http://www.minnparbackhoeparts.com/

FEVEREIRO 2004

RUTHZIL TRATOR COMERCIAL DE PEÇAS LTDA 11 97083-6812 ROLANDO

580 SUPER M
580 SUPER M+
SERIES 2
LOADER BACKHOE
PARTS CATALOG

Publication Part Number: 7-9042 NA



Photograph may show installation of optional equipment.

DB04A007

This unit first became available in 02-2004.

Table of Contents
General Information
Section 2 – Engine
Section 3 – Fuel System
Section 4 – Electrical System
Section 5 – Tracks / Steering
Section 6 – Power train
Section 7 – Brakes
Section 8 – Hydraulics
Section 9 – Chassis/Attachments
Index

http://www.minnparbackhoeparts.com/

CNH America, LLC reserves the right to make improvements in design or changes in specifications at any time without incurring any obligation to install them on units previously sold.

All data given in this publication is subject to production variations. Dimensions and weights are only approximate. Illustrations do not necessarily show products in standard condition.For exact information about any particular product, please consult your Dealer

Revision History			
Issue	Issue Date	Applicable Machines	Remarks
First Edition	02-2004	580 SUPER M / 580 SUPER M+ Series 2	7-9040 NA
Revision 1	05-2004	580 SUPER M / 580 SUPER M+ Series 2	7-9041 NA
Revision 2	05-2005	580 SUPER M / 580 SUPER M+ Series 2	7-9042 NA

Any use of editorial or pictorial content is strictly prohibited without express written permission from
CNH America, LLC. Racine, WI 53403 U.S.A..

http://www.minnparbackhoeparts.com/

TABLE OF CONTENTS

02-01	RADIATOR - MOUNTING
02-02	DEAERATION SYSTEM - MOUNTING
02-03	RADIATOR ASSY (WITHOUT AIR CONDITIONING)
02-03A	RADIATOR ASSY (WITH AIR CONDITIONING)
02-04	AIR CLEANER - AIR INTAKE PARTS
02-05	AIR CLEANER
02-06	MUFFLER - EXHAUST SYSTEM
02-06A	MUFFLER, ASPIRATED - EXHAUST SYSTEM
02-07	ENGINE - MOUNTING
02-07A	ENGINE - BLOCK HEATER
02-08	ENGINE
02-09	CYLINDER BLOCK
02-10	CYLINDER BLOCK
02-11	OIL PUMP, PAN
02-12	CYLINDER BLOCK - COVERS
02-13	CYLINDER BLOCK - COVERS
02-14	CYLINDER BLOCK - COVERS
02-15	BREATHER - ENGINE
02-16	CYLINDER HEAD
02-17	CYLINDER HEAD - COVERS
02-18	CYLINDER HEAD - VALVE MECHANISM
02-19	MANIFOLD - INTAKE
02-20	MANIFOLD - EXHAUST
02-21	CRANKSHAFT
02-22	PISTONS - CONNECTING ROD
02-23	PISTONS - CONNECTING ROD
02-24	FLYWHEEL - ENGINE
02-25	PULLEY - CRANKSHAFT
02-26	DYNAMIC BALANCER, GEARS & SHAFTS
02-27	DYNAMIC BALANCER, GEARS & SHAFTS (2830952)
02-28	CAMSHAFT
02-29	TURBOCHARGER
02-30	ENGINE, OIL
02-31	OIL PUMP - ENGINE
02-32	OIL FILTERS - ENGINE
02-33	PIPING - ENGINE OIL
02-34	OIL FILTER AND COOLER
02-35	WATER PUMP
02-36	COOLING SYSTEM - ENGINE
02-37	THERMOSTAT - ENGINE COOLING SYSTEM
02-38	WATER PUMP - CONTROL
02-39	FAN DRIVE
02-40	POWER TAKE-OFF
02-41	ENGINE - LIFT HOOK
03-01	FUEL LINES, RESERVOIR - FILTER, IN-LINE FUEL
03-02	CONTROLS - THROTTLE, HAND
03-03	CONTROLS - THROTTLE, FOOT
03-04	FUEL INJECTION PUMP
03-05	FUEL INJECTION SYSTEM
03-06	FUEL INJECTION SYSTEM
03-07	FUEL INJECTION SYSTEM
03-08	FUEL FILTER

http://www.minnparbackhoeparts.com/

TABLE OF CONTENTS

03-09	FUEL PUMP
03-10	FUEL INJECTION SYSTEM
03-11	FUEL INJECTION SYSTEM
04-01	STARTER
04-02	ALTERNATOR
04-03	STARTER MOUNTING - ALTERNATOR MOUNTING
04-04	HARNESS, ENGINE - MOUNTING AND CONNECTIONS
04-05	BATTERY CABLES (MODELS WITHOUT COLD START)
04-06	BATTERY, DUAL - COLD START
04-06A	COLD START GRID HEATER
04-07	HARNESS, FRONT CONSOLE - SWITCHES
04-08	HARNESS, FRONT CONSOLE - MOUNTING
04-09	ELECTRICAL - TRANSMISSION, POWERSHIFT
04-10	HARNESS, SIDE CONSOLE - SWITCHES
04-11	INSTRUMENT PANEL, FRONT - COVERS
04-12	INSTRUMENT PANEL, SIDE - COVERS (RIGHT-HAND SIDE)
04-13	INSTRUMENT CLUSTER
04-14	ELECTRICAL - LAMPS, ROPS CANOPY
04-15	ELECTRICAL - LAMPS, ROPS CAB
04-16	LAMP ASSY (ROPS CANOPY MODELS)
04-17	HORN - ALARM, BACKUP
04-18	BEACON, ROTATING (CAB OR CANOPY MODELS)
04-19	ANTENNA, RADIO - HARNESS, RADIO
04-20	ELECTRICAL - BACKHOE AUXILIARY HYDRAULIC, UNI-DIRECTIONAL
04-21	ELECTRICAL - BACKHOE AUXILIARY HYDRAULIC, WITH PILOT CONTROLS
05-01	STEERING WHEEL - COLUMN
05-02	HYDRAULICS - STEERING
05-03	STEERING COLUMN
05-04	AXLE, FRONT (86990837) - MOUNTING
05-05	AXLE, FRONT (86990837) - HOUSING
05-06	AXLE, FRONT (86990837) - HOUSING, SWIVEL
05-07	AXLE, FRONT (86990837) - CYLINDER, STEERING
05-08	AXLE, FRONT (86990837) - HUB AND BEARINGS
05-09	WHEELS, FRONT - TIRES
06-01	AXLE, FRONT DRIVE - MOUNTING
06-02	AXLE, FRONT DRIVE - HOUSING
06-03	AXLE, FRONT DRIVE - HOUSING, SWIVEL
06-04	AXLE, FRONT DRIVE - CYLINDER, STEERING
06-05	AXLE, FRONT DRIVE - SHAFTS, AXLE
06-06	AXLE, FRONT DRIVE - PLANETARY
06-07	AXLE, FRONT DRIVE - DIFFERENTIAL
06-08	AXLE, FRONT DRIVE - RING AND PINION
06-09	DRIVE SHAFT, FRONT AXLE
06-10	COOLING SYSTEM - TRANSMISSION (MODELS WITHOUT POWERSHIFT)(WITH CUT HOSES AT COOLER)
06-11	COOLING SYSTEM - TRANSMISSION (MODELS WITH POWERSHIFT)(WITH CUT HOSES AT COOLER)
06-11A	COOLING SYSTEM - TRANSMISSION (WITH FLARED FITTINGS AT COOLER)
06-12	TRANSMISSION - MOUNTING (MODELS WITHOUT POWERSHIFT)
06-13	TRANSMISSION - MOUNTING (MODELS WITH POWERSHIFT)
06-14	TRANSMISSION ASSY - FILTER, OIL (MODELS WITHOUT POWERSHIFT)
06-15	TRANSMISSION ASSY (2WD) - HOUSING (MODELS WITHOUT POWERSHIFT)

http://www.minnparbackhoeparts.com/

TABLE OF CONTENTS

06-16	TRANSMISSION ASSY (4WD) - HOUSING (MODELS WITHOUT POWERSHIFT)
06-17	TRANSMISSION ASSY - PUMP, OIL (MODELS WITHOUT POWERSHIFT)
06-18	TRANSMISSION ASSY - SHIFTER MECHANISM (MODELS WITHOUT POWERSHIFT)
06-19	TRANSMISSION ASSY - SHAFT, IDLER AND PRIMARY (MODELS WITHOUT POWERSHIFT)
06-20	TRANSMISSION ASSY - SHAFT, INPUT (MODELS WITHOUT POWERSHIFT)
06-21	TRANSMISSION ASSY - SHAFT, SECONDARY (MODELS WITHOUT POWERSHIFT)
06-22	TRANSMISSION ASSY (4WD) - SHAFT, OUTPUT (MODELS WITHOUT POWERSHIFT)
06-23	TRANSMISSION ASSY (86984097 OR 86984098) - VALVE, CONTROL (MODELS WITHOUT POWERSHIFT)
06-23A	TRANSMISSION ASSY (87456843 OR 87456844) - VALVE, CONTROL (MODELS WITHOUT POWERSHIFT)
06-24	TRANSMISSION ASSY (4WD) - VALVE, SOLENOID (MODELS WITHOUT POWERSHIFT)
06-25	TRANSMISSION ASSY, POWERSHIFT - HOUSING
06-26	TRANSMISSION ASSY, POWERSHIFT - HOUSING, REAR
06-27	TRANSMISSION ASSY, POWERSHIFT - TORQUE CONVERTER
06-28	TRANSMISSION ASSY, POWERSHIFT - PUMP, OIL
06-29	TRANSMISSION ASSY, POWERSHIFT - CLUTCH, FORWARD DRIVE
06-30	TRANSMISSION ASSY, POWERSHIFT - CLUTCH, REVERSE DRIVE
06-31	TRANSMISSION ASSY, POWERSHIFT - CLUTCH, PUMP DRIVE
06-32	TRANSMISSION ASSY, POWERSHIFT - CLUTCH, SECOND GEAR
06-33	TRANSMISSION ASSY, POWERSHIFT - CLUTCH, OUTPUT SHAFT
06-34	TRANSMISSION ASSY, POWERSHIFT - MOUNTING, VALVE
06-35	TRANSMISSION ASSY, POWERSHIFT - VALVE, CONTROL
06-36	TRANSMISSION ASSY, POWERSHIFT - PLATE, DRIVE
06-37	WHEELS, REAR - TIRES
06-38	AXLE, REAR DRIVE - MOUNTING
06-39	AXLE, REAR - DIFFERENTIAL LOCK
06-40	AXLE, REAR DRIVE - HOUSING
06-41	AXLE, REAR DRIVE - DIFFERENTIAL (CLOCKWISE INPUT, MODELS WITHOUT POWERSHIFT)
06-42	AXLE, REAR DRIVE - DIFFERENTIAL (COUNTER CLOCKWISE INPUT, MODELS WITH POWERSHIFT)
06-43	AXLE, REAR DRIVE - RING AND PINION
06-44	AXLE, REAR DRIVE - DIFFERENTIAL LOCK (CLOCKWISE INPUT, MODELS WITHOUT POWERSHIFT)
06-45	AXLE, REAR DRIVE - DIFFERENTIAL LOCK (COUNTER CLOCKWISE INPUT, MODELS WITH POWERSHIFT)
06-46	AXLE, REAR DRIVE - PLANETARY
06-47	DRIVE SHAFT, REAR AXLE
07-01	AXLE, REAR DRIVE - BRAKE, DIFFERENTIAL
07-02	AXLE, REAR DRIVE - BRAKE, PARKING
07-03	BRAKE - PEDALS
07-04	HYDRAULICS - BRAKE MASTER CYLINDER
07-05	CYLINDER ASSY - BRAKE MASTER
07-06	CONTROLS - BRAKE, PARKING
08-01	HYDRAULICS - PUMP, FILTER AND LOADER VALVE
08-02	HYDRAULICS - LOADER VALVE AND FILTER TO BACKHOE VALVE
08-03	HYDRAULICS - COOLER, RETURN LINES AND FILTER
08-04	HYDRAULICS - CYLINDER, LOADER LIFT
08-05	HYDRAULICS - CYLINDER, LOADER BUCKET

http://www.minnparbackhoeparts.com/

TABLE OF CONTENTS

08-06	HYDRAULICS - CYLINDER, LOADER CLAM
08-07	HYDRAULICS - CYLINDER, LOADER CLAM
08-08	HYDRAULICS - CYLINDER, BACKHOE STABILIZER (WITHOUT PILOT CONTROLS)
08-08A	HYDRAULICS - CYLINDER, BACKHOE STABILIZER (WITH PILOT CONTROLS)
08-09	HYDRAULICS - CYLINDER, BACKHOE SWING (WITHOUT PILOT CONTROLS)
08-09A	HYDRAULICS - CYLINDER, BACKHOE SWING (WITH PILOT CONTROLS)
08-10	HYDRAULICS - CYLINDER, BACKHOE BOOM
08-10A	HYDRAULICS - BACKHOE BOOM LOCK AND ELECTRICAL CIRCUIT
08-11	HYDRAULICS - CYLINDER, BACKHOE DIPPER
08-12	HYDRAULICS - CYLINDER, BACKHOE BUCKET (MODELS WITHOUT EXTENDABLE DIPPER)
08-13	HYDRAULICS - CYLINDER, BACKHOE BUCKET (MODELS WITH EXTENDABLE DIPPER)
08-14	HYDRAULICS - CYLINDER, BACKHOE EXTENDABLE DIPPER
08-15	HYDRAULICS - VALVE, PILOT CONTROL AND JOYSTICKS (6 SPOOL, W/O EXT DIPPER, W/O AUX HYDS)
08-16	HYDRAULICS - VALVE, PILOT CONTROL AND JOYSTICKS (6 SPOOL, W/O EXT DIPPER, W/ AUX HYDS)
08-17	HYDRAULICS - VALVE, PILOT CONTROL AND JOYSTICKS (7 SPOOL, W/ EXT DIPPER, W/O AUX HYDS)
08-18	HYDRAULICS - VALVE, PILOT CONTROL AND JOYSTICKS (7 SPOOL, W/ EXT DIPPER, W/ AUX HYDS)
08-19	HYDRAULICS - VALVE, PILOT CONTROL AND JOYSTICKS (7 SPOOL, W/O EXT DIPPER, W/ AUX HYDS)
08-20	HYDRAULICS - VALVE, PILOT CONTROL AND JOYSTICKS (8 SPOOL, W/ EXT DIPPER, W/ AUX HYDS)
08-21	HYDRAULICS - PILOT CONTROL JOYSTICKS
08-22	HYDRAULICS - PILOT CONTROLS
08-23	HYDRAULICS - BACKHOE AUXILIARY
08-24	HYDRAULICS - BACKHOE AUXILIARY
08-25	HYDRAULICS - RIDE CONTROL (87433240 SOLENOID VALVE)
08-26	HYDRAULICS - COUPLER, LOADER TOOL QUICK
08-27	HYDRAULICS - COUPLER, LOADER TOOL QUICK
08-28	VALVE, COUPLER (87435909) - LOADER TOOL OR BACKHOE
08-29	HYDRAULICS - COUPLER, BACKHOE BUCKET
08-30	HYDRAULICS - COUPLER, BACKHOE BUCKET
08-31	VALVE, COUPLER (87435910) - LOADER TOOL AND BACKHOE BUCKET
08-32	CYLINDER - COUPLER, BACKHOE BUCKET
08-33	PUMP, EQUIPMENT HYDRAULIC
08-34	VALVE ASSY - LOADER CONTROL, TWO SPOOL
08-35	VALVE ASSY - LOADER CONTROL, THREE SPOOL
08-36	VALVE ASSY - BACKHOE CONTROL, 6 SPOOL (W/O EXT DIPPER, W/O AUX HYDS, W/O PILOT CONTROLS)
08-37	VALVE ASSY - BACKHOE CONTROL, 7 SPOOL (W/O EXT DIPPER, W/ AUX HYDS, W/O PILOT CONTROLS)
08-38	VALVE ASSY - BACKHOE CONTROL, 7 SPOOL (W/ EXT DIPPER, W/O AUX HYDS, W/O PILOT CONTROLS)
08-39	VALVE ASSY - BACKHOE CONTROL, 8 SPOOL (W/ EXT DIPPER, W/ AUX HYDS, W/O PILOT CONTROLS)
08-40	VALVE ASSY - BACKHOE CONTROL, 6 SPOOL (W/O EXT DIPPER, W/ OR W/O AUX HYDS, W/ PILOT CONTROLS)

http://www.minnparbackhoeparts.com/

TABLE OF CONTENTS

08-41	VALVE ASSY - BACKHOE CONTROL, 7 SPOOL (W/ EXT DIPPER, W/ OR W/O AUX HYDS, W/ PILOT CONTROLS)
08-42	VALVE ASSY - BACKHOE CONTROL, 7 SPOOL (W/O EXT DIPPER, W/ AUX HYDS, W/ PILOT CONTROLS)
08-43	VALVE ASSY - BACKHOE CONTROL, 8 SPOOL (W/ EXT DIPPER, W/ AUX HYDS, W/ PILOT CONTROLS)
08-43A	VALVE SECTION - INLET (WITH PILOT CONTROLS)
08-44	VALVE SECTION - BACKHOE SWING (WITH PILOT CONTROLS)
08-45	VALVE SECTION - BACKHOE BOOM (WITH PILOT CONTROLS)
08-46	VALVE SECTION - BACKHOE STABILIZER (WITH PILOT CONTROLS)
08-47	VALVE SECTION - BACKHOE DIPPER (WITH PILOT CONTROLS)
08-48	VALVE SECTION - BACKHOE BUCKET (WITH PILOT CONTROLS)
08-49	VALVE SECTION - EXTENDABLE DIPPER (WITH PILOT CONTROLS)
08-50	VALVE SECTION - OPTIONS, AUXILIARY HYDRAULICS (WITH PILOT CONTROLS)
08-51	VALVE ASSY, PRESSURE REDUCING (2 SPOOL) (WITH PILOT CONTROLS)
08-52	VALVE ASSY, PRESSURE REDUCING (3 SPOOL) (WITH PILOT CONTROLS)
08-53	VALVE ASSY, PRESSURE REDUCING (4 SPOOL) (WITH PILOT CONTROLS)
08-54	VALVE, JOYSTICK (PILOT CONTROLS) (LEFT-HAND) WITH HORN BUTTON
08-55	VALVE, JOYSTICK (PILOT CONTROLS) (LEFT-HAND) WITH HORN & UNI-DIRECTIONAL BUTTONS
08-56	VALVE, JOYSTICK (PILOT CONTROLS) (LEFT-HAND) WITH HORN & BI-DIRECTIONAL BUTTONS
08-57	VALVE, JOYSTICK (PILOT CONTROLS) (RIGHT-HAND) WITHOUT EXTENDABLE DIPPER
08-58	VALVE, JOYSTICK (PILOT CONTROLS) (RIGHT-HAND) WITH EXTENDABLE DIPPER
08-59	VALVE ASSY - SWING CUSHION (DAMPENING)
08-59A	SOLENOID VALVE - BOOM LOCK
08-60	ACCUMULATOR ASSY - RIDE CONTROL
08-61	FILTER ASSY, OIL
08-62	CYLINDER ASSY - LOADER LIFT
08-63	CYLINDER ASSY - LOADER BUCKET
08-64	CYLINDER ASSY - LOADER CLAM
08-65	CYLINDER ASSY - BACKHOE STABILIZER (580SM)
08-65A	CYLINDER ASSY - BACKHOE STABILIZER (580SM+)
08-66	CYLINDER ASSY - BACKHOE SWING
08-67	CYLINDER ASSY - BACKHOE BOOM
08-68	CYLINDER ASSY - BACKHOE DIPPER
08-69	CYLINDER ASSY - BACKHOE BUCKET
08-70	CYLINDER ASSY - BACKHOE EXTENDABLE DIPPER
09-01	CONTROLS - LOADER LIFT AND BUCKET
09-02	CONTROLS - LOADER CLAM
09-03	CONTROLS - LOADER SELF-LEVELING
09-04	FRAME - LOADER LIFT
09-05	FRAME - LOADER LINKAGE
09-06	BUCKET, LOADER LONG LIP (82 IN) (580SM)
09-07	BUCKET, LOADER LONG LIP (93 IN) (580SM / 580SM+)
09-08	BUCKET, LOADER CLAM (82 IN) (580SM)
09-08A	BUCKET, LOADER CLAM (93 IN) (580SM+)
09-09	GUARD - VALVE, LOADER
09-10	COUPLER, TOOL QUICK
09-11	COVERS - BACKHOE CONTROL TOWER, WITHOUT PILOT CONTROLS
09-12	BACKHOE CONTROL TOWER SUPPORT AND SEALS, WITHOUT PILOT CONTROLS

http://www.minnparbackhoeparts.com/

TABLE OF CONTENTS

09-13	BACKHOE CONTROL TOWER SUPPORT, WITH PILOT CONTROLS
09-14	BACKHOE CONTROL TOWER BOOTS AND SEALS, WITH PILOT CONTROLS
09-15	BACKHOE CONTROL TOWER LEVERS (BOOM LATCH), WITH PILOT CONTROLS
09-16	CONTROLS - BACKHOE, WITH FOOT SWING (MODELS WITHOUT EXTENDABLE DIPPER)
09-17	CONTROLS - BACKHOE, WITH FOOT SWING (MODELS WITH EXTENDABLE DIPPER)
09-18	CONTROLS - BACKHOE, WITH HAND SWING (MODELS WITHOUT EXTENDABLE DIPPER)
09-19	CONTROLS - BACKHOE, WITH HAND SWING (MODELS WITHOUT EXTENDABLE DIPPER)
09-19A	CONTROLS - BACKHOE, EXCAVATOR CONTROL PATTERN
09-20	CONTROLS - BACKHOE, WITH HAND SWING (MODELS WITH EXTENDABLE DIPPER)
09-21	CONTROLS - BACKHOE AUXILIARY HYDRAULICS, WITHOUT PILOT CONTROLS
09-22	BACKHOE - STABILIZERS, PLATES AND PADS (580SM)
09-22A	BACKHOE - STABILIZERS, PLATES AND PADS (580SM+)
09-23	BACKHOE - SWING TOWER AND SWING CYLINDERS
09-24	BACKHOE - BOOM AND SWING TOWER
09-25	BOOM LATCH (WITHOUT PILOT CONTROLS)
09-25A	BOOM LATCH (WITH PILOT CONTROLS)
09-26	BACKHOE - DIPPER AND BUCKET
09-27	BACKHOE - DIPPER, EXTENDABLE
09-28	DIPPER, BACKHOE - COUPLER, HYDRAULIC (MODELS WITH HYDRAULIC BACKHOE BUCKET COUPLER)
09-29	BUCKET, UNIVERSAL BACKHOE (305 MM (12 INCH) WIDE)
09-30	BUCKET, UNIVERSAL BACKHOE (406 MM (16 INCH) WIDE)
09-31	BUCKET, UNIVERSAL BACKHOE (457 MM (18 INCH) WIDE)
09-32	BUCKET, UNIVERSAL BACKHOE (610 MM (24 INCH) / 762 MM (30 INCH) WIDE)
09-33	BUCKET, UNIVERSAL BACKHOE (914 MM (36 INCH) WIDE)
09-34	BUCKET, UNIVERSAL BACKHOE (610 MM (24 INCH) / 762 MM (30 INCH) WIDE)
09-34A	FROST POINT ASSEMBLY
09-35	COUNTERWEIGHT, FRONT
09-36	CHASSIS / MOUNTS, POD - SCREEN, AIR INLET
09-37	TANK, OIL - BOX, BATTERY AND TOOL
09-38	RADIATOR WRAPPER
09-39	HOOD - PANELS, SIDE
09-40	HOOD - GRILLE
09-41	PLATES, FLOOR - FLOORMATS
09-42	FENDER COVER, LEFT-HAND - PANEL, REAR CLOSURE (STORAGE TRAY WITH CUP HOLDER)
09-43	FENDER EXTENSIONS
09-44	GUARD, MUD
09-45	SEAT - MOUNTING (MILSCO AND SEARS AIR SUSPENSION)
09-45A	SEAT - MOUNTING (SEARS, STANDARD)
09-45B	SEAT - MOUNTING (SEARS MECHANICAL SUSPENSION)
09-46	SEAT ASSY, STANDARD (MILSCO)
09-47	SEAT SUPPORT AND PEDESTAL, STANDARD (MILSCO)
09-48	SEAT ASSY, MECHANICAL SUSPENSION (MILSCO)
09-49	SEAT PEDESTAL AND SUSPENSION, MECHANICAL SUSPENSION (MILSCO)
09-49A	SEAT ASSY, MECHANICAL SUSPENSION (SEARS)
09-50	SEAT ASSY, AIR SUSPENSION (SEARS)
09-51	SEAT PEDESTAL AND SUSPENSION, AIR SUSPENSION (SEARS)
09-52	CAB - GLASS, MIRROR AND HOLD OPEN

http://www.minnparbackhoeparts.com/

TABLE OF CONTENTS

09-53	CAB - FRAME AND COVERS
09-54	CAB - DOORS, IF USED (SEE GLASS AND HINGES; REF 4, 27, 29)
09-54A	CAB - DOORS, IF USED (SEE GLASS AND HINGES; REF 4, 27, 29)
09-55	CAB - DOOR MOUNTING
09-56	CAB - WINDOW, RIGHT-HAND, FOR SINGLE DOOR CAB FRAMES, IF USED (SEE GLASS AND HINGES; REF 1, 5, 6)
09-56A	CAB - WINDOW, RIGHT-HAND, FOR SINGLE DOOR CAB FRAMES, IF USED (SEE GLASS AND HINGES; REF 1, 5, 6)
09-57	CAB - WINDOW, REAR
09-58	CAB - WASHER, WINDSHIELD
09-59	CAB - WIPERS
09-60	CAB HEADLINER - FILTER, LOUVERS, DOME LAMP
09-61	CAB - FILTER, AIR
09-62	CAB - BLOWER HOUSING, VENTILATION DUCTS, DRAIN LINES
09-63	CAB - HEATER
09-64	CAB - AIR CONDITIONING LINES, EVAPORATOR CORE
09-65	CAB - AIR CONDITIONING, CONDENSER, RECEIVER-DRIER
09-66	CAB - AIR CONDITIONING COMPRESSOR
09-67	CANOPY, ROPS - FRAME, COVERS, MIRROR, VISOR
09-68	CANOPY, ROPS - GLASS
09-69	CANOPY, ROPS - WIPER, FRONT AND WINDSHIELD WASHER
09-70	MIRROR, REAR VIEW - MOUNTING, CAB MODELS
09-71	SLOW MOVING VEHICLE EMBLEM
09-72	DECALS
09-73	DECALS
09-74	DECALS
09-75	DECALS - ENGLISH
09-76	DECALS - LATIN AMERICAN SPANISH
09-77	DECALS - CANADIAN FRENCH
09-78	DECALS - ENGLISH
09-79	DECALS - LATIN AMERICAN SPANISH
09-80	DECALS - CANADIAN FRENCH

http://www.minnparbackhoeparts.com/

NOTES

http://www.minnparbackhoeparts.com/

GENERAL INFORMATION

PROPRIETARY NOTICE

The contents of this manual are proprietary data of this company. Reproduction or use of any part for other than the operation and maintenance of our equipment is permissible only if expressly authorized in writing.

Additional copies may be obtained from your dealer. Address requests for copies to your Dealer and refer to the publication part number appearing on the bottom of the rear catalog cover or on the title page.

COMPANY POLICY

Company policy, which is one of continuous improvement, reserves the right to change prices and to make changes in design and specification at any time without notice and without obligation to modify units previously built.

All data given in this book is subject to production variations. Dimensions and weights are approximate only and the illustrations do not necessarily show machines in standard condition. For exact information about any particular machine please consult your dealer.

PARTS AND ACCESSORIES

Genuine parts and accessories have been specifically designed for these machines.

We would like to point out that “non-genuine” parts and accessories have NOT been examined and released by the Company. The installation and or use of such products could have negative effects upon the design characteristics of your machine and thereby affect its safety. The company is not liable for any damage caused by the use of “non-genuine” parts and accessories.

IMPROVEMENTS

We are continually striving to improve our products. We reserve the right to make improvements or changes when it becomes practical and possible to do so, without incurring any obligation to make changes or additions to the equipment sold previously.

MODEL CODES

The range of machines listed may not be available in all countries or markets therefore, for the latest information consult your local dealer.

OWNER ASSISTANCE

We want you to be completely satisfied with your investment. Normally any problems with your equipment will be handled by your dealer's Service Department; however, misunderstandings can occur. If your problem has not been handled to your satisfaction, we suggest the following:

1. Contact the owner or General Manager of the dealership, explain the problem, and request assistance. When additional assistance is needed, your dealer has direct access to our office.
2. Provide your dealer with:
   - Your Name, Address, and Telephone number
   - Machine Model and Serial Number
   - Dealership Name and Address
   - Machine purchase date and amount of use
   - Nature of problem

Be aware that your problem will likely be resolved in the dealership using the dealer's facilities, equipment, and personnel. So it is important that your initial contact be with the dealer.

SPARE PARTS

To maintain operating efficiency, use original spare parts.

When ordering parts, give the following information:

- Machine Model
- Machine and Engine Serial Numbers
- Part Number from the Parts Catalog

http://www.minnparbackhoeparts.com/

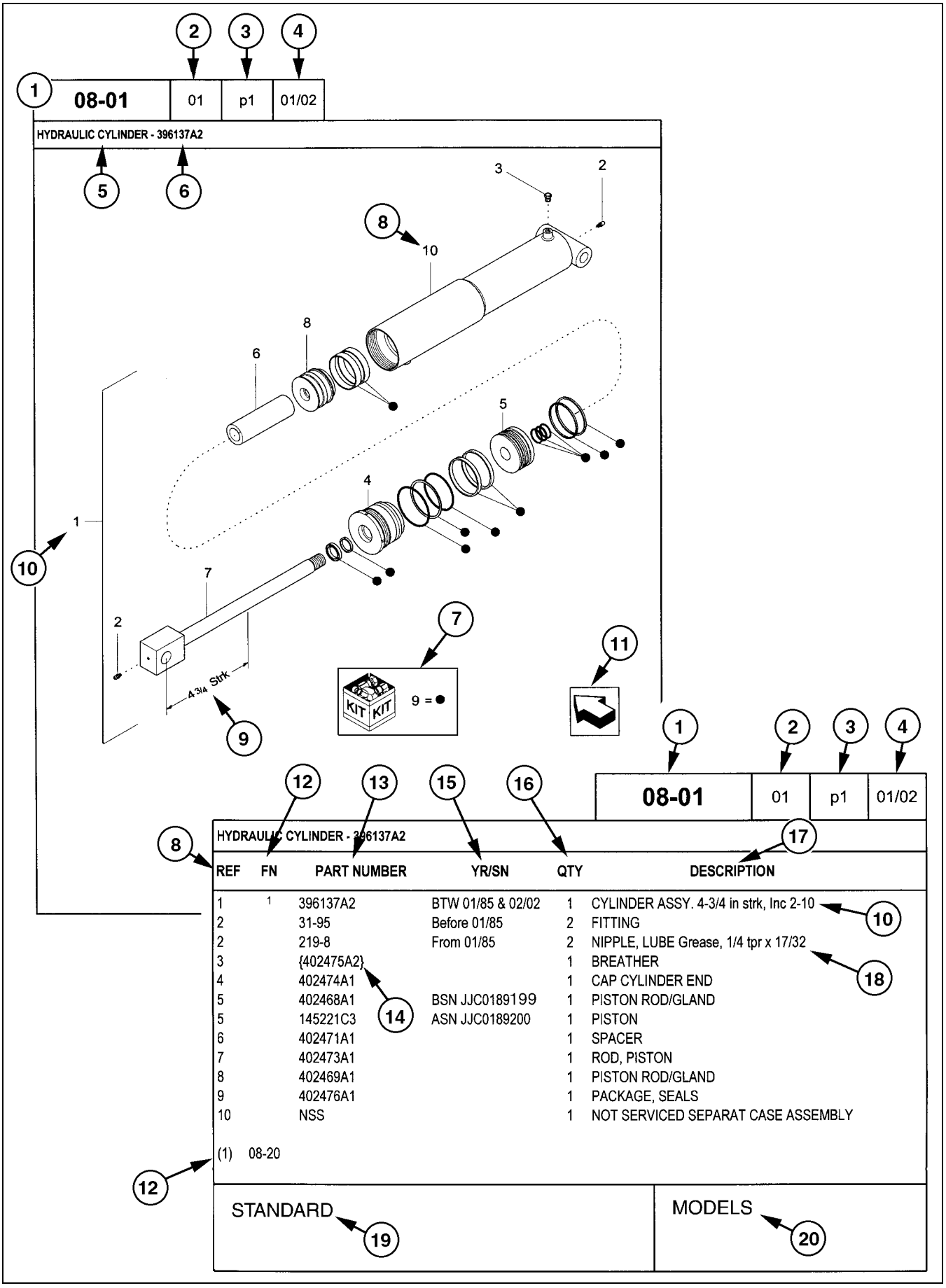

REF	FN	PART NUMBER	YR/SN	QTY	DESCRIPTION
1	1	396137A2	BTW 01/85 & 02/02	1	CYLINDER ASSY. 4-3/4 in strk, Inc 2-10
2		31-95	Before 01/85	2	FITTING
2		219-8	From 01/85	2	NIPPLE, LUBE Grease, 1/4 tpr x 17/32
3		{402475A2}		1	BREATHER
4		402474A1		1	CAP CYLINDER END
5		402468A1	BSN JJC0189199	1	PISTON ROD/GLAND
5		145221C3	ASN JJC0189200	1	PISTON
6		402471A1		1	SPACER
7		402473A1		1	ROD, PISTON
8		402469A1		1	PISTON ROD/GLAND
9		402476A1		1	PACKAGE, SEALS
10		NSS		1	NOT SERVICED SEPARAT CASE ASSEMBLY

(1) 08-20

STANDARD

MODELS

http://www.minnparbackhoeparts.com/

HOW TO USE YOUR PARTS CATALOG

1. Figure Number
2. Sequence Code within the Figure Number
3. Page Number within the Sequence Code
4. Date of Printing (month / year)
5. Figure Description
6. General information regarding the figure
7. Parts supplied in repair kits per symbol reference
8. Figure call-out of the part number (REF)
9. Technical specifications relating to the part indicated
10. Figure call-out includes bracketed items, the included items may also be listed in the additional description area
11. Orientation - Arrow indicates front of the machine
12. Footnote - Additional information relating to the part number. In this example, 08-20 equals another figure that this part is shown on
13. Part Number
    NSS = Not Serviced Separately (Non-serviced parts)
    Bracketed numbers = not available as service parts in this market
14. Not Available as service part in this market
15. YR/SN
    Year
    Before 01/85 = Part valid for production January 1985 and before
    From 01/85 = Part valid for production from January 1985 and after
    BTW 01/85 & 02/02 = Part valid for machines produced between January 1985 and February 2002.
    Serial Number (P.I.N.)
    BSN JJC0268800 = Part valid for serial number JJC0268800 and below
    ASN JJC0268800 = Part valid for serial number JJC0268800 and above
    BTW JJC0178000 & JJC0179000 = Part valid for serial numbers between JJC0178000 & JJC0179000
16. Total Quantity of the Part referred to in the page. The quantity can be replaced by the following indications:
    AR = As Required
    X = As required
17. Part Description
18. Additional description of the part to help confirm identification
19. Figure Notes
20. Model Number(s)

RIGHT-HAND AND LEFT-HAND

The reference to right-hand and left-hand in this catalog is identified by the operator standing at the rear of the basic unit (without rear attachment), looking toward the front of the machine (in normal forward travel).

For pages covering any machine attachments, right-hand and left-hand are defined by the operator sitting in the position for proper operation of the attachment.

DIMENSIONS

Metric and U.S. hardware dimensions do not show the numeric designations of standard coarse threads. A number following a semi colon (;) is the class or grade of hardware. A comma (,) represents the decimal point (.) used in U.S. dimensions.

http://www.minnparbackhoeparts.com/

EXPLANATION OF ABBREVIATIONS

AC	Alternating Current
adj	adjustable
amp	ampere
AR	As required
ASN	Serial number and after P.I.N. and after
blkhd	bulkhead
br	branch
BSN	before Serial number before P.I.N.
BTW	between
cc	cubic centimetre
cl	class
cmprsn	compression
cn pt	cone point
cp pt	cup point
CRS	Chrome Alloy Steel
CST	Carbon Steel
cu yd	cubic yard
DC	Direct Current
deg	degree
dg pt	dog point
dia	diameter
dr type	drive type
fc	face
fc sl	face seal
fem	female
fem PT	female pipe thread
fl	flare
flat pt	flat point
ft	feet or foot
ga	gauge
gal	gallon or gallons
gpm	gallons per minute
gr	grade
hd	head
hdg pt	half dog point
hp	horsepower
ID	inside diameter
in	inch or inches
Incl.	Includes
inv fl	inverted flare
K	kilo
kg	kilogram
km/h	kilometers per hour
L	litre
lb	pounds
lb-ft	pound-foot
lg	long
LH	left-hand
LH thd	left-hand thread
M	(prefix) metric thread size
m	metre
ml	milliliter
mm	millimetre
NF	National Fine
No.	number
NPT	National Pipe Thread
NS	National Super Fine
OD	outside diameter
ohm	electrical unit of resistance
Or	O-ring
ORB	O-ring boss
ORFS	O-ring face seal
ov cntr	over center
ov pt	oval point
oz	ounce
P	pitch
psi	pounds per square inch
pt	pint
PT	pipe thread
rd	round
rd holes	round holes
RH	right-hand
RH thd	right-hand thread
rpm	revolutions per minute
sl	self-locking
sq	square
SST	Stainless Steel
st	self-tapping
strk	stroke
sw	swivel
T	teeth
thk	thick
tpr	taper
tube OD	tube outside diameter
V	volt or volts
W	watt or watts
X	as required
yd	yard

http://www.minnparbackhoeparts.com/

SECTION INDEX

02-01	RADIATOR - MOUNTING
02-02	DEAERATION SYSTEM - MOUNTING
02-03	RADIATOR ASSY (WITHOUT AIR CONDITIONING)
02-03A	RADIATOR ASSY (WITH AIR CONDITIONING)
02-04	AIR CLEANER - AIR INTAKE PARTS
02-05	AIR CLEANER
02-06	MUFFLER - EXHAUST SYSTEM
02-06A	MUFFLER, ASPIRATED - EXHAUST SYSTEM
02-07	ENGINE - MOUNTING
02-07A	ENGINE - BLOCK HEATER
02-08	ENGINE
02-09	CYLINDER BLOCK
02-10	CYLINDER BLOCK
02-11	OIL PUMP, PAN
02-12	CYLINDER BLOCK - COVERS
02-13	CYLINDER BLOCK - COVERS
02-14	CYLINDER BLOCK - COVERS
02-15	BREATHER - ENGINE
02-16	CYLINDER HEAD
02-17	CYLINDER HEAD - COVERS
02-18	CYLINDER HEAD - VALVE MECHANISM
02-19	MANIFOLD - INTAKE
02-20	MANIFOLD - EXHAUST
02-21	CRANKSHAFT
02-22	PISTONS - CONNECTING ROD
02-23	PISTONS - CONNECTING ROD
02-24	FLYWHEEL - ENGINE
02-25	PULLEY - CRANKSHAFT
02-26	DYNAMIC BALANCER, GEARS & SHAFTS
02-27	DYNAMIC BALANCER, GEARS & SHAFTS (2830952)
02-28	CAMSHAFT
02-29	TURBOCHARGER
02-30	ENGINE, OIL
02-31	OIL PUMP - ENGINE
02-32	OIL FILTERS - ENGINE
02-33	PIPING - ENGINE OIL
02-34	OIL FILTER AND COOLER
02-35	WATER PUMP
02-36	COOLING SYSTEM - ENGINE
02-37	THERMOSTAT - ENGINE COOLING SYSTEM
02-38	WATER PUMP - CONTROL
02-39	FAN DRIVE
02-40	POWER TAKE-OFF
02-41	ENGINE - LIFT HOOK

http://www.minnparbackhoeparts.com/

02-01		p1	05/05

RADIATOR - MOUNTING

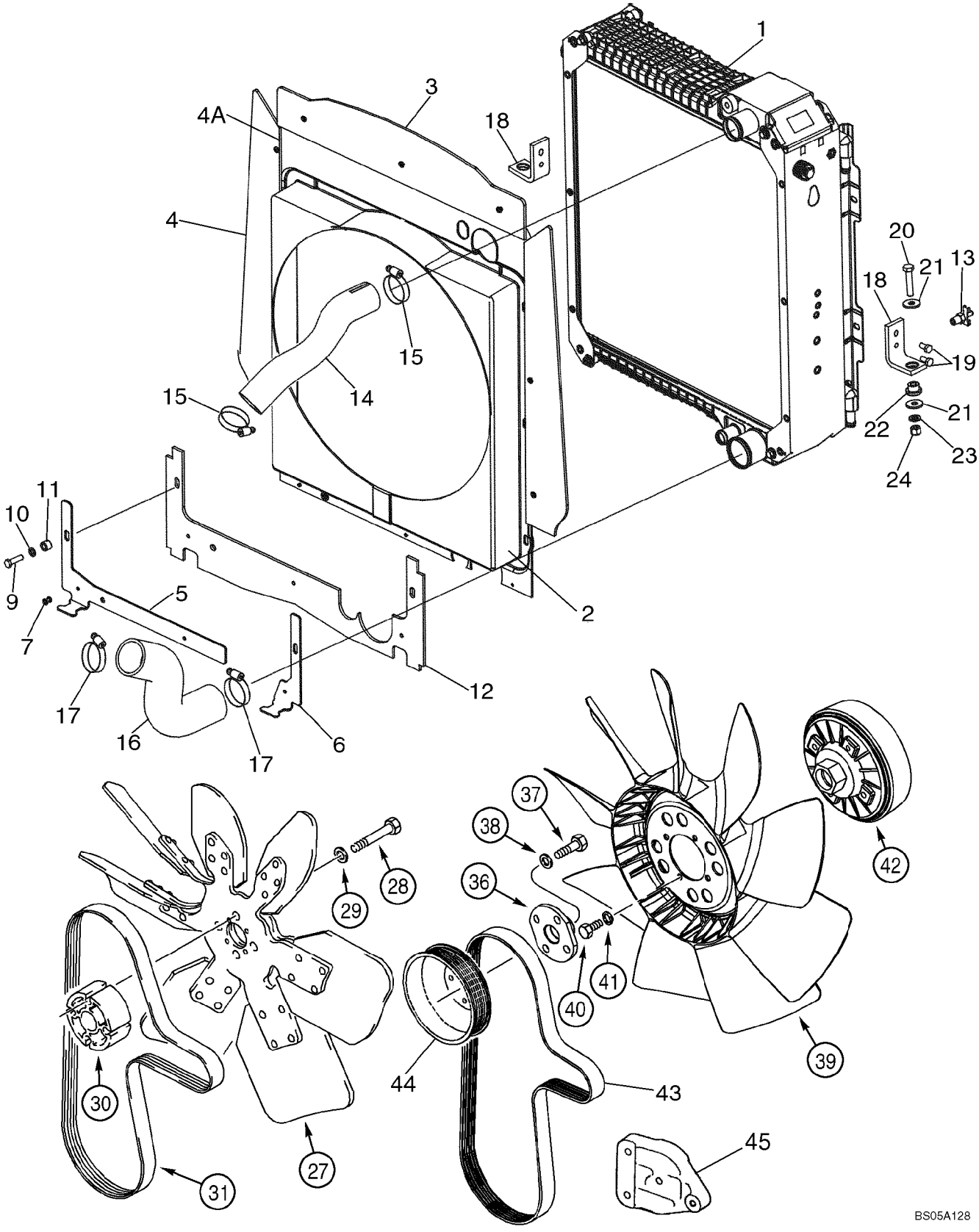

http://www.minnparbackhoeparts.com/

RADIATOR - MOUNTING

REF	FN	PART NUMBER	YR/SN	QTY	DESCRIPTION
1		87410096		1	RADIATOR 3 Row Radiator, Models Without Air Conditioning; See Figure 02-03
1		87410098		1	CONDENSER 5 Row Radiator, Models With Air Conditioning; See Figure 02-03A
		87434793		1	SHROUD ASSEMBLY; Incl. Ref 2 - 4A
2		87417301		1	SHROUD Fan
3		87434775		1	SEAL, RUBBER Top
4		87434774		2	SEAL, RUBBER Sides
4A		87301355		9	RIVET 3/16 x 37/64
5		87434614		1	PLATE, RETAINING Plate, Lower Left-Hand Shroud; With 1 Slot, 3 Holes; If Used
5		87446082		1	PLATE, RETAINING Plate, Lower Left-Hand Shroud; With 2 Slots, 2 Holes; If Used
6		87434649		1	PLATE, RETAINING Plate, Lower Right-Hand Shroud; 199 mm (7-27/32 in) Long; If Used
6		87446081		1	PLATE, RETAINING Plate, Lower Right-Hand Shroud; 195 mm (7-11/16 in) Long; If Used
7		87301356		3	RIVET 3/16 x 11/16
9		614-8030		2	BOLT M8 x 30
10		895-11008		2	WASHER 9 x 16 x 1,6 mm
11		407962A1		2	SPACER
12		87434978		1	SEAL, RUBBER Lower Seal
13		81465471		1	DRAINCOCK/TAP, SUPPLY Drain, 1/4
14		87413237		1	HOSE, LARGE Upper; Part Number Stamped On Hose; If Used
14		87454377		1	HOSE, LARGE Upper; Part Number Stamped On Hose; If Used
15		214-1432		2	CLAMP 1-9/16 x 2-1/2
16		87407272		1	HOSE, LARGE Lower; 6.4 mm (1/4 in) Thick; Part Number Stamped On Hose; If Used
16		87454378		1	HOSE, LARGE Lower; 5.6 mm (7/32 in) Thick; Part Number Stamped On Hose; If Used
17		214-1440		2	CLAMP 2-1/16 - 3
18		87407771		2	BRACKET, SUPPORTING Radiator Mounting Support
19		614-8016		4	SCREW M8 x 16
20		814-10050		2	BOLT M10 x 50

http://www.minnparbackhoeparts.com/

02-01		p2	05/05

RADIATOR - MOUNTING

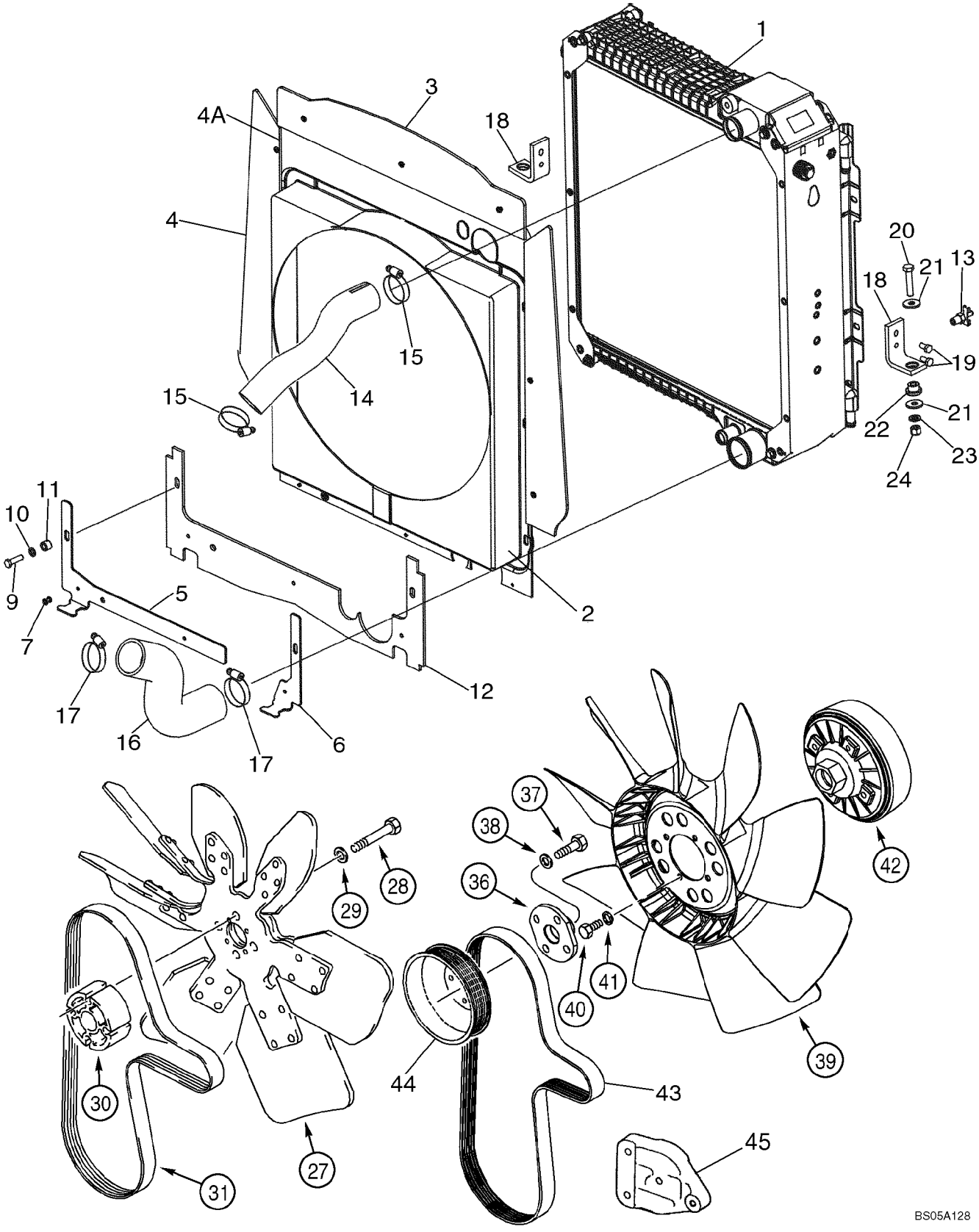

http://www.minnparbackhoeparts.com/

RADIATOR - MOUNTING

REF	FN	PART NUMBER	YR/SN	QTY	DESCRIPTION
21		K691987		4	WASHER Flat, 10 mm
22		D52276		2	ISOLATOR Rubber
23		895-11010		2	WASHER 11 x 20 x 2 mm
24		832-10410		2	NUT M10
27		228133A2		1	FAN 39 Degrees; Standard Fan Drive; With Air Conditioning
27		185377A1		1	FAN 33 Degrees; Standard Fan Drive; Without Air Conditioning
28		814-10090		4	BOLT M10 x 90
29		496-21041		4	WASHER 13/32 x 13/16 x 3/32
30		85826229		1	SPACER 59 mm Long, Standard Fan Drive; With Or Without Air Conditioning
31		85826230		1	BELT V-Type, Standard Fan Drive; With Or Without Air Conditioning
36		303192A1		1	ADAPTER Viscous Fan Drive, With Air Conditioning
37		614-10030		4	SCREW M10 x 30
38		896-11010		4	WASHER 11 x 21 x 2,5 mm
39		277800A1		1	FAN 9 Blade, Viscous Fan Drive; With Air Conditioning
40		614-8016		4	SCREW M8 x 16
41		892-11008		4	WASHER M8
42		87340008		1	DRIVE ASSY. Fan Drive; Component Parts Not Serviced Separately; Viscous Fan Drive; With Air Conditioning; Replaces 303195A1, 47049810
43		87415774		1	BELT, TRANSMISSION V-Type; Viscous Fan Drive, With Air Conditioning
		87419385		1	BODY Fan 1.4:1 Ratio Pulley Kit; Includes Ref 44, 45; Viscous Fan Drive; With Air Conditioning; No Longer Available For Service, Order Components
44		4890343		1	PULLEY
45		87442419		1	BRACKET Pulley Tensioner Support, Painted, Replaces 2852621, 504069572 Which Were Used With 86990710 Engine

http://www.minnparbackhoeparts.com/

DEAERATION SYSTEM - MOUNTING

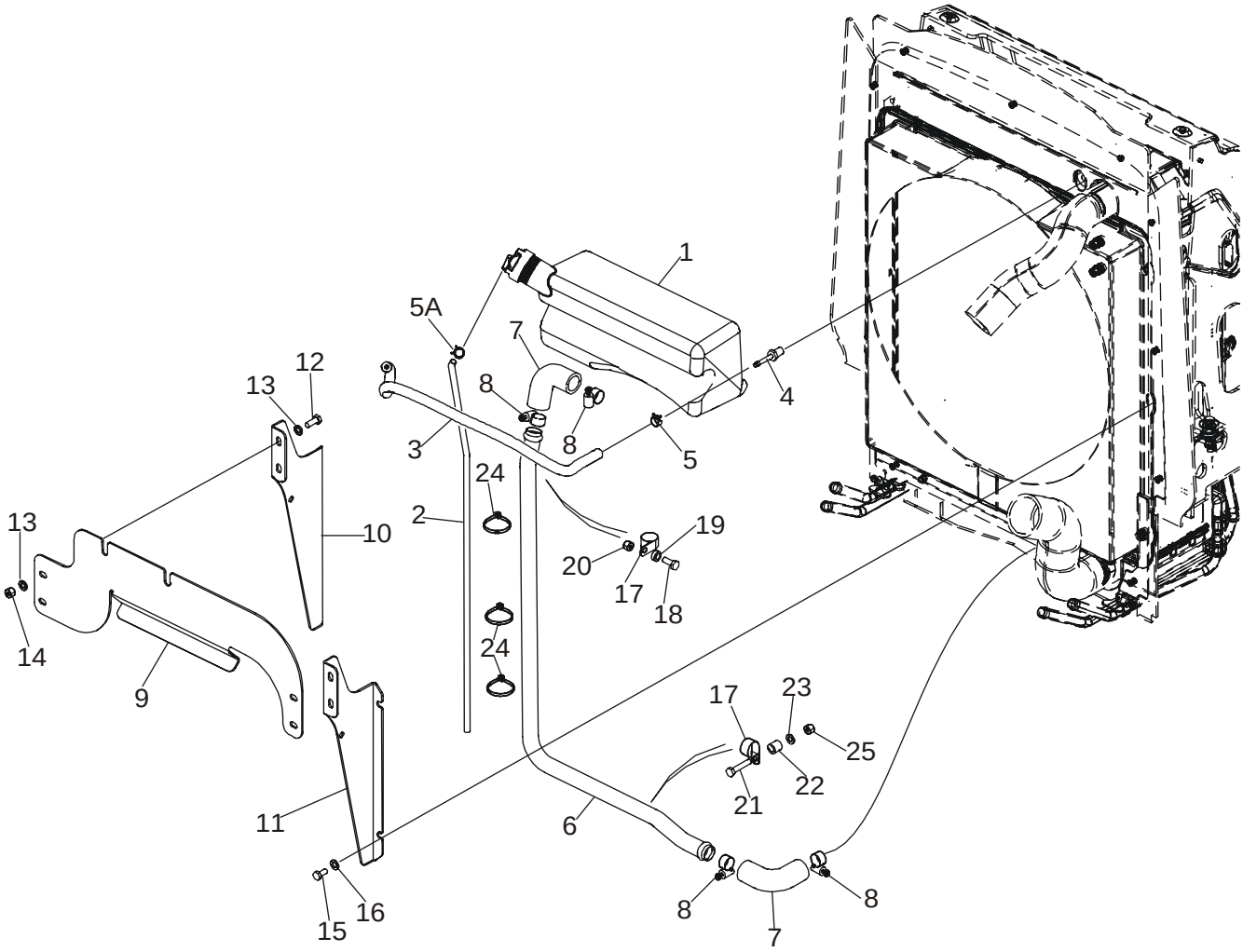

http://www.minnparbackhoeparts.com/

DEAERATION SYSTEM - MOUNTING

REF	FN	PART NUMBER	YR/SN	QTY	DESCRIPTION
1		87412139		1	RESERVOIR, COOLANT EXPNSN Deaeration Reservoir, 3.5 Liters; Includes 85803019 Cap
		85803019		1	CAP ASSY. Cap, 13 psi
2		87435409		1	HOSE Overflow Hose
3		87417300		1	HOSE Recovery, 5/16 ID x 19/32 OD x 22-11/64; Reservoir to Radiator; If Used
3		87306306		1	HOSE Recovery, 5/16 ID x 19/32 OD x 22-1/4; Reservoir to Radiator; If Used
4		87301325		1	CONNECTOR, HYD. Fitting, 5/16 Stem x 1/4 NPTF
5		1348264C1		1	CLAMP, HOSE
5A		214-1704		1	CLAMP Type M, No. 04
6		87433503		1	TUBE
7		87417299		2	HOSE R31.8 Bend Radius; Part Number Not Stamped On Hose; If Used
7		87454376		2	HOSE R33 Bend Radius; Part Number Stamped On Hose; If Used
8		214-1416		4	CLAMP Type F, No. 16
9		87448489		1	BRACKET Replaces 87417223 Bracket
10		87417225		1	BRACKET Left-Hand Bracket
11		87417224		1	BRACKET Right-Hand Bracket
12		614-8020		4	BOLT M8 x 20
13		895-11008		8	WASHER 9 x 16 x 1,6 mm
14		832-10408		4	NUT M8
15		806-8016		4	SCREW M8 x 16
16		895-11008		4	WASHER 9 x 16 x 1,6 mm
17		515-22254		2	CLAMP
18		614-8020		1	BOLT M8 x 20
19		87418359		1	SPACER 8 x 6 mm
20		829-1408		1	NUT M8
21		614-8040		1	BOLT Hex, M8 x 40, 8.8, Full Thd
22		87418360		1	SPACER 8 x 16 mm
23		895-11008		1	WASHER 9 x 16 x 1,6 mm
24		L18337		3	STRAP Tie
25		832-10408		1	NUT M8

http://www.minnparbackhoeparts.com/

02-03		p1	03/04

RADIATOR ASSY (WITHOUT AIR CONDITIONING)

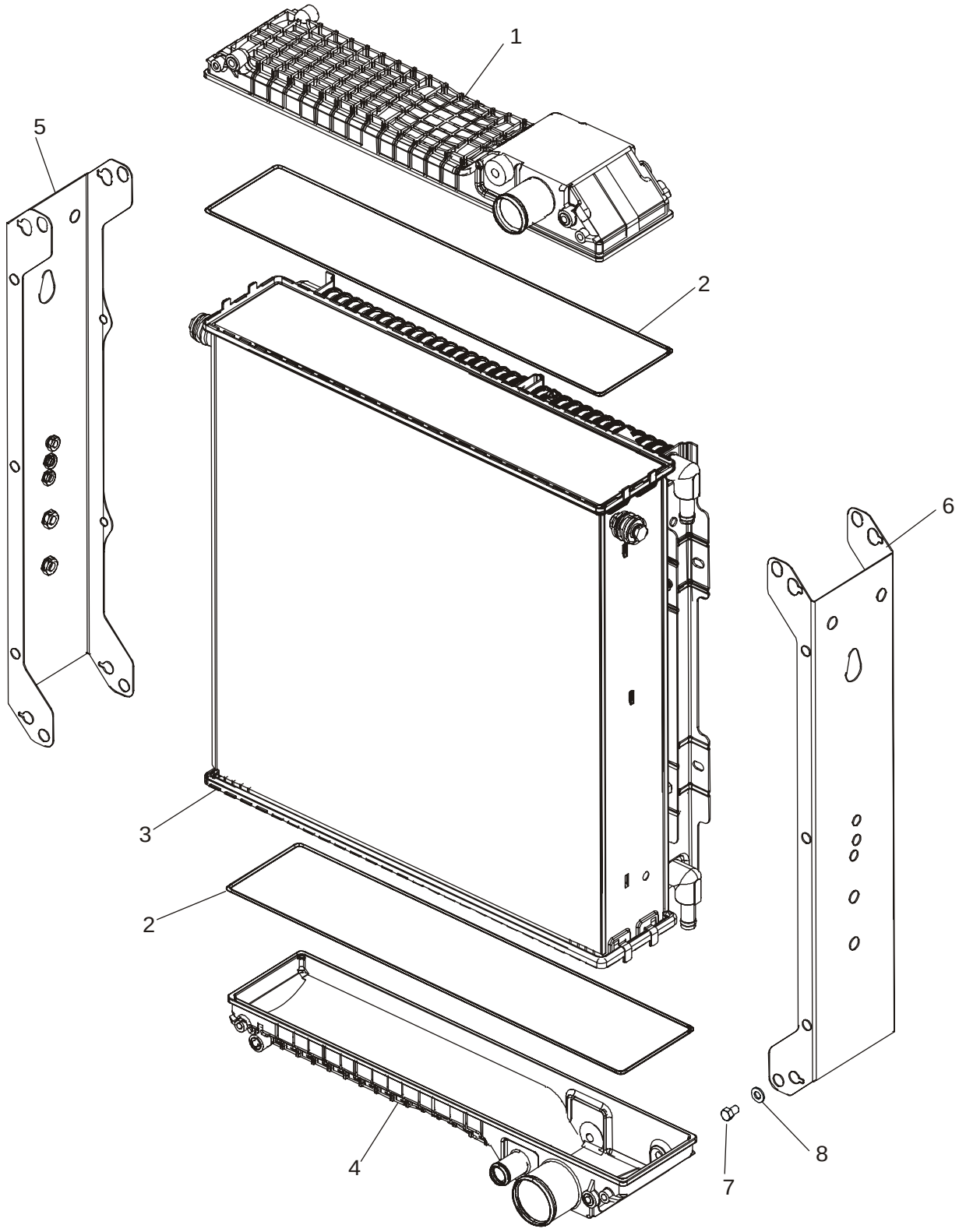

http://www.minnparbackhoeparts.com/

RADIATOR ASSY (WITHOUT AIR CONDITIONING)

REF	FN	PART NUMBER	YR/SN	QTY	DESCRIPTION
		87410096		1	RADIATOR 3 Row Radiator, Models Without Air Conditioning; Incl. Ref 1 - 8
1		87429694		1	RESERVOIR, COOLANT EXPNSN Upper Reservoir
2		254409A1		2	SEAL
3		87429690		1	CORE, RADIATOR Core
4		87429695		1	RESERVOIR, COOLANT EXPNSN Lower Reservoir
5		87429692		1	SIDE MEMBER Left-Hand
6		87429693		1	SIDE MEMBER Right-Hand
7		614-8012		8	SCREW M8 x 12
8		895-11008		8	WASHER 9 x 17 x 1,6 mm

http://www.minnparbackhoeparts.com/

02-03A		p1	03/04

RADIATOR ASSY (WITH AIR CONDITIONING)

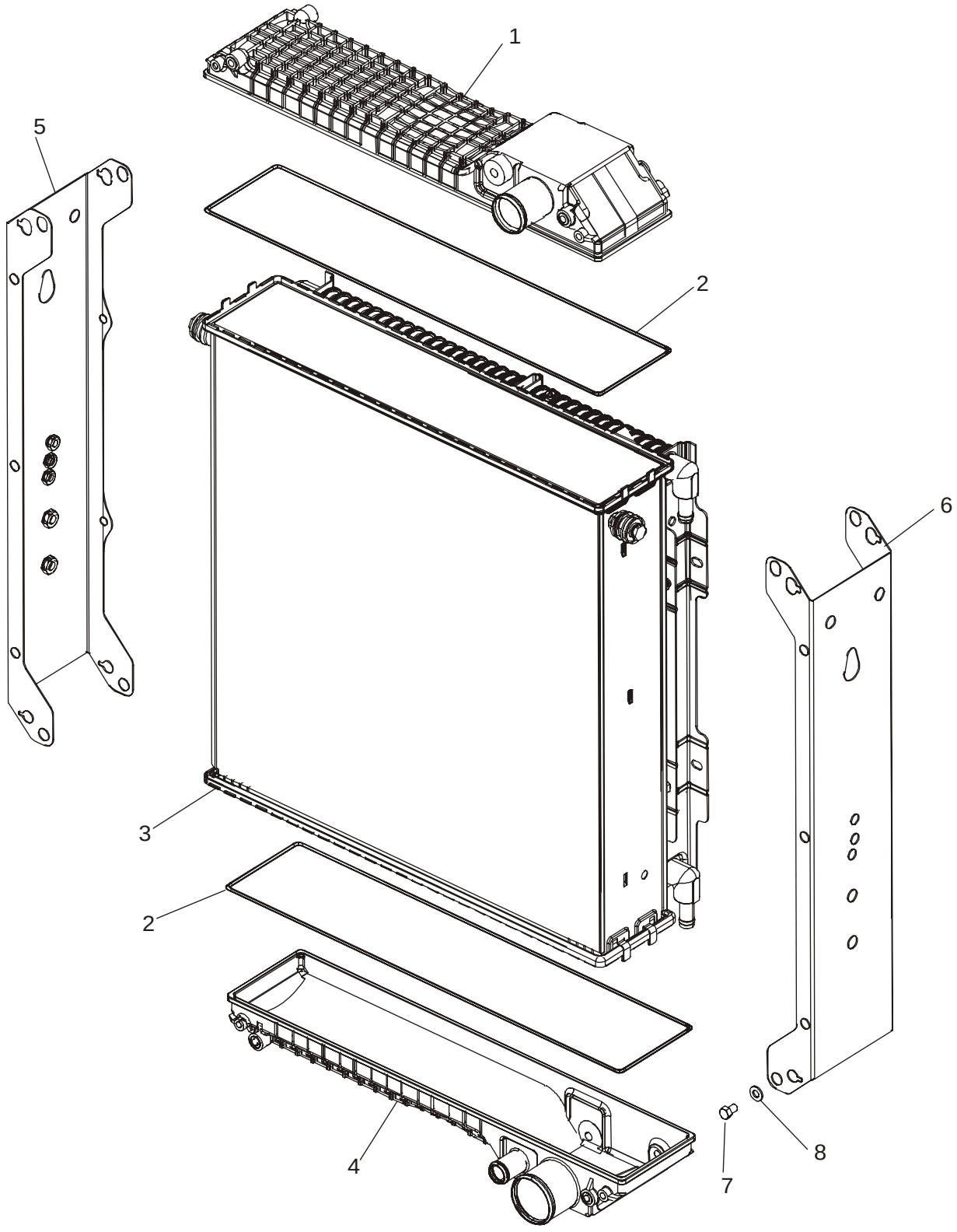

http://www.minnparbackhoeparts.com/

RADIATOR ASSY (WITH AIR CONDITIONING)

REF	FN	PART NUMBER	YR/SN	QTY	DESCRIPTION
		87410098		1	CONDENSER 5 Row Radiator, Models With Air Conditioning; Incl. Ref 1 - 8
1		87429694		1	RESERVOIR, COOLANT EXPNSN Upper Reservoir
2		254409A1		2	SEAL
3		87429691		1	CORE, RADIATOR Core
4		87429695		1	RESERVOIR, COOLANT EXPNSN Lower Reservoir
5		87429692		1	SIDE MEMBER Left-Hand
6		87429693		1	SIDE MEMBER Right-Hand
7		614-8012		8	SCREW M8 x 12
8		895-11008		8	WASHER 9 x 17 x 1,6 mm

http://www.minnparbackhoeparts.com/

02-04		p1	03/05

AIR CLEANER - AIR INTAKE PARTS

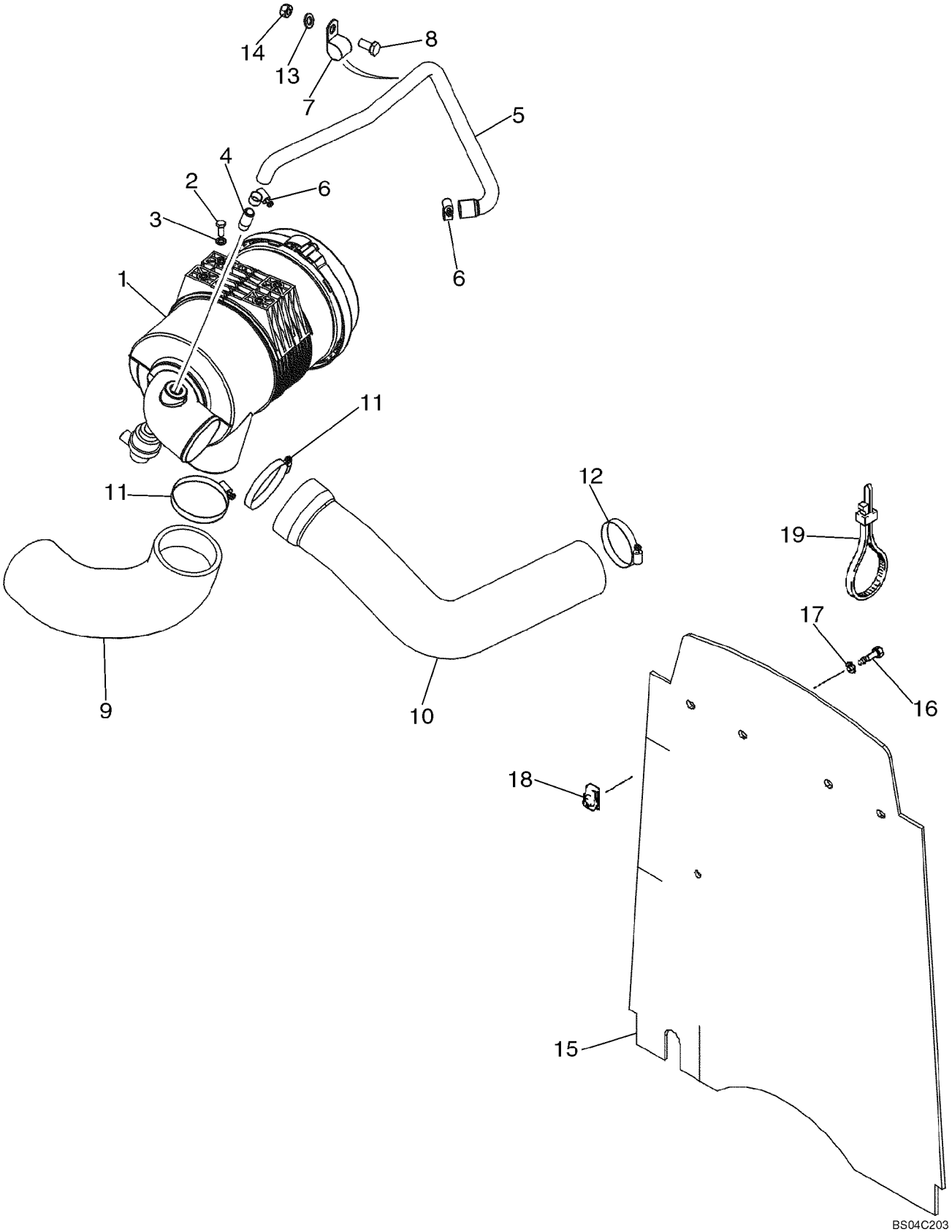

http://www.minnparbackhoeparts.com/

AIR CLEANER - AIR INTAKE PARTS

REF	FN	PART NUMBER	YR/SN	QTY	DESCRIPTION
1		87442618		1	AIR CLEANER Air Cleaner; See Figure 02-05
2		614-8020		4	BOLT M8 x 20
3		895-11008		4	WASHER 9 x 16 x 1,6 mm
4		L17985		1	FITTING
5		87454381		1	HOSE Replaces 87442308
6		214-1412		2	CLAMP Type F, No. 12
7		515-25254		1	CLAMP P
8		614-10020		1	SCREW M10 x 20
9		87454380		1	HOSE, LARGE Inlet; Replaces 87420834
10		87454383		1	HOSE, LARGE To Turbocharger; Replaces 87442306, 87412489
11		214-1464		2	CLAMP Type F, No. 64, 3-9/16 - 4-1/2
12		214-1456		1	CLAMP Type F, No. 56
13		896-15010		1	WASHER 11 x 24 x 3 mm
14		829-1410		1	NUT M10
15		87434099		1	CURTAIN Barrier, Heat and Noise Reduction
16		806-8025		4	SCREW M8 x 25; 10.9
17		495-81001		4	WASHER 9,5 x 29 x 1,6 mm
18		833-40408		4	NUT U-Type, M8
19		L18337		2	STRAP 15 in

http://www.minnparbackhoeparts.com/

AIR CLEANER

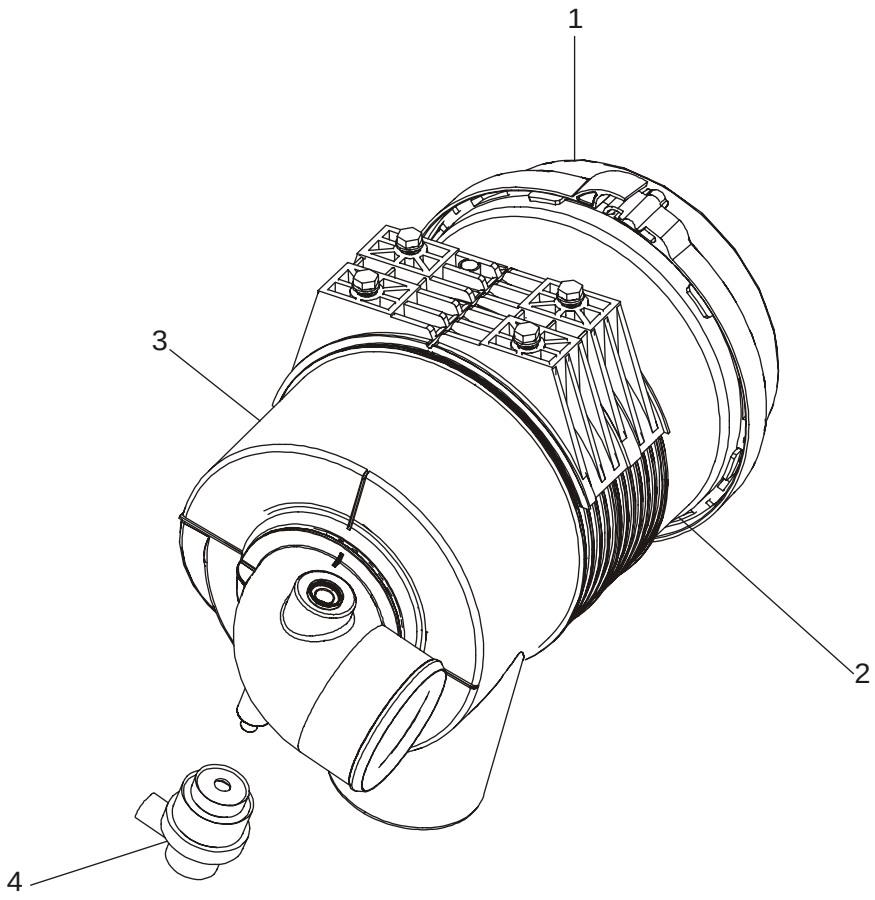

BS03K151

http://www.minnparbackhoeparts.com/

AIR CLEANER

REF	FN	PART NUMBER	YR/SN	QTY	DESCRIPTION
		87442618		1	AIR CLEANER Air Cleaner; Incl. Ref 1 - 4
1		87412635		1	AIR CLEANER Includes Rear Cover
2		87418364		1	FILTER, ELEMENT Primary
3		87418365		1	FILTER, ELEMENT Secondary
4		87442601		1	SWITCH Air Restriction Switch

http://www.minnparbackhoeparts.com/

02-06		p1	04/05

MUFFLER - EXHAUST SYSTEM

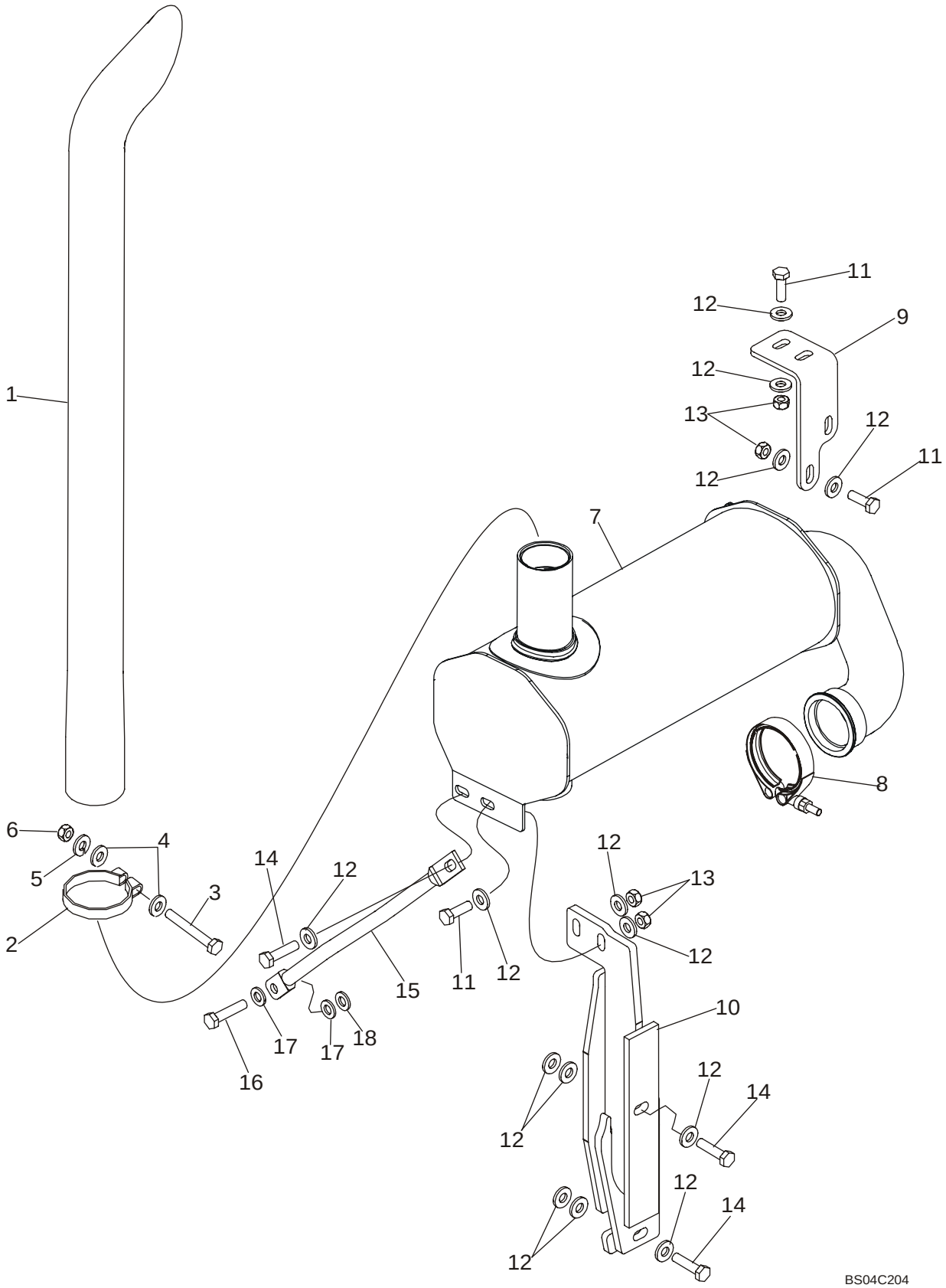

http://www.minnparbackhoeparts.com/

MUFFLER - EXHAUST SYSTEM

REF	FN	PART NUMBER	YR/SN	QTY	DESCRIPTION
1		87309656		1	VERTICAL EXHAUST 844 mm (33-1/4 in) Long Exhaust Stack; Replaces 87437805 868 mm (34-11/64 in) Long Stack
2		87437804		1	PIPE CLAMP Stack Clamp
3		614-10080		1	BOLT M10 x 80
4		896-15010		2	WASHER Flat
5		892-11010		1	WASHER, LOCK M10
6		829-1410		1	NUT M10
7		87440554		1	MUFFLER Turbo Engine
8		A170467		1	CLAMP Includes Hardware
9		87423531		1	BRACKET, SUPPORTING Front Support Bracket
10		87441285		1	BRACKET, SUPPORTING Rear Support Bracket
11		627-10030		5	SCREW M10 x 30
12		896-15010		18	WASHER 11 x 24 x 3 mm
13		829-1410		6	NUT M10
14		827-10040		3	BOLT M10 x 40
15		87442357		1	BRACE
16		814-10045		1	BOLT M10 x 45
17		896-11010		2	WASHER 11 x 21 x 2.5 mm
18		896-11010		X	WASHER 11 x 21 x 2.5 mm; Used As A Shim

http://www.minnparbackhoeparts.com/

02-06A		p1	04/05

MUFFLER, ASPIRATED - EXHAUST SYSTEM

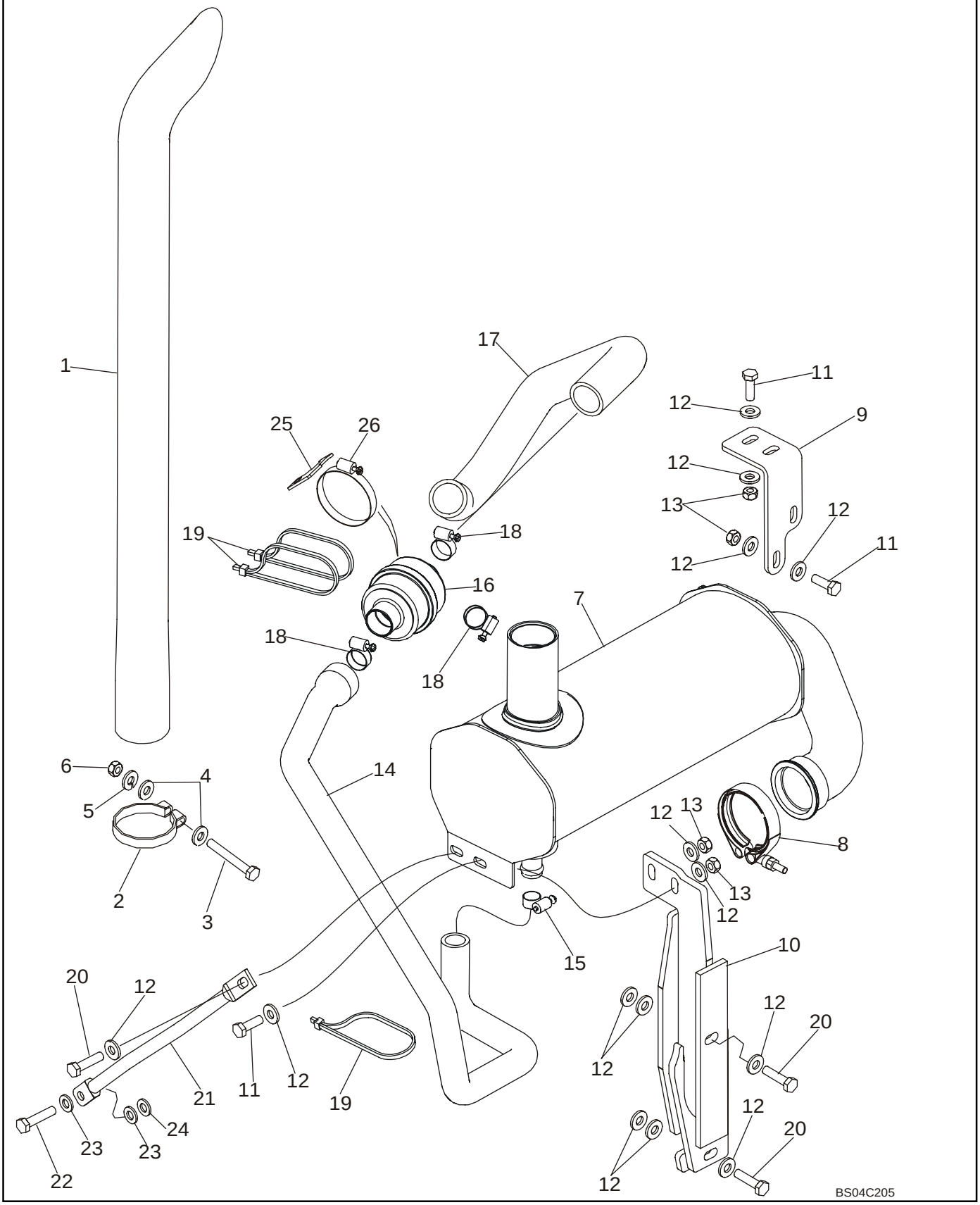

http://www.minnparbackhoeparts.com/

MUFFLER, ASPIRATED - EXHAUST SYSTEM

REF	FN	PART NUMBER	YR/SN	QTY	DESCRIPTION
1		87309656		1	VERTICAL EXHAUST 844 mm (33-1/4 in) Long Exhaust Stack; Replaces 87437805 868 mm (34-11/64 in) Long Stack
2		87437804		1	PIPE CLAMP Stack Clamp
3		614-10080		1	BOLT M10 x 80
4		896-15010		2	WASHER Flat
5		892-11010		1	WASHER, LOCK M10
6		829-1410		1	NUT M10
7		87447052		1	MUFFLER Aspirated and Spark Arrestor
8		A170467		1	CLAMP Includes Hardware
9		87423531		1	BRACKET, SUPPORTING Front Support Bracket
10		87441285		1	BRACKET, SUPPORTING Rear Support Bracket
11		627-10030		5	SCREW M10 x 30
12		896-15010		18	WASHER 11 x 24 x 3 mm
13		829-1410		6	NUT M10
14		87313164		1	HOSE Aspiration Hose, Check Valve to Muffler; Replaces 87436615
15		214-1416		1	CLAMP #16, Type F
16		307123A1		1	VALVE Aspirator Check
17		87444169		1	HOSE Aspiration Hose, Air Cleaner to Valve
18		214-1424		3	CLAMP #24, Type F
19		L18337		3	STRAP Tie
20		827-10040		3	BOLT M10 x 40
21		87442357		1	BRACE
22		814-10045		1	BOLT M10 x 45
23		896-11010		2	WASHER 11 x 21 x 2.5 mm
24		896-11010		X	WASHER 11 x 21 x 2.5 mm; Used As A Shim
25		87447313		1	PLATE, MOUNTING Aspirator Check Valve Mounting Plate
26		214-1456		1	CLAMP #56, Type F

http://www.minnparbackhoeparts.com/

ENGINE - MOUNTING

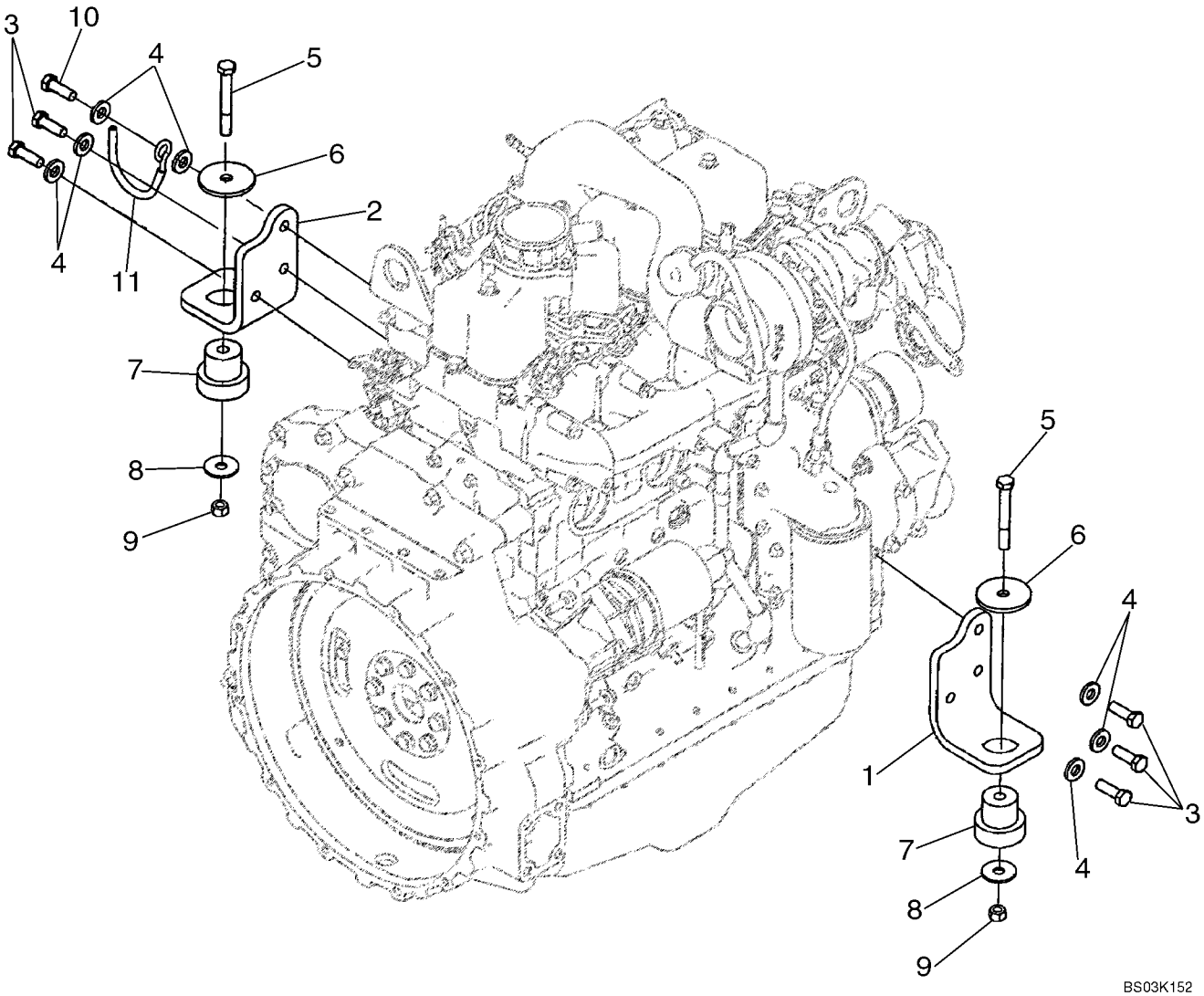

http://www.minnparbackhoeparts.com/

ENGINE - MOUNTING

REF	FN	PART NUMBER	YR/SN	QTY	DESCRIPTION
		87437203		1	ENGINE 95 hp, Turbocharged Engine; Includes Parts On Figures 02-08 - 02-41, 03-04 - 03-11; Replaces 86990710 Engine
1		87411319		1	BRACKET Right-Hand
2		87411320		1	BRACKET Left-Hand
3		614-12035		5	BOLT M12 x 35
4		896-15012		7	WASHER 13,5 x 28 x 4 mm
5		814-12080		2	SCREW M12 x 80
6		85801585		2	WASHER, SEALING
7		87416966		2	SUPPORT Insulator, Rubber Mount
8		85802618		2	WASHER, SEALING
9		832-10412		2	NUT M12
10		614-12040		1	BOLT M12 x 40
11		87431799		1	SUPPORT Hose Support

http://www.minnparbackhoeparts.com/

ENGINE - BLOCK HEATER

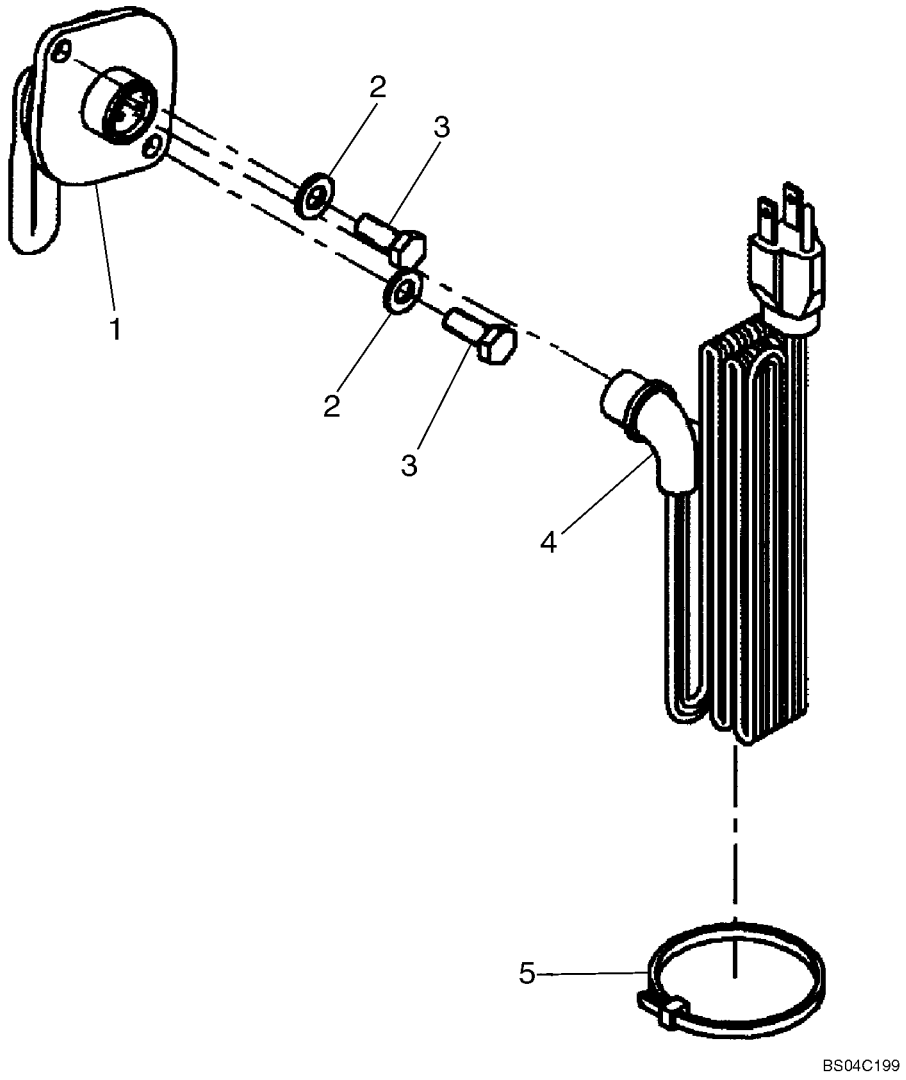

http://www.minnparbackhoeparts.com/

ENGINE - BLOCK HEATER

REF	FN	PART NUMBER	YR/SN	QTY	DESCRIPTION
		87447135		1	KIT, SERVICE Engine Block Heater Kit; Incl. Ref 1 - 5 and Instructions
1		8602005		1	HEATER Block Heater; 750W, 120V
2		896-11008		2	WASHER 9 x 17 x 2 mm
3		627-8020		2	BOLT Thd to Hd; M8 x 20; 10.9
4		196466A1		1	CABLE, ELECTRIC 1829 mm (72 in)
5		L18331		1	STRAP Tie

http://www.minnparbackhoeparts.com/

ENGINE

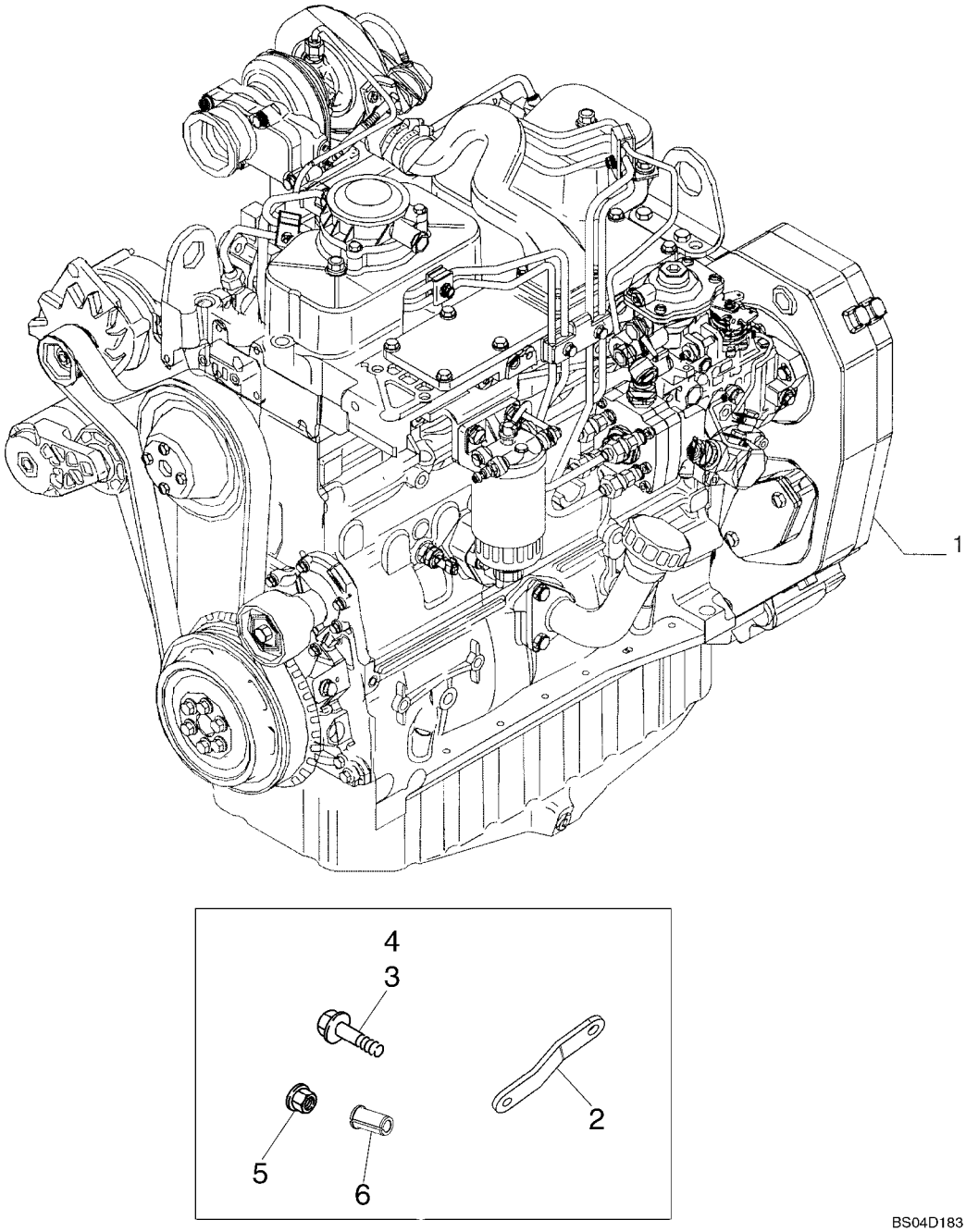

http://www.minnparbackhoeparts.com/

ENGINE

REF	FN	PART NUMBER	YR/SN	QTY	DESCRIPTION
1		87437203		1	ENGINE 95hp Turbocharged Engine; Includes Parts On Figures 02-08 - 02-41, 03-04 - 03-11; Replaces 86990710 Engine
2		2852180		1	BRACKET Alternator Mounting Strap; Used With 86990710 Engine; For Alternator Mounting Used With 87437203 Engine, See Figure 04-03
3		4895291		1	SCREW Flange, M10 x 20; If Used
4		4895538		1	SCREW Flange, M10 x 120; If Used
5		4895166		1	NUT Flange, M10; If Used
6		2852181		1	SPACER If Used

http://www.minnparbackhoeparts.com/

CYLINDER BLOCK

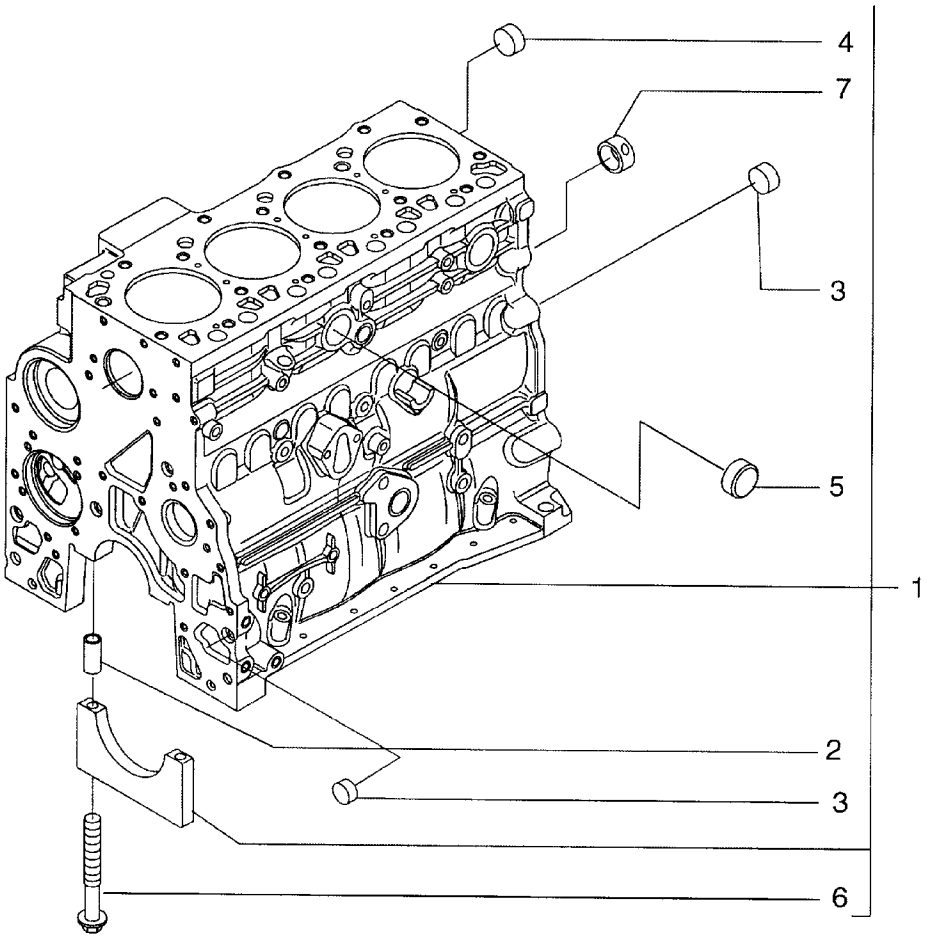

BS04A024

http://www.minnparbackhoeparts.com/

CYLINDER BLOCK

REF	FN	PART NUMBER	YR/SN	QTY	DESCRIPTION
1		2830082		1	CYLINDER BLOCK - ASSY; Incl. Ref 2 - 7
2		4899026		10	DOWEL
3		4895039		3	PLUG
4		4895038		4	PLUG
5		4895228		2	PLUG
6		4891353		10	SCREW Flange, M12 x 120
7		4895040		1	BUSHING

http://www.minnparbackhoeparts.com/

CYLINDER BLOCK

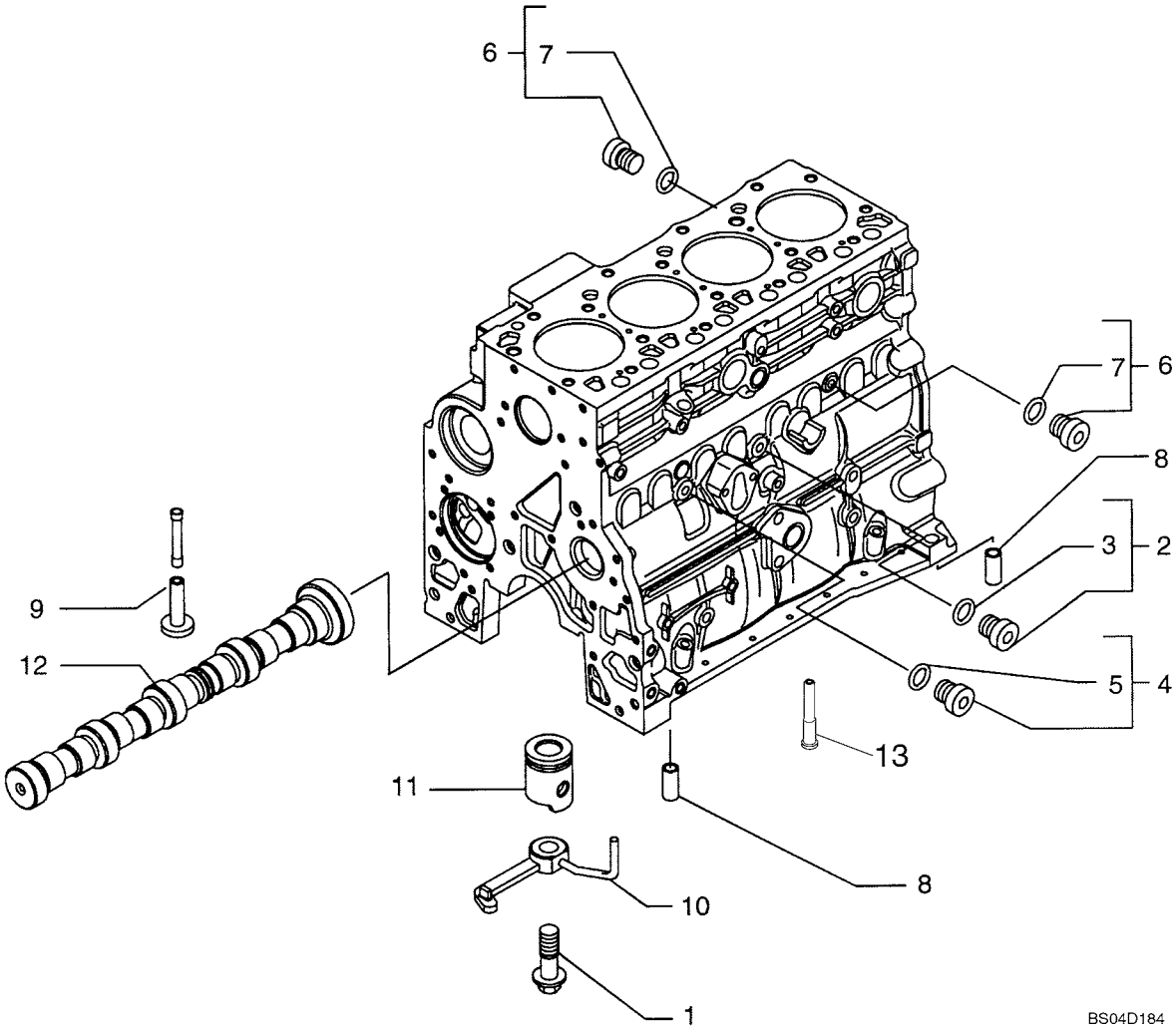

http://www.minnparbackhoeparts.com/

CYLINDER BLOCK

REF	FN	PART NUMBER	YR/SN	QTY	DESCRIPTION
1		4894218		4	SCREW
2		4895605		1	PLUG 14 x 1.5 - ASSY; Incl. Ref 3
3		4899115		1	O-RING
4		4899009		1	PLUG 10 x 1.5 - ASSY; Incl. Ref 5
5		4899072		1	O-RING
6		4895392		2	PLUG 18 x 1.5 - ASSY; Incl. Ref 7
7		4895393		1	O-RING
8		4895049		2	DOWEL
9		4895180		8	TAPPET
10		2852202		4	NOZZLE, LUB. OIL JET Incl. Ref 1
11		REF		1	INSTRUCTION PISTON; See Figure 02-23
12		REF		1	INSTRUCTION CAMSHAFT; See Figure 02-28
13		4896153		1	PLUG Piston Cooling, M6.08 OD x 30 mm lg; If Used

http://www.minnparbackhoeparts.com/

OIL PUMP, PAN

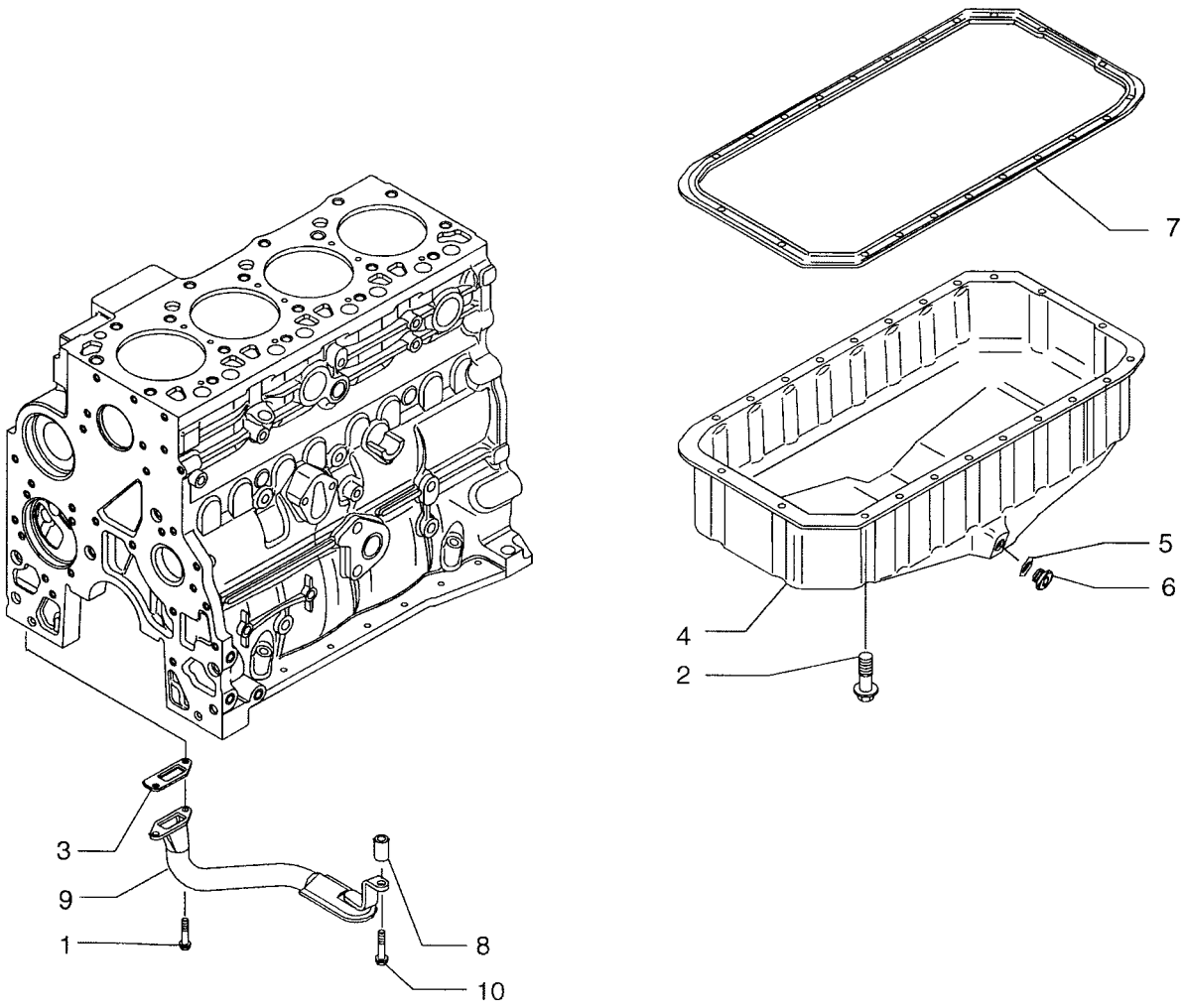

http://www.minnparbackhoeparts.com/

OIL PUMP, PAN

REF	FN	PART NUMBER	YR/SN	QTY	DESCRIPTION
1		4899020		2	SCREW Flange, M8 x 20
2		4899091		22	SCREW Flange, M8 x 40
2		4895489		2	SCREW Flange, M8 x 110
3		4898301		1	GASKET
4		2852011		1	PAN, ENGINE OIL
5		2853728		1	O-RING Seal
6		4894139		1	PLUG 22 x 1.5; Does Not Include Seal, Purchase Seal Separately
7		2852012		1	GASKET
8		2852016		1	SPACER
9		2852013		1	STRAINER ASSY. Tube; Oil Suction, Includes Screen Which Is Not Serviced Separately
10		4895538		1	SCREW Flange, M10 x 120

http://www.minnparbackhoeparts.com/

CYLINDER BLOCK - COVERS

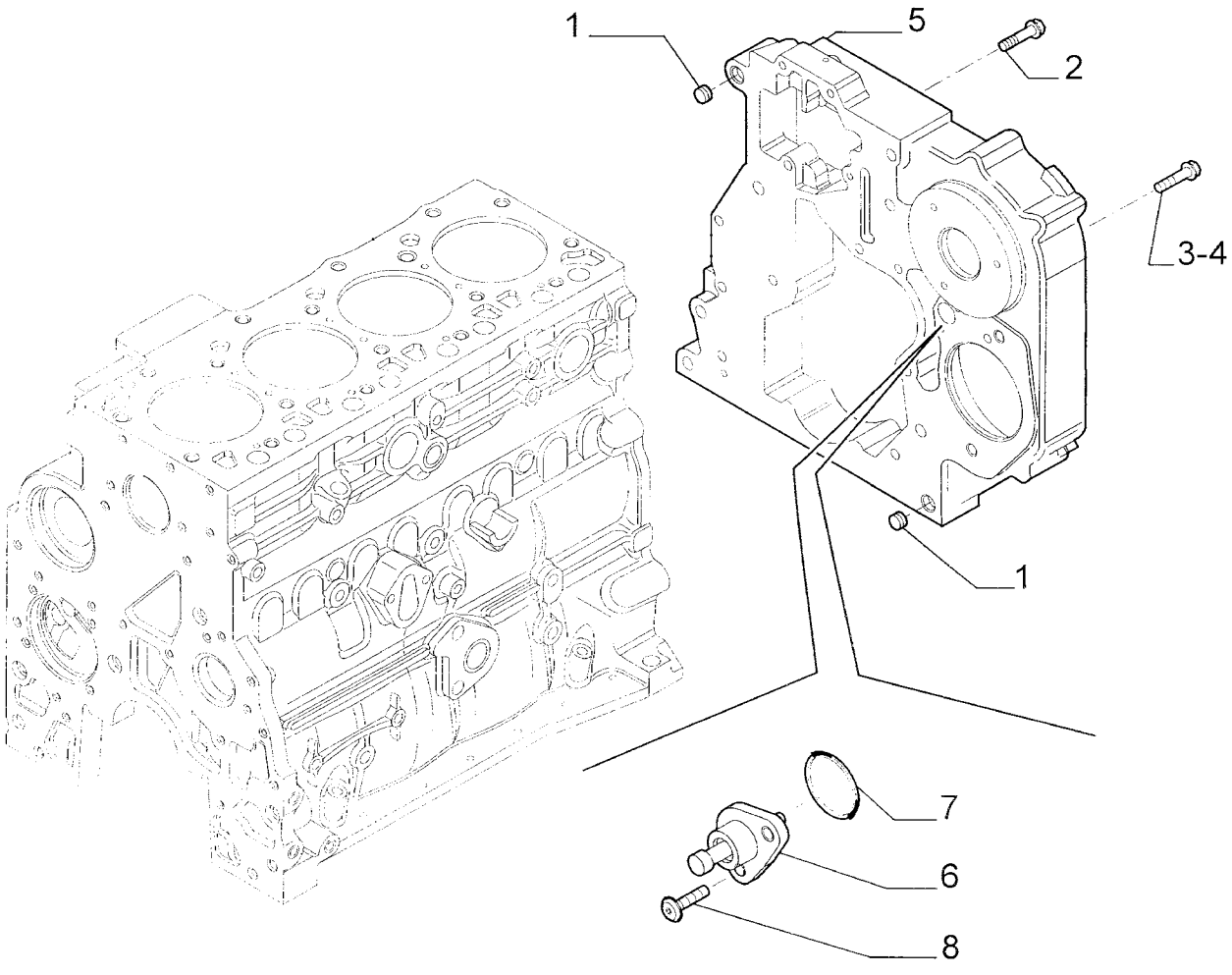

http://www.minnparbackhoeparts.com/

CYLINDER BLOCK - COVERS

REF	FN	PART NUMBER	YR/SN	QTY	DESCRIPTION
1		4899026		2	DOWEL
2		4899091		4	SCREW Flange, M8 x 40
3		4899093		5	SCREW Flange, M10 x 30
4		4899073		2	SCREW Flange, M12 x 30
5		{2853671}		1	Rear Cover
6		2852515		1	PIN Timing Pin and Housing; Includes (1) 2852517 Internal O-Ring, (1) 2852759 Ring, (1) 2852516 Pin, (1) 2852518 Housing
		2852517		1	O-RING
		2852759		1	RING
		2852516		1	PIN
		2852518		1	HOUSING Housing
7		17278781		1	O-RING
8		4895355		2	SCREW Round Head, M5 x 17

http://www.minnparbackhoeparts.com/

CYLINDER BLOCK - COVERS

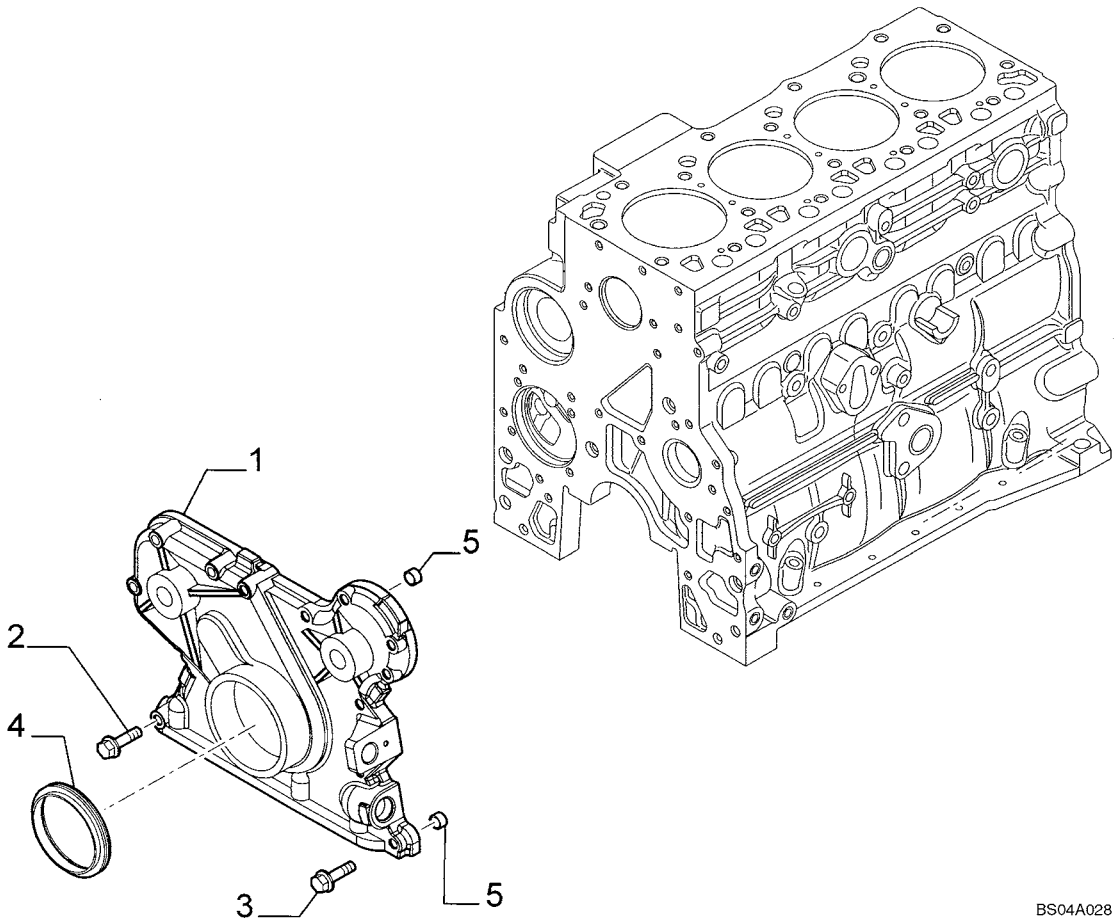

http://www.minnparbackhoeparts.com/

CYLINDER BLOCK - COVERS

REF	FN	PART NUMBER	YR/SN	QTY	DESCRIPTION
1		4897024		1	COVER Front Gear
2		4899078		5	SCREW Flange, M8 x 45
3		4899063		8	SCREW Flange, M8 x 30
4		4890832		1	GASKET
5		4891209		2	DOWEL

http://www.minnparbackhoeparts.com/

02-14		p1	10/04

CYLINDER BLOCK - COVERS

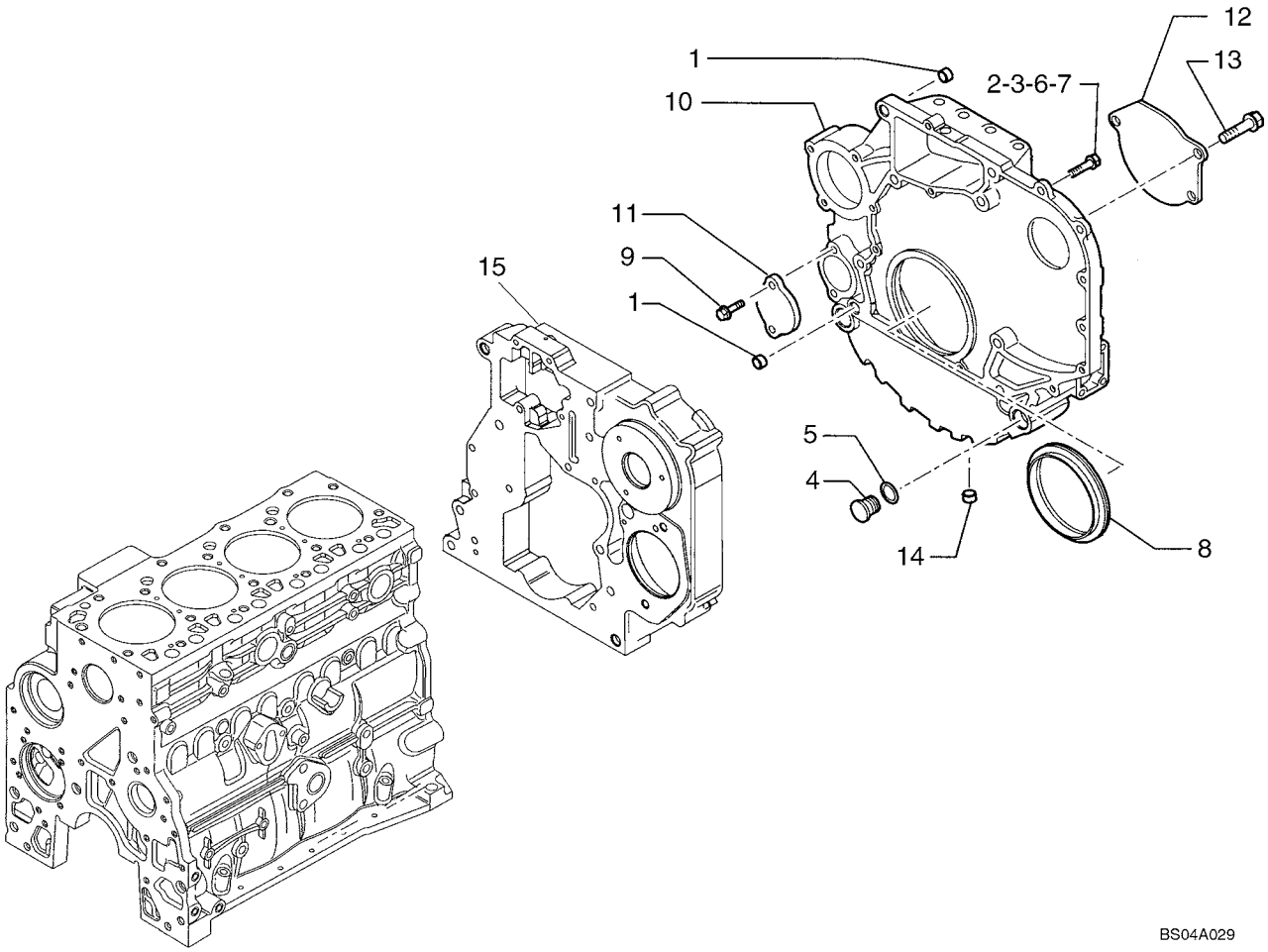

http://www.minnparbackhoeparts.com/

CYLINDER BLOCK - COVERS

REF	FN	PART NUMBER	YR/SN	QTY	DESCRIPTION
1		4899026		2	DOWEL Ring
2		4899109		3	SCREW Flange, M10 x 80
3		4899075		8	SCREW Flange, M10 x 40
4		4895378		2	PLUG Does Not Include Seal, Purchase Seal Separately
5		4895379		2	O-RING
6		4899076		5	SCREW Flange, M12 x 80
7		4899074		2	SCREW Flange, M12 x 120
8		4890833		1	GASKET Oil Seal
9		4899103		2	SCREW Flange, M8 x 12
10		2852023		1	COVER Flywheel Housing
11		4895358		1	COVER
12		2852025		1	COVER Fuel Pump Gear
13		4899020		3	SCREW Flange, M8 x 20
13		2852865		2	SCREW
14		4895079		1	PLUG
15		REF		1	INSTRUCTION COVER; See Figure 02-12
		4899143		1	SCREW Flange, M10 x 140
		4899004		1	NUT Flange, M10; If Used

http://www.minnparbackhoeparts.com/

BREATHER - ENGINE

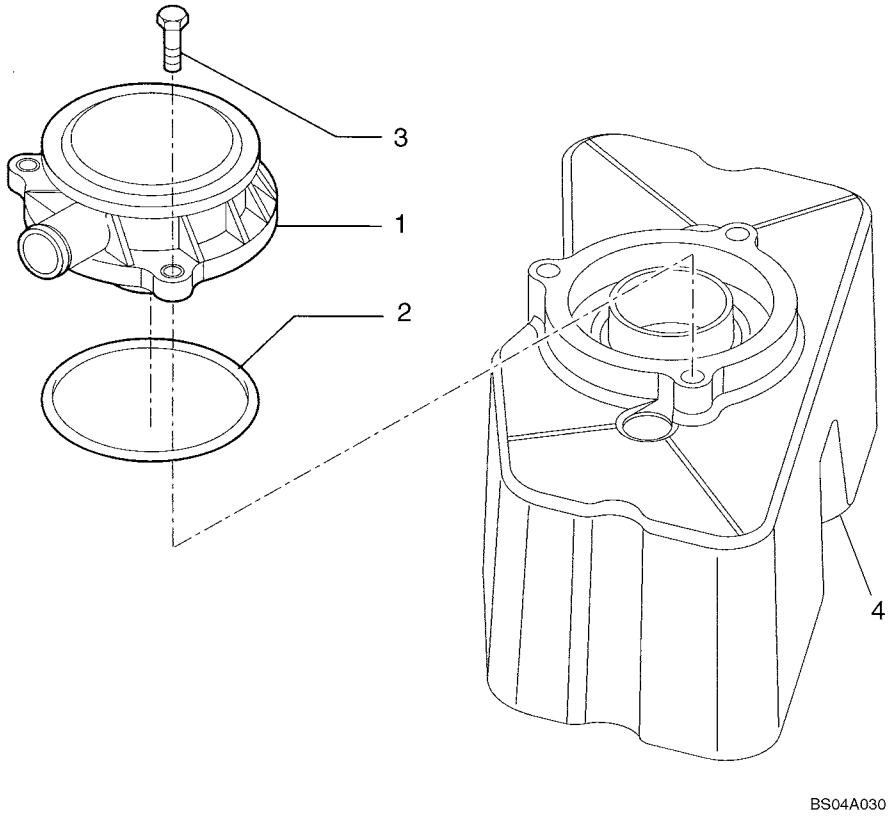

http://www.minnparbackhoeparts.com/

BREATHER - ENGINE

REF	FN	PART NUMBER	YR/SN	QTY	DESCRIPTION
1		2852027		1	BREATHER
2		2852028		1	GASKET
3		4899110		3	SCREW Flange, M6 x 20
4		REF		1	INSTRUCTION COVER; See Figure 02-17

http://www.minnparbackhoeparts.com/

CYLINDER HEAD

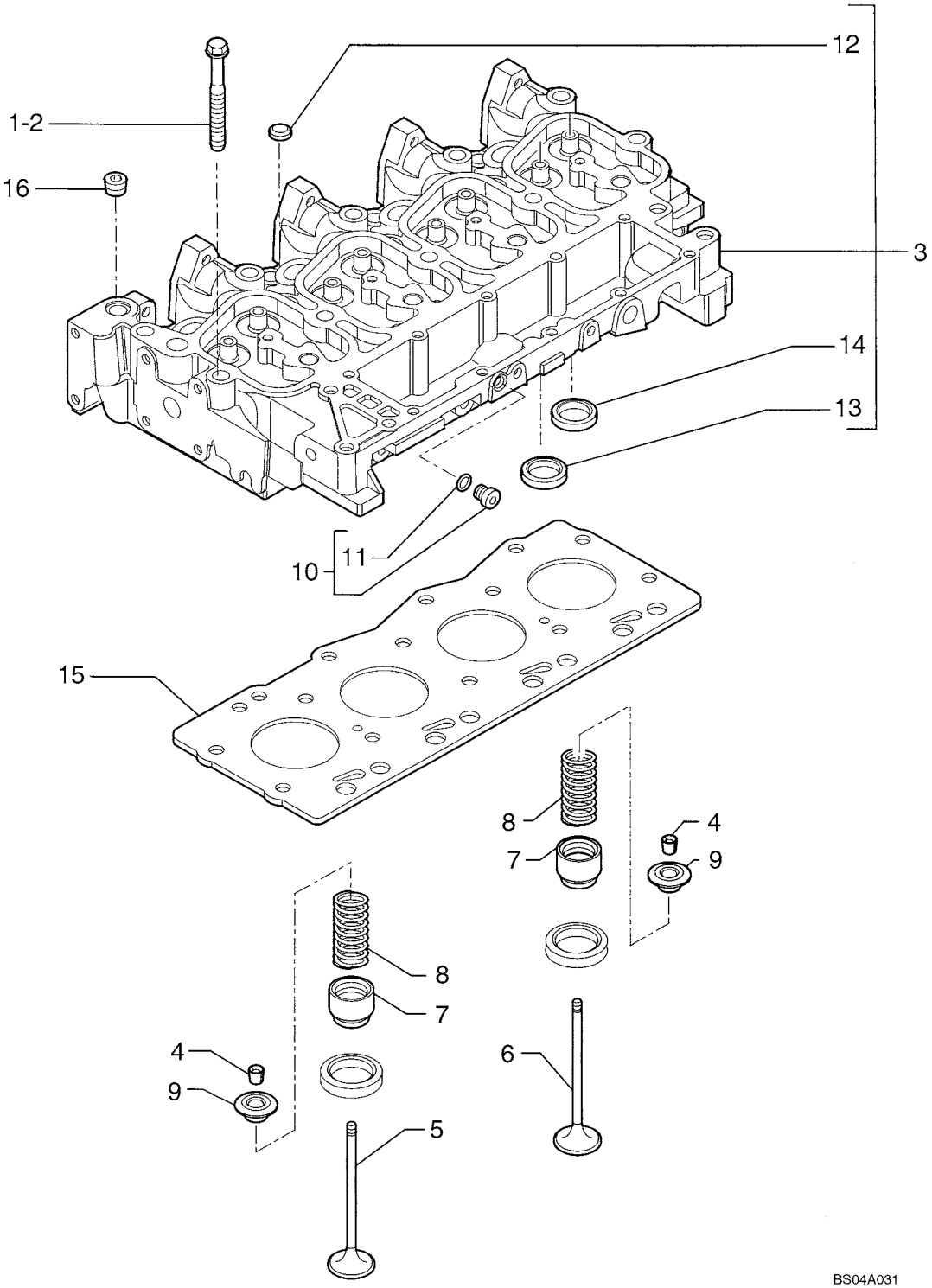

http://www.minnparbackhoeparts.com/

CYLINDER HEAD

REF	FN	PART NUMBER	YR/SN	QTY	DESCRIPTION
1		4892861		4	SCREW With Washer; M12 x 73
2		4892859		10	SCREW With Washer; M12 x 143
3		4895790		1	CYLINDER HEAD - ASSY; Incl. Ref 12 - 14
4		4895183		16	COTTER, ROCKER ARM
5		4895188		4	VALVE, ENG EXHAUST, STD
6		4895187		4	VALVE, ENGINE, INLET, STD
7		4895347		8	CUP
8		4895215		8	SPRING
9		4895184		8	CUP
10		4899009		1	PLUG - ASSY 10 x 1.5; Incl. Ref 11
11		4899072		1	O-RING
12		4895179		3	PLUG
13		4897178		4	VALVE SEAT
14		4897179		4	VALVE SEAT
15		2830919		1	GASKET, CYLINDER HEAD 1,25 mm
15		2830920		1	GASKET 1.15 mm
16		4895078		5	PLUG

http://www.minnparbackhoeparts.com/

CYLINDER HEAD - COVERS

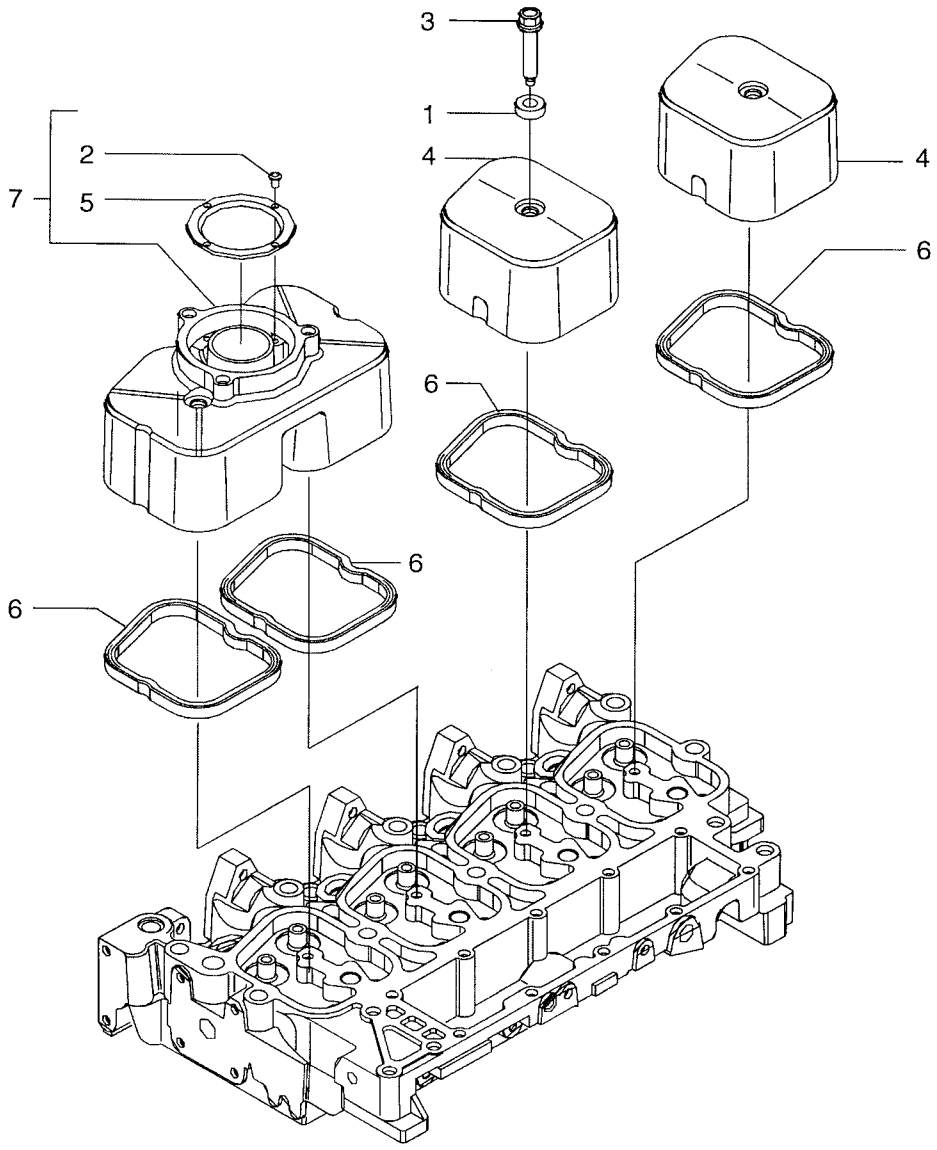

BS04A032

http://www.minnparbackhoeparts.com/

CYLINDER HEAD - COVERS

REF	FN	PART NUMBER	YR/SN	QTY	DESCRIPTION
1		4895360		4	BUSHING
2		2830281		4	SCREW Self-Tapping
3		4895214		4	SCREW Flange, M8 x 33
4		2852032		2	COVER
5		2830775		1	BAFFLE ASSY.
6		2852033		4	GASKET
7		2830784		1	COVER - ASSY; Incl. Ref 2, 5

http://www.minnparbackhoeparts.com/

CYLINDER HEAD - VALVE MECHANISM

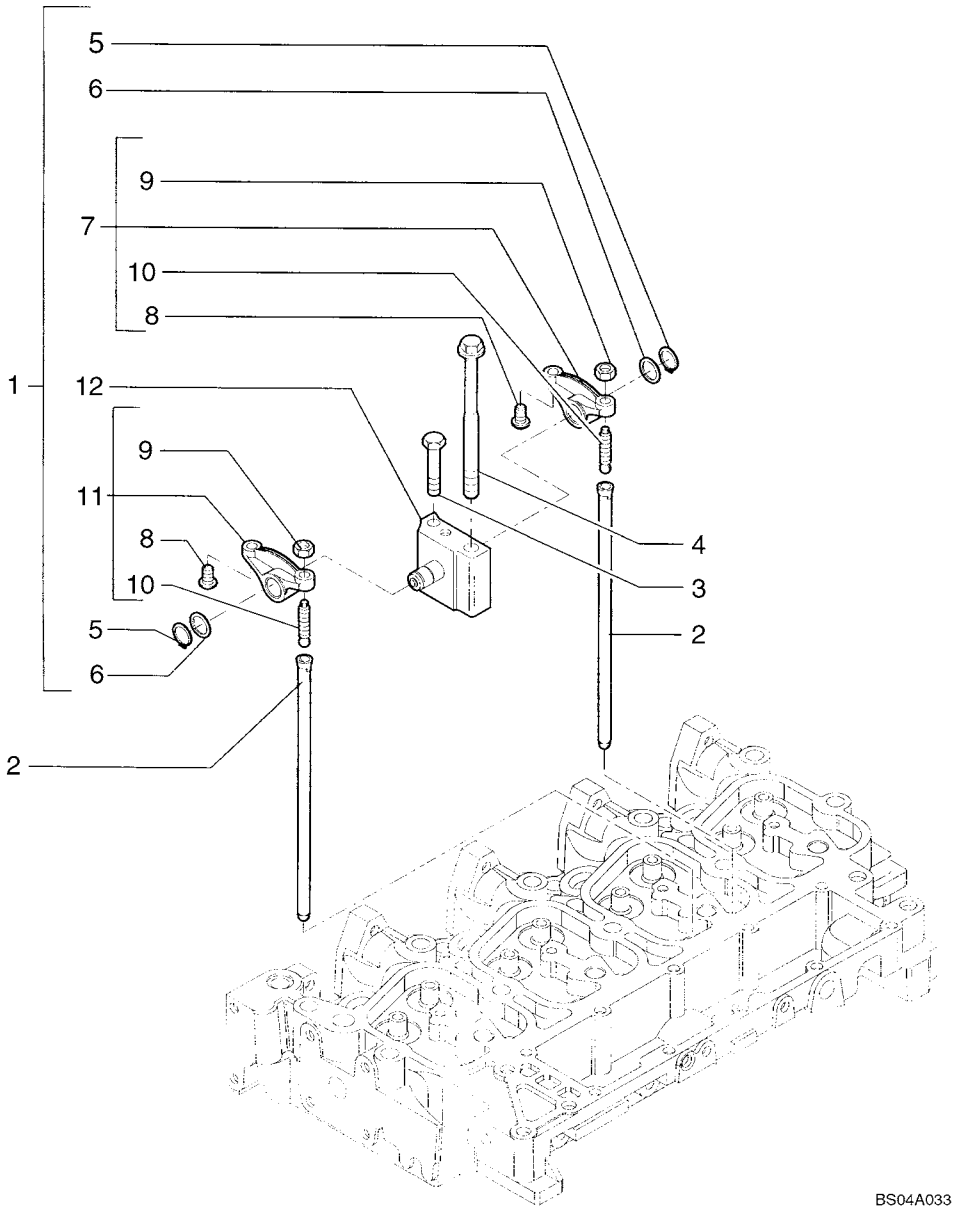

http://www.minnparbackhoeparts.com/

CYLINDER HEAD - VALVE MECHANISM

REF	FN	PART NUMBER	YR/SN	QTY	DESCRIPTION
1		4895195		4	ROCKER ARM - ASSY; Incl. Ref 5 - 12
2		4895361		8	ROD, PUSH
3		2852866		4	SCREW Hex Flange, M8 x 75
4		4892860		4	SCREW With Washer, M12 x 183
5		4895363		2	RING
6		4895364		2	WASHER
7		4895196		1	ROCKER ARM - ASSY; Incl. Ref 8 - 10
8		4895365		2	SPACER
9		4895198		2	NUT
10		4895199		2	SCREW
11		4895200		1	ROCKER ARM - ASSY; Incl. Ref 8 - 10
12		4895204		1	SUPPORT

http://www.minnparbackhoeparts.com/

02-19		p1	05/04

MANIFOLD - INTAKE

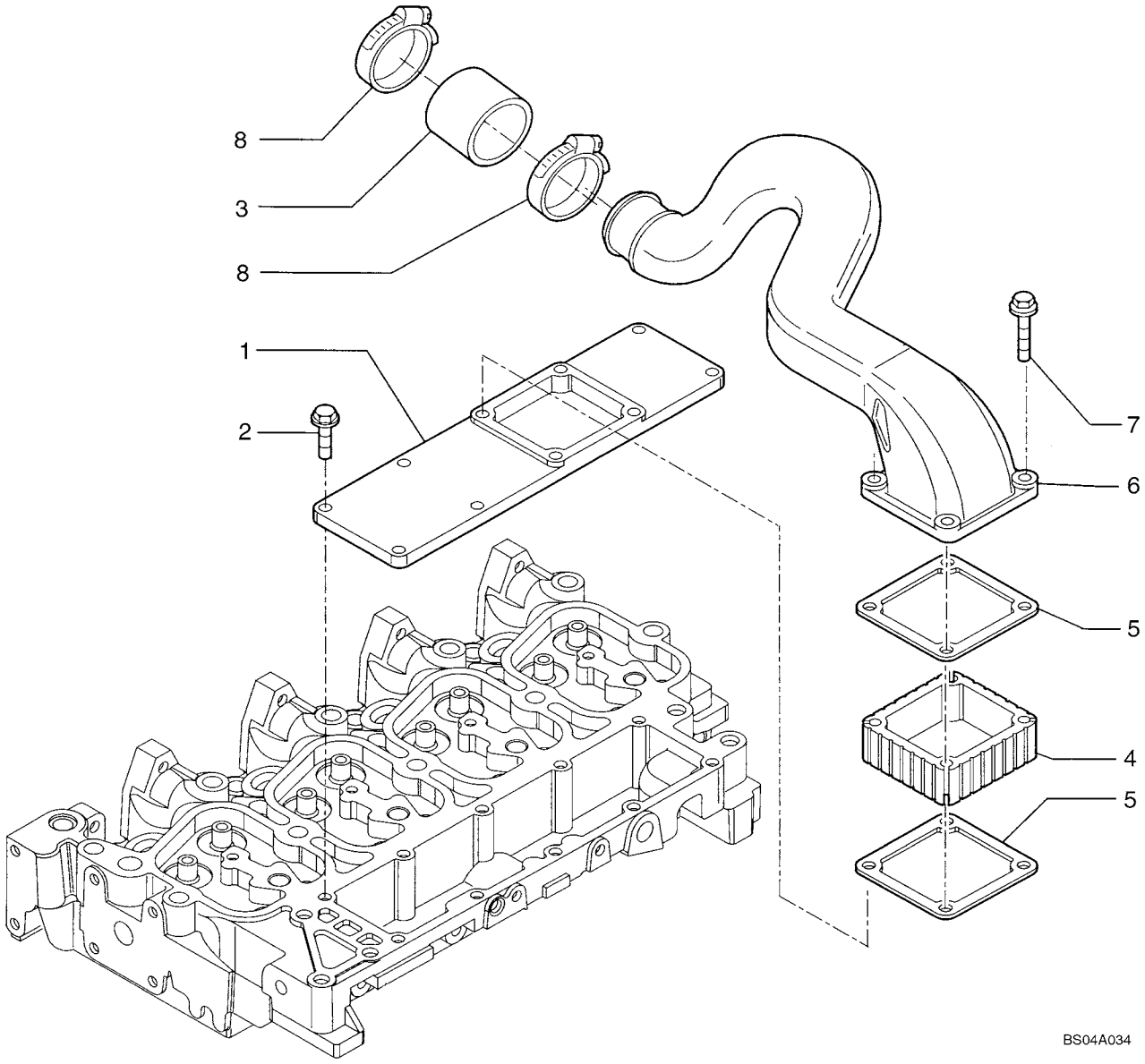

http://www.minnparbackhoeparts.com/

MANIFOLD - INTAKE

REF	FN	PART NUMBER	YR/SN	QTY	DESCRIPTION
1		2852044		1	COVER
2		4899039		6	SCREW Flange, M8 x 25
3		2852029		1	SLEEVE
4		4895648		1	SPACER
5		4899921		2	GASKET
6		2852030		1	PIPE, SUCTION
7		4895294		4	SCREW Flange, M8 x 80
8		4899629		2	COLLAR, RETAINER Clamp

http://www.minnparbackhoeparts.com/

MANIFOLD - EXHAUST

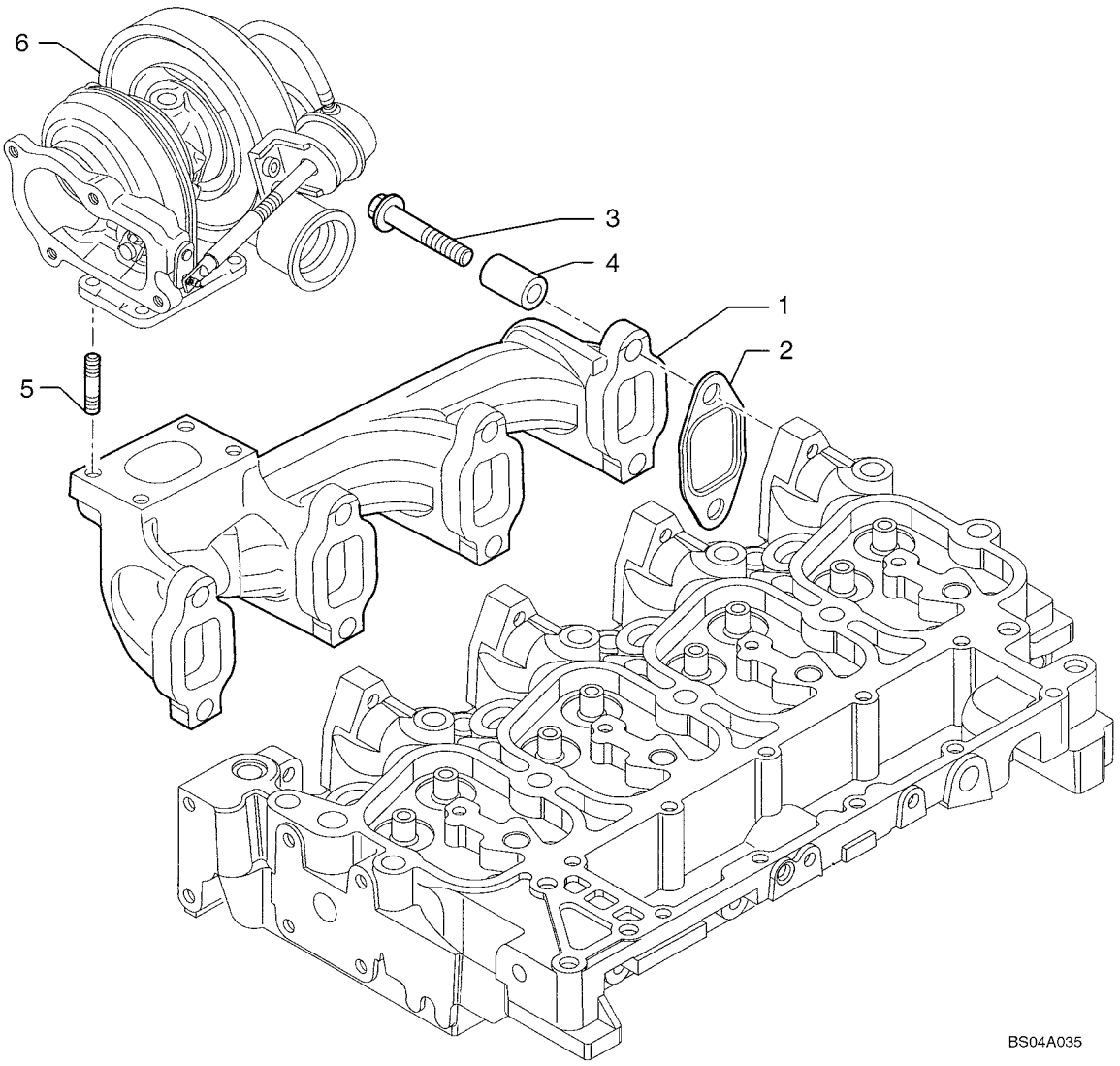

http://www.minnparbackhoeparts.com/

MANIFOLD - EXHAUST

REF	FN	PART NUMBER	YR/SN	QTY	DESCRIPTION
1		2852270		1	MANIFOLD, EXHAUST
2		2830445		4	GASKET
3		2852744		8	SCREW Flange, M10 x 65
4		4895336		8	SPACER
5		4899119		4	STUD
6		REF		1	INSTRUCTION TURBOCHARGER; See Figure 2-29

http://www.minnparbackhoeparts.com/

CRANKSHAFT

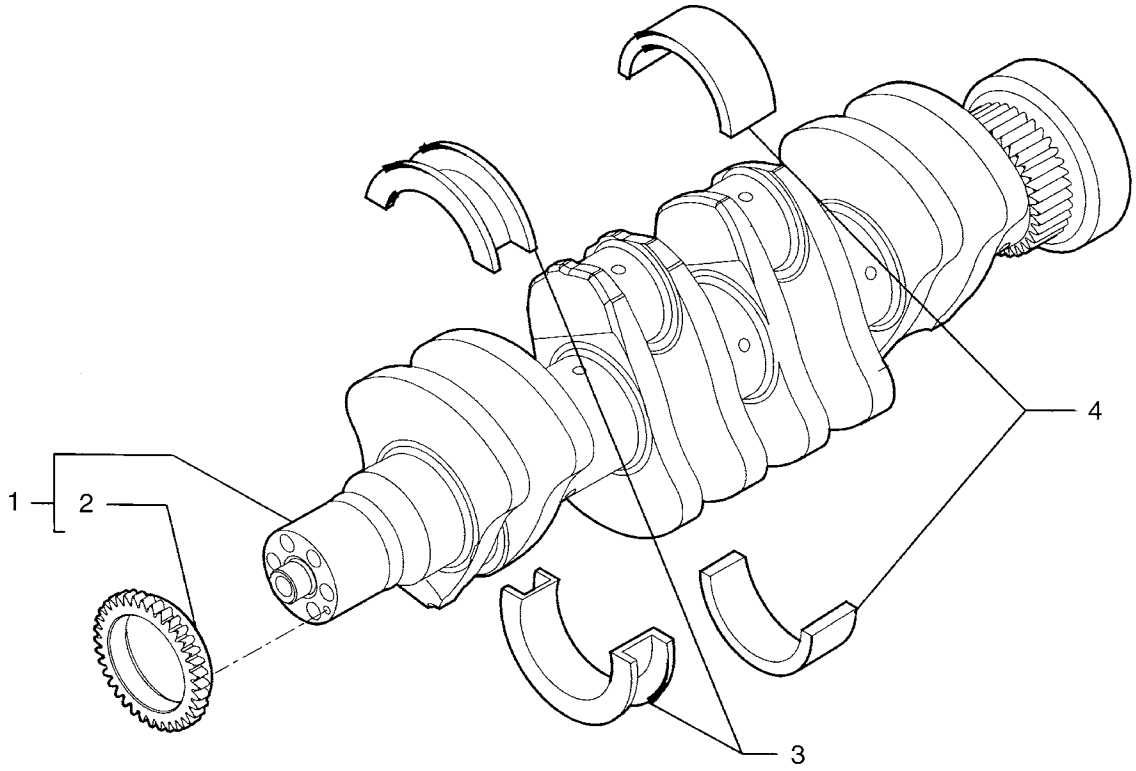

BS04A036

http://www.minnparbackhoeparts.com/

CRANKSHAFT

REF	FN	PART NUMBER	YR/SN	QTY	DESCRIPTION
1		2852009		1	CRANKSHAFT - ASSY; Incl. Ref 2
2		4893386		1	GEAR
4		2992147		4	SET, CONN ROD BRGS (STD) (-0.000) (-0.000)
4		2992148		4	SET OF MAIN BRGS -0.254 (-0.254) (-0.250)
4		2992149		4	SET, CONN ROD BRGS (STD) (-0.508) (-0.500)
3		2992153		1	SET, CONN ROD BRGS (STD) (+0.000) (+0.000)
3		2992154		1	SET, CONN ROD BRGS (STD) (+0.254) (+0.250)
3		2992155		1	BEARING, THRUST (+0.508) (+0.500)

http://www.minnparbackhoeparts.com/

PISTONS - CONNECTING ROD

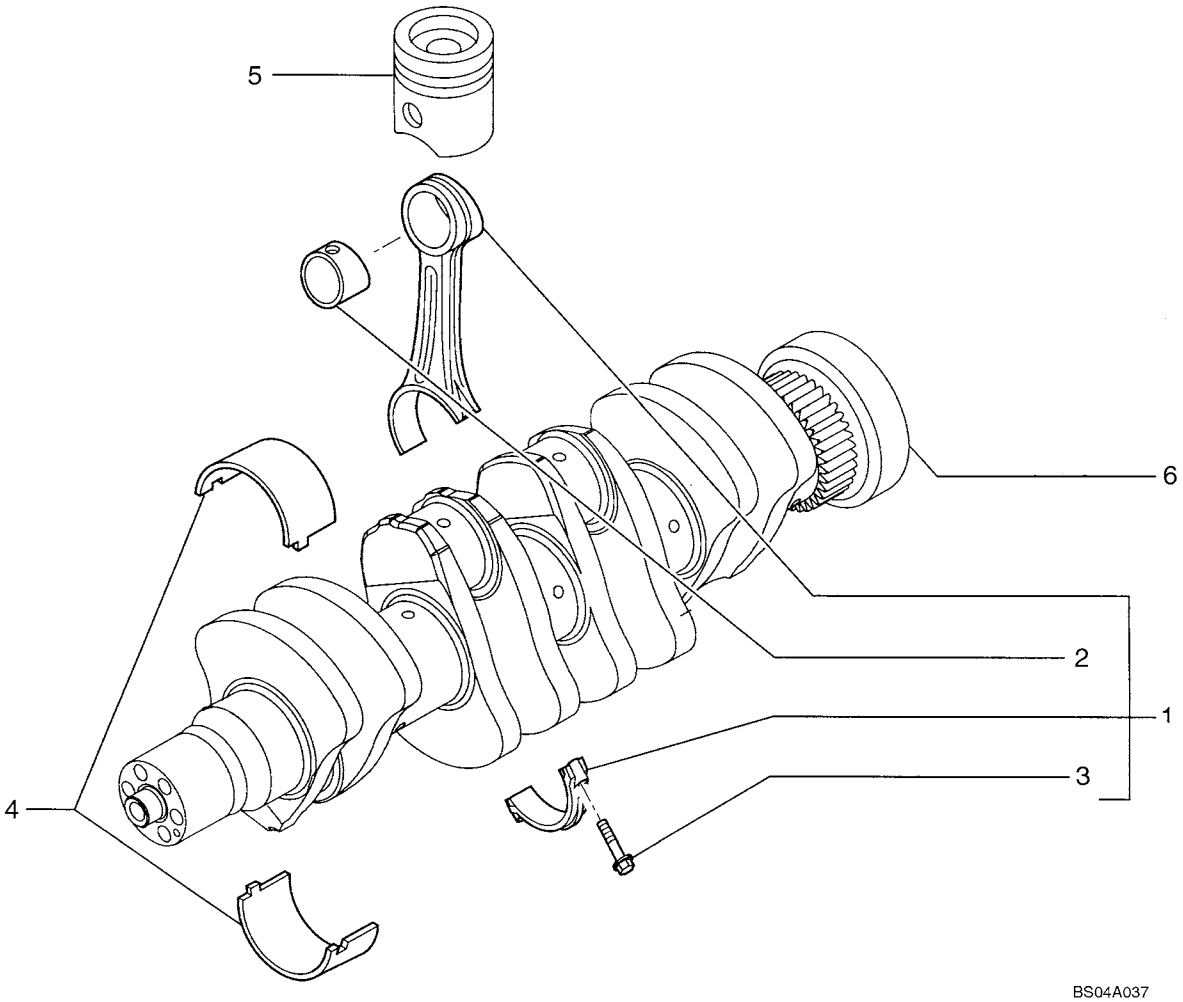

http://www.minnparbackhoeparts.com/

PISTONS - CONNECTING ROD

REF	FN	PART NUMBER	YR/SN	QTY	DESCRIPTION
1		2831298		4	LINK CONROD Connecting Rod; Incl. Ref 2, 3
2		4892708		1	BUSHING
3		2831297		2	SCREW
4		4892714		4	BEARING, CRANKSHAFT
4		4892715		4	BEARING, CRANKSHAFT
5		REF		1	INSTRUCTION PISTON; See Figure 02-23
6		REF		1	INSTRUCTION CRANKSHAFT; See Figure 02-21

http://www.minnparbackhoeparts.com/

PISTONS - CONNECTING ROD

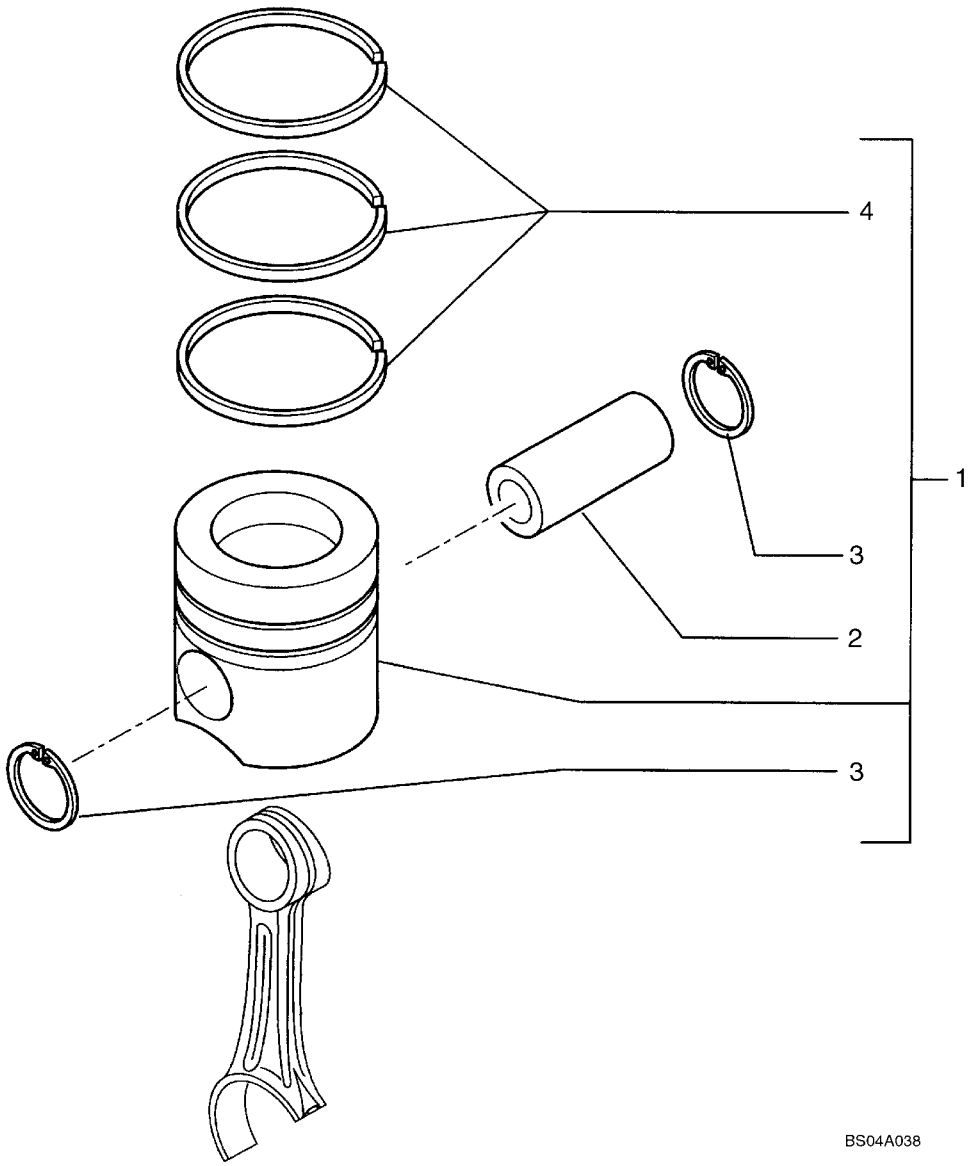

http://www.minnparbackhoeparts.com/

PISTONS - CONNECTING ROD

REF	FN	PART NUMBER	YR/SN	QTY	DESCRIPTION
1		4897980		4	PISTON ASSY Does Not Include Rings
2		4892712		4	PIN, PISTON
3		4892713		8	RING, LOCKING
4		2852037		4	RING, OIL SCRAPER
4		2830158		4	RING, PISTON Compression; 2.39 mm Wide; Yellow Identification Mark
4		2852036		4	RING, PISTON Compression; 3.00 mm Wide; Red Identification Mark

http://www.minnparbackhoeparts.com/

FLYWHEEL - ENGINE

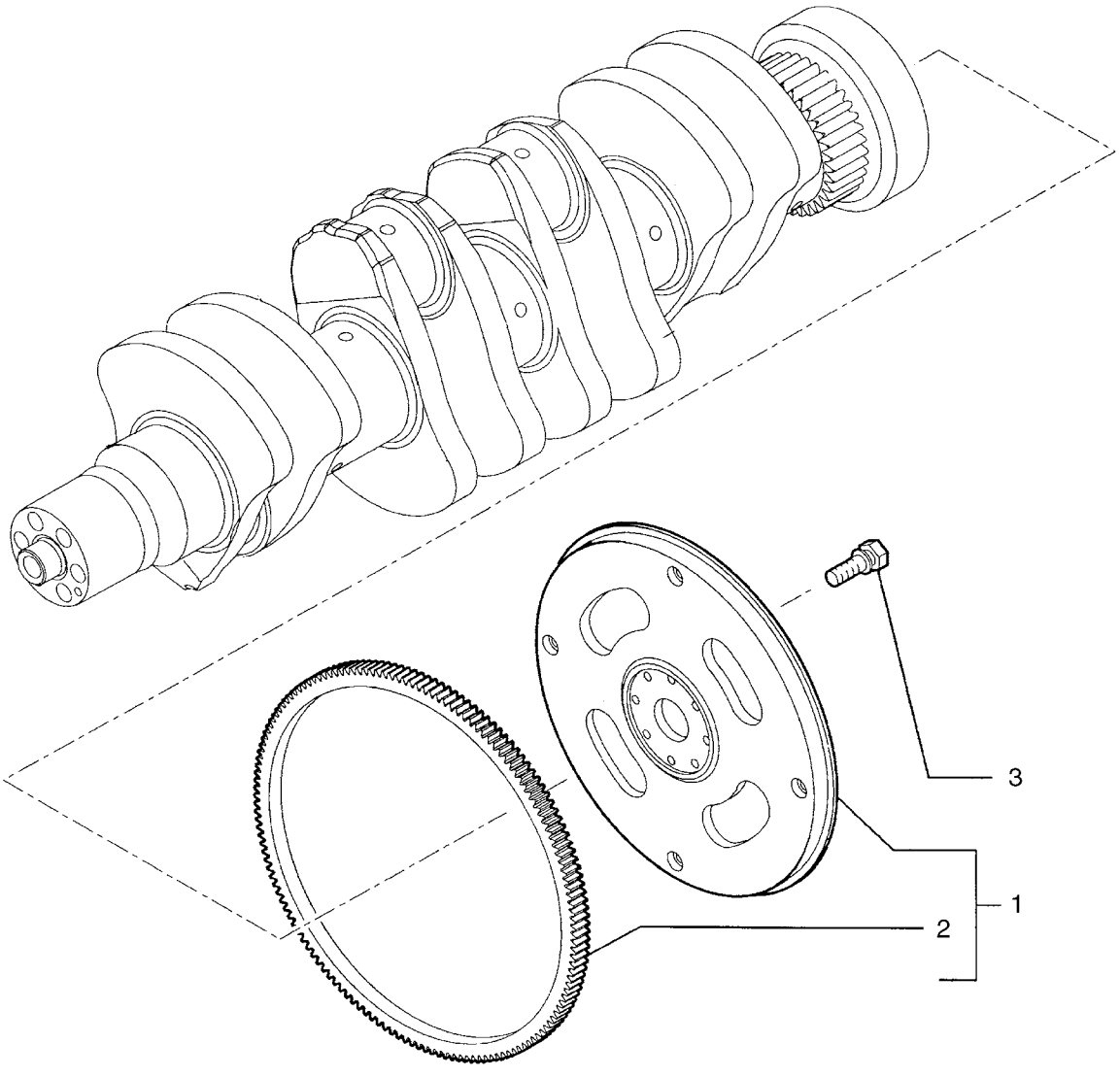

http://www.minnparbackhoeparts.com/

FLYWHEEL - ENGINE

REF	FN	PART NUMBER	YR/SN	QTY	DESCRIPTION
1		2852049		1	FLYWHEEL, ENGINE - ASSY; Incl. Ref 2
2		2852051		1	GEAR, RING
3		4894641		8	SCREW With Washer, M12 x 30

http://www.minnparbackhoeparts.com/

PULLEY - CRANKSHAFT

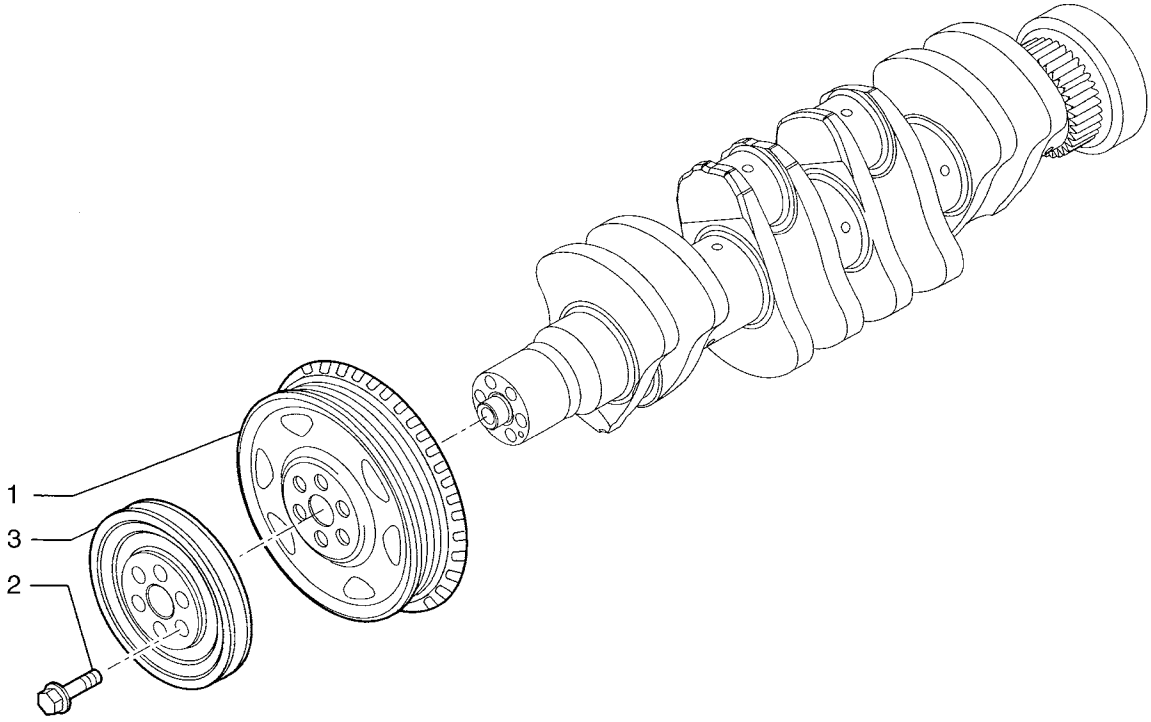

BS04A040

http://www.minnparbackhoeparts.com/

PULLEY - CRANKSHAFT

REF	FN	PART NUMBER	YR/SN	QTY	DESCRIPTION
1		4896773		1	PULLEY
2		{2853960}		6	M12 x 77 Screw
3		2852054		1	PULLEY

http://www.minnparbackhoeparts.com/

DYNAMIC BALANCER, GEARS & SHAFTS

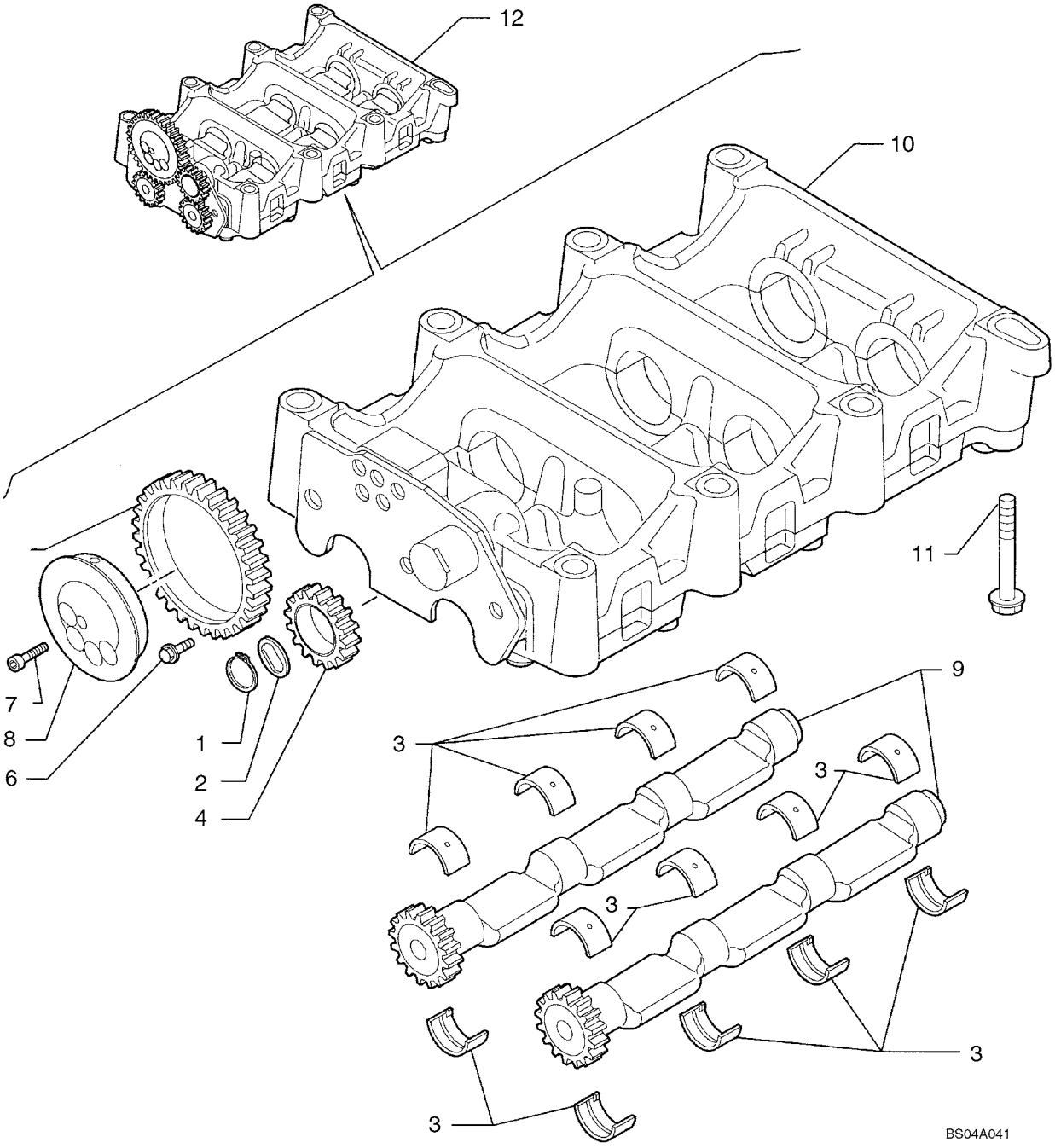

http://www.minnparbackhoeparts.com/

DYNAMIC BALANCER, GEARS & SHAFTS

REF	FN	PART NUMBER	YR/SN	QTY	DESCRIPTION
1		4897125		1	RING, LOCKING
2		4897123		1	PLATE, THRUST
3		4897071		16	BUSHING
4		4897048		1	GEAR, DRIVEN
5		4896947		1	GEAR, DRIVEN
6		4895586		3	SCREW Flange, M8 x 16
7		2830433		4-5	SCREW Socket; (4) Used With 2830953 Balancer Assy
8		2831031		1	SHAFT, IDLE
9		2831023		2	SHAFT 2830953 Balancer Assy
9A		2853226		2	SHAFT ASSY. Shaft; 2853225 Balancer Assy
10		2830952		1	HOUSING - ASSY; See Figure 02-27; 2830953 Balancer Assy
10A		2831300		1	HOUSING Housing; 2853225 Balancer Assy; Component Parts Not Available At Time Of Printing
11		4899109		7	SCREW Flange, M10 x 80
11		4897934		1	SCREW Flange, M10 x 100
12		2830953		1	BALANCER - ASSY; Incl. Ref 1 - 10; If Used
12		2853225		1	BALANCER Balancer Assy Incl. Ref 1 - 8, 9A, 10A; Includes (5) Ref 7 Screws; Fifth Screw Is Used During Assy Under Balancer to Lock Shaft, But Must Be Removed After Balancer Is Assembled to Block; If Used

http://www.minnparbackhoeparts.com/

DYNAMIC BALANCER, GEARS & SHAFTS (2830952)

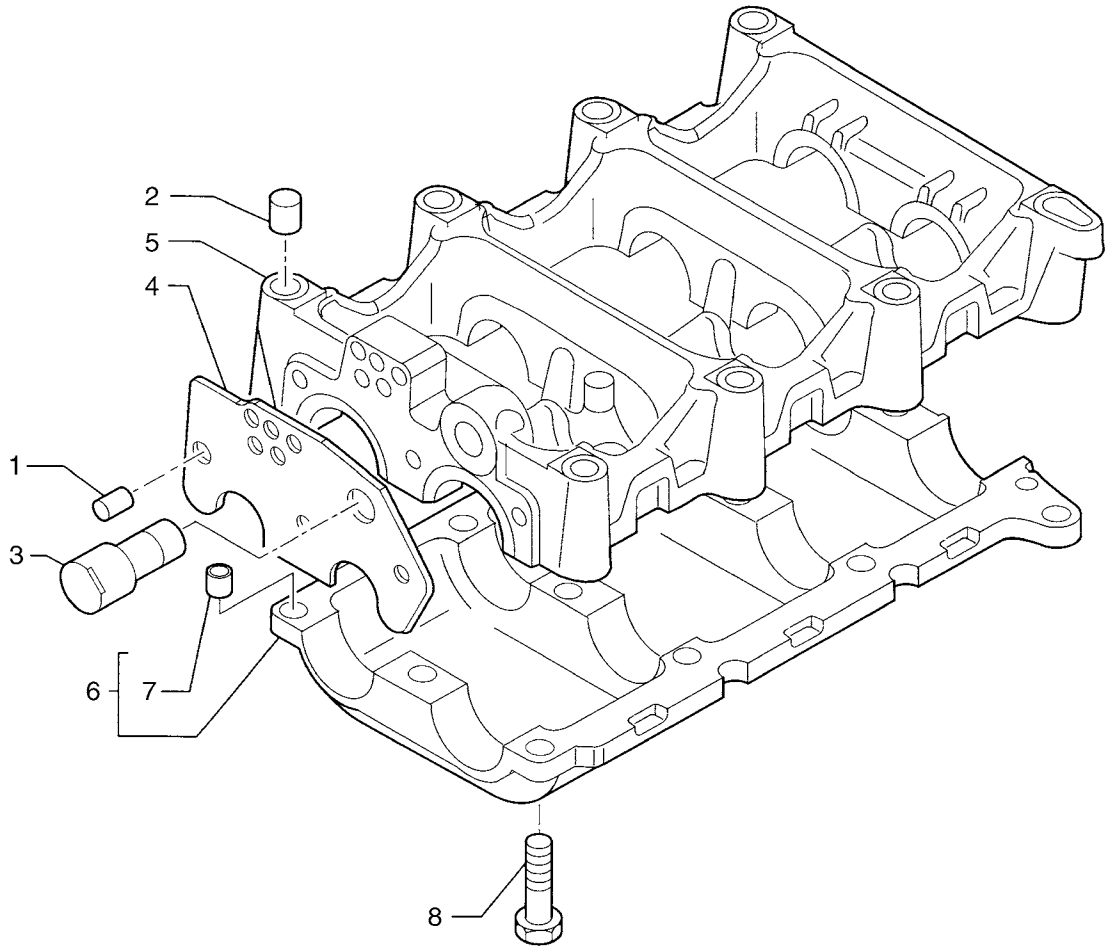

http://www.minnparbackhoeparts.com/

DYNAMIC BALANCER, GEARS & SHAFTS (2830952)

REF	FN	PART NUMBER	YR/SN	QTY	DESCRIPTION
		2830952		1	HOUSING Assy; Incl. Ref 1 - 8; 2830953 Balancer Assy
1		4892836		1	DOWEL
2		4899027		2	DOWEL
3		2830948		1	SHAFT, IDLE
4		2830905		1	PLATE, THRUST
5		2830934		1	HOUSING
6		2831101		1	HOUSING - ASSY; Incl. Ref 7
7		4891209		2	DOWEL
8		2830411		3	SCREW Flange, M8 x 30
8		4895323		9	SCREW Flange, M8 x 40

http://www.minnparbackhoeparts.com/

CAMSHAFT

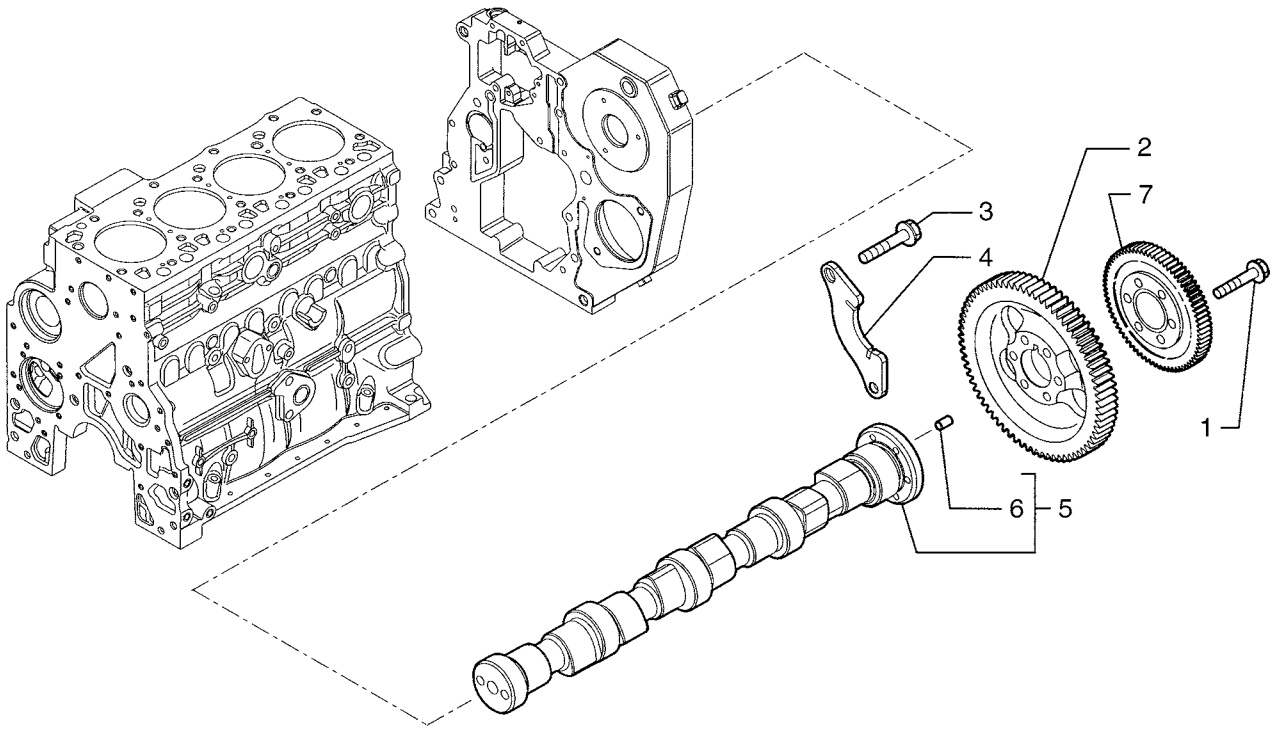

BS04A043

http://www.minnparbackhoeparts.com/

CAMSHAFT

REF	FN	PART NUMBER	YR/SN	QTY	DESCRIPTION
1		4895323		6	SCREW Flange, M8 x 40
2		2852062		1	GEAR
3		4899068		2	SCREW Flange, M8 x 16
4		4897457		1	FLANGE Support
5		4899610		1	CAMSHAFT - ASSY; Incl. Ref 6
6		4899080		1	DOWEL
7		2852063		1	GEAR, DRIVEN 52T

http://www.minnparbackhoeparts.com/

02-29		p1	05/04

TURBOCHARGER

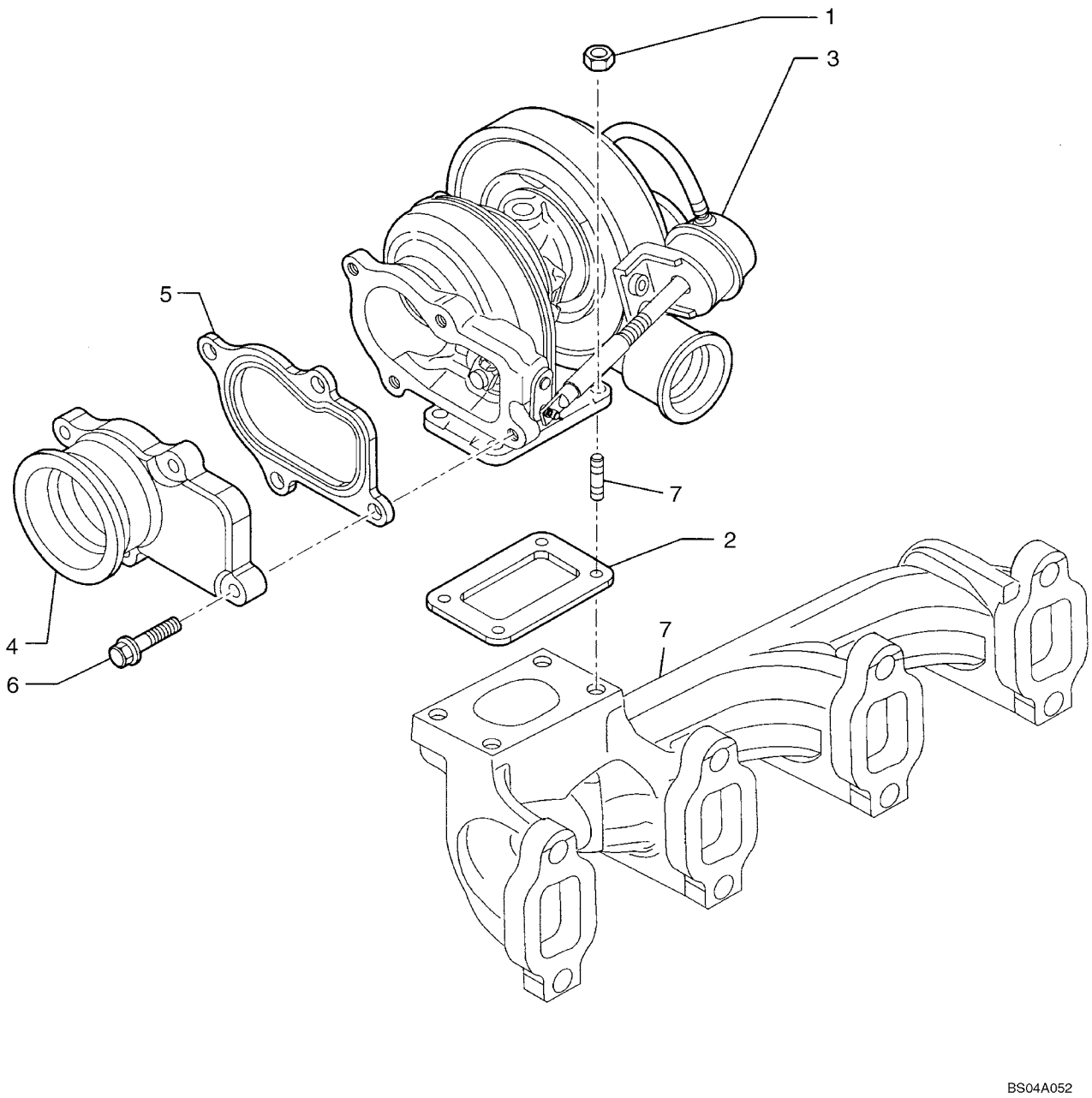

http://www.minnparbackhoeparts.com/

TURBOCHARGER

REF	FN	PART NUMBER	YR/SN	QTY	DESCRIPTION
1		4899118		4	NUT Flange, M8
2		4895133		1	GASKET
3		2852068		1	TURBOCHARGER Assembly
4		2852072		1	MANIFOLD, EXHAUST
5		2852071		1	GASKET
6		4898482		4	SCREW Flange
7		REF		1	INSTRUCTION EXHAUST MANIFOLD; See Figure 02-20

http://www.minnparbackhoeparts.com/

ENGINE, OIL

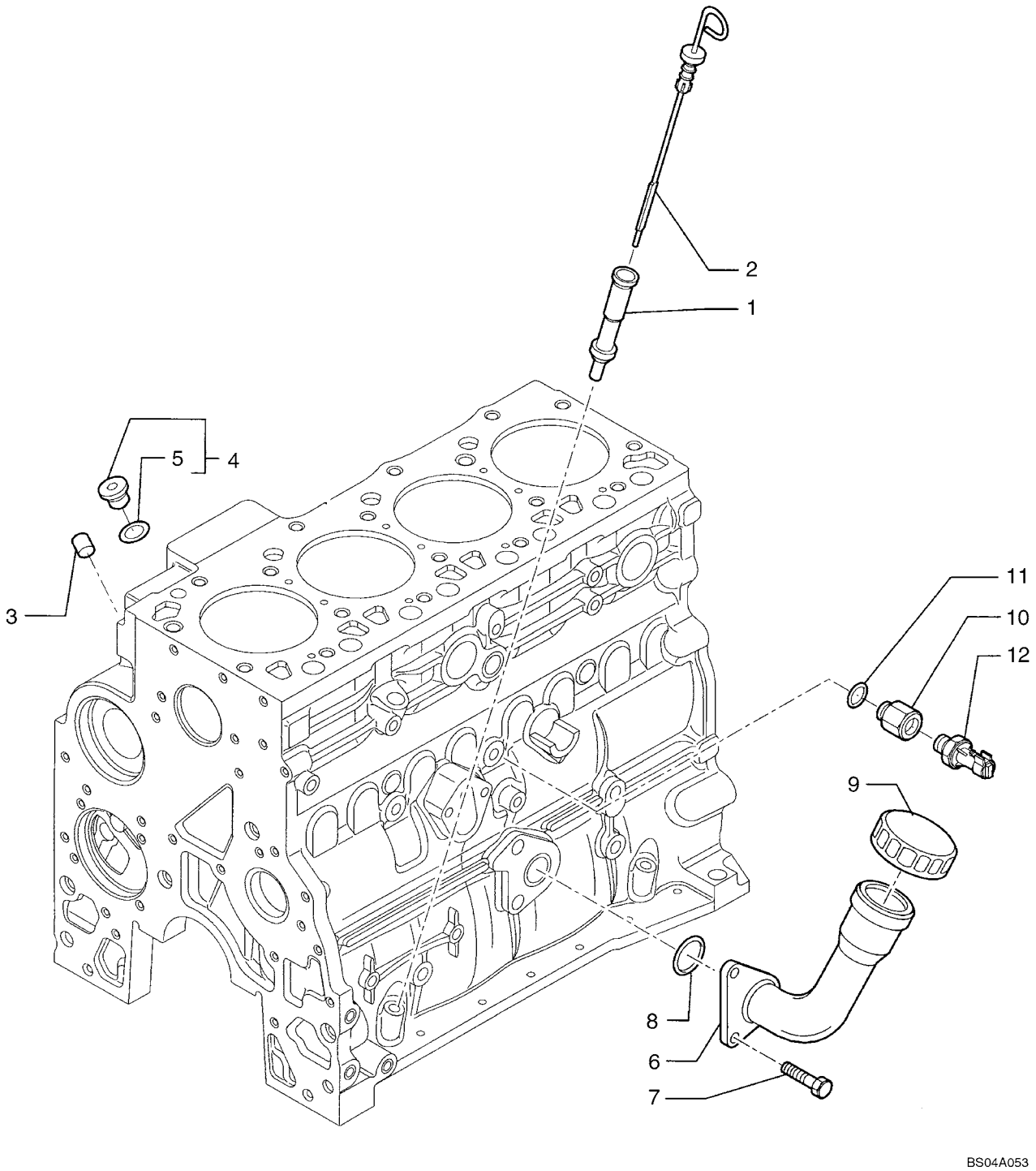

http://www.minnparbackhoeparts.com/

ENGINE, OIL

REF	FN	PART NUMBER	YR/SN	QTY	DESCRIPTION
1		2852122		1	TUBE, RIGID
2		2852125		1	DIPSTICK Includes 2852127 Seal
3		4899036		1	PLUG Expansion
4		4897330		2	PLUG - ASSY; Incl. Ref 5
5		4895610		1	O-RING
6		{2853407}		1	Tube
7		2852134		2	SCREW Flange, M12 x 25
8		2852135		1	GASKET O-Ring
9		2852136		1	CAP, INTRODUCTION
10		2852140		1	CONNECTOR, HYD. Reducer
11		4899115		1	O-RING
12		2852889		1	SWITCH, PRESSURE Oil Pressure
		{2853410}		1	Oil Filler Plug, Includes 2853412 O-Ring

http://www.minnparbackhoeparts.com/

OIL PUMP - ENGINE

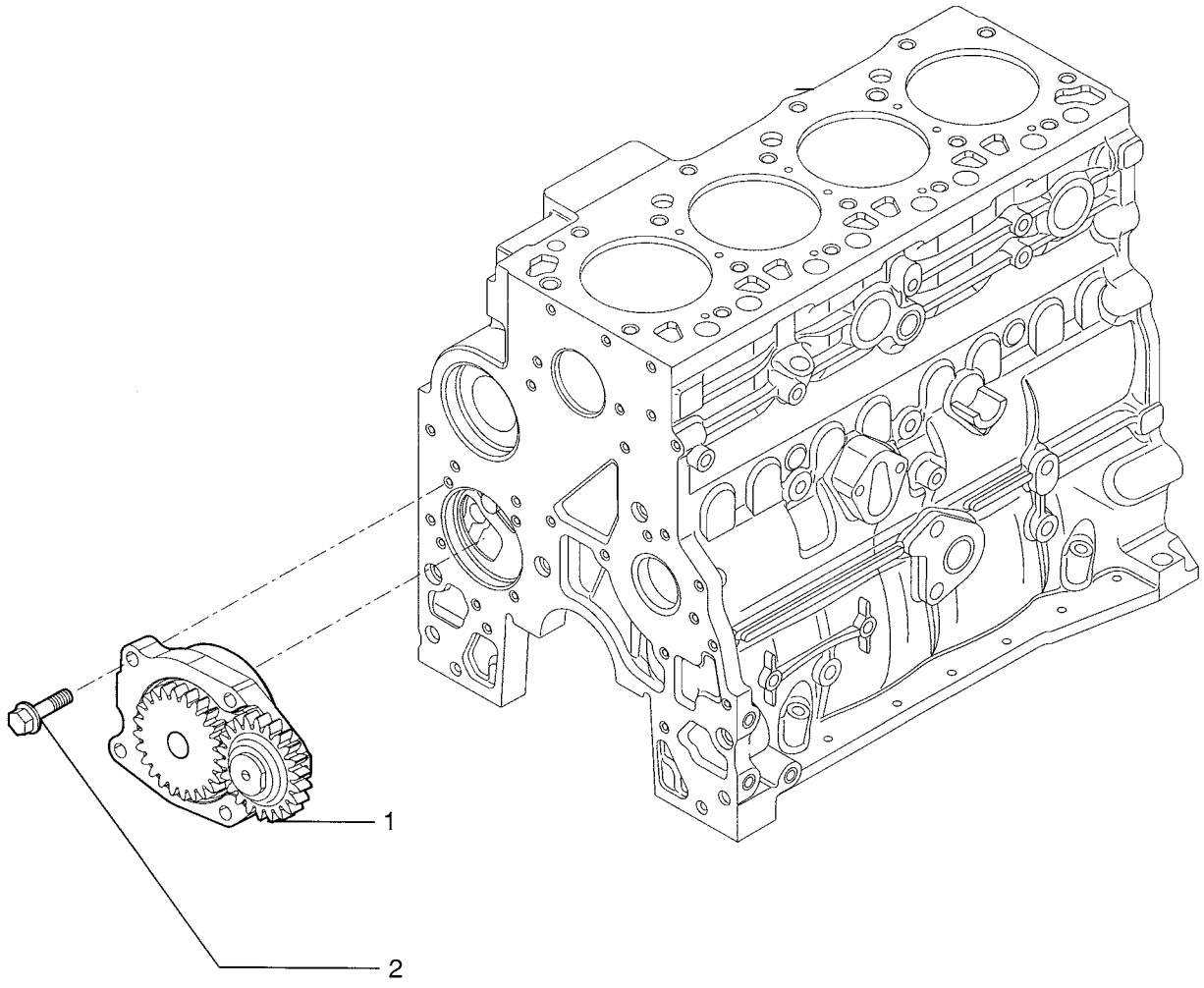

http://www.minnparbackhoeparts.com/

OIL PUMP - ENGINE

REF	FN	PART NUMBER	YR/SN	QTY	DESCRIPTION
1		4897480		1	PUMP, ENGINE OIL
2		4899090		4	SCREW Hex, M8 x 30

http://www.minnparbackhoeparts.com/

OIL FILTERS - ENGINE

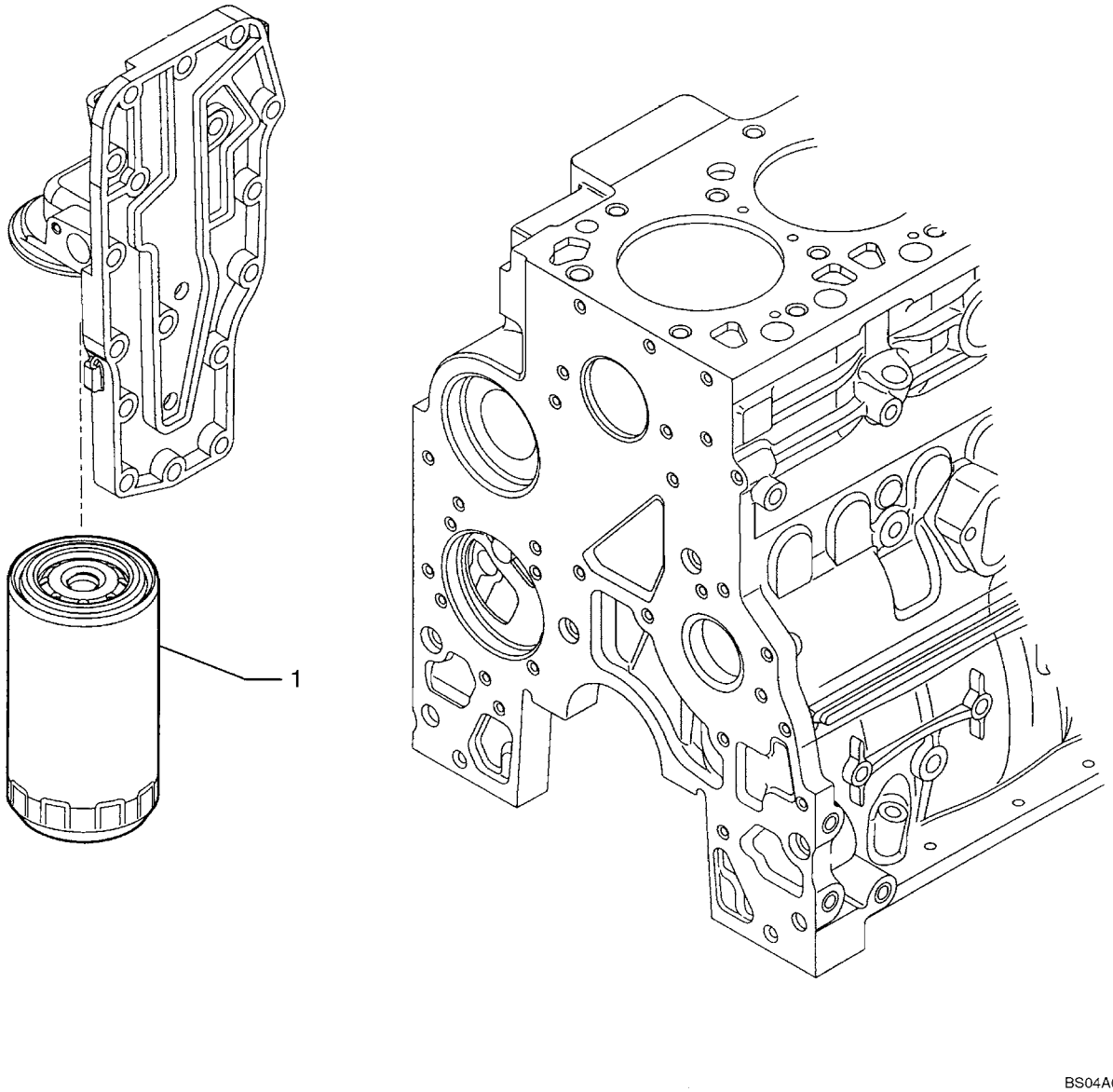

http://www.minnparbackhoeparts.com/

OIL FILTERS - ENGINE

REF	FN	PART NUMBER	YR/SN	QTY	DESCRIPTION
1		87803261		1	FILTER, ENGINE OIL

http://www.minnparbackhoeparts.com/

02-33		p1	10/04

PIPING - ENGINE OIL

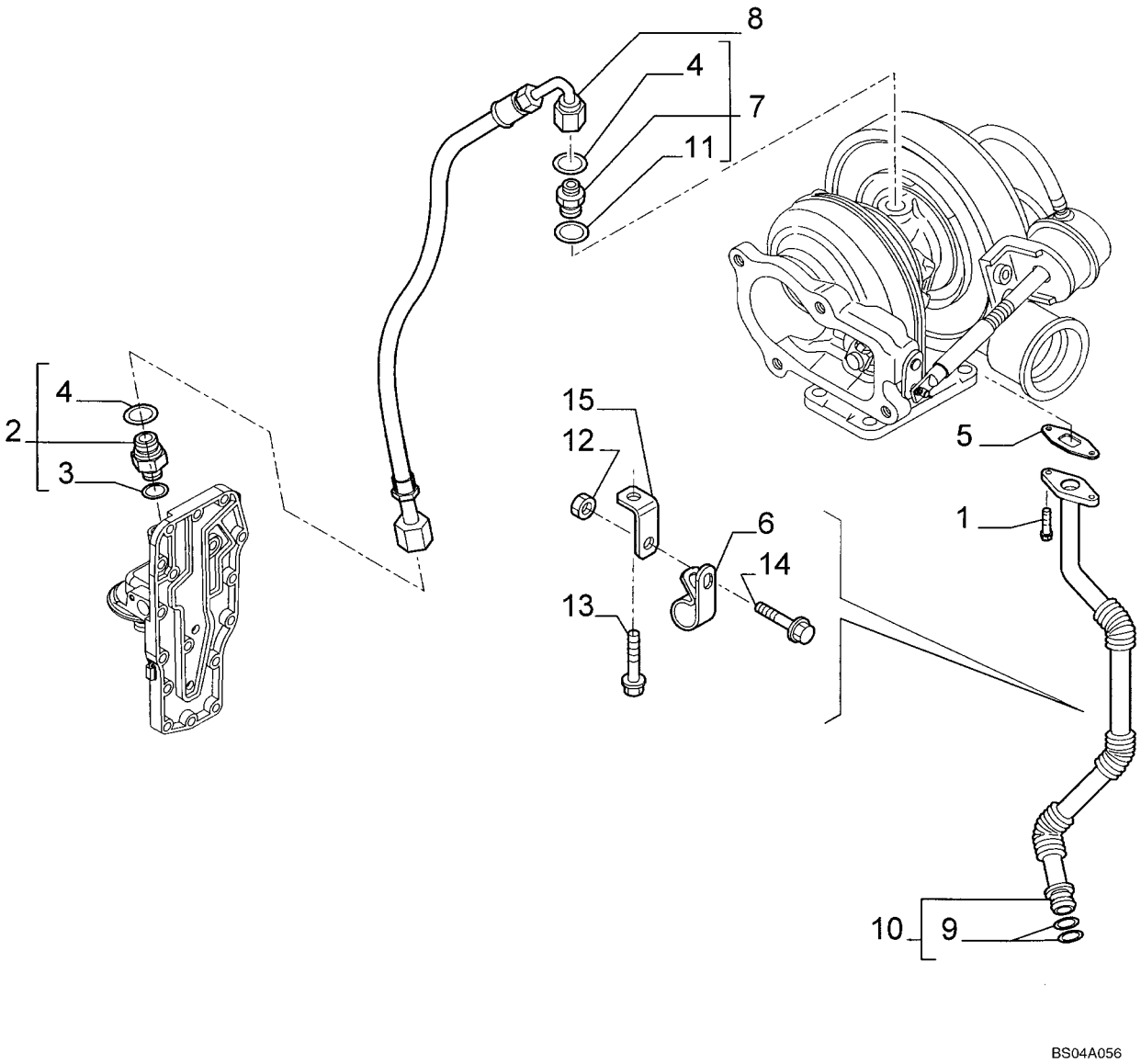

http://www.minnparbackhoeparts.com/

PIPING - ENGINE OIL

REF	FN	PART NUMBER	YR/SN	QTY	DESCRIPTION
1		4895164		2	SCREW Flange, M6 x 16
2		4895107		1	CONNECTOR, HYD. - ASSY; Incl. Ref 3, 4
3		4899107		1	O-RING
4		4899108		1	O-RING
5		4899467		1	GASKET Oil Drain
6		4899519		1	BRACKET Clamp
7		4899106		1	CONNECTOR, HYD. Incl. Ref 4, 11
8		2852195		1	HOSE ASSY.
9		4899058		2	O-RING
10		2852102		1	PIPE ASSY. - ASSY; Tube; Incl. Ref 9
11		4899121		1	GASKET Washer
12		2852197		1	NUT Flange, M6
13		2852101		1	SCREW Flange; M6 x 16
14		2852100		1	SCREW Flange; M8 x 16
15		2852196		1	BRACKET

http://www.minnparbackhoeparts.com/

OIL FILTER AND COOLER

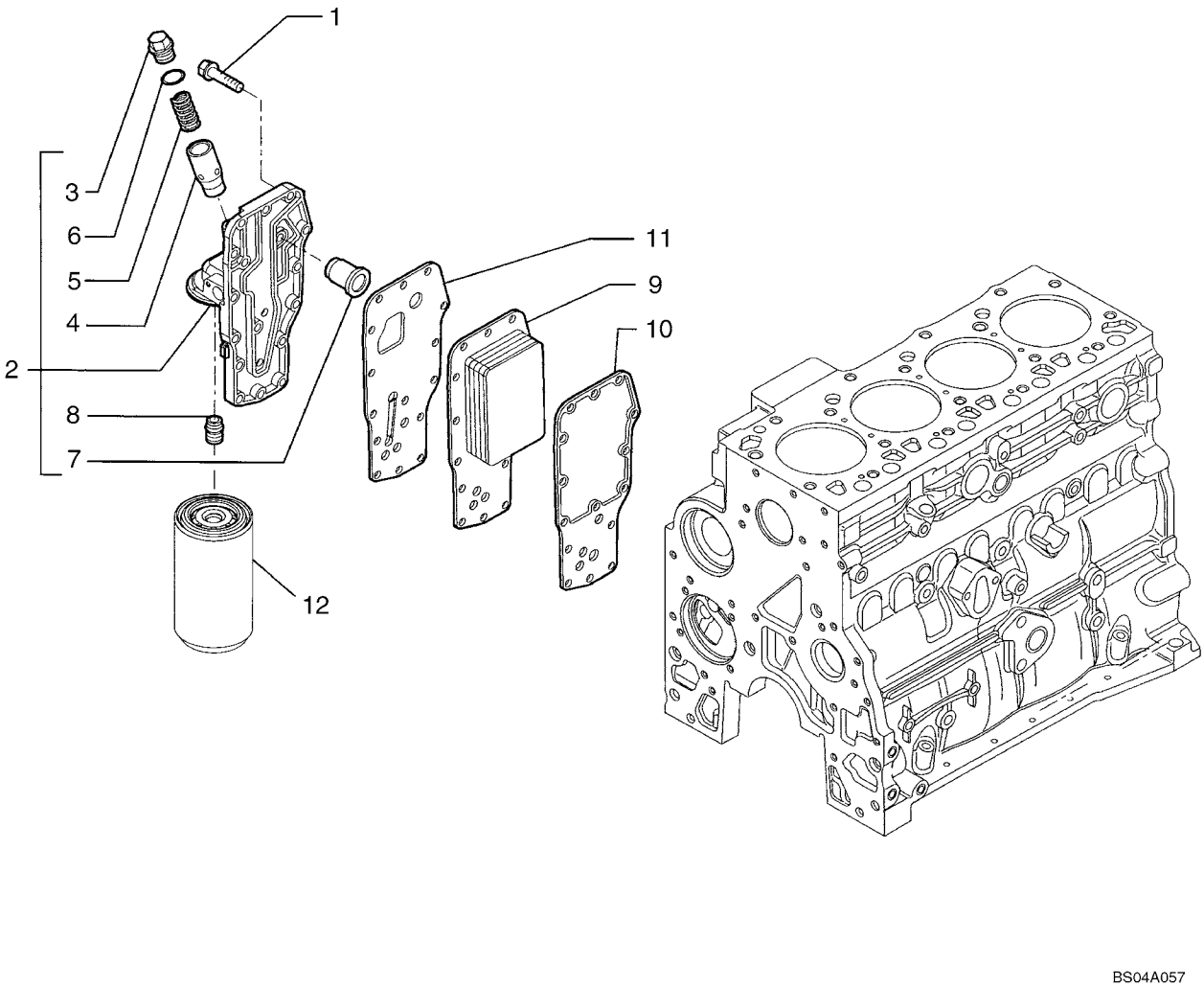

http://www.minnparbackhoeparts.com/

OIL FILTER AND COOLER

REF	FN	PART NUMBER	YR/SN	QTY	DESCRIPTION
1		4899019		15	SCREW Flange, M8 x 35
		4892774		1	HEAT EXCHANGER - ASSY; Head, Incl. Ref 2 - 8
2		4899643		1	HEAD, FILTER Incl. Ref 8
3		4895043		1	PLUG
4		4896404		1	HOUSING Plunger, Pressure Regulator
5		4895045		1	SPRING, VALVE
6		4899035		1	O-RING
7		4896410		1	VALVE, HYDRAULIC Pressure Relief
8		4893391		1	CONNECTOR, HYD.
9		4896406		1	RADIATOR Cooler Core
10		2830559		1	GASKET Core
11		4896409		1	GASKET Head
12		REF		1	INSTRUCTION FILTER, ENGINE OIL; See Figure 02-32

http://www.minnparbackhoeparts.com/

WATER PUMP

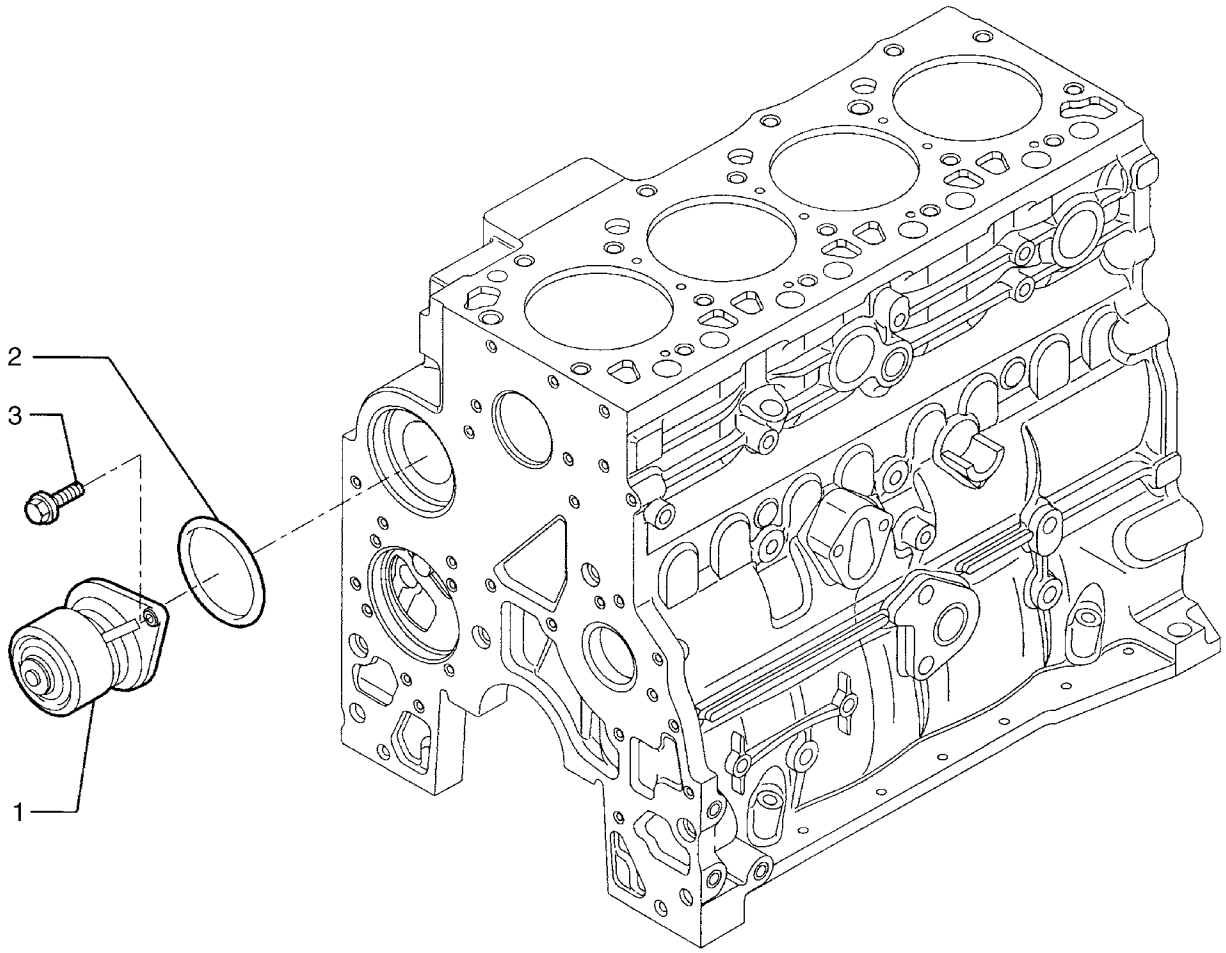

BS04A058

http://www.minnparbackhoeparts.com/

WATER PUMP

REF	FN	PART NUMBER	YR/SN	QTY	DESCRIPTION
1		87803065		1	PUMP, WATER
2		2852047		1	GASKET
3		4899031		2	SCREW Flange, M8 x 25

http://www.minnparbackhoeparts.com/

COOLING SYSTEM - ENGINE

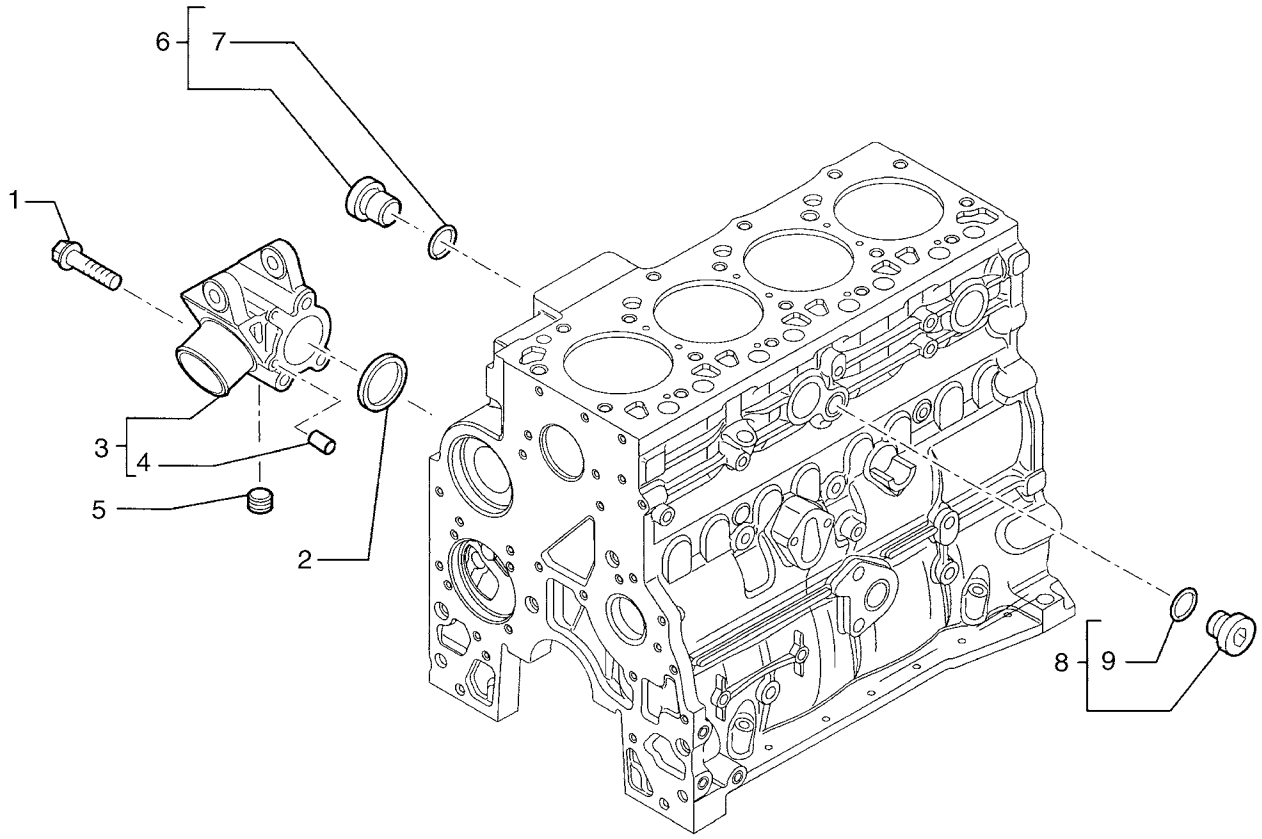

http://www.minnparbackhoeparts.com/

COOLING SYSTEM - ENGINE

REF	FN	PART NUMBER	YR/SN	QTY	DESCRIPTION
1		4899109		3	SCREW Flange, M10 x 80
2		4895121		1	GASKET
3		2852145		1	SUPPORT - ASSY; Water Inlet; Incl. Ref 4
4		2830894		2	DOWEL Dowel
5		2852511		1	PLUG
6		4895392		1	PLUG - ASSY M18; Torque Converter Oil; Incl. Ref 7
7		4895393		1	O-RING
8		4895623		1	PLUG - ASSY; Compressor Plumbing; Incl. Ref 9
9		4895625		1	O-RING

http://www.minnparbackhoeparts.com/

THERMOSTAT - ENGINE COOLING SYSTEM

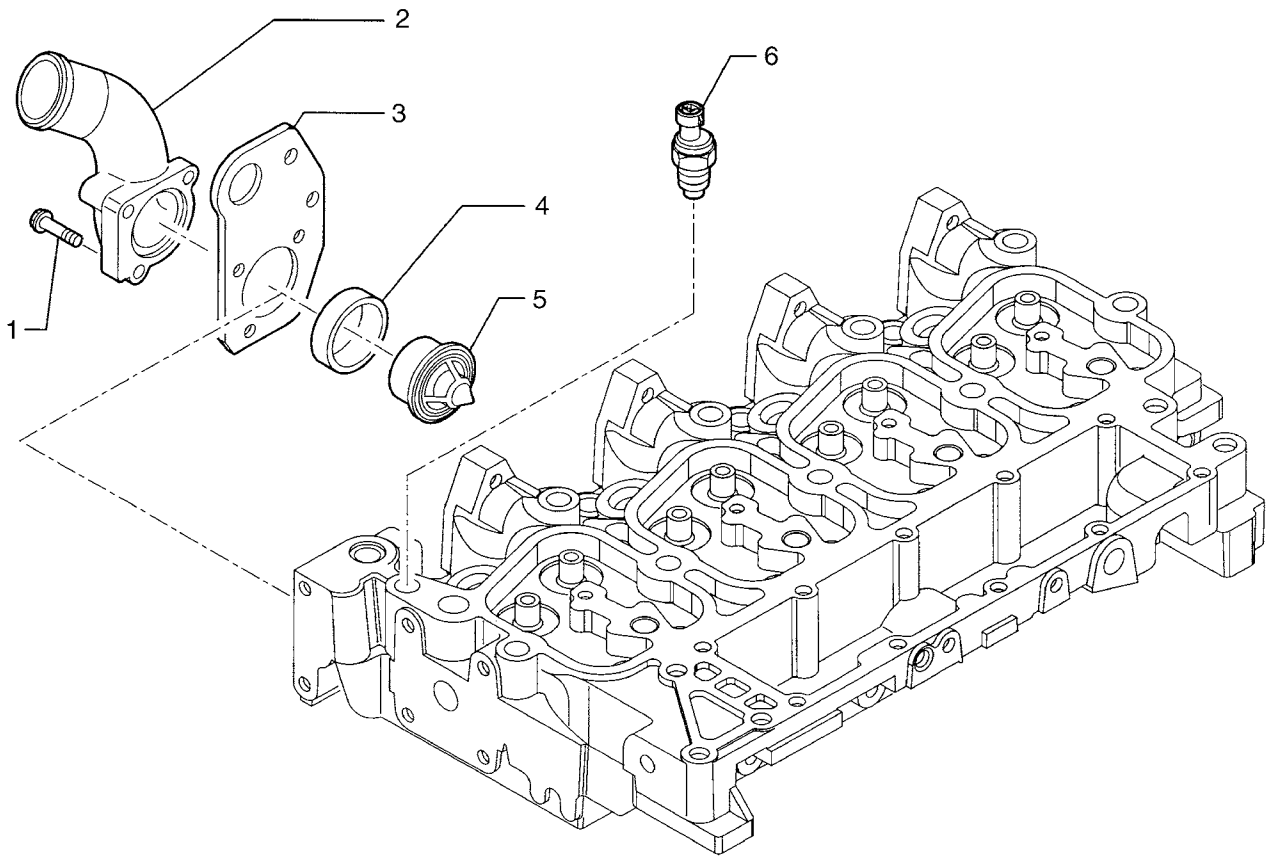

http://www.minnparbackhoeparts.com/

THERMOSTAT - ENGINE COOLING SYSTEM

REF	FN	PART NUMBER	YR/SN	QTY	DESCRIPTION
1		2852151		1	SCREW Flange; M8 x 35
1		2852155		2	SCREW Flange; M8 x 80
2		2852153		1	ELBOW Thermostat Housing
3		2852152		1	RING, LIFTING
4		2852154		1	GASKET
5		2830734		1	THERMOSTAT
6		2852157		1	SENDOR, TEMPERATURE Water; Grid Heater

http://www.minnparbackhoeparts.com/

WATER PUMP - CONTROL

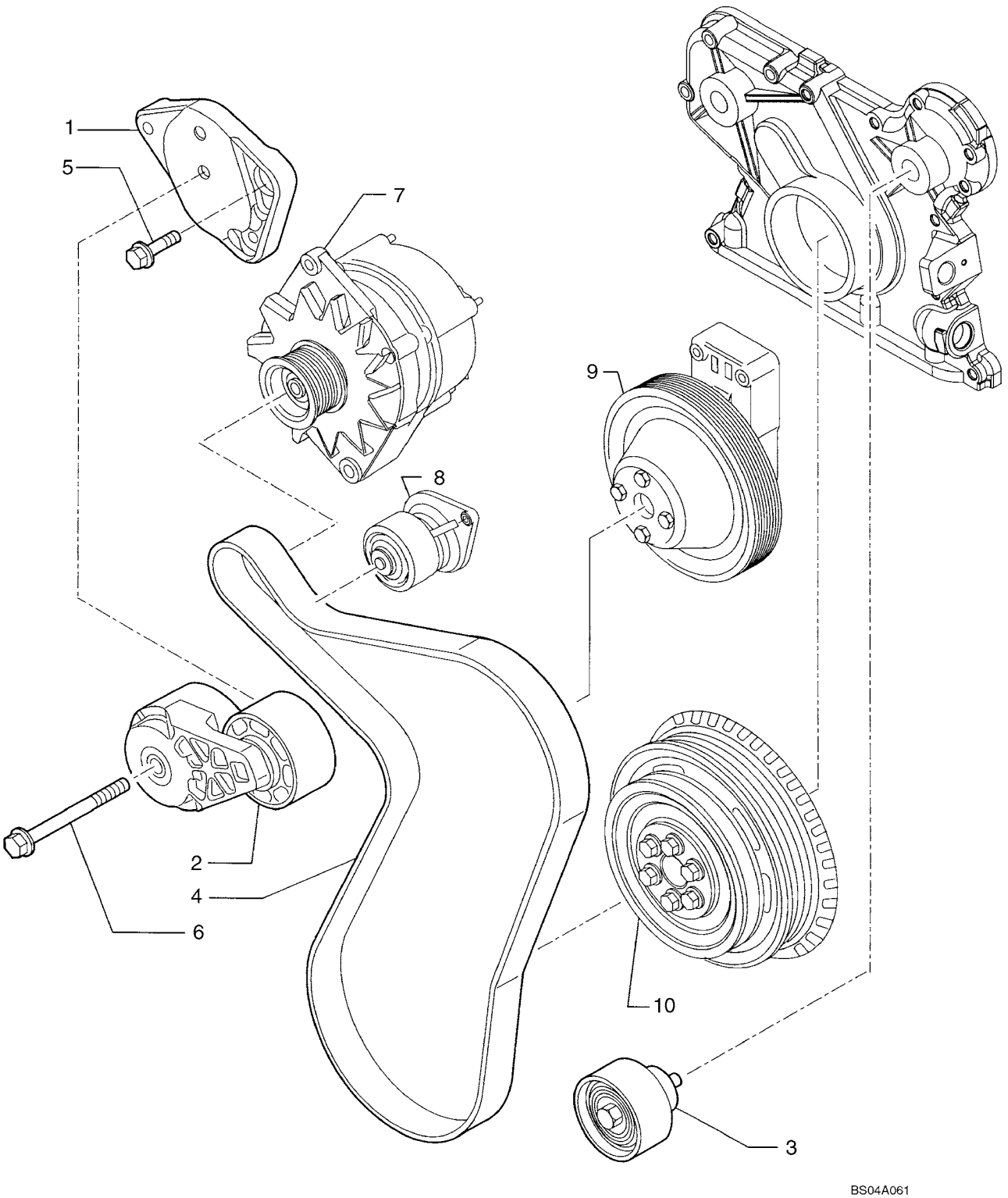

http://www.minnparbackhoeparts.com/

WATER PUMP - CONTROL

REF	FN	PART NUMBER	YR/SN	QTY	DESCRIPTION
1		2852163		1	BRACKET Support
2		2852161		1	TENSIONER, BELT
3		2852162		1	PULLEY Pulley
4		REF		1	INSTRUCTION BELT; See Figure 02-01
5		4899031		2	SCREW Flange, M8 x 25
6		4899109		1	SCREW Flange, M10 x 80
7		REF		1	INSTRUCTION ALTERNATOR; See Figure 04-02
8		REF		1	INSTRUCTION WATER PUMP; See Figure 02-35
9		REF		1	INSTRUCTION FAN DRIVE; See Figure 02-39
10		REF		1	INSTRUCTION CRANKSHAFT PULLEY; See Figure 02-25

http://www.minnparbackhoeparts.com/

FAN DRIVE

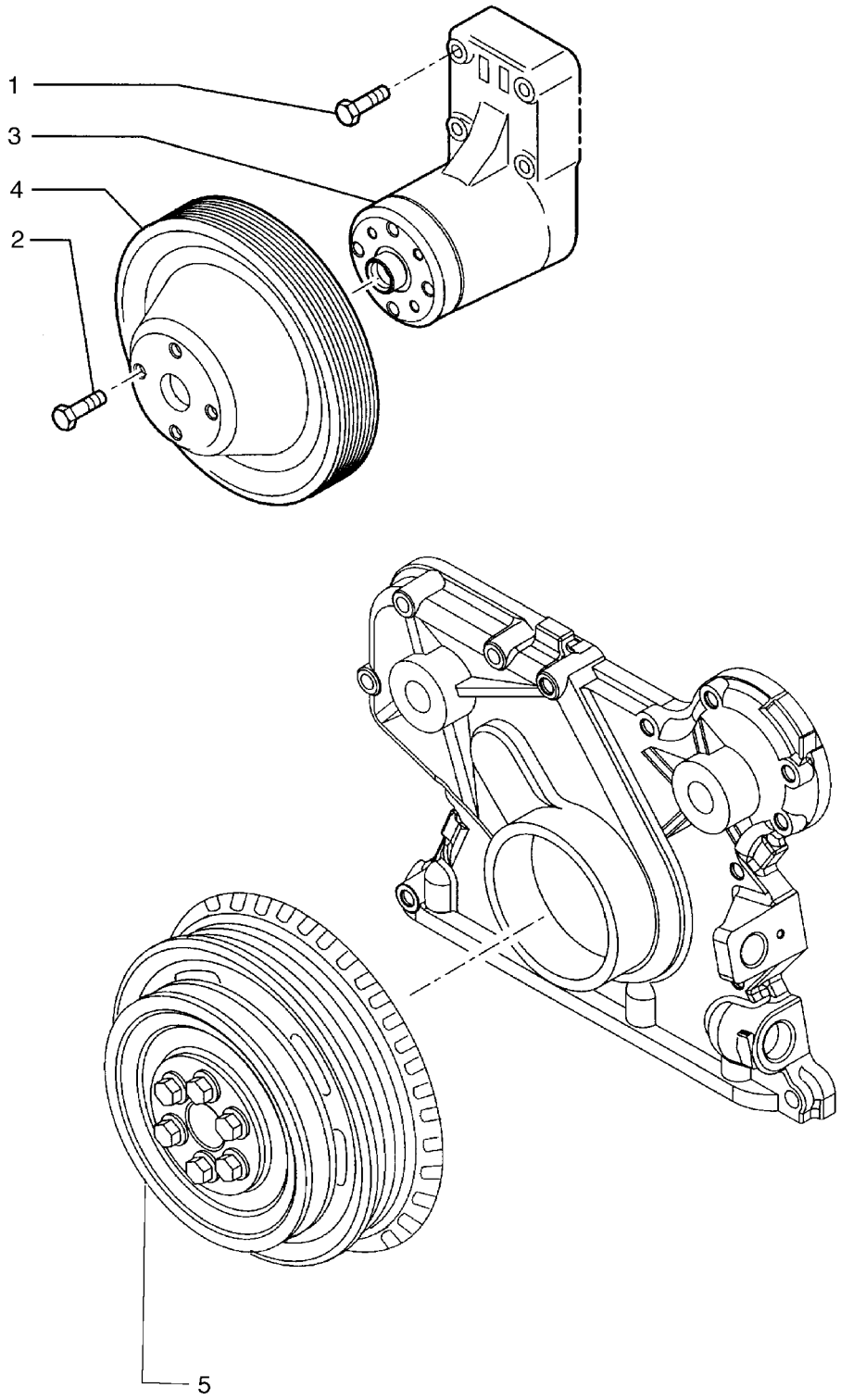

http://www.minnparbackhoeparts.com/

FAN DRIVE

REF	FN	PART NUMBER	YR/SN	QTY	DESCRIPTION
1		4899053		4	SCREW Flange, M8 x 45
2		4895291		4	SCREW Flange, M10 x 20
3		2852170		1	SUPPORT Includes (1) 2852171 Split Ring, (1) 2852172 Screw, (1) 4892732 Bearing, (1) 4892426 Hub, (1) 4890732 Hub Retainer
		2852171		1	CIRCLIP
		2852172		1	SCREW
		4892732		1	BEARING, BALL
		4892426		1	HUB
		4890732		1	SPACER Hub Retainer
4		4895301		1	PULLEY
5		REF		1	INSTRUCTION CRANKSHAFT PULLEY; See Figure 02-25

http://www.minnparbackhoeparts.com/

POWER TAKE-OFF

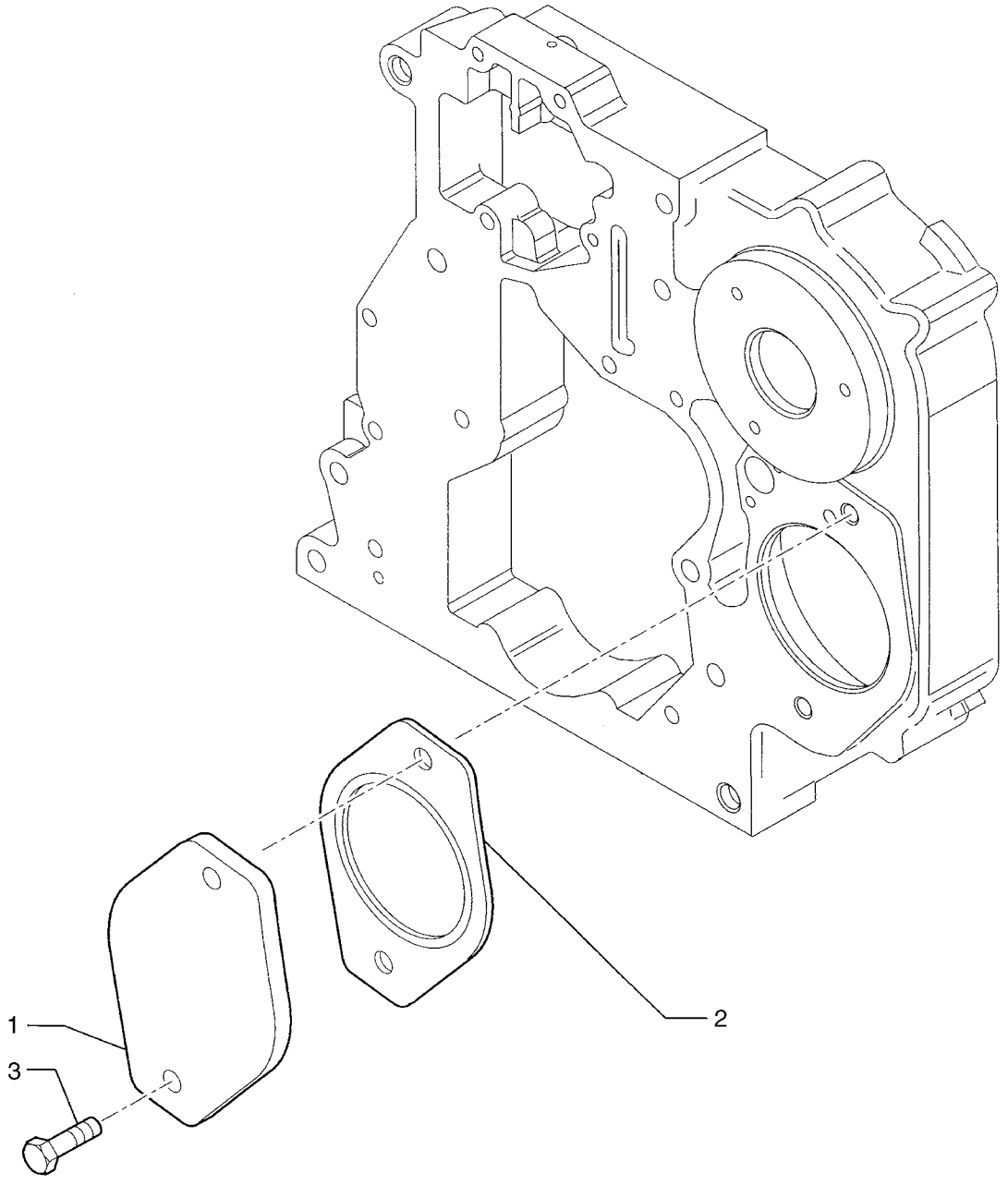

http://www.minnparbackhoeparts.com/

POWER TAKE-OFF

REF	FN	PART NUMBER	YR/SN	QTY	DESCRIPTION
1		2852175		1	COVER If Used
2		4896897		1	GASKET
3		4899037		2	SCREW Flange; M12 x 25

http://www.minnparbackhoeparts.com/

ENGINE - LIFT HOOK

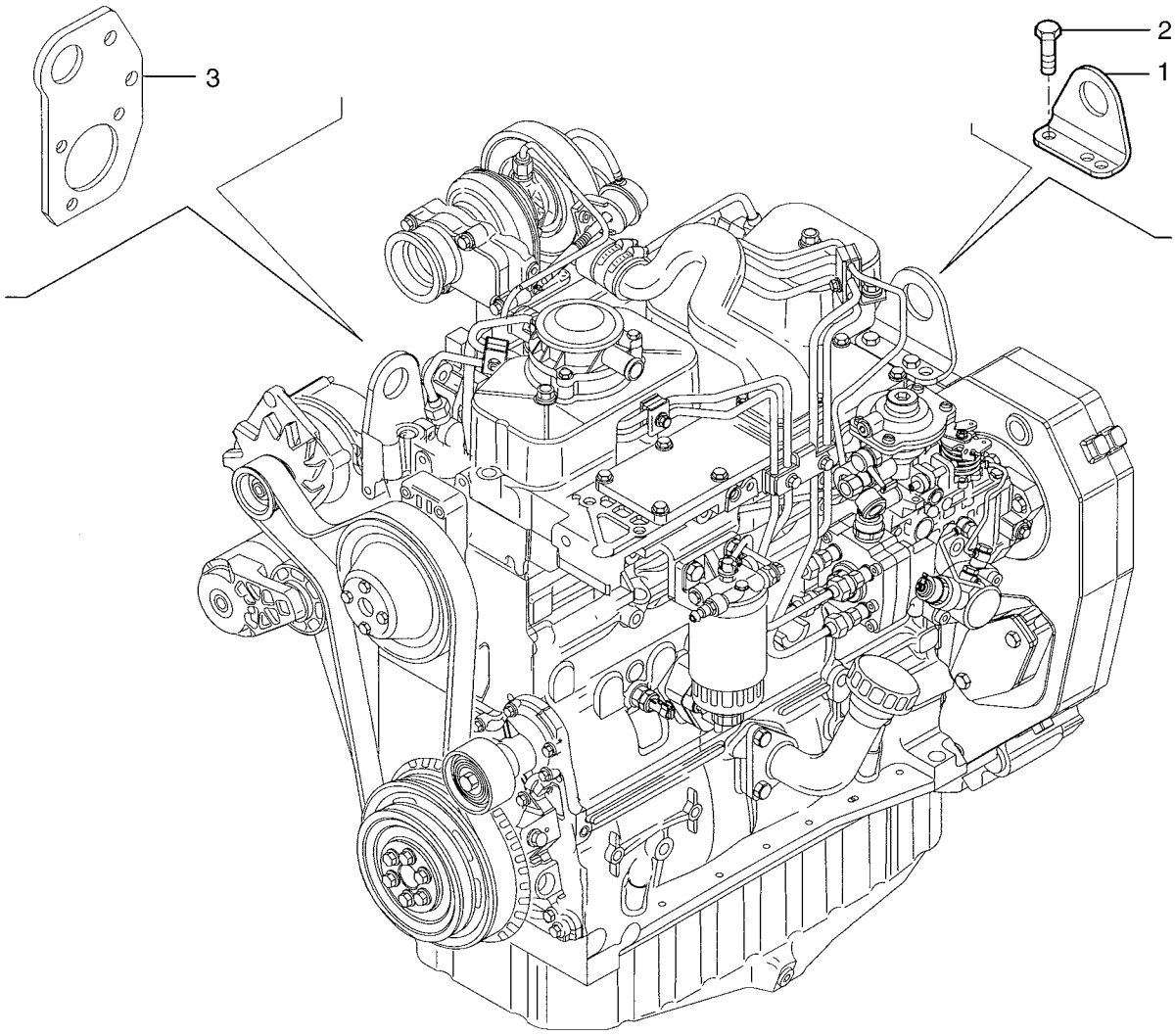

BS04A064

http://www.minnparbackhoeparts.com/

ENGINE - LIFT HOOK

REF	FN	PART NUMBER	YR/SN	QTY	DESCRIPTION
1		2852183		1	RING, LIFTING
2		4899073		2	SCREW Flange, M12 x 30
3		REF		1	INSTRUCTION LIFT RING; See Figure 02-37

http://www.minnparbackhoeparts.com/

NOTES

http://www.minnparbackhoeparts.com/

SECTION INDEX

03-01	FUEL LINES, RESERVOIR - FILTER, IN-LINE FUEL
03-02	CONTROLS - THROTTLE, HAND
03-03	CONTROLS - THROTTLE, FOOT
03-04	FUEL INJECTION PUMP
03-05	FUEL INJECTION SYSTEM
03-06	FUEL INJECTION SYSTEM
03-07	FUEL INJECTION SYSTEM
03-08	FUEL FILTER
03-09	FUEL PUMP
03-10	FUEL INJECTION SYSTEM
03-11	FUEL INJECTION SYSTEM

http://www.minnparbackhoeparts.com/

03-01		p1	06/05

FUEL LINES, RESERVOIR - FILTER, IN-LINE FUEL

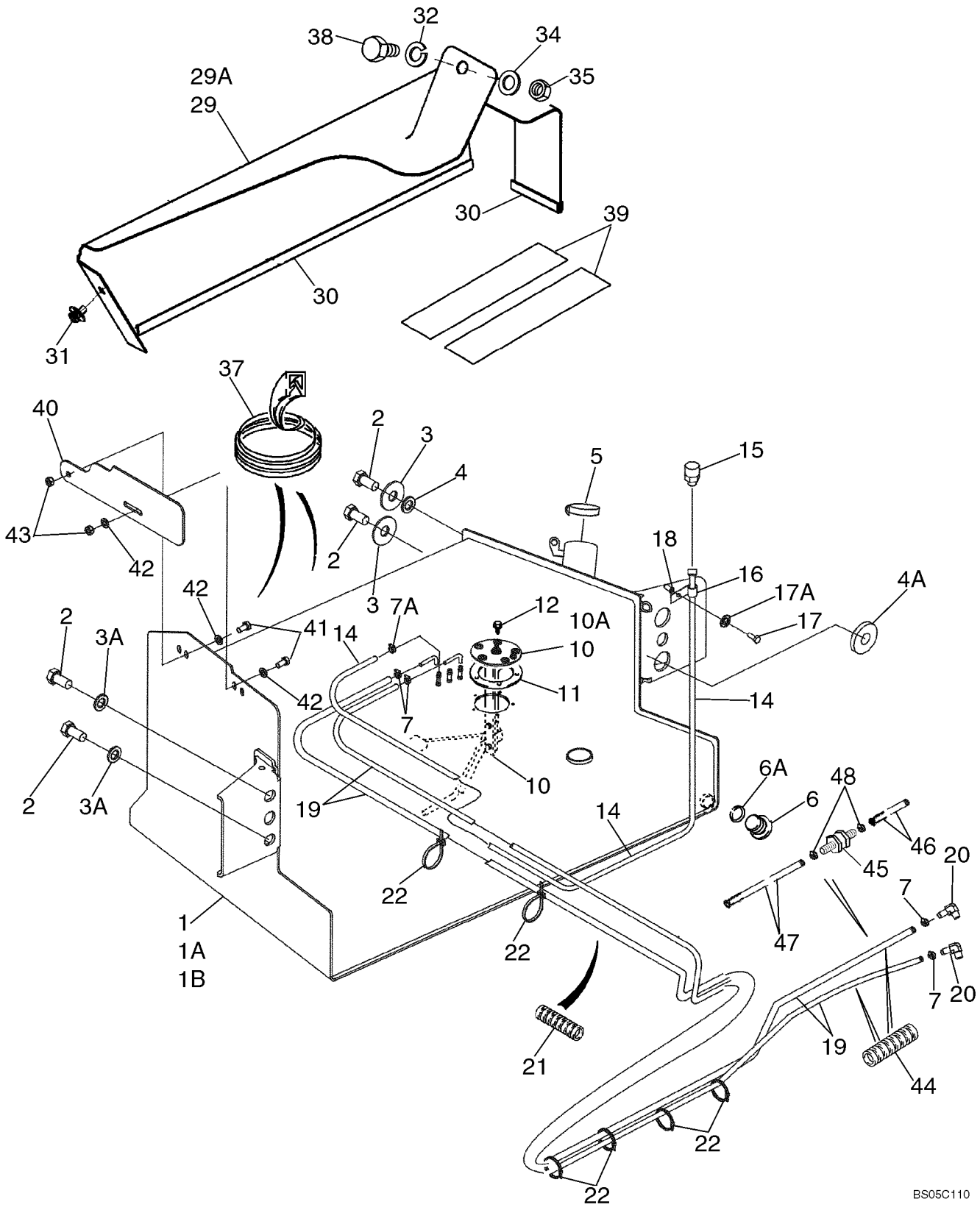

http://www.minnparbackhoeparts.com/

FUEL LINES, RESERVOIR - FILTER, IN-LINE FUEL

REF	FN	PART NUMBER	YR/SN	QTY	DESCRIPTION
1		87429310		1	FUEL TANK 580SM Models, 31 gal; Incl. Ref 6; With Welded Fuel Sender Tubes; Includes Left Hand Steps, Mounts to Left Hand Side of Chassis
1A		87429314		1	FUEL TANK 580SM Models, 40 gal; Incl. Ref 6; Optional; With Welded Fuel Sender Tubes; Includes Left Hand Steps, Mounts to Left Hand Side of Chassis; If Used
1B		87429318		1	FUEL TANK 580SM+ Models, 42 gal; Incl. Ref 6; With Welded Fuel Sender Tubes; Includes Left Hand Steps, Mounts to Left Hand Side of Chassis
2		443375A1		4	BOLT M20 x 60; With Loctite
3		302358A1		2	WASHER
3A		896-11020		2	WASHER 22 x 37 x 4 mm
4		185926A1		1	SPACER Upper Left Hand Side of Tank
4A		409472A1		1	SPACER Lower Left Hand Side of Tank
5		130049A1		1	CAP, FILLER Cap; Non-Vented
6		218-5211		1	PLUG Hex Socket, 7/8 Or, Drain, Incl. Ref 6A; Included With Ref 1, 1A, 1B
6A		237-6010		1	O-RING 3/4 ID x 3/32
7		214-1706		4	CLAMP
7A		214-1704		1	CLAMP
10		86989676		1	SENDER UNIT Fuel Level, 31 Gallon Tank, Without Tubes, Includes Seal and Grounding Hardware, If Used
10A		87408480		1	SENDER UNIT Fuel Level, 40 or 42 Gallon Tank, Without Tubes, Includes Seal and Grounding Hardware, If Used
11		188311A2		1	GASKET No Longer Used
12		D75465		5	SCREW No. 10 NF x 5/8
14		234892A1		1	HOSE, LARGE 1/4 ID x 1100 mm (43-5/16 in), Vent
15		130047A1		1	BREATHER ASSY. Vent
16		515-23127		1	CLAMP 1/2 ID
17		614-8030		1	BOLT M8 x 30
17A		892-11008		1	WASHER Lock, M8
18		87417383		1	INSERT, THREADED M8 Nut

http://www.minnparbackhoeparts.com/

03-01		p2	06/05

FUEL LINES, RESERVOIR - FILTER, IN-LINE FUEL

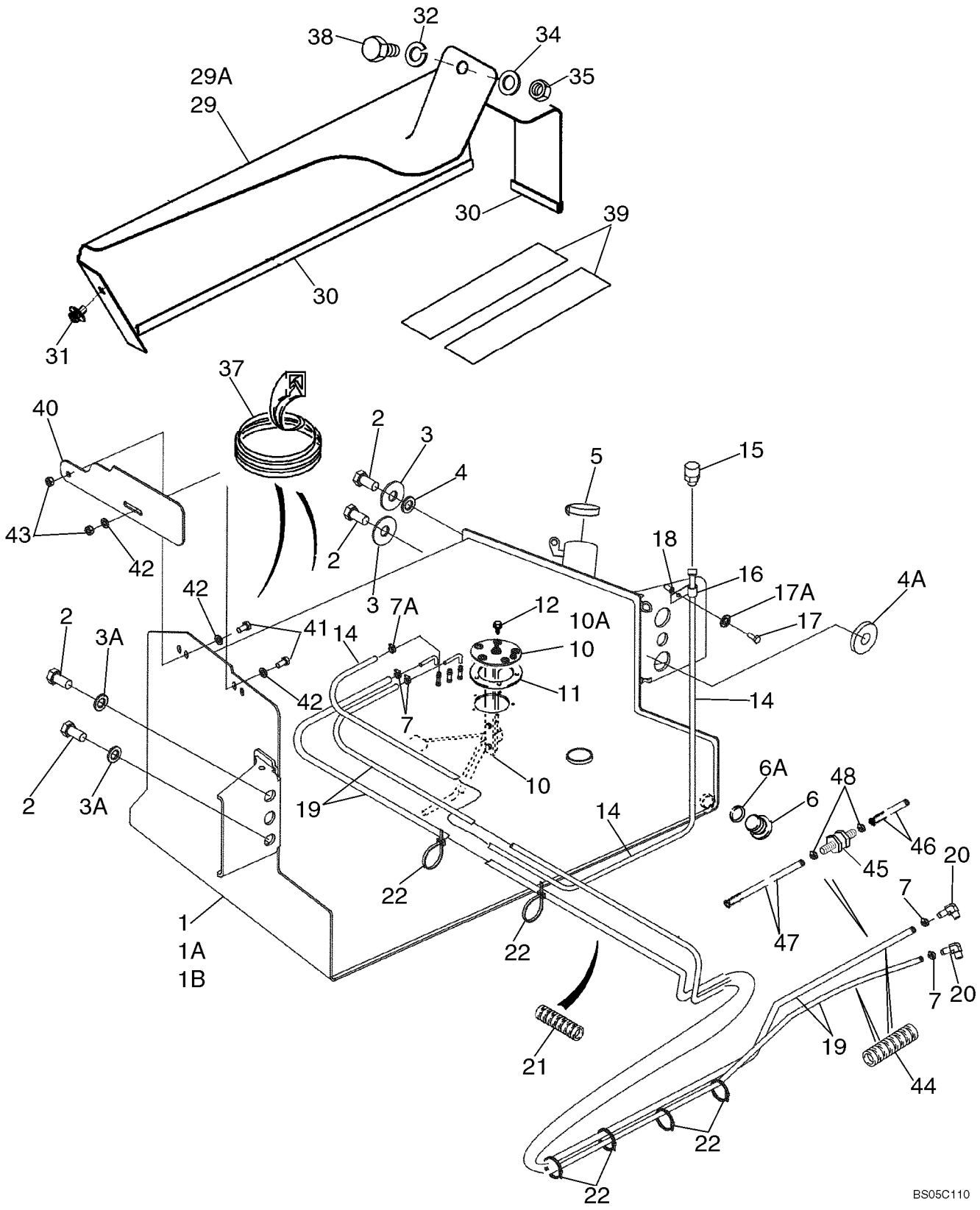

http://www.minnparbackhoeparts.com/

FUEL LINES, RESERVOIR - FILTER, IN-LINE FUEL

REF	FN	PART NUMBER	YR/SN	QTY	DESCRIPTION
19		87444942		1-2	HOSE 3/8 ID x 5/8 OD x 1650 mm (65 in); To Fuel Lift Pump and Injector Pump; Two Used On Models Without In-Line Fuel Check Valve
20		87414560		2	CONNECTOR, HYD. ELBOW, 90 deg, Includes O-Ring
21		87434880		1	HOSE, PROTECTION 450 mm (17-3/4 in)
22		L18337		X	STRAP 15 in
29		189602A3		1	COVER Mounted Above Fuel Reservoir; Models With Two Spool Loader Valve
29A		188009A3		1	COVER Mounted Above Fuel Reservoir, Models With Three Spool Loader Valve
30		191046A1		1	STRIP, ORNAMENTAL Trim, 650 mm (25-5/8 in), Cut From A165860; Apply 65 mm (2-9/16 in) of Trim to Front Lower Edge and 575 mm (22-11/16 in) of Trim to Outside Lower Edge of Cover
31		307577A1		1	BOLT Special, M8 x 20
32		892-11010		1	WASHER, LOCK M10
34		895-11010		1	WASHER 11 x 21 x 2 mm
35		829-1410		1	NUT M10; 10.9
37		D40442		1	MOLDING Trim, 305 mm (12 in), Cut From F42827; If Used
38		814-10045		1	BOLT M10 x 45; Models With Three Spool Loader Valve
38		614-10020		1	SCREW M10 x 20; Models With Two Spool Loader Valve
39		D80270		2	STRIP 635 mm (25 in), 31 or 42 Gallon Tank
39		307348A1		2	STRIP 700 mm (27-9/16 in), 40 Gallon Tank
40		397548A4		1	PLATE Mud
41		614-10020		2	SCREW M10 x 20
42		895-11010		3	WASHER 11 x 21 x 2 mm
43		829-1410		2	NUT M10; 10.9
44		191704A1		2	LOOM Hose Sleeve
45		87454053		1	VALVE, CHECK Fuel Line; Install With Flow Arrow Pointed Toward Tank; If Used
46		87454055		1	HOSE 3/8 ID x 5/8 OD x 5-29/32; Fuel Return to Check Valve; If Used

http://www.minnparbackhoeparts.com/

FUEL LINES, RESERVOIR - FILTER, IN-LINE FUEL

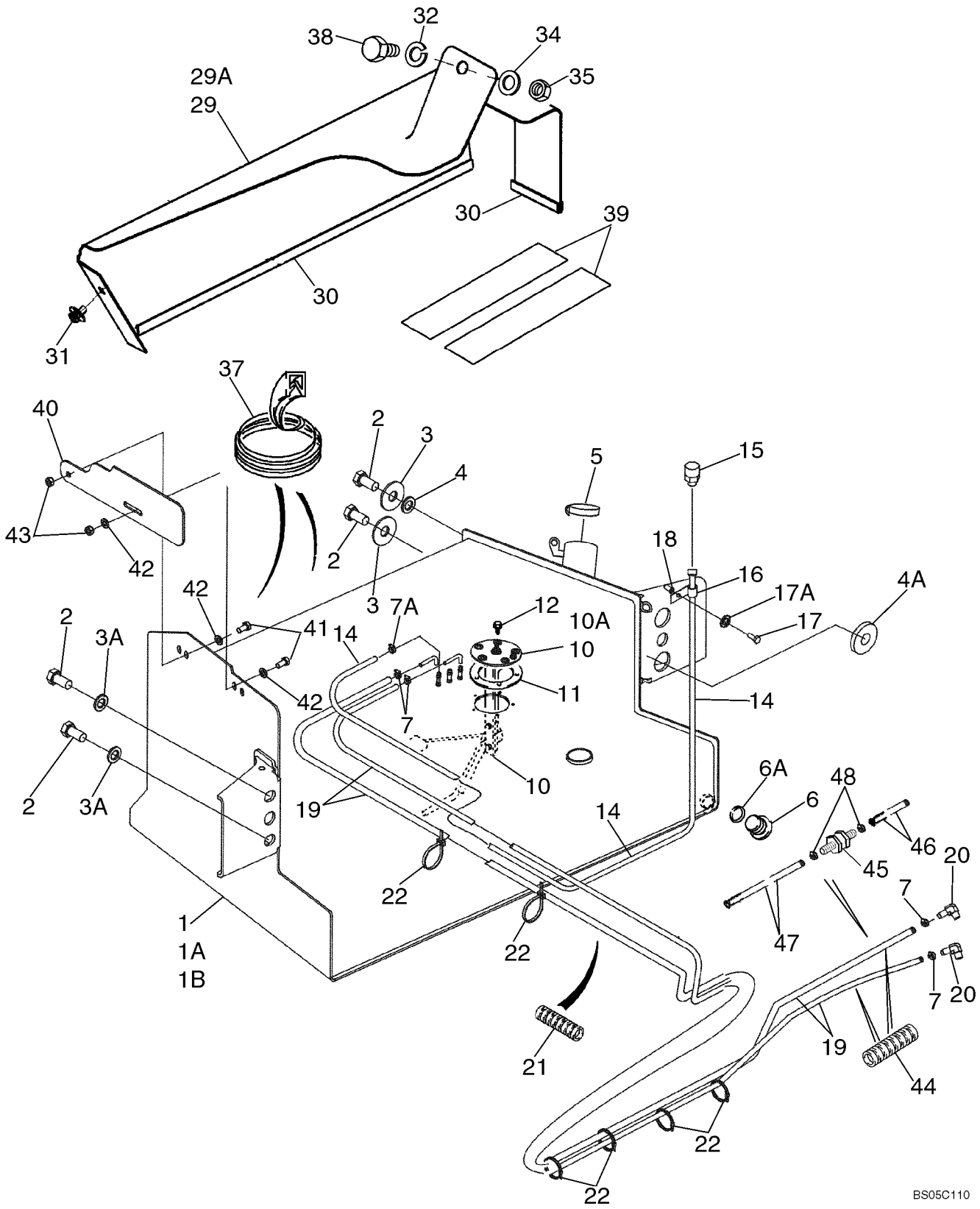

http://www.minnparbackhoeparts.com/

FUEL LINES, RESERVOIR - FILTER, IN-LINE FUEL

REF	FN	PART NUMBER	YR/SN	QTY	DESCRIPTION
47		87454054		1	HOSE 3/8 ID x 5/8 OD x 59-1/16; Check Valve to Tank; If Used
48		214-1706		2	CLAMP If Used

http://www.minnparbackhoeparts.com/

CONTROLS - THROTTLE, HAND

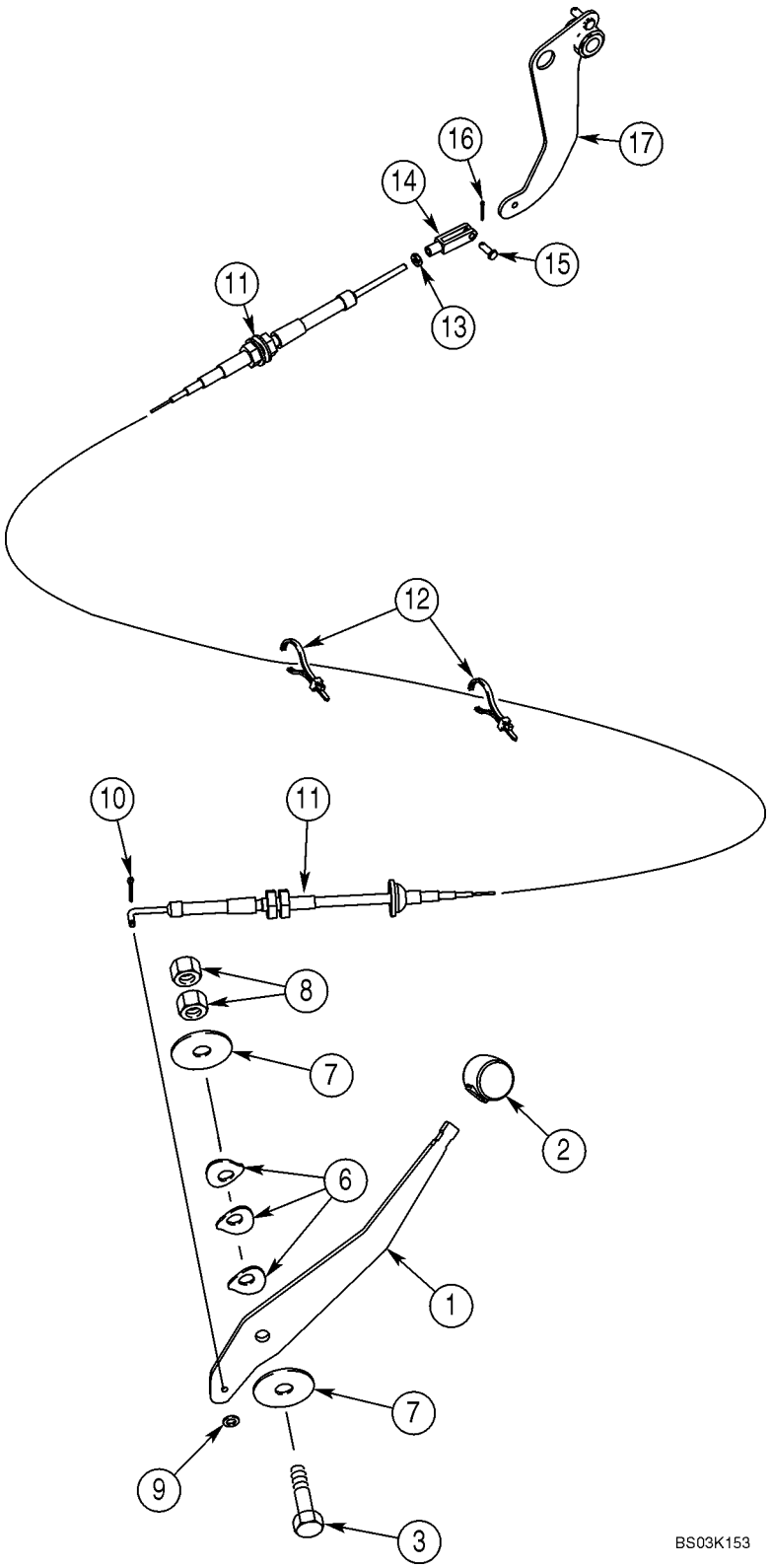

http://www.minnparbackhoeparts.com/

CONTROLS - THROTTLE, HAND

REF	FN	PART NUMBER	YR/SN	QTY	DESCRIPTION
1		395189A2		1	LEVER
2		A177435		1	KNOB,BALL Lever
3		514-847		1	BOLT M12 x 50
6		D148962		3	WASHER
7		496-81018		2	WASHER 33/64 x 2 x 1/8
8		825-11412		2	NUT M12
9		495-31022		1	WASHER 7/32 x 1/2 x 3/64
10		432-48		1	PIN, SPLIT (COTTER) 1/16" x 1/2"
11		87330322		1	CABLE Replaces 350014A3
12		L18337		4	STRAP 15 in, Nylon, Retaining
13		225-14210		1	NUT No. 10 NF
14		213-123		1	CLEVIS No. 10 NF
15		427-3058		1	PIN, CLEVIS 3/16 x 9/16
16		432-48		1	PIN, SPLIT (COTTER) 1/16" x 1/2"
17		378957A3		1	LEVER ASSY. Models Without Powershift Transmission
17A		380485A3		1	LEVER ASSY. Models With Powershift Transmission, Not Illustrated

http://www.minnparbackhoeparts.com/

CONTROLS - THROTTLE, FOOT

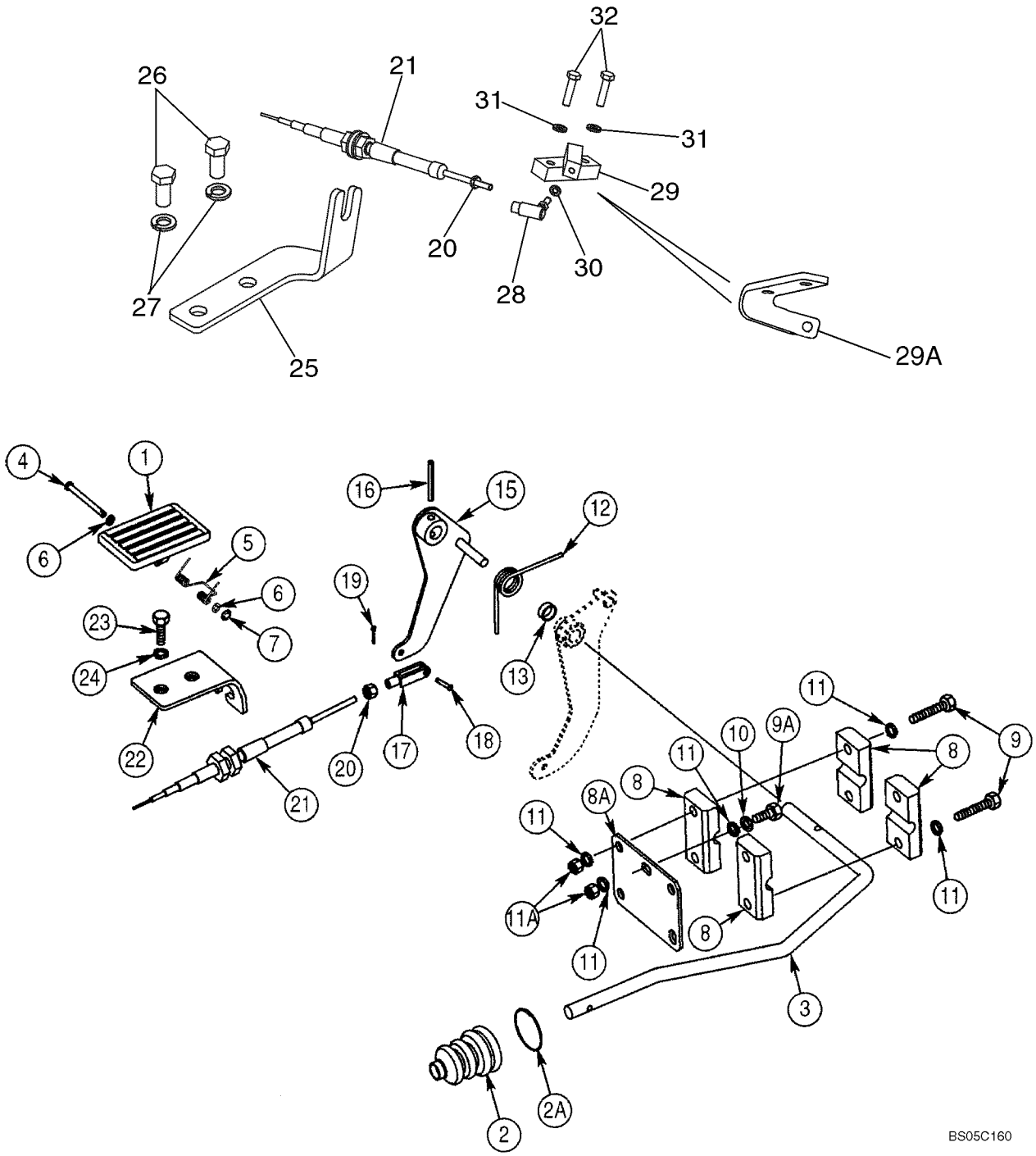

http://www.minnparbackhoeparts.com/

CONTROLS - THROTTLE, FOOT

REF	FN	PART NUMBER	YR/SN	QTY	DESCRIPTION
1		282242A1		1	PEDAL Accelerator, Plastic
2		132931A1		1	BELLOWS Boot, Accelerator Pedal Rod
2A		189109A1		1	SPRING Retainer
3		378960A1		1	ROD
4		322860A1		1	PIN, LARGE
5		256776A1		1	SPRING
6		895-11005		2	WASHER 5,5 x 10 x 1 mm
7		103-1518		1	SNAP RING No. 18
8		D124857		4	CLAMP Block
8A		378955A1		1	PLATE
9		604-8050		4	BOLT Locking, M8 x 50
9A		614-8020		1	BOLT M8 x 20
10		892-11008		1	WASHER M8
11		895-11008		7	WASHER 9 x 17 x 1,6 mm
11A		829-1408		2	NUT M8; 10
12		380483A2		1	SPRING
13		378958A1		1	SPACER, RING
15		378956A3		1	LEVER ASSY. Models Without Powershift Transmission
15A		380484A3		1	LEVER ASSY. Models With Powershift Transmission, Not Illustrated
16		838-3640		1	PIN 6 x 40 mm
17		213-123		1	CLEVIS No. 10 NF
18		427-3058		1	PIN, CLEVIS 3/16 x 9/16
19		432-48		1	PIN, SPLIT (COTTER) 1/16" x 1/2"
20		225-14210		2-3	NUT No. 10 NF
21		87330325		1	CABLE To Injection Pump; Replaces 380021A1
22		397065A2		1	BRACKET Models Without Powershift Transmission
22A		397158A2		1	BRACKET Models With Powershift Transmission, Not Illustrated
23		614-10035		2	SCREW M10 x 35
24		892-11010		2	WASHER, LOCK M10
25		87432547		1	BRACKET With Holes; If Used
25		87446095		1	BRACKET With Slots; Not Illustrated; If Used
26		627-12025		2	SCREW M12 x 25
27		896-15012		2	WASHER 13,5 x 28 x 4 mm
28		87421807		1	JOINT ASSY.

http://www.minnparbackhoeparts.com/

CONTROLS - THROTTLE, FOOT

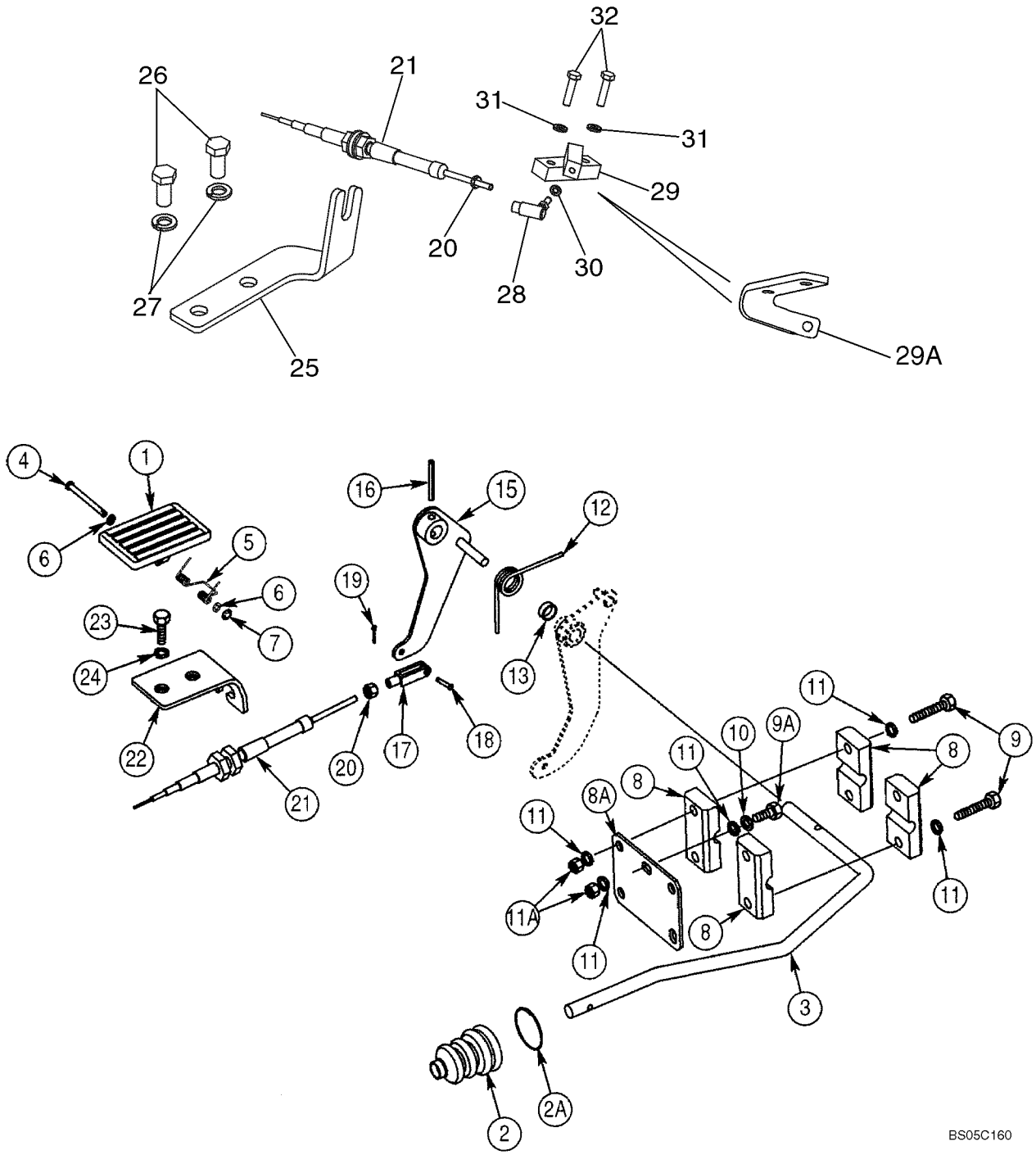

http://www.minnparbackhoeparts.com/

CONTROLS - THROTTLE, FOOT

REF	FN	PART NUMBER	YR/SN	QTY	DESCRIPTION
29		87421471		1	BLOCK ASSY. No Longer Available, Order 87452823 Bracket, Ref 29A
29A		87452823		1	BLOCK ASSY. BRACKET, Throttle Cable
30		892-11005		1	WASHER, LOCK M5
31		892-11006		2	WASHER, LOCK M6
32		614-6025		2	BOLT M6 x 25; Used With 87421471 Block, Ref 29; If Used
32		614-6016		2	BOLT M6 x 15; Used With 87452823 Bracket, Ref 29A; If Used

http://www.minnparbackhoeparts.com/

FUEL INJECTION PUMP

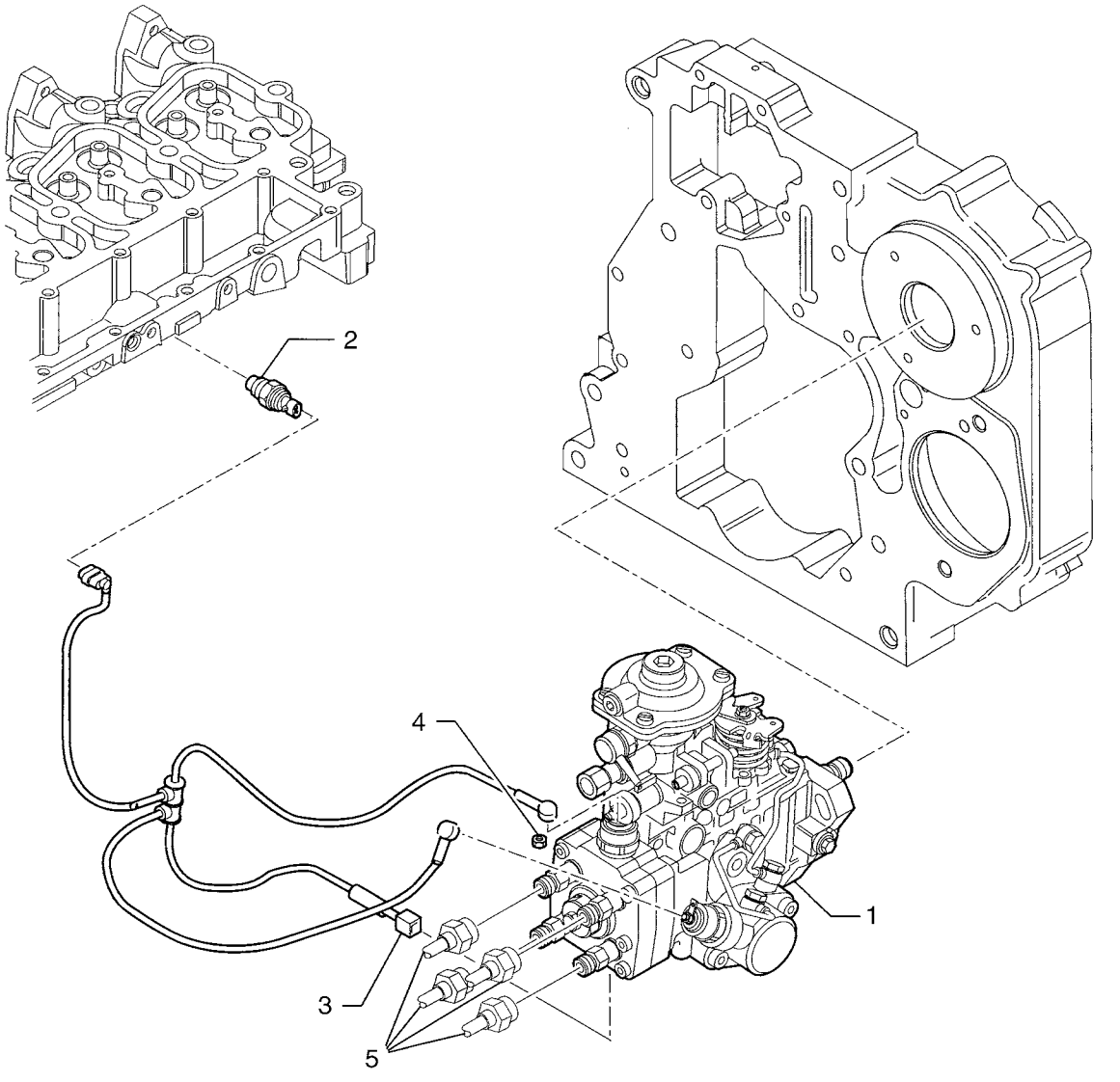

http://www.minnparbackhoeparts.com/

FUEL INJECTION PUMP

REF	FN	PART NUMBER	YR/SN	QTY	DESCRIPTION
1		2852046		1	PUMP, FUEL - ASSY; Injection Pump; Includes 2852741 Fuel Shut-Off Solenoid
		2852741		1	SOLENOID Fuel Shut-Off
2		2852087		1	SENDER UNIT Temperature
3		2852088		1	CONNECTOR, WIRE
4		2852089		2	NUT Lock, M5
5		REF		1	INSTRUCTION TUBE; See Figure 03-07 for Tube Kit

http://www.minnparbackhoeparts.com/

FUEL INJECTION SYSTEM

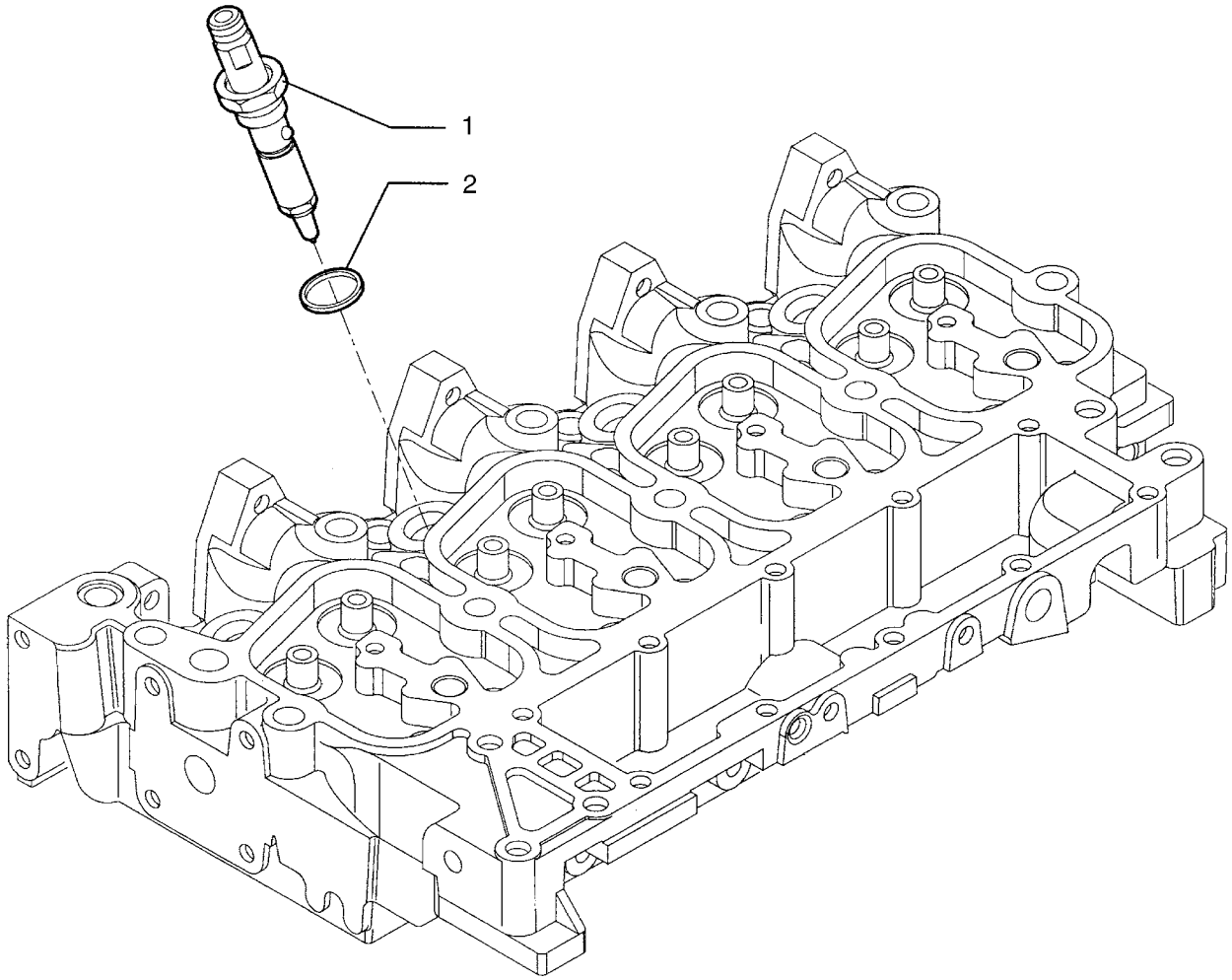

BS04A045

http://www.minnparbackhoeparts.com/

FUEL INJECTION SYSTEM

REF	FN	PART NUMBER	YR/SN	QTY	DESCRIPTION
1		2852869		4	NOZZLE INJECTION Injector
2		4895297		4	GASKET Seal

http://www.minnparbackhoeparts.com/

FUEL INJECTION SYSTEM

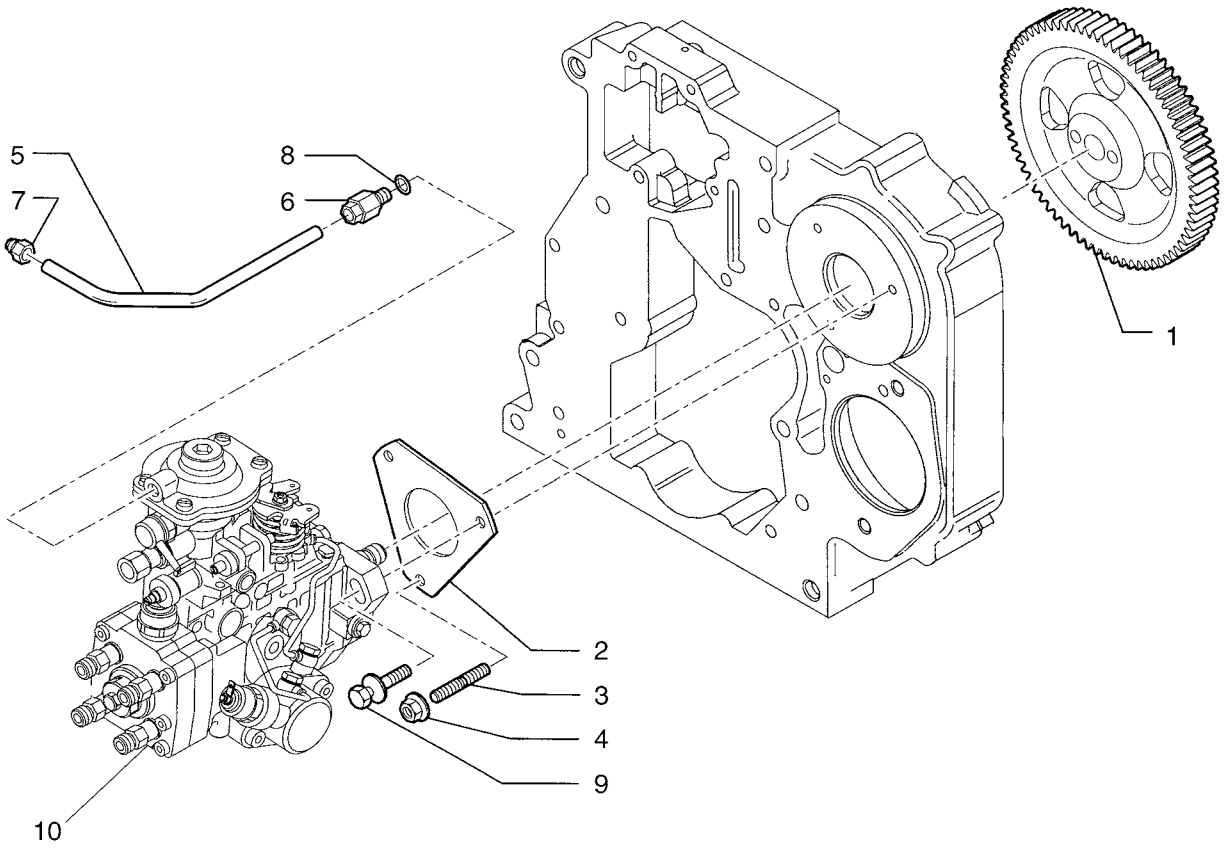

BS04A046

http://www.minnparbackhoeparts.com/

FUEL INJECTION SYSTEM

REF	FN	PART NUMBER	YR/SN	QTY	DESCRIPTION
1		4894774		1	GEAR, DRIVEN
2		2852885		1	GASKET
3		2852294		2-3	STUD M8 x 30
4		4899003		2-3	NUT Flange, M8
5		2852059		1	TUBE, RIGID
6		4893518		1	CONNECTOR, HYD. 8 x 1
7		4896770		1	CONNECTOR, HYD. 10 x 1
8		2852057		1	GASKET
9		2852091		1	SCREW M8 x 31; No Longer Used, Order Ref 3 Stud
10		REF		1	INSTRUCTION INJECTION PUMP; See Figure 03-04

http://www.minnparbackhoeparts.com/

FUEL INJECTION SYSTEM

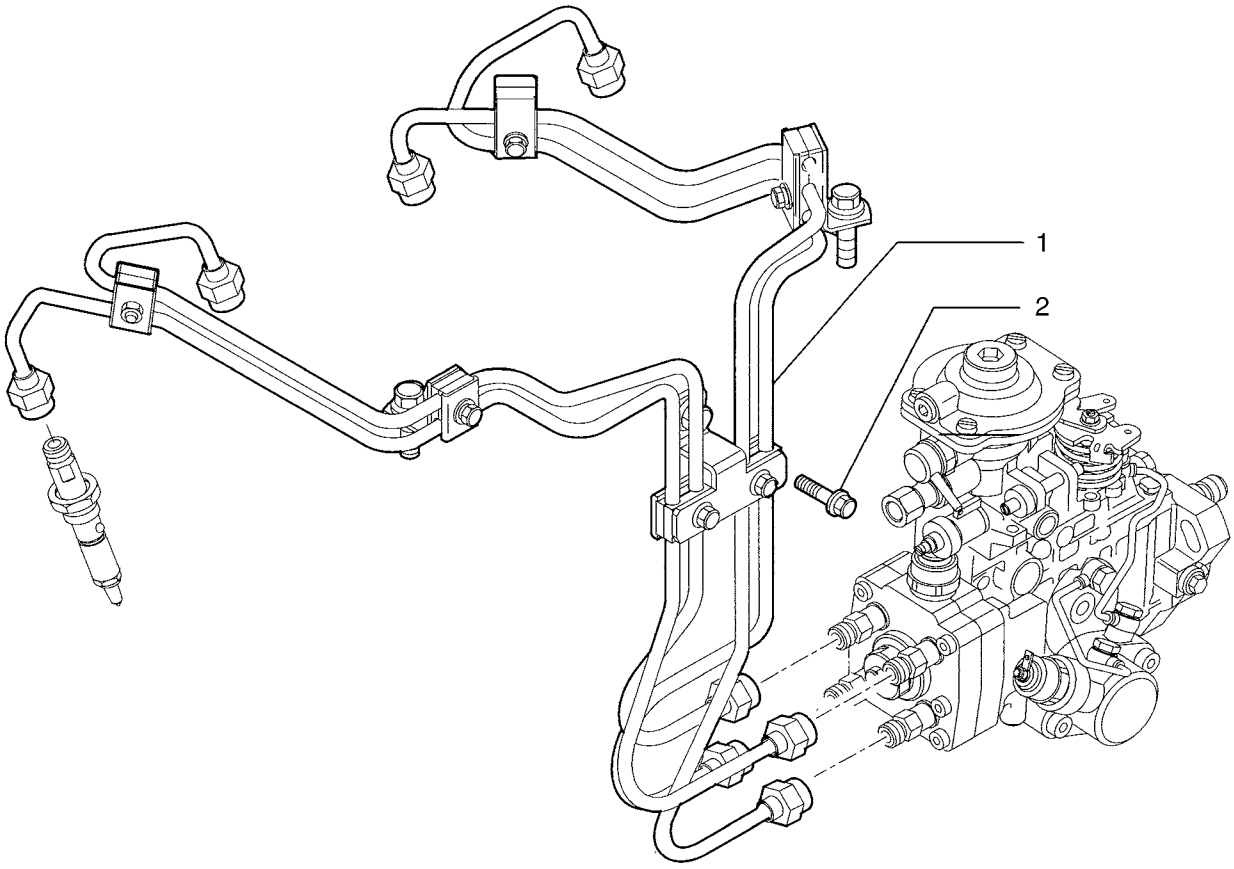

BS04A047

http://www.minnparbackhoeparts.com/

FUEL INJECTION SYSTEM

REF	FN	PART NUMBER	YR/SN	QTY	DESCRIPTION
1		2852075		1	KIT - ASSY; Fuel Injection Tube
2		4899068		1	SCREW Flange, M8 x 16

http://www.minnparbackhoeparts.com/

FUEL FILTER

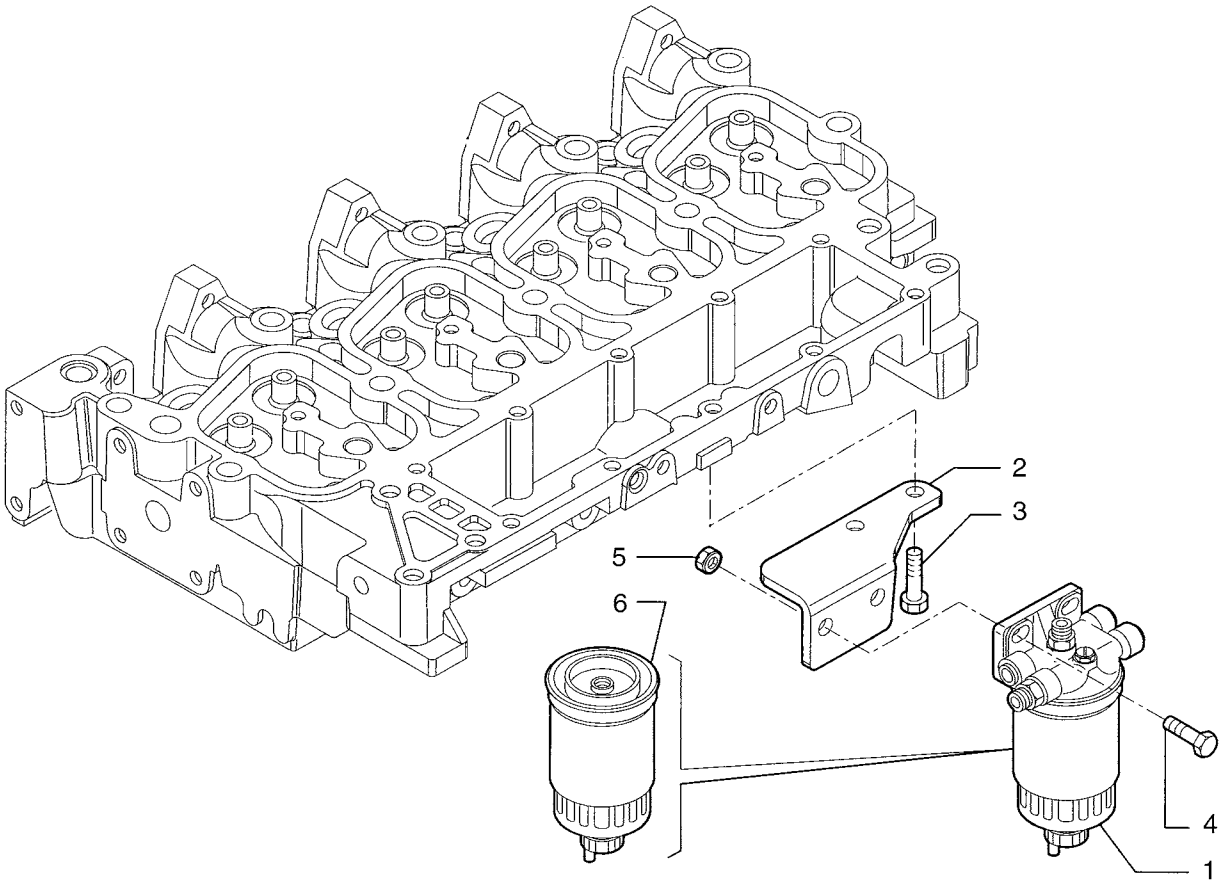

BS04A048

http://www.minnparbackhoeparts.com/

FUEL FILTER

REF	FN	PART NUMBER	YR/SN	QTY	DESCRIPTION
1		2852098		1	FILTER ASSY. - ASSY
2		2852099		1	SUPPORT
3		4899068		2	SCREW Flange, M8 x 16
4		4899093		2	SCREW Flange, M10 x 30
5		4895166		2	NUT Flange, M10
6		87803194		1	FILTER, FUEL

http://www.minnparbackhoeparts.com/

FUEL PUMP

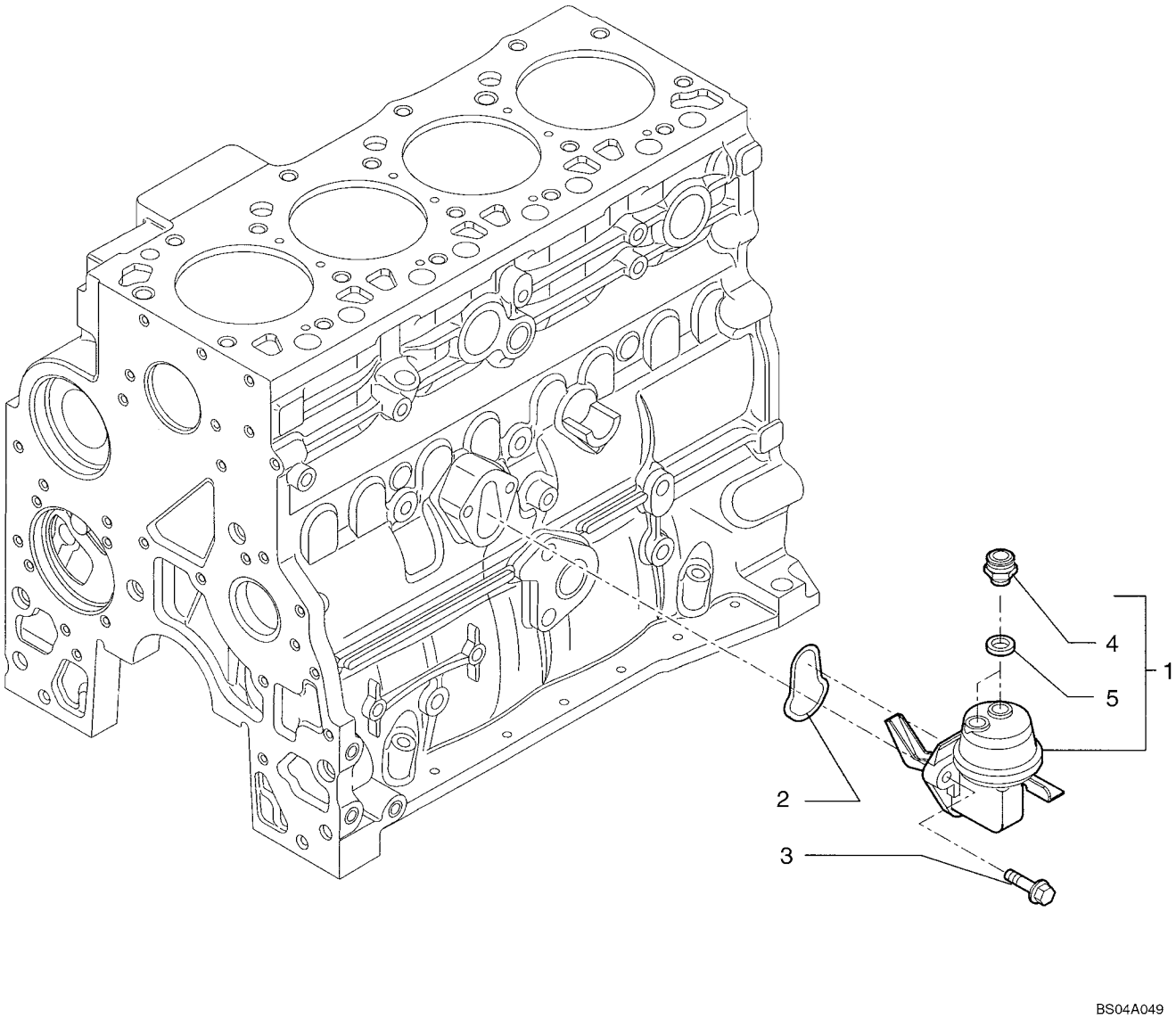

http://www.minnparbackhoeparts.com/

FUEL PUMP

REF	FN	PART NUMBER	YR/SN	QTY	DESCRIPTION
1		2830266		1	PUMP, FUEL - ASSY, Fuel Transfer, Incl. Ref 4, 5
2		2830156		1	GASKET
3		4899031		2	SCREW Flange, M8 x 25
4		4890964		2	CONNECTOR, HYD.
5		4894721		2	GASKET

http://www.minnparbackhoeparts.com/

FUEL INJECTION SYSTEM

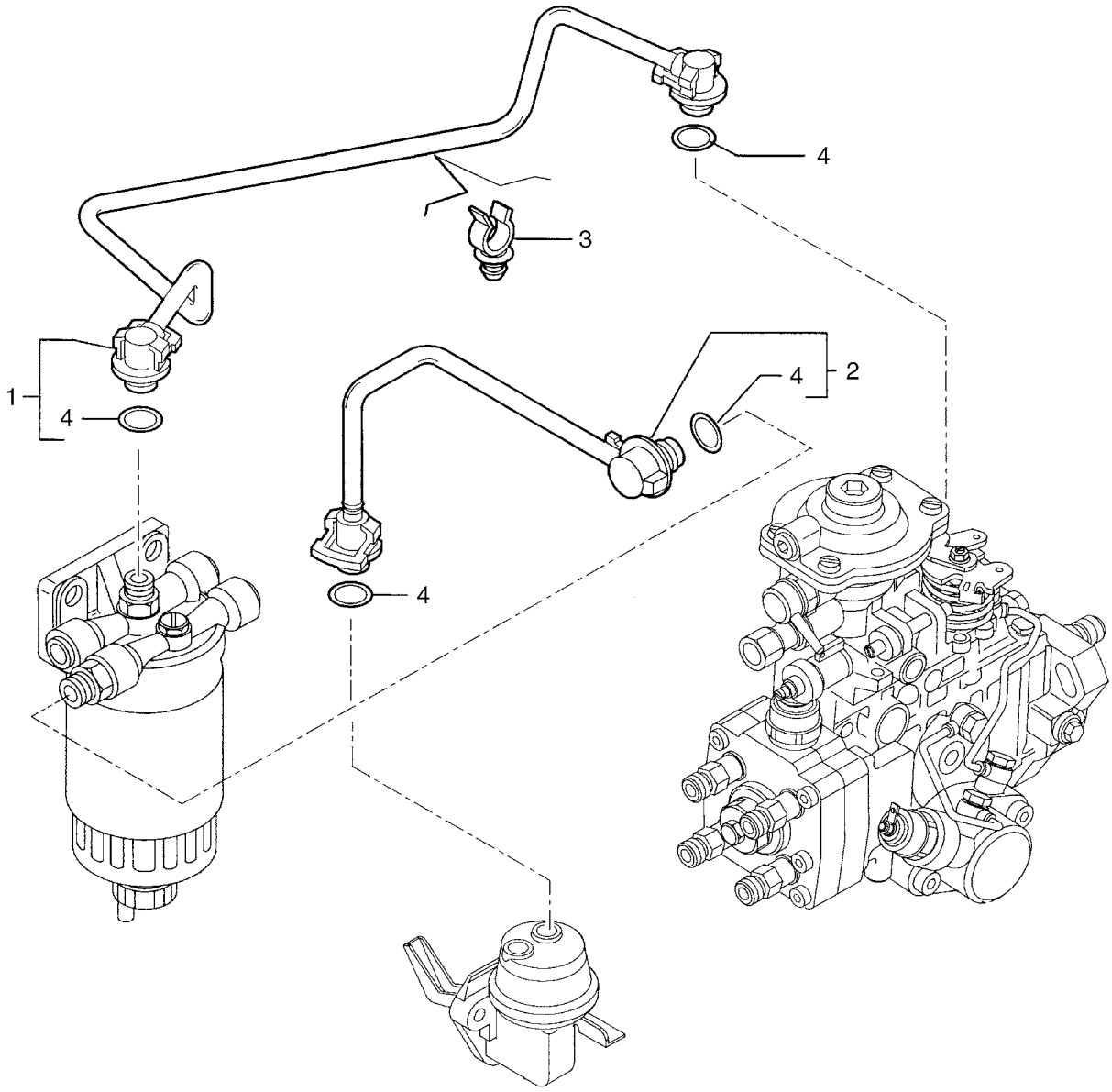

http://www.minnparbackhoeparts.com/

FUEL INJECTION SYSTEM

REF	FN	PART NUMBER	YR/SN	QTY	DESCRIPTION
1		2852105		1	TUBE ASSY. - ASSY; Tube; Incl. Ref 4
2		2852594		1	TUBE, RIGID - ASSY; Incl. Ref 4
3		2852111		1	CLAMP
4		4894095		2	O-RING

http://www.minnparbackhoeparts.com/

FUEL INJECTION SYSTEM

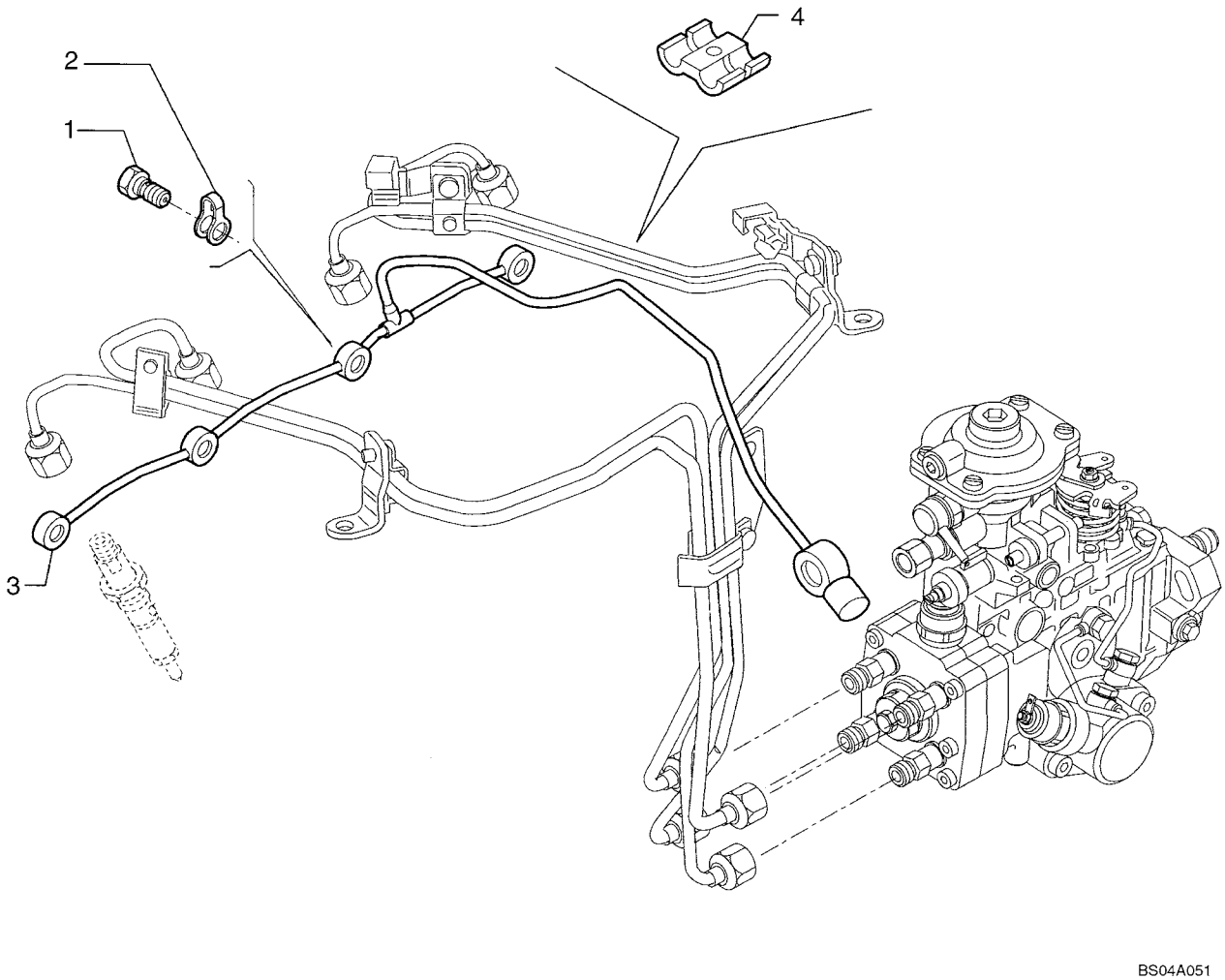

http://www.minnparbackhoeparts.com/

FUEL INJECTION SYSTEM

REF	FN	PART NUMBER	YR/SN	QTY	DESCRIPTION
1		4895244		4	JACK SCREW
2		4895305		4	GASKET
3		2852065		1	TUBE, RIGID
4		2852521		1	CLIP, SPRING

http://www.minnparbackhoeparts.com/

NOTES

http://www.minnparbackhoeparts.com/

SECTION INDEX

04-01	STARTER
04-02	ALTERNATOR
04-03	STARTER MOUNTING - ALTERNATOR MOUNTING
04-04	HARNESS, ENGINE - MOUNTING AND CONNECTIONS
04-05	BATTERY CABLES (MODELS WITHOUT COLD START)
04-06	BATTERY, DUAL - COLD START
04-06A	COLD START GRID HEATER
04-07	HARNESS, FRONT CONSOLE - SWITCHES
04-08	HARNESS, FRONT CONSOLE - MOUNTING
04-09	ELECTRICAL - TRANSMISSION, POWERSHIFT
04-10	HARNESS, SIDE CONSOLE - SWITCHES
04-11	INSTRUMENT PANEL, FRONT - COVERS
04-12	INSTRUMENT PANEL, SIDE - COVERS (RIGHT-HAND SIDE)
04-13	INSTRUMENT CLUSTER
04-14	ELECTRICAL - LAMPS, ROPS CANOPY
04-15	ELECTRICAL - LAMPS, ROPS CAB
04-16	LAMP ASSY (ROPS CANOPY MODELS)
04-17	HORN - ALARM, BACKUP
04-18	BEACON, ROTATING (CAB OR CANOPY MODELS)
04-19	ANTENNA, RADIO - HARNESS, RADIO
04-20	ELECTRICAL - BACKHOE AUXILIARY HYDRAULIC, UNI-DIRECTIONAL
04-21	ELECTRICAL - BACKHOE AUXILIARY HYDRAULIC, WITH PILOT CONTROLS

http://www.minnparbackhoeparts.com/

04-01		p1	08/04

STARTER

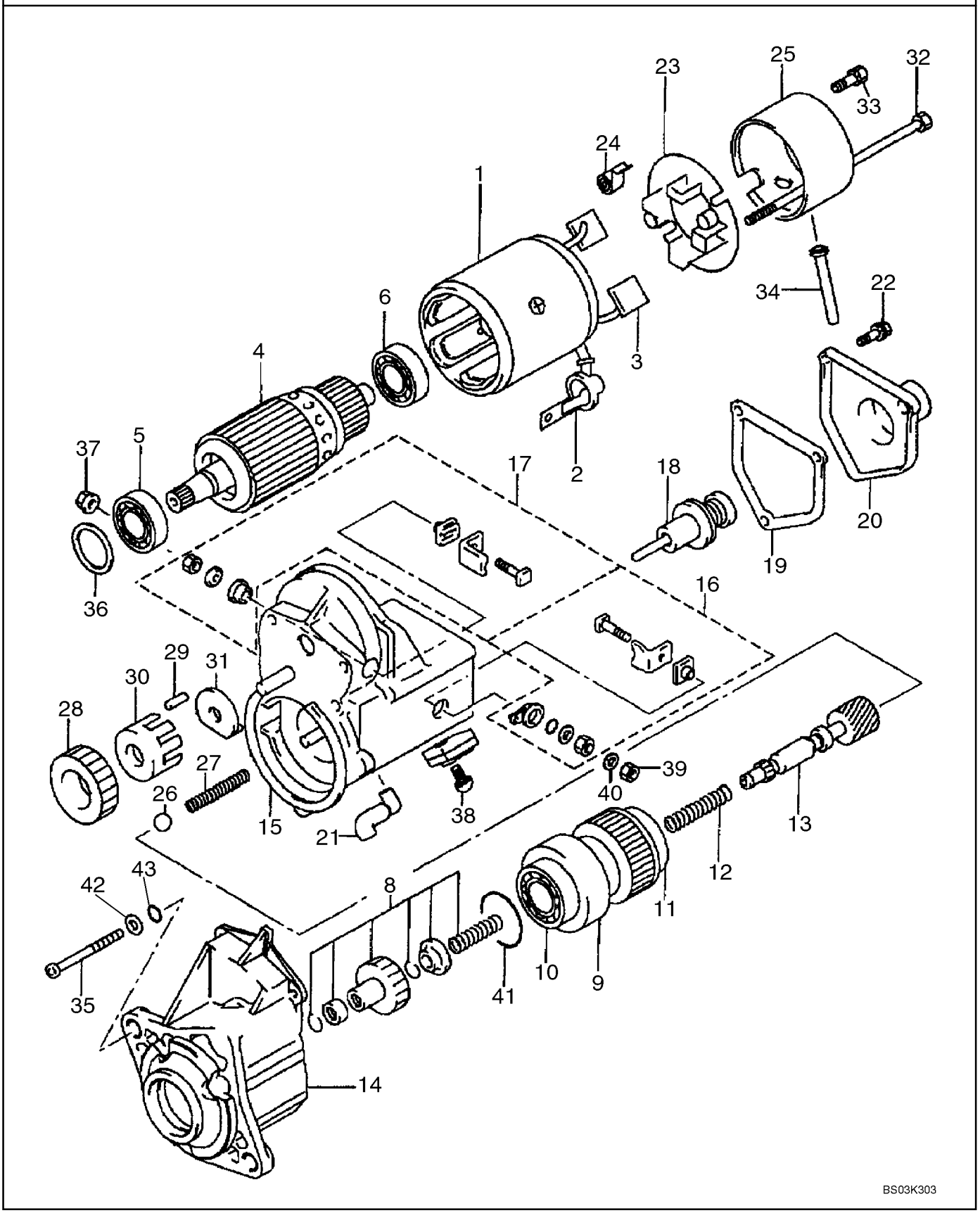

http://www.minnparbackhoeparts.com/

STARTER

REF	FN	PART NUMBER	YR/SN	QTY	DESCRIPTION
		86992395		1	MOTOR, STARTER 12 V, 2.7 kw; Incl. Ref 1 - 43
1		87438992		1	YOKE Housing, Yoke; Incl. Ref 2, 3
2		87438993		1	COVER ASSY Cover/Ring
3		87438925		2	BRUSH Brush Kit
4		87438926		1	ARMATURE Armature; Incl. Ref 5, 6
5		87438927		1	BEARING, BALL Ball Bearing, 35 mm OD
6		87438928		1	BEARING, BALL Ball Bearing, 30 mm OD
		87438994		1	CLUTCH ASSEMBLY Clutch; Incl. Ref 8 - 13
8		87438929		1	KIT, STARTER MTR REPAIR Clutch Pinion Kit
9		87438930		1	KIT, STARTER MTR REPAIR Clutch Assembly; Incl. Ref 10, 11
10		87438931		1	BEARING, BALL Ball Bearing, 47 mm OD
11		87438932		1	BEARING, BALL Ball Bearing, 47 mm OD
12		87438933		1	SPRING, COMPRESSION Compression Spring
13		87438935		1	SHAFT Clutch Shaft
14		87438937		1	HOUSING Housing
15		87438940		1	SWITCH ASSY Magnetic Switch Assembly; Incl. Ref 16 - 22
16		87438941		1	KIT, STARTER MTR REPAIR Kit, Terminal M
17		87438942		1	KIT, STARTER MTR REPAIR Kit, Terminal C
18		87438944		1	PLUNGER ASSY. Plunger
19		87438946		1	GASKET Solenoid Switch Gasket
20		87438948		1	COVER Solenoid Cover
21		87438995		1	BUSHING Bushing, Drain
22		87438950		3	BOLT Bolt With Washer; M5 x 14
23		87438996		1	HOLDER Brush Holder; Incl. Ref 24
24		87438997		4	SPRING Brush Tension Spring
25		87438999		1	FRAME Housing
26		87439000		1	BALL Ball
27		87439001		1	SPRING, COMPRESSION Compression Spring
28		87439002		1	PINION Pinion Gear
29		87439003		5	ROLLER Roller, Clutch
30		87439004		1	RETAINER Retainer
31		87439005		1	RETAINER Snap Retainer
32		87438951		2	BOLT M6 x 182 Bolt
33		87439006		2	SCREW Bolt With Washer; M5 x 9.4
34		87439007		1	BUSHING Bushing, Drain

http://www.minnparbackhoeparts.com/

04-01		p2	08/04

STARTER

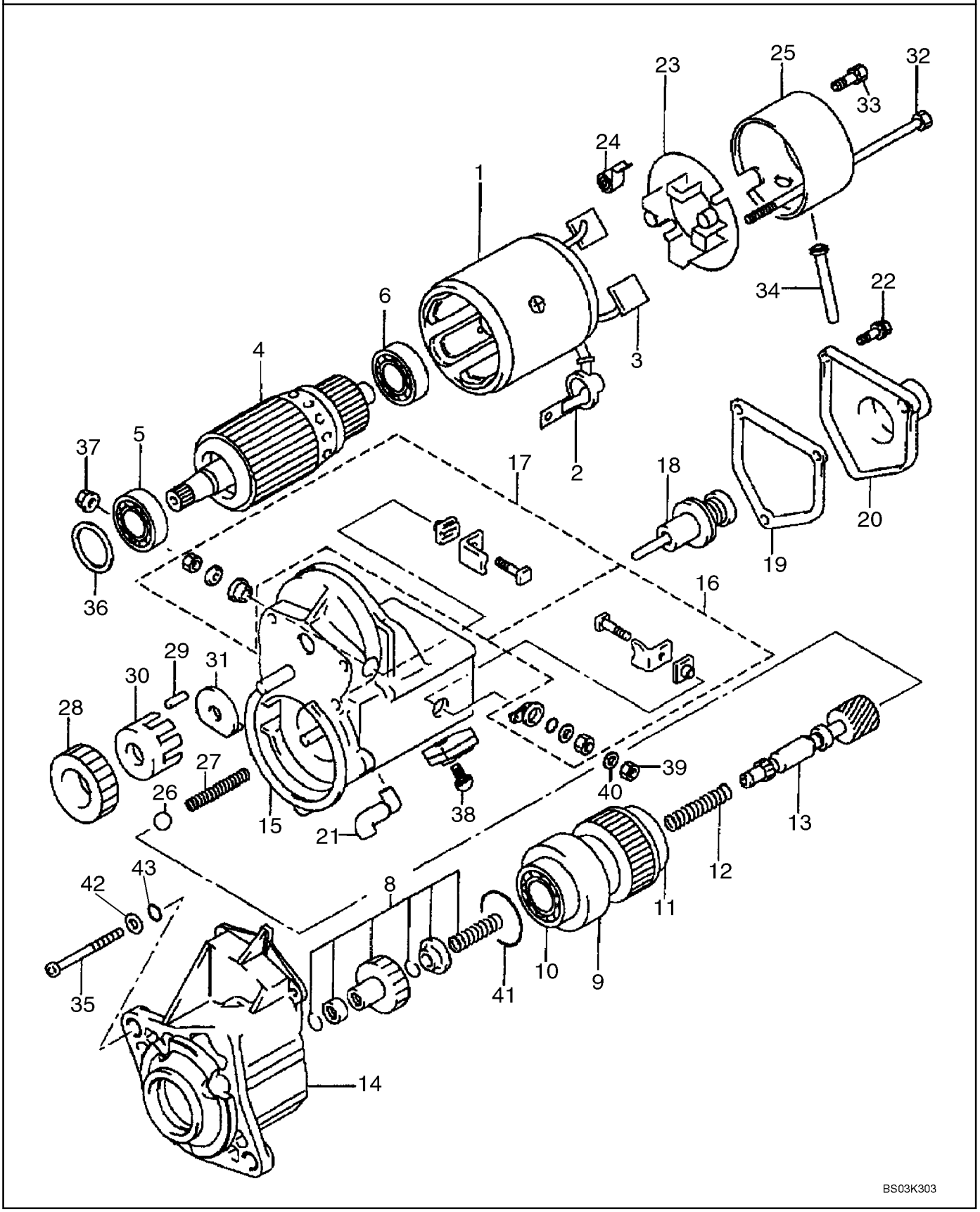

http://www.minnparbackhoeparts.com/

STARTER

REF	FN	PART NUMBER	YR/SN	QTY	DESCRIPTION
35		87439008		3	SCREW Adapter Screw, M6 x 70
36		87438954		1	WASHER Felt Washer
37		87439009		1	NUT M10 Nut
38		87438956		1	BOLT M5 x 10 Bolt
39		100016		1	NUT M10
40		892-11010		1	WASHER, LOCK Lock, M10
41		87439010		1	SEAL Seal
42		87439061		3	WASHER Washer, 9/32 x 1/2 x 3/64
43		87439011		3	O-RING O-Ring, 4.8 ID

http://www.minnparbackhoeparts.com/

ALTERNATOR

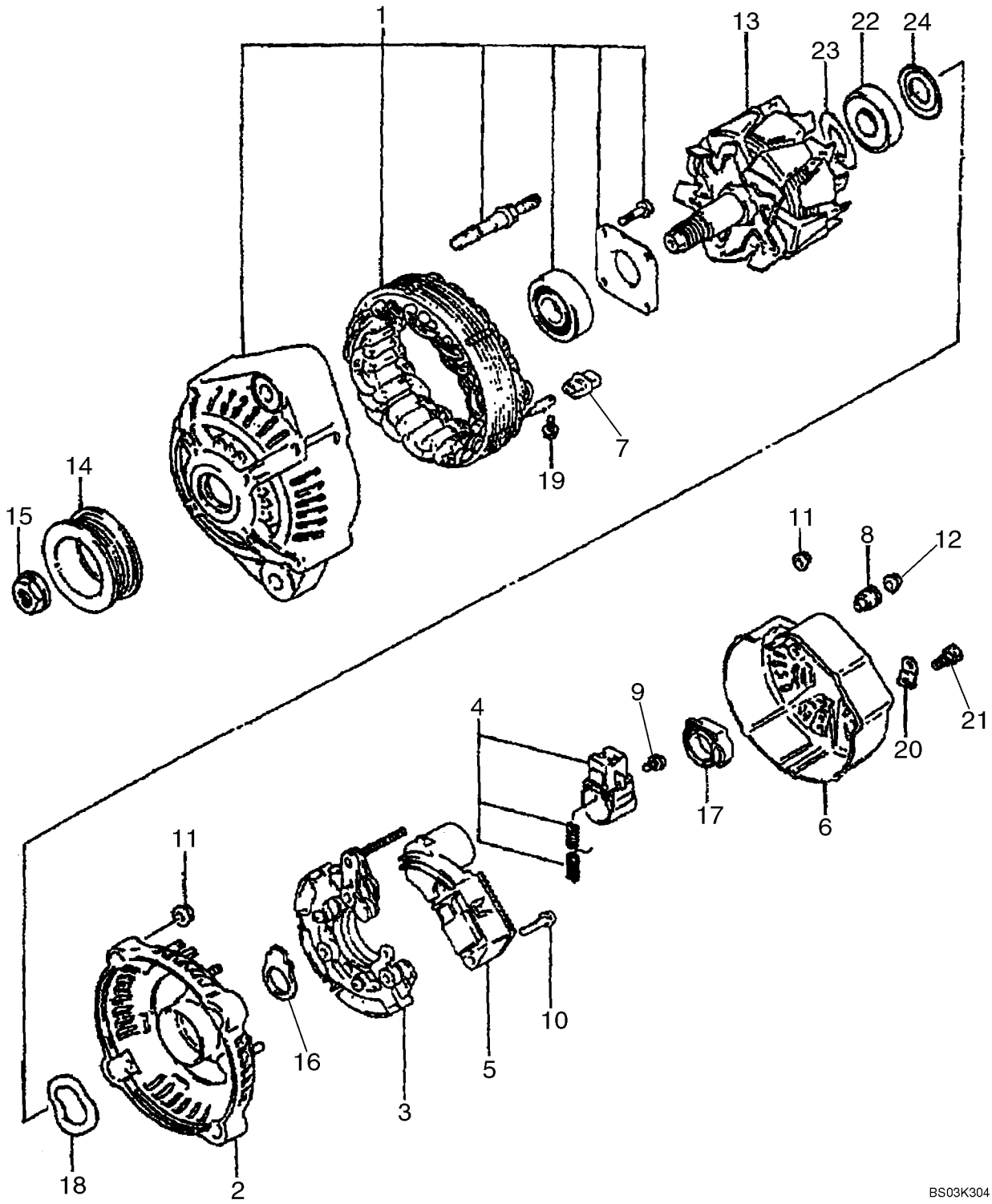

http://www.minnparbackhoeparts.com/

ALTERNATOR

REF	FN	PART NUMBER	YR/SN	QTY	DESCRIPTION
		87422777		1	ALTERNATOR 12V, 90 amp; Incl. Ref 1 - 24
1		87438960		1	FRAME ASSY Housing; Drive End, Includes Stator
2		87438963		1	FRAME Housing
3		87438965		1	HOLDER Rectifier
4		87438967		1	HOLDER Brush and Holder
5		87438969		1	REGULATOR, VOLTAGE Regulator
6		87438970		1	COVER, REAR Cover
7		87438971		4	BUSHING Insulation Bushing
8		87438972		1	BUSHING Insulation Bushing
9		87438973		3	SCREW Screw
10		87438974		2	SCREW Bolt With Washer
11		87438975		7	NUT Nut
12		87438976		1	NUT Nut
13		87438977		1	ROTOR ASSY. Rotor
14		87438978		1	PULLEY Pulley
15		87438979		1	NUT Nut
16		87438980		1	SEALRING Seal
17		87438981		1	SEALRING Seal
18		87438982		1	WASHER Wave Washer
19		87438983		4	SCREW Bolt With Washer
20		87438984		1	PLATE Terminal Plate
21		87438985		1	SCREW Screw
22		87438986		1	BEARING, BALL Ball Bearing
23		87438987		1	COVER Cover, Bearing
24		87438989		1	COVER Cover, Bearing

http://www.minnparbackhoeparts.com/

STARTER MOUNTING - ALTERNATOR MOUNTING

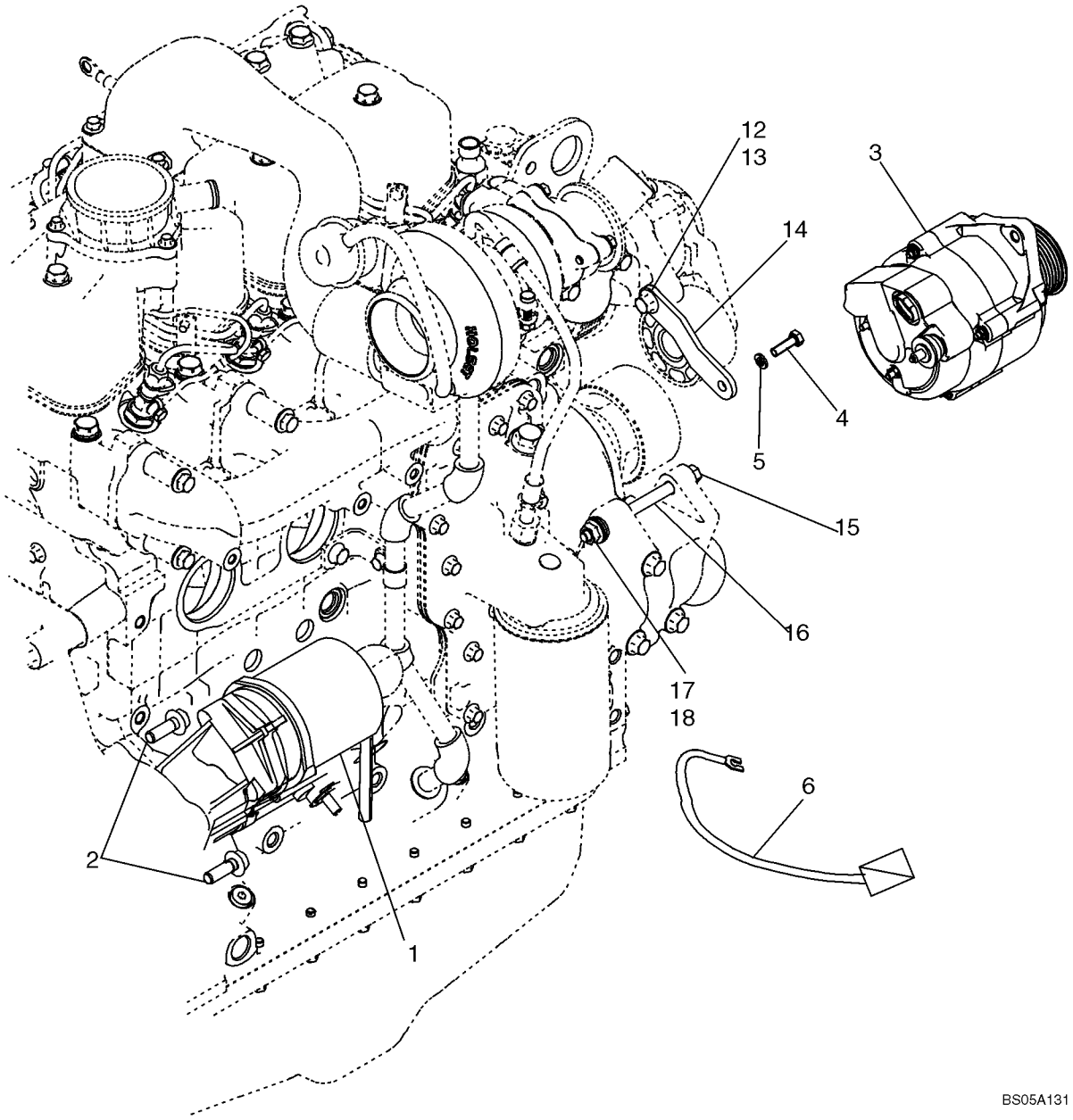

http://www.minnparbackhoeparts.com/

STARTER MOUNTING - ALTERNATOR MOUNTING

REF	FN	PART NUMBER	YR/SN	QTY	DESCRIPTION
1		86992395		1	MOTOR, STARTER See Figure 04-01
2		844-10035		2	SCREW M10 x 35
3		87422777		1	ALTERNATOR See Figure 04-02; Mounting Hardware Included With 86990710 Engine Assembly; See Below For Alternator Mounting Used With 87437203 Engine
4		614-8025		1	BOLT M8 x 25
5		892-11008		1	WASHER Lock, M8
6		87433401		1	CABLE, ELECTRIC Starter Solenoid Jumper Cable
		REF			INSTRUCTION ALTERNATOR MOUNTING FOR 87437203 ENGINE
10		614-8025		1	BOLT M8 x 25
11		892-11008		1	WASHER Lock, M8
12		614-10020		1	SCREW M10 x 20
13		896-11010		1	WASHER Flat, M10
14		87452258		1	STRAP, SECURING
15		827-10130		1	SCREW M10 x 130
16		87452257		1	SPACER
17		896-11010		2	WASHER Flat, M10
18		832-10410		1	NUT Lock, M10

http://www.minnparbackhoeparts.com/

04-04		p1	05/05

HARNESS, ENGINE - MOUNTING AND CONNECTIONS

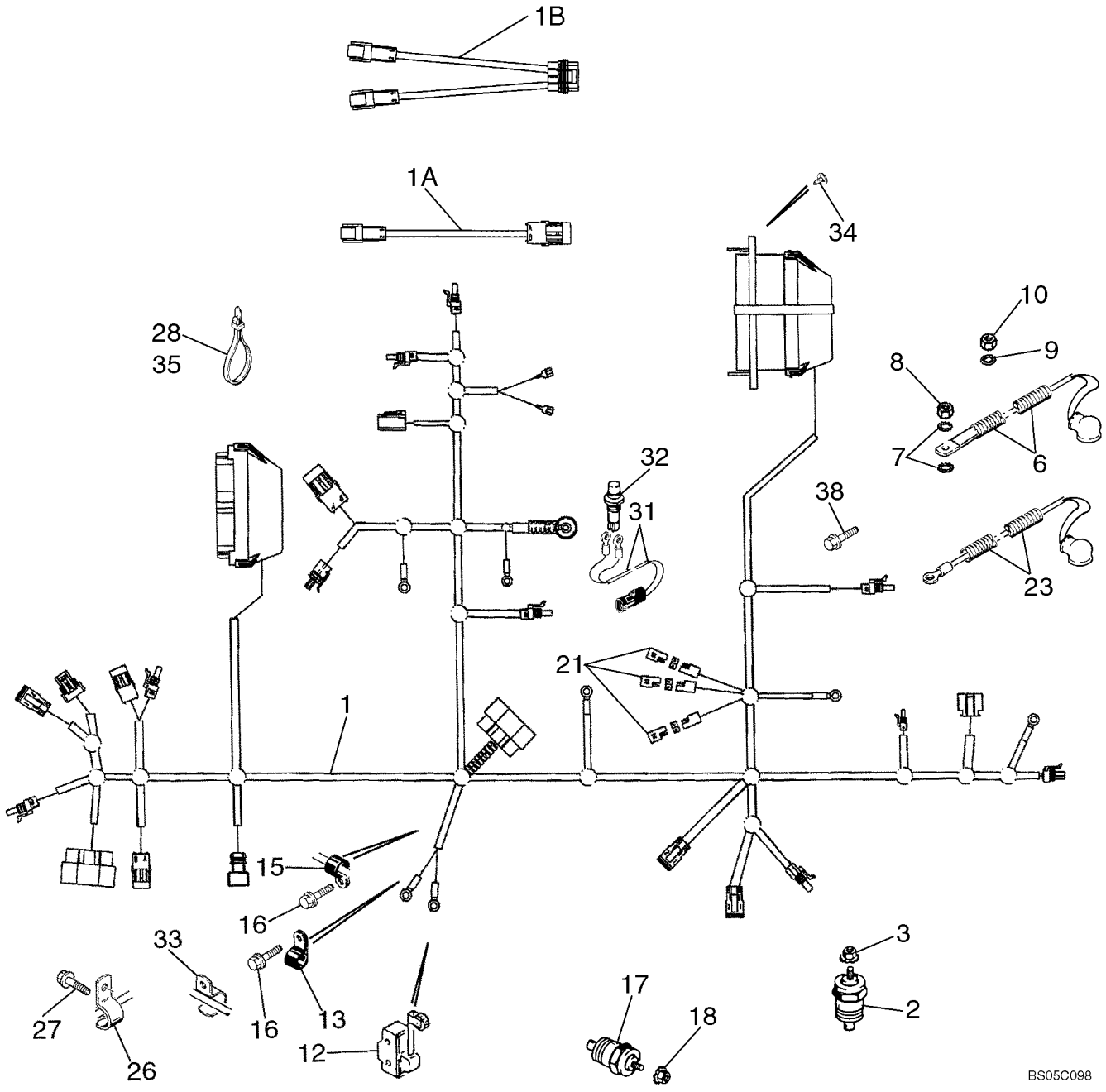

http://www.minnparbackhoeparts.com/

HARNESS, ENGINE - MOUNTING AND CONNECTIONS

REF	FN	PART NUMBER	YR/SN	QTY	DESCRIPTION
1		87433543		1	HARNESS, WIRE Engine, Main Chassis; Packard Connectors At Trans. Control Valve & 4WD Solenoids; No Longer Available, Order 87450932 Service Kit; 87450932 Service Kit Is No Longer Available, Order 87456949 Harness Service Kit
		87450932		1	HARNESS, WIRE Service Kit, Includes 87450481 Main Chassis Harness and 87450931Transmission Jumper Harness; No Longer Available, Order 87456944 Chassis Harness & 87450931 4WD Transmission Jumper Harness
1		87450481		1	HARNESS, WIRE Main Chassis Harness; Packard Connectors At Trans. Control Valve Solenoid & Deutsch Connector At 4WD Solenoid; No Longer Available, Order 87456949 Chassis Harness Service Kit
1		87456944		1	HARNESS, WIRE Main Chassis; Deutsch Connectors At Fwd/Rev & 4WD Solenoids; For Service Order 87456949 Chassis Harness Service Kit; Not Illustrated
		87456949		1	KIT, SERVICE Main Chassis; Includes 87456944 Chassis Harness, 87450931 4WD Jumper Harness, 87456948 Fwd/Rev Jumper Harness
1A		87450931		1	HARNESS, WIRE 4WD Transmission Jumper Harness; 1 Packard / 1 Deutsch Connector; Attaches to 4WD Connection on Main Chassis Harness
1B		87456948		1	HARNESS, WIRE Fwd/Rev Transmission Jumper Harness; 2 Deutsch / 1 Packard Connector; Attaches to Transmission Control Valve Solenoid Connection On Main Chassis Harness
2		A166057		1	PROBE Engine Water Coolant Temperature
3		193-1000		1	NUT No. 10 NF; With External Tooth Lock Washer
6		87423926		1	HARNESS, WIRE Alternator Cable
7		493-21033		2	WASHER, LOCK 5/16
8		829-1408		1	NUT M8; 10
9		493-21020		1	WASHER, LOCK 3/16
10		824-1405		1	NUT M5

http://www.minnparbackhoeparts.com/

04-04		p2	05/05

HARNESS, ENGINE - MOUNTING AND CONNECTIONS

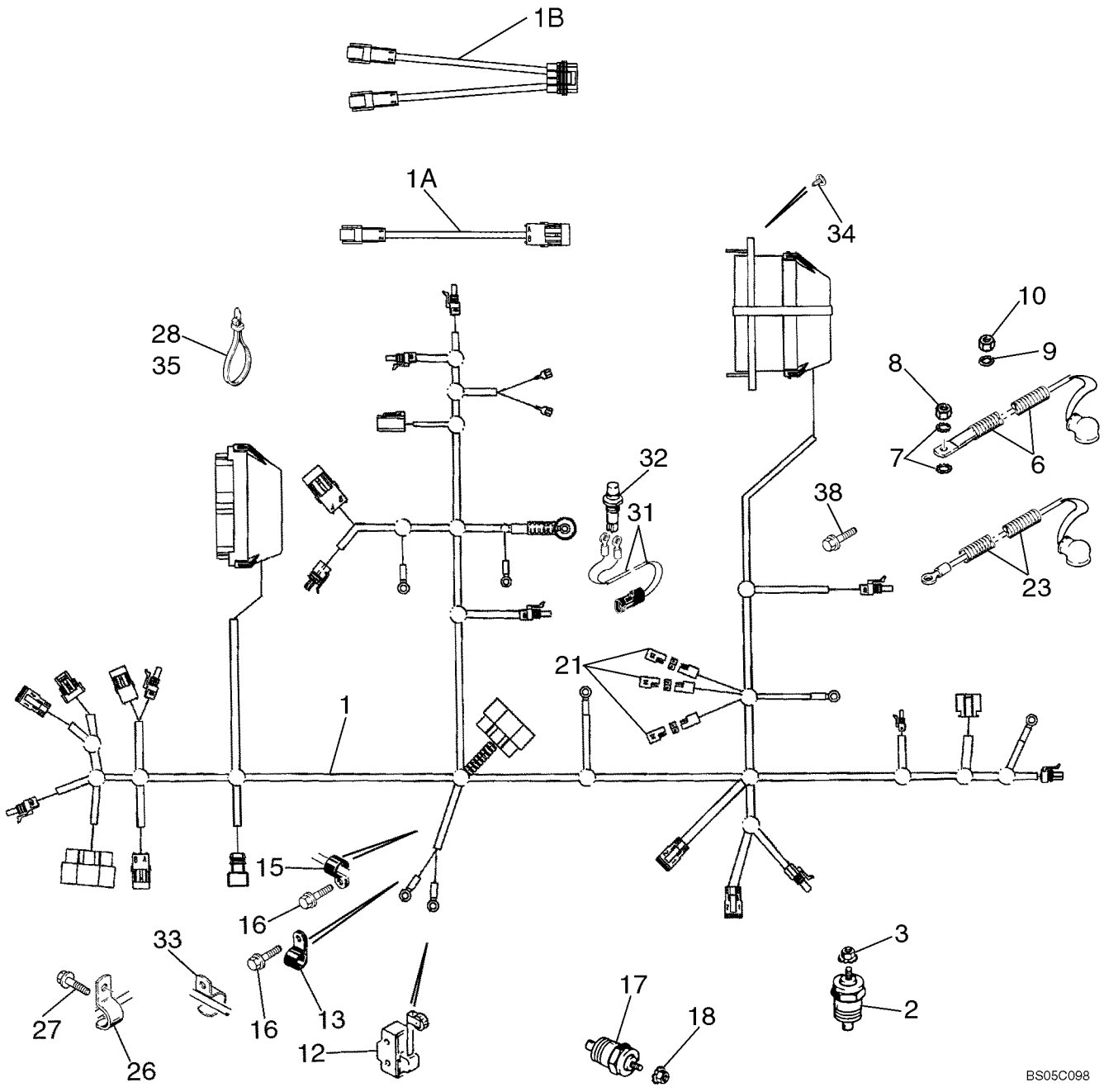

http://www.minnparbackhoeparts.com/

HARNESS, ENGINE - MOUNTING AND CONNECTIONS

REF	FN	PART NUMBER	YR/SN	QTY	DESCRIPTION
12		D137363		1	SWITCH Return To Dig; For Mounting; See Figure 09-04
13		515-23127		1	CLAMP 1/2 ID
15		515-23127		1	CLAMP 1/2 ID
16		844-10020		2	SCREW M10 x 20
17		A166057		1	PROBE Transmission Temperature
18		193-1000		1	NUT No. 10 NF; With External Tooth Lock Washer
21		L71879		3	DIODE-ELEMENT
23		87419229		1	HARNESS, WIRE Power Wire
26		515-23254		1	CLAMP P; Replaces 87032428 J-Clip Used On Some Models; For Brake Cable Bracket, See Figure 07-06
27		814-10060		1	BOLT M10 x 60
28		L18337		29	STRAP 15 in
31		123809A2		1	HARNESS Clutch Cutout; Transmission Gear Shift Lever; Incl. Ref 31A, 31B
31A		246526A1		1	CONNECTOR Not Illustrated
31B		NSS		2	NOT SERVICED SEPARATELY Eye; Not Illustrated
32		123097A1		1	SWITCH Push Button; Clutch Cutout; Transmission Gear Shift Lever; For Lever and Knob, See Figure 06-12; If Used
32		87312712		1	SWITCH Push Button; Clutch Cutout; Transmission Gear Shift Lever; For Lever and Knob, See Figure 06-12; Otto 21649 Marking; If Used
33		D147383		1	CLIP Use Existing Hardware
34		781-24613		4	SCREW M6 x 13
35		305342A1		1	STRAP 450 mm (18 in); Air Filter Restriction Branch to Air Filter Inlet Tube
38		128312A1		1	BOLT M10 x 15; Ground to Firewall

http://www.minnparbackhoeparts.com/

BATTERY CABLES (MODELS WITHOUT COLD START)

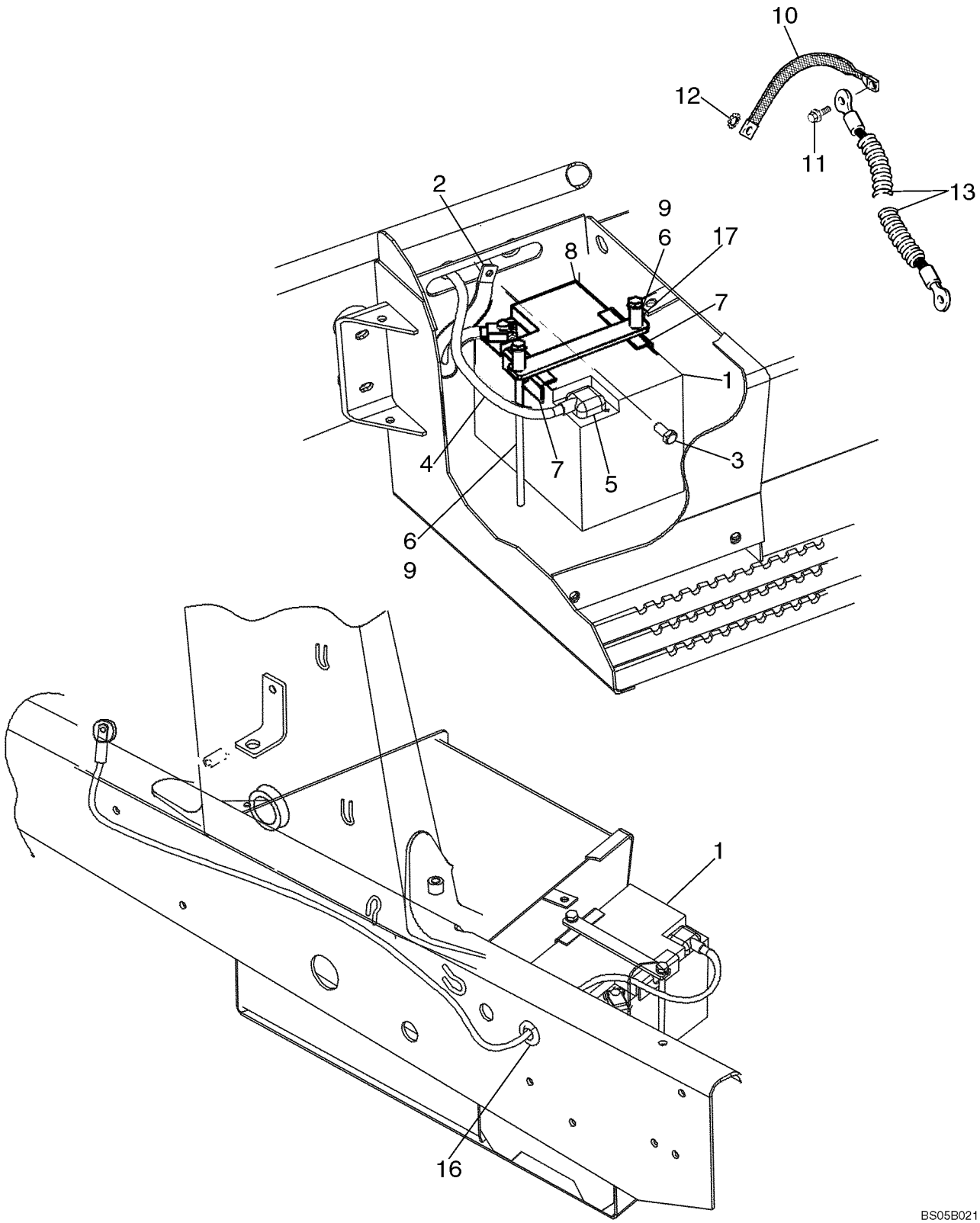

http://www.minnparbackhoeparts.com/

BATTERY CABLES (MODELS WITHOUT COLD START)

REF	FN	PART NUMBER	YR/SN	QTY	DESCRIPTION
1		87403835		1	BATTERY, WET 12V; Models Without Cold Start; Used In Production, For Service Order B4960W Through Ship Direct
2		87419259		1	CABLE, BATTERY (NEG) 350 mm; Negative Ground
3		844-10020		1	SCREW M10 x 20; Negative Battery Cable Ground; Bolt To Chassis
4		87419257		1	CABLE, ELECTRIC 1550 mm; Positive; Incl. Ref 5; Battery to Starter
5		383619R1		1	COVER
6		814-10245		2	BOLT M10 x 245 mm
7		D125079		2	BRACKET Battery Hold-Down
8		87415781		1	BRACKET Plate
9		495-11041		2	WASHER 13/32 x 13/16 x 1/16
10		87407206		2	CABLE, GROUND 330 mm; Ground Strap to Chassis
11		844-10020		1	SCREW M10 x 20
12		493-11039		1	WASHER 3/8; Internal External Tooth Lock Washer
13		381261A1		1	WIRE Ground; Cab to Chassis
16		87423677		2	GROMMET Battery Cable Grommet; Mounts In Chassis Side Channel
17		130245A1		2	SPACER 10 x 30 mm

http://www.minnparbackhoeparts.com/

04-06		p1	03/04

BATTERY, DUAL - COLD START

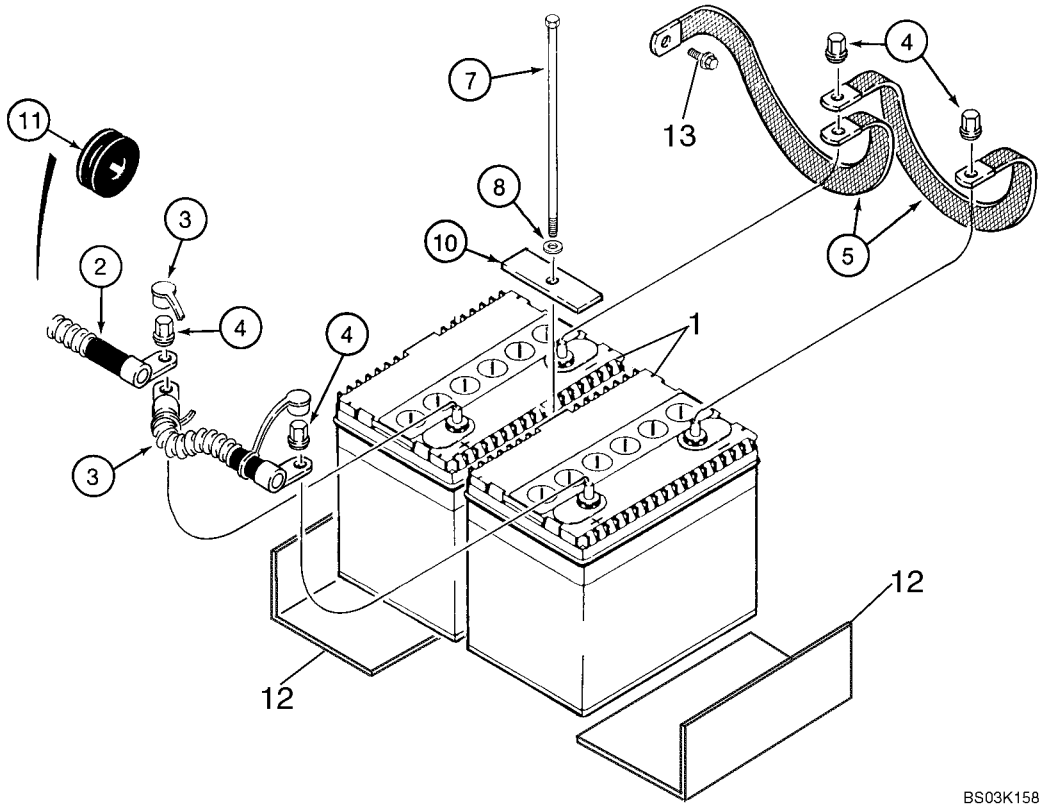

http://www.minnparbackhoeparts.com/

BATTERY, DUAL - COLD START

REF	FN	PART NUMBER	YR/SN	QTY	DESCRIPTION
		87430867		1	BATTERY, ELECTRONIC SYSTE Dual Battery Kit; Incl. Ref 1 - 13 and Instructions
1		BMF28S		2	BATTERY, DRY 12V
2		87423675		1	CABLE, ELECTRIC 1460 mm, Positive Cable; Chassis
3		184497A1		1	CABLE 227 mm, Positive Jumper
4		D126409		4	NUT 3/8
5		87423676		2	CABLE, BATTERY (NEG) 324 mm Flat Ground Strap
7		814-10245		1	BOLT M10 x 245 mm
8		495-11041		1	WASHER 13/32 x 13/16 x 1/16
10		250854A1		1	STRAP
11		87423677		2	GROMMET Battery Cable Grommet; Mounts In Chassis Side Channel
12		408535A1		2	PLATE 255 mm (10-1/32 in); Battery Support
13		844-10020		1	SCREW Flange, M10 x 20

http://www.minnparbackhoeparts.com/

04-06A		p1	04/05

COLD START GRID HEATER

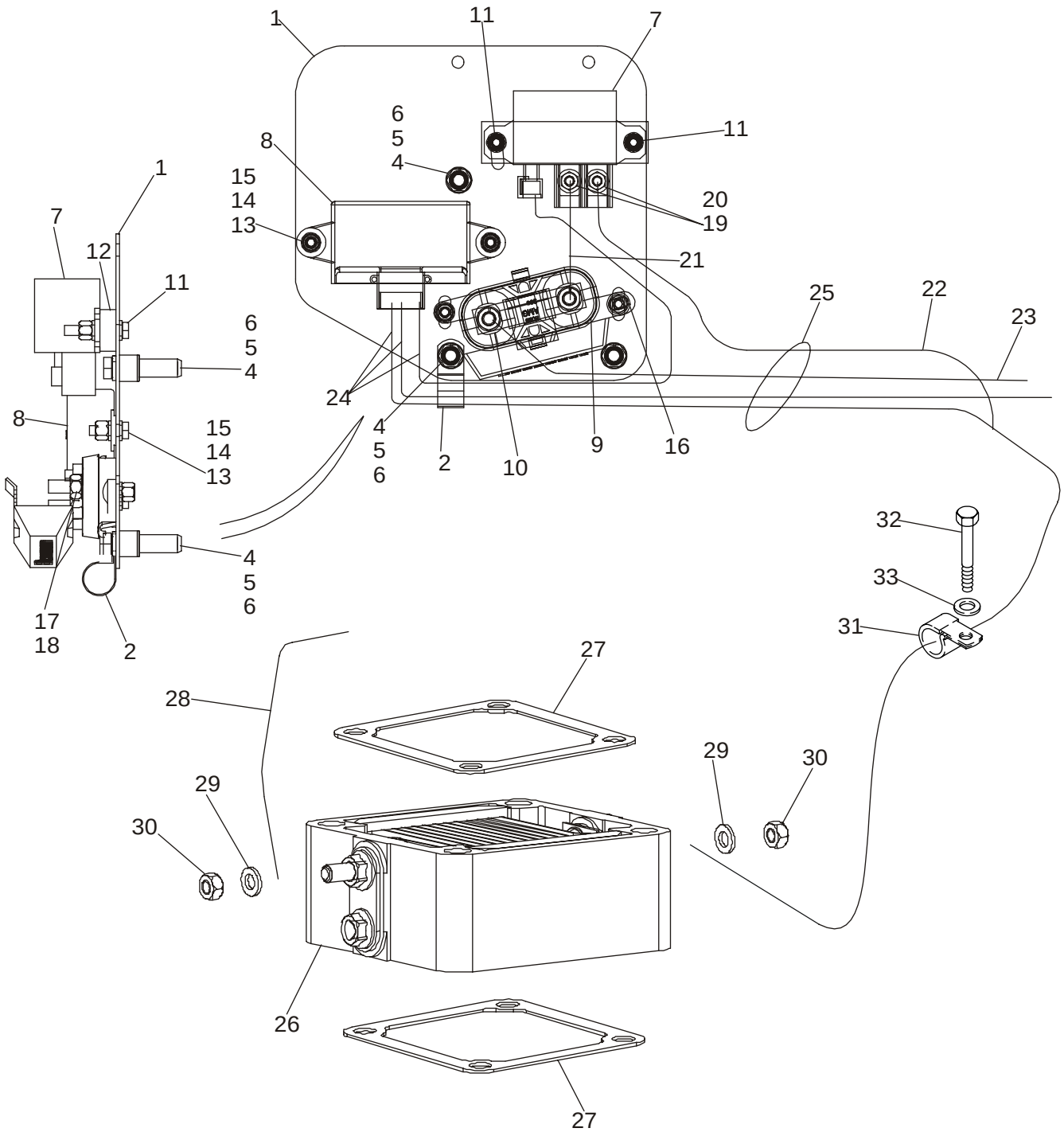

http://www.minnparbackhoeparts.com/

COLD START GRID HEATER

REF	FN	PART NUMBER	YR/SN	QTY	DESCRIPTION
		87430868		1	KIT, SERVICE Grid Heater Kit; Incl. Ref 1 - 33 and Instructions; Also Includes 8603092 Warning Decal, Explosion Hazard, Do Not Use Ether
1		87410603		1	PLATE Cold Start Plate
2		515-22190		1	CLAMP
3		614-8040		3	BOLT Hex, M8 x 40, 8.8, Full Thd
4		407962A1		3	SPACER
5		238-5011		3	O-RING -011, 70 Duro, .301" ID x .070" Thk
6		87417383		3	INSERT, THREADED M8 x 1-1/4
7		86619908		1	RELAY Cold Start Relay
8		47132002		1	ELECTRONIC UNIT, CONTROL Electronic Unit Controller, Grid Heater; Replaces 87409046
9		440038A1		1	JUNCTION Fuse Block
10		87410602		1	FUSE 300 amp Fuse
11		614-6035		2	BOLT M6 x 35
12		87414237		1	PLATE 10 mm Thick Spacer Bar
13		614-6020		3	BOLT M6 x 20
14		895-11006		11	WASHER Flat, 6,6 x 12 x 1,6 mm
15		832-10406		6	NUT M6
16		811-6016		1	SCREW Round Head, M6 x 16
17		892-11008		5	WASHER Lock, M8
18		829-1408		2	NUT M8
19		322357		2	WASHER, LOCK Belleville, M6
20		829-1406		2	NUT M6
21		87410265		1	CABLE, GROUND 90 mm Jumper Wire; Fuse to Relay
22		87419616		1	CABLE ASSY. 500 mm Wire; Relay to Grid Heater
23		87419615		1	CABLE ASSY. 1250 mm Wire; Starter to Fuse Block
24		87433544		1	HARNESS, WIRE Controller Harness, Cold Start Control; Attaches to Engine Harness
25		L18337		1	STRAP Replaces D150521 292 mm Long Nylon Tie Strap Used On Some Models
26		82017872		1	HEATER Grid
27		86014151		2	GASKET
28		87413162		1	CABLE, GROUND 150 mm Ground Wire
29		895-11006		2	WASHER Flat, 6,6 x 12 x 1,6 mm
30		829-1406		2	NUT M6

http://www.minnparbackhoeparts.com/

04-06A		p2	04/05

COLD START GRID HEATER

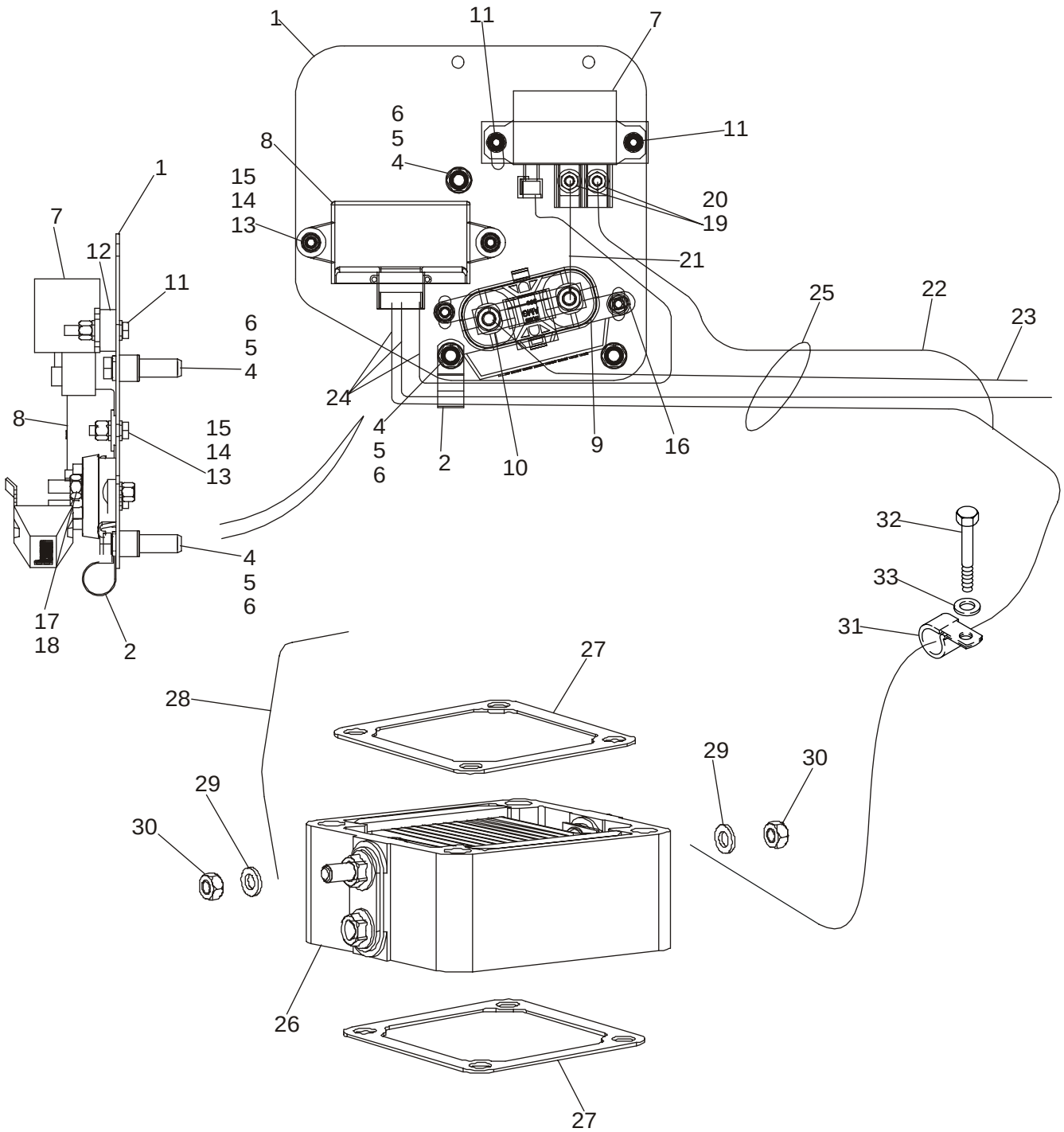

http://www.minnparbackhoeparts.com/

COLD START GRID HEATER

REF	FN	PART NUMBER	YR/SN	QTY	DESCRIPTION
31		515-25190		1	CLAMP
32		614-12025		1	BOLT M12 x 25
33		896-11012		1	WASHER

http://www.minnparbackhoeparts.com/

HARNESS, FRONT CONSOLE - SWITCHES

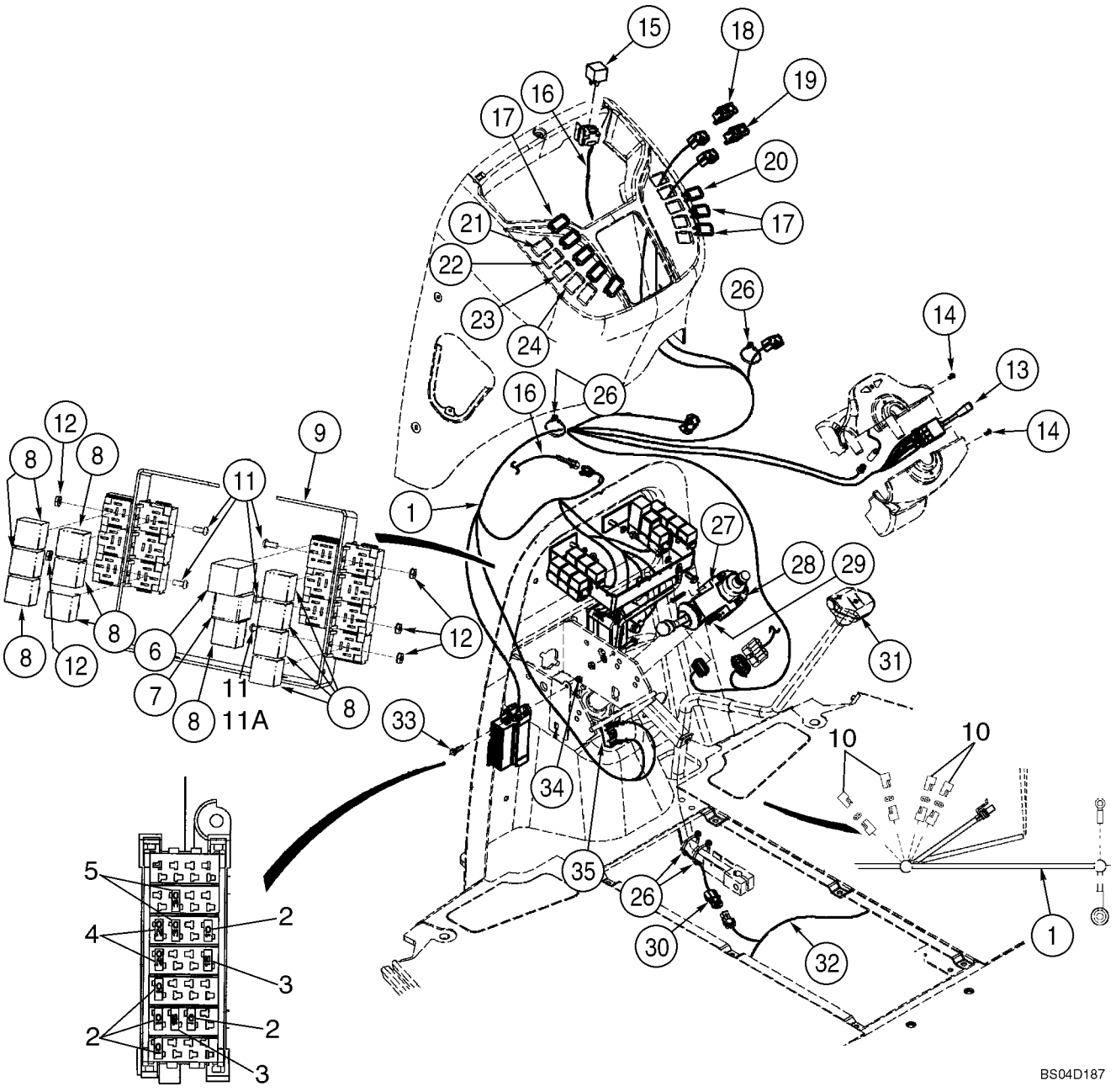

http://www.minnparbackhoeparts.com/

HARNESS, FRONT CONSOLE - SWITCHES

REF	FN	PART NUMBER	YR/SN	QTY	DESCRIPTION
1		87418541		1	HARNESS, WIRE Front Console Harness, Incl. Ref 13
2		121412A1		5-6	FUSE 10 amp; Mini, Red
3		121413A1		2-3	FUSE 15 amp; Mini, Blue
4		121414A1		2	FUSE 20 amp; Mini, Yellow
5		121416A1		2	FUSE 30 amp; Mini, Green
6		D147166		1	UNIT, FLASHER Relay, Flasher, Hazard; Turn Signal
7		347706A3		1	RELAY Sealed Time Delay, Shuttle Interlock Timing Relay, Forward Reverse Control
8		87436836		11	RELAY 40 amp, 12V
9		361900A1		1	BRACKET Relay Mounting
10		L71879		4	DIODE-ELEMENT
11		87301687		6-7	SCREW Hex Washer Head, No. 10 NF x 1/2; Replaces 490-1108 Washerless Screw Used On Some Models
11A		490-1106		1	SCREW No 10 x 3/8; No Longer Used, Order 87301687 1/2 inch Long Screw, Ref 11
12		231-24409		7	NUT, LOCK No. 10 NF; Replaces 193-1000 Nut With External Tooth Lock Washer Used On Some Models
13		389487A1		1	SWITCH, DIP Turn Signal/Driving Lamp High/Low Beam
14		404816A1		2	SCREW M4 x 12
15		87436836		1	RELAY 40 amp, 12V; Air Conditioning; Attaches To Front Console Options Harness
16		87433546		1	HARNESS, WIRE Front Console Options; Includes (1) L71879 Diode
		L71879		1	DIODE-ELEMENT
		490-1108		1	SCREW No. 10 NF x 1/2; Mounts Relay Recepticle
		193-1000		1	NUT No. 10 NF; Mounts Relay Recepticle
17		126844A1		2-8	PLUG Accessory; If Used
18		386849A1		1	SWITCH Front Work Lamps
19		386850A1		1	SWITCH Hazard Lamps
20		386851A1		1	SWITCH Rotating Beacon; If Used
21		126844A1		1	PLUG If Used
22		386785A1		1	SWITCH Front Wiper; If Used

http://www.minnparbackhoeparts.com/

HARNESS, FRONT CONSOLE - SWITCHES

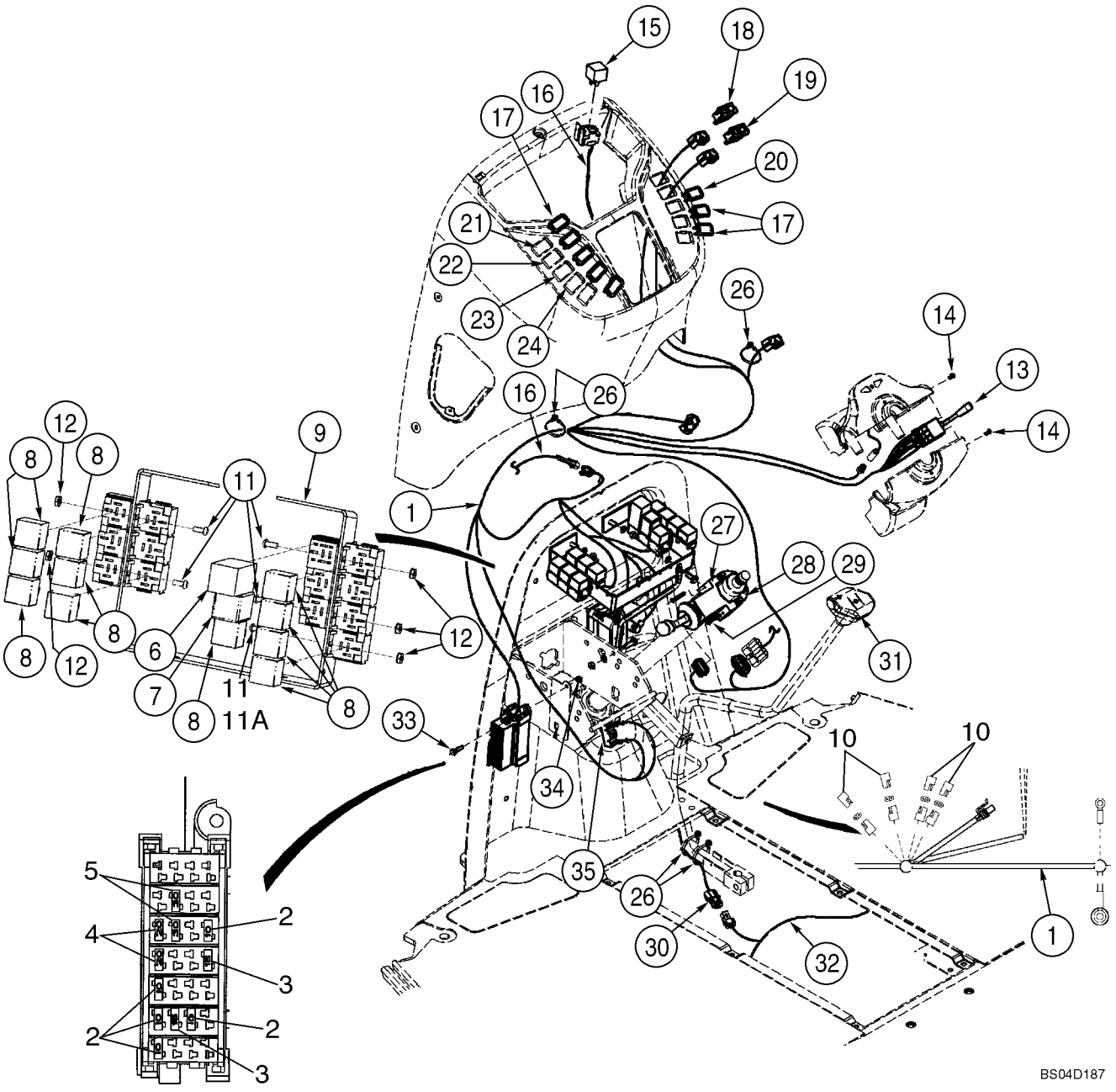

http://www.minnparbackhoeparts.com/

HARNESS, FRONT CONSOLE - SWITCHES

REF	FN	PART NUMBER	YR/SN	QTY	DESCRIPTION
23		386787A1		1	SWITCH Front Windshield Washer; If Used
24		398675A2		1	SWITCH Loader Tool Quick Coupler; If Used
26		L18337		4	STRAP 15 in
27		278328A1		1	SWITCH Shuttle Shift; Transmission Forward/Neutral/Reverse Switch; Models Without Powershift Transmission
27		231520A2		1	SWITCH Shuttle Shift; Transmission Forward/Neutral/Reverse Switch; Models With Powershift Transmission
28		366889A2		1	HALF COLLAR Shuttle Lever; Includes Threaded Insert
29		397990A1		2	SCREW M5 x 35
30		123809A2		1	HARNESS Clutch Cutout; Transmission Gear Shift Lever; For Lever, See Figure 06-12
31		123097A1		1	SWITCH Clutch Cutout; For Lever and Knob, See Figure 06-12; If Used
31		87312712		1	SWITCH Clutch Cutout; For Lever and Knob, See Figure 06-12; Otto 21649 Marking; If Used
32		87433543		1	HARNESS, WIRE Engine, Main Chassis; Packard Connectors At Trans. Control Valve & 4WD Solenoids; No Longer Available, Order 87450932 Service Kit; 87450932 Service Kit Is No Longer Available, Order 87456949 Harness Service Kit
		87450932		1	HARNESS, WIRE Service Kit, Includes 87450481 Main Chassis Harness and 87450931Transmission Jumper Harness; No Longer Available, Order 87456944 Chassis Harness & 87450931 4WD Transmission Jumper Harness
32		87450481		1	HARNESS, WIRE Main Chassis Harness; Packard Connectors At Trans. Control Valve Solenoid & Deutsch Connector At 4WD Solenoid; No Longer Available, Order 87456949 Chassis Harness Service Kit
32		87456944		1	HARNESS, WIRE Main Chassis; Deutsch Connectors At Fwd/Rev & 4WD Solenoids; For Service Order 87456949 Chassis Harness Service Kit; Not Illustrated

http://www.minnparbackhoeparts.com/

HARNESS, FRONT CONSOLE - SWITCHES

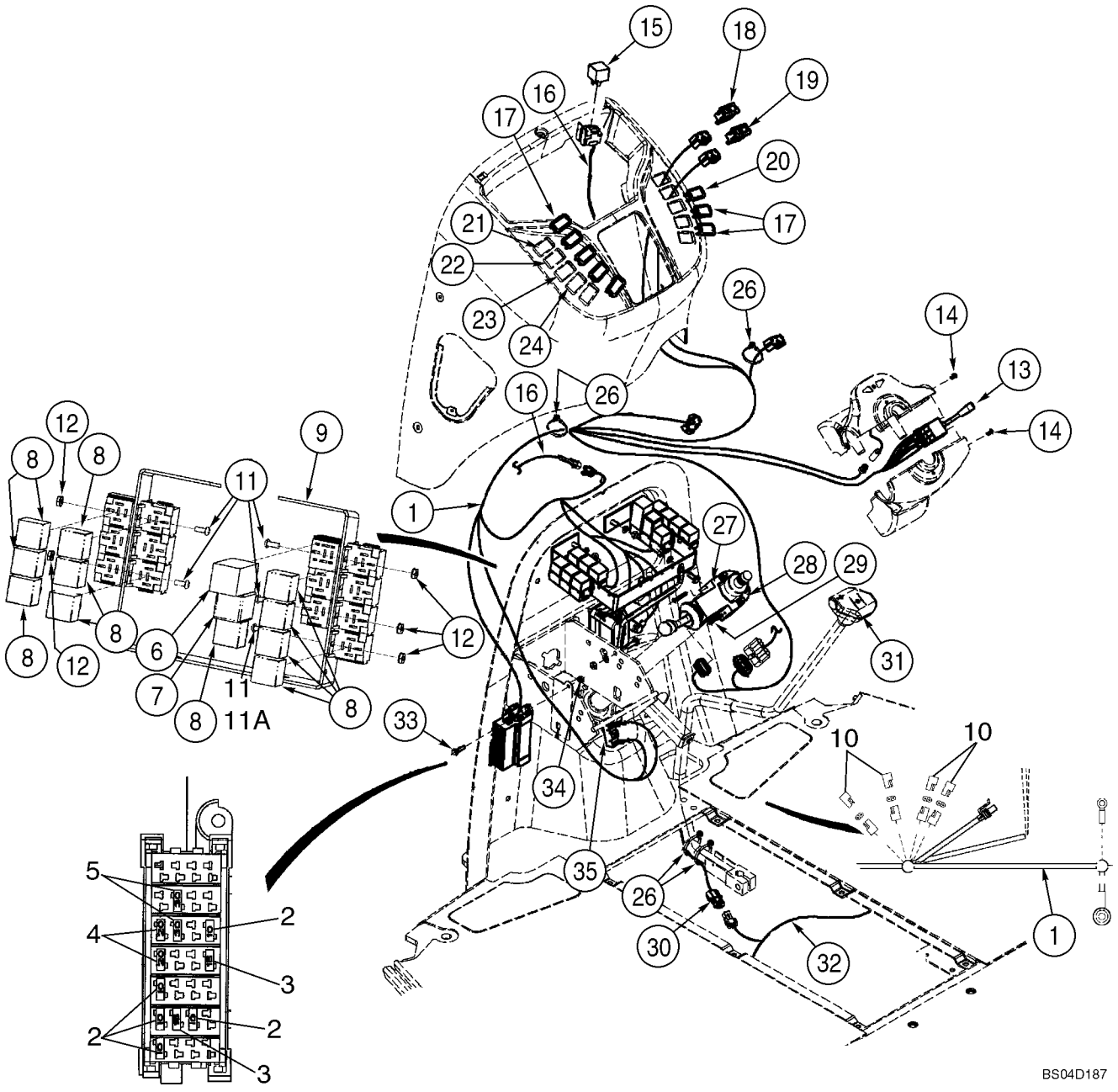

http://www.minnparbackhoeparts.com/

HARNESS, FRONT CONSOLE - SWITCHES

REF	FN	PART NUMBER	YR/SN	QTY	DESCRIPTION
		87456949		1	KIT, SERVICE Main Chassis; Includes 87456944 Chassis Harness, 87450931 4WD Jumper Harness, 87456948 Fwd/Rev Jumper Harness
32A		87450931		1	HARNESS, WIRE 4WD Transmission Jumper Harness; 1 Packard / 1 Deutsch Connector; Attaches to 4WD Connection on Main Chassis Harness, Not Illustrated
32B		87456948		1	HARNESS, WIRE Fwd/Rev Transmission Jumper Harness; 2 Deutsch / 1 Packard Connector; Attaches to Transmission Control Valve Solenoid Connection On Main Chassis Harness; Not Illustrated
		L71879		3	DIODE-ELEMENT
33		844-6025		1	BOLT M6 x 25
34		832-10406		1	NUT M6
35		D148108		1	SWITCH Brake Lamp; Includes Hardware; For Mounting, See Figure 07-03
		87436675		1	HARNESS, WIRE Chassis Options; Includes (4) L71879 Diodes
		L71879		4	DIODE-ELEMENT

http://www.minnparbackhoeparts.com/

04-08		p1	03/05

HARNESS, FRONT CONSOLE - MOUNTING

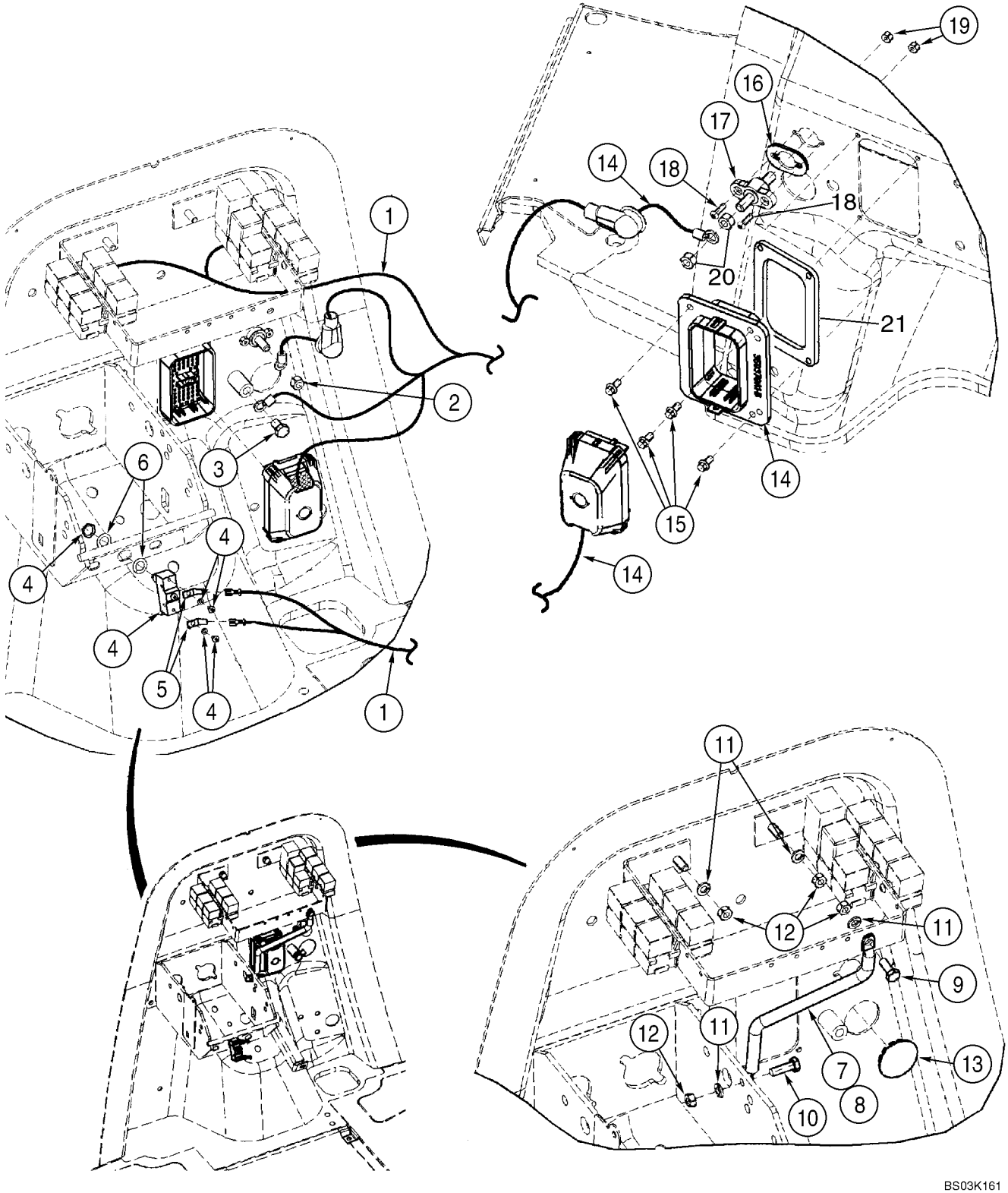

http://www.minnparbackhoeparts.com/

HARNESS, FRONT CONSOLE - MOUNTING

REF	FN	PART NUMBER	YR/SN	QTY	DESCRIPTION
1		87418541		1	HARNESS, WIRE Front Console Harness; Mounts To Front Firewall
2		425-106		1	NUT 3/8
3		128312A1		1	BOLT M10 x 15; Mounts To Front Firewall
4		D148108		1	SWITCH Brake Lamp; Includes Hardware
5		A187990		2	TERMINAL CONNECTOR Male
6		495-81153		2	WASHER 15/32 x 3/4 x 1/32
7		362930A2		1	BRACE Relay Mounting
8		392353A1		1	CONDUIT
9		614-8020		1	BOLT M8 x 20
10		614-8025		1	BOLT M8 x 25
11		892-11008		4	WASHER M8
12		829-1408		4	NUT M8; 10
13		397876A1		1	PLUG 1-5/8 in, Button
14		87433543		1	HARNESS, WIRE Engine, Main Chassis; Packard Connectors At Trans. Control Valve & 4WD Solenoids; No Longer Available, Order 87450932 Service Kit; 87450932 Service Kit Is No Longer Available, Order 87456949 Harness Service Kit
		87450932		1	HARNESS, WIRE Service Kit, Includes 87450481 Main Chassis Harness and 87450931Transmission Jumper Harness; No Longer Available, Order 87456944 Chassis Harness & 87450931 4WD Transmission Jumper Harness
14		87450481		1	HARNESS, WIRE Main Chassis Harness; Packard Connectors At Trans. Control Valve Solenoid & Deutsch Connector At 4WD Solenoid; No Longer Available, Order 87456949 Chassis Harness Service Kit
14		87456944		1	HARNESS, WIRE Main Chassis; Deutsch Connectors At Fwd/Rev & 4WD Solenoids; For Service Order 87456949 Chassis Harness Service Kit; Not Illustrated
		87456949		1	KIT, SERVICE Main Chassis; Includes 87456944 Chassis Harness, 87450931 4WD Jumper Harness, 87456948 Fwd/Rev Jumper Harness

http://www.minnparbackhoeparts.com/

HARNESS, FRONT CONSOLE - MOUNTING

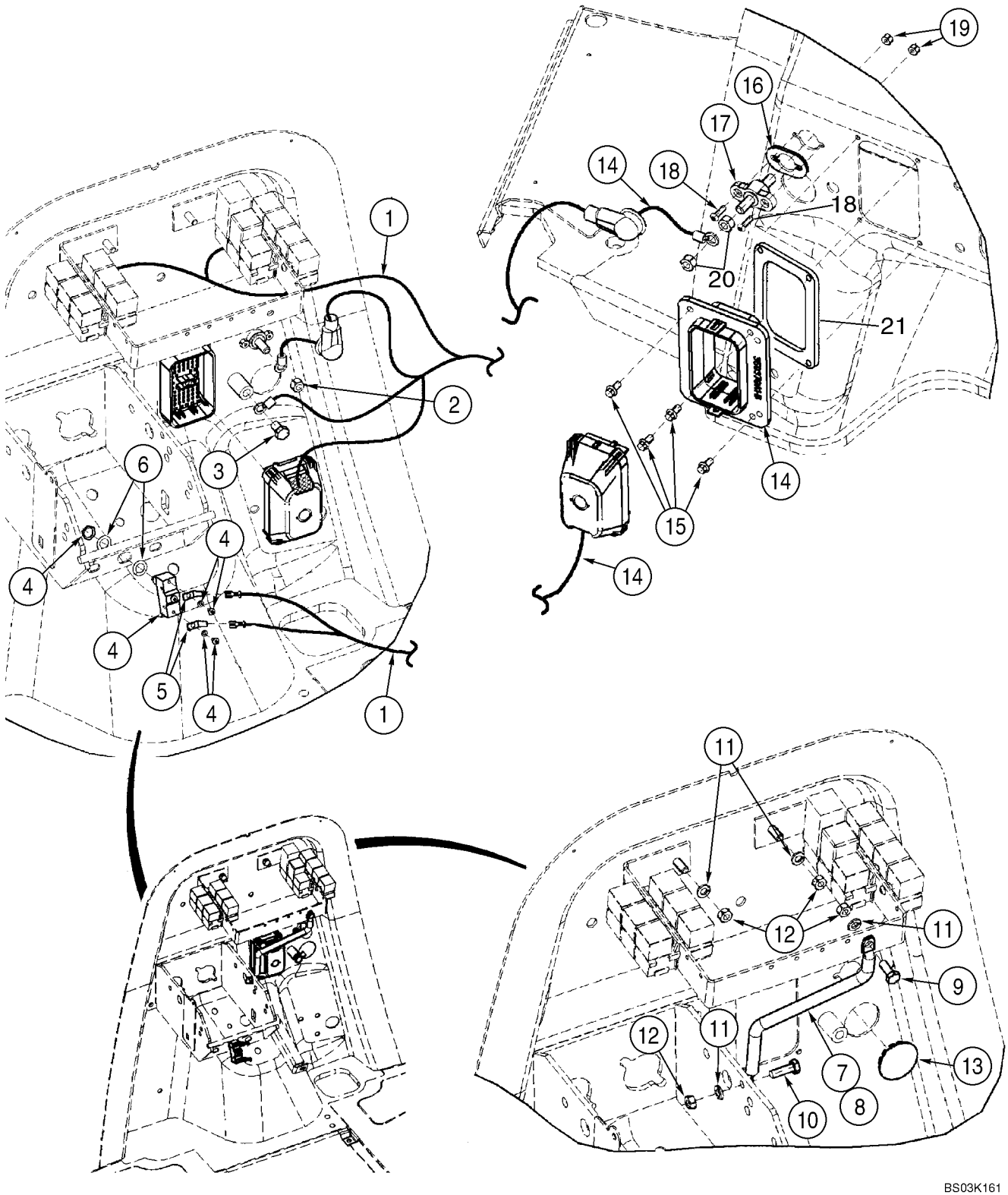

http://www.minnparbackhoeparts.com/

HARNESS, FRONT CONSOLE - MOUNTING

REF	FN	PART NUMBER	YR/SN	QTY	DESCRIPTION
14A		87450931		1	HARNESS, WIRE 4WD Transmission Jumper Harness; 1 Packard / 1 Deutsch Connector; Attaches to 4WD Connection on Main Chassis Harness, Not Illustrated
14B		87456948		1	HARNESS, WIRE Fwd/Rev Transmission Jumper Harness; 2 Deutsch / 1 Packard Connector; Attaches to Transmission Control Valve Solenoid Connection On Main Chassis Harness; Not Illustrated
		L71879		3	DIODE-ELEMENT
15		781-24613		4	SCREW Flange, M6 x 13
16		357966A1		1	GASKET
17		357278A1		1	JUNCTION BLOCK Positive Battery
18		490-11012		2	SCREW No. 10 NF x 3/4
19		231-24409		2	NUT, LOCK No. 10
20		425-106		2	NUT 3/8
21		414174A1		1	GASKET

http://www.minnparbackhoeparts.com/

ELECTRICAL - TRANSMISSION, POWERSHIFT

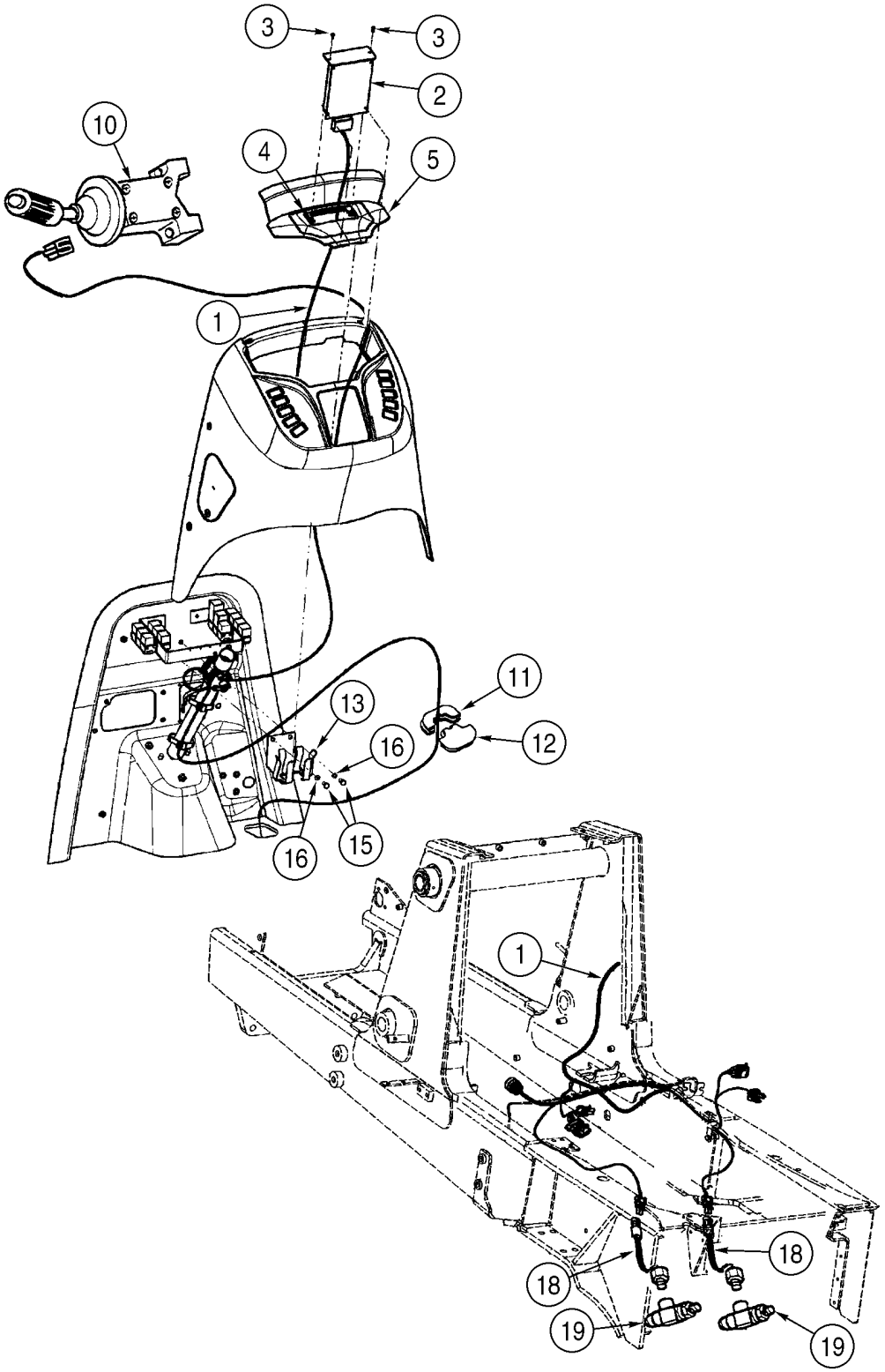

http://www.minnparbackhoeparts.com/

ELECTRICAL - TRANSMISSION, POWERSHIFT

REF	FN	PART NUMBER	YR/SN	QTY	DESCRIPTION
1		392882A4		1	HARNESS Powershift Transmission
2		87421488		1	CONTROL Controller, Transmission, APC73
3		87310126		2	SCREW No. 10 x 3/4, Stainless Steel; Replaces 140-107 Non-Stainless Steel Screw Used On Some Models
4		176857A1		2	NUT No. 10, J-Type
5		363227A2		1	COVER Relay Access
		278316A2		2	CLIP Relay Access Cover
10		231520A2		1	SWITCH Shuttle Shift; Transmission; Forward/Neutral/Reverse, See Figure 04-07
11		397443A2		1	SEAL
12		397493A2		1	SEAL
13		400376A1		1	PLATE, ELEC. SUPPORT
15		614-8020		2	BOLT M8 x 20
16		892-11008		2	WASHER M8
18		D138955		2	SWITCH Pressure; Stop Lamp
19		222889A1		2	FITTING At Rear Axle Brakes, See Figure 07-04

http://www.minnparbackhoeparts.com/

04-10		p1	01/04

HARNESS, SIDE CONSOLE - SWITCHES

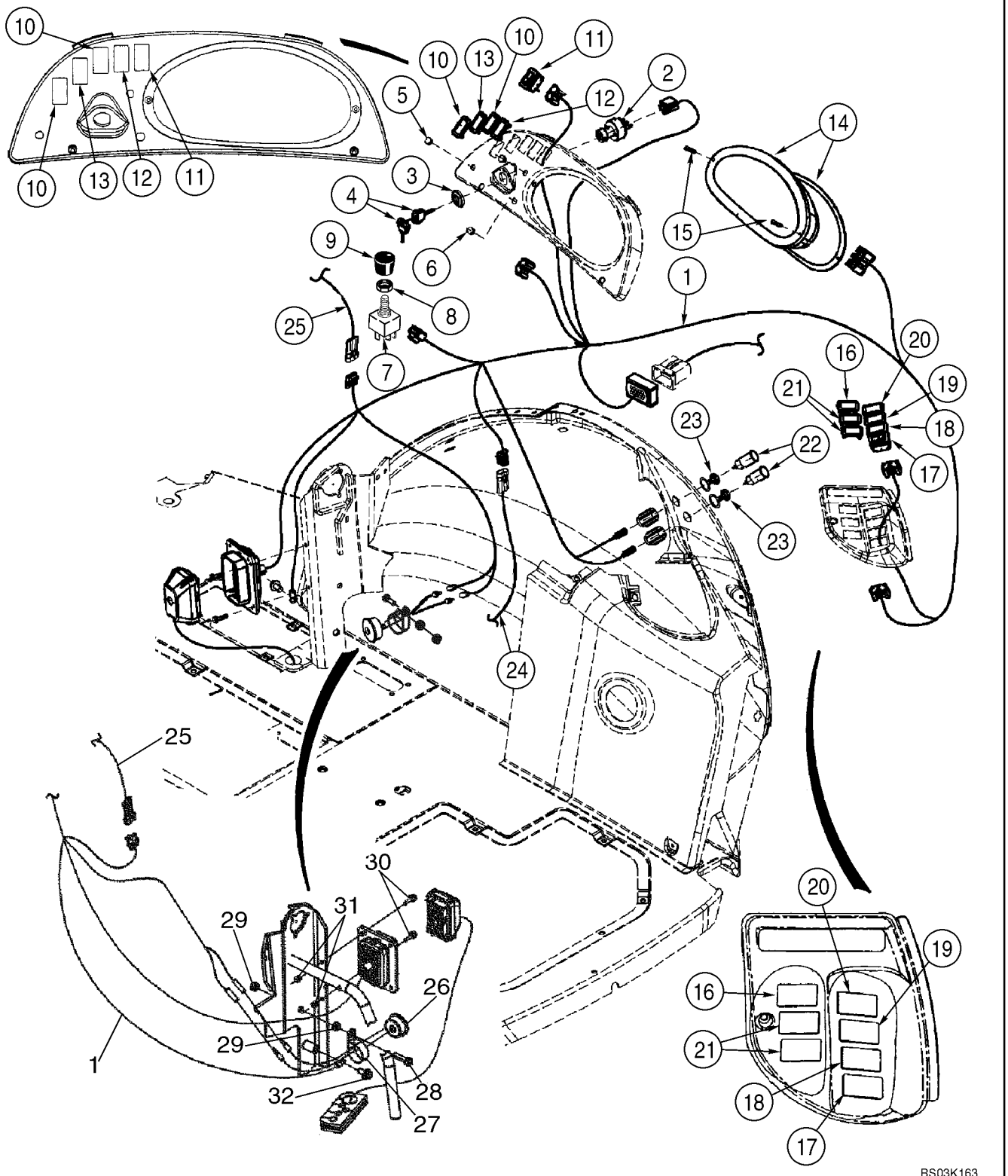

http://www.minnparbackhoeparts.com/

HARNESS, SIDE CONSOLE - SWITCHES

REF	FN	PART NUMBER	YR/SN	QTY	DESCRIPTION
1		87418542		1	HARNESS, WIRE Side Console
		282775A1		1	SWITCH, IGNITION Incl. Ref 2 - 4
2		NSS		1	NOT SERVICED SEPARATELY Switch; Without Keys
3		NSS		1	NOT SERVICED SEPARATELY Nut
4		NSS		1	NOT SERVICED SEPARATELY Key, Ignition; Set Of Two; Padded
5		397569A1		2	PLUG 7/16 in, Dome; If Used; For Air Conditioning Switch and Knob, See Figure 09-64
6		397570A1		1	PLUG 1/2 in, Dome; If Used; For Heater Switch and Knob, See Figure 09-63
7		245258A1		1	SWITCH Blower
		121415A1		1	FUSE 25 amp; Blower And Wiper
8		A42561		1	NUT
9		400379A1		1	KNOB
10		126844A1		1-4	PLUG If Used
11		133715A1		1	SWITCH Rear Work Lamps
12		235002A1		1	SWITCH Ride Control; If Used
13		133716A1		1	SWITCH Four Wheel Drive; Models Without Powershift Transmission; If Used
13		239408A1		1	SWITCH Four Wheel Drive; Models With Powershift Transmission; If Used
		121412A1		1	FUSE 10 amp, Four Wheel Drive
14		87419320		1	INSTRUMENT CLUSTER See Figure 04-13
15		140-119		2	SCREW No. 10 x 1-1/4
16		126844A1		1-6	PLUG If Used
17		386852A2		1	SWITCH Horn
18		386788A1		1	SWITCH Rear Window Washer; If Used
19		386786A1		1	SWITCH Rear Wiper; If Used
20		126844A1		1	PLUG If Used
21		386789A2		2	SWITCH Backhoe Quick Coupler and Hydraulic Backhoe Bucket Coupler; If Used
22		283779A1		2	OUTLET Power Plug Outlet; 30 amp Maximum
23		283781A1		2	CAP Power Plug Outlet
25		NSS		1	NOT SERVICED SEPARATELY Harness; Loader Control Lever; Included In Loader Control Lever Handle

http://www.minnparbackhoeparts.com/

04-10		p2	01/04

HARNESS, SIDE CONSOLE - SWITCHES

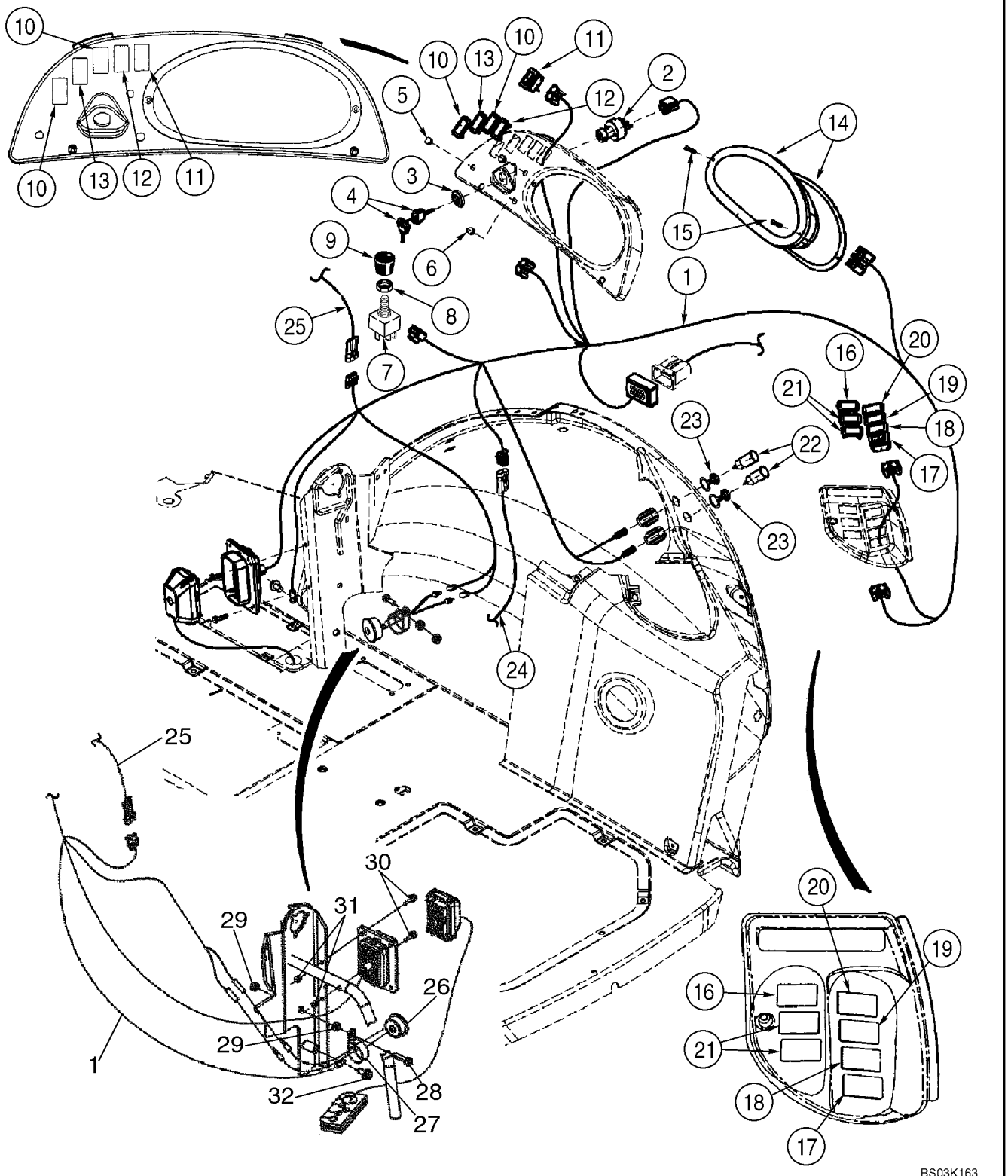

http://www.minnparbackhoeparts.com/

HARNESS, SIDE CONSOLE - SWITCHES

REF	FN	PART NUMBER	YR/SN	QTY	DESCRIPTION
26		D137468		1	BUZZER Engine Water Temperature, Engine Oil Pressure and Parking Brake
27		515-23444		1	CLAMP 1-3/4
28		614-10030		1	SCREW M10 x 30
29		829-1410		2	NUT M10; 10.9
30		844-6025		2	BOLT M6 x 25
31		832-10406		2	NUT M6
32		844-10020		1	SCREW M10 x 20
		87436675		1	HARNESS, WIRE Chassis Options Harness; Includes (4) L71879 Diodes
		L71879		4	DIODE-ELEMENT

http://www.minnparbackhoeparts.com/

INSTRUMENT PANEL, FRONT - COVERS

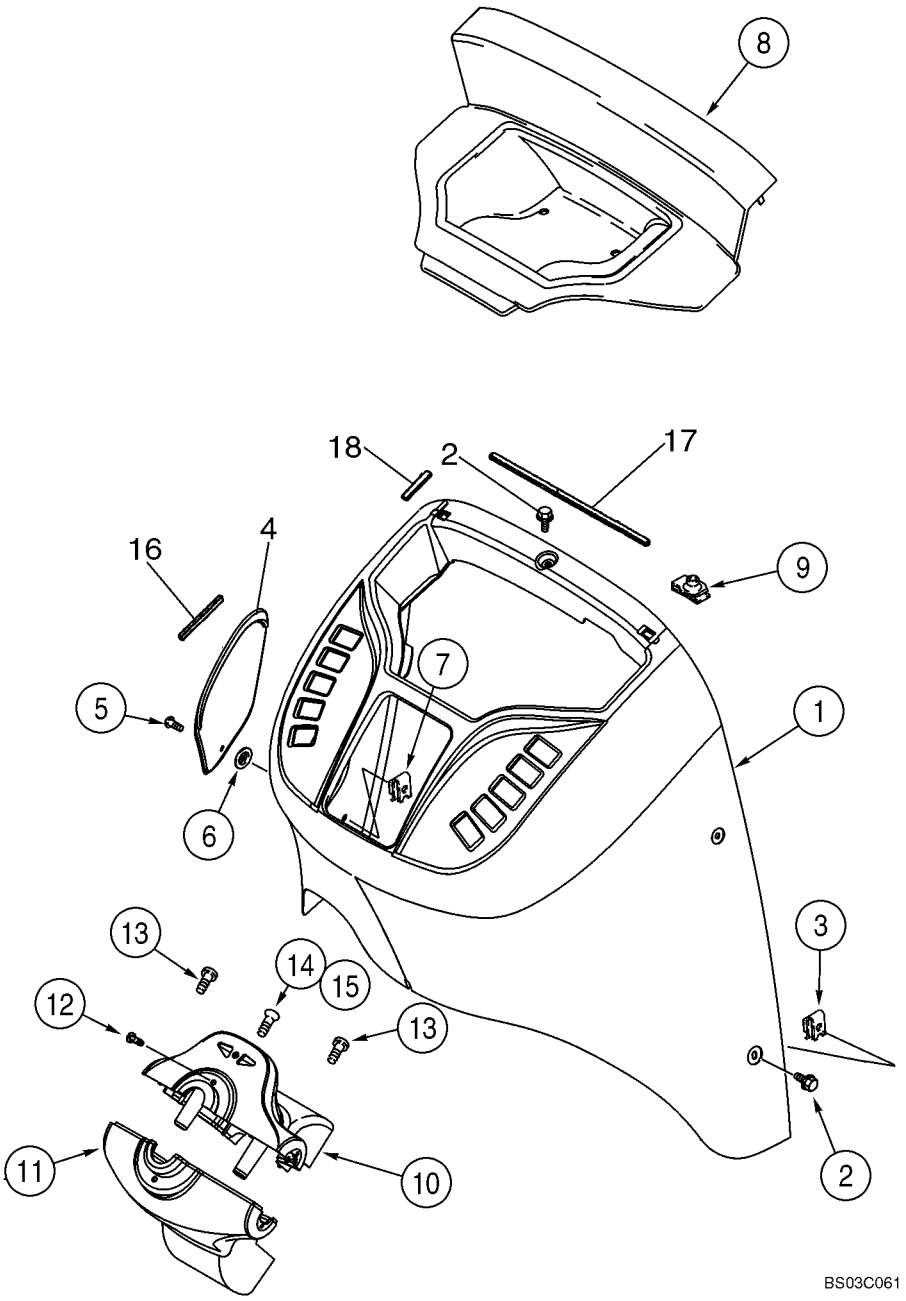

http://www.minnparbackhoeparts.com/

INSTRUMENT PANEL, FRONT - COVERS

REF	FN	PART NUMBER	YR/SN	QTY	DESCRIPTION
1		355827A2		1	COVER Front
2		87310152		6	BOLT Hex Flange, M6 x 16, Stainless Steel; Replaces 555-10 Non-Stainless Steel Screw Used On Some Models
3		833-40406		6	NUT M6
4		360244A1		1	COVER Fuse Access
5		87310086		1	SCREW Includes Washer, Stainless Steel; Replaces 182276A1 Non-Stainless Steel Screw Used On Some Models
6		127009A1		1	CLIP, ELECTRICAL
7		131-861		1	NUT No. 10
8		360245A2		1	COVER Relay Access; Models Without Powershift Transmission
8A		363227A2		1	COVER Relay Access; Models With Powershift Transmission; Not Illustrated
9		278316A2		2	CLIP
10		373689A2		1	COVER ASSY Steering Column, Upper; Incl. Ref 10A - 10E; Components Not Illustrated
10A		360242A2		1	COVER
10B		303465A2		1	LAMP Blinker
10C		303466A1		1	SYMBOLS Right Flasher
10D		303467A1		1	SYMBOLS Left Flasher
10E		373693A1		1	SCREW Flat Head, No. 8 x 7/16
11		360243A2		1	COVER Steering Column, Lower
12		87310124		2	SCREW No. 10 x 1/2, Stainless Steel; Replaces 140-106 Non-Stainless Steel Screw Used On Some Models
13		87310124		2	SCREW No. 10 x 1/2, Stainless Steel; Replaces 140-106 Non-Stainless Steel Screw Used On Some Models
14		87310142		1	SCREW No. 10-16 x 1/2, Stainless Steel; Replaces 260-1358 Non-Stainless Steel Screw Used On Some Models
15		131-121		1	NUT, SPECIAL No. 10
16		414572A1		1	STRIP 100 mm, Adhesive Back
17		414034A1		1	STRIP 330 mm, Adhesive Back
18		414033A1		4	STRIP 60 mm, Adhesive Back

http://www.minnparbackhoeparts.com/

04-12		p1	05/05

INSTRUMENT PANEL, SIDE - COVERS (RIGHT-HAND SIDE)

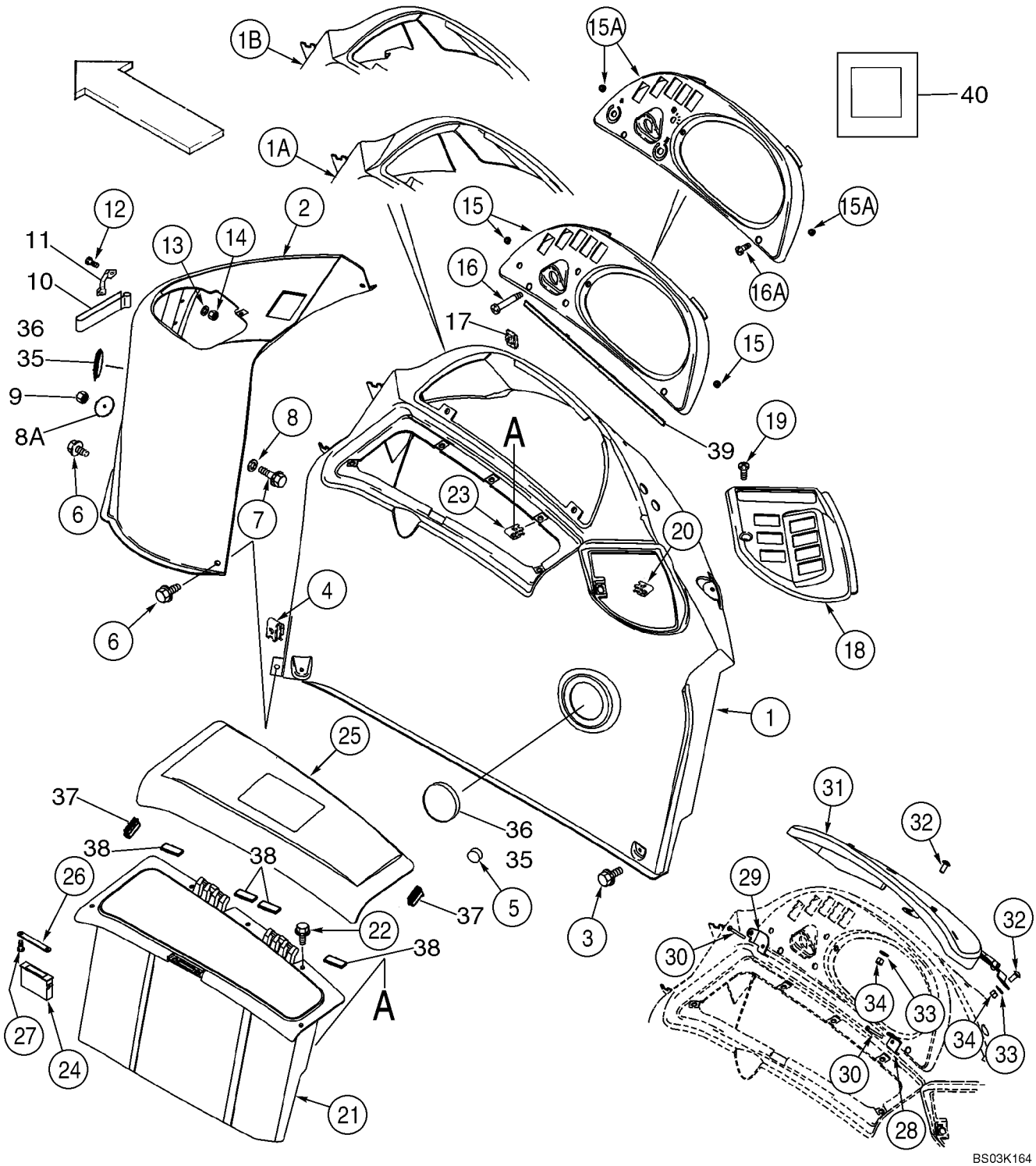

http://www.minnparbackhoeparts.com/

INSTRUMENT PANEL, SIDE - COVERS (RIGHT-HAND SIDE)

REF	FN	PART NUMBER	YR/SN	QTY	DESCRIPTION
1		360250A2		1	CONSOLE Canopy Models
1A		355198A2		1	CONSOLE Cab, Single Door
1B		372167A3		1	CONSOLE Cab, Two Door
2		355197A2		1	CONSOLE Loader Control
3		87310098		6	BOLT Flange, M6 x 20, Stainless Steel; Replaces 555-2 Non-Stainless Steel Screw Used On Some Models
4		833-40406		5	NUT M6
5		L60224		1	BUMPER Rubber
6		87310152		2	BOLT Flange, M6 x 16, Stainless Steel; Replaces 555-10 Non-Stainless Steel Screw Used On Some Models
7		844-6025		1	BOLT Flange, M6 x 25
8		895-15006		1	WASHER 6,6 x 25 x 1,6 mm
8A		407660A1		1	WASHER 7 mm ID x 50 mm OD
9		832-10406		1	NUT M6
10		184726A1		1	STRIP, FIXING Velcro
11		182594A1		2	HANDLE Velcro Retainer
12		87310184		4	SCREW M4 x 16; 4.8, Stainless Steel; Replaces 842-1416 Non-Stainless Steel Screw Used On Some Models
13		895-11004		4	WASHER 4,3 x 9 x 0,8 mm
14		832-10404		4	NUT M4
15		391818A2		1	BEZEL Instrument Cluster Mounting; Canopy Models, Includes 390258A1
		390258A1		2	INSERT No. 10, Threaded
15A		390255A2		1	BEZEL Instrument Cluster Mounting; Cab Models, Includes 390258A1
		390258A1		2	INSERT No. 10, Threaded
16		87310128		2	SCREW No. 10 x 2-1/4, Stainless Steel; Canopy Models; Replaces 140-120 Non-Stainless Steel Screw Used On Some Models
16A		87310126		2	SCREW No. 10 x 3/4, Stainless Steel; Cab Models; Replaces 140-107 Non-Stainless Steel Screw Used On Some Models
17		131-619		2	NUT No. 10; Cab or Canopy
18		353068A2		1	BEZEL Rear Switches

http://www.minnparbackhoeparts.com/

04-12		p2	05/05

INSTRUMENT PANEL, SIDE - COVERS (RIGHT-HAND SIDE)

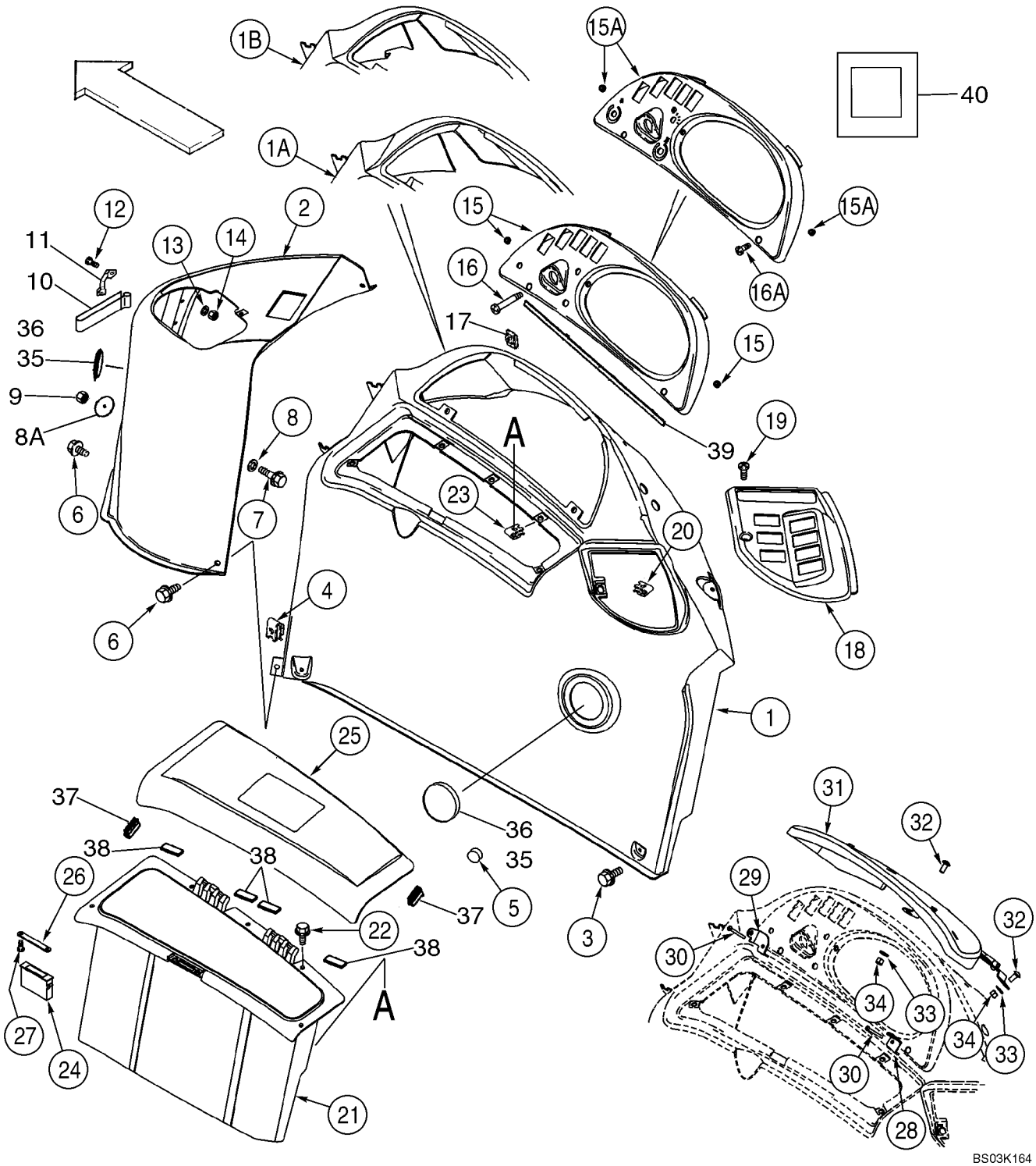

http://www.minnparbackhoeparts.com/

INSTRUMENT PANEL, SIDE - COVERS (RIGHT-HAND SIDE)

REF	FN	PART NUMBER	YR/SN	QTY	DESCRIPTION
19		87310126		1	SCREW No. 10 x 3/4, Stainless Steel; Replaces 140-107 Non-Stainless Steel Screw Used On Some Models
20		131-619		1	NUT No. 10
21		366632A2		1	BOX, TOOL Right-Hand
22		87310098		5	BOLT Flange, M6 x 20, Stainless Steel; Replaces 555-2 Non-Stainless Steel Screw Used On Some Models
23		833-40406		5	NUT M6
24		D127335		1	RETAINER Magnetic Catch
25		366633A3		1	LID Storage Box
26		375112A1		1	PLATE, CATCH Striker
27		440-1066		2	SCREW No. 6 x 3/8
28		386369A2		1	BRACKET
29		386368A2		1	BRACKET
30		87310128		2	SCREW No. 10 x 2-1/4, Stainless Steel; Replaces 140-120 Non-Stainless Steel Screw Used On Some Models
31		385614A4		1	COVER ASSY Instrument Cluster; Anti-Vandalism, Canopy Models; Includes 386502A1, F22426
		386502A1		2	BUMPER
		F22426		3	STOP
32		87310176		2	BOLT Round Head, M8 x 20, Stainless Steel; Replaces 811-8020 Non-Stainless Steel Screw Used On Some Models
33		87310185		2	WASHER 9 x 20 x 1,6 mm, Stainless Steel; Replaces 895-15008 Non-Stainless Steel Washer Used On Some Models
34		832-10408		2	NUT M8
35		1302758C1		2	PLUG 3 inch
36		87310144		4	SCREW, SELF TAPPING No. 6 x 1/2, Stainless Steel; Replaces 413054A1 Non-Stainless Steel Screw Used On Some Models
37		430471A1		2	SEAL 40 mm, Bulb; Storage Lid Bumper
38		414092A1		4	STRIP 50 mm, Storage Box; Adhesive Back
39		414071A1		1	STRIP, SEALING 480 mm, Adhesive Back

http://www.minnparbackhoeparts.com/

04-12		p3	05/05

INSTRUMENT PANEL, SIDE - COVERS (RIGHT-HAND SIDE)

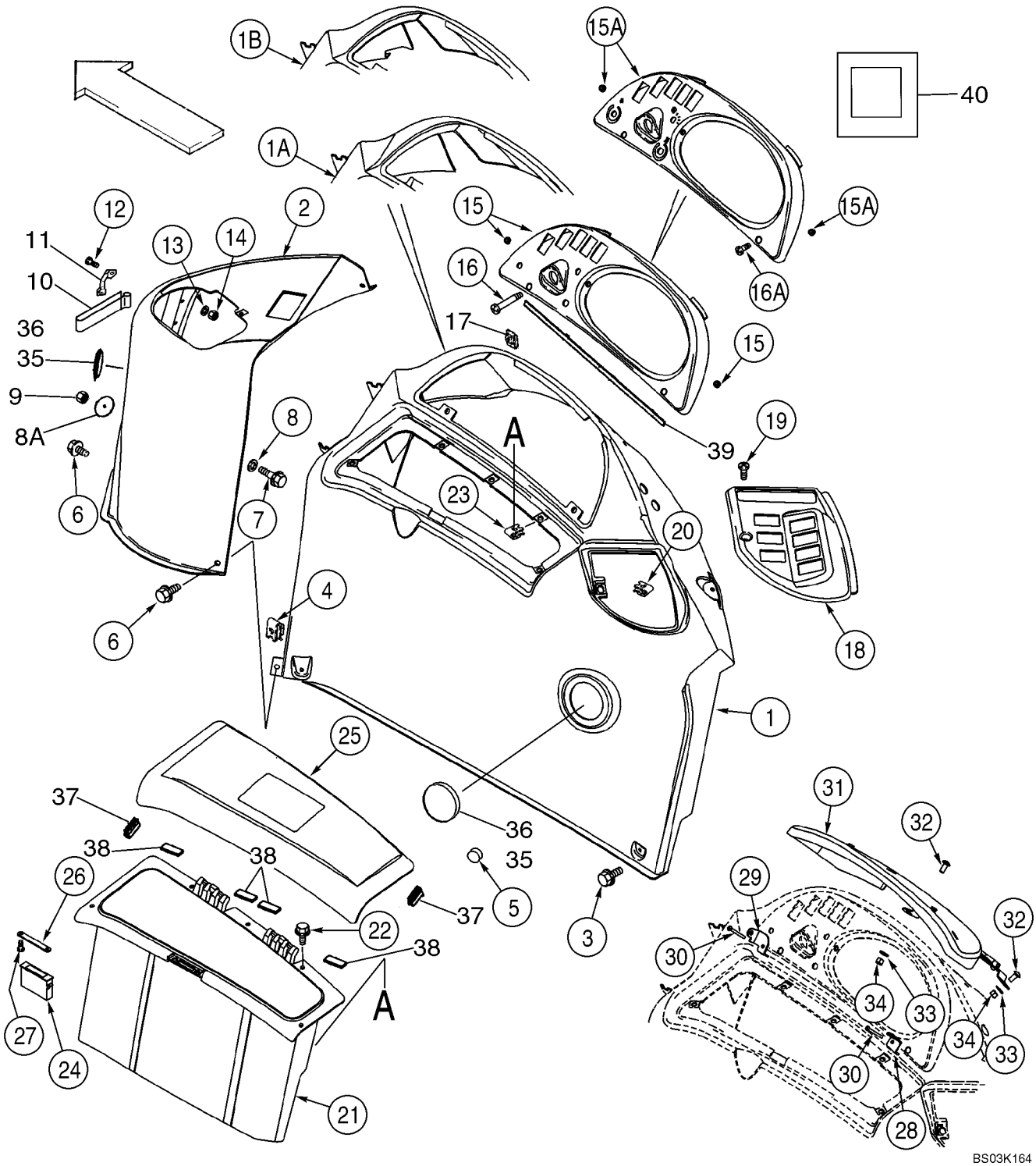

http://www.minnparbackhoeparts.com/

INSTRUMENT PANEL, SIDE - COVERS (RIGHT-HAND SIDE)

REF	FN	PART NUMBER	YR/SN	QTY	DESCRIPTION
40		412510A1		1	SEAL 25 x 25 x 3 mm; Adhesive Back; Console To Fender

http://www.minnparbackhoeparts.com/

04-13		p1	10/03

INSTRUMENT CLUSTER

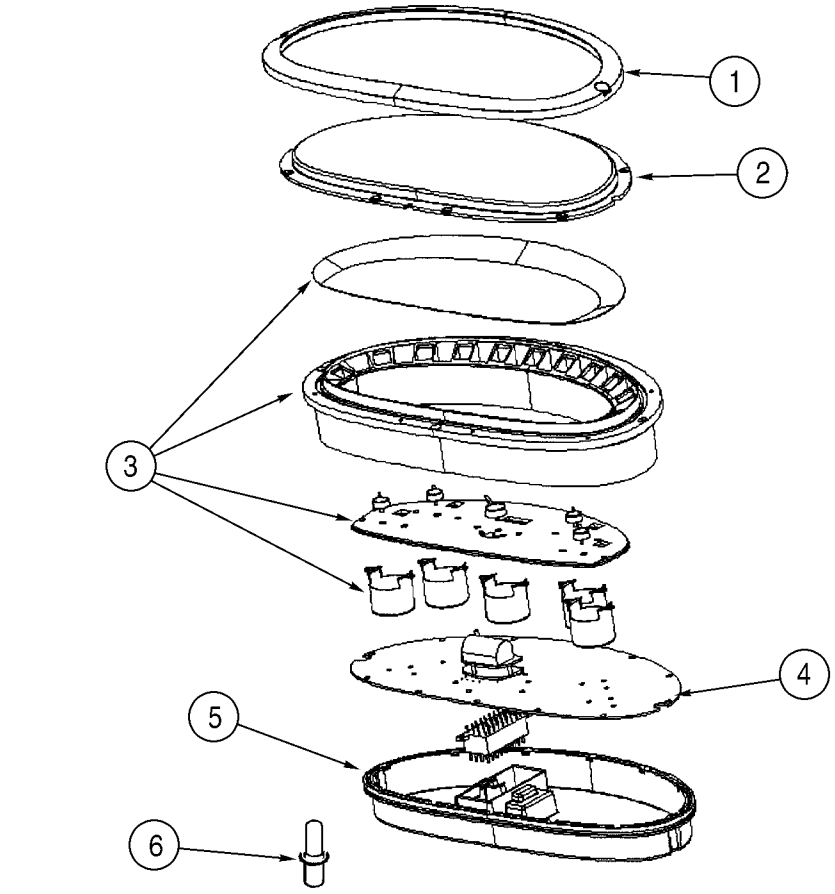

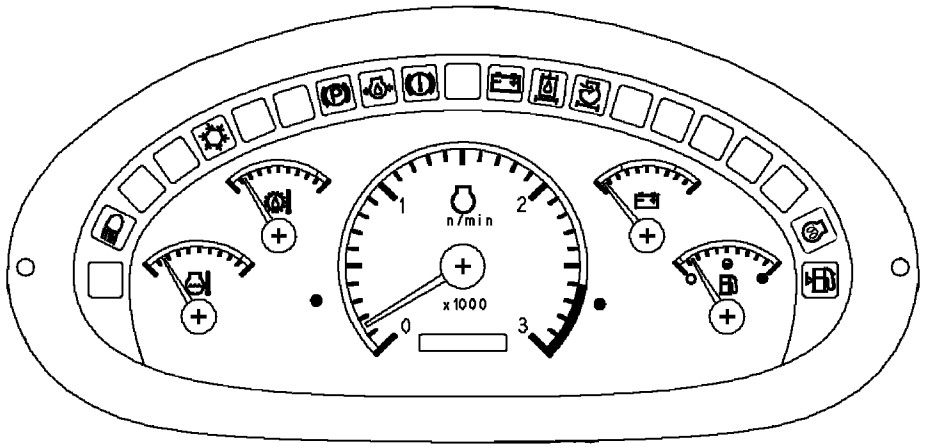

BS03K165

http://www.minnparbackhoeparts.com/

INSTRUMENT CLUSTER

REF	FN	PART NUMBER	YR/SN	QTY	DESCRIPTION
		87419320		1	INSTRUMENT CLUSTER Incl. Ref 1 - 6
1		370755A1		1	BEZEL Black
		NSS		2	NOT SERVICED SEPARATELY No. 6 x 1/4, Screw; Trim
2		370756A1		1	LENS Clear; Includes O-Ring Which Is Not Serviced Separately
3		87423396		1	GAUGE ASSY. Gauge Includes Overlay, Seal and Gauges Which Are Not Serviced Separately
4		87423397		1	HOURMETER Hourmeter, Circuit Board; Includes Seal and Hourmeter Which Are Not Serviced Separately
		NSS		25	NOT SERVICED SEPARATELY No. 6 x 3/8, Screw
5		370760A1		1	COVER, REAR Rear; Includes O-Ring Which Is Not Serviced Separately
		NSS		2	NOT SERVICED SEPARATELY No. 6 x 3/4, Screw; Rear Cover
6		388053A2		1	BULB 1W, 14V; Includes Socket

http://www.minnparbackhoeparts.com/

ELECTRICAL - LAMPS, ROPS CANOPY

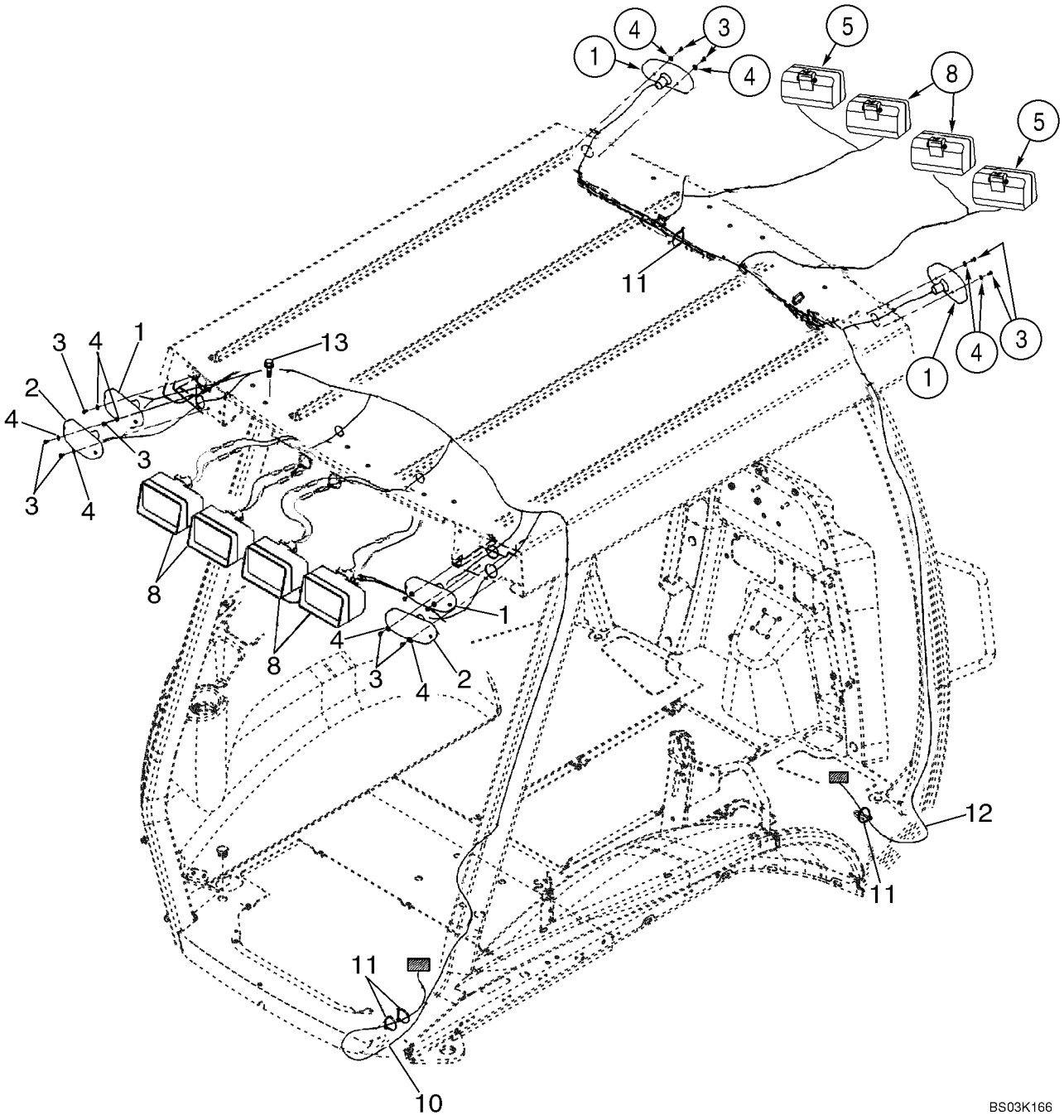

http://www.minnparbackhoeparts.com/

ELECTRICAL - LAMPS, ROPS CANOPY

REF	FN	PART NUMBER	YR/SN	QTY	DESCRIPTION
1		D135384		4	LAMP Turn Signal and Flasher; See Figure 04-16
2		D121152		2	LAMP Stop And Tail; See Figure 04-16
3		329032A1		12	SCREW No. 10 x 3/8
4		495-31022		12	WASHER 7/32 x 1/2 x 3/64
5		398846A3		2	LIGHT ASSY. Front Driving; Includes 1312210C2
		1312210C2		1	BULB 12V, 55W
8		398847A3		6	LIGHT ASSY. Front and Rear Flood and Work Lamps; Includes 1312210C2, 276498A1; ABL Brand, If Used
8		87443080		6	LIGHT ASSY. Front and Rear Flood and Work Lamps; Includes 1312210C2 Bulb; Cobo Brand, If Used
		1312210C2		1	BULB 12V, 55W
		276498A1		1	LENS With Hardened Glass; Replaces 1964801C1 Non-Hardened Lens Used In Production
10		396023A2		1	HARNESS Canopy Lamps; Rear
11		L18337		X	STRAP 15 in
12		404617A1		1	HARNESS Canopy Lamps and Wiper; Front
13		128312A1		8	BOLT Flange, M10 x 15

http://www.minnparbackhoeparts.com/

04-15		p1	04/04

ELECTRICAL - LAMPS, ROPS CAB

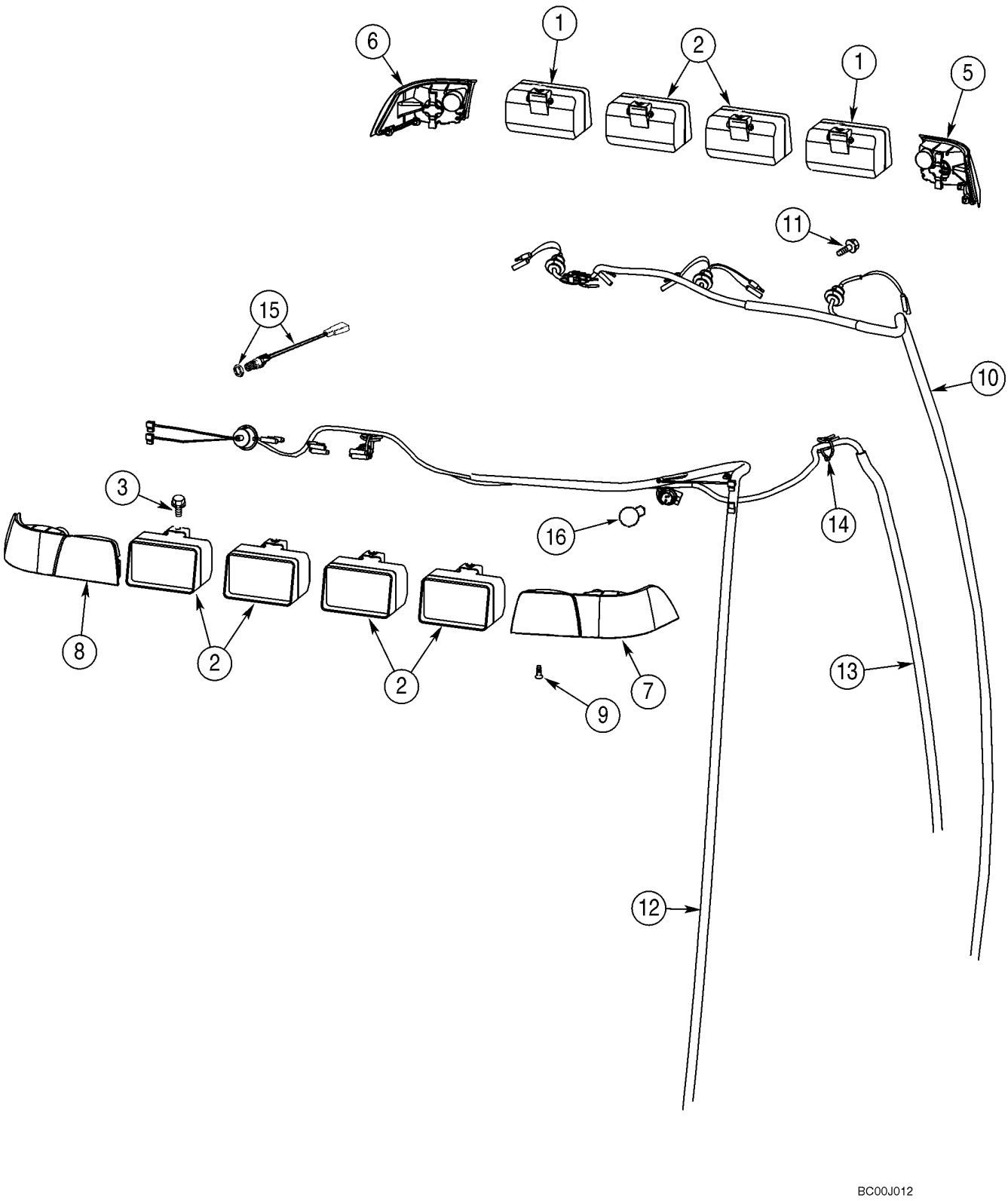

http://www.minnparbackhoeparts.com/

ELECTRICAL - LAMPS, ROPS CAB

REF	FN	PART NUMBER	YR/SN	QTY	DESCRIPTION
1		398846A3		2	LIGHT ASSY. Front Driving; Includes 1312210C2
		1312210C2		1	BULB 12V, 55W
2		398847A3		6	LIGHT ASSY. Front and Rear Flood and Work Lamps; Includes 1312210C2, 276498A1; ABL Brand, If Used
2		87443080		6	LIGHT ASSY. Front and Rear Flood and Work Lamps; Includes 1312210C2 Bulb; Cobo Brand, If Used
		1312210C2		1	BULB 12V, 55W
		276498A1		1	LENS With Hardened Glass; Replaces 1964801C1 Non-Hardened Lens Used In Production
3		128312A1		8	BOLT M10 x 15
5		279224A1		1	LIGHT, TAIL Amber; Right Front Corner
6		279223A1		1	LIGHT, TAIL Amber; Left Front Corner
7		357540A1		1	LIGHT ASSY. Amber and Red; Right Rear Corner
8		357541A1		1	LIGHT ASSY. Amber and Red; Left Rear Corner
9		394863A1		10	SCREW M6 x 20
10		404617A1		1	HARNESS Front
11		844-10020		2	SCREW M10 x 20
12		398380A3		1	HARNESS Rear
13		396018A3		1	HARNESS B-Post, Dome Lamp, Radio, Rear Wiper; Replaces 396018A2 Harness
14		L18337		5	STRAP 15 in
15		279265A2		1	SWITCH Dome Lamp
16		279916A1		2	BULB

http://www.minnparbackhoeparts.com/

04-16		p1	08/03

LAMP ASSY (ROPS CANOPY MODELS)

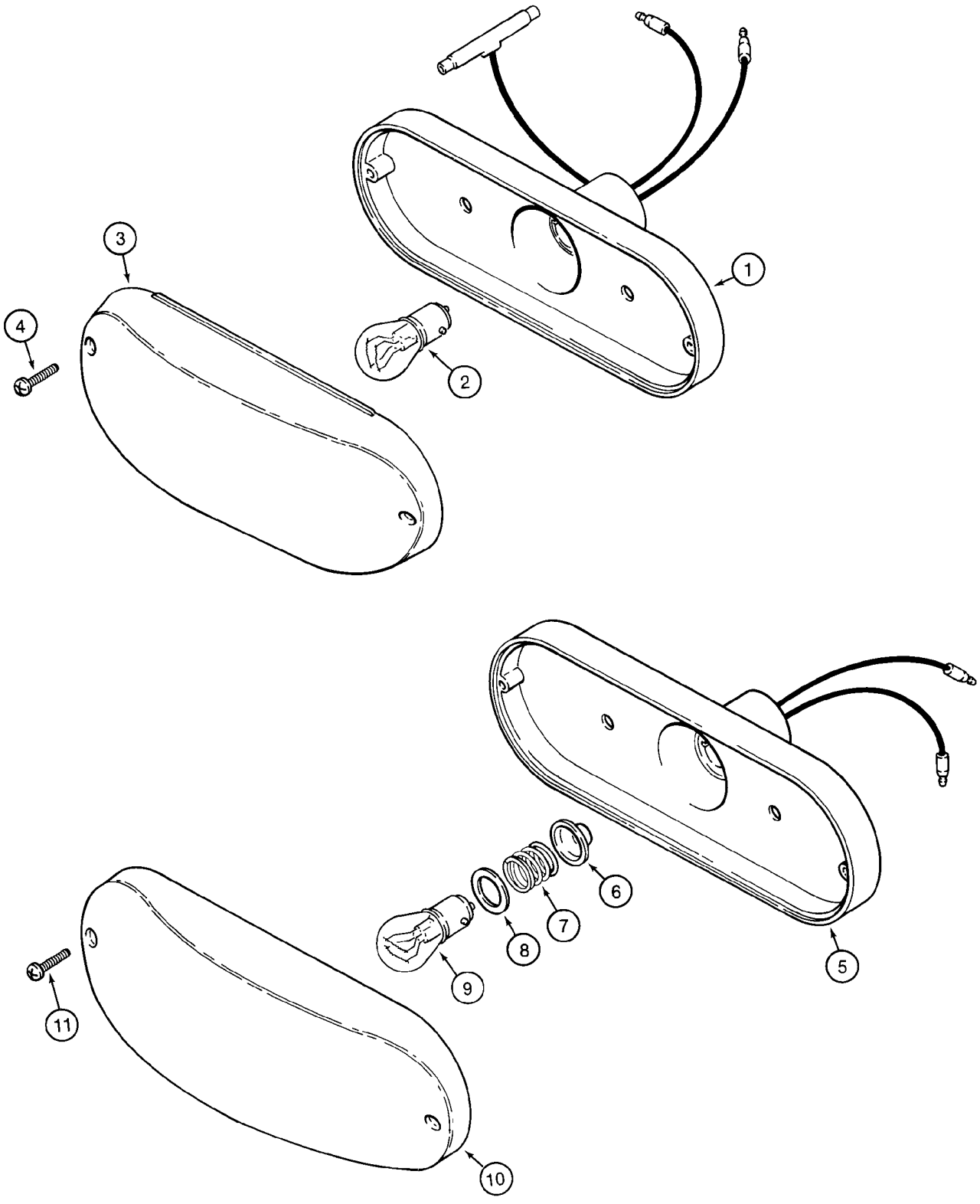

http://www.minnparbackhoeparts.com/

LAMP ASSY (ROPS CANOPY MODELS)

REF	FN	PART NUMBER	YR/SN	QTY	DESCRIPTION
		D121152		2	LAMP Stop And Tail Lamp; Red; Incl. Ref 1 - 4
1		NSS		1	NOT SERVICED SEPARATELY Housing
2		T34857		1	BULB No. 1157
3		N6836		1	LENS Red
4		261-14310		2	SCREW No. 6 st x 5/8
		D135384		4	LAMP Turn Signal and Flasher; Amber; Incl. Ref 5 - 11
5		NSS		1	NOT SERVICED SEPARATELY Housing
6		NSS		1	NOT SERVICED SEPARATELY Seal
7		NSS		1	NOT SERVICED SEPARATELY Spring
8		NSS		1	NOT SERVICED SEPARATELY Insulator
9		A41264		1	BULB 12V, No. 1156
10		N14283		1	LENS Amber
11		261-14310		2	SCREW No. 6 st x 5/8

http://www.minnparbackhoeparts.com/

04-17		p1	04/04

HORN - ALARM, BACKUP

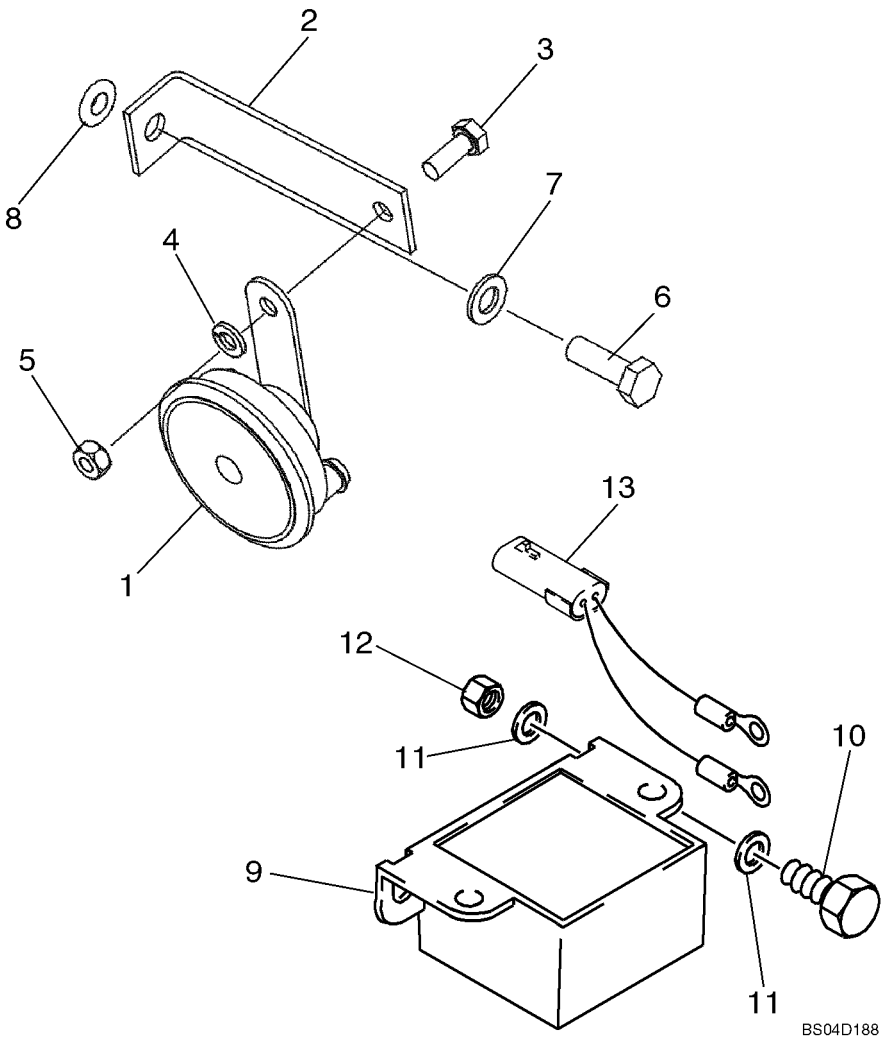

http://www.minnparbackhoeparts.com/

HORN - ALARM, BACKUP

REF	FN	PART NUMBER	YR/SN	QTY	DESCRIPTION
1		237582A1		1	HORN Black
2		87423496		1	BRACKET Bracket
3		614-8020		1	BOLT M8 x 20
4		892-11008		1	WASHER M8
5		829-1408		1	NUT M8; 10
6		614-10030		1	SCREW M10 x 30
7		895-11010		1	WASHER
8		87417721		1	INSERT, THREADED M10 Rivnut
9		109511A1		1	ALARM Backup Alarm; Includes Nuts
10		614-8025		2	BOLT M8 x 25
11		895-11008		4	WASHER 9 x 17 x 1,6 mm
12		832-10408		2	NUT M8
13		87425869		1	HARNESS, WIRE Pigtail Wire; Backup Alarm

http://www.minnparbackhoeparts.com/

04-18		p1	03/04

BEACON, ROTATING (CAB OR CANOPY MODELS)

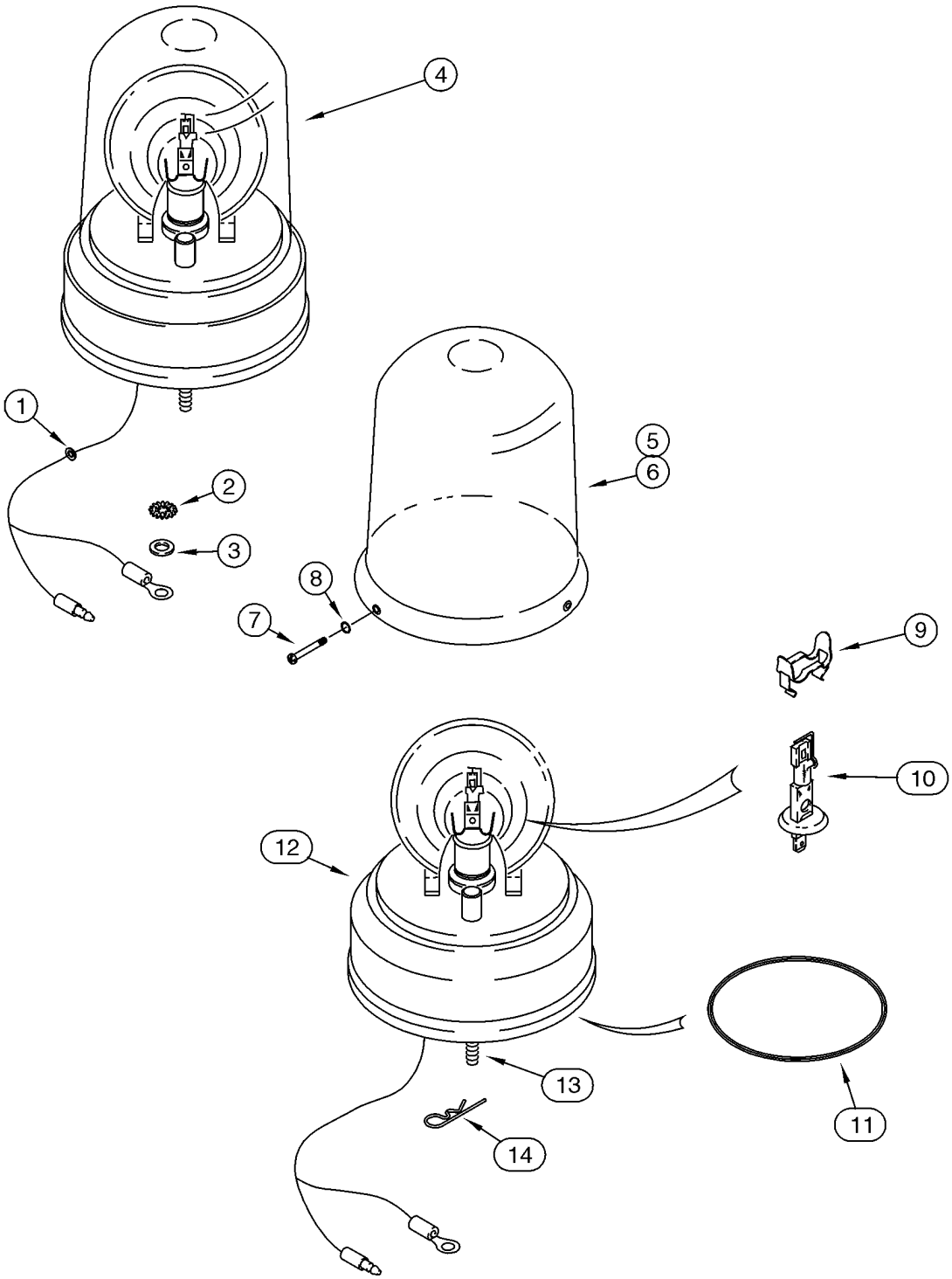

http://www.minnparbackhoeparts.com/

BEACON, ROTATING (CAB OR CANOPY MODELS)

REF	FN	PART NUMBER	YR/SN	QTY	DESCRIPTION
		387940A1		1	KIT Rotating Beacon; Amber, 12V; Incl. Ref 1 - 5, 7 - 16 and Instructions
1		A23870		1	GROMMET
2		493-11026		1	WASHER 1/4; Internal External Tooth Lock Washer; Ground
3		495-21031		1	WASHER 5/16 x 3/4 x 1/16
4		108366A1		1	LIGHT, WARNING Rotating Beacon Assembly; Amber, 12V; Incl. Ref 5, 7 - 14
5		A187542		1	LENS Amber; If Used
6		127158A1		1	LENS Blue; Optional; Not Included In Kit, Purchase Separately; If Used
7		168-71		3	SCREW No. 8 x 1/2
8		238-5005		3	O-RING 3/32 ID x 1/16
9		101531A1		1	CLIP
10		3125705R1		1	BULB 12V, 55W
11		A187575		1	BELT Drive Motor
12		NSS		1	NOT SERVICED SEPARATELY Base; With Drive Motor
13		614-6020		3	BOLT M6 x 20
14		136-54		3	PIN 1/4 x 11/16
15		386851A1		1	SWITCH Rotating Beacon; Not Illustrated
16		121412A1		1	FUSE Fuse, 10 amp; Not Illustrated

http://www.minnparbackhoeparts.com/

04-19		p1	03/04

ANTENNA, RADIO - HARNESS, RADIO

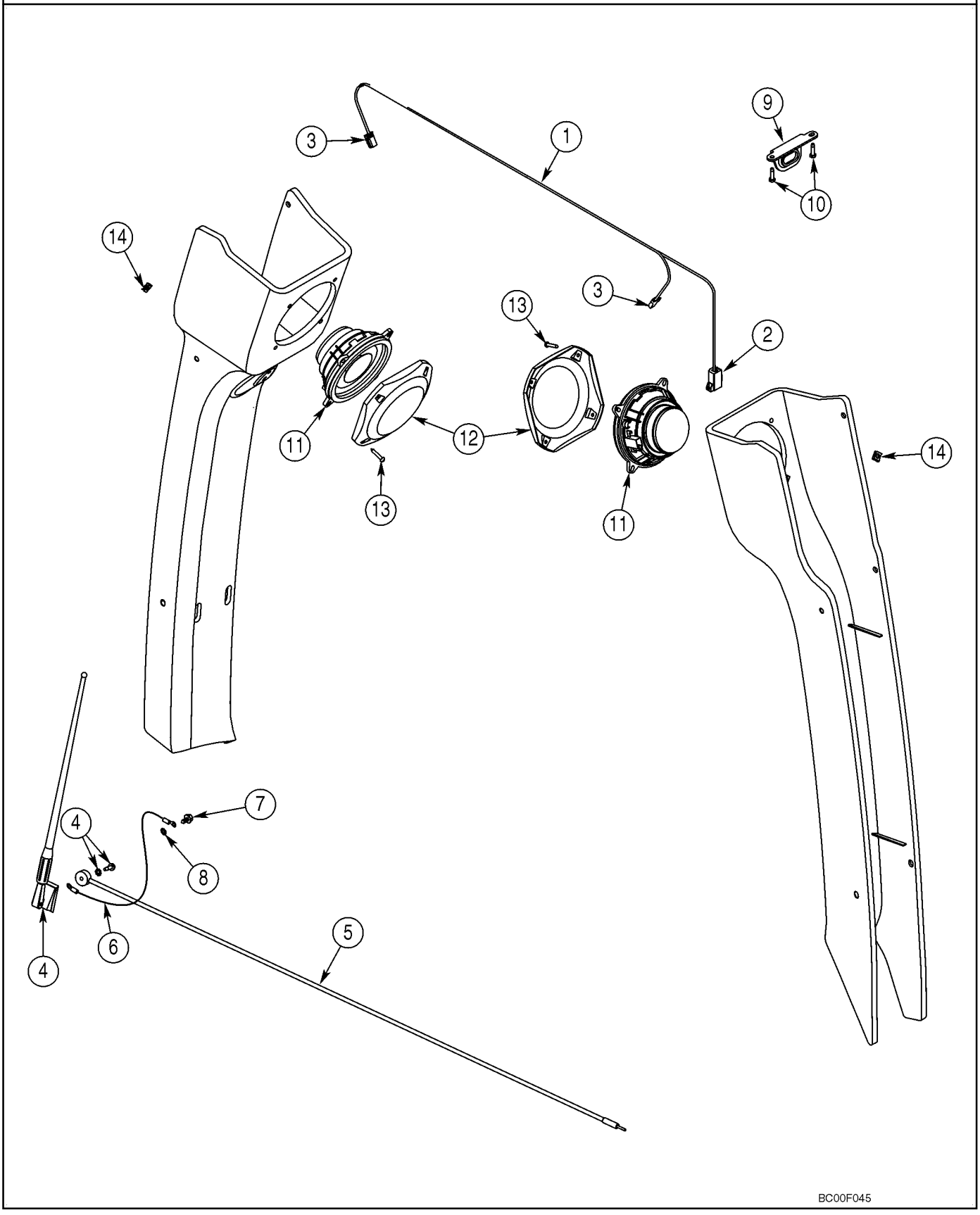

http://www.minnparbackhoeparts.com/

ANTENNA, RADIO - HARNESS, RADIO

REF	FN	PART NUMBER	YR/SN	QTY	DESCRIPTION
		404471A1		1	KIT Speakers and Antenna; Incl. Ref 1 - 15 and Instructions
1		382664A2		1	HARNESS Speaker; Incl. Ref 2, 3
2		227389A1		1	CONNECTOR To Cab Harness
3		195552A1		2	FITTING Speaker
4		197745A1		1	ANTENNA Radio; Includes Flat Washer and Nut Which Are Not Serviced Separately
5		381659A1		1	CABLE ASSY.
6		291010A1		1	WIRE Ground
7		282-16512		2	SCREW No. 10 x 3/4
8		893-11005		1	WASHER External Tooth Lock, M5
9		386927A1		1	BRACKET Radio Mounting
10		276-26512		2	SCREW No. 10 x 3/4
11		182721A2		2	SPEAKER
12		187281A1		2	COVER
13		761-17325		8	SCREW M4,2 x 25
14		177269A1		8	NUT Spring
15		L18331		1	STRAP Tie, Not Illustrated

http://www.minnparbackhoeparts.com/

ELECTRICAL - BACKHOE AUXILIARY HYDRAULIC, UNI-DIRECTIONAL

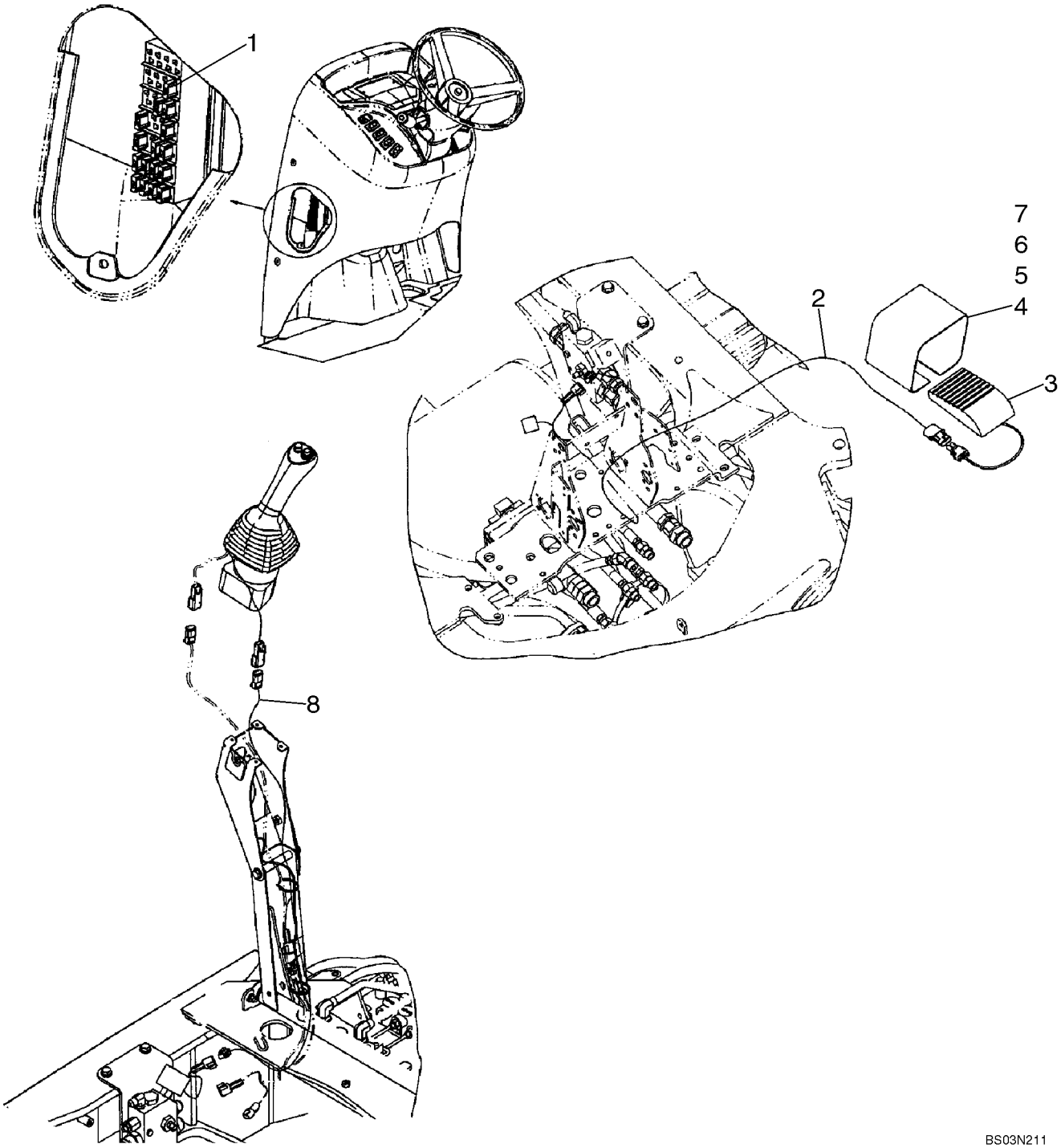

http://www.minnparbackhoeparts.com/

ELECTRICAL - BACKHOE AUXILIARY HYDRAULIC, UNI-DIRECTIONAL

REF	FN	PART NUMBER	YR/SN	QTY	DESCRIPTION
1		121413A1		1	FUSE 15 amp
2		87425631		1	HARNESS, WIRE Auxiliary Hydraulic Harness, Uni-Directional; Models Without Pilot Controls
3		137219A1		1	SWITCH Foot; Without Pilot Controls
4		300030A1		1	COVER Without Pilot Controls
5		843-1516		2	SCREW M5 x 16
6		892-11005		2	WASHER, LOCK M5
7		824-1405		2	NUT M5
8		87425635		1	HARNESS, WIRE Auxiliary Hydraulic; Uni-Directional; Models With Pilot Controls

http://www.minnparbackhoeparts.com/

ELECTRICAL - BACKHOE AUXILIARY HYDRAULIC, WITH PILOT CONTROLS

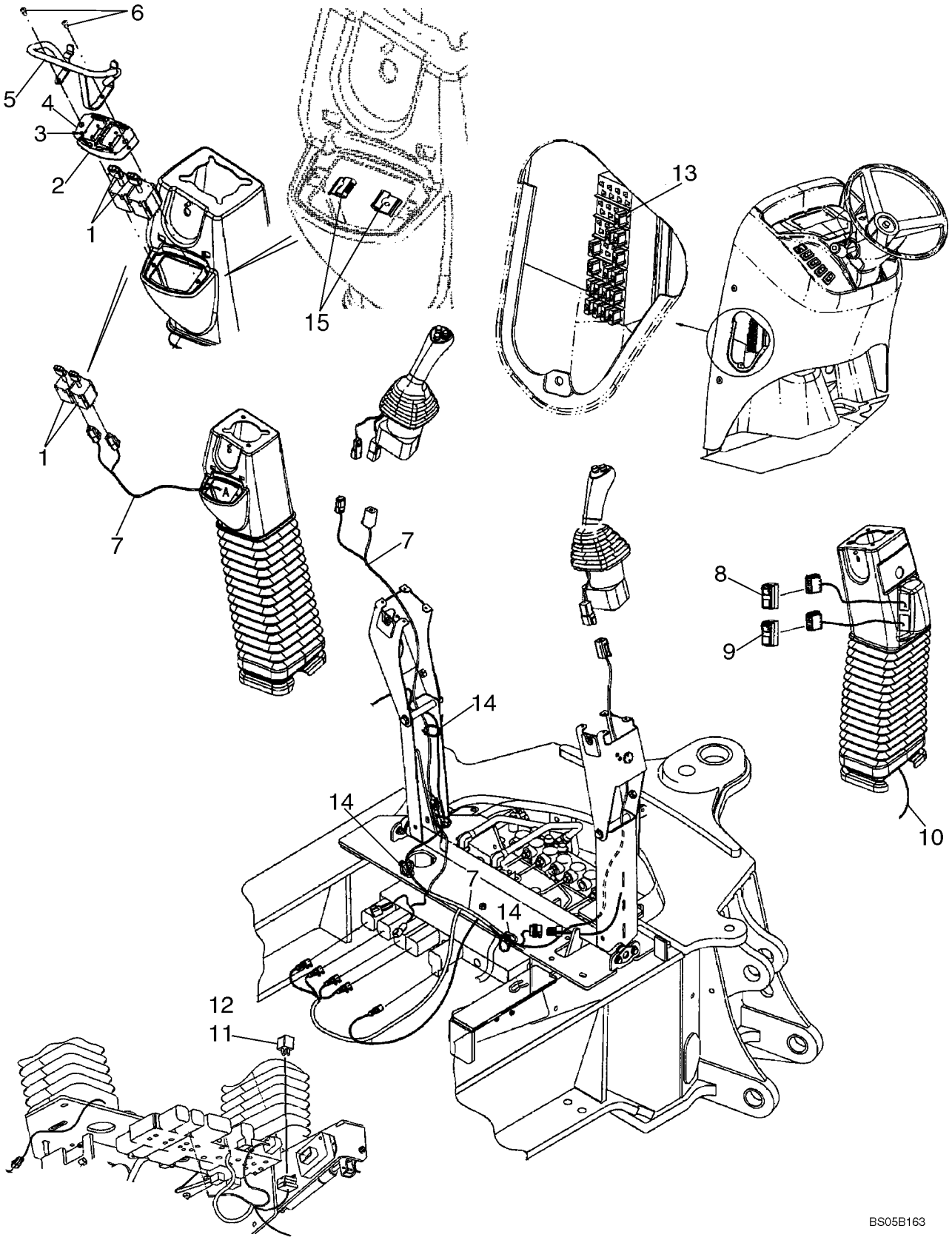

http://www.minnparbackhoeparts.com/

ELECTRICAL - BACKHOE AUXILIARY HYDRAULIC, WITH PILOT CONTROLS

REF	FN	PART NUMBER	YR/SN	QTY	DESCRIPTION
1		86988086		2	SWITCH, TOGGLE Stabilizer
2		87435381		1	PLATE, MOUNTING
3		87303784		8	SCREW M3 x 8, Pol; Replaces 87022296 Screw With BZN Finish Used On Some Models
4		87423812		1	DECAL Stabilizer Switch
5		{87307656}		1	Stabilizer Switch Guard; Replaces 87436396
6		87310083		2	SCREW, SELF TAPPING Hex Washer Head, Self-Tapping, No. 10 x 1/2; Replaces 140-106 Pan Head Cross Recess Screw Used On Some Models
7		87436676		1	HARNESS, WIRE Pilot Control Joystick, Left-Hand
8		87423802		1	SWITCH Pilot Control, On/Off
9		87410105		1	SWITCH Pilot Control Pattern Selection
10		87425636		1	HARNESS, WIRE Pilot Control Joystick, Right-Hand
11		87436836		1	RELAY Mini, 12V
12		840-1416		3	SCREW M4 x 16
13		121413A1		1	FUSE Mini, 15 amp
14		L18337		6	STRAP
15		87452511		2	NUT J-Type Nut; If Used

http://www.minnparbackhoeparts.com/

NOTES

http://www.minnparbackhoeparts.com/

SECTION INDEX

05-01	STEERING WHEEL - COLUMN
05-02	HYDRAULICS - STEERING
05-03	STEERING COLUMN
05-04	AXLE, FRONT (86990837) - MOUNTING
05-05	AXLE, FRONT (86990837) - HOUSING
05-06	AXLE, FRONT (86990837) - HOUSING, SWIVEL
05-07	AXLE, FRONT (86990837) - CYLINDER, STEERING
05-08	AXLE, FRONT (86990837) - HUB AND BEARINGS
05-09	WHEELS, FRONT - TIRES

http://www.minnparbackhoeparts.com/

STEERING WHEEL - COLUMN

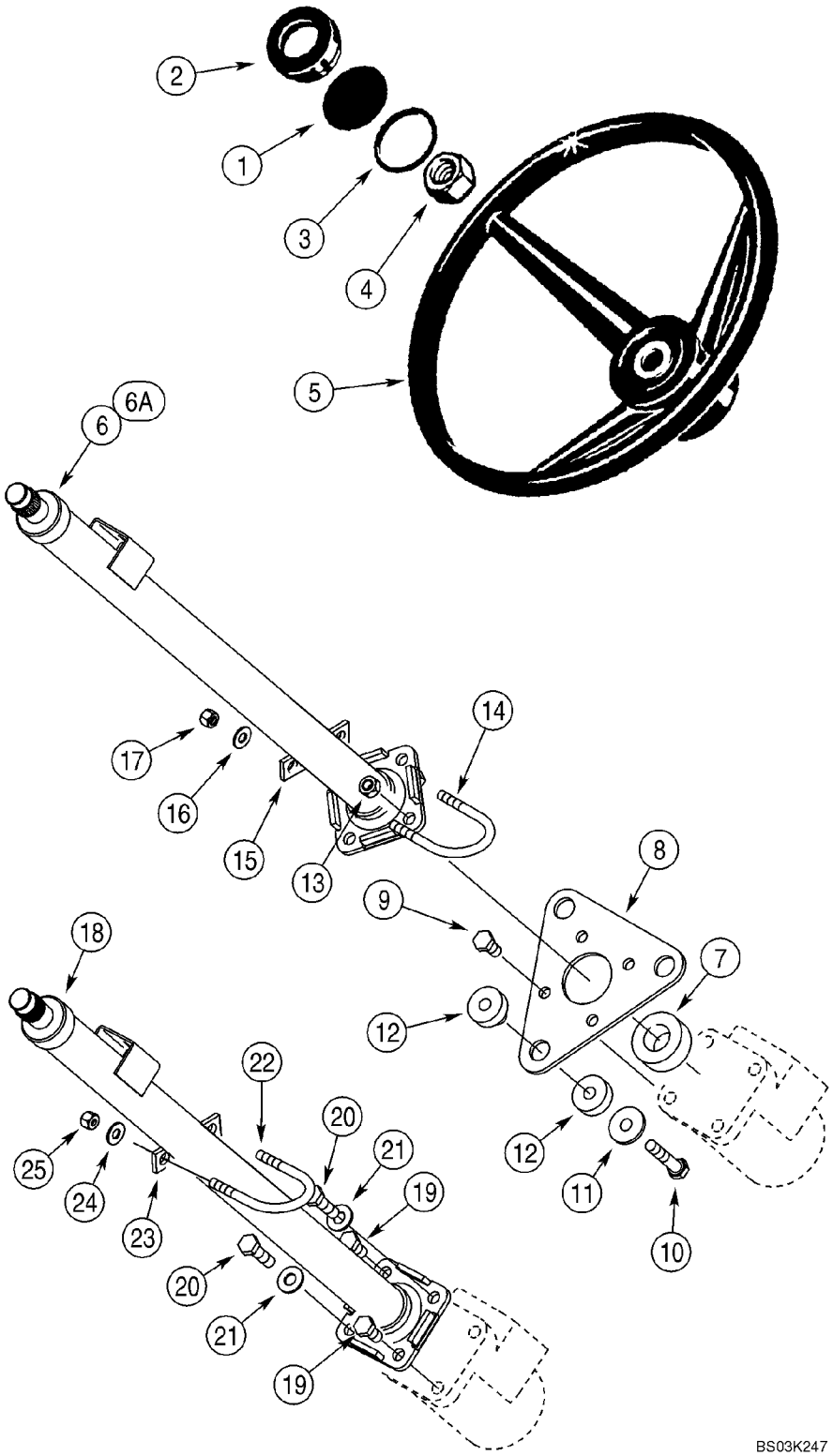

http://www.minnparbackhoeparts.com/

STEERING WHEEL - COLUMN

REF	FN	PART NUMBER	YR/SN	QTY	DESCRIPTION
1		87435569		1	EMBLEM Insert, Case
2		114882A2		1	CAP
3		238-5227		1	O-RING 2-1/8 ID x 2-3/8
4		1959509C1		1	NUT
5		A65544		1	WHEEL (STEERING)
6		352568A1		1	STEERING COLUMN Cab Models, Without Tilt Steering, See Figure 05-03
6A		352569A4		1	STEERING COLUMN Cab Models, With Tilt Steering, 712 mm Long, See Figure 05-03
7		352401A1		1	SEAL 25 x 40 x 19 mm, Sound Insulation
8		388116A2		1	PLATE
9		614-10020		4	SCREW M10 x 20
10		814-10050		3	BOLT M10 x 50
11		496-81028		3	WASHER 13/32 x 1-1/4 x 1/8 in
12		87447450		3	ISOLATOR 10 mm Hole; Replaces 141747A1 Isolator With 9.5 mm Hole Used On Some Models
13		832-10410		2	NUT Lock, M10
14		379846A1		1	U-BOLT
15		352727A1		1	SPACER
16		895-15008		2	WASHER 9 x 20 x 1,6 mm
17		832-10408		2	NUT Lock, M8
18		348794A1		1	STEERING COLUMN Canopy Models, See Figure 05-03
19		614-10020		2	SCREW M10 x 20
20		614-10035		2	SCREW M10 x 35
21		895-15010		2	WASHER 11 x 24 x 2 mm
22		379846A1		1	U-BOLT
23		352727A1		1	SPACER
24		895-15008		2	WASHER 9 x 20 x 1,6 mm
25		832-10408		2	NUT Lock, M8

http://www.minnparbackhoeparts.com/

05-02		p1	02/05

HYDRAULICS - STEERING

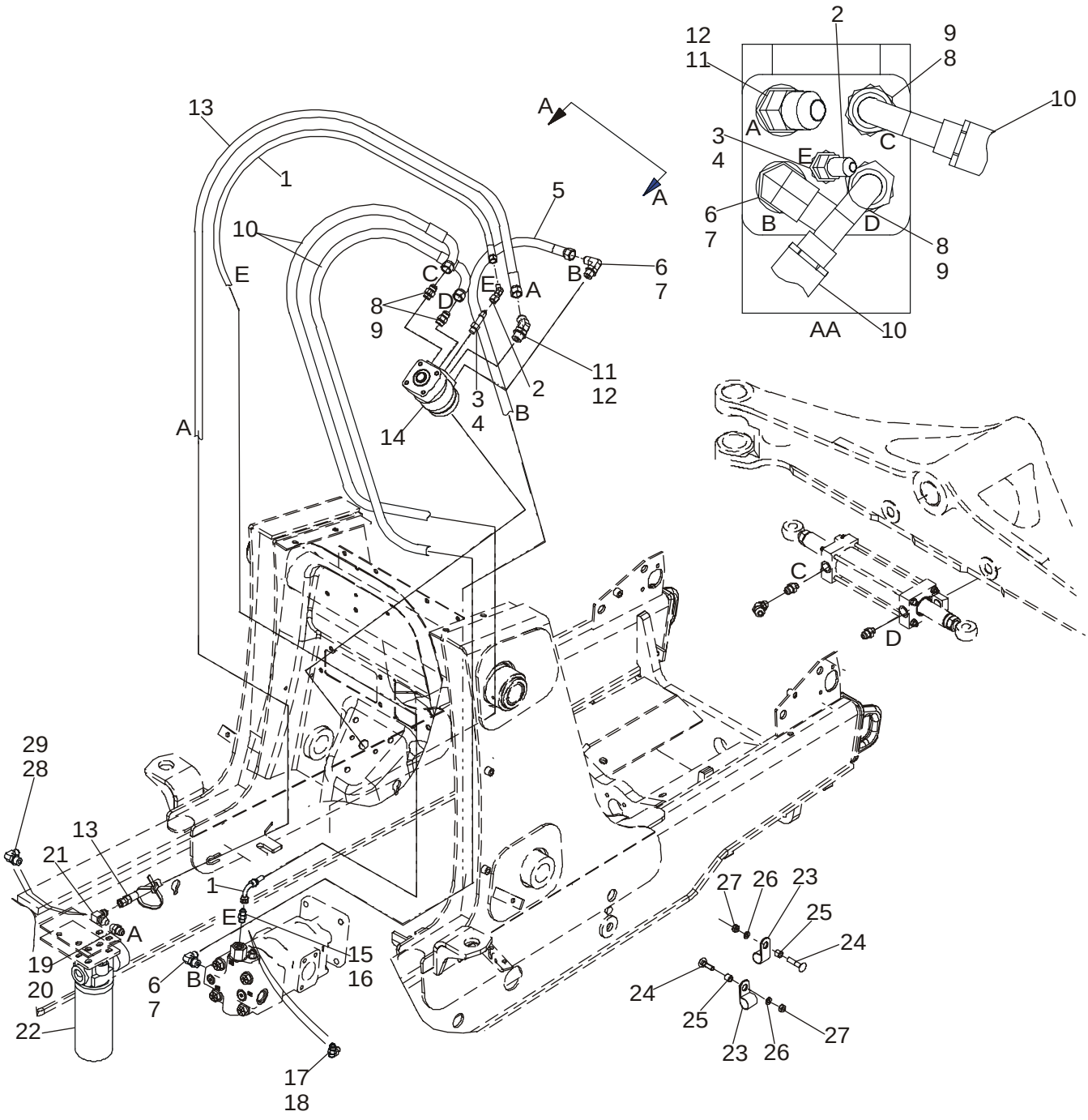

http://www.minnparbackhoeparts.com/

HYDRAULICS - STEERING

REF	FN	PART NUMBER	YR/SN	QTY	DESCRIPTION
1		87439137		1	HOSE ASSY. 1675 mm (66 in), Steering Pilot Hose
2		218-5170		1	FITTING Elbow, 45 deg, 7/16 fl x fem
3		218-5027		1	CONNECTOR 7/16 fl x Or, Incl. Ref 4
4		237-6004		1	O-RING 23/64 ID x 5/64
5		87439138		1	HOSE ASSY. 1600 mm (63 in), Steering Pressure
6		218-5106		2	FITTING Elbow, 90 deg, 3/4 Or, Incl. Ref 7
7		237-6008		1	O-RING
8		218-5059		2	CONNECTOR, HYD. 3/4 fl x Or, Incl. Ref 9
9		237-6008		1	O-RING 41/64 ID x 3/32
10		87429382		2	HOSE ASSY. 1520 mm (59-7/8 in), To Steering Cylinder
11		218-5136		1	ELBOW 45 deg, 3/4 Or; Incl. Ref 12
12		237-6008		1	O-RING
13		87439136		1	HOSE ASSY. 1550 mm (61-1/16 in), Return
14		87419634		1	PUMP Steering Control Valve; Includes 87454545 Seal Kit, 396592A1 Anti-Cavitation Valve Kit, 396593A1 Bolt Kit
		396591A1		1	KIT Seal; Includes (2) Seals, (3) O-Rings; No Longer Available, For Service Order 87454545 Seal Kit
		87454545		1	KIT, POWER STEERING Seal; Includes (2) Seals, (8) O-Rings
		396592A1		1	KIT Anti-Cavitation Valve; Includes (2) Balls, (4) Springs, (2) Retainers
		396593A1		1	KIT Bolt; Includes (7) Bolts
15		218-5057		1	CONNECTOR, HYD. 9/16 fl x Or, Incl. Ref 16, Standard Equipment, Models Without Auxiliary Hydraulics
16		237-6006		1	O-RING
17		282428A1		1	POPPET, VALVE CHECK, Tee, 9/16; Incl. Ref 18; Models With Auxiliary Hydraulics
18		237-6006		1	O-RING
19		218-5351		1	CONNECTOR, HYD. 3/4 fl x 9/16 Or; Incl. Ref 20; If Used
20		237-6006		1	O-RING 15/32 ID x 5/64
21		218-5230		1	ELBOW 90 deg, 3/4 fl x sw; If Used
22		87440045		1	FILTER ASSY. Hydraulic Oil, See Figure 08-61
23		515-23159		2	CLAMP P-Type

http://www.minnparbackhoeparts.com/

HYDRAULICS - STEERING

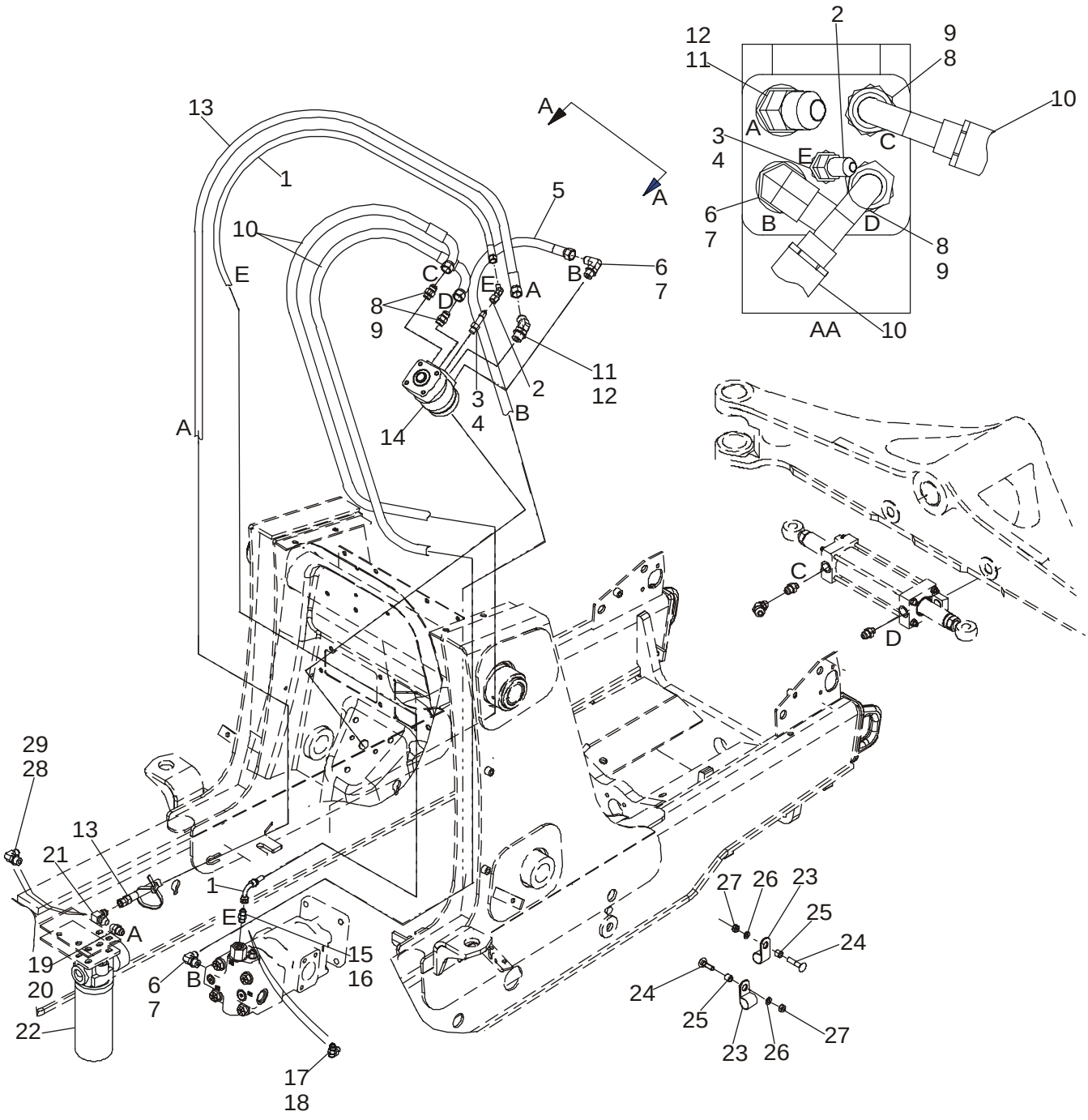

BS04D115

http://www.minnparbackhoeparts.com/

HYDRAULICS - STEERING

REF	FN	PART NUMBER	YR/SN	QTY	DESCRIPTION
24		711-10050		2	BOLT M10 x 50
25		120303A1		2	SPACER
26		892-11010		2	WASHER, LOCK M10
27		829-1410		2	NUT M10; 10.9
28		218-5280		1	FITTING ELBOW, 90 deg; 3/4 fl x 9/16 Or; Incl. Ref 29; If Used
29		237-6006		1	O-RING 15/32 ID x 5/64

http://www.minnparbackhoeparts.com/

STEERING COLUMN

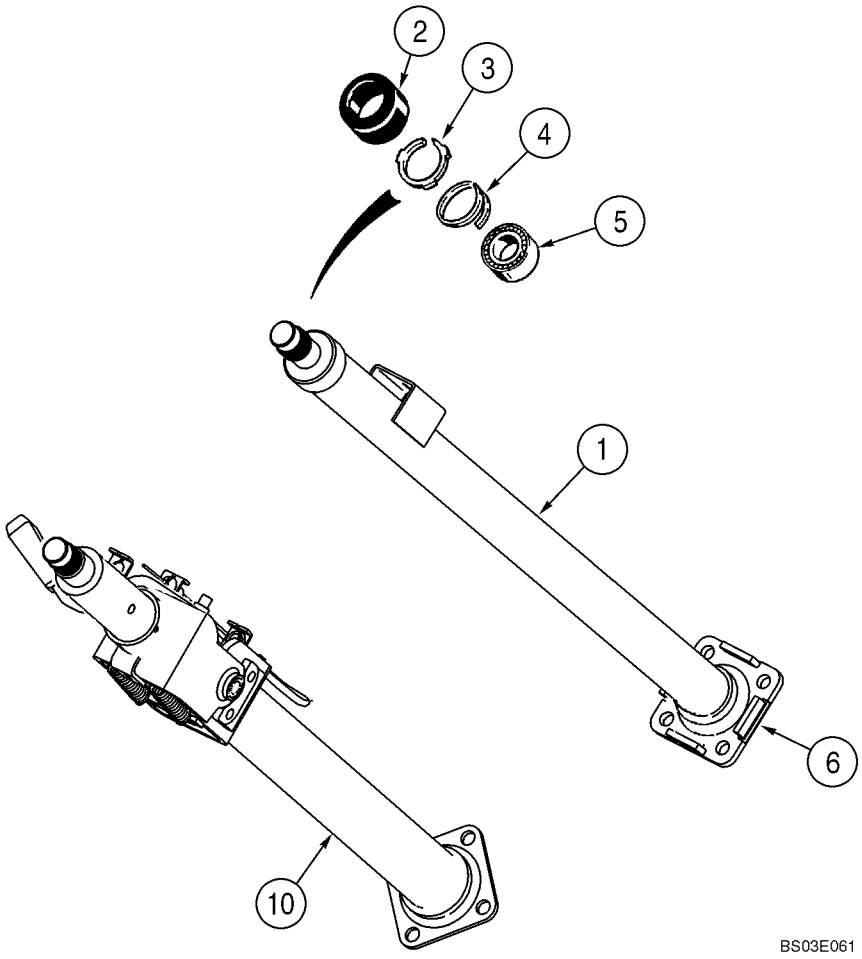

http://www.minnparbackhoeparts.com/

STEERING COLUMN

REF	FN	PART NUMBER	YR/SN	QTY	DESCRIPTION
		348794A1		1	STEERING COLUMN Canopy Models, Incl. Ref 1 - 6
		352568A1		1	STEERING COLUMN Cab Models, Without Tilt Steering, Incl. Ref 1 - 6
1		NSS		1	NOT SERVICED SEPARATELY Column
2		S115351		1	CAP
3		NSS		1	NOT SERVICED SEPARATELY Retainer
4		102-1387		1	SNAP RING No. 87
5		NSS		1	NOT SERVICED SEPARATELY Bearing
6		NSS		1	NOT SERVICED SEPARATELY Flange
10		352569A4		1	STEERING COLUMN 712 mm Long, Cab Models, With Tilt Steering, Component Parts Not Serviced Separately

http://www.minnparbackhoeparts.com/

AXLE, FRONT (86990837) - MOUNTING

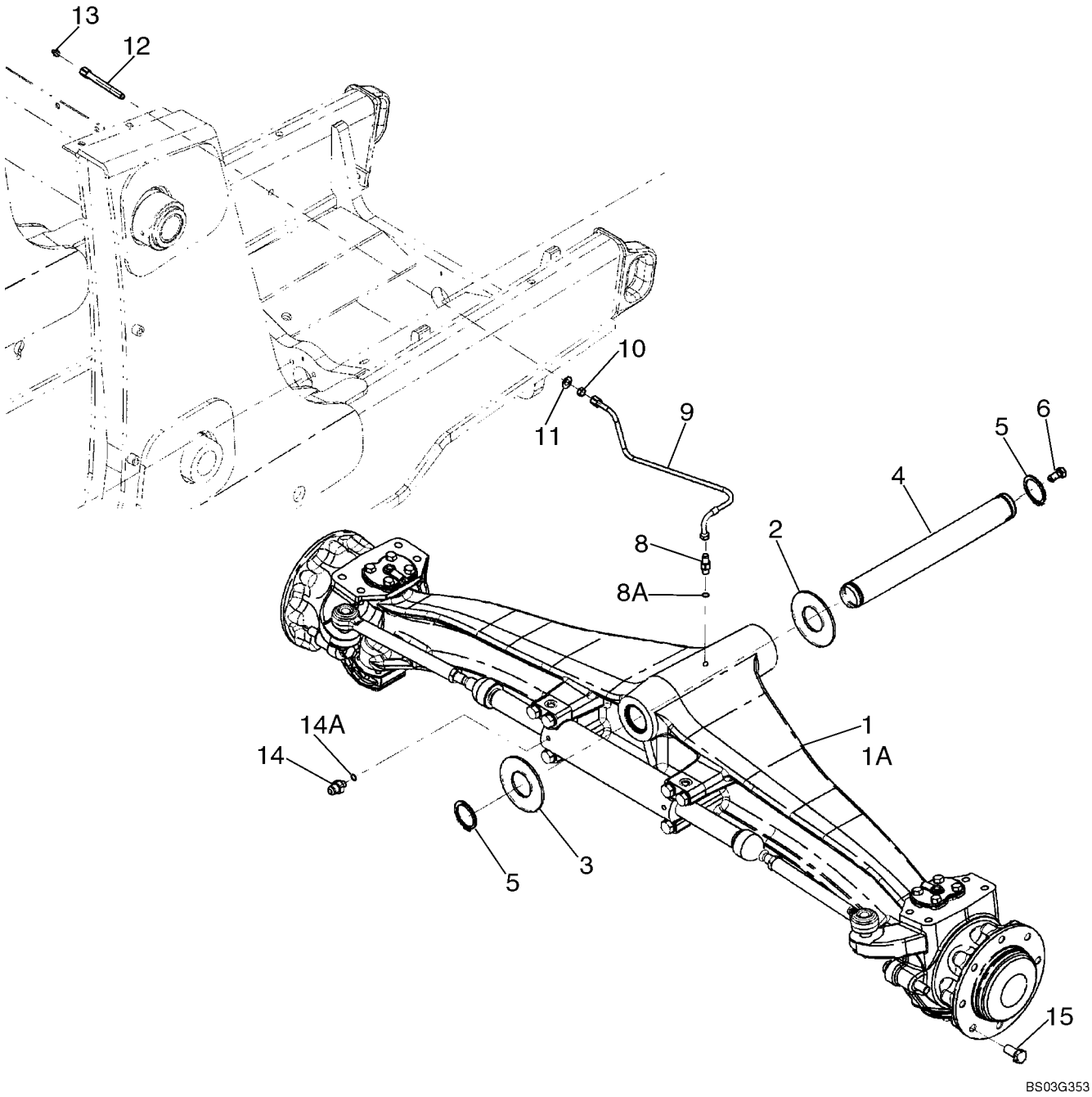

http://www.minnparbackhoeparts.com/

AXLE, FRONT (86990837) - MOUNTING

REF	FN	PART NUMBER	YR/SN	QTY	DESCRIPTION
1		86990837		1	AXLE, STEERING Front, Two Wheel Drive, See Figures 05-05 - 05-08
2		191796A1		X	WASHER 2 x 4 x 1/16
3		D123684		1	WASHER Thrust, 2-1/2 x 4-1/2 x 3/16
4		87404197		1	PIN, PIVOT
5		800-44050		2	SNAP RING No. 50
6		614-12025		1	BOLT M12 x 25
8		218-5053		1	CONNECTOR, HYD. 7/16 fl x adj Or; Incl. Ref 8A
8A		237-6004		1	O-RING 23/64 ID x 5/64
9		87433730		1	HOSE ASSY. 500 mm (19-11/16 in), Lubrication Line
10		218-1275		1	NUT, LOCK 7/16
11		495-11047		1	WASHER 15/32 x 59/64 x 1/16
12		381442A1		1	CONNECTION
13		219-1		1	NIPPLE, LUBE 1/8 PT x 21/32 Grease Fitting
14		218-5351		2	CONNECTOR, HYD. 3/4 fl x 9/16 Or, Incl. Ref 14A
14A		237-6006		1	O-RING 15/32 ID x 5/64
15		A38208		16	BOLT Wheel Bolt

http://www.minnparbackhoeparts.com/

05-05		p1	01/04

AXLE, FRONT (86990837) - HOUSING

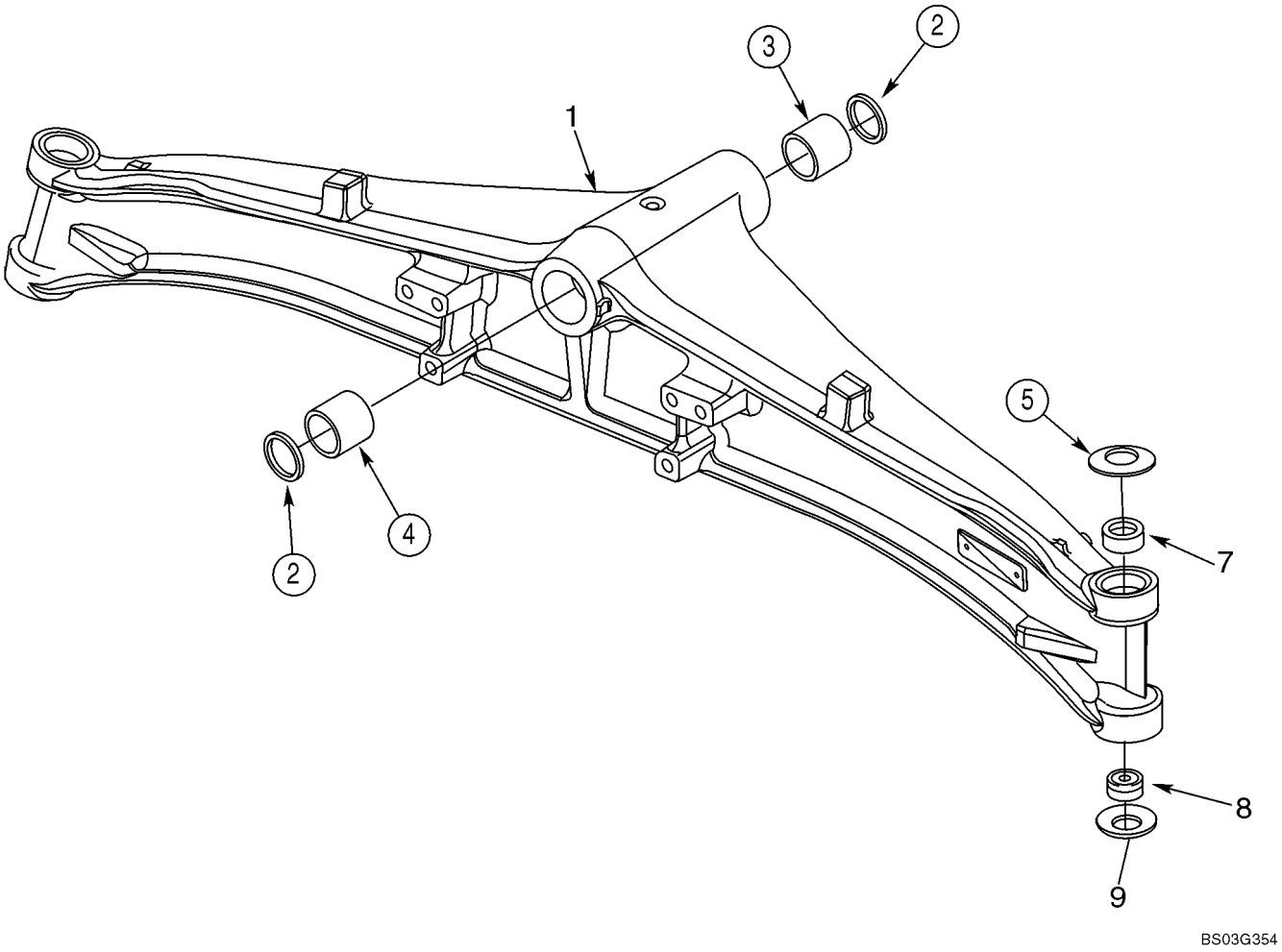

http://www.minnparbackhoeparts.com/

AXLE, FRONT (86990837) - HOUSING

REF	FN	PART NUMBER	YR/SN	QTY	DESCRIPTION
		86990837		1	AXLE, STEERING Front, Two Wheel Drive, Incl. Figures 05-05 - 05-08
1		429230A1		1	HOUSING, AXLE
2		N14367		2	SEAL
3		D149726		1	BUSHING Front
4		D149725		1	BUSHING Rear
5		122270A1		2	WASHER Belleville
7		87400286		2	BUSHING
8		N14373		2	BEARING Bushing; Two Piece; 28 ID x 50 OD x 16
9		122261A1		2	WASHER Belleville

http://www.minnparbackhoeparts.com/

AXLE, FRONT (86990837) - HOUSING, SWIVEL

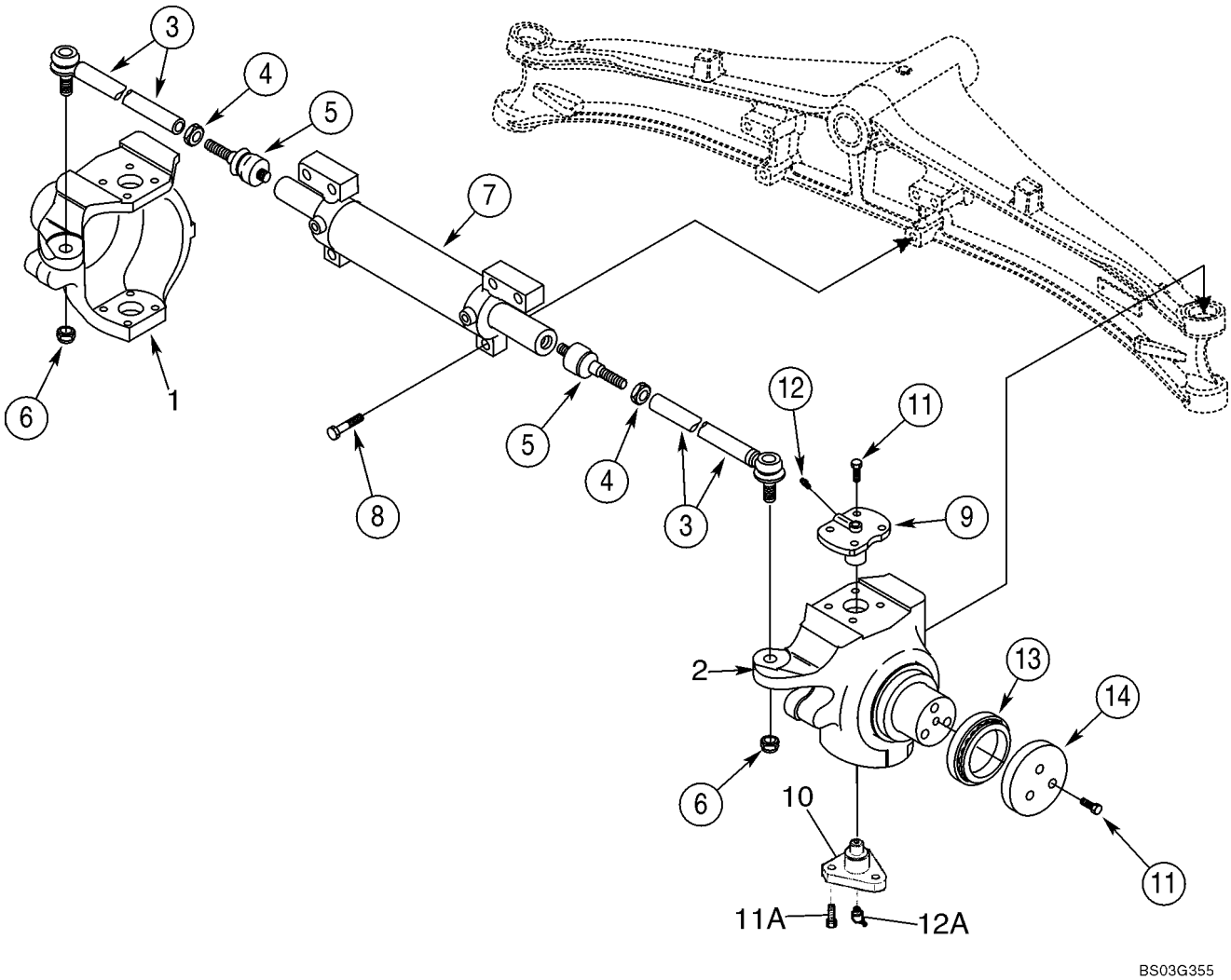

http://www.minnparbackhoeparts.com/

AXLE, FRONT (86990837) - HOUSING, SWIVEL

REF	FN	PART NUMBER	YR/SN	QTY	DESCRIPTION
		86990837		1	AXLE, STEERING Front, Two Wheel Drive, Incl. Figures 05-05 - 05-08
1		429231A1		1	HOUSING Swivel, Left-Hand
2		429232A1		1	HOUSING Swivel, Right-Hand
		401052A1		2	STEERING ASSY Arm, Incl. Ref 3 - 5
3		401054A1		1	TIE ROD
4		934727R1		1	NUT M18
5		112509A1		1	BALL JOINT
6		905839R1		2	NUT M18
7		401055A1		1	CYLINDER STEERING See Figure 05-07
8		863-16070		6	BOLT Socket Head, M16 x 70; 12.9
9		122265A1		2	PIN, LARGE King Pin, Upper
10		122259A1		2	PIVOT King Pin, Lower; Triangular Shape
11		100533A1		14	BOLT Lock, M12 x 30
11A		D150214		6	SCREW Lock, M14 x 35; Lower King Pin
12		712998R91		2	NIPPLE, LUBE M6x1, Grease Fitting
12A		N13505		2	NIPPLE, LUBE M6x1, 45 deg Grease Fitting; Lower King Pin
13		401059A1		2	BEARING, ROLLER Thrust
14		401060A1		2	WASHER, THRUST

http://www.minnparbackhoeparts.com/

AXLE, FRONT (86990837) - CYLINDER, STEERING

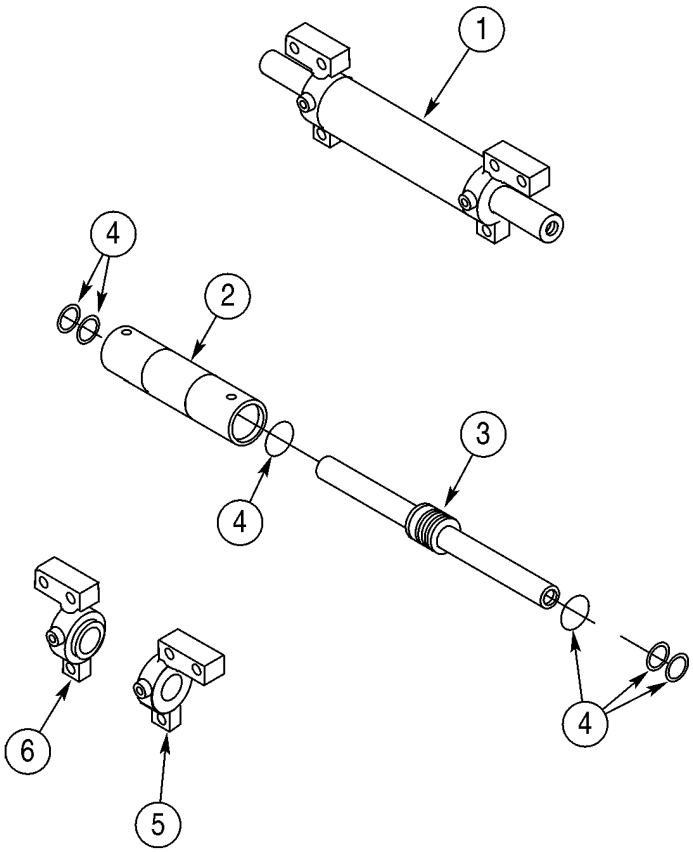

BC00G065

http://www.minnparbackhoeparts.com/

AXLE, FRONT (86990837) - CYLINDER, STEERING

REF	FN	PART NUMBER	YR/SN	QTY	DESCRIPTION
		86990837		1	AXLE, STEERING Front, Two Wheel Drive, Incl. Figures 05-05 - 05-08
1		401055A1		1	CYLINDER STEERING Incl. Ref 2 - 6
2		NSS		1	NOT SERVICED SEPARATELY Tube, Cylinder
3		401062A1		1	ROD, PISTON
4		401061A1		1	PACKAGE, SEALS Seal, Component Parts Not Serviced Separately
5		401063A1		1	HEAD ASSY. Right-Hand
6		401064A1		1	HEAD ASSY. Left-Hand

http://www.minnparbackhoeparts.com/

AXLE, FRONT (86990837) - HUB AND BEARINGS

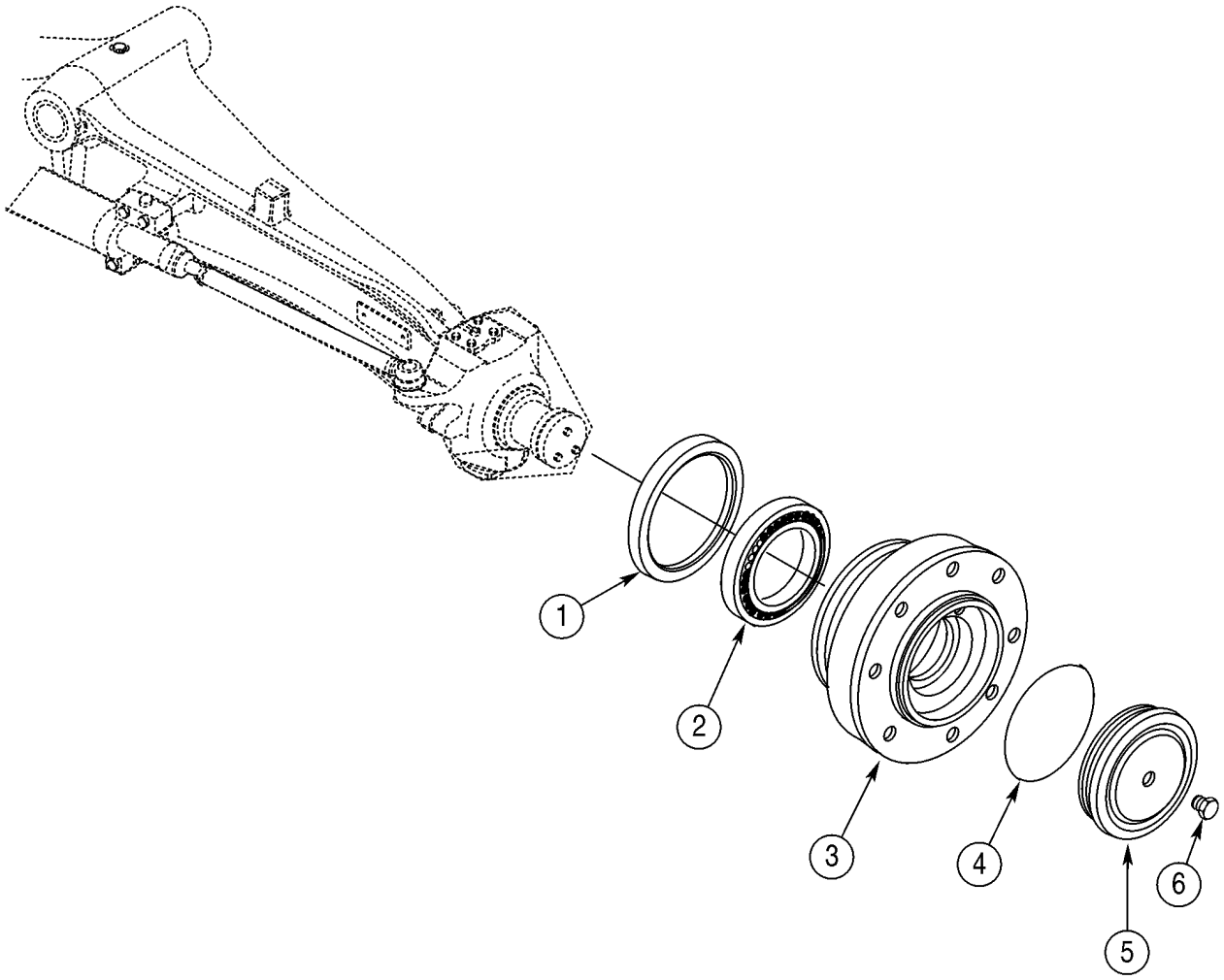

http://www.minnparbackhoeparts.com/

AXLE, FRONT (86990837) - HUB AND BEARINGS

REF	FN	PART NUMBER	YR/SN	QTY	DESCRIPTION
		86990837		1	AXLE, STEERING Front, Two Wheel Drive; Incl. Figures 05-05 - 05-08
1		311569A1		2	SEAL, OIL
2		324213A1		2	BEARING
3		401065A1		2	HUB
4		401066A1		2	O-RING
5		401067A1		2	COVER
6		D142898		2	PLUG 10 x 1 mm

http://www.minnparbackhoeparts.com/

WHEELS, FRONT - TIRES

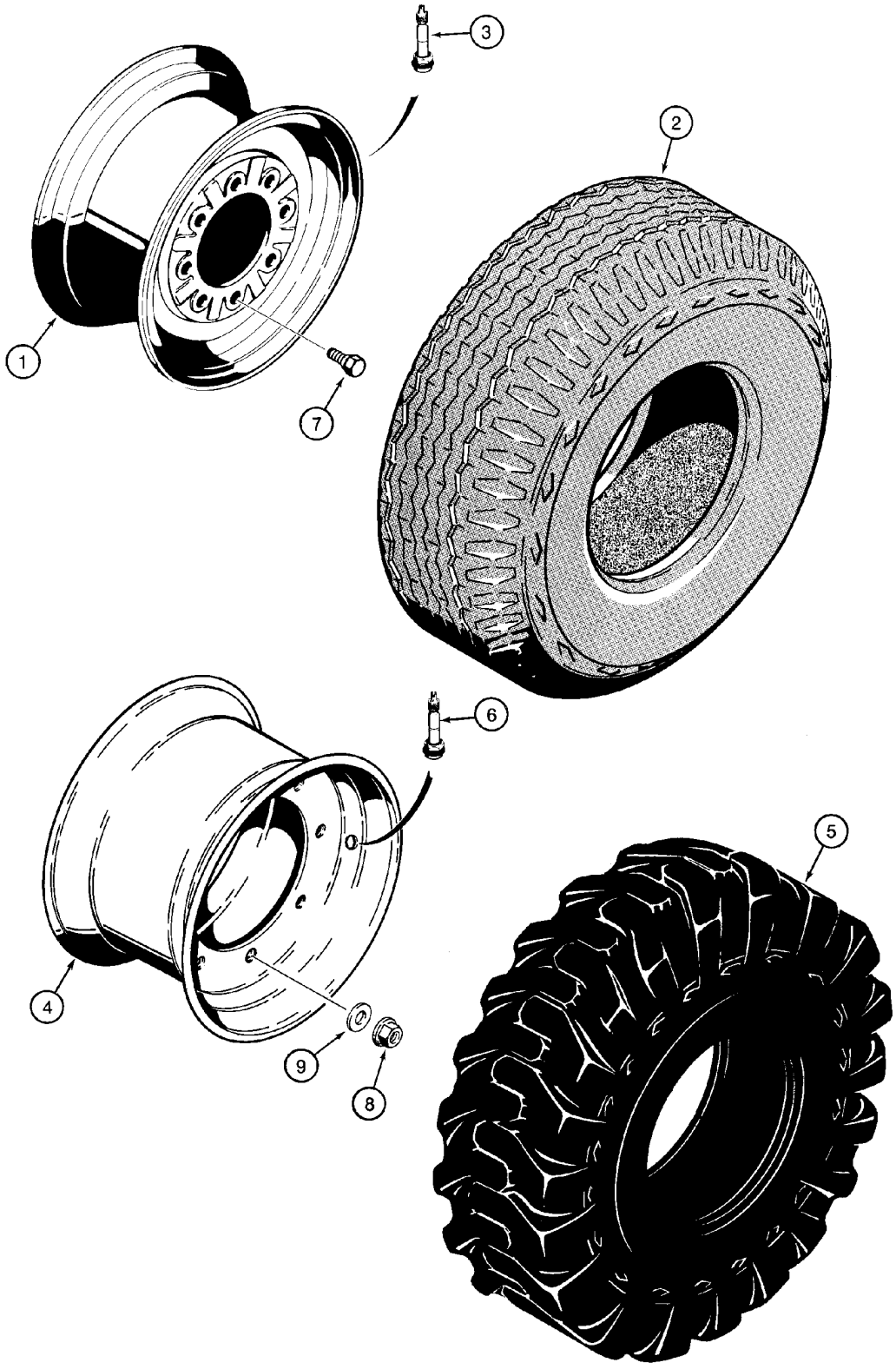

http://www.minnparbackhoeparts.com/

WHEELS, FRONT - TIRES

REF	FN	PART NUMBER	YR/SN	QTY	DESCRIPTION
1		D125223		2	RIM For 580SM 11L x 16 - 10 PR F3 Tires; Two Wheel Drive Models
1		247104A1		2	WHEEL RIM, For 580SM Plus 14.5/.75 x 16.1 - 10 Ply F3; Two Wheel or Four Wheel Drive
2		REF		2	INSTRUCTION Tire, Purchase Locally
3		387897R91		2	VALVE STEM
4		119243A1		2	RIM For 580SM 12 x 16.5 - 8 or 10 PR Tires; Four Wheel Drive Models
4		139080A1		2	RIM For 580SM 10.5/80x18x10 Ply Tires
4		139080A1		2	RIM For 580SM Plus 12.5/80 x 18 - 10 PR SG; Four Wheel Drive Models
5		REF		2	INSTRUCTION Tire, Purchase Locally
6		387897R91		2	VALVE STEM
7		A38208		16	BOLT Wheel Bolts; Two Wheel Drive Models
8		825-11418		16	NUT M18; Wheel Nuts; Four Wheel Drive Models
9		496-81000		16	WASHER 25/32 x 1-3/8 x 1/8; Four Wheel Drive Models

http://www.minnparbackhoeparts.com/

SECTION INDEX

06-01	AXLE, FRONT DRIVE - MOUNTING
06-02	AXLE, FRONT DRIVE - HOUSING
06-03	AXLE, FRONT DRIVE - HOUSING, SWIVEL
06-04	AXLE, FRONT DRIVE - CYLINDER, STEERING
06-05	AXLE, FRONT DRIVE - SHAFTS, AXLE
06-06	AXLE, FRONT DRIVE - PLANETARY
06-07	AXLE, FRONT DRIVE - DIFFERENTIAL
06-08	AXLE, FRONT DRIVE - RING AND PINION
06-09	DRIVE SHAFT, FRONT AXLE
06-10	COOLING SYSTEM - TRANSMISSION (MODELS WITHOUT POWERSHIFT)(WITH CUT HOSES AT COOLER)
06-11	COOLING SYSTEM - TRANSMISSION (MODELS WITH POWERSHIFT)(WITH CUT HOSES AT COOLER)
06-11A	COOLING SYSTEM - TRANSMISSION (WITH FLARED FITTINGS AT COOLER)
06-12	TRANSMISSION - MOUNTING (MODELS WITHOUT POWERSHIFT)
06-13	TRANSMISSION - MOUNTING (MODELS WITH POWERSHIFT)
06-14	TRANSMISSION ASSY - FILTER, OIL (MODELS WITHOUT POWERSHIFT)
06-15	TRANSMISSION ASSY (2WD) - HOUSING (MODELS WITHOUT POWERSHIFT)
06-16	TRANSMISSION ASSY (4WD) - HOUSING (MODELS WITHOUT POWERSHIFT)
06-17	TRANSMISSION ASSY - PUMP, OIL (MODELS WITHOUT POWERSHIFT)
06-18	TRANSMISSION ASSY - SHIFTER MECHANISM (MODELS WITHOUT POWERSHIFT)
06-19	TRANSMISSION ASSY - SHAFT, IDLER AND PRIMARY (MODELS WITHOUT POWERSHIFT)
06-20	TRANSMISSION ASSY - SHAFT, INPUT (MODELS WITHOUT POWERSHIFT)
06-21	TRANSMISSION ASSY - SHAFT, SECONDARY (MODELS WITHOUT POWERSHIFT)
06-22	TRANSMISSION ASSY (4WD) - SHAFT, OUTPUT (MODELS WITHOUT POWERSHIFT)
06-23	TRANSMISSION ASSY (86984097 OR 86984098) - VALVE, CONTROL (MODELS WITHOUT POWERSHIFT)
06-23A	TRANSMISSION ASSY (87456843 OR 87456844) - VALVE, CONTROL (MODELS WITHOUT POWERSHIFT)
06-24	TRANSMISSION ASSY (4WD) - VALVE, SOLENOID (MODELS WITHOUT POWERSHIFT)
06-25	TRANSMISSION ASSY, POWERSHIFT - HOUSING
06-26	TRANSMISSION ASSY, POWERSHIFT - HOUSING, REAR
06-27	TRANSMISSION ASSY, POWERSHIFT - TORQUE CONVERTER
06-28	TRANSMISSION ASSY, POWERSHIFT - PUMP, OIL
06-29	TRANSMISSION ASSY, POWERSHIFT - CLUTCH, FORWARD DRIVE
06-30	TRANSMISSION ASSY, POWERSHIFT - CLUTCH, REVERSE DRIVE
06-31	TRANSMISSION ASSY, POWERSHIFT - CLUTCH, PUMP DRIVE
06-32	TRANSMISSION ASSY, POWERSHIFT - CLUTCH, SECOND GEAR
06-33	TRANSMISSION ASSY, POWERSHIFT - CLUTCH, OUTPUT SHAFT
06-34	TRANSMISSION ASSY, POWERSHIFT - MOUNTING, VALVE
06-35	TRANSMISSION ASSY, POWERSHIFT - VALVE, CONTROL
06-36	TRANSMISSION ASSY, POWERSHIFT - PLATE, DRIVE
06-37	WHEELS, REAR - TIRES
06-38	AXLE, REAR DRIVE - MOUNTING
06-39	AXLE, REAR - DIFFERENTIAL LOCK
06-40	AXLE, REAR DRIVE - HOUSING
06-41	AXLE, REAR DRIVE - DIFFERENTIAL (CLOCKWISE INPUT, MODELS WITHOUT POWERSHIFT)
06-42	AXLE, REAR DRIVE - DIFFERENTIAL (COUNTER CLOCKWISE INPUT, MODELS WITH POWERSHIFT)

http://www.minnparbackhoeparts.com/

SECTION INDEX

06-43	AXLE, REAR DRIVE - RING AND PINION
06-44	AXLE, REAR DRIVE - DIFFERENTIAL LOCK (CLOCKWISE INPUT, MODELS WITHOUT POWERSHIFT)
06-45	AXLE, REAR DRIVE - DIFFERENTIAL LOCK (COUNTER CLOCKWISE INPUT, MODELS WITH POWERSHIFT)
06-46	AXLE, REAR DRIVE - PLANETARY
06-47	DRIVE SHAFT, REAR AXLE

http://www.minnparbackhoeparts.com/

AXLE, FRONT DRIVE - MOUNTING

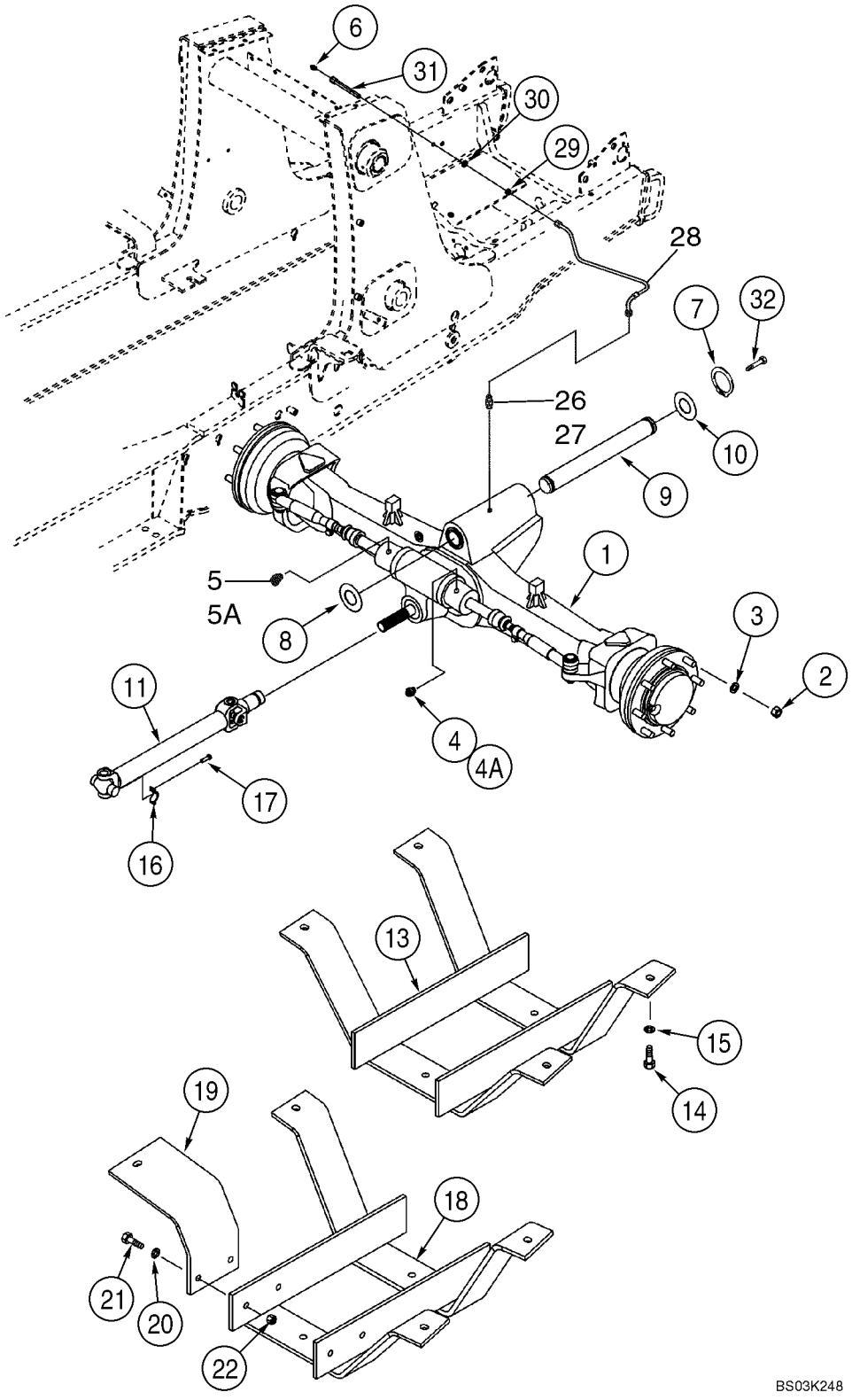

http://www.minnparbackhoeparts.com/

AXLE, FRONT DRIVE - MOUNTING

REF	FN	PART NUMBER	YR/SN	QTY	DESCRIPTION
1		87417387		1	AXLE ASSY, 4WD Front, 580SM Models Without Powershift Transmission, See Figure 06-02 - 06-08
1		87417390		1	AXLE ASSY, 4WD Front, With Limited Slip, 580SM+ Models Without Powershift Transmission, See Figure 06-02 - 06-08
1		87417389		1	AXLE ASSY, 4WD Front, 580SM Models With Powershift Transmission, See Figure 06-02 - 06-08
1		87417391		1	AXLE ASSY, 4WD Front, With Limited Slip, 580SM+ Models With Powershift Transmission, See Figure 06-02 - 06-08
2		825-11418		16	NUT M18
3		496-81000		16	WASHER 25/32 x 1-3/8 x 1/8
4		218-5351		1	CONNECTOR, HYD. 3/4 fl x 9/16 Or; Incl. Ref 4A
4A		237-6006		1	O-RING 15/32 ID x 5/64
5		218-5529		1	ELBOW Elbow, 45 deg, 3/4 fl x 9/16 Or; Incl. Ref 5A
5A		237-6006		1	O-RING 15/32 ID x 5/64
6		219-1		1	NIPPLE, LUBE 1/8 PT x 21/32
7		800-44050		2	SNAP RING No. 50
8		191796A1		X	WASHER 2 x 4 x 1/16
9		87404197		1	PIN, PIVOT Pivot Pin
10		D123684		1	WASHER Thrust, 2-1/2 x 4-1/2 x 3/16
11		367861A2		1	SHAFT, DRIVE See Figure 06-09
13		137223A2		1	GUARD Drive Shaft, Used On Models With 31 Gallon Fuel Tank
14		827-12045		4	SCREW M12 x 45; 10.9
15		495-81025		4	WASHER 17/32 x 1-1/4 x 3/16
16		90-6682T1		2	CLAMP
17		D137627		4	BOLT
18		282038A2		1	GUARD ASSY. Drive Shaft, Used On Models With 40 Gallon Fuel Tank
19		282033A1		1	BRACKET
20		495-81025		8	WASHER 17/32 x 1-1/4 x 3/16
21		827-12045		6	SCREW M12 x 45; 10.9
22		829-1412		2	NUT M12; 10
26		218-5053		1	CONNECTOR, HYD. 7/16 fl x adj Or; Incl. Ref 27
27		237-6004		1	O-RING 23/64 ID x 5/64
28		87433730		1	HOSE ASSY. 500 mm (19-11/16 in), Lubrication Line

http://www.minnparbackhoeparts.com/

AXLE, FRONT DRIVE - MOUNTING

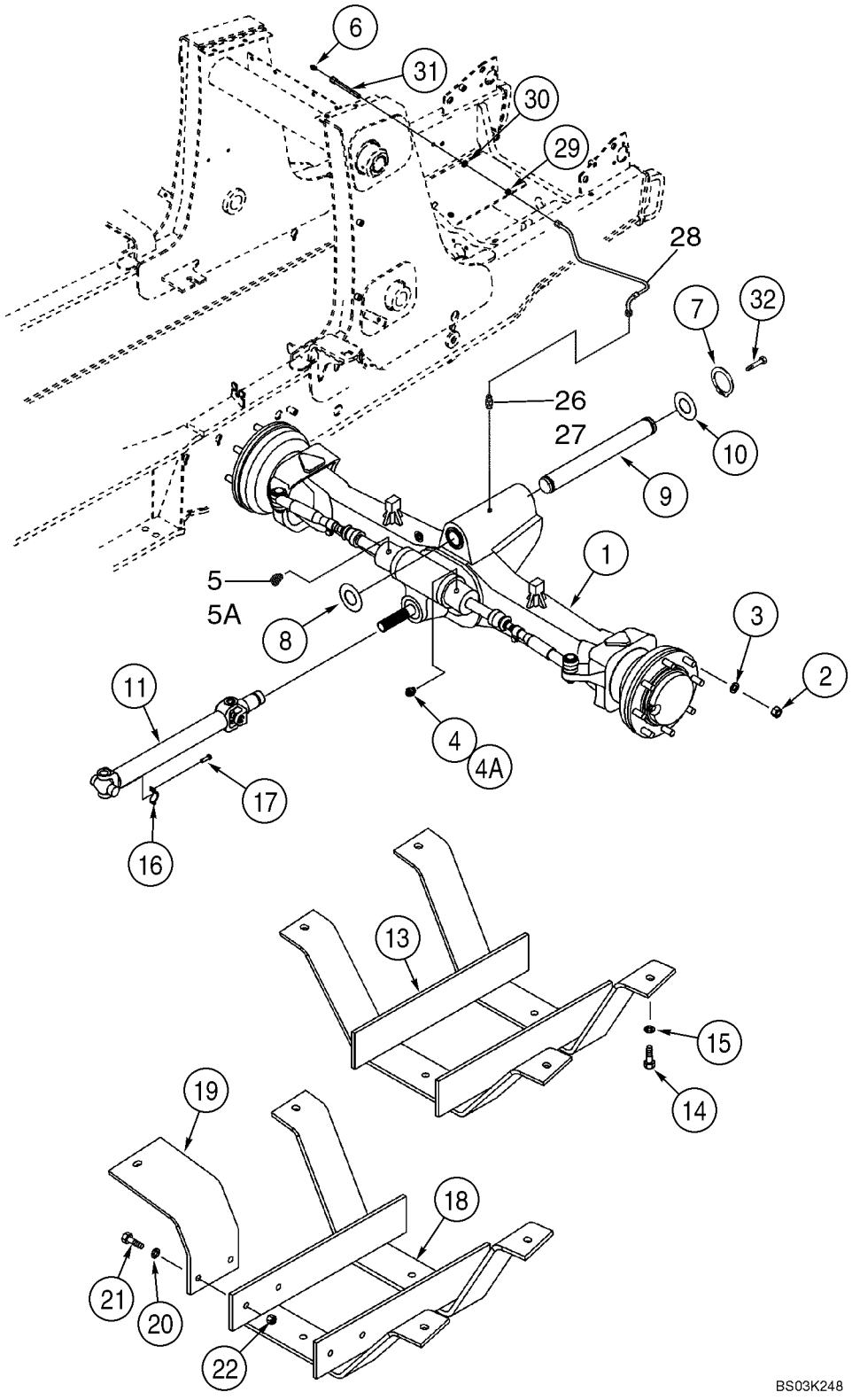

http://www.minnparbackhoeparts.com/

AXLE, FRONT DRIVE - MOUNTING

REF	FN	PART NUMBER	YR/SN	QTY	DESCRIPTION
29		218-1275		1	NUT, LOCK 7/16
30		495-11047		1	WASHER 15/32 x 59/64 x 1/16
31		381442A1		1	CONNECTION Lubrication Line
32		614-12025		1	BOLT M12 x 25

http://www.minnparbackhoeparts.com/

AXLE, FRONT DRIVE - HOUSING

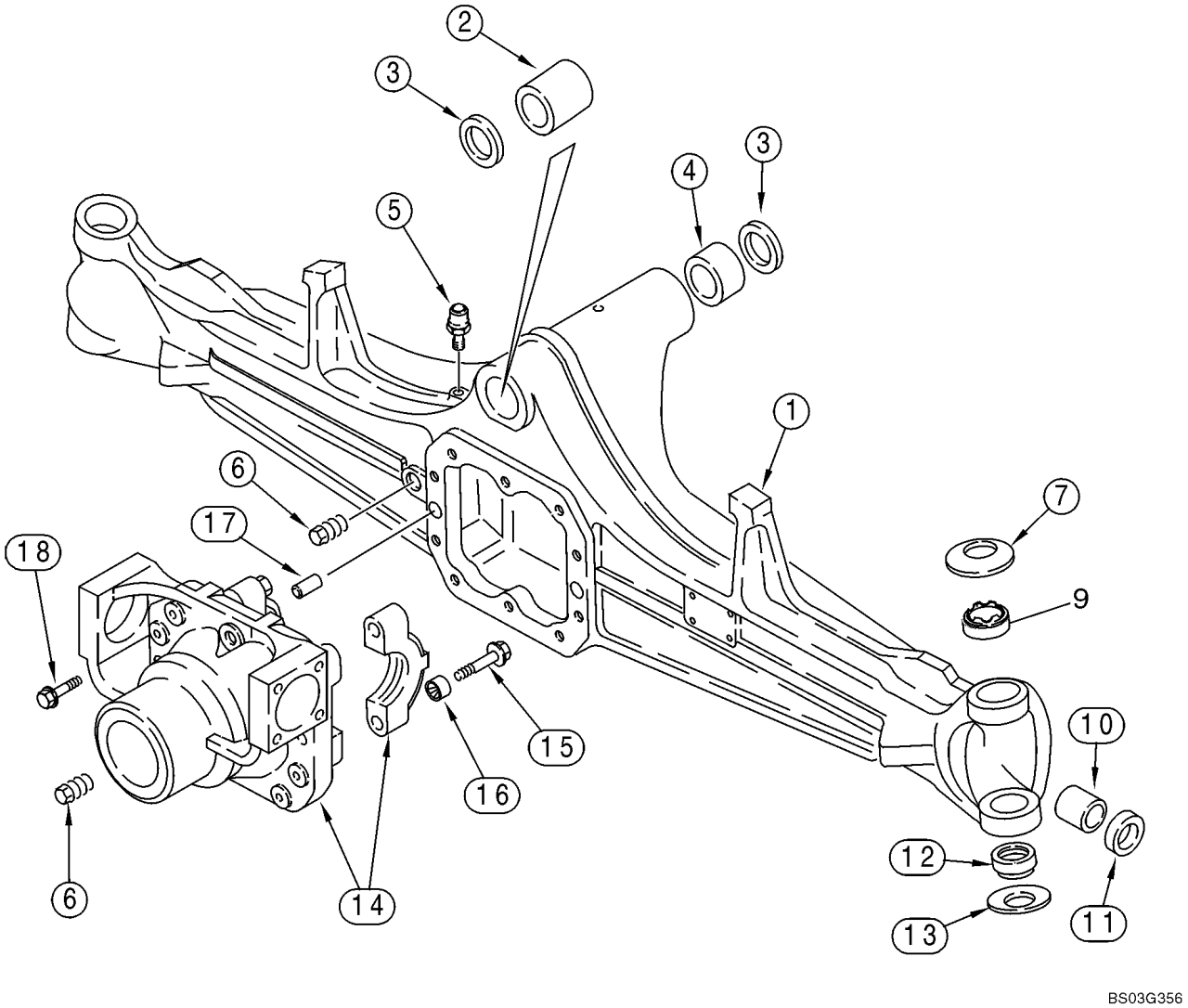

http://www.minnparbackhoeparts.com/

AXLE, FRONT DRIVE - HOUSING

REF	FN	PART NUMBER	YR/SN	QTY	DESCRIPTION
		87417387		1	AXLE ASSY, 4WD Front, 580SM Models Without Powershift Transmission, Incl. Ref 1 - 18; Also Includes Parts On Figures 06-02 - 06-08
		87417390		1	AXLE ASSY, 4WD Front, With Limited Slip, 580SM+ Models Without Powershift Transmission, Incl. Ref 1 - 18; Also Includes Parts On Figures 06-02 - 06-08
		87417389		1	AXLE ASSY, 4WD Front, 580SM Models With Powershift Transmission, Incl. Ref 1 - 18; Also Includes Parts On Figures 06-02 - 06-08
		87417391		1	AXLE ASSY, 4WD Front, With Limited Slip, 580SM+ Models With Powershift Transmission, Incl. Ref 1 - 18; Also Includes Parts On Figures 06-02 - 06-08
1		427107A1		1	HOUSING, AXLE 87417387 or 87417389 580SM Axle
1		87430345		1	HOUSING, AXLE 87417390 or 87417391 580SM+ Axle
		B17575		X	FLUID 89 ml, Black RTV Silicone; Differential Carrier to Axle Housing
2		D149725		1	BUSHING
3		N14367		2	SEAL
4		D149726		1	BUSHING
5		1966149C2		1	BREATHER
6		A156873		2	PLUG, DRAIN 22 mm
7		122270A1		2	WASHER Belleville
9		87400286		2	BUSHING
10		1966186C1		2	BUSHING
11		311565A1		2	SEAL Oil, 30 x 44 x 14 mm thk, Triple Lip, Used In 15 mm Deep Counterbore
12		100520A1		2	BALL JOINT Bushing, Two Piece
13		122268A1		2	WASHER Belleville
		144454A1		1	SUPPORT ASSY. Differential Carrier; Incl. Ref 14 - 16
14		NSS		1	NOT SERVICED SEPARATELY Carrier
15		S301065		4	SCREW 14 x 75 mm
16		1966136C1		4	BUSHING Bushing
17		1966138C1		2	PIN, LARGE Dowel
18		S301064		10	SCREW Flange, M12 x 33; 12.9

http://www.minnparbackhoeparts.com/

AXLE, FRONT DRIVE - HOUSING

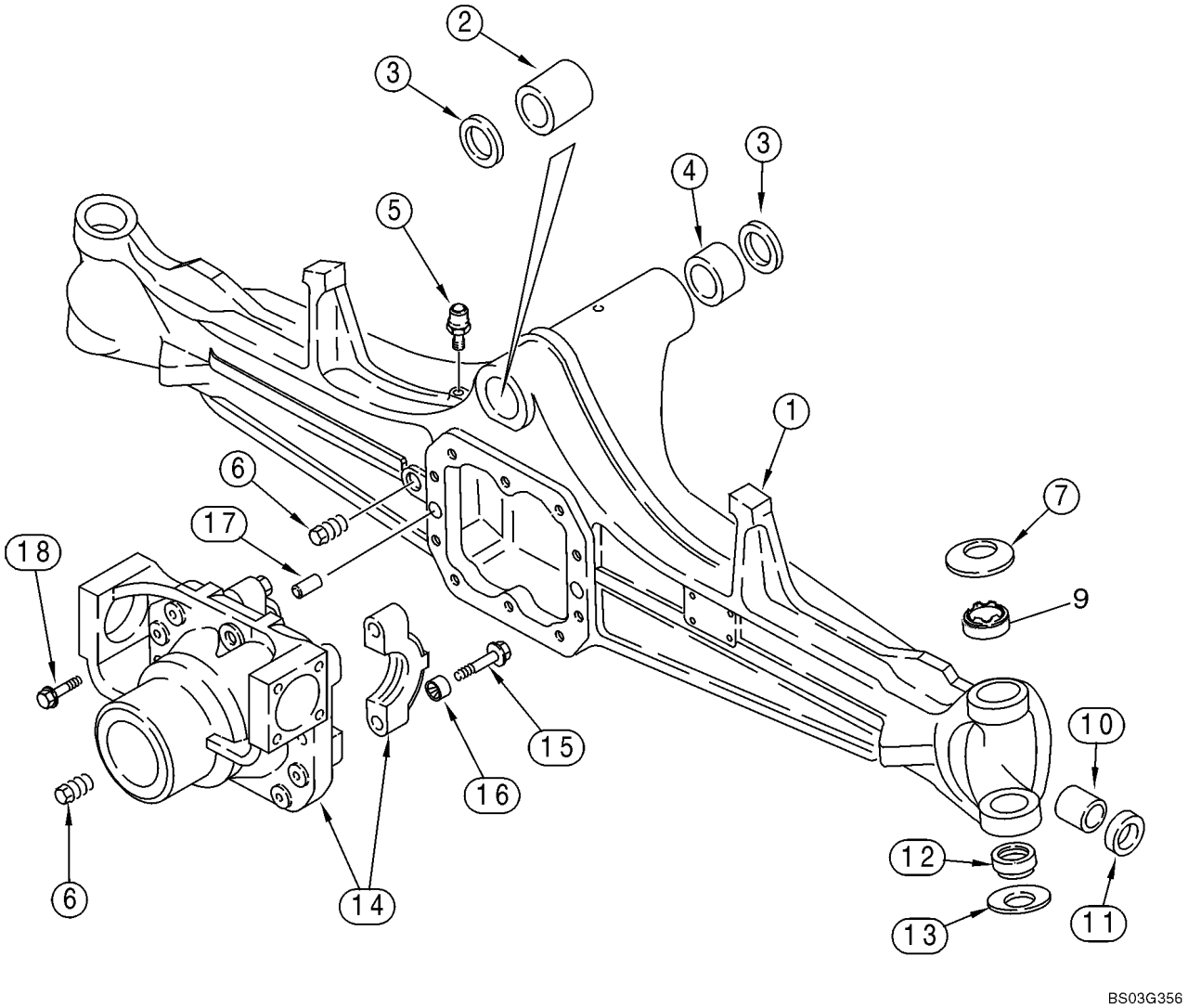

http://www.minnparbackhoeparts.com/

AXLE, FRONT DRIVE - HOUSING

REF	FN	PART NUMBER	YR/SN	QTY	DESCRIPTION
		B17575		X	FLUID 89 ml, Black RTV Silicone, Differential Carrier to Axle Housing

http://www.minnparbackhoeparts.com/

AXLE, FRONT DRIVE - HOUSING, SWIVEL

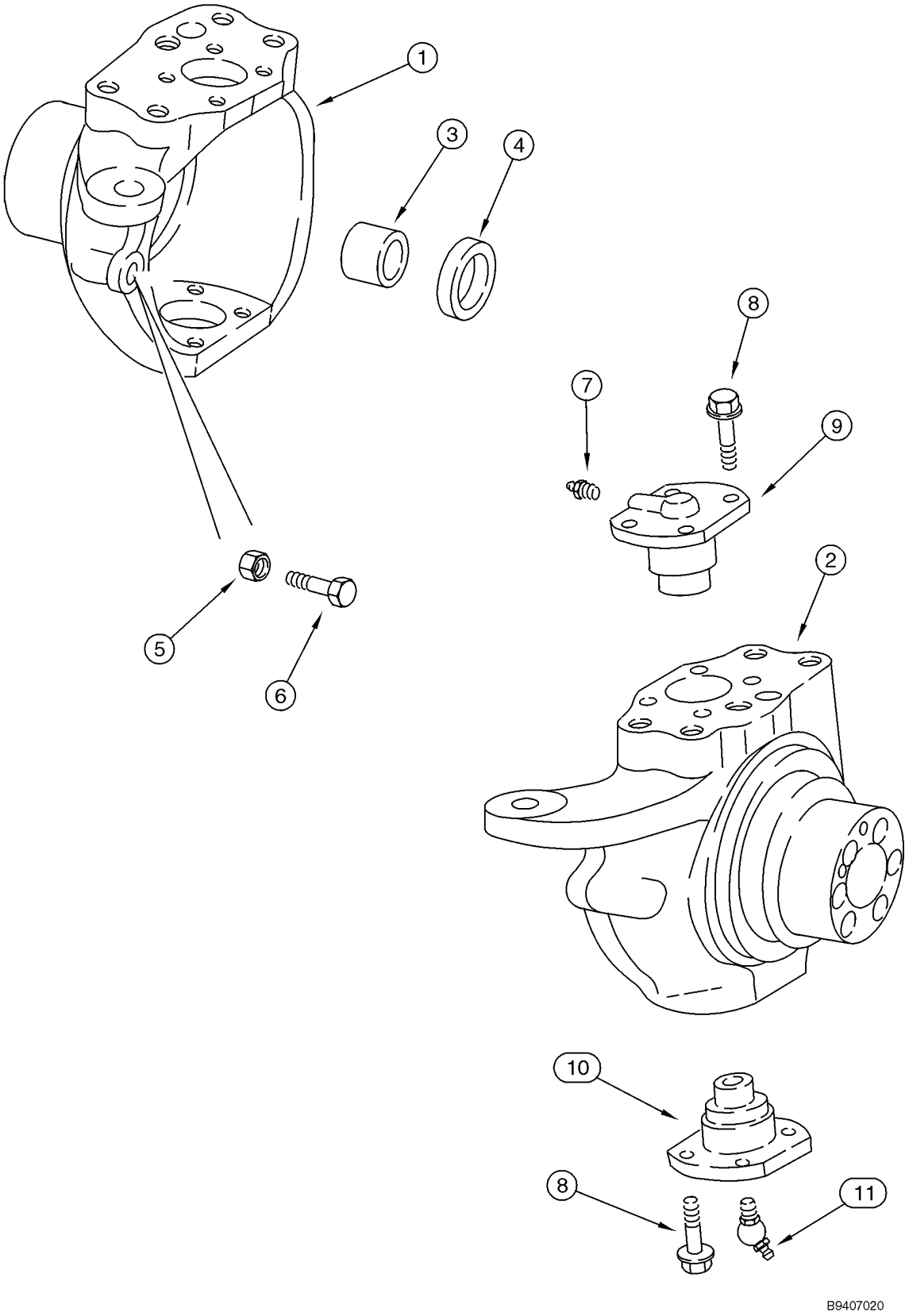

http://www.minnparbackhoeparts.com/

AXLE, FRONT DRIVE - HOUSING, SWIVEL

REF	FN	PART NUMBER	YR/SN	QTY	DESCRIPTION
		87417387		1	AXLE ASSY, 4WD Front, 580SM Models Without Powershift Transmission, Incl. Ref 1 - 11; Also Includes Parts On Figures 06-02 - 06-08
		87417390		1	AXLE ASSY, 4WD Front, With Limited Slip, 580SM+ Models Without Powershift Transmission, Incl. Ref 1 - 11; Also Includes Parts On Figures 06-02 - 06-08
		87417389		1	AXLE ASSY, 4WD Front, 580SM Models With Powershift Transmission, Incl. Ref 1 - 11; Also Includes Parts On Figures 06-02 - 06-08
		87417391		1	AXLE ASSY, 4WD Front, With Limited Slip, 580SM+ Models With Powershift Transmission, Incl. Ref 1 - 11; Also Includes Parts On Figures 06-02 - 06-08
1		397653A1		1	HOUSING, AXLE Left-Hand, 60 mm Diameter Axle Shaft Seal Counterbore; 87417387 or 87417389 580SM Axle
1		402344A1		1	HOUSING Left-Hand, 87417390 or 87417391 580SM+ Axle
		B17575		X	FLUID 89 ml, Black RTV Silicone, Wear Ring to Swivel Housing
2		397654A1		1	HOUSING, AXLE Right-Hand, 60 mm Diameter Axle Shaft Seal Counterbore; 87417387 or 87417389 580SM Axle
2		402346A1		1	HOUSING Right-Hand, 87417390 or 87417391 580SM+ Axle
3		100532A1		2	BUSHING, LARGE Used With Right-Hand or Left-Hand Swivel Housing, Not Included With Housing, Purchase Separately
4		402359A1		2	SEAL 45 x 60 x 16 mm thk, Triple Lip
5		1537663C1		2	NUT M16
6		1537664C1		2	SCREW
7		712998R91		2	NIPPLE, LUBE M6 x 1
8		100533A1		16	BOLT M12 x 30
9		122265A1		2	PIN, LARGE King Pin
10		122264A1		2	PIN, LARGE King Pin
11		N13505		2	NIPPLE, LUBE 45 deg, M6x1

http://www.minnparbackhoeparts.com/

AXLE, FRONT DRIVE - CYLINDER, STEERING

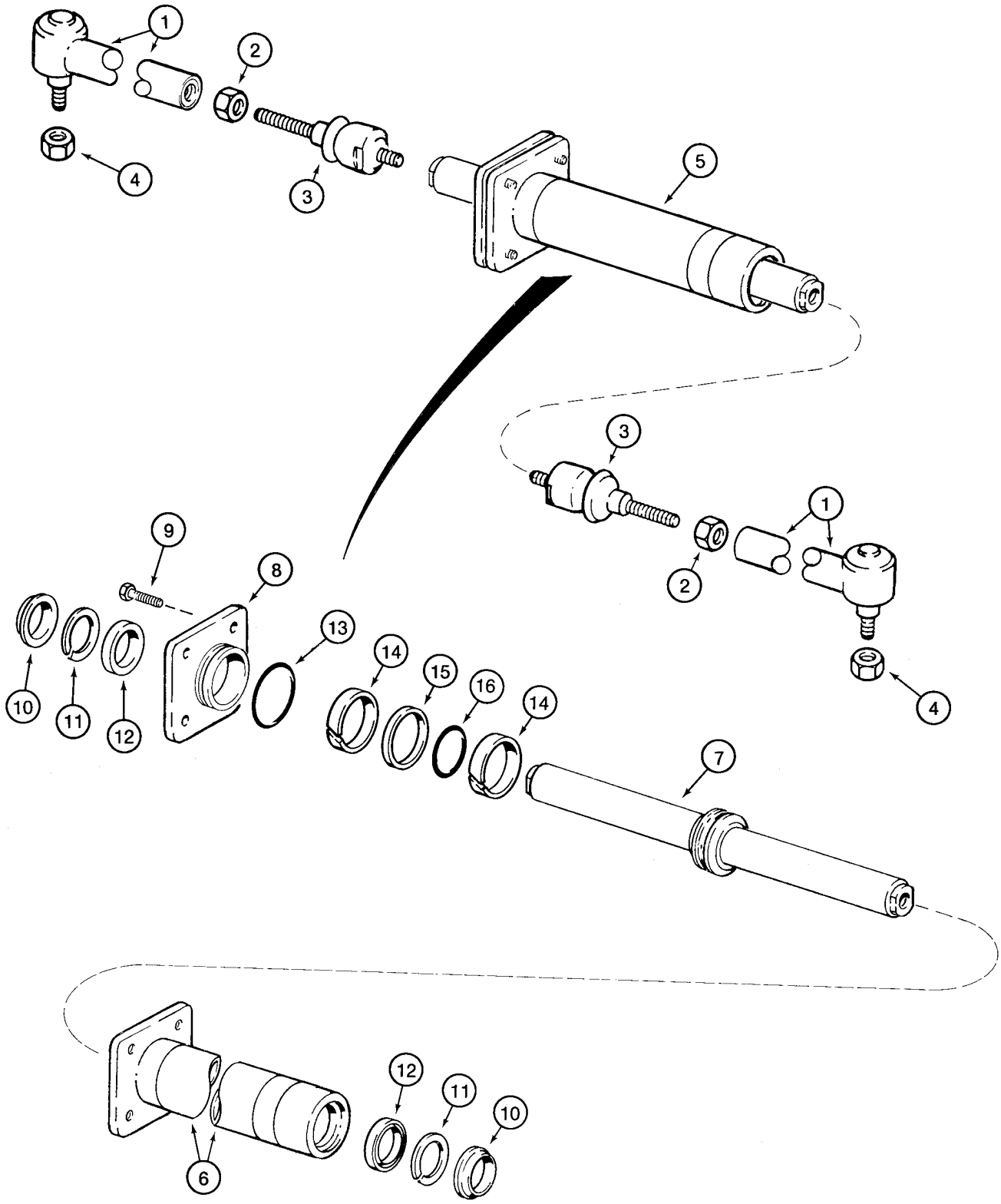

http://www.minnparbackhoeparts.com/

AXLE, FRONT DRIVE - CYLINDER, STEERING

REF	FN	PART NUMBER	YR/SN	QTY	DESCRIPTION
		87417387		1	AXLE ASSY, 4WD Front, 580SM Models Without Powershift Transmission, Incl. Ref 1 - 16; Also Includes Parts On Figures 06-02 - 06-08
		87417390		1	AXLE ASSY, 4WD Front, With Limited Slip, 580SM+ Models Without Powershift Transmission, Incl. Ref 1 - 16; Also Includes Parts On Figures 06-02 - 06-08
		87417389		1	AXLE ASSY, 4WD Front, 580SM Models With Powershift Transmission, Incl. Ref 1 - 16; Also Includes Parts On Figures 06-02 - 06-08
		87417391		1	AXLE ASSY, 4WD Front, With Limited Slip, 580SM+ Models With Powershift Transmission, Incl. Ref 1 - 16; Also Includes Parts On Figures 06-02 - 06-08
		144457A1		2	ARM Incl. Ref 1 - 3; 87417387 or 87417389 580SM Axle; See Below for 580SM+ Axle Arm
1		NSS		1	NOT SERVICED SEPARATELY Ball Joint
2		934727R1		1	NUT M18
3		112509A1		1	BALL JOINT
		313260A1		2	PITMAN Arm, Incl. Ref 1 - 3; 87417390 or 87417391 580SM+ Axle
1		390031A1		1	ARM
2		390030A1		1	NUT
3		112509A1		1	BALL JOINT
4		905839R1		2	NUT M18
5		144458A1		1	CYLINDER Steering, Incl. Ref 6 - 16, Order D149739 Kit to Service Seals
6		D149738		1	CYLINDER STEERING TUBE
7		144459A1		1	ROD Piston
8		D149737		1	GLAND GLAND
		B17575		X	FLUID 89 ml, Black RTV Silicone, Cylinder Flange to Cylinder
9		114296A1		4	SCREW For Service Order 100524A1 Bolt and 892-11012 Washer
10		NSS		2	NOT SERVICED SEPARATELY Seal, Wiper
11		NSS		2	NOT SERVICED SEPARATELY Ring, Backup
12		NSS		2	NOT SERVICED SEPARATELY Seal
13		NSS		1	NOT SERVICED SEPARATELY O-Ring
14		NSS		2	NOT SERVICED SEPARATELY Ring, Wear

http://www.minnparbackhoeparts.com/

AXLE, FRONT DRIVE - CYLINDER, STEERING

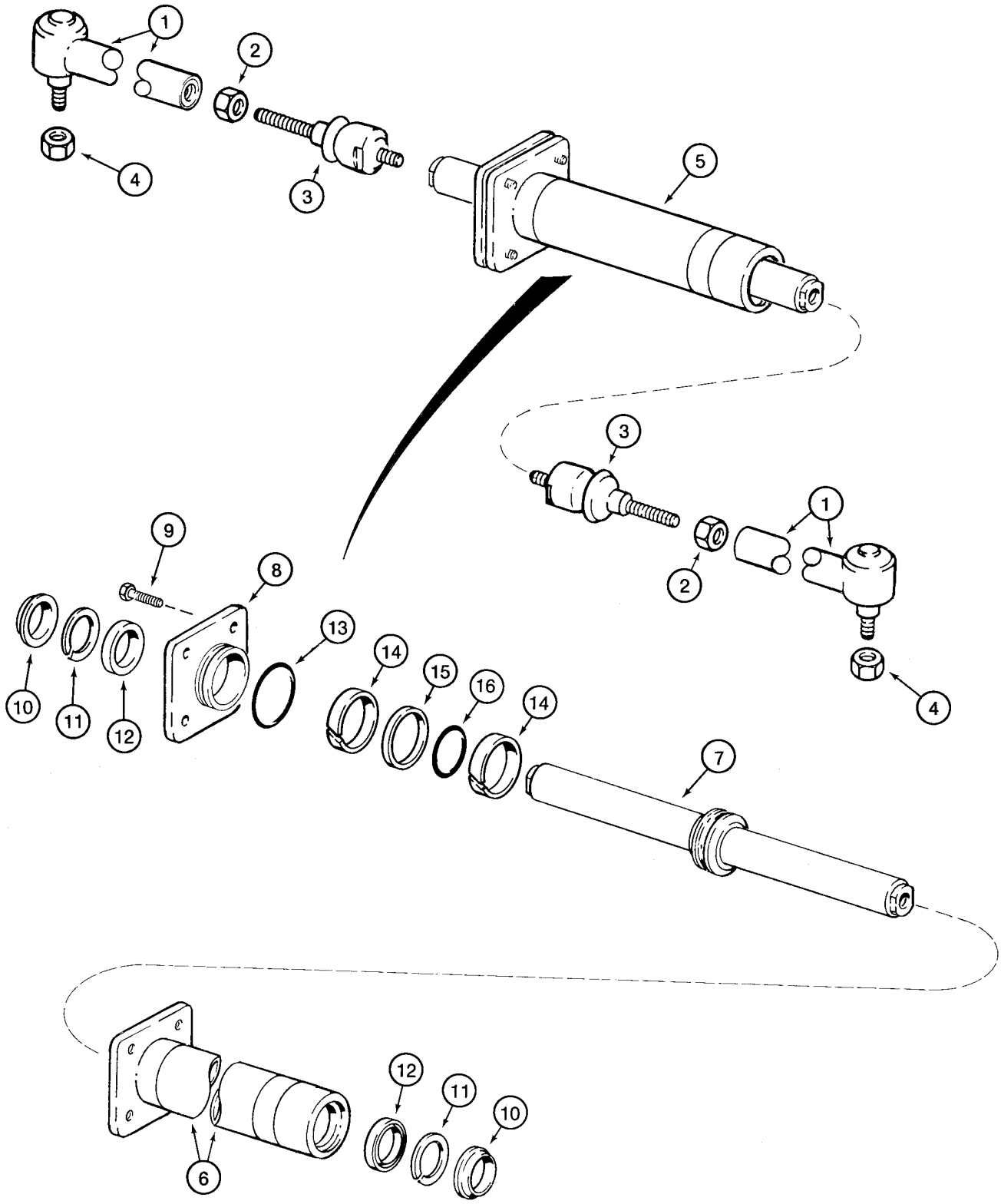

http://www.minnparbackhoeparts.com/

AXLE, FRONT DRIVE - CYLINDER, STEERING

REF	FN	PART NUMBER	YR/SN	QTY	DESCRIPTION
15		NSS		1	NOT SERVICED SEPARATELY Seal
16		NSS		1	NOT SERVICED SEPARATELY O-Ring
		D149739		1	PACKAGE, SEALS Incl. Ref 10 - 16

http://www.minnparbackhoeparts.com/

AXLE, FRONT DRIVE - SHAFTS, AXLE

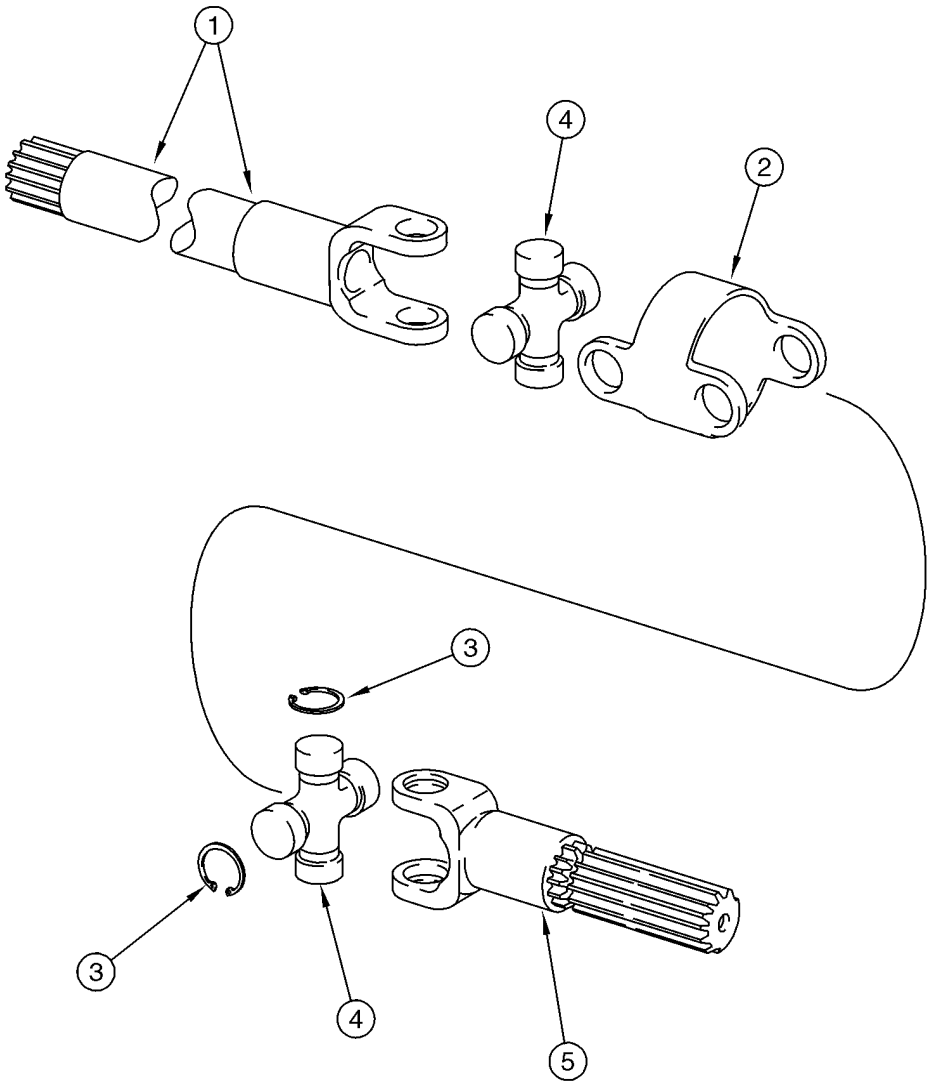

B9407022

http://www.minnparbackhoeparts.com/

AXLE, FRONT DRIVE - SHAFTS, AXLE

REF	FN	PART NUMBER	YR/SN	QTY	DESCRIPTION
		87417387		1	AXLE ASSY, 4WD Front, 580SM Models Without Powershift Transmission, Incl. Ref 1 - 5; Also Includes Parts On Figures 06-02 - 06-08
		87417390		1	AXLE ASSY, 4WD Front, With Limited Slip, 580SM+ Models Without Powershift Transmission, Incl. Ref 1 - 5; Also Includes Parts On Figures 06-02 - 06-08
		87417389		1	AXLE ASSY, 4WD Front, 580SM Models With Powershift Transmission, Incl. Ref 1 - 5; Also Includes Parts On Figures 06-02 - 06-08
		87417391		1	AXLE ASSY, 4WD Front, With Limited Slip, 580SM+ Models With Powershift Transmission, Incl. Ref 1 - 5; Also Includes Parts On Figures 06-02 - 06-08
		144461A1		2	AXLE SHAFT Incl. Ref 1 - 5; Not Available As An Assembly, Order Components; 87417387 or 87417389 580SM Axle; See Below for 580SM+ Axle Shaft
1		144462A1		2	FORK Shaft, Long, Differential Side; 580SM
2		390029A1		2	BODY
3		N14410		16	RING
4		144465A1		4	SPIDER, U-JOINT Incl. Ref 3
5		144463A1		2	SHAFT Short, Wheel Side; 580SM
		313277A1		2	SHAFT, DRIVE Incl. Ref 1 - 5; 87417390 or 87417391 580SM+ Axle Shaft
1		390027A1		1	SHAFT Fork, Long, Differential Side; 580SM+
2		390029A1		1	BODY
3		N14410		8	RING
4		144465A1		2	SPIDER, U-JOINT Incl. Ref 3
5		390028A1		1	SHAFT Short, Wheel Side; 580SM+

http://www.minnparbackhoeparts.com/

AXLE, FRONT DRIVE - PLANETARY

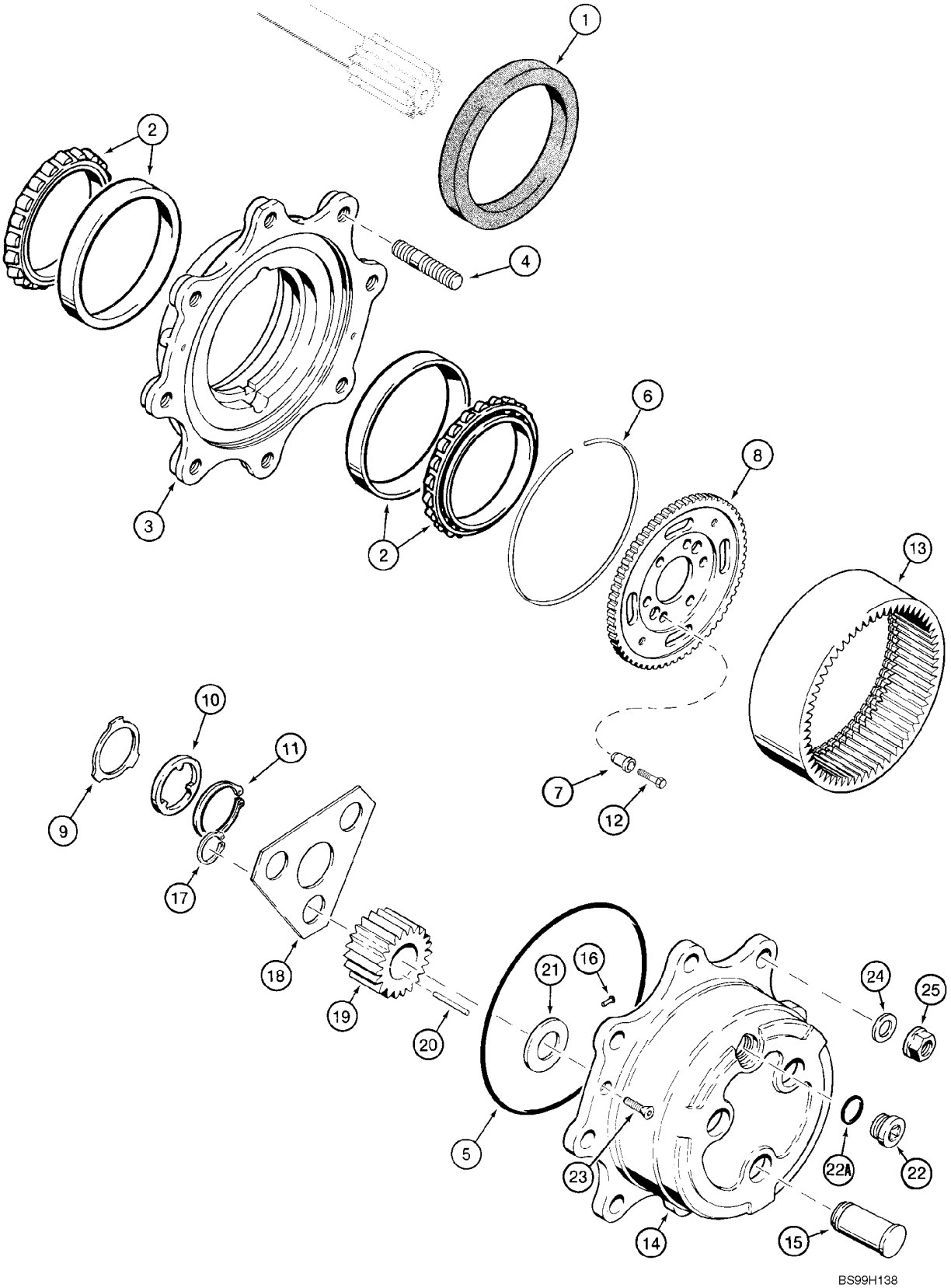

http://www.minnparbackhoeparts.com/

AXLE, FRONT DRIVE - PLANETARY

REF	FN	PART NUMBER	YR/SN	QTY	DESCRIPTION
		87417387		1	AXLE ASSY, 4WD Front, 580SM Models Without Powershift Transmission, Incl. Ref 1 - 25; Also Includes Parts On Figures 06-02 - 06-08
		87417390		1	AXLE ASSY, 4WD Front, With Limited Slip, 580SM+ Models Without Powershift Transmission, Incl. Ref 1 - 25; Also Includes Parts On Figures 06-02 - 06-08
		87417389		1	AXLE ASSY, 4WD Front, 580SM Models With Powershift Transmission, Incl. Ref 1 - 25; Also Includes Parts On Figures 06-02 - 06-08
		87417391		1	AXLE ASSY, 4WD Front, With Limited Slip, 580SM+ Models With Powershift Transmission, Incl. Ref 1 - 25; Also Includes Parts On Figures 06-02 - 06-08
1		311569A1		2	SEAL, OIL Triple Lip
2		1966169C1		4	BEARING
		144466A1		2	HUB Incl. Ref 3, 4
3		NSS		1	NOT SERVICED SEPARATELY Hub
4		100556A1		8	STUD
		B17575		X	FLUID 89 ml, RTV Silicone, Planetary Cover to Hub
5		100552A1		2	O-RING
6		100559A1		2	RING,SPECIAL
7		116426A1		12	CENTERING RING Bushing
8		116427A1		2	GEAR CARRIER, Ring Gear; 87417387 or 87417389 580SM Axle
8		313259A1		2	GEAR CARRIER, Ring Gear; 87417390 or 87417391 580SM+ Axle
9		190684A1		2	WASHER Thrust
10		190682A1		2	WASHER Thrust
11		A48041		2	CIRCLIP
12		116425A1		12	SCREW
13		100561A1		2	GEAR Ring
		100554A1		2	CARRIER PLANETARY, Includes 100553A1, Ref 14 - 22A
		100553A1		2	HOUSING ASSY. Carrier, Incl. Ref 14 - 16
14		NSS		1	NOT SERVICED SEPARATELY Carrier
15		NSS		3	NOT SERVICED SEPARATELY Shaft, Pinion
16		K395093		1	PIN, HEADED Lock
17		800-1134		6	SNAP RING No. 34

http://www.minnparbackhoeparts.com/

AXLE, FRONT DRIVE - PLANETARY

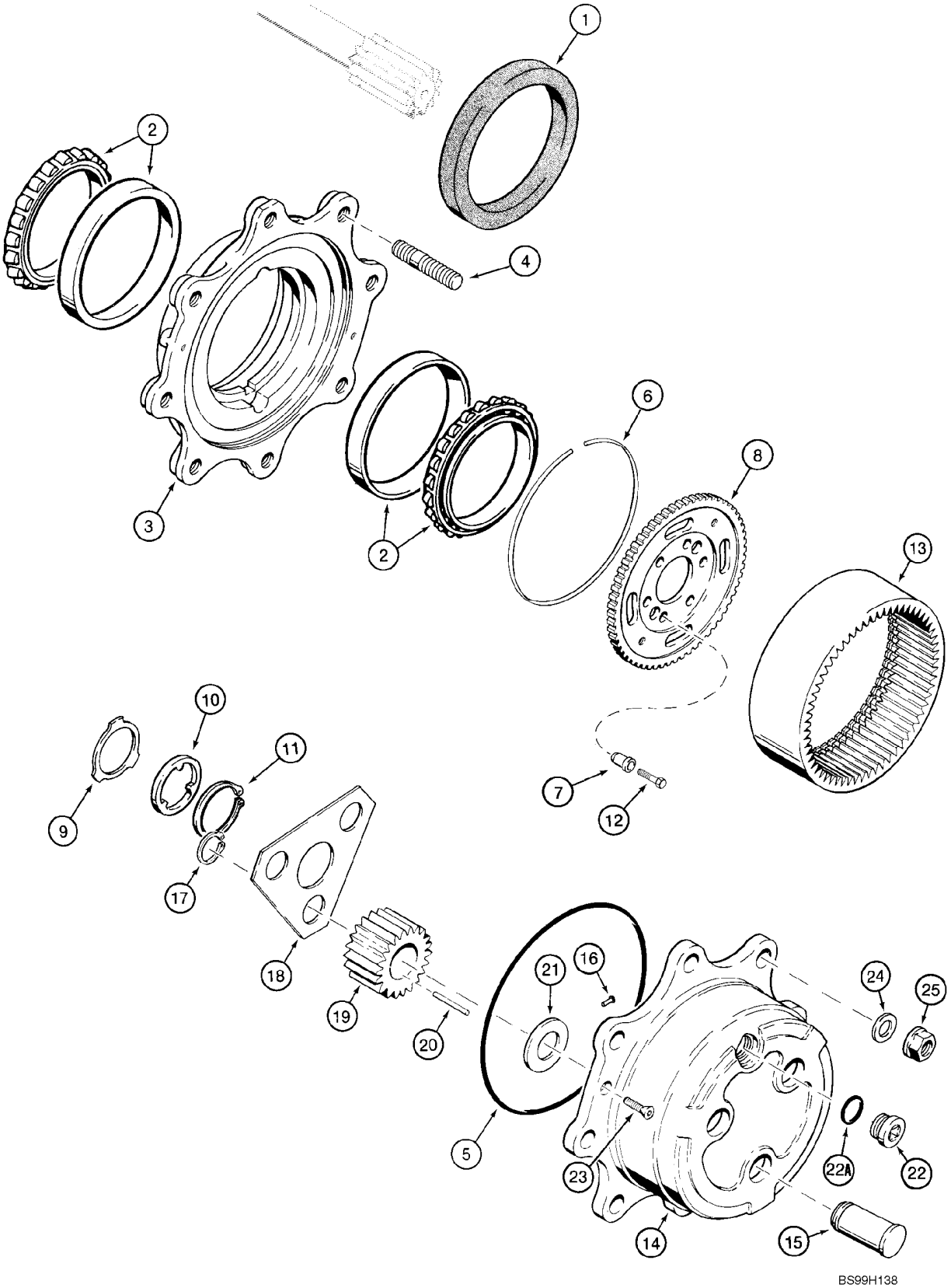

http://www.minnparbackhoeparts.com/

AXLE, FRONT DRIVE - PLANETARY

REF	FN	PART NUMBER	YR/SN	QTY	DESCRIPTION
18		100555A1		2	PLATE, LARGE Retainer
19		100562A1		6	GEAR, PLANETARY Pinion Gear
		B17575		X	FLUID 89 ml, Black RTV Silicone, Planetary Cover to Hub
20		114295A1		9	KIT, 10 NEEDLE BRGS
21		K395091		6	WASHER Thrust
22		100557A1		2	PLUG, DRAIN Incl. Ref 22A
22A		238-6121		1	O-RING 1-1/16 ID x 3/32
23		K395082		4	SCREW M8 x 20
24		496-81000		16	WASHER 25/32 x 1-3/8 x 1/8, Not Included In Assembly, Purchase Separately
25		825-11418		16	NUT M18, Not Included In Assembly, Purchase Separately

http://www.minnparbackhoeparts.com/

AXLE, FRONT DRIVE - DIFFERENTIAL

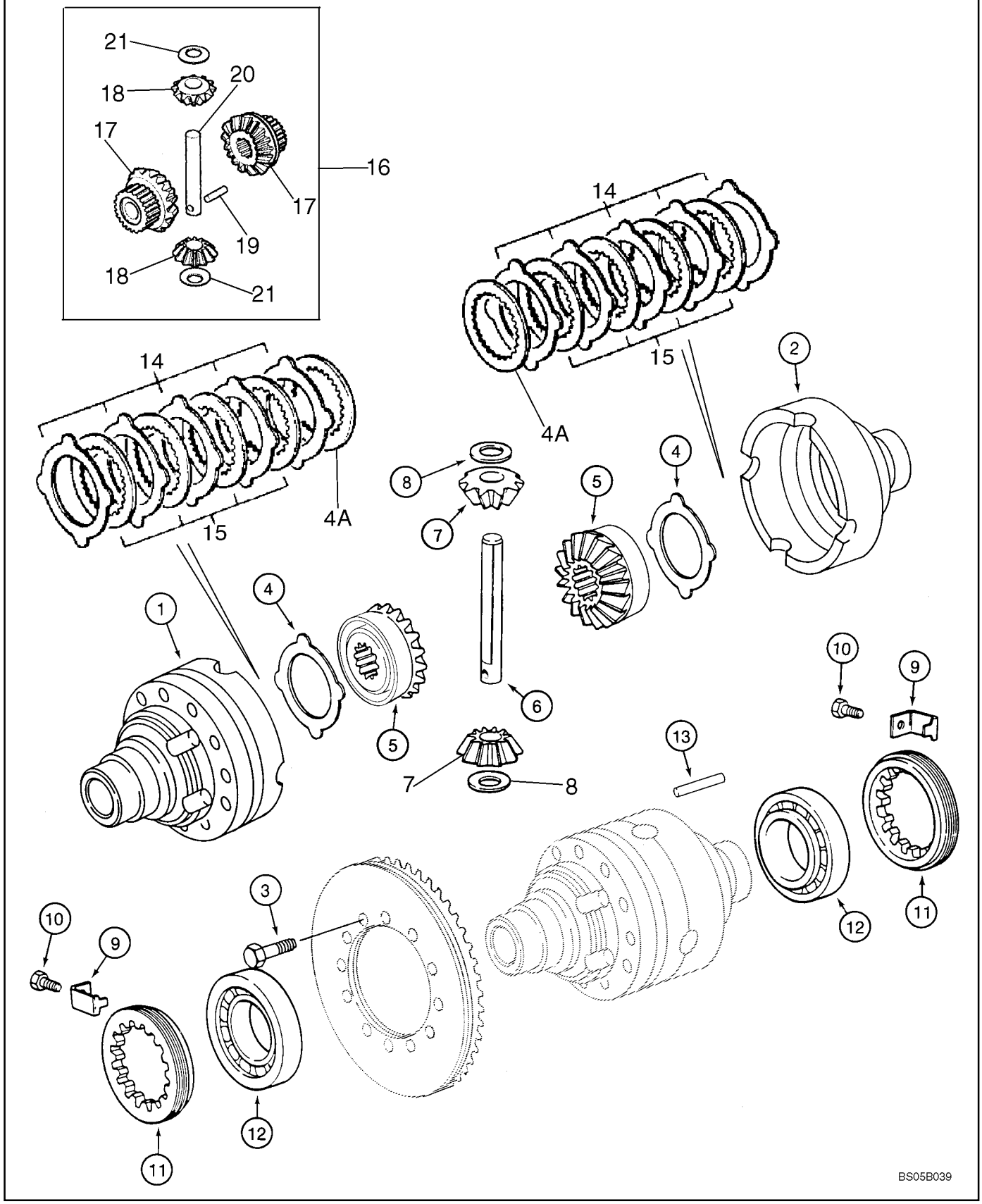

http://www.minnparbackhoeparts.com/

AXLE, FRONT DRIVE - DIFFERENTIAL

REF	FN	PART NUMBER	YR/SN	QTY	DESCRIPTION
		87417387		1	AXLE ASSY, 4WD Front, 580SM Models Without Powershift Transmission, Incl. Ref 1 - 13; Also Includes Parts On Figures 06-02 - 06-08
		87417390		1	AXLE ASSY, 4WD Front, With Limited Slip, 580SM+ Models Without Powershift Transmission, Incl. Ref 1 - 4A, 9 - 21; Also Includes Parts On Figures 06-02 - 06-08
		87417389		1	AXLE ASSY, 4WD Front, 580SM Models With Powershift Transmission, Incl. Ref 1 - 13; Also Includes Parts On Figures 06-02 - 06-08
		87417391		1	AXLE ASSY, 4WD Front, With Limited Slip, 580SM+ Models With Powershift Transmission, Incl. Ref 1 - 4A, 9 - 21; Also Includes Parts On Figures 06-02 - 06-08
		294933A1		1	SUPPORT ASSY. Differential Housing, Incl. Ref 1, 2
1		NSS		1	NOT SERVICED SEPARATELY Housing, Flange Half
2		NSS		1	NOT SERVICED SEPARATELY Housing, Plain Half
		B17575		X	FLUID 89 ml, Black RTV Silicone, Bolt to Differential Housing
3		827-10075		12	SCREW M10 x 75; 10.9
4		1967003C1		2	WASHER, THRUST 87417387 or 87417389 580SM Axle Only
4A		1966154C1		2	PLATE Backing; 87417390 or 87417391 580SM+ Limited Slip Axle Only; Used With Ref 14, 15
		231397A1		1	SET OF PARTS Differential Gear Set, Service Replacement, Incl. Ref 5 - 8, 13; Used On 580SM Models; No Longer Used On 580SM+ Models, For 580SM+ Gear Set, Order B506395 Gear Set, Ref 16 - 21
5		N14407		2	GEAR Side, No Longer Available, Order 231397A1 Differential Gear Set Kit
6		K395087		1	PIN, LARGE Shaft, Pinion Gear, No Longer Available, Order 231397A1 Differential Gear Set Kit
7		N14408		2	SUN GEAR Pinion Gear, No Longer Available, Order 231397A1 Differential Gear Set Kit

http://www.minnparbackhoeparts.com/

AXLE, FRONT DRIVE - DIFFERENTIAL

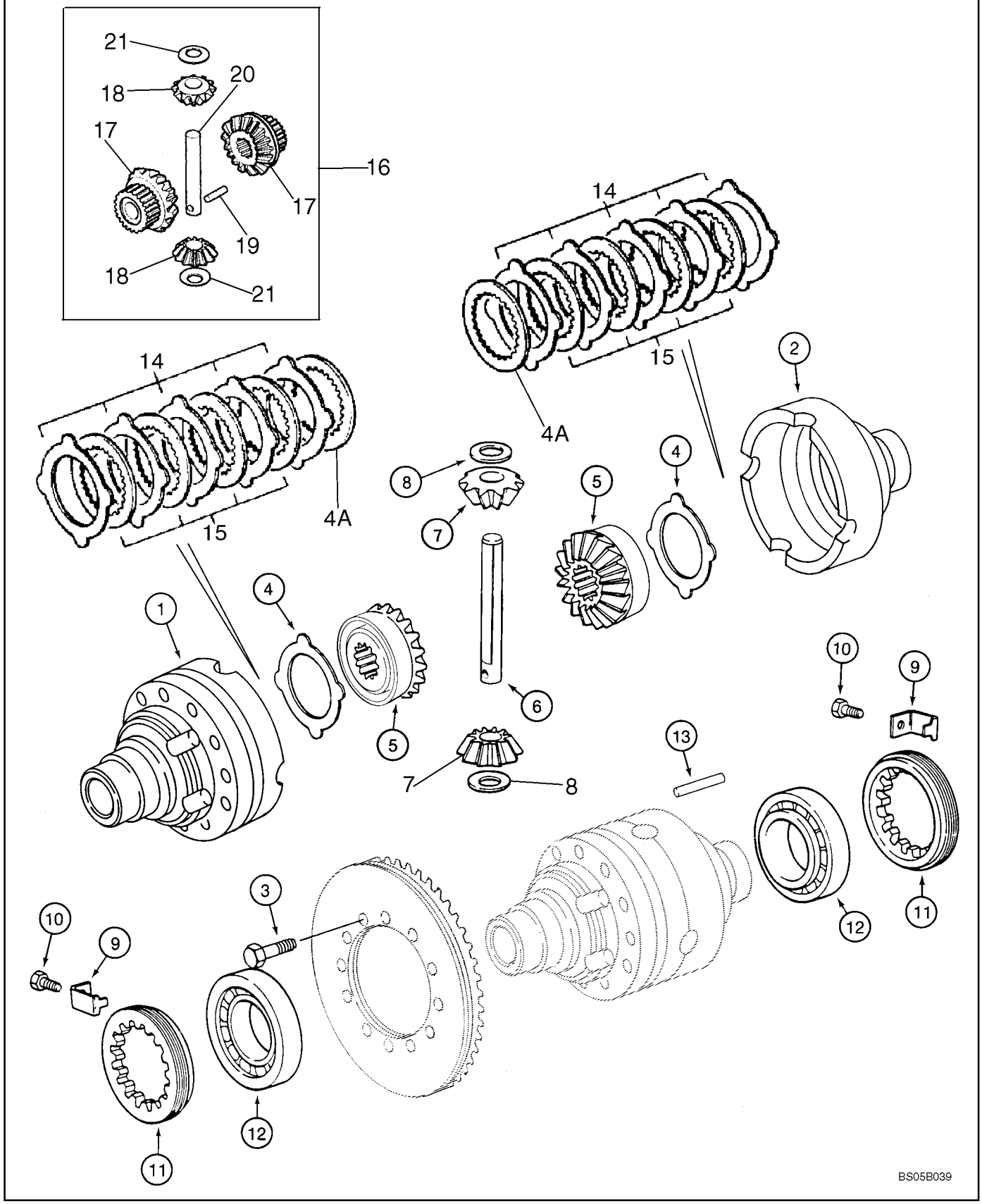

http://www.minnparbackhoeparts.com/

AXLE, FRONT DRIVE - DIFFERENTIAL

REF	FN	PART NUMBER	YR/SN	QTY	DESCRIPTION
8		K395075		2	WASHER Thrust, No Longer Available, Order 231397A1 Differential Gear Set Kit
9		1966153C1		2	PLATE, LOCKING Bracket
10		112486A1		2	SCREW M6 x 12
11		1966559C1		2	NUT Locking Ring
12		K395027		2	BEARING
13		K395086		1	PIN, LARGE Dowel, No Longer Available, Order 231397A1 Differential Gear Set Kit
14		1966155C1		10	PLATE Drive; 580SM+ 87417390 or 87417391 Limited Slip Axle Only; Used With Ref 4A, 15
15		1966156C1		8	WASHER PLATE, Driven; 580SM+ 87417390 or 87417391 Limited Slip Axle Only; Used With Ref 4A, 14
16		B506395		1	SET OF PARTS Differential Gear Set; Incl. Ref 17 - 21; Used On 580SM+ Models
17		NSS		2	NOT SERVICED SEPARATELY Gear, Side; Order B506395 Gear Set
18		NSS		2	NOT SERVICED SEPARATELY Gear, Pinion; Order B506395 Gear Set
19		K395086		1	PIN, LARGE Locking
20		NSS		1	NOT SERVICED SEPARATELY Pin, Pinion; Order B506395 Gear Set
21		K395075		2	WASHER Thrust

http://www.minnparbackhoeparts.com/

AXLE, FRONT DRIVE - RING AND PINION

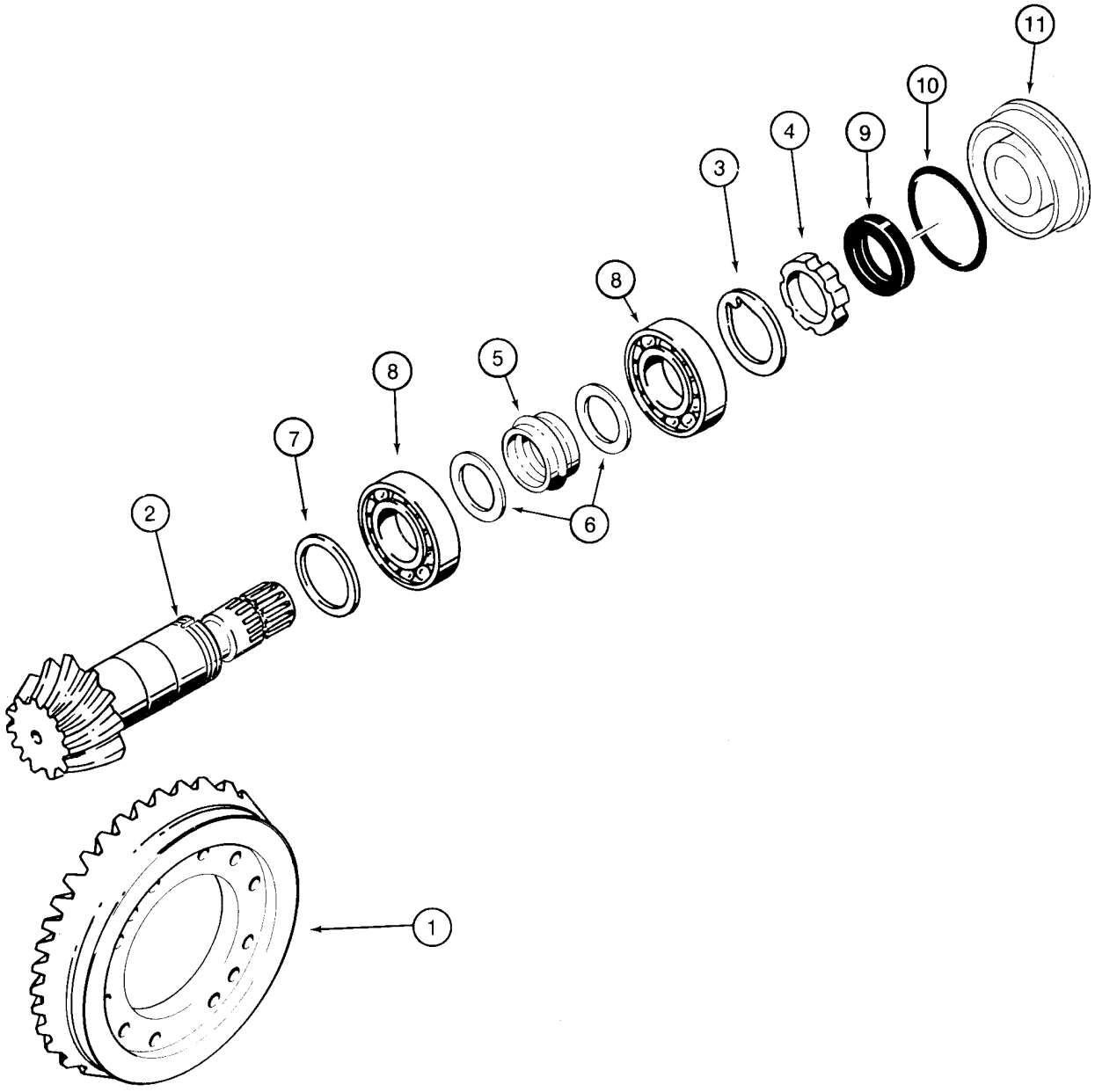

B9407025

http://www.minnparbackhoeparts.com/

AXLE, FRONT DRIVE - RING AND PINION

REF	FN	PART NUMBER	YR/SN	QTY	DESCRIPTION
		87417387		1	AXLE ASSY, 4WD Front, 580SM Models Without Powershift Transmission, Incl. Ref 1 - 11; Also Includes Parts On Figures 06-02 - 06-08
		87417390		1	AXLE ASSY, 4WD Front, With Limited Slip, 580SM+ Models Without Powershift Transmission, Incl. Ref 1 - 11; Also Includes Parts On Figures 06-02 - 06-08
		87417389		1	AXLE ASSY, 4WD Front, 580SM Models With Powershift Transmission, Incl. Ref 1 - 11; Also Includes Parts On Figures 06-02 - 06-08
		87417391		1	AXLE ASSY, 4WD Front, With Limited Slip, 580SM+ Models With Powershift Transmission, Incl. Ref 1 - 11; Also Includes Parts On Figures 06-02 - 06-08
		144460A1		1	KIT Ring and Pinion Gear Set, Incl. Ref 1 - 6; 87417387 580SM Axle Without Powershift
		195210A1		1	KIT Ring and Pinion Gear Set, Incl. Ref 1 - 6; 87417390 580SM+ Axle Without Powershift
		311046A1		1	GEAR-SET KIT, Ring and Pinion, Incl. Ref 1 - 6; 87417389 580SM Axle With Powershift
		311047A1		1	BEVEL GEAR Ring and Pinion Gear Set, Incl. Ref 1 - 6; 87417391 580SM+ Axle With Powershift
1		NSS		1	NOT SERVICED SEPARATELY Ring, Gear
2		NSS		1	NOT SERVICED SEPARATELY Gear, Pinion Gear
3		K261065		1	WASHER
4		K261014		1	NUT Ring
5		1349058C1		1	SPACER Collapsible
6		1349059C1		2	WASHER
7		140954A1		X	SHIM 2,5 mm (0,098 in)
7		140953A1		X	SHIM 2,6 mm (0,102 in)
7		140951A1		X	SHIM 2,7 mm (0,106 in)
7		140949A1		X	SHIM 2,8 mm (0,110 in)
7		140948A1		X	SHIM 2,9 mm (0,114 in)
7		140943A1		X	SHIM 3,0 mm (0,118 in)
7		140944A1		X	SHIM 3,1 mm (0,122 in)
7		140945A1		X	SHIM 3,2 mm (0,125 in)
7		140946A1		X	SHIM 3,3 mm (0,129 in)
7		140947A1		X	SHIM 3,4 mm (0,133 in)
8		K395090		2	BEARING, BALL

http://www.minnparbackhoeparts.com/

AXLE, FRONT DRIVE - RING AND PINION

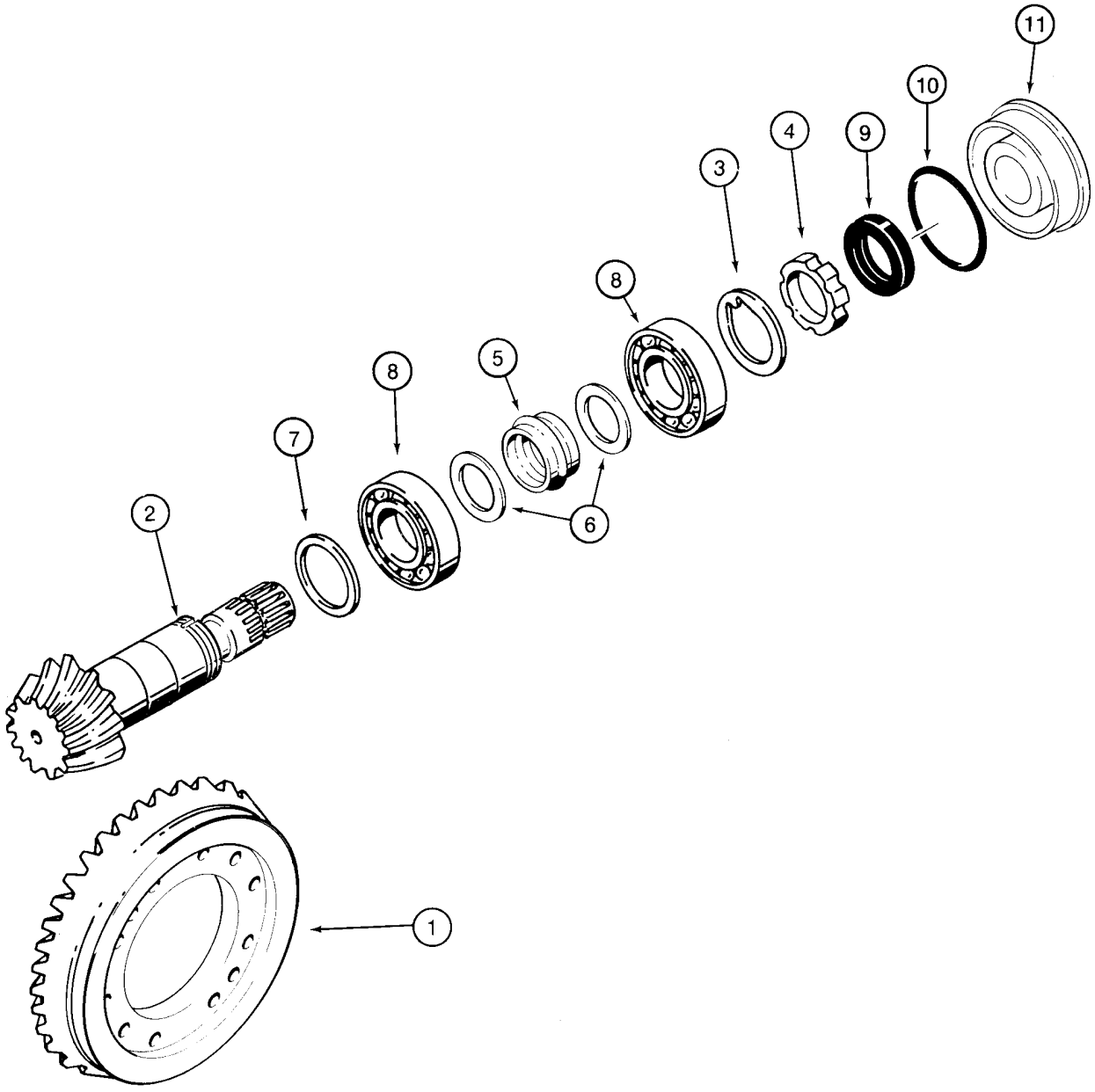

B9407025

http://www.minnparbackhoeparts.com/

AXLE, FRONT DRIVE - RING AND PINION

REF	FN	PART NUMBER	YR/SN	QTY	DESCRIPTION
9		K262143		1	SEAL Oil
10		238-5152		1	O-RING 3-1/4 ID x 3/32
11		128570A1		1	FLANGE Cover, Differential
		B17575		X	FLUID 89 ml, Black RTV Silicone, Differential Cover to Differential Carrier

http://www.minnparbackhoeparts.com/

DRIVE SHAFT, FRONT AXLE

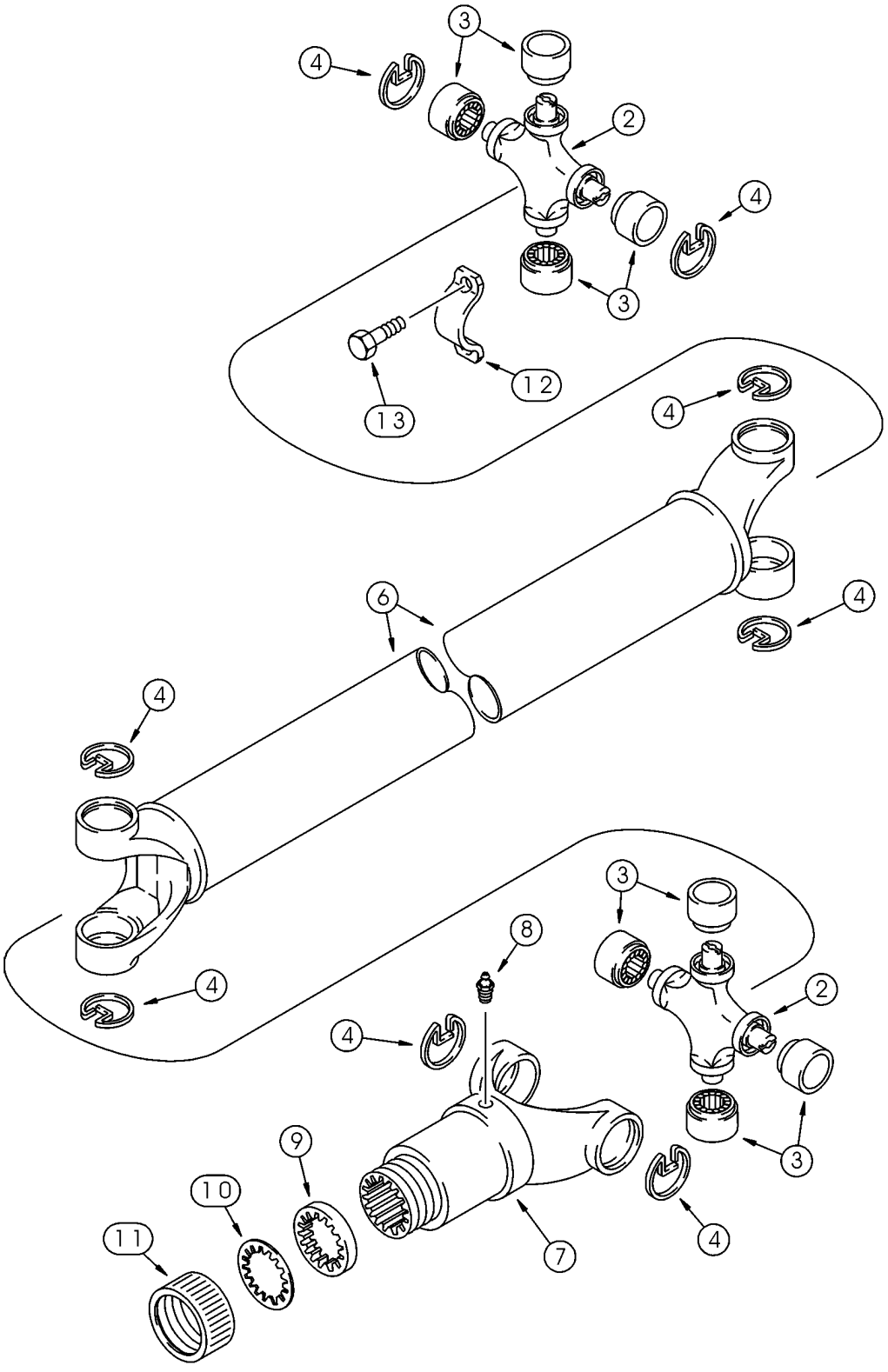

http://www.minnparbackhoeparts.com/

DRIVE SHAFT, FRONT AXLE

REF	FN	PART NUMBER	YR/SN	QTY	DESCRIPTION
		367861A2		1	SHAFT, DRIVE With or Without Powershift Transmission, Incl. 393231A1, Ref 2 - 13
		393231A1		2	KIT Universal Joint, Incl. Ref 2 - 4
2		NSS		1	NOT SERVICED SEPARATELY Joint, Universal
3		NSS		4	NOT SERVICED SEPARATELY Bearing, Journal
4		NSS		4	NOT SERVICED SEPARATELY Ring, Retaining
6		393234A1		1	SHAFT, DRIVE
7		144279A1		1	YOKE
8		219-10		1	NIPPLE, LUBE 1/4 tpr x 11/16
		D149860		1	PACKAGE,SERVICE Incl. Ref 9 - 11
9		NSS		1	NOT SERVICED SEPARATELY Washer, Cork
10		NSS		1	NOT SERVICED SEPARATELY Washer, Steel
11		NSS		1	NOT SERVICED SEPARATELY Cap
12		90-6682T1		2	CLAMP
13		D137627		4	BOLT

http://www.minnparbackhoeparts.com/

06-10		p1	02/05

COOLING SYSTEM - TRANSMISSION (MODELS WITHOUT POWERSHIFT)(WITH CUT HOSES AT COOLER)

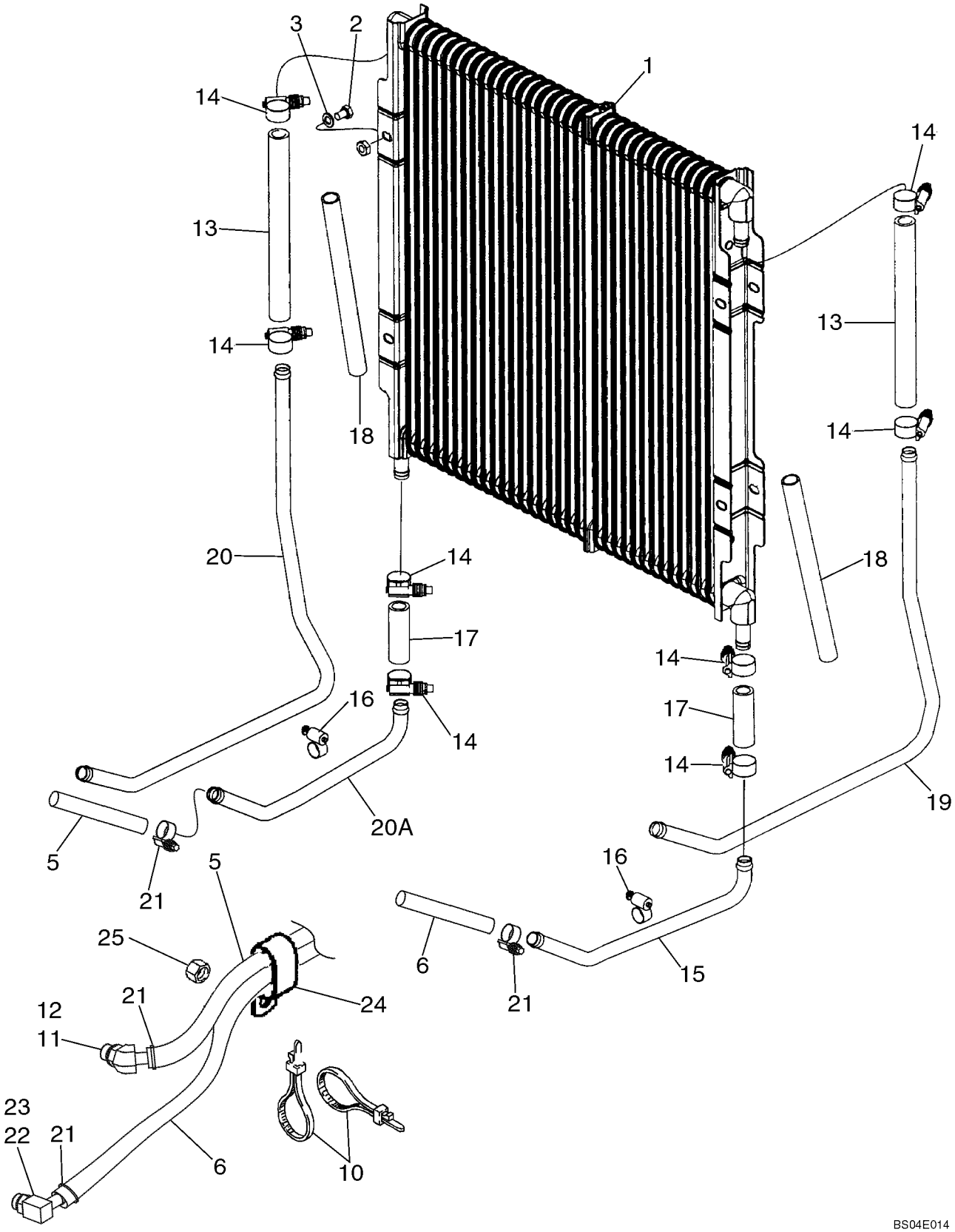

http://www.minnparbackhoeparts.com/

COOLING SYSTEM - TRANSMISSION (MODELS WITHOUT POWERSHIFT)(WITH CUT HOSES AT COOLER)

REF	FN	PART NUMBER	YR/SN	QTY	DESCRIPTION
1		87427158		1	COOLER, OIL Hydraulic Oil Cooler
2		614-8012		4	SCREW M8 x 12
3		895-11008		4	WASHER 9 x 16 x 1,6 mm
5		87422597		1	HOSE ASSY. 975 mm (38-13/32 in), Transmission to Cooler Inlet
6		87422598		1	HOSE ASSY. 1225 mm (48-1/4 in), Cooler Outlet to Transmission
10		L18337		2	STRAP 15 in
11		217-314		1	ELBOW 45 deg, 5/8 stem x 7/8 Or; Incl. Ref 12
12		237-6010		1	O-RING 3/4 ID x 3/32
13		87446338		2	HOSE 235 mm (9-9/32 in); Replaces 87417238 Hose
14		328186A1		8	CLAMP, HOSE
15		87446335		1	TUBE Lower Tube; Replaces 87435277 Tube
16		214-1412		2	CLAMP No. 12
17		87446337		2	HOSE 68 mm (2-11/16 in); Replaces 87426742 Hose
18		87428998		2	TUBE, PLASTIC-RUBBER 250 mm (9-7/8 in) Sleeve
19		87446333		1	TUBE Right-Hand Upper Cooler; Replaces 87435278 Tube
20		87446330		1	TUBE Left-Hand Upper Cooler; Replaces 87435280 Tube
20A		87446332		1	TUBE Lower; Replaces 87435279 Tube
21		328186A1		4	CLAMP, HOSE
22		217-349		1	ELBOW 90 deg, Incl. Ref 23
23		237-6010		1	O-RING
24		D39696		1	CLAMP Double P
25		829-1410		1	NUT M10

http://www.minnparbackhoeparts.com/

06-11		p1	02/05

COOLING SYSTEM - TRANSMISSION (MODELS WITH POWERSHIFT)(WITH CUT HOSES AT COOLER)

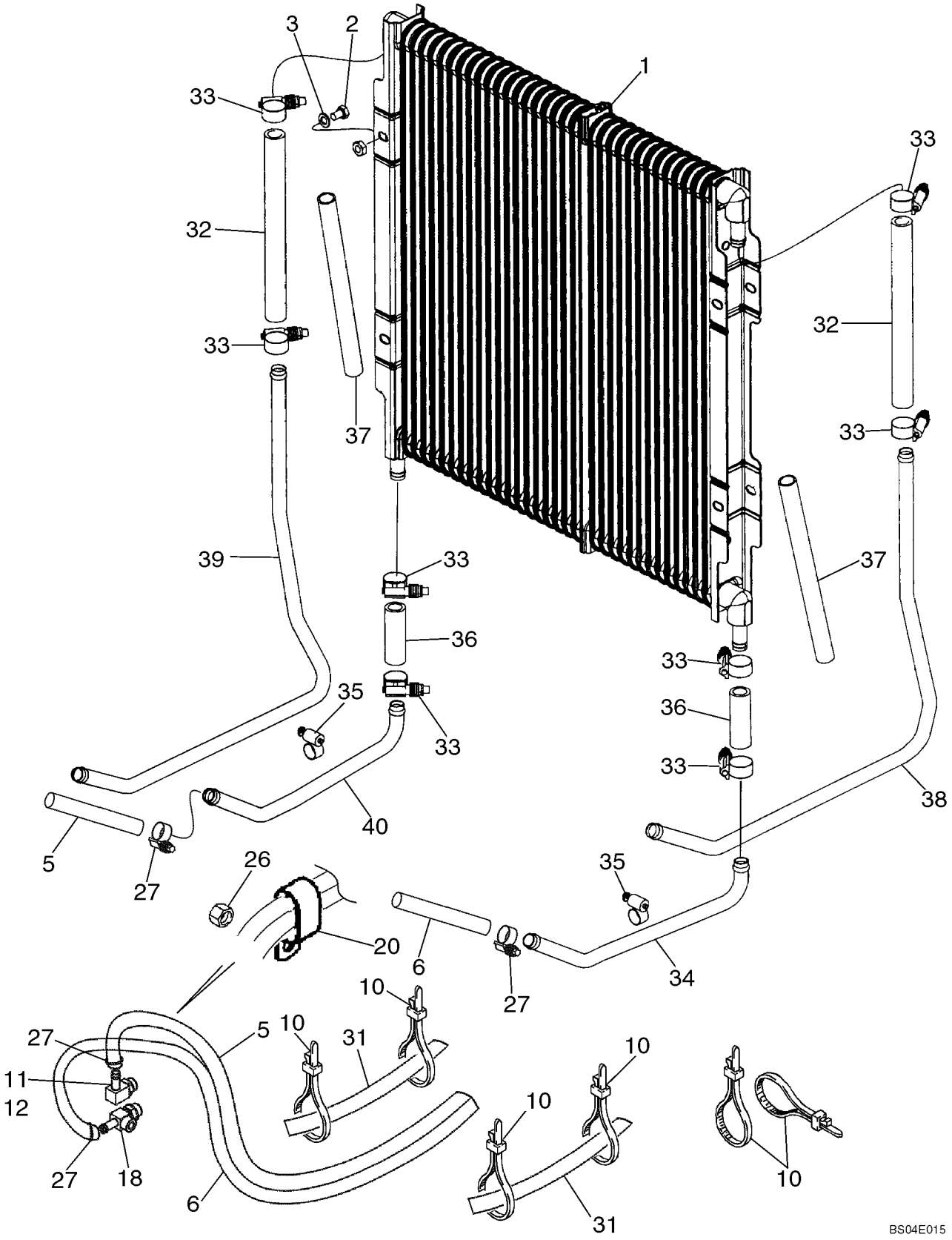

http://www.minnparbackhoeparts.com/

COOLING SYSTEM - TRANSMISSION (MODELS WITH POWERSHIFT)(WITH CUT HOSES AT COOLER)

REF	FN	PART NUMBER	YR/SN	QTY	DESCRIPTION
1		87427158		1	COOLER, OIL Hydraulic Oil Cooler
2		614-8012		4	SCREW M8 x 12
3		895-11008		4	WASHER 9 x 16 x 1,6 mm
5		87424240		1	HOSE 1900 mm (74-13/16 in), Transmission to Cooler Inlet
6		87424241		1	HOSE 2150 mm (84-11/16 in), Cooler Outlet to Transmission
10		L18337		6	STRAP 15 in
11		217-363		1	FITTING Elbow, 90 deg, Incl. Ref 12
12		237-6012		1	O-RING
18		87423044		1	TEE Tee
20		D39696		1	CLAMP
26		829-1410		1	NUT M10
27		328186A1		4	CLAMP, HOSE
31		D132982		2	LOOM Hose Sleeve
32		87446338		2	HOSE 235 mm (9-9/32 in) hose; Replaces 87417238 Hose
33		328186A1		8	CLAMP, HOSE
34		87446335		1	TUBE Lower Tube; Replaces 87435277 Tube
35		214-1412		2	CLAMP No. 12
36		87446337		2	HOSE 68 mm (2-11/16 in); Replaces 87426742 Hose
37		87428998		2	TUBE, PLASTIC-RUBBER 250 mm (9-7/8 in) Sleeve
38		87446333		1	TUBE Right-Hand Upper Cooler; Replaces 87435278 Tube
39		87446330		1	TUBE Left-Hand Upper Cooler; Replaces 87435280 Tube
40		87446332		1	TUBE Lower; Replaces 87435279 Tube

http://www.minnparbackhoeparts.com/

COOLING SYSTEM - TRANSMISSION (WITH FLARED FITTINGS AT COOLER)

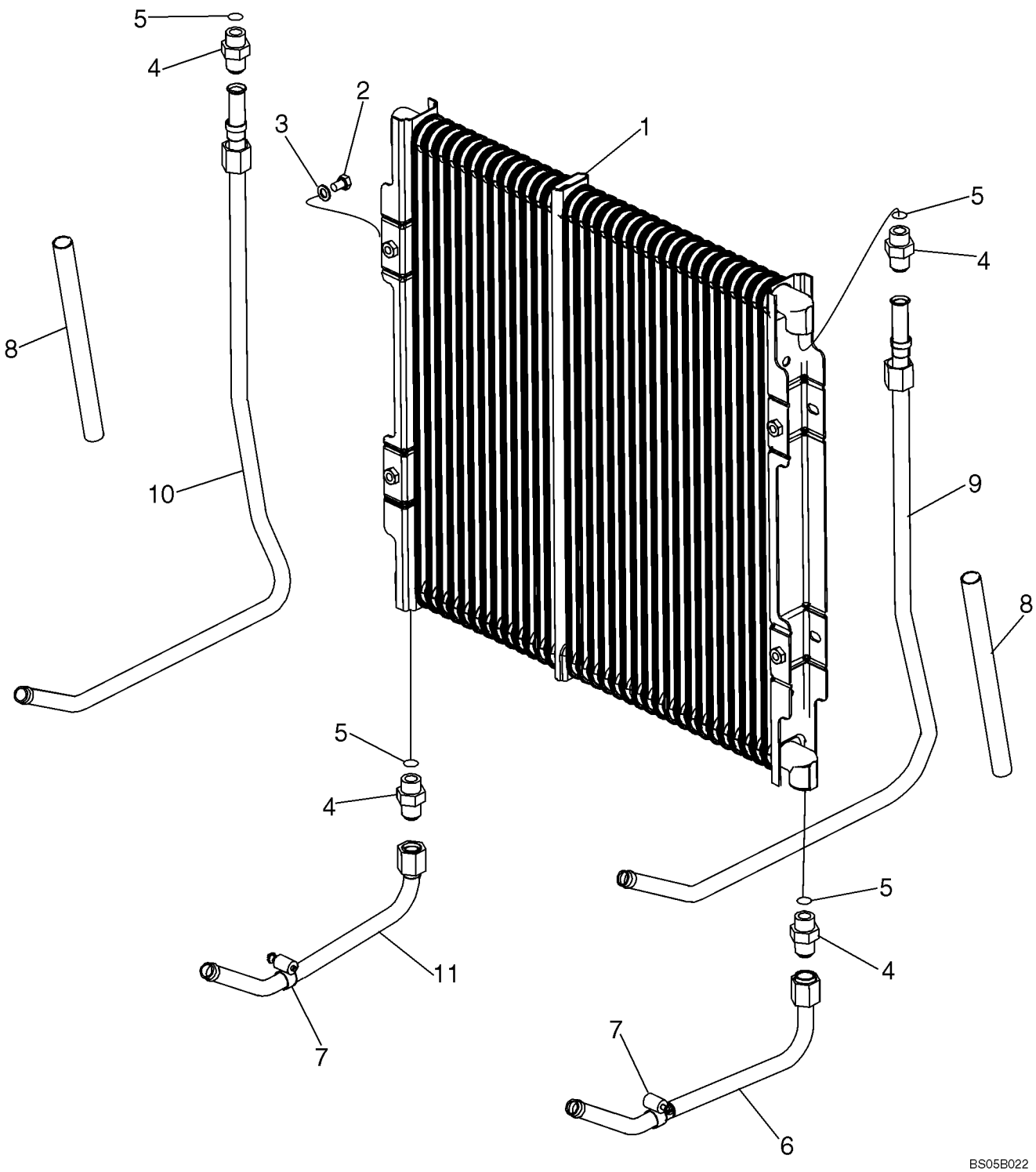

http://www.minnparbackhoeparts.com/

COOLING SYSTEM - TRANSMISSION (WITH FLARED FITTINGS AT COOLER)

REF	FN	PART NUMBER	YR/SN	QTY	DESCRIPTION
1		87441876		1	COOLER, OIL Hydraulic Oil Cooler
2		614-8012		4	SCREW M8 x 12
3		895-11008		4	WASHER 9 x 16 x 1,6 mm
4		218-5062		4	CONNECTOR, HYD. 7/8 fl x Or; Incl. Ref 5
5		237-6010		1	O-RING 3/4 ID x 3/32
6		87435078		1	TUBE Lower Right-Hand Tube
7		214-1412		2	CLAMP No. 12
8		87311219		2	TUBE, PLASTIC-RUBBER 250 mm (9-7/8 in) Sleeve
9		87435076		1	TUBE Right-Hand Upper Cooler
10		87435080		1	TUBE Left-Hand Upper Cooler
11		87435082		1	TUBE Left-Hand Lower

http://www.minnparbackhoeparts.com/

TRANSMISSION - MOUNTING (MODELS WITHOUT POWERSHIFT)

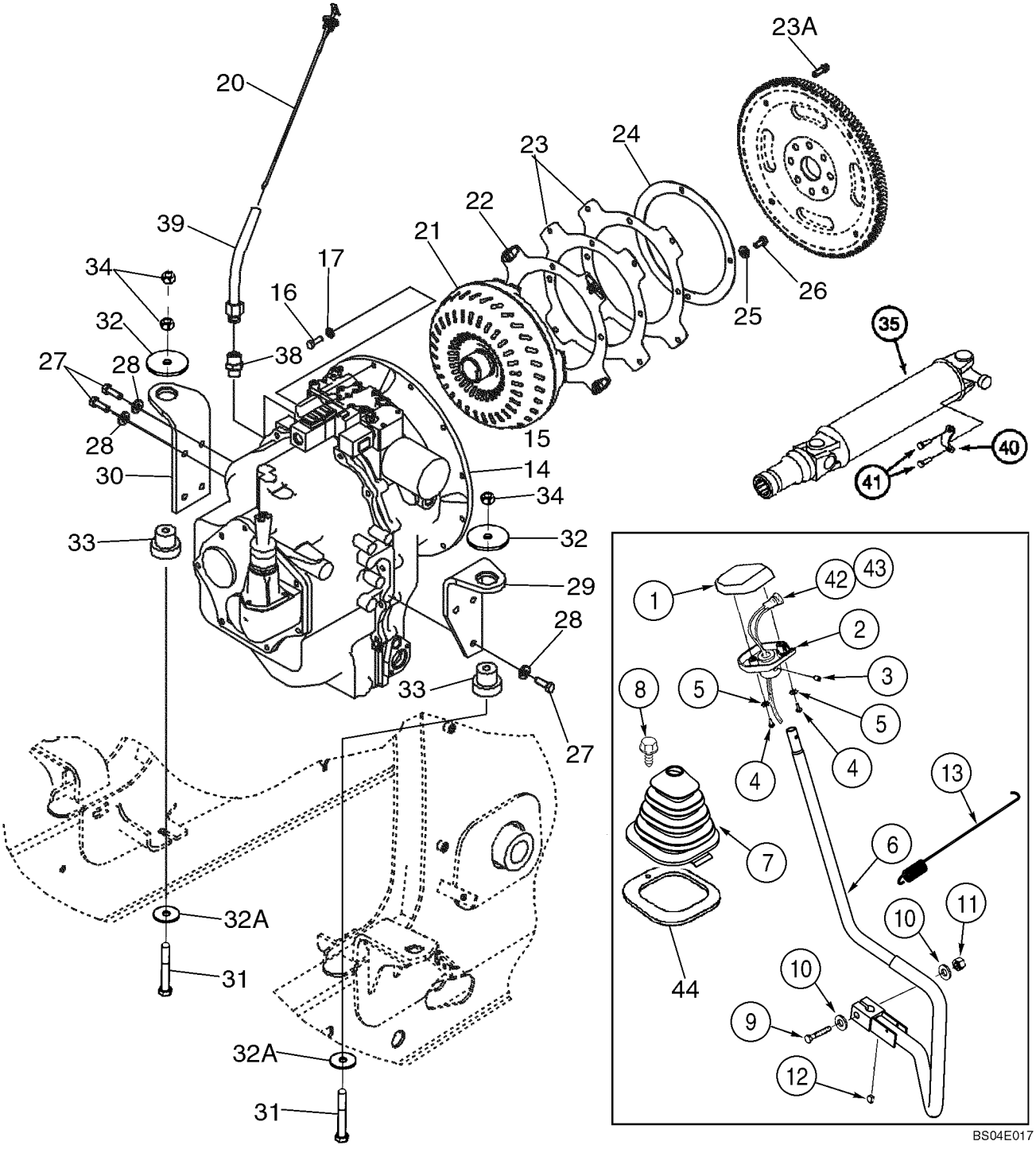

http://www.minnparbackhoeparts.com/

TRANSMISSION - MOUNTING (MODELS WITHOUT POWERSHIFT)

REF	FN	PART NUMBER	YR/SN	QTY	DESCRIPTION
		309747A1		1	KNOB Gear Shift Lever, Includes NSS Gasket, Incl. Ref 1, 2, 4, 5
		NSS		2	NOT SERVICED SEPARATELY GASKET, Knob
1		187714A1		1	BUTTON Knob, Upper
2		187715A1		1	BUTTON Knob, Lower
3		484-6316		1	SCREW Setscrew, 5/16 NF x 3/8; hdg pt
4		87020181		2	SCREW No. 10 NF x 7/8
5		493-41020		2	WASHER, LOCK 3/16
6		379314A4		1	LEVER ASSY. Gear Shift Lever
7		400588A2		1	BOOT
8		87310096		1	BOLT M6 x 25, Includes Washer, Stainless Steel; Replaces 233724A1 Non-Stainless Steel Screw Used On Some Models
9		827-12065		1	BOLT M12 x 65; 10.9
10		896-11012		2	WASHER 13,5 x 24 x 3 mm
11		832-10412		1	NUT M12
12		126-116		1	KEY, BUCKET TOOTHRT 3/16 x 3/4 Woodruff Key
13		380537A2		1	SPRING
14		87456843		1	TRANSMISSION Two Wheel Drive Models, See Figure 06-14 - 06-23A; Replaces 86984097
15		87456844		1	TRANSMISSION Four Wheel Drive Models, See Figure 06-14 - 06-24; Replaces 86984098
16		627-10030		12	SCREW M10 x 30; 10.9
17		496-21041		12	WASHER 13/32 x 13/16 x 3/32
20		87430618		1	DIPSTICK
21		87400112		1	CONVERTER Torque Converter, New
22		87406934		1	PLATE, RETAINING Flex Plate, With Caged Nuts
23		86993546		2	PLATE, RETAINING Flex Plate
23A		87019767		4	SCREW Flange, M10 x 30
24		87409201		1	PLATE, RETAINING Backing Plate
25		896-15010		4	WASHER 11 x 24 x 3 mm
26		614-10020		4	SCREW M10 x 20
27		614-12035		7	BOLT M12 x 35
28		896-15012		7	WASHER 13,5 x 28 x 4 mm
29		87416977		1	SUPPORT Right-Hand Bracket
30		87416978		1	SUPPORT Left-Hand Bracket
31		814-12080		2	SCREW M20 x 80

http://www.minnparbackhoeparts.com/

TRANSMISSION - MOUNTING (MODELS WITHOUT POWERSHIFT)

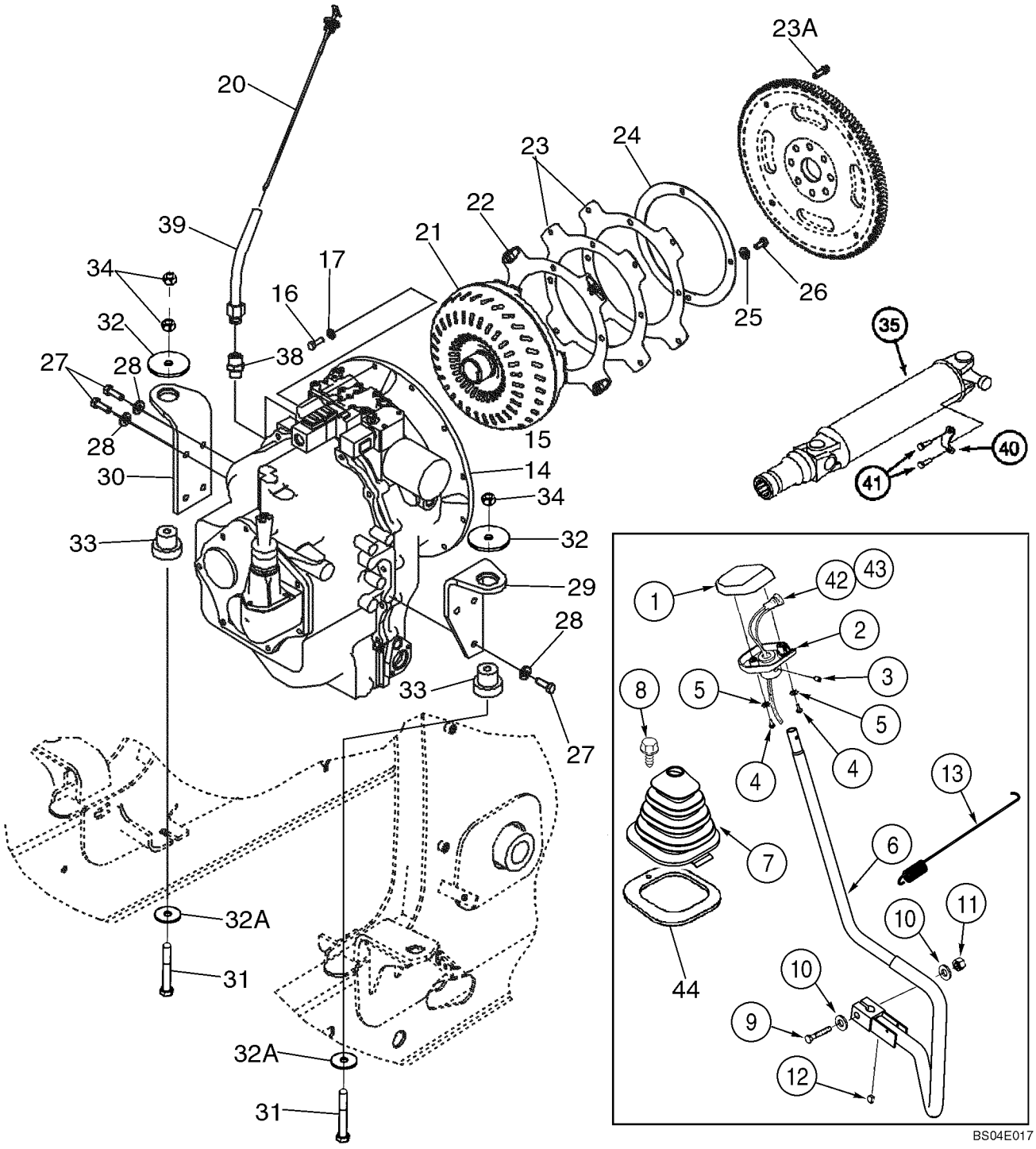

http://www.minnparbackhoeparts.com/

TRANSMISSION - MOUNTING (MODELS WITHOUT POWERSHIFT)

REF	FN	PART NUMBER	YR/SN	QTY	DESCRIPTION
32		85801585		2	WASHER, SEALING Special
32A		85802618		2	WASHER, SEALING
33		87416967		2	SUPPORT
34		832-10412		3	NUT Lock, M12
35		367860A3		1	SHAFT, DRIVE Transmission to Rear Axle, See Figure 06-47
38		218-459		1	FITTING 1-5/16 fl x 3/4 PT
39		395344A1		1	TUBE ASSY. Dipstick
40		90-6682T1		2	CLAMP
41		D137627		4	BOLT
42		123097A1		1	SWITCH Push Button, Clutch Cutout; If Used
42		87312712		1	SWITCH Push Button, Clutch Cutout; Otto 21649 Marking; If Used
43		123809A2		1	HARNESS Clutch Cutout, Transmission Gear Shift Lever
44		410561A1		1	SEAL Shift Lever Boot, Cab Models

http://www.minnparbackhoeparts.com/

TRANSMISSION - MOUNTING (MODELS WITH POWERSHIFT)

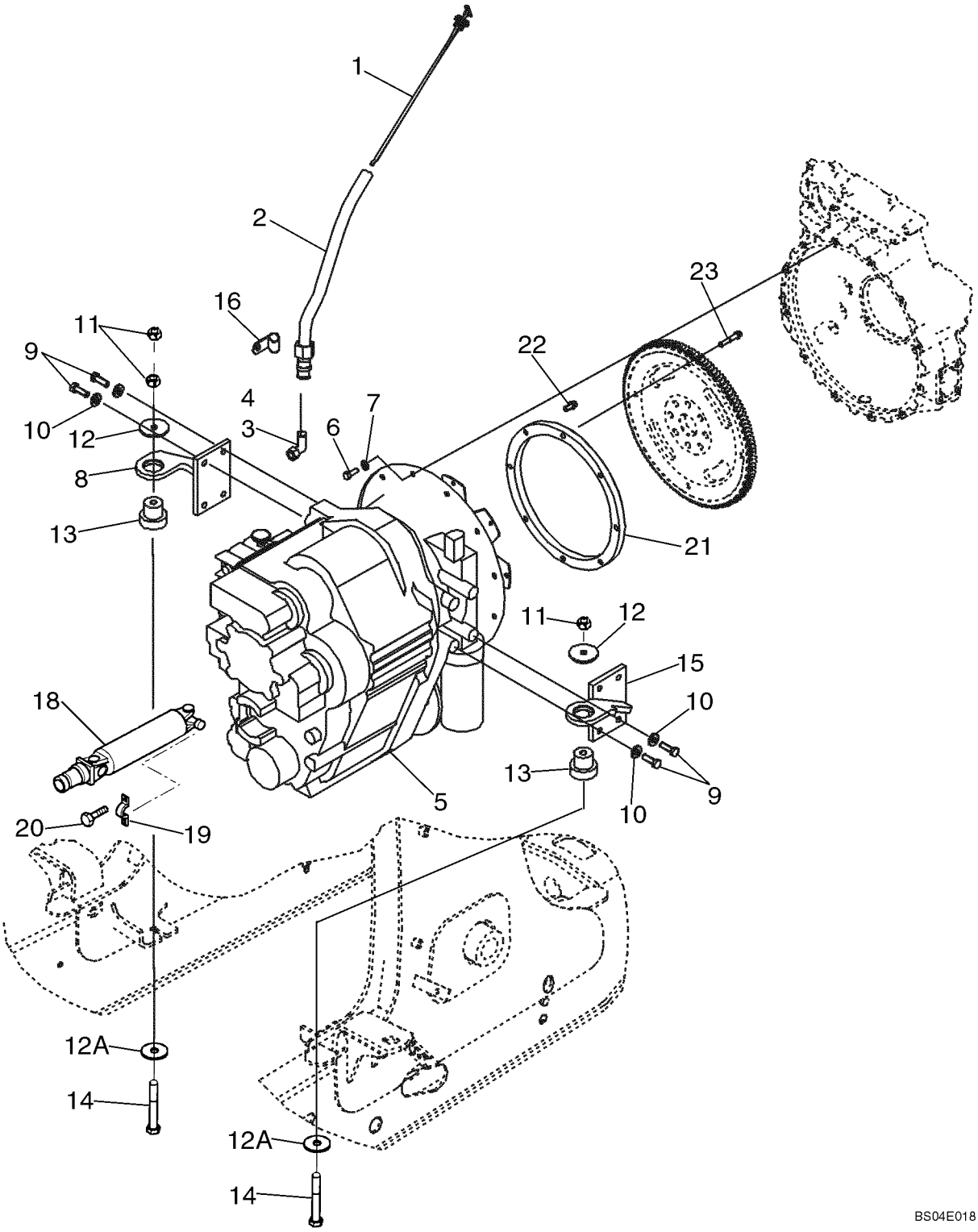

http://www.minnparbackhoeparts.com/

TRANSMISSION - MOUNTING (MODELS WITH POWERSHIFT)

REF	FN	PART NUMBER	YR/SN	QTY	DESCRIPTION
1		87430618		1	DIPSTICK
2		393999A1		1	TUBE ASSY. Dipstick
3		218-5110		1	FITTING Elbow, 90 deg, 1-5/16 fl x Or; Incl. Ref 4
4		237-6016		1	O-RING 1-11/64 ID x 7/64
5		87424815		1	TRANSMISSION New, Four Wheel Drive Models, See Figure 06-25 - 06-36
6		627-10030		12	SCREW M10 x 30; 10.9
7		496-21041		12	WASHER 13/32 x 13/16 x 3/32
8		87416982		1	MOUNTING PARTS Left-Hand Bracket
9		614-12035		8	BOLT M12 x 35
10		896-15012		8	WASHER 13,5 x 28 x 4 mm
11		832-10412		3	NUT M12
12		85801585		2	WASHER, SEALING Special
12A		85802618		2	WASHER, SEALING
13		87416967		2	SUPPORT Insulator
14		814-12080		2	SCREW M12 x 80
15		87416981		1	MOUNTING PARTS Right-Hand Bracket
16		D35908		1	CLAMP
18		367859A2		1	SHAFT, DRIVE Transmission to Rear Axle, See Figure 06-47
19		90-6682T1		2	CLAMP
20		D137627		4	BOLT
21		87407758		1	RING Adapter Ring, Flywheel
22		87021705		4	SCREW Flange, M10 x 20
23		87021704		4	SCREW Flange, M10 x 50

http://www.minnparbackhoeparts.com/

TRANSMISSION ASSY - FILTER, OIL (MODELS WITHOUT POWERSHIFT)

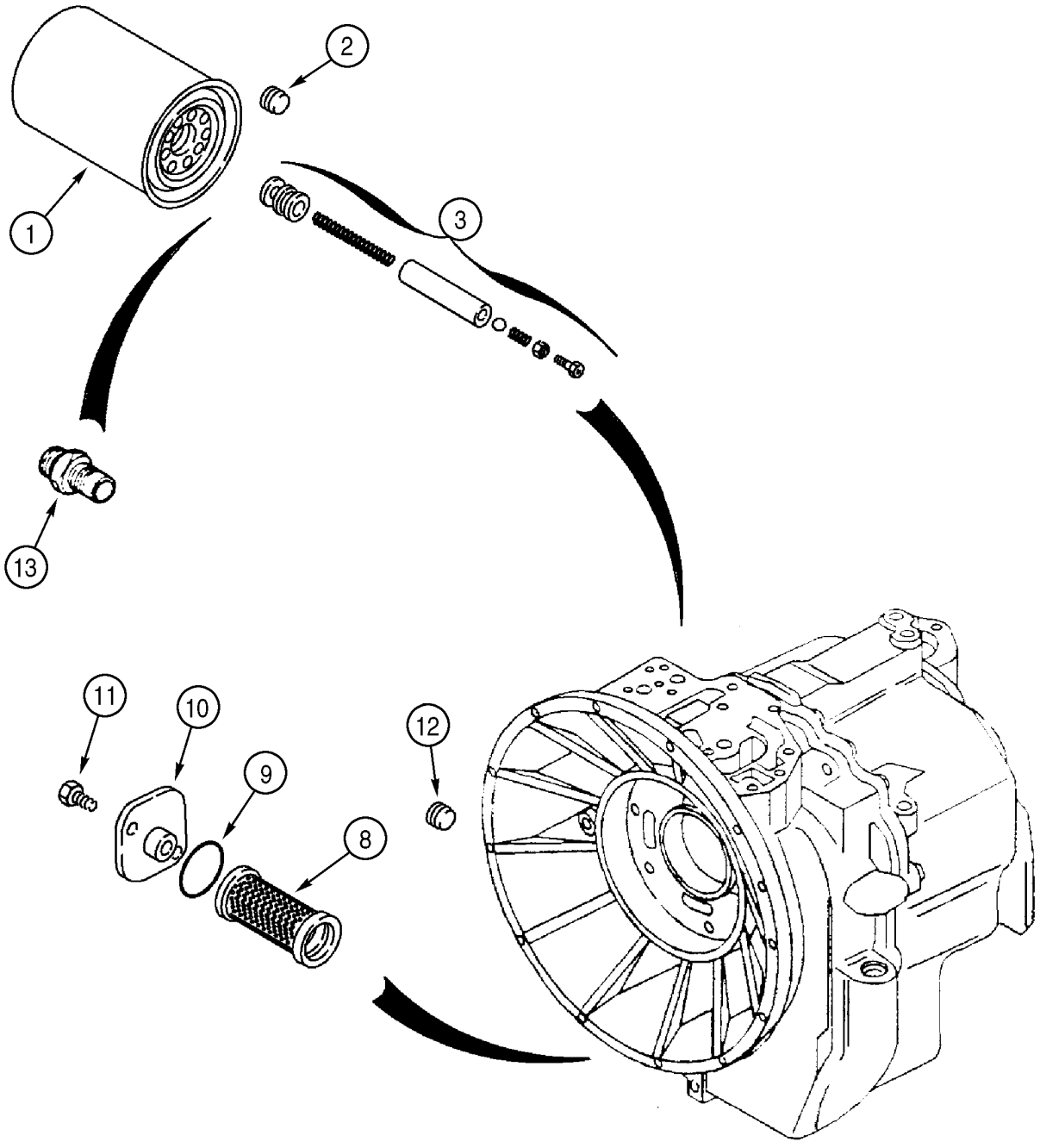

http://www.minnparbackhoeparts.com/

TRANSMISSION ASSY - FILTER, OIL (MODELS WITHOUT POWERSHIFT)

REF	FN	PART NUMBER	YR/SN	QTY	DESCRIPTION
		87456843		1	TRANSMISSION Two Wheel Drive, Incl. Ref 1, 8 - 11, 13; Also Includes Parts On Figures 06-14 - 06-23A; Replaces 86984097
		87456844		1	TRANSMISSION Four Wheel Drive, Incl. Ref 1 - 13; Also Includes Parts On Figures 06-14 - 06-24; Replaces 86984098
1		254686A2		1	FILTER Oil
2		181101A1		1	PLUG 14 - 1.5 mm; Four Wheel Drive Models Only
3		181274A1		1	SET OF PARTS Valve; Four Wheel Drive Models Only
8		278534A1		1	SCREEN, FILTER Oil
9		100748A1		1	O-RING
10		181219A1		1	COVER
11		614-8018		2	SCREW M8 x 18
12		181102A1		1	PLUG Four Wheel Drive Models Only
13		181202A1		1	FITTING

http://www.minnparbackhoeparts.com/

TRANSMISSION ASSY (2WD) - HOUSING (MODELS WITHOUT POWERSHIFT)

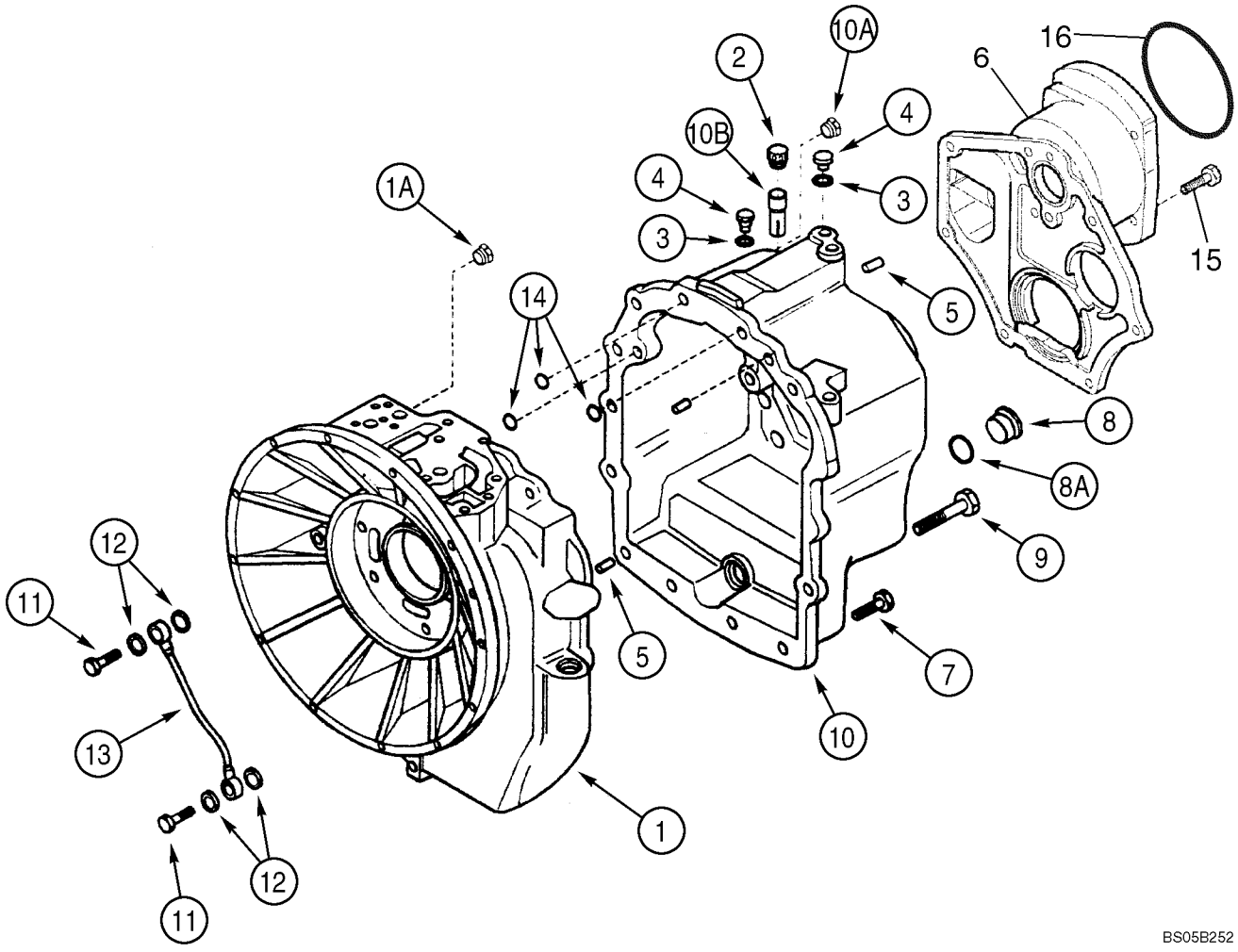

http://www.minnparbackhoeparts.com/

TRANSMISSION ASSY (2WD) - HOUSING (MODELS WITHOUT POWERSHIFT)

REF	FN	PART NUMBER	YR/SN	QTY	DESCRIPTION
		87456843		1	TRANSMISSION Two Wheel Drive, Incl. Ref 1 - 14, 16; Also Includes Parts On Figures 06-14 - 06-23A; Replaces 86984097
1		87429989		1	HOUSING Housing, Front Half, Use With Loctite 510 or 518 as a Gasket Eliminator; Incl. Ref 1A
1A		E135809		1	PLUG If Used
2		1530028C1		1	BREATHER ASSY.
		310772A1		1	PIPE 18 OD x 42 mm lg, Breather, Not Illustrated
3		934667R1		4	WASHER, SEALING Copper Washer, 10 x 14 x 1.5 mm
4		181100A1		3	PLUG
5		K260177		3	PIN Dowel, 10 x 25 mm
6		87429987		1	ADAPTER Adapter Cover, Pump, Copper
7		614-10030		19	SCREW M10 x 30
8		100557A1		1	PLUG, DRAIN Incl. Ref 8A
8A		238-6121		1	O-RING 1-1/16 ID x 3/32
9		814-10150		2	SCREW M10 x 150
10		87429988		1	HOUSING HOUSING, Rear Half, Use With Superbond 539 as a Gasket Eliminator; Incl. Ref 10A, 10B
10A		E135809		1	PLUG If Used
10B		310772A1		1	PIPE 18 OD x 42 mm lg, Breather, Not Illustrated
11		181179A1		2	JACK SCREW
12		181105A1		4	WASHER, COPPER 14 x 20 x 1.5 mm; Sealing
13		181232A1		1	PIPE Lubrication Tube
14		181141A1		3	O-RING
15		814-10045		4	BOLT M10 x 45
16		87429982		1	O-RING Pump Mounting

http://www.minnparbackhoeparts.com/

TRANSMISSION ASSY (4WD) - HOUSING (MODELS WITHOUT POWERSHIFT)

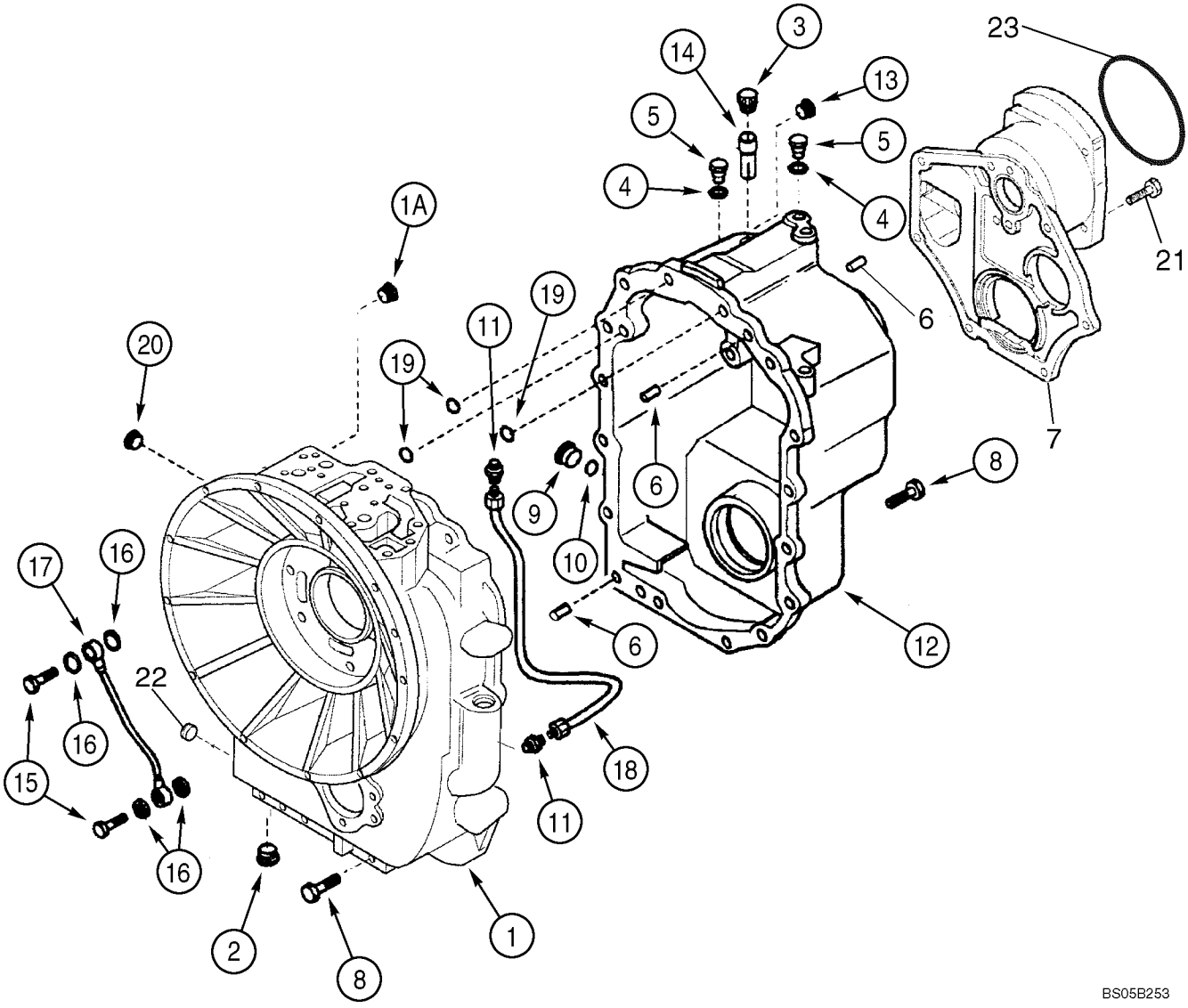

http://www.minnparbackhoeparts.com/

TRANSMISSION ASSY (4WD) - HOUSING (MODELS WITHOUT POWERSHIFT)

REF	FN	PART NUMBER	YR/SN	QTY	DESCRIPTION
		87456844		1	TRANSMISSION Four Wheel Drive, Incl. Ref 1 - 20, 23; Also Includes Parts On Figures 06-14 - 06-24; Replaces 86984098
1		87429972		1	HOUSING Housing, Front Half, Use With Loctite 510 or 518 as a Gasket Eliminator; Incl. Ref 1A
1A		E135809		1	PLUG
2		239606A1		1	PLUG
3		1530028C1		1	BREATHER ASSY.
		310772A1		1	PIPE 18 OD x 42 mm lg, Breather, Not Illustrated
4		934667R1		3	WASHER, SEALING Copper Washer, 10 x 14 x 1.5 mm
5		181100A1		3	PLUG
6		K260177		3	PIN Dowel, 10 x 25 mm
7		87429987		1	ADAPTER Adapter Cover, Pump
8		614-10030		23	SCREW M10 x 30
9		100557A1		1	PLUG, DRAIN Incl. Ref 10
10		238-6121		1	O-RING 1-1/16 ID x 3/32
11		218-1023		2	CONNECTOR, HYD. 1/2 fl x 1/4 PT
12		87429986		1	HOUSING HOUSING, Rear Half, Use With Superbond 539 as a Gasket Eliminator; Incl. Ref 13, 14
13		E135809		1	PLUG If Used
14		310772A1		1	PIPE 18 OD x 42 mm lg, Breather
15		181179A1		2	JACK SCREW
16		181105A1		4	WASHER, COPPER 14 x 20 x 1.5 mm
17		181232A1		1	PIPE Lubrication Tube
18		181176A1		1	PIPE Oil Tube
19		181141A1		3	O-RING
20		181101A1		1	PLUG 14 - 1.5 mm
21		814-10045		4	BOLT M10 x 45
22		181102A1		1	PLUG
23		87429982		1	O-RING Pump Mounting

http://www.minnparbackhoeparts.com/

06-17		p1	03/05

TRANSMISSION ASSY - PUMP, OIL (MODELS WITHOUT POWERSHIFT)

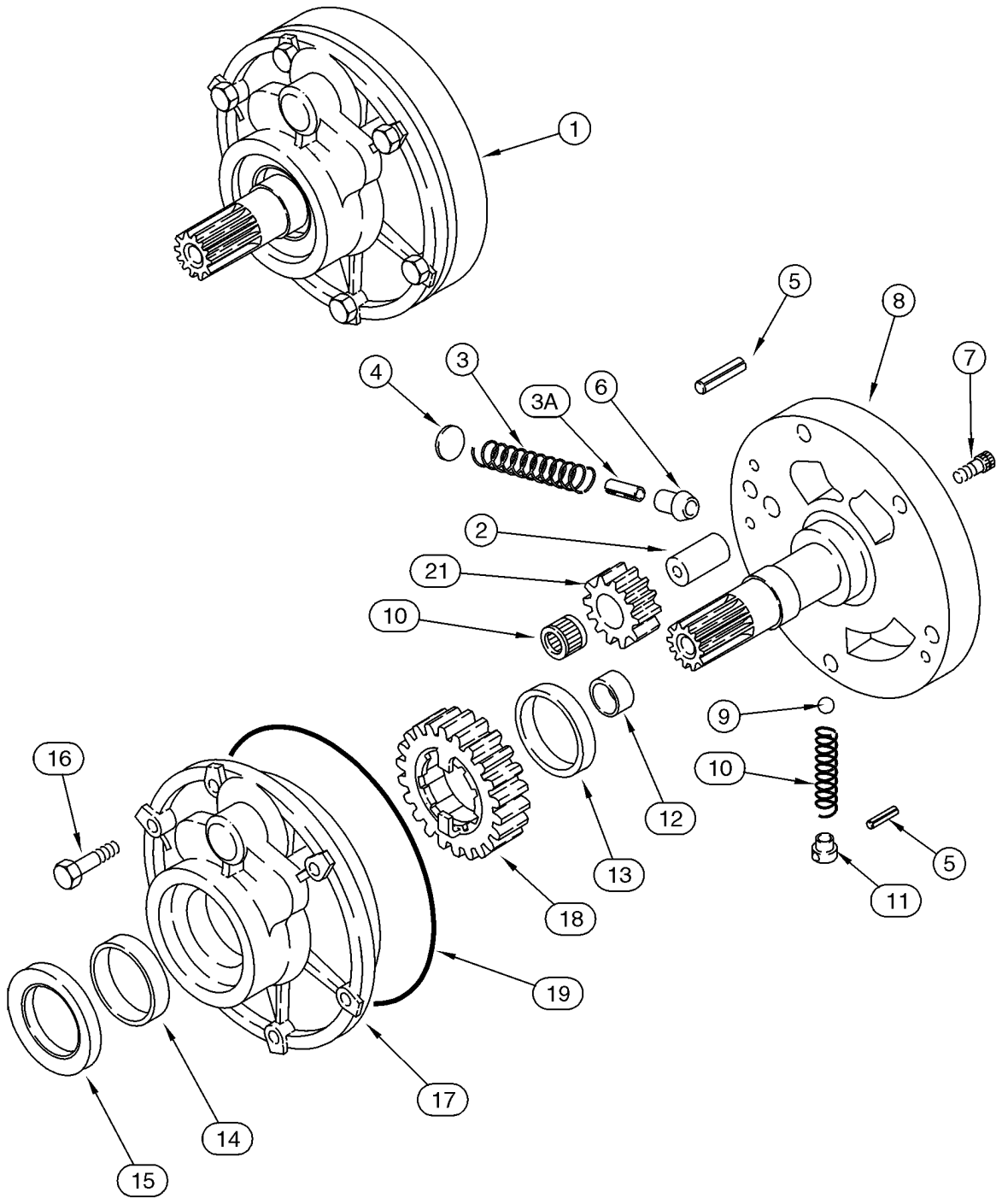

http://www.minnparbackhoeparts.com/

TRANSMISSION ASSY - PUMP, OIL (MODELS WITHOUT POWERSHIFT)

REF	FN	PART NUMBER	YR/SN	QTY	DESCRIPTION
		87456843		1	TRANSMISSION Two Wheel Drive, Incl. Ref 1 - 21; Also Includes Parts On Figures 06-14 - 06-23A; Replaces 86984097
		87456844		1	TRANSMISSION Four Wheel Drive, Incl. Ref 1 - 21; Also Includes Parts On Figures 06-14 - 06-24; Replaces 86984098
1		87429970		1	PUMP Charge, Incl. Ref 2 - 21
2		NSS		1	NOT SERVICED SEPARATELY Shaft
3		NSS		1	NOT SERVICED SEPARATELY Spring
3A		NSS		1	NOT SERVICED SEPARATELY Pin
4		NSS		1	NOT SERVICED SEPARATELY Stop
5		NSS		2	NOT SERVICED SEPARATELY Pin, Roll
6		NSS		1	NOT SERVICED SEPARATELY Piston
7		NSS		2	NOT SERVICED SEPARATELY Bolt
8		NSS		1	NOT SERVICED SEPARATELY Support
9		NSS		1	NOT SERVICED SEPARATELY Ball
10		NSS		1	NOT SERVICED SEPARATELY Spring
11		NSS		1	NOT SERVICED SEPARATELY Guide
12		NSS		1	NOT SERVICED SEPARATELY Bushing
13		NSS		1	NOT SERVICED SEPARATELY Bushing
14		NSS		1	NOT SERVICED SEPARATELY Bushing
15		87429971		1	SEAL, OIL Oil Seal
16		814-8060		6	SCREW M8 x 60
17		NSS		1	NOT SERVICED SEPARATELY Housing
18		NSS		1	NOT SERVICED SEPARATELY Gear, 23T
19		181142A1		1	O-RING
20		NSS		1	NOT SERVICED SEPARATELY Bearing, Needle
21		NSS		1	NOT SERVICED SEPARATELY Gear, 12T

http://www.minnparbackhoeparts.com/

TRANSMISSION ASSY - SHIFTER MECHANISM (MODELS WITHOUT POWERSHIFT)

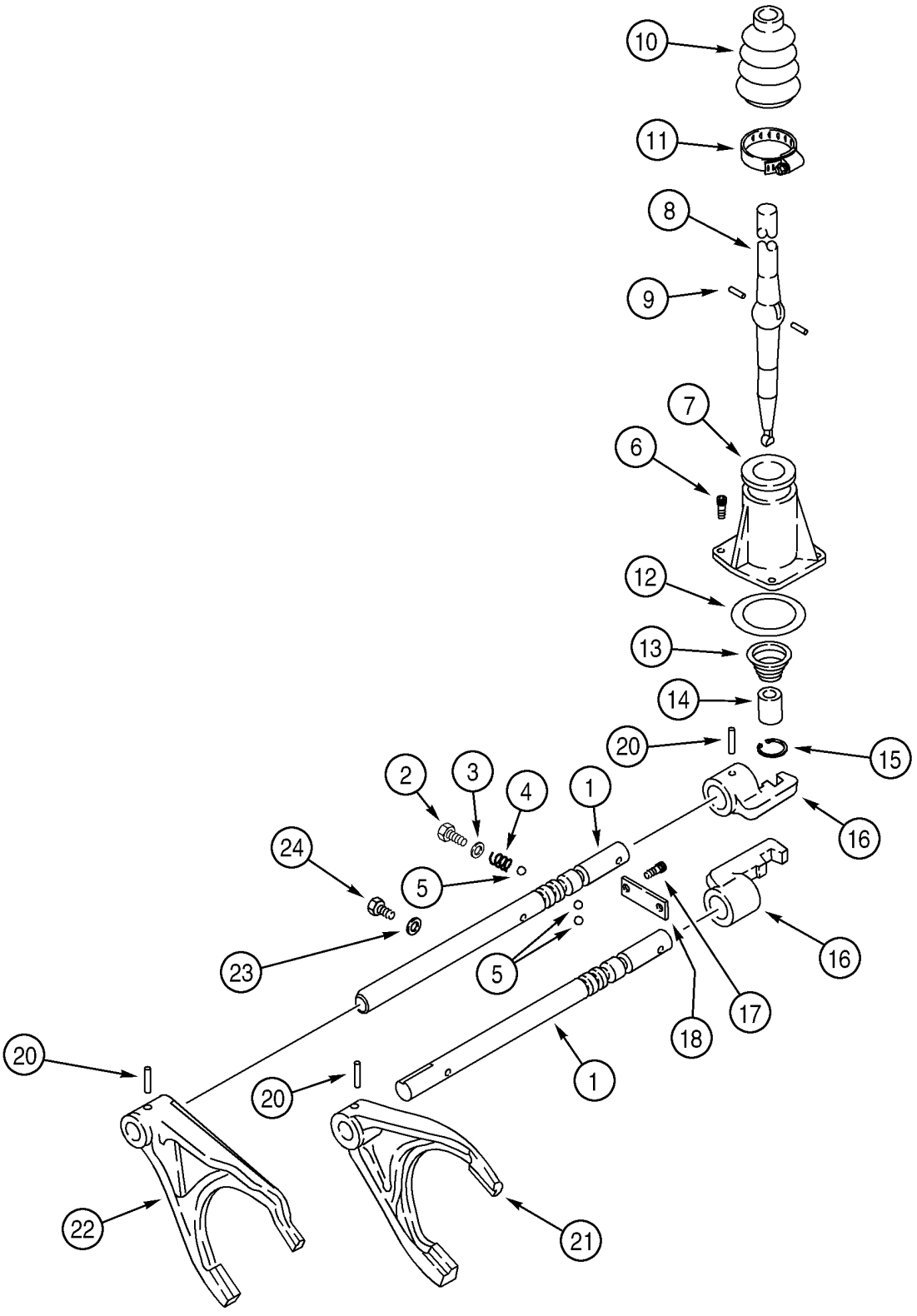

http://www.minnparbackhoeparts.com/

TRANSMISSION ASSY - SHIFTER MECHANISM (MODELS WITHOUT POWERSHIFT)

REF	FN	PART NUMBER	YR/SN	QTY	DESCRIPTION
		87456843		1	TRANSMISSION Two Wheel Drive, Incl. Ref 1 - 24; Also Includes Parts On Figures 06-14 - 06-23A; Replaces 86984097
		87456844		1	TRANSMISSION Four Wheel Drive, Incl. Ref 1 - 24; Also Includes Parts On Figures 06-14 - 06-24; Replaces 86984098
1		181245A2		2	ROD Shifter Fork Rail
2		614-12016		2	SCREW M12 x 16
3		87429994		2	WASHER, SEALING 12 x 20 x 1.5 mm
4		1966993C1		2	SPRING
5		181139A1		4	BALL
6		864-8025		3	SCREW M8 x 25
7		181171A1		1	COVER
8		190428A3		1	LEVER, CONTROL
9		1967585C1		2	PIN Pin
10		1967581C1		1	BOOT
11		181177A1		1	CLAMP
12		181138A1		1	O-RING
13		278533A1		1	SPRING
14		278532A1		1	BUSHING, LARGE
15		279039A1		1	SNAP RING
16		181173A1		2	SELECTOR Shifter
17		864-10025		2	SCREW M10 x 25
18		181175A1		1	PLATE, LARGE
20		905794R1		4	PIN 6 x 30 mm
21		181203A1		1	FORK, SHIFTER First and Second
22		181174A2		1	FORK, SHIFTER Third and Fourth
23		87429985		1	WASHER, SEALING Washer
24		1967531C1		1	BOLT M10 x 1 x 25

http://www.minnparbackhoeparts.com/

TRANSMISSION ASSY - SHAFT, IDLER AND PRIMARY (MODELS WITHOUT POWERSHIFT)

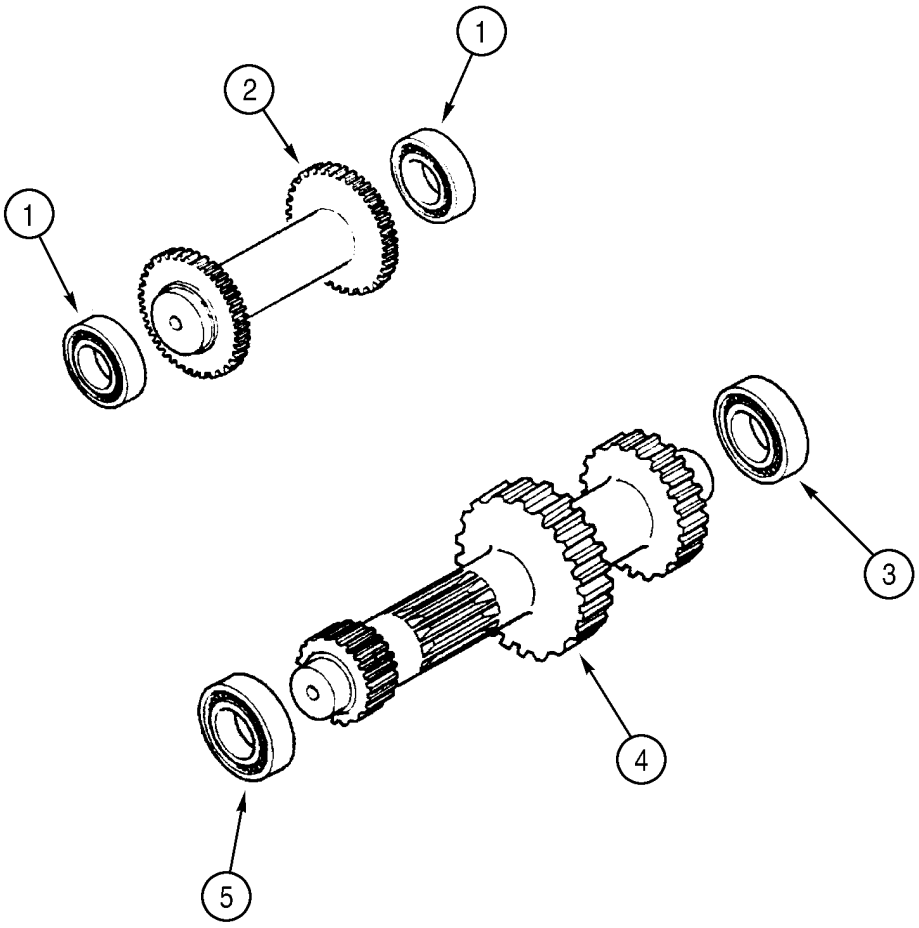

BS99H168

http://www.minnparbackhoeparts.com/

TRANSMISSION ASSY - SHAFT, IDLER AND PRIMARY (MODELS WITHOUT POWERSHIFT)

REF	FN	PART NUMBER	YR/SN	QTY	DESCRIPTION
		87456843		1	TRANSMISSION Two Wheel Drive, Incl. Ref 1 - 6; Also Includes Parts On Figures 06-14 - 06-23A; Replaces 86984097
		87456844		1	TRANSMISSION Four Wheel Drive, Incl. Ref 1 - 6; Also Includes Parts On Figures 06-14 - 06-24; Replaces 86984098
1		ST205A		2	BEARING, BALL
2		358636A1		1	SHAFT Idler Shaft
3		181126A1		1	BEARING, BALL
4		358646A1		1	SHAFT Primary Shaft
5		181132A1		1	BEARING, BALL
6		A48041		1	CIRCLIP Not Illustrated

http://www.minnparbackhoeparts.com/

TRANSMISSION ASSY - SHAFT, INPUT (MODELS WITHOUT POWERSHIFT)

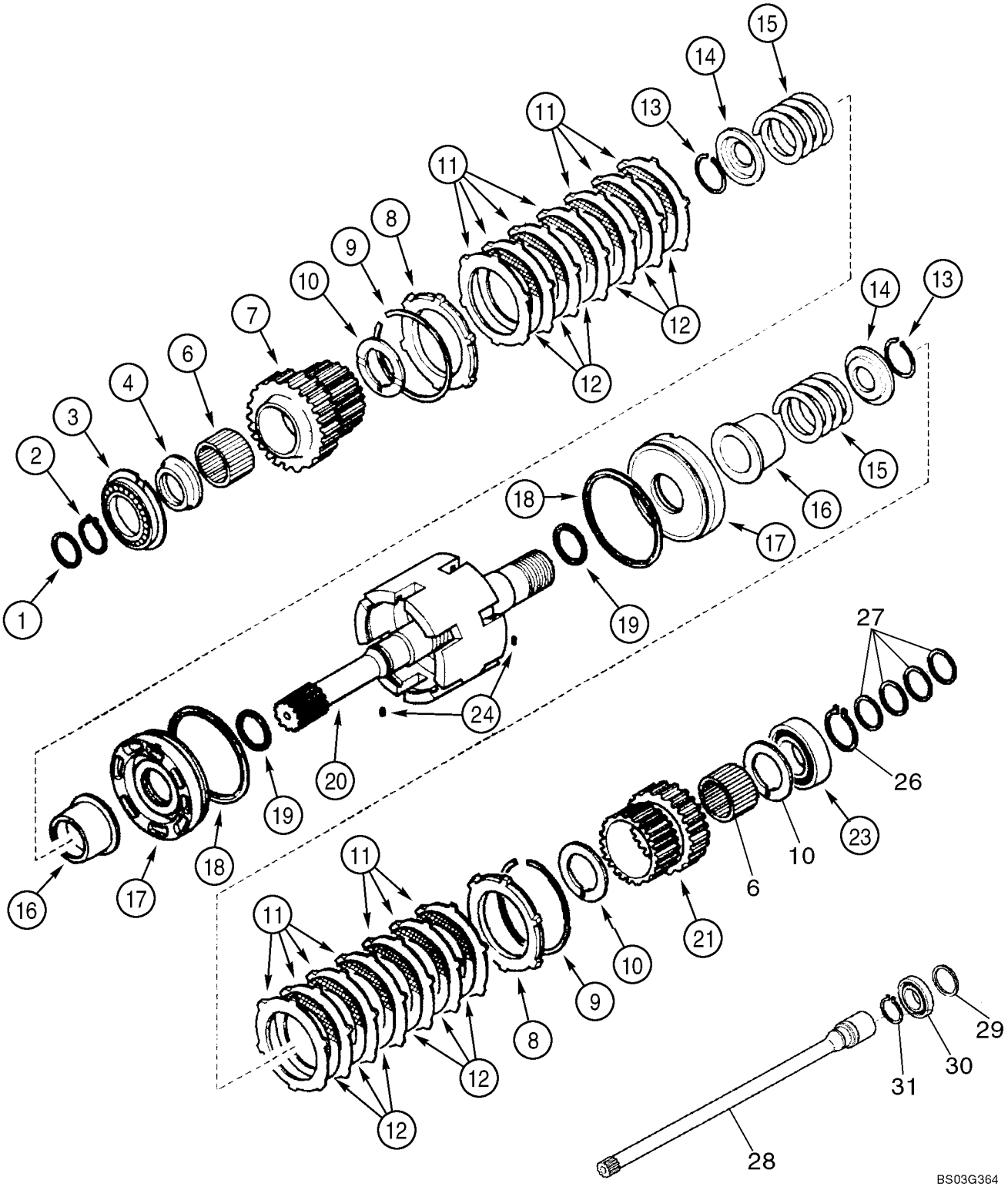

http://www.minnparbackhoeparts.com/

TRANSMISSION ASSY - SHAFT, INPUT (MODELS WITHOUT POWERSHIFT)

REF	FN	PART NUMBER	YR/SN	QTY	DESCRIPTION
		87456843		1	TRANSMISSION Two Wheel Drive, Incl. Ref 1 - 25; Also Includes Parts On Figures 06-14 - 06-23A; Replaces 86984097
		87456844		1	TRANSMISSION Four Wheel Drive, Incl. Ref 1 - 25; Also Includes Parts On Figures 06-14 - 06-24; Replaces 86984098
1		358645A1		1	SEAL, OIL
2		A48041		1	CIRCLIP
3		181128A1		1	BEARING, BALL
4		358635A1		1	SPACER 68 x 45 x 105 mm
6		358633A1		2	BEARING, NEEDLE
7		358632A1		1	PINION Gear, 35T
8		310519A1		2	PLATE
9		181116A1		2	RING, LOCKING
10		358640A1		3	WASHER Thrust
11		181159A1		14	DISC Plate
12		181158A1		12	DISC, CLUTCH Plate
13		181111A1		2	RING, LOCKING
14		181161A1		2	PLATE, THRUST Pressure
15		358637A1		2	SPRING
16		358641A1		2	SLEEVE, TRANSMISSION
17		358644A1		2	PISTON
18		358643A1		2	SNAP RING
19		358642A1		2	SEALRING
20		87429973		1	SHAFT Input Shaft, Charge; Includes D6x5,84 Rivet in Shaft End Which Is Not Serviced Separately
21		358638A1		1	PINION Gear, 29T
23		ST264		1	BEARING, BALL
24		181108A1		2	SPLIT PIN
26		800-1150		1	CIRCLIP
27		87429984		4	RING Seal Ring
28		87429981		1	SHAFT
29		358645A1		1	SEAL, OIL
30		87429983		1	BEARING, BALL
31		358655A1		1	SNAP RING

http://www.minnparbackhoeparts.com/

TRANSMISSION ASSY - SHAFT, SECONDARY (MODELS WITHOUT POWERSHIFT)

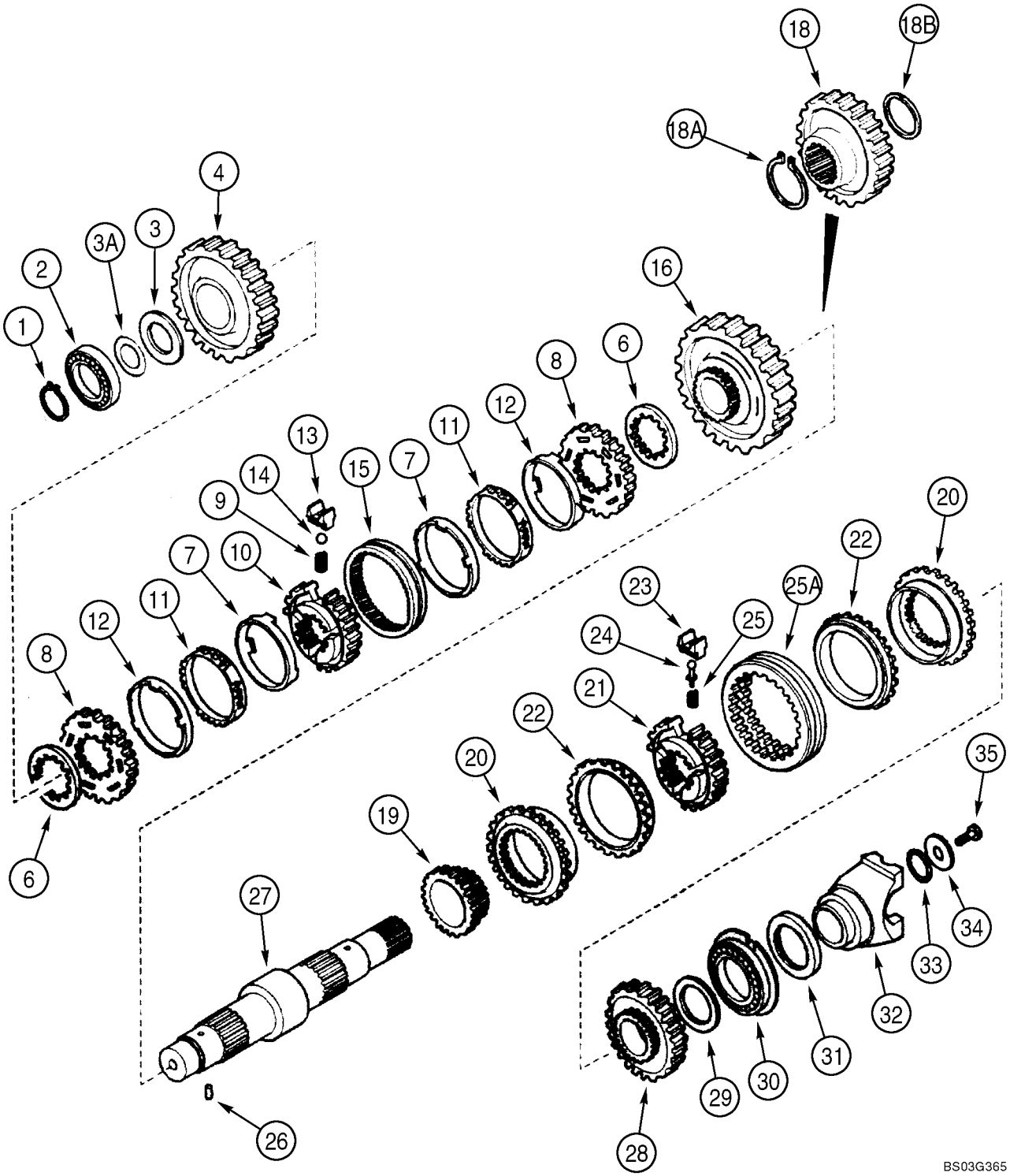

http://www.minnparbackhoeparts.com/

TRANSMISSION ASSY - SHAFT, SECONDARY (MODELS WITHOUT POWERSHIFT)

REF	FN	PART NUMBER	YR/SN	QTY	DESCRIPTION
		87456843		1	TRANSMISSION Two Wheel Drive, Incl. Ref 1 - 35; Also Includes Parts On Figures 06-14 - 06-23A; Replaces 86984097
		87456844		1	TRANSMISSION Four Wheel Drive, Incl. Ref 1 - 35; Also Includes Parts On Figures 06-14 - 06-24; Replaces 86984098
1		181118A1		1	RING, LOCKING
2		181132A1		1	BEARING, BALL
3		358649A1		1	WASHER Thrust
3A		358650A1		X	SHIM 0,05 mm
3A		358651A1		X	SHIM 0,10 mm
3A		358652A1		X	SHIM 0,30 mm
3A		196454A1		X	SHIM 0,50 mm
4		358648A1		1	PINION Gear, Driven, Second, 43T
6		244109A1		2	SPACER
		190427A1		1	SYNCHRONIZER Synchronizing Service Kit, Incl. Ref 7 - 15
7		NSS		2	NOT SERVICED SEPARATELY Ring
8		NSS		2	NOT SERVICED SEPARATELY Ring
9		384773A1		3	SPRING, COIL
10		NSS		1	NOT SERVICED SEPARATELY Hub
11		NSS		2	NOT SERVICED SEPARATELY Ring
12		NSS		2	NOT SERVICED SEPARATELY Ring
13		326865A1		3	PLATE, SPACER
14		384769A1		3	BALL
15		NSS		1	NOT SERVICED SEPARATELY Sleeve
16		358647A1		1	PINION Gear, Driven, First, 49T
18		358656A1		1	GEAR Drive, Four Wheel Drive Models
18A		358654A1		1	SNAP RING Four Wheel Drive Models
18B		358655A1		1	SNAP RING Four Wheel Drive Models
19		358282A1		1	GEAR Driven, Fourth, 23T
		87429974		1	SYNCHRONIZER Synchronizing Service Kit, Incl. Ref 20 - 25A
20		NSS		2	NOT SERVICED SEPARATELY Ring
21		NSS		1	NOT SERVICED SEPARATELY Hub
22		NSS		2	NOT SERVICED SEPARATELY Ring
23		NSS		3	NOT SERVICED SEPARATELY Plate

http://www.minnparbackhoeparts.com/

TRANSMISSION ASSY - SHAFT, SECONDARY (MODELS WITHOUT POWERSHIFT)

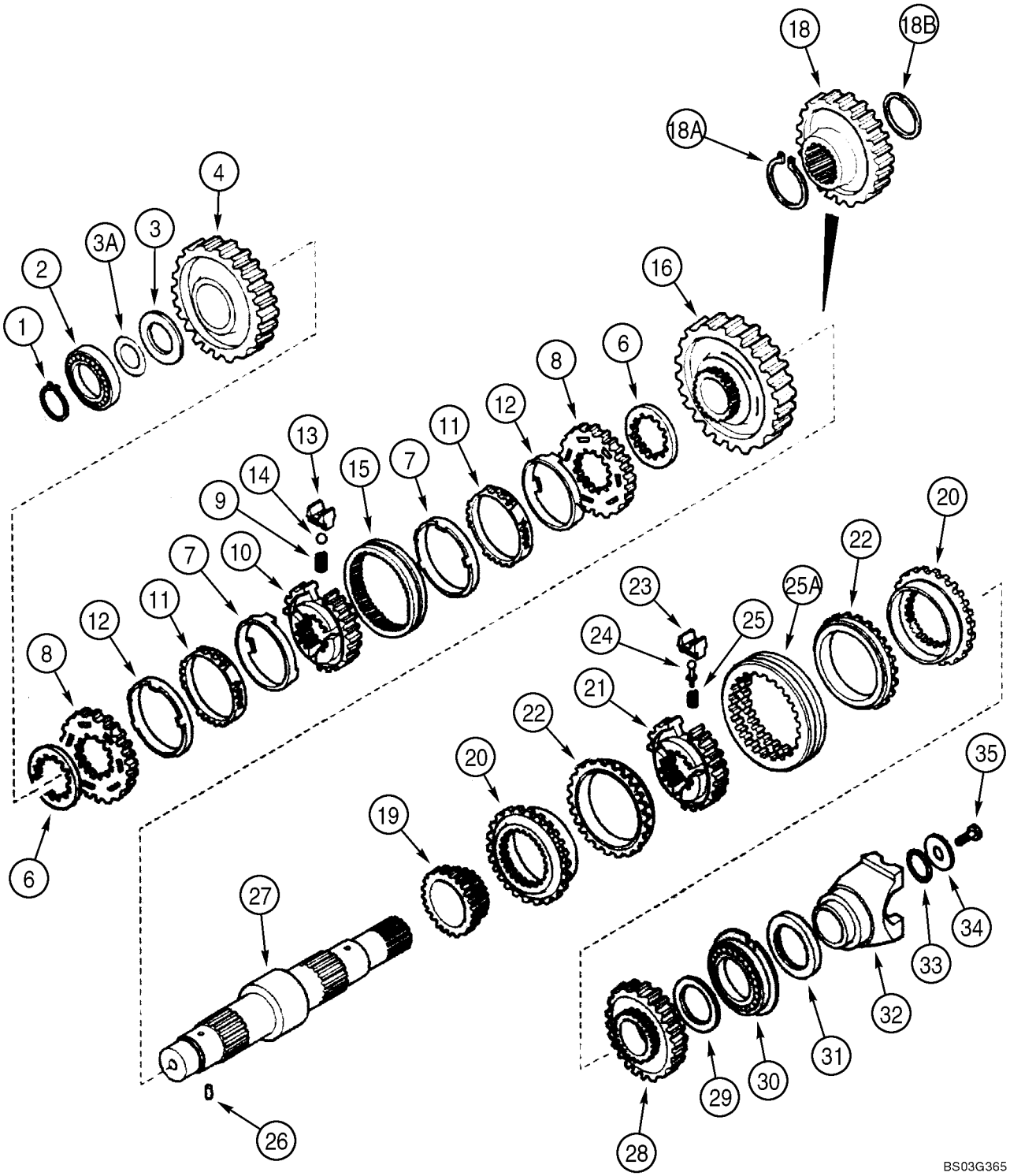

http://www.minnparbackhoeparts.com/

TRANSMISSION ASSY - SHAFT, SECONDARY (MODELS WITHOUT POWERSHIFT)

REF	FN	PART NUMBER	YR/SN	QTY	DESCRIPTION
24		NSS		3	NOT SERVICED SEPARATELY Pin
25		NSS		3	NOT SERVICED SEPARATELY Spring
25A		NSS		1	NOT SERVICED SEPARATELY Sleeve
26		181108A1		1	SPLIT PIN
27		366366A1		1	SHAFT Secondary, Two Wheel Drive Models
27		358653A1		1	SHAFT Secondary, Four Wheel Drive Models
28		358283A1		1	PINION Gear, Driven, Third, 33T
29		358639A1		1	WASHER Thrust, 68 x 45 x 4 mm
30		181130A1		1	BEARING, BALL
31		181123A1		1	SEAL, OIL 60 x 75 x 8 mm; Two Wheel Drive Models
32		233284A1		1	FORK Yoke
33		181144A1		1	O-RING
34		181165A1		1	WASHER 52 x 12.5 x 5 mm
35		P3533055		1	SCREW 12 x 25 mm

http://www.minnparbackhoeparts.com/

TRANSMISSION ASSY (4WD) - SHAFT, OUTPUT (MODELS WITHOUT POWERSHIFT)

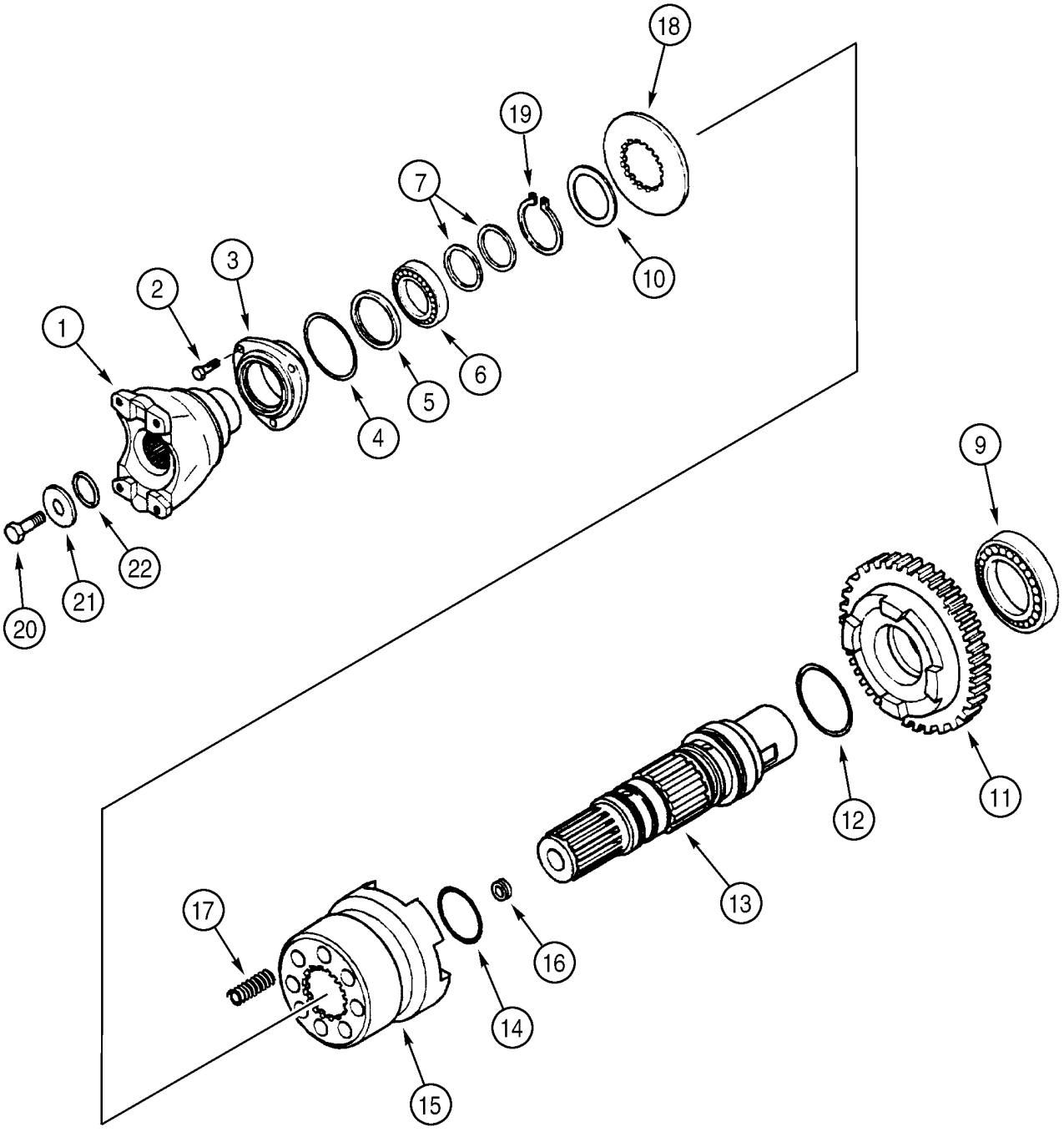

BS99H160

http://www.minnparbackhoeparts.com/

TRANSMISSION ASSY (4WD) - SHAFT, OUTPUT (MODELS WITHOUT POWERSHIFT)

REF	FN	PART NUMBER	YR/SN	QTY	DESCRIPTION
		87456844		1	TRANSMISSION Four Wheel Drive, Incl. Ref 1 - 22; Also Includes Parts On Figures 06-14 - 06-24; Replaces 86984098
1		233283A1		1	FORK Yoke, Front
2		614-8022		3	SCREW M8 x 22
3		181198A1		1	COVER
4		112517A1		1	O-RING
5		181122A1		1	SEAL, OIL 50 x 65 x 8 mm
6		ST205A		1	BEARING, BALL
7		358645A1		2	SEAL, OIL
9		181126A1		1	BEARING, BALL
10		P2745478		1	WASHER
11		366234A1		1	PINION Gear, Driven, 36T
12		366235A1		1	O-RING
13		366230A1		1	SHAFT Output Shaft
14		366236A1		2	O-RING
15		366232A1		1	SLEEVE, TRANSMISSION
16		D142898		1	PLUG 10 x 1 mm
17		100753A1		8	SPRING
18		366231A1		1	WASHER
19		800-5145		1	SNAP RING
20		P3533055		1	SCREW 12 x 25 mm
21		P2745466		1	WASHER
22		238-8217		1	O-RING 1-3/16 ID x 1/8

http://www.minnparbackhoeparts.com/

TRANSMISSION ASSY (86984097 OR 86984098) - VALVE, CONTROL (MODELS WITHOUT POWERSHIFT)

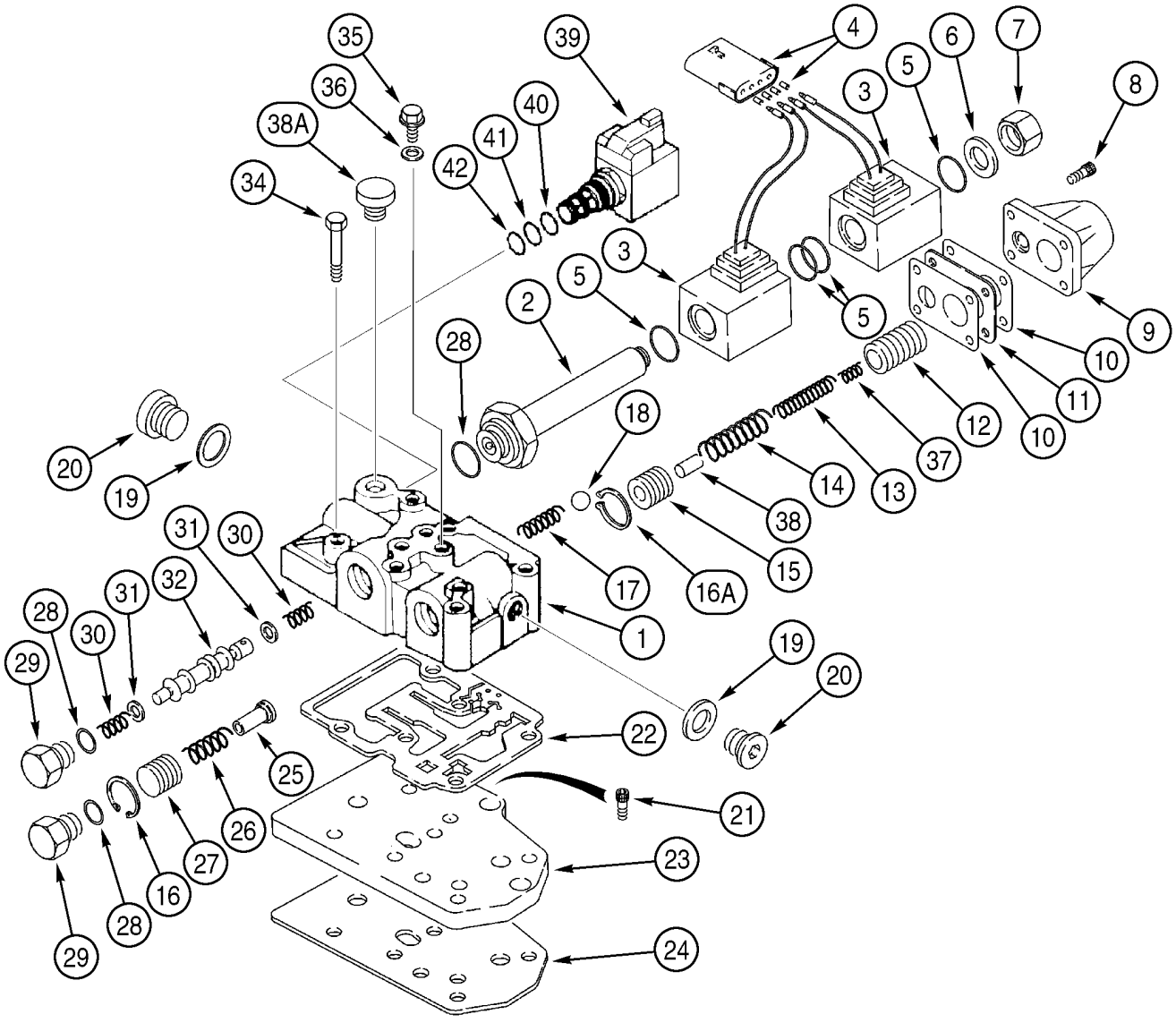

BS99J194

http://www.minnparbackhoeparts.com/

TRANSMISSION ASSY (86984097 OR 86984098) - VALVE, CONTROL (MODELS WITHOUT POWERSHIFT)

REF	FN	PART NUMBER	YR/SN	QTY	DESCRIPTION
		86984097		1	TRANSMISSION Two Wheel Drive, Incl. Ref 1 - 45; Also Includes Parts On Figures 06-14 - 06-23
		86984098		1	TRANSMISSION Four Wheel Drive, Incl. Ref 1 - 45; Also Includes Parts On Figures 06-14 - 06-24
		335640A2		1	VALVE Transmission Control, Incl. Ref 1 - 45
1		NSS		1	NOT SERVICED SEPARATELY Housing
2		190442A1		1	PLUNGER
3		190443A1		2	COIL
4		190437A1		1	FITTING
5		181136A1		4	O-RING
6		181273A1		1	WASHER, COPPER
7		181272A1		1	PLUG
8		864-6020		4	SCREW M6 x 20
9		181251A1		1	COVER
10		181256A1		2	SEAL Cover Gasket
11		190439A2		1	SPACER
12		190438A2		1	PISTON
13		190436A1		1	SPRING
14		190441A1		1	SPRING
15		181234A2		1	PISTON
16		299324A1		1	CIRCLIP
16A		368436A1		1	CIRCLIP
17		181261A1		1	SPRING
18		181146A1		1	BALL
19		181107A1		2	WASHER, COPPER
20		181103A1		2	PLUG
21		864-8020		3	SCREW M8 x 20, Not Included In Assembly, Purchase Separately
22		181166A1		1	SEAL Not Included In Assembly, Purchase Separately
23		181207A1		1	PLATE, LARGE Not Included In Assembly, Purchase Separately
24		181208A1		1	SEAL Not Included In Assembly, Purchase Separately
25		181254A1		1	SHAFT
26		181260A1		1	SPRING
27		181255A2		1	PISTON Flow Divider

http://www.minnparbackhoeparts.com/

TRANSMISSION ASSY (86984097 OR 86984098) - VALVE, CONTROL (MODELS WITHOUT POWERSHIFT)

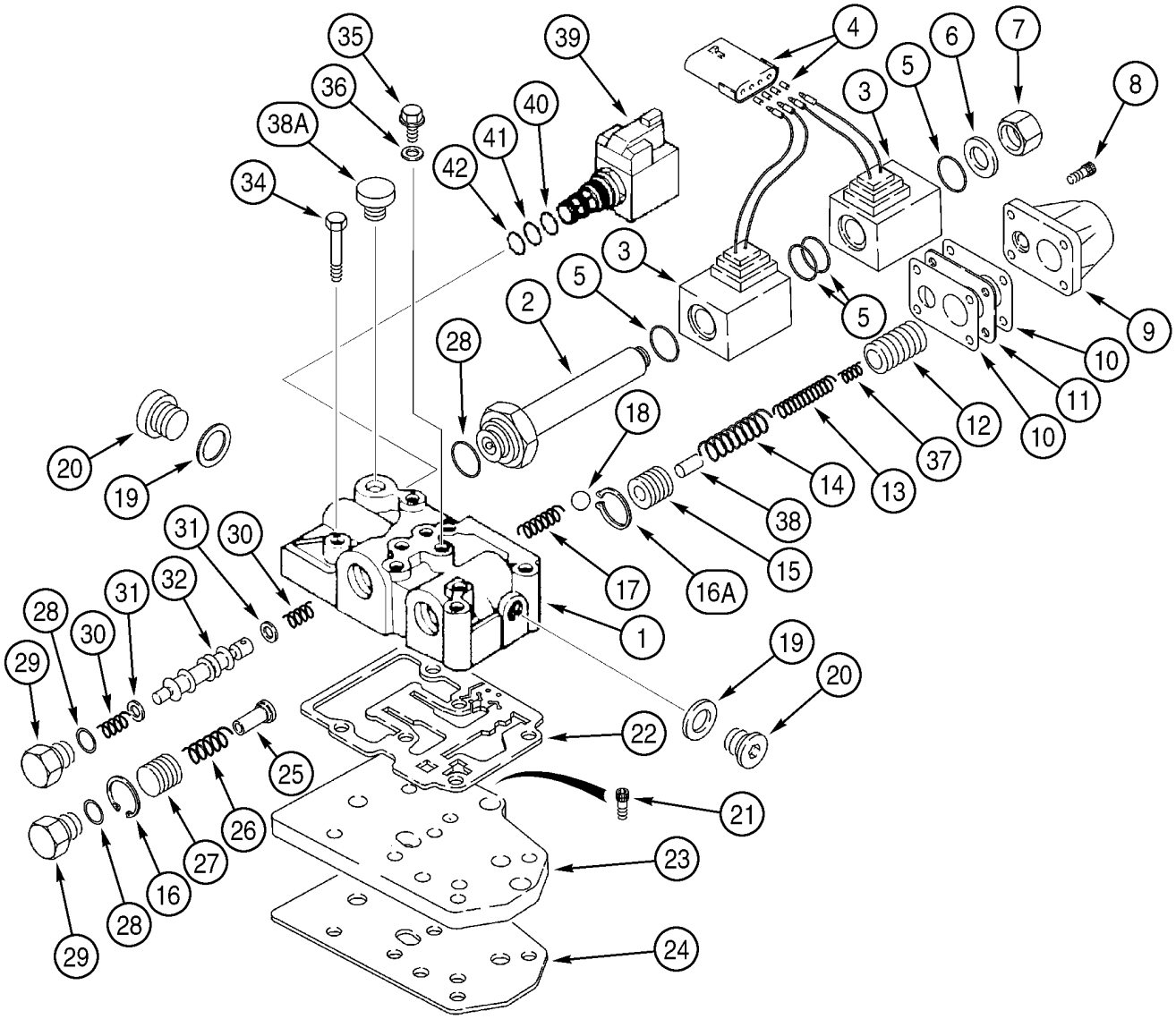

BS99J194

http://www.minnparbackhoeparts.com/

TRANSMISSION ASSY (86984097 OR 86984098) - VALVE, CONTROL (MODELS WITHOUT POWERSHIFT)

REF	FN	PART NUMBER	YR/SN	QTY	DESCRIPTION
28		181137A1		3	O-RING
29		181258A1		2	PLUG PLUG
30		334724A1		2	SPRING
31		181253A1		2	SPACER
32		334725A1		1	PLUNGER Spool, Forward/Reverse
34		814-8080		6	BOLT M8 x 80, Not Included In Assembly, Purchase Separately
35		181100A1		4	PLUG
36		934667R1		4	WASHER, SEALING Copper Washer, 10 x 14 x 1.5 mm
37		190435A1		1	SPRING
38		190440A1		1	PIN
38A		NSS		1	NOT SERVICED SEPARATELY Plug
39		349295A1		1	SOLENOID Differential Lock Solenoid Valve; Incl. Ref 40 - 45
40		237-6008		1	O-RING 41/64 ID x 3/32
41		238-5014		1	O-RING 1/2 ID x 1/16
42		238-5013		1	O-RING 7/16 ID x 1/16
43		NSS		1	NOT SERVICED SEPARATELY Solenoid Valve, Cartridge, Component Parts Not Serviced Separately, Not Illustrated
44		298614A1		1	COIL Not Illustrated
45		NSS		1	NOT SERVICED SEPARATELY Nut, Not Illustrated
		368437A2		1	KIT Snap Ring, Without Tools, Includes 10, 15, 16A, 22, 25, Plus Instructions
		368438A2		1	KIT Snap Ring, With Tools, Includes 10, 15, 16A, 22, 25, Plus 368439A1 Guide Tool and 368440A1 Pushing Tool for Snap Ring Service

http://www.minnparbackhoeparts.com/

TRANSMISSION ASSY (87456843 OR 87456844) - VALVE, CONTROL (MODELS WITHOUT POWERSHIFT)

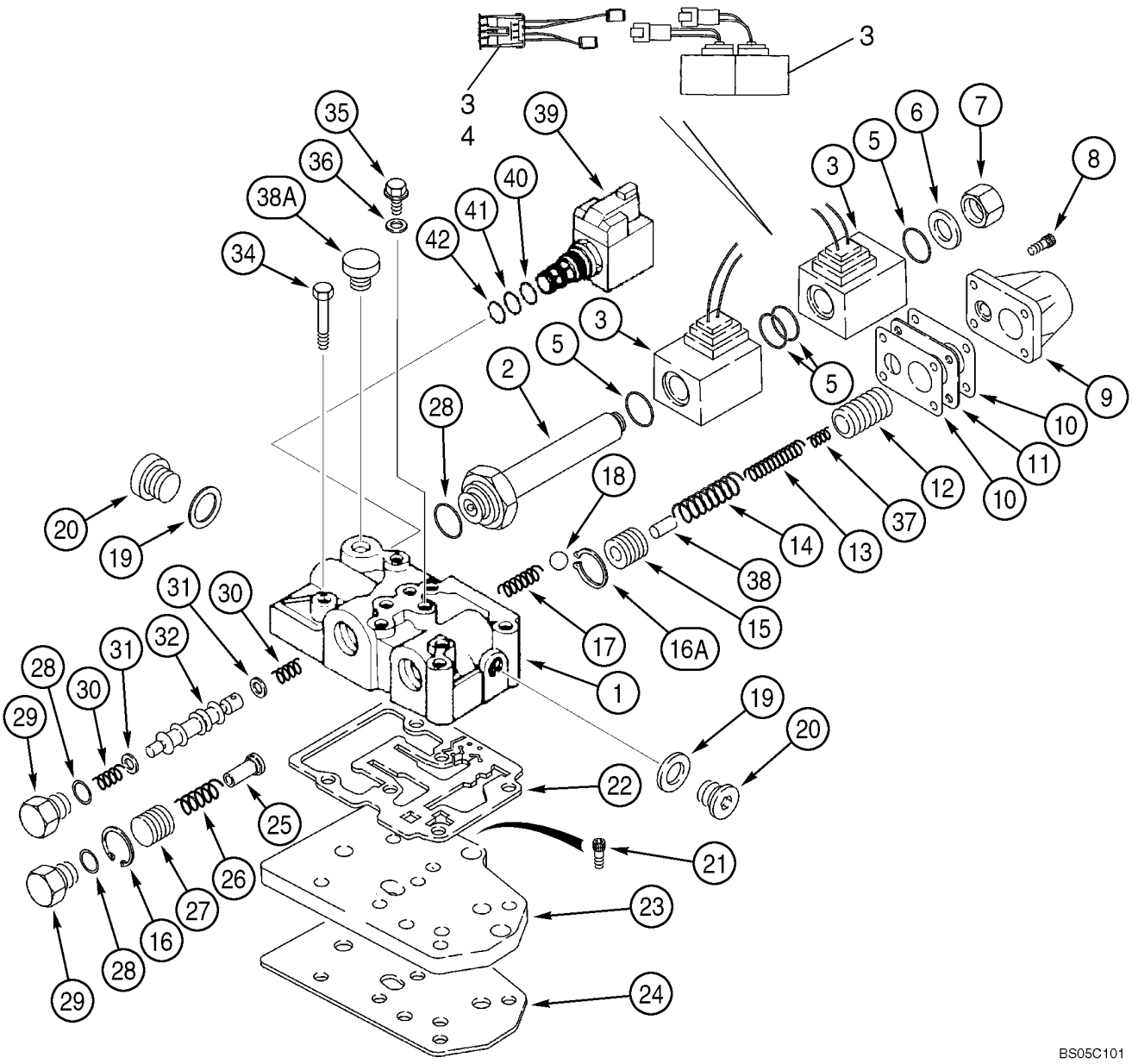

http://www.minnparbackhoeparts.com/

TRANSMISSION ASSY (87456843 OR 87456844) - VALVE, CONTROL (MODELS WITHOUT POWERSHIFT)

REF	FN	PART NUMBER	YR/SN	QTY	DESCRIPTION
		87456843		1	TRANSMISSION Two Wheel Drive, Incl. Ref 1 - 45; Also Includes Parts On Figures 06-14 - 06-23A
		87456844		1	TRANSMISSION Four Wheel Drive, Incl. Ref 1 - 45; Also Includes Parts On Figures 06-14 - 06-24
		87456899		1	VALVE Transmission Control, Incl. Ref 1 - 45
1		NSS		1	NOT SERVICED SEPARATELY Housing
2		190442A1		1	PLUNGER
3		87456900		1	KIT, SERVICE KIT, Solenoid; Includes (2) Solenoids, (1) Jumper Wire Used For Transmissions Prior to Ones With The Solenoids With Plastic Connections; See Figure 06-23, Ref 3 For Solenoids With Bullet Connectors
4		87456968		1	HARNESS, WIRE Jumper; If Used; Required On Transmissions Prior To Ones With Deutsch Connector Type Solenoids
5		181136A1		4	O-RING
6		181273A1		1	WASHER, COPPER
7		181272A1		1	PLUG
8		864-6020		4	SCREW M6 x 20
9		181251A1		1	COVER
10		181256A1		2	SEAL Cover Gasket
11		190439A2		1	SPACER
12		190438A2		1	PISTON
13		190436A1		1	SPRING
14		190441A1		1	SPRING
15		181234A2		1	PISTON
16		299324A1		1	CIRCLIP
16A		368436A1		1	CIRCLIP
17		181261A1		1	SPRING
18		181146A1		1	BALL
19		181107A1		2	WASHER, COPPER
20		181103A1		2	PLUG
21		864-8020		3	SCREW M8 x 20, Not Included In Assembly, Purchase Separately
22		181166A1		1	SEAL Not Included In Assembly, Purchase Separately

http://www.minnparbackhoeparts.com/

TRANSMISSION ASSY (87456843 OR 87456844) - VALVE, CONTROL (MODELS WITHOUT POWERSHIFT)

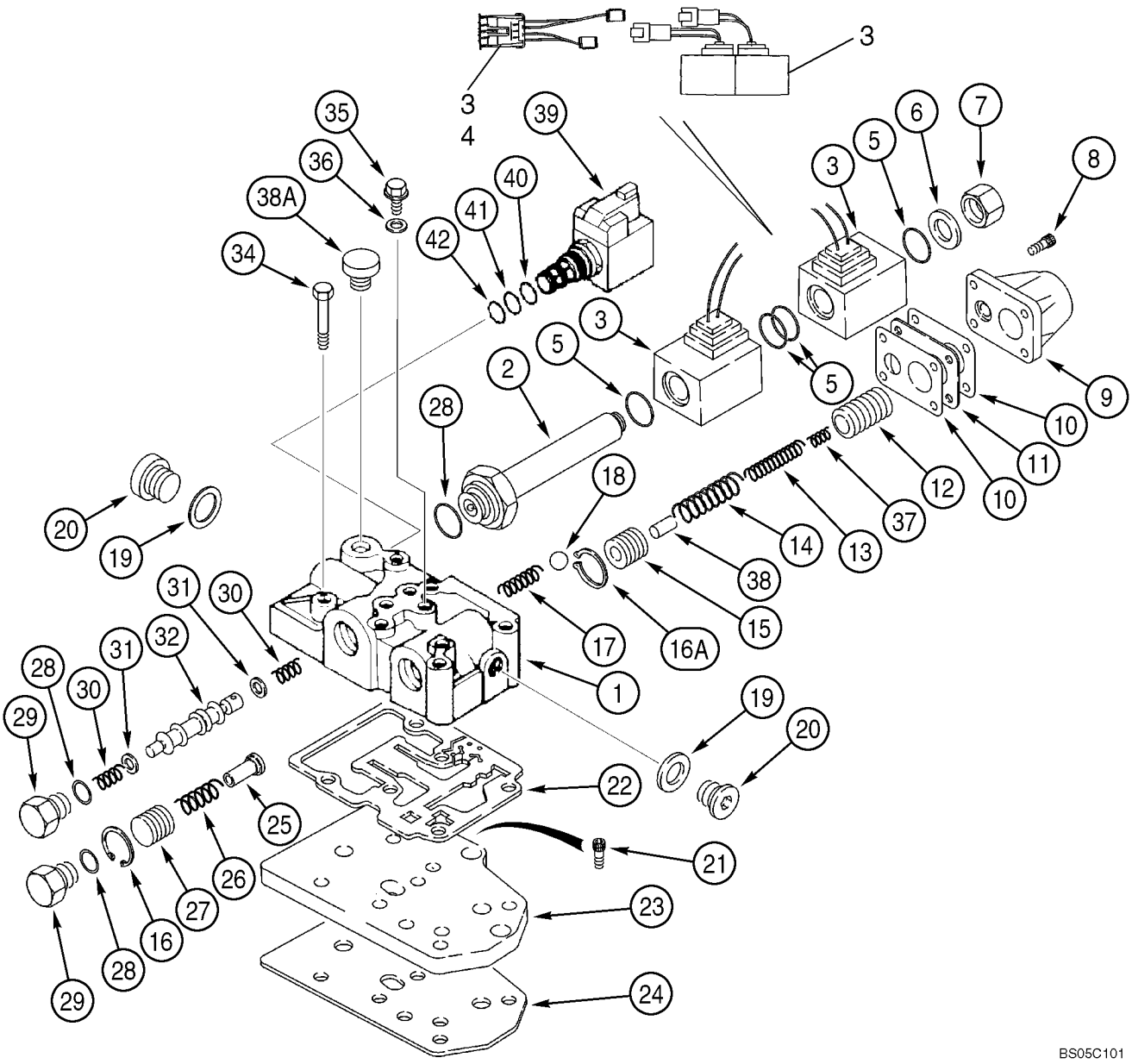

http://www.minnparbackhoeparts.com/

TRANSMISSION ASSY (87456843 OR 87456844) - VALVE, CONTROL (MODELS WITHOUT POWERSHIFT)

REF	FN	PART NUMBER	YR/SN	QTY	DESCRIPTION
23		181207A1		1	PLATE, LARGE Not Included In Assembly, Purchase Separately
24		181208A1		1	SEAL Not Included In Assembly, Purchase Separately
25		181254A1		1	SHAFT
26		181260A1		1	SPRING
27		181255A2		1	PISTON Flow Divider
28		181137A1		3	O-RING
29		181258A1		2	PLUG PLUG
30		334724A1		2	SPRING
31		181253A1		2	SPACER
32		334725A1		1	PLUNGER Spool, Forward/Reverse
34		814-8080		6	BOLT M8 x 80, Not Included In Assembly, Purchase Separately
35		181100A1		4	PLUG
36		934667R1		4	WASHER, SEALING Copper Washer, 10 x 14 x 1.5 mm
37		190435A1		1	SPRING
38		190440A1		1	PIN
38A		NSS		1	NOT SERVICED SEPARATELY Plug
39		349295A1		1	SOLENOID Differential Lock Solenoid Valve; Incl. Ref 40 - 45
40		237-6008		1	O-RING 41/64 ID x 3/32
41		238-5014		1	O-RING 1/2 ID x 1/16
42		238-5013		1	O-RING 7/16 ID x 1/16
43		NSS		1	NOT SERVICED SEPARATELY Solenoid Valve, Cartridge, Component Parts Not Serviced Separately, Not Illustrated
44		298614A1		1	COIL Not Illustrated
45		NSS		1	NOT SERVICED SEPARATELY Nut, Not Illustrated
		368437A2		1	KIT Snap Ring, Without Tools, Includes 10, 15, 16A, 22, 25, Plus Instructions
		368438A2		1	KIT Snap Ring, With Tools, Includes 10, 15, 16A, 22, 25, Plus 368439A1 Guide Tool and 368440A1 Pushing Tool for Snap Ring Service

http://www.minnparbackhoeparts.com/

TRANSMISSION ASSY (4WD) - VALVE, SOLENOID (MODELS WITHOUT POWERSHIFT)

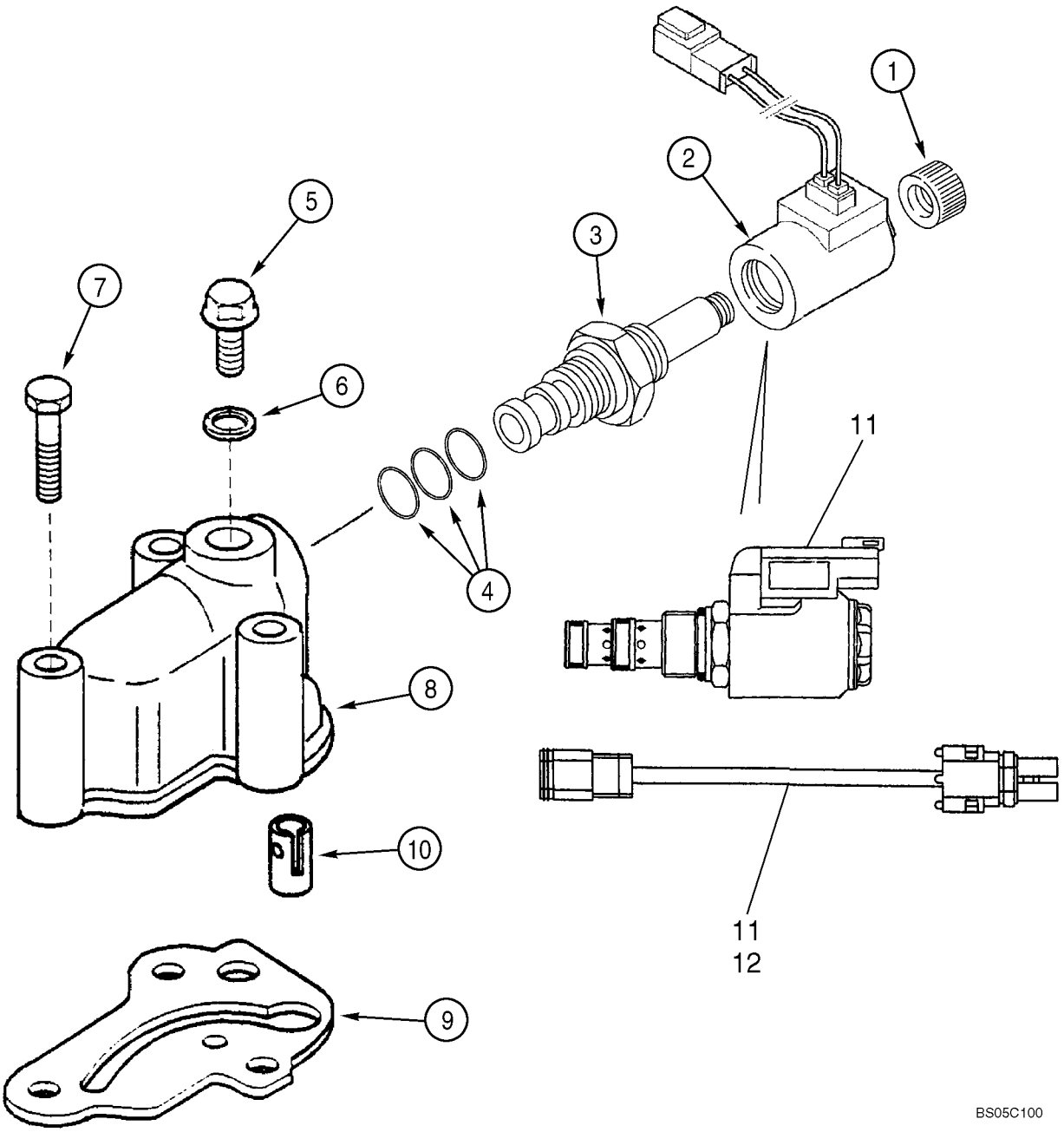

http://www.minnparbackhoeparts.com/

TRANSMISSION ASSY (4WD) - VALVE, SOLENOID (MODELS WITHOUT POWERSHIFT)

REF	FN	PART NUMBER	YR/SN	QTY	DESCRIPTION
		87456844		1	TRANSMISSION Four Wheel Drive, Incl. Ref 1 - 10; Also Includes Parts On Figures 06-14 - 06-24; Replaces 86984098
		87429978		1	VALVE, SOLENOID Valve, Incl. Ref 1 - 4; Used In 86984098 Transmission
1		NSS		1	NOT SERVICED SEPARATELY Nut
2		NSS		1	NOT SERVICED SEPARATELY Coil
3		NSS		1	NOT SERVICED SEPARATELY Valve, Solenoid
4		NSS		1	NOT SERVICED SEPARATELY Kit, Seal, Includes 238-5014, 238-5015, 237-6010 O-Rings, Kit Not Serviced Separately, Order 190432A1 Solenoid Valve
5		181100A1		1	PLUG
6		934667R1		1	WASHER, SEALING Copper Washer, 10 x 14 x 1.5 mm
7		814-8060		3	SCREW M8 x 60
8		321428A1		1	HOUSING
9		366910A1		1	SEAL
10		190431A1		1	VALVE Installed Between Ref 8 and 9
11		87456901		1	SOLENOID Component Parts Not Serviced Separately; Includes Solenoid and Ref 12 Jumper Harness; Jumper Is For Coverting Transmissions Prior to Connector Change From Weather Pack to Deutsch
12		87456969		1	HARNESS, WIRE Jumper; Weather Pack Connector/Deutsch Connector

http://www.minnparbackhoeparts.com/

06-25		p1	06/03

TRANSMISSION ASSY, POWERSHIFT - HOUSING

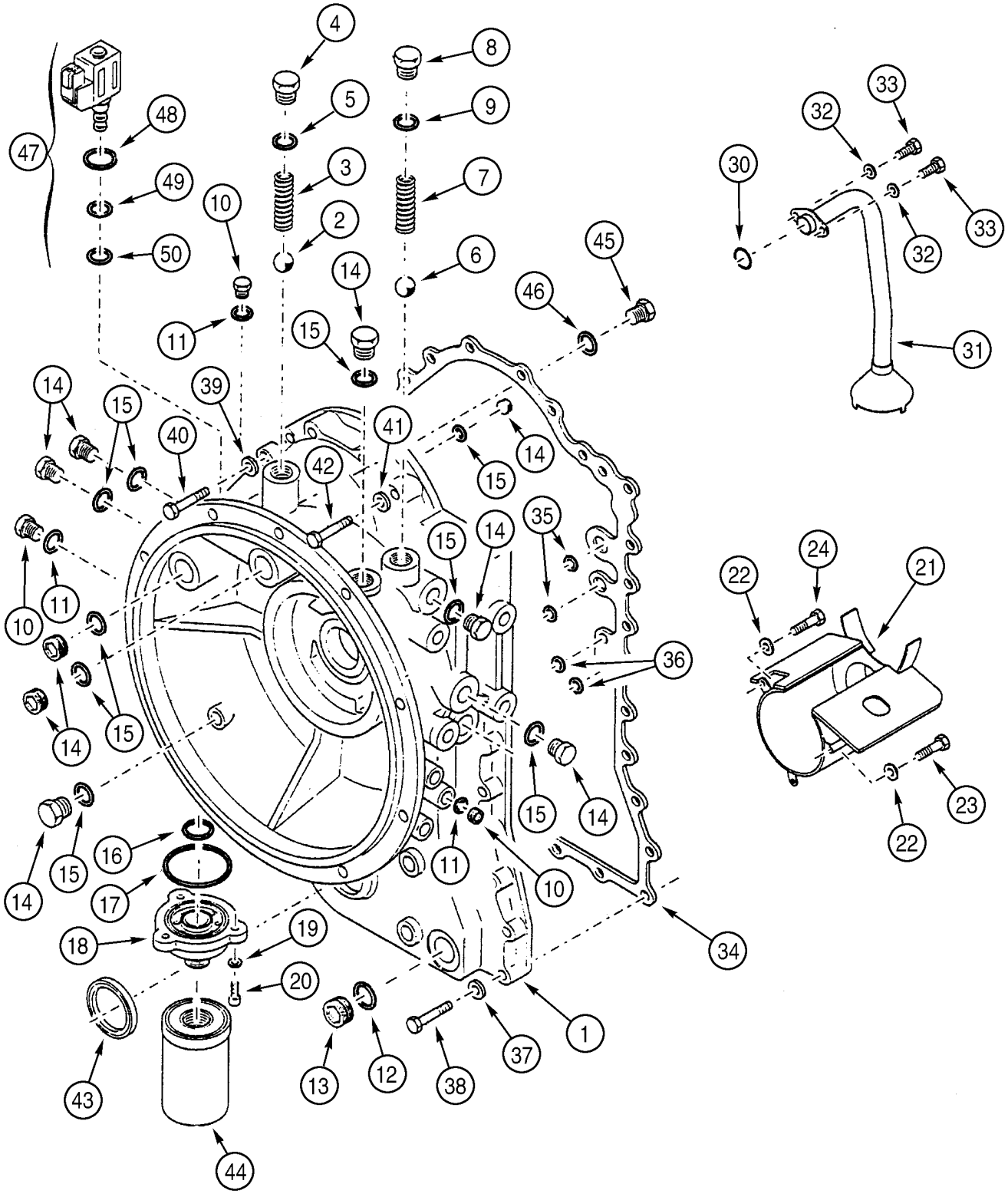

http://www.minnparbackhoeparts.com/

TRANSMISSION ASSY, POWERSHIFT - HOUSING

REF	FN	PART NUMBER	YR/SN	QTY	DESCRIPTION
		87424815		1	TRANSMISSION Powershift Transmission, Four Wheel Drive, Incl. Ref 1 - 53; Also Includes Parts On Figures 06-25 - 06-36
1		361940A1		1	HOUSING Converter
2		211-1024		1	BALL 3/4; 24,CRS
3		291568A1		1	SPRING
4		292413A1		1	PLUG Incl. Ref 5
5		238-9119		1	O-RING 15/16 ID x 3/32
6		511-10250		1	BALL 25 mm; 28, CRS
7		291525A1		1	SPRING
8		292166A1		1	PLUG Incl. Ref 9
9		238-7123		1	O-RING 1-3/16 ID x 3/32
10		292164A1		3	PLUG Incl. Ref 11
11		238-7011		1	O-RING 5/16 ID x 1/16
12		NSS		1	NOT SERVICED SEPARATELY Seal, Not Used
13		NSS		1	NOT SERVICED SEPARATELY Plug, Not Used
14		292165A1		9	PLUG Incl. Ref 15
15		238-7116		1	O-RING 3/4 ID x 3/32
16		292419A1		1	O-RING
17		238-5150		1	O-RING 2-7/8 ID x 3/32
18		362140A1		1	SUPPORT Adapter
19		892-10010		3	WASHER, LOCK M10
20		863-10025		3	SCREW M10 x 25; 12.9
21		305725A1		1	BAFFLE
22		892-10010		3	WASHER, LOCK M10
23		863-10016		2	SCREW M10 x 16; 12.9
24		615-10016		1	BOLT M10 x 16
30		238-7218		1	O-RING 1-1/4 ID x 1/8
31		291565A1		1	PIPE, SUCTION Tube
32		892-10010		2	WASHER, LOCK M10
33		863-10016		2	SCREW M10 x 16; 12.9
34		291543A1		1	GASKET
35		238-5020		2	O-RING 7/8 ID x 1/16
36		238-7013		2	O-RING 7/16 ID x 1/16
37		892-10010		14	WASHER, LOCK M10
38		828-10050		14	SCREW M10 x 50; 10.9
39		892-10010		2	WASHER, LOCK M10

http://www.minnparbackhoeparts.com/

06-25		p2	06/03

TRANSMISSION ASSY, POWERSHIFT - HOUSING

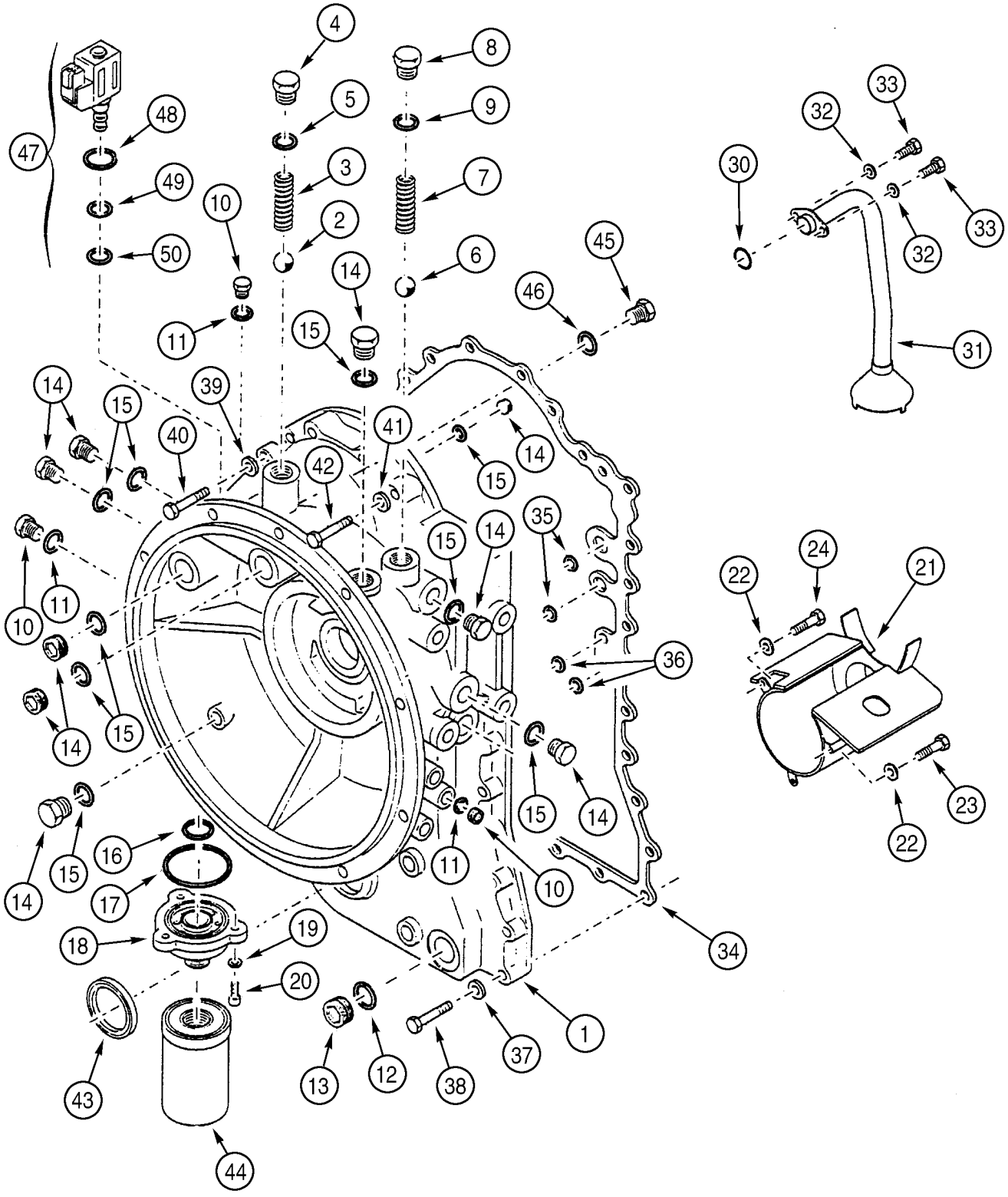

http://www.minnparbackhoeparts.com/

TRANSMISSION ASSY, POWERSHIFT - HOUSING

REF	FN	PART NUMBER	YR/SN	QTY	DESCRIPTION
40		628-10030		2	SCREW M10 x 30; 10.9
41		892-10010		4	WASHER, LOCK M10
42		828-10080		4	SCREW M10 x 80; 10.9
43		291527A1		1	SEAL, SHAFT
44		372246A1		1	FILTER ASSY.
45		218-5209		1	PLUG 9/16 Or; Incl. Ref 46
46		237-6006		1	O-RING 15/32 ID x 5/64
47		349295A1		1	SOLENOID Differential Lock Solenoid Valve; Incl. Ref 48 - 53
48		237-6008		1	O-RING 41/64 ID x 3/32
49		238-5014		1	O-RING 1/2 ID x 1/16
50		238-5013		1	O-RING 7/16 ID x 1/16
51		349291A1		1	SOLENOID Valve, Cartridge, Component Parts Not Serviced Separately, Not Illustrated
52		298614A1		1	COIL Not Illustrated
53		349292A1		1	NUT Not Illustrated

http://www.minnparbackhoeparts.com/

TRANSMISSION ASSY, POWERSHIFT - HOUSING, REAR

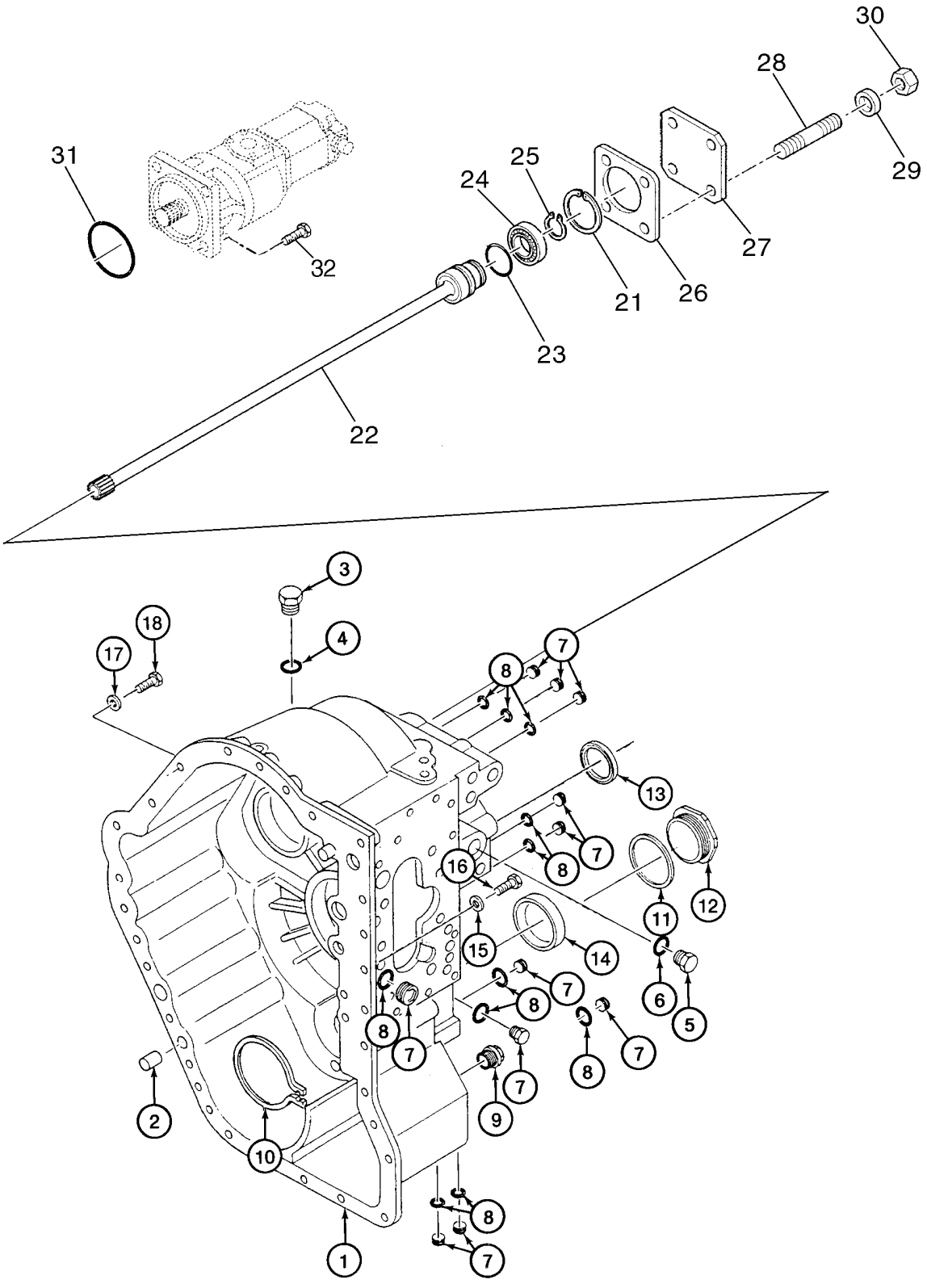

http://www.minnparbackhoeparts.com/

TRANSMISSION ASSY, POWERSHIFT - HOUSING, REAR

REF	FN	PART NUMBER	YR/SN	QTY	DESCRIPTION
		87424815		1	TRANSMISSION Powershift Transmission, Four Wheel Drive, Incl. Ref 1 - 21; Also Includes Parts On Figures 06-25 - 06-36
1		291570A1		1	HOUSING
2		292412A1		2	DOWEL
3		292165A1		1	PLUG Incl. Ref 4
4		238-7116		1	O-RING 3/4 ID x 3/32
5		292170A1		1	PLUG Incl. Ref 6
6		238-7210		1	O-RING 3/4 ID x 9/64
7		292164A1		11	PLUG Incl. Ref 8
8		238-7011		1	O-RING 5/16 ID x 1/16
9		292414A1		1	PLUG Drain, Magnetic
10		292417A1		1	CIRCLIP
11		L30039		1	GASKET
12		292171A1		1	PLUG
13		291527A1		1	SEAL, SHAFT Output
14		292173A1		1	BUSHING, LARGE PLUG, Output Shaft
15		892-10010		2	WASHER, LOCK M10
16		628-10035		2	SCREW M10 x 35; 10,9
17		892-10010		7	WASHER, LOCK M10
18		628-10030		7	SCREW M10 x 30; 10.9
21		800-2168		1	CIRCLIP No. 68
22		85808333		1	ROD Shaft, Pump
23		9969021		1	RING, PISTON Seal Ring
24		9969022		1	BEARING ASSY
25		9969023		1	RING, SNAP
26		NSS		1	NOT SERVICED SEPARATELY Plate; For Shipping Purposes Only
27		NSS		1	NOT SERVICED SEPARATELY Plate; For Shipping Purposes Only
28		NSS		4	NOT SERVICED SEPARATELY Stud, Pump Mounting; For Shipping Purposes Only
29		NSS		4	NOT SERVICED SEPARATELY Washer; For Shipping Purposes Only
30		NSS		4	NOT SERVICED SEPARATELY Nut, Pump Mounting; For Shipping Purposes Only

http://www.minnparbackhoeparts.com/

TRANSMISSION ASSY, POWERSHIFT - HOUSING, REAR

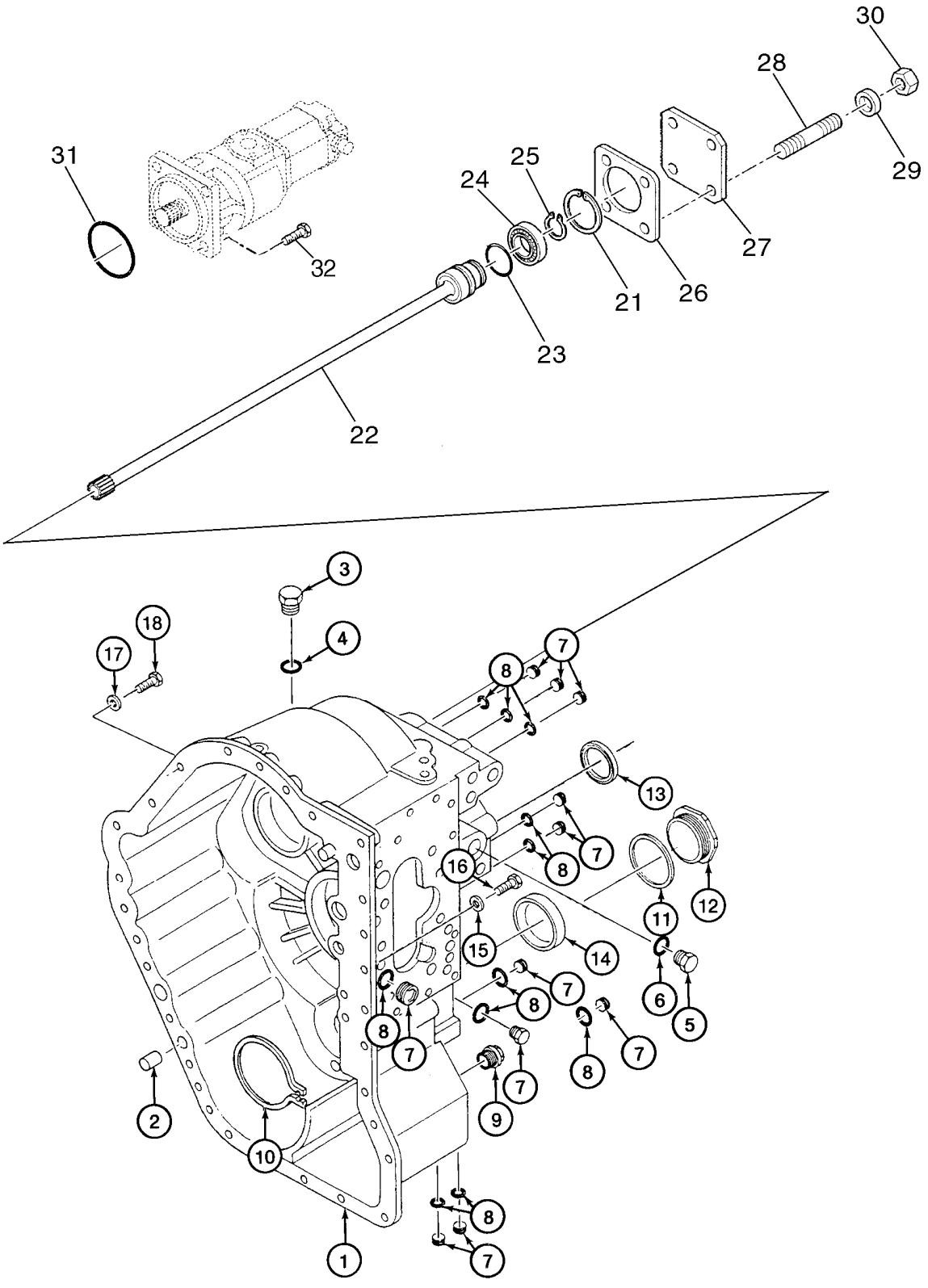

BS03G367

http://www.minnparbackhoeparts.com/

TRANSMISSION ASSY, POWERSHIFT - HOUSING, REAR

REF	FN	PART NUMBER	YR/SN	QTY	DESCRIPTION
31		510828		1	O-RING Pump, Not Included With Assembly; Purchase Separately
32		614-12035		4	BOLT M12 x 35; Pump Mounting

http://www.minnparbackhoeparts.com/

TRANSMISSION ASSY, POWERSHIFT - TORQUE CONVERTER

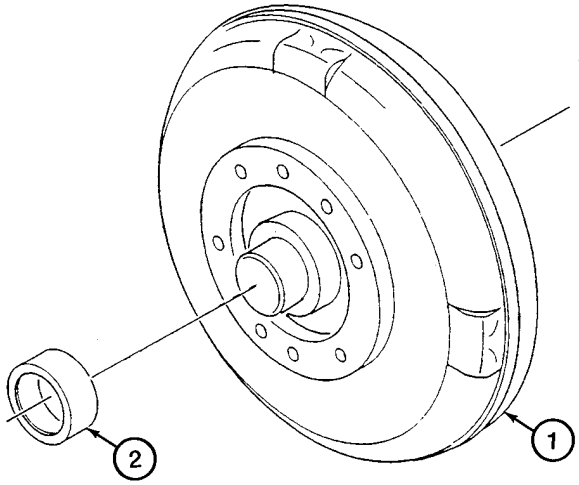

BS98D043

http://www.minnparbackhoeparts.com/

TRANSMISSION ASSY, POWERSHIFT - TORQUE CONVERTER

REF	FN	PART NUMBER	YR/SN	QTY	DESCRIPTION
		87424815		1	TRANSMISSION Powershift Transmission, Four Wheel Drive, Incl. Ref 1, 2; Also Includes Parts On Figures 06-25 - 06-36
1		87424864		1	CONVERTER Incl. Ref 2
2		87424865		1	BUSHING, LARGE

http://www.minnparbackhoeparts.com/

TRANSMISSION ASSY, POWERSHIFT - PUMP, OIL

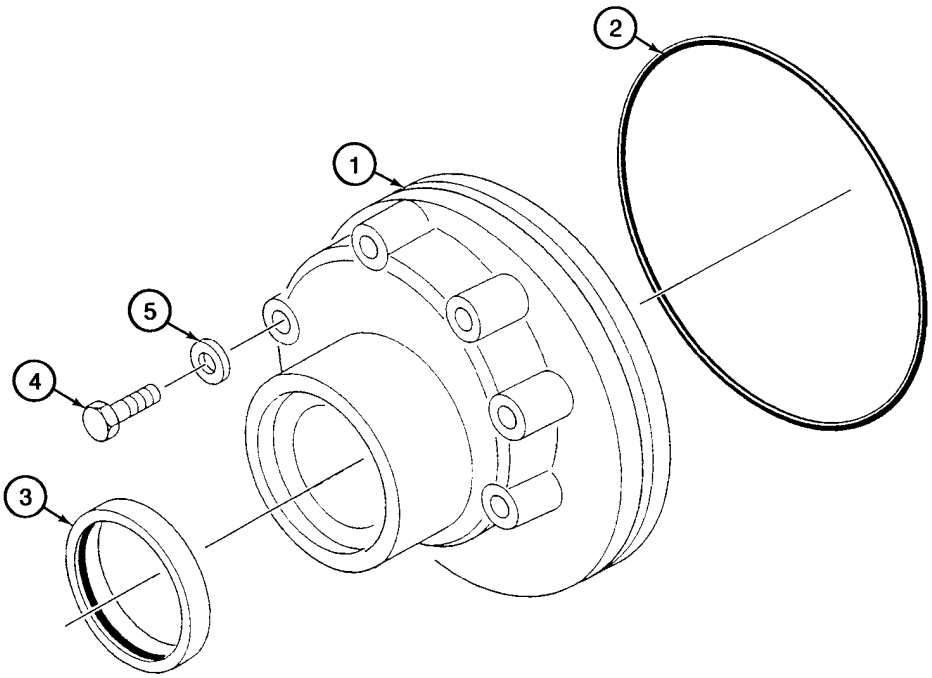

BS98D044

http://www.minnparbackhoeparts.com/

TRANSMISSION ASSY, POWERSHIFT - PUMP, OIL

REF	FN	PART NUMBER	YR/SN	QTY	DESCRIPTION
		87424815		1	TRANSMISSION Powershift Transmission, Four Wheel Drive, Incl. Ref 1 - 5; Also Includes Parts On Figures 06-25 - 06-36
1		291523A1		1	PUMP Charge, Incl. Ref 2 - 5
2		292420A1		1	O-RING Seal
3		292174A1		1	SEAL, SHAFT
4		815-8055		6	SCREW M8 x 55
5		291535A1		6	WASHER

http://www.minnparbackhoeparts.com/

TRANSMISSION ASSY, POWERSHIFT - CLUTCH, FORWARD DRIVE

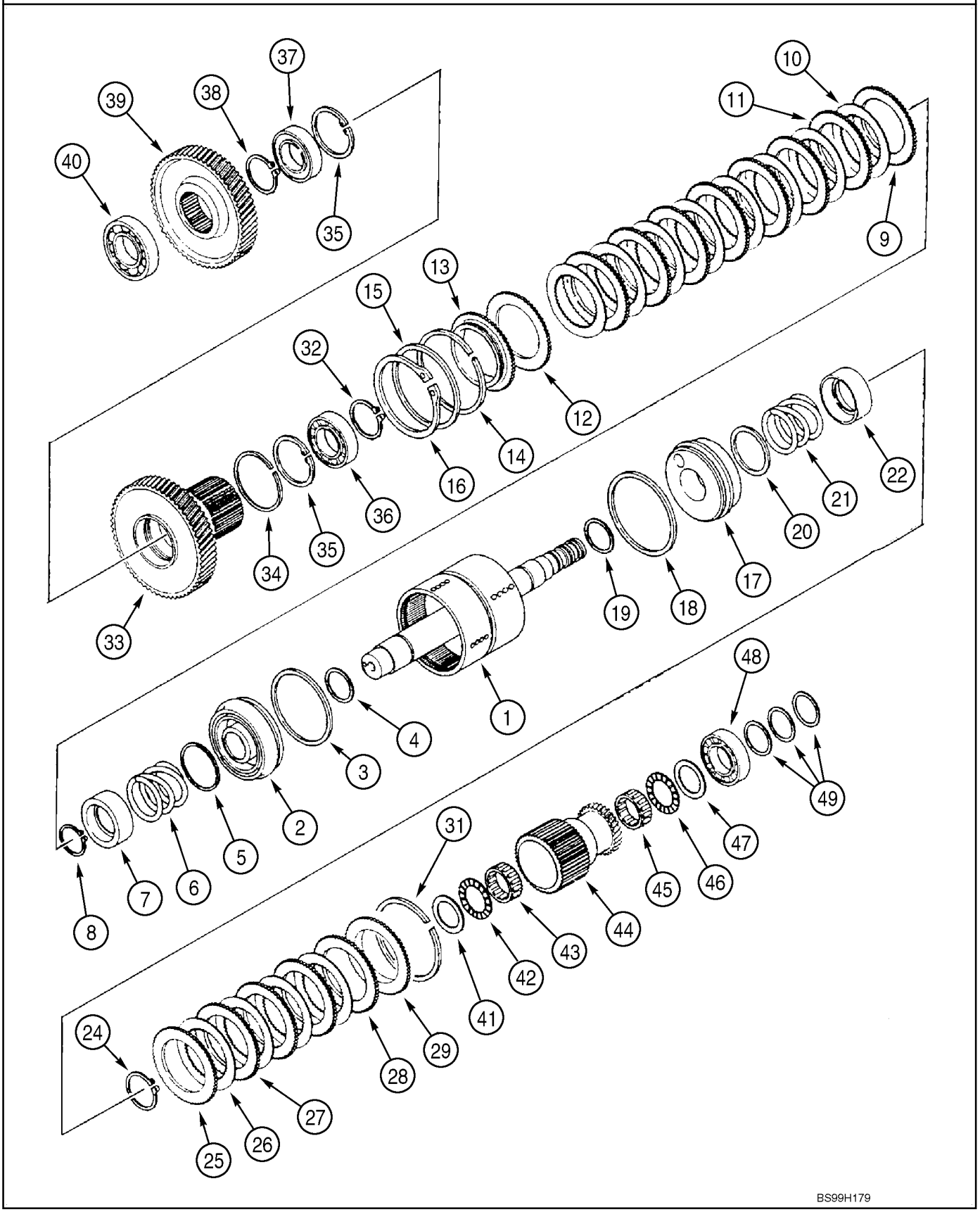

http://www.minnparbackhoeparts.com/

TRANSMISSION ASSY, POWERSHIFT - CLUTCH, FORWARD DRIVE

REF	FN	PART NUMBER	YR/SN	QTY	DESCRIPTION
		REF			INSTRUCTION HIGH AND LOW SPEED - FORWARD DRIVE, CLUTCH AND PINIONS
		87424815		1	TRANSMISSION Powershift Transmission, Four Wheel Drive, Incl. Ref 1 - 49; Also Includes Parts On Figures 06-25 - 06-36
1		445310A1		1	SHAFT ASSY. Drum, High and Low, Forward
2		291520A1		1	PISTON Incl. Ref 3, 4
3		E114385		1	SEAL Ring
4		E114386		1	SEAL
5		291529A1		1	WASHER Wear Ring
6		291531A1		1	SPRING
7		291530A1		1	CLIP, ELECTRICAL Seat
8		100-11196		1	RING No. 196
9		291578A1		1	DISC Friction
10		291580A1		8	DISC Friction, Clutch Separator Plate
11		291579A1		7	DISC Friction
12		291578A1		1	DISC Friction
13		445312A1		1	PLATE, CLUTCH, DRIVING Backing Plate
14		292415A1		1	SNAP RING RETAINING RING
15		291567A1		1	SPACER
16		800-11115		1	SNAP RING No. 115
17		291520A1		1	PISTON Incl. Ref 18, 19
18		E114385		1	SEAL Ring
19		E114386		1	SEAL
20		291529A1		1	WASHER Wear Ring
21		291531A1		1	SPRING
22		291530A1		1	CLIP, ELECTRICAL Seat
24		100-11196		1	RING No. 196
25		291578A1		1	DISC Friction
26		291580A1		4	DISC Friction, Clutch Separator Plate
27		291579A1		3	DISC Friction
28		291578A1		1	DISC Friction
29		291571A1		1	DISC Backing Plate
31		292415A1		1	SNAP RING Retaining Ring
32		800-1150		1	CIRCLIP No. 50
33		445311A1		1	GEAR Forward/Reverse Clutch, 54T
34		445313A1		1	SEAL Lip Seal

http://www.minnparbackhoeparts.com/

TRANSMISSION ASSY, POWERSHIFT - CLUTCH, FORWARD DRIVE

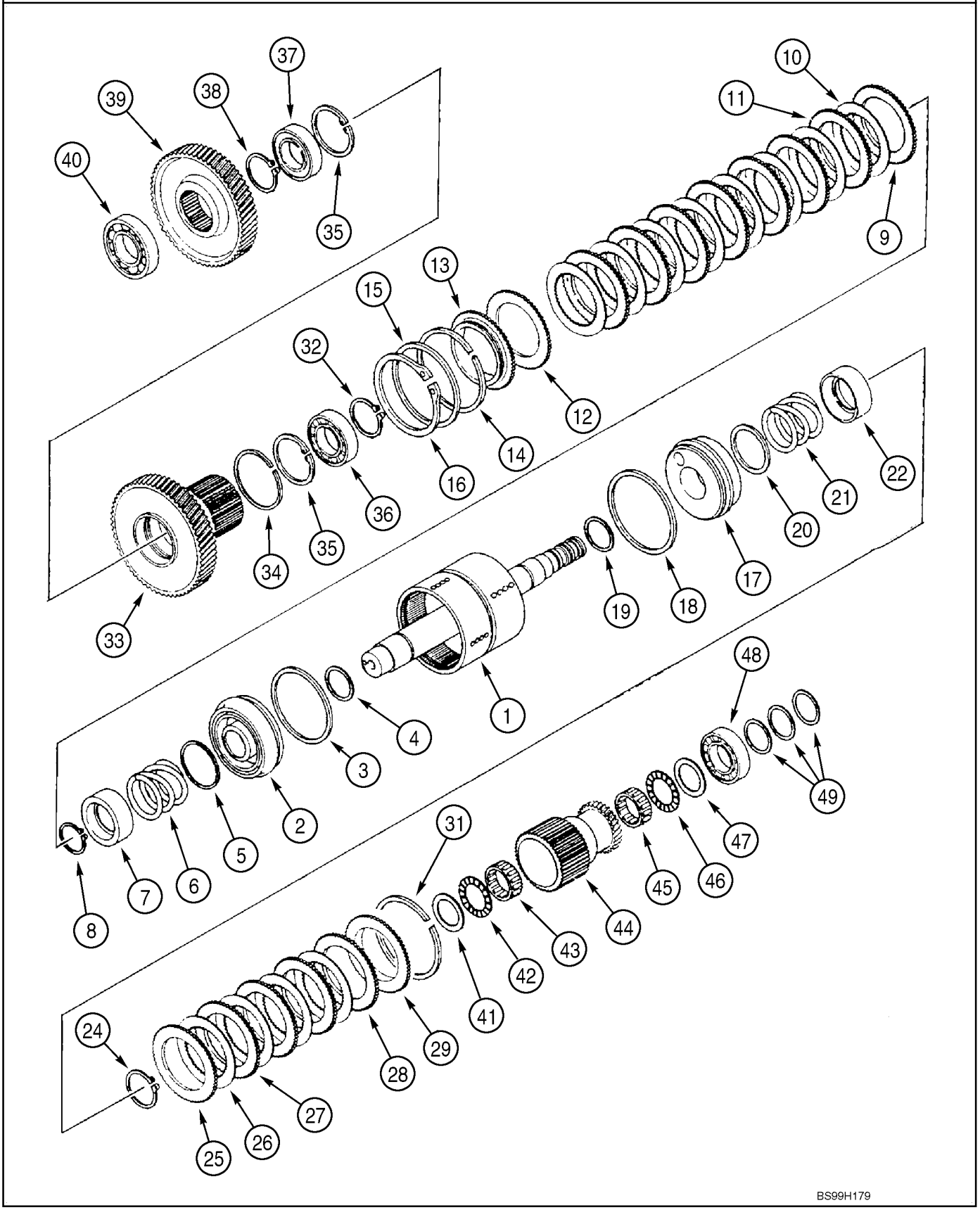

http://www.minnparbackhoeparts.com/

TRANSMISSION ASSY, POWERSHIFT - CLUTCH, FORWARD DRIVE

REF	FN	PART NUMBER	YR/SN	QTY	DESCRIPTION
35		800-2180		2	CIRCLIP No. 80
36		292426A1		1	BEARING
37		292431A1		1	BEARING
38		800-1150		1	CIRCLIP No. 50
39		291551A1		1	PINION Gear, Driven, 42T
40		292432A1		1	BEARING
41		294080A1		1	SPACER Thrust Washer
42		A183452		1	BEARING
43		A178460		1	BEARING
44		291556A1		1	PINION Gear, High Clutch, 34T
45		A178460		1	BEARING
46		A183452		1	BEARING
47		294080A1		1	SPACER Thrust Washer
48		292429A1		1	BEARING
49		291528A1		3	BUSHING, LARGE Seal Ring

http://www.minnparbackhoeparts.com/

TRANSMISSION ASSY, POWERSHIFT - CLUTCH, REVERSE DRIVE

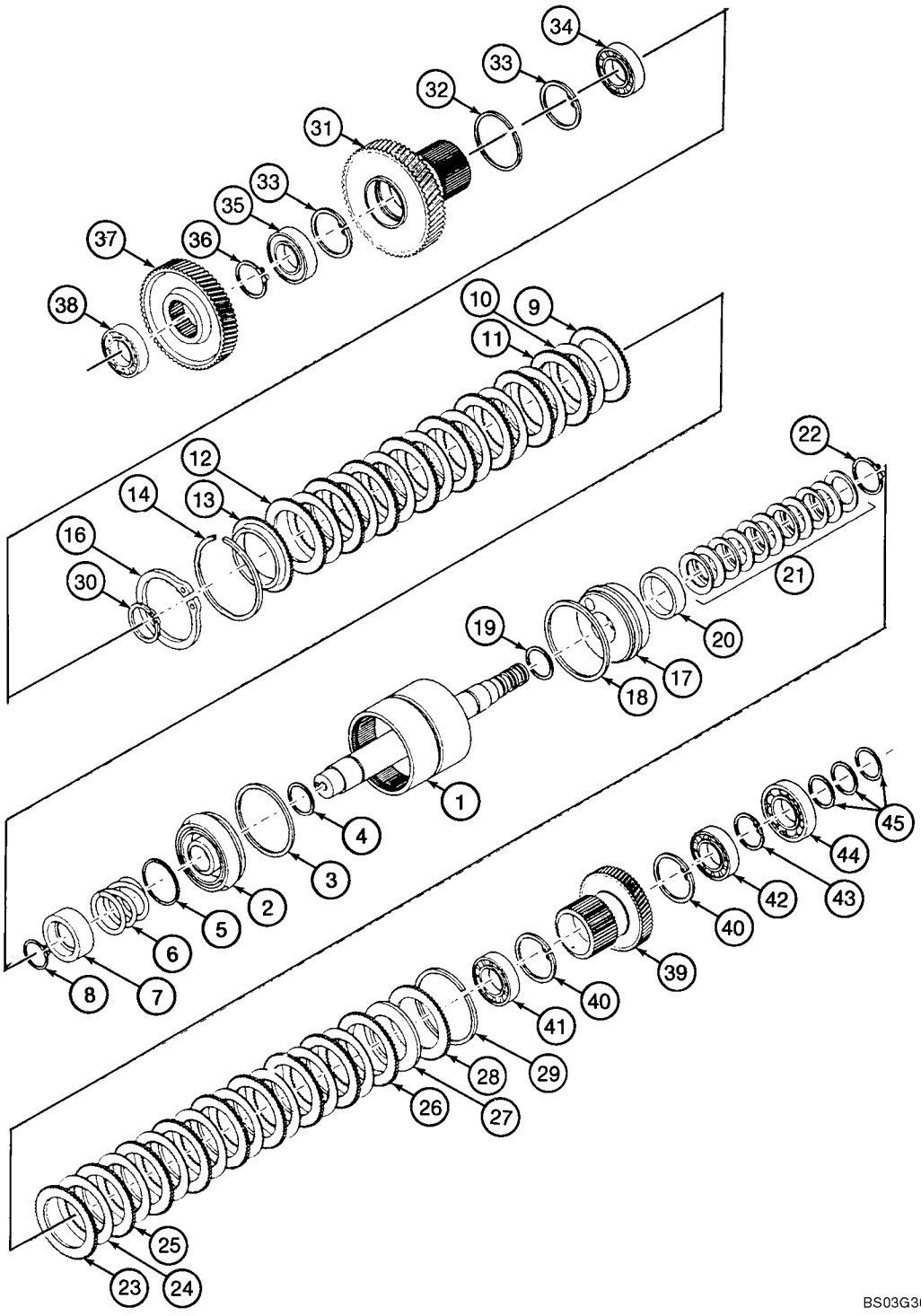

http://www.minnparbackhoeparts.com/

TRANSMISSION ASSY, POWERSHIFT - CLUTCH, REVERSE DRIVE

REF	FN	PART NUMBER	YR/SN	QTY	DESCRIPTION
		REF			INSTRUCTION FIRST GEAR - REVERSE DRIVE, CLUTCH AND PINIONS
		87424815		1	TRANSMISSION Powershift Transmission, Four Wheel Drive, Incl. Ref 1 - 495 Also Includes Parts On Figures 06-25 - 06-36
1		445314A1		1	SHAFT ASSY. Drum, First Gear - Reverse
2		291520A1		1	PISTON Incl. Ref 3, 4
3		E114385		1	SEAL Ring
4		E114386		1	SEAL
5		291529A1		1	WASHER Wear Ring
6		291531A1		1	SPRING
7		291530A1		1	CLIP, ELECTRICAL Seat
8		100-11196		1	RING No. 196
9		291578A1		1	DISC Friction
10		291580A1		8	DISC Friction
11		291579A1		7	DISC Friction
12		291578A1		1	DISC Friction
13		291566A1		1	DISC Backing Plate
14		292415A1		1	SNAP RING Retaining Ring
16		800-11115		1	SNAP RING No. 115
17		291520A1		1	PISTON Incl. Ref 18, 19
18		E114385		1	SEAL Ring
19		E114386		1	SEAL
20		305730A1		1	PLATE Wear Ring
21		291591A1		1	WASHER Kit, Belleville Springs
22		100-11196		1	RING No. 196
23		291578A1		1	DISC Friction
24		291580A1		8	DISC Friction
25		291579A1		7	DISC Friction
26		291578A1		1	DISC Friction
27		291533A1		1	WASHER Spacer
28		291571A1		1	DISC Backing Plate
29		292415A1		1	SNAP RING Retaining Ring
30		800-1150		1	CIRCLIP No. 50
31		291558A1		1	PINION Gear, Forward/Reverse Clutch, 54T
32		291573A1		1	CIRCLIP Retaining Ring
33		800-2180		2	CIRCLIP No. 80

http://www.minnparbackhoeparts.com/

TRANSMISSION ASSY, POWERSHIFT - CLUTCH, REVERSE DRIVE

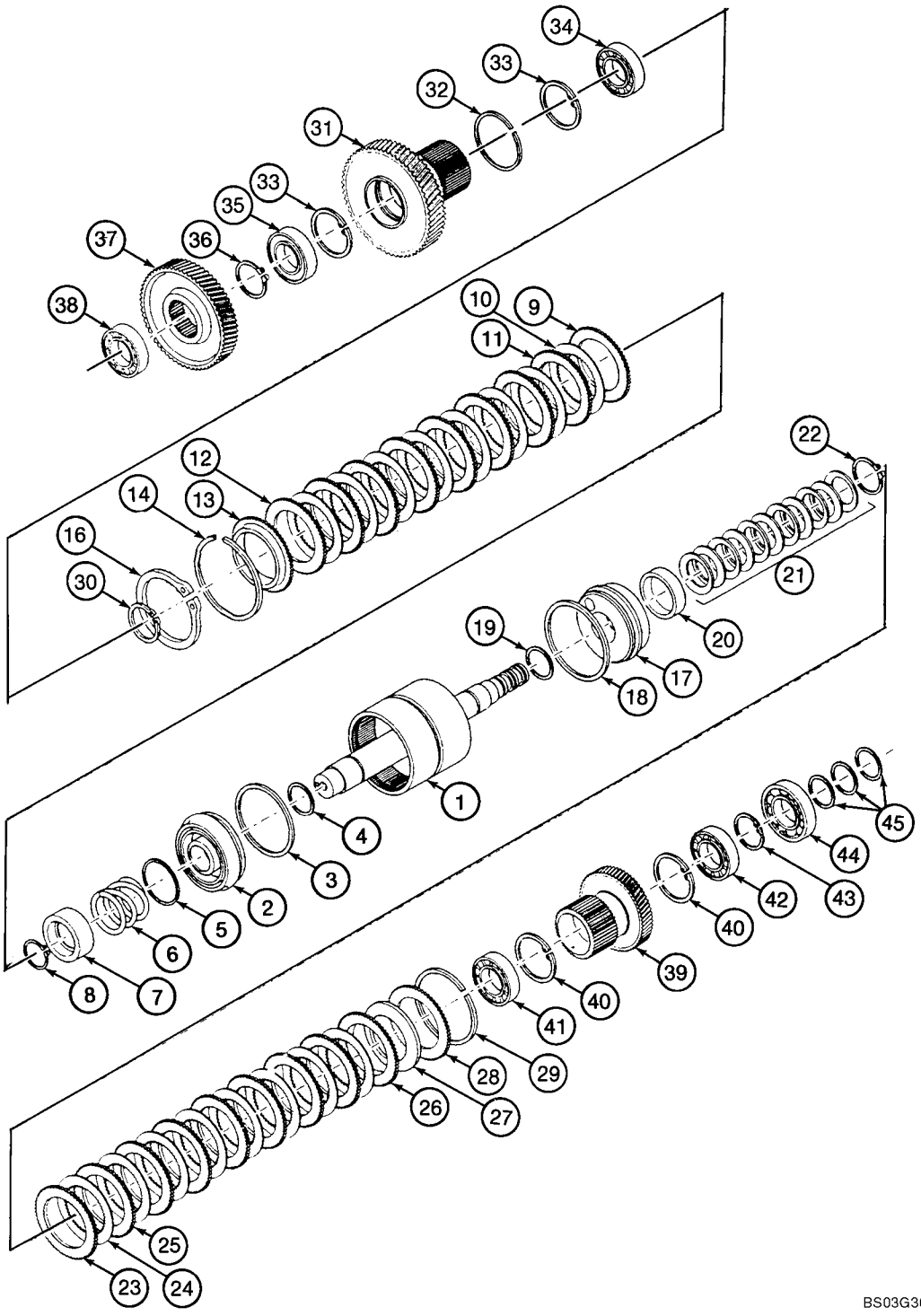

http://www.minnparbackhoeparts.com/

TRANSMISSION ASSY, POWERSHIFT - CLUTCH, REVERSE DRIVE

REF	FN	PART NUMBER	YR/SN	QTY	DESCRIPTION
34		292426A1		1	BEARING
35		292431A1		1	BEARING
36		800-1150		1	CIRCLIP No. 50
37		291552A1		1	PINION Gear, Reverse Driven, 50T
38		292432A1		1	BEARING
39		291557A1		1	PINION Gear, First Clutch, 30T
40		800-2175		2	RING, SNAP No. 75
41		292425A1		1	BEARING
42		292428A1		1	BEARING
43		800-1145		1	CIRCLIP No. 45
44		292423A1		1	BEARING
45		291528A1		3	BUSHING, LARGE Seal Ring

http://www.minnparbackhoeparts.com/

TRANSMISSION ASSY, POWERSHIFT - CLUTCH, PUMP DRIVE

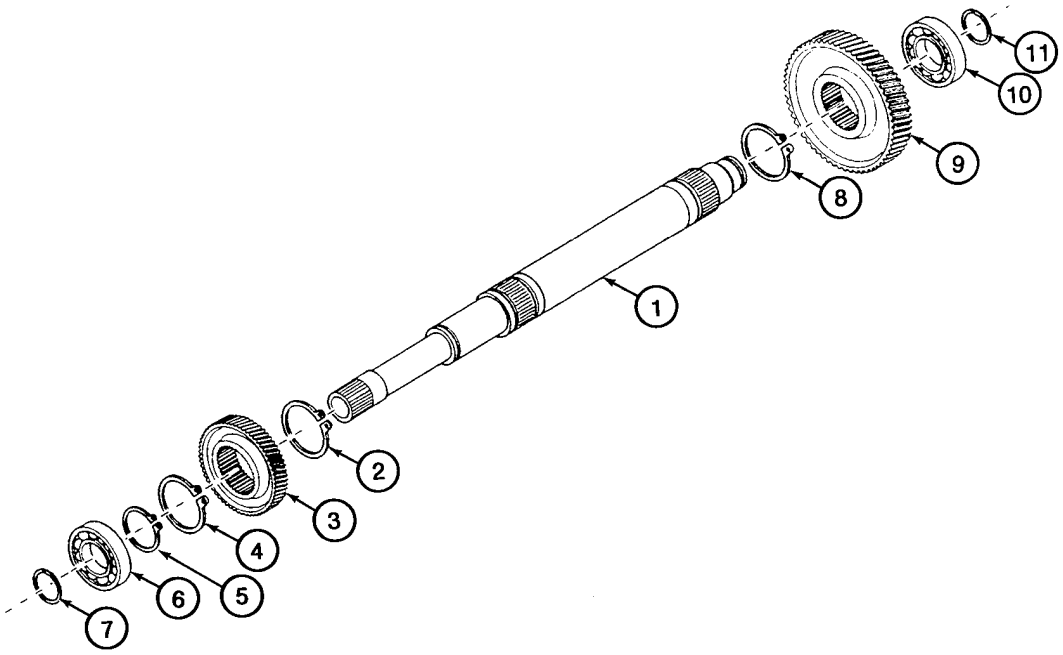

BS98D047

http://www.minnparbackhoeparts.com/

TRANSMISSION ASSY, POWERSHIFT - CLUTCH, PUMP DRIVE

REF	FN	PART NUMBER	YR/SN	QTY	DESCRIPTION
		87424815		1	TRANSMISSION Powershift Transmission, Four Wheel Drive, Incl. Ref 1 - 11; Also Includes Parts On Figures 06-25 - 06-36
1		291563A1		1	SHAFT Input Shaft
2		800-5150		1	CIRCLIP No. 50
3		291549A1		1	PINION Gear, Forward Low, 26T
4		800-1150		1	CIRCLIP No. 50
5		800-1140		1	SNAP RING
6		292423A1		1	BEARING
7		291528A1		1	BUSHING, LARGE Seal Ring
8		800-1150		1	CIRCLIP No. 50
9		291548A1		1	PINION Gear, Forward High, 62T
10		292423A1		1	BEARING
11		291528A1		1	BUSHING, LARGE Seal Ring

http://www.minnparbackhoeparts.com/

TRANSMISSION ASSY, POWERSHIFT - CLUTCH, SECOND GEAR

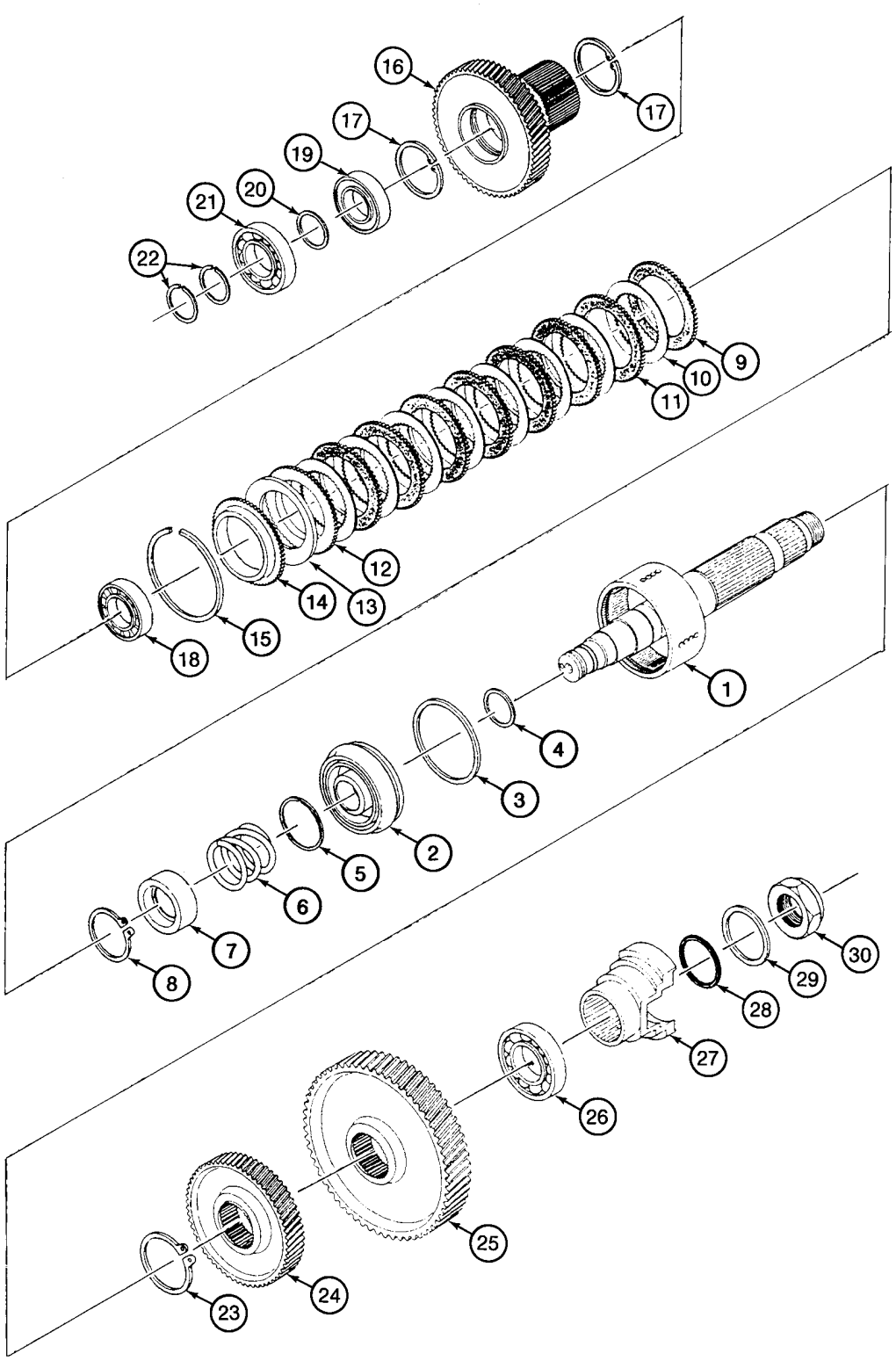

BS98D048

http://www.minnparbackhoeparts.com/

TRANSMISSION ASSY, POWERSHIFT - CLUTCH, SECOND GEAR

REF	FN	PART NUMBER	YR/SN	QTY	DESCRIPTION
		87424815		1	TRANSMISSION Powershift Transmission, Four Wheel Drive, Incl. Ref 1 - 30; Also Includes Parts On Figures 06-25 - 06-36
1		305728A1		1	SHAFT Drum, Second Clutch
2		291520A1		1	PISTON Incl. Ref 3, 4
3		E114385		1	SEAL Ring
4		E114386		1	SEAL
5		291529A1		1	WASHER Wear Ring
6		291531A1		1	SPRING
7		291530A1		1	CLIP, ELECTRICAL Seat
8		100-11196		1	RING No. 196
9		291578A1		1	DISC Friction
10		291580A1		8	DISC Friction
11		291579A1		7	DISC Friction
12		291578A1		1	DISC Friction
13		291533A1		1	WASHER Spacer
14		291571A1		1	DISC Backing Plate
15		292415A1		1	SNAP RING Retaining Ring
16		291555A1		1	PINION Gear, Second Clutch, 52T
17		800-2175		2	RING, SNAP No. 75
18		292425A1		1	BEARING
19		292428A1		1	BEARING
20		291541A1		1	SPACER Ring
21		292423A1		1	BEARING
22		291528A1		2	BUSHING, LARGE Seal Ring
23		800-5160		1	CIRCLIP No. 60
24		291550A1		1	PINION Gear, Drive, Lower Output, 41T
25		291553A1		1	PINION Gear, Upper Output, 59T
26		292433A1		1	BEARING
27		291524A1		1	SHIN YOKE, Output
28		238-5336		1	O-RING 2-7/8 ID x 3/16
29		S89696		1	WASHER
30		S89695		1	NUT 1-1/4 NF

http://www.minnparbackhoeparts.com/

TRANSMISSION ASSY, POWERSHIFT - CLUTCH, OUTPUT SHAFT

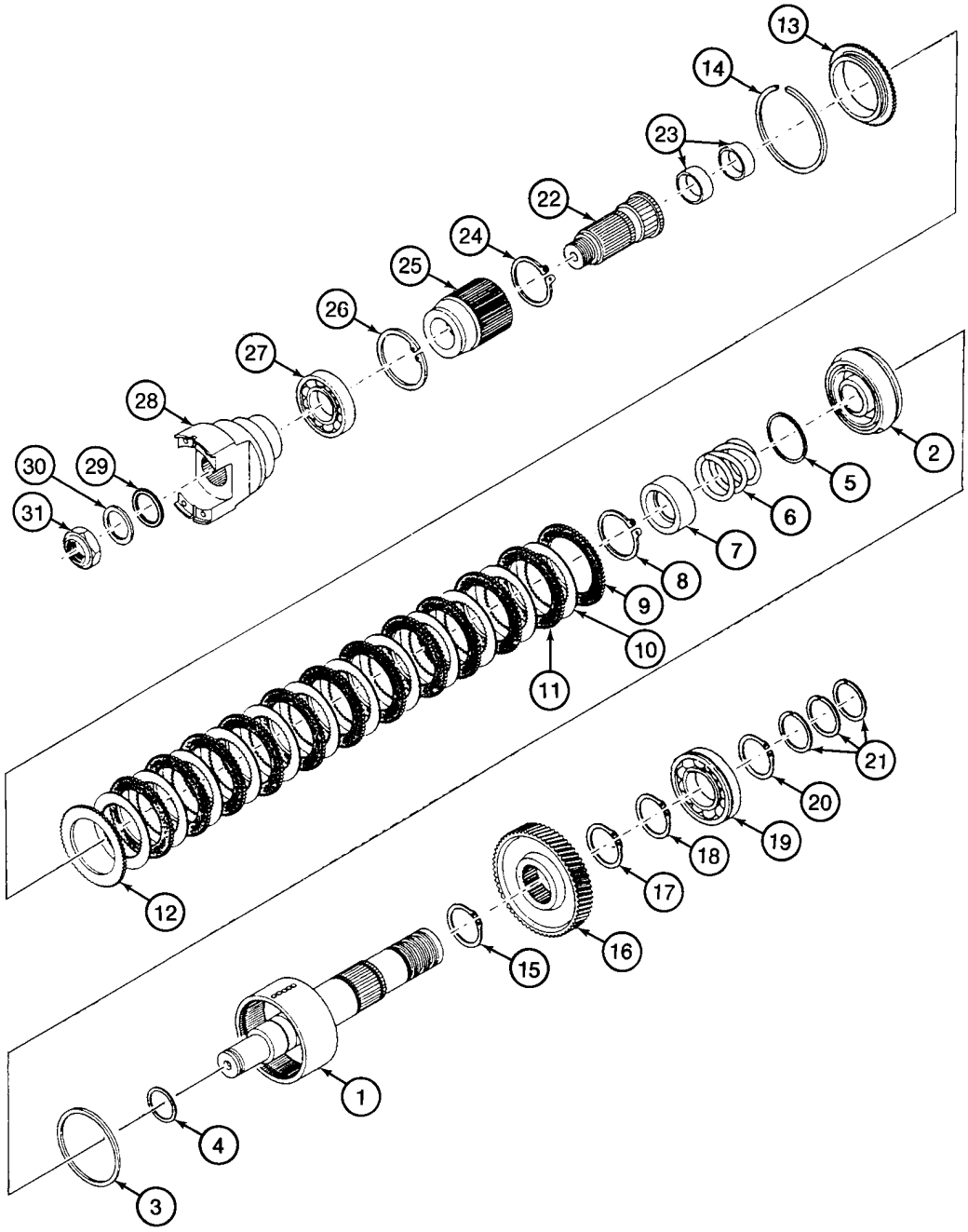

BS98D049

http://www.minnparbackhoeparts.com/

TRANSMISSION ASSY, POWERSHIFT - CLUTCH, OUTPUT SHAFT

REF	FN	PART NUMBER	YR/SN	QTY	DESCRIPTION
		87424815		1	TRANSMISSION Powershift Transmission, Four Wheel Drive, Incl. Ref 1 - 31; Also Includes Parts On Figures 06-25 - 06-36
1		305729A1		1	SHAFT Drum, Front Output, Rear Assy
2		291520A1		1	PISTON Incl. Ref 3, 4
3		E114385		1	SEAL Ring
4		E114386		1	SEAL
5		291529A1		1	WASHER Wear Ring
6		291531A1		1	SPRING
7		291530A1		1	CLIP, ELECTRICAL Seat
8		100-11196		1	RING No. 196
9		291578A1		1	DISC Friction
10		291580A1		12	DISC Friction
11		291579A1		11	DISC Friction
12		291578A1		1	DISC Friction
13		291571A1		1	DISC Backing Plate
14		292415A1		1	SNAP RING Retaining Ring
15		800-1165		1	CIRCLIP No. 65
16		291554A1		1	PINION Gear, Lower Output, 39T
17		800-1165		1	CIRCLIP No. 65
18		800-1160		1	CIRCLIP No. 60
19		292434A1		1	BEARING
20		800-1160		1	CIRCLIP No. 60
21		291540A1		3	WASHER Seal Ring
22		291575A1		1	PINION Shaft, Front Output, Front Assy; Incl. Ref 23
23		292175A1		2	BUSHING, LARGE
24		800-5160		1	CIRCLIP No. 60
25		291559A1		1	PINION HUB
26		800-21100		1	CIRCLIP No. 100
27		292424A1		1	BEARING
28		291524A1		1	SHIN YOKE
29		238-5336		1	O-RING 2-7/8 ID x 3/16
30		S89696		1	WASHER
31		S89695		1	NUT 1-1/4 NF

http://www.minnparbackhoeparts.com/

TRANSMISSION ASSY, POWERSHIFT - MOUNTING, VALVE

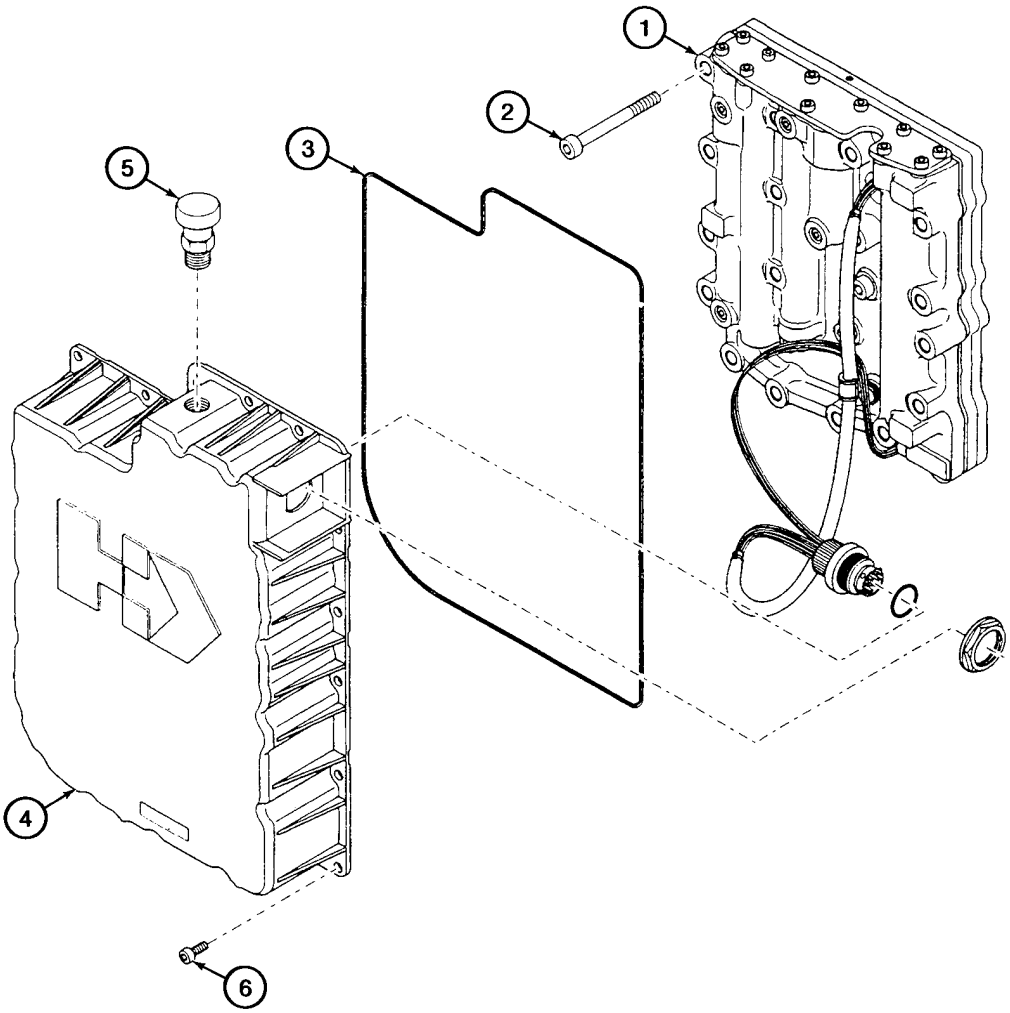

BS98D050

http://www.minnparbackhoeparts.com/

TRANSMISSION ASSY, POWERSHIFT - MOUNTING, VALVE

REF	FN	PART NUMBER	YR/SN	QTY	DESCRIPTION
		87424815		1	TRANSMISSION Powershift Transmission, Four Wheel Drive, Incl. Ref 1 - 6; Also Includes Parts On Figures 06-25 - 06-36
1		380005A1		1	VALVE, CONTROL Transmission Control Valve, See Figure 06-35
2		864-8065		17	SCREW M8 x 65
3		291545A1		1	SEAL
4		291577A1		1	HOUSING Incl. Ref 5
5		294013A1		1	BREATHER
6		864-6012		20	SCREW M6 x 12

http://www.minnparbackhoeparts.com/

TRANSMISSION ASSY, POWERSHIFT - VALVE, CONTROL

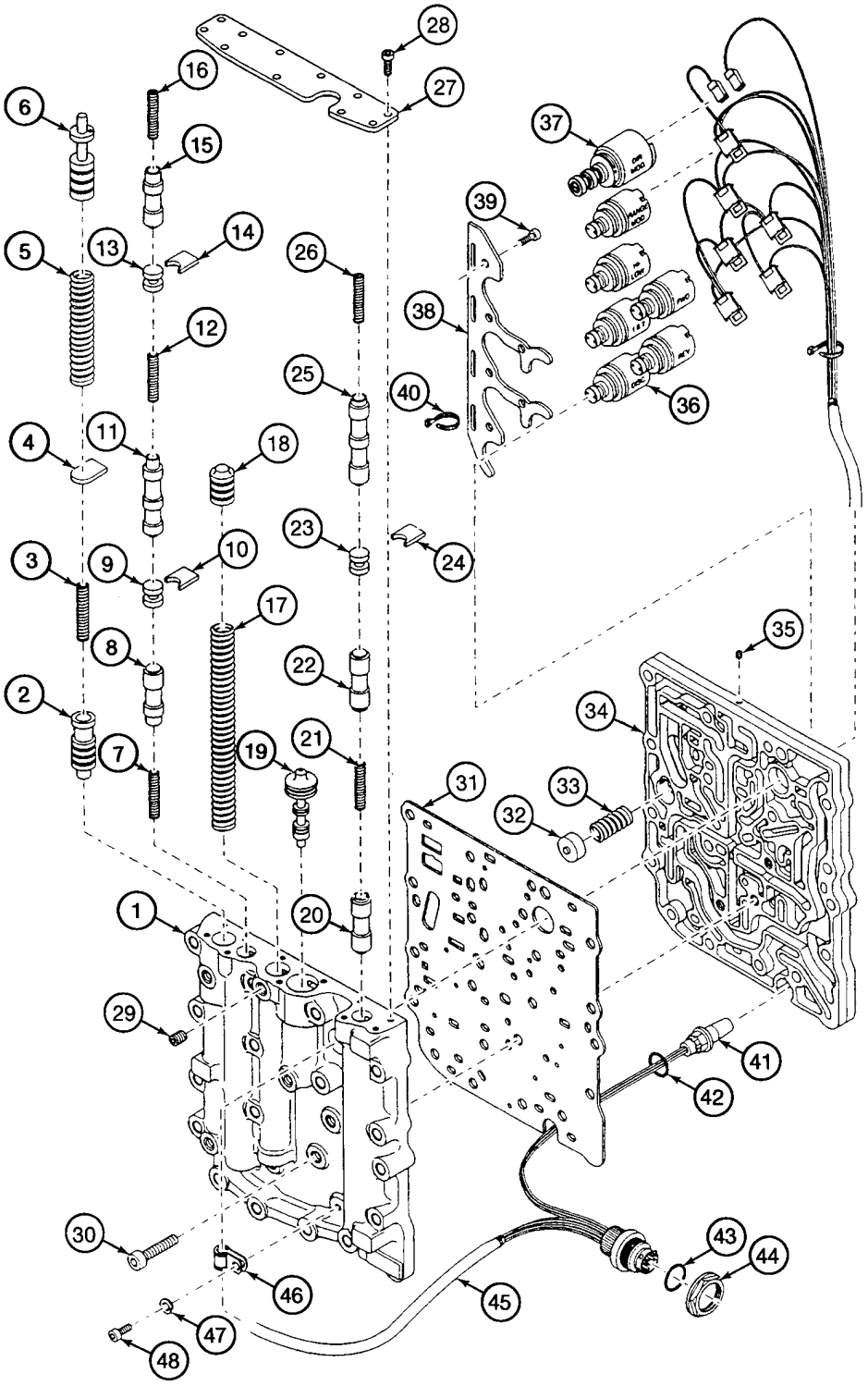

http://www.minnparbackhoeparts.com/

TRANSMISSION ASSY, POWERSHIFT - VALVE, CONTROL

REF	FN	PART NUMBER	YR/SN	QTY	DESCRIPTION
		87424815		1	TRANSMISSION Powershift Transmission, Four Wheel Drive, Incl. Ref 1 - 48; Also Includes Parts On Figures 06-25 - 06-36
		380005A1		1	VALVE, CONTROL Transmission Control Valve, Incl. Ref 1 - 48
1		NSS		1	NOT SERVICED SEPARATELY Body
2		NSS		1	NOT SERVICED SEPARATELY Spool, Pressure Reducing
3		NSS		1	NOT SERVICED SEPARATELY Spring
4		NSS		1	NOT SERVICED SEPARATELY Plate
5		NSS		1	NOT SERVICED SEPARATELY Spring
6		NSS		1	NOT SERVICED SEPARATELY Spool, Pressure Regulator
7		NSS		1	NOT SERVICED SEPARATELY Spring
8		NSS		1	NOT SERVICED SEPARATELY Spool, Disconnect
9		NSS		1	NOT SERVICED SEPARATELY Stop
10		NSS		1	NOT SERVICED SEPARATELY Plate
11		NSS		1	NOT SERVICED SEPARATELY Spool, First/Second
12		NSS		1	NOT SERVICED SEPARATELY Spring
13		NSS		1	NOT SERVICED SEPARATELY Stop
14		NSS		1	NOT SERVICED SEPARATELY Plate
15		NSS		1	NOT SERVICED SEPARATELY Spool, Range Modulation
16		NSS		1	NOT SERVICED SEPARATELY Spring
17		NSS		1	NOT SERVICED SEPARATELY Spring
18		NSS		1	NOT SERVICED SEPARATELY Spool, Accumulator
19		NSS		1	NOT SERVICED SEPARATELY Spool, Booster
20		NSS		1	NOT SERVICED SEPARATELY Spool, Reverse
21		NSS		1	NOT SERVICED SEPARATELY Spring
22		NSS		1	NOT SERVICED SEPARATELY Spool, Forward
23		NSS		1	NOT SERVICED SEPARATELY Stop
24		NSS		1	NOT SERVICED SEPARATELY Plate
25		NSS		1	NOT SERVICED SEPARATELY Spool, High/Low Forward
26		NSS		1	NOT SERVICED SEPARATELY Spring
27		NSS		1	NOT SERVICED SEPARATELY Cover
28		864-5012		11	SCREW M5 x 12

http://www.minnparbackhoeparts.com/

TRANSMISSION ASSY, POWERSHIFT - VALVE, CONTROL

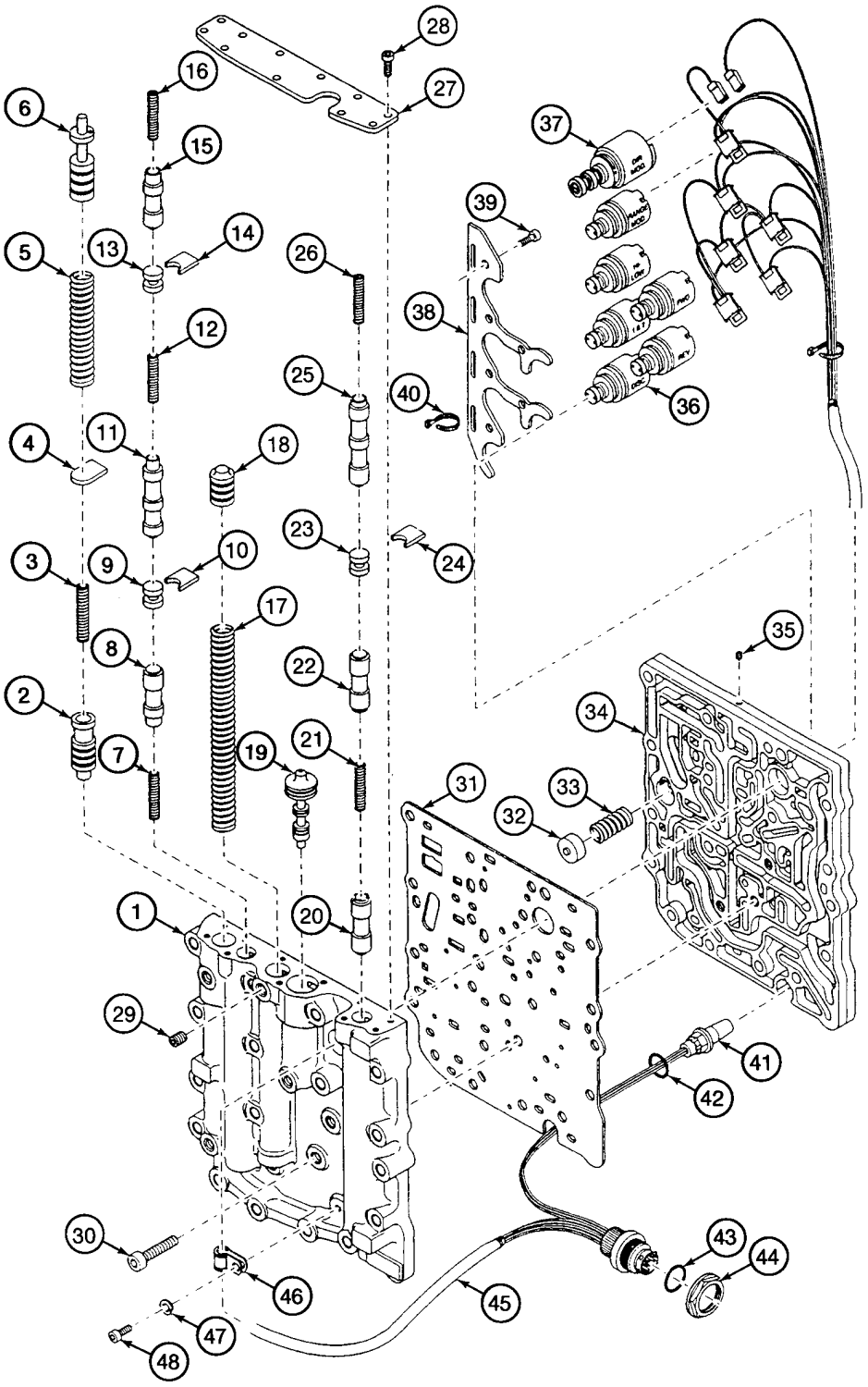

http://www.minnparbackhoeparts.com/

TRANSMISSION ASSY, POWERSHIFT - VALVE, CONTROL

REF	FN	PART NUMBER	YR/SN	QTY	DESCRIPTION
29		366663A1		2	PLUG Check Port
30		864-8030		3	SCREW M8 x 30
31		NSS		1	NOT SERVICED SEPARATELY Plate, Spacer
32		292176A1		1	POPPET, VALVE Spool, Bypass Valve
33		292177A1		1	SPRING
34		NSS		1	NOT SERVICED SEPARATELY Plate
35		319597A1		6	PLUG
36		291862A1		6	SOLENOID
37		291861A1		1	SOLENOID MODULE
38		NSS		1	NOT SERVICED SEPARATELY Bail
39		864-5012		6	SCREW M5 x 12
40		319598A1		6	STRAP
41		380004A1		1	SENSOR Speed Sensor
42		238-5115		1	O-RING 11/16 ID x 7/8
43		238-9213		1	O-RING 15/16 ID x 1/8
44		NSS		1	NOT SERVICED SEPARATELY Nut
45		380003A1		1	HARNESS Incl. Ref 41 - 44
46		319599A1		1	CLAMP
47		895-11005		1	WASHER 5,5 x 10 x 1 mm
48		864-5010		1	SCREW M5 x 10

http://www.minnparbackhoeparts.com/

TRANSMISSION ASSY, POWERSHIFT - PLATE, DRIVE

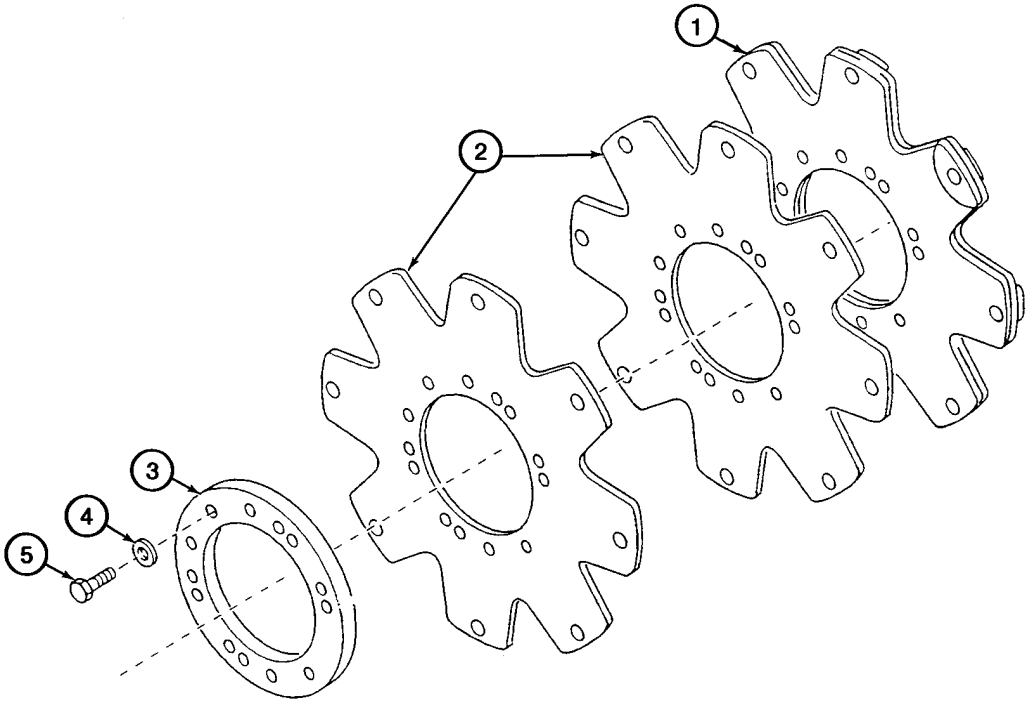

BS98D052

http://www.minnparbackhoeparts.com/

TRANSMISSION ASSY, POWERSHIFT - PLATE, DRIVE

REF	FN	PART NUMBER	YR/SN	QTY	DESCRIPTION
		87424815		1	TRANSMISSION Powershift Transmission, Four Wheel Drive, Incl. Ref 1 - 5; Also Includes Parts On Figures 06-25 - 06-36
1		87410613		1	PLATE, RETAINING Drive Plate Assy, Incl. Ref 2 - 5
2		NSS		2	NOT SERVICED SEPARATELY Face Plate
3		NSS		1	NOT SERVICED SEPARATELY Drive Plate Backing Ring
4		NSS		6	NOT SERVICED SEPARATELY Washer, 3/8
5		NSS		6	NOT SERVICED SEPARATELY Bolt, 3/8 NF x 1/2

http://www.minnparbackhoeparts.com/

WHEELS, REAR - TIRES

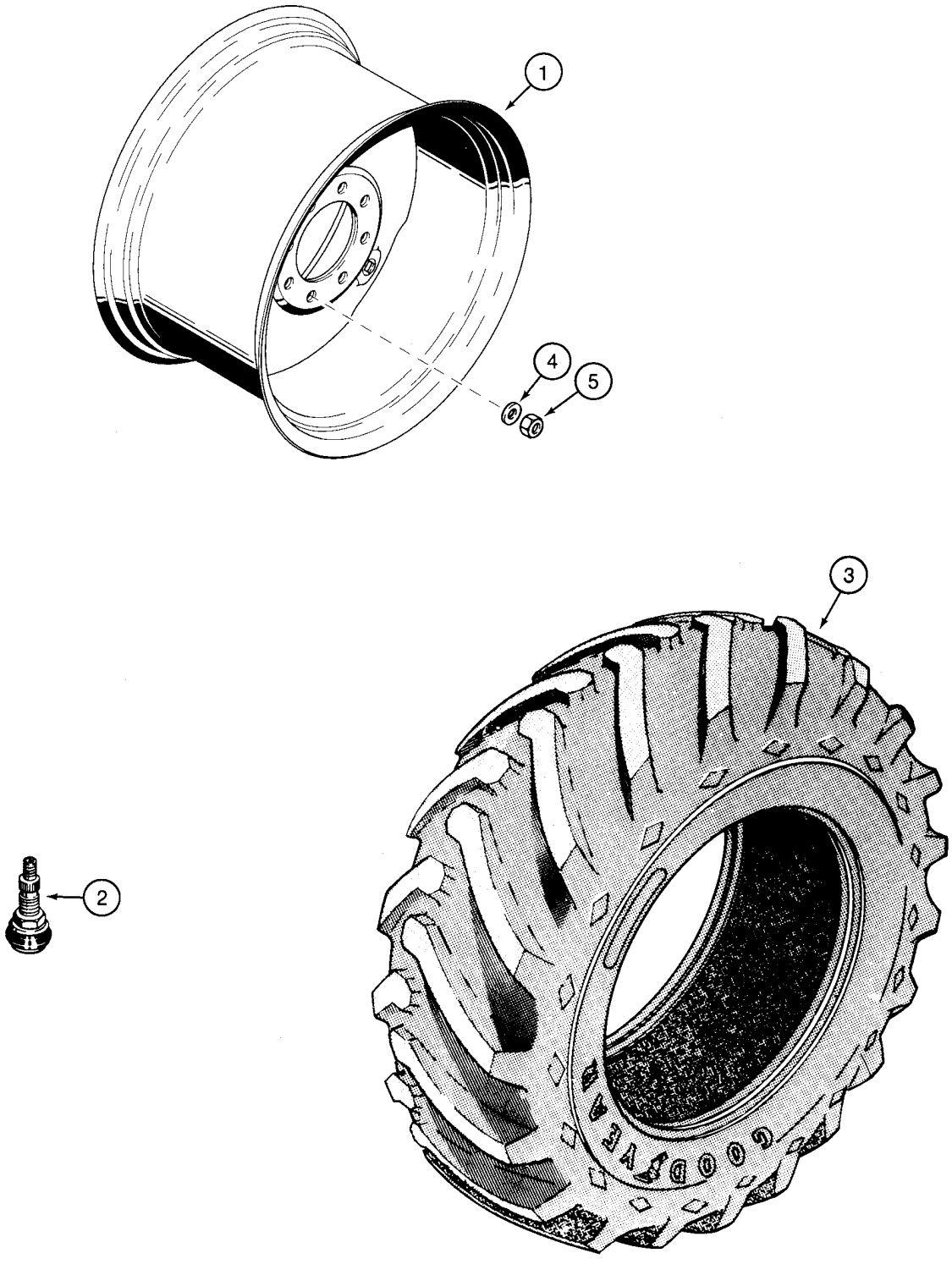

http://www.minnparbackhoeparts.com/

WHEELS, REAR - TIRES

REF	FN	PART NUMBER	YR/SN	QTY	DESCRIPTION
1		104907A1		2	RIM 580SM Models; 19.5L x 24 Tires - 10 Ply R4; Two Wheel or Four Wheel Drive
2		27549R1		2	VALVE
3		REF		2	INSTRUCTION Tire, Purchase Locally
1		400092A1		2	RIM 580SM Models; 19.5 x 24 Tires - 12 Ply (Wide); Two Wheel or Four Wheel Drive
2		27549R1		2	VALVE
3		REF		2	INSTRUCTION Tire, Purchase Locally
1		119241A1		2	RIM 580SM Models; 17.5L x 24 Tires - 10 Ply; Two Wheel or Four Wheel Drive
2		27549R1		2	VALVE
3		REF		2	INSTRUCTION Tire, Purchase Locally
1		132953A1		2	RIM 580SM+ Models; 21L x 24 - 10 Ply; Two Wheel or Four Wheel Drive
2		27549R1		2	VALVE
3		REF		2	INSTRUCTION Tire, Purchase Locally
4		D138380		20	WASHER
5		D138492		20	NUT M22; Wheel Nuts

http://www.minnparbackhoeparts.com/

AXLE, REAR DRIVE - MOUNTING

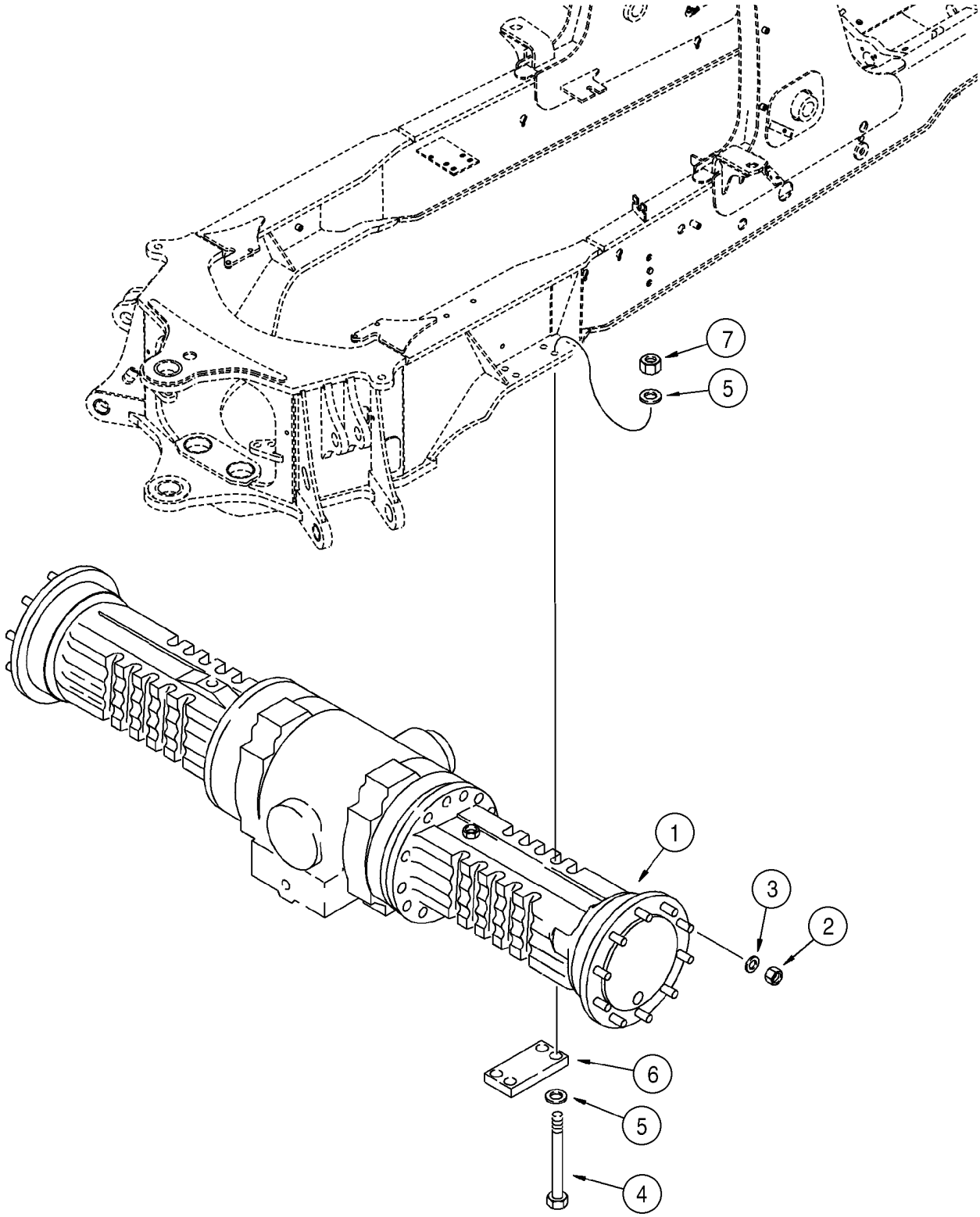

http://www.minnparbackhoeparts.com/

AXLE, REAR DRIVE - MOUNTING

REF	FN	PART NUMBER	YR/SN	QTY	DESCRIPTION
1		384956A1		1	AXLE, REAR 580SM Models Without Powershift Transmission, See Figures 06-40 - 06-46, 07-01, 07-02
1		86984108		1	AXLE DRIVE 580SM+ Models Without Powershift Transmission, See Figures 06-40 - 06-46, 07-01, 07-02
1A		384958A1		1	AXLE, REAR 580SM Models With Powershift Transmission, See Figures 06-40 - 06-46, 07-01, 07-02; Not Illustrated
1A		86984107		1	AXLE DRIVE 580SM+ Models With Powershift Transmission, See Figures 06-40 - 06-46, 07-01, 07-02; Not Illustrated
2		D138492		20	NUT 22 mm
3		87313544		20	WASHER 22.52 ID x 44.0 OD x 5.0 mm thk, Hardened; Replaces D138380 22.80 ID x 44.5 OD x 5.56 mm thk Hardened Washer Used On Some Models
4		827-20230		8	SCREW M20 x 230; 10.9
5		896-11020		16	WASHER 22 x 37 x 4 mm, Hardened
6		117933A1		2	PLATE, LARGE
7		829-1420		8	NUT M20, Cl 10

http://www.minnparbackhoeparts.com/

AXLE, REAR - DIFFERENTIAL LOCK

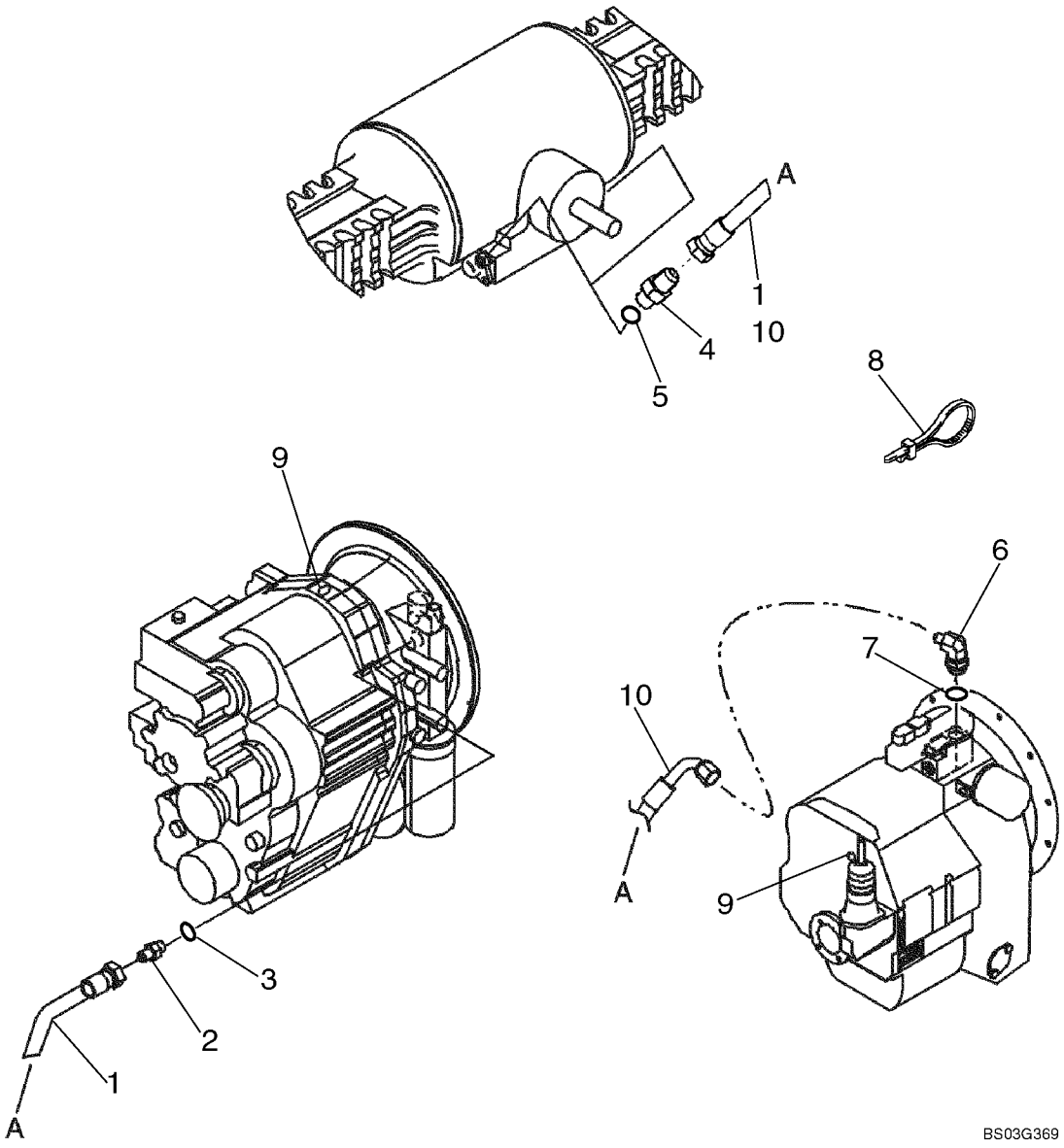

http://www.minnparbackhoeparts.com/

AXLE, REAR - DIFFERENTIAL LOCK

REF	FN	PART NUMBER	YR/SN	QTY	DESCRIPTION
1		87431702		1	HOSE ASSY. 1500 mm (59-9/16 in); Models With Powershift Transmission
2		218-5057		1	CONNECTOR, HYD. 9/16 fl x Or; Incl. Ref 3; Models With Powershift Transmission
3		237-6006		1	O-RING 15/32 ID x 5/64
4		218-5057		1	CONNECTOR, HYD. 9/16 fl x Or; Incl. Ref 5; Axle Port Location Shown Is For Models Without Powershift Transmission
5		237-6006		1	O-RING 15/32 ID x 5/64
6		218-5105		1	ELBOW 90 deg, 9/16 fl x Or; Incl. Ref 7; Models Without Powershift Transmission
7		237-6006		1	O-RING 15/32 ID x 5/64
8		L18337		2	STRAP 15 in
9		E135809		1	PLUG If Used
10		87431701		1	HOSE ASSY. 1500 mm (59-9/16 in); Models Without Powershift Transmission

http://www.minnparbackhoeparts.com/

AXLE, REAR DRIVE - HOUSING

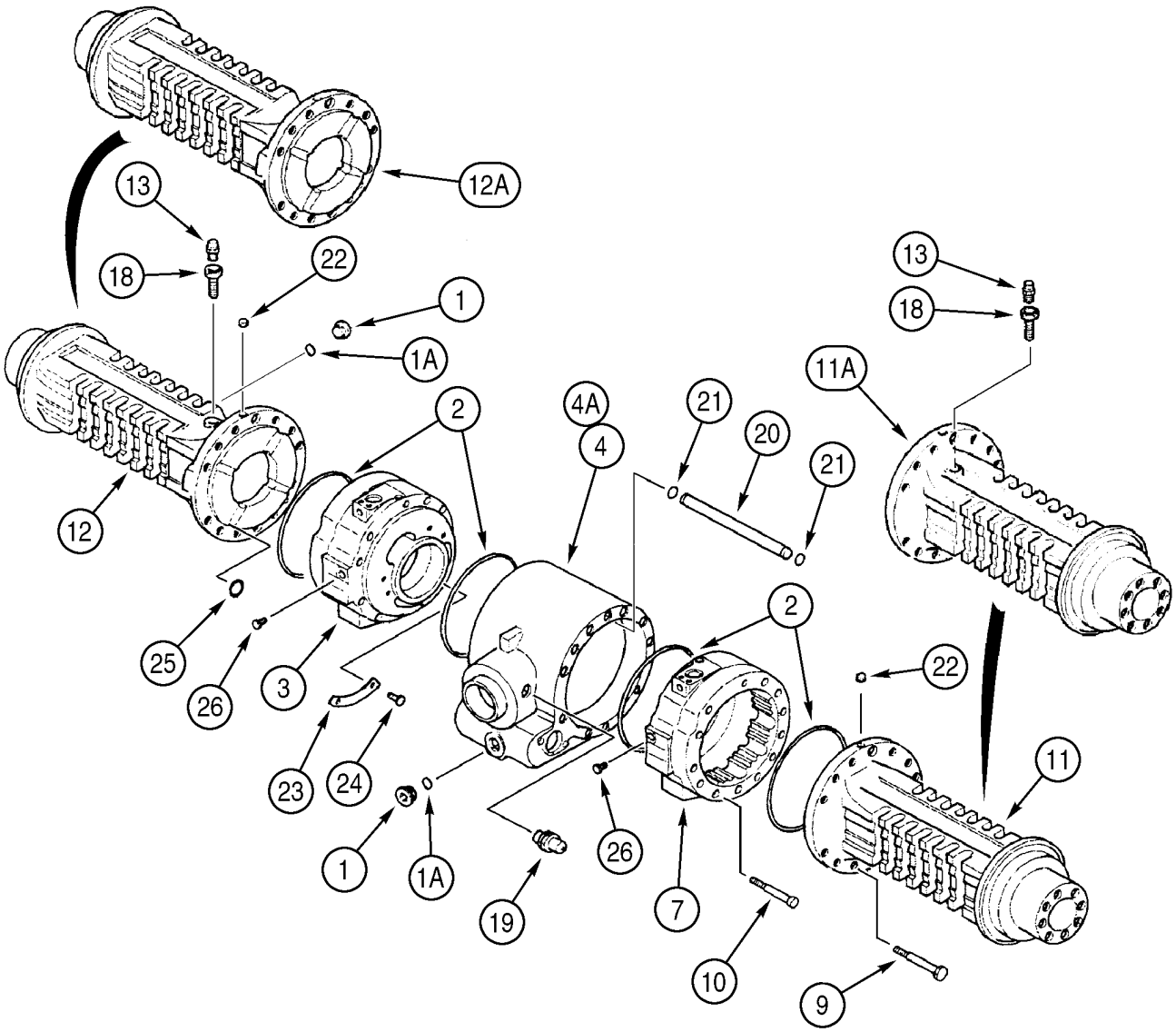

http://www.minnparbackhoeparts.com/

AXLE, REAR DRIVE - HOUSING

REF	FN	PART NUMBER	YR/SN	QTY	DESCRIPTION
		384956A1		1	AXLE, REAR 580SM Models Without Powershift Transmission, Incl. Ref 1 - 26; Also Includes Parts On Figures 06-40 - 06-46, 07-01, 07-02
		86984108		1	AXLE DRIVE 580SM+ Models Without Powershift Transmission, Incl. Ref 1 - 26; Also Includes Parts On Figures 06-40 - 06-46, 07-01, 07-02
		384958A1		1	AXLE, REAR 580SM Models With Powershift Transmission, Incl. Ref 1 - 26; Also Includes Parts On Figures 06-40 - 06-46, 07-01, 07-02
		86984107		1	AXLE DRIVE 580SM+ Models With Powershift Transmission, Incl. Ref 1 - 26; Also Includes Parts On Figures 06-40 - 06-46, 07-01, 07-02
1		100557A1		2	PLUG, DRAIN Incl. Ref 1A
1A		238-6121		1	O-RING 1-1/16 ID x 3/32
2		238-5270		4	O-RING 1-1/16 ID x 3/32
3		445267A1		1	FLANGE Brake Cylinder, Right-Hand
4		346585A1		1	HOUSING Center, 384956A1 or 86984108 Axle
4A		367195A1		1	HUB HOUSING, Center, 384958A1 or 86984107 Axle
7		445266A1		1	FLANGE Brake Cylinder, Left-Hand
9		814-14140		22	SCREW M14 x 140
10		864-12130		2	SCREW M12 x 130
11		358279A1		1	HUB Left-Hand, Without Breather Port, 384958A1 Axle
11A		358280A1		1	HUB Left-Hand, With Breather Port, 384956A1 Axle
11A		87430051		1	HOUSING, AXLE Left-Hand, With Breather Port, 86984107 Axle
11A		311484A1		1	HOUSING Left-Hand, With Breather Port, 86984108 Axle
12		358281A1		1	HUB Right-Hand, With Breather Port, 384958A1 Axle
12A		358279A1		1	HUB Right-Hand, Without Breather Port, 384956A1 Axle
12A		311485A1		1	HOUSING Right-Hand, Without Breather Port, 86984107 or 86984108 Axle
13		1966149C2		1	BREATHER
18		E135750		1	PIN, AXLE Breather Extension
19		393826A1		1	SENDER UNIT Oil Temperature, Incl. 237-8008 O-Ring

http://www.minnparbackhoeparts.com/

AXLE, REAR DRIVE - HOUSING

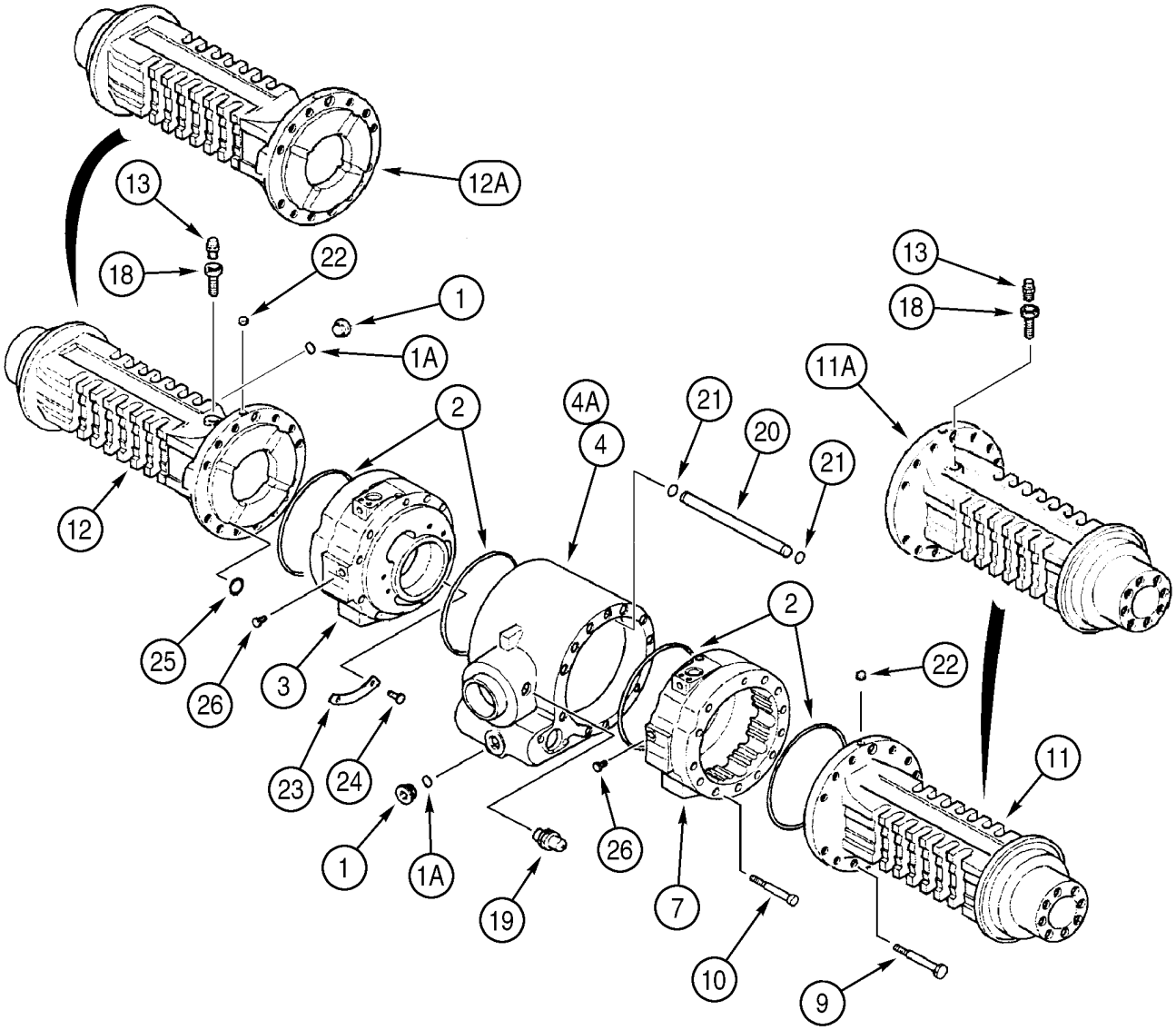

BS00C244

http://www.minnparbackhoeparts.com/

AXLE, REAR DRIVE - HOUSING

REF	FN	PART NUMBER	YR/SN	QTY	DESCRIPTION
		237-8008		1	O-RING 41/64 ID x 3/32
20		346584A1		1	TUBE Internal
21		346583A1		2	O-RING
22		D142898		2	PLUG 10 x 1 mm
23		347959A1		2	PLATE
24		347960A1		4	RIVET 4,8 x 6 mm
25		P2230493		8	SEAL
26		294245A1		2	CAP 7/16, If Used

http://www.minnparbackhoeparts.com/

AXLE, REAR DRIVE - DIFFERENTIAL (CLOCKWISE INPUT, MODELS WITHOUT POWERSHIFT)

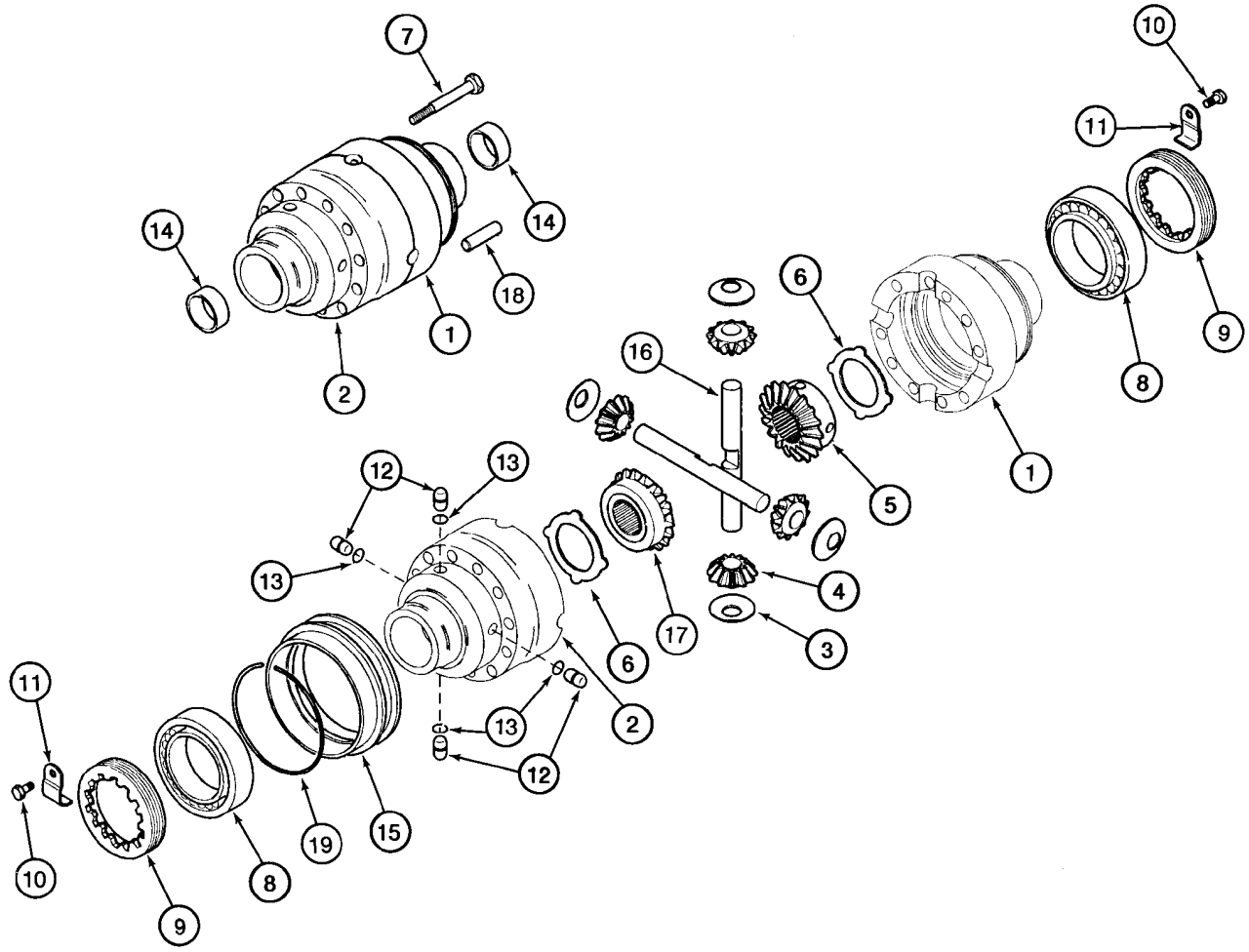

BS98D053

http://www.minnparbackhoeparts.com/

AXLE, REAR DRIVE - DIFFERENTIAL (CLOCKWISE INPUT, MODELS WITHOUT POWERSHIFT)

REF	FN	PART NUMBER	YR/SN	QTY	DESCRIPTION
		384956A1		1	AXLE, REAR 580SM Models, Incl. Ref 1 - 19; Also Includes Parts On Figures 06-40 - 06-46, 07-01, 07-02
		86984108		1	AXLE DRIVE 580SM+ Models, Incl. Ref 1 - 19; Also Includes Parts On Figures 06-40 - 06-46, 07-01, 07-02
		292268A1		1	HOUSING Differential, Incl. Ref 1, 2
1		NSS		1	NOT SERVICED SEPARATELY Housing, Flange Half
2		NSS		1	NOT SERVICED SEPARATELY Housing, Plain Half
		294192A1		1	SET Differential Gear Set, Service Replacement, Incl. Ref 3 - 6, 16, 17
3		E135777		4	WASHER Thrust
4		190471A1		4	PINION Sun Gear, 12T, No Longer Sold Separately, Must Be Replaced As a Set, For Service, Order 294192A1 Gear Set Kit
5		D142971		1	PINION Side Pinion Gear, No Longer Sold Separately, Must Be Replaced As a Set, For Service, Order 294192A1 Gear Set Kit
6		190469A1		2	WASHER, THRUST
7		S300976		10	SCREW M12 x 90; 12.9
8		E135785		2	BEARING
9		P3034505		2	NUT Lock Ring
10		112486A1		2	SCREW M6 x 12
11		175959A1		2	BRACKET Bracket
12		292207A1		4	PIN, LARGE
13		292208A1		4	O-RING
14		190452A1		2	BUSHING
15		191067A1		1	SLEEVE
		294192A1		1	SET Differential Gear Set, Service Replacement, Incl. Ref 3 - 6, 16, 17
16		190468A1		2	SHAFT Sun Gear, No Longer Sold Separately, Must Be Replaced As a Set, For Service, Order 294192A1 Gear Set Kit
17		292890A1		1	GEAR Side Pinion Gear, No Longer Sold Separately, Must Be Replaced As a Set, For Service, Order 294192A1 Gear Set Kit

http://www.minnparbackhoeparts.com/

AXLE, REAR DRIVE - DIFFERENTIAL (CLOCKWISE INPUT, MODELS WITHOUT POWERSHIFT)

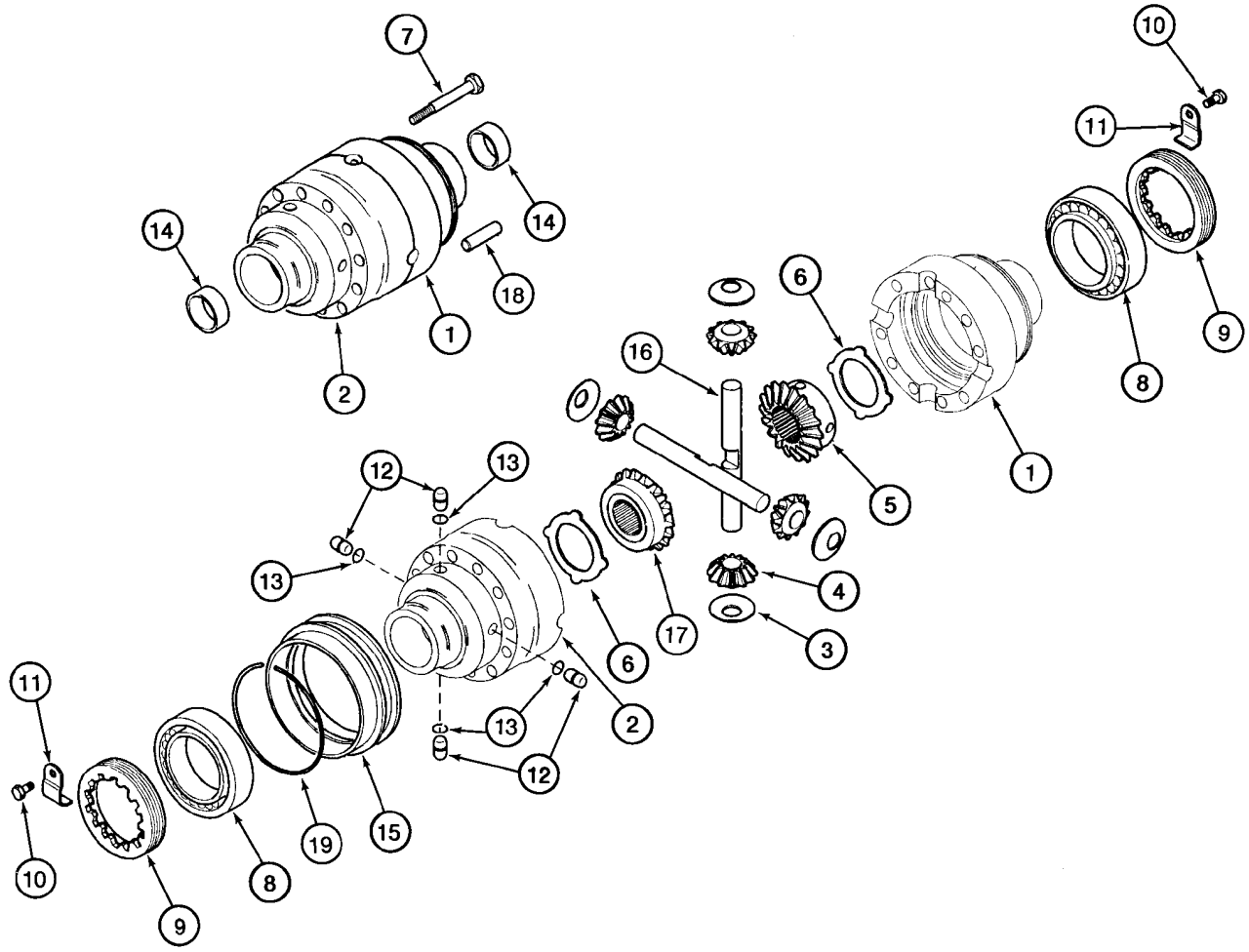

BS98D053

http://www.minnparbackhoeparts.com/

AXLE, REAR DRIVE - DIFFERENTIAL (CLOCKWISE INPUT, MODELS WITHOUT POWERSHIFT)

REF	FN	PART NUMBER	YR/SN	QTY	DESCRIPTION
18		D143033		2	DOWEL 12 x 40 mm
19		175961A1		1	RING, LOCKING

http://www.minnparbackhoeparts.com/

AXLE, REAR DRIVE - DIFFERENTIAL (COUNTER CLOCKWISE INPUT, MODELS WITH POWERSHIFT)

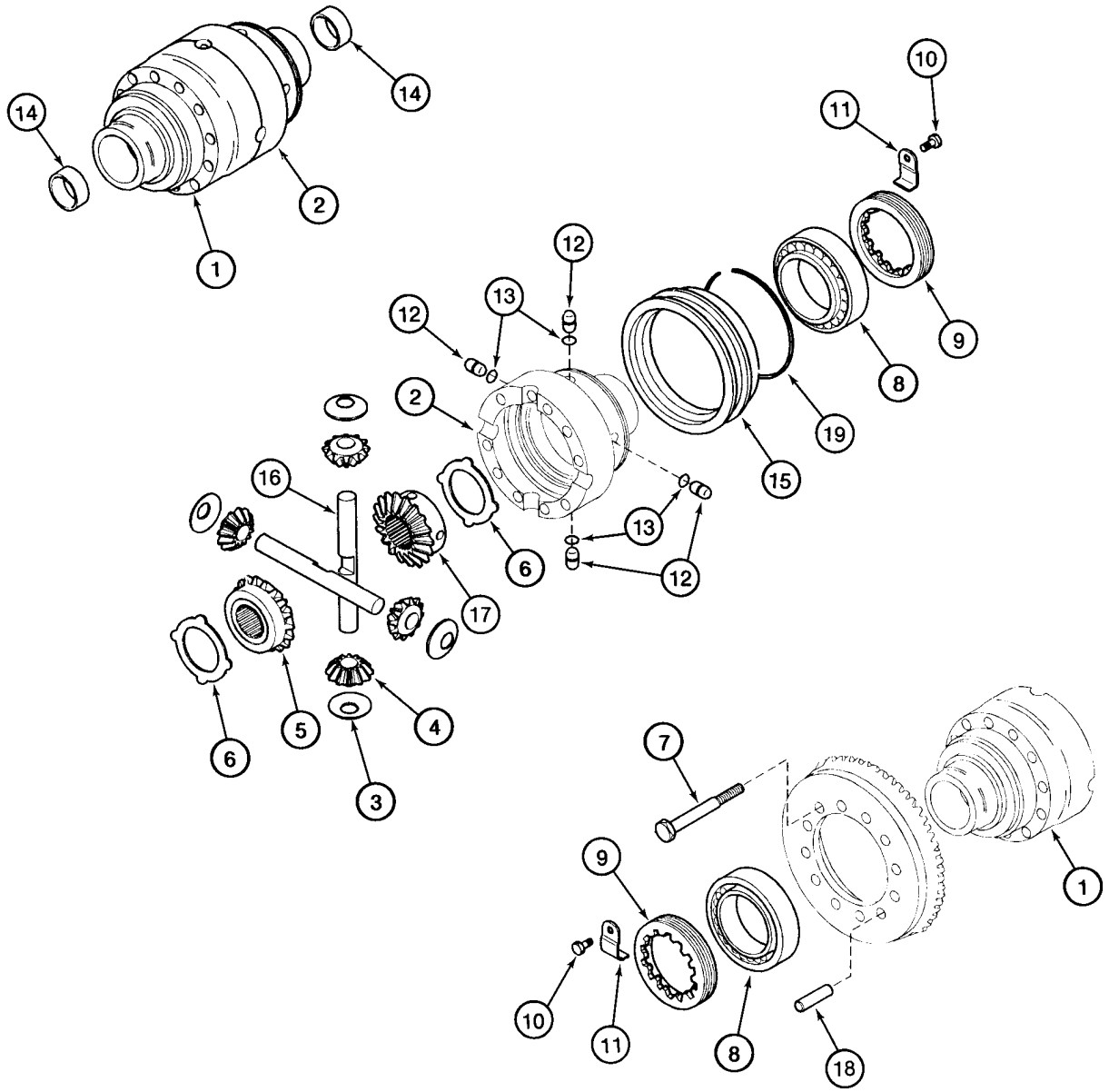

http://www.minnparbackhoeparts.com/

AXLE, REAR DRIVE - DIFFERENTIAL (COUNTER CLOCKWISE INPUT, MODELS WITH POWERSHIFT)

REF	FN	PART NUMBER	YR/SN	QTY	DESCRIPTION
		384958A1		1	AXLE, REAR 580SM Model, Incl. Ref 1 - 19; Also Includes Parts On Figures 06-40 - 06-46, 07-01, 07-02
		86984107		1	AXLE DRIVE 580SM+ Model, Incl. Ref 1 - 19; Also Includes Parts On Figures 06-40 - 06-46, 07-01, 07-02
		292268A1		1	HOUSING Differential, Incl. Ref 1, 2
1		NSS		1	NOT SERVICED SEPARATELY Housing, Flange Half
2		NSS		1	NOT SERVICED SEPARATELY Housing, Plain Half
		294192A1		1	SET Differential Gear Set, Service Replacement, Incl. Ref 3 - 6, 16, 17
3		E135777		4	WASHER Thrust
4		190471A1		4	PINION Sun Gear, 12T, No Longer Sold Separately, Must Be Replaced As a Set, For Service, Order 294192A1 Gear Set Kit
5		D142971		1	PINION Side Pinion Gear, No Longer Sold Separately, Must Be Replaced As a Set, For Service, Order 294192A1 Gear Set Kit
6		190469A1		2	WASHER, THRUST
7		S300976		10	SCREW M12 x 90; 12.9
8		E135785		2	BEARING
9		P3034505		2	NUT Lock Ring
10		112486A1		2	SCREW M6 x 12
11		175959A1		2	BRACKET Bracket
12		292207A1		4	PIN, LARGE
13		292208A1		4	O-RING
14		190452A1		2	BUSHING
15		191067A1		1	SLEEVE
		294192A1		1	SET Differential Gear Set, Service Replacement, Incl. Ref 3 - 6, 16, 17
16		190468A1		2	SHAFT Sun Gear, No Longer Sold Separately, Must Be Replaced As a Set, For Service, Order 294192A1 Gear Set Kit
17		292890A1		1	GEAR Side Pinion Gear, No Longer Sold Separately, Must Be Replaced As a Set, For Service, Order 294192A1 Gear Set Kit

http://www.minnparbackhoeparts.com/

AXLE, REAR DRIVE - DIFFERENTIAL (COUNTER CLOCKWISE INPUT, MODELS WITH POWERSHIFT)

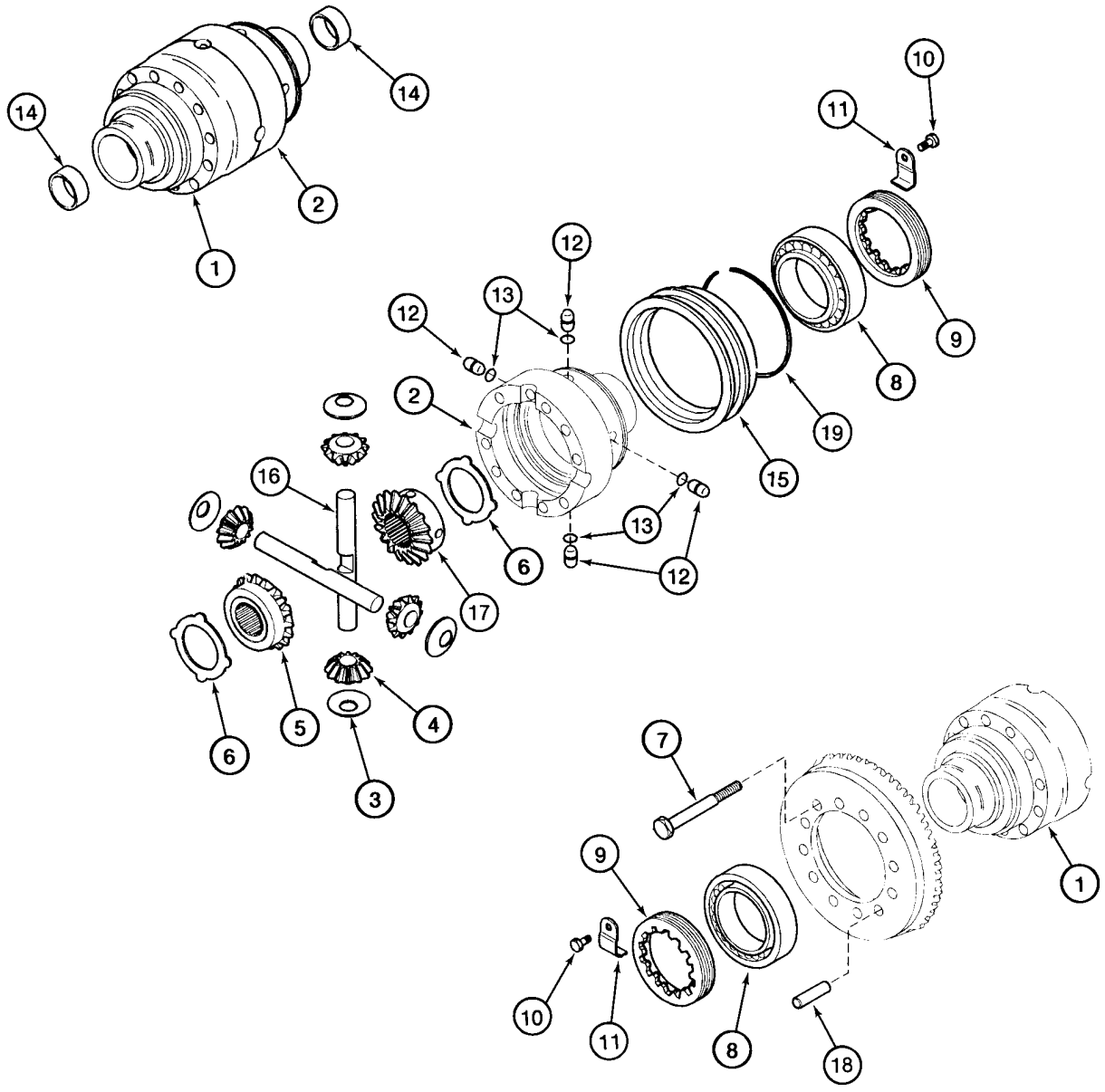

BS98D054

http://www.minnparbackhoeparts.com/

AXLE, REAR DRIVE - DIFFERENTIAL (COUNTER CLOCKWISE INPUT, MODELS WITH POWERSHIFT)

REF	FN	PART NUMBER	YR/SN	QTY	DESCRIPTION
18		D143033		2	DOWEL 12 x 40 mm
19		175961A1		1	RING, LOCKING

http://www.minnparbackhoeparts.com/

AXLE, REAR DRIVE - RING AND PINION

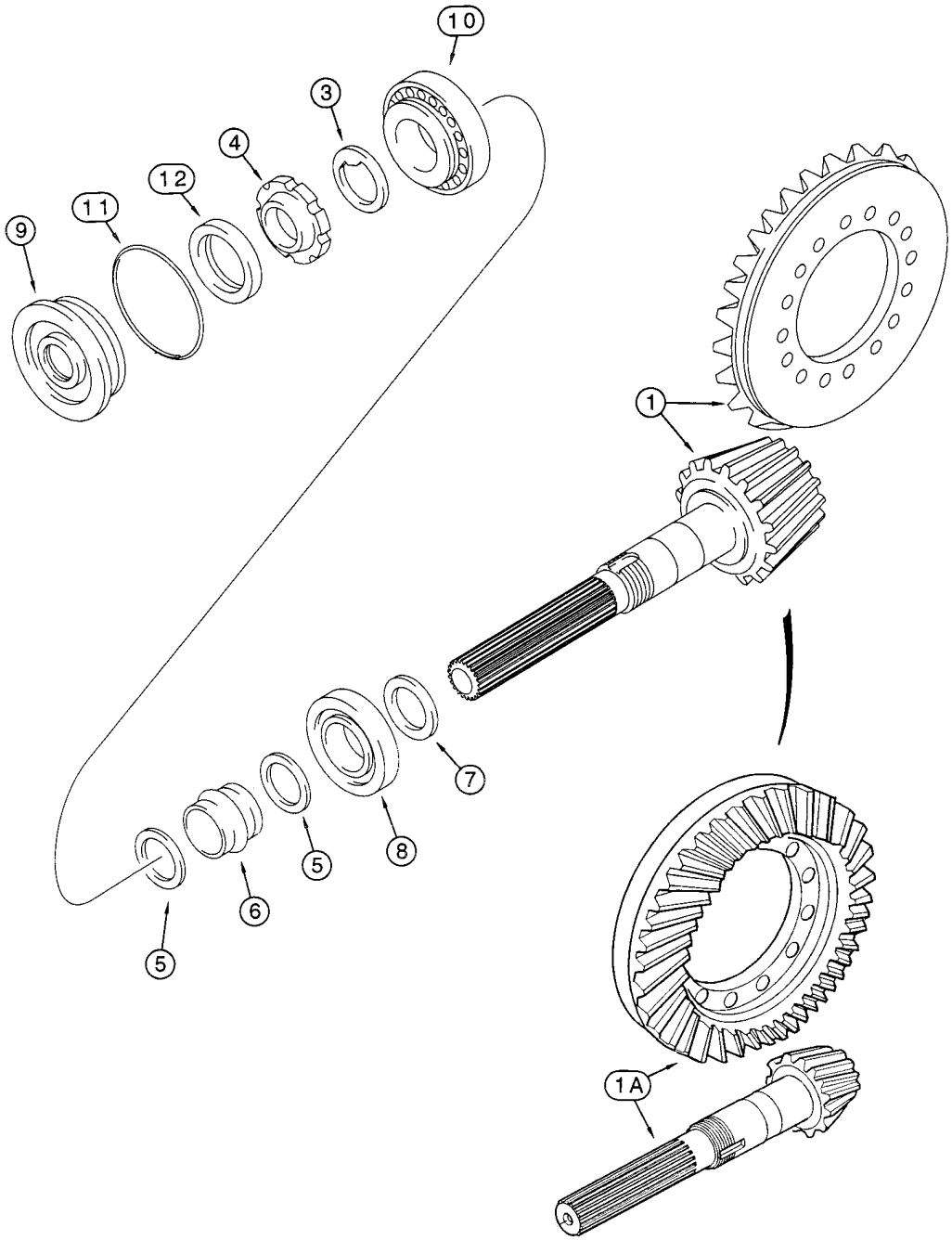

http://www.minnparbackhoeparts.com/

AXLE, REAR DRIVE - RING AND PINION

REF	FN	PART NUMBER	YR/SN	QTY	DESCRIPTION
		384956A1		1	AXLE, REAR 580SM Models Without Powershift Transmission, Incl. Ref 1 - 12; Also Includes Parts On Figures 06-40 - 06-46, 07-01, 07-02
		86984108		1	AXLE DRIVE 580SM+ Models Without Powershift Transmission, Incl. Ref 1 - 12; Also Includes Parts On Figures 06-40 - 06-46, 07-01, 07-02
		384958A1		1	AXLE, REAR 580SM Models With Powershift Transmission, Incl. Ref 1 - 12; Also Includes Parts On Figures 06-40 - 06-46, 07-01, 07-02
		86984107		1	AXLE DRIVE 580SM+ Models With Powershift Transmission, Incl. Ref 1 - 12; Also Includes Parts On Figures 06-40 - 06-46, 07-01, 07-02
		294189A1		1	SET Ring and Pinion Gear Set, Clockwise, Incl. Ref 1, 3 - 6; 384956A1 or 86984108 Axle
		294190A1		1	SET Ring and Pinion Gear Set, Counter Clockwise, Incl. Ref 1A, 3 - 6; 384958A1or 86984107 Axle
1		NSS		1	NOT SERVICED SEPARATELY Gear Set, 294189A1 Gear Set
1A		NSS		1	NOT SERVICED SEPARATELY Gear Set, 294190A1 Gear Set
3		K261065		1	WASHER
4		K261014		1	NUT Ring
5		1349059C1		2	WASHER
6		295110A1		1	SPACER Collapsible
7		190506A1		X	SHIM 2,5 mm (0,098 in)
7		190508A1		X	SHIM 2,6 mm (0,102 in)
7		190509A1		X	SHIM 2,7 mm (0,106 in)
7		190510A1		X	SHIM 2,8 mm (0,110 in)
7		190511A1		X	SHIM 2,9 mm (0,114 in)
7		190512A1		X	SHIM 3,0 mm (0,118 in)
7		190513A1		X	SHIM 3,1 mm (0,122 in)
7		190514A1		X	SHIM 3,2 mm (0,125 in)
7		190515A1		X	SHIM 3,3 mm (0,129 in)
7		190516A1		X	SHIM 3,4 mm (0,133 in)
8		E135762		1	BEARING 45 x 100 mm
9		128570A1		1	FLANGE Cover
10		K395090		1	BEARING, BALL

http://www.minnparbackhoeparts.com/

AXLE, REAR DRIVE - RING AND PINION

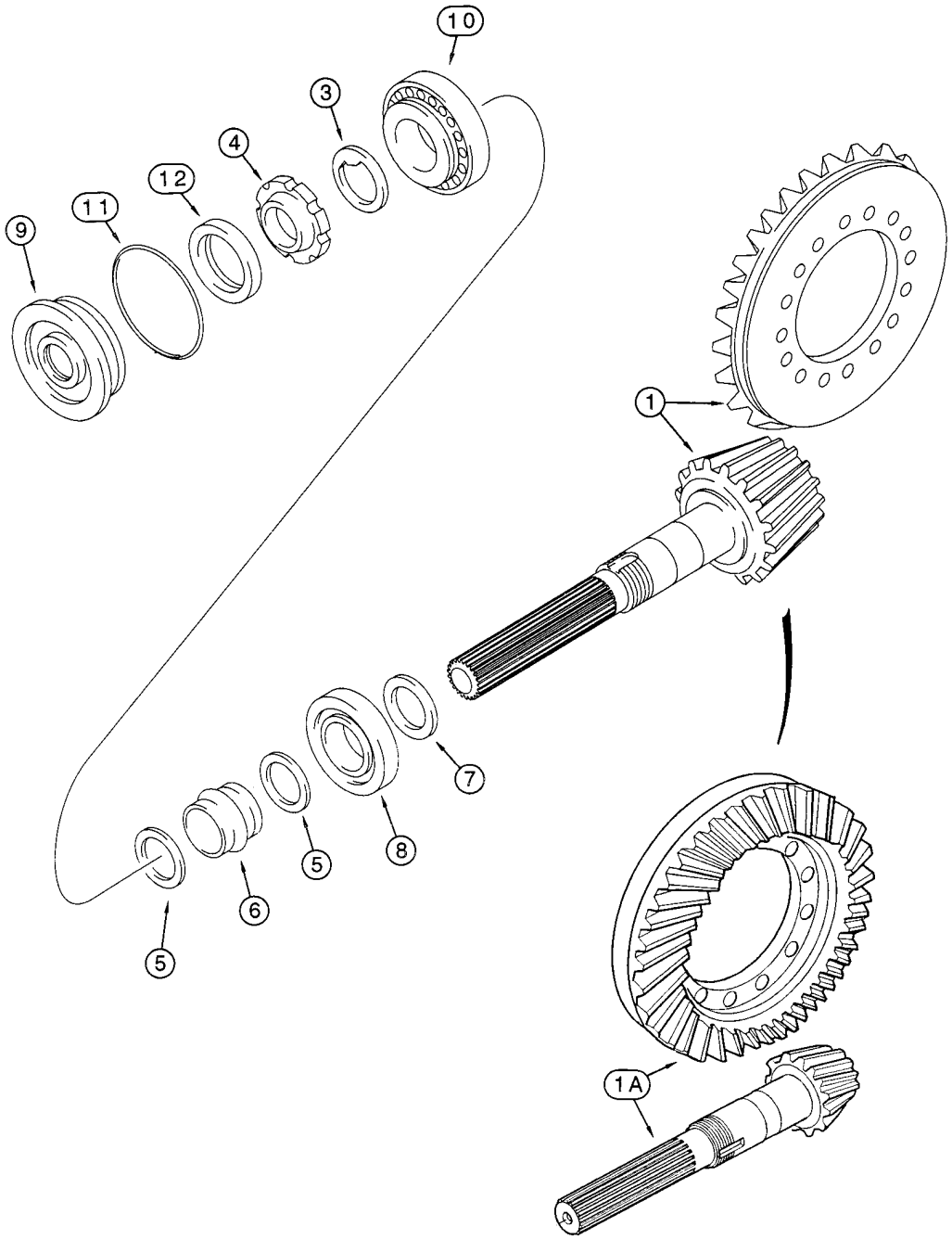

http://www.minnparbackhoeparts.com/

AXLE, REAR DRIVE - RING AND PINION

REF	FN	PART NUMBER	YR/SN	QTY	DESCRIPTION
11		238-5152		1	O-RING 3-1/4 ID x 3/32
12		K262143		1	SEAL

http://www.minnparbackhoeparts.com/

AXLE, REAR DRIVE - DIFFERENTIAL LOCK (CLOCKWISE INPUT, MODELS WITHOUT POWERSHIFT)

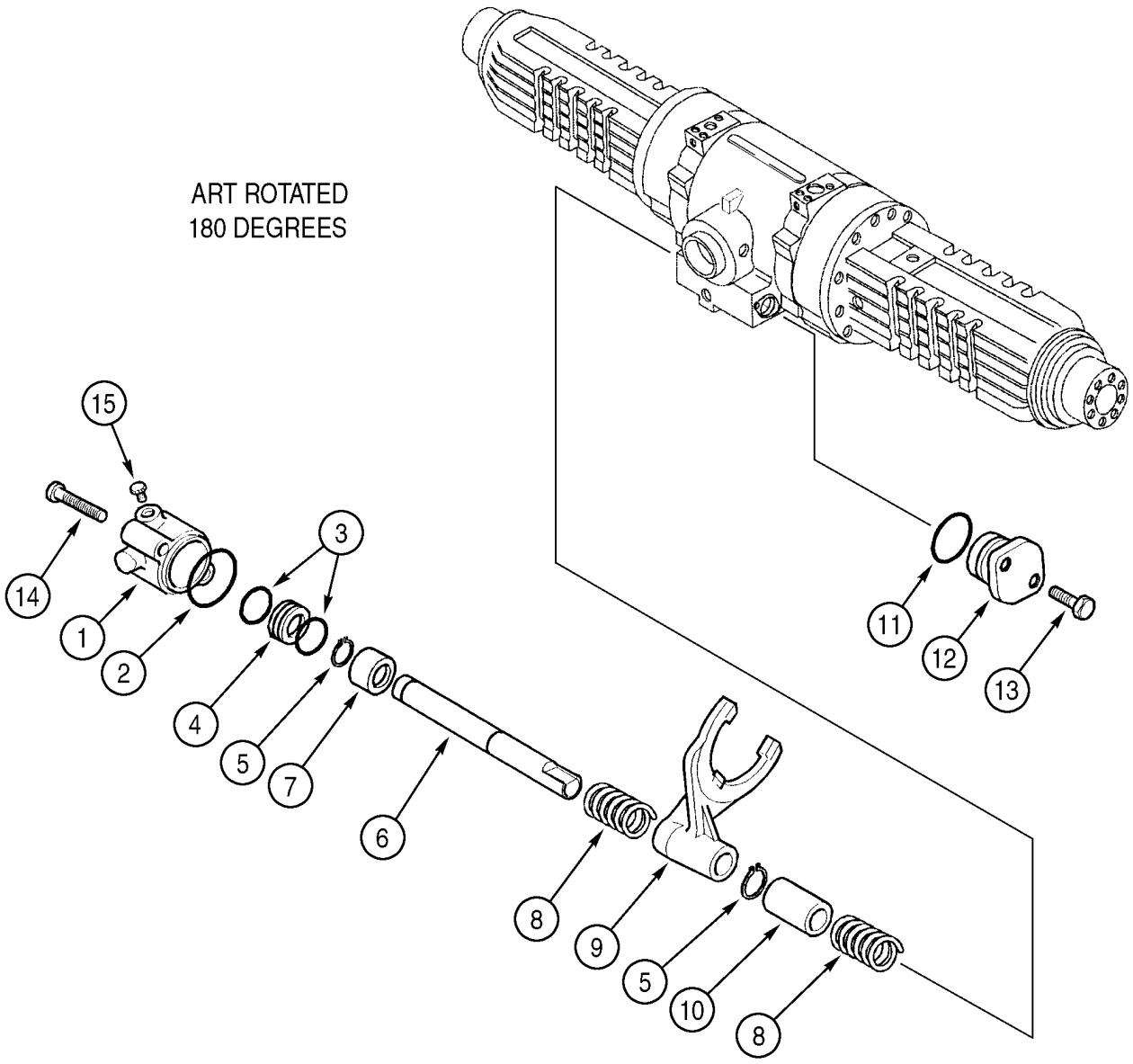

http://www.minnparbackhoeparts.com/

AXLE, REAR DRIVE - DIFFERENTIAL LOCK (CLOCKWISE INPUT, MODELS WITHOUT POWERSHIFT)

REF	FN	PART NUMBER	YR/SN	QTY	DESCRIPTION
		384956A1		1	AXLE, REAR 580SM Models, Incl. Ref 1 - 15; Also Includes Parts On Figures 06-40 - 06-46, 07-01, 07-02
		86984108		1	AXLE DRIVE 580SM+ Models, Incl. Ref 1 - 15; Also Includes Parts On Figures 06-40 - 06-46, 07-01, 07-02
1		292213A1		1	CYLINDER
2		305152A1		1	O-RING
3		292210A1		2	SEAL
4		292212A1		1	PISTON
5		800-5120		2	SNAP RING No. 20
6		292214A1		1	SHAFT Rail, Shifter Fork
7		292902A1		1	RING Bushing
8		175966A1		2	SPRING
9		175964A2		1	FORK
10		175965A1		1	BUSHING, LARGE
11		128376A1		1	O-RING
12		175968A1		1	SUPPORT Cover
13		614-8030		2	BOLT M8 x 30
14		814-8080		2	BOLT M8 x 80
15		NSS		1	NOT SERVICED SEPARATELY Plug

http://www.minnparbackhoeparts.com/

AXLE, REAR DRIVE - DIFFERENTIAL LOCK (COUNTER CLOCKWISE INPUT, MODELS WITH POWERSHIFT)

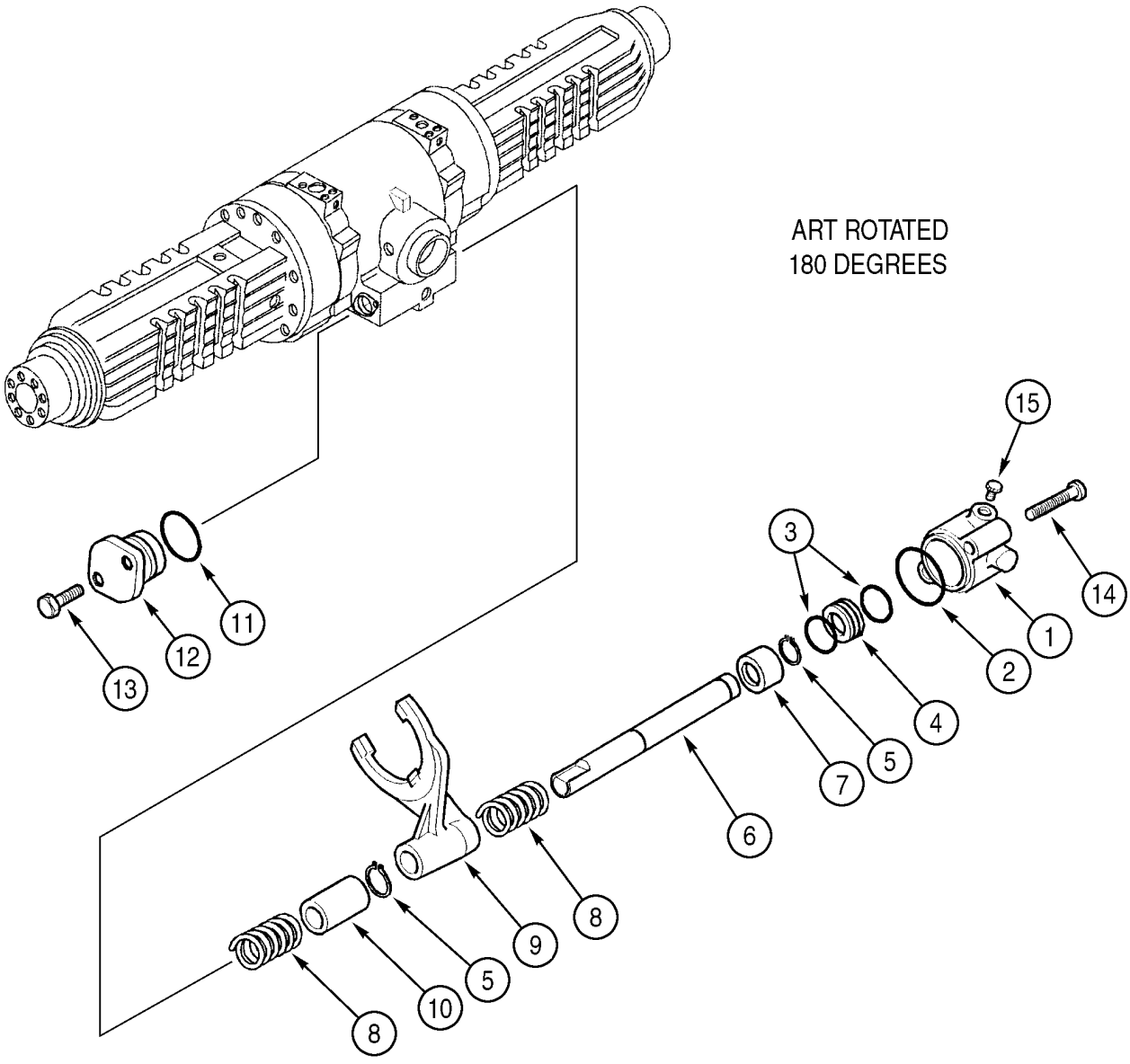

http://www.minnparbackhoeparts.com/

AXLE, REAR DRIVE - DIFFERENTIAL LOCK (COUNTER CLOCKWISE INPUT, MODELS WITH POWERSHIFT)

REF	FN	PART NUMBER	YR/SN	QTY	DESCRIPTION
		384958A1		1	AXLE, REAR 580SM Models, Incl. Ref 1 - 15; Also Includes Parts On Figures 06-40 - 06-46, 07-01, 07-02
		86984107		1	AXLE DRIVE 580SM+ Models, Incl. Ref 1 - 15; Also Includes Parts On Figures 06-40 - 06-46, 07-01, 07-02
1		305153A1		1	CYLINDER
2		305152A1		1	O-RING
3		292210A1		2	SEAL
4		292212A1		1	PISTON
5		800-5120		2	SNAP RING No. 20
6		292214A1		1	SHAFT Rail, Shifter Fork
7		292902A1		1	RING Bushing
8		175966A1		2	SPRING
9		292897A1		1	FORK
10		175965A1		1	BUSHING, LARGE
11		128376A1		1	O-RING
12		175968A1		1	SUPPORT Cover
13		614-8030		2	BOLT M8 x 30
14		814-8080		2	BOLT M8 x 80
15		NSS		1	NOT SERVICED SEPARATELY Plug

http://www.minnparbackhoeparts.com/

AXLE, REAR DRIVE - PLANETARY

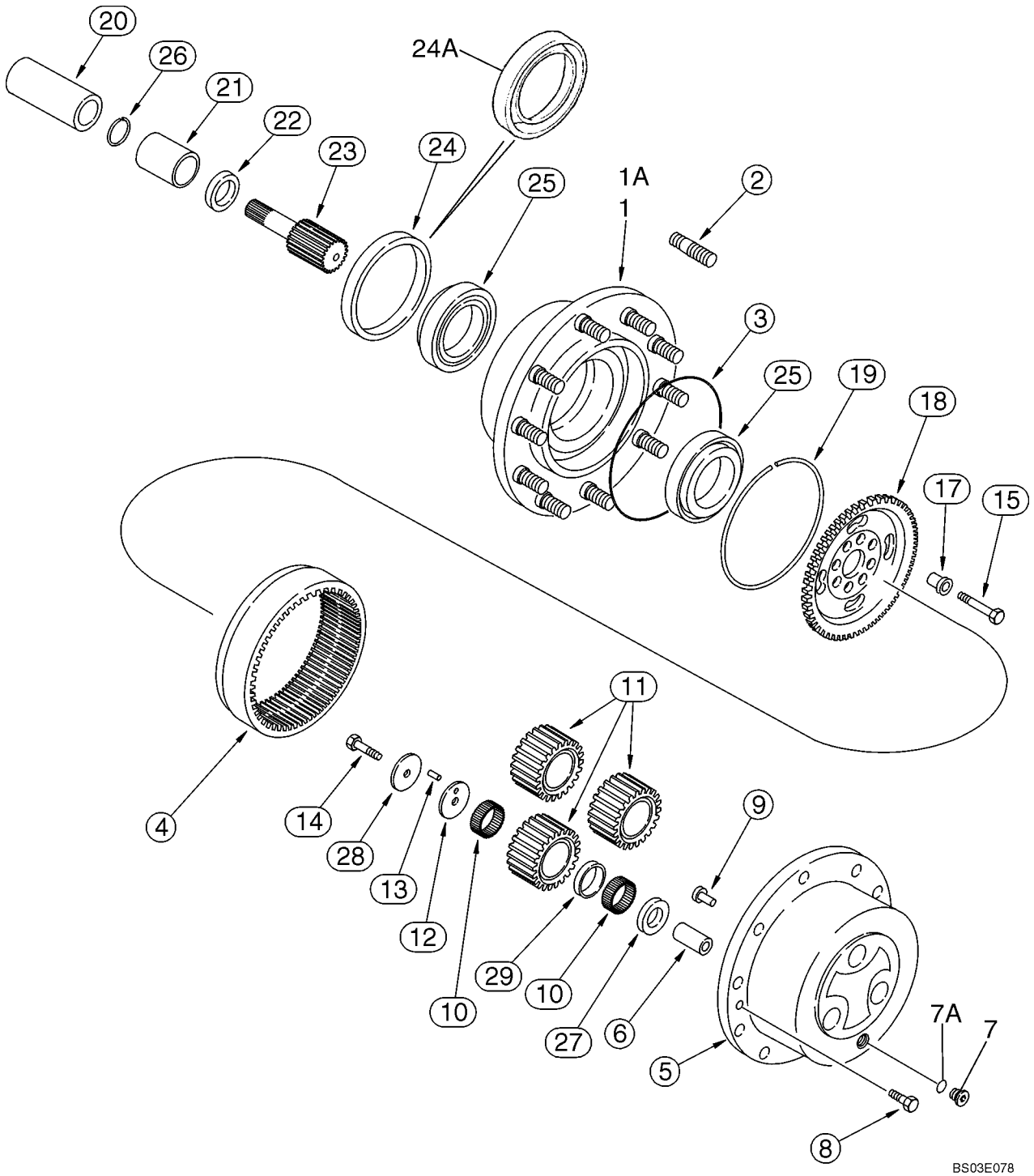

http://www.minnparbackhoeparts.com/

AXLE, REAR DRIVE - PLANETARY

REF	FN	PART NUMBER	YR/SN	QTY	DESCRIPTION
		384956A1		1	AXLE, REAR 580SM Models Without Powershift Transmission, Incl. Ref 1 - 29; Also Includes Parts On Figures 06-40 - 06-46, 07-01, 07-02
		86984108		1	AXLE DRIVE 580SM+ Models Without Powershift Transmission, Incl. Ref 1 - 29; Also Includes Parts On Figures 06-40 - 06-46, 07-01, 07-02
		384958A1		1	AXLE, REAR 580SM Models With Powershift Transmission, Incl. Ref 1 - 29; Also Includes Parts On Figures 06-40 - 06-46, 07-01, 07-02
		86984107		1	AXLE DRIVE 580SM+ Models With Powershift Transmission, Incl. Ref 1 - 29; Also Includes Parts On Figures 06-40 - 06-46, 07-01, 07-02
1		367233A1		2	HUB ASSY. Includes (10) D142986 Studs, Ref 2; Used With 1349265C1 Seal, Ref 24; 384956A1 or 384958A1 Axle; If Used; When Stock of 367233A1 Hub is Exhausted, Order 87416108 Hub & 87415728 seal
1A		87416108		2	KIT, SERVICE HUB ASSY, Includes (10) D142986 Stud, Ref 2; Used With 247546A1 Seal, Ref 24A; If Used
2		D142986		10	STUD Without Flanged Collar, If Used
2		196090A1		10	STUD With Flanged Collar, For Recessed Bolt Holes, If Used
3		P2930467		2	SEAL
4		175976A1		2	PINION Ring Gear; 384956A1 or 384958A1 Axle
4		311488A1		2	GEAR, RING Ring Gear; 86984107 or 86984108 Axle
5		292891A1		2	SUPPORT Planetary Carrier, Incl. Ref 6, Use With Liquid Gasket Silastic 732, Carrier to Hub
6		NSS		6	NOT SERVICED SEPARATELY Shaft
7		100557A1		2	PLUG, DRAIN Incl. Ref 7A
7A		238-6121		1	O-RING 1-1/16 ID x 3/32
8		K395082		4	SCREW
9		K395093		2	PIN, HEADED
10		292893A1		38	NEEDLE Package of 10 Needles, 372 Needles Required
11		292894A1		6	GEAR Pinion
12		292898A1		6	WASHER Thrust

http://www.minnparbackhoeparts.com/

AXLE, REAR DRIVE - PLANETARY

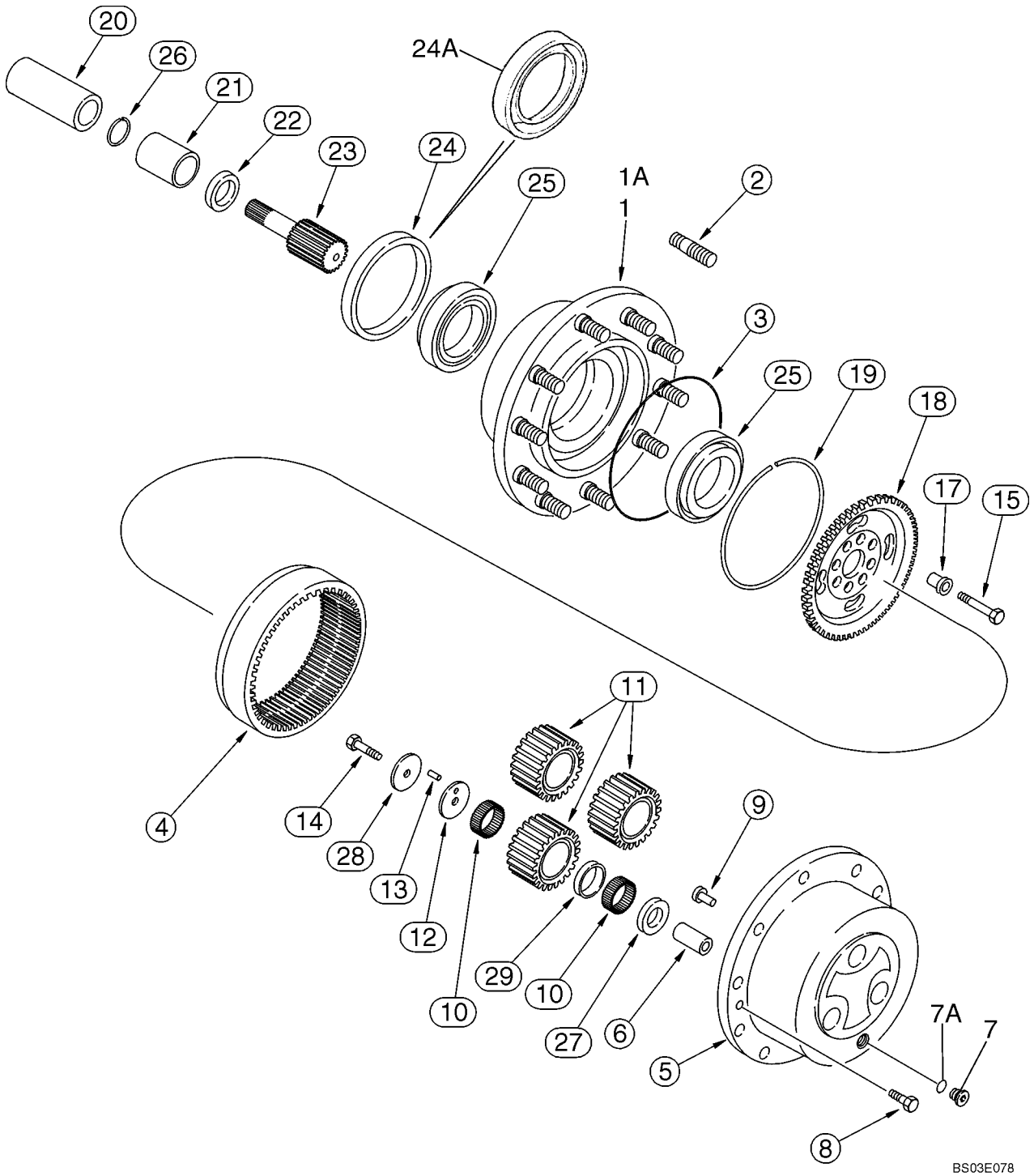

http://www.minnparbackhoeparts.com/

AXLE, REAR DRIVE - PLANETARY

REF	FN	PART NUMBER	YR/SN	QTY	DESCRIPTION
13		247550A1		1	BEARING ASSY Package of 10 Needles, Used As Pins, 6 Needles Required
14		175982A1		6	SCREW M10 x 50; 10.9
15		K395131		16	BOLT M14 x 65
17		107071A1		16	CENTERING RING Bushing, 20 mm OD
18		310492A1		2	CARRIER, GEARS Ring Gear, With Two Extraction Holes
19		175984A1		2	RING, LOCKING
20		NSS		2	NOT SERVICED SEPARATELY Coupling, Welded To and Included With the Differential Brake Oil Auger; 384956A1 or 384958A1 Axle
20		196092A1		2	BUSHING, LARGE 86984107 or 86984108 Axle
21		196065A1		2	BUSHING, LARGE
22		196066A1		2	SEAL, OIL 38 ID x 50 OD
23		292896A1		2	SHAFT
24		1349265C1		2	SEAL Used With Ref 1 367233A1 Hub, If Used
24A		247546A1		2	SEAL With Internal Garter Spring Seal, Used With Ref 1A 87416108 Hub, If Used
25		K395101		4	BEARING
26		800-2136		2	SNAP RING No. 36
27		292899A1		6	WASHER Thrust
28		292900A1		6	WASHER Thrust
29		292901A1		6	WASHER

http://www.minnparbackhoeparts.com/

06-47		p1	05/03

DRIVE SHAFT, REAR AXLE

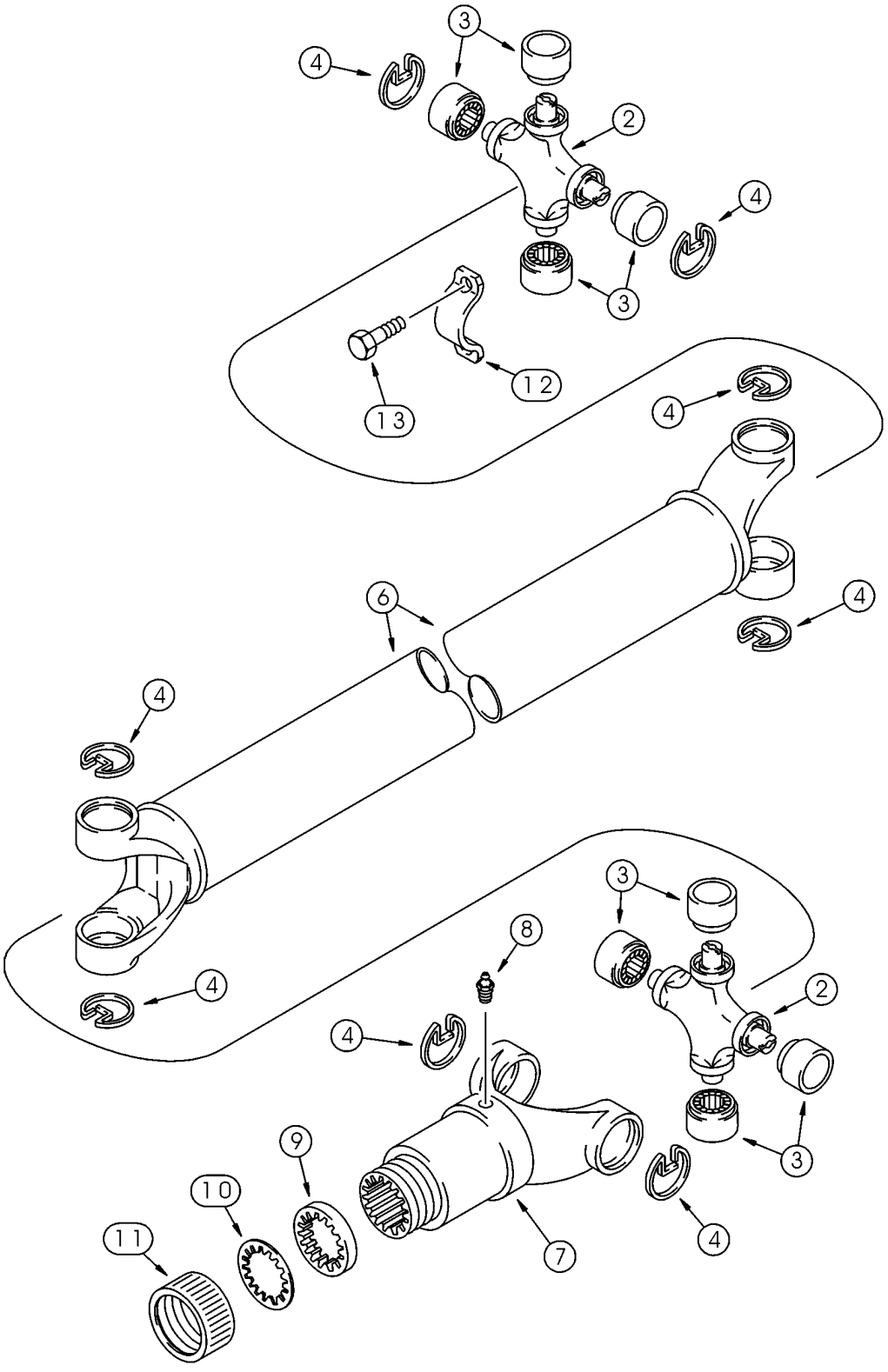

http://www.minnparbackhoeparts.com/

DRIVE SHAFT, REAR AXLE

REF	FN	PART NUMBER	YR/SN	QTY	DESCRIPTION
		367860A3		1	SHAFT, DRIVE Models Without Powershift Transmission, Incl. 393231A1, Ref 2 - 13
		367859A2		1	SHAFT, DRIVE Models With Powershift Transmission, Incl. 393231A1, Ref 2 - 13
		393231A1		2	KIT Universal Joint, Incl. Ref 2 - 4
2		NSS		1	NOT SERVICED SEPARATELY Joint, Universal
3		NSS		4	NOT SERVICED SEPARATELY Bearing, Journal
4		NSS		4	NOT SERVICED SEPARATELY Ring
6		393233A1		1	SHAFT, DRIVE 367860A3 Drive Shaft
6		393232A1		1	SHAFT, DRIVE 367859A2 Drive Shaft
7		144279A1		1	YOKE
8		219-10		1	NIPPLE, LUBE 1/4 tpr x 11/16
		D149860		1	PACKAGE,SERVICE Incl. Ref 9 - 11
9		NSS		1	NOT SERVICED SEPARATELY Washer, Cork
10		NSS		1	NOT SERVICED SEPARATELY Washer, Steel
11		NSS		1	NOT SERVICED SEPARATELY Cap
12		90-6682T1		2	CLAMP
13		D137627		4	BOLT

http://www.minnparbackhoeparts.com/

NOTES

http://www.minnparbackhoeparts.com/

SECTION INDEX

07-01	AXLE, REAR DRIVE - BRAKE, DIFFERENTIAL
07-02	AXLE, REAR DRIVE - BRAKE, PARKING
07-03	BRAKE - PEDALS
07-04	HYDRAULICS - BRAKE MASTER CYLINDER
07-05	CYLINDER ASSY - BRAKE MASTER
07-06	CONTROLS - BRAKE, PARKING

http://www.minnparbackhoeparts.com/

AXLE, REAR DRIVE - BRAKE, DIFFERENTIAL

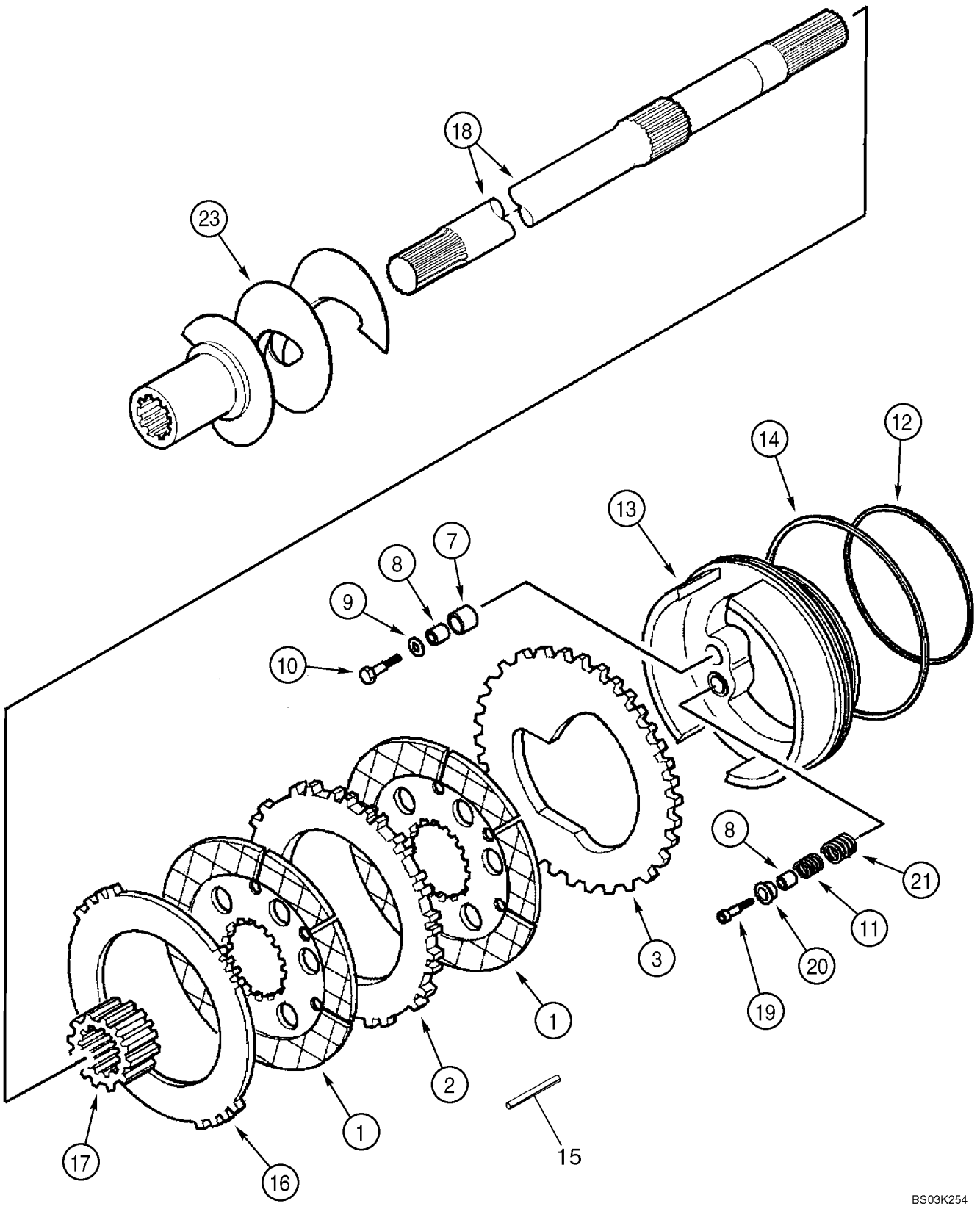

http://www.minnparbackhoeparts.com/

AXLE, REAR DRIVE - BRAKE, DIFFERENTIAL

REF	FN	PART NUMBER	YR/SN	QTY	DESCRIPTION
		384956A1		1	AXLE, REAR 580SM Models Without Powershift Transmission, Incl. Ref 1 - 25; Also Includes Parts On Figures 06-40 - 06-46, 07-01, 07-02
		86984108		1	AXLE DRIVE 580SM+ Models Without Powershift Transmission, Incl. Ref 1 - 25; Also Includes Parts On Figures 06-40 - 06-46, 07-01, 07-02
		384958A1		1	AXLE, REAR 580SM Models With Powershift Transmission, Incl. Ref 1 - 25; Also Includes Parts On Figures 06-40 - 06-46, 07-01, 07-02
		86984107		1	AXLE DRIVE 580SM+ Models With Powershift Transmission, Incl. Ref 1 - 25; Also Includes Parts On Figures 06-40 - 06-46, 07-01, 07-02
1		237021A1		4	PLATE, LARGE Brake Disc
2		237022A1		2	PLATE, LARGE Friction
3		308029A1		2	PLATE Piston
		358212A1		1	KIT Brake Self Adjuster, Incl. Ref 7, 8, Plus An Instruction Sheet
7		190449A1		6	SPLIT PIN 18 x 20 mm, No Longer Sold Separately, Order 358212A1 Kit
8		190496A1		12	BUSHING, LARGE No Longer Sold Separately, Order 358212A1 Kit
9		190450A1		6	WASHER
10		864-6035		6	SCREW M6 x 35
11		237026A1		6	SPRING
12		308036A1		2	O-RING
13		359653A1		2	PISTON
14		190493A1		2	O-RING
15		190447A1		6	SPLIT PIN 6 x 14 mm; 86984107 or 86984108 Axle Only
16		308030A1		2	PLATE Friction
17		308042A1		2	SUPPORT Sleeve
18		295111A1		2	SHAFT 384956A1 or 384958A1 Axle
18		311486A1		2	SHAFT, DRIVE 86984107 or 86984108 Axle
19		864-6035		6	SCREW M6 x 35
20		190500A1		6	COVER
21		237025A1		6	SPRING

http://www.minnparbackhoeparts.com/

AXLE, REAR DRIVE - BRAKE, DIFFERENTIAL

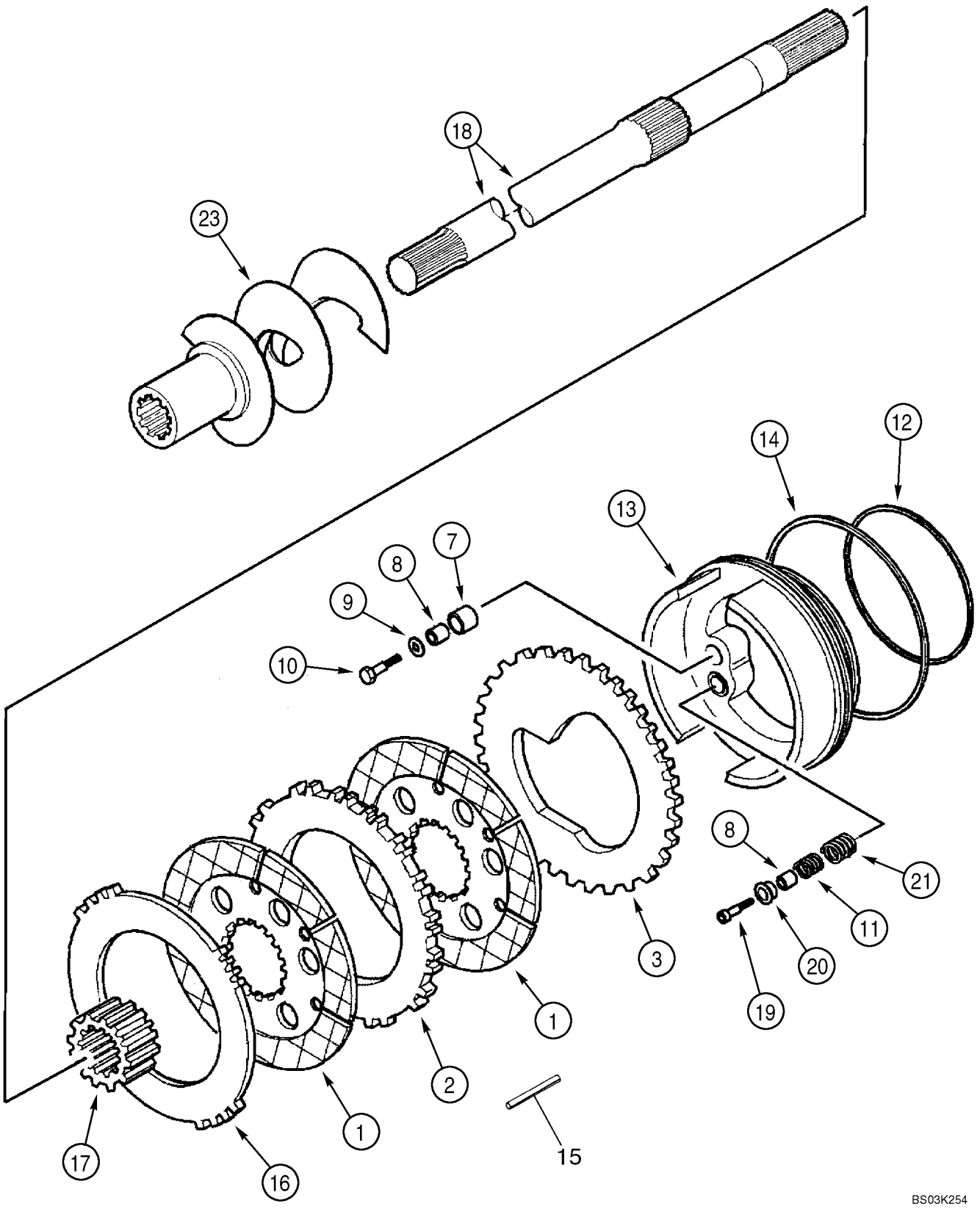

http://www.minnparbackhoeparts.com/

AXLE, REAR DRIVE - BRAKE, DIFFERENTIAL

REF	FN	PART NUMBER	YR/SN	QTY	DESCRIPTION
23		295112A1		1	AUGER Auger, Oil, Right-Hand, Includes Welded-On Clamp and Bolt, Plus Welded-On Drive Coupling, Incl. Ref 25
24		295113A1		1	AUGER Auger, Oil, Left-Hand, Includes Welded-On Clamp and Bolt, Plus Welded-On Drive Coupling, Incl. Ref 25
25		863-6020		2	SCREW M6 x 20; 12.9, Not Illustrated

http://www.minnparbackhoeparts.com/

AXLE, REAR DRIVE - BRAKE, PARKING

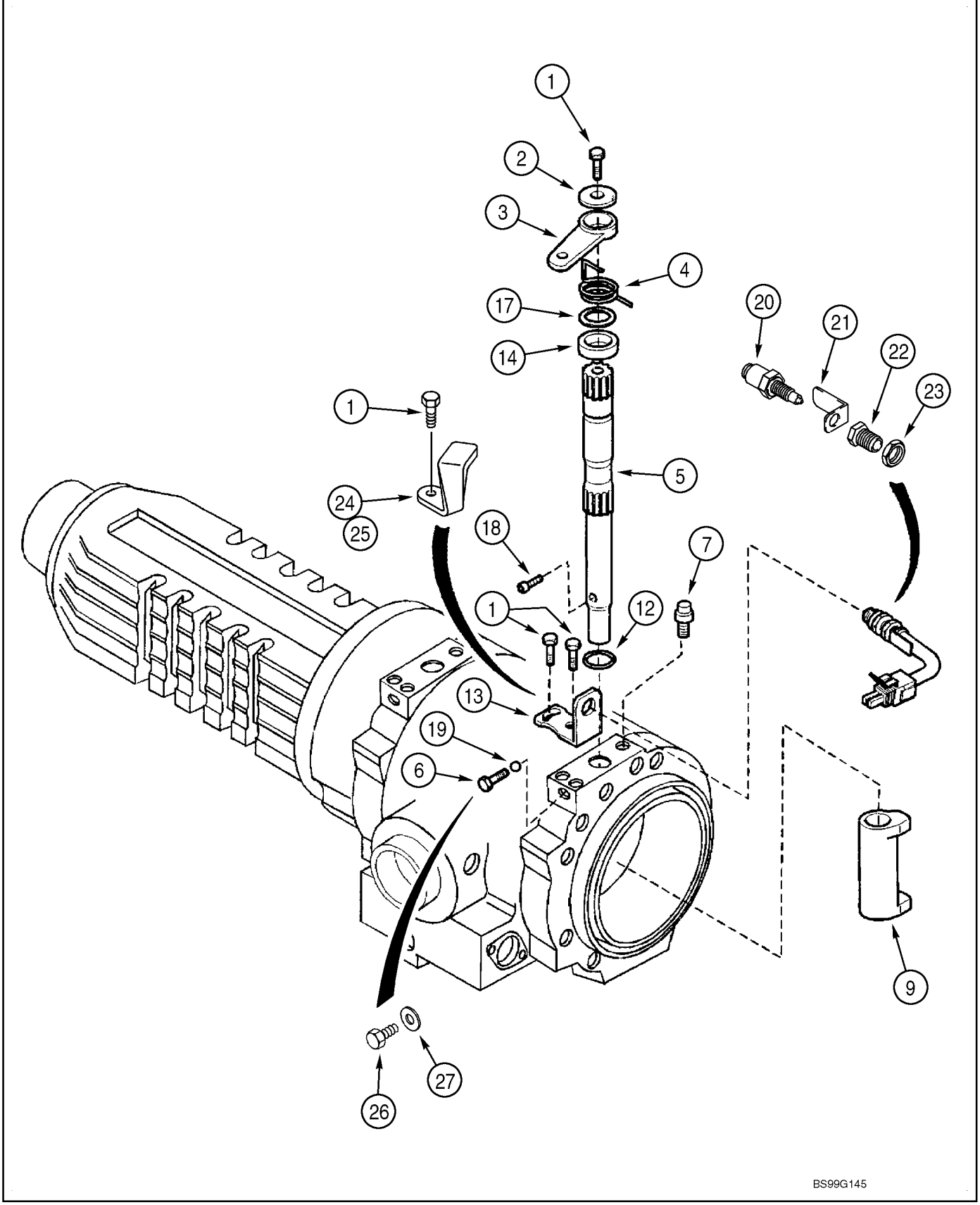

http://www.minnparbackhoeparts.com/

AXLE, REAR DRIVE - BRAKE, PARKING

REF	FN	PART NUMBER	YR/SN	QTY	DESCRIPTION
		384956A1		1	AXLE, REAR 580SM Models Without Powershift Transmission, Incl. Ref 1 - 27; Also Includes Parts On Figures 06-40 - 06-46, 07-01, 07-02
		86984108		1	AXLE DRIVE 580SM+ Models Without Powershift Transmission, Incl. Ref 1 - 27; Also Includes Parts On Figures 06-40 - 06-46, 07-01, 07-02
		384958A1		1	AXLE, REAR 580SM Models With Powershift Transmission, Incl. Ref 1 - 27; Also Includes Parts On Figures 06-40 - 06-46, 07-01, 07-02
		86984107		1	AXLE DRIVE 580SM+ Models With Powershift Transmission, Incl. Ref 1 - 27; Also Includes Parts On Figures 06-40 - 06-46, 07-01, 07-02
1		190451A1		6	SCREW M8 x 20
2		190463A1		2	WASHER
3		280436A1		2	LEVER Brake
4		190476A2		1	SPRING Left-Hand
4		190477A2		1	SPRING Right-Hand, Not Illustrated
5		308040A1		2	SHAFT
6		283462A1		2	SCREW M8 x 23.5
7		E135810		2	SCREW, VENTING Brake Bleeder
9		196085A1		2	CAM
12		321183A1		2	O-RING
13		256478A1		2	SUPPORT Stop
14		256481A1		2	SPACER Bushing
17		256482A1		2	SHIM Shim
18		256485A1		2	SCREW M6 x 16
19		283466A1		2	BALL
		281952A1		2	KIT KIT, Incl. Ref 20 - 23
20		280450A1		1	SWITCH, IGNITION
21		280452A1		1	BRACKET
22		280457A1		1	LEVER Sleeve
23		281960A1		1	NUT
		279645A1		1	PACKAGE, REPAIR Parking Brake, External Adjustment Parts, Incl. Ref 1, 12 - 17, 281952A1, 20 - 23, 24 - 27, Includes Instructions, If Used
24		259254A1		1	RETAINER Left-Hand
25		280443A1		1	RETAINER Right-Hand

http://www.minnparbackhoeparts.com/

AXLE, REAR DRIVE - BRAKE, PARKING

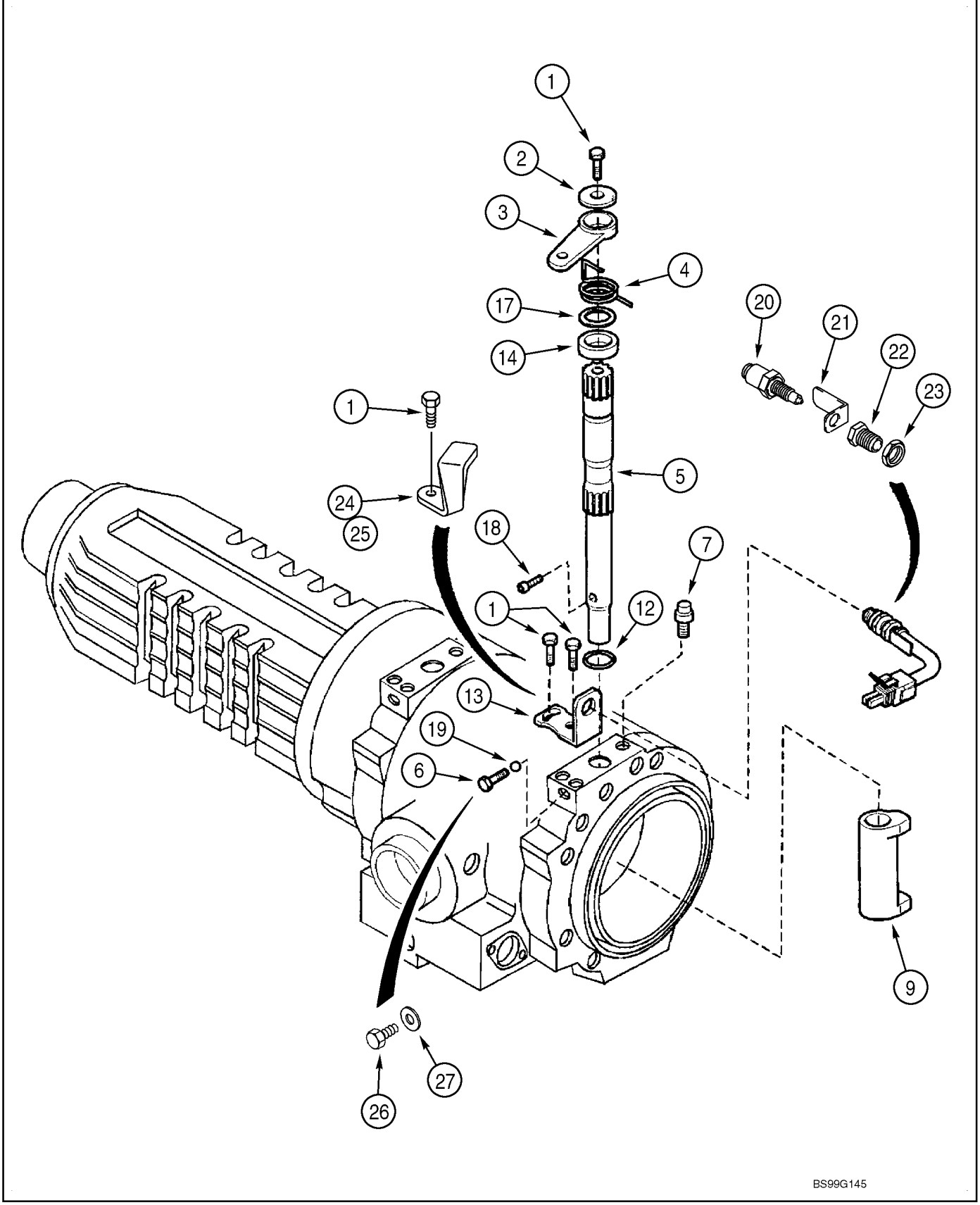

http://www.minnparbackhoeparts.com/

AXLE, REAR DRIVE - BRAKE, PARKING

REF	FN	PART NUMBER	YR/SN	QTY	DESCRIPTION
26		514-634		2	SCREW M8 x 16
27		181104A1		2	WASHER, COPPER

http://www.minnparbackhoeparts.com/

07-03		p1	05/05

BRAKE - PEDALS

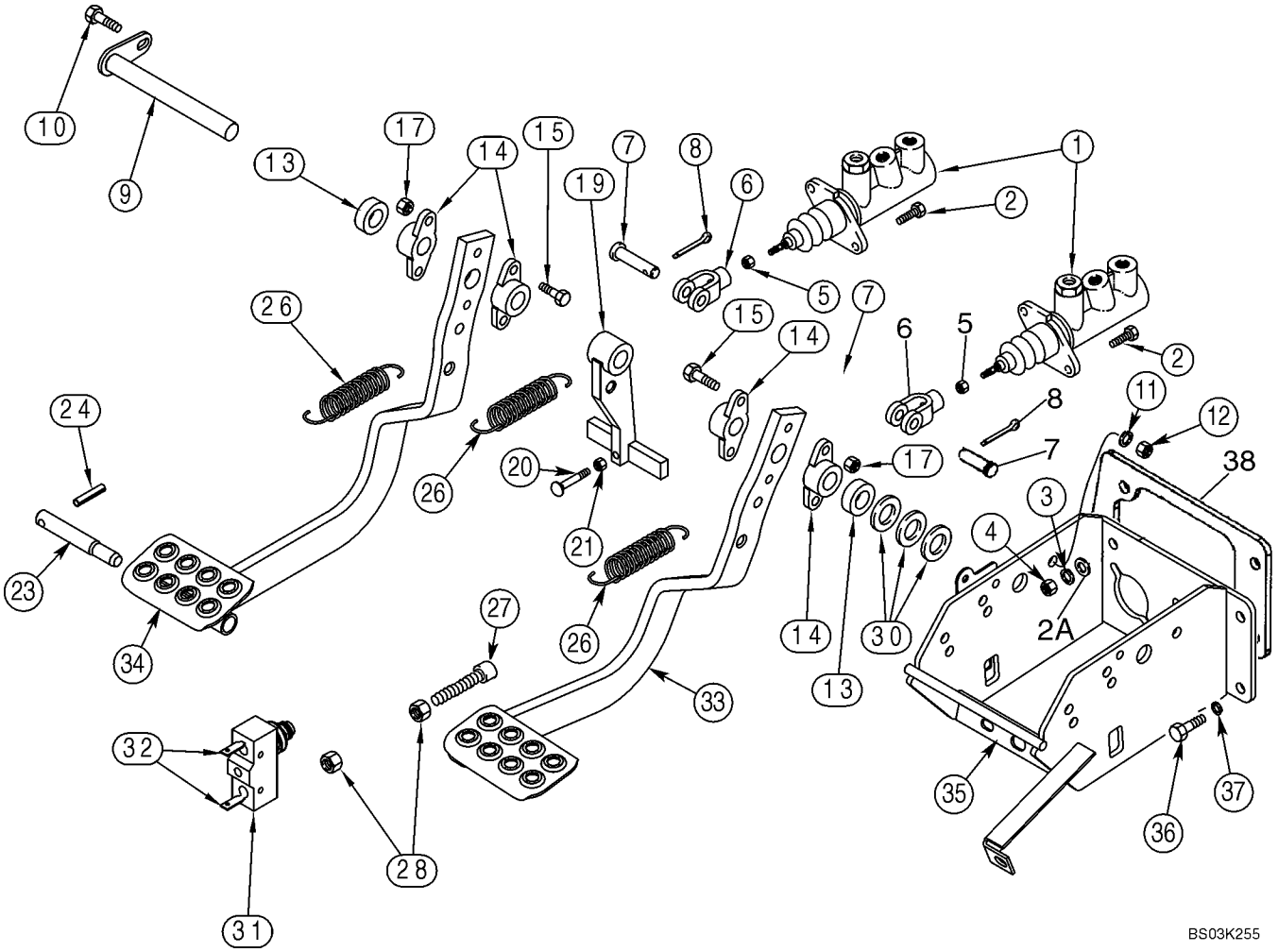

http://www.minnparbackhoeparts.com/

BRAKE - PEDALS

REF	FN	PART NUMBER	YR/SN	QTY	DESCRIPTION
1		182445A1		2	CYLINDER, MASTER See Figure 07-05
2		614-8030		4	BOLT M8 x 30
2A		895-11008		4	WASHER 9 x 17 x 1,6 mm
3		892-11008		4	WASHER M8
4		829-1408		4	NUT M8; 10
5		425-156		2	NUT 3/8 NF
6		D137077		2	CLEVIS
7		L26209		2	PIN 3/8
8		432-612		2	PIN, SPLIT (COTTER) 3/32" x 3/4"
9		D140035		1	PIN, LARGE Shaft
10		614-10025		1	BOLT M10 x 25
11		892-11010		1	WASHER, LOCK M10
12		829-1410		1	NUT M10; 10.9
13		D124529		2	SPACER
14		A77310		4	PIVOT Bearing
15		814-8040		4	SCREW Hex, M8 x 40, 8.8
17		832-10408		4	NUT M8
19		D124528		1	LEVER Brake Lamp
20		121-145		1	SCREW 5/16 X 2-1/2, Flat Countersunk Head
21		425-105		1	NUT 5/16
23		D124530		1	PIN Brake Pedal Lock
24		438-12040		1	SPLIT PIN/SAFETY PIN 5/16 x 2-1/2
26		230973A1		3	SPRING
27		413870A1		2	ISOLATOR Rubber Head, M8 x 45, Brake Pedal
28		829-1408		4	NUT M8; 10
30		495-81261		X	WASHER 13/16 x 1-1/2 x 1/16; Used As A Spacer
31		D148108		1	SWITCH Push Button, Brake Lamp, Attaches To Front Console Wiring Harness
32		A187990		2	TERMINAL CONNECTOR Male
33		339047A3		1	PEDAL ASSY. Right-Hand
34		339046A3		1	PEDAL ASSY. Left-Hand
35		338886A4		1	BRACKET Brake Pedal and Brake Master Cylinder Mounting
36		614-8020		4	BOLT M8 x 20
37		892-11008		4	WASHER M8
38		409370A1		1	SEAL

http://www.minnparbackhoeparts.com/

HYDRAULICS - BRAKE MASTER CYLINDER

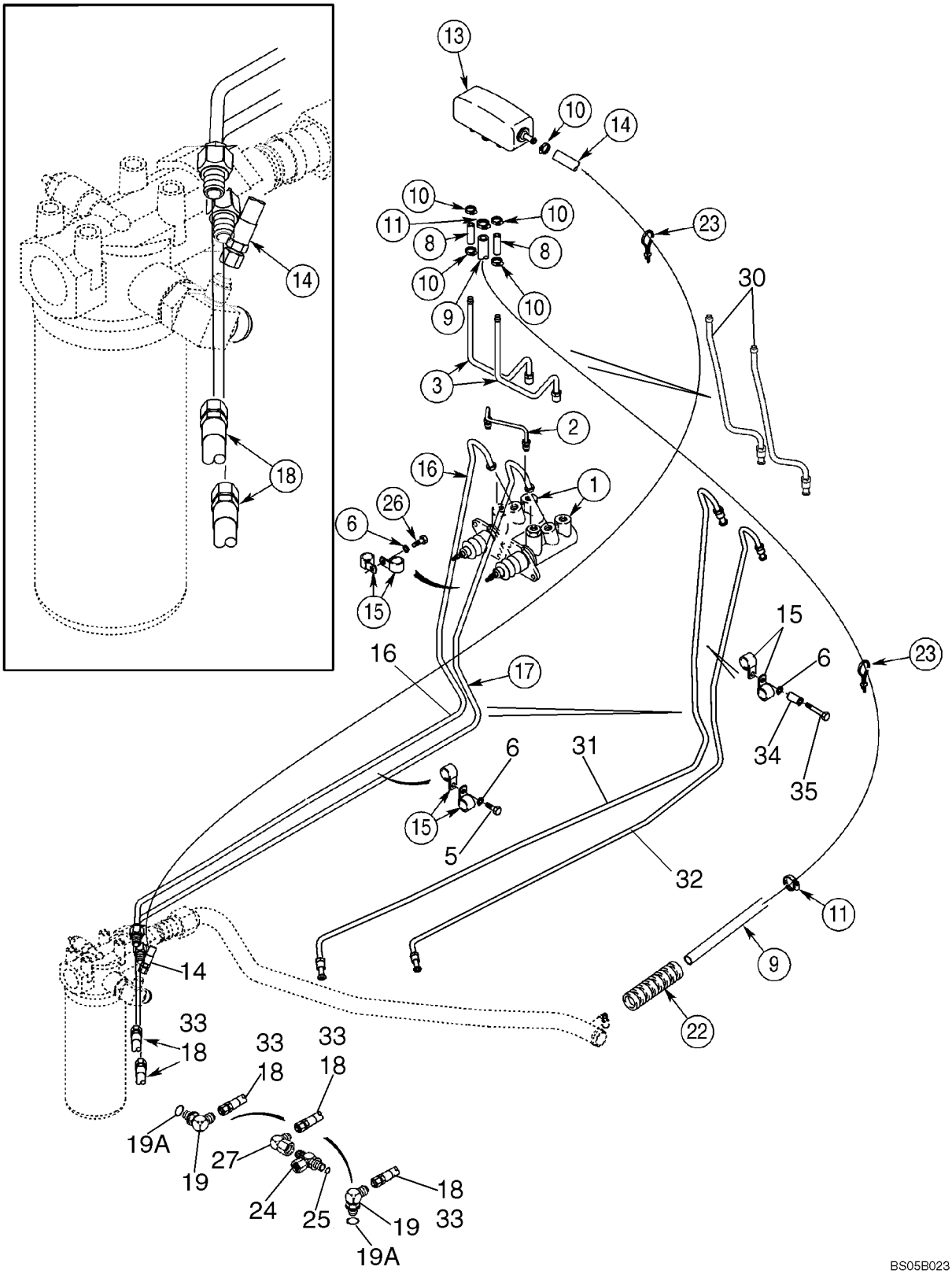

http://www.minnparbackhoeparts.com/

HYDRAULICS - BRAKE MASTER CYLINDER

REF	FN	PART NUMBER	YR/SN	QTY	DESCRIPTION
1		182445A1		2	CYLINDER, MASTER See Figure 07-05
2		345061A2		1	TUBE ASSY. Crossover
3		345325A2		2	TUBE ASSY. No Longer Available, If Replacing This Tube, Must Also Replace Ref 16, 17 Tubes; Order Ref 30 - 35 For Service
5		614-8020		1	BOLT M8 x 20
6		892-11008		2	WASHER M8
8		121729A1		2	HOSE 52 mm (2-3/64 in); To Master Cylinder
9		397076A1		1	HOSE 1500 mm (59-1/16 in), Reservoir Outlet, Attaches To Return To Tank Tube, See Figure 08-03
10		214-1704		5	CLAMP 1/4 - 5/8
11		214-1706		2	CLAMP 7/16 - 3/4
13		184627A2		1	RESERVOIR, BRAKE FLUID
14		86991496		1	HOSE ASSY. 1666 mm (65-19/32 in), Reservoir Inlet, See Figure 08-03 for Fitting
15		515-2379		4	CLAMP 7,9 mm
16		397177A2		1	TUBE ASSY. Left-Hand, No Longer Available, If Replacing This Tube, Must Also Replace Ref 3, 17 Tubes; Order Ref 30 - 35 For Service
17		396620A2		1	TUBE ASSY. Right-Hand, No Longer Available, If Replacing This Tube, Must Also Replace Ref 3, 16 Tubes; Order Ref 30 - 35 For Service
18		409318A1		2	HOSE ASSY. 565 mm (22-1/4 in), Brake Tube To Adapter On Rear Axle; Used With Ref 3, 16, 17 Tubes; If Used
19		218-5103		2	ELBOW 90 deg, 7/16 fl x Or, Incl. Ref 19A, Models Without Powershift Transmission
19A		237-6004		1	O-RING 23/64 ID x 5/64
22		D132982		1	LOOM 400 mm (15-3/4 in)
23		L18337		3	STRAP 15 in
24		222889A1		2	FITTING Tee, Incl. Ref 25, Models With Powershift Transmission; See Figure 04-09 For Powershift Pressure Switch
25		237-6004		1	O-RING 23/64 ID x 5/64
26		614-8030		1	BOLT M8 x 30; If Used
27		218-5228		2	FITTING ELBOW, 90 deg, 7/16 fl x 7/16 sw fl; Models With Powershift Transmission

http://www.minnparbackhoeparts.com/

HYDRAULICS - BRAKE MASTER CYLINDER

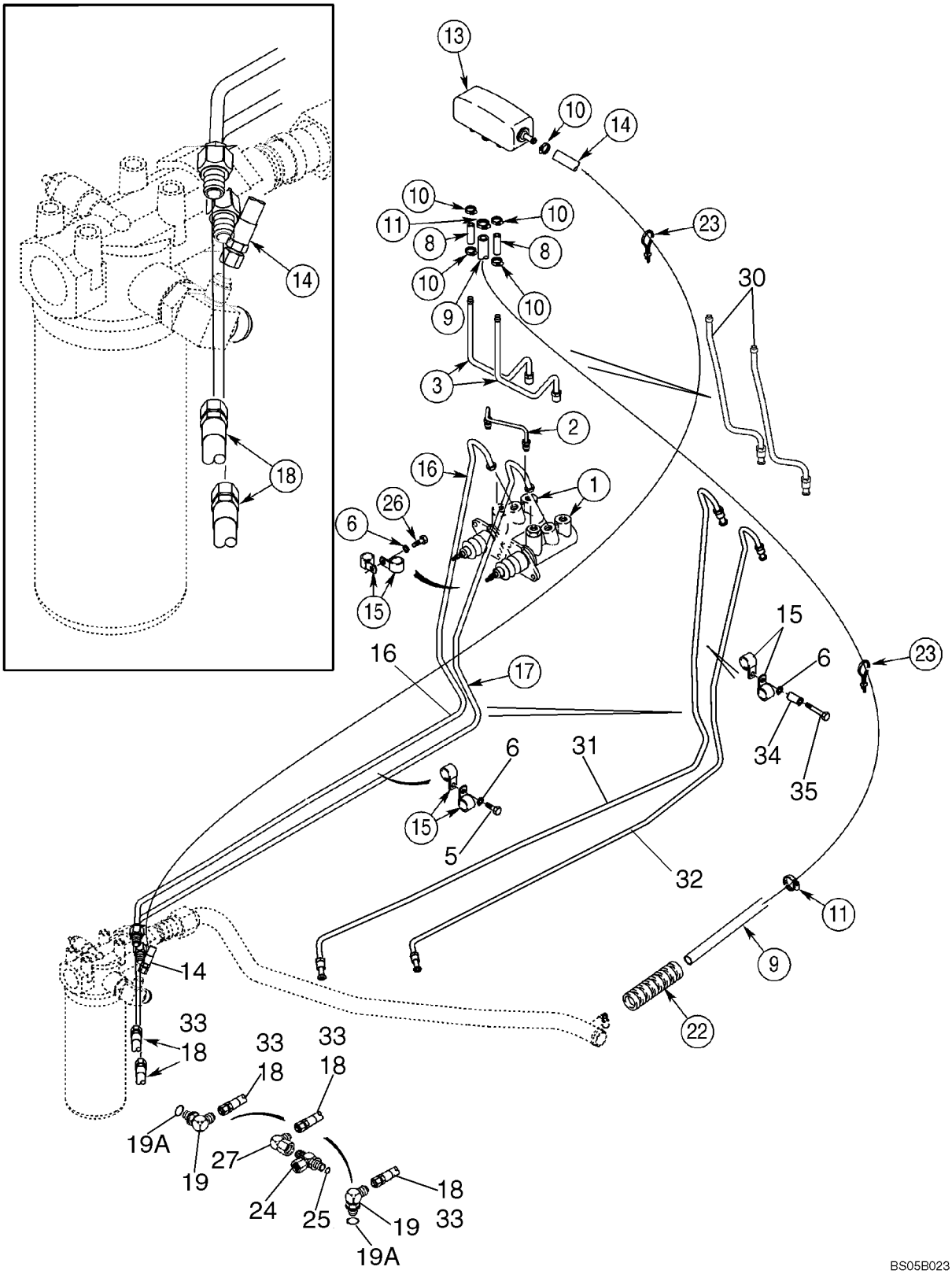

http://www.minnparbackhoeparts.com/

HYDRAULICS - BRAKE MASTER CYLINDER

REF	FN	PART NUMBER	YR/SN	QTY	DESCRIPTION
30		87448661		2	TUBE ASSY.
31		87450910		1	TUBE ASSY. Left-Hand
32		87448658		1	TUBE ASSY. Right-Hand
33		87451751		2	HOSE ASSY. 520 mm (20-1/2 in); Brake Tube To Adapter On Rear Axle; Used With Ref 30 - 32 Tubes
34		87449579		1	SPACER 9.5 ID x 19.05 OD x 40 mm
35		814-8060		1	SCREW M8 x 60

http://www.minnparbackhoeparts.com/

07-05		p1	09/03

CYLINDER ASSY - BRAKE MASTER

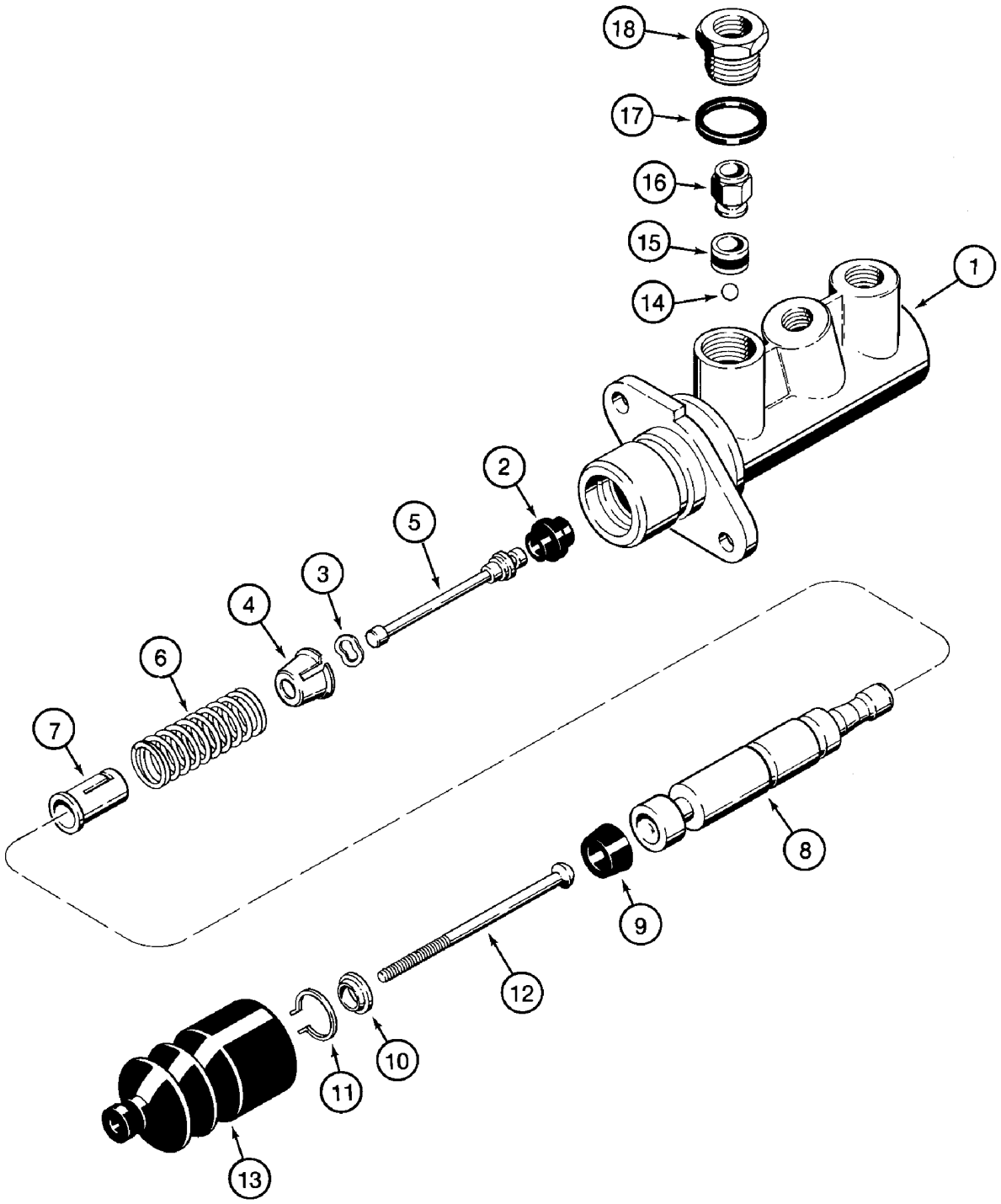

http://www.minnparbackhoeparts.com/

CYLINDER ASSY - BRAKE MASTER

REF	FN	PART NUMBER	YR/SN	QTY	DESCRIPTION
		182445A1		2	CYLINDER, MASTER Incl. Ref 1 - 18
1		NSS		1	NOT SERVICED SEPARATELY Housing
2		NSS		1	NOT SERVICED SEPARATELY Seal
3		NSS		1	NOT SERVICED SEPARATELY Washer
4		NSS		1	NOT SERVICED SEPARATELY Seat
5		NSS		1	NOT SERVICED SEPARATELY Plunger
6		NSS		1	NOT SERVICED SEPARATELY Spring
7		NSS		1	NOT SERVICED SEPARATELY Seat
8		NSS		1	NOT SERVICED SEPARATELY Piston
9		NSS		1	NOT SERVICED SEPARATELY Seal
10		NSS		1	NOT SERVICED SEPARATELY Washer
11		NSS		1	NOT SERVICED SEPARATELY Ring, Retaining
12		NSS		1	NOT SERVICED SEPARATELY Rod
13		NSS		1	NOT SERVICED SEPARATELY Boot
14		NSS		1	NOT SERVICED SEPARATELY Ball
15		NSS		1	NOT SERVICED SEPARATELY Seal
16		NSS		1	NOT SERVICED SEPARATELY Valve, Check
17		NSS		1	NOT SERVICED SEPARATELY Seal
18		NSS		1	NOT SERVICED SEPARATELY Adapter
		N14784		1	KIT Seal, Incl. Ref 2, 3, 9, 11, 13 - 15, 17

http://www.minnparbackhoeparts.com/

07-06		p1	05/05

CONTROLS - BRAKE, PARKING

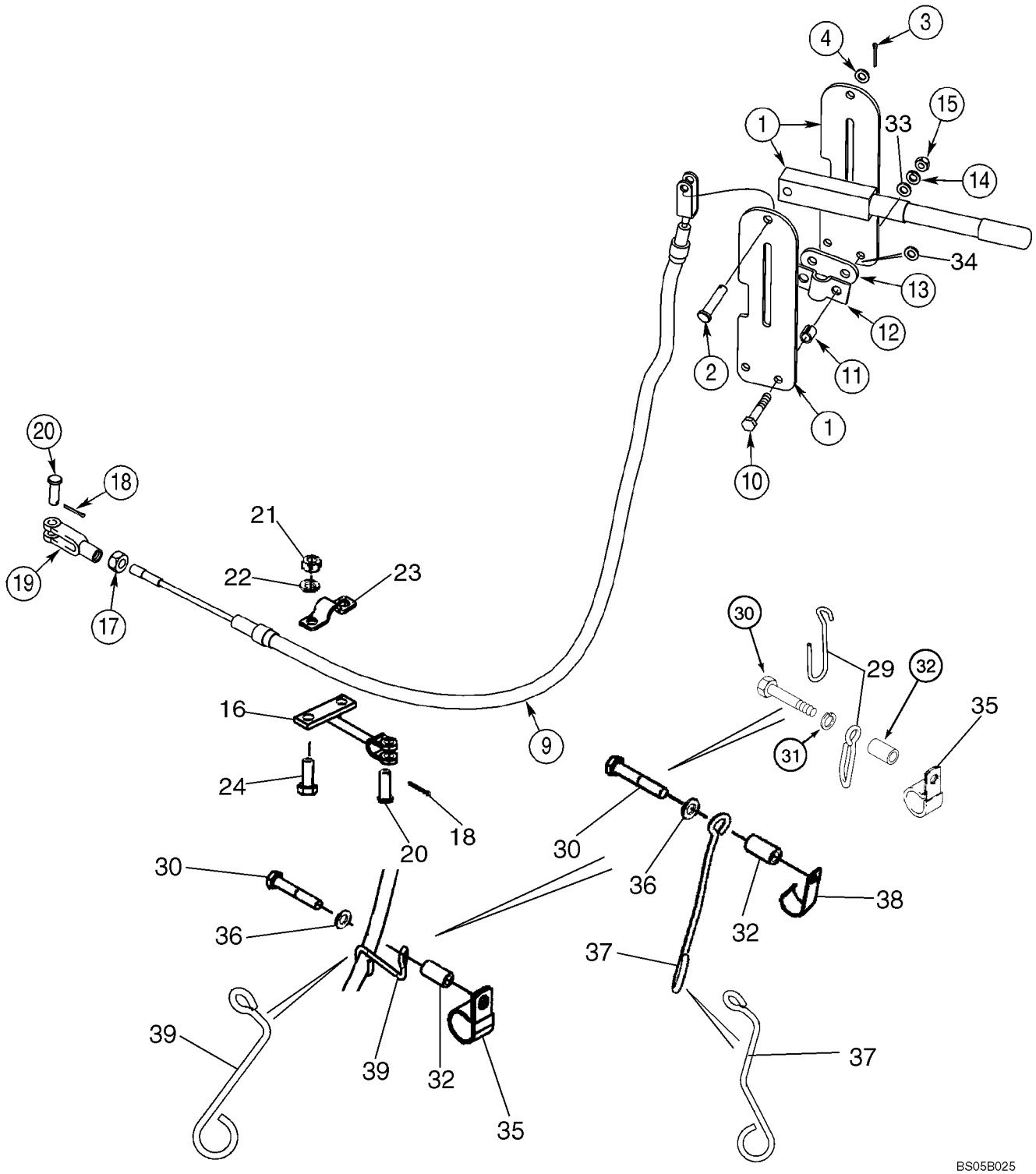

http://www.minnparbackhoeparts.com/

CONTROLS - BRAKE, PARKING

REF	FN	PART NUMBER	YR/SN	QTY	DESCRIPTION
		367977A1		1	LEVER Incl. Ref 1 - 4
1		NSS		1	NOT SERVICED SEPARATELY Lever
2		NSS		1	NOT SERVICED SEPARATELY Pin, Clevis
3		432-612		1	PIN, SPLIT (COTTER) 3/32" x 3/4"
4		495-21038		1	WASHER 3/8 x 7/8 x 3/32
9		280681A1		1	CABLE 1325 mm (52-3/16 in); If Used
9		87331077		1	CABLE ASSY. 1262 mm (49-11/16 in); If Used
10		827-8050		2	SCREW M8 x 50; 10.9
11		D150633		2	SPACER
12		D121608		1	CLAMP
13		D129747		1	PLATE
14		892-11008		2	WASHER M8
15		829-1408		2	NUT M8; 10
16		326348A1		1	SUPPORT Yoke, 151 mm (6 in)
17		425-156		1	NUT 3/8 NF
18		432-612		2	PIN, SPLIT (COTTER) 3/32" x 3/4"
19		213-126		1	CLEVIS 3/8 NF
20		D149288		2	PIN, LARGE
21		829-1410		2	NUT M10; 10.9
22		892-11010		2	WASHER, LOCK M10
23		A188028		1	CLAMP
24		614-10025		2	BOLT M10 x 25
29		87424794		1	SUPPORT If Used
30		814-10060		1	BOLT M10 x 60
31		895-11010		1	WASHER 11 x 21 x 2 mm; If Used
32		130245A1		1	SPACER
33		896-15008		2	WASHER 9 x 21 x 2,5 mm
34		895-11008		X	WASHER 9 x 16 x 1,6 mm
35		9827902		1	CLAMP P-Type, 1 inch Insulated Closed Clamping; Replaces 515-23254 & R14668 1 in P-Clamps; If Used
36		895-15010		1	WASHER 11 x 24 x 2 mm; If Used
37		87453949		1	SUPPORT If Used
38		87032428		1	CLAMP, WIRE J-Type, 22.2 mm Clamp diameter; If Used
39		87327489		1	SUPPORT If Used

http://www.minnparbackhoeparts.com/

SECTION INDEX

08-01	HYDRAULICS - PUMP, FILTER AND LOADER VALVE
08-02	HYDRAULICS - LOADER VALVE AND FILTER TO BACKHOE VALVE
08-03	HYDRAULICS - COOLER, RETURN LINES AND FILTER
08-04	HYDRAULICS - CYLINDER, LOADER LIFT
08-05	HYDRAULICS - CYLINDER, LOADER BUCKET
08-06	HYDRAULICS - CYLINDER, LOADER CLAM
08-07	HYDRAULICS - CYLINDER, LOADER CLAM
08-08	HYDRAULICS - CYLINDER, BACKHOE STABILIZER (WITHOUT PILOT CONTROLS)
08-08A	HYDRAULICS - CYLINDER, BACKHOE STABILIZER (WITH PILOT CONTROLS)
08-09	HYDRAULICS - CYLINDER, BACKHOE SWING (WITHOUT PILOT CONTROLS)
08-09A	HYDRAULICS - CYLINDER, BACKHOE SWING (WITH PILOT CONTROLS)
08-10	HYDRAULICS - CYLINDER, BACKHOE BOOM
08-10A	HYDRAULICS - BACKHOE BOOM LOCK AND ELECTRICAL CIRCUIT
08-11	HYDRAULICS - CYLINDER, BACKHOE DIPPER
08-12	HYDRAULICS - CYLINDER, BACKHOE BUCKET (MODELS WITHOUT EXTENDABLE DIPPER)
08-13	HYDRAULICS - CYLINDER, BACKHOE BUCKET (MODELS WITH EXTENDABLE DIPPER)
08-14	HYDRAULICS - CYLINDER, BACKHOE EXTENDABLE DIPPER
08-15	HYDRAULICS - VALVE, PILOT CONTROL AND JOYSTICKS (6 SPOOL, W/O EXT DIPPER, W/O AUX HYDS)
08-16	HYDRAULICS - VALVE, PILOT CONTROL AND JOYSTICKS (6 SPOOL, W/O EXT DIPPER, W/ AUX HYDS)
08-17	HYDRAULICS - VALVE, PILOT CONTROL AND JOYSTICKS (7 SPOOL, W/ EXT DIPPER, W/O AUX HYDS)
08-18	HYDRAULICS - VALVE, PILOT CONTROL AND JOYSTICKS (7 SPOOL, W/ EXT DIPPER, W/ AUX HYDS)
08-19	HYDRAULICS - VALVE, PILOT CONTROL AND JOYSTICKS (7 SPOOL, W/O EXT DIPPER, W/ AUX HYDS)
08-20	HYDRAULICS - VALVE, PILOT CONTROL AND JOYSTICKS (8 SPOOL, W/ EXT DIPPER, W/ AUX HYDS)
08-21	HYDRAULICS - PILOT CONTROL JOYSTICKS
08-22	HYDRAULICS - PILOT CONTROLS
08-23	HYDRAULICS - BACKHOE AUXILIARY
08-24	HYDRAULICS - BACKHOE AUXILIARY
08-25	HYDRAULICS - RIDE CONTROL (87433240 SOLENOID VALVE)
08-26	HYDRAULICS - COUPLER, LOADER TOOL QUICK
08-27	HYDRAULICS - COUPLER, LOADER TOOL QUICK
08-28	VALVE, COUPLER (87435909) - LOADER TOOL OR BACKHOE
08-29	HYDRAULICS - COUPLER, BACKHOE BUCKET
08-30	HYDRAULICS - COUPLER, BACKHOE BUCKET
08-31	VALVE, COUPLER (87435910) - LOADER TOOL AND BACKHOE BUCKET
08-32	CYLINDER - COUPLER, BACKHOE BUCKET
08-33	PUMP, EQUIPMENT HYDRAULIC
08-34	VALVE ASSY - LOADER CONTROL, TWO SPOOL
08-35	VALVE ASSY - LOADER CONTROL, THREE SPOOL
08-36	VALVE ASSY - BACKHOE CONTROL, 6 SPOOL (W/O EXT DIPPER, W/O AUX HYDS, W/O PILOT CONTROLS)
08-37	VALVE ASSY - BACKHOE CONTROL, 7 SPOOL (W/O EXT DIPPER, W/ AUX HYDS, W/O PILOT CONTROLS)
08-38	VALVE ASSY - BACKHOE CONTROL, 7 SPOOL (W/ EXT DIPPER, W/O AUX HYDS, W/O PILOT CONTROLS)

http://www.minnparbackhoeparts.com/

SECTION INDEX

08-39	VALVE ASSY - BACKHOE CONTROL, 8 SPOOL (W/ EXT DIPPER, W/ AUX HYDS, W/O PILOT CONTROLS)
08-40	VALVE ASSY - BACKHOE CONTROL, 6 SPOOL (W/O EXT DIPPER, W/ OR W/O AUX HYDS, W/ PILOT CONTROLS)
08-41	VALVE ASSY - BACKHOE CONTROL, 7 SPOOL (W/ EXT DIPPER, W/ OR W/O AUX HYDS, W/ PILOT CONTROLS)
08-42	VALVE ASSY - BACKHOE CONTROL, 7 SPOOL (W/O EXT DIPPER, W/ AUX HYDS, W/ PILOT CONTROLS)
08-43	VALVE ASSY - BACKHOE CONTROL, 8 SPOOL (W/ EXT DIPPER, W/ AUX HYDS, W/ PILOT CONTROLS)
08-43A	VALVE SECTION - INLET (WITH PILOT CONTROLS)
08-44	VALVE SECTION - BACKHOE SWING (WITH PILOT CONTROLS)
08-45	VALVE SECTION - BACKHOE BOOM (WITH PILOT CONTROLS)
08-46	VALVE SECTION - BACKHOE STABILIZER (WITH PILOT CONTROLS)
08-47	VALVE SECTION - BACKHOE DIPPER (WITH PILOT CONTROLS)
08-48	VALVE SECTION - BACKHOE BUCKET (WITH PILOT CONTROLS)
08-49	VALVE SECTION - EXTENDABLE DIPPER (WITH PILOT CONTROLS)
08-50	VALVE SECTION - OPTIONS, AUXILIARY HYDRAULICS (WITH PILOT CONTROLS)
08-51	VALVE ASSY, PRESSURE REDUCING (2 SPOOL) (WITH PILOT CONTROLS)
08-52	VALVE ASSY, PRESSURE REDUCING (3 SPOOL) (WITH PILOT CONTROLS)
08-53	VALVE ASSY, PRESSURE REDUCING (4 SPOOL) (WITH PILOT CONTROLS)
08-54	VALVE, JOYSTICK (PILOT CONTROLS) (LEFT-HAND) WITH HORN BUTTON
08-55	VALVE, JOYSTICK (PILOT CONTROLS) (LEFT-HAND) WITH HORN & UNI-DIRECTIONAL BUTTONS
08-56	VALVE, JOYSTICK (PILOT CONTROLS) (LEFT-HAND) WITH HORN & BI-DIRECTIONAL BUTTONS
08-57	VALVE, JOYSTICK (PILOT CONTROLS) (RIGHT-HAND) WITHOUT EXTENDABLE DIPPER
08-58	VALVE, JOYSTICK (PILOT CONTROLS) (RIGHT-HAND) WITH EXTENDABLE DIPPER
08-59	VALVE ASSY - SWING CUSHION (DAMPENING)
08-59A	SOLENOID VALVE - BOOM LOCK
08-60	ACCUMULATOR ASSY - RIDE CONTROL
08-61	FILTER ASSY, OIL
08-62	CYLINDER ASSY - LOADER LIFT
08-63	CYLINDER ASSY - LOADER BUCKET
08-64	CYLINDER ASSY - LOADER CLAM
08-65	CYLINDER ASSY - BACKHOE STABILIZER (580SM)
08-65A	CYLINDER ASSY - BACKHOE STABILIZER (580SM+)
08-66	CYLINDER ASSY - BACKHOE SWING
08-67	CYLINDER ASSY - BACKHOE BOOM
08-68	CYLINDER ASSY - BACKHOE DIPPER
08-69	CYLINDER ASSY - BACKHOE BUCKET
08-70	CYLINDER ASSY - BACKHOE EXTENDABLE DIPPER

http://www.minnparbackhoeparts.com/

HYDRAULICS - PUMP, FILTER AND LOADER VALVE

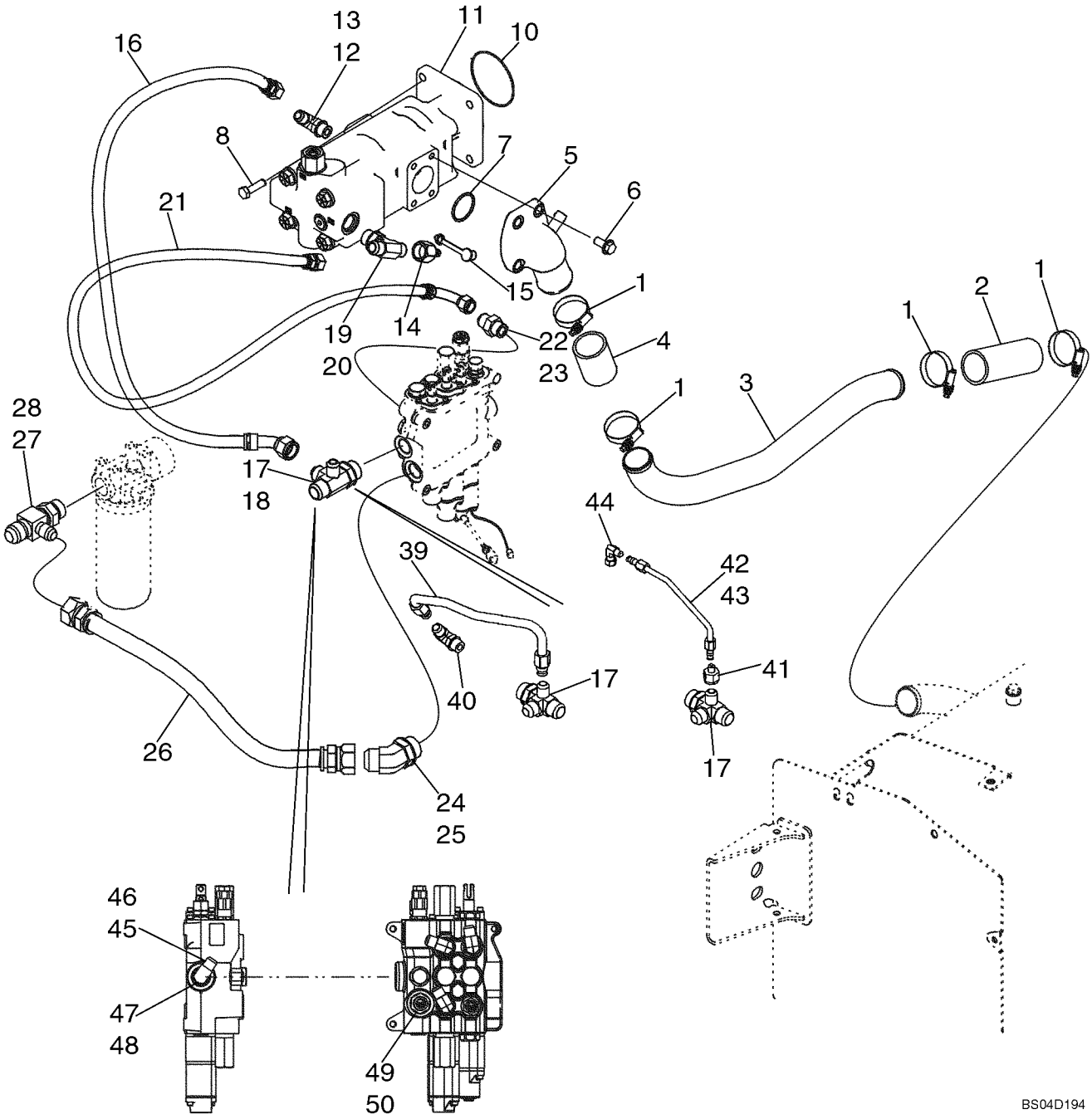

http://www.minnparbackhoeparts.com/

HYDRAULICS - PUMP, FILTER AND LOADER VALVE

REF	FN	PART NUMBER	YR/SN	QTY	DESCRIPTION
1		259044A1		4	CLAMP
2		87306274		1	HOSE Suction Hose, At Hydraulic Tank; Replaces 282496A1
3		87435761		1	TUBE, HYD Suction Tube
4		87306307		1	HOSE 105 mm lg Hose; Replaces 87446433
5		87434257		1	FLANGE ASSY Pump Flange
6		864-12030		3	SCREW M12 x 30
7		238-5228		1	O-RING
8		514-832		4	SCREW M12 x 35; Models Without Powershift Transmission
8		614-12035		4	BOLT M12 x 35; Models With Powershift Transmission
10		87429982		1	O-RING Pump Mounting; Models Without Powershift Transmission; Included In Transmission Assembly
10		510828		1	O-RING Pump Mounting; Models With Powershift Transmission
11		87434673		1	PUMP, HYDRAULIC Equipment, Tandem; See Figure 08-33
12		218-5107		1	ELBOW 90 deg, 7/8 fl x Or; Incl. Ref 13
13		237-6010		1	O-RING 3/4 ID x 3/32
14		D137625		1	COUPLING, BREAK AWAY Quick Disconnect; Includes (1) 425-1120 Nut
15		H434163		1	CAP Dust
16		87437230		1	HOSE ASSY. 740 mm (29-5/32 in) Hose; Large Pump Section to Loader Valve
17		87436066		1	FITTING 4-Way Special Fitting; Incl. Ref 18
18		237-6016		1	O-RING 1-11/64 ID x 7/64 wide
19		218-5185		1	FITTING TEE, 1-1/16 adj Or br x fl x fl; Incl. Ref 20
20		237-6012		1	O-RING 59/64 ID x 7/64 wide
21		87452399		1	HOSE ASSY. 775 mm (30-9/16 in) Hose, Small Pump Section; Replaces 87429895 Hose
22		218-5064		1	CONNECTOR, HYD. 1-1/16 fl x Or; Incl. Ref 23
23		237-6012		1	O-RING 59/64 ID x 7/65
24		218-5140		1	FITTING Elbow, 45 Degree, 1-5/16 fl x Or; Incl. Ref 25
25		237-6016		1	O-RING 1-11/64 ID x 7/64 wide

http://www.minnparbackhoeparts.com/

HYDRAULICS - PUMP, FILTER AND LOADER VALVE

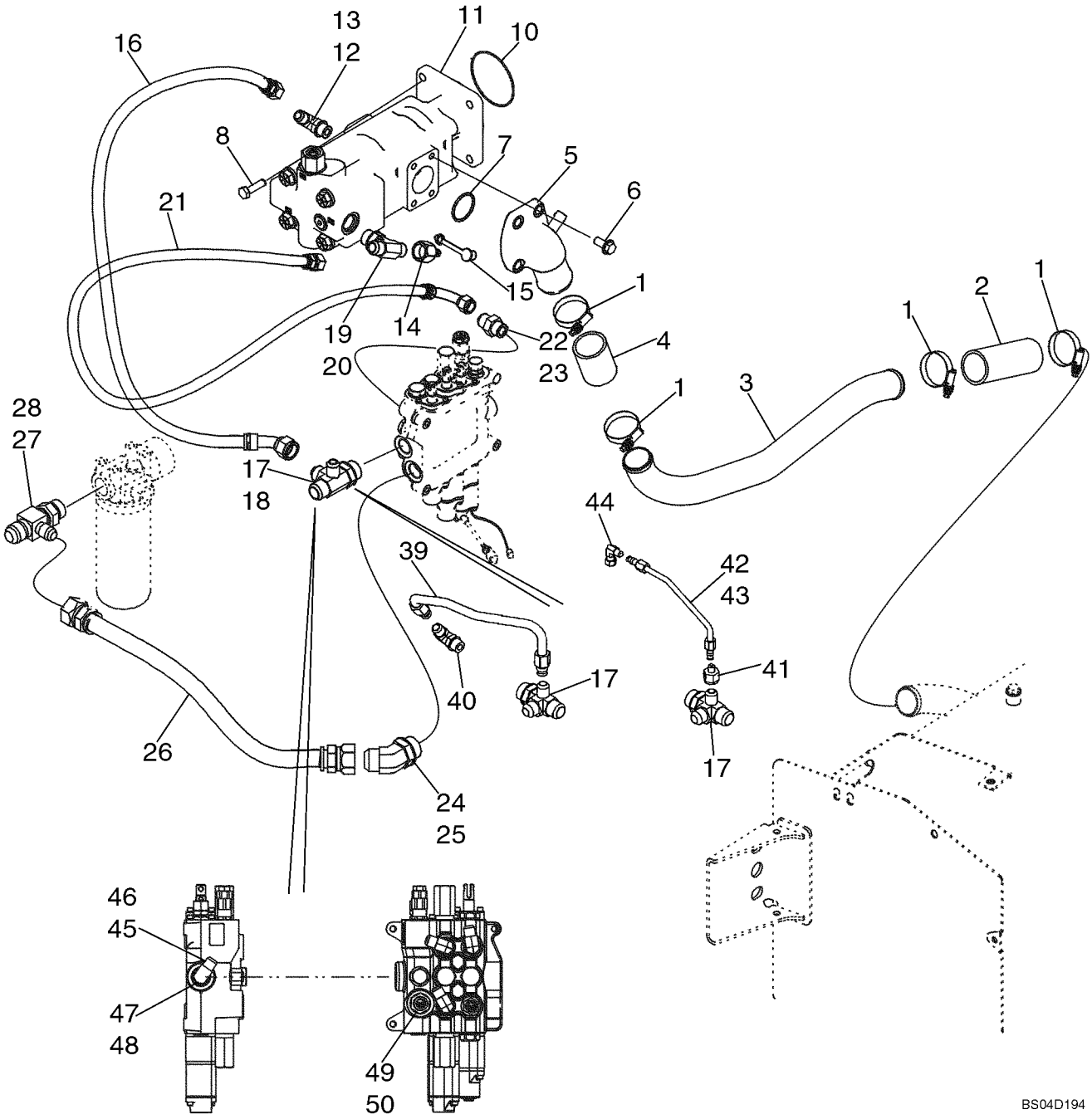

http://www.minnparbackhoeparts.com/

HYDRAULICS - PUMP, FILTER AND LOADER VALVE

REF	FN	PART NUMBER	YR/SN	QTY	DESCRIPTION
26		87452400		1	HOSE ASSY. 635 mm (25 in), Loader Valve to Filter; Replaces 87437228 Hose
27		218-5584		1	FITTING TEE, 1-1/16 fl branch x 1-5/16 fl x Or; Incl. Ref 28
28		237-6016		1	O-RING 1-11/64 ID x 7/64 wide
39		87437655		1	TUBE ASSY. Two Spool Loader Valve; Models Without Pilot Controls
39		87437657		1	TUBE ASSY. Three Spool Loader Valve; Models Without Pilot Controls
40		218-5107		1	ELBOW 90 deg, 7/8 fl x Or; Includes 237-6010 O-Ring
41		218-765		1	REDUCER Models With Pilot Controls
42		87437980		1	TUBE ASSY. Two Spool Loader Valve; Models With Pilot Controls
43		87437982		1	TUBE ASSY. Three Spool Loader Valve; Models With Pilot Controls
44		218-980		1	ELBOW 90 deg, 9/16 fl x sw fl
45		218-5107		1	ELBOW 90 deg, 7/8 fl x Or; Incl. Ref 46; Models Without Pilot Controls
46		237-6010		1	O-RING 3/4 ID x 3/32
47		218-5157		1	PLUG Hex, 7/8 Or; Incl. Ref 48; Models With Pilot Controls
48		237-6010		1	O-RING 3/4 ID x 3/32
49		218-5064		1	CONNECTOR, HYD. 1-1/16 fl x Or; Incl. Ref 50
50		237-6012		1	O-RING 59/64 ID x 7/64

http://www.minnparbackhoeparts.com/

08-02		p1	02/05

HYDRAULICS - LOADER VALVE AND FILTER TO BACKHOE VALVE

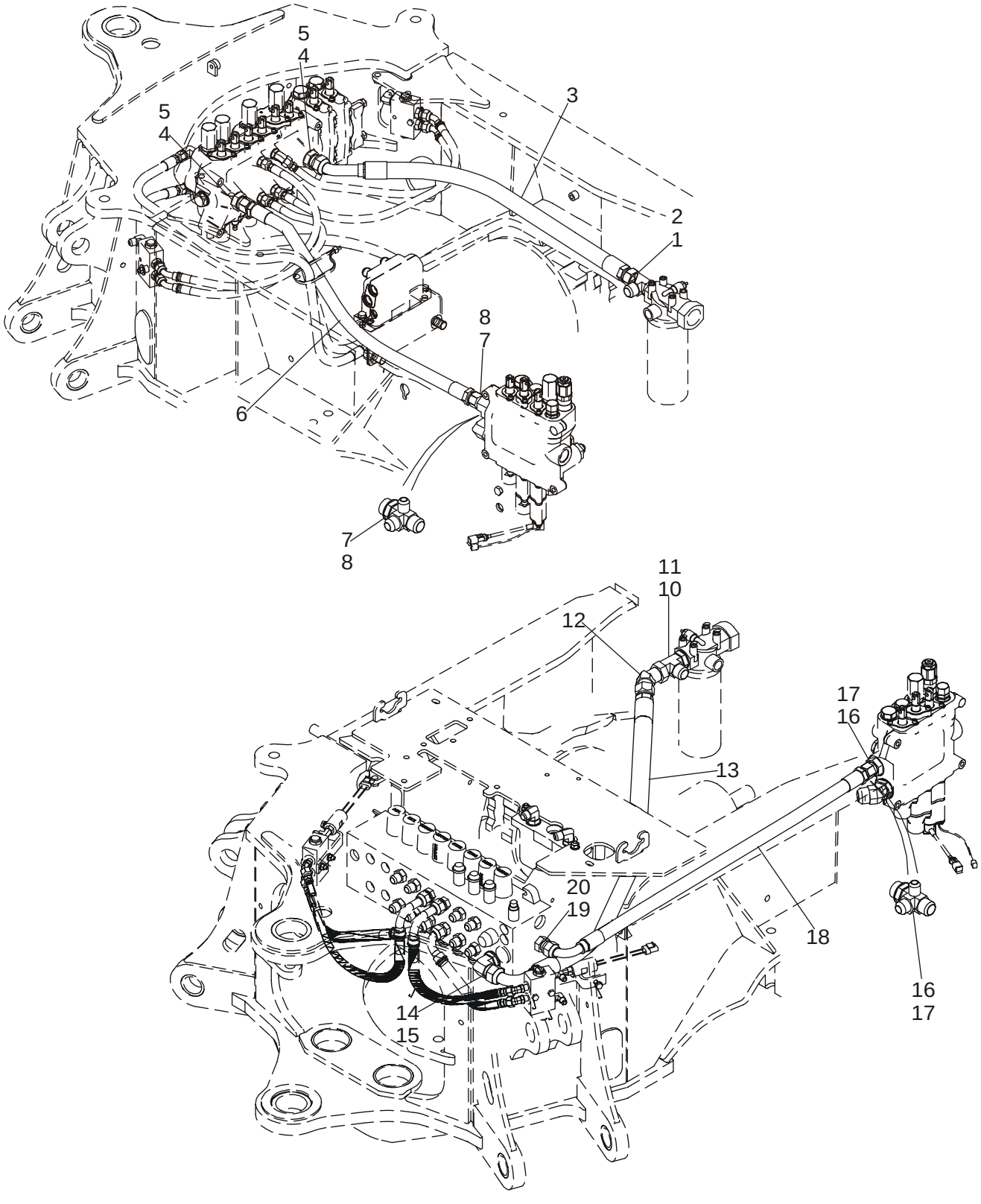

http://www.minnparbackhoeparts.com/

HYDRAULICS - LOADER VALVE AND FILTER TO BACKHOE VALVE

REF	FN	PART NUMBER	YR/SN	QTY	DESCRIPTION
		REF			INSTRUCTION MODELS WITHOUT PILOT CONTROLS
1		218-5584		1	FITTING TEE, 1-1/16 fl br x 1-5/16 fl x Or; Incl. Ref 2
2		237-6016		1	O-RING 1-11/64 ID x 7/64
3		313648A1		1	HOSE 910 mm (35-7/8 in); Return; Models Without Pilot Controls
4		218-5069		2	CONNECTOR, HYD. 1-5/16 fl x Or; Incl. Ref 5
5		237-6016		1	O-RING 1-11/64 ID x 7/64
6		87437441		1	HOSE ASSY. 1025 mm (40-3/8 in); 2 or 3 Spool Valve; Without Auxiliary Hydraulics, Without Pilot Controls; Loader Valve Power Beyond to Backhoe Valve
6		87437232		1	HOSE ASSY. 420 mm (16-9/16 in); 2 Spool Valve; With Auxiliary Hydraulics; With or Without Pilot Controls; Loader Valve Power Beyond to Backhoe Valve
6		87437231		1	HOSE ASSY. 370 mm (14-5/8 in); 3 Spool Valve; With Auxiliary Hydraulics; With or Without Pilot Controls; Loader Valve Power Beyond to Backhoe Valve
7		87436066		1	FITTING 4-Way Special Tee; Incl. Ref 8
8		237-6016		1	O-RING 1-11/64 ID x 7/64
		REF			INSTRUCTION MODELS WITH PILOT CONTROLS
10		218-5584		1	FITTING TEE, 1-1/16 fl br x 1-5/16 fl x Or; Incl. Ref 11
11		237-6016		1	O-RING 1-11/64 ID x 7/64
12		218-5176		1	FITTING ELBOW, 45 deg, 1-5/16 fl x sw str thrd; Used With 87437934 1230 mm Hose; If Used
13		87437934		1	HOSE ASSY. 1230 mm (48-7/16 in); Return; Models With Pilot Controls; Used With Ref 12 Elbow; If Used
13		87450456		1	HOSE ASSY. 1254 mm (49-3/8 in); Return; Models With Pilot Controls; Replaces Ref 12 Elbow and 87437934 1230 mm Hose Used On Some Models
14		218-5110		1	FITTING ELBOW, 90 deg, 1-5/16 fl x adj Or; Incl. Ref 15
15		237-6016		1	O-RING 1-11/64 ID x 7/64
16		87436066		1	FITTING 4-Way Tee, Special, 1-5/16 fl x Or; Incl. Ref 17

http://www.minnparbackhoeparts.com/

HYDRAULICS - LOADER VALVE AND FILTER TO BACKHOE VALVE

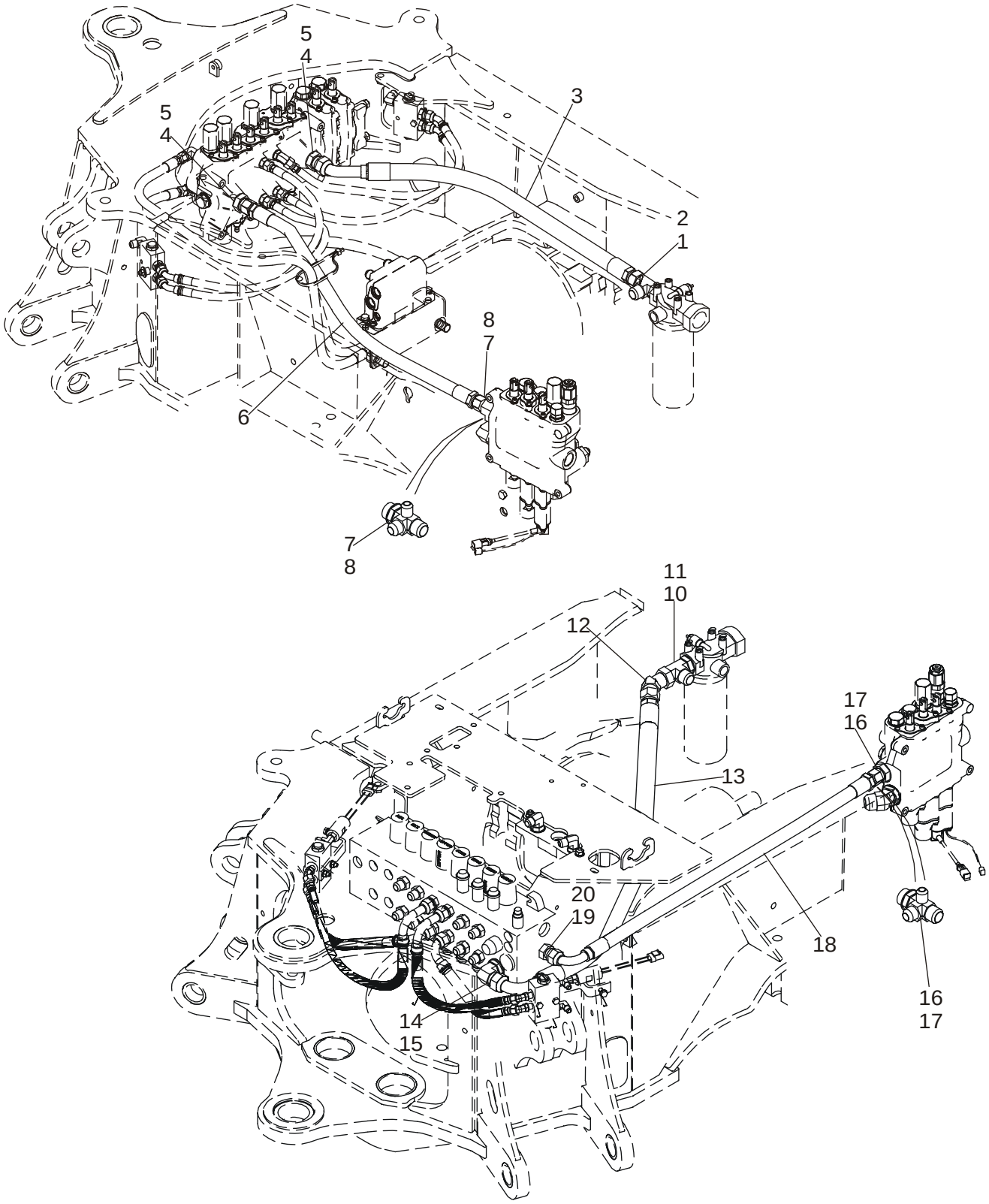

http://www.minnparbackhoeparts.com/

HYDRAULICS - LOADER VALVE AND FILTER TO BACKHOE VALVE

REF	FN	PART NUMBER	YR/SN	QTY	DESCRIPTION
17		237-6016		1	O-RING 1-11/64 ID x 7/64
18		87455832		1	HOSE ASSY. 1020 mm (40-5/32 in); 2 or 3 Spool Valve; Without Auxiliary Hydraulics, With Pilot Controls; Power Beyond; Replaces 87437442 1050 mm (41-3/8 in) Hose
18		87437232		1	HOSE ASSY. 420 mm (16-9/16 in); 2 Spool Valve; With Auxiliary Hydraulics; With or Without Pilot Controls; Loader Valve Power Beyond to Backhoe Valve
18		87437231		1	HOSE ASSY. 370 mm (14-5/8 in); 3 Spool Valve; With Auxiliary Hydraulics; With or Without Pilot Controls; Loader Valve Power Beyond to Backhoe Valve
19		218-5064		1	CONNECTOR, HYD. 1-1/16 fl x Or; Incl. Ref 20
20		237-6012		1	O-RING 59/64 ID x 7/64

http://www.minnparbackhoeparts.com/

08-03		p1	02/05

HYDRAULICS - COOLER, RETURN LINES AND FILTER

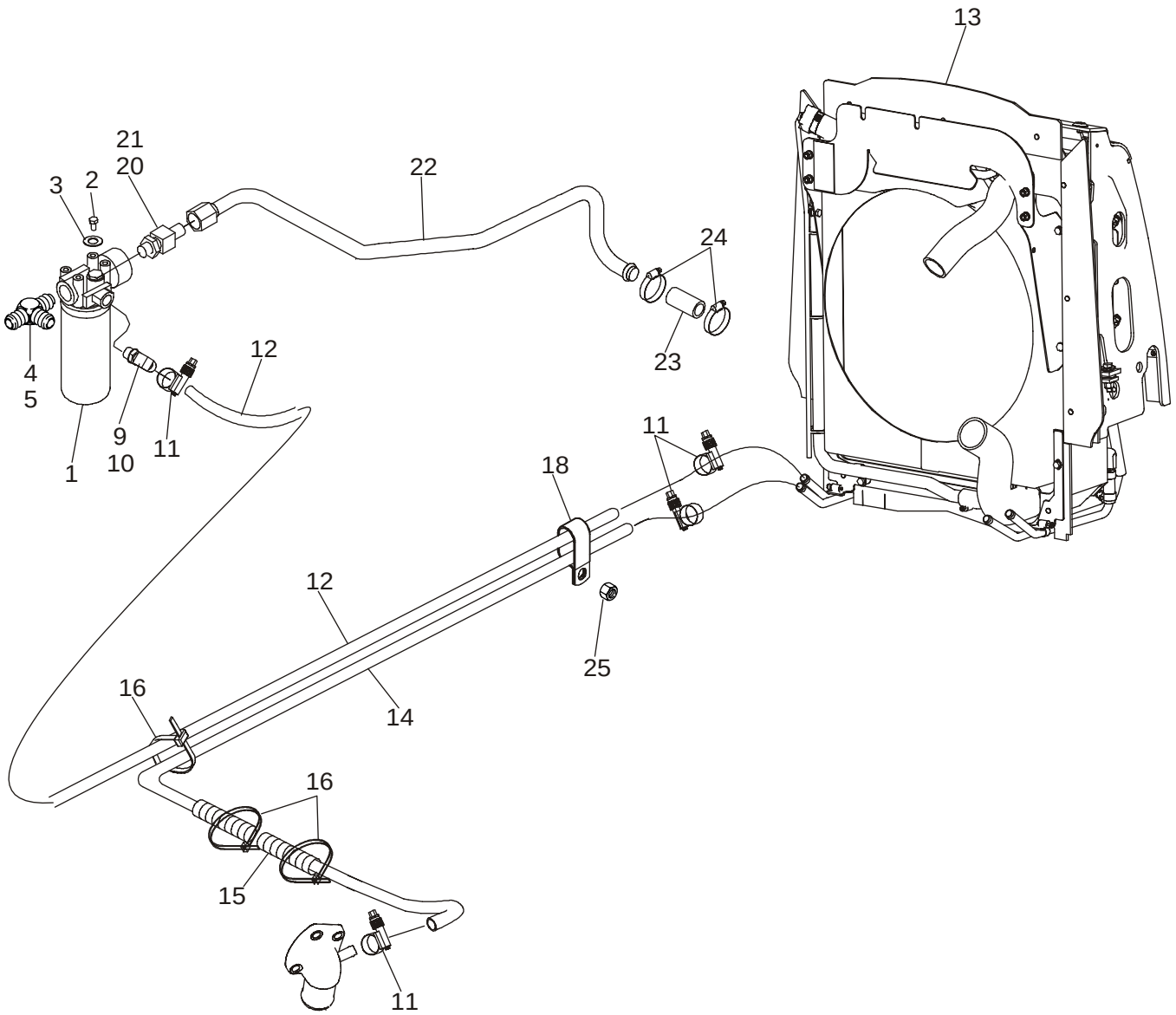

http://www.minnparbackhoeparts.com/

HYDRAULICS - COOLER, RETURN LINES AND FILTER

REF	FN	PART NUMBER	YR/SN	QTY	DESCRIPTION
1		87440045		1	FILTER ASSY. Hydraulic Oil; See Figure 08-61
2		614-10020		4	SCREW M10 x 20
3		895-11010		4	WASHER 11 x 21 x 2 mm
4		218-5584		1	FITTING TEE, 1-1/16 fl br x 1-5/16 fl x Or; Incl. Ref 5
5		237-6016		1	O-RING 1-11/64 ID x 7/64 wide
9		301104A1		1	FITTING Special; Incl. Ref 10
10		237-6010		1	O-RING 3/4 ID x 3/32 wide
11		328186A1		4	CLAMP, HOSE
12		87426965		1	HOSE 1785 mm (70-5/16 in)
13		REF		1	INSTRUCTION Hydraulic Oil Cooler; For Cooler and Attaching Parts, See Figure 06-10 - 06-11A
14		87426966		1	HOSE 1860 mm (73-1/4 in), Return
15		D132982		2	LOOM Hose Sleeve
16		L18337		4	STRAP
18		D39696		1	CLAMP Double P-Type
20		218-5086		1	CONNECTOR 5/16-12 fl x 1-5/8; Incl. Ref 21
21		237-6020		1	O-RING 1-15/32 ID x 1/8
22		87308472		1	TUBE ASSY. Return To Tank; Replaces 87421940
23		D38435		1	HOSE, LARGE 89 mm (3-5/8 in); Cut From S118383X; Return To Tank; For Attaching Brake Line Clamp, See Figure 07-04
24		214-1420		2	CLAMP No. 20
25		829-1410		1	NUT M10

http://www.minnparbackhoeparts.com/

08-04		p1	05/05

HYDRAULICS - CYLINDER, LOADER LIFT

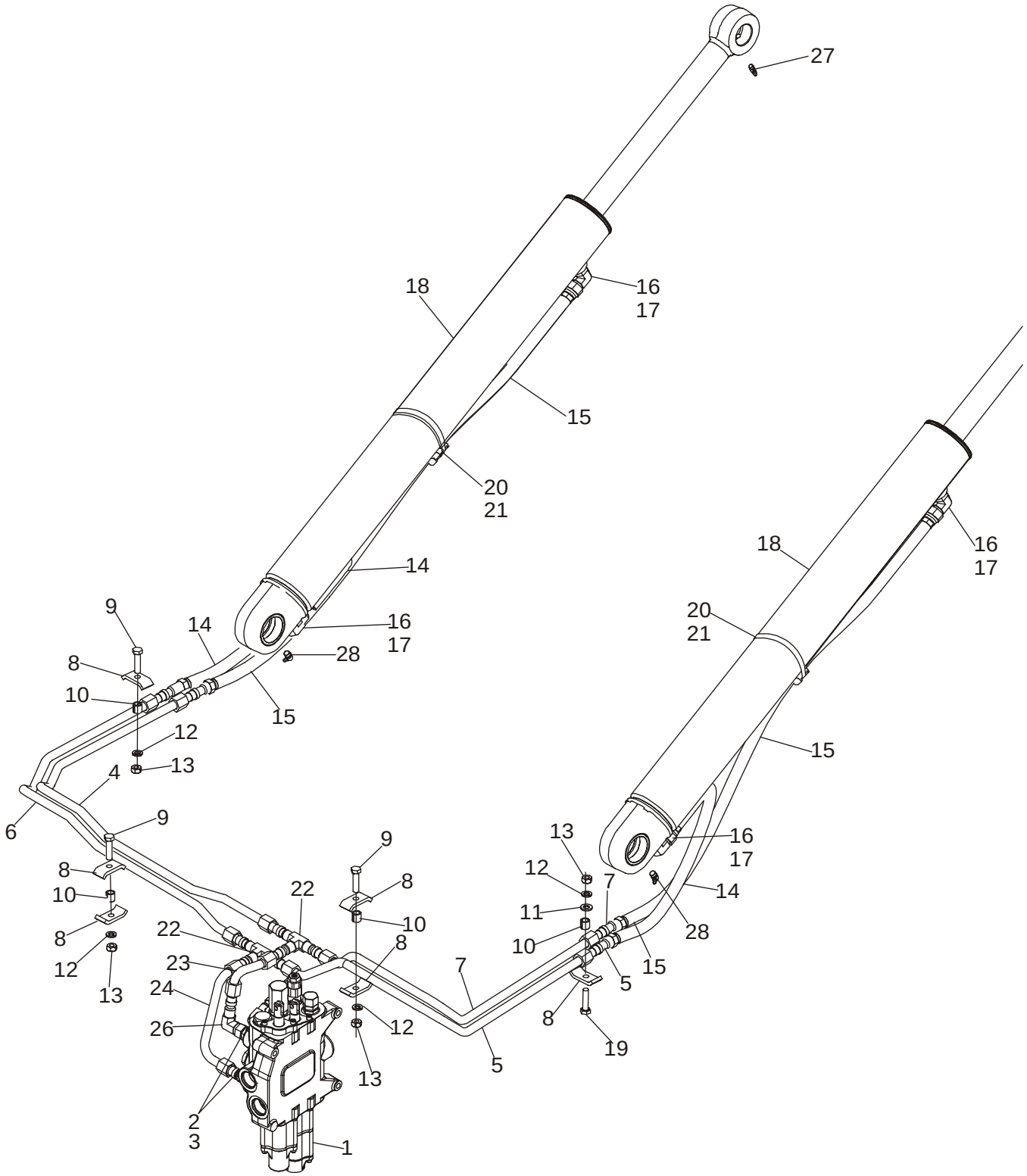

BS03M016

http://www.minnparbackhoeparts.com/

HYDRAULICS - CYLINDER, LOADER LIFT

REF	FN	PART NUMBER	YR/SN	QTY	DESCRIPTION
1		REF		1	INSTRUCTION LOADER CONTROL VALVE; For Correct Assembly and Components, See Figures 08-34, 08-35
2		218-5062		2	CONNECTOR, HYD. 7/8 fl x Or; Incl. Ref 3
3		237-6010		1	O-RING 3/4 ID x 3/32
4		87421930		1	TUBE ASSY. Upper Lift Port
5		87421932		1	TUBE ASSY. Lower Lift Port
6		87421934		1	TUBE ASSY. Lower Lift Port
7		87421928		1	TUBE ASSY. Upper Lift Port
8		D138055		6	CLAMP
9		814-10040		3	BOLT M10 x 40
10		120303A1		4	SPACER
11		895-11010		1	WASHER 11 x 21 x 2 mm
12		892-11010		4	WASHER, LOCK M10
13		829-1410		4	NUT M10; 10.9
14		87443150		2	HOSE ASSY. 740 mm (29-5/32 in)
15		87443149		2	HOSE ASSY. 1130 mm (44-1/2 in)
16		218-5107		4	ELBOW 7/8 fl x adj Or; Incl. Ref 17
17		237-6010		1	O-RING 3/4 ID x 3/32
18		384240A1		2	CYLINDER ASSY. 82.6 ID x 766 mm strk; Loader Lift Cylinder; See Figure 08-62
19		814-10045		1	BOLT M10 x 45
20		D142787		2	SPACER
21		214-1472		2	CLAMP 4-1/16 - 5; If Used
21		214-1464		2	CLAMP 3-9/16 - 4-1/2 in dia; If Used
22		218-595		2	FITTING TEE, 7/8 fl
23		87416024		1	TUBE ASSY. Upper Lift Port
24		87437108		1	TUBE ASSY. Lower Lift Port
26		218-5232		1	ELBOW 90 Deg, 7/8 fl x sw fl
27		219-1		2	NIPPLE, LUBE Straight, 1/8 PT x 21/32
28		219-55		2	NIPPLE, LUBE 90 Deg, 1/8 PT x 27/32

http://www.minnparbackhoeparts.com/

08-05		p1	06/05

HYDRAULICS - CYLINDER, LOADER BUCKET

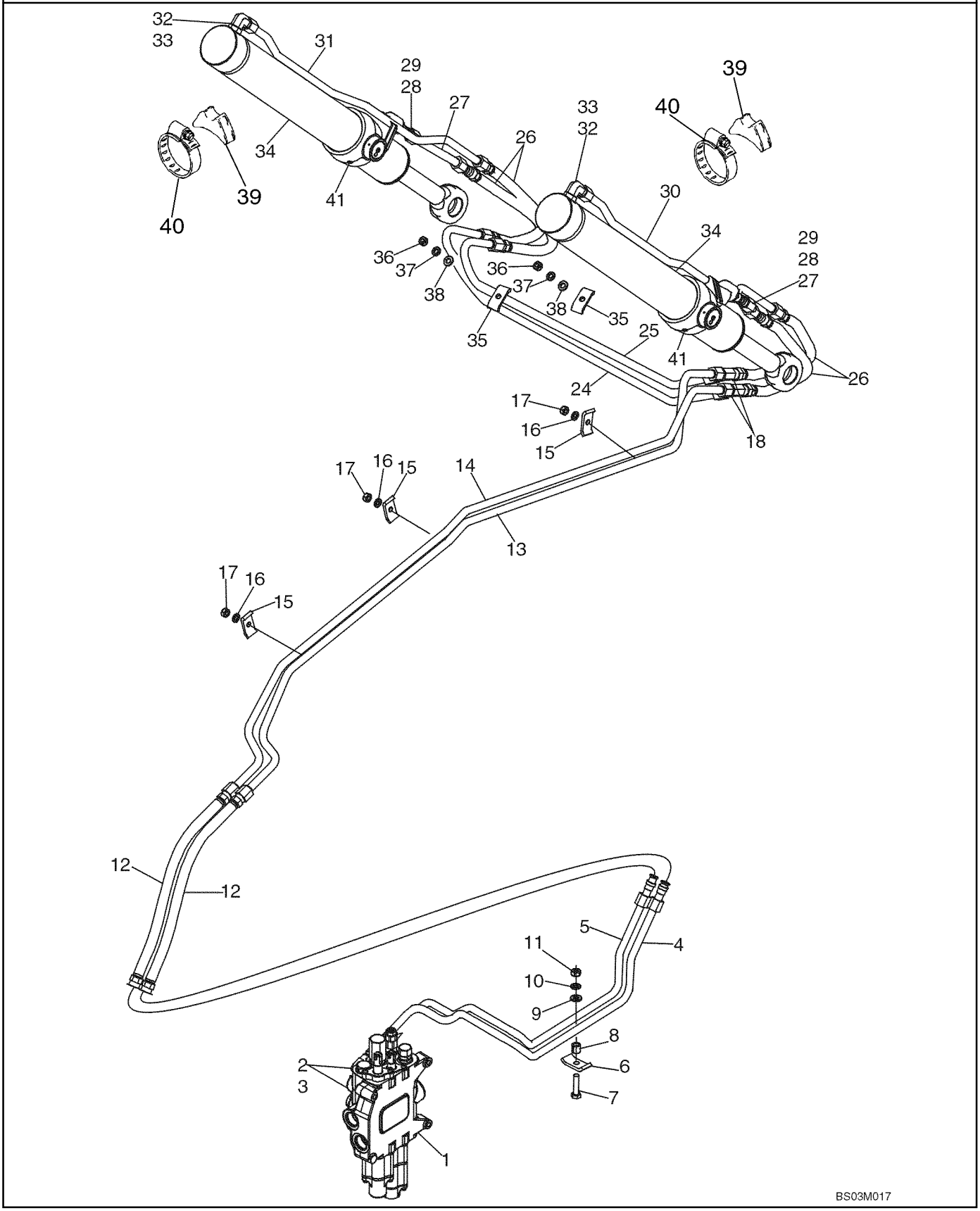

http://www.minnparbackhoeparts.com/

HYDRAULICS - CYLINDER, LOADER BUCKET

REF	FN	PART NUMBER	YR/SN	QTY	DESCRIPTION
1		REF		1	INSTRUCTION LOADER CONTROL VALVE; For Correct Assembly and Components, See Figures 08-34, 08-35; For Mounting, See Figure 09-01
2		218-5107		2	ELBOW 90 Deg, 7/8 fl x Or; Incl. Ref 3
3		237-6010		1	O-RING 3/4 ID x 3/32, Boss Seal
4		87421918		1	TUBE ASSY. Upper Bucket Port
5		87421920		1	TUBE ASSY. Lower Bucket Port
6		D138055		1	CLAMP
7		814-10045		1	BOLT M10 x 45
8		120303A1		1	SPACER
9		895-11010		1	WASHER 11 x 21 x 2 mm
10		892-11010		1	WASHER, LOCK M10
11		829-1410		1	NUT M10; 10.9
12		87429287		2	HOSE ASSY. 710 mm (28 in)
13		418789A1		1	TUBE ASSY. To Upper Port
14		418791A1		1	TUBE ASSY.
15		D138055		3	CLAMP
16		892-11010		3	WASHER, LOCK M10
17		829-1410		3	NUT M10; 10.9
18		218-5220		2	TEE 7/8 fl br x fl x sw
24		196815A1		1	PIPE Rear
25		196813A1		1	PIPE Front
26		371031A1		4	HOSE ASSY. 840 mm (33 in)
27		87316049		2	TUBE ASSY. Bucket Cylinder Rod End; Replaces 192152A1
28		218-5062		2	CONNECTOR, HYD. 7/8 fl x Or; Incl. Ref 29
29		237-6010		1	O-RING 3/4 ID x 3/32, Boss Seal
30		87316270		1	TUBE ASSY. Right-Hand Cylinder Closed End; Replaces 192156A1
31		87316264		1	TUBE ASSY. Left-Hand Cylinder Closed End; Replaces 192154A1
32		218-5107		2	ELBOW 90 Deg, 7/8 fl x adj Or; Incl. Ref 33
33		237-6010		1	O-RING 3/4 ID x 3/32, Boss Seal
34		113133A2		2	CYLINDER ASSY. 76 ID x 522 mm strk; Loader Bucket Cylinder; See Figure 08-63
35		D138055		2	CLAMP
36		829-1410		2	NUT M10; 10.9

http://www.minnparbackhoeparts.com/

08-05		p2	06/05

HYDRAULICS - CYLINDER, LOADER BUCKET

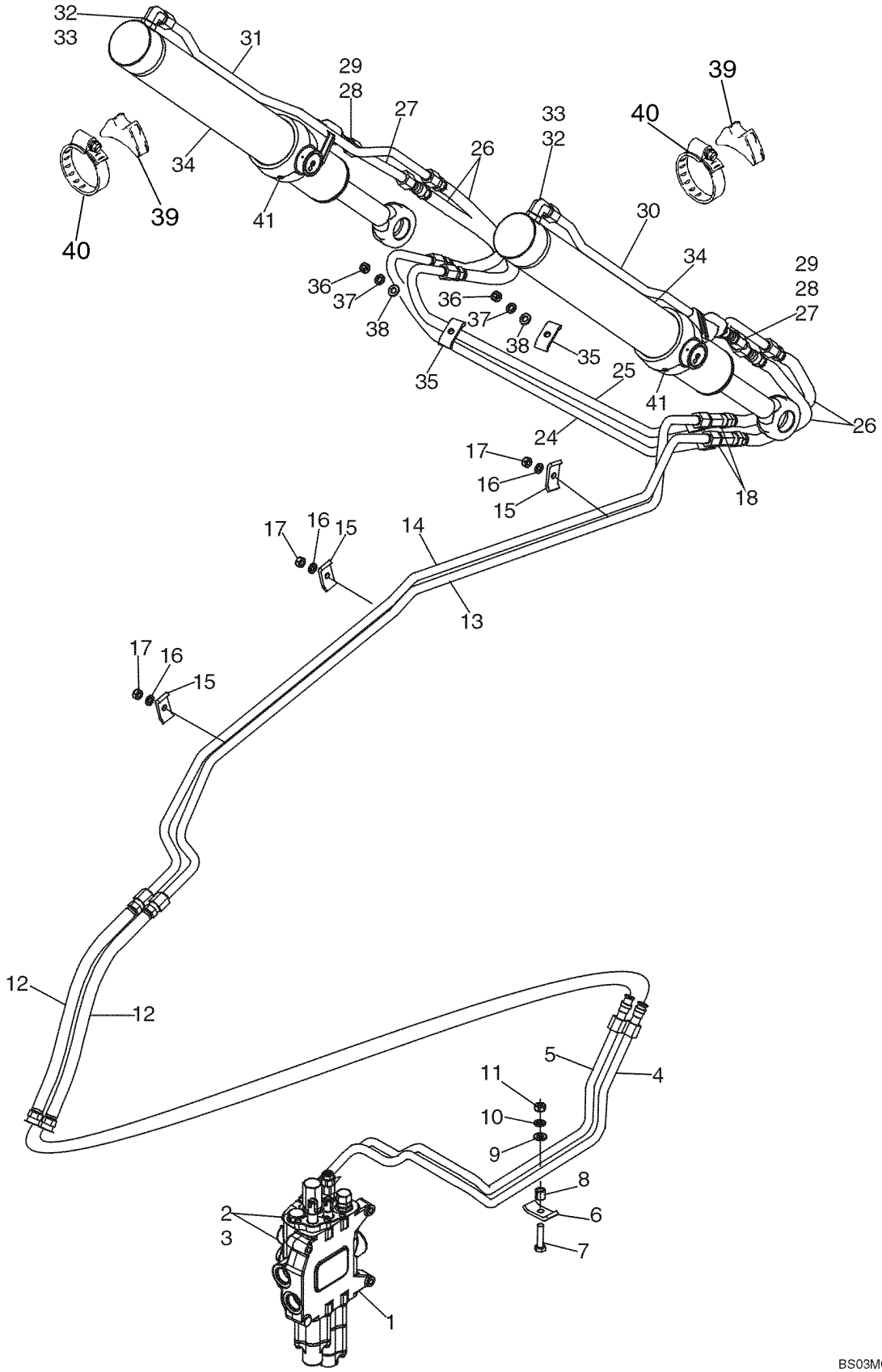

http://www.minnparbackhoeparts.com/

HYDRAULICS - CYLINDER, LOADER BUCKET

REF	FN	PART NUMBER	YR/SN	QTY	DESCRIPTION
37		892-11010		2	WASHER, LOCK M10
38		895-11010		2	WASHER 11 x 21 x 2 mm
39		L79937		2	SADDLE
40		214-1464		2	CLAMP 3-9/16 - 4-1/2 in dia
41		219-55		2	NIPPLE, LUBE 90 Deg, 1/8 PT x 27/32

http://www.minnparbackhoeparts.com/

08-06		p1	01/05

HYDRAULICS - CYLINDER, LOADER CLAM

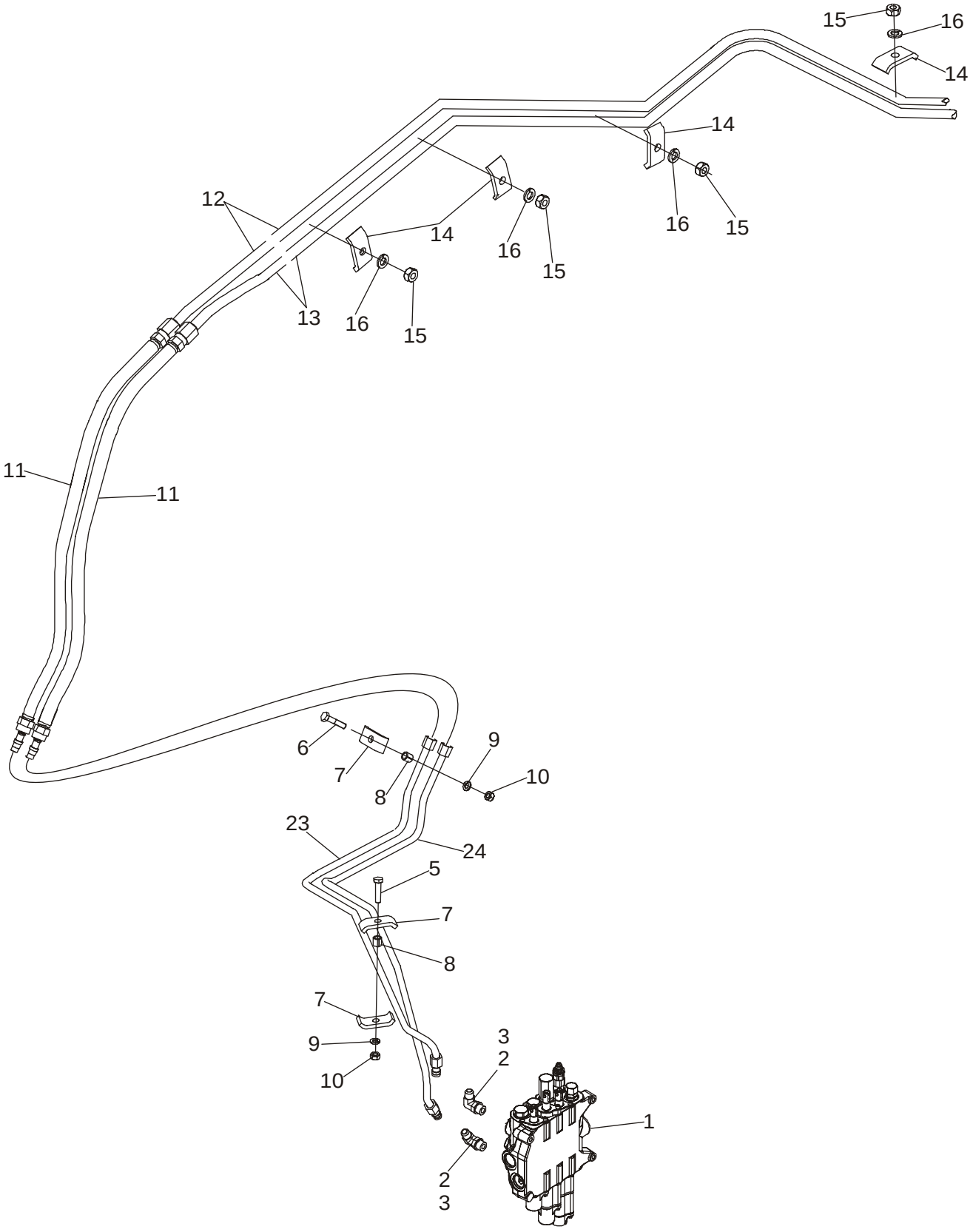

http://www.minnparbackhoeparts.com/

HYDRAULICS - CYLINDER, LOADER CLAM

REF	FN	PART NUMBER	YR/SN	QTY	DESCRIPTION
1		REF		1	INSTRUCTION LOADER CONTROL VALVE; Three Spool; See Figure 08-35 for Valve Options; For Mounting, See Figure 09-01
2		218-5107		2	ELBOW 90 deg, 7/8 fl x Or; Incl. Ref 3
3		237-6010		1	O-RING 3/4 ID x 3/32, Boss Seal
5		814-10045		1	BOLT M10 x 45
6		814-10040		1	BOLT M10 x 40
7		D138055		3	CLAMP
8		120303A1		2	SPACER
9		892-11010		2	WASHER, LOCK M10
10		829-1410		2	NUT M10; 10.9
11		87429287		2	HOSE ASSY. 710 mm (28 in)
12		196824A1		1	PIPE Upper Clam Port
13		196821A1		1	PIPE Lower Clam Port
14		D138055		4	CLAMP
15		829-1410		4	NUT M10; 10.9
16		892-11010		4	WASHER, LOCK M10
17		218-776		2	PLUG 7/8 fl; Located on the End of Ref 13 Tube; Not Used On Models With Clam Bucket; Not Illustrated
23		87447044		1	TUBE ASSY. Upper Clam Port; Replaces 87436908 Tube
24		87447887		1	TUBE ASSY. Lower Clam Port; Replaces 87436910 Tube

http://www.minnparbackhoeparts.com/

HYDRAULICS - CYLINDER, LOADER CLAM

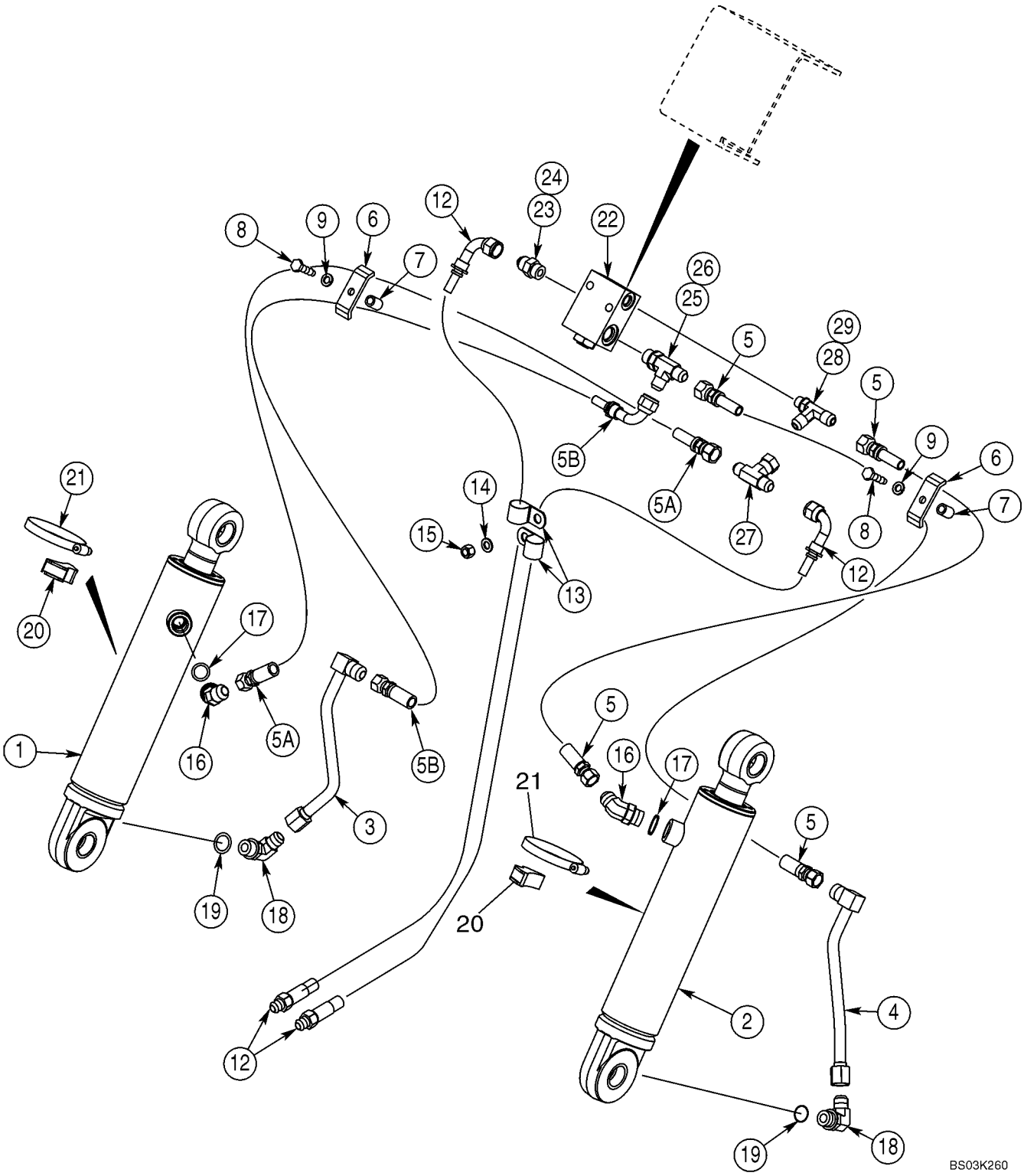

http://www.minnparbackhoeparts.com/

HYDRAULICS - CYLINDER, LOADER CLAM

REF	FN	PART NUMBER	YR/SN	QTY	DESCRIPTION
1		1346190C1		1	CYLINDER ASSY. 76 ID x 231 mm strk: Loader Clam Cylinder; Left-Hand; See Figure 08-64; If Used
1		87454016		1	CYLINDER ASSY. 76 ID x 231 mm strk: Loader Clam Cylinder; Left-Hand; See Figure 08-64; If Used
2		1346189C1		1	CYLINDER ASSY. 76 ID x 231 mm strk; Loader Clam Cylinder; Right-Hand; See Figure 08-64; If Used
2		87454017		1	CYLINDER ASSY. 76 ID x 231 mm strk; Loader Clam Cylinder; Right-Hand; See Figure 08-64; If Used
3		192352A1		1	PIPE Left-Hand Cylinder
4		192345A1		1	PIPE Right-Hand Cylinder
5		353167A1		2	HOSE ASSY. 1100 mm (43-5/16 in); Right-Hand Cylinder; 580SM Models
5		376157A1		2	HOSE ASSY. 1240 mm (48-7/8 in); Right-Hand Cylinder; 580SM+ Models
5A		353103A1		1	HOSE ASSY. 1200 mm (47-1/4 in); Left-Hand Cylinder; 580SM Models
5A		353102A1		1	HOSE ASSY. 1340 mm (52-13/16 in); Left-Hand Cylinder; 580SM+ Models
5B		367352A1		1	HOSE ASSY. 1200 mm (47-1/4 in); Left-Hand Cylinder; 580SM Models
5B		376158A1		1	HOSE ASSY. 1340 mm (52-13/16 in); Left-Hand Cylinder; 580SM+ Models
6		D143846		2	SHIN CLAMP
7		R46493		2	SPACER
8		814-10040		2	BOLT M10 x 40
9		892-11010		2	WASHER, LOCK M10
12		356743A1		2	HOSE ASSY. 1170 mm (46-1/16 in); Lift Frame
13		515-25254		2	CLAMP 1 in ID
14		895-11010		1	WASHER 11 x 21 x 2 mm
15		832-10410		1	NUT M10
16		218-5137		2	FITTING 7/8 fl x Or; Incl. Ref 17
17		237-6010		1	O-RING 3/4 ID x 3/32, Boss Seal
18		218-5107		2	ELBOW 7/8 fl x adj Or; Incl. Ref 19
19		237-6010		1	O-RING 3/4 ID x 3/32, Boss Seal
20		D38648		2	BLOCK

http://www.minnparbackhoeparts.com/

HYDRAULICS - CYLINDER, LOADER CLAM

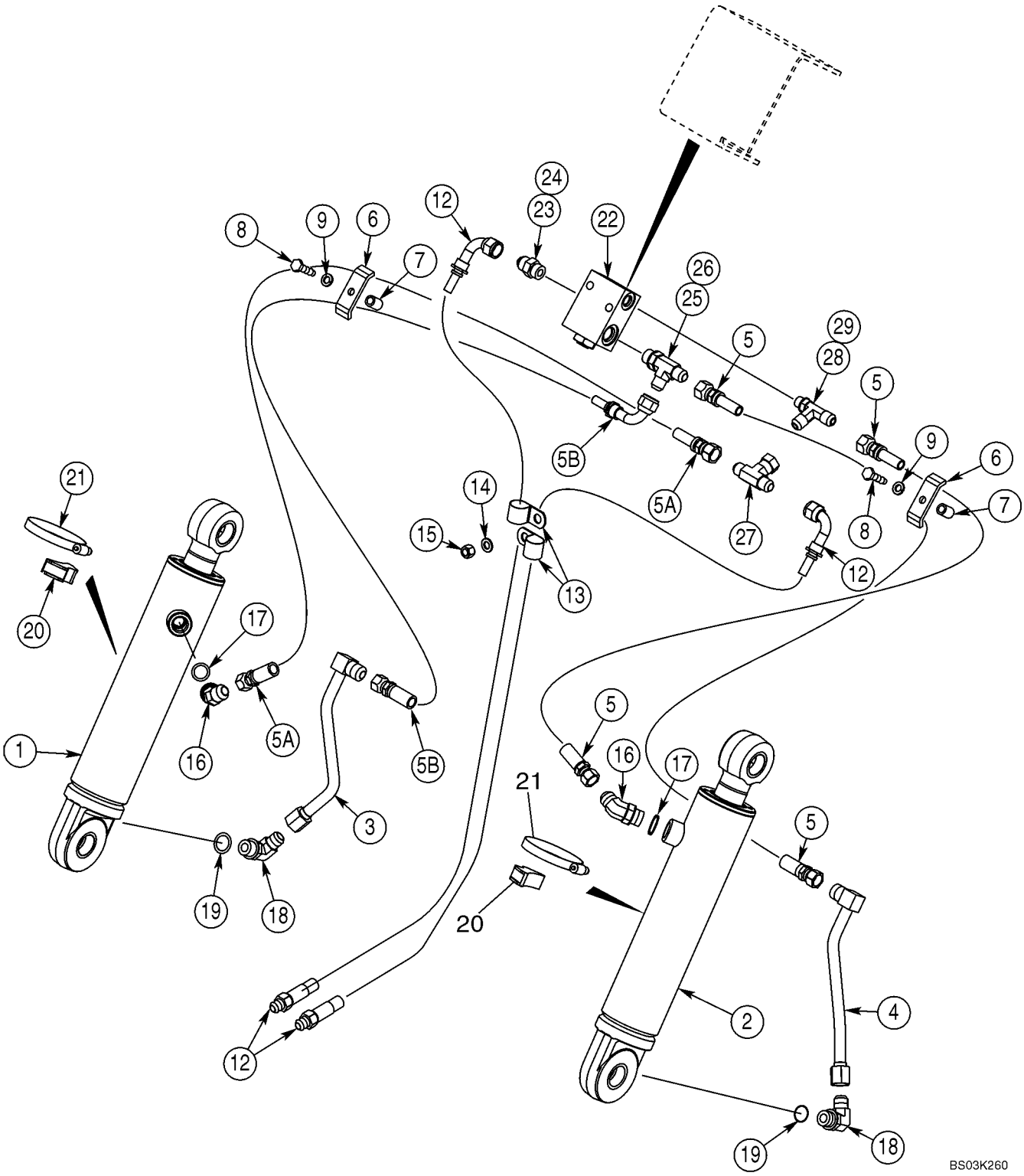

http://www.minnparbackhoeparts.com/

HYDRAULICS - CYLINDER, LOADER CLAM

REF	FN	PART NUMBER	YR/SN	QTY	DESCRIPTION
21		214-1464		2	CLAMP 3-9/16 - 4-1/2 in dia
22		325465A2		1	VALVE, CHECK Pilot Operated Check Valve; For Mounting, See Figure 09-08, 09-08A
		399963A1		1	KIT Seal; For Use With 325465A2 Valve; Includes (1) Piston, (1) Backup Ring, (2) O-Rings and Instructions
23		218-5059		1	CONNECTOR, HYD. 3/4 fl x Or; Incl. Ref 24
24		237-6008		1	O-RING 41/64 ID x 3/32, Boss Seal
25		218-5242		1	CONNECTOR, HYD. 3/4 fl br x fl x Or; Incl. Ref 26
26		237-6008		1	O-RING 41/64 ID x 3/32, Boss Seal
27		218-840		1	TEE 3/4 NF sw x fl x fl
28		218-5650		1	TEE 3/4 fl x fl x 9/16 Or; Incl. Ref 29
29		237-6006		1	O-RING 15/32 ID x 5/64, Boss Seal

http://www.minnparbackhoeparts.com/

HYDRAULICS - CYLINDER, BACKHOE STABILIZER (WITHOUT PILOT CONTROLS)

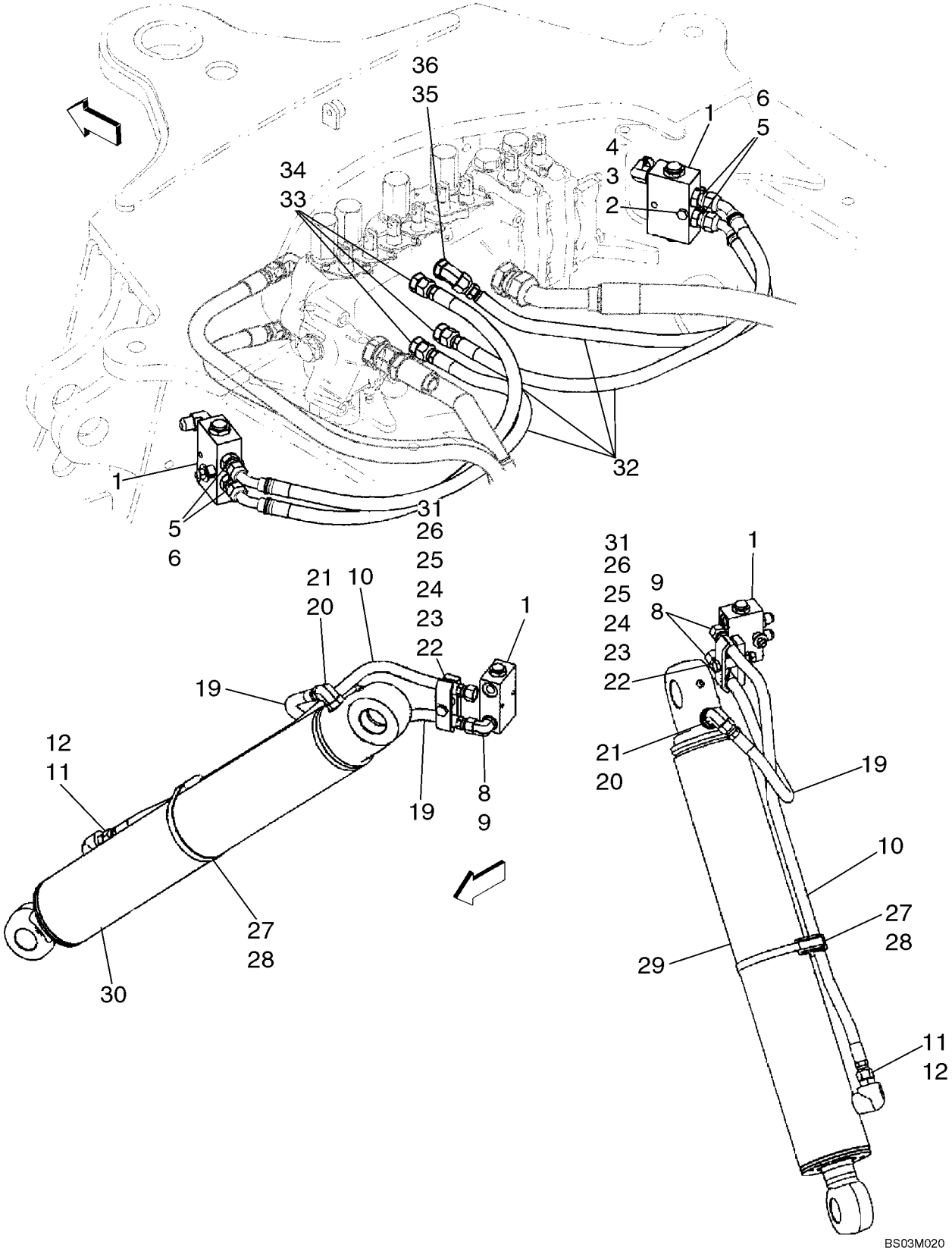

http://www.minnparbackhoeparts.com/

HYDRAULICS - CYLINDER, BACKHOE STABILIZER (WITHOUT PILOT CONTROLS)

REF	FN	PART NUMBER	YR/SN	QTY	DESCRIPTION
		REF			INSTRUCTION MODELS WITHOUT PILOT CONTROLS
1		85802820		2	VALVE, HYDRAULIC Load Check; Component Parts Not Serviced Separately
2		814-8060		2	SCREW M8 x 60
3		496-41041		2	WASHER 13/32 x 1-1/8 x 1/8
		87437840		2	SPACER
4		829-1408		2	NUT M8
5		218-5057		4	CONNECTOR, HYD. 9/16 fl x Or; Incl. Ref 6
6		237-6006		1	O-RING 15/32 ID x 5/64
8		218-5105		4	ELBOW 90 deg, 9/16 fl x Or; Incl. Ref 9
9		237-6006		1	O-RING 15/32 ID x 5/64
10		87439306		2	HOSE ASSY. 830 mm (32-11/16 in)
11		218-5351		2	CONNECTOR, HYD. 3/4 fl x 9/16 Or; Incl. Ref 12; 580SM Models
12		237-6006		1	O-RING 15/32 ID x 5/64
11		218-5059		2	CONNECTOR, HYD. 3/4 fl x Or; Incl. Ref 12; 580SM+ Models
12		237-6008		1	O-RING 41/64 ID x 3/32
19		87429584		2	HOSE ASSY. 500 mm (19-11/16 in) Hose
20		218-5106		2	FITTING 3/4 fl x Or, Incl. Ref 21
21		237-6008		1	O-RING 41/64 ID x 3/32
22		814-10070		2	BOLT M10 x 70
23		87420673		2	CLAMP, HOSE Clamp
		496-41041		2	WASHER 13/32 x 1-1/8 x 1/8
24		87439665		2	SPACER
25		87420672		2	SPACER Spacer, Clamp
26		829-1410		2	NUT M10; 10.9
27		D142787		2	SPACER
28		214-3188		2	CLAMP 4-3/4 - 5-5/8; 580SM Models
28		214-1496		2	CLAMP 5-9/16 - 6-1/2; 580SM+ Models
29		199721A1		1	CYLINDER ASSY. 108 ID x 553 mm strk; Stabilizer Cylinder; Left-Hand; 580SM Models; See Figure 08-65
29		177257A1		1	CYLINDER ASSY. 127 ID x 519 mm strk; Stabilizer Cylinder; Left-Hand; 580SM+ Models; See Figure 08-65A

http://www.minnparbackhoeparts.com/

HYDRAULICS - CYLINDER, BACKHOE STABILIZER (WITHOUT PILOT CONTROLS)

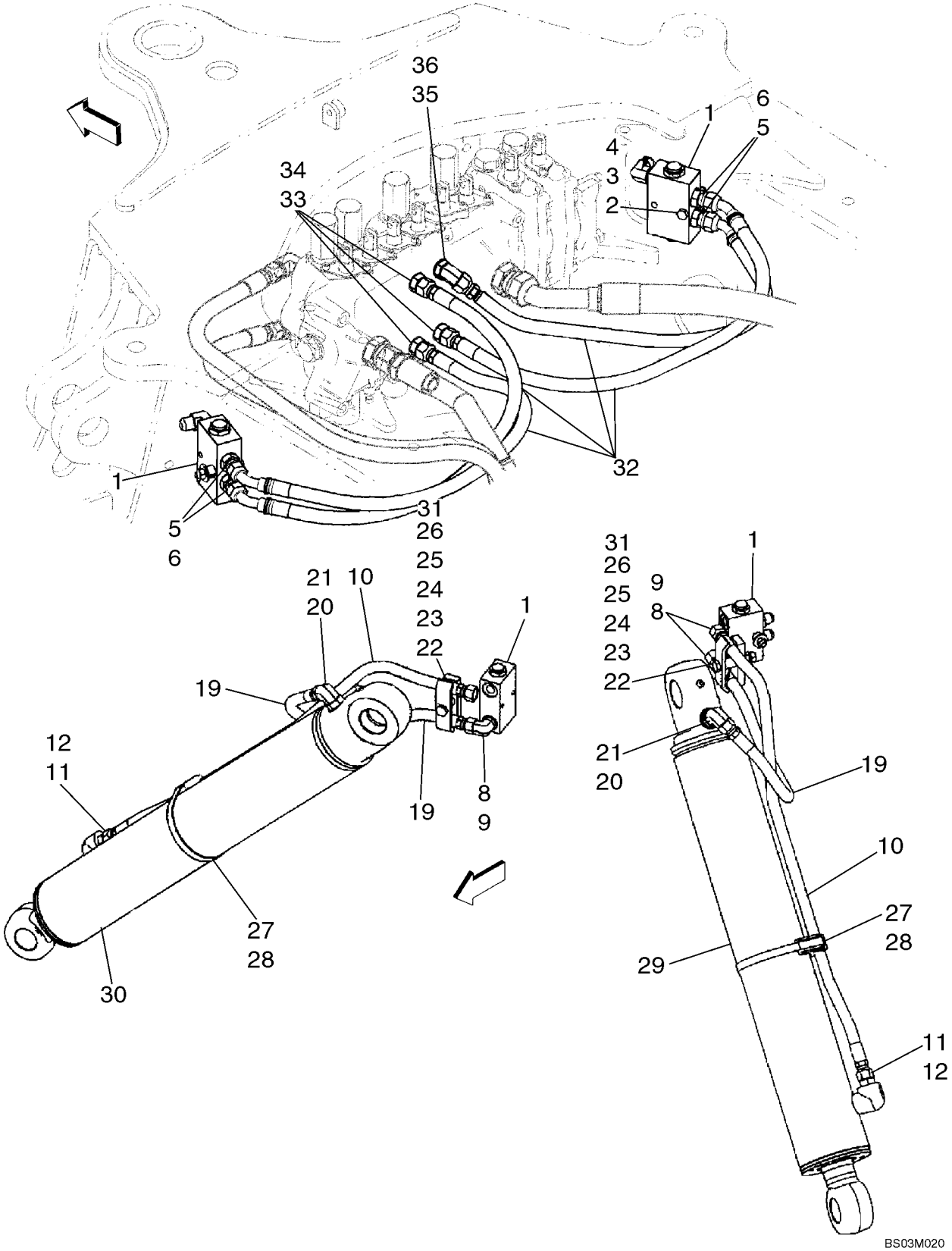

http://www.minnparbackhoeparts.com/

HYDRAULICS - CYLINDER, BACKHOE STABILIZER (WITHOUT PILOT CONTROLS)

REF	FN	PART NUMBER	YR/SN	QTY	DESCRIPTION
30		199720A1		1	CYLINDER ASSY. 108 ID x 553 mm strk; Stabilizer Cylinder; Right-Hand; 580SM Models; See Figure 08-65
30		177256A1		1	CYLINDER 127 ID x 519 mm strk; Stabilizer Cylinder; Right-Hand; 580SM+ Models; See Figure 08-65A
31		895-11010		2	WASHER 11 x 24 x 2 mm
32		87429654		4	HOSE ASSY. 720 mm (28-3/8 in)
33		218-5059		3	CONNECTOR, HYD. 3/4 fl x Or; Incl. Ref 34
34		237-6008		1	O-RING 41/64 ID x 3/32
35		218-5136		1	ELBOW 45 deg, 3/4 fl x adj Or; Incl. Ref 36
36		237-6008		1	O-RING 41/64 ID x 3/32

http://www.minnparbackhoeparts.com/

HYDRAULICS - CYLINDER, BACKHOE STABILIZER (WITH PILOT CONTROLS)

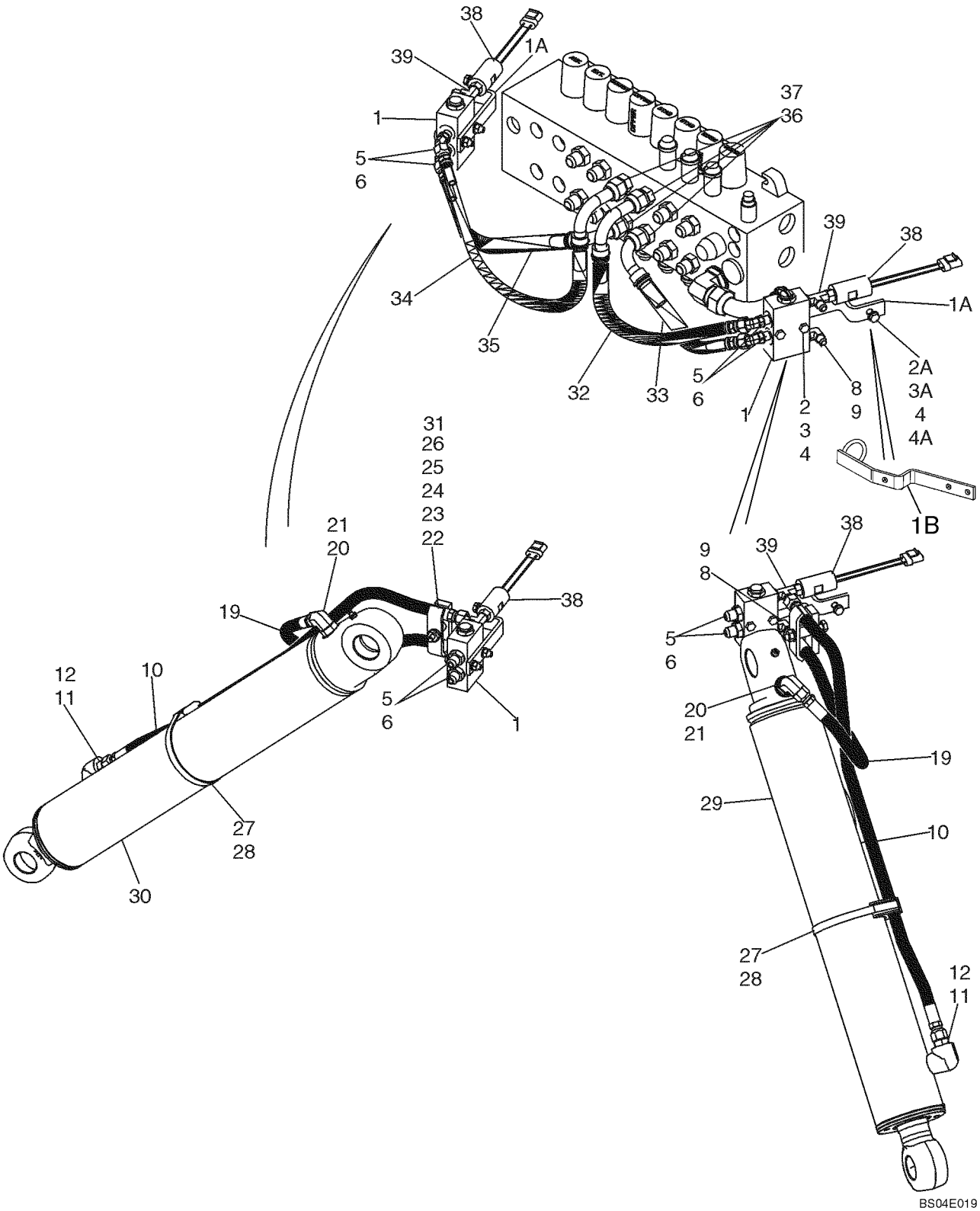

http://www.minnparbackhoeparts.com/

HYDRAULICS - CYLINDER, BACKHOE STABILIZER (WITH PILOT CONTROLS)

REF	FN	PART NUMBER	YR/SN	QTY	DESCRIPTION
		REF			INSTRUCTION MODELS WITH PILOT CONTROLS
1		85802820		2	VALVE, HYDRAULIC Load Check; Component Parts Not Serviced Separately
1A		87423034		2	BRACKET, SUPPORTING No Longer Available, Order 87450318 Bracket, Ref 1B
1B		87450318		2	BRACKET, SUPPORTING
2		814-8055		4	SCREW M8 x 55
2A		814-8035		2	BOLT M8 x 35
3		496-41041		2	WASHER 13/32 x 1-1/8 x 1/8
3A		895-11008		6	WASHER 9 x 16 x 1.6 mm
4		829-1408		6	NUT M8
4A		87437840		2	SPACER
5		218-5135		4	ELBOW 45 deg, 9/16 fl x Or; Incl. Ref 6
6		237-6006		1	O-RING 15/32 ID x 5/64
8		218-5105		2-4	ELBOW 90 deg, 9/16 fl x Or; Incl. Ref 9; (2) Used On Models With Auto-Up; (4) Used On Models Without Auto-Up
9		237-6006		1	O-RING 15/32 ID x 5/64
10		87439306		2	HOSE ASSY. 830 mm (32-11/16 in) Hose
11		218-5351		2	CONNECTOR, HYD. 3/4 fl x 9/16 Or; Incl. Ref 12; 580SM Models
12		237-6006		1	O-RING 15/32 ID x 5/64
11		218-5059		2	CONNECTOR, HYD. 3/4 fl x Or; Incl. Ref 12; 580SM+ Models
12		237-6008		1	O-RING 41/64 ID x 3/32
19		87429584		2	HOSE ASSY. 500 mm (19-11/16 in) Hose
20		218-5106		2	FITTING 3/4 fl x Or, Incl. Ref 21
21		237-6008		1	O-RING 41/64 ID x 3/32
22		814-10070		2	BOLT M10 x 70
23		87420673		2	CLAMP, HOSE Clamp
		496-41041		2	WASHER 13/32 x 1-1/8 x 1/8
24		87439665		2	SPACER
25		87420672		2	SPACER Spacer, Clamp
26		829-1410		2	NUT M10; 10.9
27		D142787		2	SPACER
28		214-3188		2	CLAMP 4-3/4 - 5-5/8; 580SM Models
28		214-1496		2	CLAMP 5-9/16 - 6-1/2; 580SM+ Models

http://www.minnparbackhoeparts.com/

HYDRAULICS - CYLINDER, BACKHOE STABILIZER (WITH PILOT CONTROLS)

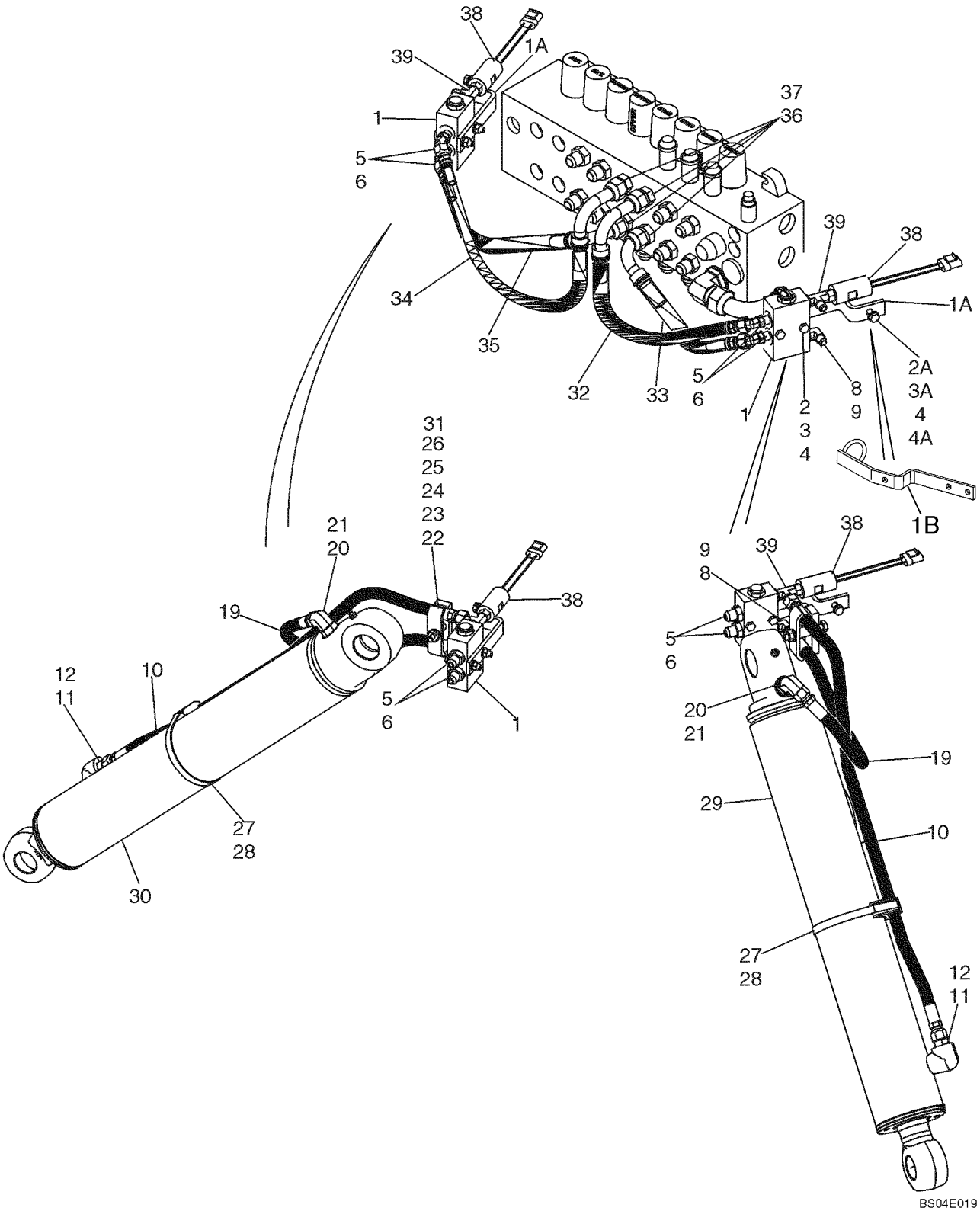

http://www.minnparbackhoeparts.com/

HYDRAULICS - CYLINDER, BACKHOE STABILIZER (WITH PILOT CONTROLS)

REF	FN	PART NUMBER	YR/SN	QTY	DESCRIPTION
29		199721A1		1	CYLINDER ASSY. 108 ID x 553 mm strk; Stabilizer Cylinder; Left-Hand; 580SM Models; See Figure 08-65
29		177257A1		1	CYLINDER ASSY. 127 ID x 519 mm strk; Stabilizer Cylinder; Left-Hand; 580SM+ Models; See Figure 08-65A
30		199720A1		1	CYLINDER ASSY. 108 ID x 553 mm strk; Stabilizer Cylinder; Right-Hand; 580SM Models; See Figure 08-65
30		177256A1		1	CYLINDER 127 ID x 519 mm strk; Stabilizer Cylinder; Right-Hand; 580SM+ Models; See Figure 08-65A
31		895-11010		2	WASHER 11 x 24 x 2 mm
32		87437939		1	HOSE ASSY. 440 mm (17-3/8 in)
33		87437938		1	HOSE ASSY. 350 mm (13-13/16 in)
34		87437941		1	HOSE ASSY. 485 mm (19-1/8 in)
35		87437940		1	HOSE ASSY. 400 mm (15-3/4 in)
36		218-5070		4	CONNECTOR 3/4 fl x 1-1/16 Or; Incl. Ref 37
37		237-6012		1	O-RING 59/64 ID x 7/64
38		87439163		2	SWITCH, PRESSURE Pilot Control; Includes 237-6004 O-Ring; If Used; Used On Models With Auto-Up
38		86992557		2	SWITCH PRESSURE, Pilot Control; Includes 237-6004 O-Ring; If Used; Used On Models With Auto-Up
39		87423033		2	TEE 9/16 x 9/16 Or x 7/16 Or; Includes 237-6004, 237-6006 O-Ring; Used On Models With Auto-Up

http://www.minnparbackhoeparts.com/

HYDRAULICS - CYLINDER, BACKHOE SWING (WITHOUT PILOT CONTROLS)

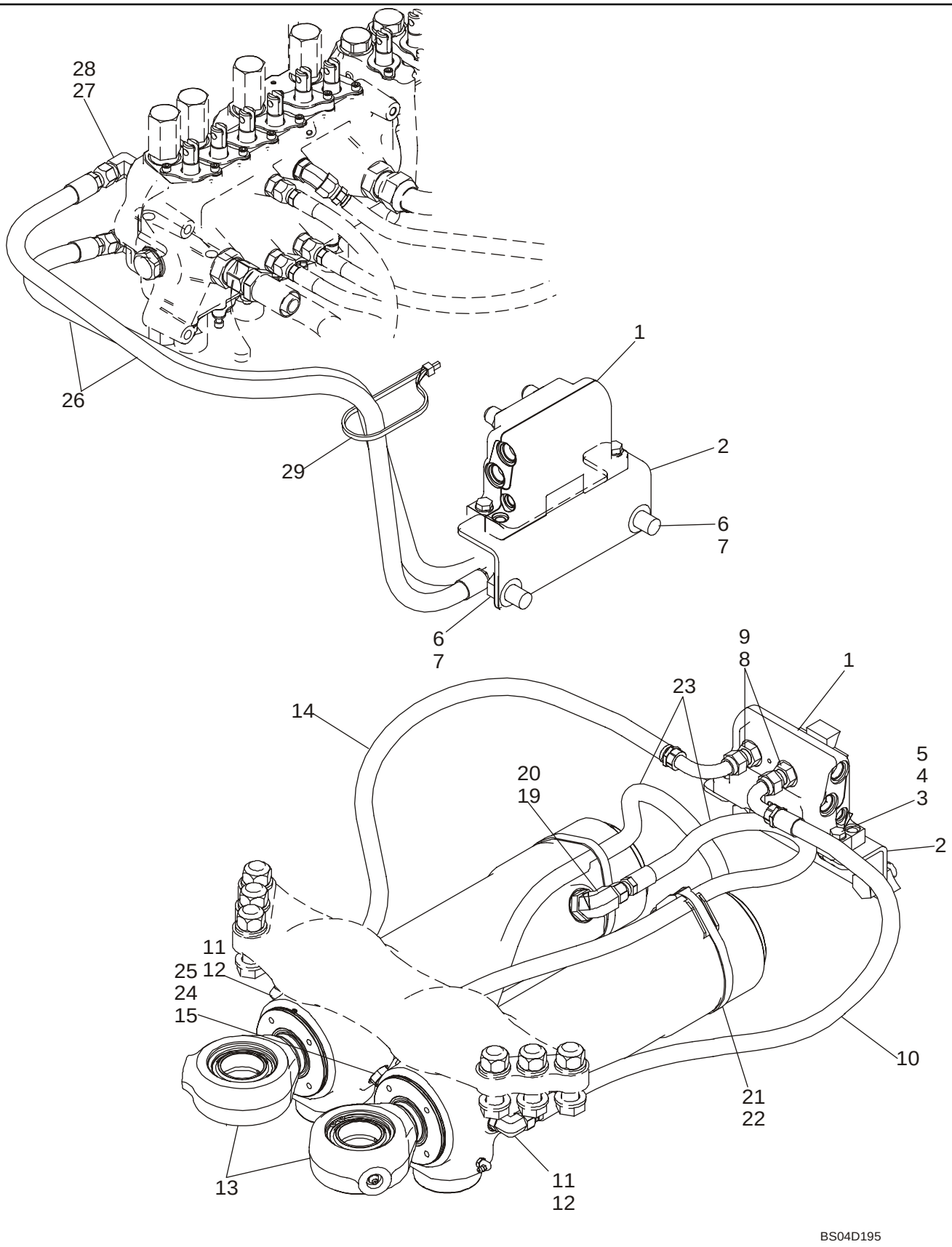

http://www.minnparbackhoeparts.com/

HYDRAULICS - CYLINDER, BACKHOE SWING (WITHOUT PILOT CONTROLS)

REF	FN	PART NUMBER	YR/SN	QTY	DESCRIPTION
		REF			INSTRUCTION MODELS WITHOUT PILOT CONTROLS
1		87449373		1	VALVE, DAMPING Swing Cushion; See Figure 08-59; Replaces 87416975 Valve
2		87428140		1	BRACKET, SUPPORTING Valve Bracket
3		814-10040		2	BOLT M10 x 40
4		895-11010		4	WASHER
5		829-1410		2	NUT M10
6		614-18035		2	BOLT M18 x 35
7		895-11018		4	WASHER
8		218-5062		4	CONNECTOR, HYD. 7/8 fl x Or; Incl. Ref 9
9		237-6010		1	O-RING 3/4 ID x 3/32
10		87423356		1	HOSE ASSY. 850 mm (33-1/2 in)
11		218-5106		2	FITTING 3/4 fl x Or, Incl. Ref 12
12		237-6008		1	O-RING 41/64 ID x 3/32, Boss Seal
13		139808A2		2	CYLINDER ASSY. 102 ID x 292 mm strk; Swing Cylinder, See Figure 08-66
14		87423356		1	HOSE ASSY. 850 mm (33-1/2 in)
15		124690A1		2	RESTRICTOR Orifice
19		218-5119		2	FITTING 7/8 fl x 1-1/16 Or, Incl. Ref 20
20		237-6012		1	O-RING 59/64 ID x 7/64, Boss Seal
21		D142787		2	SPACER
22		214-1492		2	CLAMP
23		87441076		2	HOSE ASSY. 802 mm (31-19/32 in)
24		218-5106		2	FITTING 3/4 fl x Or, Incl. Ref 25
25		237-6008		1	O-RING 41/64 ID x 3/32, Boss Seal
26		87428158		2	HOSE ASSY. 1194 mm (47 in)
27		218-5107		2	ELBOW 90 deg, 7/8 fl x Or; Incl. Ref 28
28		237-6010		1	O-RING
29		L18337		1	STRAP

http://www.minnparbackhoeparts.com/

HYDRAULICS - CYLINDER, BACKHOE SWING (WITH PILOT CONTROLS)

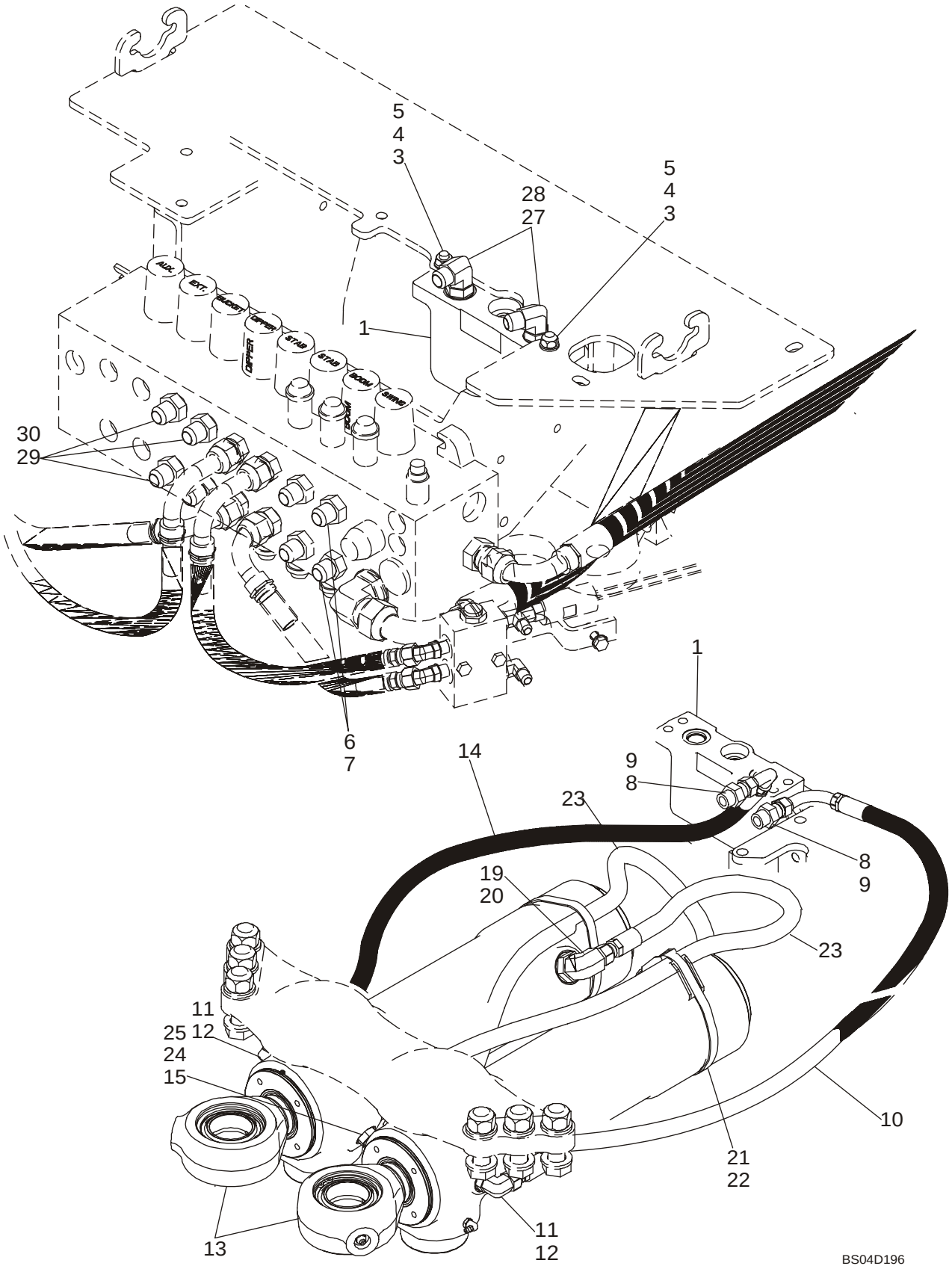

http://www.minnparbackhoeparts.com/

HYDRAULICS - CYLINDER, BACKHOE SWING (WITH PILOT CONTROLS)

REF	FN	PART NUMBER	YR/SN	QTY	DESCRIPTION
		REF			INSTRUCTION MODELS WITH PILOT CONTROLS
1		87449373		1	VALVE, DAMPING Swing Cushion; See Figure 08-59; Replaces 87416975 Valve
3		814-10045		2	BOLT M10 x 45
4		895-11010		4	WASHER
5		829-1410		2	NUT M10
6		218-5063		2	CONNECTOR, HYD. 7/8 fl x 1-1/16 Or; Incl. Ref 7
7		237-6012		1	O-RING
8		218-5062		2	CONNECTOR, HYD. 7/8 fl x Or; Incl. Ref 9
9		237-6010		1	O-RING 3/4 ID x 3/32
10		87440812		1	HOSE ASSY. 950 mm (37-13/32 in)
11		218-5106		2	FITTING 3/4 fl x Or, Incl. Ref 12
12		237-6008		1	O-RING 41/64 ID x 3/32, Boss Seal
13		139808A2		2	CYLINDER ASSY. 102 ID x 292 mm strk; Swing Cylinder, See Figure 08-66
14		87437685		1	HOSE ASSY. 1310 mm (51-5/8 in); No Longer Available, Order 87450698 Hose and 87450318 Bracket on Figure 08-8A
14		87450698		1	HOSE ASSY. 1285 mm (50-19/32 in); Replaces 1310 mm 87437685 Hose Used On Some Models
15		124690A1		2	RESTRICTOR Orifice
19		218-5119		2	FITTING 7/8 fl x 1-1/16 Or, Incl. Ref 20
20		237-6012		1	O-RING 59/64 ID x 7/64, Boss Seal
21		D142787		2	SPACER
22		214-1492		2	CLAMP
23		87441076		2	HOSE ASSY. 802 mm (31-19/32 in)
24		218-5106		2	FITTING 3/4 fl x Or, Incl. Ref 25
25		237-6008		1	O-RING 41/64 ID x 3/32, Boss Seal
27		218-5107		2	ELBOW 90 deg, 7/8 fl x Or; Incl. Ref 28
28		237-6010		1	O-RING
29		218-5064		6	CONNECTOR, HYD. 1-1/16 fl x Or; Incl. Ref 30
30		237-6012		1	O-RING

http://www.minnparbackhoeparts.com/

08-10		p1	06/05

HYDRAULICS - CYLINDER, BACKHOE BOOM

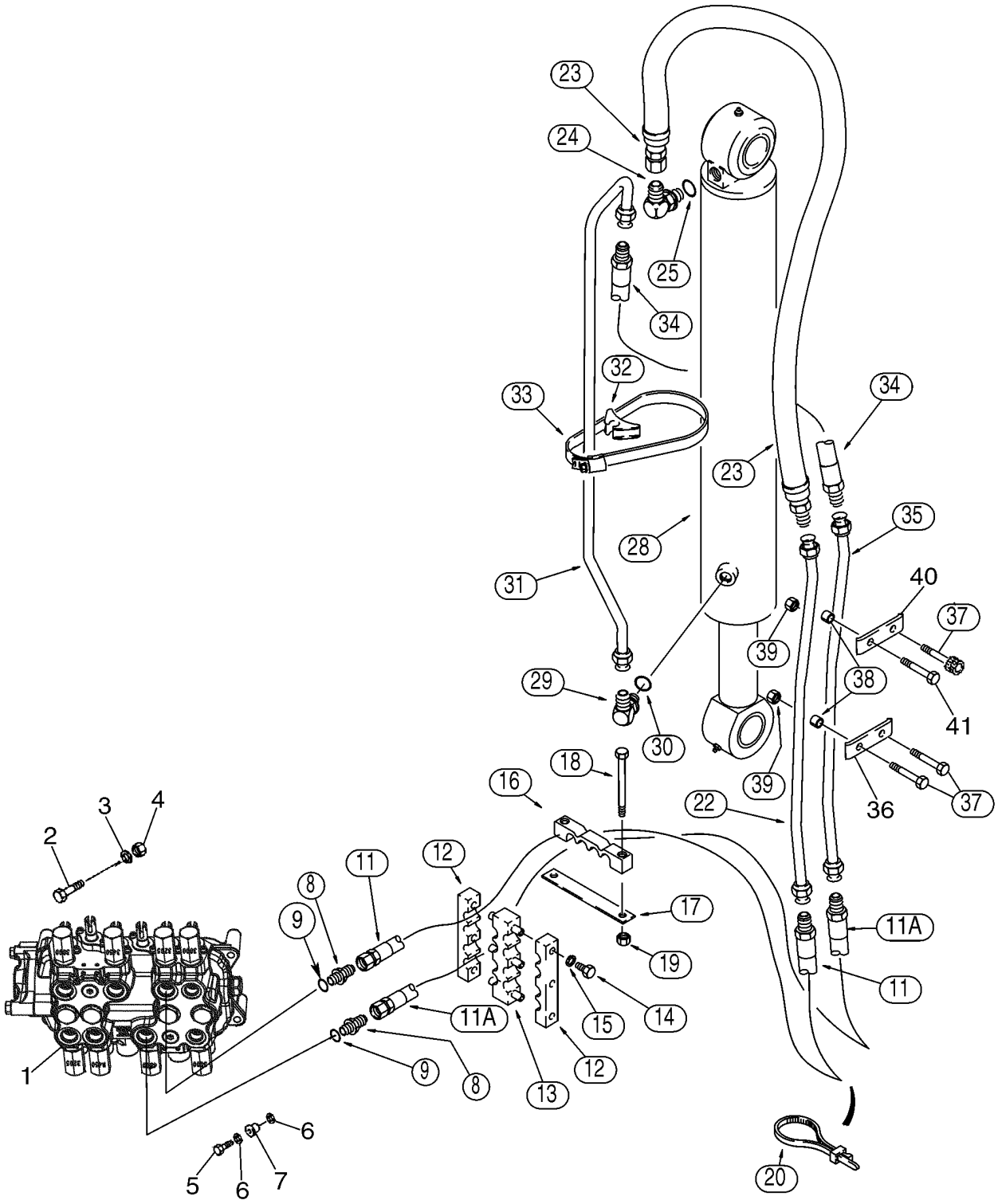

http://www.minnparbackhoeparts.com/

HYDRAULICS - CYLINDER, BACKHOE BOOM

REF	FN	PART NUMBER	YR/SN	QTY	DESCRIPTION
1		REF		1	INSTRUCTION Valve Assy, Control; Backhoe Control Valve; For Correct Assembly and Components, See Figures 08-36 - 08-43
2		814-10080		2	SCREW M10 x 80
3		896-11010		2	WASHER
4		829-1410		2	NUT M10
5		614-10035		1	SCREW M10 x 35; Replaces 614-10040 M10 x 40 Bolt Used On Some Models
6		496-41041		2	WASHER 13/32 x 1-1/8 x 9/64
7		D52276		1	ISOLATOR
8		218-5064		2	CONNECTOR, HYD. 1-1/16 fl x Or; Incl. Ref 9
9		237-6012		1	O-RING 59/64 ID x 7/64, Boss Seal
11		393380A1		1	HOSE ASSY. 1295 mm (51 in); Upper Valve Port
11A		393380A1		1	HOSE ASSY. 1295 mm (51 in); Lower Valve Port
12		143439A1		2	SHIN Clamp
13		176226A1		1	FIXING BRACKET Clamp
14		614-8025		6	BOLT M8 x 25
15		892-11008		6	WASHER M8
16		373833A1		1	CLAMP
17		132212A1		1	PLATE, LARGE
18		814-12100		2	BOLT M12 x 100
19		832-10412		2	NUT M12
20		L18337		1	STRAP 15 in
22		87455441		1	TUBE ASSY. Replaces 87412076
23		187845A1		1	HOSE 1000 mm (39-3/8 in)
24		218-5108		1	ELBOW 1-1/16 fl x 0r; Incl. Ref 25
25		237-6012		1	O-RING 59/64 ID x 7/64, Boss Seal
28		87417644		1	CYLINDER ASSY. 133 ID x 843 strk; Boom Cylinder; See Figure 08-67
29		218-5123		1	FITTING 1-1/16 fl x 7/8 Or; Incl. Ref 30
30		237-6010		1	O-RING 3/4 ID x 3/32, Boss Seal
31		142815A1		1	PIPE TUBE
32		D142787		1	SPACER
33		214-14104		1	CLAMP 6-1/8 - 7 in dia
34		177634A1		1	HOSE 440 mm (17-3/8 in)
35		142122A1		1	PIPE TUBE
36		133605A1		1	SHIN Clamp

http://www.minnparbackhoeparts.com/

08-10		p2	06/05

HYDRAULICS - CYLINDER, BACKHOE BOOM

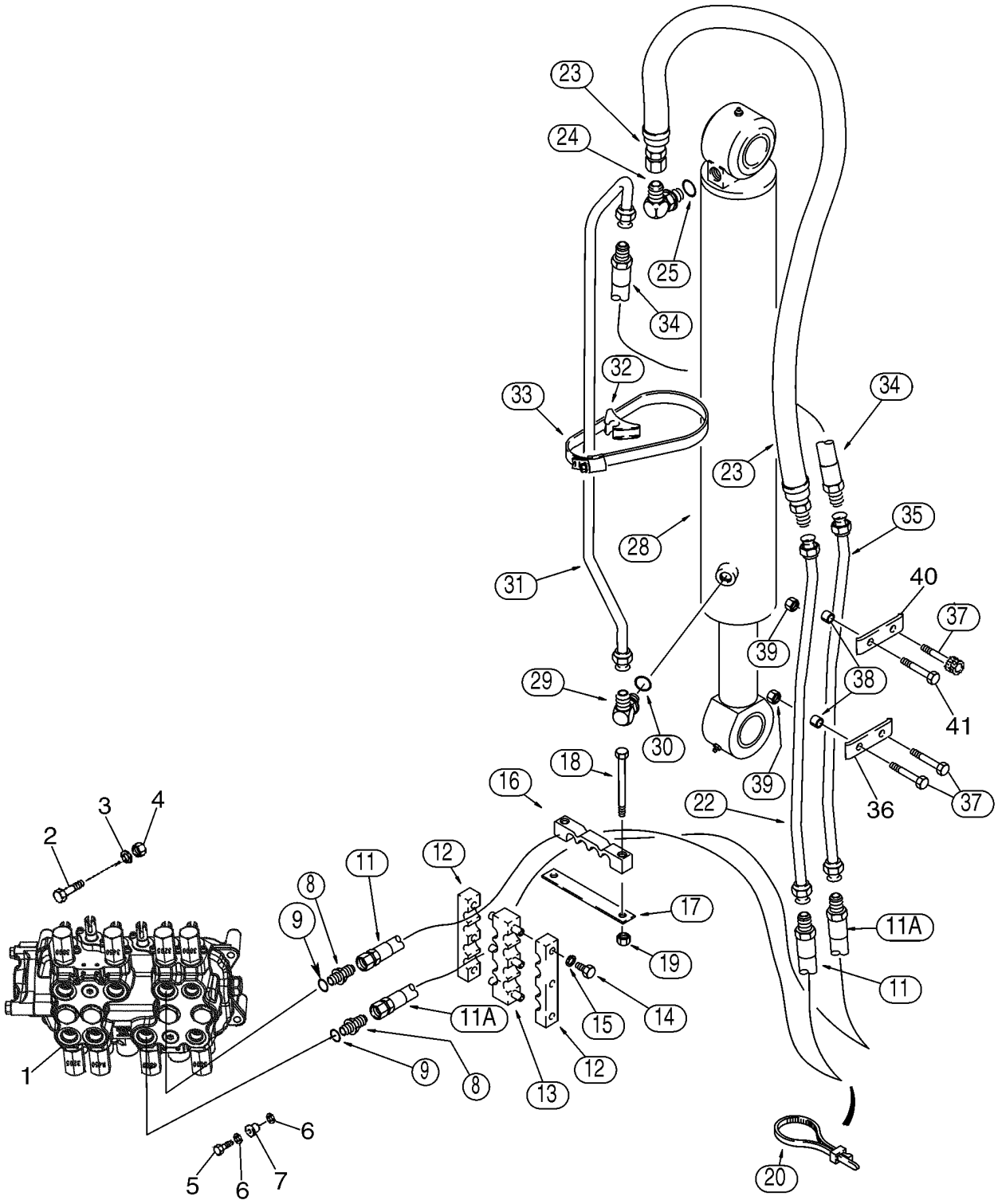

http://www.minnparbackhoeparts.com/

HYDRAULICS - CYLINDER, BACKHOE BOOM

REF	FN	PART NUMBER	YR/SN	QTY	DESCRIPTION
37		814-12080		3	SCREW Hex, M12 x 80
38		132930A1		4	SPACER
39		832-10412		4	NUT M12
40		87307476		1	CLAMP Replaces 451605A1 Clamp Used On Some Models
41		814-12080		1	SCREW Hex, M12 x 80; Replaces 869-12080 M12 x 80 Flat Socket Head Screw Used On Some Models

http://www.minnparbackhoeparts.com/

08-10A		p1	03/04

HYDRAULICS - BACKHOE BOOM LOCK AND ELECTRICAL CIRCUIT

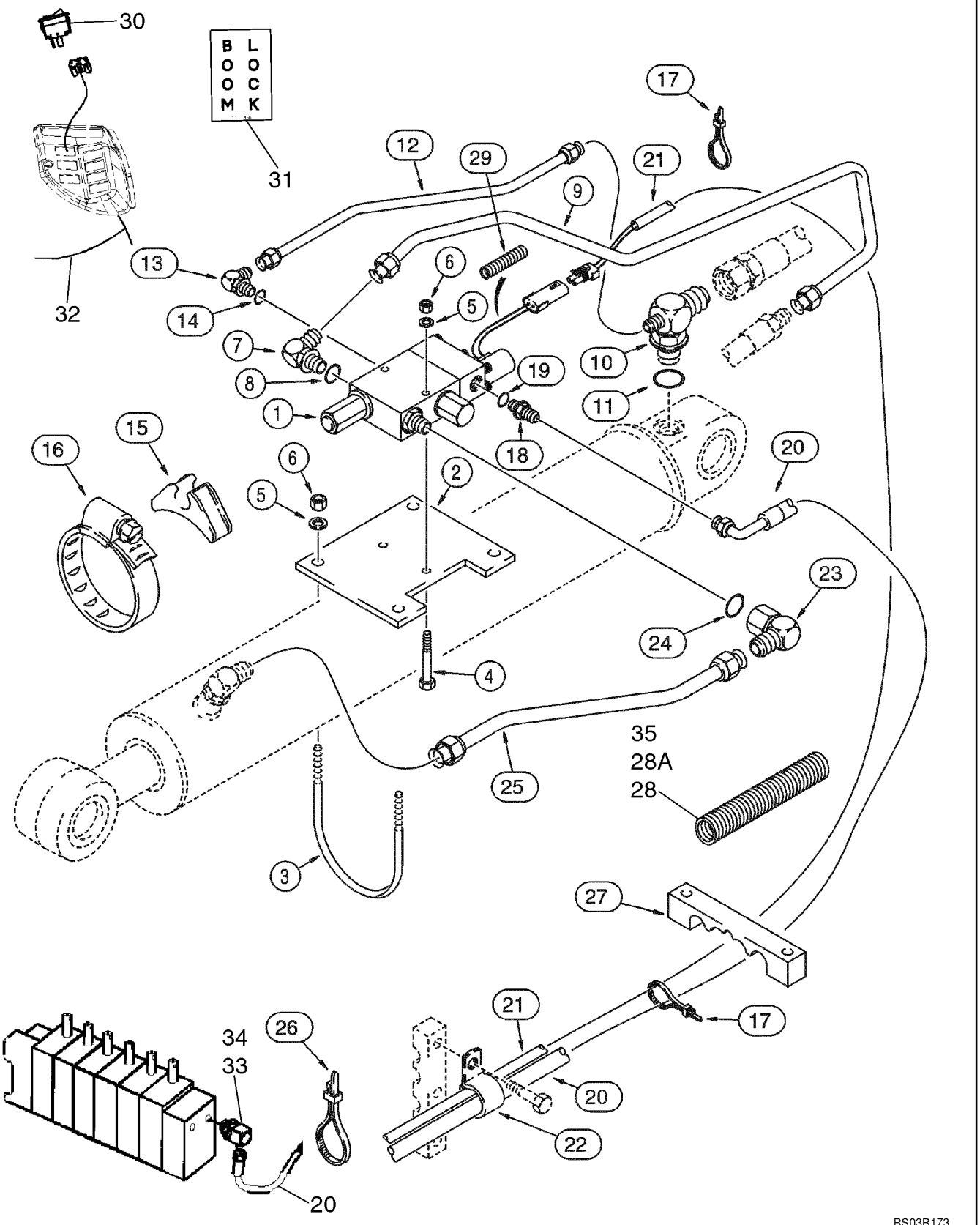

http://www.minnparbackhoeparts.com/

HYDRAULICS - BACKHOE BOOM LOCK AND ELECTRICAL CIRCUIT

REF	FN	PART NUMBER	YR/SN	QTY	DESCRIPTION
		399221A1		1	KIT Backhoe Boom Lock; Incl. Ref 1 - 35 and an Instruction Sheet; Also Includes Backhoe Boom Lock Valve On Figure 08-59A
1		189957A1		1	VALVE Solenoid; Backhoe Boom Lock; Incl. (2) 321-6046 Warning Decals; See Figure 08-59A
2		D150054		1	PLATE, LARGE Valve Mounting
3		D150053		2	BOLT 3/8 in
4		413-648		2	BOLT 3/8 NC x 3 in; Hex
5		495-11041		6	WASHER 13/32 x 13/16 x 1/16 in; Flat
6		231-1446		6	NUT, LOCK 3/8 NC
7		218-5118		1	FITTING 90 deg, 1-11/64 ID fl x 1-5/16 in adj, Incl. Ref 8
8		237-6016		1	O-RING 1-11/64 ID x 7/64, Boss Seal
9		192025A1		1	TUBE Valve Port; Attaches to Ref 34 Hose on Figure 8-10
10		187677A1		1	TEE Reducer; Boom Cylinder Closed End; Attaches to Ref 23 Hose on Figure 08-10; Incl. Ref 11
11		237-6012		1	O-RING 59/64 ID x 7/64, Boss Seal
12		189709A1		1	TUBE Pilot Port
13		218-5283		1	ELBOW 90 deg, 7/16 fl x 9/16 in adj, Incl. Ref 14
14		237-6006		1	O-RING 15/32 x 5/64, Boss Seal
15		D142787		1	SPACER Rubber
16		214-31104		1	CLAMP 5-3/4 - 6-5/8 in dia adj
17		L18337		15	STRAP 15 in
18		218-5359		1	UNION 7/16 fl x 3/16 in; Incl. Ref 19
19		237-6008		1	O-RING 41/64 ID x 3/32, Boss Seal
20		189103A1		1	HOSE 3700 mm (145-11/16 in), Return; Attaches to Elbow at Backhoe Valve
21		189263A1		1	HARNESS Boom Lock Valve to Control Tower Harness
22		515-25190		1	CLAMP 3/4 in ID; Return Hose
23		218-5382		1	FITTING 90 deg, 1-1/16 fl x 1-5/16 in swl; Incl. Ref 24
24		237-6016		1	O-RING 1-11/64 ID x 7/64, Boss Seal
25		187612A1		1	TUBE Boom Lock Valve to Boom Cylinder Rod End; See Figure 08-10 For Elbow
26		D147773		1	CLAMP Tie, 11 in
27		221330A1		1	CLAMP Hose and Harness

http://www.minnparbackhoeparts.com/

08-10A		p2	03/04

HYDRAULICS - BACKHOE BOOM LOCK AND ELECTRICAL CIRCUIT

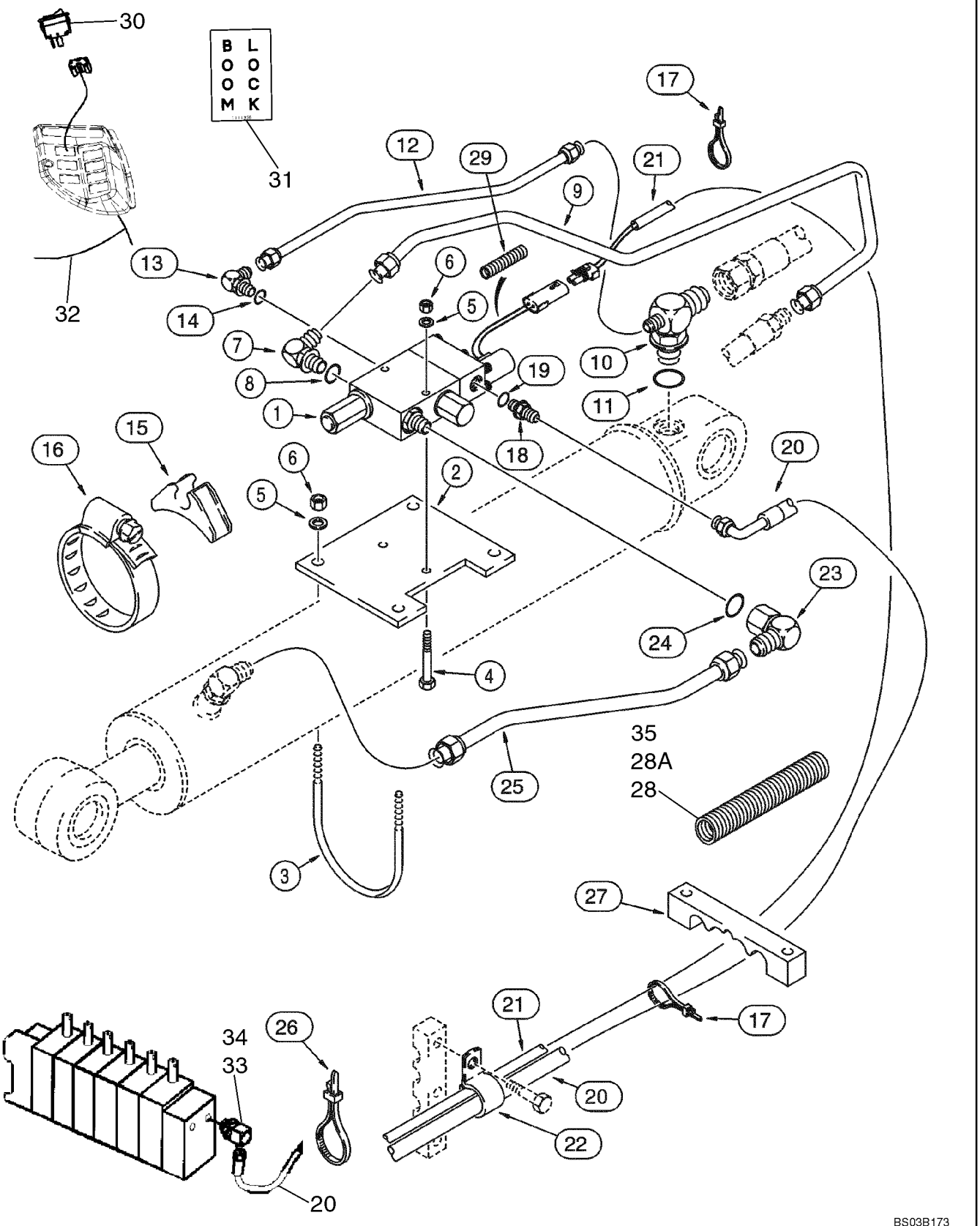

http://www.minnparbackhoeparts.com/

HYDRAULICS - BACKHOE BOOM LOCK AND ELECTRICAL CIRCUIT

REF	FN	PART NUMBER	YR/SN	QTY	DESCRIPTION
28		220276A1		1	SLEEVE 610 mm long, Hose Guard; Ref 20 Hose and Ref 21 Harness, Ahead of Clamp
28A		404907A1		1	SLEEVE 740 mm long, Hose Guard; Ref 20 Hose and Ref 21 Harness, Behind Clamp
29		1999528C1		1	CABLE SHEATH. 455 mm long; Harness Protection
30		400016A1		1	SWITCH Rocker; Boom Lock
31		L111356		1	DECAL Boom Lock
32		399246A1		1	HARNESS Cab to Solenoid
33		189414A1		1	ELBOW 90 deg; Incl. Ref 34
34		237-6010		1	O-RING 7/8 - 14, Boss Seal
35		226582A1		1	PROTECTOR 1850 mm long; Harness Below Floor Plate

http://www.minnparbackhoeparts.com/

08-11		p1	06/05

HYDRAULICS - CYLINDER, BACKHOE DIPPER

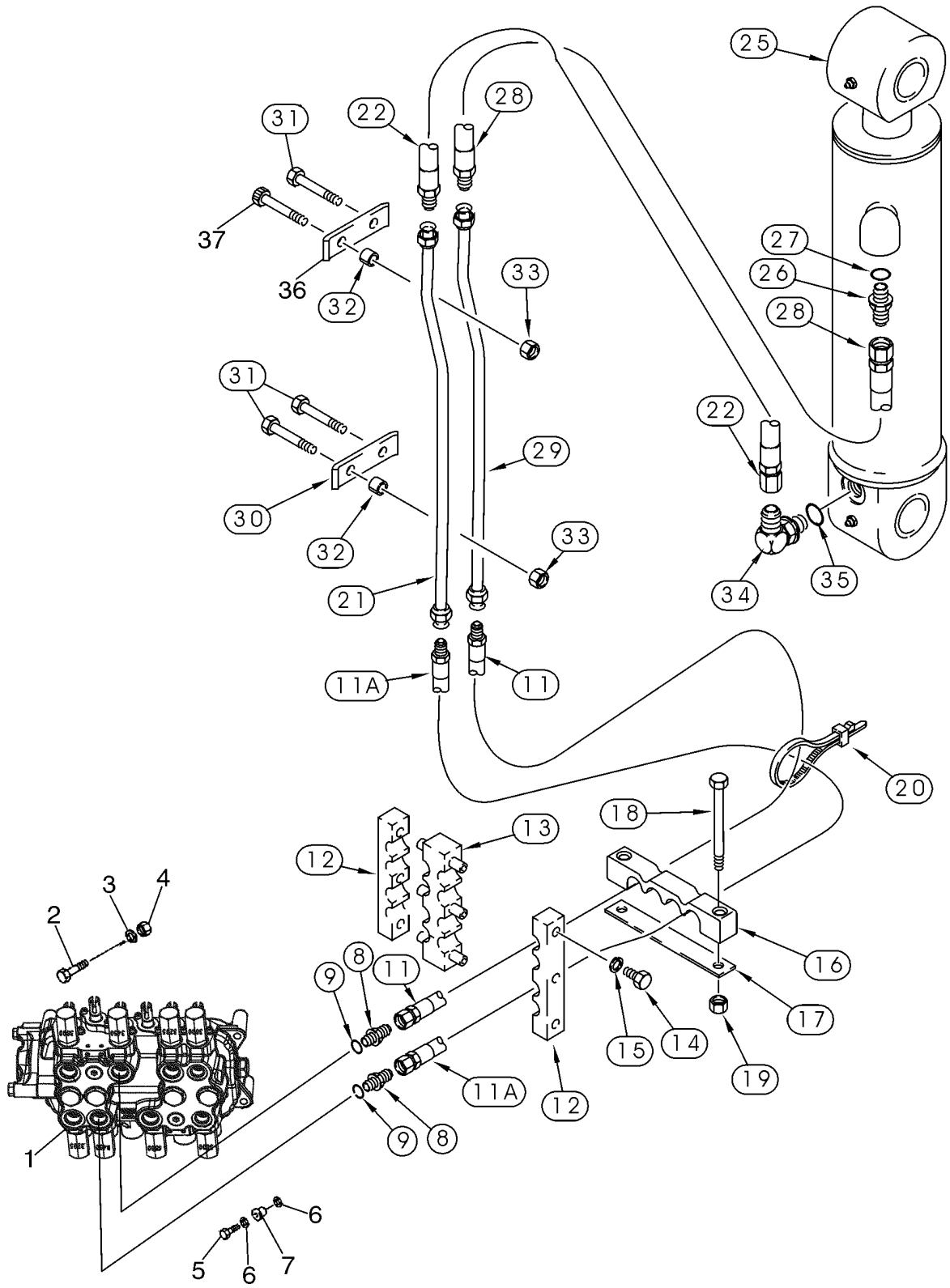

http://www.minnparbackhoeparts.com/

HYDRAULICS - CYLINDER, BACKHOE DIPPER

REF	FN	PART NUMBER	YR/SN	QTY	DESCRIPTION
1		REF		1	INSTRUCTION Valve Assy; Control, Backhoe Control Valve; For Correct Assembly and Components, See Figures 08-36 - 08-43
2		814-10080		2	SCREW M10 x 80
3		896-11010		2	WASHER
4		829-1410		2	NUT M10
5		614-10035		1	SCREW M10 x 35; Replaces 614-10040 M10 x 40 Bolt Used On Some Models
6		496-41041		2	WASHER 13/32 x 1-1/8 x 9/64
7		D52276		1	ISOLATOR
8		218-5064		2	CONNECTOR, HYD. 1-1/16 fl x Or; Incl. Ref 9
9		237-6012		1	O-RING 59/64 ID x 7/64, Boss Seal
11		393380A1		1	HOSE ASSY. 1295 mm (51 in); Upper Valve Port
11A		393380A1		1	HOSE ASSY. 1295 mm (51 in); Lower Valve Port
12		143439A1		2	SHIN Clamp
13		176226A1		1	FIXING BRACKET Clamp
14		614-8025		6	BOLT M8 x 25
15		892-11008		6	WASHER M8
16		373833A1		1	CLAMP
17		132212A1		1	PLATE, LARGE
18		814-12100		2	BOLT M12 x 100
19		832-10412		2	NUT M12
20		L18337		1	STRAP 15 in
21		87455443		1	TUBE ASSY. Replaces 87412079
22		87439660		1	HOSE ASSY. 660 mm (26 in)
25		183795A3		1	CYLINDER ASSY. 127 ID x 583 mm strk; Dipper Cylinder; See Figure 08-68; If Used
25		183795A4		1	CYLINDER ASSY. 127 ID x 583 mm strk; Dipper Cylinder; See Figure 08-68; If Used
26		218-5064		1	CONNECTOR, HYD. 1-1/16 fl x Or; Incl. Ref 27
27		237-6012		1	O-RING 59/64 ID x 7/64, Boss Seal
28		397782A1		1	HOSE ASSY. 780 mm (30-3/4 in)
29		142124A1		1	PIPE TUBE
30		133605A1		1	SHIN Clamp
31		814-12080		3	SCREW Hex, M12 x 80
32		132930A1		4	SPACER
33		832-10412		4	NUT M12

http://www.minnparbackhoeparts.com/

08-11		p2	06/05

HYDRAULICS - CYLINDER, BACKHOE DIPPER

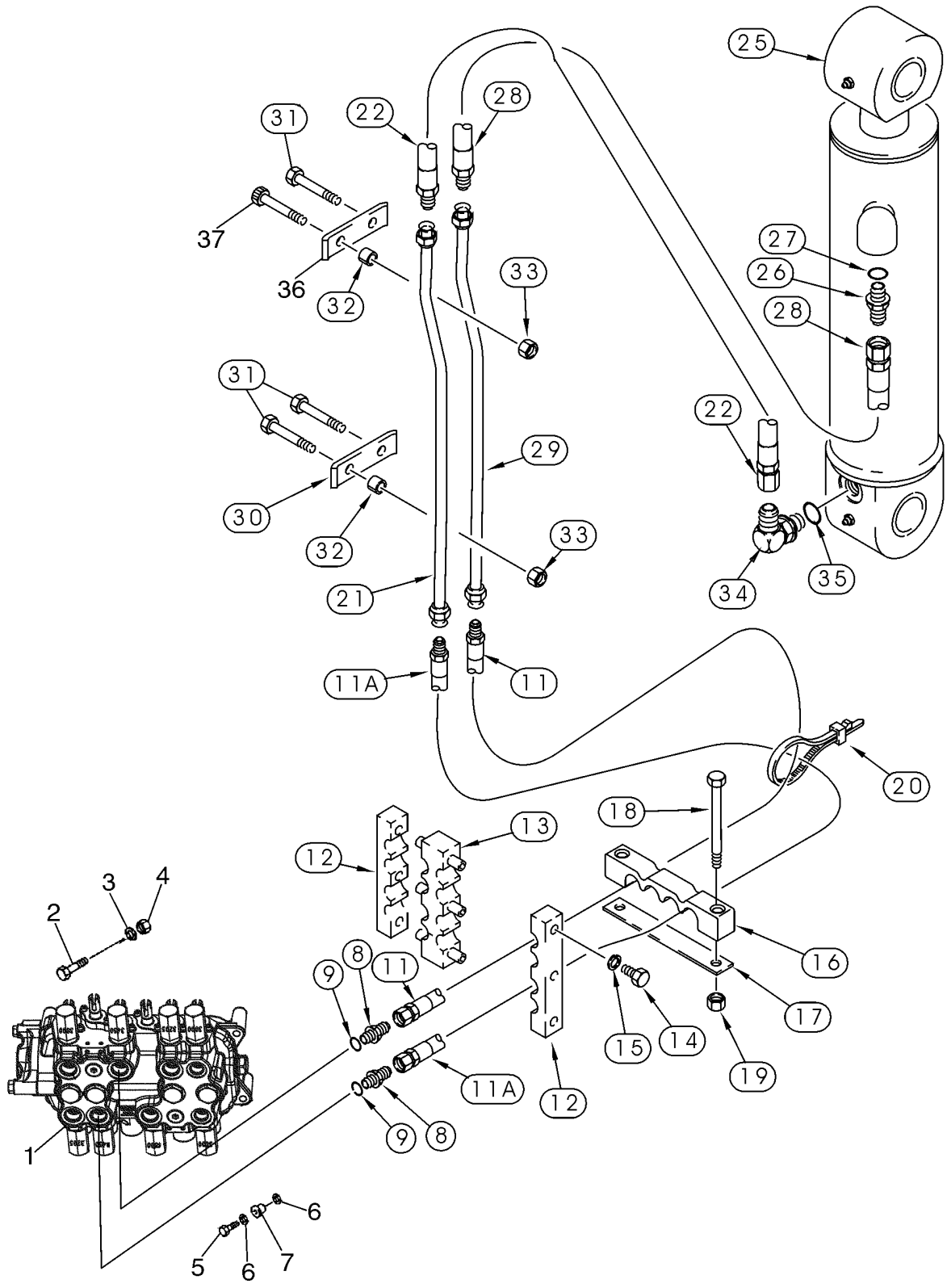

http://www.minnparbackhoeparts.com/

HYDRAULICS - CYLINDER, BACKHOE DIPPER

REF	FN	PART NUMBER	YR/SN	QTY	DESCRIPTION
34		87439842		1	FITTING ELBOW, 90 deg, 7/8 fl x 1-1/16 0r; Incl. Ref 35
35		237-6012		1	O-RING 59/64 ID x 7/64, Boss Seal
36		87307476		1	CLAMP Replaces 451605A1 Clamp Used On Some Models
37		814-12080		1	SCREW Hex, M12 x 80; Replaces 869-12080 M12 x 80 Flat Socket Head Screw Used On Some Models

http://www.minnparbackhoeparts.com/

08-12		p1	06/05

HYDRAULICS - CYLINDER, BACKHOE BUCKET (MODELS WITHOUT EXTENDABLE DIPPER)

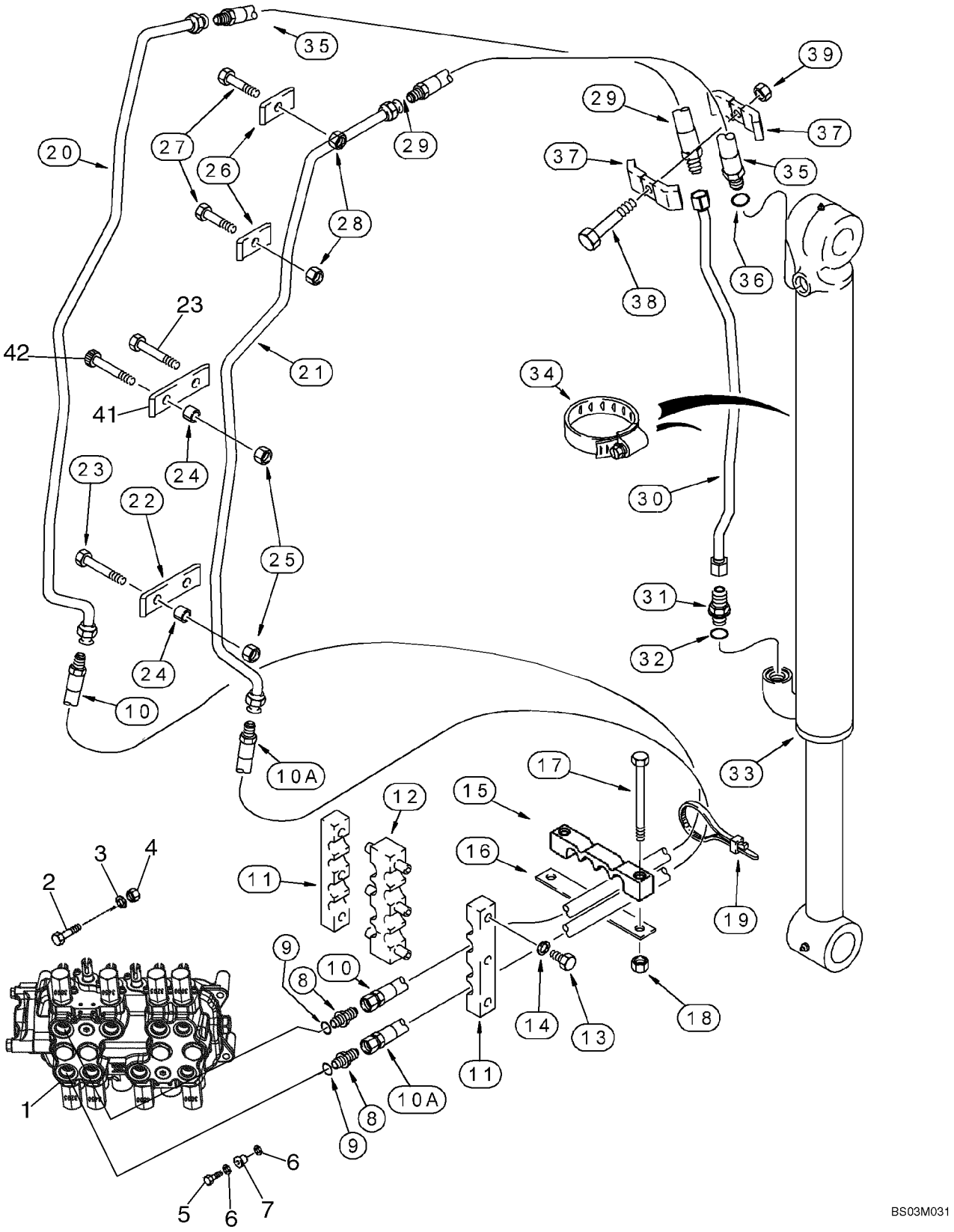

http://www.minnparbackhoeparts.com/

HYDRAULICS - CYLINDER, BACKHOE BUCKET (MODELS WITHOUT EXTENDABLE DIPPER)

REF	FN	PART NUMBER	YR/SN	QTY	DESCRIPTION
1		REF		1	INSTRUCTION Valve Assy, Control; Backhoe Control Valve; For Correct Assembly and Components, See Figures 08-36 - 08-43
2		814-10080		2	SCREW M10 x 80
3		896-11010		2	WASHER
4		829-1410		2	NUT M10
5		614-10035		1	SCREW M10 x 35; Replaces 614-10040 M10 x 40 Bolt Used On Some Models
6		496-41041		2	WASHER 13/32 x 1-1/8 x 9/64
7		D52276		1	ISOLATOR
8		218-5064		2	CONNECTOR, HYD. 1-1/16 fl x Or; Incl. Ref 9
9		237-6012		1	O-RING 59/64 ID x 7/64, Boss Seal
10		393380A1		1	HOSE ASSY. 1295 mm (51 in)
10A		393380A1		1	HOSE ASSY. 1295 mm (51 in)
11		143439A1		2	SHIN Clamp
12		176226A1		1	FIXING BRACKET Clamp
13		614-8025		6	BOLT M8 x 25
14		892-11008		6	WASHER M8
15		373833A1		1	CLAMP
16		132212A1		1	PLATE, LARGE
17		814-12100		2	BOLT M12 x 100
18		832-10412		2	NUT M12
19		L18337		1	STRAP 15 in
20		141806A1		1	PIPE TUBE
21		141801A1		1	PIPE TUBE
22		133605A1		2	SHIN Clamp
23		814-12080		6	SCREW Hex, M12 x 80
24		132930A1		8	SPACER
25		832-10412		8	NUT M12
26		133604A1		4	SHIN Clamp
27		814-12060		4	SCREW M12 x 60
28		832-10412		4	NUT M12
29		87307636		1	HOSE ASSY. 691 mm (27-1/4 in); Replaces 183660A1 640 mm (25-3/16 in) Long Hose Used On Some Models
30		396634A1		1	TUBE ASSY. Models Without Backhoe Auxiliary Hydraulics

http://www.minnparbackhoeparts.com/

08-12		p2	06/05

HYDRAULICS - CYLINDER, BACKHOE BUCKET (MODELS WITHOUT EXTENDABLE DIPPER)

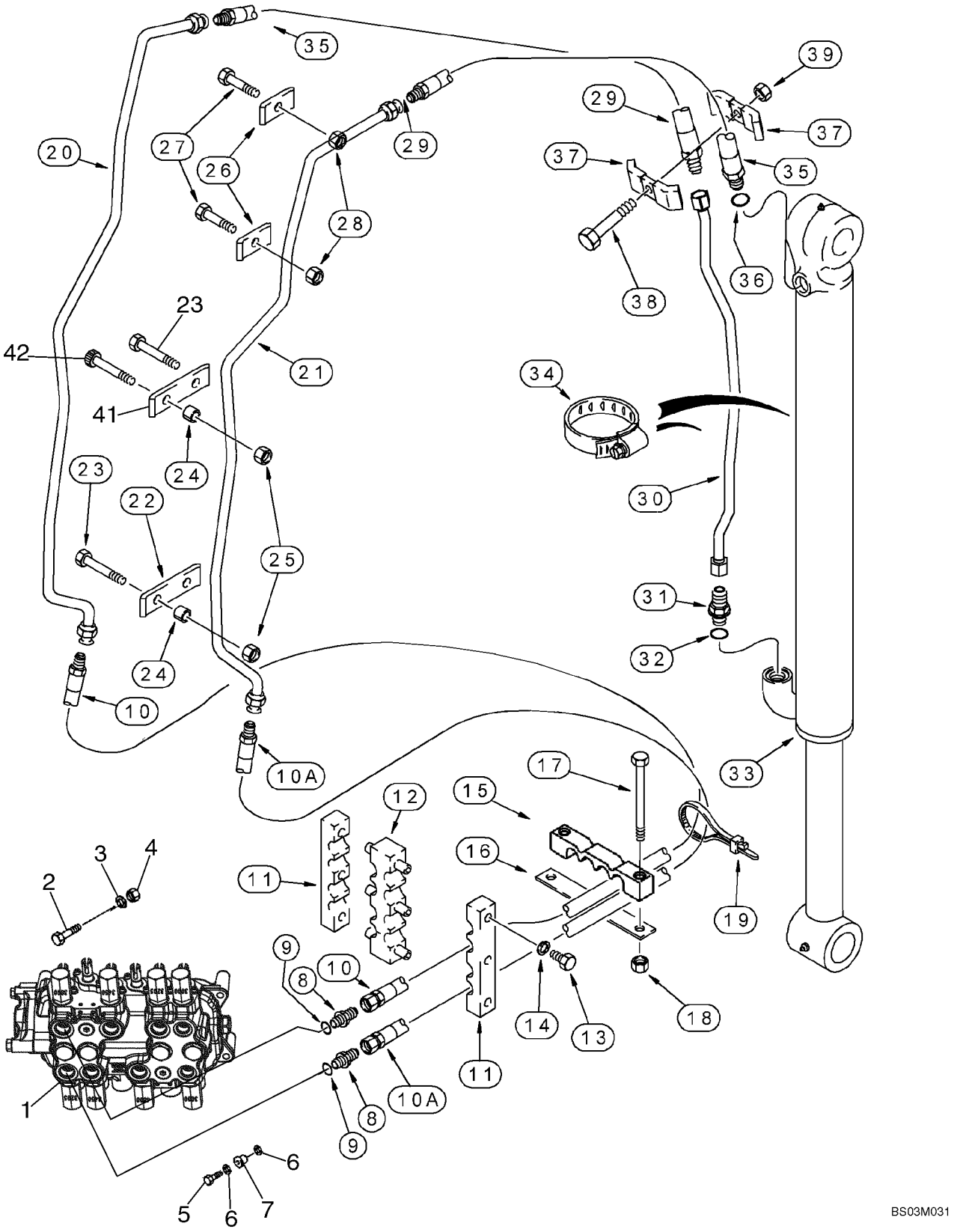

http://www.minnparbackhoeparts.com/

HYDRAULICS - CYLINDER, BACKHOE BUCKET (MODELS WITHOUT EXTENDABLE DIPPER)

REF	FN	PART NUMBER	YR/SN	QTY	DESCRIPTION
30		314772A1		1	PIPE Models With Backhoe Auxiliary Hydraulics
31		218-5064		1	CONNECTOR, HYD. 1-1/16 fl x Or; Incl. Ref 32
32		237-6012		1	O-RING 59/64 ID x 7/64, Boss Seal
33		235916A1		1	CYLINDER ASSY. 80 ID x 872 mm strk; Bucket Cylinder; See Figure 08-69
34		214-1472		1	CLAMP 4-1/16 - 5
35		87307635		1	HOSE ASSY. 691 mm (27-1/4 in); Incl. Ref 36; Replaces 183658A1 640 mm (25-3/16 in) Long Hose Used On Some Models
36		237-6012		1	O-RING 59/64 ID x 7/64, Boss Seal
37		D143846		2	SHIN Clamp
38		814-10055		1	BOLT M10 x 55
39		832-10410		1	NUT M10
41		87307476		2	CLAMP Replaces 451605A1 Clamp Used On Some Models
42		814-12080		2	SCREW Hex, M12 x 80; Replaces 869-12080 M12 x 80 Flat Socket Head Screw Used On Some Models

http://www.minnparbackhoeparts.com/

08-13		p1	06/05

HYDRAULICS - CYLINDER, BACKHOE BUCKET (MODELS WITH EXTENDABLE DIPPER)

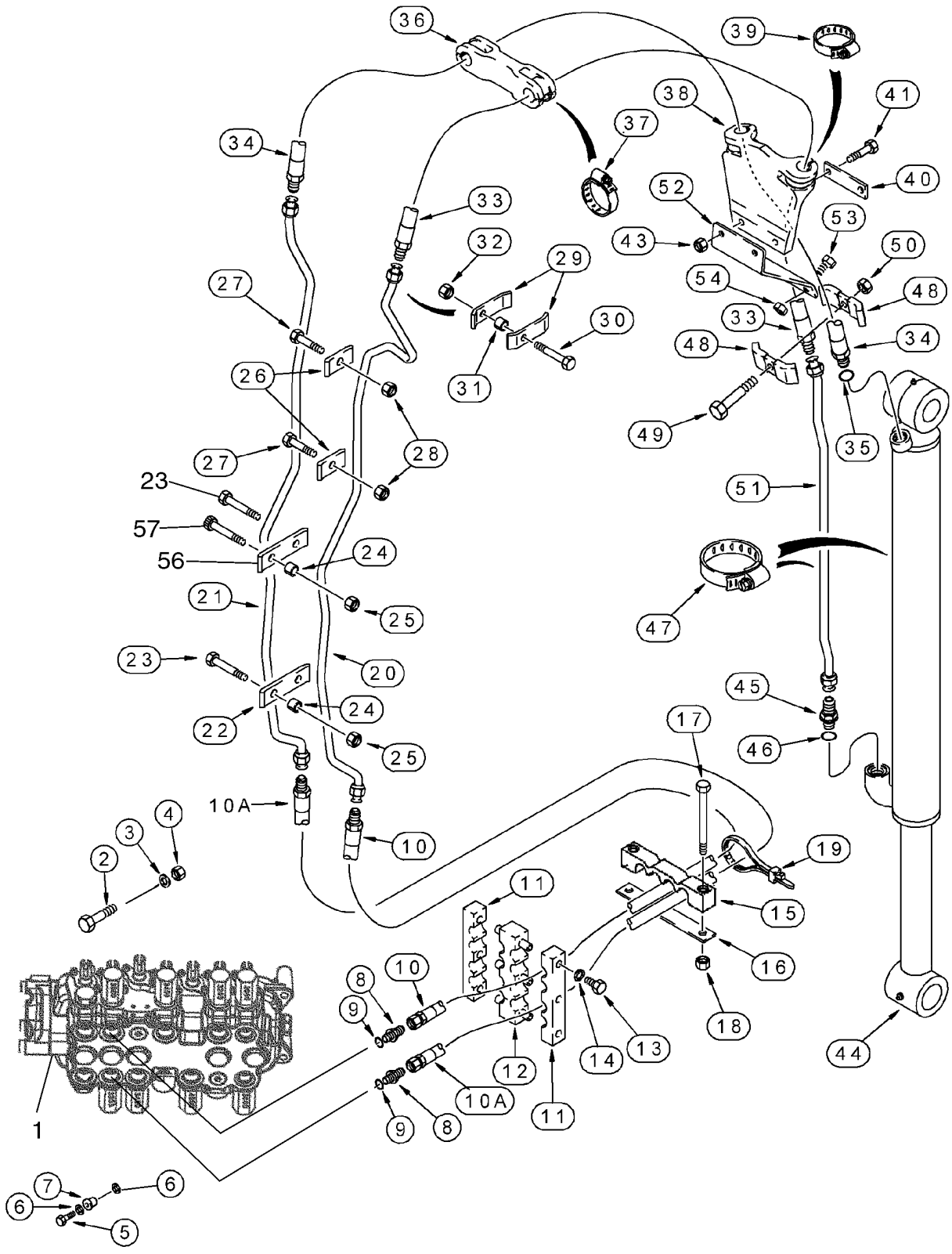

http://www.minnparbackhoeparts.com/

HYDRAULICS - CYLINDER, BACKHOE BUCKET (MODELS WITH EXTENDABLE DIPPER)

REF	FN	PART NUMBER	YR/SN	QTY	DESCRIPTION
1		REF		1	INSTRUCTION Valve Assy, Control; Backhoe Control Valve; For Correct Assembly and Components, See Figures 08-38, 08-39, 08-41, 08-43
2		814-10080		2	SCREW M10 x 80
3		896-11010		2	WASHER
4		829-1410		2	NUT M10
5		614-10035		1	SCREW M10 x 35; Replaces 614-10040 M10 x 40 Bolt Used On Some Models
6		496-41041		2	WASHER 13/32 x 1-1/8 x 9/64
7		D52276		1	ISOLATOR
8		218-5064		2	CONNECTOR, HYD. 1-1/16 fl x Or; Incl. Ref 9
9		237-6012		1	O-RING 59/64 ID x 7/64
10		393380A1		1	HOSE ASSY. 1295 mm (51 in)
10A		393380A1		1	HOSE ASSY. 1295 mm (51 in)
11		143439A1		2	SHIN Clamp
12		176226A1		1	FIXING BRACKET Clamp
13		614-8025		6	BOLT M8 x 25
14		892-11008		6	WASHER M8
15		373833A1		1	CLAMP
16		132212A1		1	PLATE, LARGE
17		814-12100		2	BOLT M12 x 100
18		832-10412		2	NUT M12
19		L18337		1	STRAP 15 in
20		187637A1		1	TUBE ASSY.
21		187639A1		1	PIPE
22		133605A1		2	SHIN Clamp
23		814-12080		6	SCREW HexM12 x 80
24		132930A1		8	SPACER
25		832-10412		8	NUT M12
26		133604A1		4	SHIN Clamp
27		814-12060		4	SCREW M12 x 60
28		832-10412		4	NUT M12
29		D143426		4	CLAMP
30		814-10055		2	BOLT M10 x 55
31		D143412		2	SPACER
32		832-10410		2	NUT M10

http://www.minnparbackhoeparts.com/

08-13		p2	06/05

HYDRAULICS - CYLINDER, BACKHOE BUCKET (MODELS WITH EXTENDABLE DIPPER)

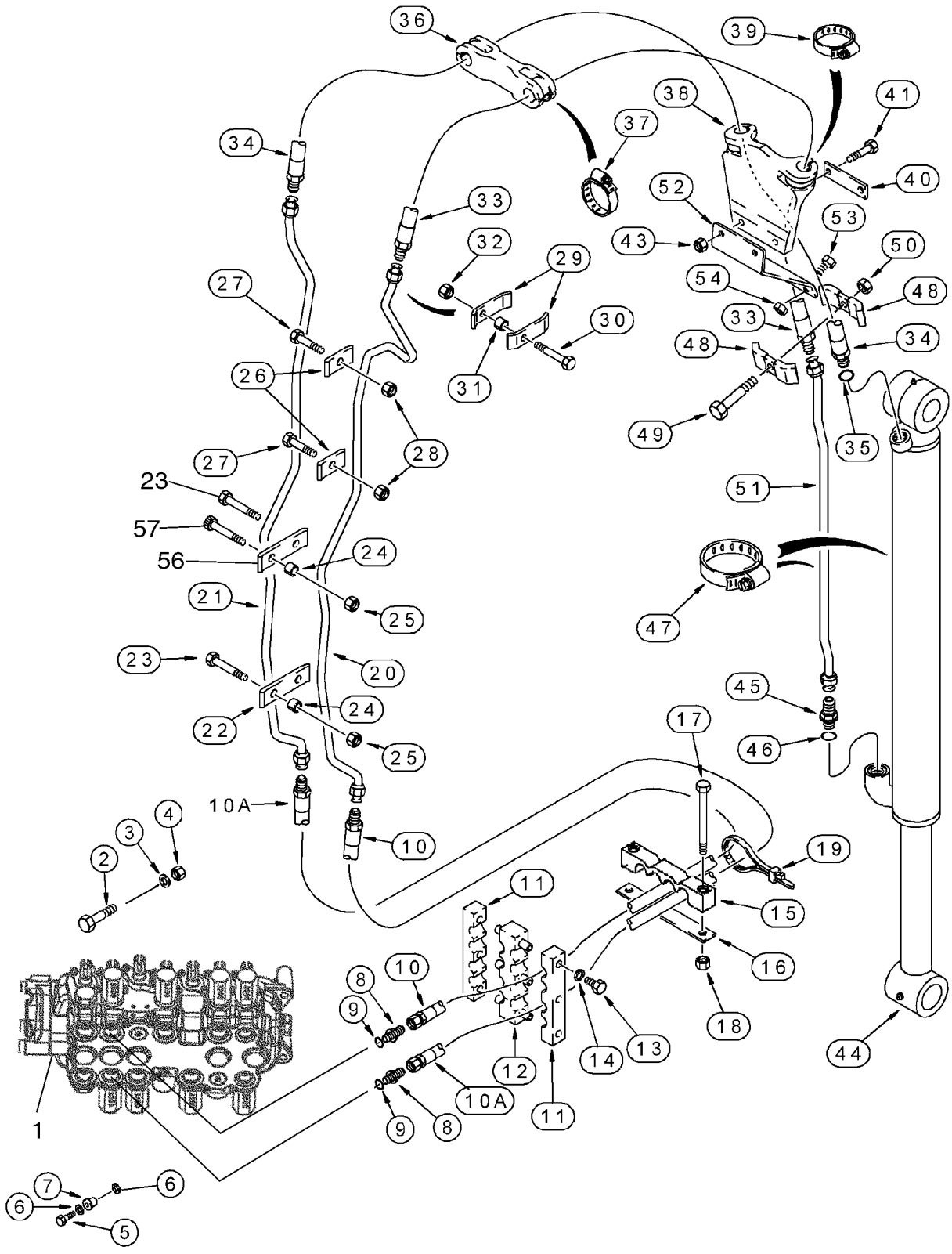

http://www.minnparbackhoeparts.com/

HYDRAULICS - CYLINDER, BACKHOE BUCKET (MODELS WITH EXTENDABLE DIPPER)

REF	FN	PART NUMBER	YR/SN	QTY	DESCRIPTION
33		108335A1		1	HOSE 1960 mm (77-1/8 in)
34		108336A1		1	HOSE 1930 mm (76 in); Incl. Ref 35
35		237-6012		1	O-RING 59/64 ID x 7/64
36		103670A1		1	CLAMP, HOSE
37		214-3132		2	CLAMP 2,0 in
38		184297A1		1	SUPPORT
39		214-3132		2	CLAMP 2,0 in
40		101479A1		1	SUPPORT
41		814-10045		2	BOLT M10 x 45
43		832-10410		2	NUT M10
44		235916A1		1	CYLINDER ASSY. 80 ID x 872 mm strk; Bucket Cylinder; See Figure 08-69
45		218-5064		1	CONNECTOR, HYD. 1-1/16 fl x Or; Incl. Ref 46
46		237-6012		1	O-RING 59/64 ID x 7/64
47		214-1472		1	CLAMP 4-1/16 - 5
48		D143846		2	SHIN Clamp
49		814-10055		1	BOLT M10 x 55
50		832-10410		1	NUT M10
51		396634A1		1	TUBE ASSY. Models Without Auxiliary Hydraulics
51		314772A1		1	PIPE Models With Auxiliary Hydraulics
52		183736A1		1	SUPPORT
53		614-10030		2	SCREW M10 x 30
54		832-10410		2	NUT M10
56		87307476		2	CLAMP Replaces 451605A1 Clamp Used On Some Models
57		814-12080		2	SCREW Hex, M12 x 80; Replaces 869-12080 M12 x 80 Flat Socket Head Screw Used On Some Models

http://www.minnparbackhoeparts.com/

HYDRAULICS - CYLINDER, BACKHOE EXTENDABLE DIPPER

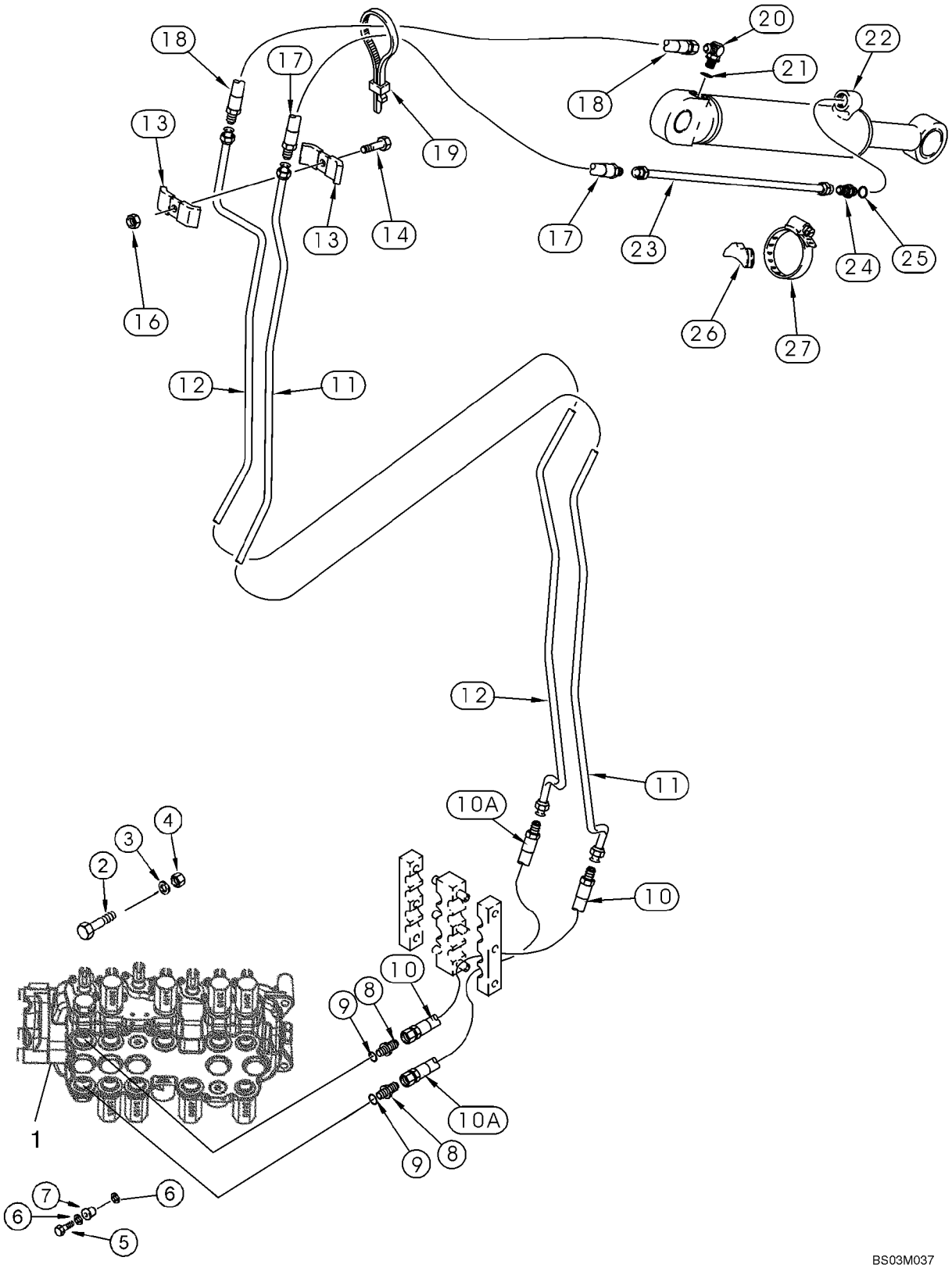

http://www.minnparbackhoeparts.com/

HYDRAULICS - CYLINDER, BACKHOE EXTENDABLE DIPPER

REF	FN	PART NUMBER	YR/SN	QTY	DESCRIPTION
1		REF		1	INSTRUCTION Valve Assy, Control; Backhoe Control Valve; For Correct Assembly and Components, See Figures 08-38, 08-39, 08-41, 08-43
2		814-10080		2	SCREW M10 x 80
3		896-11010		2	WASHER
4		829-1410		2	NUT M10
5		614-10035		1	SCREW M10 x 35; Replaces 614-10040 M10 x 40 Bolt Used On Some Models
6		496-41041		2	WASHER 13/32 x 1-1/8 x 9/64
7		D52276		1	ISOLATOR
8		218-5064		2	CONNECTOR, HYD. 1-1/16 fl x Or; Incl. Ref 9
9		237-6012		1	O-RING 59/64 ID x 7/64
10		393380A1		1	HOSE ASSY. 1295 mm (51 in)
10A		393380A1		1	HOSE ASSY. 1295 mm (51 in)
11		141809A1		1	PIPE Tube
12		141811A1		1	PIPE Tube
13		D40236		2	CLAMP
14		814-10050		1	BOLT M10 x 50
16		832-10410		1	NUT M10
17		184617A1		1	HOSE 850 mm (33-1/2 in)
18		184616A1		1	HOSE 700 mm (27-9/16 in)
19		L18337		1	STRAP 15 in
20		218-5107		1	ELBOW 7/8 fl x adj Or; Incl. Ref 21
21		237-6010		1	O-RING 3/4 ID x 3/32
22		1340969C2		1	CYLINDER ASSY. 76 ID x 1068 mm strk; Extendable Dipper Cylinder; See Figure 08-70
23		87439537		1	TUBE ASSY. Tube; Replaces D140706
24		218-5062		1	CONNECTOR, HYD. 7/8 fl x Or; Incl. Ref 25
25		237-6010		1	O-RING 3/4 ID x 3/32
26		D38648		1	BLOCK
27		214-1464		1	CLAMP 3-9/16 - 4-1/2 in dia

http://www.minnparbackhoeparts.com/

08-15		p1	04/05

HYDRAULICS - VALVE, PILOT CONTROL AND JOYSTICKS (6 SPOOL, W/O EXT DIPPER, W/O AUX HYDS)

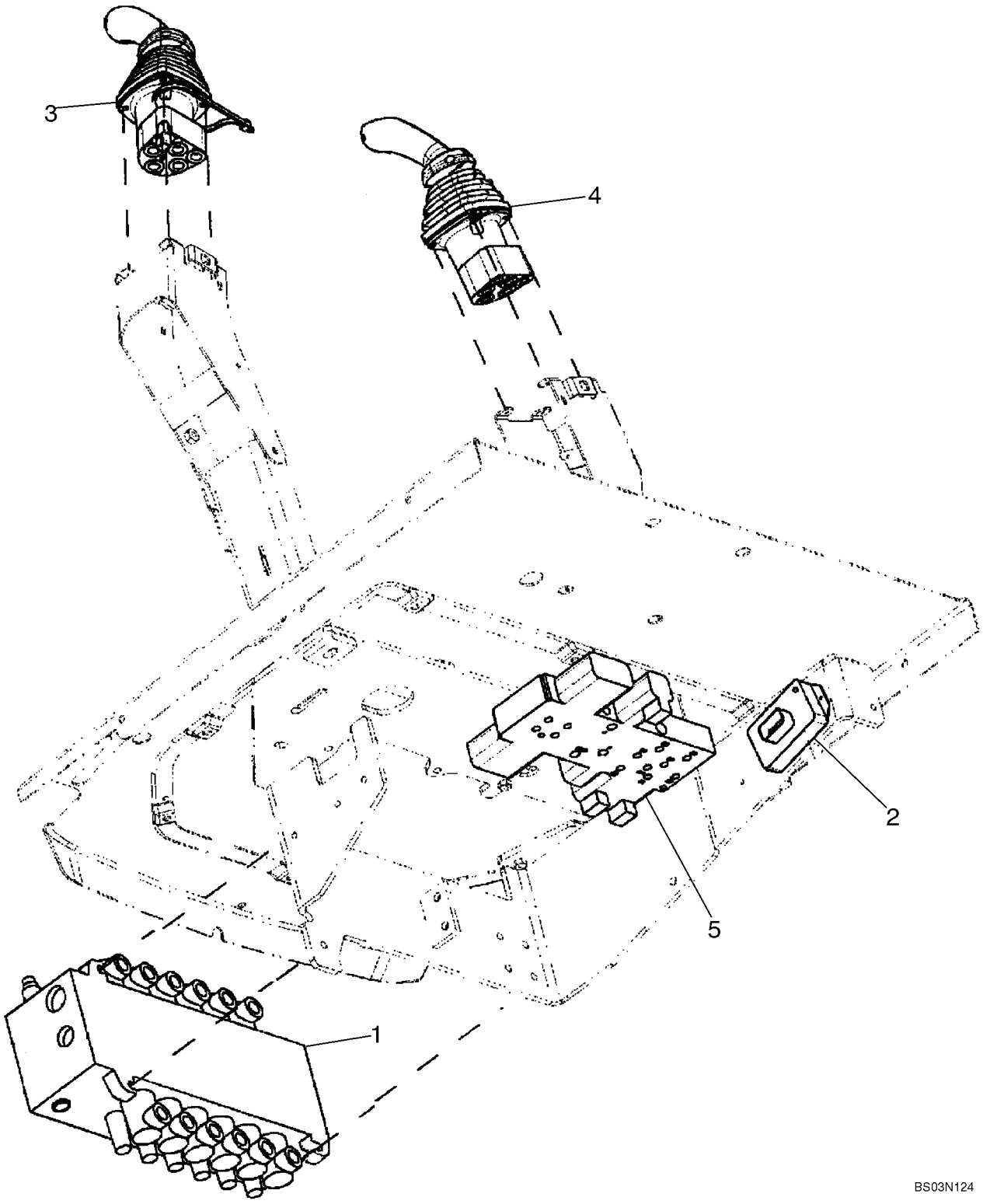

http://www.minnparbackhoeparts.com/

HYDRAULICS - VALVE, PILOT CONTROL AND JOYSTICKS (6 SPOOL, W/O EXT DIPPER, W/O AUX HYDS)

REF	FN	PART NUMBER	YR/SN	QTY	DESCRIPTION
		REF			INSTRUCTION SIX SPOOL VALVE WITHOUT EXTENDABLE DIPPER; WITH AUTO-UP; WITHOUT AUXILIARY HYDRAULICS, WITHOUT UNI-DIRECTIONAL OR BI-DIRECTIONAL
1		86987459		1	VALVE, CONTROL Backhoe, 6 Spool; See Figure 08-40; For Mounting See Figure 08-22
2		87419454		1	BOX Box, Pilot Control Power Supply Module
		840-1416		2	SCREW M4 x 16
3		87308844		1	VALVE, CONTROL JOYSTICK; Left-Hand; With Horn Button; See Figure 08-54; Replaces 87443740
4		87308840		1	VALVE, CONTROL JOYSTICK; Right-Hand; See Figure 08-57; Replaces 87443739
5		85827472		1	VALVE, HYDRAULIC Pressure Reducing, 2 Spool; See Figure 08-51

http://www.minnparbackhoeparts.com/

HYDRAULICS - VALVE, PILOT CONTROL AND JOYSTICKS (6 SPOOL, W/O EXT DIPPER, W/ AUX HYDS)

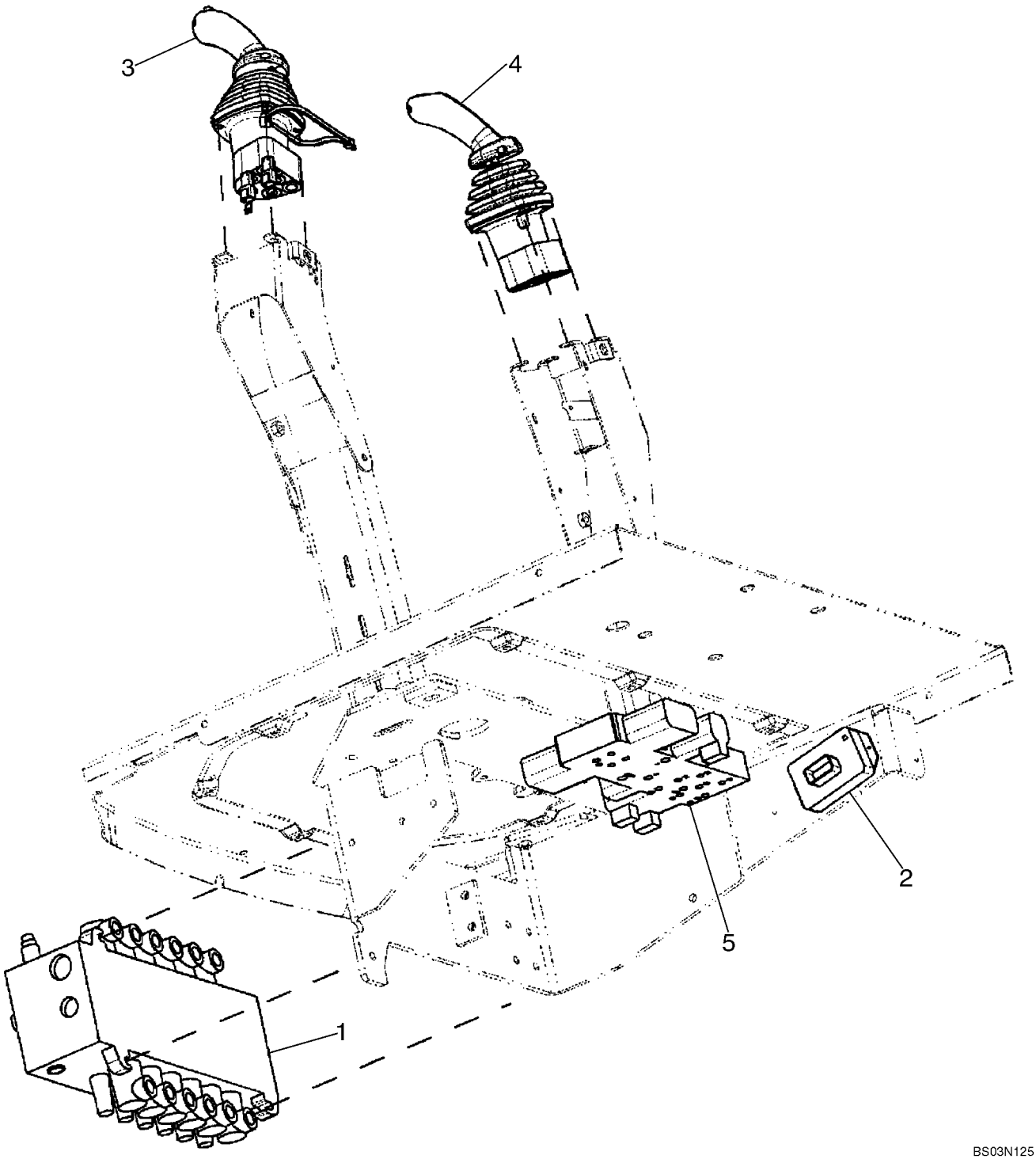

http://www.minnparbackhoeparts.com/

HYDRAULICS - VALVE, PILOT CONTROL AND JOYSTICKS (6 SPOOL, W/O EXT DIPPER, W/ AUX HYDS)

REF	FN	PART NUMBER	YR/SN	QTY	DESCRIPTION
		REF			INSTRUCTION SIX SPOOL VALVE WITHOUT EXTENDABLE DIPPER; WITH AUTO-UP; WITH AUXILIARY HYDRAULICS, WITH UNI-DIRECTIONAL
1		86987459		1	VALVE, CONTROL Backhoe, 6 Spool; See Figure 08-40; For Mounting See Figure 08-22
2		87419454		1	BOX Box, Pilot Control Power Supply Module
		840-1416		2	SCREW M4 x 16
3		87308846		1	VALVE, CONTROL JOYSTICK; Left-Hand; With Horn and Uni-Directional Buttons; See Figure 08-55; Replaces 87443742
4		87308840		1	VALVE, CONTROL JOYSTICK; Right-Hand; See Figure 08-57; Replaces 87443739
5		85827472		1	VALVE, HYDRAULIC Pressure Reducing, 2 Spool; See Figure 08-51

http://www.minnparbackhoeparts.com/

HYDRAULICS - VALVE, PILOT CONTROL AND JOYSTICKS (7 SPOOL, W/ EXT DIPPER, W/O AUX HYDS)

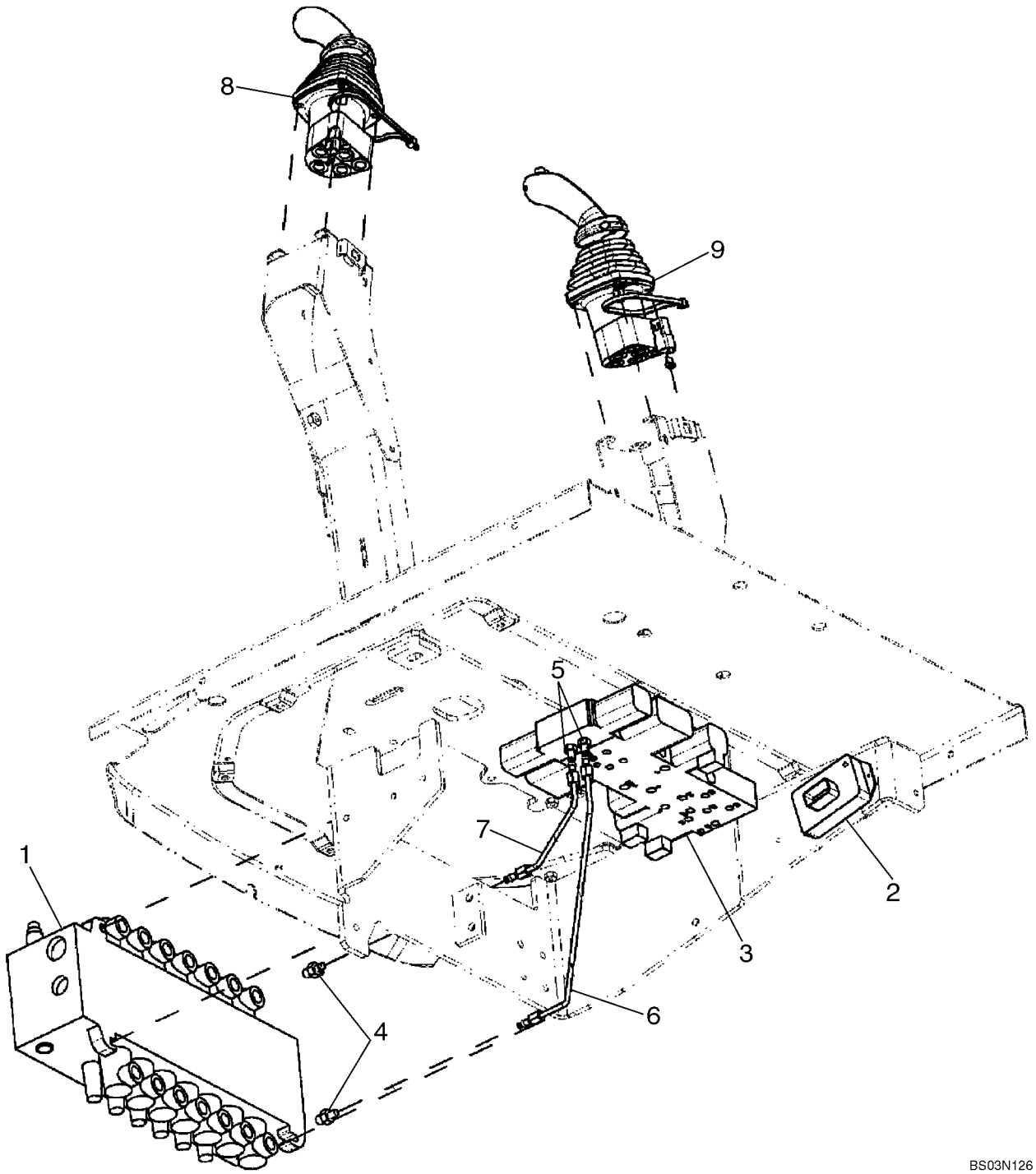

http://www.minnparbackhoeparts.com/

HYDRAULICS - VALVE, PILOT CONTROL AND JOYSTICKS (7 SPOOL, W/ EXT DIPPER, W/O AUX HYDS)

REF	FN	PART NUMBER	YR/SN	QTY	DESCRIPTION
		REF			INSTRUCTION SEVEN SPOOL VALVE WITH EXTENDABLE DIPPER; WITHOUT AUXILIARY HYDRAULICS; WITH AUTO-UP; WITHOUT UNI-DIRECTIONAL OR BI-DIRECTIONAL
1		86987460		1	VALVE, CONTROL Backhoe, 7 Spool; See Figure 08-41; For Mounting See Figure 08-22
2		87419454		1	BOX Box, Pilot Control Power Supply Module
		840-1416		2	SCREW M4 x 16
3		85827471		1	VALVE, HYDRAULIC Pressure Reducing, 3 Spool; See Figure 08-52
4		218-5089		2	CONNECTOR 7/16 fl x 9/16 Or; Includes 237-6006 O-Ring
		237-6006		1	O-RING 15/32 ID x 5/64
5		218-5053		2	CONNECTOR, HYD. 7/16 fl x Or; Includes 237-6004 O-Ring
		237-6004		1	O-RING 23/64 ID x 5/64
6		87437633		1	TUBE ASSY. To Lower Extendable Dipper Port
7		87437635		1	TUBE ASSY. To Upper Extendable Dipper Port
8		87308844		1	VALVE, CONTROL JOYSTICK; Left-Hand; With Horn Button; See Figure 08-54; Replaces 87443740
9		87308847		1	VALVE, CONTROL JOYSTICK; Right-Hand; See Figure 08-58; Replaces 87443743

http://www.minnparbackhoeparts.com/

08-18		p1	04/05

HYDRAULICS - VALVE, PILOT CONTROL AND JOYSTICKS (7 SPOOL, W/ EXT DIPPER, W/ AUX HYDS)

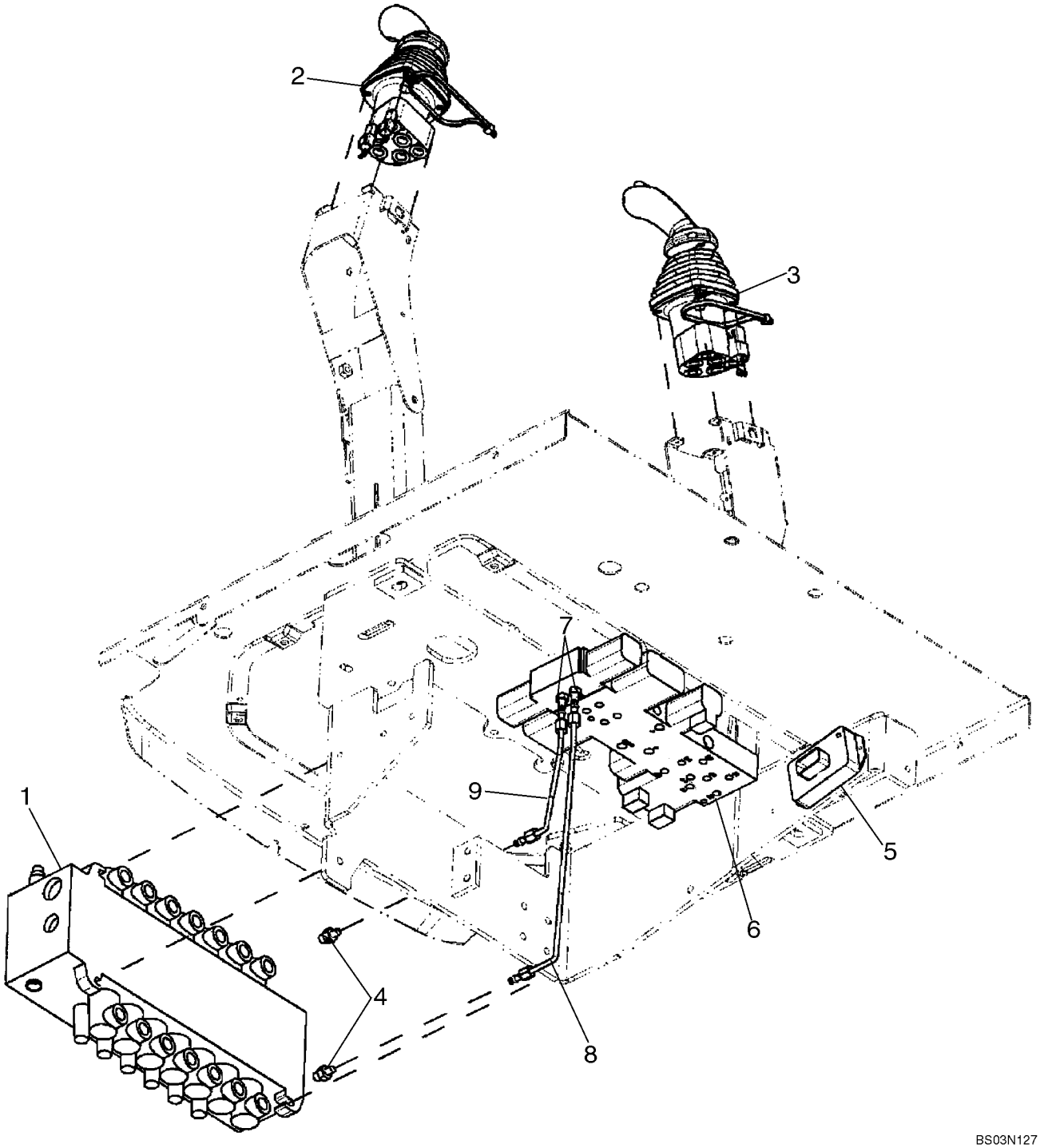

http://www.minnparbackhoeparts.com/

HYDRAULICS - VALVE, PILOT CONTROL AND JOYSTICKS (7 SPOOL, W/ EXT DIPPER, W/ AUX HYDS)

REF	FN	PART NUMBER	YR/SN	QTY	DESCRIPTION
		REF			INSTRUCTION SEVEN SPOOL VALVE WITH EXTENDABLE DIPPER; WITH AUXILIARY HYDRAULICS; WITH AUTO-UP; WITH UNI-DIRECTIONAL
1		86987460		1	VALVE, CONTROL Backhoe, 7 Spool; See Figure 08-41; For Mounting See Figure 08-22
2		87308846		1	VALVE, CONTROL JOYSTICK; Left-Hand; With Horn and Uni-Directional Buttons; See Figure 08-55; Replaces 87443742
3		87308847		1	VALVE, CONTROL JOYSTICK; Right-Hand; See Figure 08-58; Replaces 87443743
4		218-5089		2	CONNECTOR 7/16 fl x 9/16 Or; Includes 237-6006 O-Ring
		237-6006		1	O-RING 15/32 ID x 5/64
5		87419454		1	BOX Box, Pilot Control Power Supply Module
		840-1416		2	SCREW M4 x 16
6		85827471		1	VALVE, HYDRAULIC Pressure Reducing, 3 Spool; See Figure 08-52
7		218-5053		2	CONNECTOR, HYD. 7/16 fl x Or; Includes 237-6004 O-Ring
		237-6004		1	O-RING 23/64 ID x 5/64
8		87437633		1	TUBE ASSY. To Lower Extendable Dipper Port
9		87437635		1	TUBE ASSY. To Upper Extendable Dipper Port

http://www.minnparbackhoeparts.com/

08-19		p1	04/05

HYDRAULICS - VALVE, PILOT CONTROL AND JOYSTICKS (7 SPOOL, W/O EXT DIPPER, W/ AUX HYDS)

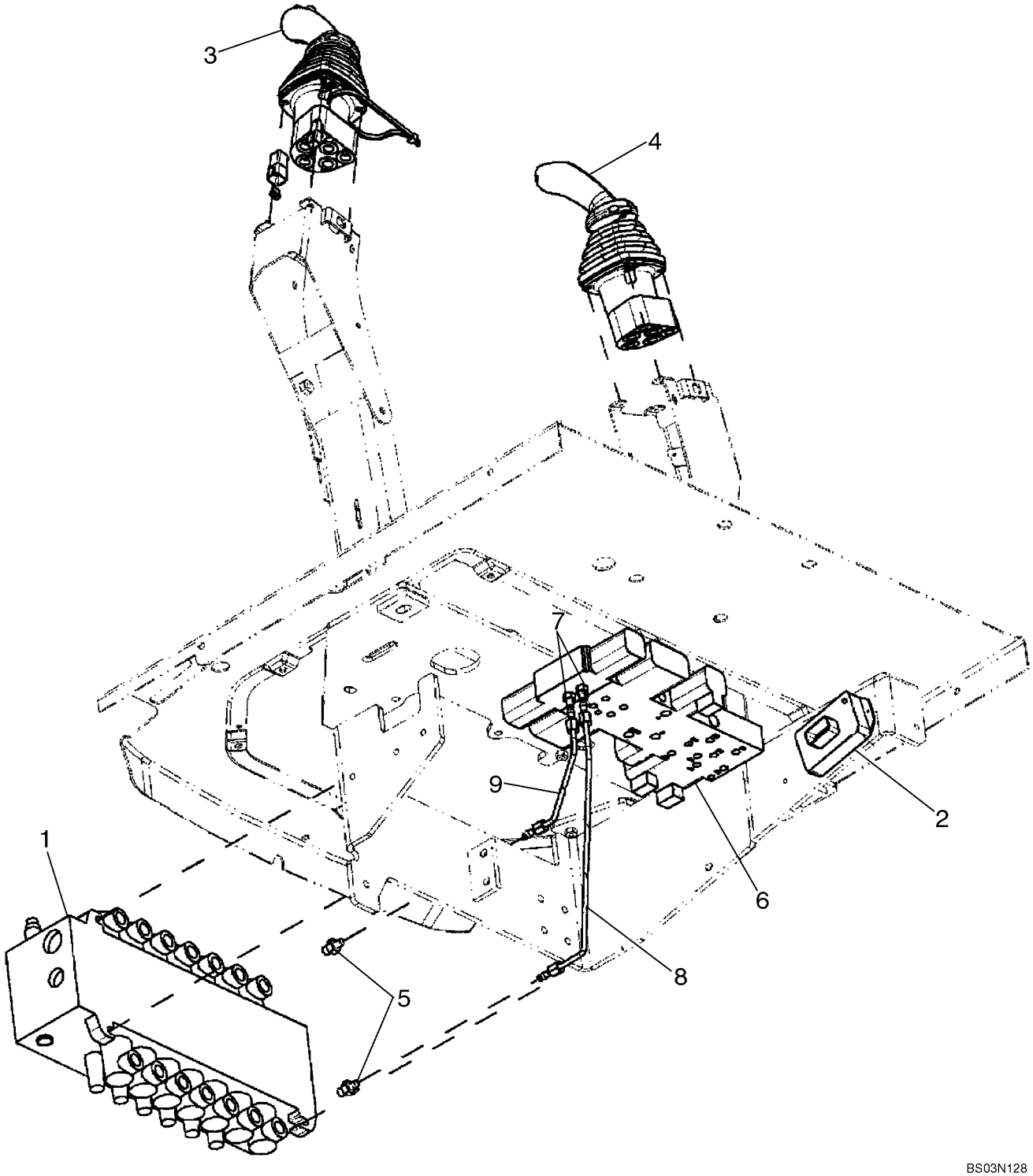

http://www.minnparbackhoeparts.com/

HYDRAULICS - VALVE, PILOT CONTROL AND JOYSTICKS (7 SPOOL, W/O EXT DIPPER, W/ AUX HYDS)

REF	FN	PART NUMBER	YR/SN	QTY	DESCRIPTION
		REF			INSTRUCTION SEVEN SPOOL VALVE WITHOUT EXTENDABLE DIPPER; WITH AUXILIARY HYDRAULICS; WITH AUTO-UP; WITH BI-DIRECTIONAL
1		87407965		1	VALVE, CONTROL Backhoe, 7 Spool; See Figure 08-42; For Mounting See Figure 08-22
2		87419455		1	CONTROL UNIT Box, Pilot Control Power Supply Module
		840-1416		2	SCREW M4 x 16
3		87308845		1	VALVE, CONTROL JOYSTICK; Left-Hand; With Horn and Bi-Directional Buttons; See Figure 08-56; Replaces 87443741
4		87308840		1	VALVE, CONTROL JOYSTICK; Right-Hand; See Figure 08-57; Replaces 87443739
5		218-5089		2	CONNECTOR 7/16 fl x 9/16 Or; Includes 237-6006 O-Ring
		237-6006		1	O-RING 15/32 ID x 5/64
6		85827471		1	VALVE, HYDRAULIC Pressure Reducing, 3 Spool; See Figure 08-52
7		218-5053		2	CONNECTOR, HYD. 7/16 fl x Or; Includes 237-6004 O-Ring
		237-6004		1	O-RING 23/64 ID x 5/64
8		87438012		1	TUBE ASSY. To Lower Auxiliary Port
9		87438015		1	TUBE ASSY. To Upper Auxiliary Port

http://www.minnparbackhoeparts.com/

08-20		p1	04/05

HYDRAULICS - VALVE, PILOT CONTROL AND JOYSTICKS (8 SPOOL, W/ EXT DIPPER, W/ AUX HYDS)

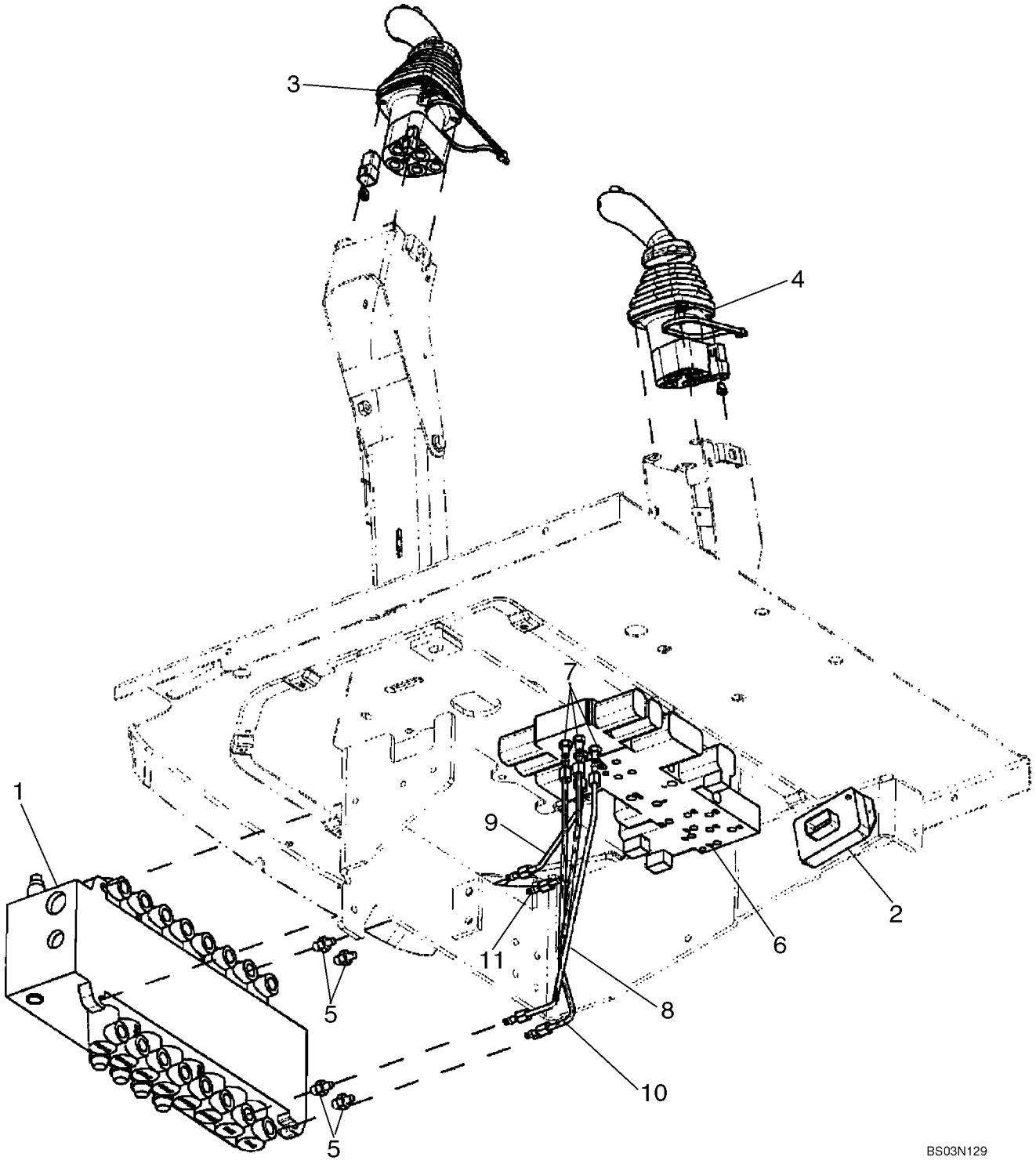

http://www.minnparbackhoeparts.com/

HYDRAULICS - VALVE, PILOT CONTROL AND JOYSTICKS (8 SPOOL, W/ EXT DIPPER, W/ AUX HYDS)

REF	FN	PART NUMBER	YR/SN	QTY	DESCRIPTION
		REF			INSTRUCTION EIGHT SPOOL VALVE WITH EXTENDABLE DIPPER; WITH AUXILIARY HYDRAULICS; WITH AUTO-UP; WITH BI-DIRECTIONAL
1		86987461		1	VALVE, HYDRAULIC Backhoe, 8 Spool; See Figure 08-43; For Mounting See Figure 08-22
2		87419455		1	CONTROL UNIT Box, Pilot Control Power Supply Module
		840-1416		2	SCREW M4 x 16
3		87308845		1	VALVE, CONTROL JOYSTICK; Left-Hand; With Horn and Bi-Directional Buttons; See Figure 08-56; Replaces 87443741
4		87308847		1	VALVE, CONTROL JOYSTICK; Right-Hand; See Figure 08-58; Replaces 87443743
5		218-5089		4	CONNECTOR 7/16 fl x 9/16 Or; Includes 237-6006 O-Ring
		237-6006		1	O-RING 15/32 ID x 5/64
6		87434621		1	VALVE, CONTROL Pressure Reducing, 4 Spool; SeeFigure 08-53
7		218-5053		4	CONNECTOR, HYD. 7/16 fl x Or; Includes 237-6004 O-Ring
		237-6004		1	O-RING 23/64 ID x 5/64
8		87437633		1	TUBE ASSY. To Lower Extendable Dipper Port
9		87437635		1	TUBE ASSY. To Upper Extendable Dipper Port
10		87440835		1	TUBE ASSY. Tube, To Lower Auxiliary Port
11		87440837		1	TUBE ASSY. Tube, To Upper Auxiliary Port

http://www.minnparbackhoeparts.com/

HYDRAULICS - PILOT CONTROL JOYSTICKS

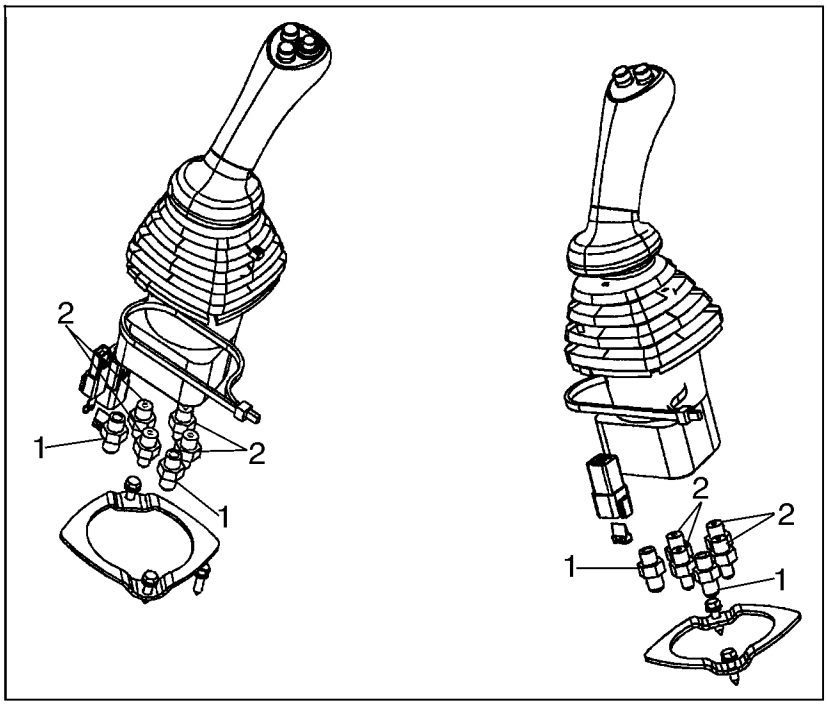

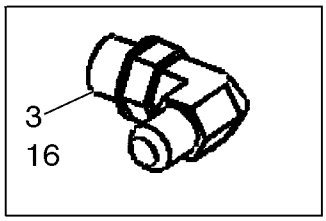

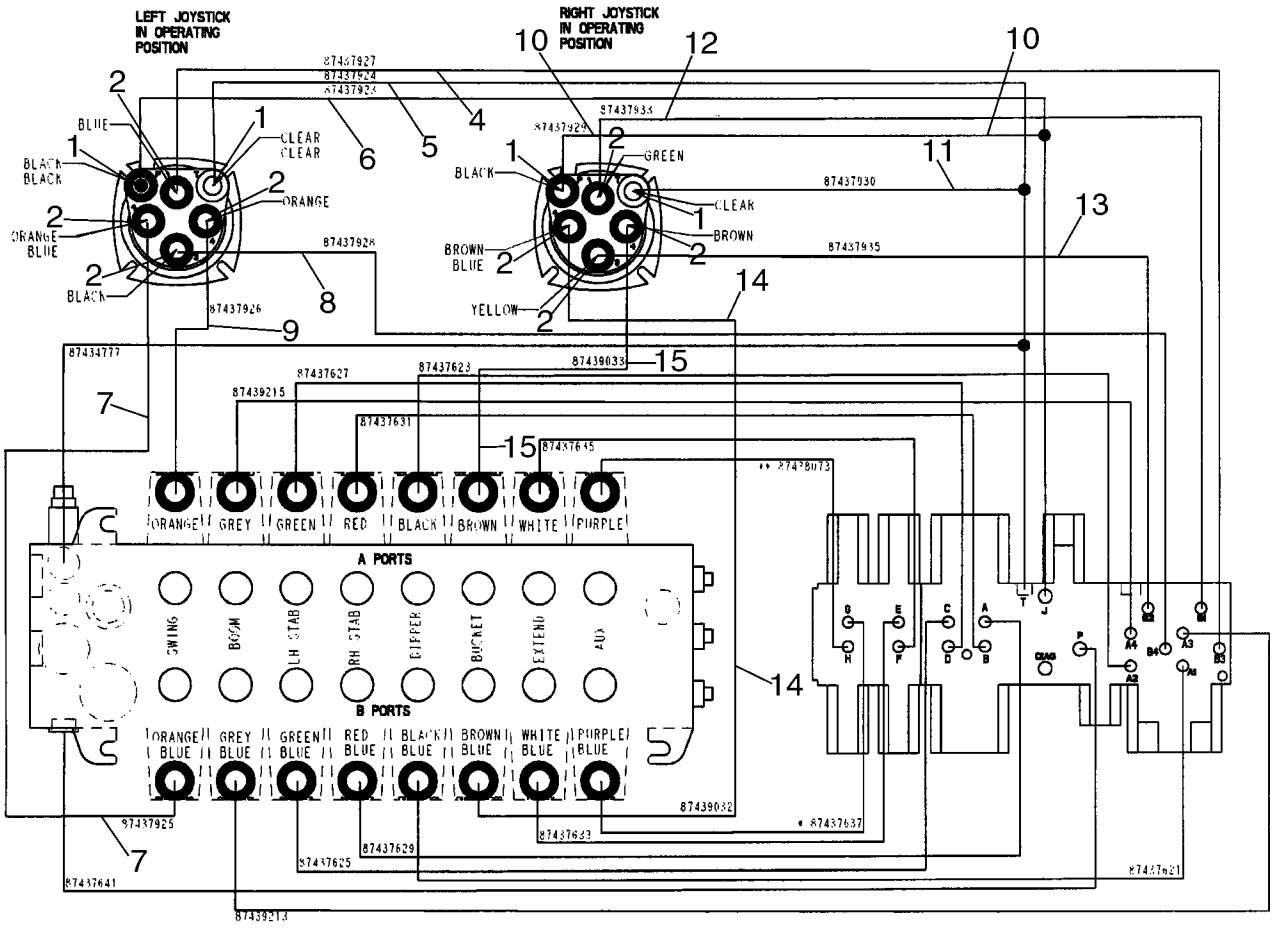

BS04A002

http://www.minnparbackhoeparts.com/

HYDRAULICS - PILOT CONTROL JOYSTICKS

REF	FN	PART NUMBER	YR/SN	QTY	DESCRIPTION
1		218-5057		4	CONNECTOR, HYD. 9/16 fl x Or; Includes 237-6006 O-Ring
2		218-5089		8	CONNECTOR 7/16 fl x 9/16 Or; Includes 237-6006 O-Ring
3		218-5105		1	ELBOW 90 deg, 9/16 fl x Or; Includes 237-6006; Installs in Hydraulic Tank for Pilot Return
4		87437927		1	HOSE ASSY. 1295 mm (51 in); Left-Hand Joystick No. 1 to Selector Valve B3
5		87437924		1	HOSE ASSY. 1000 mm (39-3/8 in); Left-Hand Joystick Tank to Pressure Reducing Valve T
6		87437923		1	HOSE ASSY. 1035 mm (40-3/4 in); Left-Hand Joystick Pressure to Pressure Reducing Valve J
7		87437925		1	HOSE ASSY. 1075 mm (42-3/8 in); Left-Hand Joystick No. 2 to Swing Port B
8		87437928		1	HOSE ASSY. 1270 mm (50 in); Left-Hand Joystick No. 3 to Selector Valve B4
		399004A1		1	GUARD Hose, 38.9 ID x 270 mm long; Used With Ref 4 - 8
9		87437926		1	HOSE ASSY. 825 mm (32-1/2 in); Left-Hand Joystick No. 4 to Swing Port A
10		87437929		1	HOSE ASSY. 1105 mm (43-1/2 in); Right-Hand Joystick Pressure to Pressure Reducing Valve J
11		87437930		1	HOSE ASSY. 1345 mm (53 in); Right-Hand Joystick Tank to Pressure Reducing Valve T
		191703A1		1	LOOM Hose Guard, 28 ID x 400 mm long; Used With Ref 10, 11
12		87437933		1	HOSE ASSY. 1185 mm (46-11/16 in); Right-Hand Joystick No. 1 to Selector Valve B1
13		87437935		1	HOSE ASSY. 1175 mm (46-5/16 in); Right-Hand Joystick No. 3 to Selector Valve B2
14		87439032		1	HOSE ASSY. 1090 mm (42-15/16 in); Right-Hand Joystick No. 2 to Bucket Port B
15		87439033		1	HOSE ASSY. 915 mm (36-1/32 in); Right-Hand Joystick No. 4 to Bucket Port A
		191703A1		1	LOOM Hose Guard, 28 ID x 400 mm long; Used With Ref 12 - 15

http://www.minnparbackhoeparts.com/

HYDRAULICS - PILOT CONTROL JOYSTICKS

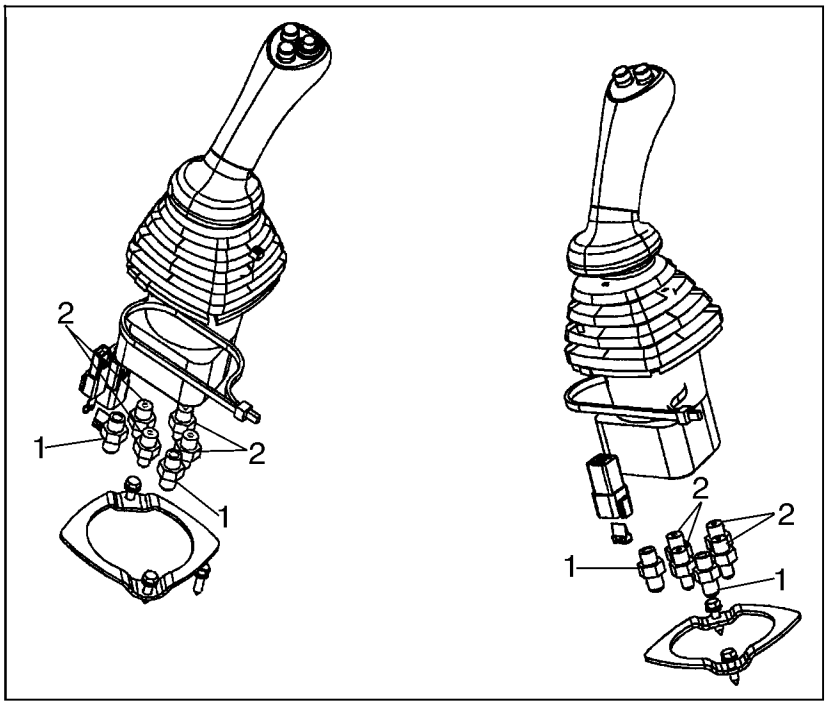

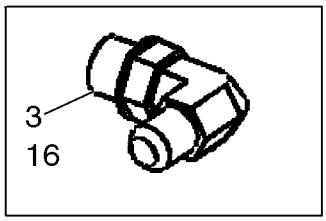

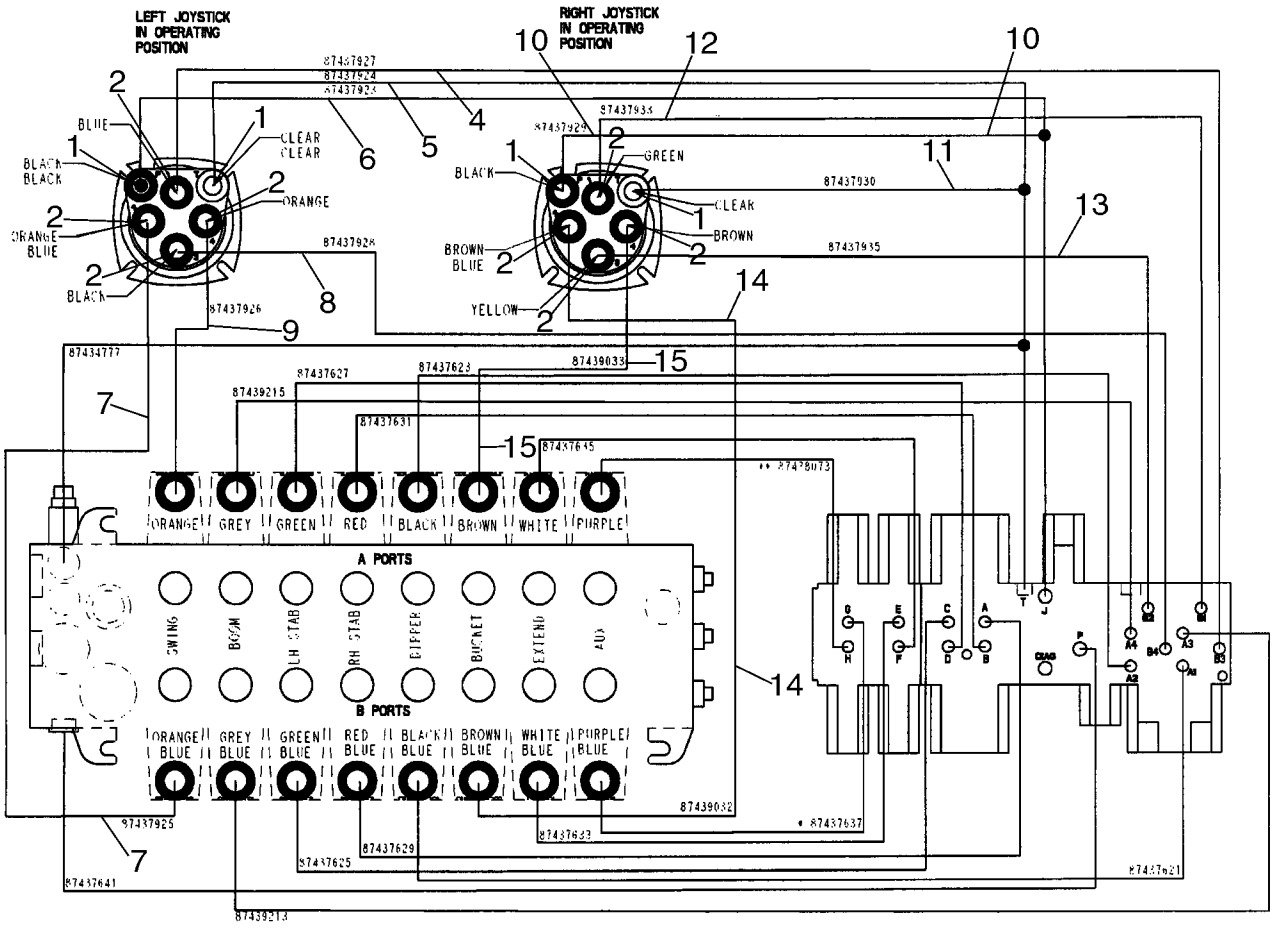

http://www.minnparbackhoeparts.com/

HYDRAULICS - PILOT CONTROL JOYSTICKS

REF	FN	PART NUMBER	YR/SN	QTY	DESCRIPTION
16		87452405		1	HOSE ASSY. 1520 mm (59-7/8 in); Pressure Reducing Valve T to Tank; Replaces 87435073
		143219A1		1	PROTECTOR HOSE GUARD, 19 ID x 450 mm long; Used With Ref 16
		L18337		X	STRAP Tie

http://www.minnparbackhoeparts.com/

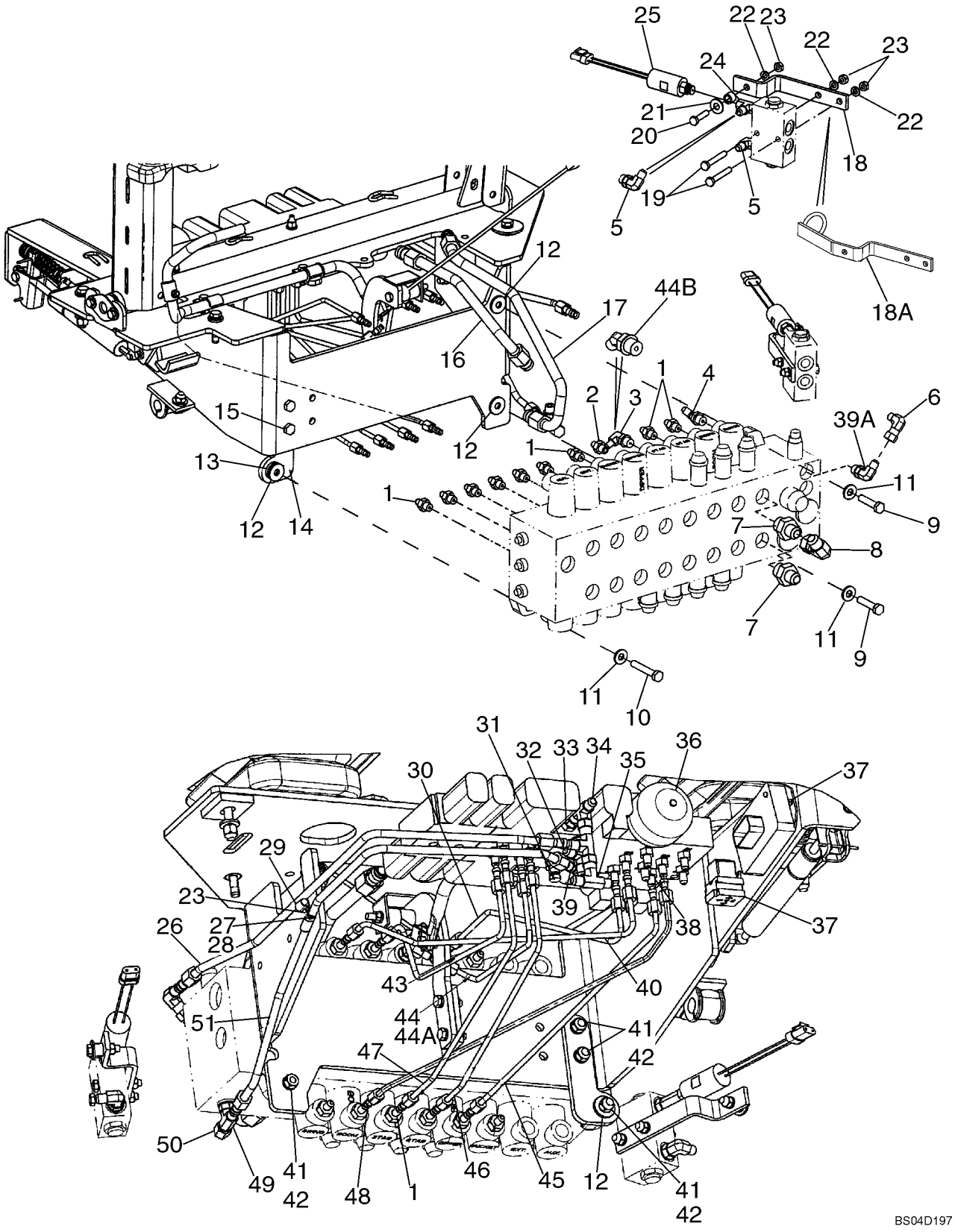

http://www.minnparbackhoeparts.com/

HYDRAULICS - PILOT CONTROLS

REF	FN	PART NUMBER	YR/SN	QTY	DESCRIPTION
1		218-5089		9	CONNECTOR 7/16 fl x 9/16 Or; Includes 237-6006 O-Ring
2		87423401		1	FITTING Special Orifice
3		218-5283		1	ELBOW 90 deg, 7/16 fl x 9/16 Or; Includes 237-6006 O-Ring
4		218-5365		1	FITTING ELBOW, 45 deg, 7/16 fl x 9/16 Or; Includes 237-6006 O-Ring
5		218-5105		2-4	ELBOW 90 deg, 9/16 fl x Or; Includes 237-6006; 2 Used on Models With Auto Up; 4 Used on Models Without Auto Up
6		218-980		1	ELBOW 90 deg, 9/16 fl x sw fl
7		218-5063		2	CONNECTOR, HYD. 7/8 fl x 1-1/16 Or; Includes 237-6012 O-Ring
8		218-5232		1	ELBOW 90 deg, 7/8 fl x sw fl
9		814-10045		2	BOLT M10 x 45
10		814-10060		1	BOLT M10 x 60
11		896-15010		3	WASHER 11 x 24 x 3 mm
12		496-41041		5	WASHER 13/32 x 1-1/8 x 1/8
13		D52276		1	ISOLATOR Mount
14		87440712		1	BRACKET, SUPPORTING Valve Mounting Bracket
15		614-10030		2	SCREW M10 x 30
16		87426488		1	TUBE ASSY. Swing Dampening Upper Port
17		87427948		1	TUBE ASSY. Swing Dampening Lower Port
18		87423034		2	BRACKET, SUPPORTING No Longer Available, Order 87450318 Bracket, Ref 18A
18A		87450318		2	BRACKET, SUPPORTING
19		814-8055		4	SCREW M8 x 55
20		814-8035		2	BOLT M8 x 35
21		496-41041		2	WASHER 13/32 x 1-1/8 x 1/8
21A		87437840		2	SPACER Not Illustrated
22		895-11008		6	WASHER 9 x 16 x 1.6 mm
23		829-1408		7	NUT M8
24		87423033		2	TEE Includes 237-6004 O-Ring, 237-6006 O-Ring; Models With Auto Up, If Used
25		87439163		2	SWITCH, PRESSURE Includes 237-6004 O-Ring; Models With Auto Up, If Used

http://www.minnparbackhoeparts.com/

HYDRAULICS - PILOT CONTROLS

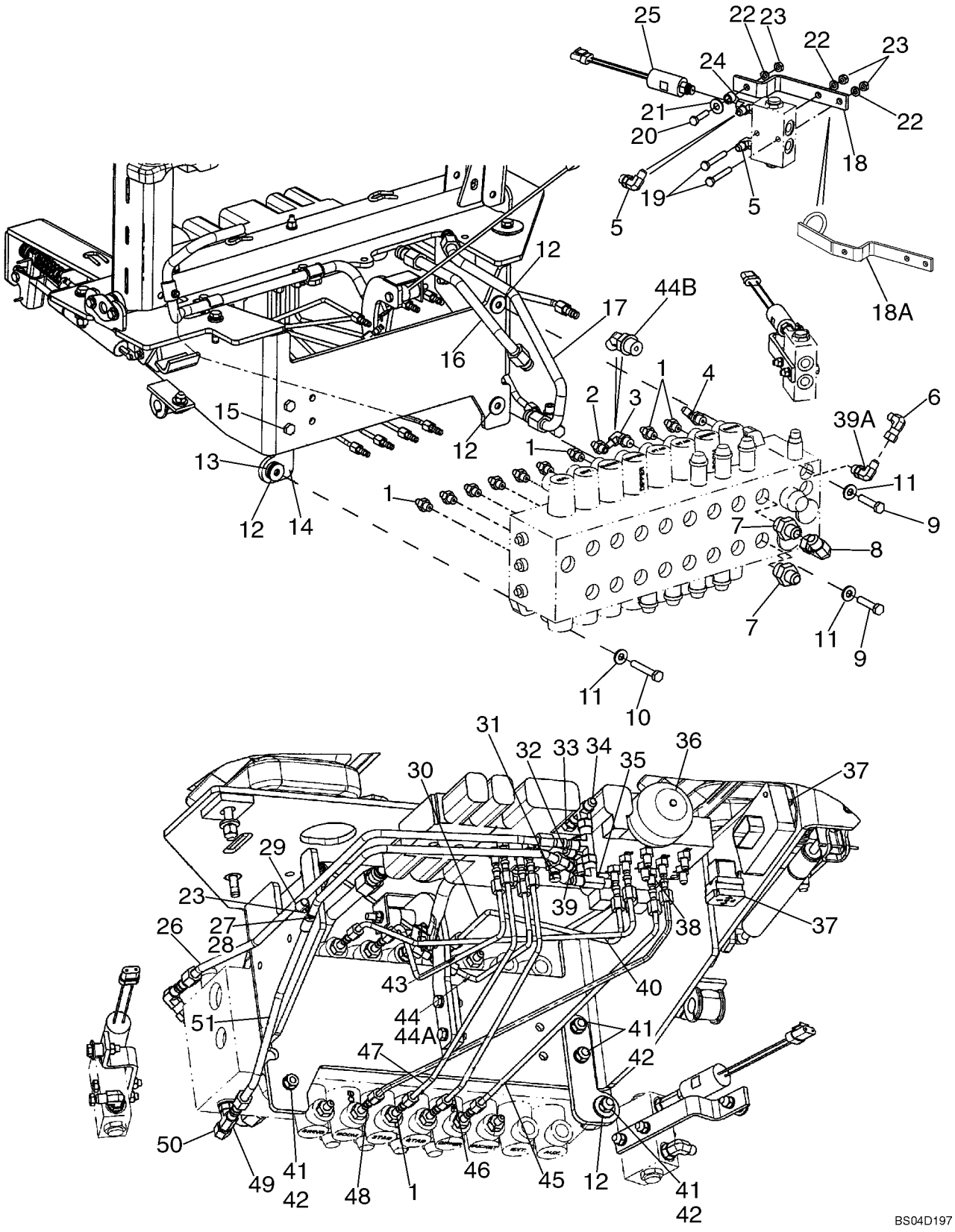

http://www.minnparbackhoeparts.com/

HYDRAULICS - PILOT CONTROLS

REF	FN	PART NUMBER	YR/SN	QTY	DESCRIPTION
25		86992557		2	SWITCH PRESSURE, Includes 237-6004 O-Ring; Models With Auto Up, If Used
26		87434777		1	TUBE ASSY. Reducing Valve Tank to Backhoe Valve
27		895-11008		1	WASHER 9 x 16 x 1.6 mm
28		614-8025		1	BOLT M8 x 25
29		515-2295		2	CLAMP
30		87437623		1	TUBE ASSY. Selector A2 to Dipper Port A
31		86596853		1	COUPLING, QUICK, MALE Includes 9617873 O-Ring
32		218-5243		1	FITTING TEE; Includes 237-6006 O-Ring
33		218-5057		1	CONNECTOR, HYD. 9/16 fl x Or; Includes 237-6006 O-Ring
34		218-5222		2	FITTING TEE
35		218-836		1	TEE
36		87425225		1	ACCUMULATOR Includes 237-6008 O-Ring
37		840-1416		3	SCREW M4 x 16; See Figure 08-15 - 08-20 For Pilot Control Power Supply Control Unit; See Figure 04-21 For Relay
38		218-5053		12	CONNECTOR, HYD. 7/16 fl x Or; Includes 237-6004 O-Ring
39		218-5105		1	ELBOW 90 deg, 9/16 fl x Or; Includes 237-6006 O-Ring
39A		87448990		1	ELBOW 90 deg, 9/16 fl x Or; Includes Orifice; Includes 237-6006 O-Ring
40		87439215		1	TUBE ASSY. Selector A4 to Boom Port A
41		829-1410		5	NUT M10
42		892-11010		4	WASHER, LOCK M10
43		87437627		1	TUBE ASSY. Reducing Valve to Left-Hand Stabilizer Port A
44		87437631		1	TUBE ASSY. Reducing Valve to Right-Hand Stabilizer Port A; Used With 90 deg 218-5283 Elbow (Ref 3); No Longer Available, Order 87445557 Tube and 218-5365 45 deg Elbow, Ref 44A, 44B
44A		87445557		1	TUBE ASSY. Reducing Valve to Right-Hand Stabilizer Port A; Used With 45 deg Elbow, Ref 44B
44B		218-5365		1	FITTING ELBOW, 45 deg, 7/16 fl x 9/16 Or; Includes 237-6006 O-Ring

http://www.minnparbackhoeparts.com/

HYDRAULICS - PILOT CONTROLS

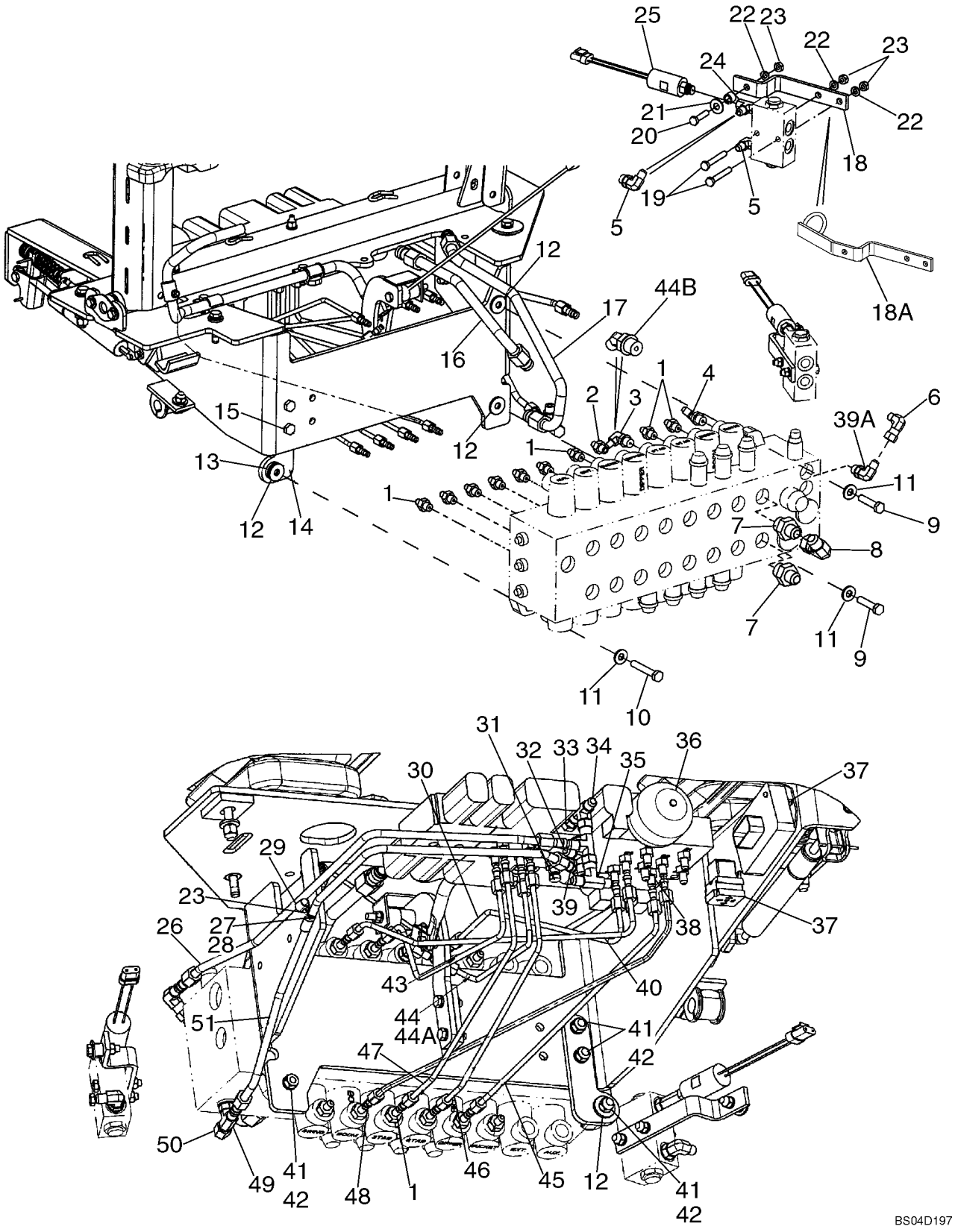

http://www.minnparbackhoeparts.com/

HYDRAULICS - PILOT CONTROLS

REF	FN	PART NUMBER	YR/SN	QTY	DESCRIPTION
45		87437621		1	TUBE ASSY. Selector A1 to Dipper Port B
46		87437629		1	TUBE ASSY. Reducing Valve to Right-Hand Stabilizer Port B
47		87437625		1	TUBE ASSY. Reducing Valve to Left-Hand Stabilizer Port B
48		87439213		1	TUBE ASSY. Selector A3 to Boom Port B
49		218-5182		1	TEE Includes 237-6006 O-Ring
50		218-754		1	CAP Hex, 9/16
51		87437641		1	TUBE ASSY. Reducing Valve Pressure to Backhoe Valve

http://www.minnparbackhoeparts.com/

HYDRAULICS - BACKHOE AUXILIARY

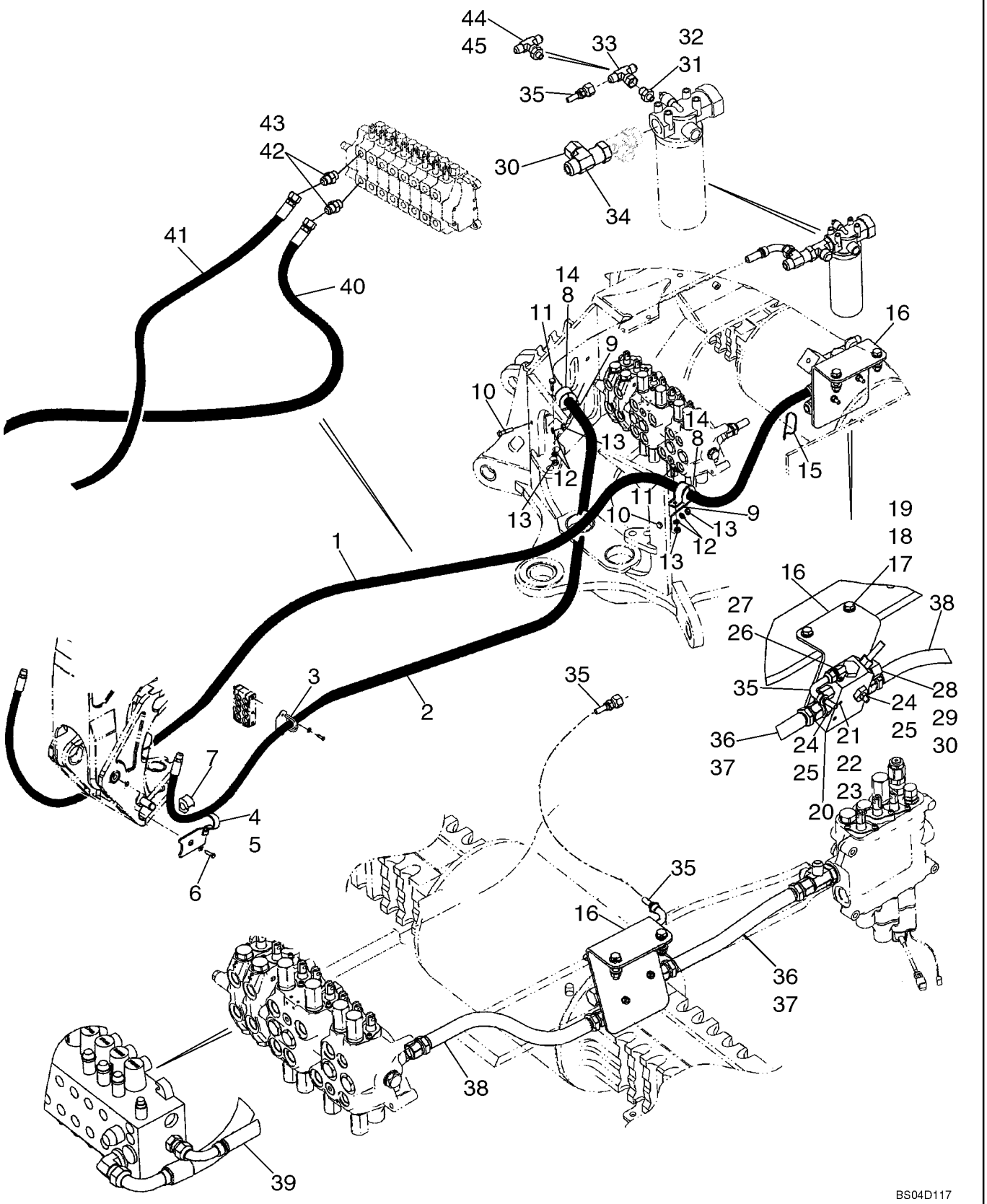

http://www.minnparbackhoeparts.com/

HYDRAULICS - BACKHOE AUXILIARY

REF	FN	PART NUMBER	YR/SN	QTY	DESCRIPTION
1		87430972		1	HOSE ASSY. 2467 mm (97-1/8 in) Hose; Models With Uni-Directional
2		87429387		1	HOSE ASSY. 2890 mm (113-13/16 in) Hose; Models With Uni-Directional
3		87431630		2	BRACKET
4		329799A1		1	SUPPORT Left-Hand
5		329797A1		1	SUPPORT Right-Hand
6		604-20045		2	BOLT M20 x 45
7		144477A1		2	SHOCK ABSORBER
8		144479A1		2	CLAMP
9		413778A1		2	BRACKET
10		814-10040		2	BOLT M10 x 40
11		614-10025		2	BOLT M10 x 25
12		892-11010		4	WASHER, LOCK M10
13		829-1410		4	NUT M10
14		144477A1		2	SHOCK ABSORBER
15		L18337		1	STRAP
16		87440694		1	BRACKET, SUPPORTING Bracket
17		814-12050		2	SCREW M12 x 50
18		896-11012		4	WASHER
19		829-1412		2	NUT M12
20		87421836		1	VALVE, HYDRAULIC Auxiliary Uni-Directional Valve; Component Parts Not Available At Time Of Printing
21		814-8070		2	BOLT M8 x 70
22		892-11008		2	WASHER Lock, M8
23		829-1408		2	NUT M8
24		218-5050		2	FITTING 1-5/16 fl x 1-1/16 Or; Incl. Ref 25
25		237-6012		1	O-RING 59/64 ID x 7/64
26		218-5280		1	FITTING ELBOW, 90 deg, 3/4 fl x 9/16 Or; Incl. Ref 27
27		237-6006		1	O-RING 15/32 ID x 5/64
28		218-5064		1	CONNECTOR, HYD. 1-1/16 fl x Or; Incl. Ref 29
29		237-6012		1	O-RING 59/64 ID x 7/64
30		218-335		2	CAP Hex, 1-1/16
31		218-5351		1	CONNECTOR, HYD. 3/4 fl x 9/16 Or; Incl. Ref 32; If Used
32		237-6006		1	O-RING 15/32 ID x 5/64

http://www.minnparbackhoeparts.com/

08-23		p2	04/04

HYDRAULICS - BACKHOE AUXILIARY

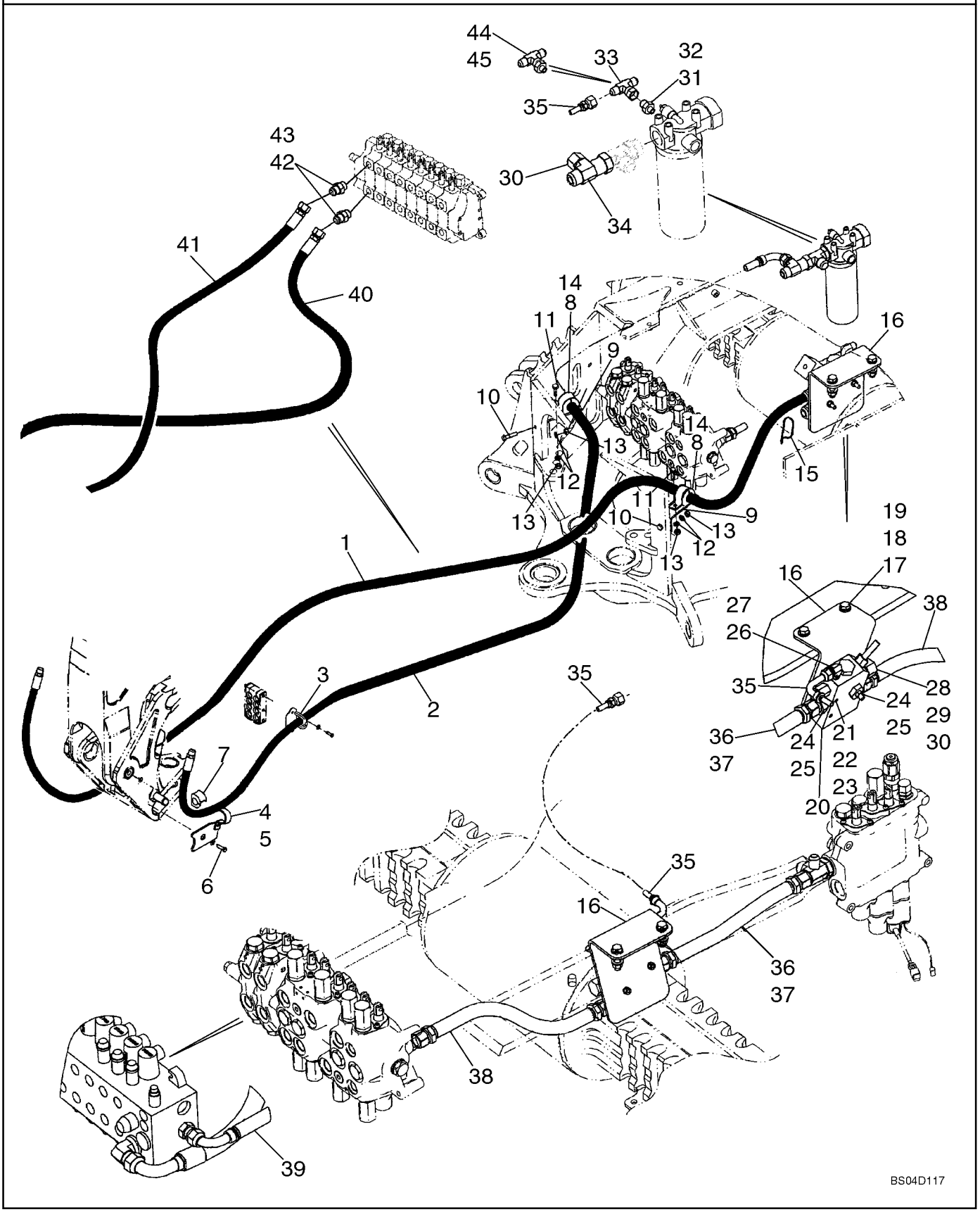

http://www.minnparbackhoeparts.com/

HYDRAULICS - BACKHOE AUXILIARY

REF	FN	PART NUMBER	YR/SN	QTY	DESCRIPTION
33		218-840		1	TEE 3/4 sw str br x fl x fl; If Used
34		218-5216		1	FITTING Tee, 1-1/16 fl br x 15/16 fl x adj str thrd
35		87422948		1	HOSE ASSY. 930 mm (36-5/8 in)
36		87437232		1	HOSE ASSY. 420 mm (16-9/16 in); Two Spool Loader Valve
37		87437231		1	HOSE ASSY. 370 mm (14-19/32 in); Three Spool Loader Valve
38		87422977		1	HOSE ASSY. 465 mm (18-5/16 in); Power Beyond; Models Without Pilot Controls
39		87428814		1	HOSE ASSY. 458 mm (18-1/32 in); Power Beyond; Models With Pilot Controls
40		87423969		1	HOSE ASSY. 1500 mm (59-1/16 in); Models With Bi-Directional
41		87423970		1	HOSE ASSY. 1725 mm (67-15/16 in); Models With Bi Directional
42		218-5064		2	CONNECTOR, HYD. 1-1/16 fl x Or; Incl. Ref 43
43		237-6012		1	O-RING 59/64 ID x 7/64
44		218-5511		1	TEE Incl. Ref 45; If Used
45		237-6006		1	O-RING 15/32 ID x 5/64

http://www.minnparbackhoeparts.com/

HYDRAULICS - BACKHOE AUXILIARY

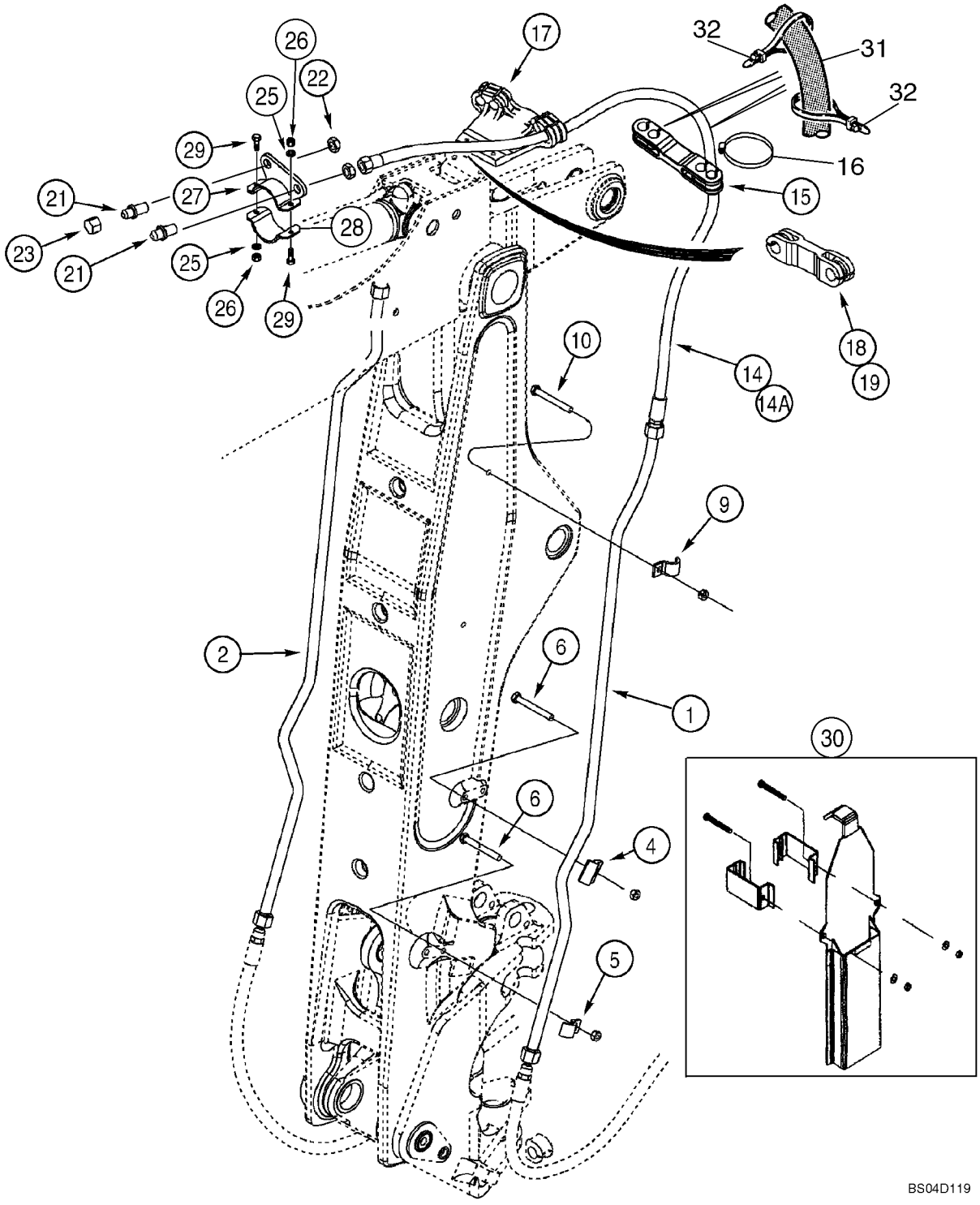

http://www.minnparbackhoeparts.com/

HYDRAULICS - BACKHOE AUXILIARY

REF	FN	PART NUMBER	YR/SN	QTY	DESCRIPTION
		REF			INSTRUCTION AT BOOM AND DIPPER
1		252885A1		1	TUBE
2		252883A1		1	TUBE ASSY.
4		253038A1		2	BRACKET
5		255051A1		2	CLAMP
6		814-12090		4	BOLT M12 x 90
9		242459A1		2	SHIN Clamp
10		814-12070		2	SCREW M12 x 70
14		243679A2		2	HOSE 2665 mm (104-15/16 in); Models With Extendable Dipper
14A		256210A2		2	HOSE 1285 mm (50-19/32 in); Models Without Extendable Dipper
15		246158A1		1	SHIN Models With Extendable Dipper
16		214-3156		4	CLAMP 2-3/4 x 3-5/8; Models With Extendable Dipper
17		246151A1		1	SUPPORT Models With Extendable Dipper
18		103670A1		1	CLAMP, HOSE Rubber
19		214-3132		2	CLAMP
21		218-676		2	UNION 1-1/16 fl x bkhd fl
22		218-1256		2	NUT, LOCK 1-1/16
23		218-335		2	CAP 1/16
25		896-11010		2	WASHER 11 x 21 x 2,5 mm
26		832-10410		2	NUT M10
27		314607A1		1	CLAMP, SPECIAL
28		314608A1		1	CLAMP, SPECIAL
29		614-10040		2	BOLT M10 x 40
		370915A1		1	KIT Boom Guard; Incl. Ref 30 and Instructions
30		317989A1		1	GUARD Boom; Component Parts Not Serviced Separately
31		87441372		2	SLEEVE 2044 mm (80-1/2 in)
32		L18337		4	STRAP

http://www.minnparbackhoeparts.com/

HYDRAULICS - RIDE CONTROL (87433240 SOLENOID VALVE)

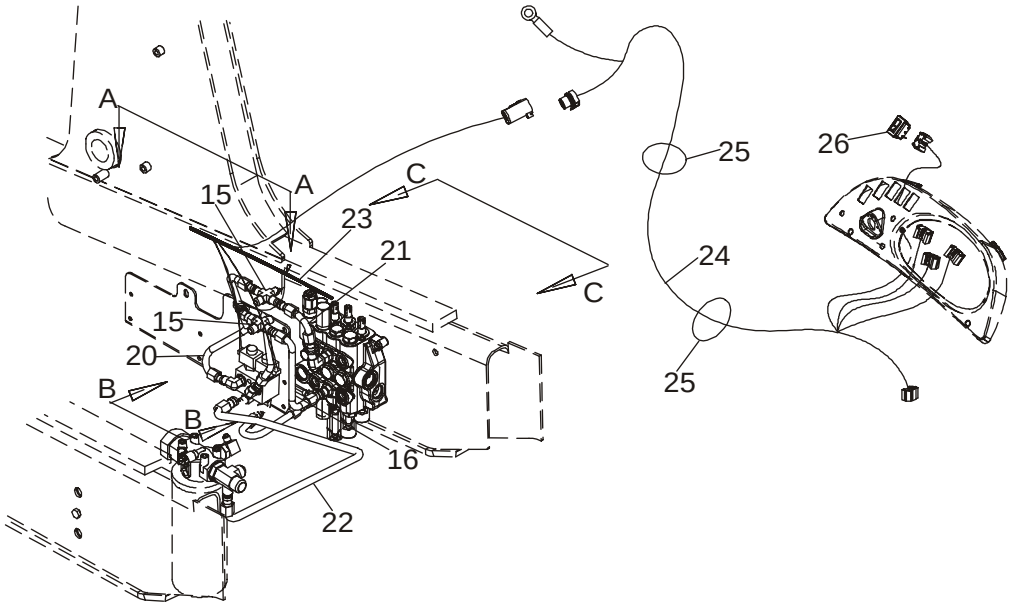

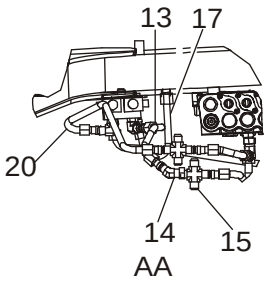

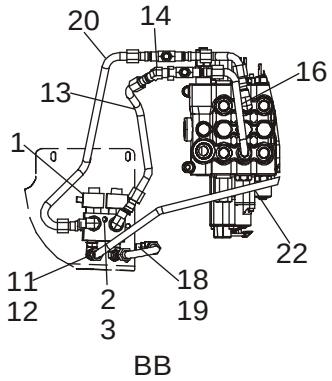

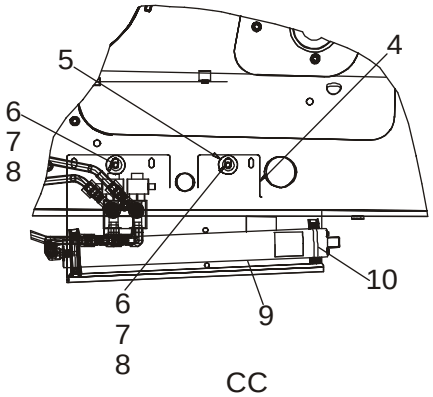

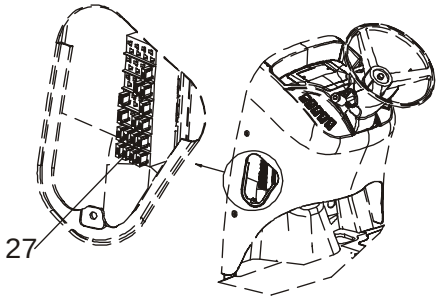

BS03M139

http://www.minnparbackhoeparts.com/

HYDRAULICS - RIDE CONTROL (87433240 SOLENOID VALVE)

REF	FN	PART NUMBER	YR/SN	QTY	DESCRIPTION
		REF			INSTRUCTION RIDE CONTROL HYDRAULIC AND ELECTRICAL CIRCUIT
1		87433240		1	VALVE, SOLENOID Ride Control; Component Parts Not Available At Time Of Printing
2		814-10080		1	SCREW M10 x 80
3		895-11010		1	WASHER 11 x 21 x 2 mm
4		87421213		1	BRACKET, SUPPORTING Plate
5		87423067		2	SPACER
6		814-10040		2	BOLT M10 x 40
7		895-15010		2	WASHER 11 x 24 x 2 mm
8		87417721		2	INSERT, THREADED M10; Replaces 829-1410 Hex Nut Used On Some Models
9		448284A1		1	ACCUMULATOR Ride Control; Component Parts Not Serviced Separately; Used In Production, For Service, Order 234412A1 Accumulator
9		234412A1		1	ACCUMULATOR Ride Control; See Figure 08-60
10		A13240		2	CLAMP Two Piece; Includes Hardware
11		218-5117		4	FITTING ELBOW, 90 deg, 7/8 fl x 3/4 adj Or; Incl. Ref 12
12		237-6008		1	O-RING 41/64 ID x 3/32
13		87421938		1	TUBE ASSY. Solenoid Valve to Loader Control Valve Lower Lift Section Port
14		218-5174		1	FITTING ELBOW, 45 deg, 7/8 fl x sw str thrd
15		218-655		2	FITTING TEE
16		REF		1	INSTRUCTION TUBE, For Tube and Fitting At Loader Valve, See Figure 08-04
17		87420696		1	TUBE ASSY. Accumulator to Solenoid Valve
18		218-5600		1	FITTING ELBOW, 90 deg, 7/8 fl x 3/4 Or; Incl. Ref 19
19		237-6008		1	O-RING 41/64 ID x 3/32
20		87435923		1	TUBE ASSY. Solenoid Valve To Loader Control Valve Upper Lift Section Port
21		REF		1	INSTRUCTION TUBE, For Tube and Fitting At Loader Valve, See Figure 08-04
22		87437265		1	TUBE ASSY. Solenoid Valve To Filter
23		87436675		1	HARNESS, WIRE Chassis Options Harness; Includes (4) L71879 Diodes

http://www.minnparbackhoeparts.com/

HYDRAULICS - RIDE CONTROL (87433240 SOLENOID VALVE)

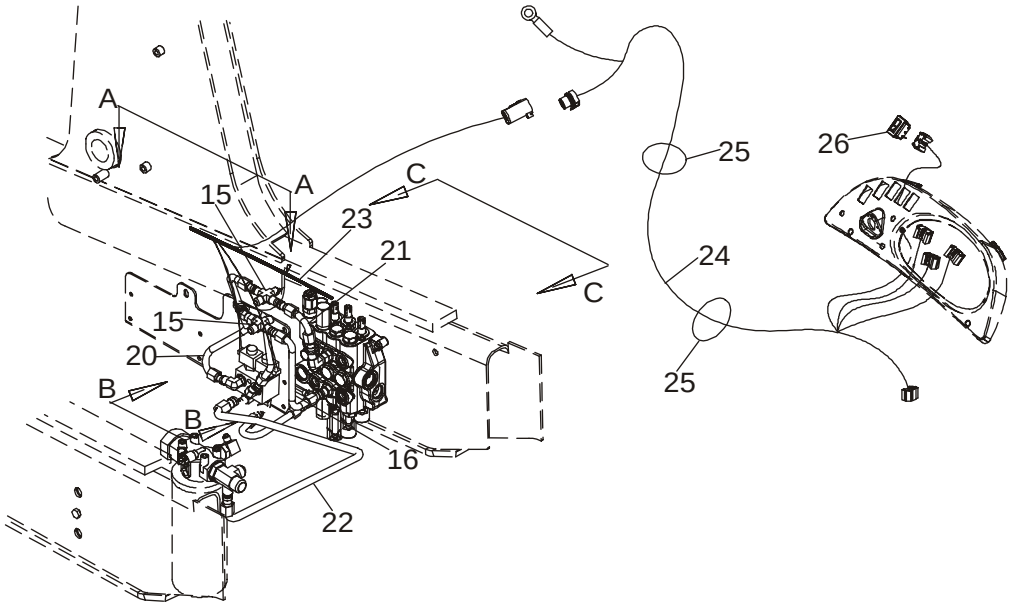

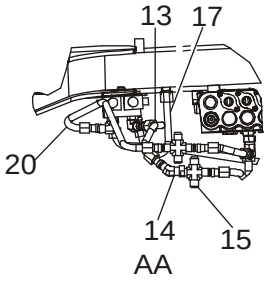

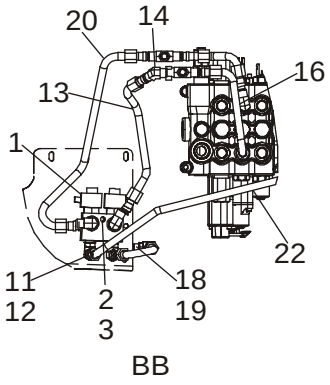

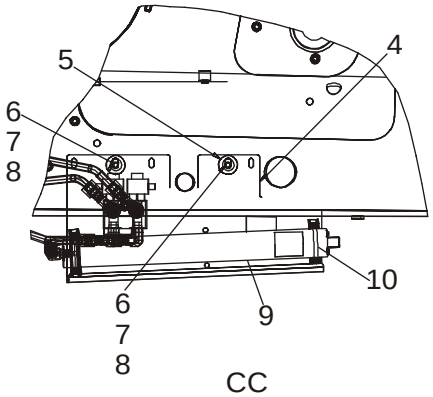

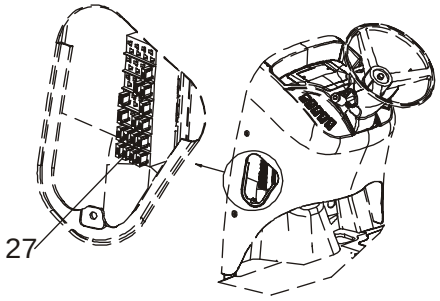

BS03M139

http://www.minnparbackhoeparts.com/

HYDRAULICS - RIDE CONTROL (87433240 SOLENOID VALVE)

REF	FN	PART NUMBER	YR/SN	QTY	DESCRIPTION
24		87419256		1	HARNESS, WIRE Side Console Options Harness; Includes (1) L71879 Diode; Attaches to Side Console Harness and Main Chassis Options Harness
25		L18337		2	STRAP Tie
26		235002A1		1	SWITCH Ride Control
27		121413A1		1	FUSE 15 amp, Mini, Blue

http://www.minnparbackhoeparts.com/

08-26		p1	01/05

HYDRAULICS - COUPLER, LOADER TOOL QUICK

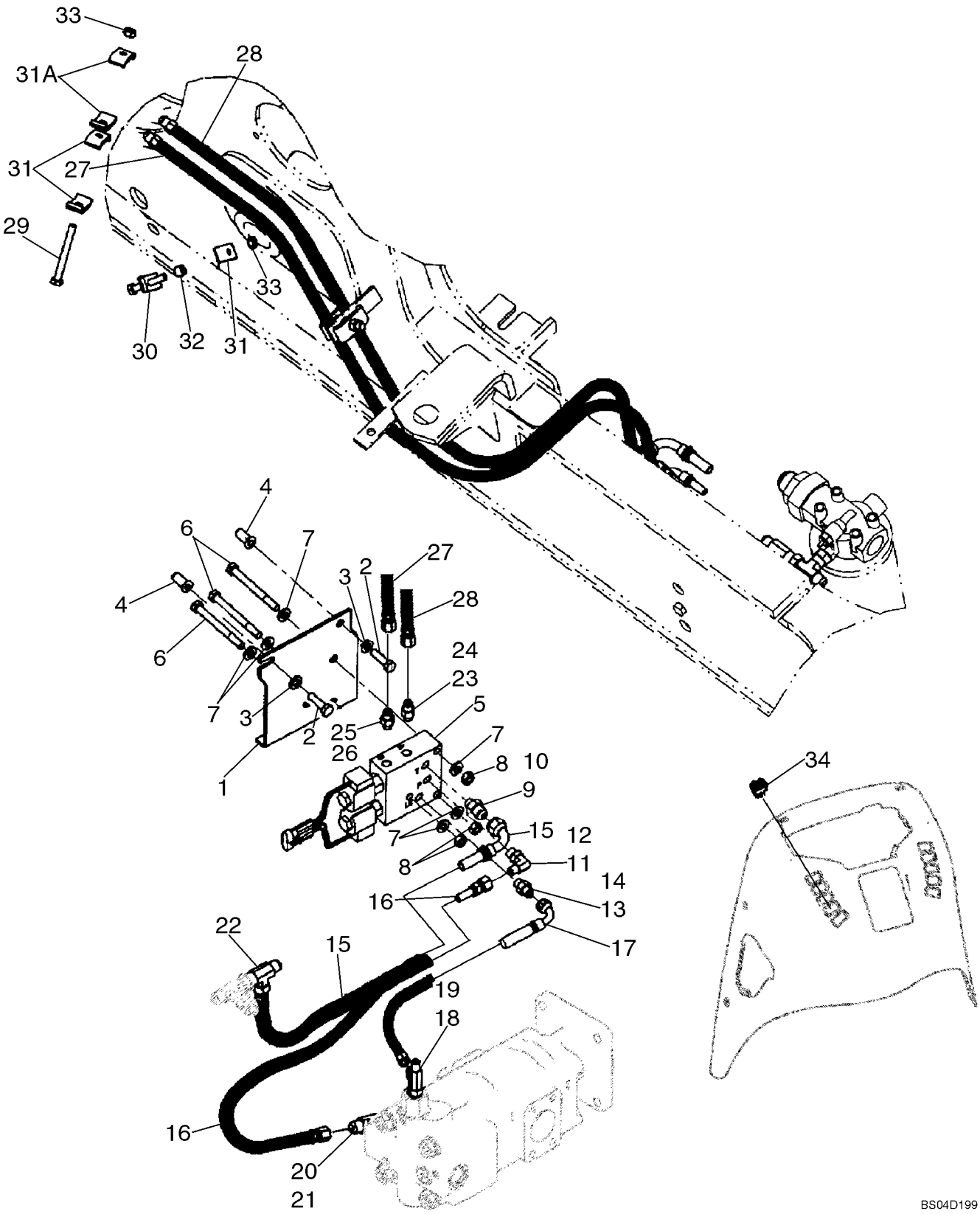

http://www.minnparbackhoeparts.com/

HYDRAULICS - COUPLER, LOADER TOOL QUICK

REF	FN	PART NUMBER	YR/SN	QTY	DESCRIPTION
1		87437263		1	BRACKET, SUPPORTING Coupler Valve Mounting
2		614-10035		2	SCREW M10 x 35
3		896-11010		2	WASHER
4		87417721		2	INSERT, THREADED M10
5		87435909		1	VALVE, SOLENOID Coupler; Loader Tool; See Figure 08-28
6		814-10060		3	BOLT M10 x 60
7		896-11010		6	WASHER
8		829-1410		3	NUT M10
9		218-5351		1	CONNECTOR, HYD. 3/4 fl x 9/16 Or; Incl. Ref 10
10		237-6006		1	O-RING 15/32 ID x 5/64
11		218-5105		1	ELBOW 90 deg, 9/16 fl x Or; Incl. Ref 12
12		237-6006		1	O-RING 15/32 ID x 5/64
13		218-5057		1	CONNECTOR, HYD. 9/16 fl x Or; Incl. Ref 14
14		237-6006		1	O-RING 15/32 ID x 5/64
15		87434265		1	HOSE ASSY. 500 mm (19-11/16 in); Coupler Valve to Filter
16		87452402		1	HOSE ASSY. 830 mm (32-11/16 in); Pump to Coupler Pressure Port; Replaces 87434262
17		87452403		1	HOSE ASSY. 600 mm (23-5/8 in); Pump to Coupler Valve Load Sense Port; Replaces 87434261
18		282428A1		1	POPPET, VALVE TEE, Check; Incl. Ref 19
19		237-6006		1	O-RING 15/32 ID x 5/64
20		218-5183		1	TEE TEE, 3/4 adj Or br x 3/4 fl x fl; Incl. Ref 21; Replaces Standard Steering Fitting
21		237-6008		1	O-RING 41/64 ID x 3/32
22		218-845		1	TEE 3/4 fl br x fl x adj str thrd; Attaches to Tee At Back Of Filter
23		218-5053		1	CONNECTOR, HYD. 7/16 fl x Or; Incl. Ref 24
24		237-6004		1	O-RING 23/64 ID x 5/64
25		218-5056		1	CONNECTOR, HYD. 1/2 fl x Or; Incl. Ref 26
26		237-6005		1	O-RING 13/32 ID x 5/64
27		87427539		1	HOSE ASSY. 1815 mm (71-1/2 in); B Port
28		87427537		1	HOSE ASSY. 1815 mm (71-1/2 in); A Port
29		814-10090		1	BOLT M10 x 90
30		814-10070		1	BOLT M10 x 70
31		D138055		6	CLAMP

http://www.minnparbackhoeparts.com/

HYDRAULICS - COUPLER, LOADER TOOL QUICK

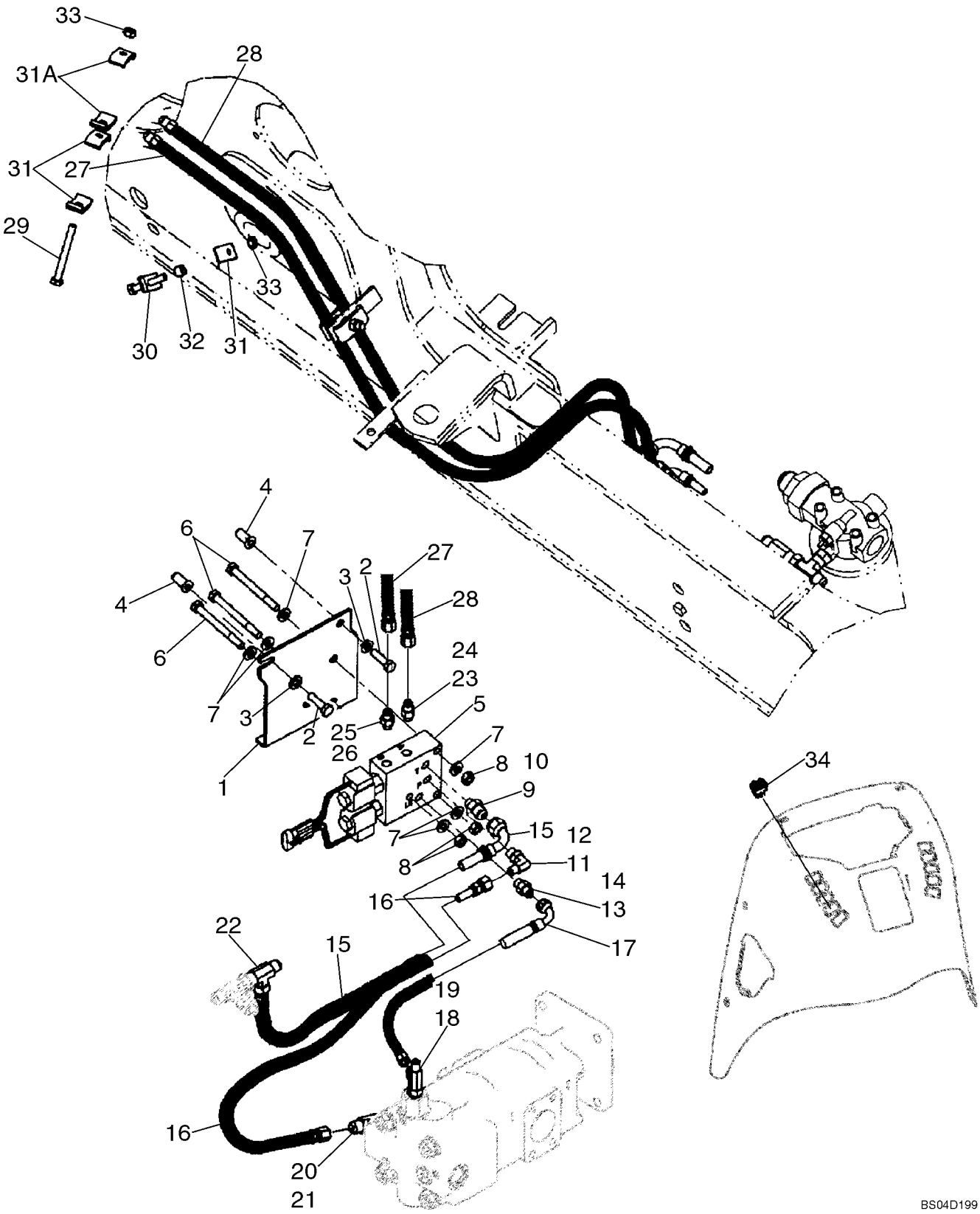

http://www.minnparbackhoeparts.com/

HYDRAULICS - COUPLER, LOADER TOOL QUICK

REF	FN	PART NUMBER	YR/SN	QTY	DESCRIPTION
31A		D143846		2	SHIN CLAMP
32		120303A1		1	SPACER
33		832-10410		2	NUT M10
34		398675A2		1	SWITCH Loader Tool Quick Coupler

http://www.minnparbackhoeparts.com/

HYDRAULICS - COUPLER, LOADER TOOL QUICK

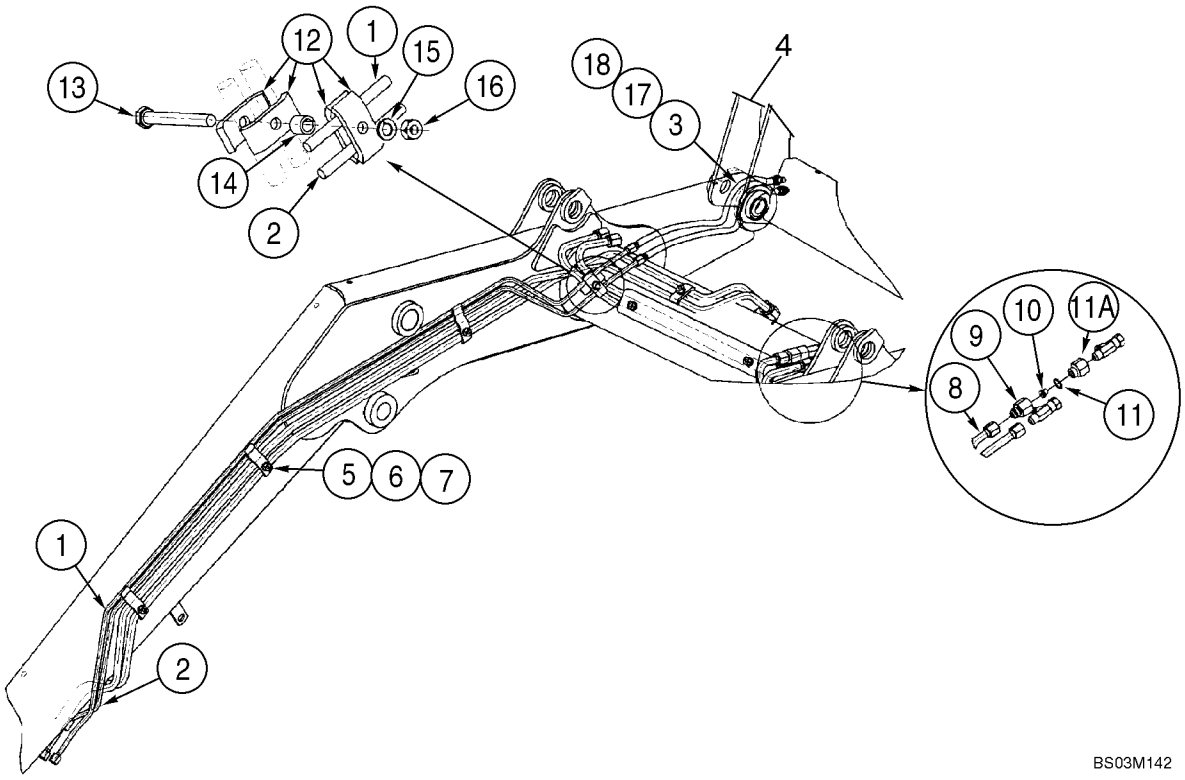

http://www.minnparbackhoeparts.com/

HYDRAULICS - COUPLER, LOADER TOOL QUICK

REF	FN	PART NUMBER	YR/SN	QTY	DESCRIPTION
		REF			INSTRUCTION AT LOADER LIFT FRAME
1		308255A1		1	TUBE ASSY.
2		308254A1		1	TUBE ASSY.
3		300996A3		2	HOSE ASSY. 772 mm (30-13/32 in)
4		REF		1	INSTRUCTION Coupler, Hydr., Loader Tool Quick Coupler; For Complete Assembly, See Figure 09-10; Order From Machinery Price List; Use Standard Loader Bucket Pins To Mount Coupler
5		302820A2		3	CLAMP
6		892-11010		3	WASHER, LOCK M10
7		829-1410		3	NUT M10; 10.9
8		434605A1		1	TUBE ASSY.
9		304424A1		1	CONNECTOR
10		304890A1		1	RESTRICTOR
11		237-6010		1	O-RING 3/4 ID x 3/32
11A		309674A1		1	CONNECTOR 7/8 male x 7/8 female
12		D138055		4	CLAMP
13		814-10090		1	BOLT M10 x 90
14		120303A1		1	SPACER
15		892-11010		1	WASHER, LOCK M10
16		829-1410		1	NUT M10; 10.9
17		307277A1		1	SLEEVE
18		L18337		2	STRAP 15 in

http://www.minnparbackhoeparts.com/

VALVE, COUPLER (87435909) - LOADER TOOL OR BACKHOE

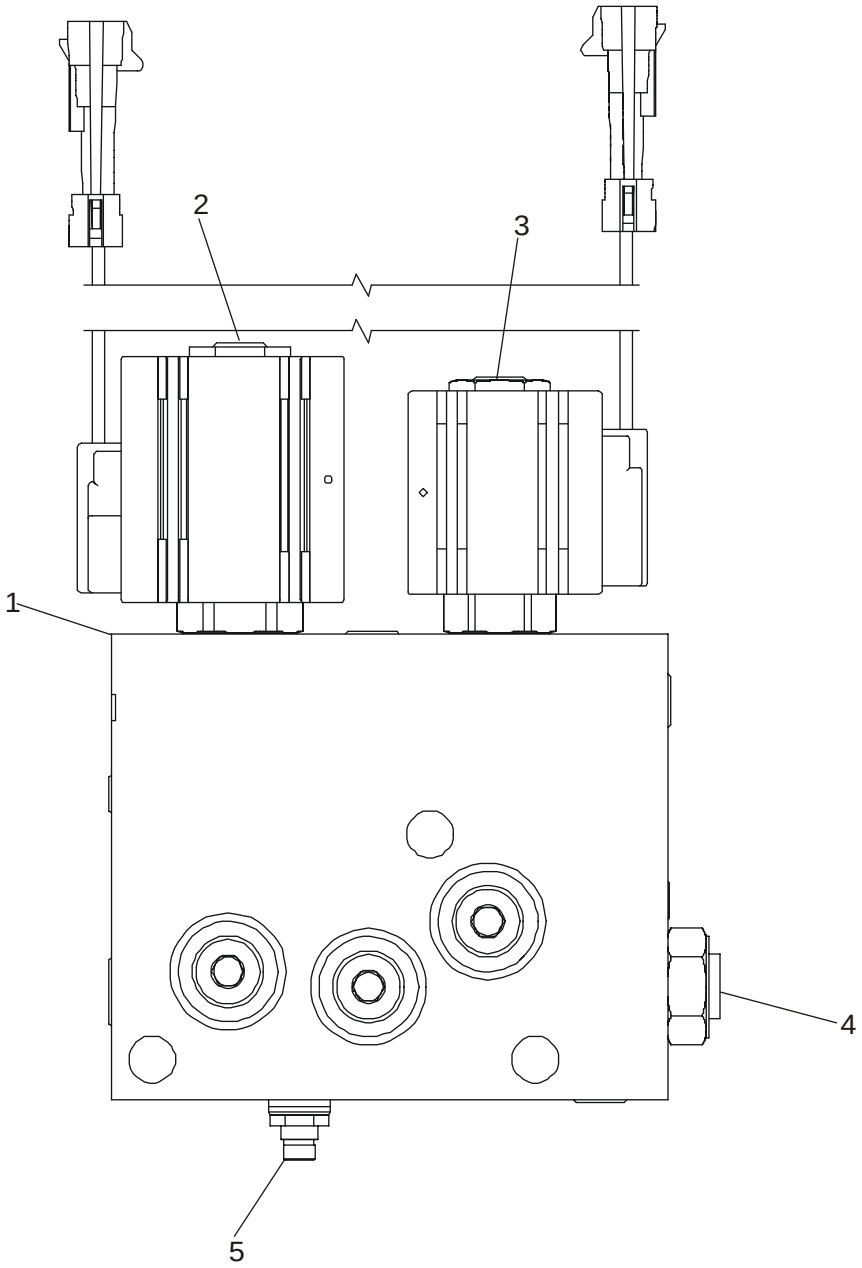

BS03M143

http://www.minnparbackhoeparts.com/

VALVE, COUPLER (87435909) - LOADER TOOL OR BACKHOE

REF	FN	PART NUMBER	YR/SN	QTY	DESCRIPTION
		87435909		1	VALVE, SOLENOID Incl. Ref 1 - 5
1		NSS		1	NOT SERVICED SEPARATELY Body
2		87438021		1	VALVE, SOLENOID 4-Way Cartridge With Coil; Includes 87438022, 87438023, 87438024
		87438022		1	VALVE, HYDRAULIC Valve, Cartridge
		87438023		1	COIL Coil, Solenoid
		87438024		1	KIT, SEALS Seal Kit, 4-Way Solenoid
3		87438025		1	VALVE, SOLENOID 2-Way 2-Position Cartridge With Coil; Includes 87438026, 87438027, 87438028
		87438026		1	VALVE, HYDRAULIC Valve, Cartridge
		87438027		1	COIL Coil, Solenoid
		87438028		1	KIT, SEALS Seal Kit, 2-Way Solenoid
4		87438029		1	VALVE, CHECK Check Valve; Includes 87438028 Seal Kit
		87438028		1	KIT, SEALS Seal Kit, 2-Way Solenoid
5		87438031		1	VALVE, PRESSURE RELIEF Relief Valve; Includes 87438032
		87438032		1	KIT, SEALS Seal Kit, Relief Valve

http://www.minnparbackhoeparts.com/

HYDRAULICS - COUPLER, BACKHOE BUCKET

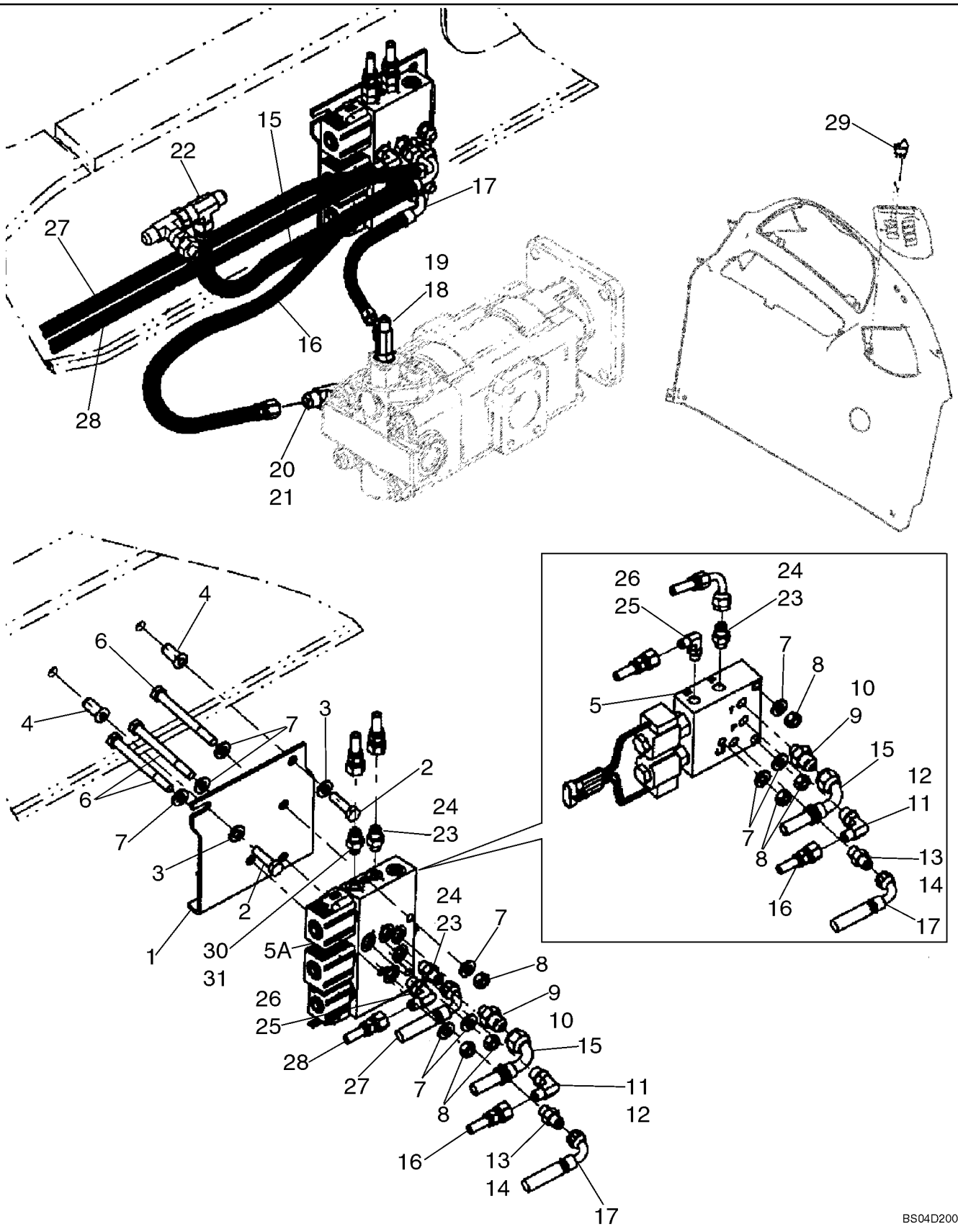

http://www.minnparbackhoeparts.com/

HYDRAULICS - COUPLER, BACKHOE BUCKET

REF	FN	PART NUMBER	YR/SN	QTY	DESCRIPTION
1		87437263		1	BRACKET, SUPPORTING Coupler Valve Mounting
2		614-10035		2	SCREW M10 x 35
3		896-11010		2	WASHER
4		87417721		2	INSERT, THREADED M10
5		87435909		1	VALVE, SOLENOID Coupler; Backhoe Bucket; See Figure 08-28
5A		87435910		1	VALVE, SOLENOID Coupler; Models With Both Loader Tool and Backhoe Bucket Coupler; See Figure 08-31
6		814-10060		3	BOLT M10 x 60
7		896-11010		6	WASHER
8		829-1410		3	NUT M10
9		218-5351		1	CONNECTOR, HYD. 3/4 fl x 9/16 Or; Incl. Ref 10
10		237-6006		1	O-RING 15/32 ID x 5/64
11		218-5105		1	ELBOW 90 deg, 9/16 fl x Or; Incl. Ref 12
12		237-6006		1	O-RING 15/32 ID x 5/64
13		218-5057		1	CONNECTOR, HYD. 9/16 fl x Or; Incl. Ref 14
14		237-6006		1	O-RING 15/32 ID x 5/64
15		87434265		1	HOSE ASSY. 500 mm (19-11/16 in); Coupler Valve to Filter
16		87452402		1	HOSE ASSY. 830 mm (32-11/16 in); Pump to Coupler Pressure Port; Replaces 87434262
17		87452403		1	HOSE ASSY. 600 mm (23-5/8 in); Pump to Coupler Valve Load Sense Port; Replaces 87434261
18		282428A1		1	POPPET, VALVE TEE, Check; Incl. Ref 19
19		237-6006		1	O-RING 15/32 ID x 5/64
20		218-5183		1	TEE TEE, 3/4 adj Or br x 3/4 fl x fl; Incl. Ref 21; Replaces Standard Steering Fitting
21		237-6008		1	O-RING 41/64 ID x 3/32
22		218-845		1	TEE 3/4 fl br x fl x adj str thrd; Attaches to Tee At Back Of Filter
23		218-5053		1-2	CONNECTOR, HYD. 7/16 fl x Or; Incl. Ref 24; One Used On Models With Backhoe Bucket Coupler Only; Two Used On Models With Both Loader Tool and Backhoe Bucket Coupler
24		237-6004		1	O-RING 23/64 ID x 5/64

http://www.minnparbackhoeparts.com/

HYDRAULICS - COUPLER, BACKHOE BUCKET

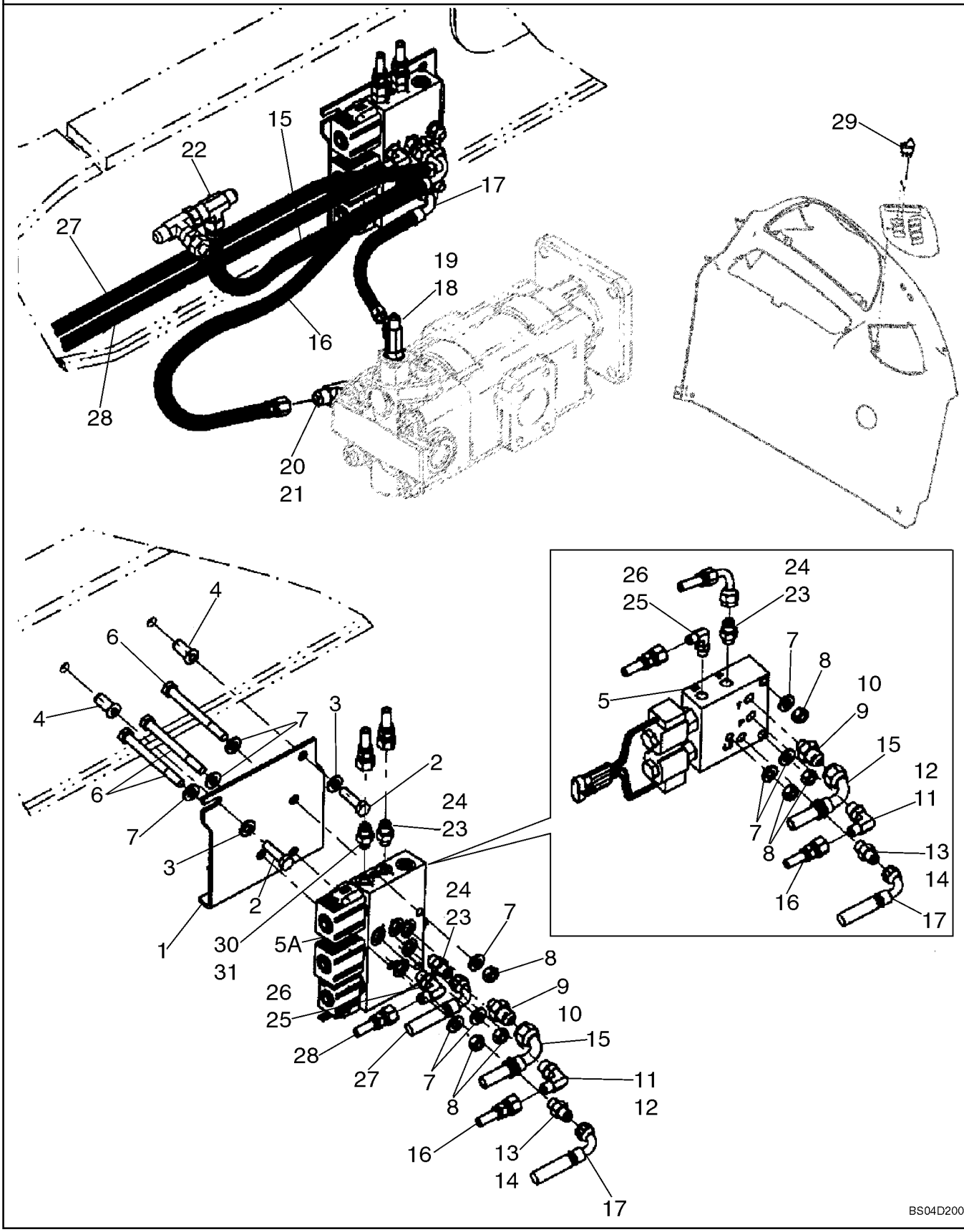

http://www.minnparbackhoeparts.com/

HYDRAULICS - COUPLER, BACKHOE BUCKET

REF	FN	PART NUMBER	YR/SN	QTY	DESCRIPTION
25		218-5335		1	FITTING ELBOW, 90 deg, 9/16 fl x 1/2 Or; Incl. Ref 26
26		237-6005		1	O-RING 13/32 ID x 5/64
27		87448526		1	HOSE ASSY. 3125 mm (123-1/32 in); used with straight fitting
28		87448527		1	HOSE ASSY. 3100 mm (122-1/16 in); used with elbow fitting
29		386789A2		1	SWITCH Backhoe Bucket Hydraulic Coupler; For Switch Used With Loader Tool Quick Coupler, See Figure 08-26
30		218-5056		1	CONNECTOR, HYD. 1/2 fl x Or; Incl. Ref 31
31		237-6005		1	O-RING 13/32 ID x 5/64

http://www.minnparbackhoeparts.com/

08-30		p1	06/05

HYDRAULICS - COUPLER, BACKHOE BUCKET

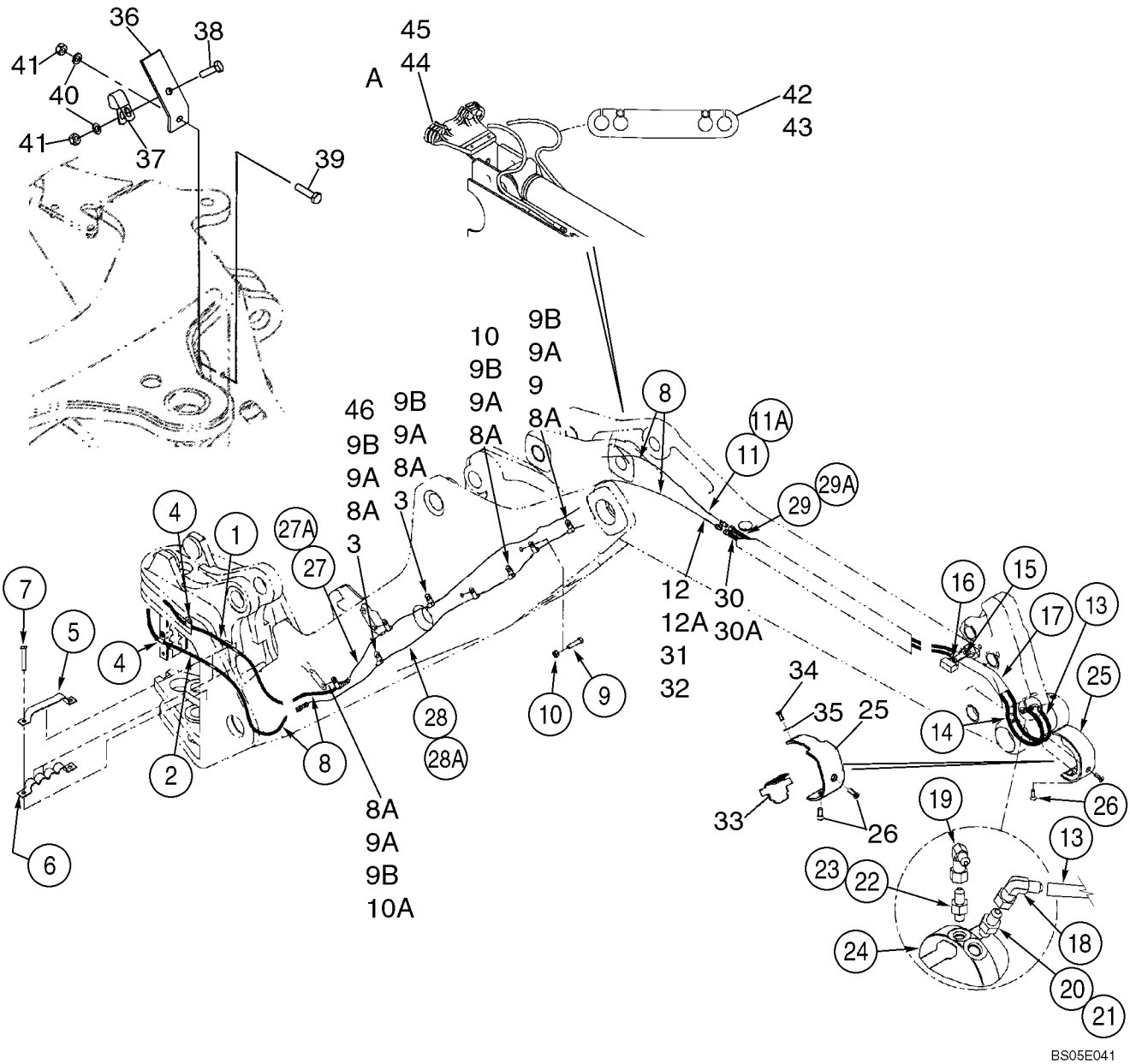

http://www.minnparbackhoeparts.com/

HYDRAULICS - COUPLER, BACKHOE BUCKET

REF	FN	PART NUMBER	YR/SN	QTY	DESCRIPTION
		REF			INSTRUCTION AT BOOM AND DIPPER
1		87448526		1	HOSE ASSY. 3125 mm (123-1/32 in); From Coupler Solenoid Valve
2		87448527		1	HOSE ASSY. 3100 mm (122-1/16 in); From Coupler Solenoid Valve
3		414415A1		4	CLAMP 3/8 ID
4		515-23143		2	CLAMP
5		385420A2		1	STRAP At Swing Tower
6		380692A1		1	CLAMP
7		814-12070		2	SCREW M12 x 70
8		L18337		X	STRAP 15 in
8A		409499A1		8-10	CLAMP (10) Used With Extendable Dipper Models
9		409471A1		2	CLAMP BRACKET Used With Extendable Dipper Models
9A		614-8016		8-10	SCREW M8 x 16
9B		892-11008		8-10	WASHER M8, Lock
10		409469A1		2	CLAMP
10A		409470A1		2	CLAMP
11		87433386		1	HOSE ASSY. 1180 mm (46-1/2 in); Standard Dipper
11A		87433390		1	HOSE ASSY. 2415 mm (95-1/8 in); Extendable Dipper
12		87433387		1	HOSE ASSY. 1180 mm (46-1/2 in); Standard Dipper
12A		87433389		1	HOSE ASSY. 2415 mm (95-1/8 in); Extendable Dipper
13		87418552		1	HOSE ASSY. 1080 mm (42-9/16 in); To Coupler Cylinder
14		87418553		1	HOSE ASSY. 1120 mm (44-1/8 in); To Coupler Cylinder
15		87418551		1	CLAMP
16		407975A1		2	SCREW M8 x 16
17		87448668		1	SLEEVE 560 mm (22-3/64 in); Replaces 87419105 440 mm (17-21/64 in) long Sleeve
18		402855A1		1	ELBOW Attaches To Ref 13 Hose
19		402854A1		1	ELBOW Attaches To Ref 14 Hose
20		218-5053		1	CONNECTOR, HYD. 7/16 fl x Or; Incl. Ref 21
21		237-6004		1	O-RING 23/64 ID x 5/64
22		218-5052		1	CONNECTOR, HYD. 3/8 fl x Or; Incl. Ref 23

http://www.minnparbackhoeparts.com/

HYDRAULICS - COUPLER, BACKHOE BUCKET

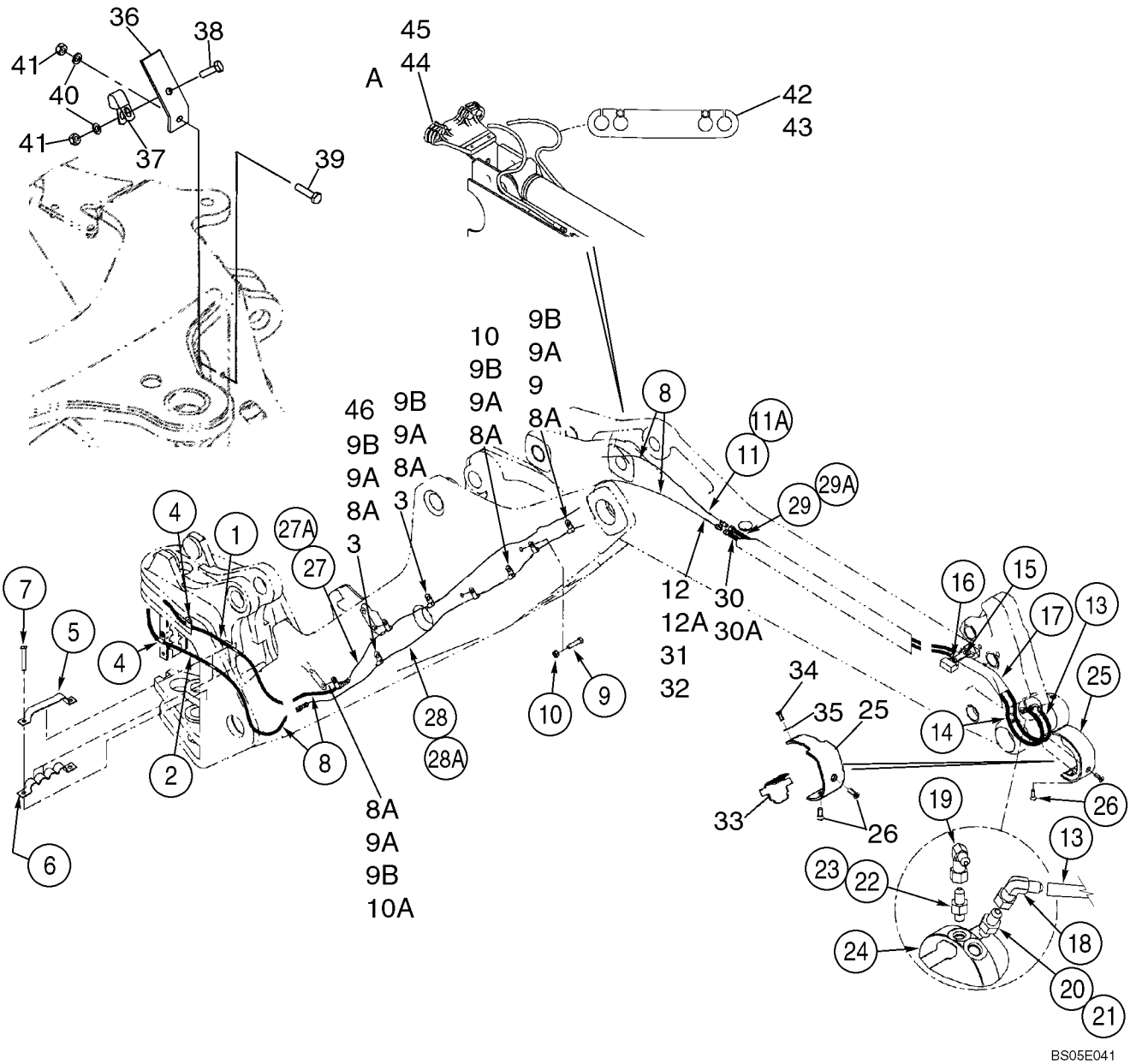

http://www.minnparbackhoeparts.com/

HYDRAULICS - COUPLER, BACKHOE BUCKET

REF	FN	PART NUMBER	YR/SN	QTY	DESCRIPTION
23		237-6003		1	O-RING 5/16 ID x 1/16
24		87423867		1	CYLINDER ASSY. Backhoe Bucket Coupler Cylinder; See Figure 08-32
25		402940A2		1	GUARD ASSY.
26		402361A3		2	SCREW
27		87423343		1	TUBE ASSY. Standard Dipper; Left-Hand
27A		87411722		1	TUBE, HYD Extendable Dipper; Left-Hand
28		87423345		1	TUBE ASSY. Standard Dipper; Right-Hand
28A		87411720		1	TUBE, HYD Extendable Dipper; Right-Hand
29		406172A1		1	TUBE ASSY. Standard Dipper; See Figure 09-28
29A		403840A1		1	TUBE ASSY. Extendable Dipper; See Figure 09-28
30		406168A1		1	TUBE ASSY. Standard Dipper
30A		403400A1		1	TUBE ASSY. Extendable Dipper
31		407804A1		1	SLEEVE 600 mm (23-5/8 in); Standard Dipper
31		87441372		2	SLEEVE 2044 mm (80-1/2 in); Extendable Dipper; Replaces 408158A2 1980 mm (78 in) long Sleeve
32		L18337		4	STRAP
33		409691A2		1	GUARD
34		607-8020		2	BOLT M8 x 20; Lock
35		896-11008		2	WASHER
36		413778A1		1	BRACKET
37		D49498		1	CLAMP
38		614-10030		1	SCREW M10 x 30
39		814-10040		1	BOLT M10 x 40
40		892-11010		2	WASHER, LOCK M10
41		829-1410		2	NUT M10
42		407745A1		1	CLAMP, HOSE Extendable Dipper; Models With Hydraulic Coupler
43		407746A1		1	CLAMP, HOSE Extendable Dipper; Models With Hydraulic Coupler and Auxiliary Hydraulics
44		407734A1		1	SUPPORT Extendable Dipper; Models With Hydraulic Coupler
45		407735A1		1	SUPPORT Extendable Dipper; Models With Hydraulic Coupler and Auxiliary Hydraulics
46		87333648		1	CLAMP Replaces 86983643 Clamp Used On Some Models

http://www.minnparbackhoeparts.com/

VALVE, COUPLER (87435910) - LOADER TOOL AND BACKHOE BUCKET

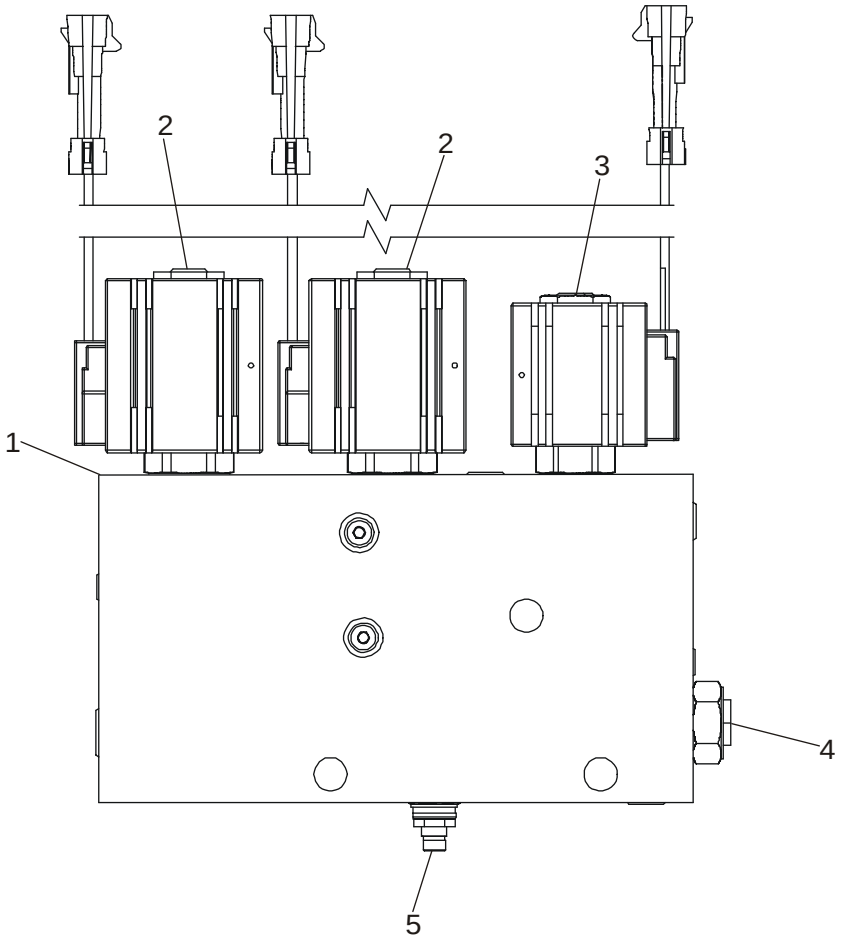

BS03M145

http://www.minnparbackhoeparts.com/

VALVE, COUPLER (87435910) - LOADER TOOL AND BACKHOE BUCKET

REF	FN	PART NUMBER	YR/SN	QTY	DESCRIPTION
		87435910		1	VALVE, SOLENOID Incl. Ref 1 - 5; Models With Both Loader Tool and Backhoe Bucket Coupler
1		NSS		1	NOT SERVICED SEPARATELY Body
2		87438021		2	VALVE, SOLENOID 4-Way Cartridge With Coil; Includes 87438022, 87438023, 87438024
		87438022		1	VALVE, HYDRAULIC Valve, Cartridge
		87438023		1	COIL Coil, Solenoid
		87438024		1	KIT, SEALS Seal Kit, 4-Way Solenoid
3		87438025		1	VALVE, SOLENOID 2-Way 2-Position Cartridge With Coil; Includes 87438026, 87438027, 87438028
		87438026		1	VALVE, HYDRAULIC Valve, Cartridge
		87438027		1	COIL Coil, Solenoid
		87438028		1	KIT, SEALS Seal Kit, 2-Way Solenoid
4		87438029		1	VALVE, CHECK Check Valve; Includes 87438028 Seal Kit
		87438028		1	KIT, SEALS Seal Kit, 2-Way Solenoid
5		87438031		1	VALVE, PRESSURE RELIEF Relief Valve; Includes 87438032
		87438032		1	KIT, SEALS Seal Kit, Relief Valve

http://www.minnparbackhoeparts.com/

CYLINDER - COUPLER, BACKHOE BUCKET

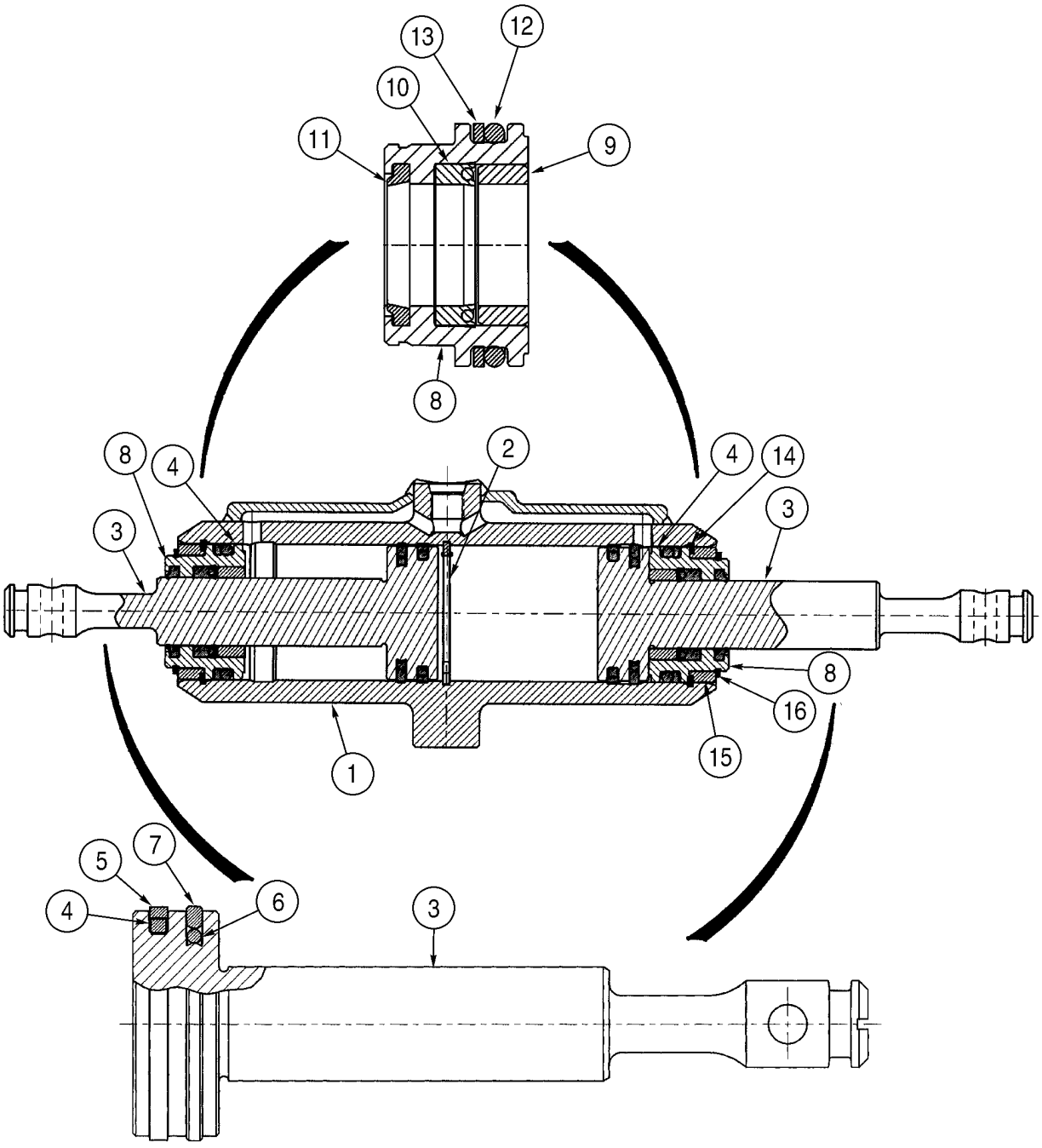

http://www.minnparbackhoeparts.com/

CYLINDER - COUPLER, BACKHOE BUCKET

REF	FN	PART NUMBER	YR/SN	QTY	DESCRIPTION
		87423867		1	CYLINDER ASSY. Backhoe Bucket Coupler Cylinder; Incl. Ref 1 - 16 and 390320A4 Seal Kit
1		87423868		1	TUBE Includes 369263A1 Plug
		369263A1		4	PLUG Expansion
2		800-6138		1	RETAINER
		NSS		2	NOT SERVICED SEPARATELY Rod Assy; Incl. Ref 3 - 7
3		399907A2		1	ROD Chrome
4		353078A1		1	RING
5		353079A1		1	SEAL 38,1 dia; Replaces 404203A1, Seal Used On Some Cylinders
6		395609A1		1	O-RING
7		384844A1		1	RING Detent
		311459A2		2	GLAND Incl. Ref 8 - 13
8		NSS		1	NOT SERVICED SEPARATELY Gland, Cylinder
9		NSS		1	NOT SERVICED SEPARATELY Bushing
10		D83187		1	SEAL Rod
11		A44651		1	WIPER
12		238-6218		1	O-RING 1-1/4 ID x 1/8 in
13		A45035		1	O-RING Backup Ring
14		102-23150		2	SNAP RING
15		A44641		2	BUSHING Spacer
16		102-12125		2	CIRCLIP Retaining Ring
		390320A4		1	KIT, SEALS Incl. Ref 4 - 16; Also Includes (2) 390317A1 Rings; (1) 445364A1 Service Ring For Cylinder Tube End Coupler Outer Sleeve End

http://www.minnparbackhoeparts.com/

PUMP, EQUIPMENT HYDRAULIC

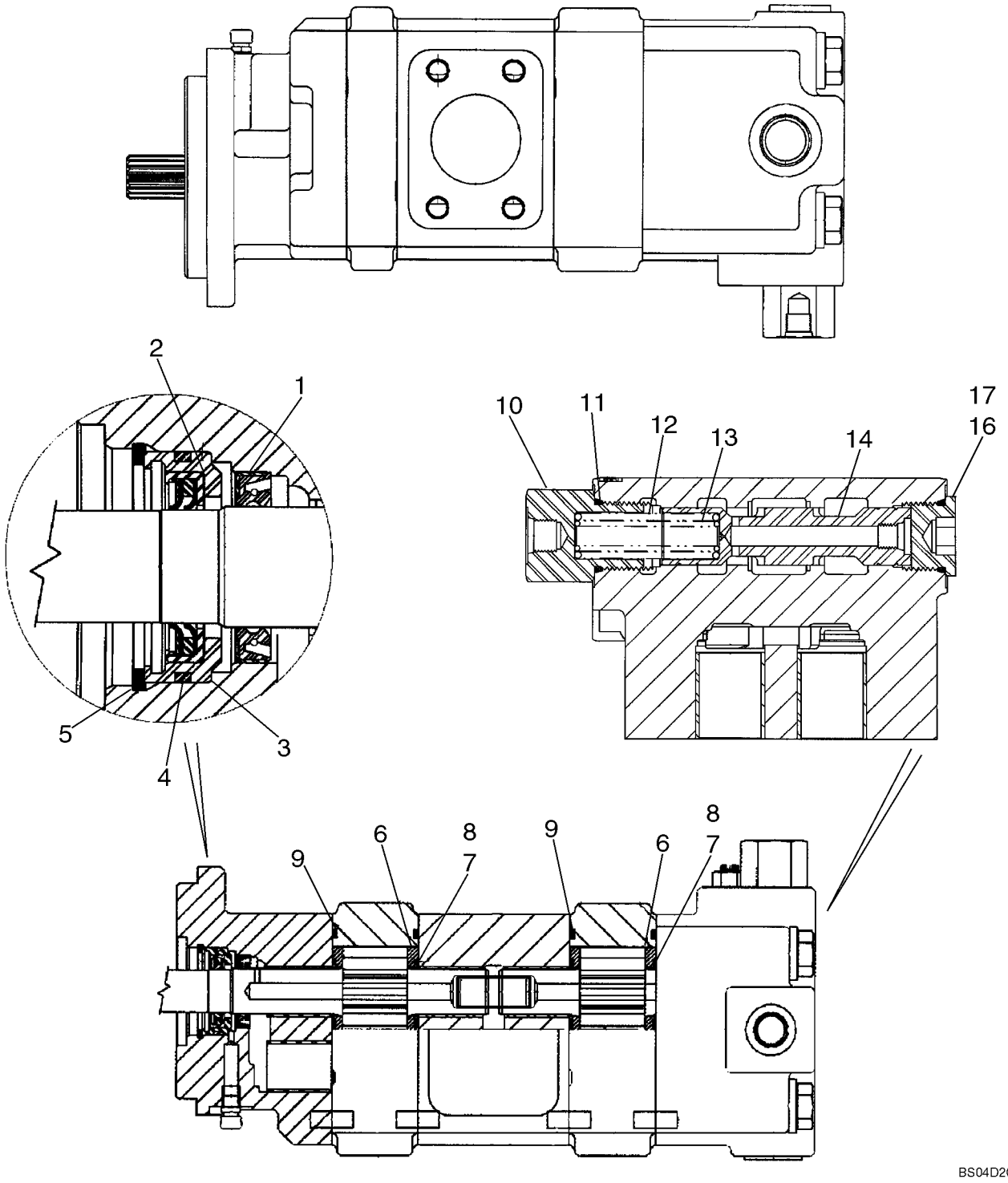

http://www.minnparbackhoeparts.com/

PUMP, EQUIPMENT HYDRAULIC

REF	FN	PART NUMBER	YR/SN	QTY	DESCRIPTION
		87434673		1	PUMP, HYDRAULIC Tandem; Component Parts Not Serviced Separately, Except for 87434072 and 87438045 Service Kits, Ref 1 - 17, See Below
		87434072		1	KIT, HYD PUMP REPAIR Pump Service Kit, Dual Section; Incl. Ref 1 - 9
1		L32418		1	SEAL Double Lip
2		87434075		1	SEAL Lip Seal
3		87434076		1	RETAINER, SEAL Seal Retainer
4		87434077		1	SEALRING O-Ring Seal
5		102-23206		1	CIRCLIP Retaining Ring
6		N13582		4	PLATE Thrust
7		144173A1		4	SEAL
8		178051A1		4	BACK-UP RING
9		L32100		4	SEAL Gear Housing Gasket
		87438045		1	KIT, HYD PUMP REPAIR Priority Valve Service Kit, Single; Incl. Ref 10 - 17
10		87437899		1	PLUG Load Sense Plug
11		237-6014		1	O-RING 1-3/64 ID x 7/64
12		87437905		1	SPRING-CHECK Spool Spring, 100 psi
13		87437906		1	SPRING-CHECK Spool Spring, 50 psi
14		87437914		1	SPOOL Priority Valve Spool
15		87437917		1	PLUG Orifice, Hex Socket Plug, Spool; Not Illustrated; No Longer Used; No Longer In Service Kit
16		218-5213		1	PLUG Hex Socket, 1-3/16 Or; Incl. Ref 17
17		237-6014		1	O-RING 1-3/64 ID x 7/64

http://www.minnparbackhoeparts.com/

VALVE ASSY - LOADER CONTROL, TWO SPOOL

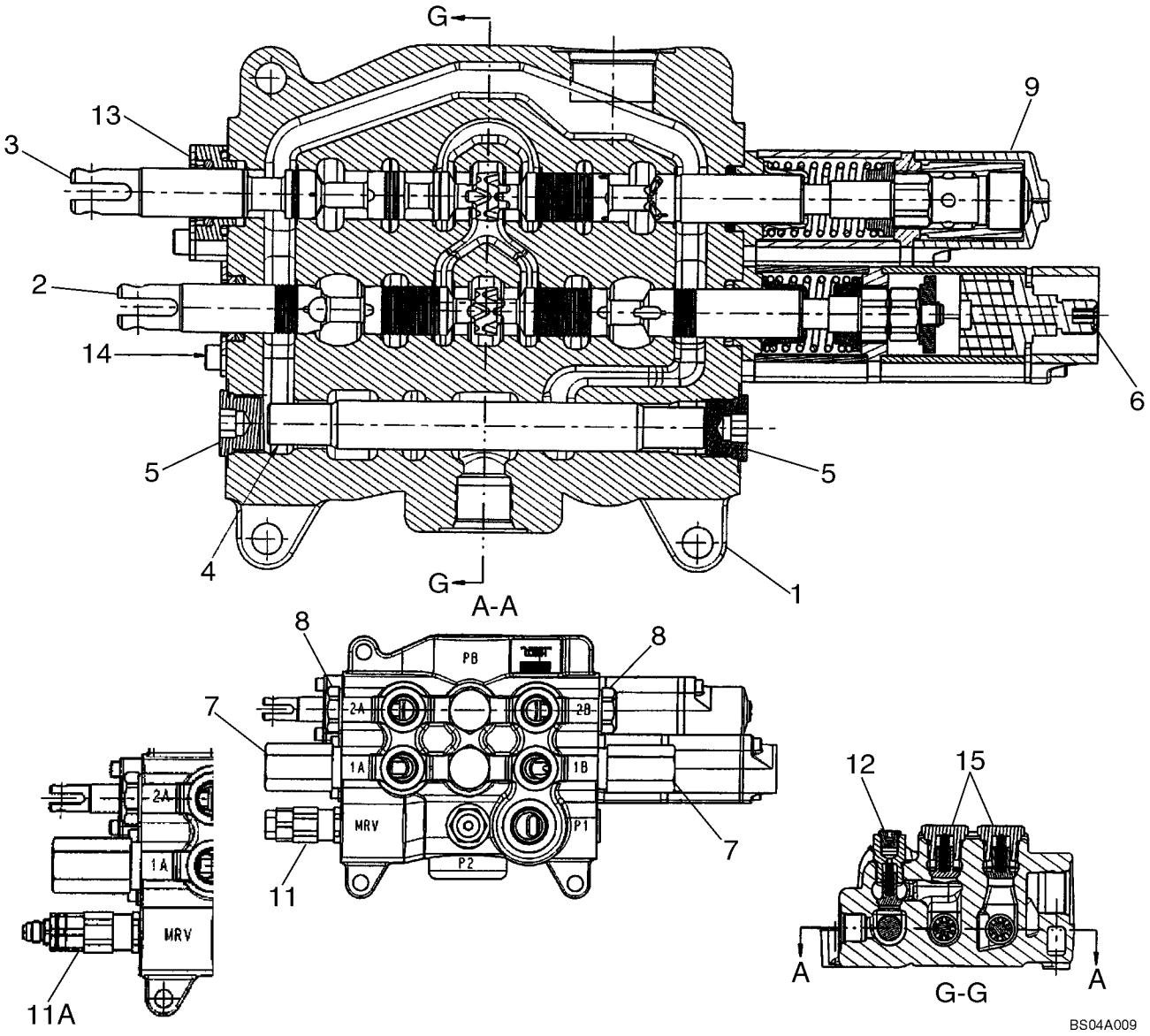

http://www.minnparbackhoeparts.com/

VALVE ASSY - LOADER CONTROL, TWO SPOOL

REF	FN	PART NUMBER	YR/SN	QTY	DESCRIPTION
		87434766		1	VALVE, HYDRAULIC Two Spool Loader Valve, Used On Models Without Pilot Controls; Incl. Ref 1 - 11, 12 - 15
		87434768		1	VALVE, HYDRAULIC Two Spool Loader Valve, Used On Models With Pilot Controls; Incl. Ref 1 - 9, 11A - 15
1		NSS		1	NOT SERVICED SEPARATELY HOUSING
2		NSS		1	NOT SERVICED SEPARATELY SPOOL, Bucket
3		NSS		1	NOT SERVICED SEPARATELY SPOOL, Lift
4		NSS		1	NOT SERVICED SEPARATELY SPOOL
5		87426233		2	PLUG 7/8 - 14 NF Plug, Serviceable Includes (1) 87455974 O-Ring
6		87426221		1	DETENT Magnetic Detent Kit, Bucket; Some Component Parts Not Serviced Separately; Serviceable Includes (1) 87454547 O-Ring, (1) 87310277 Magnet, (2) 87310278 Screw
7		87450978		2	VALVE, PRESSURE RELIEF Relief Valve Assembly; Replaces 87426232; Some Component Parts Not Serviced Separately; Includes Serviceable 87455549 Seal Kit
8		81868381		2	VALVE, CHECK Load Check Valve, Anti-Void; Component Parts Not Serviced Separately; Includes Serviceable 87455580 Seal Kit
9		87426227		1	DETENT Manual Detent Assembly, Lift; Some Component Parts Not Serviced Separately; Serviceable Includes (1) 87454547 O-Ring, (2) 87310275 Scew, (4) 87310276 Ball Bearing
11		87426717		1	VALVE, PRESSURE RELIEF Main Relief Valve Assembly, Single Stage; 87434766 Loader Valve, Models Without Pilot Controls; Component Parts Not Serviced Separately; Includes Serviceable 87455551 Seal Kit
11A		87426235		1	VALVE, PRESSURE RELIEF Main Relief Valve Assembly, Two Stage; 87434768 Loader Valve, Models With Pilot Controls; Component Parts Not Serviced Separately; Includes Serviceable 87455550 Seal Kit

http://www.minnparbackhoeparts.com/

VALVE ASSY - LOADER CONTROL, TWO SPOOL

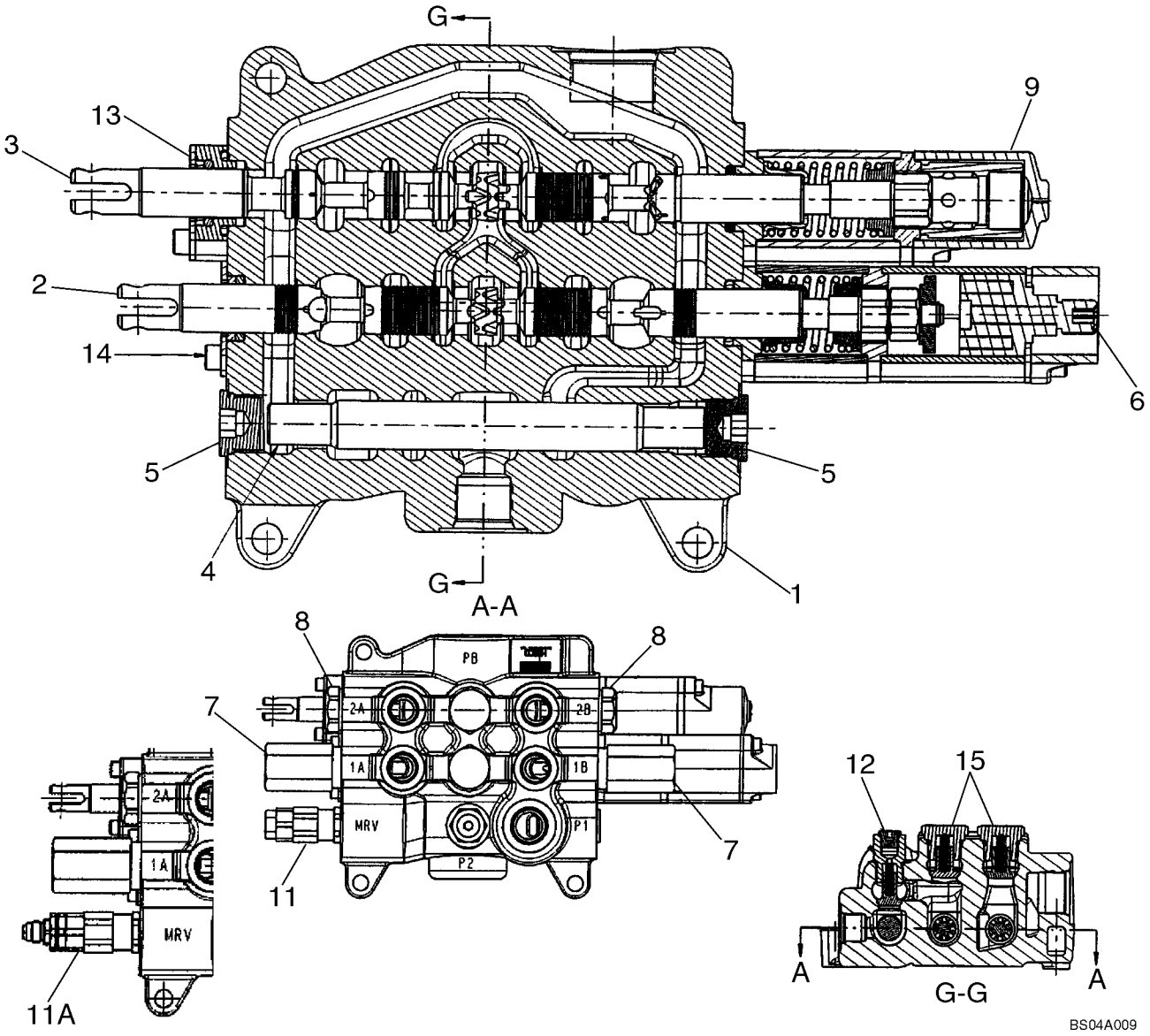

http://www.minnparbackhoeparts.com/

VALVE ASSY - LOADER CONTROL, TWO SPOOL

REF	FN	PART NUMBER	YR/SN	QTY	DESCRIPTION
12		87426716		1	VALVE, CHECK Check Valve; Some Component Parts Not Serviced Separately; Includes Serviceable (1) 87455974 O-Ring, (1) 87309001 O-Ring, (1) 87446002 Poppet, (1) 87446003 Spring
13		87440815		1	PLATE ASSY. Lift Spool Plate and Seal Assembly; Some Component Parts Not Serviced Separately; Serviceable Includes (1) 87454547 O-Ring, (1) 87454548 Seal, (1) 87455538 O-Ring, (2) 87455534 Screw
14		87440814		1	PLATE ASSY. Bucket Spool Plate and Seal Assembly; Some Component Parts Not Serviced Separately; Serviceable Includes (1) 87454547 O-Ring, (1) 87454548 Seal, (2) 87455540 Screw
15		87426238		2	VALVE, CHECK Check Valve; Component Parts Not Serviced Separately; Includes Serviceable 87455975 O-Ring

http://www.minnparbackhoeparts.com/

VALVE ASSY - LOADER CONTROL, THREE SPOOL

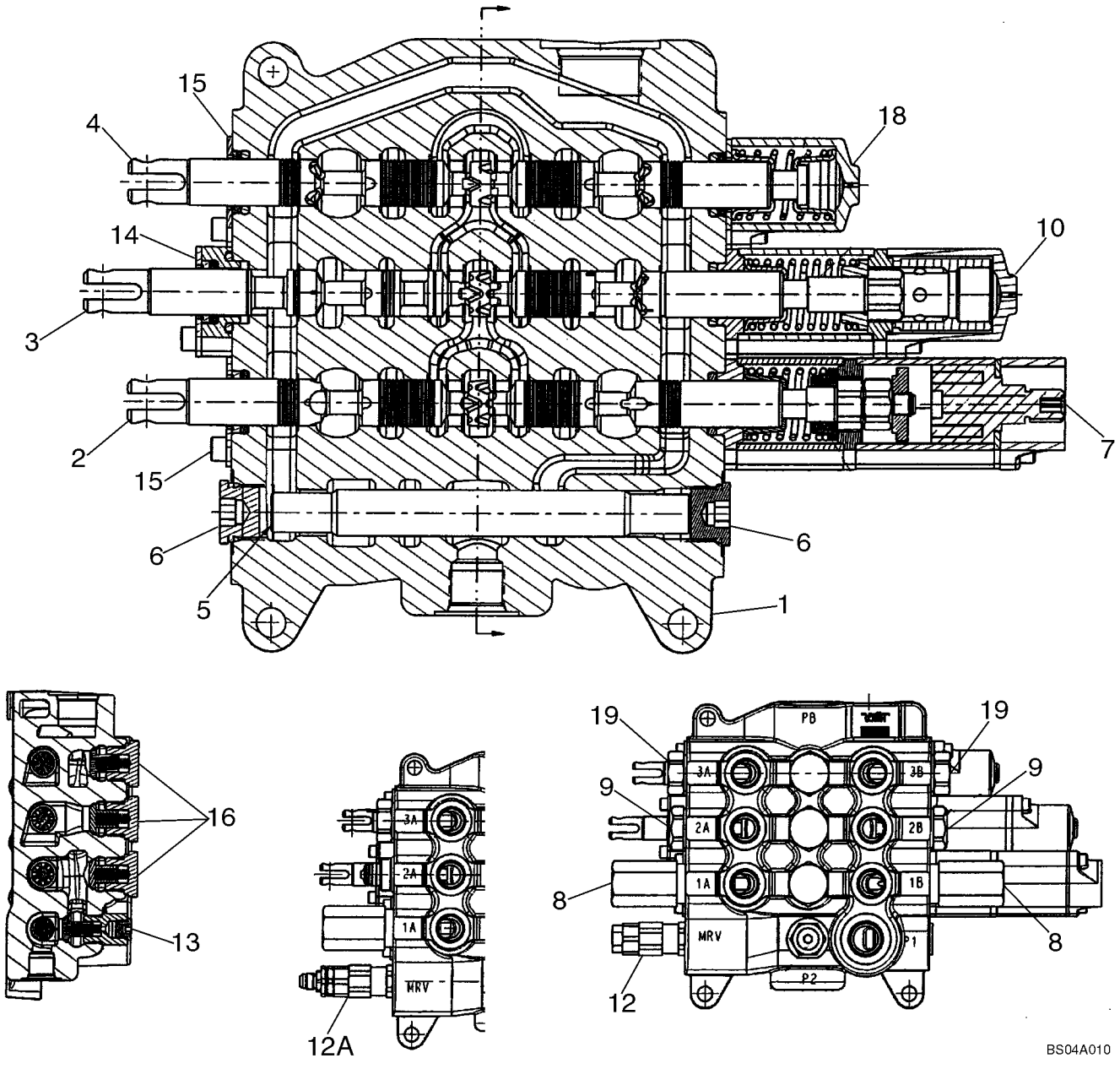

http://www.minnparbackhoeparts.com/

VALVE ASSY - LOADER CONTROL, THREE SPOOL

REF	FN	PART NUMBER	YR/SN	QTY	DESCRIPTION
		87434767		1	VALVE, HYDRAULIC Three Spool Loader Valve, Used On Models Without Pilot Controls; Incl. Ref 1 - 12, 13 - 19
		87434769		1	VALVE, HYDRAULIC Three Spool Loader Valve, Used On Models With Pilot Controls; Incl. Ref 1 -10, 12A - 19
1		NSS		1	NOT SERVICED SEPARATELY HOUSING
2		NSS		1	NOT SERVICED SEPARATELY SPOOL, Bucket
3		NSS		1	NOT SERVICED SEPARATELY SPOOL, Lift
4		NSS		1	NOT SERVICED SEPARATELY SPOOL, Clam
5		NSS		1	NOT SERVICED SEPARATELY SPOOL
6		87426233		2	PLUG 7/8 - 14 NF Plug, Serviceable Includes (1) 87455974 O-Ring
7		87426221		1	DETENT Magnetic Detent Kit, Bucket; Some Component Parts Not Serviced Separately; Serviceable Includes (1) 87454547 O-Ring, (1) 87310277 Magnet, (2) 87310278 Screw
8		87450978		2	VALVE, PRESSURE RELIEF Relief Valve Assembly; Replaces 87426232; Some Component Parts Not Serviced Separately; Includes Serviceable 87455549 Seal Kit
9		81868381		2	VALVE, CHECK Load Check Valve, Anti-Void; Component Parts Not Serviced Separately; Includes Serviceable 87455580 Seal Kit
10		87426227		1	DETENT Manual Detent Assembly, Lift; Some Component Parts Not Serviced Separately; Serviceable Includes (1) 87454547 O-Ring, (2) 87310275 Screw, (4) 87310276 Ball Bearing
12		87426717		1	VALVE, PRESSURE RELIEF Main Relief Valve Assembly, Single Stage; 87434767 Loader Valve, Models Without Pilot Controls; Component Parts Not Serviced Separately; Includes Serviceable 87455551 Seal Kit

http://www.minnparbackhoeparts.com/

VALVE ASSY - LOADER CONTROL, THREE SPOOL

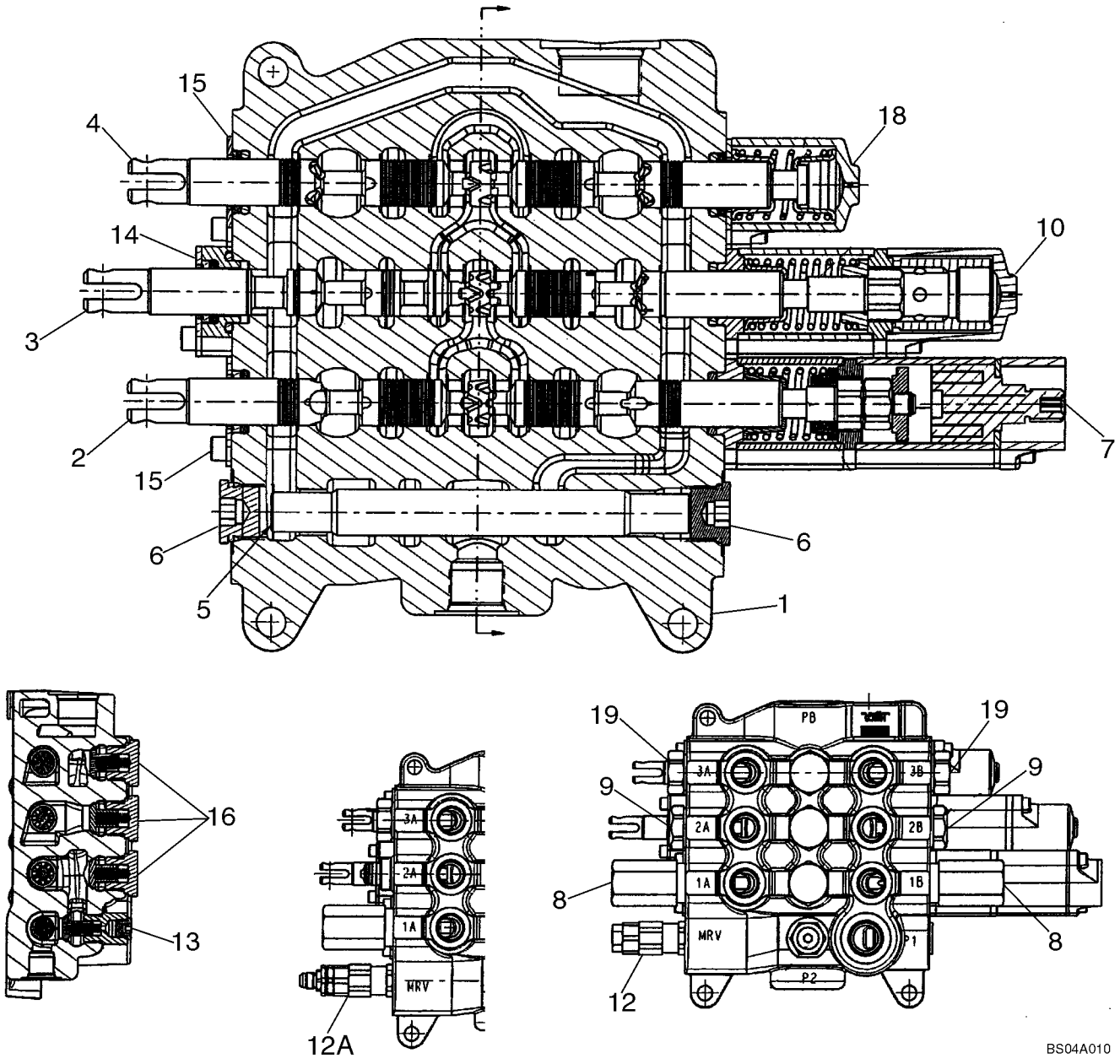

http://www.minnparbackhoeparts.com/

VALVE ASSY - LOADER CONTROL, THREE SPOOL

REF	FN	PART NUMBER	YR/SN	QTY	DESCRIPTION
12A		87426235		1	VALVE, PRESSURE RELIEF Main Relief Valve Assembly, Two Stage; 87434769 Loader Valve, Models With Pilot Controls; Component Parts Not Serviced Separately; Includes Serviceable 87455550 Seal Kit
13		87426716		1	VALVE, CHECK Check Valve; Some Component Parts Not Serviced Separately; Serviceable Includes (1) 87455974 O-Ring, (1) 87309001 O-Ring, (1) 87446002 Poppet, (1) 87446003 Spring
14		87440815		1	PLATE ASSY. Lift Spool Plate and Seal Assembly; Some Component Parts Not Serviced Separately; Serviceable Includes (1) 87454547 O-Ring, (1) 87454548 Seal, (1) 87455538 O-Ring, (2) 87455534 Screw
15		87440814		2	PLATE ASSY. Bucket and Clam Spool Plate and Seal Assembly; Some Component Parts Not Serviced Separately; Serviceable Includes (1) 87454547 O-Ring, (1) 87454548 Seal, (2) 87455540 Screw
16		87426238		3	VALVE, CHECK Check Valve; Component Parts Not Serviced Separately; Includes Serviceable 87455975 O-Ring
18		87426241		1	END ASSY. Clam Spool End Cap Assembly; Some Component Parts Not Serviced Separately; Serviceable Includes (1) 87454547 O-Ring, (1) 87454548 Seal, (1) 87444567 Spring, (2) 87455541 Screw
19		83981068		2	PLUG, STOP Shut-Off Plug Assembly Includes Seal; Component Parts Not Serviced Separately

http://www.minnparbackhoeparts.com/

VALVE ASSY - BACKHOE CONTROL, 6 SPOOL (W/O EXT DIPPER, W/O AUX HYDS, W/O PILOT CONTROLS)

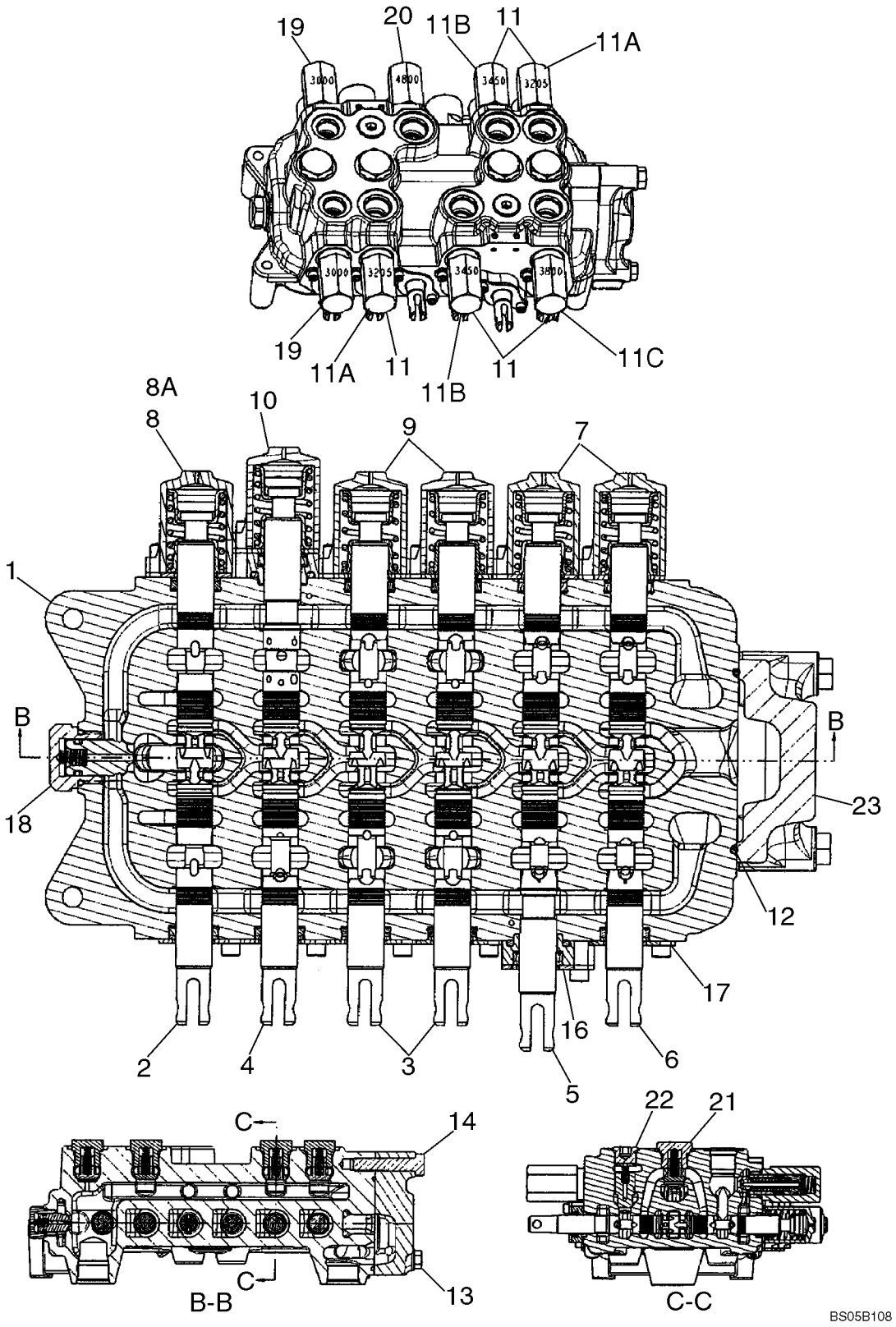

http://www.minnparbackhoeparts.com/

VALVE ASSY - BACKHOE CONTROL, 6 SPOOL (W/O EXT DIPPER, W/O AUX HYDS, W/O PILOT CONTROLS)

REF	FN	PART NUMBER	YR/SN	QTY	DESCRIPTION
		REF			INSTRUCTION MODELS WITHOUT EXTENDABLE DIPPER, WITHOUT AUXILIARY HYDRAULICS, WITHOUT PILOT CONTROLS
		87413144		1	VALVE, HYDRAULIC 6 Spool, Foot Swing; Incl. Ref 1 - 8, 9 - 23; If Used
		87416476		1	VALVE, HYDRAULIC 6 Spool, Hand Swing; Incl. Ref 1 - 7, 8A, 9 - 23; If Used
1		NSS		1	NOT SERVICED SEPARATELY HOUSING
2		NSS		1	NOT SERVICED SEPARATELY SPOOL, SWING
3		NSS		2	NOT SERVICED SEPARATELY SPOOL, STABILIZER, Right-hand and Left-Hand
4		NSS		1	NOT SERVICED SEPARATELY SPOOL, BOOM
5		NSS		1	NOT SERVICED SEPARATELY SPOOL, DIPPER
6		NSS		1	NOT SERVICED SEPARATELY SPOOL, BUCKET
7		87426241		2	END ASSY. Cap Assembly, Bucket and Dipper Spool End; Some Component Parts Not Serviced Separately; Serviceable Includes (1) 87454547 O-Ring, (1) 87454548 Seal, (1) 87444567 Spring, (2) 87455541 Screw; Replaces 87433028 End
8		87428500		1	END ASSY. Cap Assembly, Swing Spool End; 87413144 Foot Swing Valve; Some Component Parts Not Serviced Separately; Serviceable Includes (1) 87454547 O-Ring, (1) 87454548 Seal, (1) 87429151 Centering Spring, (2) 87455541 Screw
8A		87426241		1	END ASSY. Cap Assembly, Swing Spool End; 87416476 Hand Swing Valve; Some Component Parts Not Serviced Separately; Serviceable Includes (1) 87454547 O-Ring, (1) 87454548 Seal, (1) 87444567 Spring, (2) 87455541 Screw; Replaces 87433028 End
9		87428497		2	END ASSY. Cap Assembly, Stabilizer Spool Ends; Some Component Parts Not Serviced Separately; Serviceable Includes (2) 87454547 O-Rings, (1) 87454548 Seal, (1) 87455533 Spring, (2) 87455541 Screw

http://www.minnparbackhoeparts.com/

VALVE ASSY - BACKHOE CONTROL, 6 SPOOL (W/O EXT DIPPER, W/O AUX HYDS, W/O PILOT CONTROLS)

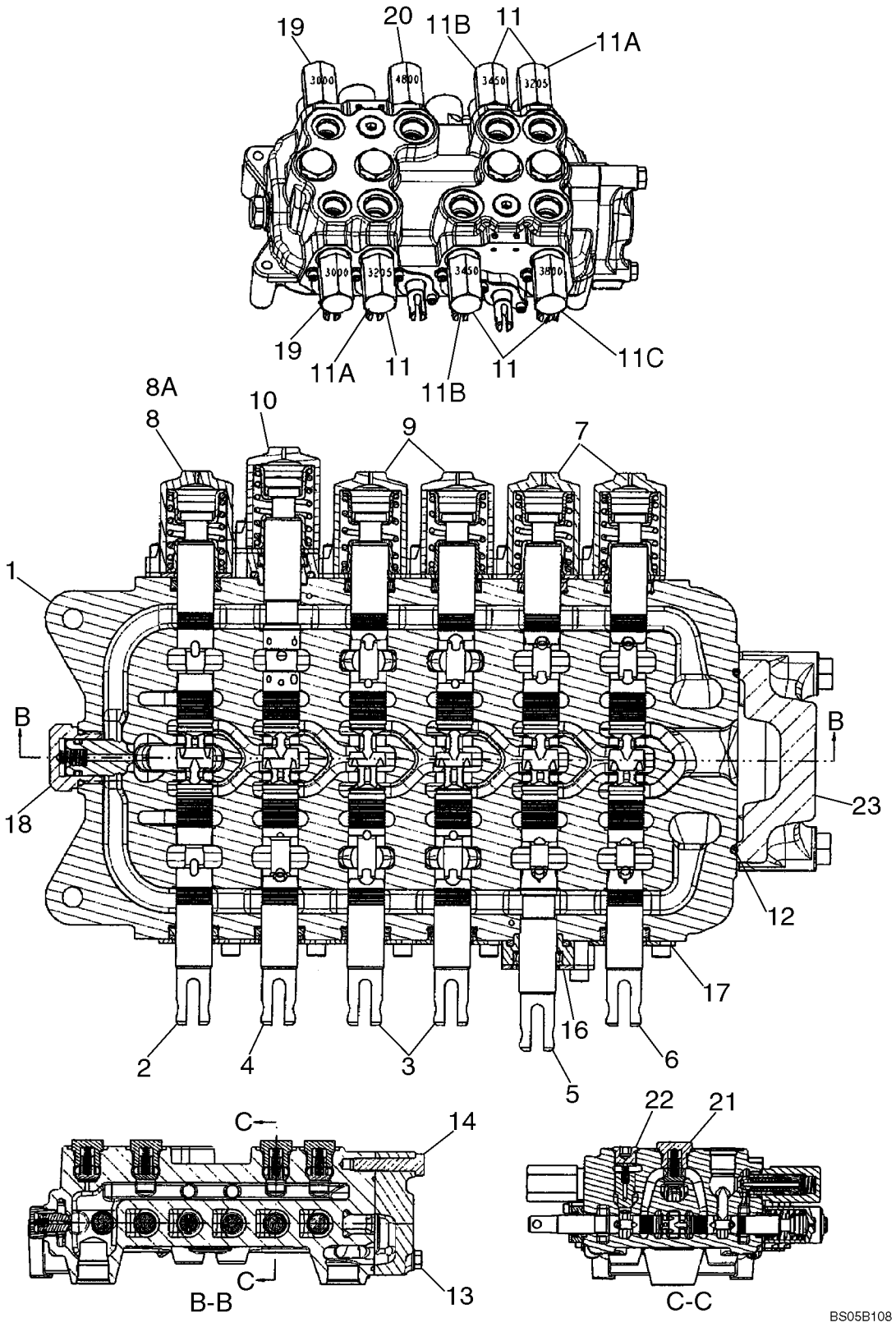

http://www.minnparbackhoeparts.com/

VALVE ASSY - BACKHOE CONTROL, 6 SPOOL (W/O EXT DIPPER, W/O AUX HYDS, W/O PILOT CONTROLS)

REF	FN	PART NUMBER	YR/SN	QTY	DESCRIPTION
10		87433029		1	END ASSY. Cap Assembly, Boom Spool End; Some Component Parts Not Serviced Separately; Serviceable Includes (1) 87454547 O-Ring, (1) 87454548 Seal, (1) 87444567 Spring, (1) 87455538 O-Ring, (2) 87455545 Screw
11		87426232		5	VALVE, PRESSURE RELIEF Relief Valve Assembly; (2) 3205 psi, (2) 3450 psi, (1) 3800 psi; Component Parts Not Serviced Separately; No Longer Used, See Ref 11A - 11C
11A		87450978		2	VALVE, PRESSURE RELIEF Circuit; 3205 psi; Component Parts Not Serviced Separately; Includes 87455549 Seal Kit
11B		87450979		2	VALVE, PRESSURE RELIEF Circuit; 3450 psi; Component Parts Not Serviced Separately; Includes 87455549 Seal Kit
11C		87450980		1	VALVE, PRESSURE RELIEF Circuit; 3800 psi; Component Parts Not Serviced Separately; Includes 87455549 Seal Kit
12		87428495		1	O-RING O-Ring Seal, Outlet Section
13		87428491		2	SCREW Bolt
14		87428492		1	SCREW Bolt
16		87440815		1	PLATE ASSY. Seal Plate Assembly, Dipper Spool; Some Component Parts Not Serviced Separately; Serviceable Includes (1) 87454547 O-Ring, (1) 87454548 Seal, (1) 87455538 O-Ring, (2) 87455534 Screw
17		87440814		5	PLATE ASSY. Seal Plate Assembly; Some Component Parts Not Serviced Separately; Serviceable Includes (1) 87454547 O-Ring, (1) 87454548 Seal, (2) 87455540 Screw
18		81868381		1	VALVE, CHECK Anti-Void Valve; Component Parts Not Serviced Separately; Includes 87455580 Seal Kit
19		87428490		2	VALVE, PRESSURE RELIEF Relief Valve Assembly; 3000 psi; Component Parts Not Serviced Separately; Includes 87455549 Seal Kit

http://www.minnparbackhoeparts.com/

VALVE ASSY - BACKHOE CONTROL, 6 SPOOL (W/O EXT DIPPER, W/O AUX HYDS, W/O PILOT CONTROLS)

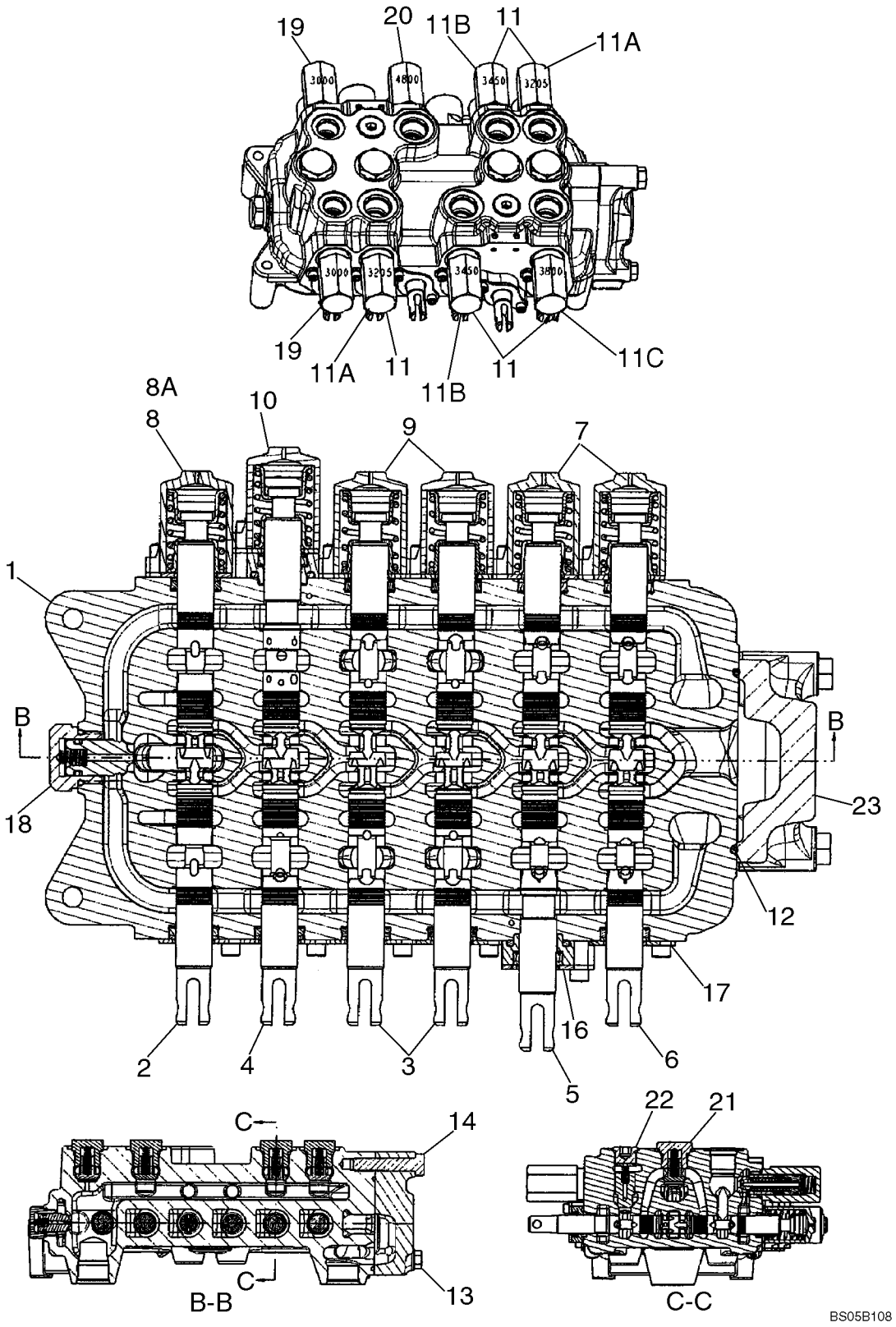

http://www.minnparbackhoeparts.com/

VALVE ASSY - BACKHOE CONTROL, 6 SPOOL (W/O EXT DIPPER, W/O AUX HYDS, W/O PILOT CONTROLS)

REF	FN	PART NUMBER	YR/SN	QTY	DESCRIPTION
20		87428488		1	VALVE, PRESSURE RELIEF Relief Valve Assembly; 4800 psi; Component Parts Not Serviced Separately; Includes 87455549 Seal Kit
21		87426238		4	VALVE, CHECK Check Valve Assembly; Hex Head; Component Parts Not Serviced Separately; Includes (1) 87455975 O-Ring
22		87428486		2	VALVE, CHECK Check Valve Assembly; Hex Socket Head; Component Parts Not Serviced Separately; Includes (1) 87455974 O-Ring
23		87433030		1	VALVE SECTION, HYD Outlet Section Assembly; Component Parts Not Serviced Separately

http://www.minnparbackhoeparts.com/

VALVE ASSY - BACKHOE CONTROL, 7 SPOOL (W/O EXT DIPPER, W/ AUX HYDS, W/O PILOT CONTROLS)

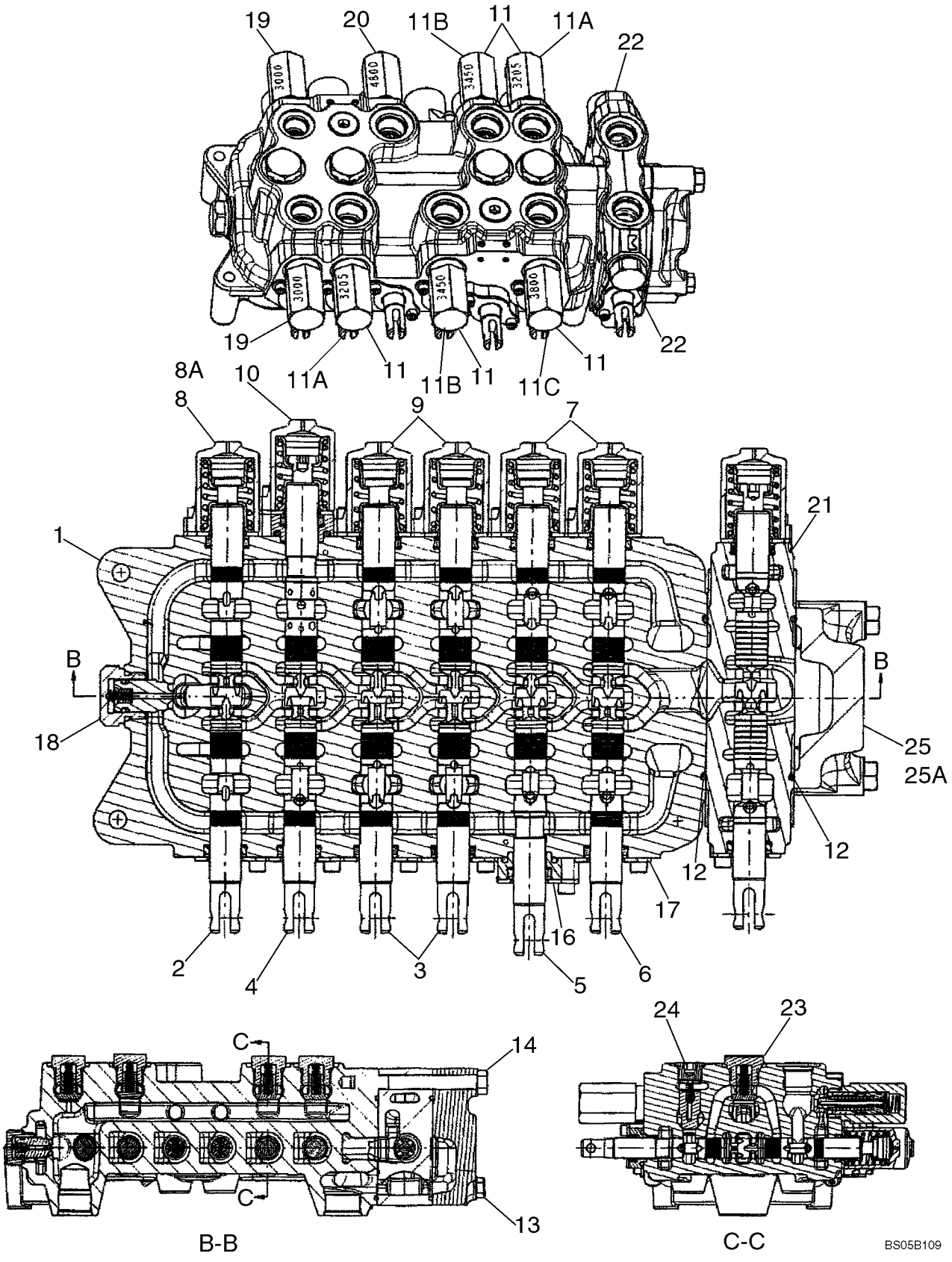

http://www.minnparbackhoeparts.com/

VALVE ASSY - BACKHOE CONTROL, 7 SPOOL (W/O EXT DIPPER, W/ AUX HYDS, W/O PILOT CONTROLS)

REF	FN	PART NUMBER	YR/SN	QTY	DESCRIPTION
		REF			INSTRUCTION MODELS WITHOUT EXTENDABLE DIPPER, WITH AUXILIARY HYDRAULICS, WITHOUT PILOT CONTROLS
		87414278		1	VALVE, HYDRAULIC 7 Spool, Foot Swing; Incl. Ref 1 - 8, 9 - 25; If Used
		87414277		1	VALVE, HYDRAULIC 7 Spool, Hand Swing; Incl. Ref 1 - 7, 8A, 9 - 24, 25A; If Used
1		NSS		1	NOT SERVICED SEPARATELY HOUSING
2		NSS		1	NOT SERVICED SEPARATELY SPOOL, SWING
3		NSS		2	NOT SERVICED SEPARATELY SPOOL, STABILIZER, Left-Hand and Right-Hand
4		NSS		1	NOT SERVICED SEPARATELY SPOOL, BOOM
5		NSS		1	NOT SERVICED SEPARATELY SPOOL, DIPPER
6		NSS		1	NOT SERVICED SEPARATELY SPOOL, BUCKET
7		87426241		2	END ASSY. Cap Assembly, Bucket and Dipper Spool End; Some Component Parts Not Serviced Separately; Serviceable Includes (1) 87454547 O-Ring, (1) 87454548 Seal, (1) 87444567 Spring, (2) 87455541 Screw; Replaces 87433028 End
8		87428500		1	END ASSY. Cap Assembly, Swing Spool End; 87414278 Foot Swing Valve; Some Component Parts Not Serviced Separately; Serviceable Includes (1) 87454547 O-Ring, (1) 87454548 Seal, (1) 87429151 Centering Spring, (2) 87455541 Screw
8A		87426241		1	END ASSY. Cap Assembly, Swing Spool End; 87414277 Hand Swing Valve; Some Component Parts Not Serviced Separately; Serviceable Includes (1) 87454547 O-Ring, (1) 87454548 Seal, (1) 87444567 Spring, (2) 87455541 Screw; Replaces 87433028 End
9		87428497		2	END ASSY. Cap Assembly, Stabilizer Spool Ends; Some Component Parts Not Serviced Separately; Serviceable Includes (2) 87454547 O-Ring, (1) 87454548 Seal, (1) 87455533 Spring, (2) 87455541 Screw

http://www.minnparbackhoeparts.com/

VALVE ASSY - BACKHOE CONTROL, 7 SPOOL (W/O EXT DIPPER, W/ AUX HYDS, W/O PILOT CONTROLS)

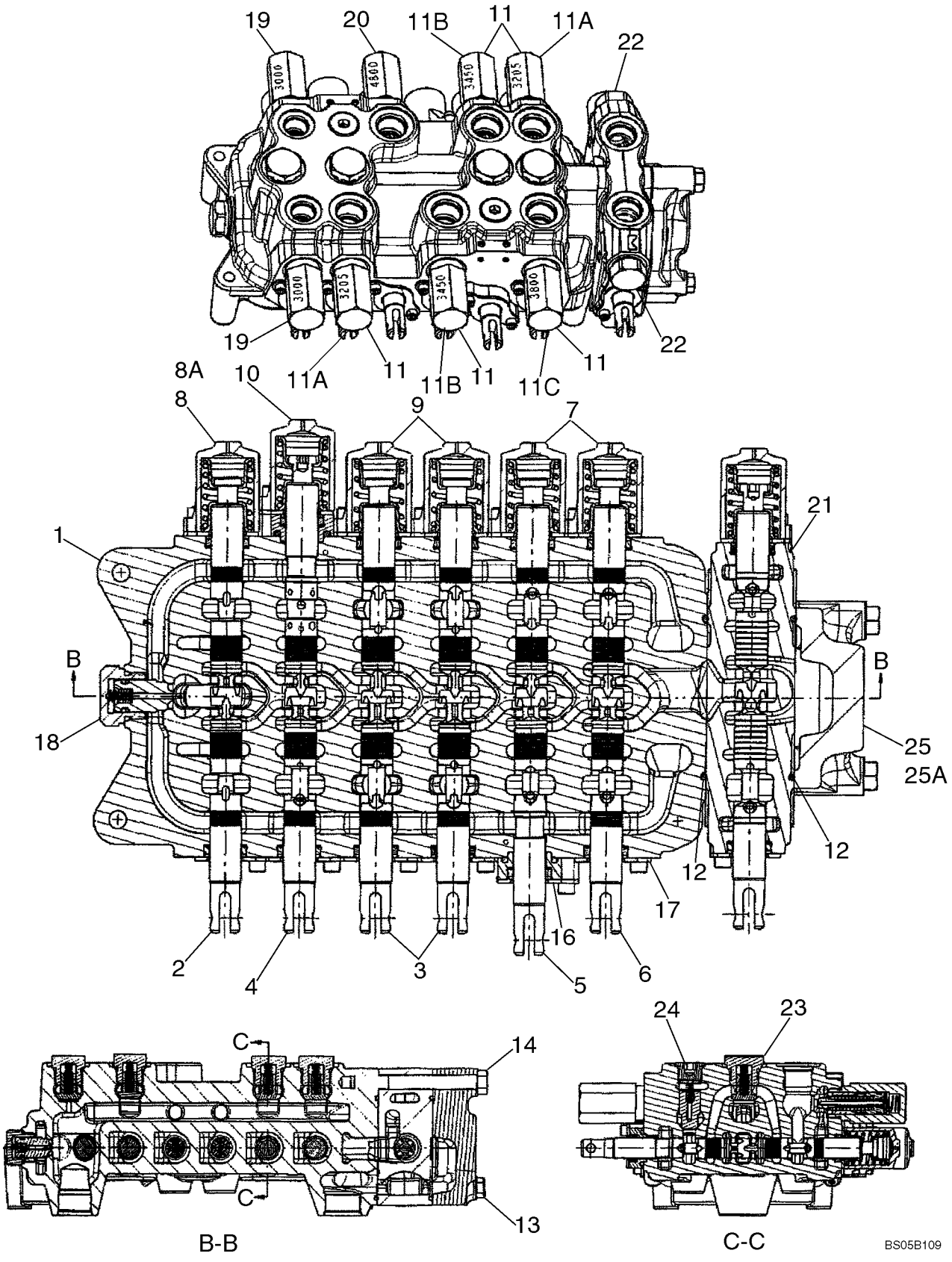

http://www.minnparbackhoeparts.com/

VALVE ASSY - BACKHOE CONTROL, 7 SPOOL (W/O EXT DIPPER, W/ AUX HYDS, W/O PILOT CONTROLS)

REF	FN	PART NUMBER	YR/SN	QTY	DESCRIPTION
10		87433029		1	END ASSY. Cap Assembly, Boom Spool End; Some Component Parts Not Serviced Separately; Serviceable Includes (1) 87454547 O-Ring, (1) 87454548 Seal, (1) 87444567 Spring, (1) 87455538 O-Ring, (2) 87455545 Screw
11		87426232		5	VALVE, PRESSURE RELIEF Relief Valve Assembly; (2) 3205 psi, (2) 3450 psi, (1) 3800 psi; Component Parts Not Serviced Separately; No Longer Used, See Ref 11A - 11C
11A		87450978		2	VALVE, PRESSURE RELIEF Circuit; 3205 psi; Component Parts Not Serviced Separately; Includes 87455549 Seal Kit
11B		87450979		2	VALVE, PRESSURE RELIEF Circuit; 3450 psi; Component Parts Not Serviced Separately; Includes 87455549 Seal Kit
11C		87450980		1	VALVE, PRESSURE RELIEF Circuit; 3800 psi; Component Parts Not Serviced Separately; Includes 87455549 Seal Kit
12		87428495		2	O-RING O-Ring Seal, Auxiliary/Outlet Section
13		87428476		2	SCREW Bolt
14		87428477		1	SCREW Bolt
16		87440815		1	PLATE ASSY. Seal Plate Assembly, Dipper Spool; Some Component Parts Not Serviced Separately; Serviceable Includes (1) 87454547 O-Ring, (1) 87454548 Seal, (1) 87455538 O-Ring, (2) 87455534 Screw
17		87440814		5	PLATE ASSY. Seal Plate Assembly; Some Component Parts Not Serviced Separately; Serviceable Includes (1) 87454547 O-Ring, (1) 87454548 Seal, (2) 87455540 Screw
18		81868381		1	VALVE, CHECK Anti-Void Valve; Component Parts Not Serviced Separately; Includes 87455580 Seal Kit
19		87428490		2	VALVE, PRESSURE RELIEF Relief Valve Assembly; 3000 psi; Component Parts Not Serviced Separately; Includes 87455549 Seal Kit

http://www.minnparbackhoeparts.com/

VALVE ASSY - BACKHOE CONTROL, 7 SPOOL (W/O EXT DIPPER, W/ AUX HYDS, W/O PILOT CONTROLS)

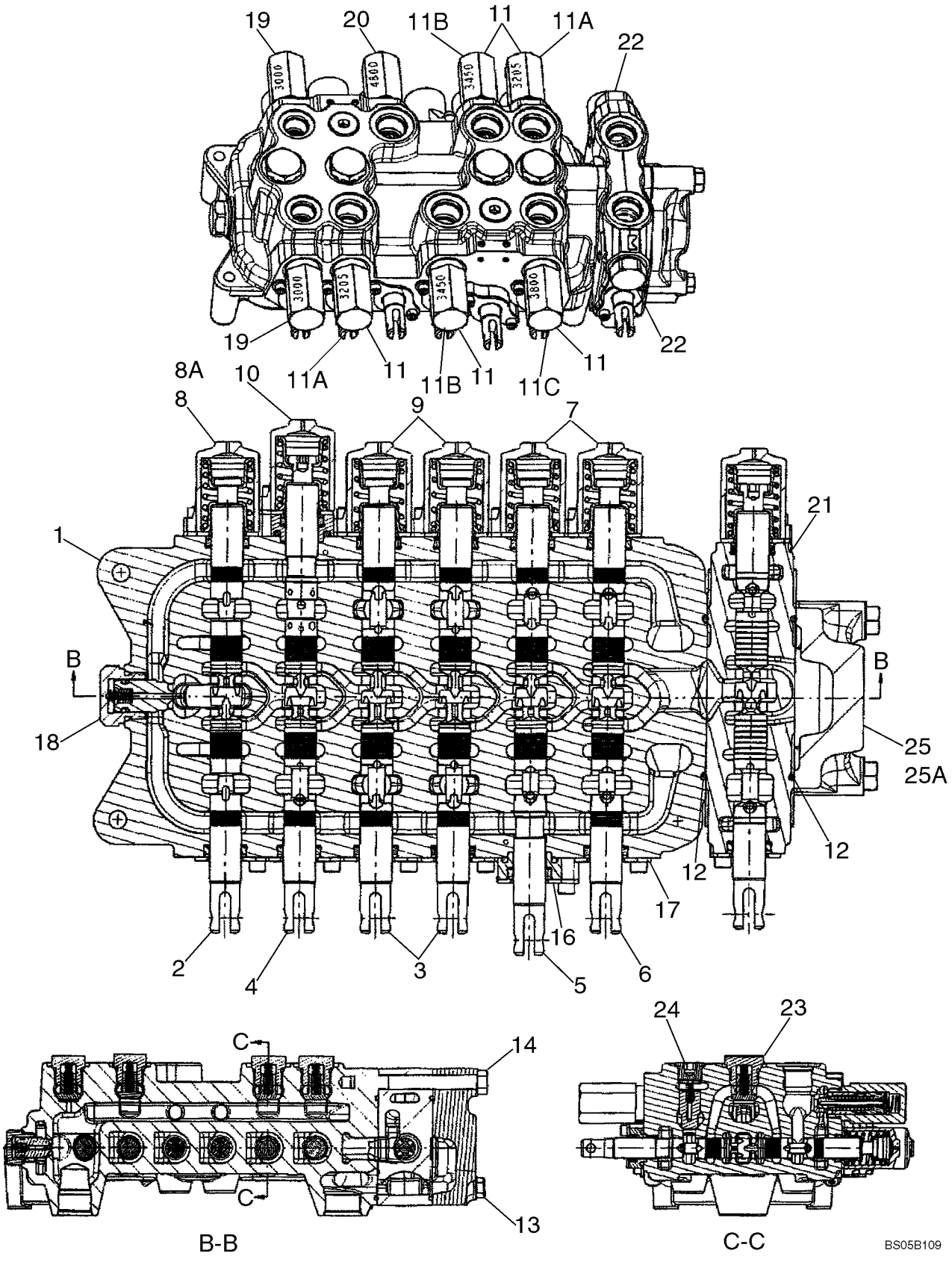

http://www.minnparbackhoeparts.com/

VALVE ASSY - BACKHOE CONTROL, 7 SPOOL (W/O EXT DIPPER, W/ AUX HYDS, W/O PILOT CONTROLS)

REF	FN	PART NUMBER	YR/SN	QTY	DESCRIPTION
20		87428488		1	VALVE, PRESSURE RELIEF Relief Valve Assembly; 4800 psi; Component Parts Not Serviced Separately; Includes 87455549 Seal Kit
21		87428501		1	VALVE SECTION, HYD Spool Section Assembly; Auxiliary Hydraulics; Incl. Ref 21A - 21I, Which Are Not Illustrated; Remainder Component Parts Not Serviced Separately
21A		87433028		1	END ASSY. Spool; Incl. Ref 21B - 21E, Which Are Not Illustrated; Remainder Components Not Serviced Separately
21B		87454547		1	O-RING
21C		87454548		1	SEAL Wiper
21D		87429150		1	SPRING, VALVE
21E		87455541		2	SCREW
21F		87428495		1	O-RING
21G		87455564		1	POPPET, VALVE Load Check
21H		87455565		1	SPRING, VALVE Load Check
21I		83981068		2	PLUG, STOP Shut-Off
22		83981068		2	PLUG, STOP Shut-Off Plug; Component Parts Not Serviced Separately; Now Included With Ref 21
23		87426238		4	VALVE, CHECK Check Valve Assembly; Hex Head; Component Parts Not Serviced Separately; Includes (1) 87455975 O-Ring
24		87428486		2	VALVE, CHECK Check Valve Assembly; Hex Socket Head; Component Parts Not Serviced Separately; Includes (1) 87455974 O-Ring
25		87433030		1	VALVE SECTION, HYD Outlet Section Assembly; 87414278 Foot Swing Valve; Component Parts Not Serviced Separately
25A		87433030		1	VALVE SECTION, HYD Outlet Section Assembly; 87414277 Hand Swing Valve; Component Parts Not Serviced Separately

http://www.minnparbackhoeparts.com/

VALVE ASSY - BACKHOE CONTROL, 7 SPOOL (W/ EXT DIPPER, W/O AUX HYDS, W/O PILOT CONTROLS)

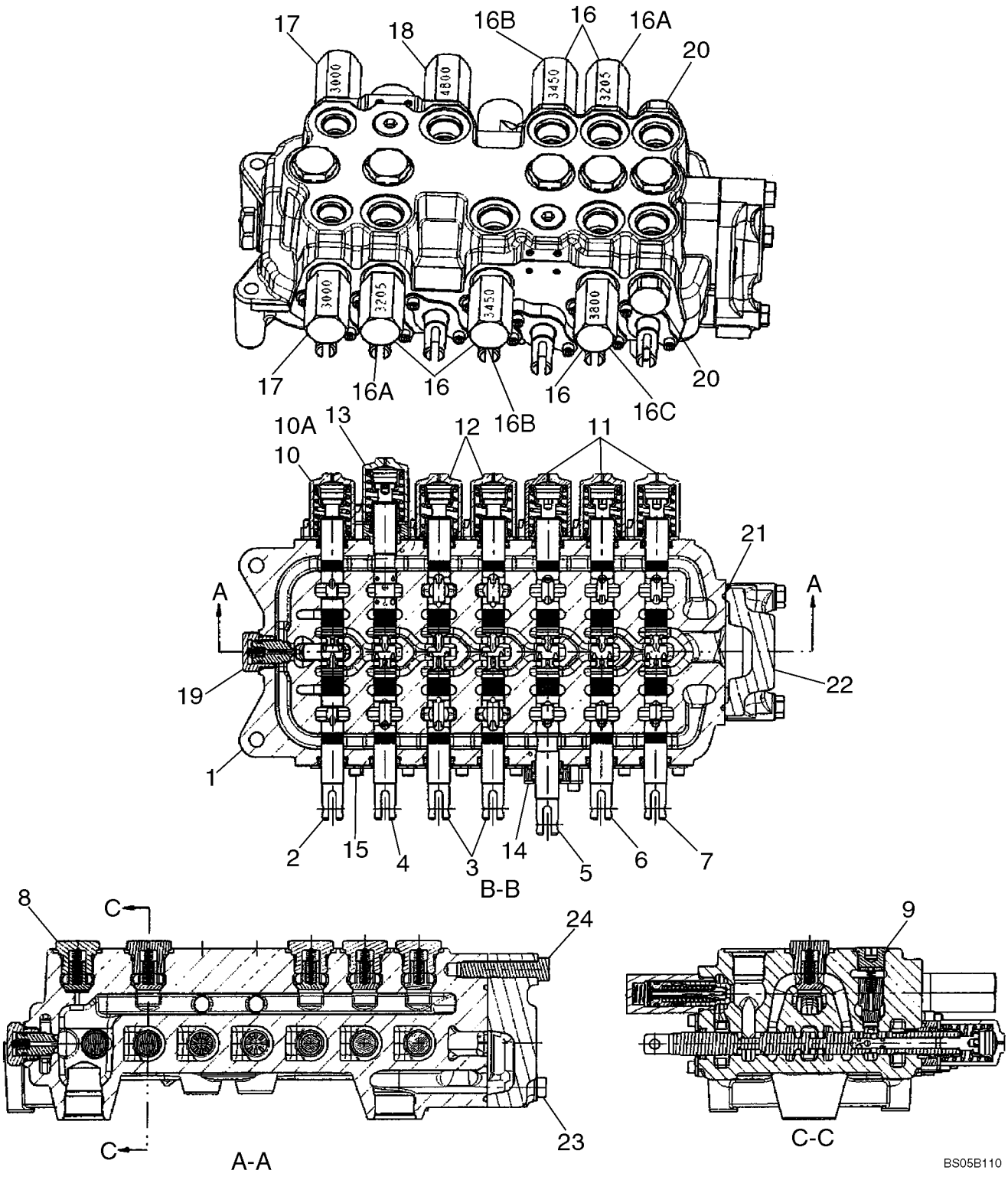

http://www.minnparbackhoeparts.com/

VALVE ASSY - BACKHOE CONTROL, 7 SPOOL (W/ EXT DIPPER, W/O AUX HYDS, W/O PILOT CONTROLS)

REF	FN	PART NUMBER	YR/SN	QTY	DESCRIPTION
		REF			INSTRUCTION MODELS WITH EXTENDABLE DIPPER, WITHOUT AUXILIARY HYDRAULICS, WITHOUT PILOT CONTROLS
		87413145		1	VALVE, HYDRAULIC 7 Spool, Foot Swing; Incl. Ref 1 - 10, 11 - 24; If Used
		87403386		1	VALVE, HYDRAULIC 7 Spool, Hand Swing; Incl. Ref 1 - 9, 10A, 11 - 24; If Used
1		NSS		1	NOT SERVICED SEPARATELY HOUSING
2		NSS		1	NOT SERVICED SEPARATELY SPOOL, SWING
3		NSS		2	NOT SERVICED SEPARATELY SPOOL, STABILIZER, Right-Hand and Left-Hand
4		NSS		1	NOT SERVICED SEPARATELY SPOOL, BOOM
5		NSS		1	NOT SERVICED SEPARATELY SPOOL, DIPPER
6		NSS		1	NOT SERVICED SEPARATELY SPOOL, BUCKET
7		NSS		1	NOT SERVICED SEPARATELY SPOOL, EXTENDABLE DIPPER
8		87426238		5	VALVE, CHECK Check Valve Assembly; Hex Head; Component Parts Not Serviced Separately; Includes (1) 87455975 O-Ring
9		87428486		2	VALVE, CHECK Check Valve Assembly; Hex Socket Head; Component Parts Not Serviced Separately; Includes (1) 87455974 O-Ring
10		87428500		1	END ASSY. Cap Assembly, Swing Spool End; 87413145 Foot Swing Valve; Some Component Parts Not Serviced Separately; Serviceable Includes (1) 87454547 O-Ring, (1) 87454548 Seal, (1) 87429151 Centering Spring, (2) 87455541 Screw
10A		87426241		1	END ASSY. Cap Assembly, Swing Spool End; 87403386 Hand Swing Valve; Some Component Parts Not Serviced Separately; Serviceable Includes (1) 87454547 O-Ring, (1) 87454548 Seal, (1) 87444567 Spring, (2) 87455541 Screw; Replaces 87433028 End

http://www.minnparbackhoeparts.com/

VALVE ASSY - BACKHOE CONTROL, 7 SPOOL (W/ EXT DIPPER, W/O AUX HYDS, W/O PILOT CONTROLS)

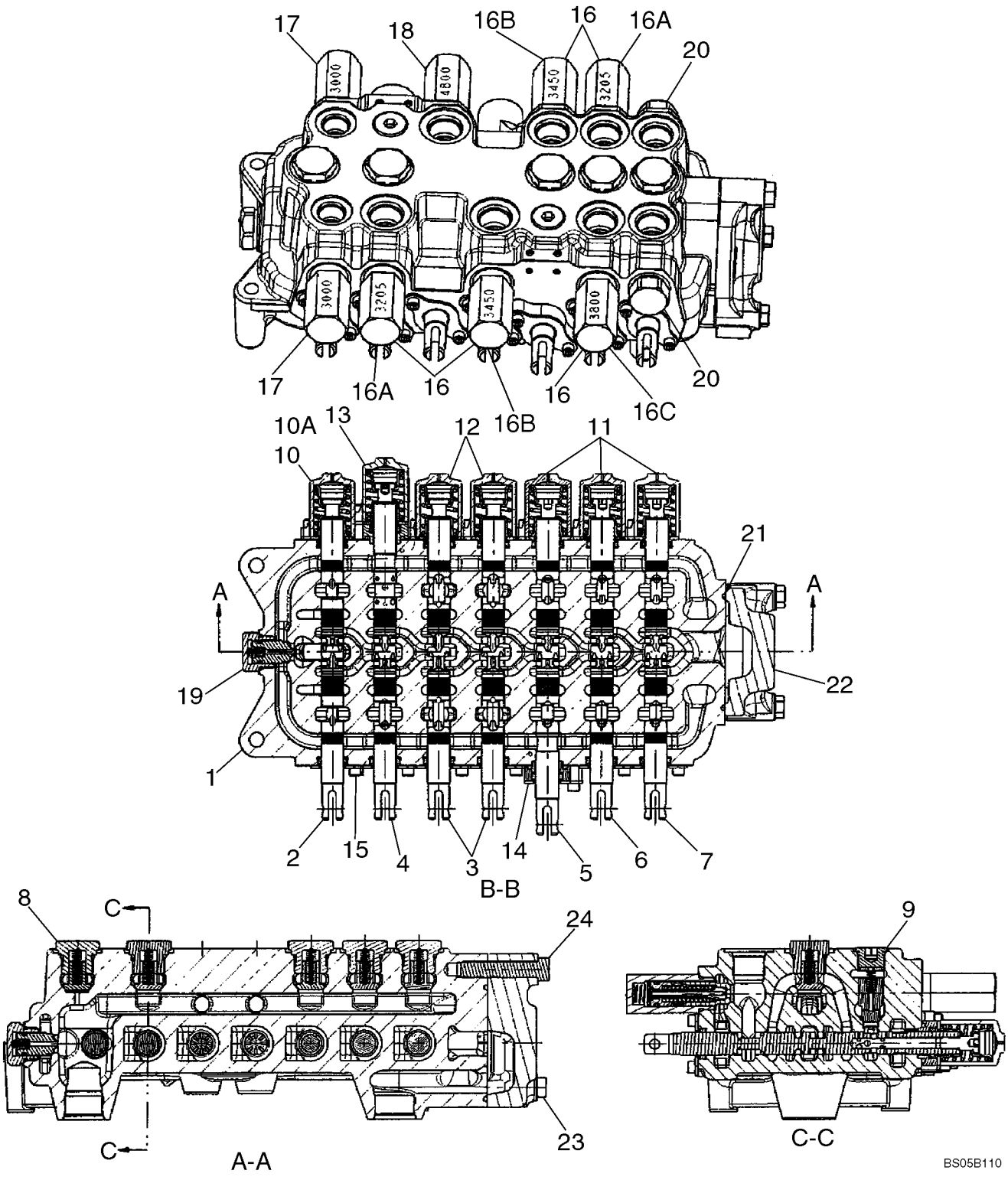

http://www.minnparbackhoeparts.com/

VALVE ASSY - BACKHOE CONTROL, 7 SPOOL (W/ EXT DIPPER, W/O AUX HYDS, W/O PILOT CONTROLS)

REF	FN	PART NUMBER	YR/SN	QTY	DESCRIPTION
11		87426241		3	END ASSY. Cap Assembly, Bucket, Dipper, and Extendahoe Spool End; Some Component Parts Not Serviced Separately; Serviceable Includes (1) 87454547 O-Ring, (1) 87454548 Seal, (1) 87444567 Spring, (2) 87455541 Screw; Replaces 87433028 End
12		87428497		2	END ASSY. Cap Assembly, Stabilizer Spool Ends; Some Component Parts Not Serviced Separately; Serviceable Includes (2) 87454547 O-Ring, (1) 87454548 Seal, (1) 87455533 Spring, (2) 87455541 Screw
13		87433029		1	END ASSY. Cap Assembly, Boom Spool End; Some Component Parts Not Serviced Separately; Serviceable Includes (1) 87454547 O-Ring, (1) 87454548 Seal, (1) 87444567 Spring, (1) 87455538 O-Ring, (2) 87455545 Screw
14		87440815		1	PLATE ASSY. Seal Plate Assembly, Dipper Spool; Some Component Parts Not Serviced Separately; Serviceable Includes (1) 87454547 O-Ring, (1) 87454548 Seal, (1) 87455538 O-Ring, (2) 87455534 Screw
15		87440814		6	PLATE ASSY. Seal Plate Assembly; Some Component Parts Not Serviced Separately; Serviceable Includes (1) 87454547 O-Ring, (1) 87454548 Seal, (2) 87455540 Screw
16		87426232		5	VALVE, PRESSURE RELIEF Relief Valve Assembly; (2) 3205 psi, (2) 3450 psi, (1) 3800 psi; Component Parts Not Serviced Separately; No Longer Used, See Ref 16A - 16C
16A		87450978		2	VALVE, PRESSURE RELIEF Circuit; 3205 psi; Component Parts Not Serviced Separately; Includes 87455549 Seal Kit
16B		87450979		2	VALVE, PRESSURE RELIEF Circuit; 3450 psi; Component Parts Not Serviced Separately; Includes 87455549 Seal Kit

http://www.minnparbackhoeparts.com/

VALVE ASSY - BACKHOE CONTROL, 7 SPOOL (W/ EXT DIPPER, W/O AUX HYDS, W/O PILOT CONTROLS)

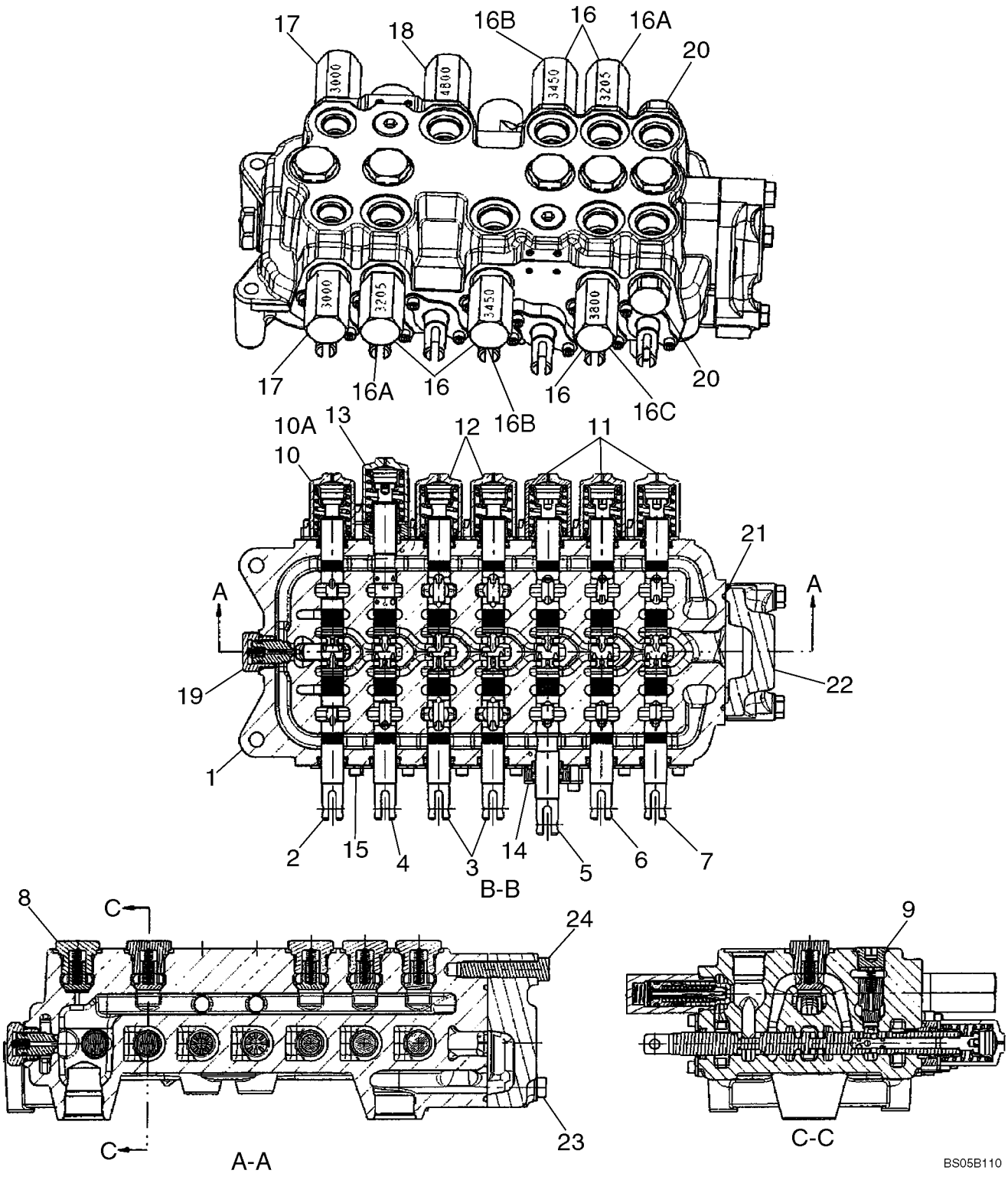

http://www.minnparbackhoeparts.com/

VALVE ASSY - BACKHOE CONTROL, 7 SPOOL (W/ EXT DIPPER, W/O AUX HYDS, W/O PILOT CONTROLS)

REF	FN	PART NUMBER	YR/SN	QTY	DESCRIPTION
16C		87450980		1	VALVE, PRESSURE RELIEF Circuit; 3800 psi; Component Parts Not Serviced Separately; Includes 87455549 Seal Kit
17		87428490		2	VALVE, PRESSURE RELIEF Relief Valve Assembly; 3000 psi; Component Parts Not Serviced Separately; Includes 87455549 Seal Kit
18		87428488		1	VALVE, PRESSURE RELIEF Relief Valve Assembly; 4800 psi; Component Parts Not Serviced Separately; Includes 87455549 Seal Kit
19		81868381		1	VALVE, CHECK Anti-Void Plug; Component Parts Not Serviced Separately; Includes 87455580 Seal Kit
20		83981068		2	PLUG, STOP Shut-Off Plug; Component Parts Not Serviced Separately
21		87428495		1	O-RING O-Ring Seal; Outlet Section
22		87433030		1	VALVE SECTION, HYD Outlet Section Assembly; Component Parts Not Serviced Separately
23		87428491		2	SCREW Bolt
24		87428492		1	SCREW Bolt

http://www.minnparbackhoeparts.com/

08-39		p1	04/05

VALVE ASSY - BACKHOE CONTROL, 8 SPOOL (W/ EXT DIPPER, W/ AUX HYDS, W/O PILOT CONTROLS)

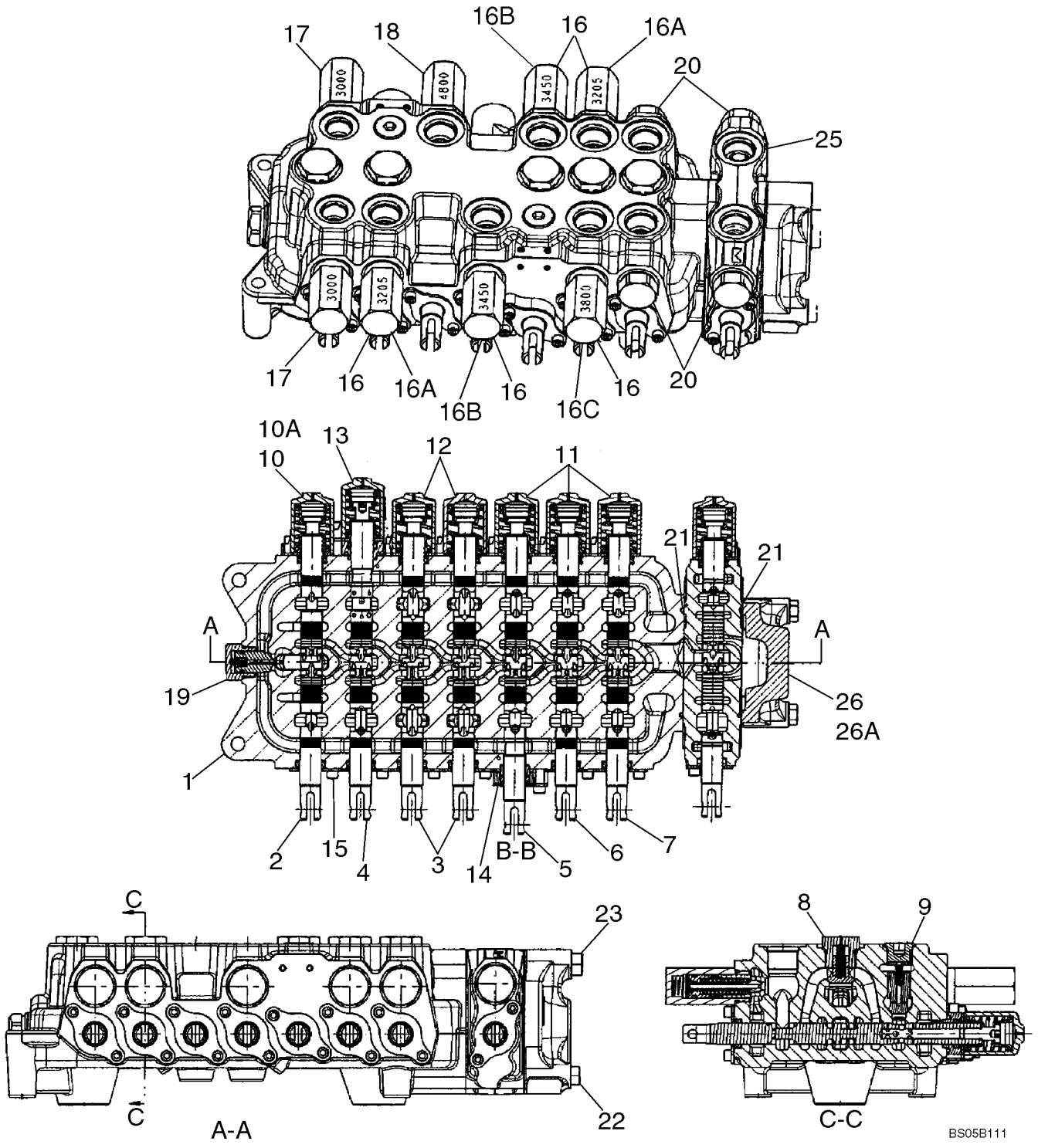

http://www.minnparbackhoeparts.com/

VALVE ASSY - BACKHOE CONTROL, 8 SPOOL (W/ EXT DIPPER, W/ AUX HYDS, W/O PILOT CONTROLS)

REF	FN	PART NUMBER	YR/SN	QTY	DESCRIPTION
		REF			INSTRUCTION MODELS WITH EXTENDABLE DIPPER, WITH AUXILIARY HYDRAULICS, WITHOUT PILOT CONTROLS
		87413146		1	VALVE, HYDRAULIC 8 Spool, Foot Swing; Incl. Ref 1 - 10, 12 - 26; If Used
		87403387		1	VALVE, HYDRAULIC 8 Spool, Hand Swing; Incl. Ref 1 - 9, 10A, 11 - 25, 26A; If Used
1		NSS		1	NOT SERVICED SEPARATELY HOUSING
2		NSS		1	NOT SERVICED SEPARATELY SPOOL, SWING
3		NSS		2	NOT SERVICED SEPARATELY SPOOL, STABILIZER, Right-Hand and Left-Hand
4		NSS		1	NOT SERVICED SEPARATELY SPOOL, BOOM
5		NSS		1	NOT SERVICED SEPARATELY SPOOL, DIPPER
6		NSS		1	NOT SERVICED SEPARATELY SPOOL, BUCKET
7		NSS		1	NOT SERVICED SEPARATELY SPOOL, EXTENDABLE DIPPER
8		87426238		5	VALVE, CHECK Check Valve Assembly; Hex Head; Component Parts Not Serviced Separately; Includes (1) 87455975 O-Ring
9		87428486		2	VALVE, CHECK Check Valve Assembly; Hex Socket Head; Component Parts Not Serviced Separately; Includes (1) 87455974 O-Ring
10		87428500		1	END ASSY. Cap Assembly, Swing Spool End; 87413146 Foot Swing Valve; Component Parts Not Serviced Separately; Includes 87429151 Centering Spring
10A		87426241		1	END ASSY. Cap Assembly, Swing Spool End; 87403387 Hand Swing Valve; Some Component Parts Not Serviced Separately; Serviceable Includes (1) 87454547 O-Ring, (1) 87454548 Seal, (1) 87444567 Spring, (2) 87455541 Screw; Replaces 87433028 End
11		87426241		3	END ASSY. Cap Assembly, Bucket, Dipper and Extendahoe Spool Ends; Some Component Parts Not Serviced Separately; Serviceable Includes (1) 87454547 O-Ring, (1) 87454548 Seal, (1) 87444567 Spring, (2) 87455541 Screw; Replaces 87433028 End

http://www.minnparbackhoeparts.com/

VALVE ASSY - BACKHOE CONTROL, 8 SPOOL (W/ EXT DIPPER, W/ AUX HYDS, W/O PILOT CONTROLS)

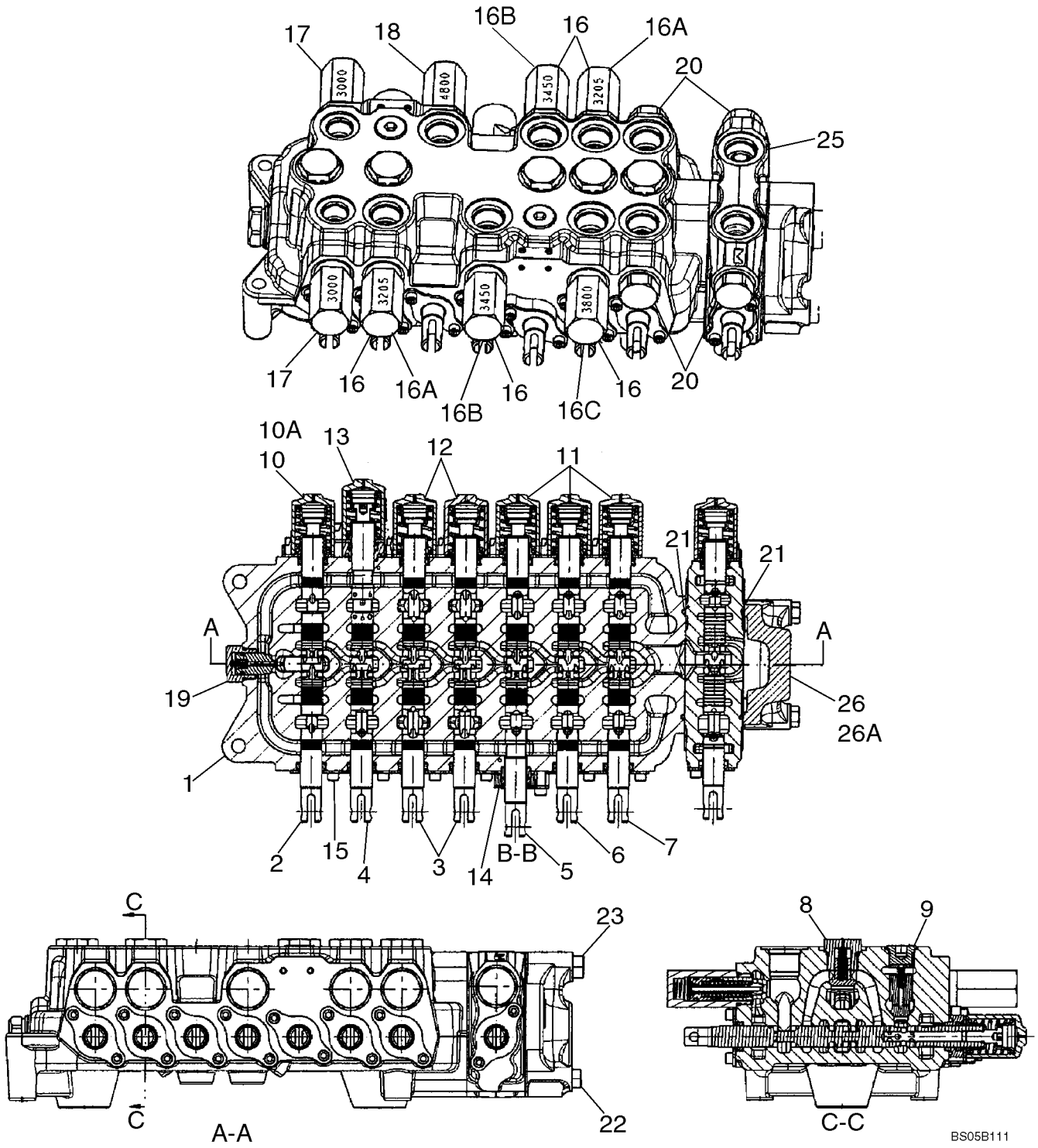

http://www.minnparbackhoeparts.com/

VALVE ASSY - BACKHOE CONTROL, 8 SPOOL (W/ EXT DIPPER, W/ AUX HYDS, W/O PILOT CONTROLS)

REF	FN	PART NUMBER	YR/SN	QTY	DESCRIPTION
12		87428497		2	END ASSY. Cap Assembly, Stabilizer Spool Ends; Some Component Parts Not Serviced Separately; Serviceable Includes (2) 87454547 O-Ring, (1) 87454548 Seal, (1) 87455533 Spring, (2) 87455541 Screw
13		87433029		1	END ASSY. Cap Assembly, Boom Spool End; Some Component Parts Not Serviced Separately; Serviceable Includes (1) 87454547 O-Ring, (1) 87454548 Seal, (1) 87444567 Spring, (1) 87455538 O-Ring, (2) 87455545 Screw
14		87440815		1	PLATE ASSY. Seal Plate Assembly, Dipper Spool; Some Component Parts Not Serviced Separately; Serviceable Includes (1) 87454547 O-Ring, (1) 87454548 Seal, (1) 87455538 O-Ring, (2) 87455534 Screw
15		87440814		6	PLATE ASSY. Seal Plate Assembly; Some Component Parts Not Serviced Separately; Serviceable Includes (1) 87454547 O-Ring, (1) 87454548 Seal, (2) 87455540 Screw
16		87426232		5	VALVE, PRESSURE RELIEF Relief Valve Assembly; (2) 3205 psi, (2) 3450 psi, (1) 3800 psi; Component Parts Not Serviced Separately; No Longer Used, See Ref 16A - 16C
16A		87450978		2	VALVE, PRESSURE RELIEF Circuit; 3205 psi; Component Parts Not Serviced Separately; Includes 87455549 Seal Kit
16B		87450979		2	VALVE, PRESSURE RELIEF Circuit; 3450 psi; Component Parts Not Serviced Separately; Includes 87455549 Seal Kit
16C		87450980		1	VALVE, PRESSURE RELIEF Circuit; 3800 psi; Component Parts Not Serviced Separately; Includes 87455549 Seal Kit
17		87428490		2	VALVE, PRESSURE RELIEF Relief Valve Assembly; 3000 psi; Component Parts Not Serviced Separately; Includes 87455549 Seal Kit

http://www.minnparbackhoeparts.com/

VALVE ASSY - BACKHOE CONTROL, 8 SPOOL (W/ EXT DIPPER, W/ AUX HYDS, W/O PILOT CONTROLS)

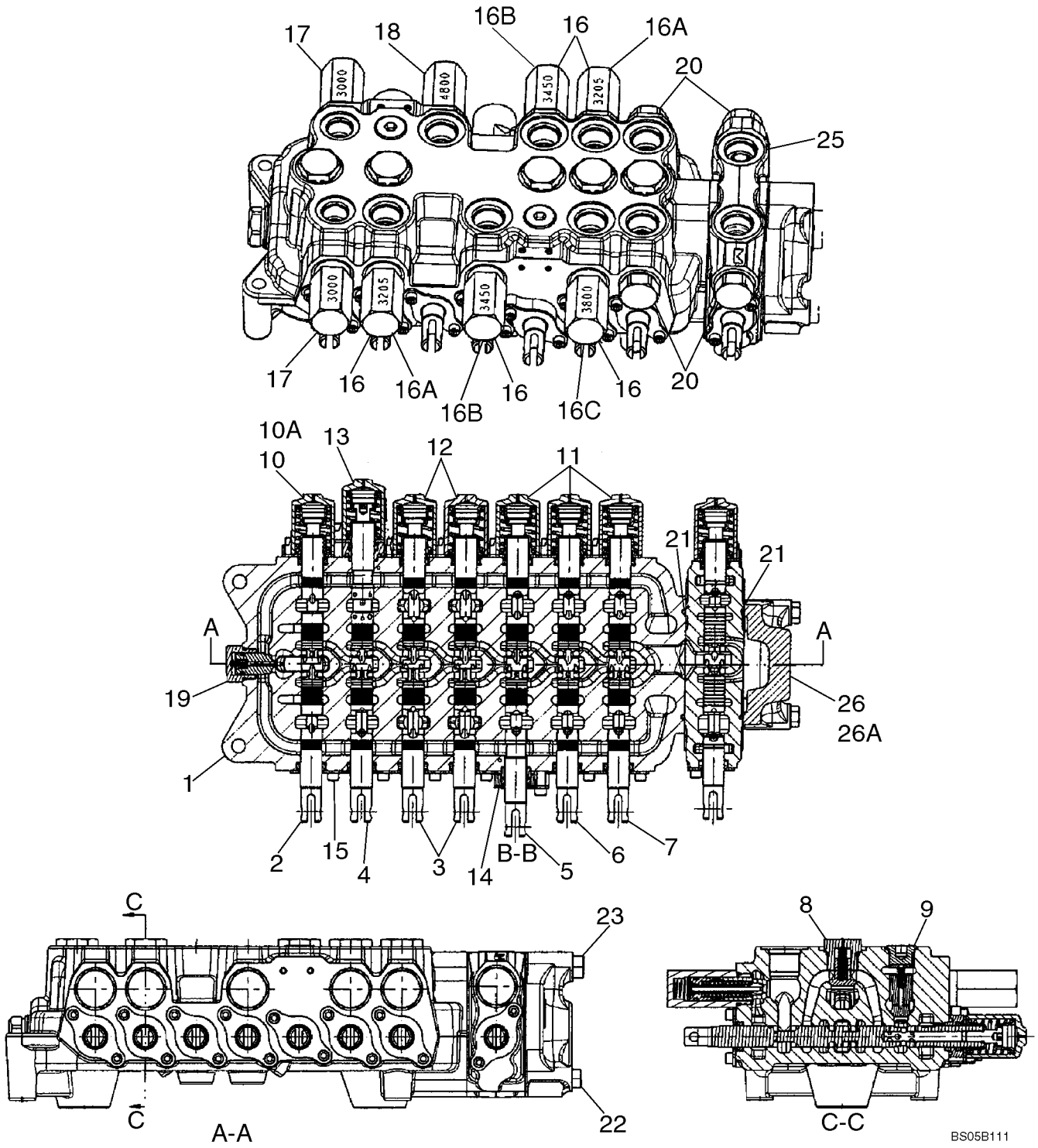

http://www.minnparbackhoeparts.com/

VALVE ASSY - BACKHOE CONTROL, 8 SPOOL (W/ EXT DIPPER, W/ AUX HYDS, W/O PILOT CONTROLS)

REF	FN	PART NUMBER	YR/SN	QTY	DESCRIPTION
18		87428488		1	VALVE, PRESSURE RELIEF Relief Valve Assembly; 4800 psi; Component Parts Not Serviced Separately; Includes 87455549 Seal Kit
19		81868381		1	VALVE, CHECK Anti-Void Valve; Component Parts Not Serviced Separately; Includes 87455580 Seal Kit
20		83981068		4	PLUG, STOP Shut-Off Plug; Component Parts Not Serviced Separately; (2) Are Now Included With Ref 25
21		87428495		2	O-RING O-Ring Seal, Auxiliary/Outlet Section
22		87428476		2	SCREW Bolt
23		87428477		1	SCREW Bolt
25		87428501		1	VALVE SECTION, HYD Spool Section Assembly; Auxiliary Hydraulics; Includes Ref 25A - 25I, Which Are Not Illustrated; Remainder Component Parts Not Serviced Separately
25A		87433028		1	END ASSY. Spool; Incl. Ref 21B - 21E, Which Are Not Illustrated; Remainder Component Parts Not Serviced Separately
25B		87454547		1	O-RING
25C		87454548		1	SEAL Wiper
25D		87429150		1	SPRING, VALVE
25E		87455541		2	SCREW
25F		87428495		1	O-RING
25G		87455564		1	POPPET, VALVE Load Check
25H		87455565		1	SPRING, VALVE Load Check
25I		83981068		2	PLUG, STOP Shut-Off
26		87433030		1	VALVE SECTION, HYD Outlet Section Assembly; 87413146 Foot Swing Valve; Component Parts Not Serviced Separately
26A		87433030		1	VALVE SECTION, HYD Outlet Section Assembly; 87403387 Hand Swing Valve; Component Parts Not Serviced Separately

http://www.minnparbackhoeparts.com/

VALVE ASSY - BACKHOE CONTROL, 6 SPOOL (W/O EXT DIPPER, W/ OR W/O AUX HYDS, W/ PILOT CONTROLS)

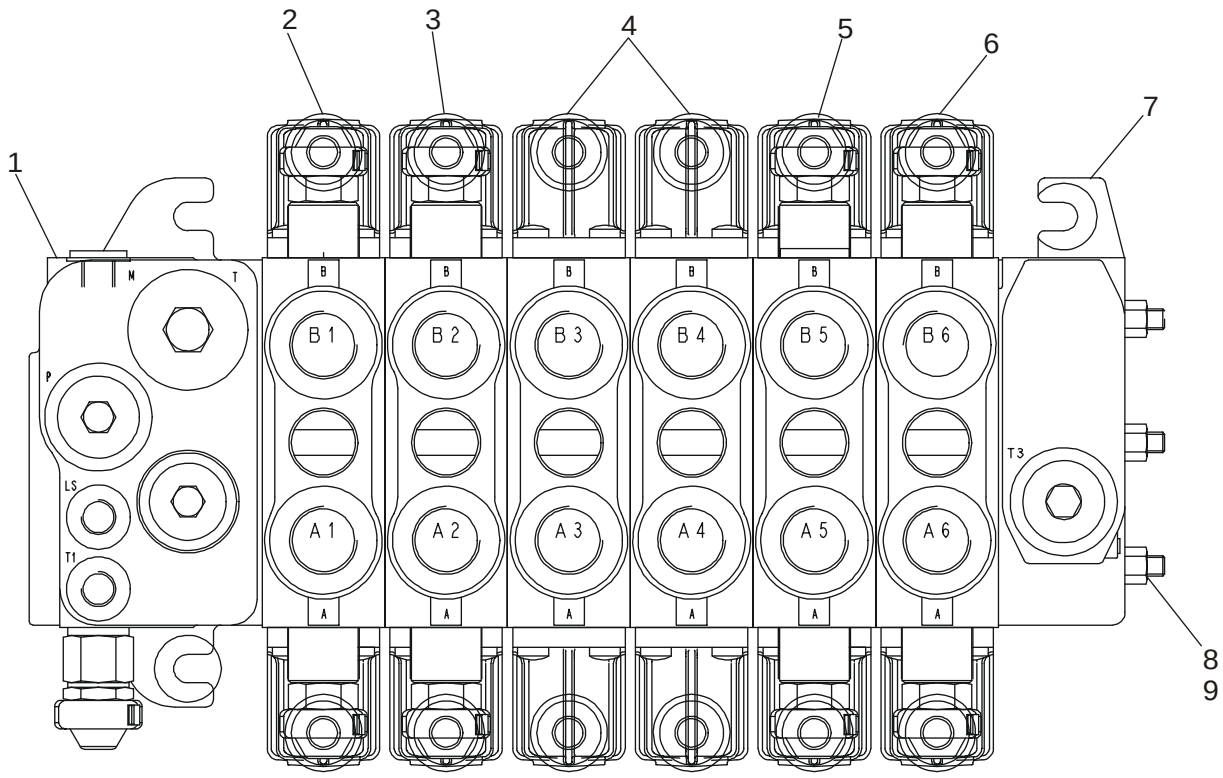

BS03N130

http://www.minnparbackhoeparts.com/

VALVE ASSY - BACKHOE CONTROL, 6 SPOOL (W/O EXT DIPPER, W/ OR W/O AUX HYDS, W/ PILOT CONTROLS)

REF	FN	PART NUMBER	YR/SN	QTY	DESCRIPTION
		86987459		1	VALVE, CONTROL Backhoe, 6 Spool; Incl. Ref 1 - 9
1		87441495		1	VALVE SECTION, HYD Inlet Section; With Orifice Threaded In LS Cavity; See Figure 08-43A
2		85826339		1	VALVE SECTION, HYD Swing Section; See Figure 08-44
3		85826337		1	VALVE SECTION, HYD Boom Section; See Figure 08-45
4		85826340		2	VALVE SECTION, HYD Stabilizer Section; See Figure 08-46
5		85826338		1	VALVE SECTION, HYD Dipper Section; See Figure 08-47
6		85826365		1	VALVE SECTION, HYD Bucket Section; See Figure 08-48
7		NSS		1	NOT SERVICED SEPARATELY Outlet Section
8		NSS		3	NOT SERVICED SEPARATELY Tie Bolt
9		NSS		3	NOT SERVICED SEPARATELY Nut

http://www.minnparbackhoeparts.com/

08-41		p1	02/05

VALVE ASSY - BACKHOE CONTROL, 7 SPOOL (W/ EXT DIPPER, W/ OR W/O AUX HYDS, W/ PILOT CONTROLS)

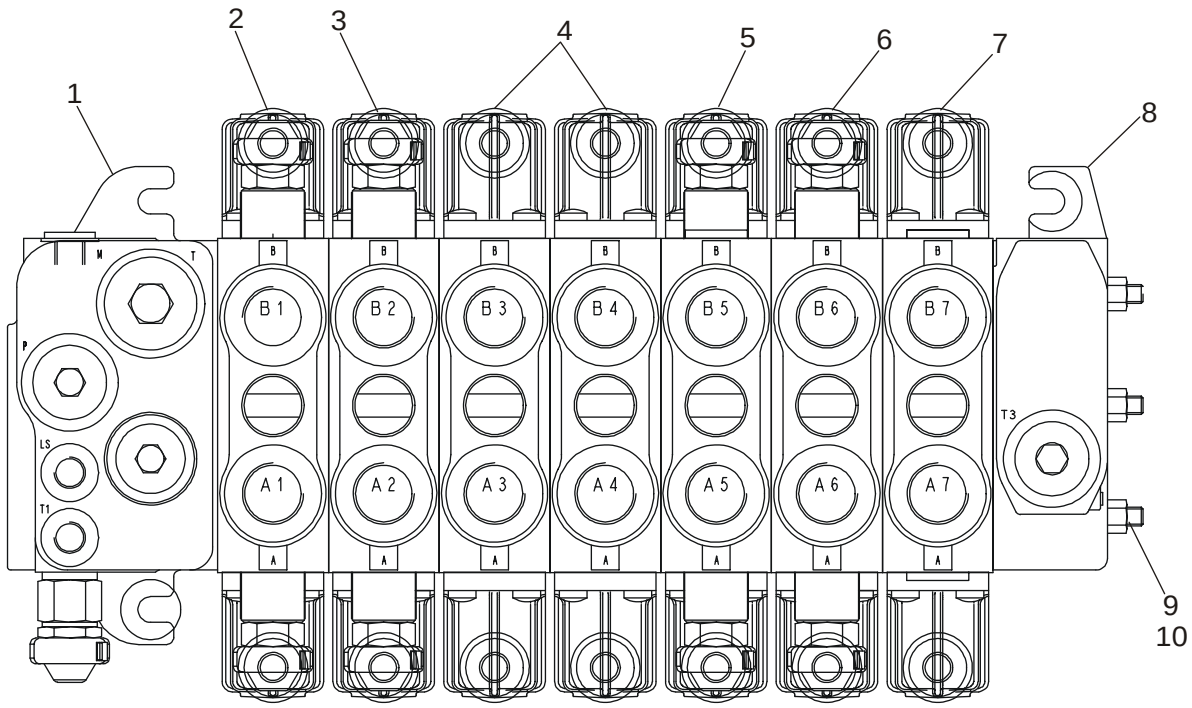

BS03N131

http://www.minnparbackhoeparts.com/

VALVE ASSY - BACKHOE CONTROL, 7 SPOOL (W/ EXT DIPPER, W/ OR W/O AUX HYDS, W/ PILOT CONTROLS)

REF	FN	PART NUMBER	YR/SN	QTY	DESCRIPTION
		86987460		1	VALVE, CONTROL Backhoe, 7 Spool; Incl. Ref 1 - 10
1		87441495		1	VALVE SECTION, HYD Inlet Section; With Orifice Threaded In LS Cavity; See Figure 08-43A
2		85826339		1	VALVE SECTION, HYD Swing Section; See Figure 08-44
3		85826337		1	VALVE SECTION, HYD Boom Section; See Figure 08-45
4		85826340		2	VALVE SECTION, HYD Stabilizer Section; See Figure 08-46
5		85826338		1	VALVE SECTION, HYD Dipper Section; See Figure 08-47
6		85826365		1	VALVE SECTION, HYD Bucket Section; See Figure 08-48
7		85826341		1	VALVE SECTION, HYD Extendable Dipper Section; See Figure 08-49
8		NSS		1	NOT SERVICED SEPARATELY Outlet Section
9		NSS		3	NOT SERVICED SEPARATELY Tie Bolt
10		NSS		3	NOT SERVICED SEPARATELY Nut

http://www.minnparbackhoeparts.com/

08-42		p1	02/05

VALVE ASSY - BACKHOE CONTROL, 7 SPOOL (W/O EXT DIPPER, W/ AUX HYDS, W/ PILOT CONTROLS)

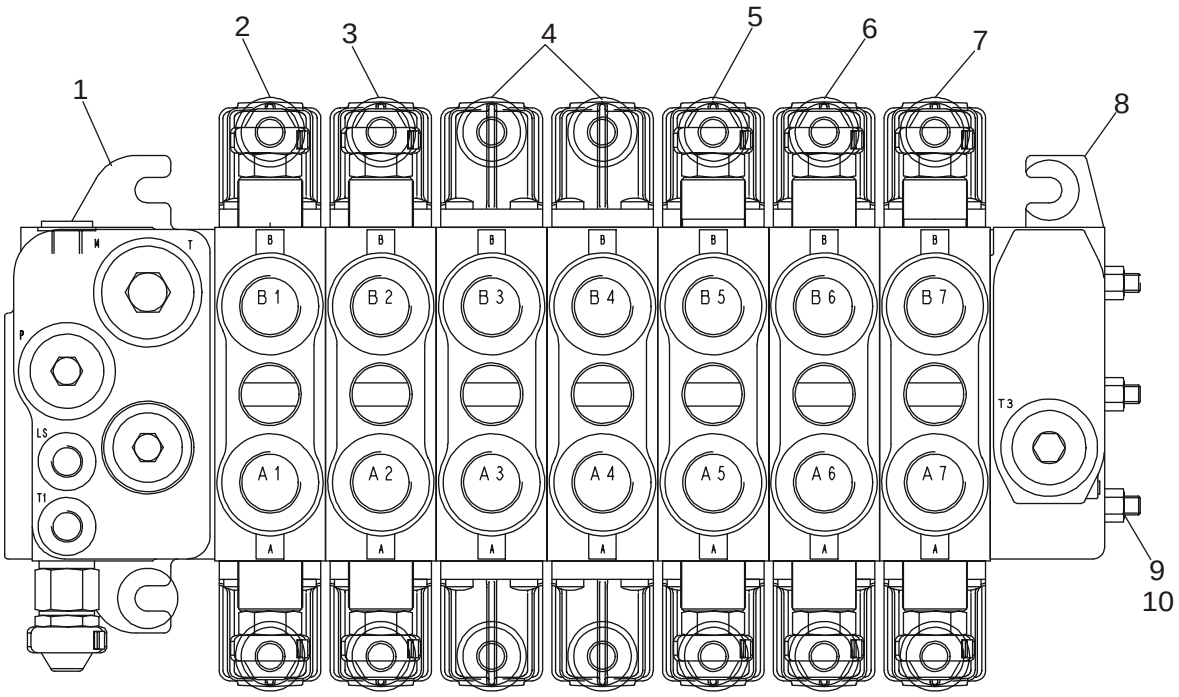

BS03N132

http://www.minnparbackhoeparts.com/

VALVE ASSY - BACKHOE CONTROL, 7 SPOOL (W/O EXT DIPPER, W/ AUX HYDS, W/ PILOT CONTROLS)

REF	FN	PART NUMBER	YR/SN	QTY	DESCRIPTION
		87407965		1	VALVE, CONTROL Backhoe, 7 Spool; Incl. Ref 1 - 10
1		87441495		1	VALVE SECTION, HYD Inlet Section; With Orifice Threaded In LS Cavity; See Figure 08-43A
2		85826339		1	VALVE SECTION, HYD Swing Section; See Figure 08-44
3		85826337		1	VALVE SECTION, HYD Boom Section; See Figure 08-45
4		85826340		2	VALVE SECTION, HYD Stabilizer Section; See Figure 08-46
5		85826338		1	VALVE SECTION, HYD Dipper Section; See Figure 08-47
6		85826365		1	VALVE SECTION, HYD Bucket Section; See Figure 08-48
7		85826342		1	VALVE SECTION, HYD Auxiliary Section; See Figure 08-50
8		NSS		1	NOT SERVICED SEPARATELY Outlet Section
9		NSS		3	NOT SERVICED SEPARATELY Tie Bolt
10		NSS		3	NOT SERVICED SEPARATELY Nut

http://www.minnparbackhoeparts.com/

VALVE ASSY - BACKHOE CONTROL, 8 SPOOL (W/ EXT DIPPER, W/ AUX HYDS, W/ PILOT CONTROLS)

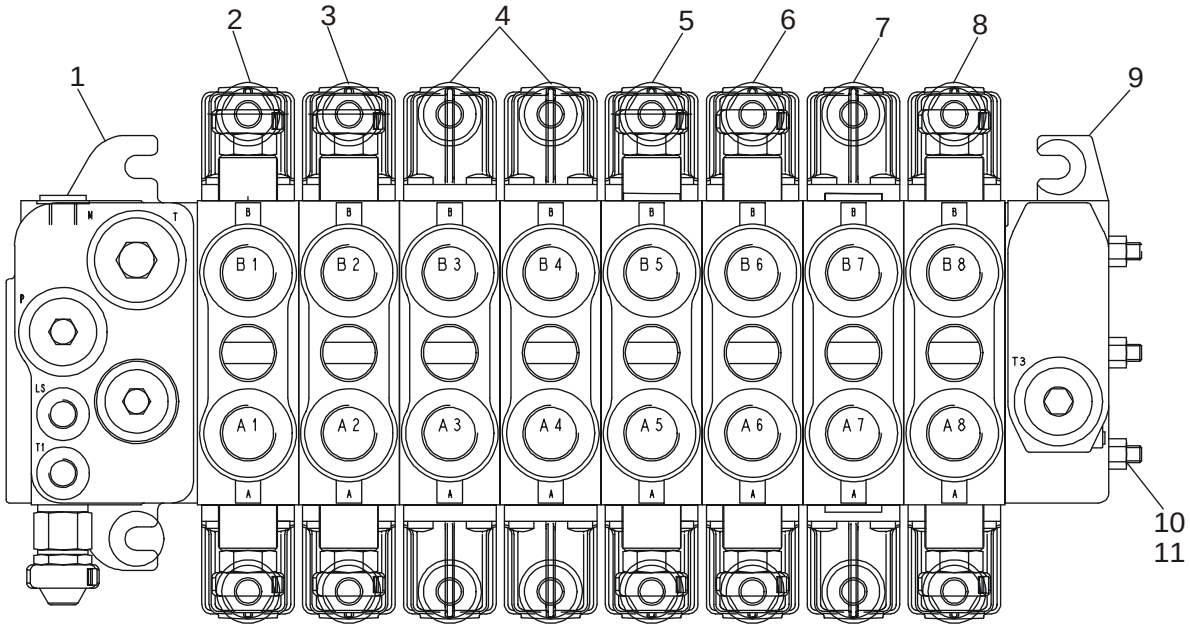

BS03N133

http://www.minnparbackhoeparts.com/

VALVE ASSY - BACKHOE CONTROL, 8 SPOOL (W/ EXT DIPPER, W/ AUX HYDS, W/ PILOT CONTROLS)

REF	FN	PART NUMBER	YR/SN	QTY	DESCRIPTION
		86987461		1	VALVE, HYDRAULIC Backhoe, 8 Spool; Incl. Ref 1 - 11
1		87441495		1	VALVE SECTION, HYD Inlet Section; With Orifice Threaded In LS Cavity; See Figure 08-43A
2		85826339		1	VALVE SECTION, HYD Swing Section; See Figure 08-44
3		85826337		1	VALVE SECTION, HYD Boom Section; See Figure 08-45
4		85826340		2	VALVE SECTION, HYD Stabilizer Section; See Figure 08-46
5		85826338		1	VALVE SECTION, HYD Dipper Section; See Figure 08-47
6		85826365		1	VALVE SECTION, HYD Bucket Section; See Figure 08-48
7		85826341		1	VALVE SECTION, HYD Extendable Dipper Section; See Figure 08-49
8		85826342		1	VALVE SECTION, HYD Auxiliary Section; See Figure 08-50
9		NSS		1	NOT SERVICED SEPARATELY Outlet Section
10		NSS		3	NOT SERVICED SEPARATELY Tie Bolt
11		NSS		3	NOT SERVICED SEPARATELY Nut

http://www.minnparbackhoeparts.com/

VALVE SECTION - INLET (WITH PILOT CONTROLS)

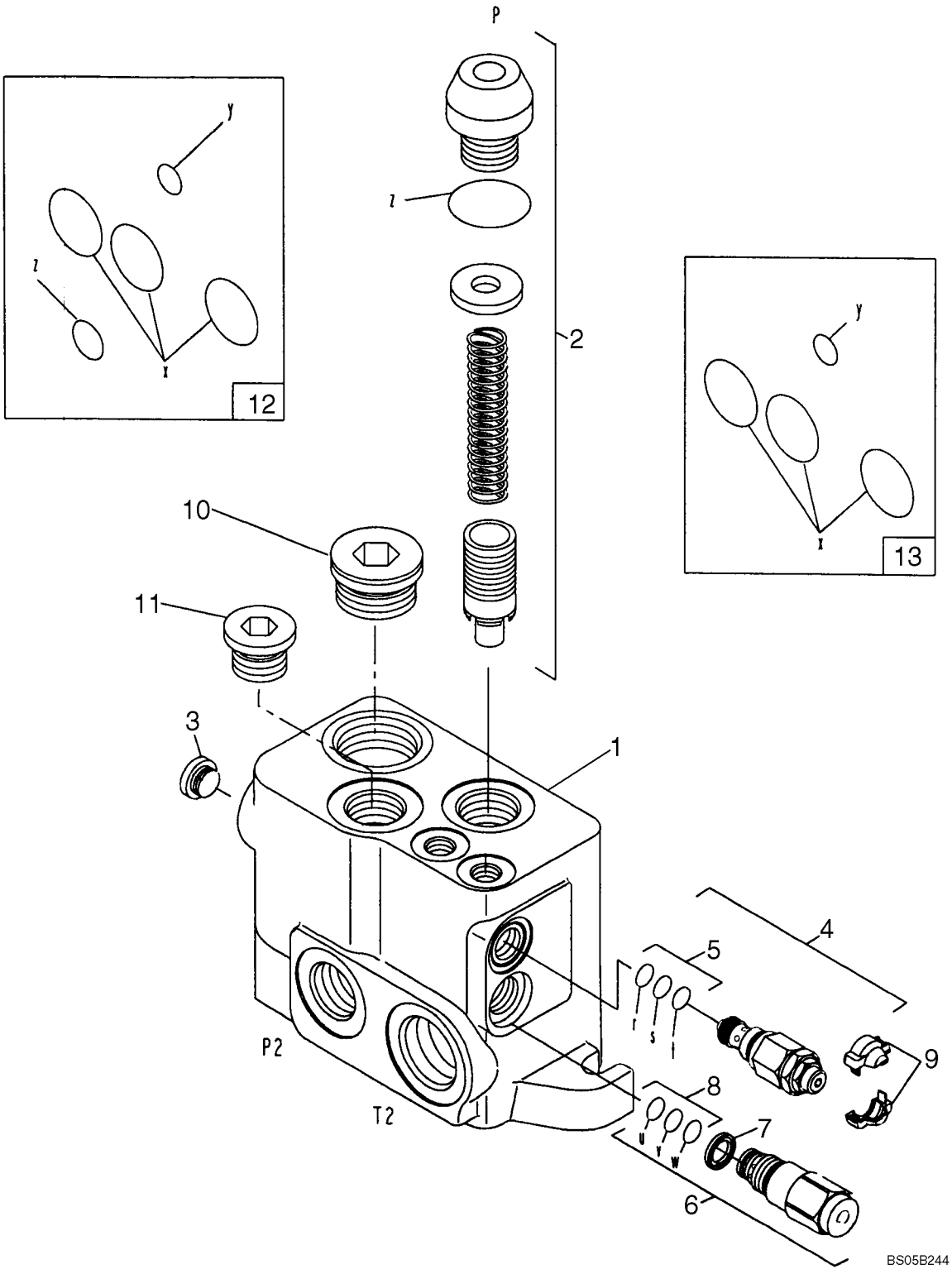

http://www.minnparbackhoeparts.com/

VALVE SECTION - INLET (WITH PILOT CONTROLS)

REF	FN	PART NUMBER	YR/SN	QTY	DESCRIPTION
		87441495		1	VALVE SECTION, HYD Inlet Section; With Orifice Threaded In LS Cavity; Incl. Ref 1 - 13
1		NSS		1	NOT SERVICED SEPARATELY Housing
2		85820129		1	KIT Relief Valve Regulator; Component Parts Not Serviced Separately
3		85811923		1	PLUG
4		85811946		2	VALVE, HYDRAULIC RELIEF; LS Port; Incl. Ref 5
5		85821236		1	KIT LS Relief Valve; Includes (2) O-Rings, (1) Thrust Ring
6		85820128		1	VALVE, HYDRAULIC Regulator, Flow; Incl. Ref 7, 8
7		85817669		1	GASKET Filter, For Regulated Drain Flow
8		85821235		1	KIT Seal; Includes (2) O-Rings, (1) Thrust Ring
9		85811934		1	KIT COVER; Two Piece; Orange; If Used
9		85811935		1	KIT COVER; Two Piece; Blue; If Used
10		85811922		1	PLUG 1-5/16
11		85811921		1	PLUG 1-1/16
12		85825477		1	KIT Seal; Low Pressure Inlet Elements; Includes (5) O-Rings
13		85825473		1	KIT Seal; Between Elements; Includes (4) O-Rings

http://www.minnparbackhoeparts.com/

VALVE SECTION - BACKHOE SWING (WITH PILOT CONTROLS)

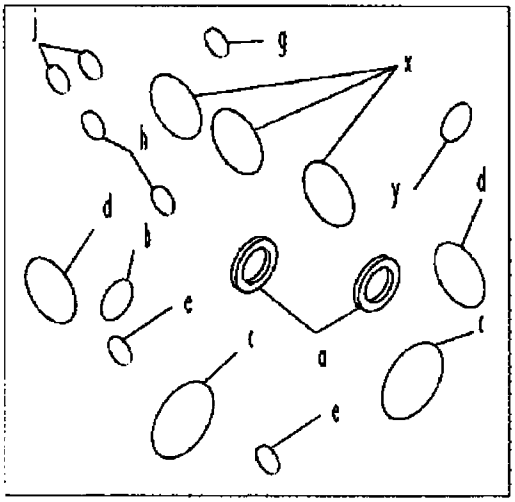

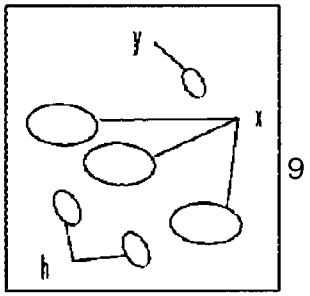

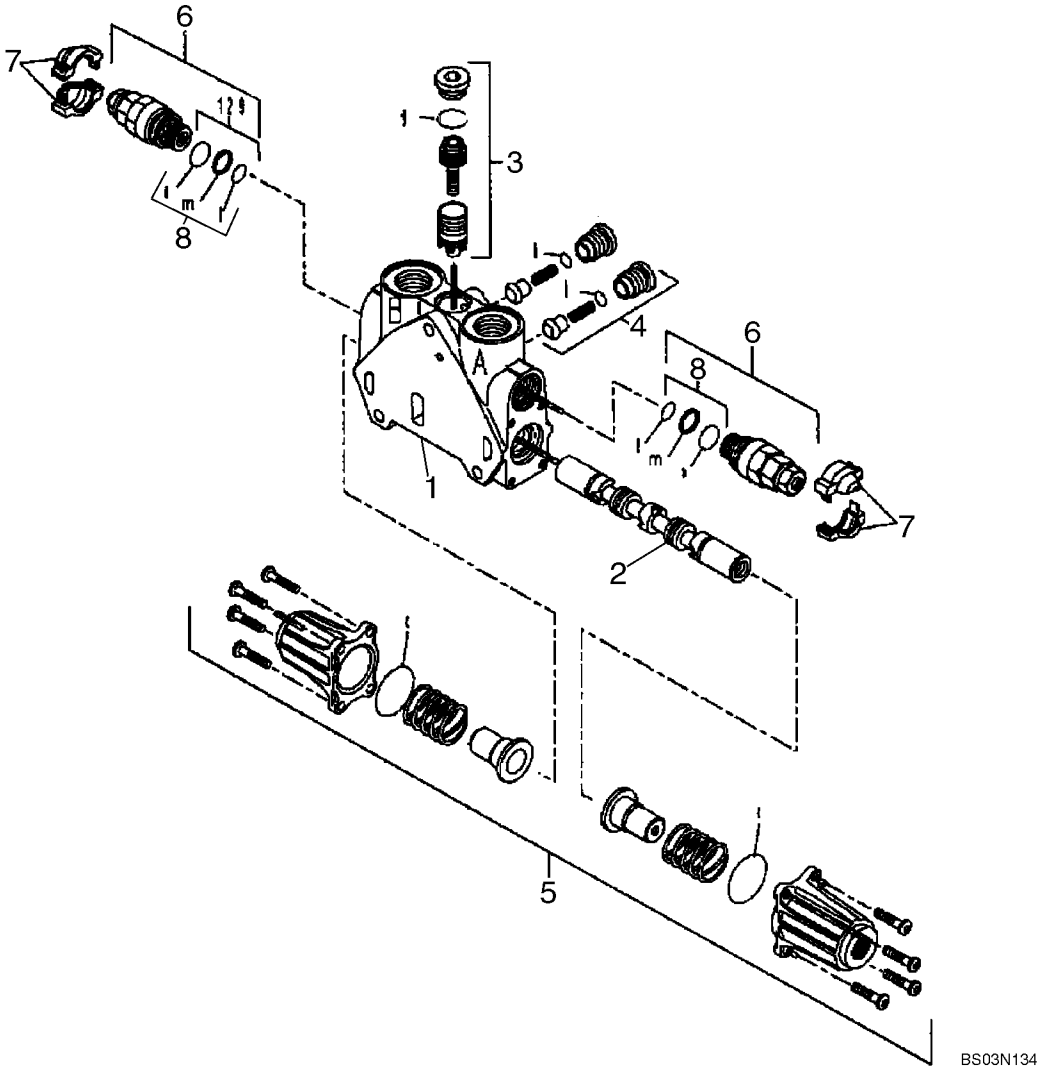

http://www.minnparbackhoeparts.com/

VALVE SECTION - BACKHOE SWING (WITH PILOT CONTROLS)

REF	FN	PART NUMBER	YR/SN	QTY	DESCRIPTION
		85826339		1	VALVE SECTION, HYD Swing; Incl. Ref 1 - 10
1		NSS		1	NOT SERVICED SEPARATELY HOUSING
2		NSS		1	NOT SERVICED SEPARATELY SPOOL
3		85826345		1	KIT Pressure Compensator Kit; Component Parts Not Serviced Separately
4		85811938		2	KIT Check Valve Kit; Component Parts Not Serviced Separately
5		85826344		1	KIT End Cap Kit; Component Parts Not Serviced Separately
6		85812114		2	VALVE, HYDRAULIC Pressure Relief Valve; Some Component Parts Not Serviced Separately; Serviceable Includes 85811933, Ref 8 Kit
7		85811934		2	KIT Cover, Orange
7		85811935		2	KIT Cover, Blue
8		85811933		2	KIT Seal Kit Includes (2) O-Rings, (1) Thrust Ring; Component Parts Not Serviced Separately
9		85819148		1	KIT Seal Kit Includes (6) O-Rings; Component Parts Not Serviced Separately
10		85824282		1	KIT Seal Kit Includes (15) O-Rings, (2) Lip Seals; Component Parts Not Serviced Separately

http://www.minnparbackhoeparts.com/

VALVE SECTION - BACKHOE BOOM (WITH PILOT CONTROLS)

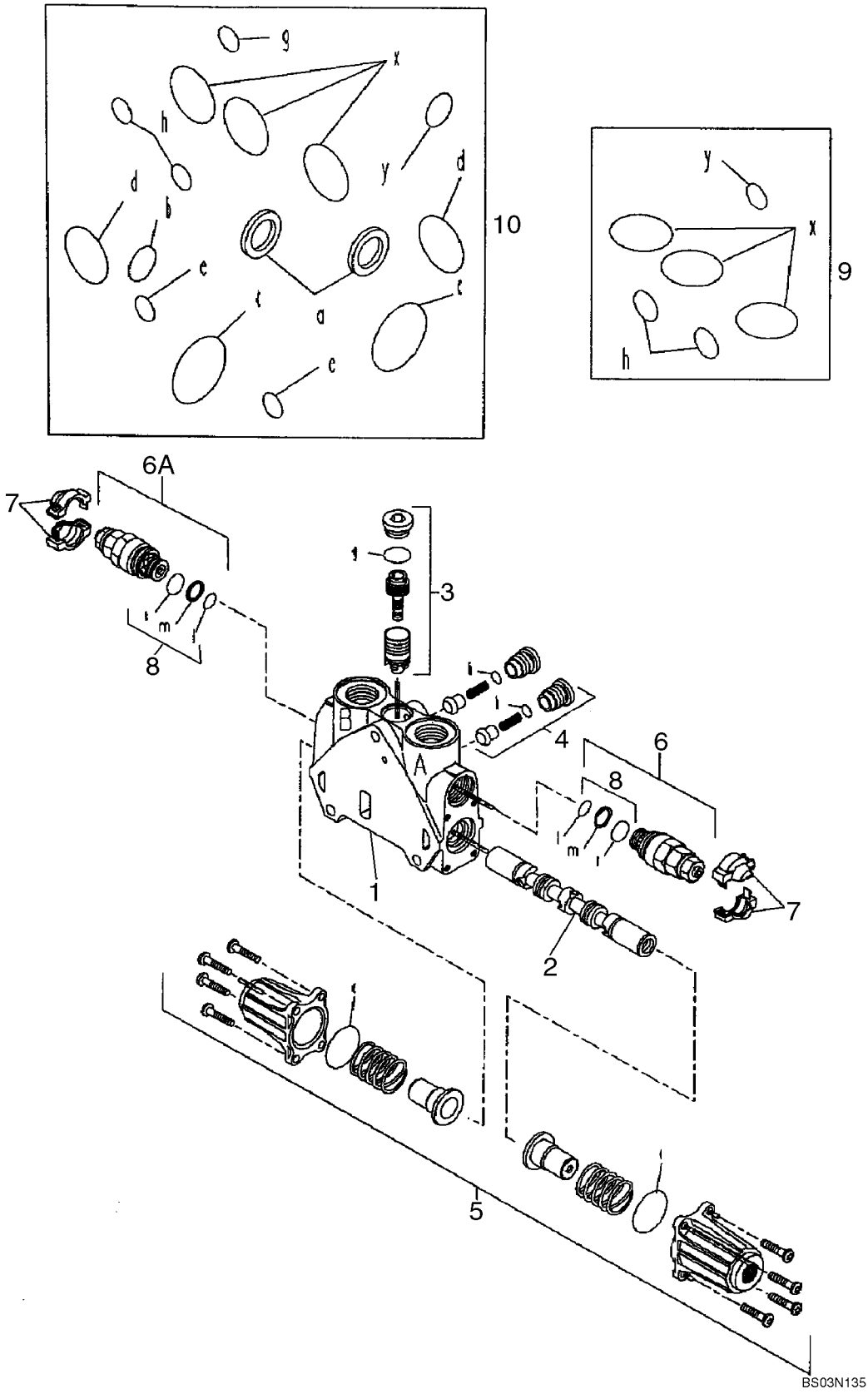

http://www.minnparbackhoeparts.com/

VALVE SECTION - BACKHOE BOOM (WITH PILOT CONTROLS)

REF	FN	PART NUMBER	YR/SN	QTY	DESCRIPTION
		85826337		1	VALVE SECTION, HYD Boom; Incl. Ref 1 - 10
1		NSS		1	NOT SERVICED SEPARATELY HOUSING
2		NSS		1	NOT SERVICED SEPARATELY SPOOL
3		85819378		1	KIT Pressure Compensator Kit; Component Parts Not Serviced Separately
4		85811938		2	KIT Check Valve Kit; Component Parts Not Serviced Separately
5		85826344		1	KIT End Cap Kit; Component Parts Not Serviced Separately
6		85812115		1	VALVE, HYDRAULIC Pressure Relief Valve Kit; Side A; Some Component Parts Not Serviced Separately; Serviceable Includes 85811933, Ref 8 Kit
6A		85826346		1	VALVE, PRESSURE RELIEF Pressure Relief Valve Kit; Side B; Some Component Parts Not Serviced Separately; Serviceable Includes 85811933, Ref 8 Kit
7		85811934		2	KIT Cover, Orange
7		85811935		2	KIT Cover, Blue
8		85811933		2	KIT Seal Kit Includes (2) O-Rings, (1) Thrust Ring; Component Parts Not Serviced Separately
9		85819148		1	KIT Seal Kit Includes (6) O-Rings; Component Parts Not Serviced Separately
10		85824281		1	KIT Seal Kit Includes (13) O-Rings, (2) Lip Seals; Component Parts Not Serviced Separately

http://www.minnparbackhoeparts.com/

VALVE SECTION - BACKHOE STABILIZER (WITH PILOT CONTROLS)

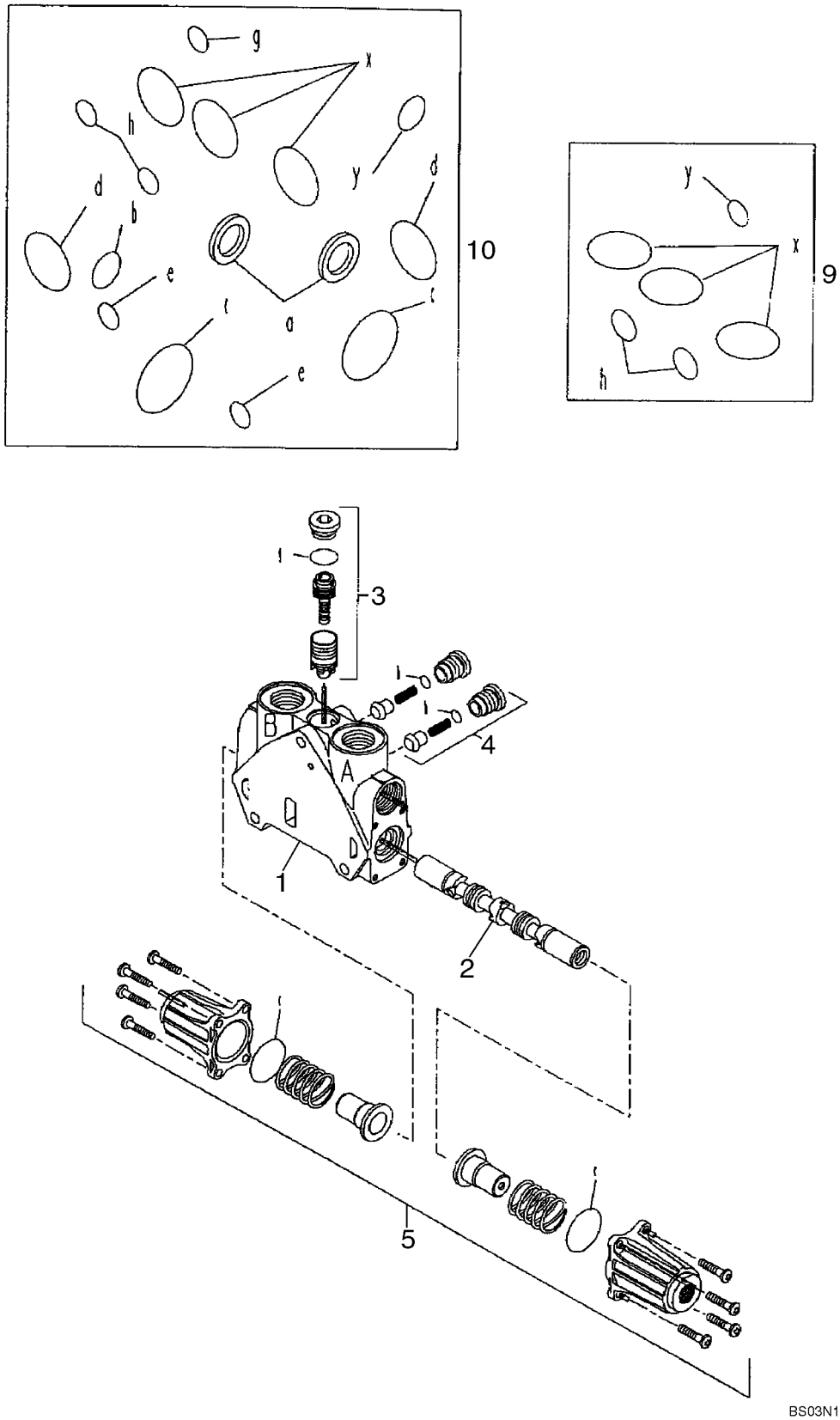

http://www.minnparbackhoeparts.com/

VALVE SECTION - BACKHOE STABILIZER (WITH PILOT CONTROLS)

REF	FN	PART NUMBER	YR/SN	QTY	DESCRIPTION
		85826340		2	VALVE SECTION, HYD Stabilizer; Left-Hand and Right-Hand; Incl. Ref 1 - 10
1		NSS		1	NOT SERVICED SEPARATELY HOUSING
2		NSS		1	NOT SERVICED SEPARATELY SPOOL
3		85819378		1	KIT Pressure Compensator Kit; Component Parts Not Serviced Separately
4		85811938		2	KIT Check Valve Kit; Component Parts Not Serviced Separately
5		85826344		1	KIT End Cap Kit; Component Parts Not Serviced Separately
9		85819148		1	KIT Seal Kit Includes (6) O-Rings; Component Parts Not Serviced Separately
10		85824281		1	KIT Seal Kit Includes (13) O-Rings, (2) Lip Seals; Component Parts Not Serviced Separately

http://www.minnparbackhoeparts.com/

08-47		p1	06/05

VALVE SECTION - BACKHOE DIPPER (WITH PILOT CONTROLS)

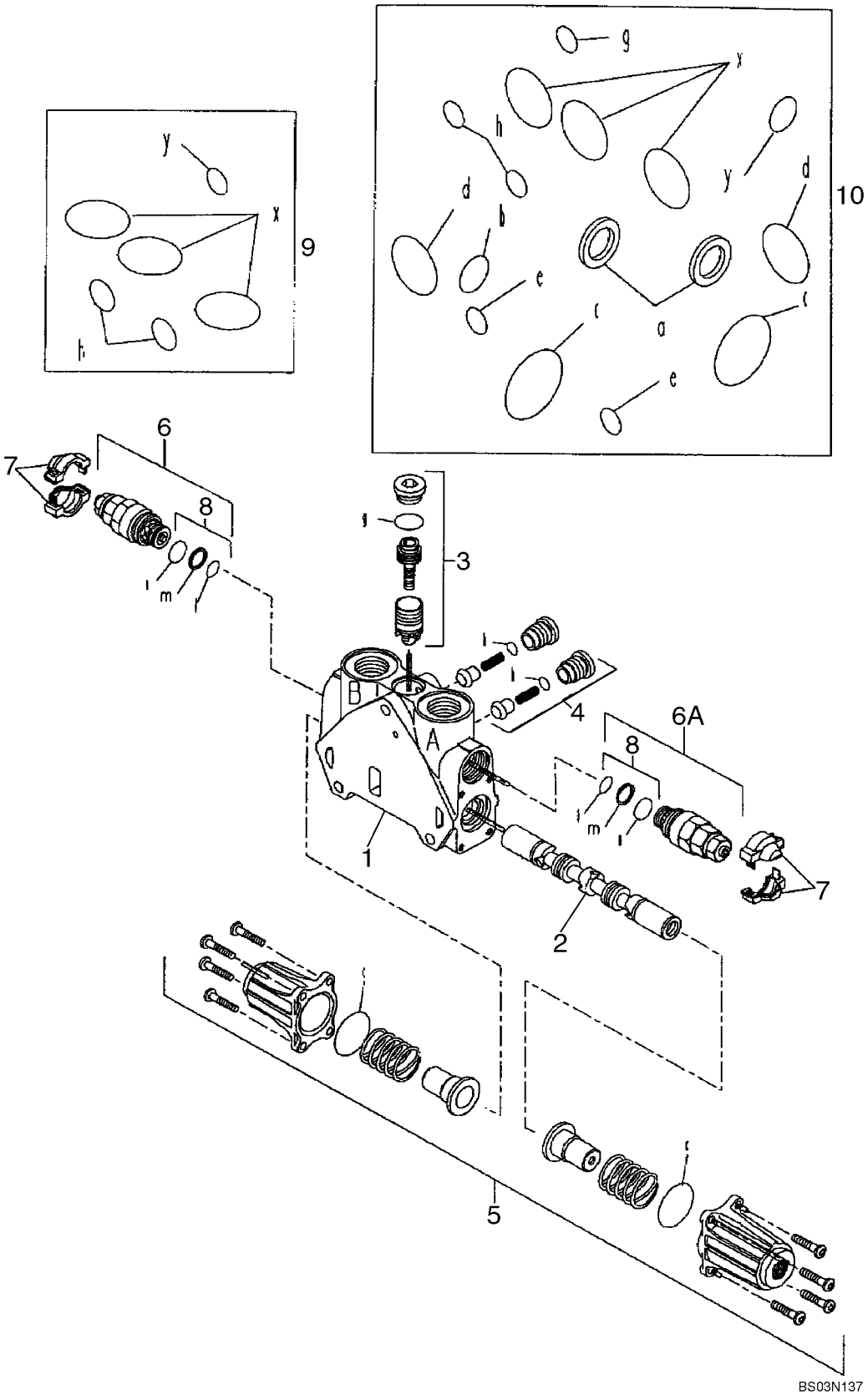

http://www.minnparbackhoeparts.com/

VALVE SECTION - BACKHOE DIPPER (WITH PILOT CONTROLS)

REF	FN	PART NUMBER	YR/SN	QTY	DESCRIPTION
		85826338		1	VALVE SECTION, HYD Dipper; Incl. Ref 1 - 10
1		NSS		1	NOT SERVICED SEPARATELY HOUSING
2		NSS		1	NOT SERVICED SEPARATELY SPOOL
3		85826345		1	KIT Pressure Compensator Kit; Component Parts Not Serviced Separately
4		85811938		2	KIT Check Valve Kit; Component Parts Not Serviced Separately
5		85826344		1	KIT End Cap Kit; Component Parts Not Serviced Separately
6		85812116		1	VALVE, HYDRAULIC Pressure Relief Valve; Side B; Some Component Parts Not Serviced Separately; Serviceable Includes 85811933, Ref 8 Kit
6A		85826343		1	VALVE, PRESSURE RELIEF Pressure Relief Valve; Side A; Some Component Parts Not Serviced Separately; Serviceable Includes 85811933, Ref 8 Kit
7		85811934		2	KIT Cover, Orange
7		85811935		2	KIT Cover, Blue
8		85811933		2	KIT Seal Kit Includes (2) O-Rings, (1) Thrust Ring; Component Parts Not Serviced Separately
9		85819148		1	KIT Seal Kit Includes (6) O-Rings; Component Parts Not Serviced Separately
10		85824281		1	KIT Seal Kit Includes (13) O-Rings, (2) Lip Seals; Component Parts Not Serviced Separately

http://www.minnparbackhoeparts.com/

VALVE SECTION - BACKHOE BUCKET (WITH PILOT CONTROLS)

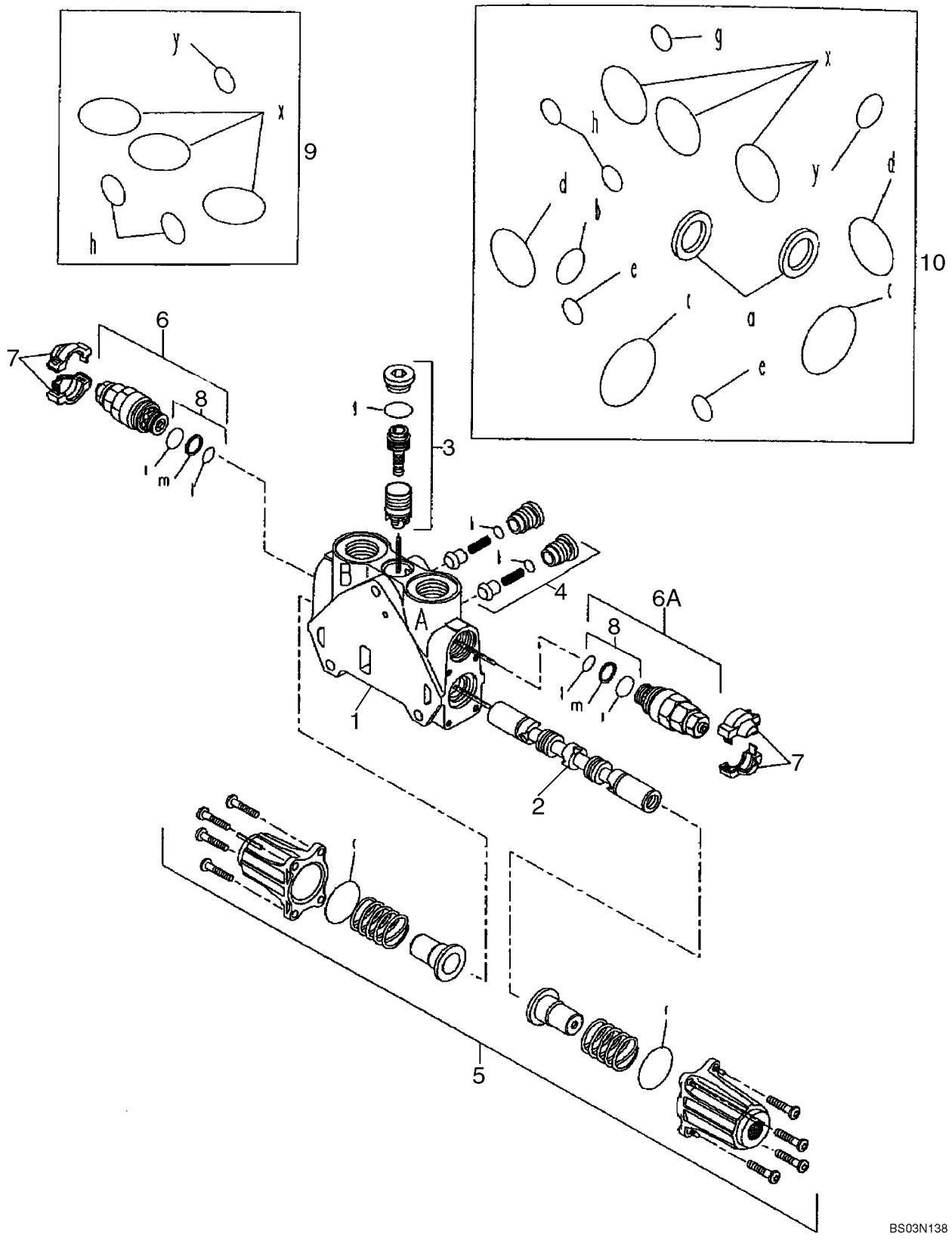

http://www.minnparbackhoeparts.com/

VALVE SECTION - BACKHOE BUCKET (WITH PILOT CONTROLS)

REF	FN	PART NUMBER	YR/SN	QTY	DESCRIPTION
		85826365		1	VALVE SECTION, HYD Bucket; Incl. Ref 1 - 10
1		NSS		1	NOT SERVICED SEPARATELY HOUSING
2		NSS		1	NOT SERVICED SEPARATELY SPOOL
3		85819378		1	KIT Pressure Compensator Kit; Component Parts Not Serviced Separately
4		85811938		2	KIT Check Valve Kit; Component Parts Not Serviced Separately
5		85826344		1	KIT End Cap Kit; Component Parts Not Serviced Separately
6		85812116		1	VALVE, HYDRAULIC Pressure Relief Valve; Side B; Some Component Parts Not Serviced Separately; Serviceable Includes 85811933, Ref 8 Kit
6A		85826905		1	VALVE, PRESSURE RELIEF Pressure Relief Valve; Side A; Some Component Parts Not Serviced Separately; Serviceable Includes 85811933, Ref 8 Kit
7		85811934		2	KIT Cover, Orange
7		85811935		2	KIT Cover, Blue
8		85811933		2	KIT Seal Kit Includes (2) O-Rings, (1) Thrust Ring; Component Parts Not Serviced Separately
9		85819148		1	KIT Seal Kit Includes (6) O-Rings; Component Parts Not Serviced Separately
10		85824281		1	KIT Seal Kit Includes (13) O-Rings, (2) Lip Seals; Component Parts Not Serviced Separately

http://www.minnparbackhoeparts.com/

VALVE SECTION - EXTENDABLE DIPPER (WITH PILOT CONTROLS)

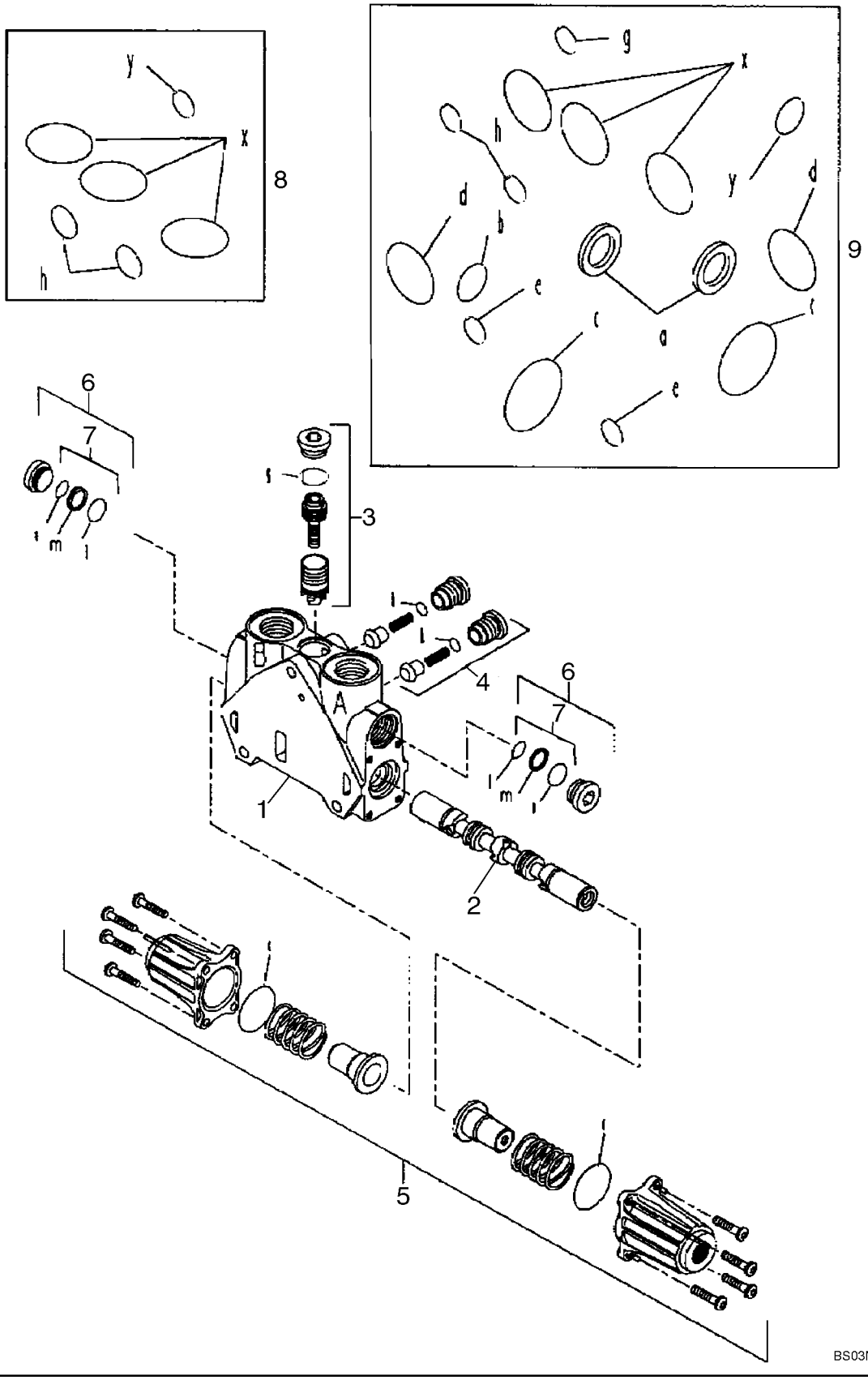

http://www.minnparbackhoeparts.com/

VALVE SECTION - EXTENDABLE DIPPER (WITH PILOT CONTROLS)

REF	FN	PART NUMBER	YR/SN	QTY	DESCRIPTION
		85826341		1	VALVE SECTION, HYD Extendable Dipper; Incl. Ref 1 - 9
1		NSS		1	NOT SERVICED SEPARATELY HOUSING
2		NSS		1	NOT SERVICED SEPARATELY SPOOL
3		85819378		1	KIT Pressure Compensator Kit; Component Parts Not Serviced Separately
4		85811938		2	KIT Check Valve Kit; Component Parts Not Serviced Separately
5		85826344		1	KIT End Cap Kit; Component Parts Not Serviced Separately
6		85811937		2	PLUG Plug Assembly Kit; Some Component Parts Not Serviced Separately; Serviceable Includes 85811933, Ref 7 Kit
7		85811933		2	KIT Seal Kit Includes (2) O-Rings, (1) Thrust Ring; Component Parts Not Serviced Separately
8		85819148		1	KIT Seal Kit Includes (6) O-Rings; Component Parts Not Serviced Separately
9		85824281		1	KIT Seal Kit Includes (13) O-Rings, (2) Lip Seals; Component Parts Not Serviced Separately

http://www.minnparbackhoeparts.com/

VALVE SECTION - OPTIONS, AUXILIARY HYDRAULICS (WITH PILOT CONTROLS)

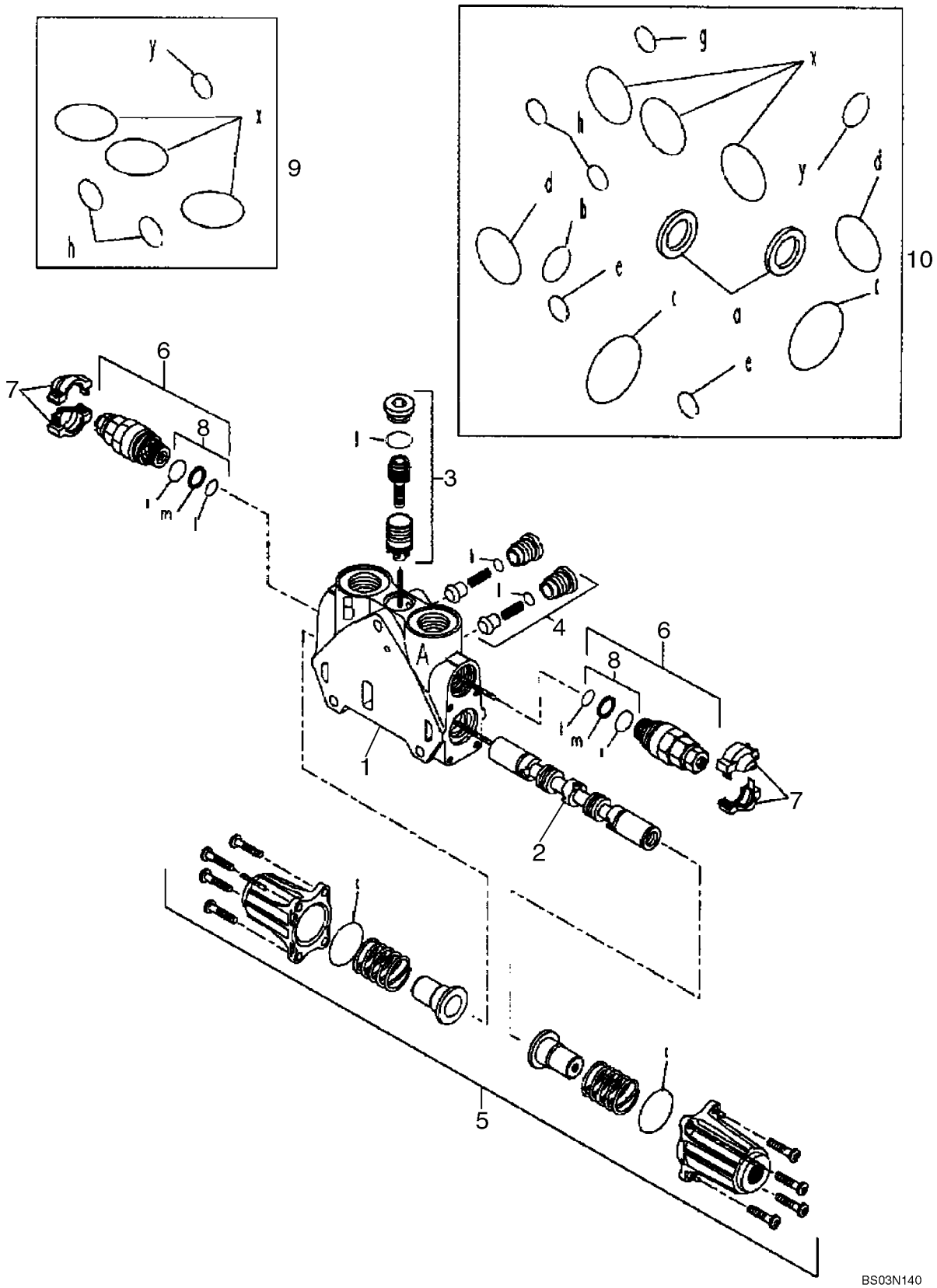

http://www.minnparbackhoeparts.com/

VALVE SECTION - OPTIONS, AUXILIARY HYDRAULICS (WITH PILOT CONTROLS)

REF	FN	PART NUMBER	YR/SN	QTY	DESCRIPTION
		85826342		1	VALVE SECTION, HYD Options, Auxiliary Hydraulics; Incl. Ref 1 - 10
1		NSS		1	NOT SERVICED SEPARATELY HOUSING
2		NSS		1	NOT SERVICED SEPARATELY SPOOL
3		85819378		1	KIT Pressure Compensator Kit; Component Parts Not Serviced Separately
4		85811938		2	KIT Check Valve Kit; Component Parts Not Serviced Separately
5		85826344		1	KIT End Cap Kit; Component Parts Not Serviced Separately
6		85812115		2	VALVE, HYDRAULIC Pressure Relief Valve; Some Component Parts Not Serviced Separately; Serviceable Includes 85811933, Ref 8 Kit
7		85811934		2	KIT Cover, Orange
7		85811935		2	KIT Cover, Blue
8		85811933		2	KIT Seal Kit Includes (2) O-Rings, (1) Thrust Ring; Component Parts Not Serviced Separately
9		85819148		1	KIT Seal Kit Includes (6) O-Rings; Component Parts Not Serviced Separately
10		85824281		1	KIT Seal Kit Includes (13) O-Rings, (2) LIp Seals; Component Parts Not Serviced Separately

http://www.minnparbackhoeparts.com/

08-51		p1	07/04

VALVE ASSY, PRESSURE REDUCING (2 SPOOL) (WITH PILOT CONTROLS)

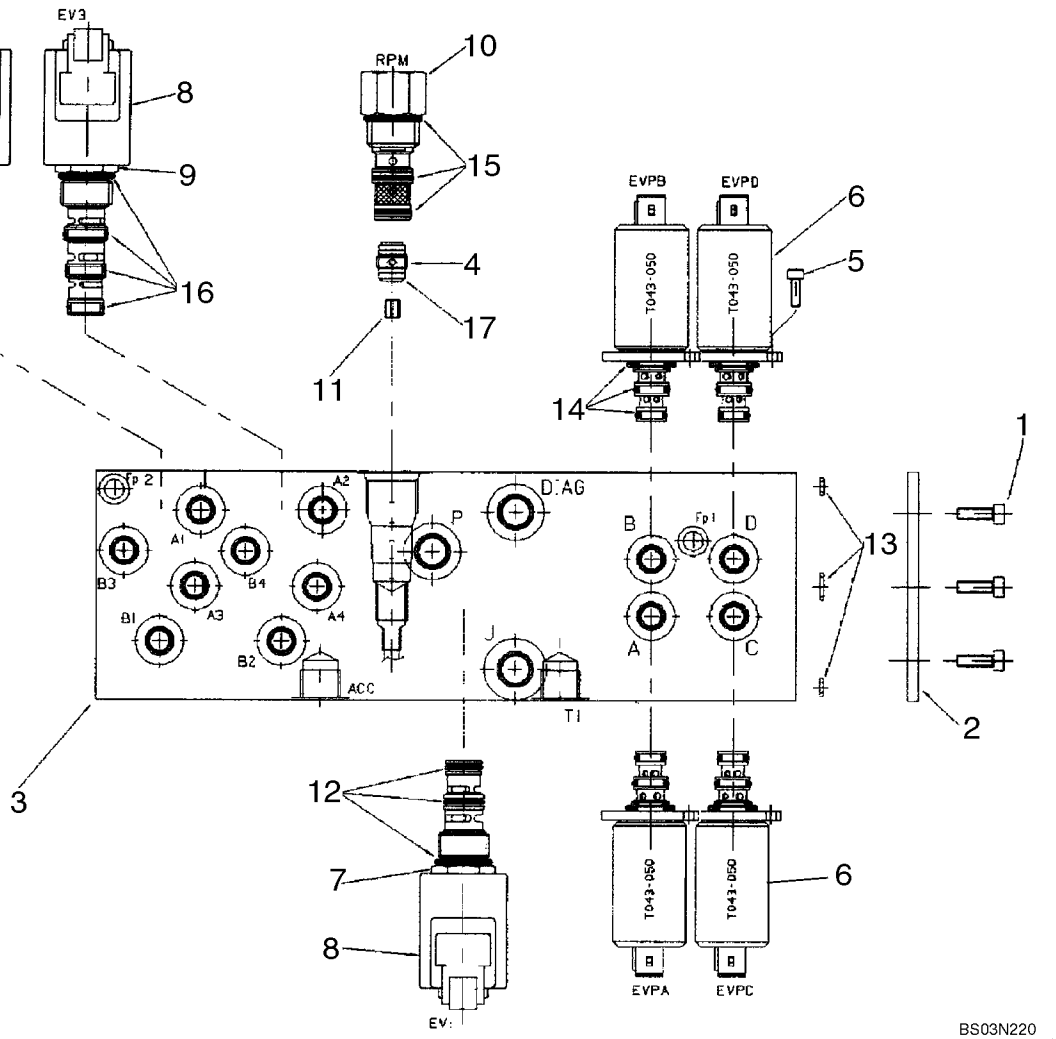

http://www.minnparbackhoeparts.com/

VALVE ASSY, PRESSURE REDUCING (2 SPOOL) (WITH PILOT CONTROLS)

REF	FN	PART NUMBER	YR/SN	QTY	DESCRIPTION
		85827472		1	VALVE, HYDRAULIC Pressure Reducing, Two Spool, Pilot Controls; Incl. Ref 1 - 17
1		14304021		3	SCREW M5 x 10 Screw
2		85827991		1	PLATE Sealing Plate
3		85828013		1	BODY Manifold Block
4		85827992		1	VALVE, HYDRAULIC Check Valve
5		14302921		8	BOLT M4 x 10 Screw
6		85827993		4	ELECTRO-VALVE Pressure Reducing Valve
7	1	85827994		1	SOLENOID Solenoid Valve Cartridge, 3 Way, 2 Position
8		85827995		3	COIL Coil With Diode
9	2	85827996		2	SOLENOID Solenoid Valve Cartridge, 4 Way, 2 Position
10		85827997		1	GEAR REDUCTION UNIT Mechanical Pressure Reducing Valve With Fixed Setting
11		85828005		1	ORIFICE 1.8 mm Orifice
12		85827998		1	KIT O-Ring Kit
13		85827999		1	KIT O-Ring Kit
14		85828000		4	KIT O-Ring Kit
15		85828001		1	KIT O-Ring Kit
16		85828002		2	KIT O-Ring Kit
17		85828003		1	O-RING O-Ring, D9x1

(1) Includes Ref. Numbers 8, 12
(2) Includes Ref. Numbers 8, 16

http://www.minnparbackhoeparts.com/

08-52		p1	07/04

VALVE ASSY, PRESSURE REDUCING (3 SPOOL) (WITH PILOT CONTROLS)

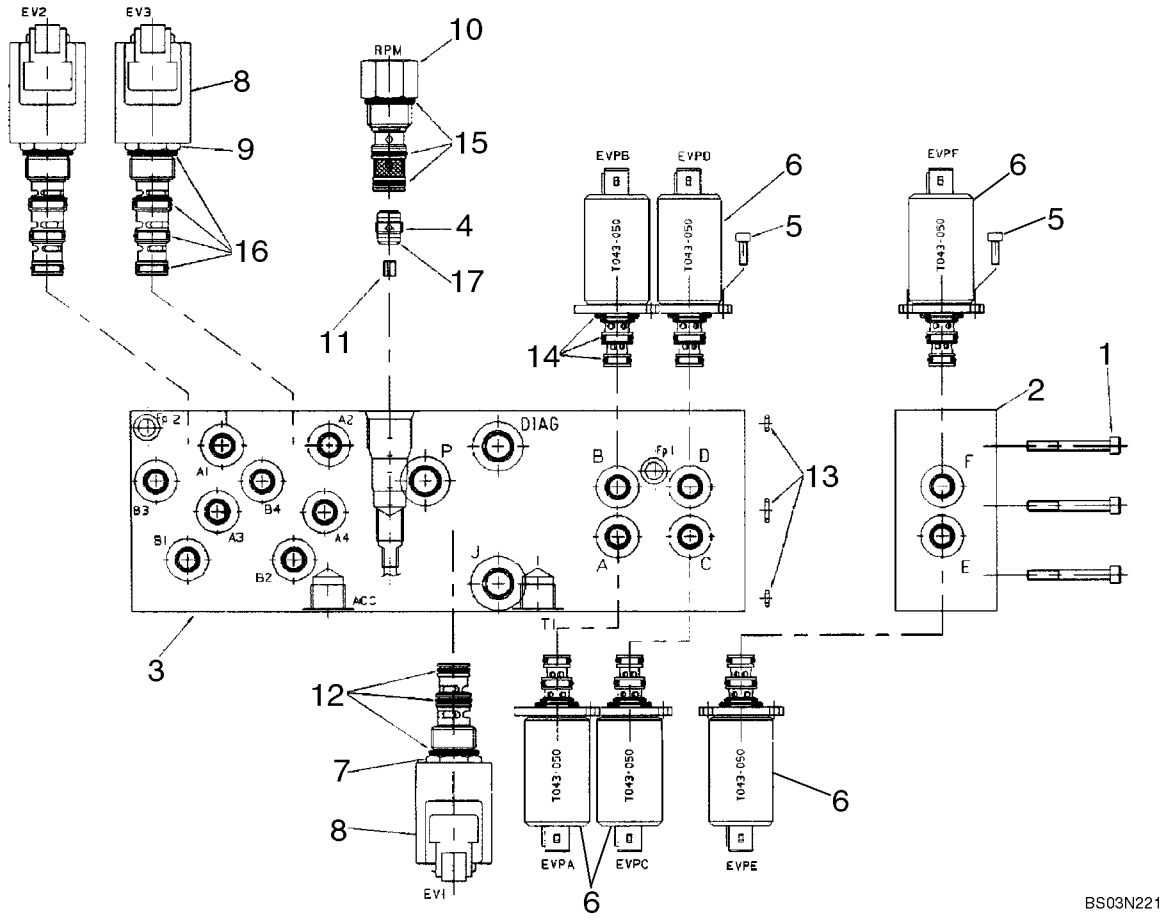

http://www.minnparbackhoeparts.com/

VALVE ASSY, PRESSURE REDUCING (3 SPOOL) (WITH PILOT CONTROLS)

REF	FN	PART NUMBER	YR/SN	QTY	DESCRIPTION
		85827471		1	VALVE, HYDRAULIC Pressure Reducing, Three Spool, Pilot Controls; Incl. Ref 1 - 17
1		14358921		3	SCREW M5 x 45 Screw
2		85828004		1	BODY One Function Add-On Manifold Block
3		85828015		1	BODY Manifold Block
4		85827992		1	VALVE, HYDRAULIC Check Valve
5		14302921		12	BOLT M4 x 10 Screw
6		85827993		6	ELECTRO-VALVE Pressure Reducing Valve
7	1	85827994		1	SOLENOID Solenoid Valve Cartridge, 3 Way, 2 Position
8		85827995		3	COIL Coil With Diode
9	2	85827996		2	SOLENOID Solenoid Valve Cartridge, 4 Way, 2 Position
10		85827997		1	GEAR REDUCTION UNIT Mechanical Pressure Reducing Valve With Fixed Setting
11		85828005		1	ORIFICE 1.8 mm Orifice
12		85827998		1	KIT O-Ring Kit
13		85827999		1	KIT O-Ring Kit
14		85828000		6	KIT O-Ring Kit
15		85828001		1	KIT O-Ring Kit
16		85828002		2	KIT O-Ring Kit
17		85828003		1	O-RING O-Ring, D9x1

(1) Includes Ref. Numbers 8, 12
(2) Includes Ref. Numbers 8, 16

http://www.minnparbackhoeparts.com/

VALVE ASSY, PRESSURE REDUCING (4 SPOOL) (WITH PILOT CONTROLS)

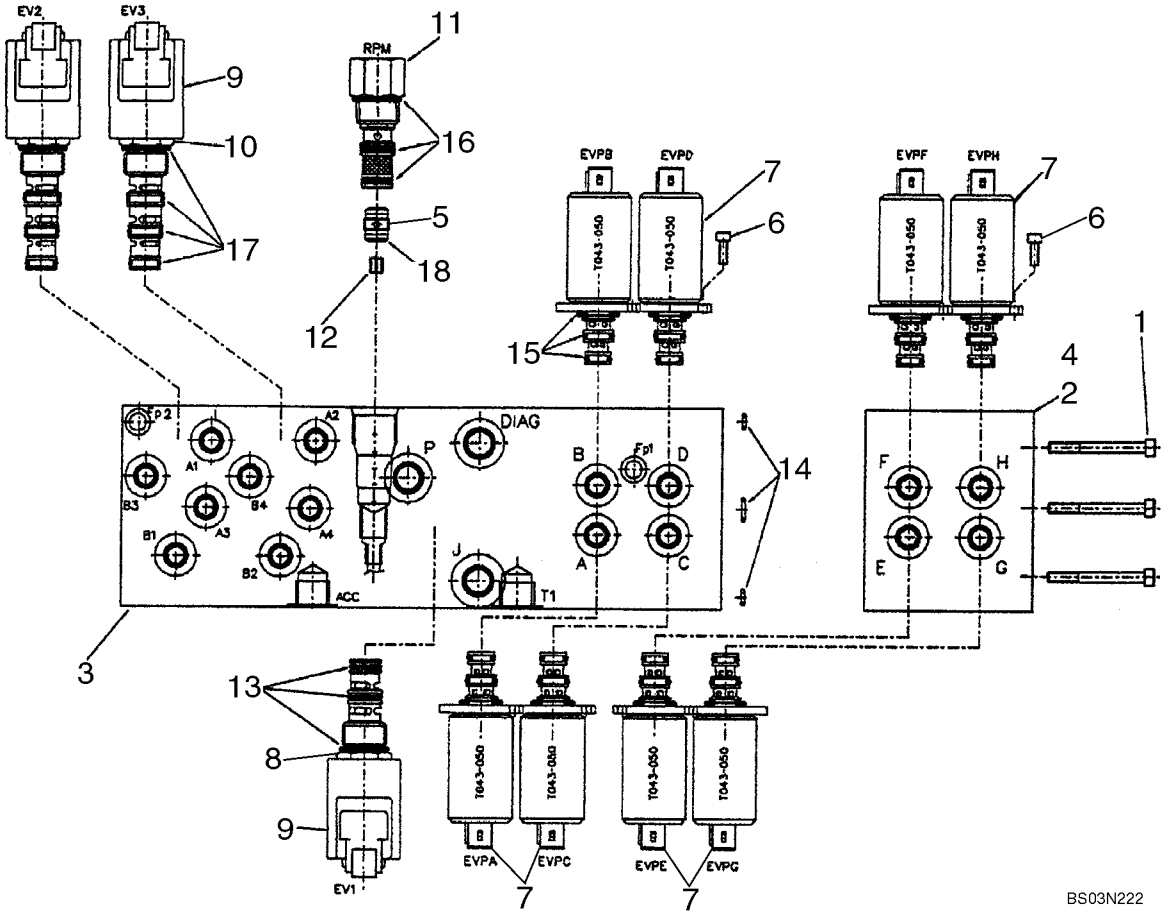

http://www.minnparbackhoeparts.com/

VALVE ASSY, PRESSURE REDUCING (4 SPOOL) (WITH PILOT CONTROLS)

REF	FN	PART NUMBER	YR/SN	QTY	DESCRIPTION
		87434621		1	VALVE, CONTROL Pressure Reducing, Four Spool, Pilot Controls; Incl. Ref 1 - 18
1		85828061		3	SCREW M5 x 80 Screw
2		85828048		1	MANIFOLD VALVE Manifold Block
3		85828015		1	BODY Manifold Block
4		85828054		1	MANIFOLD VALVE Manifold Block
5		85827992		1	VALVE, HYDRAULIC Check Valve
6		14302921		16	BOLT M4 x 10 Screw
7		85827993		8	ELECTRO-VALVE Pressure Reducing Valve
8	1	85827994		1	SOLENOID Solenoid Valve Cartridge, 3 Way, 2 Position
9		85827995		3	COIL Coil With Diode
10	2	85827996		2	SOLENOID Solenoid Valve Cartridge, 4 Way, 2 Position
11		85827997		1	GEAR REDUCTION UNIT Mechanical Pressure Reducing Valve With Fixed Setting
12		85828005		1	ORIFICE 1.8 mm Orifice
13		85827998		1	KIT O-Ring Kit
14		85827999		1	KIT O-Ring Kit
15		85828000		8	KIT O-Ring Kit
16		85828001		1	KIT O-Ring Kit
17		85828002		2	KIT O-Ring Kit
18		85828003		1	O-RING O-Ring, D9x1

(1) Includes Ref. Numbers 9, 13
(2) Includes Ref. Numbers 9, 17

http://www.minnparbackhoeparts.com/

08-54		p1	04/05

VALVE, JOYSTICK (PILOT CONTROLS) (LEFT-HAND) WITH HORN BUTTON

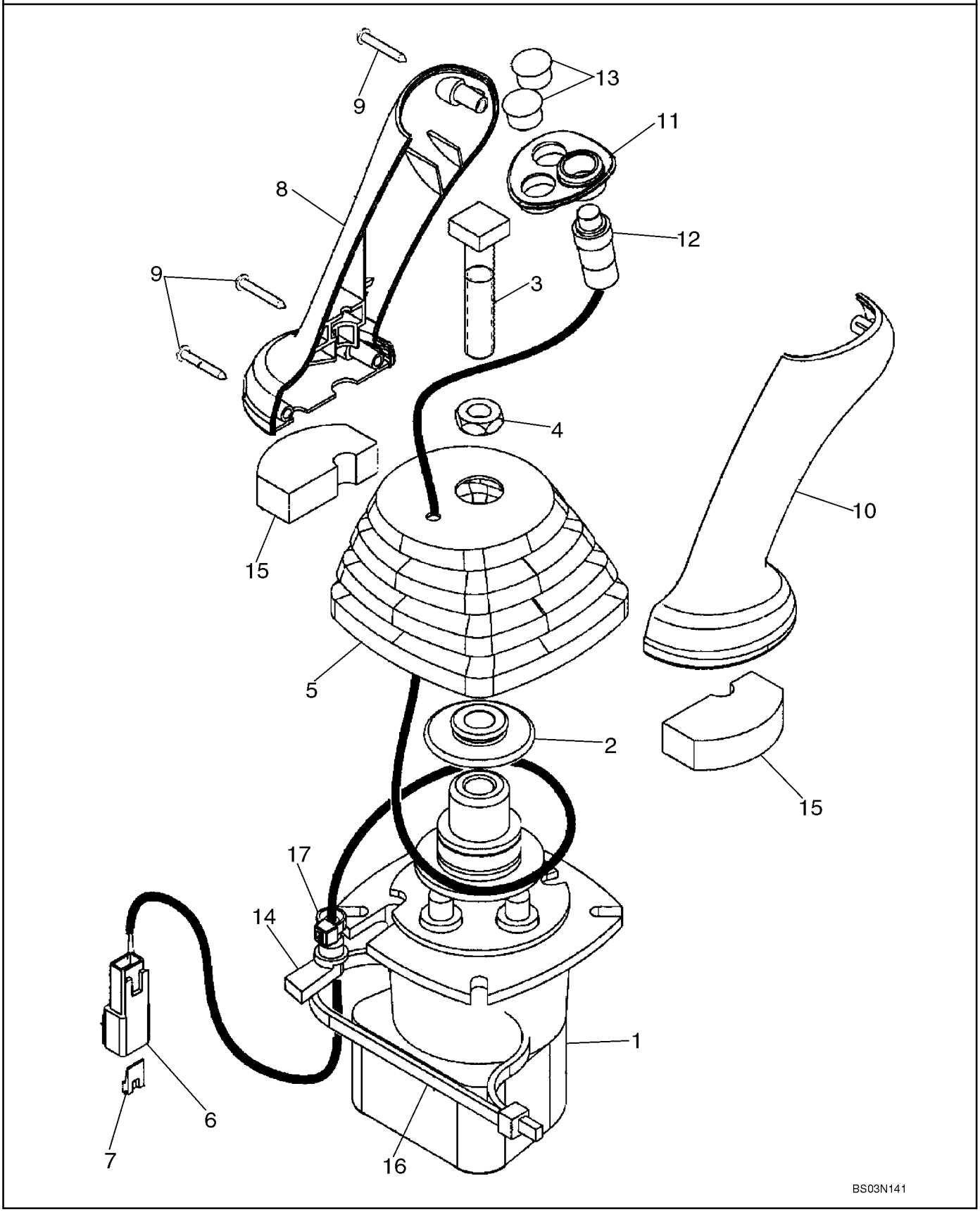

http://www.minnparbackhoeparts.com/

VALVE, JOYSTICK (PILOT CONTROLS) (LEFT-HAND) WITH HORN BUTTON

REF	FN	PART NUMBER	YR/SN	QTY	DESCRIPTION
		87308844		1	VALVE, CONTROL JOYSTICK; Pilot Controls, Left-Hand, With Horn Button; Incl. Ref 1 - 17; Replaces 87443740
1		86983311		1	VALVE, CONTROL Pilot Control Joystick Valve; Component Parts Not Serviced Separately
2		87436225		1	RETAINER Control Boot Retainer
3		87428023		1	BOLT Square Head Bolt
4		87037944		1	NUT Thin M12 Nut
5		87443721		1	BOOT Control Handle Boot
6		225315C1		1	CONNECTOR
7		225318C1		1	WEDGE Connector
8		87308838		1	HANDLE GRIP Joystick Control Handle; Replaces 87428164
9		15687475		3	SCREW, SELF TAPPING M3.5 x 25 Pan Head Cross Recess, Self Tapping, Stainless Steel With Nerinox Coating; Replaces 87032819 Black Zinc Plated Screw, Which Is Used In Other Applications
10		87308839		1	HANDLE GRIP Joystick Control Handle; Replaces 87428165
11		87435243		1	BEZEL Switch Mounting Bezel
12		87437372		1	SWITCH Push Button Horn Switch
13		86625128		2	PLUG Dome Plug, .562 inch, Black Nylon
14		87424267		1	GROMMET Wire Grommet
15		87435506		2	GASKET Pilot Control Handle Seal, Lower
16		87438046		1	STRAP Tie Strap
17		87000312		1	RETAINER Black Tie Strap

http://www.minnparbackhoeparts.com/

08-55		p1	04/05

VALVE, JOYSTICK (PILOT CONTROLS) (LEFT-HAND) WITH HORN & UNI-DIRECTIONAL BUTTONS

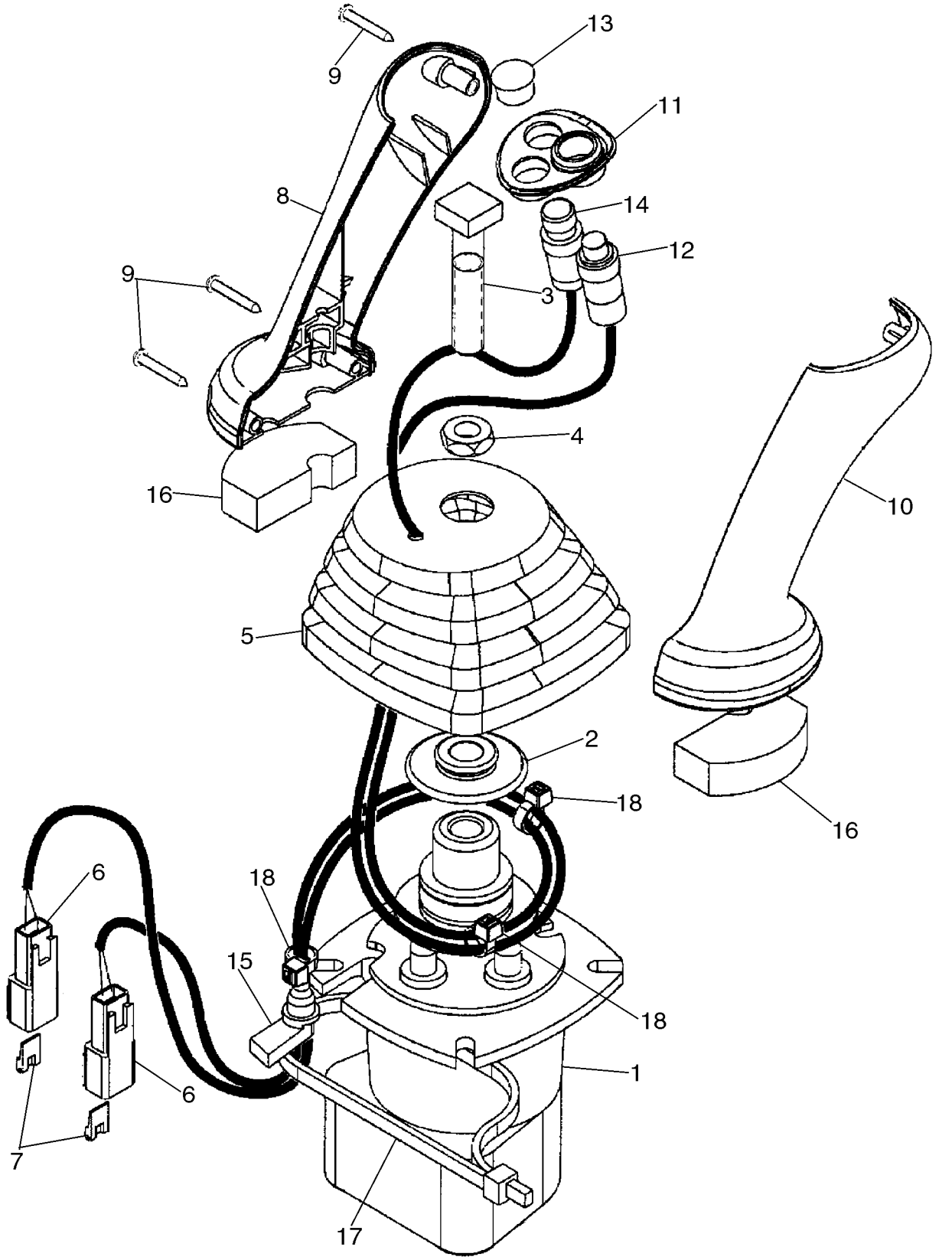

http://www.minnparbackhoeparts.com/

VALVE, JOYSTICK (PILOT CONTROLS) (LEFT-HAND) WITH HORN & UNI-DIRECTIONAL BUTTONS

REF	FN	PART NUMBER	YR/SN	QTY	DESCRIPTION
		87308846		1	VALVE, CONTROL JOYSTICK; Pilot Controls, Left-Hand, With Horn and Uni-Directional Buttons; Incl. Ref 1 - 18; Replaces 87443742
1		86983311		1	VALVE, CONTROL Pilot Control Joystick Valve; Component Parts Not Serviced Separately
2		87436225		1	RETAINER Control Boot Retainer
3		87428023		1	BOLT Square Head Bolt
4		87037944		1	NUT Thin M12 Nut
5		87443721		1	BOOT Control Handle Boot
6		225315C1		2	CONNECTOR
7		225318C1		2	WEDGE Connector
8		87308838		1	HANDLE GRIP Joystick Control Handle; Replaces 87428164
9		15687475		3	SCREW, SELF TAPPING M3.5 x 25 Pan Head Cross Recess, Self Tapping, Stainless Steel With Nerinox Coating; Replaces 87032819 Black Zinc Plated Screw, Which Is Used In Other Applications
10		87308839		1	HANDLE GRIP Joystick Control Handle; Replaces 87428165
11		87435243		1	BEZEL Switch Mounting Bezel
12		87437372		1	SWITCH Push Button Horn Switch
13		86625128		1	PLUG Dome Plug, .562 inch, Black Nylon
14		87437373		1	SWITCH ASSY Push Button Uni-Directional Auxiliary Hydraulic Switch
15		87424267		1	GROMMET Wire Grommet
16		87435506		2	GASKET Pilot Control Handle Seal, Lower
17		87438046		1	STRAP Tie Strap
18		87000312		3	RETAINER Black Tie Strap

http://www.minnparbackhoeparts.com/

08-56		p1	04/05

VALVE, JOYSTICK (PILOT CONTROLS) (LEFT-HAND) WITH HORN & BI-DIRECTIONAL BUTTONS

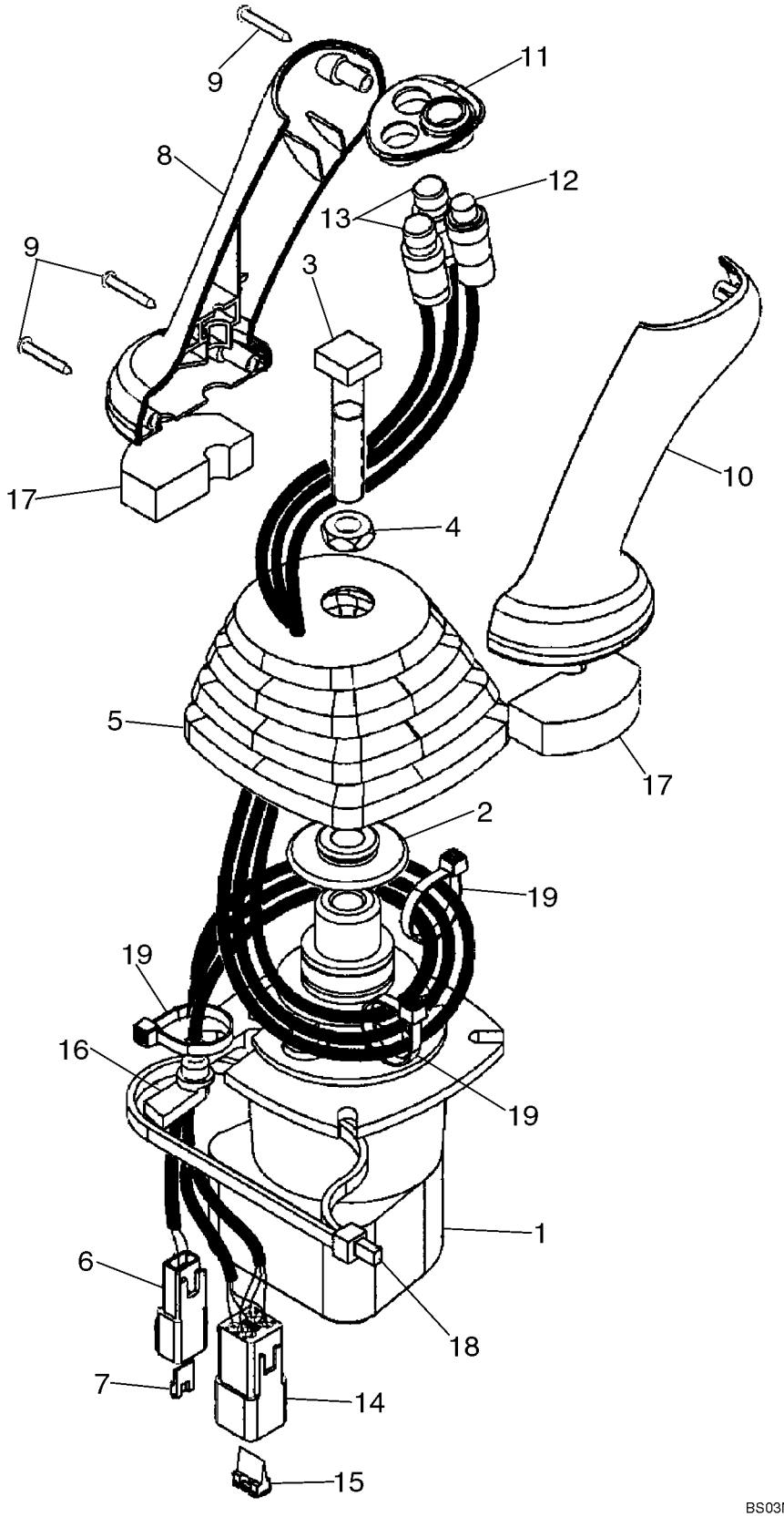

http://www.minnparbackhoeparts.com/

VALVE, JOYSTICK (PILOT CONTROLS) (LEFT-HAND) WITH HORN & BI-DIRECTIONAL BUTTONS

REF	FN	PART NUMBER	YR/SN	QTY	DESCRIPTION
		87308845		1	VALVE, CONTROL JOYSTICK; Pilot Controls, Left-Hand, With Horn and Bi-Directional Buttons; Incl. Ref 1 - 19; Replaces 87443741
1		86983311		1	VALVE, CONTROL Pilot Control Joystick Valve; Component Parts Not Serviced Separately
2		87436225		1	RETAINER Control Boot Retainer
3		87428023		1	BOLT Square Head Bolt
4		87037944		1	NUT Thin M12 Nut
5		87443721		1	BOOT Control Handle Boot
6		225315C1		1	CONNECTOR
7		225318C1		1	WEDGE Connector
8		87308838		1	HANDLE GRIP Joystick Control Handle; Replaces 87428164
9		15687475		3	SCREW, SELF TAPPING M3.5 x 25 Pan Head Cross Recess, Self Tapping, Stainless Steel With Nerinox Coating; Replaces 87032819 Black Zinc Plated Screw, Which Is Used In Other Applications
10		87308839		1	HANDLE GRIP Joystick Control Handle; Replaces 87428165
11		87435243		1	BEZEL Switch Mounting Bezel
12		87437372		1	SWITCH Push Button Horn Switch
13		87437371		2	SWITCH ASSY Push Button Bi-Directional Auxiliary Hydraulic Switch
14		225350C1		1	CONNECTOR
15		225353C1		1	WEDGE Connector
16		87424267		1	GROMMET Wire Grommet
17		87435506		2	GASKET Pilot Control Handle Seal, Lower
18		87438046		1	STRAP Tie Strap
19		87000312		3	RETAINER Black Tie Strap

http://www.minnparbackhoeparts.com/

VALVE, JOYSTICK (PILOT CONTROLS) (RIGHT-HAND) WITHOUT EXTENDABLE DIPPER

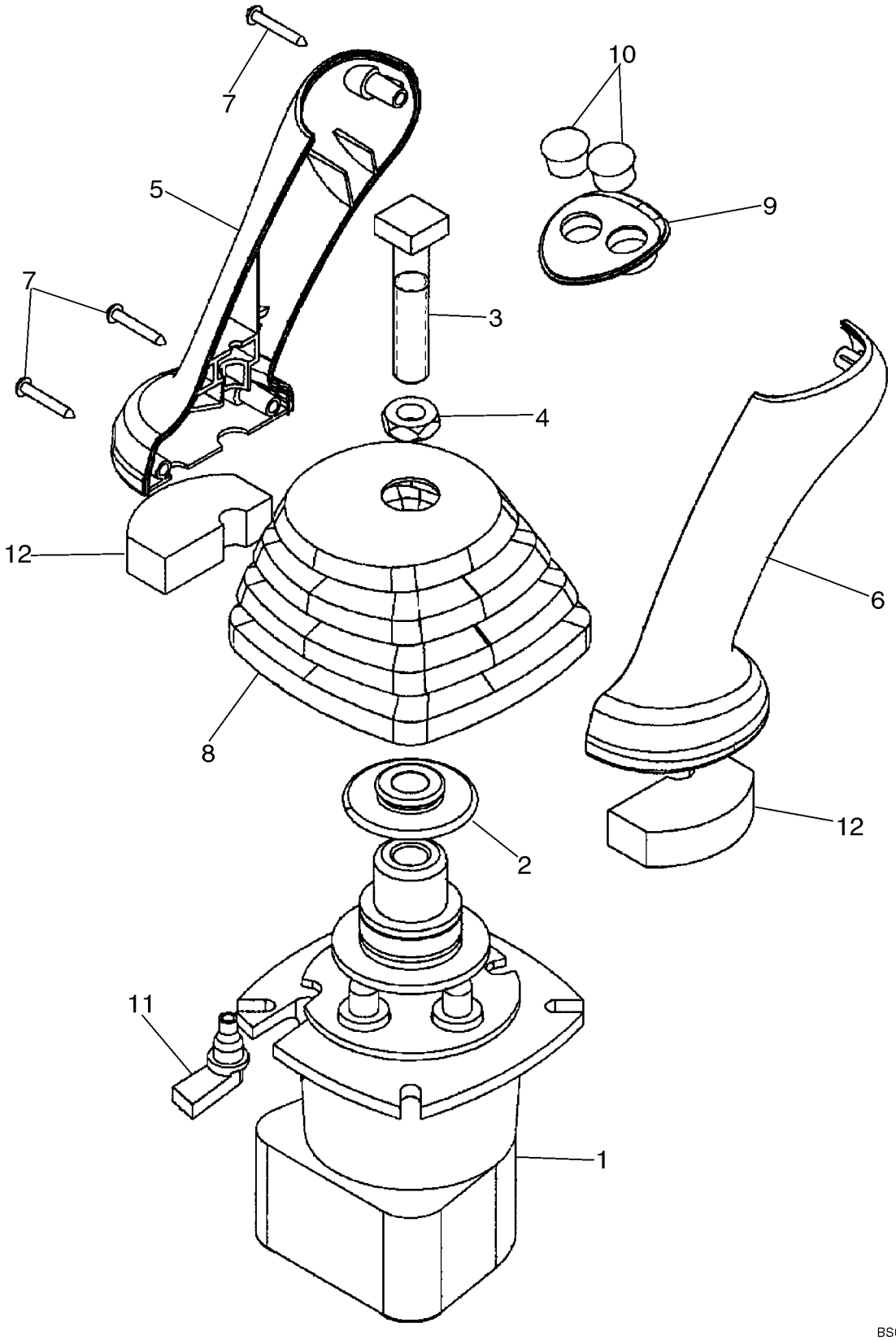

http://www.minnparbackhoeparts.com/

VALVE, JOYSTICK (PILOT CONTROLS) (RIGHT-HAND) WITHOUT EXTENDABLE DIPPER

REF	FN	PART NUMBER	YR/SN	QTY	DESCRIPTION
		87308840		1	VALVE, CONTROL JOYSTICK; Pilot Controls, Right-Hand; Without Extendable Dipper; Incl. Ref 1 - 12; Replaces 87443739
1		86983311		1	VALVE, CONTROL Pilot Control Joystick Valve; Component Parts Not Serviced Separately
2		87436225		1	RETAINER Control Boot Retainer
3		87428023		1	BOLT Square Head Bolt
4		87037944		1	NUT Thin M12 Nut
5		87308838		1	HANDLE GRIP Joystick Control Handle; Replaces 87428164
6		87308839		1	HANDLE GRIP Joystick Control Handle; Replaces 87428165
7		15687475		3	SCREW, SELF TAPPING M3.5 x 25 Pan Head Cross Recess, Self Tapping, Stainless Steel With Nerinox Coating; Replaces 87032819 Black Zinc Plated Screw, Which Is Used In Other Applications
8		87443722		1	BOOT Joystick Control Boot
9		87435242		1	BEZEL Switch Mounting Bezel
10		86625128		2	PLUG Dome Plug, .562 inch, Black Nylon; Replaces 353-405 Plug Which Is Used In Other Applications
11		87451448		1	GROMMET Wire Grommet; Replaces 87424267 Grommet, Which Is Used In Other Applications
12		87435506		2	GASKET Pilot Control Handle Seal, Lower

http://www.minnparbackhoeparts.com/

VALVE, JOYSTICK (PILOT CONTROLS) (RIGHT-HAND) WITH EXTENDABLE DIPPER

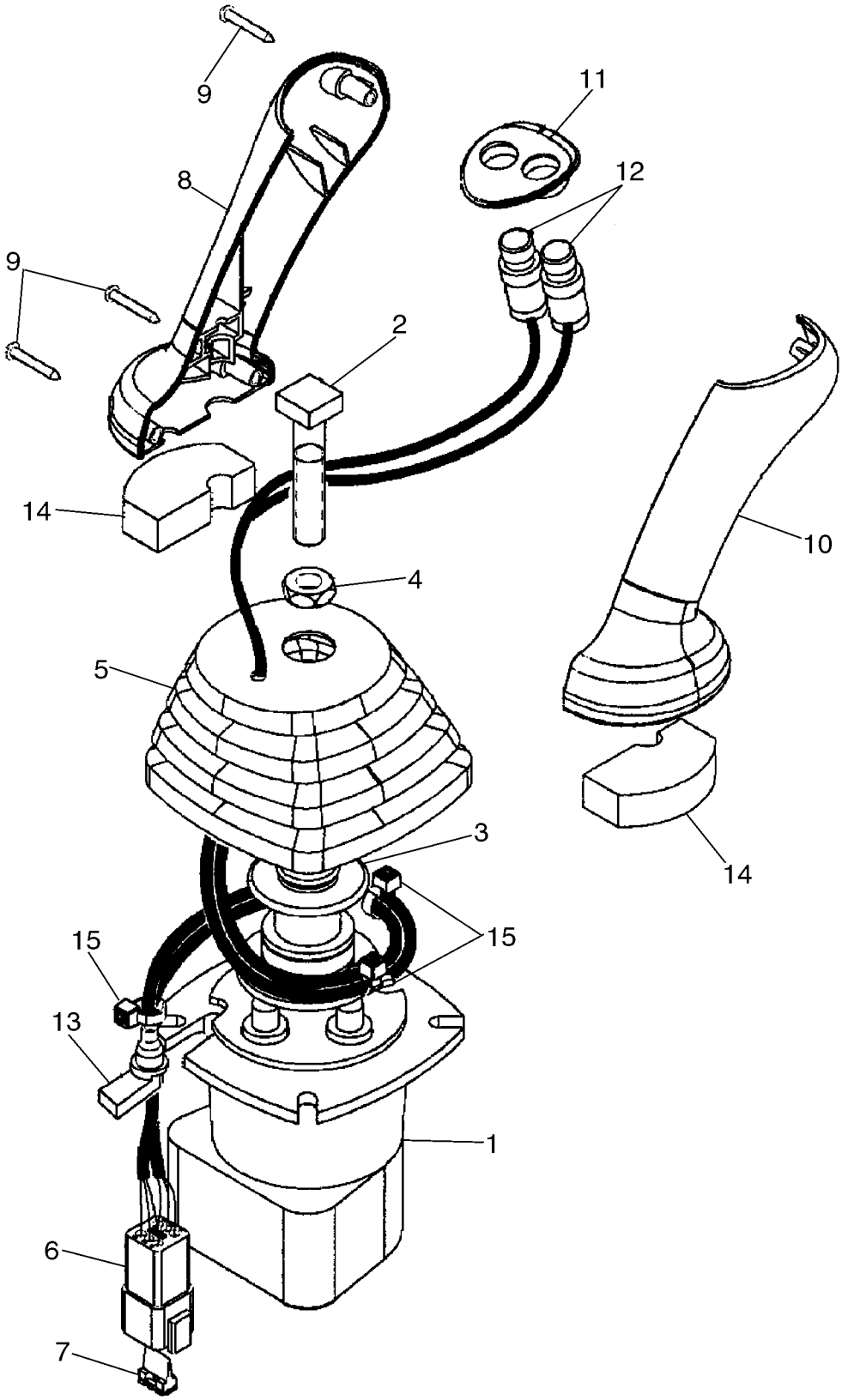

http://www.minnparbackhoeparts.com/

VALVE, JOYSTICK (PILOT CONTROLS) (RIGHT-HAND) WITH EXTENDABLE DIPPER

REF	FN	PART NUMBER	YR/SN	QTY	DESCRIPTION
		87308847		1	VALVE, CONTROL JOYSTICK; Pilot Controls, Right-Hand; With Extendable Dipper; Incl. Ref 1 - 15; Replaces 87443743
1		86983311		1	VALVE, CONTROL Pilot Control Joystick Valve; Component Parts Not Serviced Separately
2		87428023		1	BOLT Square Head Bolt
3		87436225		1	RETAINER Control Boot Retainer
4		87037944		1	NUT Thin M12 Nut
5		87443721		1	BOOT Joystick Control Boot
6		225350C1		1	CONNECTOR
7		225353C1		1	WEDGE Connector
8		87308838		1	HANDLE GRIP Joystick Control Handle; Replaces 87428164
9		15687475		3	SCREW, SELF TAPPING M3.5 x 25 Pan Head Cross Recess, Self Tapping, Stainless Steel With Nerinox Coating; Replaces 87032819 Black Zinc Plated Screw, Which Is Used In Other Applications
10		87308839		1	HANDLE GRIP Joystick Control Handle; Replaces 87428165
11		87435242		1	BEZEL Switch Mounting Bezel
12		87437371		2	SWITCH ASSY Push Button Retract and Extendahoe Switches
13		87424267		1	GROMMET Wire Grommet
14		87435506		2	GASKET Pilot Control Handle Seal, Lower
15		87000312		3	RETAINER Black Nylon
		87438046		1	STRAP Tie

http://www.minnparbackhoeparts.com/

VALVE ASSY - SWING CUSHION (DAMPENING)

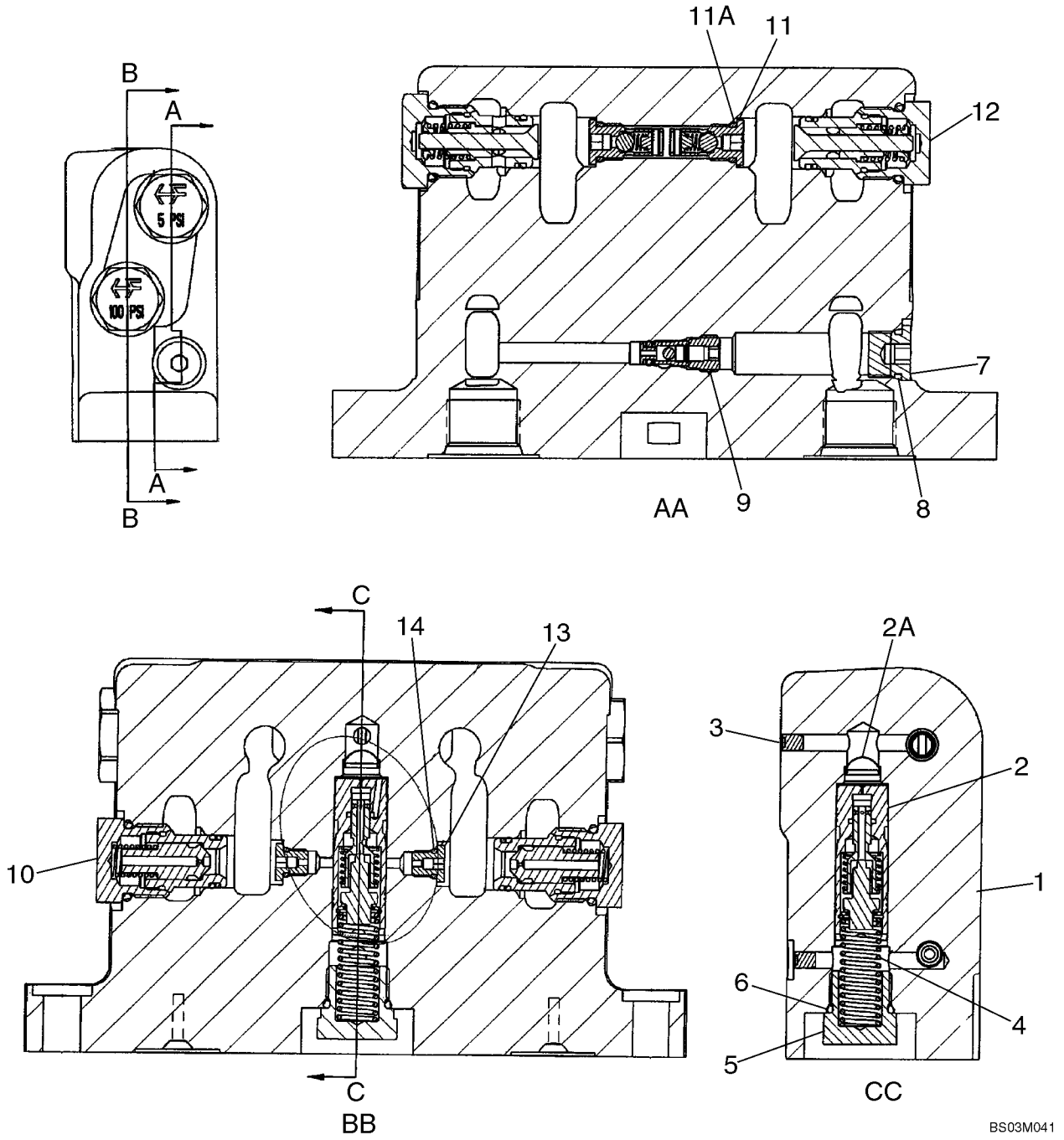

http://www.minnparbackhoeparts.com/

VALVE ASSY - SWING CUSHION (DAMPENING)

REF	FN	PART NUMBER	YR/SN	QTY	DESCRIPTION
		87449373		1	VALVE, DAMPING Swing Cushion; Incl. Ref 1 - 14; Replaces 87416975 Valve
1		NSS		1	NOT SERVICED SEPARATELY Housing
2		87449374		1	SPOOL Thermal Compensating; Component Parts Not Serviced Separately; Replaces 388876A6 Spool
2A		1976955C1		1	FILTER CARTRIDGE Screen, Filter
3		369372A1		2	PLUG M5; Plug, Expansion
4		388881A1		1	SPRING, COIL
5		409025A1		1	PLUG Relief Check; Incl. Ref 6
6		237-6008		1	O-RING 41/64 ID x 3/32, Boss Seal
7		218-5209		1	PLUG 9/16 Or; Incl. Ref 8
8		237-6006		1	O-RING 15/32 ID x 5/64, Boss Seal
9		388712A2		1	VALVE Bi-Directional Check Valve; Includes 388713A1 Seal Kit
		388713A1		1	KIT Seal; Includes An O-Ring and Backup Ring; Component Parts Not Serviced Separately
10		396422A2		2	VALVE, CHECK 100 psi, Orifice Check Valve; Component Parts Not Serviced Separately; Order 1542830C2 Seal Kit To Service External Seals
		443432A1		1	KIT, SEALS For Servicing External Seals on Ref 9, 10, 11 or 12 Valve; If Used
11		400296A2		2	VALVE, CHECK In-Line Check Valve; Component Parts Not Serviced Separately; Incl. Ref 11A
11A		237-6004		1	O-RING 23/64 ID x 5/64, Boss Seal
12		389541A1		2	VALVE, CHECK 5 psi; Component Parts Not Serviced Separately; Order 1542830C2 Seal Kit To Service External Seals
13		400657A1		2	PLUG Orifice 1.85 mm; Incl. Ref 14
14		237-6002		1	O-RING 1/4 ID x 1/16
		1542830C2		1	KIT, GASKET For Servicing External Seals on Ref 10 or 12 Valve

http://www.minnparbackhoeparts.com/

08-59A		p1	03/04

SOLENOID VALVE - BOOM LOCK

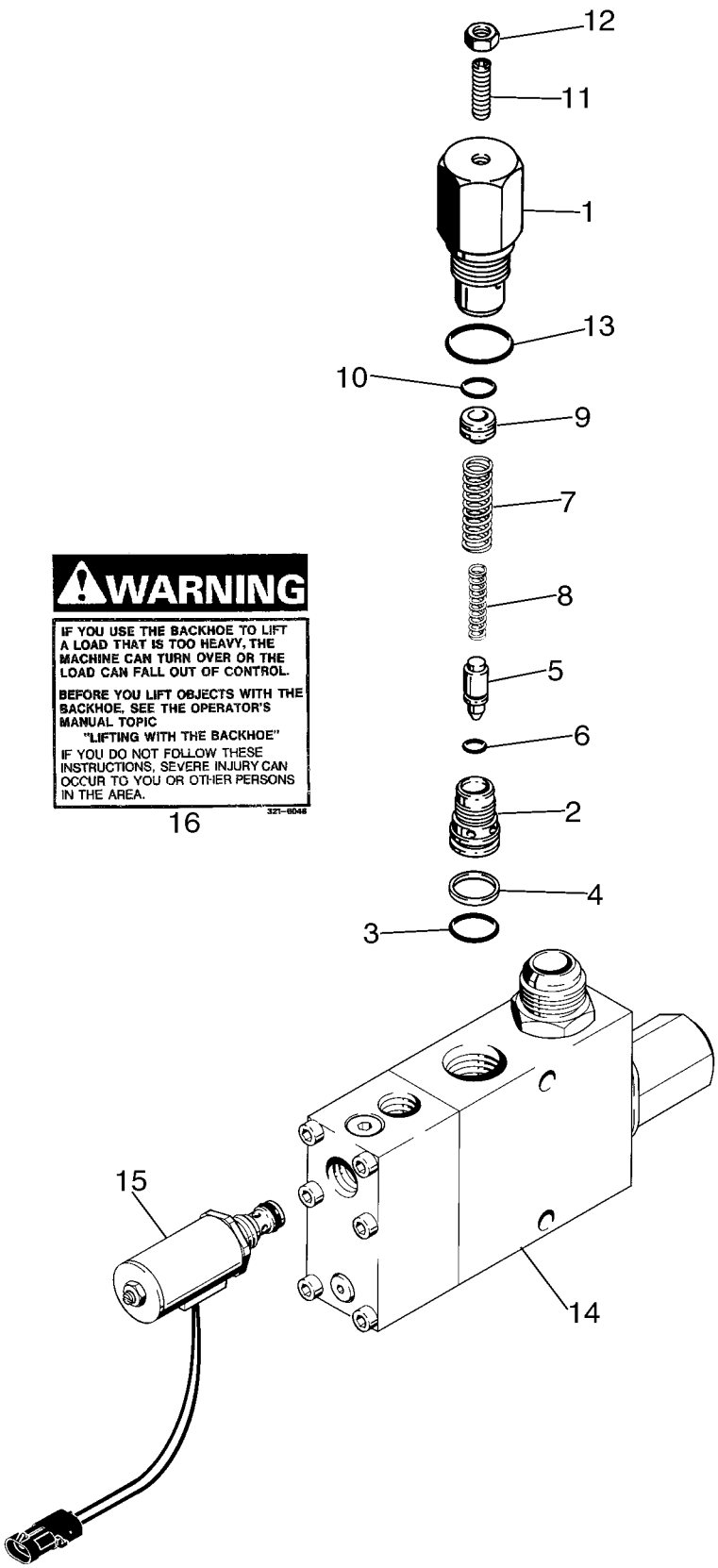

BS03B174

http://www.minnparbackhoeparts.com/

SOLENOID VALVE - BOOM LOCK

REF	FN	PART NUMBER	YR/SN	QTY	DESCRIPTION
		189957A1		1	VALVE Solenoid, Backhoe Boom Lock; Incl. Ref 1 - 16; Included In 399221A1 Backhoe Boom Lock Kit
		G110467		1	VALVE, PRESSURE RELIEF Circuit, Solenoid; Used In Production; Order G110077, Kit For Service
1		NSS		1	NOT SERVICED SEPARATELY Body, Relief Valve
2		NSS		1	NOT SERVICED SEPARATELY Seat, Relief Valve
3		238-6018		1	O-RING 3/4 ID x 1/16 in, Face Seal
4		G35540		1	RING Backup, Seat
5		NSS		1	NOT SERVICED SEPARATELY Poppet
6		NSS		1	NOT SERVICED SEPARATELY O-Ring
7		NSS		1	NOT SERVICED SEPARATELY Spring, Relief, Outer
8		NSS		1	NOT SERVICED SEPARATELY Spring, Relief, Inner
9		NSS		1	NOT SERVICED SEPARATELY Piston
10		NSS		1	NOT SERVICED SEPARATELY O-Ring
11		484-43120		1	SCREW 5/16 NF x 1-1/4 in, Hex Socket, Headless
12		425-155		1	NUT 5/16 in NF
13		237-6012		1	O-RING 59/64 ID x 7/64, Boss Seal
14		NSS		1	NOT SERVICED SEPARATELY Body, Solenoid
15		221168A1		1	SOLENOID 12 Volt; Relief, With Connector
		D150781		1	KIT Repair; Includes (3) Springs, (1) Ball, (1) Poppet, (1) Plug; Not Serviced Separately; and D150810 Seal Kit, Not Shown
		D150810		1	SEAL Kit, Includes (8) O-Rings and (2) Backup Rings; Which Are Not Serviced Separately, Not Shown
		G110077		1	KIT Service For G110467, Circuit Relief Valve; Includes G110078, Circuit Relief Valve Assembly (Ref. 1 - 13) and an Instruction Sheet
16		321-6046		2	DECAL Warning, If You Use The Backhoe To Lift A Load That Is Too Heavy

http://www.minnparbackhoeparts.com/

ACCUMULATOR ASSY - RIDE CONTROL

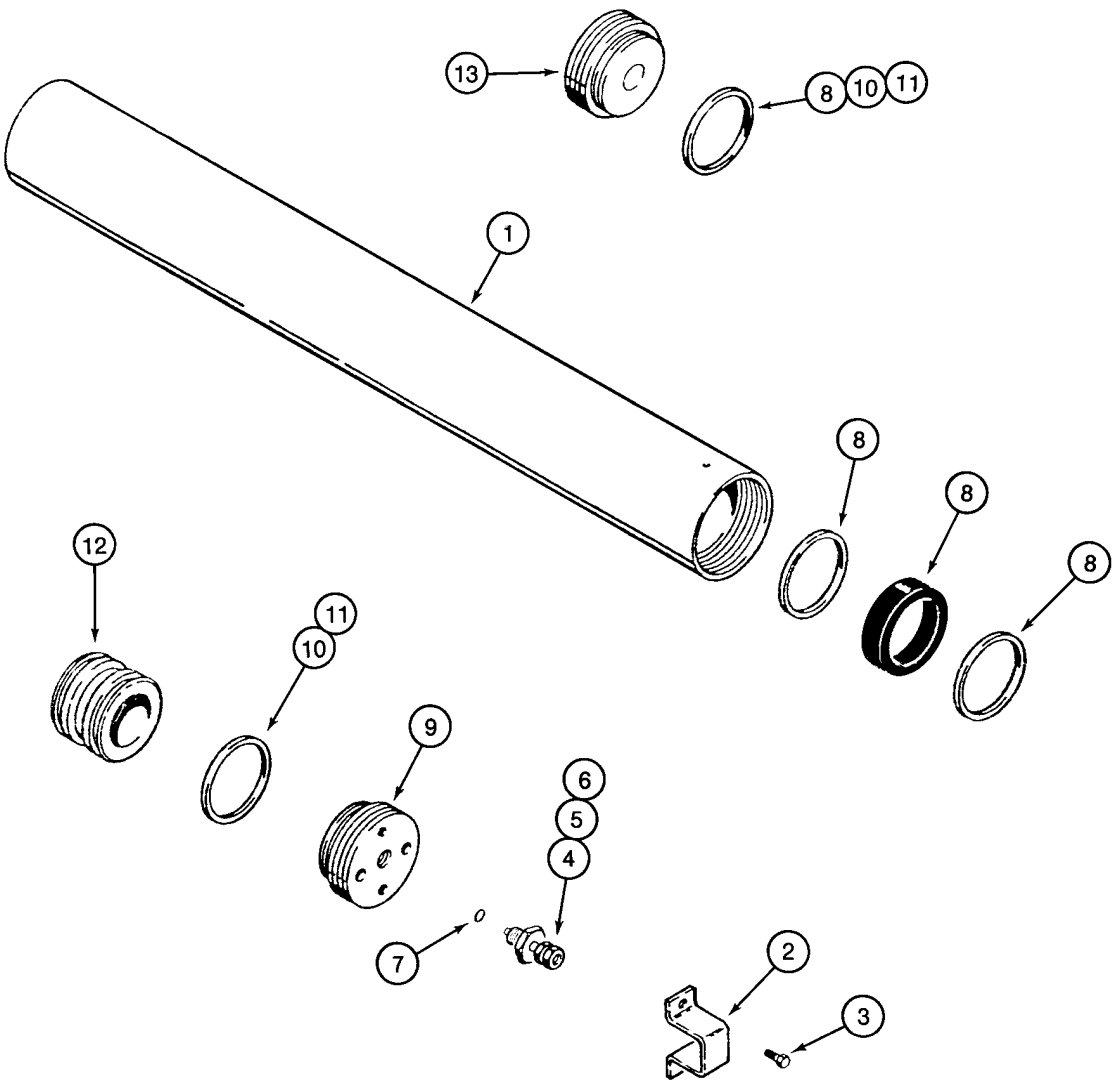

http://www.minnparbackhoeparts.com/

ACCUMULATOR ASSY - RIDE CONTROL

REF	FN	PART NUMBER	YR/SN	QTY	DESCRIPTION
		234412A1		1	ACCUMULATOR Incl. Ref 1 - 13
1		NSS		1	NOT SERVICED SEPARATELY Body
2		192895A1		1	PROTECTOR
3		276-2456		2	SCREW No. 10 x 3/8
		1978142C1		1	VALVE Incl. Ref 4 - 6
4		NSS		1	NOT SERVICED SEPARATELY Valve, Pressure
5		1978143C1		1	PISTON
6		1978144C1		1	CAP
7		1978158C1		1	GASKET
8		1978141C1		1	PACKAGE, SEALS Includes (1) V-Type O-Ring, (2) Teflon Bearing Rings and (1) Body End Seal Ring; Component Parts Not Serviced Separately
9		NSS		1	NOT SERVICED SEPARATELY Gland, Cylinder
10		NSS		2	NOT SERVICED SEPARATELY O-Ring
11		NSS		2	NOT SERVICED SEPARATELY Ring, Backup, If Used
12		NSS		1	NOT SERVICED SEPARATELY Piston
13		NSS		1	NOT SERVICED SEPARATELY Cap

http://www.minnparbackhoeparts.com/

FILTER ASSY, OIL

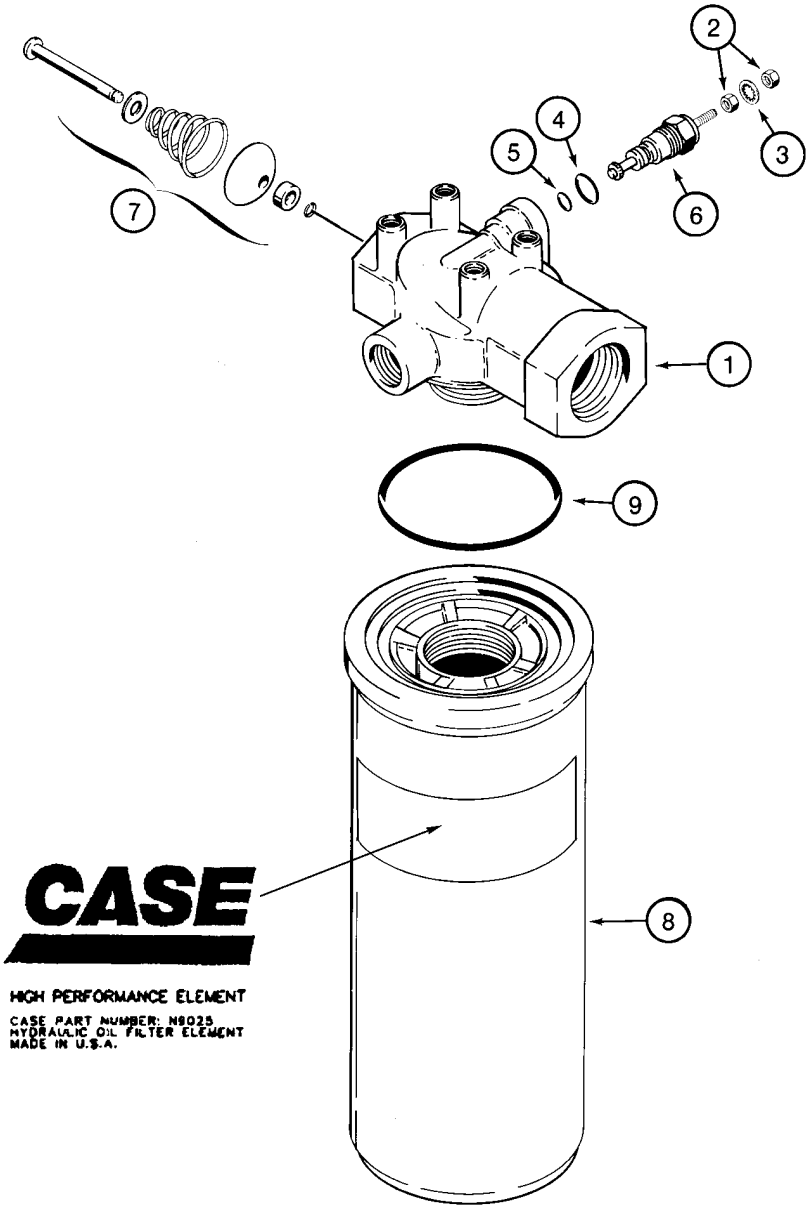

BS00D009

http://www.minnparbackhoeparts.com/

FILTER ASSY, OIL

REF	FN	PART NUMBER	YR/SN	QTY	DESCRIPTION
		87440045		1	FILTER ASSY. Hydraulic Oil Filter; Incl. Ref 1 - 9
1		NSS		1	NOT SERVICED SEPARATELY Head, Filter
		N6755		1	INDICATOR Restriction; Includes N6941, Ref 6
		N6941		1	KIT Restriction Indicator Repair; Incl. Ref 2 - 5; Order Ref 2 - 5
2		129-667		2	NUT No. 10 NF
3		493-21020		1	WASHER, LOCK 3/16
4		237-6006		1	O-RING 15/32 ID x 5/64, Boss Seal
5		238-5011		1	O-RING -011, 70 Duro, .301" ID x .070" Thk
6		NSS		1	NOT SERVICED SEPARATELY Indicator
7		NSS		1	NOT SERVICED SEPARATELY Valve, By-Pass
		N9025		1	FILTER, ELEMENT Incl. Ref 8, 9
8		NSS		1	NOT SERVICED SEPARATELY Element
9		238-5230		1	O-RING 2-1/2 ID x 1/8

http://www.minnparbackhoeparts.com/

08-62		p1	01/04

CYLINDER ASSY - LOADER LIFT

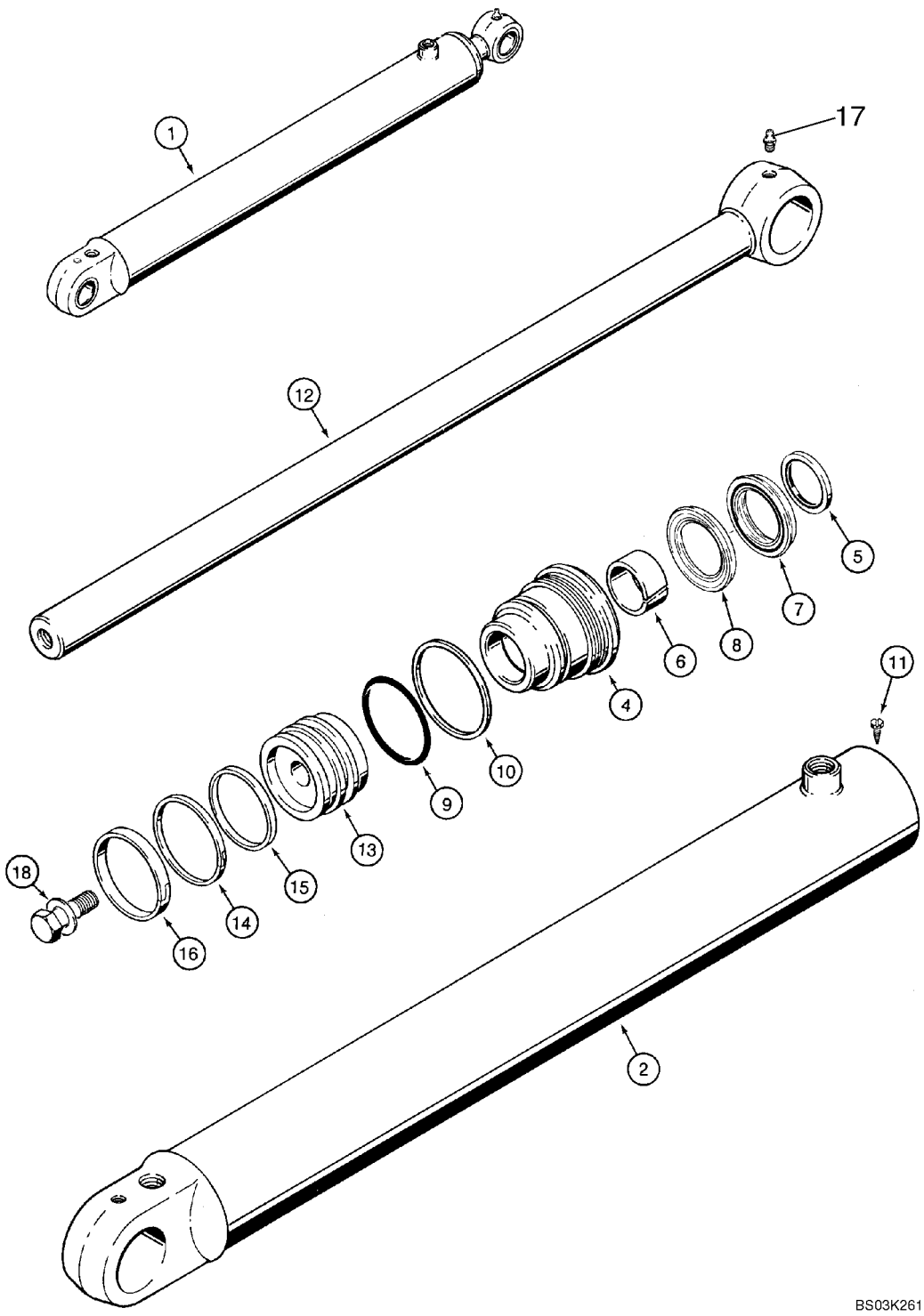

http://www.minnparbackhoeparts.com/

CYLINDER ASSY - LOADER LIFT

REF	FN	PART NUMBER	YR/SN	QTY	DESCRIPTION
1		384240A1		2	CYLINDER ASSY. 82.6 ID x 766 mm strk; Loader Lift; Incl. Ref 2 - 18
2		384241A1		1	SLEEVE, HYD' CYL' TUBE, Without Bushings
4		1980321C3		1	GLAND
		1543260C1		1	KIT, GASKET Seal Repair, Incl. Ref 5 - 10, 14 - 16
5		D95143		1	SEAL Wiper
6		G102425		1	BUSHING, LARGE
		1542875C1		1	SET OF PARTS Rod and Buffer Seal Kit; Incl. Ref 7, 8; Not Serviced Separately; Order 1543260C1 Seal Kit
7		NSS		1	NOT SERVICED SEPARATELY Rod Seal; Order 1543260C1 Seal Kit
8		NSS		1	NOT SERVICED SEPARATELY Buffer Seal; Order 1543260C1 Seal Kit
9		238-5233		1	O-RING 2-7/8 ID x 1/8 in
10		G32122		1	RING
11		276-2446		1	SCREW No. 8 x 3/8, self-tapping
12		133083A1		1	ROD, PISTON 44 mm (1-3/4 in) dia
13		135161A1		1	PISTON
14		G102287		1	SEAL
15		S109444		1	RING
16		S109445		1	RING
17		219-1		1	NIPPLE, LUBE 1/8 PT x 21/32
18		86982437		1	BOLT, SPECIAL 1 x 2,5 in; Includes Washer

http://www.minnparbackhoeparts.com/

CYLINDER ASSY - LOADER BUCKET

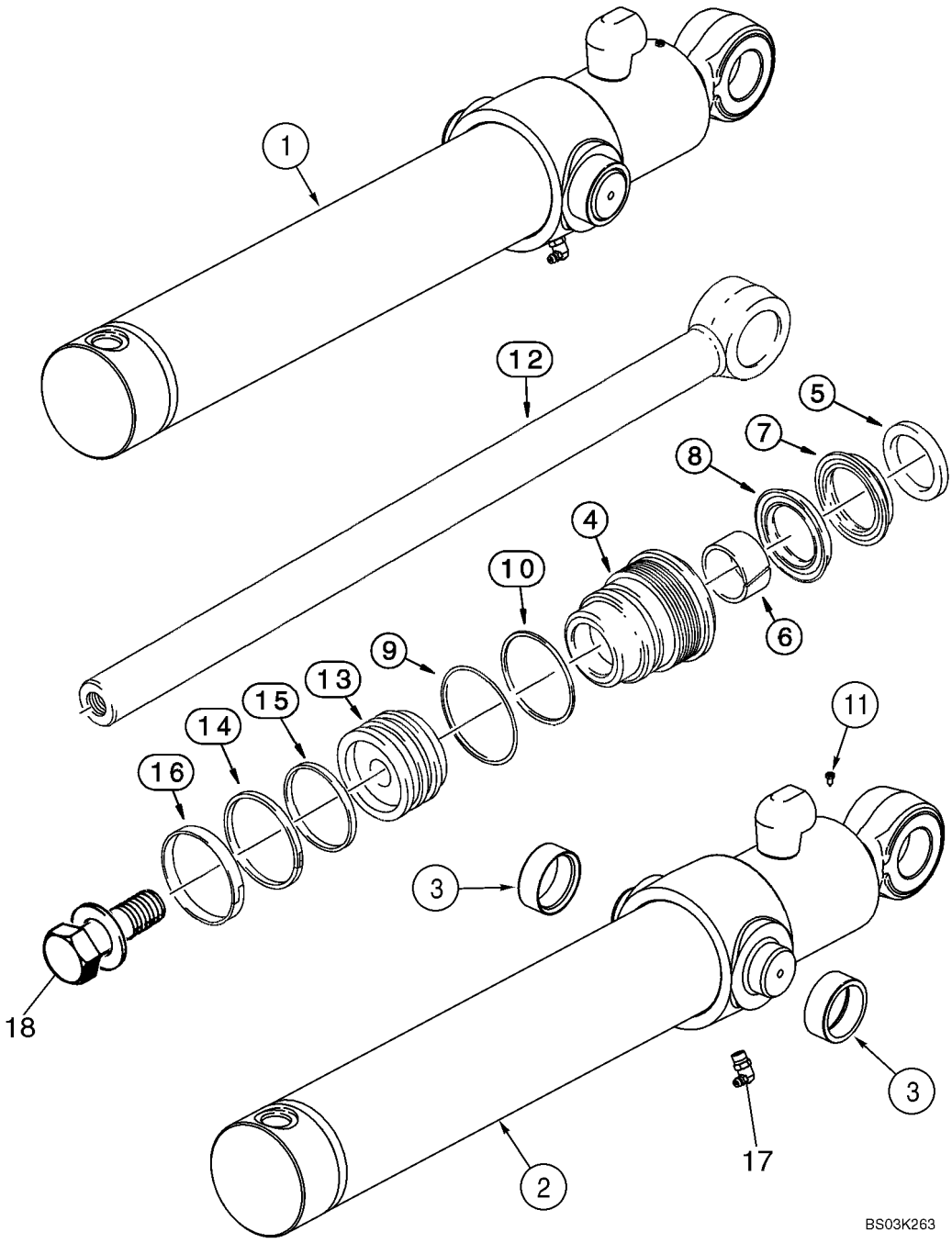

http://www.minnparbackhoeparts.com/

CYLINDER ASSY - LOADER BUCKET

REF	FN	PART NUMBER	YR/SN	QTY	DESCRIPTION
1		113133A2		2	CYLINDER ASSY. 76 ID x 522 mm strk; Loader Bucket; Incl. Ref 2- 18
2		113135A2		1	SLEEVE, HYD' CYL' TUBE, Incl. Ref 3
3		G108512		2	BUSHING
4		297280A1		1	GLAND
		1543256C1		1	KIT, GASKET Seal Repair; Incl. Ref 5 - 10, 14 - 16
5		D95142		1	SEAL Wiper
6		G102424		1	BUSHING, LARGE
		1542874C1		1	PACKAGE Rod and Buffer Seal Kit; Incl. Ref 7, 8; Not Serviced Separately; Order 1543256C1 Seal Kit
7		NSS		1	NOT SERVICED SEPARATELY Rod Seal; Order 1543256C1 Seal Kit
8		NSS		1	NOT SERVICED SEPARATELY Buffer Seal; Order 1543256C1 Seal Kit
9		238-5231		1	O-RING 2-5/8 ID x 1/8
10		G109298		1	RING
11		276-2446		1	SCREW No. 8 x 3/8, self-tapping
12		110307A1		1	ROD, PISTON 38 mm (1-1/2 in) dia
13		G108518		1	PISTON
14		G102288		1	SEAL ASSY.
15		G100444		1	SEAL
16		G100449		1	RING, WEAR
17		219-55		1	NIPPLE, LUBE 90 deg, 1/8 PT x 27/32
18		86982435		1	BOLT, SPECIAL 3/4 x 2,5 in, Includes Washer

http://www.minnparbackhoeparts.com/

08-64		p1	05/05

CYLINDER ASSY - LOADER CLAM

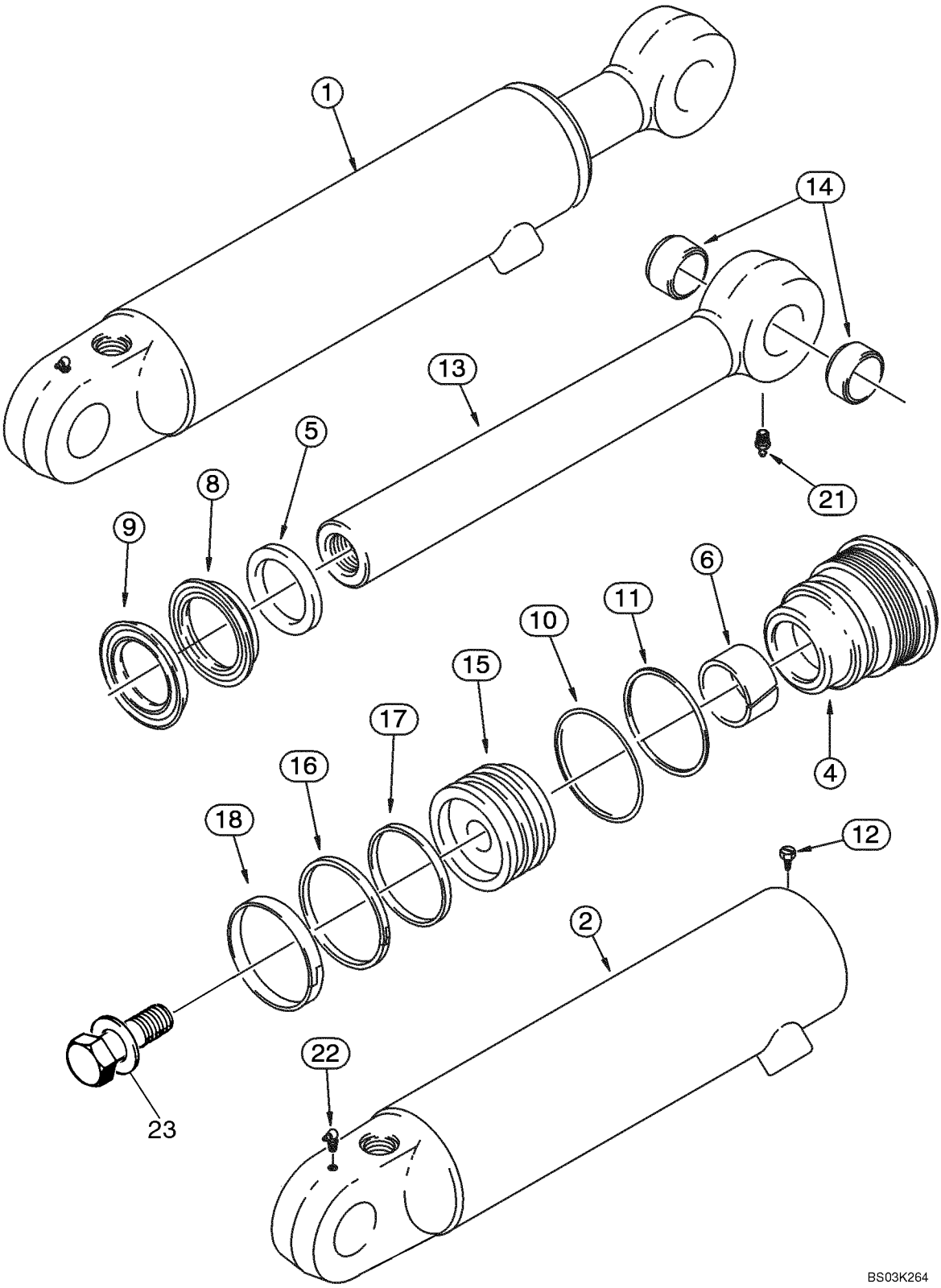

http://www.minnparbackhoeparts.com/

CYLINDER ASSY - LOADER CLAM

REF	FN	PART NUMBER	YR/SN	QTY	DESCRIPTION
1		1346189C1		1	CYLINDER ASSY. 76 ID x 231 mm strk; Right-Hand; Incl. Ref 2 - 23; If Used
1		87454017		1	CYLINDER ASSY. 76 ID x 231 mm strk; Right-Hand; Incl. Ref 2 - 23; If Used
1		1346190C1		1	CYLINDER ASSY. 76 ID x 231 mm strk; Left-Hand; Incl. Ref 2 - 23; If Used
1		87454016		1	CYLINDER ASSY. 76 ID x 231 mm strk; Left-Hand; Incl. Ref 2 - 23; If Used
2		1346191C1		1	SLEEVE, HYD' CYL' TUBE, Right-Hand; 1346189C1 Cylinder; Includes (2) 30634 Bushings; If Used
2		87454907		1	TUBE ASSY. TUBE, Right-Hand; 87454017 Cylinder; Includes (2) 30634 Bushings; If Used
2		1346192C1		1	SLEEVE, HYD' CYL' TUBE, Left-Hand; 1346190C1 Cylinder; Includes (2) 30634 Bushings; If Used
2		87454908		1	TUBE ASSY. TUBE, Left-Hand; 87454016 Cylinder; Includes (2) 30634 Bushings; If Used
4		297281A1		1	CAP CYLINDER END Gland
		1543267C1		1	KIT, GASKET Seal Repair; Incl. Ref 5 - 11, 16 - 18
5		D95143		1	SEAL
6		G102425		1	BUSHING, LARGE
		1542875C1		1	SET OF PARTS Rod and Buffer Seal; Incl. Ref 8, 9; Not Serviced Separately; Order 1543267C1 Seal Kit
8		NSS		1	NOT SERVICED SEPARATELY Rod Seal; Order 1543267C1 Seal Kit
9		NSS		1	NOT SERVICED SEPARATELY Buffer Seal; Order 1543267C1 Seal Kit
10		238-5231		1	O-RING 2-5/8 ID x 1/8
11		G109298		1	RING
12		276-2446		1	SCREW Self-Tapping, No. 8 x 3/8
13		1346195C1		1	ROD, PISTON 44 mm (1-3/4 in) dia; Incl. Ref 14
14		30634		2	BUSHING
15		1340798C1		1	PISTON
16		G102288		1	SEAL ASSY.
17		G100444		1	SEAL
18		G100449		1	RING, WEAR
21		219-1		1	NIPPLE, LUBE 1/8 PT x 21/32

http://www.minnparbackhoeparts.com/

CYLINDER ASSY - LOADER CLAM

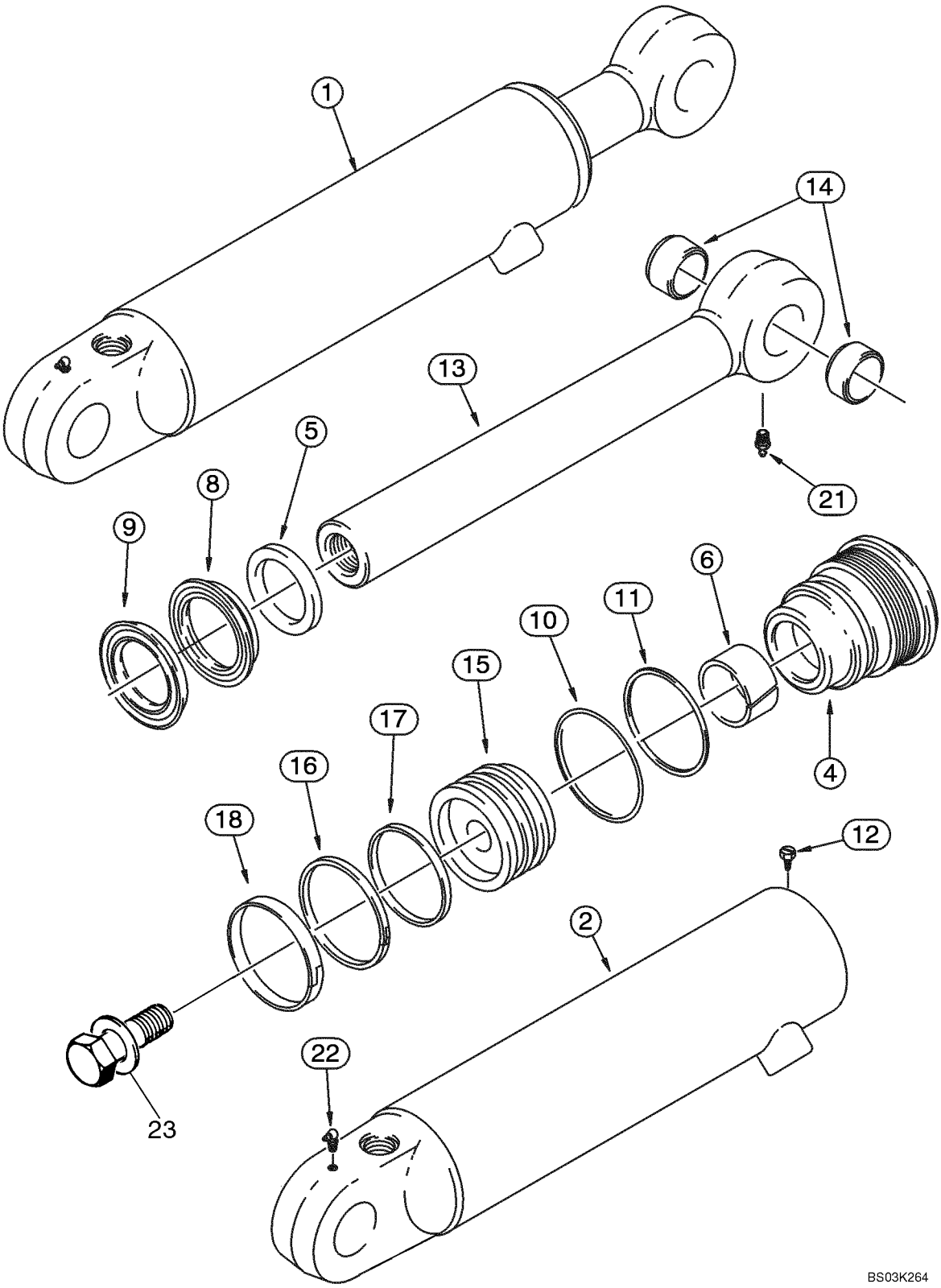

http://www.minnparbackhoeparts.com/

CYLINDER ASSY - LOADER CLAM

REF	FN	PART NUMBER	YR/SN	QTY	DESCRIPTION
22		219-55		1	NIPPLE, LUBE 90 deg, 1/8 PT x 27/32
23		86982437		1	BOLT, SPECIAL 1,0 x 2,5 in, Includes Washer

http://www.minnparbackhoeparts.com/

08-65		p1	01/04

CYLINDER ASSY - BACKHOE STABILIZER (580SM)

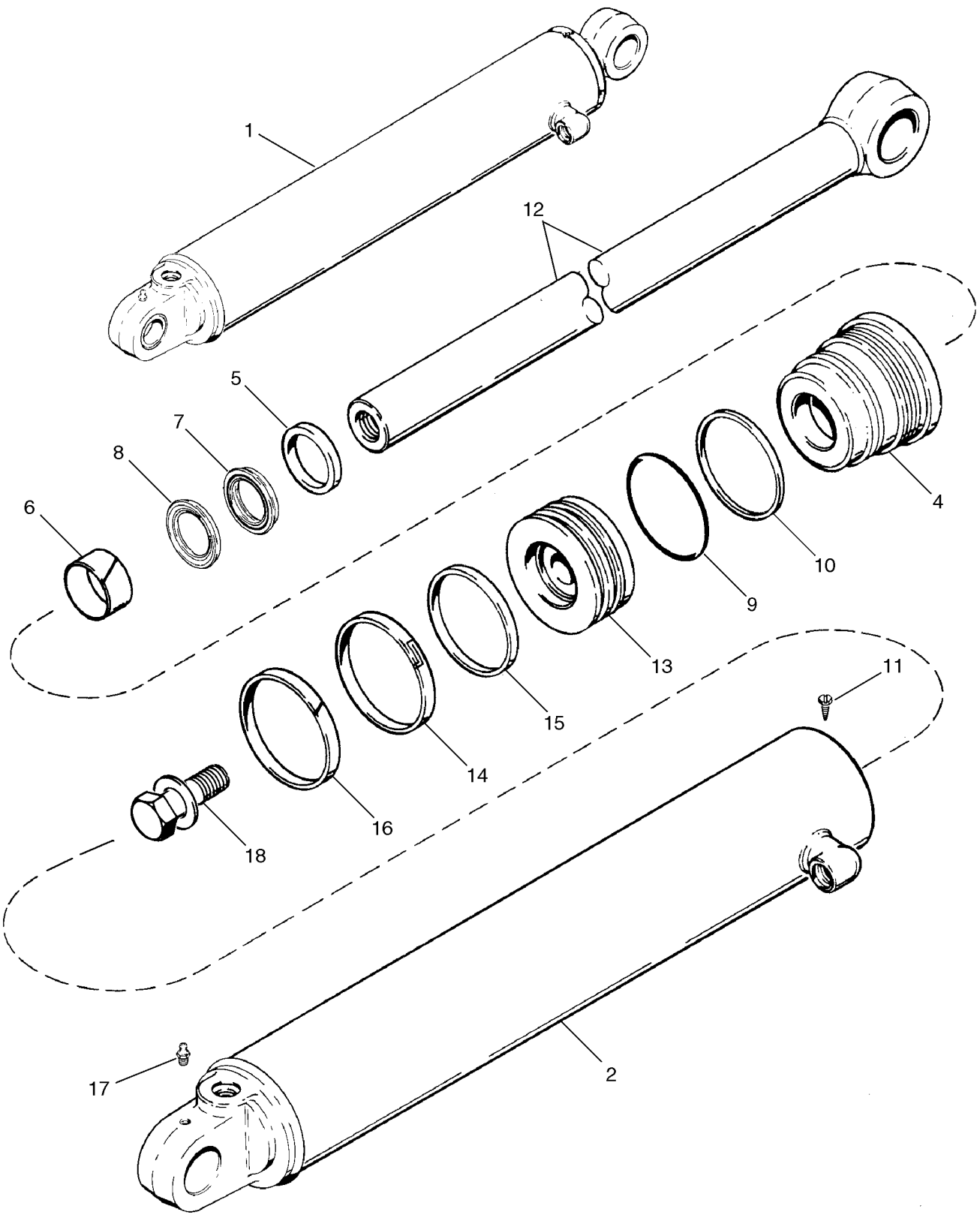

http://www.minnparbackhoeparts.com/

CYLINDER ASSY - BACKHOE STABILIZER (580SM)

REF	FN	PART NUMBER	YR/SN	QTY	DESCRIPTION
1		199720A1		1	CYLINDER ASSY. 108 ID x 553 mm strk; Right-Hand; Incl. Ref 2- 18
1		199721A1		1	CYLINDER ASSY. 108 ID x 553 mm strk; Left-Hand; Incl. Ref 2 - 18
2		199722A1		1	SLEEVE, HYD' CYL' Right-Hand
2		199723A1		1	SLEEVE, HYD' CYL' Left-Hand
4		297284A1		1	CAP CYLINDER END GLAND
		1543275C1		1	KIT, GASKET Seal Repair; Incl. Ref 5 - 10, 14 - 16
5		D95144		1	SEALRING WIPER
6		G101533		1	BUSHING, LARGE
		1542876C1		1	PACKAGE,SERVICE Rod and Buffer Seal; Incl. Ref 7, 8; Not Serviced Separately; Order 1543275C1 Seal Kit
7		NSS		1	NOT SERVICED SEPARATELY Rod Seal; Order 1543275C1 Seal Kit
8		NSS		1	NOT SERVICED SEPARATELY Buffer Seal; Order 1543275C1 Seal Kit
9		238-5241		1	O-RING 3-7/8 ID x 1/8
10		G32176		1	RING Backup
11		276-2446		1	SCREW Self-Tapping, No. 8 x 3/8
12		123726A1		1	ROD, PISTON 51 mm (2 in) dia
13		123732A1		1	PISTON
14		G110531		1	SEAL
15		G110529		1	RING
16		G110530		1	RING
17		219-1		1	NIPPLE, LUBE 1/8 PT x 21/32
18		86982441		1	BOLT, SPECIAL 1,25 x 3,00 in, Includes Washer

http://www.minnparbackhoeparts.com/

08-65A		p1	01/04

CYLINDER ASSY - BACKHOE STABILIZER (580SM+)

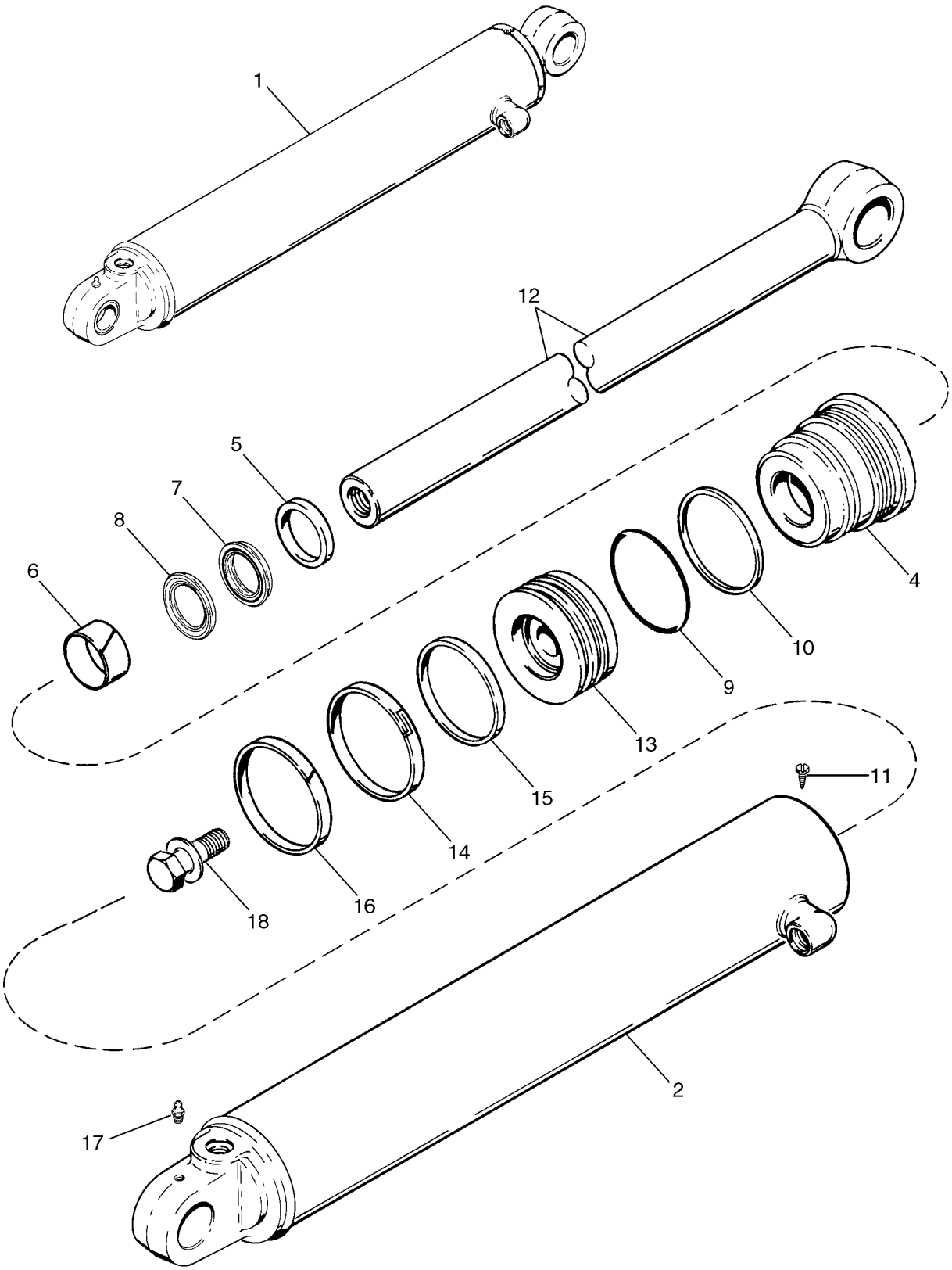

http://www.minnparbackhoeparts.com/

CYLINDER ASSY - BACKHOE STABILIZER (580SM+)

REF	FN	PART NUMBER	YR/SN	QTY	DESCRIPTION
1		177256A1		1	CYLINDER 127 ID x 519 mm strk; Right-Hand; Incl. Ref 2 - 18
1		177257A1		1	CYLINDER ASSY. 127 ID x 519 mm strk; Left-Hand; Incl. Ref 2 - 18
2		177258A1		1	TUBE Right-Hand
2		177259A1		1	TUBE Left-Hand
4		1542918C3		1	CAP CYLINDER END GLAND
		1543289C2		1	PACKAGE, SEALS Seal; Incl. Ref 5 - 10, 14 - 16; Plus An Additional Seal Not Used In This Application
5		D95145		1	WIPER
6		G102426		1	BUSHING, LARGE
		1542877C1		1	KIT Rod and Buffer Seal; Incl. Ref 7, 8; Not Serviced Separately; Order 1543289C2 Seal Kit
7		NSS		1	NOT SERVICED SEPARATELY Rod Seal; Order 1543289C2 Seal Kit
8		NSS		1	NOT SERVICED SEPARATELY Buffer Seal; Order 1543289C2 Seal Kit
9		238-5247		1	O-RING 4-5/8 ID x 1/8
10		G107970		1	RING Backup
11		276-2446		1	SCREW Self-Tapping, No. 8 x 3/8
12		177261A1		1	ROD 57 mm (2-1/4 in) dia
13		G110594		1	PISTON
14		1986753C1		1	SEAL
15		G102092		1	RING
16		G102090		1	RING
17		219-1		1	NIPPLE, LUBE 1/8 PT x 21/32
18		86982442		1	BOLT, SPECIAL 1,25 x 3,25 lg; Incl. Washer

http://www.minnparbackhoeparts.com/

08-66		p1	06/04

CYLINDER ASSY - BACKHOE SWING

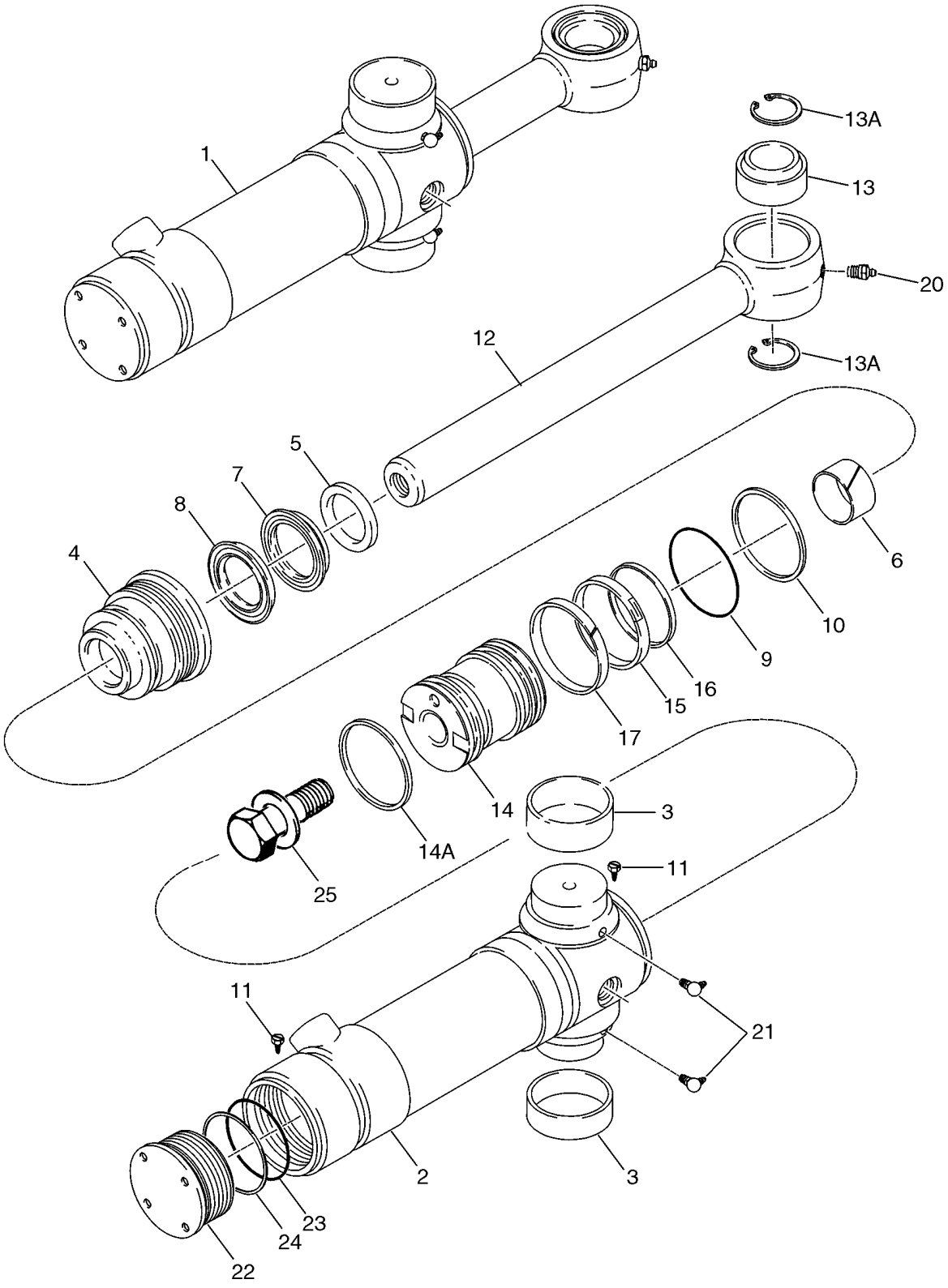

http://www.minnparbackhoeparts.com/

CYLINDER ASSY - BACKHOE SWING

REF	FN	PART NUMBER	YR/SN	QTY	DESCRIPTION
1		139808A2		2	CYLINDER ASSY. 102 ID x 292 mm strk; Incl. Ref 2- 25
2		199953A2		1	TUBE Incl. Ref 2, 3, 11, 22 - 24; Not Available As An Assembly; Order Components
2		139810A2		1	SLEEVE, HYD' CYL' Incl. Ref 3
3		124568A2		2	RING Bushing
4		297283A1		1	CAP CYLINDER END GLAND
		122535A1		1	KIT, GASKET Seal Repair; Incl. Ref 5 - 10, 14A - 17, 23, 24
5		D95144		1	SEALRING WIPER
6		G101533		1	BUSHING, LARGE
		1542876C1		1	PACKAGE,SERVICE Rod and Buffer Seal; Incl. Ref 7, 8; Not Serviced Separately; Order 122535A1 Seal Kit
7		NSS		1	NOT SERVICED SEPARATELY Rod Seal; Order 122535A1 Seal Kit
8		NSS		1	NOT SERVICED SEPARATELY Buffer Seal; Order 122535A1 Seal Kit
9		238-5239		1	O-RING 3-5/8 x 1/8
10		G109299		1	RING Backup
11		276-2446		2	SCREW Self-Tapping, No. 8 x 3/8
12		87413722		1	ROD, PISTON 51 mm (2 in) dia; Incl. 13, 13A
13		137248A1		1	RING
13A		100-21315		2	SNAP RING No. 315
14		112370A3		1	JACK PISTON
14A		121478A1		1	RING 4 in OD, Cast Iron
15		G102285		1	SEAL
16		G100440		1	RING
17		G100448		1	RING
20		219-1		1	NIPPLE, LUBE 1/8 PT x 21/32
21		219-55		2	NIPPLE, LUBE 90 deg, 1/8 PT x 27/32
		124462A1		1	CAP CYLINDER END CAP ASSEMBLY, End; Incl. Ref 22 - 24; Not Available As An Assembly, Order Components
22		124463A1		1	CAP CYLINDER END END CAP
23		238-5242		1	O-RING 4 ID x 1/8
24		G32176		1	RING Backup

http://www.minnparbackhoeparts.com/

CYLINDER ASSY - BACKHOE SWING

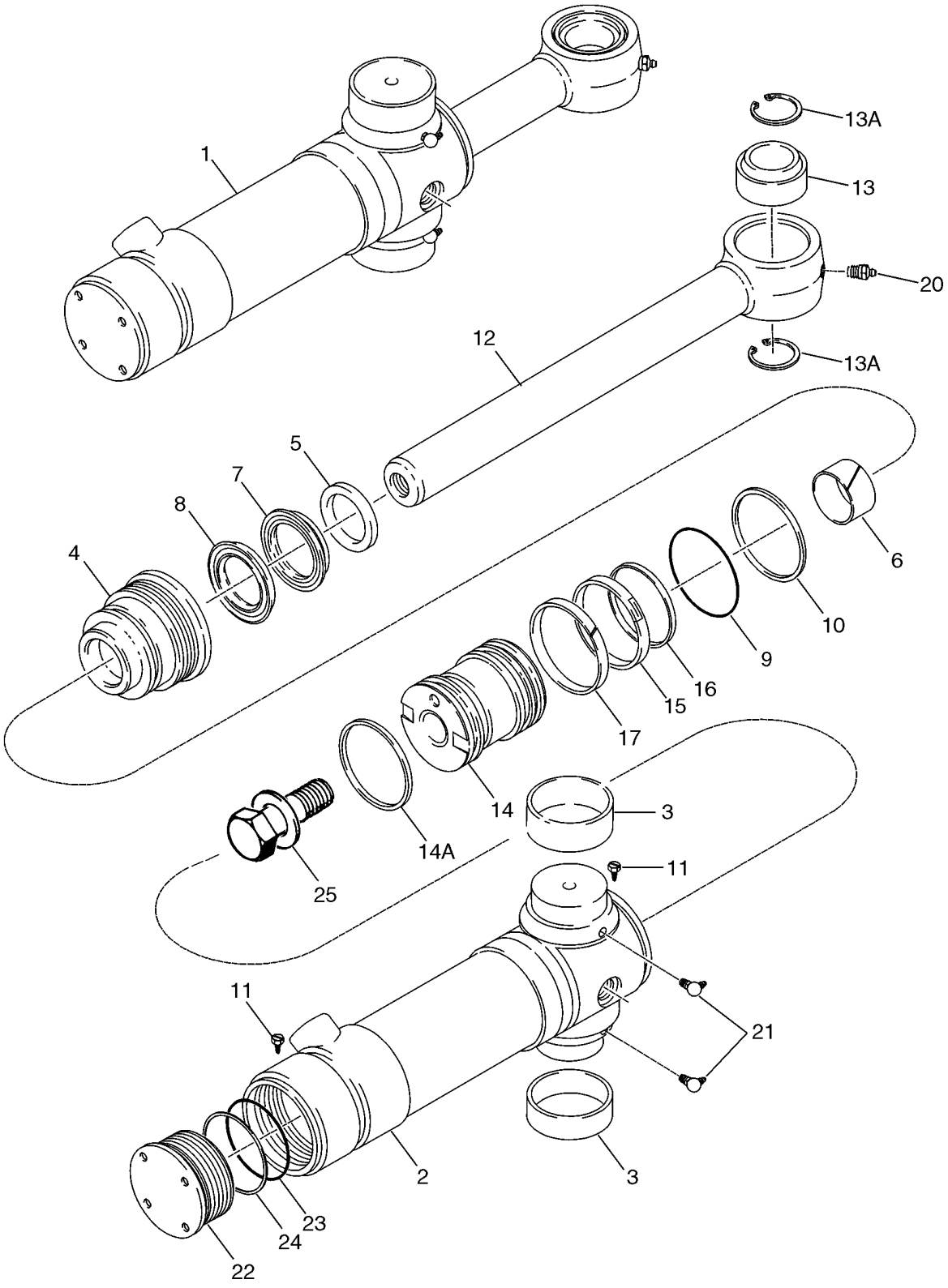

http://www.minnparbackhoeparts.com/

CYLINDER ASSY - BACKHOE SWING

REF	FN	PART NUMBER	YR/SN	QTY	DESCRIPTION
25		86982439		1	BOLT, SPECIAL 1 x 4,00 in, Includes Washer

http://www.minnparbackhoeparts.com/

08-67		p1	05/04

CYLINDER ASSY - BACKHOE BOOM

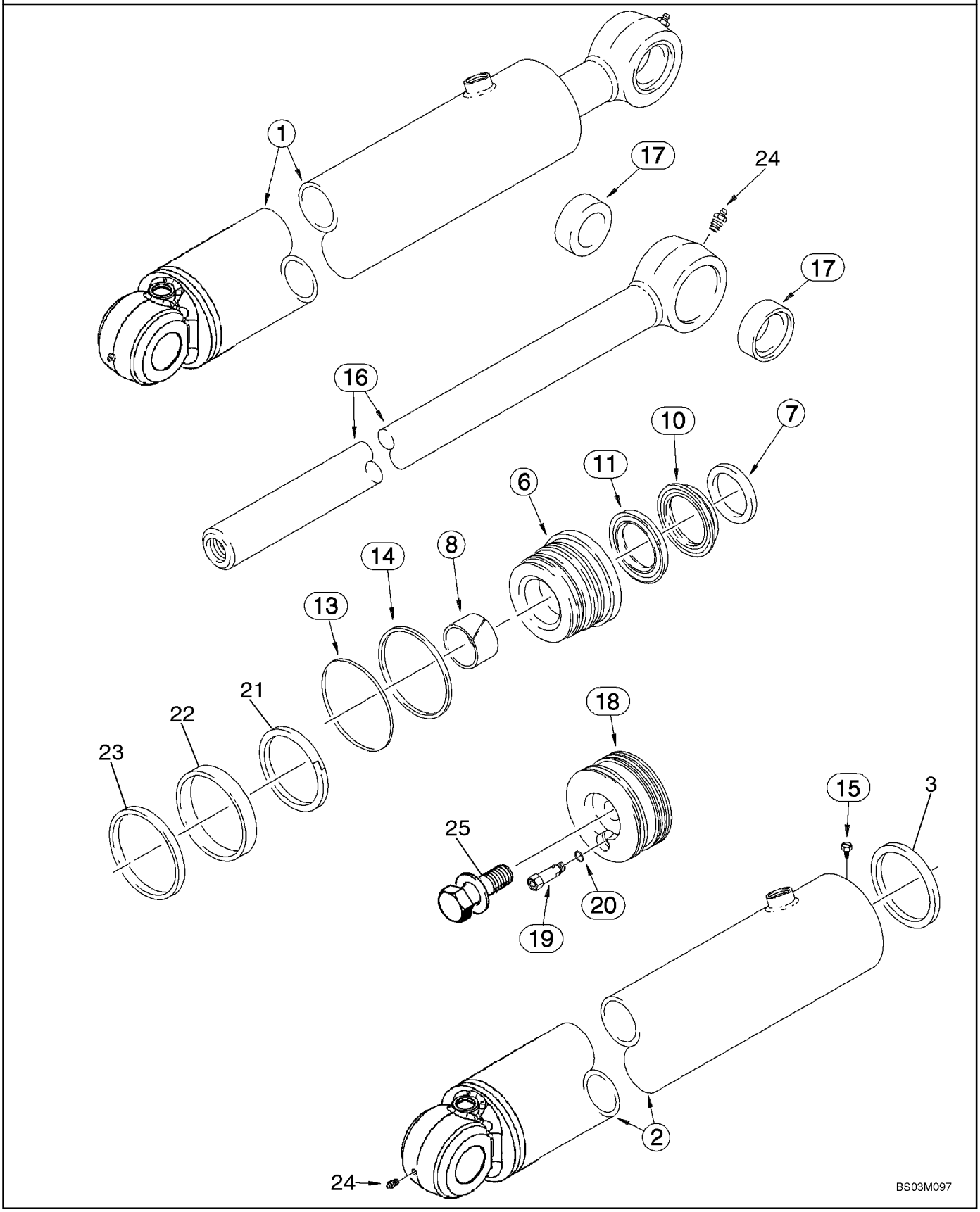

http://www.minnparbackhoeparts.com/

CYLINDER ASSY - BACKHOE BOOM

REF	FN	PART NUMBER	YR/SN	QTY	DESCRIPTION
1		87417644		1	CYLINDER ASSY. 133 ID x 843 mm strk; Incl. Ref 2 - 25
2		87417762		1	TUBE ASSY. Replaces 87417647 Tube Used In Production
3		87417649		1	SEAL, HYD-CYLINDER Internal Tube Seal; Not Included With Tube, Purchase Separately
6		87418279		1	GLAND
		87418297		1	KIT, SEALS Incl. Ref 7 - 14, 21 - 23
7		D95146		1	WIPER
8		G102427		1	BUSHING
		1542879C1		1	KIT Rod and Buffer Seal; Incl. Ref 10, 11; Not Serviced Separately; Order 87418297 Seal Kit
10		NSS		1	NOT SERVICED SEPARATELY Rod Seal; Order 87418297 Seal Kit
11		NSS		1	NOT SERVICED SEPARATELY Buffer Seal; Order 87418297 Seal Kit
13		238-5249		1	O-RING 4-7/8 ID x 1/8
14		380621A1		1	BACK-UP RING
15		276-2446		1	SCREW Self-Tapping, No. 8 x 3/8
16		380609A1		1	ROD, PISTON 63.5 mm (2-1/2 in) dia; Incl. Ref 17
17		123407A1		2	RING Bushing
18		87417651		1	PISTON
19		1958028C1		1	VALVE Cartridge; Component Parts Not Serviced Separately; Incl. Ref 20
20		237-6006		1	O-RING 15/32 ID x 5/64
21		87402623		1	RING Cast Iron
22		444640A1		1	SEAL Wear Ring
23		380627A1		1	SEAL ASSY. Piston
24		219-1		2	NIPPLE, LUBE 1/8 PT x 21/32
25		86982443		1	BOLT, SPECIAL Includes Washer

http://www.minnparbackhoeparts.com/

08-68		p1	04/04

CYLINDER ASSY - BACKHOE DIPPER

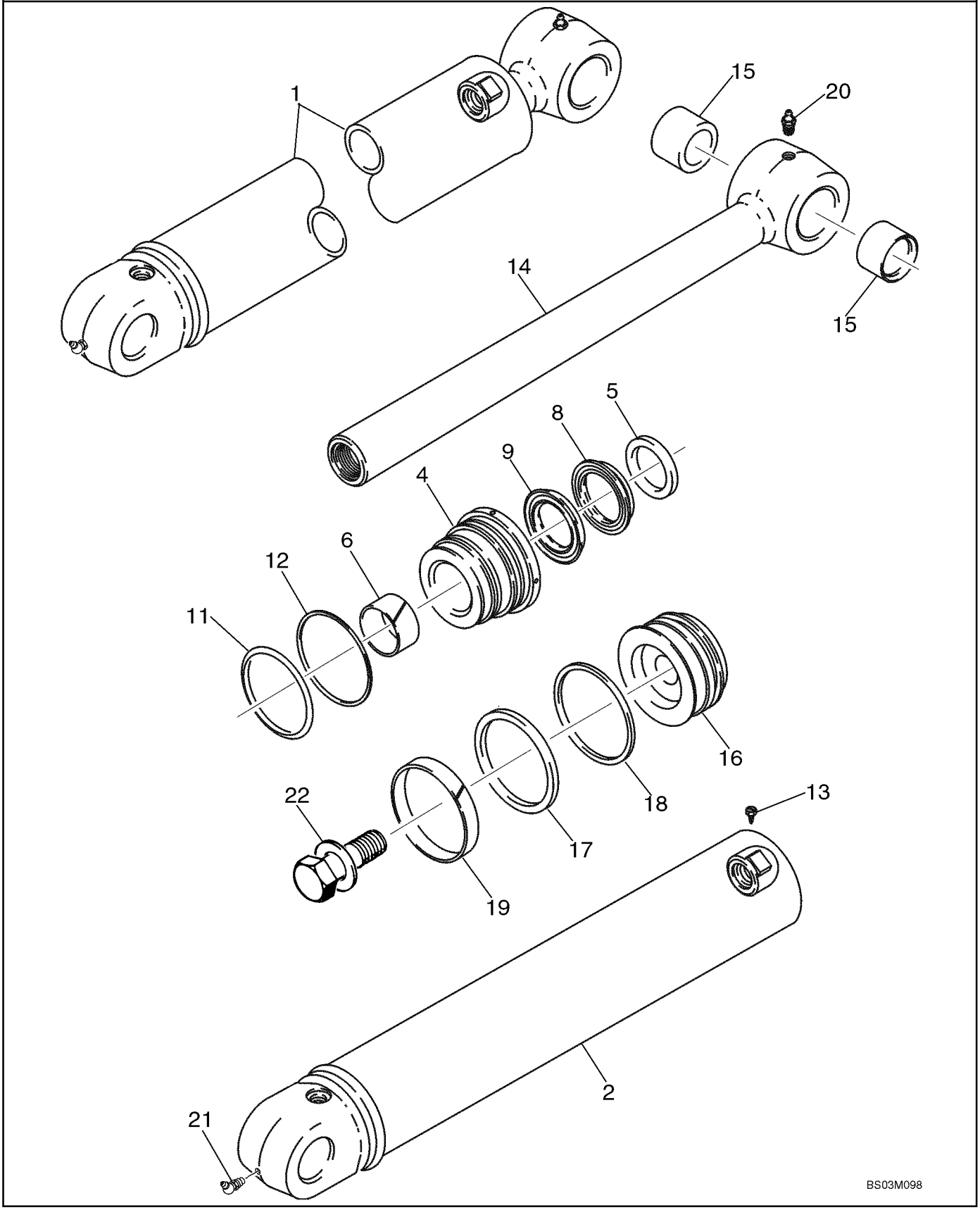

http://www.minnparbackhoeparts.com/

CYLINDER ASSY - BACKHOE DIPPER

REF	FN	PART NUMBER	YR/SN	QTY	DESCRIPTION
1		183795A3		1	CYLINDER ASSY. 127 ID x 583 mm strk; Incl. Ref 2, 4 - 22; If Used
1		183795A4		1	CYLINDER ASSY. 127 ID x 583 mm strk; Incl. Ref 2A, 4 - 22; If Used
2		310994A1		1	TUBE 183795A3 Cylinder; If Used
2A		310994A2		1	TUBE 183795A4 Cylinder; If Used
4		1542914C1		1	GLAND
		1542915C2		1	PACKAGE, SEALS Seal; Incl. Ref 5 - 12, 17 - 19; Plus Two Additional Seals Not Used In This Application
5		D95146		1	WIPER
6		G102427		1	BUSHING
		1542879C1		1	KIT Rod and Buffer Seal; Incl. Ref 8, 9; Not Serviced Separately; Order 1542915C2 Seal Kit
8		NSS		1	NOT SERVICED SEPARATELY Rod Seal; Order 1542915C2 Seal Kit
9		NSS		1	NOT SERVICED SEPARATELY Buffer Seal; Order 1542915C2 Seal Kit
11		238-5247		1	O-RING 4-5/8 ID x 1/8
12		G107970		1	RING Backup
13		276-2446		1	SCREW Self-Tapping, No. 8 x 3/8
14		178850A1		1	ROD, PISTON 64 mm (2-1/2 in) dia; Incl. Ref 15
15		D141555		2	BUSHING, LARGE
16		311109A1		1	PISTON
17		1986753C1		1	SEAL
18		G102092		1	RING
19		G102090		1	RING
20		219-1		2	NIPPLE, LUBE 1/8 PT x 21/32
21		219-36		1	NIPPLE, LUBE 45 deg, 1/8 PTF x 7/8
22		86982444		1	BOLT, SPECIAL 1,5 x 3,5 in, Includes Washer

http://www.minnparbackhoeparts.com/

CYLINDER ASSY - BACKHOE BUCKET

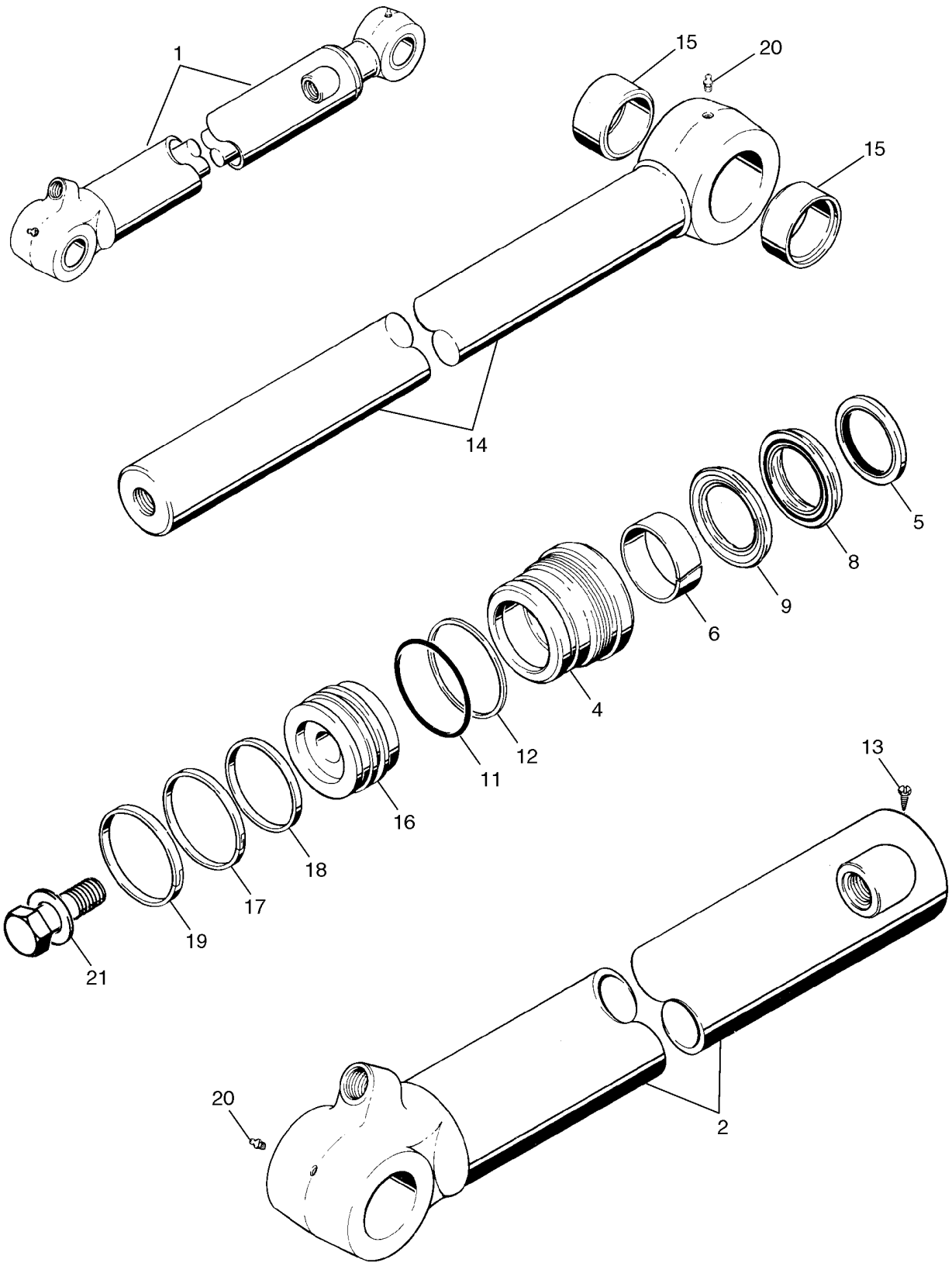

http://www.minnparbackhoeparts.com/

CYLINDER ASSY - BACKHOE BUCKET

REF	FN	PART NUMBER	YR/SN	QTY	DESCRIPTION
1		235916A1		1	CYLINDER ASSY. 80 ID x 872 mm strk; Incl. Ref 2 - 21
2		235917A2		1	SLEEVE, HYD' CYL' TUBE
4		235921A1		1	CAP CYLINDER END GLAND
		1542923C2		1	PACKAGE, SEALS Incl. Ref 5 - 12, 17 - 19
5		D95146		1	WIPER
6		G109908		1	BUSHING
		1542879C1		1	KIT Rod and Buffer Seal; Incl. Ref 8, 9; Not Serviced Separately; Order 1542923C2 Seal Kit
8		NSS		1	NOT SERVICED SEPARATELY Rod Seal; Order 1542923C2 Seal Kit
9		NSS		1	NOT SERVICED SEPARATELY Buffer Seal; Order 1542923C2 Seal Kit
11		238-5235		1	O-RING 3-1/8 ID x 1/8
12		D38858		1	GASKET Backup Ring
13		276-2446		1	SCREW Self-Tapping, No. 8 x 3/8
14		196164A1		1	ROD, PISTON 64 mm (2-1/2 in) dia; Incl. Ref 15
15		D140029		2	BUSHING, LARGE
16		1986906C1		1	PISTON
17		G102286		1	SEAL
18		G100710		1	RING
19		G100711		1	RING, WEAR
20		219-1		2	NIPPLE, LUBE 1/8 PT x 21/32
21		86982442		1	BOLT, SPECIAL 1,25 x 3,25 in, Includes Washer

http://www.minnparbackhoeparts.com/

08-70		p1	01/04

CYLINDER ASSY - BACKHOE EXTENDABLE DIPPER

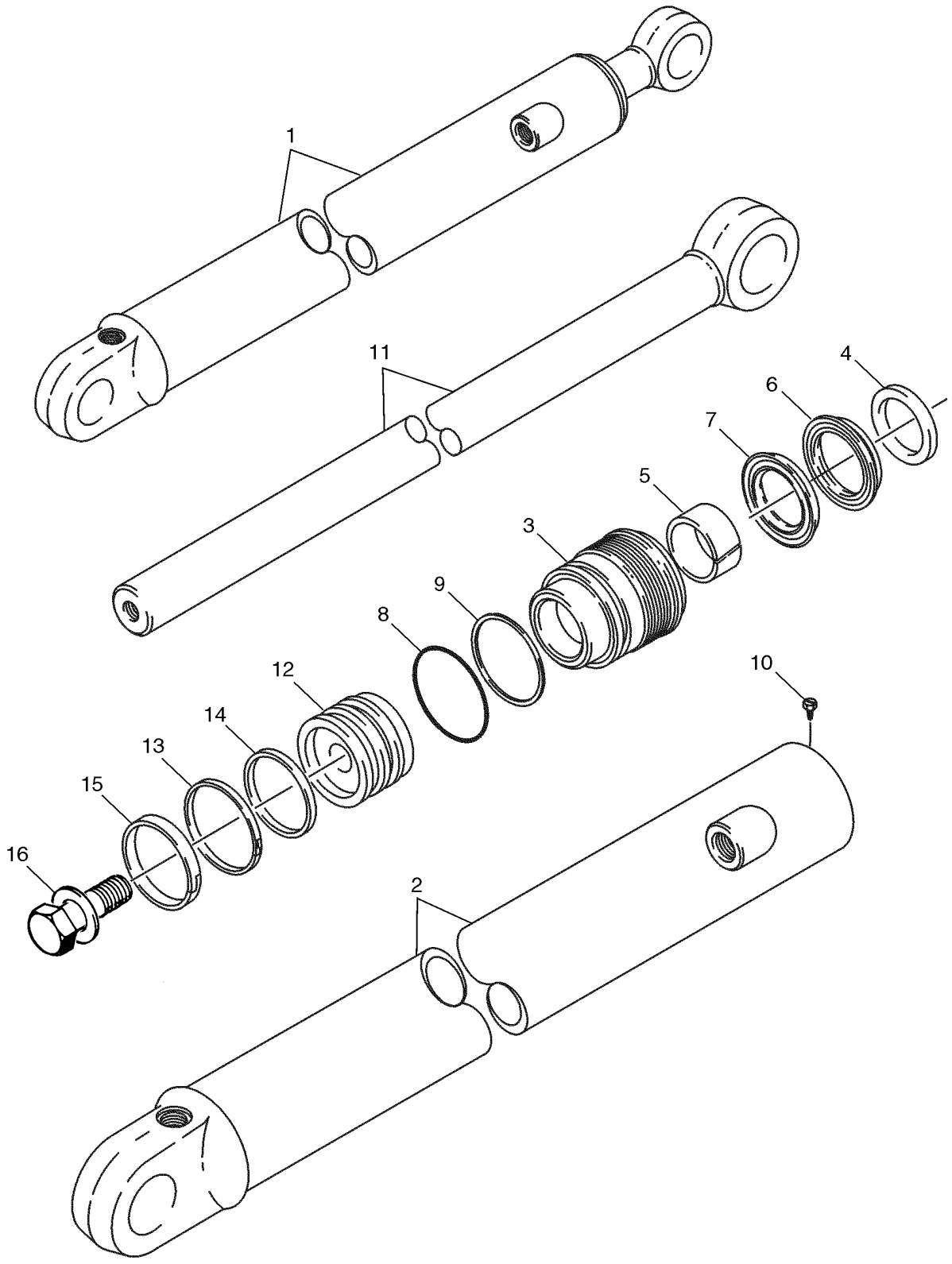

http://www.minnparbackhoeparts.com/

CYLINDER ASSY - BACKHOE EXTENDABLE DIPPER

REF	FN	PART NUMBER	YR/SN	QTY	DESCRIPTION
1		1340969C2		1	CYLINDER ASSY. 76 ID x 1068 mm strk; Incl. Ref 2 - 16
2		1340970C1		1	SLEEVE, HYD' CYL' TUBE
3		297281A1		1	CAP CYLINDER END GLAND
		1543267C1		1	KIT, GASKET Seal; Incl. Ref 4 - 9, 13 - 15
4		D95143		1	SEAL WIPER
5		G102425		1	BUSHING, LARGE
		1542875C1		1	SET OF PARTS Rod and Buffer Seal; Incl. Ref 6, 7; Not Serviced Separately; Order 1543267C1 Seal Kit
6		NSS		1	NOT SERVICED SEPARATELY Rod Seal; Order 1543267C1 Seal Kit
7		NSS		1	NOT SERVICED SEPARATELY Buffer Seal; Order 1543267C1 Seal Kit
8		238-5231		1	O-RING 2-5/8 ID x 1/8
9		G109298		1	RING Backup
10		276-2446		1	SCREW Self-Tapping, No. 8 x 3/8
11		1980296C1		1	ROD, PISTON 44 mm (1-3/4 in) dia
12		G107277		1	PISTON
13		G102288		1	SEAL ASSY.
14		G100444		1	SEAL
15		G100449		1	RING, WEAR
16		86982435		1	BOLT, SPECIAL 3/4 x 2,5 in, Incl. Washer

http://www.minnparbackhoeparts.com/

SECTION INDEX

09-01	CONTROLS - LOADER LIFT AND BUCKET
09-02	CONTROLS - LOADER CLAM
09-03	CONTROLS - LOADER SELF-LEVELING
09-04	FRAME - LOADER LIFT
09-05	FRAME - LOADER LINKAGE
09-06	BUCKET, LOADER LONG LIP (82 IN) (580SM)
09-07	BUCKET, LOADER LONG LIP (93 IN) (580SM / 580SM+)
09-08	BUCKET, LOADER CLAM (82 IN) (580SM)
09-08A	BUCKET, LOADER CLAM (93 IN) (580SM+)
09-09	GUARD - VALVE, LOADER
09-10	COUPLER, TOOL QUICK
09-11	COVERS - BACKHOE CONTROL TOWER, WITHOUT PILOT CONTROLS
09-12	BACKHOE CONTROL TOWER SUPPORT AND SEALS, WITHOUT PILOT CONTROLS
09-13	BACKHOE CONTROL TOWER SUPPORT, WITH PILOT CONTROLS
09-14	BACKHOE CONTROL TOWER BOOTS AND SEALS, WITH PILOT CONTROLS
09-15	BACKHOE CONTROL TOWER LEVERS (BOOM LATCH), WITH PILOT CONTROLS
09-16	CONTROLS - BACKHOE, WITH FOOT SWING (MODELS WITHOUT EXTENDABLE DIPPER)
09-17	CONTROLS - BACKHOE, WITH FOOT SWING (MODELS WITH EXTENDABLE DIPPER)
09-18	CONTROLS - BACKHOE, WITH HAND SWING (MODELS WITHOUT EXTENDABLE DIPPER)
09-19	CONTROLS - BACKHOE, WITH HAND SWING (MODELS WITHOUT EXTENDABLE DIPPER)
09-19A	CONTROLS - BACKHOE, EXCAVATOR CONTROL PATTERN
09-20	CONTROLS - BACKHOE, WITH HAND SWING (MODELS WITH EXTENDABLE DIPPER)
09-21	CONTROLS - BACKHOE AUXILIARY HYDRAULICS, WITHOUT PILOT CONTROLS
09-22	BACKHOE - STABILIZERS, PLATES AND PADS (580SM)
09-22A	BACKHOE - STABILIZERS, PLATES AND PADS (580SM+)
09-23	BACKHOE - SWING TOWER AND SWING CYLINDERS
09-24	BACKHOE - BOOM AND SWING TOWER
09-25	BOOM LATCH (WITHOUT PILOT CONTROLS)
09-25A	BOOM LATCH (WITH PILOT CONTROLS)
09-26	BACKHOE - DIPPER AND BUCKET
09-27	BACKHOE - DIPPER, EXTENDABLE
09-28	DIPPER, BACKHOE - COUPLER, HYDRAULIC (MODELS WITH HYDRAULIC BACKHOE BUCKET COUPLER)
09-29	BUCKET, UNIVERSAL BACKHOE (305 MM (12 INCH) WIDE)
09-30	BUCKET, UNIVERSAL BACKHOE (406 MM (16 INCH) WIDE)
09-31	BUCKET, UNIVERSAL BACKHOE (457 MM (18 INCH) WIDE)
09-32	BUCKET, UNIVERSAL BACKHOE (610 MM (24 INCH) / 762 MM (30 INCH) WIDE)
09-33	BUCKET, UNIVERSAL BACKHOE (914 MM (36 INCH) WIDE)
09-34	BUCKET, UNIVERSAL BACKHOE (610 MM (24 INCH) / 762 MM (30 INCH) WIDE)
09-34A	FROST POINT ASSEMBLY
09-35	COUNTERWEIGHT, FRONT
09-36	CHASSIS / MOUNTS, POD - SCREEN, AIR INLET
09-37	TANK, OIL - BOX, BATTERY AND TOOL
09-38	RADIATOR WRAPPER
09-39	HOOD - PANELS, SIDE
09-40	HOOD - GRILLE
09-41	PLATES, FLOOR - FLOORMATS
09-42	FENDER COVER, LEFT-HAND - PANEL, REAR CLOSURE (STORAGE TRAY WITH CUP HOLDER)

http://www.minnparbackhoeparts.com/

SECTION INDEX

09-43	FENDER EXTENSIONS
09-44	GUARD, MUD
09-45	SEAT - MOUNTING (MILSCO AND SEARS AIR SUSPENSION)
09-45A	SEAT - MOUNTING (SEARS, STANDARD)
09-45B	SEAT - MOUNTING (SEARS MECHANICAL SUSPENSION)
09-46	SEAT ASSY, STANDARD (MILSCO)
09-47	SEAT SUPPORT AND PEDESTAL, STANDARD (MILSCO)
09-48	SEAT ASSY, MECHANICAL SUSPENSION (MILSCO)
09-49	SEAT PEDESTAL AND SUSPENSION, MECHANICAL SUSPENSION (MILSCO)
09-49A	SEAT ASSY, MECHANICAL SUSPENSION (SEARS)
09-50	SEAT ASSY, AIR SUSPENSION (SEARS)
09-51	SEAT PEDESTAL AND SUSPENSION, AIR SUSPENSION (SEARS)
09-52	CAB - GLASS, MIRROR AND HOLD OPEN
09-53	CAB - FRAME AND COVERS
09-54	CAB - DOORS, IF USED (SEE GLASS AND HINGES; REF 4, 27, 29)
09-54A	CAB - DOORS, IF USED (SEE GLASS AND HINGES; REF 4, 27, 29)
09-55	CAB - DOOR MOUNTING
09-56	CAB - WINDOW, RIGHT-HAND, FOR SINGLE DOOR CAB FRAMES, IF USED (SEE GLASS AND HINGES; REF 1, 5, 6)
09-56A	CAB - WINDOW, RIGHT-HAND, FOR SINGLE DOOR CAB FRAMES, IF USED (SEE GLASS AND HINGES; REF 1, 5, 6)
09-57	CAB - WINDOW, REAR
09-58	CAB - WASHER, WINDSHIELD
09-59	CAB - WIPERS
09-60	CAB HEADLINER - FILTER, LOUVERS, DOME LAMP
09-61	CAB - FILTER, AIR
09-62	CAB - BLOWER HOUSING, VENTILATION DUCTS, DRAIN LINES
09-63	CAB - HEATER
09-64	CAB - AIR CONDITIONING LINES, EVAPORATOR CORE
09-65	CAB - AIR CONDITIONING, CONDENSER, RECEIVER-DRIER
09-66	CAB - AIR CONDITIONING COMPRESSOR
09-67	CANOPY, ROPS - FRAME, COVERS, MIRROR, VISOR
09-68	CANOPY, ROPS - GLASS
09-69	CANOPY, ROPS - WIPER, FRONT AND WINDSHIELD WASHER
09-70	MIRROR, REAR VIEW - MOUNTING, CAB MODELS
09-71	SLOW MOVING VEHICLE EMBLEM
09-72	DECALS
09-73	DECALS
09-74	DECALS
09-75	DECALS - ENGLISH
09-76	DECALS - LATIN AMERICAN SPANISH
09-77	DECALS - CANADIAN FRENCH
09-78	DECALS - ENGLISH
09-79	DECALS - LATIN AMERICAN SPANISH
09-80	DECALS - CANADIAN FRENCH

http://www.minnparbackhoeparts.com/

CONTROLS - LOADER LIFT AND BUCKET

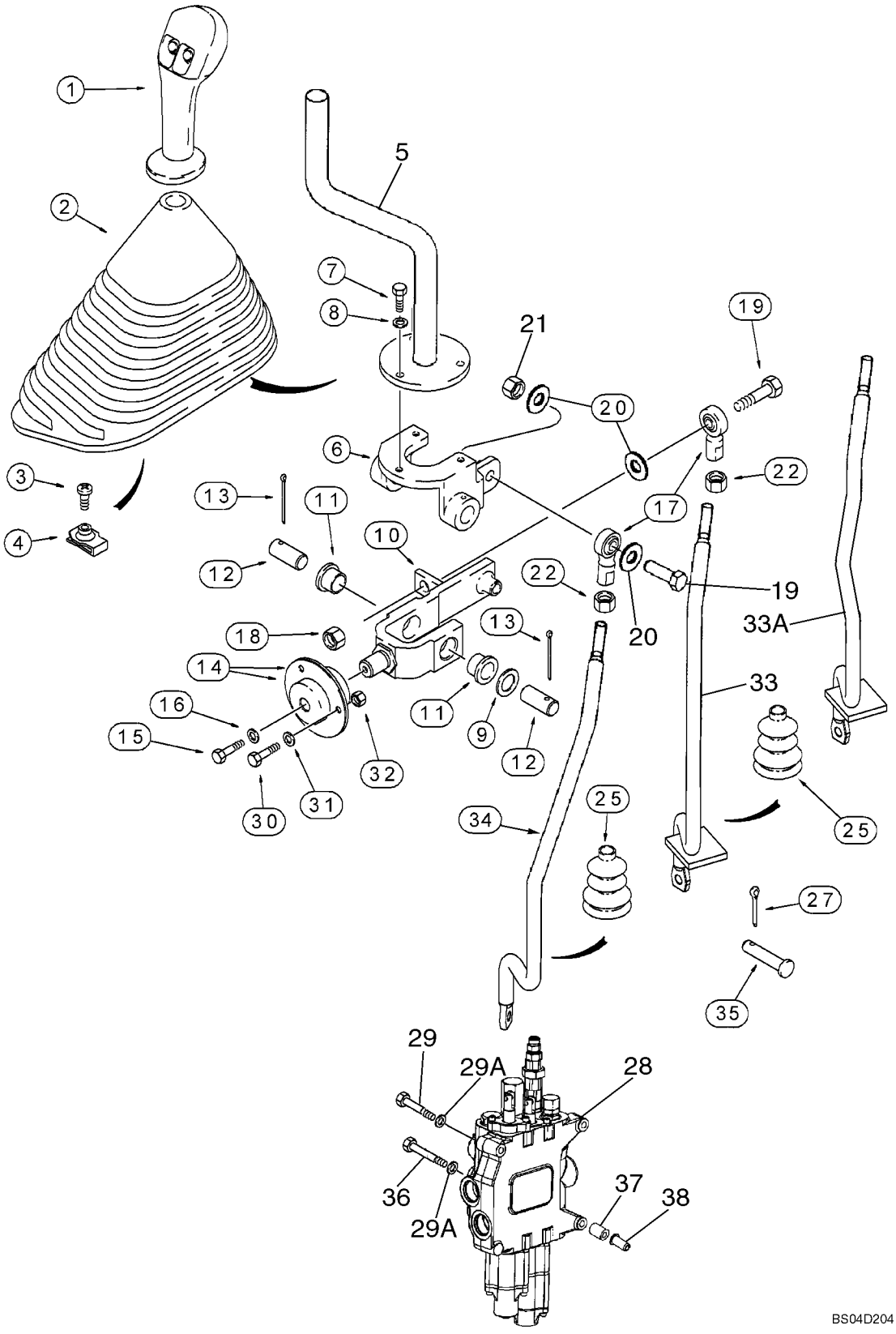

http://www.minnparbackhoeparts.com/

CONTROLS - LOADER LIFT AND BUCKET

REF	FN	PART NUMBER	YR/SN	QTY	DESCRIPTION
1		87412687		1	HANDLE Loader Control Lever, Two Button, Declutch and Differential Lock Switches; Models Without Powershift Transmission
1A		87412695		1	HANDLE Loader Control Lever, Three Button; Kick Down, Declutch and Differential Lock Switches; Models With Powershift Transmission; Not Illustrated
		256347A1		1	CONNECTOR
		258616A1		1	LOCK
		298176A1		1	PLUG Not Used With Ref 1A
		87301351		X	ADHESIVE Permabond Adhesive, F246, 1 ml With No. 5 Initiator
2		133615A1		1	BOOT
3		87310126		1	SCREW No. 10 x 3/4, Stainless Steel; Replaces 140-107 Non-Stainless Steel Screw Used On Some Models
4		131-861		1	NUT No. 10
5		132661A1		1	LEVER
6		195615A1		1	SUPPORT
7		614-6020		3	BOLT M6 x 20; Replaces 614-6016 M6 x 16 Bolt Used On Some Models
8		495-11028		3	WASHER 9/32 x 5/8 x 1/16
9		495-81184		1	WASHER
10		176311A1		1	JOINT, RUBBER Incl. Ref 11
11		108088A1		2	BUSHING
12		102761A1		2	PIN, LARGE
13		432-828		2	PIN, SPLIT (COTTER) 1/8" x 1 3/4"
14		112380A1		2	BEARING Incl. Ref 14A
14A		465004R91		1	BEARING Not Illustrated
15		614-6016		1	BOLT M6 x 16
16		396-41028		1	WASHER 9/32 x 7/8 x 3/32
17		D136773		2	BALL JOINT 3/8 NF
18		231-1446		1	NUT, LOCK 3/8
19		413-628		2	BOLT 3/8 x 1-3/4
20		496-21041		3	WASHER 13/32 x 13/16 x 3/32
21		425-106		1	NUT 3/8
22		425-116		2	NUT 3/8 NF
25		132931A1		2	BELLOWS Cab Models

http://www.minnparbackhoeparts.com/

CONTROLS - LOADER LIFT AND BUCKET

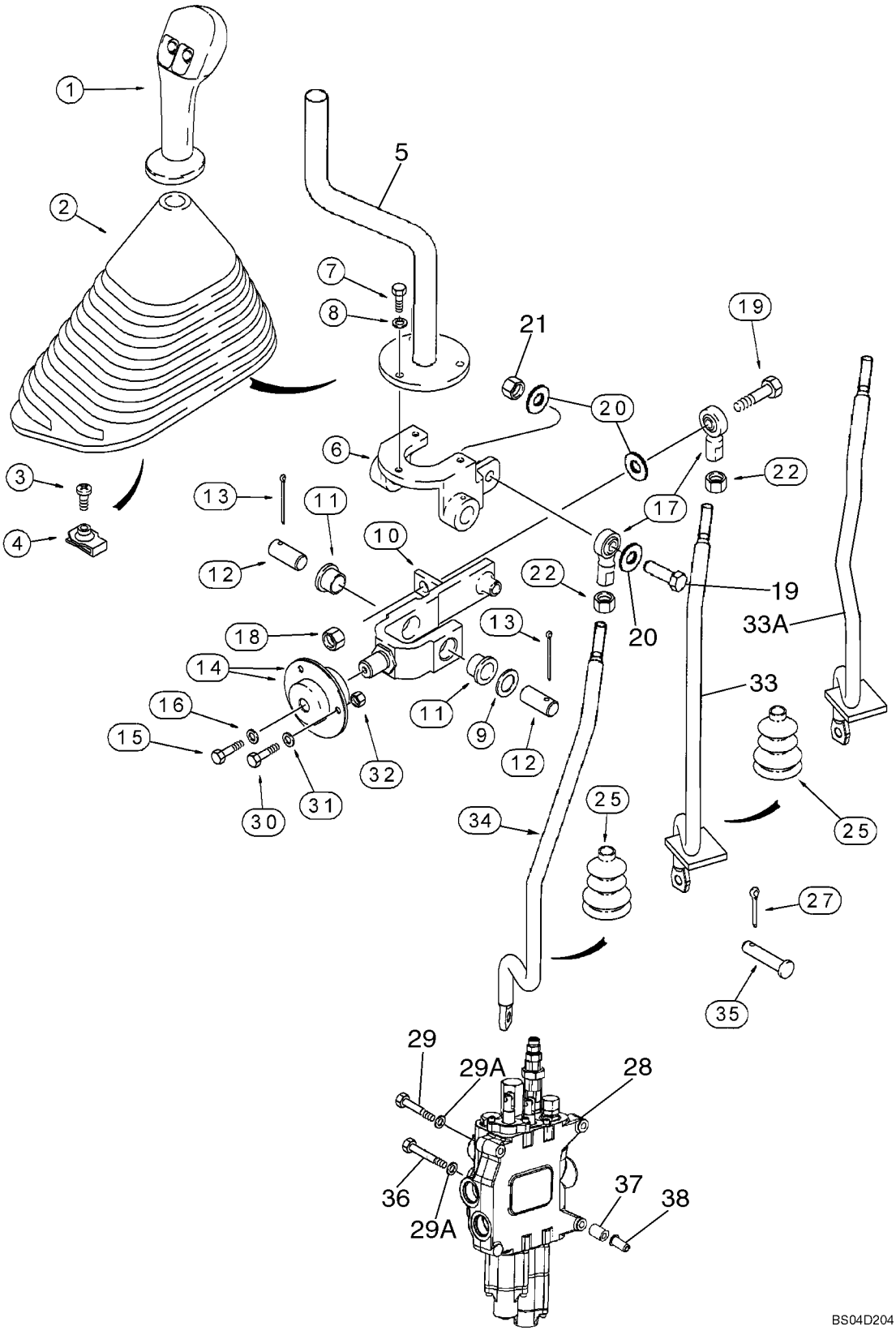

http://www.minnparbackhoeparts.com/

CONTROLS - LOADER LIFT AND BUCKET

REF	FN	PART NUMBER	YR/SN	QTY	DESCRIPTION
		189109A1		2	SPRING Boot Retainer; Cab Models
27		432-612		2	PIN, SPLIT (COTTER) 3/32" x 3/4"
28		REF		1	INSTRUCTION LOADER CONTROL VALVE, Two Spool; See Figure 08-34 For Two Spool Valve Options
29		814-10090		2	BOLT M10 x 90
29A		896-11010		3	WASHER 11 x 21 x 2,5 mm
30		614-6020		3	BOLT M6 x 20
31		396-41028		3	WASHER 9/32 x 7/8 x 3/32
32		829-1406		3	NUT M6; 10.9
33		87428151		1	ROD, THREADED Bucket Control Rod; Canopy Units; No Longer Available, For Service Order 87446596 Rod, Ref 33A
33A		87446596		1	ROD, THREADED Bucket Control Rod; Cab Units; Now Services Cab or Canopy Units
34		87428152		1	ROD, THREADED Lift Control Rod
35		D149287		2	PIN, LARGE
36		814-10110		1	BOLT M10 x 110
37		87417599		3	SPACER
38		87417721		3	INSERT, THREADED M10

http://www.minnparbackhoeparts.com/

CONTROLS - LOADER CLAM

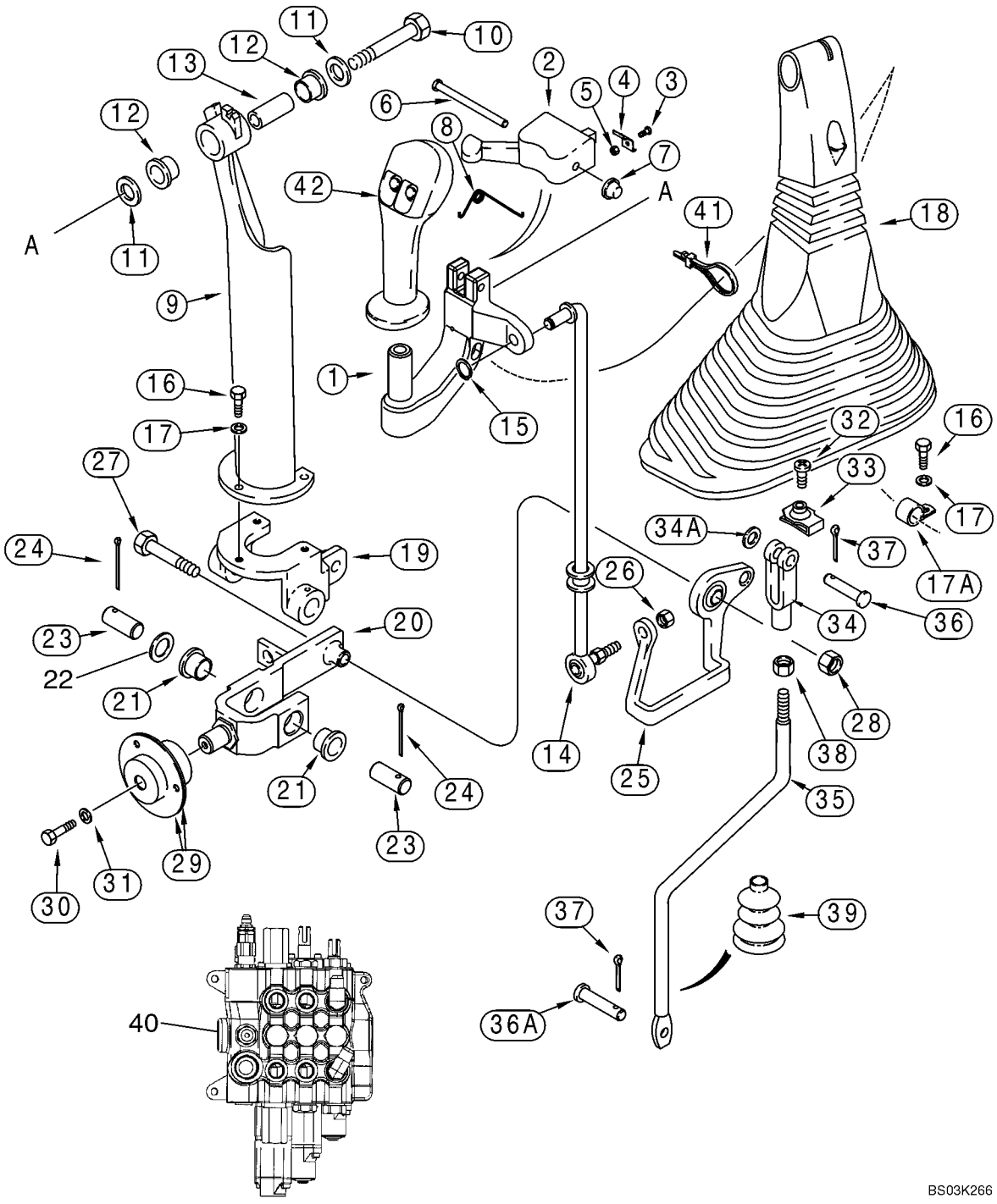

http://www.minnparbackhoeparts.com/

CONTROLS - LOADER CLAM

REF	FN	PART NUMBER	YR/SN	QTY	DESCRIPTION
1		297615A1		1	HANDLE
2		123815A1		1	LATCH
3		170-104		2	SCREW No. 5 x 3/8
4		129914A1		2	SPRING
5		225-14105		2	NUT No. 5
6		439-5436		1	SPLIT PIN/SAFETY PIN 1/4 x 2-1/4
7		143210A1		1	BLANK-OFF PLUG CAP
8		124243A1		1	SPRING
9		123493A1		1	SUPPORT
10		413-632		1	BOLT 3/8 x 2
11		495-21044		2	WASHER 7/16 x 1 x 5/64
12		108088A1		2	BUSHING
13		133989A1		1	PIN, LARGE SLEEVE
14		239306A1		1	THREADED ROD
15		103-1437		1	CLIP, ELECTRICAL RETAINING RING
16		614-6020		3	BOLT M6 x 20; Replaces 614-6016 M6 x 16 Bolt Used On Some Models
17		495-11028		3	WASHER 9/32 x 5/8 x 1/16
17A		515-2295		1	CLAMP 3/8 ID
18		133617A1		1	BOOT
19		195615A1		1	SUPPORT
20		176311A1		1	JOINT, RUBBER Incl. Ref 21
21		108088A1		2	BUSHING
22		495-81184		1	WASHER
23		102761A1		2	PIN, LARGE
24		432-828		2	PIN, SPLIT (COTTER) 1/8" x 1 3/4"
25		112382A1		1	JOINT Bellcrank
26		425-116		1	NUT 3/8 NF
27		413-632		1	BOLT 3/8 x 2
28		231-1446		1	NUT, LOCK 3/8
29		112380A1		2	BEARING Incl. (1) 465004R91 Internal Bearing
		465004R91		1	BEARING
30		614-6016		1	BOLT M6 x 16
31		396-41028		1	WASHER 9/32 x 7/8 x 3/32
32		87310126		1	SCREW No. 10 x 3/4, Stainless Steel; Replaces 140-107 Non-Stainless Steel Screw Used On Some Models

http://www.minnparbackhoeparts.com/

CONTROLS - LOADER CLAM

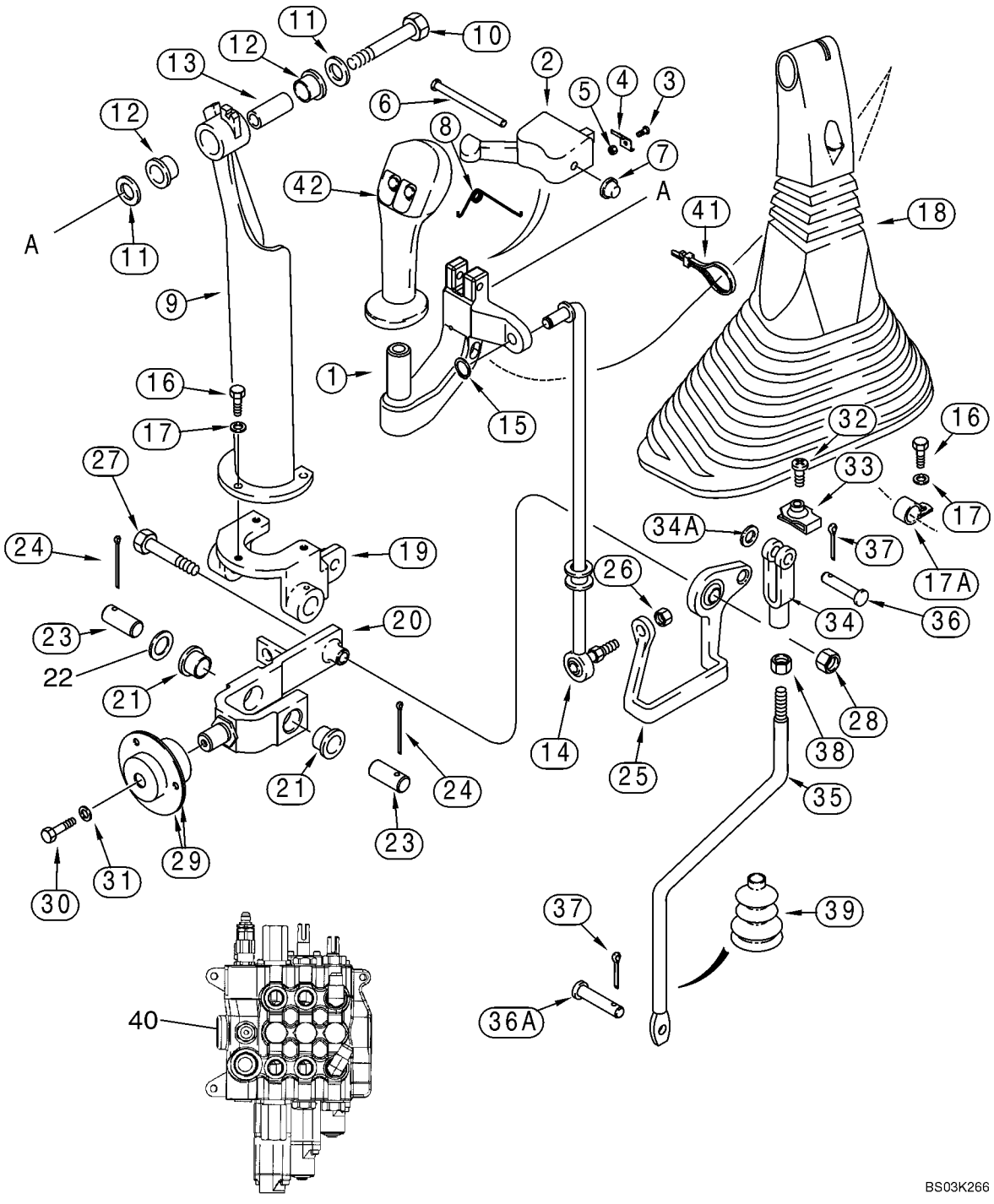

http://www.minnparbackhoeparts.com/

CONTROLS - LOADER CLAM

REF	FN	PART NUMBER	YR/SN	QTY	DESCRIPTION
33		131-121		1	NUT, SPECIAL No. 10
34		213-126		1	CLEVIS 3/8 NF
34A		495-11041		1	WASHER 13/32 x 13/16 x 1/16
35		87428153		1	ROD, THREADED Clam Control Rod
36		D149288		1	PIN, LARGE
36A		D149287		1	PIN, LARGE
37		432-612		2	PIN, SPLIT (COTTER) 3/32" x 3/4"
38		425-116		1	NUT 3/8 NF
39		132873A1		1	BELLOWS
		189109A1		1	SPRING Boot Retainer
40		REF		1	INSTRUCTION LOADER CONTROL VALVE, Three Spool; See Figure 08-35 For Three Spool Valve Options
41		L18337		1	STRAP 15 in
42		87412687		1	HANDLE Loader Control Lever, Two Button, Declutch and Differential Lock Switches; Models Without Powershift Transmission
42A		87412695		1	HANDLE Loader Control Lever, Three Button; Kick Down, Declutch and Differential Lock Switches; Models With Powershift Transmission; Not Illustrated
		256347A1		1	CONNECTOR
		258616A1		1	LOCK
		298176A1		1	PLUG Used With Ref 42 Handle
		87301351		X	ADHESIVE Permabond Adhesive, F246, 1 ml With No. 5 Initiator; For Attaching Ref 1 to Ref 42

http://www.minnparbackhoeparts.com/

09-03		p1	05/05

CONTROLS - LOADER SELF-LEVELING

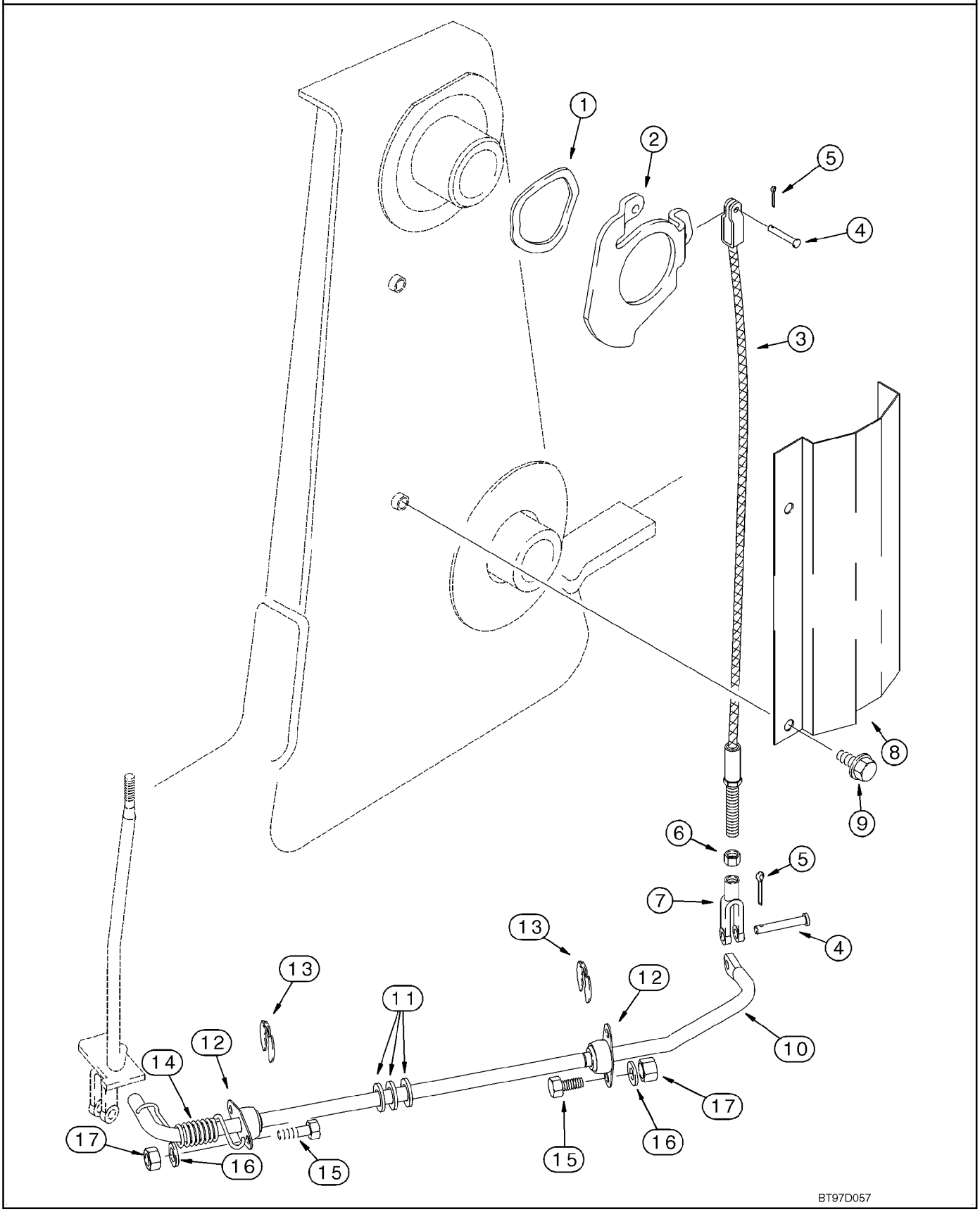

http://www.minnparbackhoeparts.com/

CONTROLS - LOADER SELF-LEVELING

REF	FN	PART NUMBER	YR/SN	QTY	DESCRIPTION
1		137283A1		1	WASHER
2		142404A1		1	CAM
3		87428645		1	CABLE Self-Leveling Cable
4		D149287		2	PIN, LARGE
5		432-612		2	PIN, SPLIT (COTTER) 3/32" x 3/4"
6		425-115		1	NUT 5/16 NF
7		239406A1		1	CLEVIS 5/16
8		139865A1		1	PROTECTOR
9		844-10020		2	SCREW M10 x 20
		87417601		1	ROD ASSY. Incl. Ref 10 - 12
10		NSS		1	NOT SERVICED SEPARATELY Rod
11		A30881		3	WASHER
12		L15401		2	BEARING
13		D95096		2	RING
14		124721A1		1	SPRING
15		614-8025		4	BOLT M8 x 25
16		895-11008		4	WASHER 9 x 17 x 1,6 mm
17		829-1408		4	NUT M8; 10

http://www.minnparbackhoeparts.com/

09-04		p1	05/05

FRAME - LOADER LIFT

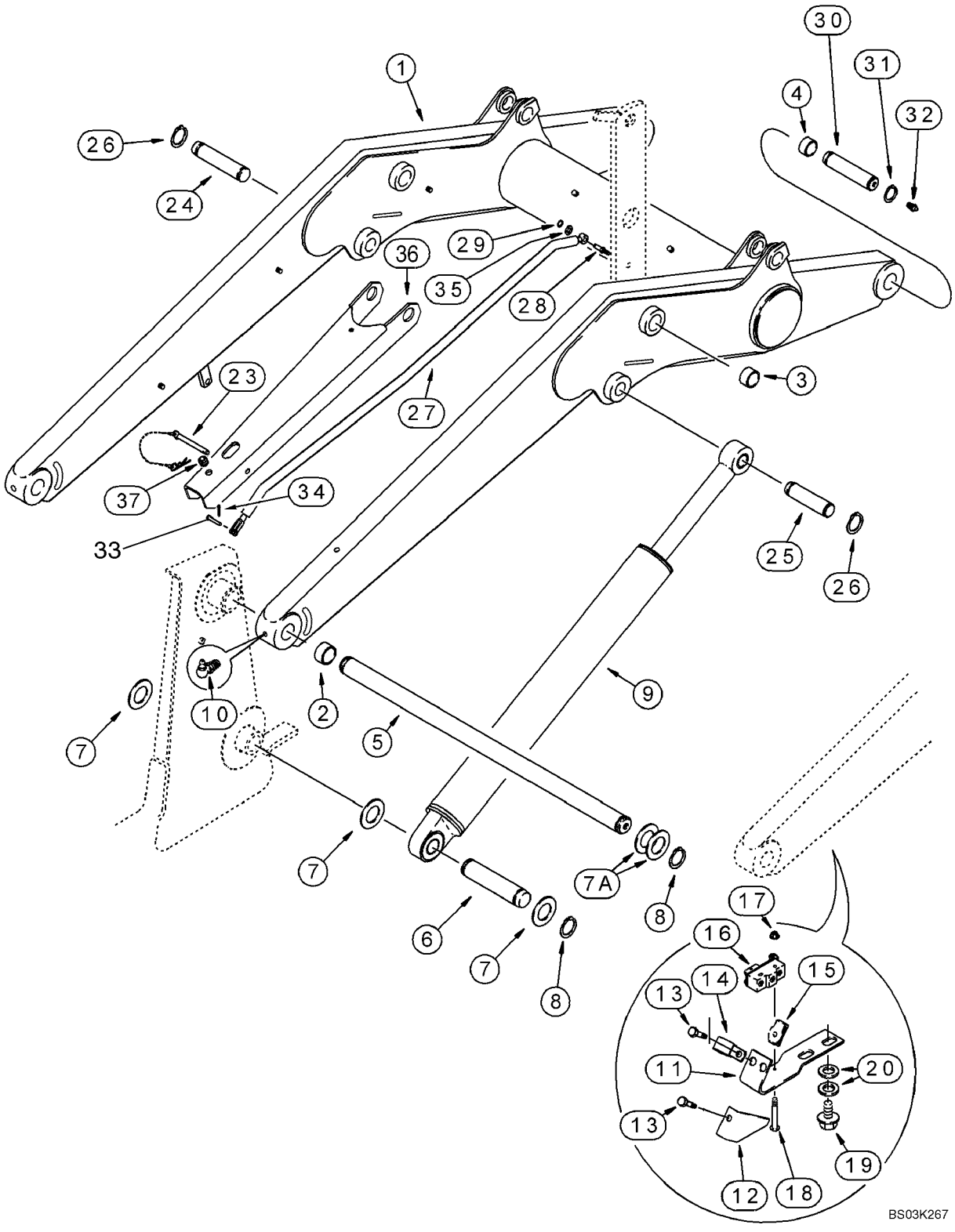

http://www.minnparbackhoeparts.com/

FRAME - LOADER LIFT

REF	FN	PART NUMBER	YR/SN	QTY	DESCRIPTION
		REF			INSTRUCTION LIFT CYLINDER, SUPPORT STRUT, RETURN-TO-DIG AND ANTIROLLBACK
1		87426379		1	ARM ASSY. Incl. Ref 2, 4
2		D127542		4	BUSHING
3		100696A1		4	BUSHING, LARGE Bucket Cylinder Link Pivot; Not Included With Frame; Purchase Separately
4		109268A1		4	BUSHING
5		111522A1		1	PIN SHAFT
6		387019A1		2	PIN
7		495-81282		6	WASHER 2-1/16 x 3 x 3/32
7A		181842A1		X	WASHER
8		800-44050		6	SNAP RING No. 50
9		384240A1		2	CYLINDER ASSY. 82.6 ID x 766 mm strk; Loader Lift; See Figure 08-62
10		219-55		2	NIPPLE, LUBE 90 deg, 1/8 PT x 27/32
11		128818A1		1	SUPPORT Return-To-Dig
12		142524A1		1	PROTECTOR
13		614-6016		2	BOLT M6 x 16
14		515-2179		1	CLAMP 7,9 mm
15		833-40406		2	NUT M6
16		D137363		1	SWITCH Return-To-Dig
17		193-1003		2	NUT No. 6
18		440-10616		2	SCREW No. 6 x 1
19		128312A1		2	BOLT M10 x 15
20		895-11010		4	WASHER 11 x 21 x 2 mm
23		104824A1		1	PIN, LARGE
24		118900A1		1	PIN, LARGE
25		113629A1		1	PIN, LARGE
26		800-44040		4	SNAP RING
27		311200A1		1	ROD ASSY. Antirollback
28		192815A1		1	PIN
29		103-3350		1	RING, SNAP No. 50
30		118901A1		2	PIN, LARGE
31		800-44040		4	SNAP RING
32		219-1		2	NIPPLE, LUBE 1/8 PT x 21/32
33		427-6100		1	PIN, CLEVIS 3/8 x 7
34		432-612		1	PIN, SPLIT (COTTER) 3/32" x 3/4"

http://www.minnparbackhoeparts.com/

09-04		p2	05/05

FRAME - LOADER LIFT

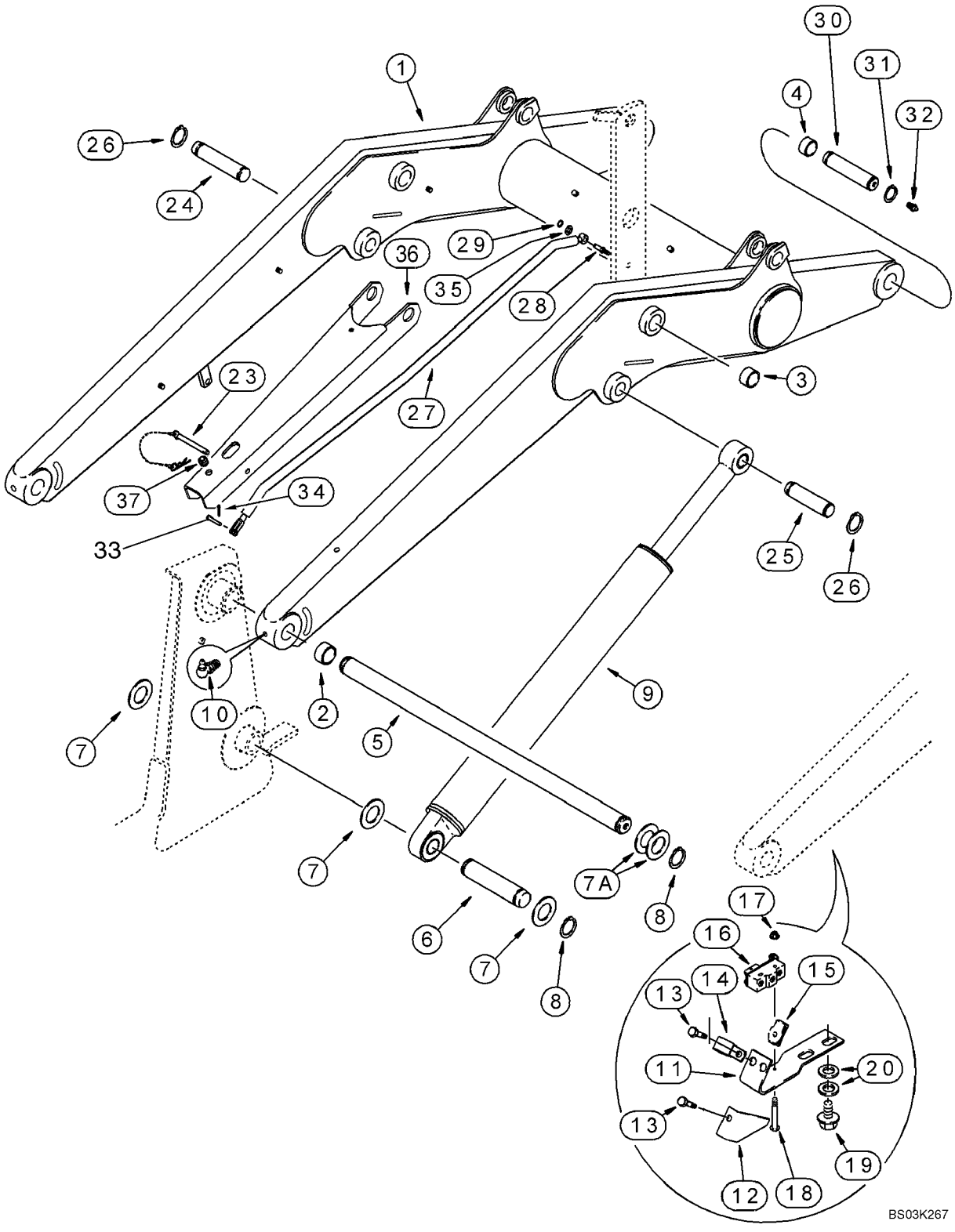

http://www.minnparbackhoeparts.com/

FRAME - LOADER LIFT

REF	FN	PART NUMBER	YR/SN	QTY	DESCRIPTION
35		495-11053		1	WASHER 17/32 x 1-1/16 x 3/32
36		341564A2		1	STRUT
37		344892A1		1	GROMMET

http://www.minnparbackhoeparts.com/

09-05		p1	03/05

FRAME - LOADER LINKAGE

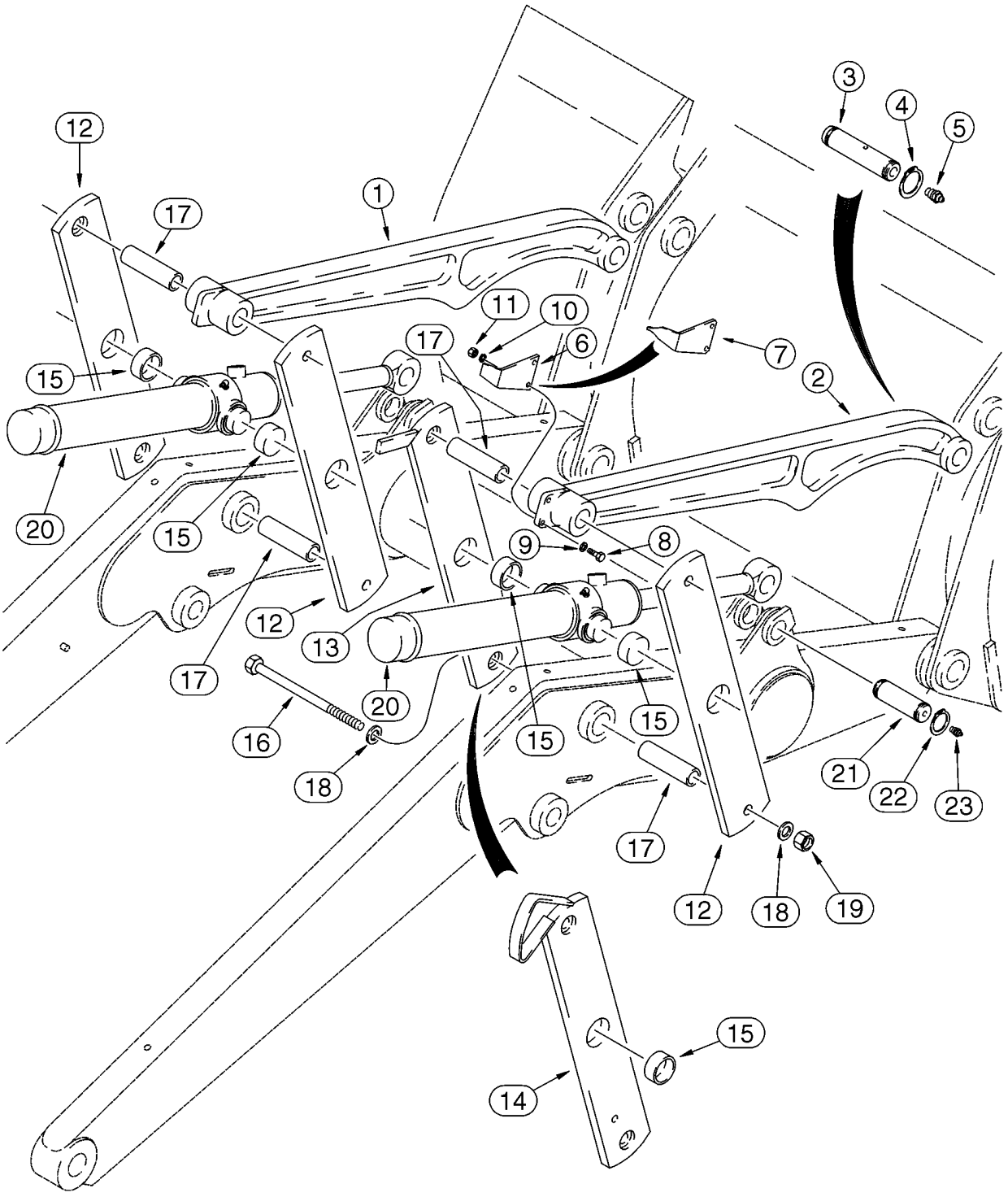

http://www.minnparbackhoeparts.com/

FRAME - LOADER LINKAGE

REF	FN	PART NUMBER	YR/SN	QTY	DESCRIPTION
1		331621A1		1	PITMAN Bucket, Left-Hand; Without Mounting Holes For Bucket Position Pointer; For Service, Order 331620A1
2		331620A1		1-2	PITMAN Bucket, Left-Hand or Right-Hand; With Mounting Holes For Bucket Position Pointer
3		118901A1		2	PIN, LARGE
4		800-44040		4	SNAP RING
5		219-1		2	NIPPLE, LUBE 1/8 PT x 21/32
6		D121194		1	POINTER Models Without Clam Bucket
7		250851A1		1	POINTER Models With Clam Bucket
8		614-8030		2	BOLT M8 x 30
9		895-11008		2	WASHER 9 x 17 x 1,6 mm
10		892-11008		2	WASHER M8
11		829-1408		2	NUT M8; 10
12		139180A1		3	PITMAN Bucket Cylinder, Outer Right-Hand; Inner and Outer Left-Hand; Incl. Ref 15
13		139235A1		1	PITMAN Bucket Cylinder, Inner Right-Hand; With Extra Hole For Antirollback Rod; Models Without Clam Bucket; Incl. Ref 15
14		139195A1		1	PITMAN 580SM, Bucket Cylinder, Inner Right-Hand; With Extra Hole For Antirollback Rod; Models With Clam Bucket; Incl. Ref 15
14		275937A1		1	LINK ASSY. 580SM+, Bucket Cylinder, Inner Right-Hand; With Extra Hole For Antirollback Rod; Models With Clam Bucket; Incl. Ref 15
15		D151034		1	BUSHING, LARGE
16		827-20190		4	SCREW M20 x 190; 10.9
17		D132076		4	SPACER
18		896-11020		8	WASHER 22 x 37 x 4 mm
19		829-1420		4	NUT M20, Cl 10
20		113133A2		2	CYLINDER ASSY. 76 ID x 522 mm strk; Loader Bucket; See Figure 08-63
21		116339A1		2	PIN, LARGE
22		800-44040		4	SNAP RING
23		219-1		2	NIPPLE, LUBE 1/8 PT x 21/32

http://www.minnparbackhoeparts.com/

09-06		p1	09/03

BUCKET, LOADER LONG LIP (82 IN) (580SM)

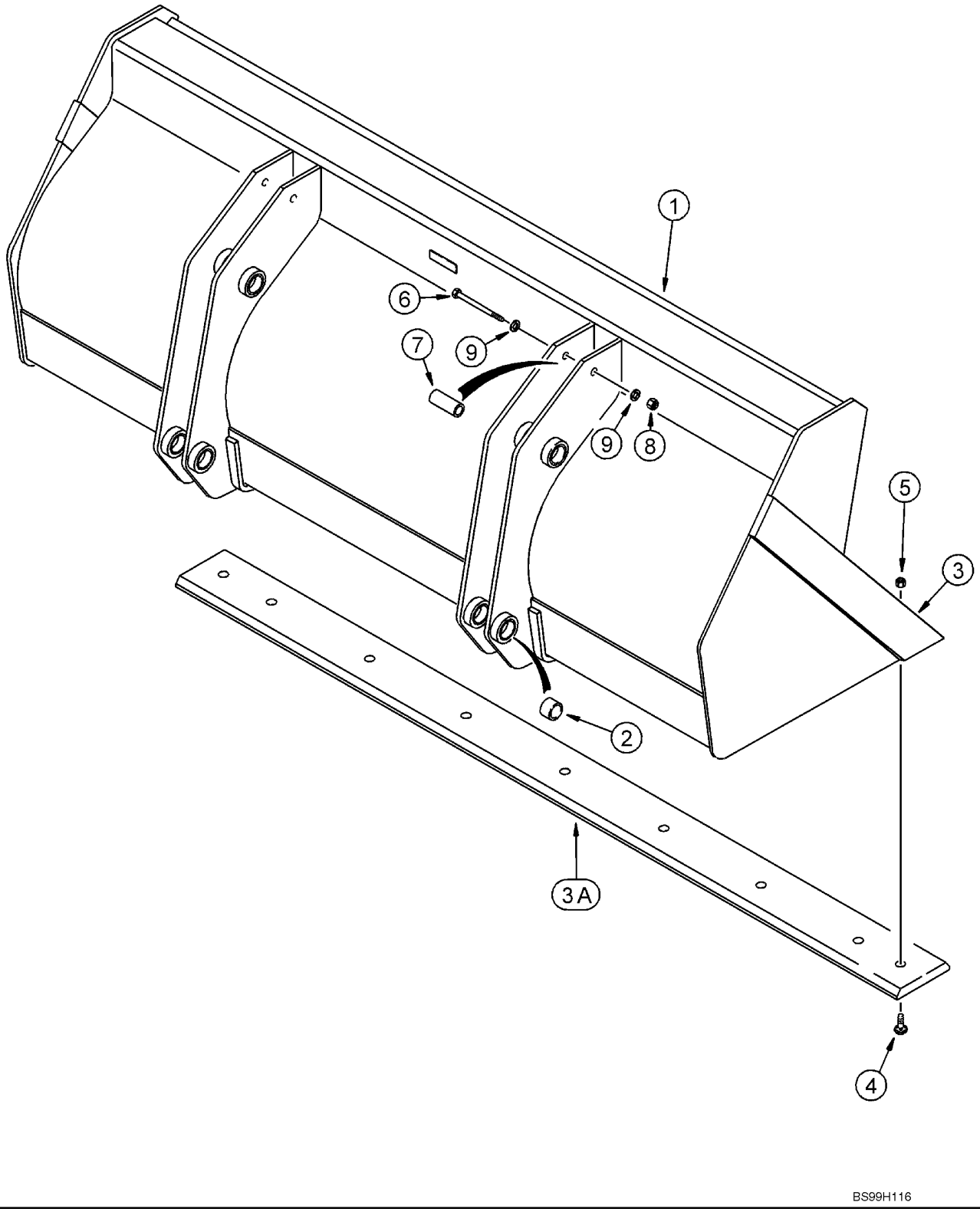

http://www.minnparbackhoeparts.com/

BUCKET, LOADER LONG LIP (82 IN) (580SM)

REF	FN	PART NUMBER	YR/SN	QTY	DESCRIPTION
		141473A1		1	BUCKET 2083 mm (82 in); Assembly Includes Bolt-On Cutting Edge; Without Bucket Teeth; Incl. 1 - 9; Order Through Parts Marketing
1		NSS		1	NOT SERVICED SEPARATELY Bucket; Incl. Ref 2, 3
2		D129264		8	BUSHING
3		113457A1		1	PLATE, LARGE Weld-On
3A		112946A1		1	EDGE, CUTTING
4		20-21232		10	SCREW
5		429-1012		10	NUT 3/4; 8
6		828-20160		2	SCREW M20 x 160; 10.9
7		142538A1		2	SPACER
8		832-10420		2	NUT M20
9		896-11020		4	WASHER 22 x 37 x 4 mm

http://www.minnparbackhoeparts.com/

09-07		p1	03/05

BUCKET, LOADER LONG LIP (93 IN) (580SM / 580SM+)

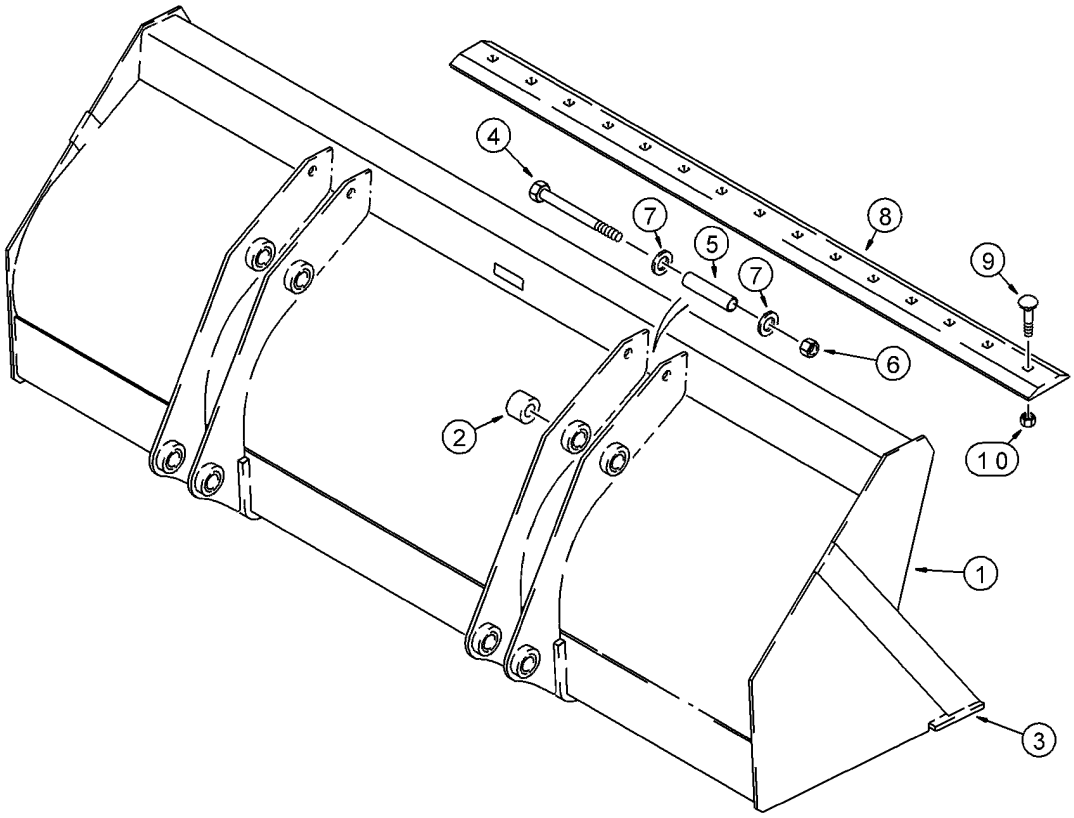

BS00C247

http://www.minnparbackhoeparts.com/

BUCKET, LOADER LONG LIP (93 IN) (580SM / 580SM+)

REF	FN	PART NUMBER	YR/SN	QTY	DESCRIPTION
		87441059		1	BUCKET 2362 mm (93 in); Without Bucket Teeth; Assembly Includes Bolt-On Cutting Edge; Incl. Ref 1 - 10; Order Through Parts Marketing; Replaces 142687A1
1		NSS		1	NOT SERVICED SEPARATELY Bucket; Incl. Ref 2, 3
2		D129264		8	BUSHING
3		134844A1		1	PLATE, LARGE Weld-On
4		828-20160		2	SCREW M20 x 160; 10.9
5		142538A1		2	SPACER
6		832-10420		2	NUT M20
7		896-11020		4	WASHER 22 x 37 x 4 mm
8		185506A1		1	EDGE BLADE, Bolt-On
9		20-21232		10	SCREW
10		429-1012		10	NUT 3/4; 8

http://www.minnparbackhoeparts.com/

09-08		p1	03/05

BUCKET, LOADER CLAM (82 IN) (580SM)

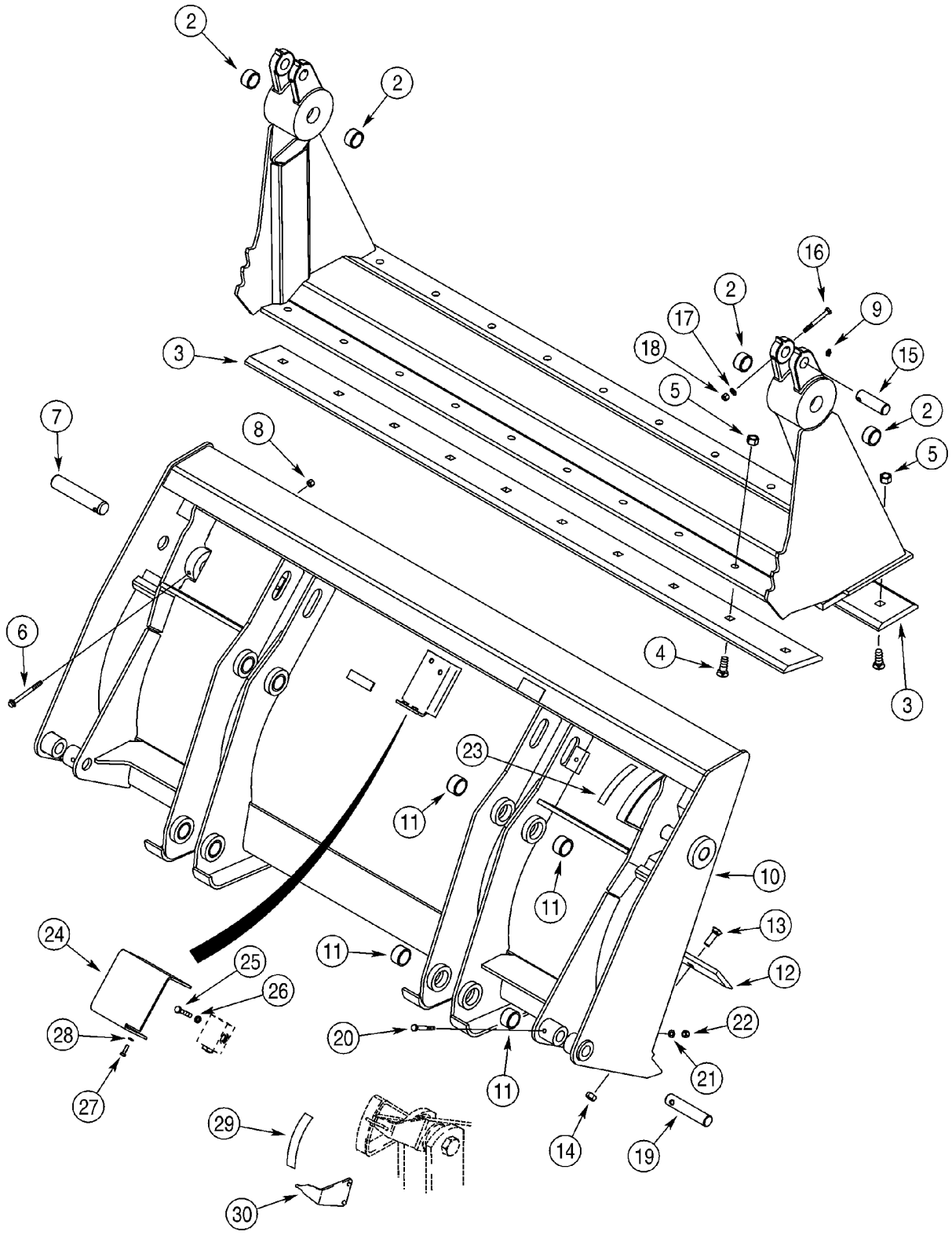

http://www.minnparbackhoeparts.com/

BUCKET, LOADER CLAM (82 IN) (580SM)

REF	FN	PART NUMBER	YR/SN	QTY	DESCRIPTION
		87455509		1	BUCKET ASSEMBLY; 2083 mm (82 in); With Hydraulics; Includes 376288A2 Bucket Assembly, Ref 1 - 28; Also Includes Hydraulics on Figure 08-07, Ref 1 - 29; Order Through Parts Marketing; Replaces 376528A4
		{376288A2}		1	BUCKET ASSEMBLY; 2083 mm (82 in); Without Hydraulics; Includes 411668A1 Bucket and (2) Ref 7 Pins; Order Through Parts Marketing
		411668A1		1	BUCKET BUCKET ASSEMBLY; 2083 mm (82 in; Without Hydraulics; Incl. Ref 1 - 6, 8 - 14
		175156A1		1	SHELL CLAM, Incl. Ref 1, 2
1		NSS		1	NOT SERVICED SEPARATELY Clam Assy
2		D31140		4	BUSHING
3		142300A1		2	BLADE, HALF
4		20-21232		20	SCREW 3/4 x 2
5		29-1012		20	NUT 3/4; 8
6		844-10110		2	SCREW Flange, M10 x 110
7		D51391		2	PIN, LARGE
8		832-10410		2	NUT M10
9		219-1		2	NIPPLE, LUBE 1/8 PT x 21/32
		376286A2		1	BUCKET BLADE, Incl. Ref 10, 11
10		NSS		1	NOT SERVICED SEPARATELY Blade Assy, Dozer
11		D129264		8	BUSHING
12		121920A1		1	EDGE Cutting
13		20-21032		10	BOLT 5/8 x 2
14		29-1010		10	NUT 5/8
15		D51392		2	PIN
16		814-10090		2	BOLT M10 x 90
17		895-11010		2	WASHER 11 x 21 x 2 mm
18		832-10410		2	NUT M10
19		D51393		2	PIN, LARGE
20		814-10080		2	SCREW M10 x 80
21		895-11010		2	WASHER 11 x 21 x 2 mm
22		832-10410		2	NUT M10
23		321-1708		1	DECAL
24		388848A1		1	GUARD Pilot Operated Check Valve
25		814-10060		2	BOLT M10 x 60

http://www.minnparbackhoeparts.com/

09-08		p2	03/05

BUCKET, LOADER CLAM (82 IN) (580SM)

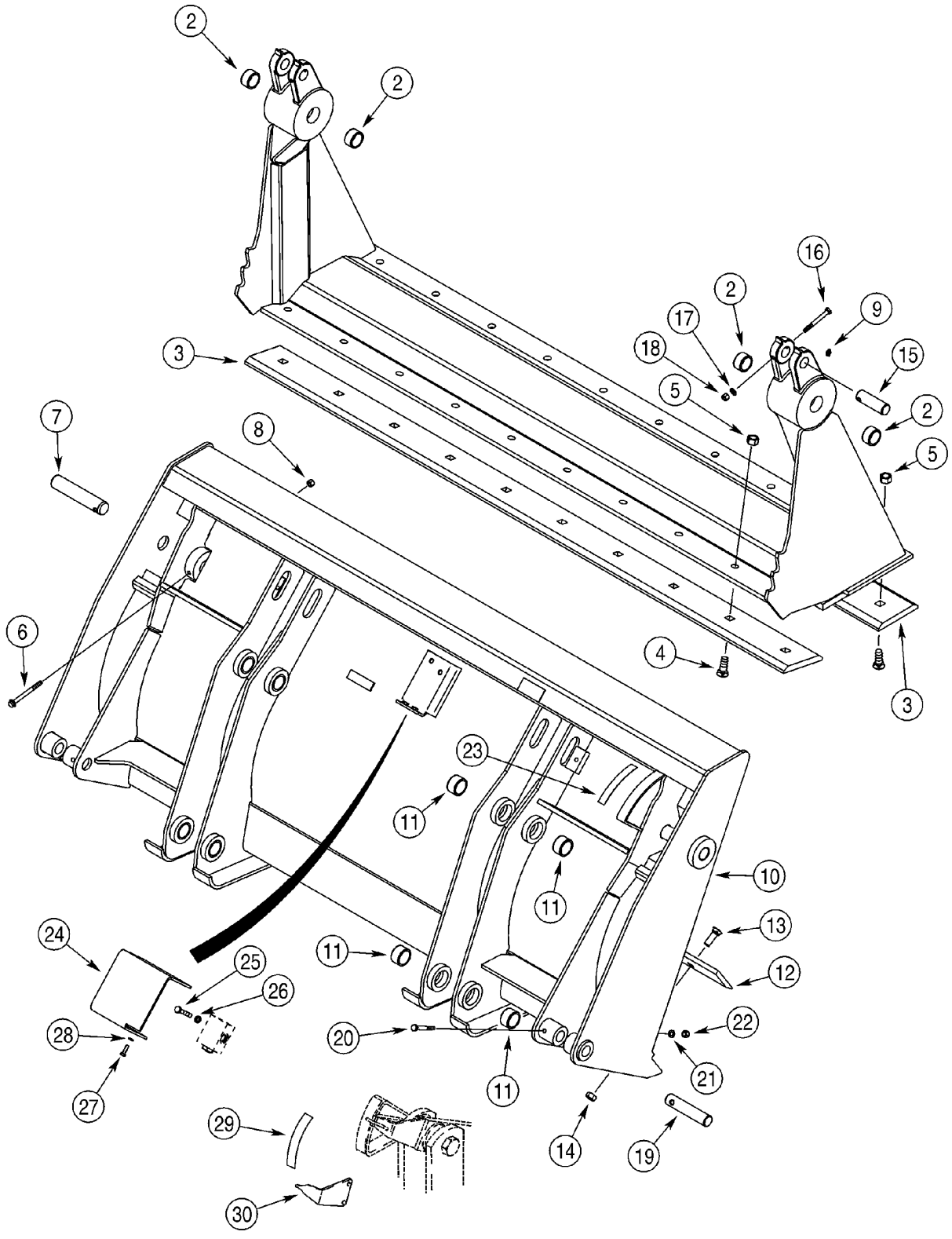

http://www.minnparbackhoeparts.com/

BUCKET, LOADER CLAM (82 IN) (580SM)

REF	FN	PART NUMBER	YR/SN	QTY	DESCRIPTION
26		892-11010		2	WASHER, LOCK M10
27		614-8025		2	BOLT M8 x 25
28		892-11008		2	WASHER M8
29		321-1707		1	DECAL
30		250851A1		1	POINTER

http://www.minnparbackhoeparts.com/

09-08A		p1	03/05

BUCKET, LOADER CLAM (93 IN) (580SM+)

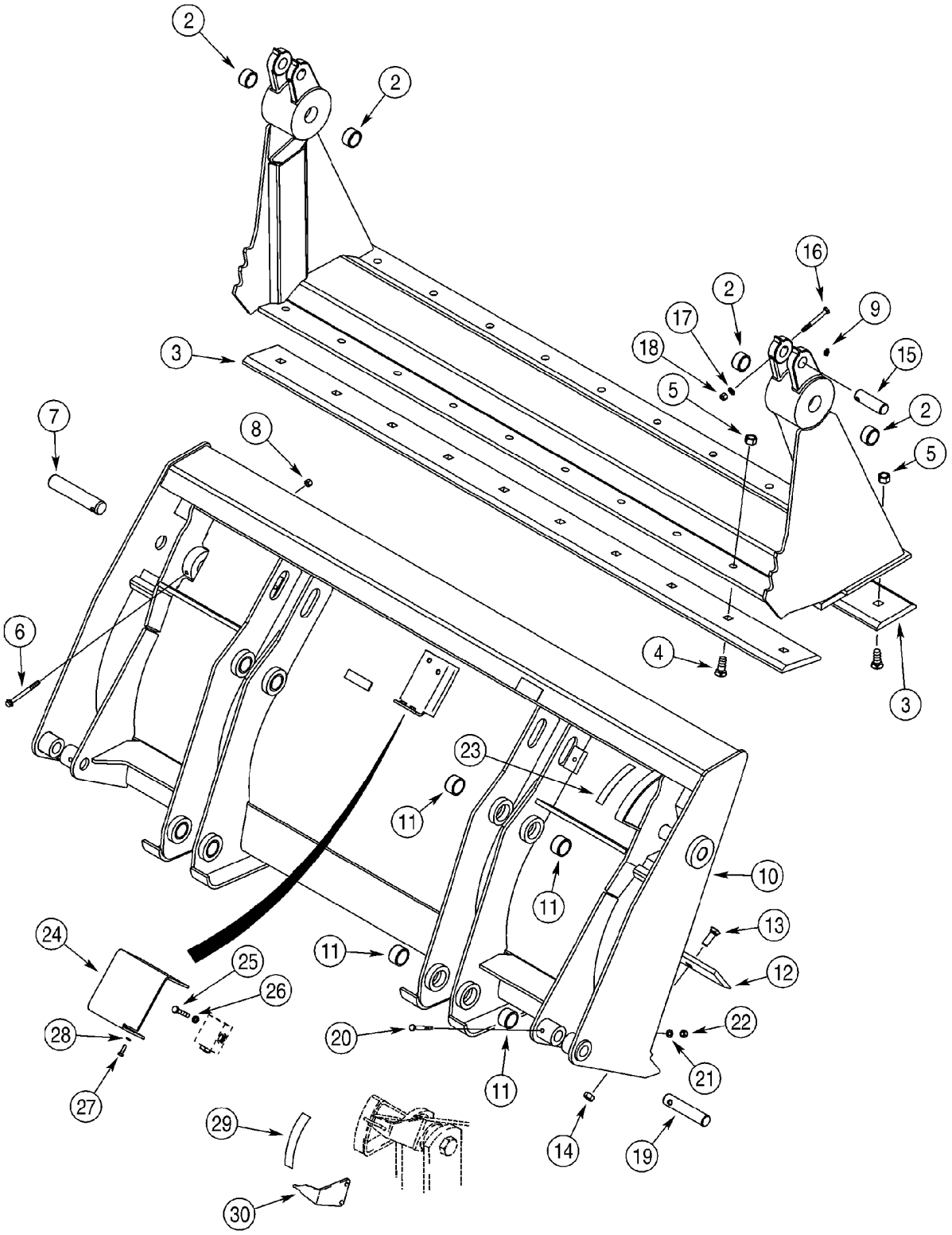

http://www.minnparbackhoeparts.com/

BUCKET, LOADER CLAM (93 IN) (580SM+)

REF	FN	PART NUMBER	YR/SN	QTY	DESCRIPTION
		87455505		1	BUCKET ASSEMBLY, 2362 mm (93 in); With Hydraulics; Incl. 87441073 Bucket Assembly, Ref 1 - 28; Also Includes Hydraulics On Figure 08-07, Ref 1 - 29; Order Through Parts Marketing; Replaces 376526A4, 87441062 Bucket Assembly
		87441073		1	BUCKET BUCKET ASSEMBLY, 2362 mm (93 in); Without Hydraulics; Incl. Ref 1 - 14; Order Through Parts Marketing; Replaces 376287A2 Bucket Assembly
		144210A1		1	CLAW CLAM, Incl. Ref 1, 2
1		NSS		1	NOT SERVICED SEPARATELY Clam Assy
2		D31140		4	BUSHING
3		142301A1		2	EDGE Blade
4		20-21232		20	SCREW 3/4 x 2
5		29-1012		20	NUT 3/4; 8
6		844-10110		2	SCREW Flange, M10 x 110
7		D51391		2	PIN, LARGE
8		832-10410		2	NUT M10
9		219-1		4	NIPPLE, LUBE 1/8 PT x 21/32
		376285A2		1	BUCKET BLADE, Incl. Ref 10, 11; Used With 376526A4, 376287A2 Bucket Assembly
		87441074		1	BUCKET BLADE, Incl. Ref 10, 11; Used With 87455505, 87441073 Bucket Assembly
10		NSS		1	NOT SERVICED SEPARATELY Blade Assy; Dozer
11		D129264		8	BUSHING
12		133542A1		1	EDGE Cutting
13		20-21032		10	BOLT 5/8 x 2
14		29-1010		10	NUT 5/8
15		D51392		2	PIN
16		814-10090		2	BOLT M10 x 90
17		895-11010		2	WASHER 11 x 21 x 2 mm
18		832-10410		2	NUT M10
19		D51393		2	PIN, LARGE
20		814-10080		2	SCREW M10 x 80
21		895-11010		2	WASHER 11 x 21 x 2 mm
22		832-10410		2	NUT M10
23		321-1708		1	DECAL

http://www.minnparbackhoeparts.com/

09-08A		p2	03/05

BUCKET, LOADER CLAM (93 IN) (580SM+)

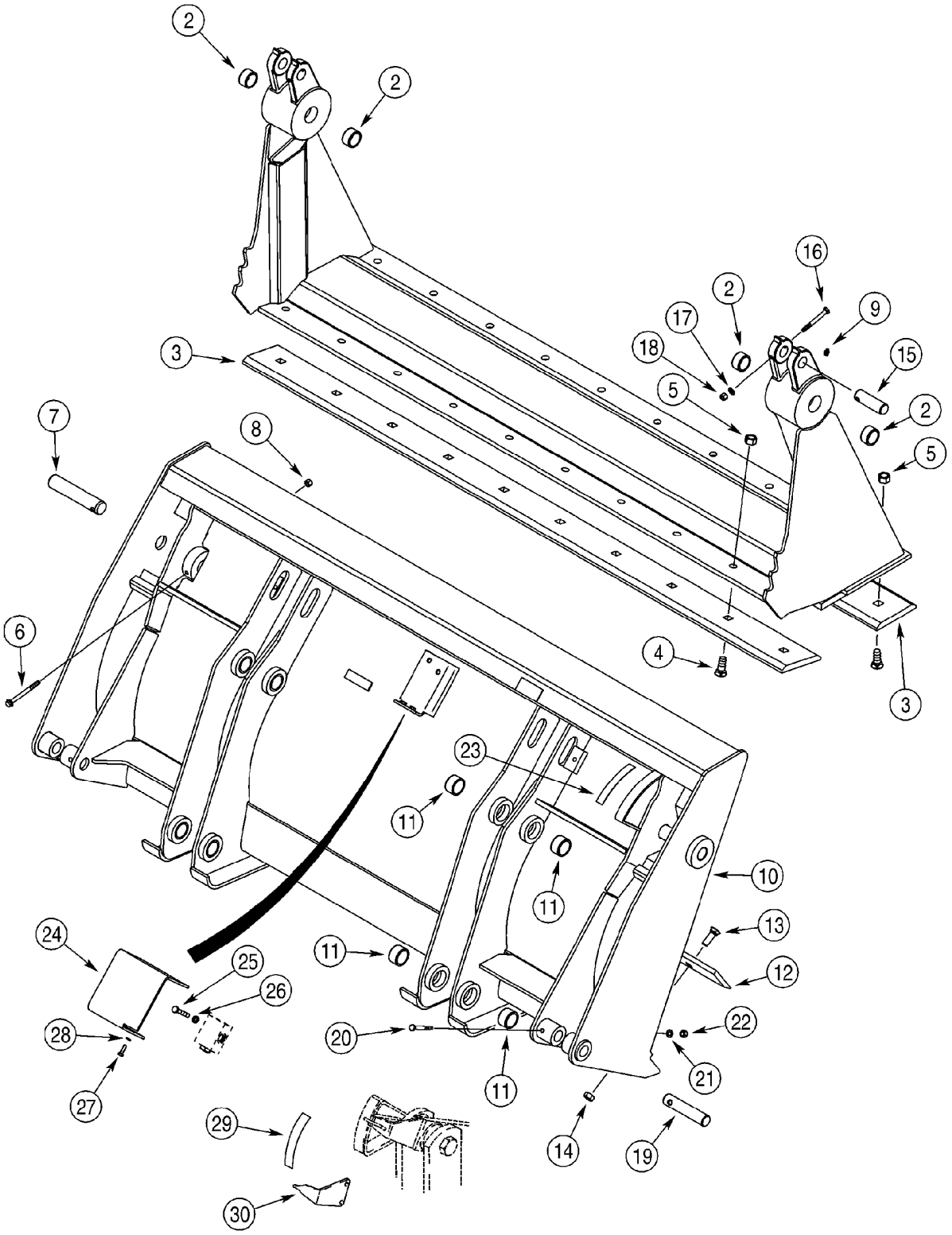

http://www.minnparbackhoeparts.com/

BUCKET, LOADER CLAM (93 IN) (580SM+)

REF	FN	PART NUMBER	YR/SN	QTY	DESCRIPTION
24		388848A1		1	GUARD Pilot Operated Check Valve
25		814-10060		2	BOLT M10 x 60
26		892-11010		2	WASHER, LOCK M10
27		614-8025		2	BOLT M8 x 25
28		892-11008		2	WASHER M8
29		321-1707		1	DECAL
30		250851A1		1	POINTER

http://www.minnparbackhoeparts.com/

09-09		p1	04/04

GUARD - VALVE, LOADER

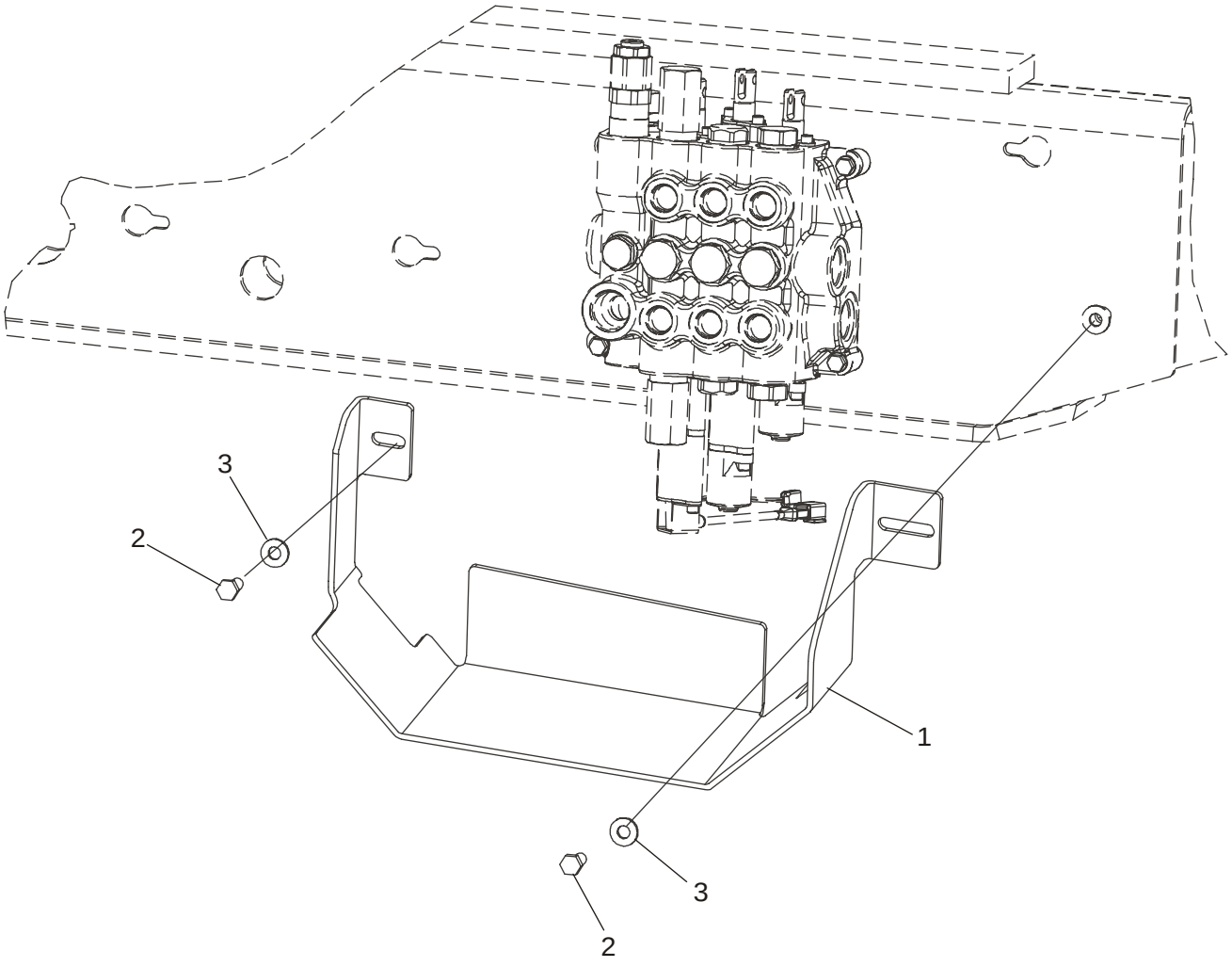

http://www.minnparbackhoeparts.com/

GUARD - VALVE, LOADER

REF	FN	PART NUMBER	YR/SN	QTY	DESCRIPTION
1		87444379		1	SHIELD
2		614-10025		2	BOLT M10 x 25
3		896-15010		2	WASHER 11 x 24 x 3 mm

http://www.minnparbackhoeparts.com/

09-10		p1	04/05

COUPLER, TOOL QUICK

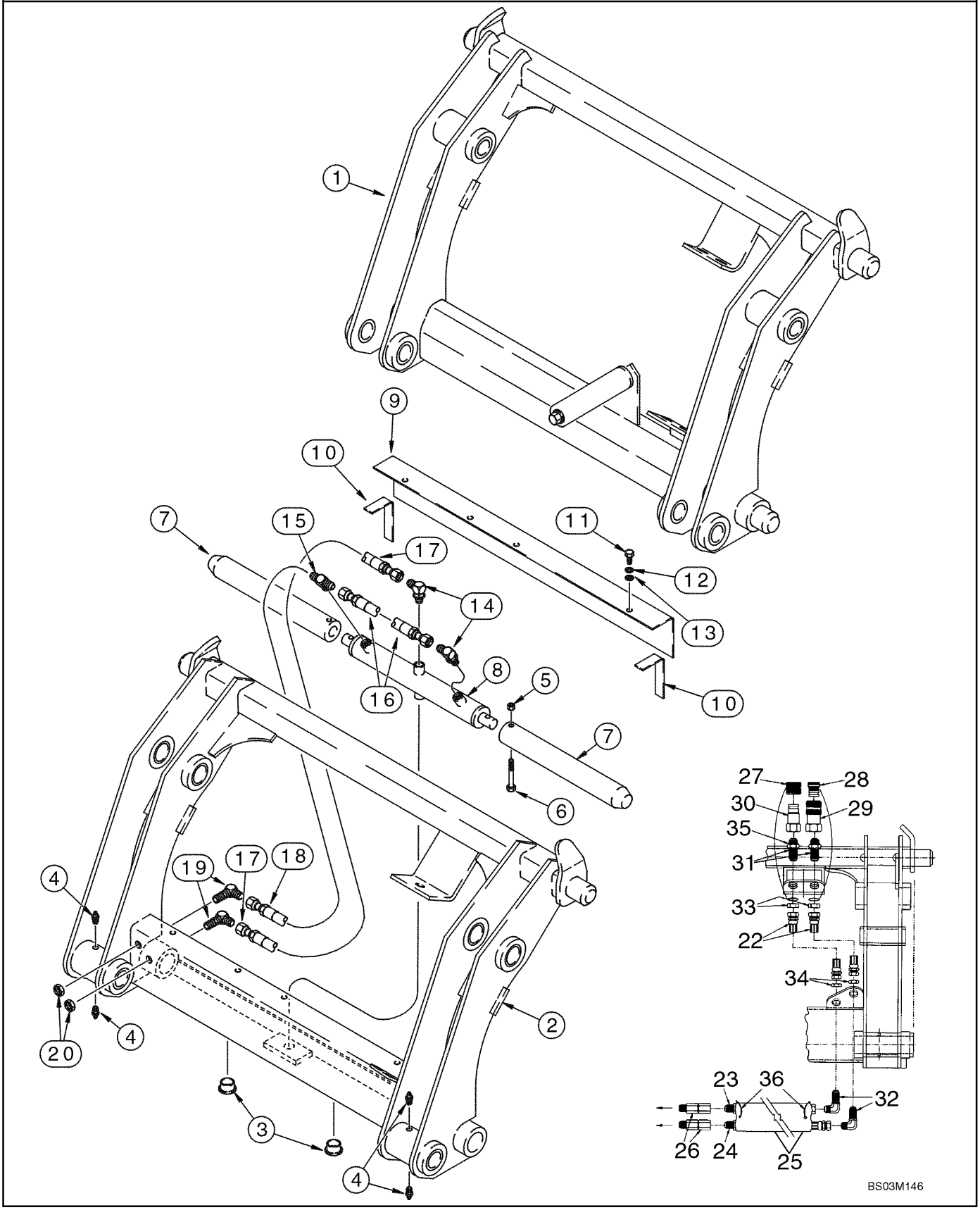

http://www.minnparbackhoeparts.com/

COUPLER, TOOL QUICK

REF	FN	PART NUMBER	YR/SN	QTY	DESCRIPTION
		REF			INSTRUCTION MANUAL COUPLER
1		191239A1		1	COUPLING Loader, Complete; Component Parts Not Serviced Separately; Used With D121194 Bucket Position Pointer and 139235A1 Bucket Cylinder Link; See Figure 09-05, Ref 6, 13
		REF			INSTRUCTION HYDRAULIC COUPLER
		292969A2		1	COUPLING Loader; Incl. Ref 2 - 35; With Auxiliary Hydraulics; For Complete Assembly, Order From Machinery Price List; Category III; For Hydraulic Tool Quick Coupler Hydraulics, See Figure 08-26, 08-27
2		NSS		1	NOT SERVICED SEPARATELY Frame
3		305497A1		2	PLUG 1-1/4 ID x 1/2 in OD; Plastic
4		219-87		4	FITTING 1/4 st x 9/16
5		231-4246		2	NUT 3/8
6		326-640		2	BOLT 3/8 x 2-1/2; 8
7		305496A1		2	PIN 1-15/16 OD x 15 in lg
8		305499A1		1	CYLINDER ASSY. Double Acting; Component Parts Not Serviced Separately
9		305495A1		1	COVER
10		NSS		2	NOT SERVICED SEPARATELY Seal; Foam
11		413-516		3	BOLT 5/16 x 1
12		492-11031		3	WASHER, LOCK 5/16"
13		495-11034		3	WASHER 11/32 x 11/16 x 1/16
14		218-5105		2	ELBOW 9/16 fl x Or; Includes 237-6006 O-Ring
		237-6006		1	O-RING 15/32 ID x 5/64, Boss Seal
15		218-5182		1	TEE 9/16 adj Or x fl x fl; Includes 237-6006 O-Ring
		237-6006		1	O-RING 15/32 ID x 5/64, Boss Seal
16		305492A1		1	HOSE ASSY. 260 mm (10-1/4 in)
17		305494A1		1	HOSE ASSY. 387 mm (15-1/4 in)
18		305493A1		1	HOSE ASSY. 235 mm (9-1/4 in)
19		218-693		2	ELBOW 9/16 fl x blkhd fl
20		218-1254		2	NUT, LOCK 9/16 NF
21		305508A1		1	KIT Decal; Includes Four Decals; Not Illustrated
22		307385A1		2	HOSE ASSY. 387 mm (15-1/4 in)
23		307386A1		1	HOSE ASSY. 629 mm (24-3/4 in)
24		307387A1		1	HOSE ASSY. 718 mm (28-1/4 in)

http://www.minnparbackhoeparts.com/

09-10		p2	04/05

COUPLER, TOOL QUICK

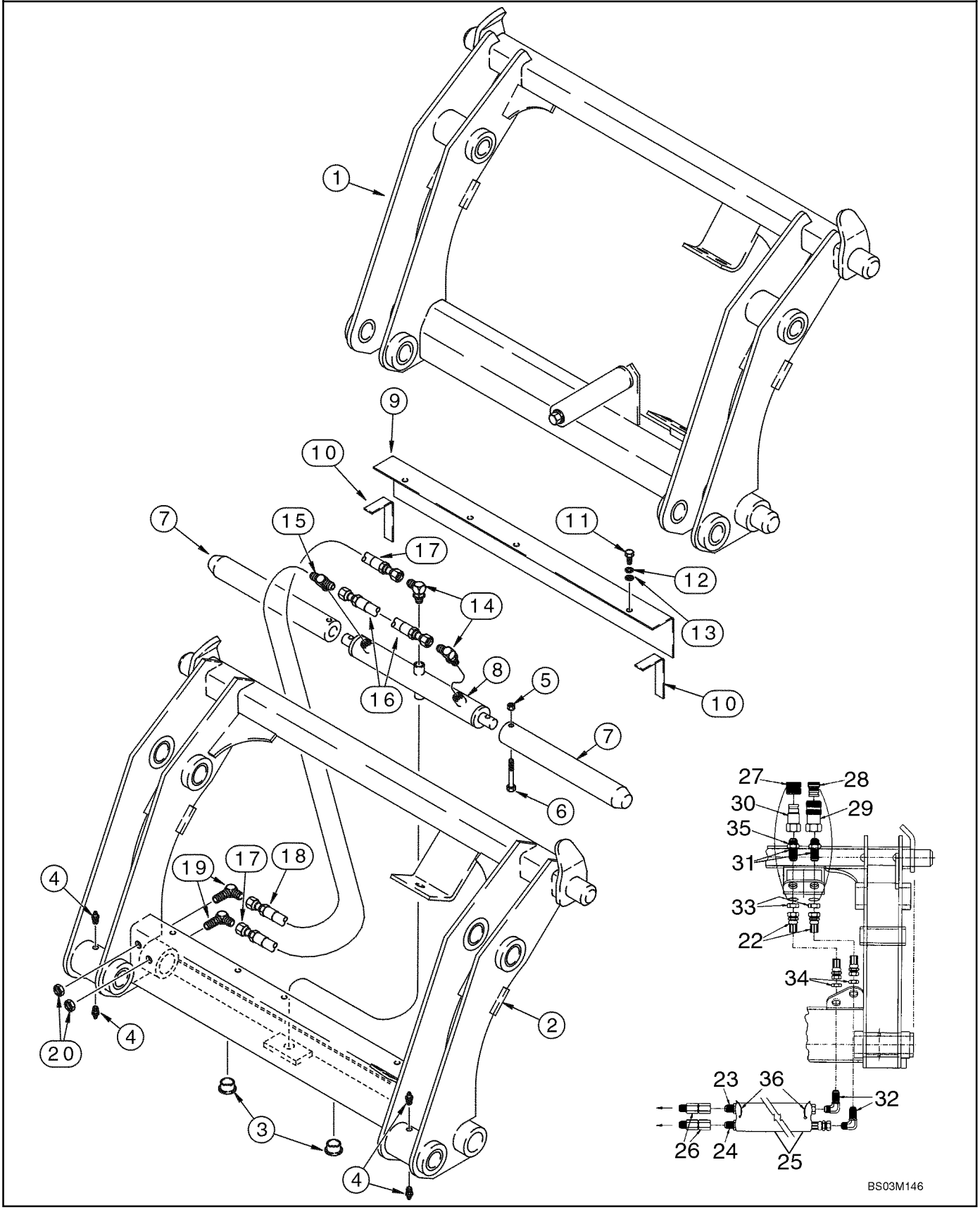

http://www.minnparbackhoeparts.com/

COUPLER, TOOL QUICK

REF	FN	PART NUMBER	YR/SN	QTY	DESCRIPTION
25		307388A1		1	HOSE SLEEVE, 660 mm (26 in)
26		307389A1		2	PIVOT Swivel
27		137344A1		1	PLUG Male Coupling
28		137343A1		1	PLUG Female Coupling
29		123537A1		1	FITTING Quick Disconnect; Female
30		245423A1		1	FITTING
31		126155A1		2	FITTING 1-1/16 blkhd fl x Or
32		218-695		2	FITTING ELBOW, 90 deg, 7/8 fl x bkhd fl
33		218-1256		2	NUT, LOCK 1-1/16
34		218-1279		2	NUT 7/8
35		237-6012		2	O-RING 59/64 ID x 7/64
36		L18337		2	STRAP Tie

http://www.minnparbackhoeparts.com/

09-11		p1	05/05

COVERS - BACKHOE CONTROL TOWER, WITHOUT PILOT CONTROLS

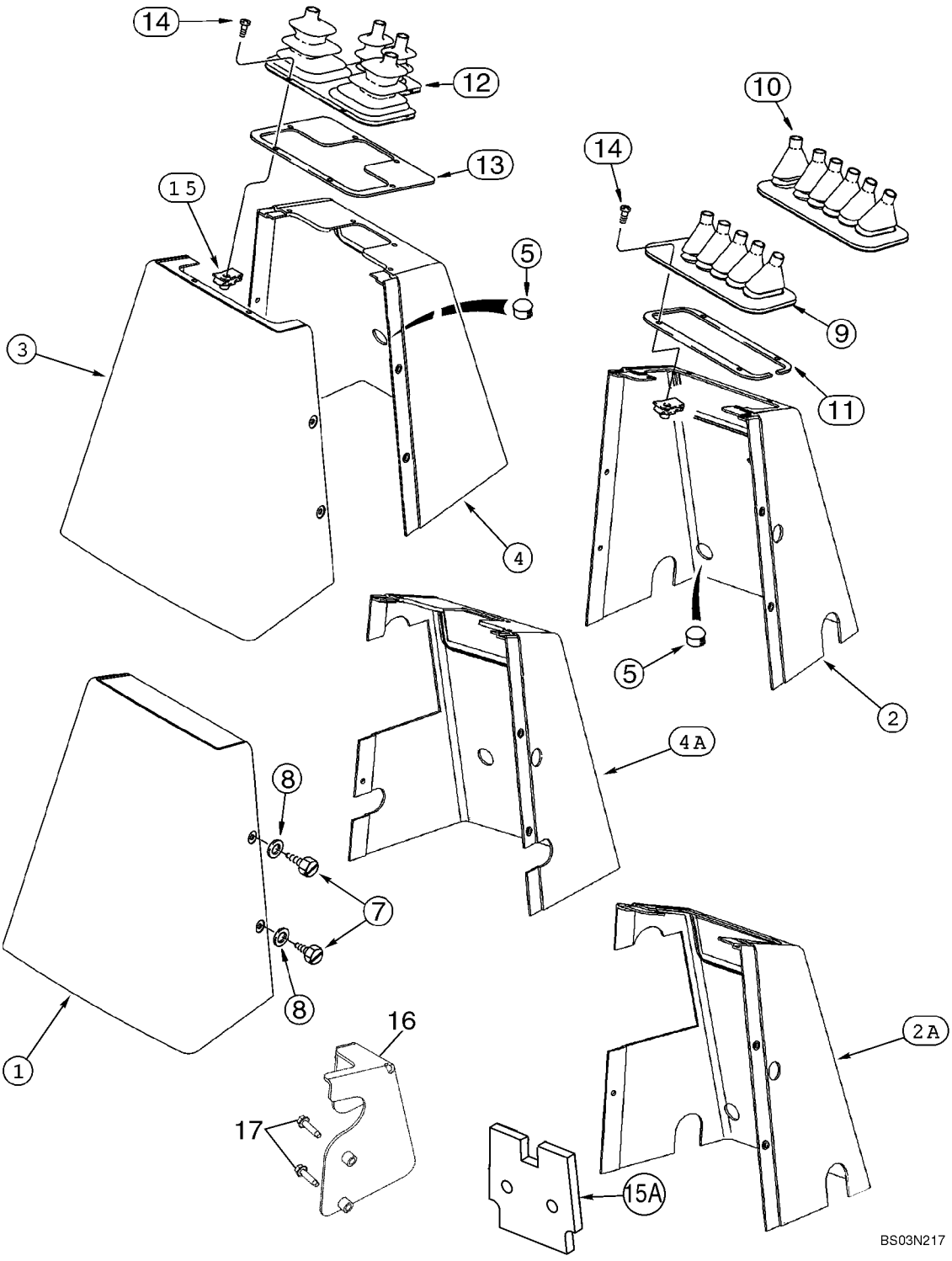

http://www.minnparbackhoeparts.com/

COVERS - BACKHOE CONTROL TOWER, WITHOUT PILOT CONTROLS

REF	FN	PART NUMBER	YR/SN	QTY	DESCRIPTION
1		390759A1		1	COVER, PROTECTIVE Rear; All Models With Foot Swing
2		390760A1		1	COVER, PROTECTIVE Front; Foot Swing; Without Auxiliary Hydraulics
2A		87411083		1	COVER, PROTECTIVE Front; Foot Swing; With Auxiliary Hydraulics
3		390758A1		1	COVER, PROTECTIVE Rear; All Models With Hand Swing
4		390690A1		1	COVER, PROTECTIVE Front; Hand Swing; Without Auxiliary Hydraulics
4A		87411084		1	COVER, PROTECTIVE Front; Hand Swing; With Auxiliary Hydraulics
5		353-411		1-2	PLUG 1 in dia
7		87310156		5	SCREW M6.3 x 16 st, Stainless Steel; Replaces 779-37616 Non-Stainless Steel Screw Used On Some Models
8		87310139		5	WASHER 9/32 ID x 5/8 OD x 1/16 thk, Stainless Steel; Replaces 195-140 Non-Stainless Steel Washer Used On Some Models
9		D149866		1	BOOT 5 Control Levers
10		D149867		1	BOOT 6 Control Levers
11		136822A1		1	RING,SPECIAL
12		D149868		1	BELLOWS 4 Control Levers
13		136824A1		1	PLATE, LARGE Used With Ref 12 Only
14		87310124		4	SCREW No. 10 x 1/2, Stainless Steel; Replaces 140-106 Non-Stainless Steel Screw Used On Some Models
14		87310126		6	SCREW No. 10 x 3/4, Stainless Steel; Replaces 140-107 Non-Stainless Steel Screw Used On Some Models
15		131-861		4-6	NUT No. 10, 4; Used With Ref 11 Retainer; (6) Used With Ref 13 Retainer
15A		397870A3		2	SEAL Front and Rear Console Covers; Noise Barrier; Adhesive Back
16		87425122		1	BRACKET Models With Backhoe Auxiliary Hydraulics
		87430677		1	DECAL Auxiliary Hydraulics
17		281-14716		2	SCREW

http://www.minnparbackhoeparts.com/

09-12		p1	05/05

BACKHOE CONTROL TOWER SUPPORT AND SEALS, WITHOUT PILOT CONTROLS

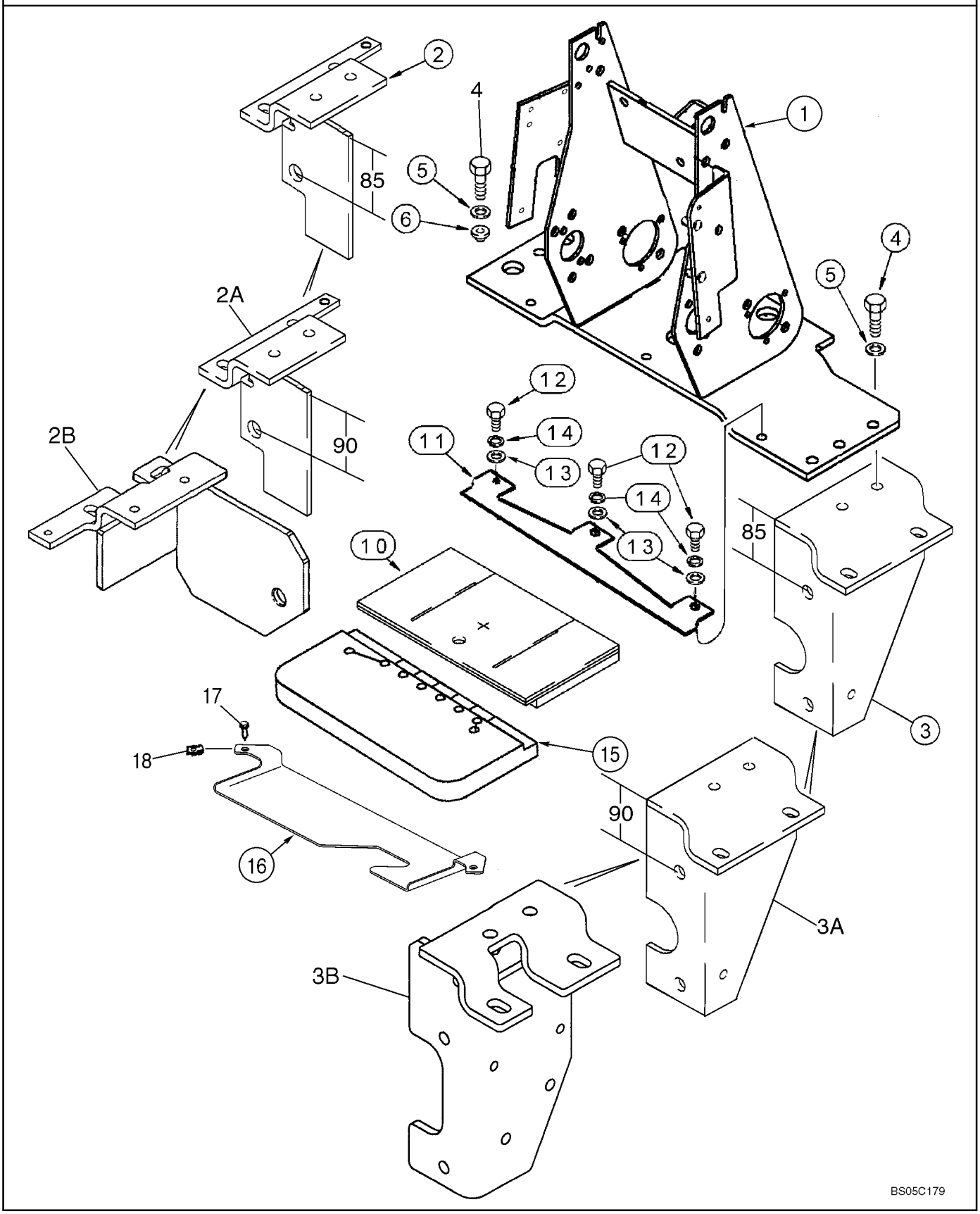

http://www.minnparbackhoeparts.com/

BACKHOE CONTROL TOWER SUPPORT AND SEALS, WITHOUT PILOT CONTROLS

REF	FN	PART NUMBER	YR/SN	QTY	DESCRIPTION
1		87418516		1	BRACKET, SUPPORTING
2		86985341		1	BRACKET, SUPPORTING Left-Hand; Distance Between Center of Hole and Top Edge Is 85 mm (3-11/32 in); Used With Ref 3; No Longer Used, When Replacing This Bracket, You Must Also Replace Ref 3 Bracket With Ref 2A and 3A
2A		87448057		1	BRACKET, SUPPORTING Left-Hand; Distance Between Center of Hole and Top Edge Is 90 mm (3-35/64 in); Used With Ref 3A; If Used
2B		87448059		1	BRACKET, SUPPORTING Left-Hand; Used With Ref 3B; If Used
3		86985339		1	BRACKET, SUPPORTING Right-Hand; Distance Between Center Hole and Top Edge Is 85 mm (3-11/32 in); Used With Ref 2; No Longer Used, When Replacing This Bracket, You Must Also Replace Ref 2 Bracket With Ref 2A and 3A
3A		87448055		1	BRACKET, SUPPORTING Right-Hand; Distance Between Center Hole and Top Edge Is 90 mm (3-35/64 in); Used With Ref 2A; If Used
3B		87452627		1	BRACKET, SUPPORTING Right-Hand; Used With Ref 2B; If Used
4		614-10035		8	SCREW M10 x 35
5		496-41041		8	WASHER 13/32 x 1-1/8 x 9/64
6		179956A1		2	SHOCK ABSORBER
10		400069A1		1	FOAM
11		87418518		1	BRACKET, SUPPORTING
12		614-8020		3	BOLT M8 x 20
13		895-11008		3	WASHER 9 x 17 x 1,6 mm
14		892-11008		3	WASHER M8
15		87439210		1	FOAM
16		397911A1		1	BRACKET
17		87310096		2	BOLT M6 x 25, Includes Washer, Stainless Steel; Replaces 233724A1 Non-Stainless Steel Screw Used On Some Models
18		833-40406		2	NUT M6

http://www.minnparbackhoeparts.com/

09-13		p1	05/04

BACKHOE CONTROL TOWER SUPPORT, WITH PILOT CONTROLS

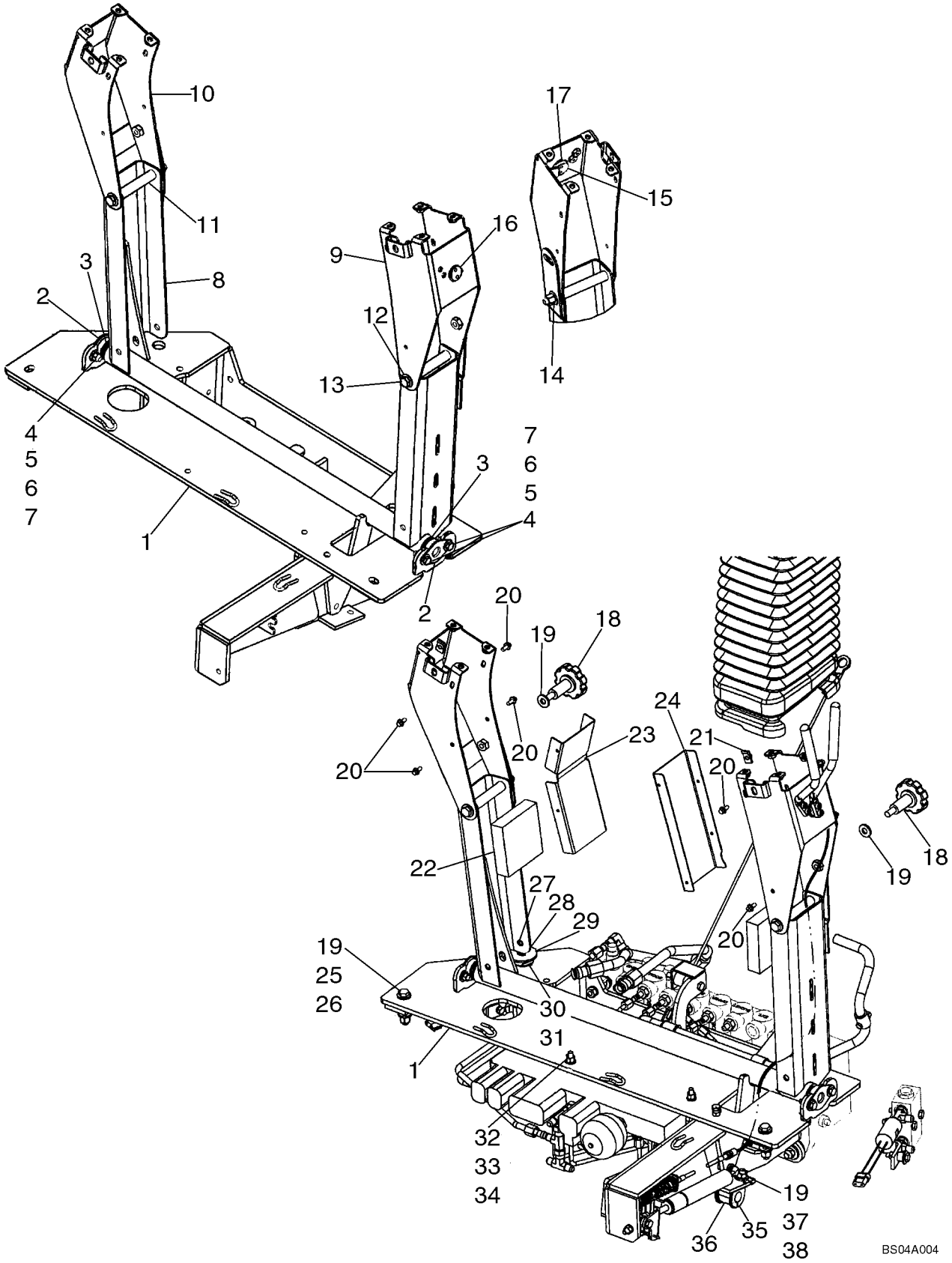

http://www.minnparbackhoeparts.com/

BACKHOE CONTROL TOWER SUPPORT, WITH PILOT CONTROLS

REF	FN	PART NUMBER	YR/SN	QTY	DESCRIPTION
		87440711		1	TOWER Tower Assembly; Pilot Controls; Includes Ref 1 - 17
1		87440710		1	BRACKET, SUPPORTING Bracket, Tower
2		D148993		2	BEARING
3		A30881		4	WASHER Seal
4		895-15008		8	WASHER 9 x 20 x 1.6 mm
5		614-8025		4	BOLT M8 x 25
6		892-11008		4	WASHER Lock, M8
7		829-1408		4	NUT M8
8		87435275		1	PIVOT ASSY.
9		87440704		1	BRACKET, SUPPORTING Right-Hand Joystick Mounting
10		87440706		1	BRACKET, SUPPORTING Left-Hand Joystick Mounting
11		86983278		2	TUBE Spacer
12		895-15010		4	WASHER 11 x 24 x 2 mm
13		814-10130		2	BOLT M10 x 130
14		832-10410		2	NUT M10
15		87431529		1	LEVER ASSY. Control Tower Release
16		103-11100		1	RING Retaining, No. 100
17		87405706		1	WASHER Wave, 1 inch
18		87437688		2	KNOB Lateral Adjustment Pilot Control Tower
19		896-15010		8	WASHER 11 x 24 x 3 mm
20		781-24613		8	SCREW Flange Head, M6 x 13, Self-Tapping
21		833-40406		2	NUT M6, Spring
22		87425696		2	SEAL, RUBBER
23		87431301		1	GUARD Shield, Left-Hand
24		87431300		1	GUARD Shield, Right-Hand
25		814-10060		2	BOLT M10 x 60
26		832-10410		2	NUT M10
27		87450914		2	BOLT Locking, M10 x 40; Replaces 87040885 M10 x 45 Bolt Used On Some Models
28		892-11010		2	WASHER, LOCK M10
29		496-81018		1	WASHER 17/32 x 2 x 1/8
30		D148962		1	WASHER Belleville
31		87440381		1	SPACER Spacer
32		896-11008		2	WASHER 9 x 17 x 2 mm

http://www.minnparbackhoeparts.com/

09-13		p2	05/04

BACKHOE CONTROL TOWER SUPPORT, WITH PILOT CONTROLS

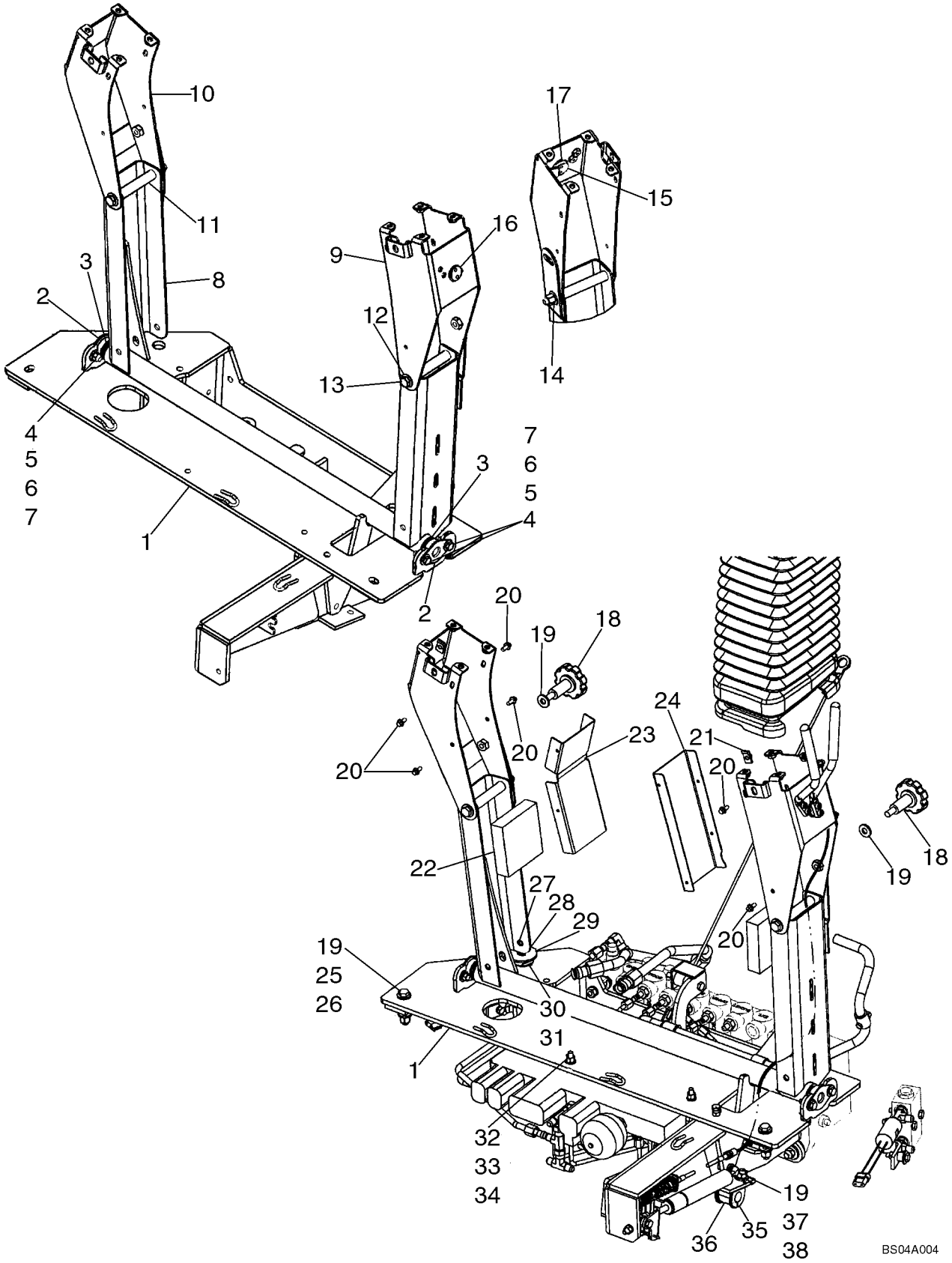

http://www.minnparbackhoeparts.com/

BACKHOE CONTROL TOWER SUPPORT, WITH PILOT CONTROLS

REF	FN	PART NUMBER	YR/SN	QTY	DESCRIPTION
33		832-10408		2	NUT M8
34		864-8055		2	SCREW Socket, M8 x 55
35		D143411		1	CLAMP
36		D74182		1	GROMMET Isolation Block
37		829-1410		1	NUT M10
38		614-10025		1	BOLT M10 x 25

http://www.minnparbackhoeparts.com/

09-14		p1	05/05

BACKHOE CONTROL TOWER BOOTS AND SEALS, WITH PILOT CONTROLS

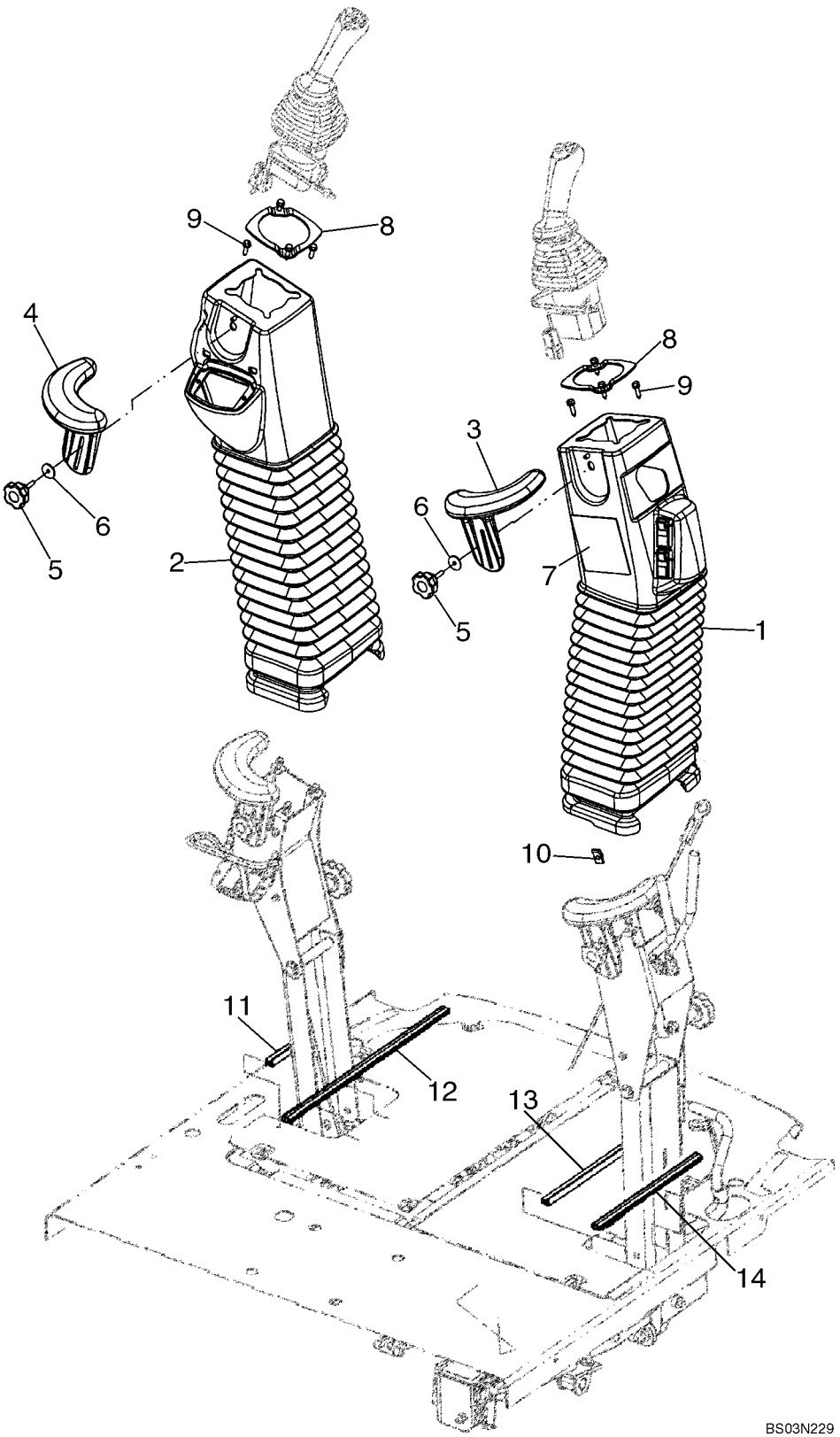

http://www.minnparbackhoeparts.com/

BACKHOE CONTROL TOWER BOOTS AND SEALS, WITH PILOT CONTROLS

REF	FN	PART NUMBER	YR/SN	QTY	DESCRIPTION
1		87309924		1	BOOT Replaces 87422678 Boot, Which Included (1) 87422679 Boot and (1) 86992675 Pin
2		87309923		1	BOOT Replaces 87422675 Boot, Which Included (1) 87422676 Boot, (1) 86992675 Pin, (2) 87418520 No. 10 Threaded Inserts
3		87437366		1	ARMREST Wrist
4		87437369		1	SUPPORT Wrist
5		87437689		2	KNOB
6		87310186		2	WASHER 6.6 ID x 25 OD x 1.6 mm thk, Stainless Steel; Replaces 895-30109 Non-Stainless Steel Washer Used On Some Models
7		87414205		1	DECAL Pattern Selecting; If Used
7		87305413		1	DECAL Pattern Selecting; With Backhoe/Excavator Black Silhouette on Decal; If Used; Not Illustrated
8		87435372		2	BRACKET
9		87310096		8	BOLT With Washer, M6 x 25, Stainless Steel; Replaces 233724A1 Non-Stainless Steel Screw Used On Some Models
10		833-40406		2	NUT M6
11		87433008		1	SEAL, RUBBER 183 mm (7-1/4 in); Cut From 87438002
12		87433006		1	SEAL, RUBBER 428 mm (16-7/8 in); Cut From 87438002
13		87433005		1	SEAL, RUBBER 335 mm (13-3/16 in); Cut From 87438002
14		87433007		1	SEAL, RUBBER 275 mm (10-7/8 in); Cut From 87438002

http://www.minnparbackhoeparts.com/

09-15		p1	05/05

BACKHOE CONTROL TOWER LEVERS (BOOM LATCH), WITH PILOT CONTROLS

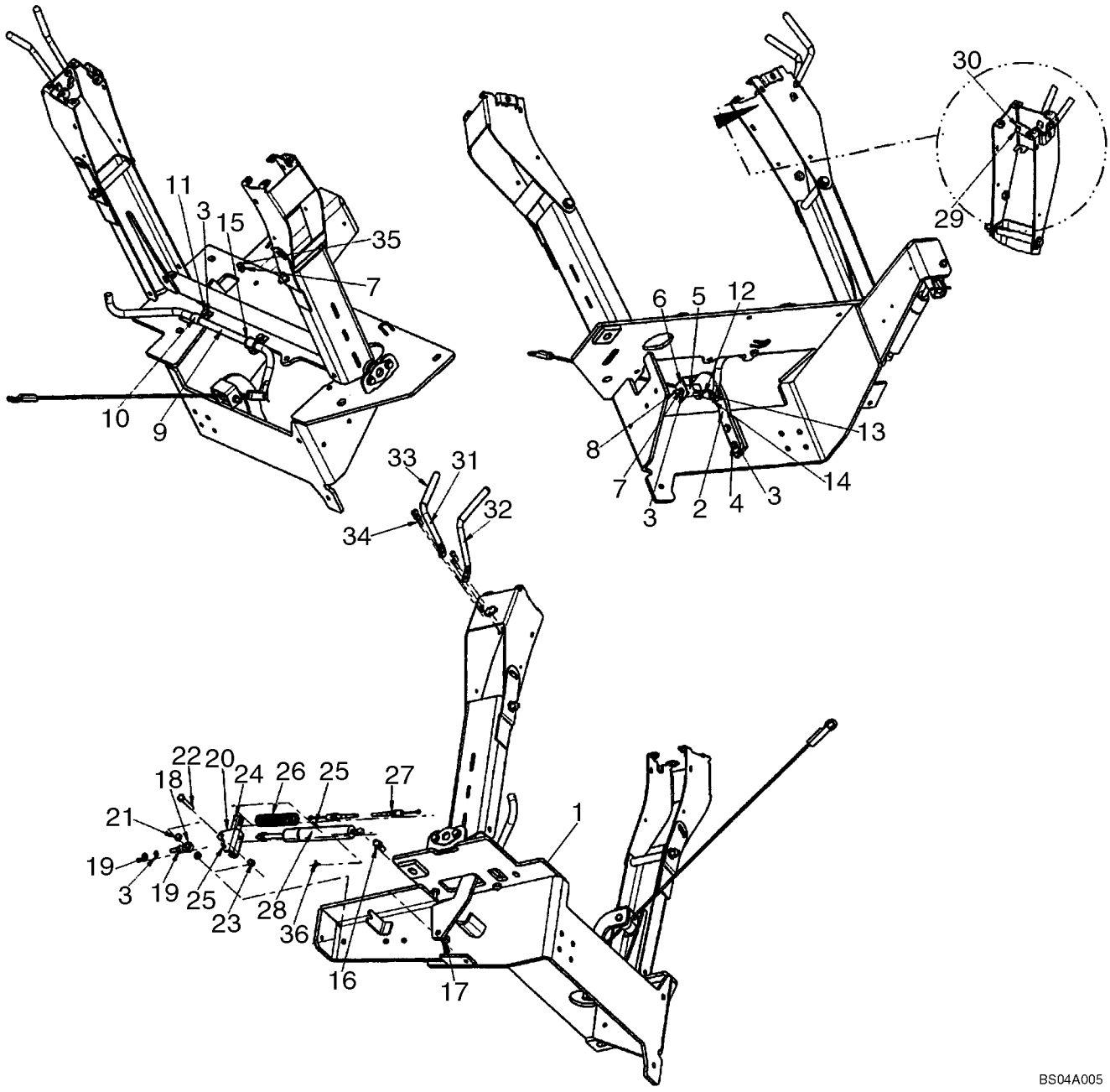

http://www.minnparbackhoeparts.com/

BACKHOE CONTROL TOWER LEVERS (BOOM LATCH), WITH PILOT CONTROLS

REF	FN	PART NUMBER	YR/SN	QTY	DESCRIPTION
1		87440711		1	TOWER Pilot Control Tower Assembly; See Figure 09-13
2		86984544		1	BRACKET Roller Mounting
3		892-11008		6	WASHER Lock, M8
4		614-8030		2	BOLT M8 x 30
5		86984547		2	GUIDE
6		86984545		1	BRACKET
7		829-1408		2	NUT M8
8		814-8070		1	BOLT M8 x 70
9		87422696		1	ROD Boom Latch Release, See Figure 09-25A; 6.50 mm (1/32 in) Mounting Hole At Ref 2 Lever, If Used
9		87441850		1	ROD Boom Latch Release, See Figure 09-25A; 6.00 mm (1/64 in) Mounting Hole At Ref 2 Lever, If Used
10		D143723		2	SHIN Clamp
11		614-8025		2	BOLT M8 x 25
12		87435924		1	CABLE Boom Latch
13		427-5094		1	PIN, CLEVIS 5/16 x 15/16
		895-11008		1	WASHER 9 x 16 x 1.6 mm; Used With Ref 13 and 14
14		432-612		1	PIN, SPLIT (COTTER) 3/32" x 3/4"
15		D143591		2	SNAP RING
16		85824067		1	TRACK ROD END Stud
17		832-10410		1	NUT M10
18		85824081		1	BALL JOINT
19		425-115		2	NUT 5/16
20		85824080		1	BRACKET
21		85821520		2	SPACER
22		413-528		1	BOLT 5/16 x 1-3/4
23		231-1445		1	NUT, LOCK 5/16
24		86984549		1	EXTRUSION Channel
25		432-828		2	PIN, SPLIT (COTTER) 1/8" x 1 3/4"
26		87443692		1	SPRING, TENSION
27		87437806		1	CABLE, FLEXIBLE Pilot Control Positioner
28		86989616		1	GAS STRUT Cylinder
29		140-108		1	SCREW No. 10 x 3/4
30		231-14409		1	NUT, LOCK No. 10
31		87418368		1	ROD Tower Stationary
32		87418369		1	ROD Tower Position

http://www.minnparbackhoeparts.com/

BACKHOE CONTROL TOWER LEVERS (BOOM LATCH), WITH PILOT CONTROLS

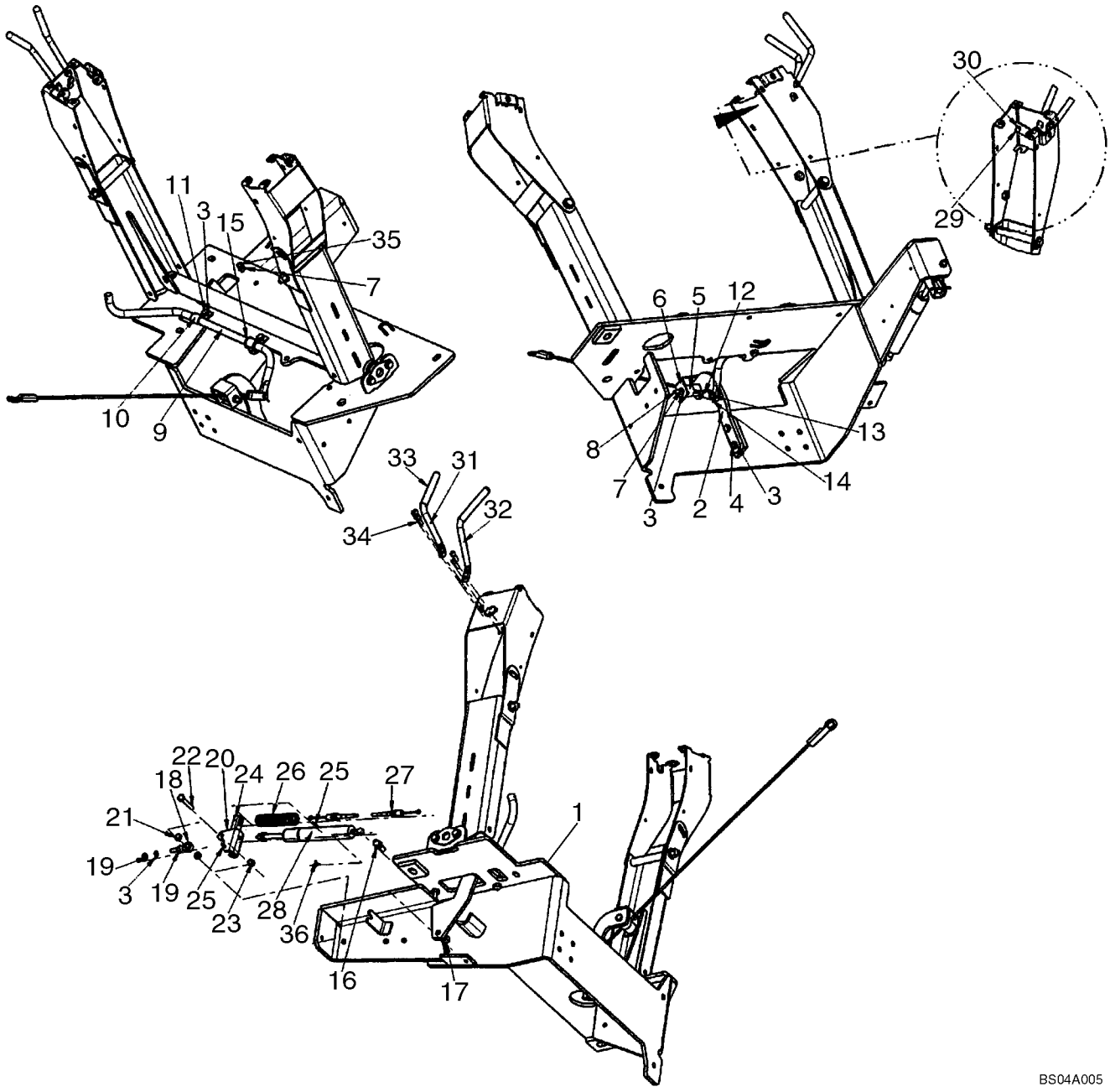

http://www.minnparbackhoeparts.com/

BACKHOE CONTROL TOWER LEVERS (BOOM LATCH), WITH PILOT CONTROLS

REF	FN	PART NUMBER	YR/SN	QTY	DESCRIPTION
33		87442409		2	GRIP
34		565-104		4	SCREW Socket, M6 x 20; If Used
34		87303781		4	BOLT, CARRIAGE HEX FLANGE, M6 x 20, Polished; If Used
34		87310098		4	BOLT Hex Flange, M6 x 20, Black Oxide; If Used
35		614-8050		1	SCREW M8 x 50
36		3233348R1		1	CLIP, ELECTRICAL

http://www.minnparbackhoeparts.com/

09-16		p1	05/05

CONTROLS - BACKHOE, WITH FOOT SWING (MODELS WITHOUT EXTENDABLE DIPPER)

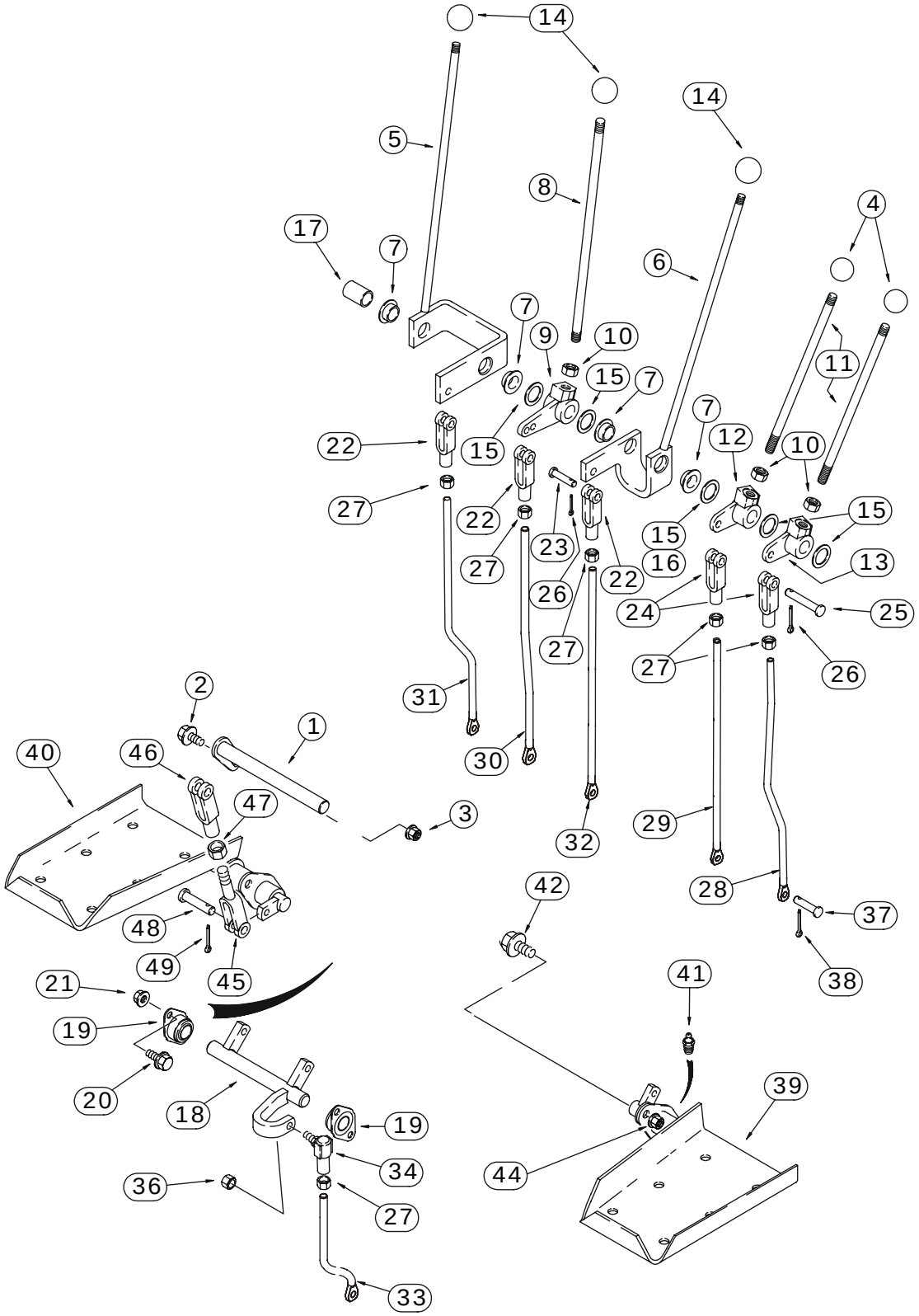

http://www.minnparbackhoeparts.com/

CONTROLS - BACKHOE, WITH FOOT SWING (MODELS WITHOUT EXTENDABLE DIPPER)

REF	FN	PART NUMBER	YR/SN	QTY	DESCRIPTION
1		129015A1		1	SHAFT
2		614-8025		1	BOLT M8 x 25
3		832-10408		1	NUT Lock, M8
4		D59912		2	KNOB Stabilizer Control Levers
5		136267A1		1	LEVER Boom; Incl. Ref 7
6		136269A1		1	LEVER Bucket; Incl. Ref 7
7		D148992		2	BUSHING, LARGE
8		136263A1		1	ROD Dipper
9		D150397		1	LEVER, CRANK Dipper
10		425-118		3	NUT 1/2 NF
11		136261A1		2	THREADED ROD Stabilizer
12		D150435		1	LEVER, CRANK Right-Hand Stabilizer Control
13		D150434		1	LEVER, CRANK Left-Hand Stabilizer Control
14		L54563		3	KNOB Boom, Dipper, and Bucket
15		A30881		X	WASHER 49/64 x 1-15/64 x 1/32; Used As A Shim
16		D34666		1	WASHER 25/32 x 1-3/8 x 9/64; May Be Used In Place Of Ref 15
17		D150486		1	SPACER Not Used On Models With Extendable Dipper
18		D148994		1	SHAFT Swing
19		D139039		2	BEARING
20		614-8025		4	BOLT M8 x 25
21		832-10408		4	NUT Lock, M8
22		213-126		3	CLEVIS 3/8 NF
23		D149288		3	PIN, LARGE Special
24		D150493		2	CLEVIS
25		427-6088		2	PIN, LARGE 3/8 x 7/8
26		432-612		5	PIN, SPLIT (COTTER) 3/32" x 3/4"
27		425-156		6	NUT 3/8 NF
28		87422243		1	ROD, THREADED Left-Hand Stabilizer Control
29		87422245		1	ROD, THREADED Right-Hand Stabilizer Control
30		87422247		1	ROD, THREADED Dipper
31		87422241		1	ROD, THREADED Boom
32		87422249		1	ROD, THREADED Bucket
33		87422239		1	ROD, THREADED Swing
34		D149295		1	BALL JOINT 3/8
36		425-116		1	NUT 3/8 NF

http://www.minnparbackhoeparts.com/

09-16		p2	05/05

CONTROLS - BACKHOE, WITH FOOT SWING (MODELS WITHOUT EXTENDABLE DIPPER)

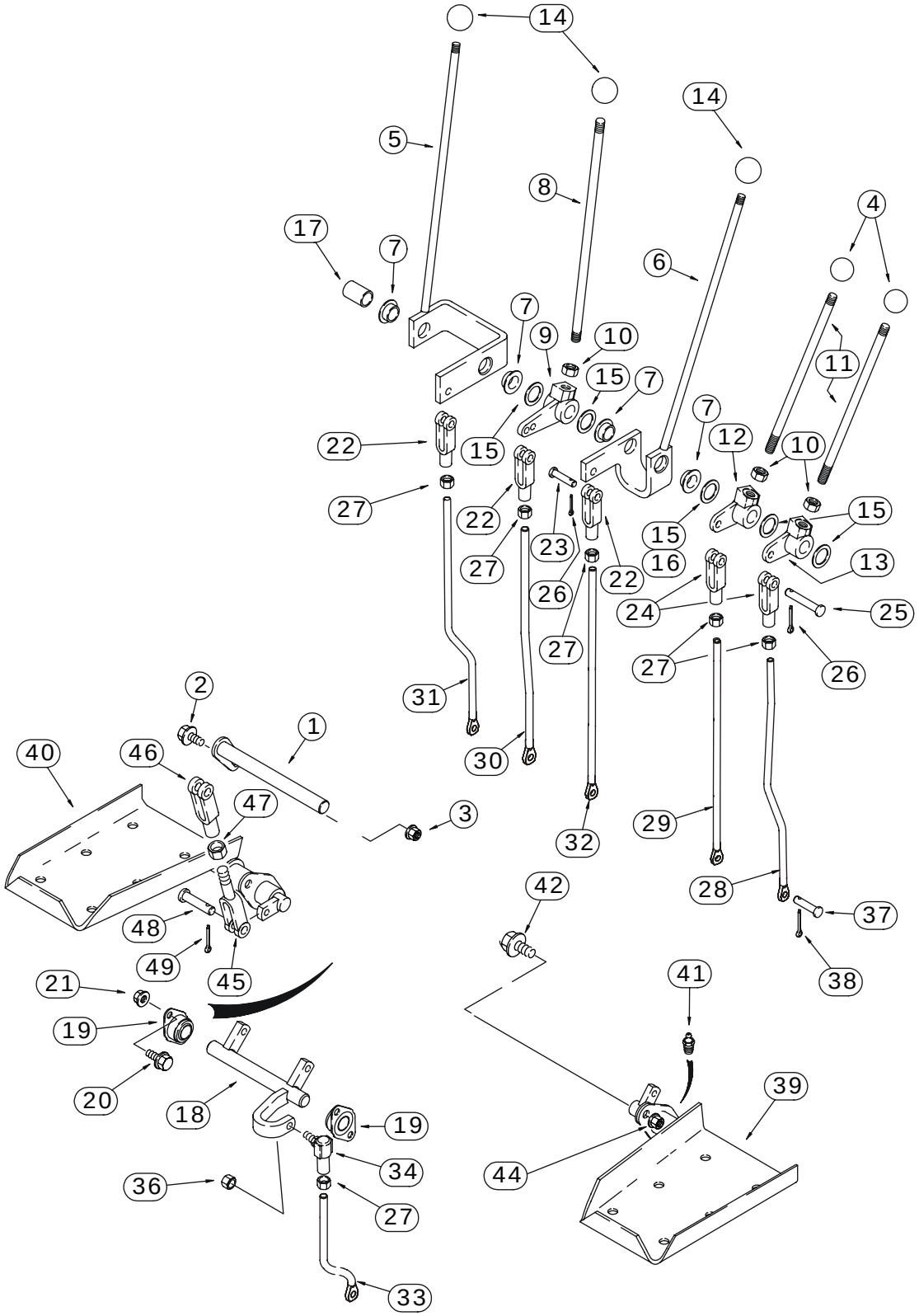

http://www.minnparbackhoeparts.com/

CONTROLS - BACKHOE, WITH FOOT SWING (MODELS WITHOUT EXTENDABLE DIPPER)

REF	FN	PART NUMBER	YR/SN	QTY	DESCRIPTION
37		D149287		6	PIN, LARGE 5/16
38		432-612		6	PIN, SPLIT (COTTER) 3/32" x 3/4"
39		136271A2		1	PEDAL ASSY. Left-Hand Swing; Without Pilot Controls
40		136270A2		1	PEDAL ASSY. Right-Hand Swing; Without Pilot Controls
41		219-1		2	NIPPLE, LUBE 1/8 PT x 21/32
42		614-10025		4	BOLT M10 x 25
44		832-10410		4	NUT Lock, M10
45		D150503		2	END Yoke
46		D149262		2	CLEVIS 3/8
47		425-156		2	NUT 3/8 NF
48		D149288		4	PIN, LARGE 3/8
49		432-612		4	PIN, SPLIT (COTTER) 3/32" x 3/4"

http://www.minnparbackhoeparts.com/

CONTROLS - BACKHOE, WITH FOOT SWING (MODELS WITH EXTENDABLE DIPPER)

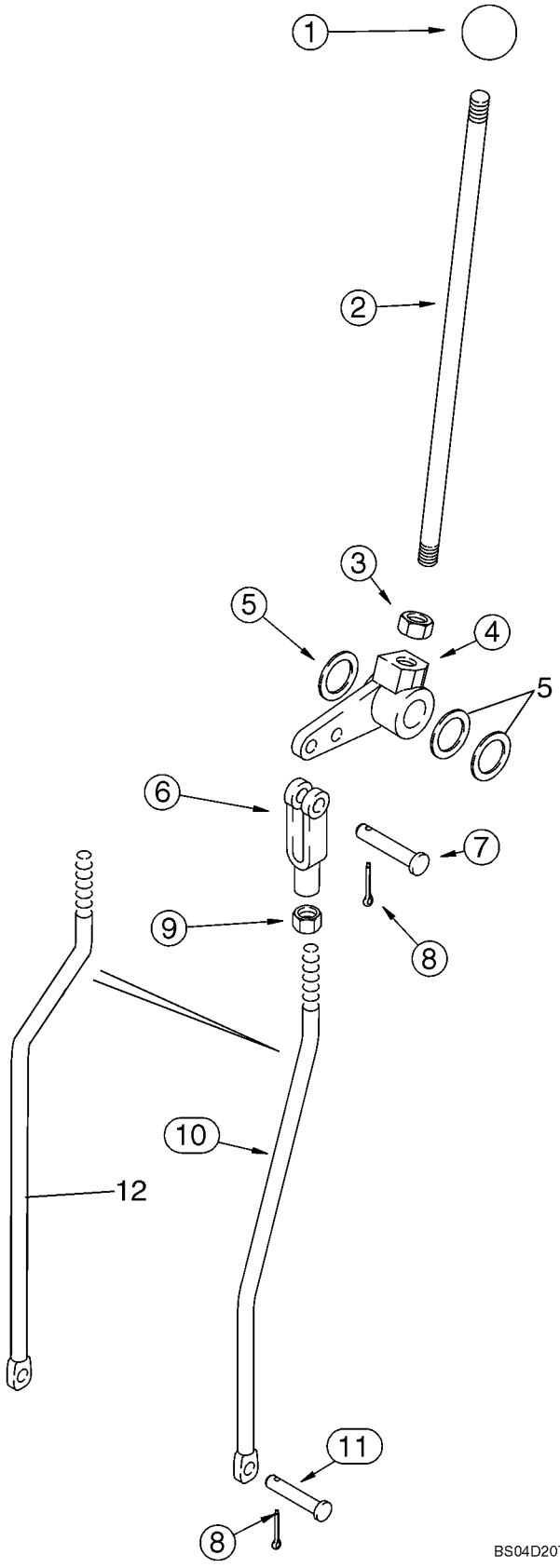

http://www.minnparbackhoeparts.com/

CONTROLS - BACKHOE, WITH FOOT SWING (MODELS WITH EXTENDABLE DIPPER)

REF	FN	PART NUMBER	YR/SN	QTY	DESCRIPTION
1		L54563		1	KNOB Extendahoe
2		136263A1		1	ROD Extendahoe
3		425-118		1	NUT 1/2 NF
4		182006A1		1	LEVER Bellcrank
5		A30881		X	WASHER 49/64 x 1-15/64 x 1/32
6		213-126		1	CLEVIS 3/8 NF
7		427-6088		1	PIN, LARGE 3/8 x 7/8
8		432-612		2	PIN, SPLIT (COTTER) 3/32" x 3/4"
9		425-156		1	NUT 3/8 NF
10		87440076		1	ROD, THREADED Extendahoe Rod; Mounts In Outer Bellcrank Lever Hole; If Used; No Longer Available, Order 87446113 Rod, Ref 12
11		D149287		1	PIN, LARGE
12		87446113		1	ROD, THREADED Extendahoe Rod; Mounts In Inner Bellcrank Lever Hole; If Used

http://www.minnparbackhoeparts.com/

09-18		p1	05/05

CONTROLS - BACKHOE, WITH HAND SWING (MODELS WITHOUT EXTENDABLE DIPPER)

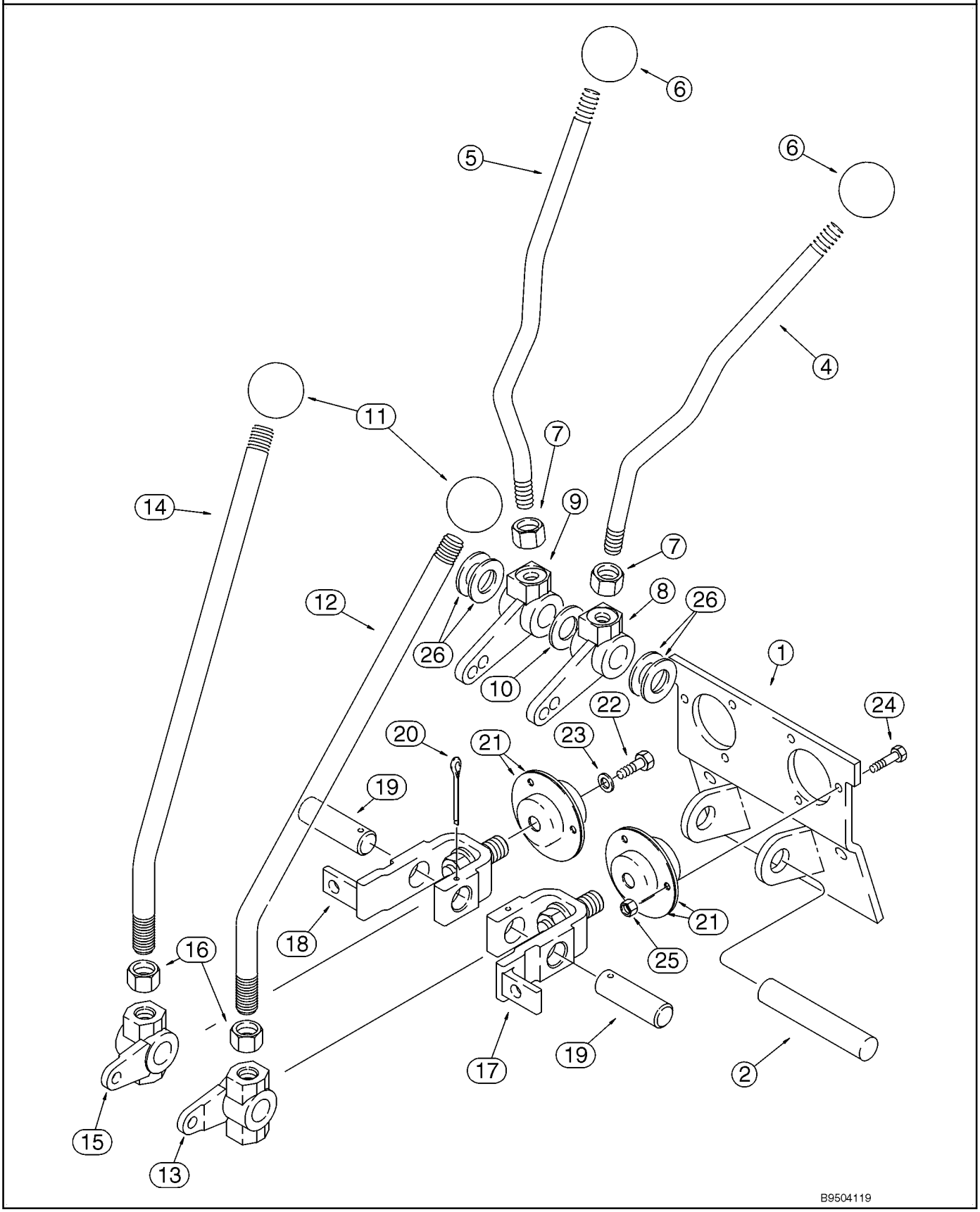

http://www.minnparbackhoeparts.com/

CONTROLS - BACKHOE, WITH HAND SWING (MODELS WITHOUT EXTENDABLE DIPPER)

REF	FN	PART NUMBER	YR/SN	QTY	DESCRIPTION
		REF			INSTRUCTION UPPER CONTROL LEVERS
1		108864A1		1	SUPPORT
2		D148947		1	PIN, LARGE Stabilizer
4		409672A1		1	LEVER Left-Hand; Stabilizer
5		409673A1		1	LEVER Right-Hand; Stabilizer
6		D59912		2	KNOB Stabilizer
7		425-118		2	NUT 1/2 NF
8		108924A1		1	LEVER
9		108923A1		1	LEVER
10		495-11081		1	WASHER 13/16 x 1-15/32 x 1/8
11		D39118		2	KNOB
12		125113A1		1	LEVER Boom and Swing
13		106989A1		1	LEVER Left-Hand Boom and Swing Lever
14		125113A1		1	LEVER Bucket and Dipper
15		106990A1		1	LEVER Right-Hand Bucket and Dipper Lever
16		425-1110		2	NUT 5/8 NF
17		178006A1		1	LEVER Boom and Swing
18		178004A1		1	LEVER Bucket and Dipper
19		102765A1		2	PIN, LARGE Bellcrank
20		432-828		2	PIN, SPLIT (COTTER) 1/8" x 1 3/4"
21		112380A1		4	BEARING
22		614-6016		2	BOLT M6 x 16
23		396-41028		2	WASHER 9/32 x 7/8 x 3/32
24		614-6020		6	BOLT M6 x 20
25		829-1406		6	NUT M6; 10.9
26		A30881		X	WASHER 49/64 x 1-15/64 x 1/32

http://www.minnparbackhoeparts.com/

09-19		p1	05/05

CONTROLS - BACKHOE, WITH HAND SWING (MODELS WITHOUT EXTENDABLE DIPPER)

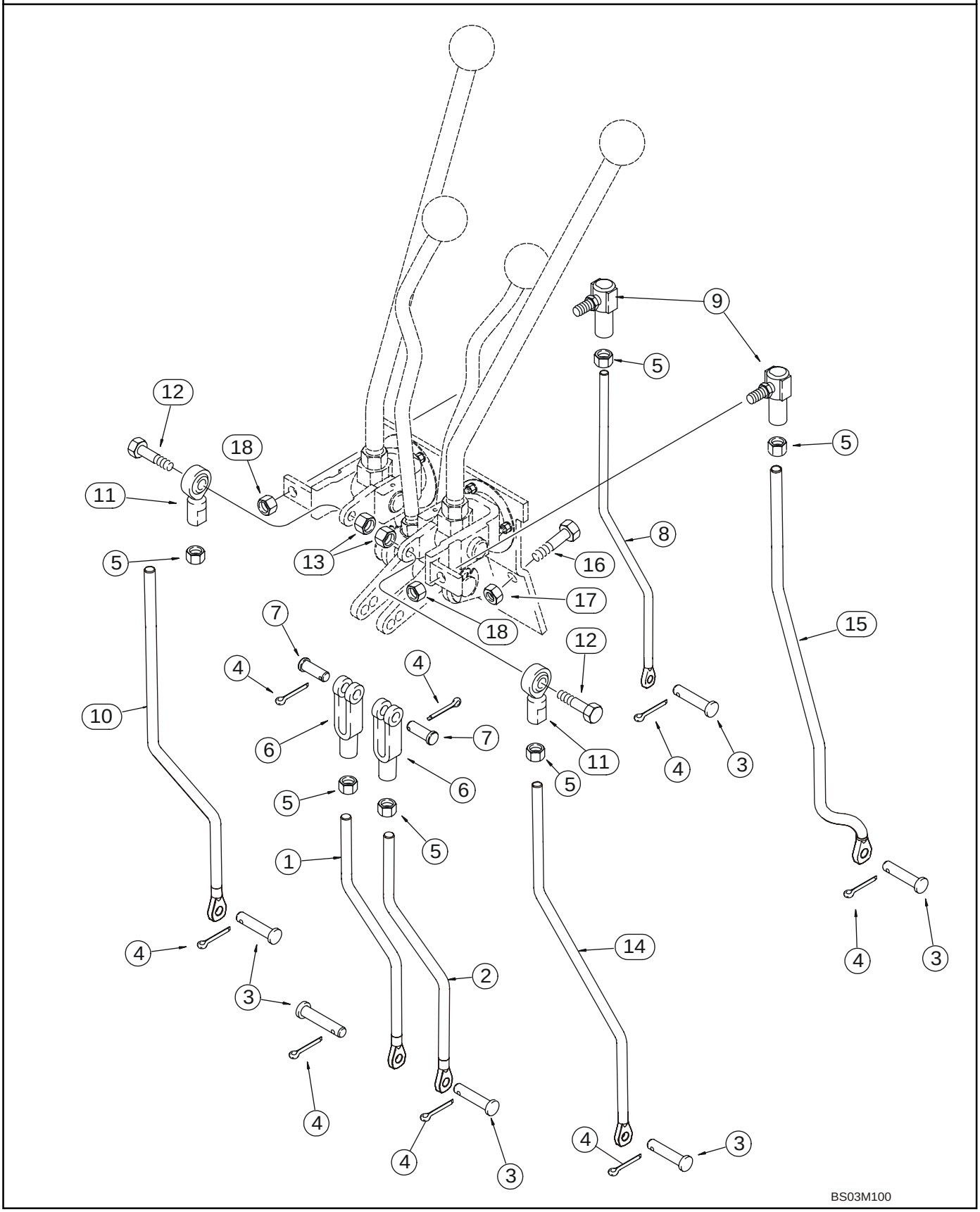

http://www.minnparbackhoeparts.com/

CONTROLS - BACKHOE, WITH HAND SWING (MODELS WITHOUT EXTENDABLE DIPPER)

REF	FN	PART NUMBER	YR/SN	QTY	DESCRIPTION
		REF			INSTRUCTION LOWER CONTROL LEVERS
1		87422260		1	ROD, THREADED Right-Hand; Stabilizer; 262.6 mm (10-11/32 in) Long; No Longer Available, Order 87452406 Rod; If Replacing Either LH or RH 10-11/32 Inch Rod, You Must Order Both LH and RH 11-9/32 Inch Rods
1		87452406		1	ROD, THREADED Right-Hand; Stabilizer; 286.6 mm (11-9/32 in) Long
2		87422258		1	ROD, THREADED Left-Hand; Stabilizer; 262.6 mm (10-11/32 in) Long; No Longer Available, Order 87452404 Rod; If Replacing Either LH or RH 10-11/32 Inch Rod, You Must Order Both LH and RH 11-9/32 Inch Rods
2		87452404		1	ROD, THREADED Left-Hand; Stabilizer; 286.6 mm (11-9/32 in) Long
3		D149287		6	PIN, LARGE
4		432-612		8	PIN, SPLIT (COTTER) 3/32" x 3/4"
5		425-116		6	NUT 3/8 NF
6		213-126		2	CLEVIS 3/8 NF
7		D149288		2	PIN, LARGE Special
8		87422264		1	ROD, THREADED Bucket
9		D149295		2	BALL JOINT
10		87422262		1	ROD, THREADED Dipper
11		D136773		2	BALL JOINT 3/8 NF
12		413-624		2	BOLT 3/8 x 1-1/2
13		425-106		2	NUT 3/8
14		87422256		1	ROD, THREADED Boom
15		87422253		1	ROD, THREADED Swing
16		614-10025		2	BOLT M10 x 25
17		832-10410		2	NUT M10
18		231-2446		2	NUT 3/8 NF

http://www.minnparbackhoeparts.com/

CONTROLS - BACKHOE, EXCAVATOR CONTROL PATTERN

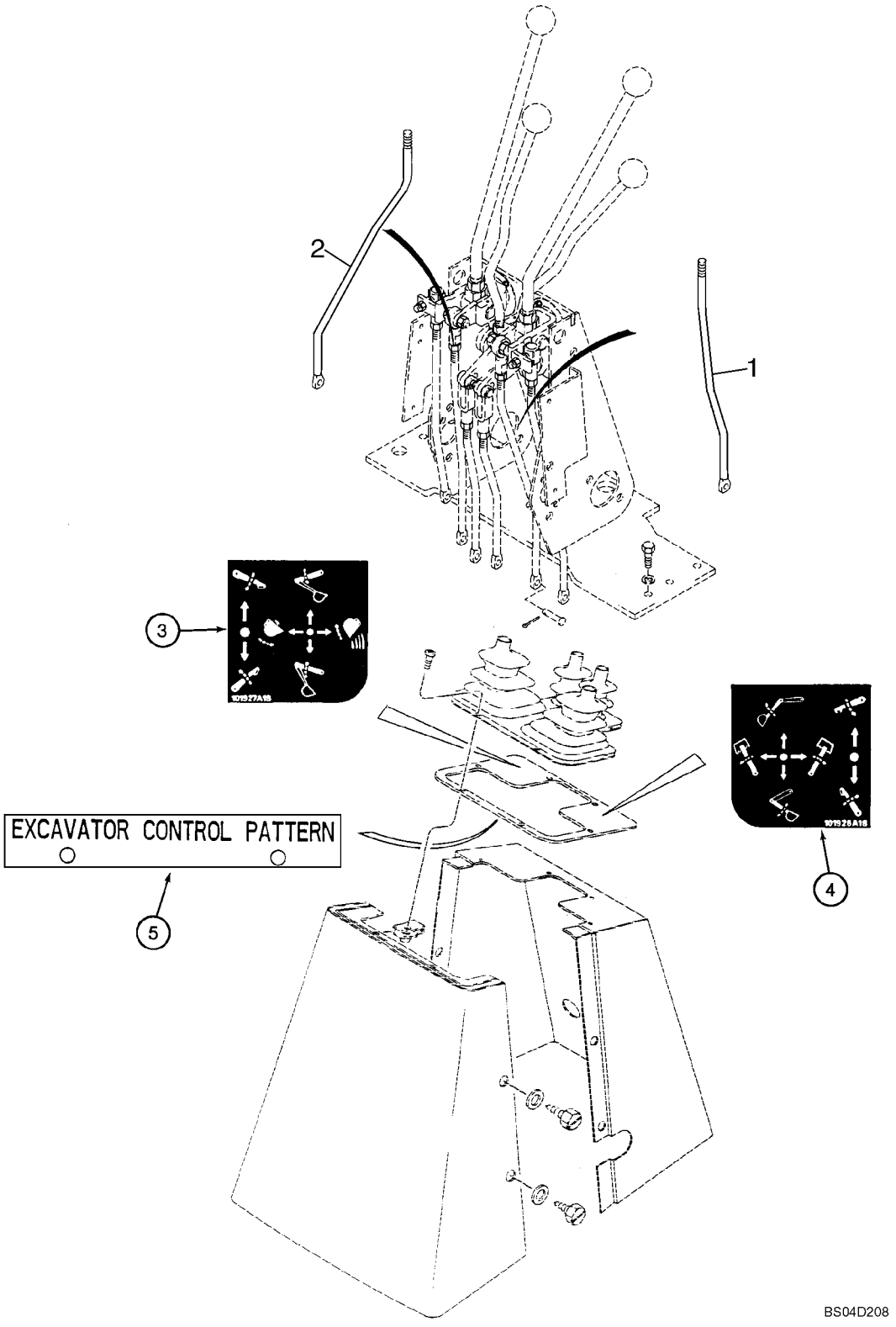

http://www.minnparbackhoeparts.com/

CONTROLS - BACKHOE, EXCAVATOR CONTROL PATTERN

REF	FN	PART NUMBER	YR/SN	QTY	DESCRIPTION
		87447088		1	KIT, SERVICE Excavator Control Pattern; Incl. Ref 1 - 5; Purchase From Parts and Components; Machine Must Be Equipped With Hand Swing Controls; If Machine Is Equipped With Foot Swing Controls, Foot Swing to Hand Swing Controls Kit Must Be Ordered and Installed First
1		87422272		1	ROD, THREADED Dipper; Replaces Existing Boom Control Rod; Right-Hand Control Lever Which Used To Control The Dipper, Now Controls The Boom
2		87422270		1	ROD, THREADED Boom; Replaces Existing Dipper Control Rod; The Left-Hand Control Lever Which Used To Control The Boom, Now Controls The Dipper
3		E49498		1	DECAL Control; Right-Hand
4		E49497		1	DECAL Control; Left-Hand
5		198410A1		1	PLATE, LARGE Excavator Control Pattern

http://www.minnparbackhoeparts.com/

09-20		p1	05/05

CONTROLS - BACKHOE, WITH HAND SWING (MODELS WITH EXTENDABLE DIPPER)

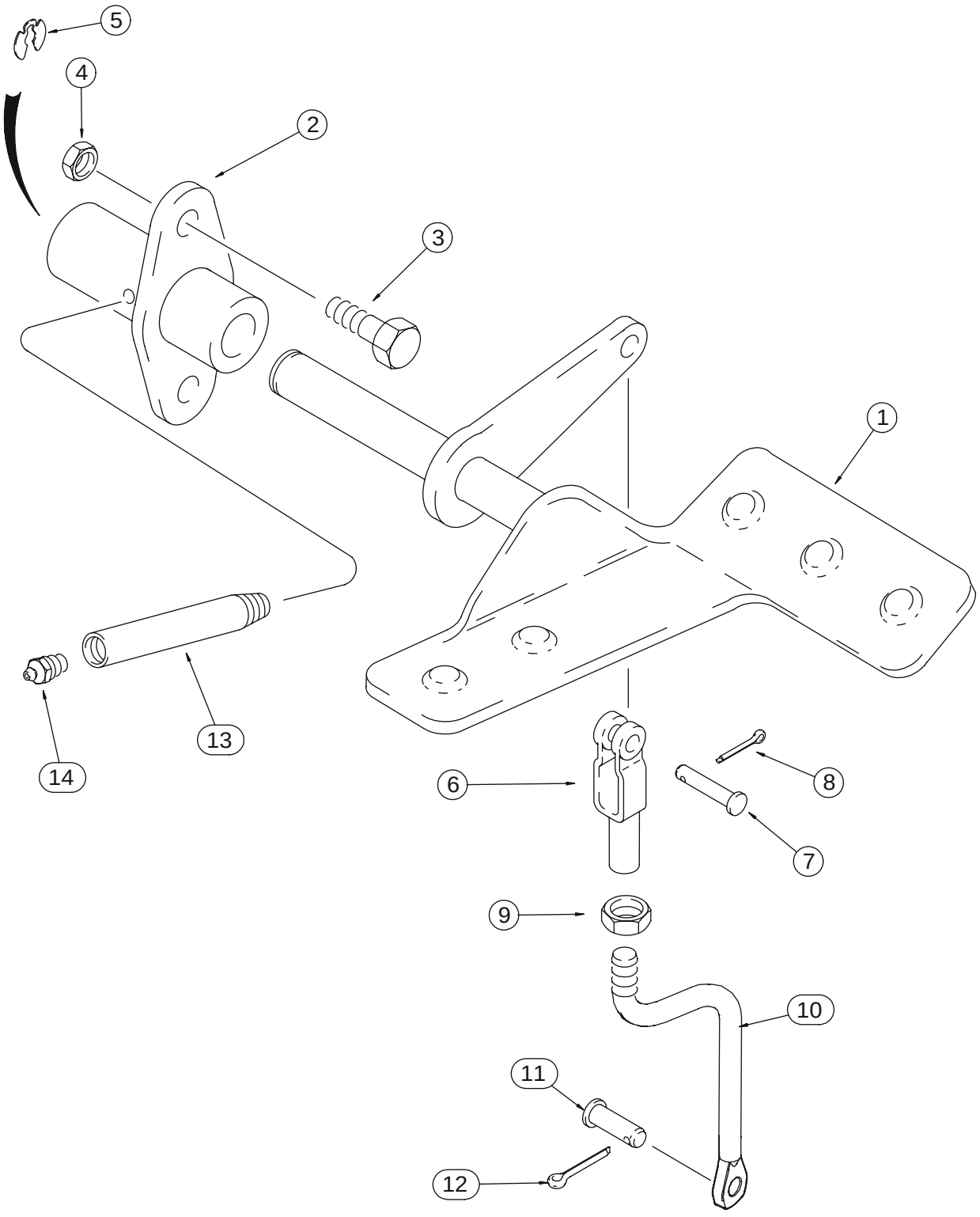

http://www.minnparbackhoeparts.com/

CONTROLS - BACKHOE, WITH HAND SWING (MODELS WITH EXTENDABLE DIPPER)

REF	FN	PART NUMBER	YR/SN	QTY	DESCRIPTION
1		179029A1		1	PEDAL Right-Hand; Extendahoe
2		126918A1		1	SUPPORT ASSY.
3		614-10025		2	BOLT M10 x 25
4		832-10410		2	NUT M10
5		D143416		1	SNAP RING
6		D134900		1	CLEVIS
7		427-6088		1	PIN, LARGE 3/8 x 7/8
8		432-612		1	PIN, SPLIT (COTTER) 3/32" x 3/4"
9		425-156		1	NUT 3/8 NF
10		87440058		1	ROD, THREADED Extendahoe Rod
11		D149287		1	PIN, LARGE
12		432-612		1	PIN, SPLIT (COTTER) 3/32" x 3/4"
13		D150032		1	TUBE Lube
14		219-1		1	NIPPLE, LUBE 1/8 PT x 21/32

http://www.minnparbackhoeparts.com/

CONTROLS - BACKHOE AUXILIARY HYDRAULICS, WITHOUT PILOT CONTROLS

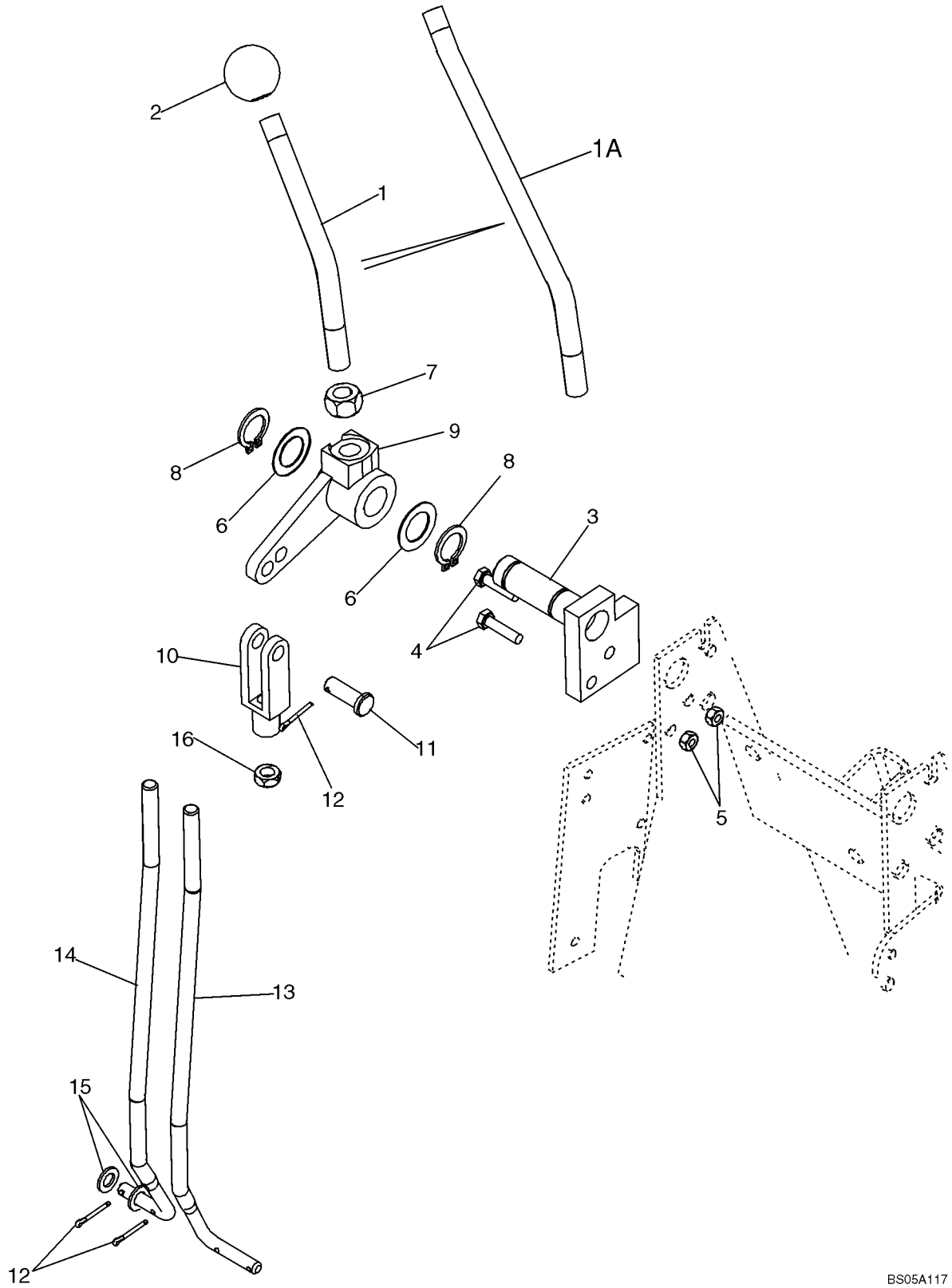

http://www.minnparbackhoeparts.com/

CONTROLS - BACKHOE AUXILIARY HYDRAULICS, WITHOUT PILOT CONTROLS

REF	FN	PART NUMBER	YR/SN	QTY	DESCRIPTION
1		87425118		1	ROD, THREADED Auxiliary Control; 143 mm (5-5/8 in) long; If Used
1A		221477A1		1	THREADED ROD Auxiliary Control; 250 mm (9-27/32 in) long; If Used
2		D59912		1	KNOB
3		87425117		1	PIVOT ASSY. 7 or 8 Spool Valve
4		614-6025		2	BOLT M6 x 25
5		829-1406		2	NUT M6; 10.9
6		A30881		2	WASHER Used As A Shim
7		425-118		1	NUT Hex, 1/2
8		103-1475		2	SNAP RING No. 75
9		182006A1		1	LEVER
10		213-126		1	CLEVIS 3/8
11		D149288		1	PIN, LARGE Clevis, 3/8
12		432-612		3	PIN, SPLIT (COTTER) 3/32" x 3/4"
13		87439135		1	ROD, THREADED 7 Spool Valve; If Used
14		87438157		1	ROD, THREADED 8 Spool Valve; If Used
15		895-11008		2	WASHER 9 x 17 x 1,6 mm
16		425-156		1	NUT Hex, Jam, 3/8 NF

http://www.minnparbackhoeparts.com/

BACKHOE - STABILIZERS, PLATES AND PADS (580SM)

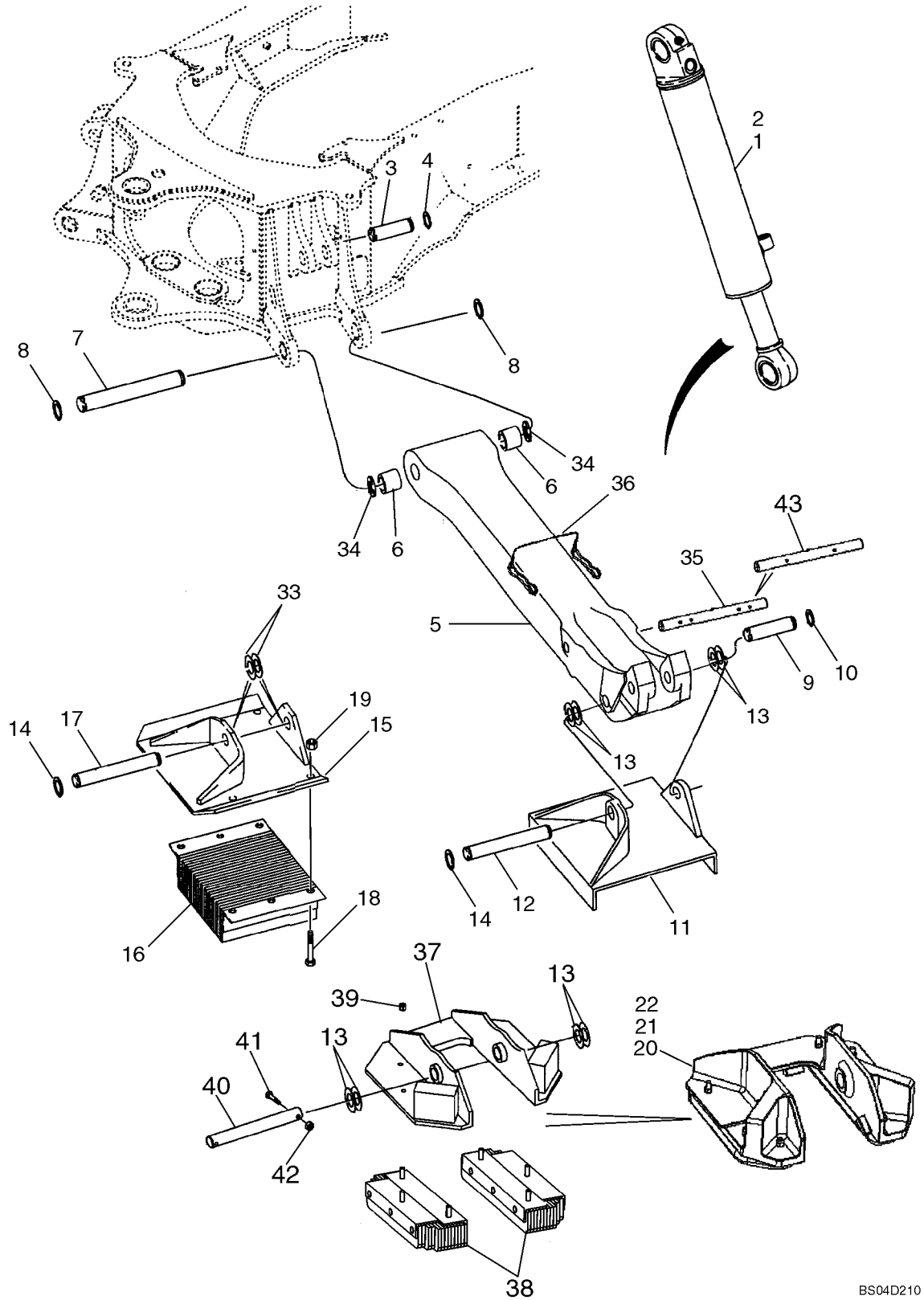

http://www.minnparbackhoeparts.com/

BACKHOE - STABILIZERS, PLATES AND PADS (580SM)

REF	FN	PART NUMBER	YR/SN	QTY	DESCRIPTION
1		199720A1		1	CYLINDER ASSY. 108 ID x 553 mm strk; Stabilizer; Right-Hand; See Figure 08-65; 580SM Models
2		199721A1		1	CYLINDER ASSY. 108 ID x 553 mm strk; Stabilizer; Left-Hand; See Figure 08-65; 580SM Models
3		D38907		2	PIN Stabilizer Cylinder to Chassis
4		103-16175		4	SNAP RING No. 175
5		446222A1		2	STABILIZER 1135 mm (44-11/16 in); Incl. Ref 6
6		D50146		2	BUSHING, LARGE
7		121665A1		2	PIN, LARGE Stabilizer Leg to Chassis
8		103-16175		4	SNAP RING No. 175
9		D26002		2	PIN Stabilizer Cylinder
10		D25279		4	SNAP RING
11		D88427		2	PLATE Cleated; If Used
12		D28648		2	PIN Plate/Pad to Leg
13		D143406		X	WASHER Used as a Spacer
14		D25279		4	SNAP RING
15		D142519		2	SHOE (ASSY) Street or Cemetery; If Used
16		D61368		2	SHOCK ABSORBER Rubber; If Used
17		D39256		2	PIN, AXLE Plate to Leg
18		413-1228		8	SCREW 3/4 x 1-3/4
19		425-1012		8	NUT 3/4
20		408398A1		2	PAD PLATE, Anti-Flipover; No Longer Available, Order Ref 37 - 43
21		339680A2		4	PAD, RUBBER Anti-Flipover; Used With 408398A1 Plate, Ref 20
22		832-41312		16	NUT M12; If Used
33		D143406		X	WASHER Used as a Spacer
34		495-81282		X	WASHER 2-1/16 x 3 x 3/32; Used as a Spacer
35		408405A1		2	PIN, PIVOT Anti-Flip; Used With 408398A1 Pad, Ref 20
36		446454A1		2	PIN, LOCK Used With 408398A1 Pad, Ref 20 or 386000A2 Pad, Ref 37
37		386000A2		2	PAD Anti-Flipover
38		395753A2		4	PAD, RUBBER Used With 386000A2 Pad
39		231-4247		12	NUT
40		D149033		2	PIN, LARGE
41		413-632		4	BOLT 3/8 x 2

http://www.minnparbackhoeparts.com/

BACKHOE - STABILIZERS, PLATES AND PADS (580SM)

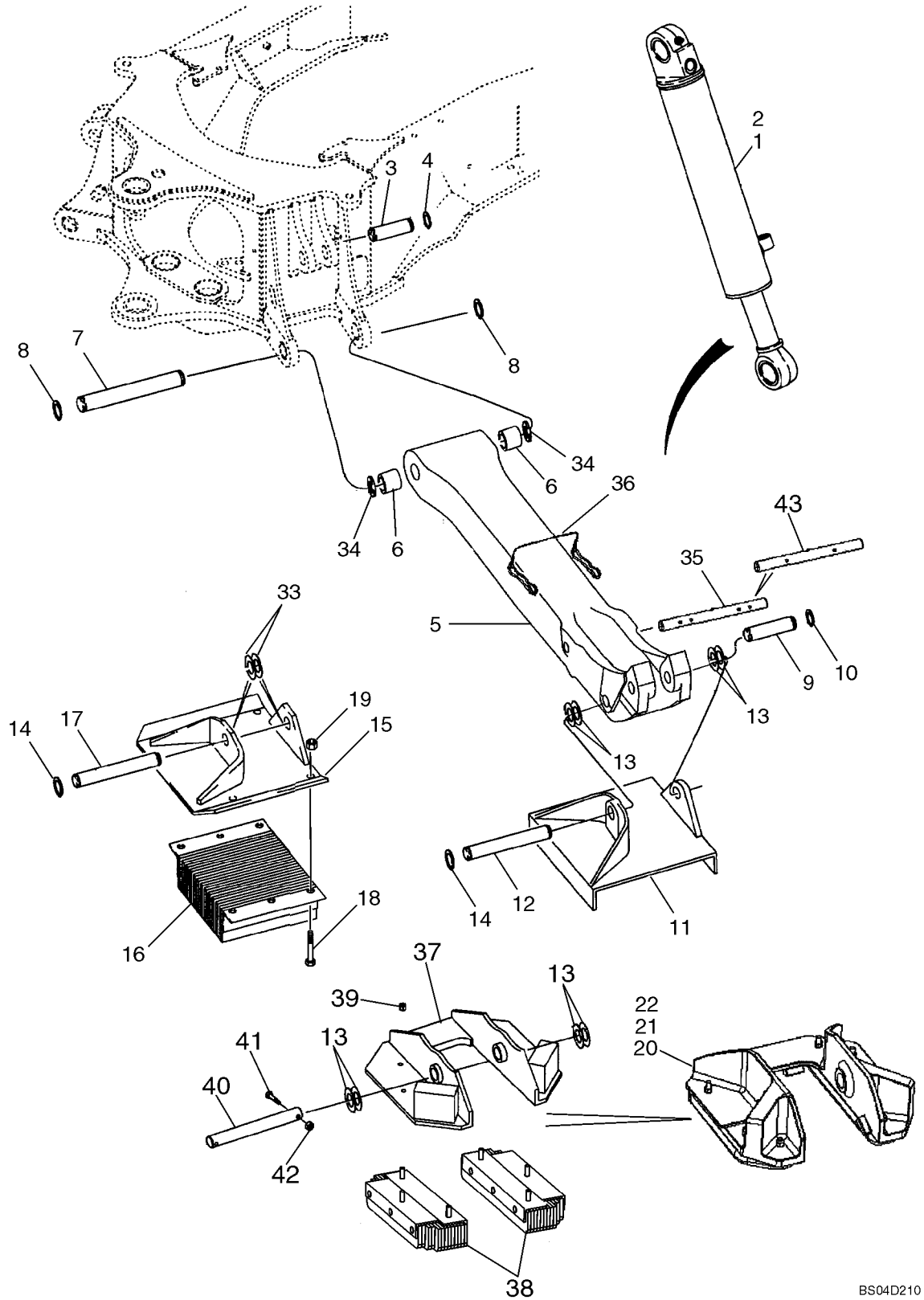

http://www.minnparbackhoeparts.com/

BACKHOE - STABILIZERS, PLATES AND PADS (580SM)

REF	FN	PART NUMBER	YR/SN	QTY	DESCRIPTION
42		230-4216		4	NUT 3/8
43		87436782		2	PIN, PIVOT Anti-Flipover; Used With 386000A2 Pad, Ref 37
43		87436782		2	PIN, PIVOT Anti-Flipover; Used With 386000A2 Pad, Ref 37

http://www.minnparbackhoeparts.com/

09-22A		p1	04/04

BACKHOE - STABILIZERS, PLATES AND PADS (580SM+)

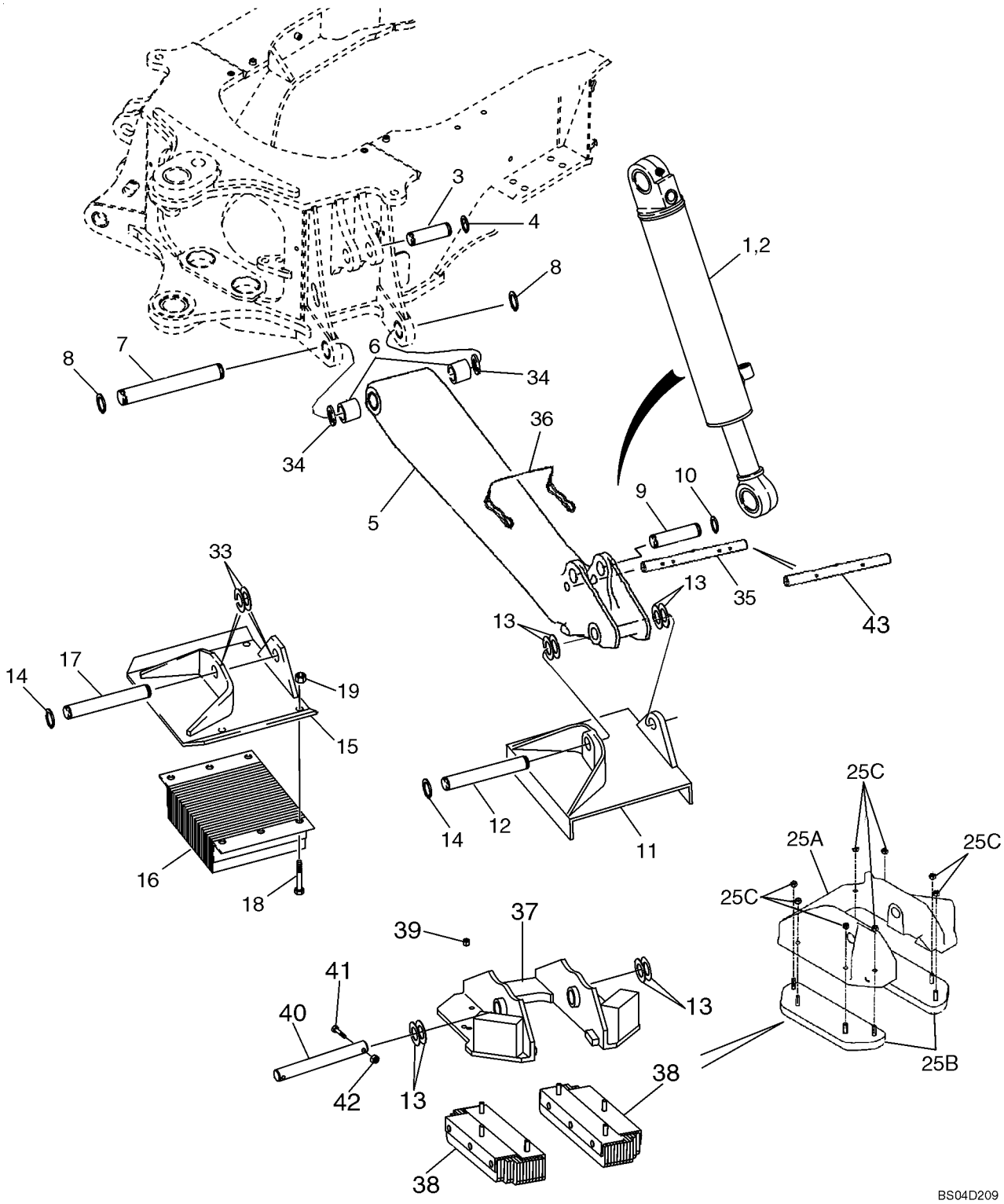

http://www.minnparbackhoeparts.com/

BACKHOE - STABILIZERS, PLATES AND PADS (580SM+)

REF	FN	PART NUMBER	YR/SN	QTY	DESCRIPTION
1		177256A1		1	CYLINDER 127 ID x 519 mm strk; Stabilizer; Right-Hand; See Figure 08-65A; 580SM+ Models
2		177257A1		1	CYLINDER ASSY. 127 ID x 519 mm strk; Stabilizer; Left-Hand; See Figure 08-65A; 580SM+ Models
3		D38907		2	PIN Stabilizer Cylinder to Chassis
4		103-16175		4	SNAP RING No. 175
5		446220A1		2	STABILIZER 1307 mm (51-7/16 in); Incl. Ref 6
6		D50146		2	BUSHING, LARGE
7		121665A1		2	PIN, LARGE Stabilizer Leg to Chassis
8		103-16175		4	SNAP RING No. 175
9		R26725		2	PIN, LARGE Stabilizer Cylinder
10		D25279		4	SNAP RING
11		D88427		2	PLATE Cleated; If Used
12		D28648		2	PIN Plate/Pad to Leg
13		D143406		X	WASHER Used as a Spacer
14		D25279		4	SNAP RING
15		D142519		2	SHOE (ASSY) Street or Cemetery; If Used
16		D61368		2	SHOCK ABSORBER Rubber; If Used
17		D39256		2	PIN, AXLE Plate to Leg
18		413-1228		8	SCREW 3/4 x 1-3/4
19		425-1012		8	NUT 3/4
25A		408399A1		2	PAD PLATE, Anti-Flipover; No Longer Available, Order Ref 37 - 43
25B		339680A2		4	PAD, RUBBER Anti-Flipover; Used With 408399A1 Plate, Ref 25A
25C		832-41312		16	NUT M12; If Used
33		D143406		X	WASHER Used as a Spacer
34		495-81282		X	WASHER 2-1/16 x 3 x 3/32; Used as a Spacer
35		408405A1		2	PIN, PIVOT Used With 408399A1 Pad, Ref 25A
36		446454A1		2	PIN, LOCK Used With 408399A1 Pad or 400880A1 Pad
37		400880A1		2	PAD PLATE, Anti-Flipover
38		395753A2		4	PAD, RUBBER Used With 400880A1 Pad
39		231-4247		12	NUT
40		D149033		2	PIN, LARGE
41		413-632		4	BOLT 3/8 x 2
42		230-4216		4	NUT 3/8

http://www.minnparbackhoeparts.com/

09-22A		p2	04/04

BACKHOE - STABILIZERS, PLATES AND PADS (580SM+)

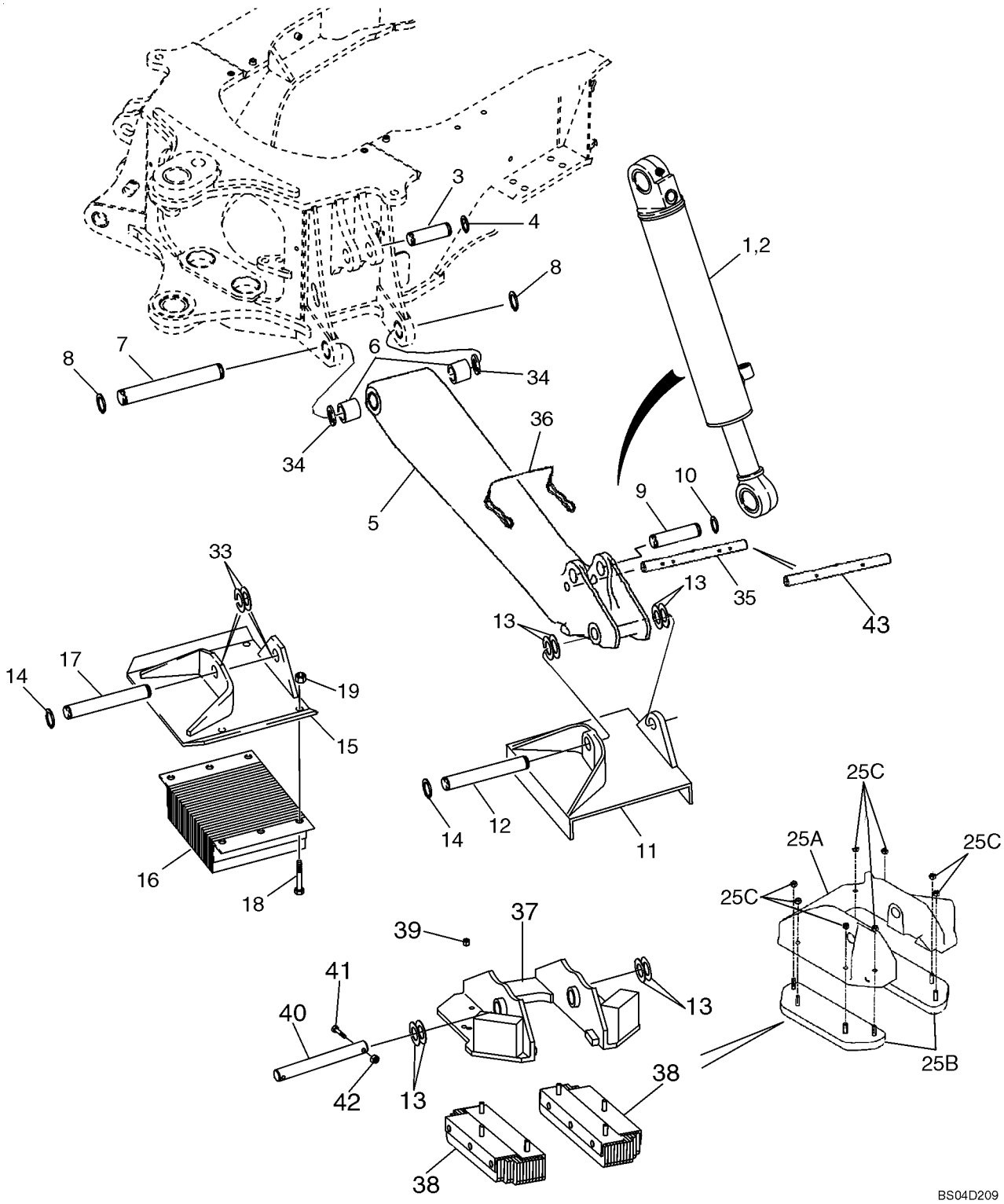

http://www.minnparbackhoeparts.com/

BACKHOE - STABILIZERS, PLATES AND PADS (580SM+)

REF	FN	PART NUMBER	YR/SN	QTY	DESCRIPTION
43		87436783		2	PIN, PIVOT Anti-Flipover; Used With 400880A1 Pad, Ref 37

http://www.minnparbackhoeparts.com/

BACKHOE - SWING TOWER AND SWING CYLINDERS

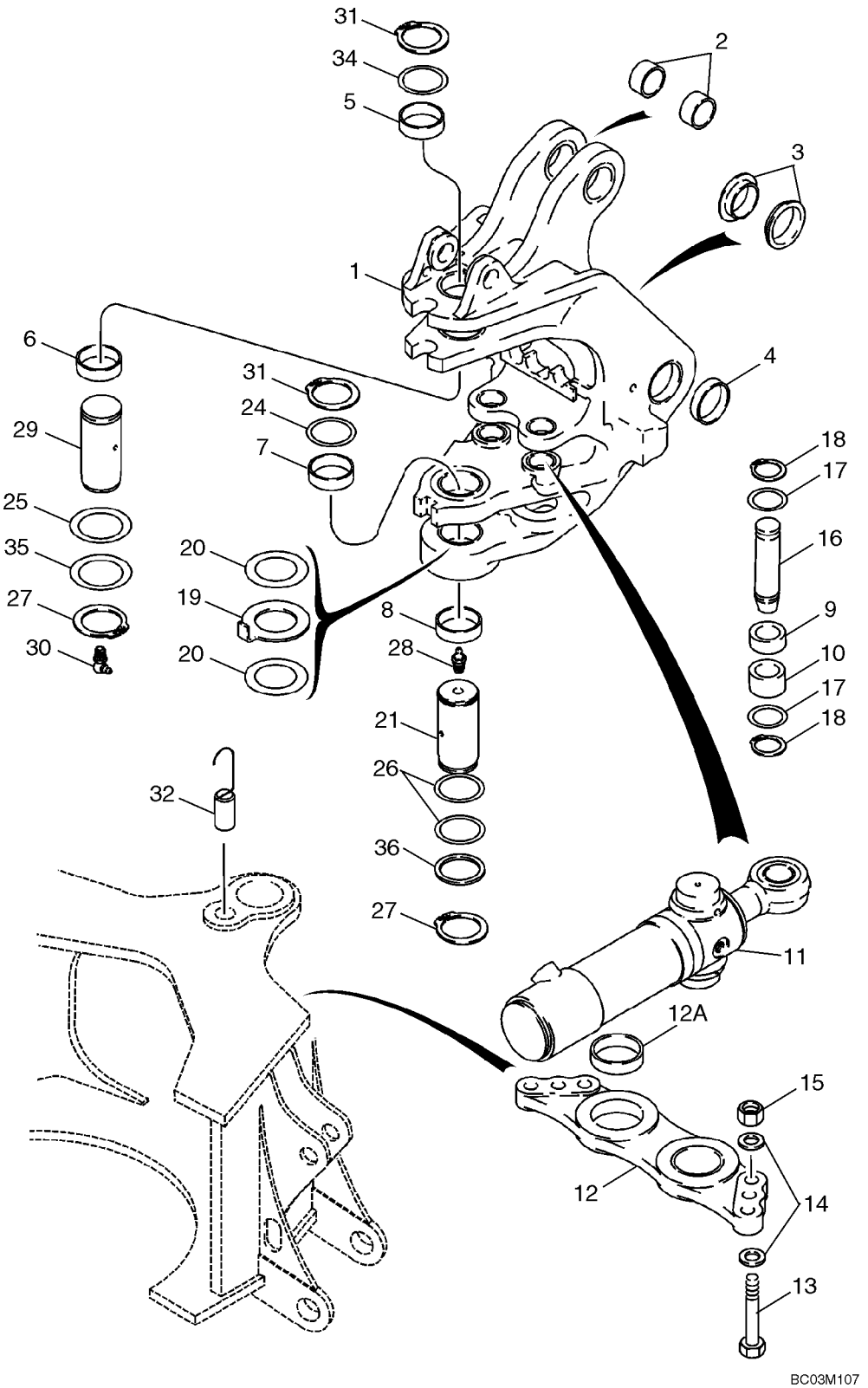

http://www.minnparbackhoeparts.com/

BACKHOE - SWING TOWER AND SWING CYLINDERS

REF	FN	PART NUMBER	YR/SN	QTY	DESCRIPTION
1		326805A1		1	CHASSIS SWING TOWER; Incl. Ref 2 - 10
2		191017A1		2	BUSHING
3		121778A1		2	BUSHING
4		D135741		2	BUSHING
5		D135557		1	BUSHING
6		D135559		1	BUSHING
7		D151073		1	BUSHING
8		D151074		1	BUSHING 70 x 86 x 28 mm lg
9		135249A1		2	BUSHING 28.6 mm lg
10		135248A1		2	BUSHING 38.1 mm lg
11		139808A2		2	CYLINDER ASSY. 102 ID x 292 mm strk; Swing; See Figure 08-66
12		198976A1		1	PLATE, LARGE Incl. Ref 12A
12A		114318A1		2	BUSHING 80 x 90 x 29.3 mm
13		827-20075		6	SCREW M20 x 75; 10.9
14		896-11020		12	WASHER 22 x 37 x 4 mm
15		829-1420		6	NUT M20, Cl 10
16		386092A1		2	PIN, LARGE Swing Cylinder Rod End
17		495-81227		4	WASHER 2-1/16 x 2-15/16 x 1/16
18		103-16200		4	SNAP RING No. 200
19		243084A1		1	WASHER 5 mm thk
20		134167A1		X	SHIM 2.05 mm (.08 in) thk
21		D151065		1	PIN, LARGE
24		D136392		X	SHIM 72 x 89 x 3.0 mm; Upper
25		D136700		X	SHIM 67 x 83 x 2.0 mm
26		D136391		X	SHIM 72 x 89 x 1.6 mm
27		800-40065		2	SNAP RING
28		219-1		1	NIPPLE, LUBE 1/8 PT x 21/32
29		292385A1		1	PIN, LARGE
30		219-55		1	NIPPLE, LUBE 90 deg, 1/8 PT x 27/32
31		800-40070		2	SNAP RING
32		384815A1		1	PIN ASSY. Swing Stop
34		293636A1		1	WASHER Upper
35		D144423		X	WASHER 2-5/8 x 3-3/8 x 1/8; Used As A Shim
36		D136700		1	SHIM Washer

http://www.minnparbackhoeparts.com/

09-24		p1	04/05

BACKHOE - BOOM AND SWING TOWER

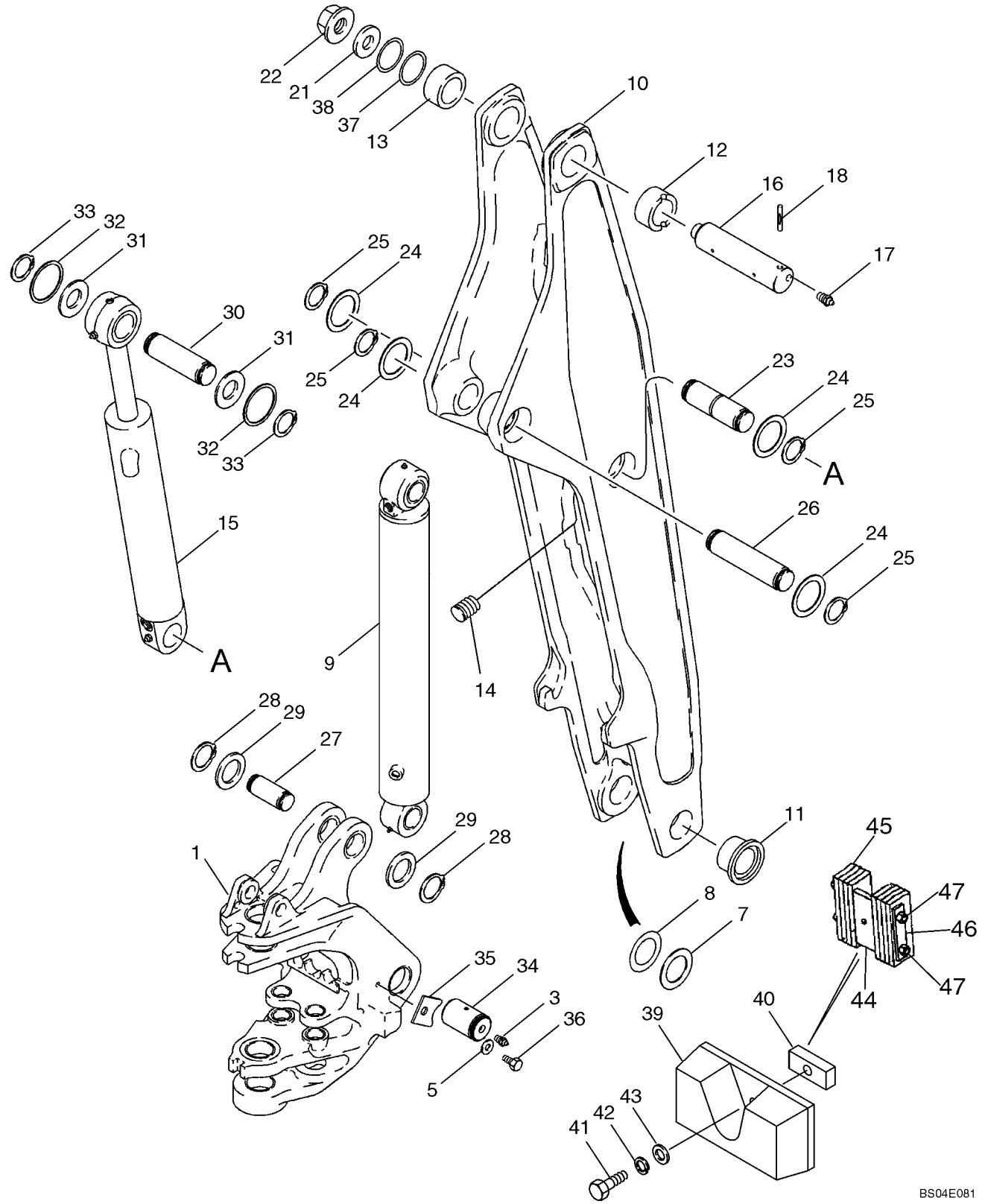

http://www.minnparbackhoeparts.com/

BACKHOE - BOOM AND SWING TOWER

REF	FN	PART NUMBER	YR/SN	QTY	DESCRIPTION
1		326805A1		1	CHASSIS SWING TOWER; See Figure 09-23 For Bushings
3		219-1		2	NIPPLE, LUBE 1/8 PT x 21/32
5		896-11020		2	WASHER 22 x 37 x 4 mm; Replaces 496-41081 13/16 x 1-3/4 x 7/32 in Washer Used On Some Models
7		H71514		X	WASHER
8		R32119		X	WASHER 71 ID x 114 mm
9		87417644		1	CYLINDER ASSY. 133 ID x 843 mm strk, Boom; See Figure 08-67
10		122284A2		1	BOOM Incl. Ref 11 - 14
11		D151071		2	BUSHING 70 ID x 34 mm lg
12		D135739		1	BUSHING 70 ID x 44 mm lg; With Slot For Groove Pin; Right-Hand Side
13		D137218		1	BUSHING 70 ID x 44 mm lg; Without Slot For Groove Pin; Left-Hand Side
14		D120450		7	PLUG
15		183795A3		1	CYLINDER ASSY. 127 ID x 583 mm strk; Dipper; See Figure 08-68; If Used
15		183795A4		1	CYLINDER ASSY. 127 ID x 583 mm strk; Dipper; See Figure 08-68; If Used
16		D132494		1	PIN, LARGE Boom to Dipper
17		219-1		2	NIPPLE, LUBE 1/8 PT x 21/32
18		135-51652		1	PIN, GROOVED 1/2 x 3-1/4 lg; Center Groove
21		D133632		1	WASHER
22		181042A1		1	NUT Flange, Special
23		123167A2		1	PIN, LARGE Dipper Cylinder Closed End to Boom
24		H433285		4	SPACER
25		800-4155		4	SNAP RING
26		123168A2		1	PIN, LARGE Boom Cylinder Closed End to Boom
27		190313A1		1	PIN, LARGE Boom Cylinder Rod End to Swing Tower
28		103-11237		2	CIRCLIP
29		123318A1		2	WASHER 62 mm ID
30		D138022		1	PIN, LARGE
31		495-81227		X	WASHER 2-1/16 x 2-15/16 x 1/16
32		495-81226		2	WASHER 1-13/16 x 2-1/2 x 1/8

http://www.minnparbackhoeparts.com/

09-24		p2	04/05

BACKHOE - BOOM AND SWING TOWER

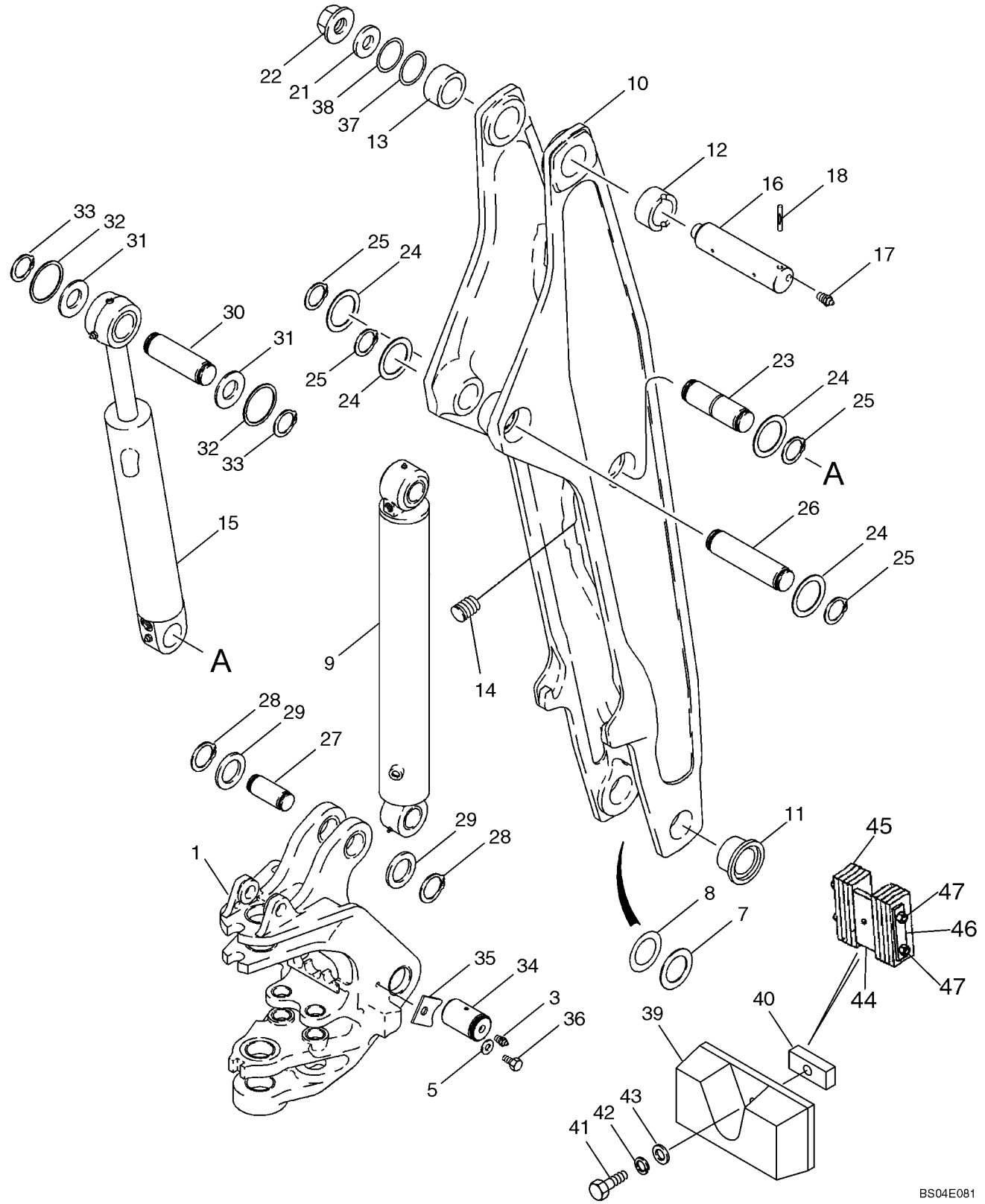

http://www.minnparbackhoeparts.com/

BACKHOE - BOOM AND SWING TOWER

REF	FN	PART NUMBER	YR/SN	QTY	DESCRIPTION
33		103-16175		2	SNAP RING No. 175
34		87326813		2	PIN, GROOVED Boom to Swing Tower; Replaces 250663A1
35		303646A1		2	BRACKET
36		604-20035		2	BOLT M20 x 35
37		404834A1		X	SHIM Concave
38		404835A1		X	SHIM Concave
39		122995A1		1	BUMPER Bumper, Boom; If Used; No Longer Available, Order 87443971 Bumper, Ref 44 - 47
40		122993A1		1	BAR
41		614-10050		1	BOLT M10 x 50
42		892-11010		1	WASHER, LOCK M10
43		895-11010		1	WASHER 11 x 21 x 2 mm
		87443971		1	BUMPER Boom Bumper; If Used; Incl. Ref 44 - 47
44		87443847		1	PLATE, BACK Plate
45		87443912		8	PAD, RUBBER Pad
46		87443661		2	PLATE, END Plate
47		825-1412		4	NUT M12; Replaces 832-46412 M12 Nut Used On Some Models

http://www.minnparbackhoeparts.com/

09-25		p1	05/05

BOOM LATCH (WITHOUT PILOT CONTROLS)

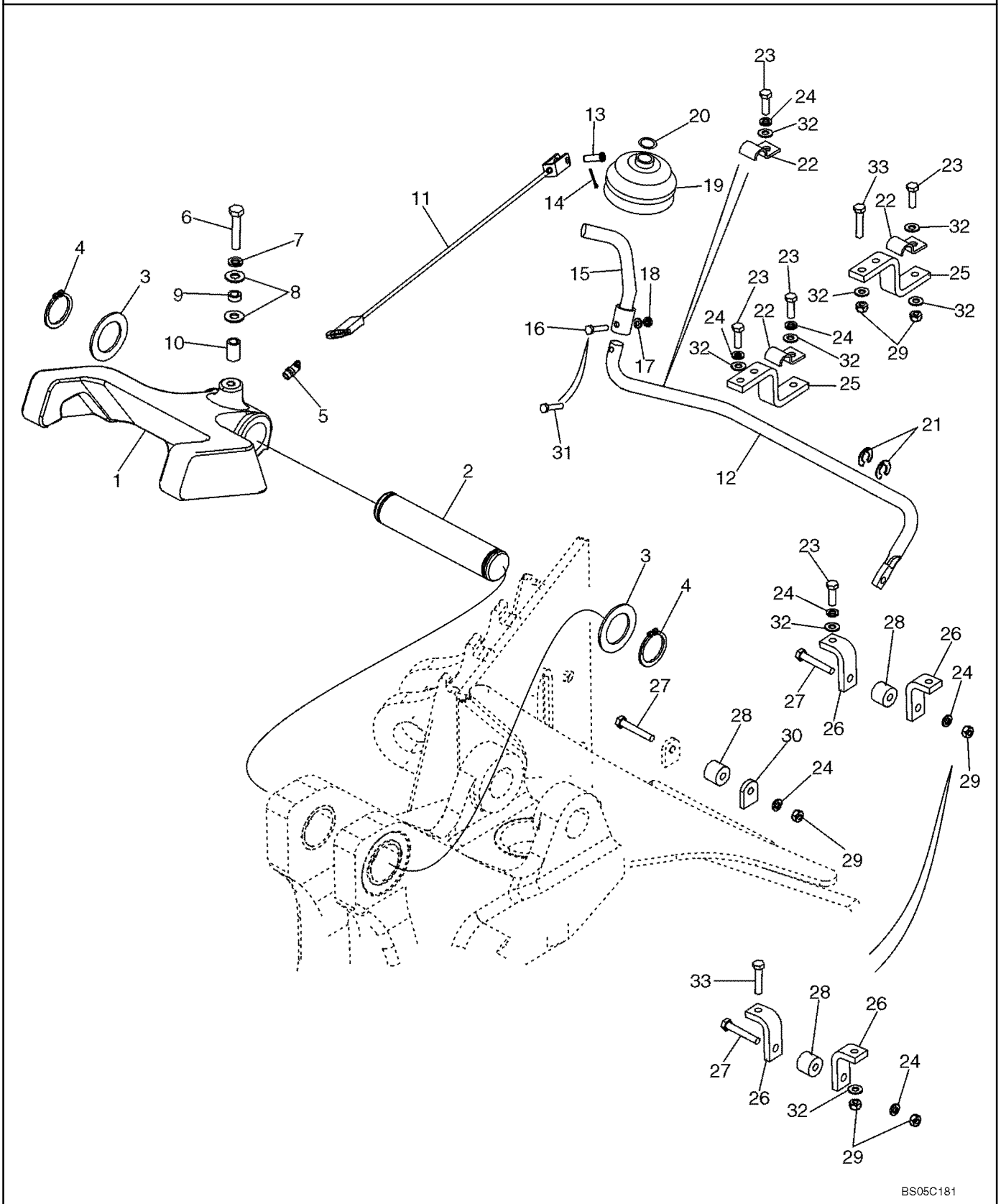

http://www.minnparbackhoeparts.com/

BOOM LATCH (WITHOUT PILOT CONTROLS)

REF	FN	PART NUMBER	YR/SN	QTY	DESCRIPTION
1		122974A1		1	LATCH ASSY.
2		D129227		1	PIN, LARGE
3		D144592		2	WASHER
4		800-44040		2	SNAP RING
5		219-55		1	NIPPLE, LUBE 90 deg, 1/8 PT x 27/32
6		614-10050		1	BOLT M10 x 50
7		892-11010		1	WASHER, LOCK M10
8		895-15010		2	WASHER 11 x 24 x 2 mm
9		87445245		1	SPACER 15.88 OD x 6.4 W x 2.41 mm thick wall; Replaces D143417 15.88 OD x 6.4 W x 2.77 mm thick wall Spacer Used On Some Models
10		396092A1		1	SPACER
11		87435924		1	CABLE
12		87422696		1	ROD Boom Latch Release; 6.5 mm Mounting Hole; If Used
12		87441850		1	ROD Boom Latch Release; 6.0 mm Mounting Hole; If Used
13		427-5094		1	PIN, CLEVIS 5/16 x 15/16
14		432-612		1	PIN, SPLIT (COTTER) 3/32" x 3/4"
15		87444149		1	ROD ASSY.
16		814-6030		1	BOLT M6 x 30; If Used
17		892-11006		1	WASHER, LOCK M6; If Used
18		829-1406		1	NUT M6; If Used
19		D86664		1	BOOT
20		D143735		1	CLAMP Ring
21		D143591		2	SNAP RING CLIP RING, 5/8 dia
22		D143723		2	SHIN CLAMP, 5/8
23		614-8025		2-6	BOLT M8 x 25
24		892-11008		3-8	WASHER LOCK, M8
25		87449995		1	BRACKET Rod; Without Threaded Tapped Holes; Replaces 87422701 Bracket With Threaded Tapped Holes
26		87449996		2	BRACKET Cable; Without Threaded Tapped Holes; Replaces 87422702 Bracket With Threaded Tapped Holes
27		814-8050		2	BOLT M8 x 50
28		86984547		2	GUIDE Roller, Cable Guide

http://www.minnparbackhoeparts.com/

09-25		p2	05/05

BOOM LATCH (WITHOUT PILOT CONTROLS)

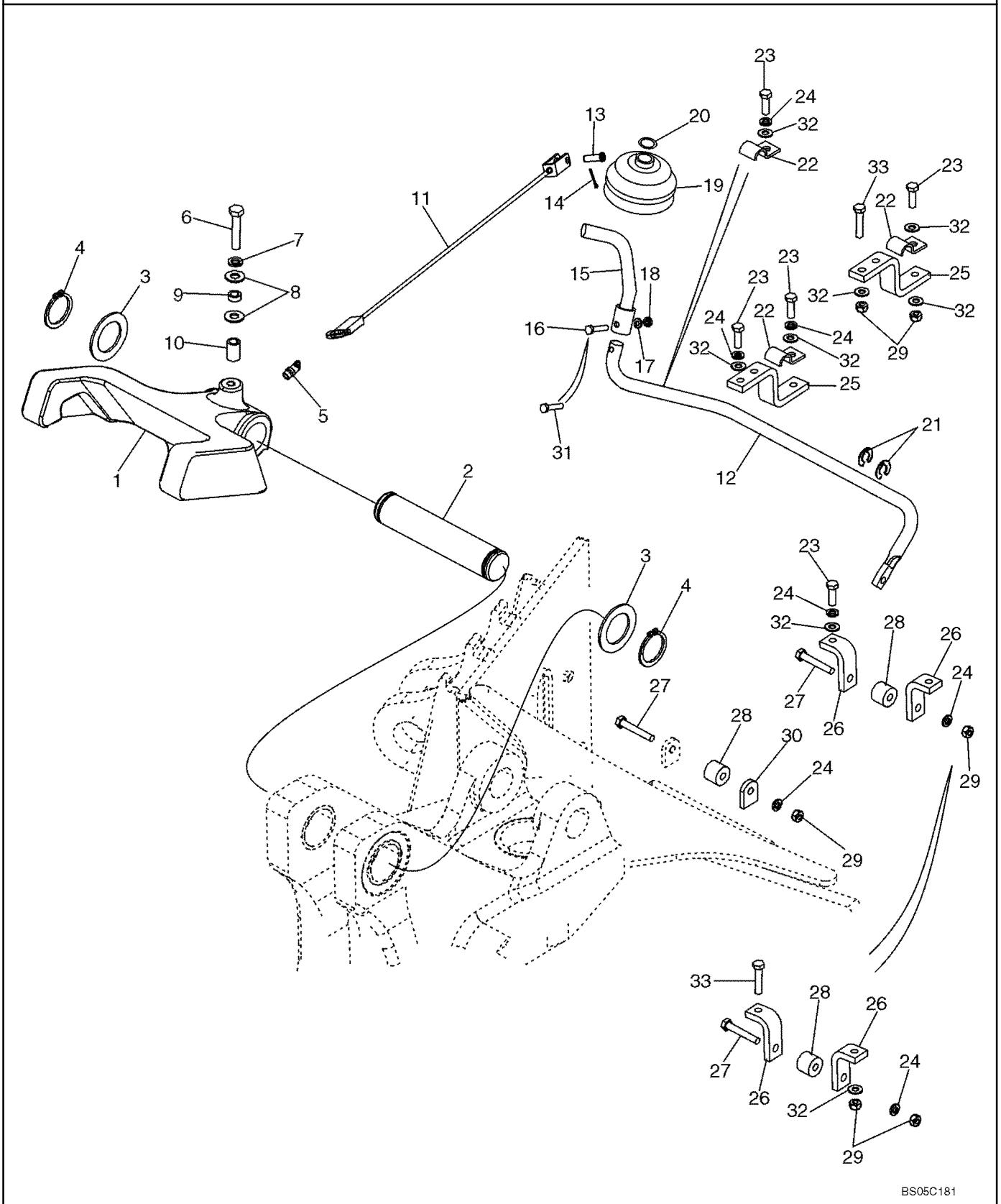

http://www.minnparbackhoeparts.com/

BOOM LATCH (WITHOUT PILOT CONTROLS)

REF	FN	PART NUMBER	YR/SN	QTY	DESCRIPTION
29		829-1408		2-7	NUT M8
30		87432811		1	BRACKET TAB
31		87041331		1	BOLT M6 x 16, Includes Loctite; May Replace Ref 16 - 18 On Some Models
32		895-11008		6-7	WASHER 9 x 16 x 1.6 mm
33		614-8030		4	BOLT M8 x 30; Used With Brackets (Ref 25, 26) Without Threaded Tapped Holes

http://www.minnparbackhoeparts.com/

09-25A		p1	05/05

BOOM LATCH (WITH PILOT CONTROLS)

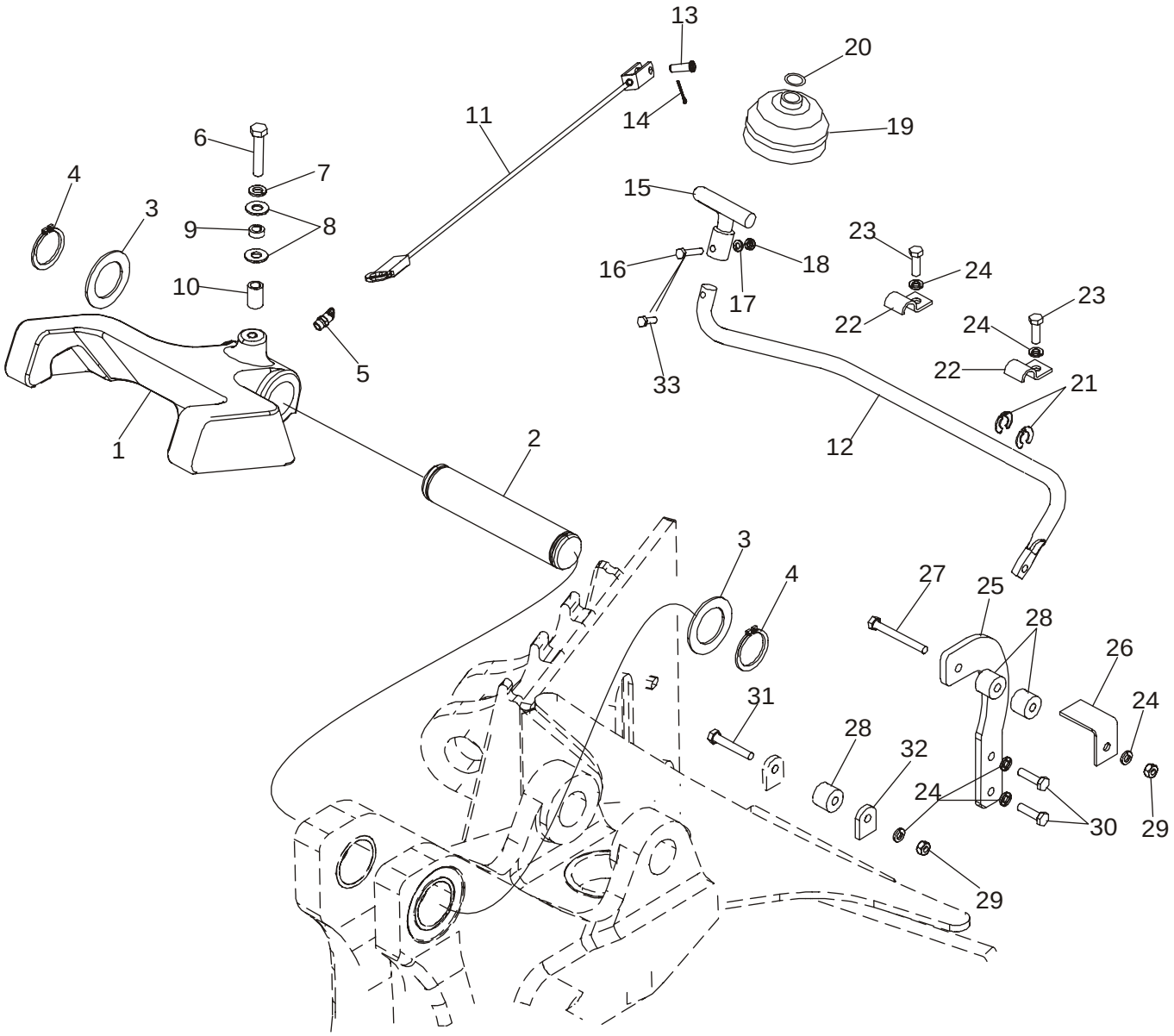

http://www.minnparbackhoeparts.com/

BOOM LATCH (WITH PILOT CONTROLS)

REF	FN	PART NUMBER	YR/SN	QTY	DESCRIPTION
1		122974A1		1	LATCH ASSY.
2		D129227		1	PIN, LARGE
3		D144592		2	WASHER
4		800-44040		2	SNAP RING
5		219-55		1	NIPPLE, LUBE 90 deg, 1/8 PT x 27/32
6		614-10050		1	BOLT M10 x 50
7		892-11010		1	WASHER, LOCK M10
8		895-15010		2	WASHER 11 x 24 x 2 mm
9		D143417		1	SPACER
10		396092A1		1	SPACER
11		87435924		1	CABLE
12		87422696		1	ROD Boom Latch Release; 6.50 mm (1/32 in) Mounting Hole At Ref 25 Lever; If Used
12		87441850		1	ROD Boom Latch Release; 6.00 mm (1/64 in) Mounting Hole At Ref 25 Lever; If Used
13		427-5094		1	PIN, CLEVIS 5/16 x 15/16
14		432-612		1	PIN, SPLIT (COTTER) 3/32" x 3/4"
15		87427775		1	ROD ASSY.
16		814-6030		1	BOLT M6 x 30; If Used
17		892-11006		1	WASHER, LOCK M6; If Used
18		829-1406		1	NUT M6; If Used
19		D86664		1	BOOT
20		D143735		1	CLAMP Ring
21		D143591		2	SNAP RING CLIP RING, 5/8 dia
22		D143723		2	SHIN CLAMP, 5/8
23		614-8025		2	BOLT M8 x 25
24		892-11008		6	WASHER LOCK, M8
25		86984544		1	BRACKET Roller Mounting
26		86984545		1	BRACKET Cable
27		814-8070		1	BOLT M8 x 70
28		86984547		3	GUIDE Roller, Cable Guide
29		829-1408		2	NUT M8
30		614-8030		2	BOLT M8 x 30
31		814-8050		1	BOLT M8 x 50
32		87432811		1	BRACKET TAB
33		87041331		1	BOLT M6 x 16, Includes Loctite; May Replace Ref 16 - 18 On Some Models

http://www.minnparbackhoeparts.com/

BACKHOE - DIPPER AND BUCKET

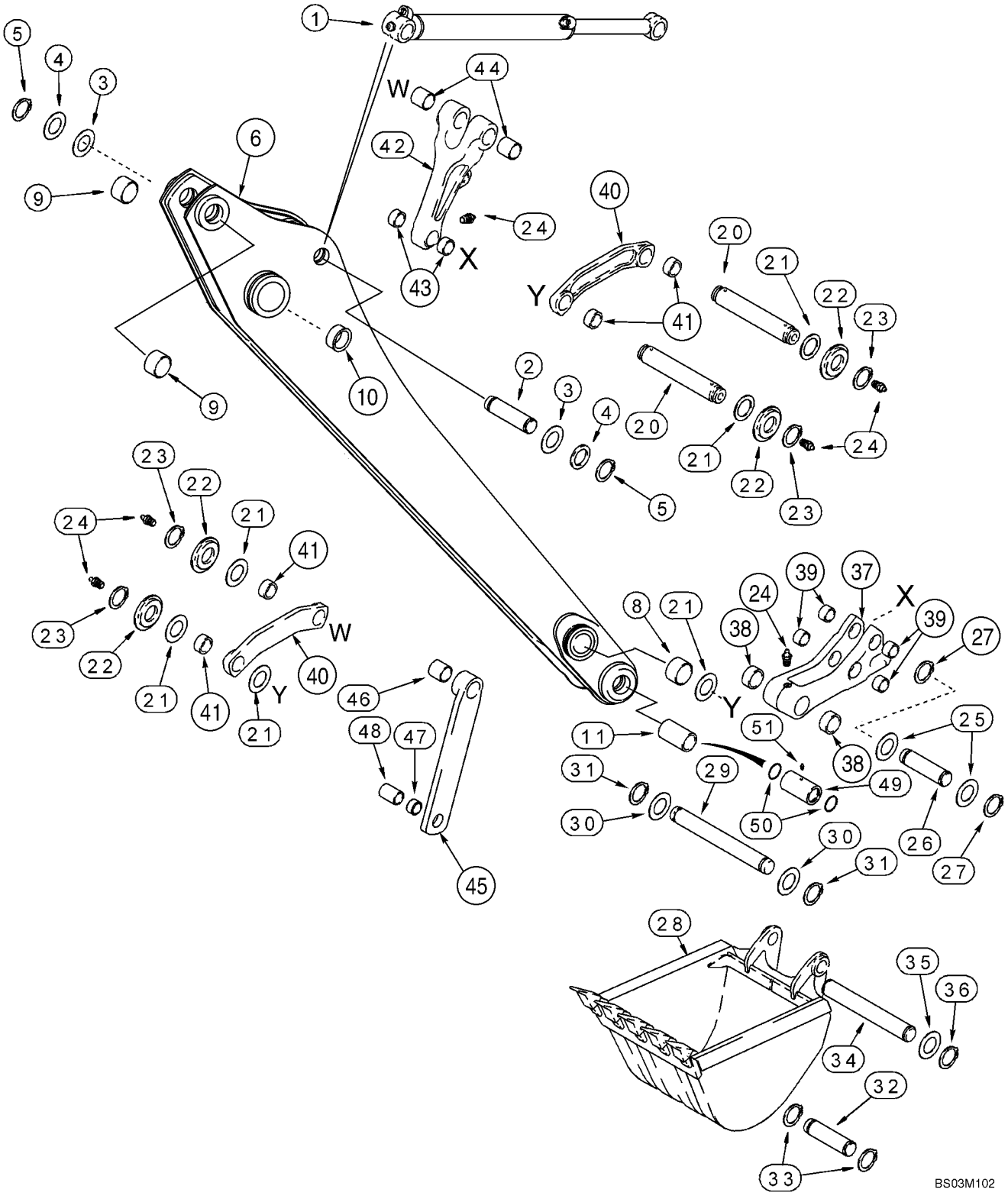

http://www.minnparbackhoeparts.com/

BACKHOE - DIPPER AND BUCKET

REF	FN	PART NUMBER	YR/SN	QTY	DESCRIPTION
1		235916A1		1	CYLINDER ASSY. 80 ID x 872 mm strk; Bucket; See Figure 08-69
2		D138022		1	PIN, LARGE
3		495-81227		X	WASHER 2-1/16 x 2-15/16 x 1/16
4		495-81226		2	WASHER 1-13/16 x 2-1/2 x 1/8
5		103-16175		2	SNAP RING No. 175
		403353A1		1	DIPPER Incl. Ref 6 - 10; Models Without Hydraulic Backhoe Bucket Coupler; For Models With Hydraulic Backhoe Bucket Coupler, See Figure 09-28
6		NSS		1	NOT SERVICED SEPARATELY Dipper
7		D120450		6	PLUG Not Illustrated
8		D140029		2	BUSHING, LARGE 50 x 60 x 25.5 mm lg
9		D138047		2	BUSHING 54 mm (2-1/8 in) lg
10		D150121		2	BUSHING 70 ID x 36 mm lg
11		307186A1		2	BUSHING 104 mm lg; Not Included In Assembly; Purchase Separately
20		D141142		2	PIN, LARGE 306 mm lg; Guide Link
21		495-81282		X	WASHER 2-1/16 x 3 x 3/32
22		D141164		4	SPACER
23		103-16175		4	SNAP RING No. 175
24		219-1		7	NIPPLE, LUBE 1/8 PT x 21/32
25		495-81226		2	WASHER 1-13/16 x 2-1/2 x 1/8
26		D146288		1	PIN, LARGE Dump Link to Coupler
27		103-16175		2	SNAP RING No. 175
28		REF		1	INSTRUCTION Bucket; See Figures 09-29 - 09-34
29		D37614		1	PIN, LARGE Bucket
30		D143324		2	WASHER
31		D25279		2	SNAP RING
32		D149298		1	PIN 305 mm (12 inch) Universal Bucket Only
33		103-16175		2	SNAP RING No. 175
34		D150619		1	PIN, LARGE All Buckets Except 12 Inch (305 mm) Buckets
35		495-81226		X	WASHER 1-13/16 x 2-1/2 x 1/8
36		103-16175		2	SNAP RING No. 175
		281185A1		1	COUPLING Bucket; Incl. Ref 37 - 39
37		NSS		1	NOT SERVICED SEPARATELY Coupler, Quick

http://www.minnparbackhoeparts.com/

BACKHOE - DIPPER AND BUCKET

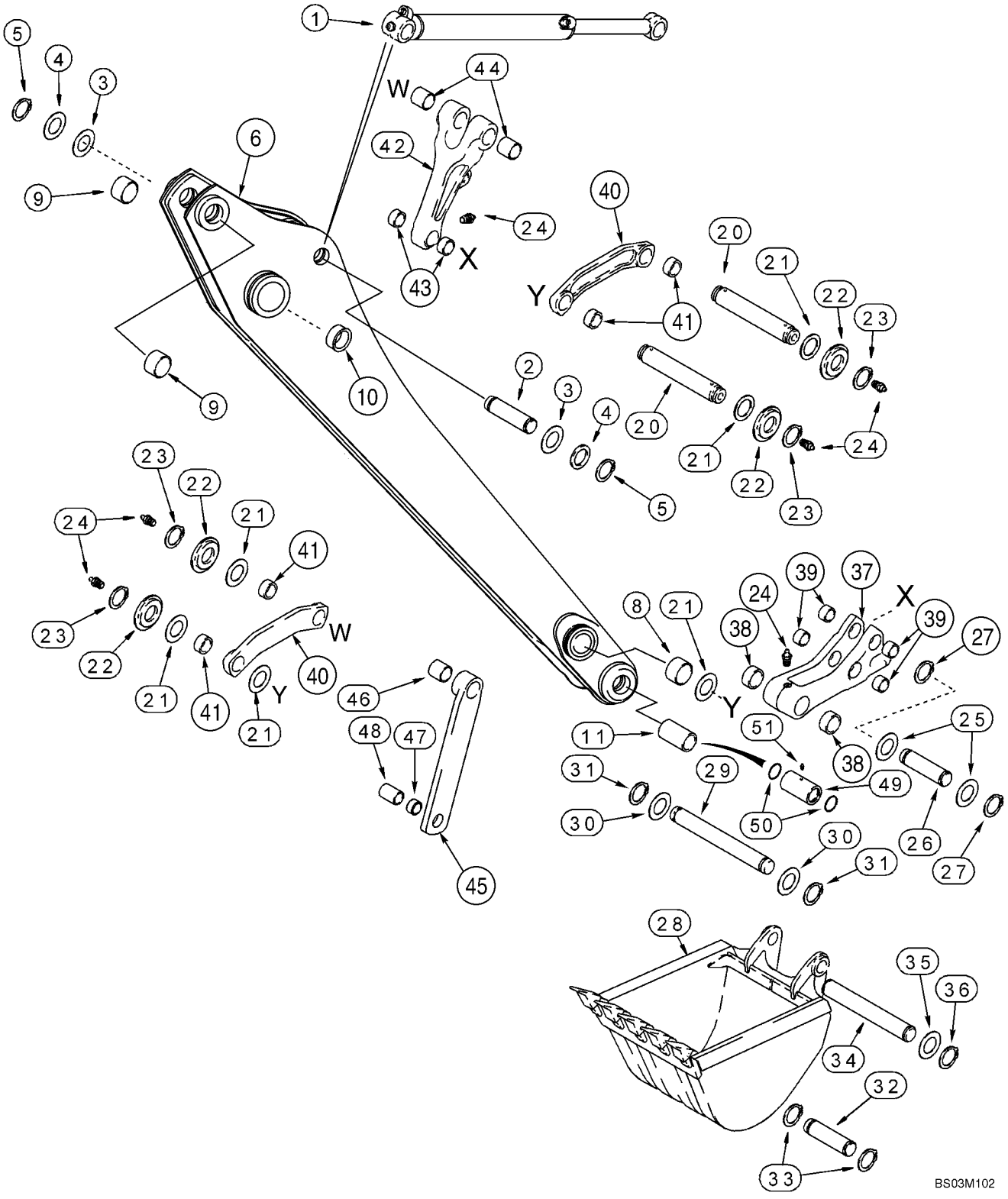

http://www.minnparbackhoeparts.com/

BACKHOE - DIPPER AND BUCKET

REF	FN	PART NUMBER	YR/SN	QTY	DESCRIPTION
38		D127167		2	BUSHING 30 mm lg
39		107124A1		4	BUSHING 29 mm lg
40		348706A1		2	LINK ASSY. Bucket Guide; Incl. Ref 41
41		D149079		2	BUSHING 50 x 34 mm lg
42		400398A1		1	LINK ASSY. Bucket Dump; Incl. Ref 43, 44
43		107124A1		2	BUSHING
44		D138047		2	BUSHING 54 mm (2-1/8 in) lg
45		244790A1		2	LINK ASSY. Bucket Dump; Incl. Ref 46, 47
46		D138047		1	BUSHING 54 mm (2-1/8 in) lg
47		D31140		1	BUSHING
48		D141075		1	SPACER
49		D141076		1	SPACER
50		238-5228		2	O-RING 2-1/4 ID x 1/8
51		219-1		1	NIPPLE, LUBE 1/8 PT x 21/32

http://www.minnparbackhoeparts.com/

BACKHOE - DIPPER, EXTENDABLE

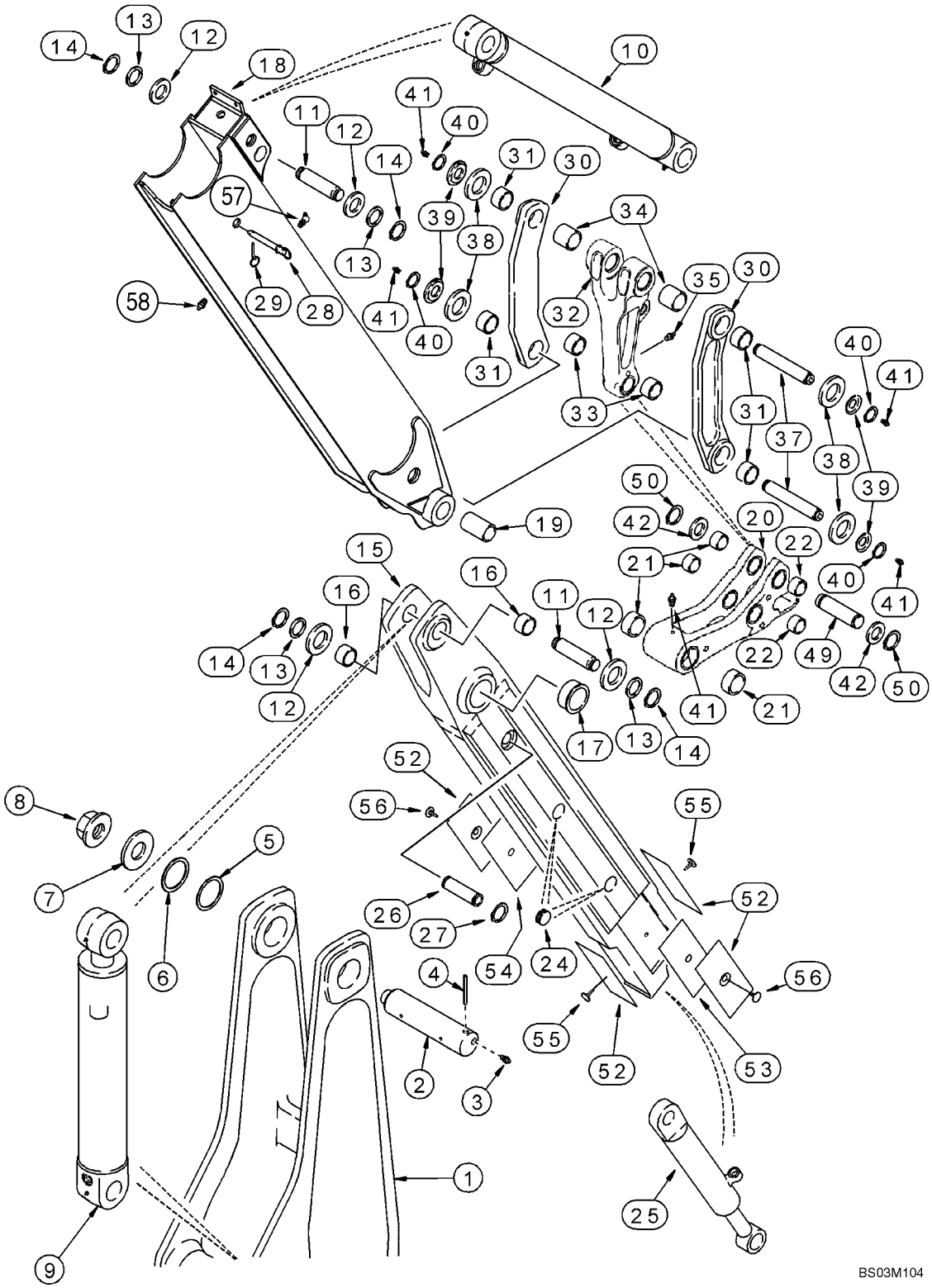

http://www.minnparbackhoeparts.com/

BACKHOE - DIPPER, EXTENDABLE

REF	FN	PART NUMBER	YR/SN	QTY	DESCRIPTION
1		122284A2		1	BOOM Boom; See Figure 09-24
2		D132494		1	PIN, LARGE Boom to Dipper
3		219-1		2	NIPPLE, LUBE 1/8 PT x 21/32
4		135-51652		1	PIN, GROOVED 1/2 x 3-1/4 lg; Center Groove
5		404834A1		X	SHIM
6		404835A1		X	SHIM
7		D133632		1	WASHER
8		181042A1		1	NUT Flange, Special
9		183795A3		1	CYLINDER ASSY. 127 ID x 583 mm strk; Dipper; See Figure 08-68; If Used
9		183795A4		1	CYLINDER ASSY. 127 ID x 583 mm strk; Dipper; See Figure 08-68; If Used
10		235916A1		1	CYLINDER ASSY. 80 ID x 872 mm strk; Bucket; See Figure 08-69
11		D141666		2	PIN, LARGE
12		495-81227		X	WASHER 2-1/16 x 2-15/16 x 1/16
13		495-81226		4	WASHER 1-13/16 x 2-1/2 x 1/8
14		103-16175		4	SNAP RING No. 175
		244536A1		1	DIPPER Inner; Incl. Ref 15 - 17
15		NSS		1	NOT SERVICED SEPARATELY Dipper
16		D149079		2	BUSHING 50 x 34 mm lg
17		D150121		2	BUSHING 70 ID x 36 mm lg
18		87436234		1	DIPPER Outer; Incl. Ref 57, 58; Models Without Hydraulic Backhoe Bucket Coupler; For Models With Hydraulic Backhoe Bucket Coupler, See Figure 09-28
19		307186A1		2	BUSHING 104 mm lg
		281185A1		1	COUPLING Bucket; Incl. Ref 20 - 22
20		NSS		1	NOT SERVICED SEPARATELY Coupler, Quick
21		D127167		2	BUSHING 30 mm lg
22		107124A1		4	BUSHING 29 mm lg
24		D133865		4	PLUG
25		1340969C2		1	CYLINDER ASSY. 76 ID x 1068 mm strk; Extendable Dipper; See Figure 08-70
26		300588A1		1	PIN, LARGE
27		800-44040		2	SNAP RING
28		D140247		1	PIN, LARGE Lock, Transport

http://www.minnparbackhoeparts.com/

BACKHOE - DIPPER, EXTENDABLE

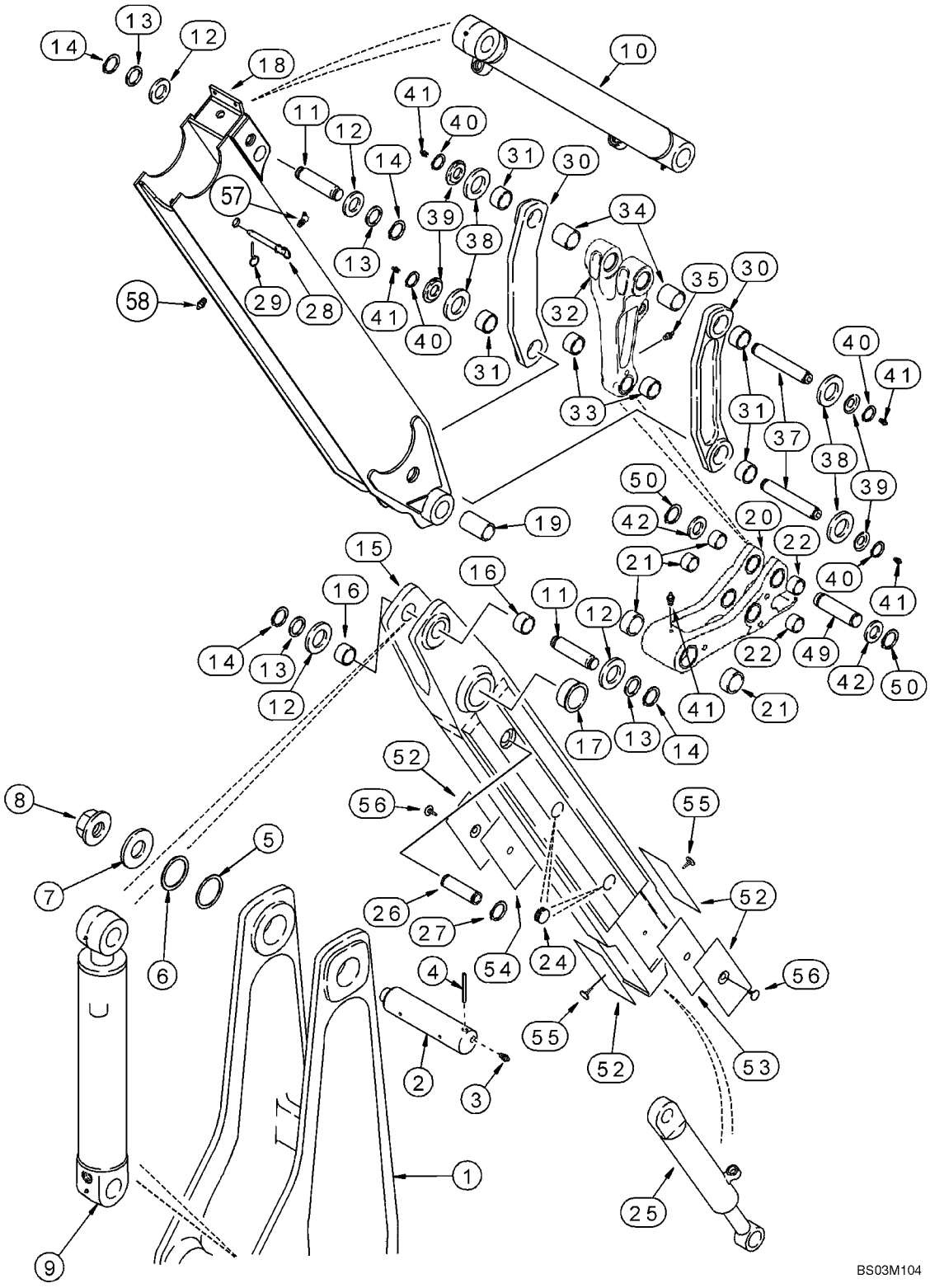

http://www.minnparbackhoeparts.com/

BACKHOE - DIPPER, EXTENDABLE

REF	FN	PART NUMBER	YR/SN	QTY	DESCRIPTION
29		A33509		1	PIN, LARGE
30		348706A1		2	LINK ASSY. Bucket Guide; Incl. Ref 31
31		D149079		2	BUSHING 50 x 34 mm lg
32		400398A1		1	LINK ASSY. Bucket Dump; Incl. Ref 33, 34
33		107124A1		2	BUSHING
34		D138047		2	BUSHING 54 mm (2-1/8 in) lg
35		219-1		1	NIPPLE, LUBE 1/8 PT x 21/32
37		D141142		2	PIN, LARGE 306 mm lg
38		495-81282		4	WASHER 2-1/16 x 3 x 3/32
39		D141164		4	SPACER
40		103-16175		4	SNAP RING No. 175
41		219-1		5	NIPPLE, LUBE 1/8 PT x 21/32
42		495-81226		2	WASHER 1-13/16 x 2-1/2 x 1/8
49		D146288		1	PIN, LARGE
50		103-16175		2	SNAP RING No. 175
52		451384A1		4	PLATE, WEAR
53		132844A1		1	SHIM 0.8 mm
54		132842A1		1	SHIM 1.6 mm
55		183443A1		2	PIN, LARGE
56		183509A1		2	PIN, LARGE
57		219-89		1	NIPPLE, LUBE 1/8 PT x 25/32
58		219-86		1	FITTING 1/8 PT x 5/8

http://www.minnparbackhoeparts.com/

DIPPER, BACKHOE - COUPLER, HYDRAULIC (MODELS WITH HYDRAULIC BACKHOE BUCKET COUPLER)

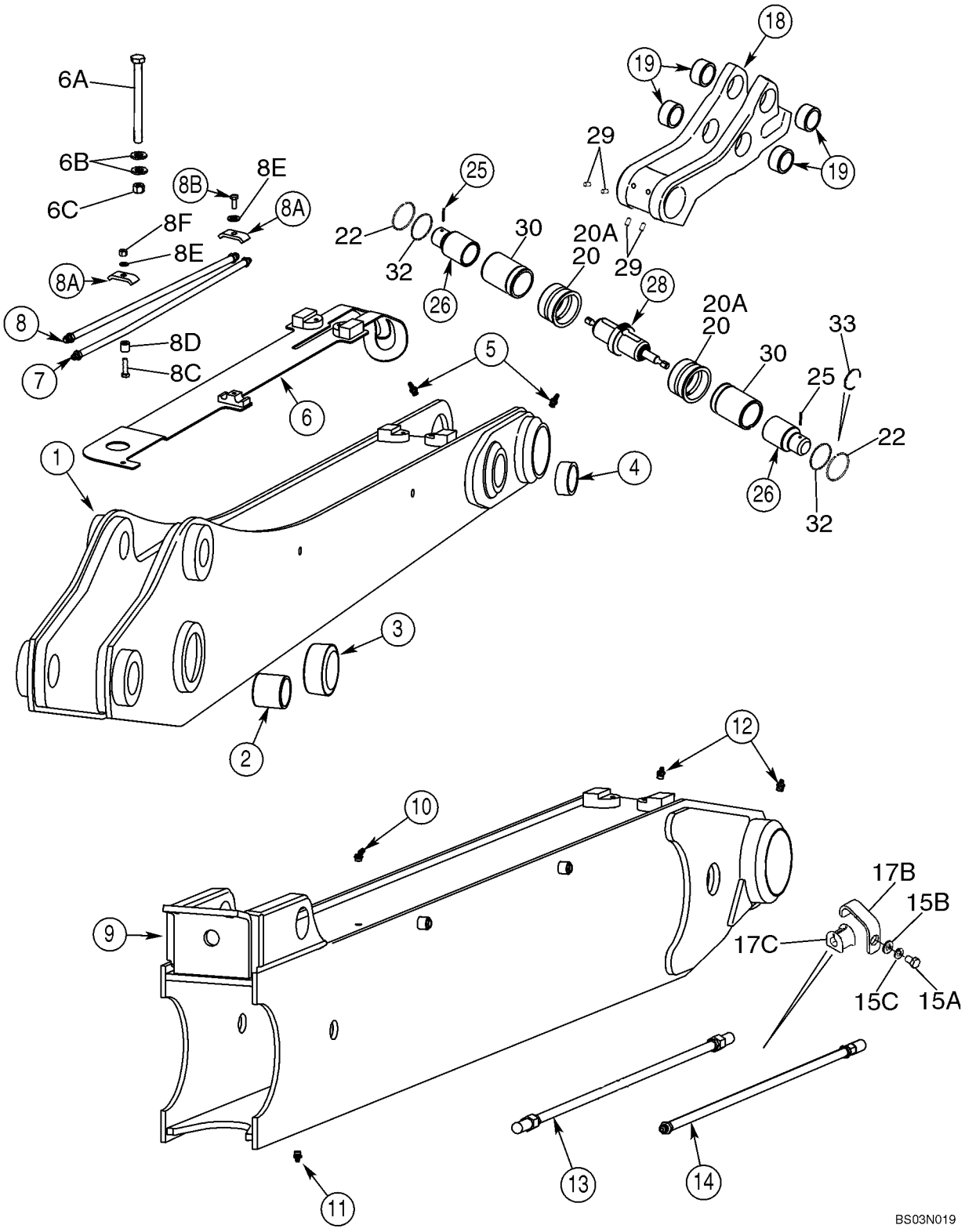

http://www.minnparbackhoeparts.com/

DIPPER, BACKHOE - COUPLER, HYDRAULIC (MODELS WITH HYDRAULIC BACKHOE BUCKET COUPLER)

REF	FN	PART NUMBER	YR/SN	QTY	DESCRIPTION
		REF			INSTRUCTION STANDARD DIPPER
1		404807A1		1	DIPPER Standard Dipper; Incl. Ref 2 - 5, 20A
2		D138047		2	BUSHING 54 mm (2-1/8 in) lg
3		D150121		2	BUSHING 70 ID x 36 mm lg
3A		D120450		4	PLUG Not Illustrated
4		D140029		2	BUSHING, LARGE 50 x 60 x 25.5 mm lg
5		219-86		2	FITTING 5/8 PT x 5/8
6		405716A1		1	PLATE ASSY.
6A		827-12240		1	BOLT M12 x 240
6B		378921A1		2	WASHER, SPECIAL
6C		829-1412		1	NUT M12
7		406168A1		1	TUBE ASSY. See Figure 08-30
8		406172A1		1	TUBE ASSY. See Figure 08-30
8A		D138055		2	CLAMP
8B		607-8020		1	BOLT M8 x 20; 10,9; Lock
8C		607-8035		1	BOLT M8 x 35; Lock
8D		407962A1		1	SPACER
8E		895-11008		2	WASHER 9 x 16 x 1,6 mm
8F		829-1408		1	NUT M8
		REF			INSTRUCTION EXTENDABLE DIPPER
9		392559A3		1	DIPPER Outer; Extendable Dipper; Incl. Ref 10 - 12, 20
10		219-89		1	NIPPLE, LUBE 1/8 PT x 25/32
11		219-86		1	FITTING 1/8 PT x 5/8
12		219-1		2	NIPPLE, LUBE 1/8 PT x 21/32
13		403840A1		1	TUBE ASSY. See Figure 08-30
14		403400A1		1	TUBE ASSY. See Figure 08-30
15A		607-10020		4	BOLT M10 x 20; Lock
15B		896-15010		4	WASHER 11 x 24 x 2 mm
15C		892-11010		4	WASHER, LOCK M10
17B		445757A1		4	BRACKET
17C		D67296		4	GROMMET
		REF			INSTRUCTION HYDRAULIC BACKHOE BUCKET COUPLER
18		417681A1		1	COUPLING Incl. Ref 19
19		107124A1		4	BUSHING
20		400934A2		2	BUSHING Models With Extendable Dipper

http://www.minnparbackhoeparts.com/

DIPPER, BACKHOE - COUPLER, HYDRAULIC (MODELS WITH HYDRAULIC BACKHOE BUCKET COUPLER)

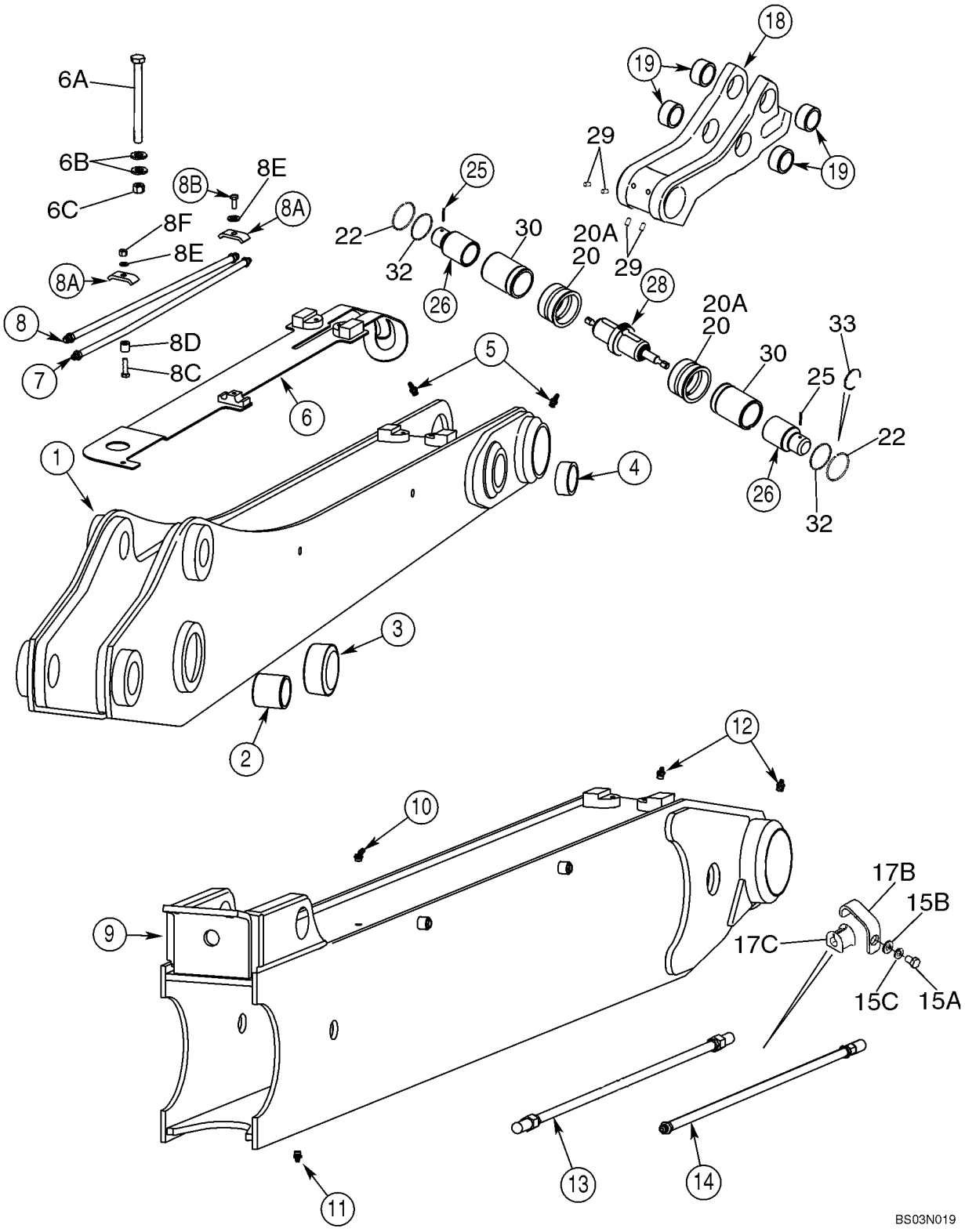

http://www.minnparbackhoeparts.com/

DIPPER, BACKHOE - COUPLER, HYDRAULIC (MODELS WITH HYDRAULIC BACKHOE BUCKET COUPLER)

REF	FN	PART NUMBER	YR/SN	QTY	DESCRIPTION
20A		400935A3		2	BUSHING Models Without Extendable Dipper
22		406624A1		2	RING
25		135-1233		2	PIN, GROOVED 7/32 x 1-1/2
26		400932A4		2	PIN
28		87423867		1	CYLINDER ASSY. Coupler; See Figure 08-32
29		418070A1		4	SET SCREW M10 x 20; Hex Socket
30		448676A1		2	SLEEVE, HYD' CYL'
32		434891A1		2	SEAL, HYD-CYLINDER Wiper
33		445364A1		2	SEALRING Service Ring; Included In Coupler Cylinder Seal Kit

http://www.minnparbackhoeparts.com/

09-29		p1	01/04

BUCKET, UNIVERSAL BACKHOE (305 MM (12 INCH) WIDE)

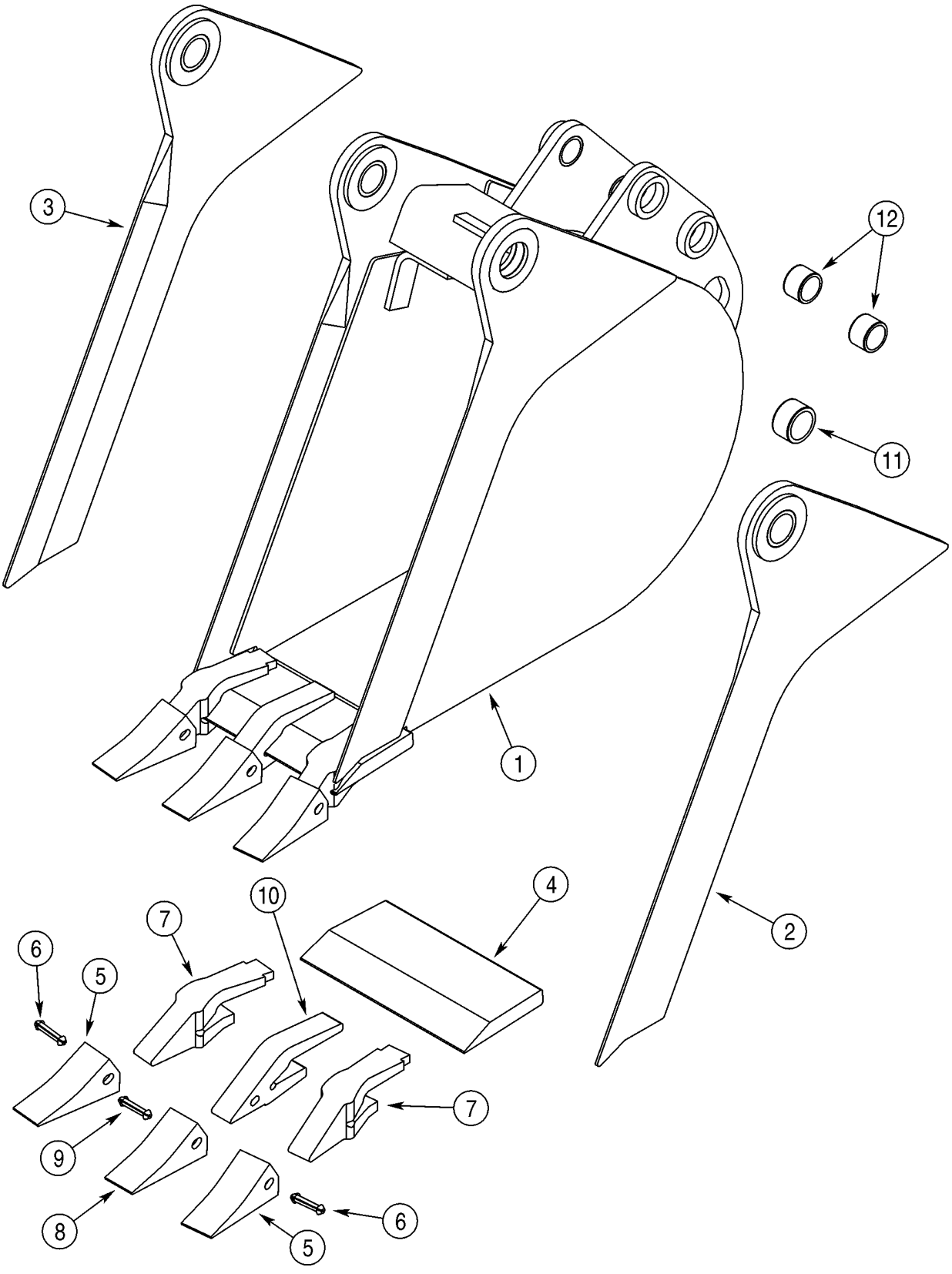

http://www.minnparbackhoeparts.com/

BUCKET, UNIVERSAL BACKHOE (305 MM (12 INCH) WIDE)

REF	FN	PART NUMBER	YR/SN	QTY	DESCRIPTION
1		381488A4		1	BUCKET 305 mm (12 in), With 3 Teeth; Order Through Parts Marketing; Incl. Ref 2 - 12
2		NSS		1	NOT SERVICED SEPARATELY Edge; Right-Hand; Incl. Ref 11
3		NSS		1	NOT SERVICED SEPARATELY Edge; Left-Hand; Incl. Ref 11
4		D147409		1	EDGE, CUTTING
		D139851		2	TOOTH Outer; Incl. Ref 5 - 7
5		D51750		1	POINT
6		245466A1		1	SPLIT PIN/SAFETY PIN
7		D138157		1	SHANK
		D139849		1	TOOTH Center; Incl. Ref 8 - 10; Order Ref 8 - 10
8		D51750		1	POINT
9		245466A1		1	SPLIT PIN/SAFETY PIN
10		D48212		1	SHANK
11		D43940		2	BUSHING 1-3/4 x 2-1/4 x 1
12		D30933		4	BUSHING

http://www.minnparbackhoeparts.com/

BUCKET, UNIVERSAL BACKHOE (406 MM (16 INCH) WIDE)

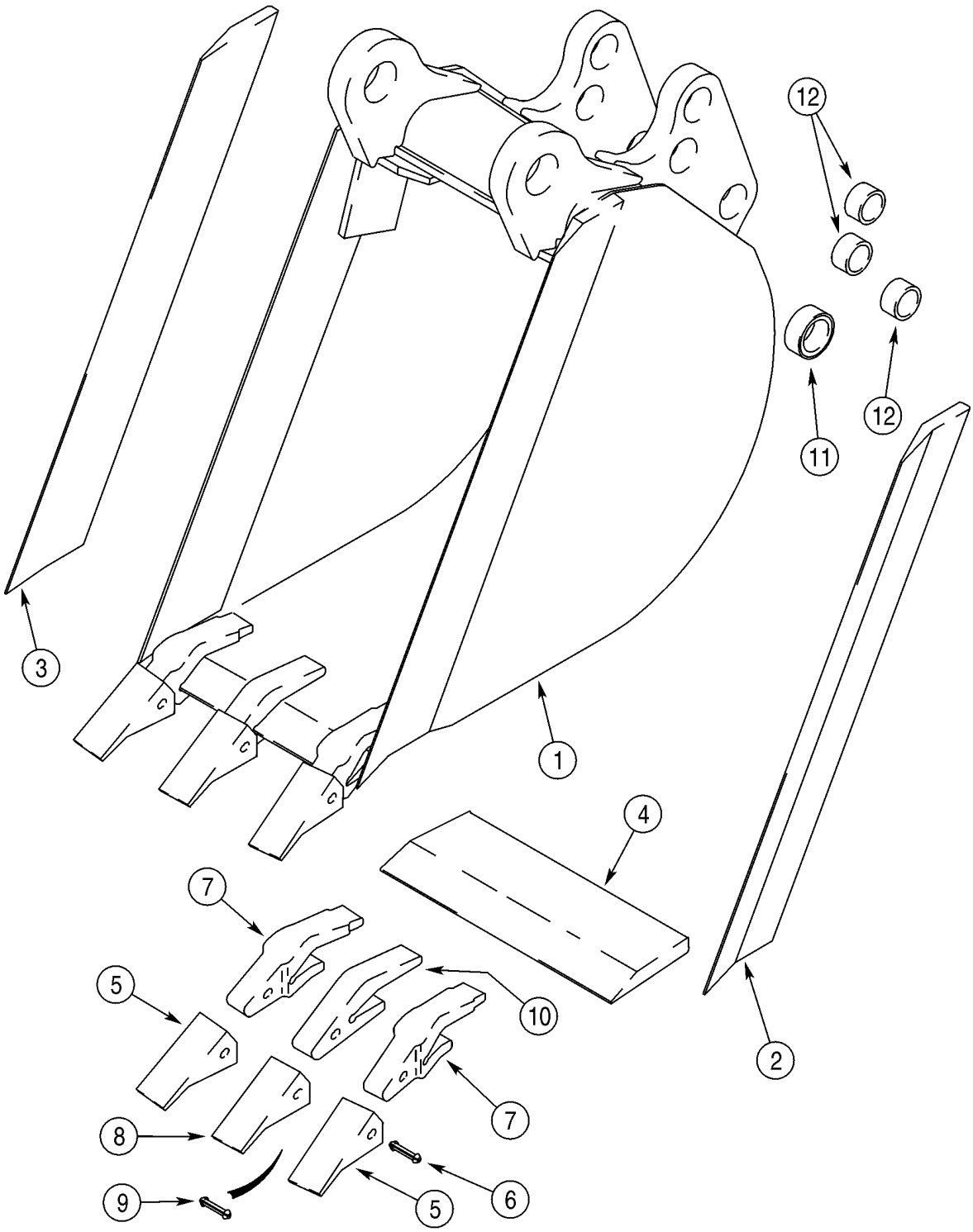

http://www.minnparbackhoeparts.com/

BUCKET, UNIVERSAL BACKHOE (406 MM (16 INCH) WIDE)

REF	FN	PART NUMBER	YR/SN	QTY	DESCRIPTION
1		388843A1		1	BUCKET 406 mm (16 in), With 3 Teeth; Order Through Parts Marketing; Incl. Ref 2 - 12
2		D146421		1	EDGE, CUTTING Right-Hand
3		D146420		1	EDGE, CUTTING Left-Hand
4		D147249		1	EDGE
		D139851		2	TOOTH Outer; Incl. Ref 5 - 7
5		D51750		1	POINT
6		245466A1		1	SPLIT PIN/SAFETY PIN
7		D138157		1	SHANK
		D139849		1	TOOTH Center; Incl. Ref 8 - 10; Order Ref 8 - 10
8		D51750		1	POINT
9		245466A1		1	SPLIT PIN/SAFETY PIN
10		D48212		1	SHANK
11		D37495		2	BUSHING
12		D30933		6	BUSHING

http://www.minnparbackhoeparts.com/

BUCKET, UNIVERSAL BACKHOE (457 MM (18 INCH) WIDE)

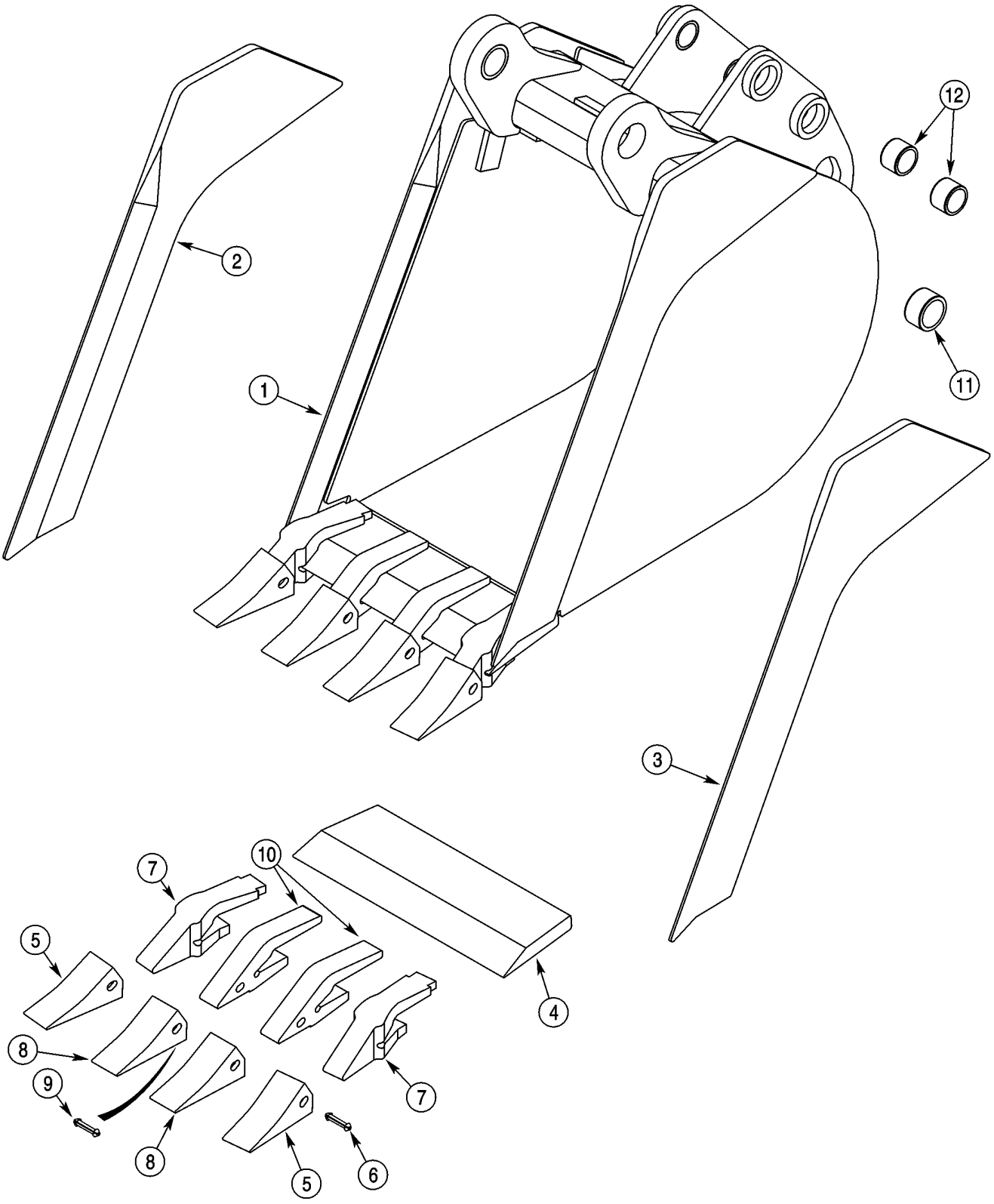

http://www.minnparbackhoeparts.com/

BUCKET, UNIVERSAL BACKHOE (457 MM (18 INCH) WIDE)

REF	FN	PART NUMBER	YR/SN	QTY	DESCRIPTION
1		376384A1		1	BUCKET 457 mm (18 in), With 4 Teeth; Order Through Parts Marketing; Incl. Ref 2 - 12
2		NSS		1	NOT SERVICED SEPARATELY Edge; Right-Hand
3		NSS		1	NOT SERVICED SEPARATELY Edge; Left-Hand
4		NSS		1	NOT SERVICED SEPARATELY Edge
		D139851		2	TOOTH Outer; Incl. Ref 5 - 7
5		D51750		1	POINT
6		245466A1		1	SPLIT PIN/SAFETY PIN
7		D138157		1	SHANK
		D139849		2	TOOTH Center; Incl. Ref 8 - 10; Order Ref 8 - 10
8		D51750		1	POINT
9		245466A1		1	SPLIT PIN/SAFETY PIN
10		D48212		1	SHANK
11		D37495		2	BUSHING
12		D30933		4	BUSHING

http://www.minnparbackhoeparts.com/

09-32		p1	01/04

BUCKET, UNIVERSAL BACKHOE (610 MM (24 INCH) / 762 MM (30 INCH) WIDE)

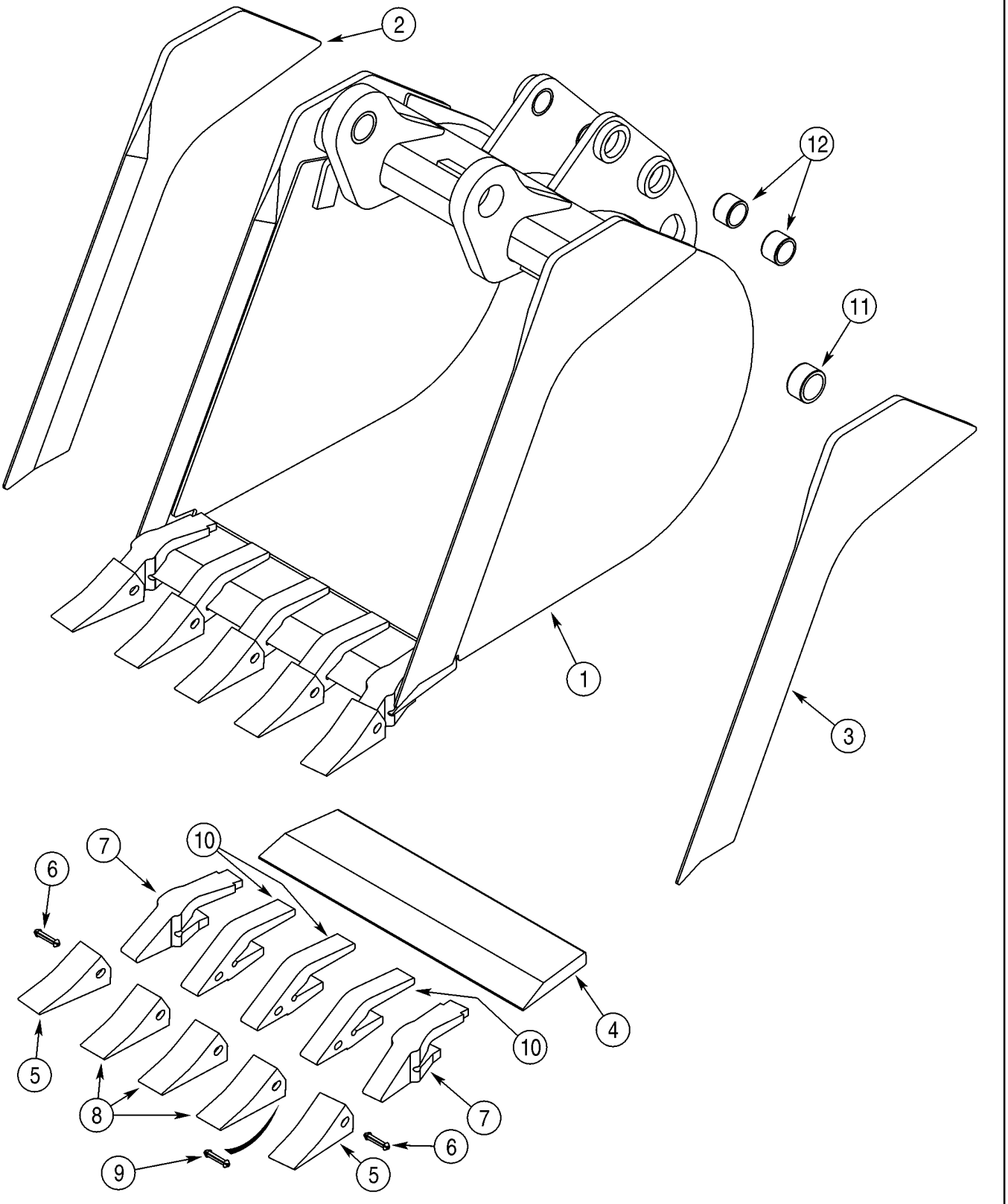

http://www.minnparbackhoeparts.com/

BUCKET, UNIVERSAL BACKHOE (610 MM (24 INCH) / 762 MM (30 INCH) WIDE)

REF	FN	PART NUMBER	YR/SN	QTY	DESCRIPTION
1		365328A1		1	BUCKET 610 mm (24 in), With 5 Teeth; Order Through Parts Marketing; Incl. Ref 2 - 12
2		NSS		1	NOT SERVICED SEPARATELY Edge; Right-Hand
3		NSS		1	NOT SERVICED SEPARATELY Edge; Left-Hand
4		NSS		1	NOT SERVICED SEPARATELY Edge
		D139851		2	TOOTH Outer; Incl. Ref 5 - 7
5		D51750		1	POINT
6		245466A1		1	SPLIT PIN/SAFETY PIN
7		D138157		1	SHANK
		D139849		3	TOOTH Center; Incl. Ref 8 - 10; Order Ref 8 - 10
8		D51750		1	POINT
9		245466A1		1	SPLIT PIN/SAFETY PIN
10		D48212		1	SHANK
11		D37495		2	BUSHING
12		D30933		4	BUSHING
		REF			INSTRUCTION 610 mm (24 Inch) and 762 mm (30 Inch) Wide
1		376385A1		1	BUCKET 762 mm (30 in), With 6 Teeth; Not Illustrated; Order Through Parts Marketing; Incl. Ref 2 - 12
2		NSS		1	NOT SERVICED SEPARATELY Edge; Right-Hand
3		NSS		1	NOT SERVICED SEPARATELY Edge; Left-Hand
4		NSS		1	NOT SERVICED SEPARATELY Edge
		D139851		2	TOOTH Outer; Incl. Ref 5 - 7
5		D51750		1	POINT
6		245466A1		1	SPLIT PIN/SAFETY PIN
7		D138157		1	SHANK
		D139849		4	TOOTH Center; Incl. Ref 8 - 10; Order Ref 8 - 10
8		D51750		1	POINT
9		245466A1		1	SPLIT PIN/SAFETY PIN
10		D48212		1	SHANK
11		D37495		2	BUSHING
12		D30933		4	BUSHING

http://www.minnparbackhoeparts.com/

09-33		p1	01/04

BUCKET, UNIVERSAL BACKHOE (914 MM (36 INCH) WIDE)

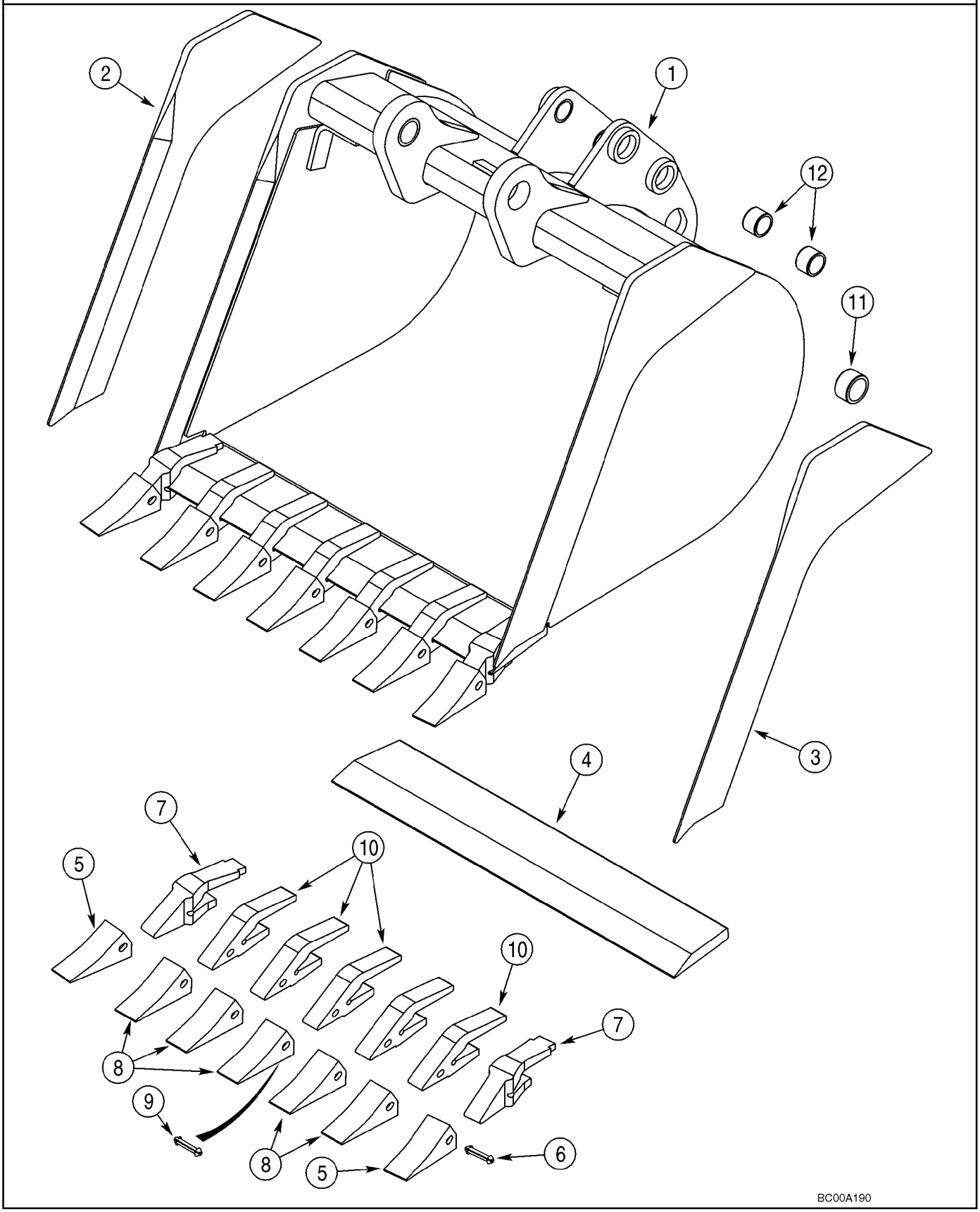

http://www.minnparbackhoeparts.com/

BUCKET, UNIVERSAL BACKHOE (914 MM (36 INCH) WIDE)

REF	FN	PART NUMBER	YR/SN	QTY	DESCRIPTION
1		376386A1		1	BUCKET 914 mm (36 in), With 7 Teeth; Order Through Parts Marketing; Incl. Ref 2 - 12
2		NSS		1	NOT SERVICED SEPARATELY Edge; Right-Hand
3		NSS		1	NOT SERVICED SEPARATELY Edge; Left-Hand
4		NSS		1	NOT SERVICED SEPARATELY Edge
		D139851		2	TOOTH Outer; Incl. Ref 5 - 7
5		D51750		1	POINT
6		245466A1		1	SPLIT PIN/SAFETY PIN
7		D138157		1	SHANK
		D139849		5	TOOTH Center; Incl. Ref 8 - 10; Order Ref 8 - 10
8		D51750		1	POINT
9		245466A1		1	SPLIT PIN/SAFETY PIN
10		D48212		1	SHANK
11		D37495		2	BUSHING
12		D30933		4	BUSHING

http://www.minnparbackhoeparts.com/

BUCKET, UNIVERSAL BACKHOE (610 MM (24 INCH) / 762 MM (30 INCH) WIDE)

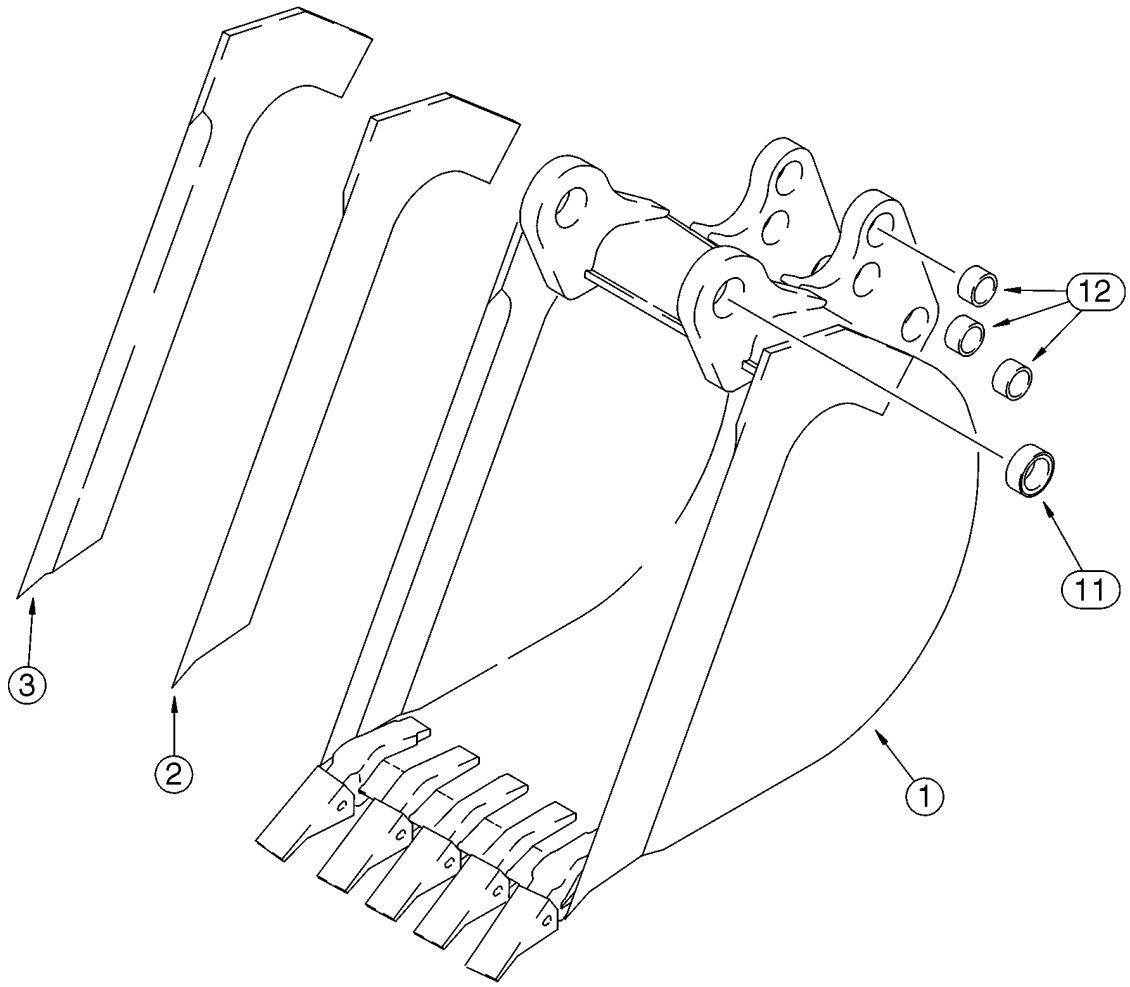

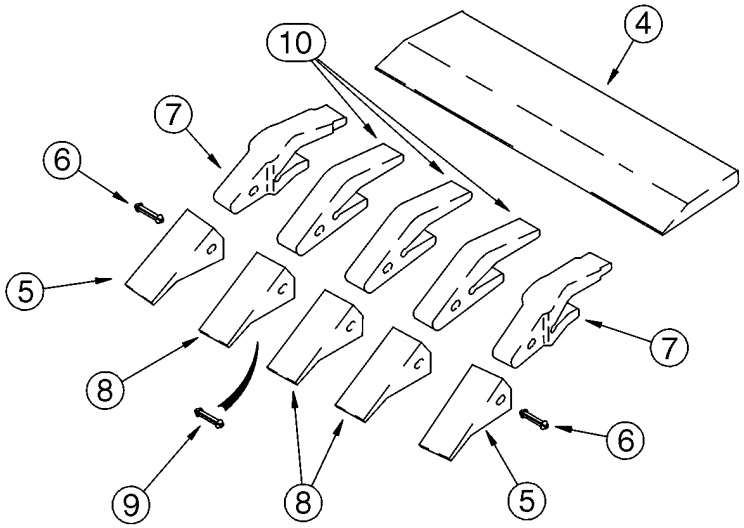

B9405159

http://www.minnparbackhoeparts.com/

BUCKET, UNIVERSAL BACKHOE (610 MM (24 INCH) / 762 MM (30 INCH) WIDE)

REF	FN	PART NUMBER	YR/SN	QTY	DESCRIPTION
1		141232A2		1	BUCKET 610 mm (24 in), With 5 Teeth; Order Through Parts Marketing; Incl. Ref 2 - 12
2		141234A1		1	EDGE, CUTTING Right-Hand
3		141233A1		1	EDGE, CUTTING Left-Hand
4		D142012		1	EDGE, CUTTING
		D139851		2	TOOTH Outer; Incl. Ref 5 - 7
5		D51750		1	POINT
6		245466A1		1	SPLIT PIN/SAFETY PIN
7		D138157		1	SHANK
		D139849		3	TOOTH Center; Incl. Ref 8 - 10; Order Ref 8 - 10
8		D51750		1	POINT
9		245466A1		1	SPLIT PIN/SAFETY PIN
10		D48212		1	SHANK
11		D37495		2	BUSHING
12		D30933		6	BUSHING
1		190267A2		1	BUCKET 762 mm (30 in), With 5 Teeth; Not Illustrated; Order Through Parts Marketing; Incl. Ref 2 - 12
2		141234A1		1	EDGE, CUTTING Right-Hand
3		141233A1		1	EDGE, CUTTING Left-Hand
4		D145061		1	EDGE, CUTTING
		D139851		2	TOOTH Outer; Incl. Ref 5 - 7
5		D51750		1	POINT
6		245466A1		1	SPLIT PIN/SAFETY PIN
7		D138157		1	SHANK
		D139849		3	TOOTH Center; Incl. Ref 8 - 10; Order Ref 8 - 10
8		D51750		1	POINT
9		245466A1		1	SPLIT PIN/SAFETY PIN
10		D48212		1	SHANK
11		D37495		2	BUSHING
12		D30933		6	BUSHING

http://www.minnparbackhoeparts.com/

FROST POINT ASSEMBLY

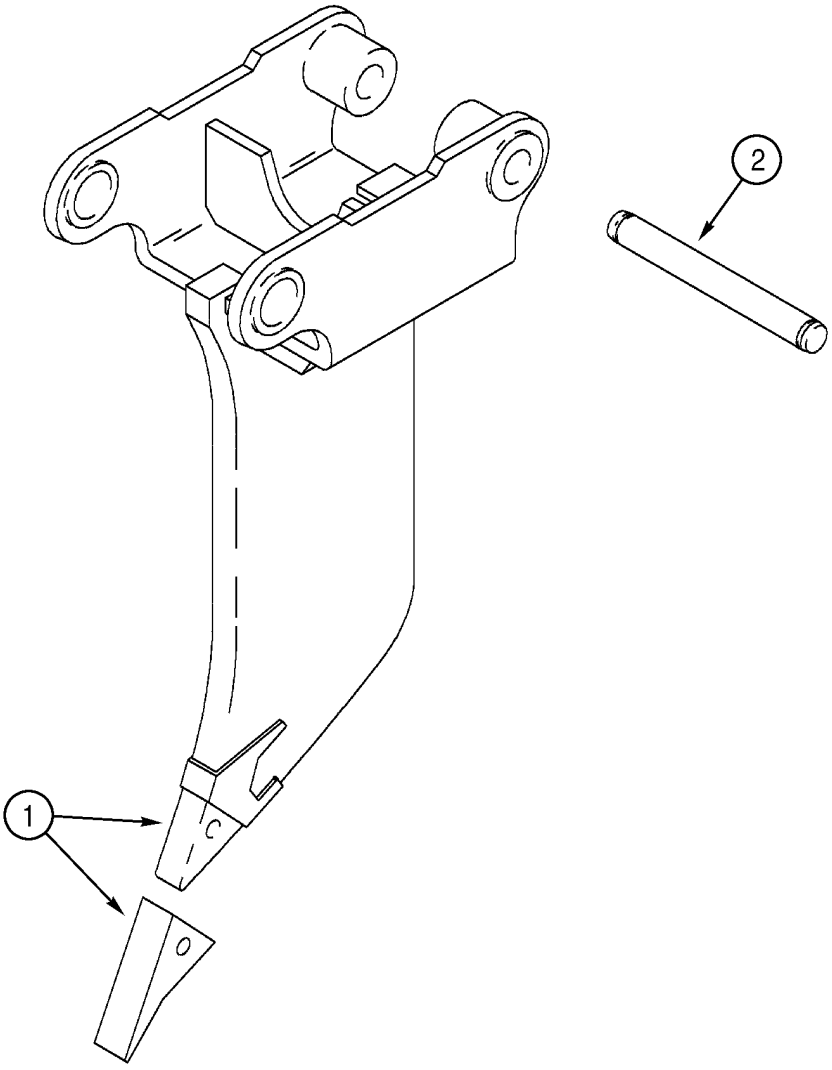

BS00H128

http://www.minnparbackhoeparts.com/

FROST POINT ASSEMBLY

REF	FN	PART NUMBER	YR/SN	QTY	DESCRIPTION
1		319467A1		1	POINT Frost Point Assembly; Includes (2) Pin Retaining Bolts; Component Parts Not Serviced Separately
2		D50696		1	PIN

http://www.minnparbackhoeparts.com/

09-35		p1	03/05

COUNTERWEIGHT, FRONT

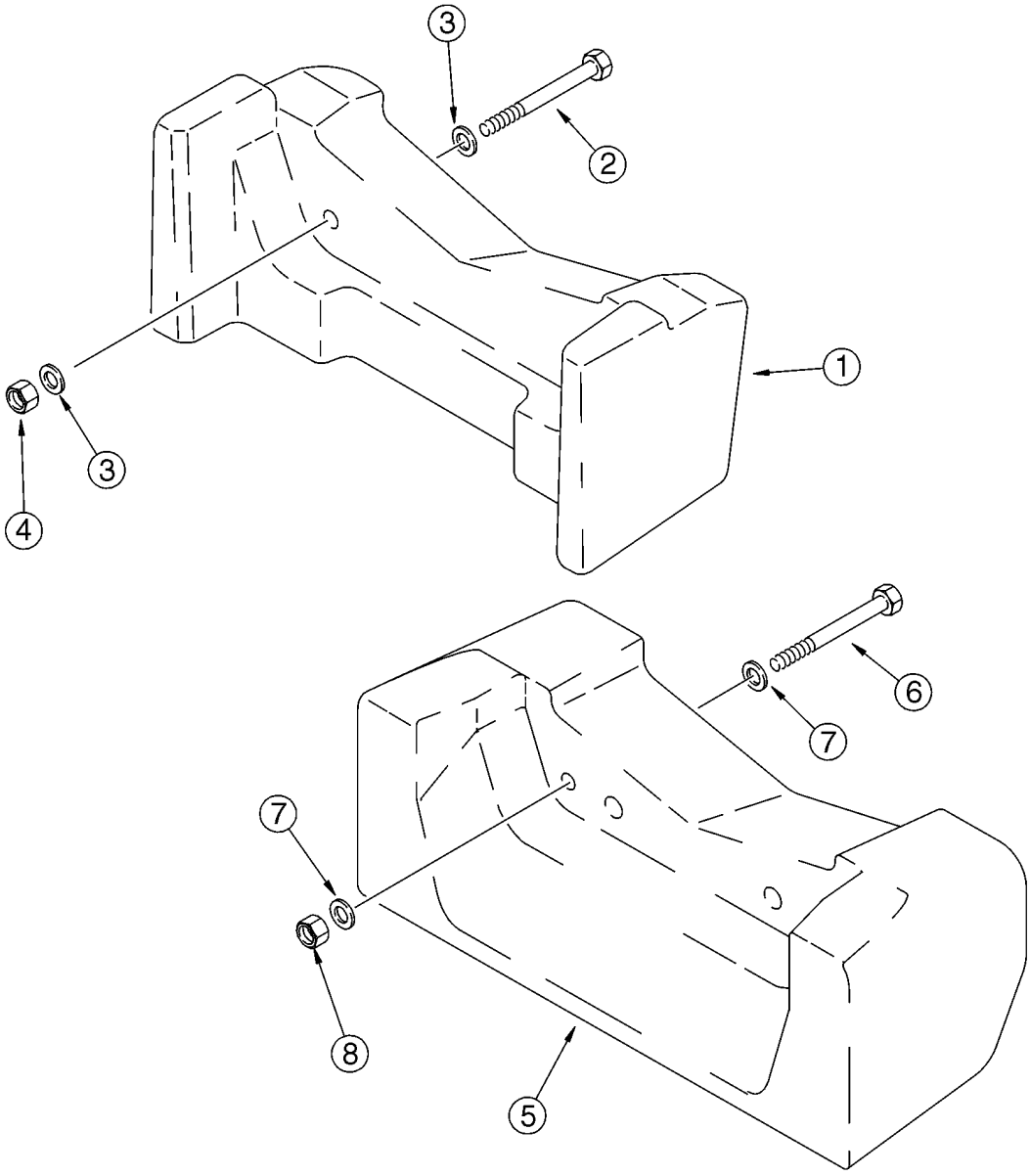

BT97N084

http://www.minnparbackhoeparts.com/

COUNTERWEIGHT, FRONT

REF	FN	PART NUMBER	YR/SN	QTY	DESCRIPTION
1		360867A1		1	WEIGHT 200 kg (441 lbs); If Used
2		827-20170		2	SCREW
3		896-11020		4	WASHER 22 x 37 x 4 mm
4		829-1420		2	NUT M20, Cl 10
5		87425456		1	BALANCER 408 kg (900 lbs); If Used
6		827-20170		2	SCREW
7		896-11020		4	WASHER 22 x 37 x 4 mm
8		829-1420		2	NUT M20, Cl 10

http://www.minnparbackhoeparts.com/

CHASSIS / MOUNTS, POD - SCREEN, AIR INLET

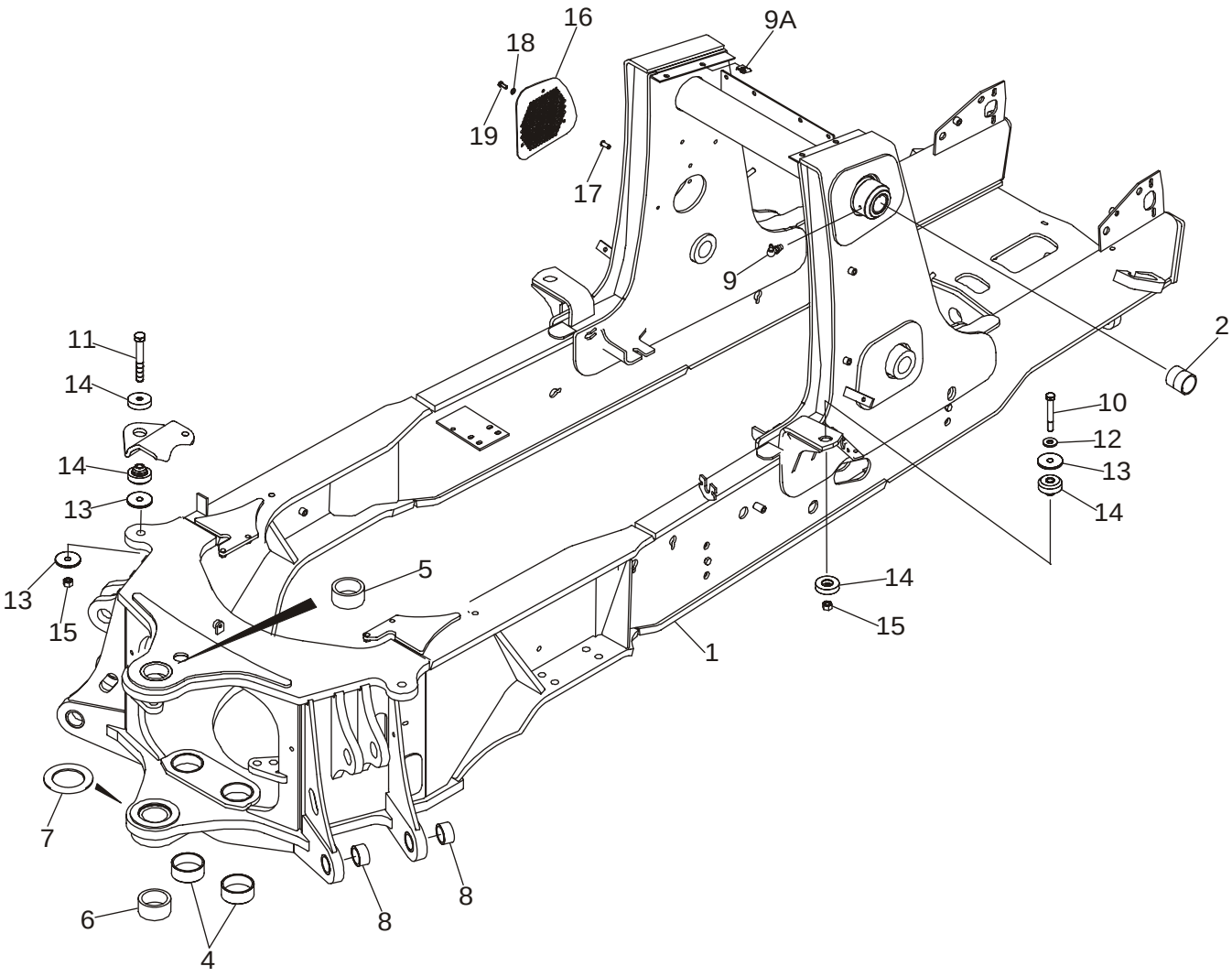

BS03J143

http://www.minnparbackhoeparts.com/

CHASSIS / MOUNTS, POD - SCREEN, AIR INLET

REF	FN	PART NUMBER	YR/SN	QTY	DESCRIPTION
1		87423004		1	CHASSIS 580SM; Incl. Ref 2 - 8
1		87423006		1	CHASSIS 580SM+; Incl. Ref 2 - 8; Not Illustrated
2		180427A1		2	BUSHING
4		114318A1		2	BUSHING 80 x 5 x 28.8
5		D151069		1	BUSHING 70 x 10 x 32 mm
6		D151070		1	BUSHING 70 x 10 x 38 mm
7		220413A1		1	SPACER 93 x 135 x 5 mm; Welded-On
8		107124A1		4	BUSHING
9		219-55		2	NIPPLE, LUBE 90 deg, 1/8 PT x 27/32
9A		833-40310		4	NUT J-Type, M10
10		827-16085		2	BOLT M16 x 85; 10.9
11		827-16100		2	BOLT M16 x 100; 10.9
12		896-11016		2	WASHER 17,5 x 30 x 4 mm
13		186977A1		6	WASHER 4,5 mm thick
14		411892A1		4	MOUNTING, RUBBER M16; Operator Compartment Pod Mounts
15		829-1416		4	NUT M16; 10
16		87423668		1	SCREEN Air Inlet
17		87417383		3	INSERT, THREADED Nut, M8
18		895-11008		3	WASHER Flat, 8 mm
19		614-8030		3	BOLT M8 x 30

http://www.minnparbackhoeparts.com/

09-37		p1	04/05

TANK, OIL - BOX, BATTERY AND TOOL

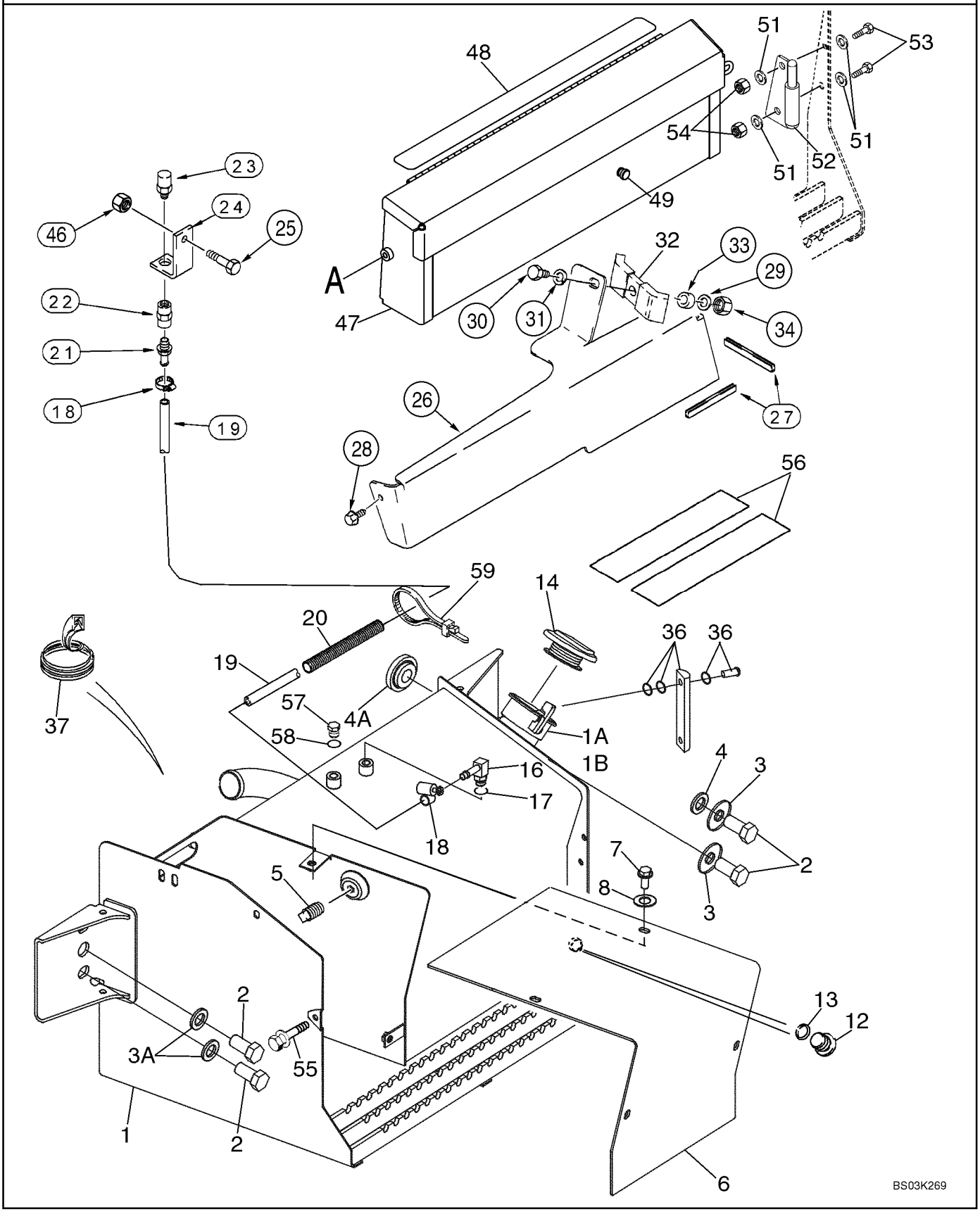

http://www.minnparbackhoeparts.com/

TANK, OIL - BOX, BATTERY AND TOOL

REF	FN	PART NUMBER	YR/SN	QTY	DESCRIPTION
		87434746		1	TANK, HYDRAULIC OIL ASSEMBLY; Incl. Ref 1, 14, 16, 35, 36, 56, 57; Plus 321-229 Hydraulic Fluid Decal
1		87434745		1	TANK, HYDRAULIC OIL Right-Hand Side of Chassis; Incl. Ref 1A, 1B, 12
1A		230857A1		1	SCREEN, FILTER Strainer; Fill Tube
1B		440-1066		2	SCREW No. 6 x 3/8
2		627-20060		4	SCREW M20 x 60; 10.9; Use With Loctite 345-49
3		302358A1		2	WASHER Right-Hand
3A		896-11020		2	WASHER 22 x 37 x 4 mm; Left-Hand
4		185926A1		1	SPACER Right-Hand; Upper
4A		409472A1		1	SPACER Right-Hand; Lower
5		217-436		1	PLUG 3/8 PT; If Used
6		231656A1		1	COVER Battery
7		614-10020		4	SCREW M10 x 20; Use With 345-56 Loctite No. 767
8		495-21044		4	WASHER 7/16 x 1 x 5/64
12		218-5211		1	PLUG 7/8 Or, Drain; Incl. Ref 13
13		237-6010		1	O-RING 3/4 ID x 3/32, Boss Seal
14		138595A1		1	PLUG CAP
16		217-347		1	FITTING 3/8 stem x 9/16 Or; Incl. Ref 17
17		237-6006		1	O-RING 15/32 ID x 5/64, Boss Seal
18		214-1406		2	CLAMP 7/16 - 25/32
19		393161A1		1	HOSE 912 mm (35-29/32 in); Vent
20		87452021		1	TUBE, PLASTIC-RUBBER 650 mm (25-19/32 in); Replaces 143219A1 380 mm (15 in) Sleeve
21		217-380		1	FITTING 3/8 stem x PT; Use With 345-147 Sealant
22		217-1102		1	FITTING 3/8 in
23		361776A1		1	BREATHER Use With 345-147 Sealant
24		122603A1		1	SUPPORT
25		711-10030		1	SCREW M10 x 30
26		399959A2		1	COVER Right-Hand Loader Lift Frame Tubing
27		191047A1		1	MOLDING 305 mm (12 in) lg; Apply 65 mm (2-9/16 in) Of Trim To Front Lower Edge and 240 mm (9-1/2 in) Of Trim To Outisde Lower Edge of Cover
28		307577A1		1	BOLT With Washer, M8 x 20
29		895-11010		1	WASHER 11 x 21 x 2 mm
30		814-10045		1	BOLT M10 x 45

http://www.minnparbackhoeparts.com/

09-37		p2	04/05

TANK, OIL - BOX, BATTERY AND TOOL

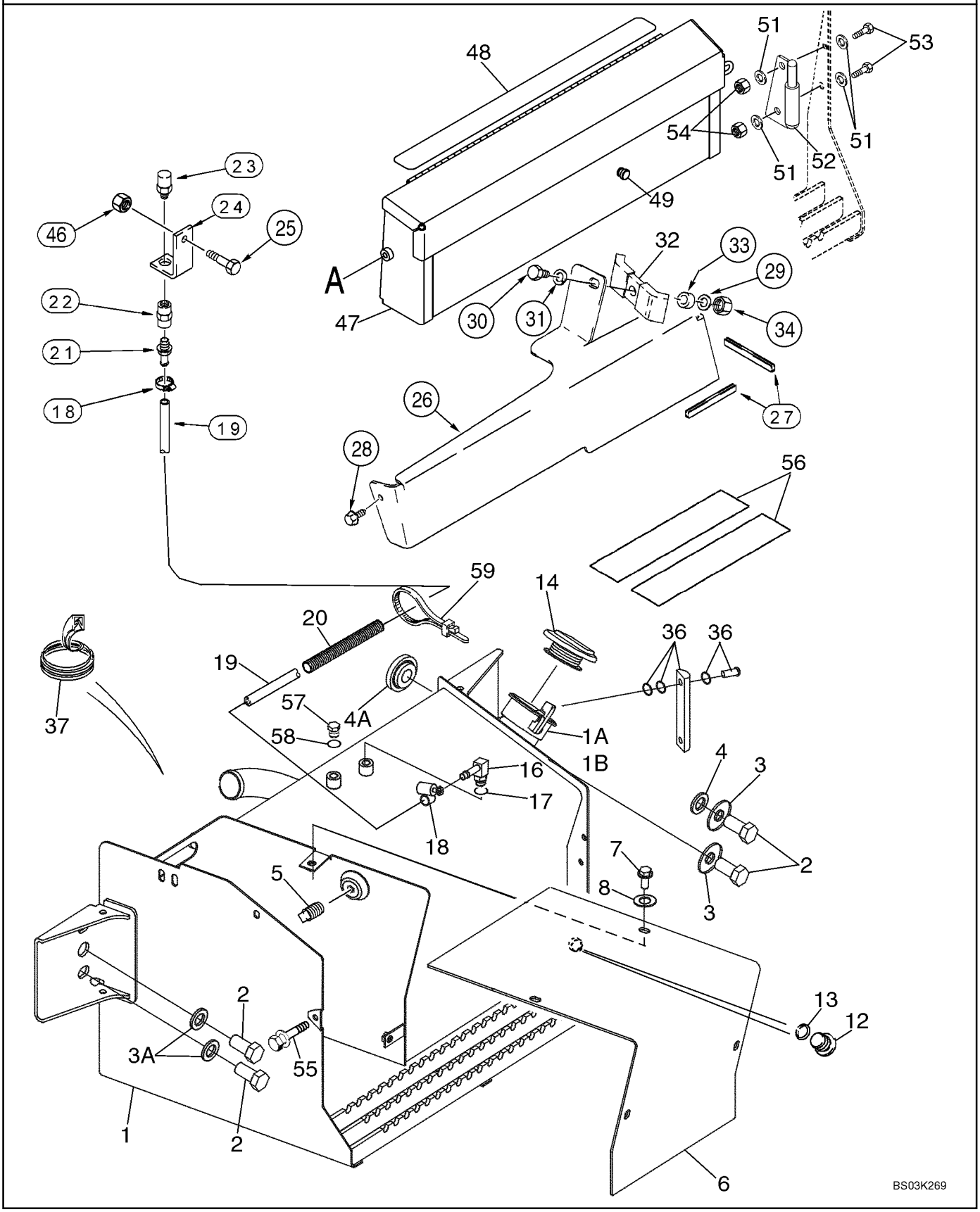

http://www.minnparbackhoeparts.com/

TANK, OIL - BOX, BATTERY AND TOOL

REF	FN	PART NUMBER	YR/SN	QTY	DESCRIPTION
31		892-11010		1	WASHER, LOCK M10
32		D138055		1	CLAMP
33		120303A1		1	SPACER
34		829-1410		1	NUT M10; 10.9
35		345-49		1	LOCTITE 242; 1 ml
36		226456A1		1	GAUGE Aluminum; Includes (2) Hollow Head Bolts and (4) O-Rings; Component Parts Not Serviced Separately, Used With Ref 35
37		D40442		1	MOLDING 305 mm (12 in); Cut From F42827
46		829-1410		1	NUT M10; 10.9
47		380807A4		1	BOX, TOOL
48		D80270		1	STRIP 635 mm (25 in)
49		L60224		1	BUMPER 1/2 in Hole; Bumper
51		895-11010		4	WASHER 11 x 21 x 2 mm
52		382202A2		1	HINGE
53		614-10025		2	BOLT M10 x 25
54		829-1410		2	NUT M10; 10.9
55		121856A1		1	SCREW M10 x 30; Includes Washer
56		D55216		2	PAD Non-Slip, 2 x 9
57		218-5155		1	PLUG Hex, 9/16, Incl. Ref 58; Models Without Pilot Controls
58		237-6006		1	O-RING
59		L18337		2	STRAP

http://www.minnparbackhoeparts.com/

09-38		p1	03/05

RADIATOR WRAPPER

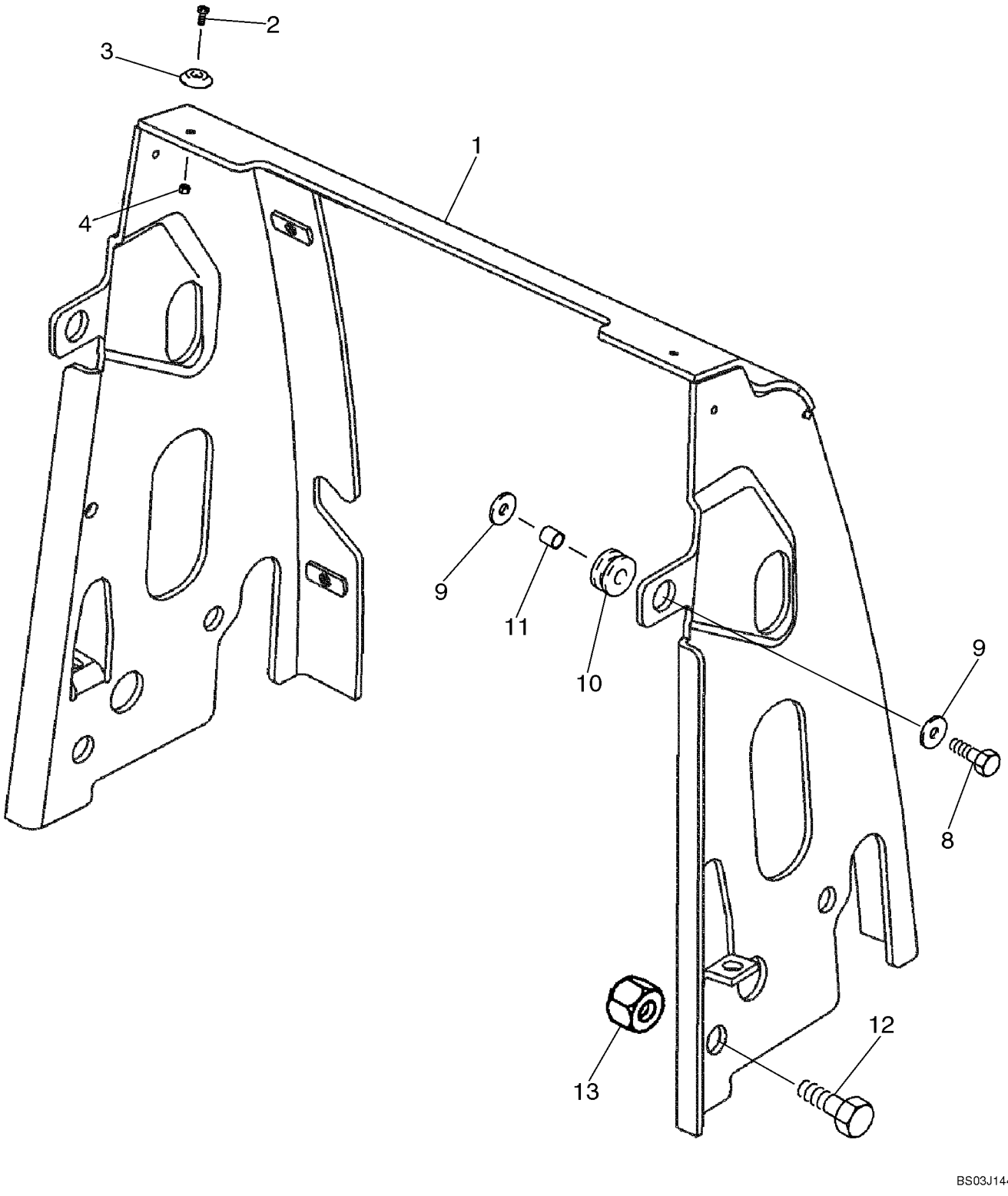

http://www.minnparbackhoeparts.com/

RADIATOR WRAPPER

REF	FN	PART NUMBER	YR/SN	QTY	DESCRIPTION
1		87433659		1	PLATE ASSY.
2		440-11010		2-4	SCREW No. 10 x 5/8
3		109879A1		2-4	SPACER Hood; Plastic
4		231-14109		2-4	NUT No. 10
8		614-10035		2	SCREW M10 x 35
9		K691987		4	WASHER Flat, 10 mm
10		86982682		2	GROMMET Rubber Grommet
11		D76209		2	SPACER
12		614-20030		4	SCREW M20 x 30
13		829-1420		4	NUT M20, Cl 10

http://www.minnparbackhoeparts.com/

09-39		p1	04/04

HOOD - PANELS, SIDE

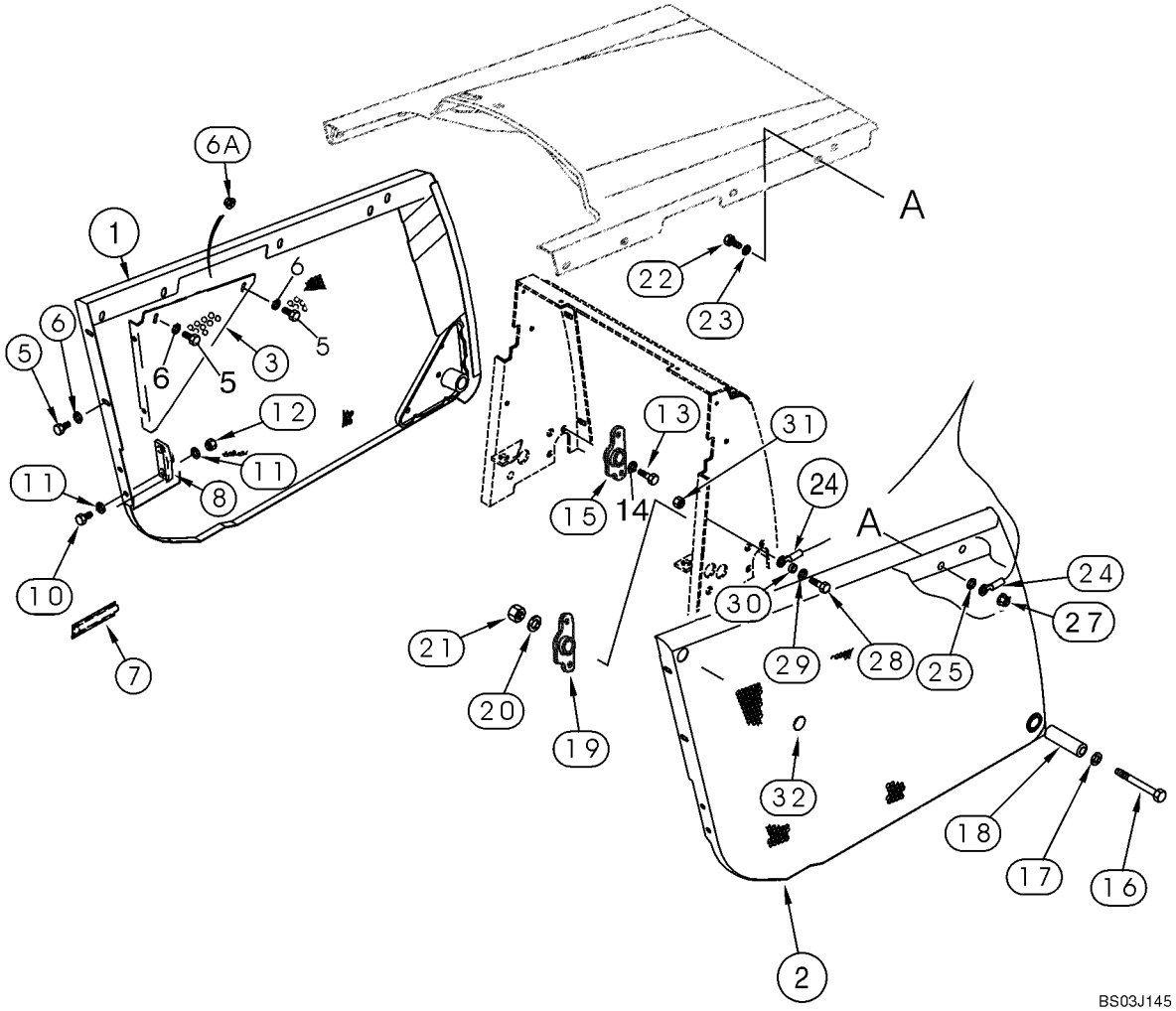

http://www.minnparbackhoeparts.com/

HOOD - PANELS, SIDE

REF	FN	PART NUMBER	YR/SN	QTY	DESCRIPTION
1		87444148		1	PANEL, SIDE Left-Hand Side
2		87444147		1	PANEL, SIDE Right-Hand Side
3		362609A1		1	BRACE Left-Hand
4		362607A1		1	BRACE Right-Hand; Not Illustrated
5		614-10025		8	BOLT M10 x 25
6		895-11010		8	WASHER 11 x 21 x 2 mm
6A		825-2410		4	NUT M10
7		183168A1		1	HANDLE Left-Hand
8		D143715		1	SUPPORT Guide, Left-Hand
9		D143714		1	SUPPORT Guide, Right-Hand; Not Illustrated
10		614-10025		4	BOLT M10 x 25
11		895-11010		8	WASHER 11 x 21 x 2 mm
12		832-10410		4	NUT M10
13		614-10020		4	SCREW M10 x 20
14		895-11010		4	WASHER Flat, 10 mm
15		87407769		1	PIVOT Left-Hand
16		814-12100		2	BOLT M12 x 100
17		896-15012		2	WASHER 13,5 x 28 x 4 mm
18		87412060		2	TUBE Spacer
19		87407770		1	PIVOT Right-Hand
20		896-15012		2	WASHER 13,5 x 28 x 4 mm
21		829-1412		2	NUT M12; 10
22		614-10025		1	BOLT M10 x 25
23		895-11010		1	WASHER 11 x 21 x 2 mm
24		144908A2		1	CABLE
25		D143417		1	SPACER
27		825-2410		1	NUT M10
28		614-10030		1	SCREW M10 x 30
29		895-11010		1	WASHER 11 x 21 x 2 mm
30		396605A1		1	SPACER
31		825-2410		1	NUT M10
32		D140267		2	PLUG

http://www.minnparbackhoeparts.com/

09-40		p1	05/04

HOOD - GRILLE

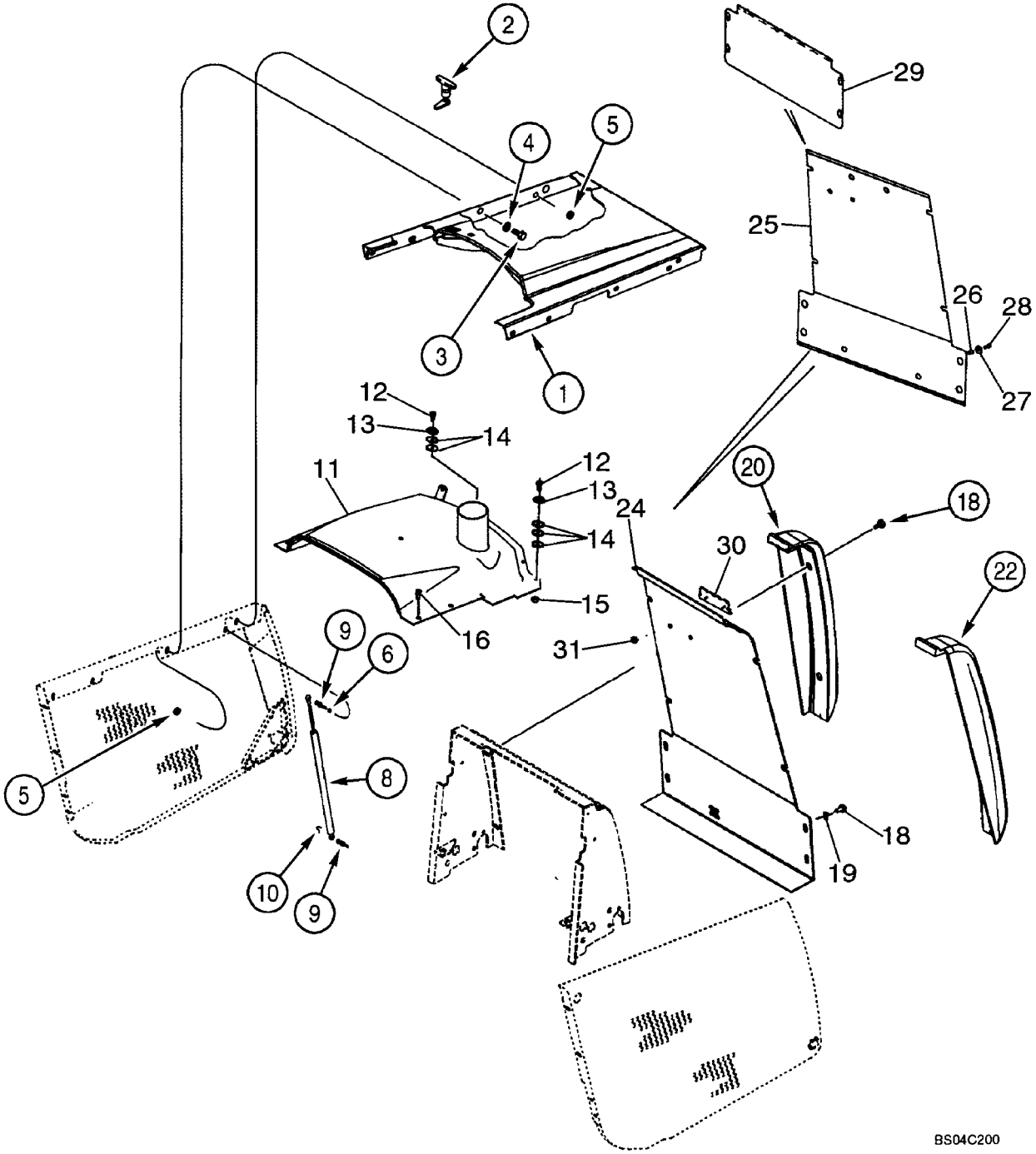

http://www.minnparbackhoeparts.com/

HOOD - GRILLE

REF	FN	PART NUMBER	YR/SN	QTY	DESCRIPTION
1		362340A6		1	HOOD Engine; Tilt
2		175599A1		1	LATCH
3		614-10025		3	BOLT M10 x 25
4		895-11010		3	WASHER 11 x 21 x 2 mm
5		825-2410		5	NUT M10
6		895-11010		2	WASHER 11 x 21 x 2 mm
8		114980A1		2	SHOCK ABSORBER Spring; Counterbalance
9		139363A1		4	BALL JOINT Stud
10		F44883		4	CLIP, ELECTRICAL
11		87439448		1	PLATE ASSY. Fixed Hood
12		440-11012		3	SCREW No. 10 x 3/4
13		109879A1		3	SPACER
14		185325A1		8	SPACER
15		231-14109		3	NUT No. 10
16		392828A2		4	BOLT With Washer, M10 x 40
18		392828A2		8	BOLT With Washer, M10 x 40
19		87423817		4	WASHER
20		381927A1		1	BUMPER Left-Hand
22		381926A1		1	BUMPER Right-Hand
24		87402618		1	SCREEN GRILLE
		87431128		1	SCREEN Chaff Screen Kit; Incl. Ref 25 - 28, Plus Instructions; No Longer Includes 87402618 Grille or Ref 30, 31
25		87444040		1	SCREEN Chaff Screen; If Used
26		255447A1		4	RIVET Threaded Insert
27		257382A1		4	WASHER 6.6 x 25 x 1.6 mm
28		257381A1		4	SCREW Hex, 1/4 x 3/4
29		87445597		1	SCREEN Lower Chaff Screen; Models With Air Conditioning; If Used
30		186989A1		1	DECAL Case Emblem
31		131-431		2	NUT 1/4

http://www.minnparbackhoeparts.com/

09-41		p1	05/05

PLATES, FLOOR - FLOORMATS

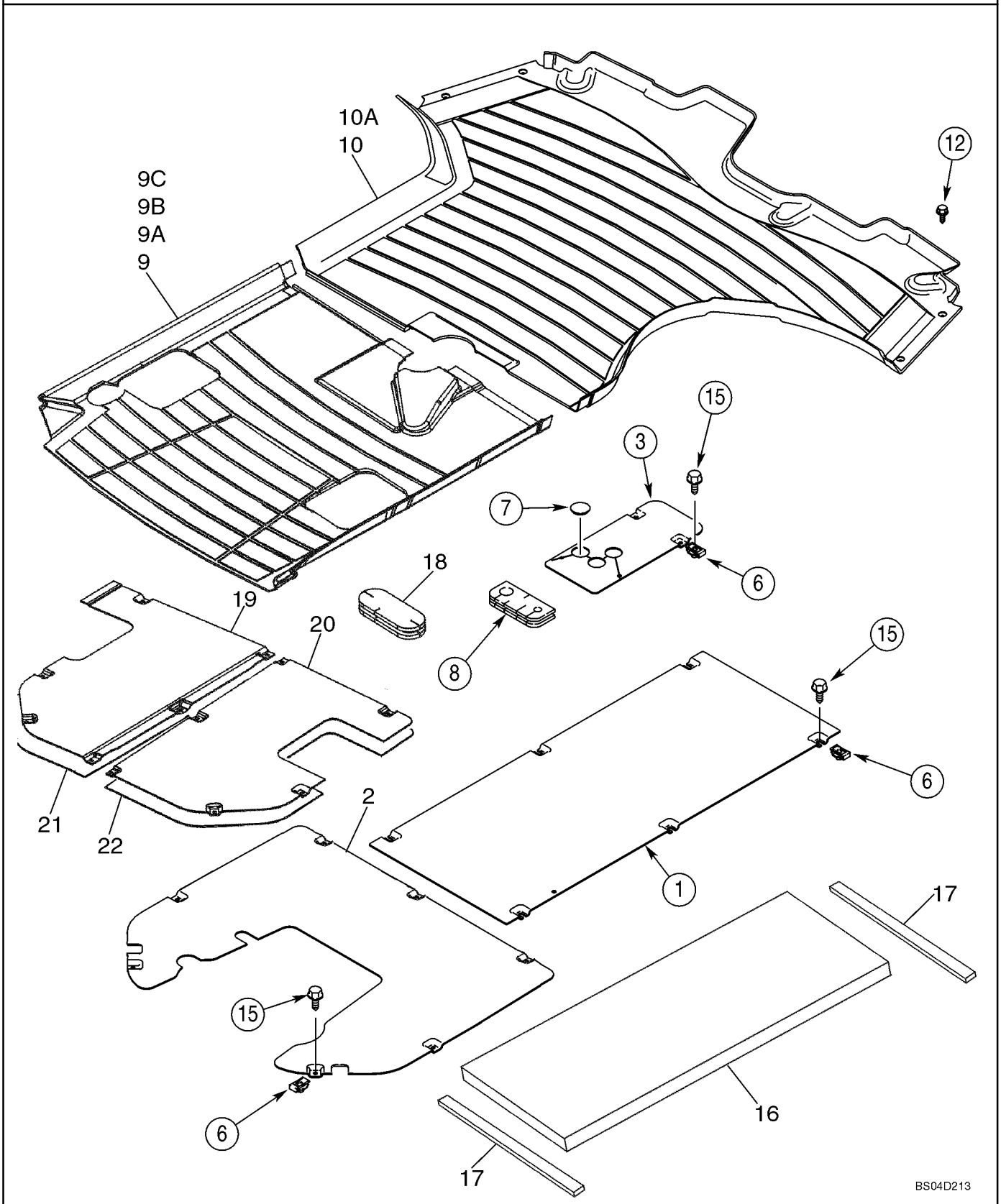

http://www.minnparbackhoeparts.com/

PLATES, FLOOR - FLOORMATS

REF	FN	PART NUMBER	YR/SN	QTY	DESCRIPTION
1		355984A2		1	PLATE, LARGE Front
2		86983190		1	PLATE, COVER Rear; Without Pilot Controls
3		87436076		1	PLATE, COVER Loader Control Lever
6		833-40406		16-17	NUT M6
7		353-422		1	PLUG Models Without Clam Bucket
8		393623A1		1	BLOCK Floor
9		86983325		1	MAT, FLOOR Rear, 580SM Canopy Models, Without Pilot Controls
9A		86983269		1	MAT, FLOOR Rear, 580SM Canopy Models, With Pilot Controls; Not Illustrated
9B		86993773		1	MAT, FLOOR Rear, 580SM+ Canopy Models, Without Pilot Controls; Not Illustrated
9C		86993774		1	MAT, FLOOR Rear, 580SM+ Canopy Models, With Pilot Controls; Not Illustrated
10		390551A2		1	MAT, FLOOR Front, 580SM Cab or Canopy Models
10A		391625A2		1	MAT, FLOOR Front, 580SM+ Cab or Canopy Models; Not Illustrated
12		87310085		4	SCREW, SELF TAPPING Hex Washer Head, No. 10 x 1, Self-Tapping, Stainless Steel; Replaces 280-16516 Non-Stainless Steel Screw Used On Some Models
15		87310096		16-17	BOLT M6 x 25, Includes Washer, Stainless Steel; Replaces 233724A1 Non-Stainless Steel Screw Used On Some Models
16		411074A1		1	SEAL Cab Models
17		181981A1		2	GASKET Foam; Adhesive Back; Cab Models
18		87407927		1	INSULATOR BLOCK Rubber Grommet
19		87434049		1	PLATE, COVER Rear, With Pilot Controls
20		87434050		1	PLATE, COVER Rear, With Pilot Controls
21		87442376		1	INSULATION, FOAM Heat Barrier, Left-Hand, Canopy Models With Pilot Controls
22		87442377		1	INSULATION, FOAM Heat Barrier, Right-Hand, Canopy Models With Pilot Controls

http://www.minnparbackhoeparts.com/

09-42		p1	05/05

FENDER COVER, LEFT-HAND - PANEL, REAR CLOSURE (STORAGE TRAY WITH CUP HOLDER)

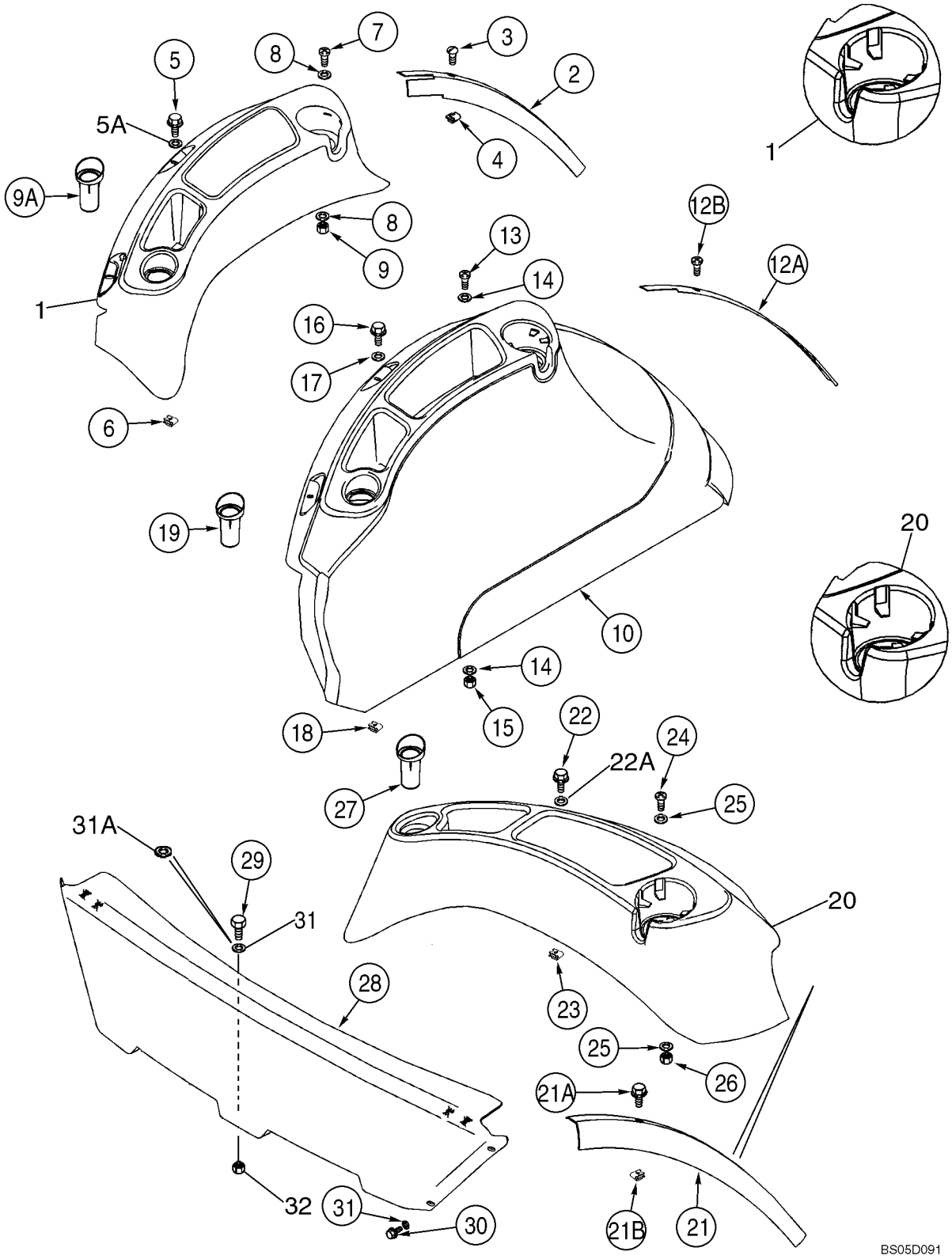

http://www.minnparbackhoeparts.com/

FENDER COVER, LEFT-HAND - PANEL, REAR CLOSURE (STORAGE TRAY WITH CUP HOLDER)

REF	FN	PART NUMBER	YR/SN	QTY	DESCRIPTION
1		86992247		1	TRAY Cab Models, With Standard Interior; Includes 86992284, 400077A1
		NSS		1	NOT SERVICED SEPARATELY Tray
		86992284		4	BUMPER
		400077A1		1	STRIP, METRES 1300 mm (51-3/16 in); Cut From 1977224C1
2		397026A3		1	STRIP, PROTECTION Trim, Left-Hand Fender, Cab Models With Standard Interior
3		87310088		3	SCREW No. 10 x 3/4, Stainless Steel; Replaces 398113A1 Non-Stainless Steel Screw Used On Some Models
4		131-869		3	NUT No. 10
5		87310098		2	BOLT Flange, M6 x 20, Stainless Steel; Replaces 555-2 Non-Stainless Steel Screw Used On Some Models
5A		87310186		2	WASHER 6.6 ID x 25 OD x 1.6 mm thk, Stainless Steel; Replaces 895-30109 Non-Stainless Steel Washer Used On Some Models
6		833-40406		2	NUT M6
7		87310127		2	SCREW No. 10 x 1, Stainless Steel; Replaces 140-117 Non-Stainless Steel Screw Used On Some Models
8		87310146		4	WASHER 13/64 x 3/4 x 1/16, Stainless Steel; Replaces 495-61020 Non-Stainless Steel Washer Used On Some Models
9		231-14109		2	NUT No. 10
9A		378742A3		1	INSERT Swing Pin Holder
10		86992245		1	COVER ASSY 580SM Cab Models With Deluxe Interior; Includes (4) 86992284 Bumpers
10		86992248		1	COVER ASSY 580SM+ Cab Models With Deluxe Interior; Includes (4) 86992284 Bumpers
12A		397774A3		1	STRIP Deluxe Interior
12B		87310088		3	SCREW No. 10 x 3/4, Stainless Steel; Replaces 398113A1 Non-Stainless Steel Screw Used On Some Models

http://www.minnparbackhoeparts.com/

09-42		p2	05/05

FENDER COVER, LEFT-HAND - PANEL, REAR CLOSURE (STORAGE TRAY WITH CUP HOLDER)

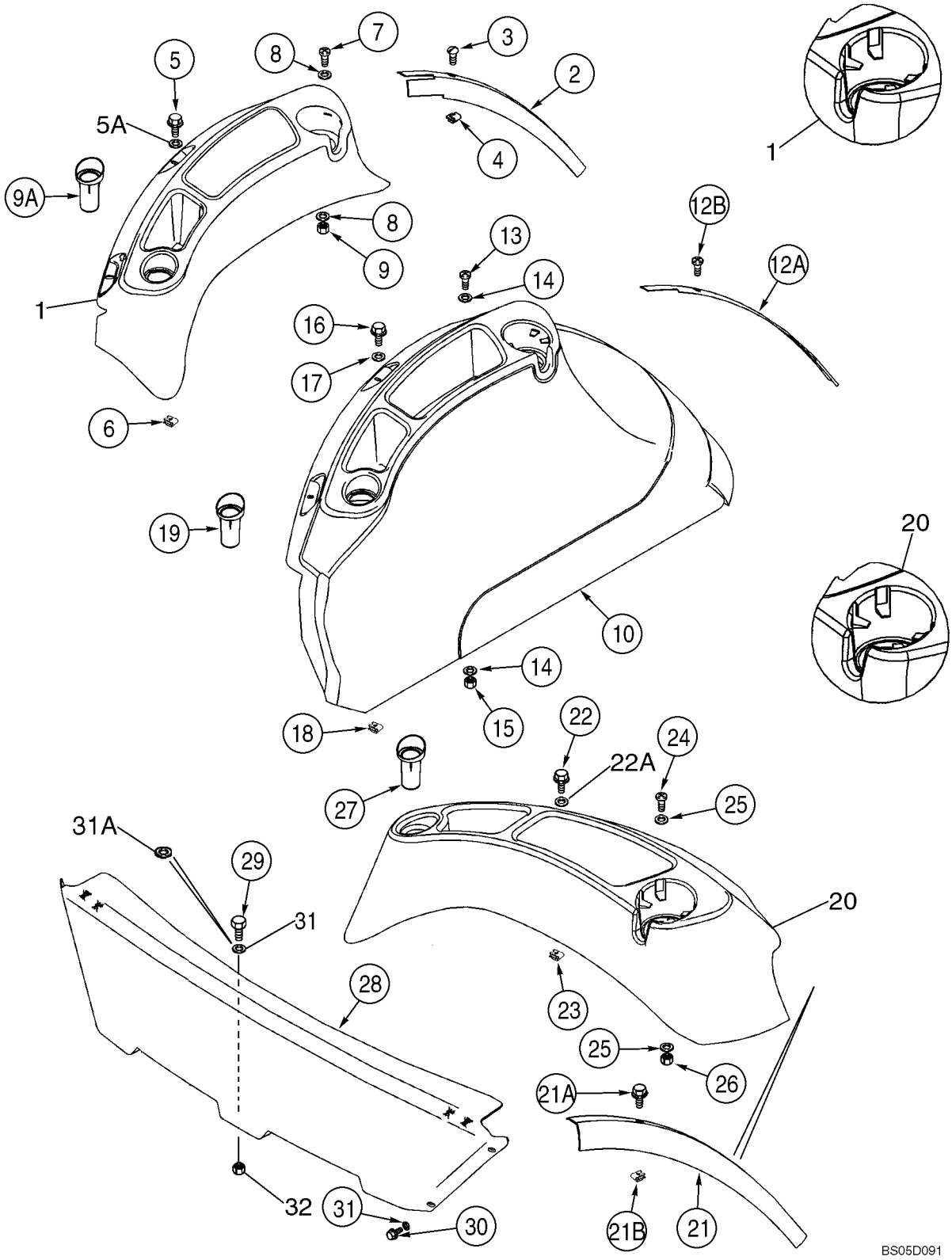

http://www.minnparbackhoeparts.com/

FENDER COVER, LEFT-HAND - PANEL, REAR CLOSURE (STORAGE TRAY WITH CUP HOLDER)

REF	FN	PART NUMBER	YR/SN	QTY	DESCRIPTION
13		87310127		2	SCREW No. 10 x 1, Stainless Steel; Replaces 140-117 Non-Stainless Steel Screw Used On Some Models
14		87310146		4	WASHER 13/64 x 3/4 x 1/16, Stainless Steel; Replaces 495-61020 Non-Stainless Steel Washer Used On Some Models
15		231-14109		2	NUT No. 10
16		87310098		2	BOLT Flange, M6 x 20, Stainless Steel; Replaces 555-2 Non-Stainless Steel Screw Used On Some Models
17		87310186		2	WASHER 6.6 ID x 25 OD x 1.6 mm thk, Stainless Steel; Replaces 895-30109 Non-Stainless Steel Washer Used On Some Models
18		833-40406		2	NUT M6
19		378742A3		1	INSERT Swing Pin Holder
20		86992243		1	TRAY ASSY. Canopy Models; Includes 86992284, 4000077A1
		NSS		1	NOT SERVICED SEPARATELY Tray
		86992284		4	BUMPER
		400077A1		1	STRIP, METRES 1300 mm (51-3/16 in); Cut From 1977224C1
21		397025A2		1	STRIP, PROTECTION Trim, Canopy Models
21A		87310088		3	SCREW No. 10 x 3/4, Stainless Steel; Replaces 398113A1 Non-Stainless Steel Screw Used On Some Models
21B		131-869		3	NUT No. 10
22		87310098		2	BOLT Flange, M6 x 20, Stainless Steel; Replaces 555-2 Non-Stainless Steel Screw Used On Some Models
22A		87310186		2	WASHER 6.6 ID x 25 OD x 1.6 mm thk, Stainless Steel; Replaces 895-30109 Non-Stainless Steel Washer Used On Some Models
23		833-40406		2	NUT M6
24		87310127		2	SCREW No. 10 x 1, Stainless Steel; Replaces 140-117 Non-Stainless Steel Screw Used On Some Models

http://www.minnparbackhoeparts.com/

09-42		p3	05/05

FENDER COVER, LEFT-HAND - PANEL, REAR CLOSURE (STORAGE TRAY WITH CUP HOLDER)

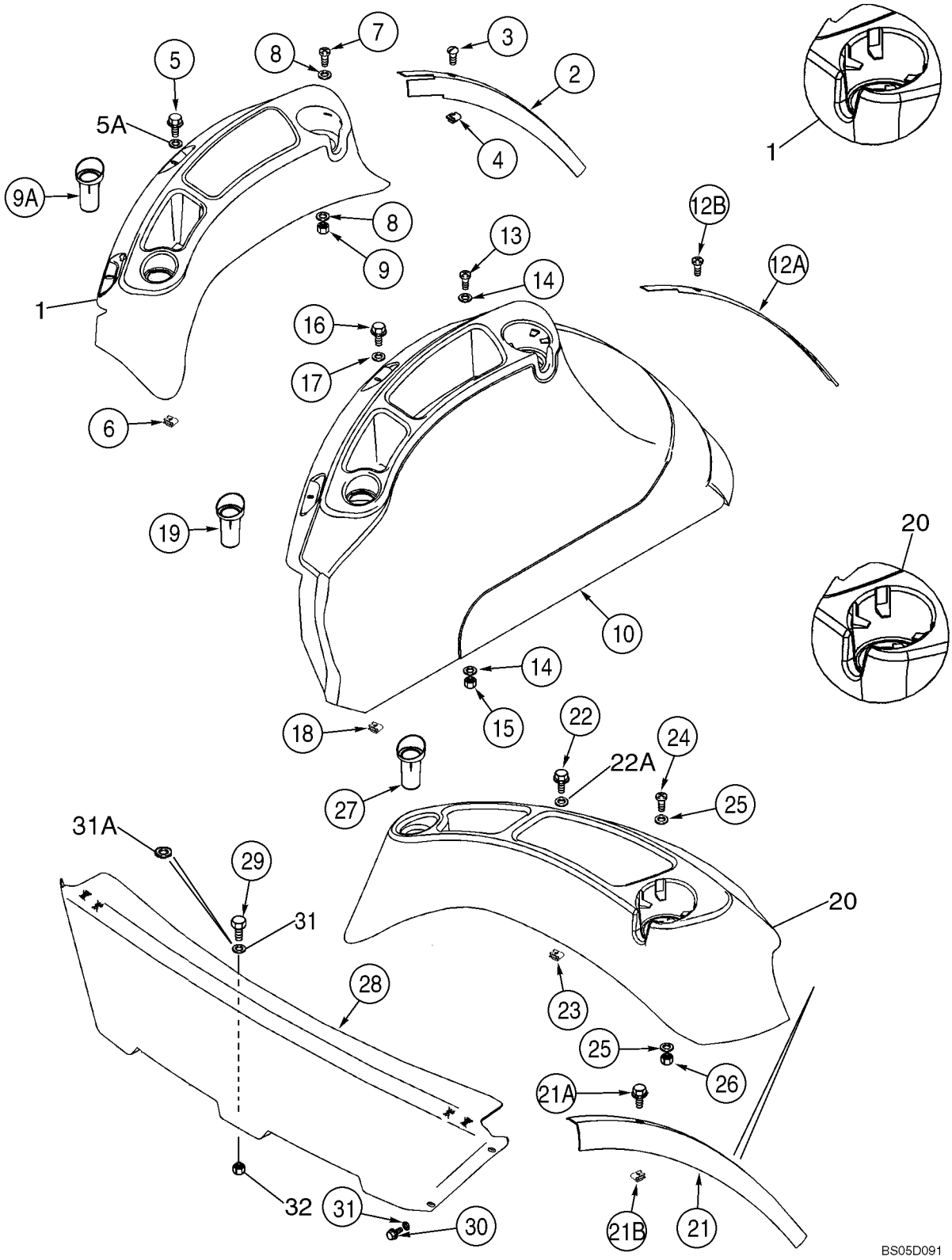

http://www.minnparbackhoeparts.com/

FENDER COVER, LEFT-HAND - PANEL, REAR CLOSURE (STORAGE TRAY WITH CUP HOLDER)

REF	FN	PART NUMBER	YR/SN	QTY	DESCRIPTION
25		87310146		4	WASHER 13/64 x 3/4 x 1/16, Stainless Steel; Replaces 495-61020 Non-Stainless Steel Washer Used On Some Models
26		231-14109		2	NUT No. 10
27		378742A3		1	INSERT Swing Pin Holder
28		86992977		1	PANEL Rear Closure Panel; Canopy Models
29		87310154		1	BOLT M8 x 25, Stainless Steel; Replaces 614-8025 Non-Stainless Steel Screw Used On Some Models
30		781-24820		4	SCREW Flange, M8 x 20
31		895-15008		4-5	WASHER 9 x 16 x 1,6 mm
31A		87310185		1	WASHER 9 x 20 x 1,6 mm, Stainless Steel; Replaces (1) 895-15008 9 x 16 x 1,6 mm Washer Used On Some Models
32		832-10408		1	NUT M8

http://www.minnparbackhoeparts.com/

09-43		p1	01/04

FENDER EXTENSIONS

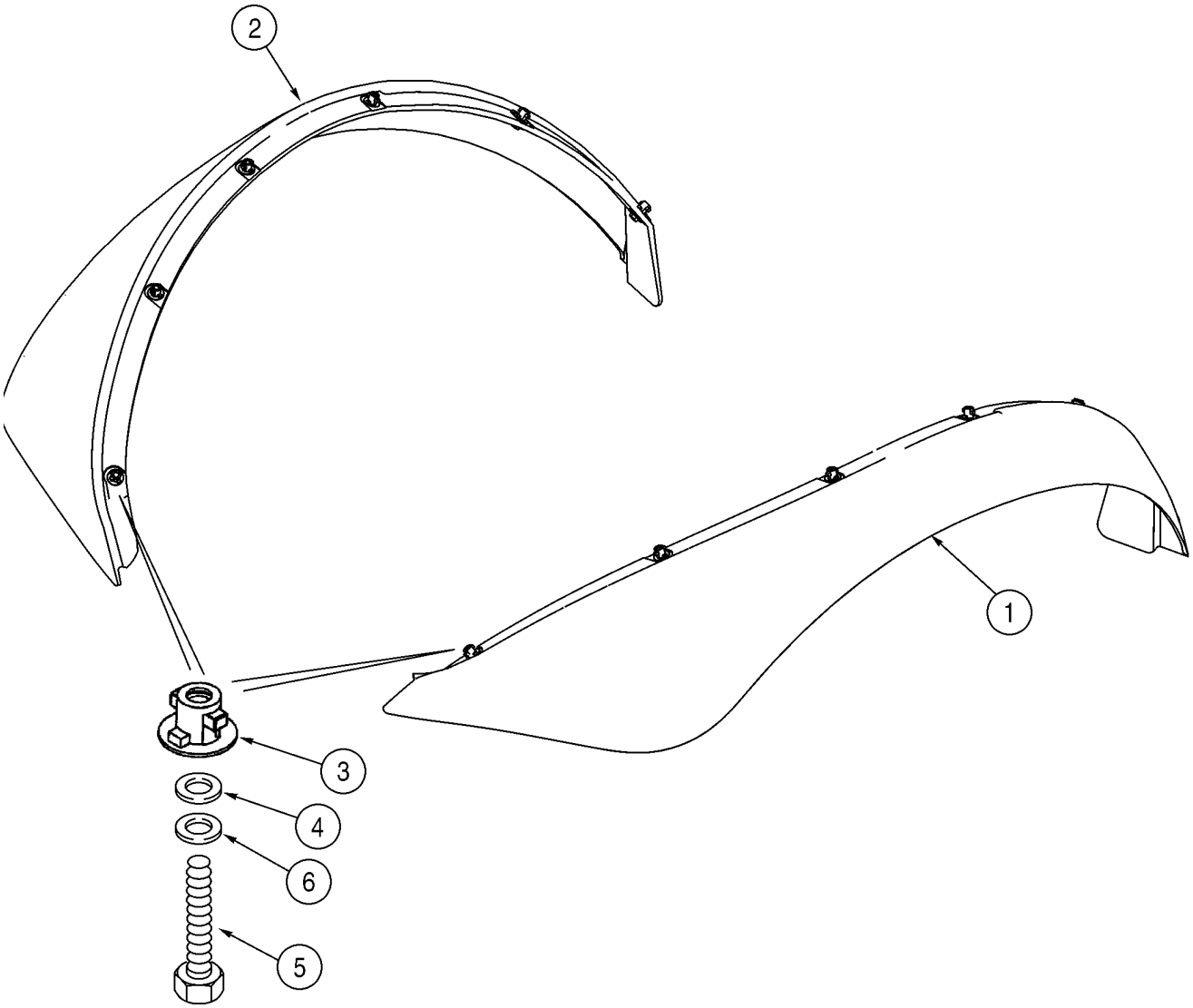

BC00F002

http://www.minnparbackhoeparts.com/

FENDER EXTENSIONS

REF	FN	PART NUMBER	YR/SN	QTY	DESCRIPTION
1		340998A3		1	FENDER Right-Hand
2		340997A3		1	FENDER Left-Hand
3		345231A1		12	FASTENER
4		496-41041		12	WASHER 13/32 x 1-1/8 x 9/64
5		614-8030		12	BOLT M8 x 30
6		892-11008		12	WASHER 8 mm; Lock

http://www.minnparbackhoeparts.com/

09-44		p1	02/05

GUARD, MUD

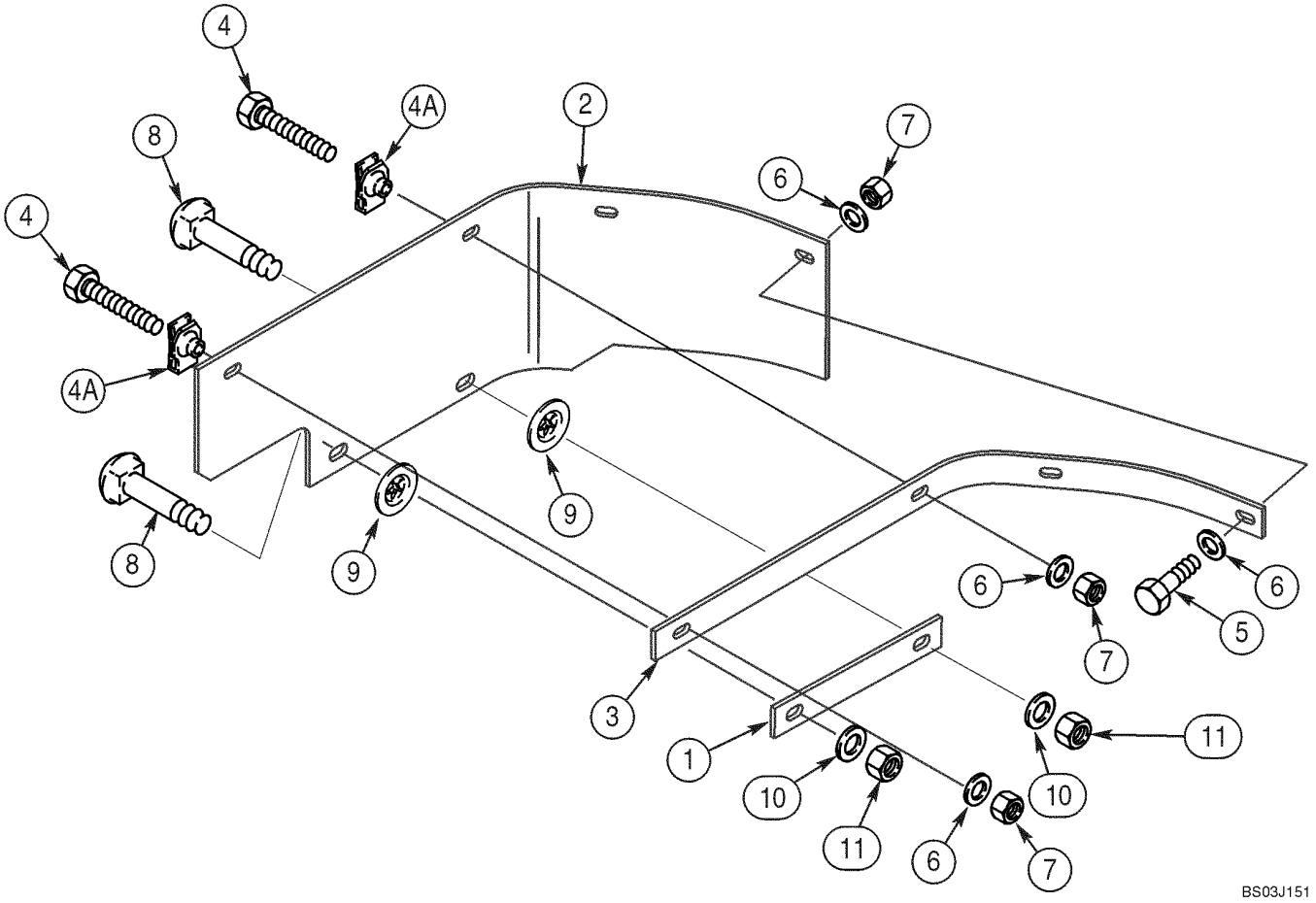

http://www.minnparbackhoeparts.com/

GUARD, MUD

REF	FN	PART NUMBER	YR/SN	QTY	DESCRIPTION
1		362557A1		1	STRIP Plate
2		362556A2		1	GUARD Mounts At Right-Hand Fender
3		362558A1		1	STRIP Angle
4		614-8040		2	BOLT Hex, M8 x 40, 8.8, Full Thd
4A		833-40408		2	NUT M8
5		614-8030		2	BOLT M8 x 30
6		495-21038		6	WASHER 3/8 x 7/8 x 3/32
7		832-10408		4	NUT M8
8		711-10040		2	BOLT M10 x 40
9		368417A1		2	WASHER
10		895-11010		2	WASHER 11 x 21 x 2 mm
11		832-10410		2	NUT M10

http://www.minnparbackhoeparts.com/

SEAT - MOUNTING (MILSCO AND SEARS AIR SUSPENSION)

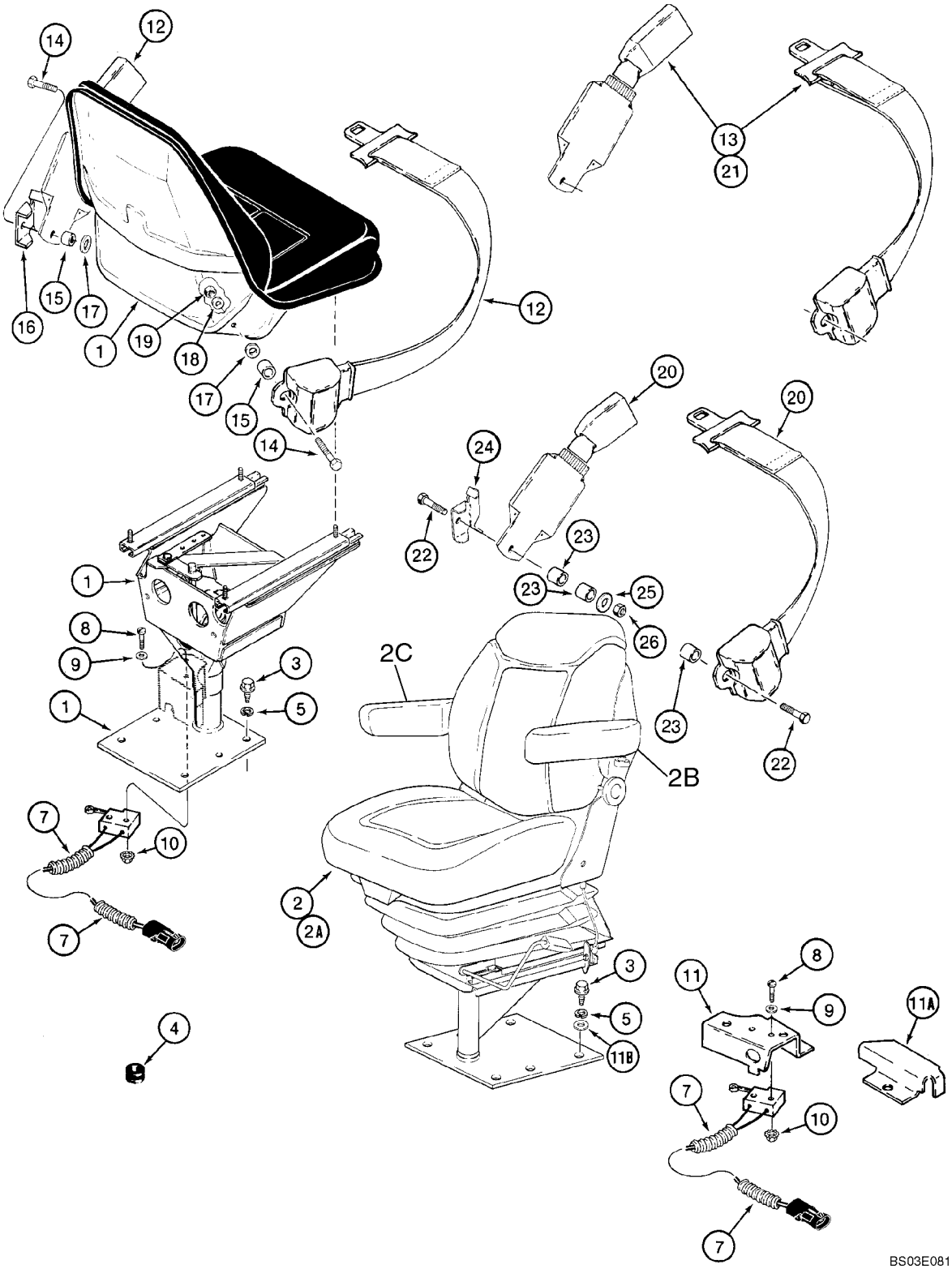

http://www.minnparbackhoeparts.com/

SEAT - MOUNTING (MILSCO AND SEARS AIR SUSPENSION)

REF	FN	PART NUMBER	YR/SN	QTY	DESCRIPTION
1		397132A1		1	SEAT ASSY. Standard, Vinyl, Without Armrest, Includes Seat, Pedestal, and Support, See Figures 09-46, 09-47
2		397137A1		1	SEAT ASSY. Air Suspension, Cloth, Deluxe, With Armrests On Figure 09-50, See Figures 09-50, 09-51
2A		397136A2		1	SEAT ASSY. Suspension, Cloth, Without Armrests, Includes Seat, Suspension, and Pedestal, See Figures 09-48, 09-49; Order 397407A1 Service Kit For Seat Assy With Armrests
2A		397134A2		1	SEAT ASSY. Suspension, Vinyl, Without Armrests, Includes Seat, Suspension, and Pedestal, See Figures 09-48, 09-49; Order 397408A1 Service Kit For Seat Assy With Armrests
2B		292262A1		1	ARMREST ASSY. Kit, Left-Hand
2C		292263A2		1	ARMREST ASSY. Kit, Right-Hand
3		604-12030		4	BOLT M12 x 30
4		248-2373		1	GROMMET 1-1/4
5		896-15012		4	WASHER 13,5 x 28 x 4 mm
7		118769A1		1	SWITCH Limit Switch
8		470-10620		2	SCREW No. 6 x 1-1/4
9		495-31016		2	WASHER 5/32 x 3/8 x 3/64
10		193-1003		2	NUT No. 6
11		119211A1		1	BRACKET Switch Mounting, Suspension Seat
11A		186351A1		1	GUARD Harness
11B		896-11012		1	WASHER Flat, 13,5 x 24 x 3 mm
12		87408889		1	SEAT BELT 51 mm (2 in), If Used; Standard Seat Belt Mounting
13		87408888		1	SEAT BELT 76 mm (3 in), Retractable, If Used; Standard Seat Belt Mounting
14		414-724		2	SCREW 7/16 x 1-1/2; 5
15		D150391		2	SPACER
16		D150392		1	BRACKET Left-Hand
17		495-81169		2	WASHER 17/32 x 2,5 x 1/8, Not Used On Deluxe Air Suspension Seat
18		496-81010		4	WASHER 15/32 x 1 x 7/64
19		232-4617		2	NUT 7/16 NF; 8

http://www.minnparbackhoeparts.com/

SEAT - MOUNTING (MILSCO AND SEARS AIR SUSPENSION)

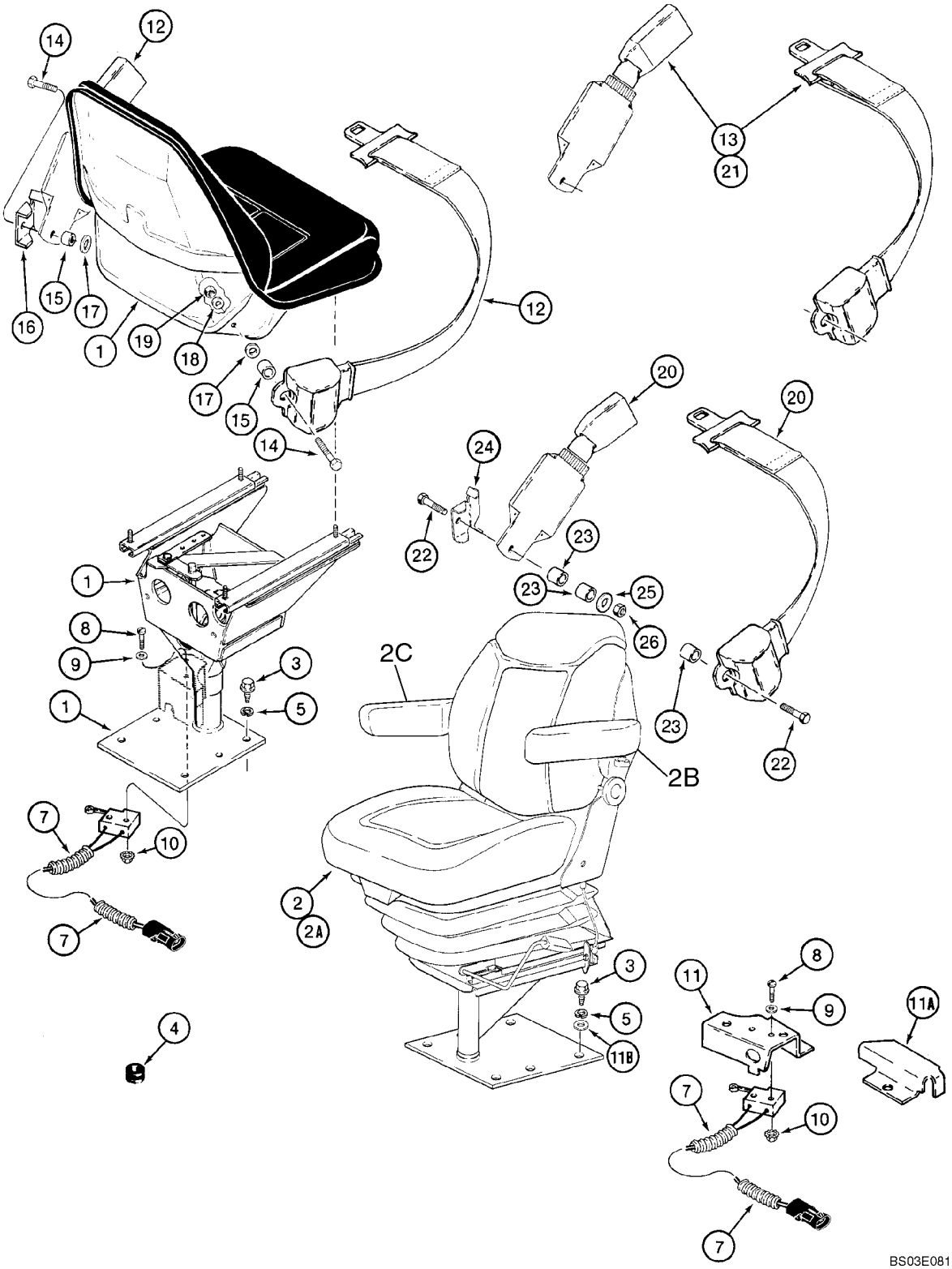

http://www.minnparbackhoeparts.com/

SEAT - MOUNTING (MILSCO AND SEARS AIR SUSPENSION)

REF	FN	PART NUMBER	YR/SN	QTY	DESCRIPTION
20		87408889		1	SEAT BELT 51 mm (2 in), If Used; Suspension Seat Belt Mounting
21		87408888		1	SEAT BELT 76 mm (3 in), Retractable, If Used; Suspension Seat Belt Mounting
22		414-724		2	SCREW 7/16 x 1-1/2; 5
23		D150391		2	SPACER
24		D150392		1	BRACKET Left-Hand
25		496-81010		2	WASHER 15/32 x 1 x 7/64
26		232-4617		2	NUT 7/16 NF; 8

http://www.minnparbackhoeparts.com/

09-45A		p1	06/05

SEAT - MOUNTING (SEARS, STANDARD)

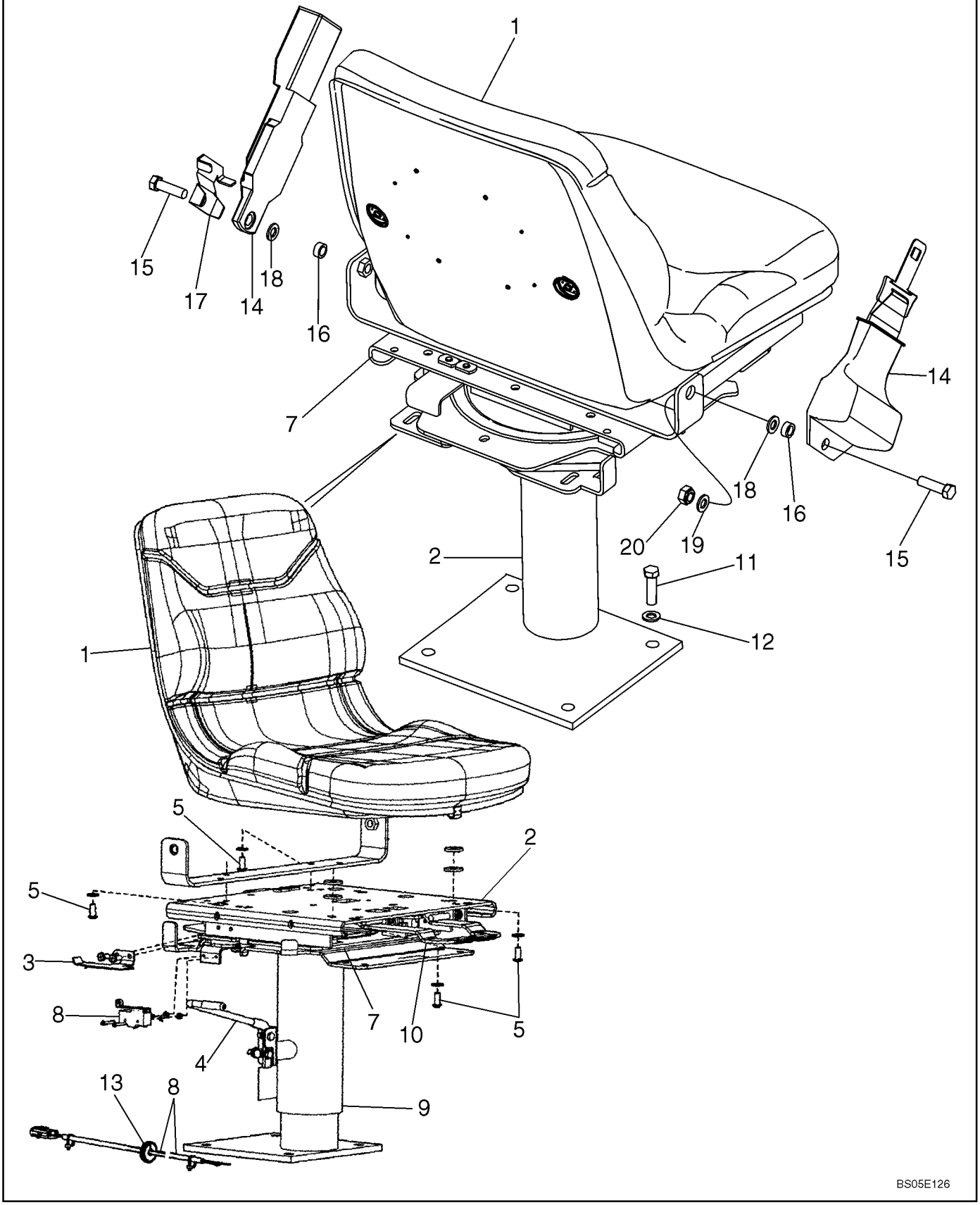

http://www.minnparbackhoeparts.com/

SEAT - MOUNTING (SEARS, STANDARD)

REF	FN	PART NUMBER	YR/SN	QTY	DESCRIPTION
		{87454292}		1	Standard, Vinyl, Without Armrest, Sears Brand; Includes Seat, Swivel and Pedestal, and Swivel Bearing Kit, Ref 1 - 10
1		87338681		1	SEAT, BACK Seat Only
2		{87346606}		1	Swivel and Pedestal; Component Parts Not Serviced Separately
3		{87346607}		1	Lever, Switch Actuator
4		{87346611}		1	Handle, Height Adjustment
5		{87346612}		4	Button Head Screw, 5/16 x 3/4
6		{87346615}		1	Spring Not Illustrated
7		87308132		1	BEARING ASSY Swivel Bearing Kit; Includes (1) Bolt, (8) Bearings, (1) Clip, (1) Nut, (1) Cotter Pin, (1) Plastic Washer, (1) Ball Retainer; Component Parts Not Serviced Separately
8		{87346625}		1	Kit, Switch/Harness, Adj. Height
9		{87346633}		1	Kit, Pedestal
10		{87346634}		1	Kit, Slide/Swivel
11		604-12030		4	BOLT Locking, M12 x 30
12		896-15012		4	WASHER 13.5 x 28 x 4 mm
13		248-2373		1	GROMMET Rubber, 1/2 ID
14		87408888		1	SEAT BELT 76 mm (3 in); Retractable, If Used
14		87408889		1	SEAT BELT 51 mm (2 in), Retractable, If Used
15		414-724		2	SCREW 7/16 x 1-1/2; 5
16		87311572		2	SPACER
17		87310149		1	BRACKET Left-Hand; Seat Belt Mounting/Standard Seat
18		495-81169		2	WASHER 17/32 x 2,5 x 1/8
19		496-81010		4	WASHER 15/32 x 1 x 7/64
20		232-4617		2	NUT 7/16 NF; 8

http://www.minnparbackhoeparts.com/

09-45B		p1	05/05

SEAT - MOUNTING (SEARS MECHANICAL SUSPENSION)

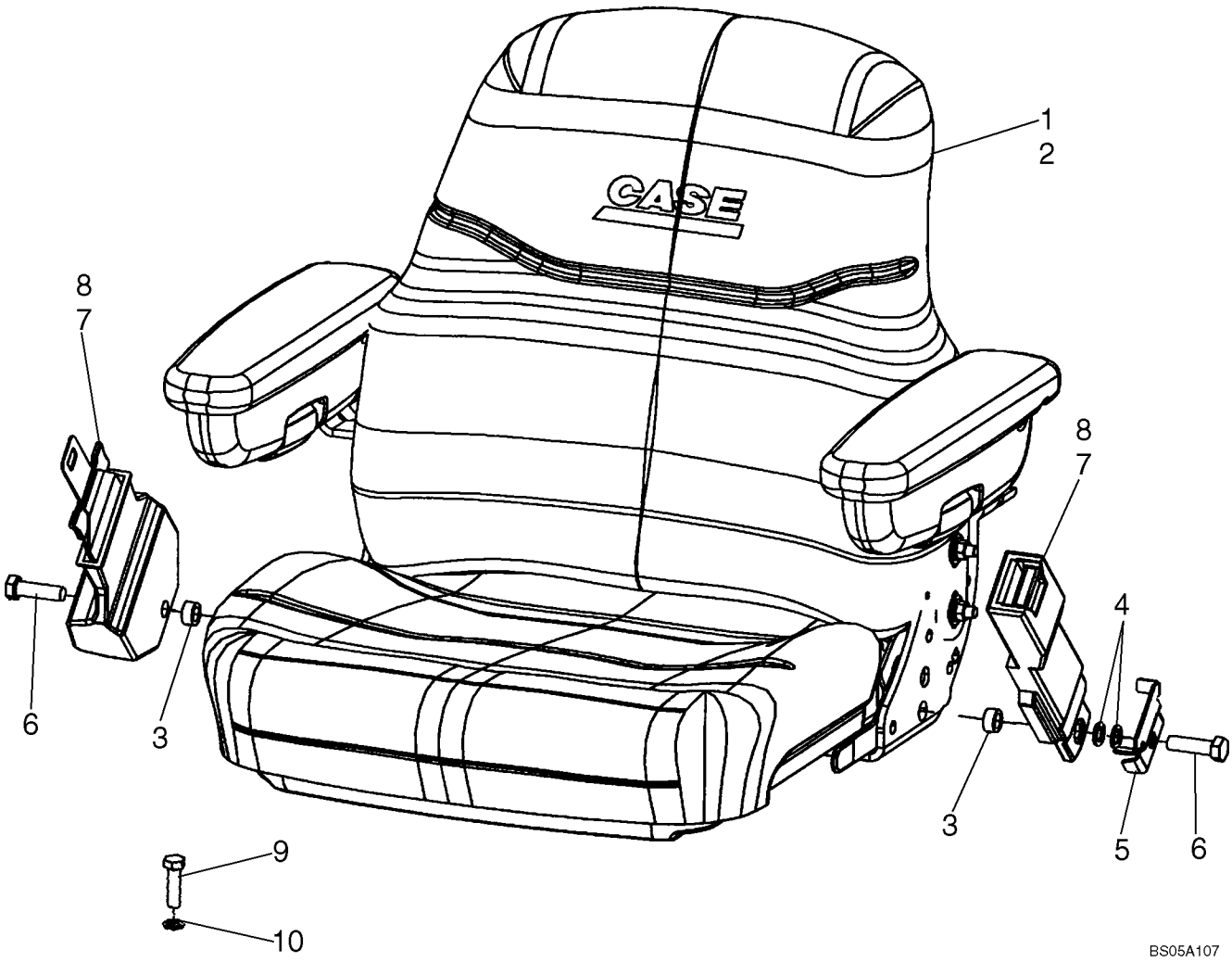

http://www.minnparbackhoeparts.com/

SEAT - MOUNTING (SEARS MECHANICAL SUSPENSION)

REF	FN	PART NUMBER	YR/SN	QTY	DESCRIPTION
1		87454295		1	SEAT ASSY. Mechanical Suspension, Sears, Vinyl, With Armrests; See Figure 09-49A
2		87454294		1	SEAT ASSY. Mechanical Suspension, Sears, Cloth, With Armrests; See Figure 09-49A
3		87311572		2	SPACER
4		895-18012		2	WASHER 13.5 x 20 x 2 mm; Left-Hand Side
5		87310149		1	BRACKET Belt Mounting
6		614-12040		2	BOLT Thread to Head, M12 x 40
7		87408888		1	SEAT BELT 76 mm (3 in), Retractable, If Used
8		87408889		1	SEAT BELT 51 mm (2 in), If Used
9		604-12030		4	BOLT Locking, M12 x 30; Seat Pedestal to Floor
10		896-15012		4	WASHER 13.5 x 28 x 4 mm

http://www.minnparbackhoeparts.com/

09-46		p1	01/05

SEAT ASSY, STANDARD (MILSCO)

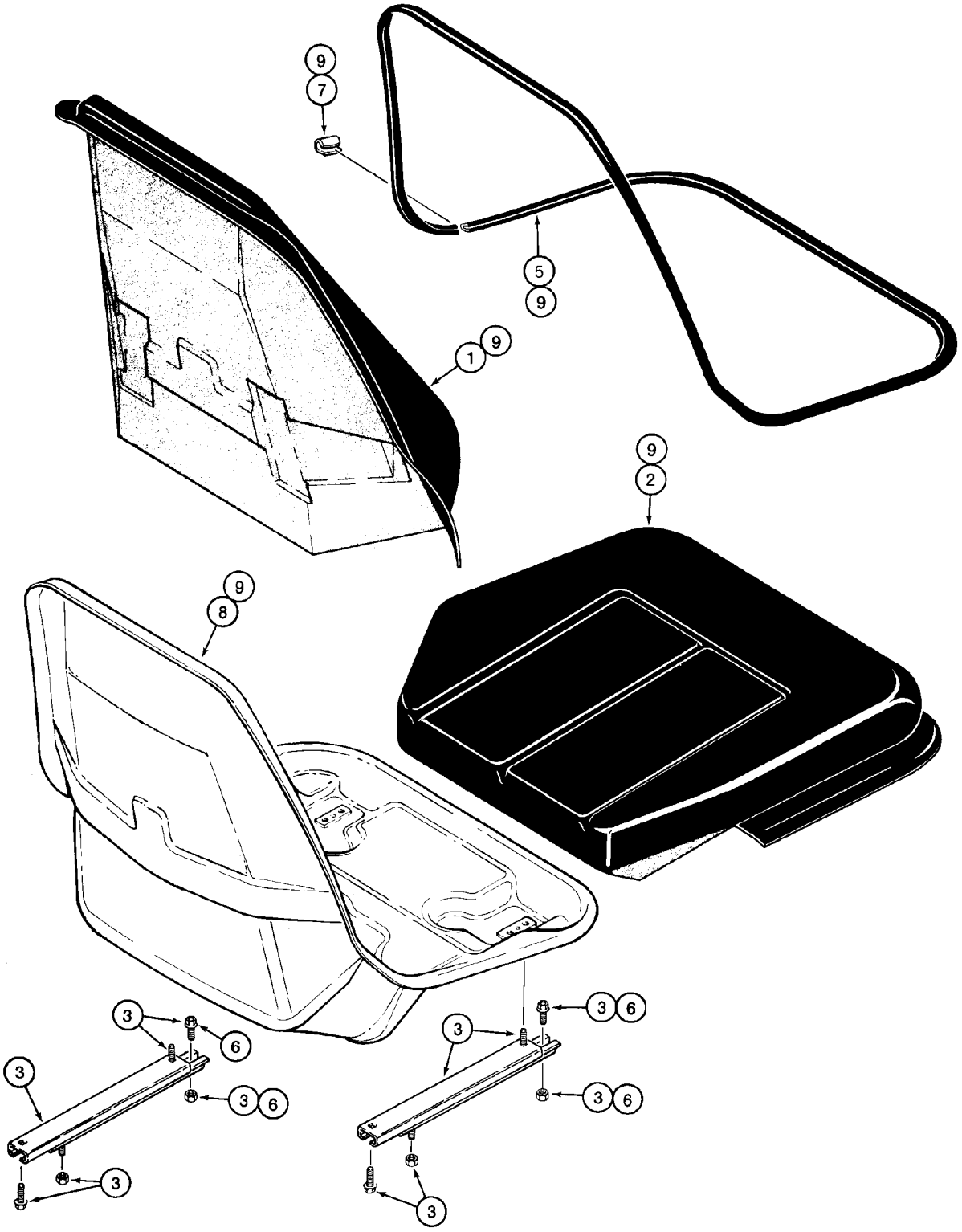

BS00J117

http://www.minnparbackhoeparts.com/

SEAT ASSY, STANDARD (MILSCO)

REF	FN	PART NUMBER	YR/SN	QTY	DESCRIPTION
		397132A1		1	SEAT ASSY. Vinyl, Standard Seat; Incl. Ref 1 - 9; Also Includes Parts On Figure 09-47
1		NSS		1	NOT SERVICED SEPARATELY Cushion, Backrest; Order 406700A1 Cushion Assy, Ref 9
2		NSS		1	NOT SERVICED SEPARATELY Cushion, Seat; Order 406700A1 Cushion Assy, Ref 9
3		399777A1		1	KIT Seat Slide Adjusters
5		176924A1		1	SET OF PARTS Trim
6		181169A1		1	KIT Cable, Fore-Aft/Swivel Mechanism, For Cable, See Figure 09-47
7		NSS		1	NOT SERVICED SEPARATELY Clip, Order N7802 Clip Kit
8		NSS		1	NOT SERVICED SEPARATELY Shell, Seat Frame, Order 406700A1 Cushion Assy, Ref 9
9		406700A1		1	CUSHION ASSY. Seat Shell, Cushions, and Trim, Incl. Ref 1, 2, 5, 8
		N7802		1	CLIP Clip, Incl. Ref 7 Clip, Plus 6 Additional Narrow Clips

http://www.minnparbackhoeparts.com/

SEAT SUPPORT AND PEDESTAL, STANDARD (MILSCO)

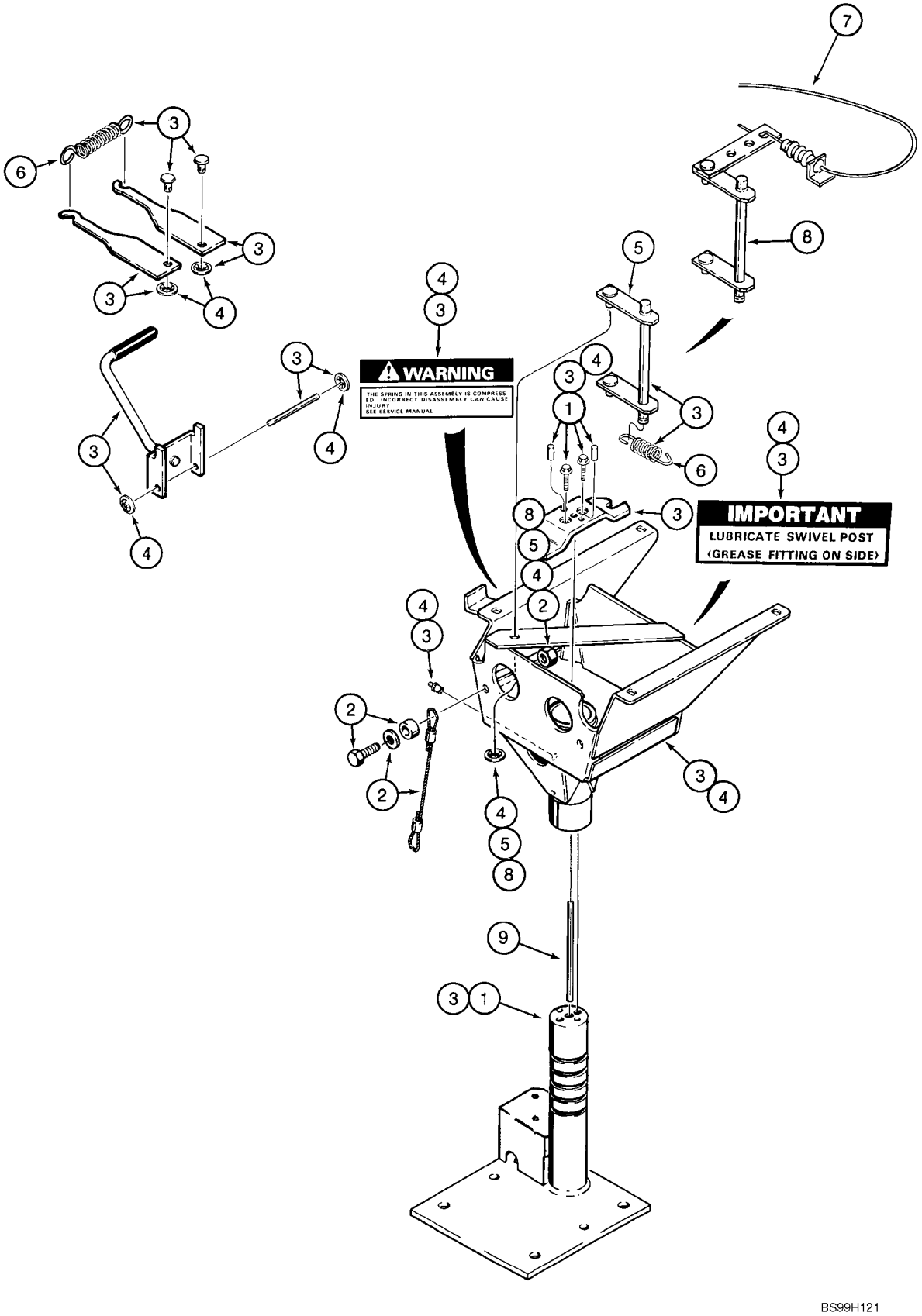

http://www.minnparbackhoeparts.com/

SEAT SUPPORT AND PEDESTAL, STANDARD (MILSCO)

REF	FN	PART NUMBER	YR/SN	QTY	DESCRIPTION
		397132A1		1	SEAT ASSY. Vinyl, Standard Seat, Incl. Ref 1 - 9, Also Includes Parts On Figure 09-46
1		116761A3		1	KIT Support, Base, Includes (6) Lock Nuts, (2) Pins, (1) Rivet, (1) Washer, (1) Spacer, 2 Screws
2		116763A1		1	KIT Cable, Anchor, Includes Hardware For Both Ends
3		116764A3		1	KIT Pedestal, Includes (4) Lock Nuts, (1) Rivet, (1) Washer, (1) Spacer, (1) Tie, (2) Screws
		219-16		1	NIPPLE, LUBE 5/16 dr type x 19/32; If Used
4		116766A2		1	KIT Pedestal Box, Includes (4) Lock Nuts For Seat Adjuster Slide, Includes 219-16
		219-16		1	NIPPLE, LUBE 5/16 dr type x 19/32
5		116767A1		1	KIT Swivel Latch, Includes (6) Lock Nuts, (1) Push Nut, (1) Swivel Latch; Also Includes (4) Lock Nuts For Seat Adjuster Slide
6		119171A1		1	KIT Spring
7		181169A1		1	KIT Cable, Fore-Aft/Swivel Mechanism, Also Includes (4) Nuts
8		253209A1		1	KIT Swivel Latch, Includes (4) Lock Nuts, (1) Rivet, (1) Spacer, (1) Washer, (1) Push Nut, (1) Swivel Latch
9		NSS		1	NOT SERVICED SEPARATELY Pin, Seat

http://www.minnparbackhoeparts.com/

09-48		p1	01/05

SEAT ASSY, MECHANICAL SUSPENSION (MILSCO)

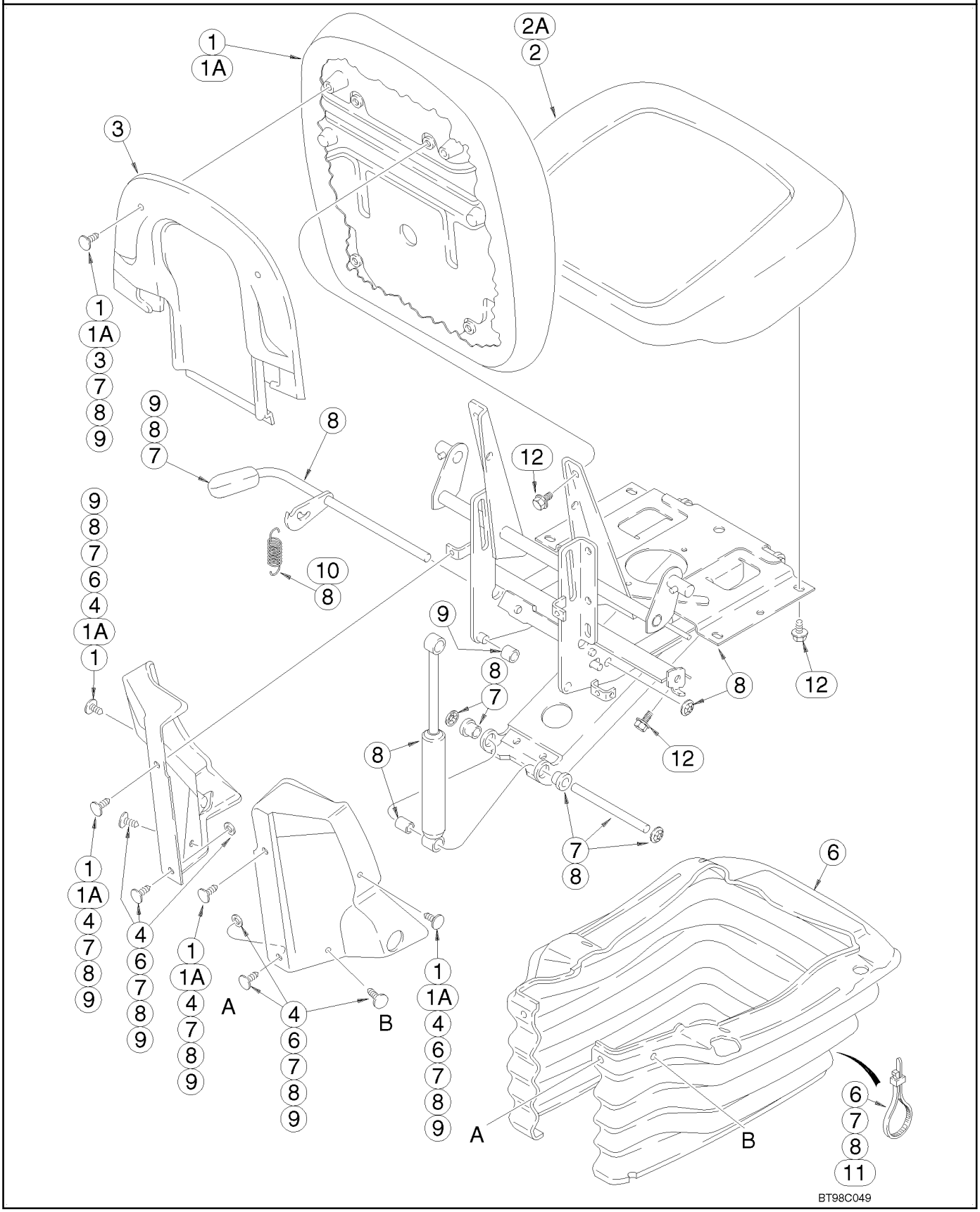

http://www.minnparbackhoeparts.com/

SEAT ASSY, MECHANICAL SUSPENSION (MILSCO)

REF	FN	PART NUMBER	YR/SN	QTY	DESCRIPTION
		397136A2		1	SEAT ASSY. Cloth, Includes Seat, Suspension, Pedestal and Weight Adjuster, Without Armrests, Incl. Ref 1 - 11; Also Includes Parts On Figure 09-49
		397134A2		1	SEAT ASSY. Vinyl, Includes Seat, Suspension, Pedestal and Weight Adjuster, Without Armrests, Incl. Ref 1 - 11; Also Includes Parts On Figure 09-49
1		399757A1		1	KIT Cushion, Backrest, Cloth, Includes Lumbar Knob, (6) Clips and (4) Screws
1A		399759A1		1	KIT Cushion, Backrest, Vinyl, Includes Lumbar Knob, (6) Clips and (4) Screws
2		399758A1		1	KIT Cushion, Seat, Cloth, Includes (6) Screws
2A		399760A1		1	KIT Cushion, Seat, Vinyl, Includes (6) Screws
3		307091A1		1	ASSEMBLY Kit, Backrest Shroud, Includes (2) Clips
4		307090A1		1	KIT Side Shroud, Left-Hand and Right-Hand, Includes (6) Clips, (2) Washers, (1) Height Adjustment Grip, (1) Back Angle Grip
6		307098A1		1	KIT Boot, Includes (2) Ties, (2) Washers, (4) Clips
7		176919A1		1	KIT Swing Arm Pivot Shaft, Includes (2) Flanged Bearings, (4) Push Nuts, (2) Clips, (2) Washers, (1) Grip, (2) Ties
8		307092A1		1	KIT Suspension, Includes Suspension, Back Angle Adjust, (2) Groove Pins, (1) Handle, (8) Screws, (2) Springs, (3) Washers, (1) Rivet; Includes Parts From Seat Frame To Adjuster Slides; For Additional Kit Parts See Figure 09-49, Ref 1
8		307092A1		1	KIT 307092A1 Suspension Kit Also Includes (1) Spacer, (2) Ties, (8) Clips, (12) Nuts, (1) Height Adjust Grip, (1) Back Angle Grip, (1) Rake Grip, (1) Fore/Aft/Swivel Grip, (1) Decal
9		176921A1		1	KIT Plastic Components, Includes (2) Rollers, (4) Downstops, (2) Roller Guides, (2) Bearings, (1) Bumper, (4) Nuts, (10) Clips, (2) Washers, (1) Grip; For Additional Kit Parts, See Figure 09-49, Ref 2
10		116547A1		1	KIT Height Adjusting Spring, Includes (10) Shroud Retainers, (2) Washers, (2) Springs, (1) Wear Strip; For Additional Kit Parts, See Figure 09-49, Ref 6

http://www.minnparbackhoeparts.com/

09-48		p2	01/05

SEAT ASSY, MECHANICAL SUSPENSION (MILSCO)

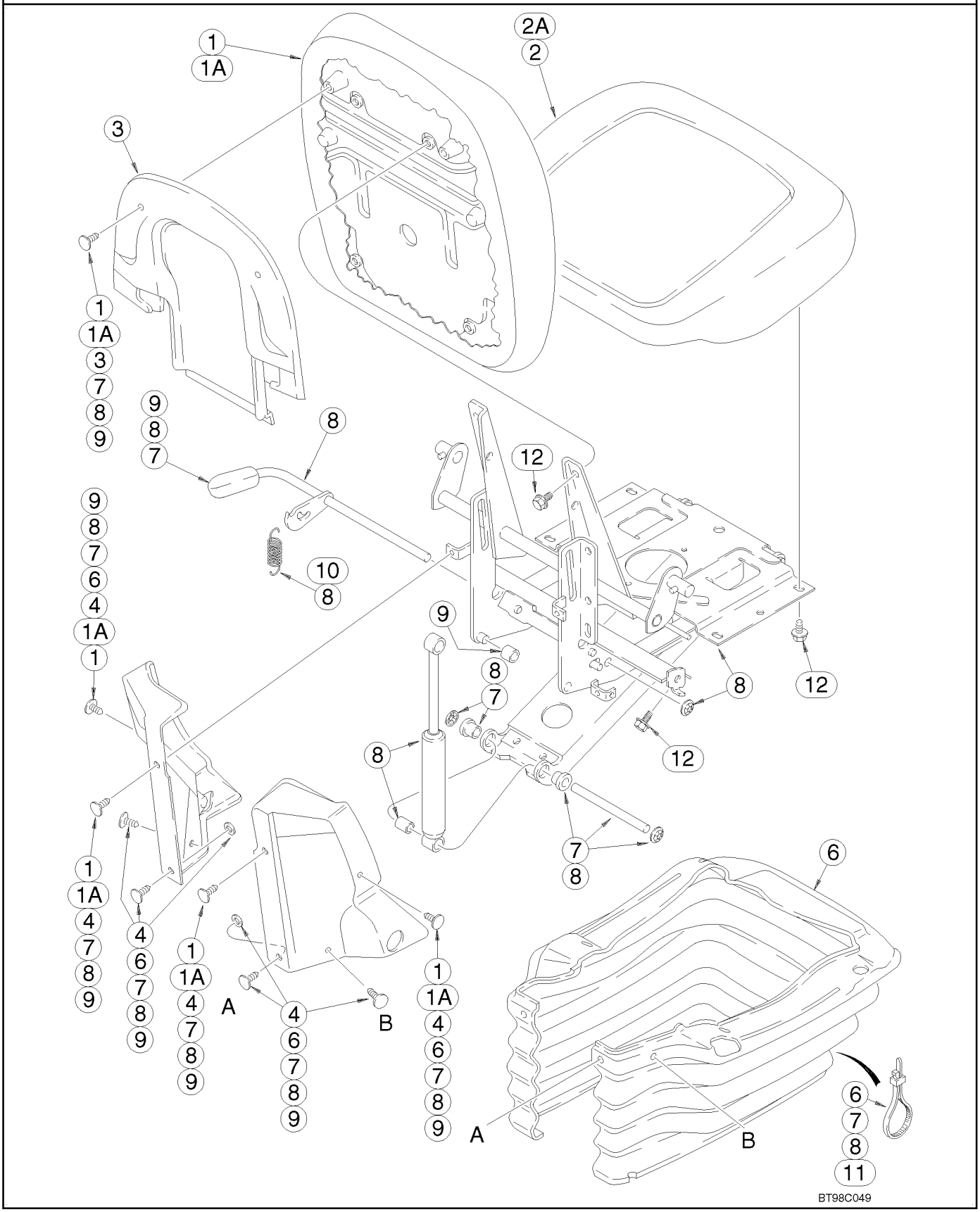

http://www.minnparbackhoeparts.com/

SEAT ASSY, MECHANICAL SUSPENSION (MILSCO)

REF	FN	PART NUMBER	YR/SN	QTY	DESCRIPTION
11		181170A1		1	KIT Cable, Fore-Aft/Swivel Mechanism, Includes (2) Screws, (2) Ties, Cable, (4) Nuts
12		NSS		8	NOT SERVICED SEPARATELY Bolt, 5/16 Inch Thread, Length As Required, Purchase Locally, Seat Cushion and Backrest

http://www.minnparbackhoeparts.com/

SEAT PEDESTAL AND SUSPENSION, MECHANICAL SUSPENSION (MILSCO)

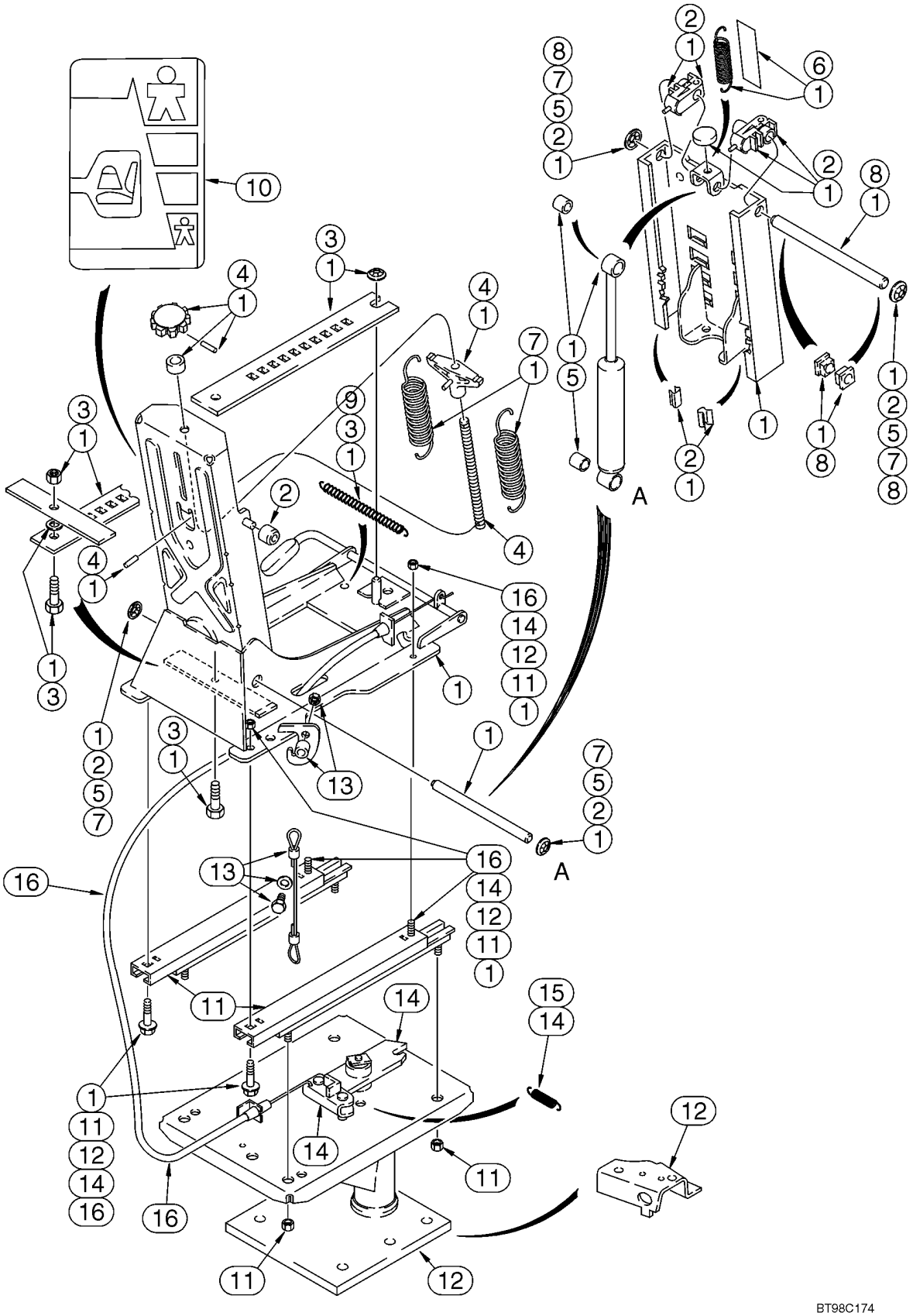

http://www.minnparbackhoeparts.com/

SEAT PEDESTAL AND SUSPENSION, MECHANICAL SUSPENSION (MILSCO)

REF	FN	PART NUMBER	YR/SN	QTY	DESCRIPTION
		397136A2		1	SEAT ASSY. Cloth, Includes Seat, Suspension, Pedestal and Weight Adjuster, Without Armrests; Incl. Ref 1 - 16; Also Includes Parts On Figure 09-48
		397134A2		1	SEAT ASSY. Vinyl, Includes Seat, Suspension, Pedestal and Weight Adjuster, Without Armrests; Incl. Ref 1 - 16; Also Includes Parts On Figure 09-48
1		307092A1		1	KIT Suspension, Includes Suspension, Back Angle Adjust, (2) Groove Pins, (1) Handle, (8) Screws, (2) Springs, (3) Washers and (1) Rivet; Includes Parts From Seat Frame To Adjuster Slides; For Additional Kit Parts, See Figure 09-48, Ref 8
1		307092A1		1	KIT Suspension; Also Includes (1) Spacer, (2) Ties, (8) Clips, (12) Nuts, (1) Height Adjust Grip, (1) Back Angle Grip, (1) Rake Grip, (1) Fore/Aft/Swivel Grip, (1) Decal
2		176921A1		1	KIT Plastic Components, Includes (2) Rollers, (4) Downstops, (2) Roller Guides, (2) Bearings, (1) Bumper, (4) Nuts, (10) Clips, (2) Washers, (1) Grip; For Additional Kit Parts, See Figure 09-48, Ref 9
3		116521A1		1	KIT Fore/Aft Adjuster Latch, Includes (1) Latch Bar, (1) Bolt, (1) Spacer, (2) Nuts, (1) Spring and (2) Ties, Includes 131-435 Nut
		131-435		X	NUT 3/8
4		176916A1		1	KIT Weight Adjuster, Includes Adjusting Knob, (1) Spacer, (2) Roll Pins, (1) Shaft, (1) Spring, (10) Clips, (2) Washers, (1) Grip and (2) Ties; Also Includes (10) Shroud Retainers, (2) Washers, (2) Ties, See Figure 09-48
5		176914A1		1	KIT Suspension Damper, Includes Damper, (2) Spacers, (4) Nuts, (10) Clips, (2) Washers, (1) Grip and (2) Ties; Also Includes (10) Shroud Retainers, (2) Washers, (2) Ties, See Figure 09-48
6		116547A1		1	KIT Height Adjusting Spring, Includes (10) Shroud Retainers, (2) Washers, (2) Springs, (1) Wear Strip; For Additional Kit Parts, See Figure 09-48, Ref 10
7		176920A1		1	KIT Main Extension Springs, Includes (2) Springs, (4) Nuts, (2) Washers, (10) Clips, (1) Grip, (2) Ties

http://www.minnparbackhoeparts.com/

SEAT PEDESTAL AND SUSPENSION, MECHANICAL SUSPENSION (MILSCO)

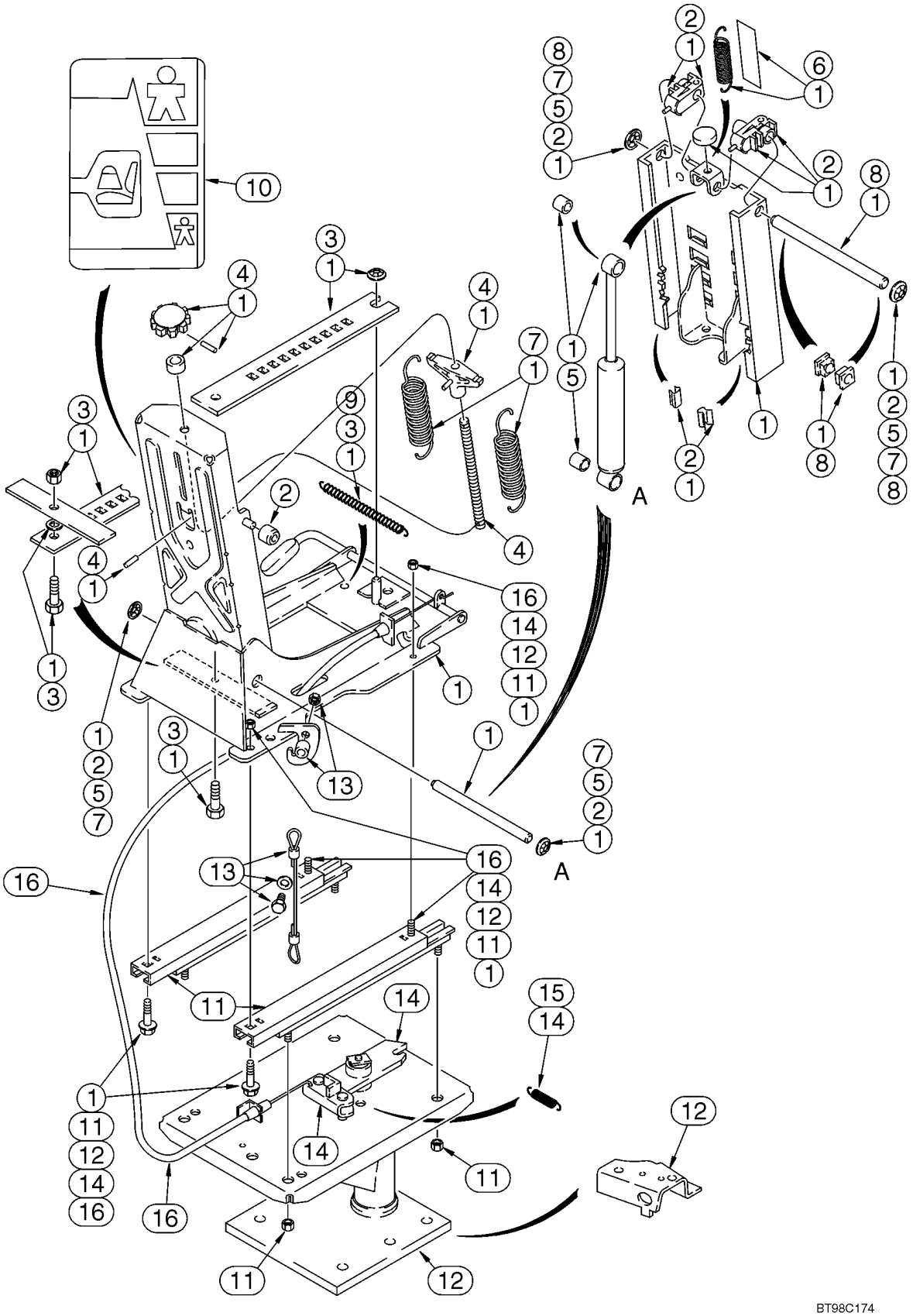

http://www.minnparbackhoeparts.com/

SEAT PEDESTAL AND SUSPENSION, MECHANICAL SUSPENSION (MILSCO)

REF	FN	PART NUMBER	YR/SN	QTY	DESCRIPTION
8		116551A1		1	KIT Upper Suspension Tower Shaft, Includes Shaft, (2) Bearings, (2) Nuts, (10) Clips, (2) Washers
9		116545A1		1	KIT Fore/Aft Latch Spring, Includes (1) Spring, (2) Ties
10		116534A1		1	KIT Decal, Seat Weight Adjustment
11		399764A1		1	KIT Fore/Aft Adjuster Slides
12		116538A2		1	KIT Pedestal, Includes Pedestal, (4) Screws, (4) Nuts and 119211A1 Bracket
13		116552A1		1	KIT Cable, Includes (2) Cables, (2) Screws, (2) Spacers, (2) Washers, (2) Nuts
14		116550A1		1	KIT Swivel Latch Bar, Includes Latch Bar, (1) Spring, (1) Ring, (4) Screws, (4) Nuts
14		336375A1		1	KIT Swivel Latch Plate, Includes Latch, Swivel Plate Latch, (5) Screws, (6) Nuts, (2) Pins
15		116548A1		1	KIT Swivel Latch Spring Only
16		181170A1		1	KIT Cable, Fore-Aft/Swivel Mechanism, Includes (2) Screws, (2) Ties, Cable, (4) Nuts

http://www.minnparbackhoeparts.com/

09-49A		p1	05/05

SEAT ASSY, MECHANICAL SUSPENSION (SEARS)

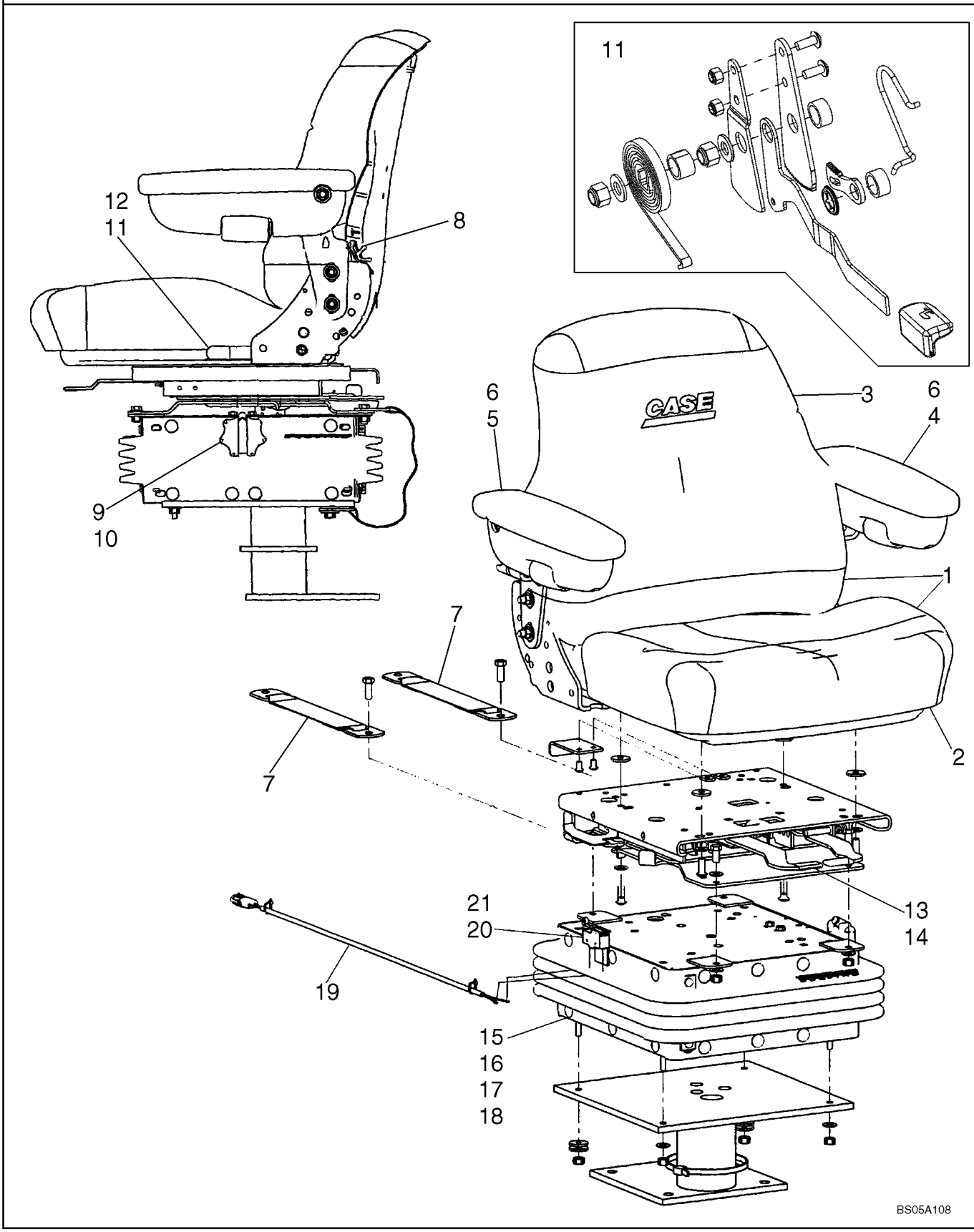

http://www.minnparbackhoeparts.com/

SEAT ASSY, MECHANICAL SUSPENSION (SEARS)

REF	FN	PART NUMBER	YR/SN	QTY	DESCRIPTION
		87454295		1	SEAT ASSY. Vinyl, Mechanical Suspension, Sears; Incl. Ref 1 - 21
		87454294		1	SEAT ASSY. Cloth, Mechanical Suspension, Sears; Incl. Ref 1 - 21
1		87308118		1	SEAT, BACK Seat Top Assy, Vinyl; Includes Back and Seat Cushions
1		87308157		1	SEAT, BACK Seat Top Assy, Cloth; Includes Back and Seat Cushions
2		87308119		1	CUSHION, SEAT Vinyl
2		87308158		1	CUSHION, SEAT Cloth
3		87308127		1	SEAT, BACK Vinyl
3		87308159		1	SEAT, BACK Cloth
4		87308153		1	ARM ASSY. Left-Hand
5		87308152		1	ARM ASSY. Right-Hand
6		87308154		2	SEAT ACCESSORY Kit, Arm Pad; Includes (1) Arm Pad, (1) Screw
7		87308128		1	SEAT ACCESSORY Kit, Tether Belt; Includes (2) Tether Belts, (2) Bolts, (4) Washers, (2) Lock Nuts
8		87037462		1	SEAT BACK ADJUST. DEVICE Lumbar Knob Kit; Includes Knob, 1/8 x 5/8 Roll Pin
		87308130		1	SEAT BACK ADJUST. DEVICE Kit, Lumbar; Includes (2) Screws, (2) Rivets, (1) Back Support, (1) Lumbar Shaft Yoke
9		123969A1		1	BUTTON Kit, Height/Weight Adjustment; Includes (1) Knob, (1) Shaft, (1) 5/32 x 1 in Roll Pin
10		38-11016		1	SPLIT PIN/SAFETY PIN Roll Pin, 5/32 x 1 in
		130674A1		1	SET Kit, Weight Adjustment; Includes (1) Thrust Washer, (2) Shaft and Gear
		87308145		1	WASHER, THRUST 2 OD x .6 in ID
11		86994165		1	SEAT ACCESSORY Recliner Kit; Includes (2) Brackets, (3) Spacers, (2) Springs, Knob, Latch, Lever, (2) Bolts, (2) Washers, (5) Nuts
12		87416475		1	KNOB Recliner Cap
		87308143		1	SUPPORT, SEAT Upper Housing, Boxed

http://www.minnparbackhoeparts.com/

SEAT ASSY, MECHANICAL SUSPENSION (SEARS)

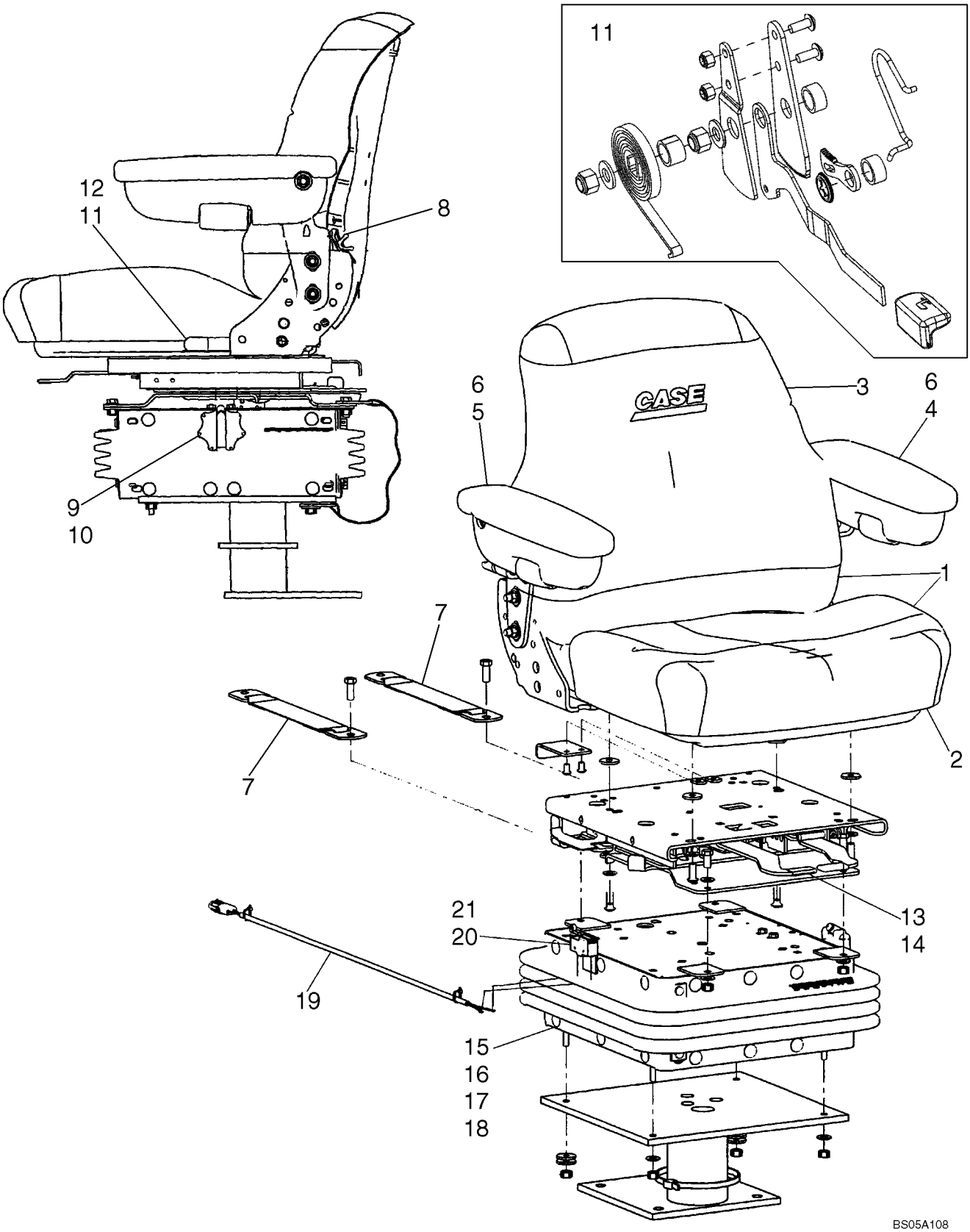

http://www.minnparbackhoeparts.com/

SEAT ASSY, MECHANICAL SUSPENSION (SEARS)

REF	FN	PART NUMBER	YR/SN	QTY	DESCRIPTION
		1977725C1		1	SLIDER Kit, Bearing, Slider Block; Includes (4) Tube Bearings, (1) Ride Indicator, (1) A45512 Slider Block, (1) A45515 Slider Block, (1) A45516 Slider Block, (1) NSS Slider Block
13		87308131		1	SEAT ACCESSORY Swivel Assembly
14		87308132		1	BEARING ASSY Kit, Swivel Bearing; Includes (1) Bolt, (8) Ball Bearings, (1) Clip, (1) Nut, (1) Cotter Pin, (1) Plastic Washer, (1) Ball Retainer
15		87308141		1	SUPPORT, SEAT Kit, Suspension Assembly, Boxed
16		87308144		1	SUPPORT, SEAT Suspension Arm, Boxed
17		87308146		1	SEAT ACCESSORY Kit, Spring, Suspension
18		87308147		1	SEAT ACCESSORY Kit, Boot, Suspension, Boxed; Includes (1) Boot, (26) Buttons
		87308148		1	SEAT ACCESSORY Kit, Shock Absorber, Boxed; Includes (1) Shock Absorber, (2) Bushings
		51200906		1	BRACKET Shaft, Suspension
		112884A1		2	SHAFT Bearing Shaft Weldment, Boxed
		A45504		1	WASHER Spring, Square, With Weldnut
		A45505		1	GEAR Large Gear and Shaft Weldment
		A45513		1	GEAR Gear and Shaft Weldment
		A45054		2	BUMPER Rubber, Black
		87308142		1	SUPPORT, SEAT Lower Housing, Boxed
19		87308149		1	HARNESS, WIRE
20		87308150		1	SWITCH Seat
21		87308151		1	SEAT ACCESSORY Kit, Switch and Actuator Lever; Includes Switch, Actuator, (4) Screws, (2) Lock Washers, (2) Nuts

http://www.minnparbackhoeparts.com/

09-50		p1	01/05

SEAT ASSY, AIR SUSPENSION (SEARS)

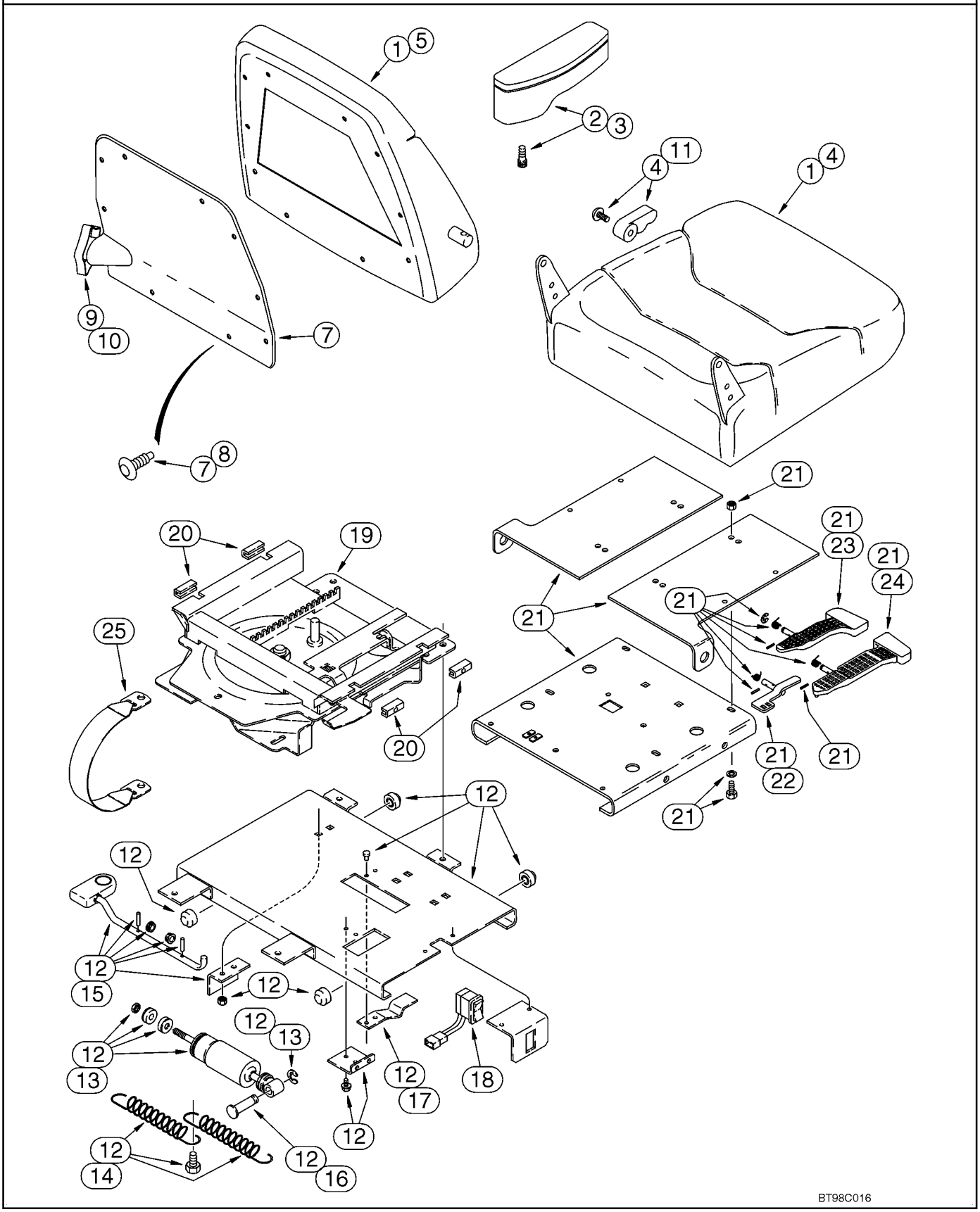

http://www.minnparbackhoeparts.com/

SEAT ASSY, AIR SUSPENSION (SEARS)

REF	FN	PART NUMBER	YR/SN	QTY	DESCRIPTION
		121414A1		1	FUSE 20 amp, Not Illustrated
		604-12030		4	BOLT M12 x 30
		896-15012		4	WASHER 13,5 x 28 x 4 mm
		397137A1		1	SEAT ASSY. Air Suspension Seat, Cloth, With Armrests, Incl. Ref 1 - 25; Also Includes Parts On Figure 09-51
1		400981A1		1	KIT Seat Cushion and Backrest, Includes Seat, Backrest, Backrest Cover and Hardware
2		300659A1		1	KIT Armrest, Right-Hand, Includes Armrest Knob and Shaft, Groove Pin, Pivot Stud and Screw
3		300661A1		1	KIT Armrest, Left-Hand, Includes Armrest Knob and Shaft, Groove Pin, Pivot Stud and Screw
4		400837A1		1	KIT Seat Cushion, With Frame, Includes (5) Clips, (18) Rings, (1) Screw and Recliner Handle
5		400838A1		1	KIT Backrest Cushion, With Frame, Includes (23) Rings, Lumbar, (2) Screws and (2) Clips
6		176091A1		1	PACKAGE,SERVICE Package of 48 Rings For Cushions, Not Illustrated
7		300664A1		1	KIT Backrest Cover and Retainers, Incl. Ref 8
8		1999693C1		1	KIT Clip, Package of 14
9		300665A1		1	KIT Lumbar, With Knob
10		300667A1		1	KNOB Lumbar Knob, Includes Knob, Actuator and (2) Screws
11		1987212C1		1	PACKAGE Seat Cushion Back Tilt Knob, Includes Knob, Recliner Handle and (1) Screw
12		300670A1		1	KIT Lateral Isolator Assy, Incl. Ref 13 - 17
13		1987219C2		1	SET OF PARTS Lateral Isolator Shock, Includes Shock Absorber, (1) Bearing, (2) Bushings, (1) Nut, (2) Washers, (1) Spacer, (1) Ring
14		1987290C1		1	SET OF PARTS Spring, Includes (2) Springs, (1) Bolt
15		259054A1		1	SET OF PARTS Lock, Includes Latch Rod, Bracket, (2) Bearings, Knob, (2) Roll Pins
16		1344025C1		1	PIN, LARGE Pivot
17		1344026C1		1	SPRING
18		300672A1		1	SWITCH Rocker, Height Adjustment
		300674A1		1	HARNESS Swivel Switch, Not Illustrated
19		300675A1		1	KIT Slide/Swivel Assy, Incl. Ref 21

http://www.minnparbackhoeparts.com/

09-50		p2	01/05

SEAT ASSY, AIR SUSPENSION (SEARS)

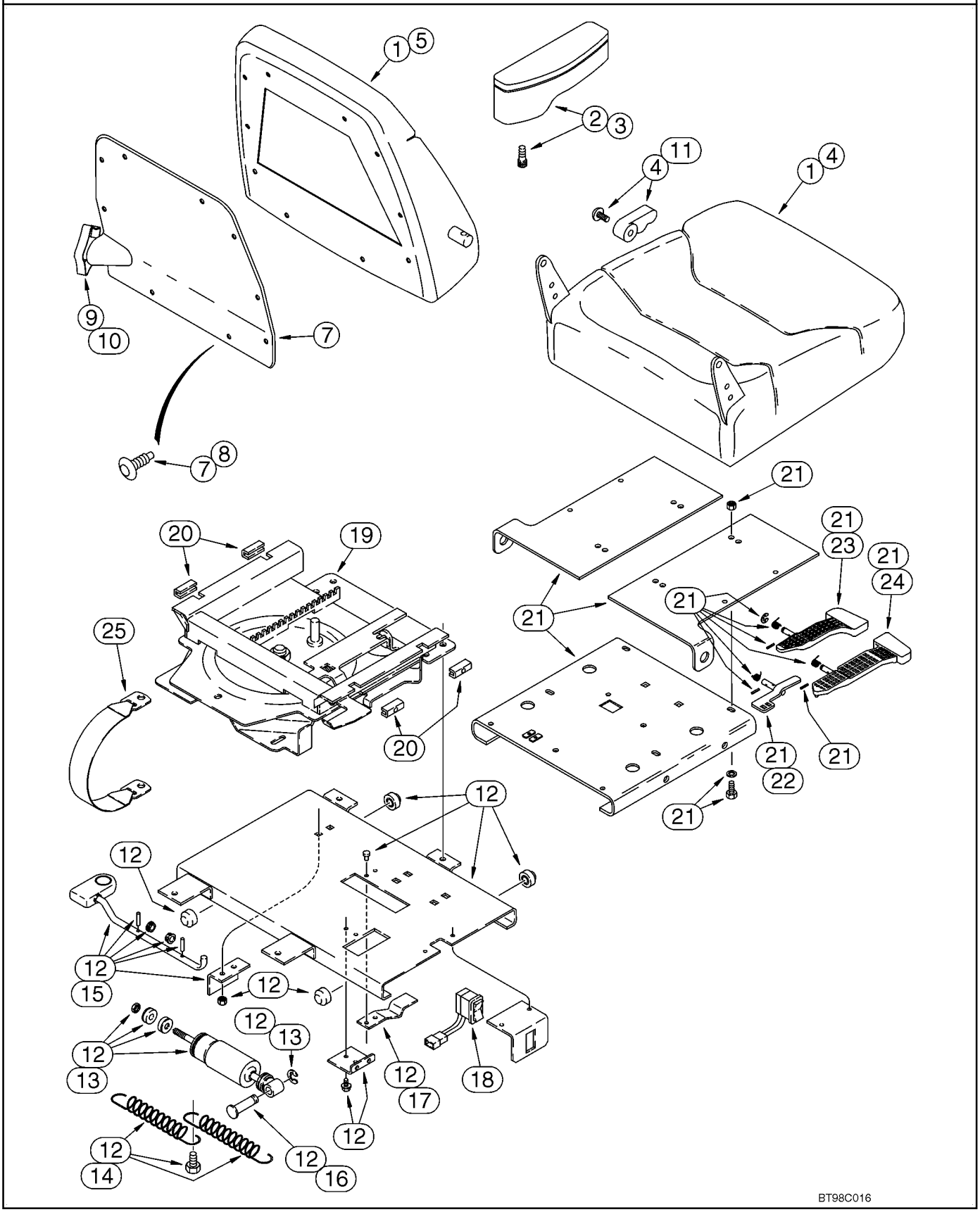

http://www.minnparbackhoeparts.com/

SEAT ASSY, AIR SUSPENSION (SEARS)

REF	FN	PART NUMBER	YR/SN	QTY	DESCRIPTION
20		300680A1		1	KIT Slide Blocks, Includes (2) Adjustable Slider Blocks, (2) Stationary Slider Blocks, (2) Setscrews
21		300677A1		1	KIT Upper Slide Plate Assy, Includes Upper Slide Plate, Slide and Swivel Levers, (3) Springs, (3) Roll Pins, (3) E-Rings and Slide Latch, Incl. Ref 22 - 24
22		300679A1		1	SLIDE Latch
23		300681A1		1	LEVER, CONTROL Slide
24		300683A1		1	LEVER Swivel
25		300684A1		1	BELT, SAFETY Tether

http://www.minnparbackhoeparts.com/

09-51		p1	01/05

SEAT PEDESTAL AND SUSPENSION, AIR SUSPENSION (SEARS)

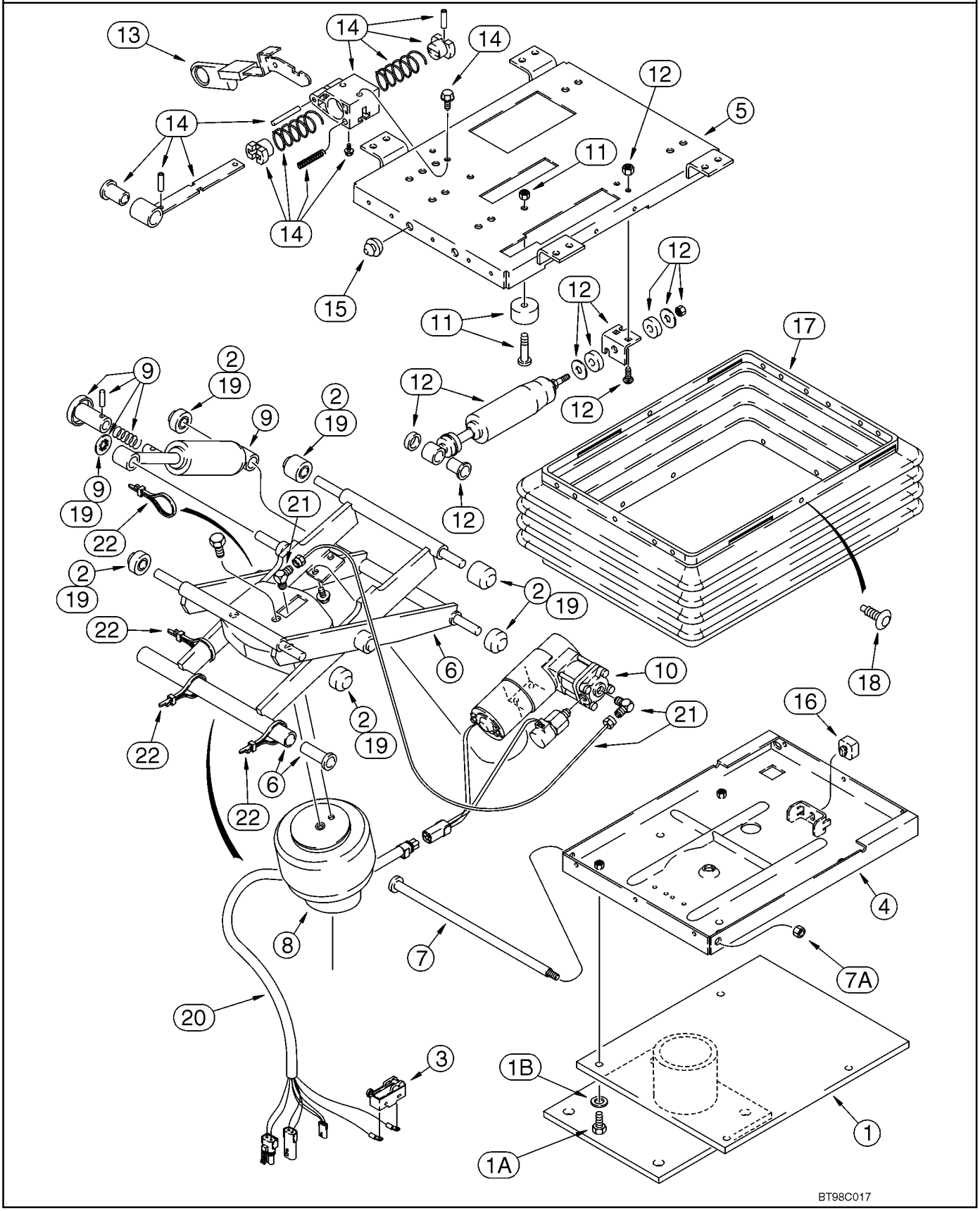

http://www.minnparbackhoeparts.com/

SEAT PEDESTAL AND SUSPENSION, AIR SUSPENSION (SEARS)

REF	FN	PART NUMBER	YR/SN	QTY	DESCRIPTION
		397137A1		1	SEAT ASSY. Air Suspension Seat, Cloth, With Armrests, Incl. Ref 1 - 22; Also Includes Parts On Figure 09-50
1		300669A1		1	PEDESTAL Support, Base
1A		614-8025		4	BOLT M8 x 25
1B		NSS		2	NOT SERVICED SEPARATELY Washer
		300685A1		1	KIT Air Suspension Assembly, Includes Parts From Upper To Lower Housing Plates, Incl. Ref 2 - 16, 18 - 22, Includes all items shown except for the boot and pedestal, Ref 1 and 17
2		135512A3		1	PACKAGE Roller Bearing, Isolator, Includes (4) Narrow Rollers, (2) Wide Rollers, (1) Bushing, (1) Spacer, (1) Retaining Ring, Isolator
3		D137363		1	SWITCH Contact, Swivel Limit Switch
4		226560A1		1	HOUSING Lower, With Upper Stop Bracket
5		300688A1		1	HOUSING Upper
6		132862A1		1	DIPPER Arm, Suspension
7		143786A1		1	SHAFT
7A		230-4216		1	NUT 3/8
8		197793A1		1	SPRING Air Spring, Includes Air Spring, J-Clip and (3) Ties
9		132866A1		1	SHOCK ABSORBER Kit, Includes Shock, (2) Bearings, Fastener, Actuator Arm, Roll Pin, Bracket and Retaining Ring
		132864A1		1	COMPRESSOR Kit, Compressor/Valve, Includes Compressor, Valve, Mount, Air Line Tubing, (2) Screws, (2) Sleeves and (2) Nuts, Includes 300689A1, 300690A1
10		300689A1		1	KIT Compressor/Valve
		300690A1		1	MOUNTING PARTS Compressor
11		180593A1		1	KIT, FIP Bumper, Includes 231-1444, 340-12520
		231-1444		2	NUT, LOCK 1/4
		340-12520		2	SCREW 1/4 x 1-1/4
12		300691A1		1	SPARE PART SET Fore/Aft Isolator Latch, Includes Shock Absorber, (3) Nuts, (2) Washers, (2) Grommets, (1) Bearing and (15) Clips
13		1981850C1		1	GRIP Knob, Isolator Control, Fore/Aft

http://www.minnparbackhoeparts.com/

09-51		p2	01/05

SEAT PEDESTAL AND SUSPENSION, AIR SUSPENSION (SEARS)

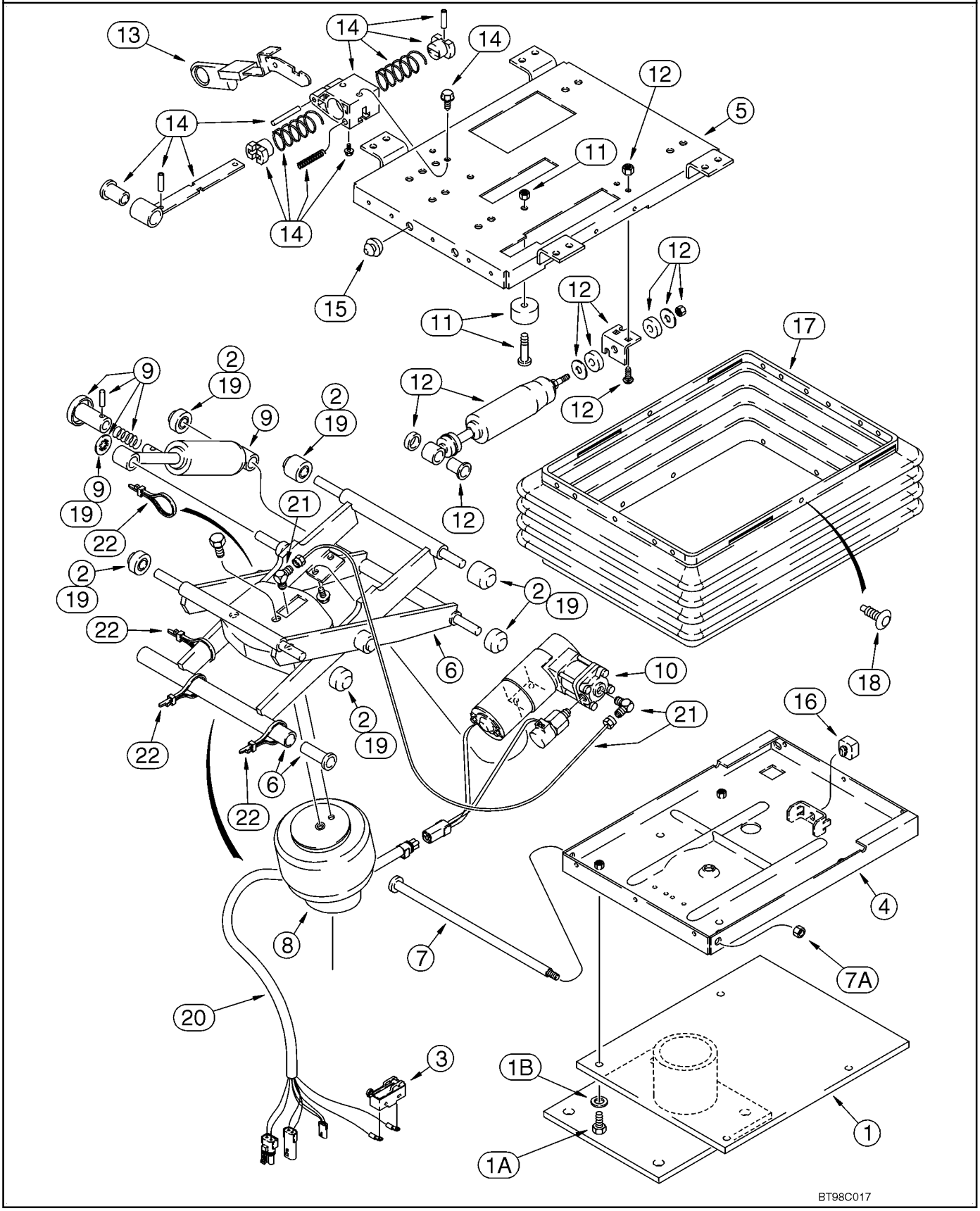

http://www.minnparbackhoeparts.com/

SEAT PEDESTAL AND SUSPENSION, AIR SUSPENSION (SEARS)

REF	FN	PART NUMBER	YR/SN	QTY	DESCRIPTION
14		300692A1		1	SPARE PART SET Fore/Aft Isolator Latch, Includes Latch Assy and (2) Screws
15		133422A1		2	BUMPER Rubber
16		A45054		1	BUMPER Seat
17		133421A1		1	PACKAGE Boot, With Pins
18		132872A1		1	SET OF PARTS Boot Pin, Package of 23 Retainers and (3) Dome Nuts
19		180594A3		1	PACKAGE Rollers and Bearings, Includes (2) Bushings, (6) Rollers, (1) Push Nut, (5) Bearings and (2) Spacers, Includes 131-425 Nut
		131-425		1	NUT 1/2
20		300896A1		1	HARNESS
21		1990548C4		1	PACKAGE Air Line and Fittings, Includes (2) Elbows, (1) Tee, (2) Adapters, 3.5 Feet Nylon Tubing, (5) Ties and (1) J-Clip, Incl. Ref 22
22		L18337		4	STRAP 15 in

http://www.minnparbackhoeparts.com/

CAB - GLASS, MIRROR AND HOLD OPEN

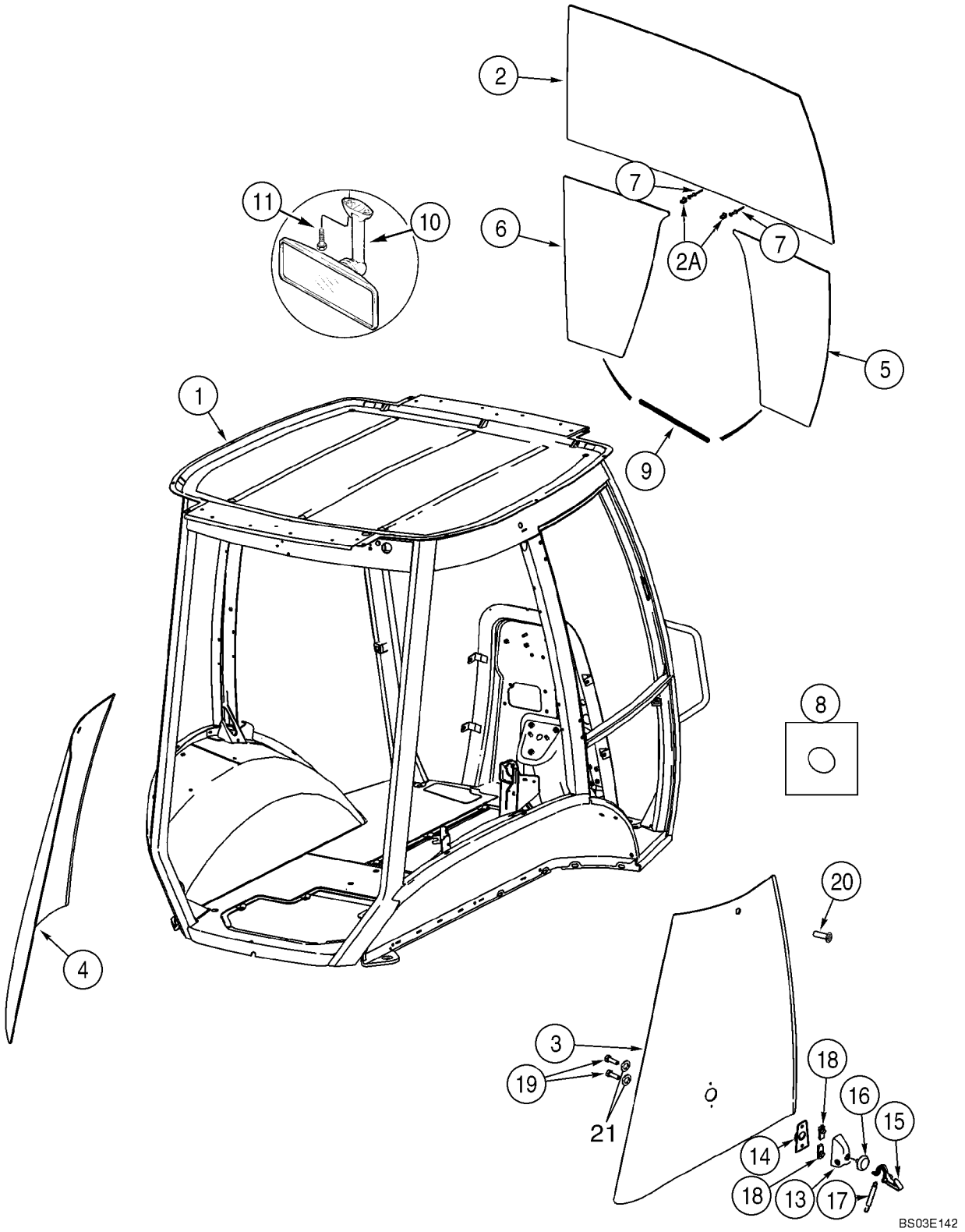

http://www.minnparbackhoeparts.com/

CAB - GLASS, MIRROR AND HOLD OPEN

REF	FN	PART NUMBER	YR/SN	QTY	DESCRIPTION
1		87443430		1	CAB 580SM Single Door; Includes Frame, Left-Hand Door, 341746A2 Right-Hand Window on Figure 09-56, All Glass, Front and Rear Wipers and Exterior Lamps; Order From Machinery Price List; Replaces 87434979 Cab/A; No Longer Available, Order 87448272 Cab/A
1		87448272		1	CAB 580SM Single Door; Includes Frame, Left-Hand Door, 87442204 Right-Hand Window on Figure 09-56A, All Glass, Front and Rear Wipers and Exterior Lamps; Order From Machinery Price List
1		87443432		1	CAB 580SM+ Single Door; Includes Frame, Left-Hand Door, 341746A2 Right-Hand Window on Figure 09-56, All Glass, Front and Rear Wipers and Exterior Lamps; Order From Machinery Price List; Replaces 87434981 Cab/A; No Longer Available, Order 87448274 Cab/A
1		87448274		1	CAB 580SM+ Single Door; Includes Frame, Left-Hand Door, 87442204 Right-Hand Window on Figure 09-56A, All Glass, Front and Rear Wipers and Exterior Lamps; Order From Machinery Price List
1		87443431		1	CAB 580SM Two Door; Includes Frame, Left-Hand Door, 394585A3 Right-Hand Door on Figure 09-54, All Glass, Front and Rear Wipers and Exterior Lamps; Order From Machinery Price List; Replaces 87434980 Cab/A; No Longer Available, Order 87448273 Cab/A
1		87448273		1	CAB 580SM Two Door; Includes Frame, Left-Hand Door, 87439726 Right-Hand Door on Figure 09-54A, All Glass, Front and Rear Wipers and Exterior Lamps; Order From Machinery Price List
1		87443433		1	CAB 580SM+ Two Door; Includes Frame, Left-Hand Door, 394585A3 Right-Hand Door on Figure 09-54, All Glass, Front and Rear Wipers and Exterior Lamps; Order From Machinery Price List; Replaces 87434982 Cab/A; No Longer Available, Order 87448275 Cab/A

http://www.minnparbackhoeparts.com/

CAB - GLASS, MIRROR AND HOLD OPEN

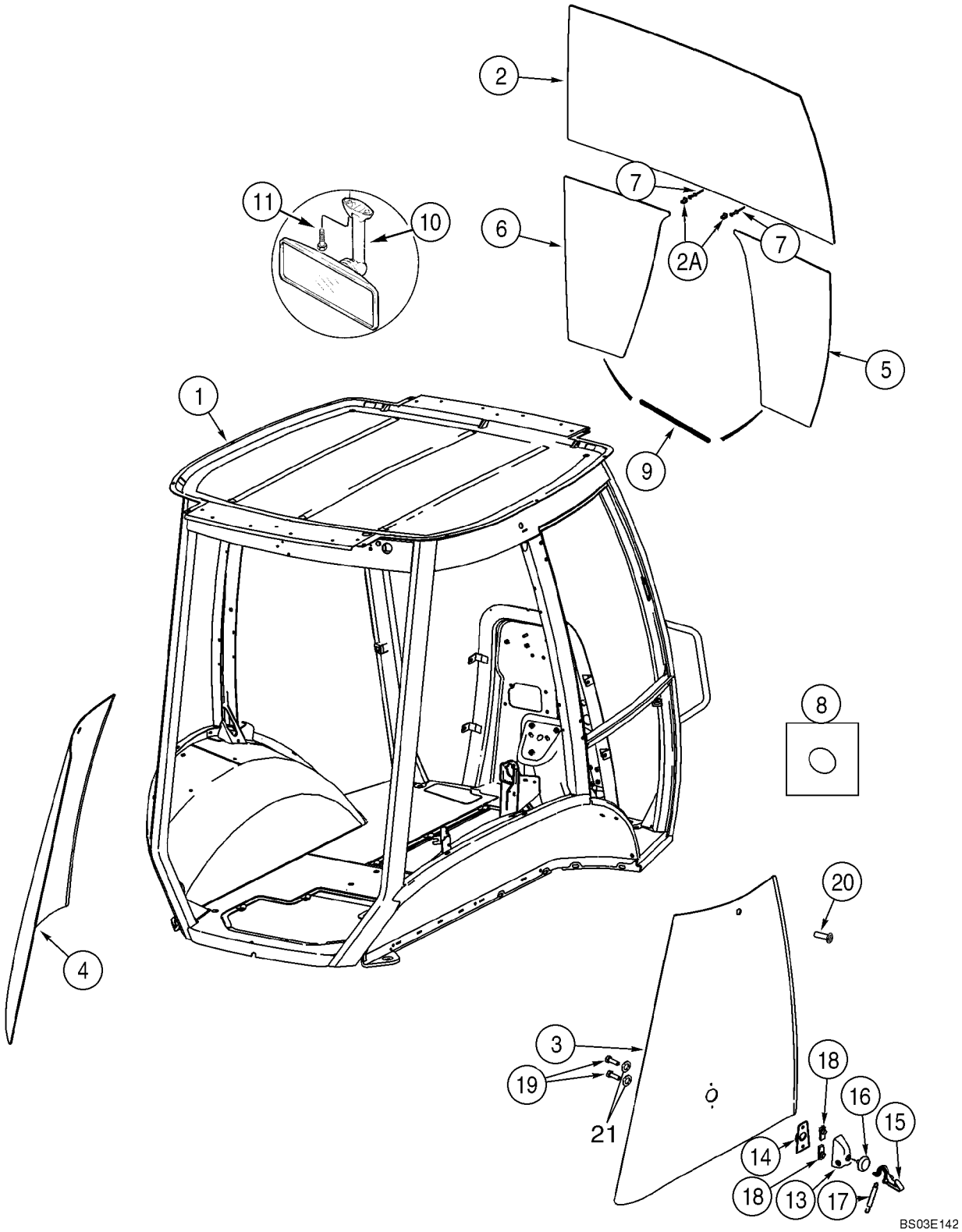

http://www.minnparbackhoeparts.com/

CAB - GLASS, MIRROR AND HOLD OPEN

REF	FN	PART NUMBER	YR/SN	QTY	DESCRIPTION
1		87448275		1	CAB 580SM+ Two Door; Includes Frame, Left-Hand Door, 87439726 Right-Hand Door on Figure 09-54A, All Glass, Front and Rear Wipers and Exterior Lamps; Order From Machinery Price List
2		448607A1		1	WINDSHIELD
2A		279482A1		2	CLAMP Windshield
3		338425A1		1	WINDOW Right Rear Quarter Panel
4		338424A1		1	WINDOW Left Rear Quarter Panel
5		448609A1		1	WINDSHIELD Lower Right-Hand
6		448608A1		1	WINDSHIELD Lower Left-Hand
7		151-516		2	RIVET
8		391827A1		36	SPACER
9		395793A1		2	STRIP, PROTECTION
10		87406924		1	MIRROR, REAR-VIEW Interior
11		286-56520		2	SCREW No. 10 x 1-1/4
13		405740A1		2	COVER
14		405739A1		2	BODY
15		405738A1		2	LEVER Hold Open
16		400573A1		2	GROMMET
17		405741A1		2	SPRING, COIL Latch Back
18		405742A1		4	NUT M8
19		400572A1		4	BOLT M8; Nylon
20		400571A2		2	BUMPER
21		431801A1		4	WASHER Black Nylon

http://www.minnparbackhoeparts.com/

09-53		p1	05/05

CAB - FRAME AND COVERS

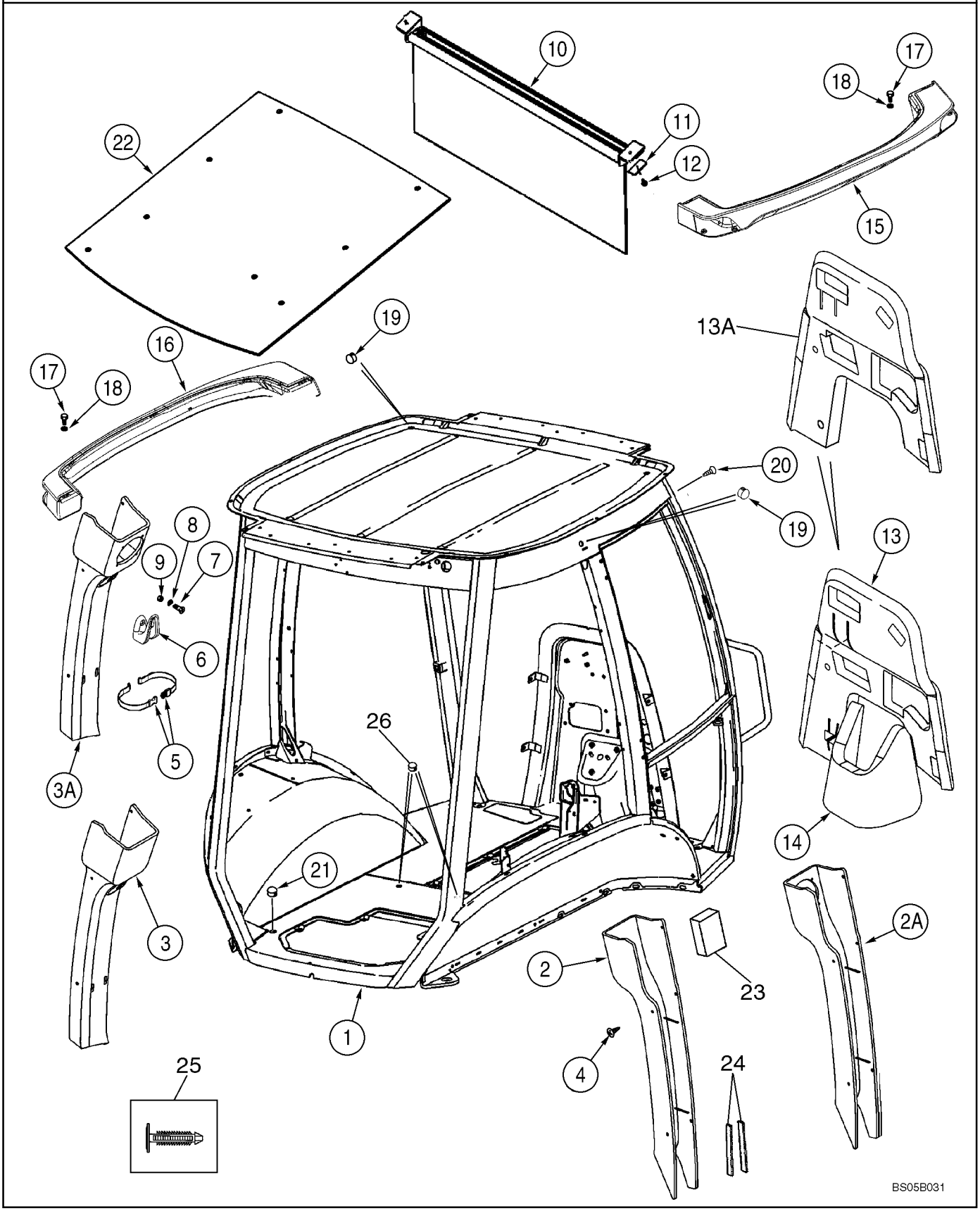

http://www.minnparbackhoeparts.com/

CAB - FRAME AND COVERS

REF	FN	PART NUMBER	YR/SN	QTY	DESCRIPTION
1		87435108		1	FRAME, CAB 580SM Single Door; Replaces 87407908
1		87435110		1	FRAME, CAB 580SM+ Single Door; Replaces 87407910
1		87435109		1	FRAME, CAB 580SM Two Door; Replaces 87407909
1		87435112		1	FRAME, CAB 580SM+ Two Door; Replaces 87407911
2		360267A3		1	COVER Plastic; Right-Hand Post; Standard Interior
2A		379425A3		1	COVER Vinyl; With Speaker Holes; Right-Hand Post; Deluxe Interior
3		360266A2		1	COVER Plastic; Left-Hand Post; Standard Interior
3A		379424A2		1	COVER Vinyl; With Speaker Holes; Left-Hand Post; Deluxe Interior
4		401949A1		10	FASTENER
5		378227A1		1	STRAP Garment Strap
6		114549A1		1	COAT HOOK
7		87310147		2	SCREW M4 x 16, Stainless Steel; Replaces 540-720 Non-Stainless Steel Screw Used On Some Models
8		895-11004		2	WASHER 4,3 x 9 x 0,8 mm
9		832-10404		2	NUT M4
10		364180A1		1	VISOR, SUN
11		409618A1		2	PLATE 1/4 in Mounting Hole
12		396516A1		3	SCREW, POINTED No. 10 x 1; With Washer; Phillips
13		87440282		1	COVER, PROTECTIVE Firewall; If Used
13A		87451021		1	COVER, PROTECTIVE Firewall; If Used
14		87440283		1	COVER, PROTECTIVE Firewall, Lower
15		360247A3		1	LIGHT ASSY. Right-Hand
16		360246A3		1	LIGHT ASSY. Left-Hand
17		394863A1		10	SCREW M6 x 20
18		395387A1		10	WASHER 6.4 ID; Nylon
19		395388A1		3	PLUG
		353-415		1	PLUG 1-1/2 in; Cab Roof; Models Without Radio Antenna
		353-410		1	PLUG 7/8; Upper Windshield Frame; Models Without Radio Antenna
		353-407		1	PLUG 11/16; Rear Filter Plate On Models Without Windshield Washer

http://www.minnparbackhoeparts.com/

09-53		p2	05/05

CAB - FRAME AND COVERS

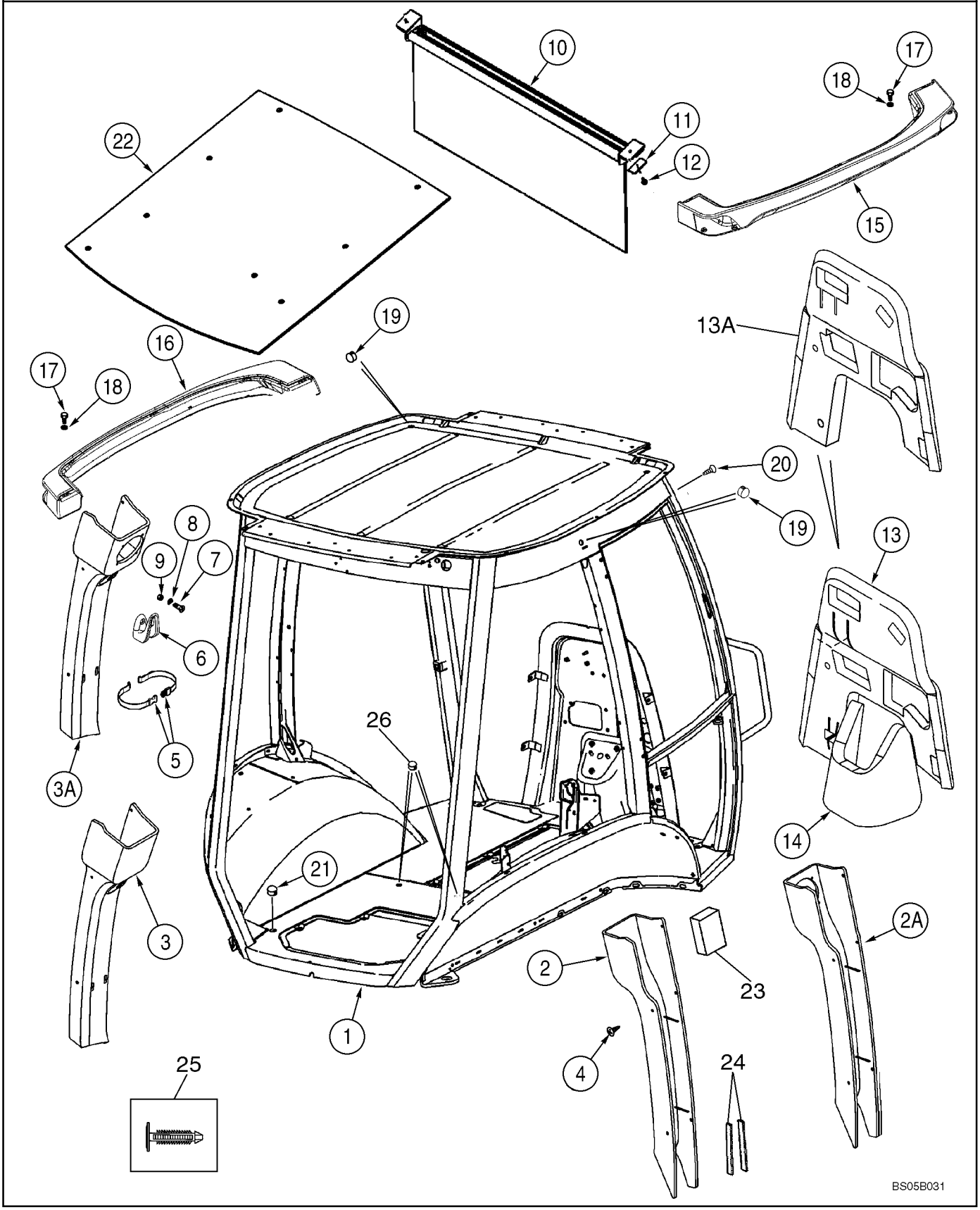

http://www.minnparbackhoeparts.com/

CAB - FRAME AND COVERS

REF	FN	PART NUMBER	YR/SN	QTY	DESCRIPTION
		353-425		2	PLUG 7/16 in dia
		353-421		1	PLUG 3/16
		353-405		1	PLUG 9/16
		353-408		1	PLUG 3/4
20		402610A1		8	FASTENER Cab Frame; Models Without Exterior Mirrors
21		382298A1		2	PLUG
22		368809A1		1	INSULATOR Insulation
23		412285A1		1	STRIP Foam; Adhesive Back; B-Post
24		414939A1		2	STRIP, SEALING Adhesive Back; B Post
25		411399A1		1	FASTENER For 1/4 in dia Hole; Christmas Tree Clip
26		87301515		2	PLASTIC PLUG Flat Top, Black Glossy, 1-3/16 Hole Size; Brake Bleeder

http://www.minnparbackhoeparts.com/

09-54		p1	04/05

CAB - DOORS, IF USED (SEE GLASS AND HINGES; REF 4, 27, 29)

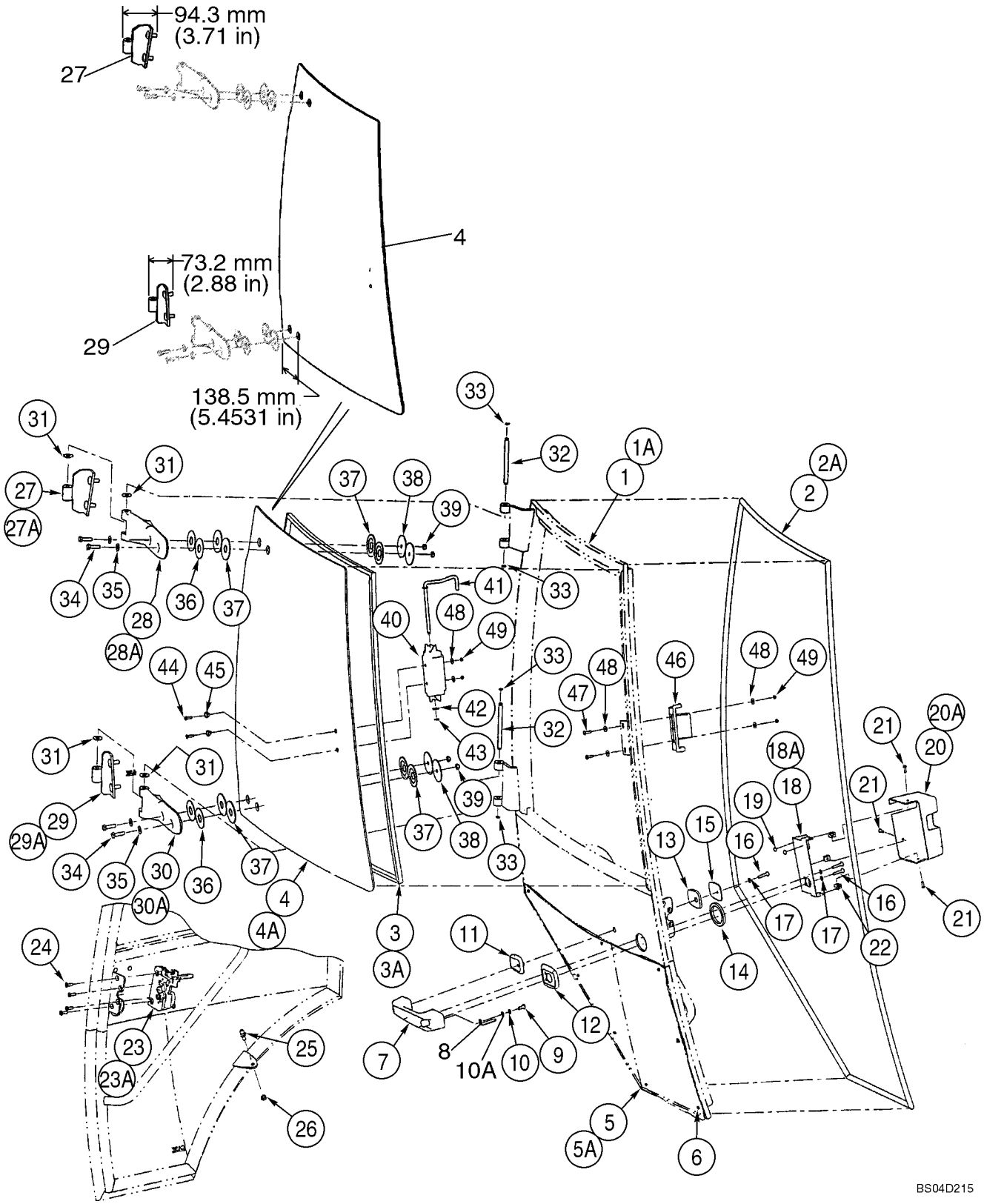

http://www.minnparbackhoeparts.com/

CAB - DOORS, IF USED (SEE GLASS AND HINGES; REF 4, 27, 29)

REF	FN	PART NUMBER	YR/SN	QTY	DESCRIPTION
		REF			INSTRUCTION Left-Hand and Right-Hand Cab Doors; Left-Hand Door Not Illustrated
		394585A3		1	CAB DOOR, RH Right-Hand Door; Incl. Ref 1 - 49, Except Where Noted For Left-Hand Door
		341743A3		1	CAB DOOR, LH Left-Hand Door; Incl. Ref 1A - 49, Except Where Noted For Right-Hand Door
1		NSS		1	NOT SERVICED SEPARATELY Frame; Right-Hand Door
1A		87443691		1	FRAME ASSY Frame; Left-Hand Door
2		394707A1		1	STRIP, RUBBER Right-Hand Door
2A		390838A1		1	STRIP, RUBBER Left-Hand Door
3		394708A1		1	SEAL, WINDOW Window; Upper; Right-Hand Door
3A		391850A1		1	SEAL, WINDOW Window; Upper; Left-Hand Door
4		394700A1		1	GLASS Upper; Right-Hand Door; Distance From Edge to Second Hole 138.5 mm (5-29/64 in)
4A		338429A1		1	GLASS Upper; Left-Hand Door
5		338427A1		1	GLASS, CAB Lower; Right-Hand Door
5A		338426A1		1	GLASS, CAB Lower; Left-Hand Door
6		391827A1		4	SPACER 4 Per Door; Cut Bumpers In Half For 8 Locations
7		60-7083T1		1	HANDLE Outer
8		442718A1		1	BUTTON Release
9		440-12510		1	SCREW 1/4 x 5/8
10		492-11025		1	WASHER, LOCK 1/4"
10A		895-11006		1	WASHER 6,6 x 12,5 x 1,6 mm
11		315276A1		1	BEZEL Small
12		315273A1		1	BEZEL Large
13		391847A1		1	GASKET Small
14		391838A1		1	GASKET Large
15		391848A1		1	PLATE, BACK
16		393203A1		3	SCREW
17		393202A1		3	WASHER 6 mm
18		394704A1		1	BRACKET Cover Mounting; Right-Hand Door
18A		391841A1		1	BRACKET Cover Mounting; Left-Hand Door
19		391827A1		2	SPACER
20		394705A1		1	COVER Latch; Right-Hand Door
20A		391842A1		1	COVER Latch; Left-Hand Door

http://www.minnparbackhoeparts.com/

09-54		p2	04/05

CAB - DOORS, IF USED (SEE GLASS AND HINGES; REF 4, 27, 29)

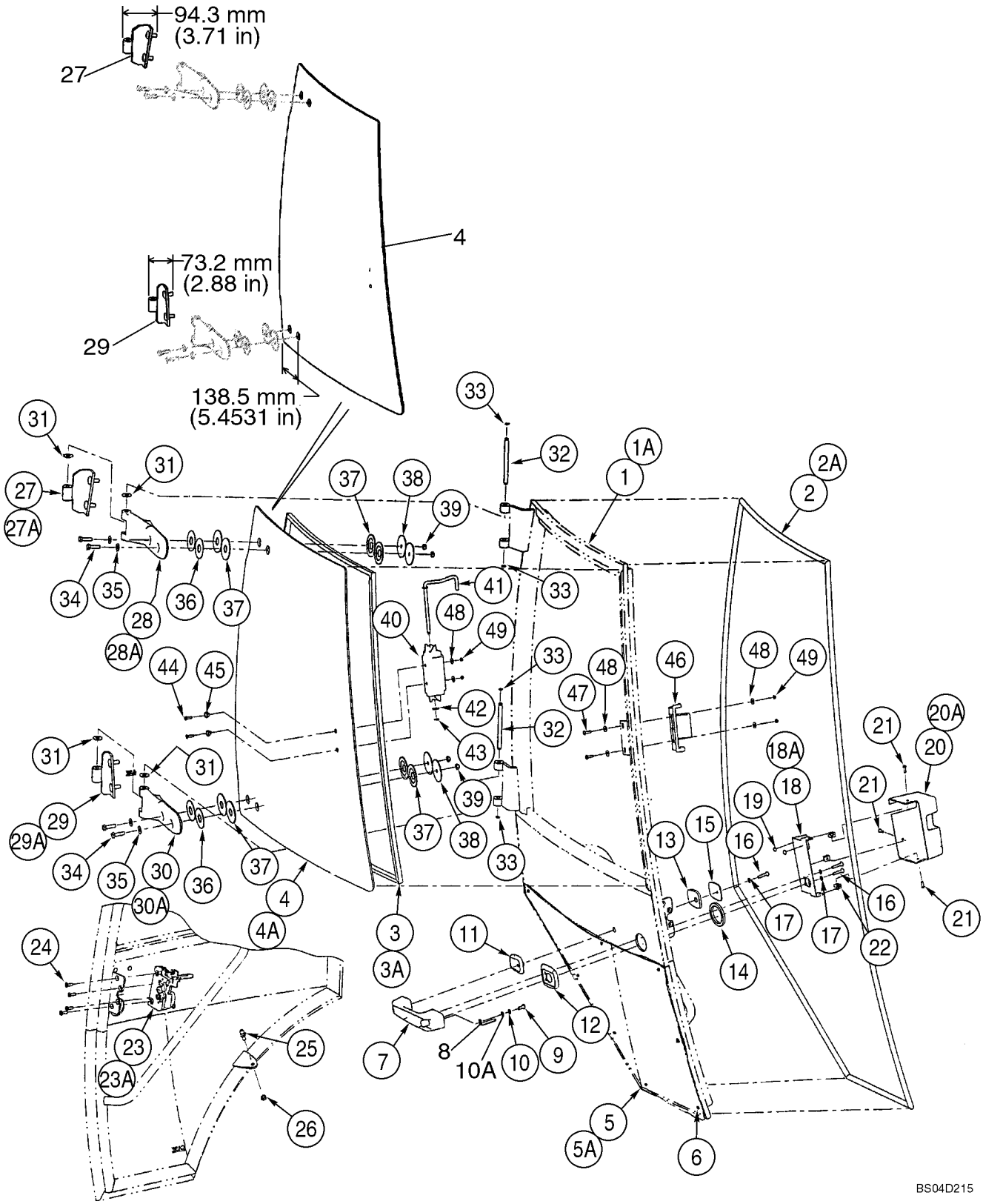

http://www.minnparbackhoeparts.com/

CAB - DOORS, IF USED (SEE GLASS AND HINGES; REF 4, 27, 29)

REF	FN	PART NUMBER	YR/SN	QTY	DESCRIPTION
21		390-100		3	SCREW
22		393209A1		3	NUT, SPECIAL
23		382777A1		1	LATCH Right-Hand Door
23A		382775A1		1	LATCH Left-Hand Door
24		569-4		4	SCREW
25		3234063R1		1	BALL JOINT
26		832-10408		1	NUT M8
27		394701A1		1	HINGE Upper; Right-Hand Door
27A		390840A1		1	HINGE Upper; Left-Hand Door
28		364134A2		1	HINGE Plastic; Upper; Right-Hand Door
28A		364132A2		1	HINGE Plastic; Upper; Left-Hand Door
29		394702A1		1	HINGE Lower; Right-Hand Door
29A		390841A1		1	HINGE Lower; Left-Hand Door
30		364135A2		1	HINGE Plastic; Lower; Right-Hand Door
30A		364133A2		1	HINGE Plastic; Lower; Left-Hand Door
31		391845A1		4	WASHER Nylon
32		391843A1		2	PIN
33		442773A1		4	CIRCLIP
34		514-633		4	SCREW M8 x 30
35		895-30107		4	WASHER
36		376334A1		4	WASHER 55 mm OD; Yellow
37		376336A1		8	WASHER, RUBBER Rubber
38		376332A1		4	WASHER 60 mm OD; Black
39		832-10508		4	NUT M8
40		368147A1		1	HANDLE Slam Latch
41		391849A1		1	ROD
42		906086R1		1	WASHER 8.4 x 16 x 1.6 thk
43		100-39001		1	RING
44		140-104		2	SCREW No. 8 x 3/4
45		F64198		2	BUSHING Nylon
46		368146A1		1	LATCH Slam Latch
47		142-103		2	SCREW
48		195-81023		6	WASHER 1/4 x 9/16 x 3/64
49		F45165		4	SAFETY NUT No. 10

http://www.minnparbackhoeparts.com/

09-54A		p1	04/05

CAB - DOORS, IF USED (SEE GLASS AND HINGES; REF 4, 27, 29)

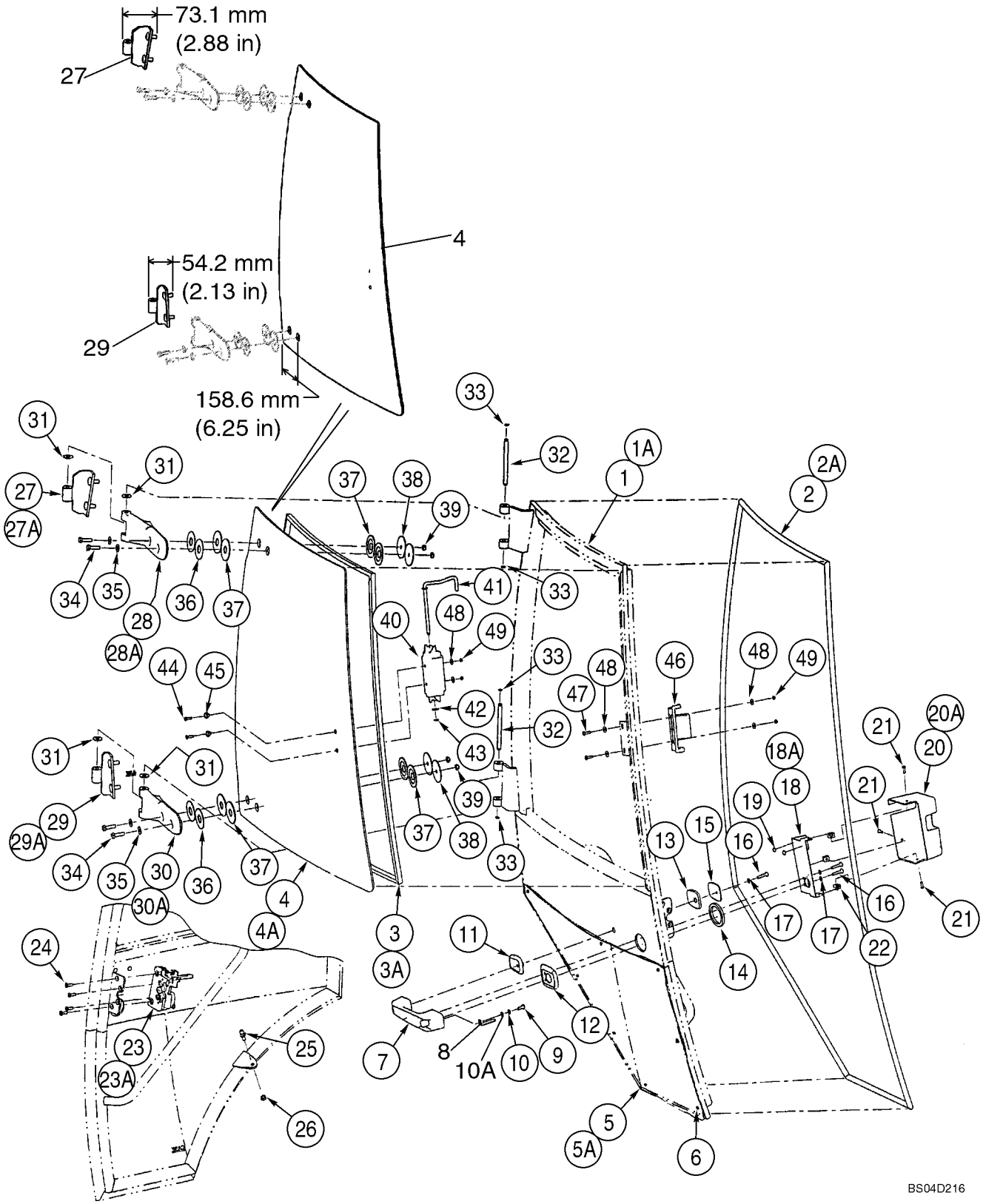

http://www.minnparbackhoeparts.com/

CAB - DOORS, IF USED (SEE GLASS AND HINGES; REF 4, 27, 29)

REF	FN	PART NUMBER	YR/SN	QTY	DESCRIPTION
		REF			INSTRUCTION Left-Hand and Right-Hand Cab Doors; Left-Hand Door Not Illustrated
		87439726		1	CAB DOOR, RH Right-Hand Door; Incl. Ref 1 - 49, Except Where Noted For Left-Hand Door
		341743A3		1	CAB DOOR, LH Left-Hand Door; Incl. Ref 1A - 49, Except Where Noted For Right-Hand Door
1		NSS		1	NOT SERVICED SEPARATELY Frame; Right-Hand Door
1A		87443691		1	FRAME ASSY Frame; Left-Hand Door
2		394707A1		1	STRIP, RUBBER Right-Hand Door
2A		390838A1		1	STRIP, RUBBER Left-Hand Door
3		394708A1		1	SEAL, WINDOW Window; Upper; Right-Hand Door
3A		391850A1		1	SEAL, WINDOW Window; Upper; Left-Hand Door
		87448199		1	WINDOW ASSY SERVICE KIT, Right-Hand Door Window and Hinges; Includes Ref 4, 27, 29, Plus Instructions
4		87439725		1	GLASS Upper; Right-Hand Door; Distance From Edge to Second Hole 158.6 mm (6-1/4 in)
4A		338429A1		1	GLASS Upper; Left-Hand Door
5		338427A1		1	GLASS, CAB Lower; Right-Hand Door
5A		338426A1		1	GLASS, CAB Lower; Left-Hand Door
6		391827A1		4	SPACER 4 Per Door; Cut Bumpers In Half For 8 Locations
7		60-7083T1		1	HANDLE Outer
8		442718A1		1	BUTTON Release
9		440-12510		1	SCREW 1/4 x 5/8
10		492-11025		1	WASHER, LOCK 1/4"
10A		895-11006		1	WASHER 6,6 x 12,5 x 1,6 mm
11		315276A1		1	BEZEL Small
12		315273A1		1	BEZEL Large
13		391847A1		1	GASKET Small
14		391838A1		1	GASKET Large
15		391848A1		1	PLATE, BACK
16		393203A1		3	SCREW
17		393202A1		3	WASHER 6 mm
18		394704A1		1	BRACKET Cover Mounting; Right-Hand Door
18A		391841A1		1	BRACKET Cover Mounting; Left-Hand Door

http://www.minnparbackhoeparts.com/

09-54A		p2	04/05

CAB - DOORS, IF USED (SEE GLASS AND HINGES; REF 4, 27, 29)

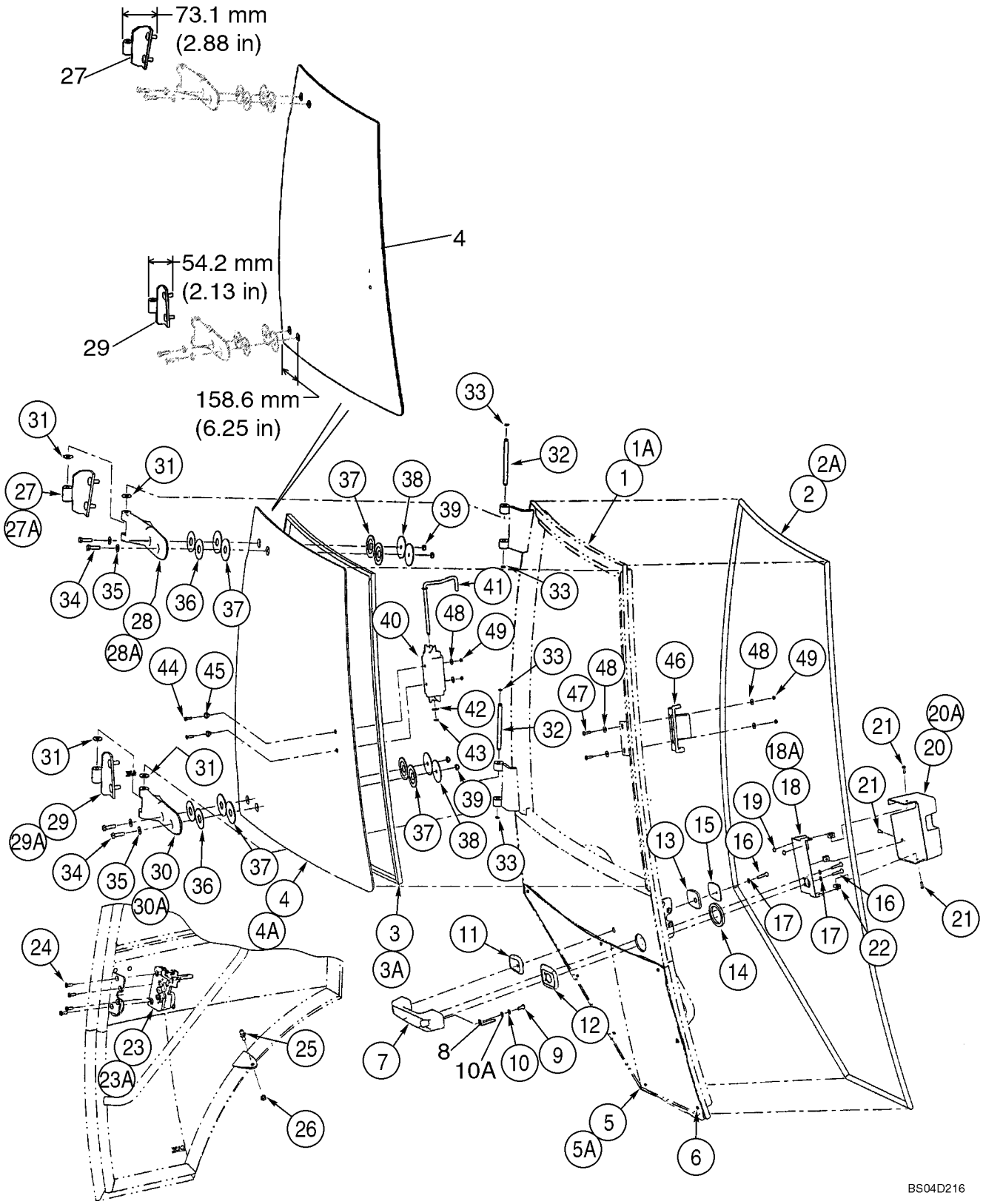

http://www.minnparbackhoeparts.com/

CAB - DOORS, IF USED (SEE GLASS AND HINGES; REF 4, 27, 29)

REF	FN	PART NUMBER	YR/SN	QTY	DESCRIPTION
19		391827A1		2	SPACER
20		394705A1		1	COVER Latch; Right-Hand Door
20A		391842A1		1	COVER Latch; Left-Hand Door
21		390-100		3	SCREW
22		393209A1		3	NUT, SPECIAL
23		382777A1		1	LATCH Right-Hand Door
23A		382775A1		1	LATCH Left-Hand Door
24		569-4		4	SCREW
25		3234063R1		1	BALL JOINT
26		832-10408		1	NUT M8
27		87439722		1	HINGE Upper; Right-Hand Door
27A		390840A1		1	HINGE Upper; Left-Hand Door
28		364134A2		1	HINGE Plastic; Upper; Right-Hand Door
28A		364132A2		1	HINGE Plastic; Upper; Left-Hand Door
29		87439723		1	HINGE Lower; Right-Hand Door
29A		390841A1		1	HINGE Lower; Left-Hand Door
30		364135A2		1	HINGE Plastic; Lower; Right-Hand Door
30A		364133A2		1	HINGE Plastic; Lower; Left-Hand Door
31		391845A1		4	WASHER Nylon
32		391843A1		2	PIN
33		442773A1		4	CIRCLIP
34		514-633		4	SCREW M8 x 30
35		895-30107		4	WASHER
36		376334A1		4	WASHER 55 mm OD; Yellow
37		376336A1		8	WASHER, RUBBER Rubber
38		376332A1		4	WASHER 60 mm OD; Black
39		832-10508		4	NUT M8
40		368147A1		1	HANDLE Slam Latch
41		391849A1		1	ROD
42		906086R1		1	WASHER 8.4 x 16 x 1.6 thk
43		100-39001		1	RING
44		140-104		2	SCREW No. 8 x 3/4
45		F64198		2	BUSHING Nylon
46		368146A1		1	LATCH Slam Latch
47		142-103		2	SCREW
48		195-81023		6	WASHER 1/4 x 9/16 x 3/64
49		F45165		4	SAFETY NUT No. 10

http://www.minnparbackhoeparts.com/

09-55		p1	01/04

CAB - DOOR MOUNTING

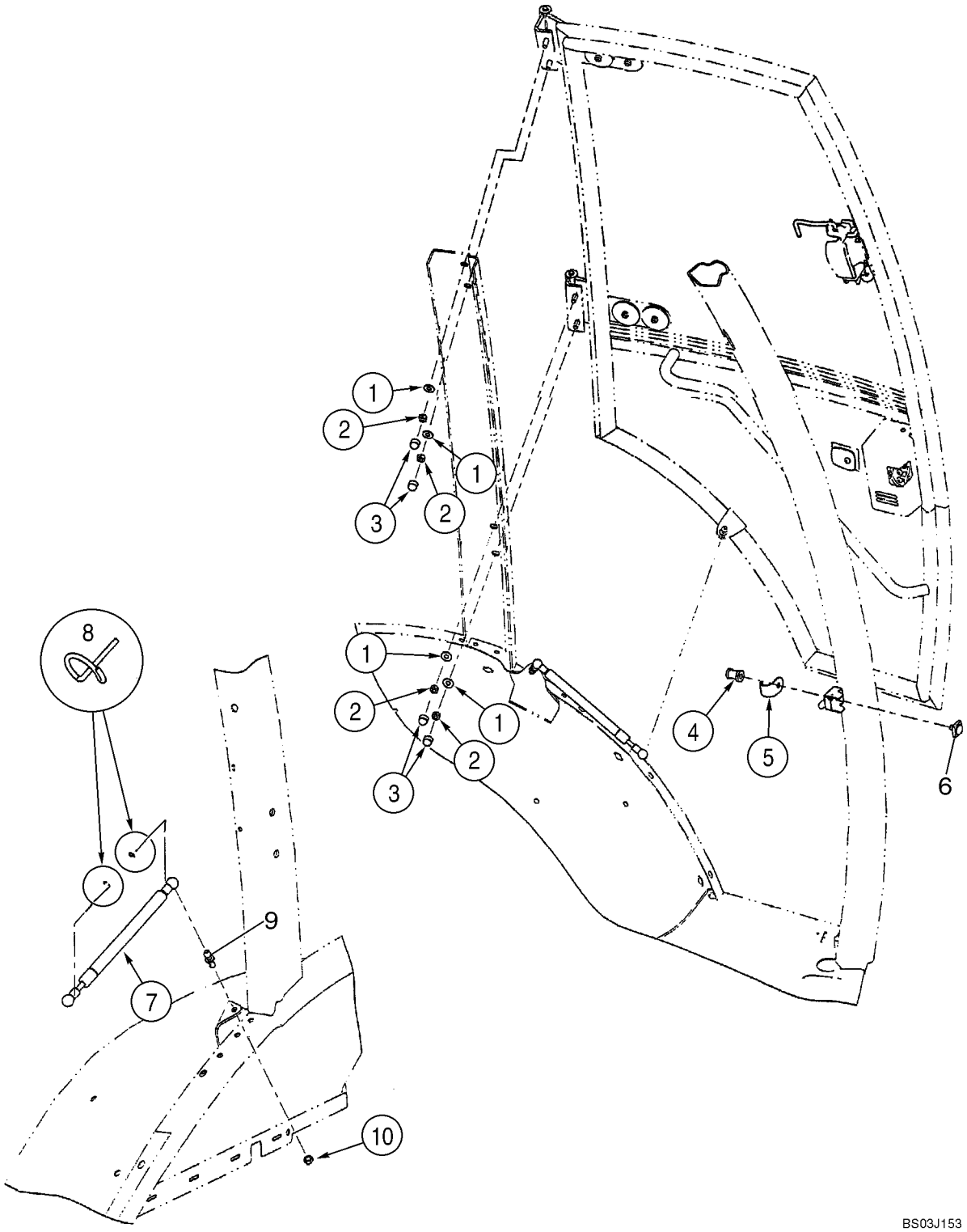

http://www.minnparbackhoeparts.com/

CAB - DOOR MOUNTING

REF	FN	PART NUMBER	YR/SN	QTY	DESCRIPTION
		REF			INSTRUCTION Left-Hand and Right-Hand Cab Doors; Left-Hand Cab Door Shown
1		397064A1		4-8	WASHER, SPECIAL 3/8 x 7/8 x 1/16 thk
2		232-1446		4-8	NUT, LOCK 3/8
3		396841A1		4-8	CAP
4		87411108		1-2	BOLT, SPECIAL Striker
5		393211A1		1-2	GUARD
6		442842A1		1-2	BLOCK ASSY. Striker
7		394800A1		1-2	SPRING Gas Spring
8		3233348R1		2-4	CLIP, ELECTRICAL
9		432431A1		1-2	STUD Ball
10		832-10408		1-2	NUT M8

http://www.minnparbackhoeparts.com/

09-56		p1	04/04

CAB - WINDOW, RIGHT-HAND, FOR SINGLE DOOR CAB FRAMES, IF USED (SEE GLASS AND HINGES; REF 1, 5, 6)

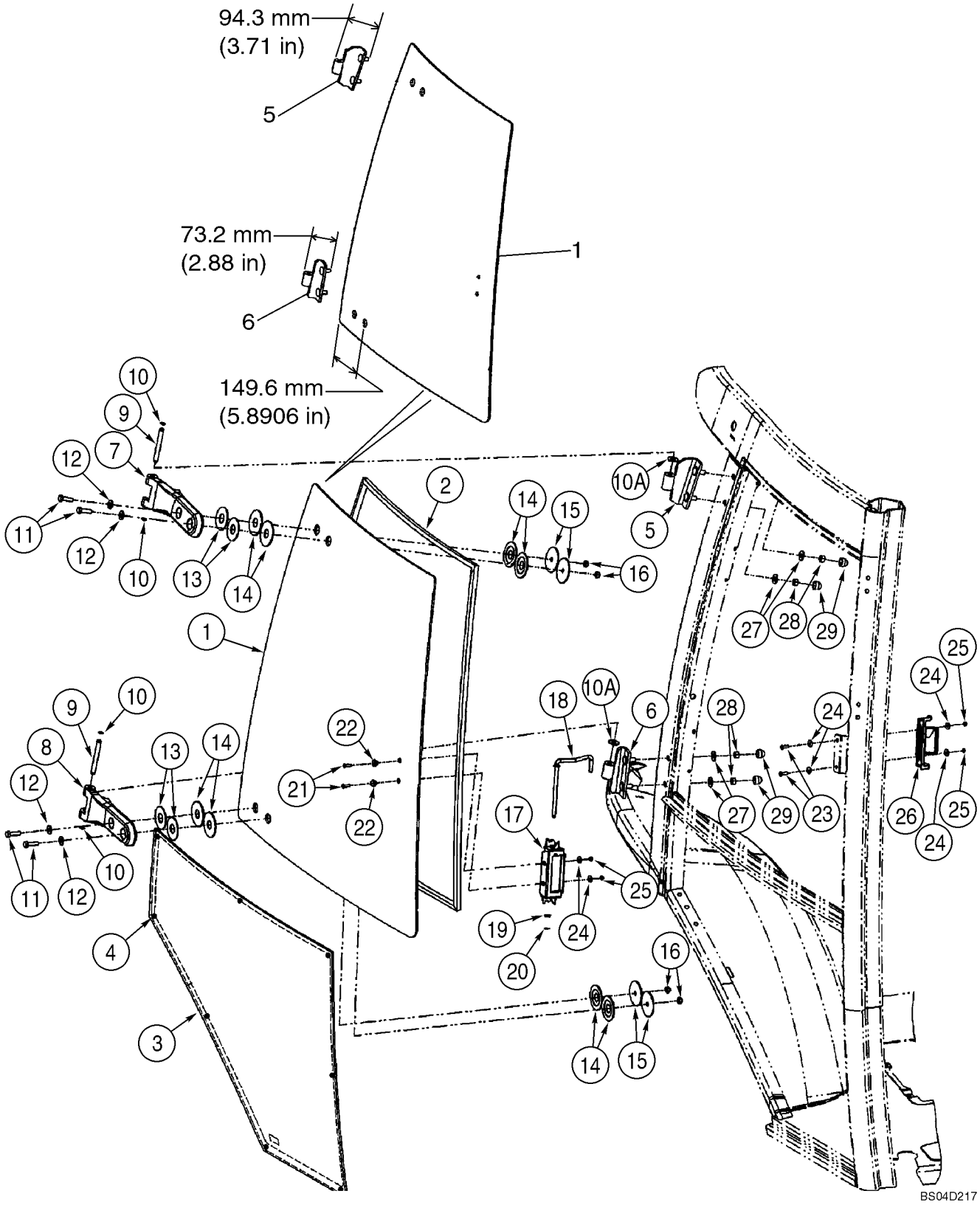

http://www.minnparbackhoeparts.com/

CAB - WINDOW, RIGHT-HAND, FOR SINGLE DOOR CAB FRAMES, IF USED (SEE GLASS AND HINGES; REF 1, 5, 6)

REF	FN	PART NUMBER	YR/SN	QTY	DESCRIPTION
		341746A2		1	WINDOW ASSY Right-Hand; Incl. Ref 1 - 29
1		360046A1		1	GLASS, CAB Upper; Distance From Edge to Second Hole 149.6 mm (5-57/64 in)
2		394864A1		1	SEAL, WINDOW
3		338428A1		1	WINDOW ASSY Lower
4		391827A1		4	SPACER Cut Bumpers In Half For 8 Locations
5		394701A1		1	HINGE Upper
6		394702A1		1	HINGE Lower
7		364134A2		1	HINGE Plastic; Upper
8		364135A2		1	HINGE Plastic; Lower
9		394865A1		2	PIN
10		393330A1		4	RING
10A		391845A1		4	WASHER Nylon
11		514-633		4	SCREW M8 x 30
12		895-30107		4	WASHER
13		376334A1		4	WASHER 55 mm OD; Yellow
14		376336A1		8	WASHER, RUBBER Rubber
15		376332A1		4	WASHER 60 mm OD; Black
16		832-10508		4	NUT M8
17		368147A1		1	HANDLE Slam Latch
18		391849A1		1	ROD
19		906086R1		1	WASHER 8.4 x 16 x 1.6 thk
20		100-39001		1	RING
21		140-104		2	SCREW No. 8 x 3/4
22		F64198		2	BUSHING Nylon
23		142-103		2	SCREW
24		195-81023		6	WASHER 1/4 x 9/16 x 3/64
25		F45165		4	SAFETY NUT No. 10
26		368146A1		1	LATCH Slam Latch
27		397064A1		4	WASHER, SPECIAL 3/8 x 7/8 x 1/16 thk
28		232-1446		4	NUT, LOCK 3/8
29		396841A1		4	CAP

http://www.minnparbackhoeparts.com/

09-56A		p1	04/04

CAB - WINDOW, RIGHT-HAND, FOR SINGLE DOOR CAB FRAMES, IF USED (SEE GLASS AND HINGES; REF 1, 5, 6)

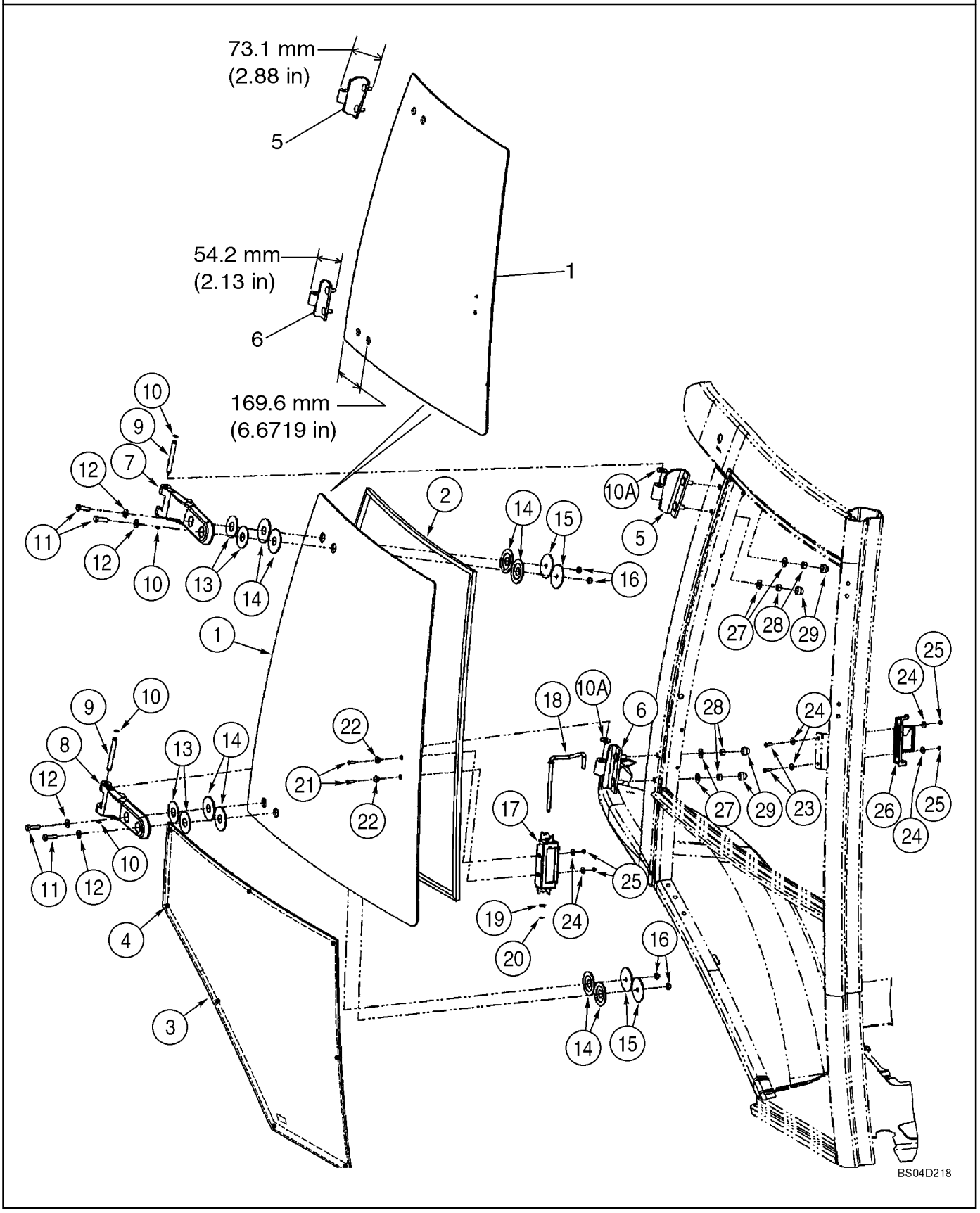

http://www.minnparbackhoeparts.com/

CAB - WINDOW, RIGHT-HAND, FOR SINGLE DOOR CAB FRAMES, IF USED (SEE GLASS AND HINGES; REF 1, 5, 6)

REF	FN	PART NUMBER	YR/SN	QTY	DESCRIPTION
		{87442204}		1	Right-Hand; Incl. Ref 1 - 29
		87448198		1	WINDOW ASSY SERVICE KIT, Right-Hand Window and Hinges; Incl. Ref 1, 5, 6, Plus Instructions
1		87439724		1	GLASS, CAB Upper; Distance From Edge to Second Hole 169.6 mm (6-43/64 in)
2		394864A1		1	SEAL, WINDOW
3		338428A1		1	WINDOW ASSY Lower
4		391827A1		4	SPACER Cut Bumpers In Half For 8 Locations
5		87439722		1	HINGE Upper
6		87439723		1	HINGE Lower
7		364134A2		1	HINGE Plastic; Upper
8		364135A2		1	HINGE Plastic; Lower
9		394865A1		2	PIN
10		393330A1		4	RING
10A		391845A1		4	WASHER Nylon
11		514-633		4	SCREW M8 x 30
12		895-30107		4	WASHER
13		376334A1		4	WASHER 55 mm OD; Yellow
14		376336A1		8	WASHER, RUBBER Rubber
15		376332A1		4	WASHER 60 mm OD; Black
16		832-10508		4	NUT M8
17		368147A1		1	HANDLE Slam Latch
18		391849A1		1	ROD
19		906086R1		1	WASHER 8.4 x 16 x 1.6 thk
20		100-39001		1	RING
21		140-104		2	SCREW No. 8 x 3/4
22		F64198		2	BUSHING Nylon
23		142-103		2	SCREW
24		195-81023		6	WASHER 1/4 x 9/16 x 3/64
25		F45165		4	SAFETY NUT No. 10
26		368146A1		1	LATCH Slam Latch
27		397064A1		4	WASHER, SPECIAL 3/8 x 7/8 x 1/16 thk
28		232-1446		4	NUT, LOCK 3/8
29		396841A1		4	CAP

http://www.minnparbackhoeparts.com/

09-57		p1	04/04

CAB - WINDOW, REAR

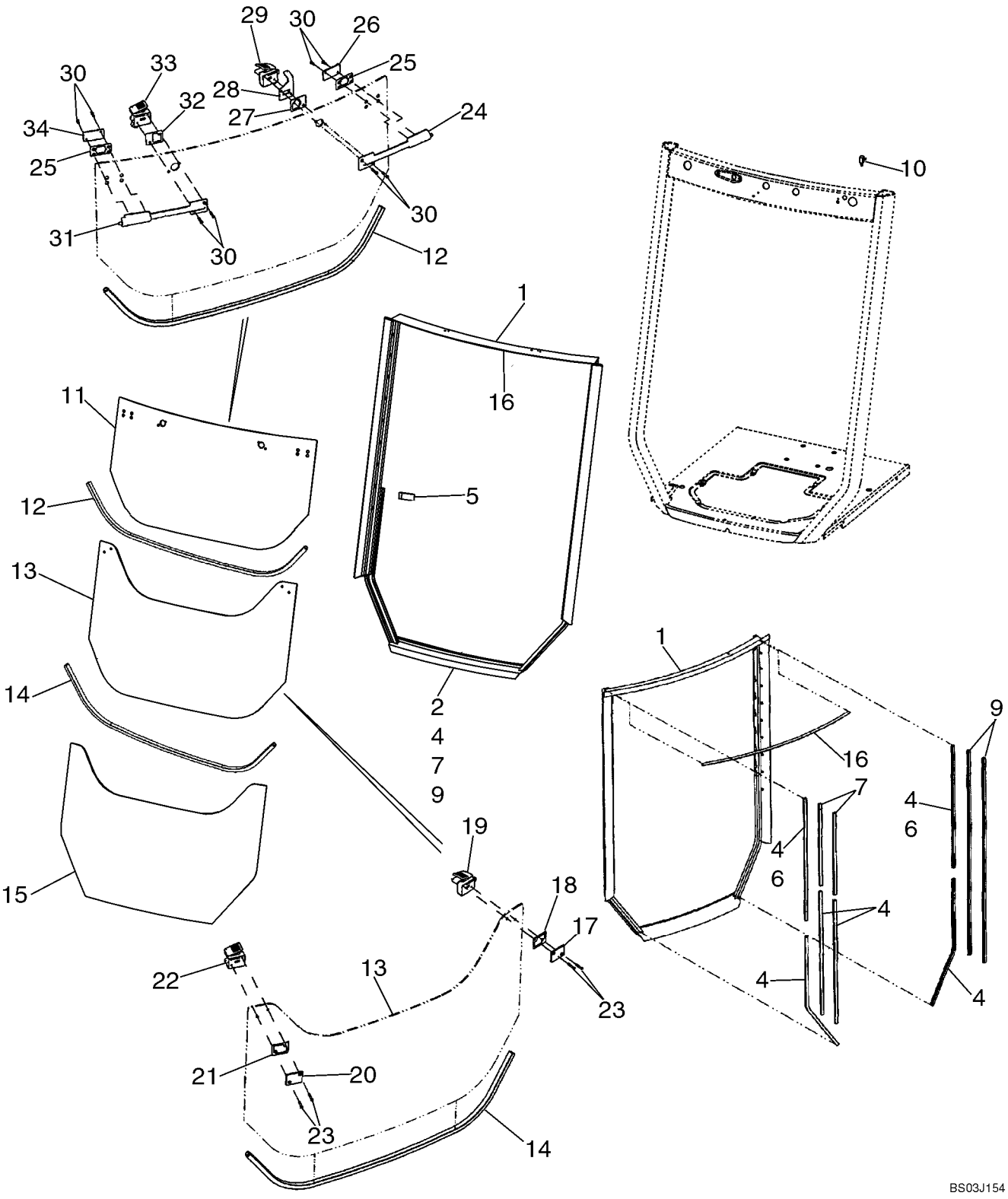

http://www.minnparbackhoeparts.com/

CAB - WINDOW, REAR

REF	FN	PART NUMBER	YR/SN	QTY	DESCRIPTION
		411850A1		1	KIT Frame and Seal; Incl. 1, 4, 7, 9, 16
1		87435929		1	FRAME ASSY Included in 411850A1 Frame and Seal Kit; Replaces 403948A1 Frame
2		410867A1		1	GASKET Rubber Seal; Bulb Type
		411851A1		1	KIT Seal; Incl. 4, 7, 9, 16
4		404228A1		6	SEAL 760 mm (29-15/16 in), Flocked Channel Seals; Cut From 402852A1; Included in 411851A1 Seal Kit and 411850A1 Frame and Seal Kit
5		400200A1		2	STRIP, RUBBER Stop
6		404226A1		2	SEAL 787 mm (31 in), Flocked Channel Seals; Cut From 402852A1
7		404229A1		2	SEAL 508 mm (20 in), Flocked Channel Seals; Cut From 402852A1; Included In 411851A1 Seal Kit and 411850A1 Frame and Seal Kit
9		404227A1		2	SEAL 1270 mm (50 in), Flocked Channel Seals; Cut From 402852A1; Included in 411851A1 Seal Kit and 411850A1 Frame and Seal Kit
10		A187714		1	SWITCH Rear Wiper Cutout
		495-11047		2	WASHER 15/32 x 59/64 x 1/16
		425-147		1	NUT 7/16
11		352208A1		1	GLASS, CAB Upper
12		395348A1		1	STRIP, ORNAMENTAL 1210 mm (47-21/32 in), Lower Glass Edge; Cut From 404426A1
		87434783		1	WINDOW ASSY Center; Includes Ref 13, 19, 22, 23; Plus (1) 87426969 Backing Plate and (4) Backing Plates and (4) Grommets Which Are Not Serviced Separately; Includes Instructions
13		352209A1		1	GLASS, CAB Center
14		395348A1		1	STRIP, ORNAMENTAL 1210 mm (47-21/32 in), Lower Glass Edge; Cut From 404426A1
15		352210A1		1	GLASS, CAB Lower
16		400494A1		1	SEAL 1095 mm (43-1/8 in), Hollow Seal; Cut From 404231A1; Included in 411851A1 Seal Kit and 411850A1 Frame and Seal Kit
17		411917A1		1	PLATE, BACK Kit; Includes 1 Each 402849A1 Plate, 411942A1 Gasket Pad
18		402847A1		1	PLATE, PLASTIC Bushing

http://www.minnparbackhoeparts.com/

09-57		p2	04/04

CAB - WINDOW, REAR

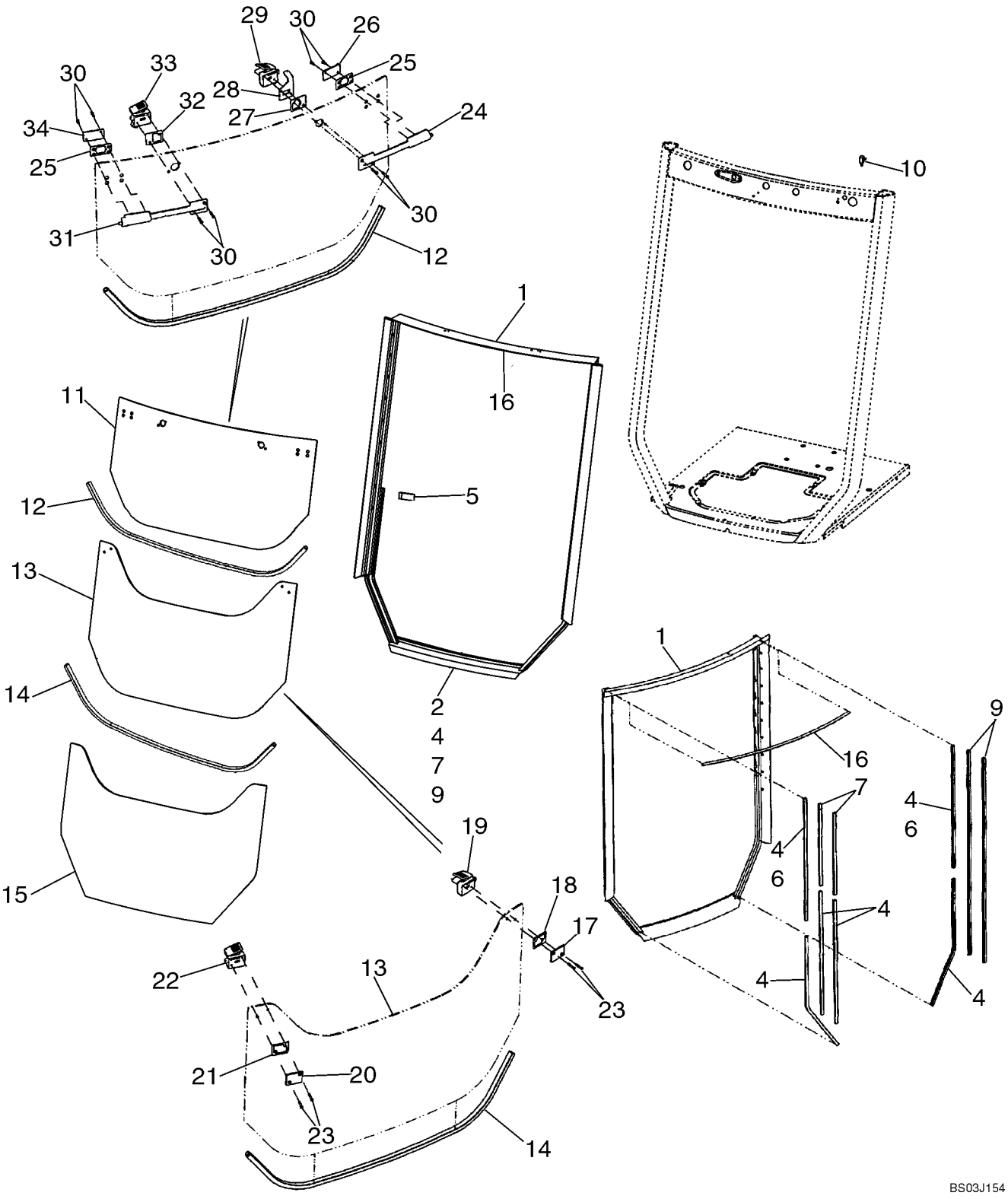

http://www.minnparbackhoeparts.com/

CAB - WINDOW, REAR

REF	FN	PART NUMBER	YR/SN	QTY	DESCRIPTION
19		411909A1		1	LATCH Kit, Includes 1 Each 402868A1 Cover, 402867A1 Lever, 402833A1 Plunger, 402831A1 Housing, 402830A1 Bushing, 402870A1 Spring, 402869A1 Rivet, 402865A1 Bumper
20		411916A1		1	PLATE, BACK Kit; Includes 1 Each 402848A1 Plate, 411942A1 Gasket Pad
21		402846A1		1	PLATE, PLASTIC Bushing
22		411908A1		1	LATCH Kit, Includes 1 Each 402871A1 Cover, 402872A1 Lever, 402873A1 Plunger, 402832A1 Housing, 402830A1 Bushing, 402870A1 Spring, 402869A1 Rivet, 402865A1 Bumper
23		87435453		4	SCREW Flat Head Socket, M5 x 30
24		411910A1		1	LATCH Kit, Bolt Assy; Includes 1 Each 402860A1 Housing, 402840A1 Gasket, 402837A1 Bolt, 402861A1 Insert, 402838A1 Rod, 402856A1 Spring
25		402843A1		2	PLATE, PLASTIC
26		87423503		1	PLATE, BACK Backing Plate
27		402844A1		1	PLATE, PLASTIC
28		402836A1		1	BRACKET Rear Wiper Cutout Switch
29		411914A1		1	LATCH Kit, Includes 1 Each 402831A1 Housing, 402866A1 Bumper, 402830A1 Bushing, 402833A1 Plunger, 402867A1 Lever, 402868A1 Cover
30		87445051		8	SCREW Flat Head Socket, M5 x 16
31		411911A1		1	LATCH Kit, Bolt Assy; Includes 1 Each 402863A1 Housing, 402851A1 Gasket, 402856A1 Spring, 402841A1 Bolt, 402861A1 Insert, 402838A1 Rod
32		402845A1		1	PLATE, PLASTIC
33		411912A1		1	LATCH Kit, Includes 1 Each 402832A1 Housing, 402866A1 Bumper, 402830A1 Bushing, 402873A1 Plunger, 402872A1 Lever, 402871A1 Cover
34		87423502		1	PLATE, BACK Backing Plate
		411844A1		1	KIT Upper Bolt Latch; Includes 1 Each 411910A1 Bolt Assy Ref 24, 87423502 Backing Plate Ref 34, 87423503 Backing Plate Ref 26, (2) 402843A1 Bushing late Ref 25

http://www.minnparbackhoeparts.com/

09-57		p3	04/04

CAB - WINDOW, REAR

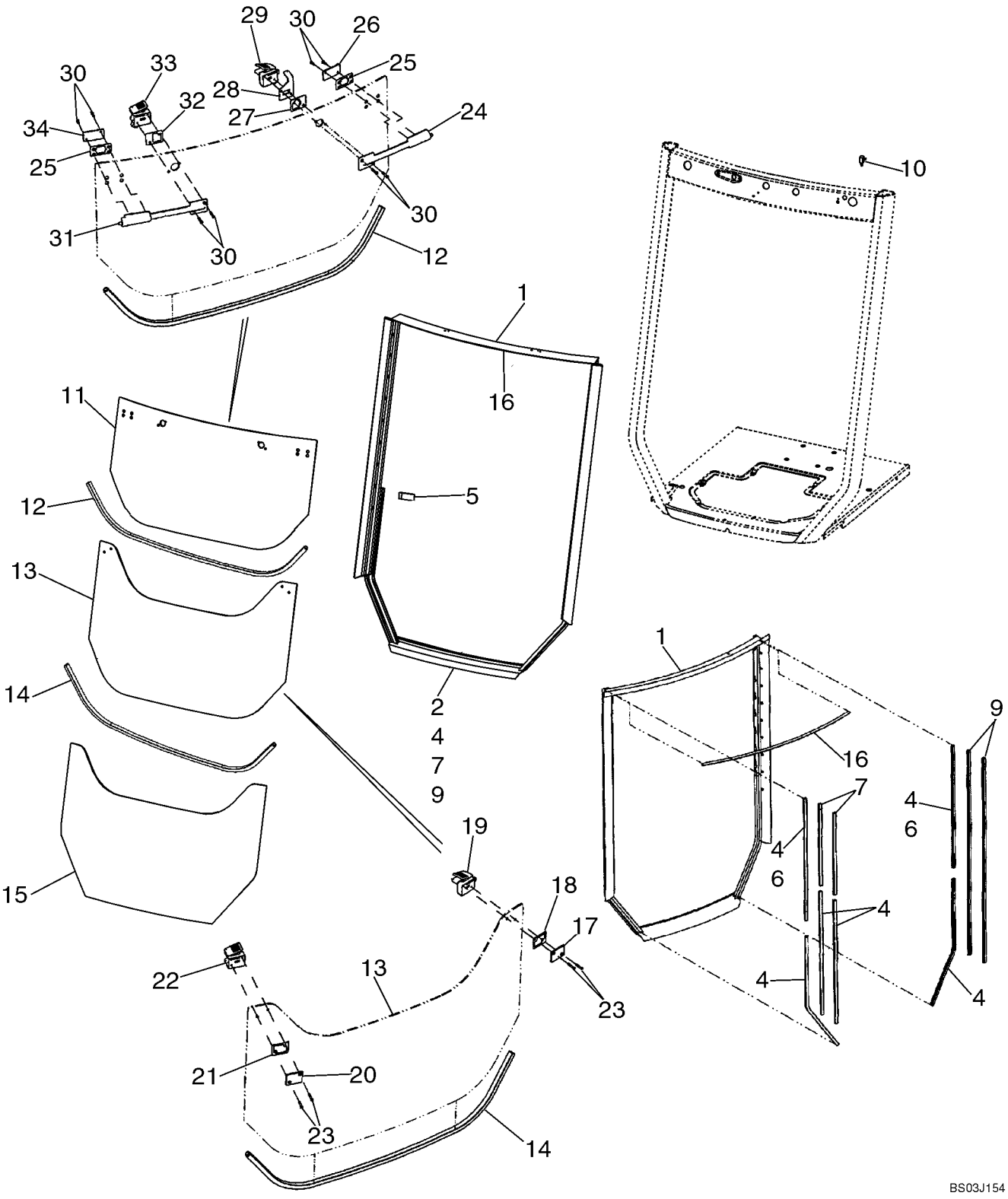

http://www.minnparbackhoeparts.com/

CAB - WINDOW, REAR

REF	FN	PART NUMBER	YR/SN	QTY	DESCRIPTION
		411845A1		1	KIT Upper Bolt Latch; Includes 1 Each 411911A1 Bolt Assy Ref 31, 87423502 Backing Plate Ref 34, 87423503 Backing Plate Ref 26, (2) 402843A1 Bushing Plate Ref 25
		411846A1		1	KIT Mid Catch; Includes 1 Each 411908A1 Catch Kit Ref 22, 411916A1 Backing Plate Kit Ref 20, 402846A1 Bushing Plate Ref 21
		411847A1		1	KIT Mid Catch; Includes 1 Each 411909A1 Catch Kit Ref 19, 411917A1 Backing Plate Ref 17, 402847A1 Bushing Plate Ref 18
		411848A1		1	KIT Upper Catch; Includes 1 Each 411912A1 Upper Catch Kit Ref 33, 402845A1 Bushing Plate Ref 32
		411849A1		1	KIT Upper Catch; Includes 1 Each 411914A1 Upper Catch Kit Ref 29, 402844A1 Bushing Plate Ref 27

http://www.minnparbackhoeparts.com/

09-58		p1	05/05

CAB - WASHER, WINDSHIELD

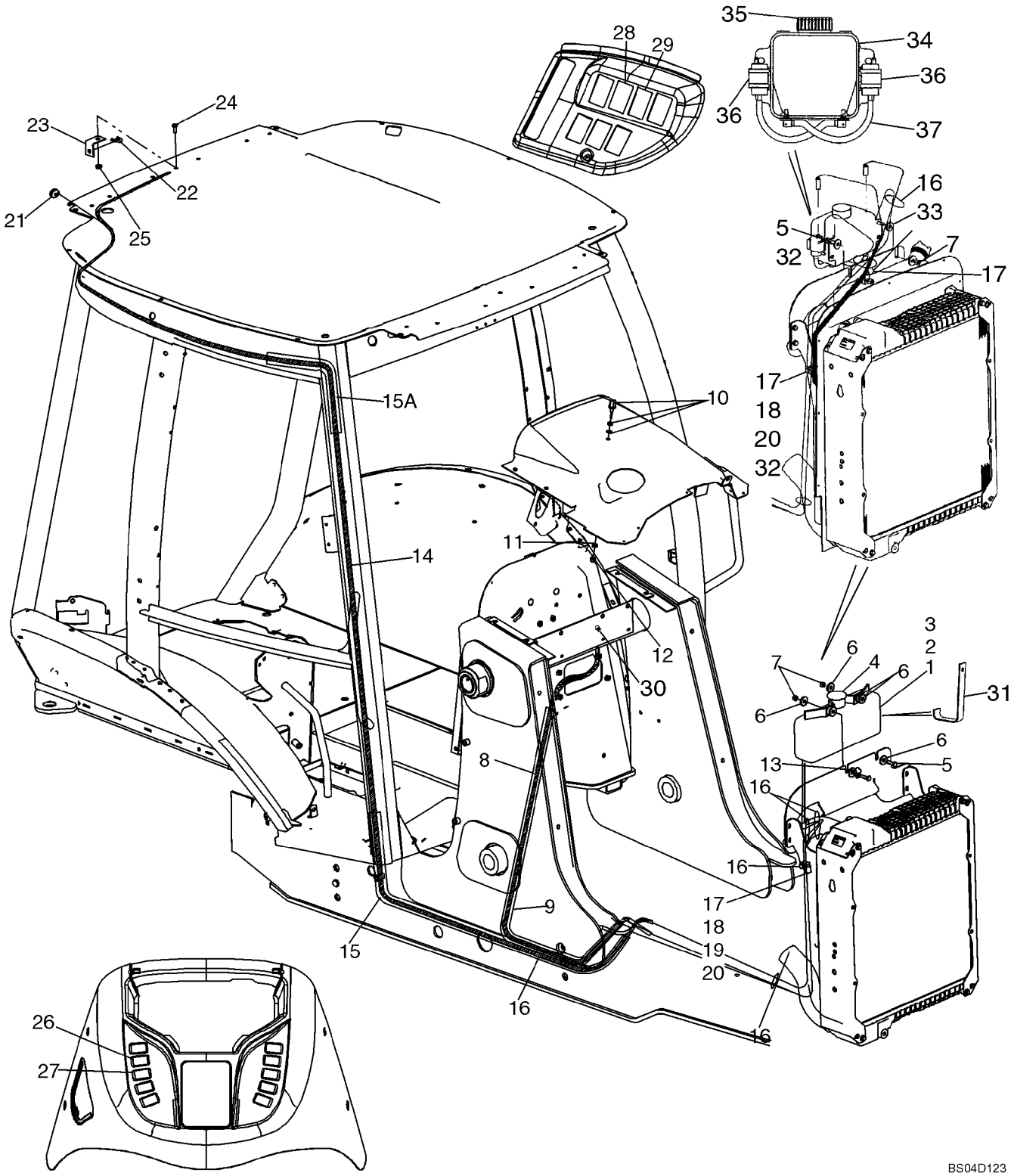

http://www.minnparbackhoeparts.com/

CAB - WASHER, WINDSHIELD

REF	FN	PART NUMBER	YR/SN	QTY	DESCRIPTION
		E46560		1	RESERVOIR Incl. Ref 1 - 4; If Used
1		NSS		1	NOT SERVICED SEPARATELY RESERVOIR
2		E47239		2	SEAL
3		E47238		2	PUMP MOTOR, 12 Volt
4		E47240		1	PLUG Cap
5		614-8030		2	BOLT M8 x 30
6		496-41041		7	WASHER 13/32 x 1-1/8 x 1/8
7		832-10408		2	NUT M8
8		87428316		1	HOSE (METRES) HOSE 3150 mm (124-1/64 in); Front Washer; Cut From 1968141CX
9		386718A3		1	GUARD 1630 mm (64-3/16 in); Cut From 397155A2
10		284154A1		1	NOZZLE INJECTION Includes A Steel and Rubber Washer Which Are Not Serviced Separately
11		492-11038		1	WASHER, LOCK 3/8"
12		425-106		1	NUT 3/8
13		D147383		1	CLIP J-Clamp, 5/8
14		87423346		1	HOSE 6325 mm (249-1/64 in); Rear Washer; Cut From 1968141CX
15		408966A1		1	GUARD 2200 mm (86-5/8 in); Rear Washer Hose; Lower; Cut From 397155A2
15A		408965A1		1	GUARD 550 mm (21-11/16 in); Rear Washer Hose, Upper; Cut From 397155A2
16		L18337		6	STRAP 15 in
17		D147383		1	CLIP J-Clamp, 5/8
18		614-8016		1	SCREW M8 x 16
19		895-11008		1	WASHER Flat
20		829-1408		1	NUT M8
21		87442441		1	GROMMET Washer, Hose
22		E43769		1	SPRAY Rear Nozzle; Includes Rubber Seal Which Is Not Serviced Separately
23		386720A1		1	BRACKET Rear Nozzle
24		614-8020		1	BOLT M8 x 20
25		825-2408		1	NUT M8
26		386785A1		1	SWITCH Front Wiper
27		386787A1		1	SWITCH Front Washer
28		386786A1		1	SWITCH Rear Wiper
29		386788A1		1	SWITCH Rear Washer

http://www.minnparbackhoeparts.com/

09-58		p2	05/05

CAB - WASHER, WINDSHIELD

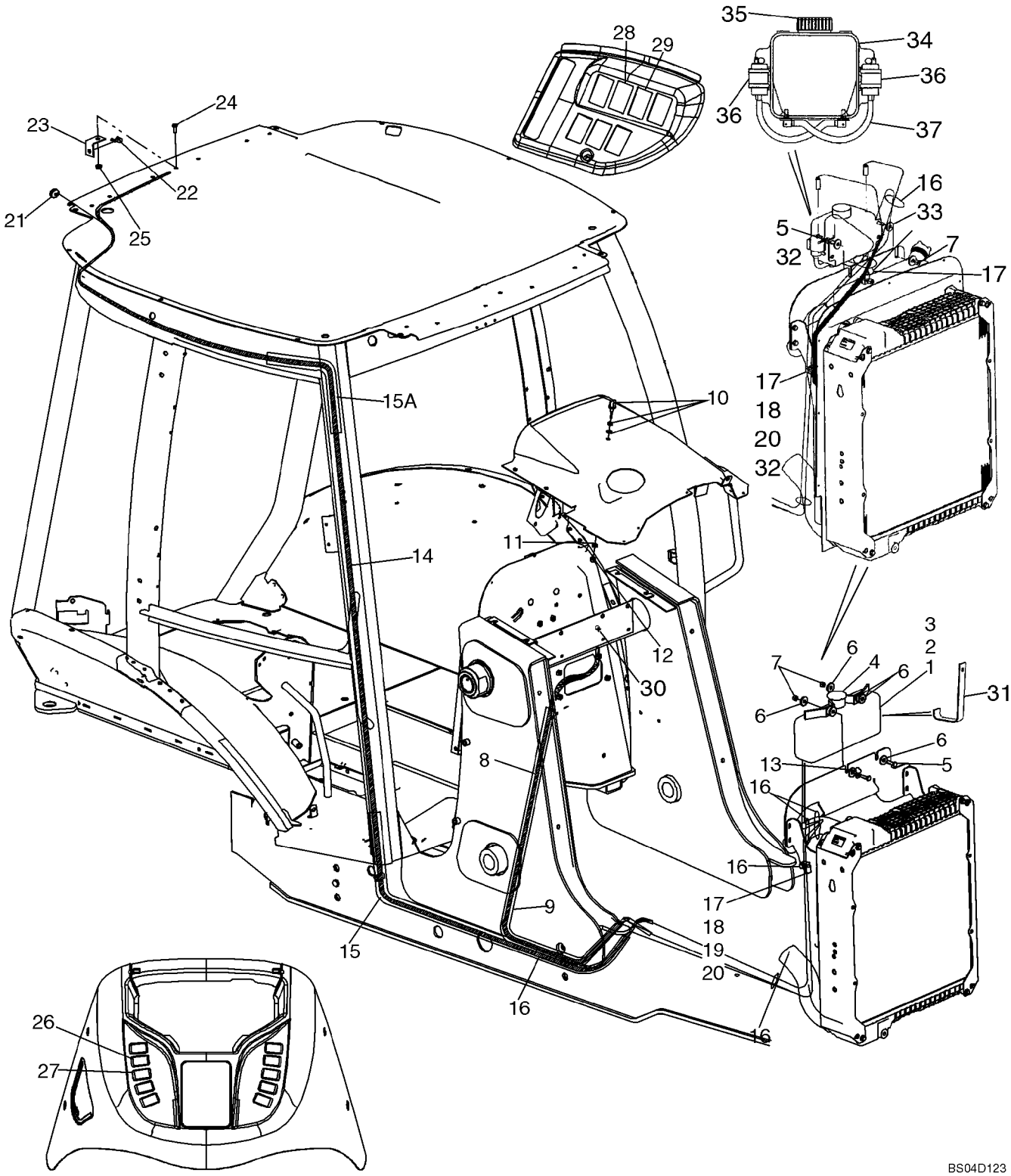

http://www.minnparbackhoeparts.com/

CAB - WASHER, WINDSHIELD

REF	FN	PART NUMBER	YR/SN	QTY	DESCRIPTION
30		87444176		1	CLIP, HOSE
31		87442924		1	BRACE Used With E46560 Reservoir; If Used
32		896-11008		3	WASHER 9 x 17 x 2
33		496-41041		4	WASHER 13/32 x 1-1/8 x 1/8
		87448685		1	WASHER, WINDSHIELD RESERVOIR; Incl. Ref 34 - 38; If Used
34		87449514		1	RESERVOIR, WINDSH. WASH 20 Quart
35		86507190		1	COVER, CAP
36		86507198		2	PUMP, SMALL Component Parts Not Serviced Separately
37		87449517		1	HOSE (METRES) 203 mm (8 in)
38		L18337		1	STRAP Not Illustrated

http://www.minnparbackhoeparts.com/

CAB - WIPERS

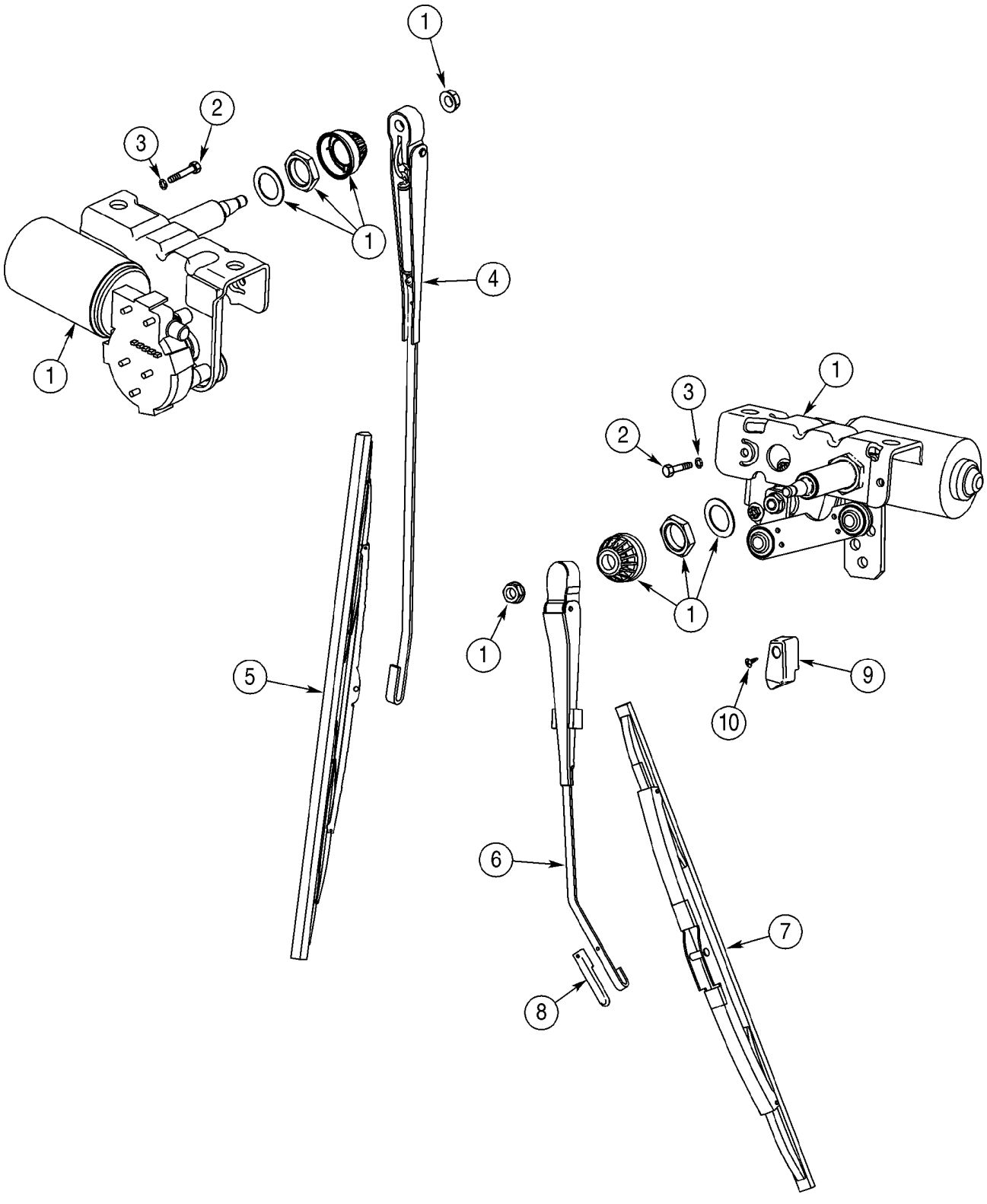

http://www.minnparbackhoeparts.com/

CAB - WIPERS

REF	FN	PART NUMBER	YR/SN	QTY	DESCRIPTION
1		450037A1		2	WIPER MOTOR 12V
		404617A1		1	HARNESS Front Lamps and Wiper
		396018A3		1	HARNESS Cab, B-Post, Rear Wiper, Radio, Blower, Dome Lamp; Replaces 396018A2 Harness
		386786A1		1	SWITCH Rear Wiper
		386785A1		1	SWITCH Front Wiper
		A187714		1	SWITCH Rear Wiper Cutout Switch
		495-11047		2	WASHER 15/32 x 59/64 x 1/16
		425-147		1	NUT 7/16
2		814-6050		4	BOLT M6 x 50
3		892-11006		4	WASHER, LOCK M6
4		D128745		1	WIPER ARM Front Wiper
5		414426A1		1	BLADE, WIPER Front Wiper
6		395136A1		1	WIPER ARM Rear Wiper
7		D128022		1	BLADE, WIPER Rear Wiper; 13.77 inch; If Used
7		A187603		1	BLADE, WIPER Rear Wiper; 16 inch; If Used
8		395033A1		1	CLIP
9		395026A1		1	RAMP Block
10		395389A1		1	SCREW M6

http://www.minnparbackhoeparts.com/

09-60		p1	01/04

CAB HEADLINER - FILTER, LOUVERS, DOME LAMP

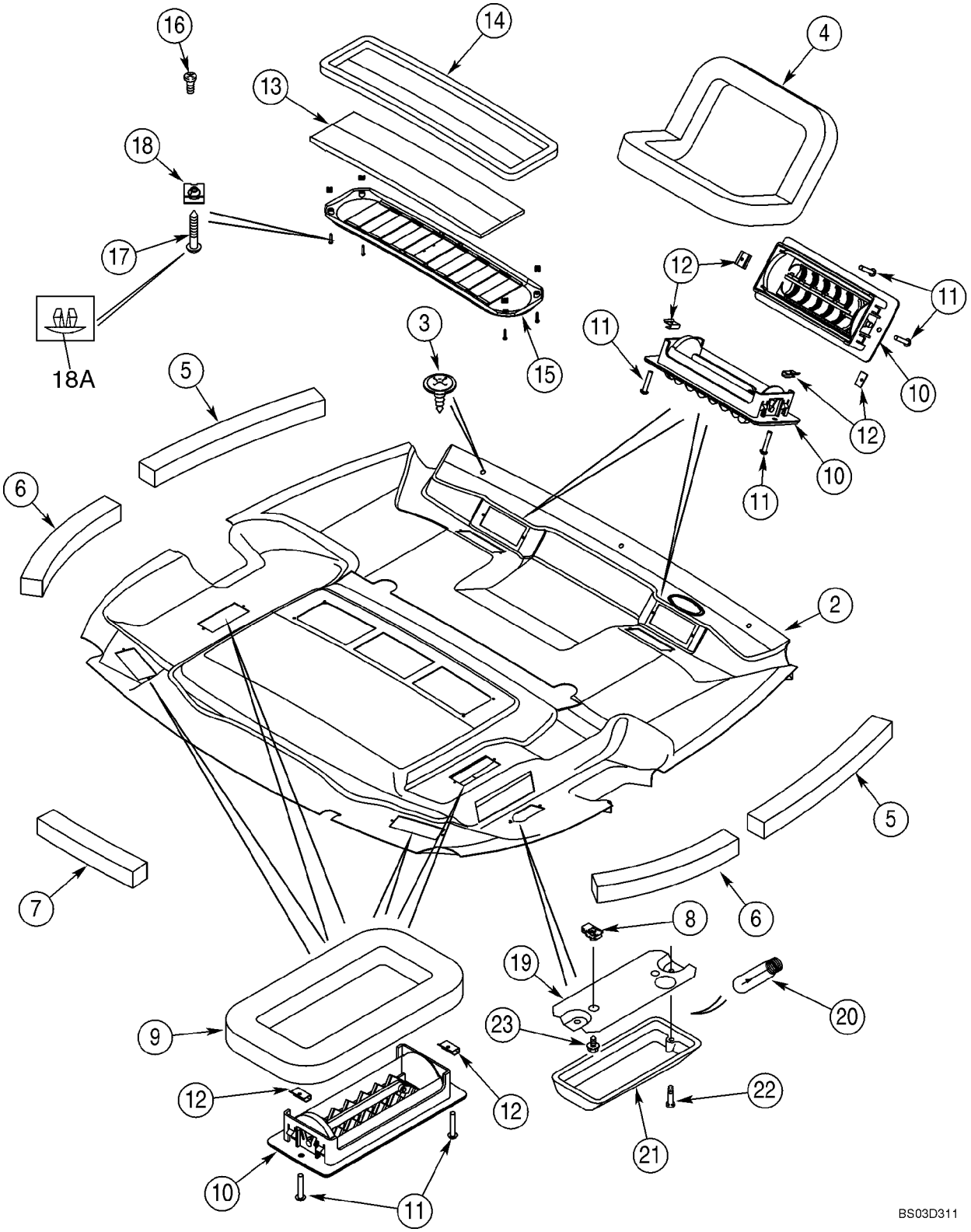

http://www.minnparbackhoeparts.com/

CAB HEADLINER - FILTER, LOUVERS, DOME LAMP

REF	FN	PART NUMBER	YR/SN	QTY	DESCRIPTION
		367705A6		1	LINING, ROOF HEADLINER ASSY, Standard Interior; Incl. Ref 1, 4 - 18A
		360272A6		1	LINING, ROOF HEADLINER ASSY, Deluxe Interior; Incl. Ref 2, 4 - 18A
1		367704A4		1	LINING, ROOF Shell; Standard Interior; Not Illustrated
2		381696A5		1	LINING, ROOF Shell With Foam and Fabric Covering; Deluxe Interior
3		396516A1		3	SCREW, POINTED
4		368813A2		2	SEAL Defrost
5		379160A1		2	SEAL 494 mm; Foam; Adhesive Back; Front
6		379161A1		2	SEAL 379 mm; Foam; Adhesive Back; Rear
7		379209A1		1	SEAL 303 mm; Foam; Adhesive Back, Center, Rear
8		131-861		2	NUT No. 10; Dome Lamp
9		377194A1		4	SEAL Heat and Air
10		363883A1		8	GRILLE ASSY
11		140-103		16	SCREW No. 6 x 3/4
12		125749A1		16	NUT J-Type, No. 6
13		377594A5		1	FILTER Air Recirculation
14		381972A1		1	SEAL
15		369450A1		1	GRILLE Air Recirculation; Incl. Ref 16
16		260-1436		2	SCREW
17		414600A1		4	SCREW
18		177269A1		4	NUT
18A		409723A1		4	PLUG Plastic; Fits 5,5 mm Hole
		380719A2		1	LIGHT, INTERIOR Dome Lamp; Incl. Ref 19 - 21
19		NSS		1	NOT SERVICED SEPARATELY Base
20		N14466		1	BULB
21		NSS		1	NOT SERVICED SEPARATELY Lens; With Switch
22		440-1088		2	SCREW No. 8 x 1/2 in; Base To Lens
23		281-54512		2	SCREW No. 10 x 3/4; Lamp To Headliner

http://www.minnparbackhoeparts.com/

09-61		p1	01/04

CAB - FILTER, AIR

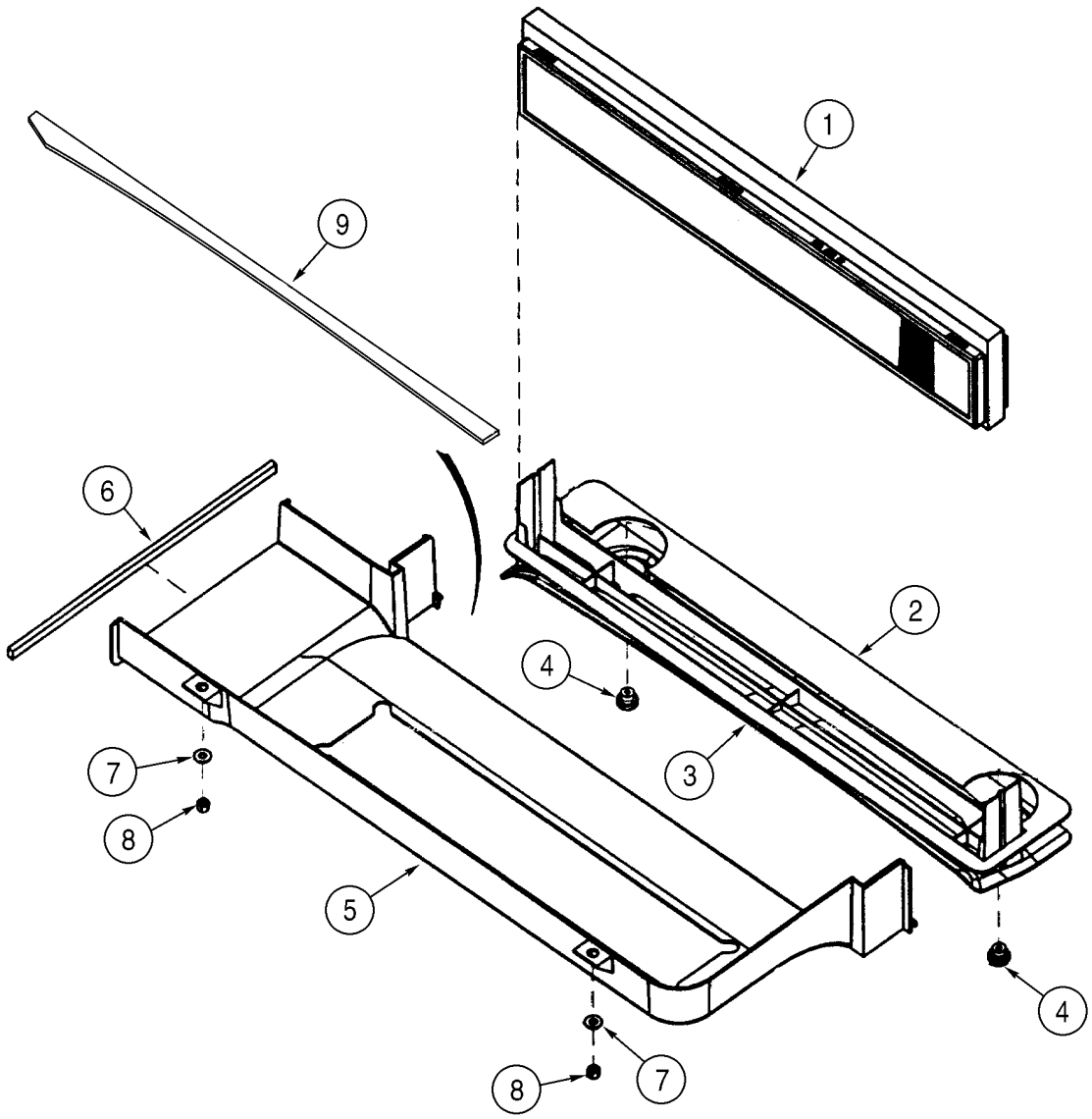

BS00F073

http://www.minnparbackhoeparts.com/

CAB - FILTER, AIR

REF	FN	PART NUMBER	YR/SN	QTY	DESCRIPTION
1		360260A2		1	FILTER, ELEMENT Includes Foam Seal
2		382770A2		1	SEAL
3		360261A1		1	TRAY
4		398738A1		2	KNOB Fresh Air Duct Retainer
5		360252A2		1	DUCT Fresh Air Intake
6		368990A1		1	SEAL
7		895-15008		2	WASHER 9 x 20 x 1,6 mm
8		832-10408		2	NUT M8
9		403271A1		1	SEAL 882 mm; Adhesive Back

http://www.minnparbackhoeparts.com/

09-62		p1	05/04

CAB - BLOWER HOUSING, VENTILATION DUCTS, DRAIN LINES

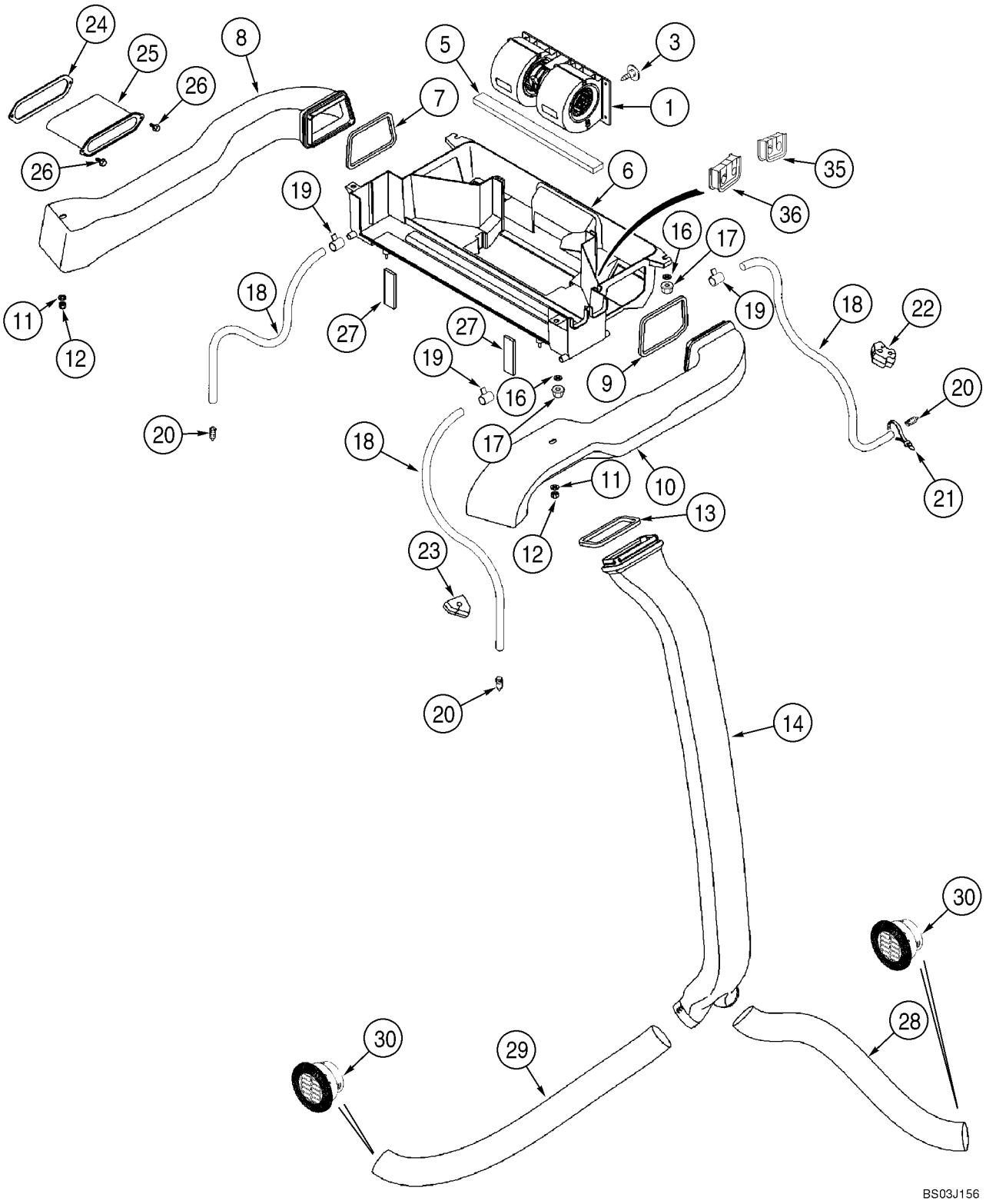

http://www.minnparbackhoeparts.com/

CAB - BLOWER HOUSING, VENTILATION DUCTS, DRAIN LINES

REF	FN	PART NUMBER	YR/SN	QTY	DESCRIPTION
1		377220A2		1	BLOWER ASSY. Component Parts Not Serviced Separately; Kysor/Westran Brand; If Used; For Blower Switch, See Figure 04-10
1		377241A2		1	BLOWER ASSY. Component Parts Not Serviced Separately; Aurora Brand; If Used; For Blower Switch, See Figure 04-10
3		182697A1		1	CLASP
5		181981A1		1	GASKET 6 x 20 x 355 mm; Adhesive Back; Under Blower
6		360251A3		1	HOUSING ASSY. Heat and Air; Includes 373995A1
		373995A1		2	INSERT
7		368805A1		1	SEAL Left-Hand Duct
8		360253A3		1	DUCT Left-Hand
9		369249A1		1	SEAL Right-Hand Duct
10		360254A3		1	DUCT Right-Hand
11		895-15010		2	WASHER 11 x 24 x 2 mm
12		832-10408		2	NUT M8
13		368807A1		1	SEAL
14		360255A1		1	DUCT
16		895-15008		4	WASHER 9 x 20 x 1,6 mm
17		832-10408		4	NUT M8
18		368821A1		4	HOSE 3050 mm; Drain
19		214-1406		4	CLAMP 7/16 - 25/32
20		365789A1		4	VALVE, DRAIN Drain
21		L18337		2	STRAP 15 in
22		383794A2		2	PLUG
23		383795A2		2	PLUG 580SM Models
23		395470A1		2	PLUG 580SM+ Models
24		381113A2		1	SEAL
25		381111A2		1	SLEEVE
26		281-18712		2	SCREW 1/4 st x 3/4
27		377230A3		2	SEAL 16 mm thk; Fresh Air Duct To Ventilation Housing
28		375392A1		1	HOSE, LARGE 750 mm; Cut From 236559A1
29		368818A1		1	HOSE, LARGE 1015 mm; Cut From 236559A1
30		398986A1		2	VENT
35		403225A1		1	SEAL Heater Tubes At Housing

http://www.minnparbackhoeparts.com/

09-62		p2	05/04

CAB - BLOWER HOUSING, VENTILATION DUCTS, DRAIN LINES

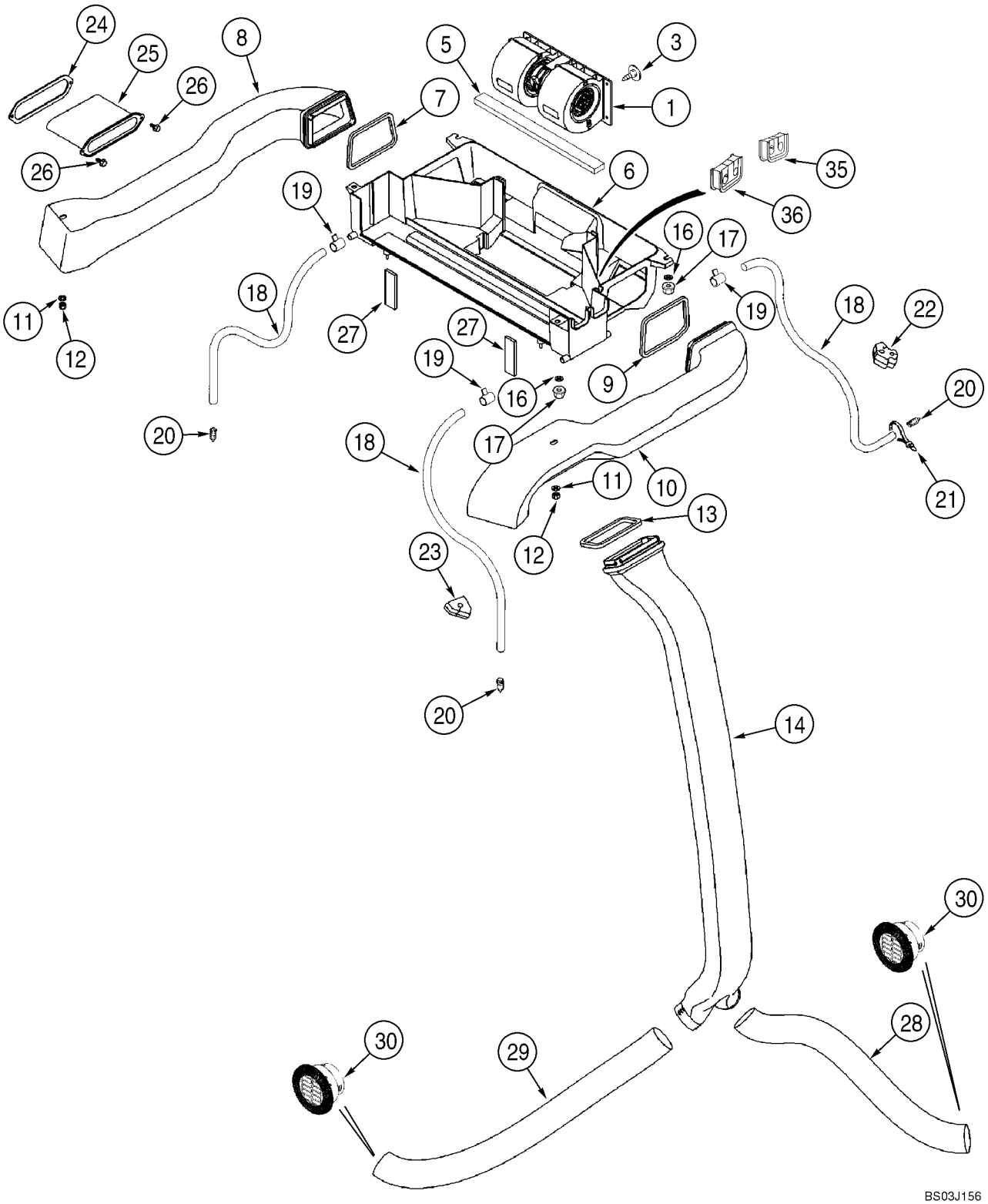

http://www.minnparbackhoeparts.com/

CAB - BLOWER HOUSING, VENTILATION DUCTS, DRAIN LINES

REF	FN	PART NUMBER	YR/SN	QTY	DESCRIPTION
36		403193A1		1	SEAL Air Conditioning Tubes At Housing

http://www.minnparbackhoeparts.com/

09-63		p1	02/05

CAB - HEATER

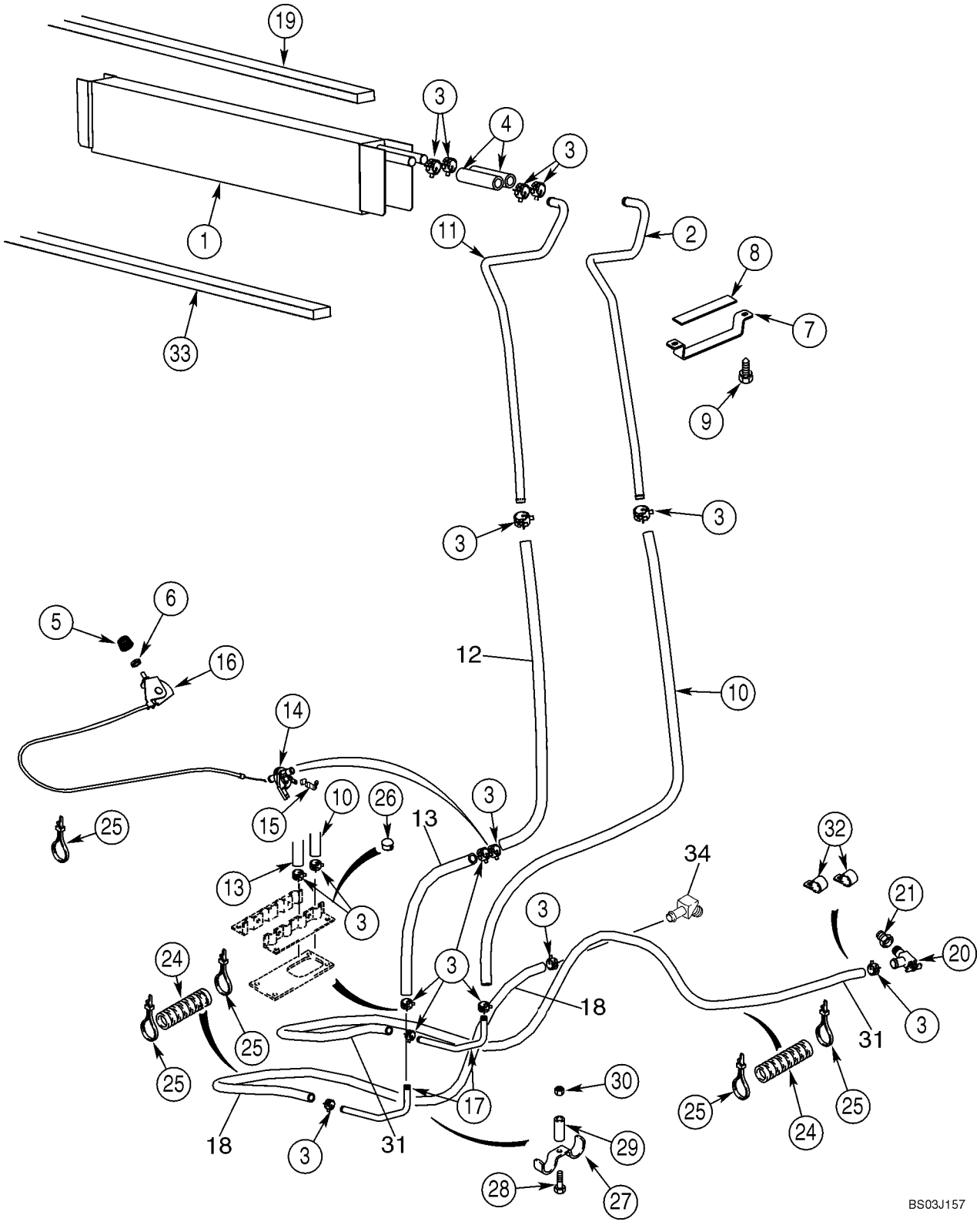

http://www.minnparbackhoeparts.com/

CAB - HEATER

REF	FN	PART NUMBER	YR/SN	QTY	DESCRIPTION
1		360262A2		1	HEAT-EXCHANGER Core, Mounts In Blower Housing Box; Seal Mounts On Top Of Core On Models With Heat Only
2		400282A1		1	TUBE Front
3		1954736C1		14	CLAMP No. 24
4		377222A1		2	HOSE 100 mm; Cut From 97252CX
5		400379A1		1	KNOB 23 mm
6		A42561		1	NUT
7		388762A1		1	BRACKET
8		389402A1		1	SEAL
9		281-14520		2	SCREW, SELF TAPPING With Washer, No. 10 x 1, 25
10		368801A2		1	HOSE 1361 mm; Cut From 97252CX
11		400280A1		1	TUBE Rear
12		448428A1		1	HOSE (METRES) 1175 mm (46-1/4 in); Heater Valve To Core; Cut From 97252CX
13		448429A1		1	HOSE (METRES) 150 mm (5-29/32 in) Floor To Valve; Cut From 97252CX
14		1331087C1		1	VALVE Heater Control
15		1954626C1		1	CLAMP
16		1999666C1		1	CONTROL Heater; Includes 1999667C1, 1999668C1
		1999667C1		1	CONTROL
		1999668C1		1	CABLE
17		190675A1		2	PIPE
18		377232A2		1	HOSE, LARGE HOSE 2650 mm (104-21/64 in); Heater; Return To Water Pump; Cut From 97252CX
19		406287A1		1	SEAL 19 x 19 x 736 mm; Location Of Seal On Models With Heat Only; On Models With Air Conditioning, Seal Is Located On Evaporator Core
20		301803R1		1	VALVE, SHUT-OFF
21		221-89		1	RESTRICTOR 1/2 x 3/8; Replaces Existing Plug
24		D132982		7	LOOM Sleeve, 400 mm (15-3/4 in)
25		L18337		6	STRAP 15 in
26		353-410		2	PLUG 7/8; Models With Heat Only
27		D143427		1	CLAMP
28		614-8030		1	BOLT M8 x 30
29		D143417		1	SPACER

http://www.minnparbackhoeparts.com/

09-63		p2	02/05

CAB - HEATER

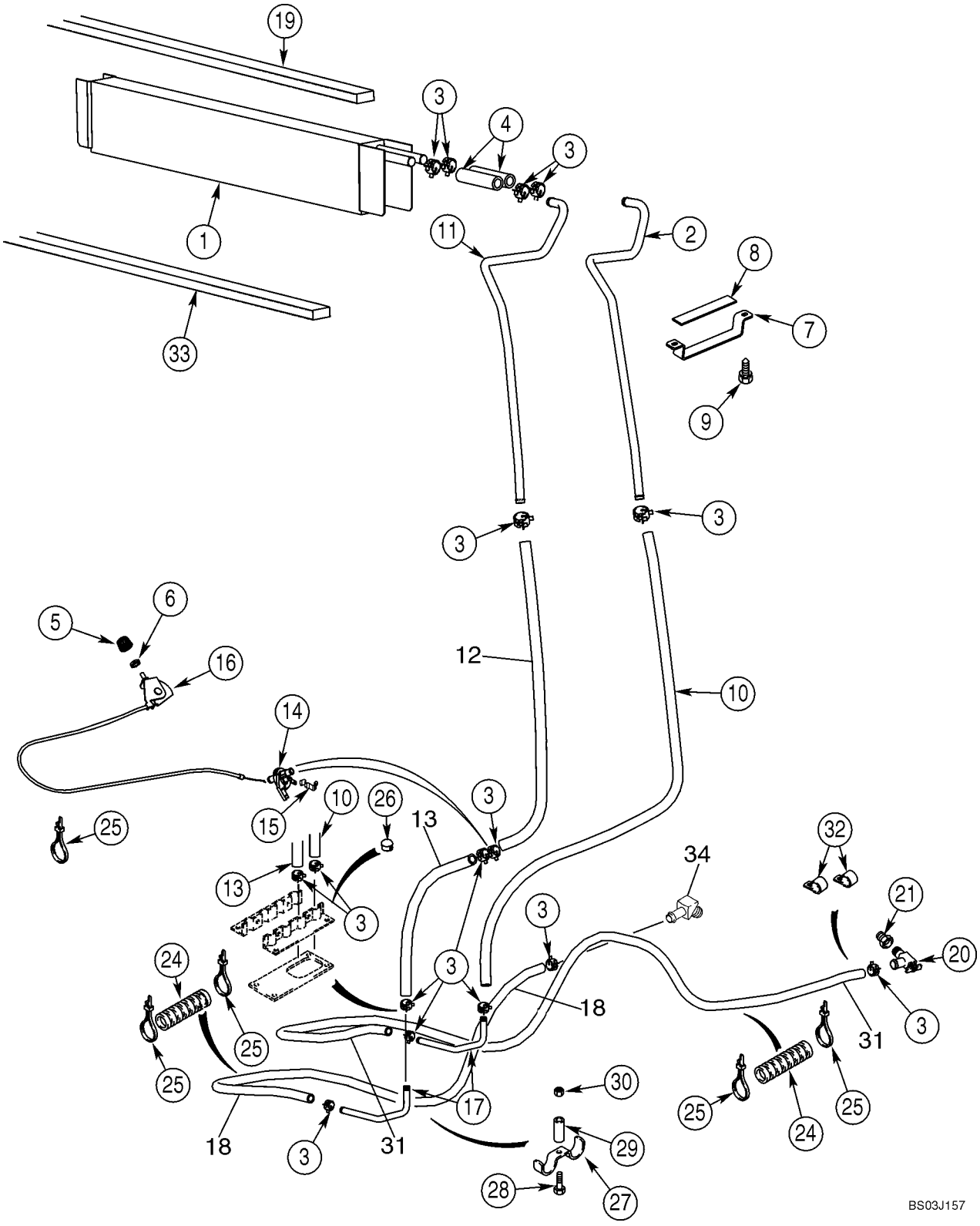

http://www.minnparbackhoeparts.com/

CAB - HEATER

REF	FN	PART NUMBER	YR/SN	QTY	DESCRIPTION
30		825-2408		1	NUT M8
31		377233A2		1	HOSE, LARGE HOSE 1830 mm (72-3/64 in); Heater; Inlet From Engine; Cut From 97252CX
32		D88052		2	CLAMP
33		1987096C1		1	PLATE, LARGE Seal, Below Heater Core; Location Of Seal On Models With Heat Only; On Models With Air Conditioning, Seal Is Located At Rear Of Housing
34		217-144		1	ELBOW 45 deg, 5/8 stm x 1/2 NPTF

http://www.minnparbackhoeparts.com/

09-64		p1	01/04

CAB - AIR CONDITIONING LINES, EVAPORATOR CORE

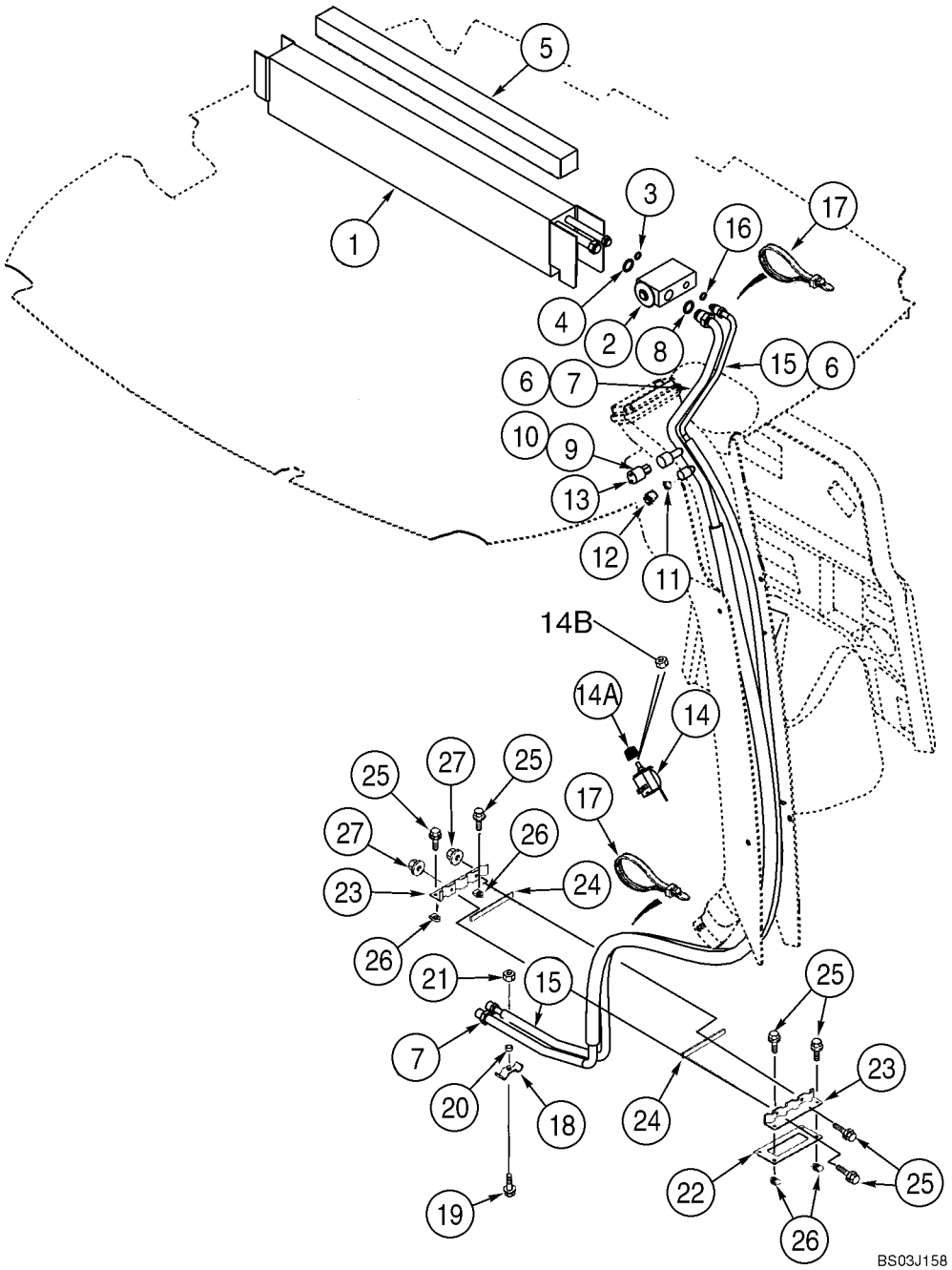

http://www.minnparbackhoeparts.com/

CAB - AIR CONDITIONING LINES, EVAPORATOR CORE

REF	FN	PART NUMBER	YR/SN	QTY	DESCRIPTION
		363832A5		1	EVAPORATOR Incl. Ref 1 - 4; Not Available as An Assembly; Order Components
1		360263A4		1	EVAPORATOR Core
2		386535A1		1	VALVE
3		128484A1		1	O-RING 7/16 ID x 1/16
4		128485A1		1	O-RING 9/16 ID x 1/16
		83822C1		3	TAPE, ADHESIVE Insulation; 63,5 (2-1/2 in) x 610 mm (24-1/64 in)
5		406287A1		1	SEAL 19 x 19 x 736 mm; Adhesive Back; Models With Heat and Air, Locate Seal On Top Of Core
		345-621		2	TAPE, ADHESIVE 2 x 6 in
7		360257A1		1	TUBE, PLASTIC-RUBBER Suction; Incl. Ref 8 - 12
8		128485A1		1	O-RING 9/16 ID x 1/16
9		128483A1		1	O-RING 5/16 ID x 1/16; Valve Core
10		1250594C1		1	CORE Low Pressure Switch
11		1250594C1		1	CORE Low Side Service Port
12		122553A1		1	CAP
13		122579A1		1	SWITCH Low Pressure
14		370381A1		1	SWITCH Temperature Control; Air Conditioning
14A		400379A1		1	KNOB 23 mm
14B		A42561		1	NUT 7/16
15		360256A1		1	TUBE, PLASTIC-RUBBER Pressure; Incl. Ref 16
16		128483A1		1	O-RING 5/16 ID x 1/16
17		L18337		4	STRAP 15 in
18		D143427		1	CLAMP
19		614-8030		1	BOLT M8 x 30
20		D143417		1	SPACER
21		825-2408		1	NUT M8
22		124011A1		1	GASKET
23		123980A1		2	SHIN CLAMP, Heater and Air Conditioning Hoses
24		181979A1		2	GASKET
25		845-6020		6	SCREW M6 x 20
26		833-40406		4	NUT M6
27		825-2406		2	NUT M6

http://www.minnparbackhoeparts.com/

09-65		p1	05/04

CAB - AIR CONDITIONING, CONDENSER, RECEIVER-DRIER

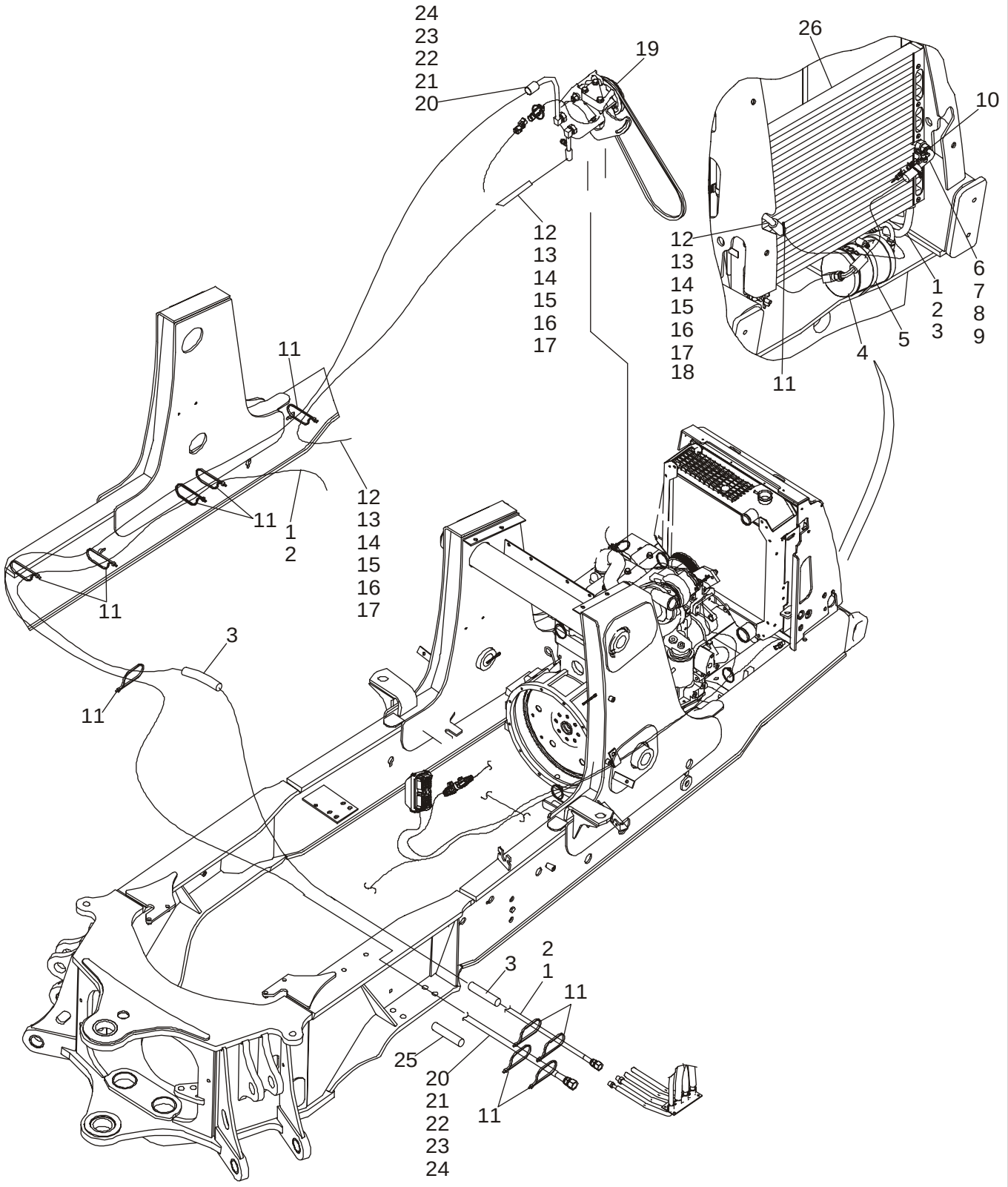

http://www.minnparbackhoeparts.com/

CAB - AIR CONDITIONING, CONDENSER, RECEIVER-DRIER

REF	FN	PART NUMBER	YR/SN	QTY	DESCRIPTION
1		87421777		1	HOSE ASSY. 2730 mm (107-1/2 in), Receiver Drier to Cab; Incl. Ref 2
2		128483A1		2	O-RING 5/16 ID x 1/16
3		191704A1		4	LOOM 460 mm (18-1/8 in)
4		86984155		1	RECEIVER-DRYER Receiver-Drier
5		214-1464		2	CLAMP No. 64
6		87421775		1	HOSE ASSY. 431 mm (17 in), Condenser to Drier; Incl. Ref 7 - 9
7		128483A1		3	O-RING 5/16 ID x 1/16
8		1250594C1		1	CORE Valve, High Pressure Switch
9		122081A1		1	FITTING Switch
10		232948A1		1	SWITCH, PRESSURE High Pressure
11		L18337		15	STRAP
12		87421776		1	HOSE ASSY. 1542 mm (60-3/4 in), Compressor to Condenser; Incl. Ref 13 - 17
13		128484A1		1	O-RING 7/16 D x 1/16
14		128485A1		1	O-RING 9/16 ID x 1/16
15		1999926C1		1	FITTING, PIPE
16		1250594C1		1	CORE Valve
17		122554A1		1	CAP Sealing Cap
18		193913A1		1	PROTECTOR Guard, 1200 mm (47-1/4 in)
19		87430122		1	COMPRESSOR, AIRCOND Component Parts Not Serviced Separately, See Figure 09-66 for Mounting
20		87427294		1	HOSE ASSY. 2240 mm (88-3/16 in), Cab to Compressor; Incl. Ref 21 - 24
21		128485A1		2	O-RING 9/16 ID x 1/16
22		1999927C1		1	FITTING, PIPE
23		1250594C1		1	CORE Valve
24		122553A1		1	CAP Sealing
25		191703A1		2	LOOM Sleeve, 400 mm (15-3/4 in)
26		87417329		1	CONDENSER Condenser
		895-11008		4	WASHER 9 x 16 x 1,6 mm
		829-1408		4	NUT M8

http://www.minnparbackhoeparts.com/

CAB - AIR CONDITIONING COMPRESSOR

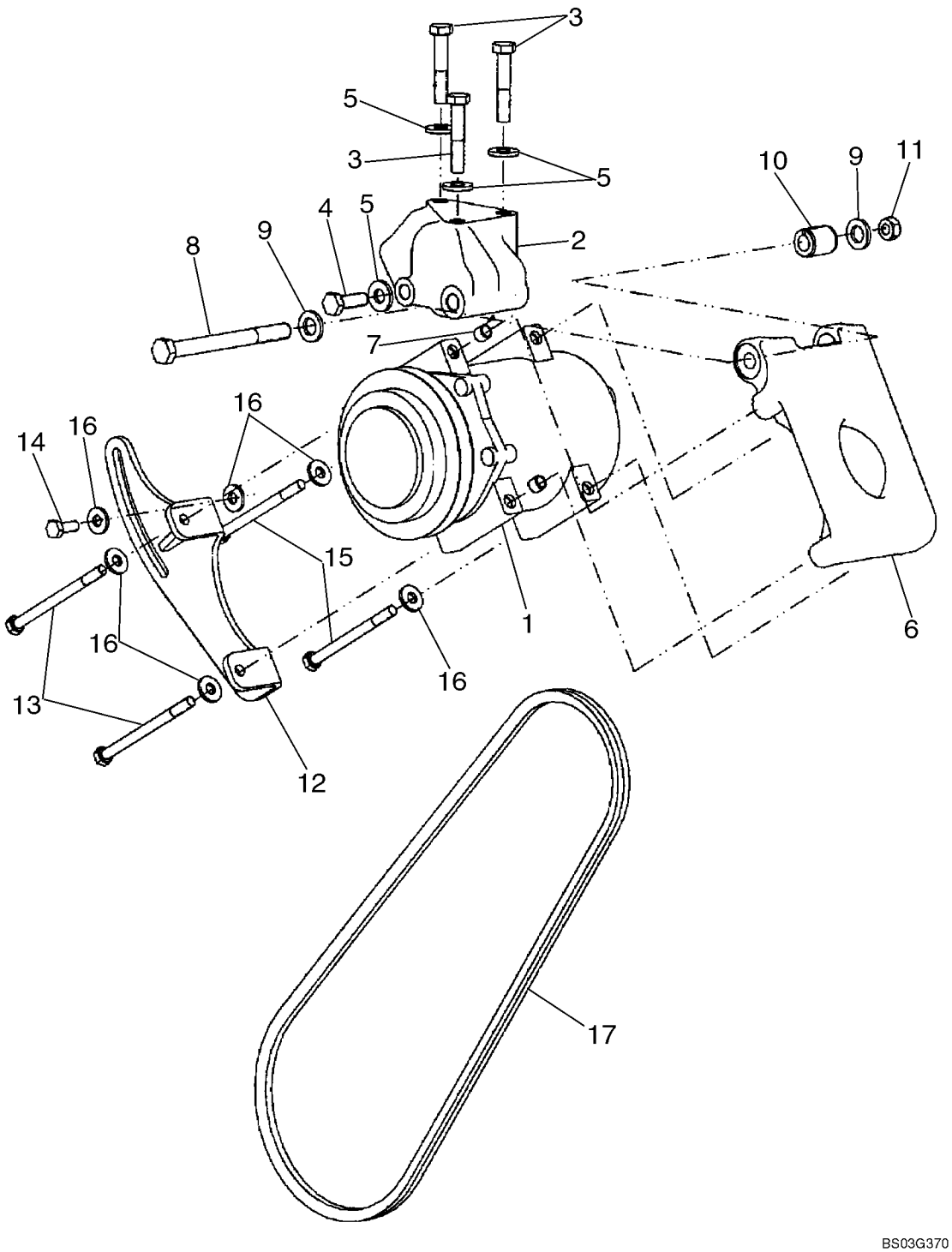

http://www.minnparbackhoeparts.com/

CAB - AIR CONDITIONING COMPRESSOR

REF	FN	PART NUMBER	YR/SN	QTY	DESCRIPTION
1		87430122		1	COMPRESSOR, AIRCOND Compressor Component Parts Not Serviced Separately
2		87429950		1	SUPPORT Mounting Support
3		814-10055		3	BOLT M10 x 55
4		614-10030		1	SCREW M10 x 30
5		896-15010		4	WASHER 11 x 24 x 3mm
6		87429948		1	SUPPORT
7		87429952		2	RING
8		814-12130		1	BOLT M12 x 130
9		896-11012		2	WASHER 13,5 x 24 x 3 mm
10		87429951		1	SPACER Pivot
11		829-1412		1	NUT M12
12		87429949		1	BRACKET, SUPPORTING
13		814-8110		2	BOLT M8 x 110
14		614-8020		1	BOLT M8 x 20
15		814-8100		2	BOLT M8 x 100
16		896-15008		6	WASHER 9 x 21 x 2,5 mm
17		87429954		1	BELT, TRANSMISSION V-Belt

http://www.minnparbackhoeparts.com/

09-67		p1	05/05

CANOPY, ROPS - FRAME, COVERS, MIRROR, VISOR

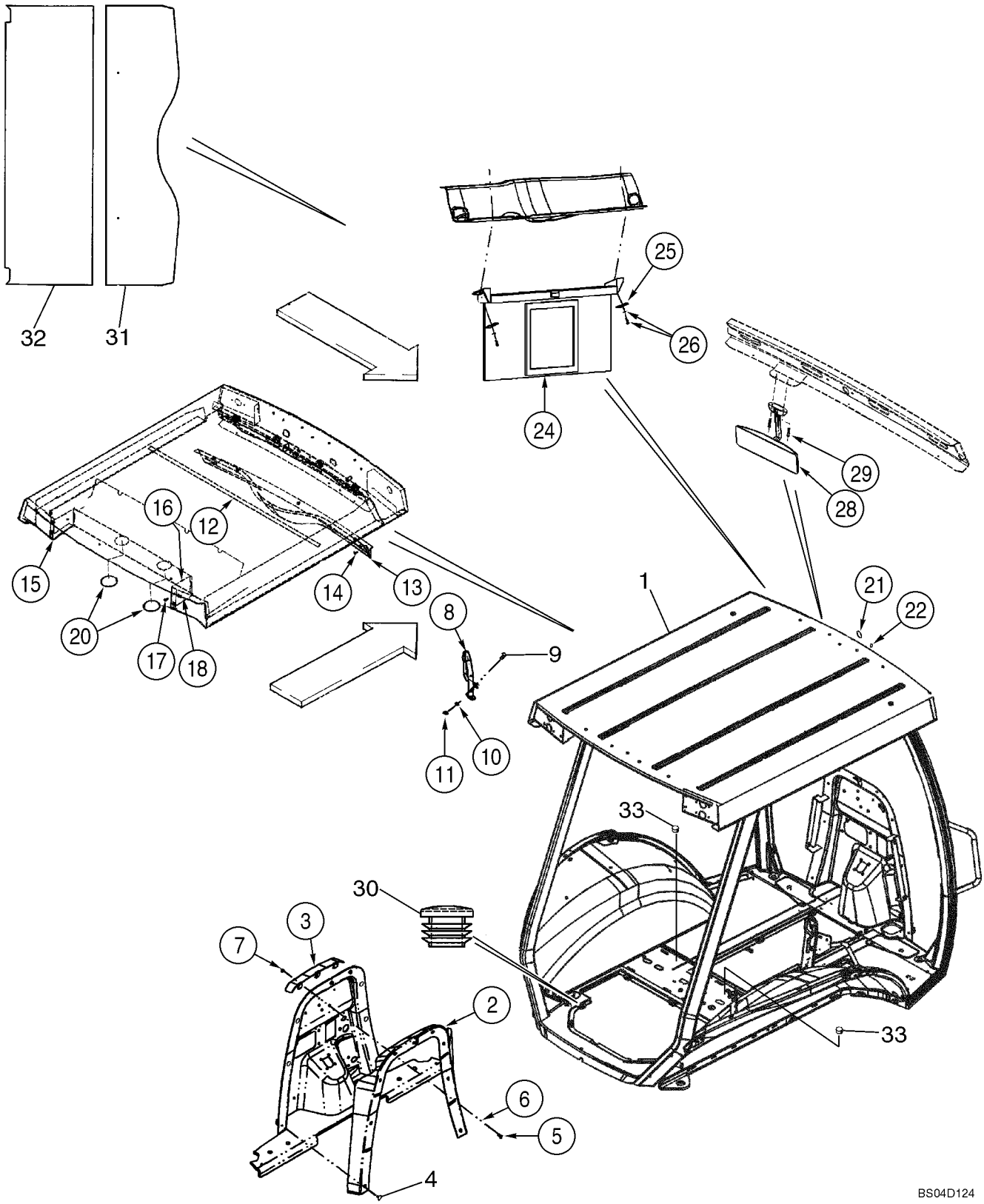

http://www.minnparbackhoeparts.com/

CANOPY, ROPS - FRAME, COVERS, MIRROR, VISOR

REF	FN	PART NUMBER	YR/SN	QTY	DESCRIPTION
		87449825		1	CANOPY ASSEMBLY, Includes 87443434 580SM Frame, Glass, Wiper and Roof Foam Panels; Replaces 87434983 and 87443436 Canopy Assembly
1		87443434		1	FRAME, CAB 580SM ROPS Canopy Frame; Order From Machinery Price List; Replaces 87434974 Frame
		87443437		1	CANOPY ASSEMBLY, Includes 87443435 580SM+ Frame, Glass, Wiper and Roof Foam Panels; Replaces 87434984 Canopy Assembly
1		87443435		1	ROPS ASSEMBLY 580SM+ Canopy Frame; Order From Machinery Price List; Replaces 87434975 Frame
2		396938A3		1	MOLDING Firewall
3		395478A3		1	BRACKET
4		D143242		6	PLUG Push-In Fastener
5		614-8020		3	BOLT M8 x 20
6		495-81001		3	WASHER ,375 x 1,125 x ,065
7		832-10408		3	NUT M8
8		392930A1		1	GRAB RAIL Grab Handle
9		87310177		2	BOLT M10 x 25; 8.8, Round Head Square Neck, Stainless Steel; Replaces 811-10025 Non-Stainless Steel Screw Used On Some Models
10		495-81267		2	WASHER ,469 x 1,5
11		832-10410		2	NUT M10
12		385506A1		1	STRIP, PROTECTION 127 mm; Foam; Adhesive Back
13		367712A3		1	COVER Harness
14		F64519		5	SCREW No. 10 x 3/4; For Service, Order 265-16512, F64315
15		357099A1		1	COVER Left-Hand
16		357100A1		1	COVER Right-Hand
17		87310098		4	BOLT Flange, M6 x 20, Stainless Steel; Replaces 555-2 Non-Stainless Steel Screw Used On Some Models
18		833-40406		4	NUT Spring, M6
20		1302758C1		2	PLUG 3 in

http://www.minnparbackhoeparts.com/

CANOPY, ROPS - FRAME, COVERS, MIRROR, VISOR

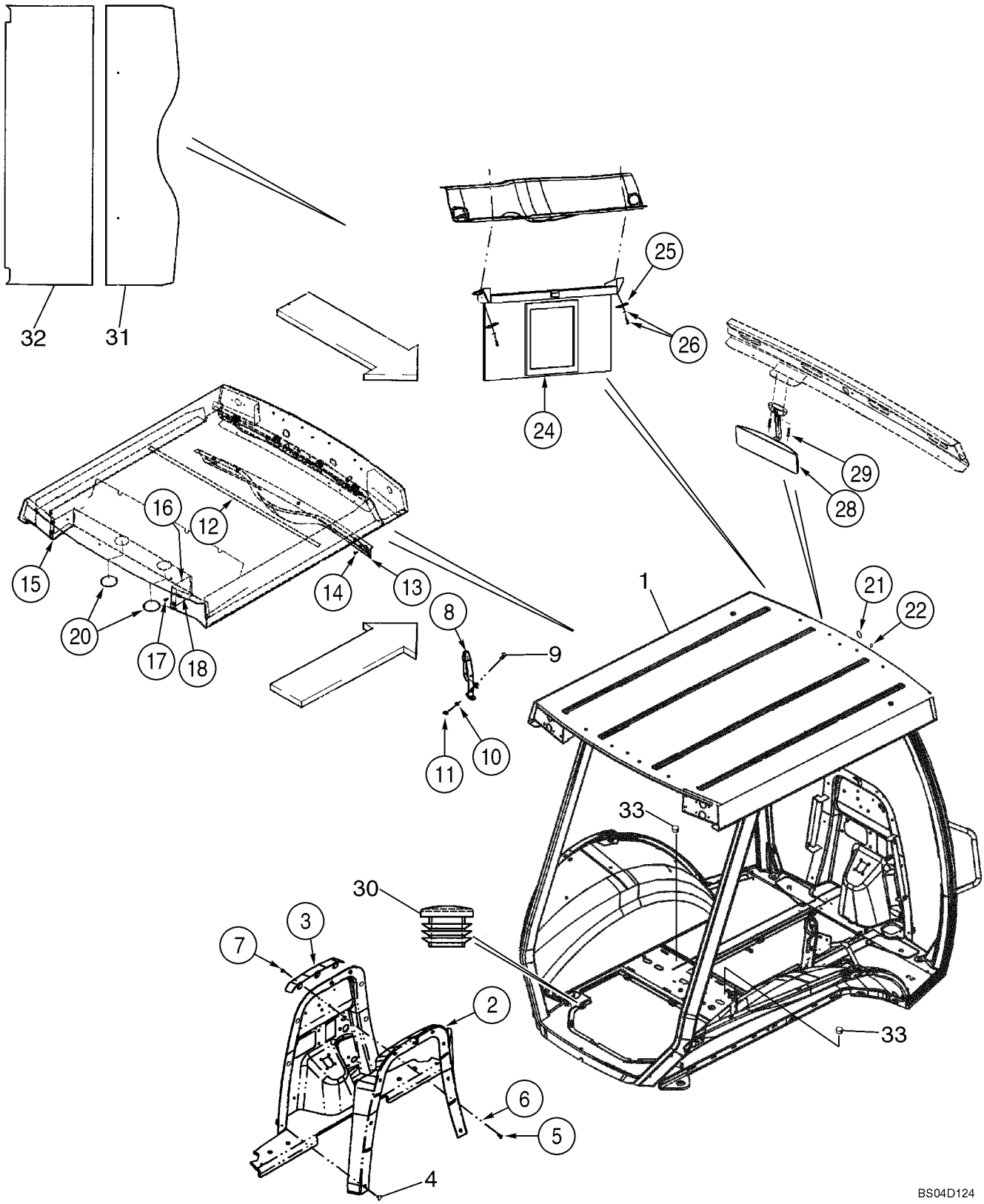

http://www.minnparbackhoeparts.com/

CANOPY, ROPS - FRAME, COVERS, MIRROR, VISOR

REF	FN	PART NUMBER	YR/SN	QTY	DESCRIPTION
		353-410		1	PLUG Dome, 7/8 Black Nylon
21		411549A1		1	PLUG 1 in; Windshield Frame
22		353-421		2	PLUG 3/16; Upper Windshield Frame
24		364180A1		1	VISOR, SUN
25		409618A1		2	PLATE 1/4 in Mounting Hole
26		396516A1		2	SCREW, POINTED No 10 x 1 st; With Washer; Phillips
28		87406924		1	MIRROR, REAR-VIEW
29		286-56520		2	SCREW No. 10 x 1-1/4
30		382298A1		2	PLUG 7/8 in
31		431583A1		1	PANEL Foam; Roof Front
32		431584A1		1	PANEL Foam: Roof Rear
33		87301515		2	PLASTIC PLUG Flat Top, Black Glossy, 1-3/16 in Hole Size; Brake Bleeder

http://www.minnparbackhoeparts.com/

09-68		p1	01/04

CANOPY, ROPS - GLASS

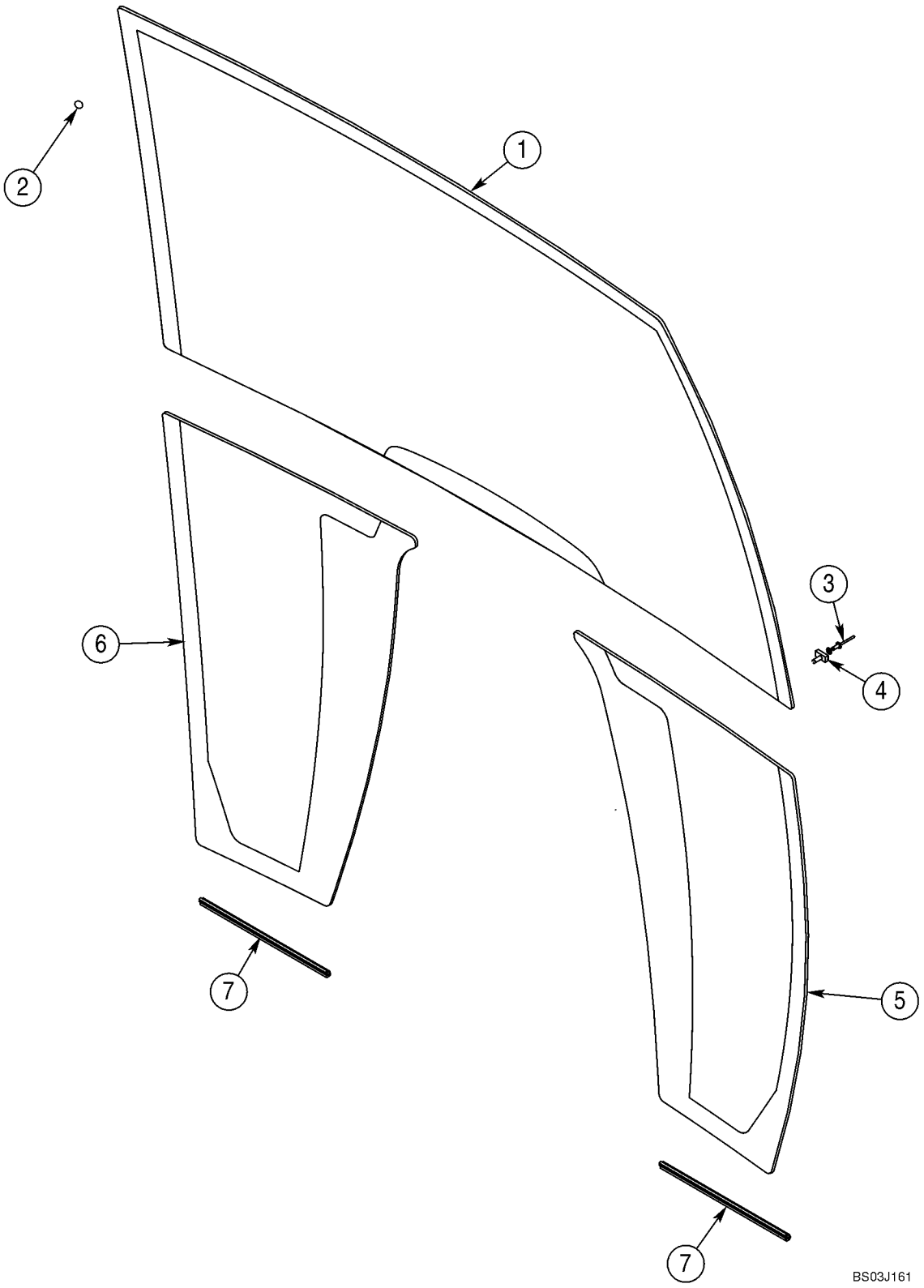

http://www.minnparbackhoeparts.com/

CANOPY, ROPS - GLASS

REF	FN	PART NUMBER	YR/SN	QTY	DESCRIPTION
1		448607A1		1	WINDSHIELD
2		391827A1		28	SPACER
3		151-516		2	RIVET
4		279482A1		2	CLAMP
5		448609A1		1	WINDSHIELD Lower; Right-Hand
6		448608A1		1	WINDSHIELD Lower; Left-Hand
7		395793A1		2	STRIP, PROTECTION Lower Glass Trim

http://www.minnparbackhoeparts.com/

09-69		p1	05/05

CANOPY, ROPS - WIPER, FRONT AND WINDSHIELD WASHER

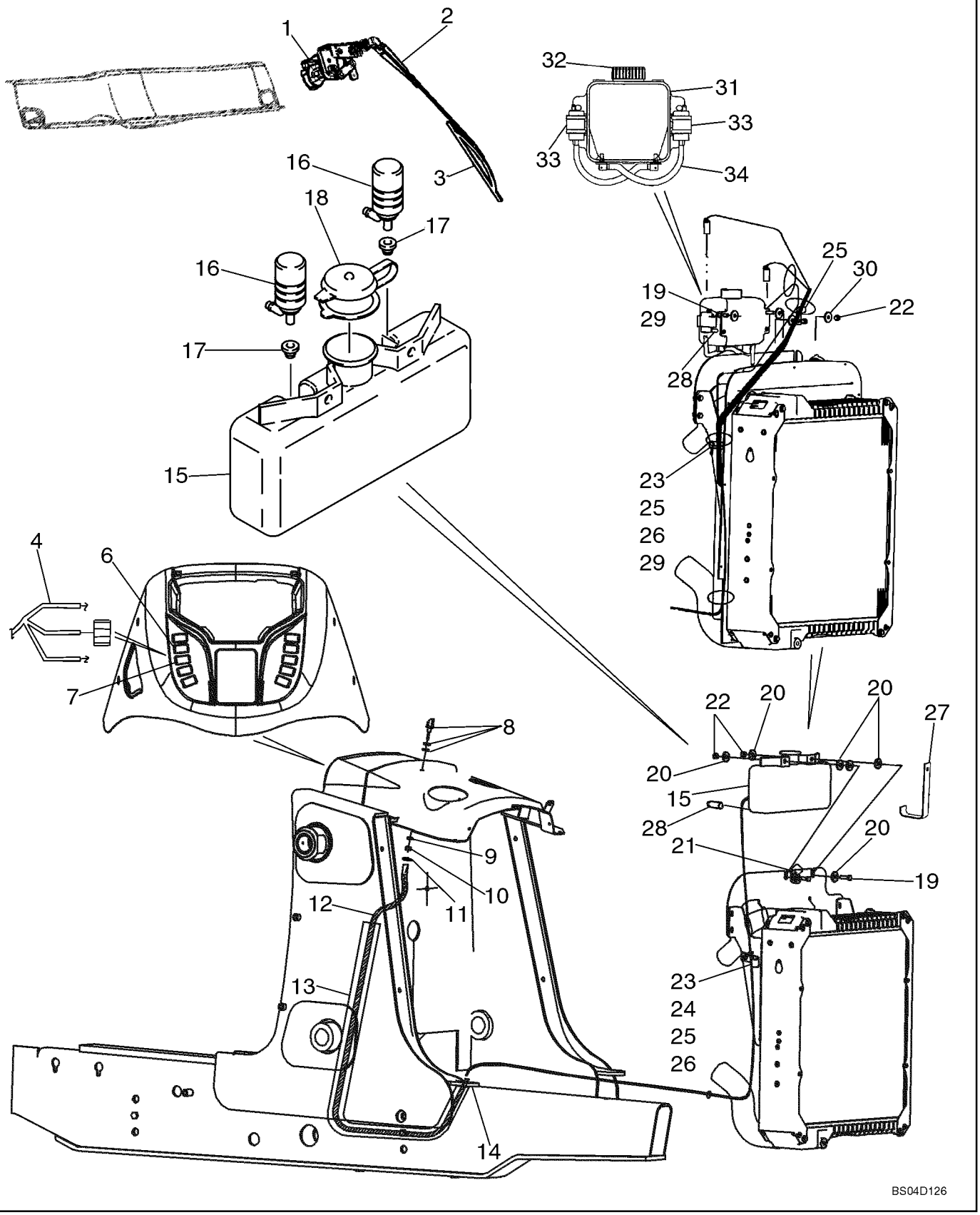

http://www.minnparbackhoeparts.com/

CANOPY, ROPS - WIPER, FRONT AND WINDSHIELD WASHER

REF	FN	PART NUMBER	YR/SN	QTY	DESCRIPTION
1		450037A1		1	WIPER MOTOR 12V
		814-6050		2	BOLT M6 x 50; Wiper Motor Mounting
		892-11006		2	WASHER, LOCK M6
2		D128745		1	WIPER ARM
3		414426A1		1	BLADE, WIPER 600 mm
		404617A1		1	HARNESS Front Lamps and Wiper
4		87433546		1	HARNESS, WIRE Front Console Options; Includes (1) L71879 Diode
5		87436675		1	HARNESS, WIRE Chassis Options; Includes (4) L71879 Diodes
6		386785A1		1	SWITCH Front Wiper
7		386787A1		1	SWITCH Windshield Washer
8		284154A1		1	NOZZLE INJECTION Includes A Steel and Rubber Washer Which Are Not Serviced Separately
9		492-11038		1	WASHER, LOCK 3/8"
10		425-106		1	NUT 3/8
11		87444176		1	CLIP, HOSE
12		87428316		1	HOSE (METRES) 3150 mm (124-1/64 in); Cut From 1968141CX
13		386718A3		1	GUARD 1630 mm (64-3/16 in); Cut From 397155A2
14		L18337		6	STRAP 15 in
		E46560		1	RESERVOIR Windshield Washer; Incl. Ref 15 - 18; If Used
15		NSS		1	NOT SERVICED SEPARATELY Reservoir
16		E47238		2	PUMP 12 Volt
17		E47239		2	SEAL Pump to Reservoir
18		E47240		1	PLUG Cap
19		614-8030		2	BOLT M8 x 30
20		496-41041		7	WASHER 13/32 x 1-1/8 x 1/8
21		D147383		1	CLIP J-Clamp, 5/8
22		832-10408		2	NUT M8
23		614-8016		1	SCREW M8 x 16
24		895-11008		1	WASHER Flat, 8 mm
25		D147383		1	CLIP J-Clamp, 5/8
26		829-1408		1	NUT M8
27		87442924		1	BRACE Used With E46560 Reservoir; If Used
28		87441758		1	CAP, WASHER PLUG, Unused Pump Port

http://www.minnparbackhoeparts.com/

09-69		p2	05/05

CANOPY, ROPS - WIPER, FRONT AND WINDSHIELD WASHER

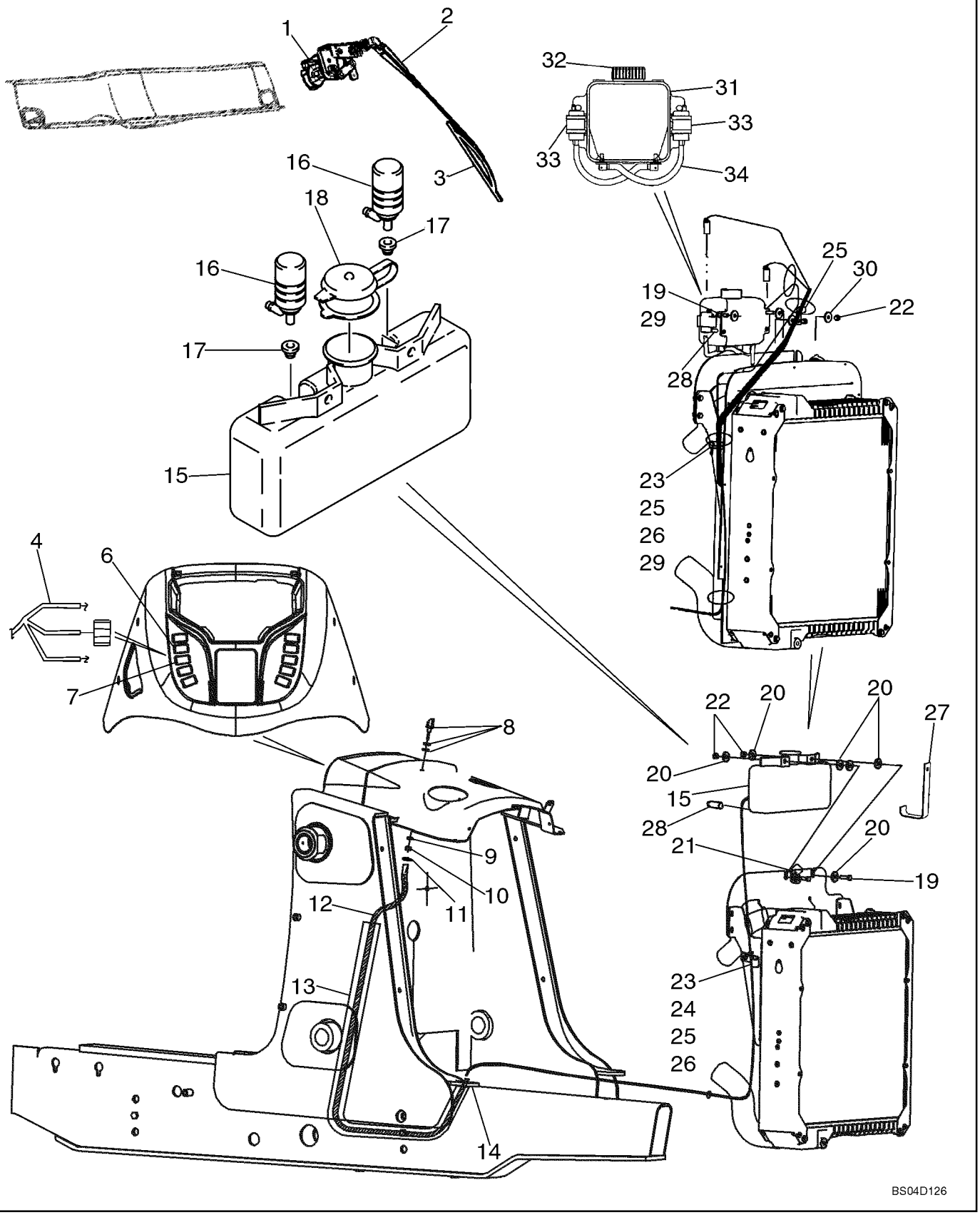

http://www.minnparbackhoeparts.com/

CANOPY, ROPS - WIPER, FRONT AND WINDSHIELD WASHER

REF	FN	PART NUMBER	YR/SN	QTY	DESCRIPTION
29		896-11008		3	WASHER 9 x 17 x 2
30		496-41041		4	WASHER 13/32 x 1-1/8 x 1/8
		87448685		1	WASHER, WINDSHIELD RESERVOIR; Incl. Ref 31 - 35; If Used
31		87449514		1	RESERVOIR, WINDSH. WASH 20 Quart
32		86507190		1	COVER, CAP
33		86507198		2	PUMP, SMALL Component Parts Not Serviced Separately
34		87449517		1	HOSE (METRES) 203 mm (8 in)
35		L18337		1	STRAP Not Illustrated

http://www.minnparbackhoeparts.com/

MIRROR, REAR VIEW - MOUNTING, CAB MODELS

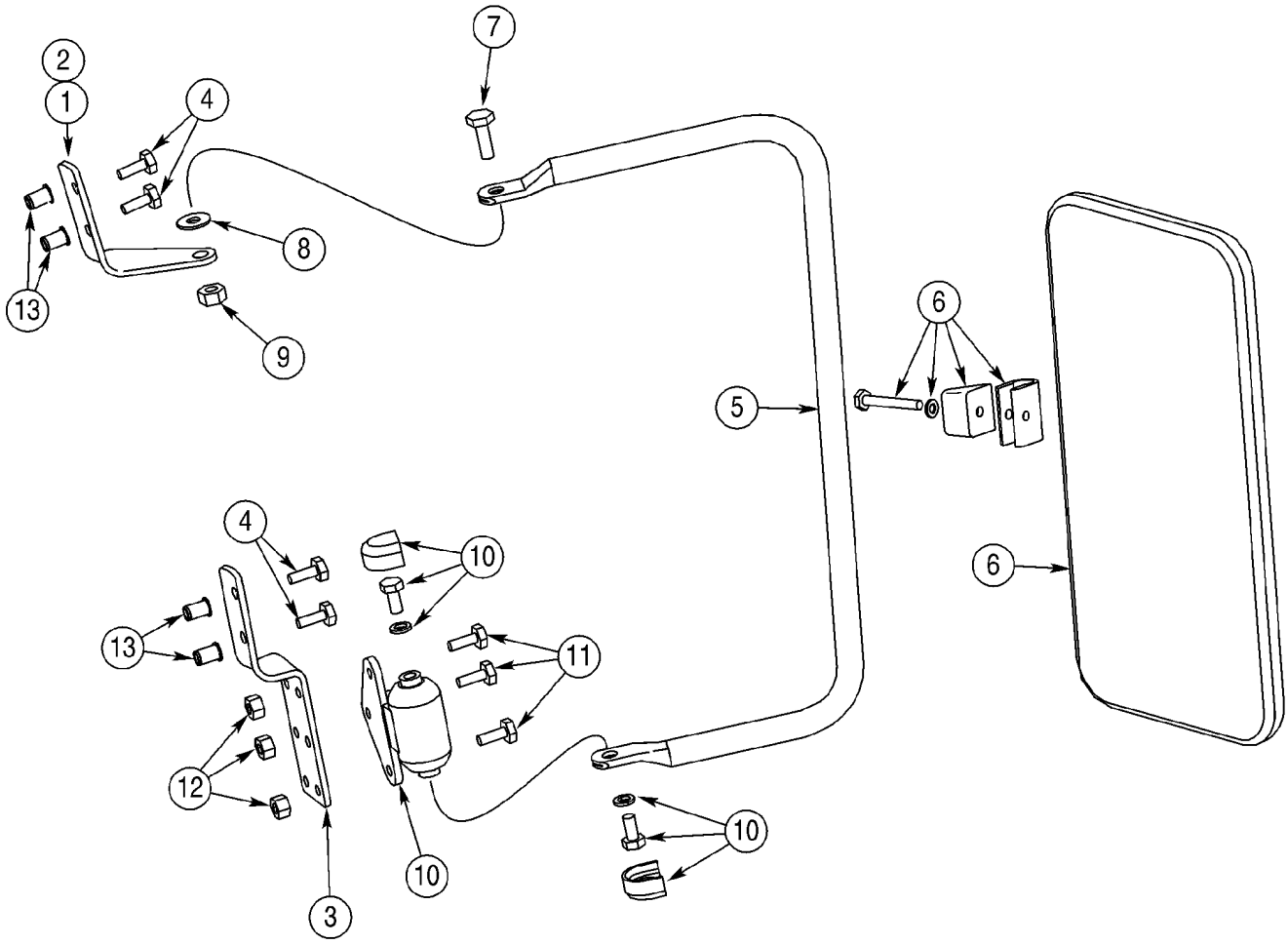

http://www.minnparbackhoeparts.com/

MIRROR, REAR VIEW - MOUNTING, CAB MODELS

REF	FN	PART NUMBER	YR/SN	QTY	DESCRIPTION
		397974A1		1	KIT Outside Mirror; Incl. Ref 1 - 14 and Instructions
1		402933A1		1	BRACKET Upper; Right-Hand
2		402934A1		1	BRACKET Upper; Left-Hand; Not Illustrated
3		402936A1		2	BRACKET Lower
4		413-412		8	BOLT 1/4 x 3/4
5		402935A1		2	TUBE, SUPPORT
6		R54682		2	MIRROR Exterior
7		413-516		2	BOLT 5/16 x 1
8		A167037		2	WASHER
9		231-4115		2	NUT, LOCK 5/16
10		D142144		2	KNUCKLE, STEERING Includes Hardware
11		413-412		6	BOLT 1/4 x 3/4
12		231-1444		6	NUT, LOCK 1/4
13		255447A1		10	RIVET Threaded Insert; Cab Front ROPS Post
14		NSS		1	NOT SERVICED SEPARATELY Tool, Insert Nut; Not Illustrated

http://www.minnparbackhoeparts.com/

SLOW MOVING VEHICLE EMBLEM

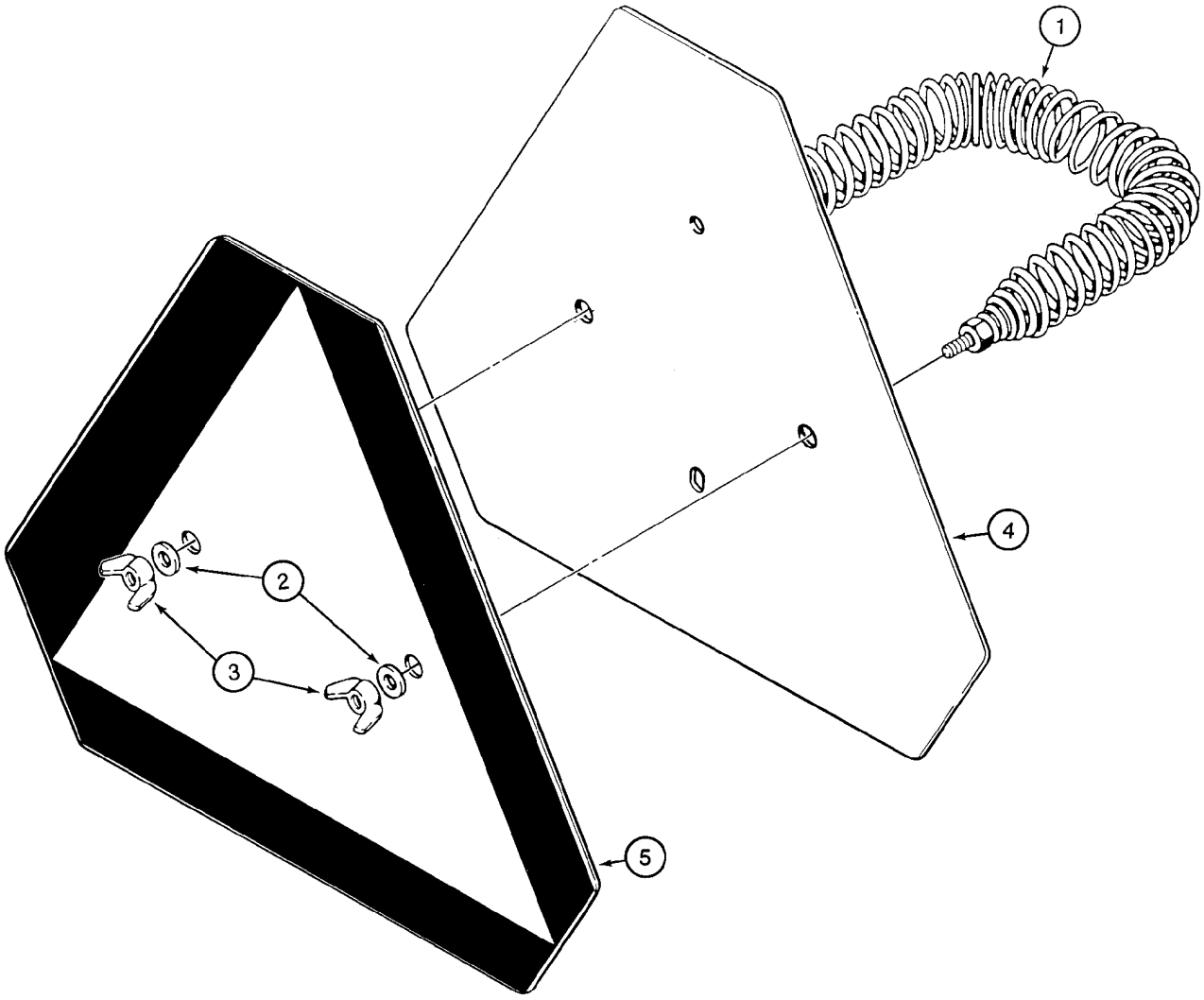

B9409034

http://www.minnparbackhoeparts.com/

SLOW MOVING VEHICLE EMBLEM

REF	FN	PART NUMBER	YR/SN	QTY	DESCRIPTION
1		D52564		1	SPRING
2		495-11028		2	WASHER 9/32 x 5/8 x 1/16
3		126177		2	NUT, WING 1/4
4		D123347		1	SIGN, WARNING Incl. Ref 5
5		321-4311		1	DECAL Slow Moving Vehicle

http://www.minnparbackhoeparts.com/

DECALS



1

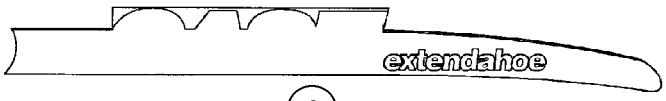

9



1A



1B

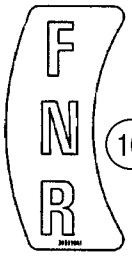

10



2 3



10A

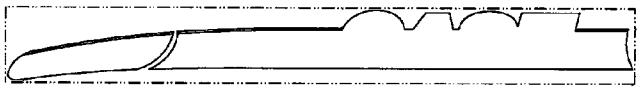

4

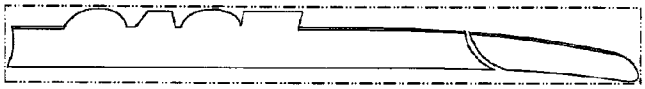

5

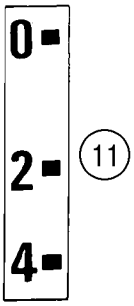

11

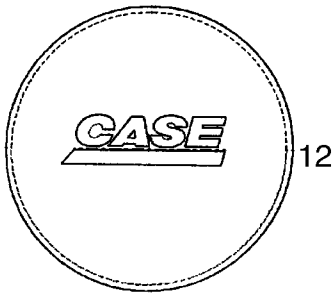

12



6



13



14



7



8

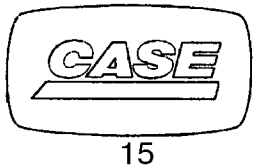

15

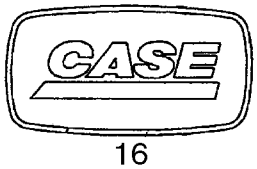

16

BS03K270

http://www.minnparbackhoeparts.com/

DECALS

REF	FN	PART NUMBER	YR/SN	QTY	DESCRIPTION
1		401461A1		2	DECAL 580 Super M Model Designation
1A		87438735		2	DECAL 580 Super M + Model Designation
1B		87436192		2	DECAL Series 2
2		401457A1		2	DECAL 525 mm (20-11/16 in); Case Logo; Loader Arm
3		401458A1		4	DECAL 655 mm (25-13/16 in); Case Logo; Backhoe Dipper
4		401459A2		1	DECAL Case; Loader Arm Pin Stripe; Left-Hand Stripe
5		401460A2		1	DECAL Case; Loader Arm Pin Stripe; Right-Hand Stripe
6		407009A2		1	DECAL Case; Standard Dipper; Left-Hand Stripe
7		407010A2		1	DECAL Case; Standard Dipper; Right-Hand Stripe
8		373698A2		1	DECAL Case; Extendahoe Dipper; Left-Hand Stripe
9		373699A2		1	DECAL Case; Extendahoe Dipper; Right-Hand Stripe
10		395910A2		1	DECAL FNR (Forward/Neutral/Reverse); Shuttle Shift Lever Control Pattern
10A		373696A1		2	DECAL Powershift
11		321-1708		1	DECAL 0-2-4; Clam Bucket Opening Indicator
12		87435569		1	EMBLEM Insert, Case, Steering Wheel
13		186989A1		1	DECAL EMBLEM, Case
14		131-431		2	NUT 1/4
15		87415931		2	DECAL Case, 37 x 70 mm; Located on Engine Filters
16		87429186		1	EMBLEM Case, 37 x 70 mm; Located on Engine

http://www.minnparbackhoeparts.com/

DECALS

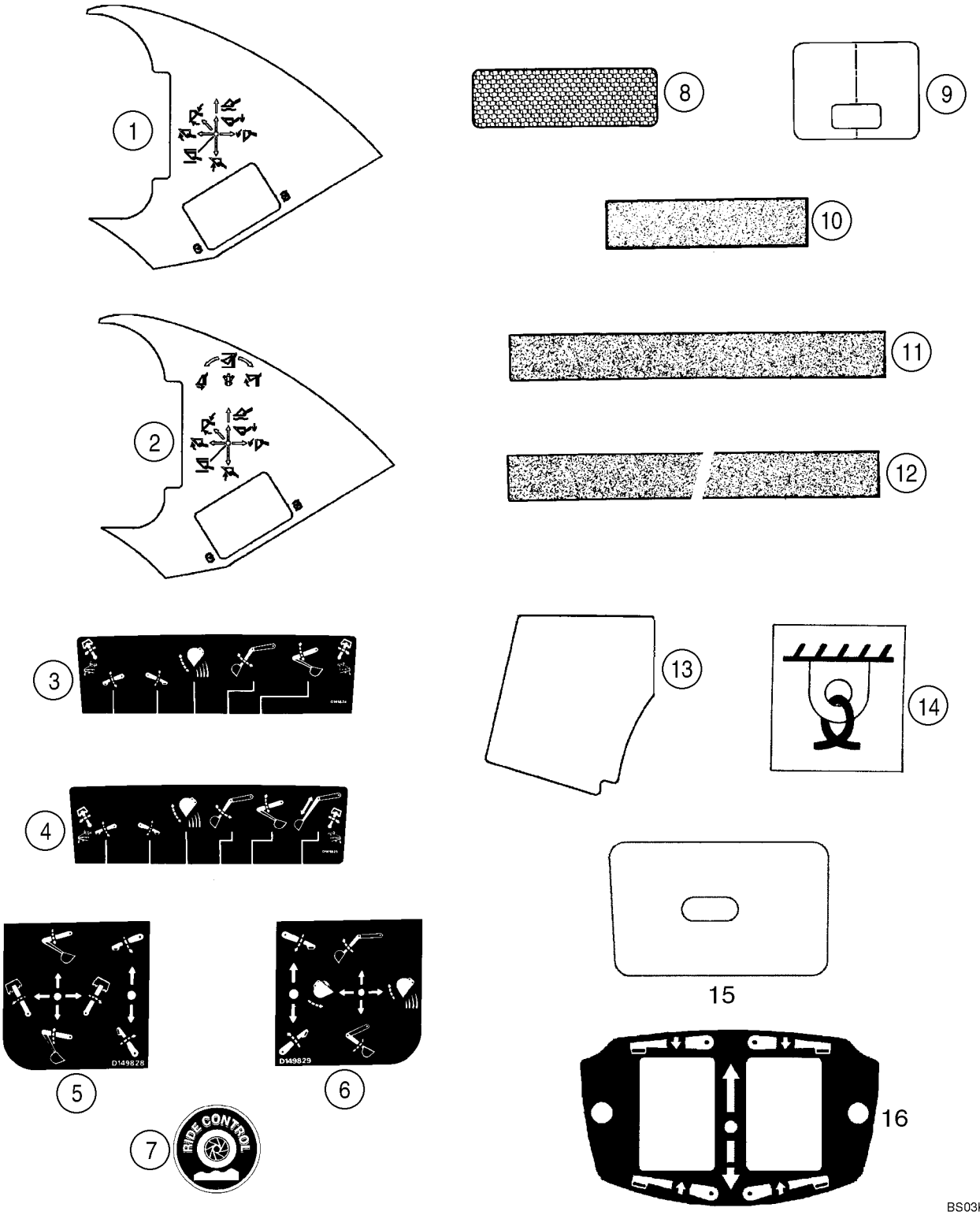

http://www.minnparbackhoeparts.com/

DECALS

REF	FN	PART NUMBER	YR/SN	QTY	DESCRIPTION
1		384930A2		1	DECAL Two Function Loader Control
2		384931A2		1	DECAL Three Function Loader Control
3		D149824		1	DECAL Upper; Standard Backhoe Control Pattern
4		D149825		1	DECAL Upper; Extendahoe Control Pattern; With Foot Swing
5		D149828		1	DECAL Upper; Standard Backhoe Control Pattern; With Hand Swing; Left-Hand Side Of Console
6		D149829		1	DECAL Upper; Standard Backhoe Control Pattern; With Hand Swing; Right-Hand Side Of Console
7		304083A1		2	DECAL Ride Control
8		449842A1		2	DECAL 2 x 6-5/16 in; Red, Reflector
9		192450A1		1	DECAL Clear Vinyl; Hood
10		D55216		2-11	PAD 2 x 9 in; Anti-Skid
11		D80270		3-4	STRIP 635 mm (25 in); Anti-Skid
12		307348A1		2	STRIP 700 mm (27-9/16 in); Anti-Skid; 40 gallon fuel tank
13		367848A2		1	PAD Anti-Skid; Canopy Models
14		139728A1		4	DECAL Tie Down
15		406723A1		1	DECAL Poly Film; Lockup Cover; Canopy Models
16		87423812		1	DECAL Stabilizer Switch; Models With Pilot Controls

http://www.minnparbackhoeparts.com/

DECALS



1

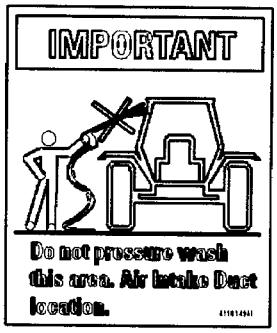

2

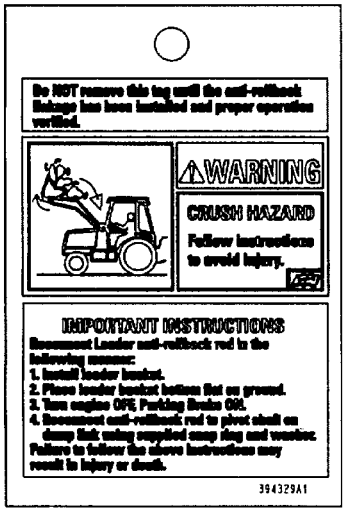

3

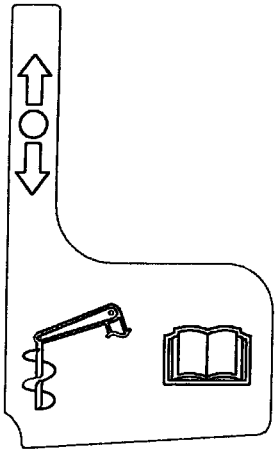

4

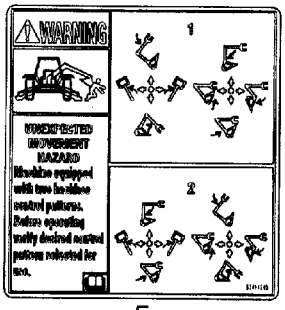

5

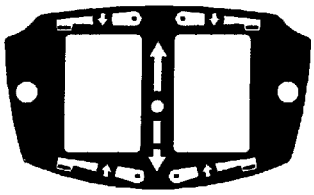

6

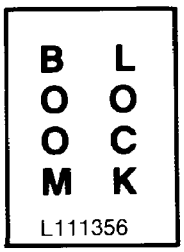

7

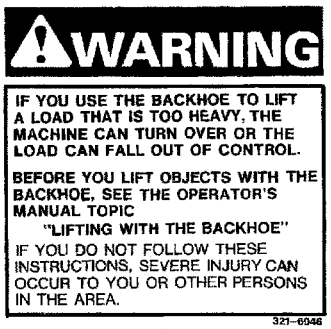

8

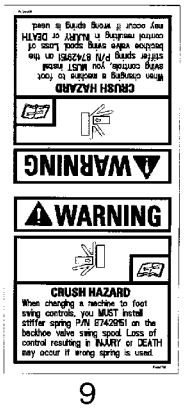

9

BS04C201

http://www.minnparbackhoeparts.com/

DECALS

REF	FN	PART NUMBER	YR/SN	QTY	DESCRIPTION
1		116534A1		1	KIT Decal; Seat Weight Adjustment; Included In Seat Assy
2		411049A1		1	DECAL Important; Do Not Pressure Wash This Area
3		394329A1		1	TAG Warning; Anti-Rollback Hazard
4		87430677		1	DECAL Auxiliary Hydraulics
5		87414205		1	DECAL Warning, Unexpected Movement; If Used
5		87305413		1	DECAL Warning, Unexpected Movement; Pattern Selecting; With Backhoe/Excavator Black Silhouette on Decal; If Used; Not Illustrated
6		87423812		1	DECAL Stabilizer Control Switch
7		L111356		1	DECAL Boom Lock; Included In 399221A1 Backhoe Boom Lock Kit
8		321-6046		2	DECAL Warning, If You Use The Backhoe To Lift A Load That Is Too Heavy; Included With 189957A1 Boom Lock Valve Used In 399221A1 Backhoe Boom Lock Kit
9		87444776		1	DECAL Warning, Crush Hazard; When Changing A Machine to Foot Swing Controls; English
9		87307893		1	DECAL Warning, Crush Hazard; When Changing A Machine to Foot Swing Controls; Latin American spanish
9		87307896		1	DECAL Warning, Crush Hazard; When Changing A Machine to Foot Swing Controls; Canadian French

http://www.minnparbackhoeparts.com/

DECALS - ENGLISH

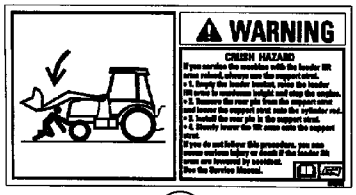

1

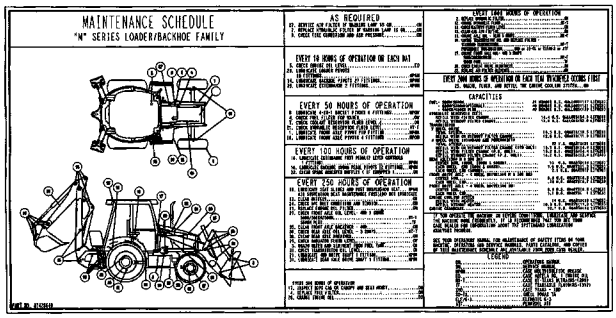

2



3

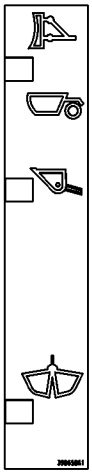

5



4

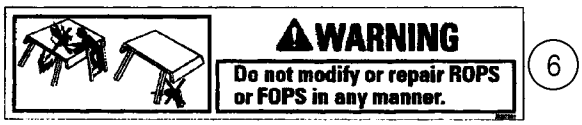

6

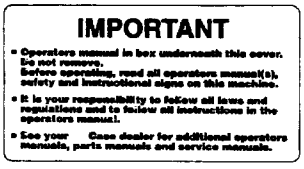

7

FUSES			87423410
SPARE	----	----	----
SPARE	POWER OUTLET 30A	----	PILOT CONTROLS RH AUX (OPT.) 15AMP
FRONT WORK LIGHTS 20A	POWER OUTLET 30A	AIR SUSP. SEAT-AIR COMP. (OPT) 20A	RETURN TO DIG 10A
REAR WORK LIGHTS 20A	SPARE	SPARE	DRIVING LIGHTS 15A
FUEL SHUTOFF 10A	BLOWER 25A	DOME LIGHT 10A	ROTATING BEACON (OPT) 10A
INSTRUMENTS ALARM SYS. 10A	SIGNAL LIGHTS 15A	HORN 10A	4WD (OPT) 10A
STARTING TRANSMISSION CONTROL 10A	RADIO, RIDE CONTROL, HAND AUX HYD'S 15A	RADIO (BATT) (OPT) 10A	WIPERS 15A

8

RELAYS			87423409
POWER RELAY #1	POWER RELAY #4	FLASHER RELAY	STARTER RELAY
POWER RELAY #2	LDR LVR DIFF LK RELAY	SHUTTLE INTLK TIMING RELAY	NEUTRAL RELAY
POWER RELAY #3	CLUTCH RELAY	SHUTTLE INTLK RELAY	FORWARD RELAY
----	----	----	REVERSE RELAY
----	----	AC RELAY (OPTION)	----

9

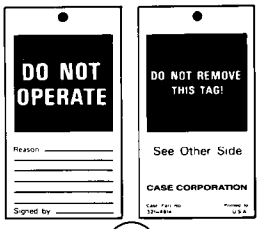

11

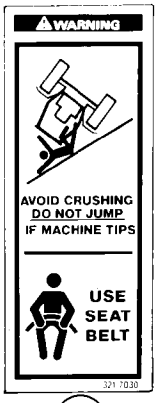

10



12



13

BS03K274

http://www.minnparbackhoeparts.com/

DECALS - ENGLISH

REF	FN	PART NUMBER	YR/SN	QTY	DESCRIPTION
1		384264A1		1	DECAL Warning; Crush Hazard; Loader Arm Support Strut
2		87308996		1	DECAL Maintenance Schedule; Supplied by Parts and Components; Replaces 87428640, 87445785
3		8603092		1	DECAL Warning; Explosion Hazard, Do Not Use Ether
4		86992976		1	DECAL Danger; Crush Hazard
5		398658A1		1	DECAL Clam Bucket Position
6		383972A1		1	DECAL Warning; Do Not Modify or Repair ROPS or FOPS In Any Manner
7		144193A3		1	DECAL Important; Operator's Manual In Box Underneath This Cover; Glove Box Lid
8		87423410		1	DECAL Fuse Location
9		87423409		1	DECAL Relay
10		321-7030		2	DECAL Warning; Avoid Crushing; Do Not Jump / Use Seat Belt
11		321-4614		1	DECAL TAG, Do Not Operate
12		86992975		2	DECAL Warning; No Step/Not An Exit; Canopy
13		392374A1		1	DECAL Warning/Danger; Read the Operator's Manual

http://www.minnparbackhoeparts.com/

DECALS - LATIN AMERICAN SPANISH

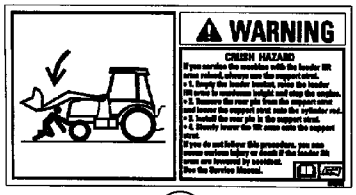

1

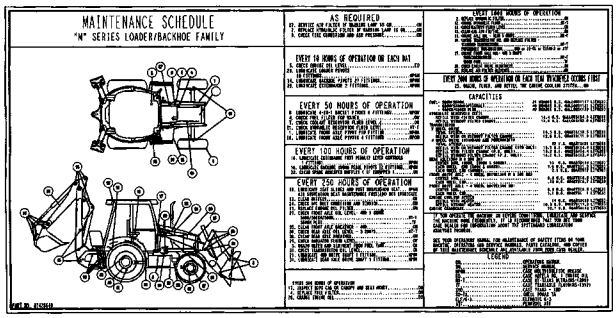

2

FUSES			87423410
SPARE	----	----	----
SPARE	POWER OUTLET 30A	----	PILOT CONTROLS BH AUX (OPT.) 15AMP
FRONT WORK LIGHTS 20A	POWER OUTLET 30A	AIR SUSP. SEAT-AIR COMP. (OPT) 20A	RETURN TO DIG 10A
REAR WORK LIGHTS 20A	SPARE	SPARE	DRIVING LIGHTS 15A
FUEL SHUTOFF 10A	BLOWER 25A	DOME LIGHT 10A	ROTATING BEACON (OPT) 10A
INSTRUMENTS ALARM SYS. 10A	SIGNAL LIGHTS 15A	HORN 10A	4WD (OPT) 10A
STARTING TRANSMISSION CONTROL 10A	RADIO, RIDE CONTROL, HAND AUX HYD'S 15A	RADIO (BATT) (OPT) 10A	WIPERS 15A

8

RELAYS			87423409
POWER RELAY #1	POWER RELAY #4	FLASHER RELAY	STARTER RELAY
POWER RELAY #2	LDR LVR DIFF LK RELAY	SHUTTLE INTLK TIMING RELAY	NEUTRAL RELAY
POWER RELAY #3	CLUTCH RELAY	SHUTTLE INTLK RELAY	FORWARD RELAY
----	----	----	REVERSE RELAY
----	----	AC RELAY (OPTION)	----

9



3

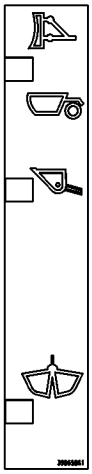

5

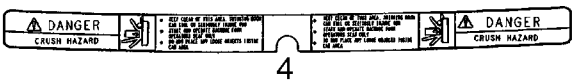

4

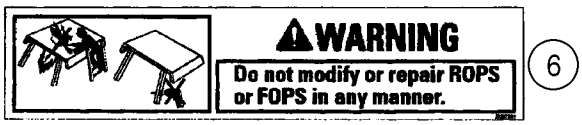

6

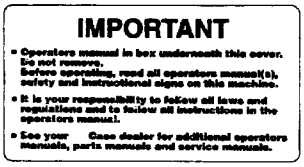

7

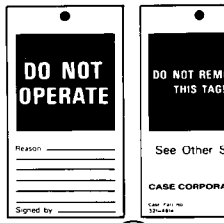

11

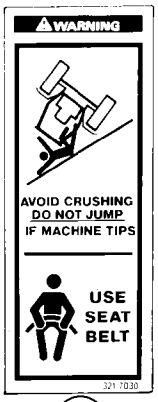

10



12

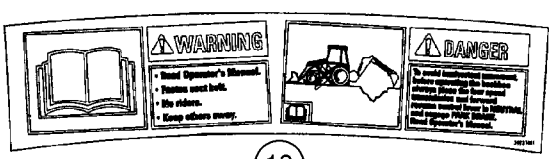

13

BS03K274

http://www.minnparbackhoeparts.com/

DECALS - LATIN AMERICAN SPANISH

REF	FN	PART NUMBER	YR/SN	QTY	DESCRIPTION
		87307893		1	DECAL Warning, Crush Hazard; When Changing A Machine to Foot Swing Controls; For Illustration See ref 9 on Figure 09-74
1		398576A1		1	DECAL Warning; Crush Hazard; Loader Arm Support Strut
2		87308998		1	DECAL Maintenance Schedule; Supplied by Parts and Components; Replaces 87430921, 87446006
3		8603094		1	DECAL Warning; Explosion Hazard, Do Not Use Ether
4		86992981		1	DECAL Danger; Crush Hazard
5		398658A1		1	DECAL Clam Bucket Position
6		389729A1		1	DECAL Warning; Do Not Modify or Repair ROPS or FOPS In Any Manner
7		398662A1		1	DECAL Important; Operator's Manual In Box Underneath This Cover; Glove Box Lid
8		87431078		1	DECAL Fuse Location
9		87431081		1	DECAL Relay
10		398672A1		2	DECAL Warning; Avoid Crushing; Do Not Jump / Use Seat Belt
11		298521A1		1	TAG Do Not Operate
12		86992980		2	DECAL Warning; No Step/Not An Exit; Canopy
13		398598A1		1	DECAL Warning/Danger; Read the Operator's Manual
14		148093A1		1	DECAL DECAL, Important; Lubrication; Not Illustrated
15		148095A1		1	DECAL DECAL, Attention; Welding; Not Illustrated

http://www.minnparbackhoeparts.com/

DECALS - CANADIAN FRENCH

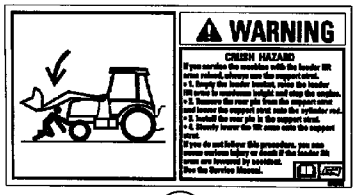

1

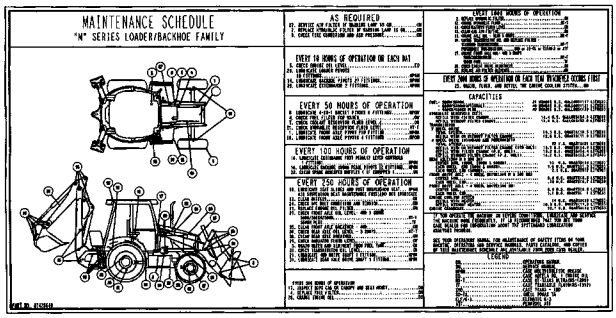

2

FUSES			87423410
SPARE	----	----	----
SPARE	POWER OUTLET 30A	----	PILOT CONTROLS RH AUX (OPT.) 15AMP
FRONT WORK LIGHTS 20A	POWER OUTLET 30A	AIR SUSP. SEAT-AIR COMP. (OPT) 20A	RETURN TO DIG 10A
REAR WORK LIGHTS 20A	SPARE	SPARE	DRIVING LIGHTS 15A
FUEL SHUTOFF 10A	BLOWER 25A	DOME LIGHT 10A	ROTATING BEACON (OPT) 10A
INSTRUMENTS ALARM SYS. 10A	SIGNAL LIGHTS 15A	HORN 10A	4WD (OPT) 10A
STARTING TRANSMISSION CONTROL 10A	RADIO, RIDE CONTROL, HAND AUX HYD'S 15A	RADIO (BATT) (OPT) 10A	WIPERS 15A

8

RELAYS			87423409
POWER RELAY #1	POWER RELAY #4	FLASHER RELAY	STARTER RELAY
POWER RELAY #2	LDR LVR DIFF LK RELAY	SHUTTLE INTLK TIMING RELAY	NEUTRAL RELAY
POWER RELAY #3	CLUTCH RELAY	SHUTTLE INTLK RELAY	FORWARD RELAY
----	----	----	REVERSE RELAY
----	----	AC RELAY (OPTION)	----

9



3

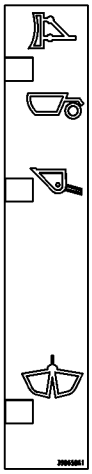

5

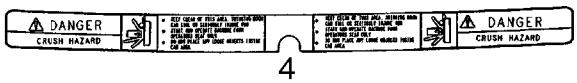

4

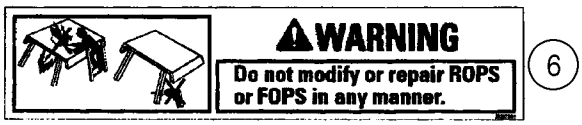

6

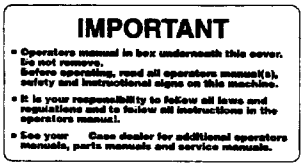

7

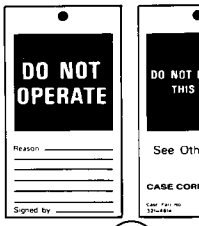

11

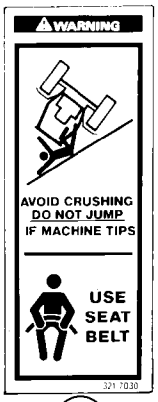

10



12

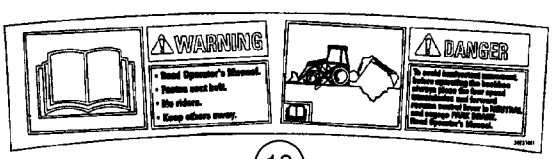

13

BS03K274

http://www.minnparbackhoeparts.com/

DECALS - CANADIAN FRENCH

REF	FN	PART NUMBER	YR/SN	QTY	DESCRIPTION
		87307896		1	DECAL Warning, Crush Hazard; When Changing A Machine to Foot Swing Controls; For Illustration See ref 9 On Figure 09-74
1		398577A1		1	DECAL Warning; Crush Hazard; Loader Arm Support Strut
2		87308997		1	DECAL Maintenance Schedule; Supplied by Parts and Components; Replaces 87430922, 874469009
3		8603093		1	DECAL Warning; Explosion Hazard, Do Not Use Ether
4		86992979		1	DECAL Danger; Crush Hazard
5		398658A1		1	DECAL Clam Bucket Position
6		389730A1		1	DECAL Warning; Do Not Modify or Repair ROPS or FOPS In Any Manner
7		398663A1		1	DECAL Important; Operator's Manual In Box Underneath This Cover; Glove Box Lid
8		87431077		1	DECAL Fuse Location
9		87431080		1	DECAL Relay
10		398673A1		2	DECAL Warning; Avoid Crushing; Do Not Jump / Use Seat Belt
11		321-5675		1	DECAL Do Not Operate
12		86992978		2	DECAL Warning; No Step/Not An Exit; Canopy
13		398599A1		1	DECAL Warning/Danger; Read the Operator's Manual

http://www.minnparbackhoeparts.com/

DECALS - ENGLISH

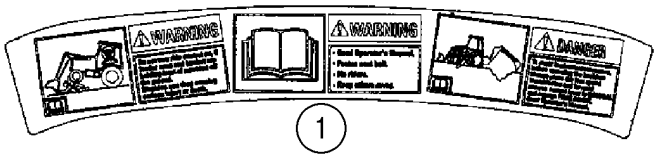

1



2

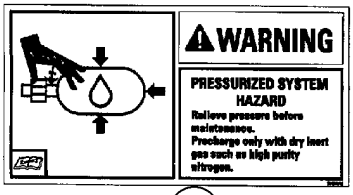

9



10



11

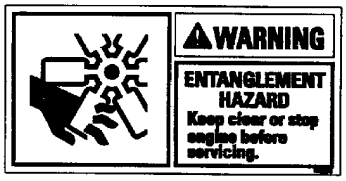

3

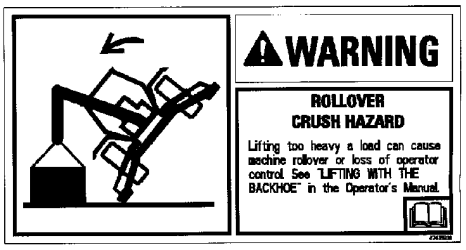

12

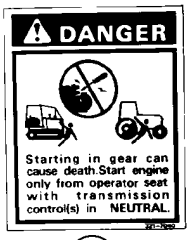

4



5

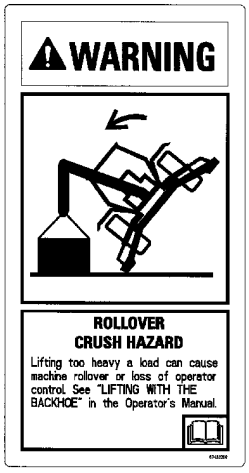

12A



14

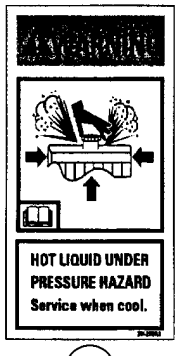

6

DIESEL FUEL

7

HYDRAULIC FLUID

8



13

HYDRAULIC FLUID

8A

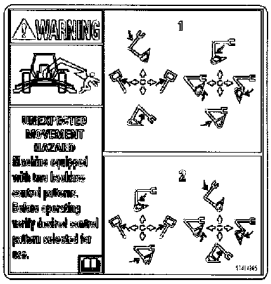

15

BS03K275

http://www.minnparbackhoeparts.com/

DECALS - ENGLISH

REF	FN	PART NUMBER	YR/SN	QTY	DESCRIPTION
1		392375A1		1	DECAL Warning/Warning/Danger; Front, With Ride Control; Do Not Turn Ride Control On/Read Operator's Manual/To Avoid Inadvertent Movement
2		384265A1		1	DECAL Warning; Crush Hazard; Keep Clear; Support Loader Lift Arms During Maintenance
3		384267A1		2	DECAL Warning; Entanglement Hazard, Fan; Keep Clear or Stop Engine Before Servicing
4		321-7040		1	DECAL Danger; Starting In Gear
5		384269A1		2	DECAL Danger; Jump Start
6		384258A1		1	DECAL Warning; Hot Liquid Under Pressure
7		321-230		1	DECAL Diesel Fuel
8		321-229		1	DECAL Hydraulic Fluid; Used In Production; For Service, Order 321-6376, English Decal Only
8A		321-6376		1	DECAL Hydraulic Fluid
9		384260A1		1	DECAL Warning; Ride Control Accumulator
10		D149826		1	DECAL Caution/Important; For All Models With Foot Swing Backhoe Controls and Standard Backhoe Models With Hand Swing
11		D149827		1	DECAL Caution/Important; Extendahoe Backhoe Models With Hand Swing
12		87435938		1	DECAL Warning; Rollover Crush Hazard; Lifting Too Heavy A Load; Models Without Pilot Controls
12A		87433209		1	DECAL Warning; Rollover Crush Hazard; Lifting Too Heavy A Load; Models With Pilot Controls
13		321-6774		1	DECAL Warning; Seat Spring
14		87423813		2	DECAL Warning; Unexpected Movement Hazard; Before Adjusting Windows
15		87414205		1	DECAL Pilot Control Pattern; If Used
15		87305413		1	DECAL Warning, Unexpected Movement; Pattern Selecting; With Backhoe/Excavator Black Silhouette on Decal; If Used; Not Illustrated

http://www.minnparbackhoeparts.com/

DECALS - LATIN AMERICAN SPANISH

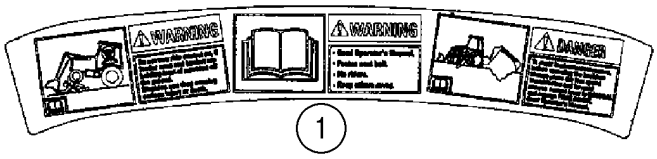

1



2

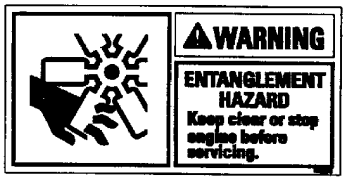

3

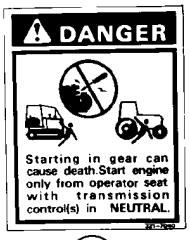

4



5

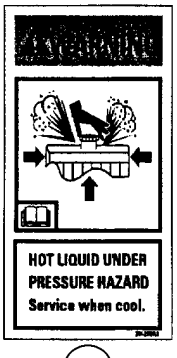

6

DIESEL FUEL

7

HYDRAULIC FLUID

8

HYDRAULIC FLUID

8A

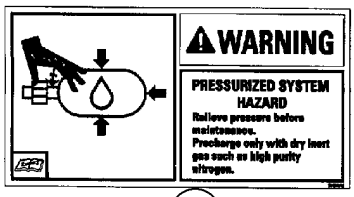

9



10



11

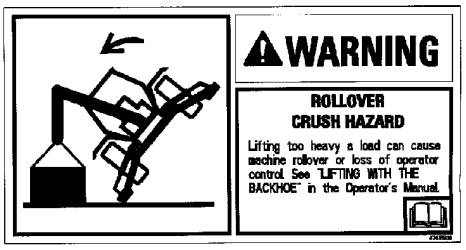

12

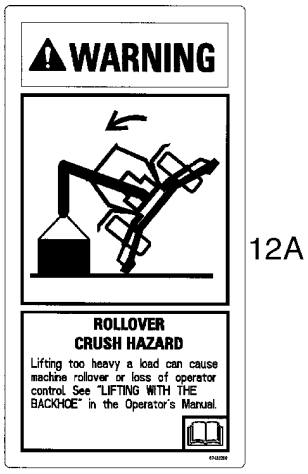

12A



14



13

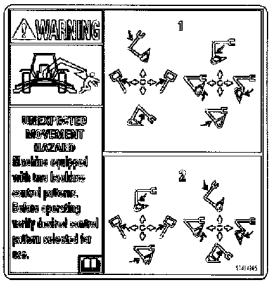

15

BS03K275

http://www.minnparbackhoeparts.com/

DECALS - LATIN AMERICAN SPANISH

REF	FN	PART NUMBER	YR/SN	QTY	DESCRIPTION
1		398600A1		1	DECAL Warning/Warning/Danger; Front, With Ride Control; Do Not Turn Ride Control On/Read Operator's Manual/To Avoid Inadvertent Movement
2		398578A1		1	DECAL Warning; Crush Hazard; Keep Clear; Support Loader Lift Arms During Maintenance
3		398580A1		2	DECAL Warning; Entanglement Hazard, Fan; Keep Clear or Stop Engine Before Servicing
4		398674A1		1	DECAL Danger; Starting In Gear
5		398582A1		2	DECAL Danger; Jump Start
6		398570A1		1	DECAL Warning; Hot Liquid Under Pressure
7		398667A1		1	DECAL Diesel Fuel
8		398665A1		1	DECAL Hydraulic Fluid
8A		321-6376		1	DECAL Hydraulic Fluid, English Decal Only
9		398572A1		1	DECAL Warning; Ride Control Accumulator
10		398677A1		1	DECAL Caution/Important; For All Models With Foot Swing Backhoe Controls and Standard Backhoe Models With Hand Swing
11		398669A1		1	DECAL Caution/Important; Extendahoe Backhoe Models With Hand Swing
12		87435939		1	DECAL Warning; Rollover Crush Hazard; Lifting Too Heavy A Load; Models Without Pilot Controls
12A		87434771		1	DECAL Warning; Rollover Crush Hazard; Lifting Too Heavy A Load; Models With Pilot Controls
13		398670A1		1	DECAL Warning; Seat Spring
14		87429163		2	DECAL Warning; Unexpected Movement Hazard; Before Adjusting Windows
15		87429165		1	DECAL Pilot Control Pattern; If Used
15		87336843		1	DECAL Warning, Unexpected Movement; Pattern Selecting; With Backhoe/Excavator Black Silhouette on Decal; If Used; Not Illustrated

http://www.minnparbackhoeparts.com/

DECALS - CANADIAN FRENCH

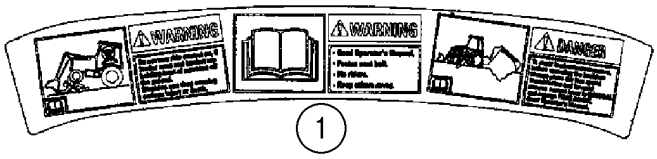

1



2

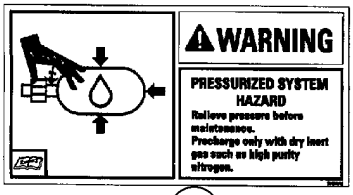

9



10



11

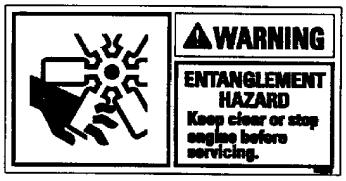

3

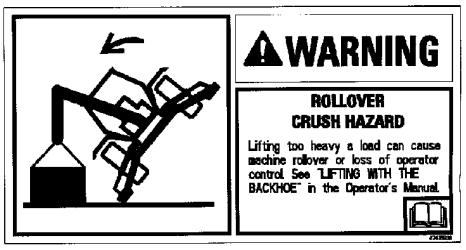

12

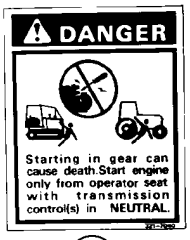

4



5

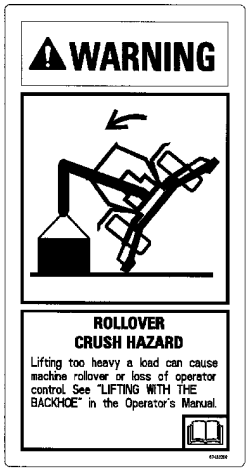

12A



14

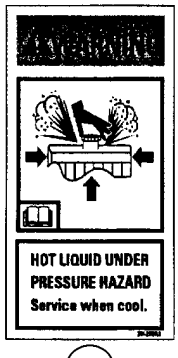

6

DIESEL FUEL

7

HYDRAULIC FLUID

8



13

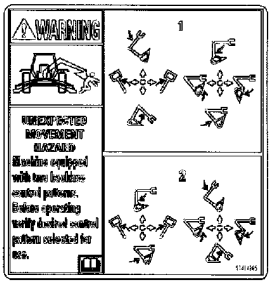

15

HYDRAULIC FLUID

8A

BS03K275

http://www.minnparbackhoeparts.com/

DECALS - CANADIAN FRENCH

REF	FN	PART NUMBER	YR/SN	QTY	DESCRIPTION
1		398601A1		1	DECAL Warning/Warning/Danger; Front, With Ride Control; Do Not Turn Ride Control On/Read Operator's Manual/To Avoid Inadvertent Movement
2		398579A1		1	DECAL Warning; Crush Hazard; Keep Clear; Support Loader Lift Arms During Maintenance
3		398581A1		2	DECAL Warning; Entanglement Hazard, Fan; Keep Clear or Stop Engine Before Servicing
4		398676A1		1	DECAL Danger; Starting In Gear
5		398583A1		2	DECAL Danger; Jump Start
6		398571A1		1	DECAL Warning; Hot Liquid Under Pressure
7		398668A1		1	DECAL Diesel Fuel
8		398666A1		1	DECAL Hydraulic Fluid
8A		321-6376		1	DECAL Hydraulic Fluid, English Decal Only
9		398573A1		1	DECAL Warning; Ride Control Accumulator
10		398656A1		1	DECAL Caution/Important; For All Models With Foot Swing Backhoe Controls and Standard Backhoe Models With Hand Swing
11		398654A1		1	DECAL Caution/Important; Extendahoe Backhoe Models With Hand Swing
12		87435940		1	DECAL Warning; Rollover Crush Hazard; Lifting Too Heavy A Load; Models Without Pilot Controls
12A		87434772		1	DECAL Warning; Rollover Crush Hazard; Lifting Too Heavy A Load; Models With Pilot Controls
13		398671A1		1	DECAL Warning; Seat Spring
14		87429164		2	DECAL Warning; Unexpected Movement Hazard; Before Adjusting Windows
15		87429166		1	DECAL Pilot Control Pattern; If Used
15		87336844		1	DECAL Warning, Unexpected Movement; Pattern Selecting; With Backhoe/Excavator Black Silhouette on Decal; If Used; Not Illustrated

http://www.minnparbackhoeparts.com/

Number	Figure	Sequence	Ref.	Number	Figure	Sequence	Ref.
{2853407}	02-30		6	106990A1	09-18		15
{2853410}	02-30			107071A1	06-46		17
{2853671}	02-12		5	107124A1	09-26		39
{2853960}	02-25		2		09-26		43
{376288A2}	09-08				09-27		22
{87307656}	04-21		5		09-27		33
{87346606}	09-45A		2		09-28		19
{87346607}	09-45A		3		09-36		8
{87346611}	09-45A		4	108088A1	09-01		11
{87346612}	09-45A		5		09-02		12
{87346615}	09-45A		6		09-02		21
{87346625}	09-45A		8	108335A1	08-13		33
{87346633}	09-45A		9	108336A1	08-13		34
{87346634}	09-45A		10	108366A1	04-18		4
{87442204}	09-56A			108864A1	09-18		1
{87454292}	09-45A			108923A1	09-18		9
100-11196	06-29		24	108924A1	09-18		8
	06-29		8	109268A1	09-04		4
	06-30		22	109511A1	04-17		9
	06-30		8	109879A1	09-38		3
	06-32		8		09-40		13
	06-33		8	110307A1	08-63		12
100-21315	08-66		13A	111522A1	09-04		5
100-39001	09-54		43	112370A3	08-66		14
	09-54A		43	112380A1	09-01		14
	09-56		20		09-02		29
	09-56A		20		09-18		21
100016	04-01		39	112382A1	09-02		25
100520A1	06-02		12	112486A1	06-07		10
100532A1	06-03		3		06-41		10
100533A1	05-06		11		06-42		10
	06-03		8	112509A1	05-06		5
100552A1	06-06		5		06-04		3
100553A1	06-06				06-04		3
100554A1	06-06			112517A1	06-22		4
100555A1	06-06		18	112884A1	09-49A		
100556A1	06-06		4	112946A1	09-06		3A
100557A1	06-06		22	113133A2	08-05		34
	06-15		8		08-63		1
	06-16		9		09-05		20
	06-40		1	113135A2	08-63		2
	06-46		7	113457A1	09-06		3
100559A1	06-06		6	113629A1	09-04		25
100561A1	06-06		13	114295A1	06-06		20
100562A1	06-06		19	114296A1	06-04		9
100696A1	09-04		3	114318A1	09-23		12A
100748A1	06-14		9		09-36		4
100753A1	06-22		17	114549A1	09-53		6
101479A1	08-13		40	114882A2	05-01		2
101531A1	04-18		9	114980A1	09-40		8
102-12125	08-32		16	116339A1	09-05		21
102-1387	05-03		4	116425A1	06-06		12
102-23150	08-32		14	116426A1	06-06		7
102-23206	08-33		5	116427A1	06-06		8
102761A1	09-01		12	116521A1	09-49		3
	09-02		23	116534A1	09-49		10
102765A1	09-18		19		09-74		1
103-11100	09-13		16	116538A2	09-49		12
103-11237	09-24		28	116545A1	09-49		9
103-1437	09-02		15	116547A1	09-48		10
103-1475	09-21		8		09-49		6
103-1518	03-03		7	116548A1	09-49		15
103-16175	09-22		4	116550A1	09-49		14
	09-22		8	116551A1	09-49		8
	09-22A		4	116552A1	09-49		13
	09-22A		8	116761A3	09-47		1
	09-24		33	116763A1	09-47		2
	09-26		23	116764A3	09-47		3
	09-26		27	116766A2	09-47		4
	09-26		33	116767A1	09-47		5
	09-26		36	117933A1	06-38		6
	09-26		5	118769A1	09-45		7
	09-27		14	118900A1	09-04		24
	09-27		40	118901A1	09-04		30
	09-27		50		09-05		3
103-16200	09-23		18	119171A1	09-47		6
103-3350	09-04		29	119211A1	09-45		11
103670A1	08-13		36	119241A1	06-37		1
	08-24		18	119243A1	05-09		4
104824A1	09-04		23	120303A1	05-02		25
104907A1	06-37		1		08-04		10
106989A1	09-18		13		08-05		8

http://www.minnparbackhoeparts.com/

Number	Figure	Sequence	Ref.	Number	Figure	Sequence	Ref.
120303A1	08-06		8	126844A1	04-10		10
	08-26		32		04-10		16
	08-27		14		04-10		20
	09-37		33	126918A1	09-20		2
121-145	07-03		20	127009A1	04-11		6
121412A1	04-07		2	127158A1	04-18		6
	04-10			128312A1	04-04		38
	04-18		16		04-08		3
121413A1	04-07		3		04-14		13
	04-20		1		04-15		3
	04-21		13		09-04		19
	08-25		27	128376A1	06-44		11
121414A1	04-07		4		06-45		11
	09-50			128483A1	09-64		16
121415A1	04-10				09-64		9
121416A1	04-07		5		09-65		2
121478A1	08-66		14A		09-65		7
121665A1	09-22		7	128484A1	09-64		3
	09-22A		7		09-65		13
121729A1	07-04		8	128485A1	09-64		4
121778A1	09-23		3		09-64		8
121856A1	09-37		55		09-65		14
121920A1	09-08		12		09-65		21
122081A1	09-65		9	128570A1	06-08		11
122259A1	05-06		10		06-43		9
122261A1	05-05		9	128818A1	09-04		11
122264A1	06-03		10	129-667	08-61		2
122265A1	05-06		9	129015A1	09-16		1
	06-03		9	129914A1	09-02		4
122268A1	06-02		13	130047A1	03-01		15
122270A1	05-05		5	130049A1	03-01		5
	06-02		7	130245A1	04-05		17
122284A2	09-24		10		07-06		32
	09-27		1	1302758C1	04-12		35
122535A1	08-66				09-67		20
122553A1	09-64		12	130674A1	09-49A		
	09-65		24	131-121	04-11		15
122554A1	09-65		17		09-02		33
122579A1	09-64		13	131-425	09-51		
122603A1	09-37		24	131-431	09-40		31
122974A1	09-25		1		09-72		14
	09-25A		1	131-435	09-49		
122993A1	09-24		40	131-619	04-12		17
122995A1	09-24		39		04-12		20
123097A1	04-04		32	131-861	04-11		7
	04-07		31		09-01		4
	06-12		42		09-11		15
123167A2	09-24		23		09-60		8
123168A2	09-24		26	131-869	09-42		21B
123318A1	09-24		29		09-42		4
123407A1	08-67		17	1312210C2	04-14		
123493A1	09-02		9		04-14		
123537A1	09-10		29		04-15		
123726A1	08-65		12		04-15		
123732A1	08-65		13	132212A1	08-10		17
123809A2	04-04		31		08-11		17
	04-07		30		08-12		16
	06-12		43		08-13		16
123815A1	09-02		2	132661A1	09-01		5
123969A1	09-49A		9	132842A1	09-27		54
123980A1	09-64		23	132844A1	09-27		53
124011A1	09-64		22	132862A1	09-51		6
124243A1	09-02		8	132864A1	09-51		
124462A1	08-66			132866A1	09-51		9
124463A1	08-66		22	132872A1	09-51		18
124568A2	08-66		3	132873A1	09-02		39
124690A1	08-09		15	132930A1	08-10		38
	08-09A		15		08-11		32
124721A1	09-03		14		08-12		24
1250594C1	09-64		10		08-13		24
	09-64		11	132931A1	03-03		2
	09-65		16		09-01		25
	09-65		23	132953A1	06-37		1
	09-65		8	133083A1	08-62		12
125113A1	09-18		12	1331087C1	09-63		14
	09-18		14	133421A1	09-51		17
125749A1	09-60		12	133422A1	09-51		15
126-116	06-12		12	133542A1	09-08A		12
126155A1	09-10		31	133604A1	08-12		26
126177	09-71		3		08-13		26
126844A1	04-07		17	133605A1	08-10		36
	04-07		21		08-11		30

http://www.minnparbackhoeparts.com/

Number	Figure	Sequence	Ref.	Number	Figure	Sequence	Ref.
133605A1	08-12		22	141232A2	09-34		1
	08-13		22	141233A1	09-34		3
133615A1	09-01		2		09-34		3
133617A1	09-02		18	141234A1	09-34		2
133715A1	04-10		11		09-34		2
133716A1	04-10		13	141473A1	09-06		
133989A1	09-02		13	141801A1	08-12		21
1340798C1	08-64		15	141806A1	08-12		20
1340969C2	08-14		22	141809A1	08-14		11
	08-70		1	141811A1	08-14		12
	09-27		25	142-103	09-54		47
1340970C1	08-70		2		09-54A		47
134167A1	09-23		20		09-56		23
1344025C1	09-50		16		09-56A		23
1344026C1	09-50		17	142122A1	08-10		35
1346189C1	08-07		2	142124A1	08-11		29
	08-64		1	142300A1	09-08		3
1346190C1	08-07		1	142301A1	09-08A		3
	08-64		1	142404A1	09-03		2
1346191C1	08-64		2	142524A1	09-04		12
1346192C1	08-64		2	142538A1	09-06		7
1346195C1	08-64		13		09-07		5
1348264C1	02-02		5	142815A1	08-10		31
134844A1	09-07		3	14302921	08-51		5
1349058C1	06-08		5		08-52		5
1349059C1	06-08		6		08-53		6
	06-43		5	14304021	08-51		1
1349265C1	06-46		24	143210A1	09-02		7
135-1233	09-28		25	143219A1	08-21		
135-51652	09-24		18	143439A1	08-10		12
	09-27		4		08-11		12
135161A1	08-62		13		08-12		11
135248A1	09-23		10		08-13		11
135249A1	09-23		9	14358921	08-52		1
135512A3	09-51		2	143786A1	09-51		7
136-54	04-18		14	144173A1	08-33		7
136261A1	09-16		11	144193A3	09-75		7
136263A1	09-16		8	144210A1	09-08A		
	09-17		2	144279A1	06-09		7
136267A1	09-16		5		06-47		7
136269A1	09-16		6	144454A1	06-02		
136270A2	09-16		40	144457A1	06-04		
136271A2	09-16		39	144458A1	06-04		5
136822A1	09-11		11	144459A1	06-04		7
136824A1	09-11		13	144460A1	06-08		
137219A1	04-20		3	144461A1	06-05		
137223A2	06-01		13	144462A1	06-05		1
137248A1	08-66		13	144463A1	06-05		5
137283A1	09-03		1	144465A1	06-05		4
137343A1	09-10		28		06-05		4
137344A1	09-10		27	144466A1	06-06		
138595A1	09-37		14	144477A1	08-23		14
139080A1	05-09		4		08-23		7
	05-09		4	144479A1	08-23		8
139180A1	09-05		12	144908A2	09-39		24
139195A1	09-05		14	148093A1	09-76		14
139235A1	09-05		13	148095A1	09-76		15
139363A1	09-40		9	151-516	09-52		7
139728A1	09-73		14		09-68		3
139808A2	08-09		13	1530028C1	06-15		2
	08-09A		13		06-16		3
	08-66		1	1537663C1	06-03		5
	09-23		11	1537664C1	06-03		6
139810A2	08-66		2	1542830C2	08-59		
139865A1	09-03		8	1542874C1	08-63		
140-103	09-60		11	1542875C1	08-62		
140-104	09-54		44		08-64		
	09-54A		44		08-70		
	09-56		21	1542876C1	08-65		
	09-56A		21		08-66		
140-108	09-15		29	1542877C1	08-65A		
140-119	04-10		15	1542879C1	08-67		
140943A1	06-08		7		08-68		
140944A1	06-08		7		08-69		
140945A1	06-08		7	1542914C1	08-68		4
140946A1	06-08		7	1542915C2	08-68		
140947A1	06-08		7	1542918C3	08-65A		4
140948A1	06-08		7	1542923C2	08-69		
140949A1	06-08		7	1543256C1	08-63		
140951A1	06-08		7	1543260C1	08-62		
140953A1	06-08		7	1543267C1	08-64		
140954A1	06-08		7		08-70		

http://www.minnparbackhoeparts.com/

Number	Figure	Sequence	Ref.
1543275C1	08-65		
1543289C2	08-65A		
15687475	08-54		9
	08-55		9
	08-56		9
	08-57		7
	08-58		9
168-71	04-18		7
170-104	09-02		3
17278781	02-12		7
175156A1	09-08		
175599A1	09-40		2
175959A1	06-41		11
	06-42		11
175961A1	06-41		19
	06-42		19
175964A2	06-44		9
175965A1	06-44		10
	06-45		10
175966A1	06-44		8
	06-45		8
175968A1	06-44		12
	06-45		12
175976A1	06-46		4
175982A1	06-46		14
175984A1	06-46		19
176091A1	09-50		6
176226A1	08-10		13
	08-11		13
	08-12		12
	08-13		12
176311A1	09-01		10
	09-02		20
176857A1	04-09		4
176914A1	09-49		5
176916A1	09-49		4
176919A1	09-48		7
176920A1	09-49		7
176921A1	09-48		9
	09-49		2
176924A1	09-46		5
177256A1	08-08		30
	08-08A		30
	08-65A		1
	09-22A		1
177257A1	08-08		29
	08-08A		29
	08-65A		1
	09-22A		2
177258A1	08-65A		2
177259A1	08-65A		2
177261A1	08-65A		12
177269A1	04-19		14
	09-60		18
177634A1	08-10		34
178004A1	09-18		18
178006A1	09-18		17
178051A1	08-33		8
178850A1	08-68		14
179029A1	09-20		1
179956A1	09-12		6
180427A1	09-36		2
180593A1	09-51		11
180594A3	09-51		19
181042A1	09-24		22
	09-27		8
181100A1	06-15		4
	06-16		5
	06-23		35
	06-23A		35
	06-24		5
181101A1	06-14		2
	06-16		20
181102A1	06-14		12
	06-16		22
181103A1	06-23		20
	06-23A		20
181104A1	07-02		27
181105A1	06-15		12
	06-16		16
181107A1	06-23		19
	06-23A		19
181108A1	06-20		24
	06-21		26
181111A1	06-20		13
181116A1	06-20		9
181118A1	06-21		1
181122A1	06-22		5
181123A1	06-21		31
181126A1	06-19		3
	06-22		9
181128A1	06-20		3
181130A1	06-21		30
181132A1	06-19		5
	06-21		2
181136A1	06-23		5
	06-23A		5
181137A1	06-23		28
	06-23A		28
181138A1	06-18		12
181139A1	06-18		5
181141A1	06-15		14
	06-16		19
181142A1	06-17		19
181144A1	06-21		33
181146A1	06-23		18
	06-23A		18
181158A1	06-20		12
181159A1	06-20		11
181161A1	06-20		14
181165A1	06-21		34
181166A1	06-23		22
	06-23A		22
181169A1	09-46		6
	09-47		7
181170A1	09-48		11
	09-49		16
181171A1	06-18		7
181173A1	06-18		16
181174A2	06-18		22
181175A1	06-18		18
181176A1	06-16		18
181177A1	06-18		11
181179A1	06-15		11
	06-16		15
181198A1	06-22		3
181202A1	06-14		13
181203A1	06-18		21
181207A1	06-23		23
	06-23A		23
181208A1	06-23		24
	06-23A		24
181219A1	06-14		10
181232A1	06-15		13
	06-16		17
181234A2	06-23		15
	06-23A		15
181245A2	06-18		1
181251A1	06-23		9
	06-23A		9
181253A1	06-23		31
	06-23A		31
181254A1	06-23		25
	06-23A		25
181255A2	06-23		27
	06-23A		27
181256A1	06-23		10
	06-23A		10
181258A1	06-23		29
	06-23A		29
181260A1	06-23		26
	06-23A		26
181261A1	06-23		17
	06-23A		17
181272A1	06-23		7
	06-23A		7
181273A1	06-23		6
	06-23A		6
181274A1	06-14		3
181842A1	09-04		7A
181979A1	09-64		24
181981A1	09-41		17
	09-62		5
182006A1	09-17		4

http://www.minnparbackhoeparts.com/

Number	Figure	Sequence	Ref.	Number	Figure	Sequence	Ref.
182006A1	09-21		9	190468A1	06-41		16
182445A1	07-03		1		06-42		16
	07-04		1	190469A1	06-41		6
	07-05				06-42		6
182594A1	04-12		11	190471A1	06-41		4
182697A1	09-62		3		06-42		4
182721A2	04-19		11	190476A2	07-02		4
183168A1	09-39		7	190477A2	07-02		4
183443A1	09-27		55	190493A1	07-01		14
183509A1	09-27		56	190496A1	07-01		8
183736A1	08-13		52	190500A1	07-01		20
183795A3	08-11		25	190506A1	06-43		7
	08-68		1	190508A1	06-43		7
	09-24		15	190509A1	06-43		7
	09-27		9	190510A1	06-43		7
183795A4	08-11		25	190511A1	06-43		7
	08-68		1	190512A1	06-43		7
	09-24		15	190513A1	06-43		7
	09-27		9	190514A1	06-43		7
184297A1	08-13		38	190515A1	06-43		7
184497A1	04-06		3	190516A1	06-43		7
184616A1	08-14		18	190675A1	09-63		17
184617A1	08-14		17	190682A1	06-06		10
184627A2	07-04		13	190684A1	06-06		9
184726A1	04-12		10	191017A1	09-23		2
185325A1	09-40		14	191046A1	03-01		30
185377A1	02-01		27	191047A1	09-37		27
185506A1	09-07		8	191067A1	06-41		15
185926A1	03-01		4		06-42		15
	09-37		4	191239A1	09-10		1
186351A1	09-45		11A	191703A1	08-21		
186977A1	09-36		13		08-21		
186989A1	09-40		30		09-65		25
	09-72		13	191704A1	03-01		44
187281A1	04-19		12		09-65		3
187612A1	08-10A		25	191796A1	05-04		2
187637A1	08-13		20		06-01		8
187639A1	08-13		21	192025A1	08-10A		9
187677A1	08-10A		10	192345A1	08-07		4
187714A1	06-12		1	192352A1	08-07		3
187715A1	06-12		2	192450A1	09-73		9
187845A1	08-10		23	192815A1	09-04		28
188009A3	03-01		29A	192895A1	08-60		2
188311A2	03-01		11	193-1000	04-04		18
189103A1	08-10A		20		04-04		3
189109A1	03-03		2A		04-07		
	09-01			193-1003	09-04		17
	09-02				09-45		10
189263A1	08-10A		21	193913A1	09-65		18
189414A1	08-10A		33	195-81023	09-54		48
189602A3	03-01		29		09-54A		48
189709A1	08-10A		12		09-56		24
189957A1	08-10A		1		09-56A		24
	08-59A			195210A1	06-08		
190267A2	09-34		1	1954626C1	09-63		15
190313A1	09-24		27	1954736C1	09-63		3
190427A1	06-21			195552A1	04-19		3
190428A3	06-18		8	195615A1	09-01		6
190431A1	06-24		10		09-02		19
190435A1	06-23		37	1958028C1	08-67		19
	06-23A		37	1959509C1	05-01		4
190436A1	06-23		13	196065A1	06-46		21
	06-23A		13	196066A1	06-46		22
190437A1	06-23		4	196085A1	07-02		9
190438A2	06-23		12	196090A1	06-46		2
	06-23A		12	196092A1	06-46		20
190439A2	06-23		11	196164A1	08-69		14
	06-23A		11	196454A1	06-21		3A
190440A1	06-23		38	196466A1	02-07A		4
	06-23A		38	1966136C1	06-02		16
190441A1	06-23		14	1966138C1	06-02		17
	06-23A		14	1966149C2	06-02		5
190442A1	06-23		2		06-40		13
	06-23A		2	1966153C1	06-07		9
190443A1	06-23		3	1966154C1	06-07		4A
190447A1	07-01		15	1966155C1	06-07		14
190449A1	07-01		7	1966156C1	06-07		15
190450A1	07-01		9	1966169C1	06-06		2
190451A1	07-02		1	1966186C1	06-02		10
190452A1	06-41		14	1966559C1	06-07		11
	06-42		14	1966993C1	06-18		4
190463A1	07-02		2	1967003C1	06-07		4

http://www.minnparbackhoeparts.com/

Number	Figure	Sequence	Ref.	Number	Figure	Sequence	Ref.
1967531C1	06-18		24	214-1464	09-65		5
1967581C1	06-18		10	214-1472	08-04		21
1967585C1	06-18		9		08-12		34
196813A1	08-05		25		08-13		47
196815A1	08-05		24	214-1492	08-09		22
196821A1	08-06		13		08-09A		22
196824A1	08-06		12	214-1496	08-08		28
1976955C1	08-59		2A		08-08A		28
197745A1	04-19		4	214-1704	02-02		5A
1977725C1	09-49A				03-01		7A
197793A1	09-51		8		07-04		10
1978141C1	08-60		8	214-1706	03-01		48
1978142C1	08-60				03-01		7
1978143C1	08-60		5		07-04		11
1978144C1	08-60		6	214-31104	08-10A		16
1978158C1	08-60		7	214-3132	08-13		37
1980296C1	08-70		11		08-13		39
1980321C3	08-62		4		08-24		19
1981850C1	09-51		13	214-3156	08-24		16
198410A1	09-19A		5	214-3188	08-08		28
1986753C1	08-65A		14		08-08A		28
	08-68		17	217-1102	09-37		22
1986906C1	08-69		16	217-144	09-63		34
1987096C1	09-63		33	217-314	06-10		11
1987212C1	09-50		11	217-347	09-37		16
1987219C2	09-50		13	217-349	06-10		22
1987290C1	09-50		14	217-363	06-11		11
198976A1	09-23		12	217-380	09-37		21
1990548C4	09-51		21	217-436	09-37		5
199720A1	08-08		30	218-1023	06-16		11
	08-08A		30	218-1254	09-10		20
	08-65		1	218-1256	08-24		22
	09-22		1		09-10		33
199721A1	08-08		29	218-1275	05-04		10
	08-08A		29		06-01		29
	08-65		1	218-1279	09-10		34
	09-22		2	218-335	08-23		30
199722A1	08-65		2		08-24		23
199723A1	08-65		2	218-459	06-12		38
1999528C1	08-10A		29	218-5027	05-02		3
199953A2	08-66		2	218-5050	08-23		24
1999666C1	09-63		16	218-5052	08-30		22
1999667C1	09-63			218-5053	05-04		8
1999668C1	09-63				06-01		26
1999693C1	09-50		8		08-17		5
1999926C1	09-65		15		08-18		7
1999927C1	09-65		22		08-19		7
20-21032	09-08		13		08-20		7
	09-08A		13		08-22		38
20-21232	09-06		4		08-26		23
	09-07		9		08-29		23
	09-08		4		08-30		20
	09-08A		4	218-5056	08-26		25
211-1024	06-25		2		08-29		30
213-123	03-02		14	218-5057	05-02		15
	03-03		17		06-39		2
213-126	07-06		19		06-39		4
	09-02		34		08-08		5
	09-16		22		08-21		1
	09-17		6		08-22		33
	09-19		6		08-26		13
	09-21		10		08-29		13
214-1406	09-37		18	218-5059	05-02		8
	09-62		19		08-07		23
214-14104	08-10		33		08-08		11
214-1412	02-04		6		08-08		33
	06-10		16		08-08A		11
	06-11		35	218-5062	06-11A		4
	06-11A		7		08-04		2
214-1416	02-02		8		08-05		28
	02-06A		15		08-09		8
214-1420	08-03		24		08-09A		8
214-1424	02-06A		18		08-14		24
214-1432	02-01		15	218-5063	08-09A		6
214-1440	02-01		17		08-22		7
214-1456	02-04		12	218-5064	08-01		22
	02-06A		26		08-01		49
214-1464	02-04		11		08-02		19
	08-04		21		08-09A		29
	08-05		40		08-10		8
	08-07		21		08-11		26
	08-14		27		08-11		8

http://www.minnparbackhoeparts.com/

Number	Figure	Sequence	Ref.	Number	Figure	Sequence	Ref.
218-5064	08-12		31	218-5280	08-23		26
	08-12		8	218-5283	08-10A		13
	08-13		45		08-22		3
	08-13		8	218-5335	08-29		25
	08-14		8	218-5351	05-02		19
	08-23		28		05-04		14
	08-23		42		06-01		4
218-5069	08-02		4		08-08		11
218-5070	08-08A		36		08-08A		11
218-5086	08-03		20		08-23		31
218-5089	08-17		4		08-26		9
	08-18		4		08-29		9
	08-19		5	218-5359	08-10A		18
	08-20		5	218-5365	08-22		4
	08-21		2		08-22		44B
	08-22		1	218-5382	08-10A		23
218-5103	07-04		19	218-5511	08-23		44
218-5105	06-39		6	218-5529	06-01		5
	08-08		8	218-5584	08-01		27
	08-08A		8		08-02		1
	08-21		3		08-02		10
	08-22		39		08-03		4
	08-22		5	218-5600	08-25		18
	08-26		11	218-5650	08-07		28
	08-29		11	218-595	08-04		22
	09-10		14	218-655	08-25		15
218-5106	05-02		6	218-676	08-24		21
	08-08		20	218-693	09-10		19
	08-08A		20	218-695	09-10		32
	08-09		11	218-754	08-22		50
	08-09		24	218-765	08-01		41
	08-09A		11	218-776	08-06		17
	08-09A		24	218-836	08-22		35
218-5107	08-01		12	218-840	08-07		27
	08-01		40		08-23		33
	08-01		45	218-845	08-26		22
	08-04		16		08-29		22
	08-05		2	218-980	08-01		44
	08-05		32		08-22		6
	08-06		2	219-1	05-04		13
	08-07		18		06-01		6
	08-09		27		08-04		27
	08-09A		27		08-62		17
	08-14		20		08-64		21
218-5108	08-10		24		08-65		17
218-5110	06-13		3		08-65A		17
	08-02		14		08-66		20
218-5117	08-25		11		08-67		24
218-5118	08-10A		7		08-68		20
218-5119	08-09		19		08-69		20
	08-09A		19		09-04		32
218-5123	08-10		29		09-05		23
218-5135	08-08A		5		09-05		5
218-5136	05-02		11		09-08		9
	08-08		35		09-08A		9
218-5137	08-07		16		09-16		41
218-5140	08-01		24		09-20		14
218-5155	09-37		57		09-23		28
218-5157	08-01		47		09-24		17
218-5170	05-02		2		09-24		3
218-5174	08-25		14		09-26		24
218-5176	08-02		12		09-26		51
218-5182	08-22		49		09-27		3
	09-10		15		09-27		35
218-5183	08-26		20		09-27		41
	08-29		20		09-28		12
218-5185	08-01		19	219-10	06-09		8
218-5209	06-25		45		06-47		8
	08-59		7	219-16	09-47		
218-5211	03-01		6		09-47		
	09-37		12	219-36	08-68		21
218-5213	08-33		16	219-55	08-04		28
218-5216	08-23		34		08-05		41
218-5220	08-05		18		08-63		17
218-5222	08-22		34		08-64		22
218-5228	07-04		27		08-66		21
218-5230	05-02		21		09-04		10
218-5232	08-04		26		09-23		30
	08-22		8		09-25		5
218-5242	08-07		25		09-25A		5
218-5243	08-22		32		09-36		9
218-5280	05-02		28	219-86	09-27		58

http://www.minnparbackhoeparts.com/

Number	Figure	Sequence	Ref.	Number	Figure	Sequence	Ref.
219-86	09-28		11	237-6004	05-02		4
	09-28		5		05-04		8A
219-87	09-10		4		06-01		27
219-89	09-27		57		07-04		19A
	09-28		10		07-04		25
220276A1	08-10A		28		08-17		
220413A1	09-36		7		08-18		
221-89	09-63		21		08-19		
221168A1	08-59A		15		08-20		
221330A1	08-10A		27		08-26		24
221477A1	09-21		1A		08-29		24
222889A1	04-09		19		08-30		21
	07-04		24		08-59		11A
225-14105	09-02		5	237-6005	08-26		26
225-14210	03-02		13		08-29		26
	03-03		20		08-29		31
225315C1	08-54		6	237-6006	05-02		16
	08-55		6		05-02		18
	08-56		6		05-02		20
225318C1	08-54		7		05-02		29
	08-55		7		05-04		14A
	08-56		7		06-01		4A
225350C1	08-56		14		06-01		5A
	08-58		6		06-25		46
225353C1	08-56		15		06-39		3
	08-58		7		06-39		5
226456A1	09-37		36		06-39		7
226560A1	09-51		4		08-07		29
226582A1	08-10A		35		08-08		12
227389A1	04-19		2		08-08		6
228133A2	02-01		27		08-08		9
230-4216	09-22		42		08-08A		12
	09-22A		42		08-08A		6
	09-51		7A		08-08A		9
230857A1	09-37		1A		08-10A		14
230973A1	07-03		26		08-17		
231-14109	09-38		4		08-18		
	09-40		15		08-19		
	09-42		15		08-20		
	09-42		26		08-23		27
	09-42		9		08-23		32
231-14409	09-15		30		08-23		45
231-1444	09-51				08-26		10
	09-70		12		08-26		12
231-1445	09-15		23		08-26		14
231-1446	08-10A		6		08-26		19
	09-01		18		08-29		10
	09-02		28		08-29		12
231-24409	04-07		12		08-29		14
	04-08		19		08-29		19
231-2446	09-19		18		08-59		8
231-4115	09-70		9		08-61		4
231-4246	09-10		5		08-67		20
231-4247	09-22		39		09-10		
	09-22A		39		09-10		
231397A1	06-07				09-37		17
231520A2	04-07		27		09-37		58
	04-09		10	237-6008	05-02		12
231656A1	09-37		6		05-02		7
232-1446	09-55		2		05-02		9
	09-56		28		06-23		40
	09-56A		28		06-23A		40
232-4617	09-45		19		06-25		48
	09-45		26		08-07		24
	09-45A		20		08-07		26
232948A1	09-65		10		08-08		12
233283A1	06-22		1		08-08		21
233284A1	06-21		32		08-08		34
234412A1	08-25		9		08-08		36
	08-60				08-08A		12
234892A1	03-01		14		08-08A		21
235002A1	04-10		12		08-09		12
	08-25		26		08-09		25
235916A1	08-12		33		08-09A		12
	08-13		44		08-09A		25
	08-69		1		08-10A		19
	09-26		1		08-25		12
	09-27		10		08-25		19
235917A2	08-69		2		08-26		21
235921A1	08-69		4		08-29		21
237-6002	08-59		14		08-59		6
237-6003	08-30		23	237-6010	03-01		6A

http://www.minnparbackhoeparts.com/

Number	Figure	Sequence	Ref.	Number	Figure	Sequence	Ref.
237-6010	06-10		12	238-5014	06-23A		41
	06-10		23		06-25		49
	06-11A		5	238-5020	06-25		35
	08-01		13	238-5115	06-35		42
	08-01		46	238-5150	06-25		17
	08-01		48	238-5152	06-08		10
	08-03		10		06-43		11
	08-04		17	238-5227	05-01		3
	08-04		3	238-5228	08-01		7
	08-05		29		09-26		50
	08-05		3	238-5230	08-61		9
	08-05		33	238-5231	08-63		9
	08-06		3		08-64		10
	08-07		17		08-70		8
	08-07		19	238-5233	08-62		9
	08-09		28	238-5235	08-69		11
	08-09		9	238-5239	08-66		9
	08-09A		28	238-5241	08-65		9
	08-09A		9	238-5242	08-66		23
	08-10		30	238-5247	08-65A		9
	08-10A		34		08-68		11
	08-14		21	238-5249	08-67		13
	08-14		25	238-5270	06-40		2
	08-27		11	238-5336	06-32		28
	09-37		13		06-33		29
237-6012	06-11		12	238-6018	08-59A		3
	08-01		20	238-6121	06-06		22A
	08-01		23		06-15		8A
	08-01		50		06-16		10
	08-02		20		06-40		1A
	08-08A		37		06-46		7A
	08-09		20	238-6218	08-32		12
	08-09A		20	238-7011	06-25		11
	08-09A		30		06-26		8
	08-09A		7	238-7013	06-25		36
	08-10		25	238-7116	06-25		15
	08-10		9		06-26		4
	08-10A		11	238-7123	06-25		9
	08-11		27	238-7210	06-26		6
	08-11		35	238-7218	06-25		30
	08-11		9	238-8217	06-22		22
	08-12		32	238-9119	06-25		5
	08-12		36	238-9213	06-35		43
	08-12		9	239306A1	09-02		14
	08-13		35	239406A1	09-03		7
	08-13		46	239408A1	04-10		13
	08-13		9	239606A1	06-16		2
	08-14		9	242459A1	08-24		9
	08-23		25	243084A1	09-23		19
	08-23		29	243679A2	08-24		14
	08-23		43	244109A1	06-21		6
	08-59A		13	244536A1	09-27		
	09-10		35	244790A1	09-26		45
237-6014	08-33		11	245258A1	04-10		7
	08-33		17	245423A1	09-10		30
237-6016	06-13		4	245466A1	09-29		6
	08-01		18		09-29		9
	08-01		25		09-30		6
	08-01		28		09-30		9
	08-02		11		09-31		6
	08-02		15		09-31		9
	08-02		17		09-32		6
	08-02		2		09-32		6
	08-02		5		09-32		9
	08-02		8		09-32		9
	08-03		5		09-33		6
	08-10A		24		09-33		9
	08-10A		8		09-34		6
237-6020	08-03		21		09-34		6
237-8008	06-40				09-34		9
237021A1	07-01		1		09-34		9
237022A1	07-01		2	246151A1	08-24		17
237025A1	07-01		21	246158A1	08-24		15
237026A1	07-01		11	246526A1	04-04		31A
237582A1	04-17		1	247104A1	05-09		1
238-5005	04-18		8	247546A1	06-46		24A
238-5011	04-06A		5	247550A1	06-46		13
	08-61		5	248-2373	09-45		4
238-5013	06-23		42		09-45A		13
	06-23A		42	250851A1	09-05		7
	06-25		50		09-08		30
238-5014	06-23		41		09-08A		30

http://www.minnparbackhoeparts.com/

Number	Figure	Sequence	Ref.	Number	Figure	Sequence	Ref.
250854A1	04-06		10	282428A1	08-26		18
252883A1	08-24		2		08-29		18
252885A1	08-24		1	282775A1	04-10		
253038A1	08-24		4	2830082	02-09		1
253209A1	09-47		8	2830156	03-09		2
254409A1	02-03		2	2830158	02-23		4
	02-03A		2	2830266	03-09		1
254686A2	06-14		1	2830281	02-17		2
255051A1	08-24		5	2830411	02-27		8
255447A1	09-40		26	2830433	02-26		7
	09-70		13	2830445	02-20		2
256210A2	08-24		14A	2830559	02-34		10
256347A1	09-01			2830734	02-37		5
	09-02			2830775	02-17		5
256478A1	07-02		13	2830784	02-17		7
256481A1	07-02		14	2830894	02-36		4
256482A1	07-02		17	2830905	02-27		4
256485A1	07-02		18	2830919	02-16		15
256776A1	03-03		5	2830920	02-16		15
257381A1	09-40		28	2830934	02-27		5
257382A1	09-40		27	2830948	02-27		3
258616A1	09-01			2830952	02-26		10
	09-02				02-27		
259044A1	08-01		1	2830953	02-26		12
259054A1	09-50		15	2831023	02-26		9
259254A1	07-02		24	2831031	02-26		8
260-1436	09-60		16	2831101	02-27		6
261-14310	04-16		11	2831297	02-22		3
	04-16		4	2831298	02-22		1
27549R1	06-37		2	2831300	02-26		10A
	06-37		2	283462A1	07-02		6
	06-37		2	283466A1	07-02		19
	06-37		2	283779A1	04-10		22
275937A1	09-05		14	283781A1	04-10		23
276-2446	08-62		11	284154A1	09-58		10
	08-63		11		09-69		8
	08-64		12	2852009	02-21		1
	08-65		11	2852011	02-11		4
	08-65A		11	2852012	02-11		7
	08-66		11	2852013	02-11		9
	08-67		15	2852016	02-11		8
	08-68		13	2852023	02-14		10
	08-69		13	2852025	02-14		12
	08-70		10	2852027	02-15		1
276-2456	08-60		3	2852028	02-15		2
276-26512	04-19		10	2852029	02-19		3
276498A1	04-14			2852030	02-19		6
	04-15			2852032	02-17		4
277800A1	02-01		39	2852033	02-17		6
278316A2	04-09			2852036	02-23		4
	04-11		9	2852037	02-23		4
278328A1	04-07		27	2852044	02-19		1
278532A1	06-18		14	2852046	03-04		1
278533A1	06-18		13	2852047	02-35		2
278534A1	06-14		8	2852049	02-24		1
279039A1	06-18		15	2852051	02-24		2
279223A1	04-15		6	2852054	02-25		3
279224A1	04-15		5	2852057	03-06		8
279265A2	04-15		15	2852059	03-06		5
279482A1	09-52		2A	2852062	02-28		2
	09-68		4	2852063	02-28		7
279645A1	07-02			2852065	03-11		3
279916A1	04-15		16	2852068	02-29		3
280436A1	07-02		3	2852071	02-29		5
280443A1	07-02		25	2852072	02-29		4
280450A1	07-02		20	2852075	03-07		1
280452A1	07-02		21	2852087	03-04		2
280457A1	07-02		22	2852088	03-04		3
280681A1	07-06		9	2852089	03-04		4
281-14520	09-63		9	2852091	03-06		9
281-14716	09-11		17	2852098	03-08		1
281-18712	09-62		26	2852099	03-08		2
281-54512	09-60		23	2852100	02-33		14
281185A1	09-26			2852101	02-33		13
	09-27			2852102	02-33		10
281952A1	07-02			2852105	03-10		1
281960A1	07-02		23	2852111	03-10		3
282-16512	04-19		7	2852122	02-30		1
282033A1	06-01		19	2852125	02-30		2
282038A2	06-01		18	2852134	02-30		7
282242A1	03-03		1	2852135	02-30		8
282428A1	05-02		17	2852136	02-30		9

http://www.minnparbackhoeparts.com/

Number	Figure	Sequence	Ref.	Number	Figure	Sequence	Ref.
2852140	02-30		10	291533A1	06-32		13
2852145	02-36		3	291535A1	06-28		5
2852151	02-37		1	291540A1	06-33		21
2852152	02-37		3	291541A1	06-32		20
2852153	02-37		2	291543A1	06-25		34
2852154	02-37		4	291545A1	06-34		3
2852155	02-37		1	291548A1	06-31		9
2852157	02-37		6	291549A1	06-31		3
2852161	02-38		2	291550A1	06-32		24
2852162	02-38		3	291551A1	06-29		39
2852163	02-38		1	291552A1	06-30		37
2852170	02-39		3	291553A1	06-32		25
2852171	02-39			291554A1	06-33		16
2852172	02-39			291555A1	06-32		16
2852175	02-40		1	291556A1	06-29		44
2852180	02-08		2	291557A1	06-30		39
2852181	02-08		6	291558A1	06-30		31
2852183	02-41		1	291559A1	06-33		25
2852195	02-33		8	291563A1	06-31		1
2852196	02-33		15	291565A1	06-25		31
2852197	02-33		12	291566A1	06-30		13
2852202	02-10		10	291567A1	06-29		15
2852270	02-20		1	291568A1	06-25		3
2852294	03-06		3	291570A1	06-26		1
2852511	02-36		5	291571A1	06-29		29
2852515	02-12		6		06-30		28
2852516	02-12				06-32		14
2852517	02-12				06-33		13
2852518	02-12			291573A1	06-30		32
2852521	03-11		4	291575A1	06-33		22
2852594	03-10		2	291577A1	06-34		4
2852741	03-04			291578A1	06-29		12
2852744	02-20		3		06-29		25
2852759	02-12				06-29		28
2852865	02-14		13		06-29		9
2852866	02-18		3		06-30		12
2852869	03-05		1		06-30		23
2852885	03-06		2		06-30		26
2852889	02-30		12		06-30		9
2853225	02-26		12		06-32		12
2853226	02-26		9A		06-32		9
2853728	02-11		5		06-33		12
286-56520	09-52		11		06-33		9
	09-67		29	291579A1	06-29		11
29-1010	09-08		14		06-29		27
	09-08A		14		06-30		11
29-1012	09-08		5		06-30		25
	09-08A		5		06-32		11
291010A1	04-19		6		06-33		11
291520A1	06-29		17	291580A1	06-29		10
	06-29		2		06-29		26
	06-30		17		06-30		10
	06-30		2		06-30		24
	06-32		2		06-32		10
	06-33		2		06-33		10
291523A1	06-28		1	291591A1	06-30		21
291524A1	06-32		27	291861A1	06-35		37
	06-33		28	291862A1	06-35		36
291525A1	06-25		7	292164A1	06-25		10
291527A1	06-25		43		06-26		7
	06-26		13	292165A1	06-25		14
291528A1	06-29		49		06-26		3
	06-30		45	292166A1	06-25		8
	06-31		11	292170A1	06-26		5
	06-31		7	292171A1	06-26		12
	06-32		22	292173A1	06-26		14
291529A1	06-29		20	292174A1	06-28		3
	06-29		5	292175A1	06-33		23
	06-30		5	292176A1	06-35		32
	06-32		5	292177A1	06-35		33
	06-33		5	292207A1	06-41		12
291530A1	06-29		22		06-42		12
	06-29		7	292208A1	06-41		13
	06-30		7		06-42		13
	06-32		7	292210A1	06-44		3
	06-33		7		06-45		3
291531A1	06-29		21	292212A1	06-44		4
	06-29		6		06-45		4
	06-30		6	292213A1	06-44		1
	06-32		6	292214A1	06-44		6
	06-33		6		06-45		6
291533A1	06-30		27	292262A1	09-45		2B

http://www.minnparbackhoeparts.com/

Number	Figure	Sequence	Ref.	Number	Figure	Sequence	Ref.
292263A2	09-45		2C	299324A1	06-23		16
292268A1	06-41				06-23A		16
	06-42			300030A1	04-20		4
292385A1	09-23		29	300588A1	09-27		26
292412A1	06-26		2	300659A1	09-50		2
292413A1	06-25		4	300661A1	09-50		3
292414A1	06-26		9	300664A1	09-50		7
292415A1	06-29		14	300665A1	09-50		9
	06-29		31	300667A1	09-50		10
	06-30		14	300669A1	09-51		1
	06-30		29	300670A1	09-50		12
	06-32		15	300672A1	09-50		18
	06-33		14	300674A1	09-50		
292417A1	06-26		10	300675A1	09-50		19
292419A1	06-25		16	300677A1	09-50		21
292420A1	06-28		2	300679A1	09-50		22
292423A1	06-30		44	300680A1	09-50		20
	06-31		10	300681A1	09-50		23
	06-31		6	300683A1	09-50		24
	06-32		21	300684A1	09-50		25
292424A1	06-33		27	300685A1	09-51		
292425A1	06-30		41	300688A1	09-51		5
	06-32		18	300689A1	09-51		10
292426A1	06-29		36	300690A1	09-51		
	06-30		34	300691A1	09-51		12
292428A1	06-30		42	300692A1	09-51		14
	06-32		19	300896A1	09-51		20
292429A1	06-29		48	300996A3	08-27		3
292431A1	06-29		37	301104A1	08-03		9
	06-30		35	301803R1	09-63		20
292432A1	06-29		40	302358A1	03-01		3
	06-30		38		09-37		3
292433A1	06-32		26	302820A2	08-27		5
292434A1	06-33		19	303192A1	02-01		36
292890A1	06-41		17	303465A2	04-11		10B
	06-42		17	303466A1	04-11		10C
292891A1	06-46		5	303467A1	04-11		10D
292893A1	06-46		10	303646A1	09-24		35
292894A1	06-46		11	304083A1	09-73		7
292896A1	06-46		23	304424A1	08-27		9
292897A1	06-45		9	304890A1	08-27		10
292898A1	06-46		12	305152A1	06-44		2
292899A1	06-46		27		06-45		2
292900A1	06-46		28	305153A1	06-45		1
292901A1	06-46		29	305342A1	04-04		35
292902A1	06-44		7	305492A1	09-10		16
	06-45		7	305493A1	09-10		18
292969A2	09-10			305494A1	09-10		17
293636A1	09-23		34	305495A1	09-10		9
294013A1	06-34		5	305496A1	09-10		7
294080A1	06-29		41	305497A1	09-10		3
	06-29		47	305499A1	09-10		8
294189A1	06-43			305508A1	09-10		21
294190A1	06-43			305725A1	06-25		21
294192A1	06-41			305728A1	06-32		1
	06-41			305729A1	06-33		1
	06-42			305730A1	06-30		20
	06-42			30634	08-64		14
294245A1	06-40		26	307090A1	09-48		4
294933A1	06-07			307091A1	09-48		3
295110A1	06-43		6	307092A1	09-48		8
295111A1	07-01		18		09-48		8
295112A1	07-01		23		09-49		1
295113A1	07-01		24		09-49		1
297280A1	08-63		4	307098A1	09-48		6
297281A1	08-64		4	307123A1	02-06A		16
	08-70		3	307186A1	09-26		11
297283A1	08-66		4		09-27		19
297284A1	08-65		4	307277A1	08-27		17
297615A1	09-02		1	307348A1	03-01		39
298176A1	09-01				09-73		12
	09-02			307385A1	09-10		22
298521A1	09-76		11	307386A1	09-10		23
298614A1	06-23		44	307387A1	09-10		24
	06-23A		44	307388A1	09-10		25
	06-25		52	307389A1	09-10		26
2992147	02-21		4	307577A1	03-01		31
2992148	02-21		4		09-37		28
2992149	02-21		4	308029A1	07-01		3
2992153	02-21		3	308030A1	07-01		16
2992154	02-21		3	308036A1	07-01		12
2992155	02-21		3	308040A1	07-02		5

http://www.minnparbackhoeparts.com/

Number	Figure	Sequence	Ref.	Number	Figure	Sequence	Ref.
308042A1	07-01		17	329797A1	08-23		5
308254A1	08-27		2	329799A1	08-23		4
308255A1	08-27		1	331620A1	09-05		2
309674A1	08-27		11A	331621A1	09-05		1
309747A1	06-12			334724A1	06-23		30
310492A1	06-46		18		06-23A		30
310519A1	06-20		8	334725A1	06-23		32
310772A1	06-15				06-23A		32
	06-15		10B	335640A2	06-23		
	06-16			336375A1	09-49		14
	06-16		14	338424A1	09-52		4
310994A1	08-68		2	338425A1	09-52		3
310994A2	08-68		2A	338426A1	09-54		5A
311046A1	06-08				09-54A		5A
311047A1	06-08			338427A1	09-54		5
311109A1	08-68		16		09-54A		5
311200A1	09-04		27	338428A1	09-56		3
311459A2	08-32				09-56A		3
311484A1	06-40		11A	338429A1	09-54		4A
311485A1	06-40		12A		09-54A		4A
311486A1	07-01		18	338886A4	07-03		35
311488A1	06-46		4	339046A3	07-03		34
311565A1	06-02		11	339047A3	07-03		33
311569A1	05-08		1	339680A2	09-22		21
	06-06		1		09-22A		25B
3125705R1	04-18		10	340-12520	09-51		
313259A1	06-06		8	340997A3	09-43		2
313260A1	06-04			340998A3	09-43		1
313277A1	06-05			341564A2	09-04		36
313648A1	08-02		3	341743A3	09-54		
314607A1	08-24		27		09-54A		
314608A1	08-24		28	341746A2	09-56		
314772A1	08-12		30	344892A1	09-04		37
	08-13		51	345-49	09-37		35
315273A1	09-54		12	345-621	09-64		
	09-54A		12	345061A2	07-04		2
315276A1	09-54		11	345231A1	09-43		3
	09-54A		11	345325A2	07-04		3
317989A1	08-24		30	346583A1	06-40		21
319467A1	09-34A		1	346584A1	06-40		20
319597A1	06-35		35	346585A1	06-40		4
319598A1	06-35		40	347706A3	04-07		7
319599A1	06-35		46	347959A1	06-40		23
321-1707	09-08		29	347960A1	06-40		24
	09-08A		29	348706A1	09-26		40
321-1708	09-08		23		09-27		30
	09-08A		23	348794A1	05-01		18
	09-72		11		05-03		
321-229	09-78		8	349291A1	06-25		51
321-230	09-78		7	349292A1	06-25		53
321-4311	09-71		5	349295A1	06-23		39
321-4614	09-75		11		06-23A		39
321-5675	09-77		11		06-25		47
321-6046	08-59A		16	352208A1	09-57		11
	09-74		8	352209A1	09-57		13
321-6376	09-78		8A	352210A1	09-57		15
	09-79		8A	352401A1	05-01		7
	09-80		8A	352568A1	05-01		6
321-6774	09-78		13		05-03		
321-7030	09-75		10	352569A4	05-01		6A
321-7040	09-78		4		05-03		10
321183A1	07-02		12	352727A1	05-01		15
321428A1	06-24		8		05-01		23
322357	04-06A		19	353-405	09-53		
322860A1	03-03		4	353-407	09-53		
3233348R1	09-15		36	353-408	09-53		
	09-55		8	353-410	09-53		
3234063R1	09-54		25		09-63		26
	09-54A		25		09-67		
324213A1	05-08		2	353-411	09-11		5
325465A2	08-07		22	353-415	09-53		
326-640	09-10		6	353-421	09-53		
326348A1	07-06		16		09-67		22
326805A1	09-23		1	353-422	09-41		7
	09-24		1	353-425	09-53		
326865A1	06-21		13	353068A2	04-12		18
328186A1	06-10		14	353078A1	08-32		4
	06-10		21	353079A1	08-32		5
	06-11		27	353102A1	08-07		5A
	06-11		33	353103A1	08-07		5A
	08-03		11	353167A1	08-07		5
329032A1	04-14		3	355197A2	04-12		2

http://www.minnparbackhoeparts.com/

Number	Figure	Sequence	Ref.	Number	Figure	Sequence	Ref.
355198A2	04-12		1A	363883A1	09-60		10
355827A2	04-11		1	364132A2	09-54		28A
355984A2	09-41		1		09-54A		28A
356743A1	08-07		12	364133A2	09-54		30A
357099A1	09-67		15		09-54A		30A
357100A1	09-67		16	364134A2	09-54		28
357278A1	04-08		17		09-54A		28
357540A1	04-15		7		09-56		7
357541A1	04-15		8		09-56A		7
357966A1	04-08		16	364135A2	09-54		30
358212A1	07-01				09-54A		30
358279A1	06-40		11		09-56		8
	06-40		12A		09-56A		8
358280A1	06-40		11A	364180A1	09-53		10
358281A1	06-40		12		09-67		24
358282A1	06-21		19	365328A1	09-32		1
358283A1	06-21		28	365789A1	09-62		20
358632A1	06-20		7	366230A1	06-22		13
358633A1	06-20		6	366231A1	06-22		18
358635A1	06-20		4	366232A1	06-22		15
358636A1	06-19		2	366234A1	06-22		11
358637A1	06-20		15	366235A1	06-22		12
358638A1	06-20		21	366236A1	06-22		14
358639A1	06-21		29	366366A1	06-21		27
358640A1	06-20		10	366632A2	04-12		21
358641A1	06-20		16	366633A3	04-12		25
358642A1	06-20		19	366663A1	06-35		29
358643A1	06-20		18	366889A2	04-07		28
358644A1	06-20		17	366910A1	06-24		9
358645A1	06-20		1	367195A1	06-40		4A
	06-20		29	367233A1	06-46		1
	06-22		7	367352A1	08-07		5B
358646A1	06-19		4	367704A4	09-60		1
358647A1	06-21		16	367705A6	09-60		
358648A1	06-21		4	367712A3	09-67		13
358649A1	06-21		3	367848A2	09-73		13
358650A1	06-21		3A	367859A2	06-13		18
358651A1	06-21		3A		06-47		
358652A1	06-21		3A	367860A3	06-12		35
358653A1	06-21		27		06-47		
358654A1	06-21		18A	367861A2	06-01		11
358655A1	06-20		31		06-09		
	06-21		18B	367977A1	07-06		
358656A1	06-21		18	368146A1	09-54		46
359653A1	07-01		13		09-54A		46
360046A1	09-56		1		09-56		26
360242A2	04-11		10A		09-56A		26
360243A2	04-11		11	368147A1	09-54		40
360244A1	04-11		4		09-54A		40
360245A2	04-11		8		09-56		17
360246A3	09-53		16		09-56A		17
360247A3	09-53		15	368417A1	09-44		9
360250A2	04-12		1	368436A1	06-23		16A
360251A3	09-62		6		06-23A		16A
360252A2	09-61		5	368437A2	06-23		
360253A3	09-62		8		06-23A		
360254A3	09-62		10	368438A2	06-23		
360255A1	09-62		14		06-23A		
360256A1	09-64		15	368801A2	09-63		10
360257A1	09-64		7	368805A1	09-62		7
360260A2	09-61		1	368807A1	09-62		13
360261A1	09-61		3	368809A1	09-53		22
360262A2	09-63		1	368813A2	09-60		4
360263A4	09-64		1	368818A1	09-62		29
360266A2	09-53		3	368821A1	09-62		18
360267A3	09-53		2	368990A1	09-61		6
360272A6	09-60			369249A1	09-62		9
360867A1	09-35		1	369263A1	08-32		
361776A1	09-37		23	369372A1	08-59		3
361900A1	04-07		9	369450A1	09-60		15
361940A1	06-25		1	370381A1	09-64		14
362140A1	06-25		18	370755A1	04-13		1
362340A6	09-40		1	370756A1	04-13		2
362556A2	09-44		2	370760A1	04-13		5
362557A1	09-44		1	370915A1	08-24		
362558A1	09-44		3	371031A1	08-05		26
362607A1	09-39		4	372167A3	04-12		1B
362609A1	09-39		3	372246A1	06-25		44
362930A2	04-08		7	373689A2	04-11		10
363227A2	04-09		5	373693A1	04-11		10E
	04-11		8A	373696A1	09-72		10A
363832A5	09-64			373698A2	09-72		8

http://www.minnparbackhoeparts.com/

Number	Figure	Sequence	Ref.	Number	Figure	Sequence	Ref.
373699A2	09-72		9	382664A2	04-19		1
373833A1	08-10		16	382770A2	09-61		2
	08-11		16	382775A1	09-54		23A
	08-12		15		09-54A		23A
	08-13		15	382777A1	09-54		23
373995A1	09-62				09-54A		23
375112A1	04-12		26	383619R1	04-05		5
375392A1	09-62		28	383794A2	09-62		22
376157A1	08-07		5	383795A2	09-62		23
376158A1	08-07		5B	383972A1	09-75		6
376285A2	09-08A			384240A1	08-04		18
376286A2	09-08				08-62		1
376332A1	09-54		38		09-04		9
	09-54A		38	384241A1	08-62		2
	09-56		15	384258A1	09-78		6
	09-56A		15	384260A1	09-78		9
376334A1	09-54		36	384264A1	09-75		1
	09-54A		36	384265A1	09-78		2
	09-56		13	384267A1	09-78		3
	09-56A		13	384269A1	09-78		5
376336A1	09-54		37	384769A1	06-21		14
	09-54A		37	384773A1	06-21		9
	09-56		14	384815A1	09-23		32
	09-56A		14	384844A1	08-32		7
376384A1	09-31		1	384930A2	09-73		1
376385A1	09-32		1	384931A2	09-73		2
376386A1	09-33		1	384956A1	06-38		1
377194A1	09-60		9		06-40		
377220A2	09-62		1		06-41		
377222A1	09-63		4		06-43		
377230A3	09-62		27		06-44		
377232A2	09-63		18		06-46		
377233A2	09-63		31		07-01		
377241A2	09-62		1		07-02		
377594A5	09-60		13	384958A1	06-38		1A
378227A1	09-53		5		06-40		
378742A3	09-42		19		06-42		
	09-42		27		06-43		
	09-42		9A		06-45		
378921A1	09-28		6B		06-46		
378955A1	03-03		8A		07-01		
378956A3	03-03		15		07-02		
378957A3	03-02		17	385420A2	08-30		5
378958A1	03-03		13	385506A1	09-67		12
378960A1	03-03		3	385614A4	04-12		31
379160A1	09-60		5	386000A2	09-22		37
379161A1	09-60		6	386092A1	09-23		16
379209A1	09-60		7	386368A2	04-12		29
379314A4	06-12		6	386369A2	04-12		28
379424A2	09-53		3A	386502A1	04-12		
379425A3	09-53		2A	386535A1	09-64		2
379846A1	05-01		14	386718A3	09-58		9
	05-01		22		09-69		13
38-11016	09-49A		10	386720A1	09-58		23
380003A1	06-35		45	386785A1	04-07		22
380004A1	06-35		41		09-58		26
380005A1	06-34		1		09-59		
	06-35				09-69		6
380483A2	03-03		12	386786A1	04-10		19
380484A3	03-03		15A		09-58		28
380485A3	03-02		17A		09-59		
380537A2	06-12		13	386787A1	04-07		23
380609A1	08-67		16		09-58		27
380621A1	08-67		14		09-69		7
380627A1	08-67		23	386788A1	04-10		18
380692A1	08-30		6		09-58		29
380719A2	09-60			386789A2	04-10		21
380807A4	09-37		47		08-29		29
381111A2	09-62		25	386849A1	04-07		18
381113A2	09-62		24	386850A1	04-07		19
381261A1	04-05		13	386851A1	04-07		20
381442A1	05-04		12		04-18		15
	06-01		31	386852A2	04-10		17
381488A4	09-29		1	386927A1	04-19		9
381659A1	04-19		5	387019A1	09-04		6
381696A5	09-60		2	387897R91	05-09		3
381926A1	09-40		22		05-09		6
381927A1	09-40		20	387940A1	04-18		
381972A1	09-60		14	388053A2	04-13		6
382202A2	09-37		52	388116A2	05-01		8
382298A1	09-53		21	388712A2	08-59		9
	09-67		30	388713A1	08-59		

http://www.minnparbackhoeparts.com/

Number	Figure	Sequence	Ref.
388762A1	09-63		7
388843A1	09-30		1
388848A1	09-08		24
	09-08A		24
388881A1	08-59		4
389402A1	09-63		8
389487A1	04-07		13
389541A1	08-59		12
389729A1	09-76		6
389730A1	09-77		6
390-100	09-54		21
	09-54A		21
390027A1	06-05		1
390028A1	06-05		5
390029A1	06-05		2
	06-05		2
390030A1	06-04		2
390031A1	06-04		1
390255A2	04-12		15A
390258A1	04-12		
	04-12		
390320A4	08-32		
390551A2	09-41		10
390690A1	09-11		4
390758A1	09-11		3
390759A1	09-11		1
390760A1	09-11		2
390838A1	09-54		2A
	09-54A		2A
390840A1	09-54		27A
	09-54A		27A
390841A1	09-54		29A
	09-54A		29A
391625A2	09-41		10A
391818A2	04-12		15
391827A1	09-52		8
	09-54		19
	09-54		6
	09-54A		19
	09-54A		6
	09-56		4
	09-56A		4
	09-68		2
391838A1	09-54		14
	09-54A		14
391841A1	09-54		18A
	09-54A		18A
391842A1	09-54		20A
	09-54A		20A
391843A1	09-54		32
	09-54A		32
391845A1	09-54		31
	09-54A		31
	09-56		10A
	09-56A		10A
391847A1	09-54		13
	09-54A		13
391848A1	09-54		15
	09-54A		15
391849A1	09-54		41
	09-54A		41
	09-56		18
	09-56A		18
391850A1	09-54		3A
	09-54A		3A
392353A1	04-08		8
392374A1	09-75		13
392375A1	09-78		1
392559A3	09-28		9
392828A2	09-40		16
	09-40		18
392882A4	04-09		1
392930A1	09-67		8
393161A1	09-37		19
393202A1	09-54		17
	09-54A		17
393203A1	09-54		16
	09-54A		16
393209A1	09-54		22
	09-54A		22
393211A1	09-55		5
393231A1	06-09		
393231A1	06-47		
393232A1	06-47		6
393233A1	06-47		6
393234A1	06-09		6
393330A1	09-56		10
	09-56A		10
393380A1	08-10		11
	08-10		11A
	08-11		11
	08-11		11A
	08-12		10
	08-12		10A
	08-13		10
	08-13		10A
	08-14		10
	08-14		10A
393623A1	09-41		8
393826A1	06-40		19
393999A1	06-13		2
394329A1	09-74		3
394585A3	09-54		
394700A1	09-54		4
394701A1	09-54		27
	09-56		5
394702A1	09-54		29
	09-56		6
394704A1	09-54		18
	09-54A		18
394705A1	09-54		20
	09-54A		20
394707A1	09-54		2
	09-54A		2
394708A1	09-54		3
	09-54A		3
394800A1	09-55		7
394863A1	04-15		9
	09-53		17
394864A1	09-56		2
	09-56A		2
394865A1	09-56		9
	09-56A		9
395026A1	09-59		9
395033A1	09-59		8
395136A1	09-59		6
395189A2	03-02		1
395344A1	06-12		39
395348A1	09-57		12
	09-57		14
395387A1	09-53		18
395388A1	09-53		19
395389A1	09-59		10
395470A1	09-62		23
395478A3	09-67		3
395609A1	08-32		6
395753A2	09-22		38
	09-22A		38
395793A1	09-52		9
	09-68		7
395910A2	09-72		10
396-41028	09-01		16
	09-01		31
	09-02		31
	09-18		23
396018A3	04-15		13
	09-59		
396023A2	04-14		10
396092A1	09-25		10
	09-25A		10
396422A2	08-59		10
396516A1	09-53		12
	09-60		3
	09-67		26
396591A1	05-02		
396592A1	05-02		
396593A1	05-02		
396605A1	09-39		30
396620A2	07-04		17
396634A1	08-12		30
	08-13		51
396841A1	09-55		3
	09-56		29
	09-56A		29

http://www.minnparbackhoeparts.com/

Number	Figure	Sequence	Ref.	Number	Figure	Sequence	Ref.
396938A3	09-67		2	399246A1	08-10A		32
397025A2	09-42		21	399757A1	09-48		1
397026A3	09-42		2	399758A1	09-48		2
397064A1	09-55		1	399759A1	09-48		1A
	09-56		27	399760A1	09-48		2A
	09-56A		27	399764A1	09-49		11
397065A2	03-03		22	399777A1	09-46		3
397076A1	07-04		9	399907A2	08-32		3
397132A1	09-45		1	399959A2	09-37		26
	09-46			399963A1	08-07		
	09-47			400016A1	08-10A		30
397134A2	09-45		2A	400069A1	09-12		10
	09-48			400077A1	09-42		
	09-49				09-42		
397136A2	09-45		2A	400092A1	06-37		1
	09-48			400200A1	09-57		5
	09-49			400280A1	09-63		11
397137A1	09-45		2	400282A1	09-63		2
	09-50			400296A2	08-59		11
	09-51			400376A1	04-09		13
397158A2	03-03		22A	400379A1	04-10		9
397177A2	07-04		16		09-63		5
397443A2	04-09		11		09-64		14A
397493A2	04-09		12	400398A1	09-26		42
397548A4	03-01		40		09-27		32
397569A1	04-10		5	400494A1	09-57		16
397570A1	04-10		6	400571A2	09-52		20
397653A1	06-03		1	400572A1	09-52		19
397654A1	06-03		2	400573A1	09-52		16
397774A3	09-42		12A	400588A2	06-12		7
397782A1	08-11		28	400657A1	08-59		13
397870A3	09-11		15A	400837A1	09-50		4
397876A1	04-08		13	400838A1	09-50		5
397911A1	09-12		16	400880A1	09-22A		37
397974A1	09-70			400932A4	09-28		26
397990A1	04-07		29	400934A2	09-28		20
398380A3	04-15		12	400935A3	09-28		20A
398570A1	09-79		6	400981A1	09-50		1
398571A1	09-80		6	401052A1	05-06		
398572A1	09-79		9	401054A1	05-06		3
398573A1	09-80		9	401055A1	05-06		7
398576A1	09-76		1		05-07		1
398577A1	09-77		1	401059A1	05-06		13
398578A1	09-79		2	401060A1	05-06		14
398579A1	09-80		2	401061A1	05-07		4
398580A1	09-79		3	401062A1	05-07		3
398581A1	09-80		3	401063A1	05-07		5
398582A1	09-79		5	401064A1	05-07		6
398583A1	09-80		5	401065A1	05-08		3
398598A1	09-76		13	401066A1	05-08		4
398599A1	09-77		13	401067A1	05-08		5
398600A1	09-79		1	401457A1	09-72		2
398601A1	09-80		1	401458A1	09-72		3
398654A1	09-80		11	401459A2	09-72		4
398656A1	09-80		10	401460A2	09-72		5
398658A1	09-75		5	401461A1	09-72		1
	09-76		5	401949A1	09-53		4
	09-77		5	402344A1	06-03		1
398662A1	09-76		7	402346A1	06-03		2
398663A1	09-77		7	402359A1	06-03		4
398665A1	09-79		8	402361A3	08-30		26
398666A1	09-80		8	402610A1	09-53		20
398667A1	09-79		7	402836A1	09-57		28
398668A1	09-80		7	402843A1	09-57		25
398669A1	09-79		11	402844A1	09-57		27
398670A1	09-79		13	402845A1	09-57		32
398671A1	09-80		13	402846A1	09-57		21
398672A1	09-76		10	402847A1	09-57		18
398673A1	09-77		10	402854A1	08-30		19
398674A1	09-79		4	402855A1	08-30		18
398675A2	04-07		24	402933A1	09-70		1
	08-26		34	402934A1	09-70		2
398676A1	09-80		4	402935A1	09-70		5
398677A1	09-79		10	402936A1	09-70		3
398738A1	09-61		4	402940A2	08-30		25
398846A3	04-14		5	403193A1	09-62		36
	04-15		1	403225A1	09-62		35
398847A3	04-14		8	403271A1	09-61		9
	04-15		2	403353A1	09-26		
398986A1	09-62		30	403400A1	08-30		30A
399004A1	08-21				09-28		14
399221A1	08-10A			403840A1	08-30		29A

http://www.minnparbackhoeparts.com/

Number	Figure	Sequence	Ref.
403840A1	09-28		13
404226A1	09-57		6
404227A1	09-57		9
404228A1	09-57		4
404229A1	09-57		7
404471A1	04-19		
404617A1	04-14		12
	04-15		10
	09-59		
	09-69		
404807A1	09-28		1
404816A1	04-07		14
404834A1	09-24		37
	09-27		5
404835A1	09-24		38
	09-27		6
404907A1	08-10A		28A
405716A1	09-28		6
405738A1	09-52		15
405739A1	09-52		14
405740A1	09-52		13
405741A1	09-52		17
405742A1	09-52		18
406168A1	08-30		30
	09-28		7
406172A1	08-30		29
	09-28		8
406287A1	09-63		19
	09-64		5
406624A1	09-28		22
406700A1	09-46		9
406723A1	09-73		15
407009A2	09-72		6
407010A2	09-72		7
407660A1	04-12		8A
407734A1	08-30		44
407735A1	08-30		45
407745A1	08-30		42
407746A1	08-30		43
407804A1	08-30		31
407962A1	02-01		11
	04-06A		4
	09-28		8D
407975A1	08-30		16
408398A1	09-22		20
408399A1	09-22A		25A
408405A1	09-22		35
	09-22A		35
408535A1	04-06		12
408965A1	09-58		15A
408966A1	09-58		15
409025A1	08-59		5
409318A1	07-04		18
409370A1	07-03		38
409469A1	08-30		10
409470A1	08-30		10A
409471A1	08-30		9
409472A1	03-01		4A
	09-37		4A
409499A1	08-30		8A
409618A1	09-53		11
	09-67		25
409672A1	09-18		4
409673A1	09-18		5
409691A2	08-30		33
409723A1	09-60		18A
410561A1	06-12		44
410867A1	09-57		2
411049A1	09-74		2
411074A1	09-41		16
411399A1	09-53		25
411549A1	09-67		21
411668A1	09-08		
411844A1	09-57		
411845A1	09-57		
411846A1	09-57		
411847A1	09-57		
411848A1	09-57		
411849A1	09-57		
411850A1	09-57		
411851A1	09-57		
411892A1	09-36		14
411908A1	09-57		22
411909A1	09-57		19
411910A1	09-57		24
411911A1	09-57		31
411912A1	09-57		33
411914A1	09-57		29
411916A1	09-57		20
411917A1	09-57		17
412285A1	09-53		23
412510A1	04-12		40
413-1228	09-22		18
	09-22A		18
413-412	09-70		11
	09-70		4
413-516	09-10		11
	09-70		7
413-528	09-15		22
413-624	09-19		12
413-628	09-01		19
413-632	09-02		10
	09-02		27
	09-22		41
	09-22A		41
413-648	08-10A		4
413778A1	08-23		9
	08-30		36
413870A1	07-03		27
414-724	09-45		14
	09-45		22
	09-45A		15
414033A1	04-11		18
414034A1	04-11		17
414071A1	04-12		39
414092A1	04-12		38
414174A1	04-08		21
414415A1	08-30		3
414426A1	09-59		5
	09-69		3
414572A1	04-11		16
414600A1	09-60		17
414939A1	09-53		24
417681A1	09-28		18
418070A1	09-28		29
418789A1	08-05		13
418791A1	08-05		14
425-1012	09-22		19
	09-22A		19
425-105	07-03		21
425-106	04-08		2
	04-08		20
	09-01		21
	09-19		13
	09-58		12
	09-69		10
425-1110	09-18		16
425-115	09-03		6
	09-15		19
425-116	09-01		22
	09-02		26
	09-02		38
	09-16		36
	09-19		5
425-118	09-16		10
	09-17		3
	09-18		7
	09-21		7
425-147	09-57		
	09-59		
425-155	08-59A		12
425-156	07-03		5
	07-06		17
	09-16		27
	09-16		47
	09-17		9
	09-20		9
	09-21		16
427-3058	03-02		15
	03-03		18
427-5094	09-15		13
	09-25		13
	09-25A		13
427-6088	09-16		25

http://www.minnparbackhoeparts.com/

Number	Figure	Sequence	Ref.	Number	Figure	Sequence	Ref.
427-6088	09-17		7	448676A1	09-28		30
	09-20		7	449842A1	09-73		8
427-6100	09-04		33	450037A1	09-59		1
427107A1	06-02		1		09-69		1
429-1012	09-06		5	451384A1	09-27		52
	09-07		10	465004R91	09-01		14A
429230A1	05-05		1		09-02		
429231A1	05-06		1	470-10620	09-45		8
429232A1	05-06		2	47132002	04-06A		8
430471A1	04-12		37	484-43120	08-59A		11
431583A1	09-67		31	484-6316	06-12		3
431584A1	09-67		32	4890343	02-01		44
431801A1	09-52		21	4890732	02-39		
432-48	03-02		10	4890832	02-13		4
	03-02		16	4890833	02-14		8
	03-03		19	4890964	03-09		4
432-612	07-03		8	4891209	02-13		5
	07-06		18		02-27		7
	07-06		3	4891353	02-09		6
	09-01		27	4892426	02-39		
	09-02		37	4892708	02-22		2
	09-03		5	4892712	02-23		2
	09-04		34	4892713	02-23		3
	09-15		14	4892714	02-22		4
	09-16		26	4892715	02-22		4
	09-16		38	4892732	02-39		
	09-16		49	4892774	02-34		
	09-17		8	4892836	02-27		1
	09-19		4	4892859	02-16		2
	09-20		12	4892860	02-18		4
	09-20		8	4892861	02-16		1
	09-21		12	4893386	02-21		2
	09-25		14	4893391	02-34		8
	09-25A		14	4893518	03-06		6
432-828	09-01		13	4894095	03-10		4
	09-02		24	4894139	02-11		6
	09-15		25	4894218	02-10		1
	09-18		20	4894641	02-24		3
432431A1	09-55		9	4894721	03-09		5
434605A1	08-27		8	4894774	03-06		1
434891A1	09-28		32	4895038	02-09		4
438-12040	07-03		24	4895039	02-09		3
439-5436	09-02		6	4895040	02-09		7
440-10616	09-04		18	4895043	02-34		3
440-1066	04-12		27	4895045	02-34		5
	09-37		1B	4895049	02-10		8
440-1088	09-60		22	4895078	02-16		16
440-11010	09-38		2	4895079	02-14		14
440-11012	09-40		12	4895107	02-33		2
440-12510	09-54		9	4895121	02-36		2
	09-54A		9	4895133	02-29		2
440038A1	04-06A		9	4895164	02-33		1
442718A1	09-54		8	4895166	02-08		5
	09-54A		8		03-08		5
442773A1	09-54		33	4895179	02-16		12
	09-54A		33	4895180	02-10		9
442842A1	09-55		6	4895183	02-16		4
443375A1	03-01		2	4895184	02-16		9
443432A1	08-59			4895187	02-16		6
444640A1	08-67		22	4895188	02-16		5
445266A1	06-40		7	4895195	02-18		1
445267A1	06-40		3	4895196	02-18		7
445310A1	06-29		1	4895198	02-18		9
445311A1	06-29		33	4895199	02-18		10
445312A1	06-29		13	4895200	02-18		11
445313A1	06-29		34	4895204	02-18		12
445314A1	06-30		1	4895214	02-17		3
445364A1	09-28		33	4895215	02-16		8
445757A1	09-28		17B	4895228	02-09		5
446220A1	09-22A		5	4895244	03-11		1
446222A1	09-22		5	4895291	02-08		3
446454A1	09-22		36		02-39		2
	09-22A		36	4895294	02-19		7
448284A1	08-25		9	4895297	03-05		2
448428A1	09-63		12	4895301	02-39		4
448429A1	09-63		13	4895305	03-11		2
448607A1	09-52		2	4895323	02-27		8
	09-68		1		02-28		1
448608A1	09-52		6	4895336	02-20		4
	09-68		6	4895347	02-16		7
448609A1	09-52		5	4895355	02-12		8
	09-68		5	4895358	02-14		11

http://www.minnparbackhoeparts.com/

Number	Figure	Sequence	Ref.	Number	Figure	Sequence	Ref.
4895360	02-17		1	4899103	02-14		9
4895361	02-18		2	4899106	02-33		7
4895363	02-18		5	4899107	02-33		3
4895364	02-18		6	4899108	02-33		4
4895365	02-18		8	4899109	02-14		2
4895378	02-14		4		02-26		11
4895379	02-14		5		02-36		1
4895392	02-10		6		02-38		6
	02-36		6	4899110	02-15		3
4895393	02-10		7	4899115	02-10		3
	02-36		7		02-30		11
4895489	02-11		2	4899118	02-29		1
4895538	02-08		4	4899119	02-20		5
	02-11		10	4899121	02-33		11
4895586	02-26		6	4899143	02-14		
4895605	02-10		2	4899467	02-33		5
4895610	02-30		5	4899519	02-33		6
4895623	02-36		8	4899610	02-28		5
4895625	02-36		9	4899629	02-19		8
4895648	02-19		4	4899643	02-34		2
4895790	02-16		3	4899921	02-19		5
4896153	02-10		13	490-11012	04-08		18
4896404	02-34		4	490-1106	04-07		11A
4896406	02-34		9	490-1108	04-07		
4896409	02-34		11	492-11025	09-54		10
4896410	02-34		7		09-54A		10
4896770	03-06		7	492-11031	09-10		12
4896773	02-25		1	492-11038	09-58		11
4896897	02-40		2		09-69		9
4896947	02-26		5	493-11026	04-18		2
4897024	02-13		1	493-11039	04-05		12
4897048	02-26		4	493-21020	04-04		9
4897071	02-26		3		08-61		3
4897123	02-26		2	493-21033	04-04		7
4897125	02-26		1	493-41020	06-12		5
4897178	02-16		13	495-11028	09-01		8
4897179	02-16		14		09-02		17
4897330	02-30		4		09-71		2
4897457	02-28		4	495-11034	09-10		13
4897480	02-31		1	495-11041	04-05		9
4897934	02-26		11		04-06		8
4897980	02-23		1		08-10A		5
4898301	02-11		3		09-02		34A
4898482	02-29		6	495-11047	05-04		11
4899003	03-06		4		06-01		30
4899004	02-14				09-57		
4899009	02-10		4		09-59		
	02-16		10	495-11053	09-04		35
4899019	02-34		1	495-11081	09-18		10
4899020	02-11		1	495-21031	04-18		3
	02-14		13	495-21038	07-06		4
4899026	02-09		2		09-44		6
	02-12		1	495-21044	09-02		11
	02-14		1		09-37		8
4899027	02-27		2	495-31016	09-45		9
4899031	02-35		3	495-31022	03-02		9
	02-38		5		04-14		4
	03-09		3	495-81001	02-04		17
4899035	02-34		6		09-67		6
4899036	02-30		3	495-81025	06-01		15
4899037	02-40		3		06-01		20
4899039	02-19		2	495-81153	04-08		6
4899053	02-39		1	495-81169	09-45		17
4899058	02-33		9		09-45A		18
4899063	02-13		3	495-81184	09-01		9
4899068	02-28		3		09-02		22
	03-07		2	495-81226	09-24		32
	03-08		3		09-26		25
4899072	02-10		5		09-26		35
	02-16		11		09-26		4
4899073	02-12		4		09-27		13
	02-41		2		09-27		42
4899074	02-14		7	495-81227	09-23		17
4899075	02-14		3		09-24		31
4899076	02-14		6		09-26		3
4899078	02-13		2		09-27		12
4899080	02-28		6	495-81261	07-03		30
4899090	02-31		2	495-81267	09-67		10
4899091	02-11		2	495-81282	09-04		7
	02-12		2		09-22		34
4899093	02-12		3		09-22A		34
	03-08		4		09-26		21

http://www.minnparbackhoeparts.com/

Number	Figure	Sequence	Ref.
495-81282	09-27		38
496-21041	02-01		29
	06-12		17
	06-13		7
	09-01		20
496-41041	08-08		
	08-08		3
	08-08A		
	08-08A		3
	08-10		6
	08-11		6
	08-12		6
	08-13		6
	08-14		6
	08-22		12
	08-22		21
	09-12		5
	09-43		4
	09-58		33
	09-58		6
	09-69		20
	09-69		30
496-81000	05-09		9
	06-01		3
	06-06		24
496-81010	09-45		18
	09-45		25
	09-45A		19
496-81018	03-02		7
	09-13		29
496-81028	05-01		11
510828	06-26		31
	08-01		10
511-10250	06-25		6
51200906	09-49A		
514-633	09-54		34
	09-54A		34
	09-56		11
	09-56A		11
514-634	07-02		26
514-832	08-01		8
514-847	03-02		3
515-2179	09-04		14
515-22190	04-06A		2
515-22254	02-02		17
515-2295	08-22		29
	09-02		17A
515-23127	03-01		16
	04-04		13
	04-04		15
515-23143	08-30		4
515-23159	05-02		23
515-23254	04-04		26
515-23444	04-10		27
515-2379	07-04		15
515-25190	04-06A		31
	08-10A		22
515-25254	02-04		7
	08-07		13
565-104	09-15		34
569-4	09-54		24
	09-54A		24
60-7083T1	09-54		7
	09-54A		7
604-12030	09-45		3
	09-45A		11
	09-45B		9
	09-50		
604-20035	09-24		36
604-20045	08-23		6
604-8050	03-03		9
607-10020	09-28		15A
607-8020	08-30		34
	09-28		8B
607-8035	09-28		8C
614-10020	02-04		8
	03-01		38
	03-01		41
	04-03		12
	05-01		19
	05-01		9
	06-12		26
614-10020	08-03		2
	09-37		7
	09-39		13
614-10025	07-03		10
	07-06		24
	08-23		11
	09-09		2
	09-13		38
	09-16		42
	09-19		16
	09-20		3
	09-37		53
	09-39		10
	09-39		22
	09-39		5
	09-40		3
614-10030	02-01		37
	04-10		28
	04-17		6
	06-15		7
	06-16		8
	08-13		53
	08-22		15
	08-30		38
	09-39		28
	09-66		4
614-10035	03-03		23
	05-01		20
	08-10		5
	08-11		5
	08-12		5
	08-13		5
	08-14		5
	08-26		2
	08-29		2
	09-12		4
	09-38		8
614-10040	08-24		29
614-10050	09-24		41
	09-25		6
	09-25A		6
614-10080	02-06		3
	02-06A		3
	06-18		2
614-12016	04-06A		32
614-12025	05-04		6
	06-01		32
614-12035	02-07		3
	06-12		27
	06-13		9
	06-26		32
	08-01		8
614-12040	02-07		10
	09-45B		6
614-18035	08-09		6
614-20030	09-38		12
614-6016	03-03		32
	09-01		15
	09-02		30
	09-04		13
	09-18		22
614-6020	04-06A		13
	04-18		13
	09-01		30
	09-01		7
	09-02		16
	09-18		24
614-6025	03-03		32
	09-21		4
614-6035	04-06A		11
614-8012	02-03		7
	02-03A		7
	06-10		2
	06-11		2
	06-11A		2
614-8016	02-01		19
	02-01		40
	08-30		9A
	09-58		18
	09-69		23
614-8018	06-14		11
614-8020	02-02		12

http://www.minnparbackhoeparts.com/

Number	Figure	Sequence	Ref.
614-8020	02-02		18
	02-04		2
	03-03		9A
	04-08		9
	04-09		15
	04-17		3
	07-03		36
	07-04		5
	09-12		12
	09-58		24
	09-66		14
	09-67		5
614-8022	06-22		2
614-8025	04-03		10
	04-03		4
	04-08		10
	04-17		10
	08-10		14
	08-11		14
	08-12		13
	08-13		13
	08-22		28
	09-03		15
	09-08		27
	09-08A		27
	09-13		5
	09-15		11
	09-16		2
	09-16		20
	09-25		23
	09-25A		23
	09-51		1A
614-8030	02-01		9
	03-01		17
	06-44		13
	06-45		13
	07-03		2
	07-04		26
	09-05		8
	09-15		4
	09-25		33
	09-25A		30
	09-36		19
	09-43		5
	09-44		5
	09-58		5
	09-63		28
	09-64		19
	09-69		19
614-8040	02-02		21
	04-06A		3
	09-44		4
614-8050	09-15		35
615-10016	06-25		24
627-10030	02-06		11
	02-06A		11
	06-12		16
	06-13		6
627-12025	03-03		26
627-20060	09-37		2
627-8020	02-07A		3
628-10030	06-25		40
	06-26		18
628-10035	06-26		16
711-10030	09-37		25
711-10040	09-44		8
711-10050	05-02		24
712998R91	05-06		12
	06-03		7
761-17325	04-19		13
781-24613	04-04		34
	04-08		15
	09-13		20
781-24820	09-42		30
800-11115	06-29		16
	06-30		16
800-1134	06-06		17
800-1140	06-31		5
800-1145	06-30		43
800-1150	06-20		26
	06-29		32
	06-29		38
800-1150	06-30		30
	06-30		36
	06-31		4
	06-31		8
800-1160	06-33		18
	06-33		20
800-1165	06-33		15
	06-33		17
800-21100	06-33		26
800-2136	06-46		26
800-2168	06-26		21
800-2175	06-30		40
	06-32		17
800-2180	06-29		35
	06-30		33
800-40065	09-23		27
800-40070	09-23		31
800-4155	09-24		25
800-44040	09-04		26
	09-04		31
	09-05		22
	09-05		4
	09-25		4
	09-25A		4
	09-27		27
800-44050	05-04		5
	06-01		7
	09-04		8
800-5120	06-44		5
	06-45		5
800-5145	06-22		19
800-5150	06-31		2
800-5160	06-32		23
	06-33		24
800-6138	08-32		2
806-8016	02-02		15
806-8025	02-04		16
811-6016	04-06A		16
814-10040	08-04		9
	08-06		6
	08-07		8
	08-09		3
	08-23		10
	08-25		6
	08-30		39
814-10045	02-06		16
	02-06A		22
	03-01		38
	06-15		15
	06-16		21
	08-04		19
	08-05		7
	08-06		5
	08-09A		3
	08-13		41
	08-22		9
	09-37		30
814-10050	02-01		20
	05-01		10
	08-14		14
814-10055	08-12		38
	08-13		30
	08-13		49
	09-66		3
814-10060	04-04		27
	07-06		30
	08-22		10
	08-26		6
	08-29		6
	09-08		25
	09-08A		25
	09-13		25
814-10070	08-08		22
	08-08A		22
	08-26		30
814-10080	08-10		2
	08-11		2
	08-12		2
	08-13		2
	08-14		2
	08-25		2
	09-08		20

http://www.minnparbackhoeparts.com/

Number	Figure	Sequence	Ref.
814-10080	09-08A		20
814-10090	02-01		28
	08-26		29
	08-27		13
	09-01		29
	09-08		16
	09-08A		16
814-10110	09-01		36
814-10130	09-13		13
814-10150	06-15		9
814-10245	04-05		6
	04-06		7
814-12050	08-23		17
814-12060	08-12		27
	08-13		27
814-12070	08-24		10
	08-30		7
814-12080	02-07		5
	06-12		31
	06-13		14
	08-10		37
	08-10		41
	08-11		31
	08-11		37
	08-12		23
	08-12		42
	08-13		23
	08-13		57
814-12090	08-24		6
814-12100	08-10		18
	08-11		18
	08-12		17
	08-13		17
	09-39		16
814-12130	09-66		8
814-14140	06-40		9
814-6030	09-25		16
	09-25A		16
814-6050	09-59		2
	09-69		
814-8035	08-08A		2A
	08-22		20
814-8040	07-03		15
814-8050	09-25		27
	09-25A		31
814-8055	08-08A		2
	08-22		19
814-8060	06-17		16
	06-24		7
	07-04		35
	08-08		2
814-8070	08-23		21
	09-15		8
	09-25A		27
814-8080	06-23		34
	06-23A		34
	06-44		14
	06-45		14
814-8100	09-66		15
814-8110	09-66		13
81465471	02-01		13
815-8055	06-28		4
81868381	08-34		8
	08-35		9
	08-36		18
	08-37		18
	08-38		19
	08-39		19
82017872	04-06A		26
824-1405	04-04		10
	04-20		7
825-11412	03-02		8
825-11418	05-09		8
	06-01		2
	06-06		25
825-1412	09-24		47
825-2406	09-64		27
825-2408	09-58		25
	09-63		30
	09-64		21
825-2410	09-39		27
	09-39		31
825-2410	09-39		6A
	09-40		5
827-10040	02-06		14
	02-06A		20
827-10075	06-07		3
827-10130	04-03		15
827-12045	06-01		14
	06-01		21
827-12065	06-12		9
827-12240	09-28		6A
827-16085	09-36		10
827-16100	09-36		11
827-20075	09-23		13
827-20170	09-35		2
	09-35		6
827-20190	09-05		16
827-20230	06-38		4
827-8050	07-06		10
828-10050	06-25		38
828-10080	06-25		42
828-20160	09-06		6
	09-07		4
829-1406	04-06A		20
	04-06A		30
	09-01		32
	09-18		25
	09-21		5
	09-25		18
	09-25A		18
829-1408	02-02		20
	03-03		11A
	04-04		8
	04-06A		18
	04-08		12
	04-17		5
	07-03		28
	07-03		4
	07-06		15
	08-08		4
	08-08A		4
	08-22		23
	08-23		23
	09-03		17
	09-05		11
	09-13		7
	09-15		7
	09-25		29
	09-25A		29
	09-28		8F
	09-58		20
	09-65		
	09-69		26
829-1410	02-04		14
	02-06		13
	02-06		6
	02-06A		13
	02-06A		6
	03-01		35
	03-01		43
	04-10		29
	05-02		27
	06-10		25
	06-11		26
	07-03		12
	07-06		21
	08-03		25
	08-04		13
	08-05		11
	08-05		17
	08-05		36
	08-06		10
	08-06		15
	08-08		26
	08-08A		26
	08-09		5
	08-09A		5
	08-10		4
	08-11		4
	08-12		4
	08-13		4
	08-14		4
	08-22		41

http://www.minnparbackhoeparts.com/

Number	Figure	Sequence	Ref.
829-1410	08-23		13
	08-26		8
	08-27		16
	08-27		7
	08-29		8
	08-30		41
	09-13		37
	09-37		34
	09-37		46
	09-37		54
829-1412	06-01		22
	08-23		19
	09-28		6C
	09-39		21
	09-66		11
829-1416	09-36		15
829-1420	06-38		7
	09-05		19
	09-23		15
	09-35		4
	09-35		8
	09-38		13
832-10404	04-12		14
	09-53		9
832-10406	04-06A		15
	04-07		34
	04-10		31
	04-12		9
832-10408	02-02		14
	02-02		25
	04-12		34
	04-17		12
	05-01		17
	05-01		25
	07-03		17
	09-13		33
	09-16		21
	09-16		3
	09-42		32
	09-44		7
	09-54		26
	09-54A		26
	09-55		10
	09-58		7
	09-61		8
	09-62		12
	09-62		17
	09-67		7
	09-69		22
832-10410	02-01		24
	04-03		18
	05-01		13
	08-07		15
	08-12		39
	08-13		32
	08-13		43
	08-13		50
	08-13		54
	08-14		16
	08-24		26
	08-26		33
	09-08		18
	09-08		22
	09-08		8
	09-08A		18
	09-08A		22
	09-08A		8
	09-13		14
	09-13		26
	09-15		17
	09-16		44
	09-19		17
	09-20		4
	09-39		12
	09-44		11
	09-67		11
832-10412	02-07		9
	06-12		11
	06-12		34
	06-13		11
	08-10		19
	08-10		39
832-10412	08-11		19
	08-11		33
	08-12		18
	08-12		25
	08-12		28
	08-13		18
	08-13		25
	08-13		28
832-10420	09-06		8
	09-07		6
832-10508	09-54		39
	09-54A		39
	09-56		16
	09-56A		16
832-41312	09-22		22
	09-22A		25C
833-40310	09-36		9A
833-40406	04-11		3
	04-12		23
	04-12		4
	09-04		15
	09-12		18
	09-13		21
	09-14		10
	09-41		6
	09-42		18
	09-42		23
	09-42		6
	09-64		26
	09-67		18
833-40408	02-04		18
	09-44		4A
838-3640	03-03		16
83822C1	09-64		
83981068	08-35		19
	08-37		21I
	08-37		22
	08-38		20
	08-39		20
	08-39		25I
840-1416	04-21		12
	08-15		
	08-16		
	08-17		
	08-18		
	08-19		
	08-20		
	08-22		37
843-1516	04-20		5
844-10020	04-04		16
	04-05		11
	04-05		3
	04-06		13
	04-10		32
	04-15		11
	09-03		9
844-10035	04-03		2
844-10110	09-08		6
	09-08A		6
844-6025	04-07		33
	04-10		30
	04-12		7
845-6020	09-64		25
85801585	02-07		6
	06-12		32
	06-13		12
85802618	02-07		8
	06-12		32A
	06-13		12A
85802820	08-08		1
	08-08A		1
85803019	02-02		
85808333	06-26		22
85811921	08-43A		11
85811922	08-43A		10
85811923	08-43A		3
85811933	08-44		8
	08-45		8
	08-47		8
	08-48		8
	08-49		7
	08-50		8

http://www.minnparbackhoeparts.com/

Number	Figure	Sequence	Ref.	Number	Figure	Sequence	Ref.
85811934	08-43A		9	85826342	08-43		8
	08-44		7		08-50		
	08-45		7	85826343	08-47		6A
	08-47		7	85826344	08-44		5
	08-48		7		08-45		5
	08-50		7		08-46		5
85811935	08-43A		9		08-47		5
	08-44		7		08-48		5
	08-45		7		08-49		5
	08-47		7		08-50		5
	08-48		7	85826345	08-44		3
	08-50		7		08-47		3
85811937	08-49		6	85826346	08-45		6A
85811938	08-44		4	85826365	08-40		6
	08-45		4		08-41		6
	08-46		4		08-42		6
	08-47		4		08-43		6
	08-48		4		08-48		
	08-49		4	85826905	08-48		6A
	08-50		4	85827471	08-17		3
85811946	08-43A		4		08-18		6
85812114	08-44		6		08-19		6
85812115	08-45		6		08-52		
	08-50		6	85827472	08-15		5
85812116	08-47		6		08-16		5
	08-48		6		08-51		
85817669	08-43A		7	85827991	08-51		2
85819148	08-44		9	85827992	08-51		4
	08-45		9		08-52		4
	08-46		9		08-53		5
	08-47		9	85827993	08-51		6
	08-48		9		08-52		6
	08-49		8		08-53		7
	08-50		9	85827994	08-51		7
85819378	08-45		3		08-52		7
	08-46		3		08-53		8
	08-48		3	85827995	08-51		8
	08-49		3		08-52		8
	08-50		3		08-53		9
85820128	08-43A		6	85827996	08-51		9
85820129	08-43A		2		08-52		9
85821235	08-43A		8		08-53		10
85821236	08-43A		5	85827997	08-51		10
85821520	09-15		21		08-52		10
85824067	09-15		16		08-53		11
85824080	09-15		20	85827998	08-51		12
85824081	09-15		18		08-52		12
85824281	08-45		10		08-53		13
	08-46		10	85827999	08-51		13
	08-47		10		08-52		13
	08-48		10		08-53		14
	08-49		9	85828000	08-51		14
	08-50		10		08-52		14
85824282	08-44		10		08-53		15
85825473	08-43A		13	85828001	08-51		15
85825477	08-43A		12		08-52		15
85826229	02-01		30		08-53		16
85826230	02-01		31	85828002	08-51		16
85826337	08-40		3		08-52		16
	08-41		3		08-53		17
	08-42		3	85828003	08-51		17
	08-43		3		08-52		17
	08-45				08-53		18
85826338	08-40		5	85828004	08-52		2
	08-41		5	85828005	08-51		11
	08-42		5		08-52		11
	08-43		5		08-53		12
	08-47			85828013	08-51		3
85826339	08-40		2	85828015	08-52		3
	08-41		2		08-53		3
	08-42		2	85828048	08-53		2
	08-43		2	85828054	08-53		4
	08-44			85828061	08-53		1
85826340	08-40		4	86014151	04-06A		27
	08-41		4	8602005	02-07A		1
	08-42		4	8603092	09-75		3
	08-43		4	8603093	09-77		3
	08-46			8603094	09-76		3
85826341	08-41		7	863-10016	06-25		23
	08-43		7		06-25		33
	08-49			863-10025	06-25		20
85826342	08-42		7	863-16070	05-06		8

http://www.minnparbackhoeparts.com/

Number	Figure	Sequence	Ref.	Number	Figure	Sequence	Ref.
863-6020	07-01		25	86987461	08-20		1
864-10025	06-18		17		08-43		
864-12030	08-01		6	86988086	04-21		1
864-12130	06-40		10	86989616	09-15		28
864-5010	06-35		48	86989676	03-01		10
864-5012	06-35		28	86990837	05-04		1
	06-35		39		05-05		
864-6012	06-34		6		05-06		
864-6020	06-23		8		05-07		
	06-23A		8		05-08		
864-6035	07-01		10	86991496	07-04		14
	07-01		19	86992243	09-42		20
864-8020	06-23		21	86992245	09-42		10
	06-23A		21	86992247	09-42		1
864-8025	06-18		6	86992248	09-42		10
864-8030	06-35		30	86992284	09-42		
864-8055	09-13		34		09-42		
864-8065	06-34		2	86992395	04-01		
86507190	09-58		35		04-03		1
	09-69		32	86992557	08-08A		38
86507198	09-58		36		08-22		25
	09-69		33	86992975	09-75		12
86596853	08-22		31	86992976	09-75		4
86619908	04-06A		7	86992977	09-42		28
86625128	08-54		13	86992978	09-77		12
	08-55		13	86992979	09-77		4
	08-57		10	86992980	09-76		12
86982435	08-63		18	86992981	09-76		4
	08-70		16	86993546	06-12		23
86982437	08-62		18	86993773	09-41		9B
	08-64		23	86993774	09-41		9C
86982439	08-66		25	86994165	09-49A		11
86982441	08-65		18	87000312	08-54		17
86982442	08-65A		18		08-55		18
	08-69		21		08-56		19
86982443	08-67		25		08-58		15
86982444	08-68		22	87019767	06-12		23A
86982682	09-38		10	87020181	06-12		4
86983190	09-41		2	87021704	06-13		23
86983269	09-41		9A	87021705	06-13		22
86983278	09-13		11	87032428	07-06		38
86983311	08-54		1	87037462	09-49A		8
	08-55		1	87037944	08-54		4
	08-56		1		08-55		4
	08-57		1		08-56		4
	08-58		1		08-57		4
86983325	09-41		9		08-58		4
86984097	06-23			87041331	09-25		31
86984098	06-23				09-25A		33
86984107	06-38		1A	87301325	02-02		4
	06-40			87301351	09-01		
	06-42				09-02		
	06-43			87301355	02-01		4A
	06-45			87301356	02-01		7
	06-46			87301515	09-53		26
	07-01				09-67		33
	07-02			87301687	04-07		11
86984108	06-38		1	87303781	09-15		34
	06-40			87303784	04-21		3
	06-41			87305413	09-14		7
	06-43				09-74		5
	06-44				09-78		15
	06-46			87306274	08-01		2
	07-01			87306306	02-02		3
	07-02			87306307	08-01		4
86984155	09-65		4	87307476	08-10		40
86984544	09-15		2		08-11		36
	09-25A		25		08-12		41
86984545	09-15		6		08-13		56
	09-25A		26	87307635	08-12		35
86984547	09-15		5	87307636	08-12		29
	09-25		28	87307893	09-74		9
	09-25A		28		09-76		
86984549	09-15		24	87307896	09-74		9
86985339	09-12		3		09-77		
86985341	09-12		2	87308118	09-49A		1
86987459	08-15		1	87308119	09-49A		2
	08-16		1	87308127	09-49A		3
	08-40			87308128	09-49A		7
86987460	08-17		1	87308130	09-49A		
	08-18		1	87308131	09-49A		13
	08-41			87308132	09-45A		7

http://www.minnparbackhoeparts.com/

Number	Figure	Sequence	Ref.	Number	Figure	Sequence	Ref.
87308132	09-49A		14	87310128	04-12		16
87308141	09-49A		15		04-12		30
87308142	09-49A			87310139	09-11		8
87308143	09-49A			87310142	04-11		14
87308144	09-49A		16	87310144	04-12		36
87308145	09-49A			87310146	09-42		14
87308146	09-49A		17		09-42		25
87308147	09-49A		18		09-42		8
87308148	09-49A			87310147	09-53		7
87308149	09-49A		19	87310149	09-45A		17
87308150	09-49A		20		09-45B		5
87308151	09-49A		21	87310152	04-11		2
87308152	09-49A		5		04-12		6
87308153	09-49A		4	87310154	09-42		29
87308154	09-49A		6	87310156	09-11		7
87308157	09-49A		1	87310176	04-12		32
87308158	09-49A		2	87310177	09-67		9
87308159	09-49A		3	87310184	04-12		12
87308472	08-03		22	87310185	04-12		33
87308838	08-54		8		09-42		31A
	08-55		8	87310186	09-14		6
	08-56		8		09-42		17
	08-57		5		09-42		22A
	08-58		8		09-42		5A
87308839	08-54		10	87311219	06-11A		8
	08-55		10	87311572	09-45A		16
	08-56		10		09-45B		3
	08-57		6	87312712	04-04		32
	08-58		10		04-07		31
87308840	08-15		4		06-12		42
	08-16		4	87313164	02-06A		14
	08-19		4	87313544	06-38		3
	08-57			87316049	08-05		27
87308844	08-15		3	87316264	08-05		31
	08-17		8	87316270	08-05		30
	08-54			87326813	09-24		34
87308845	08-19		3	87327489	07-06		39
	08-20		3	87330322	03-02		11
	08-56			87330325	03-03		21
87308846	08-16		3	87331077	07-06		9
	08-18		2	87333648	08-30		46
	08-55			87336843	09-79		15
87308847	08-17		9	87336844	09-80		15
	08-18		3	87338681	09-45A		1
	08-20		4	87340008	02-01		42
	08-58			87400112	06-12		21
87308996	09-75		2	87400286	05-05		7
87308997	09-77		2		06-02		9
87308998	09-76		2	87402618	09-40		24
87309656	02-06		1	87402623	08-67		21
	02-06A		1	87403386	08-38		
87309923	09-14		2	87403387	08-39		
87309924	09-14		1	87403835	04-05		1
87310083	04-21		6	87404197	05-04		4
87310085	09-41		12		06-01		9
87310086	04-11		5	87405706	09-13		17
87310088	09-42		12B	87406924	09-52		10
	09-42		21A		09-67		28
	09-42		3	87406934	06-12		22
87310096	06-12		8	87407206	04-05		10
	09-12		17	87407272	02-01		16
	09-14		9	87407758	06-13		21
	09-41		15	87407769	09-39		15
87310098	04-12		22	87407770	09-39		19
	04-12		3	87407771	02-01		18
	09-15		34	87407927	09-41		18
	09-42		16	87407965	08-19		1
	09-42		22		08-42		
	09-42		5	87408480	03-01		10A
	09-67		17	87408888	09-45		13
87310124	04-11		12		09-45		21
	04-11		13		09-45A		14
	09-11		14		09-45B		7
87310126	04-09		3	87408889	09-45		12
	04-12		16A		09-45		20
	04-12		19		09-45A		14
	09-01		3		09-45B		8
	09-02		32	87409201	06-12		24
	09-11		14	87410096	02-01		1
87310127	09-42		13		02-03		
	09-42		24	87410098	02-01		1
	09-42		7		02-03A		

http://www.minnparbackhoeparts.com/

Number	Figure	Sequence	Ref.	Number	Figure	Sequence	Ref.
87410105	04-21		9	87417391	06-04		
87410265	04-06A		21		06-05		
87410602	04-06A		10		06-06		
87410603	04-06A		1		06-07		
87410613	06-36		1		06-08		
87411083	09-11		2A	87417599	09-01		37
87411084	09-11		4A	87417601	09-03		
87411108	09-55		4	87417644	08-10		28
87411319	02-07		1		08-67		1
87411320	02-07		2		09-24		9
87411720	08-30		28A	87417649	08-67		3
87411722	08-30		27A	87417651	08-67		18
87412060	09-39		18	87417721	04-17		8
87412139	02-02		1		08-25		8
87412635	02-05		1		08-26		4
87412687	09-01		1		08-29		4
	09-02		42		09-01		38
87412695	09-01		1A	87417762	08-67		2
	09-02		42A	87418279	08-67		6
87413144	08-36			87418297	08-67		
87413145	08-38			87418359	02-02		19
87413146	08-39			87418360	02-02		22
87413162	04-06A		28	87418364	02-05		2
87413237	02-01		14	87418365	02-05		3
87413722	08-66		12	87418368	09-15		31
87414205	09-14		7	87418369	09-15		32
	09-74		5	87418516	09-12		1
	09-78		15	87418518	09-12		11
87414237	04-06A		12	87418541	04-07		1
87414277	08-37				04-08		1
87414278	08-37			87418542	04-10		1
87414560	03-01		20	87418551	08-30		15
87415774	02-01		43	87418552	08-30		13
87415781	04-05		8	87418553	08-30		14
87415931	09-72		15	87419229	04-04		23
87416024	08-04		23	87419256	08-25		24
87416108	06-46		1A	87419257	04-05		4
87416475	09-49A		12	87419259	04-05		2
87416476	08-36			87419320	04-10		14
87416966	02-07		7		04-13		
87416967	06-12		33	87419385	02-01		
	06-13		13	87419454	08-15		2
87416977	06-12		29		08-16		2
87416978	06-12		30		08-17		2
87416981	06-13		15		08-18		5
87416982	06-13		8	87419455	08-19		2
87417224	02-02		11		08-20		2
87417225	02-02		10	87419615	04-06A		23
87417299	02-02		7	87419616	04-06A		22
87417300	02-02		3	87419634	05-02		14
87417301	02-01		2	87420672	08-08		25
87417329	09-65		26		08-08A		25
87417383	03-01		18	87420673	08-08		23
	04-06A		6		08-08A		23
	09-36		17	87420696	08-25		17
87417387	06-01		1	87421213	08-25		4
	06-02			87421471	03-03		29
	06-03			87421488	04-09		2
	06-04			87421775	09-65		6
	06-05			87421776	09-65		12
	06-06			87421777	09-65		1
	06-07			87421807	03-03		28
	06-08			87421836	08-23		20
87417389	06-01		1	87421918	08-05		4
	06-02			87421920	08-05		5
	06-03			87421928	08-04		7
	06-04			87421930	08-04		4
	06-05			87421932	08-04		5
	06-06			87421934	08-04		6
	06-07			87421938	08-25		13
	06-08			87422239	09-16		33
87417390	06-01		1	87422241	09-16		31
	06-02			87422243	09-16		28
	06-03			87422245	09-16		29
	06-04			87422247	09-16		30
	06-05			87422249	09-16		32
	06-06			87422253	09-19		15
	06-07			87422256	09-19		14
	06-08			87422258	09-19		2
87417391	06-01		1	87422260	09-19		1
	06-02			87422262	09-19		10
	06-03			87422264	09-19		8

http://www.minnparbackhoeparts.com/

Number	Figure	Sequence	Ref.	Number	Figure	Sequence	Ref.
87422270	09-19A		2	87425696	09-13		22
87422272	09-19A		1	87425869	04-17		13
87422597	06-10		5	87426221	08-34		6
87422598	06-10		6		08-35		7
87422696	09-15		9	87426227	08-34		9
	09-25		12		08-35		10
	09-25A		12	87426232	08-36		11
87422777	04-02				08-37		11
	04-03		3		08-38		16
87422948	08-23		35		08-39		16
87422977	08-23		38	87426233	08-34		5
87423004	09-36		1		08-35		6
87423006	09-36		1	87426235	08-34		11A
87423033	08-08A		39		08-35		12A
	08-22		24	87426238	08-34		15
87423034	08-08A		1A		08-35		16
	08-22		18		08-36		21
87423044	06-11		18		08-37		23
87423067	08-25		5		08-38		8
87423343	08-30		27		08-39		8
87423345	08-30		28	87426241	08-35		18
87423346	09-58		14		08-36		7
87423356	08-09		10		08-36		8A
	08-09		14		08-37		7
87423396	04-13		3		08-37		8A
87423397	04-13		4		08-38		10A
87423401	08-22		2		08-38		11
87423409	09-75		9		08-39		10A
87423410	09-75		8		08-39		11
87423496	04-17		2	87426379	09-04		1
87423502	09-57		34	87426488	08-22		16
87423503	09-57		26	87426716	08-34		12
87423531	02-06		9		08-35		13
	02-06A		9	87426717	08-34		11
87423668	09-36		16		08-35		12
87423675	04-06		2	87426965	08-03		12
87423676	04-06		5	87426966	08-03		14
87423677	04-05		16	87427158	06-10		1
	04-06		11		06-11		1
87423802	04-21		8	87427294	09-65		20
87423812	04-21		4	87427537	08-26		28
	09-73		16	87427539	08-26		27
	09-74		6	87427775	09-25A		15
87423813	09-78		14	87427948	08-22		17
87423817	09-40		19	87428023	08-54		3
87423867	08-30		24		08-55		3
	08-32				08-56		3
	09-28		28		08-57		3
87423868	08-32		1		08-58		2
87423926	04-04		6	87428140	08-09		2
87423969	08-23		40	87428151	09-01		33
87423970	08-23		41	87428152	09-01		34
87424240	06-11		5	87428153	09-02		35
87424241	06-11		6	87428158	08-09		26
87424267	08-54		14	87428316	09-58		8
	08-55		15		09-69		12
	08-56		16	87428476	08-37		13
	08-58		13		08-39		22
87424794	07-06		29	87428477	08-37		14
87424815	06-13		5		08-39		23
	06-25			87428486	08-36		22
	06-26				08-37		24
	06-27				08-38		9
	06-28				08-39		9
	06-29			87428488	08-36		20
	06-30				08-37		20
	06-31				08-38		18
	06-32				08-39		18
	06-33			87428490	08-36		19
	06-34				08-37		19
	06-35				08-38		17
	06-36				08-39		17
87424864	06-27		1	87428491	08-36		13
87424865	06-27		2		08-38		23
87425117	09-21		3	87428492	08-36		14
87425118	09-21		1		08-38		24
87425122	09-11		16	87428495	08-36		12
87425225	08-22		36		08-37		12
87425456	09-35		5		08-37		21F
87425631	04-20		2		08-38		21
87425635	04-20		8		08-39		21
87425636	04-21		10		08-39		25F

http://www.minnparbackhoeparts.com/

Number	Figure	Sequence	Ref.	Number	Figure	Sequence	Ref.
87428497	08-36		9	87431300	09-13		24
	08-37		9	87431301	09-13		23
	08-38		12	87431529	09-13		15
	08-39		12	87431630	08-23		3
87428500	08-36		8	87431701	06-39		10
	08-37		8	87431702	06-39		1
	08-38		10	87431799	02-07		11
	08-39		10	87432547	03-03		25
87428501	08-37		21	87432811	09-25		30
	08-39		25		09-25A		32
87428645	09-03		3	87433005	09-14		13
87428814	08-23		39	87433006	09-14		12
87428998	06-10		18	87433007	09-14		14
	06-11		37	87433008	09-14		11
87429150	08-37		21D	87433028	08-37		21A
	08-39		25D		08-39		25A
87429163	09-79		14	87433029	08-36		10
87429164	09-80		14		08-37		10
87429165	09-79		15		08-38		13
87429166	09-80		15		08-39		13
87429186	09-72		16	87433030	08-36		23
87429287	08-05		12		08-37		25
	08-06		11		08-37		25A
87429310	03-01		1		08-38		22
87429314	03-01		1A		08-39		26
87429318	03-01		1B		08-39		26A
87429382	05-02		10	87433209	09-78		12A
87429387	08-23		2	87433240	08-25		1
87429584	08-08		19	87433386	08-30		11
	08-08A		19	87433387	08-30		12
87429654	08-08		32	87433389	08-30		12A
87429690	02-03		3	87433390	08-30		11A
87429691	02-03A		3	87433401	04-03		6
87429692	02-03		5	87433503	02-02		6
	02-03A		5	87433543	04-04		1
87429693	02-03		6		04-07		32
	02-03A		6		04-08		14
87429694	02-03		1	87433544	04-06A		24
	02-03A		1	87433546	04-07		16
87429695	02-03		4		09-69		4
	02-03A		4	87433659	09-38		1
87429948	09-66		6	87433730	05-04		9
87429949	09-66		12		06-01		28
87429950	09-66		2	87434049	09-41		19
87429951	09-66		10	87434050	09-41		20
87429952	09-66		7	87434072	08-33		
87429954	09-66		17	87434075	08-33		2
87429970	06-17		1	87434076	08-33		3
87429971	06-17		15	87434077	08-33		4
87429972	06-16		1	87434099	02-04		15
87429973	06-20		20	87434257	08-01		5
87429974	06-21			87434265	08-26		15
87429978	06-24				08-29		15
87429981	06-20		28	87434614	02-01		5
87429982	06-15		16	87434621	08-20		6
	06-16		23		08-53		
	08-01		10	87434649	02-01		6
87429983	06-20		30	87434673	08-01		11
87429984	06-20		27		08-33		
87429985	06-18		23	87434745	09-37		1
87429986	06-16		12	87434746	09-37		
87429987	06-15		6	87434766	08-34		
	06-16		7	87434767	08-35		
87429988	06-15		10	87434768	08-34		
87429989	06-15		1	87434769	08-35		
87429994	06-18		3	87434771	09-79		12A
87430051	06-40		11A	87434772	09-80		12A
87430122	09-65		19	87434774	02-01		4
	09-66		1	87434775	02-01		3
87430345	06-02		1	87434777	08-22		26
87430618	06-12		20	87434783	09-57		
	06-13		1	87434793	02-01		
87430677	09-11			87434880	03-01		21
	09-74		4	87434978	02-01		12
87430867	04-06			87435076	06-11A		9
87430868	04-06A			87435078	06-11A		6
87430972	08-23		1	87435080	06-11A		10
87431077	09-77		8	87435082	06-11A		11
87431078	09-76		8	87435108	09-53		1
87431080	09-77		9	87435109	09-53		1
87431081	09-76		9	87435110	09-53		1
87431128	09-40			87435112	09-53		1

http://www.minnparbackhoeparts.com/

Number	Figure	Sequence	Ref.	Number	Figure	Sequence	Ref.
87435242	08-57		9	87437633	08-18		8
	08-58		11		08-20		8
87435243	08-54		11	87437635	08-17		7
	08-55		11		08-18		9
	08-56		11		08-20		9
87435275	09-13		8	87437641	08-22		51
87435372	09-14		8	87437655	08-01		39
87435381	04-21		2	87437657	08-01		39
87435409	02-02		2	87437685	08-09A		14
87435453	09-57		23	87437688	09-13		18
87435506	08-54		15	87437689	09-14		5
	08-55		16	87437804	02-06		2
	08-56		17		02-06A		2
	08-57		12	87437806	09-15		27
	08-58		14	87437840	08-08		
87435569	05-01		1		08-08A		4A
	09-72		12		08-22		21A
87435761	08-01		3	87437899	08-33		10
87435909	08-26		5	87437905	08-33		12
	08-28			87437906	08-33		13
	08-29		5	87437914	08-33		14
87435910	08-29		5A	87437917	08-33		15
	08-31			87437923	08-21		6
87435923	08-25		20	87437924	08-21		5
87435924	09-15		12	87437925	08-21		7
	09-25		11	87437926	08-21		9
	09-25A		11	87437927	08-21		4
87435929	09-57		1	87437928	08-21		8
87435938	09-78		12	87437929	08-21		10
87435939	09-79		12	87437930	08-21		11
87435940	09-80		12	87437933	08-21		12
87436066	08-01		17	87437934	08-02		13
	08-02		16	87437935	08-21		13
	08-02		7	87437938	08-08A		33
87436076	09-41		3	87437939	08-08A		32
87436192	09-72		1B	87437940	08-08A		35
87436225	08-54		2	87437941	08-08A		34
	08-55		2	87437980	08-01		42
	08-56		2	87437982	08-01		43
	08-57		2	87438012	08-19		8
	08-58		3	87438015	08-19		9
87436234	09-27		18	87438021	08-28		2
87436675	04-07				08-31		2
	04-10			87438022	08-28		
	08-25		23		08-31		
	09-69		5	87438023	08-28		
87436676	04-21		7		08-31		
87436782	09-22		43	87438024	08-28		
	09-22		43		08-31		
87436783	09-22A		43	87438025	08-28		3
87436836	04-07		15		08-31		3
	04-07		8	87438026	08-28		
	04-21		11		08-31		
87437108	08-04		24	87438027	08-28		
87437203	02-07				08-31		
	02-08		1	87438028	08-28		
87437230	08-01		16		08-28		
87437231	08-02		18		08-31		
	08-02		6		08-31		
	08-23		37	87438029	08-28		4
87437232	08-02		18		08-31		4
	08-02		6	87438031	08-28		5
	08-23		36		08-31		5
87437263	08-26		1	87438032	08-28		
	08-29		1		08-31		
87437265	08-25		22	87438045	08-33		
87437366	09-14		3	87438046	08-54		16
87437369	09-14		4		08-55		17
87437371	08-56		13		08-56		18
	08-58		12		08-58		
87437372	08-54		12	87438157	09-21		14
	08-55		12	87438735	09-72		1A
	08-56		12	87438925	04-01		3
87437373	08-55		14	87438926	04-01		4
87437441	08-02		6	87438927	04-01		5
87437621	08-22		45	87438928	04-01		6
87437623	08-22		30	87438929	04-01		8
87437625	08-22		47	87438930	04-01		9
87437627	08-22		43	87438931	04-01		10
87437629	08-22		46	87438932	04-01		11
87437631	08-22		44	87438933	04-01		12
87437633	08-17		6	87438935	04-01		13

http://www.minnparbackhoeparts.com/

Number	Figure	Sequence	Ref.	Number	Figure	Sequence	Ref.
87438937	04-01		14	87440045	08-03		1
87438940	04-01		15		08-61		
87438941	04-01		16	87440058	09-20		10
87438942	04-01		17	87440076	09-17		10
87438944	04-01		18	87440282	09-53		13
87438946	04-01		19	87440283	09-53		14
87438948	04-01		20	87440381	09-13		31
87438950	04-01		22	87440554	02-06		7
87438951	04-01		32	87440694	08-23		16
87438954	04-01		36	87440704	09-13		9
87438956	04-01		38	87440706	09-13		10
87438960	04-02		1	87440710	09-13		1
87438963	04-02		2	87440711	09-13		
87438965	04-02		3		09-15		1
87438967	04-02		4	87440712	08-22		14
87438969	04-02		5	87440812	08-09A		10
87438970	04-02		6	87440814	08-34		14
87438971	04-02		7		08-35		15
87438972	04-02		8		08-36		17
87438973	04-02		9		08-37		17
87438974	04-02		10		08-38		15
87438975	04-02		11		08-39		15
87438976	04-02		12	87440815	08-34		13
87438977	04-02		13		08-35		14
87438978	04-02		14		08-36		16
87438979	04-02		15		08-37		16
87438980	04-02		16		08-38		14
87438981	04-02		17		08-39		14
87438982	04-02		18	87440835	08-20		10
87438983	04-02		19	87440837	08-20		11
87438984	04-02		20	87441059	09-07		
87438985	04-02		21	87441073	09-08A		
87438986	04-02		22	87441074	09-08A		
87438987	04-02		23	87441076	08-09		23
87438989	04-02		24		08-09A		23
87438992	04-01		1	87441285	02-06		10
87438993	04-01		2		02-06A		10
87438994	04-01			87441372	08-24		31
87438995	04-01		21		08-30		31
87438996	04-01		23	87441495	08-40		1
87438997	04-01		24		08-41		1
87438999	04-01		25		08-42		1
87439000	04-01		26		08-43		1
87439001	04-01		27		08-43A		
87439002	04-01		28	87441758	09-69		28
87439003	04-01		29	87441850	09-15		9
87439004	04-01		30		09-25		12
87439005	04-01		31		09-25A		12
87439006	04-01		33	87441876	06-11A		1
87439007	04-01		34	87442357	02-06		15
87439008	04-01		35		02-06A		21
87439009	04-01		37	87442376	09-41		21
87439010	04-01		41	87442377	09-41		22
87439011	04-01		43	87442409	09-15		33
87439032	08-21		14	87442419	02-01		45
87439033	08-21		15	87442441	09-58		21
87439061	04-01		42	87442601	02-05		4
87439135	09-21		13	87442618	02-04		1
87439136	05-02		13		02-05		
87439137	05-02		1	87442924	09-58		31
87439138	05-02		5		09-69		27
87439163	08-08A		38	87443080	04-14		8
	08-22		25		04-15		2
87439210	09-12		15	87443149	08-04		15
87439213	08-22		48	87443150	08-04		14
87439215	08-22		40	87443430	09-52		1
87439306	08-08		10	87443431	09-52		1
	08-08A		10	87443432	09-52		1
87439448	09-40		11	87443433	09-52		1
87439537	08-14		23	87443434	09-67		1
87439660	08-11		22	87443435	09-67		1
87439665	08-08		24	87443437	09-67		
	08-08A		24	87443661	09-24		46
87439722	09-54A		27	87443691	09-54		1A
	09-56A		5		09-54A		1A
87439723	09-54A		29	87443692	09-15		26
	09-56A		6	87443721	08-54		5
87439724	09-56A		1		08-55		5
87439725	09-54A		4		08-56		5
87439726	09-54A				08-58		5
87439842	08-11		34	87443722	08-57		8
87440045	05-02		22	87443847	09-24		44

http://www.minnparbackhoeparts.com/

Number	Figure	Sequence	Ref.
87443912	09-24		45
87443971	09-24		
87444040	09-40		25
87444147	09-39		2
87444148	09-39		1
87444149	09-25		15
87444169	02-06A		17
87444176	09-58		30
	09-69		11
87444379	09-09		1
87444776	09-74		9
87444942	03-01		19
87445051	09-57		30
87445245	09-25		9
87445557	08-22		44A
87445597	09-40		29
87446081	02-01		6
87446082	02-01		5
87446095	03-03		25
87446113	09-17		12
87446330	06-10		20
	06-11		39
87446332	06-10		20A
	06-11		40
87446333	06-10		19
	06-11		38
87446335	06-10		15
	06-11		34
87446337	06-10		17
	06-11		36
87446338	06-10		13
	06-11		32
87446596	09-01		33A
87447044	08-06		23
87447052	02-06A		7
87447088	09-19A		
87447135	02-07A		
87447313	02-06A		25
87447450	05-01		12
87447887	08-06		24
87448055	09-12		3A
87448057	09-12		2A
87448059	09-12		2B
87448198	09-56A		
87448199	09-54A		
87448272	09-52		1
87448273	09-52		1
87448274	09-52		1
87448275	09-52		1
87448489	02-02		9
87448526	08-29		27
	08-30		1
87448527	08-29		28
	08-30		2
87448658	07-04		32
87448661	07-04		30
87448668	08-30		17
87448685	09-58		
	09-69		
87448990	08-22		39A
87449373	08-09		1
	08-09A		1
	08-59		
87449374	08-59		2
87449514	09-58		34
	09-69		31
87449517	09-58		37
	09-69		34
87449579	07-04		34
87449825	09-67		
87449995	09-25		25
87449996	09-25		26
87450318	08-08A		1B
	08-22		18A
87450456	08-02		13
87450481	04-04		1
	04-07		32
	04-08		14
87450698	08-09A		14
87450910	07-04		31
87450914	09-13		27
87450931	04-04		1A
87450931	04-07		32A
	04-08		14A
87450932	04-04		
	04-07		
	04-08		
87450978	08-34		7
	08-35		8
	08-36		11A
	08-37		11A
	08-38		16A
	08-39		16A
87450979	08-36		11B
	08-37		11B
	08-38		16B
	08-39		16B
87450980	08-36		11C
	08-37		11C
	08-38		16C
	08-39		16C
87451021	09-53		13A
87451448	08-57		11
87451751	07-04		33
87452021	09-37		20
87452257	04-03		16
87452258	04-03		14
87452399	08-01		21
87452400	08-01		26
87452402	08-26		16
	08-29		16
87452403	08-26		17
	08-29		17
87452404	09-19		2
87452405	08-21		16
87452406	09-19		1
87452511	04-21		15
87452627	09-12		3B
87452823	03-03		29A
87453949	07-06		37
87454016	08-07		1
	08-64		1
87454017	08-07		2
	08-64		1
87454053	03-01		45
87454054	03-01		47
87454055	03-01		46
87454294	09-45B		2
	09-49A		
87454295	09-45B		1
	09-49A		
87454376	02-02		7
87454377	02-01		14
87454378	02-01		16
87454380	02-04		9
87454381	02-04		5
87454383	02-04		10
87454545	05-02		
87454547	08-37		21B
	08-39		25B
87454548	08-37		21C
	08-39		25C
87454907	08-64		2
87454908	08-64		2
87455441	08-10		22
87455443	08-11		21
87455505	09-08A		
87455509	09-08		
87455541	08-37		21E
	08-39		25E
87455564	08-37		21G
	08-39		25G
87455565	08-37		21H
	08-39		25H
87455832	08-02		18
87456843	06-12		14
	06-14		
	06-15		
	06-17		
	06-18		
	06-19		
	06-20		
	06-21		
	06-23A		

http://www.minnparbackhoeparts.com/

Number	Figure	Sequence	Ref.
87456844	06-12		15
	06-14		
	06-16		
	06-17		
	06-18		
	06-19		
	06-20		
	06-21		
	06-22		
	06-23A		
	06-24		
87456899	06-23A		
87456900	06-23A		3
87456901	06-24		11
87456944	04-04		1
	04-07		32
	04-08		14
87456948	04-04		1B
	04-07		32B
	04-08		14B
87456949	04-04		
	04-07		
	04-08		
87456968	06-23A		4
87456969	06-24		12
87803065	02-35		1
87803194	03-08		6
87803261	02-32		1
892-10010	06-25		19
	06-25		22
	06-25		32
	06-25		37
	06-25		39
	06-25		41
	06-26		15
	06-26		17
892-11005	03-03		30
	04-20		6
892-11006	03-03		31
	09-25		17
	09-25A		17
	09-59		3
	09-69		
892-11008	02-01		41
	03-01		17A
	03-03		10
	04-03		11
	04-03		5
	04-06A		17
	04-08		11
	04-09		16
	04-17		4
	07-03		3
	07-03		37
	07-04		6
	07-06		14
	08-10		15
	08-11		15
	08-12		14
	08-13		14
	08-23		22
	08-30		9B
	09-05		10
	09-08		28
	09-08A		28
	09-12		14
	09-13		6
	09-15		3
	09-25		24
	09-25A		24
	09-43		6
892-11010	02-06		5
	02-06A		5
	03-01		32
	03-03		24
	04-01		40
	05-02		26
	07-03		11
	07-06		22
	08-04		12
	08-05		10
	08-05		16
892-11010	08-05		37
	08-06		16
	08-06		9
	08-07		9
	08-22		42
	08-23		12
	08-27		15
	08-27		6
	08-30		40
	09-08		26
	09-08A		26
	09-13		28
	09-24		42
	09-25		7
	09-25A		7
	09-28		15C
	09-37		31
893-11005	04-19		8
895-11004	04-12		13
	09-53		8
895-11005	03-03		6
	06-35		47
895-11006	04-06A		14
	04-06A		29
	09-54		10A
	09-54A		10A
895-11008	02-01		10
	02-02		13
	02-02		16
	02-02		23
	02-03		8
	02-03A		8
	02-04		3
	03-03		11
	04-17		11
	06-10		3
	06-11		3
	06-11A		3
	07-03		2A
	07-06		34
	08-08A		3A
	08-22		22
	08-22		27
	09-03		16
	09-05		9
	09-12		13
	09-15		
	09-21		15
	09-25		32
	09-28		8E
	09-36		18
	09-58		19
	09-65		
	09-69		24
895-11010	02-01		23
	03-01		34
	03-01		42
	04-17		7
	07-06		31
	08-03		3
	08-04		11
	08-05		38
	08-05		9
	08-07		14
	08-08		31
	08-08A		31
	08-09		4
	08-09A		4
	08-25		3
	09-04		20
	09-08		17
	09-08		21
	09-08A		17
	09-08A		21
	09-24		43
	09-37		29
	09-37		51
	09-39		11
	09-39		14
	09-39		23
	09-39		29
	09-39		6

http://www.minnparbackhoeparts.com/

Number	Figure	Sequence	Ref.
895-11010	09-40		4
	09-40		6
	09-44		10
895-11018	08-09		7
895-15006	04-12		8
895-15008	05-01		16
	05-01		24
	09-13		4
	09-42		31
	09-61		7
	09-62		16
895-15010	05-01		21
	07-06		36
	08-25		7
	09-13		12
	09-25		8
	09-25A		8
	09-62		11
895-18012	09-45B		4
895-30107	09-54		35
	09-54A		35
	09-56		12
	09-56A		12
896-11008	02-07A		2
	08-30		35
	09-13		32
	09-58		32
	09-69		29
896-11010	02-01		38
	02-06		17
	02-06		18
	02-06A		23
	02-06A		24
	04-03		13
	04-03		17
	08-10		3
	08-11		3
	08-12		3
	08-13		3
	08-14		3
	08-24		25
	08-26		3
	08-26		7
	08-29		3
	08-29		7
	09-01		29A
896-11012	04-06A		33
	06-12		10
	08-23		18
	09-45		11B
	09-66		9
896-11016	09-36		12
896-11020	03-01		3A
	06-38		5
	09-05		18
	09-06		9
	09-07		7
	09-23		14
	09-24		5
	09-35		3
	09-35		7
	09-37		3A
896-15008	07-06		33
	09-66		16
896-15010	02-04		13
	02-06		12
	02-06		4
	02-06A		12
	02-06A		4
	06-12		25
	08-22		11
	09-09		3
	09-13		19
	09-28		15B
	09-66		5
896-15012	02-07		4
	03-03		27
	06-12		28
	06-13		10
	09-39		17
	09-39		20
	09-45		5
896-15012	09-45A		12
	09-45B		10
	09-50		
90-6682T1	06-01		16
	06-09		12
	06-12		40
	06-13		19
	06-47		12
905794R1	06-18		20
905839R1	05-06		6
	06-04		4
906086R1	09-54		42
	09-54A		42
	09-56		19
	09-56A		19
934667R1	06-15		3
	06-16		4
	06-23		36
	06-23A		36
	06-24		6
934727R1	05-06		4
	06-04		2
9827902	07-06		35
9969021	06-26		23
9969022	06-26		24
9969023	06-26		25
A13240	08-25		10
A156873	06-02		6
A166057	04-04		17
	04-04		2
A167037	09-70		8
A170467	02-06		8
	02-06A		8
A177435	03-02		2
A178460	06-29		43
	06-29		45
A183452	06-29		42
	06-29		46
A187542	04-18		5
A187575	04-18		11
A187603	09-59		7
A187714	09-57		10
	09-59		
A187990	04-08		5
	07-03		32
A188028	07-06		23
A23870	04-18		1
A30881	09-03		11
	09-13		3
	09-16		15
	09-17		5
	09-18		26
	09-21		6
A33509	09-27		29
A38208	05-04		15
	05-09		7
A41264	04-16		9
A42561	04-10		8
	09-63		6
	09-64		14B
A44641	08-32		15
A44651	08-32		11
A45035	08-32		13
A45054	09-49A		
	09-51		16
A45504	09-49A		
A45505	09-49A		
A45513	09-49A		
A48041	06-06		11
	06-19		6
	06-20		2
A65544	05-01		5
A77310	07-03		14
B17575	06-02		
	06-02		
	06-03		
	06-04		
	06-06		
	06-06		
	06-07		
	06-08		
B506395	06-07		16

http://www.minnparbackhoeparts.com/

Number	Figure	Sequence	Ref.
BMF28S	04-06		1
D120450	09-24		14
	09-26		7
	09-28		3A
D121152	04-14		2
	04-16		
D121194	09-05		6
D121608	07-06		12
D123347	09-71		4
D123684	05-04		3
	06-01		10
D124528	07-03		19
D124529	07-03		13
D124530	07-03		23
D124857	03-03		8
D125079	04-05		7
D125223	05-09		1
D126409	04-06		4
D127167	09-26		38
	09-27		21
D127335	04-12		24
D127542	09-04		2
D128022	09-59		7
D128745	09-59		4
	09-69		2
D129227	09-25		2
	09-25A		2
D129264	09-06		2
	09-07		2
	09-08		11
	09-08A		11
D129747	07-06		13
D132076	09-05		17
D132494	09-24		16
	09-27		2
D132982	06-11		31
	07-04		22
	08-03		15
	09-63		24
D133632	09-24		21
	09-27		7
D133865	09-27		24
D134900	09-20		6
D135384	04-14		1
	04-16		
D135557	09-23		5
D135559	09-23		6
D135739	09-24		12
D135741	09-23		4
D136391	09-23		26
D136392	09-23		24
D136700	09-23		25
	09-23		36
D136773	09-01		17
	09-19		11
D137077	07-03		6
D137218	09-24		13
D137363	04-04		12
	09-04		16
	09-51		3
D137468	04-10		26
D137625	08-01		14
D137627	06-01		17
	06-09		13
	06-12		41
	06-13		20
	06-47		13
D138022	09-24		30
	09-26		2
D138047	09-26		44
	09-26		46
	09-26		9
	09-27		34
	09-28		2
D138055	08-04		8
	08-05		15
	08-05		35
	08-05		6
	08-06		14
	08-06		7
	08-26		31
	08-27		12
D138055	09-28		8A
D138380	06-37		4
D138492	06-37		5
	06-38		2
D138955	04-09		18
D139039	09-16		19
D139849	09-29		
	09-30		
	09-31		
	09-32		
	09-32		
	09-33		
	09-34		
	09-34		
D139851	09-29		
	09-30		
	09-31		
	09-32		
	09-32		
	09-33		
	09-34		
	09-34		
D140029	08-69		15
	09-26		8
	09-28		4
D140035	07-03		9
D140247	09-27		28
D140267	09-39		32
D141075	09-26		48
D141076	09-26		49
D141142	09-26		20
	09-27		37
D141164	09-26		22
	09-27		39
D141555	08-68		15
D141666	09-27		11
D142012	09-34		4
D142144	09-70		10
D142519	09-22		15
	09-22A		15
D142787	08-04		20
	08-08		27
	08-08A		27
	08-09		21
	08-09A		21
	08-10		32
	08-10A		15
D142898	05-08		6
	06-22		16
	06-40		22
D142971	06-41		5
	06-42		5
D142986	06-46		2
D143033	06-41		18
	06-42		18
D143242	09-67		4
D143324	09-26		30
D143406	09-22		13
	09-22		33
	09-22A		13
	09-22A		33
D143411	09-13		35
D143412	08-13		31
D143416	09-20		5
D143417	09-25A		9
	09-39		25
	09-63		29
	09-64		20
D143426	08-13		29
D143427	09-63		27
	09-64		18
D143591	09-15		15
	09-25		21

http://www.minnparbackhoeparts.com/

Number	Figure	Sequence	Ref.	Number	Figure	Sequence	Ref.
D143591	09-25A		21	D150121	09-27		17
D143714	09-39		9		09-28		3
D143715	09-39		8	D150214	05-06		11A
D143723	09-15		10	D150391	09-45		15
	09-25		22		09-45		23
	09-25A		22	D150392	09-45		16
D143735	09-25		20		09-45		24
	09-25A		20	D150397	09-16		9
D143846	08-07		6	D150434	09-16		13
	08-12		37	D150435	09-16		12
	08-13		48	D150486	09-16		17
	08-26		31A	D150493	09-16		24
D144423	09-23		35	D150503	09-16		45
D144592	09-25		3	D150619	09-26		34
	09-25A		3	D150633	07-06		11
D145061	09-34		4	D150781	08-59A		
D146288	09-26		26	D150810	08-59A		
	09-27		49	D151034	09-05		15
D146420	09-30		3	D151065	09-23		21
D146421	09-30		2	D151069	09-36		5
D147166	04-07		6	D151070	09-36		6
D147249	09-30		4	D151071	09-24		11
D147383	04-04		33	D151073	09-23		7
	09-58		13	D151074	09-23		8
	09-58		17	D25279	09-22		10
	09-69		21		09-22		14
	09-69		25		09-22A		10
D147409	09-29		4		09-22A		14
D147773	08-10A		26		09-26		31
D148108	04-07		35	D26002	09-22		9
	04-08		4	D28648	09-22		12
	07-03		31		09-22A		12
D148947	09-18		2	D30933	09-29		12
D148962	03-02		6		09-30		12
	09-13		30		09-31		12
D148992	09-16		7		09-32		12
D148993	09-13		2		09-32		12
D148994	09-16		18		09-33		12
D149033	09-22		40		09-34		12
	09-22A		40		09-34		12
D149079	09-26		41	D31140	09-08		2
	09-27		16		09-08A		2
	09-27		31		09-26		47
D149262	09-16		46	D34666	09-16		16
D149287	09-01		35	D35908	06-13		16
	09-02		36A	D37495	09-30		11
	09-03		4		09-31		11
	09-16		37		09-32		11
	09-17		11		09-32		11
	09-19		3		09-33		11
	09-20		11		09-34		11
D149288	07-06		20		09-34		11
	09-02		36	D37614	09-26		29
	09-16		23	D38435	08-03		23
	09-16		48	D38648	08-07		20
	09-19		7		08-14		26
	09-21		11	D38858	08-69		12
D149295	09-16		34	D38907	09-22		3
	09-19		9		09-22A		3
D149298	09-26		32	D39118	09-18		11
D149725	05-05		4	D39256	09-22		17
	06-02		2		09-22A		17
D149726	05-05		3	D39696	06-10		24
	06-02		4		06-11		20
D149737	06-04		8		08-03		18
D149738	06-04		6	D40236	08-14		13
D149739	06-04			D40442	03-01		37
D149824	09-73		3		09-37		37
D149825	09-73		4	D43940	09-29		11
D149826	09-78		10	D48212	09-29		10
D149827	09-78		11		09-30		10
D149828	09-73		5		09-31		10
D149829	09-73		6		09-32		10
D149860	06-09				09-32		10
	06-47				09-33		10
D149866	09-11		9		09-34		10
D149867	09-11		10		09-34		10
D149868	09-11		12	D49498	08-30		37
D150032	09-20		13	D50146	09-22		6
D150053	08-10A		3		09-22A		6
D150054	08-10A		2	D50696	09-34A		2
D150121	09-26		10	D51391	09-08		7

http://www.minnparbackhoeparts.com/

Number	Figure	Sequence	Ref.
D51391	09-08A		7
D51392	09-08		15
	09-08A		15
D51393	09-08		19
	09-08A		19
D51750	09-29		5
	09-29		8
	09-30		5
	09-30		8
	09-31		5
	09-31		8
	09-32		5
	09-32		5
	09-32		8
	09-32		8
	09-33		5
	09-33		8
	09-34		5
	09-34		5
	09-34		8
	09-34		8
D52276	02-01		22
	08-10		7
	08-11		7
	08-12		7
	08-13		7
	08-14		7
	08-22		13
D52564	09-71		1
D55216	09-37		56
	09-73		10
D59912	09-16		4
	09-18		6
	09-21		2
D61368	09-22		16
	09-22A		16
D67296	09-28		17C
D74182	09-13		36
D75465	03-01		12
D76209	09-38		11
D80270	03-01		39
	09-37		48
	09-73		11
D83187	08-32		10
D86664	09-25		19
	09-25A		19
D88052	09-63		32
D88427	09-22		11
	09-22A		11
D95096	09-03		13
D95142	08-63		5
D95143	08-62		5
	08-64		5
	08-70		4
D95144	08-65		5
	08-66		5
D95145	08-65A		5
D95146	08-67		7
	08-68		5
	08-69		5
E114385	06-29		18
	06-29		3
	06-30		18
	06-30		3
	06-32		3
	06-33		3
E114386	06-29		19
	06-29		4
	06-30		19
	06-30		4
	06-32		4
	06-33		4
E135750	06-40		18
E135762	06-43		8
E135777	06-41		3
	06-42		3
E135785	06-41		8
	06-42		8
E135809	06-15		10A
	06-15		1A
	06-16		13
	06-16		1A
E135809	06-39		9
E135810	07-02		7
E43769	09-58		22
E46560	09-58		
	09-69		
E47238	09-58		3
	09-69		16
E47239	09-58		2
	09-69		17
E47240	09-58		4
	09-69		18
E49497	09-19A		4
E49498	09-19A		3
F22426	04-12		
F44883	09-40		10
F45165	09-54		49
	09-54A		49
	09-56		25
	09-56A		25
F64198	09-54		45
	09-54A		45
	09-56		22
	09-56A		22
F64519	09-67		14
G100440	08-66		16
G100444	08-63		15
	08-64		17
	08-70		14
G100448	08-66		17
G100449	08-63		16
	08-64		18
	08-70		15
G100710	08-69		18
G100711	08-69		19
G101533	08-65		6
	08-66		6
G102090	08-65A		16
	08-68		19
G102092	08-65A		15
	08-68		18
G102285	08-66		15
G102286	08-69		17
G102287	08-62		14
G102288	08-63		14
	08-64		16
	08-70		13
G102424	08-63		6
G102425	08-62		6
	08-64		6
	08-70		5
G102426	08-65A		6
G102427	08-67		8
	08-68		6
G107277	08-70		12
G107970	08-65A		10
	08-68		12
G108512	08-63		3
G108518	08-63		13
G109298	08-63		10
	08-64		11
	08-70		9
G109299	08-66		10
G109908	08-69		6
G110077	08-59A		
G110467	08-59A		
G110529	08-65		15
G110530	08-65		16
G110531	08-65		14
G110594	08-65A		13
G32122	08-62		10
G32176	08-65		10
	08-66		24
G35540	08-59A		4
H433285	09-24		24
H434163	08-01		15
H71514	09-24		7
K260177	06-15		5
	06-16		6
K261014	06-08		4
	06-43		4
K261065	06-08		3
	06-43		3

http://www.minnparbackhoeparts.com/

Number	Figure	Sequence	Ref.	Number	Figure	Sequence	Ref.
K262143	06-08		9	L79937	08-05		39
	06-43		12	N13505	05-06		12A
K395027	06-07		12		06-03		11
K395075	06-07		21	N13582	08-33		6
	06-07		8	N14283	04-16		10
K395082	06-06		23	N14367	05-05		2
	06-46		8		06-02		3
K395086	06-07		13	N14373	05-05		8
	06-07		19	N14407	06-07		5
K395087	06-07		6	N14408	06-07		7
K395090	06-08		8	N14410	06-05		3
	06-43		10		06-05		3
K395091	06-06		21	N14466	09-60		20
K395093	06-06		16	N14784	07-05		
	06-46		9	N6755	08-61		
K395101	06-46		25	N6836	04-16		3
K395131	06-46		15	N6941	08-61		
K691987	02-01		21	N7802	09-46		
	09-38		9	N9025	08-61		
L111356	08-10A		31	NSS	04-04		31B
	09-74		7		04-10		2
L15401	09-03		12		04-10		25
L17985	02-04		4		04-10		3
L18331	02-07A		5		04-10		4
	04-19		15		04-13		
L18337	02-02		24		04-13		
	02-04		19		04-13		
	02-06A		19		04-16		1
	03-01		22		04-16		5
	03-02		12		04-16		6
	04-04		28		04-16		7
	04-06A		25		04-16		8
	04-07		26		04-18		12
	04-14		11		05-03		1
	04-15		14		05-03		3
	04-21		14		05-03		5
	06-10		10		05-03		6
	06-11		10		05-07		2
	06-39		8		06-02		14
	07-04		23		06-04		1
	08-03		16		06-04		10
	08-09		29		06-04		11
	08-10		20		06-04		12
	08-10A		17		06-04		13
	08-11		20		06-04		14
	08-12		19		06-04		15
	08-13		19		06-04		16
	08-14		19		06-06		14
	08-21				06-06		15
	08-23		15		06-06		3
	08-24		32		06-07		1
	08-25		25		06-07		17
	08-27		18		06-07		18
	08-30		32		06-07		2
	08-30		8		06-07		20
	09-02		41		06-08		1
	09-10		36		06-08		2
	09-37		59		06-09		10
	09-51		22		06-09		11
	09-58		16		06-09		2
	09-58		38		06-09		3
	09-62		21		06-09		4
	09-63		25		06-09		9
	09-64		17		06-12		
	09-65		11		06-17		10
	09-69		14		06-17		11
	09-69		35		06-17		12
L26209	07-03		7		06-17		13
L30039	06-26		11		06-17		14
L32100	08-33		9		06-17		17
L32418	08-33		1		06-17		18
L54563	09-16		14		06-17		2
	09-17		1		06-17		20
L60224	04-12		5		06-17		21
	09-37		49		06-17		3
L71879	04-04		21		06-17		3A
	04-07				06-17		4
	04-07				06-17		5
	04-07				06-17		6
	04-07		10		06-17		7
	04-08				06-17		8
	04-10				06-17		9

http://www.minnparbackhoeparts.com/

Number	Figure	Sequence	Ref.	Number	Figure	Sequence	Ref.
NSS	06-21		10	NSS	06-47		9
	06-21		11		07-05		1
	06-21		12		07-05		10
	06-21		15		07-05		11
	06-21		20		07-05		12
	06-21		21		07-05		13
	06-21		22		07-05		14
	06-21		23		07-05		15
	06-21		24		07-05		16
	06-21		25		07-05		17
	06-21		25A		07-05		18
	06-21		7		07-05		2
	06-21		8		07-05		3
	06-23		1		07-05		4
	06-23		38A		07-05		5
	06-23		43		07-05		6
	06-23		45		07-05		7
	06-23A		1		07-05		8
	06-23A		38A		07-05		9
	06-23A		43		07-06		1
	06-23A		45		07-06		2
	06-24		1		08-28		1
	06-24		2		08-31		1
	06-24		3		08-32		
	06-24		4		08-32		8
	06-25		12		08-32		9
	06-25		13		08-34		1
	06-26		26		08-34		2
	06-26		27		08-34		3
	06-26		28		08-34		4
	06-26		29		08-35		1
	06-26		30		08-35		2
	06-35		1		08-35		3
	06-35		10		08-35		4
	06-35		11		08-35		5
	06-35		12		08-36		1
	06-35		13		08-36		2
	06-35		14		08-36		3
	06-35		15		08-36		4
	06-35		16		08-36		5
	06-35		17		08-36		6
	06-35		18		08-37		1
	06-35		19		08-37		2
	06-35		2		08-37		3
	06-35		20		08-37		4
	06-35		21		08-37		5
	06-35		22		08-37		6
	06-35		23		08-38		1
	06-35		24		08-38		2
	06-35		25		08-38		3
	06-35		26		08-38		4
	06-35		27		08-38		5
	06-35		3		08-38		6
	06-35		31		08-38		7
	06-35		34		08-39		1
	06-35		38		08-39		2
	06-35		4		08-39		3
	06-35		44		08-39		4
	06-35		5		08-39		5
	06-35		6		08-39		6
	06-35		7		08-39		7
	06-35		8		08-40		7
	06-35		9		08-40		8
	06-36		2		08-40		9
	06-36		3		08-41		10
	06-36		4		08-41		8
	06-36		5		08-41		9
	06-41		1		08-42		10
	06-41		2		08-42		8
	06-42		1		08-42		9
	06-42		2		08-43		10
	06-43		1		08-43		11
	06-43		1A		08-43		9
	06-44		15		08-43A		1
	06-45		15		08-44		1
	06-46		20		08-44		2
	06-46		6		08-45		1
	06-47		10		08-45		2
	06-47		11		08-46		1
	06-47		2		08-46		2
	06-47		3		08-47		1
	06-47		4		08-47		2

http://www.minnparbackhoeparts.com/

Number	Figure	Sequence	Ref.	Number	Figure	Sequence	Ref.
NSS	08-48		1	NSS	09-51		1B
	08-48		2		09-54		1
	08-49		1		09-54A		1
	08-49		2		09-58		1
	08-50		1		09-60		19
	08-50		2		09-60		21
	08-59		1		09-69		15
	08-59A		1		09-70		14
	08-59A		10	P2230493	06-40		25
	08-59A		14	P2745466	06-22		21
	08-59A		2	P2745478	06-22		10
	08-59A		5	P2930467	06-46		3
	08-59A		6	P3034505	06-41		9
	08-59A		7		06-42		9
	08-59A		8	P3533055	06-21		35
	08-59A		9		06-22		20
	08-60		1	R26725	09-22A		9
	08-60		10	R32119	09-24		8
	08-60		11	R46493	08-07		7
	08-60		12	R54682	09-70		6
	08-60		13	REF	02-10		11
	08-60		4		02-10		12
	08-60		9		02-14		15
	08-61		1		02-15		4
	08-61		6		02-20		6
	08-61		7		02-22		5
	08-61		8		02-22		6
	08-62		7		02-29		7
	08-62		8		02-34		12
	08-63		7		02-38		10
	08-63		8		02-38		4
	08-64		8		02-38		7
	08-64		9		02-38		8
	08-65		7		02-38		9
	08-65		8		02-39		5
	08-65A		7		02-41		3
	08-65A		8		03-04		5
	08-66		7		03-06		10
	08-66		8		04-03		
	08-67		10		05-09		2
	08-67		11		05-09		5
	08-68		8		06-29		
	08-68		9		06-30		
	08-69		8		06-37		3
	08-69		9		06-37		3
	08-70		6		06-37		3
	08-70		7		06-37		3
	09-03		10		08-02		
	09-06		1		08-02		
	09-07		1		08-03		13
	09-08		1		08-04		1
	09-08		10		08-05		1
	09-08A		1		08-06		1
	09-08A		10		08-08		
	09-10		10		08-08A		
	09-10		2		08-09		
	09-26		37		08-09A		
	09-26		6		08-10		1
	09-27		15		08-11		1
	09-27		20		08-12		1
	09-29		2		08-13		1
	09-29		3		08-14		1
	09-31		2		08-15		
	09-31		3		08-16		
	09-31		4		08-17		
	09-32		2		08-18		
	09-32		2		08-19		
	09-32		3		08-20		
	09-32		3		08-24		
	09-32		4		08-25		
	09-32		4		08-25		16
	09-33		2		08-25		21
	09-33		3		08-27		
	09-33		4		08-27		4
	09-42				08-30		
	09-42				08-36		
	09-46		1		08-37		
	09-46		2		08-38		
	09-46		7		08-39		
	09-46		8		09-01		28
	09-47		9		09-02		40
	09-48		12		09-04		

http://www.minnparbackhoeparts.com/

Number	Figure	Sequence	Ref.	Number	Figure	Sequence	Ref.
REF	09-10						
	09-10						
	09-18						
	09-19						
	09-26		28				
	09-28						
	09-28						
	09-28						
	09-32						
	09-54						
	09-54A						
	09-55						
S109444	08-62		15				
S109445	08-62		16				
S115351	05-03		2				
S300976	06-41		7				
	06-42		7				
S301064	06-02		18				
S301065	06-02		15				
S89695	06-32		30				
	06-33		31				
S89696	06-32		29				
	06-33		30				
ST205A	06-19		1				
	06-22		6				
ST264	06-20		23				
T34857	04-16		2				

http://www.minnparbackhoeparts.com/

NOTES

http://www.minnparbackhoeparts.com/

580 SUPER M SERIES 2

580 SUPER M+ SERIES 2

CHARGEUSE PELLETEUSE

CATALOGUE DES PIÈCES

Référence de publication: 7-9042 FC



DB04A007

L'illustration peut montrer l'installation de l'équipement en option.

L'unité sera disponible en 02-2004.

Table des matières
Informations générales
Section 2 - Moteur
Section 3 – Installation Carburant
Section 4 – Système Électrique
Section 5 – Voies/Direction
Section 6 – Groupe moto-propulseur
Section 7 – Freins
Section 8 – Systeme Hydraulique
Section 9 – Châssis/Attachements
Index

Issued 02-2004 (Revised 05-2005)
Printed in U.S.A. • Bur • Book/Form Number 7-9042 FC
Copyright © 2005. CNH America LLC. All Rights Reserved.

http://www.minnparbackhoeparts.com/

CNH Amérique, LLC se réserve le droit d'apporter des améliorations de conception ou change dans les caractéristiques à tout moment sans encourir n'importe quelle obligation de les installer sur des unités précédemment vendues.

Toutes les données données en cette publication sont sujettes à des variations de production. Les dimensions et les poids sont seulement approximatifs.Les illustrations ne montrent pas nécessairement des produits en état standard.Pour des informations exactes sur n'importe quel produit particulier, consultez svp votre revendeur.

Histoire De Révision			
Issue	Issue Date	Applicable Machines	Remarks
First Edition	02-2004	580Super M / 580 Super M+ Series 2	7-9040 FC
Revision 1	05-2004	580Super M / 580 Super M+ Series 2	7-9041 FC
Revision 2	05-2005	580Super M / 580 Super M+ Series 2	7-9042 FC

N'importe quelle utilisation de contenu éditorial ou imagé est strictement interdite sans permission écrite exprès de CNH America, LLC. Racine, WI 53403 U.S.A..

http://www.minnparbackhoeparts.com/

TABLE OF CONTENTS

02-01	RADIATEUR - SUPPORT
02-02	SYSTEME DE PURGE D AIR - SUPPORT
02-03	RADIATEUR (SANS AIR CONDITIONNE)
02-03A	RADIATEUR (AVEC AIR CONDITIONNE)
02-04	FILTRE A AIR - PIÈCES DE LA PRISE D"AIR
02-05	FILTRE A AIR
02-06	SILENCIEUX - ÉCHAPPEMENT
02-06A	SILENCIEUX, ASPIRATEUR - ÉCHAPPEMENT
02-07	MOTEUR - SUPPORT
02-07A	MOTEUR - BLOC CHAUFFAGE
02-08	MOTEUR
02-09	BLOC CYLINDRES
02-10	BLOC CYLINDRES
02-11	POMPE À HUILE, CARTER
02-12	BLOC CYLINDRES - COUVERCLES
02-13	BLOC CYLINDRES - COUVERCLES
02-14	BLOC CYLINDRES - COUVERCLES
02-15	RENIFLARD - MOTEUR
02-16	CULASSE DE CYLINDRE
02-17	CACHE CULBUTEUR
02-18	CULASSE DE CYLINDRE - MÉCANISME DU DISTRIBUTEUR
02-19	COLLECTEURS
02-20	COLLECTEURS
02-21	VILEBREQUIN
02-22	PISTONS - BIELLES
02-23	PISTONS - BIELLES
02-24	VOLANT - MOTEUR
02-25	POULIE - VILEBREQUIN
02-26	MASSELOTTE, ENGRENAGES ET ARBRES
02-27	MASSELOTTE, ENGRENAGES ET ARBRES (2830952)
02-28	ARBRE À CAMES
02-29	TURBOCOMPRESSEUR
02-30	MOTEUR, HUILE
02-31	POMPE A HUILE - MOTEUR
02-32	FILTRE A HUILE - MOTEUR
02-33	TUYAUTERIES - HUILE DU MOTEUR
02-34	FILTRE ET REFROIDISSEUR D"HUILE
02-35	POMPE A EAU
02-36	CIRCUIT DE REFROIDISSEMENT - MOTEUR
02-37	THERMOSTAT - REFROIDISSEMENT MOTEUR
02-38	POMPE A EAU - COMMANDE
02-39	COMMANDE DE VENTILATEUR
02-40	PRISE DE FORCE
02-41	MOTEUR - CROCHET DE LEVAGE
03-01	TUYAUTERIE D"ESSENCE, RESERVOIR - FILTRE À CARBURANT EN LIGNE
03-02	COMMANDES - MANETTE DES GAZ
03-03	COMMANDES - PÉDALE D"ACCÉLÉRATION
03-04	POMPE DINJECTION
03-05	SYSTÈME D"INJECTION
03-06	SYSTÈME D"INJECTION
03-07	SYSTÈME D"INJECTION
03-08	FILTRE COMBUSTIBLE

http://www.minnparbackhoeparts.com/

TABLE OF CONTENTS

03-09	POMPE D''ALIMENTATION
03-10	SYSTÈME D''INJECTION
03-11	SYSTÈME D''INJECTION
04-01	DÉMARREUR
04-02	ALTERNATEUR
04-03	SUPPORT DU DÉMARREUR - MONTAGE DE L''ALTERNATEUR
04-04	FAISCEAU, MOTEUR - MONTAGE ET CONNEXIONS
04-05	BATTERIE CABLES (MODÈLES SANS DÉMARRAGE PAR TEMPS FROID)
04-06	BATTERIE DOUBLE - DEMARRAGE PAR TEMPS FROID
04-06A	ÉLÉMENT CHAUFFANT DE CALANDRE POUR DÉMARRAGE À FROID
04-07	FAISCEAU, TABLEAU DE BORD AVANT - CONTACTEURS
04-08	FAISCEAU, TABLEAU DE BORD AVANT - SUPPORT
04-09	SYSTÈME ÉLECTRIQUE - TRANSMISSION, AUTOMATIQUE
04-10	FAISCEAU, TABLEAU DE BORD LATÉRAL - CONTACTEURS
04-11	TABLEAU DE BORD, AVANT - COUVERCLES
04-12	TABLEAU DE BORD, LATÉRAL - COUVERCLES (CÔTÉ DROIT)
04-13	APPAREILS DE CONTROLE
04-14	SYSTÈME ÉLECTRIQUE - ECLAIRAGE, TOIT ROPS
04-15	SYSTÈME ÉLECTRIQUE - ECLAIRAGE, CABINE ROPS
04-16	ÉCLAIRAGE (MODÈLES AVEC STRUCTURE ROPS)
04-17	AVERTISSEUR SONORE - ALARME DE RECUL
04-18	GYROPHARE (MODÈLES DE CABINES OU DE TOIT)
04-19	ANTENNE, RADIO - FAISCEAU, RADIO
04-20	SYSTÈME ÉLECTRIQUE - CIRCUIT HYDRAULIQUE AUXILIAIRE POUR LA PELLE RETRO
04-21	SYSTÈME ÉLECTRIQUE - CIRCUIT HYDRAULIQUE AUXILIAIRE POUR LA PELLE RETRO, AVEC DE COMMANDE PILOTE
05-01	VOLANT - COLONNE
05-02	SYSTEME HYDRAULIQUE - DIRECTION
05-03	COLONNE DE DIRECTION
05-04	ESSIEU, AVANT (86990837) - SUPPORT
05-05	ESSIEU, AVANT (86990837) - BOÎTIER
05-06	ESSIEU, AVANT (86990837) - LOGEMENT DU PIVOT
05-07	ESSIEU, AVANT (86990837) - VERIN DE DIRECTION
05-08	ESSIEU, AVANT (86990837) - MOYEU ET ROULEMENTS
05-09	ROUES AVANT - PNEUS
06-01	ESSIEU, TRACTION AVANT - SUPPORT
06-02	ESSIEU, TRACTION AVANT - BOÎTIER
06-03	ESSIEU, TRACTION AVANT - LOGEMENT DU PIVOT
06-04	ESSIEU, TRACTION AVANT - VERIN DE DIRECTION
06-05	ESSIEU, TRACTION AVANT - ARBRES, ESSIEU
06-06	ESSIEU, TRACTION AVANT - SATELLITE
06-07	ESSIEU, TRACTION AVANT - DIFFERENTIEL
06-08	ESSIEU, TRACTION AVANT - COURONNE ET PIGNON
06-09	ARBRE DE TRANSMISSION, ESSIEU AVANT
06-10	SYSTÈME DE REFROIDISSEMENT - TRANSMISSION (MODÈLES SANS AUTOMATIQUE)(WITH CUT HOSES AT COOLER)
06-11	SYSTÈME DE REFROIDISSEMENT - TRANSMISSION (MODÈLES AVEC AUTOMATIQUE)(WITH CUT HOSES AT COOLER)
06-11A	SYSTÈME DE REFROIDISSEMENT - TRANSMISSION (WITH FLARED FITTINGS AT COOLER)
06-12	TRANSMISSION - SUPPORT (MODÈLES SANS AUTOMATIQUE)

http://www.minnparbackhoeparts.com/

TABLE OF CONTENTS

06-13	TRANSMISSION - SUPPORT (MODÈLES AVEC AUTOMATIQUE)
06-14	TRANSMISSION - FILTRE À HUILE (MODÈLES SANS AUTOMATIQUE)
06-15	TRANSMISSION (2WD) - BOÎTIER (MODÈLES SANS AUTOMATIQUE)
06-16	TRANSMISSION (4WD) - BOÎTIER (MODÈLES SANS AUTOMATIQUE)
06-17	TRANSMISSION - POMPE A HUILE (MODÈLES SANS AUTOMATIQUE)
06-18	TRANSMISSION - MÉCANISME DU CHANGEMENT DE VITESSE (MODÈLES SANS AUTOMATIQUE)
06-19	TRANSMISSION - AXE, TENDEUR ET PRIMAIRE (MODÈLES SANS AUTOMATIQUE)
06-20	TRANSMISSION - ARBRE, ENTRÉE (MODÈLES SANS AUTOMATIQUE)
06-21	TRANSMISSION - ARBRE, SECONDAIRE (MODÈLES SANS AUTOMATIQUE)
06-22	TRANSMISSION (4WD) - ARBRE DE SORTIE (MODÈLES SANS AUTOMATIQUE)
06-23	TRANSMISSION (86984097 OR 86984098) - DISTRIBUTEUR (MODÈLES SANS AUTOMATIQUE)
06-23A	TRANSMISSION (87456843 OR 87456844) - DISTRIBUTEUR (MODÈLES SANS AUTOMATIQUE)
06-24	TRANSMISSION (4WD) - ELECTROVANNE (MODÈLES SANS AUTOMATIQUE)
06-25	TRANSMISSION, BOÎTE AUTOMATIQUE - BOÎTIER
06-26	TRANSMISSION, BOÎTE AUTOMATIQUE - LOGEMENT ARRIERE
06-27	TRANSMISSION, BOÎTE AUTOMATIQUE - CONVERTISSEUR DE COUPLE
06-28	TRANSMISSION, BOÎTE AUTOMATIQUE - POMPE A HUILE
06-29	TRANSMISSION, BOÎTE AUTOMATIQUE - EMBRAYAGE, MARCHE AVANT
06-30	TRANSMISSION, BOÎTE AUTOMATIQUE - EMBRAYAGE, MARCHE ARRIERE
06-31	TRANSMISSION, BOÎTE AUTOMATIQUE - EMBRAYAGE, ENTRAINEMENT DE LA POMPE
06-32	TRANSMISSION, BOÎTE AUTOMATIQUE - EMBRAYAGE, DEUXIÈME PIGNON
06-33	TRANSMISSION, BOÎTE AUTOMATIQUE - EMBRAYAGE, ARBRE DE SORTIE
06-34	TRANSMISSION, BOÎTE AUTOMATIQUE - MONTAGE, DISTRIBUTEUR
06-35	TRANSMISSION, BOÎTE AUTOMATIQUE - DISTRIBUTEUR
06-36	TRANSMISSION, BOÎTE AUTOMATIQUE - PLAQUE, ENTRAINEMENT
06-37	ROUES, ARRIÈRE - PNEUS
06-38	ESSIEU, PROPULSION ARRIÈRE - SUPPORT
06-39	ESSIEU ARRIÈRE - BLOCAGE DU DIFFERENTIEL
06-40	ESSIEU, PROPULSION ARRIÈRE - BOÎTIER
06-41	ESSIEU, PROPULSION ARRIÈRE - DIFFERENTIEL (ENTRÉE DANS LE SENS HORAIRE, MODÈLES SANS AUTOMATIQUE)
06-42	ESSIEU, PROPULSION ARRIÈRE - DIFFERENTIEL (ENTRÉE DANS LE SENS ANTI-HORAIRE, MODÈLES AVEC AUTOMATIQU
06-43	ESSIEU, PROPULSION ARRIÈRE - COURONNE ET PIGNON
06-44	ESSIEU, PROPULSION ARRIÈRE - BLOCAGE DU DIFFERENTIEL (ENTRÉE DANS LE SENS HORAIRE, MODÈLES SANS AUTO
06-45	ESSIEU, PROPULSION ARRIÈRE - BLOCAGE DU DIFFERENTIEL (ENTRÉE DANS LE SENS ANTI-HORAIRE, MODÈLES AVEC
06-46	ESSIEU, PROPULSION ARRIÈRE - SATELLITE
06-47	ARBRE DE TRANSMISSION, ESSIEU ARRIÈRE
07-01	ESSIEU, PROPULSION ARRIÈRE - FREIN, DIFFERENTIEL
07-02	ESSIEU, PROPULSION ARRIÈRE FREIN DE STATIONNEMENT
07-03	FREINS - PÉDALES
07-04	SYSTEME HYDRAULIQUE - MAITRE-CYLINDRE DE FREIN
07-05	VERIN - MAITRE FREIN
07-06	COMMANDES FREIN DE STATIONNEMENT
08-01	SYSTEME HYDRAULIQUE - POMPE, FILTRE ET DISTRIBUTEUR DE CHARGEUSE

http://www.minnparbackhoeparts.com/

TABLE OF CONTENTS

08-02	SYSTEME HYDRAULIQUE - DU DISTRIBUTEUR DU CHARGEUR AU FILTRE AU DISTRIBUTEUR DE LA PELLE RETRO
08-03	SYSTEME HYDRAULIQUE - REFROIDISSEUR, CONDUITES DE RETOUR ET FILTRE
08-04	SYSTEME HYDRAULIQUE - VERIN DE RELEVAGE DES BRAS DE RELEVAGE
08-05	SYSTEME HYDRAULIQUE - VERIN, GODET DE LA CHARGEUSE
08-06	SYSTEME HYDRAULIQUE - VERIN, BENNE DE LA CHARGEUSE
08-07	SYSTEME HYDRAULIQUE - VERIN, BENNE DE LA CHARGEUSE
08-08	SYSTEME HYDRAULIQUE - VERIN, STABILISATEUR DE LA PELLE RETRO EUROPA (SANS DE COMMANDE PILOTE)
08-08A	SYSTEME HYDRAULIQUE - VERIN, STABILISATEUR DE LA PELLE RETRO EUROPA (AVEC DE COMMANDE PILOTE)
08-09	SYSTEME HYDRAULIQUE - VERIN, DEBATTEMENT DE LA PELLE RETRO (SANS DE COMMANDE PILOTE)
08-09A	SYSTEME HYDRAULIQUE - VERIN, DEBATTEMENT DE LA PELLE RETRO (AVEC DE COMMANDE PILOTE)
08-10	SYSTEME HYDRAULIQUE - VERIN, FLECHE DE LA PELLE RETRO EUROPA
08-10A	SYSTEME HYDRAULIQUE - LE LOQUET DE BOOM DE BACKHOE ET LE CIRCUIT ELECTRIQUE
08-11	SYSTEME HYDRAULIQUE - VERIN, BALANCIER DE LA PELLE RETRO
08-12	SYSTEME HYDRAULIQUE - VERIN, GODET DE LA PELLE RETRO (MODÈLES SANS BALANCIER EXTENSIBLE)
08-13	SYSTEME HYDRAULIQUE - VERIN, GODET DE LA PELLE RETRO (MODÈLES AVEC BALANCIER EXTENSIBLE)
08-14	SYSTEME HYDRAULIQUE - VERIN, BALANCIER EXTENSIBLE DE LA PELLE RETRO
08-15	SYSTEME HYDRAULIQUE - DISTRIBUTEUR, COMMANDE PILOTE DE LEVIER DE COMMANDE (6 SPOOL, W/O EXT DIPPER,
08-16	SYSTEME HYDRAULIQUE - DISTRIBUTEUR, COMMANDE PILOTE DE LEVIER DE COMMANDE (6 SPOOL, W/O EXT DIPPER,
08-17	SYSTEME HYDRAULIQUE - DISTRIBUTEUR, COMMANDE PILOTE DE LEVIER DE COMMANDE (7 SPOOL, W/ EXT DIPPER,
08-18	SYSTEME HYDRAULIQUE - DISTRIBUTEUR, COMMANDE PILOTE DE LEVIER DE COMMANDE (7 SPOOL, W/ EXT DIPPER,
08-19	SYSTEME HYDRAULIQUE - DISTRIBUTEUR, COMMANDE PILOTE DE LEVIER DE COMMANDE (7 SPOOL, W/O EXT DIPPER,
08-20	SYSTEME HYDRAULIQUE - DISTRIBUTEUR, COMMANDE PILOTE DE LEVIER DE COMMANDE (8 SPOOL, W/ EXT DIPPER,
08-21	SYSTEME HYDRAULIQUE - COMMANDE PILOTE DE LEVIER DE COMMANDE
08-22	SYSTEME HYDRAULIQUE - COMMANDE PILOTE
08-23	SYSTEME HYDRAULIQUE - CIRCUIT AUXILIAIRE DE LA PELLE RETRO
08-24	SYSTEME HYDRAULIQUE - CIRCUIT AUXILIAIRE DE LA PELLE RETRO
08-25	SYSTEME HYDRAULIQUE - SYSTEME ANTI-TANGAGE
08-26	SYSTEME HYDRAULIQUE - COUPLEUR, OUTIL DE CHARGEUSE, DE SÉCURITÉ
08-27	SYSTEME HYDRAULIQUE - COUPLEUR, OUTIL DE CHARGEUSE, DE SÉCURITÉ
08-28	DISTRIBUTEUR DU COUPLEUR - OUTIL DE CHARGEUSE, DE SÉCURITÉ / RETROPELLE
08-29	SYSTEME HYDRAULIQUE - COUPLEUR, GODET DE LA PELLE RETRO
08-30	SYSTEME HYDRAULIQUE - COUPLEUR, GODET DE LA PELLE RETRO
08-31	DISTRIBUTEUR DU COUPLEUR - OUTIL DE CHARGEUSE, DE SÉCURITÉ AVEC DEGODET DE LA PELLE RETRO
08-32	VERIN - COUPLEUR, GODET DE LA PELLE RETRO
08-33	POMPE, ÉQUIPEMENT HYDRAULIQUE
08-34	DISTRIBUTEUR - COMMANDE DU CHARGEUR, DEUX TIROIRS

http://www.minnparbackhoeparts.com/

TABLE OF CONTENTS

08-35	DISTRIBUTEUR - COMMANDE DU CHARGEUR, TROIS TIROIRS
08-36	DISTRIBUTEUR - COMMANDE DE LA PELLE RETRO, 6 TIROIRS (SANS BALANCIER EXTENSIBLE ET SANS CIRCUIT HYD)
08-37	DISTRIBUTEUR - COMMANDE DE LA PELLE RETRO, 7 TIROIRS (SANS BALANCIER EXTENSIBLE ET AVEC CIRCUIT HYD)
08-38	DISTRIBUTEUR - COMMANDE DE LA PELLE RETRO, 7 TIROIRS (AVEC BALANCIER EXTENSIBLE ET SANS CIRCUIT HYD)
08-39	DISTRIBUTEUR - COMMANDE DE LA PELLE RETRO, 8 TIROIRS (AVEC BALANCIER EXTENSIBLE ET SANS CIRCUIT HYD)
08-40	DISTRIBUTEUR - COMMANDE DE LA PELLE RETRO, 6 TIROIRS
08-41	DISTRIBUTEUR - COMMANDE DE LA PELLE RETRO, 7 TIROIRS
08-42	DISTRIBUTEUR - COMMANDE DE LA PELLE RETRO, 7 TIROIRS
08-43	DISTRIBUTEUR - COMMANDE DE LA PELLE RETRO, 8 TIROIRS
08-43A	CIRCUIT - ENTREE (AVEC DE COMMANDE PILOTE)
08-44	CIRCUIT - DEBATTEMENT DE LA RETROPELLE (AVEC DE COMMANDE PILOTE)
08-45	CIRCUIT - FLECHE DE LA RETROPELLE (AVEC DE COMMANDE PILOTE)
08-46	CIRCUIT - STABILISATEUR DE LA PELLE RETRO (AVEC DE COMMANDE PILOTE)
08-47	CIRCUIT - BRAS DE LA RETROPELLE (AVEC DE COMMANDE PILOTE)
08-48	CIRCUIT - GODET DE LA RETROPELLE (AVEC DE COMMANDE PILOTE)
08-49	CIRCUIT - BALANCIER EXTENSIBLE (AVEC DE COMMANDE PILOTE)
08-50	CIRCUIT - OPTIONS, CIRCUIT HYDRAULIQUE AUXILIAIRE (AVEC DE COMMANDE PILOTE)
08-51	DISTRIBUTEUR, SOUPAPE DE REDUCTION PRESSION (2 SPOOL) (AVEC DE COMMANDE PILOTE)
08-52	DISTRIBUTEUR, SOUPAPE DE REDUCTION PRESSION (3 SPOOL) (AVEC DE COMMANDE PILOTE)
08-53	DISTRIBUTEUR, SOUPAPE DE REDUCTION PRESSION (4 SPOOL) (AVEC DE COMMANDE PILOTE)
08-54	DISTRIBUTEUR, LEVIER DE COMMANDE (COMMANDE PILOTE) (GAUCHE) AVERTISSEUR SONORE
08-55	DISTRIBUTEUR, LEVIER DE COMMANDE (COMMANDE PILOTE) (GAUCHE) AVERTISSEUR SONORE & UNI-DIR
08-56	DISTRIBUTEUR, LEVIER DE COMMANDE (COMMANDE PILOTE) (GAUCHE) AVERTISSEUR SONORE & BI-DIR
08-57	DISTRIBUTEUR, LEVIER DE COMMANDE (COMMANDE PILOTE) (DROIT) SANS BALANCIER EXTENSIBLE
08-58	DISTRIBUTEUR, LEVIER DE COMMANDE (COMMANDE PILOTE) (DROIT) AVEC BALANCIER EXTENSIBLE
08-59	DISTRIBUTEUR - AMORTISSEUR DE DEBATTEMENT
08-59A	ELECTROVANNE - VERROUILLAGE DE LA FLECHE
08-60	ACCUMULATEUR ASS. - SYSTEME ANTI-TANGAGE
08-61	FILTRE A HUILE
08-62	VERIN - RELEVAGE DE LA CHARGEUSE
08-63	VERIN - GODET DE LA CHARGEUSE
08-64	VERIN - BENNE DE CHARGEUSE
08-65	VERIN - STABILISATEUR DE LA PELLE RETRO (580SM)
08-65A	VERIN - STABILISATEUR DE LA PELLE RETRO (580SM+)
08-66	VERIN - DEBATTEMENT DE LA RETROPELLE
08-67	VERIN - FLECHE DE LA RETROPELLE
08-68	VERIN - BRAS DE LA RETROPELLE
08-69	VERIN - GODET DE LA RETROPELLE
08-70	VERIN - BALANCIER EXTENSIBLE DE LA PELLE RETRO

http://www.minnparbackhoeparts.com/

TABLE OF CONTENTS

09-01	COMMANDES - RELEVAGE ET GODET DES BRAS DE RELEVAGE
09-02	COMMANDES - BENNE DE CHARGEUSE
09-03	COMMANDES - ASSIETTE AUTOMATIQUE DES BRAS DE RELEVAGE
09-04	CADRE - RELEVAGE DE LA CHARGEUSE
09-05	CADRE - TRINGLERIE DES BRAS DE RELEVAGE
09-06	GODET, CHARGEUSE À LONGUE LÈVRE (82 IN) (580SM)
09-07	GODET, CHARGEUSE À LONGUE LÈVRE (93 IN) (580SM / 580SM+)
09-08	GODET, BENNE DE CHARGEUSE (82 IN) (580SM)
09-08A	GODET, BENNE DE CHARGEUSE (93 IN) (580SM+)
09-09	GARANT - DISTRIBUTEUR, BRAS DE RELEVAGE
09-10	COUPLEUR, OUTIL, DE SÉCURITÉ
09-11	COUVERCLES - TOURELLE DE LA PELLE RETRO, SANS DE COMMANDE PILOTE
09-12	SUPPORT DE TOUR DE CONTRÔLE ET JOINTS DE PELLE RÉTRO, SANS DE COMMANDE PILOTE
09-13	TOURELLE DE LA PELLE RETRO SUPPORT, AVEC DE COMMANDE PILOTE
09-14	TOURELLE DE LA PELLE RETRO SOUFFLET DE JOINT, AVEC DE COMMANDE PILOTE
09-15	TOURELLE DE LA PELLE RETRO LEVIER (VERROU DE MAINTIEN DE BRAS DE RELEVAGE), AVEC DE COMMANDE PILOTE
09-16	COMMANDES - PELLE RETRO, AVEC DÉBATTEMENT AU PIED (MODÈLES SANS BALANCIER EXTENSIBLE)
09-17	COMMANDES - PELLE RETRO, AVEC DÉBATTEMENT AU PIED (MODÈLES AVEC BALANCIER EXTENSIBLE)
09-18	COMMANDES - PELLE RETRO, AVEC DÉBATTEMENT A LA MAIN (MODÈLES SANS BALANCIER EXTENSIBLE)
09-19	COMMANDES - PELLE RETRO, AVEC DÉBATTEMENT A LA MAIN (MODÈLES SANS BALANCIER EXTENSIBLE)
09-19A	COMMANDES - PELLE RETRO, SCHEMA DE CONTROLE DE L"EXCAVATRICE
09-20	COMMANDES - PELLE RETRO, AVEC DÉBATTEMENT A LA MAIN (MODÈLES AVEC BALANCIER EXTENSIBLE)
09-21	COMMANDES - CIRCUIT HYDRAULIQUE AUXILIAIRE POUR LA PELLE RETRO, SANS DE COMMANDE PILOTE
09-22	RETROPELLE - STABILISATEURS, PLAQUES ET PATINS (580SM)
09-22A	RETROPELLE - STABILISATEURS, PLAQUES ET PATINS (580SM+)
09-23	RETROPELLE - TOURELLE ET VERINS DE DEBATTEMENT
09-24	RETROPELLE - FLECHE ET TOURELLE DE DEBATTEMENT
09-25	VERROU DE MAINTIEN DE BRAS DE RELEVAGE (SANS DE COMMANDE PILOTE)
09-25A	VERROU DE MAINTIEN DE BRAS DE RELEVAGE (AVEC DE COMMANDE PILOTE)
09-26	RETROPELLE - BALANCIER ET GODET
09-27	RETROPELLE - BALANCIER EXTENSIBLE
09-28	BALANCIER, PELLE RÉTRO - COUPLEUR HYDRAULIQUE (COUPLEUR DE GODET DE PELLE RÉTRO HYDRAULIQUE)
09-29	GODET, PELLE RÉTRO UNIVERSELLE (305 MM (12 INCH) WIDE)
09-30	GODET, PELLE RÉTRO UNIVERSELLE (406 MM (16 INCH) WIDE)
09-31	GODET, PELLE RÉTRO UNIVERSELLE (457 MM (18 INCH) WIDE)
09-32	GODET, PELLE RÉTRO UNIVERSELLE (610 MM (24 INCH) / 762 MM (30 INCH) WIDE)
09-33	GODET, PELLE RÉTRO UNIVERSELLE (914 MM (36 INCH) WIDE)
09-34	GODET, PELLE RÉTRO UNIVERSELLE (610 MM (24 INCH) / 762 MM (30 INCH) WIDE)
09-34A	ENSEMBLE DE POINT DE GEL
09-35	CONTREPOIDS AVANT
09-36	CHASSIS / MONTAGES, COSSE - GRILLE, ADMISSION D"AIR
09-37	RÉSERVOIR, HUILE - COMPARTIMENT DE BATTERIES ET BOITE A OUTILS

http://www.minnparbackhoeparts.com/

TABLE OF CONTENTS

09-38	BOÎTIER DE RADIATEUR
09-39	CAPOT - PANNEAUX LATERAUX
09-40	CAPOT - CALANDRE
09-41	PLAQUES, PLANCHER - TAPIS DE SOL
09-42	GARDE-BOUE, GAUCHE - PANNEAU, FERMETURE ARRIERE (VIDE-POCHES AVEC PORTE-GOBELET)
09-43	EXTENSION DE GARDE BOUE
09-44	GARDE-BOUE
09-45	SIEGE - SUPPORT (MILSCO EN SEARS SUSPENSION PNEUMATIQUE)
09-45A	SIEGE - SUPPORT (SEARS, STANDARD)
09-45B	SIEGE - SUPPORT (SEARS SUSPENSION MÉCANIQUE)
09-46	SIÈGE, STANDARD (MILSCO)
09-47	SUPPORT DE SIÈGE ET BASE, STANDARD (MILSCO)
09-48	SIÈGE, SUSPENSION MÉCANIQUE (MILSCO)
09-49	BASE DE SIÈGE ET SUSPENSION, SUSPENSION MÉCANIQUE (MILSCO)
09-49A	SIÈGE, SUSPENSION MÉCANIQUE (SEARS)
09-50	SIÈGE, SUSPENSION PNEUMATIQUE (SEARS)
09-51	BASE DE SIÈGE ET SUSPENSION, SUSPENSION PNEUMATIQUE (SEARS)
09-52	CABINE - FENETRE, RETROVISEUR ET OUVERTURE
09-53	CABINE - CHASSIS ET COUVERCLES
09-54	CABINE - PORTES, SI UTILISE (VOIR VITRE / CHARNIERE; REF 4, 27, 29)
09-54A	CABINE - PORTES, SI UTILISE (VOIR VITRE / CHARNIERE; REF 4, 27, 29)
09-55	CABINE - MONTAGE DE PORTIÈRE
09-56	CABINE - FENÊTRE DROITE, POUR CADRES DE CABINE À UNE SEULE PORTIÈRE, SI UTILISE (VOIR VITRE / CHARNI
09-56A	CABINE - FENÊTRE DROITE, POUR CADRES DE CABINE À UNE SEULE PORTIÈRE, SI UTILISE (VOIR VITRE / CHARNI
09-57	CABINE - VITRE, ARRIÈRE
09-58	CABINE - LAVE-GLACE
09-59	CABINE - ESSUIE-GLACE
09-60	GARNITURE DE LA CABINE - FILTRE, DEFLECTEUR, PLAFONNIER
09-61	CABINE - FILTRE A AIR
09-62	CABINE - CARTER DE LA SOUFFLANTE, DURITS DE VENTILATION, CONDUITES DE PURGE
09-63	CABINE - CHAUFFAGE
09-64	CABINE - CONDUITES DE LA CLIMATISATION, RADIATEUR D"EVAPORATION
09-65	CABINE - CLIMATISATION, CONDENSATEUR, DESSICCATEUR
09-66	CABINE - COMPRESSEUR DE LA CLIMATISATION
09-67	STRUCTURE ROPS - CADRE, COUVERCLES, RETROVISEUR, VISIERE-ECRAN
09-68	STRUCTURE ROPS - VITRE
09-69	STRUCTURE ROPS - ESSUIE-GLACE AVANT ET LAVE-GLACE
09-70	RÉTROVISSEUR - SUPPORT, MODÈLE DE CABINE
09-71	TRIANGLE VÉHICULE LENT
09-72	AUTOCOLLANTS
09-73	AUTOCOLLANTS
09-74	AUTOCOLLANTS
09-75	AUTOCOLLANTS - ANGLAIS
09-76	AUTOCOLLANTS - ESPAGNOL D"AMÉRIQUE LATINE
09-77	AUTOCOLLANTS - FRANÇAIS CANADIEN
09-78	AUTOCOLLANTS - ANGLAIS
09-79	AUTOCOLLANTS - ESPAGNOL D"AMÉRIQUE LATINE
09-80	AUTOCOLLANTS - FRANÇAIS CANADIEN

http://www.minnparbackhoeparts.com/

NOTES

http://www.minnparbackhoeparts.com/

GÉNÉRALITÉS

AVIS DE PROPRIÉTÉ

Les données contenues dans ce manuel constituent la propriété de cette société. Toute reproduction ou utilisation de toute partie de ce manuel à d'autres fins que l'utilisation et l'entretien de notre matériel ne sont permises que si elles sont expressément autorisées par écrit.

Des copies supplémentaires peuvent être obtenues auprès du concessionnaire. Pour obtenir des exemplaires supplémentaires, s'adresser au concessionnaire et donner en référence le numéro de publication imprimé au bas de la couverture arrière de ce manuel ou sur la page de titre.

POLITIQUE DE LA SOCIÉTÉ

L'entreprise, dont la politique est fondée sur le progrès constant, se réserve le droit de changer ses prix et d'apporter des modifications à la conception et aux caractéristiques du matériel à tout moment, sans préavis et sans obligation de modifier les machines précédemment fabriquées.

Toutes les données qui apparaissent dans le présent manuel peuvent faire l'objet de variations dues aux contraintes de production. Les dimensions et les mesures de poids ne sont qu'approximatives et les machines illustrées ne sont pas nécessairement en état standard. Pour des données précises au sujet d'un modèle de machine en particulier, consulter un concessionnaire agréé.

PIÈCES ET ACCESSOIRES

Des pièces et des accessoires d'origine ont été conçus spécifiquement pour ces machines.

New Holland souhaite préciser que les pièces et accessoires « non originaux » n'ont PAS été examinés et mis en vente par la société. La pose et l'utilisation de ces produits pourraient s'avérer néfaste pour la conception de la machine et donc altérer ses caractéristiques de sécurité. La compagnie ne peut être tenue responsable des dégâts résultant de l'utilisation de pièces et d'accessoires « non originaux ».

AMÉLIORATIONS

Nous nous efforçons de sans cesse continuer à améliorer nos produits. Nous nous réservons le droit d'apporter des améliorations ou modifications dès qu'elles s'avèrent pratiques et possibles, sans engagement ni obligation d'apporter des modifications ou des ajouts sur les équipements vendus auparavant.

CODES DE MODÈLES

Les machines énumérées ne sont peut-être pas toutes disponibles dans tous les pays ou sur tous les marchés ; en conséquence, pour obtenir les informations les plus récentes, consulter le concessionnaire.

ASSISTANCE AU PROPRIÉTAIRE

Nous souhaitons que vous soyez entièrement satisfait de votre investissement. Tous les problèmes rencontrés lors de l'utilisation de l'équipement sont normalement gérés par le service Entretien des concessionnaires, mais il est possible que des malentendus aient lieu. Si le problème n'a pas été géré de façon satisfaisante, procéder comme suit.

1. Contacter le propriétaire ou le directeur de la concession, expliquer le problème et demander de l'aide. En cas de besoin d'assistance supplémentaire, le concessionnaire peut contacter directement nos bureaux.
2. Fournir au concessionnaire les renseignements suivants :
   - Nom, adresse et numéro de téléphone
   - Modèle de la machine et numéro de série
   - Nom et adresse du concessionnaire
   - Date d'achat et nombre d'heures d'utilisation
   - Nature du problème

Garder à l'esprit le fait que le problème sera très certainement réglé au sein de la concession, à l'aide des infrastructures, des équipements et du personnel du concessionnaire. C'est pourquoi il est important que le premier contact se situe au niveau du concessionnaire.

PIÈCES DÉTACHÉES

Pour maintenir un fonctionnement efficace, utiliser des pièces détachées d'origine.

Lors de la commande de pièces, fournir les informations suivantes.

- Modèle de la machine
- Numéros de série de la machine et du moteur
- Référence de la pièce du catalogue de pièces détachées

http://www.minnparbackhoeparts.com/

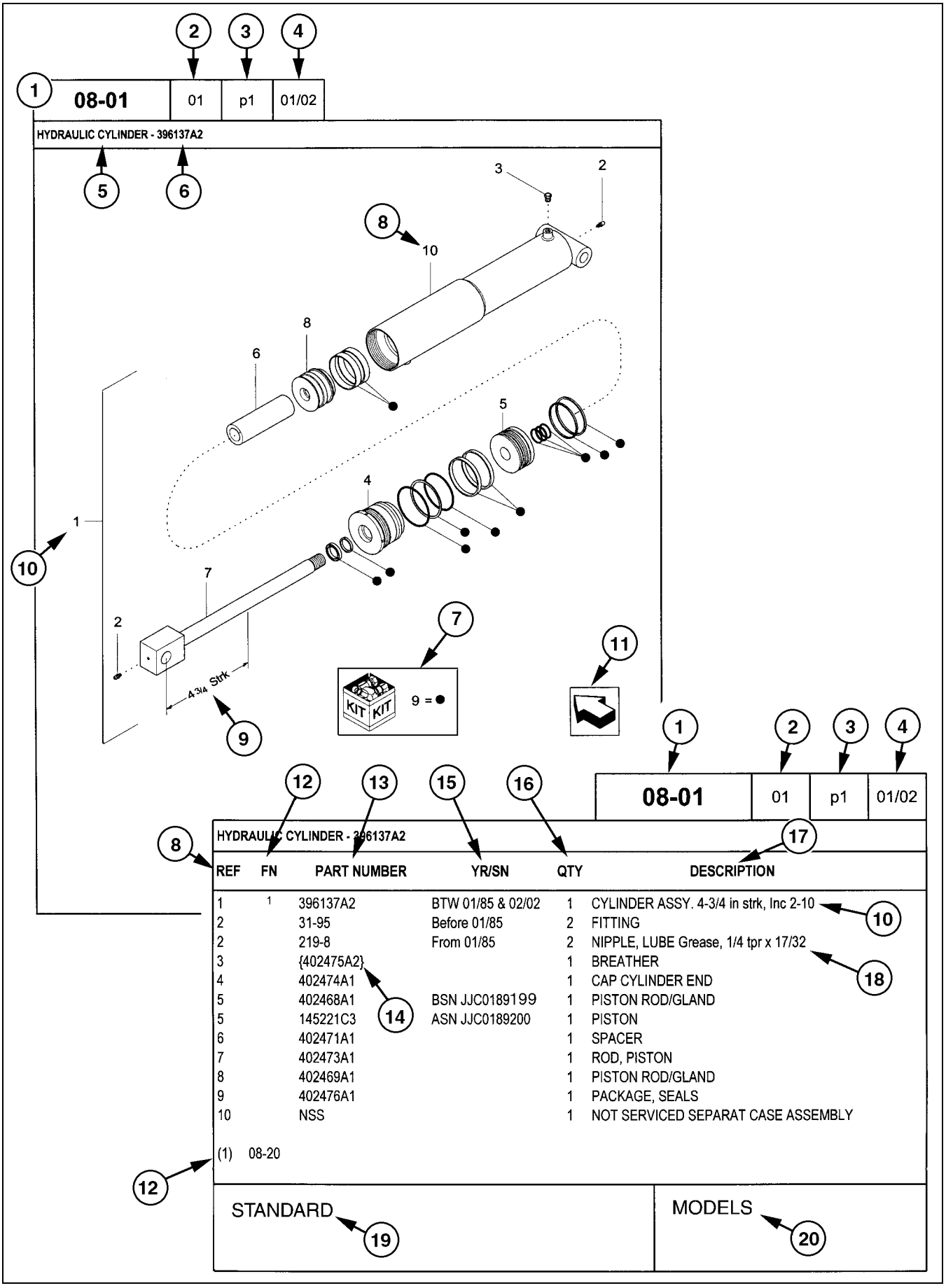

REF	FN	PART NUMBER	YR/SN	QTY	DESCRIPTION
1	1	396137A2	BTW 01/85 & 02/02	1	CYLINDER ASSY. 4-3/4 in strk, Inc 2-10
2		31-95	Before 01/85	2	FITTING
2		219-8	From 01/85	2	NIPPLE, LUBE Grease, 1/4 tpr x 17/32
3		{402475A2}		1	BREATHER
4		402474A1		1	CAP CYLINDER END
5		402468A1	BSN JJC0189199	1	PISTON ROD/GLAND
5		145221C3	ASN JJC0189200	1	PISTON
6		402471A1		1	SPACER
7		402473A1		1	ROD, PISTON
8		402469A1		1	PISTON ROD/GLAND
9		402476A1		1	PACKAGE, SEALS
10		NSS		1	NOT SERVICED SEPARAT CASE ASSEMBLY

(1) 08-20

STANDARD

MODELS

http://www.minnparbackhoeparts.com/

UTILISATION DU CATALOGUE DE PIÈCES

1. Numéro de la figure
2. Code de séquence dans le numéro de la figure
3. Numéro de la page dans le code de séquence
4. Date d'impression (mois/année)
5. Description de la figure
6. Informations générales relatives à la figure
7. Pièces fournies dans les kits de réparation selon référence de symbole
8. Chiffre-référence de la référence
9. Caractéristiques techniques relatives à la pièce indiquée
10. Le chiffre-référence de la figure inclut des articles entre crochets, les articles inclus peuvent aussi être énumérés dans la zone de description additionnelle
11. Orientation – La flèche indique l'avant de la machine
12. Note de pied de page – Informations supplémentaires relatives à la référence. Dans cet exemple, 08-20 correspond à une autre figure où cette pièce est illustrée
13. Référence
    NSS = pièces sans entretien
    Numéros entre parenthèses = localement non disponibles comme pièces détachées
14. Localement non disponible comme pièce détachée
15. Année/N° de série

    Année
    Avant 01/85 = pièce valable pour la production de janvier 1985 et antérieure
    À partir de 01/85 = pièce valable pour la production de janvier 1985 et postérieure
    Entre 01/85 et 02/02 = pièce valable pour les machines produites entre janvier 1985 et février 2002

    Numéro de série (P.I.N.)
    BSN JJC0268800 = pièce valable pour les numéros de série JJC0268800 et inférieurs
    ASN JJC0268800 = pièce valable pour les numéros de série JJC0268800 et supérieurs
    Entre JJC0178000 et JJC0179000 = pièce valable pour les numéros de série compris entre JJC0178000 et JJC0179000
16. La quantité totale de pièces auxquelles il est fait référence dans cette page. La quantité peut être remplacée par les indications suivantes :
    AR = Selon besoin
    X = Selon le besoin
17. Description
18. Description complémentaire de la pièce pour faciliter la confirmation de l'identification
19. Notes de la figure
20. Numéro(s) de modèle

GAUCHE ET DROIT

La référence aux côtés gauche et droit dans ce catalogue est identifiée par l'opérateur debout à l'arrière de l'unité de base (sans outil arrière), regardant vers l'avant de la machine (en marche avant normale).

Pour les pages concernant les outils de la machine, les côtés droit et gauche sont définis par l'opérateur assis en position correcte de commande de l'outil.

DIMENSIONS

Les dimensions impériales et métriques ne montrent pas les désignations numériques du filetage standard. Un chiffre suivant un point virgule (;) est la classe ou le grade de la visserie. Une virgule (,) représente le point séparateur décimal (.) du système impérial.

http://www.minnparbackhoeparts.com/

SIGNIFICATION DES ABRÉVIATIONS

AC	courant alternatif
adj	réglable
amp	ampère
AR	selon le besoin
ASN	numéro de série et supérieur P.I.N. et supérieur

blkhd	cloison
br	branche
BSN	avant numéro de série avant P.I.N.
BTW	entre

cc	centimètre cube
cl	classe
cmprsn	compression
cn pt	bout pointu
cp pt	bout cuvette
CRS	acier en alliage de chrome
CST	acier au carbone
cu yd	verge cube

DC	courant continu
deg	degré
dg pt	bout cylindrique long
dia	diamètre
dr type	type de transmission

fc	face
fc sl	joint à face
fem	femelle
fem PT	filetage de tube femelle
fl	évasement
flat pt	bout plat
ft	pied(s)

ga	jauge
gal	gallon(s)
gpm	gallons par minute
gr	grade

hd	tête
hdg pt	bout cylindrique court
hp	chevaux
ID	diamètre intérieur
in	pouce(s)
Incl.	comprend
inv fl	évasement inversé

K	kilo
kg	kilogramme
km/h	kilomètres/heure

L	litre
lb	livre
lb-ft	livre/pied
lg	long
LH	côté gauche
LH thd	filetage à gauche

M	(préfixe) taille métrique du filetage
m	mètre
ml	millilitre
mm	millimètre

NF	National Fine
No.	n°
NPT	pas de tuyauterie
NS	National Super Fine

OD	diamètre extérieur
ohm	ohm
Or	joint torique
ORB	bossage de joint torique
ORFS	joint torique à face
ov cntr	hypercentrique
ov pt	bout ovale
oz	once

P	pas
psi	livre par pouce carré
pt	pinte
PT	filetage de tuyau

rd	rond
rd holes	trous ronds
RH	droit
RH thd	filetage à droite
rpm	tr/mn

sl	autobloquant
sq	carré
SST	acier inoxydable
st	à auto-taraudage
strk	course
sw	pivot

T	dent
thk	épais
tpr	conique
tube OD	diamètre extérieur de tube

V	volt(s)
W	watt(s)
X	selon le besoin
yd	yard

http://www.minnparbackhoeparts.com/

SECTION INDEX

02-01	RADIATEUR - SUPPORT
02-02	SYSTEME DE PURGE D AIR - SUPPORT
02-03	RADIATEUR (SANS AIR CONDITIONNE)
02-03A	RADIATEUR (AVEC AIR CONDITIONNE)
02-04	FILTRE A AIR - PIÈCES DE LA PRISE D"AIR
02-05	FILTRE A AIR
02-06	SILENCIEUX - ÉCHAPPEMENT
02-06A	SILENCIEUX, ASPIRATEUR - ÉCHAPPEMENT
02-07	MOTEUR - SUPPORT
02-07A	MOTEUR - BLOC CHAUFFAGE
02-08	MOTEUR
02-09	BLOC CYLINDRES
02-10	BLOC CYLINDRES
02-11	POMPE À HUILE, CARTER
02-12	BLOC CYLINDRES - COUVERCLES
02-13	BLOC CYLINDRES - COUVERCLES
02-14	BLOC CYLINDRES - COUVERCLES
02-15	RENIFLARD - MOTEUR
02-16	CULASSE DE CYLINDRE
02-17	CACHE CULBUTEUR
02-18	CULASSE DE CYLINDRE - MÉCANISME DU DISTRIBUTEUR
02-19	COLLECTEURS
02-20	COLLECTEURS
02-21	VILEBREQUIN
02-22	PISTONS - BIELLES
02-23	PISTONS - BIELLES
02-24	VOLANT - MOTEUR
02-25	POULIE - VILEBREQUIN
02-26	MASSELOTTE, ENGRENAGES ET ARBRES
02-27	MASSELOTTE, ENGRENAGES ET ARBRES (2830952)
02-28	ARBRE À CAMES
02-29	TURBOCOMPRESSEUR
02-30	MOTEUR, HUILE
02-31	POMPE A HUILE - MOTEUR
02-32	FILTRE A HUILE - MOTEUR
02-33	TUYAUTERIES - HUILE DU MOTEUR
02-34	FILTRE ET REFROIDISSEUR D"HUILE
02-35	POMPE A EAU
02-36	CIRCUIT DE REFROIDISSEMENT - MOTEUR
02-37	THERMOSTAT - REFROIDISSEMENT MOTEUR
02-38	POMPE A EAU - COMMANDE
02-39	COMMANDE DE VENTILATEUR
02-40	PRISE DE FORCE
02-41	MOTEUR - CROCHET DE LEVAGE

http://www.minnparbackhoeparts.com/

02-01		p1	05/05

RADIATEUR - SUPPORT

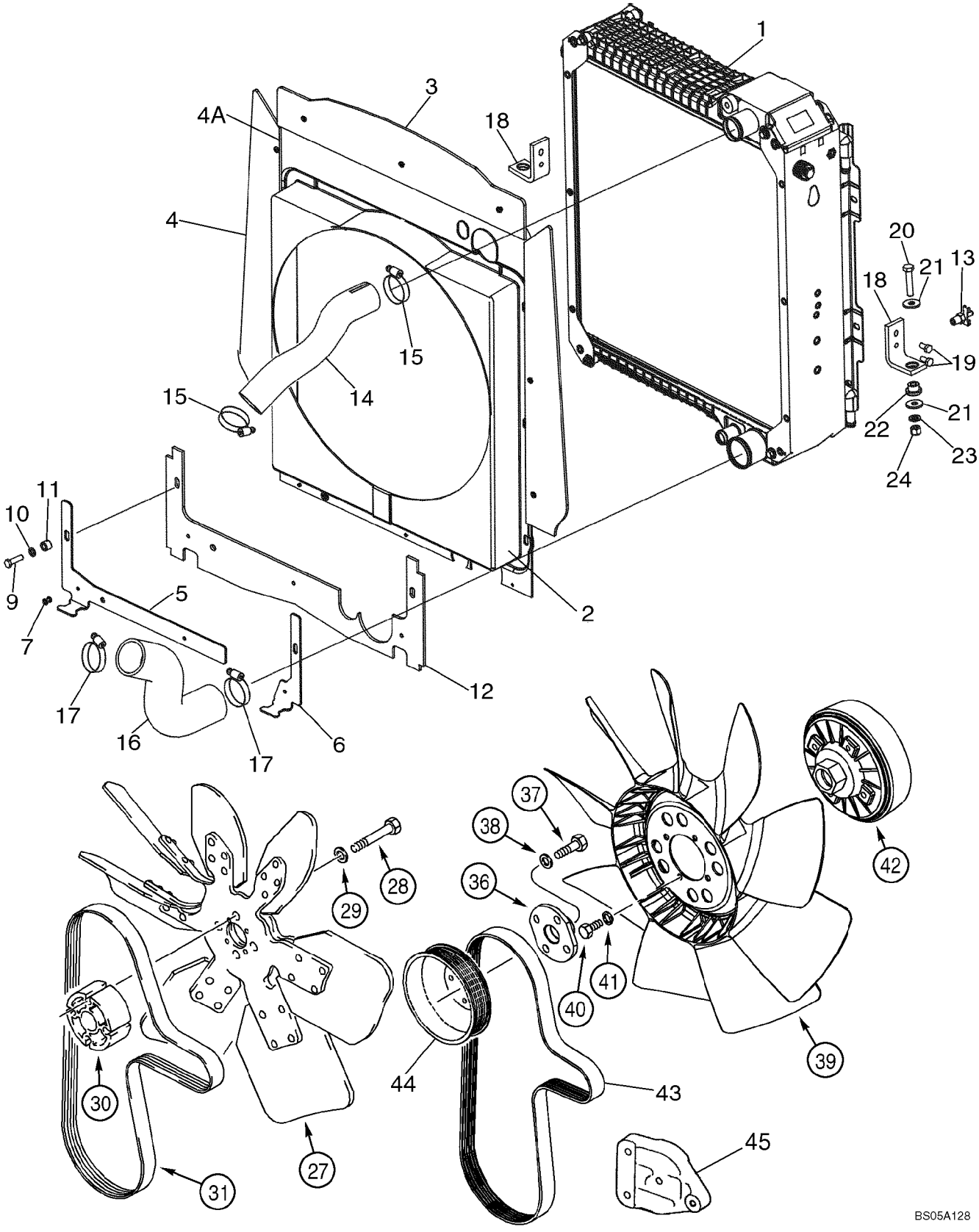

http://www.minnparbackhoeparts.com/

RADIATEUR - SUPPORT

REF	FN	PART NUMBER	YR/SN	QTY	DESCRIPTION
1		87410096		1	RADIATEUR 3 Row Radiator, Models Without Air Conditioning; See Figure 02-03
1		87410098		1	CONDENSATEUR 5 Row Radiator, Models With Air Conditioning; See Figure 02-03A
		87434793		1	BUSE ASSEMBLY; Incl. Ref 2 - 4A
2		87417301		1	BUSE Fan
3		87434775		1	JOINT, CAOUTCHOUC Top
4		87434774		2	JOINT, CAOUTCHOUC Sides
4A		87301355		9	RIVET 3/16 x 37/64
5		87434614		1	PLAQUE DE SERRAGE Plate, Lower Left-Hand Shroud; With 1 Slot, 3 Holes; If Used
5		87446082		1	PLAQUE DE SERRAGE Plate, Lower Left-Hand Shroud; With 2 Slots, 2 Holes; If Used
6		87434649		1	PLAQUE DE SERRAGE Plate, Lower Right-Hand Shroud; 199 mm (7-27/32 in) Long; If Used
6		87446081		1	PLAQUE DE SERRAGE Plate, Lower Right-Hand Shroud; 195 mm (7-11/16 in) Long; If Used
7		87301356		3	RIVET 3/16 x 11/16
9		614-8030		2	BOULON M8 x 30
10		895-11008		2	RONDELLE 9 x 16 x 1,6 mm
11		407962A1		2	ENTRETOISE
12		87434978		1	JOINT, CAOUTCHOUC Lower Seal
13		81465471		1	ROBINET Drain, 1/4
14		87413237		1	DURITE Upper; Part Number Stamped On Hose; If Used
14		87454377		1	DURITE Upper; Part Number Stamped On Hose; If Used
15		214-1432		2	COLLIER 1-9/16 x 2-1/2
16		87407272		1	DURITE Lower; 6.4 mm (1/4 in) Thick; Part Number Stamped On Hose; If Used
16		87454378		1	DURITE Lower; 5.6 mm (7/32 in) Thick; Part Number Stamped On Hose; If Used
17		214-1440		2	COLLIER 2-1/16 - 3
18		87407771		2	EQUERRE Radiator Mounting Support
19		614-8016		4	VIS M8 x 16
20		814-10050		2	BOULON M10 x 50
21		K691987		4	RONDELLE Flat, 10 mm

http://www.minnparbackhoeparts.com/

02-01		p2	05/05

RADIATEUR - SUPPORT

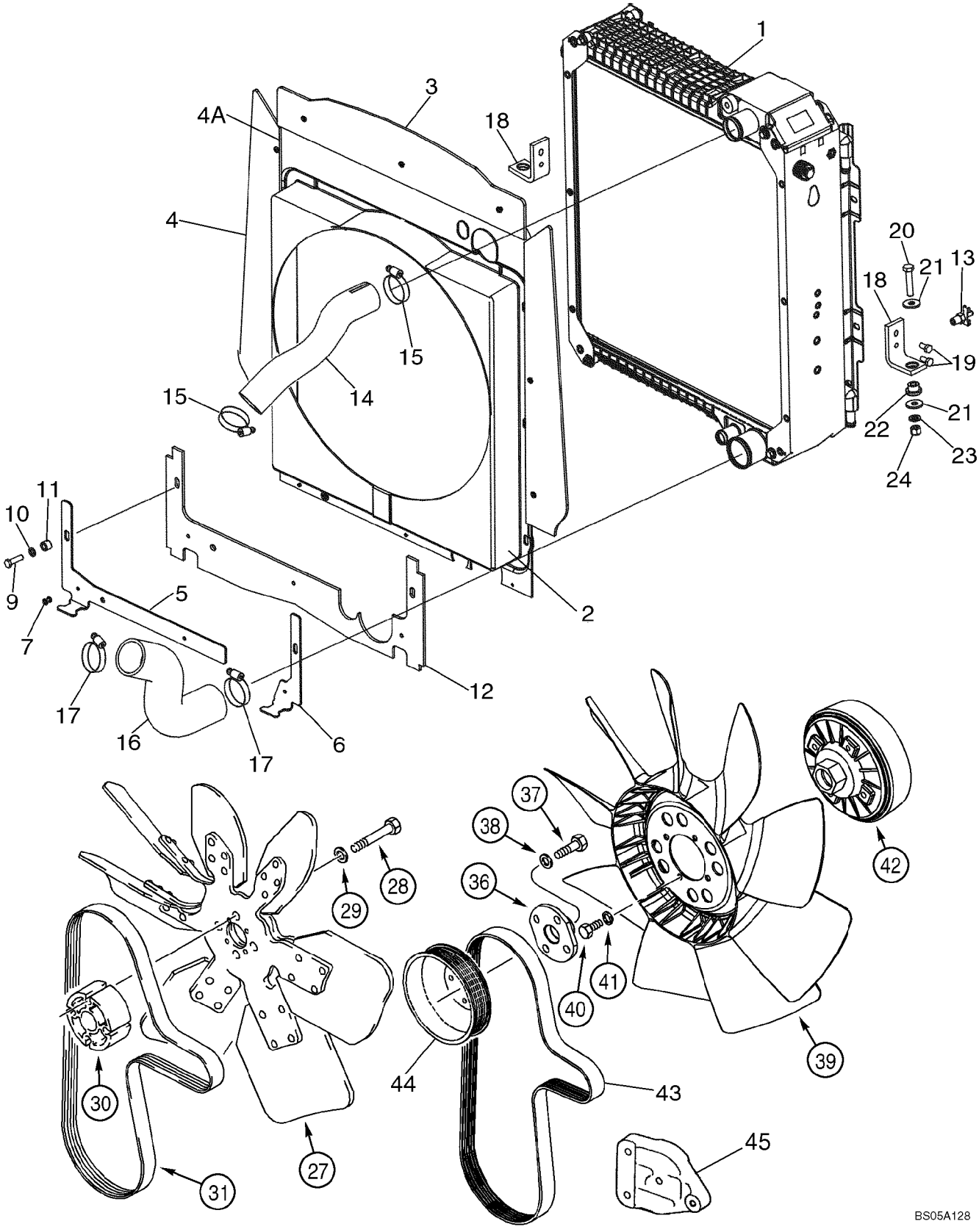

http://www.minnparbackhoeparts.com/

RADIATEUR - SUPPORT

REF	FN	PART NUMBER	YR/SN	QTY	DESCRIPTION
22		D52276		2	ISOLATEUR Rubber
23		895-11010		2	RONDELLE 11 x 20 x 2 mm
24		832-10410		2	ECROU M10
27		228133A2		1	VENTILATEUR 39 Degrees; Standard Fan Drive; With Air Conditioning
27		185377A1		1	VENTILATEUR 33 Degrees; Standard Fan Drive; Without Air Conditioning
28		814-10090		4	BOULON M10 x 90
29		496-21041		4	RONDELLE 13/32 x 13/16 x 3/32
30		85826229		1	ENTRETOISE 59 mm Long, Standard Fan Drive; With Or Without Air Conditioning
31		85826230		1	COURROIE V-Type, Standard Fan Drive; With Or Without Air Conditioning
36		303192A1		1	ADAPTEUR Viscous Fan Drive, With Air Conditioning
37		614-10030		4	VIS M10 x 30
38		896-11010		4	RONDELLE 11 x 21 x 2,5 mm
39		277800A1		1	VENTILATEUR 9 Blade, Viscous Fan Drive; With Air Conditioning
40		614-8016		4	VIS M8 x 16
41		892-11008		4	RONDELLE M8
42		87340008		1	COMMANDE ENTR. ASS. Fan Drive; Component Parts Not Serviced Separately; Viscous Fan Drive; With Air Conditioning; Replaces 303195A1, 47049810
43		87415774		1	COURROIE DE TRANSMISS. V-Type; Viscous Fan Drive, With Air Conditioning
		87419385		1	CORPS Fan 1.4:1 Ratio Pulley Kit; Includes Ref 44, 45; Viscous Fan Drive; With Air Conditioning; No Longer Available For Service, Order Components
44		4890343		1	POULIE
45		87442419		1	PATTE FIXATION Pulley Tensioner Support, Painted, Replaces 2852621, 504069572 Which Were Used With 86990710 Engine

http://www.minnparbackhoeparts.com/

SYSTEME DE PURGE D AIR - SUPPORT

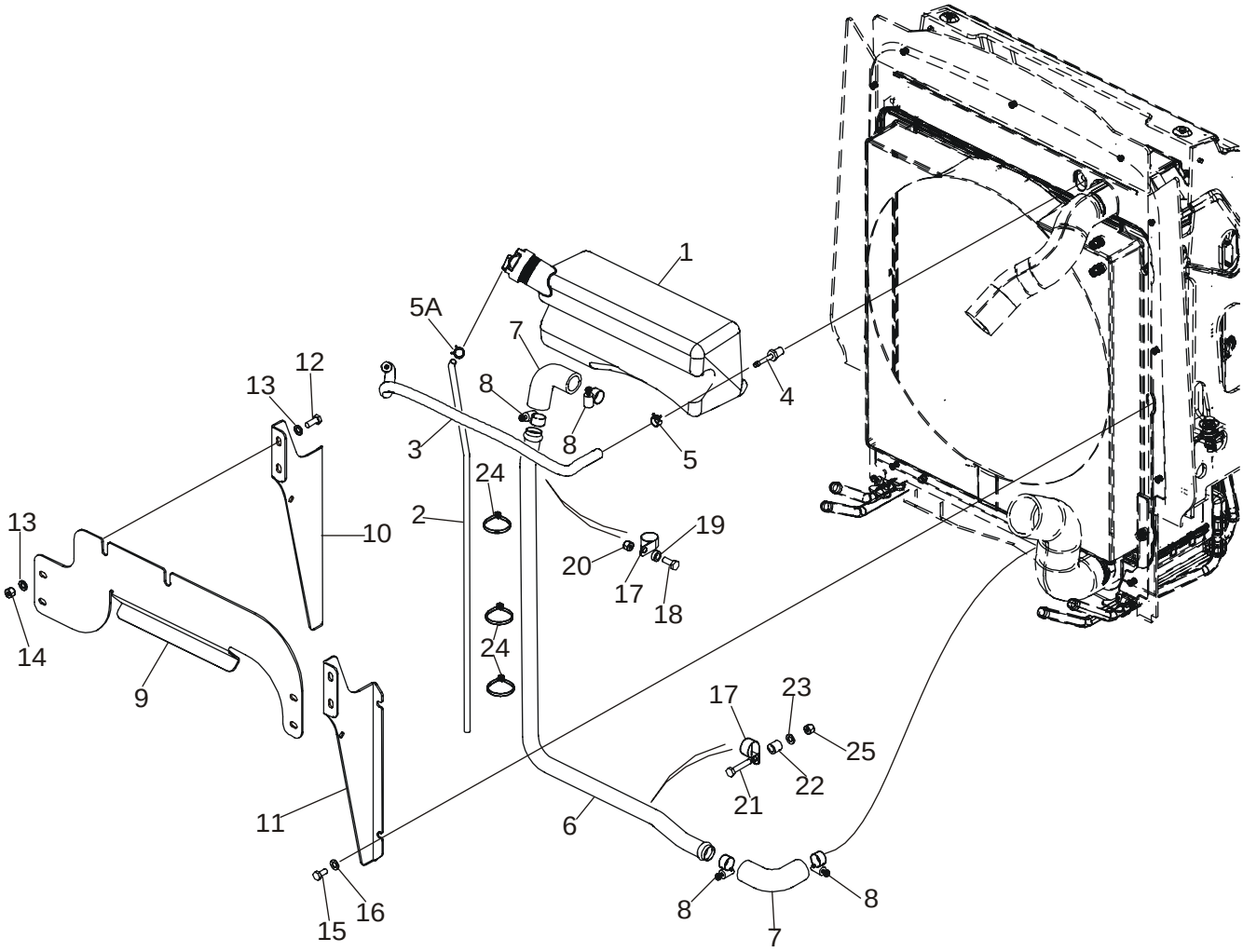

BS04D111

http://www.minnparbackhoeparts.com/

SYSTEME DE PURGE D AIR - SUPPORT

REF	FN	PART NUMBER	YR/SN	QTY	DESCRIPTION
1		87412139		1	RESERVOIR DEPRESSEUR Deaeration Reservoir, 3.5 Liters; Includes 85803019 Cap
		85803019		1	CACHE ASSEMBLE Cap, 13 psi
2		87435409		1	FLEXIBLE Overflow Hose
3		87417300		1	FLEXIBLE Recovery, 5/16 ID x 19/32 OD x 22-11/64; Reservoir to Radiator; If Used
3		87306306		1	FLEXIBLE Recovery, 5/16 ID x 19/32 OD x 22-1/4; Reservoir to Radiator; If Used
4		87301325		1	RACCORD Fitting, 5/16 Stem x 1/4 NPTF
5		1348264C1		1	BRIDE, FLEXIBLE
5A		214-1704		1	COLLIER Type M, No. 04
6		87433503		1	TUBE
7		87417299		2	FLEXIBLE R31.8 Bend Radius; Part Number Not Stamped On Hose; If Used
7		87454376		2	FLEXIBLE R33 Bend Radius; Part Number Stamped On Hose; If Used
8		214-1416		4	COLLIER Type F, No. 16
9		87448489		1	PATTE FIXATION Replaces 87417223 Bracket
10		87417225		1	PATTE FIXATION Left-Hand Bracket
11		87417224		1	PATTE FIXATION Right-Hand Bracket
12		614-8020		4	BOULON M8 x 20
13		895-11008		8	RONDELLE 9 x 16 x 1,6 mm
14		832-10408		4	ECROU M8
15		806-8016		4	VIS M8 x 16
16		895-11008		4	RONDELLE 9 x 16 x 1,6 mm
17		515-22254		2	COLLIER
18		614-8020		1	BOULON M8 x 20
19		87418359		1	ENTRETOISE 8 x 6 mm
20		829-1408		1	ECROU M8
21		614-8040		1	BOULON Hex, M8 x 40, 8.8, Full Thd
22		87418360		1	ENTRETOISE 8 x 16 mm
23		895-11008		1	RONDELLE 9 x 16 x 1,6 mm
24		L18337		3	SANGLE Tie
25		832-10408		1	ECROU M8

http://www.minnparbackhoeparts.com/

02-03		p1	03/04

RADIATEUR (SANS AIR CONDITIONNE)

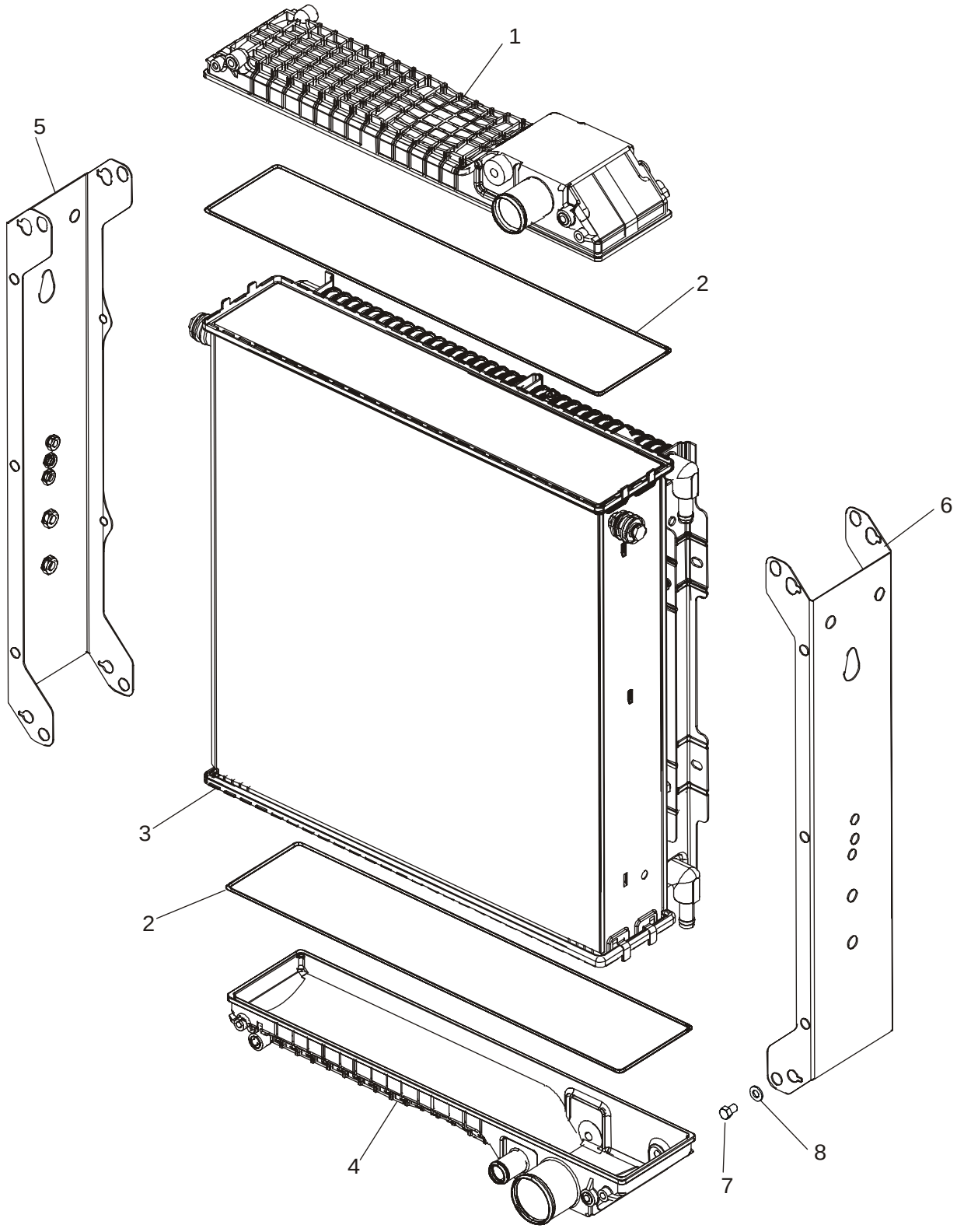

http://www.minnparbackhoeparts.com/

RADIATEUR (SANS AIR CONDITIONNE)

REF	FN	PART NUMBER	YR/SN	QTY	DESCRIPTION
		87410096		1	RADIATEUR 3 Row Radiator, Models Without Air Conditioning; Incl. Ref 1 - 8
1		87429694		1	RESERVOIR DEPRESSEUR Upper Reservoir
2		254409A1		2	JOINT
3		87429690		1	RADIATEUR NU Core
4		87429695		1	RESERVOIR DEPRESSEUR Lower Reservoir
5		87429692		1	LONGERON Left-Hand
6		87429693		1	LONGERON Right-Hand
7		614-8012		8	VIS M8 x 12
8		895-11008		8	RONDELLE 9 x 17 x 1,6 mm

http://www.minnparbackhoeparts.com/

02-03A		p1	03/04

RADIATEUR (AVEC AIR CONDITIONNE)

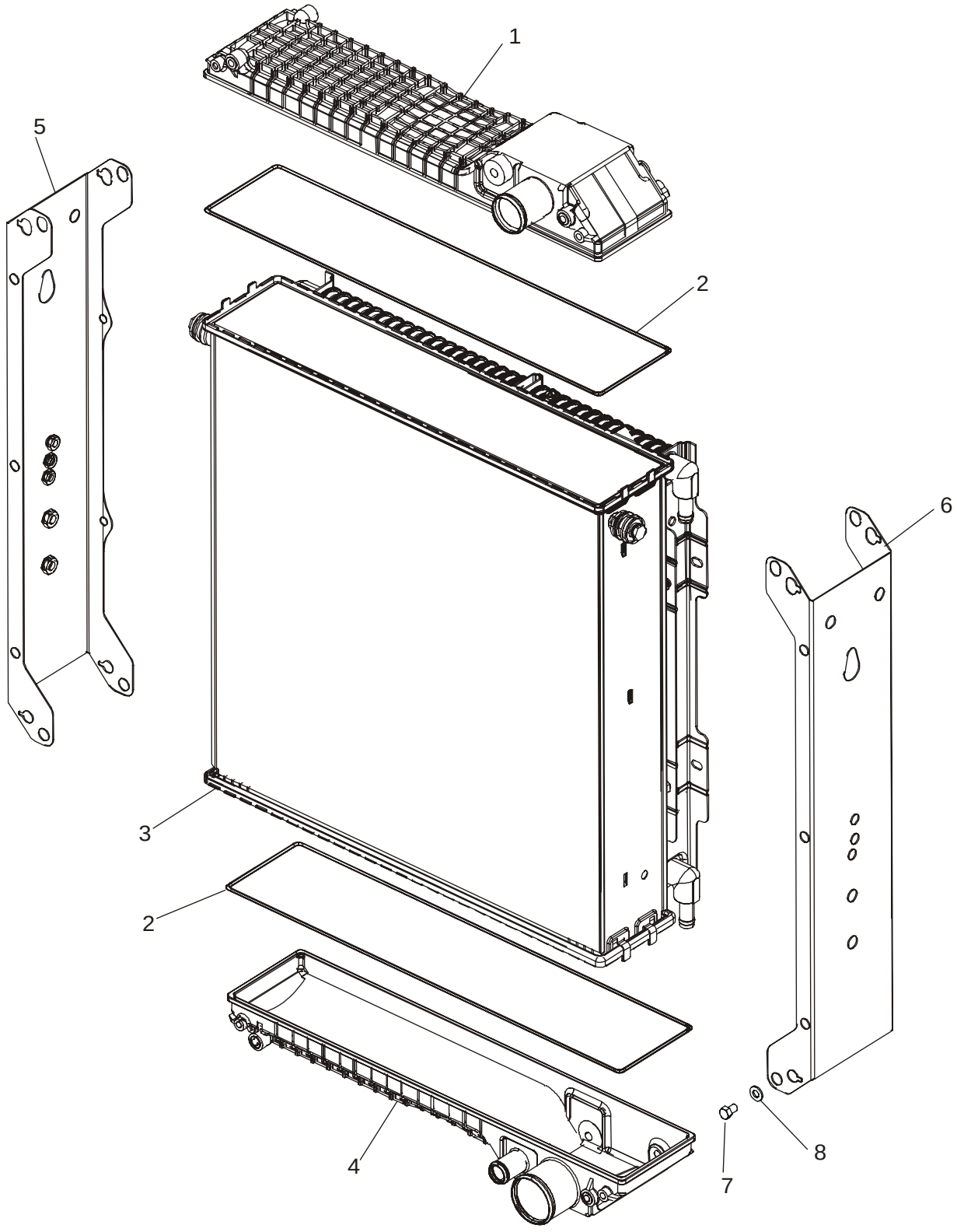

http://www.minnparbackhoeparts.com/

RADIATEUR (AVEC AIR CONDITIONNE)

REF	FN	PART NUMBER	YR/SN	QTY	DESCRIPTION
		87410098		1	CONDENSATEUR 5 Row Radiator, Models With Air Conditioning; Incl. Ref 1 - 8
1		87429694		1	RESERVOIR DEPRESSEUR Upper Reservoir
2		254409A1		2	JOINT
3		87429691		1	RADIATEUR NU Core
4		87429695		1	RESERVOIR DEPRESSEUR Lower Reservoir
5		87429692		1	LONGERON Left-Hand
6		87429693		1	LONGERON Right-Hand
7		614-8012		8	VIS M8 x 12
8		895-11008		8	RONDELLE 9 x 17 x 1,6 mm

http://www.minnparbackhoeparts.com/

02-04		p1	03/05

FILTRE A AIR - PIÈCES DE LA PRISE D'AIR

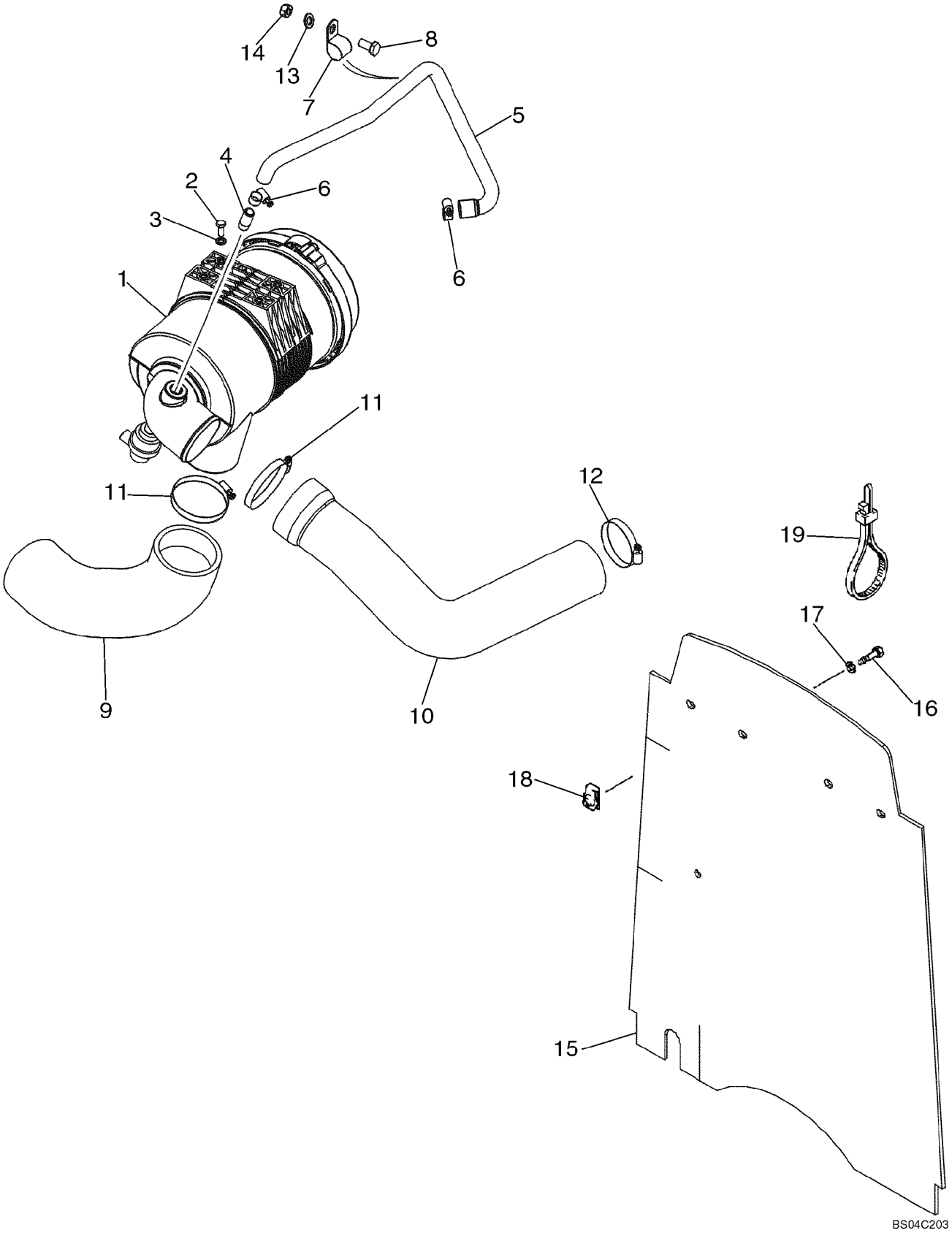

http://www.minnparbackhoeparts.com/

FILTRE A AIR - PIÈCES DE LA PRISE D'AIR

REF	FN	PART NUMBER	YR/SN	QTY	DESCRIPTION
1		87442618		1	FILTER A AIR Air Cleaner; See Figure 02-05
2		614-8020		4	BOULON M8 x 20
3		895-11008		4	RONDELLE 9 x 16 x 1,6 mm
4		L17985		1	RACCORD
5		87454381		1	FLEXIBLE Replaces 87442308
6		214-1412		2	COLLIER Type F, No. 12
7		515-25254		1	COLLIER P
8		614-10020		1	VIS M10 x 20
9		87454380		1	DURITE Inlet; Replaces 87420834
10		87454383		1	DURITE To Turbocharger; Replaces 87442306, 87412489
11		214-1464		2	COLLIER Type F, No. 64, 3-9/16 - 4-1/2
12		214-1456		1	COLLIER Type F, No. 56
13		896-15010		1	RONDELLE 11 x 24 x 3 mm
14		829-1410		1	ECROU M10
15		87434099		1	RIDEAU Barrier, Heat and Noise Reduction
16		806-8025		4	VIS M8 x 25; 10.9
17		495-81001		4	RONDELLE 9,5 x 29 x 1,6 mm
18		833-40408		4	ECROU U-Type, M8
19		L18337		2	SANGLE 15 in

http://www.minnparbackhoeparts.com/

FILTRE A AIR

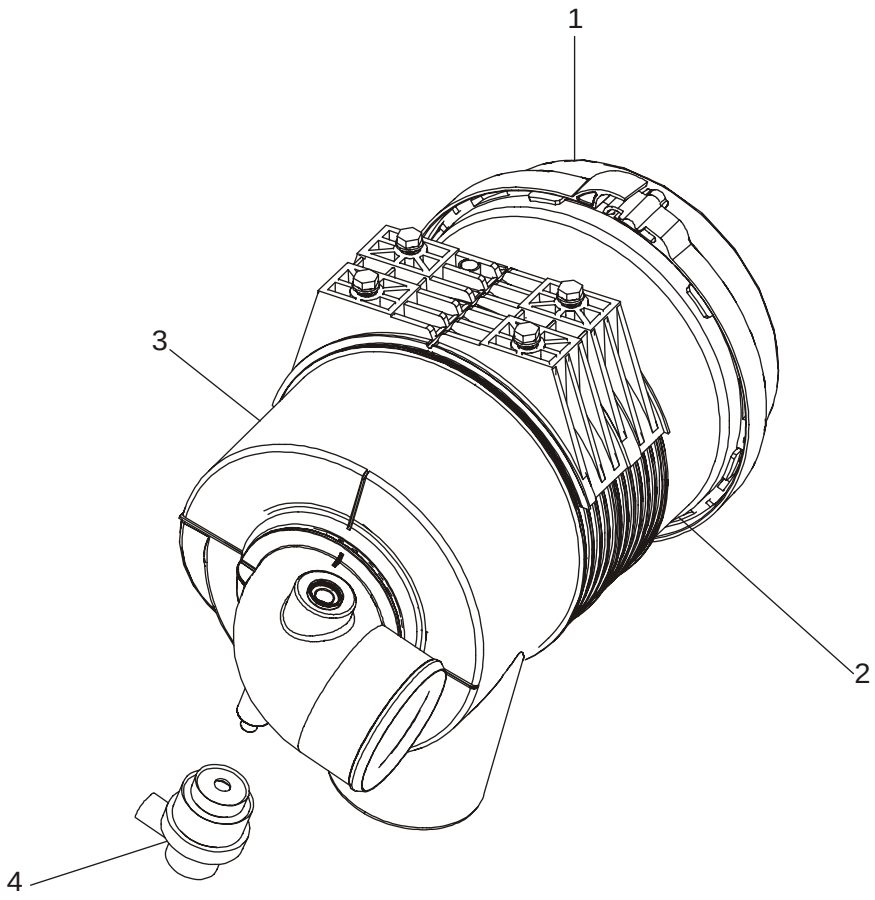

BS03K151

http://www.minnparbackhoeparts.com/

FILTRE A AIR

REF	FN	PART NUMBER	YR/SN	QTY	DESCRIPTION
		87442618		1	FILTER A AIR Air Cleaner; Incl. Ref 1 - 4
1		87412635		1	FILTER A AIR Includes Rear Cover
2		87418364		1	ELÉMENT FILTRANT Primary
3		87418365		1	ELÉMENT FILTRANT Secondary
4		87442601		1	CONTACTEUR Air Restriction Switch

http://www.minnparbackhoeparts.com/

02-06		p1	04/05

SILENCIEUX - ÉCHAPPEMENT

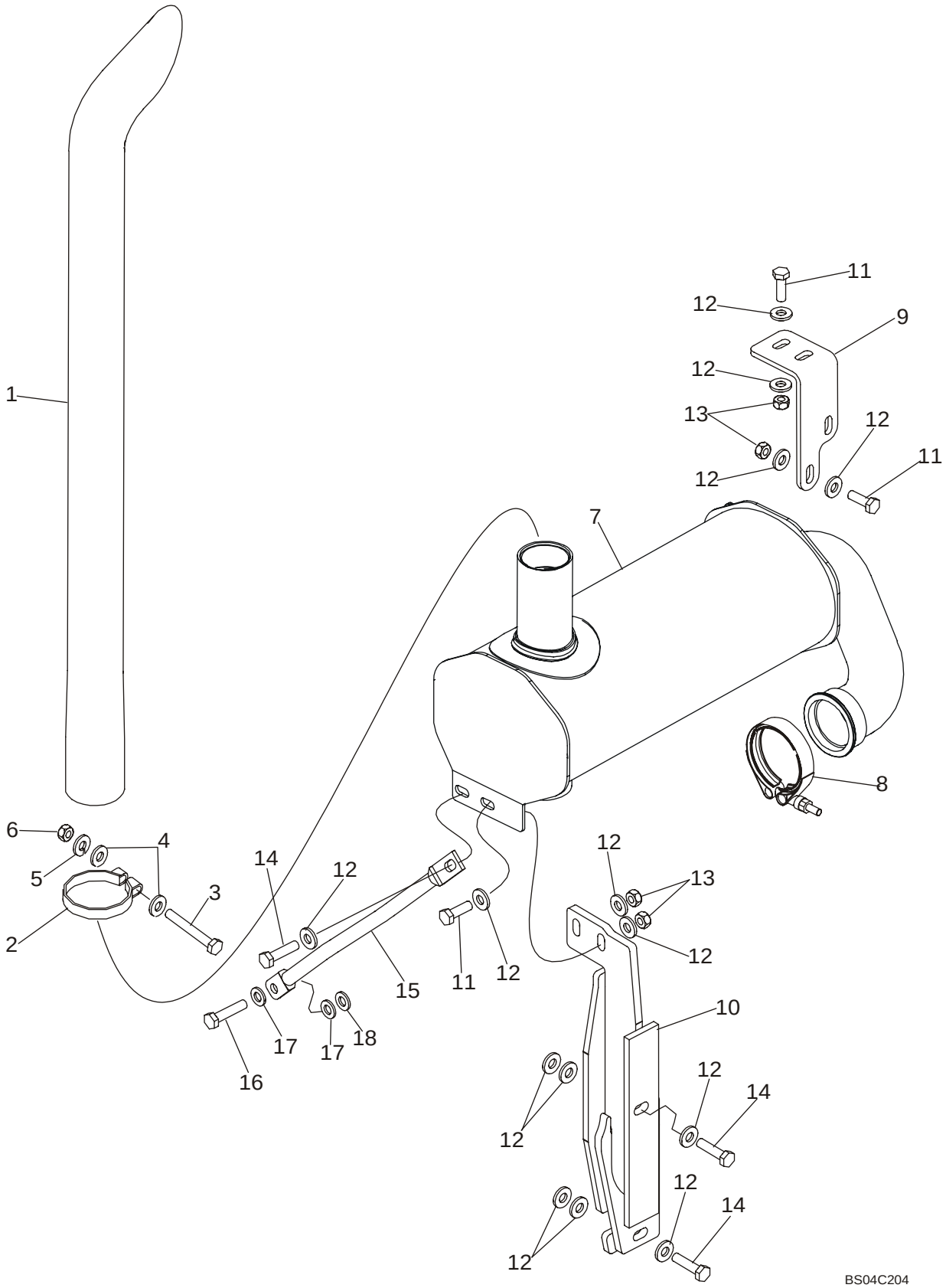

http://www.minnparbackhoeparts.com/

SILENCIEUX - ÉCHAPPEMENT

REF	FN	PART NUMBER	YR/SN	QTY	DESCRIPTION
1		87309656		1	TUBE D'ECHAPPEMENT VERTIC 844 mm (33-1/4 in) Long Exhaust Stack; Replaces 87437805 868 mm (34-11/64 in) Long Stack
2		87437804		1	CAVALIER-SERRE-TUBE Stack Clamp
3		614-10080		1	BOULON M10 x 80
4		896-15010		2	RONDELLE Flat
5		892-11010		1	RONDELLE FREIN M10
6		829-1410		1	ECROU M10
7		87440554		1	SILENCIEUX Turbo Engine
8		A170467		1	COLLIER Includes Hardware
9		87423531		1	EQUERRE Front Support Bracket
10		87441285		1	EQUERRE Rear Support Bracket
11		627-10030		5	VIS M10 x 30
12		896-15010		18	RONDELLE 11 x 24 x 3 mm
13		829-1410		6	ECROU M10
14		827-10040		3	BOULON M10 x 40
15		87442357		1	JAMBE-DE-FORCE
16		814-10045		1	BOULON M10 x 45
17		896-11010		2	RONDELLE 11 x 21 x 2.5 mm
18		896-11010		X	RONDELLE 11 x 21 x 2.5 mm; Used As A Shim

http://www.minnparbackhoeparts.com/

02-06A		p1	04/05

SILENCIEUX, ASPIRATEUR - ÉCHAPPEMENT

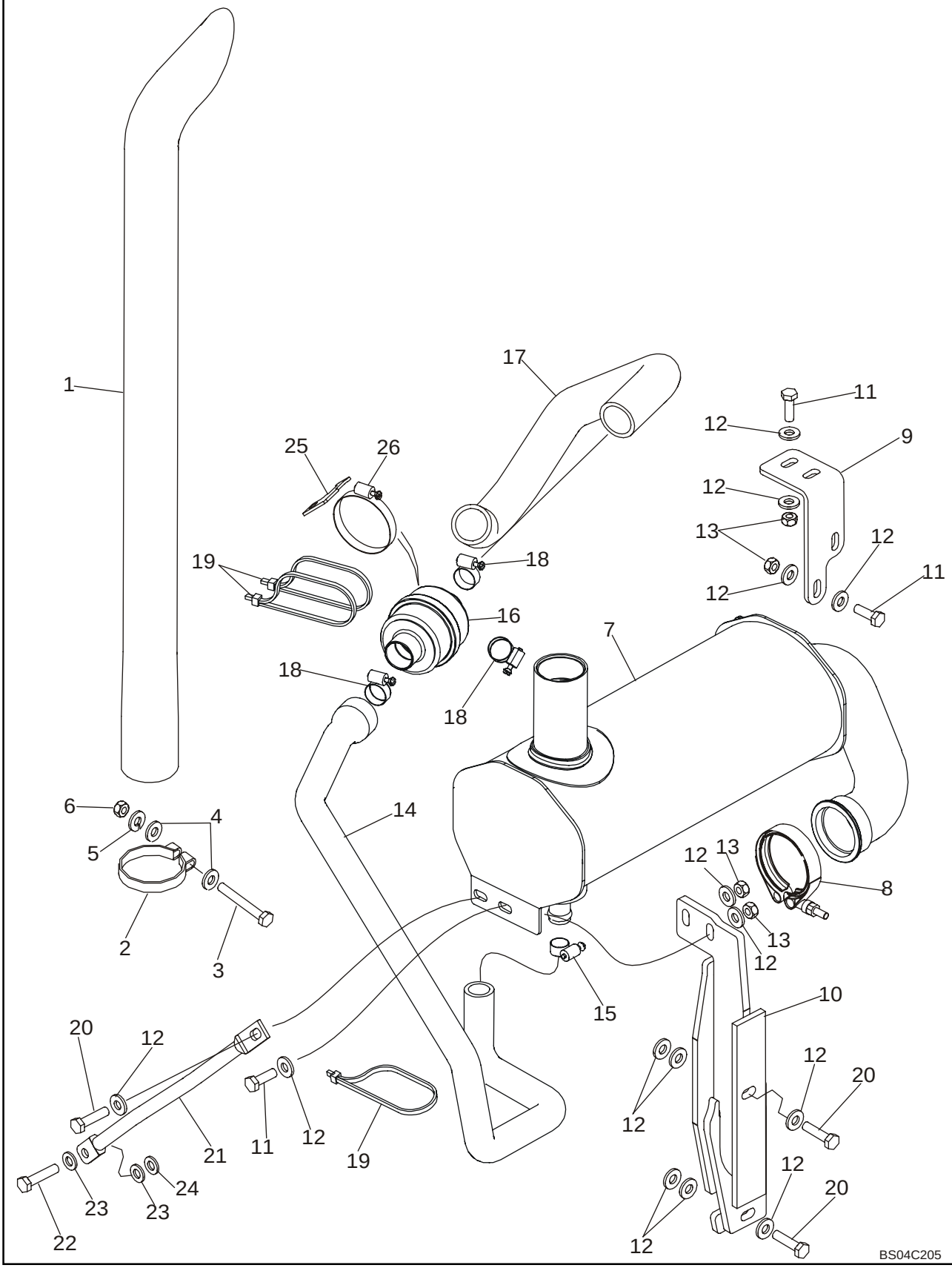

http://www.minnparbackhoeparts.com/

SILENCIEUX, ASPIRATEUR - ÉCHAPPEMENT

REF	FN	PART NUMBER	YR/SN	QTY	DESCRIPTION
1		87309656		1	TUBE D'ECHAPPEMENT VERTIC 844 mm (33-1/4 in) Long Exhaust Stack; Replaces 87437805 868 mm (34-11/64 in) Long Stack
2		87437804		1	CAVALIER-SERRE-TUBE Stack Clamp
3		614-10080		1	BOULON M10 x 80
4		896-15010		2	RONDELLE Flat
5		892-11010		1	RONDELLE FREIN M10
6		829-1410		1	ECROU M10
7		87447052		1	SILENCIEUX Aspirated and Spark Arrestor
8		A170467		1	COLLIER Includes Hardware
9		87423531		1	EQUERRE Front Support Bracket
10		87441285		1	EQUERRE Rear Support Bracket
11		627-10030		5	VIS M10 x 30
12		896-15010		18	RONDELLE 11 x 24 x 3 mm
13		829-1410		6	ECROU M10
14		87313164		1	FLEXIBLE Aspiration Hose, Check Valve to Muffler; Replaces 87436615
15		214-1416		1	COLLIER #16, Type F
16		307123A1		1	VALVE Aspirator Check
17		87444169		1	FLEXIBLE Aspiration Hose, Air Cleaner to Valve
18		214-1424		3	COLLIER #24, Type F
19		L18337		3	SANGLE Tie
20		827-10040		3	BOULON M10 x 40
21		87442357		1	JAMBE-DE-FORCE
22		814-10045		1	BOULON M10 x 45
23		896-11010		2	RONDELLE 11 x 21 x 2.5 mm
24		896-11010		X	RONDELLE 11 x 21 x 2.5 mm; Used As A Shim
25		87447313		1	PANOPLIE Aspirator Check Valve Mounting Plate
26		214-1456		1	COLLIER #56, Type F

http://www.minnparbackhoeparts.com/

MOTEUR - SUPPORT

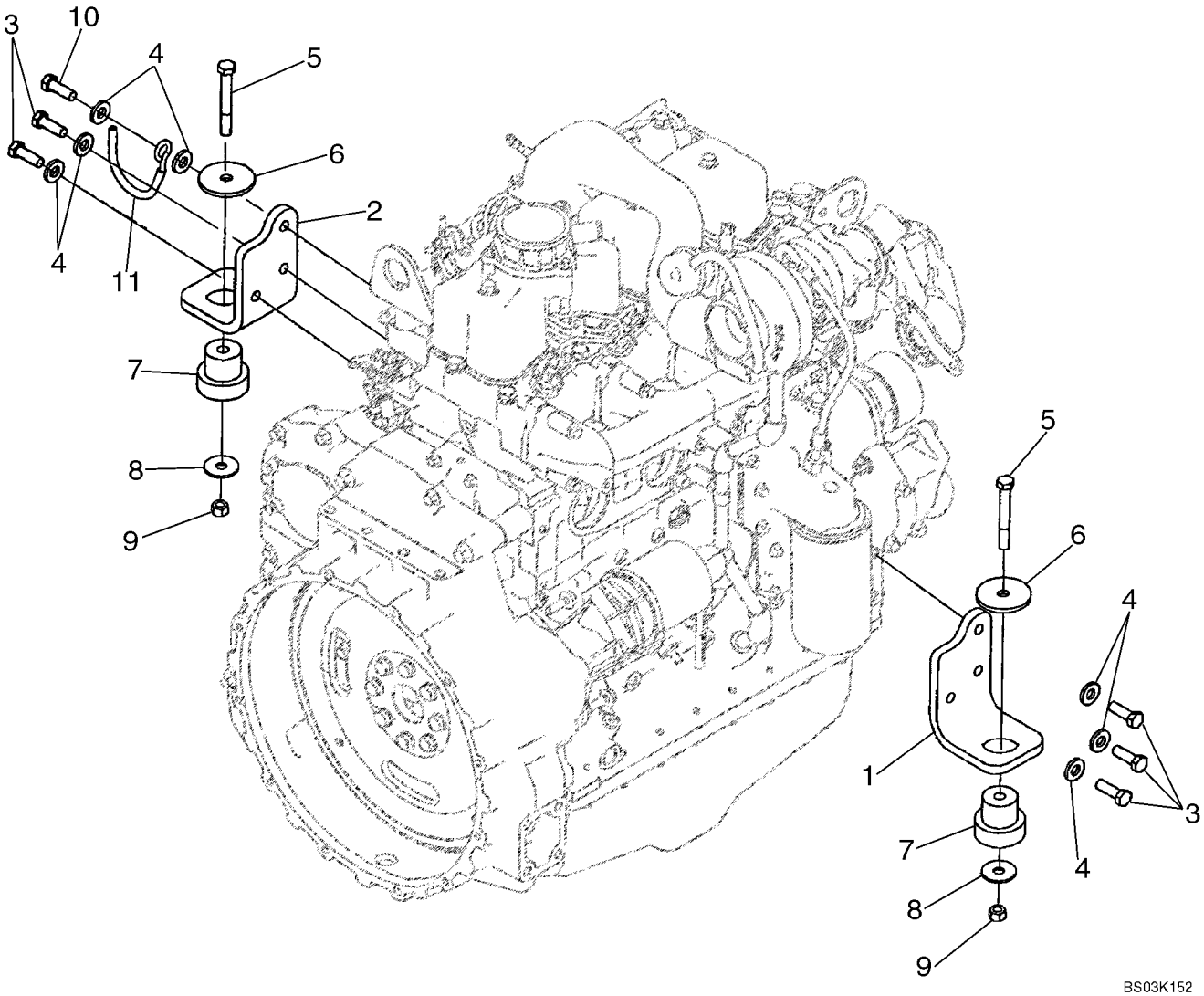

http://www.minnparbackhoeparts.com/

MOTEUR - SUPPORT

REF	FN	PART NUMBER	YR/SN	QTY	DESCRIPTION
		87437203		1	MOTEUR 95 hp, Turbocharged Engine; Includes Parts On Figures 02-08 - 02-41, 03-04 - 03-11; Replaces 86990710 Engine
1		87411319		1	PATTE FIXATION Right-Hand
2		87411320		1	PATTE FIXATION Left-Hand
3		614-12035		5	BOULON M12 x 35
4		896-15012		7	RONDELLE 13,5 x 28 x 4 mm
5		814-12080		2	VIS M12 x 80
6		85801585		2	RONDELLE D'ETANCHEITE
7		87416966		2	SUPPORT Insulator, Rubber Mount
8		85802618		2	RONDELLE D'ETANCHEITE
9		832-10412		2	ECROU M12
10		614-12040		1	BOULON M12 x 40
11		87431799		1	SUPPORT Hose Support

http://www.minnparbackhoeparts.com/

MOTEUR - BLOC CHAUFFAGE

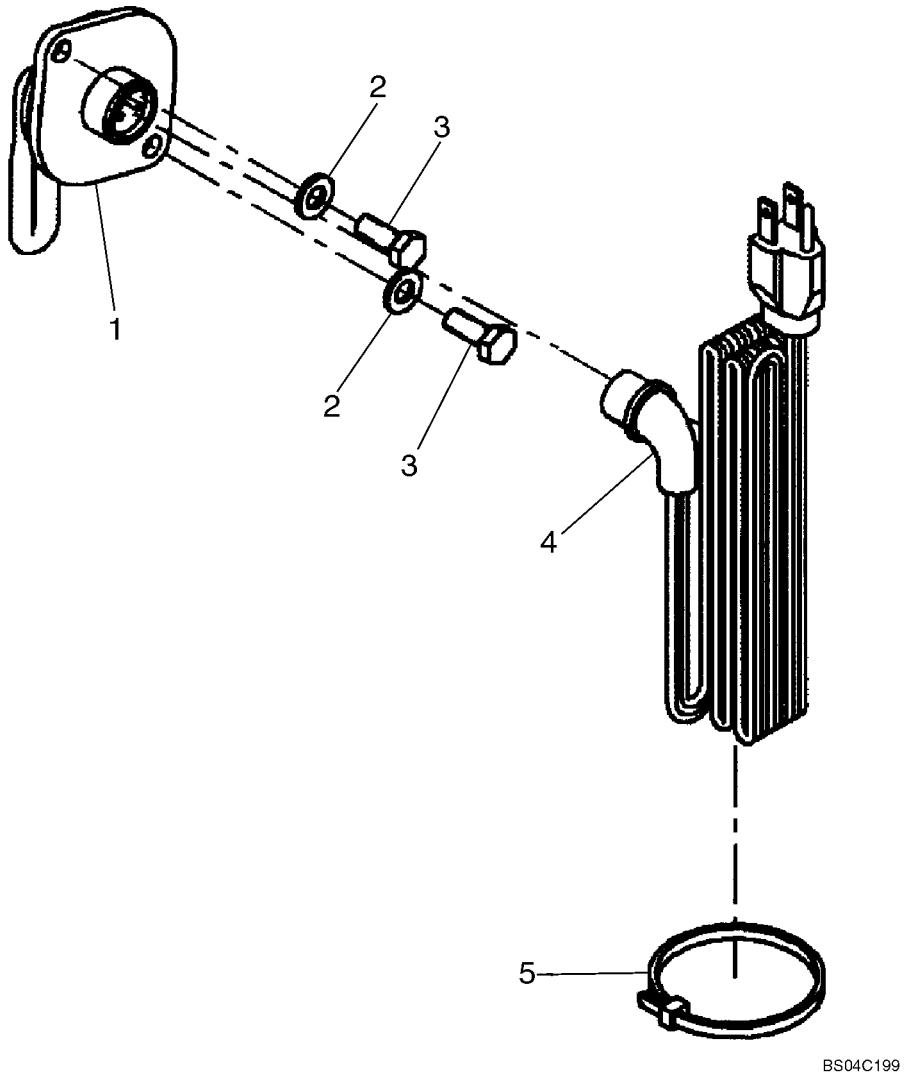

http://www.minnparbackhoeparts.com/

MOTEUR - BLOC CHAUFFAGE

REF	FN	PART NUMBER	YR/SN	QTY	DESCRIPTION
		87447135		1	KIT ASSISTANCE Engine Block Heater Kit; Incl. Ref 1 - 5 and Instructions
1		8602005		1	RECHAUFFEUR Block Heater; 750W, 120V
2		896-11008		2	RONDELLE 9 x 17 x 2 mm
3		627-8020		2	BOULON Thd to Hd; M8 x 20; 10.9
4		196466A1		1	CABLE ELECTRIQUE 1829 mm (72 in)
5		L18331		1	SANGLE Tie

http://www.minnparbackhoeparts.com/

MOTEUR

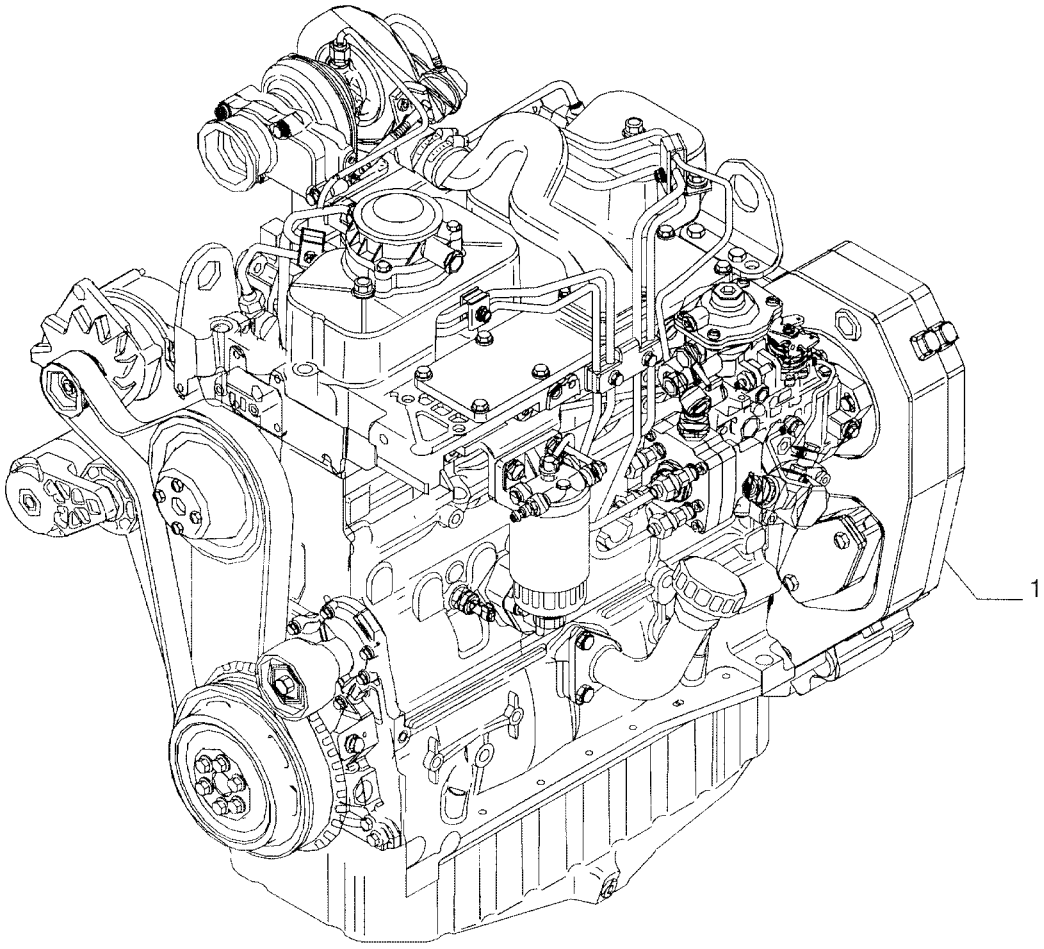

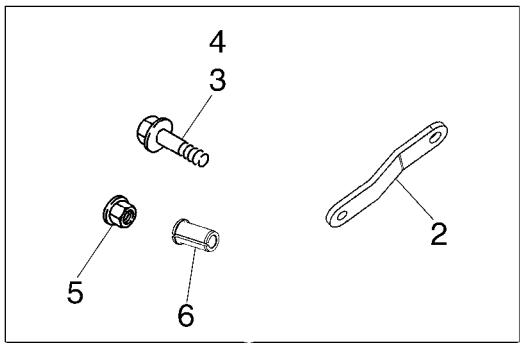

BS04D183

http://www.minnparbackhoeparts.com/

MOTEUR

REF	FN	PART NUMBER	YR/SN	QTY	DESCRIPTION
1		87437203		1	MOTEUR 95hp Turbocharged Engine; Includes Parts On Figures 02-08 - 02-41, 03-04 - 03-11; Replaces 86990710 Engine
2		2852180		1	PATTE FIXATION Alternator Mounting Strap; Used With 86990710 Engine; For Alternator Mounting Used With 87437203 Engine, See Figure 04-03
3		4895291		1	VIS Flange, M10 x 20; If Used
4		4895538		1	VIS Flange, M10 x 120; If Used
5		4895166		1	ECROU Flange, M10; If Used
6		2852181		1	ENTRETOISE If Used

http://www.minnparbackhoeparts.com/

BLOC CYLINDRES

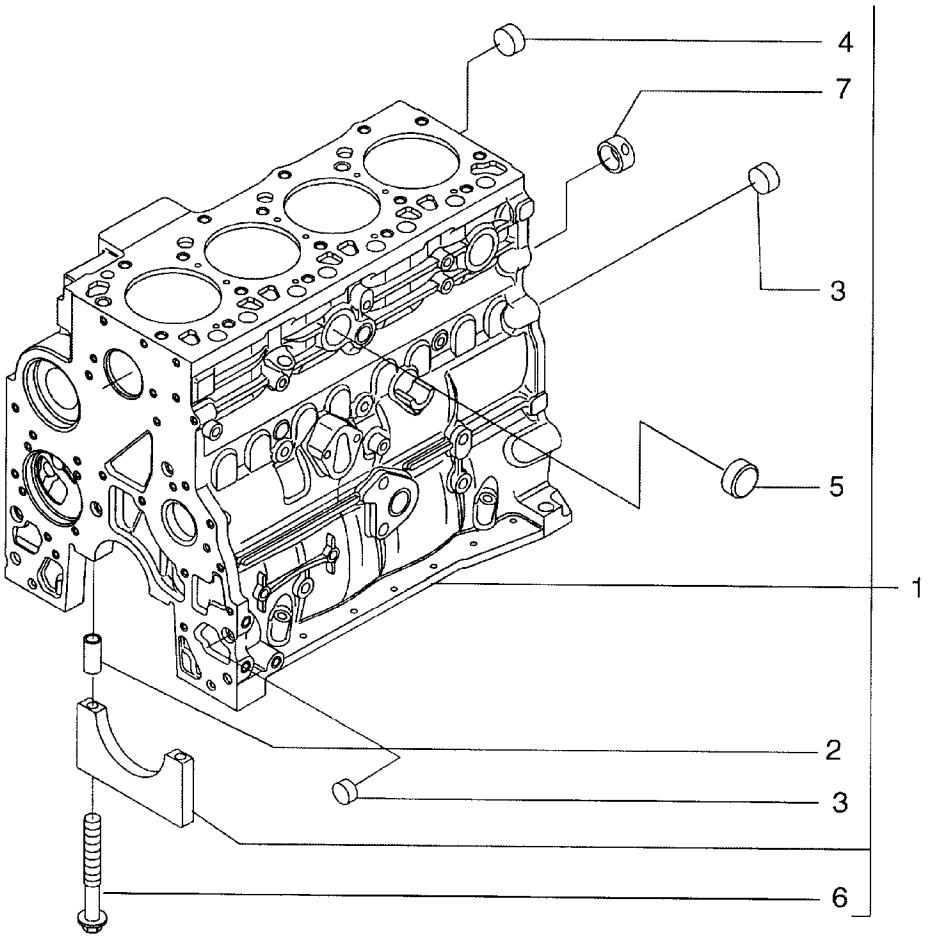

BS04A024

http://www.minnparbackhoeparts.com/

BLOC CYLINDRES

REF	FN	PART NUMBER	YR/SN	QTY	DESCRIPTION
1		2830082		1	BLOC MOTEUR - ASSY; Incl. Ref 2 - 7
2		4899026		10	PION
3		4895039		3	BOUCHON
4		4895038		4	BOUCHON
5		4895228		2	BOUCHON
6		4891353		10	VIS Flange, M12 x 120
7		4895040		1	BAGUE

http://www.minnparbackhoeparts.com/

BLOC CYLINDRES

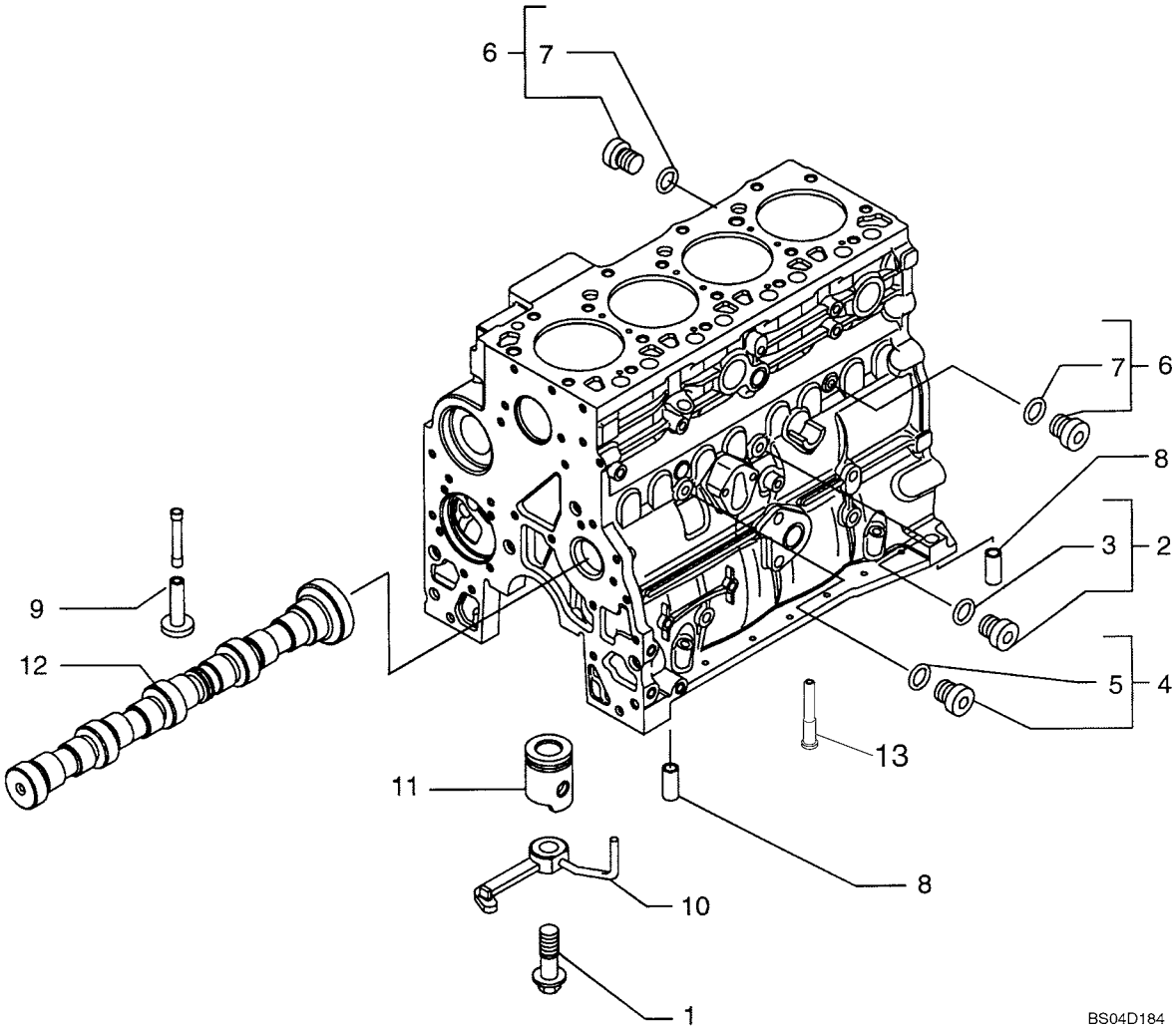

http://www.minnparbackhoeparts.com/

BLOC CYLINDRES

REF	FN	PART NUMBER	YR/SN	QTY	DESCRIPTION
1		4894218		4	VIS
2		4895605		1	BOUCHON 14 x 1.5 - ASSY; Incl. Ref 3
3		4899115		1	JOINT THORIQUE
4		4899009		1	BOUCHON 10 x 1.5 - ASSY; Incl. Ref 5
5		4899072		1	JOINT THORIQUE
6		4895392		2	BOUCHON 18 x 1.5 - ASSY; Incl. Ref 7
7		4895393		1	JOINT THORIQUE
8		4895049		2	PION
9		4895180		8	POUSSOIR
10		2852202		4	GICLEUR Incl. Ref 1
11		REF		1	NOTICE PISTON; See Figure 02-23
12		REF		1	NOTICE CAMSHAFT; See Figure 02-28
13		4896153		1	BOUCHON Piston Cooling, M6.08 OD x 30 mm lg; If Used

http://www.minnparbackhoeparts.com/

POMPE À HUILE, CARTER

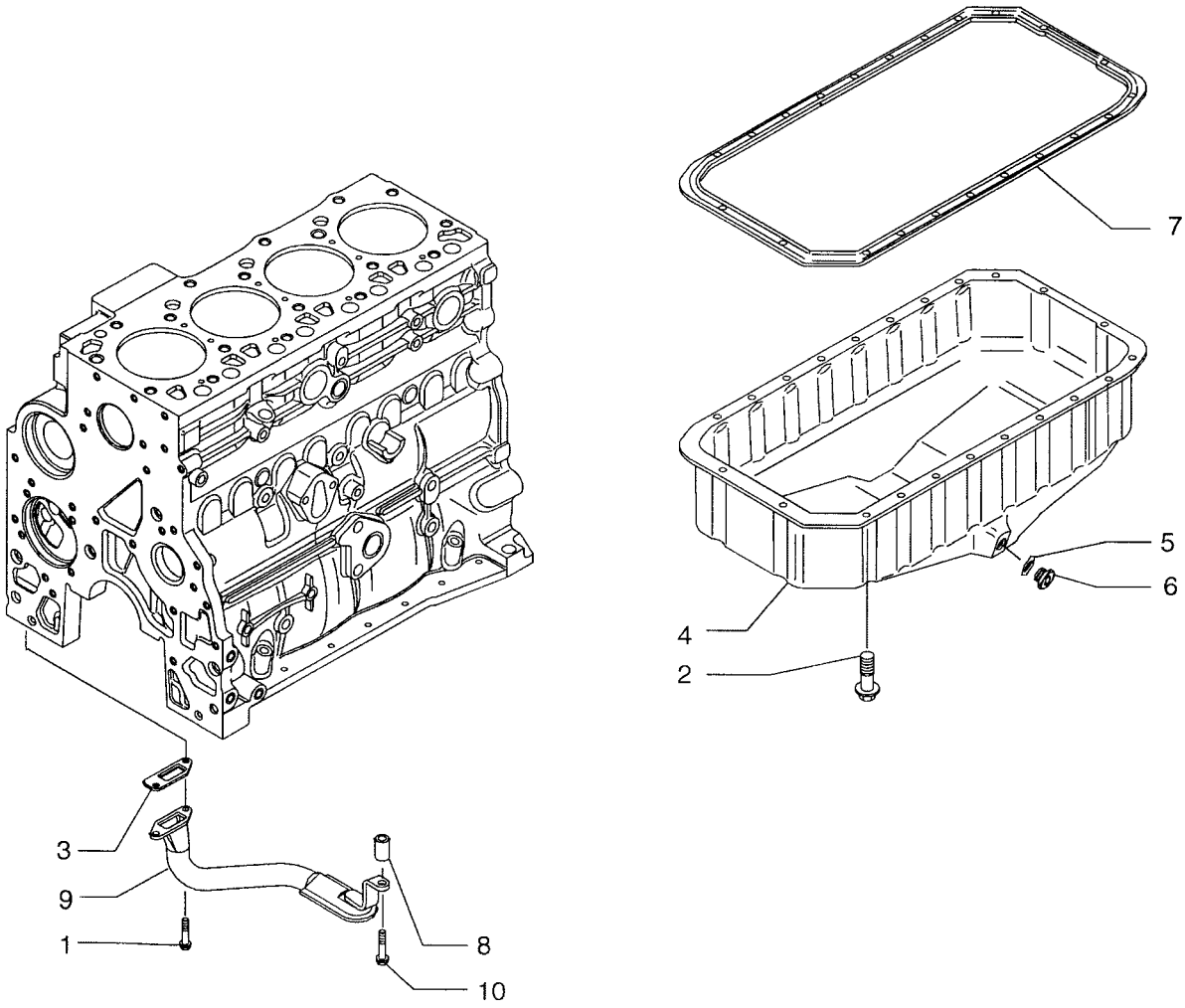

BS04A026

http://www.minnparbackhoeparts.com/

POMPE À HUILE, CARTER

REF	FN	PART NUMBER	YR/SN	QTY	DESCRIPTION
1		4899020		2	VIS Flange, M8 x 20
2		4899091		22	VIS Flange, M8 x 40
2		4895489		2	VIS Flange, M8 x 110
3		4898301		1	JOINT
4		2852011		1	CARTER D'HUILE
5		2853728		1	JOINT THORIQUE Seal
6		4894139		1	BOUCHON 22 x 1.5; Does Not Include Seal, Purchase Seal Separately
7		2852012		1	JOINT
8		2852016		1	ENTRETOISE
9		2852013		1	CREPINE Tube; Oil Suction, Includes Screen Which Is Not Serviced Separately
10		4895538		1	VIS Flange, M10 x 120

http://www.minnparbackhoeparts.com/

BLOC CYLINDRES - COUVERCLES

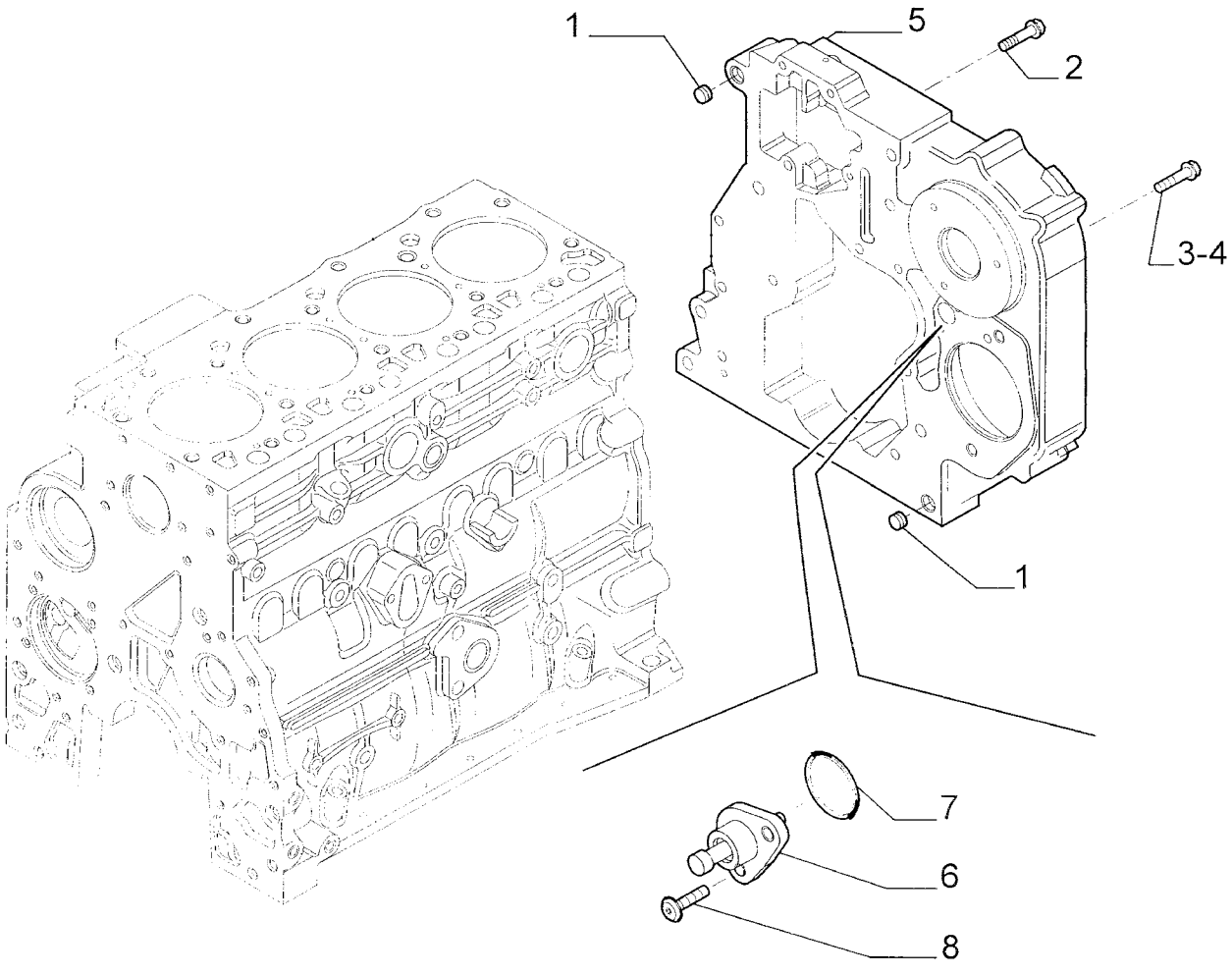

http://www.minnparbackhoeparts.com/

BLOC CYLINDRES - COUVERCLES

REF	FN	PART NUMBER	YR/SN	QTY	DESCRIPTION
1		4899026		2	PION
2		4899091		4	VIS Flange, M8 x 40
3		4899093		5	VIS Flange, M10 x 30
4		4899073		2	VIS Flange, M12 x 30
5		{2853671}		1	Rear Cover
6		2852515		1	AXE Timing Pin and Housing; Includes (1) 2852517 Internal O-Ring, (1) 2852759 Ring, (1) 2852516 Pin, (1) 2852518 Housing
		2852517		1	JOINT THORIQUE
		2852759		1	ANNEAU
		2852516		1	AXE
		2852518		1	CARTER Housing
7		17278781		1	JOINT THORIQUE
8		4895355		2	VIS Round Head, M5 x 17

http://www.minnparbackhoeparts.com/

BLOC CYLINDRES - COUVERCLES

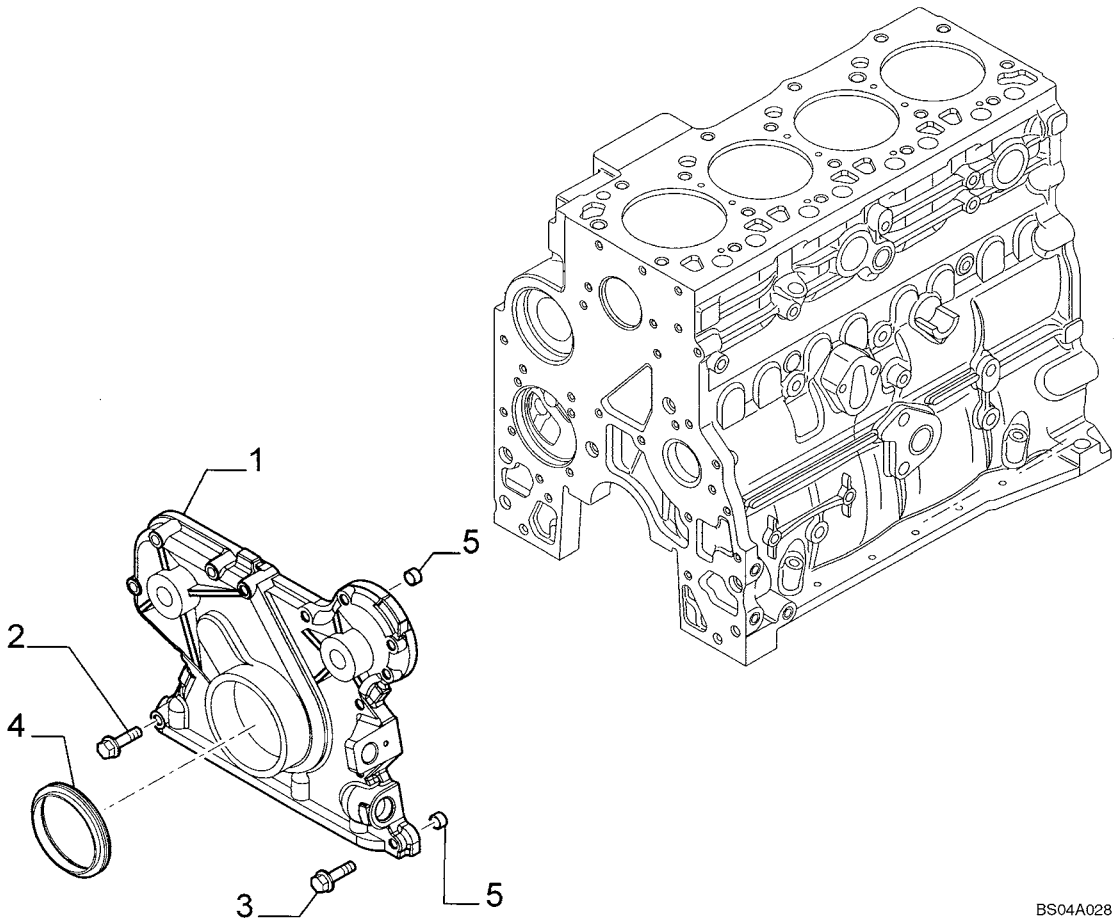

http://www.minnparbackhoeparts.com/

BLOC CYLINDRES - COUVERCLES

REF	FN	PART NUMBER	YR/SN	QTY	DESCRIPTION
1		4897024		1	COUVERCLE Front Gear
2		4899078		5	VIS Flange, M8 x 45
3		4899063		8	VIS Flange, M8 x 30
4		4890832		1	JOINT
5		4891209		2	PION

http://www.minnparbackhoeparts.com/

BLOC CYLINDRES - COUVERCLES

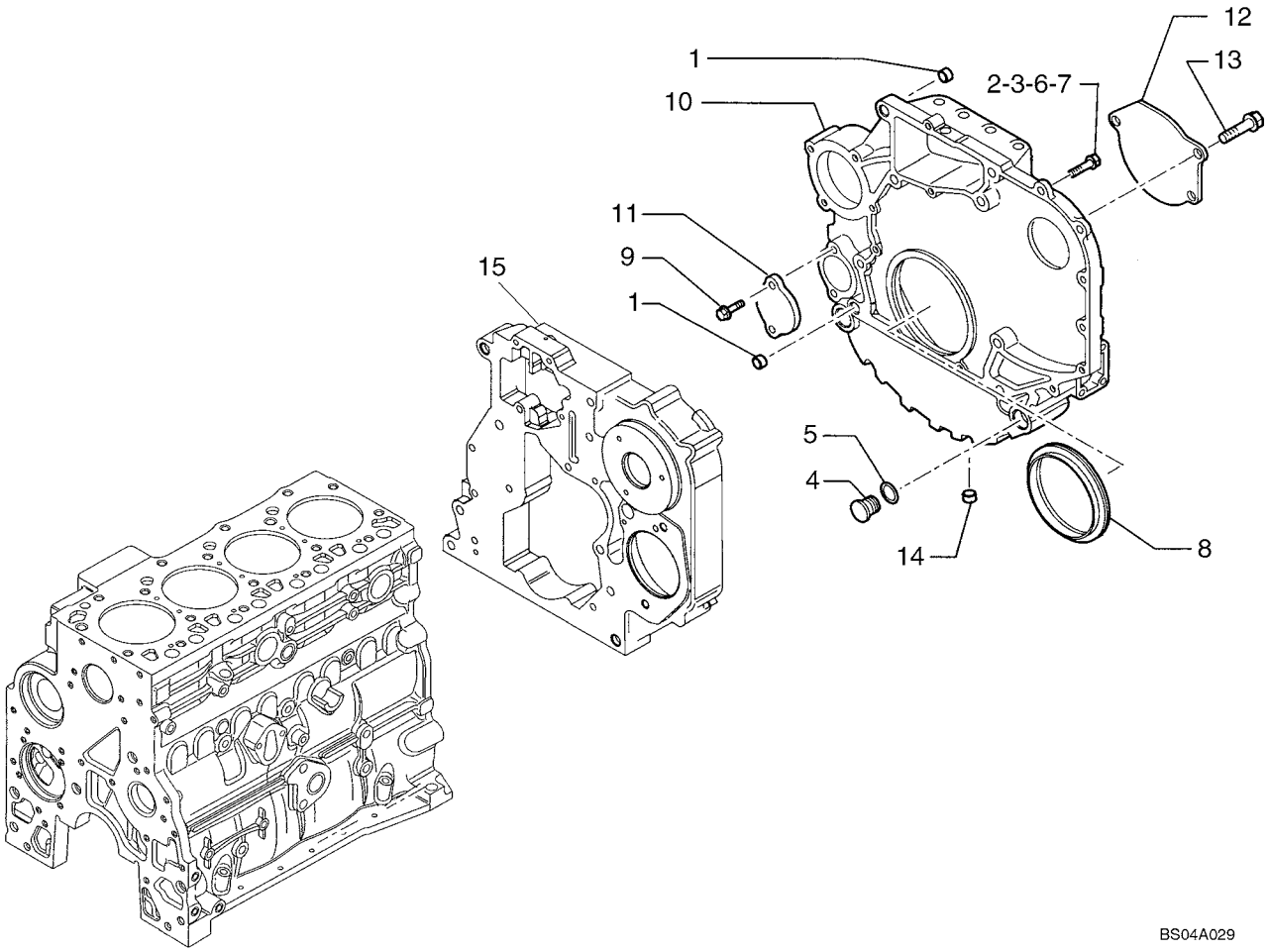

http://www.minnparbackhoeparts.com/

BLOC CYLINDRES - COUVERCLES

REF	FN	PART NUMBER	YR/SN	QTY	DESCRIPTION
1		4899026		2	PION Ring
2		4899109		3	VIS Flange, M10 x 80
3		4899075		8	VIS Flange, M10 x 40
4		4895378		2	BOUCHON Does Not Include Seal, Purchase Seal Separately
5		4895379		2	JOINT THORIQUE
6		4899076		5	VIS Flange, M12 x 80
7		4899074		2	VIS Flange, M12 x 120
8		4890833		1	JOINT Oil Seal
9		4899103		2	VIS Flange, M8 x 12
10		2852023		1	COUVERCLE Flywheel Housing
11		4895358		1	COUVERCLE
12		2852025		1	COUVERCLE Fuel Pump Gear
13		4899020		3	VIS Flange, M8 x 20
13		2852865		2	VIS
14		4895079		1	BOUCHON
15		REF		1	NOTICE COVER; See Figure 02-12
		4899143		1	VIS Flange, M10 x 140
		4899004		1	ECROU Flange, M10; If Used

http://www.minnparbackhoeparts.com/

RENIFLARD - MOTEUR

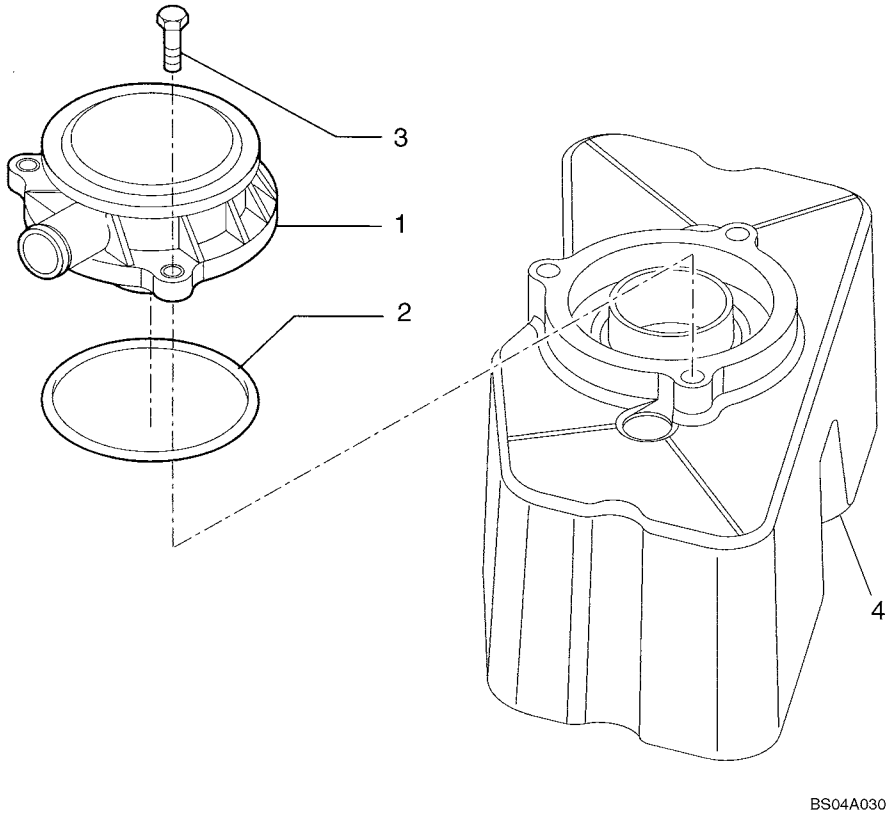

http://www.minnparbackhoeparts.com/

RENIFLARD - MOTEUR

REF	FN	PART NUMBER	YR/SN	QTY	DESCRIPTION
1		2852027		1	RENIFLARD
2		2852028		1	JOINT
3		4899110		3	VIS Flange, M6 x 20
4		REF		1	NOTICE COVER; See Figure 02-17

http://www.minnparbackhoeparts.com/

CULASSE DE CYLINDRE

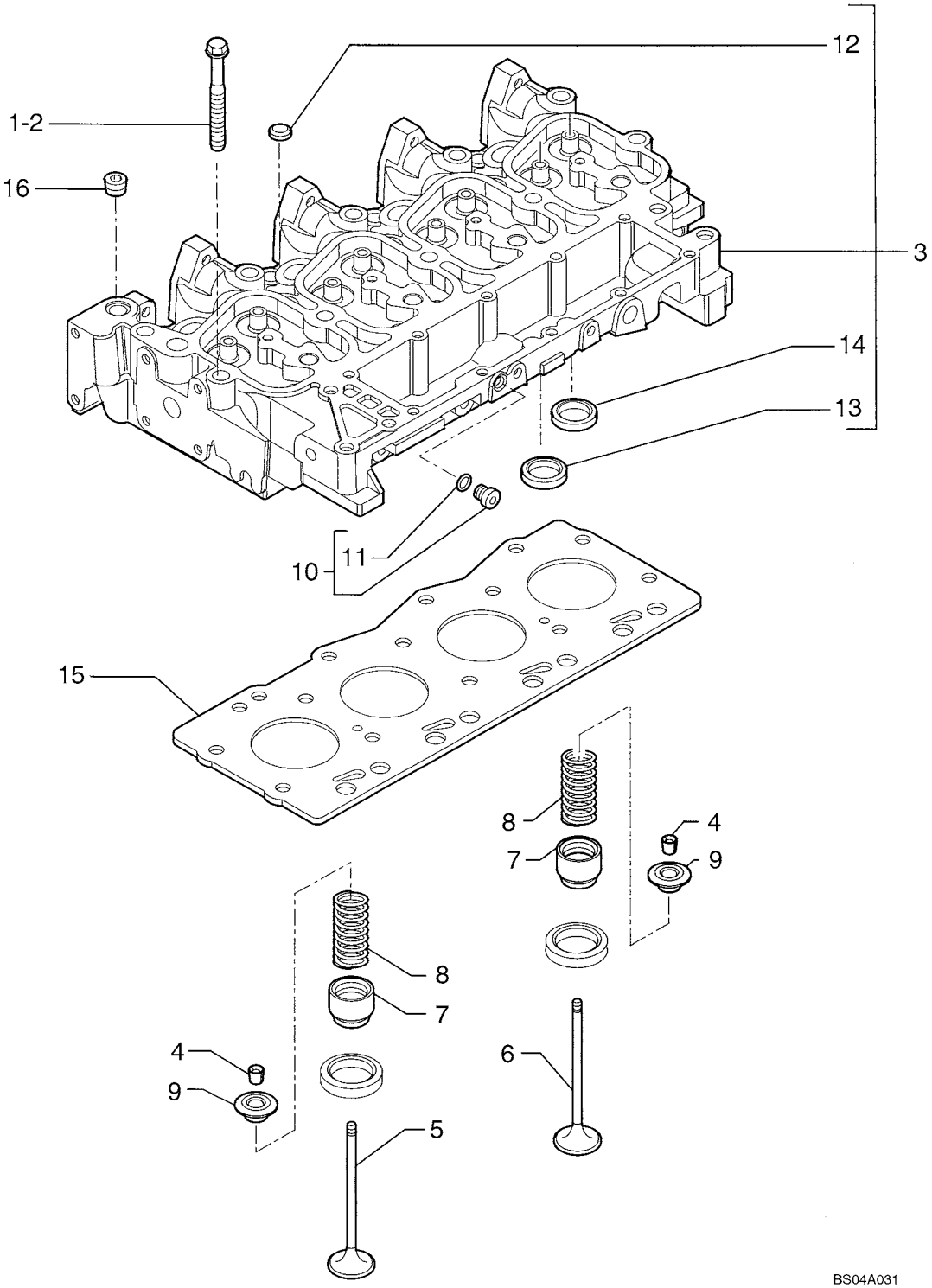

http://www.minnparbackhoeparts.com/

CULASSE DE CYLINDRE

REF	FN	PART NUMBER	YR/SN	QTY	DESCRIPTION
1		4892861		4	VIS With Washer; M12 x 73
2		4892859		10	VIS With Washer; M12 x 143
3		4895790		1	CULASSE - ASSY; Incl. Ref 12 - 14
4		4895183		16	DEMI-CONE DE POUSSOIR
5		4895188		4	SOUPAPE D'ECHAPPEMENT
6		4895187		4	SOUPAPE D'ADMISSION
7		4895347		8	CUVE
8		4895215		8	RESSORT
9		4895184		8	CUVE
10		4899009		1	BOUCHON - ASSY 10 x 1.5; Incl. Ref 11
11		4899072		1	JOINT THORIQUE
12		4895179		3	BOUCHON
13		4897178		4	SIEGE DE SOUPAPE
14		4897179		4	SIEGE DE SOUPAPE
15		2830919		1	JOINT DE CULASSE 1,25 mm
15		2830920		1	JOINT 1.15 mm
16		4895078		5	BOUCHON

http://www.minnparbackhoeparts.com/

02-17		p1	10/04

CACHE CULBUTEUR

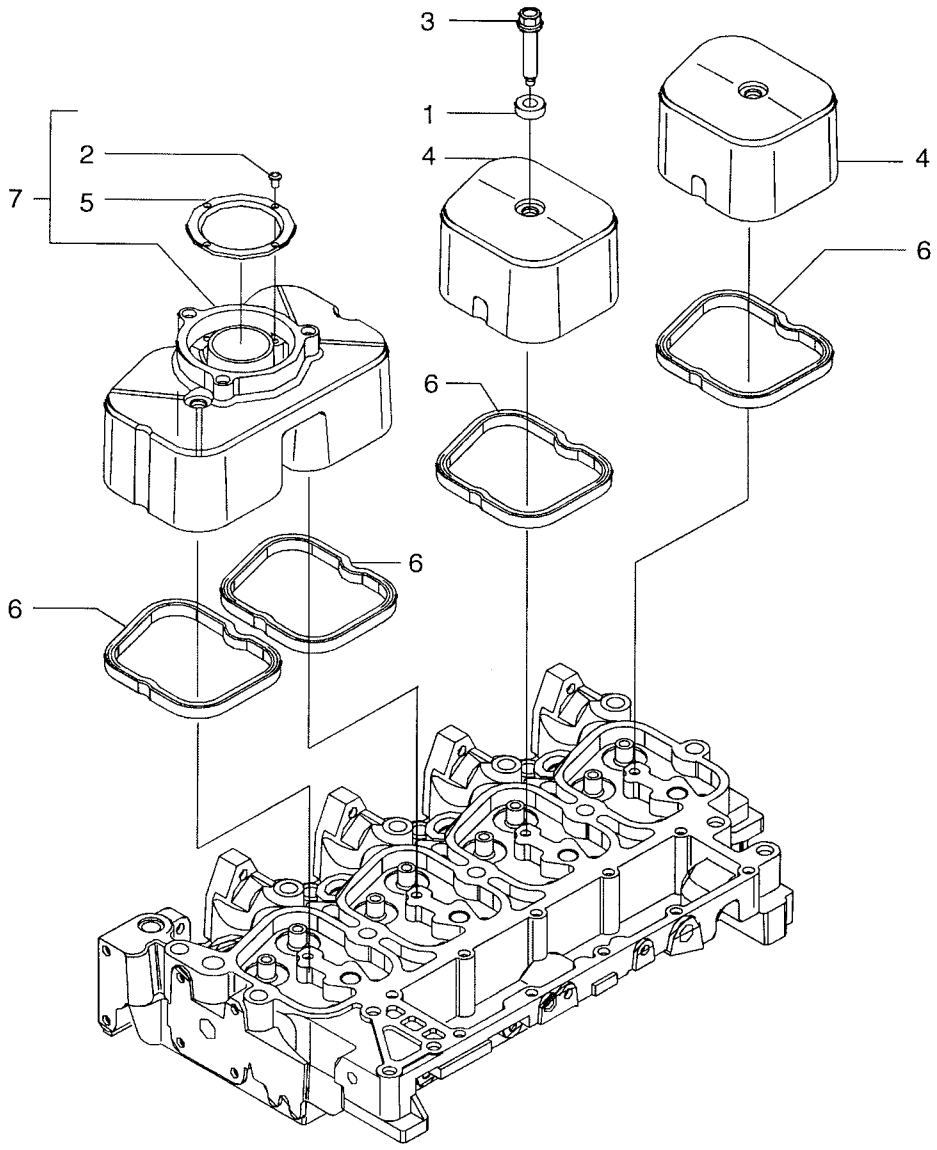

http://www.minnparbackhoeparts.com/

CACHE CULBUTEUR

REF	FN	PART NUMBER	YR/SN	QTY	DESCRIPTION
1		4895360		4	BAGUE
2		2830281		4	VIS Self-Tapping
3		4895214		4	VIS Flange, M8 x 33
4		2852032		2	COUVERCLE
5		2830775		1	DEFLECTEUR ASS.
6		2852033		4	JOINT
7		2830784		1	COUVERCLE - ASSY; Incl. Ref 2, 5

http://www.minnparbackhoeparts.com/

CULASSE DE CYLINDRE - MÉCANISME DU DISTRIBUTEUR

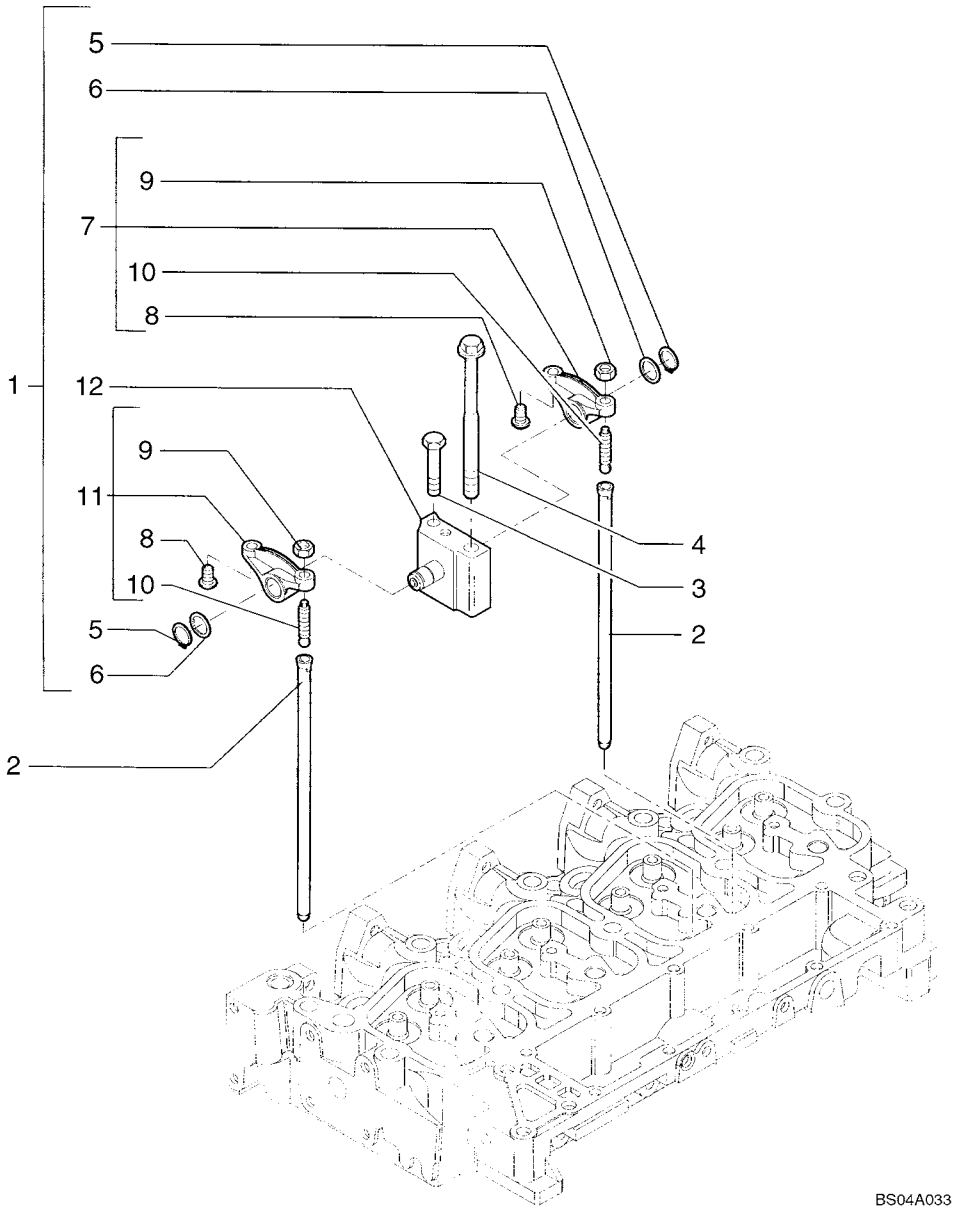

http://www.minnparbackhoeparts.com/

CULASSE DE CYLINDRE - MÉCANISME DU DISTRIBUTEUR

REF	FN	PART NUMBER	YR/SN	QTY	DESCRIPTION
1		4895195		4	CULBUTEUR - ASSY; Incl. Ref 5 - 12
2		4895361		8	TIGE DE CULBUTEUR
3		2852866		4	VIS Hex Flange, M8 x 75
4		4892860		4	VIS With Washer, M12 x 183
5		4895363		2	ANNEAU
6		4895364		2	RONDELLE
7		4895196		1	CULBUTEUR - ASSY; Incl. Ref 8 - 10
8		4895365		2	ENTRETOISE
9		4895198		2	ECROU
10		4895199		2	VIS
11		4895200		1	CULBUTEUR - ASSY; Incl. Ref 8 - 10
12		4895204		1	SUPPORT

http://www.minnparbackhoeparts.com/

COLLECTEURS

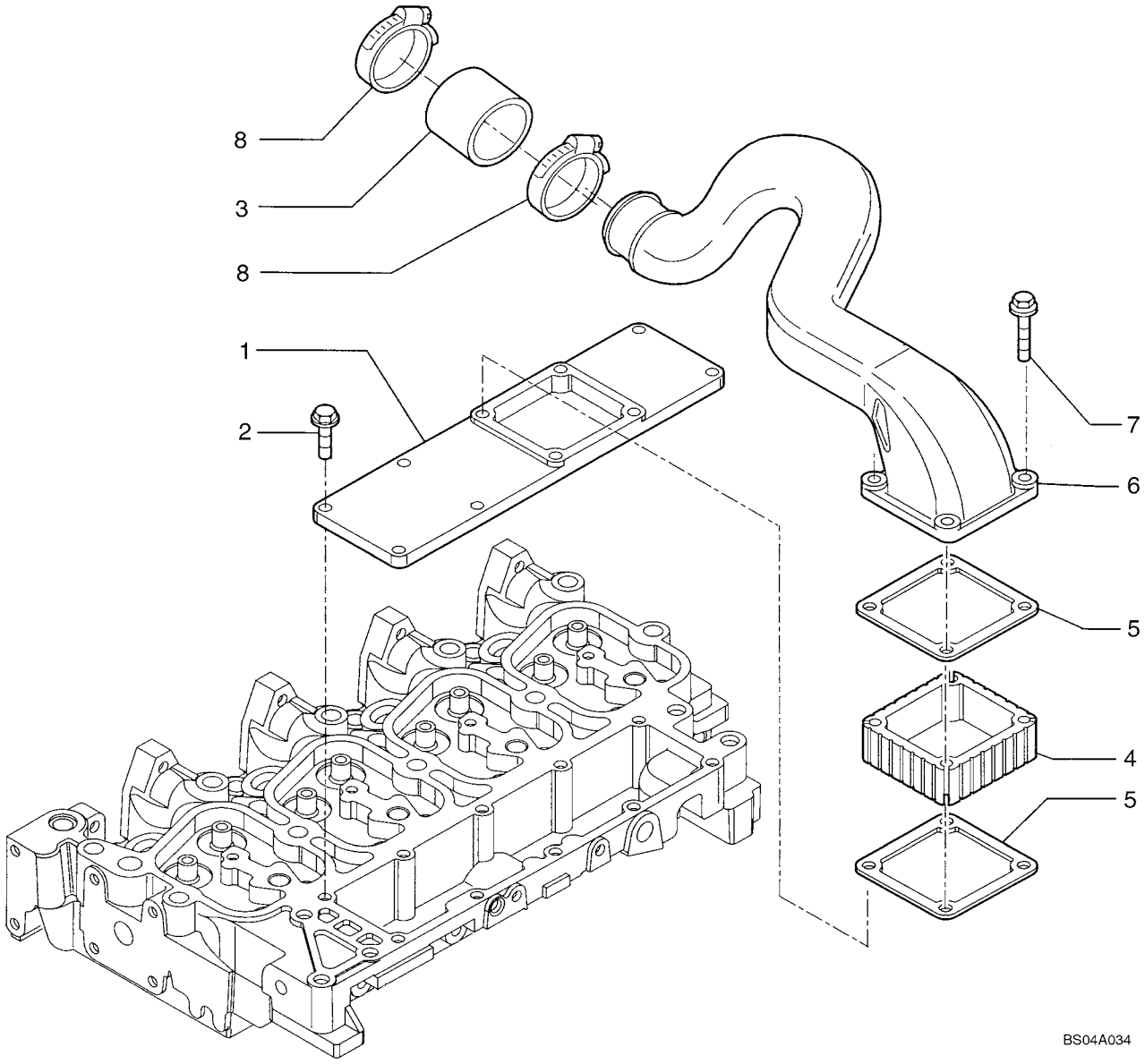

http://www.minnparbackhoeparts.com/

COLLECTEURS

REF	FN	PART NUMBER	YR/SN	QTY	DESCRIPTION
1		2852044		1	COUVERCLE
2		4899039		6	VIS Flange, M8 x 25
3		2852029		1	MANCHON
4		4895648		1	ENTRETOISE
5		4899921		2	JOINT
6		2852030		1	TUYAUTERIE D'ASPIRAT
7		4895294		4	VIS Flange, M8 x 80
8		4899629		2	BRIDE-FIXATION/ COLLIER Clamp

http://www.minnparbackhoeparts.com/

COLLECTEURS

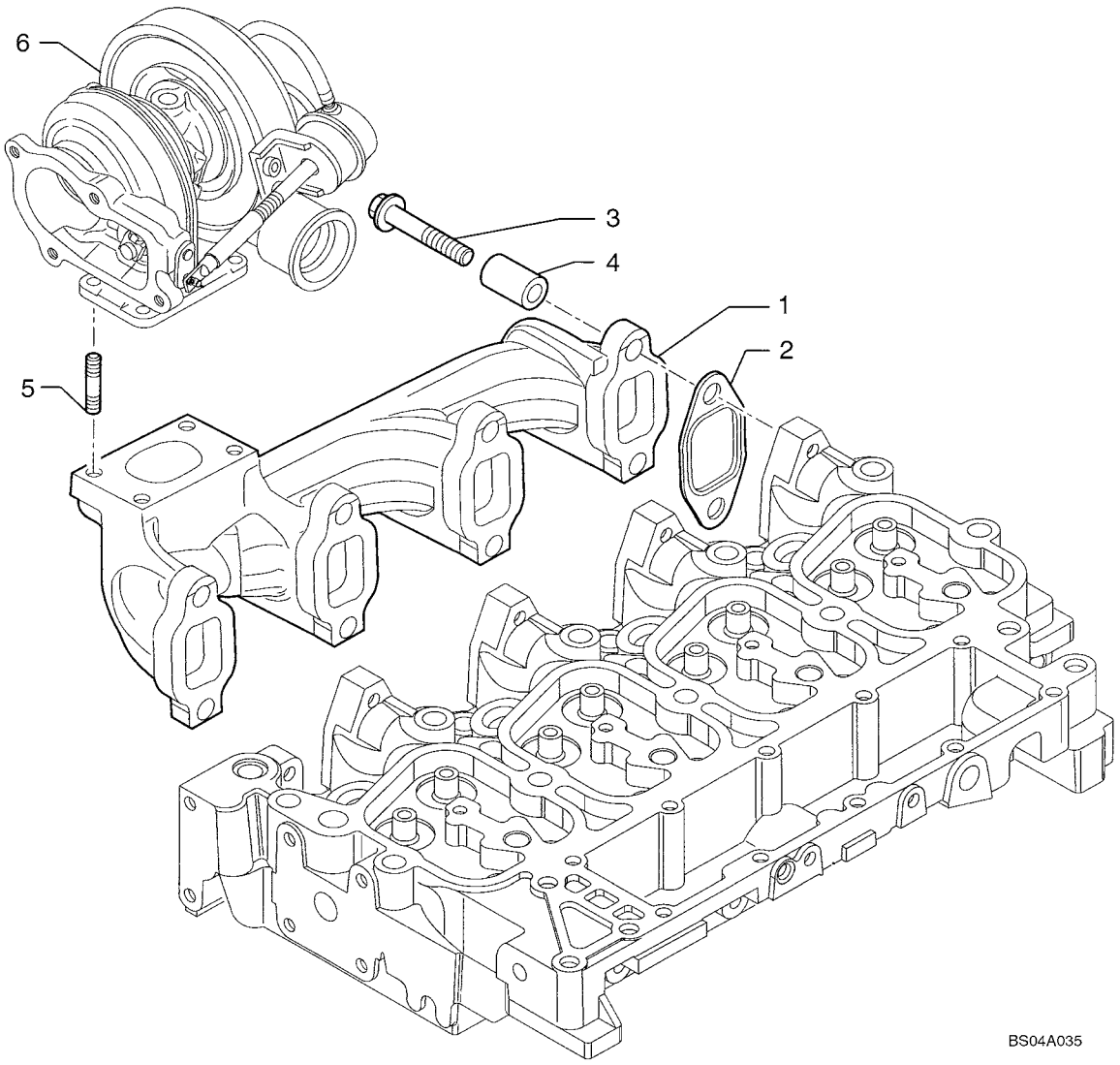

http://www.minnparbackhoeparts.com/

COLLECTEURS

REF	FN	PART NUMBER	YR/SN	QTY	DESCRIPTION
1		2852270		1	CONDUIT D'ECHAPPEMENT
2		2830445		4	JOINT
3		2852744		8	VIS Flange, M10 x 65
4		4895336		8	ENTRETOISE
5		4899119		4	GOUJON
6		REF		1	NOTICE TURBOCHARGER; See Figure 2-29

http://www.minnparbackhoeparts.com/

VILEBREQUIN

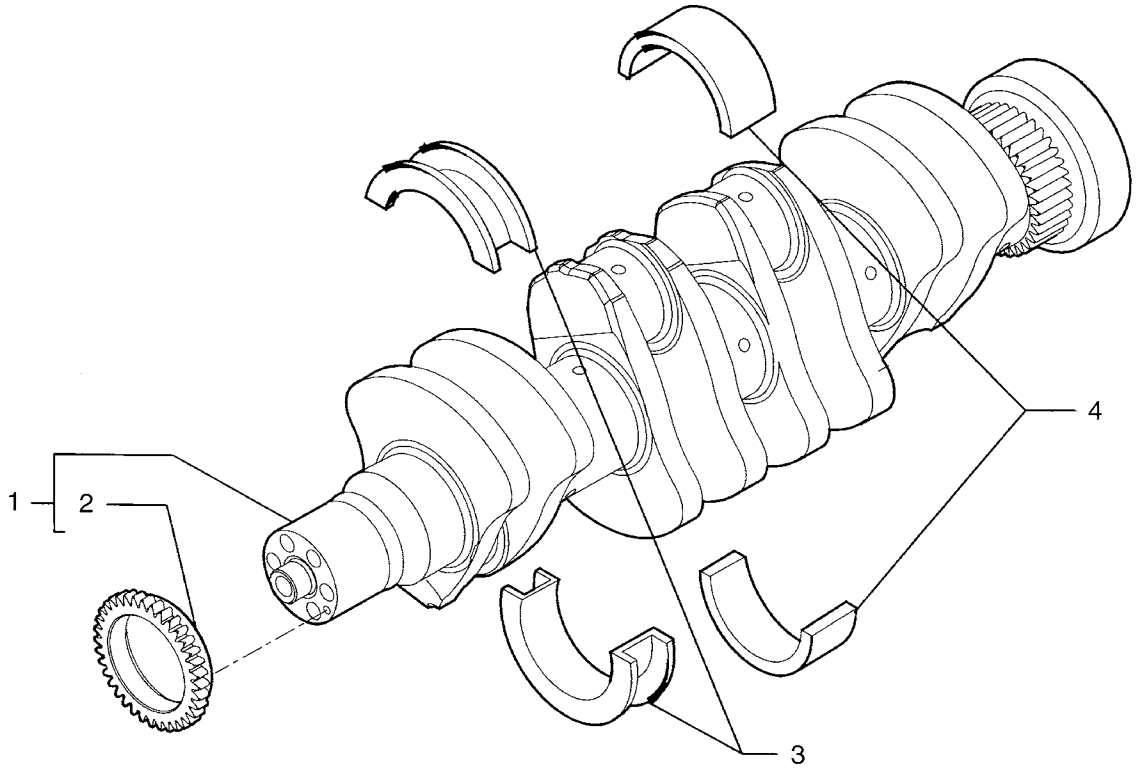

BS04A036

http://www.minnparbackhoeparts.com/

VILEBREQUIN

REF	FN	PART NUMBER	YR/SN	QTY	DESCRIPTION
1		2852009		1	VILEBREQUIN - ASSY; Incl. Ref 2
2		4893386		1	PIGNON
4		2992147		4	POCHET.DEMI-COUSS.DE BAN (-0.000) (-0.000)
4		2992148		4	POCHET. DEMI-COUSS -0.254 (-0.254) (-0.250)
4		2992149		4	POCHET.DEMI-COUSS.DE BAN (-0.508) (-0.500)
3		2992153		1	POCHET.DEMI-COUSS.DE BAN (+0.000) (+0.000)
3		2992154		1	POCHET.DEMI-COUSS.DE BAN (+0.254) (+0.250)
3		2992155		1	BUTÉE A BILLES (+0.508) (+0.500)

http://www.minnparbackhoeparts.com/

PISTONS - BIELLES

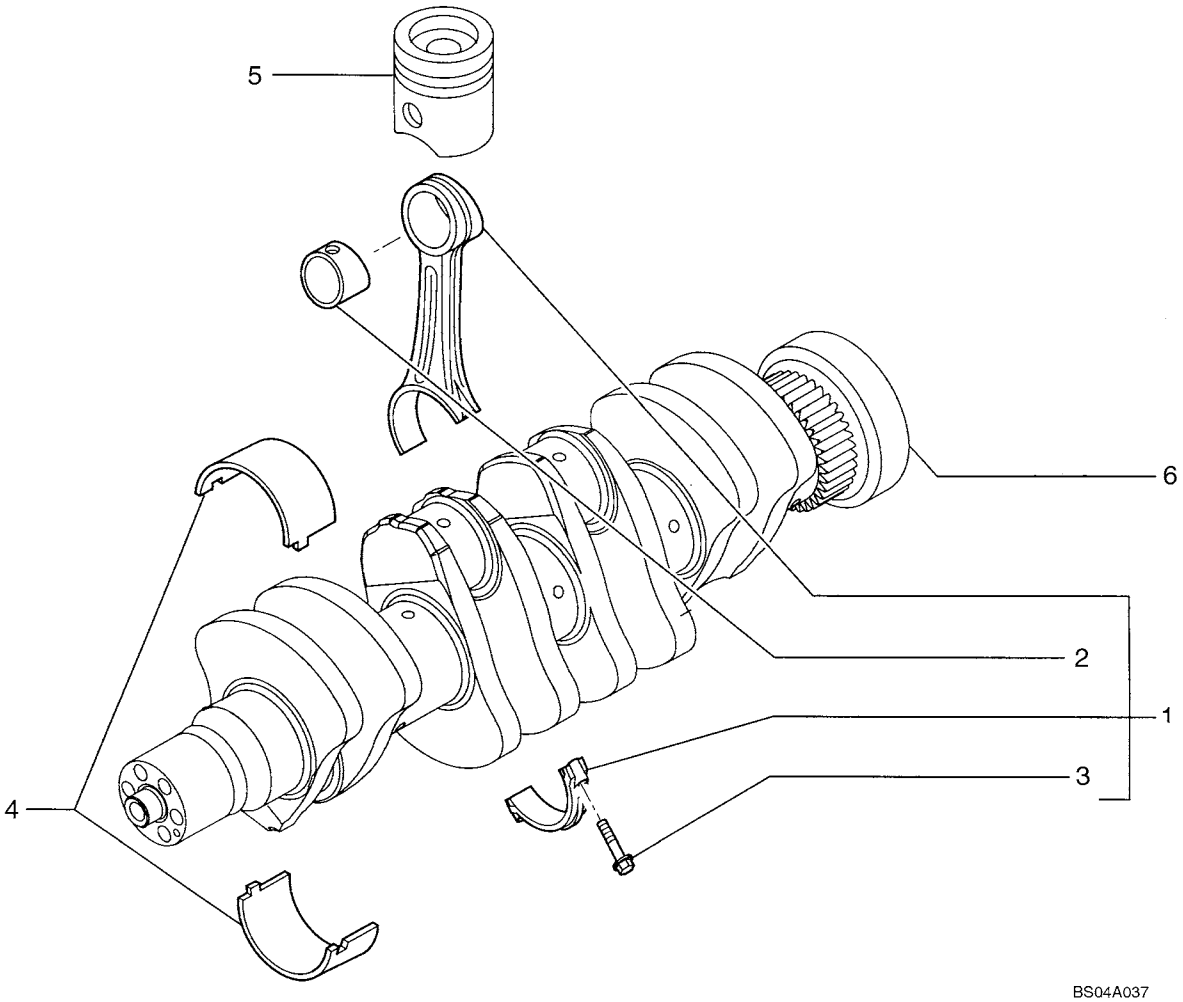

http://www.minnparbackhoeparts.com/

PISTONS - BIELLES

REF	FN	PART NUMBER	YR/SN	QTY	DESCRIPTION
1		2831298		4	BIELLE Connecting Rod; Incl. Ref 2, 3
2		4892708		1	BAGUE
3		2831297		2	VIS
4		4892714		4	COUSSINET VILEBREQUI
4		4892715		4	COUSSINET VILEBREQUI
5		REF		1	NOTICE PISTON; See Figure 02-23
6		REF		1	NOTICE CRANKSHAFT; See Figure 02-21

http://www.minnparbackhoeparts.com/

PISTONS - BIELLES

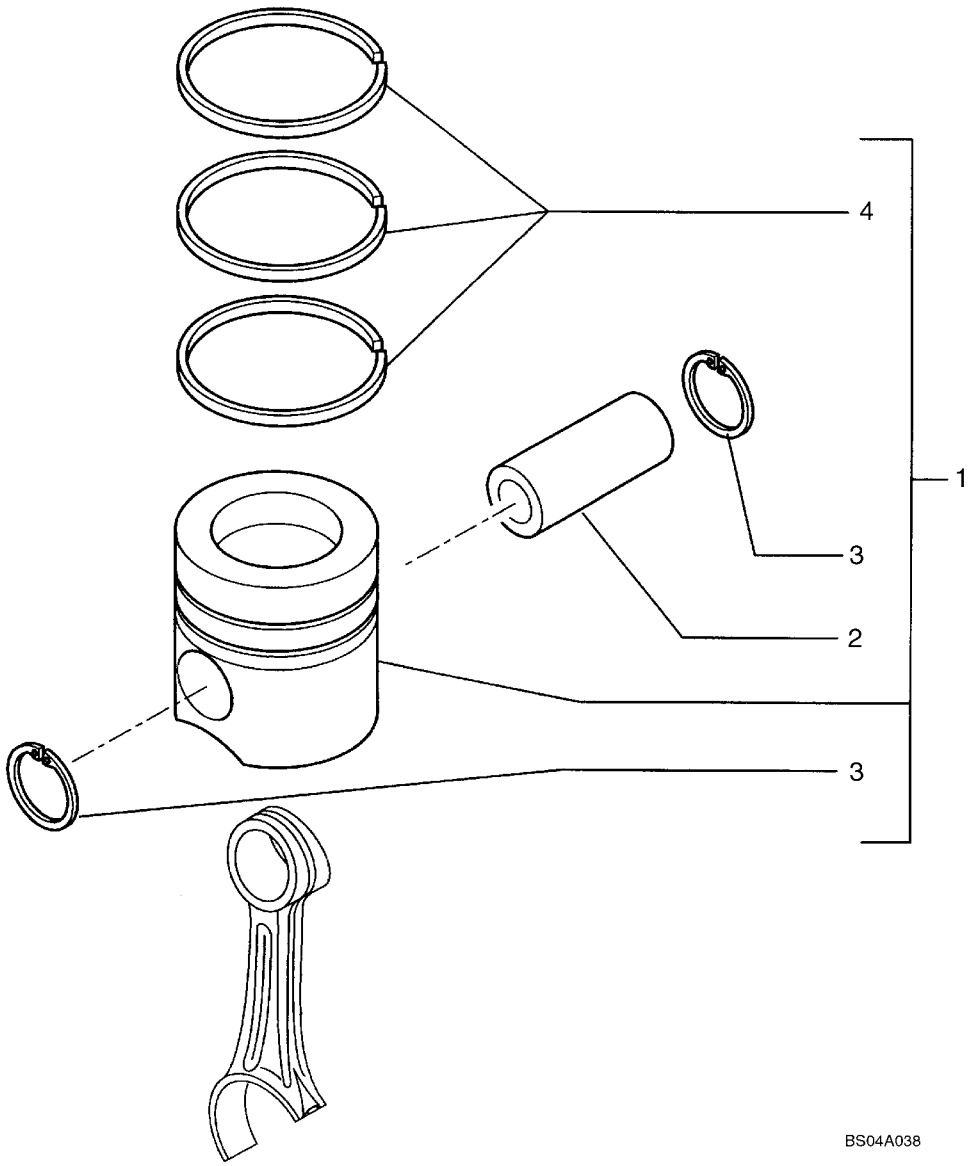

http://www.minnparbackhoeparts.com/

PISTONS - BIELLES

REF	FN	PART NUMBER	YR/SN	QTY	DESCRIPTION
1		4897980		4	PISTON COMPLET Does Not Include Rings
2		4892712		4	AXE DE PISTON
3		4892713		8	JONC D'ARRET
4		2852037		4	SEGMENT RACLEUR
4		2830158		4	SEGMENT DE PISTON Compression; 2.39 mm Wide; Yellow Identification Mark
4		2852036		4	SEGMENT DE PISTON Compression; 3.00 mm Wide; Red Identification Mark

http://www.minnparbackhoeparts.com/

VOLANT - MOTEUR

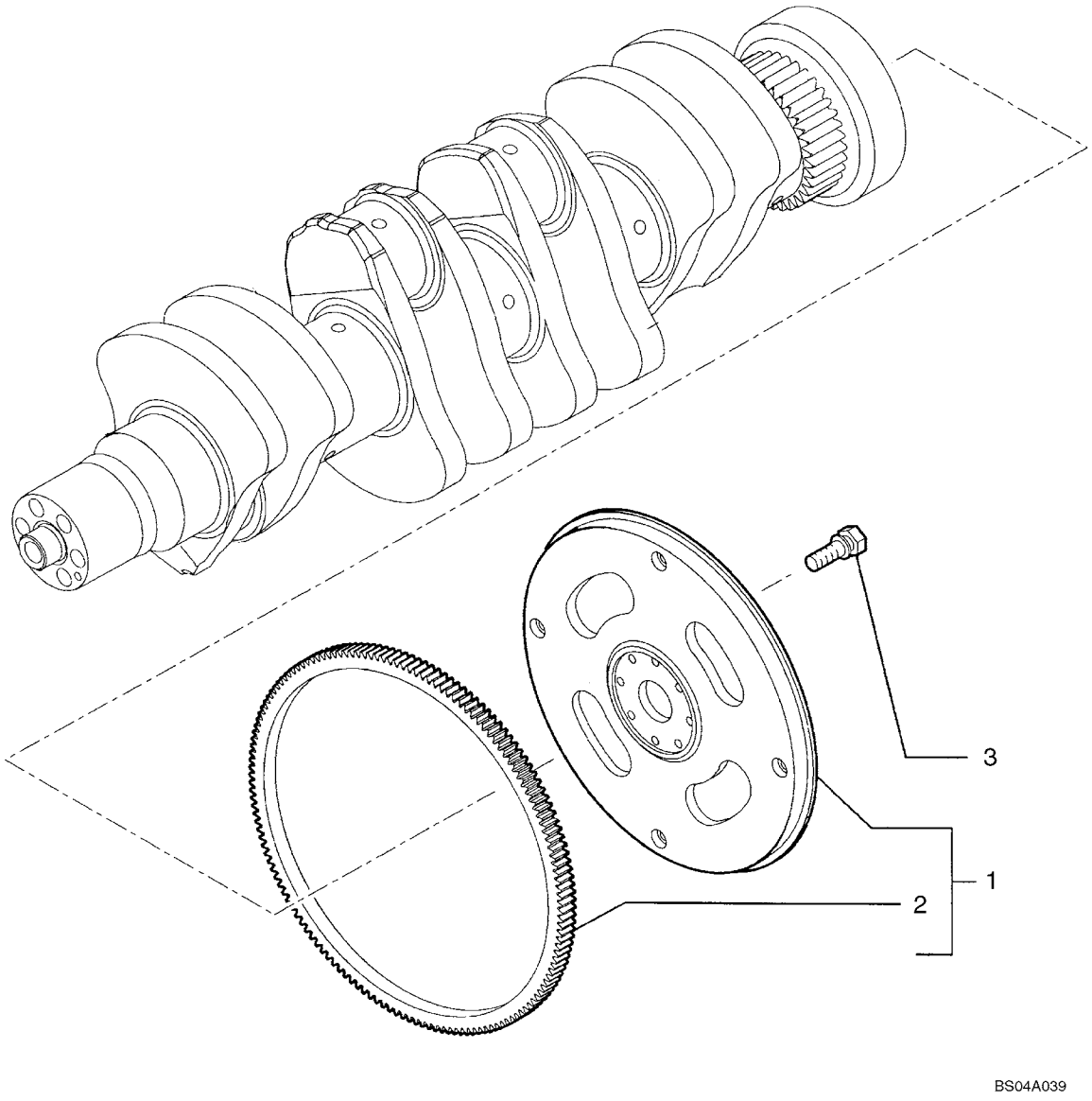

http://www.minnparbackhoeparts.com/

VOLANT - MOTEUR

REF	FN	PART NUMBER	YR/SN	QTY	DESCRIPTION
1		2852049		1	VOLANT DU MOTEUR - ASSY; Incl. Ref 2
2		2852051		1	COURONNE DENTÉE
3		4894641		8	VIS With Washer, M12 x 30

http://www.minnparbackhoeparts.com/

POULIE - VILEBREQUIN

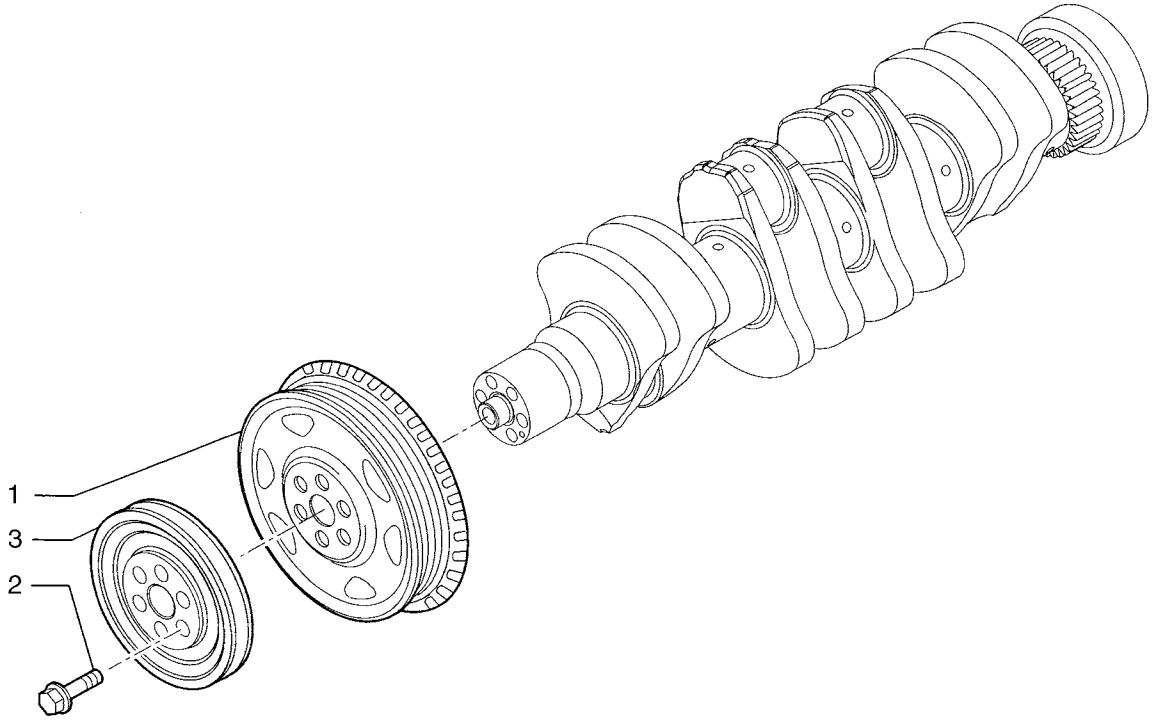

BS04A040

http://www.minnparbackhoeparts.com/

POULIE - VILEBREQUIN

REF	FN	PART NUMBER	YR/SN	QTY	DESCRIPTION
1		4896773		1	POULIE
2		{2853960}		6	M12 x 77 Screw
3		2852054		1	POULIE

http://www.minnparbackhoeparts.com/

MASSELOTTE, ENGRENAGES ET ARBRES

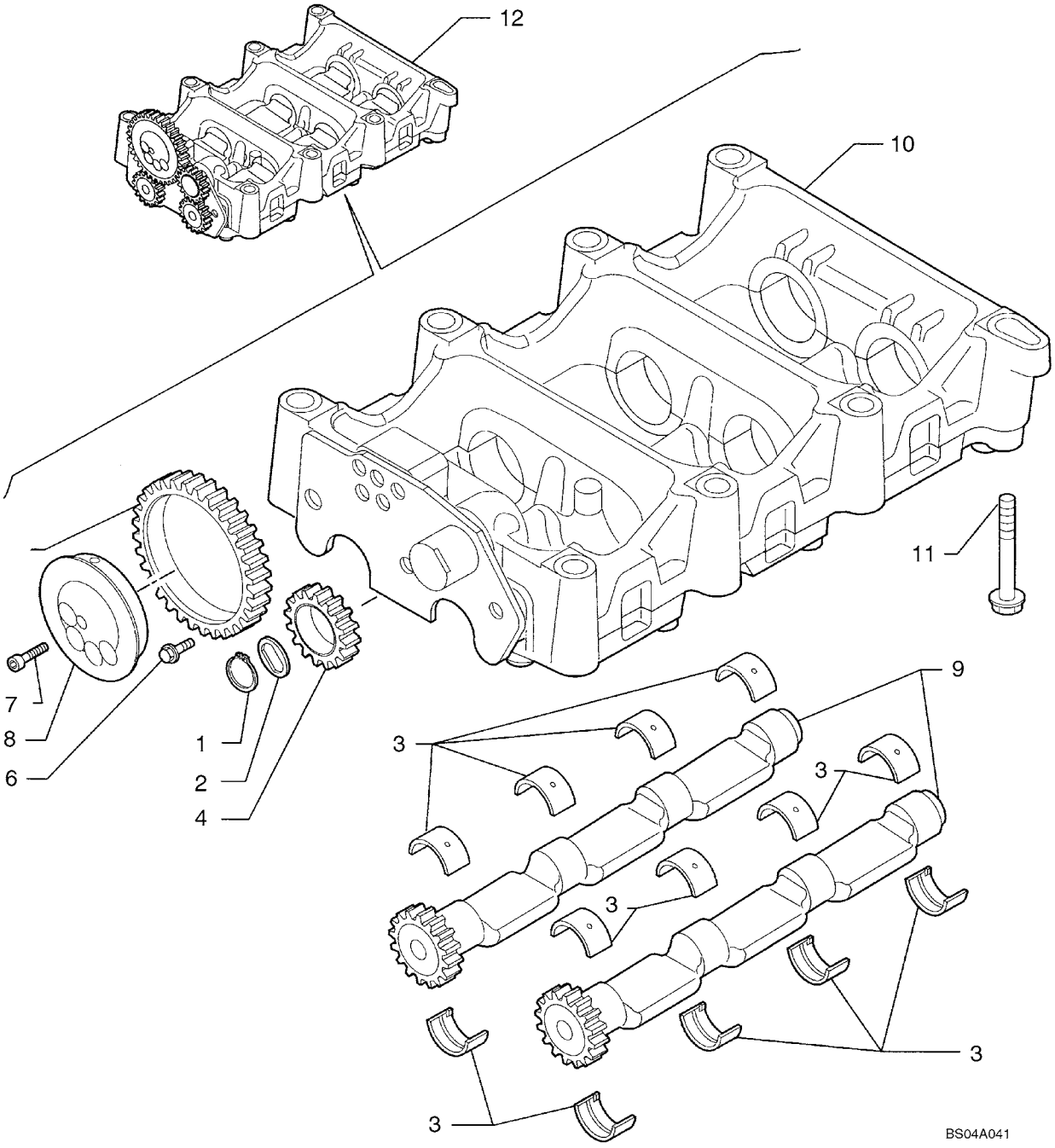

http://www.minnparbackhoeparts.com/

MASSELOTTE, ENGRENAGES ET ARBRES

REF	FN	PART NUMBER	YR/SN	QTY	DESCRIPTION
1		4897125		1	JONC D'ARRET
2		4897123		1	PLATEAU DE PRESSION
3		4897071		16	BAGUE
4		4897048		1	PIGNON CONDUIT
5		4896947		1	PIGNON CONDUIT
6		4895586		3	VIS Flange, M8 x 16
7		2830433		4-5	VIS Socket; (4) Used With 2830953 Balancer Assy
8		2831031		1	ARBRE DE RENVOI
9		2831023		2	ARBRE 2830953 Balancer Assy
9A		2853226		2	ARBRE (ASSEMBLE) Shaft; 2853225 Balancer Assy
10		2830952		1	CARTER - ASSY; See Figure 02-27; 2830953 Balancer Assy
10A		2831300		1	CARTER Housing; 2853225 Balancer Assy; Component Parts Not Available At Time Of Printing
11		4899109		7	VIS Flange, M10 x 80
11		4897934		1	VIS Flange, M10 x 100
12		2830953		1	MASSELOTTE - ASSY; Incl. Ref 1 - 10; If Used
12		2853225		1	MASSELOTTE Balancer Assy Incl. Ref 1 - 8, 9A, 10A; Includes (5) Ref 7 Screws; Fifth Screw Is Used During Assy Under Balancer to Lock Shaft, But Must Be Removed After Balancer Is Assembled to Block; If Used

http://www.minnparbackhoeparts.com/

MASSELOTTE, ENGRENAGES ET ARBRES (2830952)

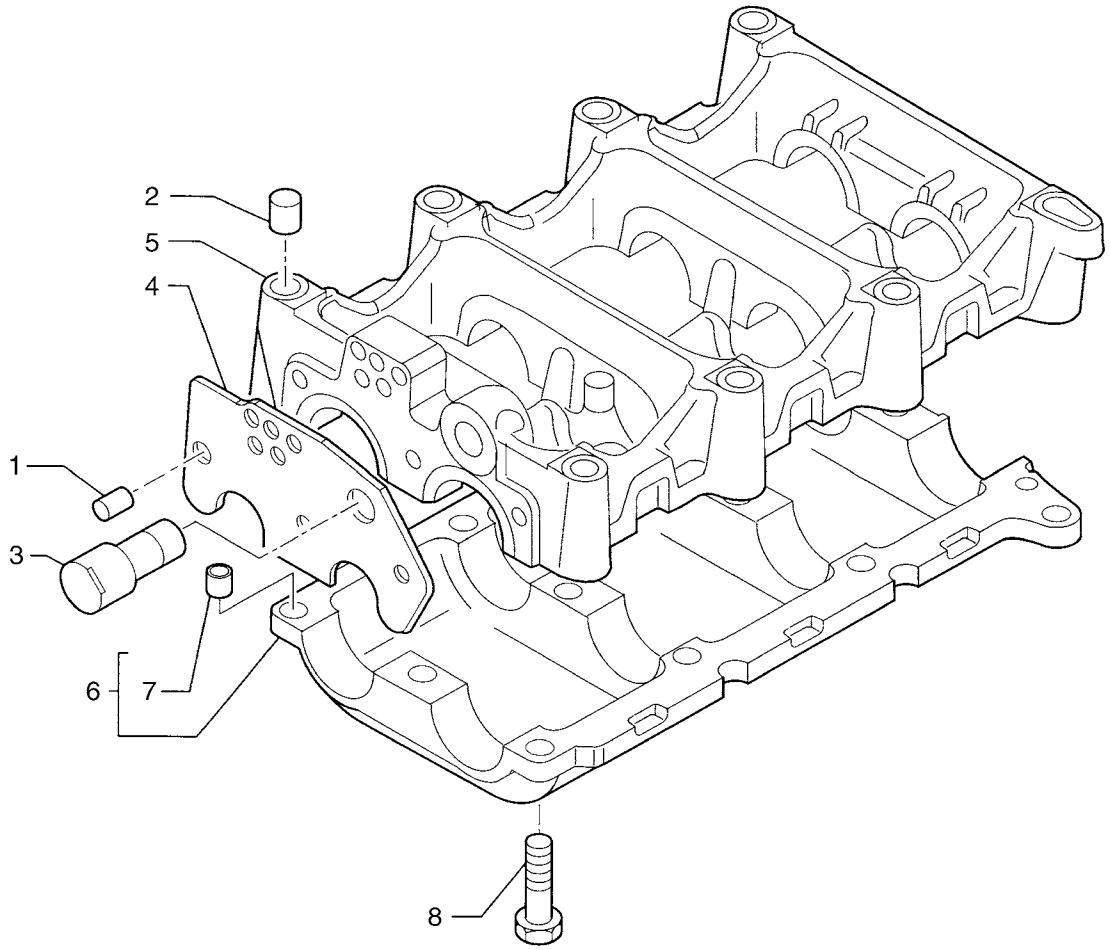

http://www.minnparbackhoeparts.com/

MASSELOTTE, ENGRENAGES ET ARBRES (2830952)

REF	FN	PART NUMBER	YR/SN	QTY	DESCRIPTION
		2830952		1	CARTER Assy; Incl. Ref 1 - 8; 2830953 Balancer Assy
1		4892836		1	PION
2		4899027		2	PION
3		2830948		1	ARBRE DE RENVOI
4		2830905		1	PLATEAU DE PRESSION
5		2830934		1	CARTER
6		2831101		1	CARTER - ASSY; Incl. Ref 7
7		4891209		2	PION
8		2830411		3	VIS Flange, M8 x 30
8		4895323		9	VIS Flange, M8 x 40

http://www.minnparbackhoeparts.com/

ARBRE À CAMES

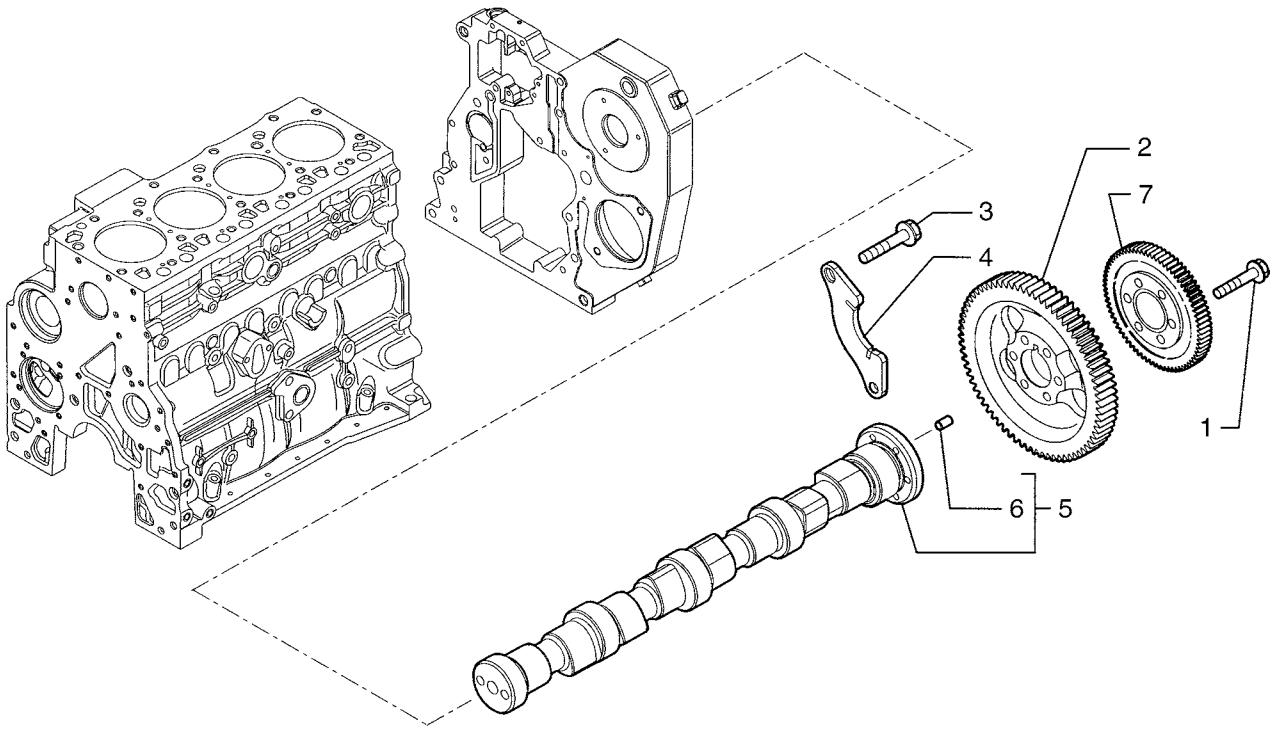

BS04A043

http://www.minnparbackhoeparts.com/

ARBRE À CAMES

REF	FN	PART NUMBER	YR/SN	QTY	DESCRIPTION
1		4895323		6	VIS Flange, M8 x 40
2		2852062		1	PIGNON
3		4899068		2	VIS Flange, M8 x 16
4		4897457		1	FLASQUE Support
5		4899610		1	ARBRE A CAMES - ASSY; Incl. Ref 6
6		4899080		1	PION
7		2852063		1	PIGNON CONDUIT 52T

http://www.minnparbackhoeparts.com/

TURBOCOMPRESSEUR

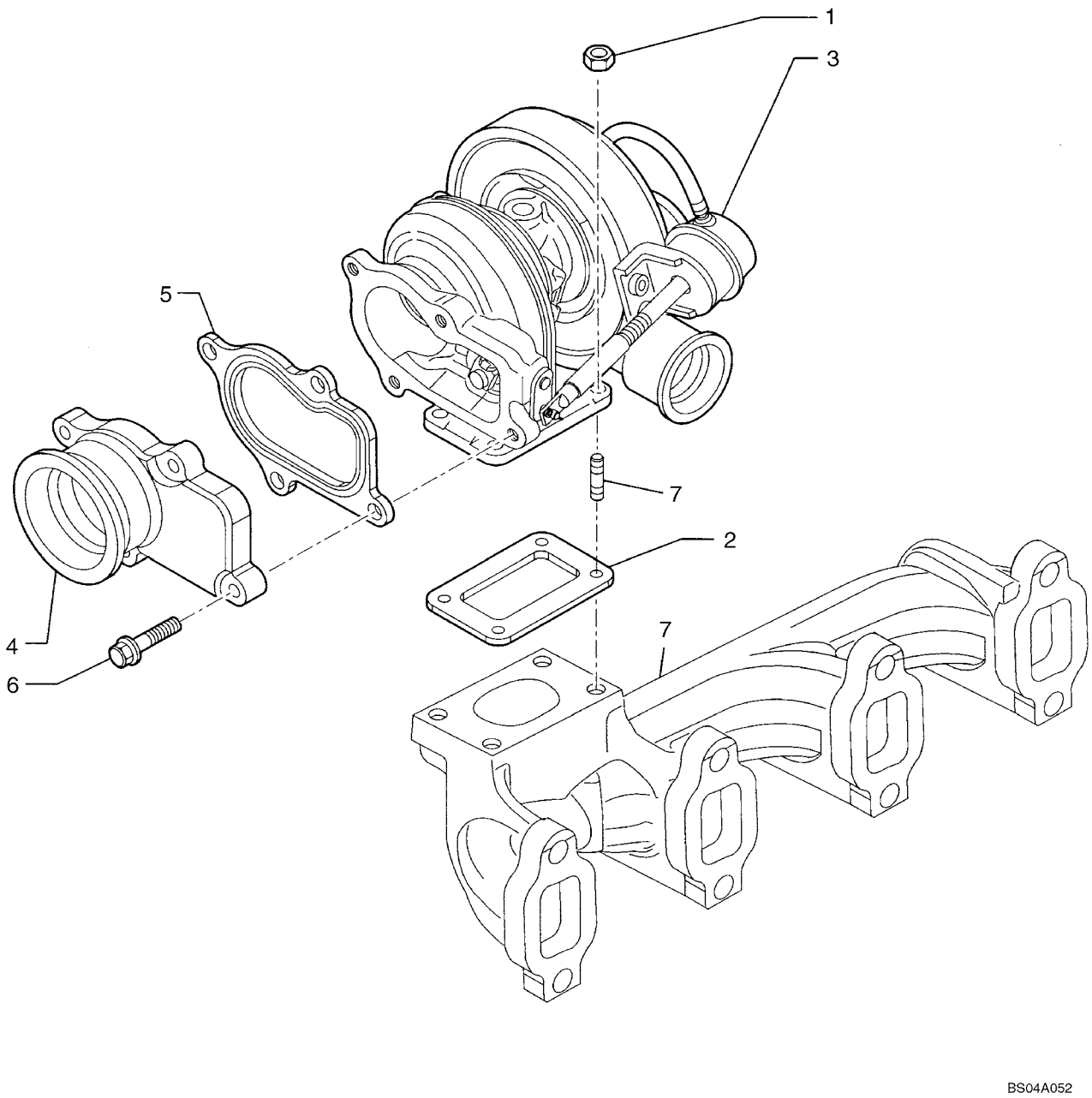

http://www.minnparbackhoeparts.com/

TURBOCOMPRESSEUR

REF	FN	PART NUMBER	YR/SN	QTY	DESCRIPTION
1		4899118		4	ECROU Flange, M8
2		4895133		1	JOINT
3		2852068		1	TURBOCOMPRESSEUR Assembly
4		2852072		1	CONDUIT D'ECHAPPEMENT
5		2852071		1	JOINT
6		4898482		4	VIS Flange
7		REF		1	NOTICE EXHAUST MANIFOLD; See Figure 02-20

http://www.minnparbackhoeparts.com/

MOTEUR, HUILE

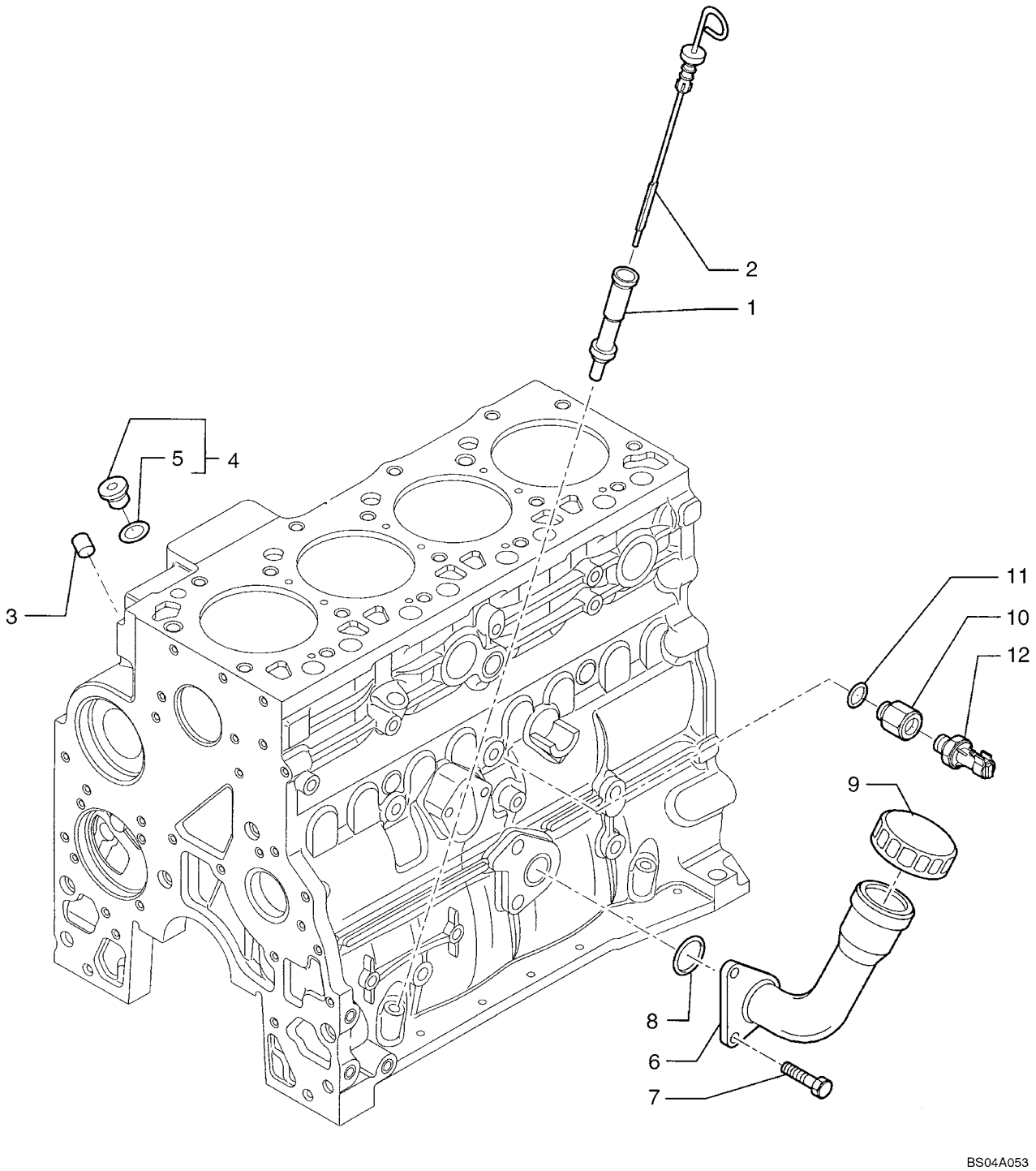

http://www.minnparbackhoeparts.com/

MOTEUR, HUILE

REF	FN	PART NUMBER	YR/SN	QTY	DESCRIPTION
1		2852122		1	TUYAU RIGIDE
2		2852125		1	JAUGE DE NIVEAU Includes 2852127 Seal
3		4899036		1	BOUCHON Expansion
4		4897330		2	BOUCHON - ASSY; Incl. Ref 5
5		4895610		1	JOINT THORIQUE
6		{2853407}		1	Tube
7		2852134		2	VIS Flange, M12 x 25
8		2852135		1	JOINT O-Ring
9		2852136		1	BOUCHON DE REMPLISSAGE
10		2852140		1	RACCORD Reducer
11		4899115		1	JOINT THORIQUE
12		2852889		1	PRESSOSTAT Oil Pressure
		{2853410}		1	Oil Filler Plug, Includes 2853412 O-Ring

http://www.minnparbackhoeparts.com/

POMPE A HUILE - MOTEUR

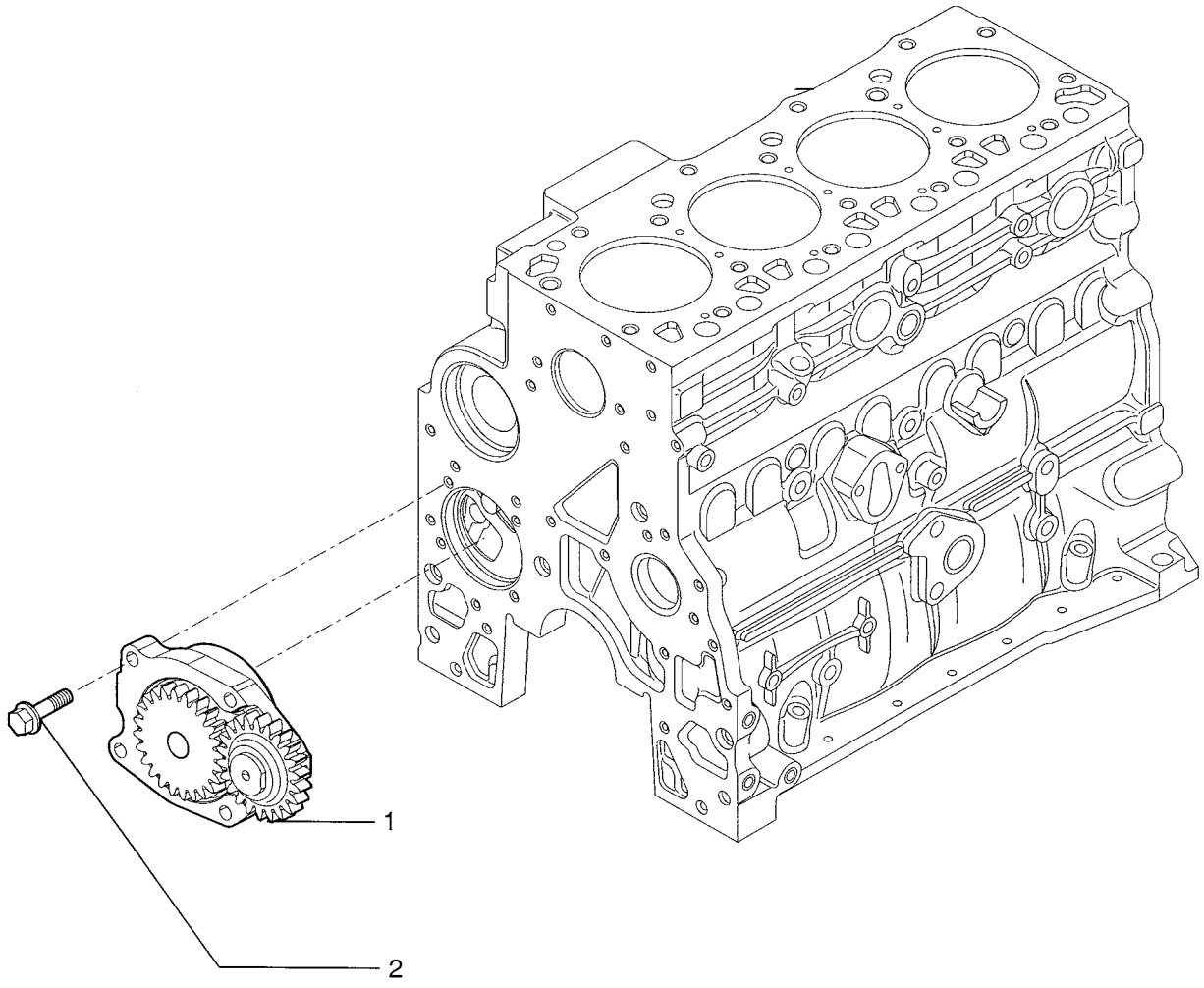

http://www.minnparbackhoeparts.com/

POMPE A HUILE - MOTEUR

REF	FN	PART NUMBER	YR/SN	QTY	DESCRIPTION
1		4897480		1	POMPE A HUILE
2		4899090		4	VIS Hex, M8 x 30

http://www.minnparbackhoeparts.com/

FILTRE A HUILE - MOTEUR

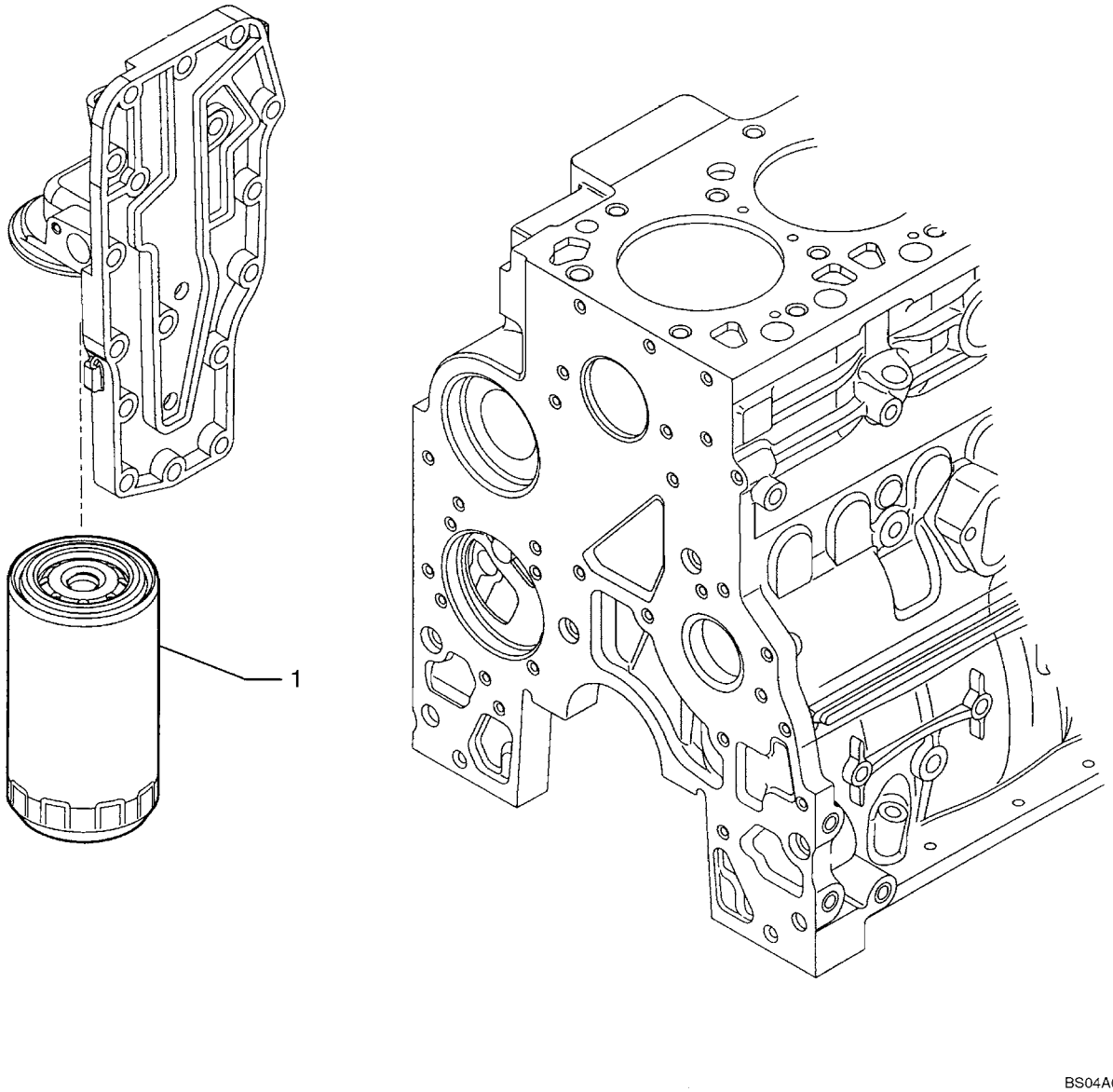

http://www.minnparbackhoeparts.com/

FILTRE A HUILE - MOTEUR

REF	FN	PART NUMBER	YR/SN	QTY	DESCRIPTION
1		87803261		1	FILTRE A HUILE MOTEUR

http://www.minnparbackhoeparts.com/

02-33		p1	10/04

TUYAUTERIES - HUILE DU MOTEUR

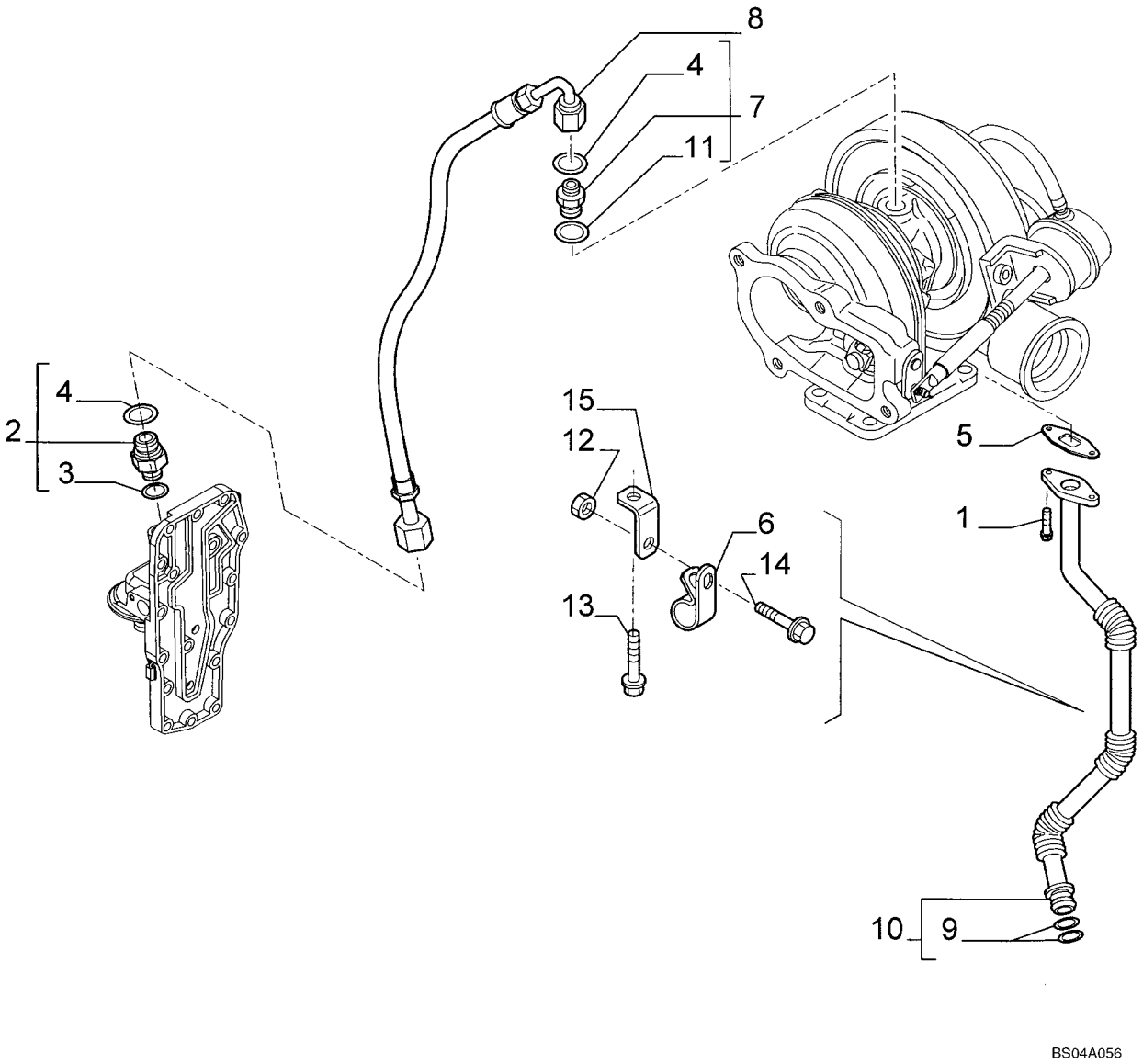

http://www.minnparbackhoeparts.com/

TUYAUTERIES - HUILE DU MOTEUR

REF	FN	PART NUMBER	YR/SN	QTY	DESCRIPTION
1		4895164		2	VIS Flange, M6 x 16
2		4895107		1	RACCORD - ASSY; Incl. Ref 3, 4
3		4899107		1	JOINT THORIQUE
4		4899108		1	JOINT THORIQUE
5		4899467		1	JOINT Oil Drain
6		4899519		1	PATTE FIXATION Clamp
7		4899106		1	RACCORD Incl. Ref 4, 11
8		2852195		1	FLEXIBLE (ASSEMBLE)
9		4899058		2	JOINT THORIQUE
10		2852102		1	TUBE (ASSEMBLE) - ASSY; Tube; Incl. Ref 9
11		4899121		1	JOINT Washer
12		2852197		1	ECROU Flange, M6
13		2852101		1	VIS Flange; M6 x 16
14		2852100		1	VIS Flange; M8 x 16
15		2852196		1	PATTE FIXATION

http://www.minnparbackhoeparts.com/

FILTRE ET REFROIDISSEUR D'HUILE

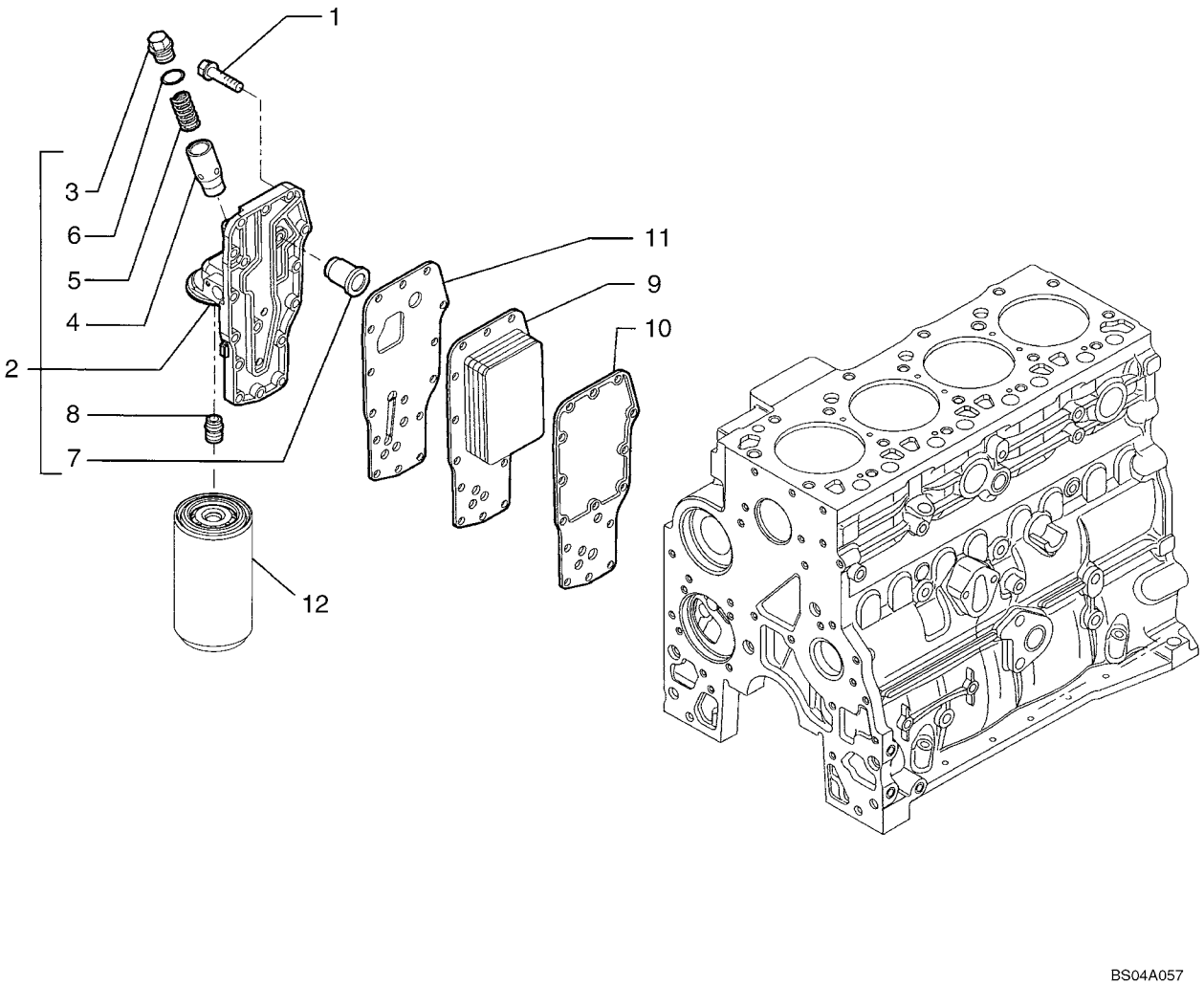

http://www.minnparbackhoeparts.com/

FILTRE ET REFROIDISSEUR D'HUILE

REF	FN	PART NUMBER	YR/SN	QTY	DESCRIPTION
1		4899019		15	VIS Flange, M8 x 35
		4892774		1	ECHANGEUR DE CHALEUR - ASSY; Head, Incl. Ref 2 - 8
2		4899643		1	TETE DE FILTRE Incl. Ref 8
3		4895043		1	BOUCHON
4		4896404		1	CARTER Plunger, Pressure Regulator
5		4895045		1	RESSORT, SOUPAPE
6		4899035		1	JOINT THORIQUE
7		4896410		1	SOUPAPE HYDRAULIQUE Pressure Relief
8		4893391		1	RACCORD
9		4896406		1	RADIATEUR Cooler Core
10		2830559		1	JOINT Core
11		4896409		1	JOINT Head
12		REF		1	NOTICE FILTER, ENGINE OIL; See Figure 02-32

http://www.minnparbackhoeparts.com/

POMPE A EAU

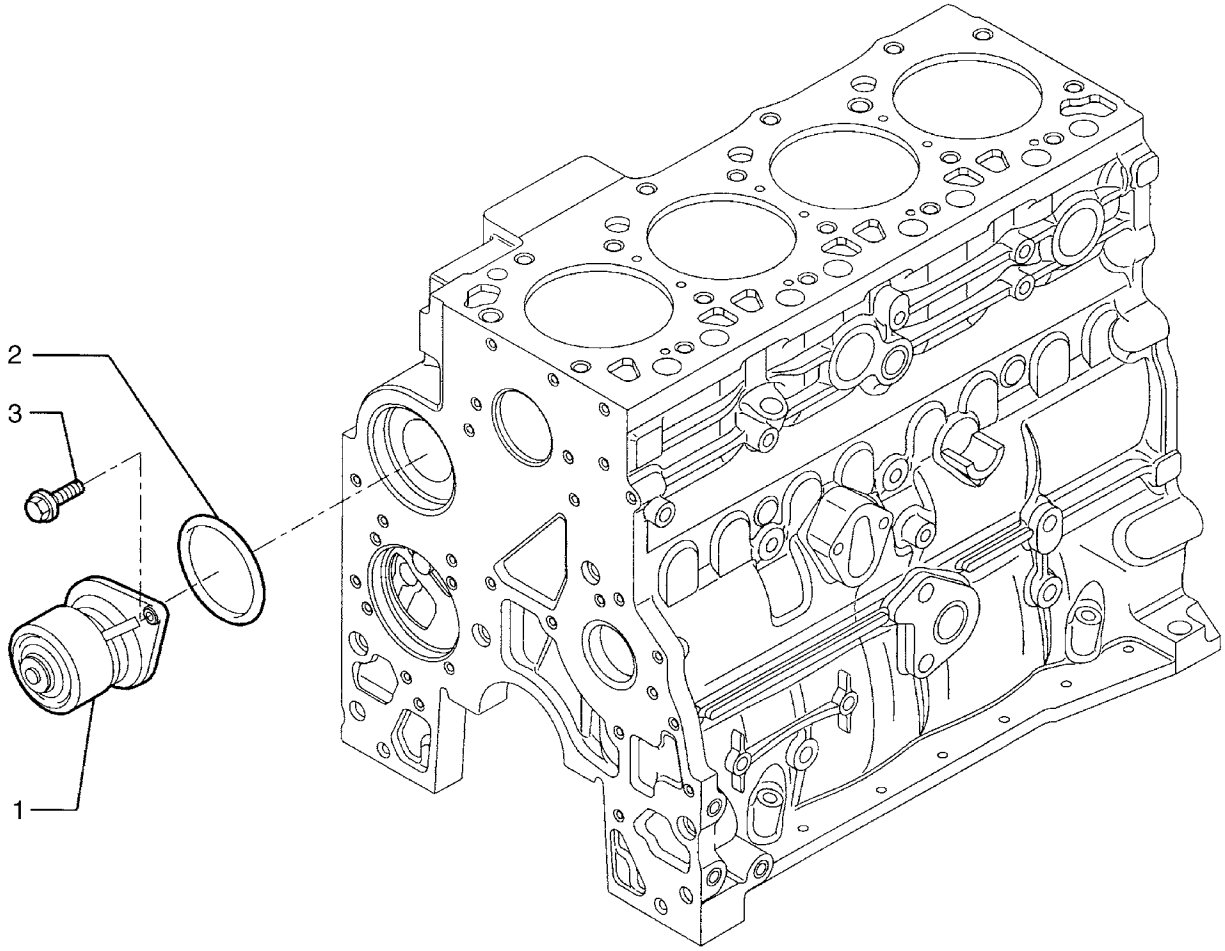

BS04A058

http://www.minnparbackhoeparts.com/

POMPE A EAU

REF	FN	PART NUMBER	YR/SN	QTY	DESCRIPTION
1		87803065		1	POMPE A EAU
2		2852047		1	JOINT
3		4899031		2	VIS Flange, M8 x 25

http://www.minnparbackhoeparts.com/

CIRCUIT DE REFROIDISSEMENT - MOTEUR

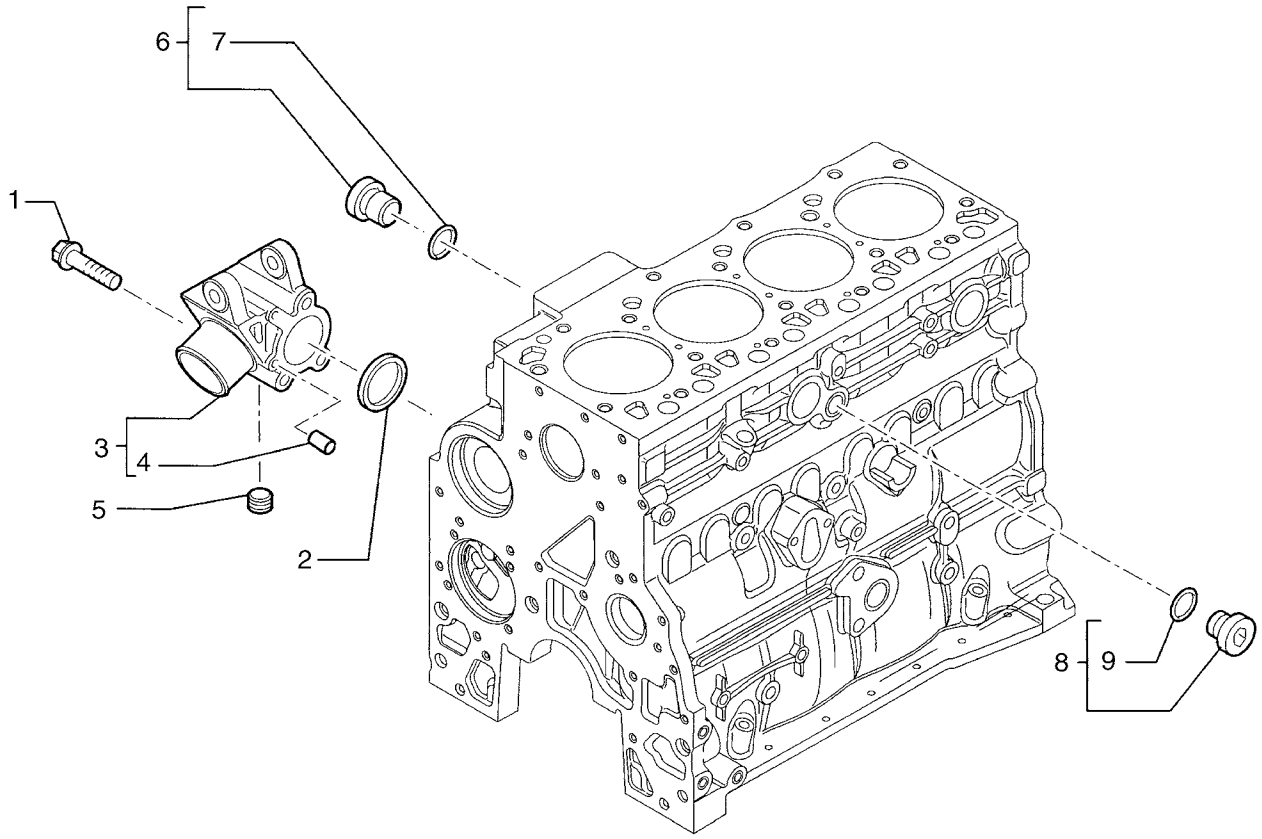

http://www.minnparbackhoeparts.com/

CIRCUIT DE REFROIDISSEMENT - MOTEUR

REF	FN	PART NUMBER	YR/SN	QTY	DESCRIPTION
1		4899109		3	VIS Flange, M10 x 80
2		4895121		1	JOINT
3		2852145		1	SUPPORT - ASSY; Water Inlet; Incl. Ref 4
4		2830894		2	PION Dowel
5		2852511		1	BOUCHON
6		4895392		1	BOUCHON - ASSY M18; Torque Converter Oil; Incl. Ref 7
7		4895393		1	JOINT THORIQUE
8		4895623		1	BOUCHON - ASSY; Compressor Plumbing; Incl. Ref 9
9		4895625		1	JOINT THORIQUE

http://www.minnparbackhoeparts.com/

THERMOSTAT - REFROIDISSEMENT MOTEUR

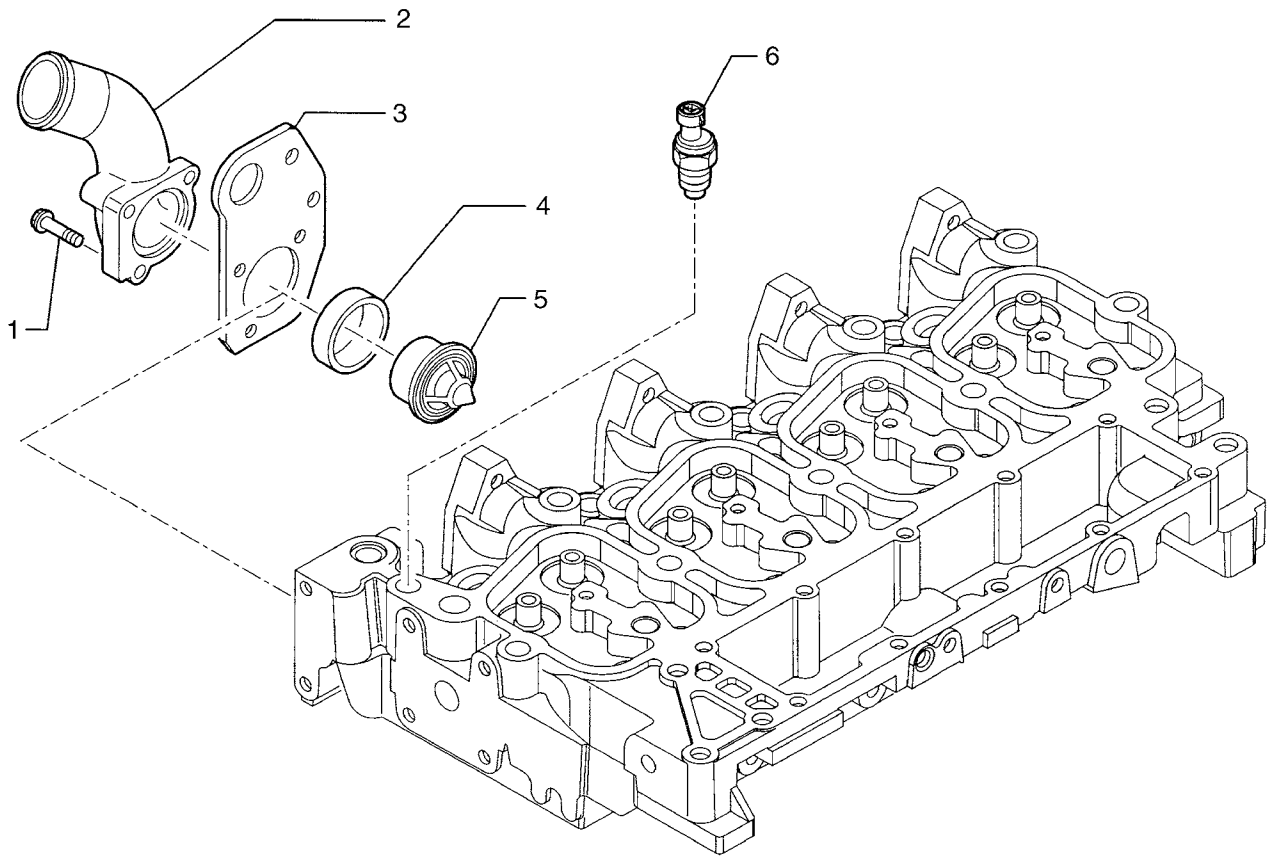

http://www.minnparbackhoeparts.com/

THERMOSTAT - REFROIDISSEMENT MOTEUR

REF	FN	PART NUMBER	YR/SN	QTY	DESCRIPTION
1		2852151		1	VIS Flange; M8 x 35
1		2852155		2	VIS Flange; M8 x 80
2		2852153		1	COUDE Thermostat Housing
3		2852152		1	ANNEAU DE LEVAGE
4		2852154		1	JOINT
5		2830734		1	THERMOSTAT
6		2852157		1	THERMO SONDE Water; Grid Heater

http://www.minnparbackhoeparts.com/

POMPE A EAU - COMMANDE

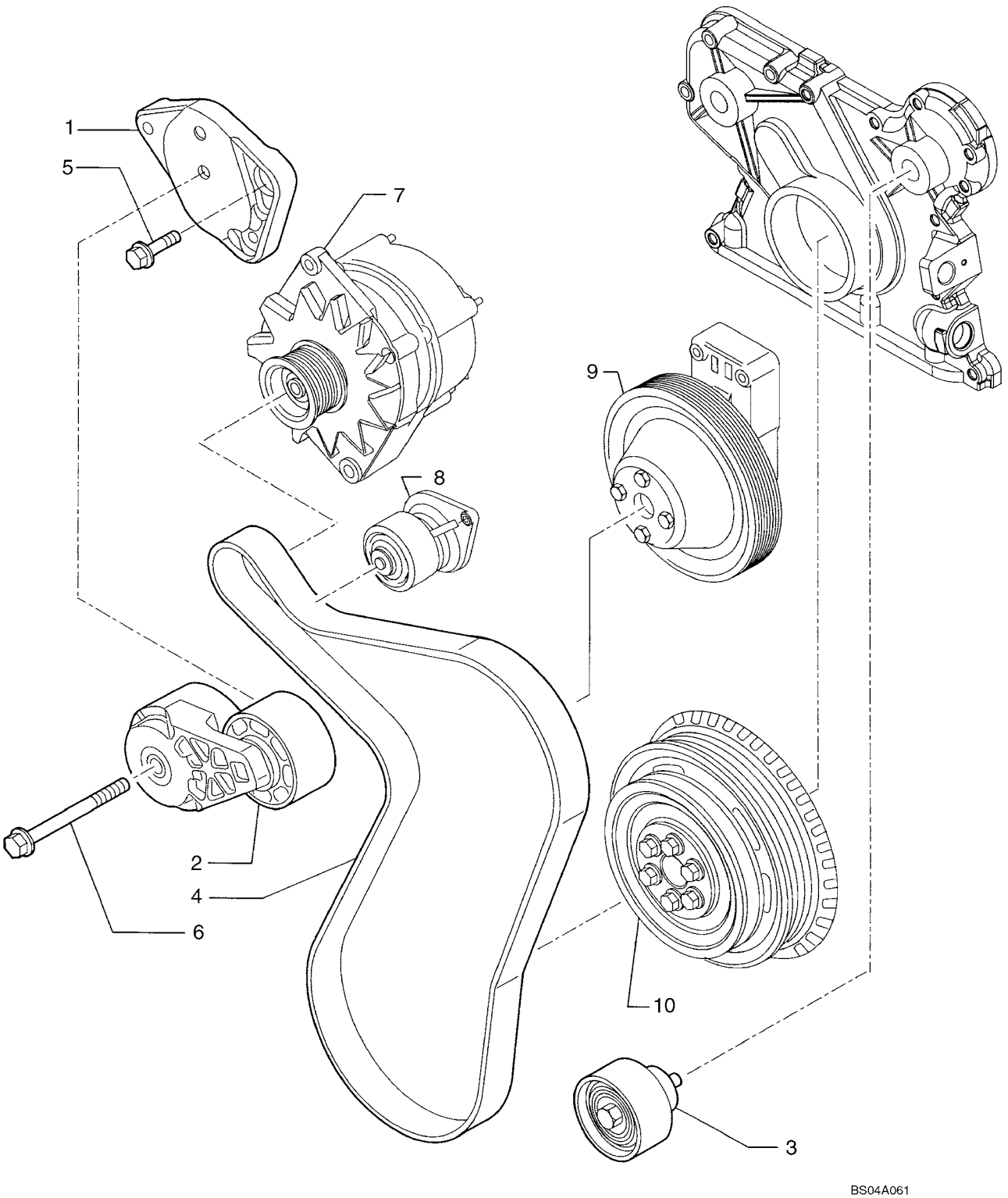

http://www.minnparbackhoeparts.com/

POMPE A EAU - COMMANDE

REF	FN	PART NUMBER	YR/SN	QTY	DESCRIPTION
1		2852163		1	PATTE FIXATION Support
2		2852161		1	TENDEUR DE COURROIE
3		2852162		1	POULIE Pulley
4		REF		1	NOTICE BELT; See Figure 02-01
5		4899031		2	VIS Flange, M8 x 25
6		4899109		1	VIS Flange, M10 x 80
7		REF		1	NOTICE ALTERNATOR; See Figure 04-02
8		REF		1	NOTICE WATER PUMP; See Figure 02-35
9		REF		1	NOTICE FAN DRIVE; See Figure 02-39
10		REF		1	NOTICE CRANKSHAFT PULLEY; See Figure 02-25

http://www.minnparbackhoeparts.com/

COMMANDE DE VENTILATEUR

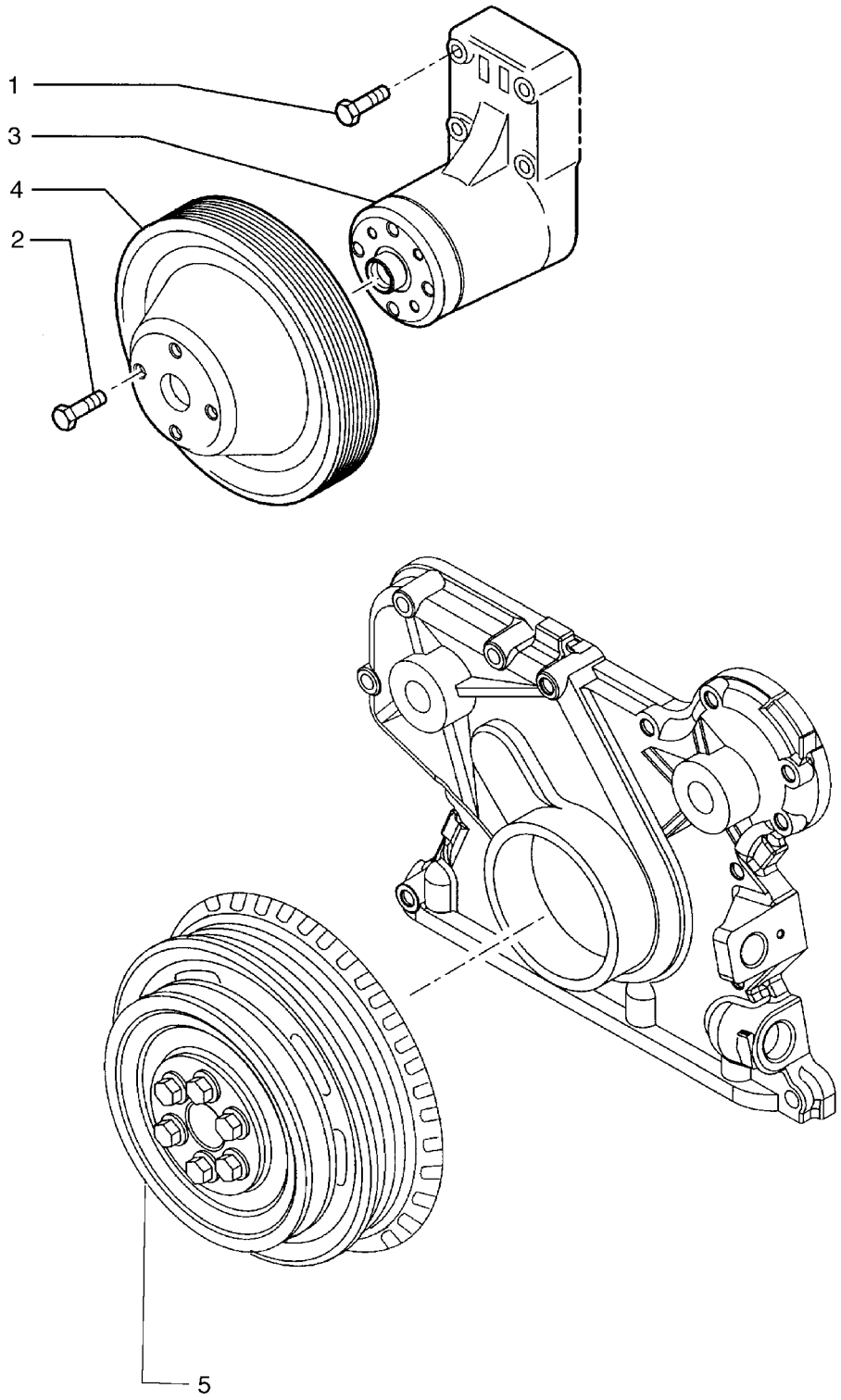

http://www.minnparbackhoeparts.com/

COMMANDE DE VENTILATEUR

REF	FN	PART NUMBER	YR/SN	QTY	DESCRIPTION
1		4899053		4	VIS Flange, M8 x 45
2		4895291		4	VIS Flange, M10 x 20
3		2852170		1	SUPPORT Includes (1) 2852171 Split Ring, (1) 2852172 Screw, (1) 4892732 Bearing, (1) 4892426 Hub, (1) 4890732 Hub Retainer
		2852171		1	CIRCLIP
		2852172		1	VIS
		4892732		1	ROULEMENT A BILLES
		4892426		1	MOYEU
		4890732		1	ENTRETOISE Hub Retainer
4		4895301		1	POULIE
5		REF		1	NOTICE CRANKSHAFT PULLEY; See Figure 02-25

http://www.minnparbackhoeparts.com/

PRISE DE FORCE

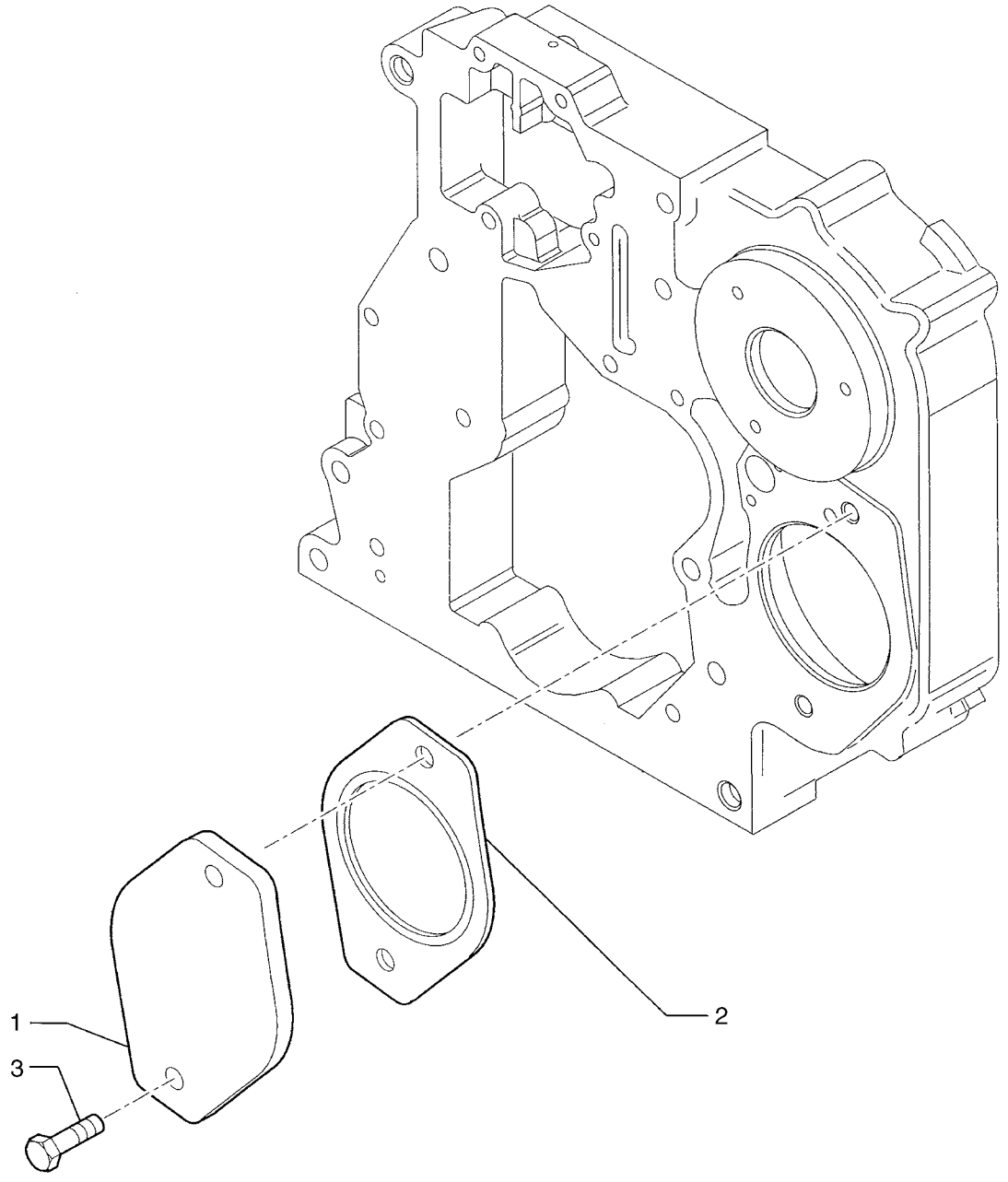

http://www.minnparbackhoeparts.com/

PRISE DE FORCE

REF	FN	PART NUMBER	YR/SN	QTY	DESCRIPTION
1		2852175		1	COUVERCLE If Used
2		4896897		1	JOINT
3		4899037		2	VIS Flange; M12 x 25

http://www.minnparbackhoeparts.com/

MOTEUR - CROCHET DE LEVAGE

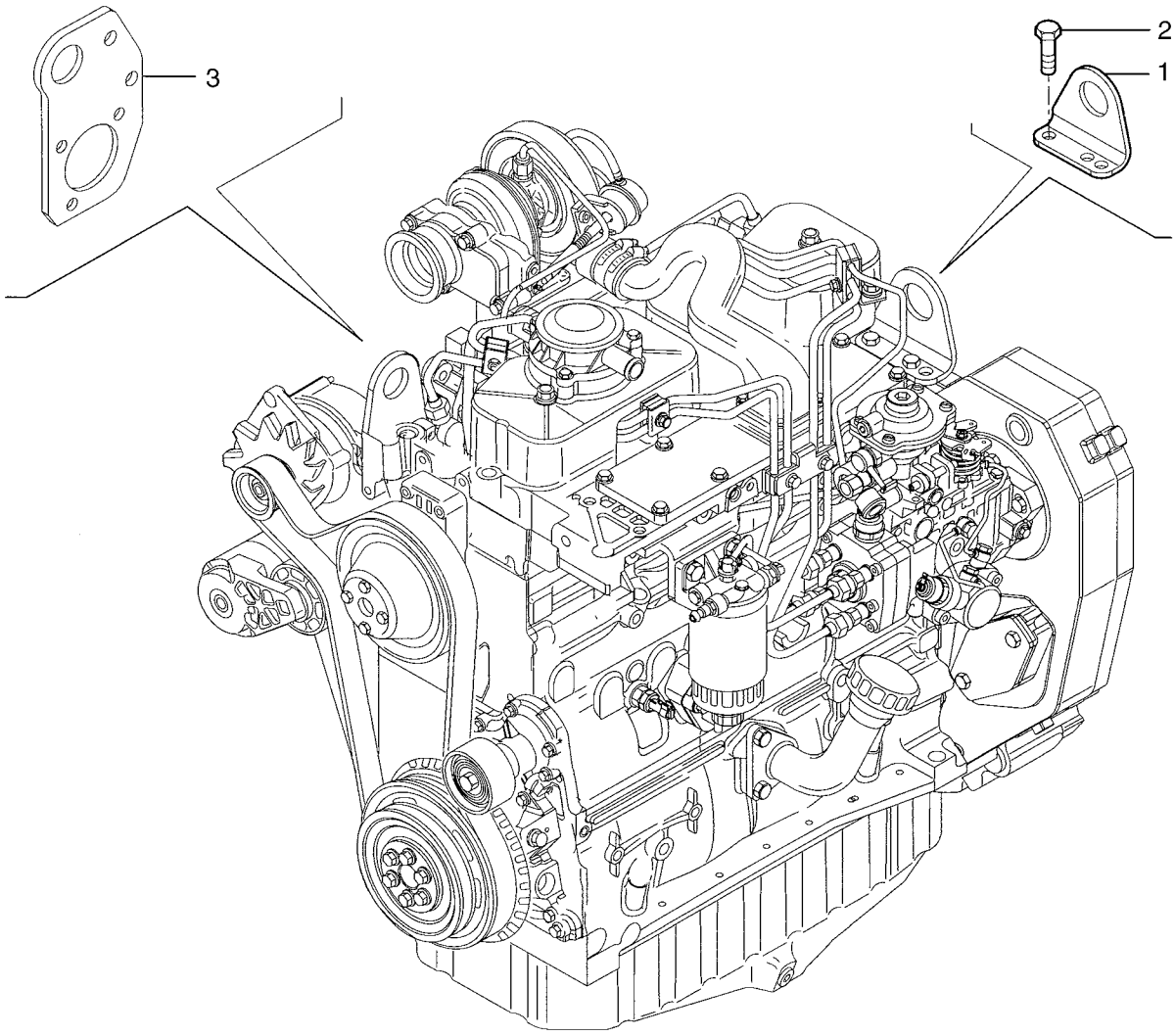

http://www.minnparbackhoeparts.com/

MOTEUR - CROCHET DE LEVAGE

REF	FN	PART NUMBER	YR/SN	QTY	DESCRIPTION
1		2852183		1	ANNEAU DE LEVAGE
2		4899073		2	VIS Flange, M12 x 30
3		REF		1	NOTICE LIFT RING; See Figure 02-37

http://www.minnparbackhoeparts.com/

NOTES

http://www.minnparbackhoeparts.com/

SECTION INDEX

03-01	TUYAUTERIE D"ESSENCE, RESERVOIR - FILTRE À CARBURANT EN LIGNE
03-02	COMMANDES - MANETTE DES GAZ
03-03	COMMANDES - PÉDALE D"ACCÉLÉRATION
03-04	POMPE DINJECTION
03-05	SYSTÈME D"INJECTION
03-06	SYSTÈME D"INJECTION
03-07	SYSTÈME D"INJECTION
03-08	FILTRE COMBUSTIBLE
03-09	POMPE D"ALIMENTATION
03-10	SYSTÈME D"INJECTION
03-11	SYSTÈME D"INJECTION

http://www.minnparbackhoeparts.com/

03-01		p1	06/05

TUYAUTERIE D'ESSENCE, RESERVOIR - FILTRE À CARBURANT EN LIGNE

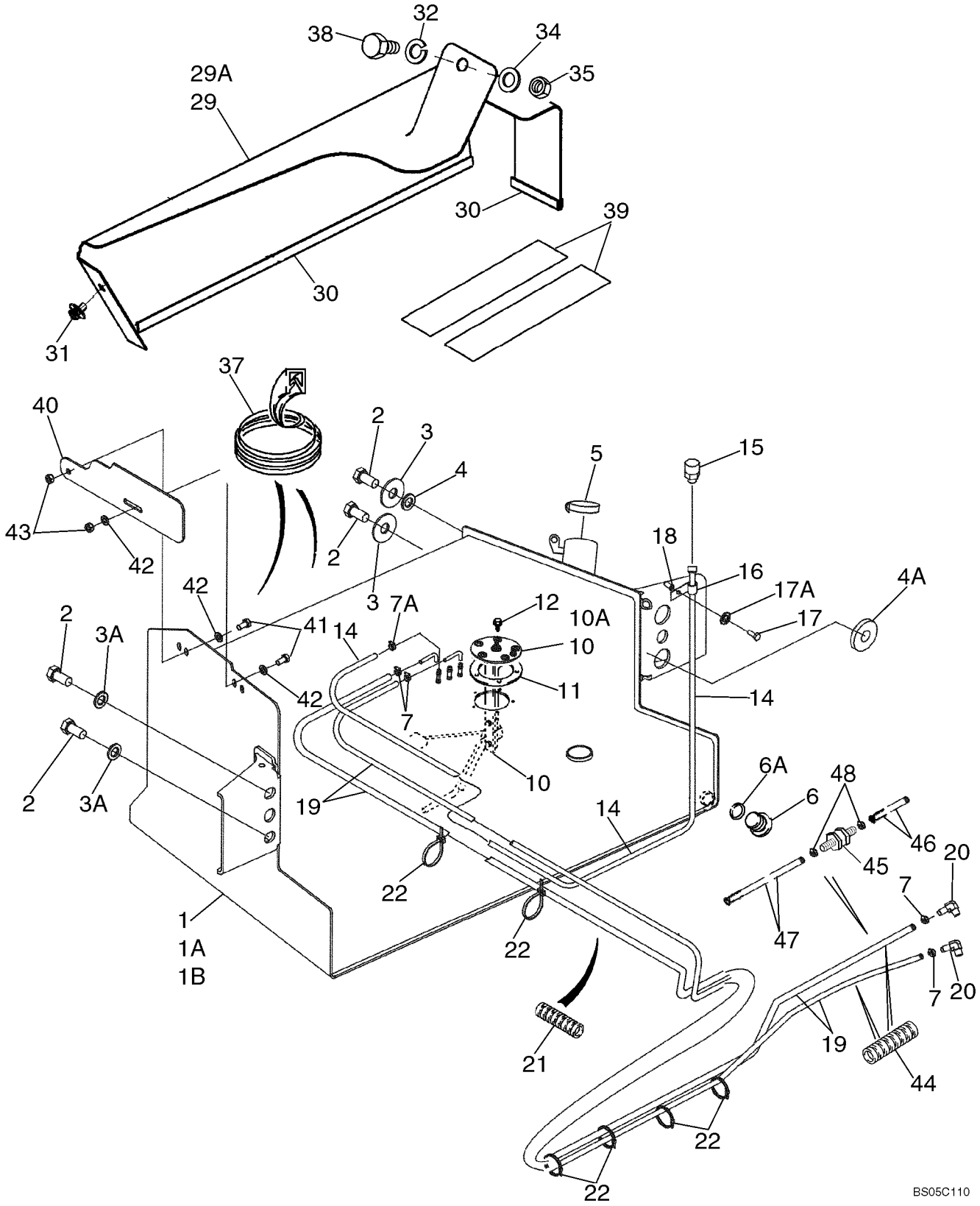

http://www.minnparbackhoeparts.com/

TUYAUTERIE D'ESSENCE, RESERVOIR - FILTRE À CARBURANT EN LIGNE

REF	FN	PART NUMBER	YR/SN	QTY	DESCRIPTION
1		87429310		1	RESERVOIR DE COMBUSTIBLE 580SM Models, 31 gal; Incl. Ref 6; With Welded Fuel Sender Tubes; Includes Left Hand Steps, Mounts to Left Hand Side of Chassis
1A		87429314		1	RESERVOIR DE COMBUSTIBLE 580SM Models, 40 gal; Incl. Ref 6; Optional; With Welded Fuel Sender Tubes; Includes Left Hand Steps, Mounts to Left Hand Side of Chassis; If Used
1B		87429318		1	RESERVOIR DE COMBUSTIBLE 580SM+ Models, 42 gal; Incl. Ref 6; With Welded Fuel Sender Tubes; Includes Left Hand Steps, Mounts to Left Hand Side of Chassis
2		443375A1		4	BOULON M20 x 60; With Loctite
3		302358A1		2	RONDELLE
3A		896-11020		2	RONDELLE 22 x 37 x 4 mm
4		185926A1		1	ENTRETOISE Upper Left Hand Side of Tank
4A		409472A1		1	ENTRETOISE Lower Left Hand Side of Tank
5		130049A1		1	BOUCHON DE REMPL. Cap; Non-Vented
6		218-5211		1	BOUCHON Hex Socket, 7/8 Or, Drain, Incl. Ref 6A; Included With Ref 1, 1A, 1B
6A		237-6010		1	JOINT TORIQUE 3/4 ID x 3/32
7		214-1706		4	COLLIER
7A		214-1704		1	COLLIER
10		86989676		1	TRANSMETTEUR ASSY Fuel Level, 31 Gallon Tank, Without Tubes, Includes Seal and Grounding Hardware, If Used
10A		87408480		1	TRANSMETTEUR ASSY Fuel Level, 40 or 42 Gallon Tank, Without Tubes, Includes Seal and Grounding Hardware, If Used
11		188311A2		1	JOINT No Longer Used
12		D75465		5	VIS No. 10 NF x 5/8
14		234892A1		1	DURITE 1/4 ID x 1100 mm (43-5/16 in), Vent
15		130047A1		1	RENIFLARD (ASSEMBLE) Vent
16		515-23127		1	COLLIER 1/2 ID
17		614-8030		1	BOULON M8 x 30
17A		892-11008		1	RONDELLE Lock, M8
18		87417383		1	INSERT FILETE M8 Nut

http://www.minnparbackhoeparts.com/

03-01		p2	06/05

TUYAUTERIE D'ESSENCE, RESERVOIR - FILTRE À CARBURANT EN LIGNE

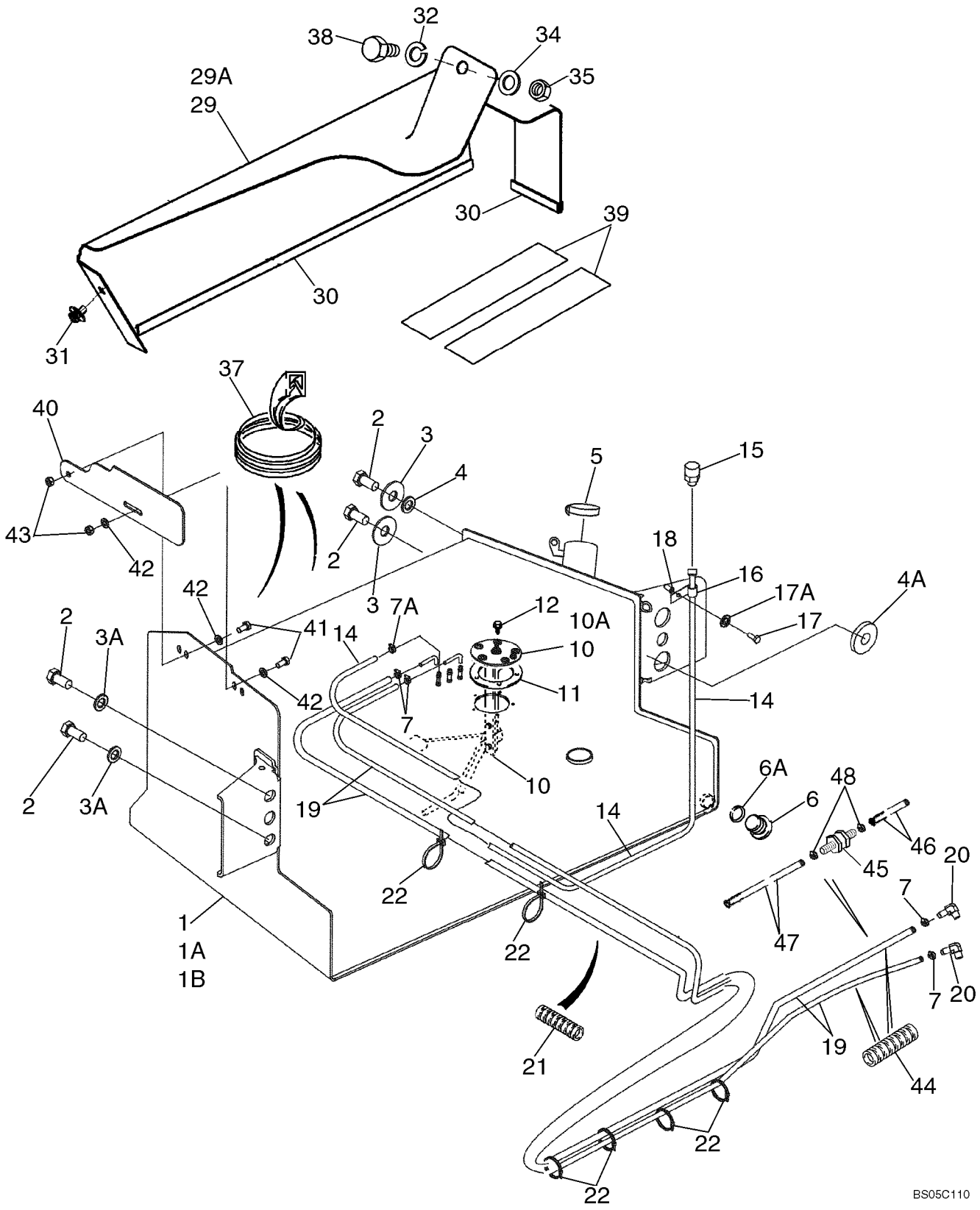

http://www.minnparbackhoeparts.com/

TUYAUTERIE D'ESSENCE, RESERVOIR - FILTRE À CARBURANT EN LIGNE

REF	FN	PART NUMBER	YR/SN	QTY	DESCRIPTION
19		87444942		1-2	FLEXIBLE 3/8 ID x 5/8 OD x 1650 mm (65 in); To Fuel Lift Pump and Injector Pump; Two Used On Models Without In-Line Fuel Check Valve
20		87414560		2	RACCORD ELBOW, 90 deg, Includes O-Ring
21		87434880		1	PROTECTEUR DE TUYAU 450 mm (17-3/4 in)
22		L18337		X	SANGLE 15 in
29		189602A3		1	COUVERCLE Mounted Above Fuel Reservoir; Models With Two Spool Loader Valve
29A		188009A3		1	COUVERCLE Mounted Above Fuel Reservoir, Models With Three Spool Loader Valve
30		191046A1		1	BANDE, ENJOLIVEUR Trim, 650 mm (25-5/8 in), Cut From A165860; Apply 65 mm (2-9/16 in) of Trim to Front Lower Edge and 575 mm (22-11/16 in) of Trim to Outside Lower Edge of Cover
31		307577A1		1	BOULON Special, M8 x 20
32		892-11010		1	RONDELLE FREIN M10
34		895-11010		1	RONDELLE 11 x 21 x 2 mm
35		829-1410		1	ECROU M10; 10.9
37		D40442		1	MOULURE Trim, 305 mm (12 in), Cut From F42827; If Used
38		814-10045		1	BOULON M10 x 45; Models With Three Spool Loader Valve
38		614-10020		1	VIS M10 x 20; Models With Two Spool Loader Valve
39		D80270		2	RUBAN 635 mm (25 in), 31 or 42 Gallon Tank
39		307348A1		2	RUBAN 700 mm (27-9/16 in), 40 Gallon Tank
40		397548A4		1	PLAQUE Mud
41		614-10020		2	VIS M10 x 20
42		895-11010		3	RONDELLE 11 x 21 x 2 mm
43		829-1410		2	ECROU M10; 10.9
44		191704A1		2	GAINE Hose Sleeve
45		87454053		1	SOUPAPE ANTI RETOUR Fuel Line; Install With Flow Arrow Pointed Toward Tank; If Used
46		87454055		1	FLEXIBLE 3/8 ID x 5/8 OD x 5-29/32; Fuel Return to Check Valve; If Used
47		87454054		1	FLEXIBLE 3/8 ID x 5/8 OD x 59-1/16; Check Valve to Tank; If Used
48		214-1706		2	COLLIER If Used

http://www.minnparbackhoeparts.com/

COMMANDES - MANETTE DES GAZ

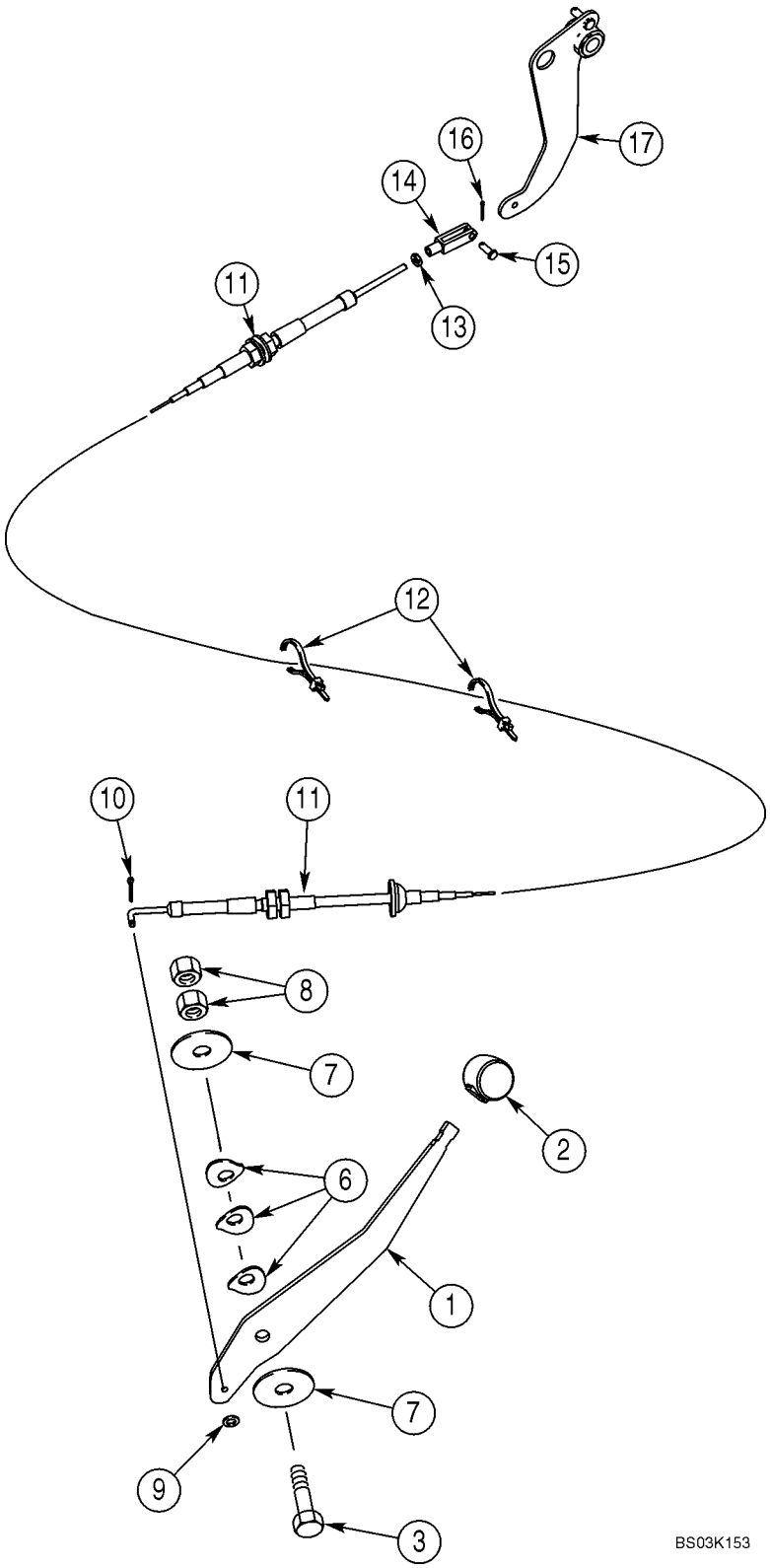

http://www.minnparbackhoeparts.com/

COMMANDES - MANETTE DES GAZ

REF	FN	PART NUMBER	YR/SN	QTY	DESCRIPTION
1		395189A2		1	LEVIER
2		A177435		1	BOULE Lever
3		514-847		1	BOULON M12 x 50
6		D148962		3	RONDELLE
7		496-81018		2	RONDELLE 33/64 x 2 x 1/8
8		825-11412		2	ECROU M12
9		495-31022		1	RONDELLE 7/32 x 1/2 x 3/64
10		432-48		1	GOUPILLE 1/16" x 1/2"
11		87330322		1	CABLE Replaces 350014A3
12		L18337		4	SANGLE 15 in, Nylon, Retaining
13		225-14210		1	ECROU No. 10 NF
14		213-123		1	FOURCHETTE No. 10 NF
15		427-3058		1	AXE DE CHAPE 3/16 x 9/16
16		432-48		1	GOUPILLE 1/16" x 1/2"
17		378957A3		1	LEVIER (ASSEMBLE) Models Without Powershift Transmission
17A		380485A3		1	LEVIER (ASSEMBLE) Models With Powershift Transmission, Not Illustrated

http://www.minnparbackhoeparts.com/

COMMANDES - PÉDALE D'ACCÉLÉRATION

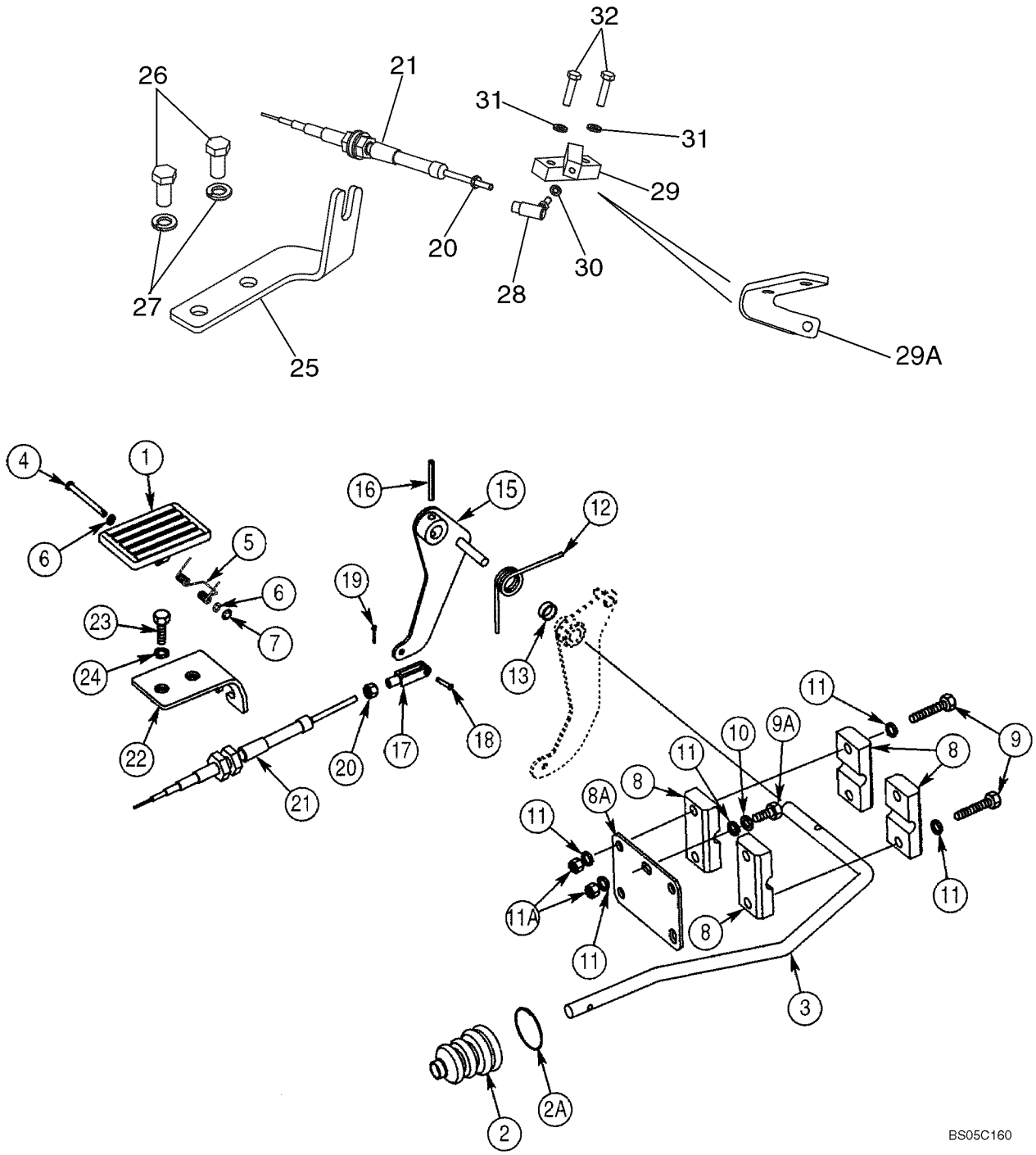

http://www.minnparbackhoeparts.com/

COMMANDES - PÉDALE D'ACCÉLÉRATION

REF	FN	PART NUMBER	YR/SN	QTY	DESCRIPTION
1		282242A1		1	PEDALE Accelerator, Plastic
2		132931A1		1	SOUFFLET Boot, Accelerator Pedal Rod
2A		189109A1		1	RESSORT Retainer
3		378960A1		1	TRINGLE
4		322860A1		1	AXE, GROS
5		256776A1		1	RESSORT
6		895-11005		2	RONDELLE 5,5 x 10 x 1 mm
7		103-1518		1	ANNEAU-D'ARRET No. 18
8		D124857		4	COLLIER Block
8A		378955A1		1	PLAQUE
9		604-8050		4	BOULON Locking, M8 x 50
9A		614-8020		1	BOULON M8 x 20
10		892-11008		1	RONDELLE M8
11		895-11008		7	RONDELLE 9 x 17 x 1,6 mm
11A		829-1408		2	ECROU M8; 10
12		380483A2		1	RESSORT
13		378958A1		1	BAGUE D'EPAISSEUR
15		378956A3		1	LEVIER (ASSEMBLE) Models Without Powershift Transmission
15A		380484A3		1	LEVIER (ASSEMBLE) Models With Powershift Transmission, Not Illustrated
16		838-3640		1	AXE 6 x 40 mm
17		213-123		1	FOURCHETTE No. 10 NF
18		427-3058		1	AXE DE CHAPE 3/16 x 9/16
19		432-48		1	GOUPILLE 1/16" x 1/2"
20		225-14210		2-3	ECROU No. 10 NF
21		87330325		1	CABLE To Injection Pump; Replaces 380021A1
22		397065A2		1	PATTE FIXATION Models Without Powershift Transmission
22A		397158A2		1	PATTE FIXATION Models With Powershift Transmission, Not Illustrated
23		614-10035		2	VIS M10 x 35
24		892-11010		2	RONDELLE FREIN M10
25		87432547		1	PATTE FIXATION With Holes; If Used
25		87446095		1	PATTE FIXATION With Slots; Not Illustrated; If Used
26		627-12025		2	VIS M12 x 25
27		896-15012		2	RONDELLE 13,5 x 28 x 4 mm

http://www.minnparbackhoeparts.com/

COMMANDES - PÉDALE D'ACCÉLÉRATION

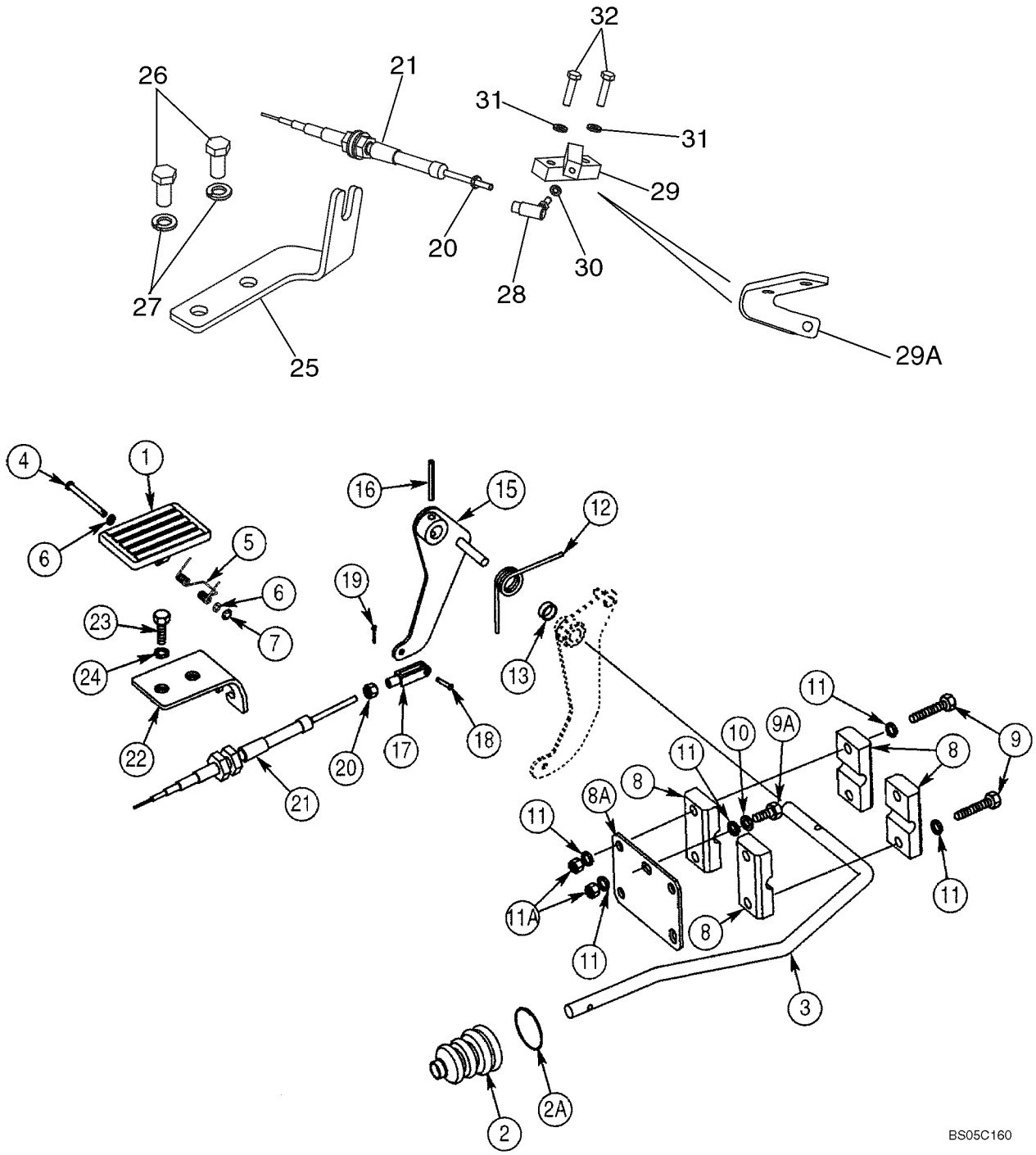

http://www.minnparbackhoeparts.com/

COMMANDES - PÉDALE D'ACCÉLÉRATION

REF	FN	PART NUMBER	YR/SN	QTY	DESCRIPTION
28		87421807		1	JOINT-CARDAN ASS.
29		87421471		1	BLOC (ASSEMBLE) No Longer Available, Order 87452823 Bracket, Ref 29A
29A		87452823		1	BLOC (ASSEMBLE) BRACKET, Throttle Cable
30		892-11005		1	RONDELLE FREIN M5
31		892-11006		2	RONDELLE FREIN M6
32		614-6025		2	BOULON M6 x 25; Used With 87421471 Block, Ref 29; If Used
32		614-6016		2	BOULON M6 x 15; Used With 87452823 Bracket, Ref 29A; If Used

http://www.minnparbackhoeparts.com/

POMPE DINJECTION

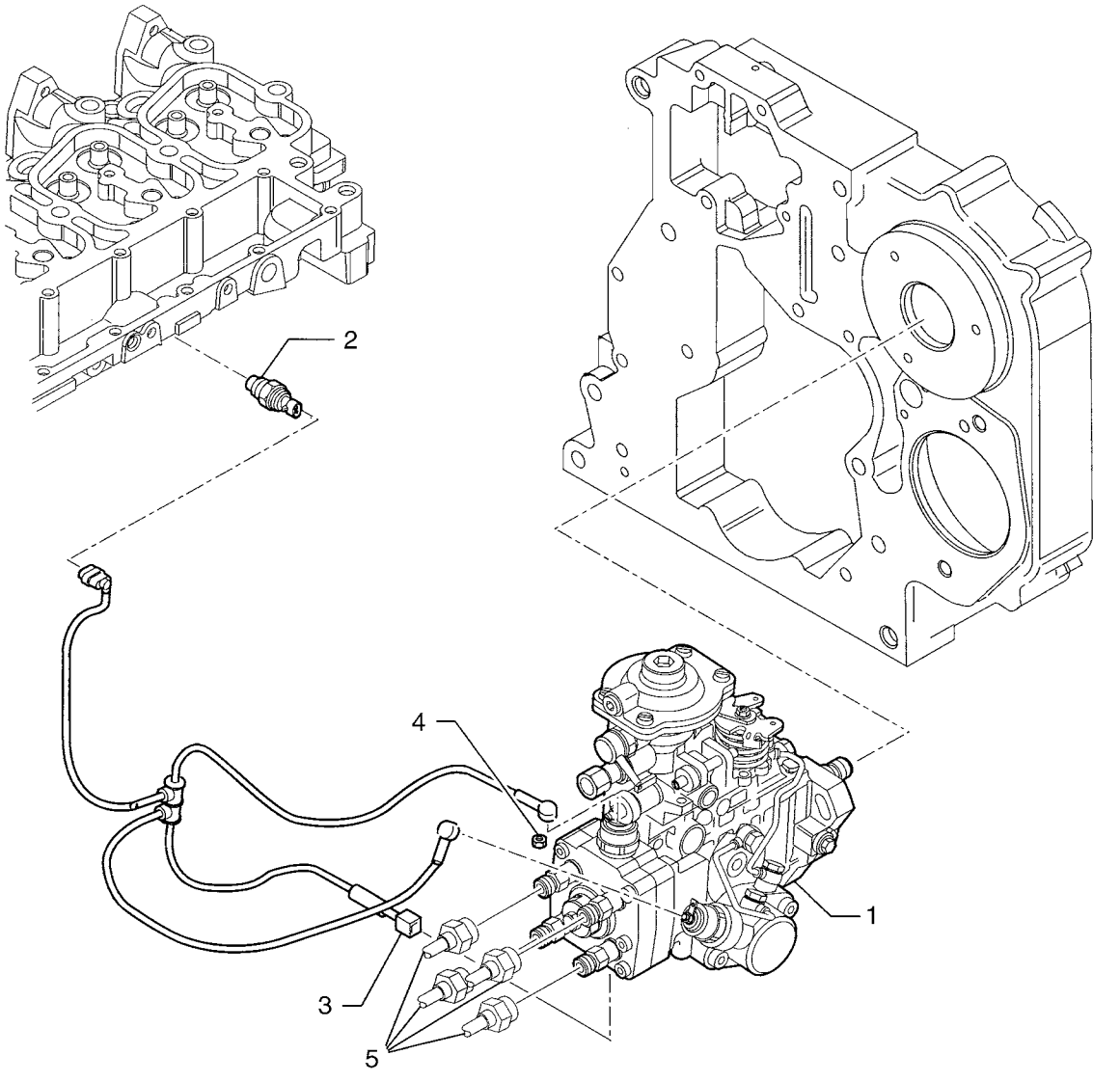

http://www.minnparbackhoeparts.com/

POMPE DINJECTION

REF	FN	PART NUMBER	YR/SN	QTY	DESCRIPTION
1		2852046		1	POMPE D'ALIMENTATION - ASSY; Injection Pump; Includes 2852741 Fuel Shut-Off Solenoid
		2852741		1	SOLENOIDE Fuel Shut-Off
2		2852087		1	TRANSMETTEUR ASSY Temperature
3		2852088		1	FIL DE CONNECTION
4		2852089		2	ECROU Lock, M5
5		REF		1	NOTICE TUBE; See Figure 03-07 for Tube Kit

http://www.minnparbackhoeparts.com/

SYSTÈME D'INJECTION

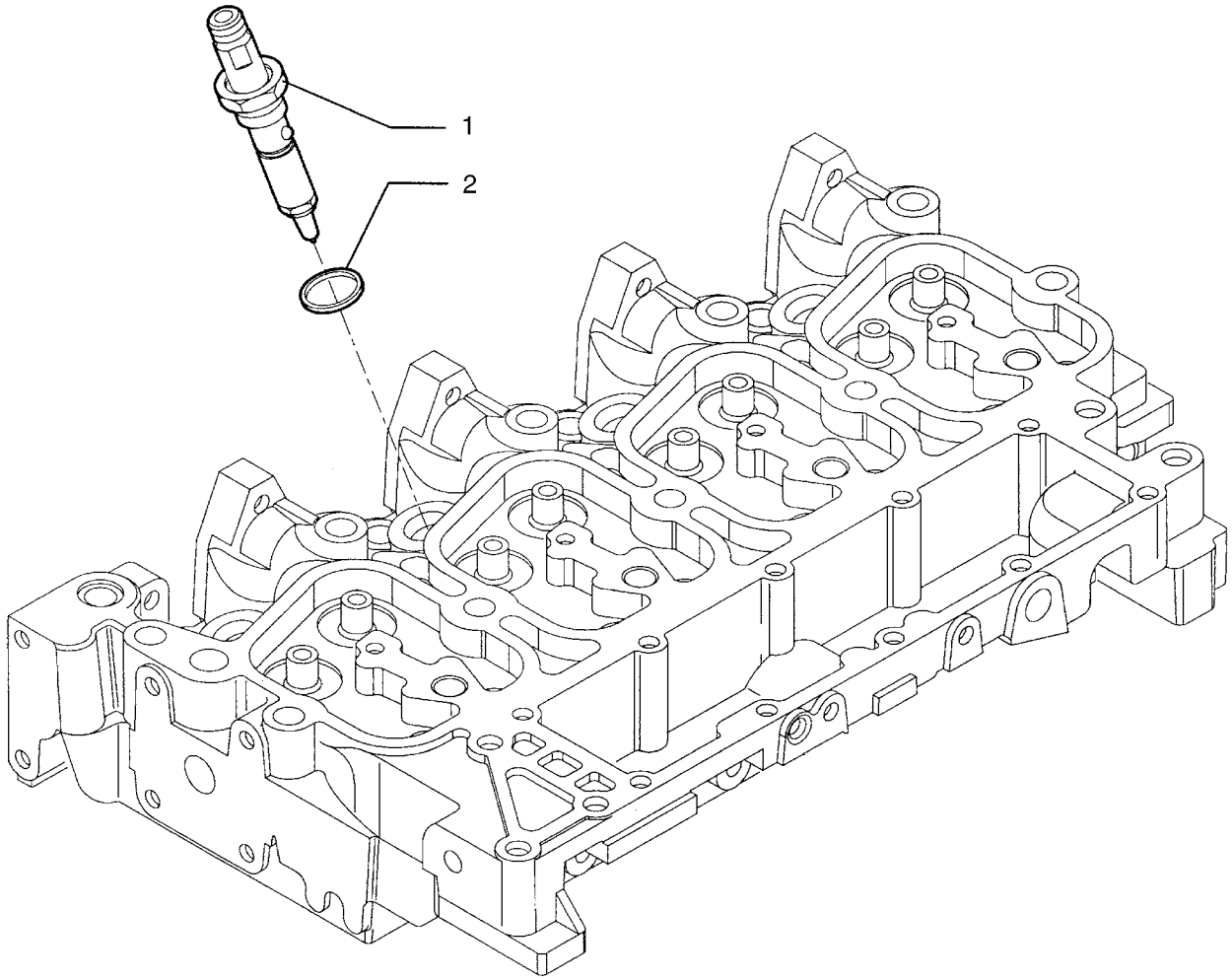

BS04A045

http://www.minnparbackhoeparts.com/

SYSTÈME D'INJECTION

REF	FN	PART NUMBER	YR/SN	QTY	DESCRIPTION
1		2852869		4	INJECTEUR Injector
2		4895297		4	JOINT Seal

http://www.minnparbackhoeparts.com/

SYSTÈME D'INJECTION

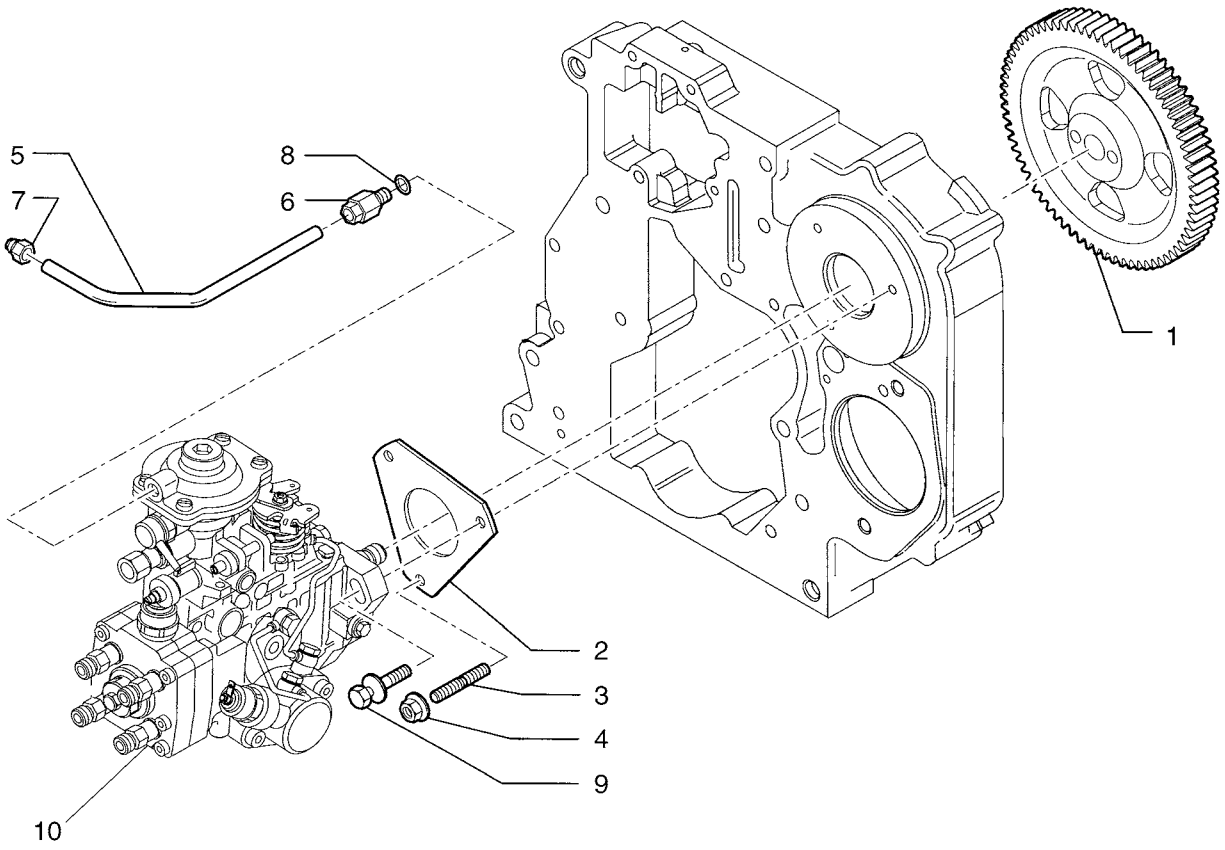

BS04A046

http://www.minnparbackhoeparts.com/

SYSTÈME D'INJECTION

REF	FN	PART NUMBER	YR/SN	QTY	DESCRIPTION
1		4894774		1	PIGNON CONDUIT
2		2852885		1	JOINT
3		2852294		2-3	GOUJON M8 x 30
4		4899003		2-3	ECROU Flange, M8
5		2852059		1	TUYAU RIGIDE
6		4893518		1	RACCORD 8 x 1
7		4896770		1	RACCORD 10 x 1
8		2852057		1	JOINT
9		2852091		1	VIS M8 x 31; No Longer Used, Order Ref 3 Stud
10		REF		1	NOTICE INJECTION PUMP; See Figure 03-04

http://www.minnparbackhoeparts.com/

SYSTÈME D'INJECTION

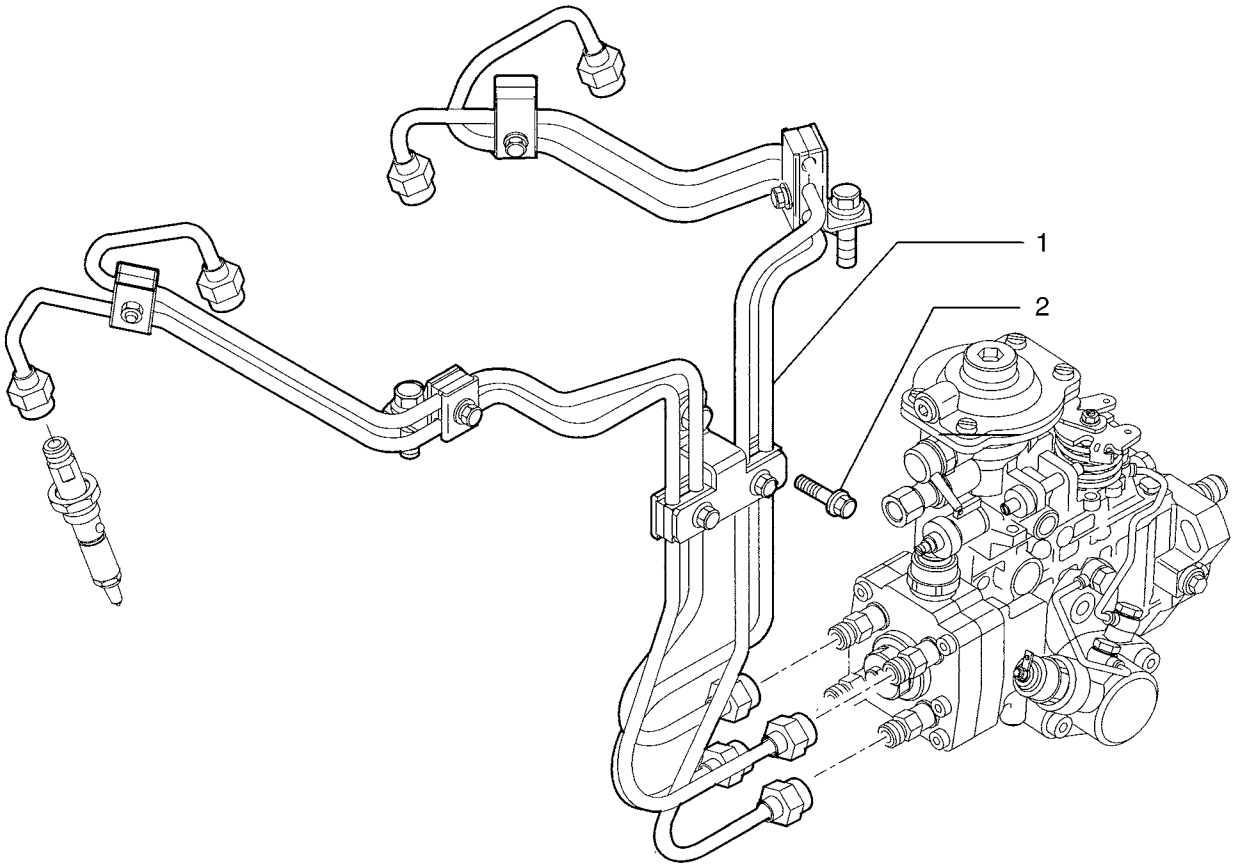

BS04A047

http://www.minnparbackhoeparts.com/

SYSTÈME D'INJECTION

REF	FN	PART NUMBER	YR/SN	QTY	DESCRIPTION
1		2852075		1	KIT - ASSY; Fuel Injection Tube
2		4899068		1	VIS Flange, M8 x 16

http://www.minnparbackhoeparts.com/

FILTRE COMBUSTIBLE

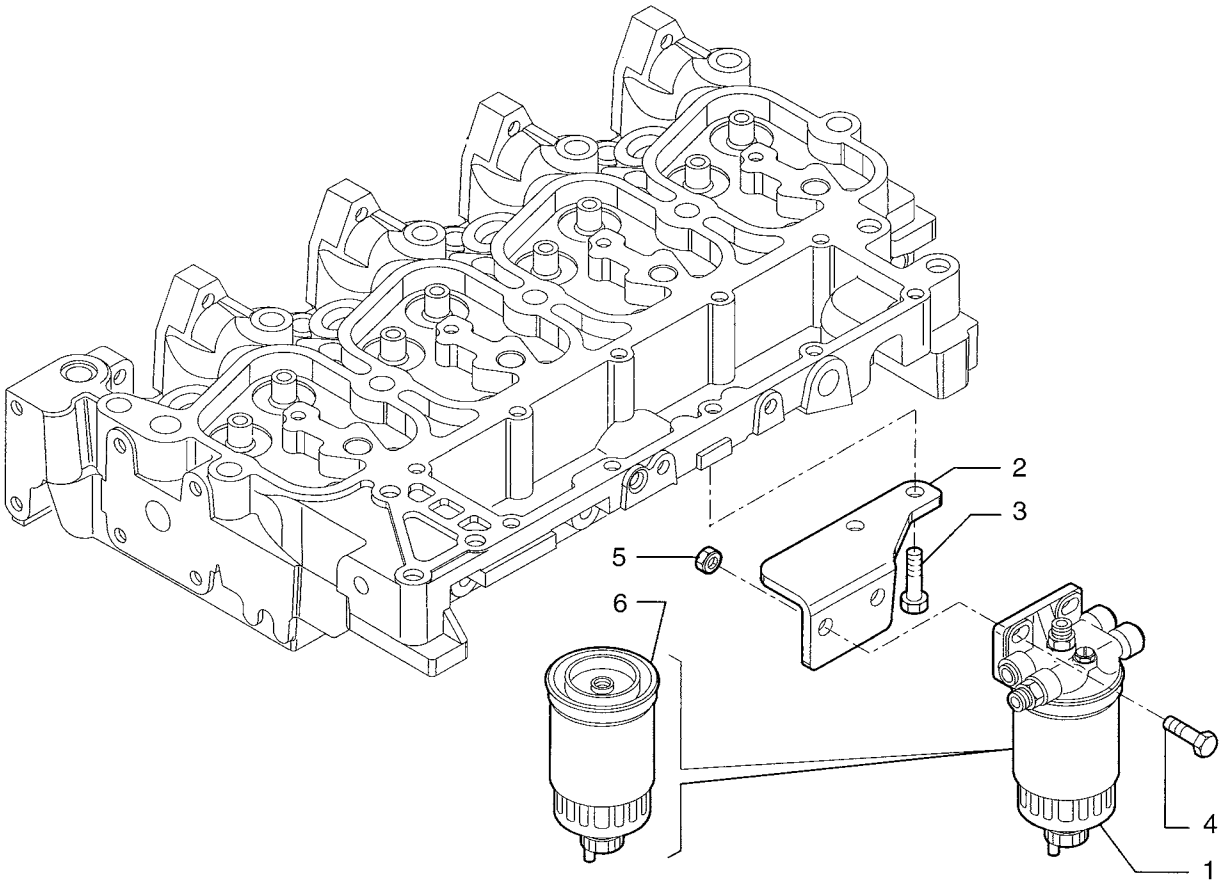

http://www.minnparbackhoeparts.com/

FILTRE COMBUSTIBLE

REF	FN	PART NUMBER	YR/SN	QTY	DESCRIPTION
1		2852098		1	FILTRE ASSY - ASSY
2		2852099		1	SUPPORT
3		4899068		2	VIS Flange, M8 x 16
4		4899093		2	VIS Flange, M10 x 30
5		4895166		2	ECROU Flange, M10
6		87803194		1	FILTRE A COMBUSTIBLE

http://www.minnparbackhoeparts.com/

POMPE D'ALIMENTATION

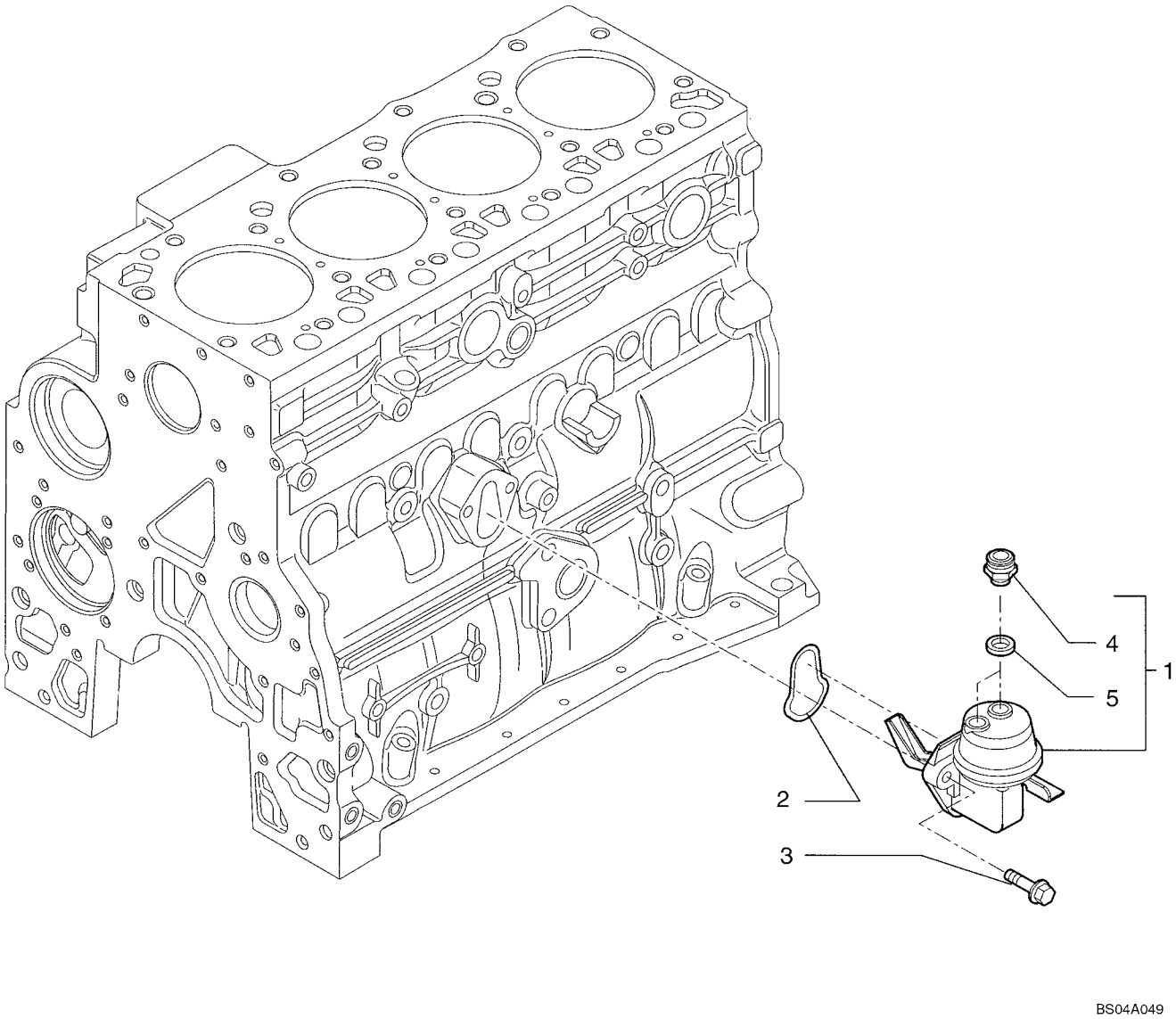

http://www.minnparbackhoeparts.com/

POMPE D'ALIMENTATION

REF	FN	PART NUMBER	YR/SN	QTY	DESCRIPTION
1		2830266		1	POMPE D'ALIMENTATION - ASSY, Fuel Transfer, Incl. Ref 4, 5
2		2830156		1	JOINT
3		4899031		2	VIS Flange, M8 x 25
4		4890964		2	RACCORD
5		4894721		2	JOINT

http://www.minnparbackhoeparts.com/

SYSTÈME D'INJECTION

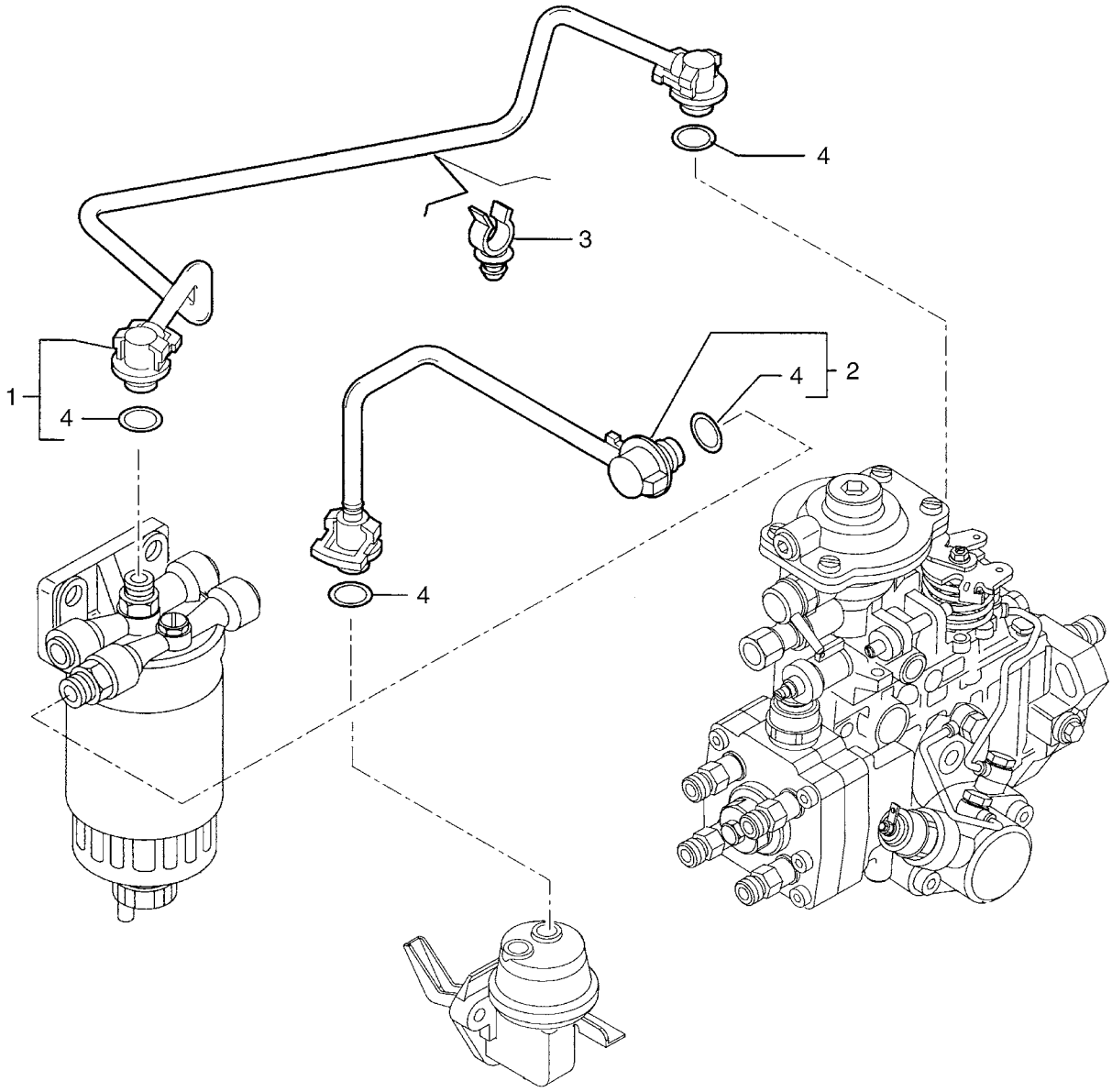

http://www.minnparbackhoeparts.com/

SYSTÈME D'INJECTION

REF	FN	PART NUMBER	YR/SN	QTY	DESCRIPTION
1		2852105		1	TUYAUTERIE - ASSY; Tube; Incl. Ref 4
2		2852594		1	TUYAU RIGIDE - ASSY; Incl. Ref 4
3		2852111		1	BRIDE
4		4894095		2	JOINT THORIQUE

http://www.minnparbackhoeparts.com/

SYSTÈME D'INJECTION

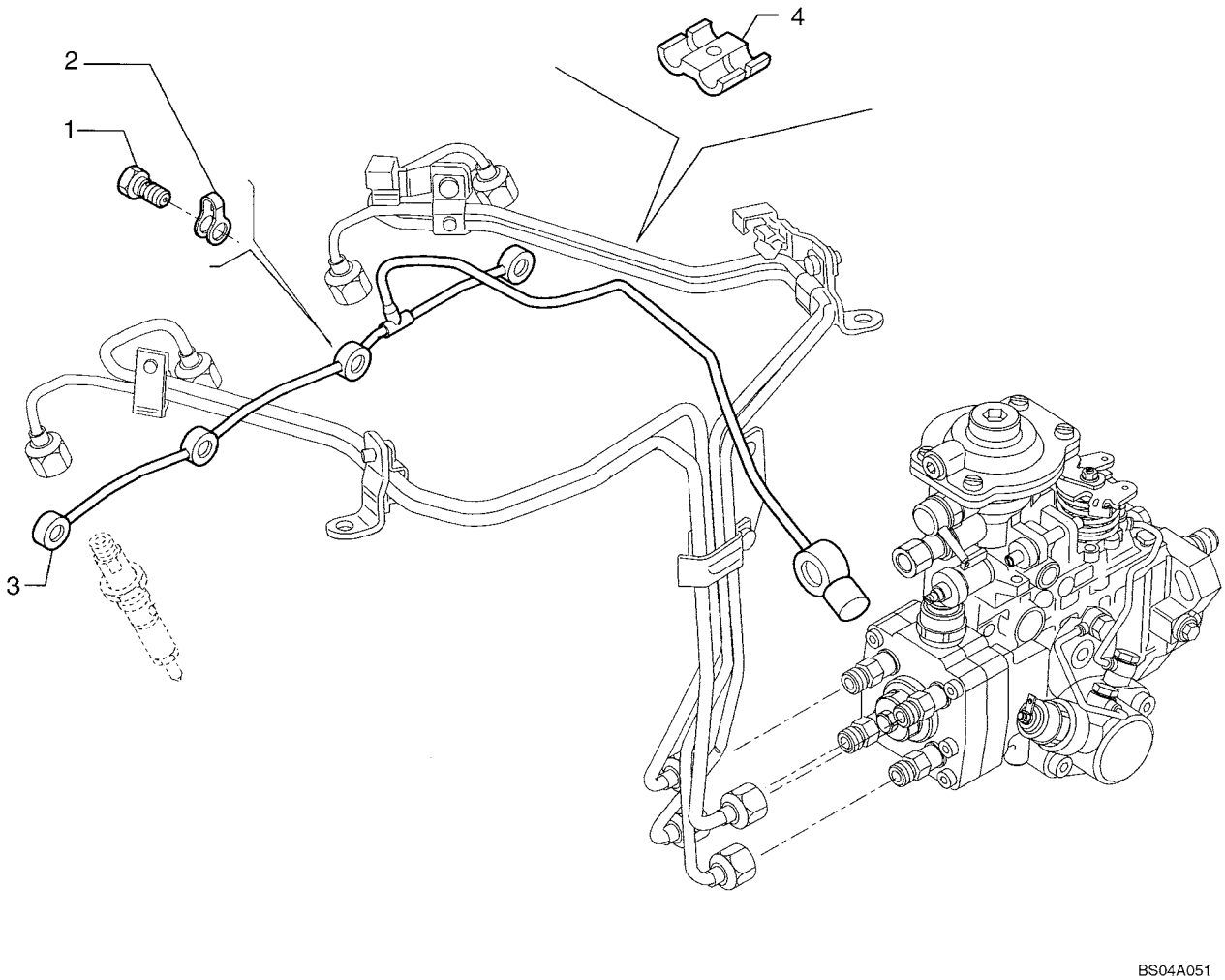

http://www.minnparbackhoeparts.com/

SYSTÈME D'INJECTION

REF	FN	PART NUMBER	YR/SN	QTY	DESCRIPTION
1		4895244		4	VIS CREUSE
2		4895305		4	JOINT
3		2852065		1	TUYAU RIGIDE
4		2852521		1	ATTACHE A RESSORT

http://www.minnparbackhoeparts.com/

NOTES

http://www.minnparbackhoeparts.com/

SECTION INDEX

04-01	DÉMARREUR
04-02	ALTERNATEUR
04-03	SUPPORT DU DÉMARREUR - MONTAGE DE L''ALTERNATEUR
04-04	FAISCEAU, MOTEUR - MONTAGE ET CONNEXIONS
04-05	BATTERIE CABLES (MODÈLES SANS DÉMARRAGE PAR TEMPS FROID)
04-06	BATTERIE DOUBLE - DEMARRAGE PAR TEMPS FROID
04-06A	ÉLÉMENT CHAUFFANT DE CALANDRE POUR DÉMARRAGE À FROID
04-07	FAISCEAU, TABLEAU DE BORD AVANT - CONTACTEURS
04-08	FAISCEAU, TABLEAU DE BORD AVANT - SUPPORT
04-09	SYSTÈME ÉLECTRIQUE - TRANSMISSION, AUTOMATIQUE
04-10	FAISCEAU, TABLEAU DE BORD LATÉRAL - CONTACTEURS
04-11	TABLEAU DE BORD, AVANT - COUVERCLES
04-12	TABLEAU DE BORD, LATÉRAL - COUVERCLES (CÔTÉ DROIT)
04-13	APPAREILS DE CONTROLE
04-14	SYSTÈME ÉLECTRIQUE - ECLAIRAGE, TOIT ROPS
04-15	SYSTÈME ÉLECTRIQUE - ECLAIRAGE, CABINE ROPS
04-16	ÉCLAIRAGE (MODÈLES AVEC STRUCTURE ROPS)
04-17	AVERTISSEUR SONORE - ALARME DE RECUL
04-18	GYROPHARE (MODÈLES DE CABINES OU DE TOIT)
04-19	ANTENNE, RADIO - FAISCEAU, RADIO
04-20	SYSTÈME ÉLECTRIQUE - CIRCUIT HYDRAULIQUE AUXILIAIRE POUR LA PELLE RETRO
04-21	SYSTÈME ÉLECTRIQUE - CIRCUIT HYDRAULIQUE AUXILIAIRE POUR LA PELLE RETRO, AVEC DE COMMANDE PILOTE

http://www.minnparbackhoeparts.com/

04-01		p1	08/04

DÉMARREUR

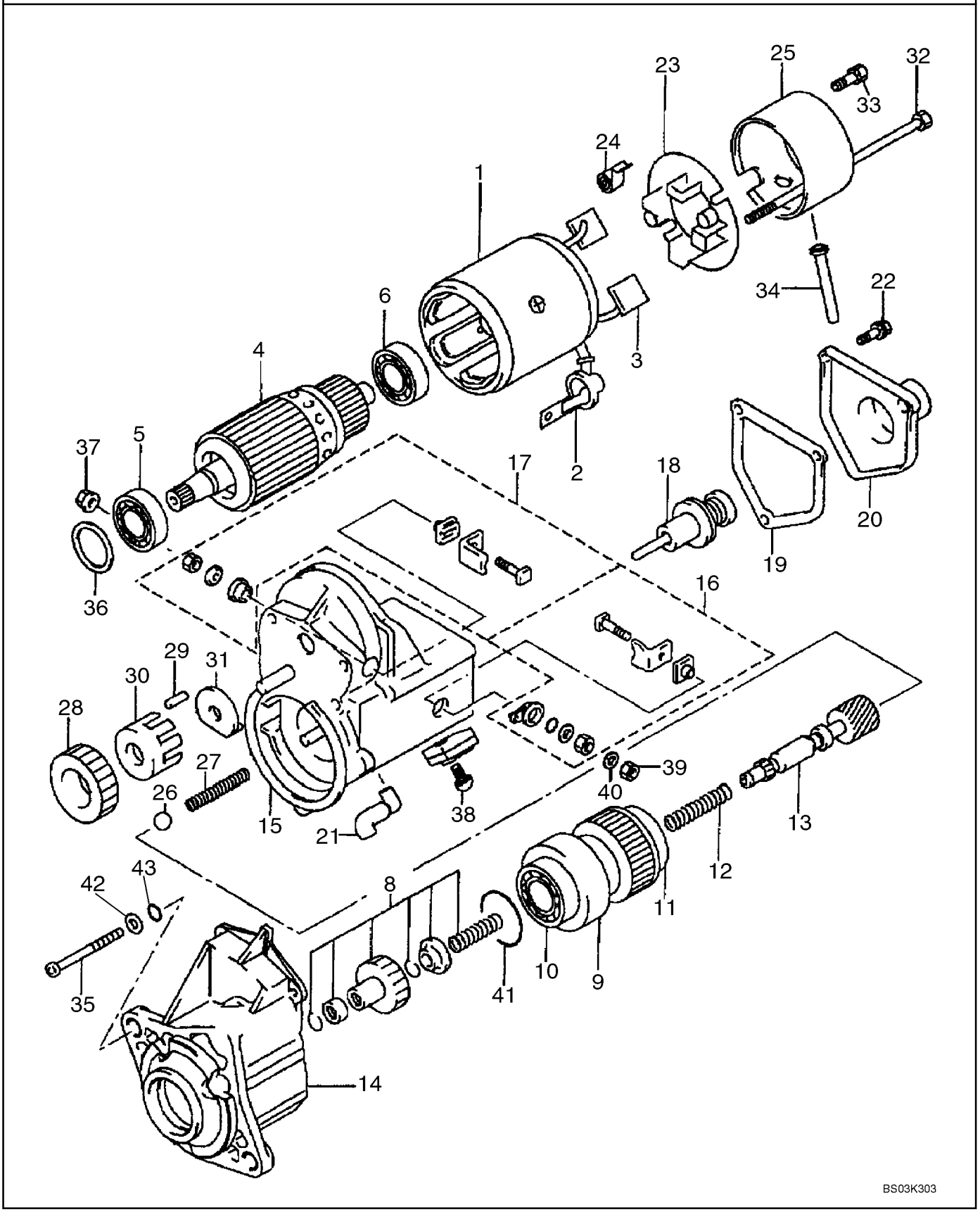

http://www.minnparbackhoeparts.com/

DÉMARREUR

REF	FN	PART NUMBER	YR/SN	QTY	DESCRIPTION
		86992395		1	DEMARREUR 12 V, 2.7 kw; Incl. Ref 1 - 43
1		87438992		1	MACHOIRE Housing, Yoke; Incl. Ref 2, 3
2		87438993		1	COUVERCLE (ASSEMBLE) Cover/Ring
3		87438925		2	BALAI Brush Kit
4		87438926		1	INDUIT Armature; Incl. Ref 5, 6
5		87438927		1	ROULEMENT A BILLES Ball Bearing, 35 mm OD
6		87438928		1	ROULEMENT A BILLES Ball Bearing, 30 mm OD
		87438994		1	EMBRAYAGE ASSEMBLE Clutch; Incl. Ref 8 - 13
8		87438929		1	KIT REPAR.DEMARREUR Clutch Pinion Kit
9		87438930		1	KIT REPAR.DEMARREUR Clutch Assembly; Incl. Ref 10, 11
10		87438931		1	ROULEMENT A BILLES Ball Bearing, 47 mm OD
11		87438932		1	ROULEMENT A BILLES Ball Bearing, 47 mm OD
12		87438933		1	RESSORT DE COMPRESS. Compression Spring
13		87438935		1	ARBRE Clutch Shaft
14		87438937		1	CARTER Housing
15		87438940		1	INTERRUPTEUR COMPLET Magnetic Switch Assembly; Incl. Ref 16 - 22
16		87438941		1	KIT REPAR.DEMARREUR Kit, Terminal M
17		87438942		1	KIT REPAR.DEMARREUR Kit, Terminal C
18		87438944		1	PLONGEUR, PISTON ASS Plunger
19		87438946		1	JOINT Solenoid Switch Gasket
20		87438948		1	COUVERCLE Solenoid Cover
21		87438995		1	BAGUE Bushing, Drain
22		87438950		3	BOULON Bolt With Washer; M5 x 14
23		87438996		1	SUPPORT Brush Holder; Incl. Ref 24
24		87438997		4	RESSORT Brush Tension Spring
25		87438999		1	CHASSIS Housing
26		87439000		1	BILLE Ball
27		87439001		1	RESSORT DE COMPRESS. Compression Spring
28		87439002		1	PIGNON Pinion Gear
29		87439003		5	ROULEAU Roller, Clutch
30		87439004		1	RETENEUR Retainer
31		87439005		1	RETENEUR Snap Retainer
32		87438951		2	BOULON M6 x 182 Bolt
33		87439006		2	VIS Bolt With Washer; M5 x 9.4
34		87439007		1	BAGUE Bushing, Drain

http://www.minnparbackhoeparts.com/

04-01		p2	08/04

DÉMARREUR

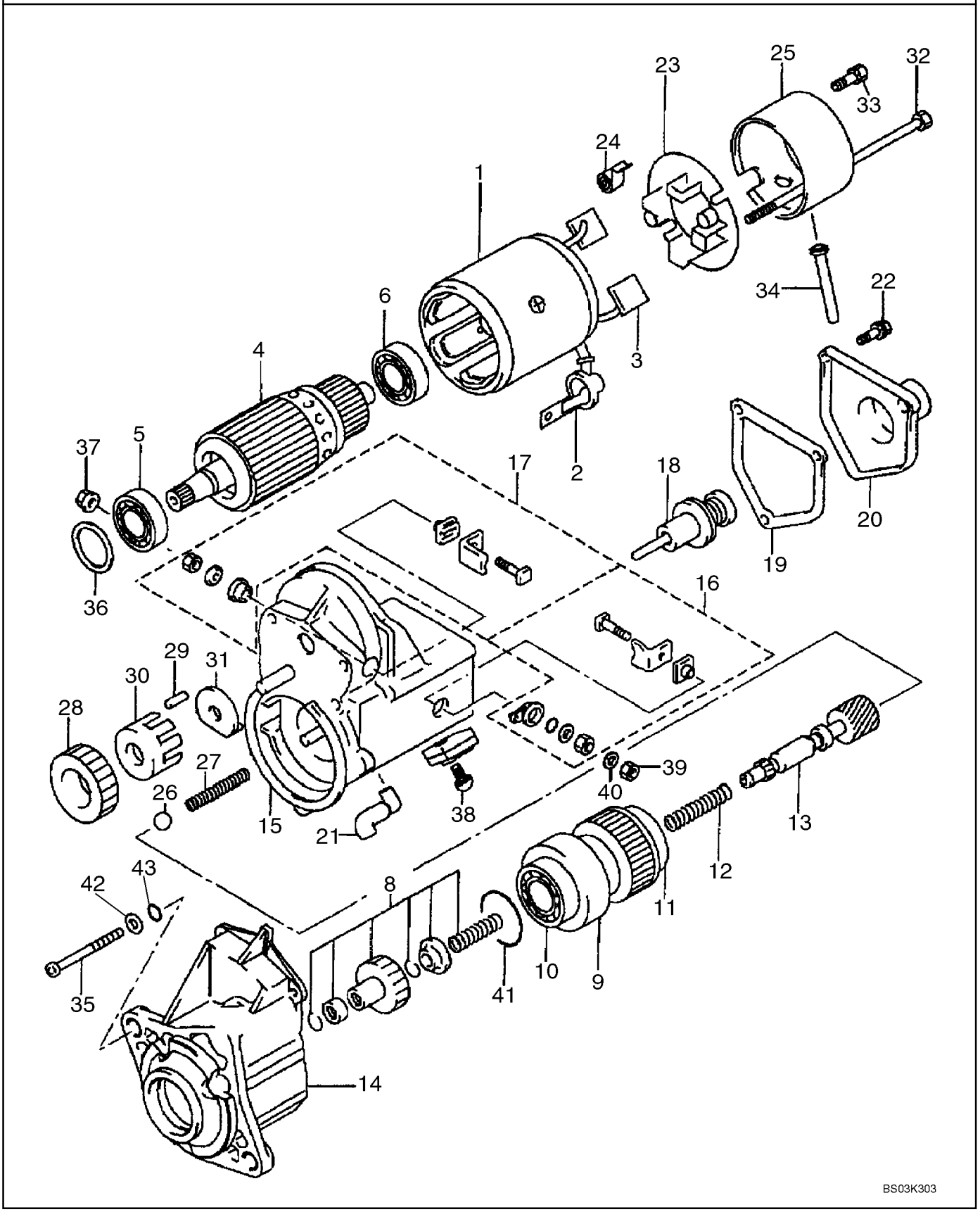

http://www.minnparbackhoeparts.com/

DÉMARREUR

REF	FN	PART NUMBER	YR/SN	QTY	DESCRIPTION
35		87439008		3	VIS Adapter Screw, M6 x 70
36		87438954		1	RONDELLE Felt Washer
37		87439009		1	ECROU M10 Nut
38		87438956		1	BOULON M5 x 10 Bolt
39		100016		1	ECROU M10
40		892-11010		1	RONDELLE FREIN Lock, M10
41		87439010		1	JOINT Seal
42		87439061		3	RONDELLE Washer, 9/32 x 1/2 x 3/64
43		87439011		3	JOINT THORIQUE O-Ring, 4.8 ID

http://www.minnparbackhoeparts.com/

04-02		p1	03/04

ALTERNATEUR

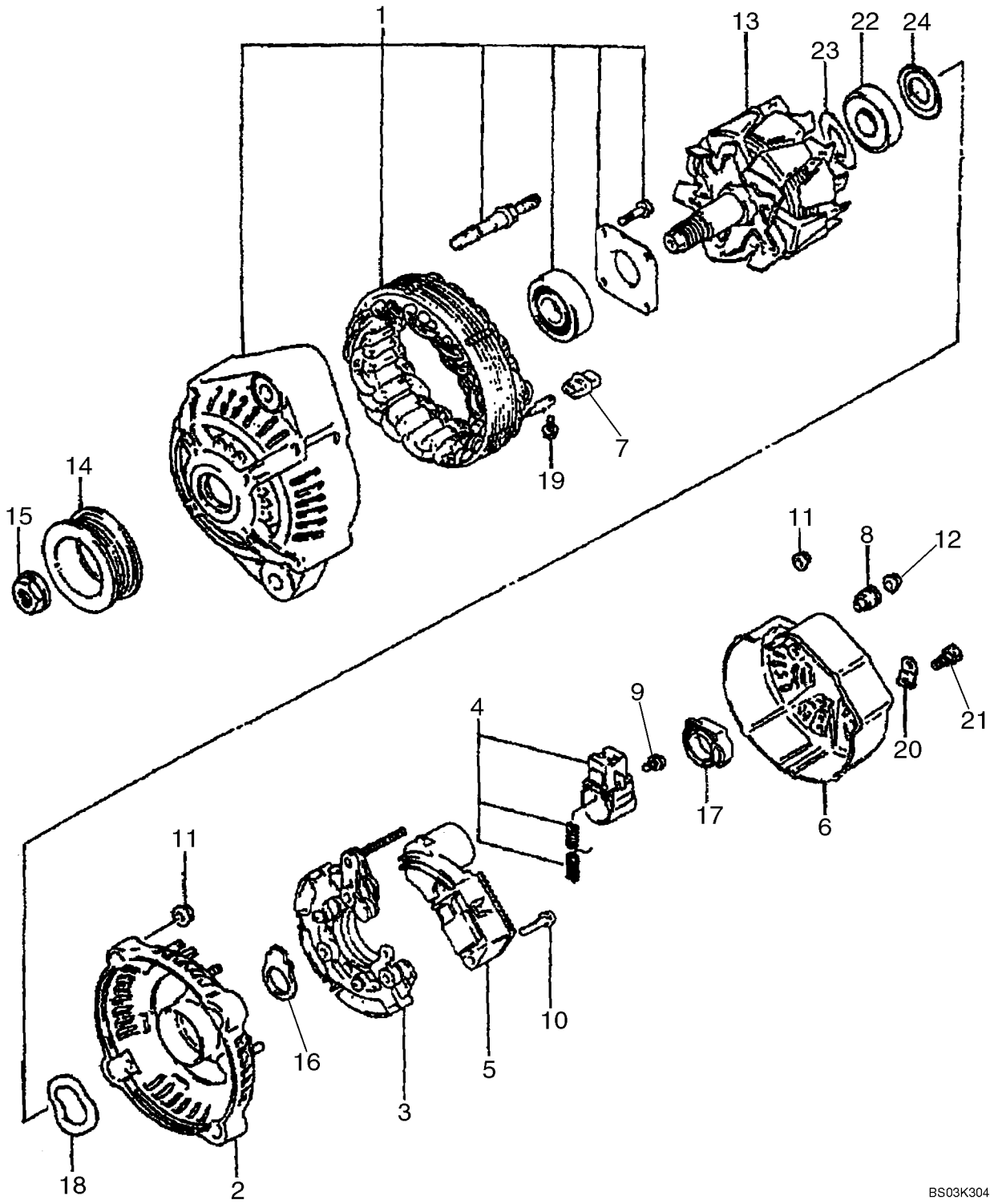

http://www.minnparbackhoeparts.com/

ALTERNATEUR

REF	FN	PART NUMBER	YR/SN	QTY	DESCRIPTION
		87422777		1	ALTERNATEUR 12V, 90 amp; Incl. Ref 1 - 24
1		87438960		1	BATI (ASSEMBLE) Housing; Drive End, Includes Stator
2		87438963		1	CHASSIS Housing
3		87438965		1	SUPPORT Rectifier
4		87438967		1	SUPPORT Brush and Holder
5		87438969		1	REGULATEUR TENSION Regulator
6		87438970		1	COUVERCLE ARRIERE Cover
7		87438971		4	BAGUE Insulation Bushing
8		87438972		1	BAGUE Insulation Bushing
9		87438973		3	VIS Screw
10		87438974		2	VIS Bolt With Washer
11		87438975		7	ECROU Nut
12		87438976		1	ECROU Nut
13		87438977		1	ROTOR (ASSEMBLE) Rotor
14		87438978		1	POULIE Pulley
15		87438979		1	ECROU Nut
16		87438980		1	JOINT ANNULAIRE Seal
17		87438981		1	JOINT ANNULAIRE Seal
18		87438982		1	RONDELLE Wave Washer
19		87438983		4	VIS Bolt With Washer
20		87438984		1	PLAQUE Terminal Plate
21		87438985		1	VIS Screw
22		87438986		1	ROULEMENT A BILLES Ball Bearing
23		87438987		1	COUVERTURE Cover, Bearing
24		87438989		1	COUVERTURE Cover, Bearing

http://www.minnparbackhoeparts.com/

SUPPORT DU DÉMARREUR - MONTAGE DE L'ALTERNATEUR

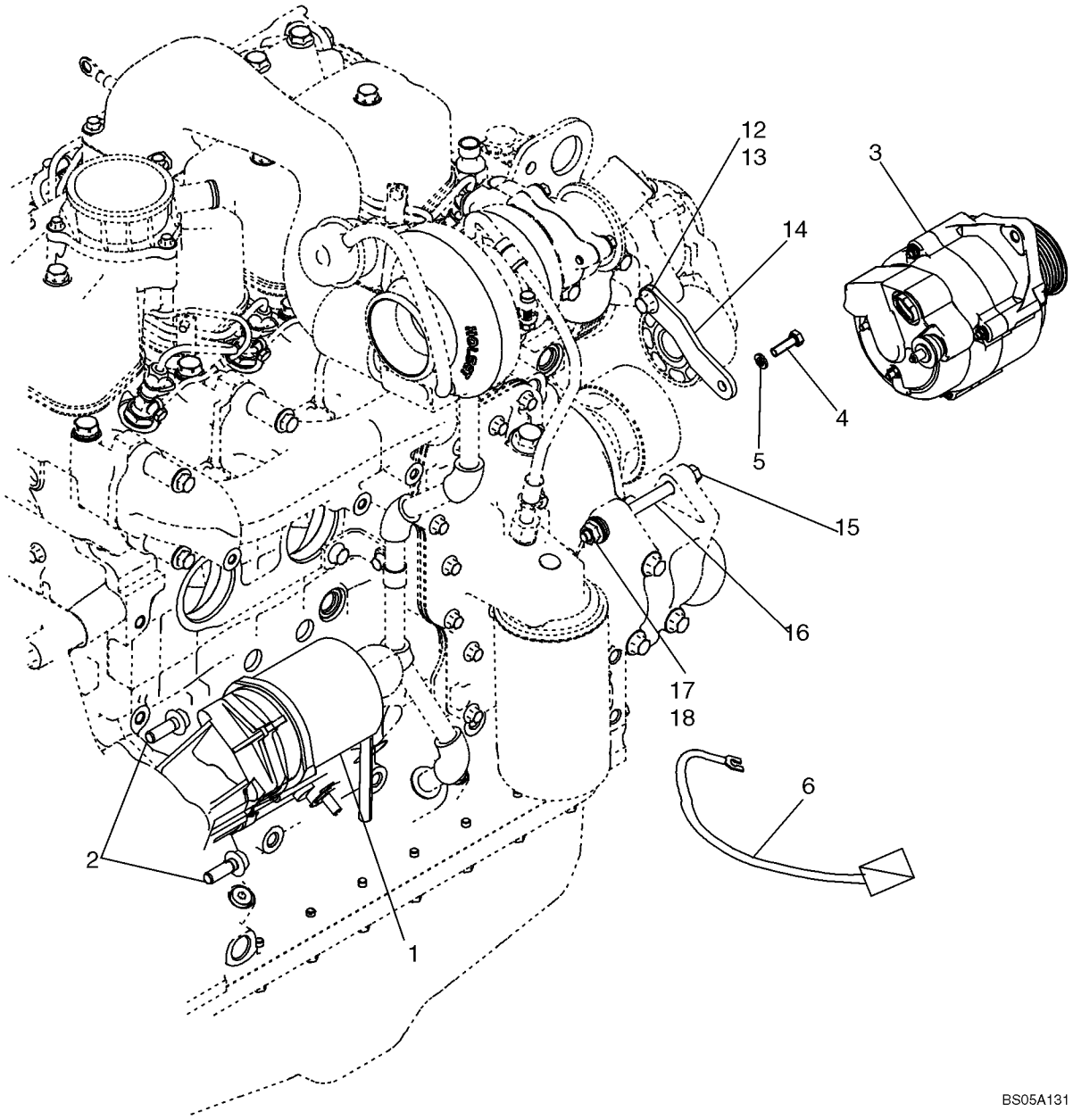

http://www.minnparbackhoeparts.com/

SUPPORT DU DÉMARREUR - MONTAGE DE L'ALTERNATEUR

REF	FN	PART NUMBER	YR/SN	QTY	DESCRIPTION
1		86992395		1	DEMARREUR See Figure 04-01
2		844-10035		2	VIS M10 x 35
3		87422777		1	ALTERNATEUR See Figure 04-02; Mounting Hardware Included With 86990710 Engine Assembly; See Below For Alternator Mounting Used With 87437203 Engine
4		614-8025		1	BOULON M8 x 25
5		892-11008		1	RONDELLE Lock, M8
6		87433401		1	CABLE ELECTRIQUE Starter Solenoid Jumper Cable
		REF			NOTICE ALTERNATOR MOUNTING FOR 87437203 ENGINE
10		614-8025		1	BOULON M8 x 25
11		892-11008		1	RONDELLE Lock, M8
12		614-10020		1	VIS M10 x 20
13		896-11010		1	RONDELLE Flat, M10
14		87452258		1	SANGLE DE FIXATION
15		827-10130		1	VIS M10 x 130
16		87452257		1	ENTRETOISE
17		896-11010		2	RONDELLE Flat, M10
18		832-10410		1	ECROU Lock, M10

http://www.minnparbackhoeparts.com/

FAISCEAU, MOTEUR - MONTAGE ET CONNEXIONS

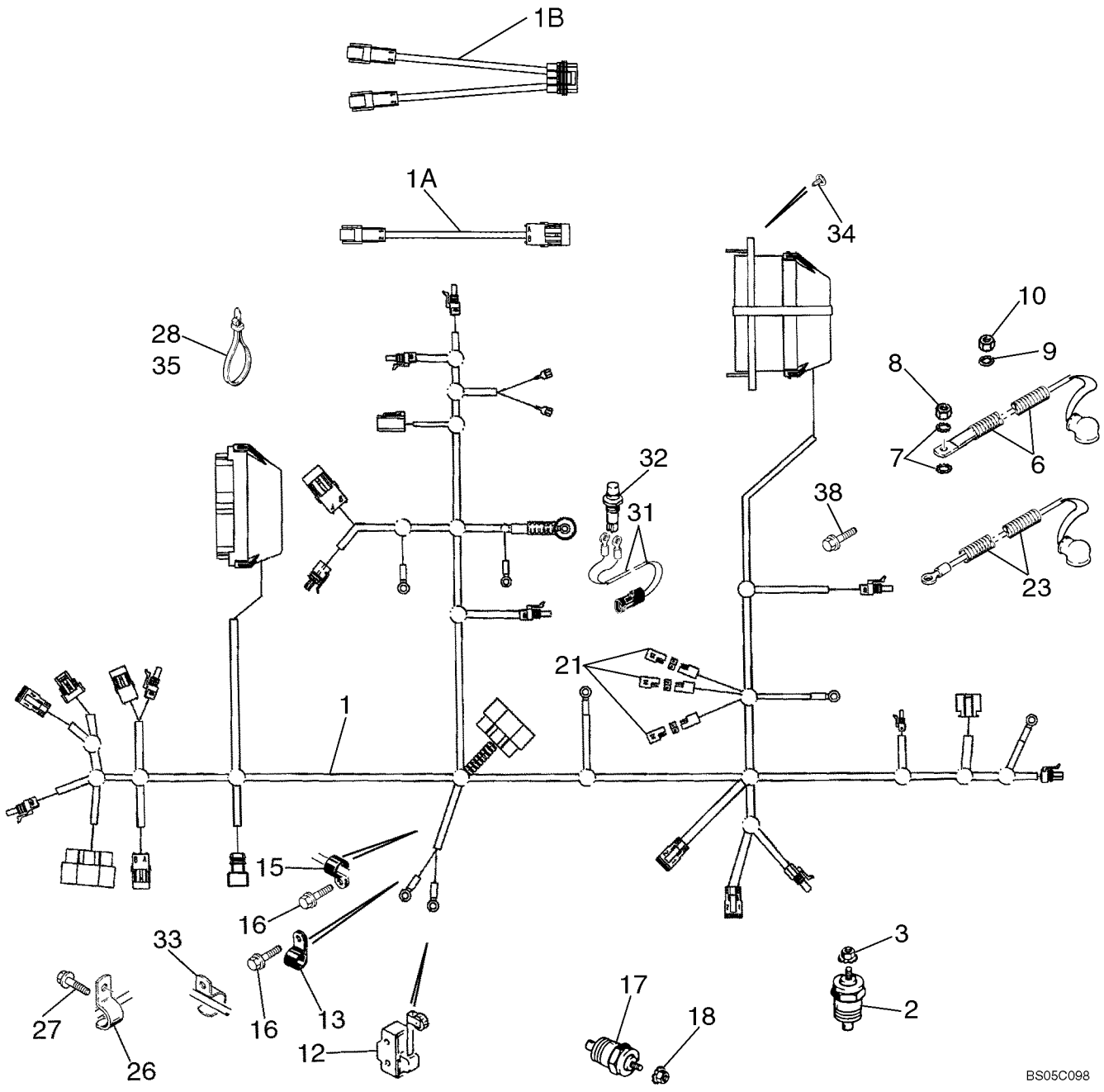

http://www.minnparbackhoeparts.com/

FAISCEAU, MOTEUR - MONTAGE ET CONNEXIONS

REF	FN	PART NUMBER	YR/SN	QTY	DESCRIPTION
1		87433543		1	FAISCEAU COMPLET Engine, Main Chassis; Packard Connectors At Trans. Control Valve & 4WD Solenoids; No Longer Available, Order 87450932 Service Kit; 87450932 Service Kit Is No Longer Available, Order 87456949 Harness Service Kit
		87450932		1	FAISCEAU COMPLET Service Kit, Includes 87450481 Main Chassis Harness and 87450931Transmission Jumper Harness; No Longer Available, Order 87456944 Chassis Harness & 87450931 4WD Transmission Jumper Harness
1		87450481		1	FAISCEAU COMPLET Main Chassis Harness; Packard Connectors At Trans. Control Valve Solenoid & Deutsch Connector At 4WD Solenoid; No Longer Available, Order 87456949 Chassis Harness Service Kit
1		87456944		1	FAISCEAU COMPLET Main Chassis; Deutsch Connectors At Fwd/Rev & 4WD Solenoids; For Service Order 87456949 Chassis Harness Service Kit; Not Illustrated
		87456949		1	KIT ASSISTANCE Main Chassis; Includes 87456944 Chassis Harness, 87450931 4WD Jumper Harness, 87456948 Fwd/Rev Jumper Harness
1A		87450931		1	FAISCEAU COMPLET 4WD Transmission Jumper Harness; 1 Packard / 1 Deutsch Connector; Attaches to 4WD Connection on Main Chassis Harness
1B		87456948		1	FAISCEAU COMPLET Fwd/Rev Transmission Jumper Harness; 2 Deutsch / 1 Packard Connector; Attaches to Transmission Control Valve Solenoid Connection On Main Chassis Harness
2		A166057		1	SONDE Engine Water Coolant Temperature
3		193-1000		1	ECROU No. 10 NF; With External Tooth Lock Washer
6		87423926		1	FAISCEAU COMPLET Alternator Cable
7		493-21033		2	RONDELLE GROWER 5/16
8		829-1408		1	ECROU M8; 10

http://www.minnparbackhoeparts.com/

FAISCEAU, MOTEUR - MONTAGE ET CONNEXIONS

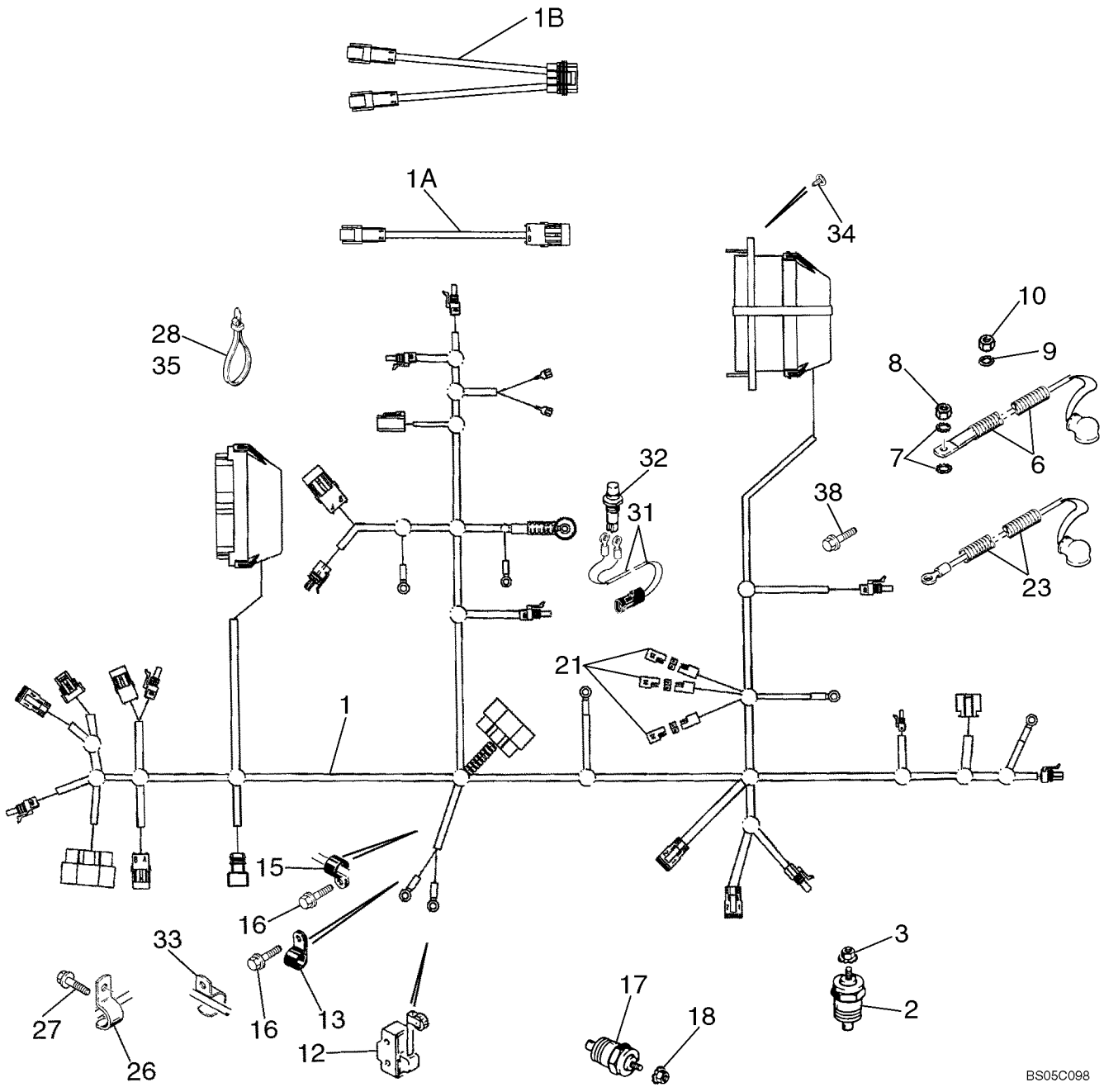

http://www.minnparbackhoeparts.com/

FAISCEAU, MOTEUR - MONTAGE ET CONNEXIONS

REF	FN	PART NUMBER	YR/SN	QTY	DESCRIPTION
9		493-21020		1	RONDELLE FREIN 3/16
10		824-1405		1	ECROU M5
12		D137363		1	CONTACTEUR Return To Dig; For Mounting; See Figure 09-04
13		515-23127		1	COLLIER 1/2 ID
15		515-23127		1	COLLIER 1/2 ID
16		844-10020		2	VIS M10 x 20
17		A166057		1	SONDE Transmission Temperature
18		193-1000		1	ECROU No. 10 NF; With External Tooth Lock Washer
21		L71879		3	SUPPORT-DE-DIODES
23		87419229		1	FAISCEAU COMPLET Power Wire
26		515-23254		1	COLLIER P; Replaces 87032428 J-Clip Used On Some Models; For Brake Cable Bracket, See Figure 07-06
27		814-10060		1	BOULON M10 x 60
28		L18337		29	SANGLE 15 in
31		123809A2		1	FAISCEAU Clutch Cutout; Transmission Gear Shift Lever; Incl. Ref 31A, 31B
31A		246526A1		1	CONNECTEUR Not Illustrated
31B		NSS		2	NON FOURNI SEPAREMENT Eye; Not Illustrated
32		123097A1		1	CONTACTEUR Push Button; Clutch Cutout; Transmission Gear Shift Lever; For Lever and Knob, See Figure 06-12; If Used
32		87312712		1	CONTACTEUR Push Button; Clutch Cutout; Transmission Gear Shift Lever; For Lever and Knob, See Figure 06-12; Otto 21649 Marking; If Used
33		D147383		1	CLIP Use Existing Hardware
34		781-24613		4	VIS M6 x 13
35		305342A1		1	SANGLE 450 mm (18 in); Air Filter Restriction Branch to Air Filter Inlet Tube
38		128312A1		1	BOULON M10 x 15; Ground to Firewall

http://www.minnparbackhoeparts.com/

04-05		p1	01/05

BATTERIE CABLES (MODÈLES SANS DÉMARRAGE PAR TEMPS FROID)

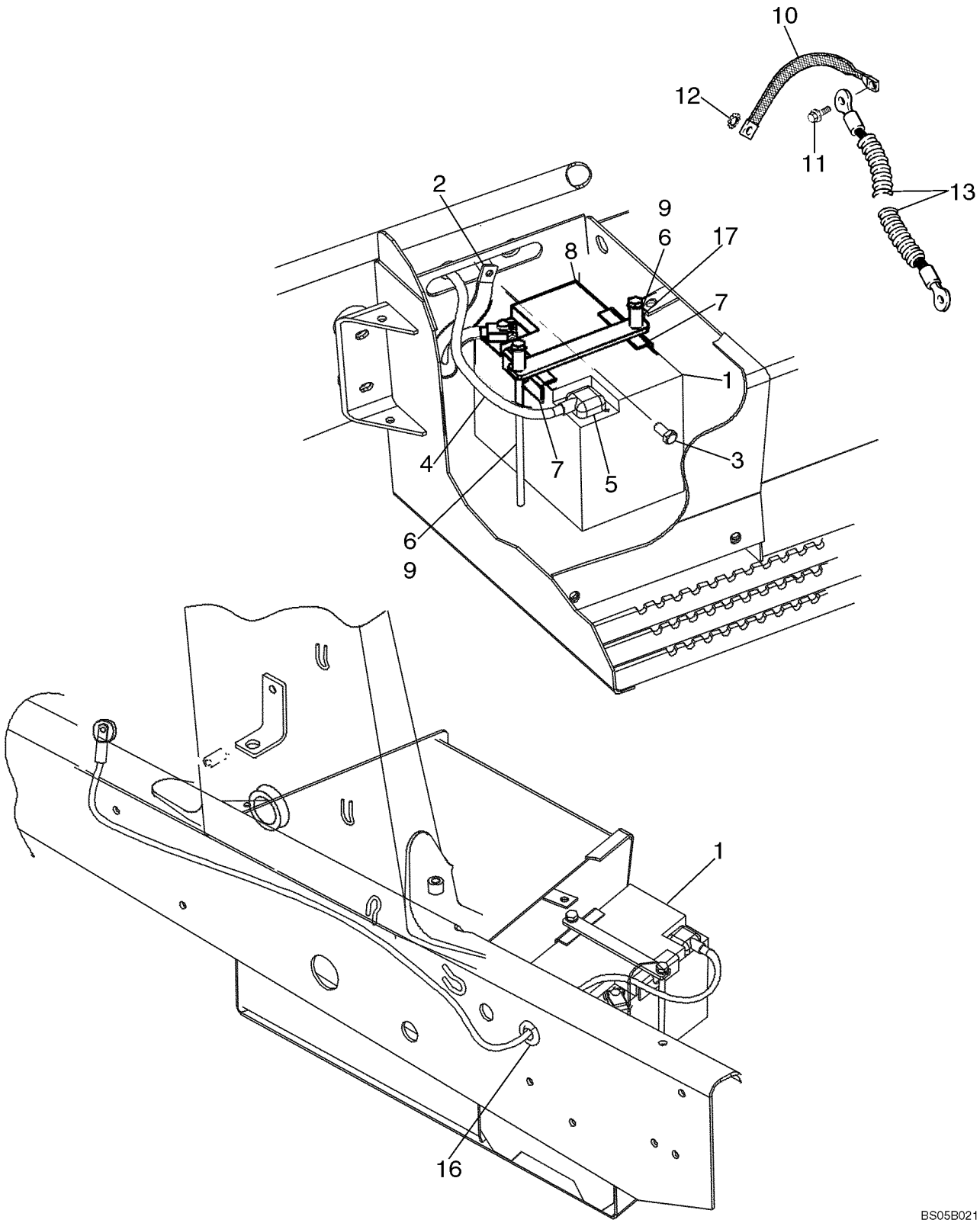

http://www.minnparbackhoeparts.com/

BATTERIE CABLES (MODÈLES SANS DÉMARRAGE PAR TEMPS FROID)

REF	FN	PART NUMBER	YR/SN	QTY	DESCRIPTION
1		87403835		1	BATTERIE HUMIDE 12V; Models Without Cold Start; Used In Production, For Service Order B4960W Through Ship Direct
2		87419259		1	JARRETIERE 350 mm; Negative Ground
3		844-10020		1	VIS M10 x 20; Negative Battery Cable Ground; Bolt To Chassis
4		87419257		1	CABLE ELECTRIQUE 1550 mm; Positive; Incl. Ref 5; Battery to Starter
5		383619R1		1	COUVERCLE
6		814-10245		2	BOULON M10 x 245 mm
7		D125079		2	PATTE FIXATION Battery Hold-Down
8		87415781		1	PATTE FIXATION Plate
9		495-11041		2	RONDELLE 13/32 x 13/16 x 1/16
10		87407206		2	CABLE, MASSE 330 mm; Ground Strap to Chassis
11		844-10020		1	VIS M10 x 20
12		493-11039		1	RONDELLE 3/8; Internal External Tooth Lock Washer
13		381261A1		1	FIL Ground; Cab to Chassis
16		87423677		2	PASSE-FIL Battery Cable Grommet; Mounts In Chassis Side Channel
17		130245A1		2	ENTRETOISE 10 x 30 mm

http://www.minnparbackhoeparts.com/

BATTERIE DOUBLE - DEMARRAGE PAR TEMPS FROID

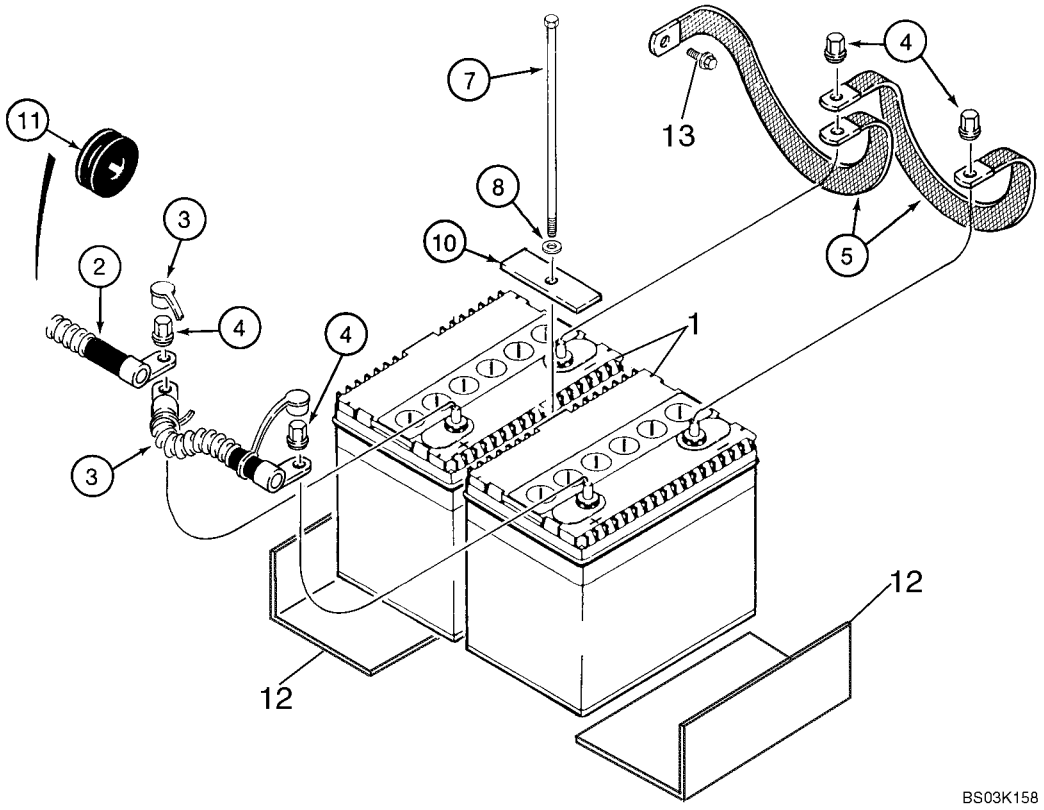

http://www.minnparbackhoeparts.com/

BATTERIE DOUBLE - DEMARRAGE PAR TEMPS FROID

REF	FN	PART NUMBER	YR/SN	QTY	DESCRIPTION
		87430867		1	BATTERIE ELECTRONIQUE Dual Battery Kit; Incl. Ref 1 - 13 and Instructions
1		BMF28S		2	BATTERIE SÈCHE 12V
2		87423675		1	CABLE ELECTRIQUE 1460 mm, Positive Cable; Chassis
3		184497A1		1	CABLE 227 mm, Positive Jumper
4		D126409		4	ECROU 3/8
5		87423676		2	JARRETIERE 324 mm Flat Ground Strap
7		814-10245		1	BOULON M10 x 245 mm
8		495-11041		1	RONDELLE 13/32 x 13/16 x 1/16
10		250854A1		1	SANGLE
11		87423677		2	PASSE-FIL Battery Cable Grommet; Mounts In Chassis Side Channel
12		408535A1		2	PLAQUE 255 mm (10-1/32 in); Battery Support
13		844-10020		1	VIS Flange, M10 x 20

http://www.minnparbackhoeparts.com/

04-06A		p1	04/05

ÉLÉMENT CHAUFFANT DE CALANDRE POUR DÉMARRAGE À FROID

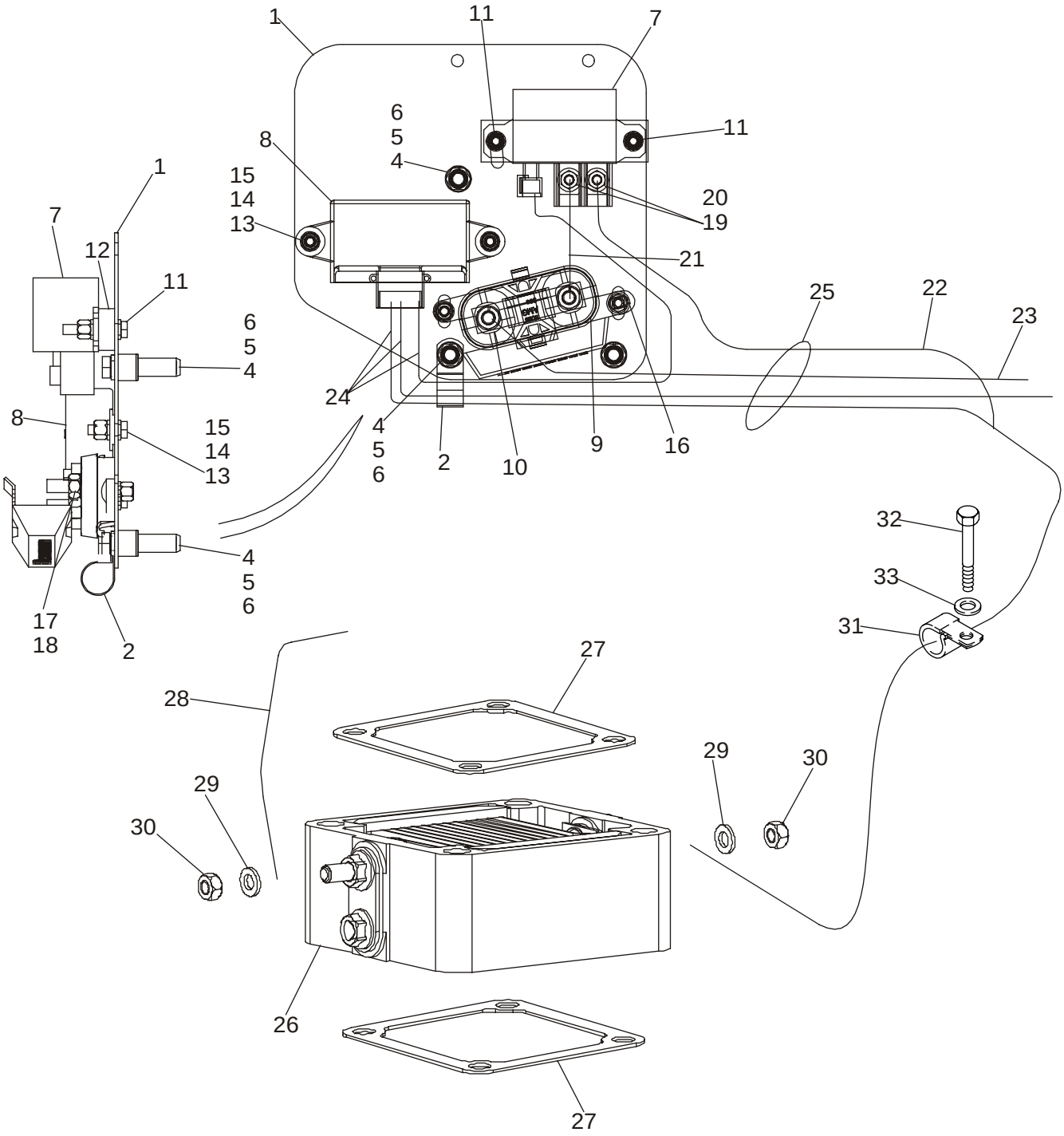

BS034E013

http://www.minnparbackhoeparts.com/

ÉLÉMENT CHAUFFANT DE CALANDRE POUR DÉMARRAGE À FROID

REF	FN	PART NUMBER	YR/SN	QTY	DESCRIPTION
		87430868		1	KIT ASSISTANCE Grid Heater Kit; Incl. Ref 1 - 33 and Instructions; Also Includes 8603092 Warning Decal, Explosion Hazard, Do Not Use Ether
1		87410603		1	PLAQUE Cold Start Plate
2		515-22190		1	COLLIER
3		614-8040		3	BOULON Hex, M8 x 40, 8.8, Full Thd
4		407962A1		3	ENTRETOISE
5		238-5011		3	JOINT THORIQUE -011, 70 Duro, .301" ID x .070" Thk
6		87417383		3	INSERT FILETE M8 x 1-1/4
7		86619908		1	RELAIS Cold Start Relay
8		47132002		1	BOITIER ELECTRONIQUE Electronic Unit Controller, Grid Heater; Replaces 87409046
9		440038A1		1	JONCTION Fuse Block
10		87410602		1	FUSIBLE 300 amp Fuse
11		614-6035		2	BOULON M6 x 35
12		87414237		1	PLAQUE 10 mm Thick Spacer Bar
13		614-6020		3	BOULON M6 x 20
14		895-11006		11	RONDELLE Flat, 6,6 x 12 x 1,6 mm
15		832-10406		6	ECROU M6
16		811-6016		1	VIS Round Head, M6 x 16
17		892-11008		5	RONDELLE Lock, M8
18		829-1408		2	ECROU M8
19		322357		2	RONDELLE FREIN Belleville, M6
20		829-1406		2	ECROU M6
21		87410265		1	CABLE, MASSE 90 mm Jumper Wire; Fuse to Relay
22		87419616		1	CABLE (ASSEMBLE) 500 mm Wire; Relay to Grid Heater
23		87419615		1	CABLE (ASSEMBLE) 1250 mm Wire; Starter to Fuse Block
24		87433544		1	FAISCEAU COMPLET Controller Harness, Cold Start Control; Attaches to Engine Harness
25		L18337		1	SANGLE Replaces D150521 292 mm Long Nylon Tie Strap Used On Some Models
26		82017872		1	RECHAUFFEUR Grid
27		86014151		2	JOINT
28		87413162		1	CABLE, MASSE 150 mm Ground Wire

http://www.minnparbackhoeparts.com/

04-06A		p2	04/05

ÉLÉMENT CHAUFFANT DE CALANDRE POUR DÉMARRAGE À FROID

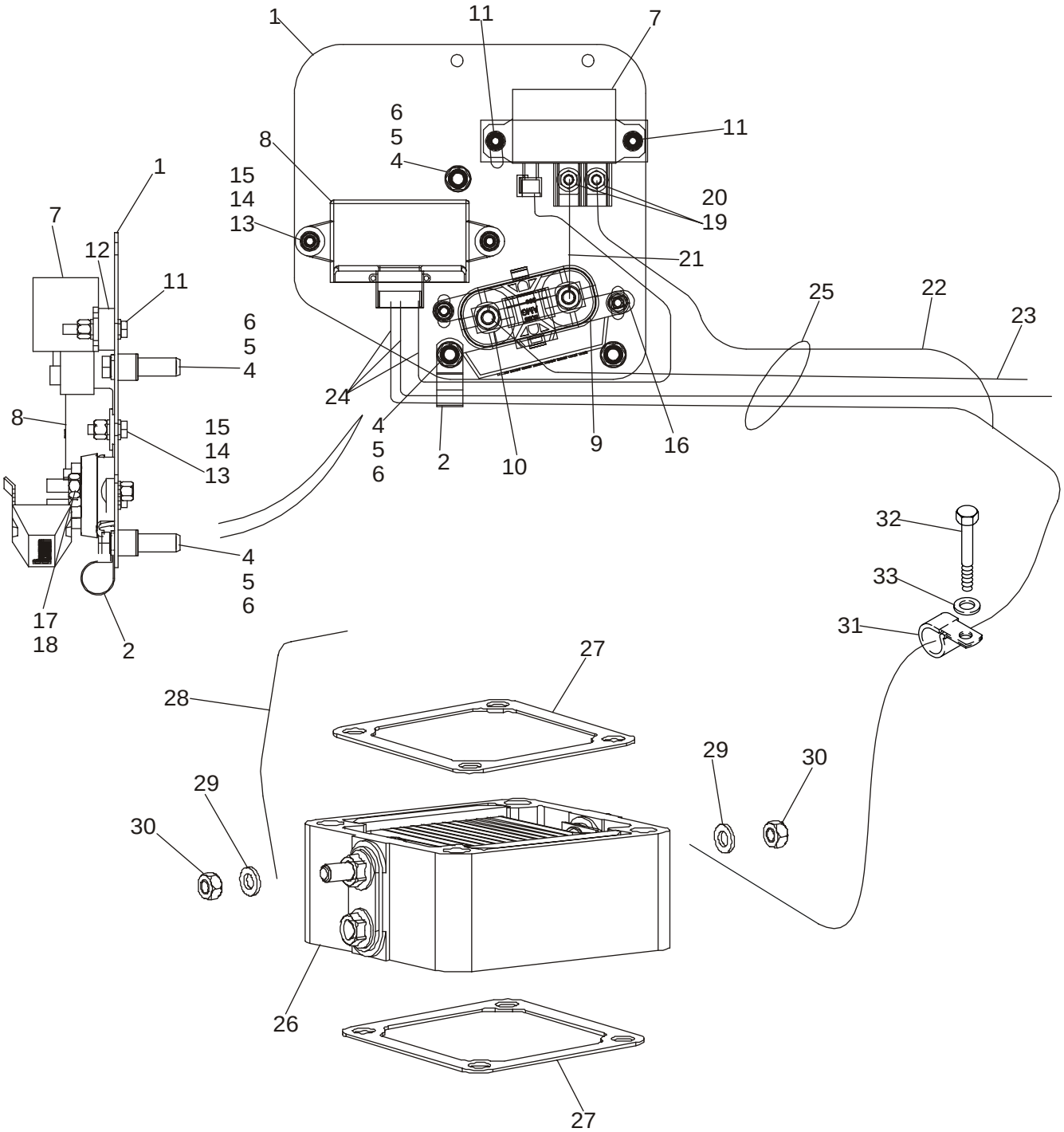

BS034E013

http://www.minnparbackhoeparts.com/

ÉLÉMENT CHAUFFANT DE CALANDRE POUR DÉMARRAGE À FROID

REF	FN	PART NUMBER	YR/SN	QTY	DESCRIPTION
29		895-11006		2	RONDELLE Flat, 6,6 x 12 x 1,6 mm
30		829-1406		2	ECROU M6
31		515-25190		1	COLLIER
32		614-12025		1	BOULON M12 x 25
33		896-11012		1	RONDELLE

http://www.minnparbackhoeparts.com/

04-07		p1	05/05

FAISCEAU, TABLEAU DE BORD AVANT - CONTACTEURS

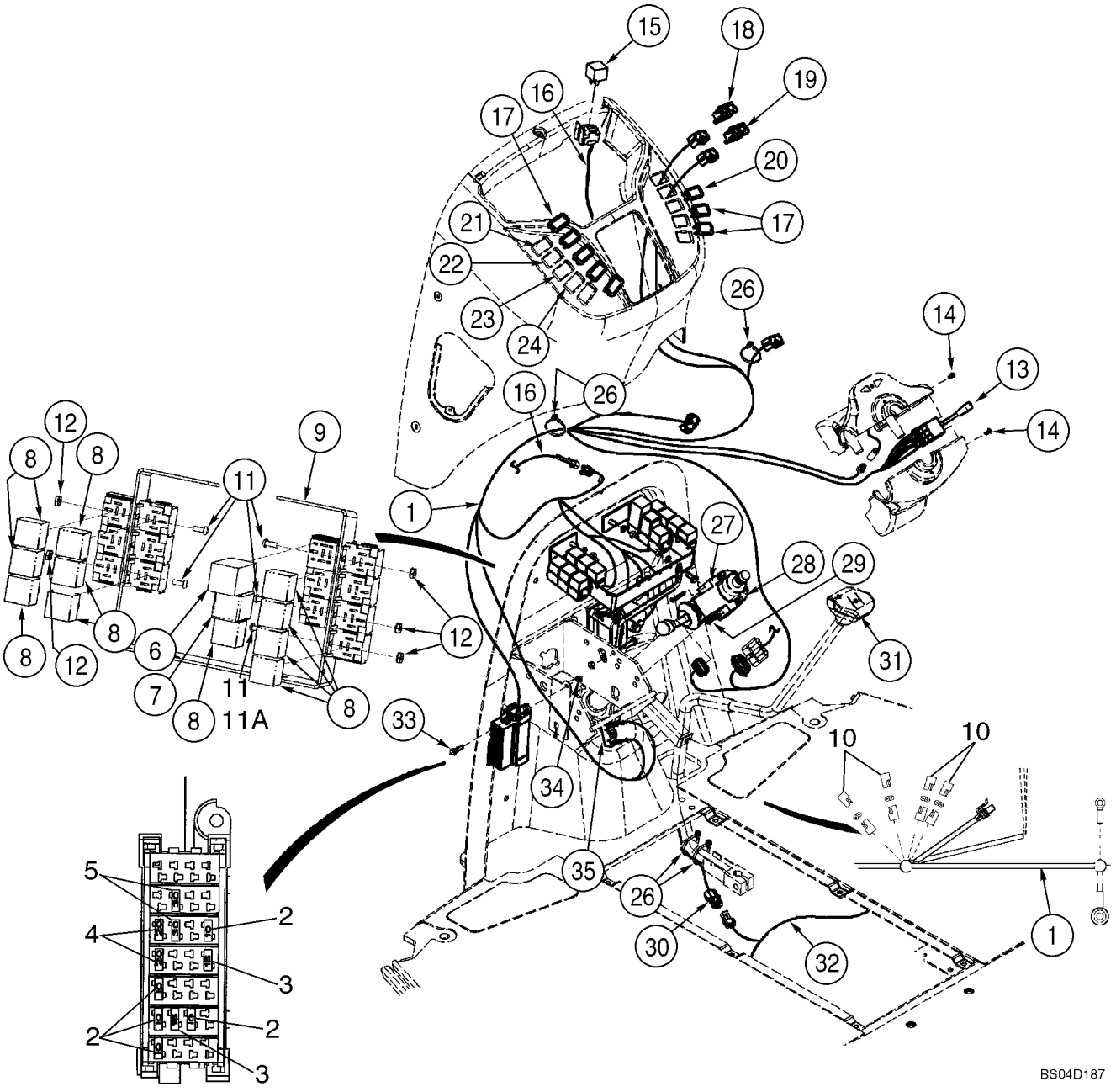

http://www.minnparbackhoeparts.com/

FAISCEAU, TABLEAU DE BORD AVANT - CONTACTEURS

REF	FN	PART NUMBER	YR/SN	QTY	DESCRIPTION
1		87418541		1	FAISCEAU COMPLET Front Console Harness, Incl. Ref 13
2		121412A1		5-6	FUSIBLE 10 amp; Mini, Red
3		121413A1		2-3	FUSIBLE 15 amp; Mini, Blue
4		121414A1		2	FUSIBLE 20 amp; Mini, Yellow
5		121416A1		2	FUSIBLE 30 amp; Mini, Green
6		D147166		1	CENTRALE CLIGNOTANTE Relay, Flasher, Hazard; Turn Signal
7		347706A3		1	RELAIS Sealed Time Delay, Shuttle Interlock Timing Relay, Forward Reverse Control
8		87436836		11	RELAIS 40 amp, 12V
9		361900A1		1	PATTE FIXATION Relay Mounting
10		L71879		4	SUPPORT-DE-DIODES
11		87301687		6-7	VIS Hex Washer Head, No. 10 NF x 1/2; Replaces 490-1108 Washerless Screw Used On Some Models
11A		490-1106		1	VIS No 10 x 3/8; No Longer Used, Order 87301687 1/2 inch Long Screw, Ref 11
12		231-24409		7	CONTRE-ECROU No. 10 NF; Replaces 193-1000 Nut With External Tooth Lock Washer Used On Some Models
13		389487A1		1	INT. FEUX CROISEMENT Turn Signal/Driving Lamp High/Low Beam
14		404816A1		2	VIS M4 x 12
15		87436836		1	RELAIS 40 amp, 12V; Air Conditioning; Attaches To Front Console Options Harness
16		87433546		1	FAISCEAU COMPLET Front Console Options; Includes (1) L71879 Diode
		L71879		1	SUPPORT-DE-DIODES
		490-1108		1	VIS No. 10 NF x 1/2; Mounts Relay Recepticle
		193-1000		1	ECROU No. 10 NF; Mounts Relay Recepticle
17		126844A1		2-8	BOUCHON Accessory; If Used
18		386849A1		1	CONTACTEUR Front Work Lamps
19		386850A1		1	CONTACTEUR Hazard Lamps
20		386851A1		1	CONTACTEUR Rotating Beacon; If Used
21		126844A1		1	BOUCHON If Used
22		386785A1		1	CONTACTEUR Front Wiper; If Used
23		386787A1		1	CONTACTEUR Front Windshield Washer; If Used

http://www.minnparbackhoeparts.com/

FAISCEAU, TABLEAU DE BORD AVANT - CONTACTEURS

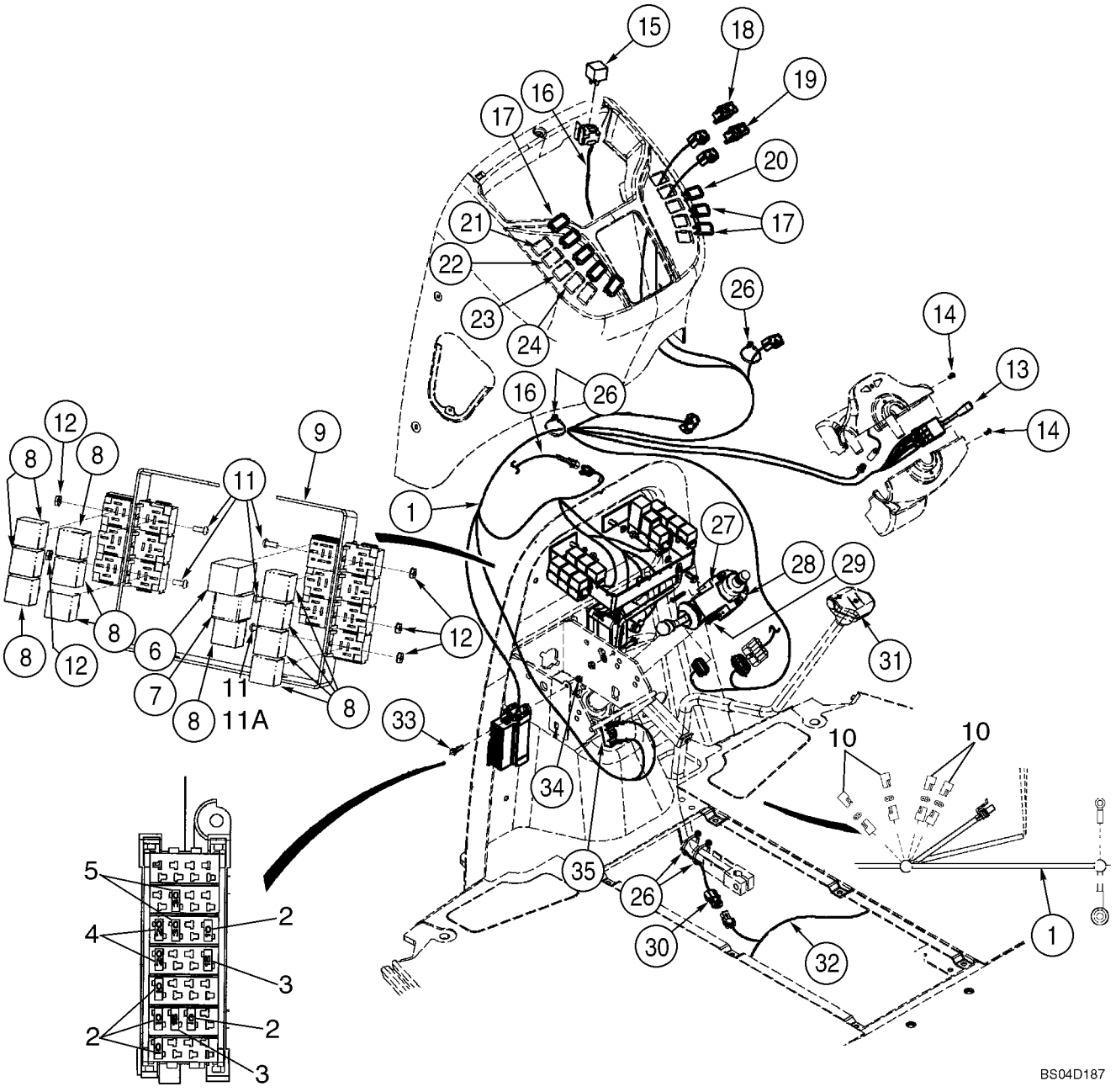

http://www.minnparbackhoeparts.com/

FAISCEAU, TABLEAU DE BORD AVANT - CONTACTEURS

REF	FN	PART NUMBER	YR/SN	QTY	DESCRIPTION
24		398675A2		1	CONTACTEUR Loader Tool Quick Coupler; If Used
26		L18337		4	SANGLE 15 in
27		278328A1		1	CONTACTEUR Shuttle Shift; Transmission Forward/Neutral/Reverse Switch; Models Without Powershift Transmission
27		231520A2		1	CONTACTEUR Shuttle Shift; Transmission Forward/Neutral/Reverse Switch; Models With Powershift Transmission
28		366889A2		1	DEMI-COLLIER Shuttle Lever; Includes Threaded Insert
29		397990A1		2	VIS M5 x 35
30		123809A2		1	FAISCEAU Clutch Cutout; Transmission Gear Shift Lever; For Lever, See Figure 06-12
31		123097A1		1	CONTACTEUR Clutch Cutout; For Lever and Knob, See Figure 06-12; If Used
31		87312712		1	CONTACTEUR Clutch Cutout; For Lever and Knob, See Figure 06-12; Otto 21649 Marking; If Used
32		87433543		1	FAISCEAU COMPLET Engine, Main Chassis; Packard Connectors At Trans. Control Valve & 4WD Solenoids; No Longer Available, Order 87450932 Service Kit; 87450932 Service Kit Is No Longer Available, Order 87456949 Harness Service Kit
		87450932		1	FAISCEAU COMPLET Service Kit, Includes 87450481 Main Chassis Harness and 87450931Transmission Jumper Harness; No Longer Available, Order 87456944 Chassis Harness & 87450931 4WD Transmission Jumper Harness
32		87450481		1	FAISCEAU COMPLET Main Chassis Harness; Packard Connectors At Trans. Control Valve Solenoid & Deutsch Connector At 4WD Solenoid; No Longer Available, Order 87456949 Chassis Harness Service Kit
32		87456944		1	FAISCEAU COMPLET Main Chassis; Deutsch Connectors At Fwd/Rev & 4WD Solenoids; For Service Order 87456949 Chassis Harness Service Kit; Not Illustrated

http://www.minnparbackhoeparts.com/

FAISCEAU, TABLEAU DE BORD AVANT - CONTACTEURS

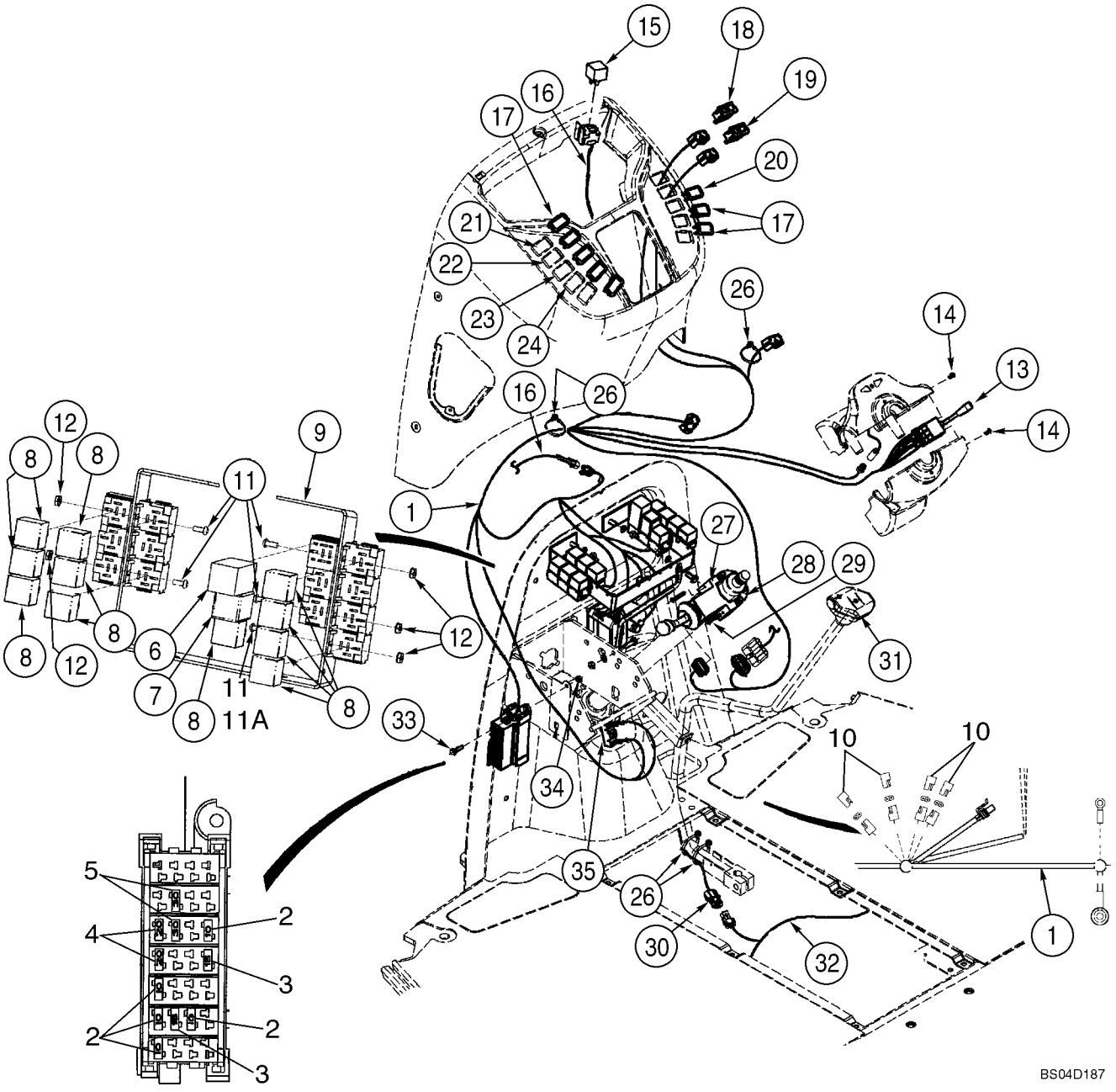

http://www.minnparbackhoeparts.com/

FAISCEAU, TABLEAU DE BORD AVANT - CONTACTEURS

REF	FN	PART NUMBER	YR/SN	QTY	DESCRIPTION
		87456949		1	KIT ASSISTANCE Main Chassis; Includes 87456944 Chassis Harness, 87450931 4WD Jumper Harness, 87456948 Fwd/Rev Jumper Harness
32A		87450931		1	FAISCEAU COMPLET 4WD Transmission Jumper Harness; 1 Packard / 1 Deutsch Connector; Attaches to 4WD Connection on Main Chassis Harness, Not Illustrated
32B		87456948		1	FAISCEAU COMPLET Fwd/Rev Transmission Jumper Harness; 2 Deutsch / 1 Packard Connector; Attaches to Transmission Control Valve Solenoid Connection On Main Chassis Harness; Not Illustrated
		L71879		3	SUPPORT-DE-DIODES
33		844-6025		1	BOULON M6 x 25
34		832-10406		1	ECROU M6
35		D148108		1	CONTACTEUR Brake Lamp; Includes Hardware; For Mounting, See Figure 07-03
		87436675		1	FAISCEAU COMPLET Chassis Options; Includes (4) L71879 Diodes
		L71879		4	SUPPORT-DE-DIODES

http://www.minnparbackhoeparts.com/

04-08		p1	03/05

FAISCEAU, TABLEAU DE BORD AVANT - SUPPORT

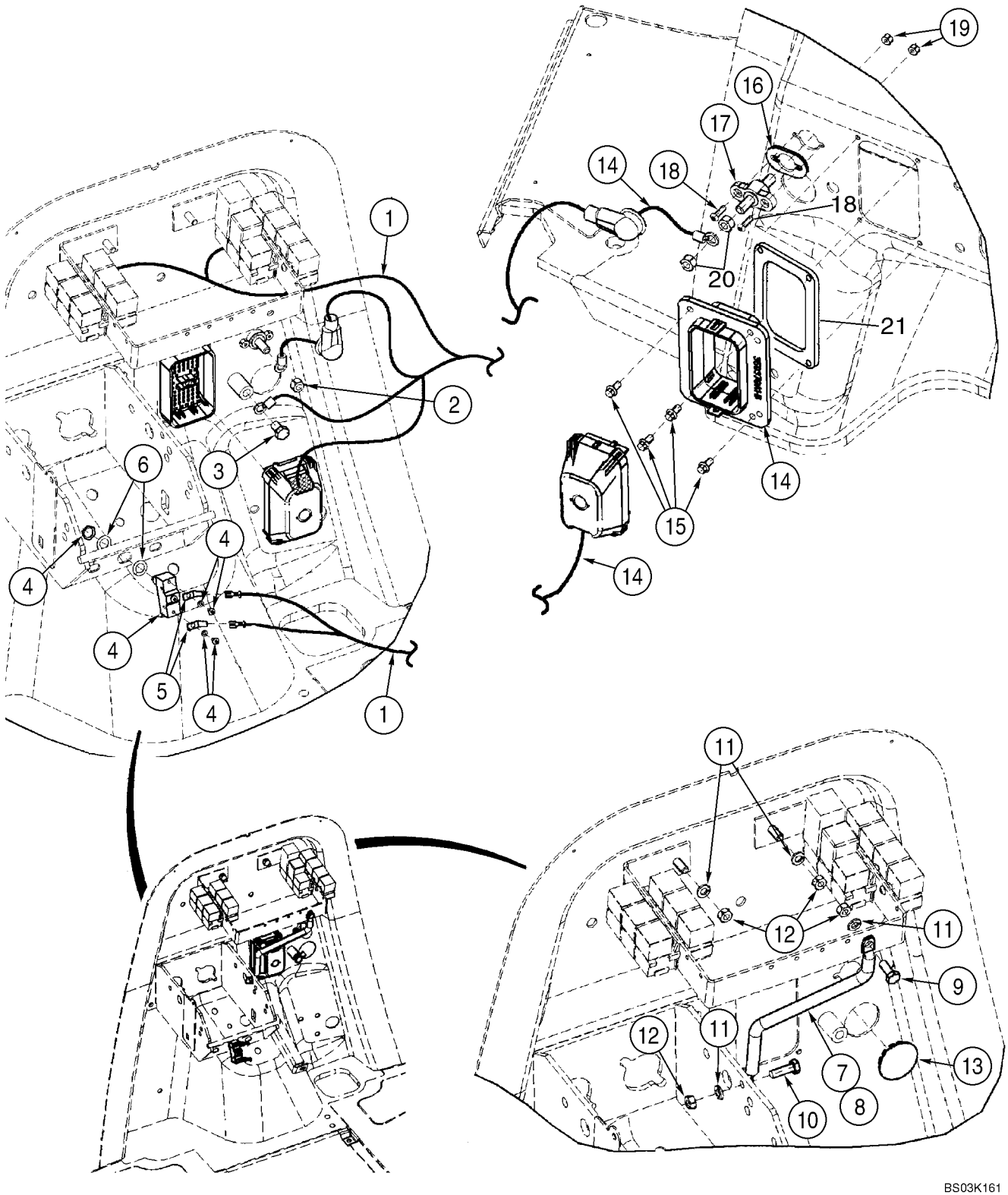

http://www.minnparbackhoeparts.com/

FAISCEAU, TABLEAU DE BORD AVANT - SUPPORT

REF	FN	PART NUMBER	YR/SN	QTY	DESCRIPTION
1		87418541		1	FAISCEAU COMPLET Front Console Harness; Mounts To Front Firewall
2		425-106		1	ECROU 3/8
3		128312A1		1	BOULON M10 x 15; Mounts To Front Firewall
4		D148108		1	CONTACTEUR Brake Lamp; Includes Hardware
5		A187990		2	COSSE Male
6		495-81153		2	RONDELLE 15/32 x 3/4 x 1/32
7		362930A2		1	JAMBE-DE-FORCE Relay Mounting
8		392353A1		1	CONDUIT
9		614-8020		1	BOULON M8 x 20
10		614-8025		1	BOULON M8 x 25
11		892-11008		4	RONDELLE M8
12		829-1408		4	ECROU M8; 10
13		397876A1		1	BOUCHON 1-5/8 in, Button
14		87433543		1	FAISCEAU COMPLET Engine, Main Chassis; Packard Connectors At Trans. Control Valve & 4WD Solenoids; No Longer Available, Order 87450932 Service Kit; 87450932 Service Kit Is No Longer Available, Order 87456949 Harness Service Kit
		87450932		1	FAISCEAU COMPLET Service Kit, Includes 87450481 Main Chassis Harness and 87450931Transmission Jumper Harness; No Longer Available, Order 87456944 Chassis Harness & 87450931 4WD Transmission Jumper Harness
14		87450481		1	FAISCEAU COMPLET Main Chassis Harness; Packard Connectors At Trans. Control Valve Solenoid & Deutsch Connector At 4WD Solenoid; No Longer Available, Order 87456949 Chassis Harness Service Kit
14		87456944		1	FAISCEAU COMPLET Main Chassis; Deutsch Connectors At Fwd/Rev & 4WD Solenoids; For Service Order 87456949 Chassis Harness Service Kit; Not Illustrated
		87456949		1	KIT ASSISTANCE Main Chassis; Includes 87456944 Chassis Harness, 87450931 4WD Jumper Harness, 87456948 Fwd/Rev Jumper Harness

http://www.minnparbackhoeparts.com/

04-08		p2	03/05

FAISCEAU, TABLEAU DE BORD AVANT - SUPPORT

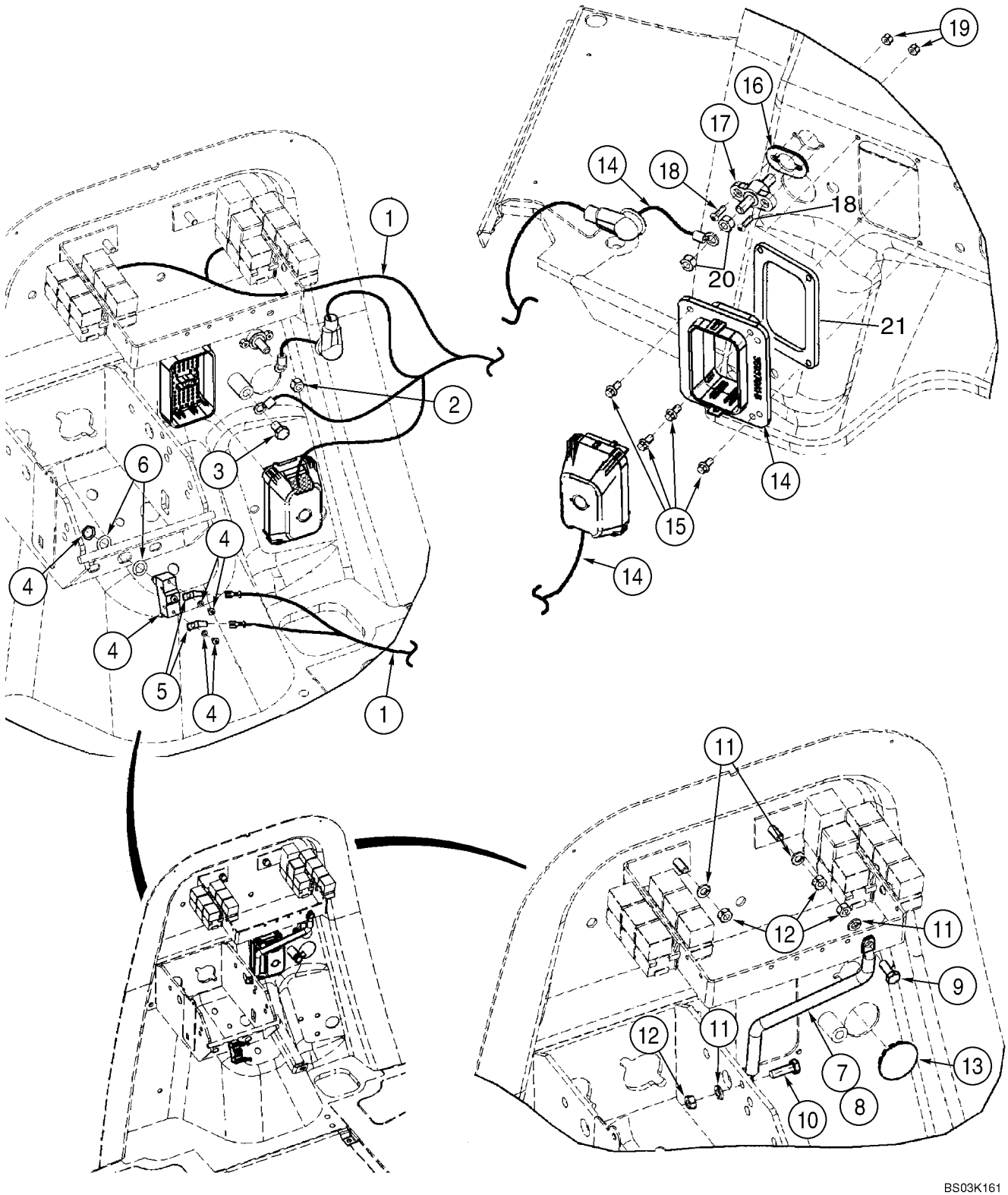

http://www.minnparbackhoeparts.com/

FAISCEAU, TABLEAU DE BORD AVANT - SUPPORT

REF	FN	PART NUMBER	YR/SN	QTY	DESCRIPTION
14A		87450931		1	FAISCEAU COMPLET 4WD Transmission Jumper Harness; 1 Packard / 1 Deutsch Connector; Attaches to 4WD Connection on Main Chassis Harness, Not Illustrated
14B		87456948		1	FAISCEAU COMPLET Fwd/Rev Transmission Jumper Harness; 2 Deutsch / 1 Packard Connector; Attaches to Transmission Control Valve Solenoid Connection On Main Chassis Harness; Not Illustrated
		L71879		3	SUPPORT-DE-DIODES
15		781-24613		4	VIS Flange, M6 x 13
16		357966A1		1	JOINT
17		357278A1		1	BLOC-CROIX Positive Battery
18		490-11012		2	VIS No. 10 NF x 3/4
19		231-24409		2	CONTRE-ECROU No. 10
20		425-106		2	ECROU 3/8
21		414174A1		1	JOINT

http://www.minnparbackhoeparts.com/

SYSTÈME ÉLECTRIQUE - TRANSMISSION, AUTOMATIQUE

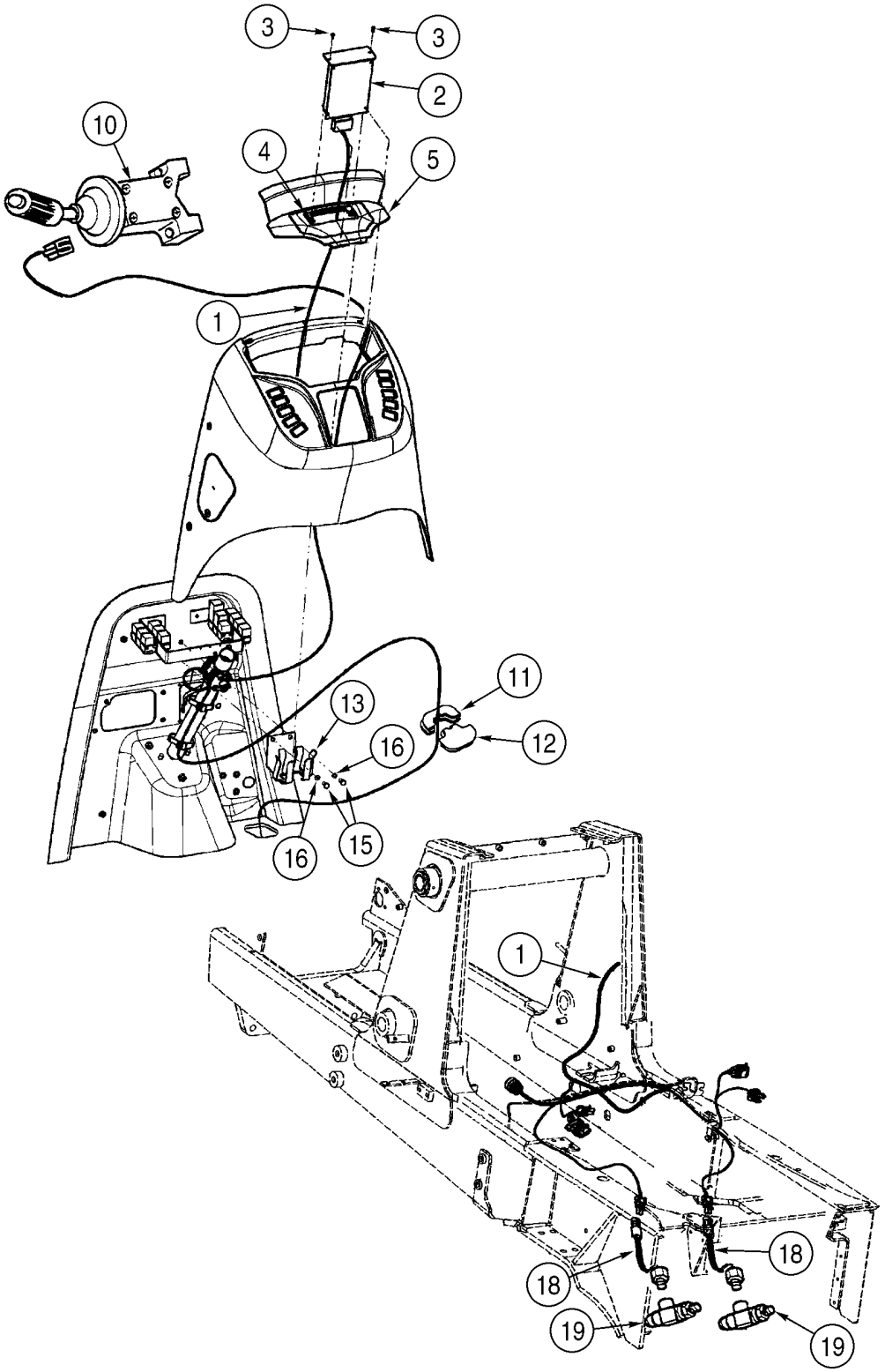

http://www.minnparbackhoeparts.com/

SYSTÈME ÉLECTRIQUE - TRANSMISSION, AUTOMATIQUE

REF	FN	PART NUMBER	YR/SN	QTY	DESCRIPTION
1		392882A4		1	FAISCEAU Powershift Transmission
2		87421488		1	COMMANDE Controller, Transmission, APC73
3		87310126		2	VIS No. 10 x 3/4, Stainless Steel; Replaces 140-107 Non-Stainless Steel Screw Used On Some Models
4		176857A1		2	ECROU No. 10, J-Type
5		363227A2		1	COUVERCLE Relay Access
		278316A2		2	CLIP Relay Access Cover
10		231520A2		1	CONTACTEUR Shuttle Shift; Transmission; Forward/Neutral/Reverse, See Figure 04-07
11		397443A2		1	JOINT
12		397493A2		1	JOINT
13		400376A1		1	PLATINE
15		614-8020		2	BOULON M8 x 20
16		892-11008		2	RONDELLE M8
18		D138955		2	CONTACTEUR Pressure; Stop Lamp
19		222889A1		2	RACCORD At Rear Axle Brakes, See Figure 07-04

http://www.minnparbackhoeparts.com/

FAISCEAU, TABLEAU DE BORD LATÉRAL - CONTACTEURS

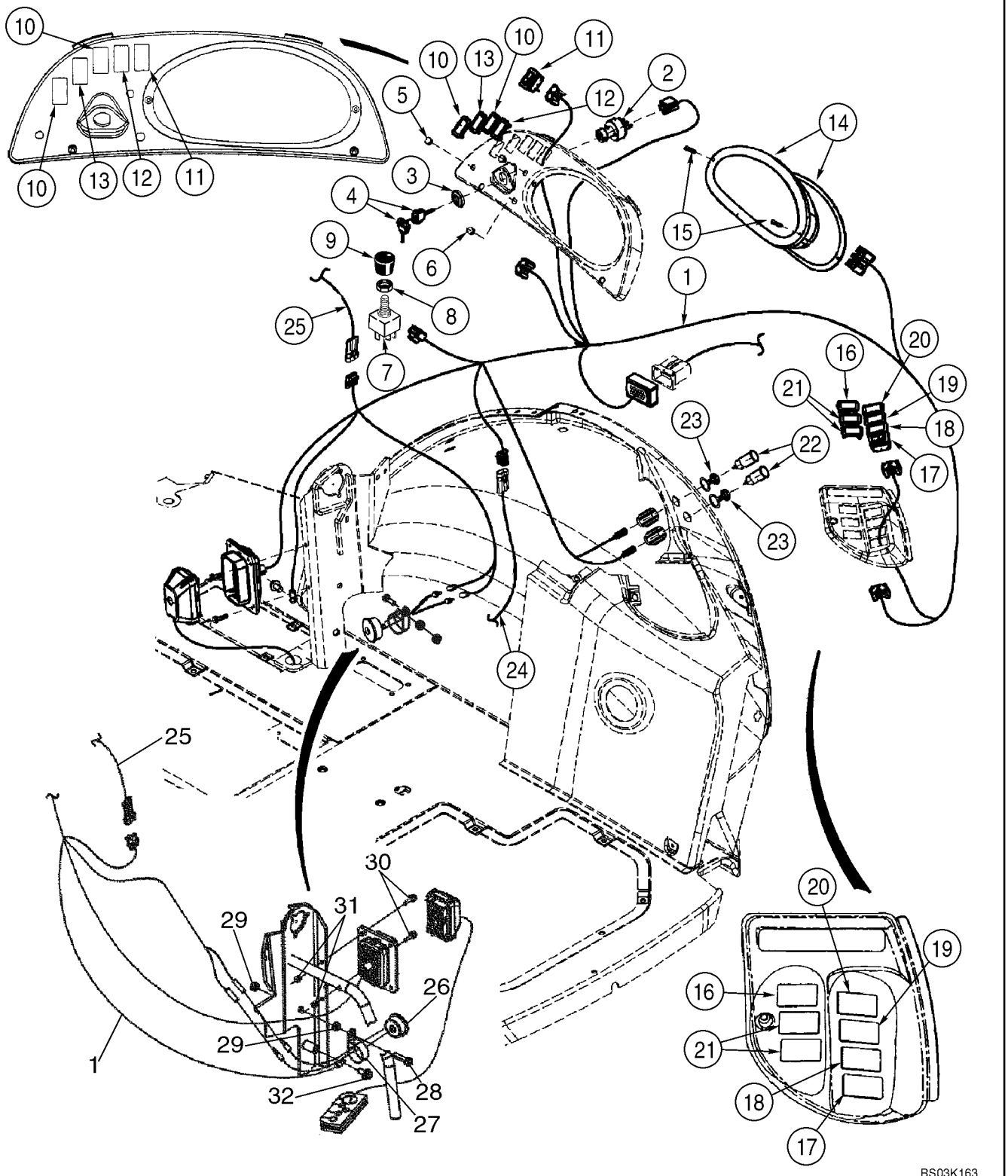

http://www.minnparbackhoeparts.com/

FAISCEAU, TABLEAU DE BORD LATÉRAL - CONTACTEURS

REF	FN	PART NUMBER	YR/SN	QTY	DESCRIPTION
1		87418542		1	FAISCEAU COMPLET Side Console
		282775A1		1	COMMUTATEUR, DEM. Incl. Ref 2 - 4
2		NSS		1	NON FOURNI SEPAREMENT Switch; Without Keys
3		NSS		1	NON FOURNI SEPAREMENT Nut
4		NSS		1	NON FOURNI SEPAREMENT Key, Ignition; Set Of Two; Padded
5		397569A1		2	BOUCHON 7/16 in, Dome; If Used; For Air Conditioning Switch and Knob, See Figure 09-64
6		397570A1		1	BOUCHON 1/2 in, Dome; If Used; For Heater Switch and Knob, See Figure 09-63
7		245258A1		1	CONTACTEUR Blower
		121415A1		1	FUSIBLE 25 amp; Blower And Wiper
8		A42561		1	ECROU
9		400379A1		1	PLAQUE
10		126844A1		1-4	BOUCHON If Used
11		133715A1		1	CONTACTEUR Rear Work Lamps
12		235002A1		1	CONTACTEUR Ride Control; If Used
13		133716A1		1	CONTACTEUR Four Wheel Drive; Models Without Powershift Transmission; If Used
13		239408A1		1	CONTACTEUR Four Wheel Drive; Models With Powershift Transmission; If Used
		121412A1		1	FUSIBLE 10 amp, Four Wheel Drive
14		87419320		1	TABLEAU DES INSTRUMENTS See Figure 04-13
15		140-119		2	VIS No. 10 x 1-1/4
16		126844A1		1-6	BOUCHON If Used
17		386852A2		1	CONTACTEUR Horn
18		386788A1		1	CONTACTEUR Rear Window Washer; If Used
19		386786A1		1	CONTACTEUR Rear Wiper; If Used
20		126844A1		1	BOUCHON If Used
21		386789A2		2	CONTACTEUR Backhoe Quick Coupler and Hydraulic Backhoe Bucket Coupler; If Used
22		283779A1		2	SORTIE Power Plug Outlet; 30 amp Maximum
23		283781A1		2	CHAPEAU Power Plug Outlet
25		NSS		1	NON FOURNI SEPAREMENT Harness; Loader Control Lever; Included In Loader Control Lever Handle

http://www.minnparbackhoeparts.com/

FAISCEAU, TABLEAU DE BORD LATÉRAL - CONTACTEURS

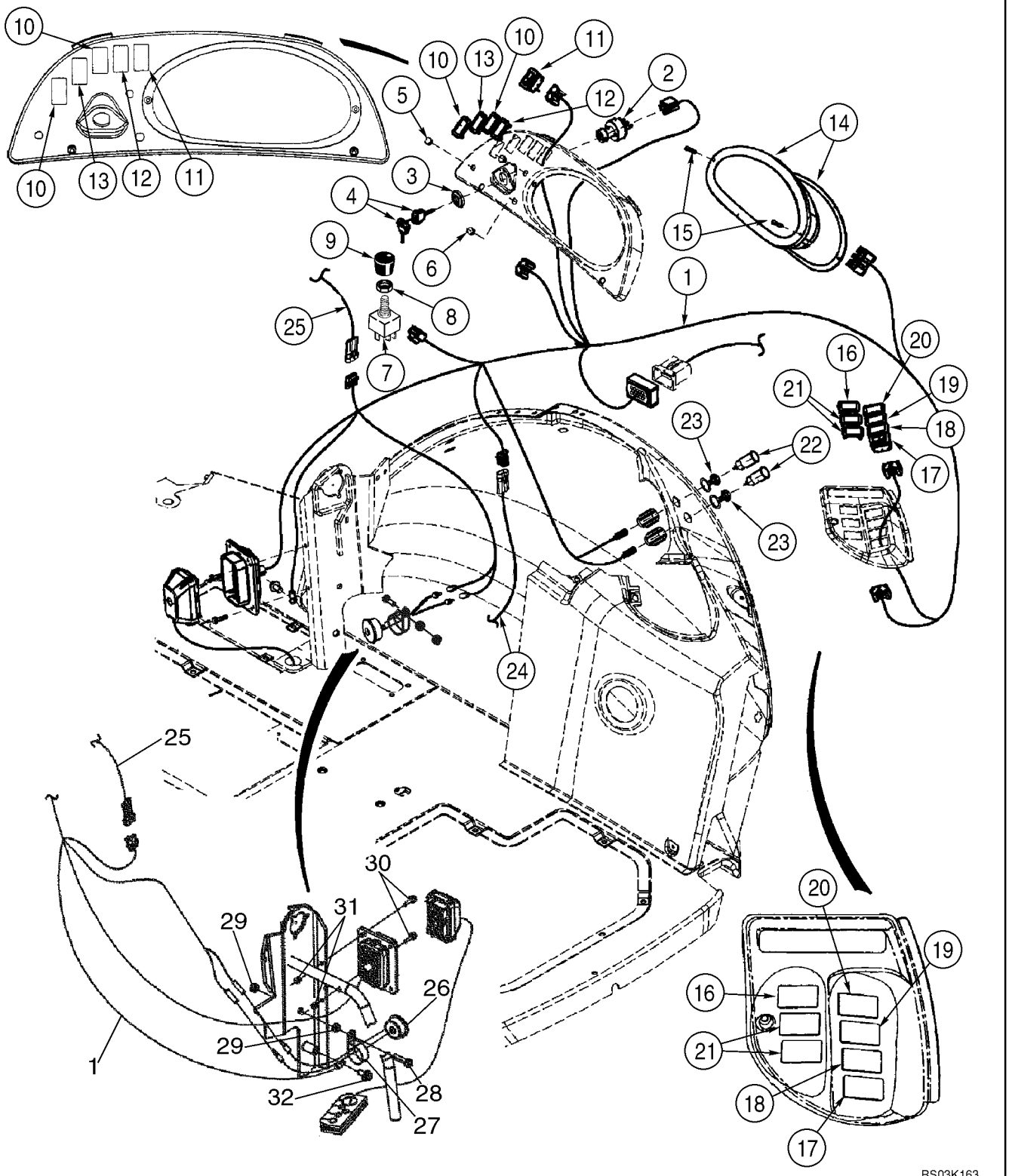

http://www.minnparbackhoeparts.com/

FAISCEAU, TABLEAU DE BORD LATÉRAL - CONTACTEURS

REF	FN	PART NUMBER	YR/SN	QTY	DESCRIPTION
26		D137468		1	AVERTISSEUR Engine Water Temperature, Engine Oil Pressure and Parking Brake
27		515-23444		1	COLLIER 1-3/4
28		614-10030		1	VIS M10 x 30
29		829-1410		2	ECROU M10; 10.9
30		844-6025		2	BOULON M6 x 25
31		832-10406		2	ECROU M6
32		844-10020		1	VIS M10 x 20
		87436675		1	FAISCEAU COMPLET Chassis Options Harness; Includes (4) L71879 Diodes
		L71879		4	SUPPORT-DE-DIODES

http://www.minnparbackhoeparts.com/

TABLEAU DE BORD, AVANT - COUVERCLES

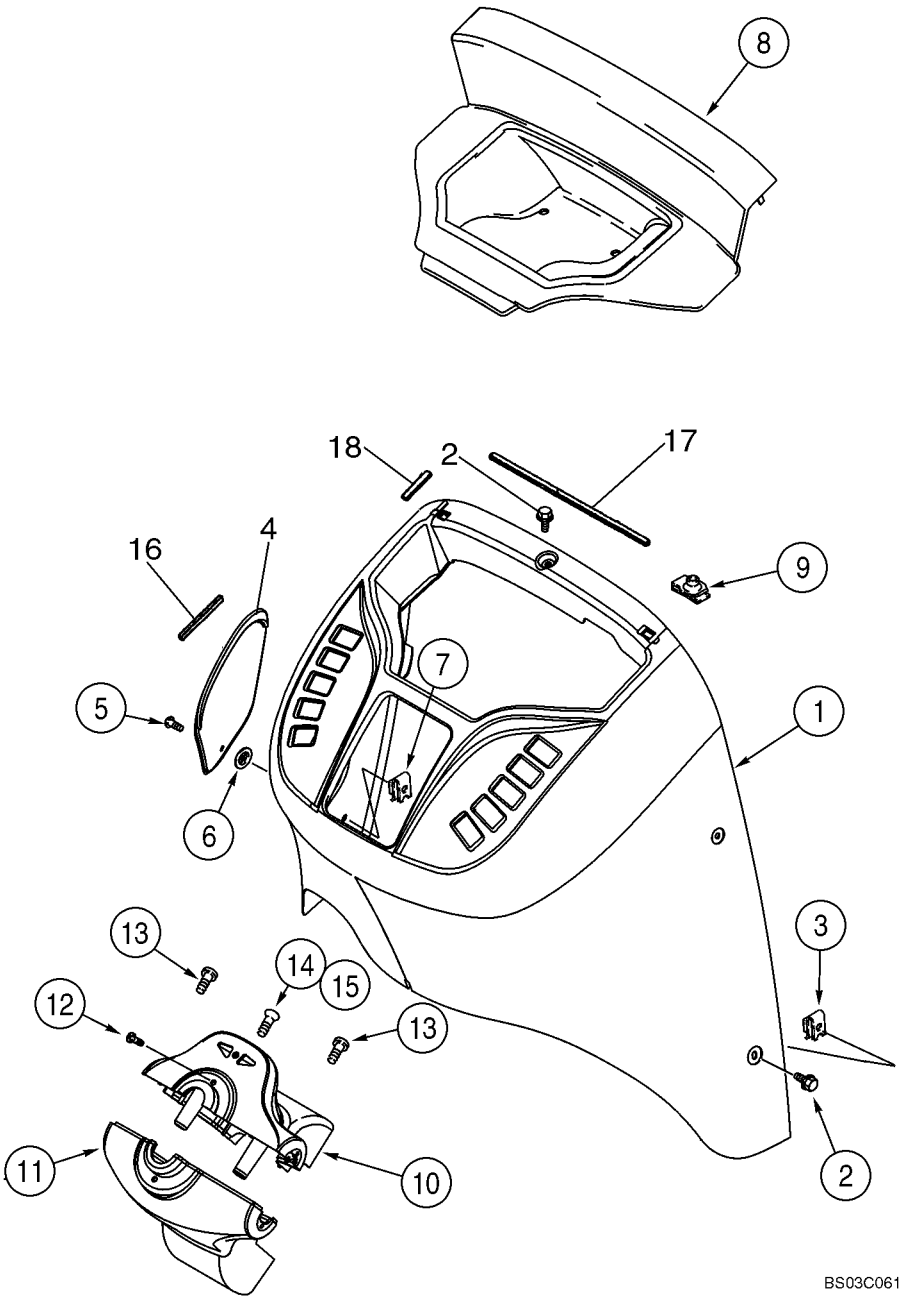

http://www.minnparbackhoeparts.com/

TABLEAU DE BORD, AVANT - COUVERCLES

REF	FN	PART NUMBER	YR/SN	QTY	DESCRIPTION
1		355827A2		1	COUVERCLE Front
2		87310152		6	BOULON Hex Flange, M6 x 16, Stainless Steel; Replaces 555-10 Non-Stainless Steel Screw Used On Some Models
3		833-40406		6	ECROU M6
4		360244A1		1	COUVERCLE Fuse Access
5		87310086		1	VIS Includes Washer, Stainless Steel; Replaces 182276A1 Non-Stainless Steel Screw Used On Some Models
6		127009A1		1	CLIP
7		131-861		1	ECROU No. 10
8		360245A2		1	COUVERCLE Relay Access; Models Without Powershift Transmission
8A		363227A2		1	COUVERCLE Relay Access; Models With Powershift Transmission; Not Illustrated
9		278316A2		2	CLIP
10		373689A2		1	COUVERCLE (ASSEMBLE) Steering Column, Upper; Incl. Ref 10A - 10E; Components Not Illustrated
10A		360242A2		1	COUVERCLE
10B		303465A2		1	LAMPE Blinker
10C		303466A1		1	SYMBOLE Right Flasher
10D		303467A1		1	SYMBOLE Left Flasher
10E		373693A1		1	VIS Flat Head, No. 8 x 7/16
11		360243A2		1	COUVERCLE Steering Column, Lower
12		87310124		2	VIS No. 10 x 1/2, Stainless Steel; Replaces 140-106 Non-Stainless Steel Screw Used On Some Models
13		87310124		2	VIS No. 10 x 1/2, Stainless Steel; Replaces 140-106 Non-Stainless Steel Screw Used On Some Models
14		87310142		1	VIS No. 10-16 x 1/2, Stainless Steel; Replaces 260-1358 Non-Stainless Steel Screw Used On Some Models
15		131-121		1	DOUILLE DE CENTRAGE No. 10
16		414572A1		1	RUBAN 100 mm, Adhesive Back
17		414034A1		1	RUBAN 330 mm, Adhesive Back
18		414033A1		4	RUBAN 60 mm, Adhesive Back

http://www.minnparbackhoeparts.com/

04-12		p1	05/05

TABLEAU DE BORD, LATÉRAL - COUVERCLES (CÔTÉ DROIT)

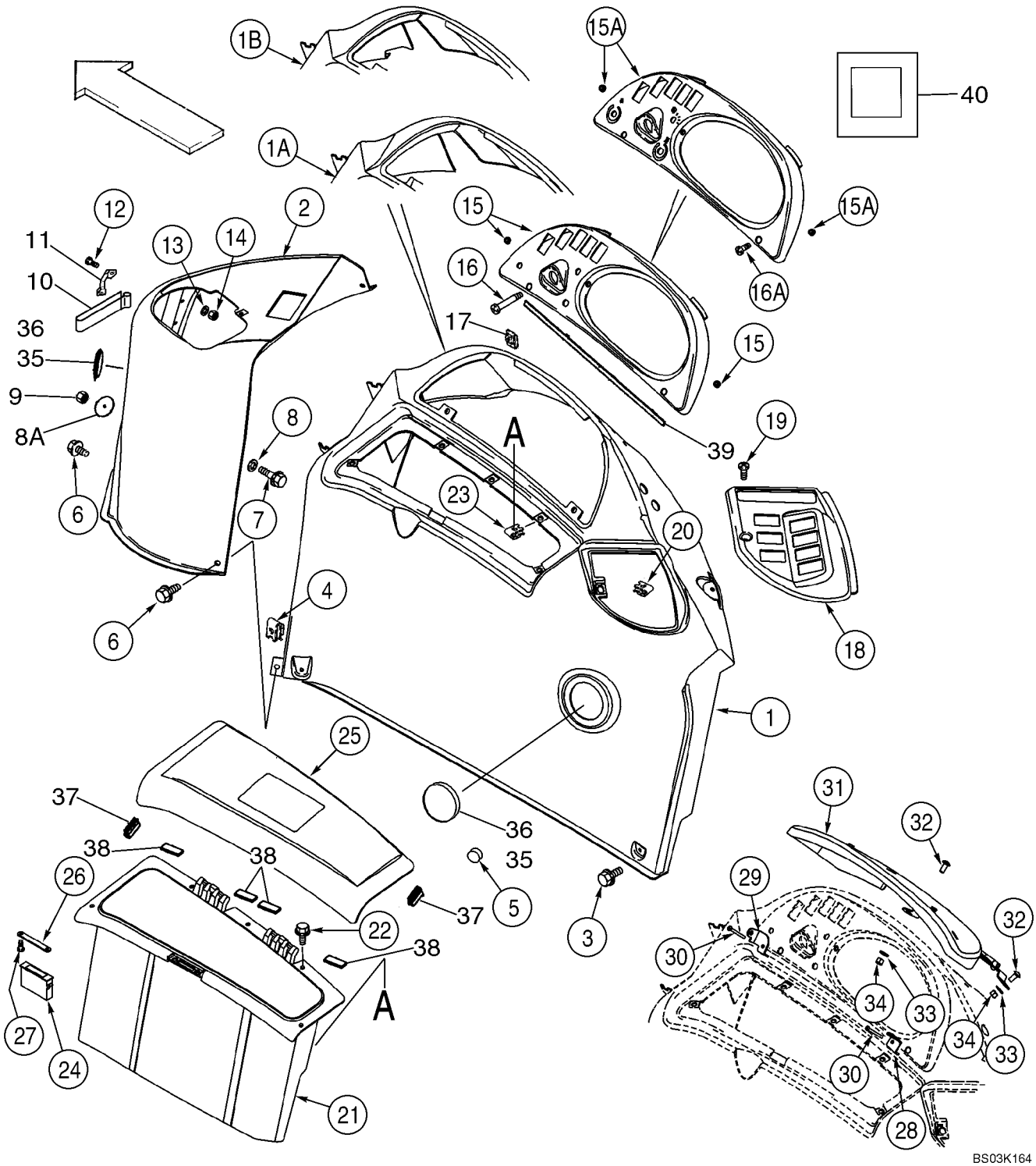

http://www.minnparbackhoeparts.com/

TABLEAU DE BORD, LATÉRAL - COUVERCLES (CÔTÉ DROIT)

REF	FN	PART NUMBER	YR/SN	QTY	DESCRIPTION
1		360250A2		1	CONSOLE Canopy Models
1A		355198A2		1	CONSOLE Cab, Single Door
1B		372167A3		1	CONSOLE Cab, Two Door
2		355197A2		1	CONSOLE Loader Control
3		87310098		6	BOULON Flange, M6 x 20, Stainless Steel; Replaces 555-2 Non-Stainless Steel Screw Used On Some Models
4		833-40406		5	ECROU M6
5		L60224		1	PARE-CHOCS Rubber
6		87310152		2	BOULON Flange, M6 x 16, Stainless Steel; Replaces 555-10 Non-Stainless Steel Screw Used On Some Models
7		844-6025		1	BOULON Flange, M6 x 25
8		895-15006		1	RONDELLE 6,6 x 25 x 1,6 mm
8A		407660A1		1	RONDELLE 7 mm ID x 50 mm OD
9		832-10406		1	ECROU M6
10		184726A1		1	BANDE DE FIXATION Velcro
11		182594A1		2	POIGNÉE Velcro Retainer
12		87310184		4	VIS M4 x 16; 4.8, Stainless Steel; Replaces 842-1416 Non-Stainless Steel Screw Used On Some Models
13		895-11004		4	RONDELLE 4,3 x 9 x 0,8 mm
14		832-10404		4	ECROU M4
15		391818A2		1	ENCADREMENT Instrument Cluster Mounting; Canopy Models, Includes 390258A1
		390258A1		2	INSERT No. 10, Threaded
15A		390255A2		1	ENCADREMENT Instrument Cluster Mounting; Cab Models, Includes 390258A1
		390258A1		2	INSERT No. 10, Threaded
16		87310128		2	VIS No. 10 x 2-1/4, Stainless Steel; Canopy Models; Replaces 140-120 Non-Stainless Steel Screw Used On Some Models
16A		87310126		2	VIS No. 10 x 3/4, Stainless Steel; Cab Models; Replaces 140-107 Non-Stainless Steel Screw Used On Some Models
17		131-619		2	ECROU No. 10; Cab or Canopy
18		353068A2		1	ENCADREMENT Rear Switches

http://www.minnparbackhoeparts.com/

04-12		p2	05/05

TABLEAU DE BORD, LATÉRAL - COUVERCLES (CÔTÉ DROIT)

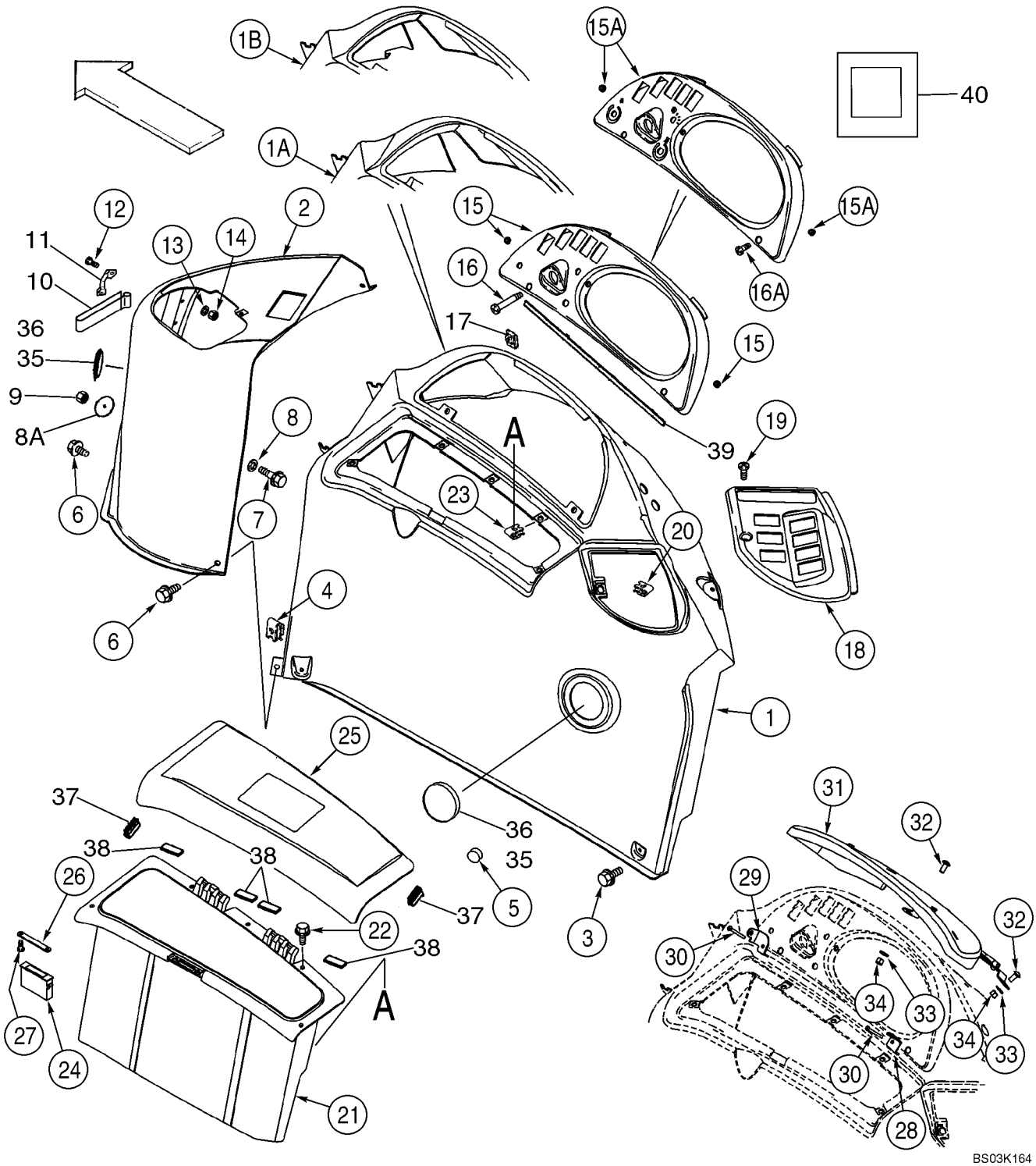

http://www.minnparbackhoeparts.com/

TABLEAU DE BORD, LATÉRAL - COUVERCLES (CÔTÉ DROIT)

REF	FN	PART NUMBER	YR/SN	QTY	DESCRIPTION
19		87310126		1	VIS No. 10 x 3/4, Stainless Steel; Replaces 140-107 Non-Stainless Steel Screw Used On Some Models
20		131-619		1	ECROU No. 10
21		366632A2		1	CAISSE A OUTILS Right-Hand
22		87310098		5	BOULON Flange, M6 x 20, Stainless Steel; Replaces 555-2 Non-Stainless Steel Screw Used On Some Models
23		833-40406		5	ECROU M6
24		D127335		1	RETENEUR Magnetic Catch
25		366633A3		1	VOLET Storage Box
26		375112A1		1	GÂCHE Striker
27		440-1066		2	VIS No. 6 x 3/8
28		386369A2		1	PATTE FIXATION
29		386368A2		1	PATTE FIXATION
30		87310128		2	VIS No. 10 x 2-1/4, Stainless Steel; Replaces 140-120 Non-Stainless Steel Screw Used On Some Models
31		385614A4		1	COUVERCLE (ASSEMBLE) Instrument Cluster; Anti-Vandalism, Canopy Models; Includes 386502A1, F22426
		386502A1		2	PARE-CHOCS
		F22426		3	BUTÉE
32		87310176		2	BOULON Round Head, M8 x 20, Stainless Steel; Replaces 811-8020 Non-Stainless Steel Screw Used On Some Models
33		87310185		2	RONDELLE 9 x 20 x 1,6 mm, Stainless Steel; Replaces 895-15008 Non-Stainless Steel Washer Used On Some Models
34		832-10408		2	ECROU M8
35		1302758C1		2	BOUCHON 3 inch
36		87310144		4	VIS AUTO-TARAUDEUSE No. 6 x 1/2, Stainless Steel; Replaces 413054A1 Non-Stainless Steel Screw Used On Some Models
37		430471A1		2	JOINT 40 mm, Bulb; Storage Lid Bumper
38		414092A1		4	RUBAN 50 mm, Storage Box; Adhesive Back
39		414071A1		1	BANDE D'ETANCHEITE 480 mm, Adhesive Back

http://www.minnparbackhoeparts.com/

04-12		p3	05/05

TABLEAU DE BORD, LATÉRAL - COUVERCLES (CÔTÉ DROIT)

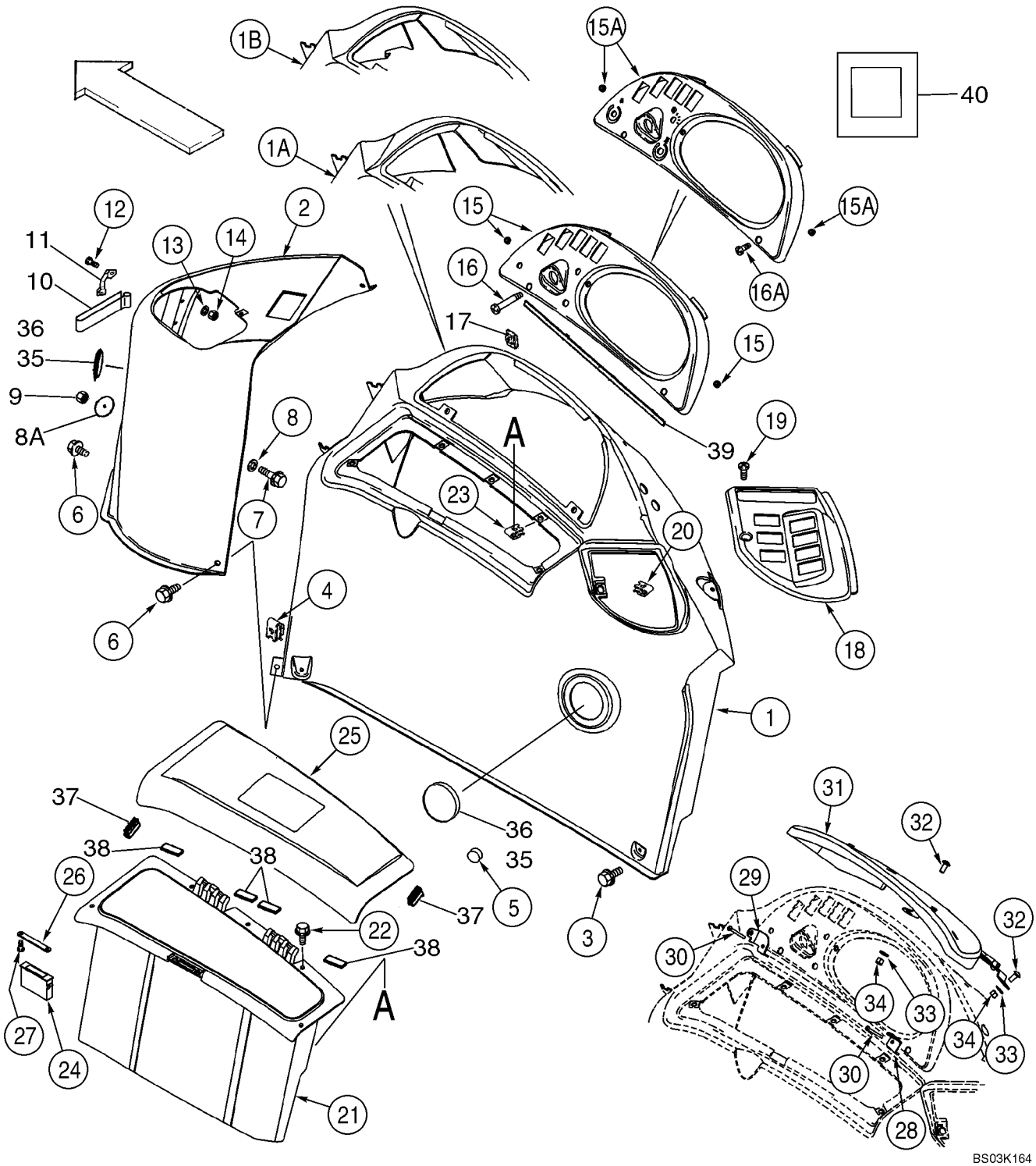

http://www.minnparbackhoeparts.com/

TABLEAU DE BORD, LATÉRAL - COUVERCLES (CÔTÉ DROIT)

REF	FN	PART NUMBER	YR/SN	QTY	DESCRIPTION
40		412510A1		1	JOINT 25 x 25 x 3 mm; Adhesive Back; Console To Fender

http://www.minnparbackhoeparts.com/

APPAREILS DE CONTROLE

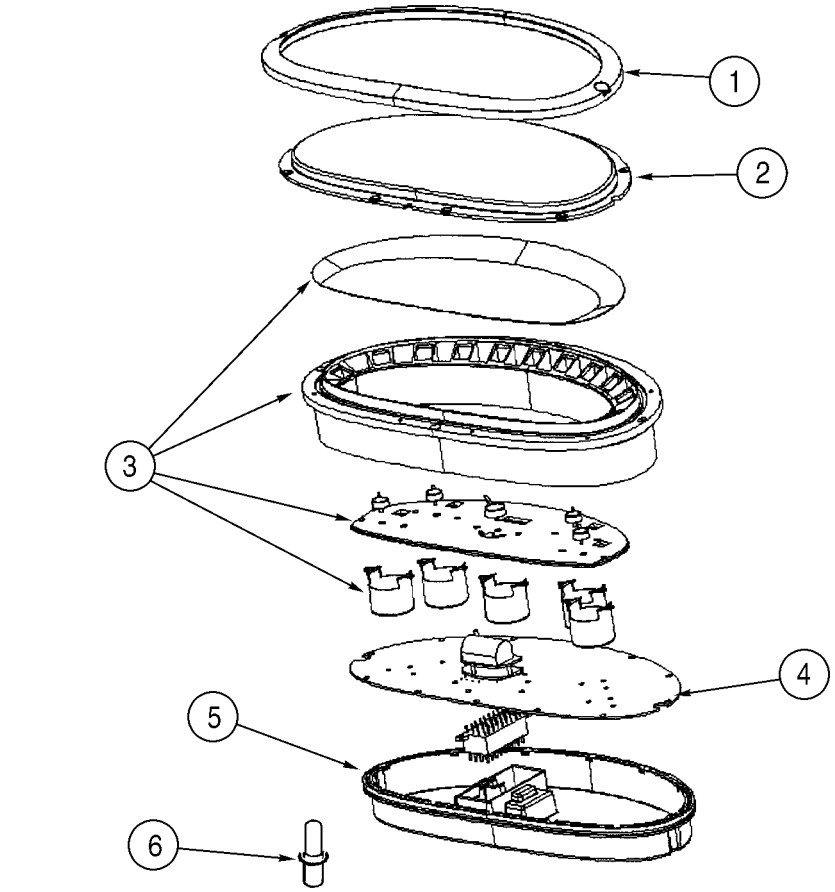

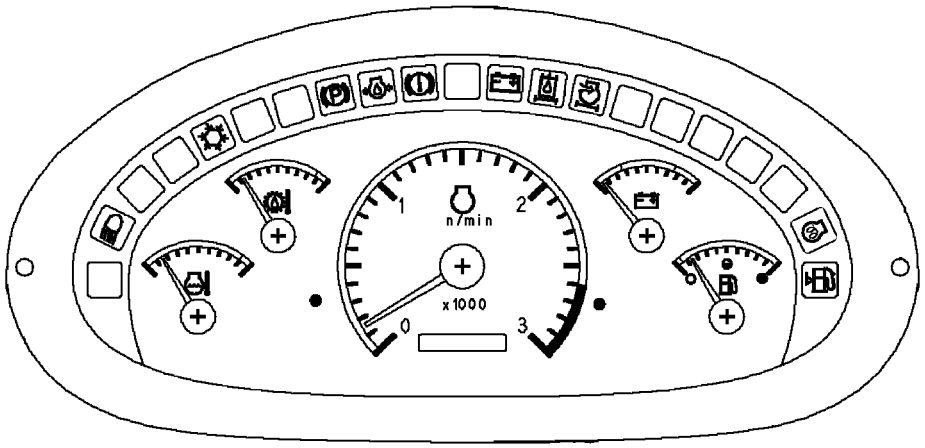

BS03K165

http://www.minnparbackhoeparts.com/

APPAREILS DE CONTROLE

REF	FN	PART NUMBER	YR/SN	QTY	DESCRIPTION
		87419320		1	TABLEAU DES INSTRUMENTS Incl. Ref 1 - 6
1		370755A1		1	ENCADREMENT Black
		NSS		2	NON FOURNI SEPAREMENT No. 6 x 1/4, Screw; Trim
2		370756A1		1	CABOCHON Clear; Includes O-Ring Which Is Not Serviced Separately
3		87423396		1	CALIBRE JAUGE Gauge Includes Overlay, Seal and Gauges Which Are Not Serviced Separately
4		87423397		1	HORAMETRE Hourmeter, Circuit Board; Includes Seal and Hourmeter Which Are Not Serviced Separately
		NSS		25	NON FOURNI SEPAREMENT No. 6 x 3/8, Screw
5		370760A1		1	COUVERCLE ARRIERE Rear; Includes O-Ring Which Is Not Serviced Separately
		NSS		2	NON FOURNI SEPAREMENT No. 6 x 3/4, Screw; Rear Cover
6		388053A2		1	AMPOULE 1W, 14V; Includes Socket

http://www.minnparbackhoeparts.com/

SYSTÈME ÉLECTRIQUE - ECLAIRAGE, TOIT ROPS

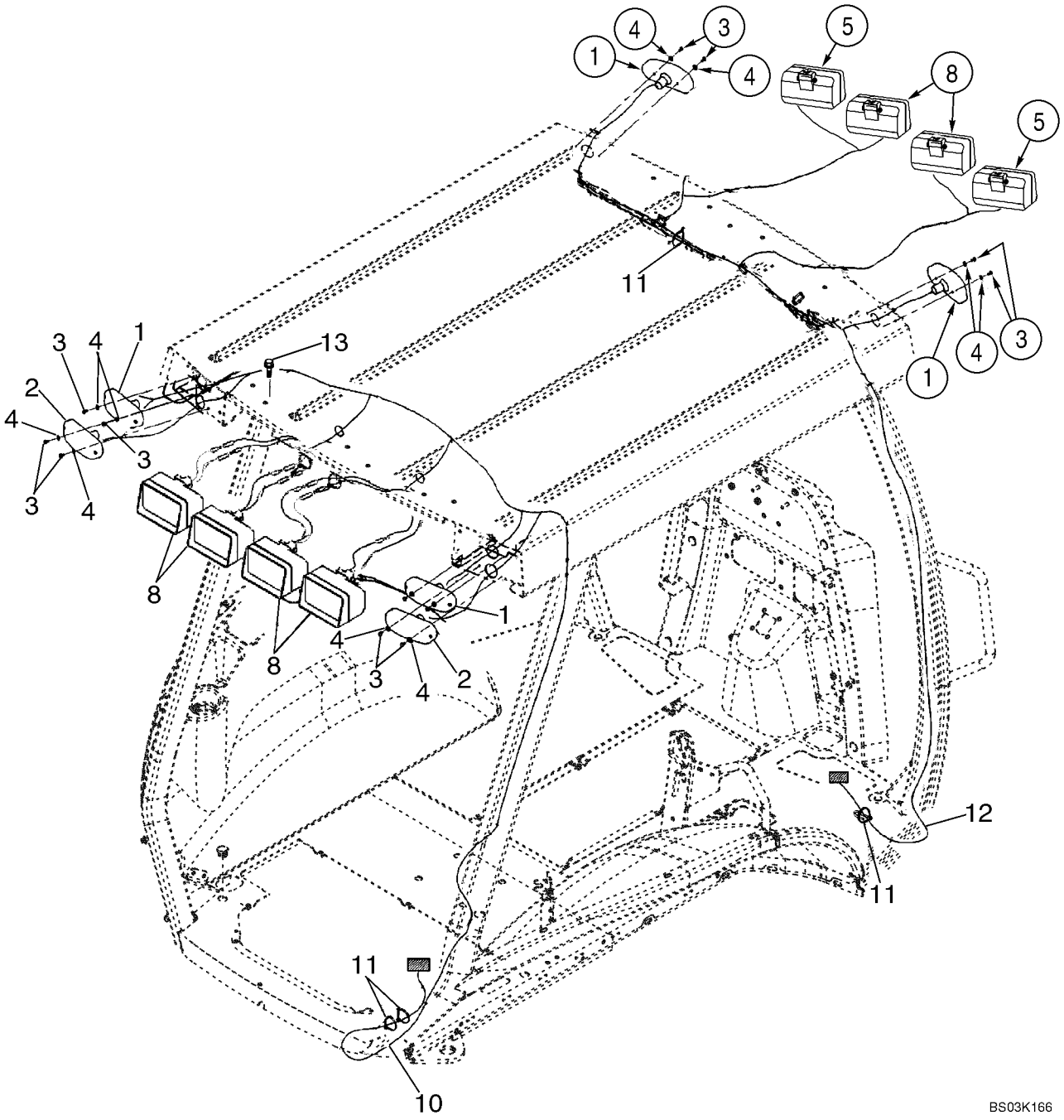

http://www.minnparbackhoeparts.com/

SYSTÈME ÉLECTRIQUE - ECLAIRAGE, TOIT ROPS

REF	FN	PART NUMBER	YR/SN	QTY	DESCRIPTION
1		D135384		4	LANTERNE Turn Signal and Flasher; See Figure 04-16
2		D121152		2	LAMPE Stop And Tail; See Figure 04-16
3		329032A1		12	VIS No. 10 x 3/8
4		495-31022		12	RONDELLE 7/32 x 1/2 x 3/64
5		398846A3		2	FEU (ASSEMBLE) Front Driving; Includes 1312210C2
		1312210C2		1	AMPOULE 12V, 55W
8		398847A3		6	FEU (ASSEMBLE) Front and Rear Flood and Work Lamps; Includes 1312210C2, 276498A1; ABL Brand, If Used
8		87443080		6	FEU (ASSEMBLE) Front and Rear Flood and Work Lamps; Includes 1312210C2 Bulb; Cobo Brand, If Used
		1312210C2		1	AMPOULE 12V, 55W
		276498A1		1	CABOCHON With Hardened Glass; Replaces 1964801C1 Non-Hardened Lens Used In Production
10		396023A2		1	FAISCEAU Canopy Lamps; Rear
11		L18337		X	SANGLE 15 in
12		404617A1		1	FAISCEAU Canopy Lamps and Wiper; Front
13		128312A1		8	BOULON Flange, M10 x 15

http://www.minnparbackhoeparts.com/

04-15		p1	04/04

SYSTÈME ÉLECTRIQUE - ECLAIRAGE, CABINE ROPS

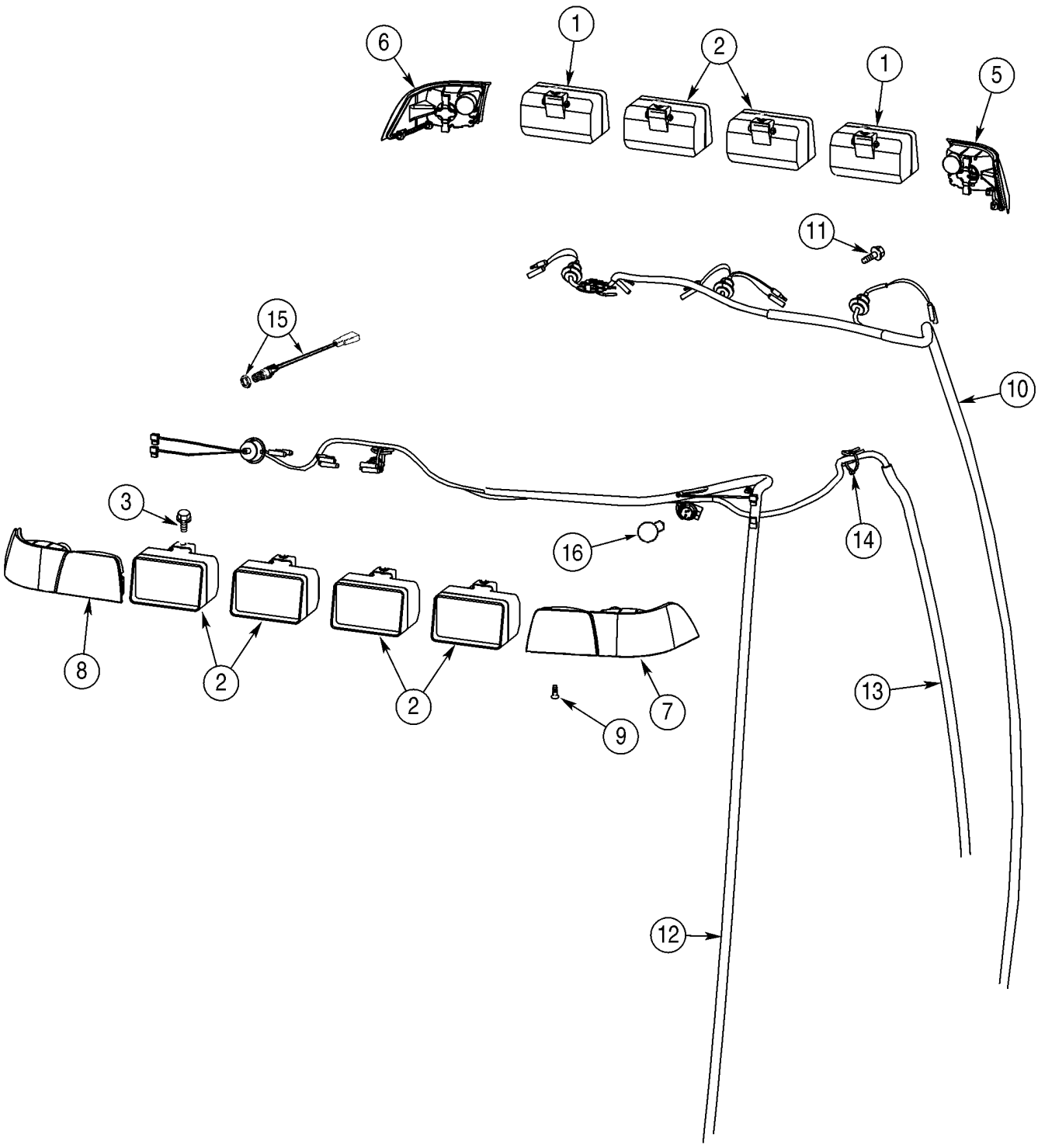

http://www.minnparbackhoeparts.com/

SYSTÈME ÉLECTRIQUE - ECLAIRAGE, CABINE ROPS

REF	FN	PART NUMBER	YR/SN	QTY	DESCRIPTION
1		398846A3		2	FEU (ASSEMBLE) Front Driving; Includes 1312210C2
		1312210C2		1	AMPOULE 12V, 55W
2		398847A3		6	FEU (ASSEMBLE) Front and Rear Flood and Work Lamps; Includes 1312210C2, 276498A1; ABL Brand, If Used
2		87443080		6	FEU (ASSEMBLE) Front and Rear Flood and Work Lamps; Includes 1312210C2 Bulb; Cobo Brand, If Used
		1312210C2		1	AMPOULE 12V, 55W
		276498A1		1	CABOCHON With Hardened Glass; Replaces 1964801C1 Non-Hardened Lens Used In Production
3		128312A1		8	BOULON M10 x 15
5		279224A1		1	FEU ARRIERE Amber; Right Front Corner
6		279223A1		1	FEU ARRIERE Amber; Left Front Corner
7		357540A1		1	FEU (ASSEMBLE) Amber and Red; Right Rear Corner
8		357541A1		1	FEU (ASSEMBLE) Amber and Red; Left Rear Corner
9		394863A1		10	VIS M6 x 20
10		404617A1		1	FAISCEAU Front
11		844-10020		2	VIS M10 x 20
12		398380A3		1	FAISCEAU Rear
13		396018A3		1	FAISCEAU B-Post, Dome Lamp, Radio, Rear Wiper; Replaces 396018A2 Harness
14		L18337		5	SANGLE 15 in
15		279265A2		1	CONTACTEUR Dome Lamp
16		279916A1		2	AMPOULE

http://www.minnparbackhoeparts.com/

04-16		p1	08/03

ÉCLAIRAGE (MODÈLES AVEC STRUCTURE ROPS)

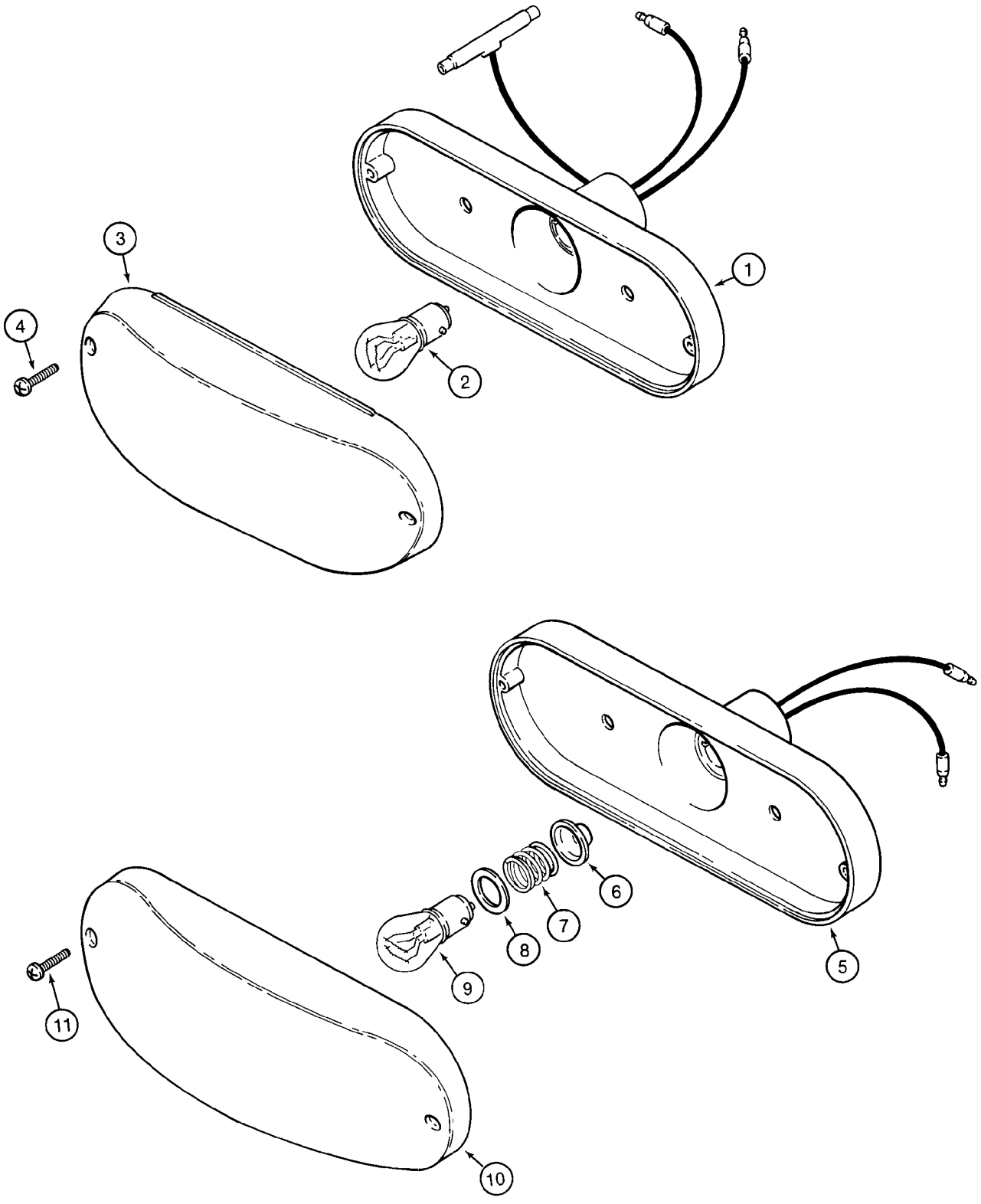

http://www.minnparbackhoeparts.com/

ÉCLAIRAGE (MODÈLES AVEC STRUCTURE ROPS)

REF	FN	PART NUMBER	YR/SN	QTY	DESCRIPTION
		D121152		2	LAMPE Stop And Tail Lamp; Red; Incl. Ref 1 - 4
1		NSS		1	NON FOURNI SEPAREMENT Housing
2		T34857		1	AMPOULE No. 1157
3		N6836		1	CABOCHON Red
4		261-14310		2	VIS No. 6 st x 5/8
		D135384		4	LANTERNE Turn Signal and Flasher; Amber; Incl. Ref 5 - 11
5		NSS		1	NON FOURNI SEPAREMENT Housing
6		NSS		1	NON FOURNI SEPAREMENT Seal
7		NSS		1	NON FOURNI SEPAREMENT Spring
8		NSS		1	NON FOURNI SEPAREMENT Insulator
9		A41264		1	AMPOULE 12V, No. 1156
10		N14283		1	CABOCHON Amber
11		261-14310		2	VIS No. 6 st x 5/8

http://www.minnparbackhoeparts.com/

04-17		p1	04/04

AVERTISSEUR SONORE - ALARME DE RECUL

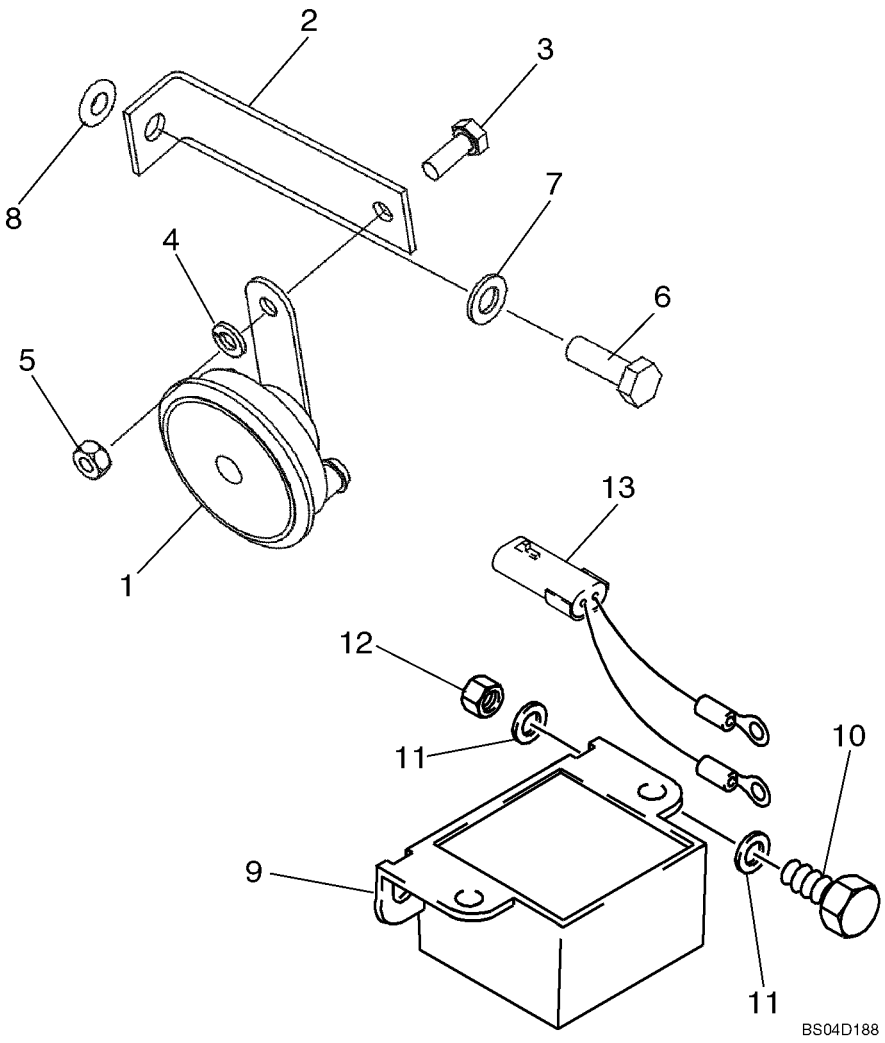

http://www.minnparbackhoeparts.com/

AVERTISSEUR SONORE - ALARME DE RECUL

REF	FN	PART NUMBER	YR/SN	QTY	DESCRIPTION
1		237582A1		1	AVERTISSEUR Black
2		87423496		1	PATTE FIXATION Bracket
3		614-8020		1	BOULON M8 x 20
4		892-11008		1	RONDELLE M8
5		829-1408		1	ECROU M8; 10
6		614-10030		1	VIS M10 x 30
7		895-11010		1	RONDELLE
8		87417721		1	INSERT FILETE M10 Rivnut
9		109511A1		1	ALARME Backup Alarm; Includes Nuts
10		614-8025		2	BOULON M8 x 25
11		895-11008		4	RONDELLE 9 x 17 x 1,6 mm
12		832-10408		2	ECROU M8
13		87425869		1	FAISCEAU COMPLET Pigtail Wire; Backup Alarm

http://www.minnparbackhoeparts.com/

04-18		p1	03/04

GYROPHARE (MODÈLES DE CABINES OU DE TOIT)

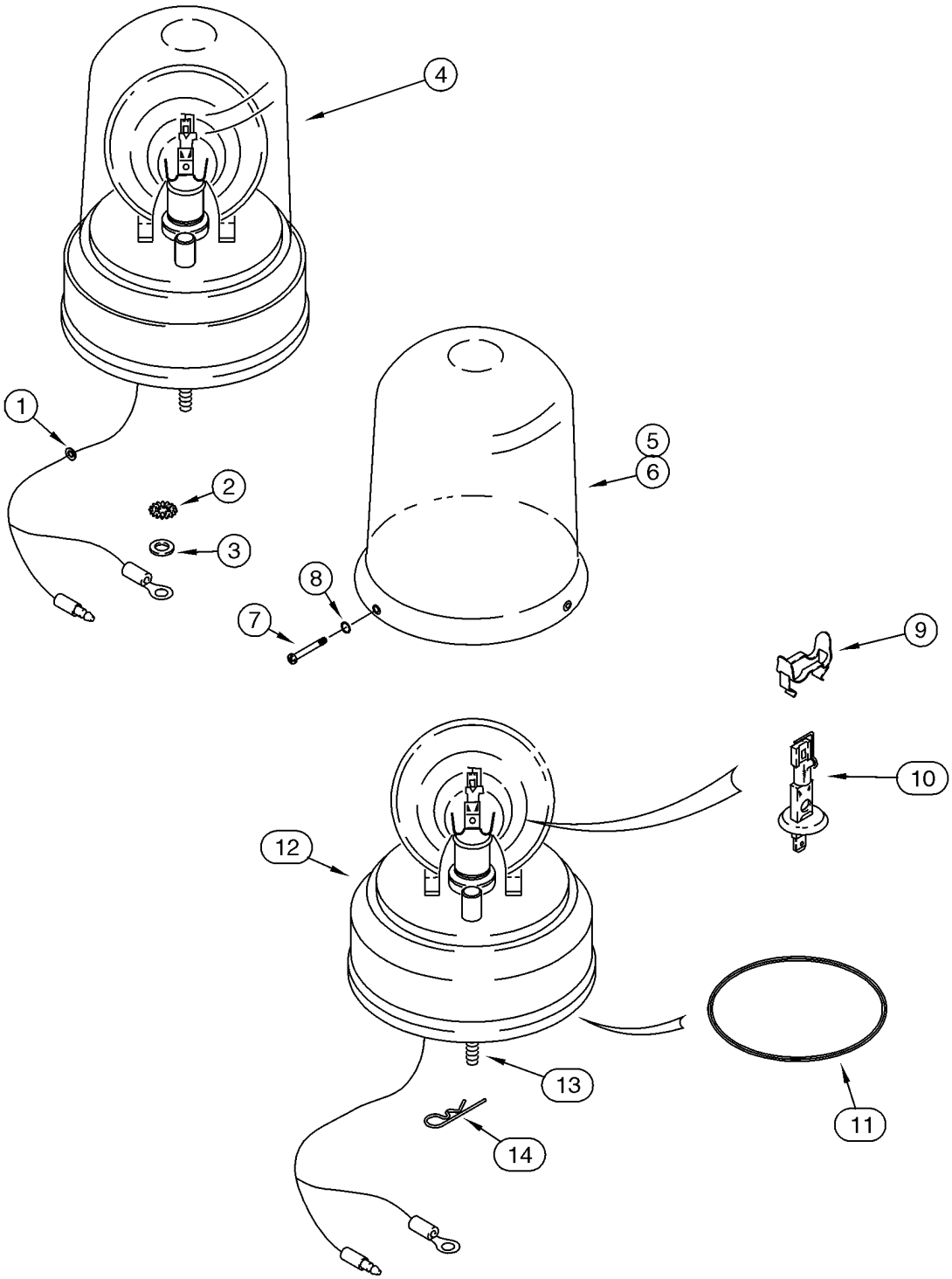

http://www.minnparbackhoeparts.com/

GYROPHARE (MODÈLES DE CABINES OU DE TOIT)

REF	FN	PART NUMBER	YR/SN	QTY	DESCRIPTION
		387940A1		1	POCHETTE Rotating Beacon; Amber, 12V; Incl. Ref 1 - 5, 7 - 16 and Instructions
1		A23870		1	PASSE-FIL
2		493-11026		1	RONDELLE 1/4; Internal External Tooth Lock Washer; Ground
3		495-21031		1	RONDELLE 5/16 x 3/4 x 1/16
4		108366A1		1	FEU DE SIGNALISATION Rotating Beacon Assembly; Amber, 12V; Incl. Ref 5, 7 - 14
5		A187542		1	CABOCHON Amber; If Used
6		127158A1		1	CABOCHON Blue; Optional; Not Included In Kit, Purchase Separately; If Used
7		168-71		3	VIS No. 8 x 1/2
8		238-5005		3	JOINT TORIQUE 3/32 ID x 1/16
9		101531A1		1	CLIP
10		3125705R1		1	AMPOULE 12V, 55W
11		A187575		1	COURROIE Drive Motor
12		NSS		1	NON FOURNI SEPAREMENT Base; With Drive Motor
13		614-6020		3	BOULON M6 x 20
14		136-54		3	AXE 1/4 x 11/16
15		386851A1		1	CONTACTEUR Rotating Beacon; Not Illustrated
16		121412A1		1	FUSIBLE Fuse, 10 amp; Not Illustrated

http://www.minnparbackhoeparts.com/

04-19		p1	03/04

ANTENNE, RADIO - FAISCEAU, RADIO

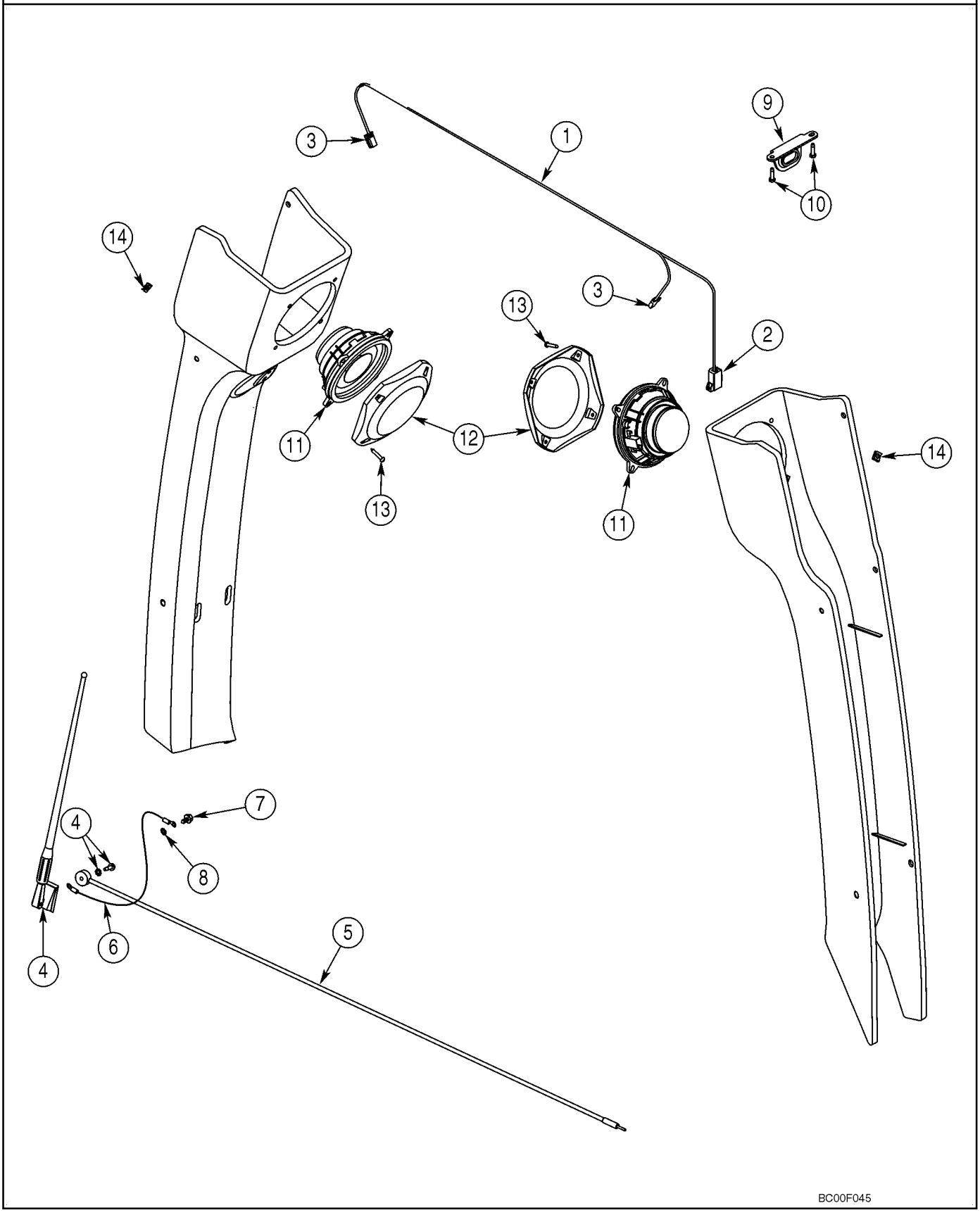

http://www.minnparbackhoeparts.com/

ANTENNE, RADIO - FAISCEAU, RADIO

REF	FN	PART NUMBER	YR/SN	QTY	DESCRIPTION
		404471A1		1	POCHETTE Speakers and Antenna; Incl. Ref 1 - 15 and Instructions
1		382664A2		1	FAISCEAU Speaker; Incl. Ref 2, 3
2		227389A1		1	CONNECTEUR To Cab Harness
3		195552A1		2	RACCORD Speaker
4		197745A1		1	ANTENNE Radio; Includes Flat Washer and Nut Which Are Not Serviced Separately
5		381659A1		1	CABLE (ASSEMBLE)
6		291010A1		1	FIL Ground
7		282-16512		2	VIS No. 10 x 3/4
8		893-11005		1	RONDELLE External Tooth Lock, M5
9		386927A1		1	PATTE FIXATION Radio Mounting
10		276-26512		2	VIS No. 10 x 3/4
11		182721A2		2	HAUT-PARLEUR
12		187281A1		2	COUVERCLE
13		761-17325		8	VIS M4,2 x 25
14		177269A1		8	ECROU Spring
15		L18331		1	SANGLE Tie, Not Illustrated

http://www.minnparbackhoeparts.com/

SYSTÈME ÉLECTRIQUE - CIRCUIT HYDRAULIQUE AUXILIAIRE POUR LA PELLE RETRO

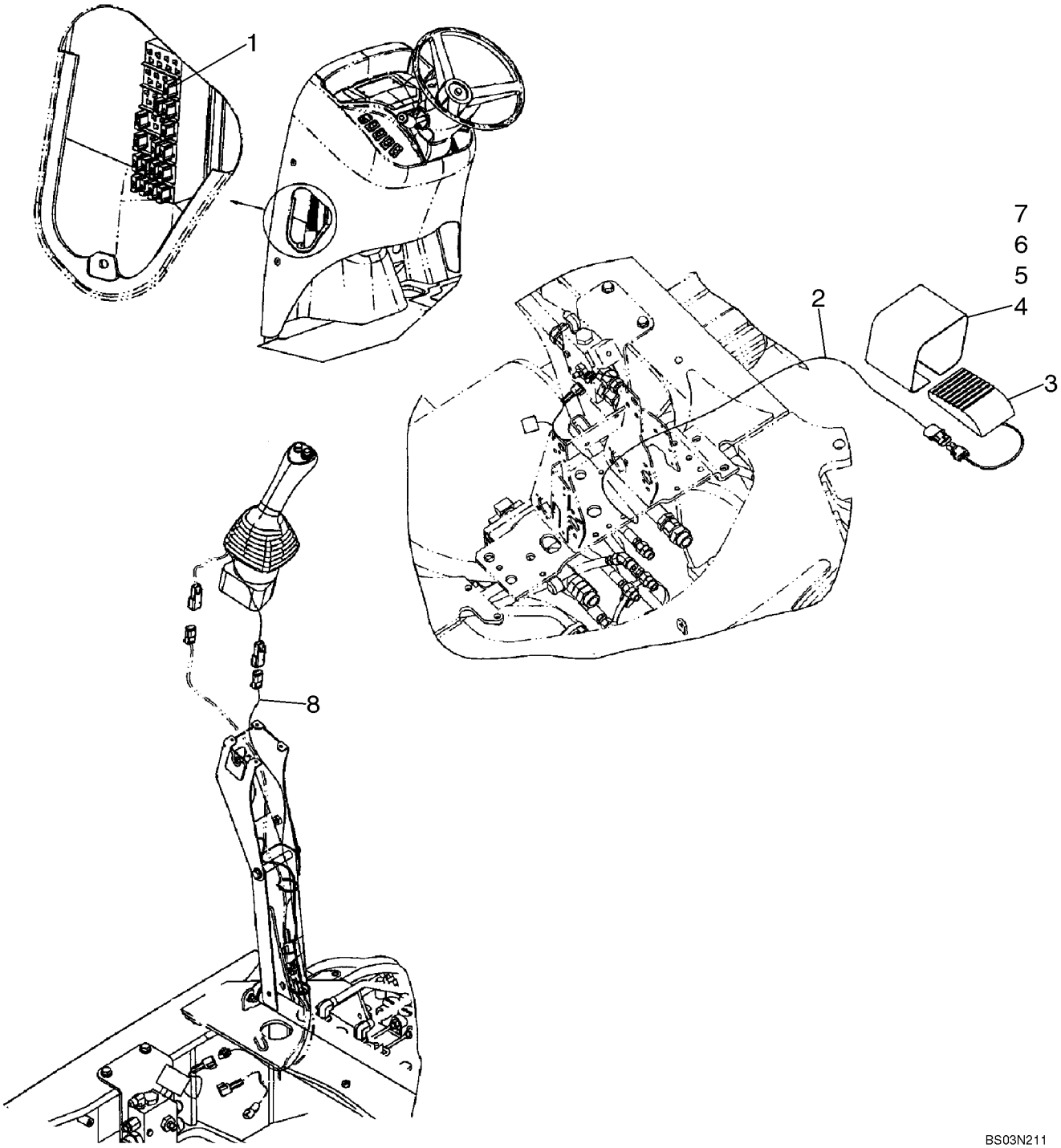

http://www.minnparbackhoeparts.com/

SYSTÈME ÉLECTRIQUE - CIRCUIT HYDRAULIQUE AUXILIAIRE POUR LA PELLE RETRO

REF	FN	PART NUMBER	YR/SN	QTY	DESCRIPTION
1		121413A1		1	FUSIBLE 15 amp
2		87425631		1	FAISCEAU COMPLET Auxiliary Hydraulic Harness, Uni-Directional; Models Without Pilot Controls
3		137219A1		1	CONTACTEUR Foot; Without Pilot Controls
4		300030A1		1	COUVERCLE Without Pilot Controls
5		843-1516		2	VIS M5 x 16
6		892-11005		2	RONDELLE FREIN M5
7		824-1405		2	ECROU M5
8		87425635		1	FAISCEAU COMPLET Auxiliary Hydraulic; Uni-Directional; Models With Pilot Controls

http://www.minnparbackhoeparts.com/

04-21		p1	05/05

SYSTÈME ÉLECTRIQUE - CIRCUIT HYDRAULIQUE AUXILIAIRE POUR LA PELLE RETRO, AVEC DE COMMANDE PILOTE

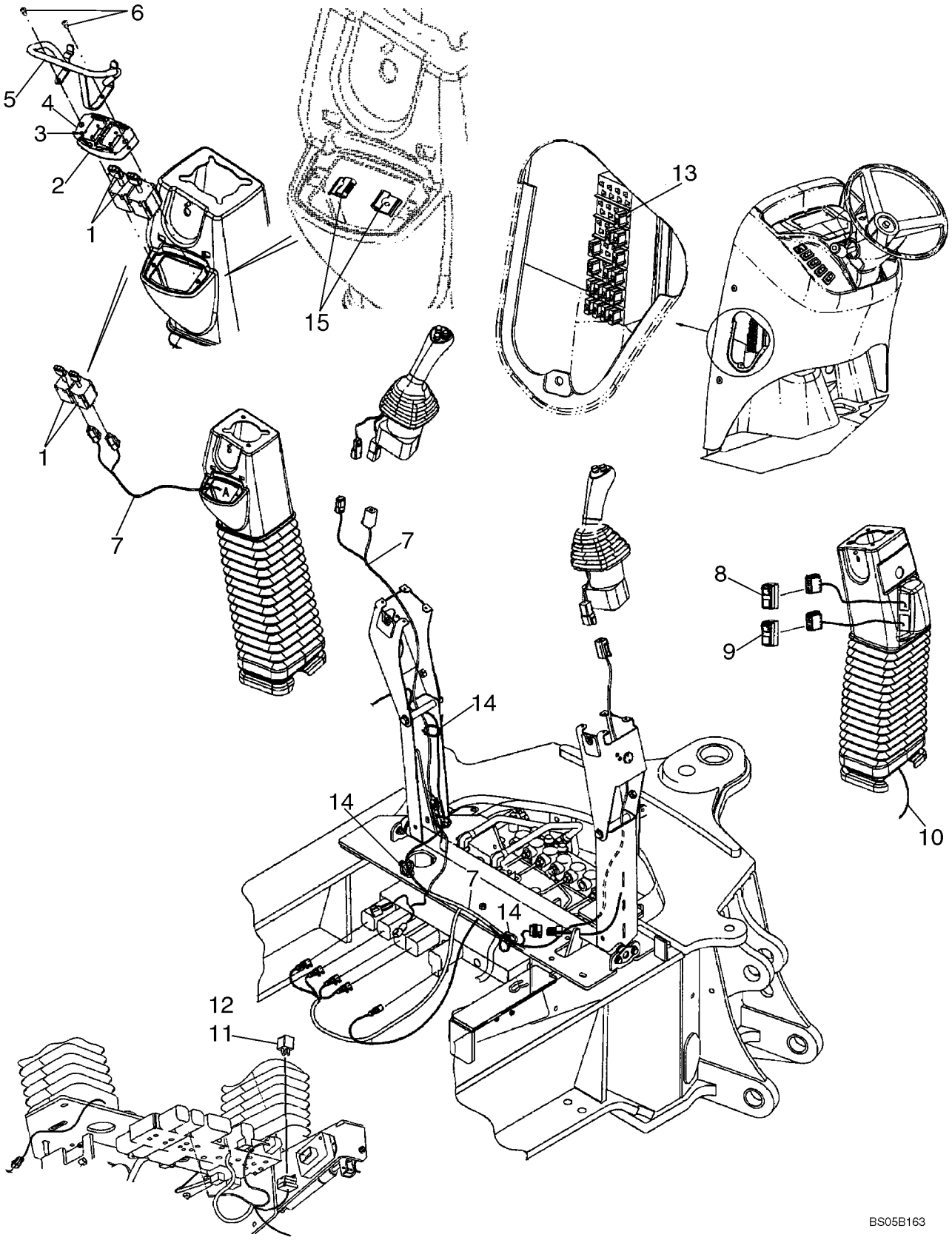

http://www.minnparbackhoeparts.com/

SYSTÈME ÉLECTRIQUE - CIRCUIT HYDRAULIQUE AUXILIAIRE POUR LA PELLE RETRO, AVEC DE COMMANDE PILOTE

REF	FN	PART NUMBER	YR/SN	QTY	DESCRIPTION
1		86988086		2	COMMUTATER A LEVIER Stabilizer
2		87435381		1	PANOPLIE
3		87303784		8	VIS M3 x 8, Pol; Replaces 87022296 Screw With BZN Finish Used On Some Models
4		87423812		1	DECALCOMANIE Stabilizer Switch
5		{87307656}		1	Stabilizer Switch Guard; Replaces 87436396
6		87310083		2	VIS AUTO-TARAUDEUSE Hex Washer Head, Self-Tapping, No. 10 x 1/2; Replaces 140-106 Pan Head Cross Recess Screw Used On Some Models
7		87436676		1	FAISCEAU COMPLET Pilot Control Joystick, Left-Hand
8		87423802		1	CONTACTEUR Pilot Control, On/Off
9		87410105		1	CONTACTEUR Pilot Control Pattern Selection
10		87425636		1	FAISCEAU COMPLET Pilot Control Joystick, Right-Hand
11		87436836		1	RELAIS Mini, 12V
12		840-1416		3	VIS M4 x 16
13		121413A1		1	FUSIBLE Mini, 15 amp
14		L18337		6	SANGLE
15		87452511		2	ECROU J-Type Nut; If Used

http://www.minnparbackhoeparts.com/

NOTES

http://www.minnparbackhoeparts.com/

SECTION INDEX

05-01	VOLANT - COLONNE
05-02	SYSTEME HYDRAULIQUE - DIRECTION
05-03	COLONNE DE DIRECTION
05-04	ESSIEU, AVANT (86990837) - SUPPORT
05-05	ESSIEU, AVANT (86990837) - BOÎTIER
05-06	ESSIEU, AVANT (86990837) - LOGEMENT DU PIVOT
05-07	ESSIEU, AVANT (86990837) - VERIN DE DIRECTION
05-08	ESSIEU, AVANT (86990837) - MOYEU ET ROULEMENTS
05-09	ROUES AVANT - PNEUS

http://www.minnparbackhoeparts.com/

VOLANT - COLONNE

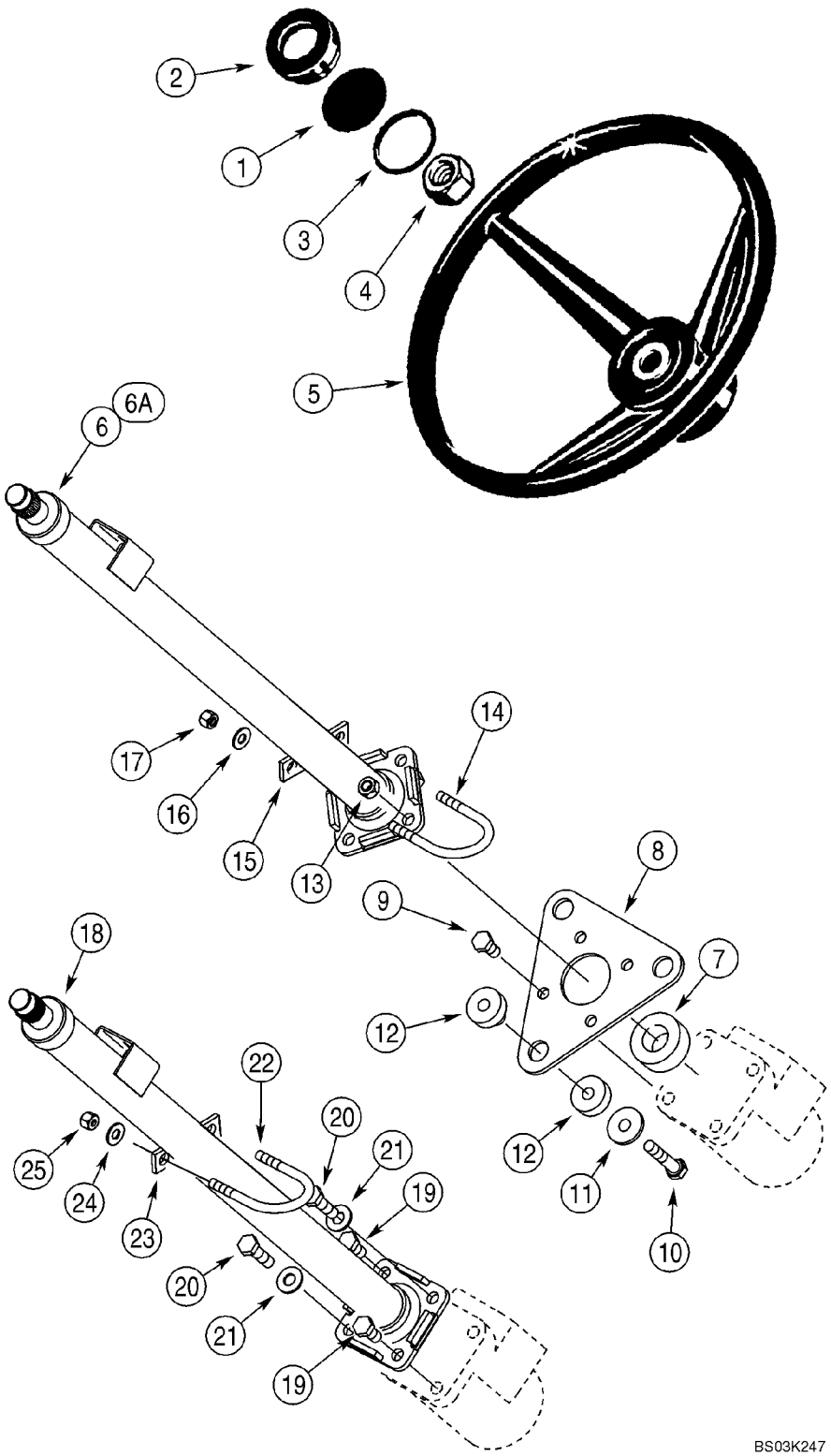

http://www.minnparbackhoeparts.com/

VOLANT - COLONNE

REF	FN	PART NUMBER	YR/SN	QTY	DESCRIPTION
1		87435569		1	EMBLÈME Insert, Case
2		114882A2		1	CHAPEAU
3		238-5227		1	JOINT TORIQUE 2-1/8 ID x 2-3/8
4		1959509C1		1	ECROU
5		A65544		1	VOLANT-DE-DIRECTION
6		352568A1		1	COLONNE DE DIRECTION Cab Models, Without Tilt Steering, See Figure 05-03
6A		352569A4		1	COLONNE DE DIRECTION Cab Models, With Tilt Steering, 712 mm Long, See Figure 05-03
7		352401A1		1	JOINT 25 x 40 x 19 mm, Sound Insulation
8		388116A2		1	PLAQUE
9		614-10020		4	VIS M10 x 20
10		814-10050		3	BOULON M10 x 50
11		496-81028		3	RONDELLE 13/32 x 1-1/4 x 1/8 in
12		87447450		3	ISOLATEUR 10 mm Hole; Replaces 141747A1 Isolator With 9.5 mm Hole Used On Some Models
13		832-10410		2	ECROU Lock, M10
14		379846A1		1	CAVALIER
15		352727A1		1	ENTRETOISE
16		895-15008		2	RONDELLE 9 x 20 x 1,6 mm
17		832-10408		2	ECROU Lock, M8
18		348794A1		1	COLONNE DE DIRECTION Canopy Models, See Figure 05-03
19		614-10020		2	VIS M10 x 20
20		614-10035		2	VIS M10 x 35
21		895-15010		2	RONDELLE 11 x 24 x 2 mm
22		379846A1		1	CAVALIER
23		352727A1		1	ENTRETOISE
24		895-15008		2	RONDELLE 9 x 20 x 1,6 mm
25		832-10408		2	ECROU Lock, M8

http://www.minnparbackhoeparts.com/

05-02		p1	02/05

SYSTEME HYDRAULIQUE - DIRECTION

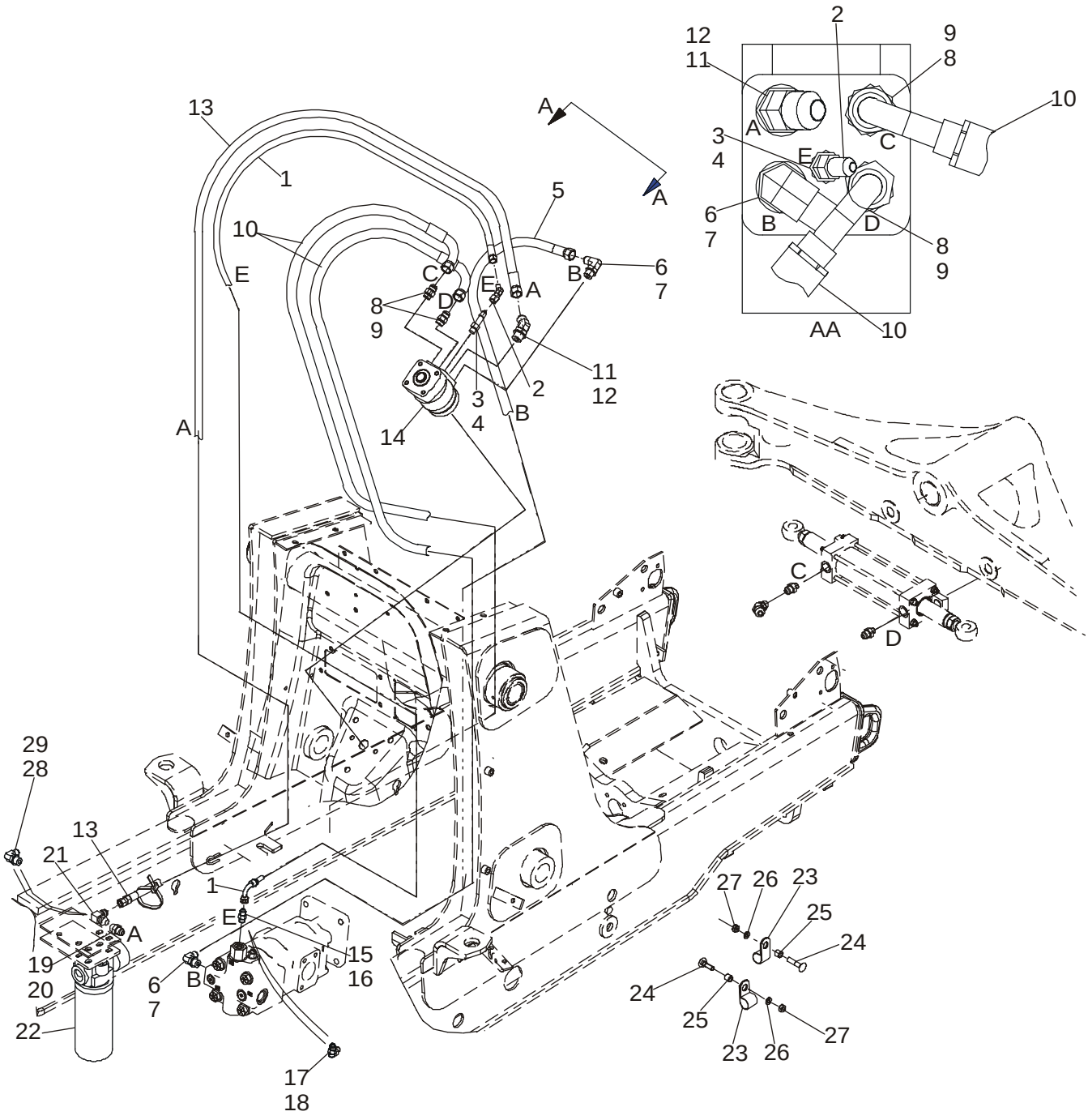

http://www.minnparbackhoeparts.com/

SYSTEME HYDRAULIQUE - DIRECTION

REF	FN	PART NUMBER	YR/SN	QTY	DESCRIPTION
1		87439137		1	FLEXIBLE (ASSEMBLE) 1675 mm (66 in), Steering Pilot Hose
2		218-5170		1	RACCORD Elbow, 45 deg, 7/16 fl x fem
3		218-5027		1	CONNECTEUR 7/16 fl x Or, Incl. Ref 4
4		237-6004		1	JOINT TORIQUE 23/64 ID x 5/64
5		87439138		1	FLEXIBLE (ASSEMBLE) 1600 mm (63 in), Steering Pressure
6		218-5106		2	RACCORD Elbow, 90 deg, 3/4 Or, Incl. Ref 7
7		237-6008		1	JOINT THORIQUE
8		218-5059		2	RACCORD 3/4 fl x Or, Incl. Ref 9
9		237-6008		1	JOINT THORIQUE 41/64 ID x 3/32
10		87429382		2	FLEXIBLE (ASSEMBLE) 1520 mm (59-7/8 in), To Steering Cylinder
11		218-5136		1	COUDE 45 deg, 3/4 Or; Incl. Ref 12
12		237-6008		1	JOINT THORIQUE
13		87439136		1	FLEXIBLE (ASSEMBLE) 1550 mm (61-1/16 in), Return
14		87419634		1	POMPE Steering Control Valve; Includes 87454545 Seal Kit, 396592A1 Anti-Cavitation Valve Kit, 396593A1 Bolt Kit
		396591A1		1	POCHETTE Seal; Includes (2) Seals, (3) O-Rings; No Longer Available, For Service Order 87454545 Seal Kit
		87454545		1	KIT DIRECTION HYDRAULIQUE Seal; Includes (2) Seals, (8) O-Rings
		396592A1		1	POCHETTE Anti-Cavitation Valve; Includes (2) Balls, (4) Springs, (2) Retainers
		396593A1		1	POCHETTE Bolt; Includes (7) Bolts
15		218-5057		1	RACCORD 9/16 fl x Or, Incl. Ref 16, Standard Equipment, Models Without Auxiliary Hydraulics
16		237-6006		1	JOINT THORIQUE
17		282428A1		1	CLAPET CHECK, Tee, 9/16; Incl. Ref 18; Models With Auxiliary Hydraulics
18		237-6006		1	JOINT THORIQUE
19		218-5351		1	RACCORD 3/4 fl x 9/16 Or; Incl. Ref 20; If Used
20		237-6006		1	JOINT THORIQUE 15/32 ID x 5/64
21		218-5230		1	COUDE 90 deg, 3/4 fl x sw; If Used

http://www.minnparbackhoeparts.com/

SYSTEME HYDRAULIQUE - DIRECTION

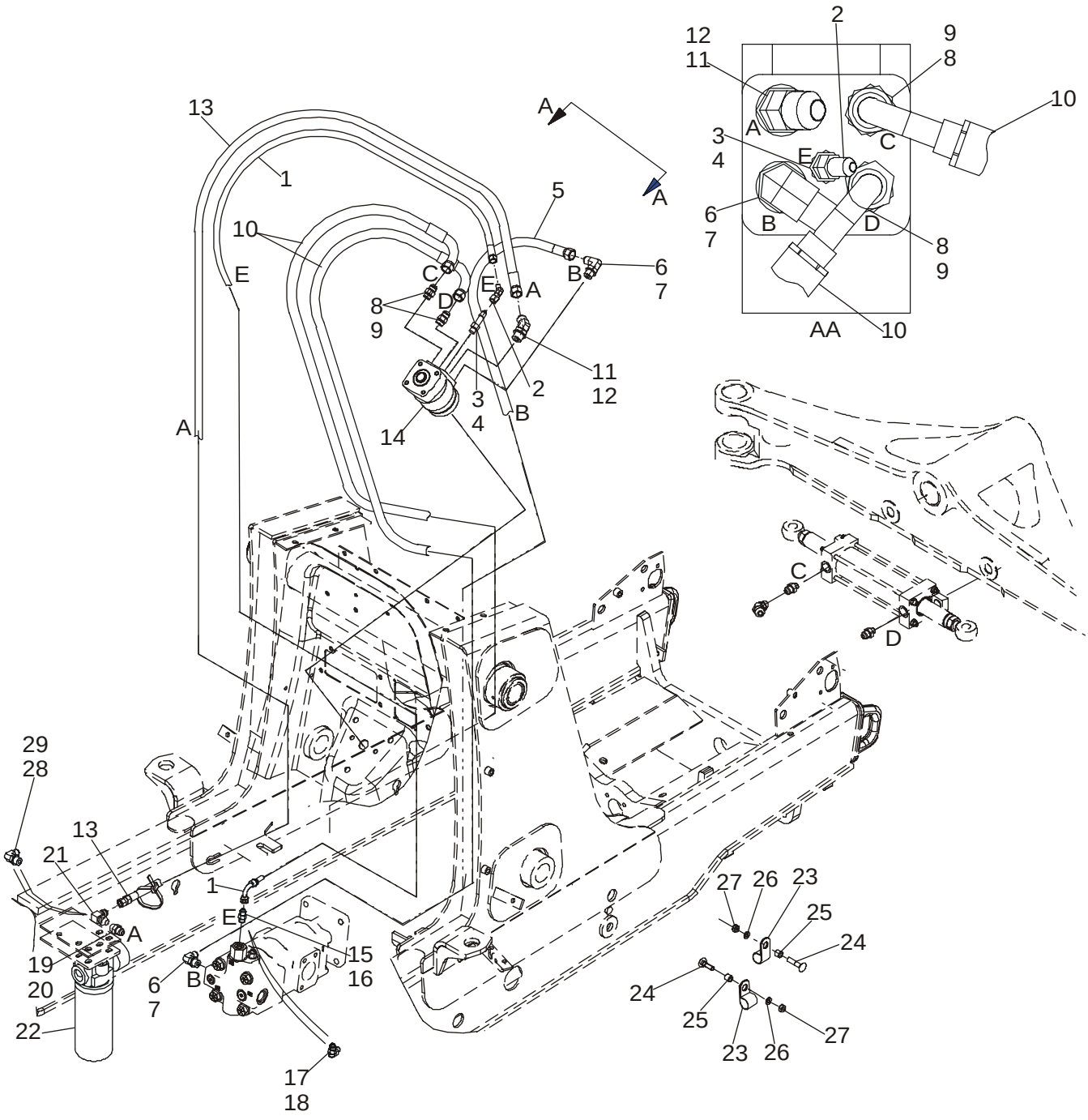

BS04D115

http://www.minnparbackhoeparts.com/

SYSTEME HYDRAULIQUE - DIRECTION

REF	FN	PART NUMBER	YR/SN	QTY	DESCRIPTION
22		87440045		1	FILTRE ASSY Hydraulic Oil, See Figure 08-61
23		515-23159		2	COLLIER P-Type
24		711-10050		2	BOULON M10 x 50
25		120303A1		2	ENTRETOISE
26		892-11010		2	RONDELLE FREIN M10
27		829-1410		2	ECROU M10; 10.9
28		218-5280		1	RACCORD ELBOW, 90 deg; 3/4 fl x 9/16 Or; Incl. Ref 29; If Used
29		237-6006		1	JOINT THORIQUE 15/32 ID x 5/64

http://www.minnparbackhoeparts.com/

COLONNE DE DIRECTION

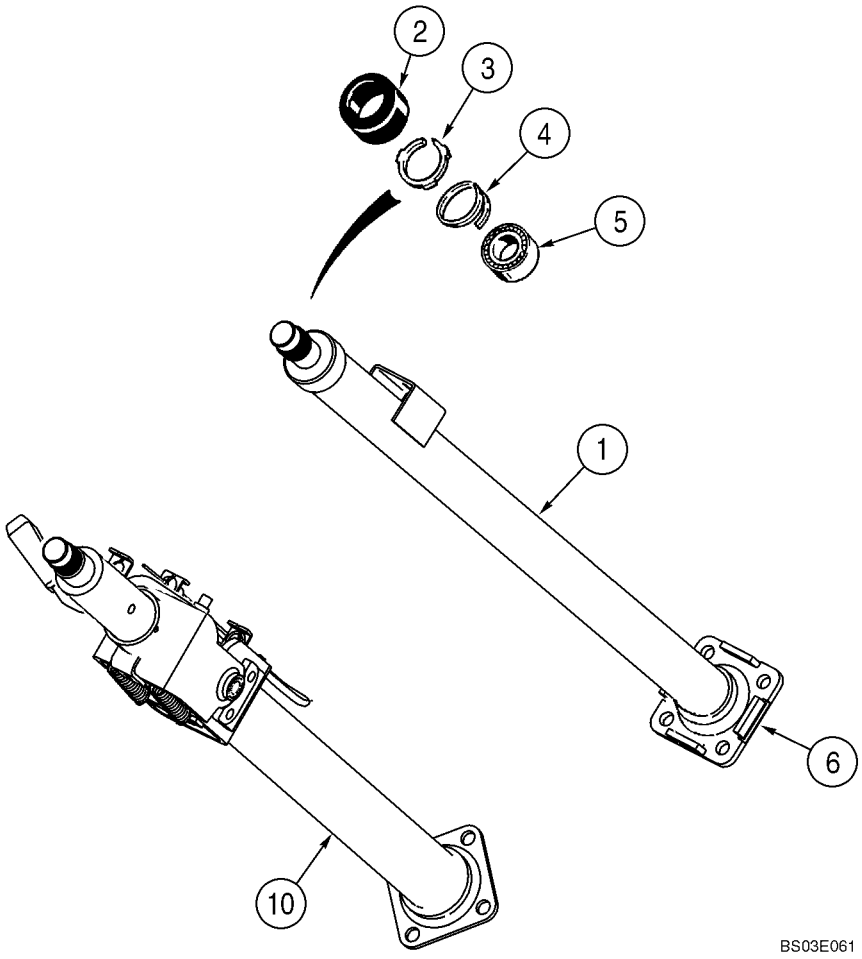

http://www.minnparbackhoeparts.com/

COLONNE DE DIRECTION

REF	FN	PART NUMBER	YR/SN	QTY	DESCRIPTION
		348794A1		1	COLONNE DE DIRECTION Canopy Models, Incl. Ref 1 - 6
		352568A1		1	COLONNE DE DIRECTION Cab Models, Without Tilt Steering, Incl. Ref 1 - 6
1		NSS		1	NON FOURNI SEPAREMENT Column
2		S115351		1	CHAPEAU
3		NSS		1	NON FOURNI SEPAREMENT Retainer
4		102-1387		1	ANNEAU-D'ARRET No. 87
5		NSS		1	NON FOURNI SEPAREMENT Bearing
6		NSS		1	NON FOURNI SEPAREMENT Flange
10		352569A4		1	COLONNE DE DIRECTION 712 mm Long, Cab Models, With Tilt Steering, Component Parts Not Serviced Separately

http://www.minnparbackhoeparts.com/

05-04		p1	01/04

ESSIEU, AVANT (86990837) - SUPPORT

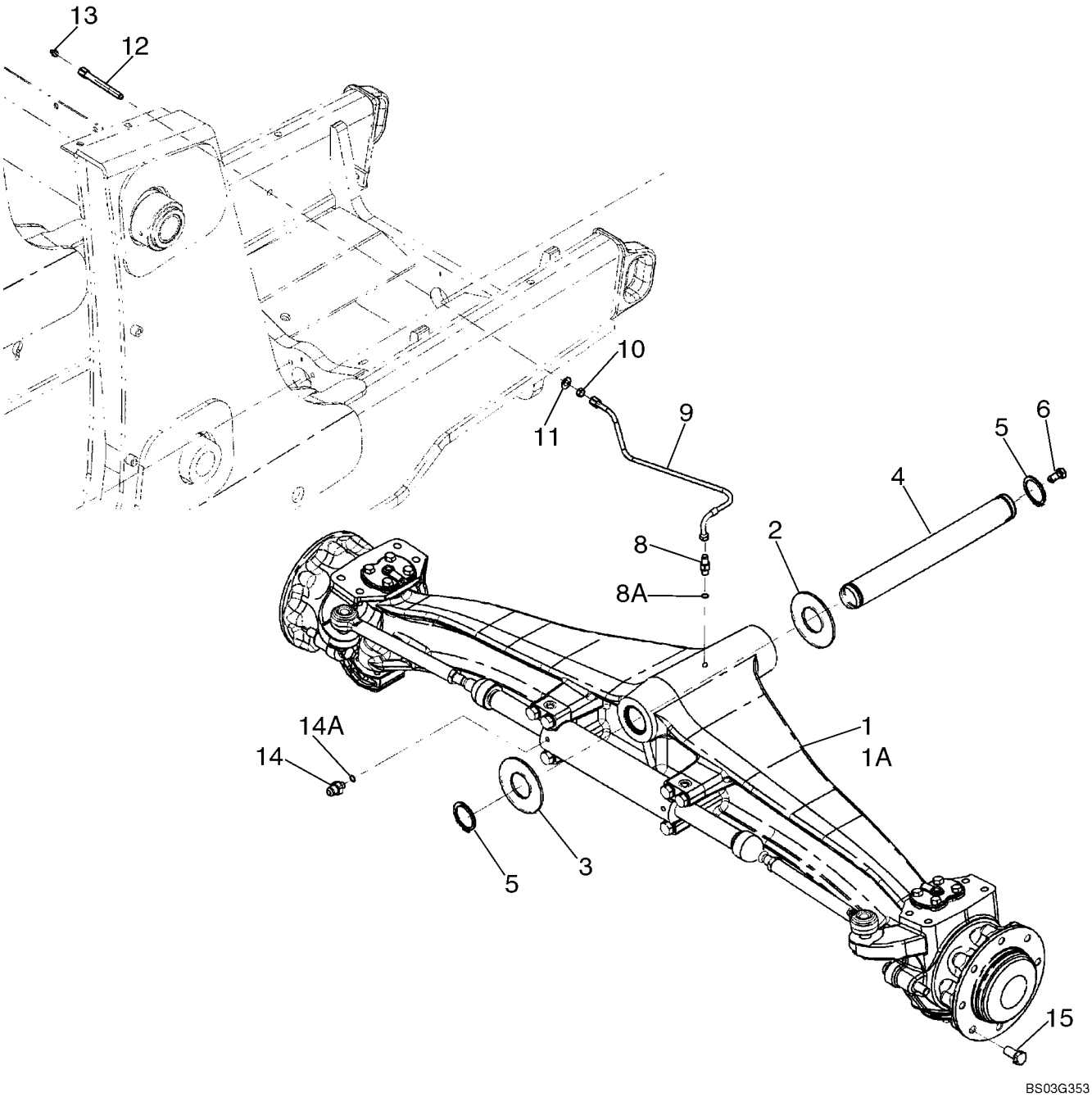

http://www.minnparbackhoeparts.com/

ESSIEU, AVANT (86990837) - SUPPORT

REF	FN	PART NUMBER	YR/SN	QTY	DESCRIPTION
1		86990837		1	ESSIEU DIRECTEUR Front, Two Wheel Drive, See Figures 05-05 - 05-08
2		191796A1		X	RONDELLE 2 x 4 x 1/16
3		D123684		1	RONDELLE Thrust, 2-1/2 x 4-1/2 x 3/16
4		87404197		1	CHEVILLE PIVOT
5		800-44050		2	ANNEAU-D'ARRET No. 50
6		614-12025		1	BOULON M12 x 25
8		218-5053		1	RACCORD 7/16 fl x adj Or; Incl. Ref 8A
8A		237-6004		1	JOINT TORIQUE 23/64 ID x 5/64
9		87433730		1	FLEXIBLE (ASSEMBLE) 500 mm (19-11/16 in), Lubrication Line
10		218-1275		1	CONTRE-ECROU 7/16
11		495-11047		1	RONDELLE 15/32 x 59/64 x 1/16
12		381442A1		1	CONNEXION
13		219-1		1	GRAISSEUR 1/8 PT x 21/32 Grease Fitting
14		218-5351		2	RACCORD 3/4 fl x 9/16 Or, Incl. Ref 14A
14A		237-6006		1	JOINT THORIQUE 15/32 ID x 5/64
15		A38208		16	BOULON Wheel Bolt

http://www.minnparbackhoeparts.com/

05-05		p1	01/04

ESSIEU, AVANT (86990837) - BOÎTIER

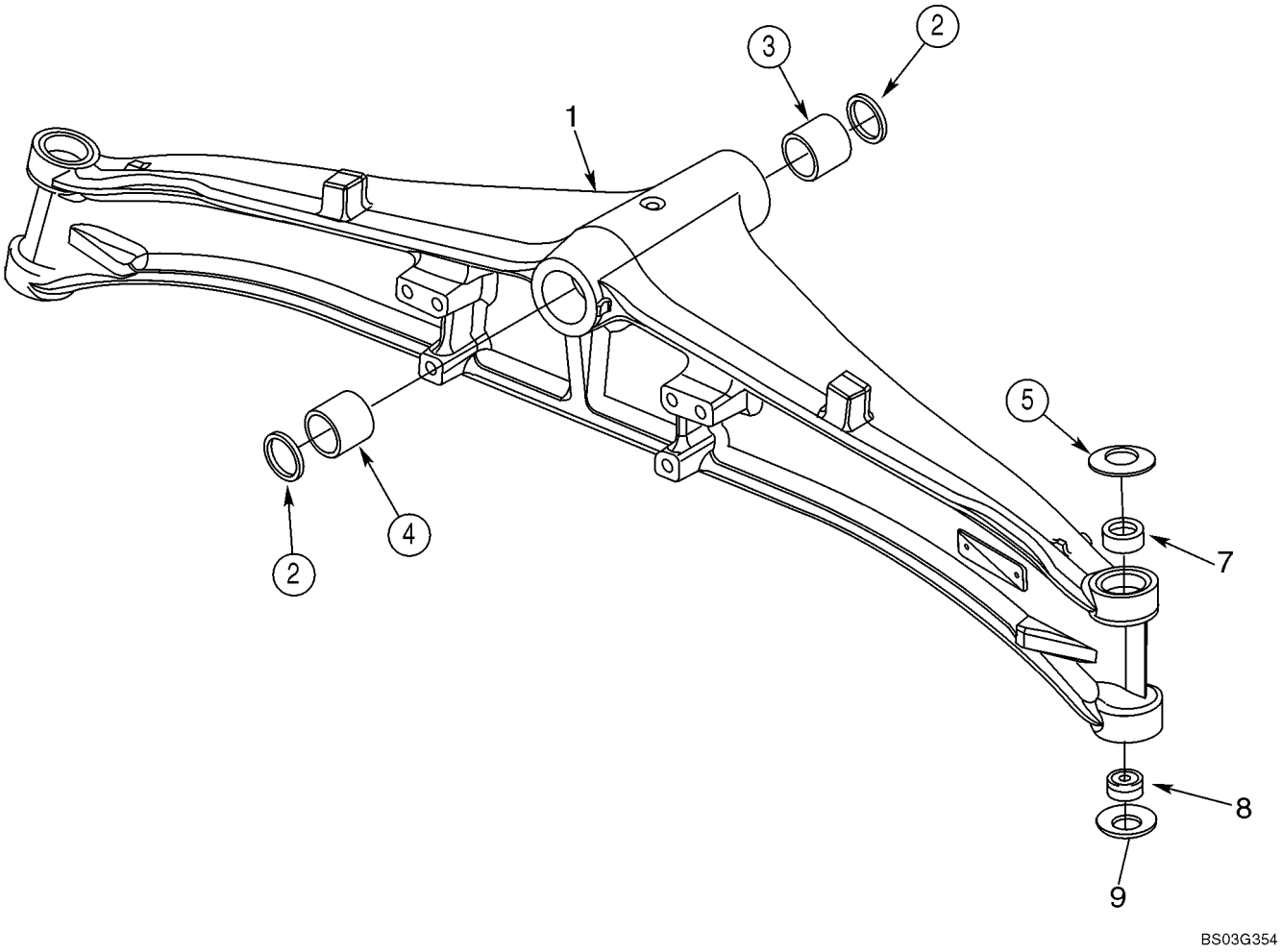

http://www.minnparbackhoeparts.com/

ESSIEU, AVANT (86990837) - BOÎTIER

REF	FN	PART NUMBER	YR/SN	QTY	DESCRIPTION
		86990837		1	ESSIEU DIRECTEUR Front, Two Wheel Drive, Incl. Figures 05-05 - 05-08
1		429230A1		1	CARTER DE PONT
2		N14367		2	JOINT
3		D149726		1	BAGUE Front
4		D149725		1	BAGUE Rear
5		122270A1		2	RONDELLE Belleville
7		87400286		2	BAGUE
8		N14373		2	ROULEMENT Bushing; Two Piece; 28 ID x 50 OD x 16
9		122261A1		2	RONDELLE Belleville

http://www.minnparbackhoeparts.com/

ESSIEU, AVANT (86990837) - LOGEMENT DU PIVOT

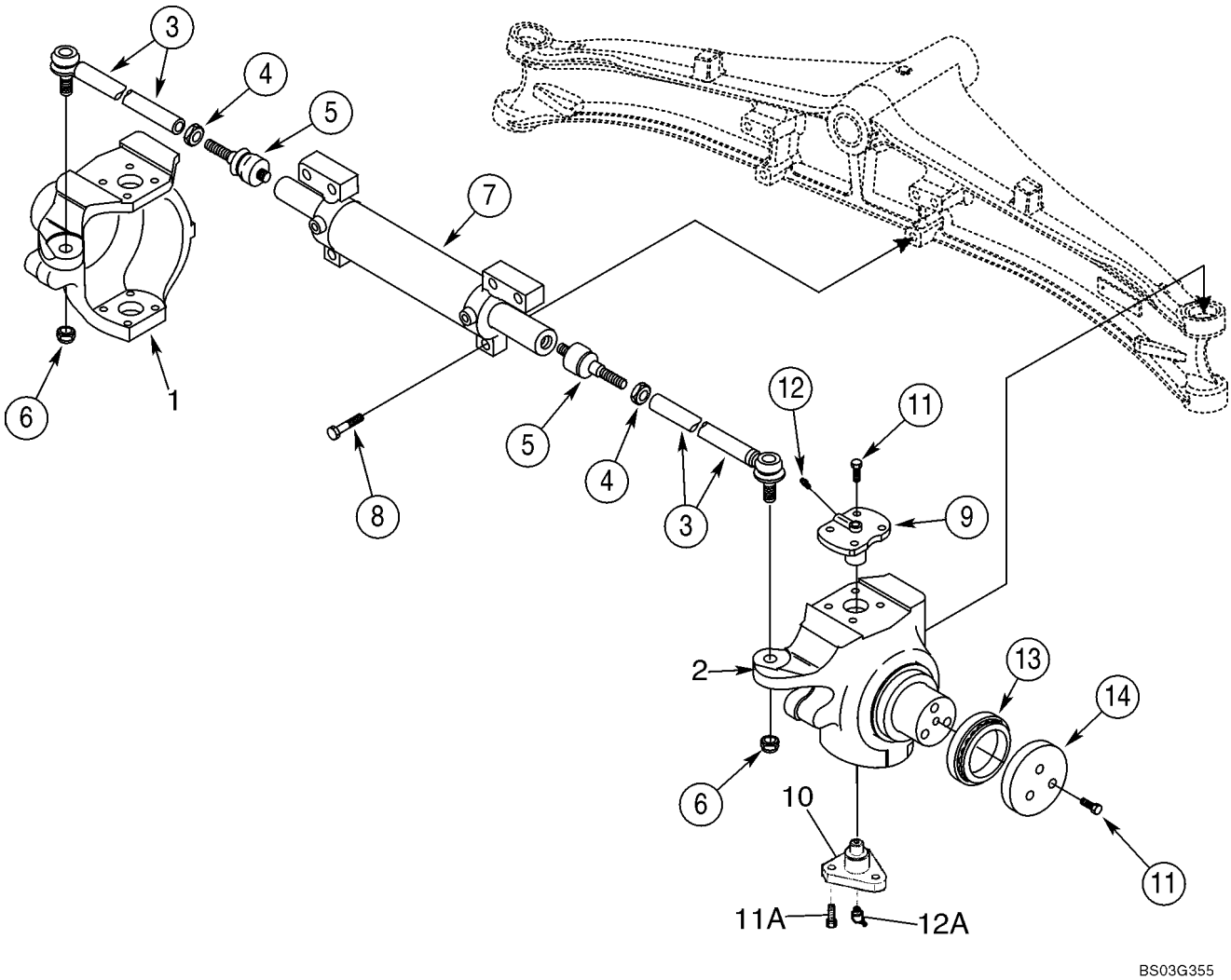

http://www.minnparbackhoeparts.com/

ESSIEU, AVANT (86990837) - LOGEMENT DU PIVOT

REF	FN	PART NUMBER	YR/SN	QTY	DESCRIPTION
		86990837		1	ESSIEU DIRECTEUR Front, Two Wheel Drive, Incl. Figures 05-05 - 05-08
1		429231A1		1	CARTER Swivel, Left-Hand
2		429232A1		1	CARTER Swivel, Right-Hand
		401052A1		2	DIRECTION (ASSY) Arm, Incl. Ref 3 - 5
3		401054A1		1	TIRANT
4		934727R1		1	ECROU M18
5		112509A1		1	ROTULE
6		905839R1		2	ECROU M18
7		401055A1		1	VÉRIN DE DIRECTION See Figure 05-07
8		863-16070		6	BOULON Socket Head, M16 x 70; 12.9
9		122265A1		2	AXE, GROS King Pin, Upper
10		122259A1		2	PIVOT King Pin, Lower; Triangular Shape
11		100533A1		14	BOULON Lock, M12 x 30
11A		D150214		6	VIS Lock, M14 x 35; Lower King Pin
12		712998R91		2	GRAISSEUR M6x1, Grease Fitting
12A		N13505		2	GRAISSEUR M6x1, 45 deg Grease Fitting; Lower King Pin
13		401059A1		2	ROULEMENT A ROULEAU Thrust
14		401060A1		2	RONDELLE DE BUTEE

http://www.minnparbackhoeparts.com/

ESSIEU, AVANT (86990837) - VERIN DE DIRECTION

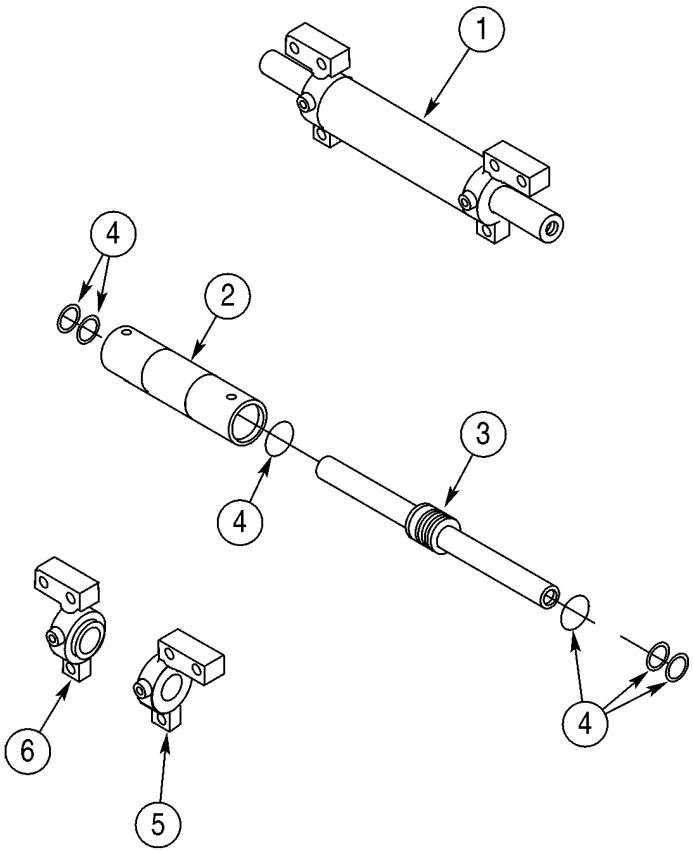

BC00G065

http://www.minnparbackhoeparts.com/

ESSIEU, AVANT (86990837) - VERIN DE DIRECTION

REF	FN	PART NUMBER	YR/SN	QTY	DESCRIPTION
		86990837		1	ESSIEU DIRECTEUR Front, Two Wheel Drive, Incl. Figures 05-05 - 05-08
1		401055A1		1	VÉRIN DE DIRECTION Incl. Ref 2 - 6
2		NSS		1	NON FOURNI SEPAREMENT Tube, Cylinder
3		401062A1		1	TIGE DE VERIN
4		401061A1		1	POCHETTE-JOINTS Seal, Component Parts Not Serviced Separately
5		401063A1		1	TETE (ASSEMBLEE) Right-Hand
6		401064A1		1	TETE (ASSEMBLEE) Left-Hand

http://www.minnparbackhoeparts.com/

ESSIEU, AVANT (86990837) - MOYEU ET ROULEMENTS

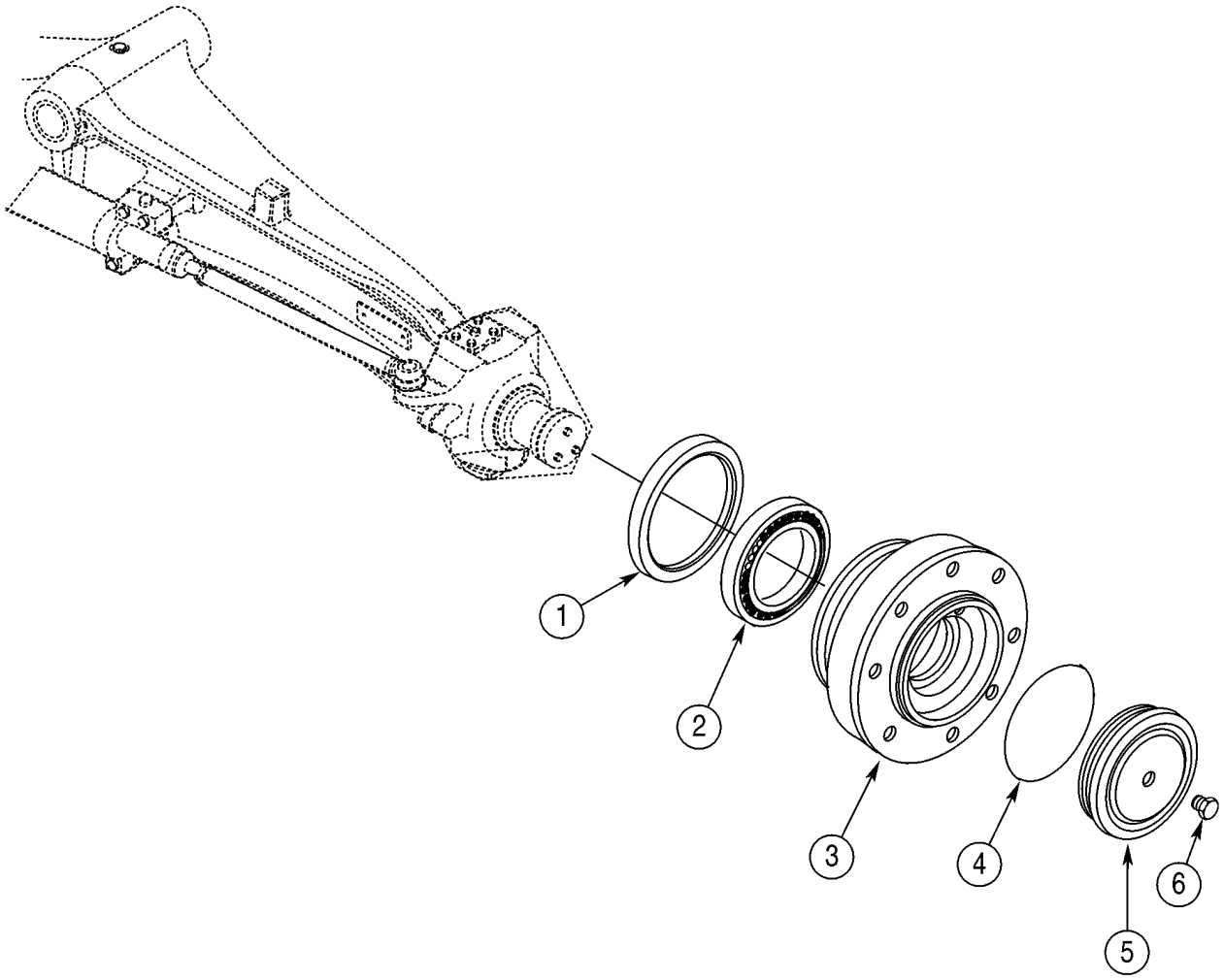

http://www.minnparbackhoeparts.com/

ESSIEU, AVANT (86990837) - MOYEU ET ROULEMENTS

REF	FN	PART NUMBER	YR/SN	QTY	DESCRIPTION
		86990837		1	ESSIEU DIRECTEUR Front, Two Wheel Drive; Incl. Figures 05-05 - 05-08
1		311569A1		2	JOINT D'HUILE
2		324213A1		2	ROULEMENT
3		401065A1		2	MOYEU
4		401066A1		2	JOINT TORIQUE
5		401067A1		2	COUVERCLE
6		D142898		2	BOUCHON 10 x 1 mm

http://www.minnparbackhoeparts.com/

ROUES AVANT - PNEUS

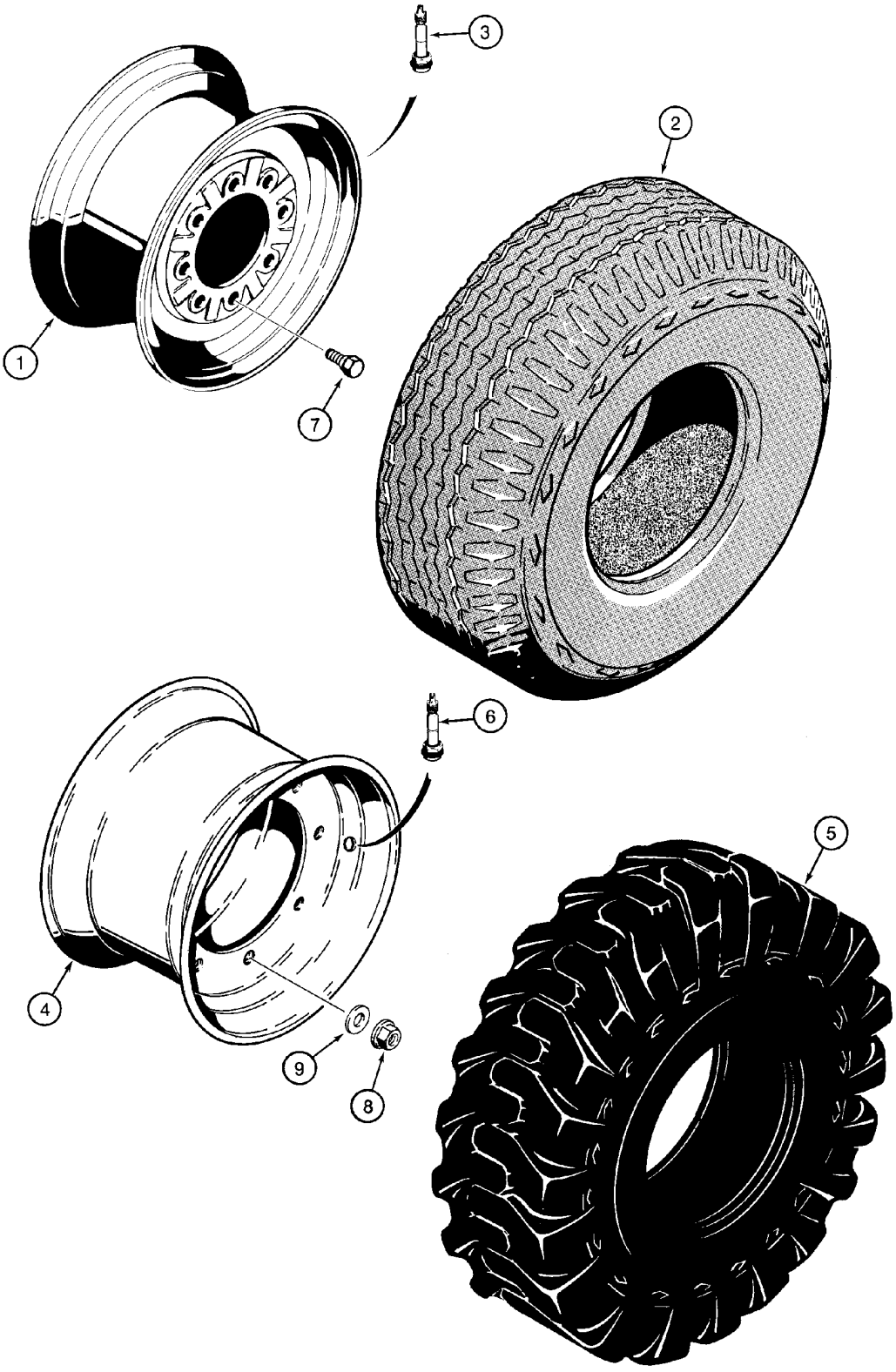

http://www.minnparbackhoeparts.com/

ROUES AVANT - PNEUS

REF	FN	PART NUMBER	YR/SN	QTY	DESCRIPTION
1		D125223		2	JANTE For 580SM 11L x 16 - 10 PR F3 Tires; Two Wheel Drive Models
1		247104A1		2	ROUE RIM, For 580SM Plus 14.5/.75 x 16.1 - 10 Ply F3; Two Wheel or Four Wheel Drive
2		REF		2	NOTICE Tire, Purchase Locally
3		387897R91		2	TIGE DE SOUPAPE
4		119243A1		2	JANTE For 580SM 12 x 16.5 - 8 or 10 PR Tires; Four Wheel Drive Models
4		139080A1		2	JANTE For 580SM 10.5/80x18x10 Ply Tires
4		139080A1		2	JANTE For 580SM Plus 12.5/80 x 18 - 10 PR SG; Four Wheel Drive Models
5		REF		2	NOTICE Tire, Purchase Locally
6		387897R91		2	TIGE DE SOUPAPE
7		A38208		16	BOULON Wheel Bolts; Two Wheel Drive Models
8		825-11418		16	ECROU M18; Wheel Nuts; Four Wheel Drive Models
9		496-81000		16	RONDELLE 25/32 x 1-3/8 x 1/8; Four Wheel Drive Models

http://www.minnparbackhoeparts.com/

SECTION INDEX

06-01	ESSIEU, TRACTION AVANT - SUPPORT
06-02	ESSIEU, TRACTION AVANT - BOÎTIER
06-03	ESSIEU, TRACTION AVANT - LOGEMENT DU PIVOT
06-04	ESSIEU, TRACTION AVANT - VERIN DE DIRECTION
06-05	ESSIEU, TRACTION AVANT - ARBRES, ESSIEU
06-06	ESSIEU, TRACTION AVANT - SATELLITE
06-07	ESSIEU, TRACTION AVANT - DIFFERENTIEL
06-08	ESSIEU, TRACTION AVANT - COURONNE ET PIGNON
06-09	ARBRE DE TRANSMISSION, ESSIEU AVANT
06-10	SYSTÈME DE REFROIDISSEMENT - TRANSMISSION (MODÈLES SANS AUTOMATIQUE)(WITH CUT HOSES AT COOLER)
06-11	SYSTÈME DE REFROIDISSEMENT - TRANSMISSION (MODÈLES AVEC AUTOMATIQUE)(WITH CUT HOSES AT COOLER)
06-11A	SYSTÈME DE REFROIDISSEMENT - TRANSMISSION (WITH FLARED FITTINGS AT COOLER)
06-12	TRANSMISSION - SUPPORT (MODÈLES SANS AUTOMATIQUE)
06-13	TRANSMISSION - SUPPORT (MODÈLES AVEC AUTOMATIQUE)
06-14	TRANSMISSION - FILTRE À HUILE (MODÈLES SANS AUTOMATIQUE)
06-15	TRANSMISSION (2WD) - BOÎTIER (MODÈLES SANS AUTOMATIQUE)
06-16	TRANSMISSION (4WD) - BOÎTIER (MODÈLES SANS AUTOMATIQUE)
06-17	TRANSMISSION - POMPE A HUILE (MODÈLES SANS AUTOMATIQUE)
06-18	TRANSMISSION - MÉCANISME DU CHANGEMENT DE VITESSE (MODÈLES SANS AUTOMATIQUE)
06-19	TRANSMISSION - AXE, TENDEUR ET PRIMAIRE (MODÈLES SANS AUTOMATIQUE)
06-20	TRANSMISSION - ARBRE, ENTRÉE (MODÈLES SANS AUTOMATIQUE)
06-21	TRANSMISSION - ARBRE, SECONDAIRE (MODÈLES SANS AUTOMATIQUE)
06-22	TRANSMISSION (4WD) - ARBRE DE SORTIE (MODÈLES SANS AUTOMATIQUE)
06-23	TRANSMISSION (86984097 OR 86984098) - DISTRIBUTEUR (MODÈLES SANS AUTOMATIQUE)
06-23A	TRANSMISSION (87456843 OR 87456844) - DISTRIBUTEUR (MODÈLES SANS AUTOMATIQUE)
06-24	TRANSMISSION (4WD) - ELECTROVANNE (MODÈLES SANS AUTOMATIQUE)
06-25	TRANSMISSION, BOÎTE AUTOMATIQUE - BOÎTIER
06-26	TRANSMISSION, BOÎTE AUTOMATIQUE - LOGEMENT ARRIERE
06-27	TRANSMISSION, BOÎTE AUTOMATIQUE - CONVERTISSEUR DE COUPLE
06-28	TRANSMISSION, BOÎTE AUTOMATIQUE - POMPE A HUILE
06-29	TRANSMISSION, BOÎTE AUTOMATIQUE - EMBRAYAGE, MARCHE AVANT
06-30	TRANSMISSION, BOÎTE AUTOMATIQUE - EMBRAYAGE, MARCHE ARRIERE
06-31	TRANSMISSION, BOÎTE AUTOMATIQUE - EMBRAYAGE, ENTRAINEMENT DE LA POMPE
06-32	TRANSMISSION, BOÎTE AUTOMATIQUE - EMBRAYAGE, DEUXIÈME PIGNON
06-33	TRANSMISSION, BOÎTE AUTOMATIQUE - EMBRAYAGE, ARBRE DE SORTIE
06-34	TRANSMISSION, BOÎTE AUTOMATIQUE - MONTAGE, DISTRIBUTEUR
06-35	TRANSMISSION, BOÎTE AUTOMATIQUE - DISTRIBUTEUR
06-36	TRANSMISSION, BOÎTE AUTOMATIQUE - PLAQUE, ENTRAINEMENT
06-37	ROUES, ARRIÈRE - PNEUS
06-38	ESSIEU, PROPULSION ARRIÈRE - SUPPORT
06-39	ESSIEU ARRIÈRE - BLOCAGE DU DIFFERENTIEL
06-40	ESSIEU, PROPULSION ARRIÈRE - BOÎTIER
06-41	ESSIEU, PROPULSION ARRIÈRE - DIFFERENTIEL (ENTRÉE DANS LE SENS HORAIRE, MODÈLES SANS AUTOMATIQUE)

http://www.minnparbackhoeparts.com/

SECTION INDEX

06-42	ESSIEU, PROPULSION ARRIÈRE - DIFFERENTIEL (ENTRÉE DANS LE SENS ANTI-HORAIRE, MODÈLES AVEC AUTOMATIQU
06-43	ESSIEU, PROPULSION ARRIÈRE - COURONNE ET PIGNON
06-44	ESSIEU, PROPULSION ARRIÈRE - BLOCAGE DU DIFFERENTIEL (ENTRÉE DANS LE SENS HORAIRE, MODÈLES SANS AUTO
06-45	ESSIEU, PROPULSION ARRIÈRE - BLOCAGE DU DIFFERENTIEL (ENTRÉE DANS LE SENS ANTI-HORAIRE, MODÈLES AVEC
06-46	ESSIEU, PROPULSION ARRIÈRE - SATELLITE
06-47	ARBRE DE TRANSMISSION, ESSIEU ARRIÈRE

http://www.minnparbackhoeparts.com/

ESSIEU, TRACTION AVANT - SUPPORT

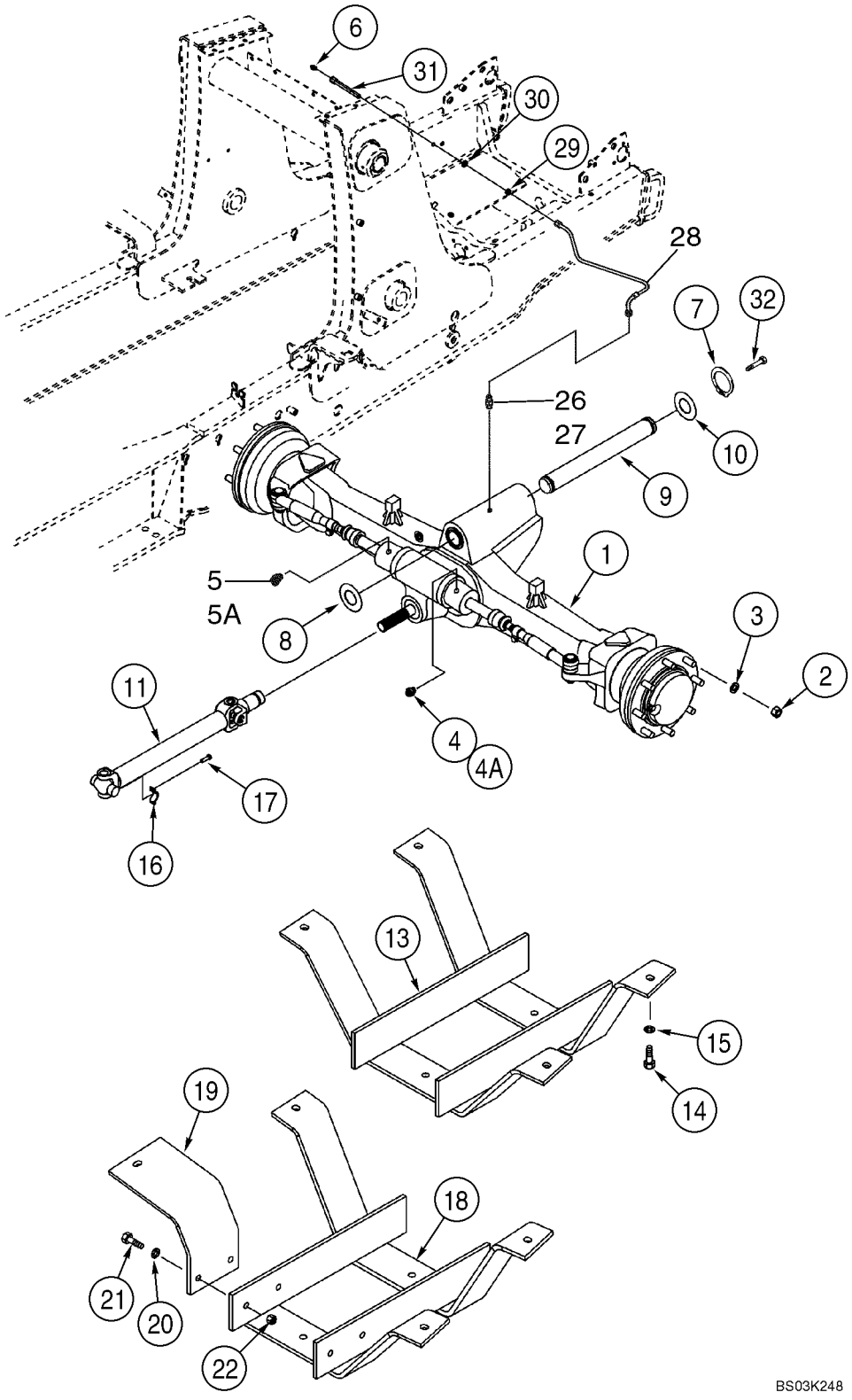

http://www.minnparbackhoeparts.com/

ESSIEU, TRACTION AVANT - SUPPORT

REF	FN	PART NUMBER	YR/SN	QTY	DESCRIPTION
1		87417387		1	PONT AVANT Front, 580SM Models Without Powershift Transmission, See Figure 06-02 - 06-08
1		87417390		1	PONT AVANT Front, With Limited Slip, 580SM+ Models Without Powershift Transmission, See Figure 06-02 - 06-08
1		87417389		1	PONT AVANT Front, 580SM Models With Powershift Transmission, See Figure 06-02 - 06-08
1		87417391		1	PONT AVANT Front, With Limited Slip, 580SM+ Models With Powershift Transmission, See Figure 06-02 - 06-08
2		825-11418		16	ECROU M18
3		496-81000		16	RONDELLE 25/32 x 1-3/8 x 1/8
4		218-5351		1	RACCORD 3/4 fl x 9/16 Or; Incl. Ref 4A
4A		237-6006		1	JOINT THORIQUE 15/32 ID x 5/64
5		218-5529		1	COUDE Elbow, 45 deg, 3/4 fl x 9/16 Or; Incl. Ref 5A
5A		237-6006		1	JOINT THORIQUE 15/32 ID x 5/64
6		219-1		1	GRAISSEUR 1/8 PT x 21/32
7		800-44050		2	ANNEAU-D'ARRET No. 50
8		191796A1		X	RONDELLE 2 x 4 x 1/16
9		87404197		1	CHEVILLE PIVOT Pivot Pin
10		D123684		1	RONDELLE Thrust, 2-1/2 x 4-1/2 x 3/16
11		367861A2		1	ARBRE D'ENTRAINEMENT See Figure 06-09
13		137223A2		1	GARANT Drive Shaft, Used On Models With 31 Gallon Fuel Tank
14		827-12045		4	VIS M12 x 45; 10.9
15		495-81025		4	RONDELLE 17/32 x 1-1/4 x 3/16
16		90-6682T1		2	COLLIER
17		D137627		4	BOULON
18		282038A2		1	GARANT (ASSEMBLE) Drive Shaft, Used On Models With 40 Gallon Fuel Tank
19		282033A1		1	PATTE FIXATION
20		495-81025		8	RONDELLE 17/32 x 1-1/4 x 3/16
21		827-12045		6	VIS M12 x 45; 10.9
22		829-1412		2	ECROU M12; 10
26		218-5053		1	RACCORD 7/16 fl x adj Or; Incl. Ref 27
27		237-6004		1	JOINT TORIQUE 23/64 ID x 5/64

http://www.minnparbackhoeparts.com/

ESSIEU, TRACTION AVANT - SUPPORT

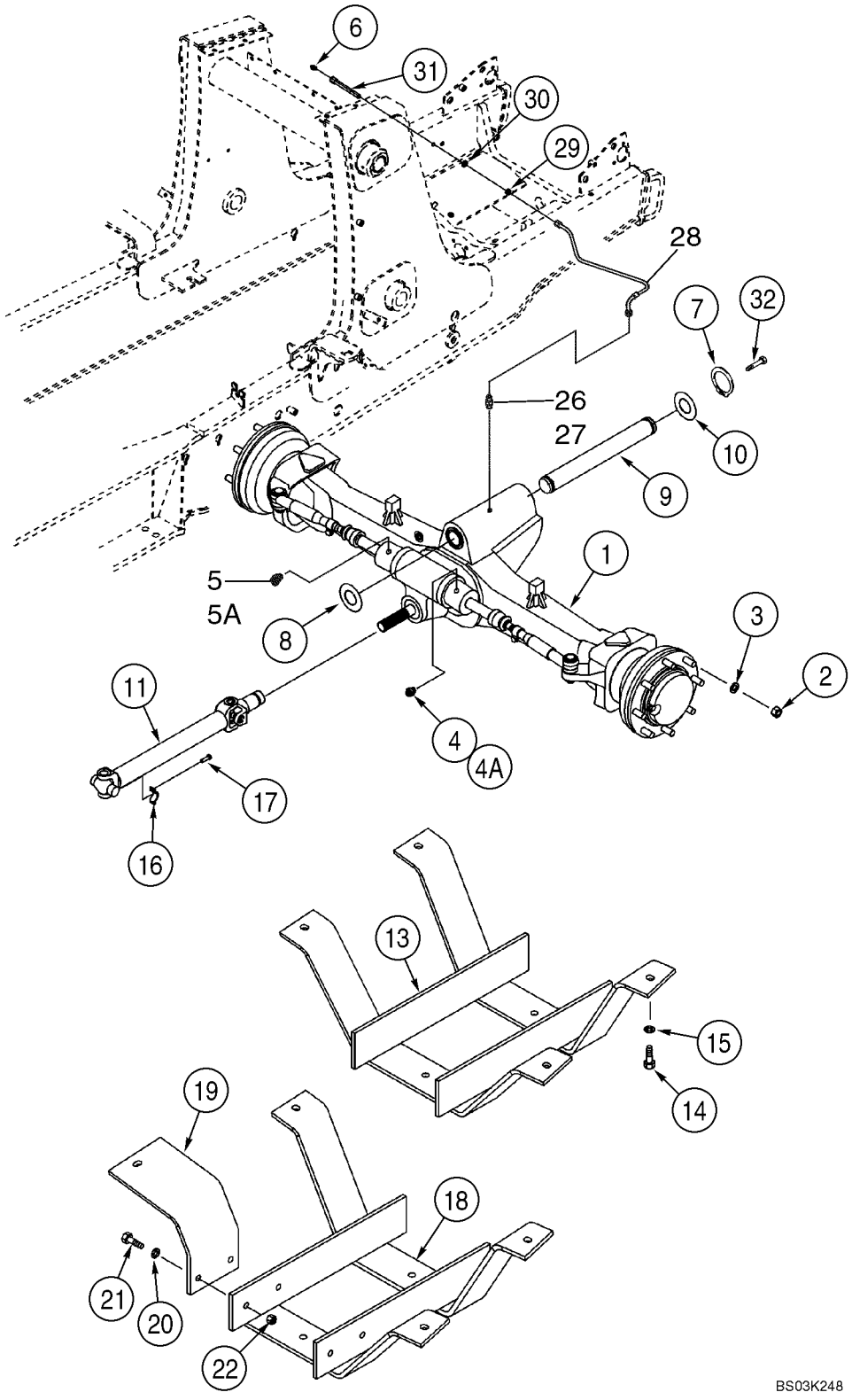

http://www.minnparbackhoeparts.com/

ESSIEU, TRACTION AVANT - SUPPORT

REF	FN	PART NUMBER	YR/SN	QTY	DESCRIPTION
28		87433730		1	FLEXIBLE (ASSEMBLE) 500 mm (19-11/16 in), Lubrication Line
29		218-1275		1	CONTRE-ECROU 7/16
30		495-11047		1	RONDELLE 15/32 x 59/64 x 1/16
31		381442A1		1	CONNEXION Lubrication Line
32		614-12025		1	BOULON M12 x 25

http://www.minnparbackhoeparts.com/

ESSIEU, TRACTION AVANT - BOÎTIER

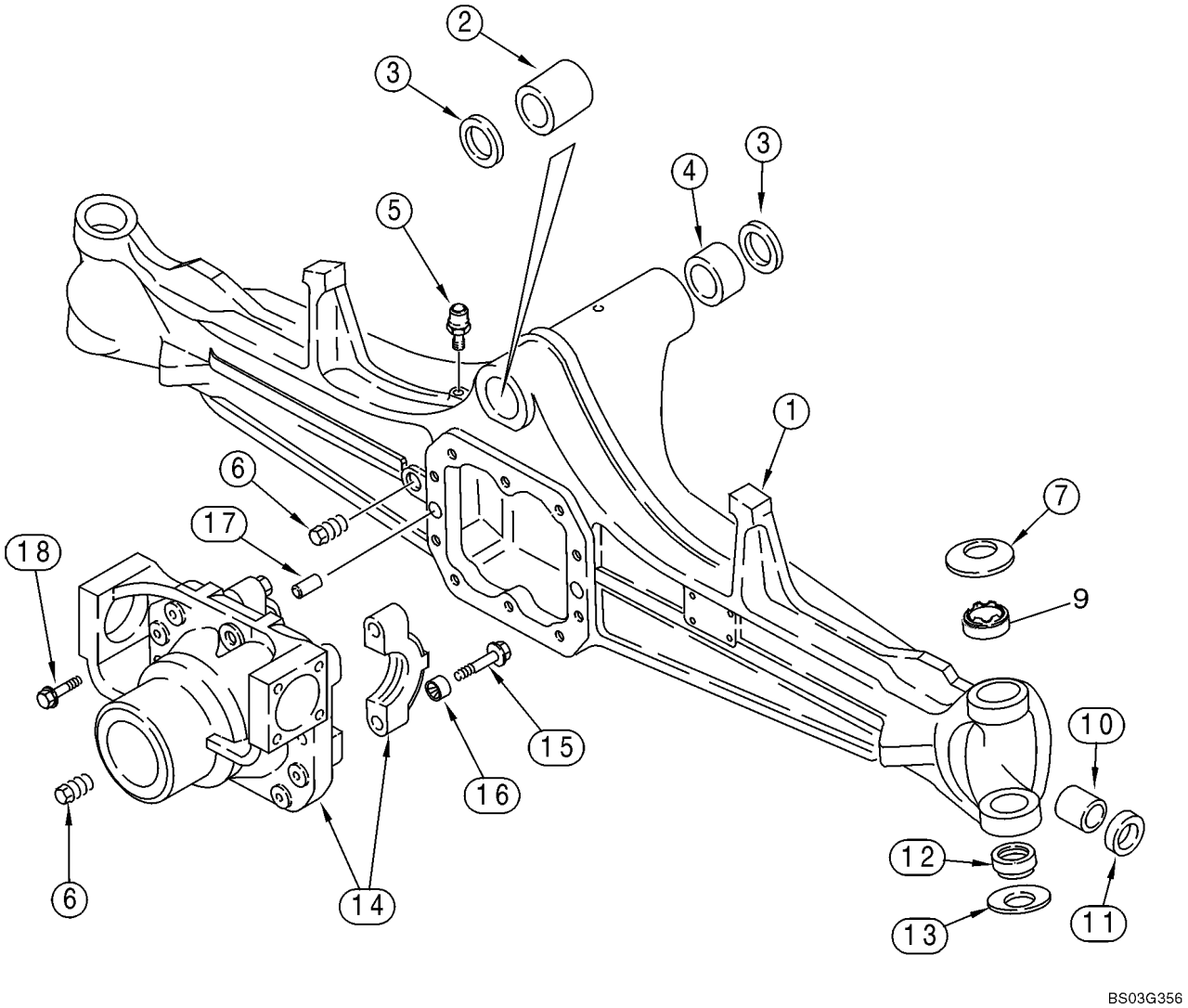

http://www.minnparbackhoeparts.com/

ESSIEU, TRACTION AVANT - BOÎTIER

REF	FN	PART NUMBER	YR/SN	QTY	DESCRIPTION
		87417387		1	PONT AVANT Front, 580SM Models Without Powershift Transmission, Incl. Ref 1 - 18; Also Includes Parts On Figures 06-02 - 06-08
		87417390		1	PONT AVANT Front, With Limited Slip, 580SM+ Models Without Powershift Transmission, Incl. Ref 1 - 18; Also Includes Parts On Figures 06-02 - 06-08
		87417389		1	PONT AVANT Front, 580SM Models With Powershift Transmission, Incl. Ref 1 - 18; Also Includes Parts On Figures 06-02 - 06-08
		87417391		1	PONT AVANT Front, With Limited Slip, 580SM+ Models With Powershift Transmission, Incl. Ref 1 - 18; Also Includes Parts On Figures 06-02 - 06-08
1		427107A1		1	CARTER DE PONT 87417387 or 87417389 580SM Axle
1		87430345		1	CARTER DE PONT 87417390 or 87417391 580SM+ Axle
		B17575		X	FLUIDE 89 ml, Black RTV Silicone; Differential Carrier to Axle Housing
2		D149725		1	BAGUE
3		N14367		2	JOINT
4		D149726		1	BAGUE
5		1966149C2		1	RENIFLARD
6		A156873		2	BOUCHON DE VIDANGE 22 mm
7		122270A1		2	RONDELLE Belleville
9		87400286		2	BAGUE
10		1966186C1		2	BAGUE
11		311565A1		2	JOINT Oil, 30 x 44 x 14 mm thk, Triple Lip, Used In 15 mm Deep Counterbore
12		100520A1		2	ROTULE Bushing, Two Piece
13		122268A1		2	RONDELLE Belleville
		144454A1		1	SUPPORT (ASSEMBLE) Differential Carrier; Incl. Ref 14 - 16
14		NSS		1	NON FOURNI SEPAREMENT Carrier
15		S301065		4	VIS 14 x 75 mm
16		1966136C1		4	BAGUE Bushing
17		1966138C1		2	AXE, GROS Dowel
18		S301064		10	VIS Flange, M12 x 33; 12.9

http://www.minnparbackhoeparts.com/

ESSIEU, TRACTION AVANT - BOÎTIER

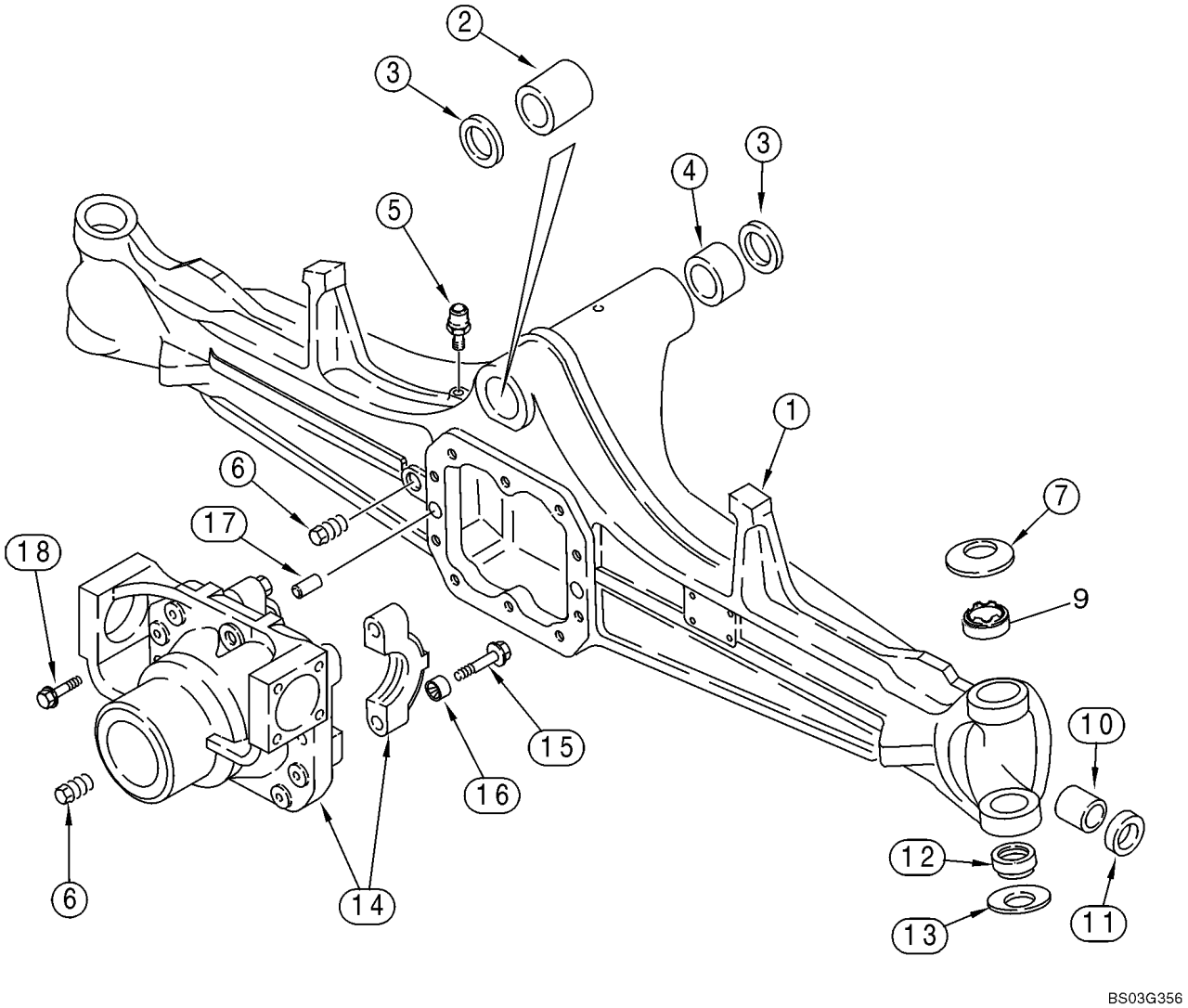

http://www.minnparbackhoeparts.com/

ESSIEU, TRACTION AVANT - BOÎTIER

REF	FN	PART NUMBER	YR/SN	QTY	DESCRIPTION
		B17575		X	FLUIDE 89 ml, Black RTV Silicone, Differential Carrier to Axle Housing

http://www.minnparbackhoeparts.com/

ESSIEU, TRACTION AVANT - LOGEMENT DU PIVOT

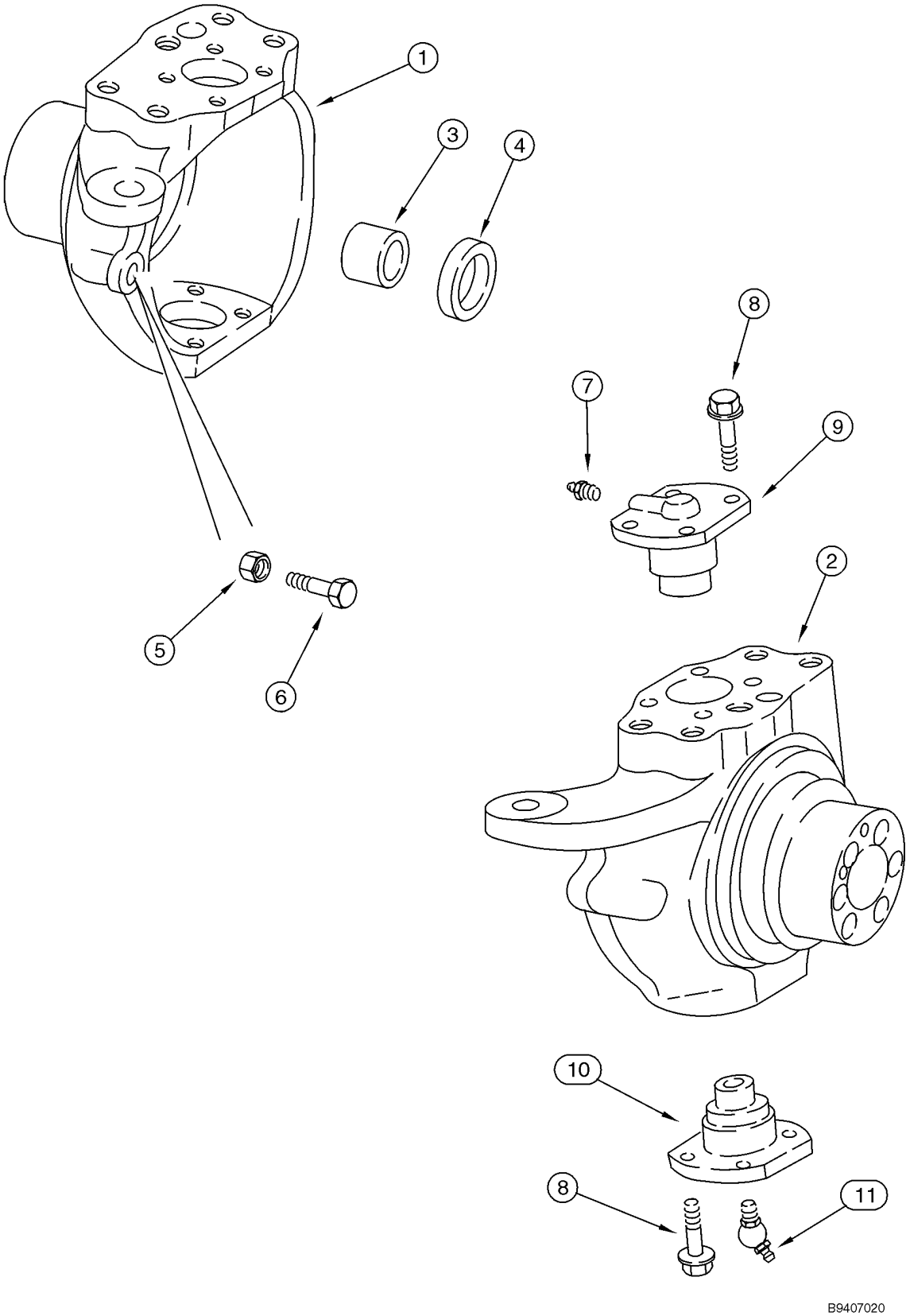

http://www.minnparbackhoeparts.com/

ESSIEU, TRACTION AVANT - LOGEMENT DU PIVOT

REF	FN	PART NUMBER	YR/SN	QTY	DESCRIPTION
		87417387		1	PONT AVANT Front, 580SM Models Without Powershift Transmission, Incl. Ref 1 - 11; Also Includes Parts On Figures 06-02 - 06-08
		87417390		1	PONT AVANT Front, With Limited Slip, 580SM+ Models Without Powershift Transmission, Incl. Ref 1 - 11; Also Includes Parts On Figures 06-02 - 06-08
		87417389		1	PONT AVANT Front, 580SM Models With Powershift Transmission, Incl. Ref 1 - 11; Also Includes Parts On Figures 06-02 - 06-08
		87417391		1	PONT AVANT Front, With Limited Slip, 580SM+ Models With Powershift Transmission, Incl. Ref 1 - 11; Also Includes Parts On Figures 06-02 - 06-08
1		397653A1		1	CARTER DE PONT Left-Hand, 60 mm Diameter Axle Shaft Seal Counterbore; 87417387 or 87417389 580SM Axle
1		402344A1		1	CARTER Left-Hand, 87417390 or 87417391 580SM+ Axle
		B17575		X	FLUIDE 89 ml, Black RTV Silicone, Wear Ring to Swivel Housing
2		397654A1		1	CARTER DE PONT Right-Hand, 60 mm Diameter Axle Shaft Seal Counterbore; 87417387 or 87417389 580SM Axle
2		402346A1		1	CARTER Right-Hand, 87417390 or 87417391 580SM+ Axle
3		100532A1		2	BAGUE Used With Right-Hand or Left-Hand Swivel Housing, Not Included With Housing, Purchase Separately
4		402359A1		2	JOINT 45 x 60 x 16 mm thk, Triple Lip
5		1537663C1		2	ECROU M16
6		1537664C1		2	VIS
7		712998R91		2	GRAISSEUR M6 x 1
8		100533A1		16	BOULON M12 x 30
9		122265A1		2	AXE, GROS King Pin
10		122264A1		2	AXE, GROS King Pin
11		N13505		2	GRAISSEUR 45 deg, M6x1

http://www.minnparbackhoeparts.com/

ESSIEU, TRACTION AVANT - VERIN DE DIRECTION

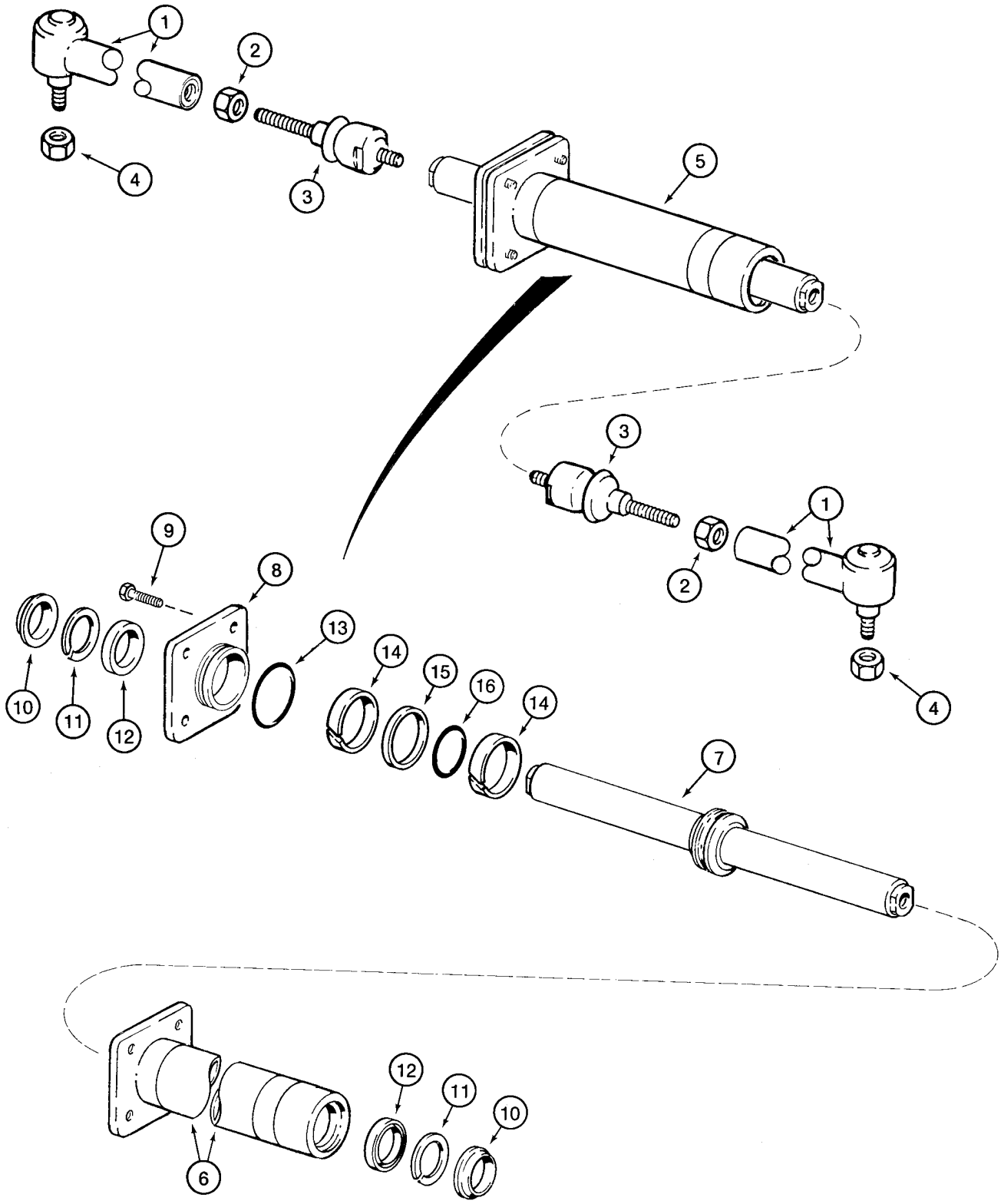

http://www.minnparbackhoeparts.com/

ESSIEU, TRACTION AVANT - VERIN DE DIRECTION

REF	FN	PART NUMBER	YR/SN	QTY	DESCRIPTION
		87417387		1	PONT AVANT Front, 580SM Models Without Powershift Transmission, Incl. Ref 1 - 16; Also Includes Parts On Figures 06-02 - 06-08
		87417390		1	PONT AVANT Front, With Limited Slip, 580SM+ Models Without Powershift Transmission, Incl. Ref 1 - 16; Also Includes Parts On Figures 06-02 - 06-08
		87417389		1	PONT AVANT Front, 580SM Models With Powershift Transmission, Incl. Ref 1 - 16; Also Includes Parts On Figures 06-02 - 06-08
		87417391		1	PONT AVANT Front, With Limited Slip, 580SM+ Models With Powershift Transmission, Incl. Ref 1 - 16; Also Includes Parts On Figures 06-02 - 06-08
		144457A1		2	BRAS Incl. Ref 1 - 3; 87417387 or 87417389 580SM Axle; See Below for 580SM+ Axle Arm
1		NSS		1	NON FOURNI SEPAREMENT Ball Joint
2		934727R1		1	ECROU M18
3		112509A1		1	ROTULE
		313260A1		2	BIELLETTE Arm, Incl. Ref 1 - 3; 87417390 or 87417391 580SM+ Axle
1		390031A1		1	BRAS
2		390030A1		1	ECROU
3		112509A1		1	ROTULE
4		905839R1		2	ECROU M18
5		144458A1		1	VERIN Steering, Incl. Ref 6 - 16, Order D149739 Kit to Service Seals
6		D149738		1	VÉRIN DE DIRECTION TUBE
7		144459A1		1	TRINGLE Piston
8		D149737		1	PRESSE-ETOUPE GLAND
		B17575		X	FLUIDE 89 ml, Black RTV Silicone, Cylinder Flange to Cylinder
9		114296A1		4	VIS For Service Order 100524A1 Bolt and 892-11012 Washer
10		NSS		2	NON FOURNI SEPAREMENT Seal, Wiper
11		NSS		2	NON FOURNI SEPAREMENT Ring, Backup
12		NSS		2	NON FOURNI SEPAREMENT Seal
13		NSS		1	NON FOURNI SEPAREMENT O-Ring
14		NSS		2	NON FOURNI SEPAREMENT Ring, Wear

http://www.minnparbackhoeparts.com/

ESSIEU, TRACTION AVANT - VERIN DE DIRECTION

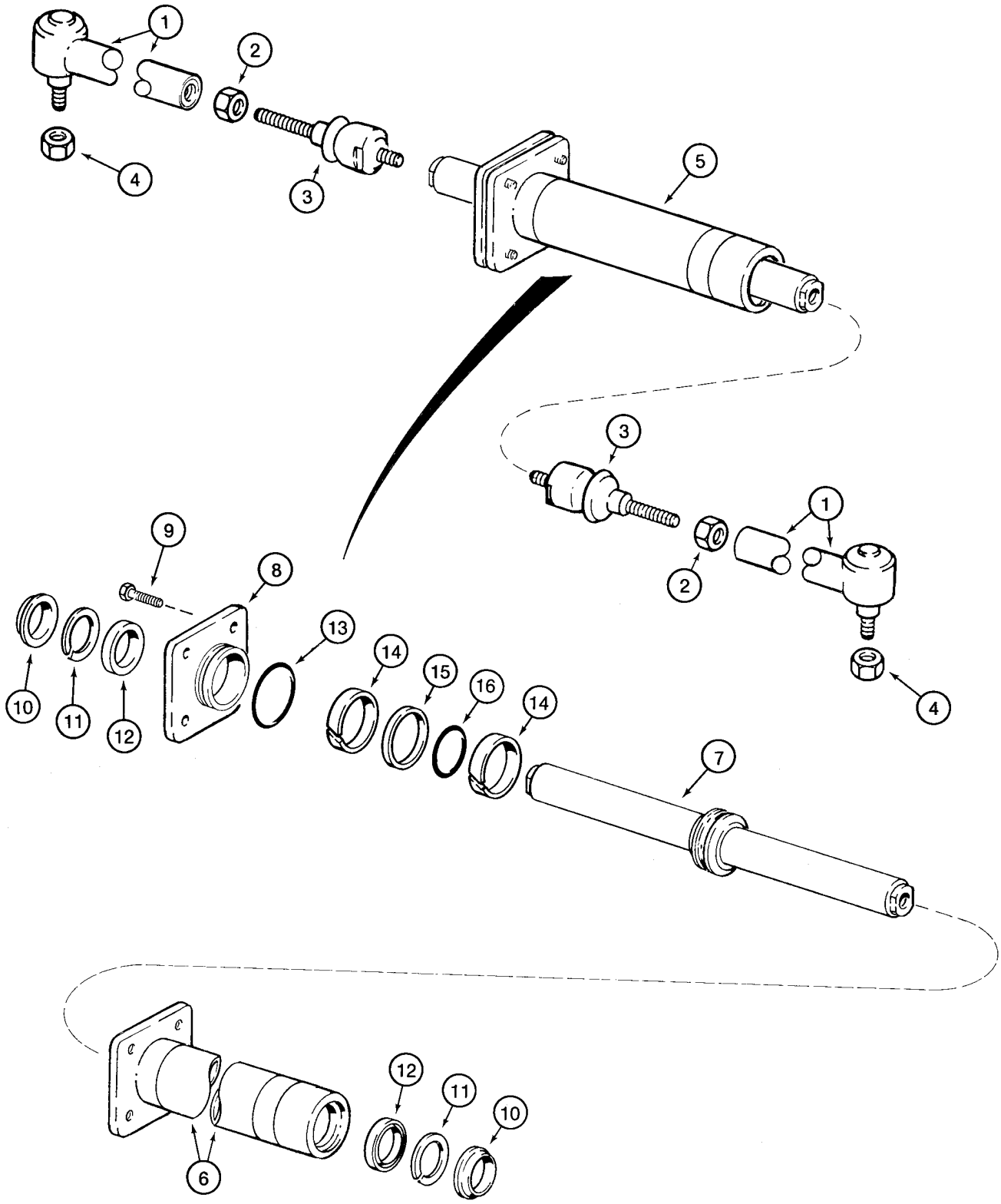

http://www.minnparbackhoeparts.com/

ESSIEU, TRACTION AVANT - VERIN DE DIRECTION

REF	FN	PART NUMBER	YR/SN	QTY	DESCRIPTION
15		NSS		1	NON FOURNI SEPAREMENT Seal
16		NSS		1	NON FOURNI SEPAREMENT O-Ring
		D149739		1	POCHETTE-JOINTS Incl. Ref 10 - 16

http://www.minnparbackhoeparts.com/

ESSIEU, TRACTION AVANT - ARBRES, ESSIEU

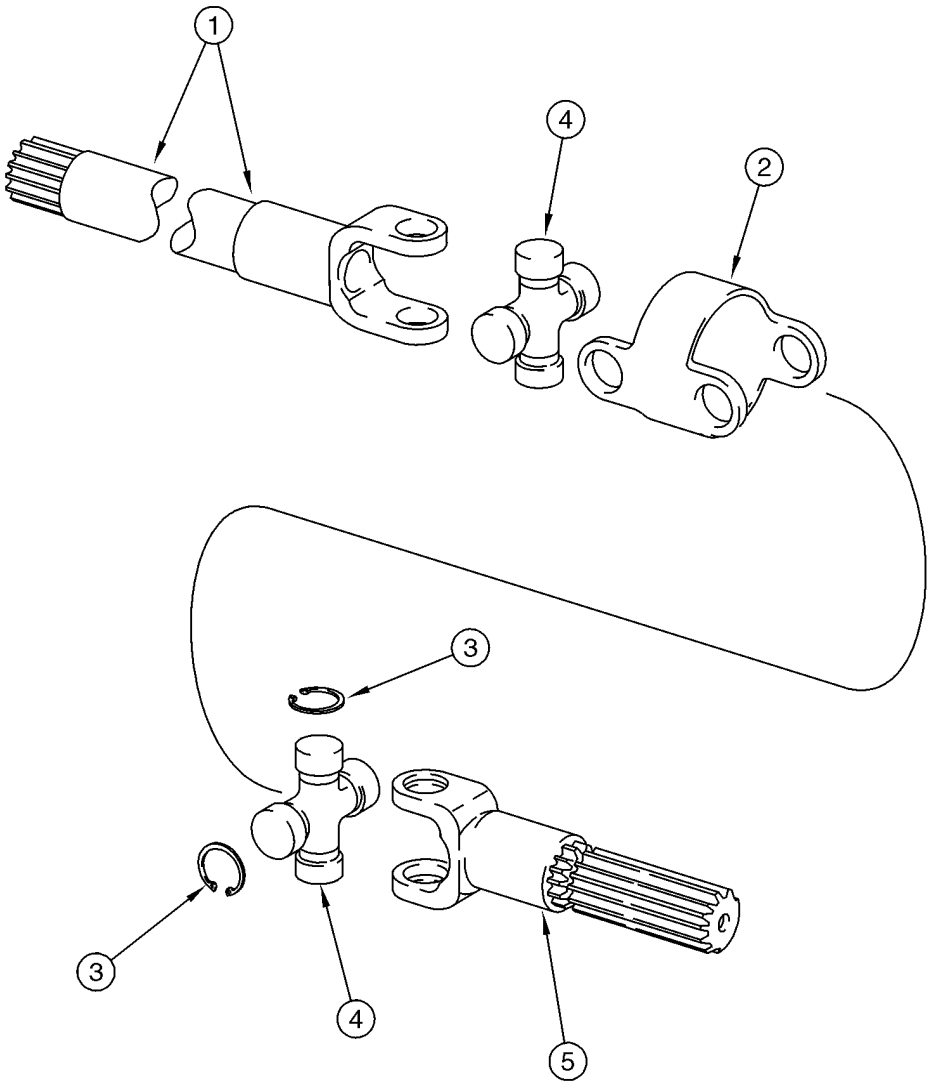

B9407022

http://www.minnparbackhoeparts.com/

ESSIEU, TRACTION AVANT - ARBRES, ESSIEU

REF	FN	PART NUMBER	YR/SN	QTY	DESCRIPTION
		87417387		1	PONT AVANT Front, 580SM Models Without Powershift Transmission, Incl. Ref 1 - 5; Also Includes Parts On Figures 06-02 - 06-08
		87417390		1	PONT AVANT Front, With Limited Slip, 580SM+ Models Without Powershift Transmission, Incl. Ref 1 - 5; Also Includes Parts On Figures 06-02 - 06-08
		87417389		1	PONT AVANT Front, 580SM Models With Powershift Transmission, Incl. Ref 1 - 5; Also Includes Parts On Figures 06-02 - 06-08
		87417391		1	PONT AVANT Front, With Limited Slip, 580SM+ Models With Powershift Transmission, Incl. Ref 1 - 5; Also Includes Parts On Figures 06-02 - 06-08
		144461A1		2	DEMI-ARBRE Incl. Ref 1 - 5; Not Available As An Assembly, Order Components; 87417387 or 87417389 580SM Axle; See Below for 580SM+ Axle Shaft
1		144462A1		2	FOURCHE Shaft, Long, Differential Side; 580SM
2		390029A1		2	CORPS
3		N14410		16	ANNEAU
4		144465A1		4	CROISILLON DE CARDAN Incl. Ref 3
5		144463A1		2	ARBRE Short, Wheel Side; 580SM
		313277A1		2	ARBRE D'ENTRAINEMENT Incl. Ref 1 - 5; 87417390 or 87417391 580SM+ Axle Shaft
1		390027A1		1	ARBRE Fork, Long, Differential Side; 580SM+
2		390029A1		1	CORPS
3		N14410		8	ANNEAU
4		144465A1		2	CROISILLON DE CARDAN Incl. Ref 3
5		390028A1		1	ARBRE Short, Wheel Side; 580SM+

http://www.minnparbackhoeparts.com/

ESSIEU, TRACTION AVANT - SATELLITE

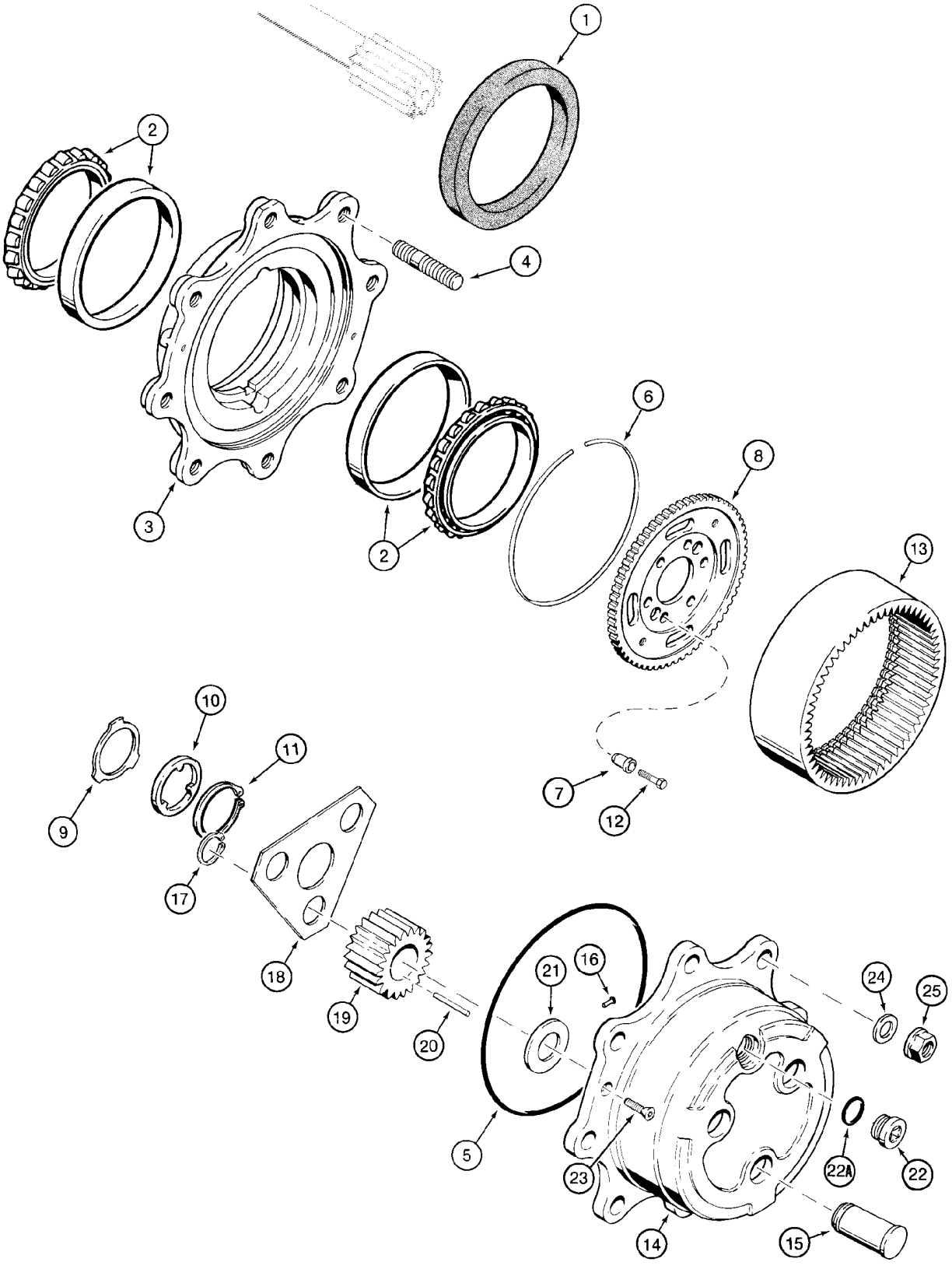

http://www.minnparbackhoeparts.com/

ESSIEU, TRACTION AVANT - SATELLITE

REF	FN	PART NUMBER	YR/SN	QTY	DESCRIPTION
		87417387		1	PONT AVANT Front, 580SM Models Without Powershift Transmission, Incl. Ref 1 - 25; Also Includes Parts On Figures 06-02 - 06-08
		87417390		1	PONT AVANT Front, With Limited Slip, 580SM+ Models Without Powershift Transmission, Incl. Ref 1 - 25; Also Includes Parts On Figures 06-02 - 06-08
		87417389		1	PONT AVANT Front, 580SM Models With Powershift Transmission, Incl. Ref 1 - 25; Also Includes Parts On Figures 06-02 - 06-08
		87417391		1	PONT AVANT Front, With Limited Slip, 580SM+ Models With Powershift Transmission, Incl. Ref 1 - 25; Also Includes Parts On Figures 06-02 - 06-08
1		311569A1		2	JOINT D'HUILE Triple Lip
2		1966169C1		4	ROULEMENT
		144466A1		2	MOYEU Incl. Ref 3, 4
3		NSS		1	NON FOURNI SEPAREMENT Hub
4		100556A1		8	GOUJON
		B17575		X	FLUIDE 89 ml, RTV Silicone, Planetary Cover to Hub
5		100552A1		2	JOINT TORIQUE
6		100559A1		2	JONC
7		116426A1		12	BAGUE-DE-CENTRAGE Bushing
8		116427A1		2	PIGNON CARRIER, Ring Gear; 87417387 or 87417389 580SM Axle
8		313259A1		2	PIGNON CARRIER, Ring Gear; 87417390 or 87417391 580SM+ Axle
9		190684A1		2	RONDELLE Thrust
10		190682A1		2	RONDELLE Thrust
11		A48041		2	CIRCLIP
12		116425A1		12	VIS
13		100561A1		2	PIGNON Ring
		100554A1		2	PILIER, SOUTIEN PLANETARY, Includes 100553A1, Ref 14 - 22A
		100553A1		2	CARTER (ASSEMBLE) Carrier, Incl. Ref 14 - 16
14		NSS		1	NON FOURNI SEPAREMENT Carrier
15		NSS		3	NON FOURNI SEPAREMENT Shaft, Pinion
16		K395093		1	AXE A TÊTE Lock
17		800-1134		6	ANNEAU-D'ARRET No. 34

http://www.minnparbackhoeparts.com/

ESSIEU, TRACTION AVANT - SATELLITE

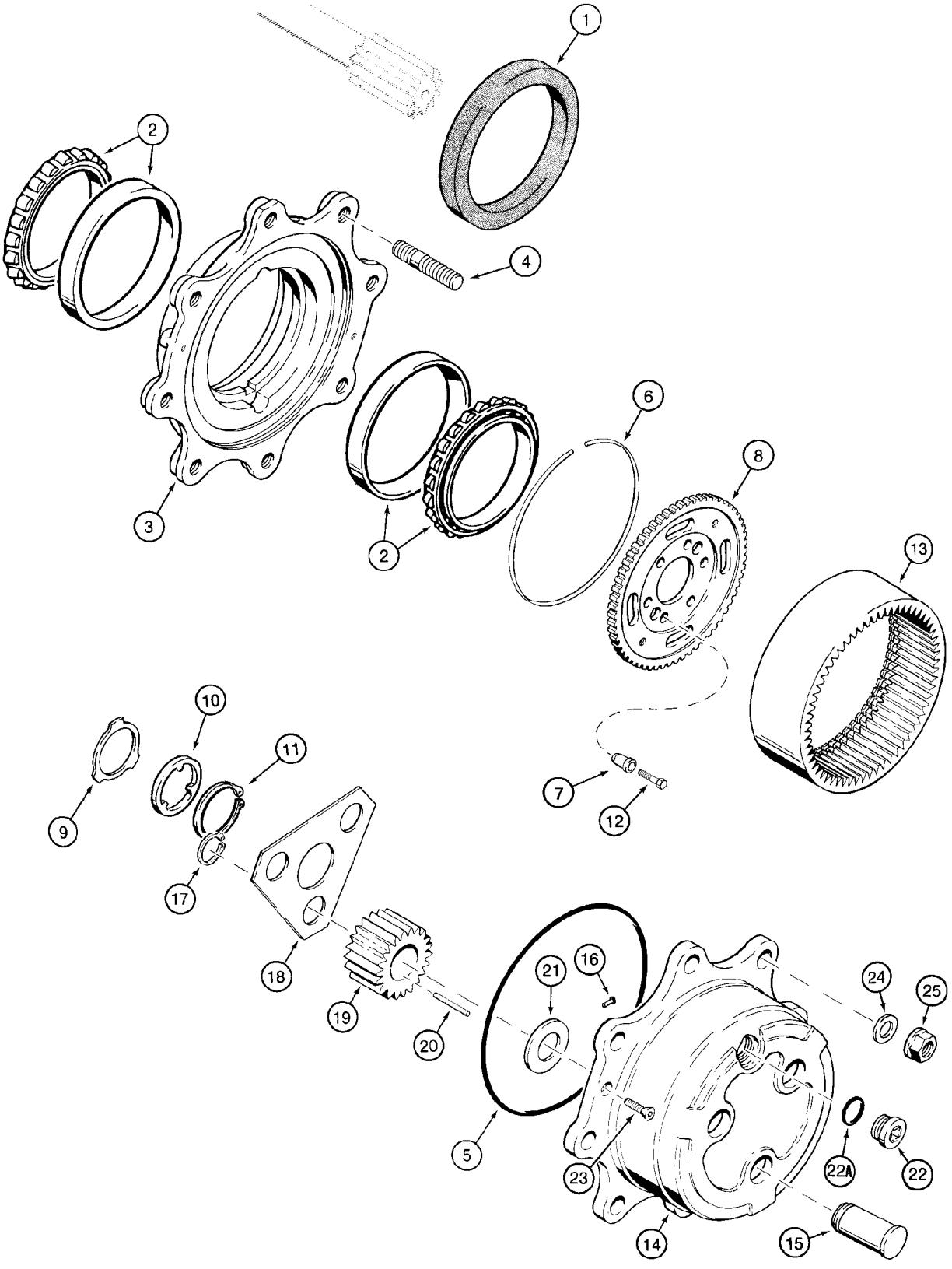

http://www.minnparbackhoeparts.com/

ESSIEU, TRACTION AVANT - SATELLITE

REF	FN	PART NUMBER	YR/SN	QTY	DESCRIPTION
18		100555A1		2	PLAQUE, GRANDE Retainer
19		100562A1		6	PLANETAIRE Pinion Gear
		B17575		X	FLUIDE 89 ml, Black RTV Silicone, Planetary Cover to Hub
20		114295A1		9	JEU DE 10 AIGUILLES
21		K395091		6	RONDELLE Thrust
22		100557A1		2	BOUCHON DE VIDANGE Incl. Ref 22A
22A		238-6121		1	JOINT TORIQUE 1-1/16 ID x 3/32
23		K395082		4	VIS M8 x 20
24		496-81000		16	RONDELLE 25/32 x 1-3/8 x 1/8, Not Included In Assembly, Purchase Separately
25		825-11418		16	ECROU M18, Not Included In Assembly, Purchase Separately

http://www.minnparbackhoeparts.com/

ESSIEU, TRACTION AVANT - DIFFERENTIEL

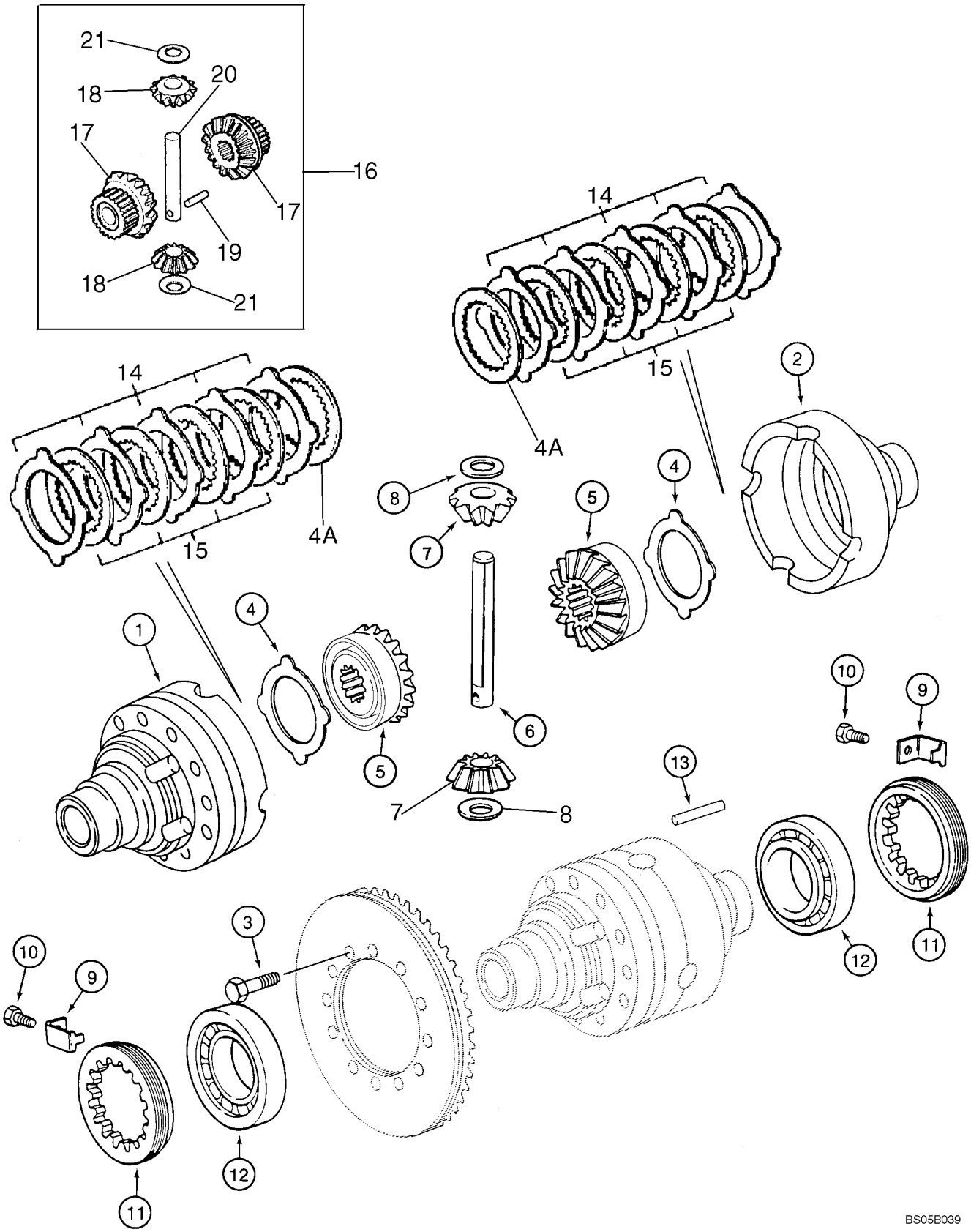

http://www.minnparbackhoeparts.com/

ESSIEU, TRACTION AVANT - DIFFERENTIEL

REF	FN	PART NUMBER	YR/SN	QTY	DESCRIPTION
		87417387		1	PONT AVANT Front, 580SM Models Without Powershift Transmission, Incl. Ref 1 - 13; Also Includes Parts On Figures 06-02 - 06-08
		87417390		1	PONT AVANT Front, With Limited Slip, 580SM+ Models Without Powershift Transmission, Incl. Ref 1 - 4A, 9 - 21; Also Includes Parts On Figures 06-02 - 06-08
		87417389		1	PONT AVANT Front, 580SM Models With Powershift Transmission, Incl. Ref 1 - 13; Also Includes Parts On Figures 06-02 - 06-08
		87417391		1	PONT AVANT Front, With Limited Slip, 580SM+ Models With Powershift Transmission, Incl. Ref 1 - 4A, 9 - 21; Also Includes Parts On Figures 06-02 - 06-08
		294933A1		1	SUPPORT (ASSEMBLE) Differential Housing, Incl. Ref 1, 2
1		NSS		1	NON FOURNI SEPAREMENT Housing, Flange Half
2		NSS		1	NON FOURNI SEPAREMENT Housing, Plain Half
		B17575		X	FLUIDE 89 ml, Black RTV Silicone, Bolt to Differential Housing
3		827-10075		12	VIS M10 x 75; 10.9
4		1967003C1		2	RONDELLE DE BUTEE 87417387 or 87417389 580SM Axle Only
4A		1966154C1		2	PLAQUE Backing; 87417390 or 87417391 580SM+ Limited Slip Axle Only; Used With Ref 14, 15
		231397A1		1	LOT DE PIECES Differential Gear Set, Service Replacement, Incl. Ref 5 - 8, 13; Used On 580SM Models; No Longer Used On 580SM+ Models, For 580SM+ Gear Set, Order B506395 Gear Set, Ref 16 - 21
5		N14407		2	PIGNON Side, No Longer Available, Order 231397A1 Differential Gear Set Kit
6		K395087		1	AXE, GROS Shaft, Pinion Gear, No Longer Available, Order 231397A1 Differential Gear Set Kit
7		N14408		2	PIGNON SOLAIRE Pinion Gear, No Longer Available, Order 231397A1 Differential Gear Set Kit

http://www.minnparbackhoeparts.com/

ESSIEU, TRACTION AVANT - DIFFERENTIEL

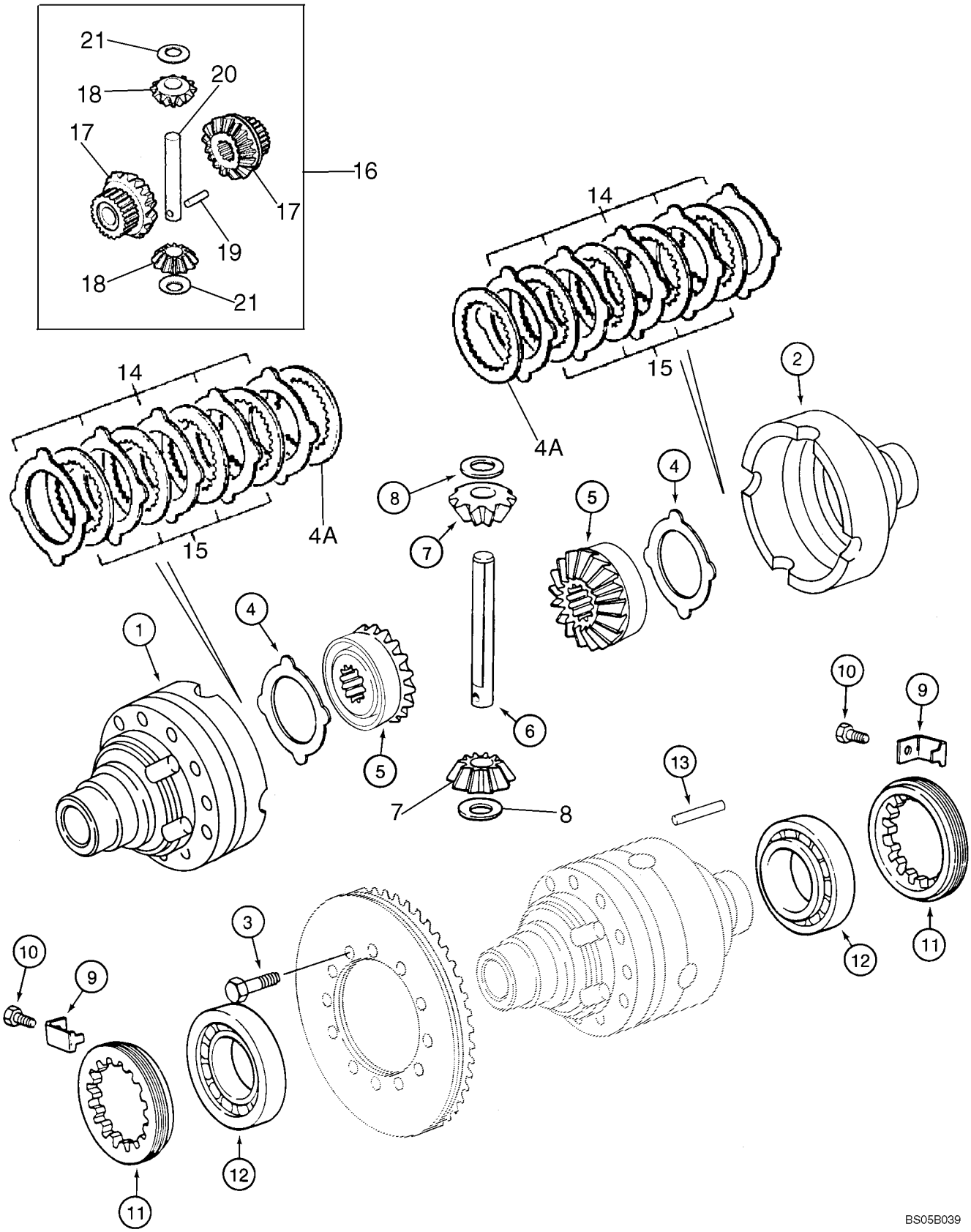

http://www.minnparbackhoeparts.com/

ESSIEU, TRACTION AVANT - DIFFERENTIEL

REF	FN	PART NUMBER	YR/SN	QTY	DESCRIPTION
8		K395075		2	RONDELLE Thrust, No Longer Available, Order 231397A1 Differential Gear Set Kit
9		1966153C1		2	PLAQUE D'ARRÊT Bracket
10		112486A1		2	VIS M6 x 12
11		1966559C1		2	ECROU Locking Ring
12		K395027		2	ROULEMENT
13		K395086		1	AXE, GROS Dowel, No Longer Available, Order 231397A1 Differential Gear Set Kit
14		1966155C1		10	PLAQUE Drive; 580SM+ 87417390 or 87417391 Limited Slip Axle Only; Used With Ref 4A, 15
15		1966156C1		8	RONDELLE PLATE, Driven; 580SM+ 87417390 or 87417391 Limited Slip Axle Only; Used With Ref 4A, 14
16		B506395		1	LOT DE PIECES Differential Gear Set; Incl. Ref 17 - 21; Used On 580SM+ Models
17		NSS		2	NON FOURNI SEPAREMENT Gear, Side; Order B506395 Gear Set
18		NSS		2	NON FOURNI SEPAREMENT Gear, Pinion; Order B506395 Gear Set
19		K395086		1	AXE, GROS Locking
20		NSS		1	NON FOURNI SEPAREMENT Pin, Pinion; Order B506395 Gear Set
21		K395075		2	RONDELLE Thrust

http://www.minnparbackhoeparts.com/

ESSIEU, TRACTION AVANT - COURONNE ET PIGNON

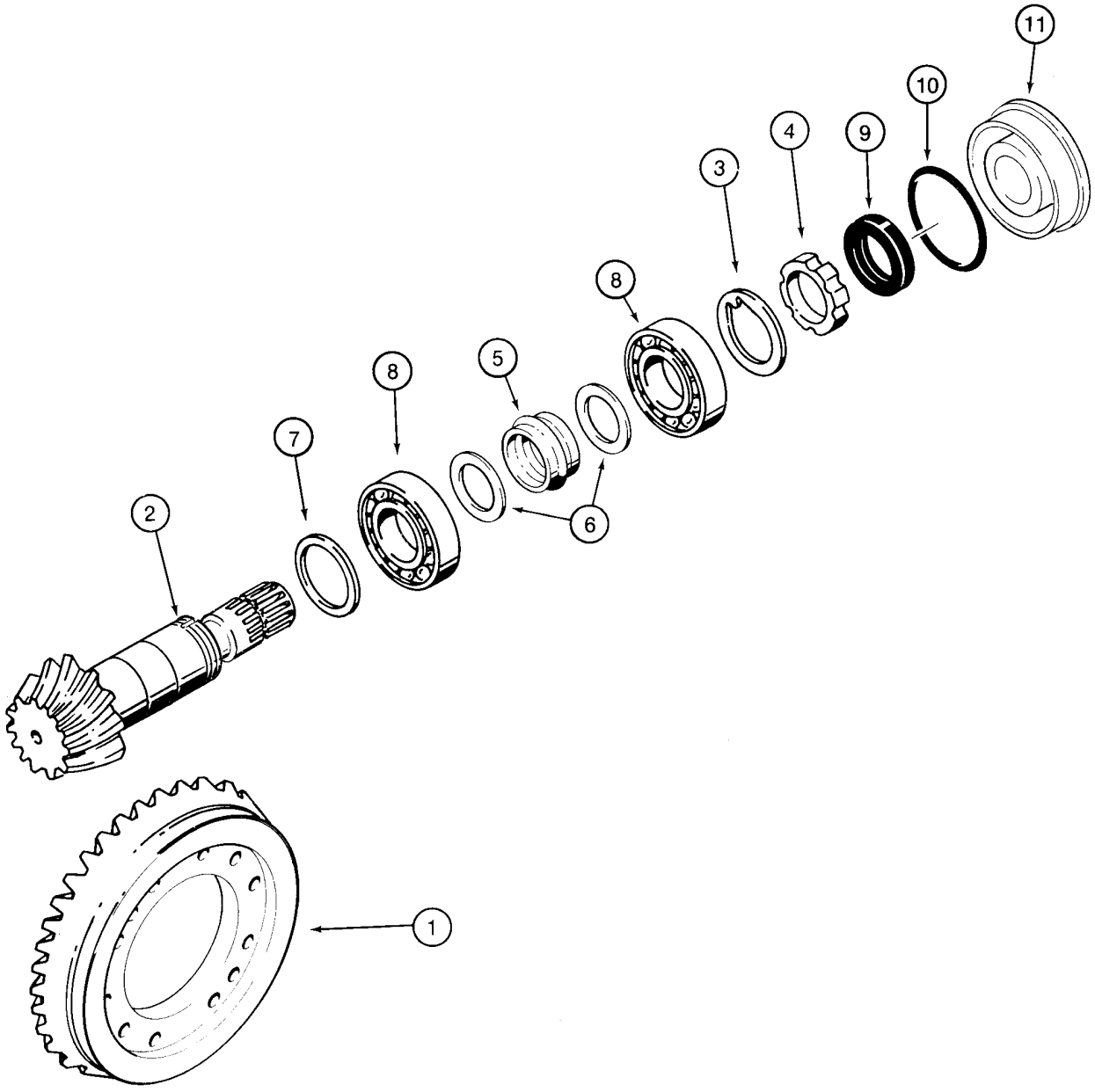

B9407025

http://www.minnparbackhoeparts.com/

ESSIEU, TRACTION AVANT - COURONNE ET PIGNON

REF	FN	PART NUMBER	YR/SN	QTY	DESCRIPTION
		87417387		1	PONT AVANT Front, 580SM Models Without Powershift Transmission, Incl. Ref 1 - 11; Also Includes Parts On Figures 06-02 - 06-08
		87417390		1	PONT AVANT Front, With Limited Slip, 580SM+ Models Without Powershift Transmission, Incl. Ref 1 - 11; Also Includes Parts On Figures 06-02 - 06-08
		87417389		1	PONT AVANT Front, 580SM Models With Powershift Transmission, Incl. Ref 1 - 11; Also Includes Parts On Figures 06-02 - 06-08
		87417391		1	PONT AVANT Front, With Limited Slip, 580SM+ Models With Powershift Transmission, Incl. Ref 1 - 11; Also Includes Parts On Figures 06-02 - 06-08
		144460A1		1	POCHETTE Ring and Pinion Gear Set, Incl. Ref 1 - 6; 87417387 580SM Axle Without Powershift
		195210A1		1	POCHETTE Ring and Pinion Gear Set, Incl. Ref 1 - 6; 87417390 580SM+ Axle Without Powershift
		311046A1		1	JEU-DE-PIGNONS KIT, Ring and Pinion, Incl. Ref 1 - 6; 87417389 580SM Axle With Powershift
		311047A1		1	COUPLE-CONIQUE Ring and Pinion Gear Set, Incl. Ref 1 - 6; 87417391 580SM+ Axle With Powershift
1		NSS		1	NON FOURNI SEPAREMENT Ring, Gear
2		NSS		1	NON FOURNI SEPAREMENT Gear, Pinion Gear
3		K261065		1	RONDELLE
4		K261014		1	ECROU Ring
5		1349058C1		1	ENTRETOISE Collapsible
6		1349059C1		2	RONDELLE
7		140954A1		X	CALE D'EPAISSEUR 2,5 mm (0,098 in)
7		140953A1		X	CALE D'EPAISSEUR 2,6 mm (0,102 in)
7		140951A1		X	CALE D'EPAISSEUR 2,7 mm (0,106 in)
7		140949A1		X	CALE D'EPAISSEUR 2,8 mm (0,110 in)
7		140948A1		X	CALE D'EPAISSEUR 2,9 mm (0,114 in)
7		140943A1		X	CALE D'EPAISSEUR 3,0 mm (0,118 in)
7		140944A1		X	CALE D'EPAISSEUR 3,1 mm (0,122 in)
7		140945A1		X	CALE D'EPAISSEUR 3,2 mm (0,125 in)
7		140946A1		X	CALE D'EPAISSEUR 3,3 mm (0,129 in)
7		140947A1		X	CALE D'EPAISSEUR 3,4 mm (0,133 in)
8		K395090		2	ROULEMENT A BILLES

http://www.minnparbackhoeparts.com/

ESSIEU, TRACTION AVANT - COURONNE ET PIGNON

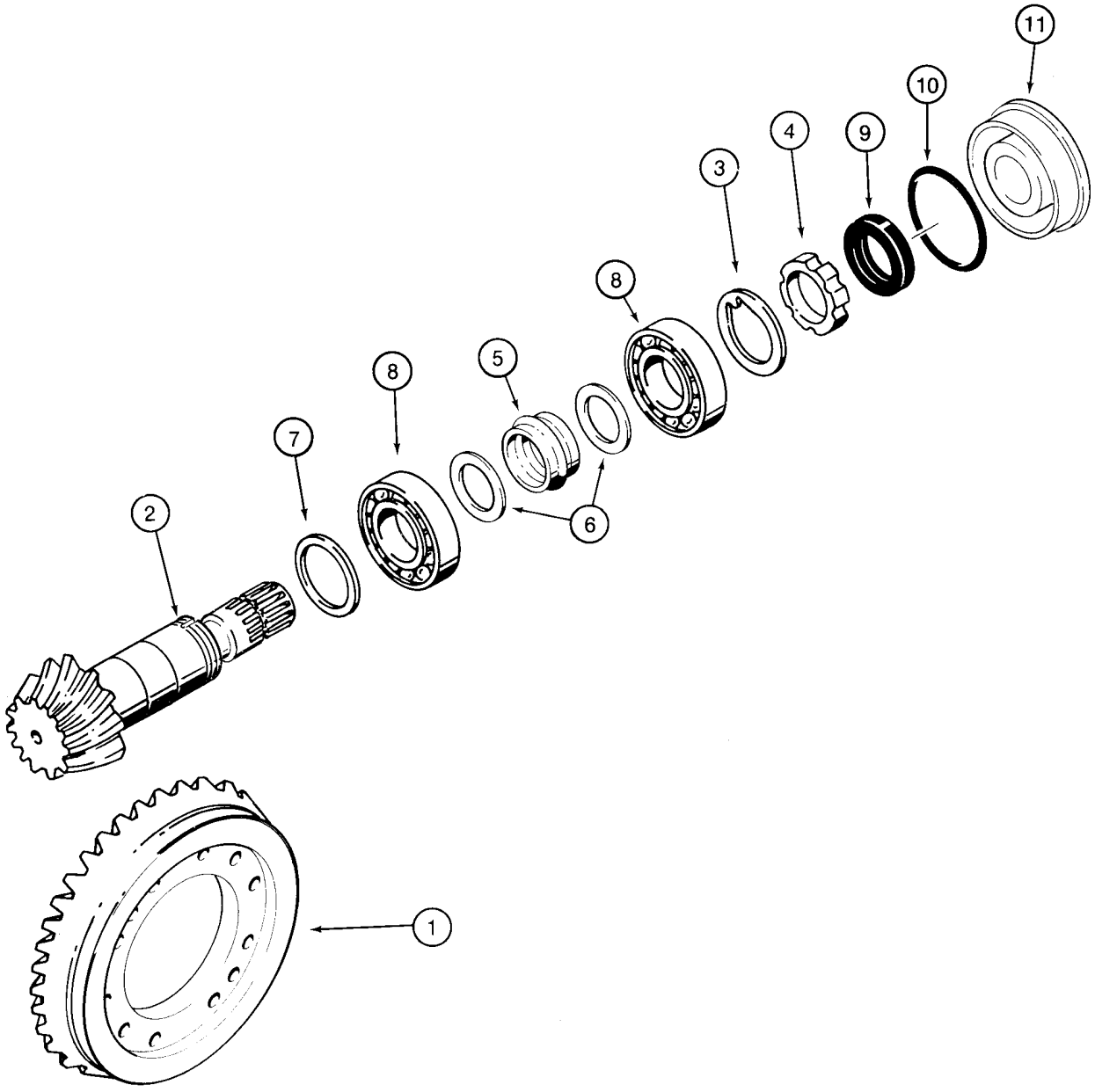

B9407025

http://www.minnparbackhoeparts.com/

ESSIEU, TRACTION AVANT - COURONNE ET PIGNON

REF	FN	PART NUMBER	YR/SN	QTY	DESCRIPTION
9		K262143		1	JOINT Oil
10		238-5152		1	JOINT TORIQUE 3-1/4 ID x 3/32
11		128570A1		1	FLASQUE Cover, Differential
		B17575		X	FLUIDE 89 ml, Black RTV Silicone, Differential Cover to Differential Carrier

http://www.minnparbackhoeparts.com/

ARBRE DE TRANSMISSION, ESSIEU AVANT

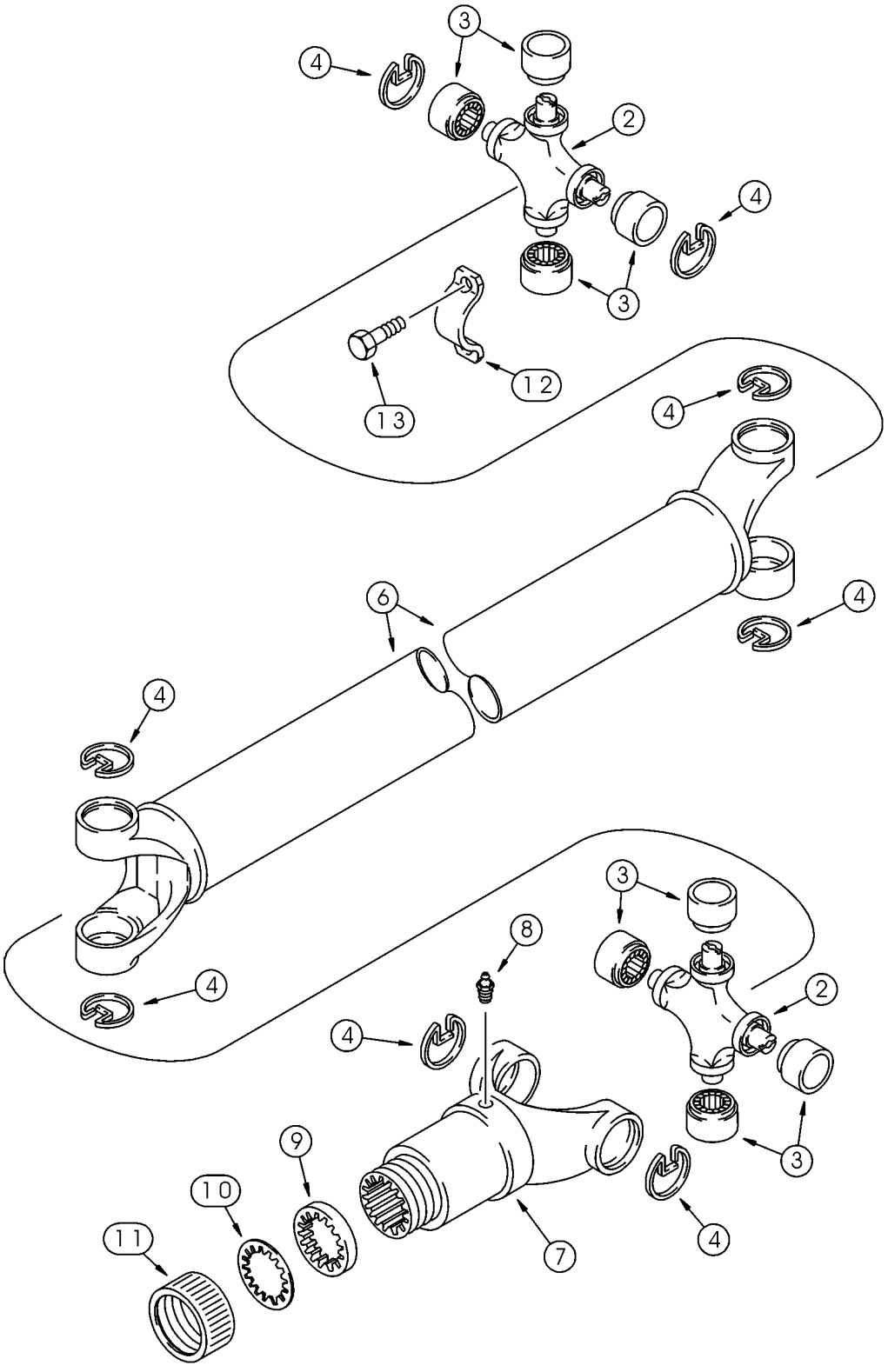

http://www.minnparbackhoeparts.com/

ARBRE DE TRANSMISSION, ESSIEU AVANT

REF	FN	PART NUMBER	YR/SN	QTY	DESCRIPTION
		367861A2		1	ARBRE D'ENTRAINEMENT With or Without Powershift Transmission, Incl. 393231A1, Ref 2 - 13
		393231A1		2	POCHETTE Universal Joint, Incl. Ref 2 - 4
2		NSS		1	NON FOURNI SEPAREMENT Joint, Universal
3		NSS		4	NON FOURNI SEPAREMENT Bearing, Journal
4		NSS		4	NON FOURNI SEPAREMENT Ring, Retaining
6		393234A1		1	ARBRE D'ENTRAINEMENT
7		144279A1		1	MACHOIRE
8		219-10		1	GRAISSEUR 1/4 tpr x 11/16
		D149860		1	COLIS POUR RECHANGE Incl. Ref 9 - 11
9		NSS		1	NON FOURNI SEPAREMENT Washer, Cork
10		NSS		1	NON FOURNI SEPAREMENT Washer, Steel
11		NSS		1	NON FOURNI SEPAREMENT Cap
12		90-6682T1		2	COLLIER
13		D137627		4	BOULON

http://www.minnparbackhoeparts.com/

06-10		p1	02/05

SYSTÈME DE REFROIDISSEMENT - TRANSMISSION (MODÈLES SANS AUTOMATIQUE)(WITH CUT HOSES AT COOLER)

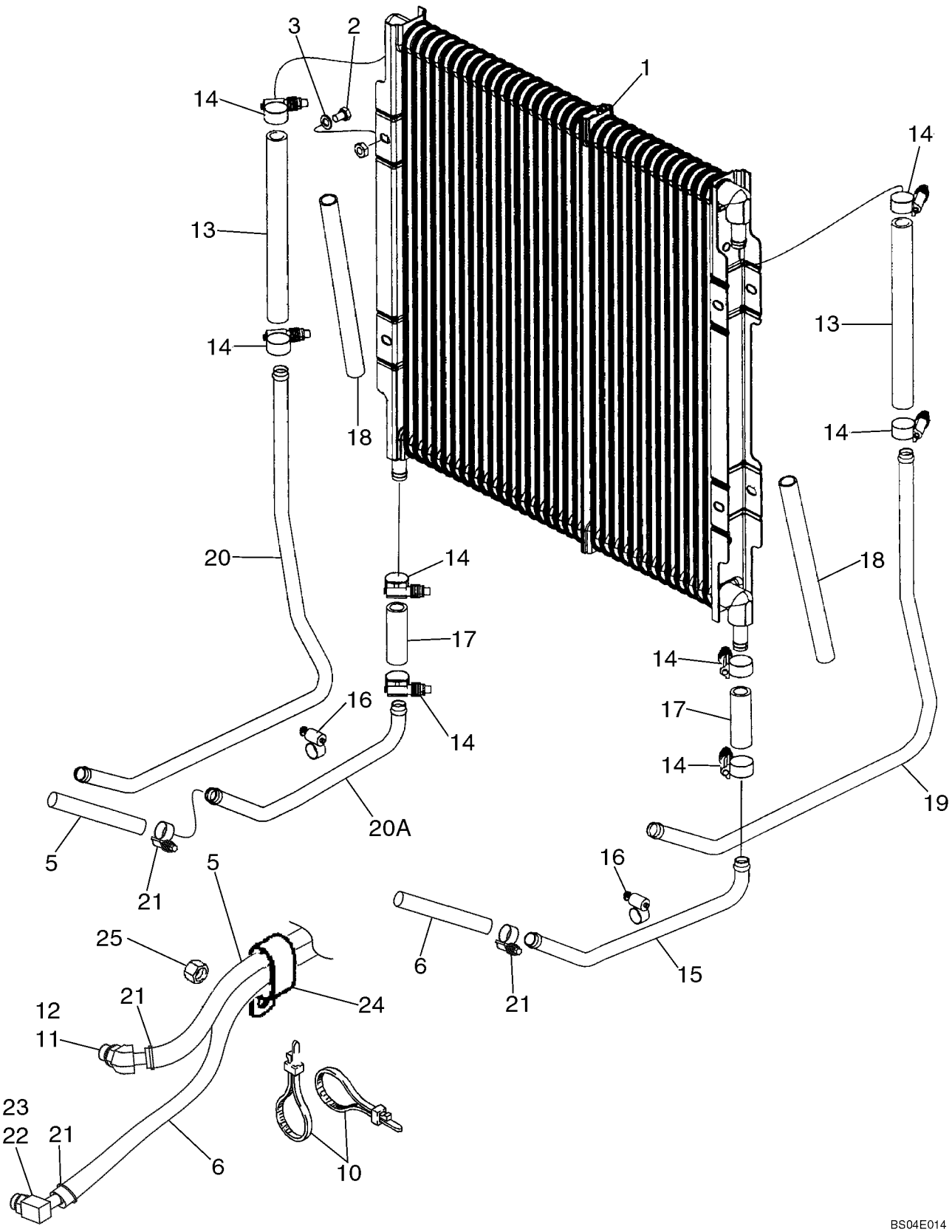

http://www.minnparbackhoeparts.com/

SYSTÈME DE REFROIDISSEMENT - TRANSMISSION (MODÈLES SANS AUTOMATIQUE)(WITH CUT HOSES AT COOLER)

REF	FN	PART NUMBER	YR/SN	QTY	DESCRIPTION
1		87427158		1	REFROIDISSEUR D'HUILE Hydraulic Oil Cooler
2		614-8012		4	VIS M8 x 12
3		895-11008		4	RONDELLE 9 x 16 x 1,6 mm
5		87422597		1	FLEXIBLE (ASSEMBLE) 975 mm (38-13/32 in), Transmission to Cooler Inlet
6		87422598		1	FLEXIBLE (ASSEMBLE) 1225 mm (48-1/4 in), Cooler Outlet to Transmission
10		L18337		2	SANGLE 15 in
11		217-314		1	COUDE 45 deg, 5/8 stem x 7/8 Or; Incl. Ref 12
12		237-6010		1	JOINT TORIQUE 3/4 ID x 3/32
13		87446338		2	FLEXIBLE 235 mm (9-9/32 in); Replaces 87417238 Hose
14		328186A1		8	BRIDE, FLEXIBLE
15		87446335		1	TUBE Lower Tube; Replaces 87435277 Tube
16		214-1412		2	COLLIER No. 12
17		87446337		2	FLEXIBLE 68 mm (2-11/16 in); Replaces 87426742 Hose
18		87428998		2	GAINE PLASTIQUE 250 mm (9-7/8 in) Sleeve
19		87446333		1	TUBE Right-Hand Upper Cooler; Replaces 87435278 Tube
20		87446330		1	TUBE Left-Hand Upper Cooler; Replaces 87435280 Tube
20A		87446332		1	TUBE Lower; Replaces 87435279 Tube
21		328186A1		4	BRIDE, FLEXIBLE
22		217-349		1	COUDE 90 deg, Incl. Ref 23
23		237-6010		1	JOINT TORIQUE
24		D39696		1	COLLIER Double P
25		829-1410		1	ECROU M10

http://www.minnparbackhoeparts.com/

SYSTÈME DE REFROIDISSEMENT - TRANSMISSION (MODÈLES AVEC AUTOMATIQUE)(WITH CUT HOSES AT COOLER)

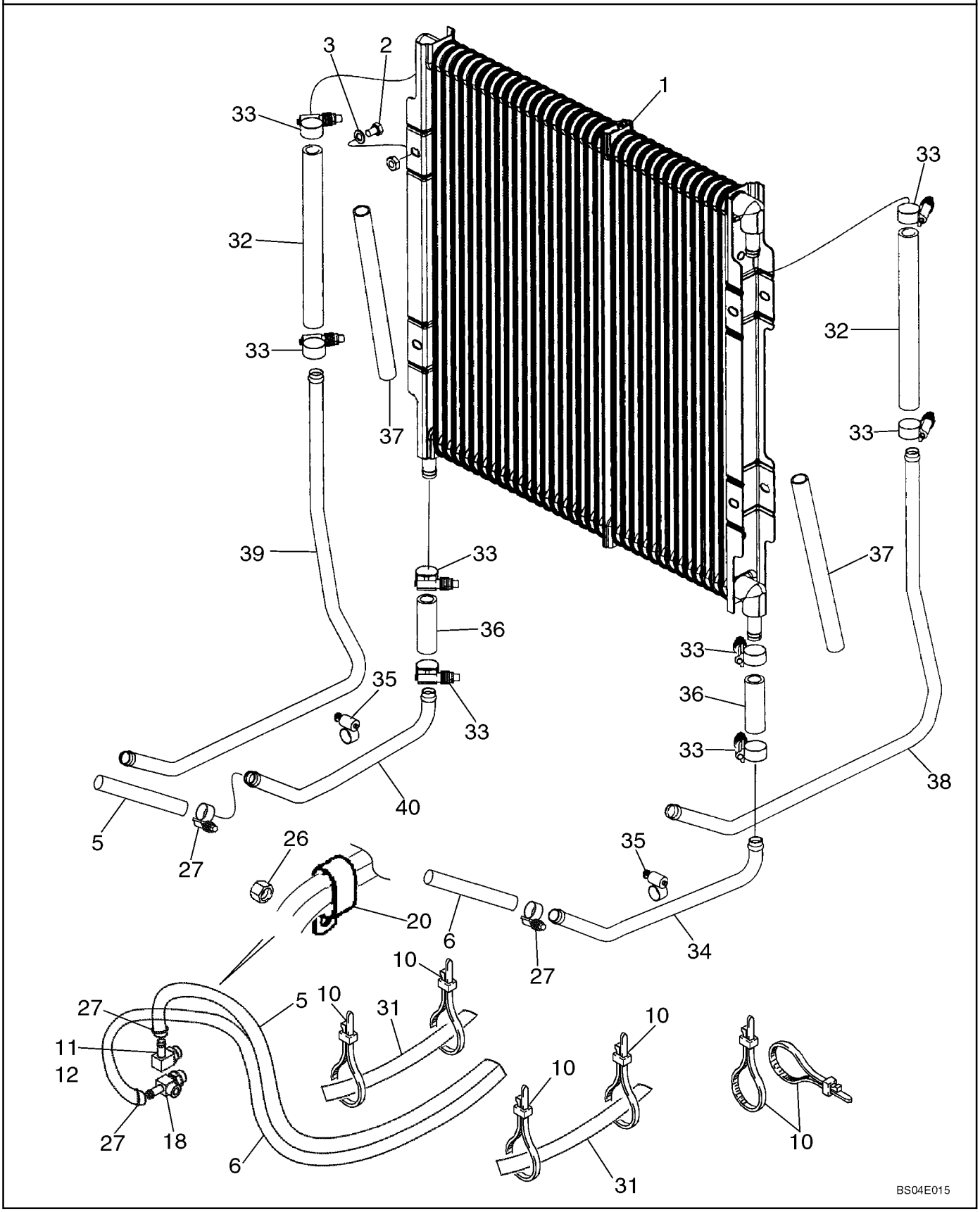

http://www.minnparbackhoeparts.com/

SYSTÈME DE REFROIDISSEMENT - TRANSMISSION (MODÈLES AVEC AUTOMATIQUE)(WITH CUT HOSES AT COOLER)

REF	FN	PART NUMBER	YR/SN	QTY	DESCRIPTION
1		87427158		1	REFROIDISSEUR D'HUILE Hydraulic Oil Cooler
2		614-8012		4	VIS M8 x 12
3		895-11008		4	RONDELLE 9 x 16 x 1,6 mm
5		87424240		1	FLEXIBLE 1900 mm (74-13/16 in), Transmission to Cooler Inlet
6		87424241		1	FLEXIBLE 2150 mm (84-11/16 in), Cooler Outlet to Transmission
10		L18337		6	SANGLE 15 in
11		217-363		1	RACCORD Elbow, 90 deg, Incl. Ref 12
12		237-6012		1	JOINT TORIQUE
18		87423044		1	TE Tee
20		D39696		1	COLLIER
26		829-1410		1	ECROU M10
27		328186A1		4	BRIDE, FLEXIBLE
31		D132982		2	GAINE Hose Sleeve
32		87446338		2	FLEXIBLE 235 mm (9-9/32 in) hose; Replaces 87417238 Hose
33		328186A1		8	BRIDE, FLEXIBLE
34		87446335		1	TUBE Lower Tube; Replaces 87435277 Tube
35		214-1412		2	COLLIER No. 12
36		87446337		2	FLEXIBLE 68 mm (2-11/16 in); Replaces 87426742 Hose
37		87428998		2	GAINE PLASTIQUE 250 mm (9-7/8 in) Sleeve
38		87446333		1	TUBE Right-Hand Upper Cooler; Replaces 87435278 Tube
39		87446330		1	TUBE Left-Hand Upper Cooler; Replaces 87435280 Tube
40		87446332		1	TUBE Lower; Replaces 87435279 Tube

http://www.minnparbackhoeparts.com/

SYSTÈME DE REFROIDISSEMENT - TRANSMISSION (WITH FLARED FITTINGS AT COOLER)

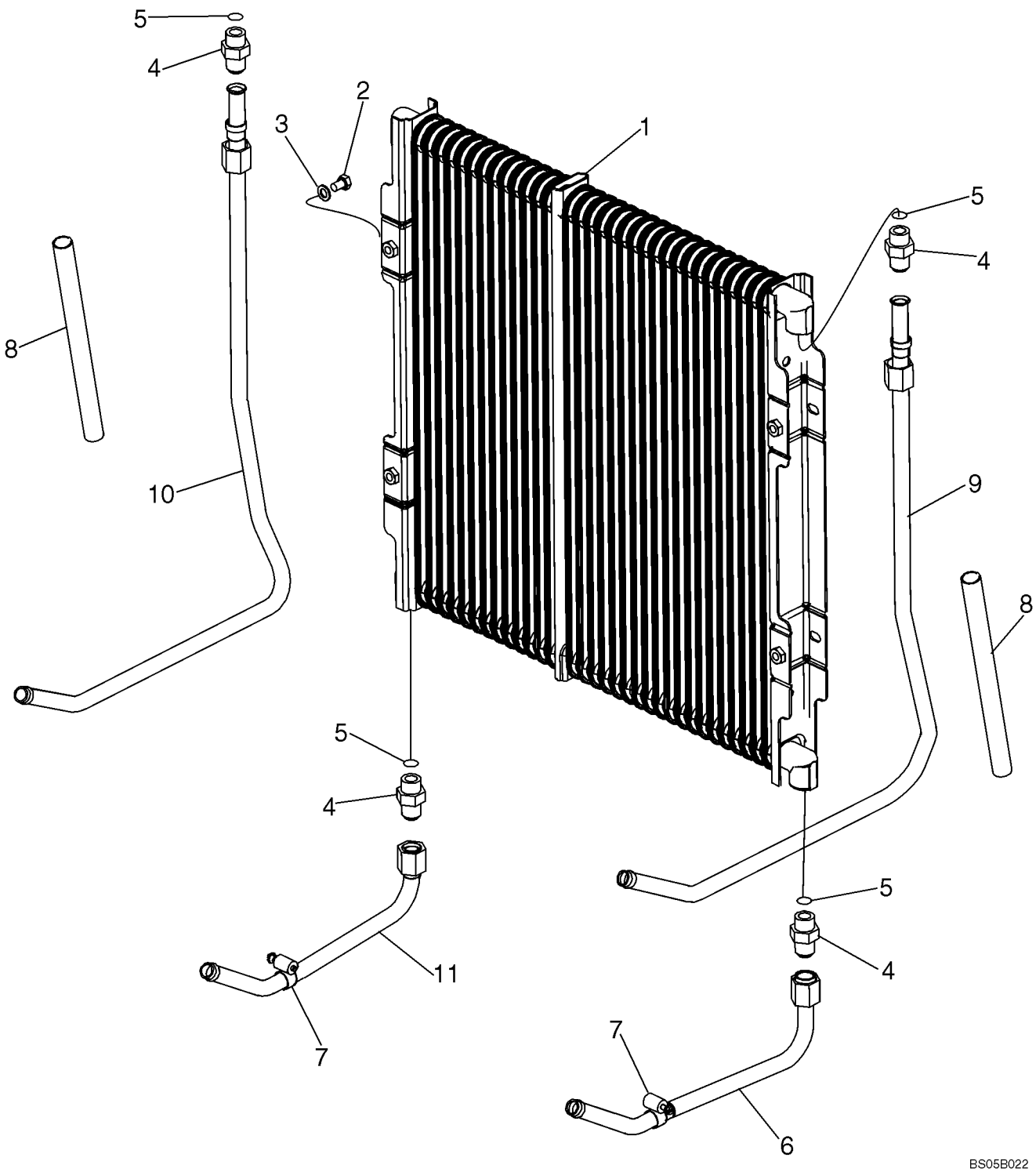

http://www.minnparbackhoeparts.com/

SYSTÈME DE REFROIDISSEMENT - TRANSMISSION (WITH FLARED FITTINGS AT COOLER)

REF	FN	PART NUMBER	YR/SN	QTY	DESCRIPTION
1		87441876		1	REFROIDISSEUR D'HUILE Hydraulic Oil Cooler
2		614-8012		4	VIS M8 x 12
3		895-11008		4	RONDELLE 9 x 16 x 1,6 mm
4		218-5062		4	RACCORD 7/8 fl x Or; Incl. Ref 5
5		237-6010		1	JOINT TORIQUE 3/4 ID x 3/32
6		87435078		1	TUBE Lower Right-Hand Tube
7		214-1412		2	COLLIER No. 12
8		87311219		2	GAINE PLASTIQUE 250 mm (9-7/8 in) Sleeve
9		87435076		1	TUBE Right-Hand Upper Cooler
10		87435080		1	TUBE Left-Hand Upper Cooler
11		87435082		1	TUBE Left-Hand Lower

http://www.minnparbackhoeparts.com/

TRANSMISSION - SUPPORT (MODÈLES SANS AUTOMATIQUE)

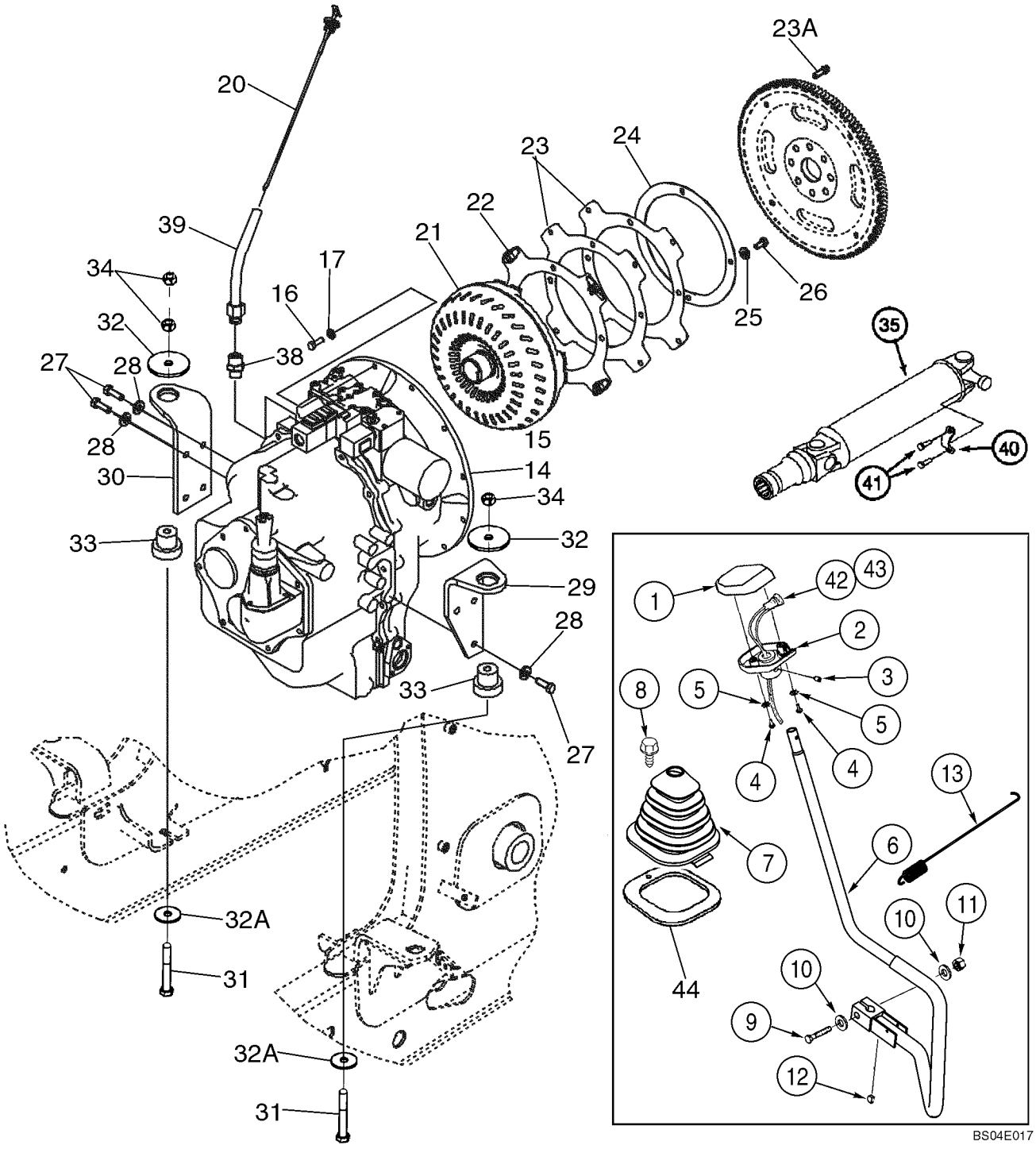

http://www.minnparbackhoeparts.com/

TRANSMISSION - SUPPORT (MODÈLES SANS AUTOMATIQUE)

REF	FN	PART NUMBER	YR/SN	QTY	DESCRIPTION
		309747A1		1	PLAQUE Gear Shift Lever, Includes NSS Gasket, Incl. Ref 1, 2, 4, 5
		NSS		2	NON FOURNI SEPAREMENT GASKET, Knob
1		187714A1		1	BOUTON Knob, Upper
2		187715A1		1	BOUTON Knob, Lower
3		484-6316		1	VIS Setscrew, 5/16 NF x 3/8; hdg pt
4		87020181		2	VIS No. 10 NF x 7/8
5		493-41020		2	RONDELLE FREIN 3/16
6		379314A4		1	LEVIER (ASSEMBLE) Gear Shift Lever
7		400588A2		1	MANCHETTE
8		87310096		1	BOULON M6 x 25, Includes Washer, Stainless Steel; Replaces 233724A1 Non-Stainless Steel Screw Used On Some Models
9		827-12065		1	BOULON M12 x 65; 10.9
10		896-11012		2	RONDELLE 13,5 x 24 x 3 mm
11		832-10412		1	ECROU M12
12		126-116		1	CLAVETTE 3/16 x 3/4 Woodruff Key
13		380537A2		1	RESSORT
14		87456843		1	TRANSMISSION Two Wheel Drive Models, See Figure 06-14 - 06-23A; Replaces 86984097
15		87456844		1	TRANSMISSION Four Wheel Drive Models, See Figure 06-14 - 06-24; Replaces 86984098
16		627-10030		12	VIS M10 x 30; 10.9
17		496-21041		12	RONDELLE 13/32 x 13/16 x 3/32
20		87430618		1	JAUGE DE NIVEAU
21		87400112		1	CONVERTISSEUR Torque Converter, New
22		87406934		1	PLAQUE DE SERRAGE Flex Plate, With Caged Nuts
23		86993546		2	PLAQUE DE SERRAGE Flex Plate
23A		87019767		4	VIS Flange, M10 x 30
24		87409201		1	PLAQUE DE SERRAGE Backing Plate
25		896-15010		4	RONDELLE 11 x 24 x 3 mm
26		614-10020		4	VIS M10 x 20
27		614-12035		7	BOULON M12 x 35
28		896-15012		7	RONDELLE 13,5 x 28 x 4 mm
29		87416977		1	SUPPORT Right-Hand Bracket
30		87416978		1	SUPPORT Left-Hand Bracket
31		814-12080		2	VIS M20 x 80

http://www.minnparbackhoeparts.com/

TRANSMISSION - SUPPORT (MODÈLES SANS AUTOMATIQUE)

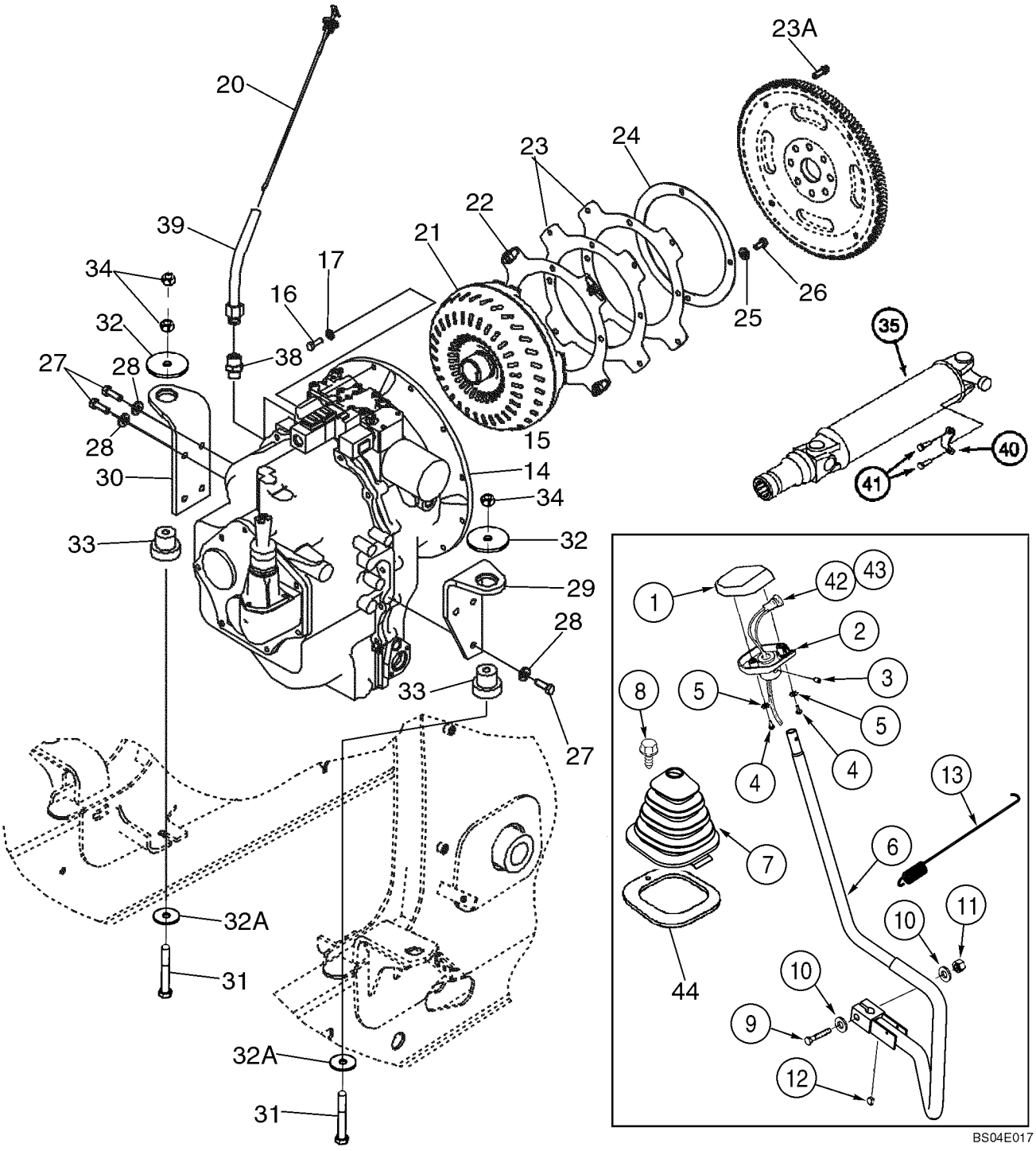

http://www.minnparbackhoeparts.com/

TRANSMISSION - SUPPORT (MODÈLES SANS AUTOMATIQUE)

REF	FN	PART NUMBER	YR/SN	QTY	DESCRIPTION
32		85801585		2	RONDELLE D'ETANCHEITE Special
32A		85802618		2	RONDELLE D'ETANCHEITE
33		87416967		2	SUPPORT
34		832-10412		3	ECROU Lock, M12
35		367860A3		1	ARBRE D'ENTRAINEMENT Transmission to Rear Axle, See Figure 06-47
38		218-459		1	RACCORD 1-5/16 fl x 3/4 PT
39		395344A1		1	TUYAUTERIE Dipstick
40		90-6682T1		2	COLLIER
41		D137627		4	BOULON
42		123097A1		1	CONTACTEUR Push Button, Clutch Cutout; If Used
42		87312712		1	CONTACTEUR Push Button, Clutch Cutout; Otto 21649 Marking; If Used
43		123809A2		1	FAISCEAU Clutch Cutout, Transmission Gear Shift Lever
44		410561A1		1	JOINT Shift Lever Boot, Cab Models

http://www.minnparbackhoeparts.com/

TRANSMISSION - SUPPORT (MODÈLES AVEC AUTOMATIQUE)

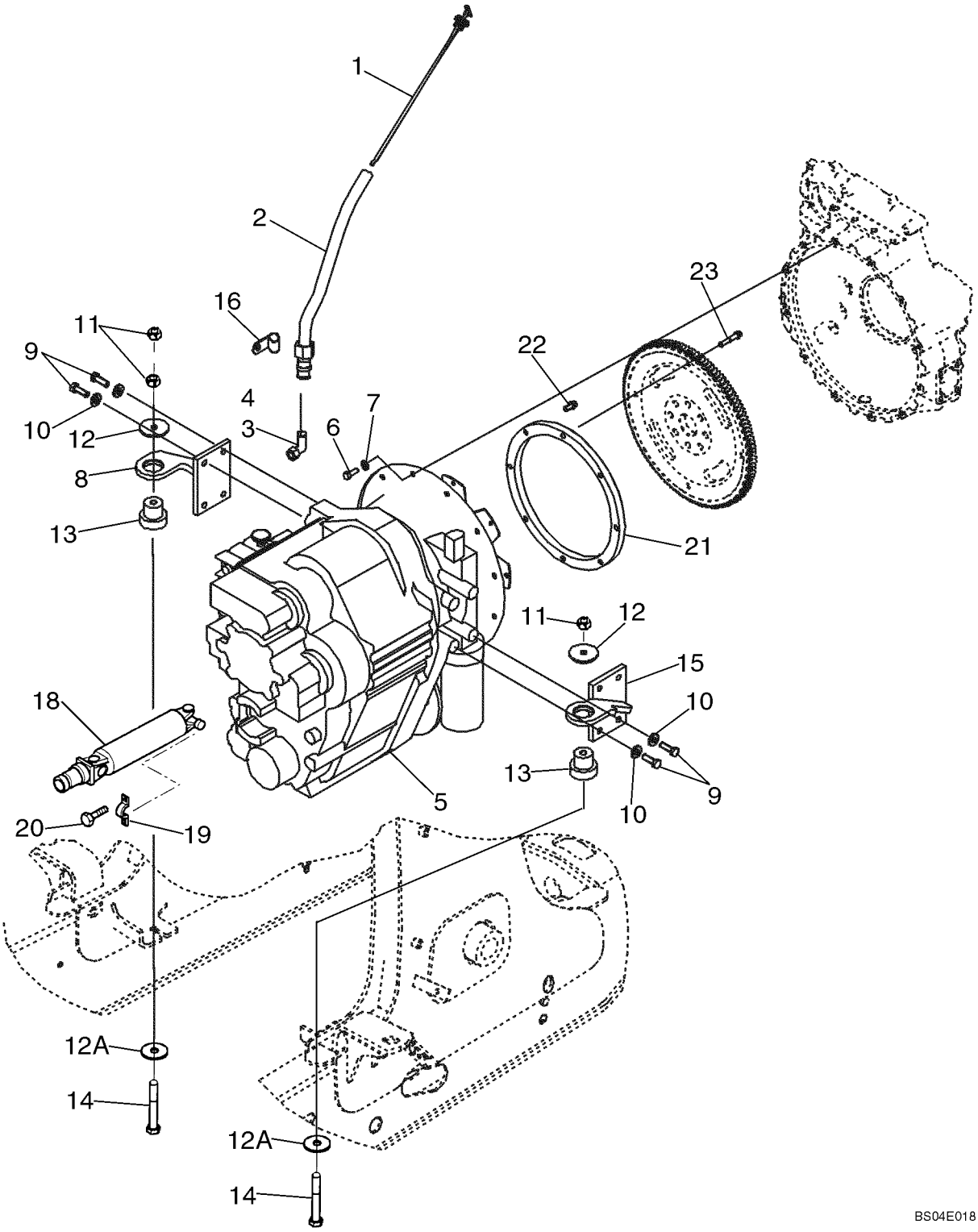

http://www.minnparbackhoeparts.com/

TRANSMISSION - SUPPORT (MODÈLES AVEC AUTOMATIQUE)

REF	FN	PART NUMBER	YR/SN	QTY	DESCRIPTION
1		87430618		1	JAUGE DE NIVEAU
2		393999A1		1	TUYAUTERIE Dipstick
3		218-5110		1	RACCORD Elbow, 90 deg, 1-5/16 fl x Or; Incl. Ref 4
4		237-6016		1	JOINT TORIQUE 1-11/64 ID x 7/64
5		87424815		1	TRANSMISSION New, Four Wheel Drive Models, See Figure 06-25 - 06-36
6		627-10030		12	VIS M10 x 30; 10.9
7		496-21041		12	RONDELLE 13/32 x 13/16 x 3/32
8		87416982		1	PIÈCES DE FIXATION Left-Hand Bracket
9		614-12035		8	BOULON M12 x 35
10		896-15012		8	RONDELLE 13,5 x 28 x 4 mm
11		832-10412		3	ECROU M12
12		85801585		2	RONDELLE D'ETANCHEITE Special
12A		85802618		2	RONDELLE D'ETANCHEITE
13		87416967		2	SUPPORT Insulator
14		814-12080		2	VIS M12 x 80
15		87416981		1	PIÈCES DE FIXATION Right-Hand Bracket
16		D35908		1	COLLIER
18		367859A2		1	ARBRE D'ENTRAINEMENT Transmission to Rear Axle, See Figure 06-47
19		90-6682T1		2	COLLIER
20		D137627		4	BOULON
21		87407758		1	ANNEAU Adapter Ring, Flywheel
22		87021705		4	VIS Flange, M10 x 20
23		87021704		4	VIS Flange, M10 x 50

http://www.minnparbackhoeparts.com/

TRANSMISSION - FILTRE À HUILE (MODÈLES SANS AUTOMATIQUE)

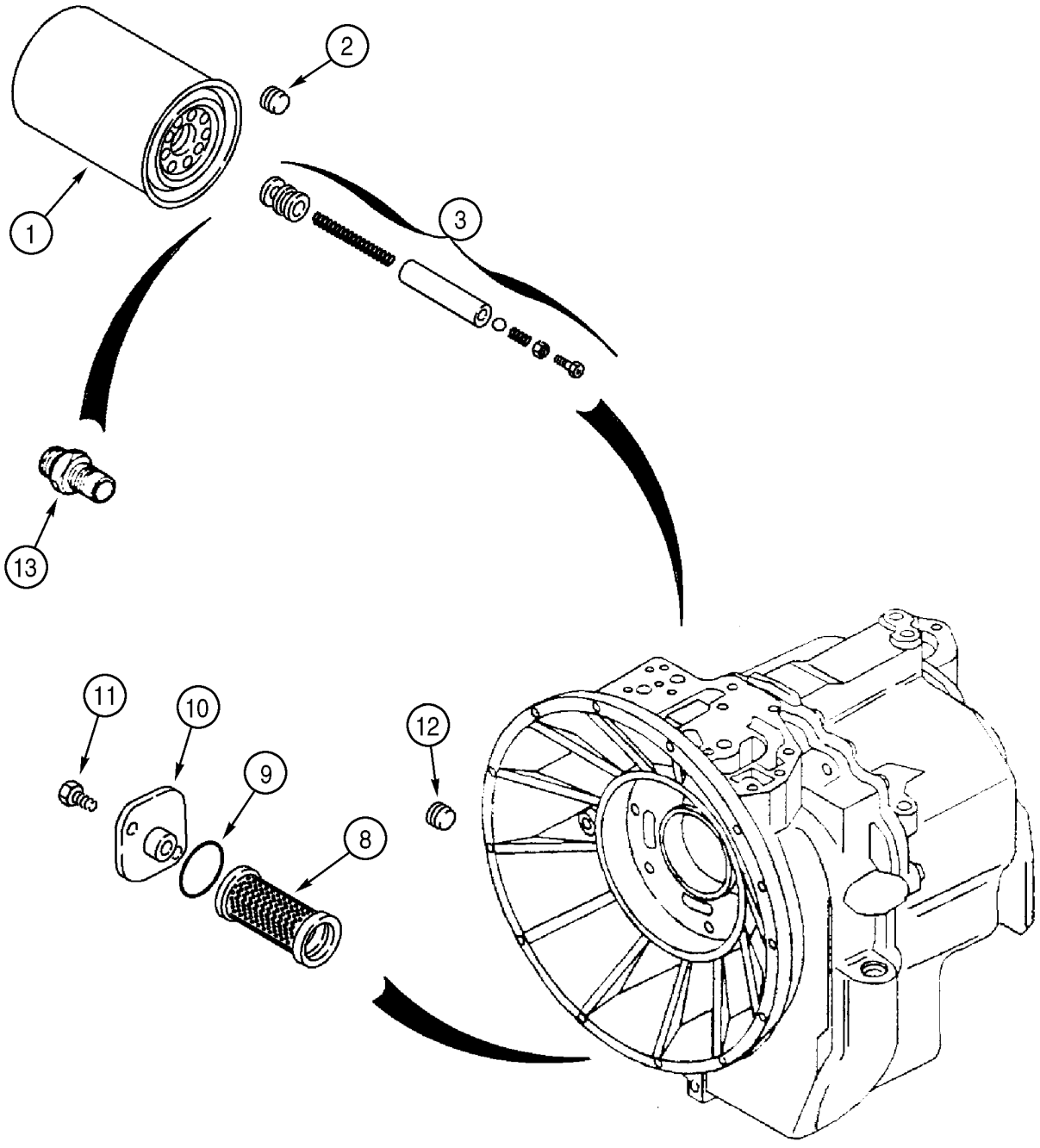

http://www.minnparbackhoeparts.com/

TRANSMISSION - FILTRE À HUILE (MODÈLES SANS AUTOMATIQUE)

REF	FN	PART NUMBER	YR/SN	QTY	DESCRIPTION
		87456843		1	TRANSMISSION Two Wheel Drive, Incl. Ref 1, 8 - 11, 13; Also Includes Parts On Figures 06-14 - 06-23A; Replaces 86984097
		87456844		1	TRANSMISSION Four Wheel Drive, Incl. Ref 1 - 13; Also Includes Parts On Figures 06-14 - 06-24; Replaces 86984098
1		254686A2		1	FILTRE Oil
2		181101A1		1	BOUCHON 14 - 1.5 mm; Four Wheel Drive Models Only
3		181274A1		1	LOT DE PIECES Valve; Four Wheel Drive Models Only
8		278534A1		1	TAMIS-FILTRE Oil
9		100748A1		1	JOINT TORIQUE
10		181219A1		1	COUVERCLE
11		614-8018		2	VIS M8 x 18
12		181102A1		1	BOUCHON Four Wheel Drive Models Only
13		181202A1		1	RACCORD

http://www.minnparbackhoeparts.com/

TRANSMISSION (2WD) - BOÎTIER (MODÈLES SANS AUTOMATIQUE)

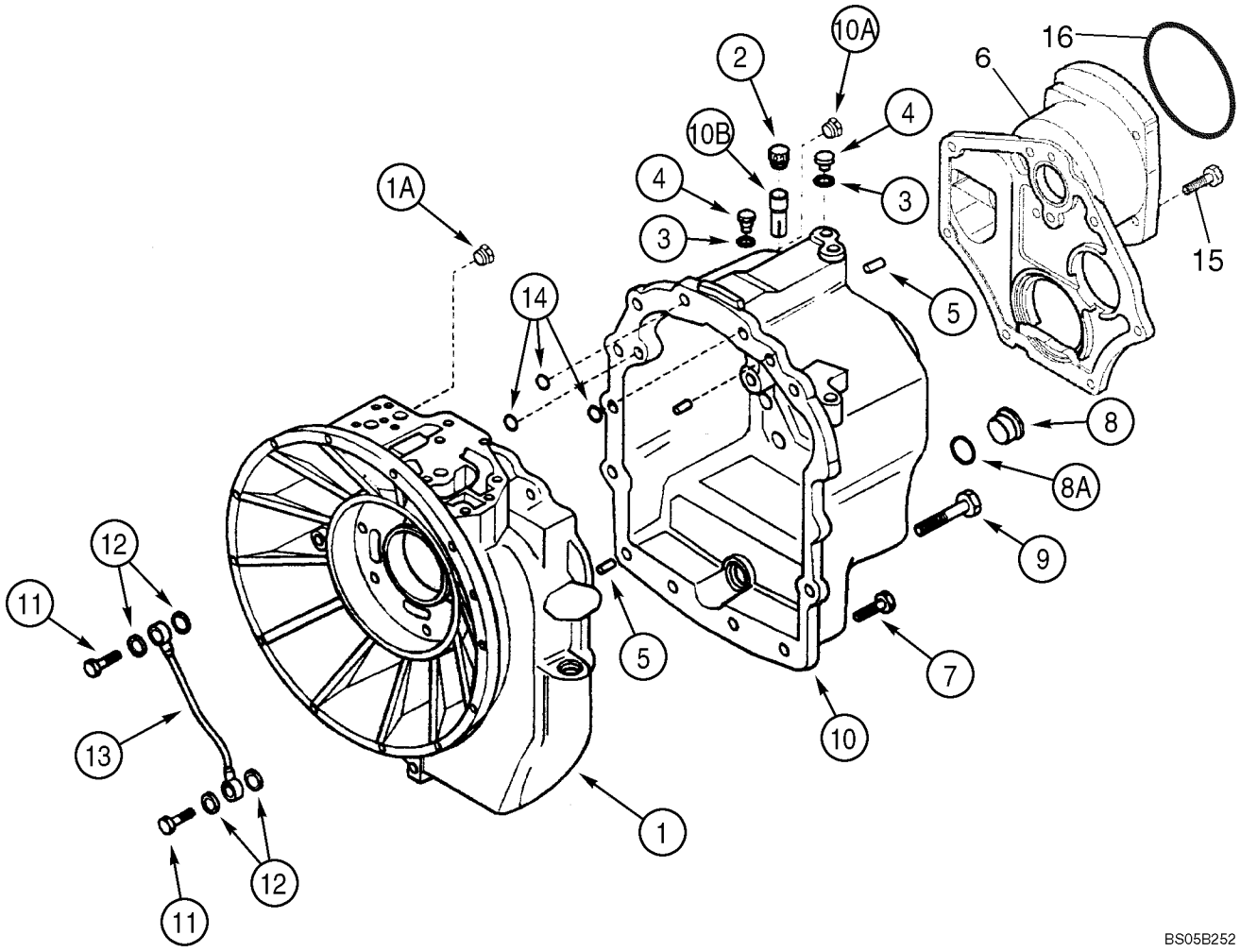

http://www.minnparbackhoeparts.com/

TRANSMISSION (2WD) - BOÎTIER (MODÈLES SANS AUTOMATIQUE)

REF	FN	PART NUMBER	YR/SN	QTY	DESCRIPTION
		87456843		1	TRANSMISSION Two Wheel Drive, Incl. Ref 1 - 14, 16; Also Includes Parts On Figures 06-14 - 06-23A; Replaces 86984097
1		87429989		1	CARTER Housing, Front Half, Use With Loctite 510 or 518 as a Gasket Eliminator; Incl. Ref 1A
1A		E135809		1	BOUCHON If Used
2		1530028C1		1	RENIFLARD (ASSEMBLE)
		310772A1		1	TUYAU 18 OD x 42 mm lg, Breather, Not Illustrated
3		934667R1		4	RONDELLE D'ETANCHEITE Copper Washer, 10 x 14 x 1.5 mm
4		181100A1		3	BOUCHON
5		K260177		3	AXE Dowel, 10 x 25 mm
6		87429987		1	ADAPTEUR Adapter Cover, Pump, Copper
7		614-10030		19	VIS M10 x 30
8		100557A1		1	BOUCHON DE VIDANGE Incl. Ref 8A
8A		238-6121		1	JOINT TORIQUE 1-1/16 ID x 3/32
9		814-10150		2	VIS M10 x 150
10		87429988		1	CARTER HOUSING, Rear Half, Use With Superbond 539 as a Gasket Eliminator; Incl. Ref 10A, 10B
10A		E135809		1	BOUCHON If Used
10B		310772A1		1	TUYAU 18 OD x 42 mm lg, Breather, Not Illustrated
11		181179A1		2	VIS CREUSE
12		181105A1		4	RONDELLE CUIVRE 14 x 20 x 1.5 mm; Sealing
13		181232A1		1	TUYAU Lubrication Tube
14		181141A1		3	JOINT TORIQUE
15		814-10045		4	BOULON M10 x 45
16		87429982		1	JOINT THORIQUE Pump Mounting

http://www.minnparbackhoeparts.com/

TRANSMISSION (4WD) - BOÎTIER (MODÈLES SANS AUTOMATIQUE)

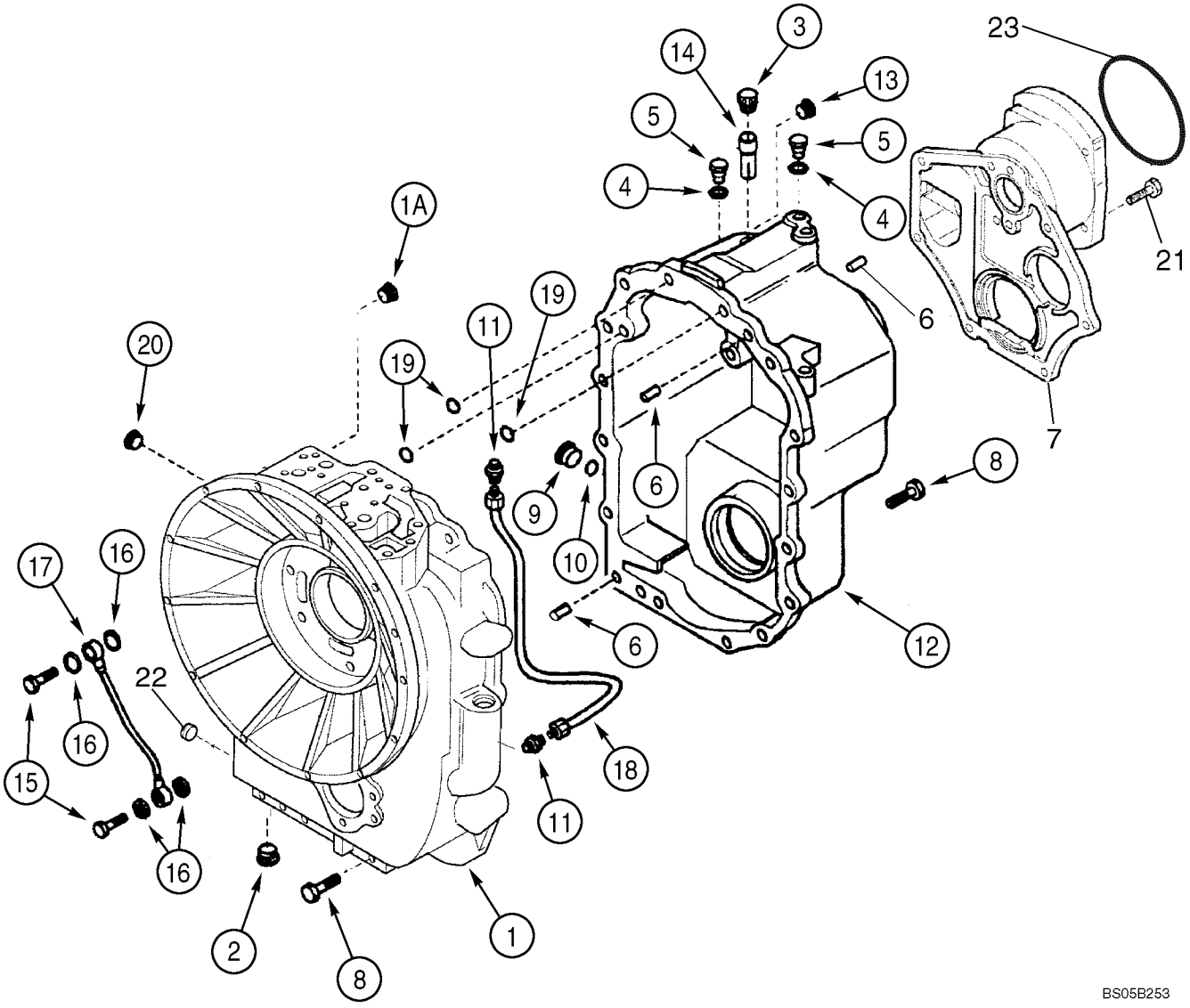

http://www.minnparbackhoeparts.com/

TRANSMISSION (4WD) - BOÎTIER (MODÈLES SANS AUTOMATIQUE)

REF	FN	PART NUMBER	YR/SN	QTY	DESCRIPTION
		87456844		1	TRANSMISSION Four Wheel Drive, Incl. Ref 1 - 20, 23; Also Includes Parts On Figures 06-14 - 06-24; Replaces 86984098
1		87429972		1	CARTER Housing, Front Half, Use With Loctite 510 or 518 as a Gasket Eliminator; Incl. Ref 1A
1A		E135809		1	BOUCHON
2		239606A1		1	BOUCHON
3		1530028C1		1	RENIFLARD (ASSEMBLE)
		310772A1		1	TUYAU 18 OD x 42 mm lg, Breather, Not Illustrated
4		934667R1		3	RONDELLE D'ETANCHEITE Copper Washer, 10 x 14 x 1.5 mm
5		181100A1		3	BOUCHON
6		K260177		3	AXE Dowel, 10 x 25 mm
7		87429987		1	ADAPTEUR Adapter Cover, Pump
8		614-10030		23	VIS M10 x 30
9		100557A1		1	BOUCHON DE VIDANGE Incl. Ref 10
10		238-6121		1	JOINT TORIQUE 1-1/16 ID x 3/32
11		218-1023		2	RACCORD 1/2 fl x 1/4 PT
12		87429986		1	CARTER HOUSING, Rear Half, Use With Superbond 539 as a Gasket Eliminator; Incl. Ref 13, 14
13		E135809		1	BOUCHON If Used
14		310772A1		1	TUYAU 18 OD x 42 mm lg, Breather
15		181179A1		2	VIS CREUSE
16		181105A1		4	RONDELLE CUIVRE 14 x 20 x 1.5 mm
17		181232A1		1	TUYAU Lubrication Tube
18		181176A1		1	TUYAU Oil Tube
19		181141A1		3	JOINT TORIQUE
20		181101A1		1	BOUCHON 14 - 1.5 mm
21		814-10045		4	BOULON M10 x 45
22		181102A1		1	BOUCHON
23		87429982		1	JOINT THORIQUE Pump Mounting

http://www.minnparbackhoeparts.com/

TRANSMISSION - POMPE A HUILE (MODÈLES SANS AUTOMATIQUE)

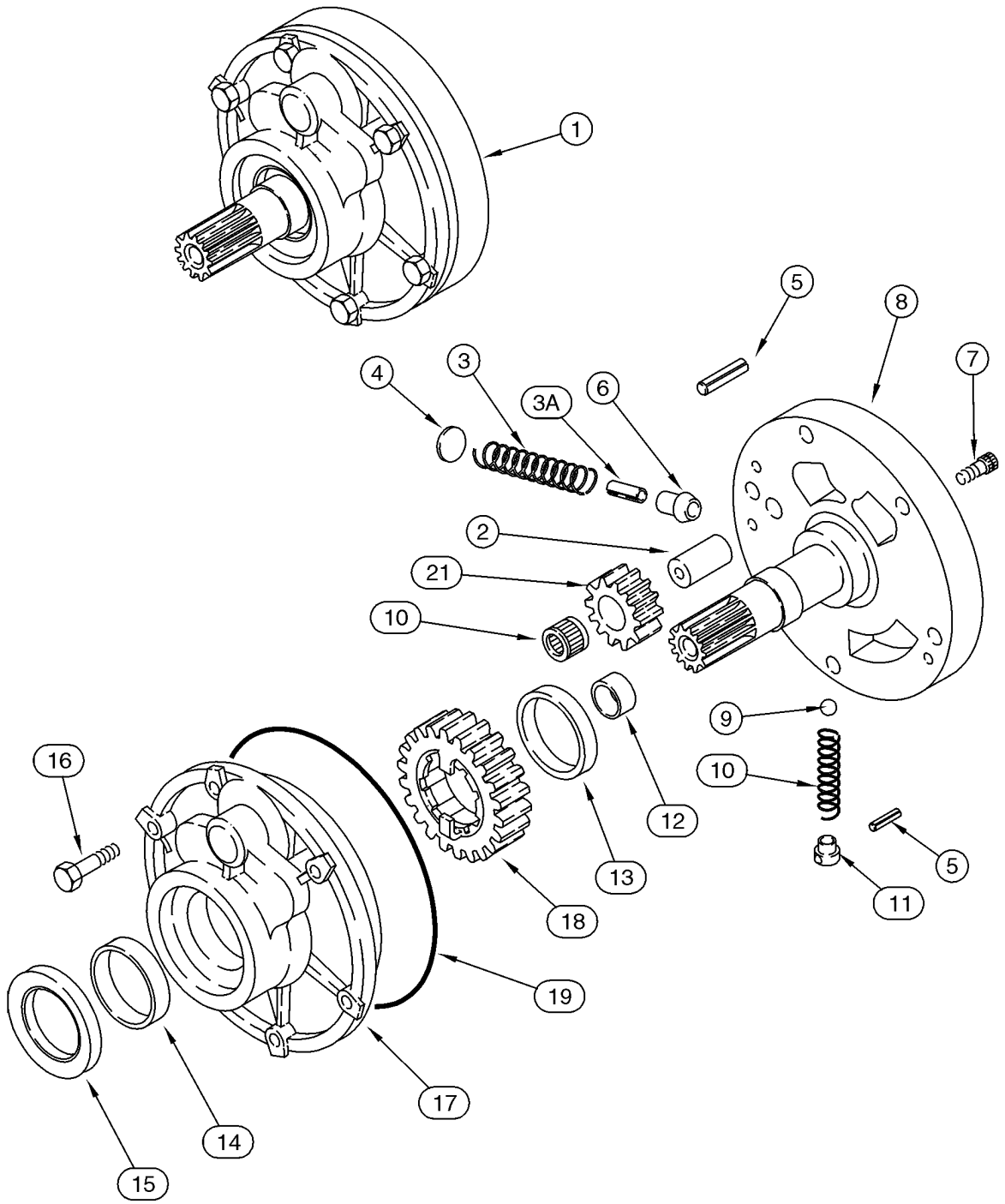

http://www.minnparbackhoeparts.com/

TRANSMISSION - POMPE A HUILE (MODÈLES SANS AUTOMATIQUE)

REF	FN	PART NUMBER	YR/SN	QTY	DESCRIPTION
		87456843		1	TRANSMISSION Two Wheel Drive, Incl. Ref 1 - 21; Also Includes Parts On Figures 06-14 - 06-23A; Replaces 86984097
		87456844		1	TRANSMISSION Four Wheel Drive, Incl. Ref 1 - 21; Also Includes Parts On Figures 06-14 - 06-24; Replaces 86984098
1		87429970		1	POMPE Charge, Incl. Ref 2 - 21
2		NSS		1	NON FOURNI SEPAREMENT Shaft
3		NSS		1	NON FOURNI SEPAREMENT Spring
3A		NSS		1	NON FOURNI SEPAREMENT Pin
4		NSS		1	NON FOURNI SEPAREMENT Stop
5		NSS		2	NON FOURNI SEPAREMENT Pin, Roll
6		NSS		1	NON FOURNI SEPAREMENT Piston
7		NSS		2	NON FOURNI SEPAREMENT Bolt
8		NSS		1	NON FOURNI SEPAREMENT Support
9		NSS		1	NON FOURNI SEPAREMENT Ball
10		NSS		1	NON FOURNI SEPAREMENT Spring
11		NSS		1	NON FOURNI SEPAREMENT Guide
12		NSS		1	NON FOURNI SEPAREMENT Bushing
13		NSS		1	NON FOURNI SEPAREMENT Bushing
14		NSS		1	NON FOURNI SEPAREMENT Bushing
15		87429971		1	JOINT D'HUILE Oil Seal
16		814-8060		6	VIS M8 x 60
17		NSS		1	NON FOURNI SEPAREMENT Housing
18		NSS		1	NON FOURNI SEPAREMENT Gear, 23T
19		181142A1		1	JOINT TORIQUE
20		NSS		1	NON FOURNI SEPAREMENT Bearing, Needle
21		NSS		1	NON FOURNI SEPAREMENT Gear, 12T

http://www.minnparbackhoeparts.com/

TRANSMISSION - MÉCANISME DU CHANGEMENT DE VITESSE (MODÈLES SANS AUTOMATIQUE)

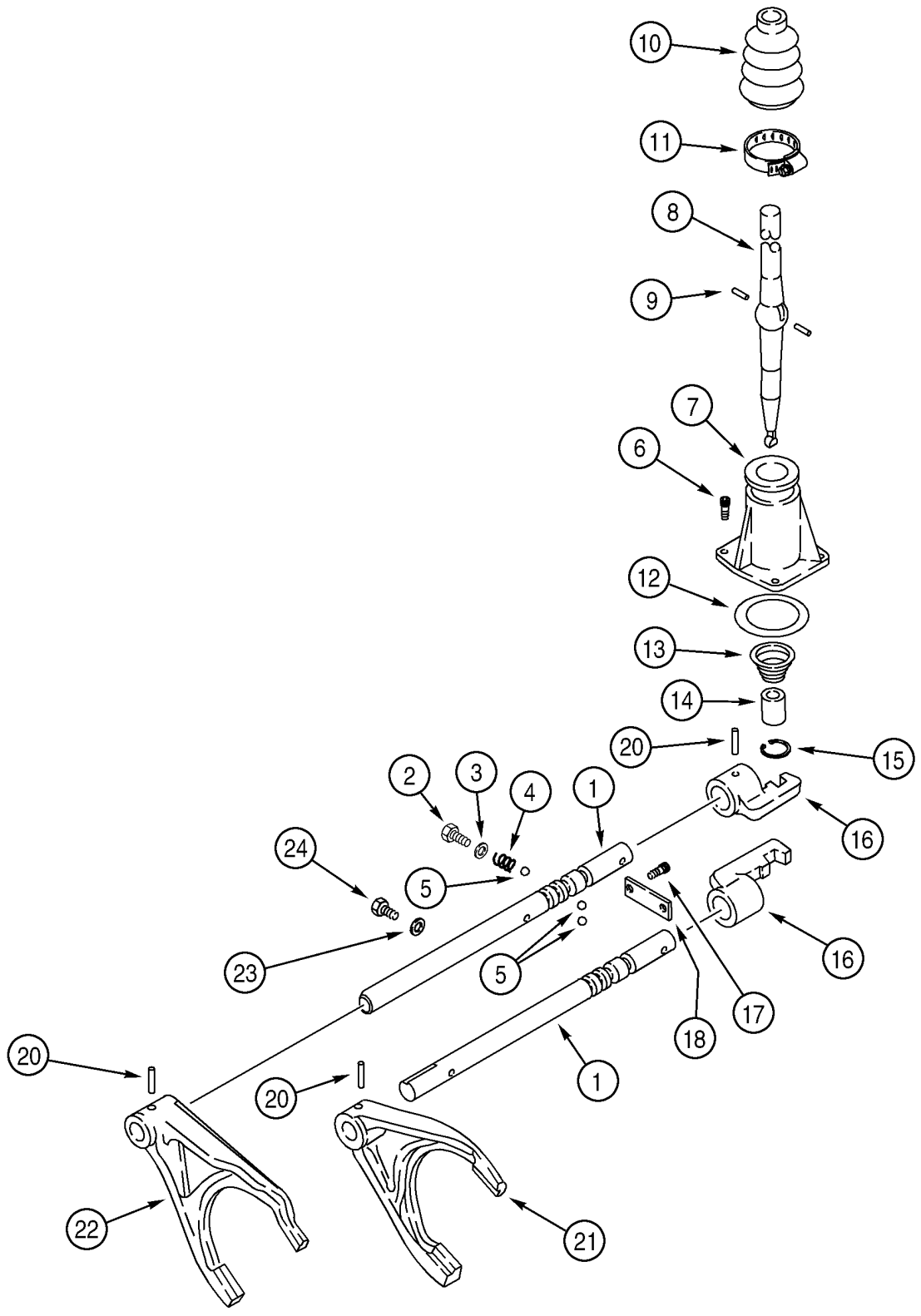

http://www.minnparbackhoeparts.com/

TRANSMISSION - MÉCANISME DU CHANGEMENT DE VITESSE (MODÈLES SANS AUTOMATIQUE)

REF	FN	PART NUMBER	YR/SN	QTY	DESCRIPTION
		87456843		1	TRANSMISSION Two Wheel Drive, Incl. Ref 1 - 24; Also Includes Parts On Figures 06-14 - 06-23A; Replaces 86984097
		87456844		1	TRANSMISSION Four Wheel Drive, Incl. Ref 1 - 24; Also Includes Parts On Figures 06-14 - 06-24; Replaces 86984098
1		181245A2		2	TRINGLE Shifter Fork Rail
2		614-12016		2	VIS M12 x 16
3		87429994		2	RONDELLE D'ETANCHEITE 12 x 20 x 1.5 mm
4		1966993C1		2	RESSORT
5		181139A1		4	BILLE
6		864-8025		3	VIS M8 x 25
7		181171A1		1	COUVERCLE
8		190428A3		1	LEVIER DE COMMANDE
9		1967585C1		2	AXE Pin
10		1967581C1		1	COIFFE
11		181177A1		1	COLLIER
12		181138A1		1	JOINT TORIQUE
13		278533A1		1	RESSORT
14		278532A1		1	BAGUE
15		279039A1		1	ANNEAU-D'ARRET
16		181173A1		2	SÉLECTEUR Shifter
17		864-10025		2	VIS M10 x 25
18		181175A1		1	PLAQUE, GRANDE
20		905794R1		4	AXE 6 x 30 mm
21		181203A1		1	FOURCHETTE First and Second
22		181174A2		1	FOURCHETTE Third and Fourth
23		87429985		1	RONDELLE D'ETANCHEITE Washer
24		1967531C1		1	BOULON M10 x 1 x 25

http://www.minnparbackhoeparts.com/

TRANSMISSION - AXE, TENDEUR ET PRIMAIRE (MODÈLES SANS AUTOMATIQUE)

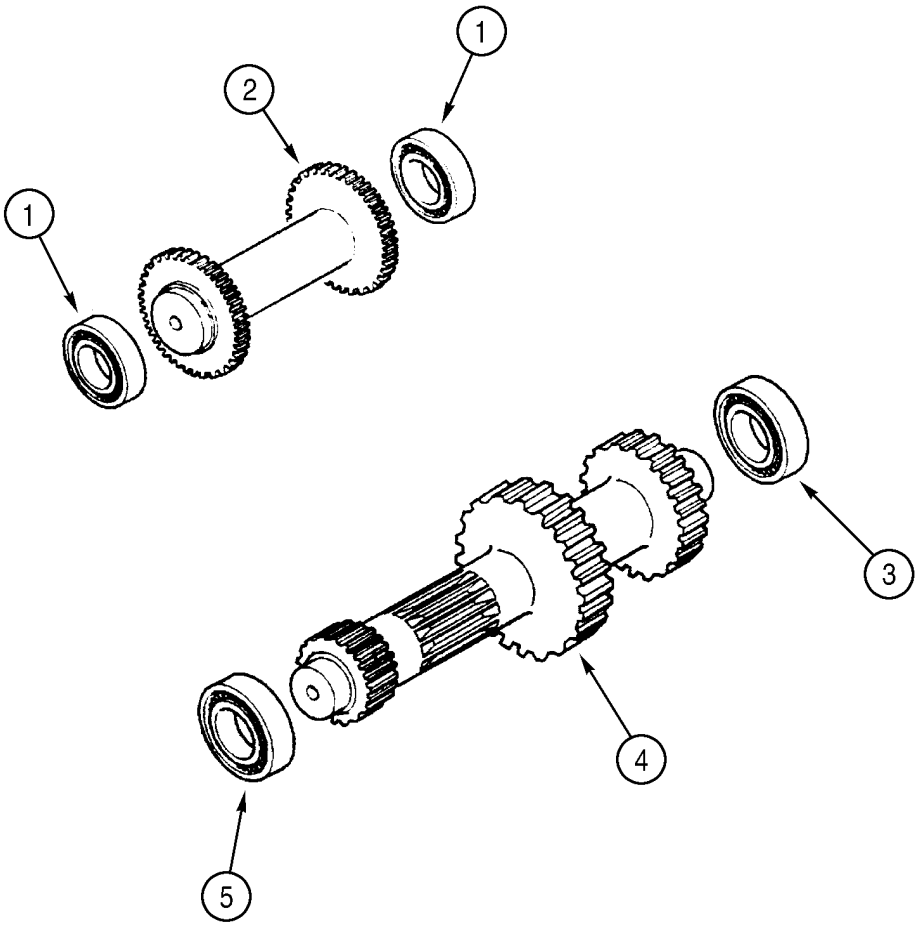

BS99H168

http://www.minnparbackhoeparts.com/

TRANSMISSION - AXE, TENDEUR ET PRIMAIRE (MODÈLES SANS AUTOMATIQUE)

REF	FN	PART NUMBER	YR/SN	QTY	DESCRIPTION
		87456843		1	TRANSMISSION Two Wheel Drive, Incl. Ref 1 - 6; Also Includes Parts On Figures 06-14 - 06-23A; Replaces 86984097
		87456844		1	TRANSMISSION Four Wheel Drive, Incl. Ref 1 - 6; Also Includes Parts On Figures 06-14 - 06-24; Replaces 86984098
1		ST205A		2	ROULEMENT A BILLES
2		358636A1		1	ARBRE Idler Shaft
3		181126A1		1	ROULEMENT A BILLES
4		358646A1		1	ARBRE Primary Shaft
5		181132A1		1	ROULEMENT A BILLES
6		A48041		1	CIRCLIP Not Illustrated

http://www.minnparbackhoeparts.com/

TRANSMISSION - ARBRE, ENTRÉE (MODÈLES SANS AUTOMATIQUE)

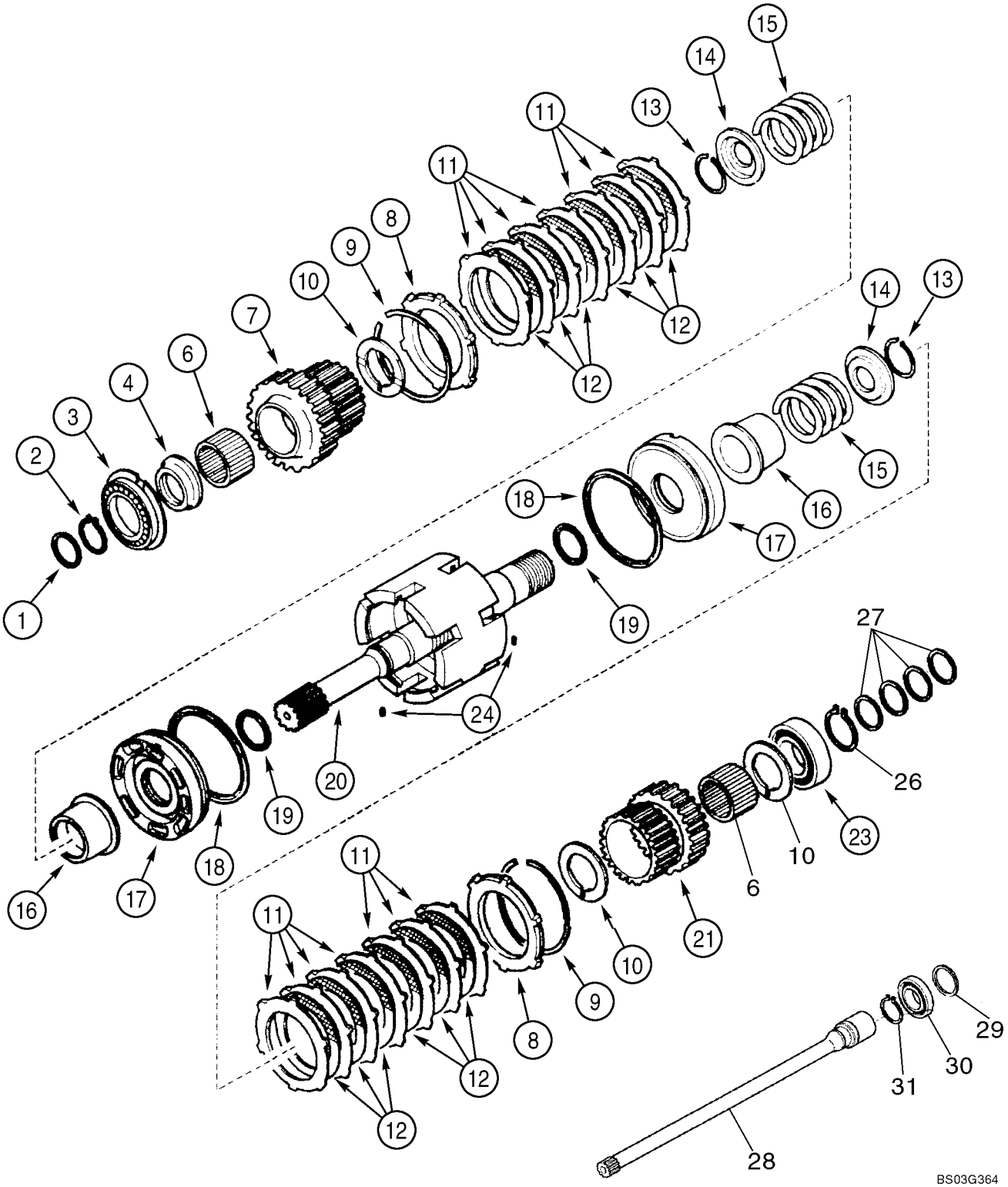

http://www.minnparbackhoeparts.com/

TRANSMISSION - ARBRE, ENTRÉE (MODÈLES SANS AUTOMATIQUE)

REF	FN	PART NUMBER	YR/SN	QTY	DESCRIPTION
		87456843		1	TRANSMISSION Two Wheel Drive, Incl. Ref 1 - 25; Also Includes Parts On Figures 06-14 - 06-23A; Replaces 86984097
		87456844		1	TRANSMISSION Four Wheel Drive, Incl. Ref 1 - 25; Also Includes Parts On Figures 06-14 - 06-24; Replaces 86984098
1		358645A1		1	JOINT D'HUILE
2		A48041		1	CIRCLIP
3		181128A1		1	ROULEMENT A BILLES
4		358635A1		1	ENTRETOISE 68 x 45 x 105 mm
6		358633A1		2	ROULEMENT A AIGUILLES
7		358632A1		1	PIGNON Gear, 35T
8		310519A1		2	PLAQUE
9		181116A1		2	JONC D'ARRET
10		358640A1		3	RONDELLE Thrust
11		181159A1		14	DISQUE Plate
12		181158A1		12	DISQUE-D'EMBRAYAGE Plate
13		181111A1		2	JONC D'ARRET
14		181161A1		2	PLATEAU DE PRESSION Pressure
15		358637A1		2	RESSORT
16		358641A1		2	MANCHON
17		358644A1		2	PISTON
18		358643A1		2	ANNEAU-D'ARRET
19		358642A1		2	JOINT ANNULAIRE
20		87429973		1	ARBRE Input Shaft, Charge; Includes D6x5,84 Rivet in Shaft End Which Is Not Serviced Separately
21		358638A1		1	PIGNON Gear, 29T
23		ST264		1	ROULEMENT A BILLES
24		181108A1		2	GOUPILLE-V
26		800-1150		1	CIRCLIP
27		87429984		4	ANNEAU Seal Ring
28		87429981		1	ARBRE
29		358645A1		1	JOINT D'HUILE
30		87429983		1	ROULEMENT A BILLES
31		358655A1		1	ANNEAU-D'ARRET

http://www.minnparbackhoeparts.com/

TRANSMISSION - ARBRE, SECONDAIRE (MODÈLES SANS AUTOMATIQUE)

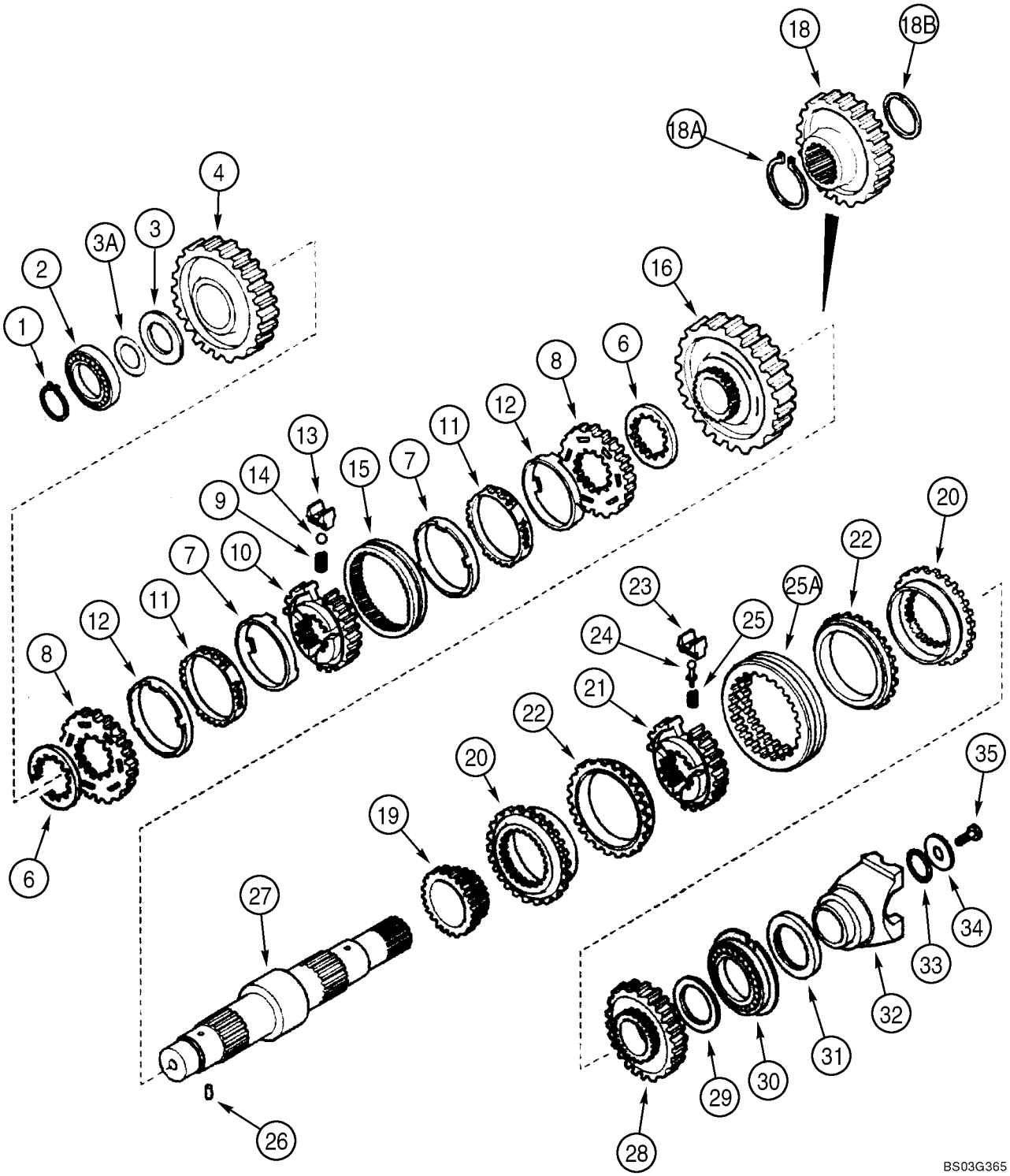

http://www.minnparbackhoeparts.com/

TRANSMISSION - ARBRE, SECONDAIRE (MODÈLES SANS AUTOMATIQUE)

REF	FN	PART NUMBER	YR/SN	QTY	DESCRIPTION
		87456843		1	TRANSMISSION Two Wheel Drive, Incl. Ref 1 - 35; Also Includes Parts On Figures 06-14 - 06-23A; Replaces 86984097
		87456844		1	TRANSMISSION Four Wheel Drive, Incl. Ref 1 - 35; Also Includes Parts On Figures 06-14 - 06-24; Replaces 86984098
1		181118A1		1	JONC D'ARRET
2		181132A1		1	ROULEMENT A BILLES
3		358649A1		1	RONDELLE Thrust
3A		358650A1		X	CALE D'EPAISSEUR 0,05 mm
3A		358651A1		X	CALE D'EPAISSEUR 0,10 mm
3A		358652A1		X	CALE D'EPAISSEUR 0,30 mm
3A		196454A1		X	CALE D'EPAISSEUR 0,50 mm
4		358648A1		1	PIGNON Gear, Driven, Second, 43T
6		244109A1		2	ENTRETOISE
		190427A1		1	SYNCHRO Synchronizing Service Kit, Incl. Ref 7 - 15
7		NSS		2	NON FOURNI SEPAREMENT Ring
8		NSS		2	NON FOURNI SEPAREMENT Ring
9		384773A1		3	RESSORT HÉLICOÏDAL
10		NSS		1	NON FOURNI SEPAREMENT Hub
11		NSS		2	NON FOURNI SEPAREMENT Ring
12		NSS		2	NON FOURNI SEPAREMENT Ring
13		326865A1		3	PLAQUETTE
14		384769A1		3	BILLE
15		NSS		1	NON FOURNI SEPAREMENT Sleeve
16		358647A1		1	PIGNON Gear, Driven, First, 49T
18		358656A1		1	PIGNON Drive, Four Wheel Drive Models
18A		358654A1		1	ANNEAU-D'ARRET Four Wheel Drive Models
18B		358655A1		1	ANNEAU-D'ARRET Four Wheel Drive Models
19		358282A1		1	PIGNON Driven, Fourth, 23T
		87429974		1	SYNCHRONISEUR Synchronizing Service Kit, Incl. Ref 20 - 25A
20		NSS		2	NON FOURNI SEPAREMENT Ring
21		NSS		1	NON FOURNI SEPAREMENT Hub
22		NSS		2	NON FOURNI SEPAREMENT Ring
23		NSS		3	NON FOURNI SEPAREMENT Plate
24		NSS		3	NON FOURNI SEPAREMENT Pin

http://www.minnparbackhoeparts.com/

TRANSMISSION - ARBRE, SECONDAIRE (MODÈLES SANS AUTOMATIQUE)

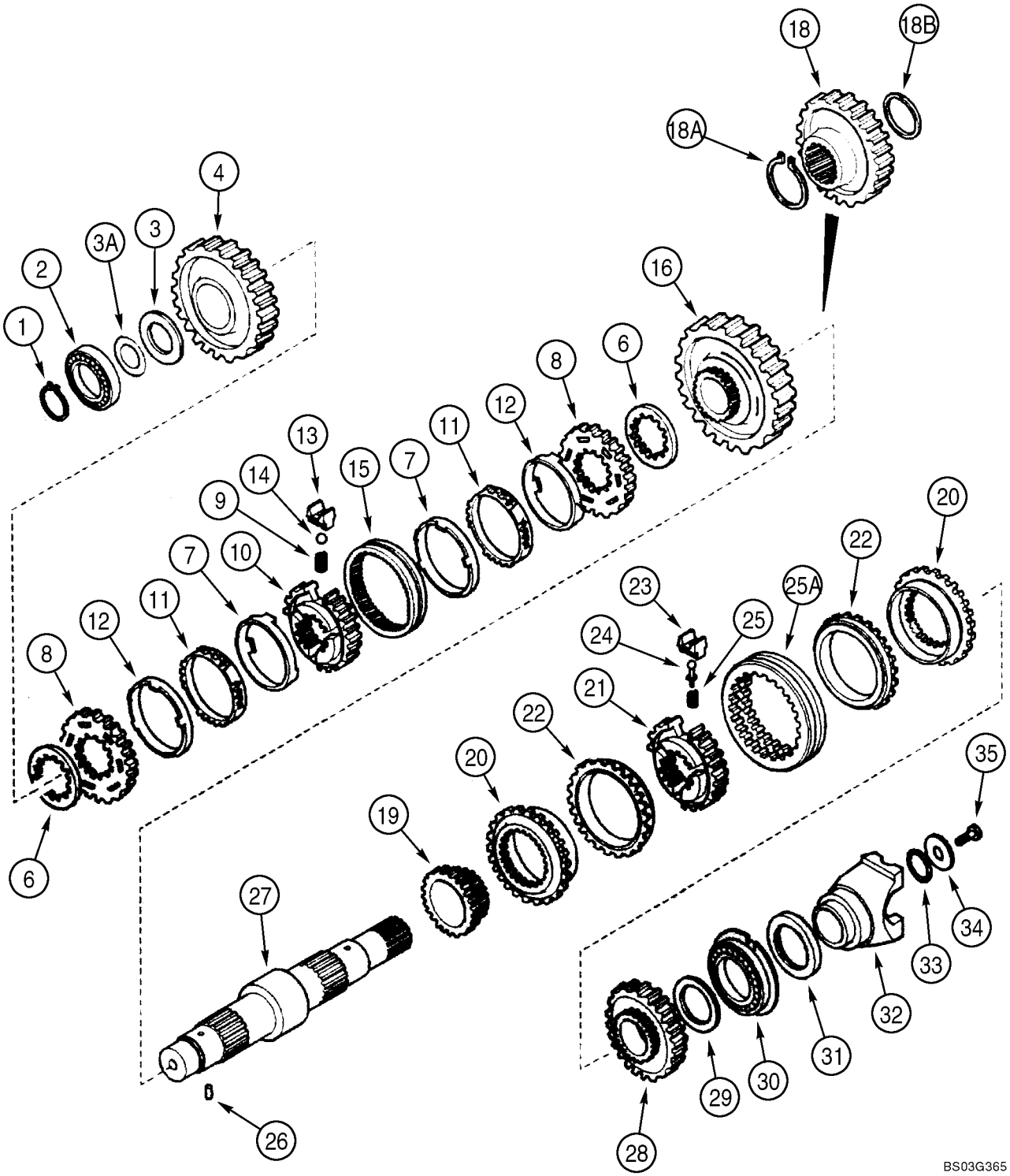

http://www.minnparbackhoeparts.com/

TRANSMISSION - ARBRE, SECONDAIRE (MODÈLES SANS AUTOMATIQUE)

REF	FN	PART NUMBER	YR/SN	QTY	DESCRIPTION
25		NSS		3	NON FOURNI SEPAREMENT Spring
25A		NSS		1	NON FOURNI SEPAREMENT Sleeve
26		181108A1		1	GOUPILLE-V
27		366366A1		1	ARBRE Secondary, Two Wheel Drive Models
27		358653A1		1	ARBRE Secondary, Four Wheel Drive Models
28		358283A1		1	PIGNON Gear, Driven, Third, 33T
29		358639A1		1	RONDELLE Thrust, 68 x 45 x 4 mm
30		181130A1		1	ROULEMENT A BILLES
31		181123A1		1	JOINT D'HUILE 60 x 75 x 8 mm; Two Wheel Drive Models
32		233284A1		1	FOURCHE Yoke
33		181144A1		1	JOINT TORIQUE
34		181165A1		1	RONDELLE 52 x 12.5 x 5 mm
35		P3533055		1	VIS 12 x 25 mm

http://www.minnparbackhoeparts.com/

TRANSMISSION (4WD) - ARBRE DE SORTIE (MODÈLES SANS AUTOMATIQUE)

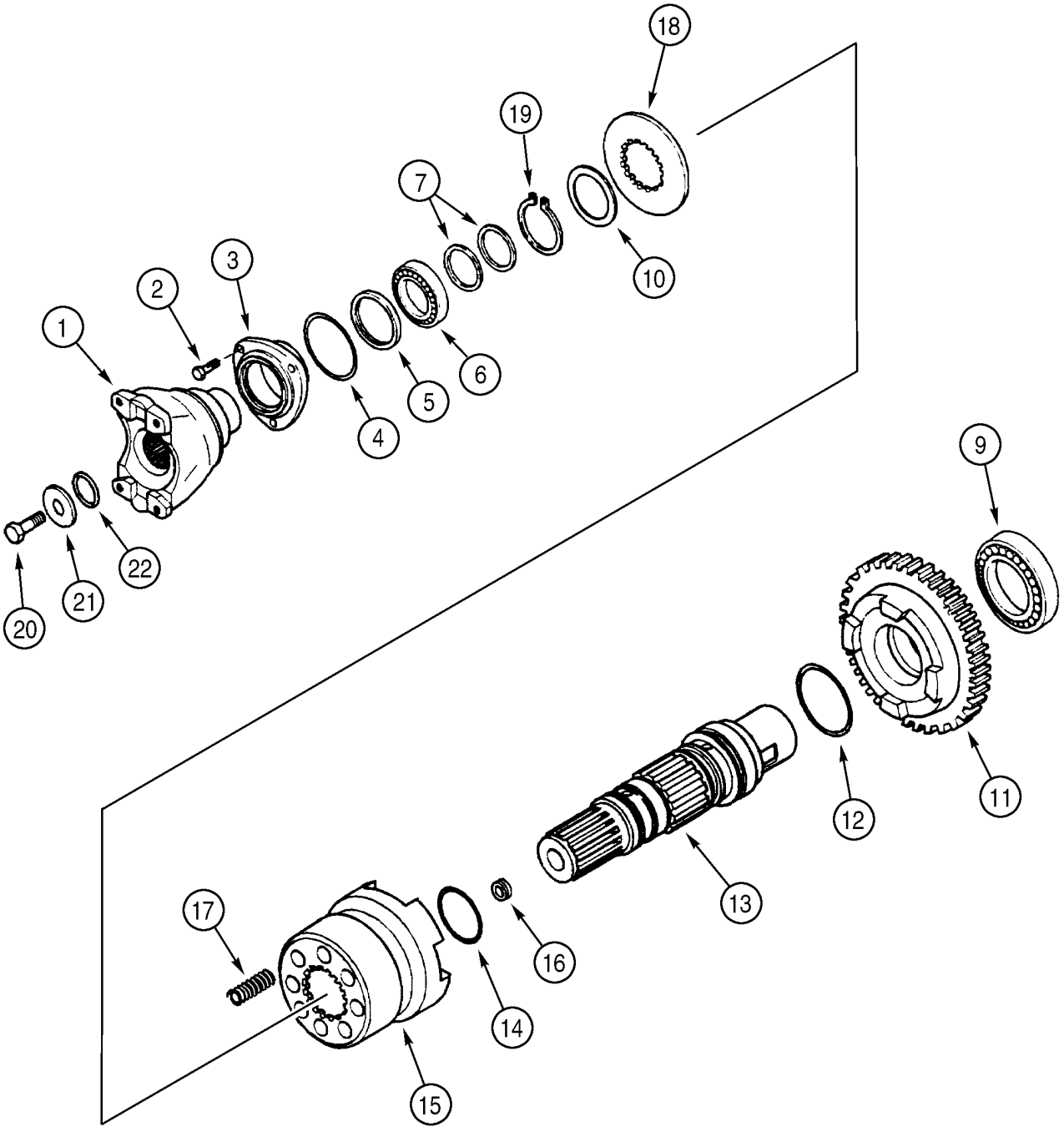

BS99H160

http://www.minnparbackhoeparts.com/

TRANSMISSION (4WD) - ARBRE DE SORTIE (MODÈLES SANS AUTOMATIQUE)

REF	FN	PART NUMBER	YR/SN	QTY	DESCRIPTION
		87456844		1	TRANSMISSION Four Wheel Drive, Incl. Ref 1 - 22; Also Includes Parts On Figures 06-14 - 06-24; Replaces 86984098
1		233283A1		1	FOURCHE Yoke, Front
2		614-8022		3	VIS M8 x 22
3		181198A1		1	COUVERCLE
4		112517A1		1	JOINT TORIQUE
5		181122A1		1	JOINT D'HUILE 50 x 65 x 8 mm
6		ST205A		1	ROULEMENT A BILLES
7		358645A1		2	JOINT D'HUILE
9		181126A1		1	ROULEMENT A BILLES
10		P2745478		1	RONDELLE
11		366234A1		1	PIGNON Gear, Driven, 36T
12		366235A1		1	JOINT TORIQUE
13		366230A1		1	ARBRE Output Shaft
14		366236A1		2	JOINT TORIQUE
15		366232A1		1	MANCHON
16		D142898		1	BOUCHON 10 x 1 mm
17		100753A1		8	RESSORT
18		366231A1		1	RONDELLE
19		800-5145		1	ANNEAU-D'ARRET
20		P3533055		1	VIS 12 x 25 mm
21		P2745466		1	RONDELLE
22		238-8217		1	JOINT TORIQUE 1-3/16 ID x 1/8

http://www.minnparbackhoeparts.com/

TRANSMISSION (86984097 OR 86984098) - DISTRIBUTEUR (MODÈLES SANS AUTOMATIQUE)

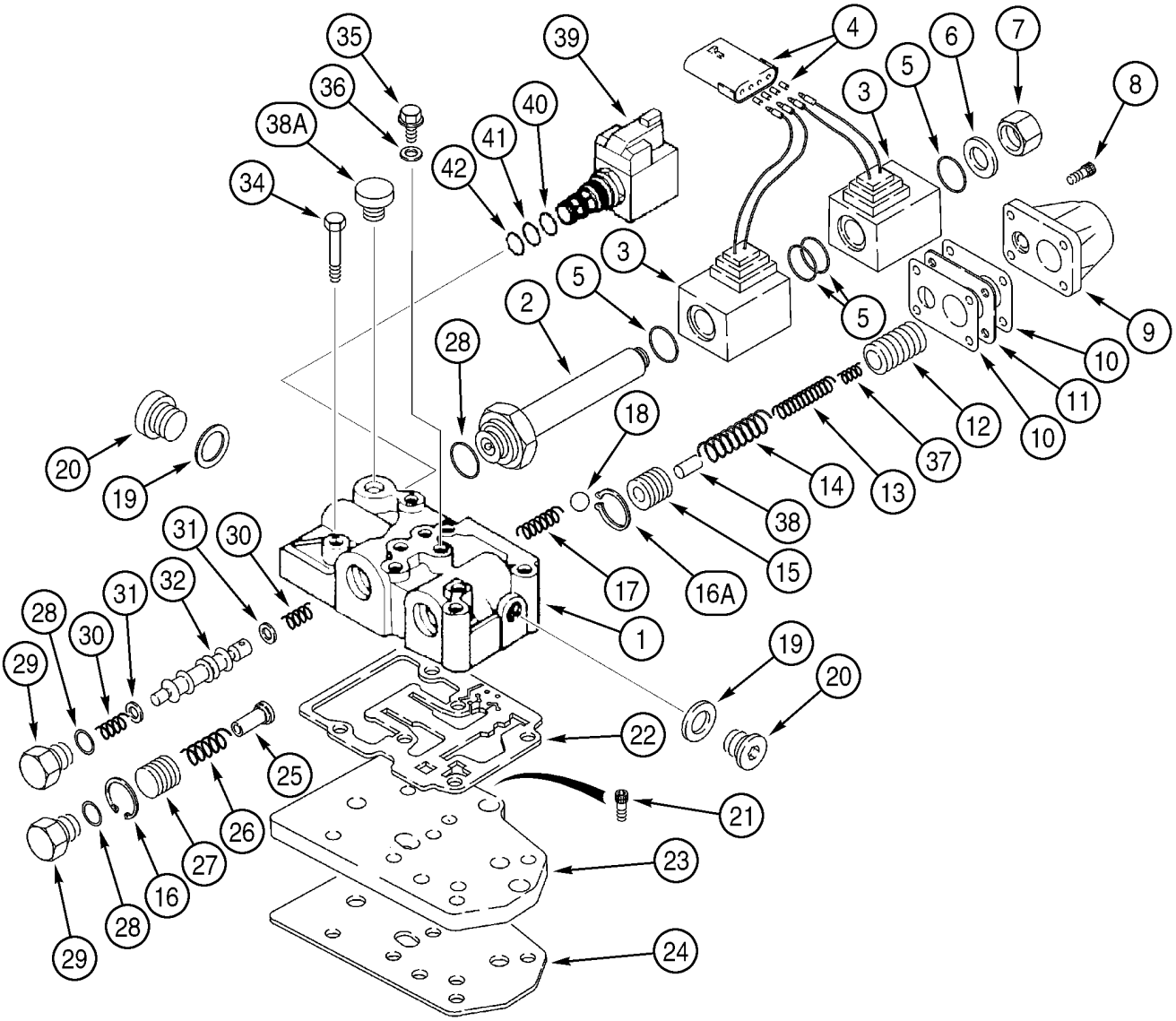

http://www.minnparbackhoeparts.com/

TRANSMISSION (86984097 OR 86984098) - DISTRIBUTEUR (MODÈLES SANS AUTOMATIQUE)

REF	FN	PART NUMBER	YR/SN	QTY	DESCRIPTION
		86984097		1	TRANSMISSION Two Wheel Drive, Incl. Ref 1 - 45; Also Includes Parts On Figures 06-14 - 06-23
		86984098		1	TRANSMISSION Four Wheel Drive, Incl. Ref 1 - 45; Also Includes Parts On Figures 06-14 - 06-24
		335640A2		1	VALVE Transmission Control, Incl. Ref 1 - 45
1		NSS		1	NON FOURNI SEPAREMENT Housing
2		190442A1		1	PLONGEUR
3		190443A1		2	BOBINE
4		190437A1		1	RACCORD
5		181136A1		4	JOINT TORIQUE
6		181273A1		1	RONDELLE CUIVRE
7		181272A1		1	BOUCHON
8		864-6020		4	VIS M6 x 20
9		181251A1		1	COUVERCLE
10		181256A1		2	JOINT Cover Gasket
11		190439A2		1	ENTRETOISE
12		190438A2		1	PISTON
13		190436A1		1	RESSORT
14		190441A1		1	RESSORT
15		181234A2		1	PISTON
16		299324A1		1	CIRCLIP
16A		368436A1		1	CIRCLIP
17		181261A1		1	RESSORT
18		181146A1		1	BILLE
19		181107A1		2	RONDELLE CUIVRE
20		181103A1		2	BOUCHON
21		864-8020		3	VIS M8 x 20, Not Included In Assembly, Purchase Separately
22		181166A1		1	JOINT Not Included In Assembly, Purchase Separately
23		181207A1		1	PLAQUE, GRANDE Not Included In Assembly, Purchase Separately
24		181208A1		1	JOINT Not Included In Assembly, Purchase Separately
25		181254A1		1	ARBRE
26		181260A1		1	RESSORT
27		181255A2		1	PISTON Flow Divider

http://www.minnparbackhoeparts.com/

TRANSMISSION (86984097 OR 86984098) - DISTRIBUTEUR (MODÈLES SANS AUTOMATIQUE)

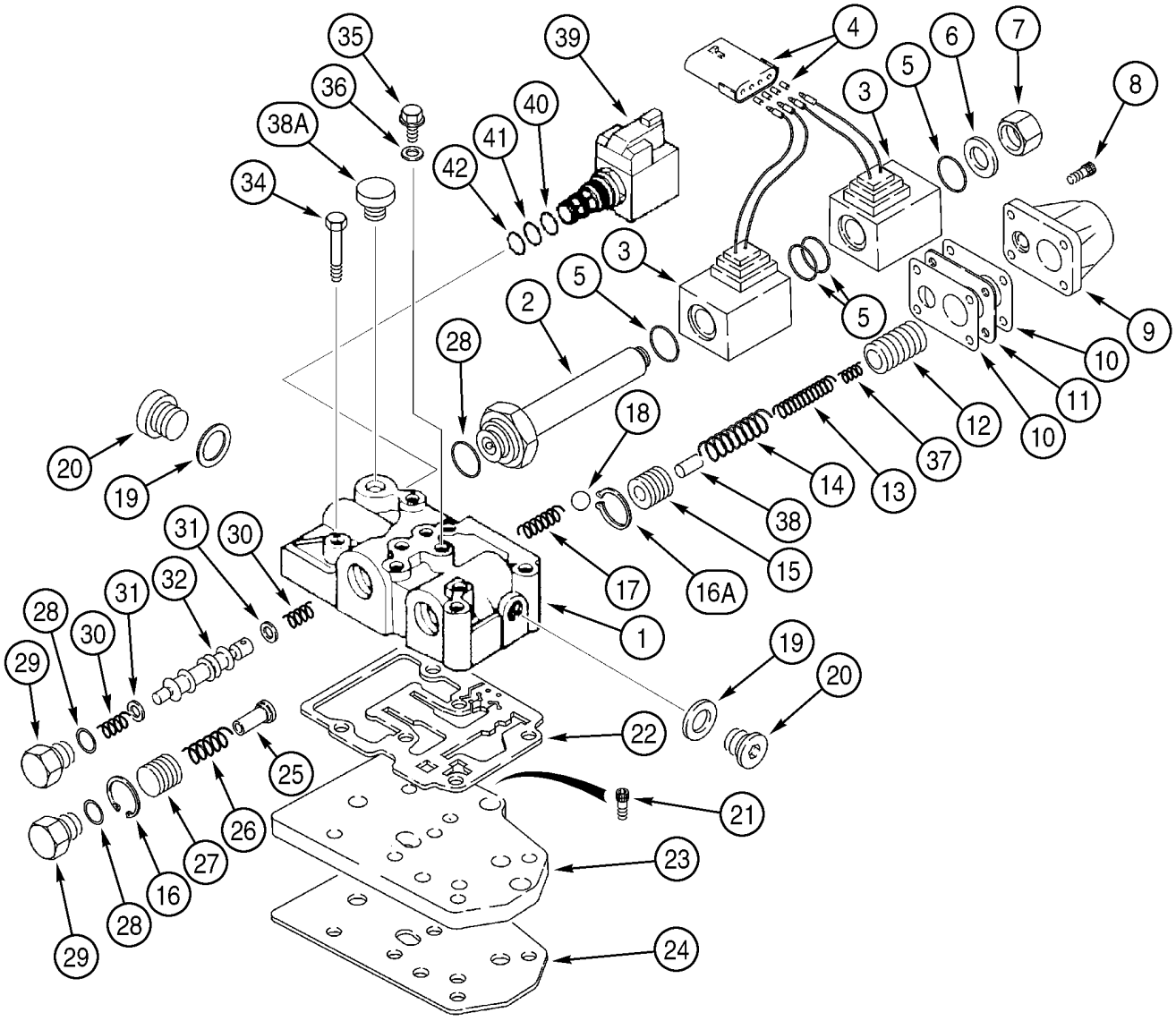

http://www.minnparbackhoeparts.com/

TRANSMISSION (86984097 OR 86984098) - DISTRIBUTEUR (MODÈLES SANS AUTOMATIQUE)

REF	FN	PART NUMBER	YR/SN	QTY	DESCRIPTION
28		181137A1		3	JOINT TORIQUE
29		181258A1		2	BOUCHON PLUG
30		334724A1		2	RESSORT
31		181253A1		2	ENTRETOISE
32		334725A1		1	PLONGEUR Spool, Forward/Reverse
34		814-8080		6	BOULON M8 x 80, Not Included In Assembly, Purchase Separately
35		181100A1		4	BOUCHON
36		934667R1		4	RONDELLE D'ETANCHEITE Copper Washer, 10 x 14 x 1.5 mm
37		190435A1		1	RESSORT
38		190440A1		1	AXE
38A		NSS		1	NON FOURNI SEPAREMENT Plug
39		349295A1		1	SOLENOIDE Differential Lock Solenoid Valve; Incl. Ref 40 - 45
40		237-6008		1	JOINT THORIQUE 41/64 ID x 3/32
41		238-5014		1	JOINT TORIQUE 1/2 ID x 1/16
42		238-5013		1	JOINT TORIQUE 7/16 ID x 1/16
43		NSS		1	NON FOURNI SEPAREMENT Solenoid Valve, Cartridge, Component Parts Not Serviced Separately, Not Illustrated
44		298614A1		1	BOBINE Not Illustrated
45		NSS		1	NON FOURNI SEPAREMENT Nut, Not Illustrated
		368437A2		1	POCHETTE Snap Ring, Without Tools, Includes 10, 15, 16A, 22, 25, Plus Instructions
		368438A2		1	POCHETTE Snap Ring, With Tools, Includes 10, 15, 16A, 22, 25, Plus 368439A1 Guide Tool and 368440A1 Pushing Tool for Snap Ring Service

http://www.minnparbackhoeparts.com/

TRANSMISSION (87456843 OR 87456844) - DISTRIBUTEUR (MODÈLES SANS AUTOMATIQUE)

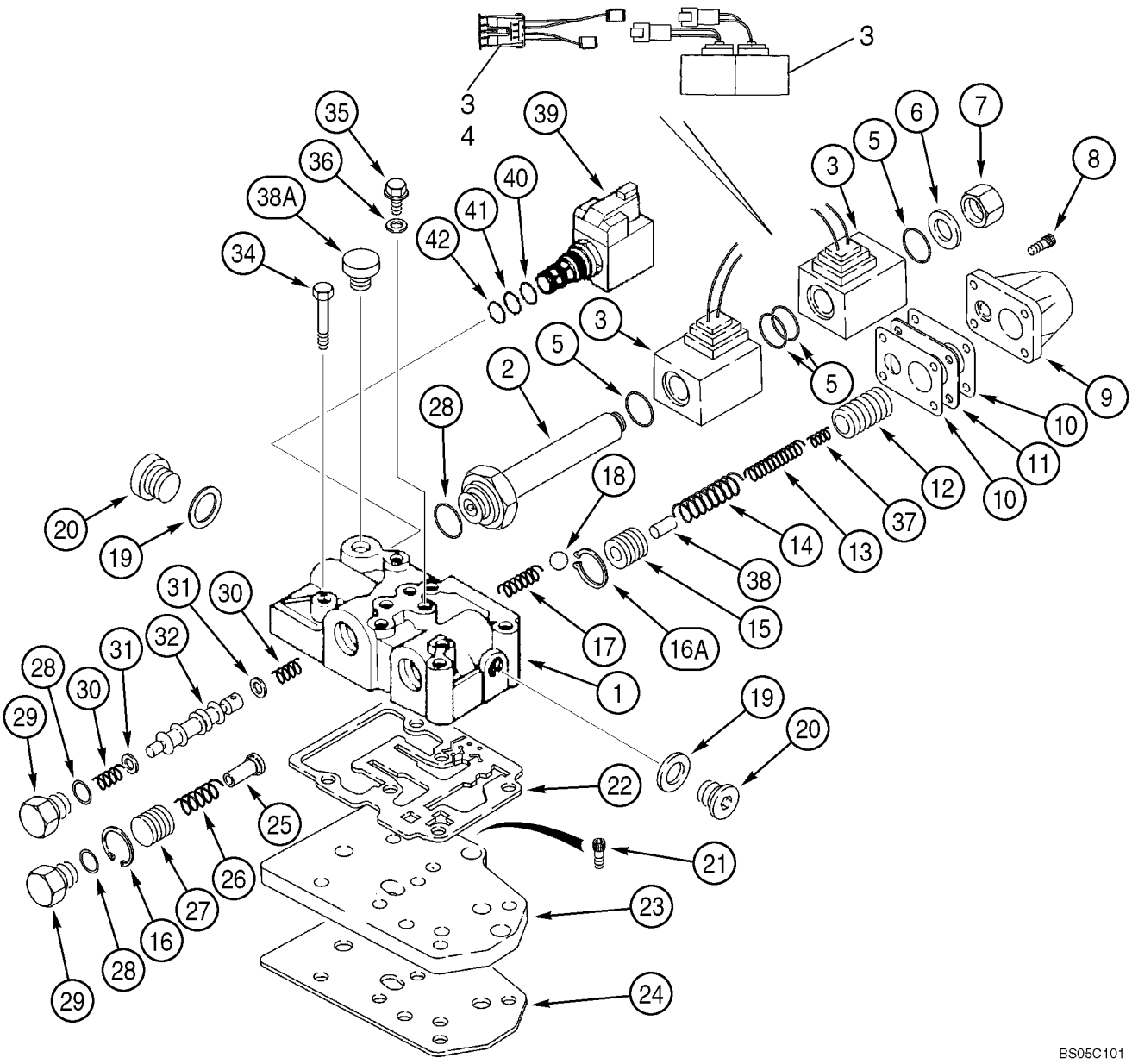

http://www.minnparbackhoeparts.com/

TRANSMISSION (87456843 OR 87456844) - DISTRIBUTEUR (MODÈLES SANS AUTOMATIQUE)

REF	FN	PART NUMBER	YR/SN	QTY	DESCRIPTION
		87456843		1	TRANSMISSION Two Wheel Drive, Incl. Ref 1 - 45; Also Includes Parts On Figures 06-14 - 06-23A
		87456844		1	TRANSMISSION Four Wheel Drive, Incl. Ref 1 - 45; Also Includes Parts On Figures 06-14 - 06-24
		87456899		1	VALVE Transmission Control, Incl. Ref 1 - 45
1		NSS		1	NON FOURNI SEPAREMENT Housing
2		190442A1		1	PLONGEUR
3		87456900		1	KIT ASSISTANCE KIT, Solenoid; Includes (2) Solenoids, (1) Jumper Wire Used For Transmissions Prior to Ones With The Solenoids With Plastic Connections; See Figure 06-23, Ref 3 For Solenoids With Bullet Connectors
4		87456968		1	FAISCEAU COMPLET Jumper; If Used; Required On Transmissions Prior To Ones With Deutsch Connector Type Solenoids
5		181136A1		4	JOINT TORIQUE
6		181273A1		1	RONDELLE CUIVRE
7		181272A1		1	BOUCHON
8		864-6020		4	VIS M6 x 20
9		181251A1		1	COUVERCLE
10		181256A1		2	JOINT Cover Gasket
11		190439A2		1	ENTRETOISE
12		190438A2		1	PISTON
13		190436A1		1	RESSORT
14		190441A1		1	RESSORT
15		181234A2		1	PISTON
16		299324A1		1	CIRCLIP
16A		368436A1		1	CIRCLIP
17		181261A1		1	RESSORT
18		181146A1		1	BILLE
19		181107A1		2	RONDELLE CUIVRE
20		181103A1		2	BOUCHON
21		864-8020		3	VIS M8 x 20, Not Included In Assembly, Purchase Separately
22		181166A1		1	JOINT Not Included In Assembly, Purchase Separately

http://www.minnparbackhoeparts.com/

TRANSMISSION (87456843 OR 87456844) - DISTRIBUTEUR (MODÈLES SANS AUTOMATIQUE)

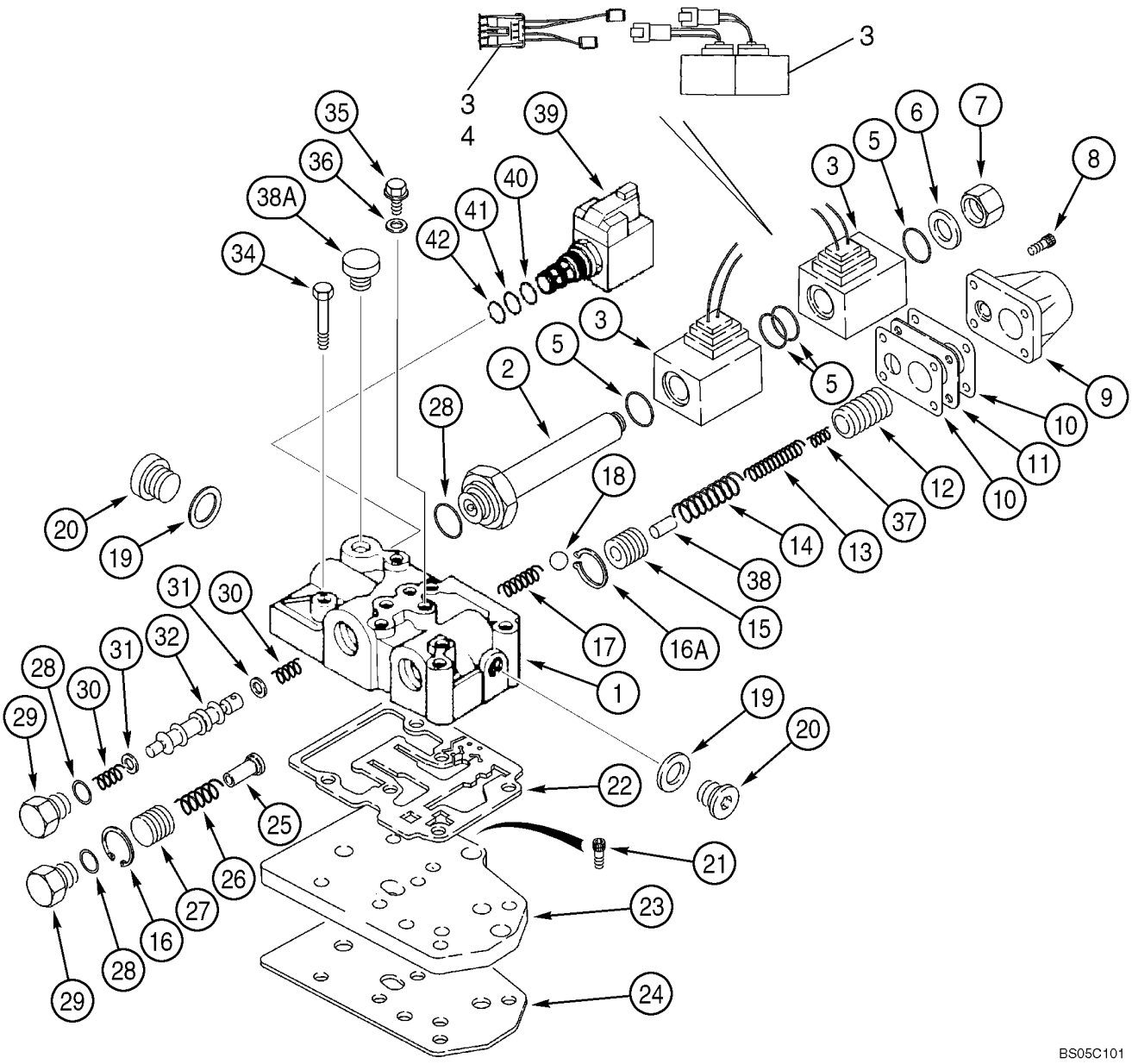

http://www.minnparbackhoeparts.com/

TRANSMISSION (87456843 OR 87456844) - DISTRIBUTEUR (MODÈLES SANS AUTOMATIQUE)

REF	FN	PART NUMBER	YR/SN	QTY	DESCRIPTION
23		181207A1		1	PLAQUE, GRANDE Not Included In Assembly, Purchase Separately
24		181208A1		1	JOINT Not Included In Assembly, Purchase Separately
25		181254A1		1	ARBRE
26		181260A1		1	RESSORT
27		181255A2		1	PISTON Flow Divider
28		181137A1		3	JOINT TORIQUE
29		181258A1		2	BOUCHON PLUG
30		334724A1		2	RESSORT
31		181253A1		2	ENTRETOISE
32		334725A1		1	PLONGEUR Spool, Forward/Reverse
34		814-8080		6	BOULON M8 x 80, Not Included In Assembly, Purchase Separately
35		181100A1		4	BOUCHON
36		934667R1		4	RONDELLE D'ETANCHEITE Copper Washer, 10 x 14 x 1.5 mm
37		190435A1		1	RESSORT
38		190440A1		1	AXE
38A		NSS		1	NON FOURNI SEPAREMENT Plug
39		349295A1		1	SOLENOIDE Differential Lock Solenoid Valve; Incl. Ref 40 - 45
40		237-6008		1	JOINT THORIQUE 41/64 ID x 3/32
41		238-5014		1	JOINT TORIQUE 1/2 ID x 1/16
42		238-5013		1	JOINT TORIQUE 7/16 ID x 1/16
43		NSS		1	NON FOURNI SEPAREMENT Solenoid Valve, Cartridge, Component Parts Not Serviced Separately, Not Illustrated
44		298614A1		1	BOBINE Not Illustrated
45		NSS		1	NON FOURNI SEPAREMENT Nut, Not Illustrated
		368437A2		1	POCHETTE Snap Ring, Without Tools, Includes 10, 15, 16A, 22, 25, Plus Instructions
		368438A2		1	POCHETTE Snap Ring, With Tools, Includes 10, 15, 16A, 22, 25, Plus 368439A1 Guide Tool and 368440A1 Pushing Tool for Snap Ring Service

http://www.minnparbackhoeparts.com/

TRANSMISSION (4WD) - ELECTROVANNE (MODÈLES SANS AUTOMATIQUE)

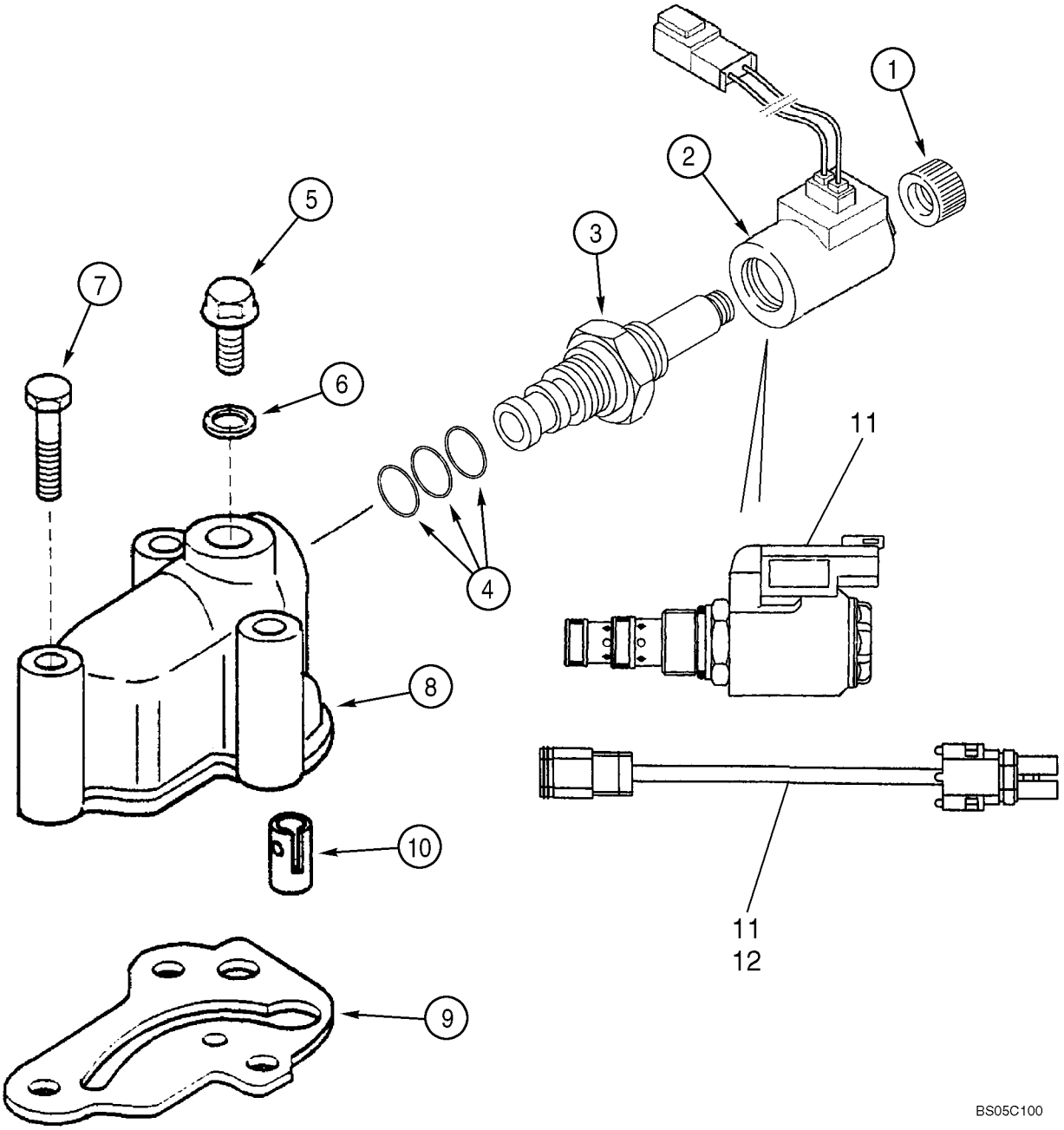

http://www.minnparbackhoeparts.com/

TRANSMISSION (4WD) - ELECTROVANNE (MODÈLES SANS AUTOMATIQUE)

REF	FN	PART NUMBER	YR/SN	QTY	DESCRIPTION
		87456844		1	TRANSMISSION Four Wheel Drive, Incl. Ref 1 - 10; Also Includes Parts On Figures 06-14 - 06-24; Replaces 86984098
		87429978		1	ELECTRO-VALVE Valve, Incl. Ref 1 - 4; Used In 86984098 Transmission
1		NSS		1	NON FOURNI SEPAREMENT Nut
2		NSS		1	NON FOURNI SEPAREMENT Coil
3		NSS		1	NON FOURNI SEPAREMENT Valve, Solenoid
4		NSS		1	NON FOURNI SEPAREMENT Kit, Seal, Includes 238-5014, 238-5015, 237-6010 O-Rings, Kit Not Serviced Separately, Order 190432A1 Solenoid Valve
5		181100A1		1	BOUCHON
6		934667R1		1	RONDELLE D'ETANCHEITE Copper Washer, 10 x 14 x 1.5 mm
7		814-8060		3	VIS M8 x 60
8		321428A1		1	CARTER
9		366910A1		1	JOINT
10		190431A1		1	VALVE Installed Between Ref 8 and 9
11		87456901		1	SOLENOIDE Component Parts Not Serviced Separately; Includes Solenoid and Ref 12 Jumper Harness; Jumper Is For Coverting Transmissions Prior to Connector Change From Weather Pack to Deutsch
12		87456969		1	FAISCEAU COMPLET Jumper; Weather Pack Connector/Deutsch Connector

http://www.minnparbackhoeparts.com/

06-25		p1	06/03

TRANSMISSION, BOÎTE AUTOMATIQUE - BOÎTIER

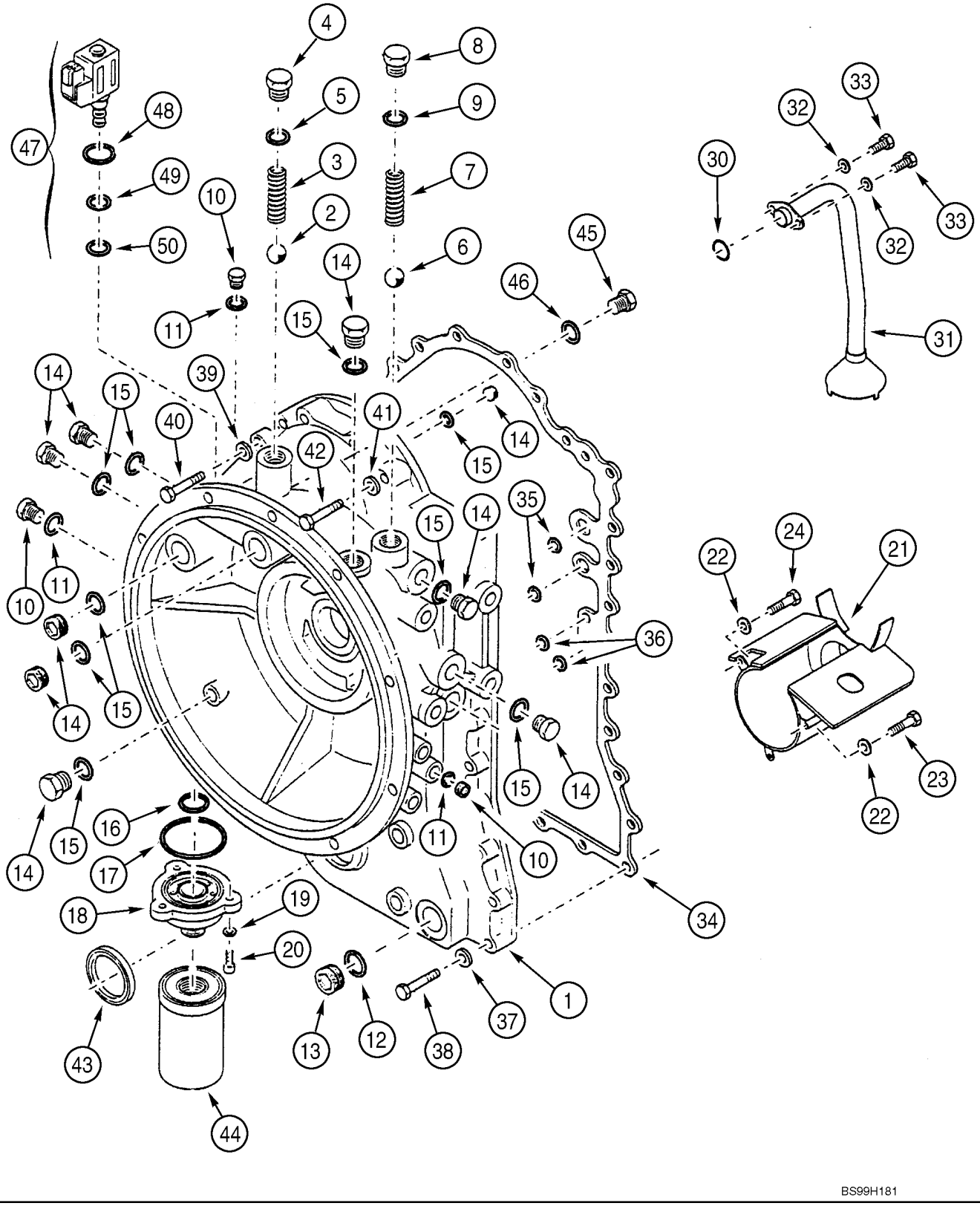

http://www.minnparbackhoeparts.com/

TRANSMISSION, BOÎTE AUTOMATIQUE - BOÎTIER

REF	FN	PART NUMBER	YR/SN	QTY	DESCRIPTION
		87424815		1	TRANSMISSION Powershift Transmission, Four Wheel Drive, Incl. Ref 1 - 53; Also Includes Parts On Figures 06-25 - 06-36
1		361940A1		1	CARTER Converter
2		211-1024		1	BILLE 3/4; 24,CRS
3		291568A1		1	RESSORT
4		292413A1		1	BOUCHON Incl. Ref 5
5		238-9119		1	JOINT TORIQUE 15/16 ID x 3/32
6		511-10250		1	BILLE 25 mm; 28, CRS
7		291525A1		1	RESSORT
8		292166A1		1	BOUCHON Incl. Ref 9
9		238-7123		1	JOINT TORIQUE 1-3/16 ID x 3/32
10		292164A1		3	BOUCHON Incl. Ref 11
11		238-7011		1	JOINT TORIQUE 5/16 ID x 1/16
12		NSS		1	NON FOURNI SEPAREMENT Seal, Not Used
13		NSS		1	NON FOURNI SEPAREMENT Plug, Not Used
14		292165A1		9	BOUCHON Incl. Ref 15
15		238-7116		1	JOINT TORIQUE 3/4 ID x 3/32
16		292419A1		1	JOINT TORIQUE
17		238-5150		1	JOINT TORIQUE 2-7/8 ID x 3/32
18		362140A1		1	SUPPORT Adapter
19		892-10010		3	RONDELLE FREIN M10
20		863-10025		3	VIS M10 x 25; 12.9
21		305725A1		1	CHICANE
22		892-10010		3	RONDELLE FREIN M10
23		863-10016		2	VIS M10 x 16; 12.9
24		615-10016		1	BOULON M10 x 16
30		238-7218		1	JOINT TORIQUE 1-1/4 ID x 1/8
31		291565A1		1	TUYAUTERIE D'ASPIRAT Tube
32		892-10010		2	RONDELLE FREIN M10
33		863-10016		2	VIS M10 x 16; 12.9
34		291543A1		1	JOINT
35		238-5020		2	JOINT TORIQUE 7/8 ID x 1/16
36		238-7013		2	JOINT TORIQUE 7/16 ID x 1/16
37		892-10010		14	RONDELLE FREIN M10
38		828-10050		14	VIS M10 x 50; 10.9
39		892-10010		2	RONDELLE FREIN M10

http://www.minnparbackhoeparts.com/

TRANSMISSION, BOÎTE AUTOMATIQUE - BOÎTIER

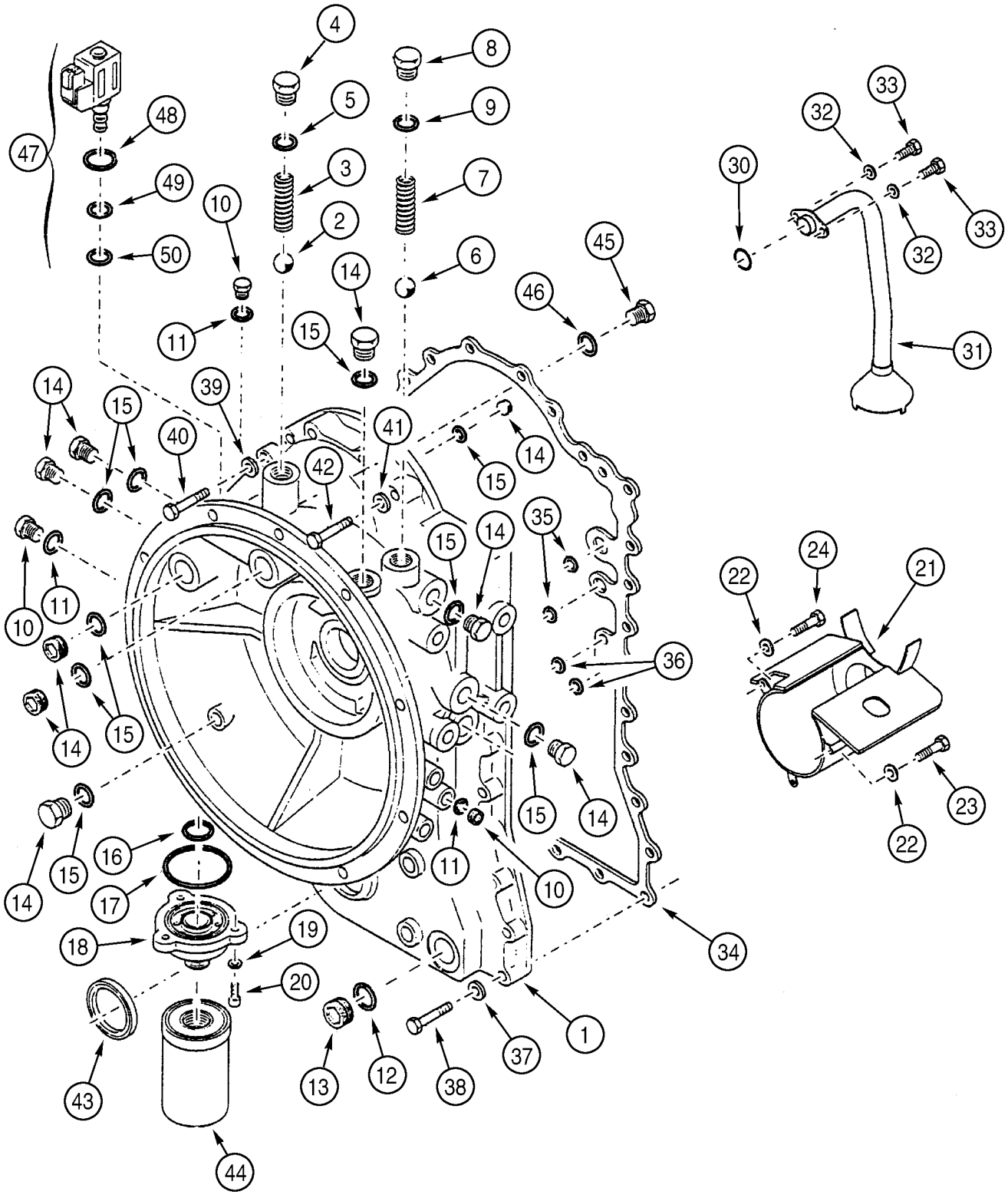

http://www.minnparbackhoeparts.com/

TRANSMISSION, BOÎTE AUTOMATIQUE - BOÎTIER

REF	FN	PART NUMBER	YR/SN	QTY	DESCRIPTION
40		628-10030		2	VIS M10 x 30; 10.9
41		892-10010		4	RONDELLE FREIN M10
42		828-10080		4	VIS M10 x 80; 10.9
43		291527A1		1	JOINT A LÈVRES
44		372246A1		1	FILTRE ASSY
45		218-5209		1	BOUCHON 9/16 Or; Incl. Ref 46
46		237-6006		1	JOINT THORIQUE 15/32 ID x 5/64
47		349295A1		1	SOLENOIDE Differential Lock Solenoid Valve; Incl. Ref 48 - 53
48		237-6008		1	JOINT THORIQUE 41/64 ID x 3/32
49		238-5014		1	JOINT TORIQUE 1/2 ID x 1/16
50		238-5013		1	JOINT TORIQUE 7/16 ID x 1/16
51		349291A1		1	SOLENOIDE Valve, Cartridge, Component Parts Not Serviced Separately, Not Illustrated
52		298614A1		1	BOBINE Not Illustrated
53		349292A1		1	ECROU Not Illustrated

http://www.minnparbackhoeparts.com/

TRANSMISSION, BOÎTE AUTOMATIQUE - LOGEMENT ARRIERE

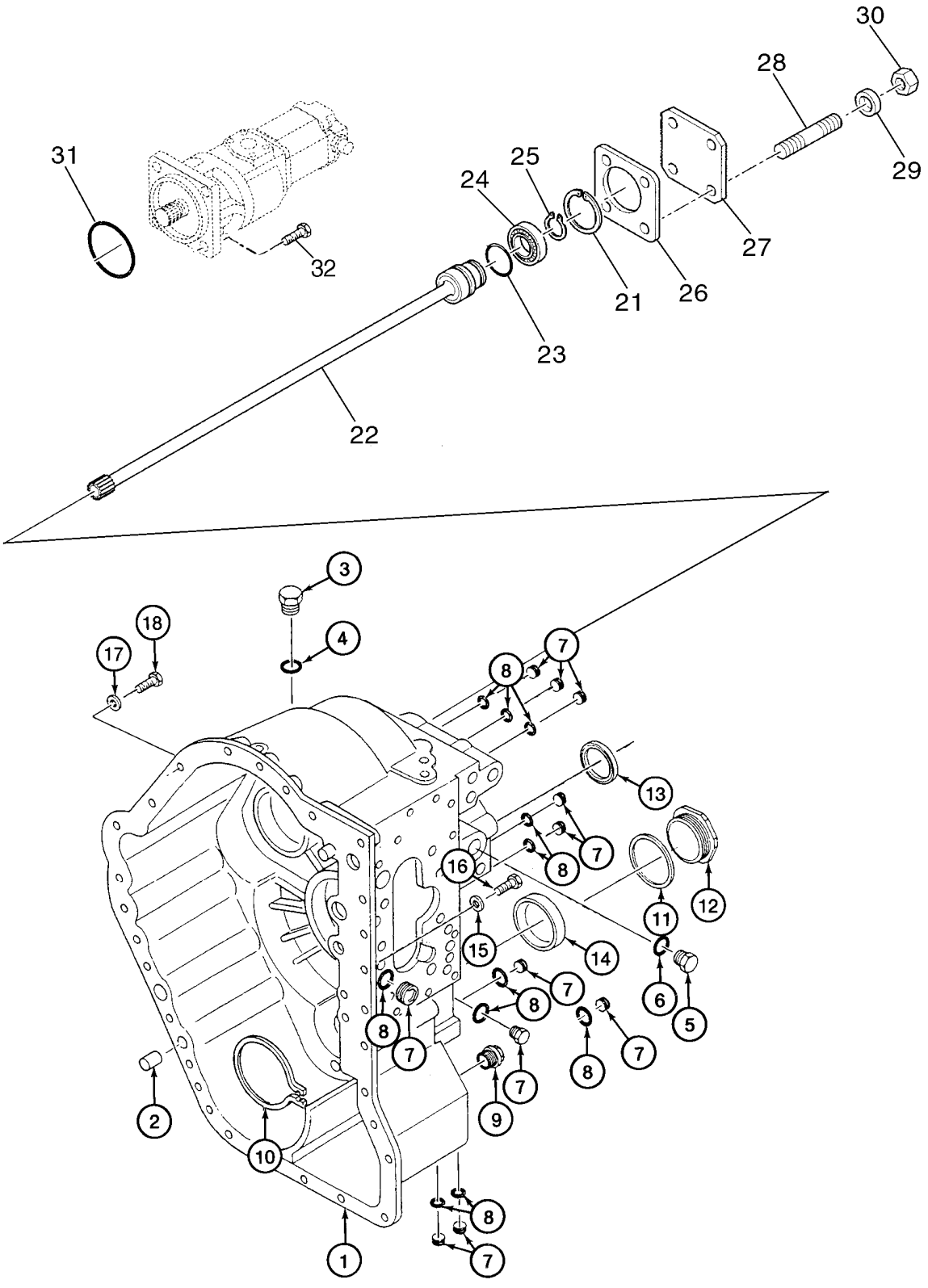

http://www.minnparbackhoeparts.com/

TRANSMISSION, BOÎTE AUTOMATIQUE - LOGEMENT ARRIERE

REF	FN	PART NUMBER	YR/SN	QTY	DESCRIPTION
		87424815		1	TRANSMISSION Powershift Transmission, Four Wheel Drive, Incl. Ref 1 - 21; Also Includes Parts On Figures 06-25 - 06-36
1		291570A1		1	CARTER
2		292412A1		2	PION
3		292165A1		1	BOUCHON Incl. Ref 4
4		238-7116		1	JOINT TORIQUE 3/4 ID x 3/32
5		292170A1		1	BOUCHON Incl. Ref 6
6		238-7210		1	JOINT TORIQUE 3/4 ID x 9/64
7		292164A1		11	BOUCHON Incl. Ref 8
8		238-7011		1	JOINT TORIQUE 5/16 ID x 1/16
9		292414A1		1	BOUCHON Drain, Magnetic
10		292417A1		1	CIRCLIP
11		L30039		1	JOINT
12		292171A1		1	BOUCHON
13		291527A1		1	JOINT A LÈVRES Output
14		292173A1		1	BAGUE PLUG, Output Shaft
15		892-10010		2	RONDELLE FREIN M10
16		628-10035		2	VIS M10 x 35; 10,9
17		892-10010		7	RONDELLE FREIN M10
18		628-10030		7	VIS M10 x 30; 10.9
21		800-2168		1	CIRCLIP No. 68
22		85808333		1	TRINGLE Shaft, Pump
23		9969021		1	SEGMENT DE PISTON Seal Ring
24		9969022		1	ROULEMENT
25		9969023		1	ANNEAU D'ARRÊT
26		NSS		1	NON FOURNI SEPAREMENT Plate; For Shipping Purposes Only
27		NSS		1	NON FOURNI SEPAREMENT Plate; For Shipping Purposes Only
28		NSS		4	NON FOURNI SEPAREMENT Stud, Pump Mounting; For Shipping Purposes Only
29		NSS		4	NON FOURNI SEPAREMENT Washer; For Shipping Purposes Only
30		NSS		4	NON FOURNI SEPAREMENT Nut, Pump Mounting; For Shipping Purposes Only

http://www.minnparbackhoeparts.com/

TRANSMISSION, BOÎTE AUTOMATIQUE - LOGEMENT ARRIERE

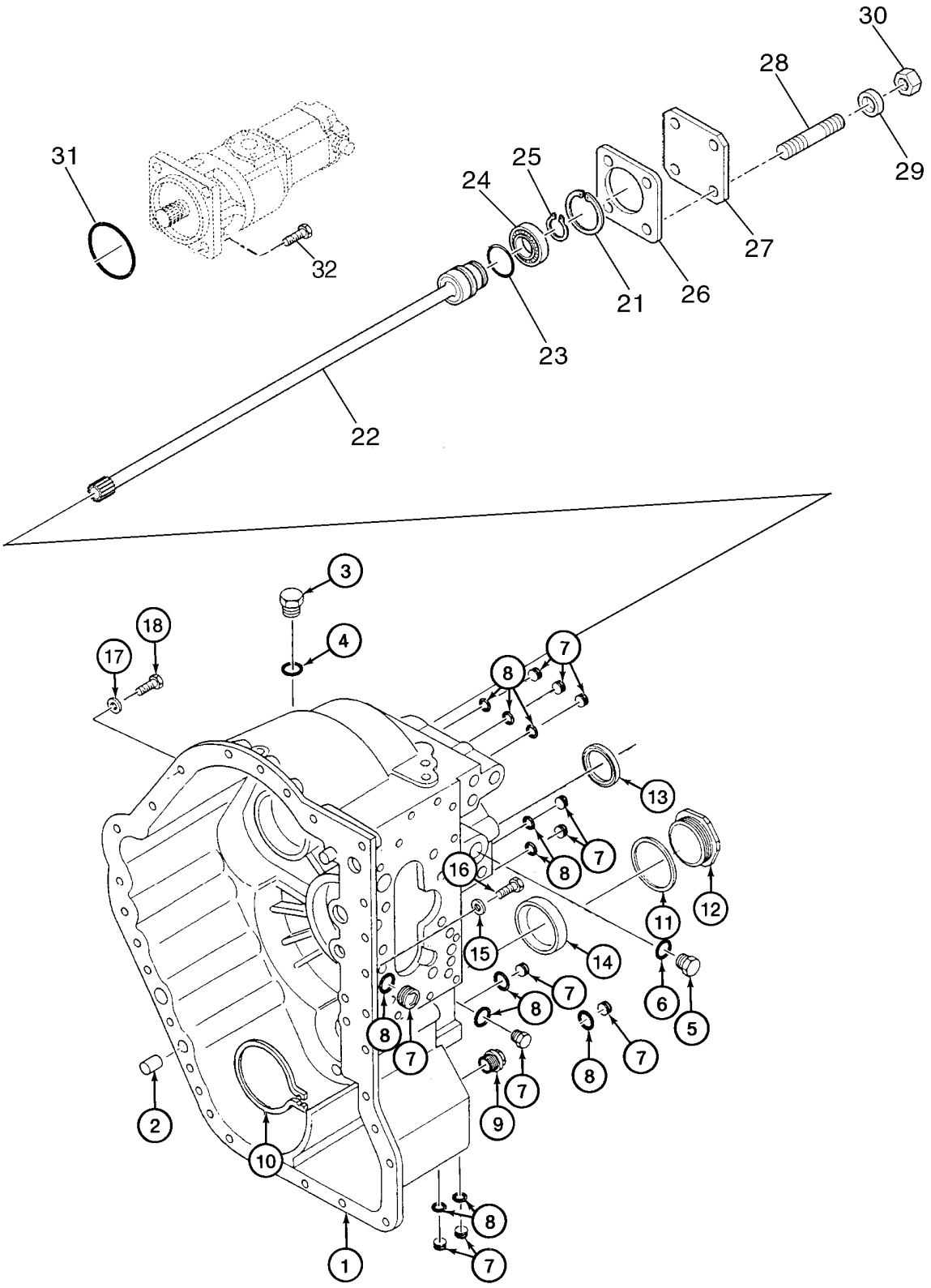

http://www.minnparbackhoeparts.com/

TRANSMISSION, BOÎTE AUTOMATIQUE - LOGEMENT ARRIERE

REF	FN	PART NUMBER	YR/SN	QTY	DESCRIPTION
31		510828		1	JOINT THORIQUE Pump, Not Included With Assembly; Purchase Separately
32		614-12035		4	BOULON M12 x 35; Pump Mounting

http://www.minnparbackhoeparts.com/

TRANSMISSION, BOÎTE AUTOMATIQUE - CONVERTISSEUR DE COUPLE

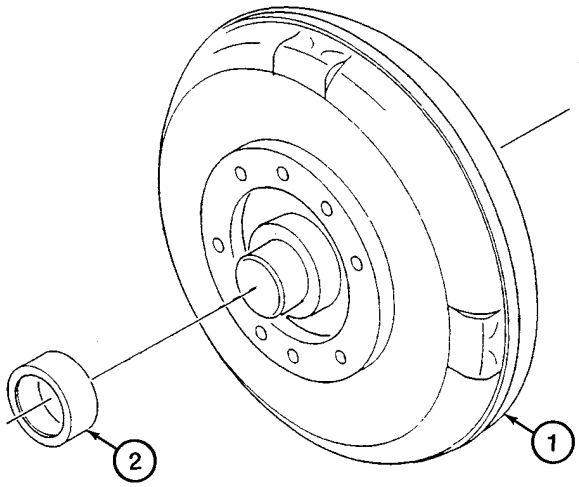

BS98D043

http://www.minnparbackhoeparts.com/

TRANSMISSION, BOÎTE AUTOMATIQUE - CONVERTISSEUR DE COUPLE

REF	FN	PART NUMBER	YR/SN	QTY	DESCRIPTION
		87424815		1	TRANSMISSION Powershift Transmission, Four Wheel Drive, Incl. Ref 1, 2; Also Includes Parts On Figures 06-25 - 06-36
1		87424864		1	CONVERTISSEUR Incl. Ref 2
2		87424865		1	BAGUE

http://www.minnparbackhoeparts.com/

TRANSMISSION, BOÎTE AUTOMATIQUE - POMPE A HUILE

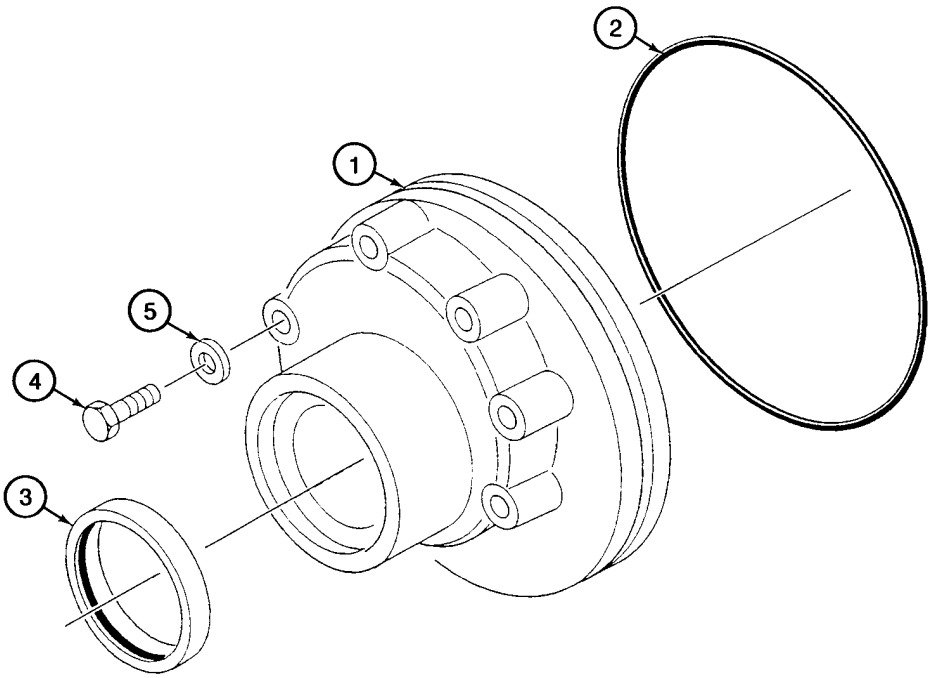

BS98D044

http://www.minnparbackhoeparts.com/

TRANSMISSION, BOÎTE AUTOMATIQUE - POMPE A HUILE

REF	FN	PART NUMBER	YR/SN	QTY	DESCRIPTION
		87424815		1	TRANSMISSION Powershift Transmission, Four Wheel Drive, Incl. Ref 1 - 5; Also Includes Parts On Figures 06-25 - 06-36
1		291523A1		1	POMPE Charge, Incl. Ref 2 - 5
2		292420A1		1	JOINT TORIQUE Seal
3		292174A1		1	JOINT A LÈVRES
4		815-8055		6	VIS M8 x 55
5		291535A1		6	RONDELLE

http://www.minnparbackhoeparts.com/

TRANSMISSION, BOÎTE AUTOMATIQUE - EMBRAYAGE, MARCHE AVANT

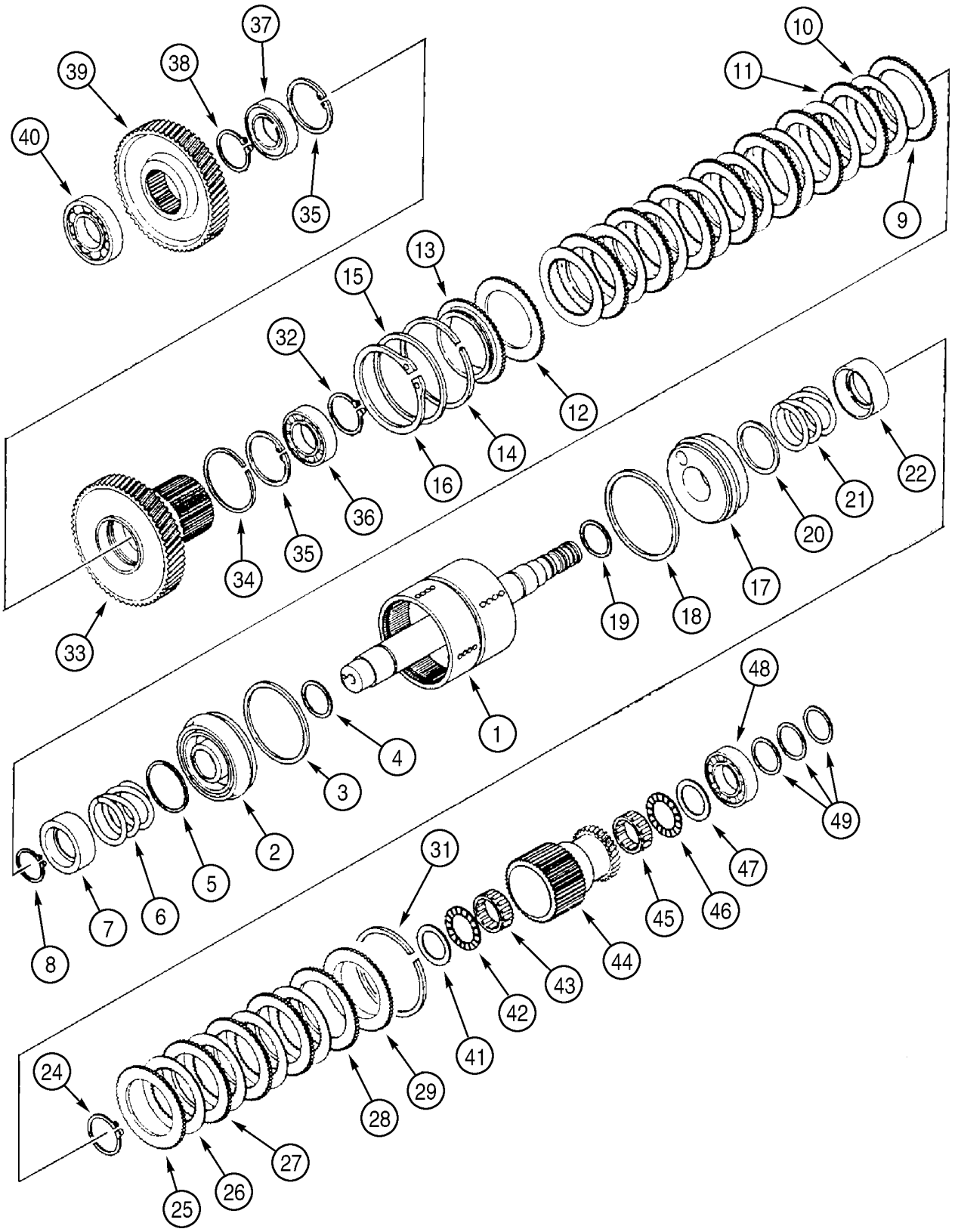

http://www.minnparbackhoeparts.com/

TRANSMISSION, BOÎTE AUTOMATIQUE - EMBRAYAGE, MARCHE AVANT

REF	FN	PART NUMBER	YR/SN	QTY	DESCRIPTION
		REF			NOTICE HIGH AND LOW SPEED - FORWARD DRIVE, CLUTCH AND PINIONS
		87424815		1	TRANSMISSION Powershift Transmission, Four Wheel Drive, Incl. Ref 1 - 49; Also Includes Parts On Figures 06-25 - 06-36
1		445310A1		1	ARBRE (ASSEMBLE) Drum, High and Low, Forward
2		291520A1		1	PISTON Incl. Ref 3, 4
3		E114385		1	JOINT Ring
4		E114386		1	JOINT
5		291529A1		1	RONDELLE Wear Ring
6		291531A1		1	RESSORT
7		291530A1		1	CLIP Seat
8		100-11196		1	ANNEAU No. 196
9		291578A1		1	DISQUE Friction
10		291580A1		8	DISQUE Friction, Clutch Separator Plate
11		291579A1		7	DISQUE Friction
12		291578A1		1	DISQUE Friction
13		445312A1		1	DISQUE MENANT EMBRAYAGE Backing Plate
14		292415A1		1	ANNEAU-D'ARRET RETAINING RING
15		291567A1		1	ENTRETOISE
16		800-11115		1	ANNEAU-D'ARRET No. 115
17		291520A1		1	PISTON Incl. Ref 18, 19
18		E114385		1	JOINT Ring
19		E114386		1	JOINT
20		291529A1		1	RONDELLE Wear Ring
21		291531A1		1	RESSORT
22		291530A1		1	CLIP Seat
24		100-11196		1	ANNEAU No. 196
25		291578A1		1	DISQUE Friction
26		291580A1		4	DISQUE Friction, Clutch Separator Plate
27		291579A1		3	DISQUE Friction
28		291578A1		1	DISQUE Friction
29		291571A1		1	DISQUE Backing Plate
31		292415A1		1	ANNEAU-D'ARRET Retaining Ring
32		800-1150		1	CIRCLIP No. 50
33		445311A1		1	PIGNON Forward/Reverse Clutch, 54T
34		445313A1		1	JOINT Lip Seal

http://www.minnparbackhoeparts.com/

TRANSMISSION, BOÎTE AUTOMATIQUE - EMBRAYAGE, MARCHE AVANT

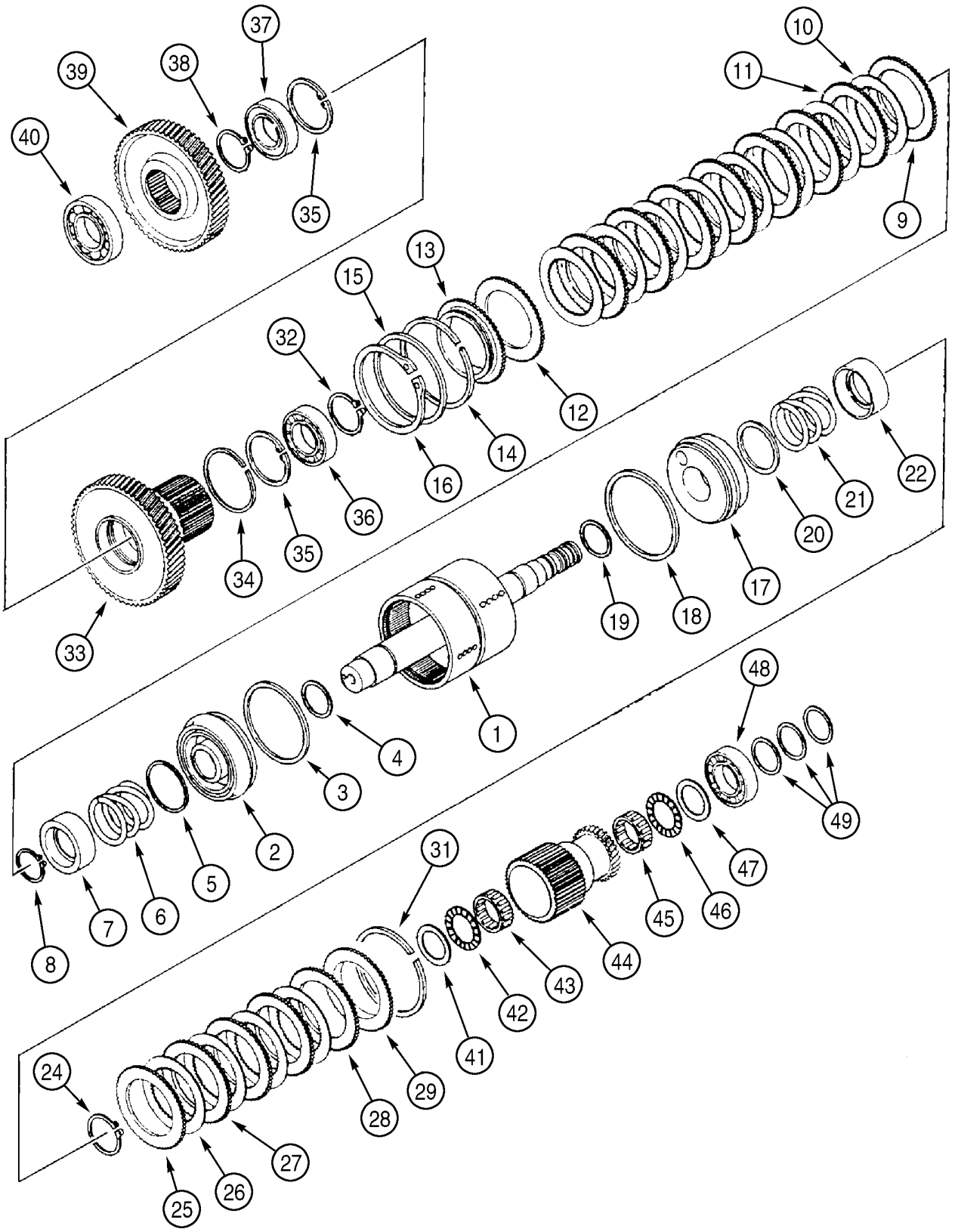

http://www.minnparbackhoeparts.com/

TRANSMISSION, BOÎTE AUTOMATIQUE - EMBRAYAGE, MARCHE AVANT

REF	FN	PART NUMBER	YR/SN	QTY	DESCRIPTION
35		800-2180		2	CIRCLIP No. 80
36		292426A1		1	ROULEMENT
37		292431A1		1	ROULEMENT
38		800-1150		1	CIRCLIP No. 50
39		291551A1		1	PIGNON Gear, Driven, 42T
40		292432A1		1	ROULEMENT
41		294080A1		1	ENTRETOISE Thrust Washer
42		A183452		1	ROULEMENT
43		A178460		1	ROULEMENT
44		291556A1		1	PIGNON Gear, High Clutch, 34T
45		A178460		1	ROULEMENT
46		A183452		1	ROULEMENT
47		294080A1		1	ENTRETOISE Thrust Washer
48		292429A1		1	ROULEMENT
49		291528A1		3	BAGUE Seal Ring

http://www.minnparbackhoeparts.com/

TRANSMISSION, BOÎTE AUTOMATIQUE - EMBRAYAGE, MARCHE ARRIERE

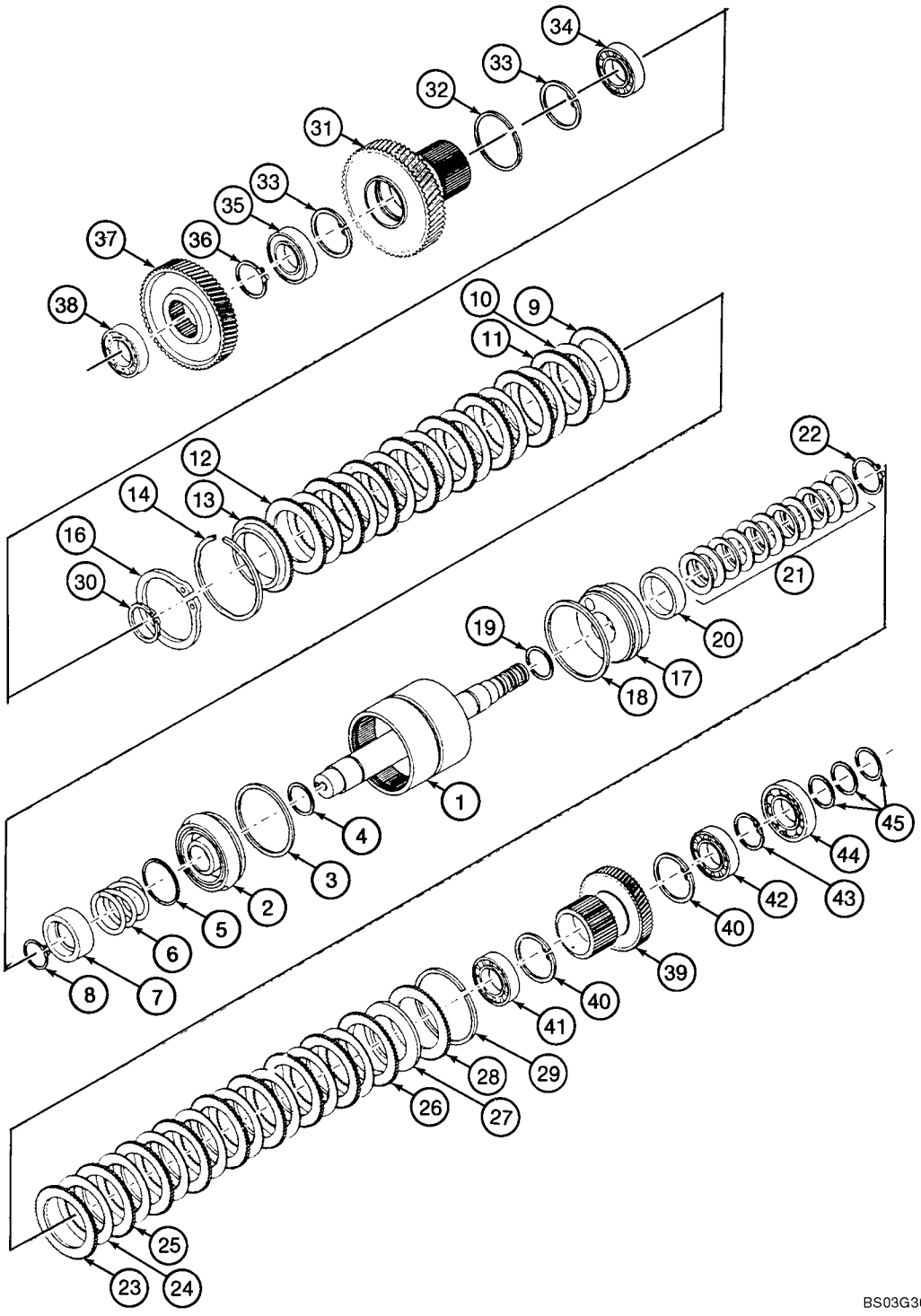

http://www.minnparbackhoeparts.com/

TRANSMISSION, BOÎTE AUTOMATIQUE - EMBRAYAGE, MARCHE ARRIERE

REF	FN	PART NUMBER	YR/SN	QTY	DESCRIPTION
		REF			NOTICE FIRST GEAR - REVERSE DRIVE, CLUTCH AND PINIONS
		87424815		1	TRANSMISSION Powershift Transmission, Four Wheel Drive, Incl. Ref 1 - 495 Also Includes Parts On Figures 06-25 - 06-36
1		445314A1		1	ARBRE (ASSEMBLE) Drum, First Gear - Reverse
2		291520A1		1	PISTON Incl. Ref 3, 4
3		E114385		1	JOINT Ring
4		E114386		1	JOINT
5		291529A1		1	RONDELLE Wear Ring
6		291531A1		1	RESSORT
7		291530A1		1	CLIP Seat
8		100-11196		1	ANNEAU No. 196
9		291578A1		1	DISQUE Friction
10		291580A1		8	DISQUE Friction
11		291579A1		7	DISQUE Friction
12		291578A1		1	DISQUE Friction
13		291566A1		1	DISQUE Backing Plate
14		292415A1		1	ANNEAU-D'ARRET Retaining Ring
16		800-11115		1	ANNEAU-D'ARRET No. 115
17		291520A1		1	PISTON Incl. Ref 18, 19
18		E114385		1	JOINT Ring
19		E114386		1	JOINT
20		305730A1		1	PLAQUE Wear Ring
21		291591A1		1	RONDELLE Kit, Belleville Springs
22		100-11196		1	ANNEAU No. 196
23		291578A1		1	DISQUE Friction
24		291580A1		8	DISQUE Friction
25		291579A1		7	DISQUE Friction
26		291578A1		1	DISQUE Friction
27		291533A1		1	RONDELLE Spacer
28		291571A1		1	DISQUE Backing Plate
29		292415A1		1	ANNEAU-D'ARRET Retaining Ring
30		800-1150		1	CIRCLIP No. 50
31		291558A1		1	PIGNON Gear, Forward/Reverse Clutch, 54T
32		291573A1		1	CIRCLIP Retaining Ring
33		800-2180		2	CIRCLIP No. 80

http://www.minnparbackhoeparts.com/

TRANSMISSION, BOÎTE AUTOMATIQUE - EMBRAYAGE, MARCHE ARRIERE

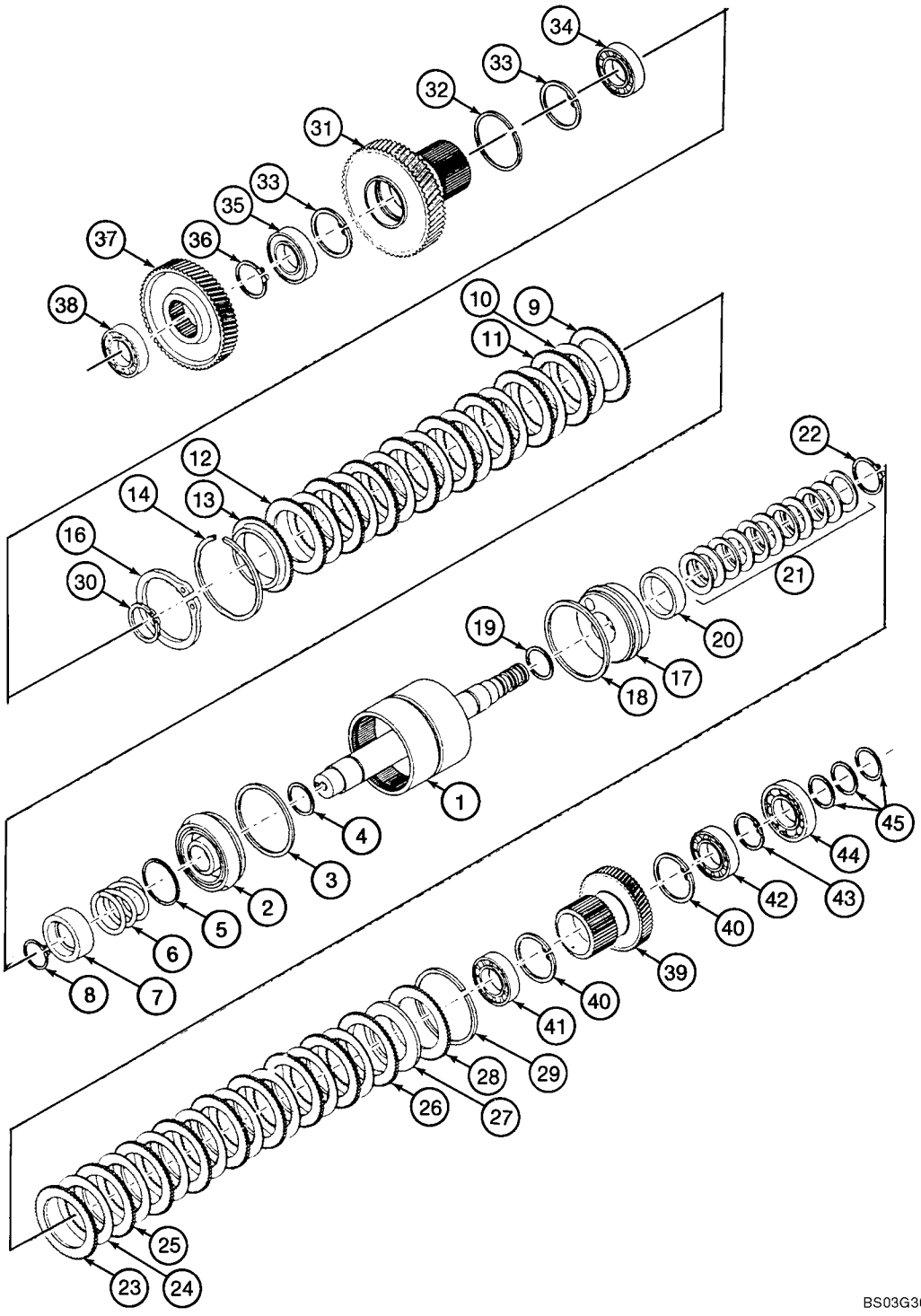

http://www.minnparbackhoeparts.com/

TRANSMISSION, BOÎTE AUTOMATIQUE - EMBRAYAGE, MARCHE ARRIERE

REF	FN	PART NUMBER	YR/SN	QTY	DESCRIPTION
34		292426A1		1	ROULEMENT
35		292431A1		1	ROULEMENT
36		800-1150		1	CIRCLIP No. 50
37		291552A1		1	PIGNON Gear, Reverse Driven, 50T
38		292432A1		1	ROULEMENT
39		291557A1		1	PIGNON Gear, First Clutch, 30T
40		800-2175		2	ANNEAU D'ARRÊT No. 75
41		292425A1		1	ROULEMENT
42		292428A1		1	ROULEMENT
43		800-1145		1	CIRCLIP No. 45
44		292423A1		1	ROULEMENT
45		291528A1		3	BAGUE Seal Ring

http://www.minnparbackhoeparts.com/

TRANSMISSION, BOÎTE AUTOMATIQUE - EMBRAYAGE, ENTRAINEMENT DE LA POMPE

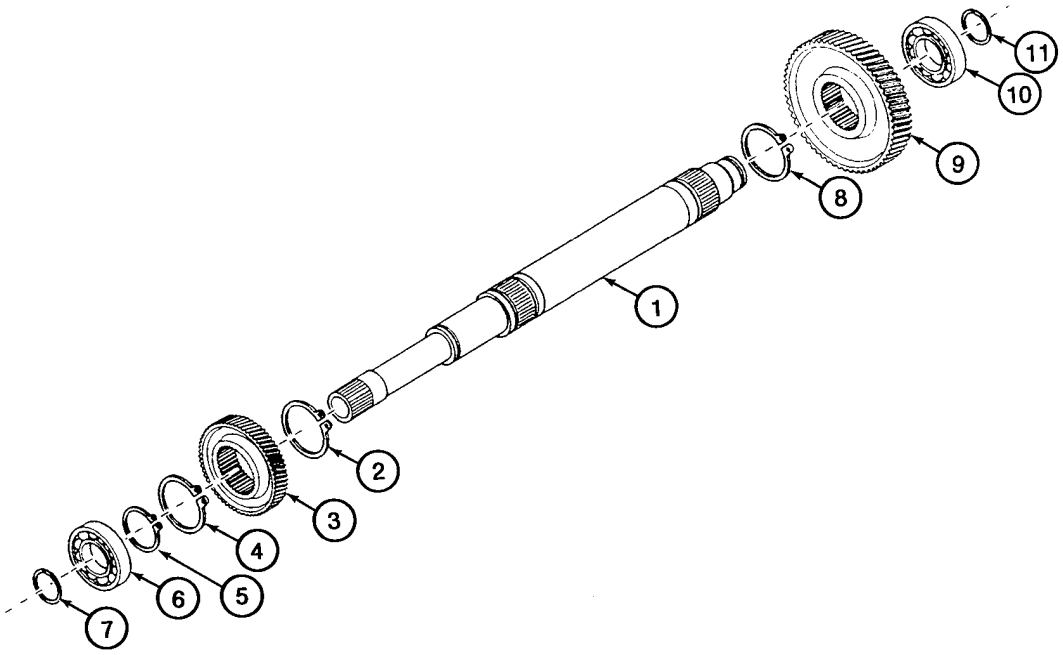

BS98D047

http://www.minnparbackhoeparts.com/

TRANSMISSION, BOÎTE AUTOMATIQUE - EMBRAYAGE, ENTRAINEMENT DE LA POMPE

REF	FN	PART NUMBER	YR/SN	QTY	DESCRIPTION
		87424815		1	TRANSMISSION Powershift Transmission, Four Wheel Drive, Incl. Ref 1 - 11; Also Includes Parts On Figures 06-25 - 06-36
1		291563A1		1	ARBRE Input Shaft
2		800-5150		1	CIRCLIP No. 50
3		291549A1		1	PIGNON Gear, Forward Low, 26T
4		800-1150		1	CIRCLIP No. 50
5		800-1140		1	ANNEAU-D'ARRET
6		292423A1		1	ROULEMENT
7		291528A1		1	BAGUE Seal Ring
8		800-1150		1	CIRCLIP No. 50
9		291548A1		1	PIGNON Gear, Forward High, 62T
10		292423A1		1	ROULEMENT
11		291528A1		1	BAGUE Seal Ring

http://www.minnparbackhoeparts.com/

TRANSMISSION, BOÎTE AUTOMATIQUE - EMBRAYAGE, DEUXIÈME PIGNON

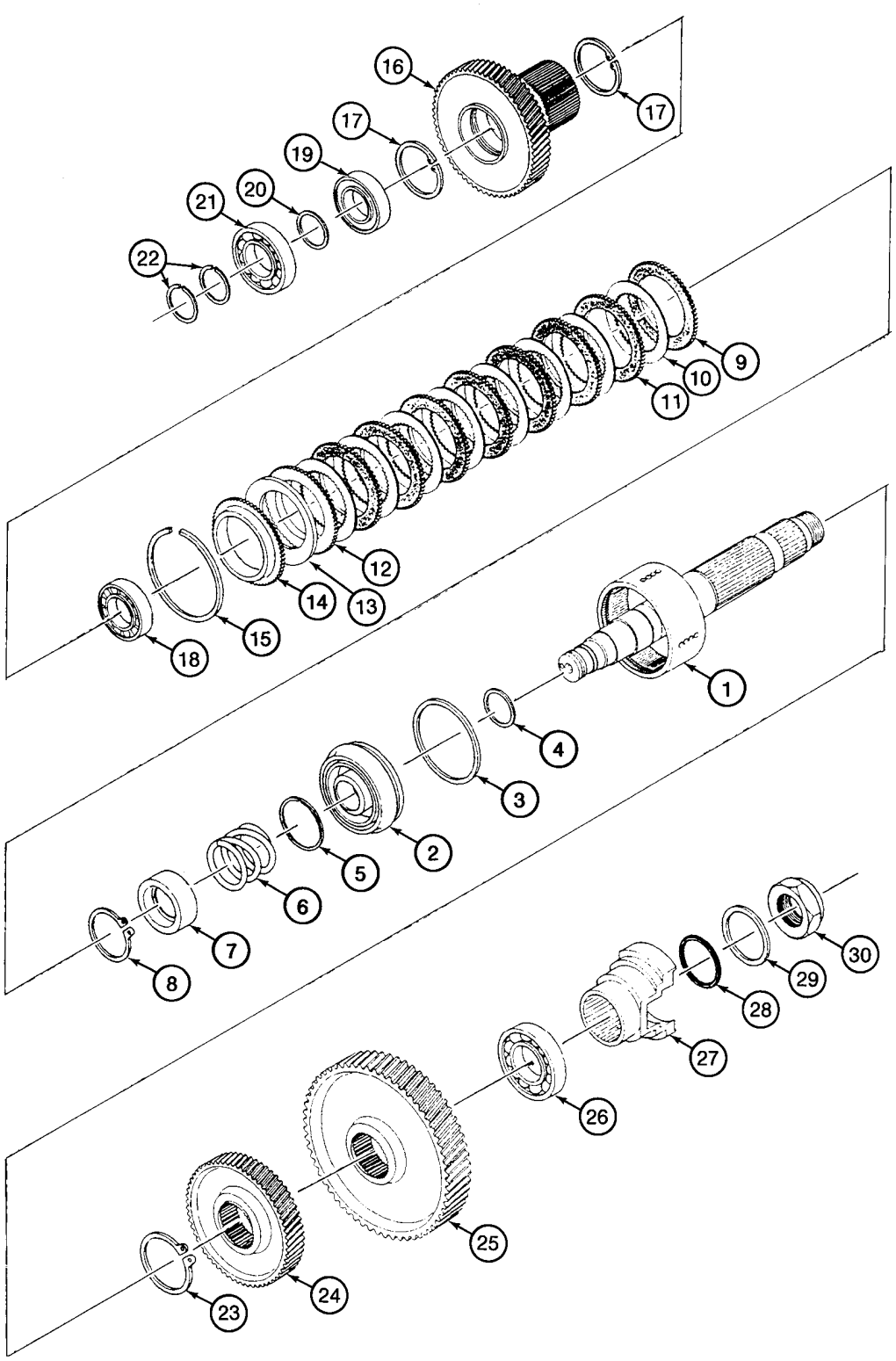

BS98D048

http://www.minnparbackhoeparts.com/

TRANSMISSION, BOÎTE AUTOMATIQUE - EMBRAYAGE, DEUXIÈME PIGNON

REF	FN	PART NUMBER	YR/SN	QTY	DESCRIPTION
		87424815		1	TRANSMISSION Powershift Transmission, Four Wheel Drive, Incl. Ref 1 - 30; Also Includes Parts On Figures 06-25 - 06-36
1		305728A1		1	ARBRE Drum, Second Clutch
2		291520A1		1	PISTON Incl. Ref 3, 4
3		E114385		1	JOINT Ring
4		E114386		1	JOINT
5		291529A1		1	RONDELLE Wear Ring
6		291531A1		1	RESSORT
7		291530A1		1	CLIP Seat
8		100-11196		1	ANNEAU No. 196
9		291578A1		1	DISQUE Friction
10		291580A1		8	DISQUE Friction
11		291579A1		7	DISQUE Friction
12		291578A1		1	DISQUE Friction
13		291533A1		1	RONDELLE Spacer
14		291571A1		1	DISQUE Backing Plate
15		292415A1		1	ANNEAU-D'ARRET Retaining Ring
16		291555A1		1	PIGNON Gear, Second Clutch, 52T
17		800-2175		2	ANNEAU D'ARRÊT No. 75
18		292425A1		1	ROULEMENT
19		292428A1		1	ROULEMENT
20		291541A1		1	ENTRETOISE Ring
21		292423A1		1	ROULEMENT
22		291528A1		2	BAGUE Seal Ring
23		800-5160		1	CIRCLIP No. 60
24		291550A1		1	PIGNON Gear, Drive, Lower Output, 41T
25		291553A1		1	PIGNON Gear, Upper Output, 59T
26		292433A1		1	ROULEMENT
27		291524A1		1	BRIDE YOKE, Output
28		238-5336		1	JOINT TORIQUE 2-7/8 ID x 3/16
29		S89696		1	RONDELLE
30		S89695		1	ECROU 1-1/4 NF

http://www.minnparbackhoeparts.com/

TRANSMISSION, BOÎTE AUTOMATIQUE - EMBRAYAGE, ARBRE DE SORTIE

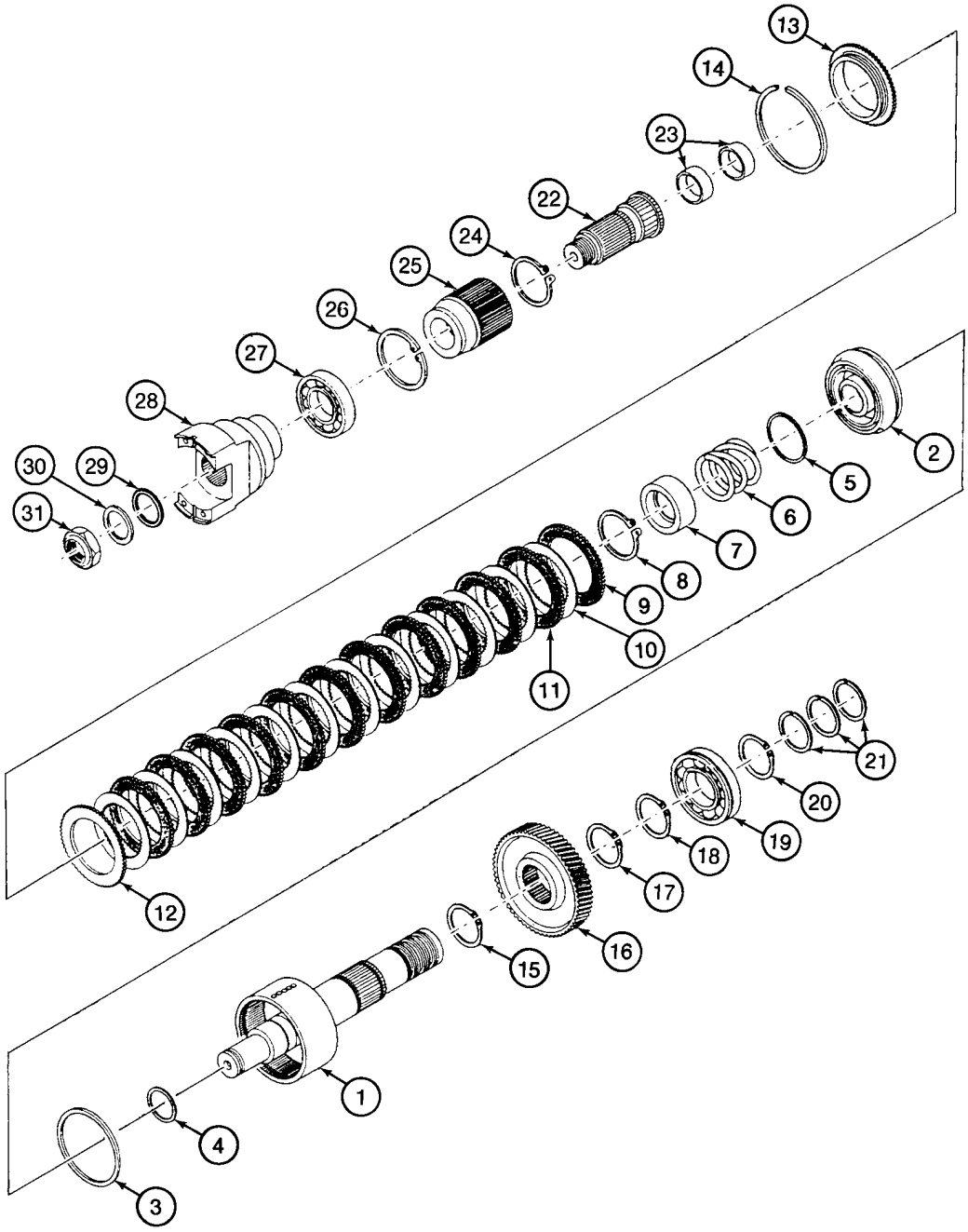

BS98D049

http://www.minnparbackhoeparts.com/

TRANSMISSION, BOÎTE AUTOMATIQUE - EMBRAYAGE, ARBRE DE SORTIE

REF	FN	PART NUMBER	YR/SN	QTY	DESCRIPTION
		87424815		1	TRANSMISSION Powershift Transmission, Four Wheel Drive, Incl. Ref 1 - 31; Also Includes Parts On Figures 06-25 - 06-36
1		305729A1		1	ARBRE Drum, Front Output, Rear Assy
2		291520A1		1	PISTON Incl. Ref 3, 4
3		E114385		1	JOINT Ring
4		E114386		1	JOINT
5		291529A1		1	RONDELLE Wear Ring
6		291531A1		1	RESSORT
7		291530A1		1	CLIP Seat
8		100-11196		1	ANNEAU No. 196
9		291578A1		1	DISQUE Friction
10		291580A1		12	DISQUE Friction
11		291579A1		11	DISQUE Friction
12		291578A1		1	DISQUE Friction
13		291571A1		1	DISQUE Backing Plate
14		292415A1		1	ANNEAU-D'ARRET Retaining Ring
15		800-1165		1	CIRCLIP No. 65
16		291554A1		1	PIGNON Gear, Lower Output, 39T
17		800-1165		1	CIRCLIP No. 65
18		800-1160		1	CIRCLIP No. 60
19		292434A1		1	ROULEMENT
20		800-1160		1	CIRCLIP No. 60
21		291540A1		3	RONDELLE Seal Ring
22		291575A1		1	PIGNON Shaft, Front Output, Front Assy; Incl. Ref 23
23		292175A1		2	BAGUE
24		800-5160		1	CIRCLIP No. 60
25		291559A1		1	PIGNON HUB
26		800-21100		1	CIRCLIP No. 100
27		292424A1		1	ROULEMENT
28		291524A1		1	BRIDE YOKE
29		238-5336		1	JOINT TORIQUE 2-7/8 ID x 3/16
30		S89696		1	RONDELLE
31		S89695		1	ECROU 1-1/4 NF

http://www.minnparbackhoeparts.com/

TRANSMISSION, BOÎTE AUTOMATIQUE - MONTAGE, DISTRIBUTEUR

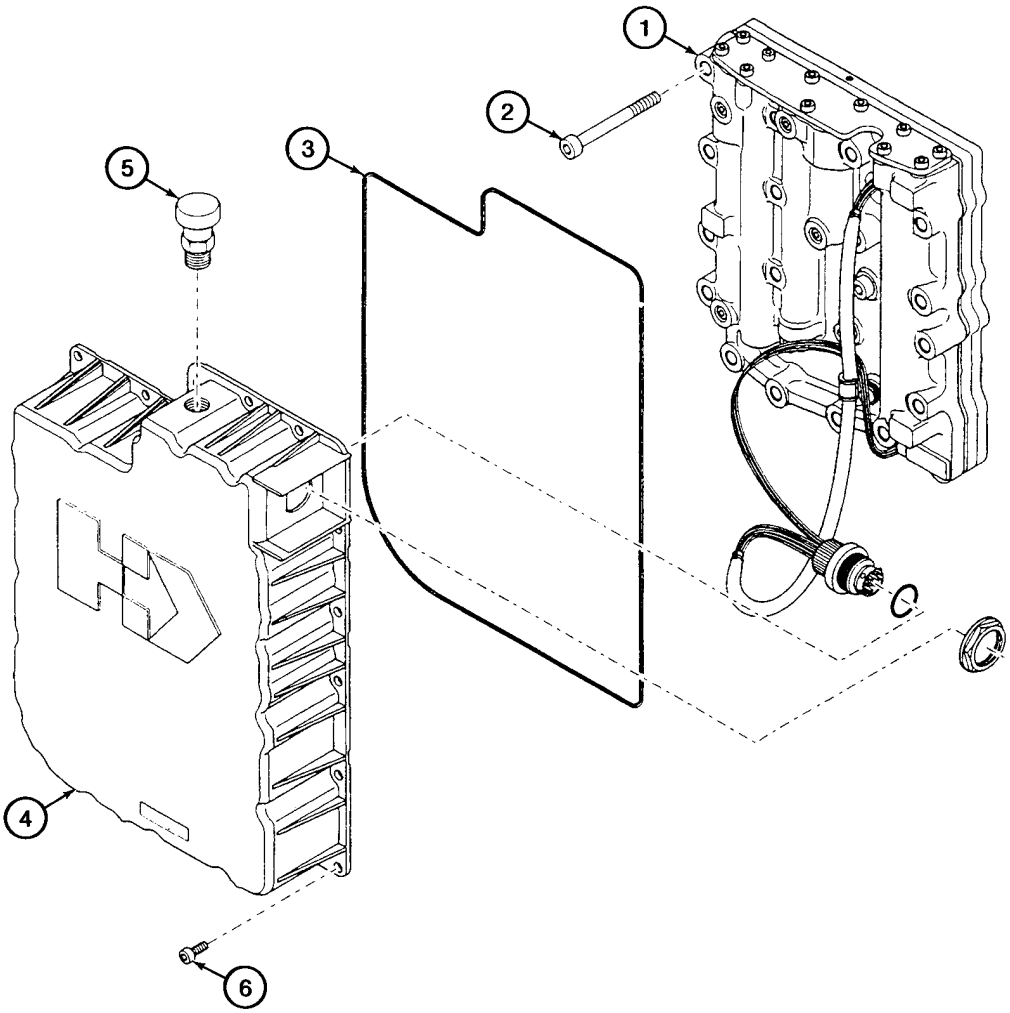

BS98D050

http://www.minnparbackhoeparts.com/

TRANSMISSION, BOÎTE AUTOMATIQUE - MONTAGE, DISTRIBUTEUR

REF	FN	PART NUMBER	YR/SN	QTY	DESCRIPTION
		87424815		1	TRANSMISSION Powershift Transmission, Four Wheel Drive, Incl. Ref 1 - 6; Also Includes Parts On Figures 06-25 - 06-36
1		380005A1		1	DISTRIBUTEUR HYDRAUL Transmission Control Valve, See Figure 06-35
2		864-8065		17	VIS M8 x 65
3		291545A1		1	JOINT
4		291577A1		1	CARTER Incl. Ref 5
5		294013A1		1	RENIFLARD
6		864-6012		20	VIS M6 x 12

http://www.minnparbackhoeparts.com/

TRANSMISSION, BOÎTE AUTOMATIQUE - DISTRIBUTEUR

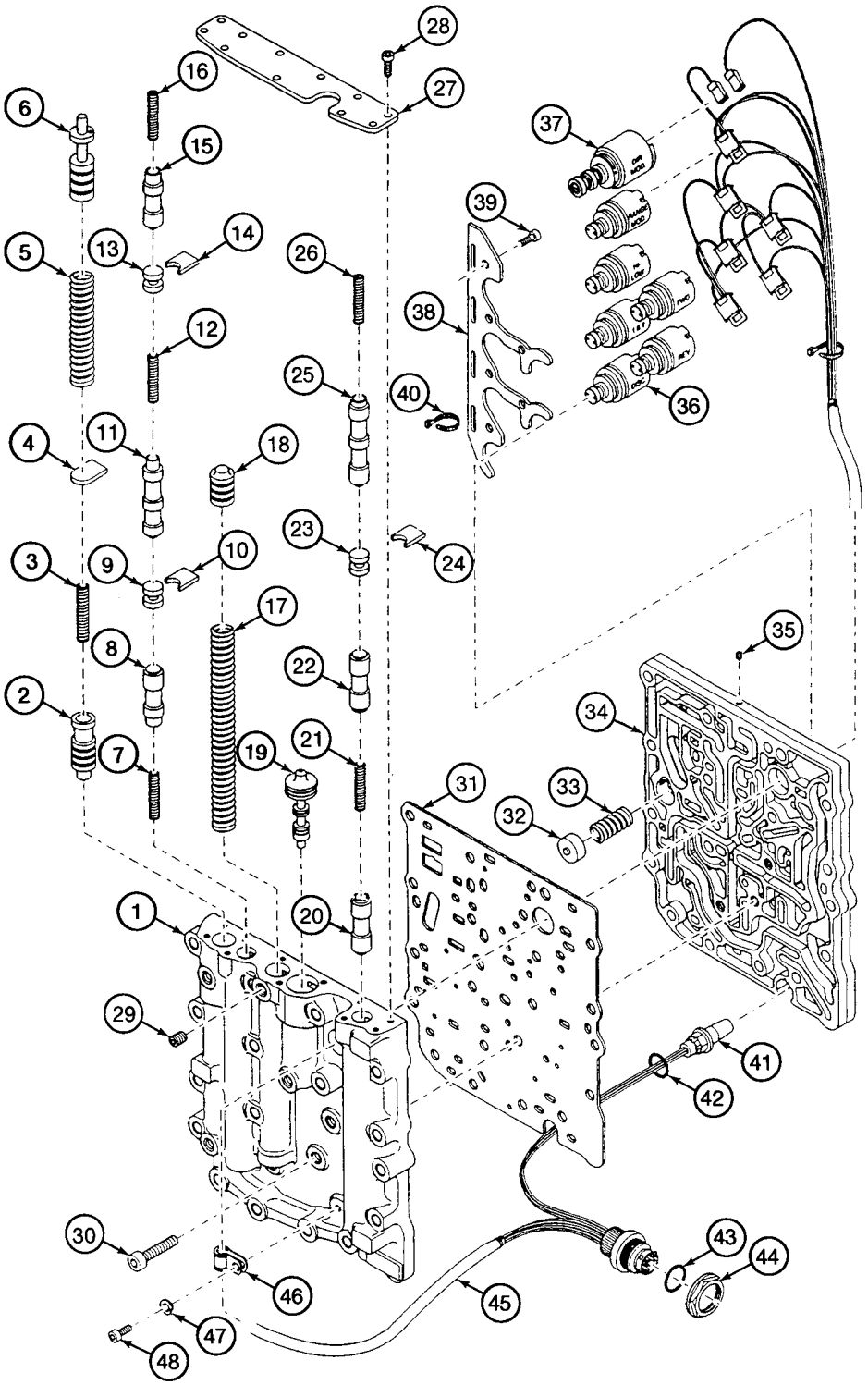

http://www.minnparbackhoeparts.com/

TRANSMISSION, BOÎTE AUTOMATIQUE - DISTRIBUTEUR

REF	FN	PART NUMBER	YR/SN	QTY	DESCRIPTION
		87424815		1	TRANSMISSION Powershift Transmission, Four Wheel Drive, Incl. Ref 1 - 48; Also Includes Parts On Figures 06-25 - 06-36
		380005A1		1	DISTRIBUTEUR HYDRAUL Transmission Control Valve, Incl. Ref 1 - 48
1		NSS		1	NON FOURNI SEPAREMENT Body
2		NSS		1	NON FOURNI SEPAREMENT Spool, Pressure Reducing
3		NSS		1	NON FOURNI SEPAREMENT Spring
4		NSS		1	NON FOURNI SEPAREMENT Plate
5		NSS		1	NON FOURNI SEPAREMENT Spring
6		NSS		1	NON FOURNI SEPAREMENT Spool, Pressure Regulator
7		NSS		1	NON FOURNI SEPAREMENT Spring
8		NSS		1	NON FOURNI SEPAREMENT Spool, Disconnect
9		NSS		1	NON FOURNI SEPAREMENT Stop
10		NSS		1	NON FOURNI SEPAREMENT Plate
11		NSS		1	NON FOURNI SEPAREMENT Spool, First/Second
12		NSS		1	NON FOURNI SEPAREMENT Spring
13		NSS		1	NON FOURNI SEPAREMENT Stop
14		NSS		1	NON FOURNI SEPAREMENT Plate
15		NSS		1	NON FOURNI SEPAREMENT Spool, Range Modulation
16		NSS		1	NON FOURNI SEPAREMENT Spring
17		NSS		1	NON FOURNI SEPAREMENT Spring
18		NSS		1	NON FOURNI SEPAREMENT Spool, Accumulator
19		NSS		1	NON FOURNI SEPAREMENT Spool, Booster
20		NSS		1	NON FOURNI SEPAREMENT Spool, Reverse
21		NSS		1	NON FOURNI SEPAREMENT Spring
22		NSS		1	NON FOURNI SEPAREMENT Spool, Forward
23		NSS		1	NON FOURNI SEPAREMENT Stop
24		NSS		1	NON FOURNI SEPAREMENT Plate
25		NSS		1	NON FOURNI SEPAREMENT Spool, High/Low Forward
26		NSS		1	NON FOURNI SEPAREMENT Spring
27		NSS		1	NON FOURNI SEPAREMENT Cover
28		864-5012		11	VIS M5 x 12

http://www.minnparbackhoeparts.com/

TRANSMISSION, BOÎTE AUTOMATIQUE - DISTRIBUTEUR

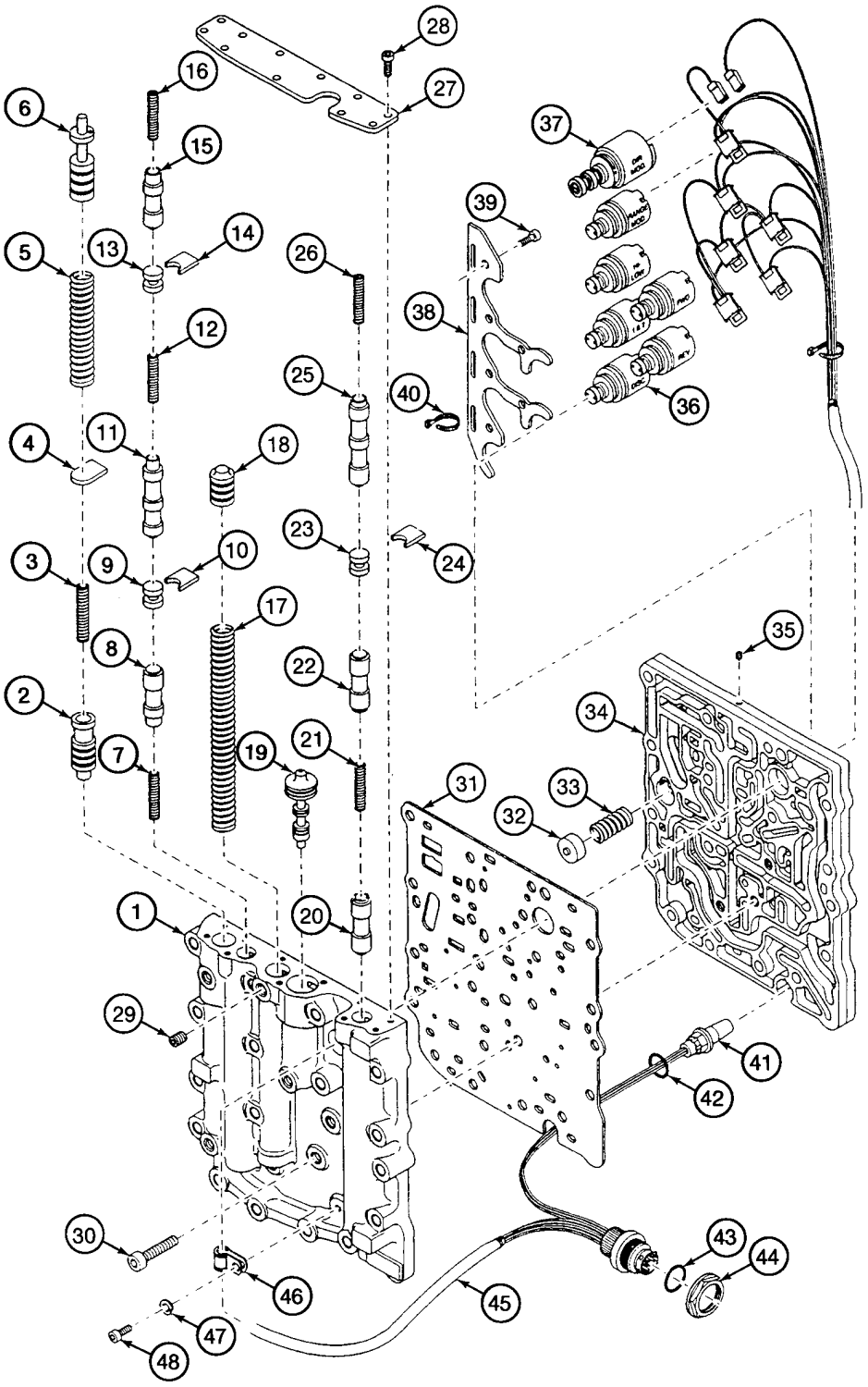

http://www.minnparbackhoeparts.com/

TRANSMISSION, BOÎTE AUTOMATIQUE - DISTRIBUTEUR

REF	FN	PART NUMBER	YR/SN	QTY	DESCRIPTION
29		366663A1		2	BOUCHON Check Port
30		864-8030		3	VIS M8 x 30
31		NSS		1	NON FOURNI SEPAREMENT Plate, Spacer
32		292176A1		1	CLAPET Spool, Bypass Valve
33		292177A1		1	RESSORT
34		NSS		1	NON FOURNI SEPAREMENT Plate
35		319597A1		6	BOUCHON
36		291862A1		6	SOLENOIDE
37		291861A1		1	SOLENOIDE MODULE
38		NSS		1	NON FOURNI SEPAREMENT Bail
39		864-5012		6	VIS M5 x 12
40		319598A1		6	SANGLE
41		380004A1		1	CAPTEUR Speed Sensor
42		238-5115		1	JOINT TORIQUE 11/16 ID x 7/8
43		238-9213		1	JOINT TORIQUE 15/16 ID x 1/8
44		NSS		1	NON FOURNI SEPAREMENT Nut
45		380003A1		1	FAISCEAU Incl. Ref 41 - 44
46		319599A1		1	COLLIER
47		895-11005		1	RONDELLE 5,5 x 10 x 1 mm
48		864-5010		1	VIS M5 x 10

http://www.minnparbackhoeparts.com/

TRANSMISSION, BOÎTE AUTOMATIQUE - PLAQUE, ENTRAINEMENT

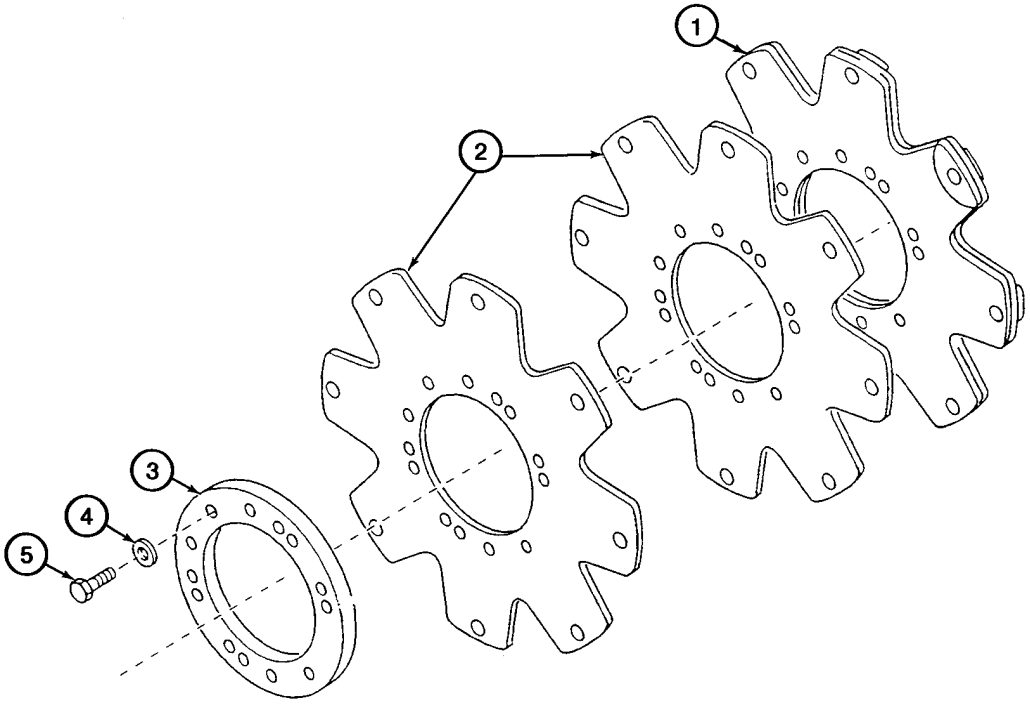

BS98D052

http://www.minnparbackhoeparts.com/

TRANSMISSION, BOÎTE AUTOMATIQUE - PLAQUE, ENTRAINEMENT

REF	FN	PART NUMBER	YR/SN	QTY	DESCRIPTION
		87424815		1	TRANSMISSION Powershift Transmission, Four Wheel Drive, Incl. Ref 1 - 5; Also Includes Parts On Figures 06-25 - 06-36
1		87410613		1	PLAQUE DE SERRAGE Drive Plate Assy, Incl. Ref 2 - 5
2		NSS		2	NON FOURNI SEPAREMENT Face Plate
3		NSS		1	NON FOURNI SEPAREMENT Drive Plate Backing Ring
4		NSS		6	NON FOURNI SEPAREMENT Washer, 3/8
5		NSS		6	NON FOURNI SEPAREMENT Bolt, 3/8 NF x 1/2

http://www.minnparbackhoeparts.com/

ROUES, ARRIÈRE - PNEUS

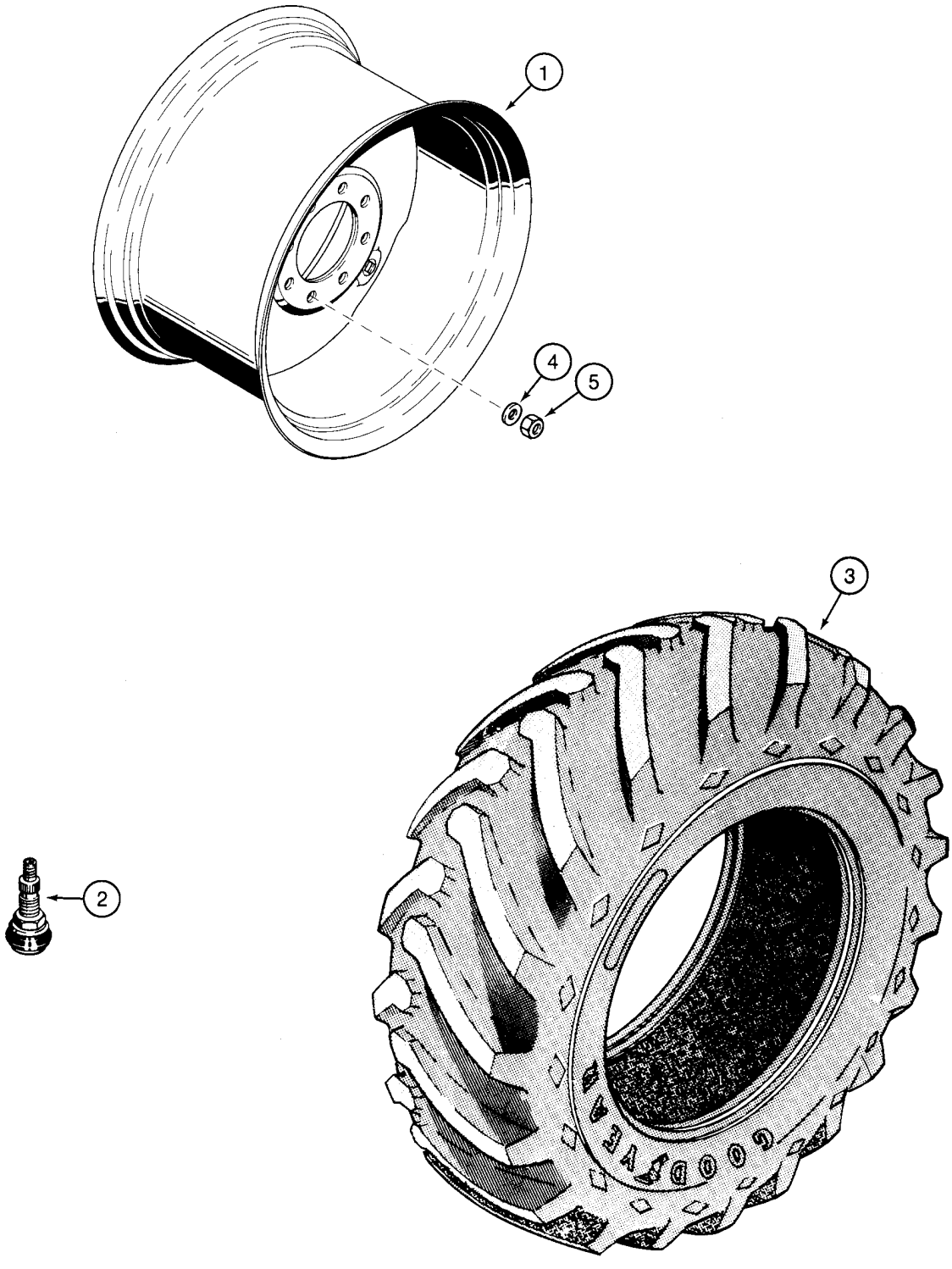

http://www.minnparbackhoeparts.com/

ROUES, ARRIÈRE - PNEUS

REF	FN	PART NUMBER	YR/SN	QTY	DESCRIPTION
1		104907A1		2	JANTE 580SM Models; 19.5L x 24 Tires - 10 Ply R4; Two Wheel or Four Wheel Drive
2		27549R1		2	VALVE
3		REF		2	NOTICE Tire, Purchase Locally
1		400092A1		2	JANTE 580SM Models; 19.5 x 24 Tires - 12 Ply (Wide); Two Wheel or Four Wheel Drive
2		27549R1		2	VALVE
3		REF		2	NOTICE Tire, Purchase Locally
1		119241A1		2	JANTE 580SM Models; 17.5L x 24 Tires - 10 Ply; Two Wheel or Four Wheel Drive
2		27549R1		2	VALVE
3		REF		2	NOTICE Tire, Purchase Locally
1		132953A1		2	JANTE 580SM+ Models; 21L x 24 - 10 Ply; Two Wheel or Four Wheel Drive
2		27549R1		2	VALVE
3		REF		2	NOTICE Tire, Purchase Locally
4		D138380		20	RONDELLE
5		D138492		20	ECROU M22; Wheel Nuts

http://www.minnparbackhoeparts.com/

ESSIEU, PROPULSION ARRIÈRE - SUPPORT

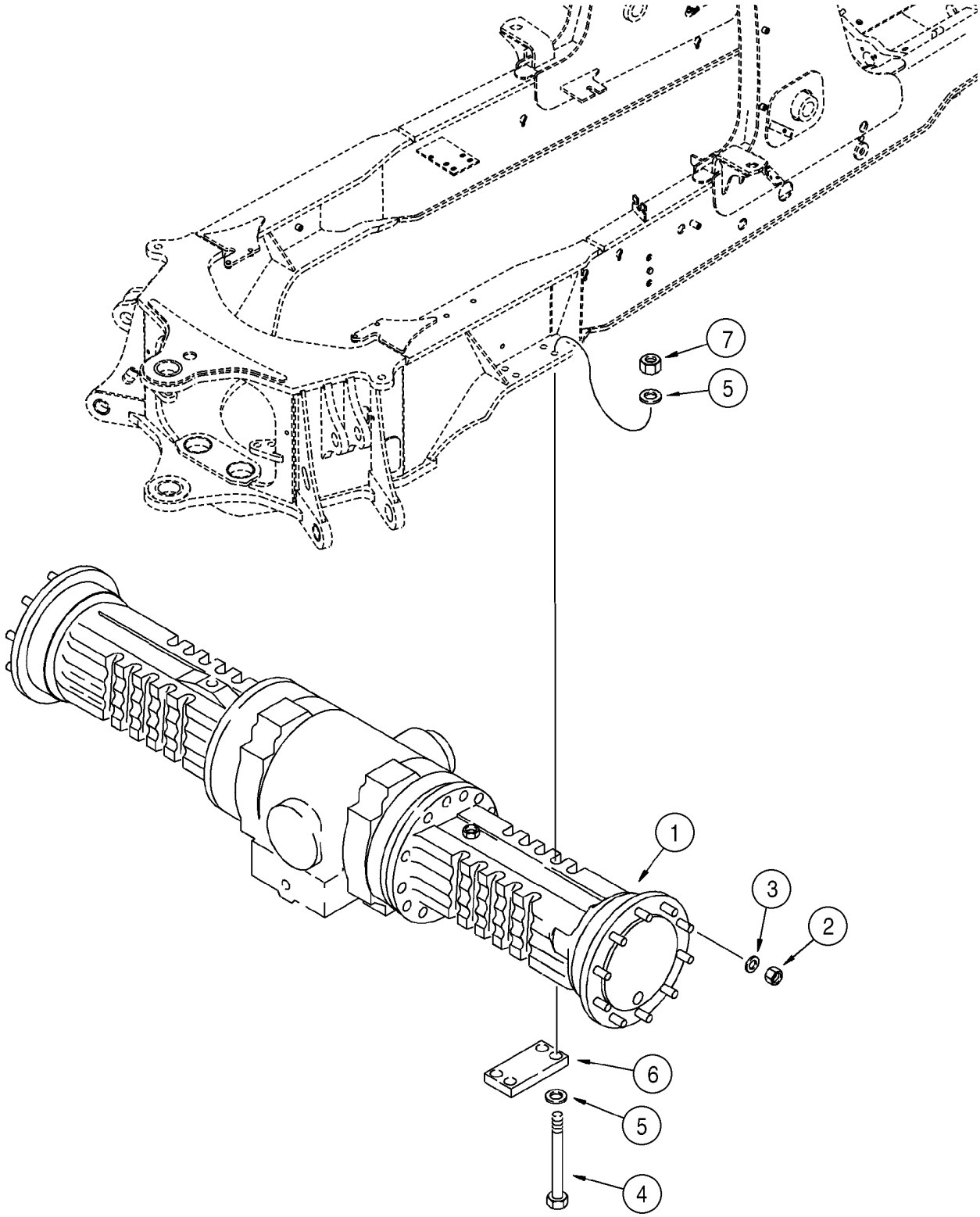

http://www.minnparbackhoeparts.com/

ESSIEU, PROPULSION ARRIÈRE - SUPPORT

REF	FN	PART NUMBER	YR/SN	QTY	DESCRIPTION
1		384956A1		1	PONT ARRIERE 580SM Models Without Powershift Transmission, See Figures 06-40 - 06-46, 07-01, 07-02
1		86984108		1	PONT-MOTEUR 580SM+ Models Without Powershift Transmission, See Figures 06-40 - 06-46, 07-01, 07-02
1A		384958A1		1	PONT ARRIERE 580SM Models With Powershift Transmission, See Figures 06-40 - 06-46, 07-01, 07-02; Not Illustrated
1A		86984107		1	PONT-MOTEUR 580SM+ Models With Powershift Transmission, See Figures 06-40 - 06-46, 07-01, 07-02; Not Illustrated
2		D138492		20	ECROU 22 mm
3		87313544		20	RONDELLE 22.52 ID x 44.0 OD x 5.0 mm thk, Hardened; Replaces D138380 22.80 ID x 44.5 OD x 5.56 mm thk Hardened Washer Used On Some Models
4		827-20230		8	VIS M20 x 230; 10.9
5		896-11020		16	RONDELLE 22 x 37 x 4 mm, Hardened
6		117933A1		2	PLAQUE, GRANDE
7		829-1420		8	ECROU M20, Cl 10

http://www.minnparbackhoeparts.com/

ESSIEU ARRIÈRE - BLOCAGE DU DIFFERENTIEL

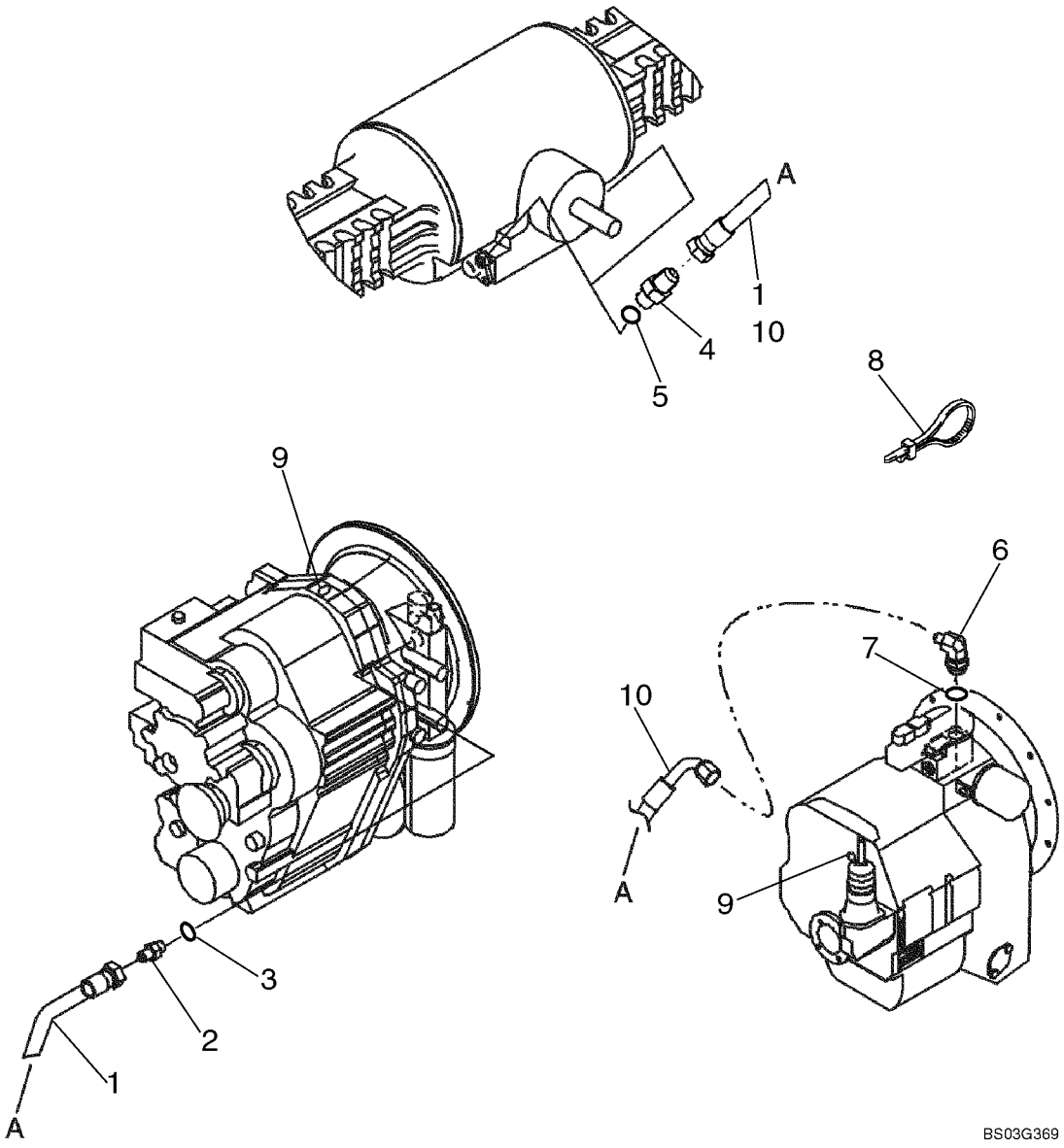

http://www.minnparbackhoeparts.com/

ESSIEU ARRIÈRE - BLOCAGE DU DIFFERENTIEL

REF	FN	PART NUMBER	YR/SN	QTY	DESCRIPTION
1		87431702		1	FLEXIBLE (ASSEMBLE) 1500 mm (59-9/16 in); Models With Powershift Transmission
2		218-5057		1	RACCORD 9/16 fl x Or; Incl. Ref 3; Models With Powershift Transmission
3		237-6006		1	JOINT THORIQUE 15/32 ID x 5/64
4		218-5057		1	RACCORD 9/16 fl x Or; Incl. Ref 5; Axle Port Location Shown Is For Models Without Powershift Transmission
5		237-6006		1	JOINT THORIQUE 15/32 ID x 5/64
6		218-5105		1	COUDE 90 deg, 9/16 fl x Or; Incl. Ref 7; Models Without Powershift Transmission
7		237-6006		1	JOINT THORIQUE 15/32 ID x 5/64
8		L18337		2	SANGLE 15 in
9		E135809		1	BOUCHON If Used
10		87431701		1	FLEXIBLE (ASSEMBLE) 1500 mm (59-9/16 in); Models Without Powershift Transmission

http://www.minnparbackhoeparts.com/

ESSIEU, PROPULSION ARRIÈRE - BOÎTIER

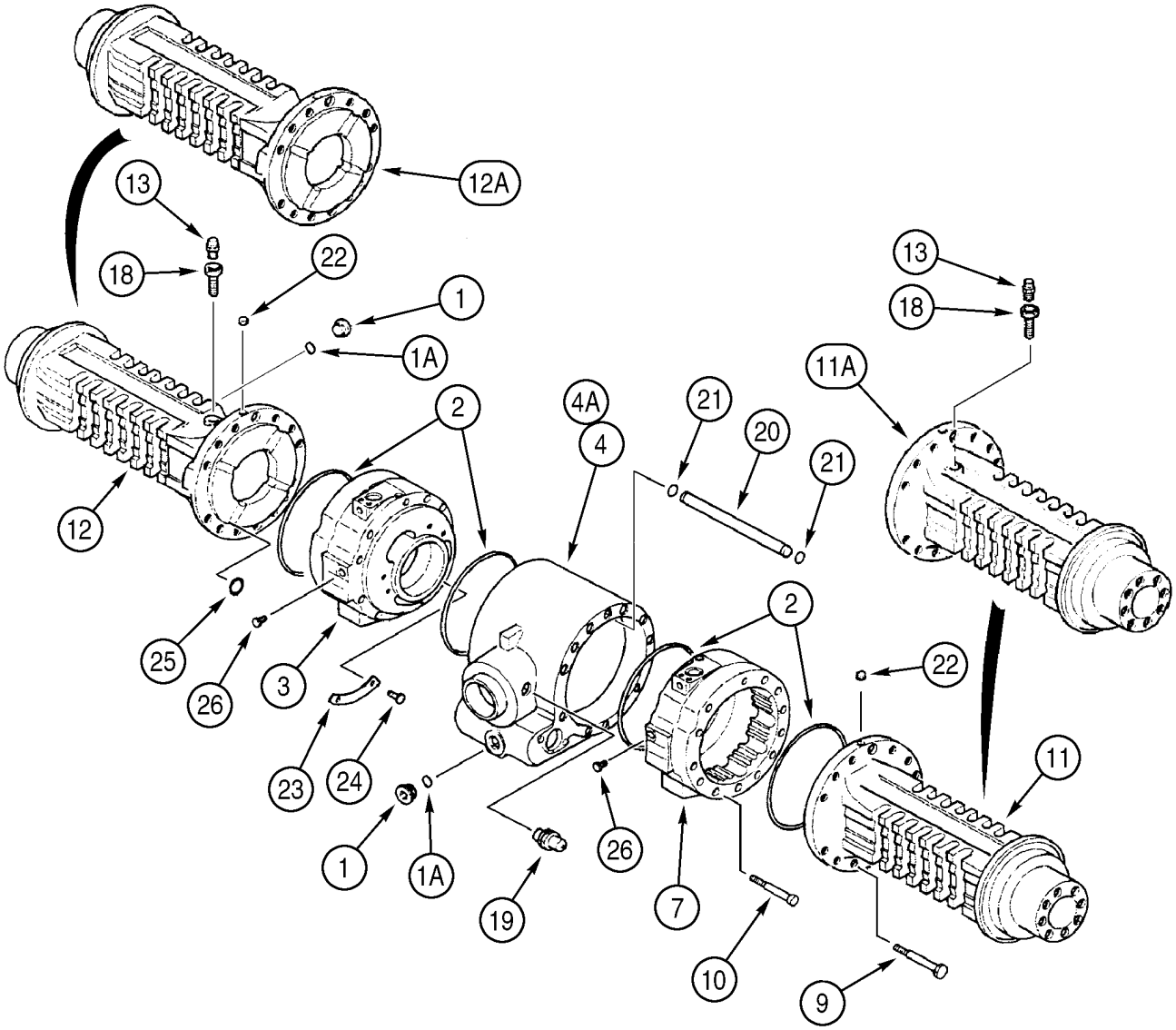

http://www.minnparbackhoeparts.com/

ESSIEU, PROPULSION ARRIÈRE - BOÎTIER

REF	FN	PART NUMBER	YR/SN	QTY	DESCRIPTION
		384956A1		1	PONT ARRIERE 580SM Models Without Powershift Transmission, Incl. Ref 1 - 26; Also Includes Parts On Figures 06-40 - 06-46, 07-01, 07-02
		86984108		1	PONT-MOTEUR 580SM+ Models Without Powershift Transmission, Incl. Ref 1 - 26; Also Includes Parts On Figures 06-40 - 06-46, 07-01, 07-02
		384958A1		1	PONT ARRIERE 580SM Models With Powershift Transmission, Incl. Ref 1 - 26; Also Includes Parts On Figures 06-40 - 06-46, 07-01, 07-02
		86984107		1	PONT-MOTEUR 580SM+ Models With Powershift Transmission, Incl. Ref 1 - 26; Also Includes Parts On Figures 06-40 - 06-46, 07-01, 07-02
1		100557A1		2	BOUCHON DE VIDANGE Incl. Ref 1A
1A		238-6121		1	JOINT TORIQUE 1-1/16 ID x 3/32
2		238-5270		4	JOINT TORIQUE 1-1/16 ID x 3/32
3		445267A1		1	FLASQUE Brake Cylinder, Right-Hand
4		346585A1		1	CARTER Center, 384956A1 or 86984108 Axle
4A		367195A1		1	MOYEU HOUSING, Center, 384958A1 or 86984107 Axle
7		445266A1		1	FLASQUE Brake Cylinder, Left-Hand
9		814-14140		22	VIS M14 x 140
10		864-12130		2	VIS M12 x 130
11		358279A1		1	MOYEU Left-Hand, Without Breather Port, 384958A1 Axle
11A		358280A1		1	MOYEU Left-Hand, With Breather Port, 384956A1 Axle
11A		87430051		1	CARTER DE PONT Left-Hand, With Breather Port, 86984107 Axle
11A		311484A1		1	CARTER Left-Hand, With Breather Port, 86984108 Axle
12		358281A1		1	MOYEU Right-Hand, With Breather Port, 384958A1 Axle
12A		358279A1		1	MOYEU Right-Hand, Without Breather Port, 384956A1 Axle
12A		311485A1		1	CARTER Right-Hand, Without Breather Port, 86984107 or 86984108 Axle

http://www.minnparbackhoeparts.com/

ESSIEU, PROPULSION ARRIÈRE - BOÎTIER

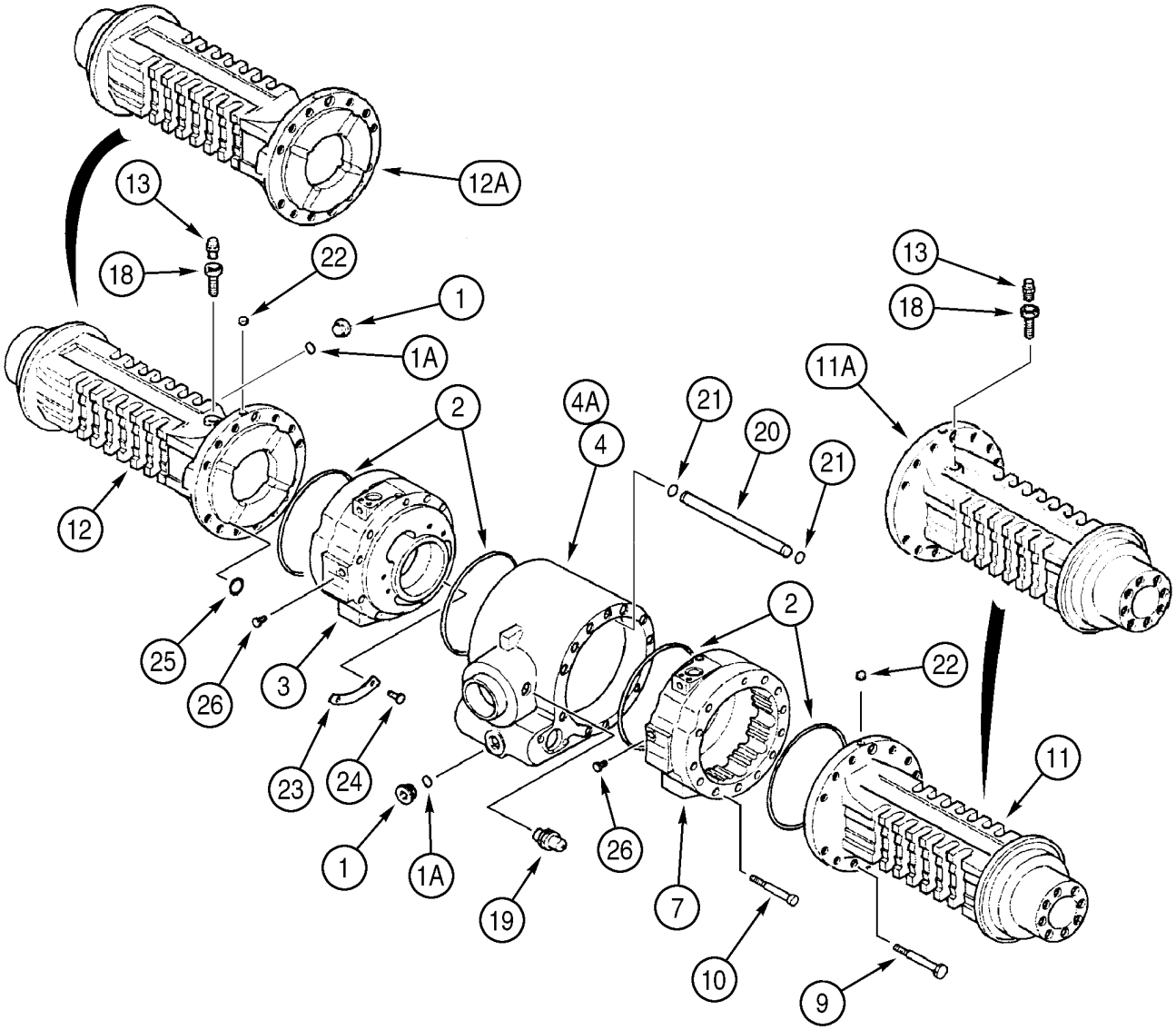

http://www.minnparbackhoeparts.com/

ESSIEU, PROPULSION ARRIÈRE - BOÎTIER

REF	FN	PART NUMBER	YR/SN	QTY	DESCRIPTION
13		1966149C2		1	RENIFLARD
18		E135750		1	PIVOT D'ESSIEU Breather Extension
19		393826A1		1	TRANSMETTEUR ASSY Oil Temperature, Incl. 237-8008 O-Ring
		237-8008		1	JOINT THORIQUE 41/64 ID x 3/32
20		346584A1		1	TUBE Internal
21		346583A1		2	JOINT TORIQUE
22		D142898		2	BOUCHON 10 x 1 mm
23		347959A1		2	PLAQUE
24		347960A1		4	RIVET 4,8 x 6 mm
25		P2230493		8	JOINT
26		294245A1		2	CHAPEAU 7/16, If Used

http://www.minnparbackhoeparts.com/

ESSIEU, PROPULSION ARRIÈRE - DIFFERENTIEL (ENTRÉE DANS LE SENS HORAIRE, MODÈLES SANS AUTOMATIQUE)

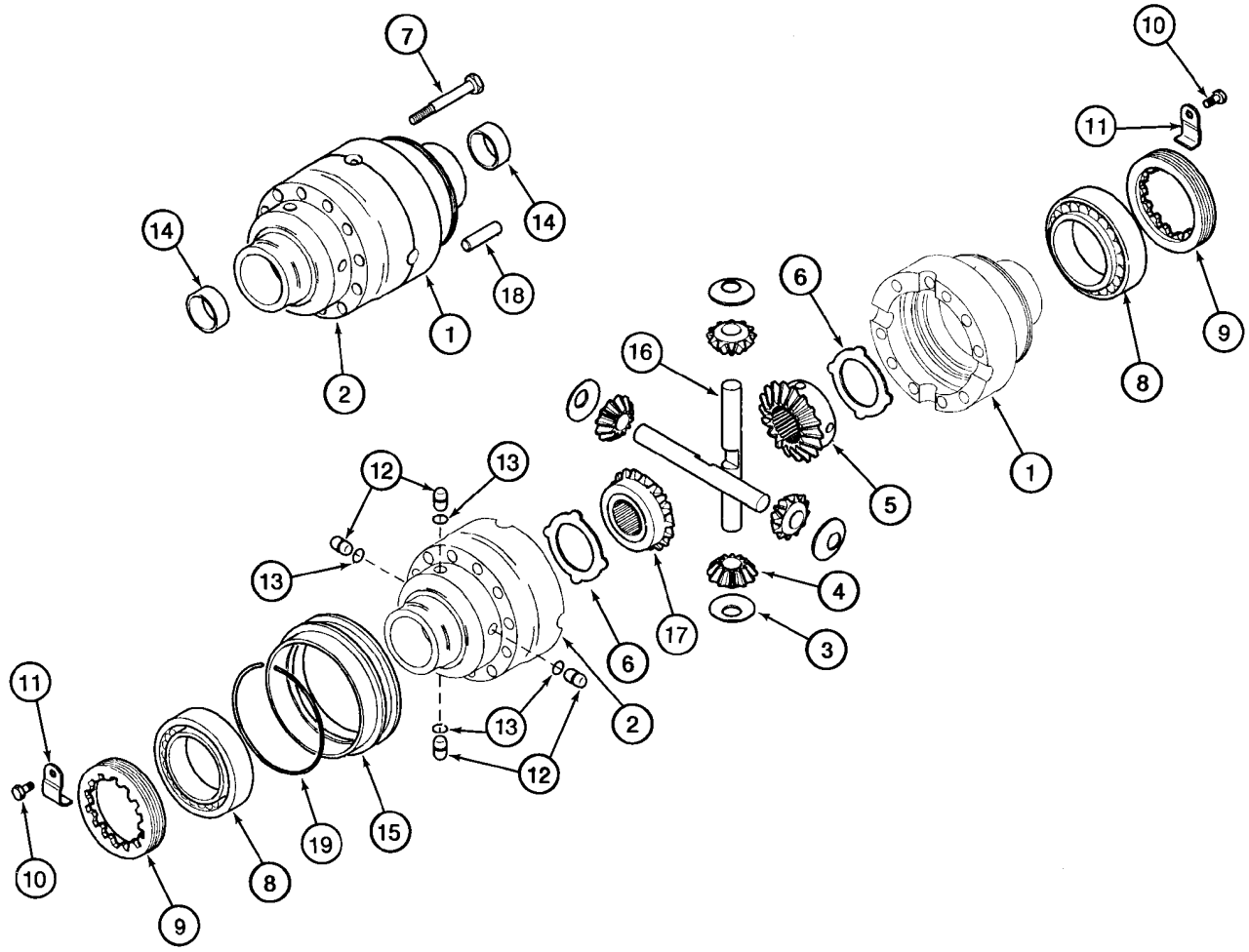

BS98D053

http://www.minnparbackhoeparts.com/

ESSIEU, PROPULSION ARRIÈRE - DIFFERENTIEL (ENTRÉE DANS LE SENS HORAIRE, MODÈLES SANS AUTOMATIQUE)

REF	FN	PART NUMBER	YR/SN	QTY	DESCRIPTION
		384956A1		1	PONT ARRIERE 580SM Models, Incl. Ref 1 - 19; Also Includes Parts On Figures 06-40 - 06-46, 07-01, 07-02
		86984108		1	PONT-MOTEUR 580SM+ Models, Incl. Ref 1 - 19; Also Includes Parts On Figures 06-40 - 06-46, 07-01, 07-02
		292268A1		1	CARTER Differential, Incl. Ref 1, 2
1		NSS		1	NON FOURNI SEPAREMENT Housing, Flange Half
2		NSS		1	NON FOURNI SEPAREMENT Housing, Plain Half
		294192A1		1	JEU Differential Gear Set, Service Replacement, Incl. Ref 3 - 6, 16, 17
3		E135777		4	RONDELLE Thrust
4		190471A1		4	PIGNON Sun Gear, 12T, No Longer Sold Separately, Must Be Replaced As a Set, For Service, Order 294192A1 Gear Set Kit
5		D142971		1	PIGNON Side Pinion Gear, No Longer Sold Separately, Must Be Replaced As a Set, For Service, Order 294192A1 Gear Set Kit
6		190469A1		2	RONDELLE DE BUTEE
7		S300976		10	VIS M12 x 90; 12.9
8		E135785		2	ROULEMENT
9		P3034505		2	ECROU Lock Ring
10		112486A1		2	VIS M6 x 12
11		175959A1		2	PATTE FIXATION Bracket
12		292207A1		4	AXE, GROS
13		292208A1		4	JOINT TORIQUE
14		190452A1		2	BAGUE
15		191067A1		1	MANCHON
		294192A1		1	JEU Differential Gear Set, Service Replacement, Incl. Ref 3 - 6, 16, 17
16		190468A1		2	ARBRE Sun Gear, No Longer Sold Separately, Must Be Replaced As a Set, For Service, Order 294192A1 Gear Set Kit
17		292890A1		1	PIGNON Side Pinion Gear, No Longer Sold Separately, Must Be Replaced As a Set, For Service, Order 294192A1 Gear Set Kit
18		D143033		2	PION 12 x 40 mm

http://www.minnparbackhoeparts.com/

ESSIEU, PROPULSION ARRIÈRE - DIFFERENTIEL (ENTRÉE DANS LE SENS HORAIRE, MODÈLES SANS AUTOMATIQUE)

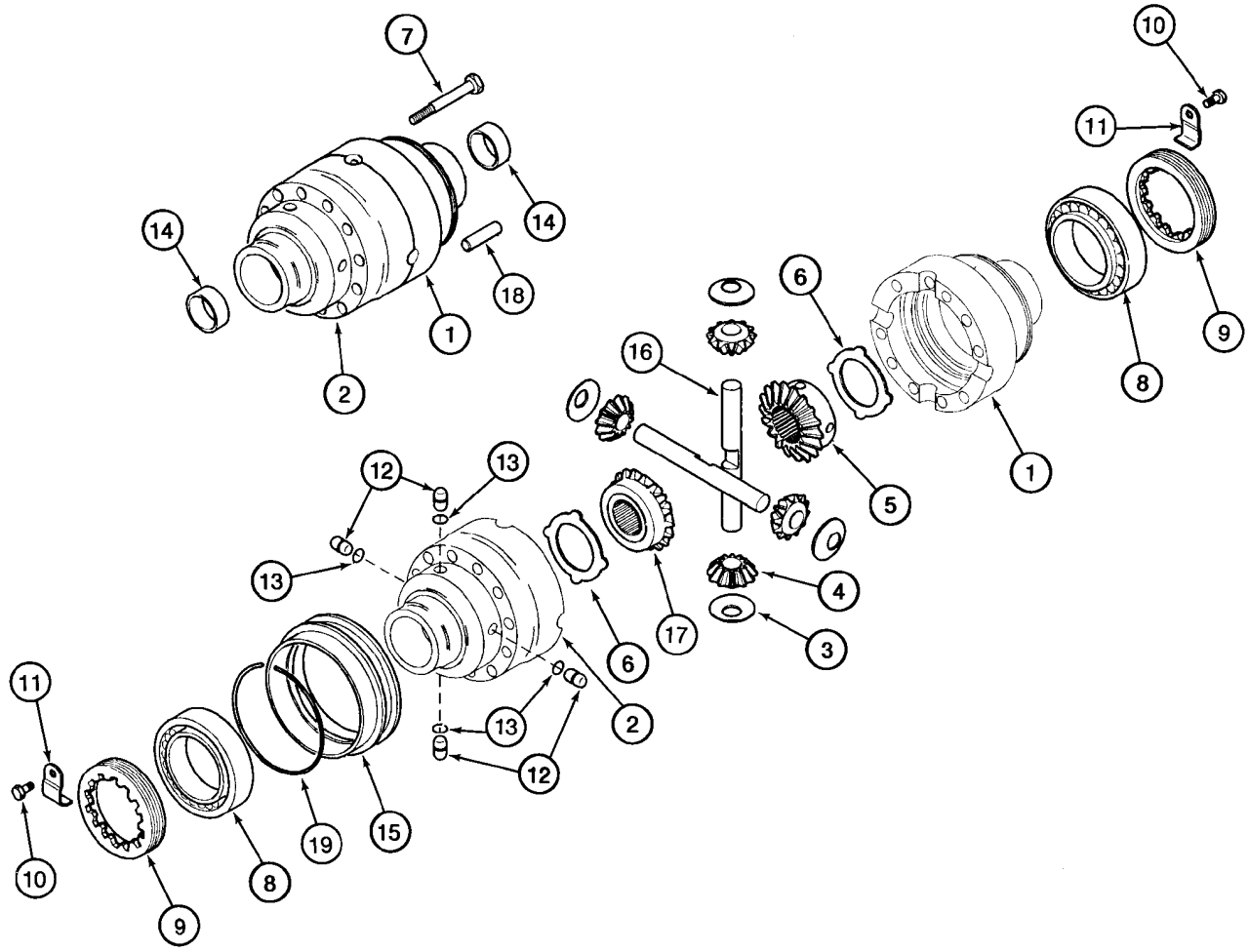

BS98D053

http://www.minnparbackhoeparts.com/

ESSIEU, PROPULSION ARRIÈRE - DIFFERENTIEL (ENTRÉE DANS LE SENS HORAIRE, MODÈLES SANS AUTOMATIQUE)

REF	FN	PART NUMBER	YR/SN	QTY	DESCRIPTION
19		175961A1		1	JONC D'ARRET

http://www.minnparbackhoeparts.com/

ESSIEU, PROPULSION ARRIÈRE - DIFFERENTIEL (ENTRÉE DANS LE SENS ANTI-HORAIRE, MODÈLES AVEC AUTOMATIQU

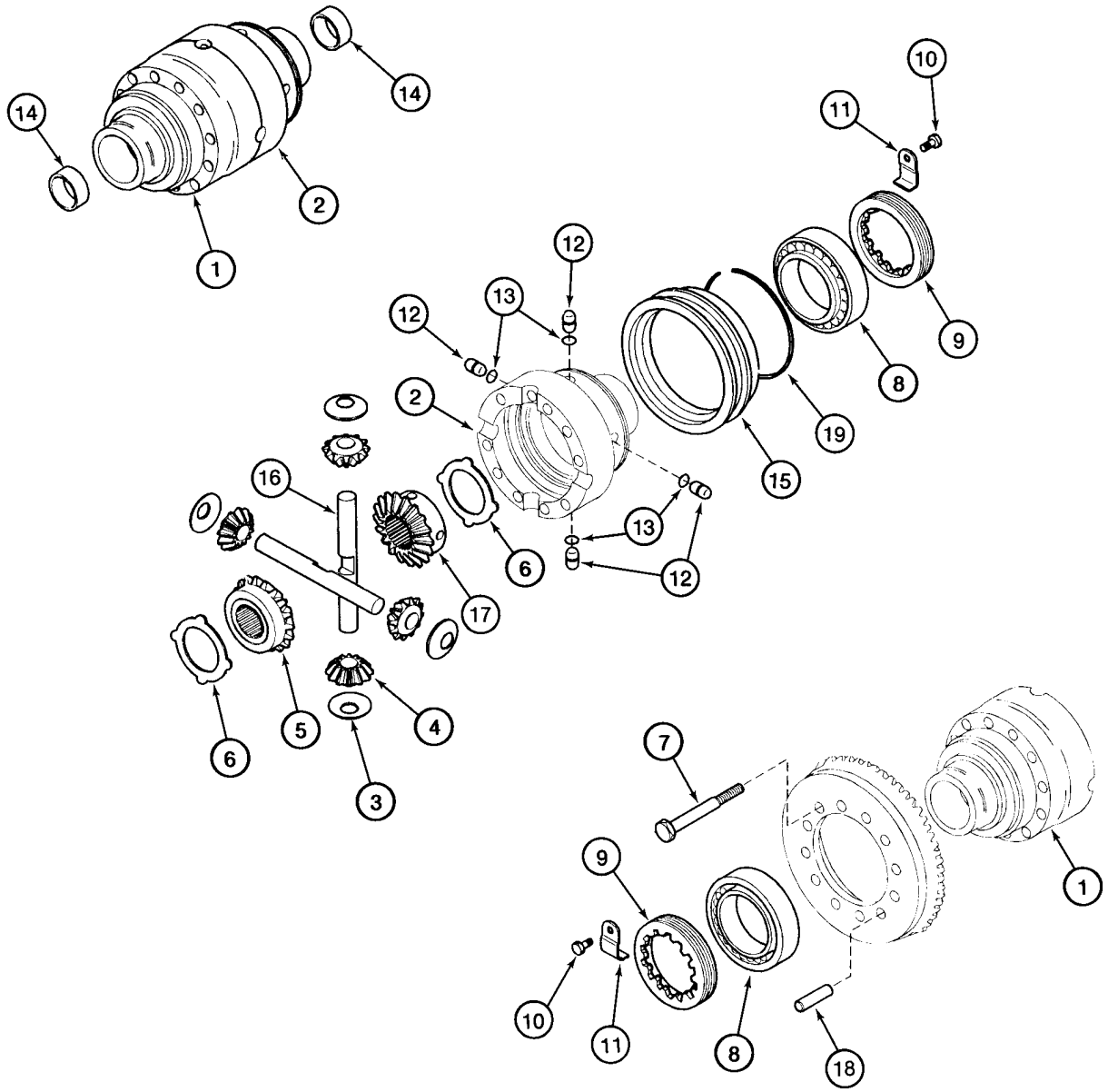

BS98D054

http://www.minnparbackhoeparts.com/

ESSIEU, PROPULSION ARRIÈRE - DIFFERENTIEL (ENTRÉE DANS LE SENS ANTI-HORAIRE, MODÈLES AVEC AUTOMATIQU

REF	FN	PART NUMBER	YR/SN	QTY	DESCRIPTION
		384958A1		1	PONT ARRIERE 580SM Model, Incl. Ref 1 - 19; Also Includes Parts On Figures 06-40 - 06-46, 07-01, 07-02
		86984107		1	PONT-MOTEUR 580SM+ Model, Incl. Ref 1 - 19; Also Includes Parts On Figures 06-40 - 06-46, 07-01, 07-02
		292268A1		1	CARTER Differential, Incl. Ref 1, 2
1		NSS		1	NON FOURNI SEPAREMENT Housing, Flange Half
2		NSS		1	NON FOURNI SEPAREMENT Housing, Plain Half
		294192A1		1	JEU Differential Gear Set, Service Replacement, Incl. Ref 3 - 6, 16, 17
3		E135777		4	RONDELLE Thrust
4		190471A1		4	PIGNON Sun Gear, 12T, No Longer Sold Separately, Must Be Replaced As a Set, For Service, Order 294192A1 Gear Set Kit
5		D142971		1	PIGNON Side Pinion Gear, No Longer Sold Separately, Must Be Replaced As a Set, For Service, Order 294192A1 Gear Set Kit
6		190469A1		2	RONDELLE DE BUTEE
7		S300976		10	VIS M12 x 90; 12.9
8		E135785		2	ROULEMENT
9		P3034505		2	ECROU Lock Ring
10		112486A1		2	VIS M6 x 12
11		175959A1		2	PATTE FIXATION Bracket
12		292207A1		4	AXE, GROS
13		292208A1		4	JOINT TORIQUE
14		190452A1		2	BAGUE
15		191067A1		1	MANCHON
		294192A1		1	JEU Differential Gear Set, Service Replacement, Incl. Ref 3 - 6, 16, 17
16		190468A1		2	ARBRE Sun Gear, No Longer Sold Separately, Must Be Replaced As a Set, For Service, Order 294192A1 Gear Set Kit
17		292890A1		1	PIGNON Side Pinion Gear, No Longer Sold Separately, Must Be Replaced As a Set, For Service, Order 294192A1 Gear Set Kit
18		D143033		2	PION 12 x 40 mm

http://www.minnparbackhoeparts.com/

ESSIEU, PROPULSION ARRIÈRE - DIFFERENTIEL (ENTRÉE DANS LE SENS ANTI-HORAIRE, MODÈLES AVEC AUTOMATIQU

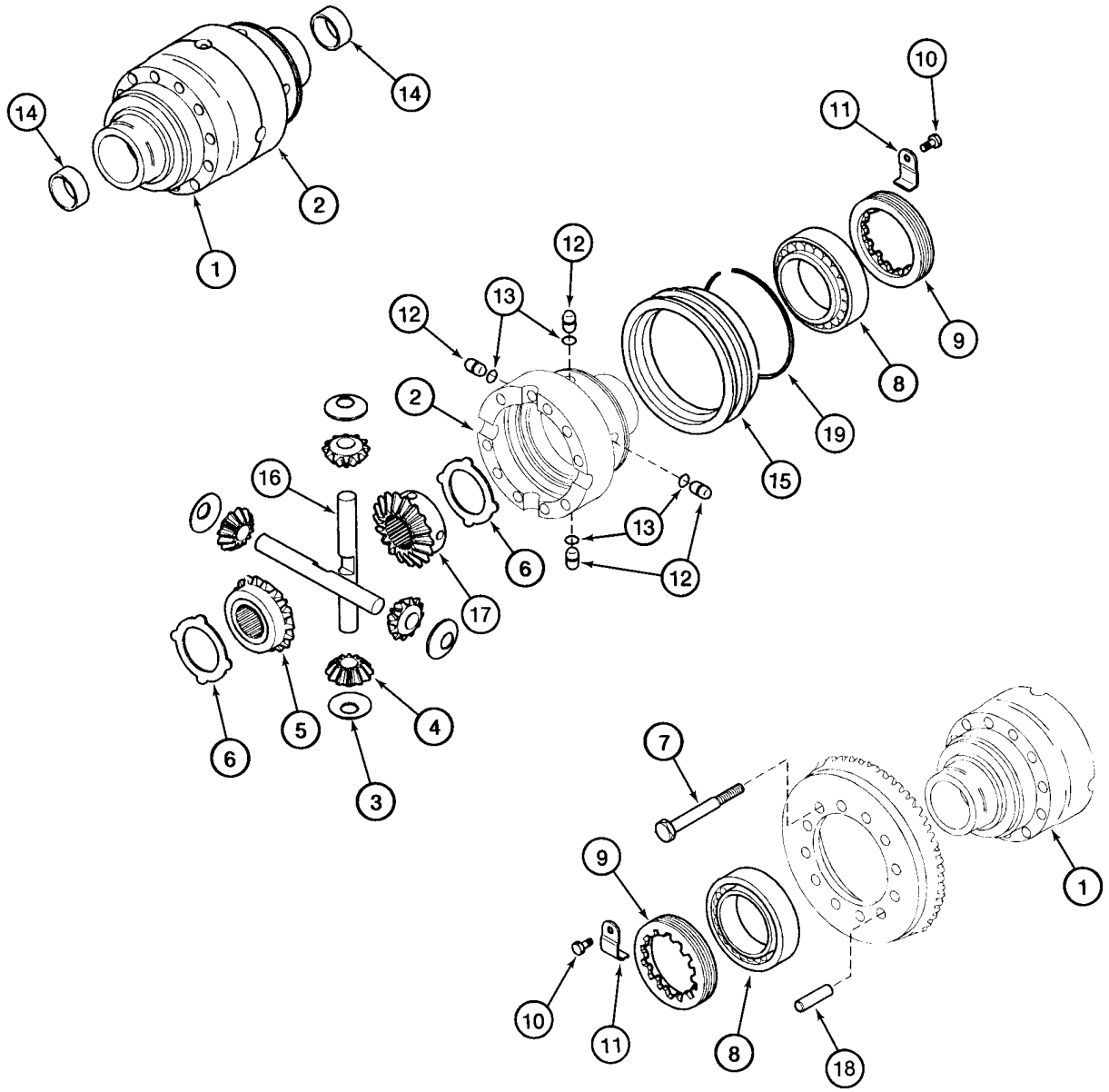

BS98D054

http://www.minnparbackhoeparts.com/

ESSIEU, PROPULSION ARRIÈRE - DIFFERENTIEL (ENTRÉE DANS LE SENS ANTI-HORAIRE, MODÈLES AVEC AUTOMATIQU

REF	FN	PART NUMBER	YR/SN	QTY	DESCRIPTION
19		175961A1		1	JONC D'ARRET

http://www.minnparbackhoeparts.com/

ESSIEU, PROPULSION ARRIÈRE - COURONNE ET PIGNON

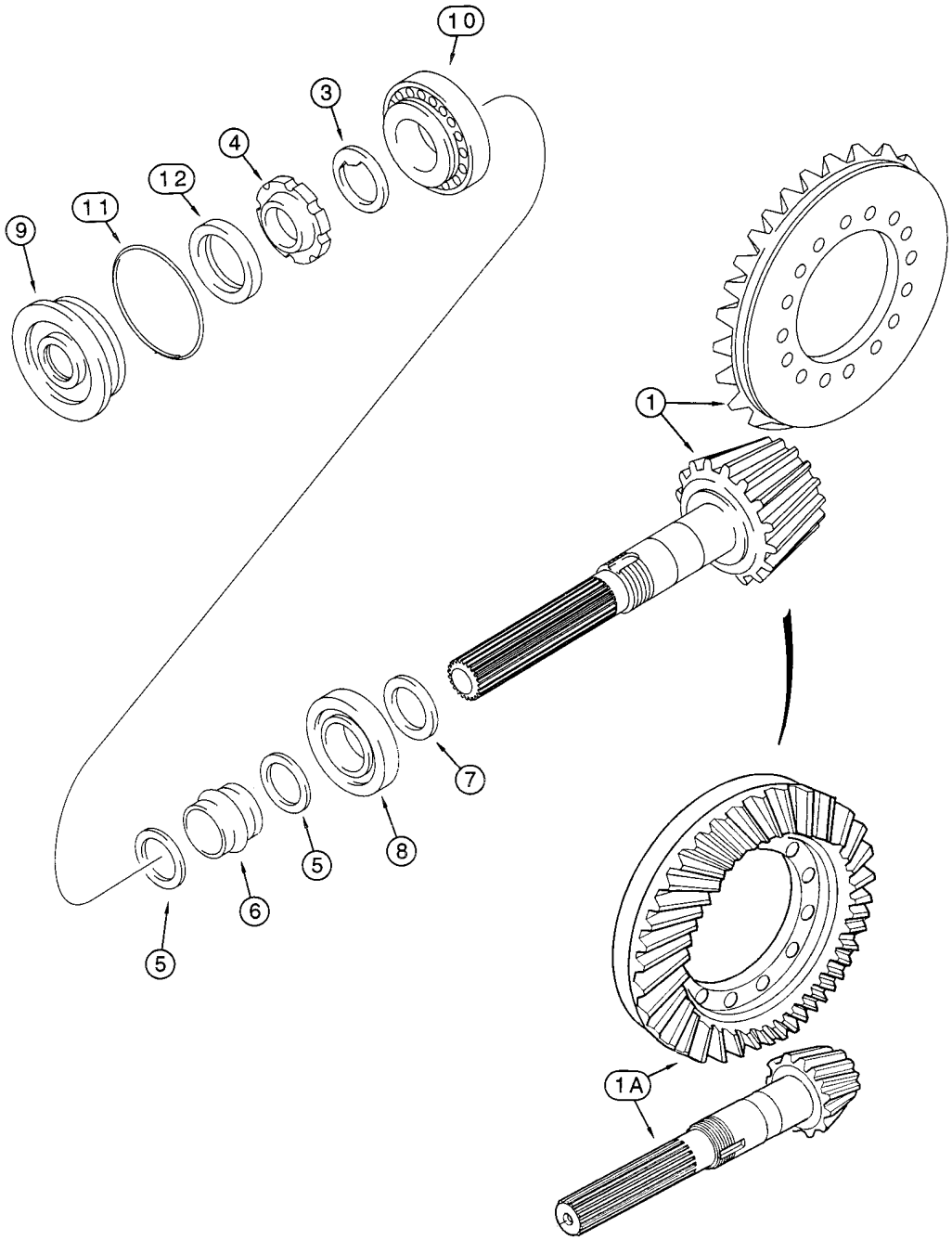

http://www.minnparbackhoeparts.com/

ESSIEU, PROPULSION ARRIÈRE - COURONNE ET PIGNON

REF	FN	PART NUMBER	YR/SN	QTY	DESCRIPTION
		384956A1		1	PONT ARRIERE 580SM Models Without Powershift Transmission, Incl. Ref 1 - 12; Also Includes Parts On Figures 06-40 - 06-46, 07-01, 07-02
		86984108		1	PONT-MOTEUR 580SM+ Models Without Powershift Transmission, Incl. Ref 1 - 12; Also Includes Parts On Figures 06-40 - 06-46, 07-01, 07-02
		384958A1		1	PONT ARRIERE 580SM Models With Powershift Transmission, Incl. Ref 1 - 12; Also Includes Parts On Figures 06-40 - 06-46, 07-01, 07-02
		86984107		1	PONT-MOTEUR 580SM+ Models With Powershift Transmission, Incl. Ref 1 - 12; Also Includes Parts On Figures 06-40 - 06-46, 07-01, 07-02
		294189A1		1	JEU Ring and Pinion Gear Set, Clockwise, Incl. Ref 1, 3 - 6; 384956A1 or 86984108 Axle
		294190A1		1	JEU Ring and Pinion Gear Set, Counter Clockwise, Incl. Ref 1A, 3 - 6; 384958A1or 86984107 Axle
1		NSS		1	NON FOURNI SEPAREMENT Gear Set, 294189A1 Gear Set
1A		NSS		1	NON FOURNI SEPAREMENT Gear Set, 294190A1 Gear Set
3		K261065		1	RONDELLE
4		K261014		1	ECROU Ring
5		1349059C1		2	RONDELLE
6		295110A1		1	ENTRETOISE Collapsible
7		190506A1		X	CALE D'EPAISSEUR 2,5 mm (0,098 in)
7		190508A1		X	CALE D'EPAISSEUR 2,6 mm (0,102 in)
7		190509A1		X	CALE D'EPAISSEUR 2,7 mm (0,106 in)
7		190510A1		X	CALE D'EPAISSEUR 2,8 mm (0,110 in)
7		190511A1		X	CALE D'EPAISSEUR 2,9 mm (0,114 in)
7		190512A1		X	CALE D'EPAISSEUR 3,0 mm (0,118 in)
7		190513A1		X	CALE D'EPAISSEUR 3,1 mm (0,122 in)
7		190514A1		X	CALE D'EPAISSEUR 3,2 mm (0,125 in)
7		190515A1		X	CALE D'EPAISSEUR 3,3 mm (0,129 in)
7		190516A1		X	CALE D'EPAISSEUR 3,4 mm (0,133 in)
8		E135762		1	ROULEMENT 45 x 100 mm
9		128570A1		1	FLASQUE Cover

http://www.minnparbackhoeparts.com/

ESSIEU, PROPULSION ARRIÈRE - COURONNE ET PIGNON

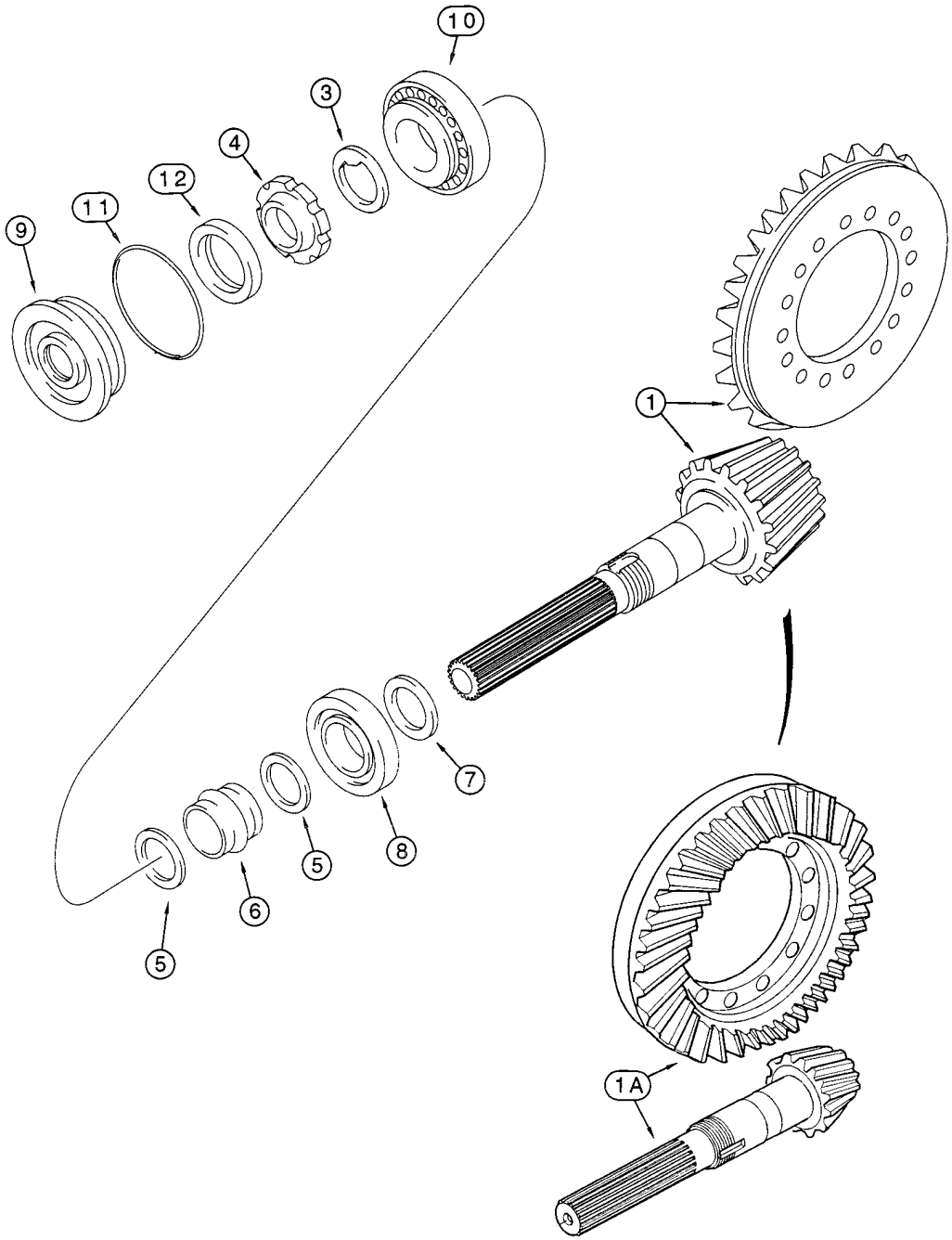

http://www.minnparbackhoeparts.com/

ESSIEU, PROPULSION ARRIÈRE - COURONNE ET PIGNON

REF	FN	PART NUMBER	YR/SN	QTY	DESCRIPTION
10		K395090		1	ROULEMENT A BILLES
11		238-5152		1	JOINT TORIQUE 3-1/4 ID x 3/32
12		K262143		1	JOINT

http://www.minnparbackhoeparts.com/

ESSIEU, PROPULSION ARRIÈRE - BLOCAGE DU DIFFERENTIEL (ENTRÉE DANS LE SENS HORAIRE, MODÈLES SANS AUTO

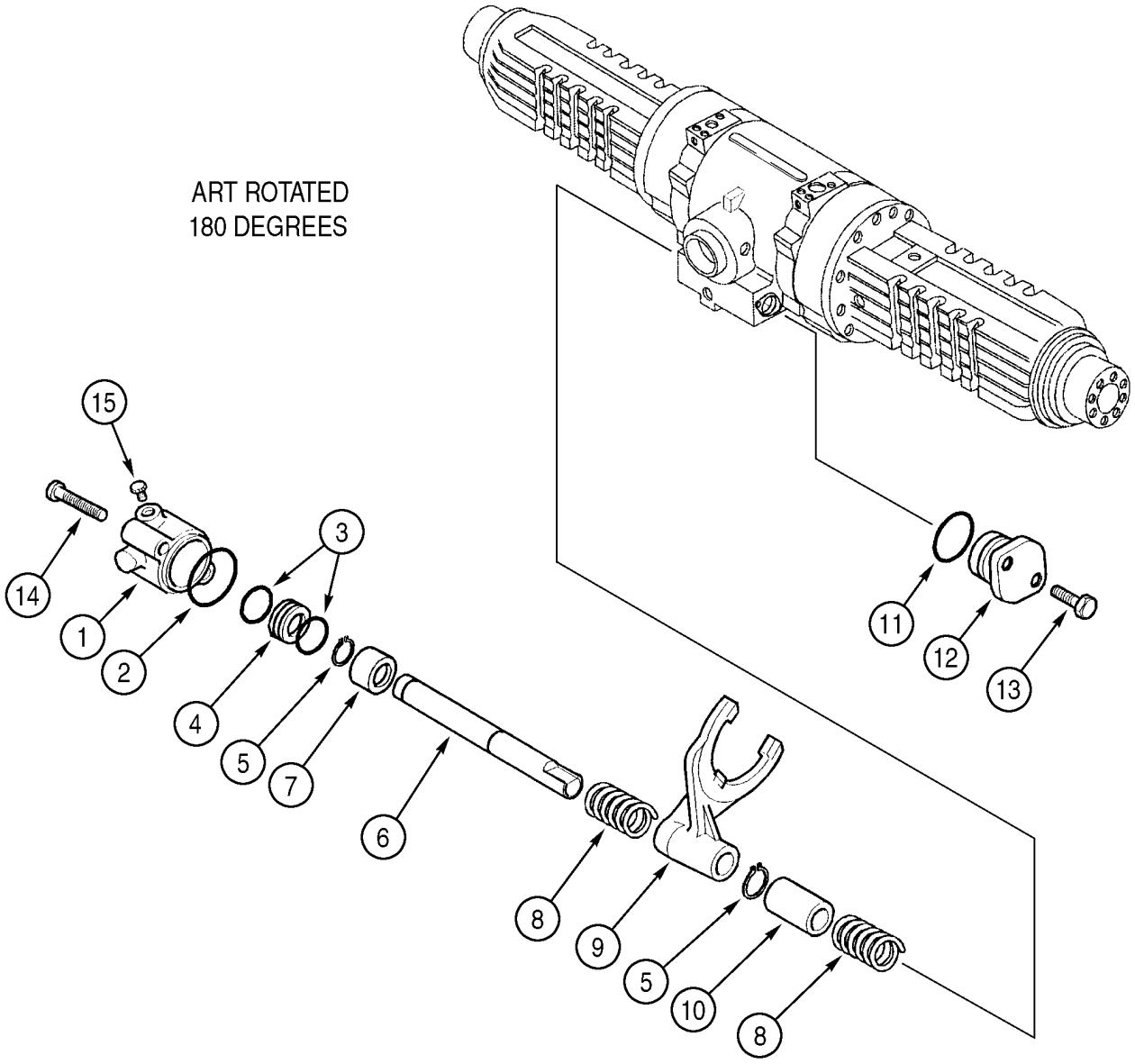

http://www.minnparbackhoeparts.com/

ESSIEU, PROPULSION ARRIÈRE - BLOCAGE DU DIFFERENTIEL (ENTRÉE DANS LE SENS HORAIRE, MODÈLES SANS AUTO

REF	FN	PART NUMBER	YR/SN	QTY	DESCRIPTION
		384956A1		1	PONT ARRIERE 580SM Models, Incl. Ref 1 - 15; Also Includes Parts On Figures 06-40 - 06-46, 07-01, 07-02
		86984108		1	PONT-MOTEUR 580SM+ Models, Incl. Ref 1 - 15; Also Includes Parts On Figures 06-40 - 06-46, 07-01, 07-02
1		292213A1		1	VERIN
2		305152A1		1	JOINT TORIQUE
3		292210A1		2	JOINT
4		292212A1		1	PISTON
5		800-5120		2	ANNEAU-D'ARRET No. 20
6		292214A1		1	ARBRE Rail, Shifter Fork
7		292902A1		1	ANNEAU Bushing
8		175966A1		2	RESSORT
9		175964A2		1	FOURCHE
10		175965A1		1	BAGUE
11		128376A1		1	JOINT TORIQUE
12		175968A1		1	SUPPORT Cover
13		614-8030		2	BOULON M8 x 30
14		814-8080		2	BOULON M8 x 80
15		NSS		1	NON FOURNI SEPAREMENT Plug

http://www.minnparbackhoeparts.com/

ESSIEU, PROPULSION ARRIÈRE - BLOCAGE DU DIFFERENTIEL (ENTRÉE DANS LE SENS ANTI-HORAIRE, MODÈLES AVEC

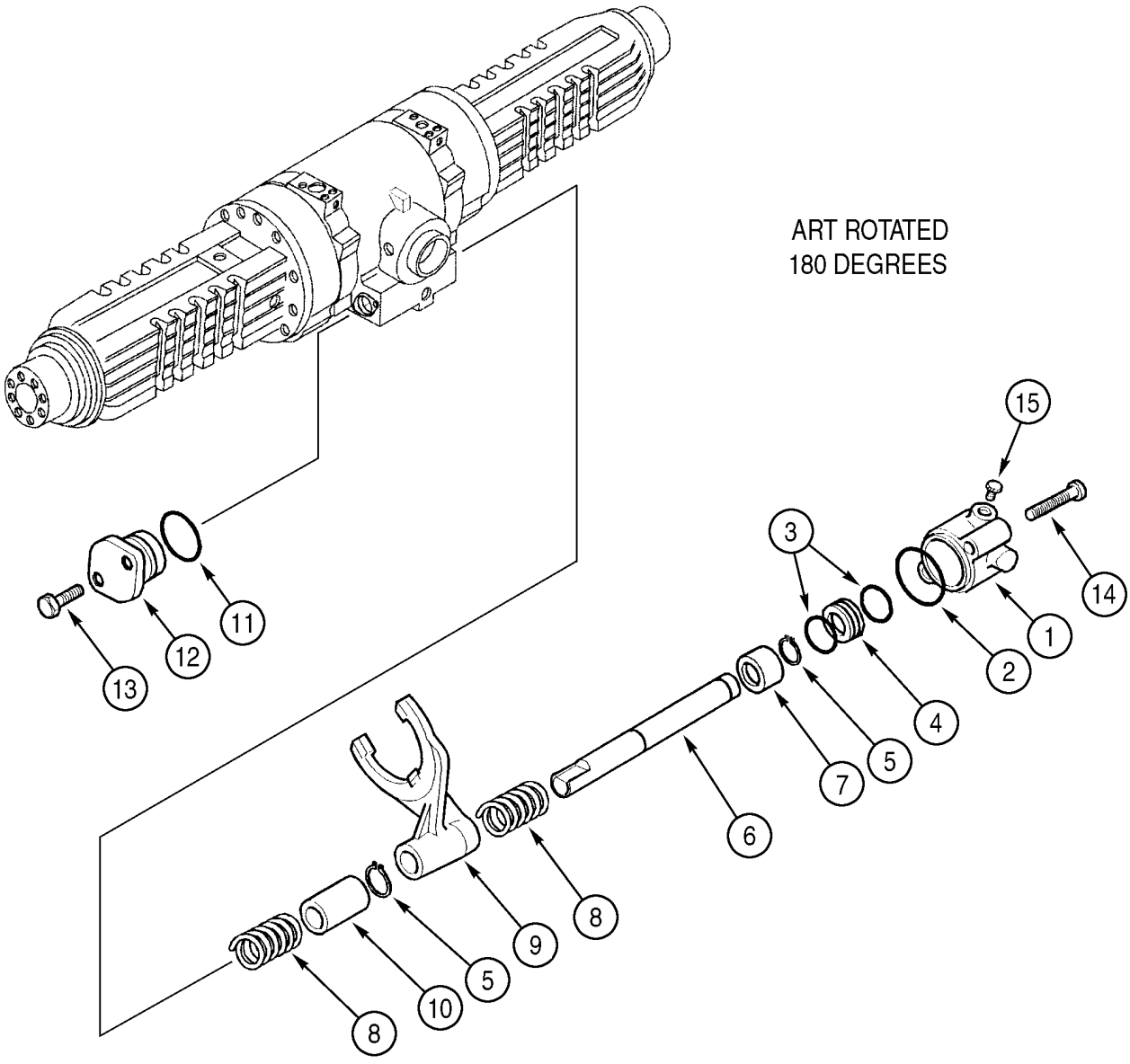

http://www.minnparbackhoeparts.com/

ESSIEU, PROPULSION ARRIÈRE - BLOCAGE DU DIFFERENTIEL (ENTRÉE DANS LE SENS ANTI-HORAIRE, MODÈLES AVEC

REF	FN	PART NUMBER	YR/SN	QTY	DESCRIPTION
		384958A1		1	PONT ARRIERE 580SM Models, Incl. Ref 1 - 15; Also Includes Parts On Figures 06-40 - 06-46, 07-01, 07-02
		86984107		1	PONT-MOTEUR 580SM+ Models, Incl. Ref 1 - 15; Also Includes Parts On Figures 06-40 - 06-46, 07-01, 07-02
1		305153A1		1	VERIN
2		305152A1		1	JOINT TORIQUE
3		292210A1		2	JOINT
4		292212A1		1	PISTON
5		800-5120		2	ANNEAU-D'ARRET No. 20
6		292214A1		1	ARBRE Rail, Shifter Fork
7		292902A1		1	ANNEAU Bushing
8		175966A1		2	RESSORT
9		292897A1		1	FOURCHE
10		175965A1		1	BAGUE
11		128376A1		1	JOINT TORIQUE
12		175968A1		1	SUPPORT Cover
13		614-8030		2	BOULON M8 x 30
14		814-8080		2	BOULON M8 x 80
15		NSS		1	NON FOURNI SEPAREMENT Plug

http://www.minnparbackhoeparts.com/

ESSIEU, PROPULSION ARRIÈRE - SATELLITE

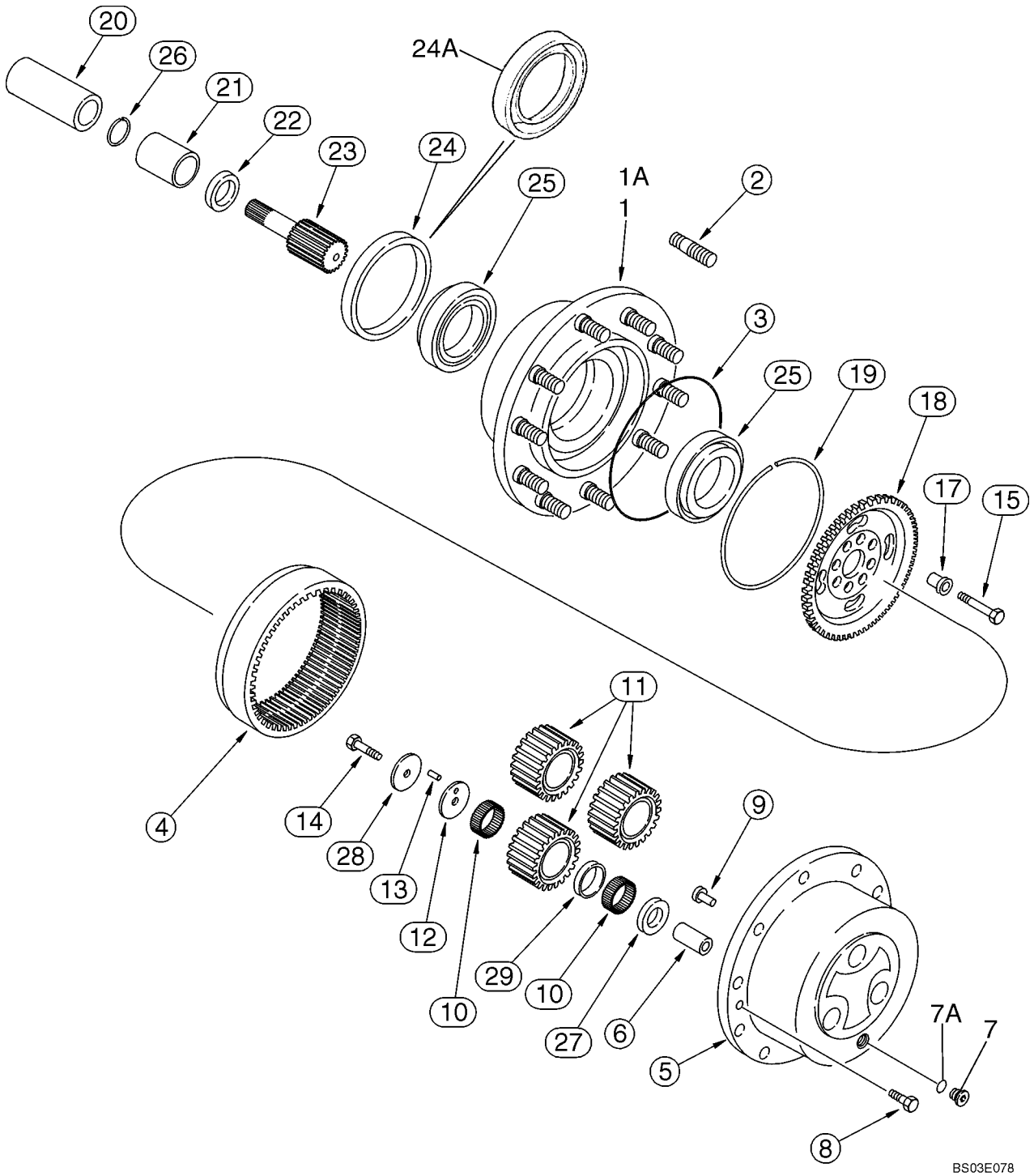

http://www.minnparbackhoeparts.com/

ESSIEU, PROPULSION ARRIÈRE - SATELLITE

REF	FN	PART NUMBER	YR/SN	QTY	DESCRIPTION
		384956A1		1	PONT ARRIERE 580SM Models Without Powershift Transmission, Incl. Ref 1 - 29; Also Includes Parts On Figures 06-40 - 06-46, 07-01, 07-02
		86984108		1	PONT-MOTEUR 580SM+ Models Without Powershift Transmission, Incl. Ref 1 - 29; Also Includes Parts On Figures 06-40 - 06-46, 07-01, 07-02
		384958A1		1	PONT ARRIERE 580SM Models With Powershift Transmission, Incl. Ref 1 - 29; Also Includes Parts On Figures 06-40 - 06-46, 07-01, 07-02
		86984107		1	PONT-MOTEUR 580SM+ Models With Powershift Transmission, Incl. Ref 1 - 29; Also Includes Parts On Figures 06-40 - 06-46, 07-01, 07-02
1		367233A1		2	MOYEU (ASSEMBLE) Includes (10) D142986 Studs, Ref 2; Used With 1349265C1 Seal, Ref 24; 384956A1 or 384958A1 Axle; If Used; When Stock of 367233A1 Hub is Exhausted, Order 87416108 Hub & 87415728 seal
1A		87416108		2	KIT ASSISTANCE HUB ASSY, Includes (10) D142986 Stud, Ref 2; Used With 247546A1 Seal, Ref 24A; If Used
2		D142986		10	GOUJON Without Flanged Collar, If Used
2		196090A1		10	GOUJON With Flanged Collar, For Recessed Bolt Holes, If Used
3		P2930467		2	JOINT
4		175976A1		2	PIGNON Ring Gear; 384956A1 or 384958A1 Axle
4		311488A1		2	COURONNE DENTÉE Ring Gear; 86984107 or 86984108 Axle
5		292891A1		2	SUPPORT Planetary Carrier, Incl. Ref 6, Use With Liquid Gasket Silastic 732, Carrier to Hub
6		NSS		6	NON FOURNI SEPAREMENT Shaft
7		100557A1		2	BOUCHON DE VIDANGE Incl. Ref 7A
7A		238-6121		1	JOINT TORIQUE 1-1/16 ID x 3/32
8		K395082		4	VIS
9		K395093		2	AXE A TÊTE
10		292893A1		38	AIGUILLE Package of 10 Needles, 372 Needles Required

http://www.minnparbackhoeparts.com/

ESSIEU, PROPULSION ARRIÈRE - SATELLITE

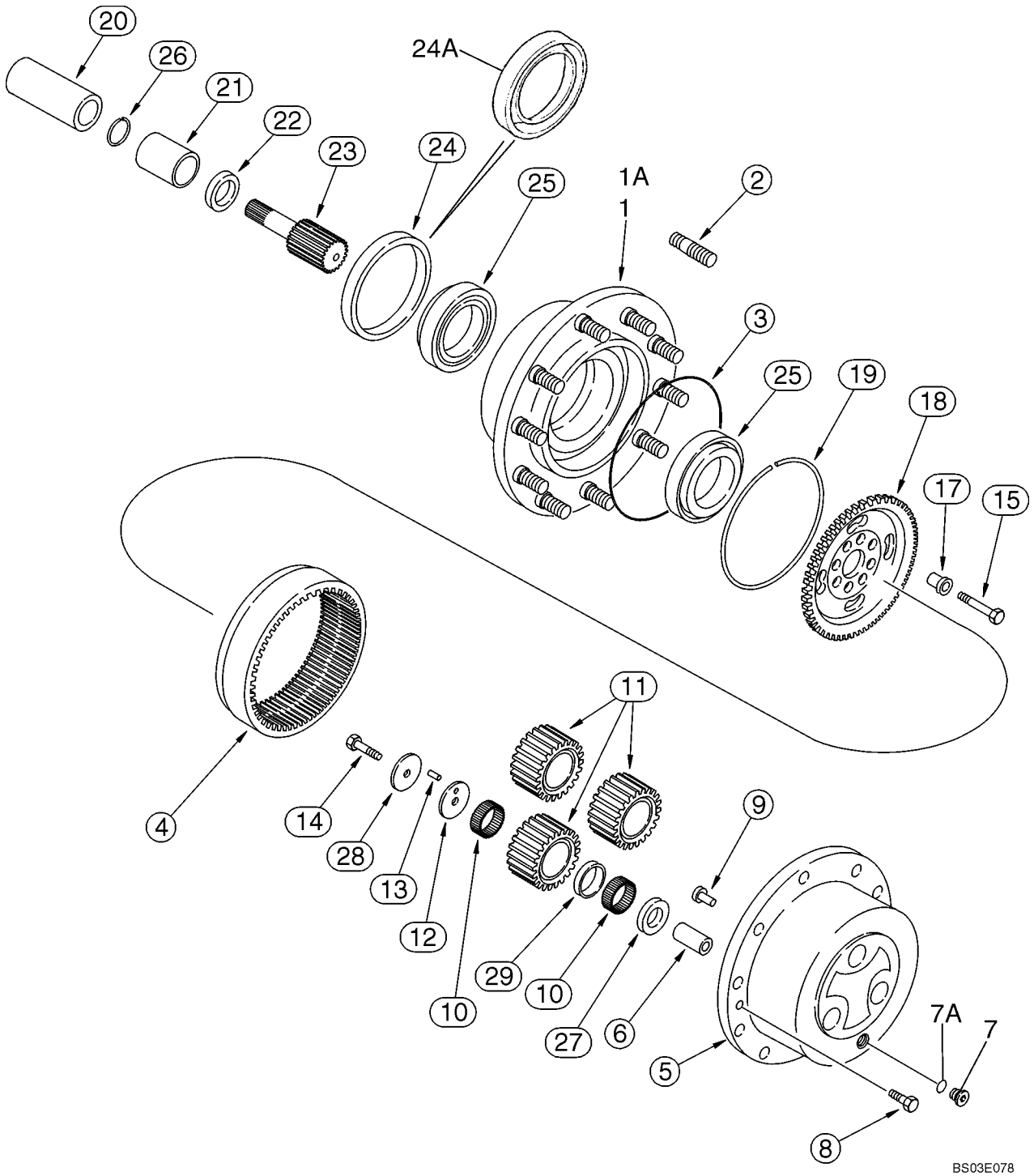

http://www.minnparbackhoeparts.com/

ESSIEU, PROPULSION ARRIÈRE - SATELLITE

REF	FN	PART NUMBER	YR/SN	QTY	DESCRIPTION
11		292894A1		6	PIGNON Pinion
12		292898A1		6	RONDELLE Thrust
13		247550A1		1	ROULEMENT Package of 10 Needles, Used As Pins, 6 Needles Required
14		175982A1		6	VIS M10 x 50; 10.9
15		K395131		16	BOULON M14 x 65
17		107071A1		16	BAGUE-DE-CENTRAGE Bushing, 20 mm OD
18		310492A1		2	PORTE-PLANETAIRE Ring Gear, With Two Extraction Holes
19		175984A1		2	JONC D'ARRET
20		NSS		2	NON FOURNI SEPAREMENT Coupling, Welded To and Included With the Differential Brake Oil Auger; 384956A1 or 384958A1 Axle
20		196092A1		2	BAGUE 86984107 or 86984108 Axle
21		196065A1		2	BAGUE
22		196066A1		2	JOINT D'HUILE 38 ID x 50 OD
23		292896A1		2	ARBRE
24		1349265C1		2	JOINT Used With Ref 1 367233A1 Hub, If Used
24A		247546A1		2	JOINT With Internal Garter Spring Seal, Used With Ref 1A 87416108 Hub, If Used
25		K395101		4	ROULEMENT
26		800-2136		2	ANNEAU-D'ARRET No. 36
27		292899A1		6	RONDELLE Thrust
28		292900A1		6	RONDELLE Thrust
29		292901A1		6	RONDELLE

http://www.minnparbackhoeparts.com/

06-47		p1	05/03

ARBRE DE TRANSMISSION, ESSIEU ARRIÈRE

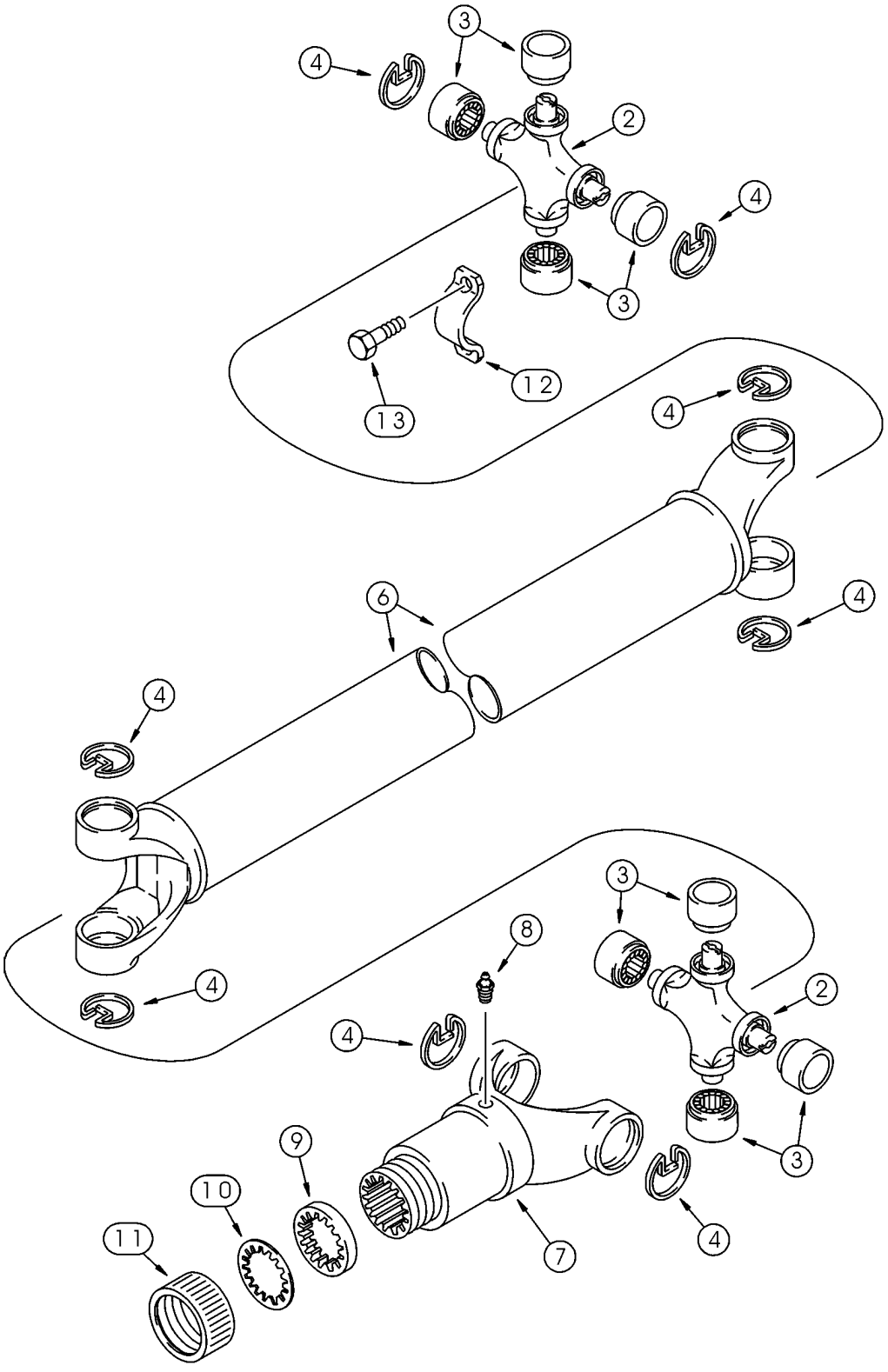

http://www.minnparbackhoeparts.com/

ARBRE DE TRANSMISSION, ESSIEU ARRIÈRE

REF	FN	PART NUMBER	YR/SN	QTY	DESCRIPTION
		367860A3		1	ARBRE D'ENTRAINEMENT Models Without Powershift Transmission, Incl. 393231A1, Ref 2 - 13
		367859A2		1	ARBRE D'ENTRAINEMENT Models With Powershift Transmission, Incl. 393231A1, Ref 2 - 13
		393231A1		2	POCHETTE Universal Joint, Incl. Ref 2 - 4
2		NSS		1	NON FOURNI SEPAREMENT Joint, Universal
3		NSS		4	NON FOURNI SEPAREMENT Bearing, Journal
4		NSS		4	NON FOURNI SEPAREMENT Ring
6		393233A1		1	ARBRE D'ENTRAINEMENT 367860A3 Drive Shaft
6		393232A1		1	ARBRE D'ENTRAINEMENT 367859A2 Drive Shaft
7		144279A1		1	MACHOIRE
8		219-10		1	GRAISSEUR 1/4 tpr x 11/16
		D149860		1	COLIS POUR RECHANGE Incl. Ref 9 - 11
9		NSS		1	NON FOURNI SEPAREMENT Washer, Cork
10		NSS		1	NON FOURNI SEPAREMENT Washer, Steel
11		NSS		1	NON FOURNI SEPAREMENT Cap
12		90-6682T1		2	COLLIER
13		D137627		4	BOULON

http://www.minnparbackhoeparts.com/

NOTES

http://www.minnparbackhoeparts.com/

SECTION INDEX

07-01	ESSIEU, PROPULSION ARRIÈRE - FREIN, DIFFERENTIEL
07-02	ESSIEU, PROPULSION ARRIÈRE FREIN DE STATIONNEMENT
07-03	FREINS - PÉDALES
07-04	SYSTEME HYDRAULIQUE - MAITRE-CYLINDRE DE FREIN
07-05	VERIN - MAITRE FREIN
07-06	COMMANDES FREIN DE STATIONNEMENT

http://www.minnparbackhoeparts.com/

ESSIEU, PROPULSION ARRIÈRE - FREIN, DIFFERENTIEL

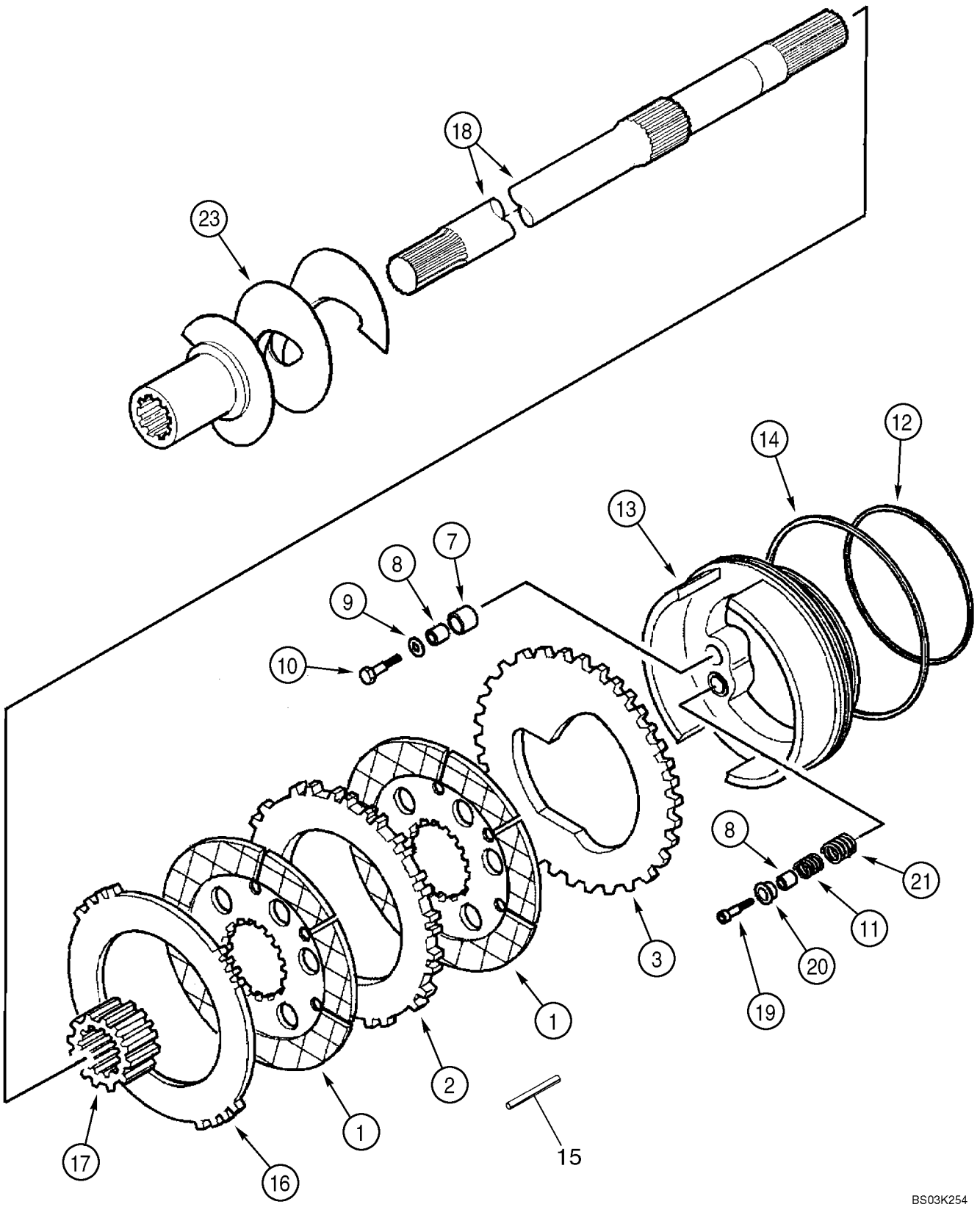

http://www.minnparbackhoeparts.com/

ESSIEU, PROPULSION ARRIÈRE - FREIN, DIFFERENTIEL

REF	FN	PART NUMBER	YR/SN	QTY	DESCRIPTION
		384956A1		1	PONT ARRIERE 580SM Models Without Powershift Transmission, Incl. Ref 1 - 25; Also Includes Parts On Figures 06-40 - 06-46, 07-01, 07-02
		86984108		1	PONT-MOTEUR 580SM+ Models Without Powershift Transmission, Incl. Ref 1 - 25; Also Includes Parts On Figures 06-40 - 06-46, 07-01, 07-02
		384958A1		1	PONT ARRIERE 580SM Models With Powershift Transmission, Incl. Ref 1 - 25; Also Includes Parts On Figures 06-40 - 06-46, 07-01, 07-02
		86984107		1	PONT-MOTEUR 580SM+ Models With Powershift Transmission, Incl. Ref 1 - 25; Also Includes Parts On Figures 06-40 - 06-46, 07-01, 07-02
1		237021A1		4	PLAQUE, GRANDE Brake Disc
2		237022A1		2	PLAQUE, GRANDE Friction
3		308029A1		2	PLAQUE Piston
		358212A1		1	POCHETTE Brake Self Adjuster, Incl. Ref 7, 8, Plus An Instruction Sheet
7		190449A1		6	GOUPILLE-V 18 x 20 mm, No Longer Sold Separately, Order 358212A1 Kit
8		190496A1		12	BAGUE No Longer Sold Separately, Order 358212A1 Kit
9		190450A1		6	RONDELLE
10		864-6035		6	VIS M6 x 35
11		237026A1		6	RESSORT
12		308036A1		2	JOINT TORIQUE
13		359653A1		2	PISTON
14		190493A1		2	JOINT TORIQUE
15		190447A1		6	GOUPILLE-V 6 x 14 mm; 86984107 or 86984108 Axle Only
16		308030A1		2	PLAQUE Friction
17		308042A1		2	SUPPORT Sleeve
18		295111A1		2	ARBRE 384956A1 or 384958A1 Axle
18		311486A1		2	ARBRE D'ENTRAINEMENT 86984107 or 86984108 Axle
19		864-6035		6	VIS M6 x 35
20		190500A1		6	COUVERCLE

http://www.minnparbackhoeparts.com/

ESSIEU, PROPULSION ARRIÈRE - FREIN, DIFFERENTIEL

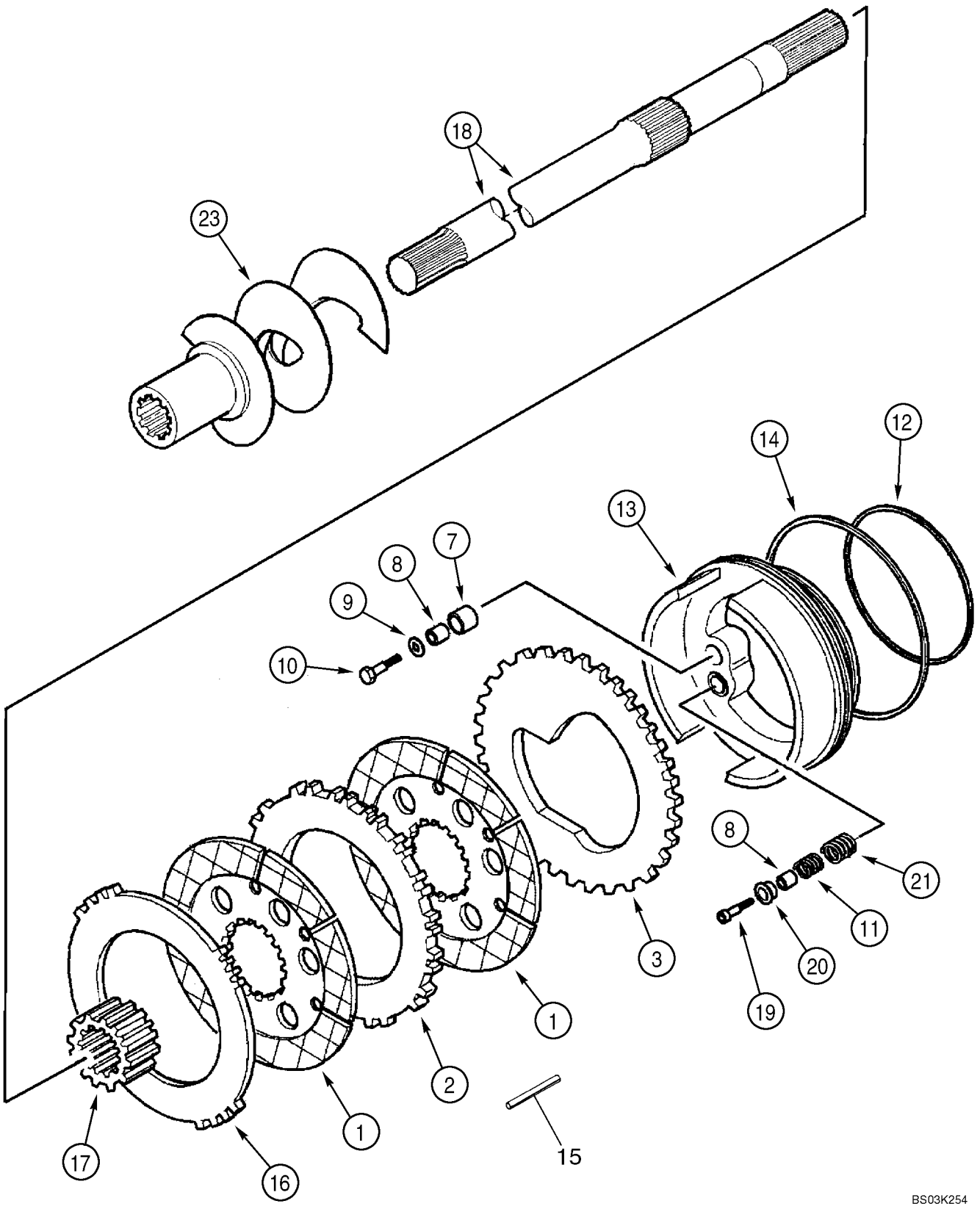

http://www.minnparbackhoeparts.com/

ESSIEU, PROPULSION ARRIÈRE - FREIN, DIFFERENTIEL

REF	FN	PART NUMBER	YR/SN	QTY	DESCRIPTION
21		237025A1		6	RESSORT
23		295112A1		1	VIS SANS FIN-ALIMENTATIO Auger, Oil, Right-Hand, Includes Welded-On Clamp and Bolt, Plus Welded-On Drive Coupling, Incl. Ref 25
24		295113A1		1	VIS SANS FIN-ALIMENTATIO Auger, Oil, Left-Hand, Includes Welded-On Clamp and Bolt, Plus Welded-On Drive Coupling, Incl. Ref 25
25		863-6020		2	VIS M6 x 20; 12.9, Not Illustrated

http://www.minnparbackhoeparts.com/

ESSIEU, PROPULSION ARRIÈRE FREIN DE STATIONNEMENT

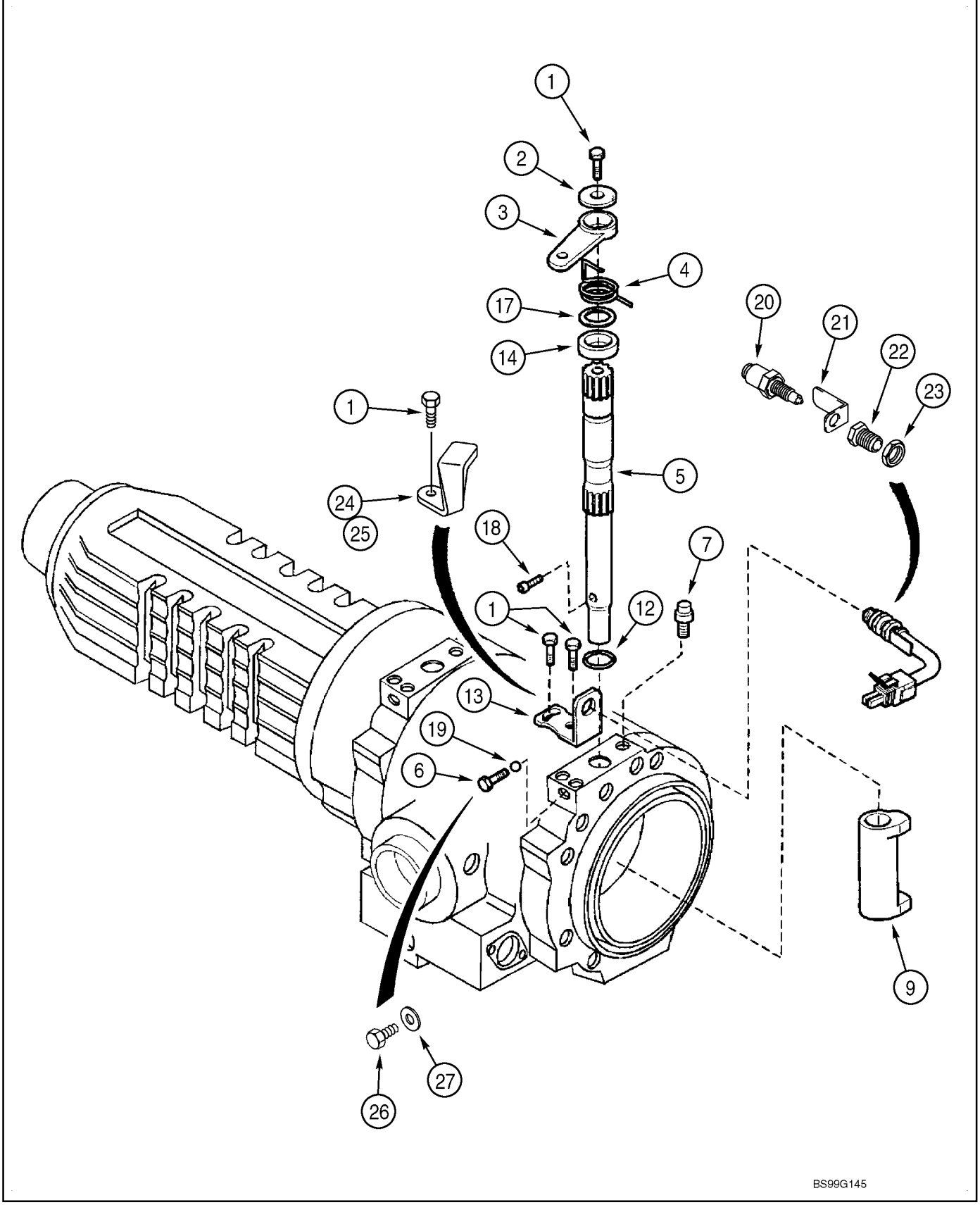

http://www.minnparbackhoeparts.com/

ESSIEU, PROPULSION ARRIÈRE FREIN DE STATIONNEMENT

REF	FN	PART NUMBER	YR/SN	QTY	DESCRIPTION
		384956A1		1	PONT ARRIERE 580SM Models Without Powershift Transmission, Incl. Ref 1 - 27; Also Includes Parts On Figures 06-40 - 06-46, 07-01, 07-02
		86984108		1	PONT-MOTEUR 580SM+ Models Without Powershift Transmission, Incl. Ref 1 - 27; Also Includes Parts On Figures 06-40 - 06-46, 07-01, 07-02
		384958A1		1	PONT ARRIERE 580SM Models With Powershift Transmission, Incl. Ref 1 - 27; Also Includes Parts On Figures 06-40 - 06-46, 07-01, 07-02
		86984107		1	PONT-MOTEUR 580SM+ Models With Powershift Transmission, Incl. Ref 1 - 27; Also Includes Parts On Figures 06-40 - 06-46, 07-01, 07-02
1		190451A1		6	VIS M8 x 20
2		190463A1		2	RONDELLE
3		280436A1		2	LEVIER Brake
4		190476A2		1	RESSORT Left-Hand
4		190477A2		1	RESSORT Right-Hand, Not Illustrated
5		308040A1		2	ARBRE
6		283462A1		2	VIS M8 x 23.5
7		E135810		2	VIS D'EVENT Brake Bleeder
9		196085A1		2	CAME
12		321183A1		2	JOINT TORIQUE
13		256478A1		2	SUPPORT Stop
14		256481A1		2	ENTRETOISE Bushing
17		256482A1		2	CALE D'EPAISSEUR Shim
18		256485A1		2	VIS M6 x 16
19		283466A1		2	BILLE
		281952A1		2	KIT KIT, Incl. Ref 20 - 23
20		280450A1		1	COMMUTATEUR, DEM.
21		280452A1		1	PATTE FIXATION
22		280457A1		1	LEVIER Sleeve
23		281960A1		1	ECROU
		279645A1		1	COLIS DE REPARATION Parking Brake, External Adjustment Parts, Incl. Ref 1, 12 - 17, 281952A1, 20 - 23, 24 - 27, Includes Instructions, If Used
24		259254A1		1	RETENEUR Left-Hand

http://www.minnparbackhoeparts.com/

ESSIEU, PROPULSION ARRIÈRE FREIN DE STATIONNEMENT

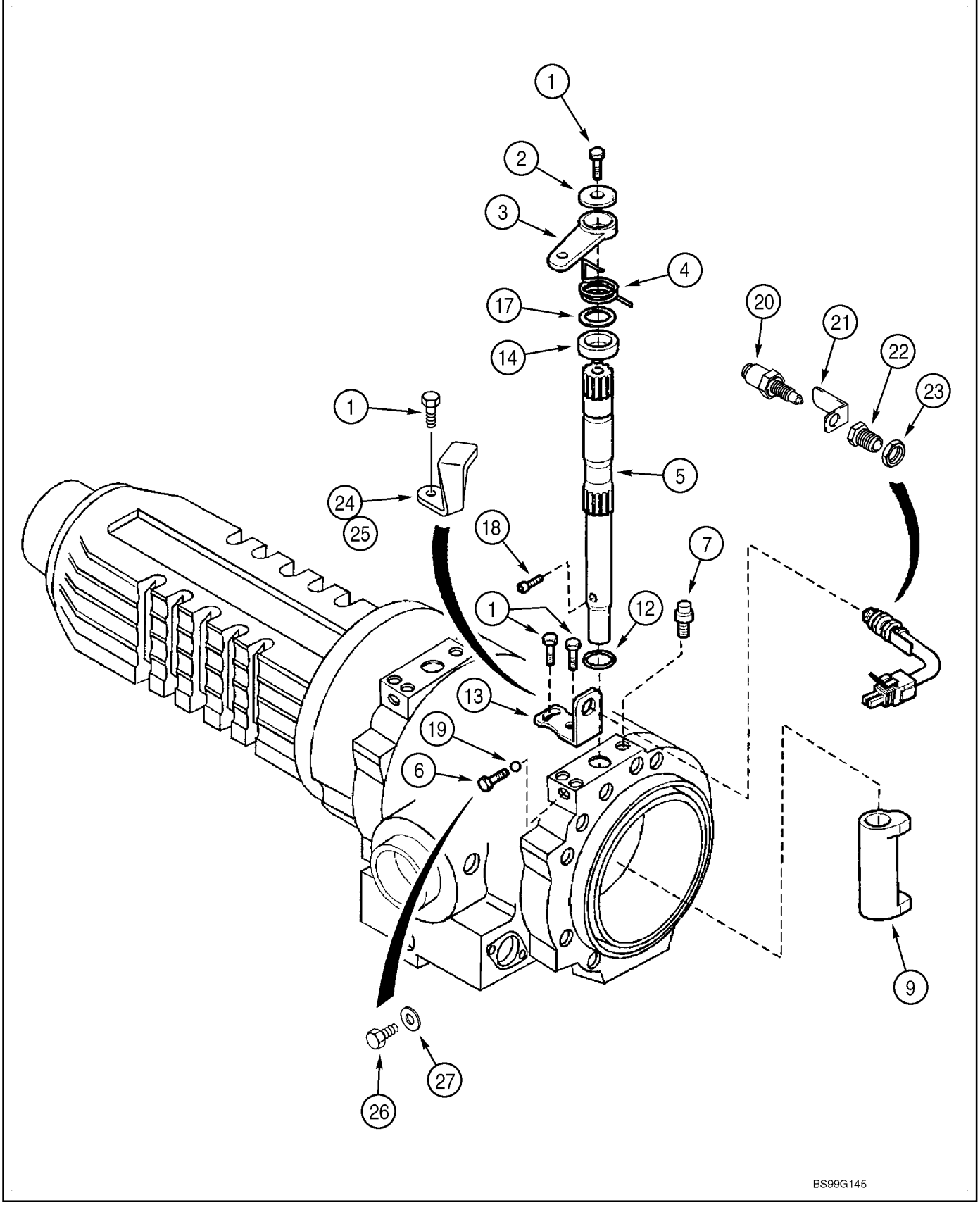

http://www.minnparbackhoeparts.com/

ESSIEU, PROPULSION ARRIÈRE FREIN DE STATIONNEMENT

REF	FN	PART NUMBER	YR/SN	QTY	DESCRIPTION
25		280443A1		1	RETENEUR Right-Hand
26		514-634		2	VIS M8 x 16
27		181104A1		2	RONDELLE CUIVRE

http://www.minnparbackhoeparts.com/

FREINS - PÉDALES

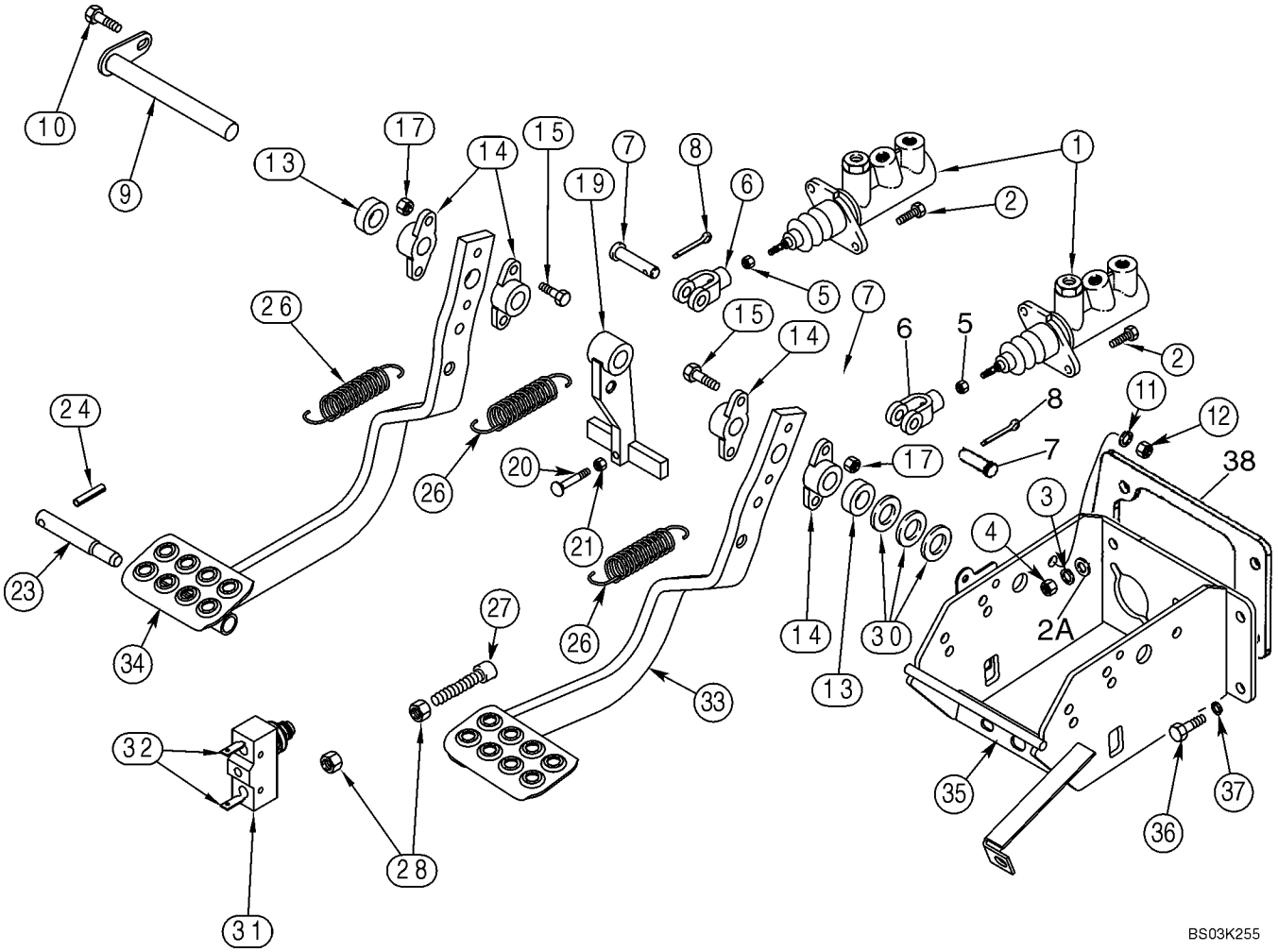

http://www.minnparbackhoeparts.com/

FREINS - PÉDALES

REF	FN	PART NUMBER	YR/SN	QTY	DESCRIPTION
1		182445A1		2	MAITRE-CYLINDRE See Figure 07-05
2		614-8030		4	BOULON M8 x 30
2A		895-11008		4	RONDELLE 9 x 17 x 1,6 mm
3		892-11008		4	RONDELLE M8
4		829-1408		4	ECROU M8; 10
5		425-156		2	ECROU 3/8 NF
6		D137077		2	FOURCHETTE
7		L26209		2	AXE 3/8
8		432-612		2	GOUPILLE 3/32" x 3/4"
9		D140035		1	AXE, GROS Shaft
10		614-10025		1	BOULON M10 x 25
11		892-11010		1	RONDELLE FREIN M10
12		829-1410		1	ECROU M10; 10.9
13		D124529		2	ENTRETOISE
14		A77310		4	PIVOT Bearing
15		814-8040		4	VIS Hex, M8 x 40, 8.8
17		832-10408		4	ECROU M8
19		D124528		1	LEVIER Brake Lamp
20		121-145		1	VIS 5/16 X 2-1/2, Flat Countersunk Head
21		425-105		1	ECROU 5/16
23		D124530		1	AXE Brake Pedal Lock
24		438-12040		1	GOUPILLE 5/16 x 2-1/2
26		230973A1		3	RESSORT
27		413870A1		2	ISOLATEUR Rubber Head, M8 x 45, Brake Pedal
28		829-1408		4	ECROU M8; 10
30		495-81261		X	RONDELLE 13/16 x 1-1/2 x 1/16; Used As A Spacer
31		D148108		1	CONTACTEUR Push Button, Brake Lamp, Attaches To Front Console Wiring Harness
32		A187990		2	COSSE Male
33		339047A3		1	PEDALE (ASSEMBLEE) Right-Hand
34		339046A3		1	PEDALE (ASSEMBLEE) Left-Hand
35		338886A4		1	PATTE FIXATION Brake Pedal and Brake Master Cylinder Mounting
36		614-8020		4	BOULON M8 x 20
37		892-11008		4	RONDELLE M8
38		409370A1		1	JOINT

http://www.minnparbackhoeparts.com/

SYSTEME HYDRAULIQUE - MAITRE-CYLINDRE DE FREIN

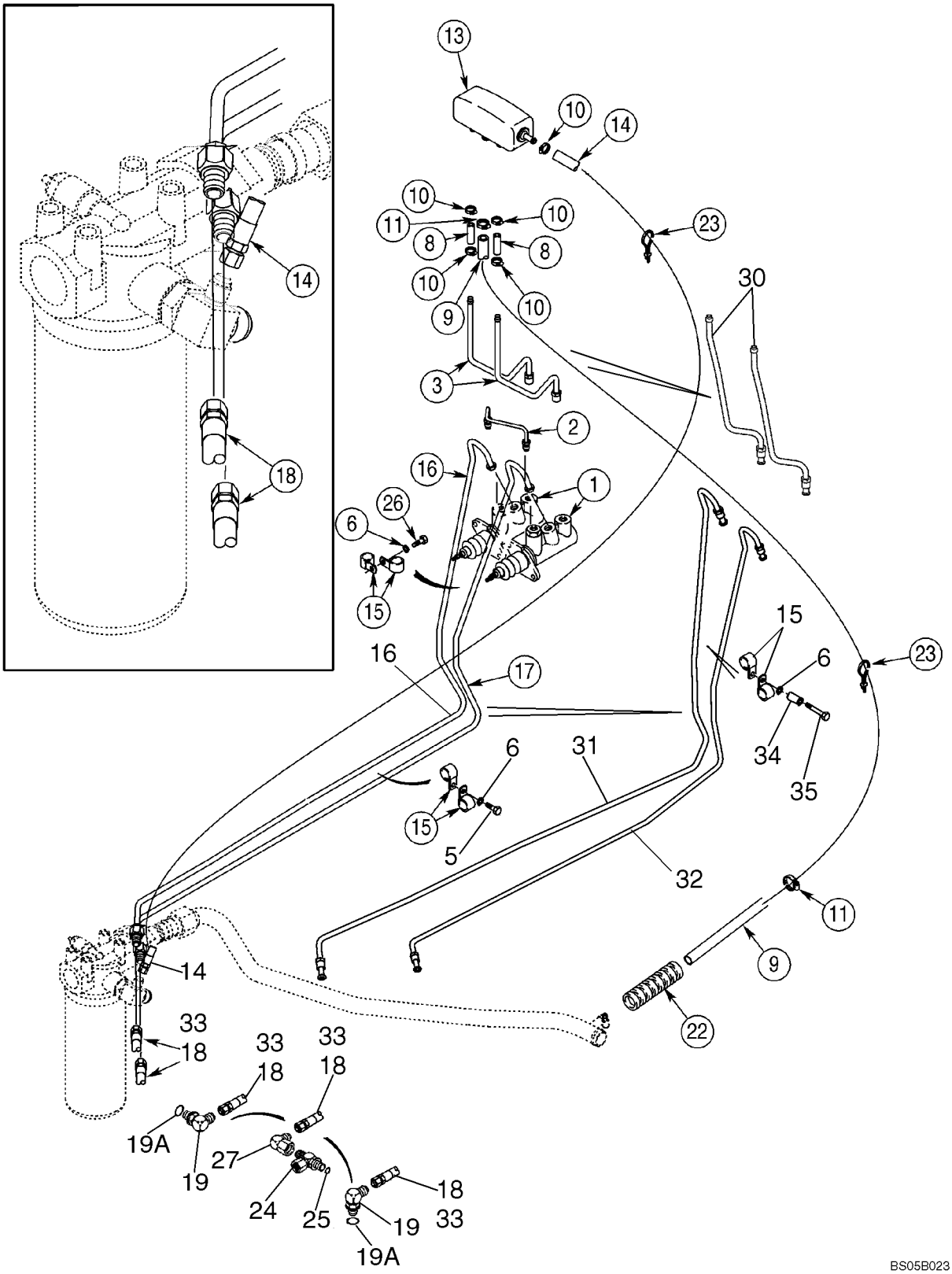

http://www.minnparbackhoeparts.com/

SYSTEME HYDRAULIQUE - MAITRE-CYLINDRE DE FREIN

REF	FN	PART NUMBER	YR/SN	QTY	DESCRIPTION
1		182445A1		2	MAITRE-CYLINDRE See Figure 07-05
2		345061A2		1	TUYAUTERIE Crossover
3		345325A2		2	TUYAUTERIE No Longer Available, If Replacing This Tube, Must Also Replace Ref 16, 17 Tubes; Order Ref 30 - 35 For Service
5		614-8020		1	BOULON M8 x 20
6		892-11008		2	RONDELLE M8
8		121729A1		2	FLEXIBLE 52 mm (2-3/64 in); To Master Cylinder
9		397076A1		1	FLEXIBLE 1500 mm (59-1/16 in), Reservoir Outlet, Attaches To Return To Tank Tube, See Figure 08-03
10		214-1704		5	COLLIER 1/4 - 5/8
11		214-1706		2	COLLIER 7/16 - 3/4
13		184627A2		1	RESERVOIR, LIQUIDE FREIN
14		86991496		1	FLEXIBLE (ASSEMBLE) 1666 mm (65-19/32 in), Reservoir Inlet, See Figure 08-03 for Fitting
15		515-2379		4	COLLIER 7,9 mm
16		397177A2		1	TUYAUTERIE Left-Hand, No Longer Available, If Replacing This Tube, Must Also Replace Ref 3, 17 Tubes; Order Ref 30 - 35 For Service
17		396620A2		1	TUYAUTERIE Right-Hand, No Longer Available, If Replacing This Tube, Must Also Replace Ref 3, 16 Tubes; Order Ref 30 - 35 For Service
18		409318A1		2	FLEXIBLE (ASSEMBLE) 565 mm (22-1/4 in), Brake Tube To Adapter On Rear Axle; Used With Ref 3, 16, 17 Tubes; If Used
19		218-5103		2	COUDE 90 deg, 7/16 fl x Or, Incl. Ref 19A, Models Without Powershift Transmission
19A		237-6004		1	JOINT TORIQUE 23/64 ID x 5/64
22		D132982		1	GAINE 400 mm (15-3/4 in)
23		L18337		3	SANGLE 15 in
24		222889A1		2	RACCORD Tee, Incl. Ref 25, Models With Powershift Transmission; See Figure 04-09 For Powershift Pressure Switch
25		237-6004		1	JOINT TORIQUE 23/64 ID x 5/64
26		614-8030		1	BOULON M8 x 30; If Used
27		218-5228		2	RACCORD ELBOW, 90 deg, 7/16 fl x 7/16 sw fl; Models With Powershift Transmission

http://www.minnparbackhoeparts.com/

SYSTEME HYDRAULIQUE - MAITRE-CYLINDRE DE FREIN

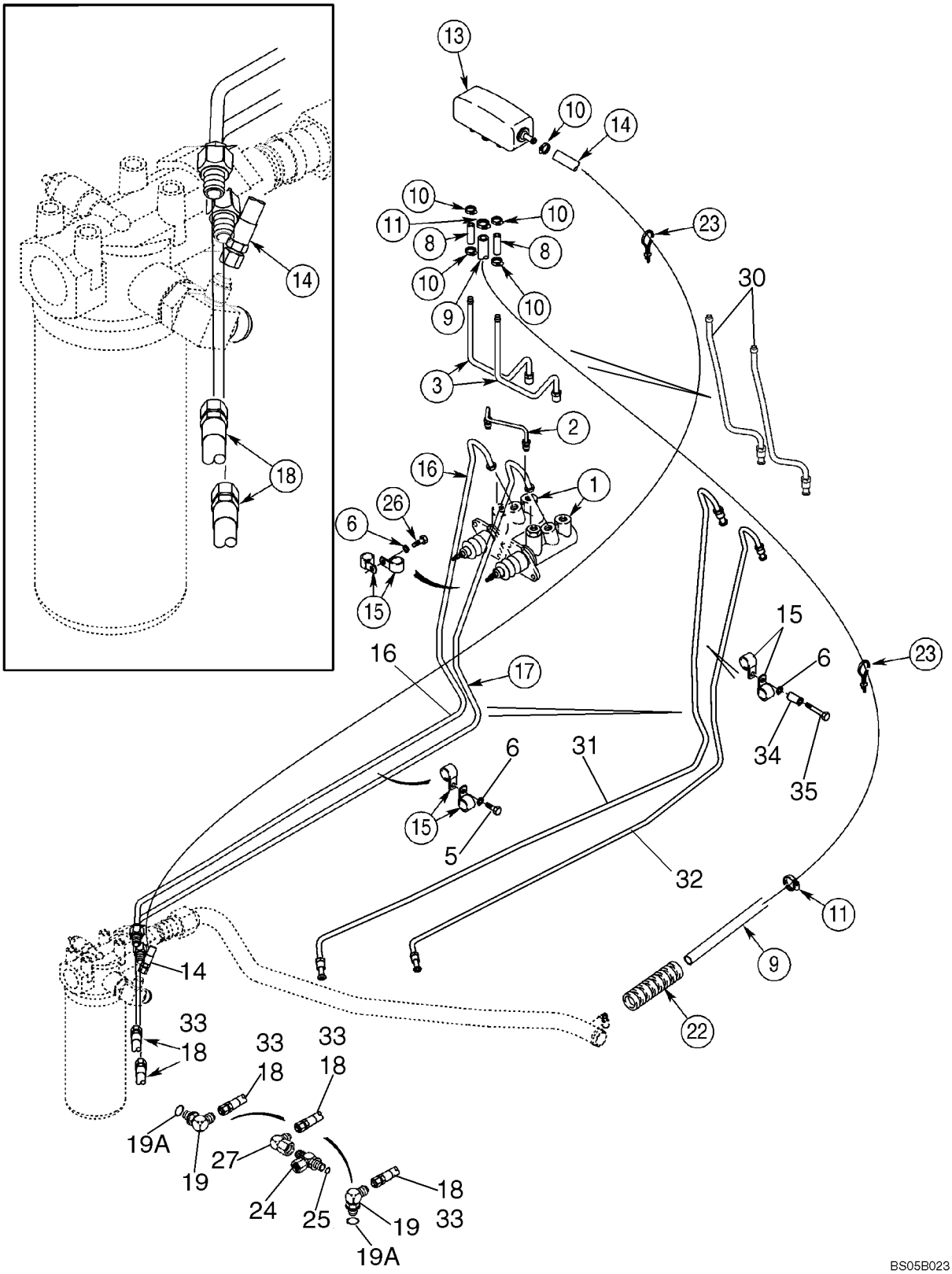

http://www.minnparbackhoeparts.com/

SYSTEME HYDRAULIQUE - MAITRE-CYLINDRE DE FREIN

REF	FN	PART NUMBER	YR/SN	QTY	DESCRIPTION
30		87448661		2	TUYAUTERIE
31		87450910		1	TUYAUTERIE Left-Hand
32		87448658		1	TUYAUTERIE Right-Hand
33		87451751		2	FLEXIBLE (ASSEMBLE) 520 mm (20-1/2 in); Brake Tube To Adapter On Rear Axle; Used With Ref 30 - 32 Tubes
34		87449579		1	ENTRETOISE 9.5 ID x 19.05 OD x 40 mm
35		814-8060		1	VIS M8 x 60

http://www.minnparbackhoeparts.com/

07-05		p1	09/03

VERIN - MAITRE FREIN

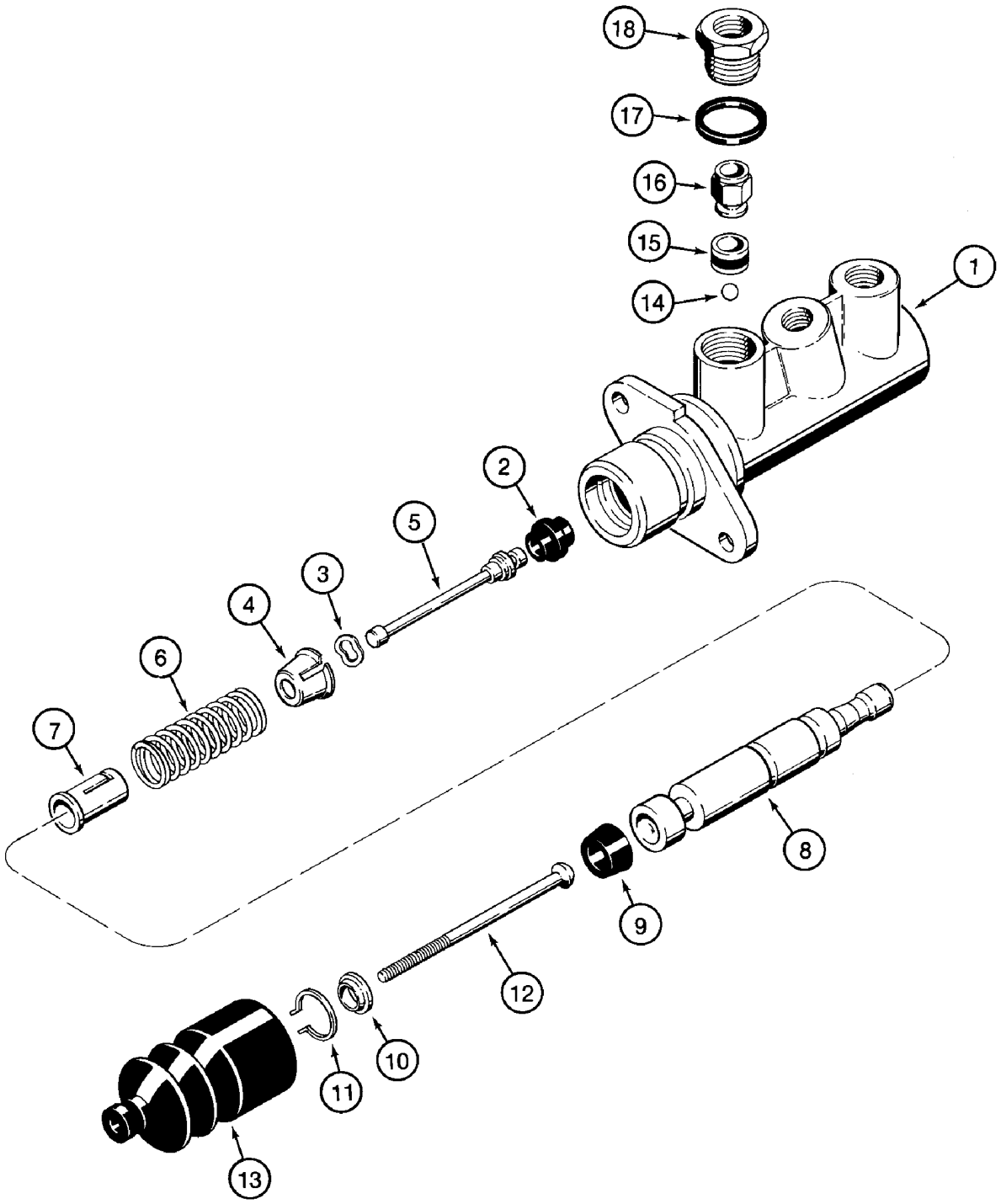

http://www.minnparbackhoeparts.com/

VERIN - MAITRE FREIN

REF	FN	PART NUMBER	YR/SN	QTY	DESCRIPTION
		182445A1		2	MAITRE-CYLINDRE Incl. Ref 1 - 18
1		NSS		1	NON FOURNI SEPAREMENT Housing
2		NSS		1	NON FOURNI SEPAREMENT Seal
3		NSS		1	NON FOURNI SEPAREMENT Washer
4		NSS		1	NON FOURNI SEPAREMENT Seat
5		NSS		1	NON FOURNI SEPAREMENT Plunger
6		NSS		1	NON FOURNI SEPAREMENT Spring
7		NSS		1	NON FOURNI SEPAREMENT Seat
8		NSS		1	NON FOURNI SEPAREMENT Piston
9		NSS		1	NON FOURNI SEPAREMENT Seal
10		NSS		1	NON FOURNI SEPAREMENT Washer
11		NSS		1	NON FOURNI SEPAREMENT Ring, Retaining
12		NSS		1	NON FOURNI SEPAREMENT Rod
13		NSS		1	NON FOURNI SEPAREMENT Boot
14		NSS		1	NON FOURNI SEPAREMENT Ball
15		NSS		1	NON FOURNI SEPAREMENT Seal
16		NSS		1	NON FOURNI SEPAREMENT Valve, Check
17		NSS		1	NON FOURNI SEPAREMENT Seal
18		NSS		1	NON FOURNI SEPAREMENT Adapter
		N14784		1	POCHETTE Seal, Incl. Ref 2, 3, 9, 11, 13 - 15, 17

http://www.minnparbackhoeparts.com/

07-06		p1	05/05

COMMANDES FREIN DE STATIONNEMENT

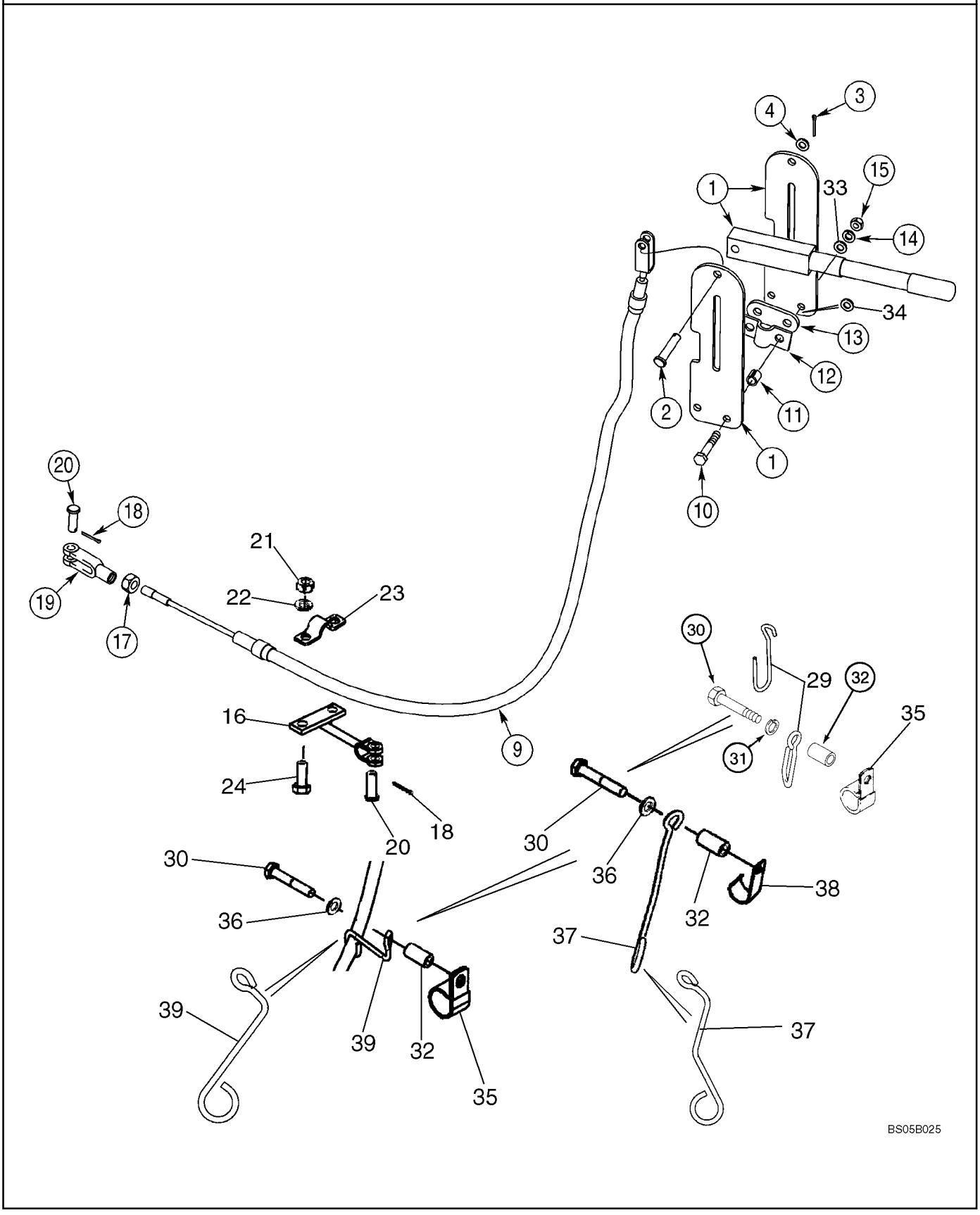

http://www.minnparbackhoeparts.com/

COMMANDES FREIN DE STATIONNEMENT

REF	FN	PART NUMBER	YR/SN	QTY	DESCRIPTION
		367977A1		1	LEVIER Incl. Ref 1 - 4
1		NSS		1	NON FOURNI SEPAREMENT Lever
2		NSS		1	NON FOURNI SEPAREMENT Pin, Clevis
3		432-612		1	GOUPILLE 3/32" x 3/4"
4		495-21038		1	RONDELLE 3/8 x 7/8 x 3/32
9		280681A1		1	CABLE 1325 mm (52-3/16 in); If Used
9		87331077		1	CABLE (ASSEMBLE) 1262 mm (49-11/16 in); If Used
10		827-8050		2	VIS M8 x 50; 10.9
11		D150633		2	ENTRETOISE
12		D121608		1	COLLIER
13		D129747		1	PLAQUE
14		892-11008		2	RONDELLE M8
15		829-1408		2	ECROU M8; 10
16		326348A1		1	SUPPORT Yoke, 151 mm (6 in)
17		425-156		1	ECROU 3/8 NF
18		432-612		2	GOUPILLE 3/32" x 3/4"
19		213-126		1	FOURCHETTE 3/8 NF
20		D149288		2	AXE, GROS
21		829-1410		2	ECROU M10; 10.9
22		892-11010		2	RONDELLE FREIN M10
23		A188028		1	COLLIER
24		614-10025		2	BOULON M10 x 25
29		87424794		1	SUPPORT If Used
30		814-10060		1	BOULON M10 x 60
31		895-11010		1	RONDELLE 11 x 21 x 2 mm; If Used
32		130245A1		1	ENTRETOISE
33		896-15008		2	RONDELLE 9 x 21 x 2,5 mm
34		895-11008		X	RONDELLE 9 x 16 x 1,6 mm
35		9827902		1	BRIDE P-Type, 1 inch Insulated Closed Clamping; Replaces 515-23254 & R14668 1 in P-Clamps; If Used
36		895-15010		1	RONDELLE 11 x 24 x 2 mm; If Used
37		87453949		1	SUPPORT If Used
38		87032428		1	SERRE-FILS J-Type, 22.2 mm Clamp diameter; If Used
39		87327489		1	SUPPORT If Used

http://www.minnparbackhoeparts.com/

NOTES

http://www.minnparbackhoeparts.com/

SECTION INDEX

08-01	SYSTEME HYDRAULIQUE - POMPE, FILTRE ET DISTRIBUTEUR DE CHARGEUSE
08-02	SYSTEME HYDRAULIQUE - DU DISTRIBUTEUR DU CHARGEUR AU FILTRE AU DISTRIBUTEUR DE LA PELLE RETRO
08-03	SYSTEME HYDRAULIQUE - REFROIDISSEUR, CONDUITES DE RETOUR ET FILTRE
08-04	SYSTEME HYDRAULIQUE - VERIN DE RELEVAGE DES BRAS DE RELEVAGE
08-05	SYSTEME HYDRAULIQUE - VERIN, GODET DE LA CHARGEUSE
08-06	SYSTEME HYDRAULIQUE - VERIN, BENNE DE LA CHARGEUSE
08-07	SYSTEME HYDRAULIQUE - VERIN, BENNE DE LA CHARGEUSE
08-08	SYSTEME HYDRAULIQUE - VERIN, STABILISATEUR DE LA PELLE RETRO EUROPA (SANS DE COMMANDE PILOTE)
08-08A	SYSTEME HYDRAULIQUE - VERIN, STABILISATEUR DE LA PELLE RETRO EUROPA (AVEC DE COMMANDE PILOTE)
08-09	SYSTEME HYDRAULIQUE - VERIN, DEBATTEMENT DE LA PELLE RETRO (SANS DE COMMANDE PILOTE)
08-09A	SYSTEME HYDRAULIQUE - VERIN, DEBATTEMENT DE LA PELLE RETRO (AVEC DE COMMANDE PILOTE)
08-10	SYSTEME HYDRAULIQUE - VERIN, FLECHE DE LA PELLE RETRO EUROPA
08-10A	SYSTEME HYDRAULIQUE - LE LOQUET DE BOOM DE BACKHOE ET LE CIRCUIT ELECTRIQUE
08-11	SYSTEME HYDRAULIQUE - VERIN, BALANCIER DE LA PELLE RETRO
08-12	SYSTEME HYDRAULIQUE - VERIN, GODET DE LA PELLE RETRO (MODÈLES SANS BALANCIER EXTENSIBLE)
08-13	SYSTEME HYDRAULIQUE - VERIN, GODET DE LA PELLE RETRO (MODÈLES AVEC BALANCIER EXTENSIBLE)
08-14	SYSTEME HYDRAULIQUE - VERIN, BALANCIER EXTENSIBLE DE LA PELLE RETRO
08-15	SYSTEME HYDRAULIQUE - DISTRIBUTEUR, COMMANDE PILOTE DE LEVIER DE COMMANDE (6 SPOOL, W/O EXT DIPPER,
08-16	SYSTEME HYDRAULIQUE - DISTRIBUTEUR, COMMANDE PILOTE DE LEVIER DE COMMANDE (6 SPOOL, W/O EXT DIPPER,
08-17	SYSTEME HYDRAULIQUE - DISTRIBUTEUR, COMMANDE PILOTE DE LEVIER DE COMMANDE (7 SPOOL, W/ EXT DIPPER,
08-18	SYSTEME HYDRAULIQUE - DISTRIBUTEUR, COMMANDE PILOTE DE LEVIER DE COMMANDE (7 SPOOL, W/ EXT DIPPER,
08-19	SYSTEME HYDRAULIQUE - DISTRIBUTEUR, COMMANDE PILOTE DE LEVIER DE COMMANDE (7 SPOOL, W/O EXT DIPPER,
08-20	SYSTEME HYDRAULIQUE - DISTRIBUTEUR, COMMANDE PILOTE DE LEVIER DE COMMANDE (8 SPOOL, W/ EXT DIPPER,
08-21	SYSTEME HYDRAULIQUE - COMMANDE PILOTE DE LEVIER DE COMMANDE
08-22	SYSTEME HYDRAULIQUE - COMMANDE PILOTE
08-23	SYSTEME HYDRAULIQUE - CIRCUIT AUXILIAIRE DE LA PELLE RETRO
08-24	SYSTEME HYDRAULIQUE - CIRCUIT AUXILIAIRE DE LA PELLE RETRO
08-25	SYSTEME HYDRAULIQUE - SYSTEME ANTI-TANGAGE
08-26	SYSTEME HYDRAULIQUE - COUPLEUR, OUTIL DE CHARGEUSE, DE SÉCURITÉ
08-27	SYSTEME HYDRAULIQUE - COUPLEUR, OUTIL DE CHARGEUSE, DE SÉCURITÉ
08-28	DISTRIBUTEUR DU COUPLEUR - OUTIL DE CHARGEUSE, DE SÉCURITÉ / RETROPELLE
08-29	SYSTEME HYDRAULIQUE - COUPLEUR, GODET DE LA PELLE RETRO
08-30	SYSTEME HYDRAULIQUE - COUPLEUR, GODET DE LA PELLE RETRO
08-31	DISTRIBUTEUR DU COUPLEUR - OUTIL DE CHARGEUSE, DE SÉCURITÉ AVEC DEGODET DE LA PELLE RETRO
08-32	VERIN - COUPLEUR, GODET DE LA PELLE RETRO
08-33	POMPE, ÉQUIPEMENT HYDRAULIQUE

http://www.minnparbackhoeparts.com/

SECTION INDEX

08-34	DISTRIBUTEUR - COMMANDE DU CHARGEUR, DEUX TIROIRS
08-35	DISTRIBUTEUR - COMMANDE DU CHARGEUR, TROIS TIROIRS
08-36	DISTRIBUTEUR - COMMANDE DE LA PELLE RETRO, 6 TIROIRS (SANS BALANCIER EXTENSIBLE ET SANS CIRCUIT HYD)
08-37	DISTRIBUTEUR - COMMANDE DE LA PELLE RETRO, 7 TIROIRS (SANS BALANCIER EXTENSIBLE ET AVEC CIRCUIT HYD)
08-38	DISTRIBUTEUR - COMMANDE DE LA PELLE RETRO, 7 TIROIRS (AVEC BALANCIER EXTENSIBLE ET SANS CIRCUIT HYD)
08-39	DISTRIBUTEUR - COMMANDE DE LA PELLE RETRO, 8 TIROIRS (AVEC BALANCIER EXTENSIBLE ET SANS CIRCUIT HYD)
08-40	DISTRIBUTEUR - COMMANDE DE LA PELLE RETRO, 6 TIROIRS
08-41	DISTRIBUTEUR - COMMANDE DE LA PELLE RETRO, 7 TIROIRS
08-42	DISTRIBUTEUR - COMMANDE DE LA PELLE RETRO, 7 TIROIRS
08-43	DISTRIBUTEUR - COMMANDE DE LA PELLE RETRO, 8 TIROIRS
08-43A	CIRCUIT - ENTREE (AVEC DE COMMANDE PILOTE)
08-44	CIRCUIT - DEBATTEMENT DE LA RETROPELLE (AVEC DE COMMANDE PILOTE)
08-45	CIRCUIT - FLECHE DE LA RETROPELLE (AVEC DE COMMANDE PILOTE)
08-46	CIRCUIT - STABILISATEUR DE LA PELLE RETRO (AVEC DE COMMANDE PILOTE)
08-47	CIRCUIT - BRAS DE LA RETROPELLE (AVEC DE COMMANDE PILOTE)
08-48	CIRCUIT - GODET DE LA RETROPELLE (AVEC DE COMMANDE PILOTE)
08-49	CIRCUIT - BALANCIER EXTENSIBLE (AVEC DE COMMANDE PILOTE)
08-50	CIRCUIT - OPTIONS, CIRCUIT HYDRAULIQUE AUXILIAIRE (AVEC DE COMMANDE PILOTE)
08-51	DISTRIBUTEUR, SOUPAPE DE REDUCTION PRESSION (2 SPOOL) (AVEC DE COMMANDE PILOTE)
08-52	DISTRIBUTEUR, SOUPAPE DE REDUCTION PRESSION (3 SPOOL) (AVEC DE COMMANDE PILOTE)
08-53	DISTRIBUTEUR, SOUPAPE DE REDUCTION PRESSION (4 SPOOL) (AVEC DE COMMANDE PILOTE)
08-54	DISTRIBUTEUR, LEVIER DE COMMANDE (COMMANDE PILOTE) (GAUCHE) AVERTISSEUR SONORE
08-55	DISTRIBUTEUR, LEVIER DE COMMANDE (COMMANDE PILOTE) (GAUCHE) AVERTISSEUR SONORE & UNI-DIR
08-56	DISTRIBUTEUR, LEVIER DE COMMANDE (COMMANDE PILOTE) (GAUCHE) AVERTISSEUR SONORE & BI-DIR
08-57	DISTRIBUTEUR, LEVIER DE COMMANDE (COMMANDE PILOTE) (DROIT) SANS BALANCIER EXTENSIBLE
08-58	DISTRIBUTEUR, LEVIER DE COMMANDE (COMMANDE PILOTE) (DROIT) AVEC BALANCIER EXTENSIBLE
08-59	DISTRIBUTEUR - AMORTISSEUR DE DEBATTEMENT
08-59A	ELECTROVANNE - VERROUILLAGE DE LA FLECHE
08-60	ACCUMULATEUR ASS. - SYSTEME ANTI-TANGAGE
08-61	FILTRE A HUILE
08-62	VERIN - RELEVAGE DE LA CHARGEUSE
08-63	VERIN - GODET DE LA CHARGEUSE
08-64	VERIN - BENNE DE CHARGEUSE
08-65	VERIN - STABILISATEUR DE LA PELLE RETRO (580SM)
08-65A	VERIN - STABILISATEUR DE LA PELLE RETRO (580SM+)
08-66	VERIN - DEBATTEMENT DE LA RETROPELLE
08-67	VERIN - FLECHE DE LA RETROPELLE
08-68	VERIN - BRAS DE LA RETROPELLE
08-69	VERIN - GODET DE LA RETROPELLE

http://www.minnparbackhoeparts.com/

SECTION INDEX

http://www.minnparbackhoeparts.com/

SYSTEME HYDRAULIQUE - POMPE, FILTRE ET DISTRIBUTEUR DE CHARGEUSE

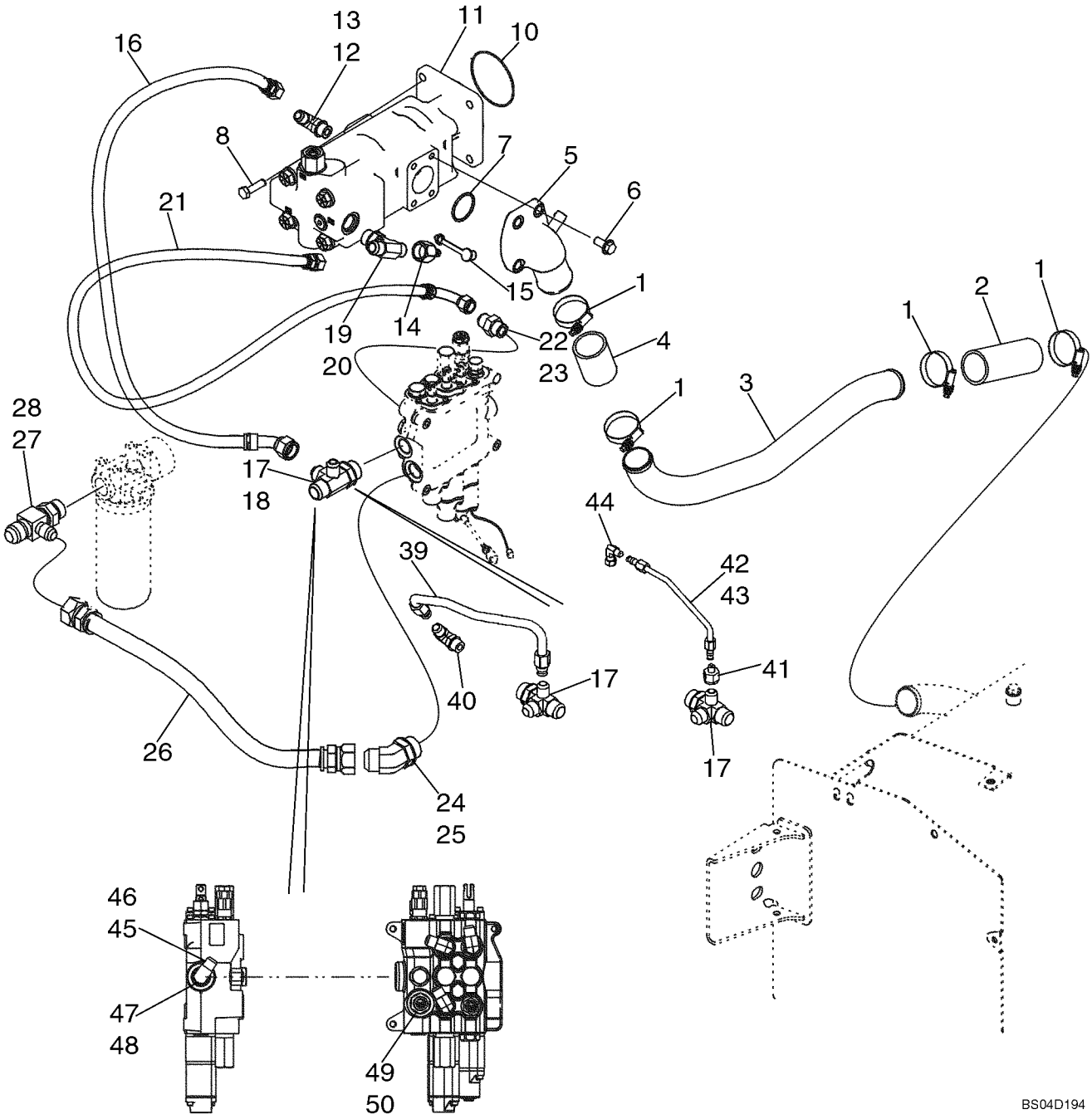

http://www.minnparbackhoeparts.com/

SYSTEME HYDRAULIQUE - POMPE, FILTRE ET DISTRIBUTEUR DE CHARGEUSE

REF	FN	PART NUMBER	YR/SN	QTY	DESCRIPTION
1		259044A1		4	COLLIER
2		87306274		1	FLEXIBLE Suction Hose, At Hydraulic Tank; Replaces 282496A1
3		87435761		1	TUYAU HYDRAULIQUE RIGIDE Suction Tube
4		87306307		1	FLEXIBLE 105 mm lg Hose; Replaces 87446433
5		87434257		1	BRIDE, FLASQUE ASS. Pump Flange
6		864-12030		3	VIS M12 x 30
7		238-5228		1	JOINT TORIQUE
8		514-832		4	VIS M12 x 35; Models Without Powershift Transmission
8		614-12035		4	BOULON M12 x 35; Models With Powershift Transmission
10		87429982		1	JOINT THORIQUE Pump Mounting; Models Without Powershift Transmission; Included In Transmission Assembly
10		510828		1	JOINT THORIQUE Pump Mounting; Models With Powershift Transmission
11		87434673		1	POMPE HYDRAULIQUE Equipment, Tandem; See Figure 08-33
12		218-5107		1	COUDE 90 deg, 7/8 fl x Or; Incl. Ref 13
13		237-6010		1	JOINT TORIQUE 3/4 ID x 3/32
14		D137625		1	ACCOUPLEMENT HYDR. Quick Disconnect; Includes (1) 425-1120 Nut
15		H434163		1	CHAPEAU Dust
16		87437230		1	FLEXIBLE (ASSEMBLE) 740 mm (29-5/32 in) Hose; Large Pump Section to Loader Valve
17		87436066		1	RACCORD 4-Way Special Fitting; Incl. Ref 18
18		237-6016		1	JOINT TORIQUE 1-11/64 ID x 7/64 wide
19		218-5185		1	RACCORD TEE, 1-1/16 adj Or br x fl x fl; Incl. Ref 20
20		237-6012		1	JOINT TORIQUE 59/64 ID x 7/64 wide
21		87452399		1	FLEXIBLE (ASSEMBLE) 775 mm (30-9/16 in) Hose, Small Pump Section; Replaces 87429895 Hose
22		218-5064		1	RACCORD 1-1/16 fl x Or; Incl. Ref 23
23		237-6012		1	JOINT TORIQUE 59/64 ID x 7/65
24		218-5140		1	RACCORD Elbow, 45 Degree, 1-5/16 fl x Or; Incl. Ref 25
25		237-6016		1	JOINT TORIQUE 1-11/64 ID x 7/64 wide

http://www.minnparbackhoeparts.com/

SYSTEME HYDRAULIQUE - POMPE, FILTRE ET DISTRIBUTEUR DE CHARGEUSE

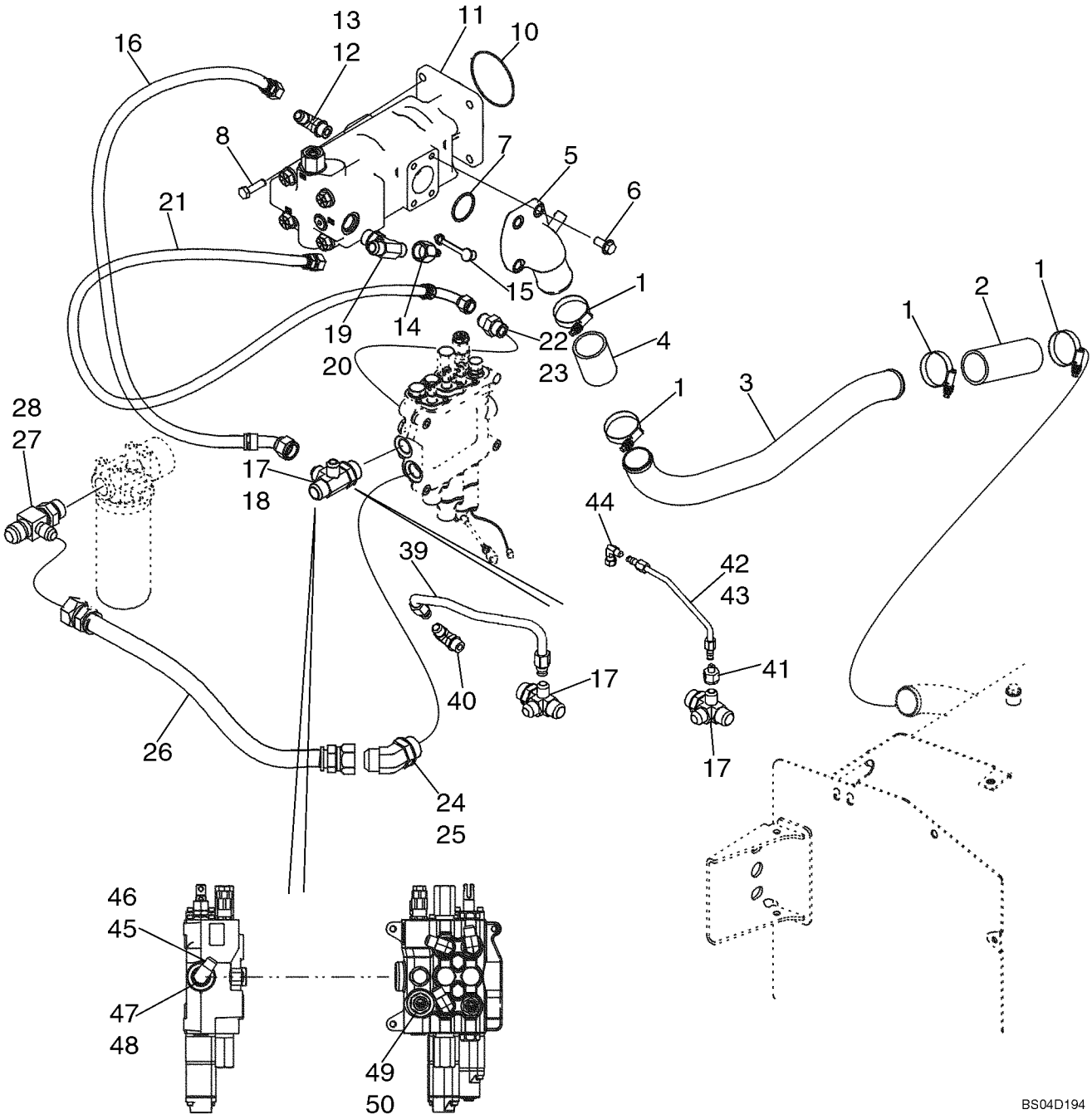

http://www.minnparbackhoeparts.com/

SYSTEME HYDRAULIQUE - POMPE, FILTRE ET DISTRIBUTEUR DE CHARGEUSE

REF	FN	PART NUMBER	YR/SN	QTY	DESCRIPTION
26		87452400		1	FLEXIBLE (ASSEMBLE) 635 mm (25 in), Loader Valve to Filter; Replaces 87437228 Hose
27		218-5584		1	RACCORD TEE, 1-1/16 fl branch x 1-5/16 fl x Or; Incl. Ref 28
28		237-6016		1	JOINT TORIQUE 1-11/64 ID x 7/64 wide
39		87437655		1	TUYAUTERIE Two Spool Loader Valve; Models Without Pilot Controls
39		87437657		1	TUYAUTERIE Three Spool Loader Valve; Models Without Pilot Controls
40		218-5107		1	COUDE 90 deg, 7/8 fl x Or; Includes 237-6010 O-Ring
41		218-765		1	REDUCTEUR Models With Pilot Controls
42		87437980		1	TUYAUTERIE Two Spool Loader Valve; Models With Pilot Controls
43		87437982		1	TUYAUTERIE Three Spool Loader Valve; Models With Pilot Controls
44		218-980		1	COUDE 90 deg, 9/16 fl x sw fl
45		218-5107		1	COUDE 90 deg, 7/8 fl x Or; Incl. Ref 46; Models Without Pilot Controls
46		237-6010		1	JOINT TORIQUE 3/4 ID x 3/32
47		218-5157		1	BOUCHON Hex, 7/8 Or; Incl. Ref 48; Models With Pilot Controls
48		237-6010		1	JOINT TORIQUE 3/4 ID x 3/32
49		218-5064		1	RACCORD 1-1/16 fl x Or; Incl. Ref 50
50		237-6012		1	JOINT TORIQUE 59/64 ID x 7/64

http://www.minnparbackhoeparts.com/

SYSTEME HYDRAULIQUE - DU DISTRIBUTEUR DU CHARGEUR AU FILTRE AU DISTRIBUTEUR DE LA PELLE RETRO

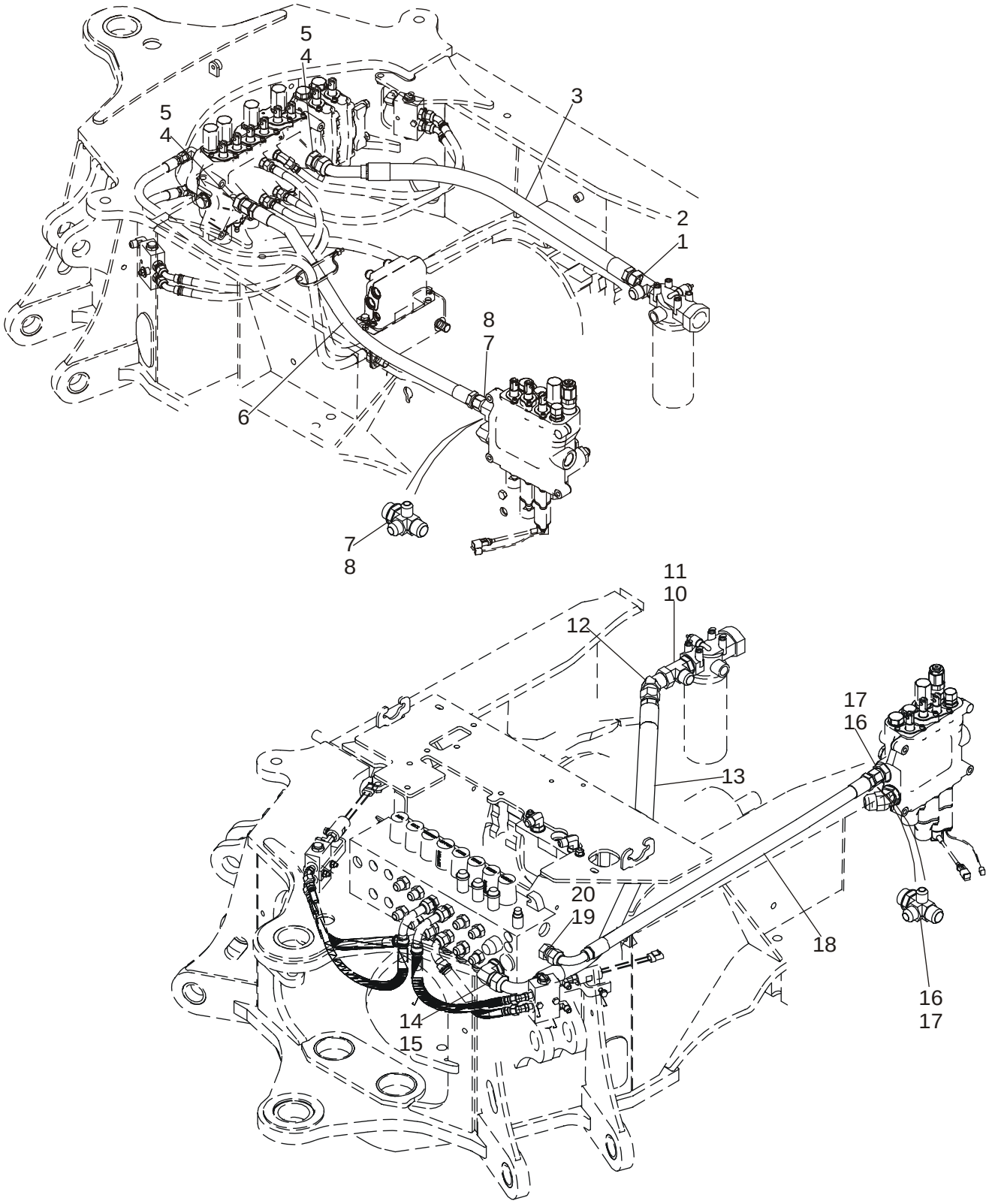

http://www.minnparbackhoeparts.com/

SYSTEME HYDRAULIQUE - DU DISTRIBUTEUR DU CHARGEUR AU FILTRE AU DISTRIBUTEUR DE LA PELLE RETRO

REF	FN	PART NUMBER	YR/SN	QTY	DESCRIPTION
		REF			NOTICE MODELS WITHOUT PILOT CONTROLS
1		218-5584		1	RACCORD TEE, 1-1/16 fl br x 1-5/16 fl x Or; Incl. Ref 2
2		237-6016		1	JOINT TORIQUE 1-11/64 ID x 7/64
3		313648A1		1	FLEXIBLE 910 mm (35-7/8 in); Return; Models Without Pilot Controls
4		218-5069		2	RACCORD 1-5/16 fl x Or; Incl. Ref 5
5		237-6016		1	JOINT TORIQUE 1-11/64 ID x 7/64
6		87437441		1	FLEXIBLE (ASSEMBLE) 1025 mm (40-3/8 in); 2 or 3 Spool Valve; Without Auxiliary Hydraulics, Without Pilot Controls; Loader Valve Power Beyond to Backhoe Valve
6		87437232		1	FLEXIBLE (ASSEMBLE) 420 mm (16-9/16 in); 2 Spool Valve; With Auxiliary Hydraulics; With or Without Pilot Controls; Loader Valve Power Beyond to Backhoe Valve
6		87437231		1	FLEXIBLE (ASSEMBLE) 370 mm (14-5/8 in); 3 Spool Valve; With Auxiliary Hydraulics; With or Without Pilot Controls; Loader Valve Power Beyond to Backhoe Valve
7		87436066		1	RACCORD 4-Way Special Tee; Incl. Ref 8
8		237-6016		1	JOINT TORIQUE 1-11/64 ID x 7/64
		REF			NOTICE MODELS WITH PILOT CONTROLS
10		218-5584		1	RACCORD TEE, 1-1/16 fl br x 1-5/16 fl x Or; Incl. Ref 11
11		237-6016		1	JOINT TORIQUE 1-11/64 ID x 7/64
12		218-5176		1	RACCORD ELBOW, 45 deg, 1-5/16 fl x sw str thrd; Used With 87437934 1230 mm Hose; If Used
13		87437934		1	FLEXIBLE (ASSEMBLE) 1230 mm (48-7/16 in); Return; Models With Pilot Controls; Used With Ref 12 Elbow; If Used
13		87450456		1	FLEXIBLE (ASSEMBLE) 1254 mm (49-3/8 in); Return; Models With Pilot Controls; Replaces Ref 12 Elbow and 87437934 1230 mm Hose Used On Some Models
14		218-5110		1	RACCORD ELBOW, 90 deg, 1-5/16 fl x adj Or; Incl. Ref 15

http://www.minnparbackhoeparts.com/

SYSTEME HYDRAULIQUE - DU DISTRIBUTEUR DU CHARGEUR AU FILTRE AU DISTRIBUTEUR DE LA PELLE RETRO

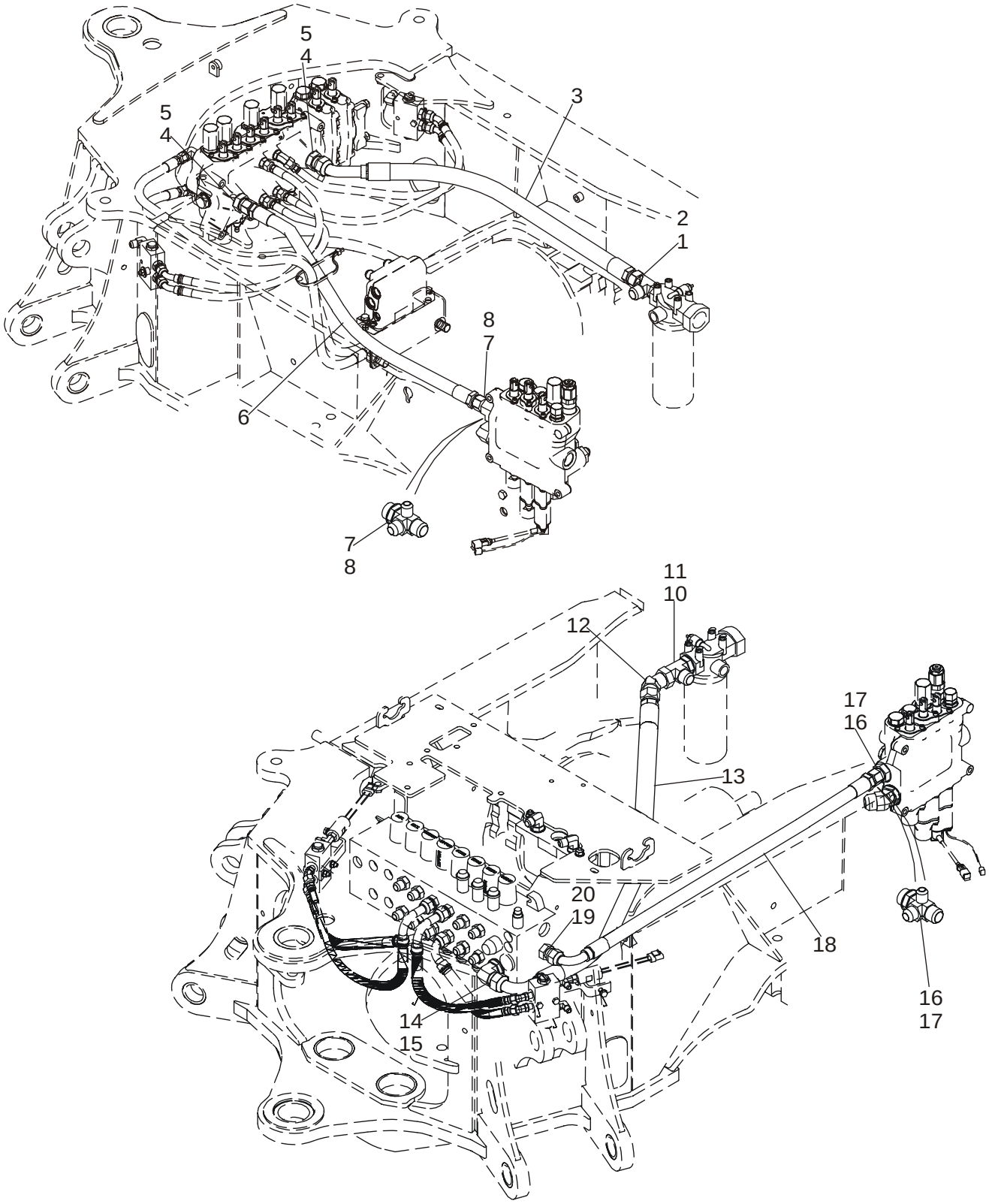

http://www.minnparbackhoeparts.com/

SYSTEME HYDRAULIQUE - DU DISTRIBUTEUR DU CHARGEUR AU FILTRE AU DISTRIBUTEUR DE LA PELLE RETRO

REF	FN	PART NUMBER	YR/SN	QTY	DESCRIPTION
15		237-6016		1	JOINT TORIQUE 1-11/64 ID x 7/64
16		87436066		1	RACCORD 4-Way Tee, Special, 1-5/16 fl x Or; Incl. Ref 17
17		237-6016		1	JOINT TORIQUE 1-11/64 ID x 7/64
18		87455832		1	FLEXIBLE (ASSEMBLE) 1020 mm (40-5/32 in); 2 or 3 Spool Valve; Without Auxiliary Hydraulics, With Pilot Controls; Power Beyond; Replaces 87437442 1050 mm (41-3/8 in) Hose
18		87437232		1	FLEXIBLE (ASSEMBLE) 420 mm (16-9/16 in); 2 Spool Valve; With Auxiliary Hydraulics; With or Without Pilot Controls; Loader Valve Power Beyond to Backhoe Valve
18		87437231		1	FLEXIBLE (ASSEMBLE) 370 mm (14-5/8 in); 3 Spool Valve; With Auxiliary Hydraulics; With or Without Pilot Controls; Loader Valve Power Beyond to Backhoe Valve
19		218-5064		1	RACCORD 1-1/16 fl x Or; Incl. Ref 20
20		237-6012		1	JOINT TORIQUE 59/64 ID x 7/64

http://www.minnparbackhoeparts.com/

08-03		p1	02/05

SYSTEME HYDRAULIQUE - REFROIDISSEUR, CONDUITES DE RETOUR ET FILTRE

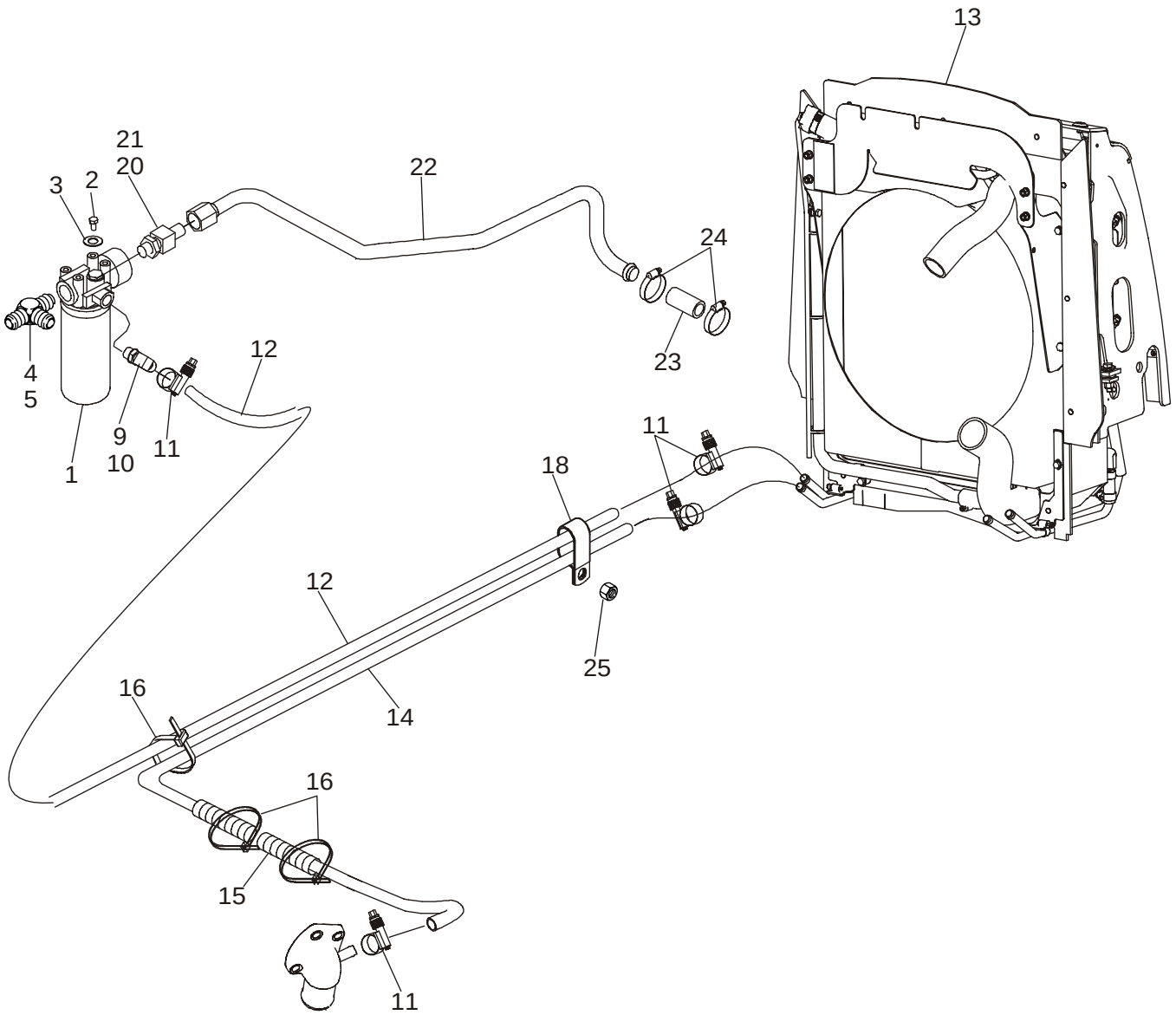

BS04D116

http://www.minnparbackhoeparts.com/

SYSTEME HYDRAULIQUE - REFROIDISSEUR, CONDUITES DE RETOUR ET FILTRE

REF	FN	PART NUMBER	YR/SN	QTY	DESCRIPTION
1		87440045		1	FILTRE ASSY Hydraulic Oil; See Figure 08-61
2		614-10020		4	VIS M10 x 20
3		895-11010		4	RONDELLE 11 x 21 x 2 mm
4		218-5584		1	RACCORD TEE, 1-1/16 fl br x 1-5/16 fl x Or; Incl. Ref 5
5		237-6016		1	JOINT TORIQUE 1-11/64 ID x 7/64 wide
9		301104A1		1	RACCORD Special; Incl. Ref 10
10		237-6010		1	JOINT TORIQUE 3/4 ID x 3/32 wide
11		328186A1		4	BRIDE, FLEXIBLE
12		87426965		1	FLEXIBLE 1785 mm (70-5/16 in)
13		REF		1	NOTICE Hydraulic Oil Cooler; For Cooler and Attaching Parts, See Figure 06-10 - 06-11A
14		87426966		1	FLEXIBLE 1860 mm (73-1/4 in), Return
15		D132982		2	GAINE Hose Sleeve
16		L18337		4	SANGLE
18		D39696		1	COLLIER Double P-Type
20		218-5086		1	CONNECTEUR 5/16-12 fl x 1-5/8; Incl. Ref 21
21		237-6020		1	JOINT THORIQUE 1-15/32 ID x 1/8
22		87308472		1	TUYAUTERIE Return To Tank; Replaces 87421940
23		D38435		1	DURITE 89 mm (3-5/8 in); Cut From S118383X; Return To Tank; For Attaching Brake Line Clamp, See Figure 07-04
24		214-1420		2	COLLIER No. 20
25		829-1410		1	ECROU M10

http://www.minnparbackhoeparts.com/

08-04		p1	05/05

SYSTEME HYDRAULIQUE - VERIN DE RELEVAGE DES BRAS DE RELEVAGE

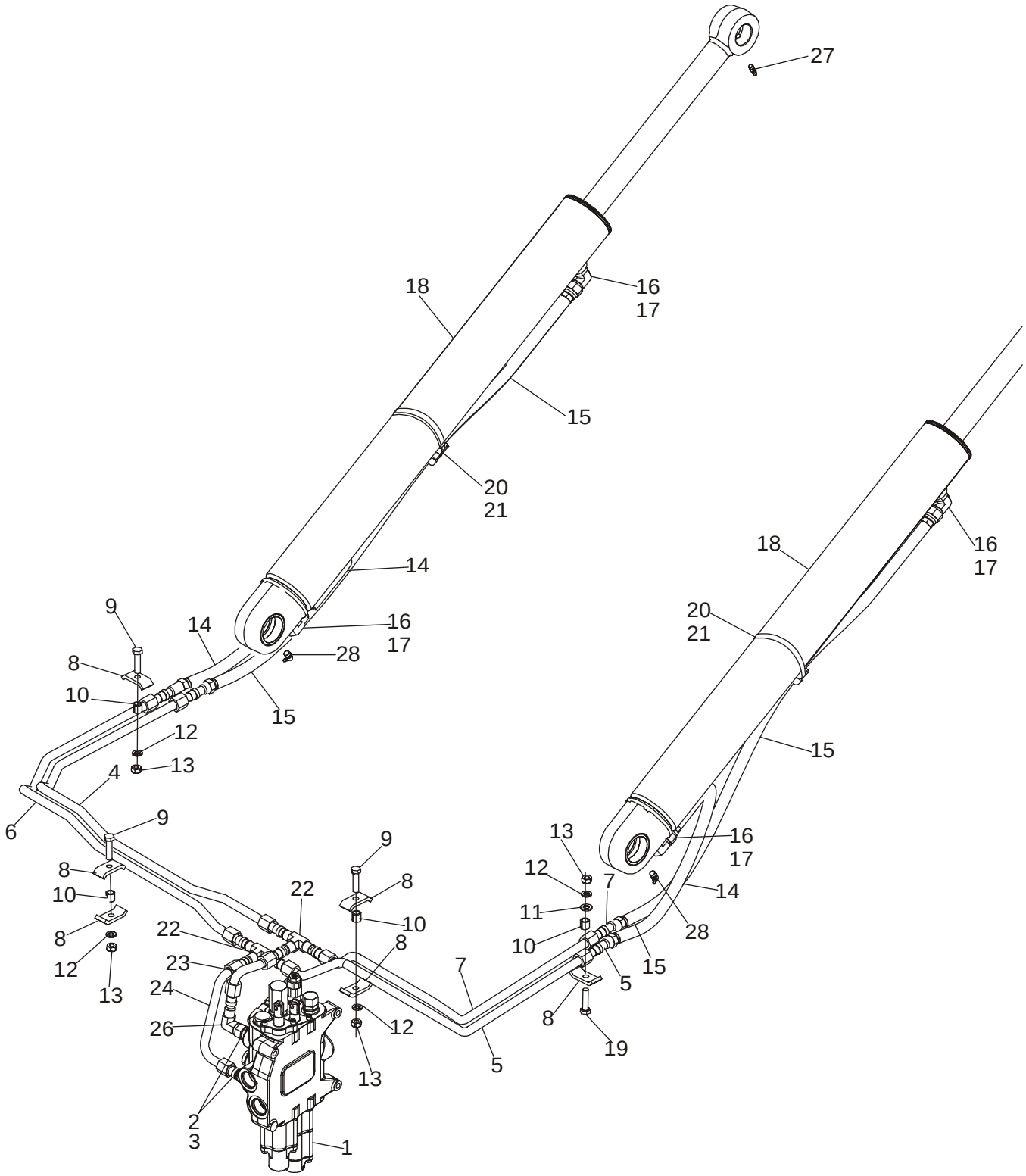

BS03M016

http://www.minnparbackhoeparts.com/

SYSTEME HYDRAULIQUE - VERIN DE RELEVAGE DES BRAS DE RELEVAGE

REF	FN	PART NUMBER	YR/SN	QTY	DESCRIPTION
1		REF		1	NOTICE LOADER CONTROL VALVE; For Correct Assembly and Components, See Figures 08-34, 08-35
2		218-5062		2	RACCORD 7/8 fl x Or; Incl. Ref 3
3		237-6010		1	JOINT TORIQUE 3/4 ID x 3/32
4		87421930		1	TUYAUTERIE Upper Lift Port
5		87421932		1	TUYAUTERIE Lower Lift Port
6		87421934		1	TUYAUTERIE Lower Lift Port
7		87421928		1	TUYAUTERIE Upper Lift Port
8		D138055		6	COLLIER
9		814-10040		3	BOULON M10 x 40
10		120303A1		4	ENTRETOISE
11		895-11010		1	RONDELLE 11 x 21 x 2 mm
12		892-11010		4	RONDELLE FREIN M10
13		829-1410		4	ECROU M10; 10.9
14		87443150		2	FLEXIBLE (ASSEMBLE) 740 mm (29-5/32 in)
15		87443149		2	FLEXIBLE (ASSEMBLE) 1130 mm (44-1/2 in)
16		218-5107		4	COUDE 7/8 fl x adj Or; Incl. Ref 17
17		237-6010		1	JOINT TORIQUE 3/4 ID x 3/32
18		384240A1		2	VERIN 82.6 ID x 766 mm strk; Loader Lift Cylinder; See Figure 08-62
19		814-10045		1	BOULON M10 x 45
20		D142787		2	ENTRETOISE
21		214-1472		2	COLLIER 4-1/16 - 5; If Used
21		214-1464		2	COLLIER 3-9/16 - 4-1/2 in dia; If Used
22		218-595		2	RACCORD TEE, 7/8 fl
23		87416024		1	TUYAUTERIE Upper Lift Port
24		87437108		1	TUYAUTERIE Lower Lift Port
26		218-5232		1	COUDE 90 Deg, 7/8 fl x sw fl
27		219-1		2	GRAISSEUR Straight, 1/8 PT x 21/32
28		219-55		2	GRAISSEUR 90 Deg, 1/8 PT x 27/32

http://www.minnparbackhoeparts.com/

08-05		p1	06/05

SYSTEME HYDRAULIQUE - VERIN, GODET DE LA CHARGEUSE

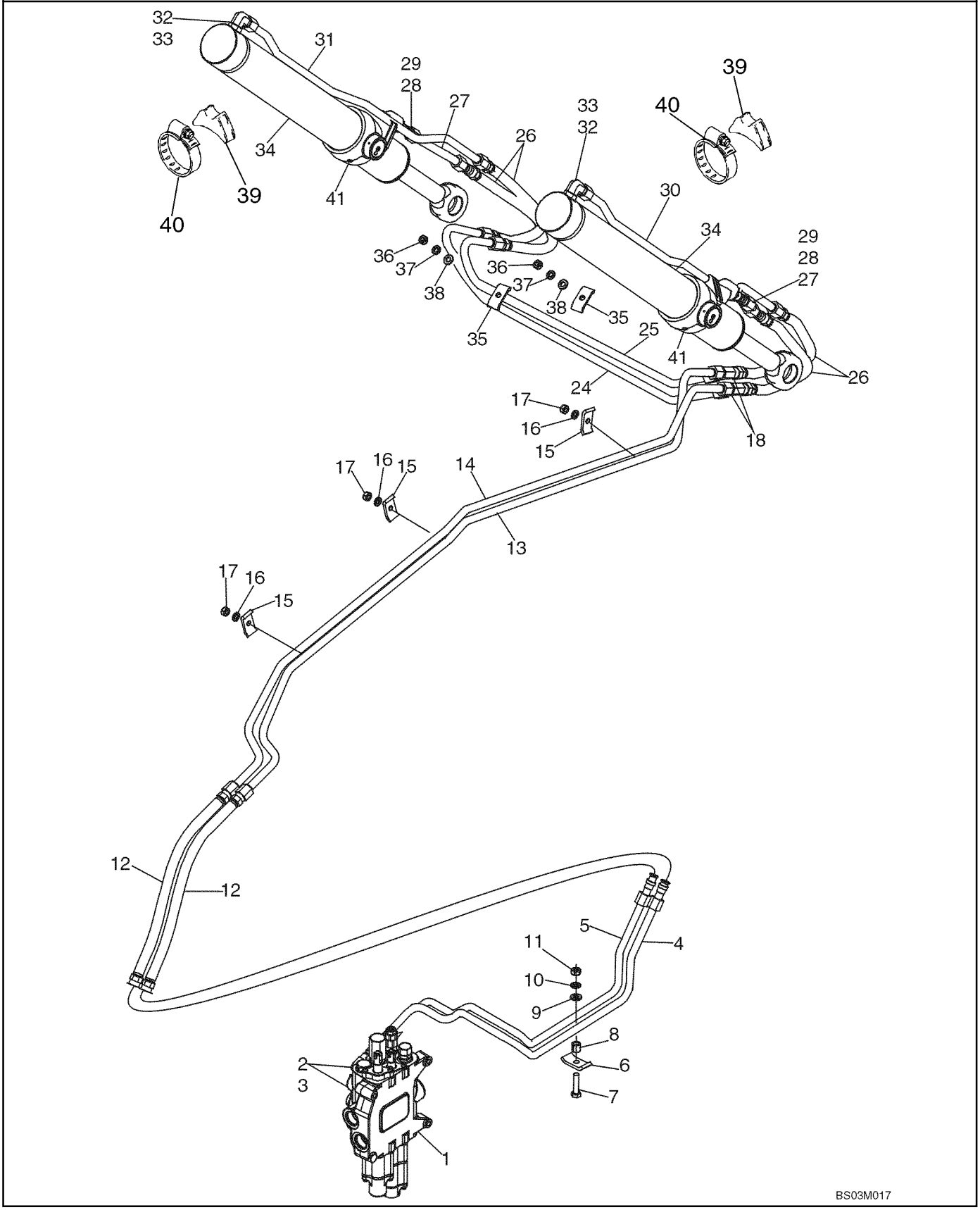

http://www.minnparbackhoeparts.com/

SYSTEME HYDRAULIQUE - VERIN, GODET DE LA CHARGEUSE

REF	FN	PART NUMBER	YR/SN	QTY	DESCRIPTION
1		REF		1	NOTICE LOADER CONTROL VALVE; For Correct Assembly and Components, See Figures 08-34, 08-35; For Mounting, See Figure 09-01
2		218-5107		2	COUDE 90 Deg, 7/8 fl x Or; Incl. Ref 3
3		237-6010		1	JOINT TORIQUE 3/4 ID x 3/32, Boss Seal
4		87421918		1	TUYAUTERIE Upper Bucket Port
5		87421920		1	TUYAUTERIE Lower Bucket Port
6		D138055		1	COLLIER
7		814-10045		1	BOULON M10 x 45
8		120303A1		1	ENTRETOISE
9		895-11010		1	RONDELLE 11 x 21 x 2 mm
10		892-11010		1	RONDELLE FREIN M10
11		829-1410		1	ECROU M10; 10.9
12		87429287		2	FLEXIBLE (ASSEMBLE) 710 mm (28 in)
13		418789A1		1	TUYAUTERIE To Upper Port
14		418791A1		1	TUYAUTERIE
15		D138055		3	COLLIER
16		892-11010		3	RONDELLE FREIN M10
17		829-1410		3	ECROU M10; 10.9
18		218-5220		2	TE 7/8 fl br x fl x sw
24		196815A1		1	TUYAU Rear
25		196813A1		1	TUYAU Front
26		371031A1		4	FLEXIBLE (ASSEMBLE) 840 mm (33 in)
27		87316049		2	TUYAUTERIE Bucket Cylinder Rod End; Replaces 192152A1
28		218-5062		2	RACCORD 7/8 fl x Or; Incl. Ref 29
29		237-6010		1	JOINT TORIQUE 3/4 ID x 3/32, Boss Seal
30		87316270		1	TUYAUTERIE Right-Hand Cylinder Closed End; Replaces 192156A1
31		87316264		1	TUYAUTERIE Left-Hand Cylinder Closed End; Replaces 192154A1
32		218-5107		2	COUDE 90 Deg, 7/8 fl x adj Or; Incl. Ref 33
33		237-6010		1	JOINT TORIQUE 3/4 ID x 3/32, Boss Seal
34		113133A2		2	VERIN 76 ID x 522 mm strk; Loader Bucket Cylinder; See Figure 08-63
35		D138055		2	COLLIER
36		829-1410		2	ECROU M10; 10.9

http://www.minnparbackhoeparts.com/

08-05		p2	06/05

SYSTEME HYDRAULIQUE - VERIN, GODET DE LA CHARGEUSE

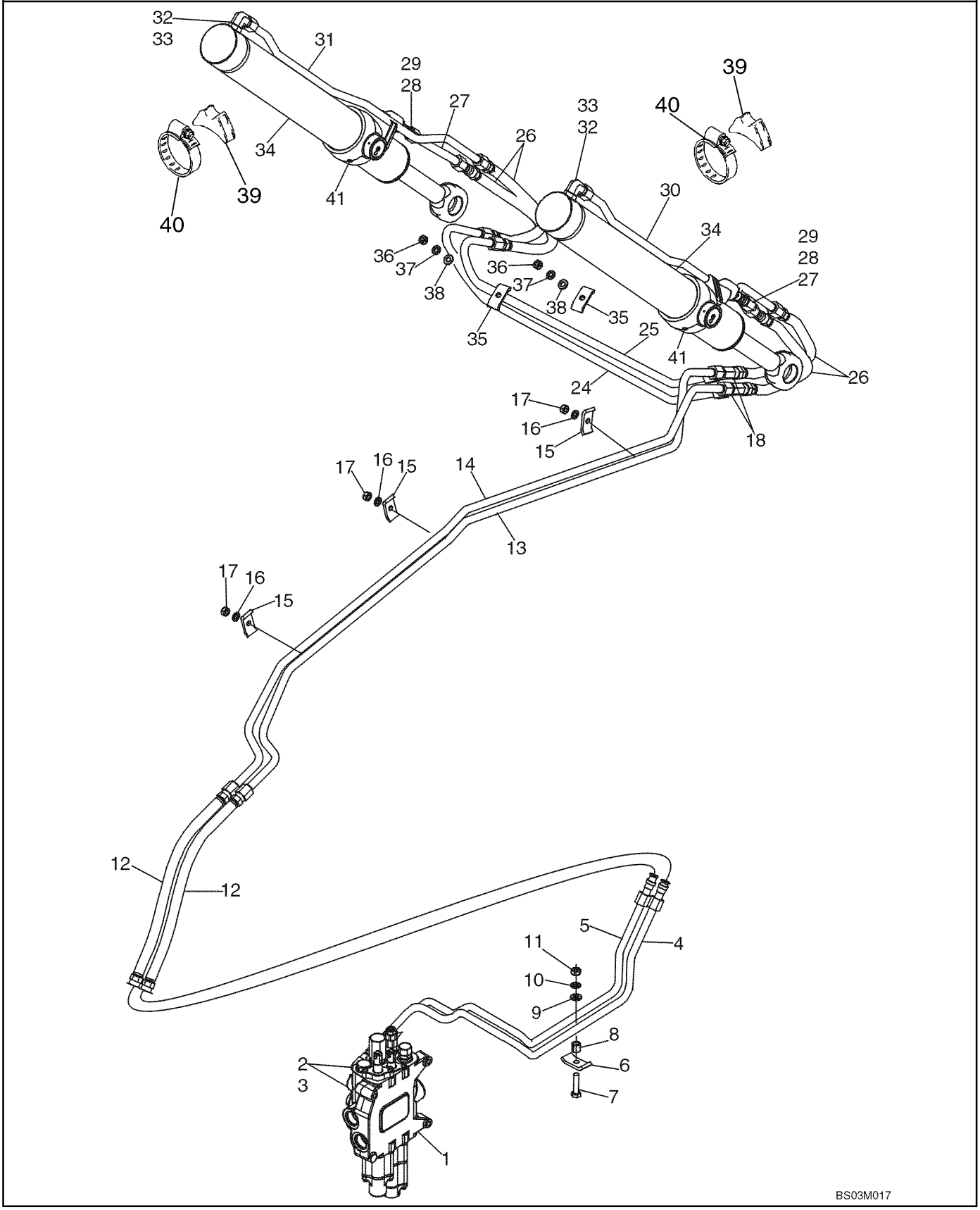

http://www.minnparbackhoeparts.com/

SYSTEME HYDRAULIQUE - VERIN, GODET DE LA CHARGEUSE

REF	FN	PART NUMBER	YR/SN	QTY	DESCRIPTION
37		892-11010		2	RONDELLE FREIN M10
38		895-11010		2	RONDELLE 11 x 21 x 2 mm
39		L79937		2	SELLE
40		214-1464		2	COLLIER 3-9/16 - 4-1/2 in dia
41		219-55		2	GRAISSEUR 90 Deg, 1/8 PT x 27/32

http://www.minnparbackhoeparts.com/

08-06		p1	01/05

SYSTEME HYDRAULIQUE - VERIN, BENNE DE LA CHARGEUSE

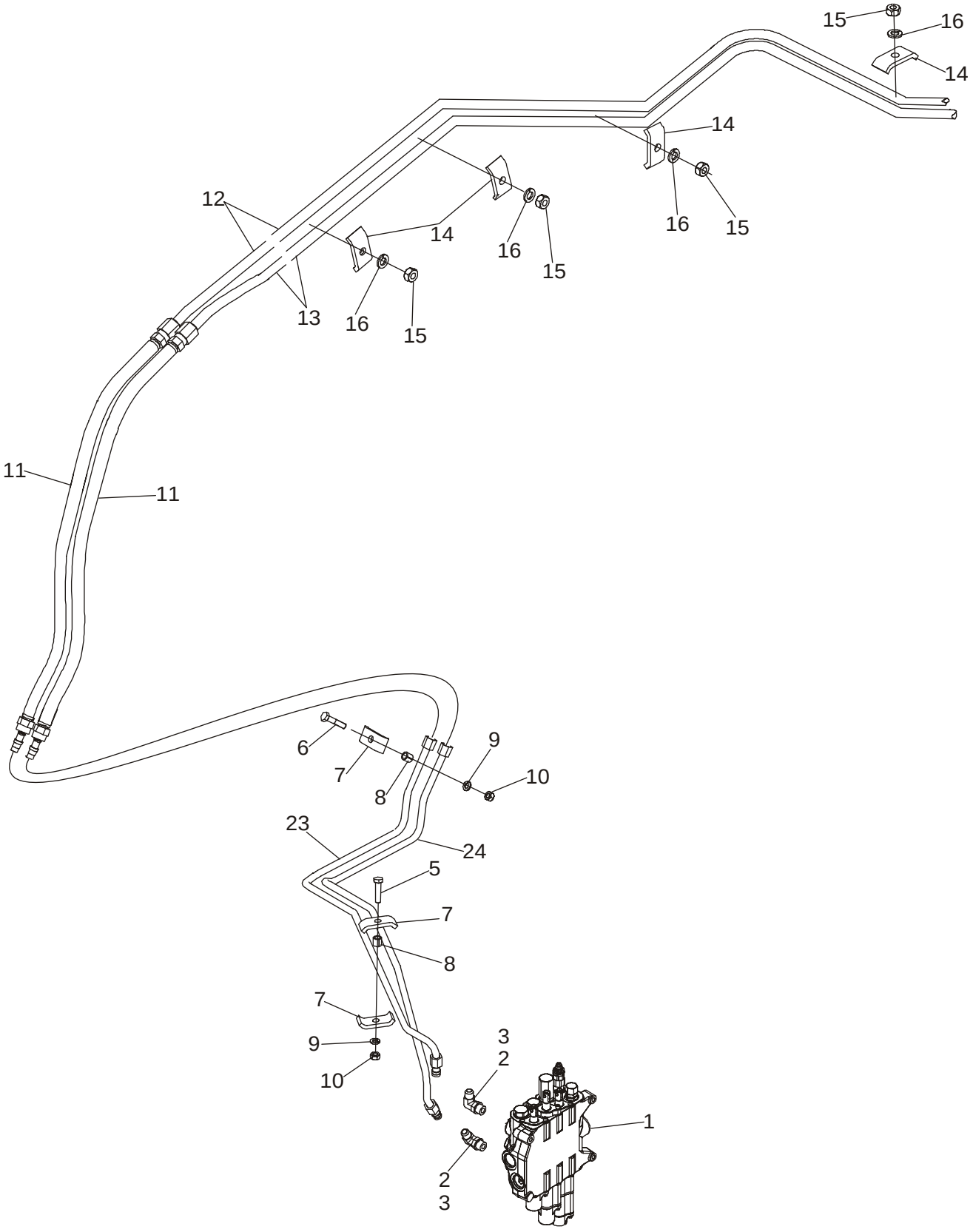

http://www.minnparbackhoeparts.com/

SYSTEME HYDRAULIQUE - VERIN, BENNE DE LA CHARGEUSE

REF	FN	PART NUMBER	YR/SN	QTY	DESCRIPTION
1		REF		1	NOTICE LOADER CONTROL VALVE; Three Spool; See Figure 08-35 for Valve Options; For Mounting, See Figure 09-01
2		218-5107		2	COUDE 90 deg, 7/8 fl x Or; Incl. Ref 3
3		237-6010		1	JOINT TORIQUE 3/4 ID x 3/32, Boss Seal
5		814-10045		1	BOULON M10 x 45
6		814-10040		1	BOULON M10 x 40
7		D138055		3	COLLIER
8		120303A1		2	ENTRETOISE
9		892-11010		2	RONDELLE FREIN M10
10		829-1410		2	ECROU M10; 10.9
11		87429287		2	FLEXIBLE (ASSEMBLE) 710 mm (28 in)
12		196824A1		1	TUYAU Upper Clam Port
13		196821A1		1	TUYAU Lower Clam Port
14		D138055		4	COLLIER
15		829-1410		4	ECROU M10; 10.9
16		892-11010		4	RONDELLE FREIN M10
17		218-776		2	BOUCHON 7/8 fl; Located on the End of Ref 13 Tube; Not Used On Models With Clam Bucket; Not Illustrated
23		87447044		1	TUYAUTERIE Upper Clam Port; Replaces 87436908 Tube
24		87447887		1	TUYAUTERIE Lower Clam Port; Replaces 87436910 Tube

http://www.minnparbackhoeparts.com/

08-07		p1	03/05

SYSTEME HYDRAULIQUE - VERIN, BENNE DE LA CHARGEUSE

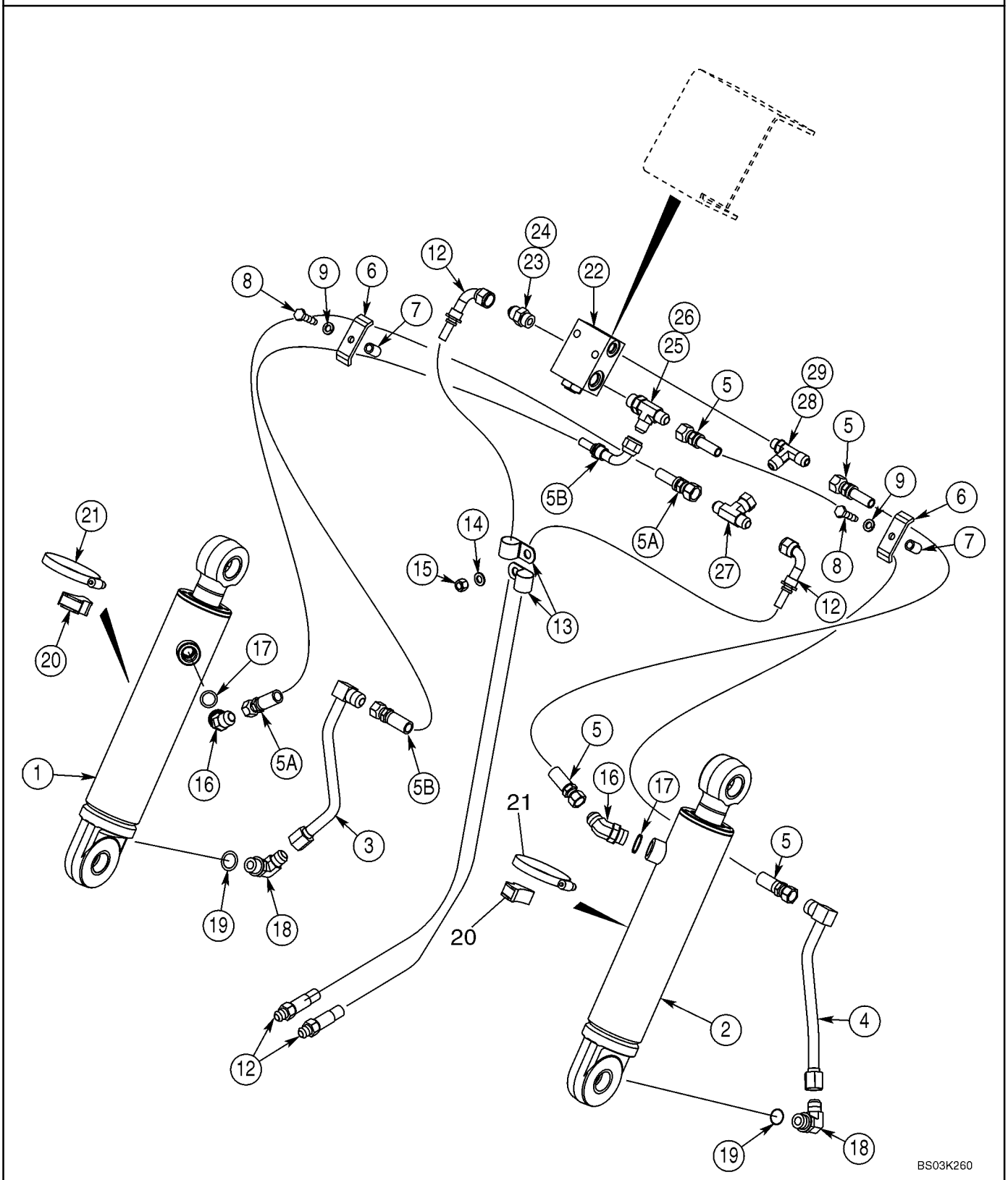

http://www.minnparbackhoeparts.com/

SYSTEME HYDRAULIQUE - VERIN, BENNE DE LA CHARGEUSE

REF	FN	PART NUMBER	YR/SN	QTY	DESCRIPTION
1		1346190C1		1	VERIN 76 ID x 231 mm strk: Loader Clam Cylinder; Left-Hand; See Figure 08-64; If Used
1		87454016		1	VERIN 76 ID x 231 mm strk: Loader Clam Cylinder; Left-Hand; See Figure 08-64; If Used
2		1346189C1		1	VERIN 76 ID x 231 mm strk; Loader Clam Cylinder; Right-Hand; See Figure 08-64; If Used
2		87454017		1	VERIN 76 ID x 231 mm strk; Loader Clam Cylinder; Right-Hand; See Figure 08-64; If Used
3		192352A1		1	TUYAU Left-Hand Cylinder
4		192345A1		1	TUYAU Right-Hand Cylinder
5		353167A1		2	FLEXIBLE (ASSEMBLE) 1100 mm (43-5/16 in); Right-Hand Cylinder; 580SM Models
5		376157A1		2	FLEXIBLE (ASSEMBLE) 1240 mm (48-7/8 in); Right-Hand Cylinder; 580SM+ Models
5A		353103A1		1	FLEXIBLE (ASSEMBLE) 1200 mm (47-1/4 in); Left-Hand Cylinder; 580SM Models
5A		353102A1		1	FLEXIBLE (ASSEMBLE) 1340 mm (52-13/16 in); Left-Hand Cylinder; 580SM+ Models
5B		367352A1		1	FLEXIBLE (ASSEMBLE) 1200 mm (47-1/4 in); Left-Hand Cylinder; 580SM Models
5B		376158A1		1	FLEXIBLE (ASSEMBLE) 1340 mm (52-13/16 in); Left-Hand Cylinder; 580SM+ Models
6		D143846		2	BRIDE CLAMP
7		R46493		2	ENTRETOISE
8		814-10040		2	BOULON M10 x 40
9		892-11010		2	RONDELLE FREIN M10
12		356743A1		2	FLEXIBLE (ASSEMBLE) 1170 mm (46-1/16 in); Lift Frame
13		515-25254		2	COLLIER 1 in ID
14		895-11010		1	RONDELLE 11 x 21 x 2 mm
15		832-10410		1	ECROU M10
16		218-5137		2	RACCORD 7/8 fl x Or; Incl. Ref 17
17		237-6010		1	JOINT TORIQUE 3/4 ID x 3/32, Boss Seal
18		218-5107		2	COUDE 7/8 fl x adj Or; Incl. Ref 19
19		237-6010		1	JOINT TORIQUE 3/4 ID x 3/32, Boss Seal
20		D38648		2	BLOC
21		214-1464		2	COLLIER 3-9/16 - 4-1/2 in dia

http://www.minnparbackhoeparts.com/

SYSTEME HYDRAULIQUE - VERIN, BENNE DE LA CHARGEUSE

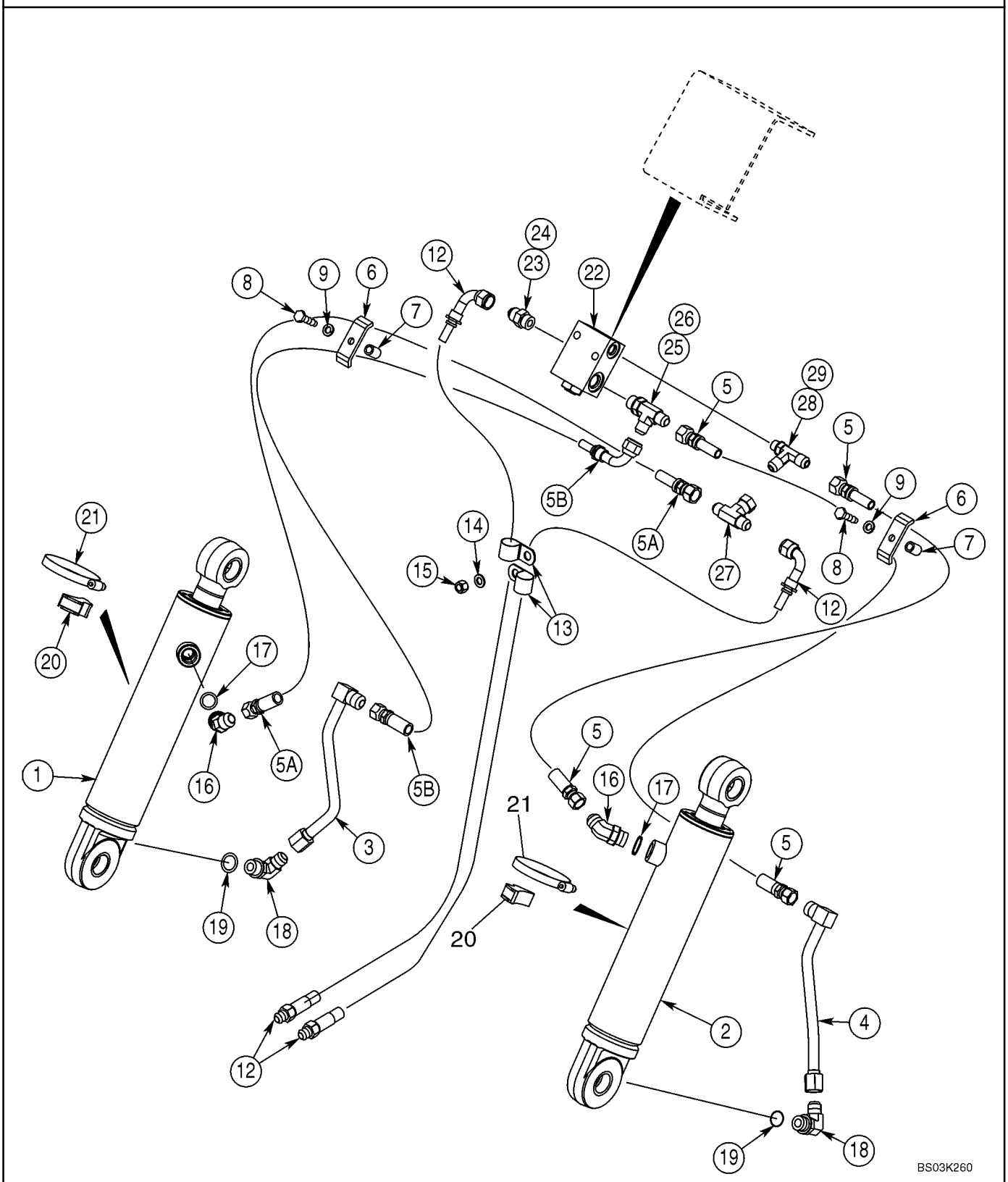

http://www.minnparbackhoeparts.com/

SYSTEME HYDRAULIQUE - VERIN, BENNE DE LA CHARGEUSE

REF	FN	PART NUMBER	YR/SN	QTY	DESCRIPTION
22		325465A2		1	SOUPAPE ANTI RETOUR Pilot Operated Check Valve; For Mounting, See Figure 09-08, 09-08A
		399963A1		1	POCHETTE Seal; For Use With 325465A2 Valve; Includes (1) Piston, (1) Backup Ring, (2) O-Rings and Instructions
23		218-5059		1	RACCORD 3/4 fl x Or; Incl. Ref 24
24		237-6008		1	JOINT THORIQUE 41/64 ID x 3/32, Boss Seal
25		218-5242		1	RACCORD 3/4 fl br x fl x Or; Incl. Ref 26
26		237-6008		1	JOINT THORIQUE 41/64 ID x 3/32, Boss Seal
27		218-840		1	TE 3/4 NF sw x fl x fl
28		218-5650		1	TE 3/4 fl x fl x 9/16 Or; Incl. Ref 29
29		237-6006		1	JOINT THORIQUE 15/32 ID x 5/64, Boss Seal

http://www.minnparbackhoeparts.com/

SYSTEME HYDRAULIQUE - VERIN, STABILISATEUR DE LA PELLE RETRO EUROPA (SANS DE COMMANDE PILOTE)

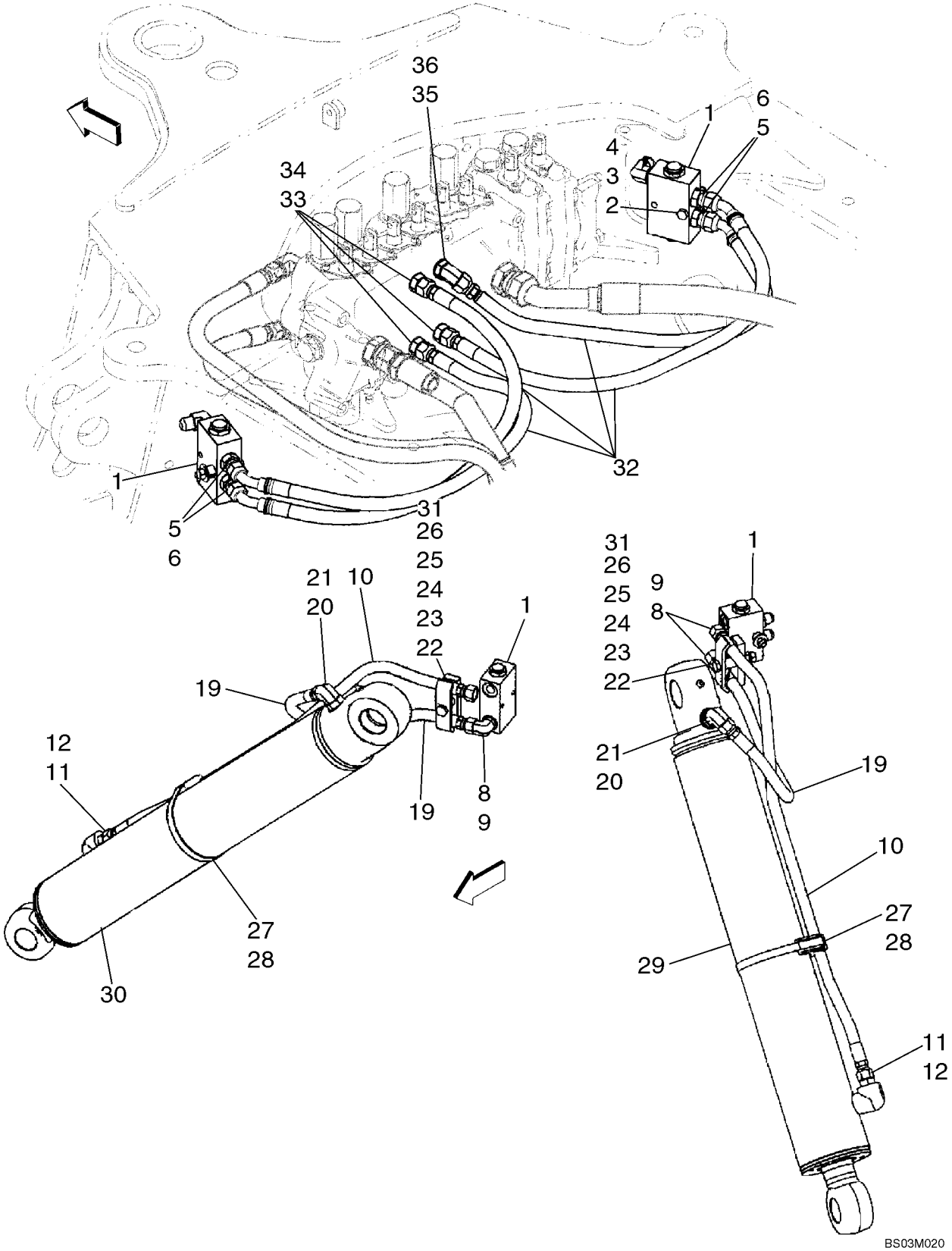

http://www.minnparbackhoeparts.com/

SYSTEME HYDRAULIQUE - VERIN, STABILISATEUR DE LA PELLE RETRO EUROPA (SANS DE COMMANDE PILOTE)

REF	FN	PART NUMBER	YR/SN	QTY	DESCRIPTION
		REF			NOTICE MODELS WITHOUT PILOT CONTROLS
1		85802820		2	SOUPAPE HYDRAULIQUE Load Check; Component Parts Not Serviced Separately
2		814-8060		2	VIS M8 x 60
3		496-41041		2	RONDELLE 13/32 x 1-1/8 x 1/8
		87437840		2	ENTRETOISE
4		829-1408		2	ECROU M8
5		218-5057		4	RACCORD 9/16 fl x Or; Incl. Ref 6
6		237-6006		1	JOINT THORIQUE 15/32 ID x 5/64
8		218-5105		4	COUDE 90 deg, 9/16 fl x Or; Incl. Ref 9
9		237-6006		1	JOINT THORIQUE 15/32 ID x 5/64
10		87439306		2	FLEXIBLE (ASSEMBLE) 830 mm (32-11/16 in)
11		218-5351		2	RACCORD 3/4 fl x 9/16 Or; Incl. Ref 12; 580SM Models
12		237-6006		1	JOINT THORIQUE 15/32 ID x 5/64
11		218-5059		2	RACCORD 3/4 fl x Or; Incl. Ref 12; 580SM+ Models
12		237-6008		1	JOINT THORIQUE 41/64 ID x 3/32
19		87429584		2	FLEXIBLE (ASSEMBLE) 500 mm (19-11/16 in) Hose
20		218-5106		2	RACCORD 3/4 fl x Or, Incl. Ref 21
21		237-6008		1	JOINT THORIQUE 41/64 ID x 3/32
22		814-10070		2	BOULON M10 x 70
23		87420673		2	BRIDE, FLEXIBLE Clamp
		496-41041		2	RONDELLE 13/32 x 1-1/8 x 1/8
24		87439665		2	ENTRETOISE
25		87420672		2	ENTRETOISE Spacer, Clamp
26		829-1410		2	ECROU M10; 10.9
27		D142787		2	ENTRETOISE
28		214-3188		2	COLLIER 4-3/4 - 5-5/8; 580SM Models
28		214-1496		2	COLLIER 5-9/16 - 6-1/2; 580SM+ Models
29		199721A1		1	VERIN 108 ID x 553 mm strk; Stabilizer Cylinder; Left-Hand; 580SM Models; See Figure 08-65
29		177257A1		1	VERIN 127 ID x 519 mm strk; Stabilizer Cylinder; Left-Hand; 580SM+ Models; See Figure 08-65A
30		199720A1		1	VERIN 108 ID x 553 mm strk; Stabilizer Cylinder; Right-Hand; 580SM Models; See Figure 08-65
30		177256A1		1	VERIN 127 ID x 519 mm strk; Stabilizer Cylinder; Right-Hand; 580SM+ Models; See Figure 08-65A

http://www.minnparbackhoeparts.com/

SYSTEME HYDRAULIQUE - VERIN, STABILISATEUR DE LA PELLE RETRO EUROPA (SANS DE COMMANDE PILOTE)

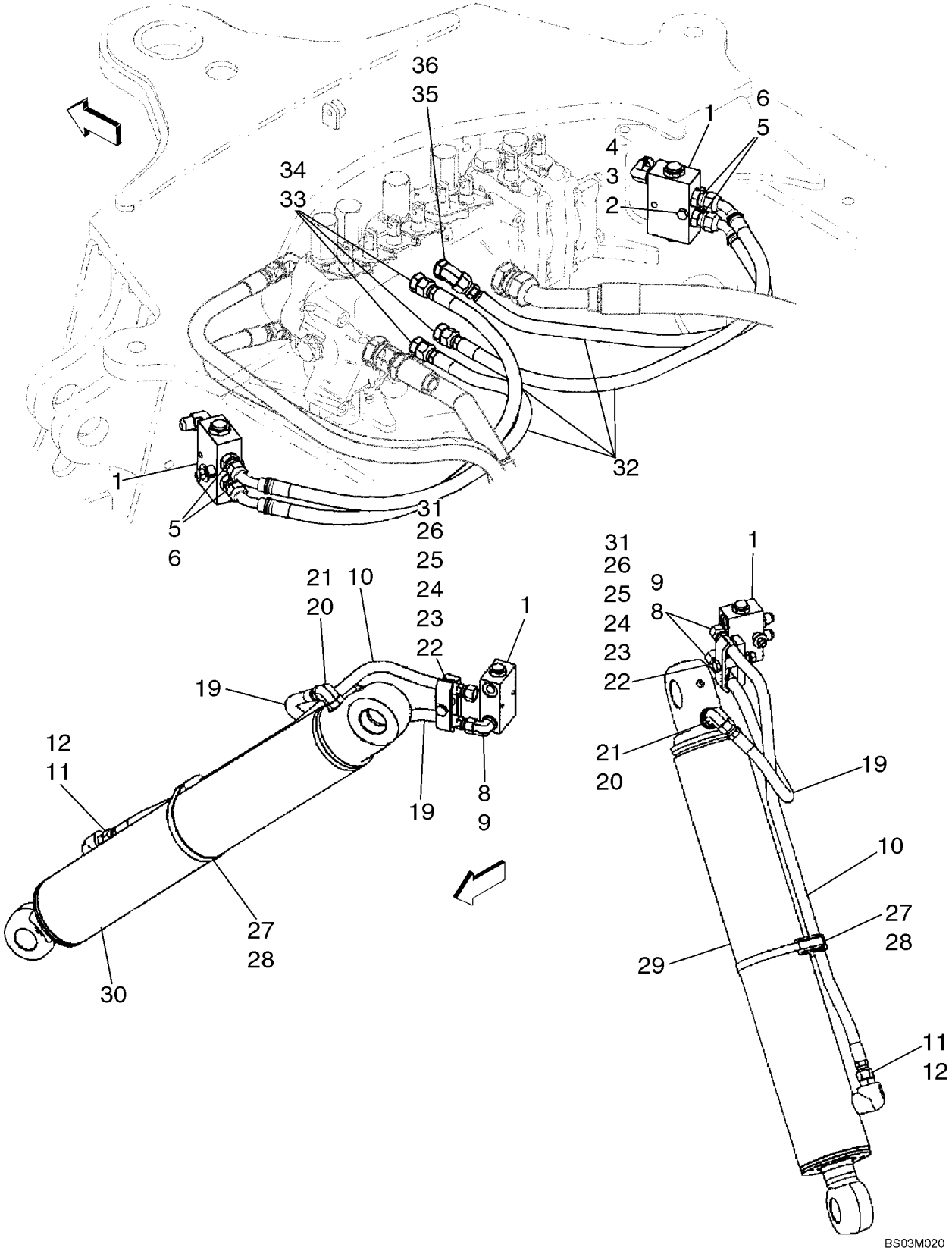

http://www.minnparbackhoeparts.com/

SYSTEME HYDRAULIQUE - VERIN, STABILISATEUR DE LA PELLE RETRO EUROPA (SANS DE COMMANDE PILOTE)

REF	FN	PART NUMBER	YR/SN	QTY	DESCRIPTION
31		895-11010		2	RONDELLE 11 x 24 x 2 mm
32		87429654		4	FLEXIBLE (ASSEMBLE) 720 mm (28-3/8 in)
33		218-5059		3	RACCORD 3/4 fl x Or; Incl. Ref 34
34		237-6008		1	JOINT THORIQUE 41/64 ID x 3/32
35		218-5136		1	COUDE 45 deg, 3/4 fl x adj Or; Incl. Ref 36
36		237-6008		1	JOINT THORIQUE 41/64 ID x 3/32

http://www.minnparbackhoeparts.com/

SYSTEME HYDRAULIQUE - VERIN, STABILISATEUR DE LA PELLE RETRO EUROPA (AVEC DE COMMANDE PILOTE)

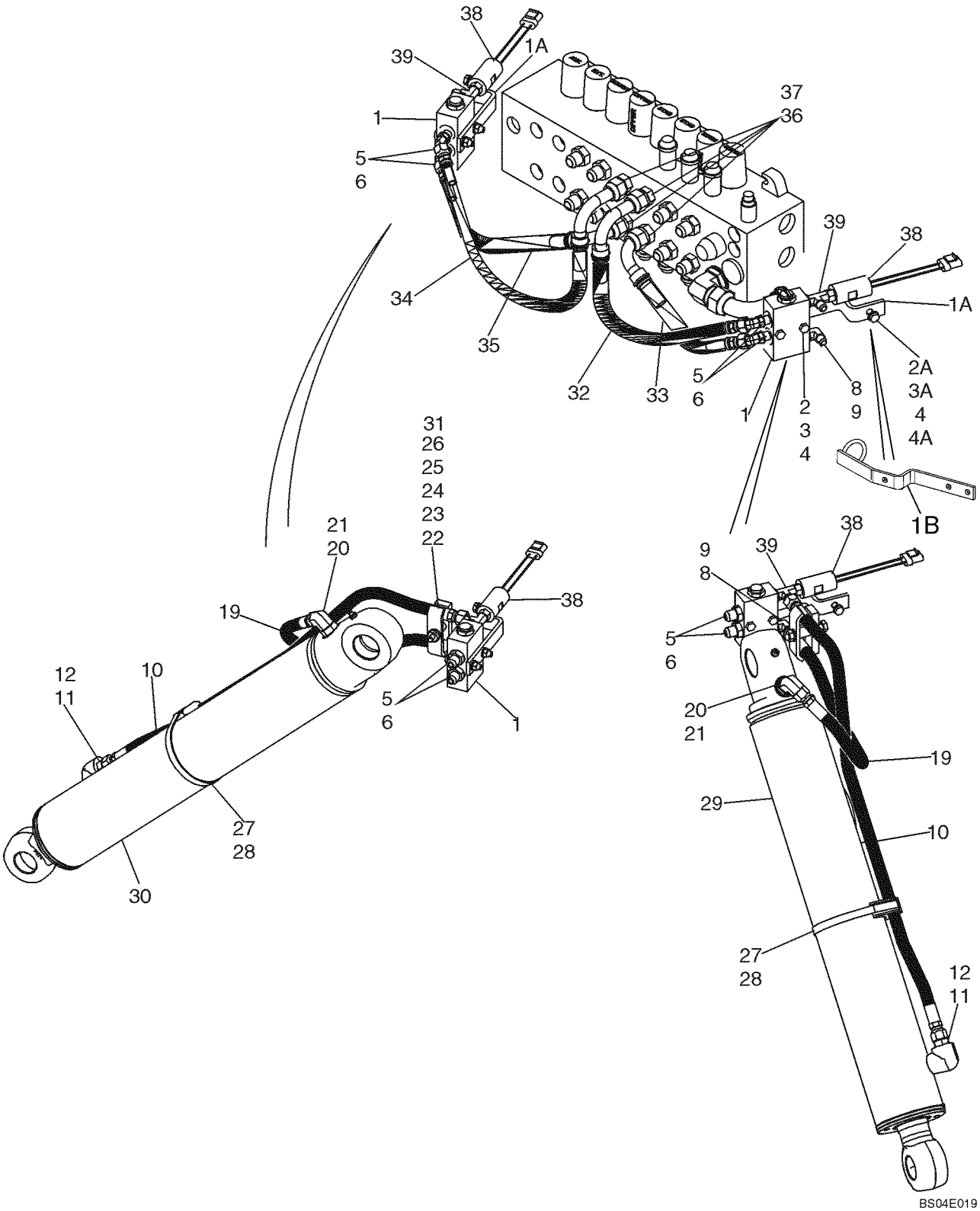

http://www.minnparbackhoeparts.com/

SYSTEME HYDRAULIQUE - VERIN, STABILISATEUR DE LA PELLE RETRO EUROPA (AVEC DE COMMANDE PILOTE)

REF	FN	PART NUMBER	YR/SN	QTY	DESCRIPTION
		REF			NOTICE MODELS WITH PILOT CONTROLS
1		85802820		2	SOUPAPE HYDRAULIQUE Load Check; Component Parts Not Serviced Separately
1A		87423034		2	EQUERRE No Longer Available, Order 87450318 Bracket, Ref 1B
1B		87450318		2	EQUERRE
2		814-8055		4	VIS M8 x 55
2A		814-8035		2	BOULON M8 x 35
3		496-41041		2	RONDELLE 13/32 x 1-1/8 x 1/8
3A		895-11008		6	RONDELLE 9 x 16 x 1.6 mm
4		829-1408		6	ECROU M8
4A		87437840		2	ENTRETOISE
5		218-5135		4	COUDE 45 deg, 9/16 fl x Or; Incl. Ref 6
6		237-6006		1	JOINT THORIQUE 15/32 ID x 5/64
8		218-5105		2-4	COUDE 90 deg, 9/16 fl x Or; Incl. Ref 9; (2) Used On Models With Auto-Up; (4) Used On Models Without Auto-Up
9		237-6006		1	JOINT THORIQUE 15/32 ID x 5/64
10		87439306		2	FLEXIBLE (ASSEMBLE) 830 mm (32-11/16 in) Hose
11		218-5351		2	RACCORD 3/4 fl x 9/16 Or; Incl. Ref 12; 580SM Models
12		237-6006		1	JOINT THORIQUE 15/32 ID x 5/64
11		218-5059		2	RACCORD 3/4 fl x Or; Incl. Ref 12; 580SM+ Models
12		237-6008		1	JOINT THORIQUE 41/64 ID x 3/32
19		87429584		2	FLEXIBLE (ASSEMBLE) 500 mm (19-11/16 in) Hose
20		218-5106		2	RACCORD 3/4 fl x Or, Incl. Ref 21
21		237-6008		1	JOINT THORIQUE 41/64 ID x 3/32
22		814-10070		2	BOULON M10 x 70
23		87420673		2	BRIDE, FLEXIBLE Clamp
		496-41041		2	RONDELLE 13/32 x 1-1/8 x 1/8
24		87439665		2	ENTRETOISE
25		87420672		2	ENTRETOISE Spacer, Clamp
26		829-1410		2	ECROU M10; 10.9
27		D142787		2	ENTRETOISE
28		214-3188		2	COLLIER 4-3/4 - 5-5/8; 580SM Models
28		214-1496		2	COLLIER 5-9/16 - 6-1/2; 580SM+ Models

http://www.minnparbackhoeparts.com/

SYSTEME HYDRAULIQUE - VERIN, STABILISATEUR DE LA PELLE RETRO EUROPA (AVEC DE COMMANDE PILOTE)

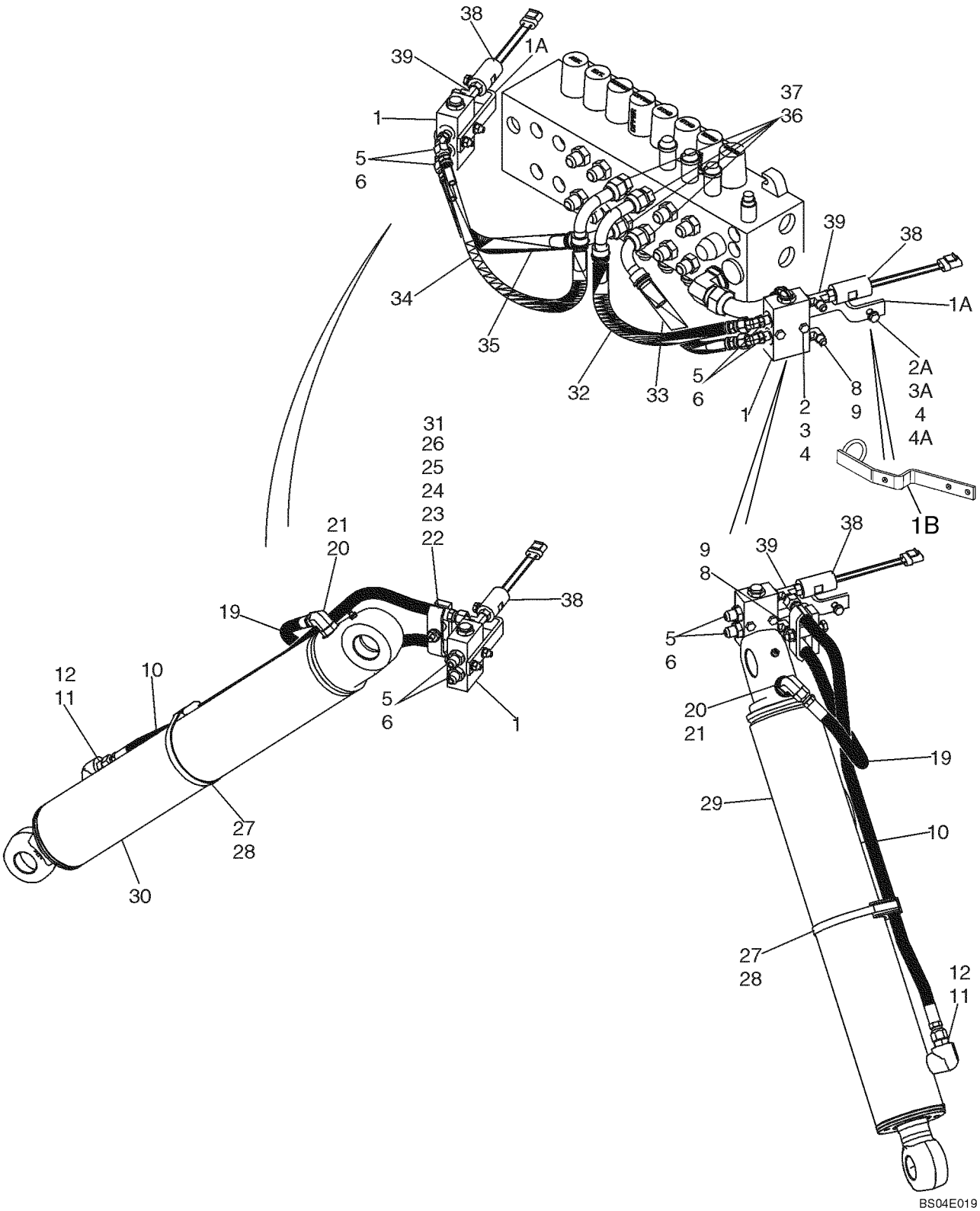

http://www.minnparbackhoeparts.com/

SYSTEME HYDRAULIQUE - VERIN, STABILISATEUR DE LA PELLE RETRO EUROPA (AVEC DE COMMANDE PILOTE)

REF	FN	PART NUMBER	YR/SN	QTY	DESCRIPTION
29		199721A1		1	VERIN 108 ID x 553 mm strk; Stabilizer Cylinder; Left-Hand; 580SM Models; See Figure 08-65
29		177257A1		1	VERIN 127 ID x 519 mm strk; Stabilizer Cylinder; Left-Hand; 580SM+ Models; See Figure 08-65A
30		199720A1		1	VERIN 108 ID x 553 mm strk; Stabilizer Cylinder; Right-Hand; 580SM Models; See Figure 08-65
30		177256A1		1	VERIN 127 ID x 519 mm strk; Stabilizer Cylinder; Right-Hand; 580SM+ Models; See Figure 08-65A
31		895-11010		2	RONDELLE 11 x 24 x 2 mm
32		87437939		1	FLEXIBLE (ASSEMBLE) 440 mm (17-3/8 in)
33		87437938		1	FLEXIBLE (ASSEMBLE) 350 mm (13-13/16 in)
34		87437941		1	FLEXIBLE (ASSEMBLE) 485 mm (19-1/8 in)
35		87437940		1	FLEXIBLE (ASSEMBLE) 400 mm (15-3/4 in)
36		218-5070		4	CONNECTEUR 3/4 fl x 1-1/16 Or; Incl. Ref 37
37		237-6012		1	JOINT TORIQUE 59/64 ID x 7/64
38		87439163		2	PRESSOSTAT Pilot Control; Includes 237-6004 O-Ring; If Used; Used On Models With Auto-Up
38		86992557		2	CONTACTEUR PRESSURE, Pilot Control; Includes 237-6004 O-Ring; If Used; Used On Models With Auto-Up
39		87423033		2	TE 9/16 x 9/16 Or x 7/16 Or; Includes 237-6004, 237-6006 O-Ring; Used On Models With Auto-Up

http://www.minnparbackhoeparts.com/

08-09		p1	05/04

SYSTEME HYDRAULIQUE - VERIN, DEBATTEMENT DE LA PELLE RETRO (SANS DE COMMANDE PILOTE)

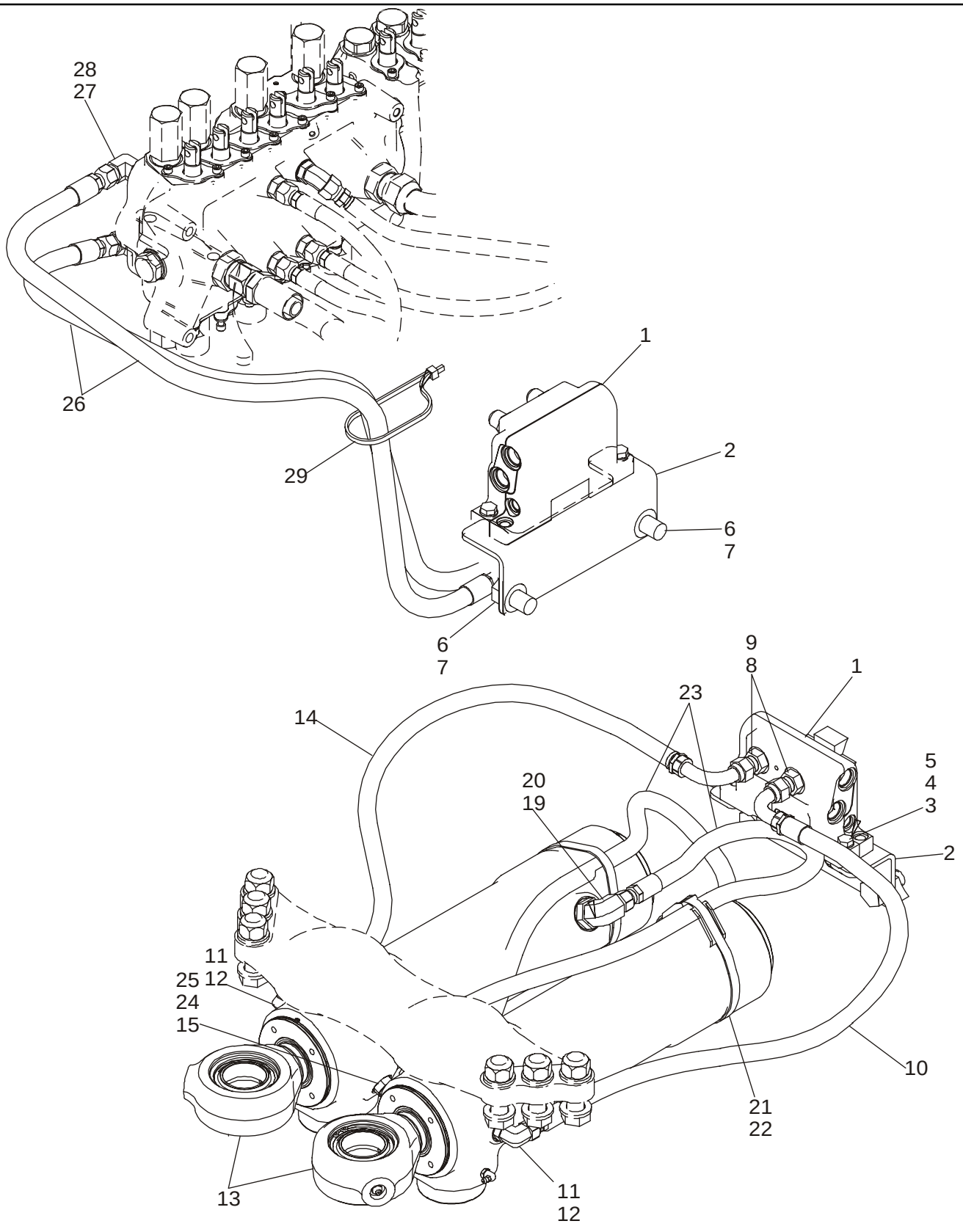

http://www.minnparbackhoeparts.com/

SYSTEME HYDRAULIQUE - VERIN, DEBATTEMENT DE LA PELLE RETRO (SANS DE COMMANDE PILOTE)

REF	FN	PART NUMBER	YR/SN	QTY	DESCRIPTION
		REF			NOTICE MODELS WITHOUT PILOT CONTROLS
1		87449373		1	SOUPAPE, AMORTISSEMENT Swing Cushion; See Figure 08-59; Replaces 87416975 Valve
2		87428140		1	EQUERRE Valve Bracket
3		814-10040		2	BOULON M10 x 40
4		895-11010		4	RONDELLE
5		829-1410		2	ECROU M10
6		614-18035		2	BOULON M18 x 35
7		895-11018		4	RONDELLE
8		218-5062		4	RACCORD 7/8 fl x Or; Incl. Ref 9
9		237-6010		1	JOINT TORIQUE 3/4 ID x 3/32
10		87423356		1	FLEXIBLE (ASSEMBLE) 850 mm (33-1/2 in)
11		218-5106		2	RACCORD 3/4 fl x Or, Incl. Ref 12
12		237-6008		1	JOINT THORIQUE 41/64 ID x 3/32, Boss Seal
13		139808A2		2	VERIN 102 ID x 292 mm strk; Swing Cylinder, See Figure 08-66
14		87423356		1	FLEXIBLE (ASSEMBLE) 850 mm (33-1/2 in)
15		124690A1		2	RÉDUCTION Orifice
19		218-5119		2	RACCORD 7/8 fl x 1-1/16 Or, Incl. Ref 20
20		237-6012		1	JOINT TORIQUE 59/64 ID x 7/64, Boss Seal
21		D142787		2	ENTRETOISE
22		214-1492		2	COLLIER
23		87441076		2	FLEXIBLE (ASSEMBLE) 802 mm (31-19/32 in)
24		218-5106		2	RACCORD 3/4 fl x Or, Incl. Ref 25
25		237-6008		1	JOINT THORIQUE 41/64 ID x 3/32, Boss Seal
26		87428158		2	FLEXIBLE (ASSEMBLE) 1194 mm (47 in)
27		218-5107		2	COUDE 90 deg, 7/8 fl x Or; Incl. Ref 28
28		237-6010		1	JOINT TORIQUE
29		L18337		1	SANGLE

http://www.minnparbackhoeparts.com/

08-09A		p1	05/04

SYSTEME HYDRAULIQUE - VERIN, DEBATTEMENT DE LA PELLE RETRO (AVEC DE COMMANDE PILOTE)

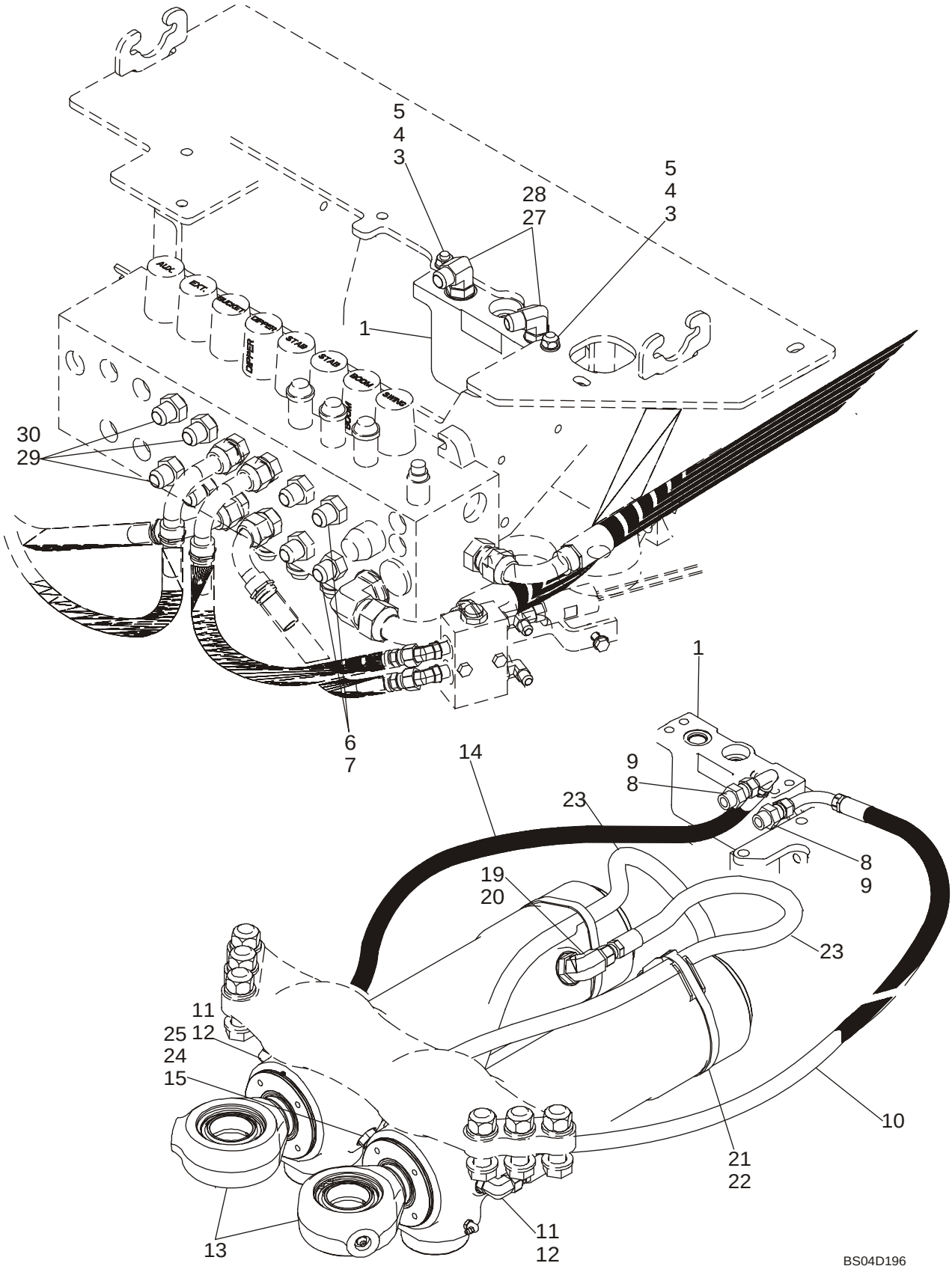

http://www.minnparbackhoeparts.com/

SYSTEME HYDRAULIQUE - VERIN, DEBATTEMENT DE LA PELLE RETRO (AVEC DE COMMANDE PILOTE)

REF	FN	PART NUMBER	YR/SN	QTY	DESCRIPTION
		REF			NOTICE MODELS WITH PILOT CONTROLS
1		87449373		1	SOUPAPE, AMORTISSEMENT Swing Cushion; See Figure 08-59; Replaces 87416975 Valve
3		814-10045		2	BOULON M10 x 45
4		895-11010		4	RONDELLE
5		829-1410		2	ECROU M10
6		218-5063		2	RACCORD 7/8 fl x 1-1/16 Or; Incl. Ref 7
7		237-6012		1	JOINT TORIQUE
8		218-5062		2	RACCORD 7/8 fl x Or; Incl. Ref 9
9		237-6010		1	JOINT TORIQUE 3/4 ID x 3/32
10		87440812		1	FLEXIBLE (ASSEMBLE) 950 mm (37-13/32 in)
11		218-5106		2	RACCORD 3/4 fl x Or, Incl. Ref 12
12		237-6008		1	JOINT THORIQUE 41/64 ID x 3/32, Boss Seal
13		139808A2		2	VERIN 102 ID x 292 mm strk; Swing Cylinder, See Figure 08-66
14		87437685		1	FLEXIBLE (ASSEMBLE) 1310 mm (51-5/8 in); No Longer Available, Order 87450698 Hose and 87450318 Bracket on Figure 08-8A
14		87450698		1	FLEXIBLE (ASSEMBLE) 1285 mm (50-19/32 in); Replaces 1310 mm 87437685 Hose Used On Some Models
15		124690A1		2	RÉDUCTION Orifice
19		218-5119		2	RACCORD 7/8 fl x 1-1/16 Or, Incl. Ref 20
20		237-6012		1	JOINT TORIQUE 59/64 ID x 7/64, Boss Seal
21		D142787		2	ENTRETOISE
22		214-1492		2	COLLIER
23		87441076		2	FLEXIBLE (ASSEMBLE) 802 mm (31-19/32 in)
24		218-5106		2	RACCORD 3/4 fl x Or, Incl. Ref 25
25		237-6008		1	JOINT THORIQUE 41/64 ID x 3/32, Boss Seal
27		218-5107		2	COUDE 90 deg, 7/8 fl x Or; Incl. Ref 28
28		237-6010		1	JOINT TORIQUE
29		218-5064		6	RACCORD 1-1/16 fl x Or; Incl. Ref 30
30		237-6012		1	JOINT TORIQUE

http://www.minnparbackhoeparts.com/

08-10		p1	06/05

SYSTEME HYDRAULIQUE - VERIN, FLECHE DE LA PELLE RETRO EUROPA

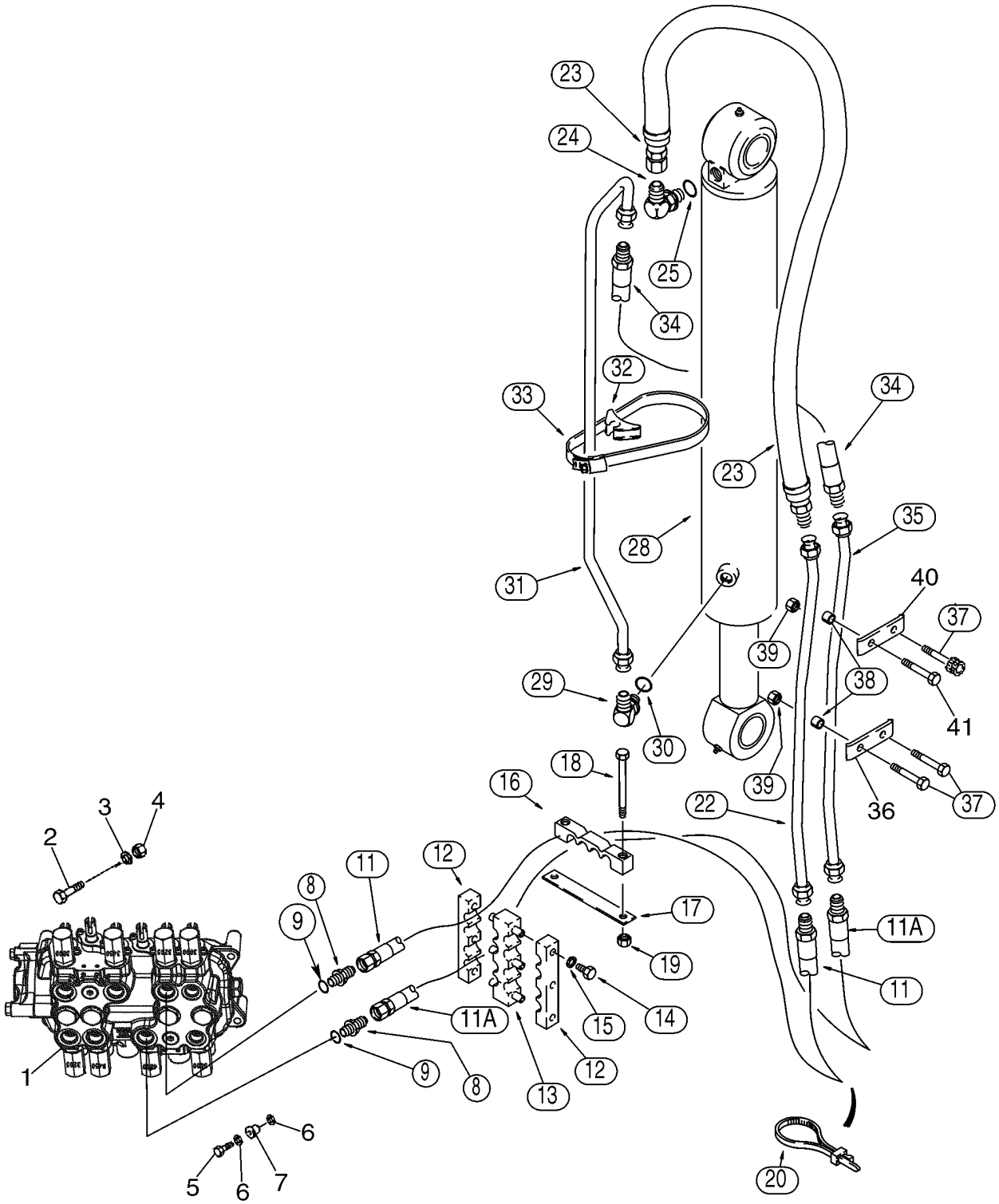

http://www.minnparbackhoeparts.com/

SYSTEME HYDRAULIQUE - VERIN, FLECHE DE LA PELLE RETRO EUROPA

REF	FN	PART NUMBER	YR/SN	QTY	DESCRIPTION
1		REF		1	NOTICE Valve Assy, Control; Backhoe Control Valve; For Correct Assembly and Components, See Figures 08-36 - 08-43
2		814-10080		2	VIS M10 x 80
3		896-11010		2	RONDELLE
4		829-1410		2	ECROU M10
5		614-10035		1	VIS M10 x 35; Replaces 614-10040 M10 x 40 Bolt Used On Some Models
6		496-41041		2	RONDELLE 13/32 x 1-1/8 x 9/64
7		D52276		1	ISOLATEUR
8		218-5064		2	RACCORD 1-1/16 fl x Or; Incl. Ref 9
9		237-6012		1	JOINT TORIQUE 59/64 ID x 7/64, Boss Seal
11		393380A1		1	FLEXIBLE (ASSEMBLE) 1295 mm (51 in); Upper Valve Port
11A		393380A1		1	FLEXIBLE (ASSEMBLE) 1295 mm (51 in); Lower Valve Port
12		143439A1		2	BRIDE Clamp
13		176226A1		1	BRIDE-DE-FIXATION Clamp
14		614-8025		6	BOULON M8 x 25
15		892-11008		6	RONDELLE M8
16		373833A1		1	COLLIER
17		132212A1		1	PLAQUE, GRANDE
18		814-12100		2	BOULON M12 x 100
19		832-10412		2	ECROU M12
20		L18337		1	SANGLE 15 in
22		87455441		1	TUYAUTERIE Replaces 87412076
23		187845A1		1	FLEXIBLE 1000 mm (39-3/8 in)
24		218-5108		1	COUDE 1-1/16 fl x 0r; Incl. Ref 25
25		237-6012		1	JOINT TORIQUE 59/64 ID x 7/64, Boss Seal
28		87417644		1	VERIN 133 ID x 843 strk; Boom Cylinder; See Figure 08-67
29		218-5123		1	RACCORD 1-1/16 fl x 7/8 Or; Incl. Ref 30
30		237-6010		1	JOINT TORIQUE 3/4 ID x 3/32, Boss Seal
31		142815A1		1	TUYAU TUBE
32		D142787		1	ENTRETOISE
33		214-14104		1	COLLIER 6-1/8 - 7 in dia
34		177634A1		1	FLEXIBLE 440 mm (17-3/8 in)

http://www.minnparbackhoeparts.com/

08-10		p2	06/05

SYSTEME HYDRAULIQUE - VERIN, FLECHE DE LA PELLE RETRO EUROPA

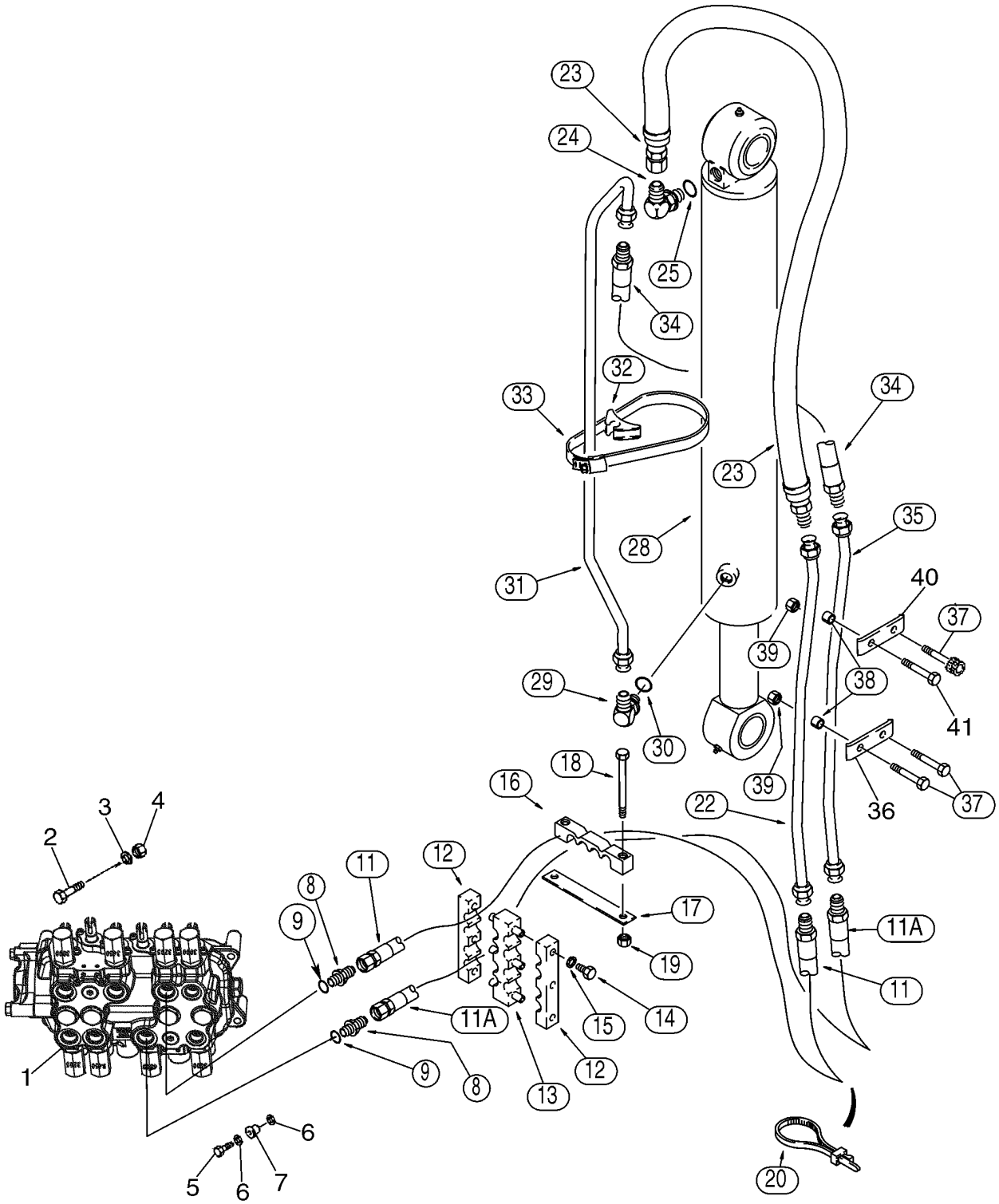

http://www.minnparbackhoeparts.com/

SYSTEME HYDRAULIQUE - VERIN, FLECHE DE LA PELLE RETRO EUROPA

REF	FN	PART NUMBER	YR/SN	QTY	DESCRIPTION
35		142122A1		1	TUYAU TUBE
36		133605A1		1	BRIDE Clamp
37		814-12080		3	VIS Hex, M12 x 80
38		132930A1		4	ENTRETOISE
39		832-10412		4	ECROU M12
40		87307476		1	BRIDE Replaces 451605A1 Clamp Used On Some Models
41		814-12080		1	VIS Hex, M12 x 80; Replaces 869-12080 M12 x 80 Flat Socket Head Screw Used On Some Models

http://www.minnparbackhoeparts.com/

08-10A		p1	03/04

SYSTEME HYDRAULIQUE - LE LOQUET DE BOOM DE BACKHOE ET LE CIRCUIT ELECTRIQUE

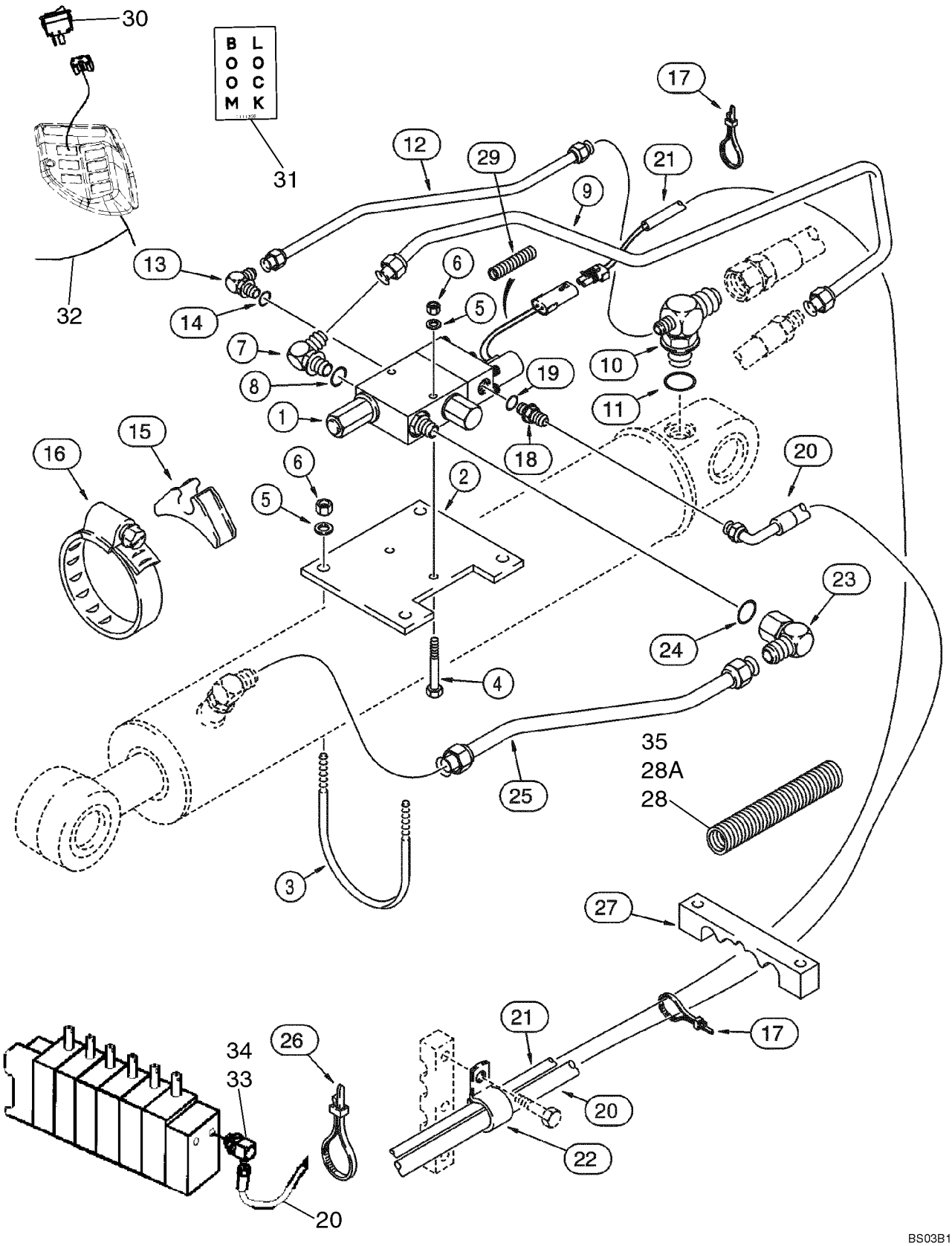

http://www.minnparbackhoeparts.com/

SYSTEME HYDRAULIQUE - LE LOQUET DE BOOM DE BACKHOE ET LE CIRCUIT ELECTRIQUE

REF	FN	PART NUMBER	YR/SN	QTY	DESCRIPTION
		399221A1		1	POCHETTE Backhoe Boom Lock; Incl. Ref 1 - 35 and an Instruction Sheet; Also Includes Backhoe Boom Lock Valve On Figure 08-59A
1		189957A1		1	VALVE Solenoid; Backhoe Boom Lock; Incl. (2) 321-6046 Warning Decals; See Figure 08-59A
2		D150054		1	PLAQUE, GRANDE Valve Mounting
3		D150053		2	BOULON 3/8 in
4		413-648		2	BOULON 3/8 NC x 3 in; Hex
5		495-11041		6	RONDELLE 13/32 x 13/16 x 1/16 in; Flat
6		231-1446		6	CONTRE-ECROU 3/8 NC
7		218-5118		1	RACCORD 90 deg, 1-11/64 ID fl x 1-5/16 in adj, Incl. Ref 8
8		237-6016		1	JOINT TORIQUE 1-11/64 ID x 7/64, Boss Seal
9		192025A1		1	TUBE Valve Port; Attaches to Ref 34 Hose on Figure 8-10
10		187677A1		1	TE Reducer; Boom Cylinder Closed End; Attaches to Ref 23 Hose on Figure 08-10; Incl. Ref 11
11		237-6012		1	JOINT TORIQUE 59/64 ID x 7/64, Boss Seal
12		189709A1		1	TUBE Pilot Port
13		218-5283		1	COUDE 90 deg, 7/16 fl x 9/16 in adj, Incl. Ref 14
14		237-6006		1	JOINT THORIQUE 15/32 x 5/64, Boss Seal
15		D142787		1	ENTRETOISE Rubber
16		214-31104		1	COLLIER 5-3/4 - 6-5/8 in dia adj
17		L18337		15	SANGLE 15 in
18		218-5359		1	UNION 7/16 fl x 3/16 in; Incl. Ref 19
19		237-6008		1	JOINT THORIQUE 41/64 ID x 3/32, Boss Seal
20		189103A1		1	FLEXIBLE 3700 mm (145-11/16 in), Return; Attaches to Elbow at Backhoe Valve
21		189263A1		1	FAISCEAU Boom Lock Valve to Control Tower Harness
22		515-25190		1	COLLIER 3/4 in ID; Return Hose
23		218-5382		1	RACCORD 90 deg, 1-1/16 fl x 1-5/16 in swl; Incl. Ref 24
24		237-6016		1	JOINT TORIQUE 1-11/64 ID x 7/64, Boss Seal
25		187612A1		1	TUBE Boom Lock Valve to Boom Cylinder Rod End; See Figure 08-10 For Elbow
26		D147773		1	COLLIER Tie, 11 in

http://www.minnparbackhoeparts.com/

08-10A		p2	03/04

SYSTEME HYDRAULIQUE - LE LOQUET DE BOOM DE BACKHOE ET LE CIRCUIT ELECTRIQUE

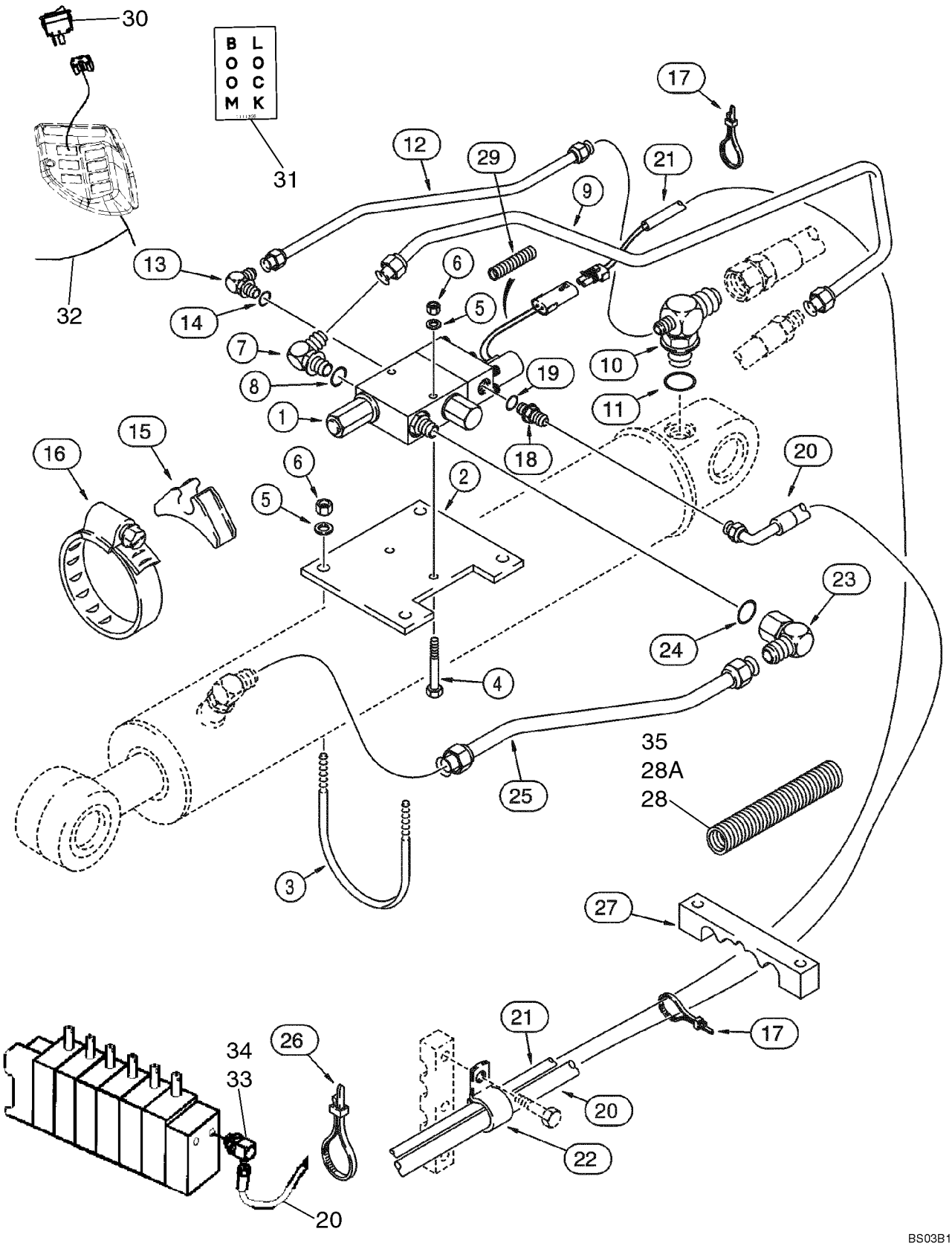

http://www.minnparbackhoeparts.com/

SYSTEME HYDRAULIQUE - LE LOQUET DE BOOM DE BACKHOE ET LE CIRCUIT ELECTRIQUE

REF	FN	PART NUMBER	YR/SN	QTY	DESCRIPTION
27		221330A1		1	COLLIER Hose and Harness
28		220276A1		1	MANCHON 610 mm long, Hose Guard; Ref 20 Hose and Ref 21 Harness, Ahead of Clamp
28A		404907A1		1	MANCHON 740 mm long, Hose Guard; Ref 20 Hose and Ref 21 Harness, Behind Clamp
29		1999528C1		1	GAINE DE CABLE 455 mm long; Harness Protection
30		400016A1		1	CONTACTEUR Rocker; Boom Lock
31		L111356		1	DECALCOMANIE Boom Lock
32		399246A1		1	FAISCEAU Cab to Solenoid
33		189414A1		1	COUDE 90 deg; Incl. Ref 34
34		237-6010		1	JOINT TORIQUE 7/8 - 14, Boss Seal
35		226582A1		1	PROTECTEUR 1850 mm long; Harness Below Floor Plate

http://www.minnparbackhoeparts.com/

08-11		p1	06/05

SYSTEME HYDRAULIQUE - VERIN, BALANCIER DE LA PELLE RETRO

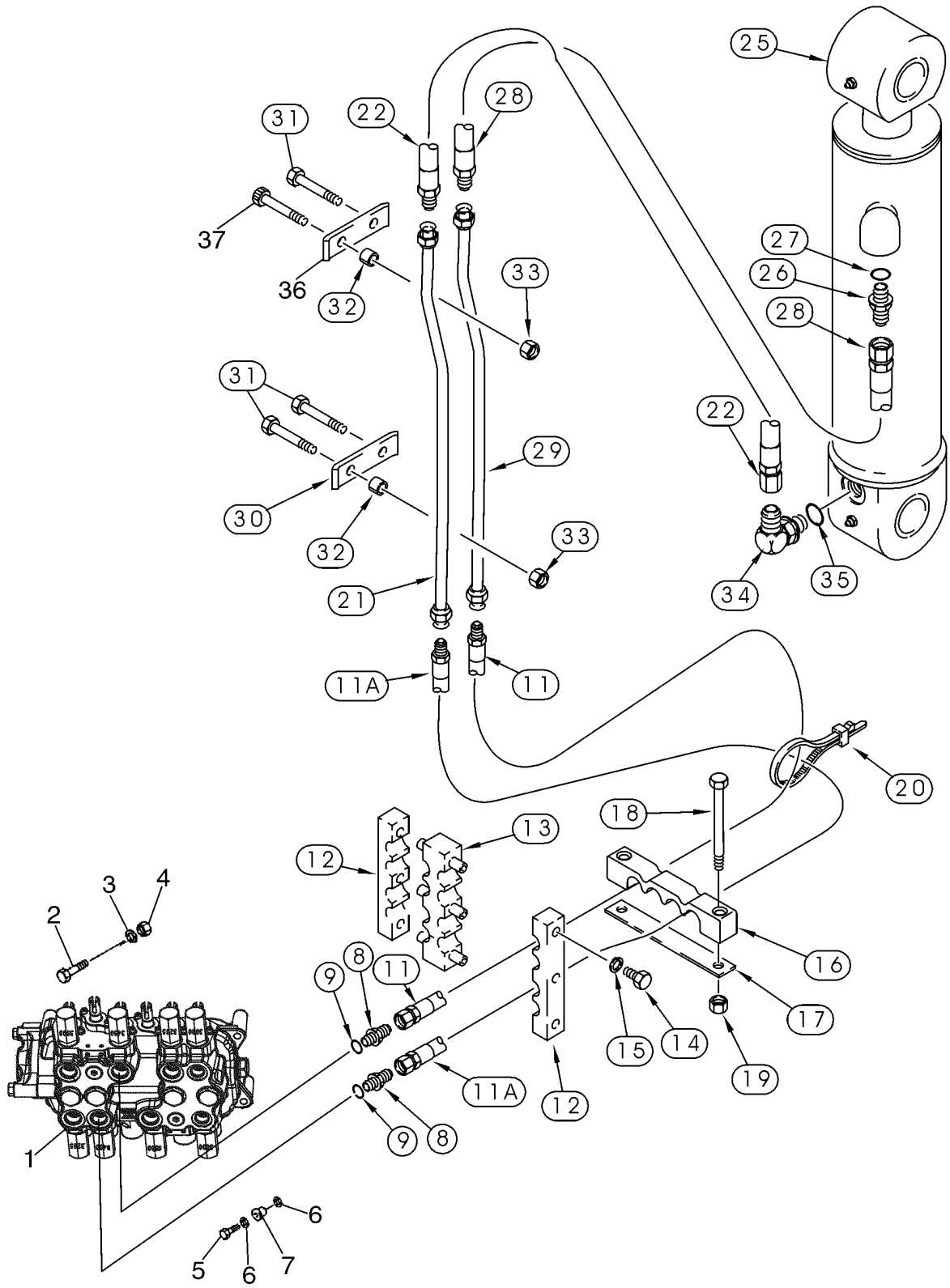

http://www.minnparbackhoeparts.com/

SYSTEME HYDRAULIQUE - VERIN, BALANCIER DE LA PELLE RETRO

REF	FN	PART NUMBER	YR/SN	QTY	DESCRIPTION
1		REF		1	NOTICE Valve Assy; Control, Backhoe Control Valve; For Correct Assembly and Components, See Figures 08-36 - 08-43
2		814-10080		2	VIS M10 x 80
3		896-11010		2	RONDELLE
4		829-1410		2	ECROU M10
5		614-10035		1	VIS M10 x 35; Replaces 614-10040 M10 x 40 Bolt Used On Some Models
6		496-41041		2	RONDELLE 13/32 x 1-1/8 x 9/64
7		D52276		1	ISOLATEUR
8		218-5064		2	RACCORD 1-1/16 fl x Or; Incl. Ref 9
9		237-6012		1	JOINT TORIQUE 59/64 ID x 7/64, Boss Seal
11		393380A1		1	FLEXIBLE (ASSEMBLE) 1295 mm (51 in); Upper Valve Port
11A		393380A1		1	FLEXIBLE (ASSEMBLE) 1295 mm (51 in); Lower Valve Port
12		143439A1		2	BRIDE Clamp
13		176226A1		1	BRIDE-DE-FIXATION Clamp
14		614-8025		6	BOULON M8 x 25
15		892-11008		6	RONDELLE M8
16		373833A1		1	COLLIER
17		132212A1		1	PLAQUE, GRANDE
18		814-12100		2	BOULON M12 x 100
19		832-10412		2	ECROU M12
20		L18337		1	SANGLE 15 in
21		87455443		1	TUYAUTERIE Replaces 87412079
22		87439660		1	FLEXIBLE (ASSEMBLE) 660 mm (26 in)
25		183795A3		1	VERIN 127 ID x 583 mm strk; Dipper Cylinder; See Figure 08-68; If Used
25		183795A4		1	VERIN 127 ID x 583 mm strk; Dipper Cylinder; See Figure 08-68; If Used
26		218-5064		1	RACCORD 1-1/16 fl x Or; Incl. Ref 27
27		237-6012		1	JOINT TORIQUE 59/64 ID x 7/64, Boss Seal
28		397782A1		1	FLEXIBLE (ASSEMBLE) 780 mm (30-3/4 in)
29		142124A1		1	TUYAU TUBE
30		133605A1		1	BRIDE Clamp
31		814-12080		3	VIS Hex, M12 x 80

http://www.minnparbackhoeparts.com/

08-11		p2	06/05

SYSTEME HYDRAULIQUE - VERIN, BALANCIER DE LA PELLE RETRO

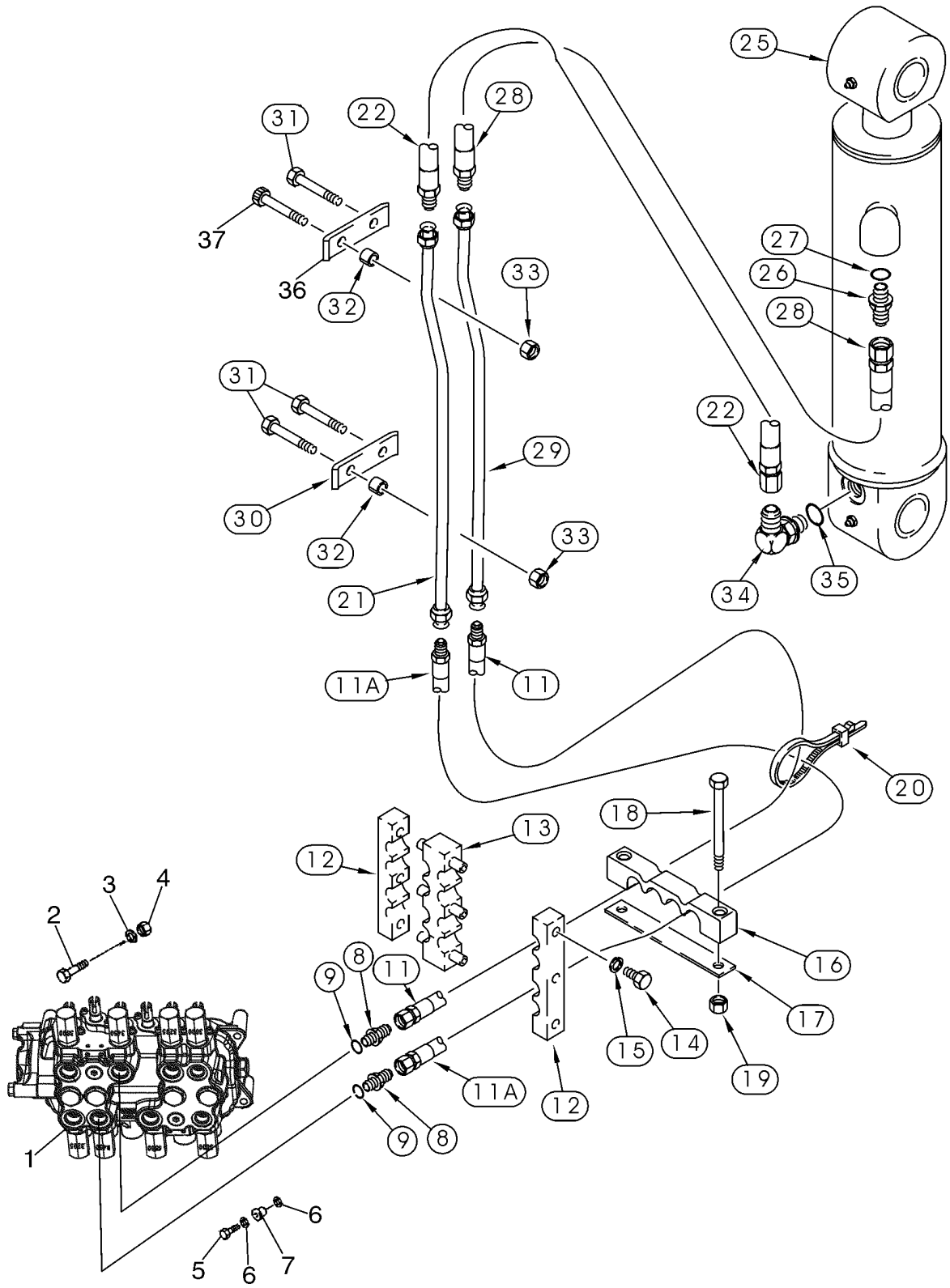

http://www.minnparbackhoeparts.com/

SYSTEME HYDRAULIQUE - VERIN, BALANCIER DE LA PELLE RETRO

REF	FN	PART NUMBER	YR/SN	QTY	DESCRIPTION
32		132930A1		4	ENTRETOISE
33		832-10412		4	ECROU M12
34		87439842		1	RACCORD ELBOW, 90 deg, 7/8 fl x 1-1/16 0r; Incl. Ref 35
35		237-6012		1	JOINT TORIQUE 59/64 ID x 7/64, Boss Seal
36		87307476		1	BRIDE Replaces 451605A1 Clamp Used On Some Models
37		814-12080		1	VIS Hex, M12 x 80; Replaces 869-12080 M12 x 80 Flat Socket Head Screw Used On Some Models

http://www.minnparbackhoeparts.com/

08-12		p1	06/05

SYSTEME HYDRAULIQUE - VERIN, GODET DE LA PELLE RETRO (MODÈLES SANS BALANCIER EXTENSIBLE)

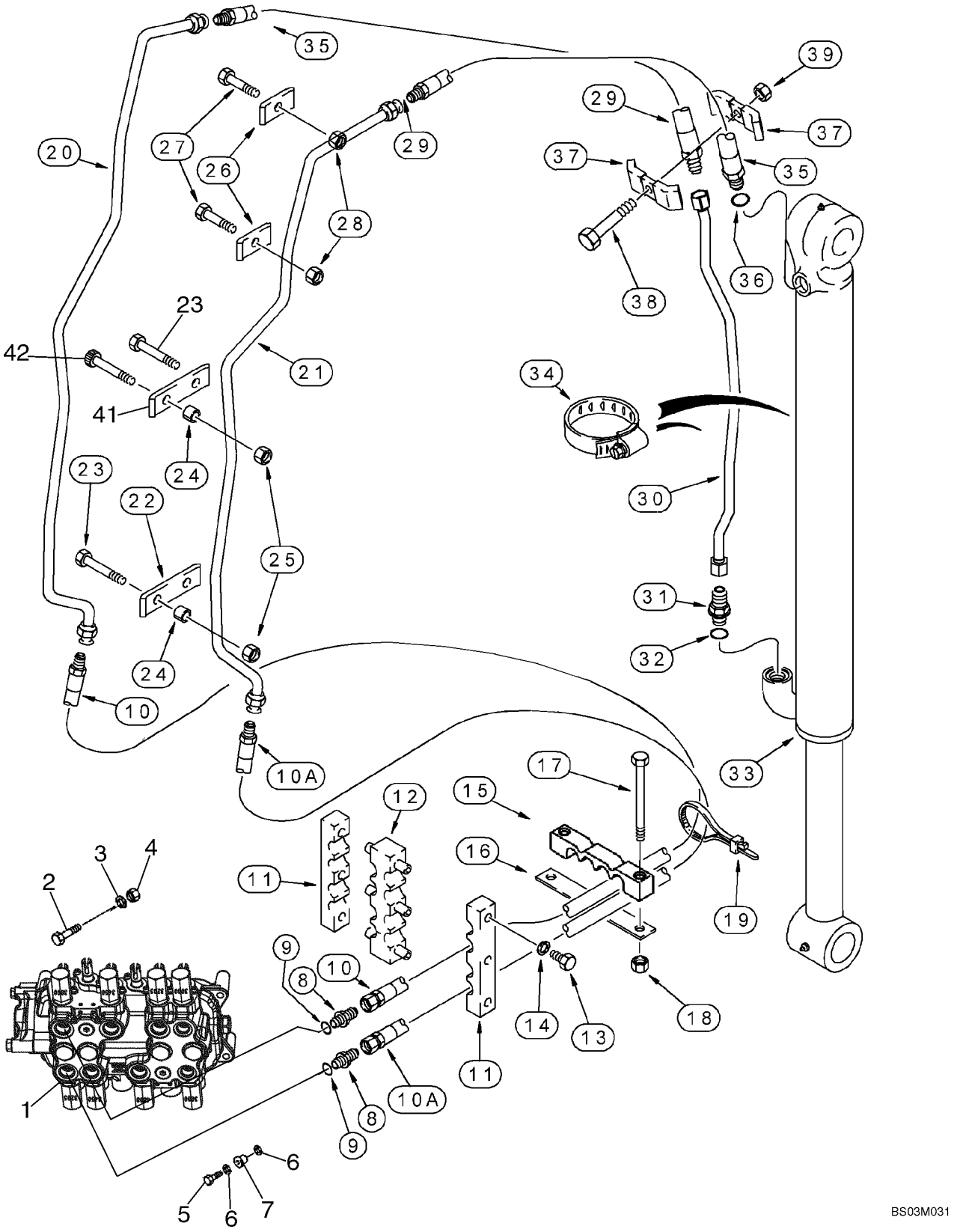

http://www.minnparbackhoeparts.com/

SYSTEME HYDRAULIQUE - VERIN, GODET DE LA PELLE RETRO (MODÈLES SANS BALANCIER EXTENSIBLE)

REF	FN	PART NUMBER	YR/SN	QTY	DESCRIPTION
1		REF		1	NOTICE Valve Assy, Control; Backhoe Control Valve; For Correct Assembly and Components, See Figures 08-36 - 08-43
2		814-10080		2	VIS M10 x 80
3		896-11010		2	RONDELLE
4		829-1410		2	ECROU M10
5		614-10035		1	VIS M10 x 35; Replaces 614-10040 M10 x 40 Bolt Used On Some Models
6		496-41041		2	RONDELLE 13/32 x 1-1/8 x 9/64
7		D52276		1	ISOLATEUR
8		218-5064		2	RACCORD 1-1/16 fl x Or; Incl. Ref 9
9		237-6012		1	JOINT TORIQUE 59/64 ID x 7/64, Boss Seal
10		393380A1		1	FLEXIBLE (ASSEMBLE) 1295 mm (51 in)
10A		393380A1		1	FLEXIBLE (ASSEMBLE) 1295 mm (51 in)
11		143439A1		2	BRIDE Clamp
12		176226A1		1	BRIDE-DE-FIXATION Clamp
13		614-8025		6	BOULON M8 x 25
14		892-11008		6	RONDELLE M8
15		373833A1		1	COLLIER
16		132212A1		1	PLAQUE, GRANDE
17		814-12100		2	BOULON M12 x 100
18		832-10412		2	ECROU M12
19		L18337		1	SANGLE 15 in
20		141806A1		1	TUYAU TUBE
21		141801A1		1	TUYAU TUBE
22		133605A1		2	BRIDE Clamp
23		814-12080		6	VIS Hex, M12 x 80
24		132930A1		8	ENTRETOISE
25		832-10412		8	ECROU M12
26		133604A1		4	BRIDE Clamp
27		814-12060		4	VIS M12 x 60
28		832-10412		4	ECROU M12
29		87307636		1	FLEXIBLE (ASSEMBLE) 691 mm (27-1/4 in); Replaces 183660A1 640 mm (25-3/16 in) Long Hose Used On Some Models
30		396634A1		1	TUYAUTERIE Models Without Backhoe Auxiliary Hydraulics

http://www.minnparbackhoeparts.com/

08-12		p2	06/05

SYSTEME HYDRAULIQUE - VERIN, GODET DE LA PELLE RETRO (MODÈLES SANS BALANCIER EXTENSIBLE)

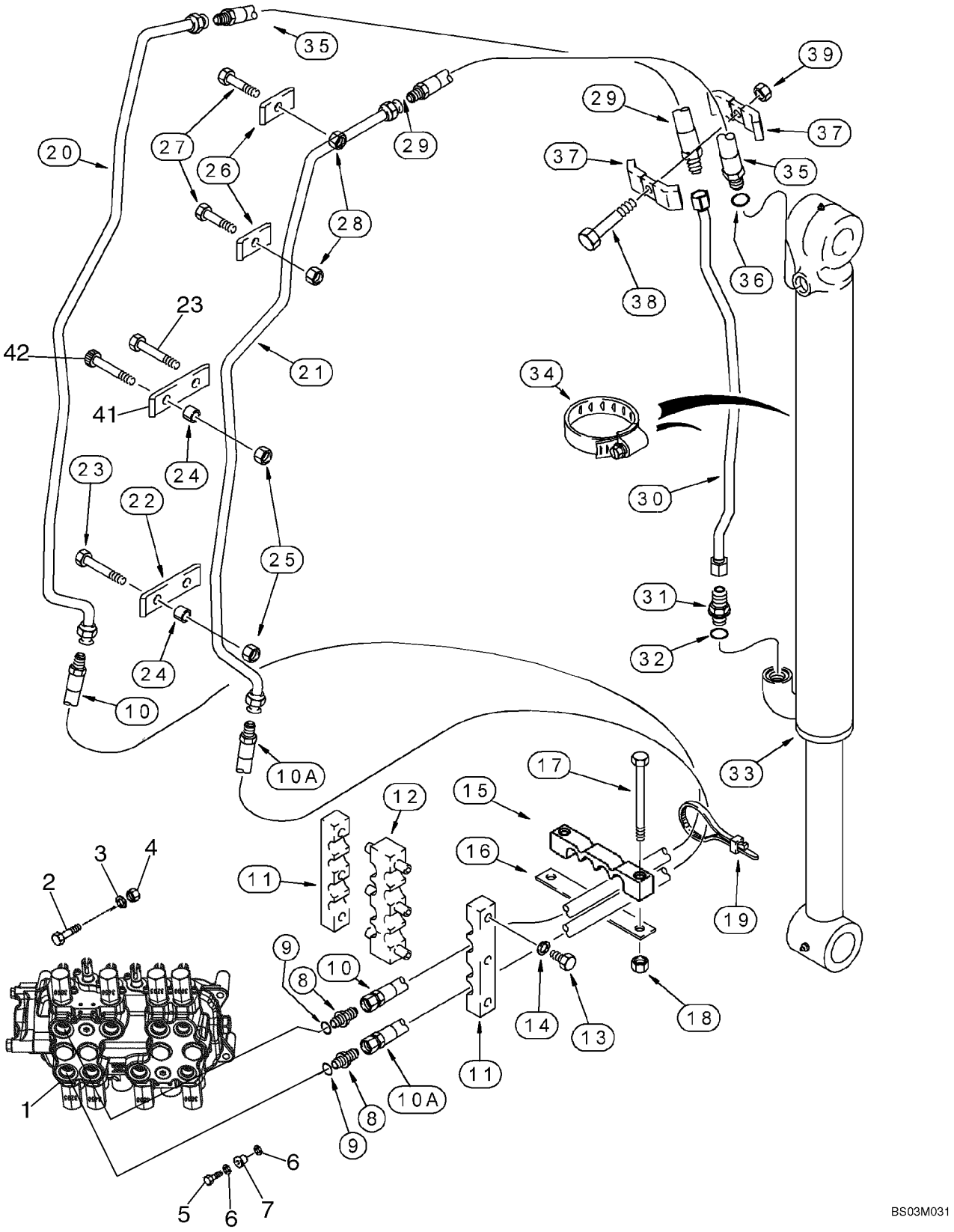

http://www.minnparbackhoeparts.com/

SYSTEME HYDRAULIQUE - VERIN, GODET DE LA PELLE RETRO (MODÈLES SANS BALANCIER EXTENSIBLE)

REF	FN	PART NUMBER	YR/SN	QTY	DESCRIPTION
30		314772A1		1	TUYAU Models With Backhoe Auxiliary Hydraulics
31		218-5064		1	RACCORD 1-1/16 fl x Or; Incl. Ref 32
32		237-6012		1	JOINT TORIQUE 59/64 ID x 7/64, Boss Seal
33		235916A1		1	VERIN 80 ID x 872 mm strk; Bucket Cylinder; See Figure 08-69
34		214-1472		1	COLLIER 4-1/16 - 5
35		87307635		1	FLEXIBLE (ASSEMBLE) 691 mm (27-1/4 in); Incl. Ref 36; Replaces 183658A1 640 mm (25-3/16 in) Long Hose Used On Some Models
36		237-6012		1	JOINT TORIQUE 59/64 ID x 7/64, Boss Seal
37		D143846		2	BRIDE Clamp
38		814-10055		1	BOULON M10 x 55
39		832-10410		1	ECROU M10
41		87307476		2	BRIDE Replaces 451605A1 Clamp Used On Some Models
42		814-12080		2	VIS Hex, M12 x 80; Replaces 869-12080 M12 x 80 Flat Socket Head Screw Used On Some Models

http://www.minnparbackhoeparts.com/

SYSTEME HYDRAULIQUE - VERIN, GODET DE LA PELLE RETRO (MODÈLES AVEC BALANCIER EXTENSIBLE)

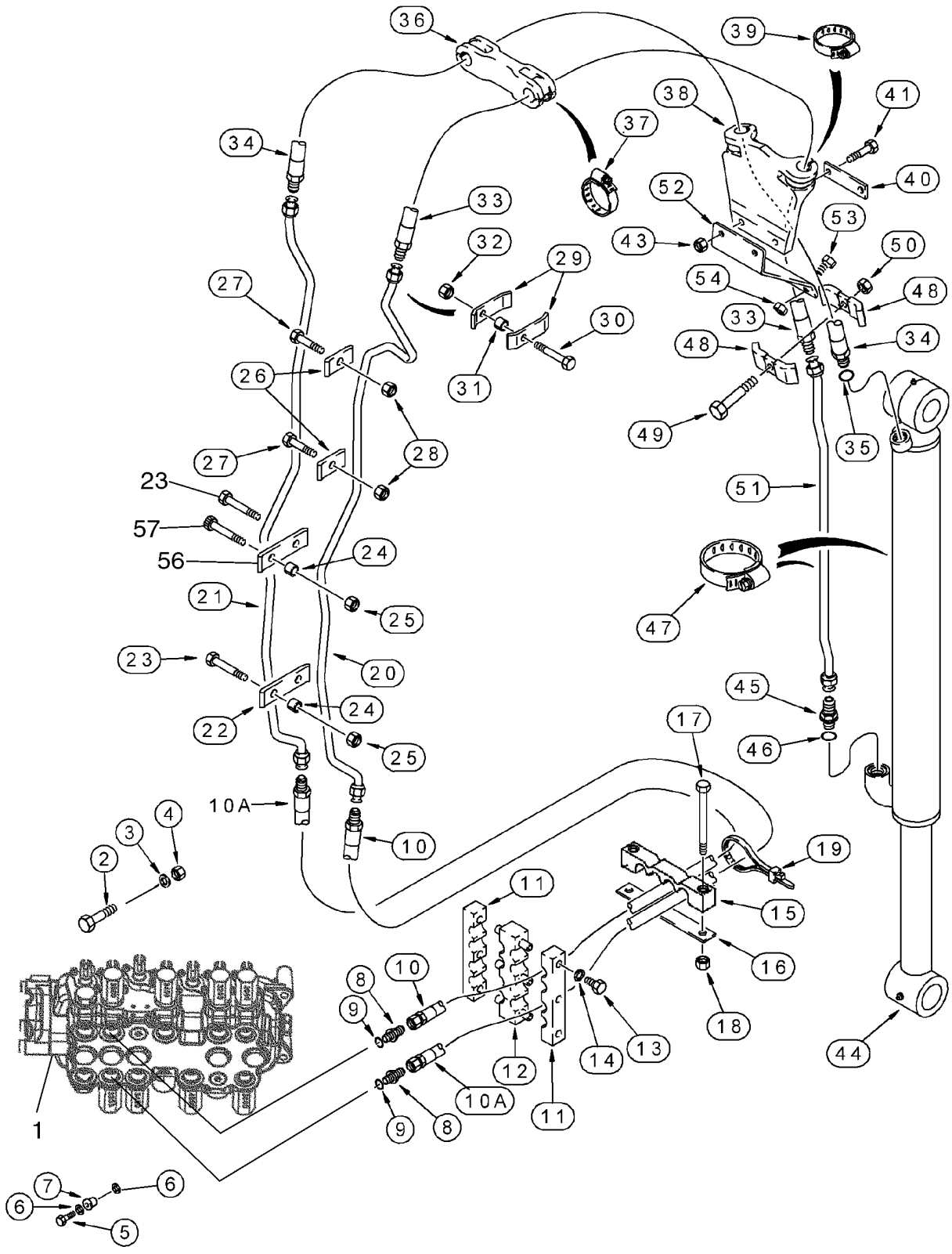

http://www.minnparbackhoeparts.com/

SYSTEME HYDRAULIQUE - VERIN, GODET DE LA PELLE RETRO (MODÈLES AVEC BALANCIER EXTENSIBLE)

REF	FN	PART NUMBER	YR/SN	QTY	DESCRIPTION
1		REF		1	NOTICE Valve Assy, Control; Backhoe Control Valve; For Correct Assembly and Components, See Figures 08-38, 08-39, 08-41, 08-43
2		814-10080		2	VIS M10 x 80
3		896-11010		2	RONDELLE
4		829-1410		2	ECROU M10
5		614-10035		1	VIS M10 x 35; Replaces 614-10040 M10 x 40 Bolt Used On Some Models
6		496-41041		2	RONDELLE 13/32 x 1-1/8 x 9/64
7		D52276		1	ISOLATEUR
8		218-5064		2	RACCORD 1-1/16 fl x Or; Incl. Ref 9
9		237-6012		1	JOINT TORIQUE 59/64 ID x 7/64
10		393380A1		1	FLEXIBLE (ASSEMBLE) 1295 mm (51 in)
10A		393380A1		1	FLEXIBLE (ASSEMBLE) 1295 mm (51 in)
11		143439A1		2	BRIDE Clamp
12		176226A1		1	BRIDE-DE-FIXATION Clamp
13		614-8025		6	BOULON M8 x 25
14		892-11008		6	RONDELLE M8
15		373833A1		1	COLLIER
16		132212A1		1	PLAQUE, GRANDE
17		814-12100		2	BOULON M12 x 100
18		832-10412		2	ECROU M12
19		L18337		1	SANGLE 15 in
20		187637A1		1	TUYAUTERIE
21		187639A1		1	TUYAU
22		133605A1		2	BRIDE Clamp
23		814-12080		6	VIS HexM12 x 80
24		132930A1		8	ENTRETOISE
25		832-10412		8	ECROU M12
26		133604A1		4	BRIDE Clamp
27		814-12060		4	VIS M12 x 60
28		832-10412		4	ECROU M12
29		D143426		4	COLLIER
30		814-10055		2	BOULON M10 x 55
31		D143412		2	ENTRETOISE
32		832-10410		2	ECROU M10
33		108335A1		1	FLEXIBLE 1960 mm (77-1/8 in)

http://www.minnparbackhoeparts.com/

SYSTEME HYDRAULIQUE - VERIN, GODET DE LA PELLE RETRO (MODÈLES AVEC BALANCIER EXTENSIBLE)

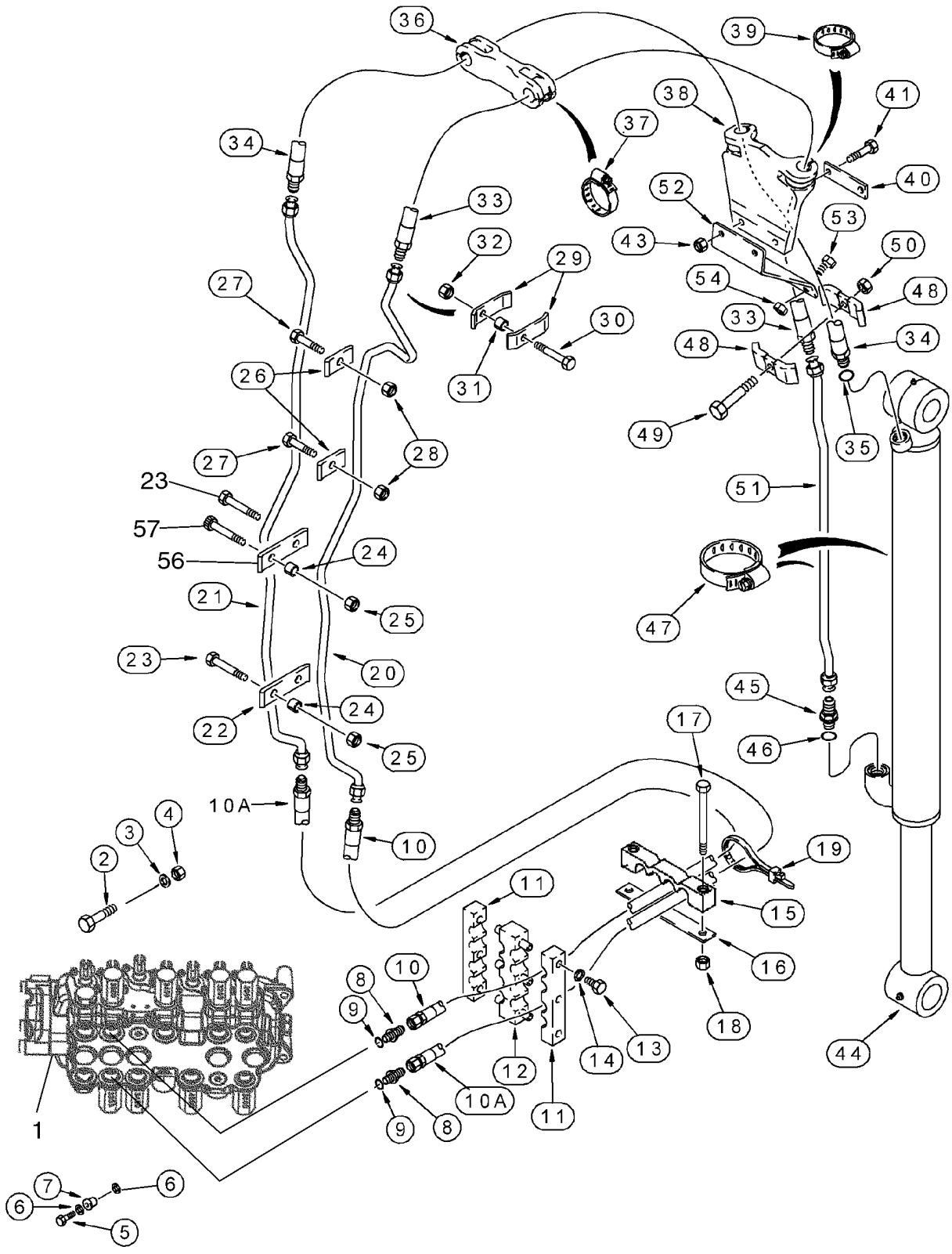

http://www.minnparbackhoeparts.com/

SYSTEME HYDRAULIQUE - VERIN, GODET DE LA PELLE RETRO (MODÈLES AVEC BALANCIER EXTENSIBLE)

REF	FN	PART NUMBER	YR/SN	QTY	DESCRIPTION
34		108336A1		1	FLEXIBLE 1930 mm (76 in); Incl. Ref 35
35		237-6012		1	JOINT TORIQUE 59/64 ID x 7/64
36		103670A1		1	BRIDE, FLEXIBLE
37		214-3132		2	COLLIER 2,0 in
38		184297A1		1	SUPPORT
39		214-3132		2	COLLIER 2,0 in
40		101479A1		1	SUPPORT
41		814-10045		2	BOULON M10 x 45
43		832-10410		2	ECROU M10
44		235916A1		1	VERIN 80 ID x 872 mm strk; Bucket Cylinder; See Figure 08-69
45		218-5064		1	RACCORD 1-1/16 fl x Or; Incl. Ref 46
46		237-6012		1	JOINT TORIQUE 59/64 ID x 7/64
47		214-1472		1	COLLIER 4-1/16 - 5
48		D143846		2	BRIDE Clamp
49		814-10055		1	BOULON M10 x 55
50		832-10410		1	ECROU M10
51		396634A1		1	TUYAUTERIE Models Without Auxiliary Hydraulics
51		314772A1		1	TUYAU Models With Auxiliary Hydraulics
52		183736A1		1	SUPPORT
53		614-10030		2	VIS M10 x 30
54		832-10410		2	ECROU M10
56		87307476		2	BRIDE Replaces 451605A1 Clamp Used On Some Models
57		814-12080		2	VIS Hex, M12 x 80; Replaces 869-12080 M12 x 80 Flat Socket Head Screw Used On Some Models

http://www.minnparbackhoeparts.com/

SYSTEME HYDRAULIQUE - VERIN, BALANCIER EXTENSIBLE DE LA PELLE RETRO

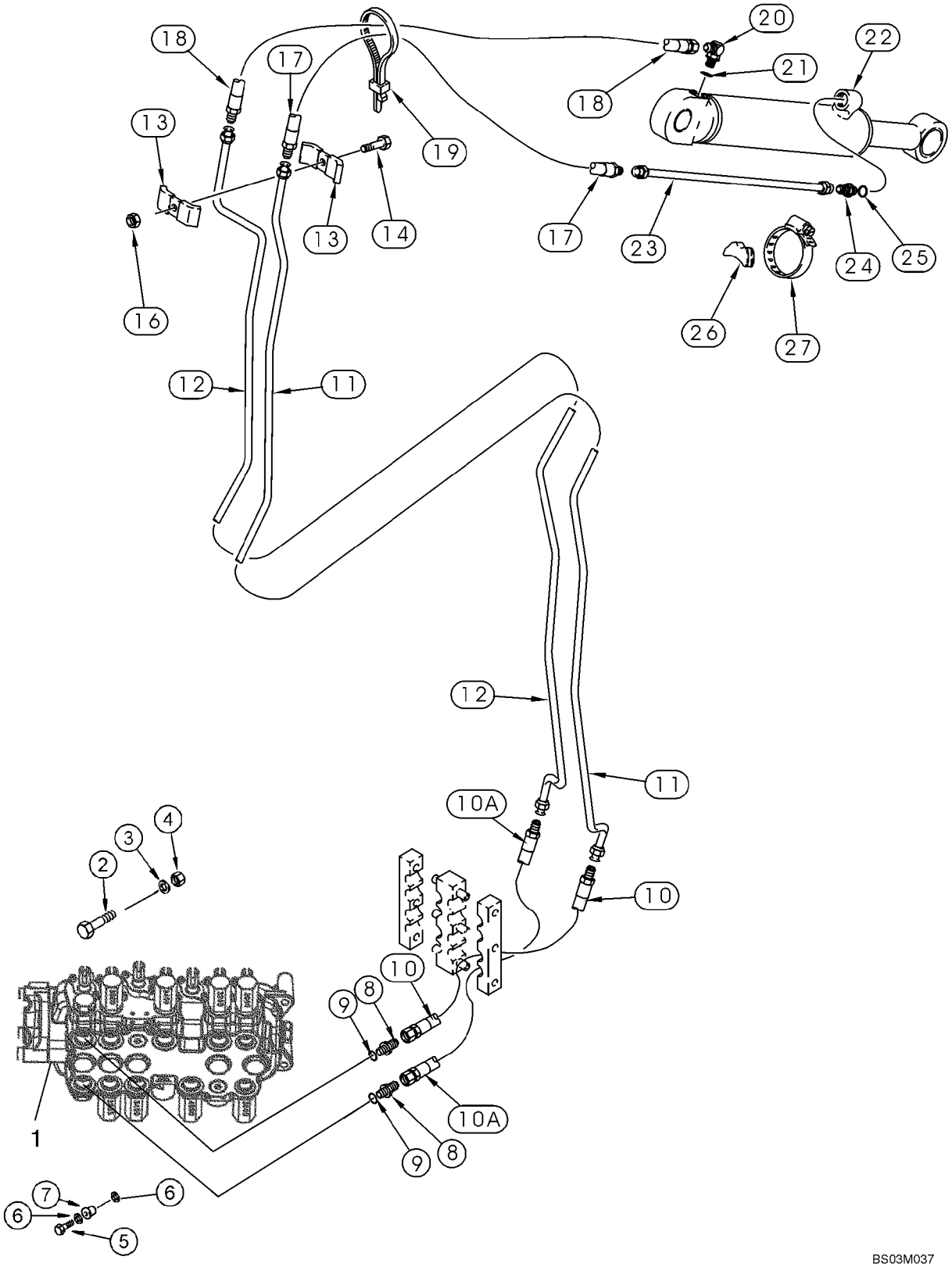

http://www.minnparbackhoeparts.com/

SYSTEME HYDRAULIQUE - VERIN, BALANCIER EXTENSIBLE DE LA PELLE RETRO

REF	FN	PART NUMBER	YR/SN	QTY	DESCRIPTION
1		REF		1	NOTICE Valve Assy, Control; Backhoe Control Valve; For Correct Assembly and Components, See Figures 08-38, 08-39, 08-41, 08-43
2		814-10080		2	VIS M10 x 80
3		896-11010		2	RONDELLE
4		829-1410		2	ECROU M10
5		614-10035		1	VIS M10 x 35; Replaces 614-10040 M10 x 40 Bolt Used On Some Models
6		496-41041		2	RONDELLE 13/32 x 1-1/8 x 9/64
7		D52276		1	ISOLATEUR
8		218-5064		2	RACCORD 1-1/16 fl x Or; Incl. Ref 9
9		237-6012		1	JOINT TORIQUE 59/64 ID x 7/64
10		393380A1		1	FLEXIBLE (ASSEMBLE) 1295 mm (51 in)
10A		393380A1		1	FLEXIBLE (ASSEMBLE) 1295 mm (51 in)
11		141809A1		1	TUYAU Tube
12		141811A1		1	TUYAU Tube
13		D40236		2	COLLIER
14		814-10050		1	BOULON M10 x 50
16		832-10410		1	ECROU M10
17		184617A1		1	FLEXIBLE 850 mm (33-1/2 in)
18		184616A1		1	FLEXIBLE 700 mm (27-9/16 in)
19		L18337		1	SANGLE 15 in
20		218-5107		1	COUDE 7/8 fl x adj Or; Incl. Ref 21
21		237-6010		1	JOINT TORIQUE 3/4 ID x 3/32
22		1340969C2		1	VERIN 76 ID x 1068 mm strk; Extendable Dipper Cylinder; See Figure 08-70
23		87439537		1	TUYAUTERIE Tube; Replaces D140706
24		218-5062		1	RACCORD 7/8 fl x Or; Incl. Ref 25
25		237-6010		1	JOINT TORIQUE 3/4 ID x 3/32
26		D38648		1	BLOC
27		214-1464		1	COLLIER 3-9/16 - 4-1/2 in dia

http://www.minnparbackhoeparts.com/

08-15		p1	04/05

SYSTEME HYDRAULIQUE - DISTRIBUTEUR, COMMANDE PILOTE DE LEVIER DE COMMANDE (6 SPOOL, W/O EXT DIPPER,

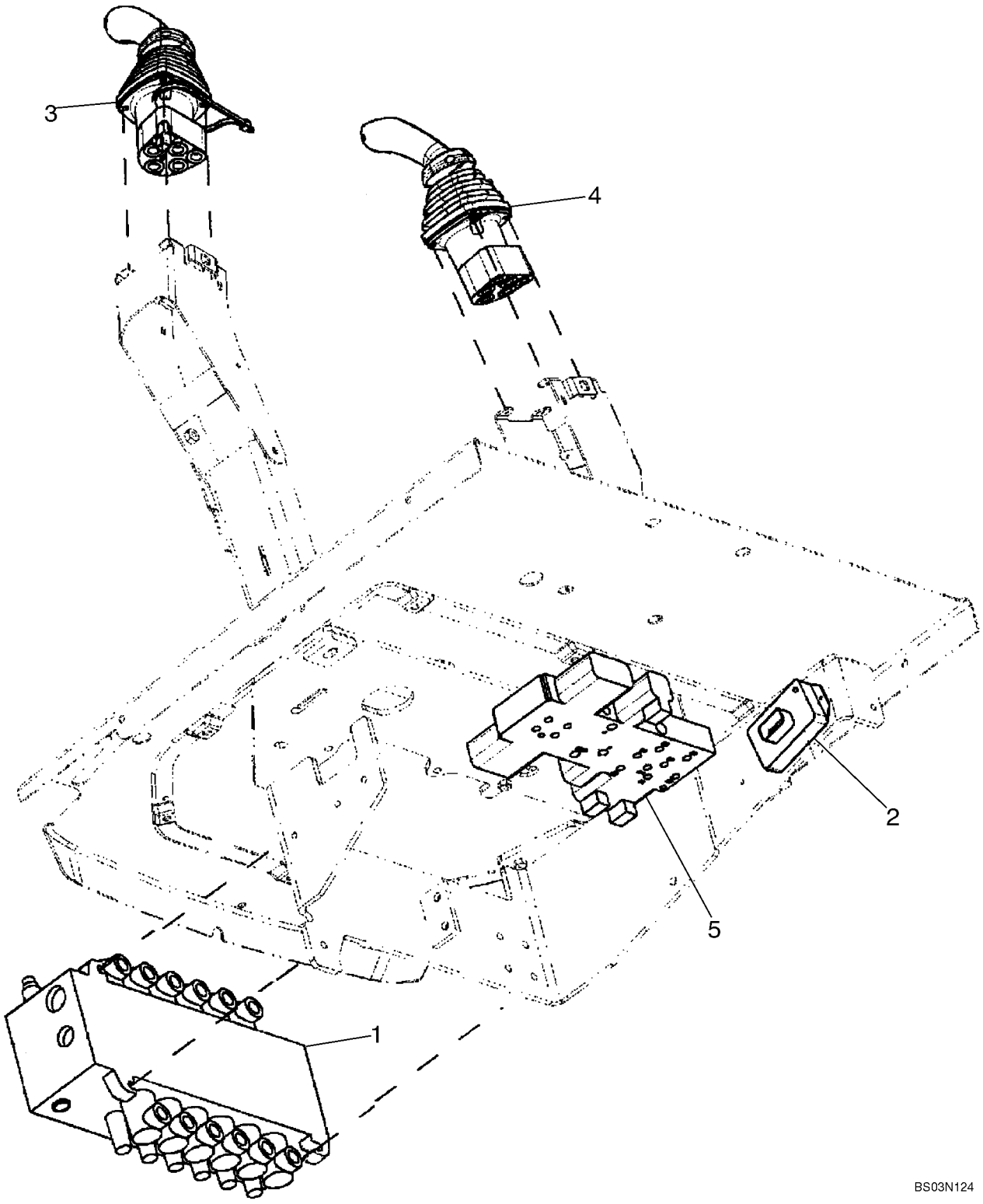

http://www.minnparbackhoeparts.com/

SYSTEME HYDRAULIQUE - DISTRIBUTEUR, COMMANDE PILOTE DE LEVIER DE COMMANDE (6 SPOOL, W/O EXT DIPPER,

REF	FN	PART NUMBER	YR/SN	QTY	DESCRIPTION
		REF			NOTICE SIX SPOOL VALVE WITHOUT EXTENDABLE DIPPER; WITH AUTO-UP; WITHOUT AUXILIARY HYDRAULICS, WITHOUT UNI-DIRECTIONAL OR BI-DIRECTIONAL
1		86987459		1	DISTRIBUTEUR Backhoe, 6 Spool; See Figure 08-40; For Mounting See Figure 08-22
2		87419454		1	BOÎTIER Box, Pilot Control Power Supply Module
		840-1416		2	VIS M4 x 16
3		87308844		1	DISTRIBUTEUR JOYSTICK; Left-Hand; With Horn Button; See Figure 08-54; Replaces 87443740
4		87308840		1	DISTRIBUTEUR JOYSTICK; Right-Hand; See Figure 08-57; Replaces 87443739
5		85827472		1	SOUPAPE HYDRAULIQUE Pressure Reducing, 2 Spool; See Figure 08-51

http://www.minnparbackhoeparts.com/

SYSTEME HYDRAULIQUE - DISTRIBUTEUR, COMMANDE PILOTE DE LEVIER DE COMMANDE (6 SPOOL, W/O EXT DIPPER,

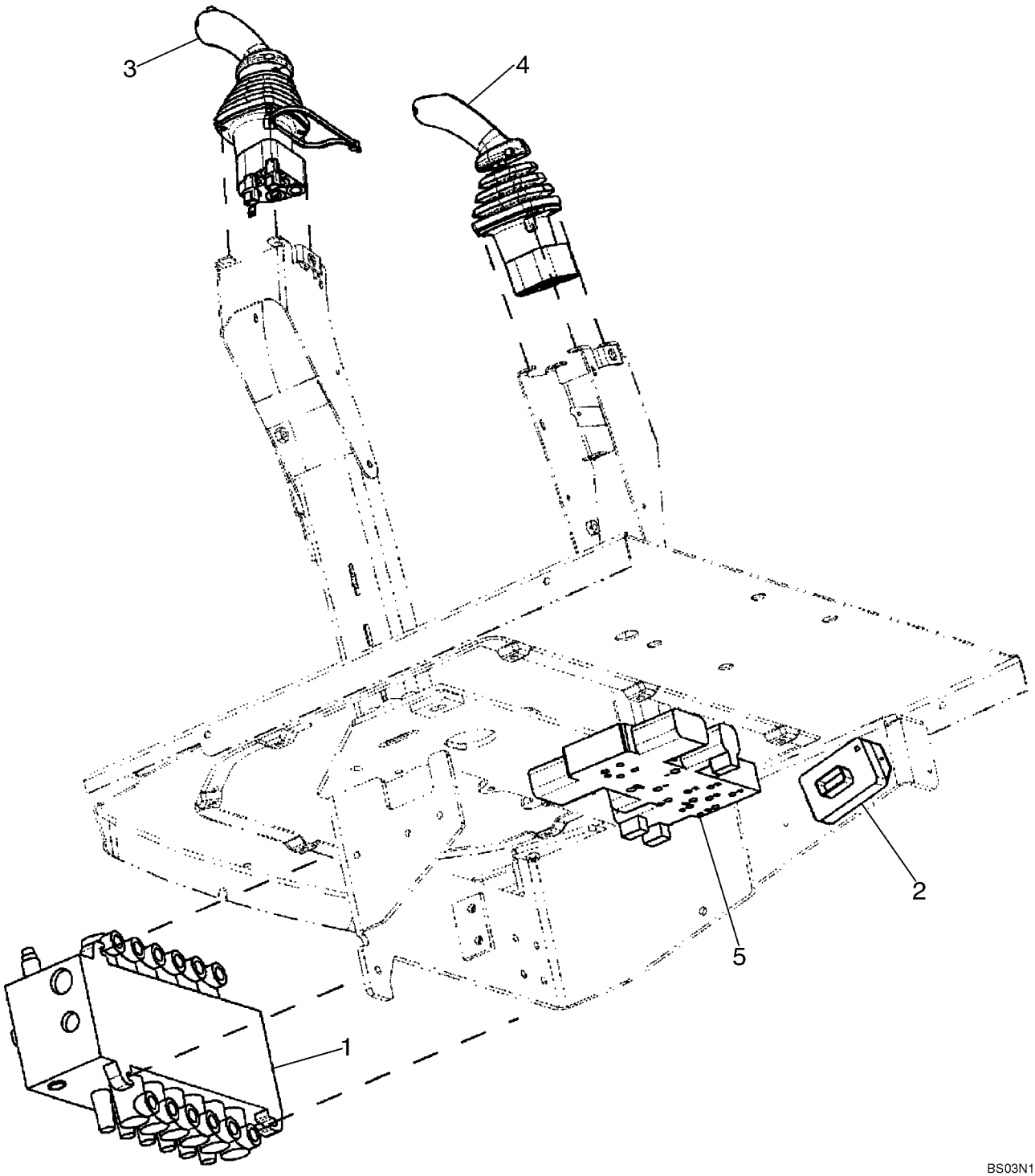

http://www.minnparbackhoeparts.com/

SYSTEME HYDRAULIQUE - DISTRIBUTEUR, COMMANDE PILOTE DE LEVIER DE COMMANDE (6 SPOOL, W/O EXT DIPPER,

REF	FN	PART NUMBER	YR/SN	QTY	DESCRIPTION
		REF			NOTICE SIX SPOOL VALVE WITHOUT EXTENDABLE DIPPER; WITH AUTO-UP; WITH AUXILIARY HYDRAULICS, WITH UNI-DIRECTIONAL
1		86987459		1	DISTRIBUTEUR Backhoe, 6 Spool; See Figure 08-40; For Mounting See Figure 08-22
2		87419454		1	BOÎTIER Box, Pilot Control Power Supply Module
		840-1416		2	VIS M4 x 16
3		87308846		1	DISTRIBUTEUR JOYSTICK; Left-Hand; With Horn and Uni-Directional Buttons; See Figure 08-55; Replaces 87443742
4		87308840		1	DISTRIBUTEUR JOYSTICK; Right-Hand; See Figure 08-57; Replaces 87443739
5		85827472		1	SOUPAPE HYDRAULIQUE Pressure Reducing, 2 Spool; See Figure 08-51

http://www.minnparbackhoeparts.com/

08-17		p1	04/05

SYSTEME HYDRAULIQUE - DISTRIBUTEUR, COMMANDE PILOTE DE LEVIER DE COMMANDE (7 SPOOL, W/ EXT DIPPER,

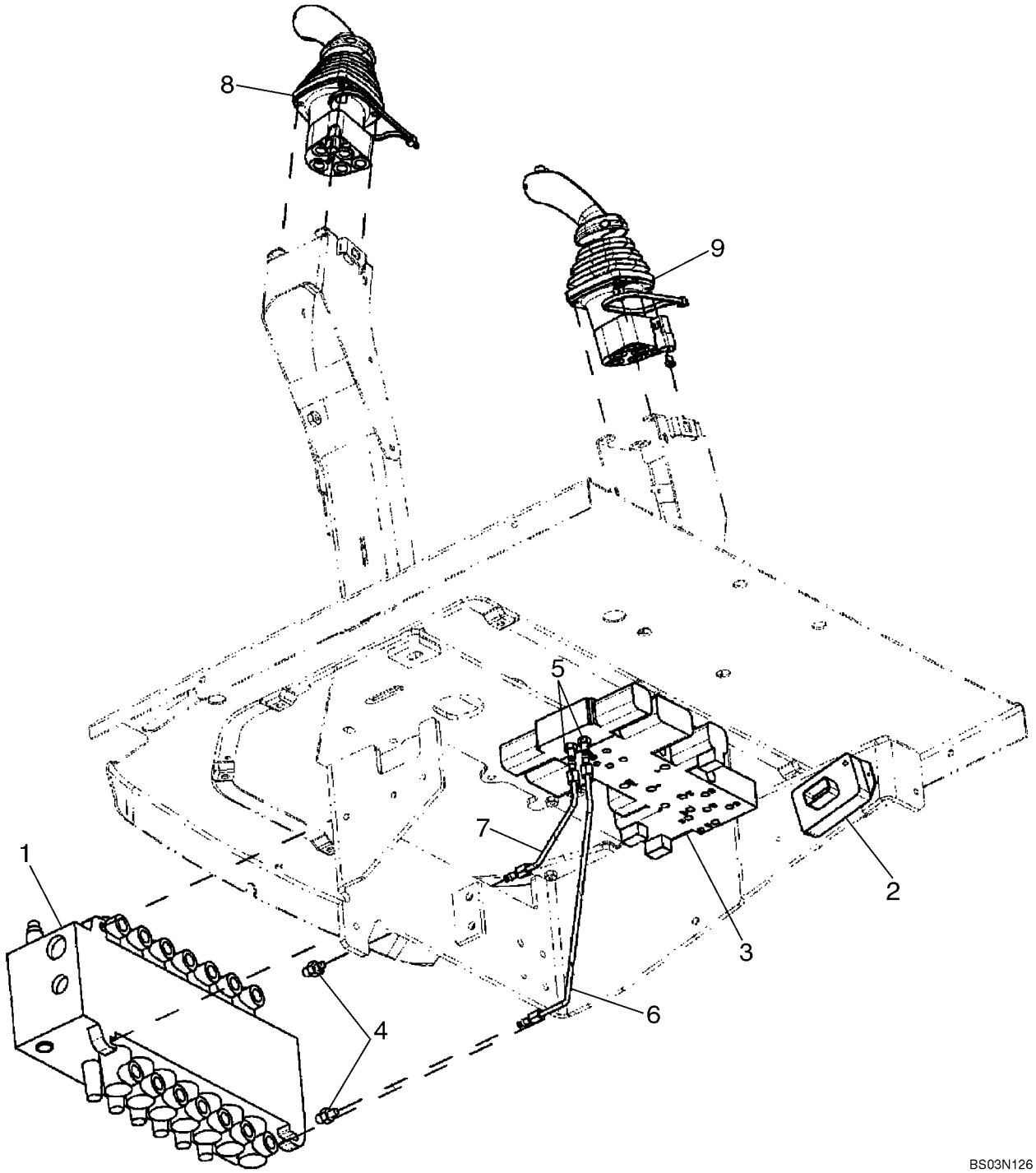

http://www.minnparbackhoeparts.com/

SYSTEME HYDRAULIQUE - DISTRIBUTEUR, COMMANDE PILOTE DE LEVIER DE COMMANDE (7 SPOOL, W/ EXT DIPPER,

REF	FN	PART NUMBER	YR/SN	QTY	DESCRIPTION
		REF			NOTICE SEVEN SPOOL VALVE WITH EXTENDABLE DIPPER; WITHOUT AUXILIARY HYDRAULICS; WITH AUTO-UP; WITHOUT UNI-DIRECTIONAL OR BI-DIRECTIONAL
1		86987460		1	DISTRIBUTEUR Backhoe, 7 Spool; See Figure 08-41; For Mounting See Figure 08-22
2		87419454		1	BOÎTIER Box, Pilot Control Power Supply Module
		840-1416		2	VIS M4 x 16
3		85827471		1	SOUPAPE HYDRAULIQUE Pressure Reducing, 3 Spool; See Figure 08-52
4		218-5089		2	CONNECTEUR 7/16 fl x 9/16 Or; Includes 237-6006 O-Ring
		237-6006		1	JOINT THORIQUE 15/32 ID x 5/64
5		218-5053		2	RACCORD 7/16 fl x Or; Includes 237-6004 O-Ring
		237-6004		1	JOINT TORIQUE 23/64 ID x 5/64
6		87437633		1	TUYAUTERIE To Lower Extendable Dipper Port
7		87437635		1	TUYAUTERIE To Upper Extendable Dipper Port
8		87308844		1	DISTRIBUTEUR JOYSTICK; Left-Hand; With Horn Button; See Figure 08-54; Replaces 87443740
9		87308847		1	DISTRIBUTEUR JOYSTICK; Right-Hand; See Figure 08-58; Replaces 87443743

http://www.minnparbackhoeparts.com/

SYSTEME HYDRAULIQUE - DISTRIBUTEUR, COMMANDE PILOTE DE LEVIER DE COMMANDE (7 SPOOL, W/ EXT DIPPER,

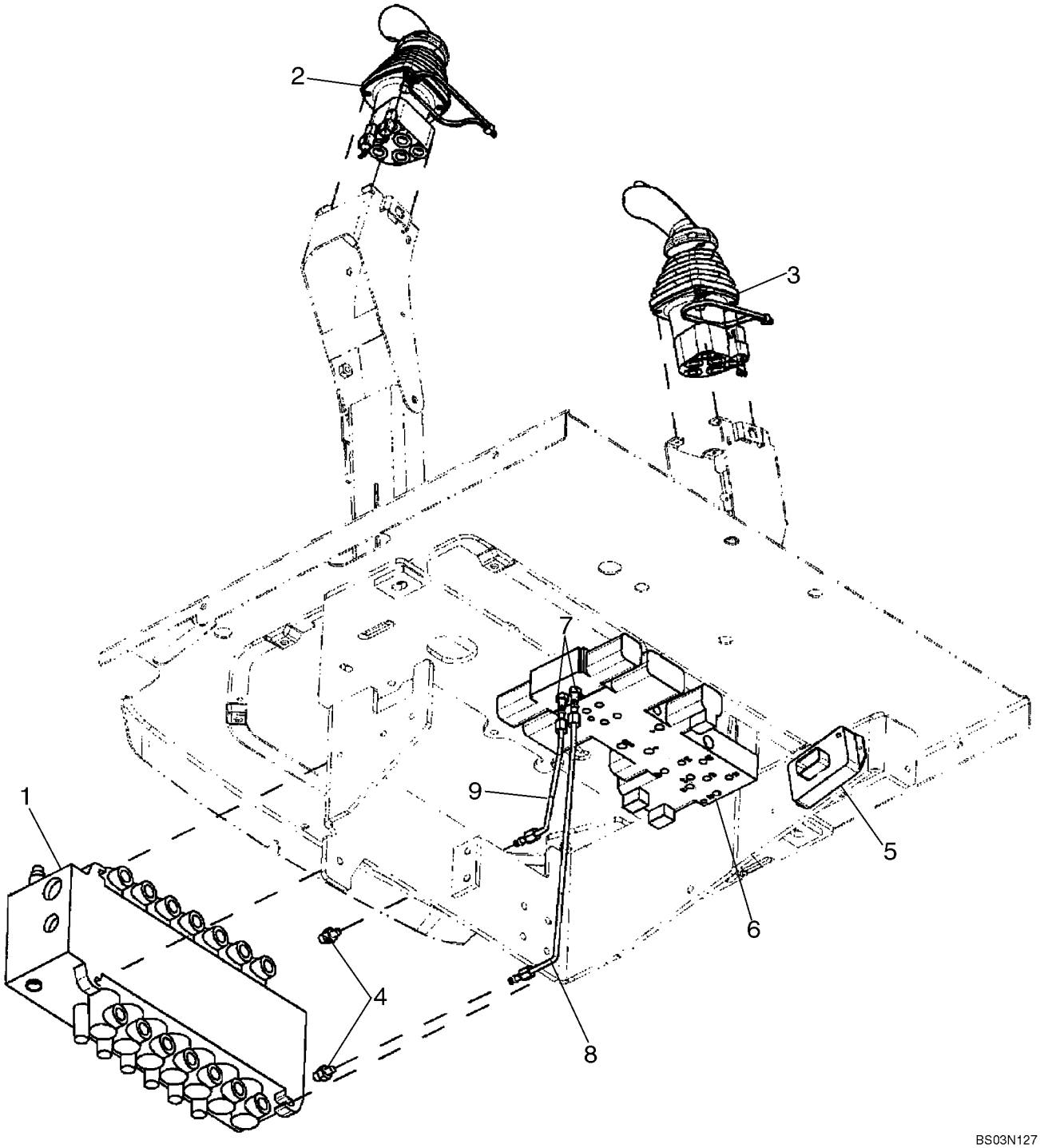

http://www.minnparbackhoeparts.com/

SYSTEME HYDRAULIQUE - DISTRIBUTEUR, COMMANDE PILOTE DE LEVIER DE COMMANDE (7 SPOOL, W/ EXT DIPPER,

REF	FN	PART NUMBER	YR/SN	QTY	DESCRIPTION
		REF			NOTICE SEVEN SPOOL VALVE WITH EXTENDABLE DIPPER; WITH AUXILIARY HYDRAULICS; WITH AUTO-UP; WITH UNI-DIRECTIONAL
1		86987460		1	DISTRIBUTEUR Backhoe, 7 Spool; See Figure 08-41; For Mounting See Figure 08-22
2		87308846		1	DISTRIBUTEUR JOYSTICK; Left-Hand; With Horn and Uni-Directional Buttons; See Figure 08-55; Replaces 87443742
3		87308847		1	DISTRIBUTEUR JOYSTICK; Right-Hand; See Figure 08-58; Replaces 87443743
4		218-5089		2	CONNECTEUR 7/16 fl x 9/16 Or; Includes 237-6006 O-Ring
		237-6006		1	JOINT THORIQUE 15/32 ID x 5/64
5		87419454		1	BOÎTIER Box, Pilot Control Power Supply Module
		840-1416		2	VIS M4 x 16
6		85827471		1	SOUPAPE HYDRAULIQUE Pressure Reducing, 3 Spool; See Figure 08-52
7		218-5053		2	RACCORD 7/16 fl x Or; Includes 237-6004 O-Ring
		237-6004		1	JOINT TORIQUE 23/64 ID x 5/64
8		87437633		1	TUYAUTERIE To Lower Extendable Dipper Port
9		87437635		1	TUYAUTERIE To Upper Extendable Dipper Port

http://www.minnparbackhoeparts.com/

08-19		p1	04/05

SYSTEME HYDRAULIQUE - DISTRIBUTEUR, COMMANDE PILOTE DE LEVIER DE COMMANDE (7 SPOOL, W/O EXT DIPPER,

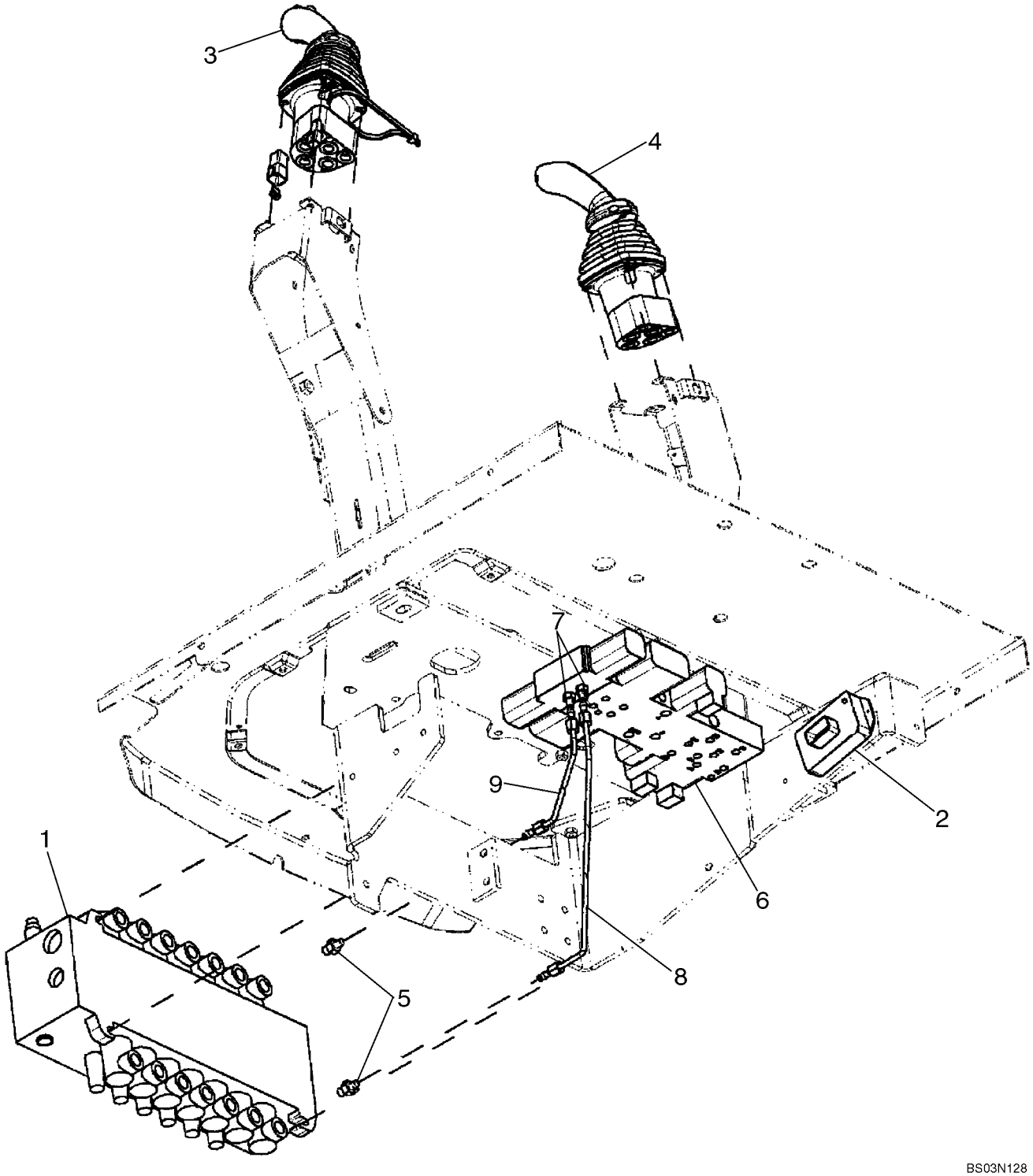

http://www.minnparbackhoeparts.com/

SYSTEME HYDRAULIQUE - DISTRIBUTEUR, COMMANDE PILOTE DE LEVIER DE COMMANDE (7 SPOOL, W/O EXT DIPPER,

REF	FN	PART NUMBER	YR/SN	QTY	DESCRIPTION
		REF			NOTICE SEVEN SPOOL VALVE WITHOUT EXTENDABLE DIPPER; WITH AUXILIARY HYDRAULICS; WITH AUTO-UP; WITH BI-DIRECTIONAL
1		87407965		1	DISTRIBUTEUR Backhoe, 7 Spool; See Figure 08-42; For Mounting See Figure 08-22
2		87419455		1	GROUPE REGULATEUR Box, Pilot Control Power Supply Module
		840-1416		2	VIS M4 x 16
3		87308845		1	DISTRIBUTEUR JOYSTICK; Left-Hand; With Horn and Bi-Directional Buttons; See Figure 08-56; Replaces 87443741
4		87308840		1	DISTRIBUTEUR JOYSTICK; Right-Hand; See Figure 08-57; Replaces 87443739
5		218-5089		2	CONNECTEUR 7/16 fl x 9/16 Or; Includes 237-6006 O-Ring
		237-6006		1	JOINT THORIQUE 15/32 ID x 5/64
6		85827471		1	SOUPAPE HYDRAULIQUE Pressure Reducing, 3 Spool; See Figure 08-52
7		218-5053		2	RACCORD 7/16 fl x Or; Includes 237-6004 O-Ring
		237-6004		1	JOINT TORIQUE 23/64 ID x 5/64
8		87438012		1	TUYAUTERIE To Lower Auxiliary Port
9		87438015		1	TUYAUTERIE To Upper Auxiliary Port

http://www.minnparbackhoeparts.com/

SYSTEME HYDRAULIQUE - DISTRIBUTEUR, COMMANDE PILOTE DE LEVIER DE COMMANDE (8 SPOOL, W/ EXT DIPPER,

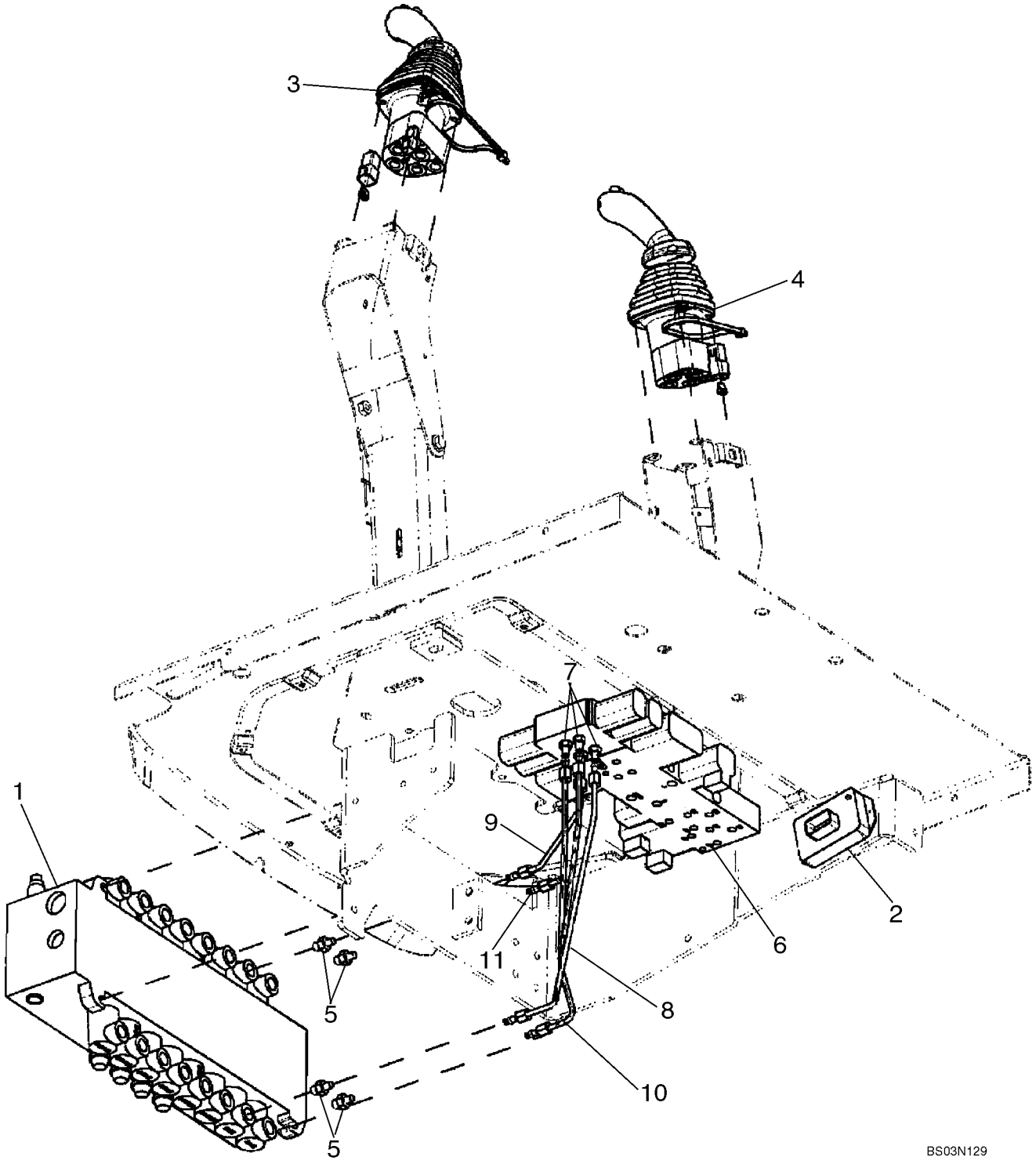

http://www.minnparbackhoeparts.com/

SYSTEME HYDRAULIQUE - DISTRIBUTEUR, COMMANDE PILOTE DE LEVIER DE COMMANDE (8 SPOOL, W/ EXT DIPPER,

REF	FN	PART NUMBER	YR/SN	QTY	DESCRIPTION
		REF			NOTICE EIGHT SPOOL VALVE WITH EXTENDABLE DIPPER; WITH AUXILIARY HYDRAULICS; WITH AUTO-UP; WITH BI-DIRECTIONAL
1		86987461		1	SOUPAPE HYDRAULIQUE Backhoe, 8 Spool; See Figure 08-43; For Mounting See Figure 08-22
2		87419455		1	GROUPE REGULATEUR Box, Pilot Control Power Supply Module
		840-1416		2	VIS M4 x 16
3		87308845		1	DISTRIBUTEUR JOYSTICK; Left-Hand; With Horn and Bi-Directional Buttons; See Figure 08-56; Replaces 87443741
4		87308847		1	DISTRIBUTEUR JOYSTICK; Right-Hand; See Figure 08-58; Replaces 87443743
5		218-5089		4	CONNECTEUR 7/16 fl x 9/16 Or; Includes 237-6006 O-Ring
		237-6006		1	JOINT THORIQUE 15/32 ID x 5/64
6		87434621		1	DISTRIBUTEUR Pressure Reducing, 4 Spool; SeeFigure 08-53
7		218-5053		4	RACCORD 7/16 fl x Or; Includes 237-6004 O-Ring
		237-6004		1	JOINT TORIQUE 23/64 ID x 5/64
8		87437633		1	TUYAUTERIE To Lower Extendable Dipper Port
9		87437635		1	TUYAUTERIE To Upper Extendable Dipper Port
10		87440835		1	TUYAUTERIE Tube, To Lower Auxiliary Port
11		87440837		1	TUYAUTERIE Tube, To Upper Auxiliary Port

http://www.minnparbackhoeparts.com/

08-21		p1	01/05

SYSTEME HYDRAULIQUE - COMMANDE PILOTE DE LEVIER DE COMMANDE

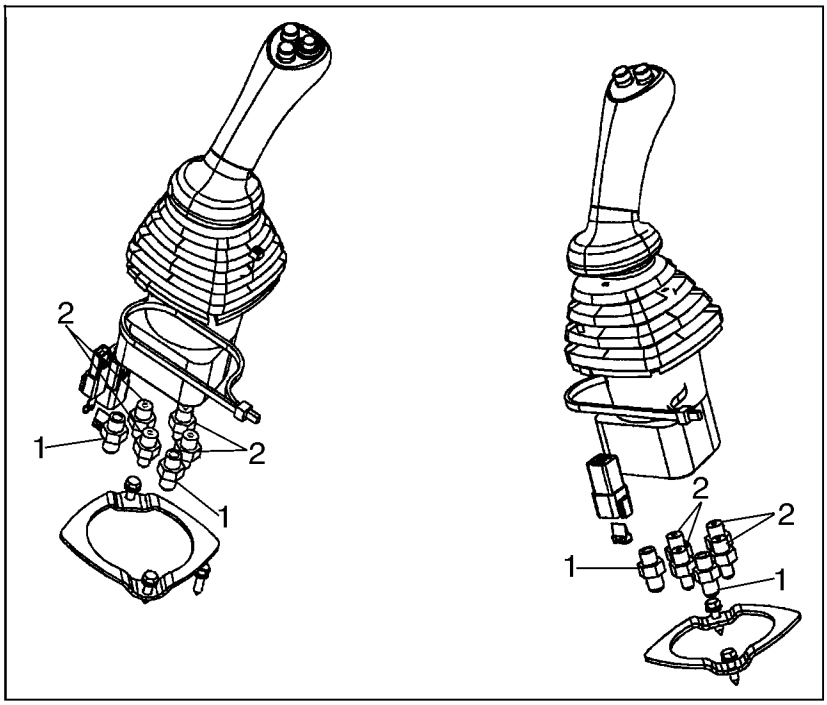

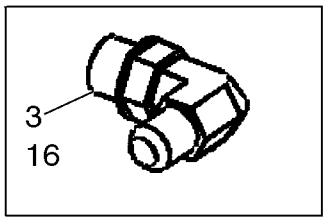

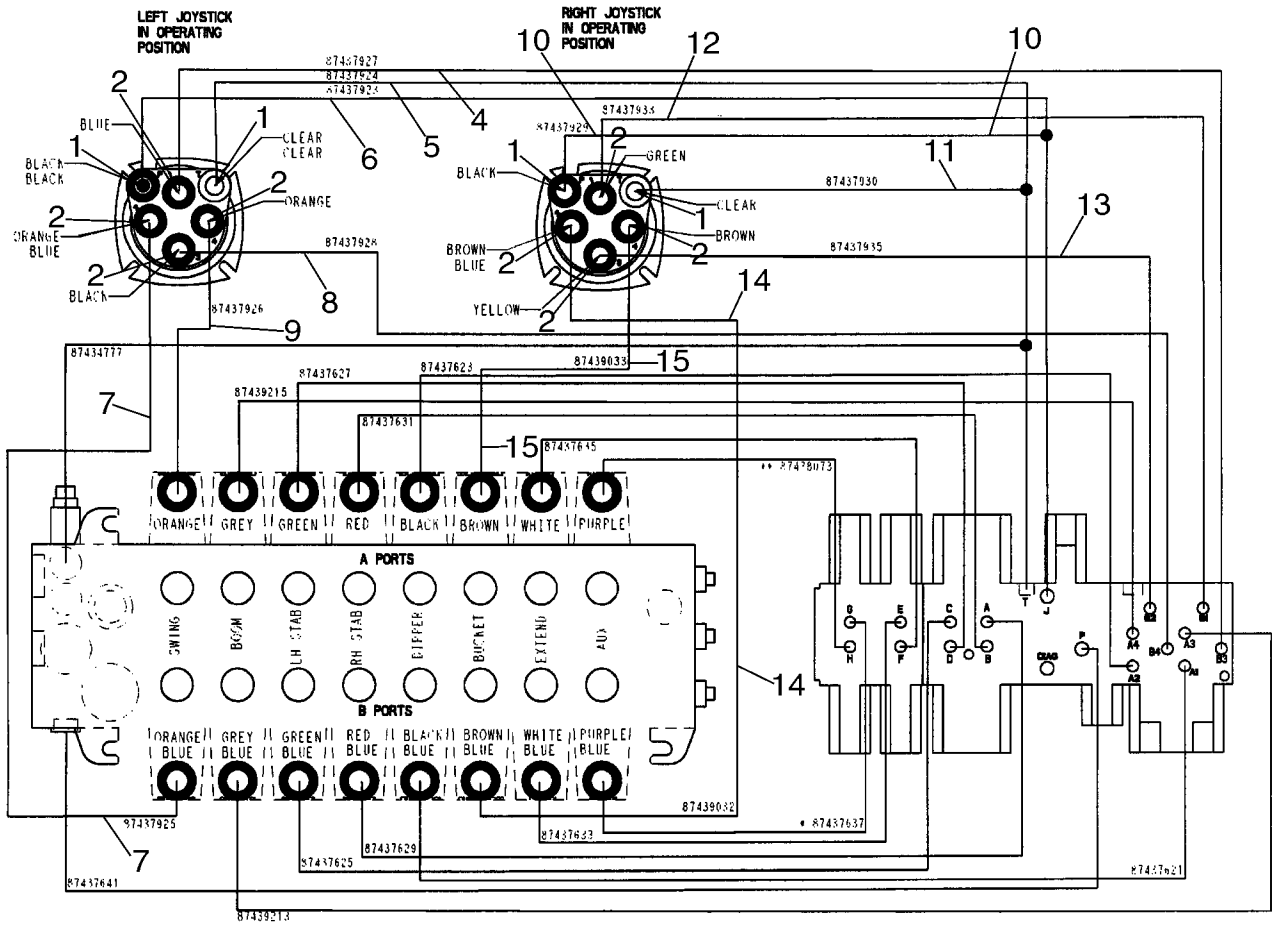

BS04A002

http://www.minnparbackhoeparts.com/

SYSTEME HYDRAULIQUE - COMMANDE PILOTE DE LEVIER DE COMMANDE

REF	FN	PART NUMBER	YR/SN	QTY	DESCRIPTION
1		218-5057		4	RACCORD 9/16 fl x Or; Includes 237-6006 O-Ring
2		218-5089		8	CONNECTEUR 7/16 fl x 9/16 Or; Includes 237-6006 O-Ring
3		218-5105		1	COUDE 90 deg, 9/16 fl x Or; Includes 237-6006; Installs in Hydraulic Tank for Pilot Return
4		87437927		1	FLEXIBLE (ASSEMBLE) 1295 mm (51 in); Left-Hand Joystick No. 1 to Selector Valve B3
5		87437924		1	FLEXIBLE (ASSEMBLE) 1000 mm (39-3/8 in); Left-Hand Joystick Tank to Pressure Reducing Valve T
6		87437923		1	FLEXIBLE (ASSEMBLE) 1035 mm (40-3/4 in); Left-Hand Joystick Pressure to Pressure Reducing Valve J
7		87437925		1	FLEXIBLE (ASSEMBLE) 1075 mm (42-3/8 in); Left-Hand Joystick No. 2 to Swing Port B
8		87437928		1	FLEXIBLE (ASSEMBLE) 1270 mm (50 in); Left-Hand Joystick No. 3 to Selector Valve B4
		399004A1		1	GARANT Hose, 38.9 ID x 270 mm long; Used With Ref 4 - 8
9		87437926		1	FLEXIBLE (ASSEMBLE) 825 mm (32-1/2 in); Left-Hand Joystick No. 4 to Swing Port A
10		87437929		1	FLEXIBLE (ASSEMBLE) 1105 mm (43-1/2 in); Right-Hand Joystick Pressure to Pressure Reducing Valve J
11		87437930		1	FLEXIBLE (ASSEMBLE) 1345 mm (53 in); Right-Hand Joystick Tank to Pressure Reducing Valve T
		191703A1		1	GAINE Hose Guard, 28 ID x 400 mm long; Used With Ref 10, 11
12		87437933		1	FLEXIBLE (ASSEMBLE) 1185 mm (46-11/16 in); Right-Hand Joystick No. 1 to Selector Valve B1
13		87437935		1	FLEXIBLE (ASSEMBLE) 1175 mm (46-5/16 in); Right-Hand Joystick No. 3 to Selector Valve B2
14		87439032		1	FLEXIBLE (ASSEMBLE) 1090 mm (42-15/16 in); Right-Hand Joystick No. 2 to Bucket Port B
15		87439033		1	FLEXIBLE (ASSEMBLE) 915 mm (36-1/32 in); Right-Hand Joystick No. 4 to Bucket Port A

http://www.minnparbackhoeparts.com/

SYSTEME HYDRAULIQUE - COMMANDE PILOTE DE LEVIER DE COMMANDE

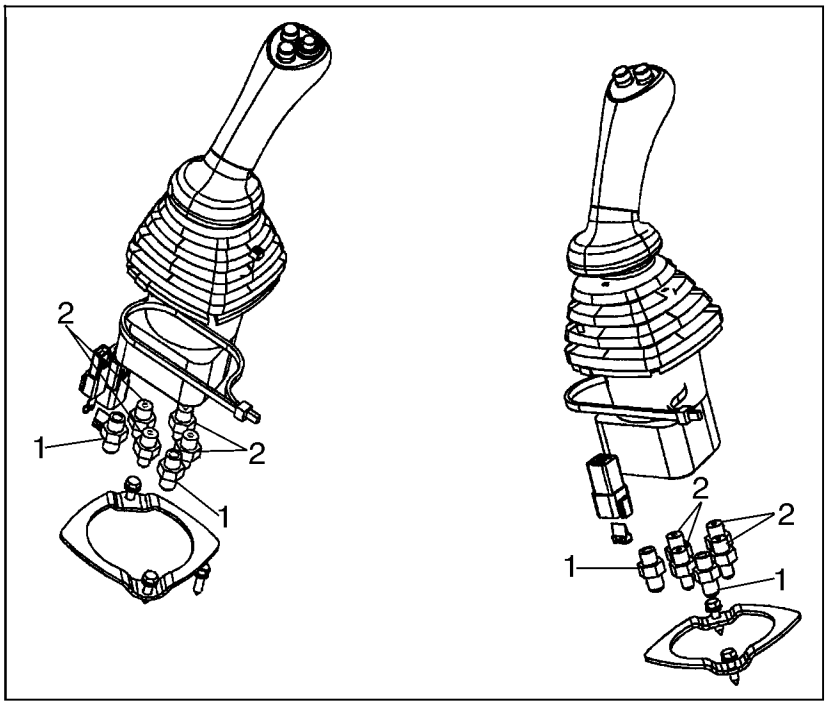

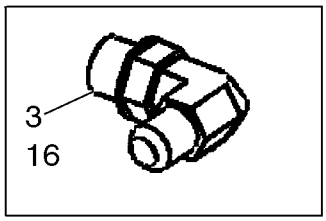

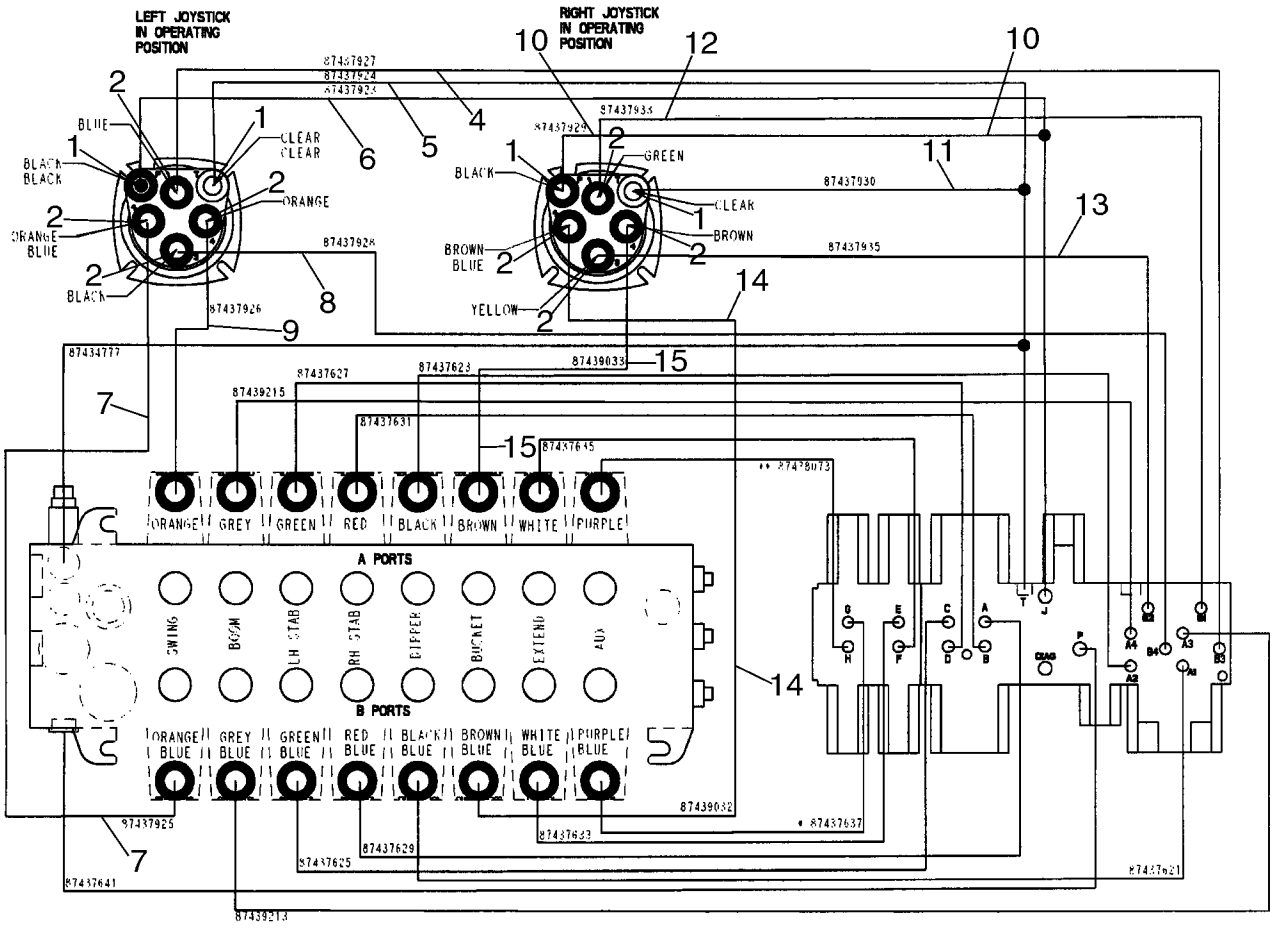

BS04A002

http://www.minnparbackhoeparts.com/

SYSTEME HYDRAULIQUE - COMMANDE PILOTE DE LEVIER DE COMMANDE

REF	FN	PART NUMBER	YR/SN	QTY	DESCRIPTION
		191703A1		1	GAINE Hose Guard, 28 ID x 400 mm long; Used With Ref 12 - 15
16		87452405		1	FLEXIBLE (ASSEMBLE) 1520 mm (59-7/8 in); Pressure Reducing Valve T to Tank; Replaces 87435073
		143219A1		1	PROTECTEUR HOSE GUARD, 19 ID x 450 mm long; Used With Ref 16
		L18337		X	SANGLE Tie

http://www.minnparbackhoeparts.com/

SYSTEME HYDRAULIQUE - COMMANDE PILOTE

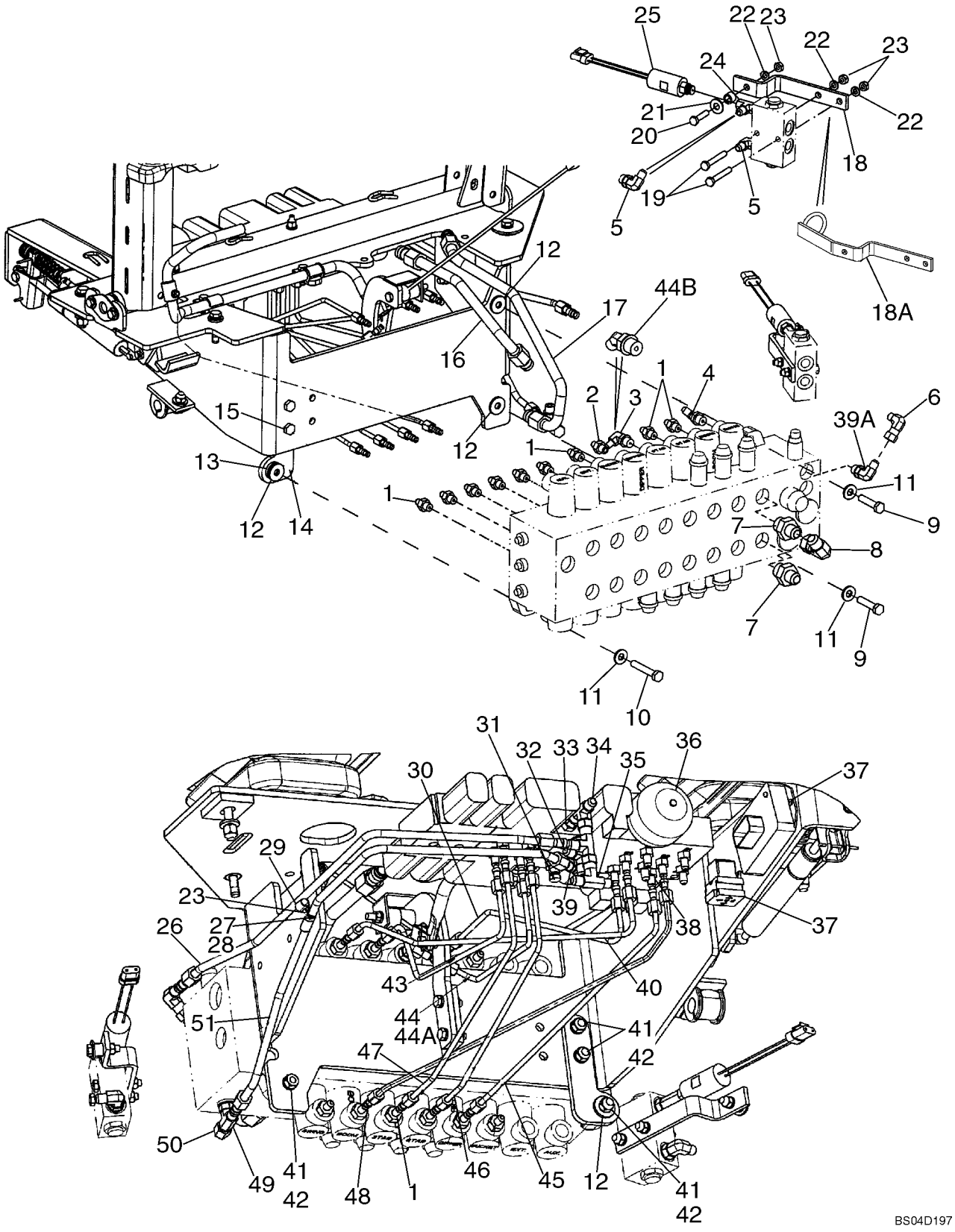

http://www.minnparbackhoeparts.com/

SYSTEME HYDRAULIQUE - COMMANDE PILOTE

REF	FN	PART NUMBER	YR/SN	QTY	DESCRIPTION
1		218-5089		9	CONNECTEUR 7/16 fl x 9/16 Or; Includes 237-6006 O-Ring
2		87423401		1	RACCORD Special Orifice
3		218-5283		1	COUDE 90 deg, 7/16 fl x 9/16 Or; Includes 237-6006 O-Ring
4		218-5365		1	RACCORD ELBOW, 45 deg, 7/16 fl x 9/16 Or; Includes 237-6006 O-Ring
5		218-5105		2-4	COUDE 90 deg, 9/16 fl x Or; Includes 237-6006; 2 Used on Models With Auto Up; 4 Used on Models Without Auto Up
6		218-980		1	COUDE 90 deg, 9/16 fl x sw fl
7		218-5063		2	RACCORD 7/8 fl x 1-1/16 Or; Includes 237-6012 O-Ring
8		218-5232		1	COUDE 90 deg, 7/8 fl x sw fl
9		814-10045		2	BOULON M10 x 45
10		814-10060		1	BOULON M10 x 60
11		896-15010		3	RONDELLE 11 x 24 x 3 mm
12		496-41041		5	RONDELLE 13/32 x 1-1/8 x 1/8
13		D52276		1	ISOLATEUR Mount
14		87440712		1	EQUERRE Valve Mounting Bracket
15		614-10030		2	VIS M10 x 30
16		87426488		1	TUYAUTERIE Swing Dampening Upper Port
17		87427948		1	TUYAUTERIE Swing Dampening Lower Port
18		87423034		2	EQUERRE No Longer Available, Order 87450318 Bracket, Ref 18A
18A		87450318		2	EQUERRE
19		814-8055		4	VIS M8 x 55
20		814-8035		2	BOULON M8 x 35
21		496-41041		2	RONDELLE 13/32 x 1-1/8 x 1/8
21A		87437840		2	ENTRETOISE Not Illustrated
22		895-11008		6	RONDELLE 9 x 16 x 1.6 mm
23		829-1408		7	ECROU M8
24		87423033		2	TE Includes 237-6004 O-Ring, 237-6006 O-Ring; Models With Auto Up, If Used
25		87439163		2	PRESSOSTAT Includes 237-6004 O-Ring; Models With Auto Up, If Used

http://www.minnparbackhoeparts.com/

08-22		p2	05/04

SYSTEME HYDRAULIQUE - COMMANDE PILOTE

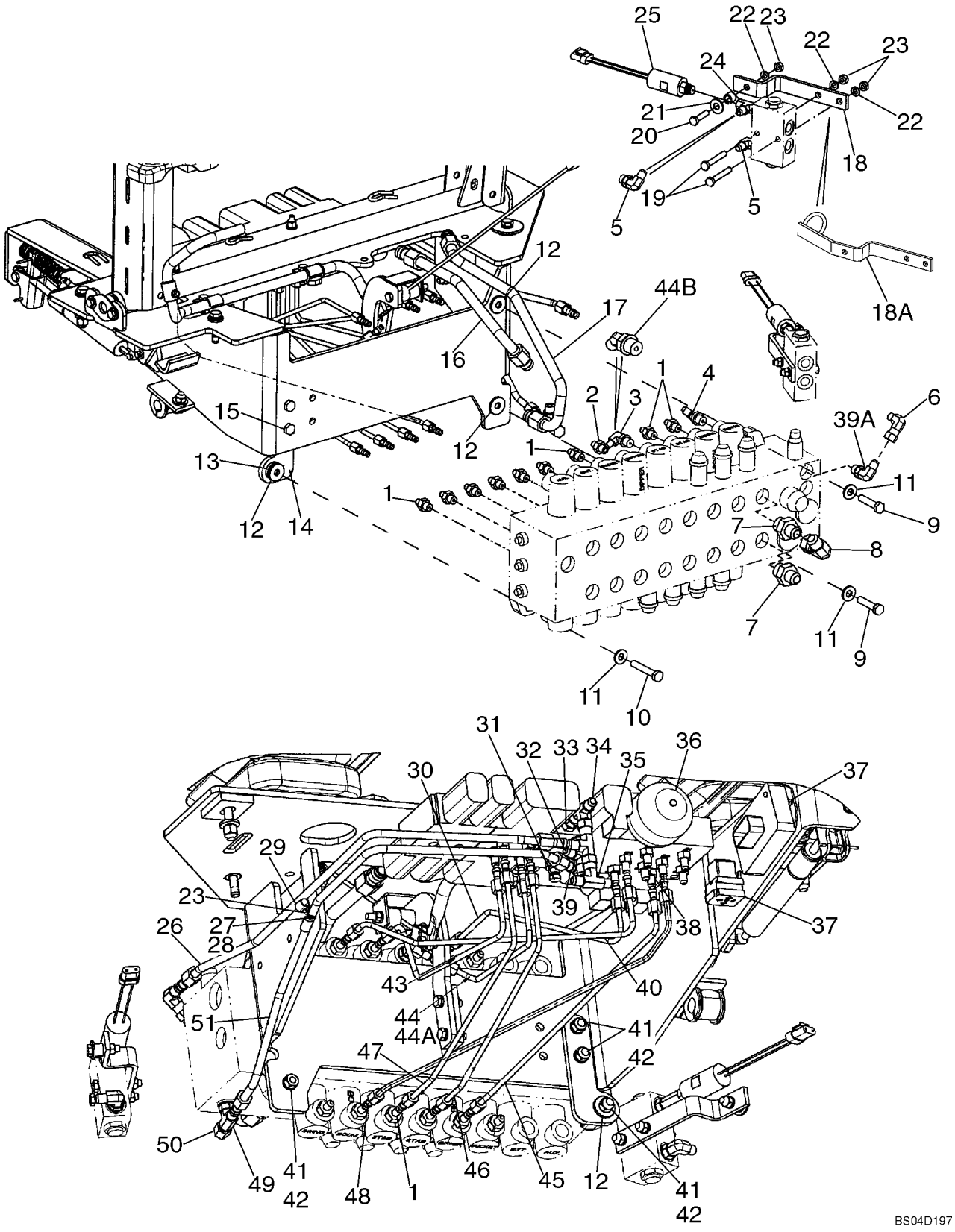

http://www.minnparbackhoeparts.com/

SYSTEME HYDRAULIQUE - COMMANDE PILOTE

REF	FN	PART NUMBER	YR/SN	QTY	DESCRIPTION
25		86992557		2	CONTACTEUR PRESSURE, Includes 237-6004 O-Ring; Models With Auto Up, If Used
26		87434777		1	TUYAUTERIE Reducing Valve Tank to Backhoe Valve
27		895-11008		1	RONDELLE 9 x 16 x 1.6 mm
28		614-8025		1	BOULON M8 x 25
29		515-2295		2	COLLIER
30		87437623		1	TUYAUTERIE Selector A2 to Dipper Port A
31		86596853		1	ACCOUPLEMANT RAP MALE Includes 9617873 O-Ring
32		218-5243		1	RACCORD TEE; Includes 237-6006 O-Ring
33		218-5057		1	RACCORD 9/16 fl x Or; Includes 237-6006 O-Ring
34		218-5222		2	RACCORD TEE
35		218-836		1	TE
36		87425225		1	ACCUMULATEUR Includes 237-6008 O-Ring
37		840-1416		3	VIS M4 x 16; See Figure 08-15 - 08-20 For Pilot Control Power Supply Control Unit; See Figure 04-21 For Relay
38		218-5053		12	RACCORD 7/16 fl x Or; Includes 237-6004 O-Ring
39		218-5105		1	COUDE 90 deg, 9/16 fl x Or; Includes 237-6006 O-Ring
39A		87448990		1	COUDE 90 deg, 9/16 fl x Or; Includes Orifice; Includes 237-6006 O-Ring
40		87439215		1	TUYAUTERIE Selector A4 to Boom Port A
41		829-1410		5	ECROU M10
42		892-11010		4	RONDELLE FREIN M10
43		87437627		1	TUYAUTERIE Reducing Valve to Left-Hand Stabilizer Port A
44		87437631		1	TUYAUTERIE Reducing Valve to Right-Hand Stabilizer Port A; Used With 90 deg 218-5283 Elbow (Ref 3); No Longer Available, Order 87445557 Tube and 218-5365 45 deg Elbow, Ref 44A, 44B
44A		87445557		1	TUYAUTERIE Reducing Valve to Right-Hand Stabilizer Port A; Used With 45 deg Elbow, Ref 44B
44B		218-5365		1	RACCORD ELBOW, 45 deg, 7/16 fl x 9/16 Or; Includes 237-6006 O-Ring

http://www.minnparbackhoeparts.com/

SYSTEME HYDRAULIQUE - COMMANDE PILOTE

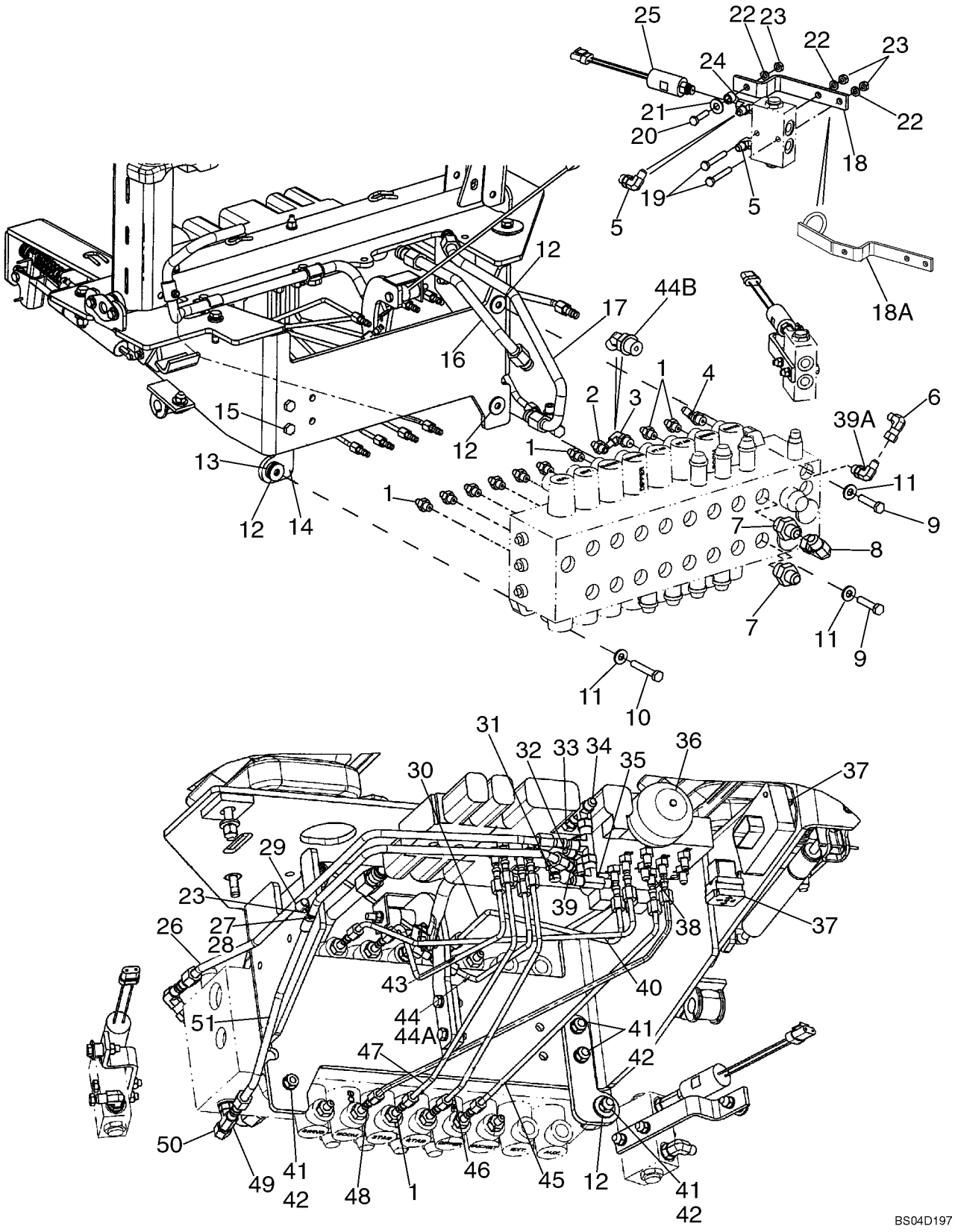

http://www.minnparbackhoeparts.com/

SYSTEME HYDRAULIQUE - COMMANDE PILOTE

REF	FN	PART NUMBER	YR/SN	QTY	DESCRIPTION
45		87437621		1	TUYAUTERIE Selector A1 to Dipper Port B
46		87437629		1	TUYAUTERIE Reducing Valve to Right-Hand Stabilizer Port B
47		87437625		1	TUYAUTERIE Reducing Valve to Left-Hand Stabilizer Port B
48		87439213		1	TUYAUTERIE Selector A3 to Boom Port B
49		218-5182		1	TE Includes 237-6006 O-Ring
50		218-754		1	CHAPEAU Hex, 9/16
51		87437641		1	TUYAUTERIE Reducing Valve Pressure to Backhoe Valve

http://www.minnparbackhoeparts.com/

08-23		p1	04/04

SYSTEME HYDRAULIQUE - CIRCUIT AUXILIAIRE DE LA PELLE RETRO

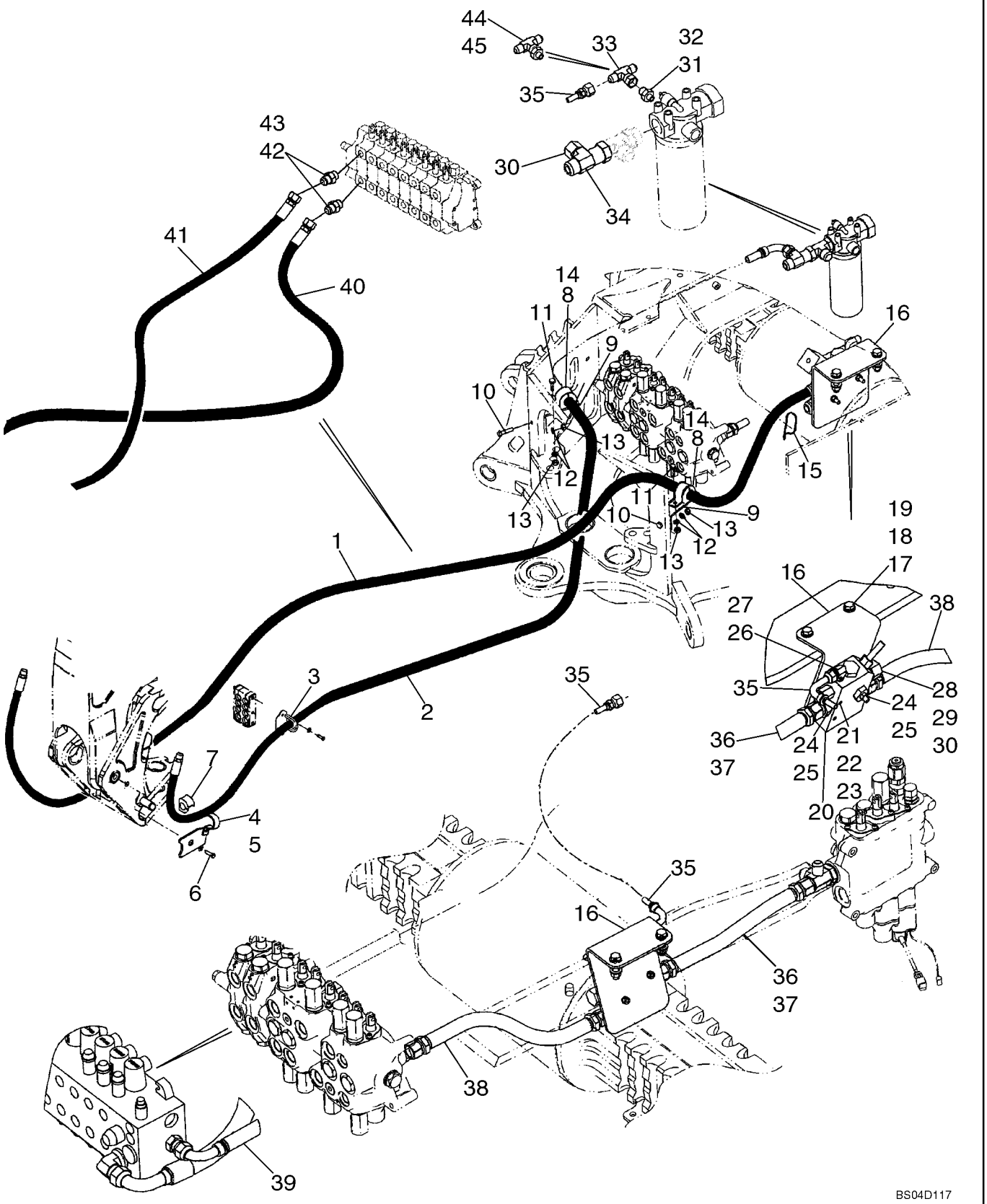

http://www.minnparbackhoeparts.com/

SYSTEME HYDRAULIQUE - CIRCUIT AUXILIAIRE DE LA PELLE RETRO

REF	FN	PART NUMBER	YR/SN	QTY	DESCRIPTION
1		87430972		1	FLEXIBLE (ASSEMBLE) 2467 mm (97-1/8 in) Hose; Models With Uni-Directional
2		87429387		1	FLEXIBLE (ASSEMBLE) 2890 mm (113-13/16 in) Hose; Models With Uni-Directional
3		87431630		2	PATTE FIXATION
4		329799A1		1	SUPPORT Left-Hand
5		329797A1		1	SUPPORT Right-Hand
6		604-20045		2	BOULON M20 x 45
7		144477A1		2	SILENTBLOC
8		144479A1		2	COLLIER
9		413778A1		2	PATTE FIXATION
10		814-10040		2	BOULON M10 x 40
11		614-10025		2	BOULON M10 x 25
12		892-11010		4	RONDELLE FREIN M10
13		829-1410		4	ECROU M10
14		144477A1		2	SILENTBLOC
15		L18337		1	SANGLE
16		87440694		1	EQUERRE Bracket
17		814-12050		2	VIS M12 x 50
18		896-11012		4	RONDELLE
19		829-1412		2	ECROU M12
20		87421836		1	SOUPAPE HYDRAULIQUE Auxiliary Uni-Directional Valve; Component Parts Not Available At Time Of Printing
21		814-8070		2	BOULON M8 x 70
22		892-11008		2	RONDELLE Lock, M8
23		829-1408		2	ECROU M8
24		218-5050		2	RACCORD 1-5/16 fl x 1-1/16 Or; Incl. Ref 25
25		237-6012		1	JOINT TORIQUE 59/64 ID x 7/64
26		218-5280		1	RACCORD ELBOW, 90 deg, 3/4 fl x 9/16 Or; Incl. Ref 27
27		237-6006		1	JOINT THORIQUE 15/32 ID x 5/64
28		218-5064		1	RACCORD 1-1/16 fl x Or; Incl. Ref 29
29		237-6012		1	JOINT TORIQUE 59/64 ID x 7/64
30		218-335		2	CHAPEAU Hex, 1-1/16
31		218-5351		1	RACCORD 3/4 fl x 9/16 Or; Incl. Ref 32; If Used
32		237-6006		1	JOINT THORIQUE 15/32 ID x 5/64

http://www.minnparbackhoeparts.com/

08-23		p2	04/04

SYSTEME HYDRAULIQUE - CIRCUIT AUXILIAIRE DE LA PELLE RETRO

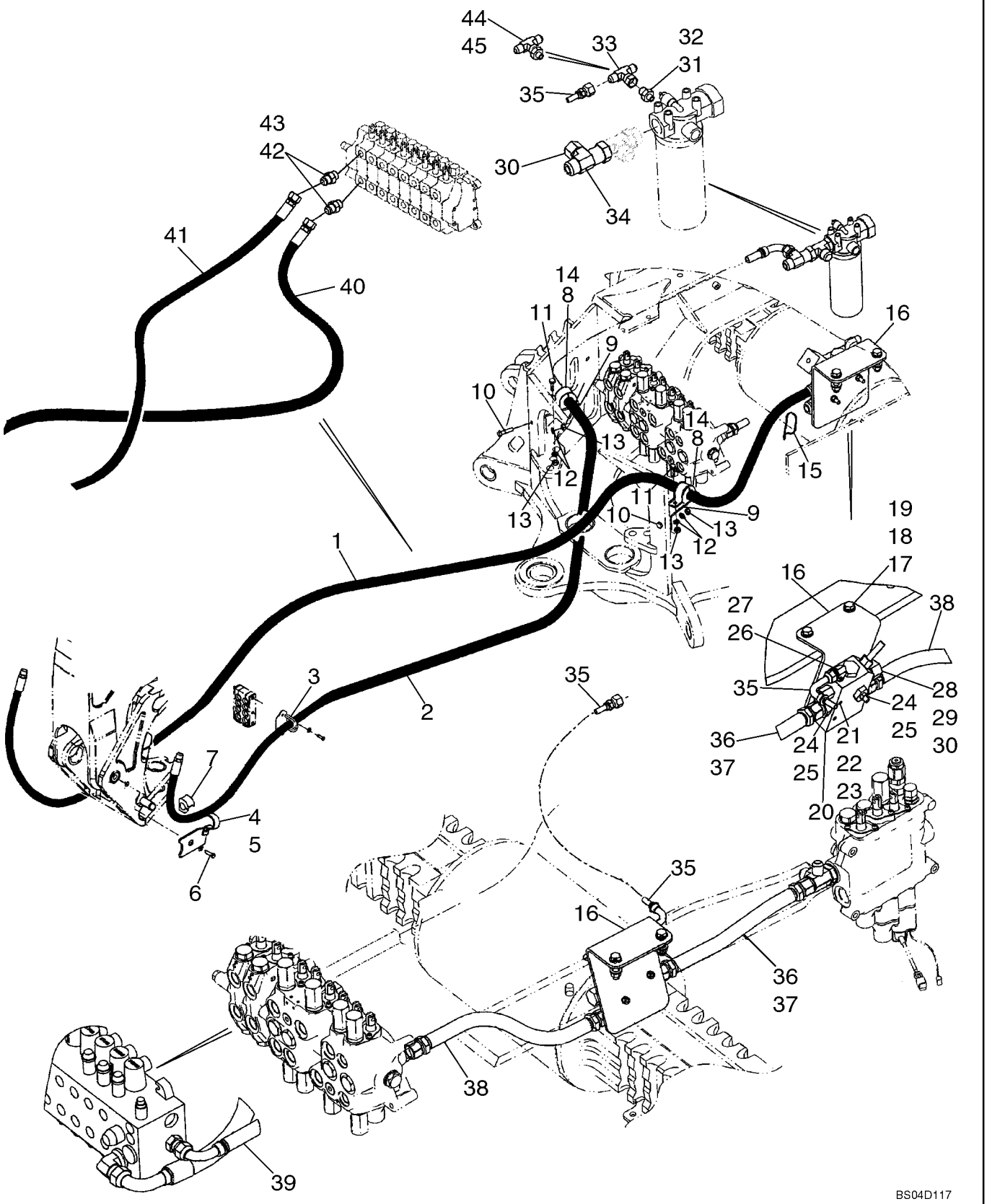

http://www.minnparbackhoeparts.com/

SYSTEME HYDRAULIQUE - CIRCUIT AUXILIAIRE DE LA PELLE RETRO

REF	FN	PART NUMBER	YR/SN	QTY	DESCRIPTION
33		218-840		1	TE 3/4 sw str br x fl x fl; If Used
34		218-5216		1	RACCORD Tee, 1-1/16 fl br x 15/16 fl x adj str thrd
35		87422948		1	FLEXIBLE (ASSEMBLE) 930 mm (36-5/8 in)
36		87437232		1	FLEXIBLE (ASSEMBLE) 420 mm (16-9/16 in); Two Spool Loader Valve
37		87437231		1	FLEXIBLE (ASSEMBLE) 370 mm (14-19/32 in); Three Spool Loader Valve
38		87422977		1	FLEXIBLE (ASSEMBLE) 465 mm (18-5/16 in); Power Beyond; Models Without Pilot Controls
39		87428814		1	FLEXIBLE (ASSEMBLE) 458 mm (18-1/32 in); Power Beyond; Models With Pilot Controls
40		87423969		1	FLEXIBLE (ASSEMBLE) 1500 mm (59-1/16 in); Models With Bi-Directional
41		87423970		1	FLEXIBLE (ASSEMBLE) 1725 mm (67-15/16 in); Models With Bi Directional
42		218-5064		2	RACCORD 1-1/16 fl x Or; Incl. Ref 43
43		237-6012		1	JOINT TORIQUE 59/64 ID x 7/64
44		218-5511		1	TE Incl. Ref 45; If Used
45		237-6006		1	JOINT THORIQUE 15/32 ID x 5/64

http://www.minnparbackhoeparts.com/

SYSTEME HYDRAULIQUE - CIRCUIT AUXILIAIRE DE LA PELLE RETRO

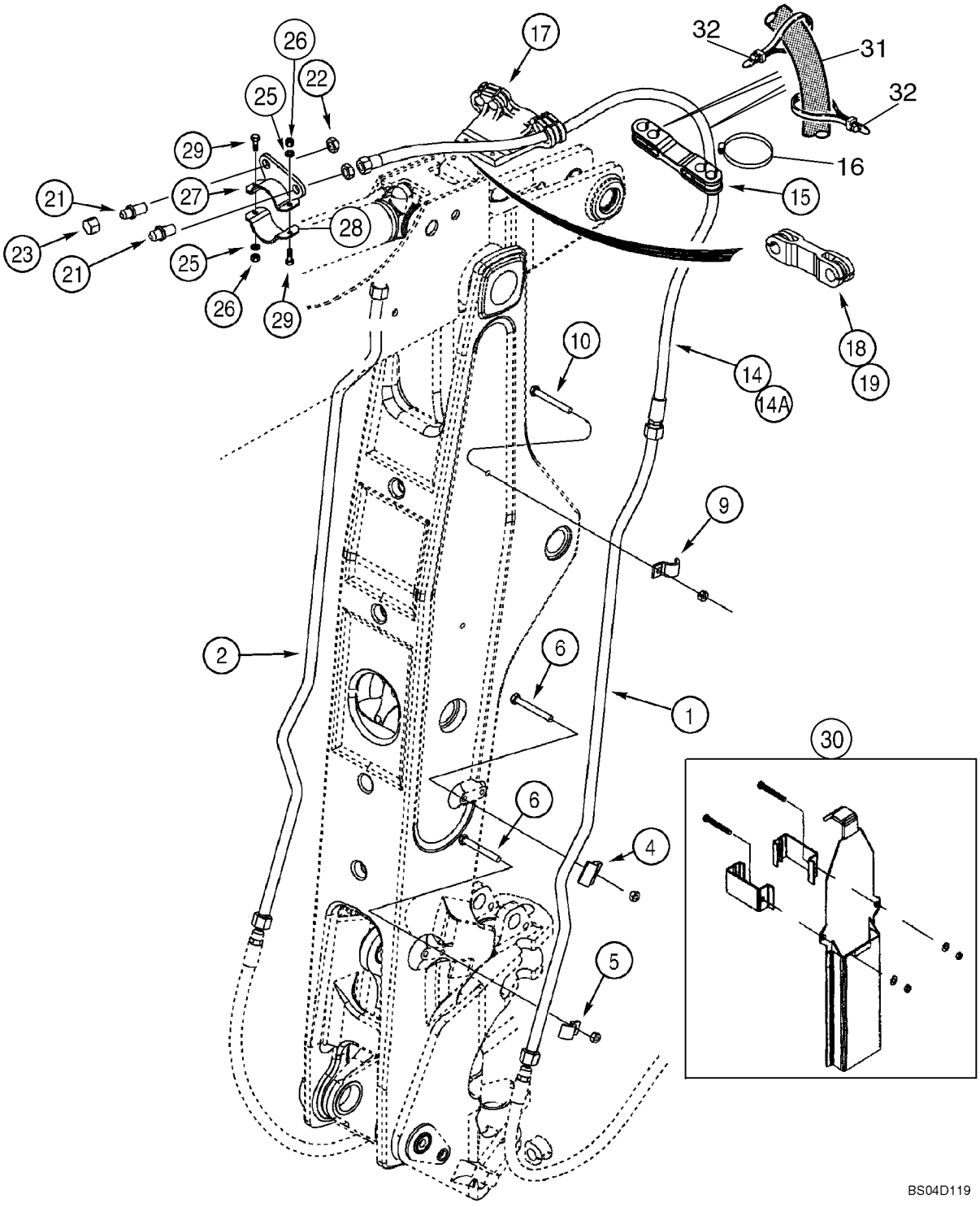

http://www.minnparbackhoeparts.com/

SYSTEME HYDRAULIQUE - CIRCUIT AUXILIAIRE DE LA PELLE RETRO

REF	FN	PART NUMBER	YR/SN	QTY	DESCRIPTION
		REF			NOTICE AT BOOM AND DIPPER
1		252885A1		1	TUBE
2		252883A1		1	TUYAUTERIE
4		253038A1		2	PATTE FIXATION
5		255051A1		2	COLLIER
6		814-12090		4	BOULON M12 x 90
9		242459A1		2	BRIDE Clamp
10		814-12070		2	VIS M12 x 70
14		243679A2		2	FLEXIBLE 2665 mm (104-15/16 in); Models With Extendable Dipper
14A		256210A2		2	FLEXIBLE 1285 mm (50-19/32 in); Models Without Extendable Dipper
15		246158A1		1	BRIDE Models With Extendable Dipper
16		214-3156		4	COLLIER 2-3/4 x 3-5/8; Models With Extendable Dipper
17		246151A1		1	SUPPORT Models With Extendable Dipper
18		103670A1		1	BRIDE, FLEXIBLE Rubber
19		214-3132		2	COLLIER
21		218-676		2	UNION 1-1/16 fl x bkhd fl
22		218-1256		2	CONTRE-ECROU 1-1/16
23		218-335		2	CHAPEAU 1/16
25		896-11010		2	RONDELLE 11 x 21 x 2,5 mm
26		832-10410		2	ECROU M10
27		314607A1		1	PONTET
28		314608A1		1	PONTET
29		614-10040		2	BOULON M10 x 40
		370915A1		1	POCHETTE Boom Guard; Incl. Ref 30 and Instructions
30		317989A1		1	GARANT Boom; Component Parts Not Serviced Separately
31		87441372		2	MANCHON 2044 mm (80-1/2 in)
32		L18337		4	SANGLE

http://www.minnparbackhoeparts.com/

SYSTEME HYDRAULIQUE - SYSTEME ANTI-TANGAGE

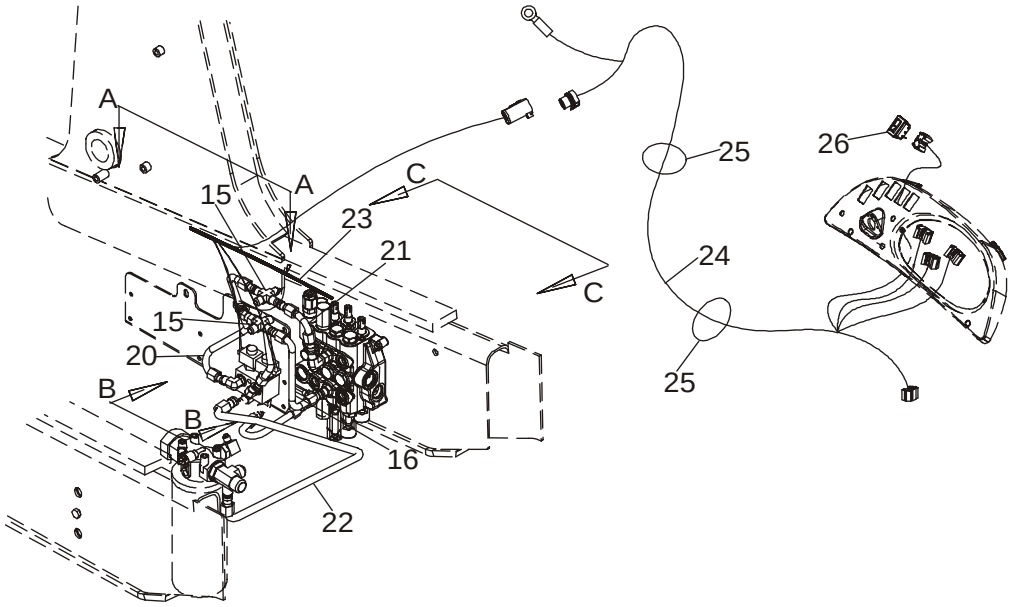

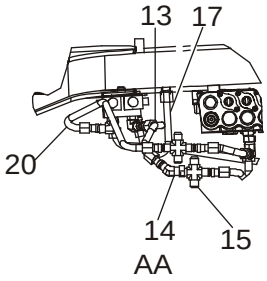

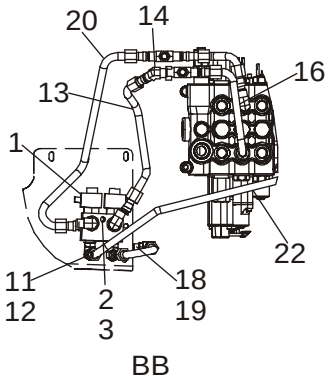

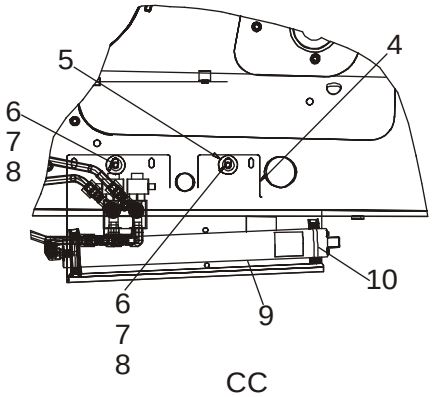

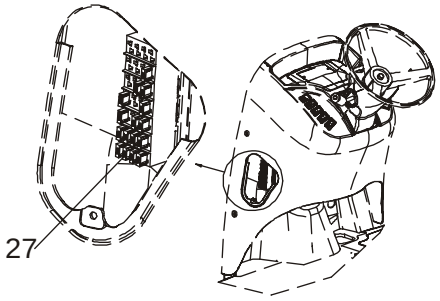

BS03M139

http://www.minnparbackhoeparts.com/

SYSTEME HYDRAULIQUE - SYSTEME ANTI-TANGAGE

REF	FN	PART NUMBER	YR/SN	QTY	DESCRIPTION
		REF			NOTICE RIDE CONTROL HYDRAULIC AND ELECTRICAL CIRCUIT
1		87433240		1	ELECTRO-VALVE Ride Control; Component Parts Not Available At Time Of Printing
2		814-10080		1	VIS M10 x 80
3		895-11010		1	RONDELLE 11 x 21 x 2 mm
4		87421213		1	EQUERRE Plate
5		87423067		2	ENTRETOISE
6		814-10040		2	BOULON M10 x 40
7		895-15010		2	RONDELLE 11 x 24 x 2 mm
8		87417721		2	INSERT FILETE M10; Replaces 829-1410 Hex Nut Used On Some Models
9		448284A1		1	ACCUMULATEUR Ride Control; Component Parts Not Serviced Separately; Used In Production, For Service, Order 234412A1 Accumulator
9		234412A1		1	ACCUMULATEUR Ride Control; See Figure 08-60
10		A13240		2	COLLIER Two Piece; Includes Hardware
11		218-5117		4	RACCORD ELBOW, 90 deg, 7/8 fl x 3/4 adj Or; Incl. Ref 12
12		237-6008		1	JOINT THORIQUE 41/64 ID x 3/32
13		87421938		1	TUYAUTERIE Solenoid Valve to Loader Control Valve Lower Lift Section Port
14		218-5174		1	RACCORD ELBOW, 45 deg, 7/8 fl x sw str thrd
15		218-655		2	RACCORD TEE
16		REF		1	NOTICE TUBE, For Tube and Fitting At Loader Valve, See Figure 08-04
17		87420696		1	TUYAUTERIE Accumulator to Solenoid Valve
18		218-5600		1	RACCORD ELBOW, 90 deg, 7/8 fl x 3/4 Or; Incl. Ref 19
19		237-6008		1	JOINT THORIQUE 41/64 ID x 3/32
20		87435923		1	TUYAUTERIE Solenoid Valve To Loader Control Valve Upper Lift Section Port
21		REF		1	NOTICE TUBE, For Tube and Fitting At Loader Valve, See Figure 08-04
22		87437265		1	TUYAUTERIE Solenoid Valve To Filter
23		87436675		1	FAISCEAU COMPLET Chassis Options Harness; Includes (4) L71879 Diodes

http://www.minnparbackhoeparts.com/

SYSTEME HYDRAULIQUE - SYSTEME ANTI-TANGAGE

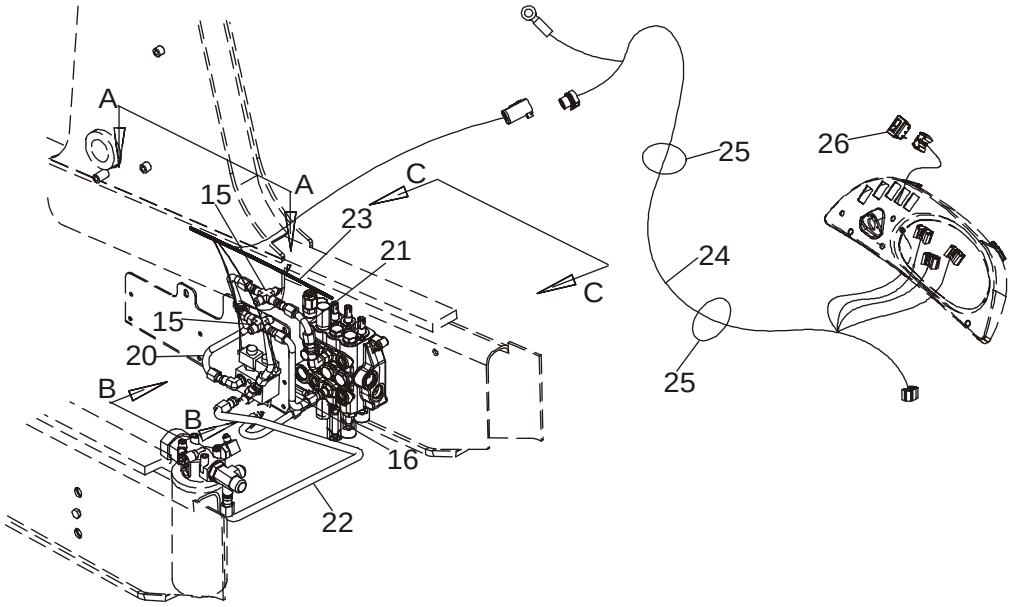

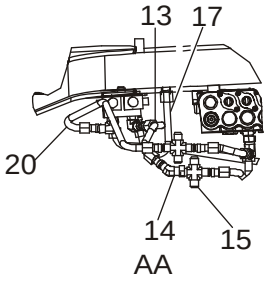

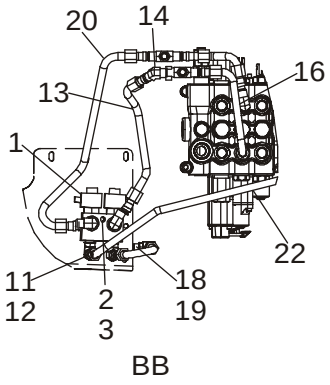

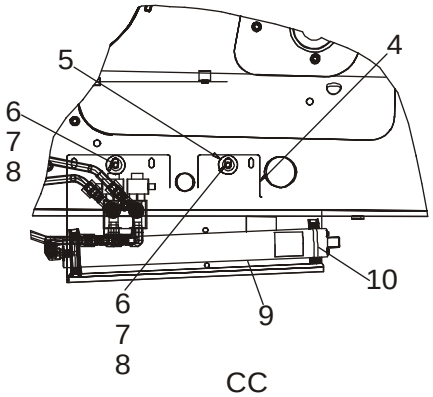

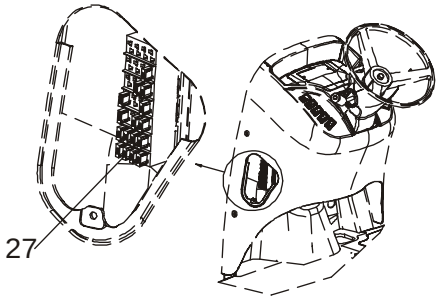

BS03M139

http://www.minnparbackhoeparts.com/

SYSTEME HYDRAULIQUE - SYSTEME ANTI-TANGAGE

REF	FN	PART NUMBER	YR/SN	QTY	DESCRIPTION
24		87419256		1	FAISCEAU COMPLET Side Console Options Harness; Includes (1) L71879 Diode; Attaches to Side Console Harness and Main Chassis Options Harness
25		L18337		2	SANGLE Tie
26		235002A1		1	CONTACTEUR Ride Control
27		121413A1		1	FUSIBLE 15 amp, Mini, Blue

http://www.minnparbackhoeparts.com/

08-26		p1	01/05

SYSTEME HYDRAULIQUE - COUPLEUR, OUTIL DE CHARGEUSE, DE SÉCURITÉ

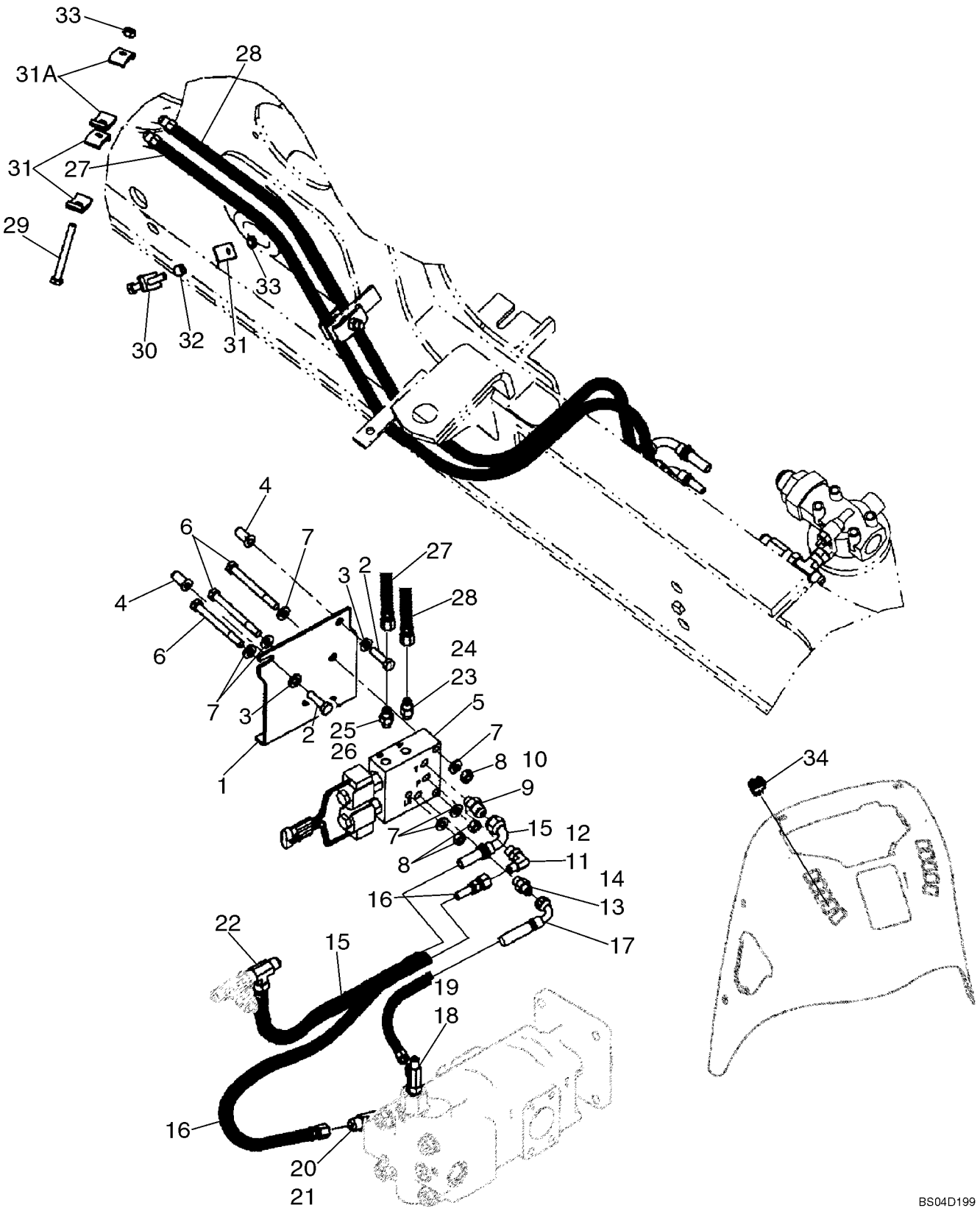

http://www.minnparbackhoeparts.com/

SYSTEME HYDRAULIQUE - COUPLEUR, OUTIL DE CHARGEUSE, DE SÉCURITÉ

REF	FN	PART NUMBER	YR/SN	QTY	DESCRIPTION
1		87437263		1	EQUERRE Coupler Valve Mounting
2		614-10035		2	VIS M10 x 35
3		896-11010		2	RONDELLE
4		87417721		2	INSERT FILETE M10
5		87435909		1	ELECTRO-VALVE Coupler; Loader Tool; See Figure 08-28
6		814-10060		3	BOULON M10 x 60
7		896-11010		6	RONDELLE
8		829-1410		3	ECROU M10
9		218-5351		1	RACCORD 3/4 fl x 9/16 Or; Incl. Ref 10
10		237-6006		1	JOINT THORIQUE 15/32 ID x 5/64
11		218-5105		1	COUDE 90 deg, 9/16 fl x Or; Incl. Ref 12
12		237-6006		1	JOINT THORIQUE 15/32 ID x 5/64
13		218-5057		1	RACCORD 9/16 fl x Or; Incl. Ref 14
14		237-6006		1	JOINT THORIQUE 15/32 ID x 5/64
15		87434265		1	FLEXIBLE (ASSEMBLE) 500 mm (19-11/16 in); Coupler Valve to Filter
16		87452402		1	FLEXIBLE (ASSEMBLE) 830 mm (32-11/16 in); Pump to Coupler Pressure Port; Replaces 87434262
17		87452403		1	FLEXIBLE (ASSEMBLE) 600 mm (23-5/8 in); Pump to Coupler Valve Load Sense Port; Replaces 87434261
18		282428A1		1	CLAPET TEE, Check; Incl. Ref 19
19		237-6006		1	JOINT THORIQUE 15/32 ID x 5/64
20		218-5183		1	TE TEE, 3/4 adj Or br x 3/4 fl x fl; Incl. Ref 21; Replaces Standard Steering Fitting
21		237-6008		1	JOINT THORIQUE 41/64 ID x 3/32
22		218-845		1	TE 3/4 fl br x fl x adj str thrd; Attaches to Tee At Back Of Filter
23		218-5053		1	RACCORD 7/16 fl x Or; Incl. Ref 24
24		237-6004		1	JOINT TORIQUE 23/64 ID x 5/64
25		218-5056		1	RACCORD 1/2 fl x Or; Incl. Ref 26
26		237-6005		1	JOINT TORIQUE 13/32 ID x 5/64
27		87427539		1	FLEXIBLE (ASSEMBLE) 1815 mm (71-1/2 in); B Port
28		87427537		1	FLEXIBLE (ASSEMBLE) 1815 mm (71-1/2 in); A Port
29		814-10090		1	BOULON M10 x 90
30		814-10070		1	BOULON M10 x 70

http://www.minnparbackhoeparts.com/

SYSTEME HYDRAULIQUE - COUPLEUR, OUTIL DE CHARGEUSE, DE SÉCURITÉ

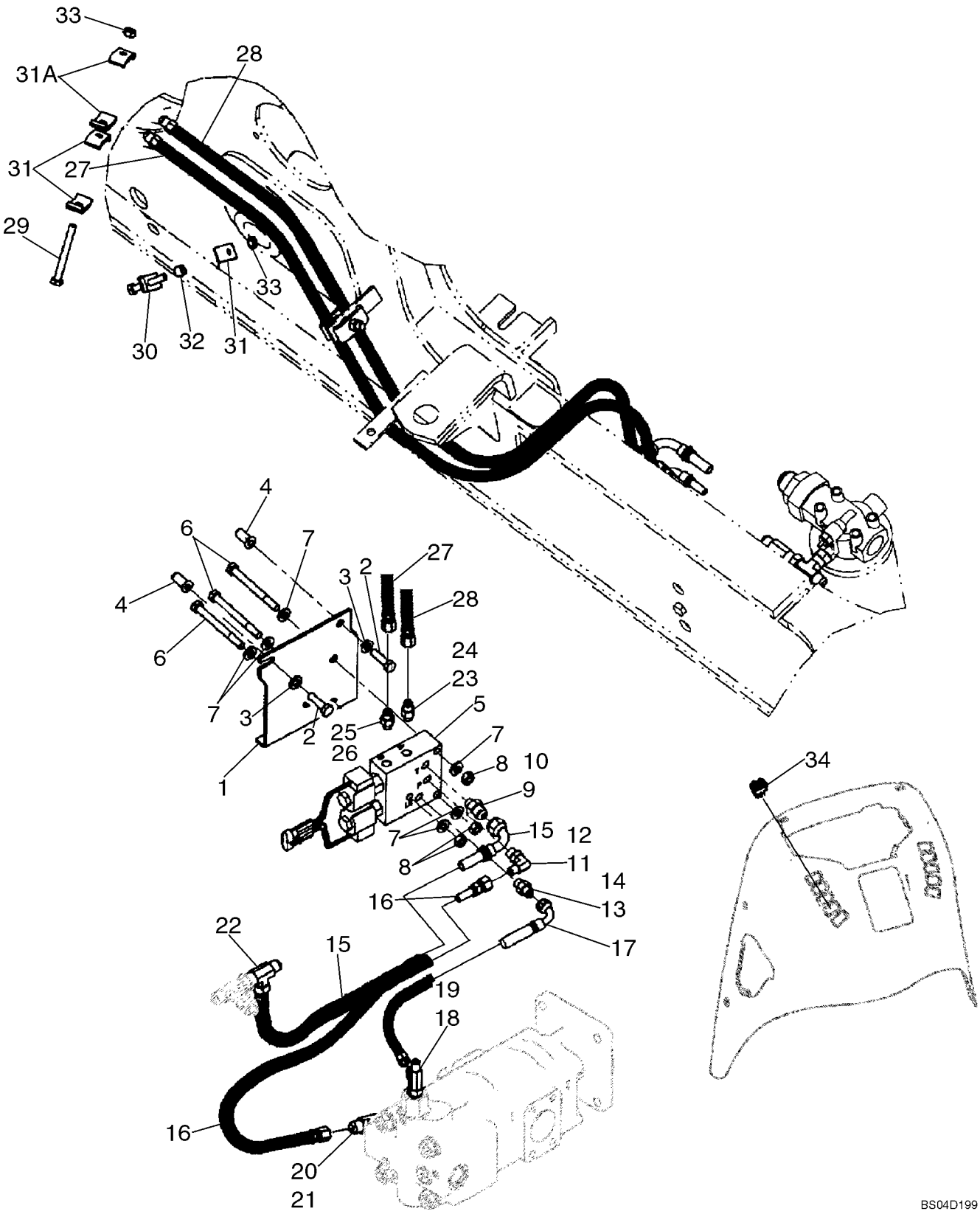

http://www.minnparbackhoeparts.com/

SYSTEME HYDRAULIQUE - COUPLEUR, OUTIL DE CHARGEUSE, DE SÉCURITÉ

REF	FN	PART NUMBER	YR/SN	QTY	DESCRIPTION
31		D138055		6	COLLIER
31A		D143846		2	BRIDE CLAMP
32		120303A1		1	ENTRETOISE
33		832-10410		2	ECROU M10
34		398675A2		1	CONTACTEUR Loader Tool Quick Coupler

http://www.minnparbackhoeparts.com/

SYSTEME HYDRAULIQUE - COUPLEUR, OUTIL DE CHARGEUSE, DE SÉCURITÉ

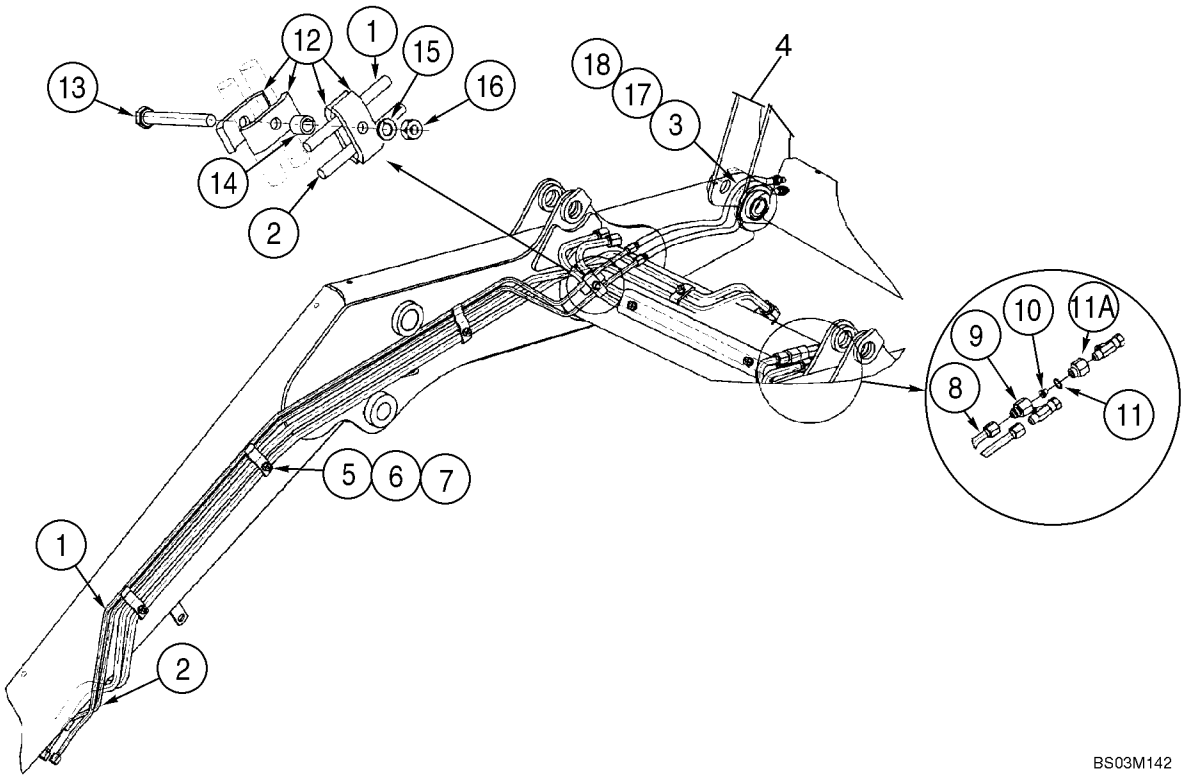

http://www.minnparbackhoeparts.com/

SYSTEME HYDRAULIQUE - COUPLEUR, OUTIL DE CHARGEUSE, DE SÉCURITÉ

REF	FN	PART NUMBER	YR/SN	QTY	DESCRIPTION
		REF			NOTICE AT LOADER LIFT FRAME
1		308255A1		1	TUYAUTERIE
2		308254A1		1	TUYAUTERIE
3		300996A3		2	FLEXIBLE (ASSEMBLE) 772 mm (30-13/32 in)
4		REF		1	NOTICE Coupler, Hydr., Loader Tool Quick Coupler; For Complete Assembly, See Figure 09-10; Order From Machinery Price List; Use Standard Loader Bucket Pins To Mount Coupler
5		302820A2		3	COLLIER
6		892-11010		3	RONDELLE FREIN M10
7		829-1410		3	ECROU M10; 10.9
8		434605A1		1	TUYAUTERIE
9		304424A1		1	CONNECTEUR
10		304890A1		1	RÉDUCTION
11		237-6010		1	JOINT TORIQUE 3/4 ID x 3/32
11A		309674A1		1	CONNECTEUR 7/8 male x 7/8 female
12		D138055		4	COLLIER
13		814-10090		1	BOULON M10 x 90
14		120303A1		1	ENTRETOISE
15		892-11010		1	RONDELLE FREIN M10
16		829-1410		1	ECROU M10; 10.9
17		307277A1		1	MANCHON
18		L18337		2	SANGLE 15 in

http://www.minnparbackhoeparts.com/

DISTRIBUTEUR DU COUPLEUR - OUTIL DE CHARGEUSE, DE SÉCURITÉ / RETROPELLE

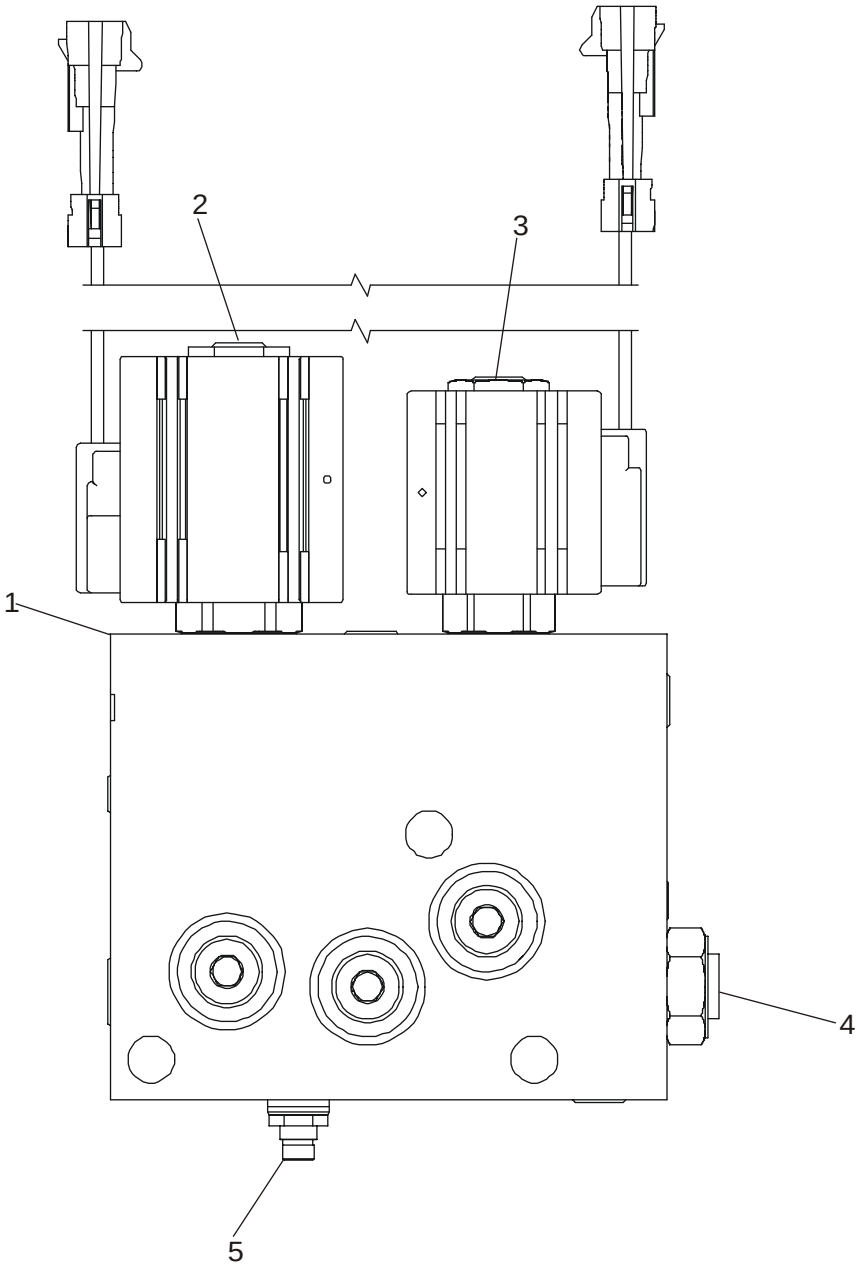

BS03M143

http://www.minnparbackhoeparts.com/

DISTRIBUTEUR DU COUPLEUR - OUTIL DE CHARGEUSE, DE SÉCURITÉ / RETROPELLE

REF	FN	PART NUMBER	YR/SN	QTY	DESCRIPTION
		87435909		1	ELECTRO-VALVE Incl. Ref 1 - 5
1		NSS		1	NON FOURNI SEPAREMENT Body
2		87438021		1	ELECTRO-VALVE 4-Way Cartridge With Coil; Includes 87438022, 87438023, 87438024
		87438022		1	SOUPAPE HYDRAULIQUE Valve, Cartridge
		87438023		1	BOBINE Coil, Solenoid
		87438024		1	POCHETTE DE JOINTS Seal Kit, 4-Way Solenoid
3		87438025		1	ELECTRO-VALVE 2-Way 2-Position Cartridge With Coil; Includes 87438026, 87438027, 87438028
		87438026		1	SOUPAPE HYDRAULIQUE Valve, Cartridge
		87438027		1	BOBINE Coil, Solenoid
		87438028		1	POCHETTE DE JOINTS Seal Kit, 2-Way Solenoid
4		87438029		1	SOUPAPE ANTI RETOUR Check Valve; Includes 87438028 Seal Kit
		87438028		1	POCHETTE DE JOINTS Seal Kit, 2-Way Solenoid
5		87438031		1	SOUPAPE, DÉCHARGE Relief Valve; Includes 87438032
		87438032		1	POCHETTE DE JOINTS Seal Kit, Relief Valve

http://www.minnparbackhoeparts.com/

08-29		p1	01/05

SYSTEME HYDRAULIQUE - COUPLEUR, GODET DE LA PELLE RETRO

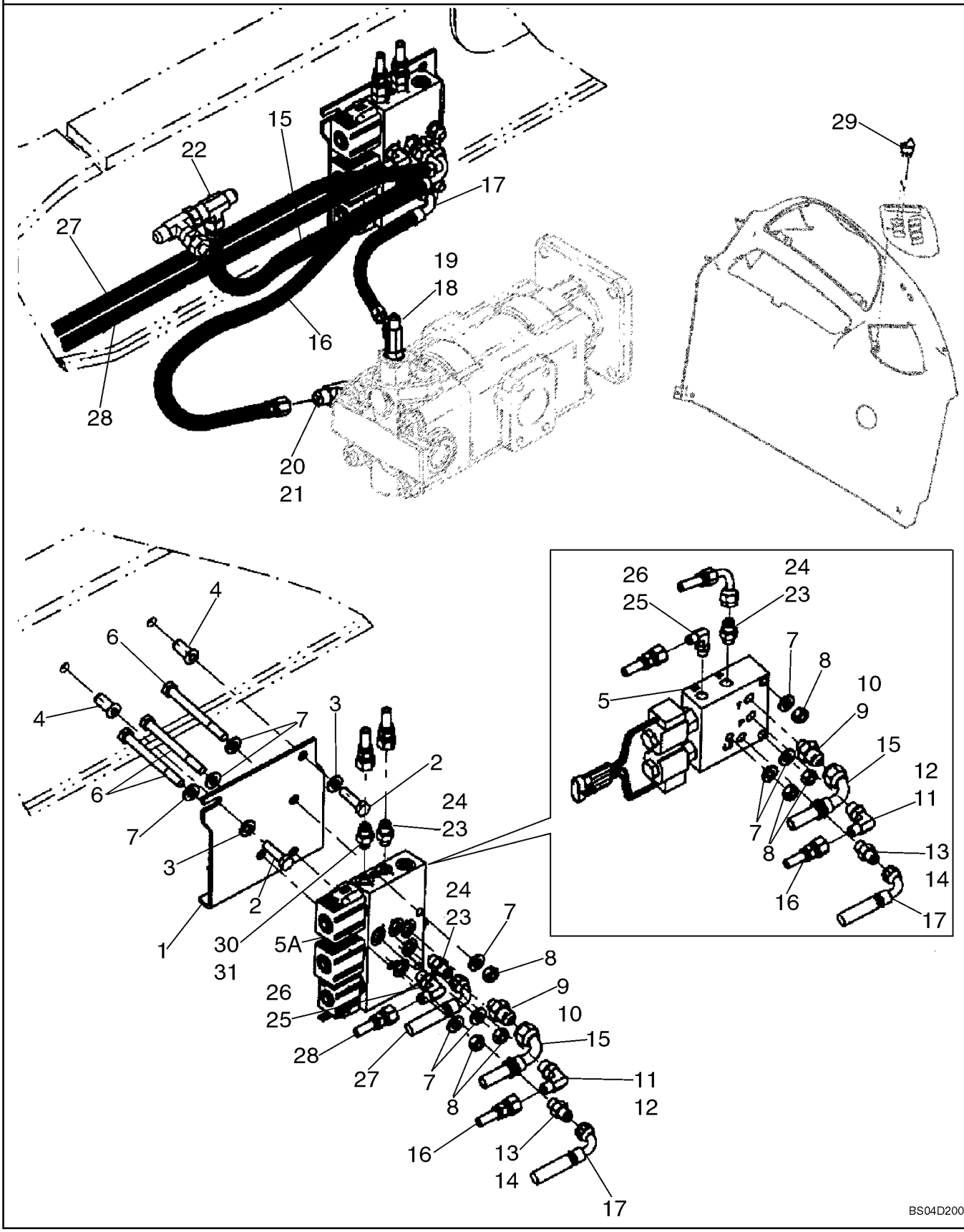

http://www.minnparbackhoeparts.com/

SYSTEME HYDRAULIQUE - COUPLEUR, GODET DE LA PELLE RETRO

REF	FN	PART NUMBER	YR/SN	QTY	DESCRIPTION
1		87437263		1	EQUERRE Coupler Valve Mounting
2		614-10035		2	VIS M10 x 35
3		896-11010		2	RONDELLE
4		87417721		2	INSERT FILETE M10
5		87435909		1	ELECTRO-VALVE Coupler; Backhoe Bucket; See Figure 08-28
5A		87435910		1	ELECTRO-VALVE Coupler; Models With Both Loader Tool and Backhoe Bucket Coupler; See Figure 08-31
6		814-10060		3	BOULON M10 x 60
7		896-11010		6	RONDELLE
8		829-1410		3	ECROU M10
9		218-5351		1	RACCORD 3/4 fl x 9/16 Or; Incl. Ref 10
10		237-6006		1	JOINT THORIQUE 15/32 ID x 5/64
11		218-5105		1	COUDE 90 deg, 9/16 fl x Or; Incl. Ref 12
12		237-6006		1	JOINT THORIQUE 15/32 ID x 5/64
13		218-5057		1	RACCORD 9/16 fl x Or; Incl. Ref 14
14		237-6006		1	JOINT THORIQUE 15/32 ID x 5/64
15		87434265		1	FLEXIBLE (ASSEMBLE) 500 mm (19-11/16 in); Coupler Valve to Filter
16		87452402		1	FLEXIBLE (ASSEMBLE) 830 mm (32-11/16 in); Pump to Coupler Pressure Port; Replaces 87434262
17		87452403		1	FLEXIBLE (ASSEMBLE) 600 mm (23-5/8 in); Pump to Coupler Valve Load Sense Port; Replaces 87434261
18		282428A1		1	CLAPET TEE, Check; Incl. Ref 19
19		237-6006		1	JOINT THORIQUE 15/32 ID x 5/64
20		218-5183		1	TE TEE, 3/4 adj Or br x 3/4 fl x fl; Incl. Ref 21; Replaces Standard Steering Fitting
21		237-6008		1	JOINT THORIQUE 41/64 ID x 3/32
22		218-845		1	TE 3/4 fl br x fl x adj str thrd; Attaches to Tee At Back Of Filter
23		218-5053		1-2	RACCORD 7/16 fl x Or; Incl. Ref 24; One Used On Models With Backhoe Bucket Coupler Only; Two Used On Models With Both Loader Tool and Backhoe Bucket Coupler
24		237-6004		1	JOINT TORIQUE 23/64 ID x 5/64

http://www.minnparbackhoeparts.com/

SYSTEME HYDRAULIQUE - COUPLEUR, GODET DE LA PELLE RETRO

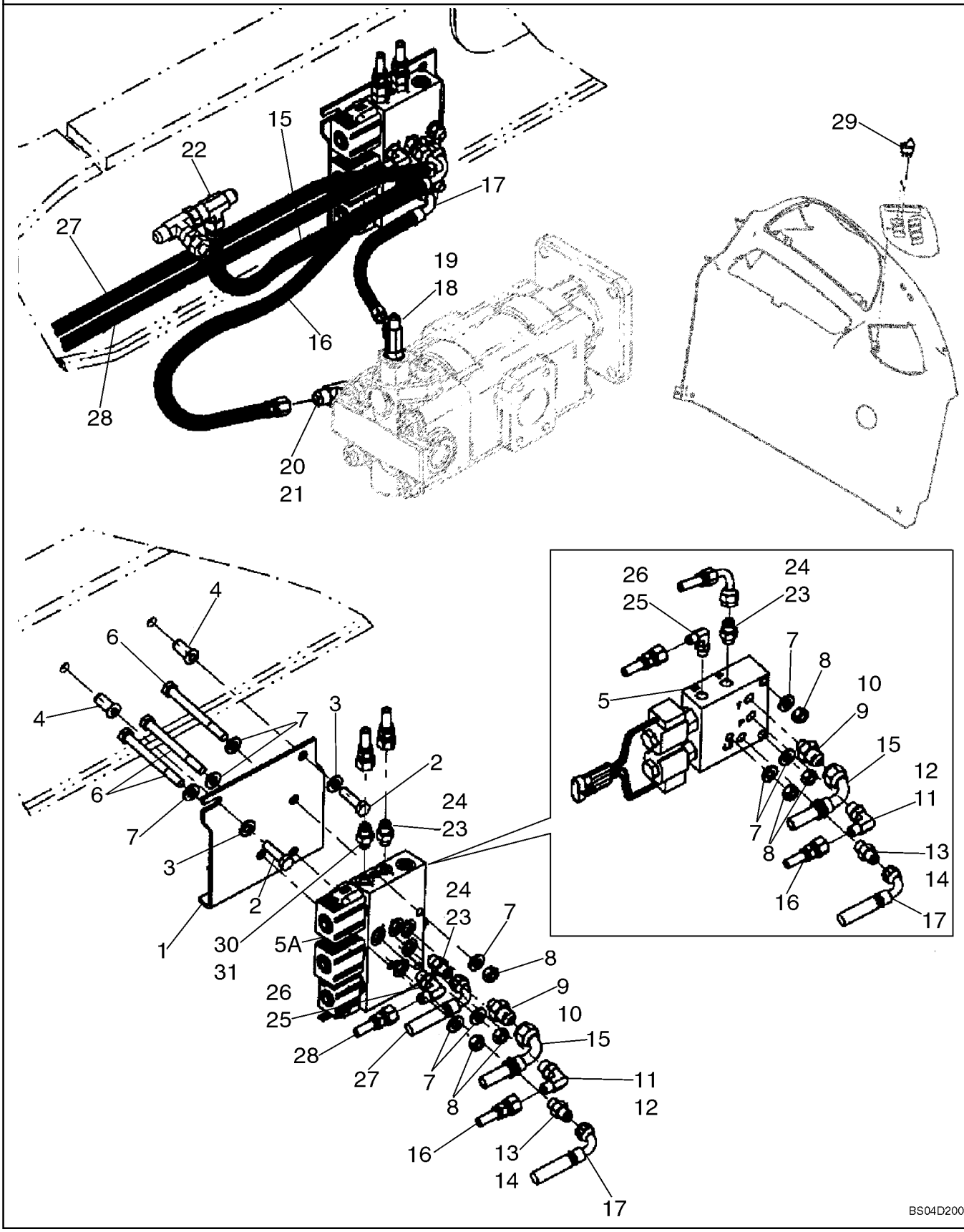

http://www.minnparbackhoeparts.com/

SYSTEME HYDRAULIQUE - COUPLEUR, GODET DE LA PELLE RETRO

REF	FN	PART NUMBER	YR/SN	QTY	DESCRIPTION
25		218-5335		1	RACCORD ELBOW, 90 deg, 9/16 fl x 1/2 Or; Incl. Ref 26
26		237-6005		1	JOINT TORIQUE 13/32 ID x 5/64
27		87448526		1	FLEXIBLE (ASSEMBLE) 3125 mm (123-1/32 in); used with straight fitting
28		87448527		1	FLEXIBLE (ASSEMBLE) 3100 mm (122-1/16 in); used with elbow fitting
29		386789A2		1	CONTACTEUR Backhoe Bucket Hydraulic Coupler; For Switch Used With Loader Tool Quick Coupler, See Figure 08-26
30		218-5056		1	RACCORD 1/2 fl x Or; Incl. Ref 31
31		237-6005		1	JOINT TORIQUE 13/32 ID x 5/64

http://www.minnparbackhoeparts.com/

08-30		p1	06/05

SYSTEME HYDRAULIQUE - COUPLEUR, GODET DE LA PELLE RETRO

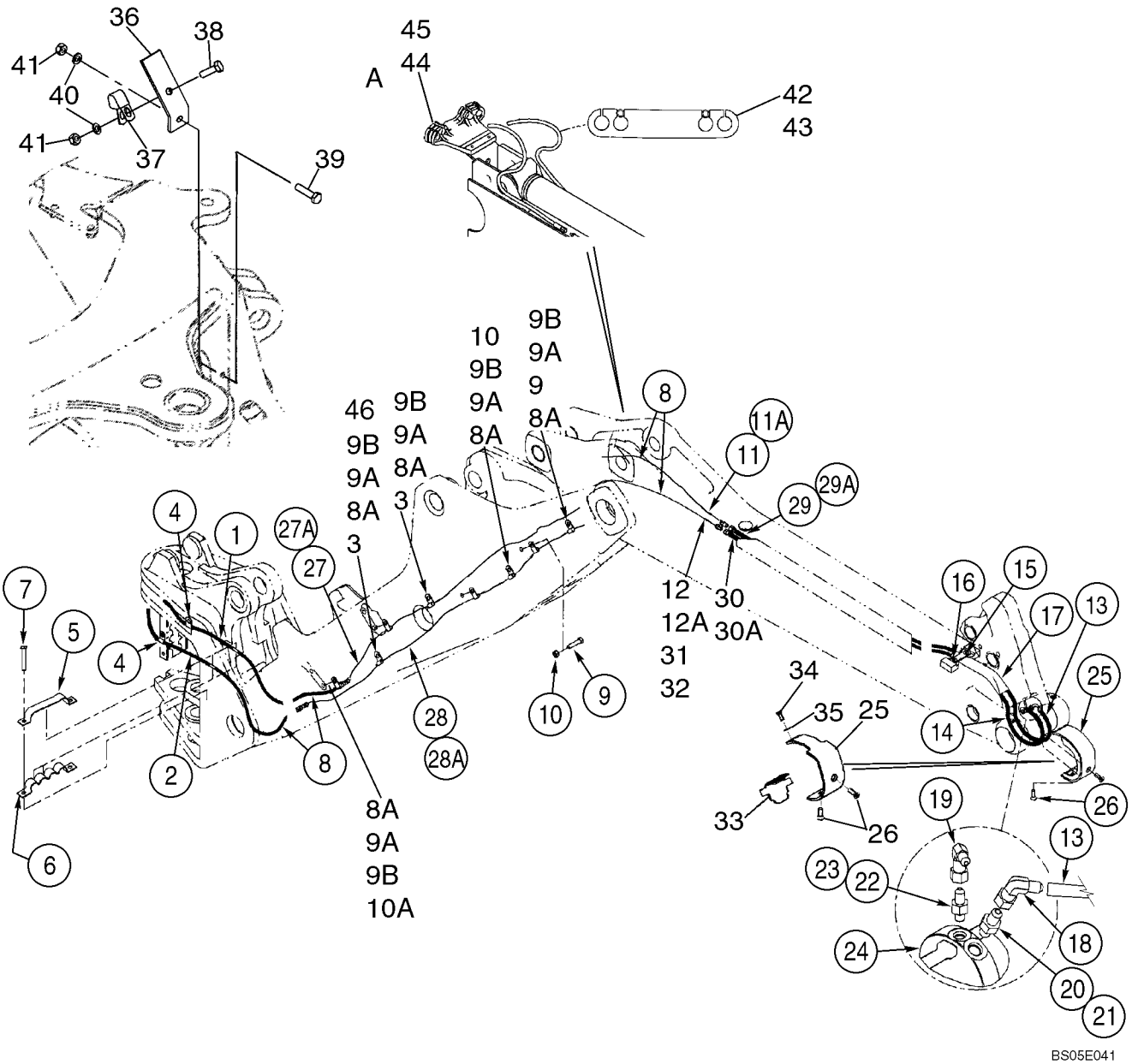

http://www.minnparbackhoeparts.com/

SYSTEME HYDRAULIQUE - COUPLEUR, GODET DE LA PELLE RETRO

REF	FN	PART NUMBER	YR/SN	QTY	DESCRIPTION
		REF			NOTICE AT BOOM AND DIPPER
1		87448526		1	FLEXIBLE (ASSEMBLE) 3125 mm (123-1/32 in); From Coupler Solenoid Valve
2		87448527		1	FLEXIBLE (ASSEMBLE) 3100 mm (122-1/16 in); From Coupler Solenoid Valve
3		414415A1		4	COLLIER 3/8 ID
4		515-23143		2	COLLIER
5		385420A2		1	SANGLE At Swing Tower
6		380692A1		1	COLLIER
7		814-12070		2	VIS M12 x 70
8		L18337		X	SANGLE 15 in
8A		409499A1		8-10	COLLIER (10) Used With Extendable Dipper Models
9		409471A1		2	BRIDE DE FIXATION Used With Extendable Dipper Models
9A		614-8016		8-10	VIS M8 x 16
9B		892-11008		8-10	RONDELLE M8, Lock
10		409469A1		2	COLLIER
10A		409470A1		2	COLLIER
11		87433386		1	FLEXIBLE (ASSEMBLE) 1180 mm (46-1/2 in); Standard Dipper
11A		87433390		1	FLEXIBLE (ASSEMBLE) 2415 mm (95-1/8 in); Extendable Dipper
12		87433387		1	FLEXIBLE (ASSEMBLE) 1180 mm (46-1/2 in); Standard Dipper
12A		87433389		1	FLEXIBLE (ASSEMBLE) 2415 mm (95-1/8 in); Extendable Dipper
13		87418552		1	FLEXIBLE (ASSEMBLE) 1080 mm (42-9/16 in); To Coupler Cylinder
14		87418553		1	FLEXIBLE (ASSEMBLE) 1120 mm (44-1/8 in); To Coupler Cylinder
15		87418551		1	COLLIER
16		407975A1		2	VIS M8 x 16
17		87448668		1	MANCHON 560 mm (22-3/64 in); Replaces 87419105 440 mm (17-21/64 in) long Sleeve
18		402855A1		1	COUDE Attaches To Ref 13 Hose
19		402854A1		1	COUDE Attaches To Ref 14 Hose
20		218-5053		1	RACCORD 7/16 fl x Or; Incl. Ref 21

http://www.minnparbackhoeparts.com/

08-30		p2	06/05

SYSTEME HYDRAULIQUE - COUPLEUR, GODET DE LA PELLE RETRO

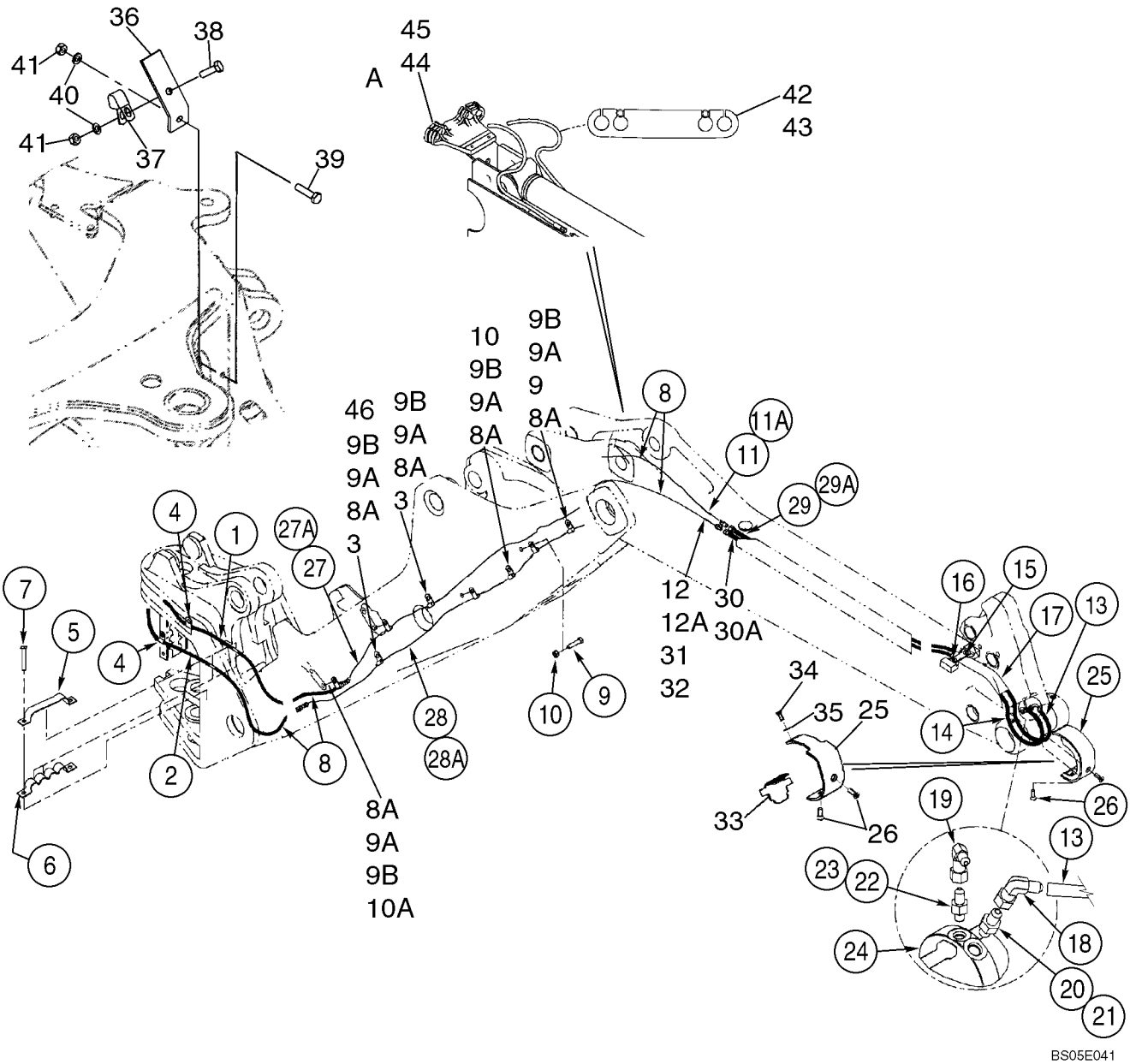

http://www.minnparbackhoeparts.com/

SYSTEME HYDRAULIQUE - COUPLEUR, GODET DE LA PELLE RETRO

REF	FN	PART NUMBER	YR/SN	QTY	DESCRIPTION
21		237-6004		1	JOINT TORIQUE 23/64 ID x 5/64
22		218-5052		1	RACCORD 3/8 fl x Or; Incl. Ref 23
23		237-6003		1	JOINT TORIQUE 5/16 ID x 1/16
24		87423867		1	VERIN Backhoe Bucket Coupler Cylinder; See Figure 08-32
25		402940A2		1	GARANT (ASSEMBLE)
26		402361A3		2	VIS
27		87423343		1	TUYAUTERIE Standard Dipper; Left-Hand
27A		87411722		1	TUYAU HYDRAULIQUE RIGIDE Extendable Dipper; Left-Hand
28		87423345		1	TUYAUTERIE Standard Dipper; Right-Hand
28A		87411720		1	TUYAU HYDRAULIQUE RIGIDE Extendable Dipper; Right-Hand
29		406172A1		1	TUYAUTERIE Standard Dipper; See Figure 09-28
29A		403840A1		1	TUYAUTERIE Extendable Dipper; See Figure 09-28
30		406168A1		1	TUYAUTERIE Standard Dipper
30A		403400A1		1	TUYAUTERIE Extendable Dipper
31		407804A1		1	MANCHON 600 mm (23-5/8 in); Standard Dipper
31		87441372		2	MANCHON 2044 mm (80-1/2 in); Extendable Dipper; Replaces 408158A2 1980 mm (78 in) long Sleeve
32		L18337		4	SANGLE
33		409691A2		1	GARANT
34		607-8020		2	BOULON M8 x 20; Lock
35		896-11008		2	RONDELLE
36		413778A1		1	PATTE FIXATION
37		D49498		1	CRAMPON
38		614-10030		1	VIS M10 x 30
39		814-10040		1	BOULON M10 x 40
40		892-11010		2	RONDELLE FREIN M10
41		829-1410		2	ECROU M10
42		407745A1		1	BRIDE, FLEXIBLE Extendable Dipper; Models With Hydraulic Coupler
43		407746A1		1	BRIDE, FLEXIBLE Extendable Dipper; Models With Hydraulic Coupler and Auxiliary Hydraulics
44		407734A1		1	SUPPORT Extendable Dipper; Models With Hydraulic Coupler

http://www.minnparbackhoeparts.com/

08-30		p3	06/05

SYSTEME HYDRAULIQUE - COUPLEUR, GODET DE LA PELLE RETRO

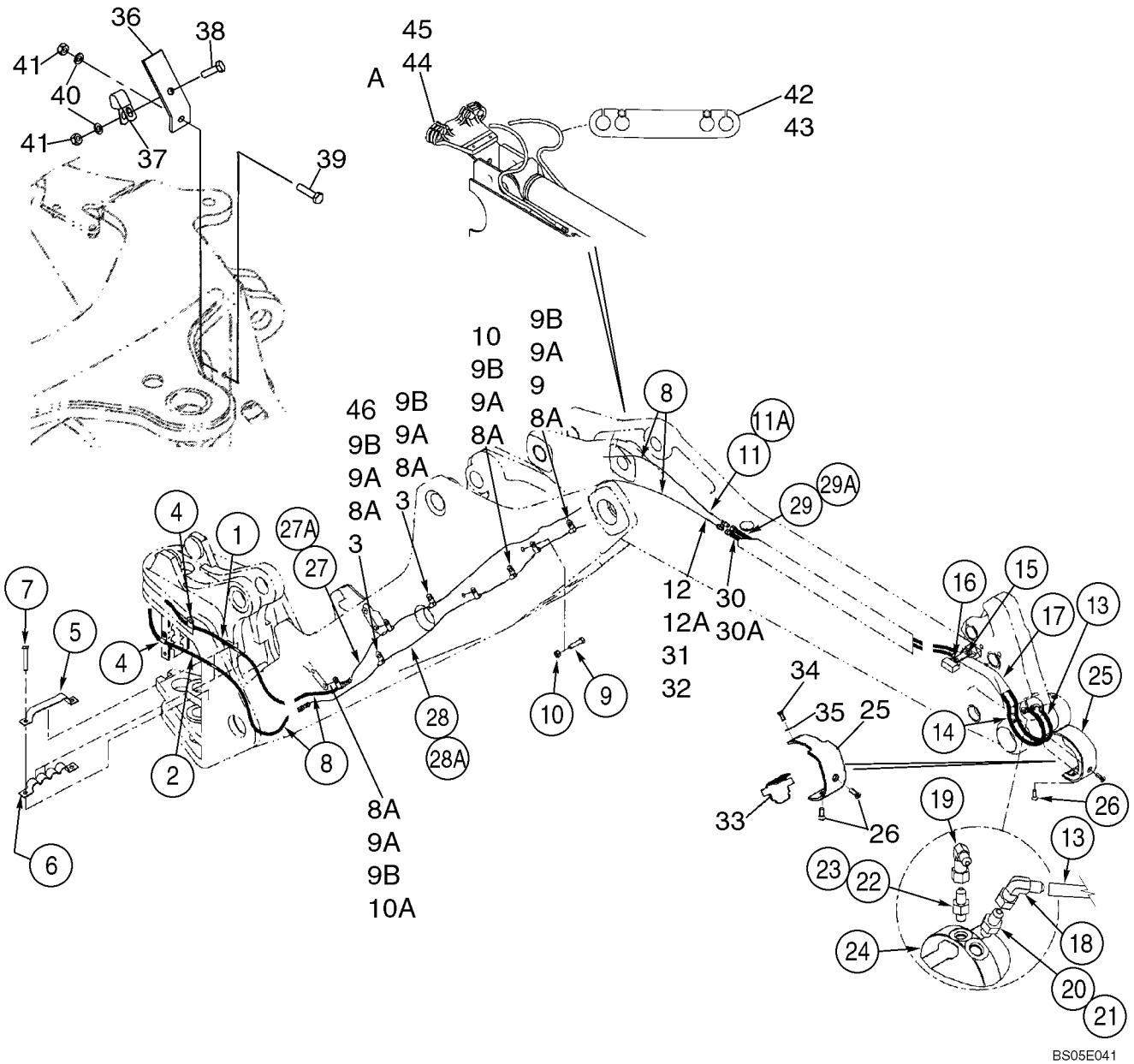

http://www.minnparbackhoeparts.com/

SYSTEME HYDRAULIQUE - COUPLEUR, GODET DE LA PELLE RETRO

REF	FN	PART NUMBER	YR/SN	QTY	DESCRIPTION
45		407735A1		1	SUPPORT Extendable Dipper; Models With Hydraulic Coupler and Auxiliary Hydraulics
46		87333648		1	BRIDE Replaces 86983643 Clamp Used On Some Models

http://www.minnparbackhoeparts.com/

08-31		p1	05/04

DISTRIBUTEUR DU COUPLEUR - OUTIL DE CHARGEUSE, DE SÉCURITÉ AVEC DEGODET DE LA PELLE RETRO

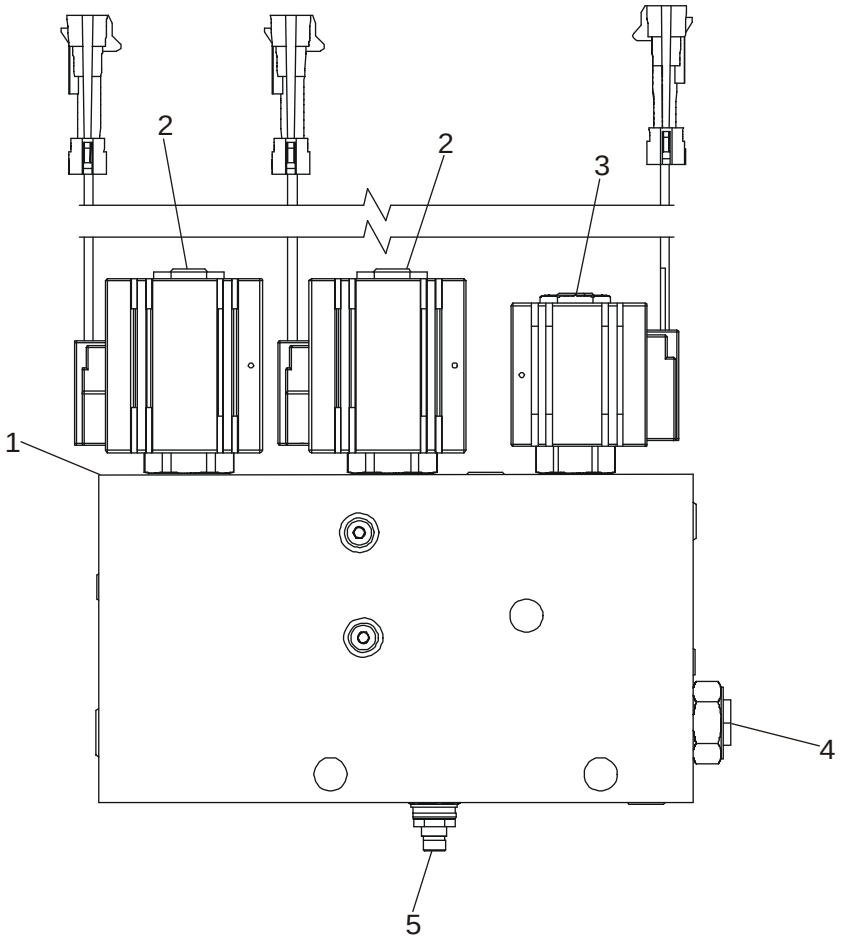

BS03M145

http://www.minnparbackhoeparts.com/

DISTRIBUTEUR DU COUPLEUR - OUTIL DE CHARGEUSE, DE SÉCURITÉ AVEC DEGODET DE LA PELLE RETRO

REF	FN	PART NUMBER	YR/SN	QTY	DESCRIPTION
		87435910		1	ELECTRO-VALVE Incl. Ref 1 - 5; Models With Both Loader Tool and Backhoe Bucket Coupler
1		NSS		1	NON FOURNI SEPAREMENT Body
2		87438021		2	ELECTRO-VALVE 4-Way Cartridge With Coil; Includes 87438022, 87438023, 87438024
		87438022		1	SOUPAPE HYDRAULIQUE Valve, Cartridge
		87438023		1	BOBINE Coil, Solenoid
		87438024		1	POCHETTE DE JOINTS Seal Kit, 4-Way Solenoid
3		87438025		1	ELECTRO-VALVE 2-Way 2-Position Cartridge With Coil; Includes 87438026, 87438027, 87438028
		87438026		1	SOUPAPE HYDRAULIQUE Valve, Cartridge
		87438027		1	BOBINE Coil, Solenoid
		87438028		1	POCHETTE DE JOINTS Seal Kit, 2-Way Solenoid
4		87438029		1	SOUPAPE ANTI RETOUR Check Valve; Includes 87438028 Seal Kit
		87438028		1	POCHETTE DE JOINTS Seal Kit, 2-Way Solenoid
5		87438031		1	SOUPAPE, DÉCHARGE Relief Valve; Includes 87438032
		87438032		1	POCHETTE DE JOINTS Seal Kit, Relief Valve

http://www.minnparbackhoeparts.com/

VERIN - COUPLEUR, GODET DE LA PELLE RETRO

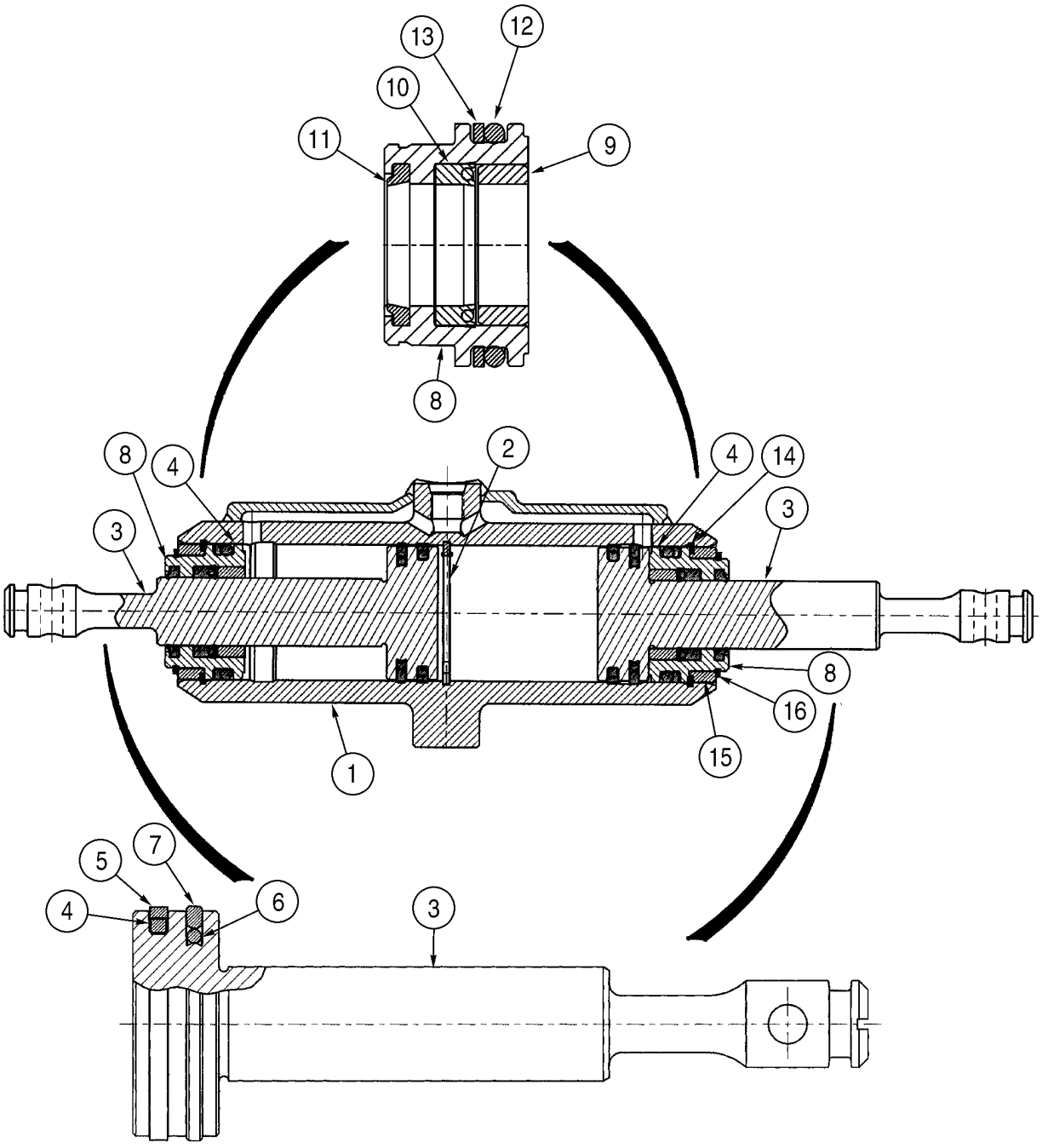

http://www.minnparbackhoeparts.com/

VERIN - COUPLEUR, GODET DE LA PELLE RETRO

REF	FN	PART NUMBER	YR/SN	QTY	DESCRIPTION
		87423867		1	VERIN Backhoe Bucket Coupler Cylinder; Incl. Ref 1 - 16 and 390320A4 Seal Kit
1		87423868		1	TUBE Includes 369263A1 Plug
		369263A1		4	BOUCHON Expansion
2		800-6138		1	RETENEUR
		NSS		2	NON FOURNI SEPAREMENT Rod Assy; Incl. Ref 3 - 7
3		399907A2		1	TRINGLE Chrome
4		353078A1		1	ANNEAU
5		353079A1		1	JOINT 38,1 dia; Replaces 404203A1, Seal Used On Some Cylinders
6		395609A1		1	JOINT TORIQUE
7		384844A1		1	ANNEAU Detent
		311459A2		2	PRESSE-ETOUPE Incl. Ref 8 - 13
8		NSS		1	NON FOURNI SEPAREMENT Gland, Cylinder
9		NSS		1	NON FOURNI SEPAREMENT Bushing
10		D83187		1	JOINT Rod
11		A44651		1	RACLEUR BALAIS
12		238-6218		1	JOINT TORIQUE 1-1/4 ID x 1/8 in
13		A45035		1	JOINT TORIQUE Backup Ring
14		102-23150		2	ANNEAU-D'ARRET
15		A44641		2	BAGUE Spacer
16		102-12125		2	CIRCLIP Retaining Ring
		390320A4		1	POCHETTE DE JOINTS Incl. Ref 4 - 16; Also Includes (2) 390317A1 Rings; (1) 445364A1 Service Ring For Cylinder Tube End Coupler Outer Sleeve End

http://www.minnparbackhoeparts.com/

POMPE, ÉQUIPEMENT HYDRAULIQUE

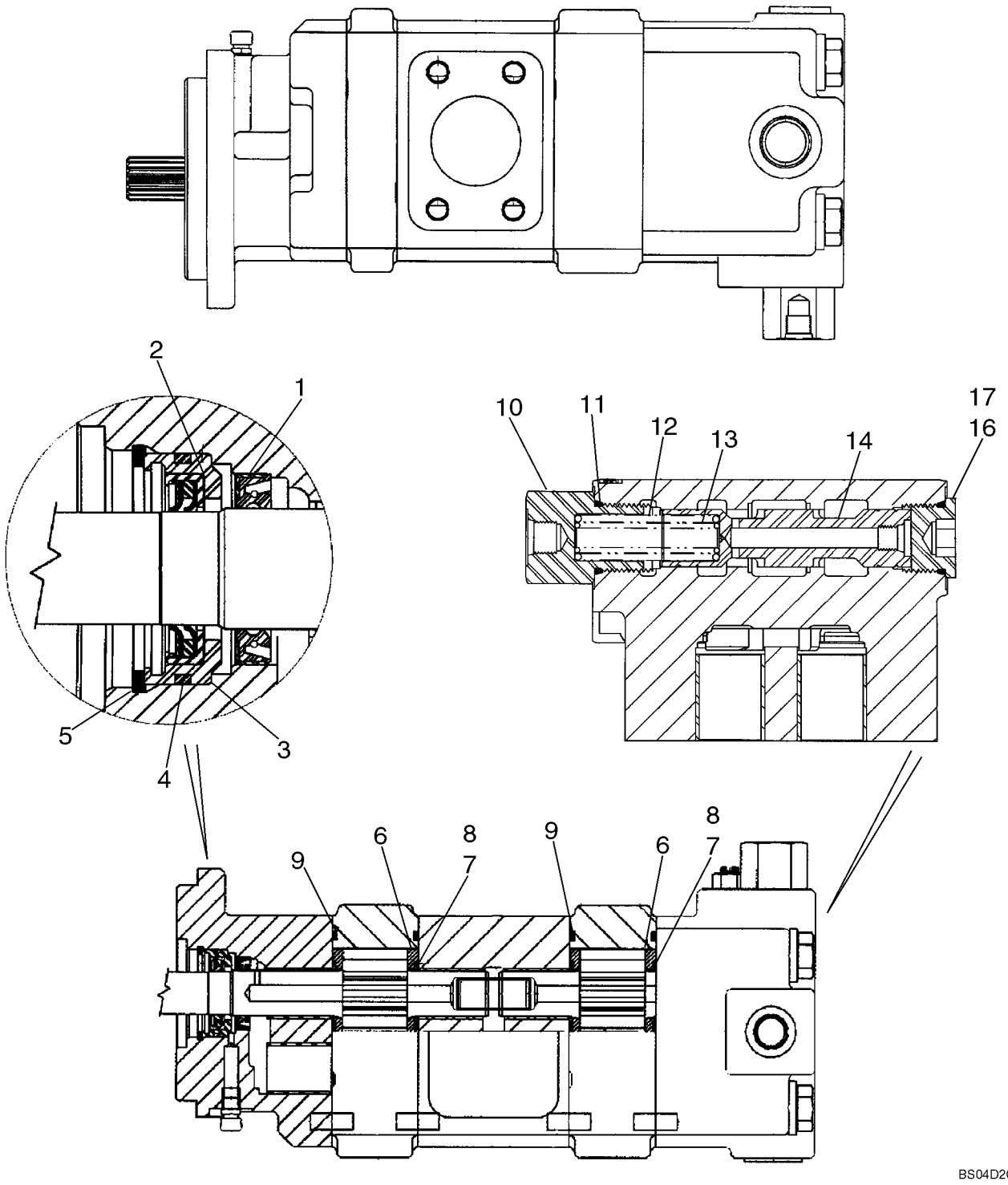

http://www.minnparbackhoeparts.com/

POMPE, ÉQUIPEMENT HYDRAULIQUE

REF	FN	PART NUMBER	YR/SN	QTY	DESCRIPTION
		87434673		1	POMPE HYDRAULIQUE Tandem; Component Parts Not Serviced Separately, Except for 87434072 and 87438045 Service Kits, Ref 1 - 17, See Below
		87434072		1	KIT REPAR.POMPE HYDRAU Pump Service Kit, Dual Section; Incl. Ref 1 - 9
1		L32418		1	JOINT Double Lip
2		87434075		1	JOINT Lip Seal
3		87434076		1	RETENEUR DE JOINT Seal Retainer
4		87434077		1	JOINT ANNULAIRE O-Ring Seal
5		102-23206		1	CIRCLIP Retaining Ring
6		N13582		4	PLAQUE Thrust
7		144173A1		4	JOINT
8		178051A1		4	CONTRE-JOINT
9		L32100		4	JOINT Gear Housing Gasket
		87438045		1	KIT REPAR.POMPE HYDRAU Priority Valve Service Kit, Single; Incl. Ref 10 - 17
10		87437899		1	BOUCHON Load Sense Plug
11		237-6014		1	JOINT TORIQUE 1-3/64 ID x 7/64
12		87437905		1	RESSORT DE MAINTIEN Spool Spring, 100 psi
13		87437906		1	RESSORT DE MAINTIEN Spool Spring, 50 psi
14		87437914		1	TIROIR Priority Valve Spool
15		87437917		1	BOUCHON Orifice, Hex Socket Plug, Spool; Not Illustrated; No Longer Used; No Longer In Service Kit
16		218-5213		1	BOUCHON Hex Socket, 1-3/16 Or; Incl. Ref 17
17		237-6014		1	JOINT TORIQUE 1-3/64 ID x 7/64

http://www.minnparbackhoeparts.com/

DISTRIBUTEUR - COMMANDE DU CHARGEUR, DEUX TIROIRS

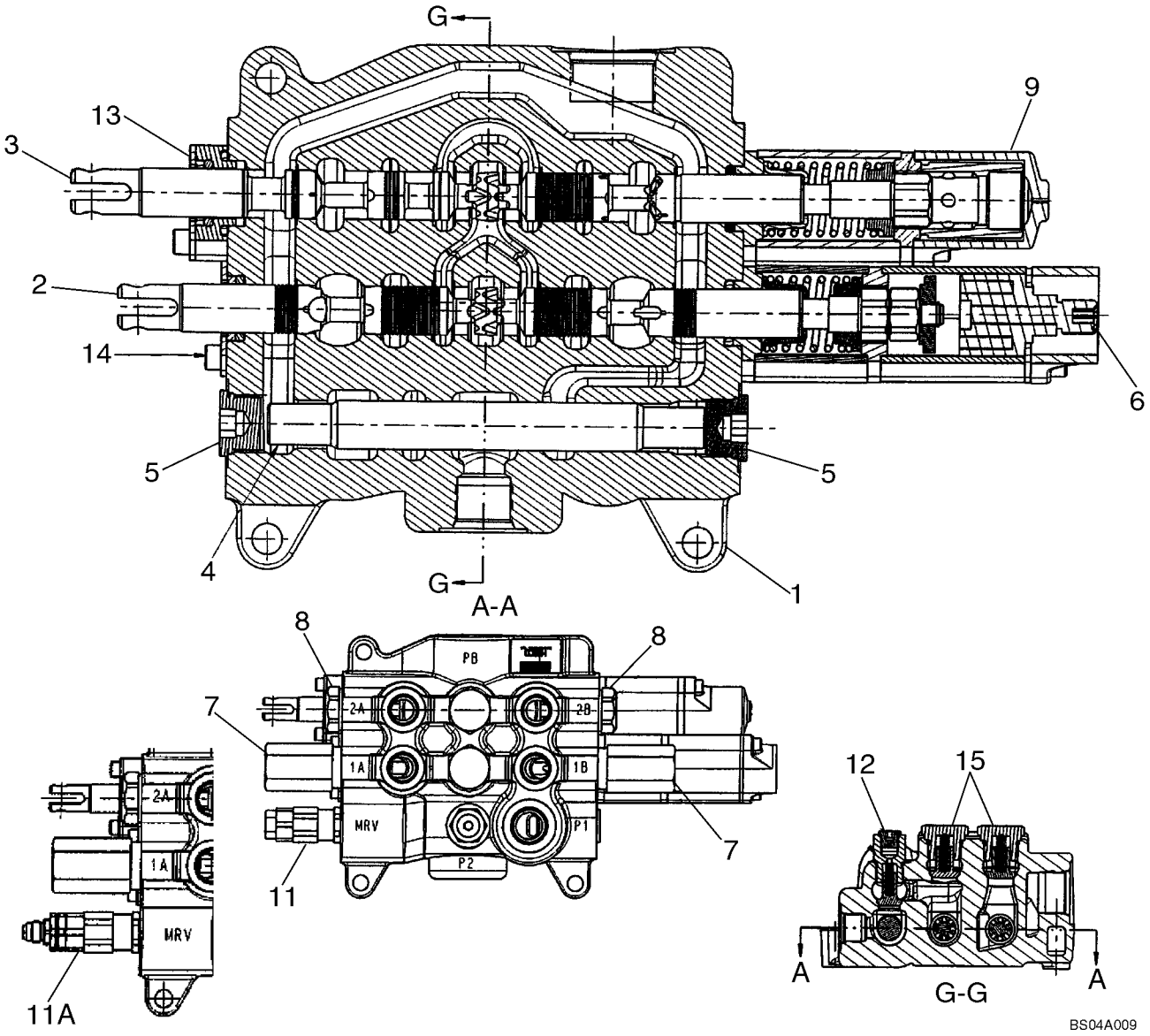

http://www.minnparbackhoeparts.com/

DISTRIBUTEUR - COMMANDE DU CHARGEUR, DEUX TIROIRS

REF	FN	PART NUMBER	YR/SN	QTY	DESCRIPTION
		87434766		1	SOUPAPE HYDRAULIQUE Two Spool Loader Valve, Used On Models Without Pilot Controls; Incl. Ref 1 - 11, 12 - 15
		87434768		1	SOUPAPE HYDRAULIQUE Two Spool Loader Valve, Used On Models With Pilot Controls; Incl. Ref 1 - 9, 11A - 15
1		NSS		1	NON FOURNI SEPAREMENT HOUSING
2		NSS		1	NON FOURNI SEPAREMENT SPOOL, Bucket
3		NSS		1	NON FOURNI SEPAREMENT SPOOL, Lift
4		NSS		1	NON FOURNI SEPAREMENT SPOOL
5		87426233		2	BOUCHON 7/8 - 14 NF Plug, Serviceable Includes (1) 87455974 O-Ring
6		87426221		1	DÉTENTE Magnetic Detent Kit, Bucket; Some Component Parts Not Serviced Separately; Serviceable Includes (1) 87454547 O-Ring, (1) 87310277 Magnet, (2) 87310278 Screw
7		87450978		2	SOUPAPE, DÉCHARGE Relief Valve Assembly; Replaces 87426232; Some Component Parts Not Serviced Separately; Includes Serviceable 87455549 Seal Kit
8		81868381		2	SOUPAPE ANTI RETOUR Load Check Valve, Anti-Void; Component Parts Not Serviced Separately; Includes Serviceable 87455580 Seal Kit
9		87426227		1	DÉTENTE Manual Detent Assembly, Lift; Some Component Parts Not Serviced Separately; Serviceable Includes (1) 87454547 O-Ring, (2) 87310275 Scew, (4) 87310276 Ball Bearing
11		87426717		1	SOUPAPE, DÉCHARGE Main Relief Valve Assembly, Single Stage; 87434766 Loader Valve, Models Without Pilot Controls; Component Parts Not Serviced Separately; Includes Serviceable 87455551 Seal Kit
11A		87426235		1	SOUPAPE, DÉCHARGE Main Relief Valve Assembly, Two Stage; 87434768 Loader Valve, Models With Pilot Controls; Component Parts Not Serviced Separately; Includes Serviceable 87455550 Seal Kit

http://www.minnparbackhoeparts.com/

DISTRIBUTEUR - COMMANDE DU CHARGEUR, DEUX TIROIRS

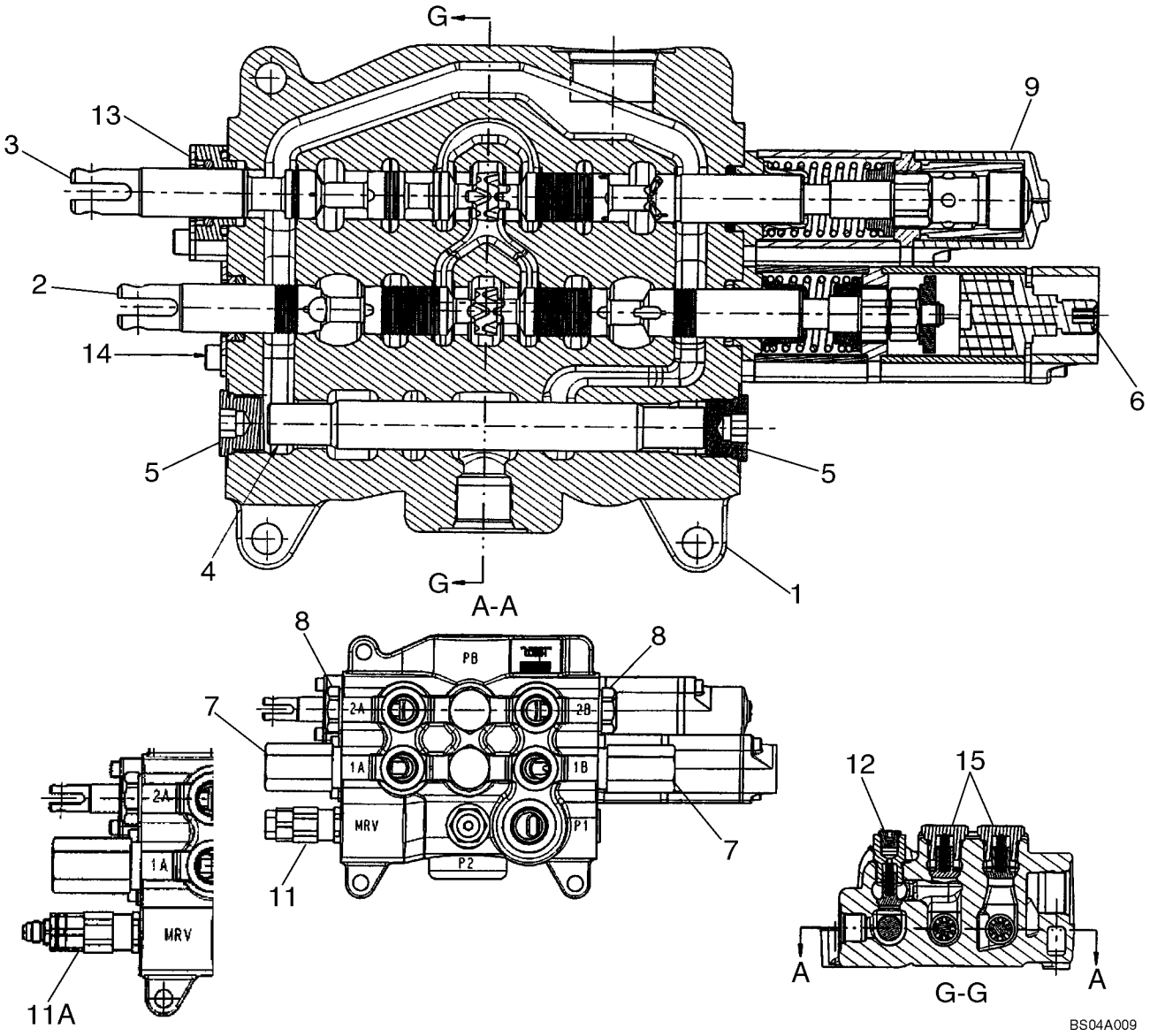

http://www.minnparbackhoeparts.com/

DISTRIBUTEUR - COMMANDE DU CHARGEUR, DEUX TIROIRS

REF	FN	PART NUMBER	YR/SN	QTY	DESCRIPTION
12		87426716		1	SOUPAPE ANTI RETOUR Check Valve; Some Component Parts Not Serviced Separately; Includes Serviceable (1) 87455974 O-Ring, (1) 87309001 O-Ring, (1) 87446002 Poppet, (1) 87446003 Spring
13		87440815		1	PLAQUE (ASSEMBLEE) Lift Spool Plate and Seal Assembly; Some Component Parts Not Serviced Separately; Serviceable Includes (1) 87454547 O-Ring, (1) 87454548 Seal, (1) 87455538 O-Ring, (2) 87455534 Screw
14		87440814		1	PLAQUE (ASSEMBLEE) Bucket Spool Plate and Seal Assembly; Some Component Parts Not Serviced Separately; Serviceable Includes (1) 87454547 O-Ring, (1) 87454548 Seal, (2) 87455540 Screw
15		87426238		2	SOUPAPE ANTI RETOUR Check Valve; Component Parts Not Serviced Separately; Includes Serviceable 87455975 O-Ring

http://www.minnparbackhoeparts.com/

DISTRIBUTEUR - COMMANDE DU CHARGEUR, TROIS TIROIRS

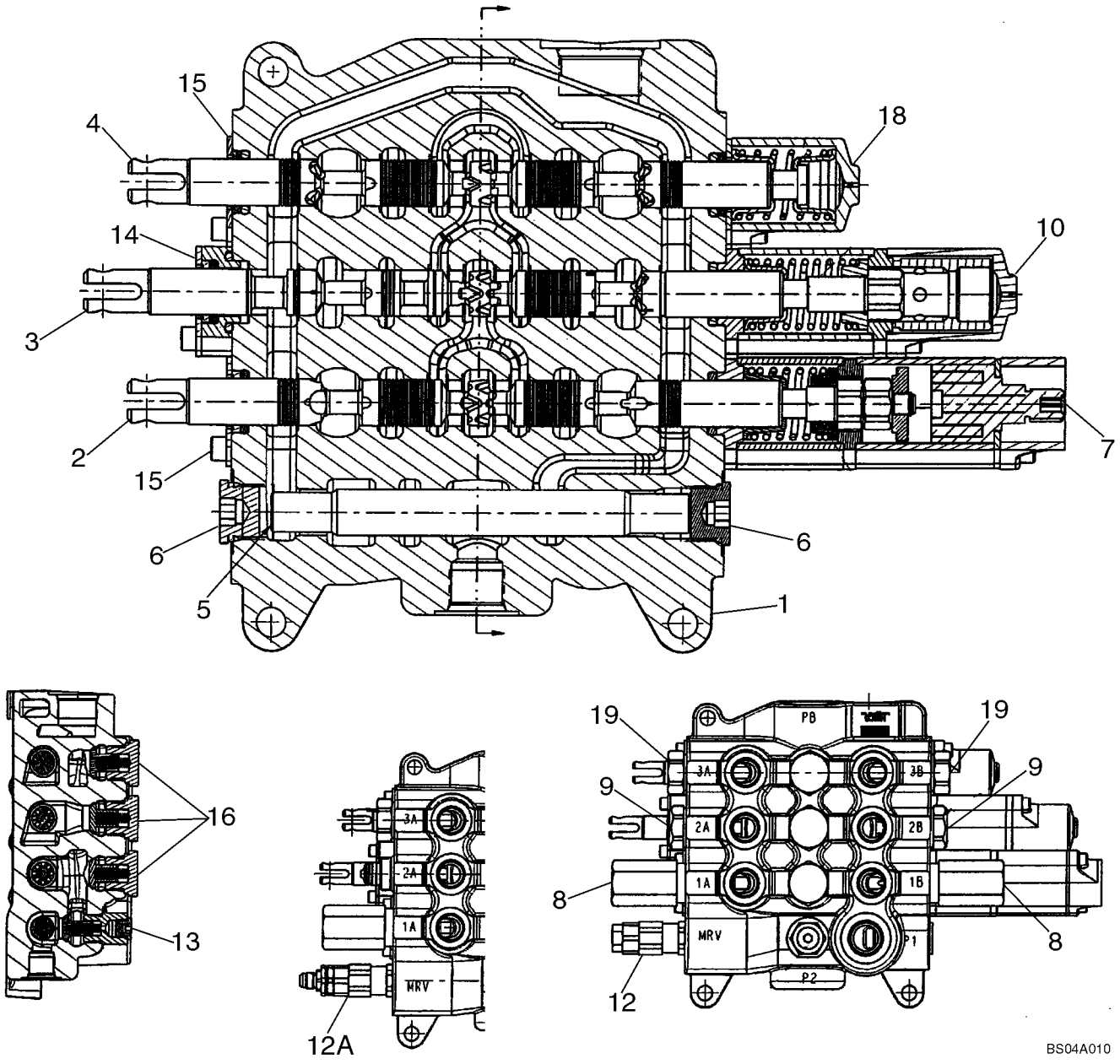

http://www.minnparbackhoeparts.com/

DISTRIBUTEUR - COMMANDE DU CHARGEUR, TROIS TIROIRS

REF	FN	PART NUMBER	YR/SN	QTY	DESCRIPTION
		87434767		1	SOUPAPE HYDRAULIQUE Three Spool Loader Valve, Used On Models Without Pilot Controls; Incl. Ref 1 - 12, 13 - 19
		87434769		1	SOUPAPE HYDRAULIQUE Three Spool Loader Valve, Used On Models With Pilot Controls; Incl. Ref 1 -10, 12A - 19
1		NSS		1	NON FOURNI SEPAREMENT HOUSING
2		NSS		1	NON FOURNI SEPAREMENT SPOOL, Bucket
3		NSS		1	NON FOURNI SEPAREMENT SPOOL, Lift
4		NSS		1	NON FOURNI SEPAREMENT SPOOL, Clam
5		NSS		1	NON FOURNI SEPAREMENT SPOOL
6		87426233		2	BOUCHON 7/8 - 14 NF Plug, Serviceable Includes (1) 87455974 O-Ring
7		87426221		1	DÉTENTE Magnetic Detent Kit, Bucket; Some Component Parts Not Serviced Separately; Serviceable Includes (1) 87454547 O-Ring, (1) 87310277 Magnet, (2) 87310278 Screw
8		87450978		2	SOUPAPE, DÉCHARGE Relief Valve Assembly; Replaces 87426232; Some Component Parts Not Serviced Separately; Includes Serviceable 87455549 Seal Kit
9		81868381		2	SOUPAPE ANTI RETOUR Load Check Valve, Anti-Void; Component Parts Not Serviced Separately; Includes Serviceable 87455580 Seal Kit
10		87426227		1	DÉTENTE Manual Detent Assembly, Lift; Some Component Parts Not Serviced Separately; Serviceable Includes (1) 87454547 O-Ring, (2) 87310275 Screw, (4) 87310276 Ball Bearing
12		87426717		1	SOUPAPE, DÉCHARGE Main Relief Valve Assembly, Single Stage; 87434767 Loader Valve, Models Without Pilot Controls; Component Parts Not Serviced Separately; Includes Serviceable 87455551 Seal Kit

http://www.minnparbackhoeparts.com/

DISTRIBUTEUR - COMMANDE DU CHARGEUR, TROIS TIROIRS

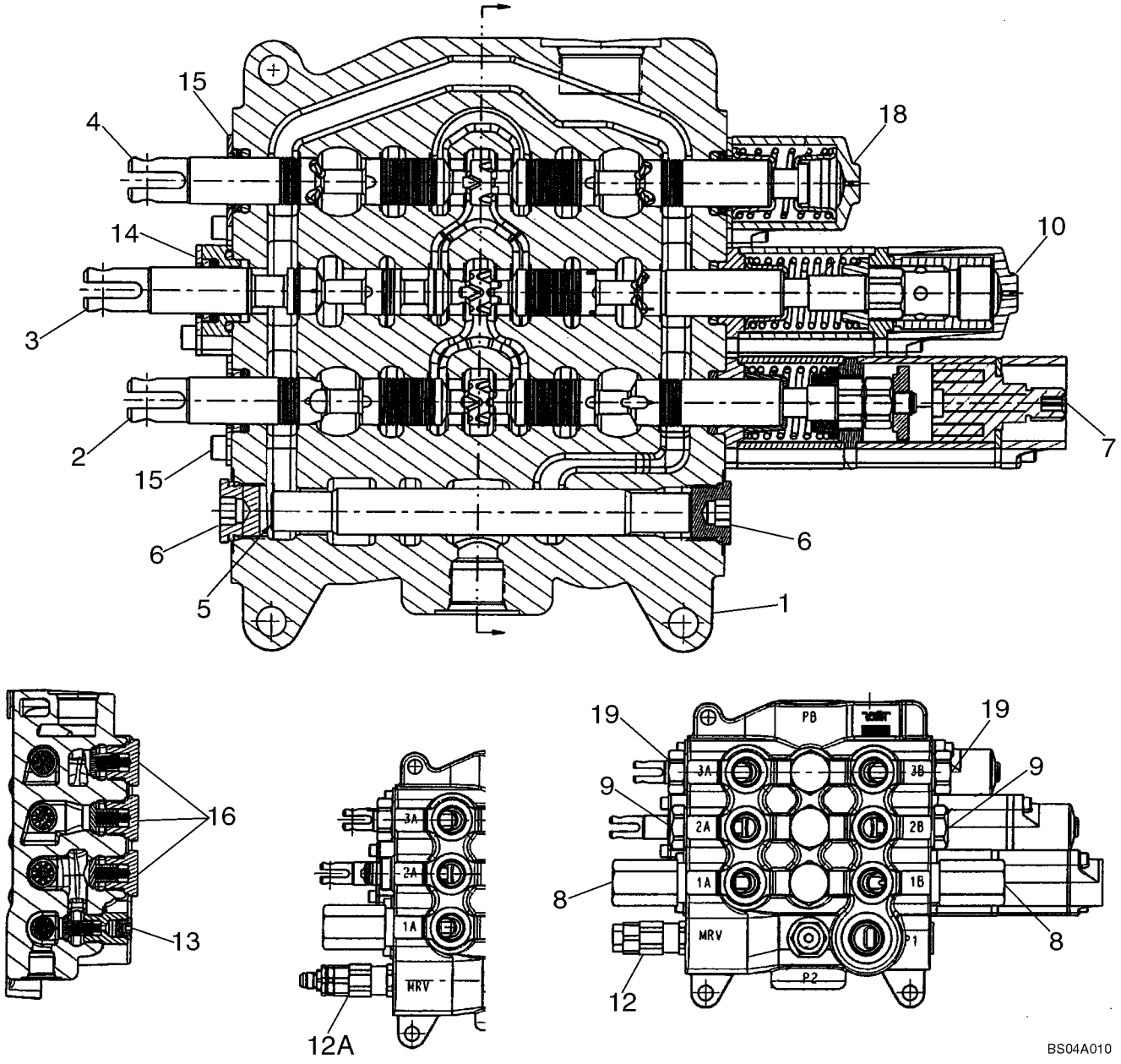

http://www.minnparbackhoeparts.com/

DISTRIBUTEUR - COMMANDE DU CHARGEUR, TROIS TIROIRS

REF	FN	PART NUMBER	YR/SN	QTY	DESCRIPTION
12A		87426235		1	SOUPAPE, DÉCHARGE Main Relief Valve Assembly, Two Stage; 87434769 Loader Valve, Models With Pilot Controls; Component Parts Not Serviced Separately; Includes Serviceable 87455550 Seal Kit
13		87426716		1	SOUPAPE ANTI RETOUR Check Valve; Some Component Parts Not Serviced Separately; Serviceable Includes (1) 87455974 O-Ring, (1) 87309001 O-Ring, (1) 87446002 Poppet, (1) 87446003 Spring
14		87440815		1	PLAQUE (ASSEMBLEE) Lift Spool Plate and Seal Assembly; Some Component Parts Not Serviced Separately; Serviceable Includes (1) 87454547 O-Ring, (1) 87454548 Seal, (1) 87455538 O-Ring, (2) 87455534 Screw
15		87440814		2	PLAQUE (ASSEMBLEE) Bucket and Clam Spool Plate and Seal Assembly; Some Component Parts Not Serviced Separately; Serviceable Includes (1) 87454547 O-Ring, (1) 87454548 Seal, (2) 87455540 Screw
16		87426238		3	SOUPAPE ANTI RETOUR Check Valve; Component Parts Not Serviced Separately; Includes Serviceable 87455975 O-Ring
18		87426241		1	EXTREMITE ASSEMBLEE Clam Spool End Cap Assembly; Some Component Parts Not Serviced Separately; Serviceable Includes (1) 87454547 O-Ring, (1) 87454548 Seal, (1) 87444567 Spring, (2) 87455541 Screw
19		83981068		2	BOUCHON DE FERMETUREE Shut-Off Plug Assembly Includes Seal; Component Parts Not Serviced Separately

http://www.minnparbackhoeparts.com/

DISTRIBUTEUR - COMMANDE DE LA PELLE RETRO, 6 TIROIRS (SANS BALANCIER EXTENSIBLE ET SANS CIRCUIT HYD)

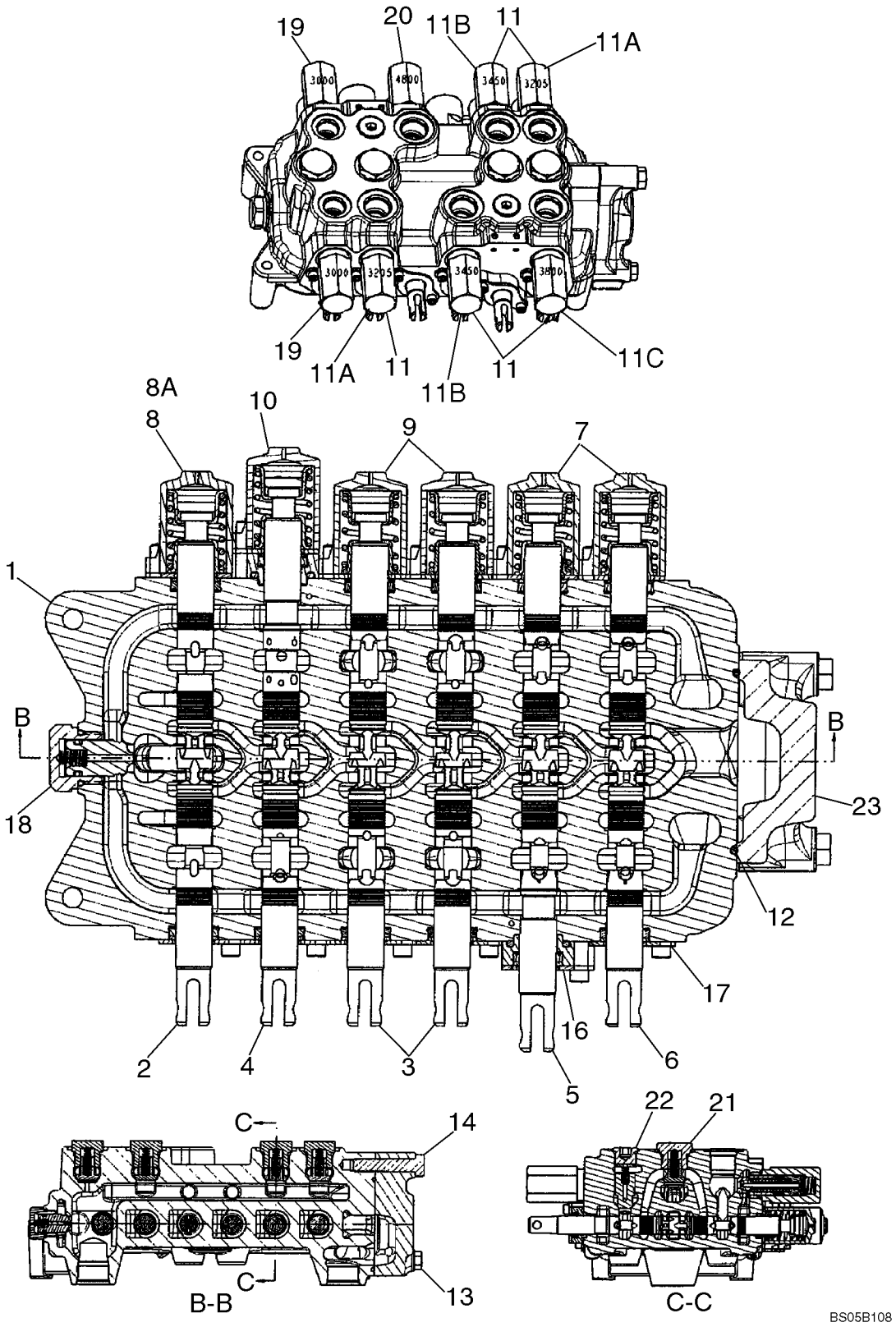

http://www.minnparbackhoeparts.com/

DISTRIBUTEUR - COMMANDE DE LA PELLE RETRO, 6 TIROIRS (SANS BALANCIER EXTENSIBLE ET SANS CIRCUIT HYD)

REF	FN	PART NUMBER	YR/SN	QTY	DESCRIPTION
		REF			NOTICE MODELS WITHOUT EXTENDABLE DIPPER, WITHOUT AUXILIARY HYDRAULICS, WITHOUT PILOT CONTROLS
		87413144		1	SOUPAPE HYDRAULIQUE 6 Spool, Foot Swing; Incl. Ref 1 - 8, 9 - 23; If Used
		87416476		1	SOUPAPE HYDRAULIQUE 6 Spool, Hand Swing; Incl. Ref 1 - 7, 8A, 9 - 23; If Used
1		NSS		1	NON FOURNI SEPAREMENT HOUSING
2		NSS		1	NON FOURNI SEPAREMENT SPOOL, SWING
3		NSS		2	NON FOURNI SEPAREMENT SPOOL, STABILIZER, Right-hand and Left-Hand
4		NSS		1	NON FOURNI SEPAREMENT SPOOL, BOOM
5		NSS		1	NON FOURNI SEPAREMENT SPOOL, DIPPER
6		NSS		1	NON FOURNI SEPAREMENT SPOOL, BUCKET
7		87426241		2	EXTREMITE ASSEMBLEE Cap Assembly, Bucket and Dipper Spool End; Some Component Parts Not Serviced Separately; Serviceable Includes (1) 87454547 O-Ring, (1) 87454548 Seal, (1) 87444567 Spring, (2) 87455541 Screw; Replaces 87433028 End
8		87428500		1	EXTREMITE ASSEMBLEE Cap Assembly, Swing Spool End; 87413144 Foot Swing Valve; Some Component Parts Not Serviced Separately; Serviceable Includes (1) 87454547 O-Ring, (1) 87454548 Seal, (1) 87429151 Centering Spring, (2) 87455541 Screw
8A		87426241		1	EXTREMITE ASSEMBLEE Cap Assembly, Swing Spool End; 87416476 Hand Swing Valve; Some Component Parts Not Serviced Separately; Serviceable Includes (1) 87454547 O-Ring, (1) 87454548 Seal, (1) 87444567 Spring, (2) 87455541 Screw; Replaces 87433028 End
9		87428497		2	EXTREMITE ASSEMBLEE Cap Assembly, Stabilizer Spool Ends; Some Component Parts Not Serviced Separately; Serviceable Includes (2) 87454547 O-Rings, (1) 87454548 Seal, (1) 87455533 Spring, (2) 87455541 Screw

http://www.minnparbackhoeparts.com/

DISTRIBUTEUR - COMMANDE DE LA PELLE RETRO, 6 TIROIRS (SANS BALANCIER EXTENSIBLE ET SANS CIRCUIT HYD)

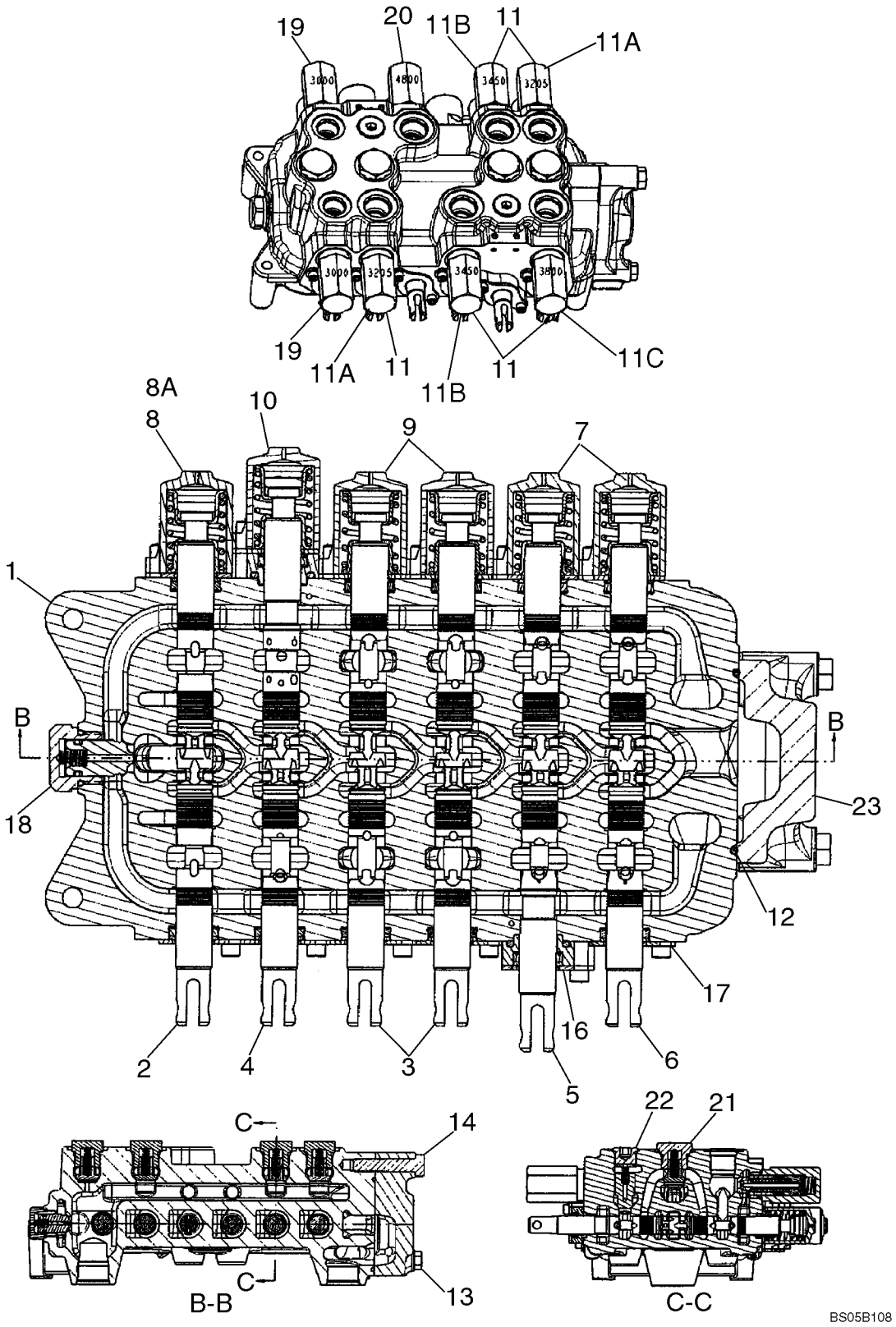

http://www.minnparbackhoeparts.com/

DISTRIBUTEUR - COMMANDE DE LA PELLE RETRO, 6 TIROIRS (SANS BALANCIER EXTENSIBLE ET SANS CIRCUIT HYD)

REF	FN	PART NUMBER	YR/SN	QTY	DESCRIPTION
10		87433029		1	EXTREMITE ASSEMBLEE Cap Assembly, Boom Spool End; Some Component Parts Not Serviced Separately; Serviceable Includes (1) 87454547 O-Ring, (1) 87454548 Seal, (1) 87444567 Spring, (1) 87455538 O-Ring, (2) 87455545 Screw
11		87426232		5	SOUPAPE, DÉCHARGE Relief Valve Assembly; (2) 3205 psi, (2) 3450 psi, (1) 3800 psi; Component Parts Not Serviced Separately; No Longer Used, See Ref 11A - 11C
11A		87450978		2	SOUPAPE, DÉCHARGE Circuit; 3205 psi; Component Parts Not Serviced Separately; Includes 87455549 Seal Kit
11B		87450979		2	SOUPAPE, DÉCHARGE Circuit; 3450 psi; Component Parts Not Serviced Separately; Includes 87455549 Seal Kit
11C		87450980		1	SOUPAPE, DÉCHARGE Circuit; 3800 psi; Component Parts Not Serviced Separately; Includes 87455549 Seal Kit
12		87428495		1	JOINT THORIQUE O-Ring Seal, Outlet Section
13		87428491		2	VIS Bolt
14		87428492		1	VIS Bolt
16		87440815		1	PLAQUE (ASSEMBLEE) Seal Plate Assembly, Dipper Spool; Some Component Parts Not Serviced Separately; Serviceable Includes (1) 87454547 O-Ring, (1) 87454548 Seal, (1) 87455538 O-Ring, (2) 87455534 Screw
17		87440814		5	PLAQUE (ASSEMBLEE) Seal Plate Assembly; Some Component Parts Not Serviced Separately; Serviceable Includes (1) 87454547 O-Ring, (1) 87454548 Seal, (2) 87455540 Screw
18		81868381		1	SOUPAPE ANTI RETOUR Anti-Void Valve; Component Parts Not Serviced Separately; Includes 87455580 Seal Kit
19		87428490		2	SOUPAPE, DÉCHARGE Relief Valve Assembly; 3000 psi; Component Parts Not Serviced Separately; Includes 87455549 Seal Kit

http://www.minnparbackhoeparts.com/

DISTRIBUTEUR - COMMANDE DE LA PELLE RETRO, 6 TIROIRS (SANS BALANCIER EXTENSIBLE ET SANS CIRCUIT HYD)

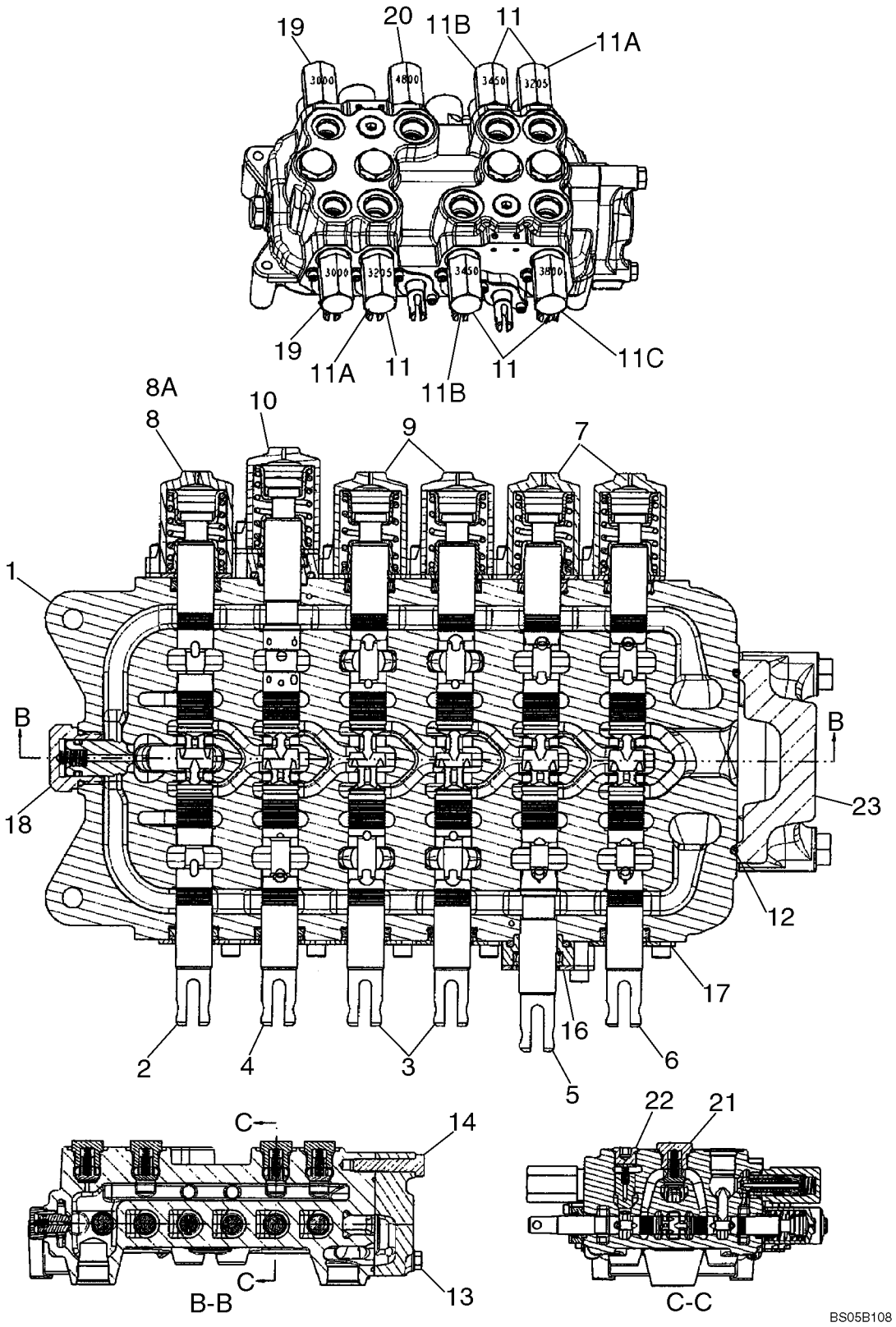

http://www.minnparbackhoeparts.com/

DISTRIBUTEUR - COMMANDE DE LA PELLE RETRO, 6 TIROIRS (SANS BALANCIER EXTENSIBLE ET SANS CIRCUIT HYD)

REF	FN	PART NUMBER	YR/SN	QTY	DESCRIPTION
20		87428488		1	SOUPAPE, DÉCHARGE Relief Valve Assembly; 4800 psi; Component Parts Not Serviced Separately; Includes 87455549 Seal Kit
21		87426238		4	SOUPAPE ANTI RETOUR Check Valve Assembly; Hex Head; Component Parts Not Serviced Separately; Includes (1) 87455975 O-Ring
22		87428486		2	SOUPAPE ANTI RETOUR Check Valve Assembly; Hex Socket Head; Component Parts Not Serviced Separately; Includes (1) 87455974 O-Ring
23		87433030		1	ELEMENT DISTR HYDR Outlet Section Assembly; Component Parts Not Serviced Separately

http://www.minnparbackhoeparts.com/

DISTRIBUTEUR - COMMANDE DE LA PELLE RETRO, 7 TIROIRS (SANS BALANCIER EXTENSIBLE ET AVEC CIRCUIT HYD)

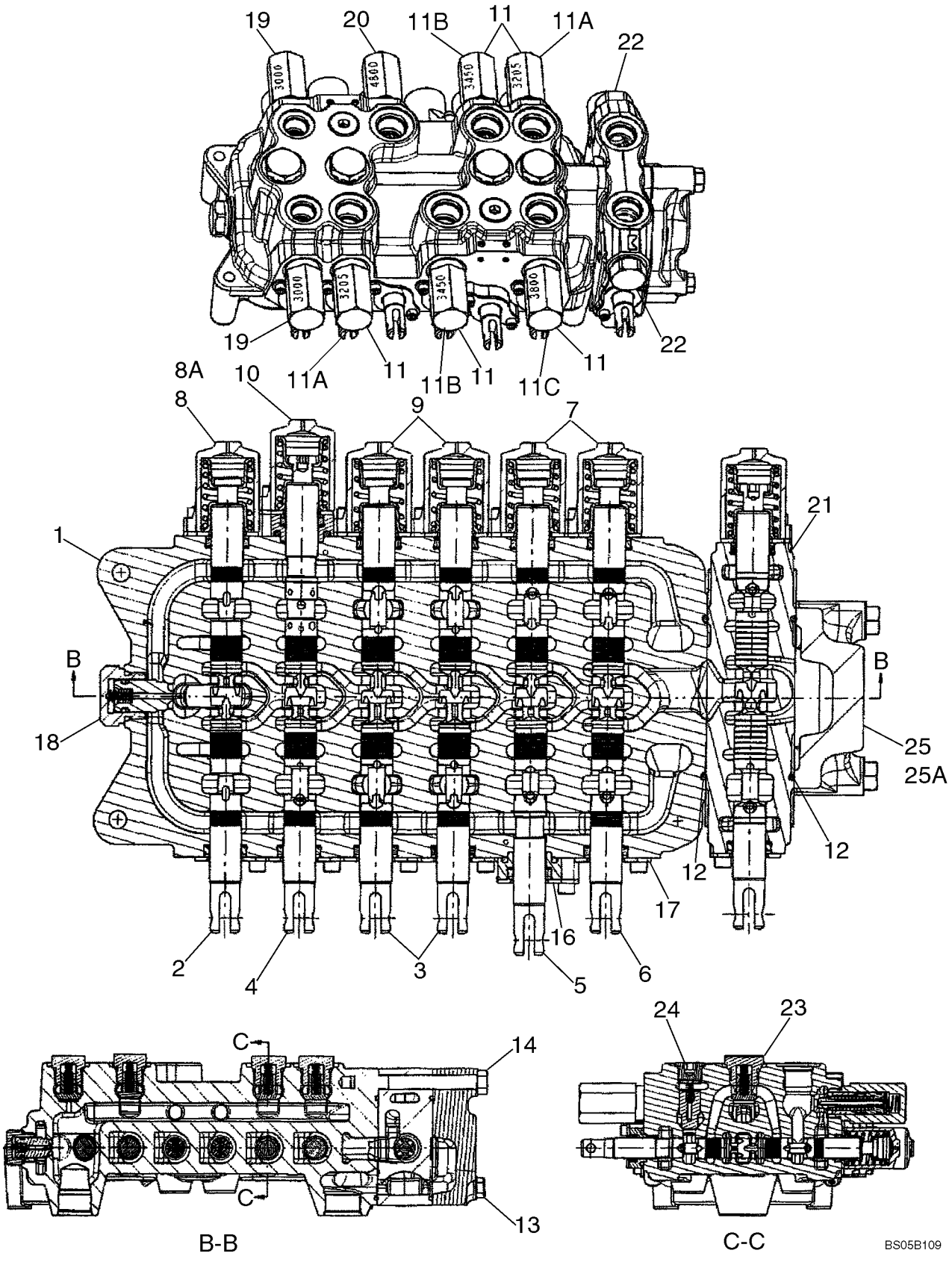

http://www.minnparbackhoeparts.com/

DISTRIBUTEUR - COMMANDE DE LA PELLE RETRO, 7 TIROIRS (SANS BALANCIER EXTENSIBLE ET AVEC CIRCUIT HYD)

REF	FN	PART NUMBER	YR/SN	QTY	DESCRIPTION
		REF			NOTICE MODELS WITHOUT EXTENDABLE DIPPER, WITH AUXILIARY HYDRAULICS, WITHOUT PILOT CONTROLS
		87414278		1	SOUPAPE HYDRAULIQUE 7 Spool, Foot Swing; Incl. Ref 1 - 8, 9 - 25; If Used
		87414277		1	SOUPAPE HYDRAULIQUE 7 Spool, Hand Swing; Incl. Ref 1 - 7, 8A, 9 - 24, 25A; If Used
1		NSS		1	NON FOURNI SEPAREMENT HOUSING
2		NSS		1	NON FOURNI SEPAREMENT SPOOL, SWING
3		NSS		2	NON FOURNI SEPAREMENT SPOOL, STABILIZER, Left-Hand and Right-Hand
4		NSS		1	NON FOURNI SEPAREMENT SPOOL, BOOM
5		NSS		1	NON FOURNI SEPAREMENT SPOOL, DIPPER
6		NSS		1	NON FOURNI SEPAREMENT SPOOL, BUCKET
7		87426241		2	EXTREMITE ASSEMBLEE Cap Assembly, Bucket and Dipper Spool End; Some Component Parts Not Serviced Separately; Serviceable Includes (1) 87454547 O-Ring, (1) 87454548 Seal, (1) 87444567 Spring, (2) 87455541 Screw; Replaces 87433028 End
8		87428500		1	EXTREMITE ASSEMBLEE Cap Assembly, Swing Spool End; 87414278 Foot Swing Valve; Some Component Parts Not Serviced Separately; Serviceable Includes (1) 87454547 O-Ring, (1) 87454548 Seal, (1) 87429151 Centering Spring, (2) 87455541 Screw
8A		87426241		1	EXTREMITE ASSEMBLEE Cap Assembly, Swing Spool End; 87414277 Hand Swing Valve; Some Component Parts Not Serviced Separately; Serviceable Includes (1) 87454547 O-Ring, (1) 87454548 Seal, (1) 87444567 Spring, (2) 87455541 Screw; Replaces 87433028 End
9		87428497		2	EXTREMITE ASSEMBLEE Cap Assembly, Stabilizer Spool Ends; Some Component Parts Not Serviced Separately; Serviceable Includes (2) 87454547 O-Ring, (1) 87454548 Seal, (1) 87455533 Spring, (2) 87455541 Screw

http://www.minnparbackhoeparts.com/

DISTRIBUTEUR - COMMANDE DE LA PELLE RETRO, 7 TIROIRS (SANS BALANCIER EXTENSIBLE ET AVEC CIRCUIT HYD)

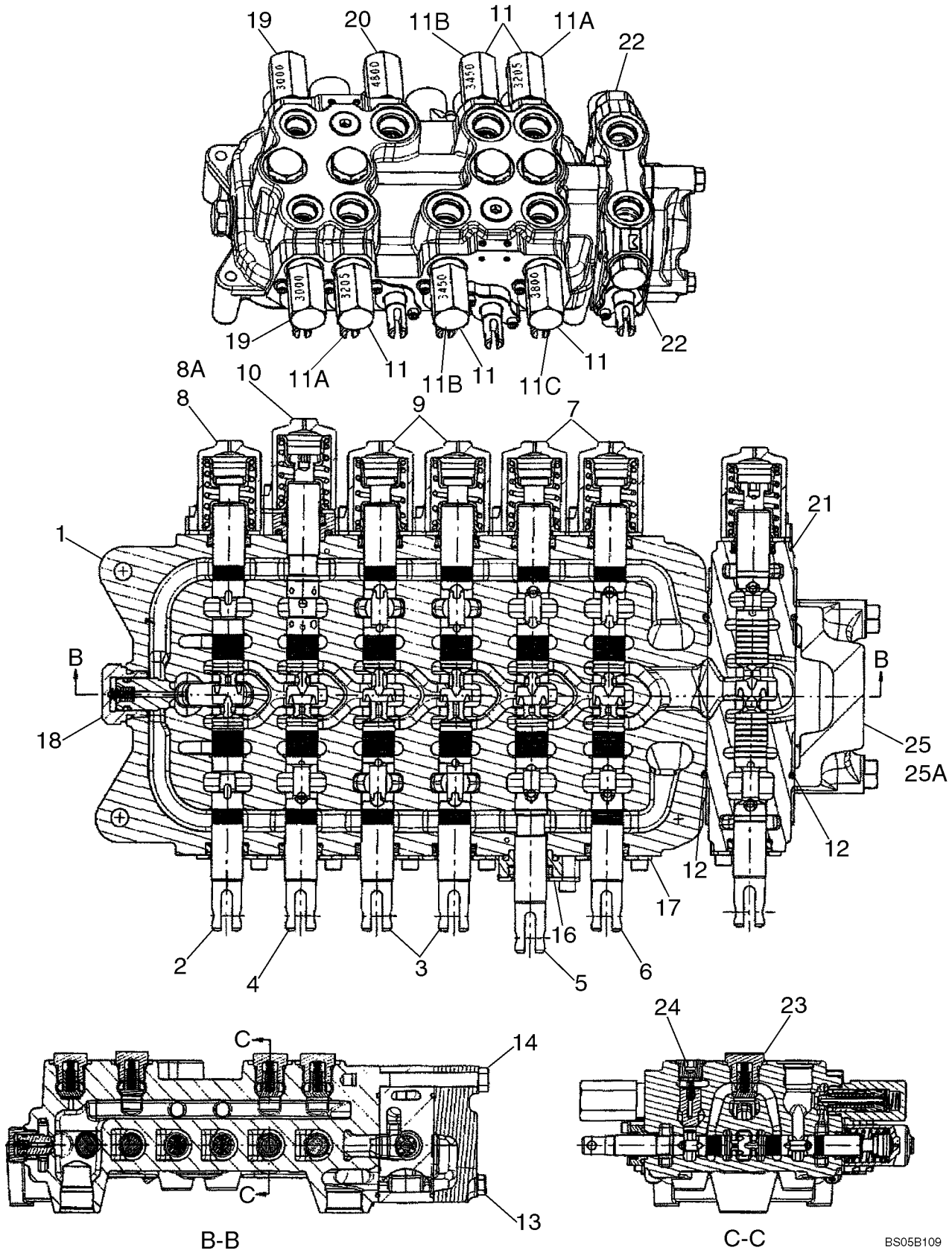

http://www.minnparbackhoeparts.com/

DISTRIBUTEUR - COMMANDE DE LA PELLE RETRO, 7 TIROIRS (SANS BALANCIER EXTENSIBLE ET AVEC CIRCUIT HYD)

REF	FN	PART NUMBER	YR/SN	QTY	DESCRIPTION
10		87433029		1	EXTREMITE ASSEMBLEE Cap Assembly, Boom Spool End; Some Component Parts Not Serviced Separately; Serviceable Includes (1) 87454547 O-Ring, (1) 87454548 Seal, (1) 87444567 Spring, (1) 87455538 O-Ring, (2) 87455545 Screw
11		87426232		5	SOUPAPE, DÉCHARGE Relief Valve Assembly; (2) 3205 psi, (2) 3450 psi, (1) 3800 psi; Component Parts Not Serviced Separately; No Longer Used, See Ref 11A - 11C
11A		87450978		2	SOUPAPE, DÉCHARGE Circuit; 3205 psi; Component Parts Not Serviced Separately; Includes 87455549 Seal Kit
11B		87450979		2	SOUPAPE, DÉCHARGE Circuit; 3450 psi; Component Parts Not Serviced Separately; Includes 87455549 Seal Kit
11C		87450980		1	SOUPAPE, DÉCHARGE Circuit; 3800 psi; Component Parts Not Serviced Separately; Includes 87455549 Seal Kit
12		87428495		2	JOINT THORIQUE O-Ring Seal, Auxiliary/Outlet Section
13		87428476		2	VIS Bolt
14		87428477		1	VIS Bolt
16		87440815		1	PLAQUE (ASSEMBLEE) Seal Plate Assembly, Dipper Spool; Some Component Parts Not Serviced Separately; Serviceable Includes (1) 87454547 O-Ring, (1) 87454548 Seal, (1) 87455538 O-Ring, (2) 87455534 Screw
17		87440814		5	PLAQUE (ASSEMBLEE) Seal Plate Assembly; Some Component Parts Not Serviced Separately; Serviceable Includes (1) 87454547 O-Ring, (1) 87454548 Seal, (2) 87455540 Screw
18		81868381		1	SOUPAPE ANTI RETOUR Anti-Void Valve; Component Parts Not Serviced Separately; Includes 87455580 Seal Kit
19		87428490		2	SOUPAPE, DÉCHARGE Relief Valve Assembly; 3000 psi; Component Parts Not Serviced Separately; Includes 87455549 Seal Kit

http://www.minnparbackhoeparts.com/

DISTRIBUTEUR - COMMANDE DE LA PELLE RETRO, 7 TIROIRS (SANS BALANCIER EXTENSIBLE ET AVEC CIRCUIT HYD)

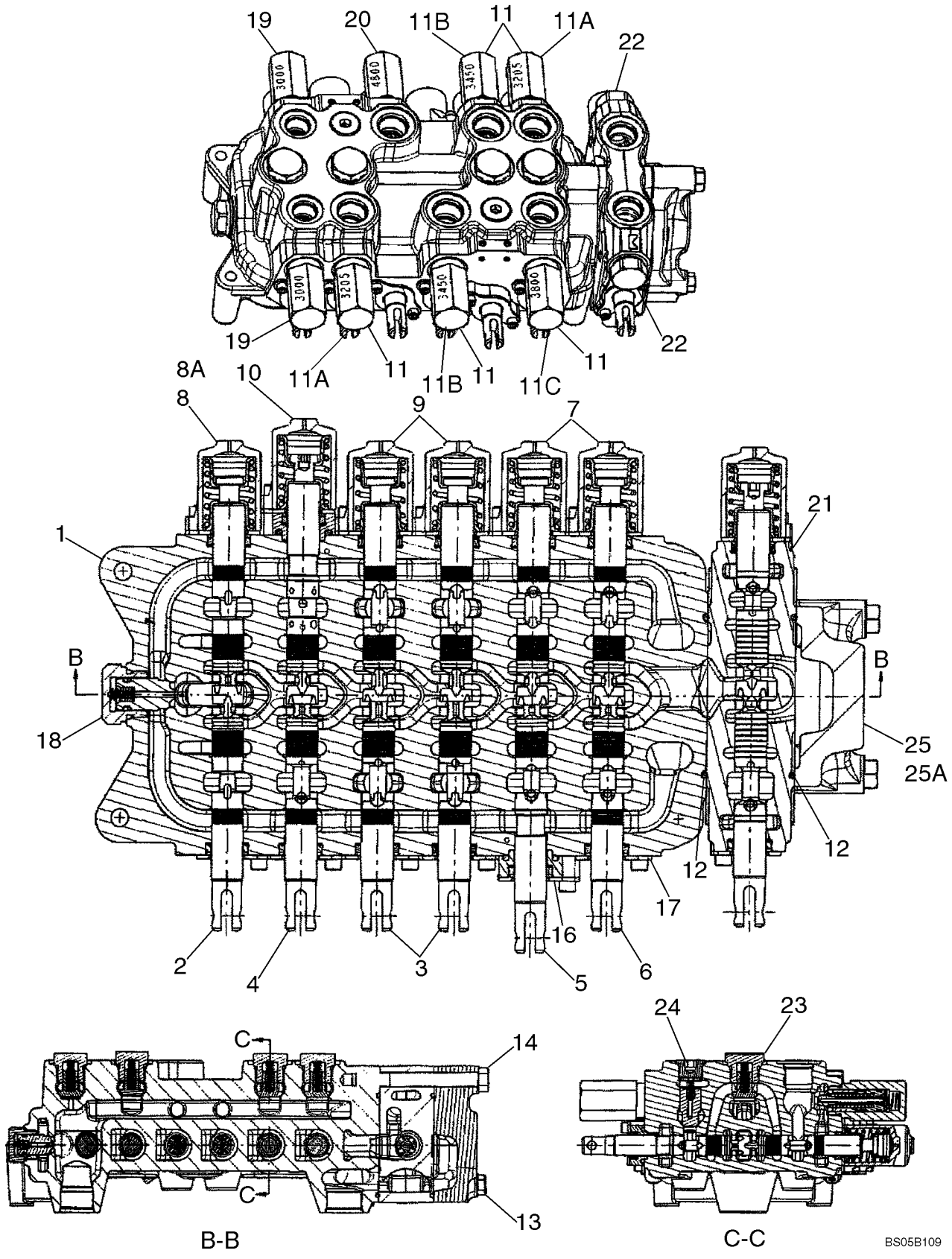

http://www.minnparbackhoeparts.com/

DISTRIBUTEUR - COMMANDE DE LA PELLE RETRO, 7 TIROIRS (SANS BALANCIER EXTENSIBLE ET AVEC CIRCUIT HYD)

REF	FN	PART NUMBER	YR/SN	QTY	DESCRIPTION
20		87428488		1	SOUPAPE, DÉCHARGE Relief Valve Assembly; 4800 psi; Component Parts Not Serviced Separately; Includes 87455549 Seal Kit
21		87428501		1	ELEMENT DISTR HYDR Spool Section Assembly; Auxiliary Hydraulics; Incl. Ref 21A - 21I, Which Are Not Illustrated; Remainder Component Parts Not Serviced Separately
21A		87433028		1	EXTREMITE ASSEMBLEE Spool; Incl. Ref 21B - 21E, Which Are Not Illustrated; Remainder Components Not Serviced Separately
21B		87454547		1	JOINT THORIQUE
21C		87454548		1	JOINT Wiper
21D		87429150		1	RESSORT, SOUPAPE
21E		87455541		2	VIS
21F		87428495		1	JOINT THORIQUE
21G		87455564		1	CLAPET Load Check
21H		87455565		1	RESSORT, SOUPAPE Load Check
21I		83981068		2	BOUCHON DE FERMETUREE Shut-Off
22		83981068		2	BOUCHON DE FERMETUREE Shut-Off Plug; Component Parts Not Serviced Separately; Now Included With Ref 21
23		87426238		4	SOUPAPE ANTI RETOUR Check Valve Assembly; Hex Head; Component Parts Not Serviced Separately; Includes (1) 87455975 O-Ring
24		87428486		2	SOUPAPE ANTI RETOUR Check Valve Assembly; Hex Socket Head; Component Parts Not Serviced Separately; Includes (1) 87455974 O-Ring
25		87433030		1	ELEMENT DISTR HYDR Outlet Section Assembly; 87414278 Foot Swing Valve; Component Parts Not Serviced Separately
25A		87433030		1	ELEMENT DISTR HYDR Outlet Section Assembly; 87414277 Hand Swing Valve; Component Parts Not Serviced Separately

http://www.minnparbackhoeparts.com/

DISTRIBUTEUR - COMMANDE DE LA PELLE RETRO, 7 TIROIRS (AVEC BALANCIER EXTENSIBLE ET SANS CIRCUIT HYD)

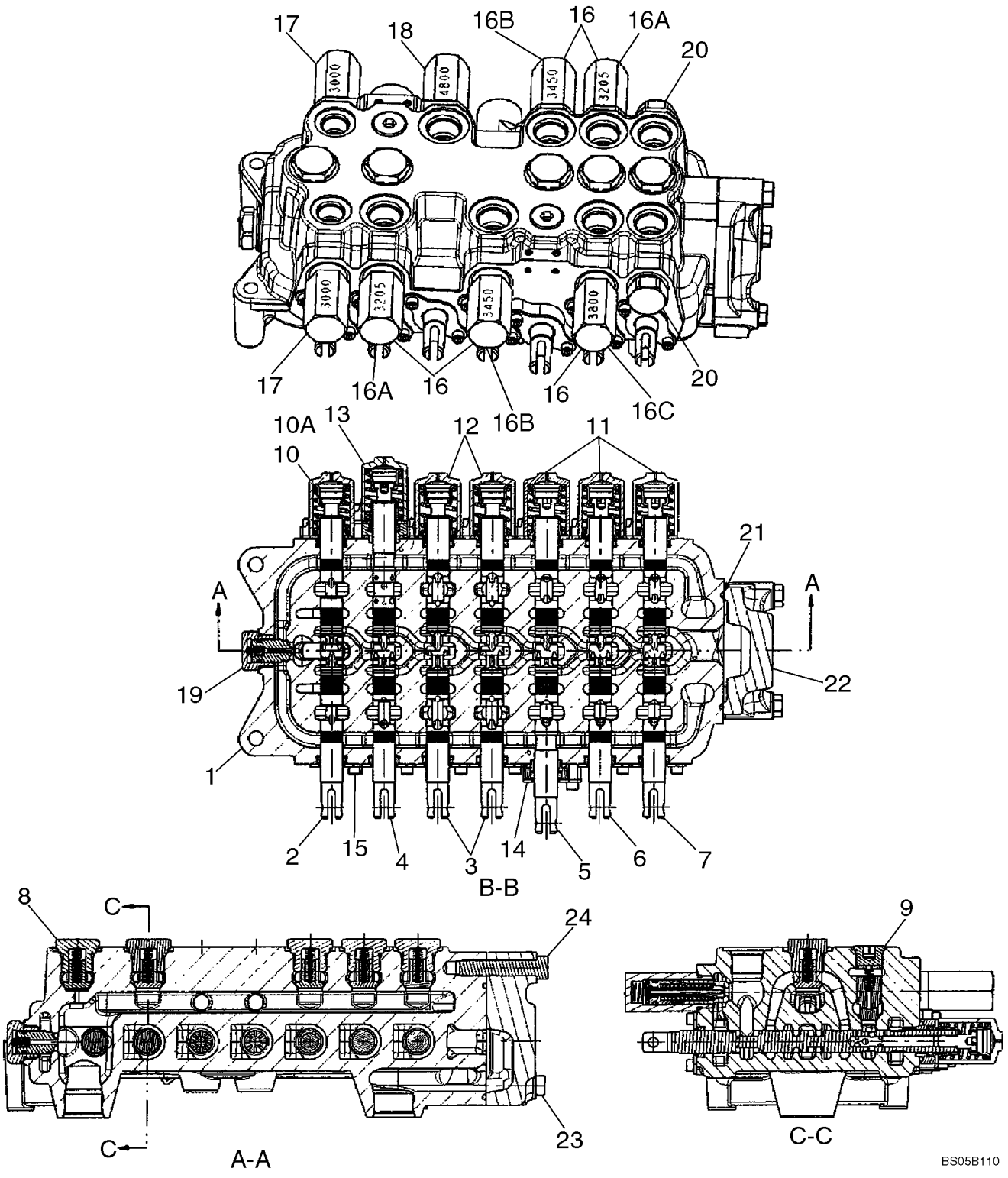

http://www.minnparbackhoeparts.com/

DISTRIBUTEUR - COMMANDE DE LA PELLE RETRO, 7 TIROIRS (AVEC BALANCIER EXTENSIBLE ET SANS CIRCUIT HYD)

REF	FN	PART NUMBER	YR/SN	QTY	DESCRIPTION
		REF			NOTICE MODELS WITH EXTENDABLE DIPPER, WITHOUT AUXILIARY HYDRAULICS, WITHOUT PILOT CONTROLS
		87413145		1	SOUPAPE HYDRAULIQUE 7 Spool, Foot Swing; Incl. Ref 1 - 10, 11 - 24; If Used
		87403386		1	SOUPAPE HYDRAULIQUE 7 Spool, Hand Swing; Incl. Ref 1 - 9, 10A, 11 - 24; If Used
1		NSS		1	NON FOURNI SEPAREMENT HOUSING
2		NSS		1	NON FOURNI SEPAREMENT SPOOL, SWING
3		NSS		2	NON FOURNI SEPAREMENT SPOOL, STABILIZER, Right-Hand and Left-Hand
4		NSS		1	NON FOURNI SEPAREMENT SPOOL, BOOM
5		NSS		1	NON FOURNI SEPAREMENT SPOOL, DIPPER
6		NSS		1	NON FOURNI SEPAREMENT SPOOL, BUCKET
7		NSS		1	NON FOURNI SEPAREMENT SPOOL, EXTENDABLE DIPPER
8		87426238		5	SOUPAPE ANTI RETOUR Check Valve Assembly; Hex Head; Component Parts Not Serviced Separately; Includes (1) 87455975 O-Ring
9		87428486		2	SOUPAPE ANTI RETOUR Check Valve Assembly; Hex Socket Head; Component Parts Not Serviced Separately; Includes (1) 87455974 O-Ring
10		87428500		1	EXTREMITE ASSEMBLEE Cap Assembly, Swing Spool End; 87413145 Foot Swing Valve; Some Component Parts Not Serviced Separately; Serviceable Includes (1) 87454547 O-Ring, (1) 87454548 Seal, (1) 87429151 Centering Spring, (2) 87455541 Screw
10A		87426241		1	EXTREMITE ASSEMBLEE Cap Assembly, Swing Spool End; 87403386 Hand Swing Valve; Some Component Parts Not Serviced Separately; Serviceable Includes (1) 87454547 O-Ring, (1) 87454548 Seal, (1) 87444567 Spring, (2) 87455541 Screw; Replaces 87433028 End

http://www.minnparbackhoeparts.com/

DISTRIBUTEUR - COMMANDE DE LA PELLE RETRO, 7 TIROIRS (AVEC BALANCIER EXTENSIBLE ET SANS CIRCUIT HYD)

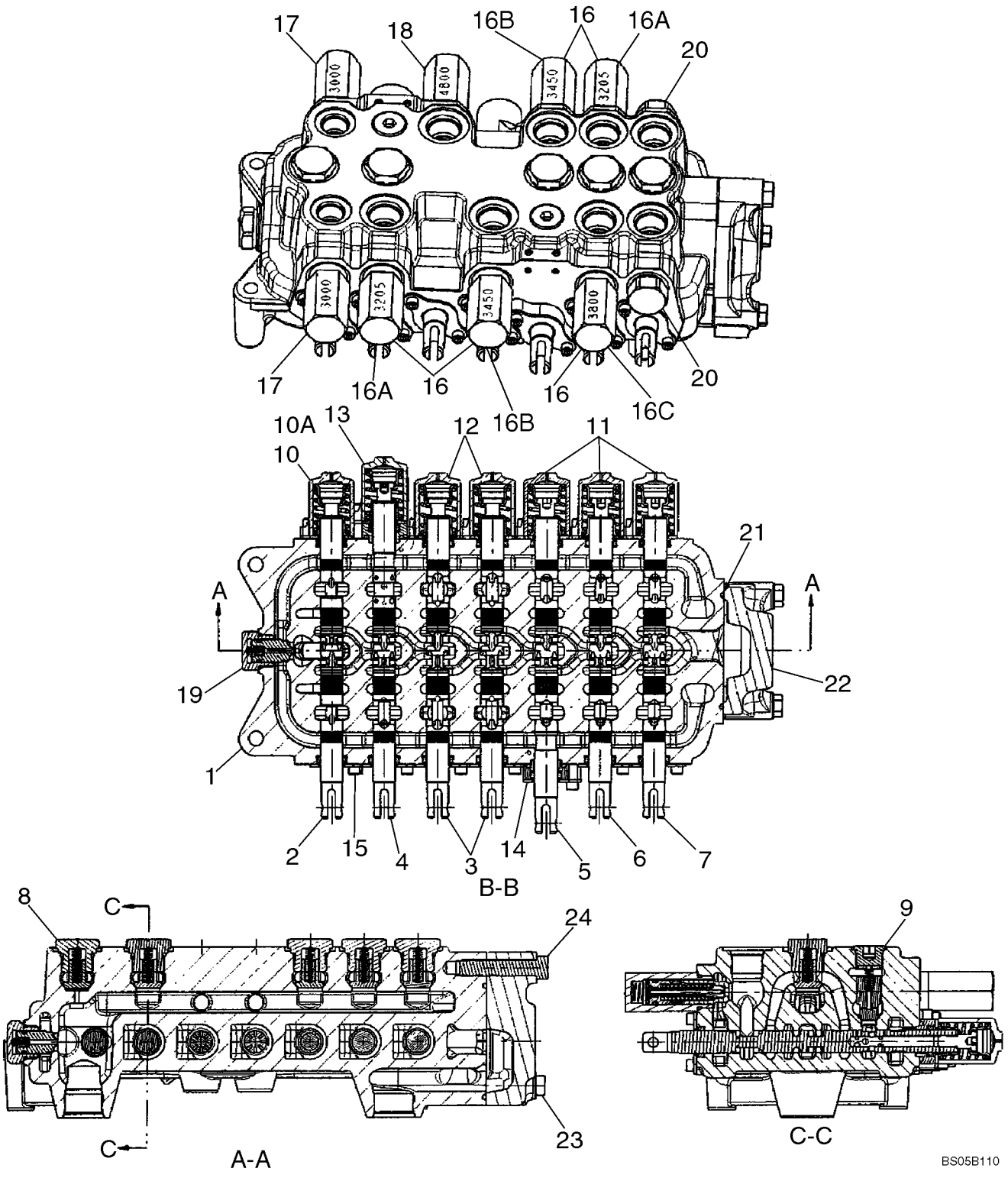

http://www.minnparbackhoeparts.com/

DISTRIBUTEUR - COMMANDE DE LA PELLE RETRO, 7 TIROIRS (AVEC BALANCIER EXTENSIBLE ET SANS CIRCUIT HYD)

REF	FN	PART NUMBER	YR/SN	QTY	DESCRIPTION
11		87426241		3	EXTREMITE ASSEMBLEE Cap Assembly, Bucket, Dipper, and Extendahoe Spool End; Some Component Parts Not Serviced Separately; Serviceable Includes (1) 87454547 O-Ring, (1) 87454548 Seal, (1) 87444567 Spring, (2) 87455541 Screw; Replaces 87433028 End
12		87428497		2	EXTREMITE ASSEMBLEE Cap Assembly, Stabilizer Spool Ends; Some Component Parts Not Serviced Separately; Serviceable Includes (2) 87454547 O-Ring, (1) 87454548 Seal, (1) 87455533 Spring, (2) 87455541 Screw
13		87433029		1	EXTREMITE ASSEMBLEE Cap Assembly, Boom Spool End; Some Component Parts Not Serviced Separately; Serviceable Includes (1) 87454547 O-Ring, (1) 87454548 Seal, (1) 87444567 Spring, (1) 87455538 O-Ring, (2) 87455545 Screw
14		87440815		1	PLAQUE (ASSEMBLEE) Seal Plate Assembly, Dipper Spool; Some Component Parts Not Serviced Separately; Serviceable Includes (1) 87454547 O-Ring, (1) 87454548 Seal, (1) 87455538 O-Ring, (2) 87455534 Screw
15		87440814		6	PLAQUE (ASSEMBLEE) Seal Plate Assembly; Some Component Parts Not Serviced Separately; Serviceable Includes (1) 87454547 O-Ring, (1) 87454548 Seal, (2) 87455540 Screw
16		87426232		5	SOUPAPE, DÉCHARGE Relief Valve Assembly; (2) 3205 psi, (2) 3450 psi, (1) 3800 psi; Component Parts Not Serviced Separately; No Longer Used, See Ref 16A - 16C
16A		87450978		2	SOUPAPE, DÉCHARGE Circuit; 3205 psi; Component Parts Not Serviced Separately; Includes 87455549 Seal Kit
16B		87450979		2	SOUPAPE, DÉCHARGE Circuit; 3450 psi; Component Parts Not Serviced Separately; Includes 87455549 Seal Kit

http://www.minnparbackhoeparts.com/

DISTRIBUTEUR - COMMANDE DE LA PELLE RETRO, 7 TIROIRS (AVEC BALANCIER EXTENSIBLE ET SANS CIRCUIT HYD)

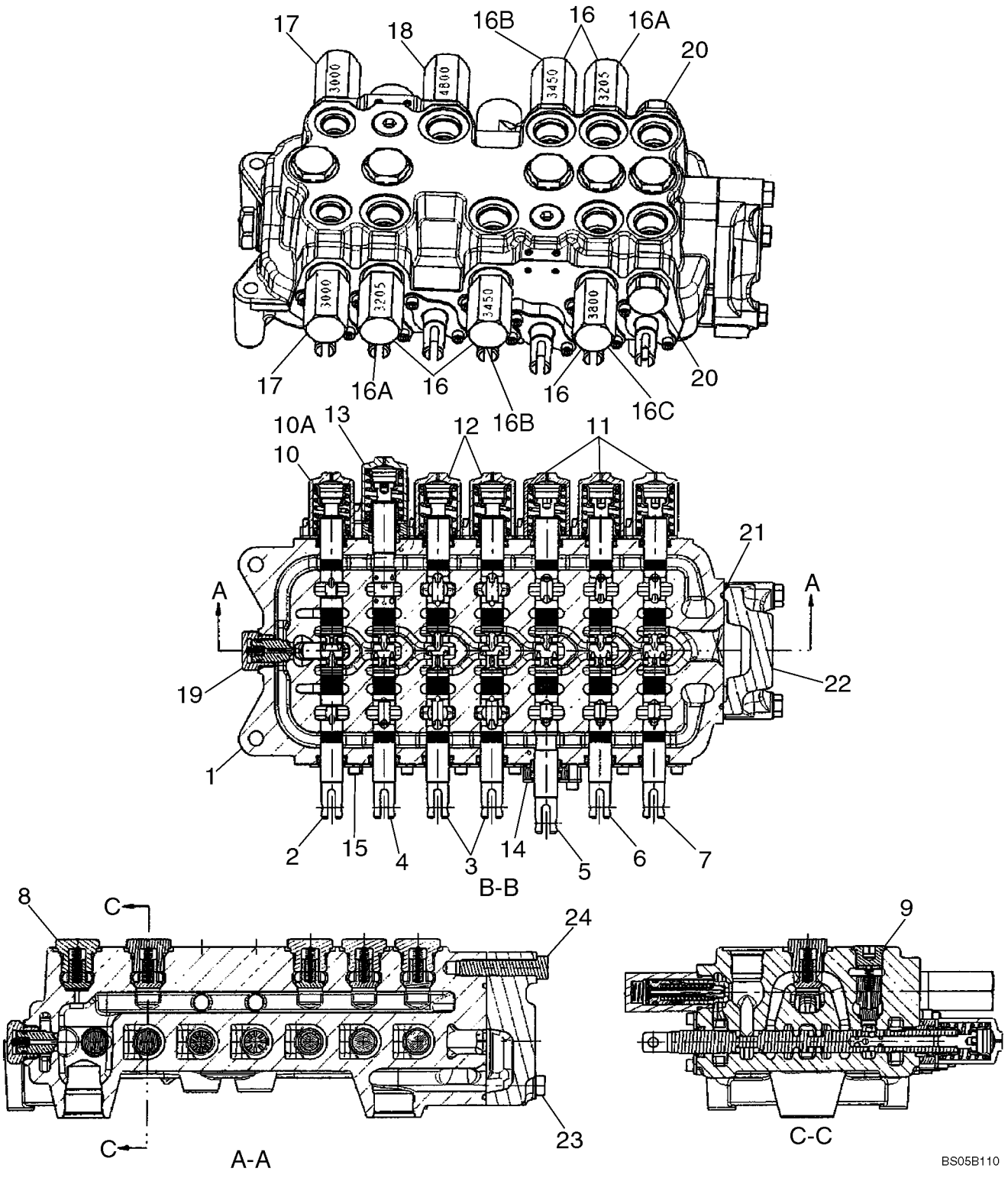

http://www.minnparbackhoeparts.com/

DISTRIBUTEUR - COMMANDE DE LA PELLE RETRO, 7 TIROIRS (AVEC BALANCIER EXTENSIBLE ET SANS CIRCUIT HYD)

REF	FN	PART NUMBER	YR/SN	QTY	DESCRIPTION
16C		87450980		1	SOUPAPE, DÉCHARGE Circuit; 3800 psi; Component Parts Not Serviced Separately; Includes 87455549 Seal Kit
17		87428490		2	SOUPAPE, DÉCHARGE Relief Valve Assembly; 3000 psi; Component Parts Not Serviced Separately; Includes 87455549 Seal Kit
18		87428488		1	SOUPAPE, DÉCHARGE Relief Valve Assembly; 4800 psi; Component Parts Not Serviced Separately; Includes 87455549 Seal Kit
19		81868381		1	SOUPAPE ANTI RETOUR Anti-Void Plug; Component Parts Not Serviced Separately; Includes 87455580 Seal Kit
20		83981068		2	BOUCHON DE FERMETUREE Shut-Off Plug; Component Parts Not Serviced Separately
21		87428495		1	JOINT THORIQUE O-Ring Seal; Outlet Section
22		87433030		1	ELEMENT DISTR HYDR Outlet Section Assembly; Component Parts Not Serviced Separately
23		87428491		2	VIS Bolt
24		87428492		1	VIS Bolt

http://www.minnparbackhoeparts.com/

DISTRIBUTEUR - COMMANDE DE LA PELLE RETRO, 8 TIROIRS (AVEC BALANCIER EXTENSIBLE ET SANS CIRCUIT HYD)

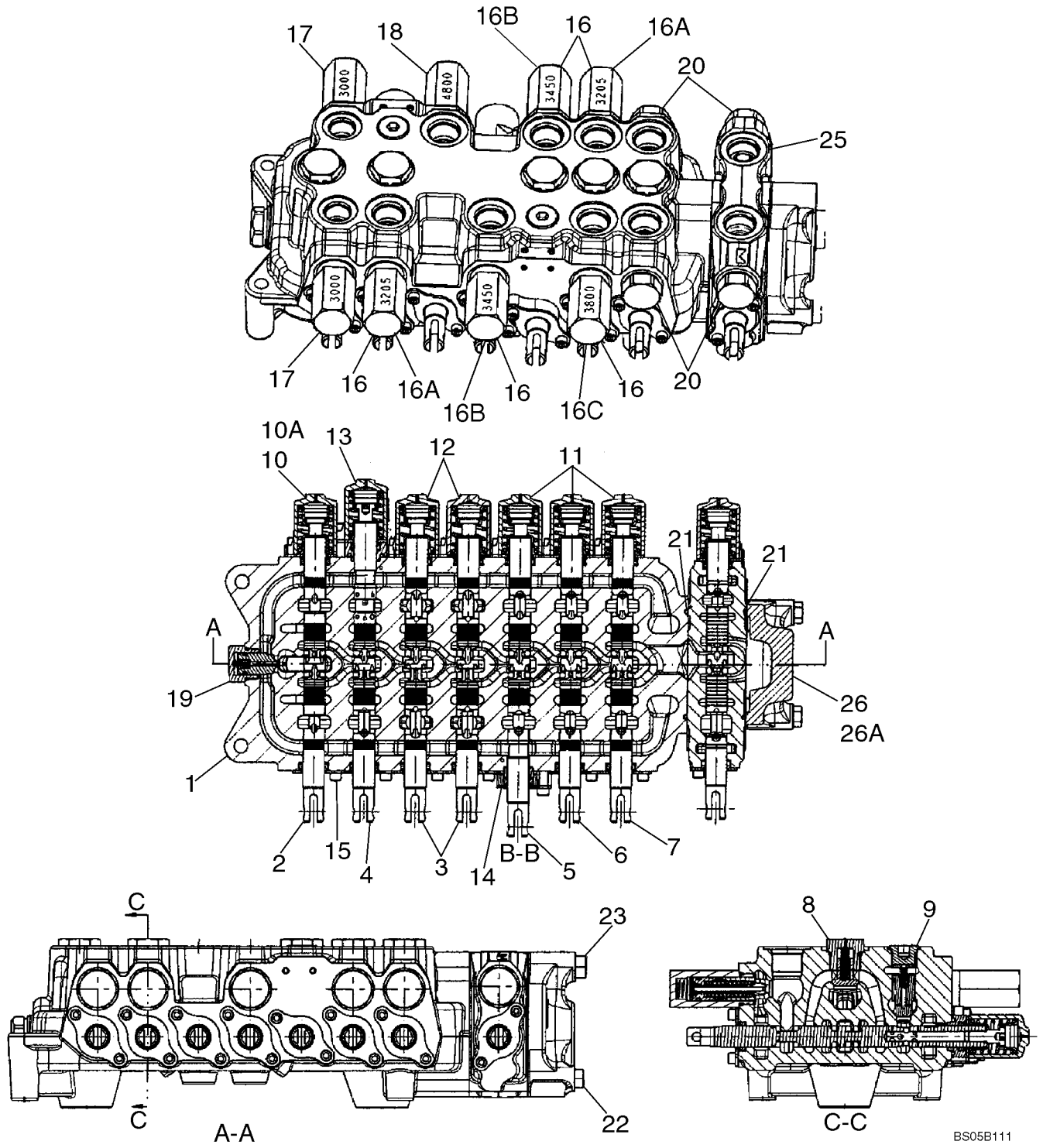

http://www.minnparbackhoeparts.com/

DISTRIBUTEUR - COMMANDE DE LA PELLE RETRO, 8 TIROIRS (AVEC BALANCIER EXTENSIBLE ET SANS CIRCUIT HYD)

REF	FN	PART NUMBER	YR/SN	QTY	DESCRIPTION
		REF			NOTICE MODELS WITH EXTENDABLE DIPPER, WITH AUXILIARY HYDRAULICS, WITHOUT PILOT CONTROLS
		87413146		1	SOUPAPE HYDRAULIQUE 8 Spool, Foot Swing; Incl. Ref 1 - 10, 12 - 26; If Used
		87403387		1	SOUPAPE HYDRAULIQUE 8 Spool, Hand Swing; Incl. Ref 1 - 9, 10A, 11 - 25, 26A; If Used
1		NSS		1	NON FOURNI SEPAREMENT HOUSING
2		NSS		1	NON FOURNI SEPAREMENT SPOOL, SWING
3		NSS		2	NON FOURNI SEPAREMENT SPOOL, STABILIZER, Right-Hand and Left-Hand
4		NSS		1	NON FOURNI SEPAREMENT SPOOL, BOOM
5		NSS		1	NON FOURNI SEPAREMENT SPOOL, DIPPER
6		NSS		1	NON FOURNI SEPAREMENT SPOOL, BUCKET
7		NSS		1	NON FOURNI SEPAREMENT SPOOL, EXTENDABLE DIPPER
8		87426238		5	SOUPAPE ANTI RETOUR Check Valve Assembly; Hex Head; Component Parts Not Serviced Separately; Includes (1) 87455975 O-Ring
9		87428486		2	SOUPAPE ANTI RETOUR Check Valve Assembly; Hex Socket Head; Component Parts Not Serviced Separately; Includes (1) 87455974 O-Ring
10		87428500		1	EXTREMITE ASSEMBLEE Cap Assembly, Swing Spool End; 87413146 Foot Swing Valve; Component Parts Not Serviced Separately; Includes 87429151 Centering Spring
10A		87426241		1	EXTREMITE ASSEMBLEE Cap Assembly, Swing Spool End; 87403387 Hand Swing Valve; Some Component Parts Not Serviced Separately; Serviceable Includes (1) 87454547 O-Ring, (1) 87454548 Seal, (1) 87444567 Spring, (2) 87455541 Screw; Replaces 87433028 End

http://www.minnparbackhoeparts.com/

DISTRIBUTEUR - COMMANDE DE LA PELLE RETRO, 8 TIROIRS (AVEC BALANCIER EXTENSIBLE ET SANS CIRCUIT HYD)

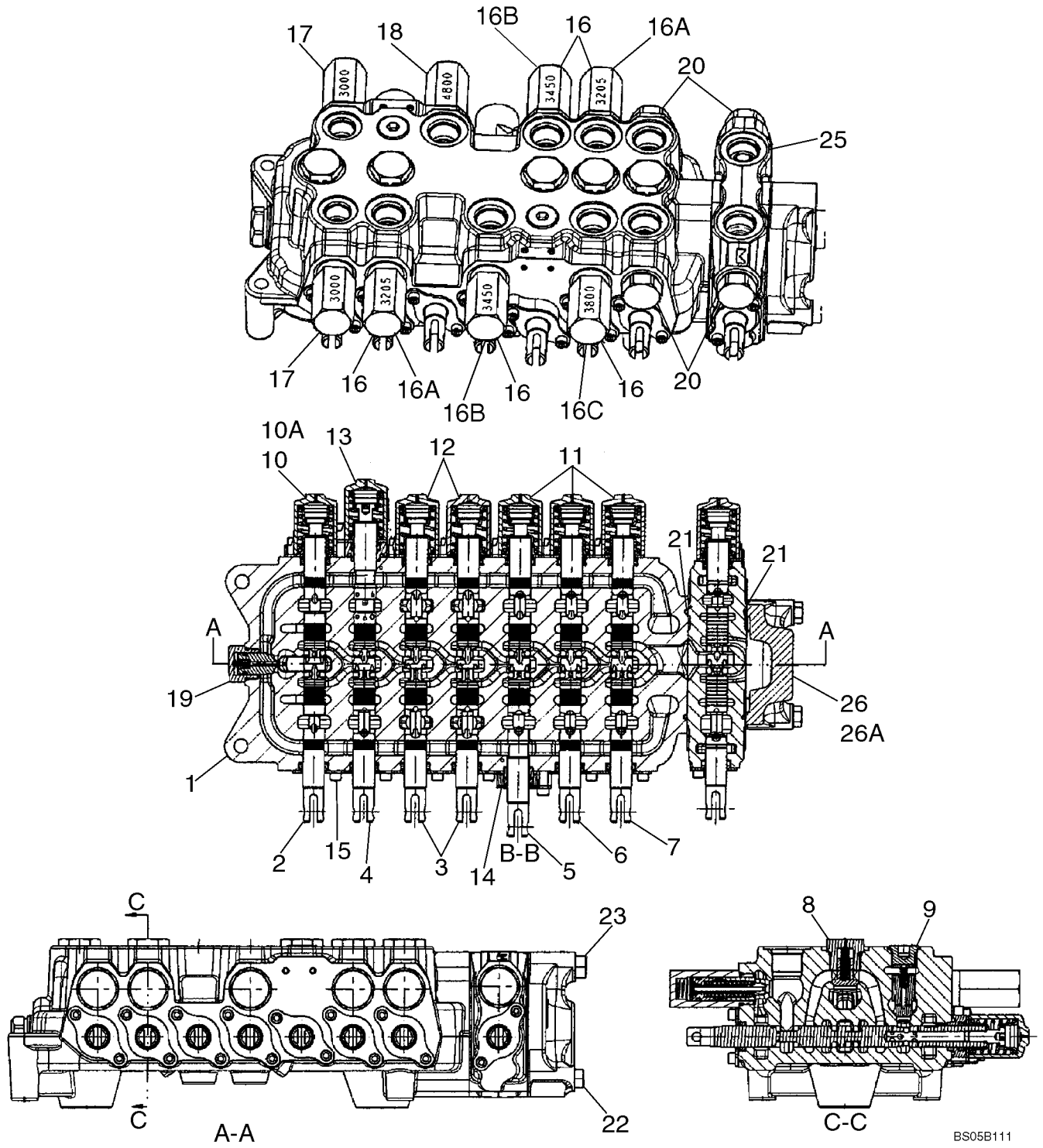

http://www.minnparbackhoeparts.com/

DISTRIBUTEUR - COMMANDE DE LA PELLE RETRO, 8 TIROIRS (AVEC BALANCIER EXTENSIBLE ET SANS CIRCUIT HYD)

REF	FN	PART NUMBER	YR/SN	QTY	DESCRIPTION
11		87426241		3	EXTREMITE ASSEMBLEE Cap Assembly, Bucket, Dipper and Extendahoe Spool Ends; Some Component Parts Not Serviced Separately; Serviceable Includes (1) 87454547 O-Ring, (1) 87454548 Seal, (1) 87444567 Spring, (2) 87455541 Screw; Replaces 87433028 End
12		87428497		2	EXTREMITE ASSEMBLEE Cap Assembly, Stabilizer Spool Ends; Some Component Parts Not Serviced Separately; Serviceable Includes (2) 87454547 O-Ring, (1) 87454548 Seal, (1) 87455533 Spring, (2) 87455541 Screw
13		87433029		1	EXTREMITE ASSEMBLEE Cap Assembly, Boom Spool End; Some Component Parts Not Serviced Separately; Serviceable Includes (1) 87454547 O-Ring, (1) 87454548 Seal, (1) 87444567 Spring, (1) 87455538 O-Ring, (2) 87455545 Screw
14		87440815		1	PLAQUE (ASSEMBLEE) Seal Plate Assembly, Dipper Spool; Some Component Parts Not Serviced Separately; Serviceable Includes (1) 87454547 O-Ring, (1) 87454548 Seal, (1) 87455538 O-Ring, (2) 87455534 Screw
15		87440814		6	PLAQUE (ASSEMBLEE) Seal Plate Assembly; Some Component Parts Not Serviced Separately; Serviceable Includes (1) 87454547 O-Ring, (1) 87454548 Seal, (2) 87455540 Screw
16		87426232		5	SOUPAPE, DÉCHARGE Relief Valve Assembly; (2) 3205 psi, (2) 3450 psi, (1) 3800 psi; Component Parts Not Serviced Separately; No Longer Used, See Ref 16A - 16C
16A		87450978		2	SOUPAPE, DÉCHARGE Circuit; 3205 psi; Component Parts Not Serviced Separately; Includes 87455549 Seal Kit
16B		87450979		2	SOUPAPE, DÉCHARGE Circuit; 3450 psi; Component Parts Not Serviced Separately; Includes 87455549 Seal Kit

http://www.minnparbackhoeparts.com/

DISTRIBUTEUR - COMMANDE DE LA PELLE RETRO, 8 TIROIRS (AVEC BALANCIER EXTENSIBLE ET SANS CIRCUIT HYD)

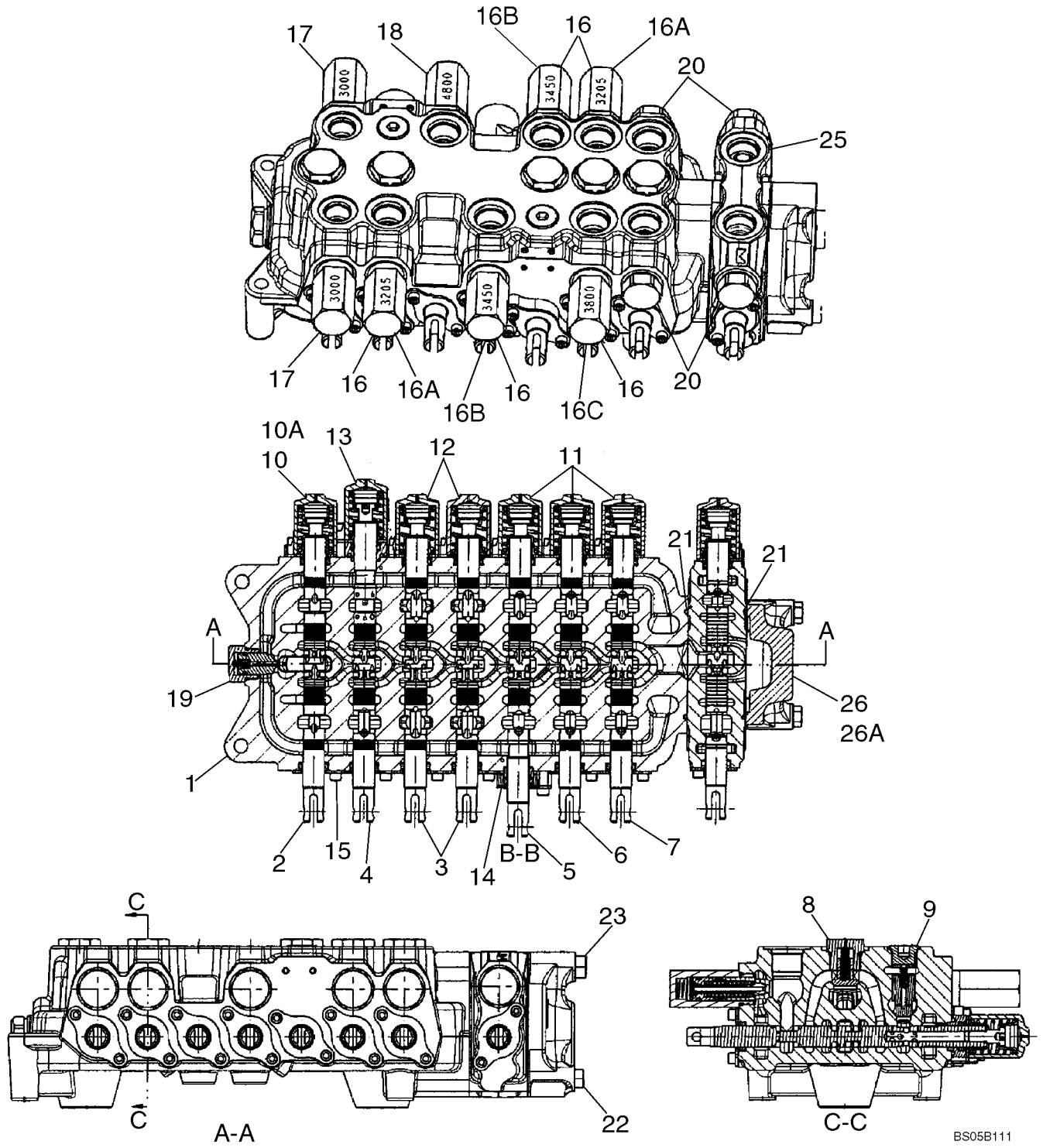

http://www.minnparbackhoeparts.com/

DISTRIBUTEUR - COMMANDE DE LA PELLE RETRO, 8 TIROIRS (AVEC BALANCIER EXTENSIBLE ET SANS CIRCUIT HYD)

REF	FN	PART NUMBER	YR/SN	QTY	DESCRIPTION
16C		87450980		1	SOUPAPE, DÉCHARGE Circuit; 3800 psi; Component Parts Not Serviced Separately; Includes 87455549 Seal Kit
17		87428490		2	SOUPAPE, DÉCHARGE Relief Valve Assembly; 3000 psi; Component Parts Not Serviced Separately; Includes 87455549 Seal Kit
18		87428488		1	SOUPAPE, DÉCHARGE Relief Valve Assembly; 4800 psi; Component Parts Not Serviced Separately; Includes 87455549 Seal Kit
19		81868381		1	SOUPAPE ANTI RETOUR Anti-Void Valve; Component Parts Not Serviced Separately; Includes 87455580 Seal Kit
20		83981068		4	BOUCHON DE FERMETUREE Shut-Off Plug; Component Parts Not Serviced Separately; (2) Are Now Included With Ref 25
21		87428495		2	JOINT THORIQUE O-Ring Seal, Auxiliary/Outlet Section
22		87428476		2	VIS Bolt
23		87428477		1	VIS Bolt
25		87428501		1	ELEMENT DISTR HYDR Spool Section Assembly; Auxiliary Hydraulics; Includes Ref 25A - 25I, Which Are Not Illustrated; Remainder Component Parts Not Serviced Separately
25A		87433028		1	EXTREMITE ASSEMBLEE Spool; Incl. Ref 21B - 21E, Which Are Not Illustrated; Remainder Component Parts Not Serviced Separately
25B		87454547		1	JOINT THORIQUE
25C		87454548		1	JOINT Wiper
25D		87429150		1	RESSORT, SOUPAPE
25E		87455541		2	VIS
25F		87428495		1	JOINT THORIQUE
25G		87455564		1	CLAPET Load Check
25H		87455565		1	RESSORT, SOUPAPE Load Check
25I		83981068		2	BOUCHON DE FERMETUREE Shut-Off
26		87433030		1	ELEMENT DISTR HYDR Outlet Section Assembly; 87413146 Foot Swing Valve; Component Parts Not Serviced Separately

http://www.minnparbackhoeparts.com/

DISTRIBUTEUR - COMMANDE DE LA PELLE RETRO, 8 TIROIRS (AVEC BALANCIER EXTENSIBLE ET SANS CIRCUIT HYD)

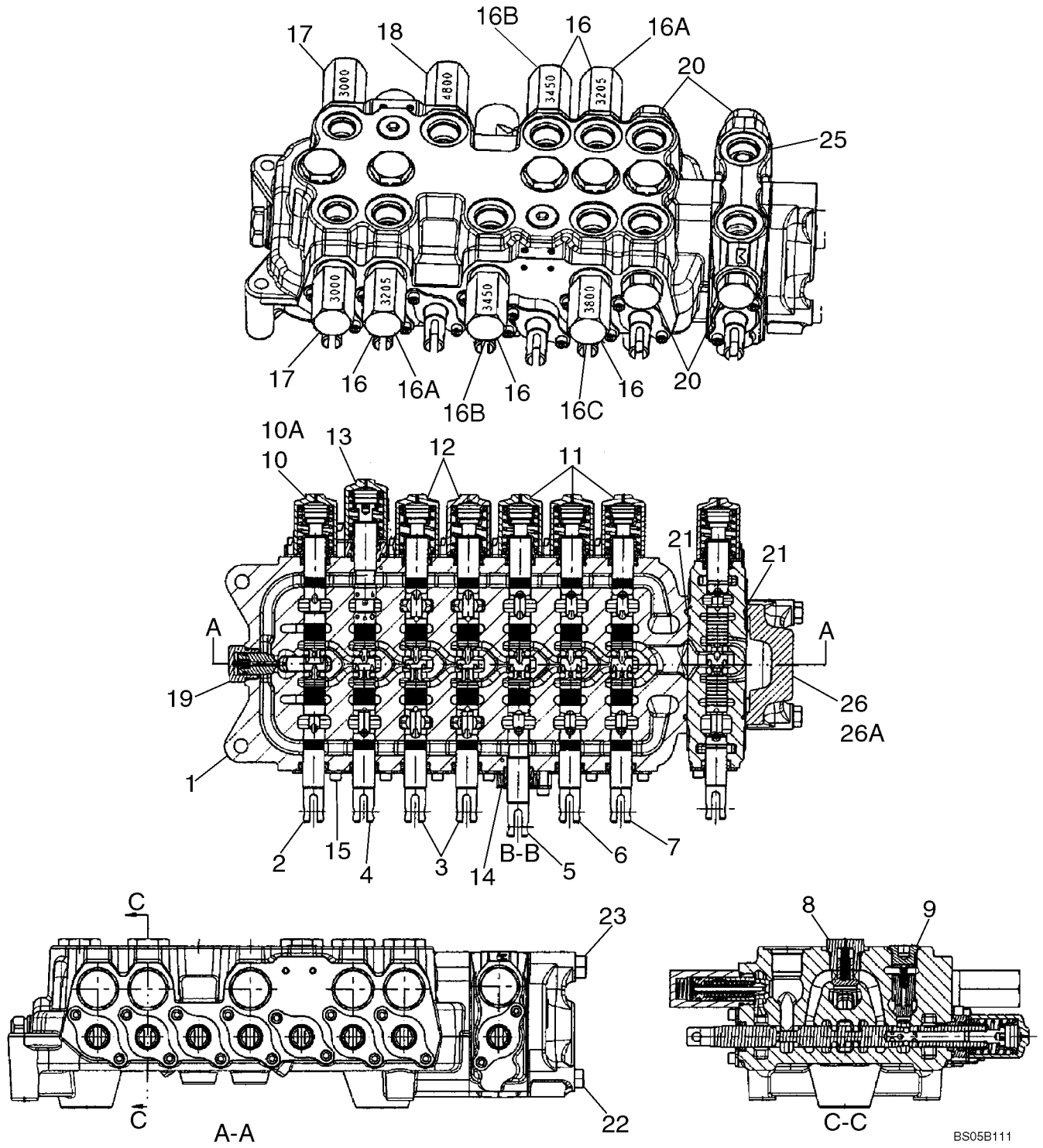

http://www.minnparbackhoeparts.com/

DISTRIBUTEUR - COMMANDE DE LA PELLE RETRO, 8 TIROIRS (AVEC BALANCIER EXTENSIBLE ET SANS CIRCUIT HYD)

REF	FN	PART NUMBER	YR/SN	QTY	DESCRIPTION
26A		87433030		1	ELEMENT DISTR HYDR Outlet Section Assembly; 87403387 Hand Swing Valve; Component Parts Not Serviced Separately

http://www.minnparbackhoeparts.com/

08-40		p1	02/05

DISTRIBUTEUR - COMMANDE DE LA PELLE RETRO, 6 TIROIRS

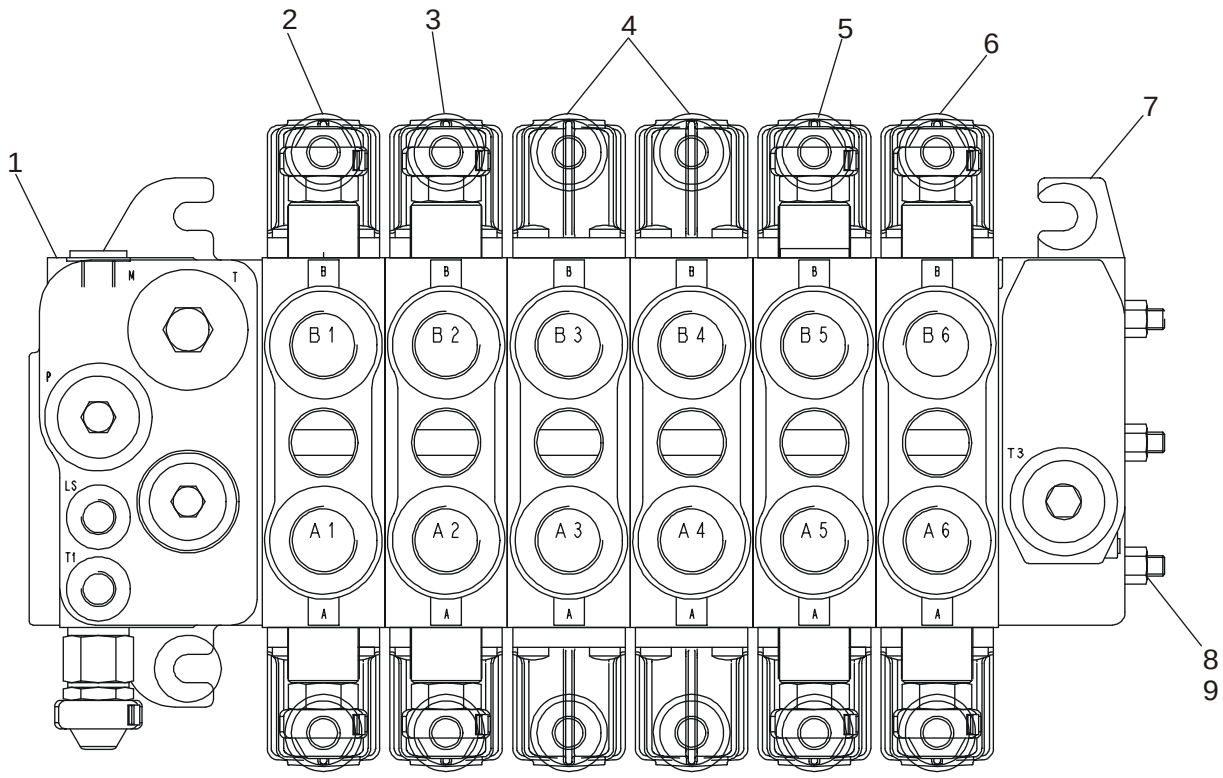

BS03N130

http://www.minnparbackhoeparts.com/

DISTRIBUTEUR - COMMANDE DE LA PELLE RETRO, 6 TIROIRS

REF	FN	PART NUMBER	YR/SN	QTY	DESCRIPTION
		86987459		1	DISTRIBUTEUR Backhoe, 6 Spool; Incl. Ref 1 - 9
1		87441495		1	ELEMENT DISTR HYDR Inlet Section; With Orifice Threaded In LS Cavity; See Figure 08-43A
2		85826339		1	ELEMENT DISTR HYDR Swing Section; See Figure 08-44
3		85826337		1	ELEMENT DISTR HYDR Boom Section; See Figure 08-45
4		85826340		2	ELEMENT DISTR HYDR Stabilizer Section; See Figure 08-46
5		85826338		1	ELEMENT DISTR HYDR Dipper Section; See Figure 08-47
6		85826365		1	ELEMENT DISTR HYDR Bucket Section; See Figure 08-48
7		NSS		1	NON FOURNI SEPAREMENT Outlet Section
8		NSS		3	NON FOURNI SEPAREMENT Tie Bolt
9		NSS		3	NON FOURNI SEPAREMENT Nut

http://www.minnparbackhoeparts.com/

DISTRIBUTEUR - COMMANDE DE LA PELLE RETRO, 7 TIROIRS

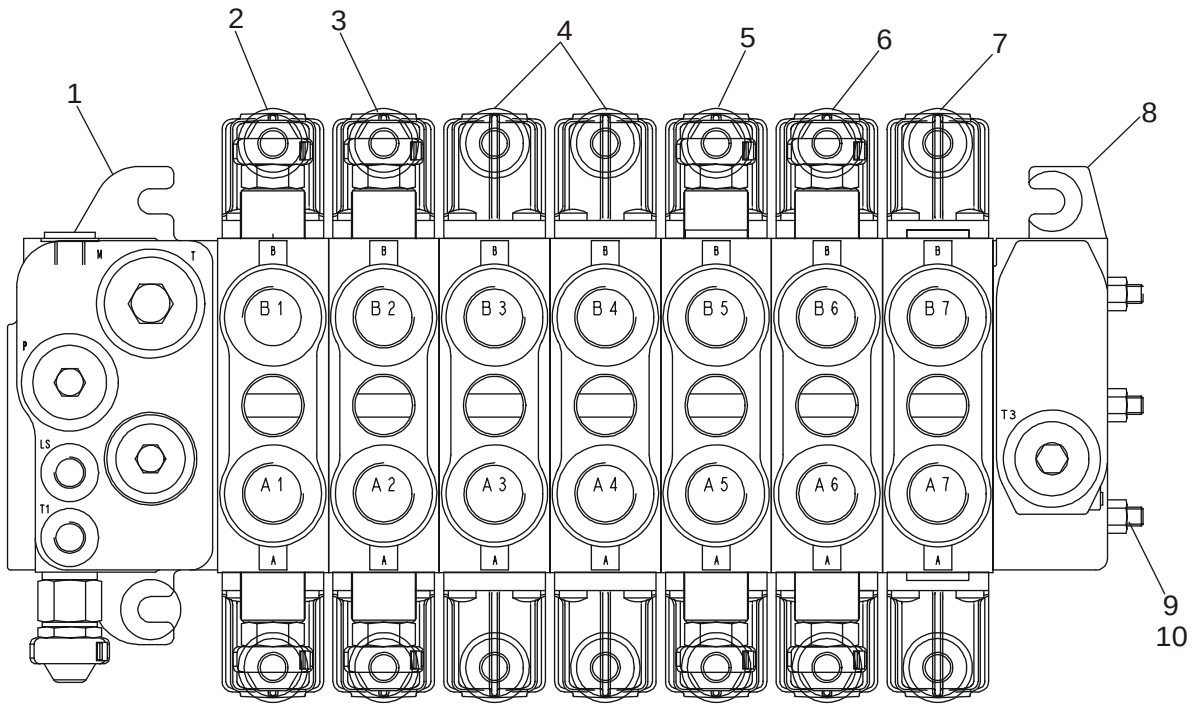

BS03N131

http://www.minnparbackhoeparts.com/

DISTRIBUTEUR - COMMANDE DE LA PELLE RETRO, 7 TIROIRS

REF	FN	PART NUMBER	YR/SN	QTY	DESCRIPTION
		86987460		1	DISTRIBUTEUR Backhoe, 7 Spool; Incl. Ref 1 - 10
1		87441495		1	ELEMENT DISTR HYDR Inlet Section; With Orifice Threaded In LS Cavity; See Figure 08-43A
2		85826339		1	ELEMENT DISTR HYDR Swing Section; See Figure 08-44
3		85826337		1	ELEMENT DISTR HYDR Boom Section; See Figure 08-45
4		85826340		2	ELEMENT DISTR HYDR Stabilizer Section; See Figure 08-46
5		85826338		1	ELEMENT DISTR HYDR Dipper Section; See Figure 08-47
6		85826365		1	ELEMENT DISTR HYDR Bucket Section; See Figure 08-48
7		85826341		1	ELEMENT DISTR HYDR Extendable Dipper Section; See Figure 08-49
8		NSS		1	NON FOURNI SEPAREMENT Outlet Section
9		NSS		3	NON FOURNI SEPAREMENT Tie Bolt
10		NSS		3	NON FOURNI SEPAREMENT Nut

http://www.minnparbackhoeparts.com/

DISTRIBUTEUR - COMMANDE DE LA PELLE RETRO, 7 TIROIRS

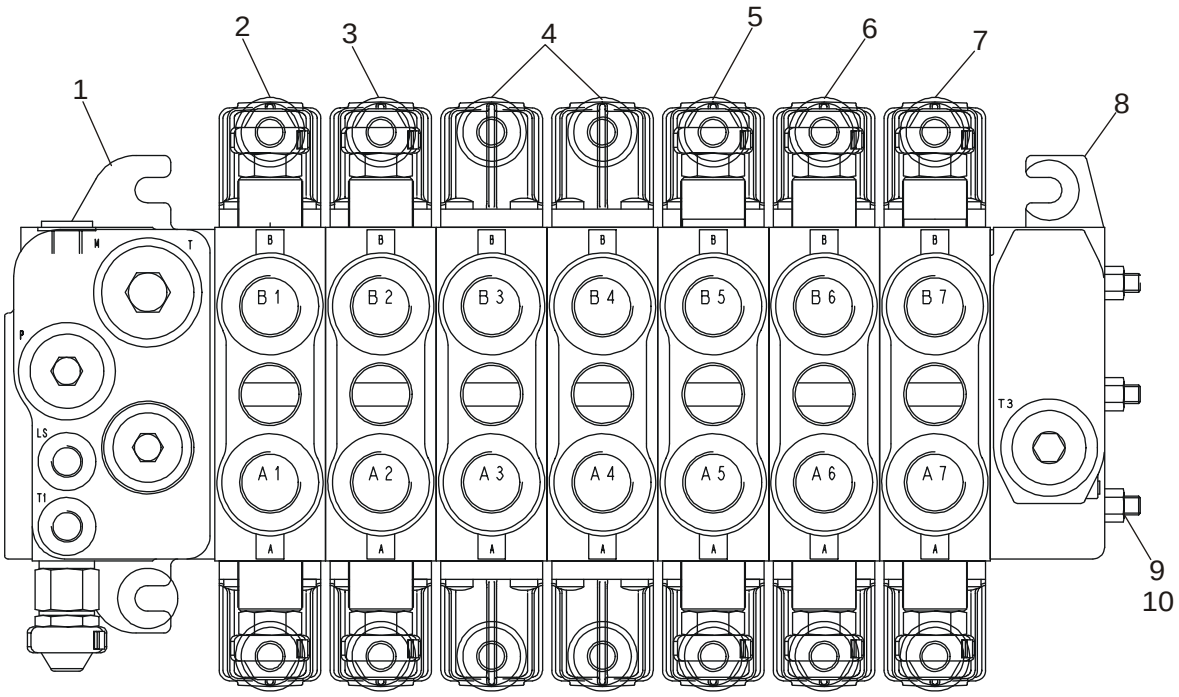

BS03N132

http://www.minnparbackhoeparts.com/

DISTRIBUTEUR - COMMANDE DE LA PELLE RETRO, 7 TIROIRS

REF	FN	PART NUMBER	YR/SN	QTY	DESCRIPTION
		87407965		1	DISTRIBUTEUR Backhoe, 7 Spool; Incl. Ref 1 - 10
1		87441495		1	ELEMENT DISTR HYDR Inlet Section; With Orifice Threaded In LS Cavity; See Figure 08-43A
2		85826339		1	ELEMENT DISTR HYDR Swing Section; See Figure 08-44
3		85826337		1	ELEMENT DISTR HYDR Boom Section; See Figure 08-45
4		85826340		2	ELEMENT DISTR HYDR Stabilizer Section; See Figure 08-46
5		85826338		1	ELEMENT DISTR HYDR Dipper Section; See Figure 08-47
6		85826365		1	ELEMENT DISTR HYDR Bucket Section; See Figure 08-48
7		85826342		1	ELEMENT DISTR HYDR Auxiliary Section; See Figure 08-50
8		NSS		1	NON FOURNI SEPAREMENT Outlet Section
9		NSS		3	NON FOURNI SEPAREMENT Tie Bolt
10		NSS		3	NON FOURNI SEPAREMENT Nut

http://www.minnparbackhoeparts.com/

DISTRIBUTEUR - COMMANDE DE LA PELLE RETRO, 8 TIROIRS

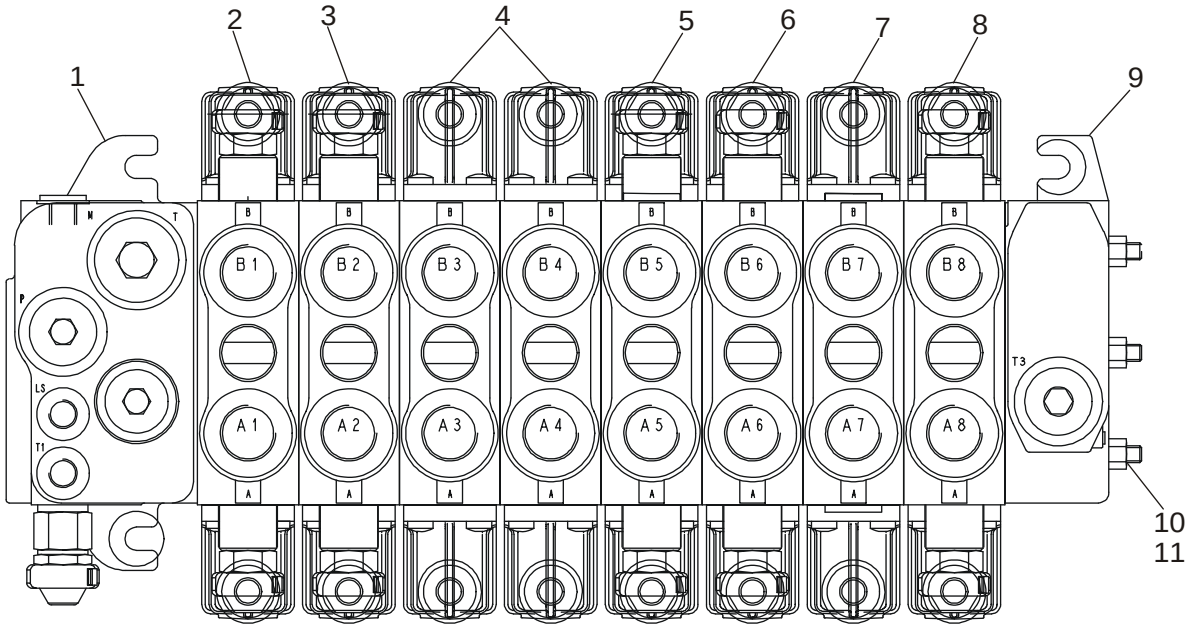

BS03N133

http://www.minnparbackhoeparts.com/

DISTRIBUTEUR - COMMANDE DE LA PELLE RETRO, 8 TIROIRS

REF	FN	PART NUMBER	YR/SN	QTY	DESCRIPTION
		86987461		1	SOUPAPE HYDRAULIQUE Backhoe, 8 Spool; Incl. Ref 1 - 11
1		87441495		1	ELEMENT DISTR HYDR Inlet Section; With Orifice Threaded In LS Cavity; See Figure 08-43A
2		85826339		1	ELEMENT DISTR HYDR Swing Section; See Figure 08-44
3		85826337		1	ELEMENT DISTR HYDR Boom Section; See Figure 08-45
4		85826340		2	ELEMENT DISTR HYDR Stabilizer Section; See Figure 08-46
5		85826338		1	ELEMENT DISTR HYDR Dipper Section; See Figure 08-47
6		85826365		1	ELEMENT DISTR HYDR Bucket Section; See Figure 08-48
7		85826341		1	ELEMENT DISTR HYDR Extendable Dipper Section; See Figure 08-49
8		85826342		1	ELEMENT DISTR HYDR Auxiliary Section; See Figure 08-50
9		NSS		1	NON FOURNI SEPAREMENT Outlet Section
10		NSS		3	NON FOURNI SEPAREMENT Tie Bolt
11		NSS		3	NON FOURNI SEPAREMENT Nut

http://www.minnparbackhoeparts.com/

CIRCUIT - ENTREE (AVEC DE COMMANDE PILOTE)

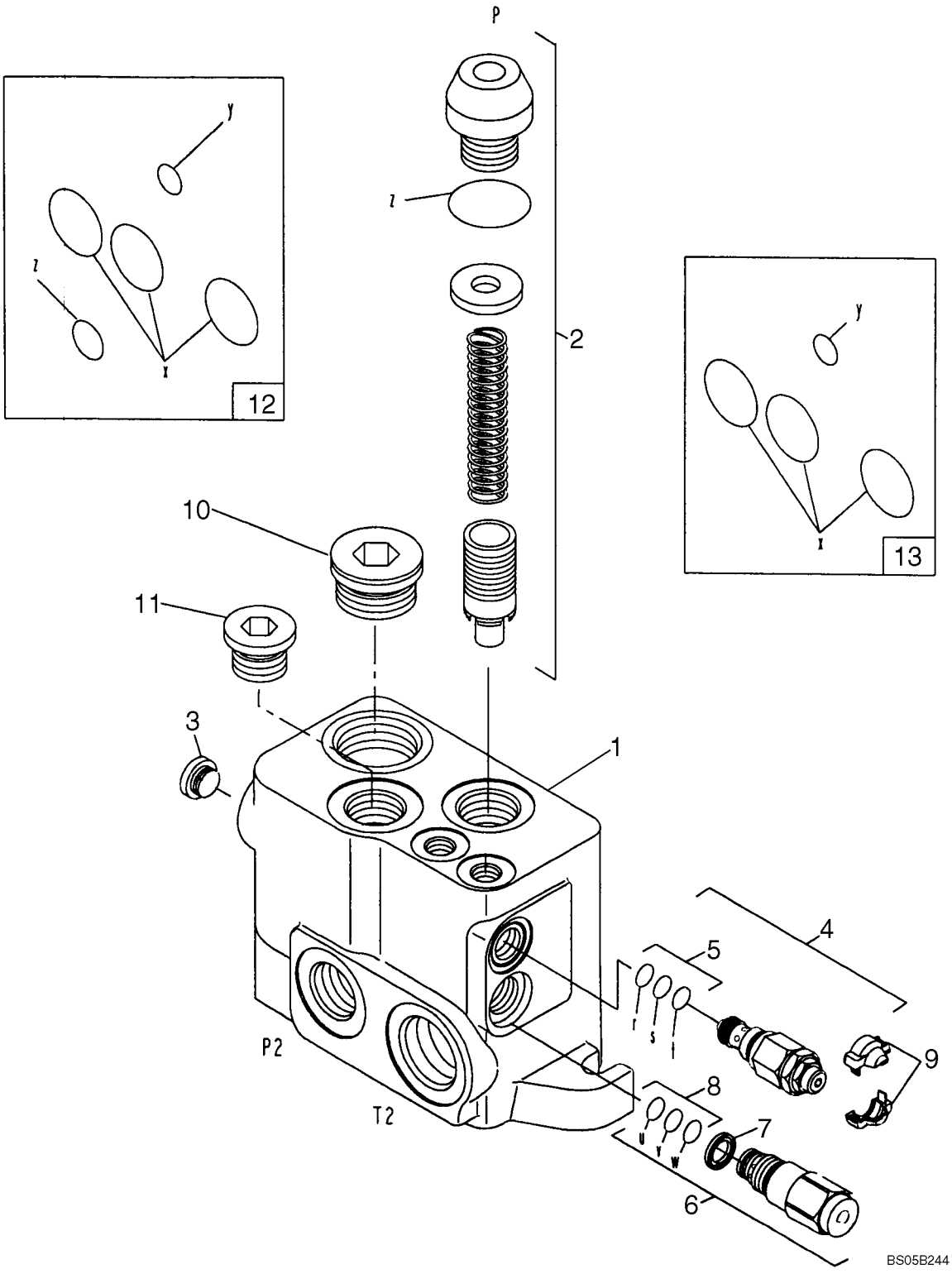

http://www.minnparbackhoeparts.com/

CIRCUIT - ENTREE (AVEC DE COMMANDE PILOTE)

REF	FN	PART NUMBER	YR/SN	QTY	DESCRIPTION
		87441495		1	ELEMENT DISTR HYDR Inlet Section; With Orifice Threaded In LS Cavity; Incl. Ref 1 - 13
1		NSS		1	NON FOURNI SEPAREMENT Housing
2		85820129		1	KIT Relief Valve Regulator; Component Parts Not Serviced Separately
3		85811923		1	BOUCHON
4		85811946		2	SOUPAPE HYDRAULIQUE RELIEF; LS Port; Incl. Ref 5
5		85821236		1	KIT LS Relief Valve; Includes (2) O-Rings, (1) Thrust Ring
6		85820128		1	SOUPAPE HYDRAULIQUE Regulator, Flow; Incl. Ref 7, 8
7		85817669		1	JOINT Filter, For Regulated Drain Flow
8		85821235		1	KIT Seal; Includes (2) O-Rings, (1) Thrust Ring
9		85811934		1	KIT COVER; Two Piece; Orange; If Used
9		85811935		1	KIT COVER; Two Piece; Blue; If Used
10		85811922		1	BOUCHON 1-5/16
11		85811921		1	BOUCHON 1-1/16
12		85825477		1	KIT Seal; Low Pressure Inlet Elements; Includes (5) O-Rings
13		85825473		1	KIT Seal; Between Elements; Includes (4) O-Rings

http://www.minnparbackhoeparts.com/

08-44		p1	06/05

CIRCUIT - DEBATTEMENT DE LA RETROPELLE (AVEC DE COMMANDE PILOTE)

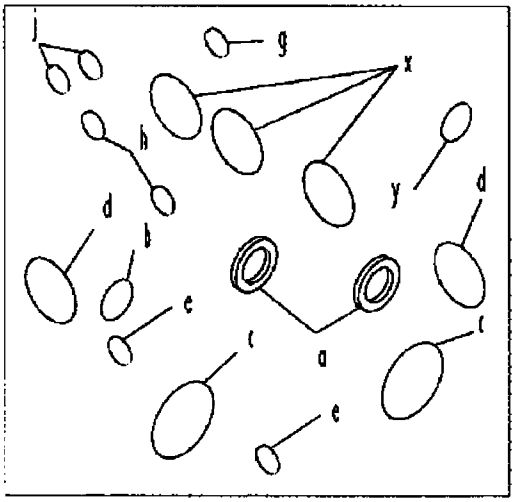

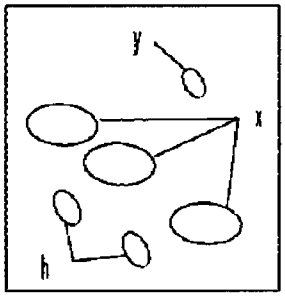

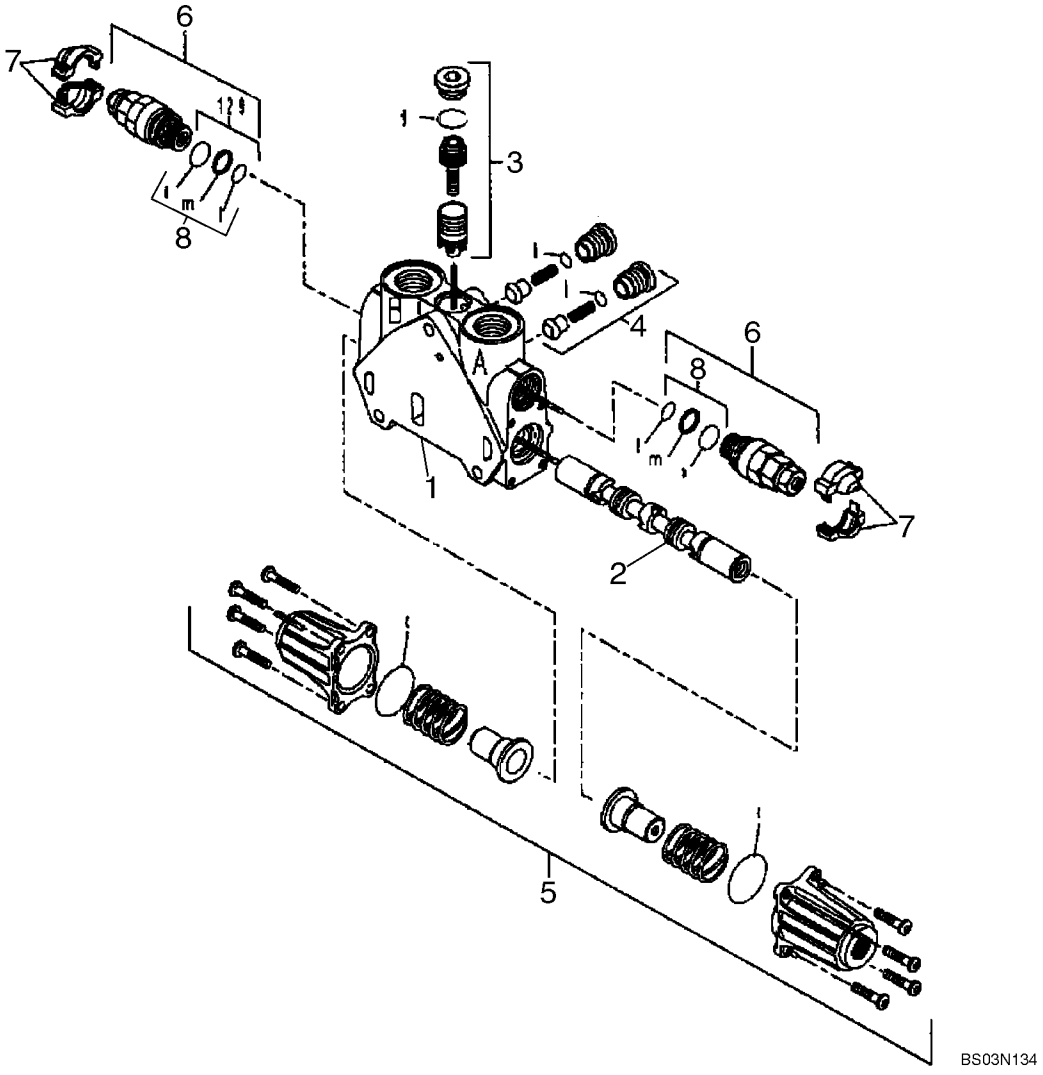

http://www.minnparbackhoeparts.com/

CIRCUIT - DEBATTEMENT DE LA RETROPELLE (AVEC DE COMMANDE PILOTE)

REF	FN	PART NUMBER	YR/SN	QTY	DESCRIPTION
		85826339		1	ELEMENT DISTR HYDR Swing; Incl. Ref 1 - 10
1		NSS		1	NON FOURNI SEPAREMENT HOUSING
2		NSS		1	NON FOURNI SEPAREMENT SPOOL
3		85826345		1	KIT Pressure Compensator Kit; Component Parts Not Serviced Separately
4		85811938		2	KIT Check Valve Kit; Component Parts Not Serviced Separately
5		85826344		1	KIT End Cap Kit; Component Parts Not Serviced Separately
6		85812114		2	SOUPAPE HYDRAULIQUE Pressure Relief Valve; Some Component Parts Not Serviced Separately; Serviceable Includes 85811933, Ref 8 Kit
7		85811934		2	KIT Cover, Orange
7		85811935		2	KIT Cover, Blue
8		85811933		2	KIT Seal Kit Includes (2) O-Rings, (1) Thrust Ring; Component Parts Not Serviced Separately
9		85819148		1	KIT Seal Kit Includes (6) O-Rings; Component Parts Not Serviced Separately
10		85824282		1	KIT Seal Kit Includes (15) O-Rings, (2) Lip Seals; Component Parts Not Serviced Separately

http://www.minnparbackhoeparts.com/

08-45		p1	06/05

CIRCUIT - FLECHE DE LA RETROPELLE (AVEC DE COMMANDE PILOTE)

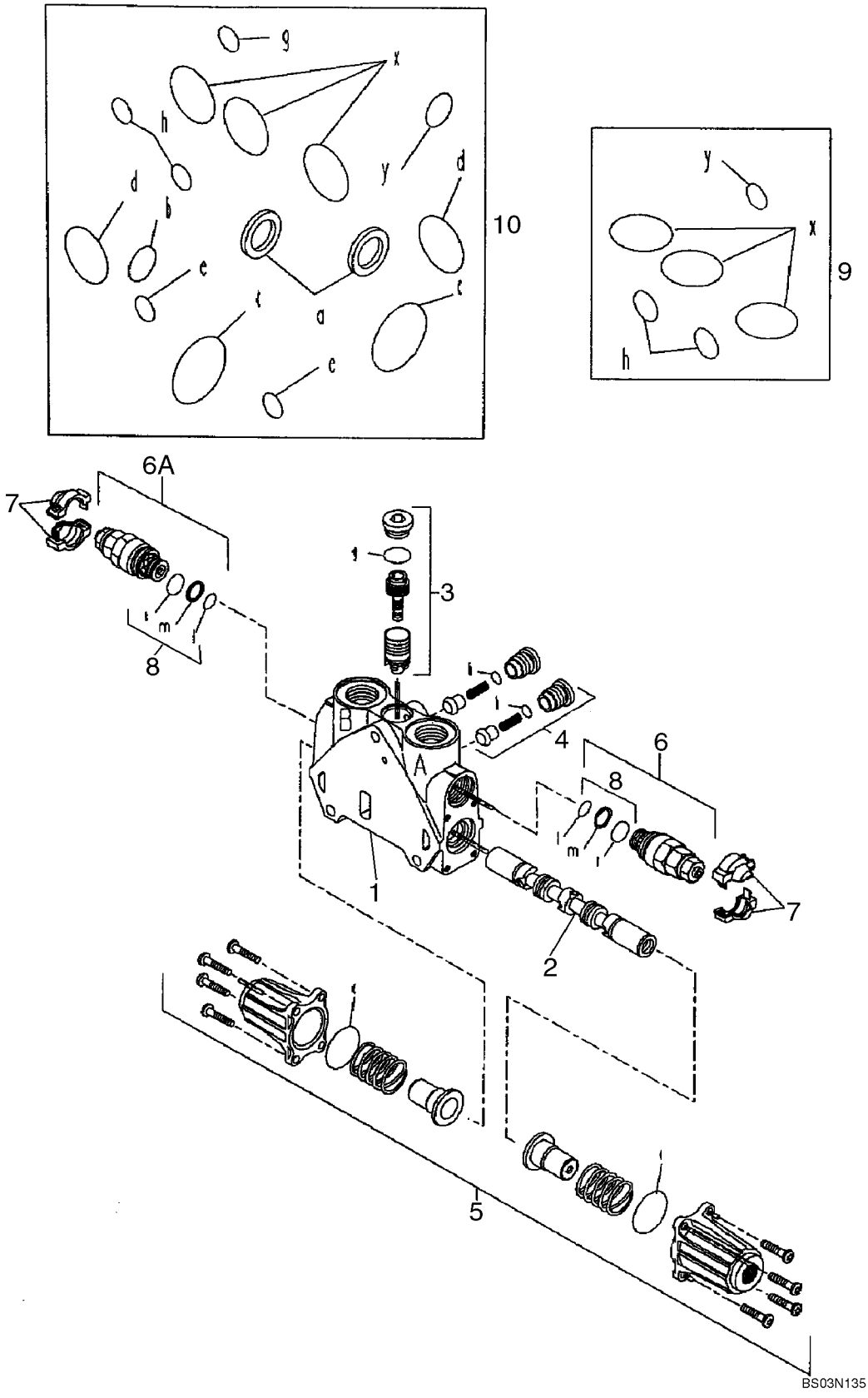

http://www.minnparbackhoeparts.com/

CIRCUIT - FLECHE DE LA RETROPELLE (AVEC DE COMMANDE PILOTE)

REF	FN	PART NUMBER	YR/SN	QTY	DESCRIPTION
		85826337		1	ELEMENT DISTR HYDR Boom; Incl. Ref 1 - 10
1		NSS		1	NON FOURNI SEPAREMENT HOUSING
2		NSS		1	NON FOURNI SEPAREMENT SPOOL
3		85819378		1	KIT Pressure Compensator Kit; Component Parts Not Serviced Separately
4		85811938		2	KIT Check Valve Kit; Component Parts Not Serviced Separately
5		85826344		1	KIT End Cap Kit; Component Parts Not Serviced Separately
6		85812115		1	SOUPAPE HYDRAULIQUE Pressure Relief Valve Kit; Side A; Some Component Parts Not Serviced Separately; Serviceable Includes 85811933, Ref 8 Kit
6A		85826346		1	SOUPAPE, DÉCHARGE Pressure Relief Valve Kit; Side B; Some Component Parts Not Serviced Separately; Serviceable Includes 85811933, Ref 8 Kit
7		85811934		2	KIT Cover, Orange
7		85811935		2	KIT Cover, Blue
8		85811933		2	KIT Seal Kit Includes (2) O-Rings, (1) Thrust Ring; Component Parts Not Serviced Separately
9		85819148		1	KIT Seal Kit Includes (6) O-Rings; Component Parts Not Serviced Separately
10		85824281		1	KIT Seal Kit Includes (13) O-Rings, (2) Lip Seals; Component Parts Not Serviced Separately

http://www.minnparbackhoeparts.com/

CIRCUIT - STABILISATEUR DE LA PELLE RETRO (AVEC DE COMMANDE PILOTE)

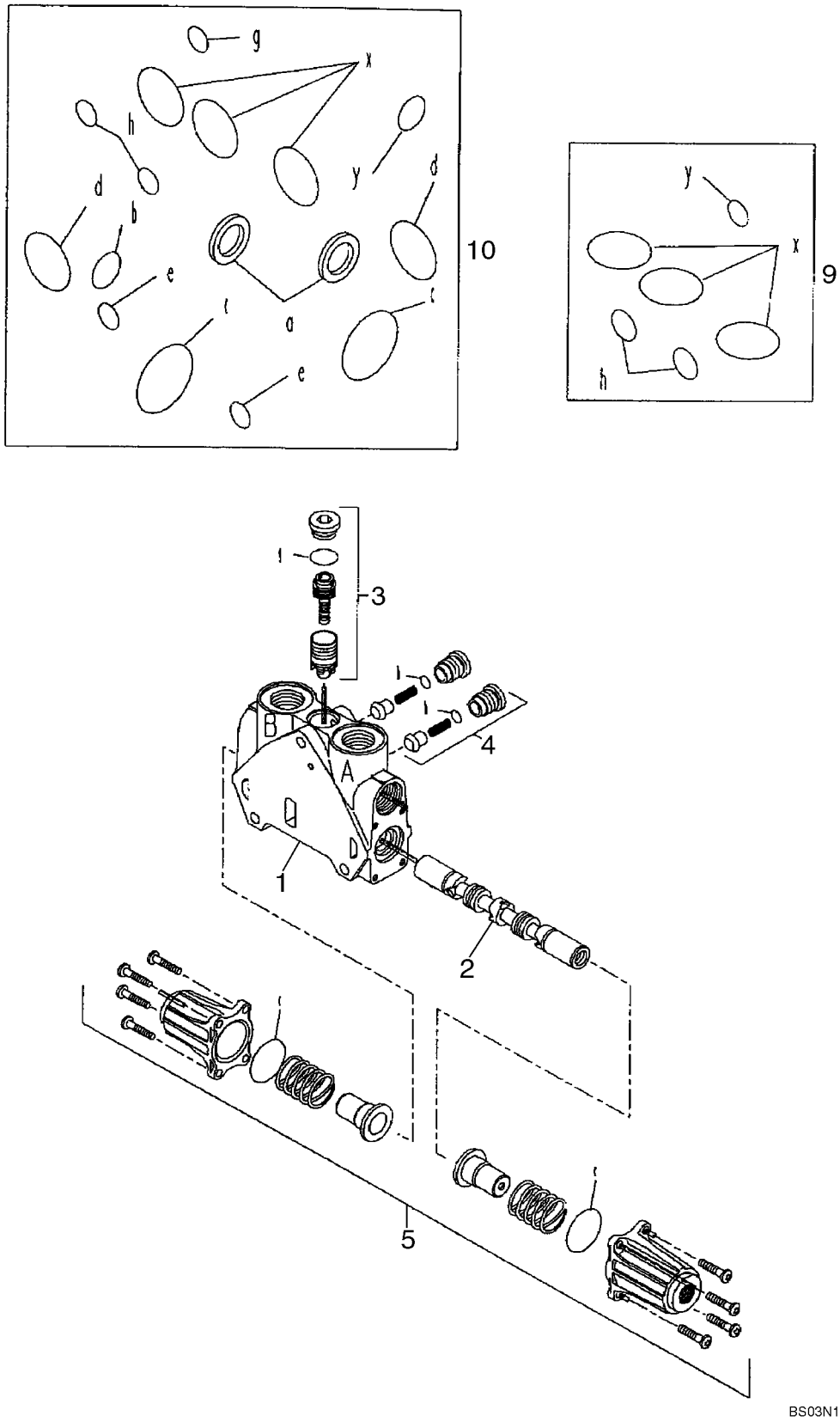

http://www.minnparbackhoeparts.com/

CIRCUIT - STABILISATEUR DE LA PELLE RETRO (AVEC DE COMMANDE PILOTE)

REF	FN	PART NUMBER	YR/SN	QTY	DESCRIPTION
		85826340		2	ELEMENT DISTR HYDR Stabilizer; Left-Hand and Right-Hand; Incl. Ref 1 - 10
1		NSS		1	NON FOURNI SEPAREMENT HOUSING
2		NSS		1	NON FOURNI SEPAREMENT SPOOL
3		85819378		1	KIT Pressure Compensator Kit; Component Parts Not Serviced Separately
4		85811938		2	KIT Check Valve Kit; Component Parts Not Serviced Separately
5		85826344		1	KIT End Cap Kit; Component Parts Not Serviced Separately
9		85819148		1	KIT Seal Kit Includes (6) O-Rings; Component Parts Not Serviced Separately
10		85824281		1	KIT Seal Kit Includes (13) O-Rings, (2) Lip Seals; Component Parts Not Serviced Separately

http://www.minnparbackhoeparts.com/

CIRCUIT - BRAS DE LA RETROPELLE (AVEC DE COMMANDE PILOTE)

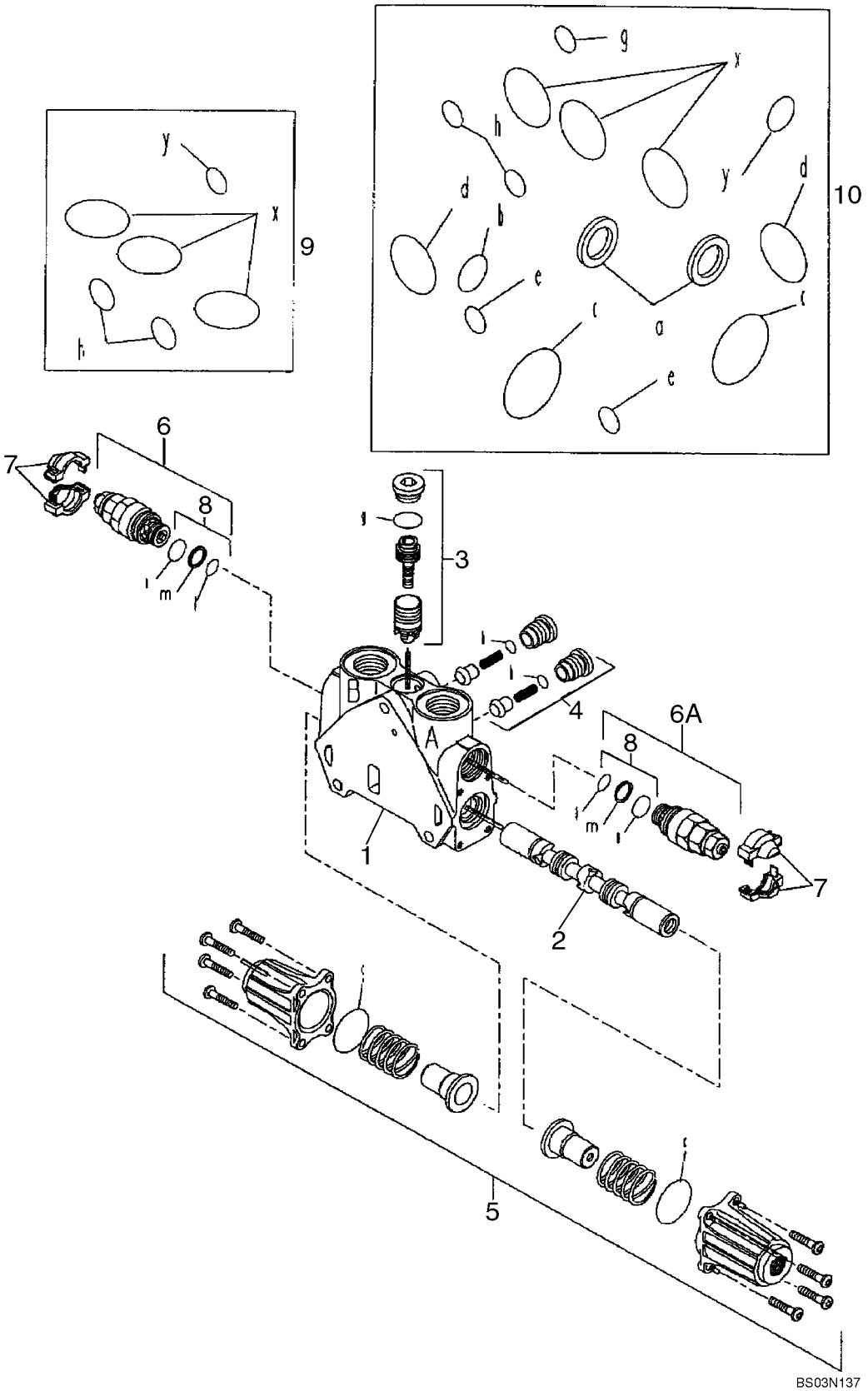

http://www.minnparbackhoeparts.com/

CIRCUIT - BRAS DE LA RETROPELLE (AVEC DE COMMANDE PILOTE)

REF	FN	PART NUMBER	YR/SN	QTY	DESCRIPTION
		85826338		1	ELEMENT DISTR HYDR Dipper; Incl. Ref 1 - 10
1		NSS		1	NON FOURNI SEPAREMENT HOUSING
2		NSS		1	NON FOURNI SEPAREMENT SPOOL
3		85826345		1	KIT Pressure Compensator Kit; Component Parts Not Serviced Separately
4		85811938		2	KIT Check Valve Kit; Component Parts Not Serviced Separately
5		85826344		1	KIT End Cap Kit; Component Parts Not Serviced Separately
6		85812116		1	SOUPAPE HYDRAULIQUE Pressure Relief Valve; Side B; Some Component Parts Not Serviced Separately; Serviceable Includes 85811933, Ref 8 Kit
6A		85826343		1	SOUPAPE, DÉCHARGE Pressure Relief Valve; Side A; Some Component Parts Not Serviced Separately; Serviceable Includes 85811933, Ref 8 Kit
7		85811934		2	KIT Cover, Orange
7		85811935		2	KIT Cover, Blue
8		85811933		2	KIT Seal Kit Includes (2) O-Rings, (1) Thrust Ring; Component Parts Not Serviced Separately
9		85819148		1	KIT Seal Kit Includes (6) O-Rings; Component Parts Not Serviced Separately
10		85824281		1	KIT Seal Kit Includes (13) O-Rings, (2) Lip Seals; Component Parts Not Serviced Separately

http://www.minnparbackhoeparts.com/

08-48		p1	06/05

CIRCUIT - GODET DE LA RETROPELLE (AVEC DE COMMANDE PILOTE)

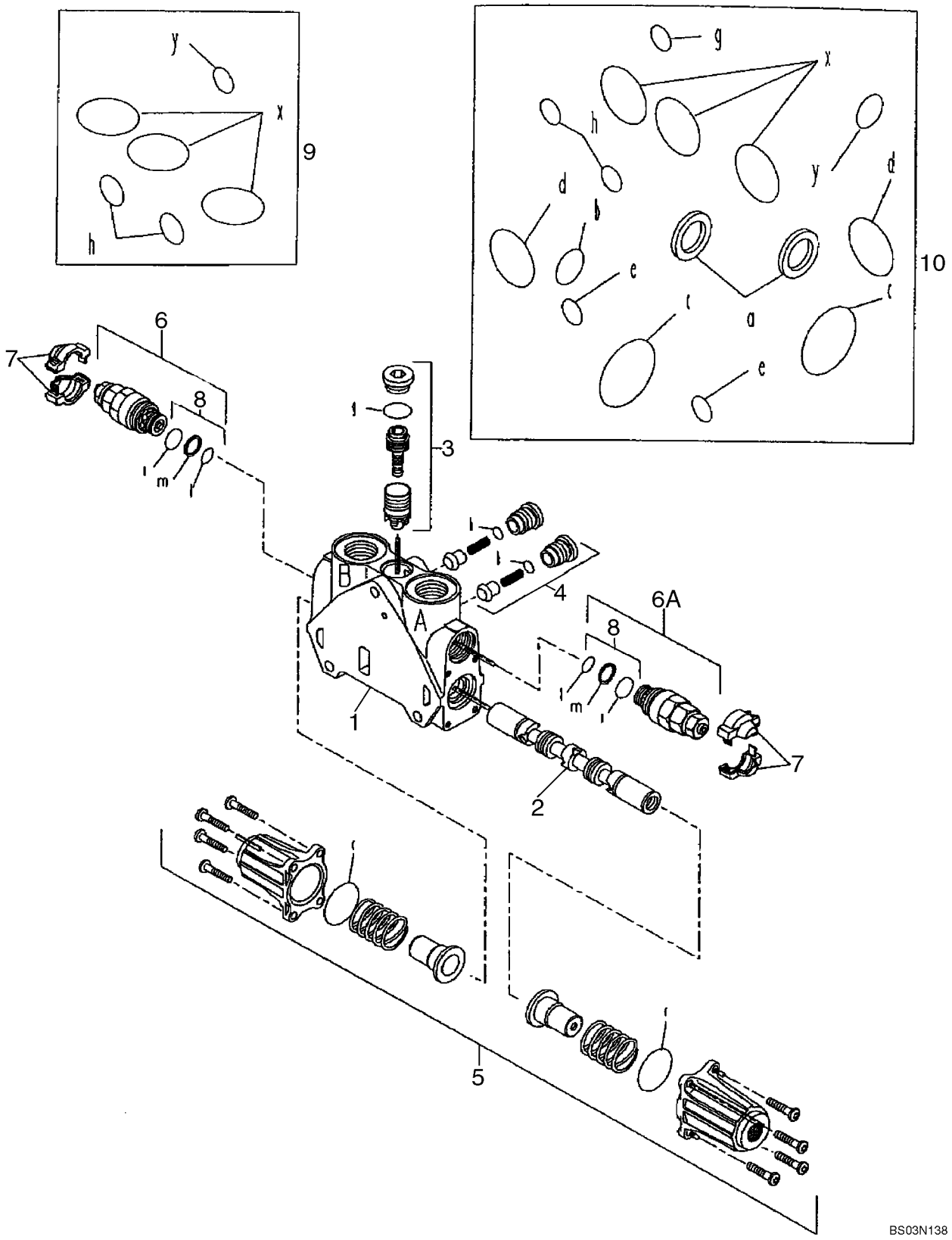

http://www.minnparbackhoeparts.com/

CIRCUIT - GODET DE LA RETROPELLE (AVEC DE COMMANDE PILOTE)

REF	FN	PART NUMBER	YR/SN	QTY	DESCRIPTION
		85826365		1	ELEMENT DISTR HYDR Bucket; Incl. Ref 1 - 10
1		NSS		1	NON FOURNI SEPAREMENT HOUSING
2		NSS		1	NON FOURNI SEPAREMENT SPOOL
3		85819378		1	KIT Pressure Compensator Kit; Component Parts Not Serviced Separately
4		85811938		2	KIT Check Valve Kit; Component Parts Not Serviced Separately
5		85826344		1	KIT End Cap Kit; Component Parts Not Serviced Separately
6		85812116		1	SOUPAPE HYDRAULIQUE Pressure Relief Valve; Side B; Some Component Parts Not Serviced Separately; Serviceable Includes 85811933, Ref 8 Kit
6A		85826905		1	SOUPAPE, DÉCHARGE Pressure Relief Valve; Side A; Some Component Parts Not Serviced Separately; Serviceable Includes 85811933, Ref 8 Kit
7		85811934		2	KIT Cover, Orange
7		85811935		2	KIT Cover, Blue
8		85811933		2	KIT Seal Kit Includes (2) O-Rings, (1) Thrust Ring; Component Parts Not Serviced Separately
9		85819148		1	KIT Seal Kit Includes (6) O-Rings; Component Parts Not Serviced Separately
10		85824281		1	KIT Seal Kit Includes (13) O-Rings, (2) Lip Seals; Component Parts Not Serviced Separately

http://www.minnparbackhoeparts.com/

CIRCUIT - BALANCIER EXTENSIBLE (AVEC DE COMMANDE PILOTE)

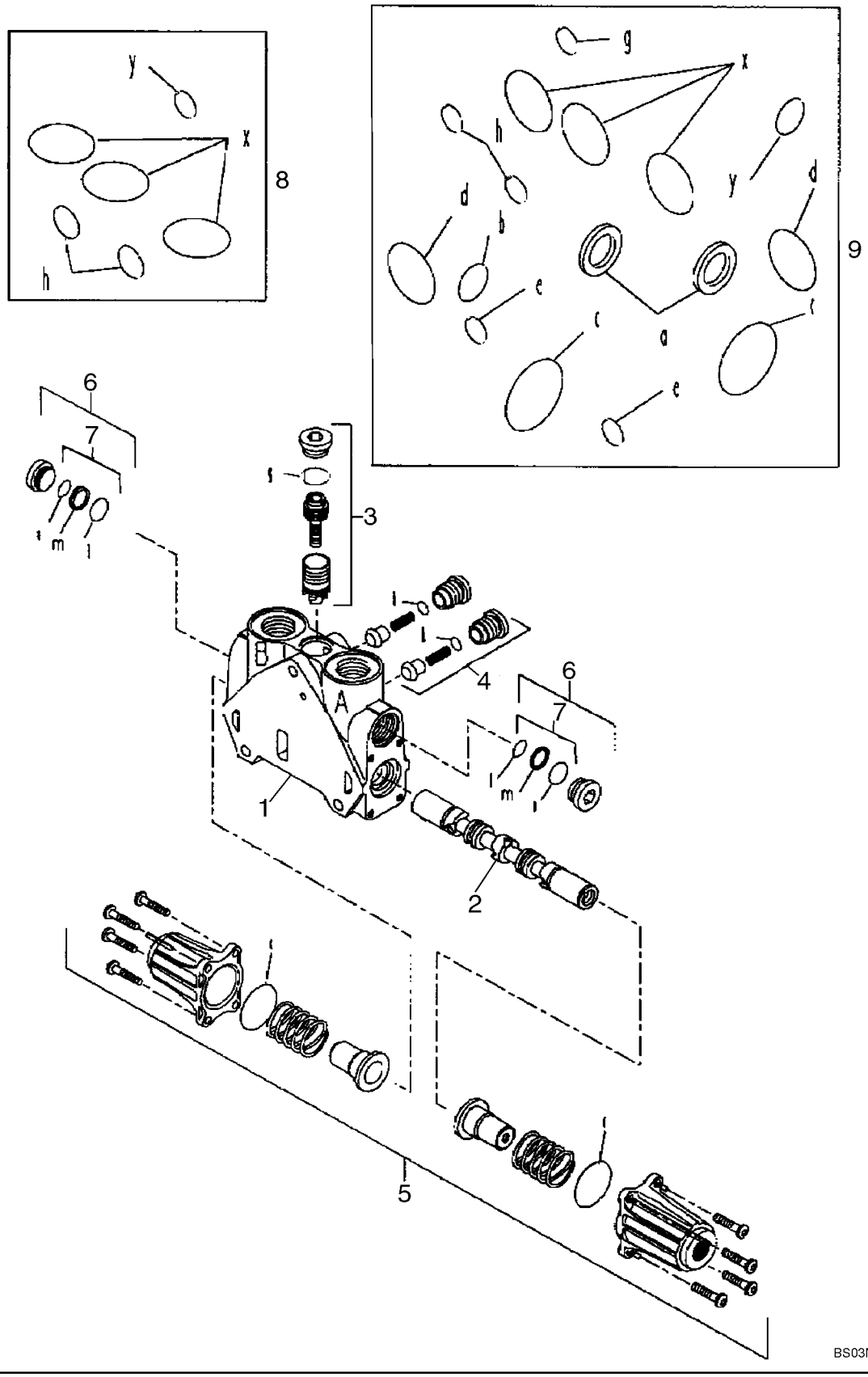

http://www.minnparbackhoeparts.com/

CIRCUIT - BALANCIER EXTENSIBLE (AVEC DE COMMANDE PILOTE)

REF	FN	PART NUMBER	YR/SN	QTY	DESCRIPTION
		85826341		1	ELEMENT DISTR HYDR Extendable Dipper; Incl. Ref 1 - 9
1		NSS		1	NON FOURNI SEPAREMENT HOUSING
2		NSS		1	NON FOURNI SEPAREMENT SPOOL
3		85819378		1	KIT Pressure Compensator Kit; Component Parts Not Serviced Separately
4		85811938		2	KIT Check Valve Kit; Component Parts Not Serviced Separately
5		85826344		1	KIT End Cap Kit; Component Parts Not Serviced Separately
6		85811937		2	BOUCHON Plug Assembly Kit; Some Component Parts Not Serviced Separately; Serviceable Includes 85811933, Ref 7 Kit
7		85811933		2	KIT Seal Kit Includes (2) O-Rings, (1) Thrust Ring; Component Parts Not Serviced Separately
8		85819148		1	KIT Seal Kit Includes (6) O-Rings; Component Parts Not Serviced Separately
9		85824281		1	KIT Seal Kit Includes (13) O-Rings, (2) Lip Seals; Component Parts Not Serviced Separately

http://www.minnparbackhoeparts.com/

CIRCUIT - OPTIONS, CIRCUIT HYDRAULIQUE AUXILIAIRE (AVEC DE COMMANDE PILOTE)

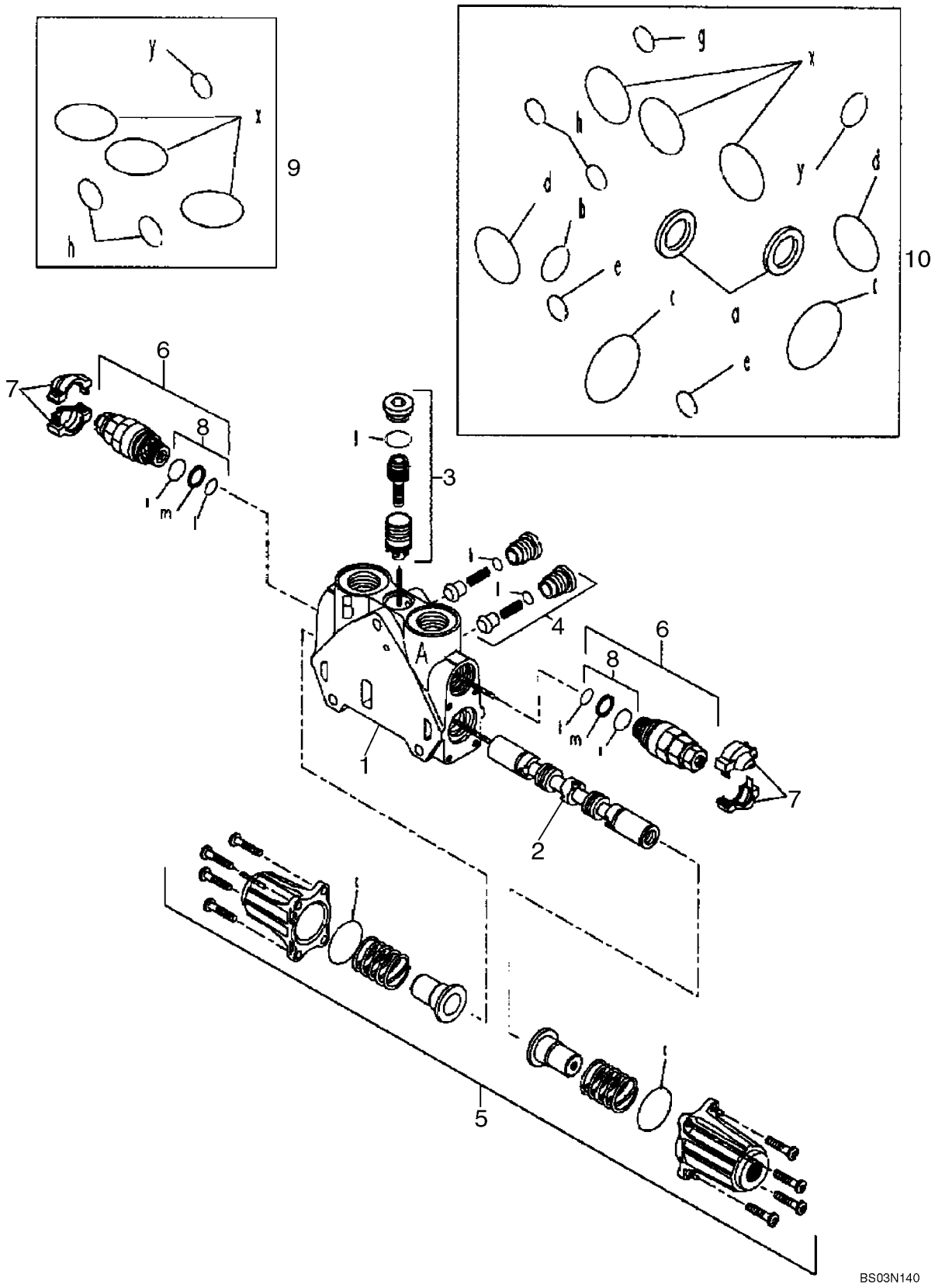

http://www.minnparbackhoeparts.com/

CIRCUIT - OPTIONS, CIRCUIT HYDRAULIQUE AUXILIAIRE (AVEC DE COMMANDE PILOTE)

REF	FN	PART NUMBER	YR/SN	QTY	DESCRIPTION
		85826342		1	ELEMENT DISTR HYDR Options, Auxiliary Hydraulics; Incl. Ref 1 - 10
1		NSS		1	NON FOURNI SEPAREMENT HOUSING
2		NSS		1	NON FOURNI SEPAREMENT SPOOL
3		85819378		1	KIT Pressure Compensator Kit; Component Parts Not Serviced Separately
4		85811938		2	KIT Check Valve Kit; Component Parts Not Serviced Separately
5		85826344		1	KIT End Cap Kit; Component Parts Not Serviced Separately
6		85812115		2	SOUPAPE HYDRAULIQUE Pressure Relief Valve; Some Component Parts Not Serviced Separately; Serviceable Includes 85811933, Ref 8 Kit
7		85811934		2	KIT Cover, Orange
7		85811935		2	KIT Cover, Blue
8		85811933		2	KIT Seal Kit Includes (2) O-Rings, (1) Thrust Ring; Component Parts Not Serviced Separately
9		85819148		1	KIT Seal Kit Includes (6) O-Rings; Component Parts Not Serviced Separately
10		85824281		1	KIT Seal Kit Includes (13) O-Rings, (2) LIp Seals; Component Parts Not Serviced Separately

http://www.minnparbackhoeparts.com/

08-51		p1	07/04

DISTRIBUTEUR, SOUPAPE DE REDUCTION PRESSION (2 SPOOL) (AVEC DE COMMANDE PILOTE)

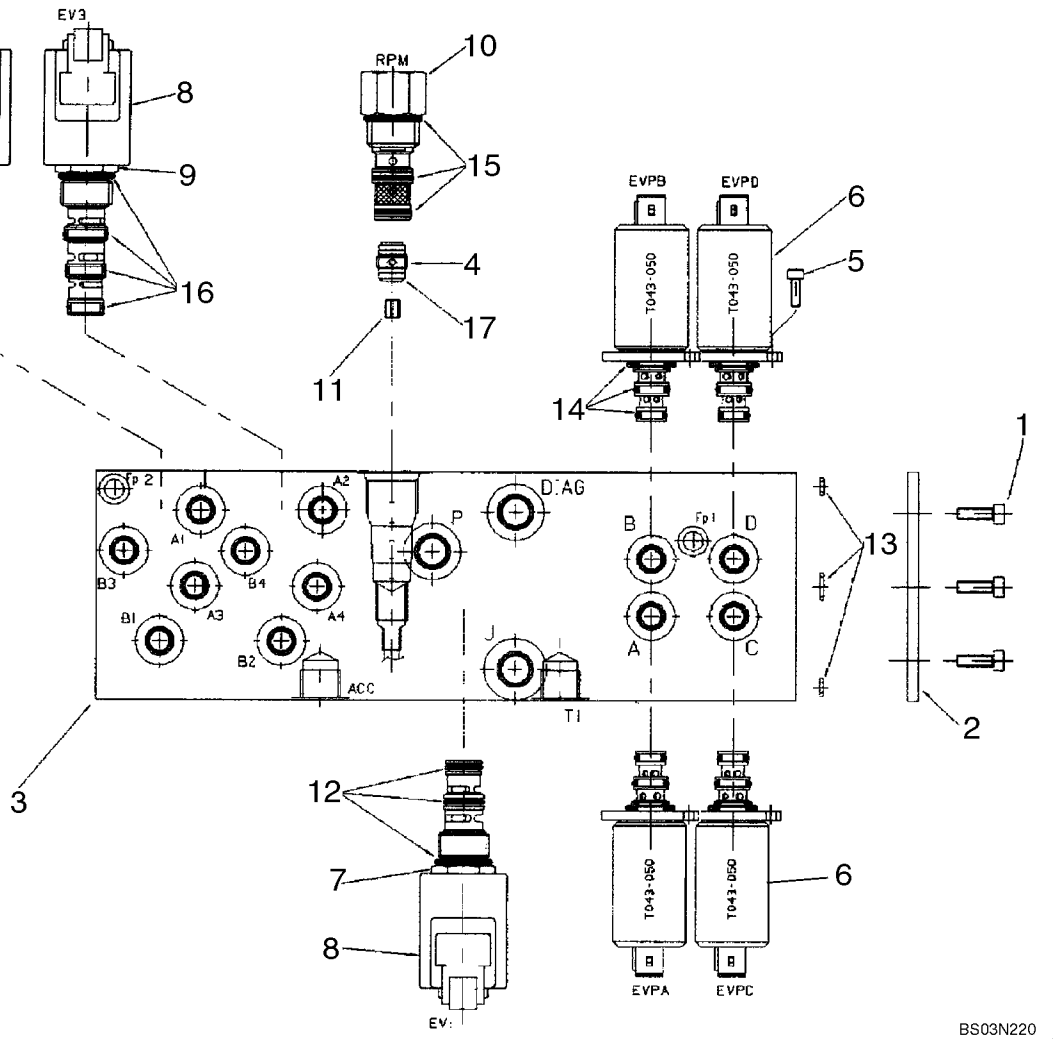

http://www.minnparbackhoeparts.com/

DISTRIBUTEUR, SOUPAPE DE REDUCTION PRESSION (2 SPOOL) (AVEC DE COMMANDE PILOTE)

REF	FN	PART NUMBER	YR/SN	QTY	DESCRIPTION
		85827472		1	SOUPAPE HYDRAULIQUE Pressure Reducing, Two Spool, Pilot Controls; Incl. Ref 1 - 17
1		14304021		3	VIS M5 x 10 Screw
2		85827991		1	PLAQUE Sealing Plate
3		85828013		1	CORPS Manifold Block
4		85827992		1	SOUPAPE HYDRAULIQUE Check Valve
5		14302921		8	BOULON M4 x 10 Screw
6		85827993		4	ELECTROVANNE Pressure Reducing Valve
7		85827994		1	SOLENOIDE Solenoid Valve Cartridge, 3 Way, 2 Position
8		85827995		3	BOBINE Coil With Diode
9		85827996		2	SOLENOIDE Solenoid Valve Cartridge, 4 Way, 2 Position
10		85827997		1	REDUCTEUR Mechanical Pressure Reducing Valve With Fixed Setting
11		85828005		1	ORIFICE 1.8 mm Orifice
12		85827998		1	KIT O-Ring Kit
13		85827999		1	KIT O-Ring Kit
14		85828000		4	KIT O-Ring Kit
15		85828001		1	KIT O-Ring Kit
16		85828002		2	KIT O-Ring Kit
17		85828003		1	JOINT THORIQUE O-Ring, D9x1

http://www.minnparbackhoeparts.com/

08-52		p1	07/04

DISTRIBUTEUR, SOUPAPE DE REDUCTION PRESSION (3 SPOOL) (AVEC DE COMMANDE PILOTE)

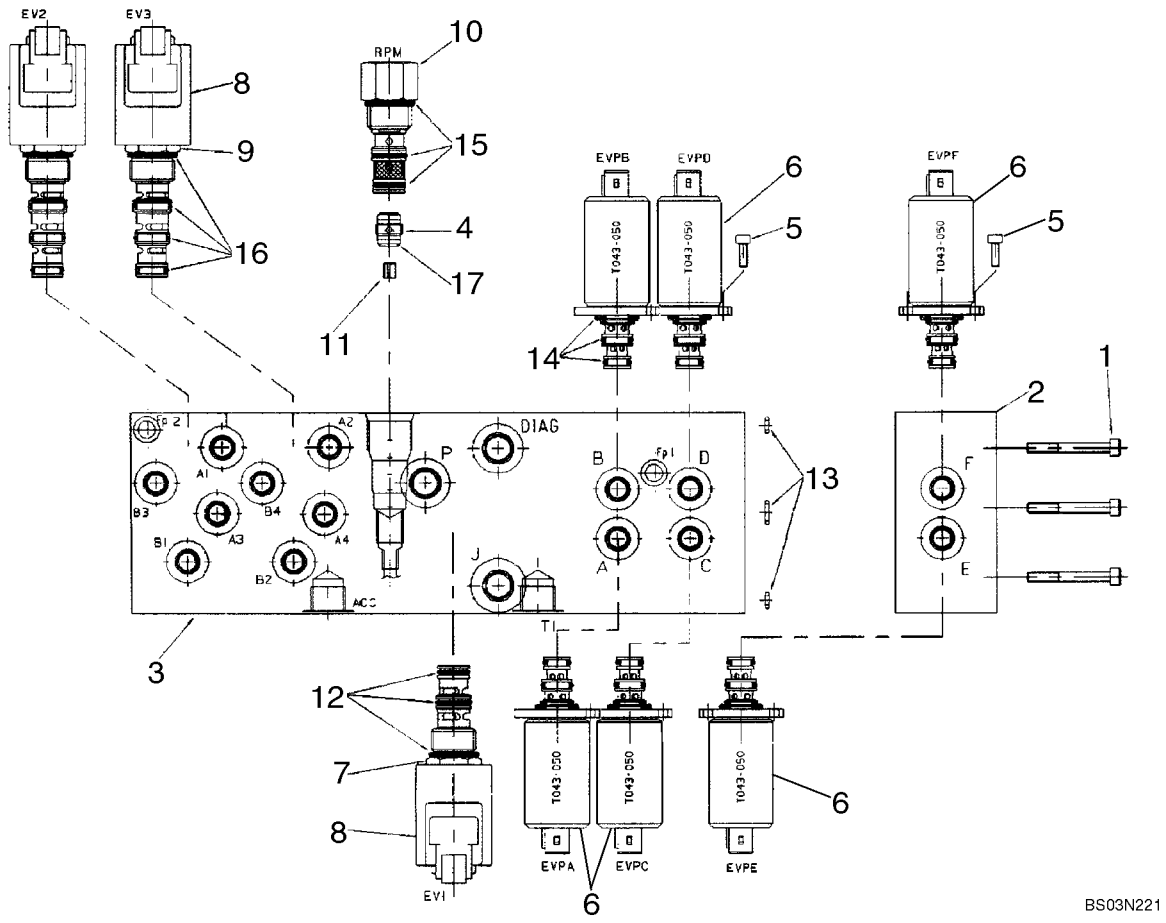

http://www.minnparbackhoeparts.com/

DISTRIBUTEUR, SOUPAPE DE REDUCTION PRESSION (3 SPOOL) (AVEC DE COMMANDE PILOTE)

REF	FN	PART NUMBER	YR/SN	QTY	DESCRIPTION
		85827471		1	SOUPAPE HYDRAULIQUE Pressure Reducing, Three Spool, Pilot Controls; Incl. Ref 1 - 17
1		14358921		3	VIS M5 x 45 Screw
2		85828004		1	CORPS One Function Add-On Manifold Block
3		85828015		1	CORPS Manifold Block
4		85827992		1	SOUPAPE HYDRAULIQUE Check Valve
5		14302921		12	BOULON M4 x 10 Screw
6		85827993		6	ELECTROVANNE Pressure Reducing Valve
7		85827994		1	SOLENOIDE Solenoid Valve Cartridge, 3 Way, 2 Position
8		85827995		3	BOBINE Coil With Diode
9		85827996		2	SOLENOIDE Solenoid Valve Cartridge, 4 Way, 2 Position
10		85827997		1	REDUCTEUR Mechanical Pressure Reducing Valve With Fixed Setting
11		85828005		1	ORIFICE 1.8 mm Orifice
12		85827998		1	KIT O-Ring Kit
13		85827999		1	KIT O-Ring Kit
14		85828000		6	KIT O-Ring Kit
15		85828001		1	KIT O-Ring Kit
16		85828002		2	KIT O-Ring Kit
17		85828003		1	JOINT THORIQUE O-Ring, D9x1

http://www.minnparbackhoeparts.com/

DISTRIBUTEUR, SOUPAPE DE REDUCTION PRESSION (4 SPOOL) (AVEC DE COMMANDE PILOTE)

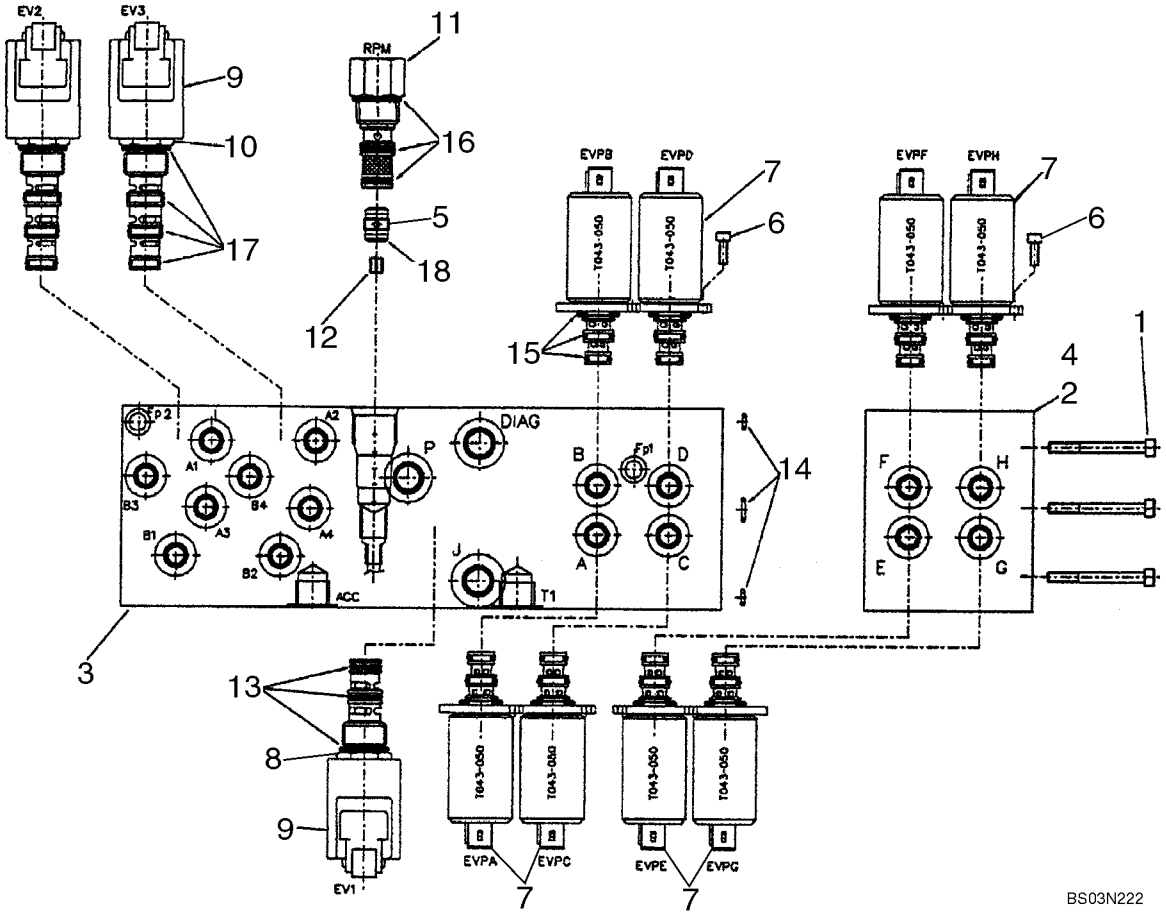

http://www.minnparbackhoeparts.com/

DISTRIBUTEUR, SOUPAPE DE REDUCTION PRESSION (4 SPOOL) (AVEC DE COMMANDE PILOTE)

REF	FN	PART NUMBER	YR/SN	QTY	DESCRIPTION
		87434621		1	DISTRIBUTEUR Pressure Reducing, Four Spool, Pilot Controls; Incl. Ref 1 - 18
1		85828061		3	VIS M5 x 80 Screw
2		85828048		1	BLOC COLLECTEUR Manifold Block
3		85828015		1	CORPS Manifold Block
4		85828054		1	BLOC COLLECTEUR Manifold Block
5		85827992		1	SOUPAPE HYDRAULIQUE Check Valve
6		14302921		16	BOULON M4 x 10 Screw
7		85827993		8	ELECTROVANNE Pressure Reducing Valve
8		85827994		1	SOLENOIDE Solenoid Valve Cartridge, 3 Way, 2 Position
9		85827995		3	BOBINE Coil With Diode
10		85827996		2	SOLENOIDE Solenoid Valve Cartridge, 4 Way, 2 Position
11		85827997		1	REDUCTEUR Mechanical Pressure Reducing Valve With Fixed Setting
12		85828005		1	ORIFICE 1.8 mm Orifice
13		85827998		1	KIT O-Ring Kit
14		85827999		1	KIT O-Ring Kit
15		85828000		8	KIT O-Ring Kit
16		85828001		1	KIT O-Ring Kit
17		85828002		2	KIT O-Ring Kit
18		85828003		1	JOINT THORIQUE O-Ring, D9x1

http://www.minnparbackhoeparts.com/

08-54		p1	04/05

DISTRIBUTEUR, LEVIER DE COMMANDE (COMMANDE PILOTE) (GAUCHE) AVERTISSEUR SONORE

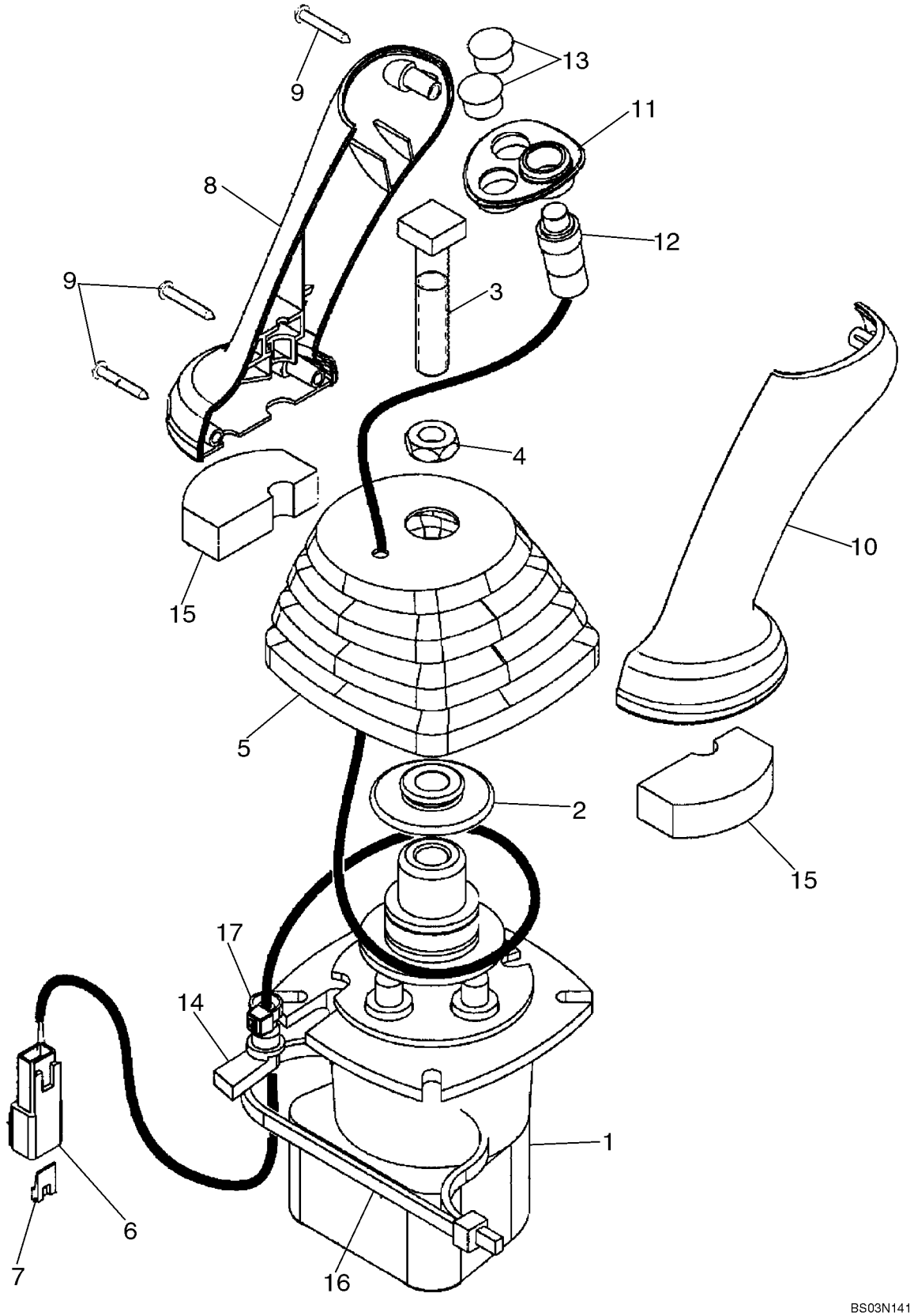

http://www.minnparbackhoeparts.com/

DISTRIBUTEUR, LEVIER DE COMMANDE (COMMANDE PILOTE) (GAUCHE) AVERTISSEUR SONORE

REF	FN	PART NUMBER	YR/SN	QTY	DESCRIPTION
		87308844		1	DISTRIBUTEUR JOYSTICK; Pilot Controls, Left-Hand, With Horn Button; Incl. Ref 1 - 17; Replaces 87443740
1		86983311		1	DISTRIBUTEUR Pilot Control Joystick Valve; Component Parts Not Serviced Separately
2		87436225		1	RETENEUR Control Boot Retainer
3		87428023		1	BOULON Square Head Bolt
4		87037944		1	ECROU Thin M12 Nut
5		87443721		1	MANCHETTE Control Handle Boot
6		225315C1		1	CONNECTEUR
7		225318C1		1	CALE DE BLOCAGE Connector
8		87308838		1	POMMEAU Joystick Control Handle; Replaces 87428164
9		15687475		3	VIS AUTO-TARAUDEUSE M3.5 x 25 Pan Head Cross Recess, Self Tapping, Stainless Steel With Nerinox Coating; Replaces 87032819 Black Zinc Plated Screw, Which Is Used In Other Applications
10		87308839		1	POMMEAU Joystick Control Handle; Replaces 87428165
11		87435243		1	ENCADREMENT Switch Mounting Bezel
12		87437372		1	CONTACTEUR Push Button Horn Switch
13		86625128		2	BOUCHON Dome Plug, .562 inch, Black Nylon
14		87424267		1	PASSE-FIL Wire Grommet
15		87435506		2	JOINT Pilot Control Handle Seal, Lower
16		87438046		1	SANGLE Tie Strap
17		87000312		1	RETENEUR Black Tie Strap

http://www.minnparbackhoeparts.com/

08-55		p1	04/05

DISTRIBUTEUR, LEVIER DE COMMANDE (COMMANDE PILOTE) (GAUCHE) AVERTISSEUR SONORE & UNI-DIR

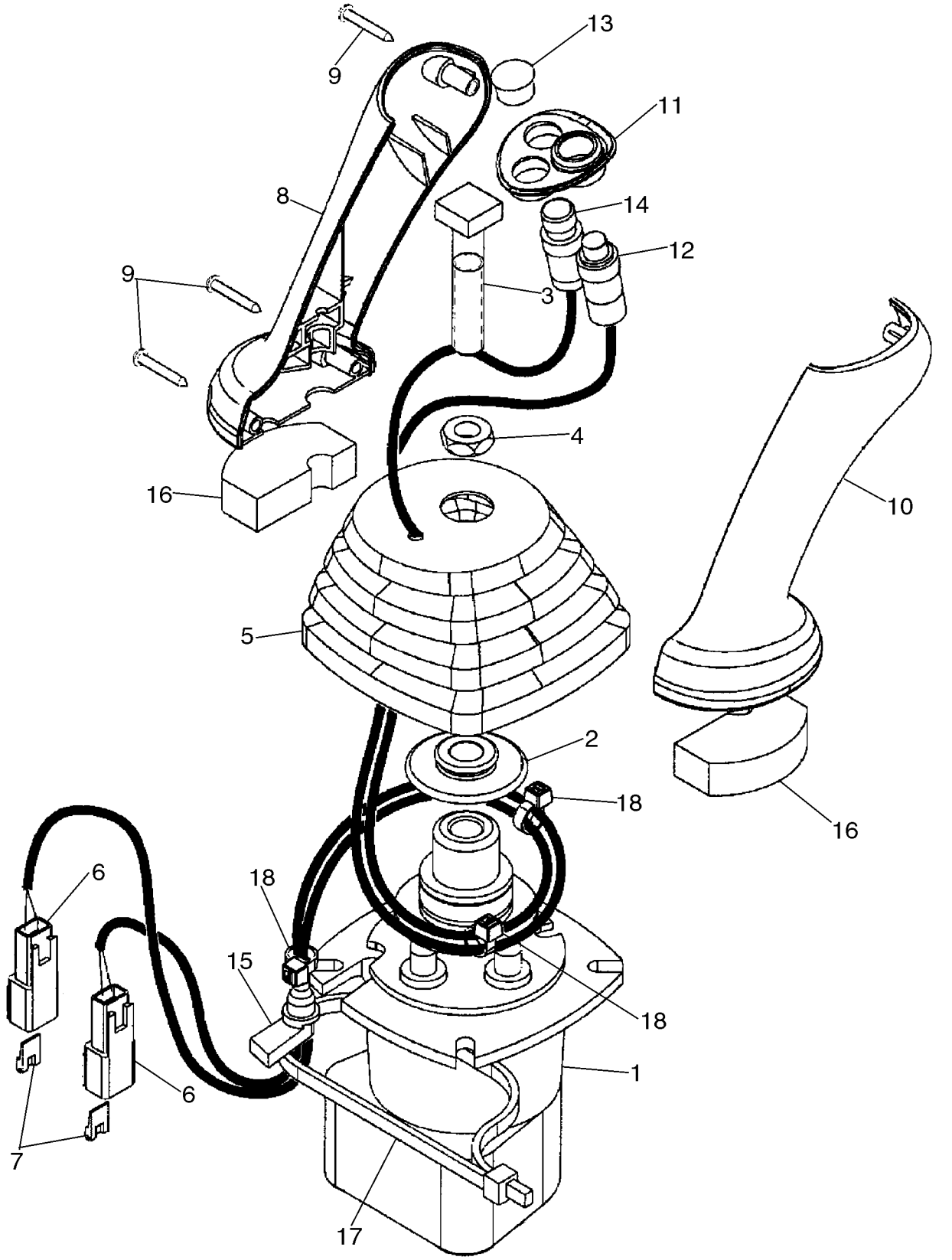

http://www.minnparbackhoeparts.com/

DISTRIBUTEUR, LEVIER DE COMMANDE (COMMANDE PILOTE) (GAUCHE) AVERTISSEUR SONORE & UNI-DIR

REF	FN	PART NUMBER	YR/SN	QTY	DESCRIPTION
		87308846		1	DISTRIBUTEUR JOYSTICK; Pilot Controls, Left-Hand, With Horn and Uni-Directional Buttons; Incl. Ref 1 - 18; Replaces 87443742
1		86983311		1	DISTRIBUTEUR Pilot Control Joystick Valve; Component Parts Not Serviced Separately
2		87436225		1	RETENEUR Control Boot Retainer
3		87428023		1	BOULON Square Head Bolt
4		87037944		1	ECROU Thin M12 Nut
5		87443721		1	MANCHETTE Control Handle Boot
6		225315C1		2	CONNECTEUR
7		225318C1		2	CALE DE BLOCAGE Connector
8		87308838		1	POMMEAU Joystick Control Handle; Replaces 87428164
9		15687475		3	VIS AUTO-TARAUDEUSE M3.5 x 25 Pan Head Cross Recess, Self Tapping, Stainless Steel With Nerinox Coating; Replaces 87032819 Black Zinc Plated Screw, Which Is Used In Other Applications
10		87308839		1	POMMEAU Joystick Control Handle; Replaces 87428165
11		87435243		1	ENCADREMENT Switch Mounting Bezel
12		87437372		1	CONTACTEUR Push Button Horn Switch
13		86625128		1	BOUCHON Dome Plug, .562 inch, Black Nylon
14		87437373		1	INTERRUPTEUR COMPLET Push Button Uni-Directional Auxiliary Hydraulic Switch
15		87424267		1	PASSE-FIL Wire Grommet
16		87435506		2	JOINT Pilot Control Handle Seal, Lower
17		87438046		1	SANGLE Tie Strap
18		87000312		3	RETENEUR Black Tie Strap

http://www.minnparbackhoeparts.com/

08-56		p1	04/05

DISTRIBUTEUR, LEVIER DE COMMANDE (COMMANDE PILOTE) (GAUCHE) AVERTISSEUR SONORE & BI-DIR

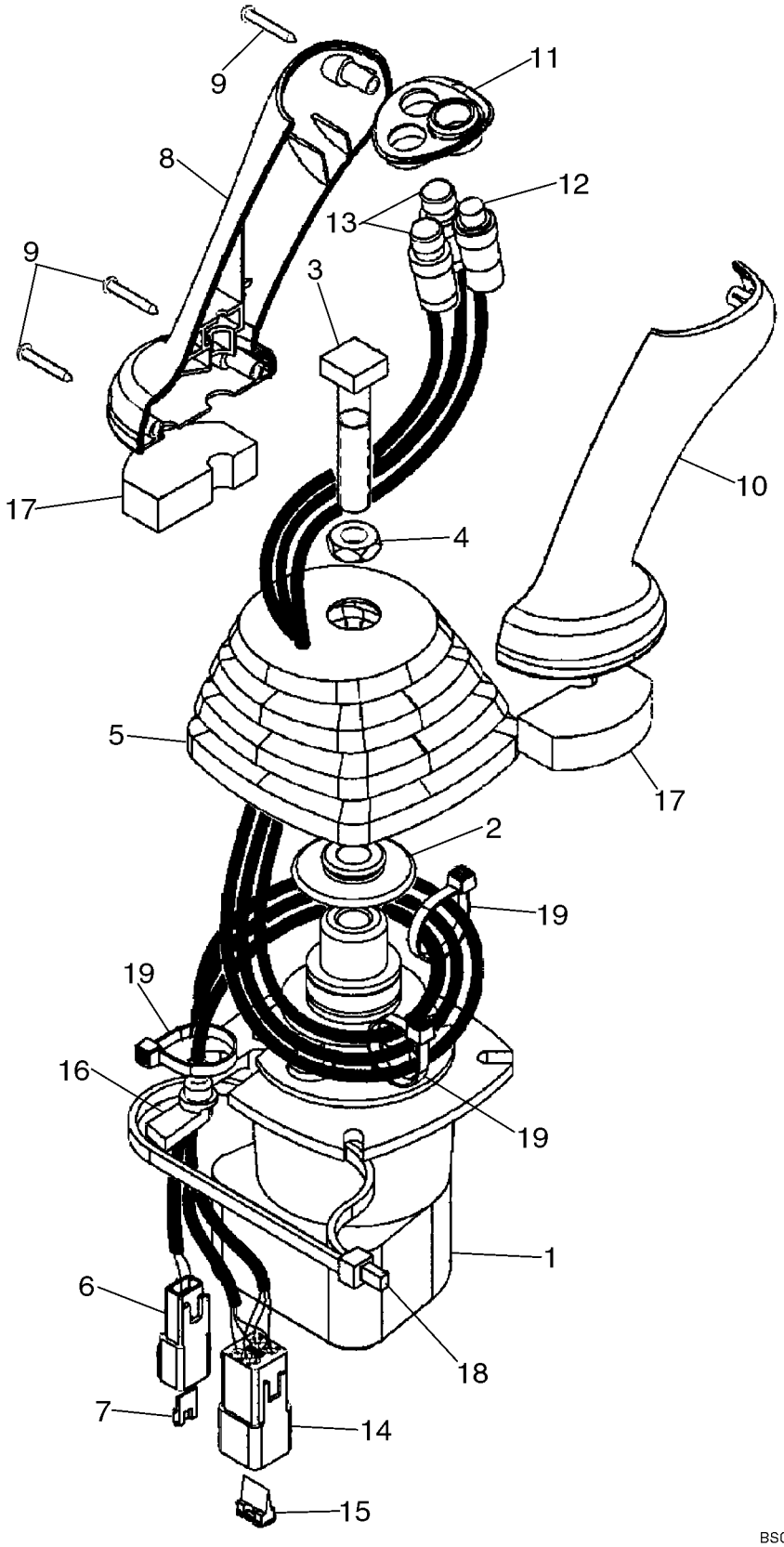

http://www.minnparbackhoeparts.com/

DISTRIBUTEUR, LEVIER DE COMMANDE (COMMANDE PILOTE) (GAUCHE) AVERTISSEUR SONORE & BI-DIR

REF	FN	PART NUMBER	YR/SN	QTY	DESCRIPTION
		87308845		1	DISTRIBUTEUR JOYSTICK; Pilot Controls, Left-Hand, With Horn and Bi-Directional Buttons; Incl. Ref 1 - 19; Replaces 87443741
1		86983311		1	DISTRIBUTEUR Pilot Control Joystick Valve; Component Parts Not Serviced Separately
2		87436225		1	RETENEUR Control Boot Retainer
3		87428023		1	BOULON Square Head Bolt
4		87037944		1	ECROU Thin M12 Nut
5		87443721		1	MANCHETTE Control Handle Boot
6		225315C1		1	CONNECTEUR
7		225318C1		1	CALE DE BLOCAGE Connector
8		87308838		1	POMMEAU Joystick Control Handle; Replaces 87428164
9		15687475		3	VIS AUTO-TARAUDEUSE M3.5 x 25 Pan Head Cross Recess, Self Tapping, Stainless Steel With Nerinox Coating; Replaces 87032819 Black Zinc Plated Screw, Which Is Used In Other Applications
10		87308839		1	POMMEAU Joystick Control Handle; Replaces 87428165
11		87435243		1	ENCADREMENT Switch Mounting Bezel
12		87437372		1	CONTACTEUR Push Button Horn Switch
13		87437371		2	INTERRUPTEUR COMPLET Push Button Bi-Directional Auxiliary Hydraulic Switch
14		225350C1		1	CONNECTEUR
15		225353C1		1	CALE DE BLOCAGE Connector
16		87424267		1	PASSE-FIL Wire Grommet
17		87435506		2	JOINT Pilot Control Handle Seal, Lower
18		87438046		1	SANGLE Tie Strap
19		87000312		3	RETENEUR Black Tie Strap

http://www.minnparbackhoeparts.com/

DISTRIBUTEUR, LEVIER DE COMMANDE (COMMANDE PILOTE) (DROIT) SANS BALANCIER EXTENSIBLE

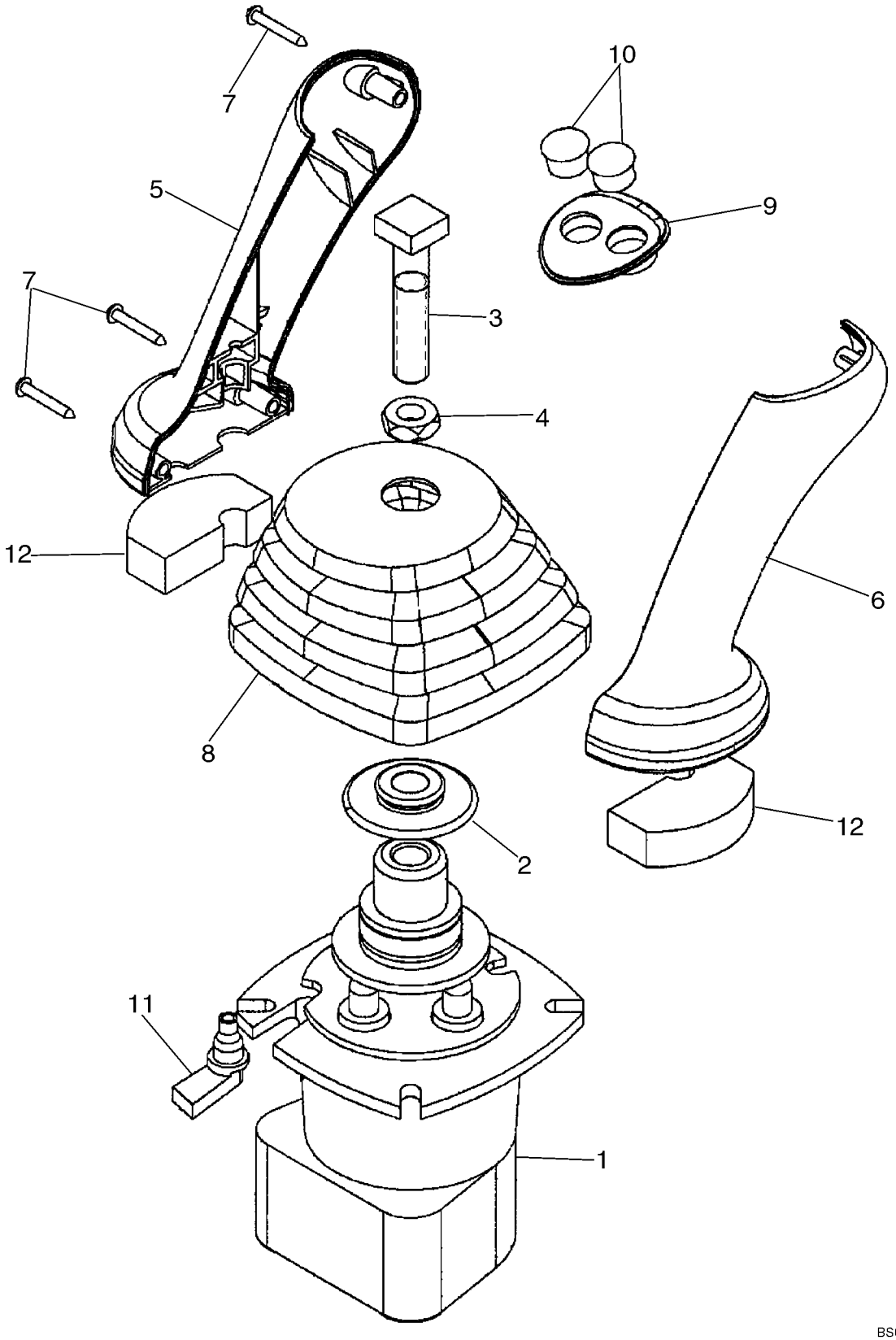

http://www.minnparbackhoeparts.com/

DISTRIBUTEUR, LEVIER DE COMMANDE (COMMANDE PILOTE) (DROIT) SANS BALANCIER EXTENSIBLE

REF	FN	PART NUMBER	YR/SN	QTY	DESCRIPTION
		87308840		1	DISTRIBUTEUR JOYSTICK; Pilot Controls, Right-Hand; Without Extendable Dipper; Incl. Ref 1 - 12; Replaces 87443739
1		86983311		1	DISTRIBUTEUR Pilot Control Joystick Valve; Component Parts Not Serviced Separately
2		87436225		1	RETENEUR Control Boot Retainer
3		87428023		1	BOULON Square Head Bolt
4		87037944		1	ECROU Thin M12 Nut
5		87308838		1	POMMEAU Joystick Control Handle; Replaces 87428164
6		87308839		1	POMMEAU Joystick Control Handle; Replaces 87428165
7		15687475		3	VIS AUTO-TARAUDEUSE M3.5 x 25 Pan Head Cross Recess, Self Tapping, Stainless Steel With Nerinox Coating; Replaces 87032819 Black Zinc Plated Screw, Which Is Used In Other Applications
8		87443722		1	MANCHETTE Joystick Control Boot
9		87435242		1	ENCADREMENT Switch Mounting Bezel
10		86625128		2	BOUCHON Dome Plug, .562 inch, Black Nylon; Replaces 353-405 Plug Which Is Used In Other Applications
11		87451448		1	PASSE-FIL Wire Grommet; Replaces 87424267 Grommet, Which Is Used In Other Applications
12		87435506		2	JOINT Pilot Control Handle Seal, Lower

http://www.minnparbackhoeparts.com/

DISTRIBUTEUR, LEVIER DE COMMANDE (COMMANDE PILOTE) (DROIT) AVEC BALANCIER EXTENSIBLE

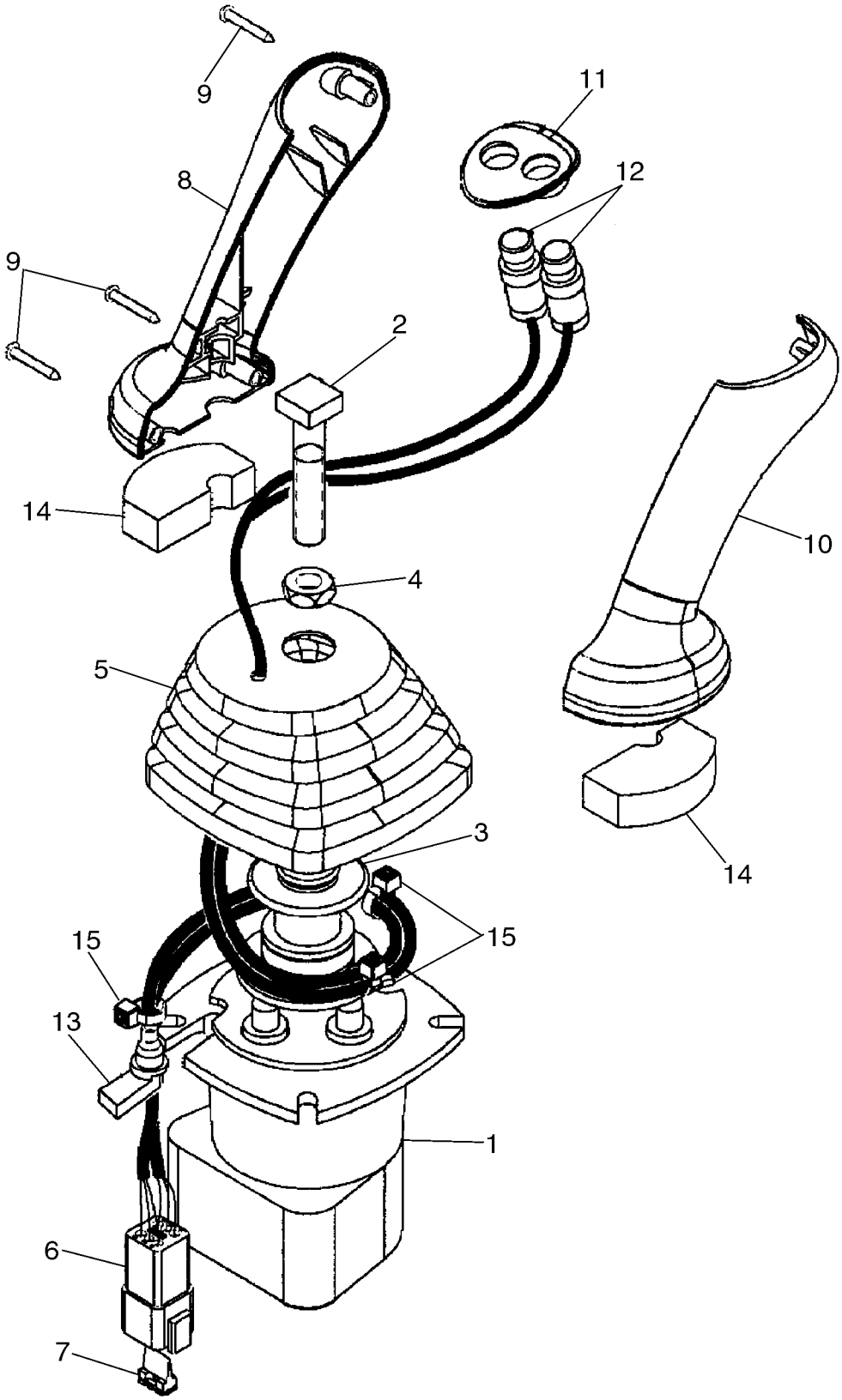

http://www.minnparbackhoeparts.com/

DISTRIBUTEUR, LEVIER DE COMMANDE (COMMANDE PILOTE) (DROIT) AVEC BALANCIER EXTENSIBLE

REF	FN	PART NUMBER	YR/SN	QTY	DESCRIPTION
		87308847		1	DISTRIBUTEUR JOYSTICK; Pilot Controls, Right-Hand; With Extendable Dipper; Incl. Ref 1 - 15; Replaces 87443743
1		86983311		1	DISTRIBUTEUR Pilot Control Joystick Valve; Component Parts Not Serviced Separately
2		87428023		1	BOULON Square Head Bolt
3		87436225		1	RETENEUR Control Boot Retainer
4		87037944		1	ECROU Thin M12 Nut
5		87443721		1	MANCHETTE Joystick Control Boot
6		225350C1		1	CONNECTEUR
7		225353C1		1	CALE DE BLOCAGE Connector
8		87308838		1	POMMEAU Joystick Control Handle; Replaces 87428164
9		15687475		3	VIS AUTO-TARAUDEUSE M3.5 x 25 Pan Head Cross Recess, Self Tapping, Stainless Steel With Nerinox Coating; Replaces 87032819 Black Zinc Plated Screw, Which Is Used In Other Applications
10		87308839		1	POMMEAU Joystick Control Handle; Replaces 87428165
11		87435242		1	ENCADREMENT Switch Mounting Bezel
12		87437371		2	INTERRUPTEUR COMPLET Push Button Retract and Extendahoe Switches
13		87424267		1	PASSE-FIL Wire Grommet
14		87435506		2	JOINT Pilot Control Handle Seal, Lower
15		87000312		3	RETENEUR Black Nylon
		87438046		1	SANGLE Tie

http://www.minnparbackhoeparts.com/

DISTRIBUTEUR - AMORTISSEUR DE DEBATTEMENT

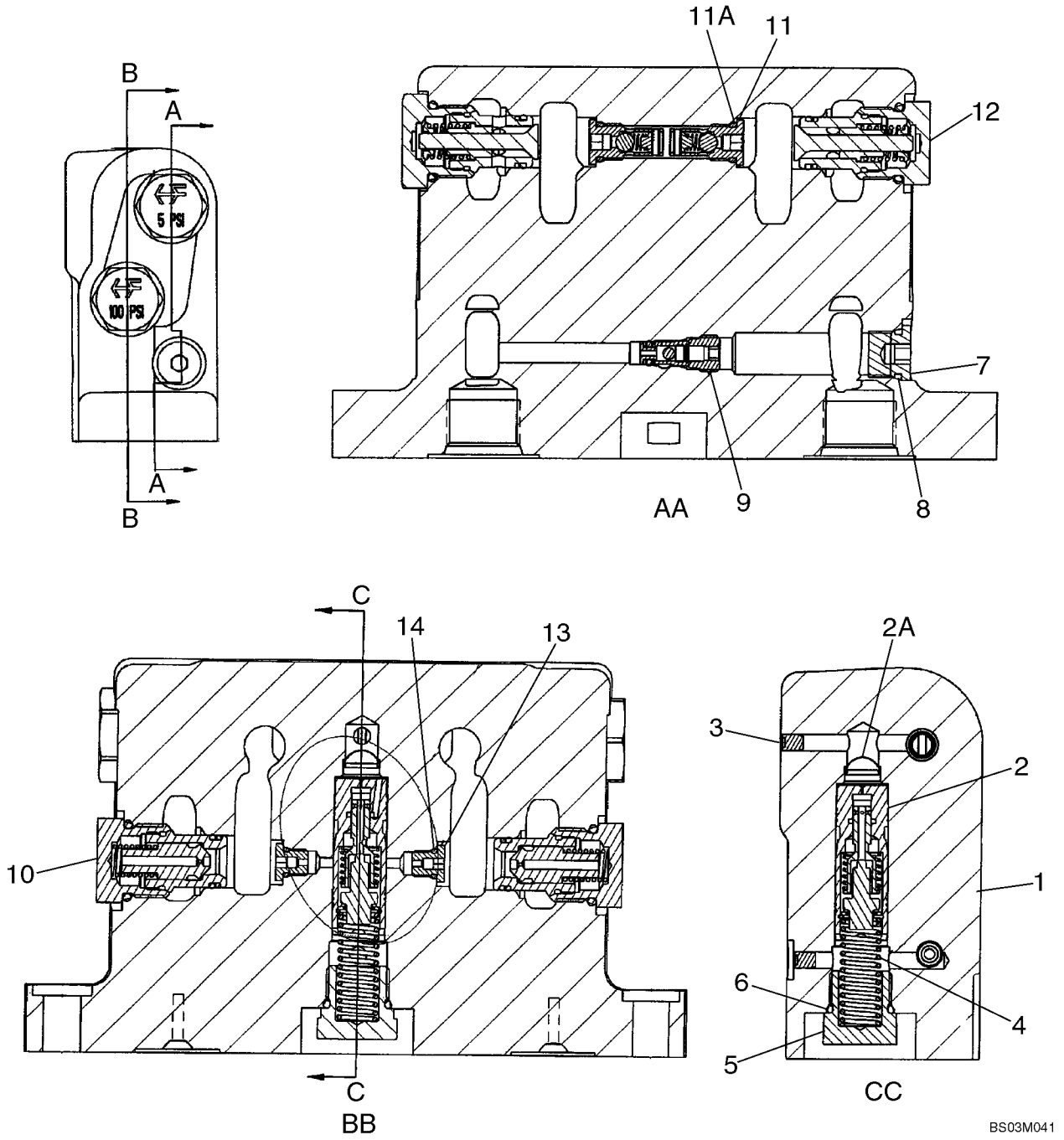

http://www.minnparbackhoeparts.com/

DISTRIBUTEUR - AMORTISSEUR DE DEBATTEMENT

REF	FN	PART NUMBER	YR/SN	QTY	DESCRIPTION
		87449373		1	SOUPAPE, AMORTISSEMENT Swing Cushion; Incl. Ref 1 - 14; Replaces 87416975 Valve
1		NSS		1	NON FOURNI SEPAREMENT Housing
2		87449374		1	TIROIR Thermal Compensating; Component Parts Not Serviced Separately; Replaces 388876A6 Spool
2A		1976955C1		1	CARTOUCHE-FILTRE Screen, Filter
3		369372A1		2	BOUCHON M5; Plug, Expansion
4		388881A1		1	RESSORT HÉLICOÏDAL
5		409025A1		1	BOUCHON Relief Check; Incl. Ref 6
6		237-6008		1	JOINT THORIQUE 41/64 ID x 3/32, Boss Seal
7		218-5209		1	BOUCHON 9/16 Or; Incl. Ref 8
8		237-6006		1	JOINT THORIQUE 15/32 ID x 5/64, Boss Seal
9		388712A2		1	VALVE Bi-Directional Check Valve; Includes 388713A1 Seal Kit
		388713A1		1	POCHETTE Seal; Includes An O-Ring and Backup Ring; Component Parts Not Serviced Separately
10		396422A2		2	SOUPAPE ANTI RETOUR 100 psi, Orifice Check Valve; Component Parts Not Serviced Separately; Order 1542830C2 Seal Kit To Service External Seals
		443432A1		1	POCHETTE DE JOINTS For Servicing External Seals on Ref 9, 10, 11 or 12 Valve; If Used
11		400296A2		2	SOUPAPE ANTI RETOUR In-Line Check Valve; Component Parts Not Serviced Separately; Incl. Ref 11A
11A		237-6004		1	JOINT TORIQUE 23/64 ID x 5/64, Boss Seal
12		389541A1		2	SOUPAPE ANTI RETOUR 5 psi; Component Parts Not Serviced Separately; Order 1542830C2 Seal Kit To Service External Seals
13		400657A1		2	BOUCHON Orifice 1.85 mm; Incl. Ref 14
14		237-6002		1	JOINT TORIQUE 1/4 ID x 1/16
		1542830C2		1	JEU JOINTS ETANCHEITE For Servicing External Seals on Ref 10 or 12 Valve

http://www.minnparbackhoeparts.com/

08-59A		p1	03/04

ELECTROVANNE - VERROUILLAGE DE LA FLECHE

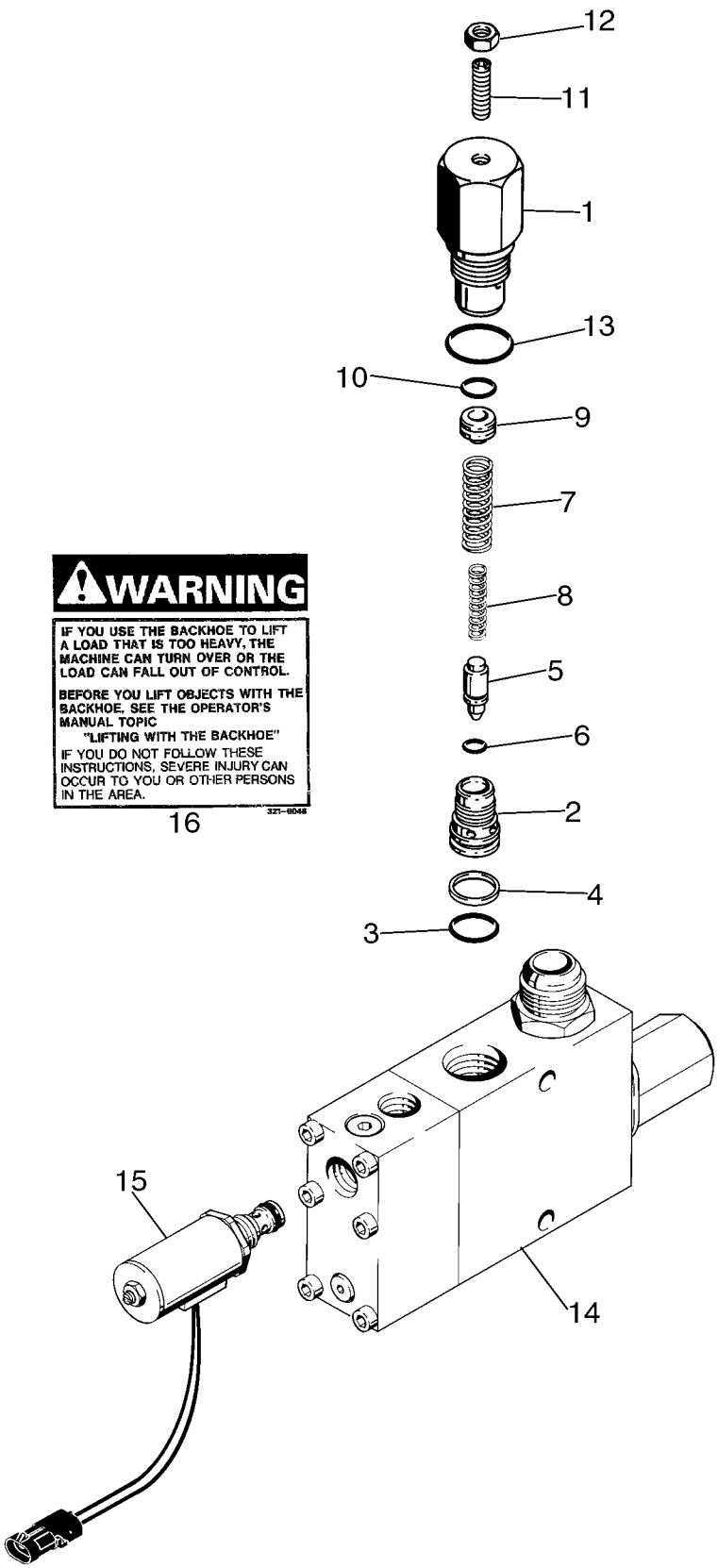

BS03B174

http://www.minnparbackhoeparts.com/

ELECTROVANNE - VERROUILLAGE DE LA FLECHE

REF	FN	PART NUMBER	YR/SN	QTY	DESCRIPTION
		189957A1		1	VALVE Solenoid, Backhoe Boom Lock; Incl. Ref 1 - 16; Included In 399221A1 Backhoe Boom Lock Kit
		G110467		1	SOUPAPE, DÉCHARGE Circuit, Solenoid; Used In Production; Order G110077, Kit For Service
1		NSS		1	NON FOURNI SEPAREMENT Body, Relief Valve
2		NSS		1	NON FOURNI SEPAREMENT Seat, Relief Valve
3		238-6018		1	JOINT TORIQUE 3/4 ID x 1/16 in, Face Seal
4		G35540		1	ANNEAU Backup, Seat
5		NSS		1	NON FOURNI SEPAREMENT Poppet
6		NSS		1	NON FOURNI SEPAREMENT O-Ring
7		NSS		1	NON FOURNI SEPAREMENT Spring, Relief, Outer
8		NSS		1	NON FOURNI SEPAREMENT Spring, Relief, Inner
9		NSS		1	NON FOURNI SEPAREMENT Piston
10		NSS		1	NON FOURNI SEPAREMENT O-Ring
11		484-43120		1	VIS 5/16 NF x 1-1/4 in, Hex Socket, Headless
12		425-155		1	ECROU 5/16 in NF
13		237-6012		1	JOINT TORIQUE 59/64 ID x 7/64, Boss Seal
14		NSS		1	NON FOURNI SEPAREMENT Body, Solenoid
15		221168A1		1	SOLENOIDE 12 Volt; Relief, With Connector
		D150781		1	POCHETTE Repair; Includes (3) Springs, (1) Ball, (1) Poppet, (1) Plug; Not Serviced Separately; and D150810 Seal Kit, Not Shown
		D150810		1	JOINT Kit, Includes (8) O-Rings and (2) Backup Rings; Which Are Not Serviced Separately, Not Shown
		G110077		1	POCHETTE Service For G110467, Circuit Relief Valve; Includes G110078, Circuit Relief Valve Assembly (Ref. 1 - 13) and an Instruction Sheet
16		321-6046		2	DECALCOMANIE Warning, If You Use The Backhoe To Lift A Load That Is Too Heavy

http://www.minnparbackhoeparts.com/

ACCUMULATEUR ASS. - SYSTEME ANTI-TANGAGE

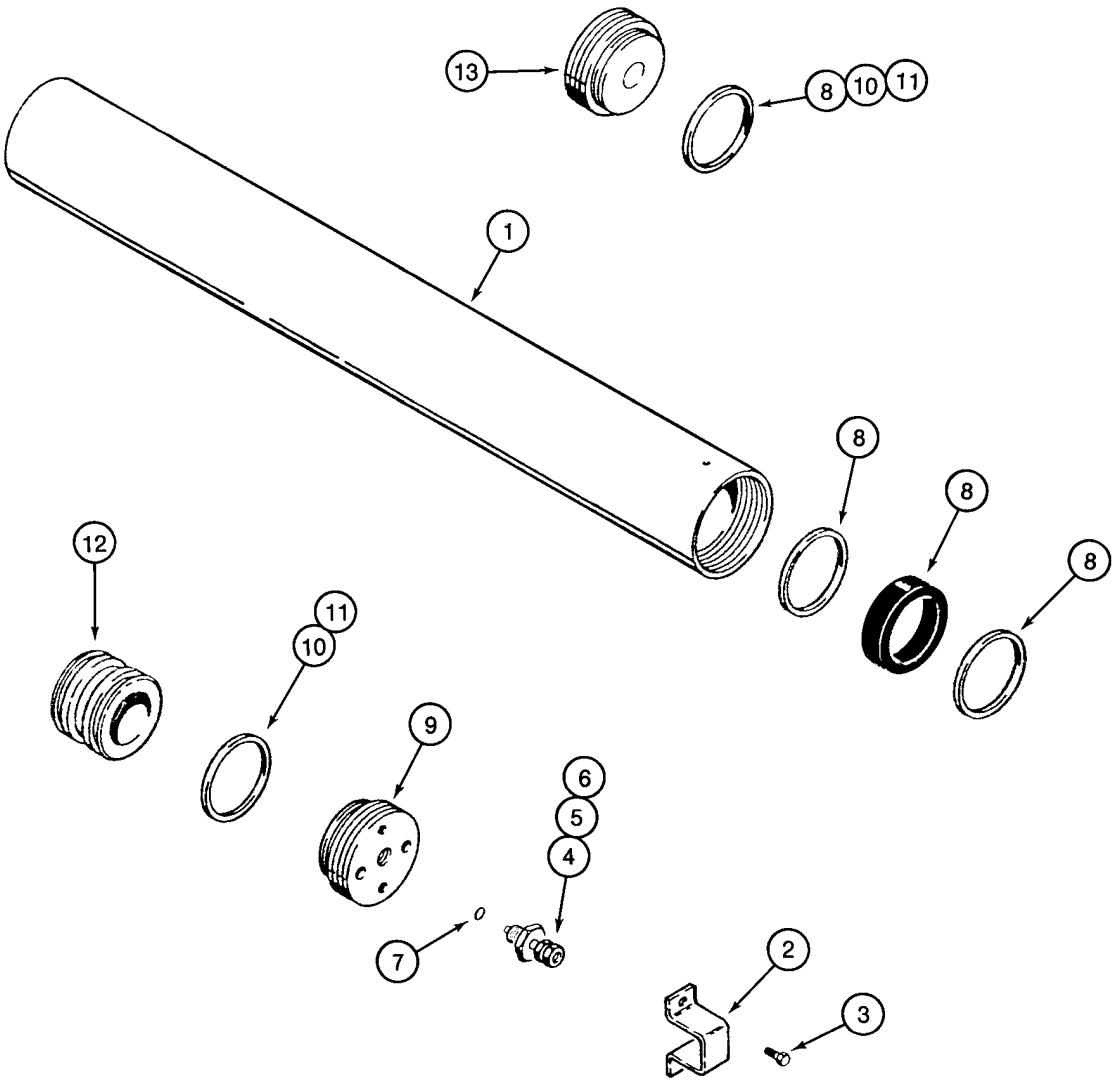

BS97C154

http://www.minnparbackhoeparts.com/

ACCUMULATEUR ASS. - SYSTEME ANTI-TANGAGE

REF	FN	PART NUMBER	YR/SN	QTY	DESCRIPTION
		234412A1		1	ACCUMULATEUR Incl. Ref 1 - 13
1		NSS		1	NON FOURNI SEPAREMENT Body
2		192895A1		1	PROTECTEUR
3		276-2456		2	VIS No. 10 x 3/8
		1978142C1		1	VALVE Incl. Ref 4 - 6
4		NSS		1	NON FOURNI SEPAREMENT Valve, Pressure
5		1978143C1		1	PISTON
6		1978144C1		1	CHAPEAU
7		1978158C1		1	JOINT
8		1978141C1		1	POCHETTE-JOINTS Includes (1) V-Type O-Ring, (2) Teflon Bearing Rings and (1) Body End Seal Ring; Component Parts Not Serviced Separately
9		NSS		1	NON FOURNI SEPAREMENT Gland, Cylinder
10		NSS		2	NON FOURNI SEPAREMENT O-Ring
11		NSS		2	NON FOURNI SEPAREMENT Ring, Backup, If Used
12		NSS		1	NON FOURNI SEPAREMENT Piston
13		NSS		1	NON FOURNI SEPAREMENT Cap

http://www.minnparbackhoeparts.com/

FILTRE A HUILE

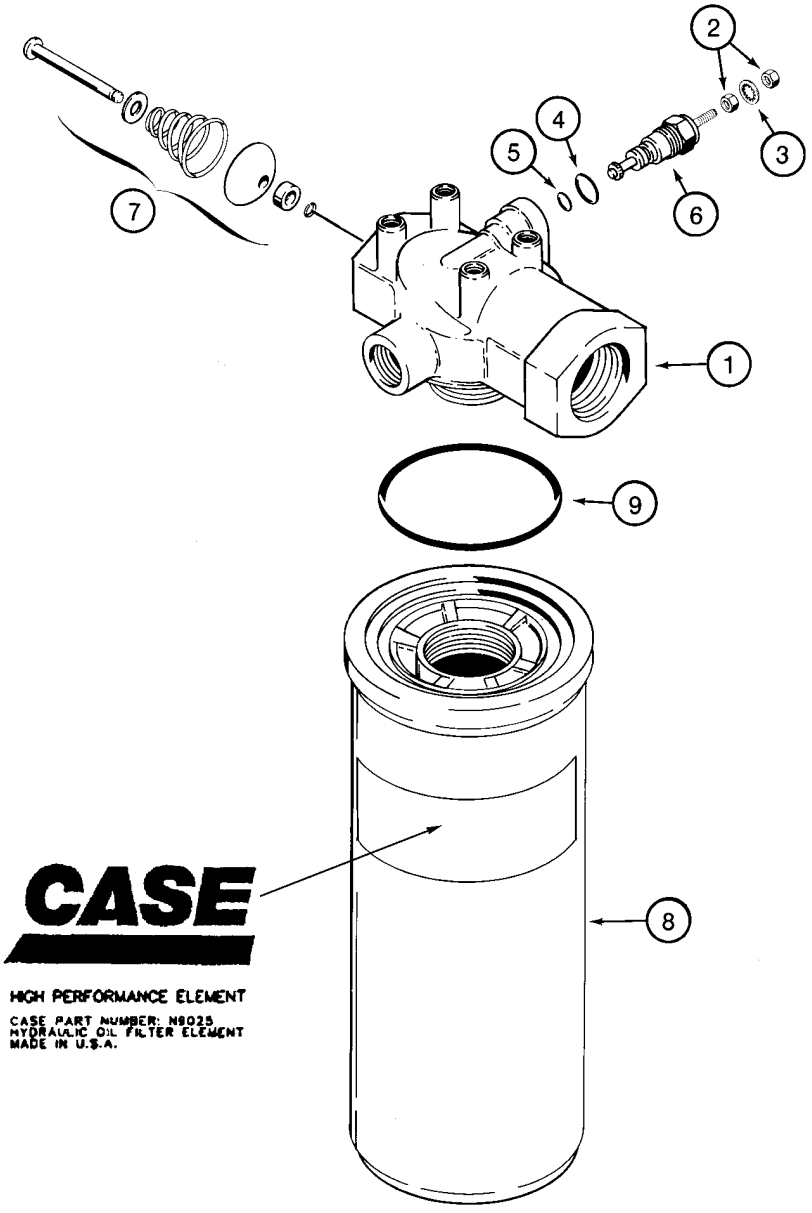

BS00D009

http://www.minnparbackhoeparts.com/

FILTRE A HUILE

REF	FN	PART NUMBER	YR/SN	QTY	DESCRIPTION
		87440045		1	FILTRE ASSY Hydraulic Oil Filter; Incl. Ref 1 - 9
1		NSS		1	NON FOURNI SEPAREMENT Head, Filter
		N6755		1	INDICATEUR Restriction; Includes N6941, Ref 6
		N6941		1	POCHETTE Restriction Indicator Repair; Incl. Ref 2 - 5; Order Ref 2 - 5
2		129-667		2	ECROU No. 10 NF
3		493-21020		1	RONDELLE FREIN 3/16
4		237-6006		1	JOINT THORIQUE 15/32 ID x 5/64, Boss Seal
5		238-5011		1	JOINT THORIQUE -011, 70 Duro, .301" ID x .070" Thk
6		NSS		1	NON FOURNI SEPAREMENT Indicator
7		NSS		1	NON FOURNI SEPAREMENT Valve, By-Pass
		N9025		1	ELÉMENT FILTRANT Incl. Ref 8, 9
8		NSS		1	NON FOURNI SEPAREMENT Element
9		238-5230		1	JOINT TORIQUE 2-1/2 ID x 1/8

http://www.minnparbackhoeparts.com/

08-62		p1	01/04

VERIN - RELEVAGE DE LA CHARGEUSE

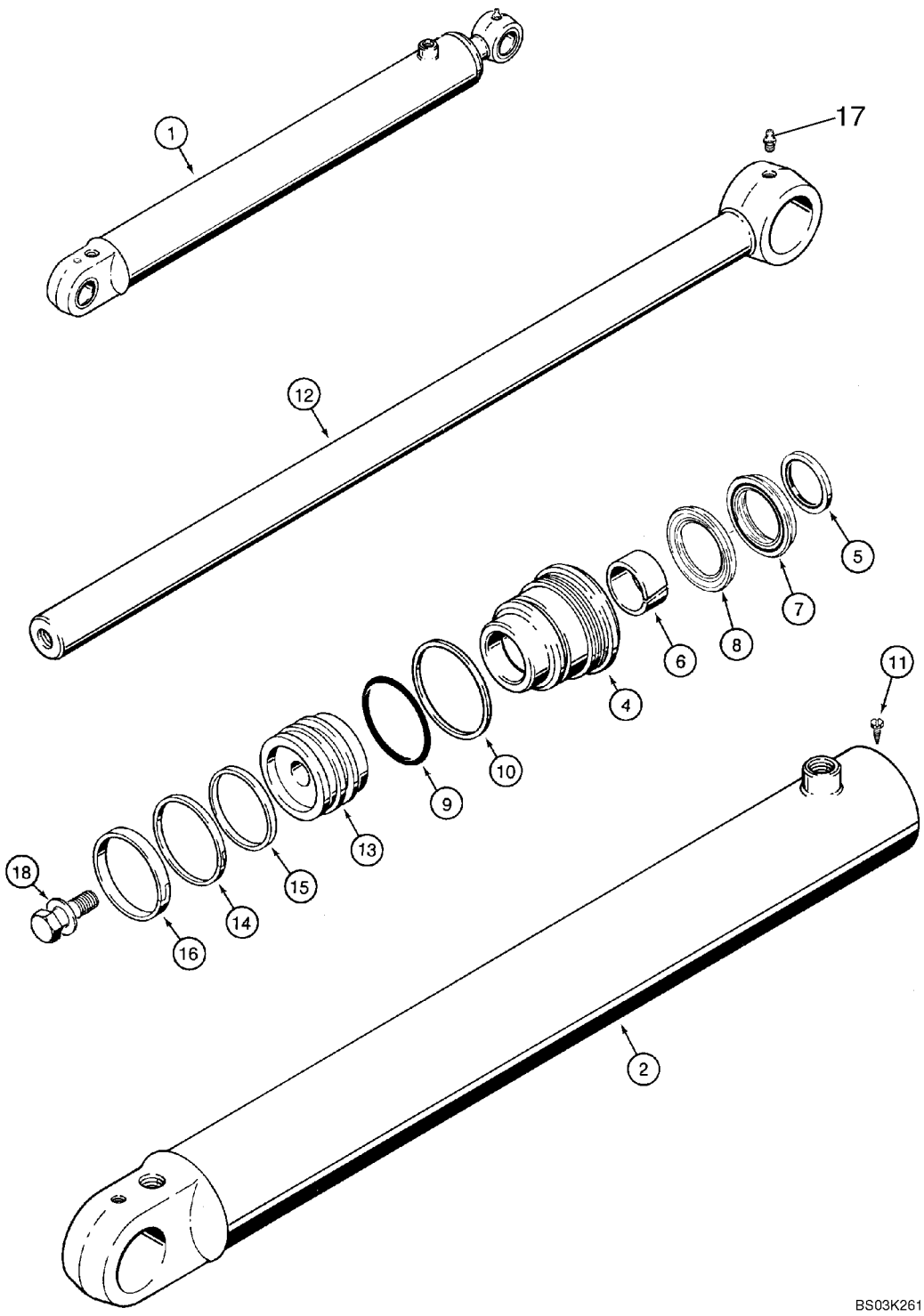

http://www.minnparbackhoeparts.com/

VERIN - RELEVAGE DE LA CHARGEUSE

REF	FN	PART NUMBER	YR/SN	QTY	DESCRIPTION
1		384240A1		2	VERIN 82.6 ID x 766 mm strk; Loader Lift; Incl. Ref 2 - 18
2		384241A1		1	TUBE DE VERIN TUBE, Without Bushings
4		1980321C3		1	PRESSE-ETOUPE
		1543260C1		1	JEU JOINTS ETANCHEITE Seal Repair, Incl. Ref 5 - 10, 14 - 16
5		D95143		1	JOINT Wiper
6		G102425		1	BAGUE
		1542875C1		1	LOT DE PIECES Rod and Buffer Seal Kit; Incl. Ref 7, 8; Not Serviced Separately; Order 1543260C1 Seal Kit
7		NSS		1	NON FOURNI SEPAREMENT Rod Seal; Order 1543260C1 Seal Kit
8		NSS		1	NON FOURNI SEPAREMENT Buffer Seal; Order 1543260C1 Seal Kit
9		238-5233		1	JOINT TORIQUE 2-7/8 ID x 1/8 in
10		G32122		1	ANNEAU
11		276-2446		1	VIS No. 8 x 3/8, self-tapping
12		133083A1		1	TIGE DE VERIN 44 mm (1-3/4 in) dia
13		135161A1		1	PISTON
14		G102287		1	JOINT
15		S109444		1	ANNEAU
16		S109445		1	ANNEAU
17		219-1		1	GRAISSEUR 1/8 PT x 21/32
18		86982437		1	BOULON SPECIAL 1 x 2,5 in; Includes Washer

http://www.minnparbackhoeparts.com/

08-63		p1	01/04

VERIN - GODET DE LA CHARGEUSE

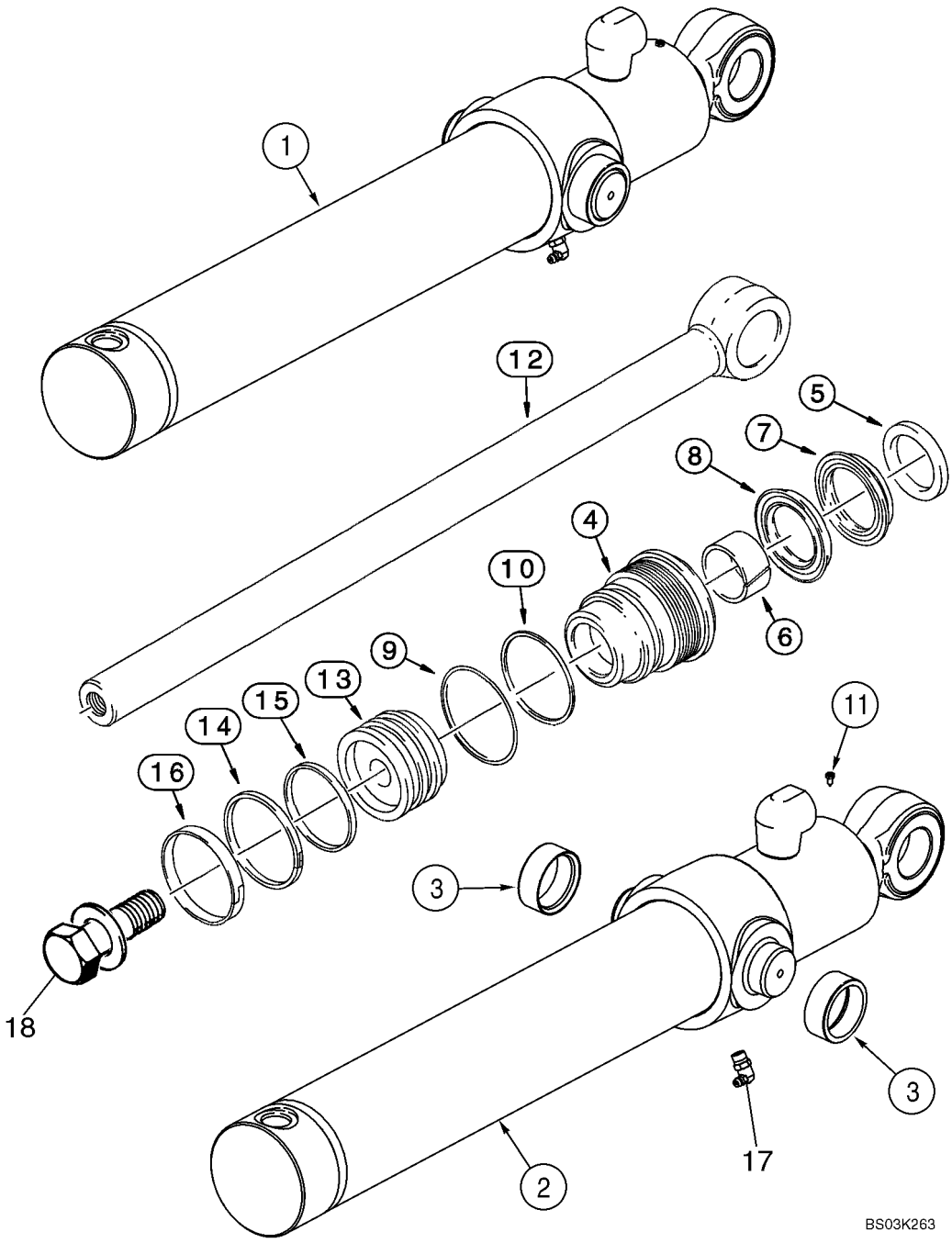

http://www.minnparbackhoeparts.com/

VERIN - GODET DE LA CHARGEUSE

REF	FN	PART NUMBER	YR/SN	QTY	DESCRIPTION
1		113133A2		2	VERIN 76 ID x 522 mm strk; Loader Bucket; Incl. Ref 2- 18
2		113135A2		1	TUBE DE VERIN TUBE, Incl. Ref 3
3		G108512		2	BAGUE
4		297280A1		1	PRESSE-ETOUPE
		1543256C1		1	JEU JOINTS ETANCHEITE Seal Repair; Incl. Ref 5 - 10, 14 - 16
5		D95142		1	JOINT Wiper
6		G102424		1	BAGUE
		1542874C1		1	COLIS Rod and Buffer Seal Kit; Incl. Ref 7, 8; Not Serviced Separately; Order 1543256C1 Seal Kit
7		NSS		1	NON FOURNI SEPAREMENT Rod Seal; Order 1543256C1 Seal Kit
8		NSS		1	NON FOURNI SEPAREMENT Buffer Seal; Order 1543256C1 Seal Kit
9		238-5231		1	JOINT THORIQUE 2-5/8 ID x 1/8
10		G109298		1	ANNEAU
11		276-2446		1	VIS No. 8 x 3/8, self-tapping
12		110307A1		1	TIGE DE VERIN 38 mm (1-1/2 in) dia
13		G108518		1	PISTON
14		G102288		1	JOINT-D'ETANCH. ASS.
15		G100444		1	JOINT
16		G100449		1	BAGUE D"USURE
17		219-55		1	GRAISSEUR 90 deg, 1/8 PT x 27/32
18		86982435		1	BOULON SPECIAL 3/4 x 2,5 in, Includes Washer

http://www.minnparbackhoeparts.com/

08-64		p1	05/05

VERIN - BENNE DE CHARGEUSE

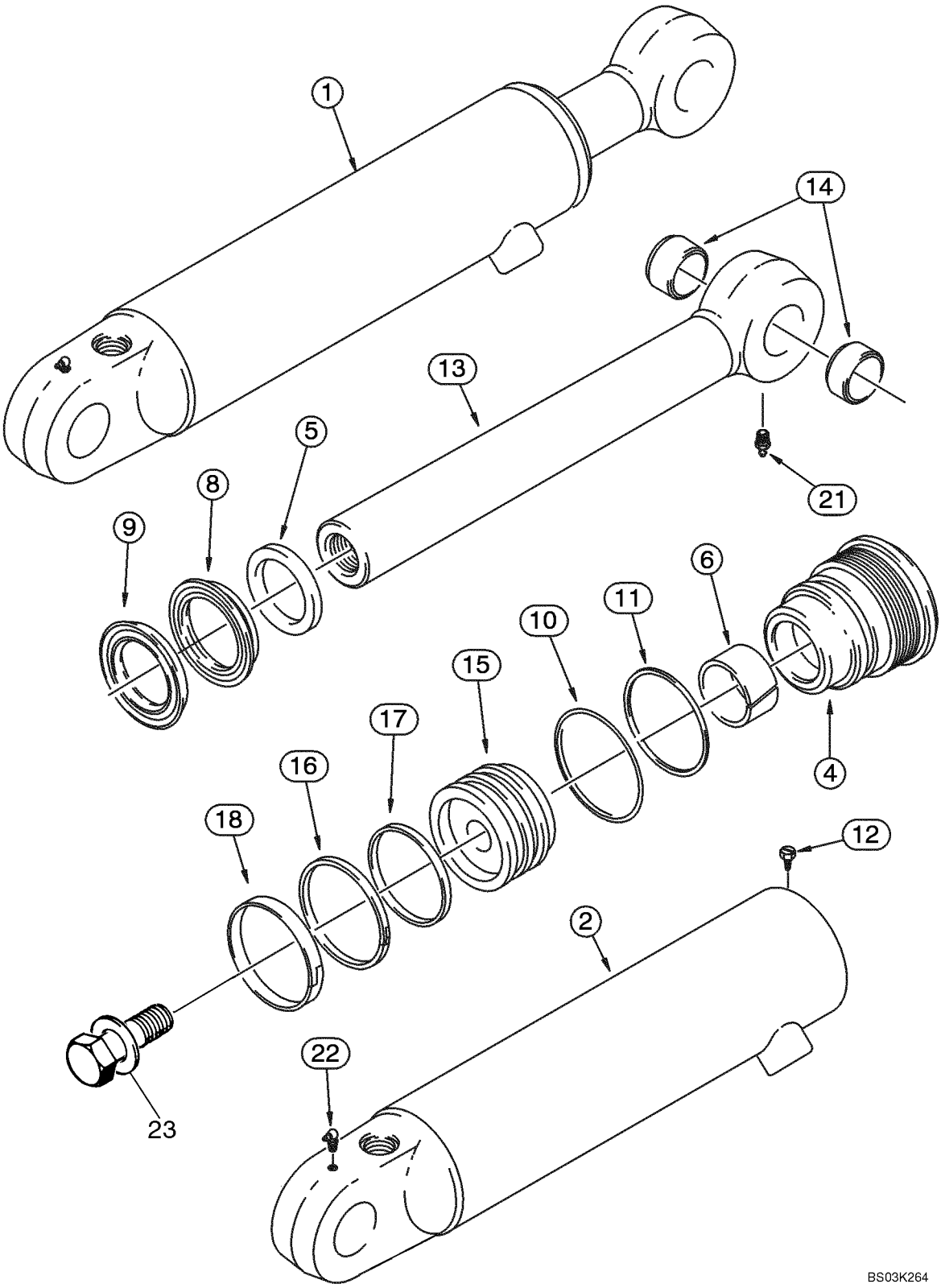

http://www.minnparbackhoeparts.com/

VERIN - BENNE DE CHARGEUSE

REF	FN	PART NUMBER	YR/SN	QTY	DESCRIPTION
1		1346189C1		1	VERIN 76 ID x 231 mm strk; Right-Hand; Incl. Ref 2 - 23; If Used
1		87454017		1	VERIN 76 ID x 231 mm strk; Right-Hand; Incl. Ref 2 - 23; If Used
1		1346190C1		1	VERIN 76 ID x 231 mm strk; Left-Hand; Incl. Ref 2 - 23; If Used
1		87454016		1	VERIN 76 ID x 231 mm strk; Left-Hand; Incl. Ref 2 - 23; If Used
2		1346191C1		1	TUBE DE VERIN TUBE, Right-Hand; 1346189C1 Cylinder; Includes (2) 30634 Bushings; If Used
2		87454907		1	TUYAUTERIE TUBE, Right-Hand; 87454017 Cylinder; Includes (2) 30634 Bushings; If Used
2		1346192C1		1	TUBE DE VERIN TUBE, Left-Hand; 1346190C1 Cylinder; Includes (2) 30634 Bushings; If Used
2		87454908		1	TUYAUTERIE TUBE, Left-Hand; 87454016 Cylinder; Includes (2) 30634 Bushings; If Used
4		297281A1		1	PALIER DE VERIN Gland
		1543267C1		1	JEU JOINTS ETANCHEITE Seal Repair; Incl. Ref 5 - 11, 16 - 18
5		D95143		1	JOINT
6		G102425		1	BAGUE
		1542875C1		1	LOT DE PIECES Rod and Buffer Seal; Incl. Ref 8, 9; Not Serviced Separately; Order 1543267C1 Seal Kit
8		NSS		1	NON FOURNI SEPAREMENT Rod Seal; Order 1543267C1 Seal Kit
9		NSS		1	NON FOURNI SEPAREMENT Buffer Seal; Order 1543267C1 Seal Kit
10		238-5231		1	JOINT THORIQUE 2-5/8 ID x 1/8
11		G109298		1	ANNEAU
12		276-2446		1	VIS Self-Tapping, No. 8 x 3/8
13		1346195C1		1	TIGE DE VERIN 44 mm (1-3/4 in) dia; Incl. Ref 14
14		30634		2	BAGUE
15		1340798C1		1	PISTON
16		G102288		1	JOINT-D'ETANCH. ASS.
17		G100444		1	JOINT
18		G100449		1	BAGUE D"USURE
21		219-1		1	GRAISSEUR 1/8 PT x 21/32

http://www.minnparbackhoeparts.com/

08-64		p2	05/05

VERIN - BENNE DE CHARGEUSE

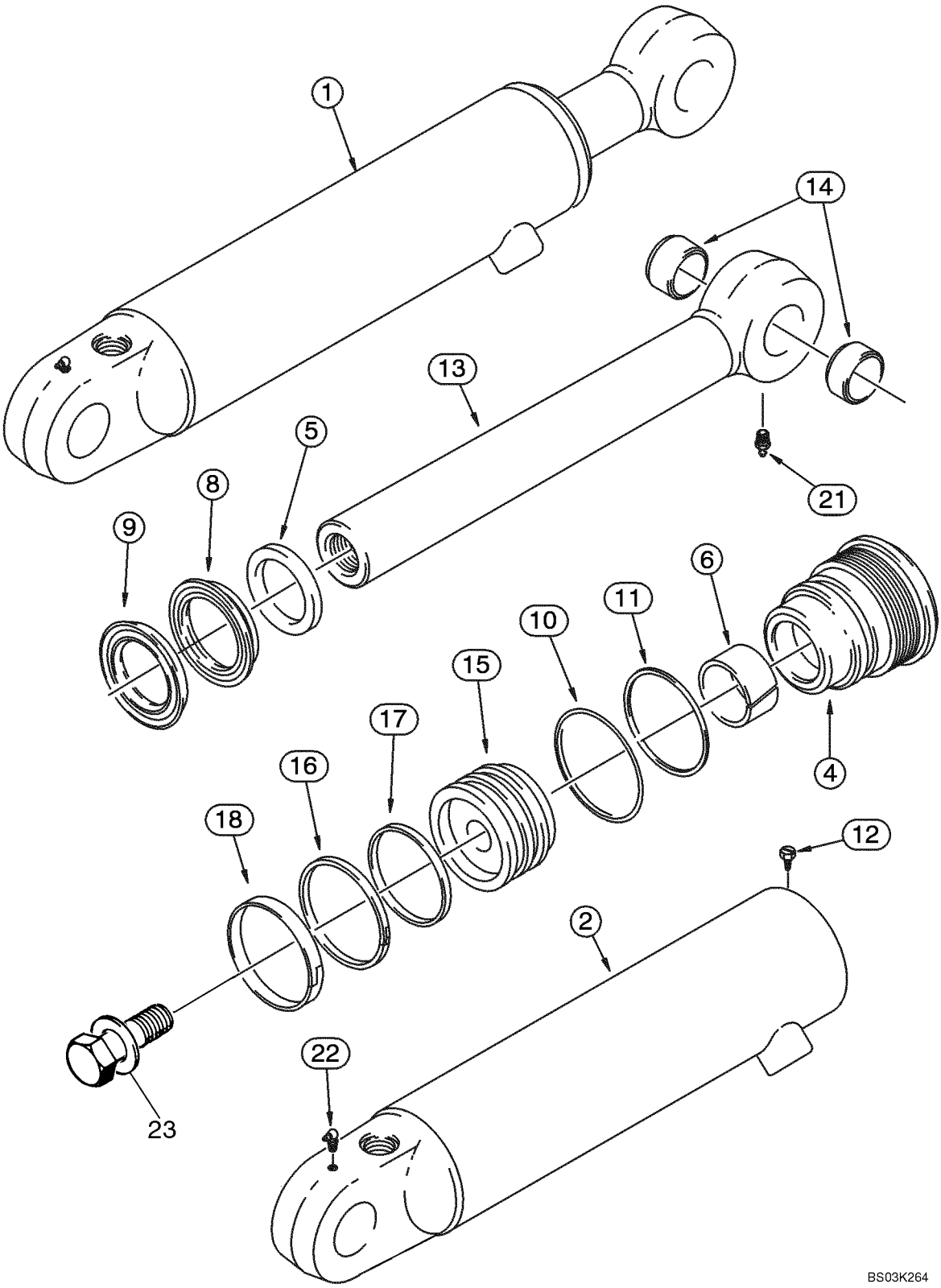

http://www.minnparbackhoeparts.com/

VERIN - BENNE DE CHARGEUSE

REF	FN	PART NUMBER	YR/SN	QTY	DESCRIPTION
22		219-55		1	GRAISSEUR 90 deg, 1/8 PT x 27/32
23		86982437		1	BOULON SPECIAL 1,0 x 2,5 in, Includes Washer

http://www.minnparbackhoeparts.com/

08-65		p1	01/04

VERIN - STABILISATEUR DE LA PELLE RETRO (580SM)

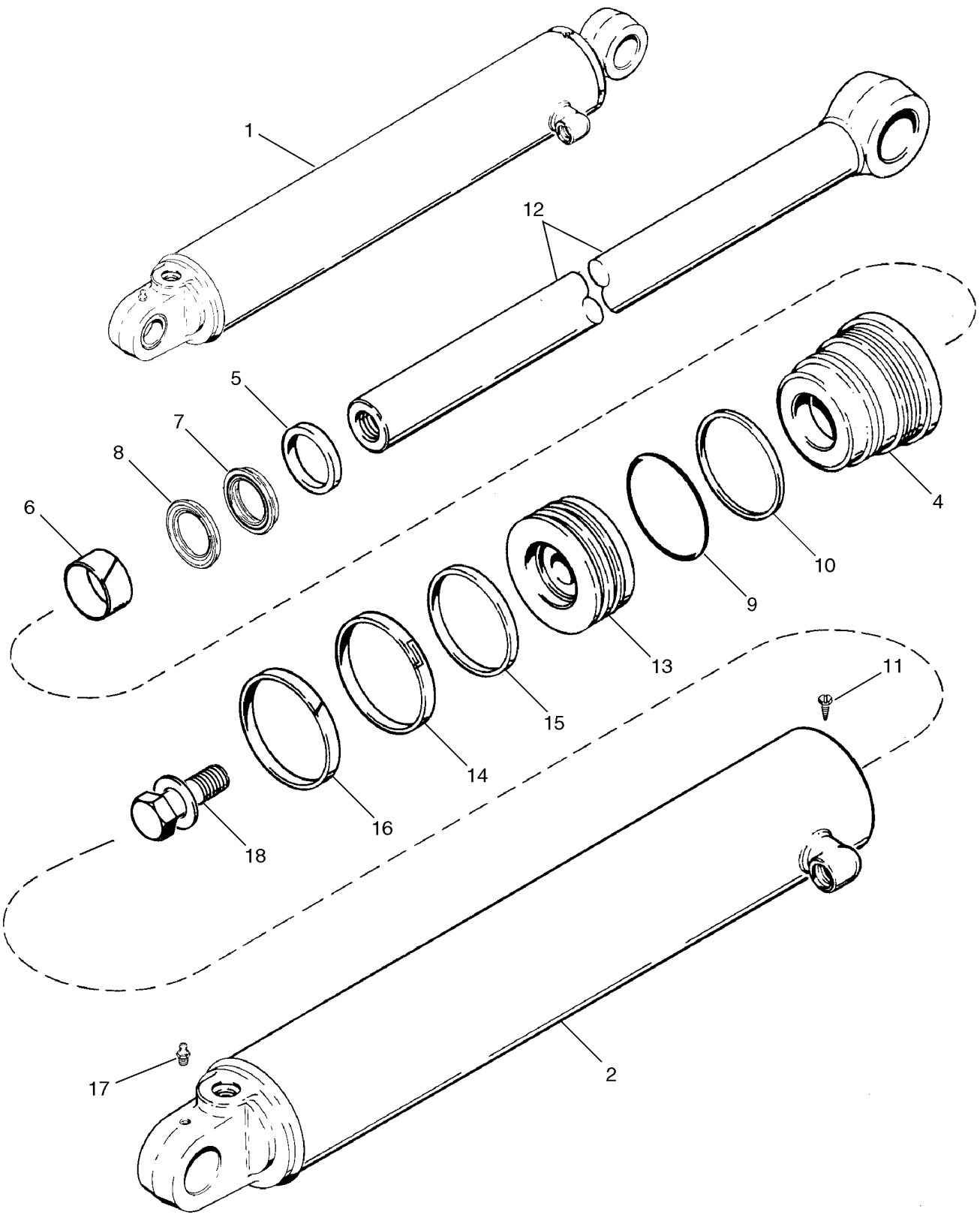

http://www.minnparbackhoeparts.com/

VERIN - STABILISATEUR DE LA PELLE RETRO (580SM)

REF	FN	PART NUMBER	YR/SN	QTY	DESCRIPTION
1		199720A1		1	VERIN 108 ID x 553 mm strk; Right-Hand; Incl. Ref 2- 18
1		199721A1		1	VERIN 108 ID x 553 mm strk; Left-Hand; Incl. Ref 2 - 18
2		199722A1		1	TUBE DE VERIN Right-Hand
2		199723A1		1	TUBE DE VERIN Left-Hand
4		297284A1		1	PALIER DE VERIN GLAND
		1543275C1		1	JEU JOINTS ETANCHEITE Seal Repair; Incl. Ref 5 - 10, 14 - 16
5		D95144		1	JOINT ANNULAIRE WIPER
6		G101533		1	BAGUE
		1542876C1		1	COLIS POUR RECHANGE Rod and Buffer Seal; Incl. Ref 7, 8; Not Serviced Separately; Order 1543275C1 Seal Kit
7		NSS		1	NON FOURNI SEPAREMENT Rod Seal; Order 1543275C1 Seal Kit
8		NSS		1	NON FOURNI SEPAREMENT Buffer Seal; Order 1543275C1 Seal Kit
9		238-5241		1	JOINT TORIQUE 3-7/8 ID x 1/8
10		G32176		1	ANNEAU Backup
11		276-2446		1	VIS Self-Tapping, No. 8 x 3/8
12		123726A1		1	TIGE DE VERIN 51 mm (2 in) dia
13		123732A1		1	PISTON
14		G110531		1	JOINT
15		G110529		1	ANNEAU
16		G110530		1	ANNEAU
17		219-1		1	GRAISSEUR 1/8 PT x 21/32
18		86982441		1	BOULON SPECIAL 1,25 x 3,00 in, Includes Washer

http://www.minnparbackhoeparts.com/

08-65A		p1	01/04

VERIN - STABILISATEUR DE LA PELLE RETRO (580SM+)

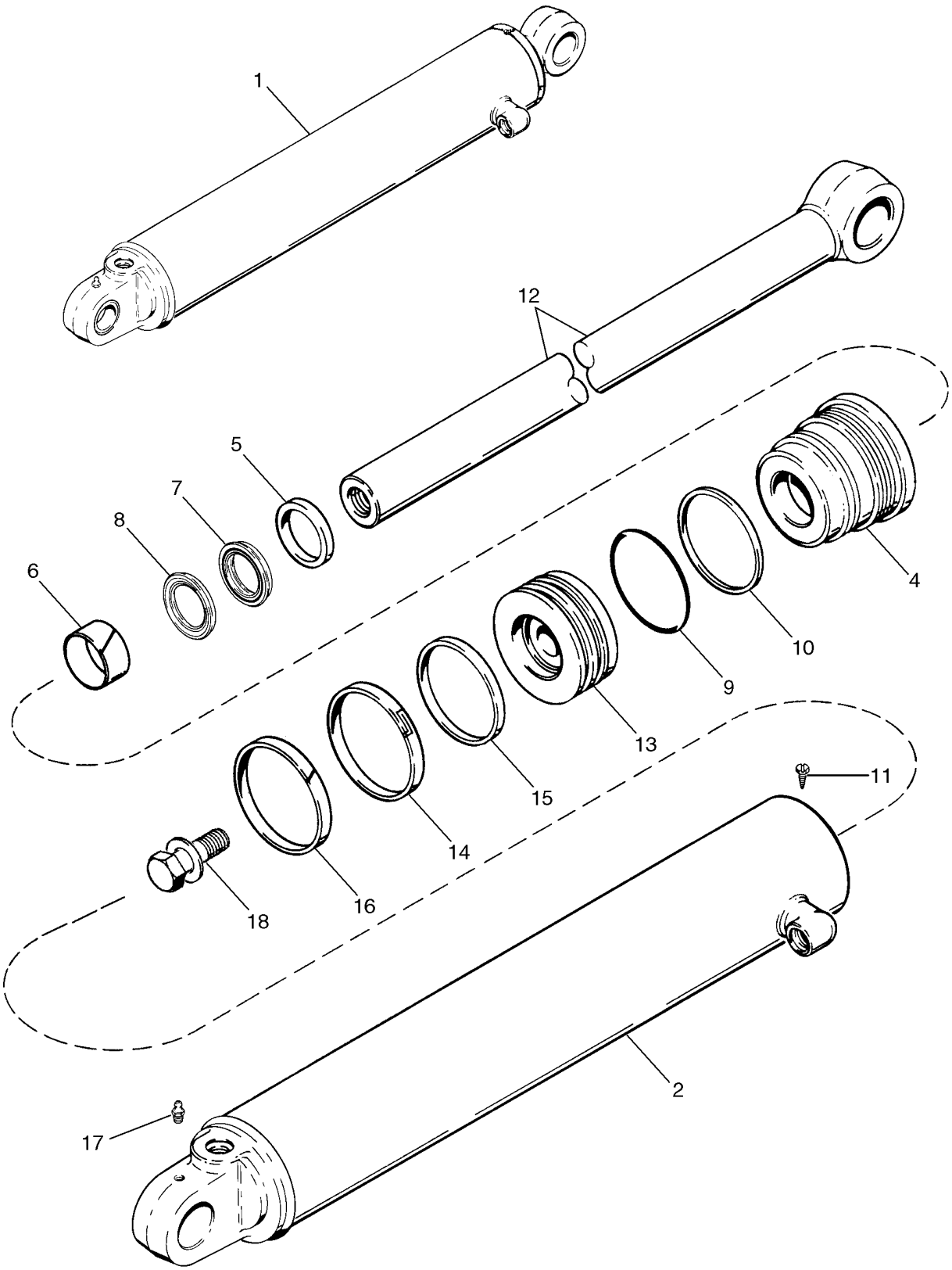

http://www.minnparbackhoeparts.com/

VERIN - STABILISATEUR DE LA PELLE RETRO (580SM+)

REF	FN	PART NUMBER	YR/SN	QTY	DESCRIPTION
1		177256A1		1	VERIN 127 ID x 519 mm strk; Right-Hand; Incl. Ref 2 - 18
1		177257A1		1	VERIN 127 ID x 519 mm strk; Left-Hand; Incl. Ref 2 - 18
2		177258A1		1	TUBE Right-Hand
2		177259A1		1	TUBE Left-Hand
4		1542918C3		1	PALIER DE VERIN GLAND
		1543289C2		1	POCHETTE-JOINTS Seal; Incl. Ref 5 - 10, 14 - 16; Plus An Additional Seal Not Used In This Application
5		D95145		1	RACLEUR BALAIS
6		G102426		1	BAGUE
		1542877C1		1	POCHETTE Rod and Buffer Seal; Incl. Ref 7, 8; Not Serviced Separately; Order 1543289C2 Seal Kit
7		NSS		1	NON FOURNI SEPAREMENT Rod Seal; Order 1543289C2 Seal Kit
8		NSS		1	NON FOURNI SEPAREMENT Buffer Seal; Order 1543289C2 Seal Kit
9		238-5247		1	JOINT TORIQUE 4-5/8 ID x 1/8
10		G107970		1	ANNEAU Backup
11		276-2446		1	VIS Self-Tapping, No. 8 x 3/8
12		177261A1		1	TRINGLE 57 mm (2-1/4 in) dia
13		G110594		1	PISTON
14		1986753C1		1	JOINT
15		G102092		1	ANNEAU
16		G102090		1	ANNEAU
17		219-1		1	GRAISSEUR 1/8 PT x 21/32
18		86982442		1	BOULON SPECIAL 1,25 x 3,25 lg; Incl. Washer

http://www.minnparbackhoeparts.com/

08-66		p1	06/04

VERIN - DEBATTEMENT DE LA RETROPELLE

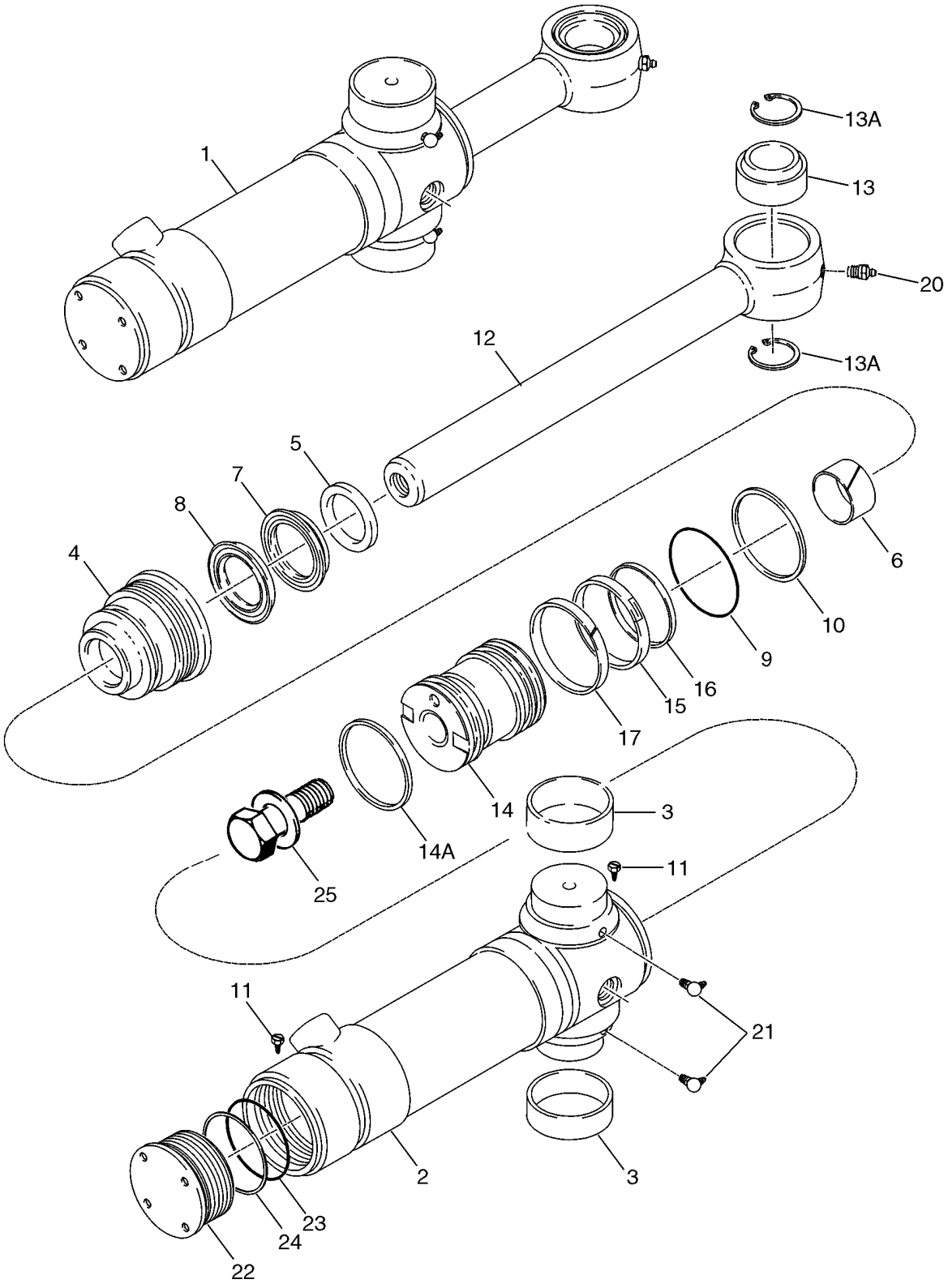

http://www.minnparbackhoeparts.com/

VERIN - DEBATTEMENT DE LA RETROPELLE

REF	FN	PART NUMBER	YR/SN	QTY	DESCRIPTION
1		139808A2		2	VERIN 102 ID x 292 mm strk; Incl. Ref 2- 25
2		199953A2		1	TUBE Incl. Ref 2, 3, 11, 22 - 24; Not Available As An Assembly; Order Components
2		139810A2		1	TUBE DE VERIN Incl. Ref 3
3		124568A2		2	ANNEAU Bushing
4		297283A1		1	PALIER DE VERIN GLAND
		122535A1		1	JEU JOINTS ETANCHEITE Seal Repair; Incl. Ref 5 - 10, 14A - 17, 23, 24
5		D95144		1	JOINT ANNULAIRE WIPER
6		G101533		1	BAGUE
		1542876C1		1	COLIS POUR RECHANGE Rod and Buffer Seal; Incl. Ref 7, 8; Not Serviced Separately; Order 122535A1 Seal Kit
7		NSS		1	NON FOURNI SEPAREMENT Rod Seal; Order 122535A1 Seal Kit
8		NSS		1	NON FOURNI SEPAREMENT Buffer Seal; Order 122535A1 Seal Kit
9		238-5239		1	JOINT TORIQUE 3-5/8 x 1/8
10		G109299		1	ANNEAU Backup
11		276-2446		2	VIS Self-Tapping, No. 8 x 3/8
12		87413722		1	TIGE DE VERIN 51 mm (2 in) dia; Incl. 13, 13A
13		137248A1		1	ANNEAU
13A		100-21315		2	ANNEAU-D'ARRET No. 315
14		112370A3		1	PISTON-DE-VERIN
14A		121478A1		1	ANNEAU 4 in OD, Cast Iron
15		G102285		1	JOINT
16		G100440		1	ANNEAU
17		G100448		1	ANNEAU
20		219-1		1	GRAISSEUR 1/8 PT x 21/32
21		219-55		2	GRAISSEUR 90 deg, 1/8 PT x 27/32
		124462A1		1	PALIER DE VERIN CAP ASSEMBLY, End; Incl. Ref 22 - 24; Not Available As An Assembly, Order Components
22		124463A1		1	PALIER DE VERIN END CAP
23		238-5242		1	JOINT TORIQUE 4 ID x 1/8
24		G32176		1	ANNEAU Backup
25		86982439		1	BOULON SPECIAL 1 x 4,00 in, Includes Washer

http://www.minnparbackhoeparts.com/

08-67		p1	05/04

VERIN - FLECHE DE LA RETROPELLE

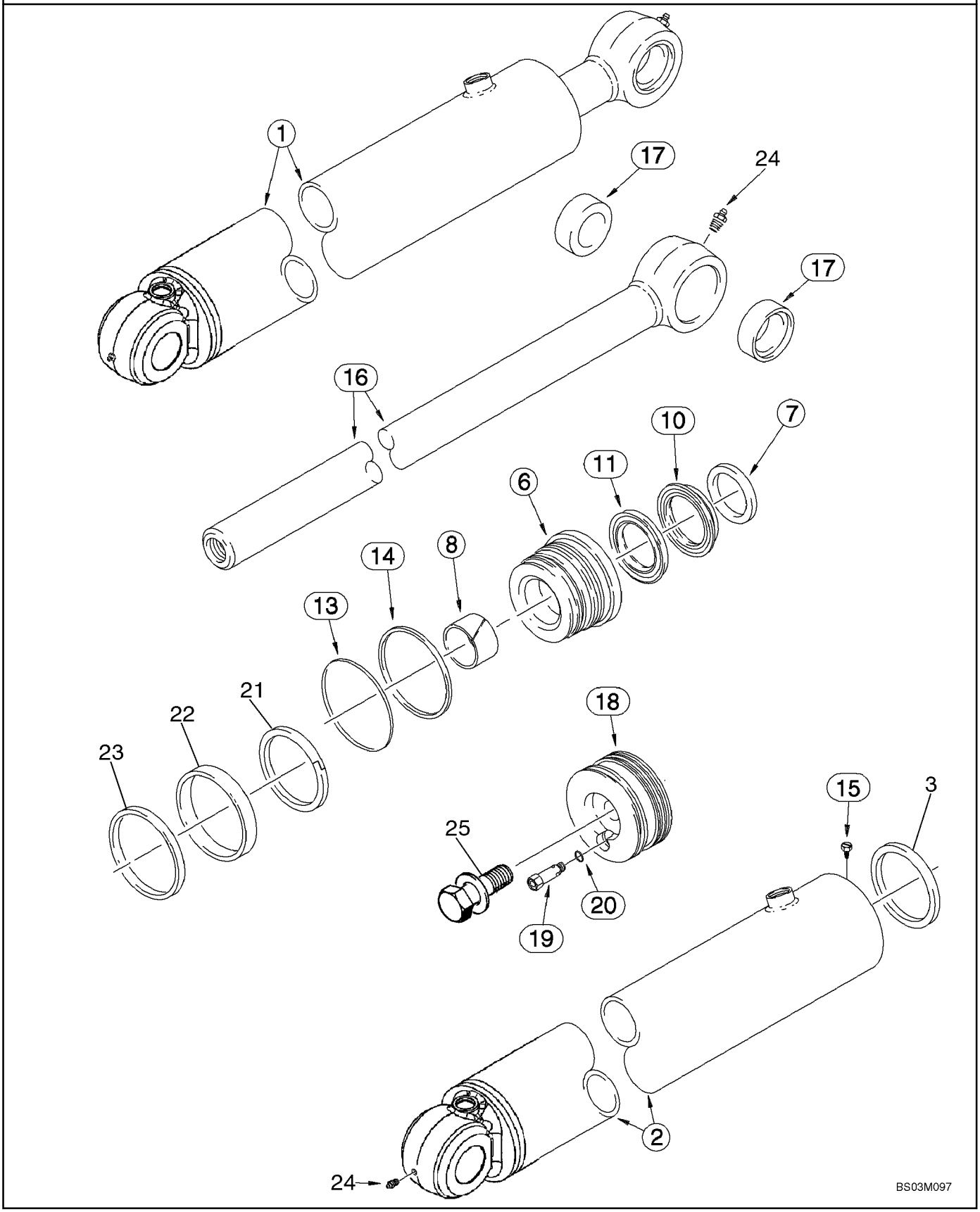

http://www.minnparbackhoeparts.com/

VERIN - FLECHE DE LA RETROPELLE

REF	FN	PART NUMBER	YR/SN	QTY	DESCRIPTION
1		87417644		1	VERIN 133 ID x 843 mm strk; Incl. Ref 2 - 25
2		87417762		1	TUYAUTERIE Replaces 87417647 Tube Used In Production
3		87417649		1	JOINT-RACLEUR Internal Tube Seal; Not Included With Tube, Purchase Separately
6		87418279		1	PRESSE-ETOUPE
		87418297		1	POCHETTE DE JOINTS Incl. Ref 7 - 14, 21 - 23
7		D95146		1	RACLEUR BALAIS
8		G102427		1	BAGUE
		1542879C1		1	POCHETTE Rod and Buffer Seal; Incl. Ref 10, 11; Not Serviced Separately; Order 87418297 Seal Kit
10		NSS		1	NON FOURNI SEPAREMENT Rod Seal; Order 87418297 Seal Kit
11		NSS		1	NON FOURNI SEPAREMENT Buffer Seal; Order 87418297 Seal Kit
13		238-5249		1	JOINT TORIQUE 4-7/8 ID x 1/8
14		380621A1		1	CONTRE-JOINT
15		276-2446		1	VIS Self-Tapping, No. 8 x 3/8
16		380609A1		1	TIGE DE VERIN 63.5 mm (2-1/2 in) dia; Incl. Ref 17
17		123407A1		2	ANNEAU Bushing
18		87417651		1	PISTON
19		1958028C1		1	SOUPAPE Cartridge; Component Parts Not Serviced Separately; Incl. Ref 20
20		237-6006		1	JOINT THORIQUE 15/32 ID x 5/64
21		87402623		1	ANNEAU Cast Iron
22		444640A1		1	JOINT Wear Ring
23		380627A1		1	JOINT-D'ETANCH. ASS. Piston
24		219-1		2	GRAISSEUR 1/8 PT x 21/32
25		86982443		1	BOULON SPECIAL Includes Washer

http://www.minnparbackhoeparts.com/

08-68		p1	04/04

VERIN - BRAS DE LA RETROPELLE

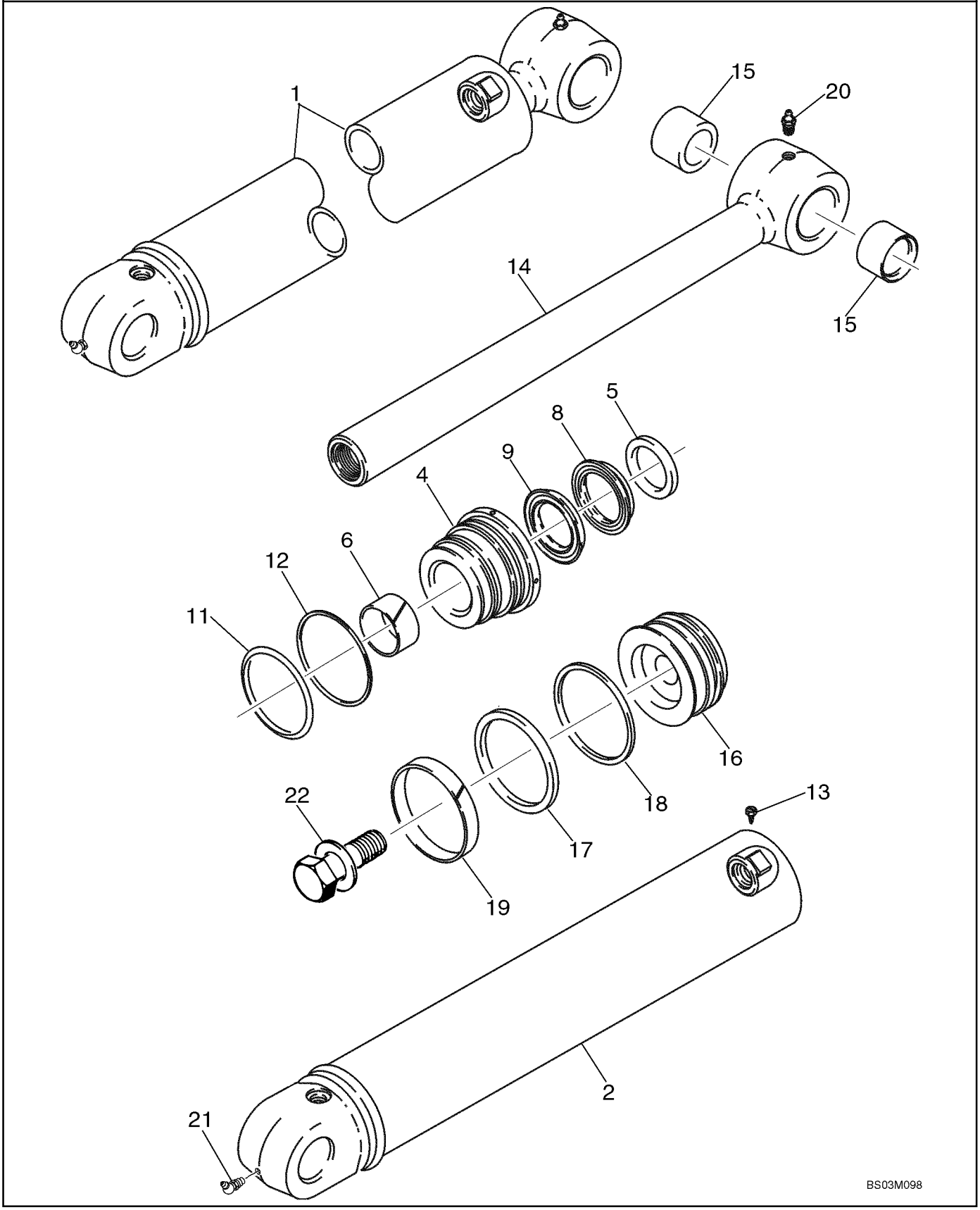

http://www.minnparbackhoeparts.com/

VERIN - BRAS DE LA RETROPELLE

REF	FN	PART NUMBER	YR/SN	QTY	DESCRIPTION
1		183795A3		1	VERIN 127 ID x 583 mm strk; Incl. Ref 2, 4 - 22; If Used
1		183795A4		1	VERIN 127 ID x 583 mm strk; Incl. Ref 2A, 4 - 22; If Used
2		310994A1		1	TUBE 183795A3 Cylinder; If Used
2A		310994A2		1	TUBE 183795A4 Cylinder; If Used
4		1542914C1		1	PRESSE-ETOUPE
		1542915C2		1	POCHETTE-JOINTS Seal; Incl. Ref 5 - 12, 17 - 19; Plus Two Additional Seals Not Used In This Application
5		D95146		1	RACLEUR BALAIS
6		G102427		1	BAGUE
		1542879C1		1	POCHETTE Rod and Buffer Seal; Incl. Ref 8, 9; Not Serviced Separately; Order 1542915C2 Seal Kit
8		NSS		1	NON FOURNI SEPAREMENT Rod Seal; Order 1542915C2 Seal Kit
9		NSS		1	NON FOURNI SEPAREMENT Buffer Seal; Order 1542915C2 Seal Kit
11		238-5247		1	JOINT TORIQUE 4-5/8 ID x 1/8
12		G107970		1	ANNEAU Backup
13		276-2446		1	VIS Self-Tapping, No. 8 x 3/8
14		178850A1		1	TIGE DE VERIN 64 mm (2-1/2 in) dia; Incl. Ref 15
15		D141555		2	BAGUE
16		311109A1		1	PISTON
17		1986753C1		1	JOINT
18		G102092		1	ANNEAU
19		G102090		1	ANNEAU
20		219-1		2	GRAISSEUR 1/8 PT x 21/32
21		219-36		1	GRAISSEUR 45 deg, 1/8 PTF x 7/8
22		86982444		1	BOULON SPECIAL 1,5 x 3,5 in, Includes Washer

http://www.minnparbackhoeparts.com/

08-69		p1	01/04

VERIN - GODET DE LA RETROPELLE

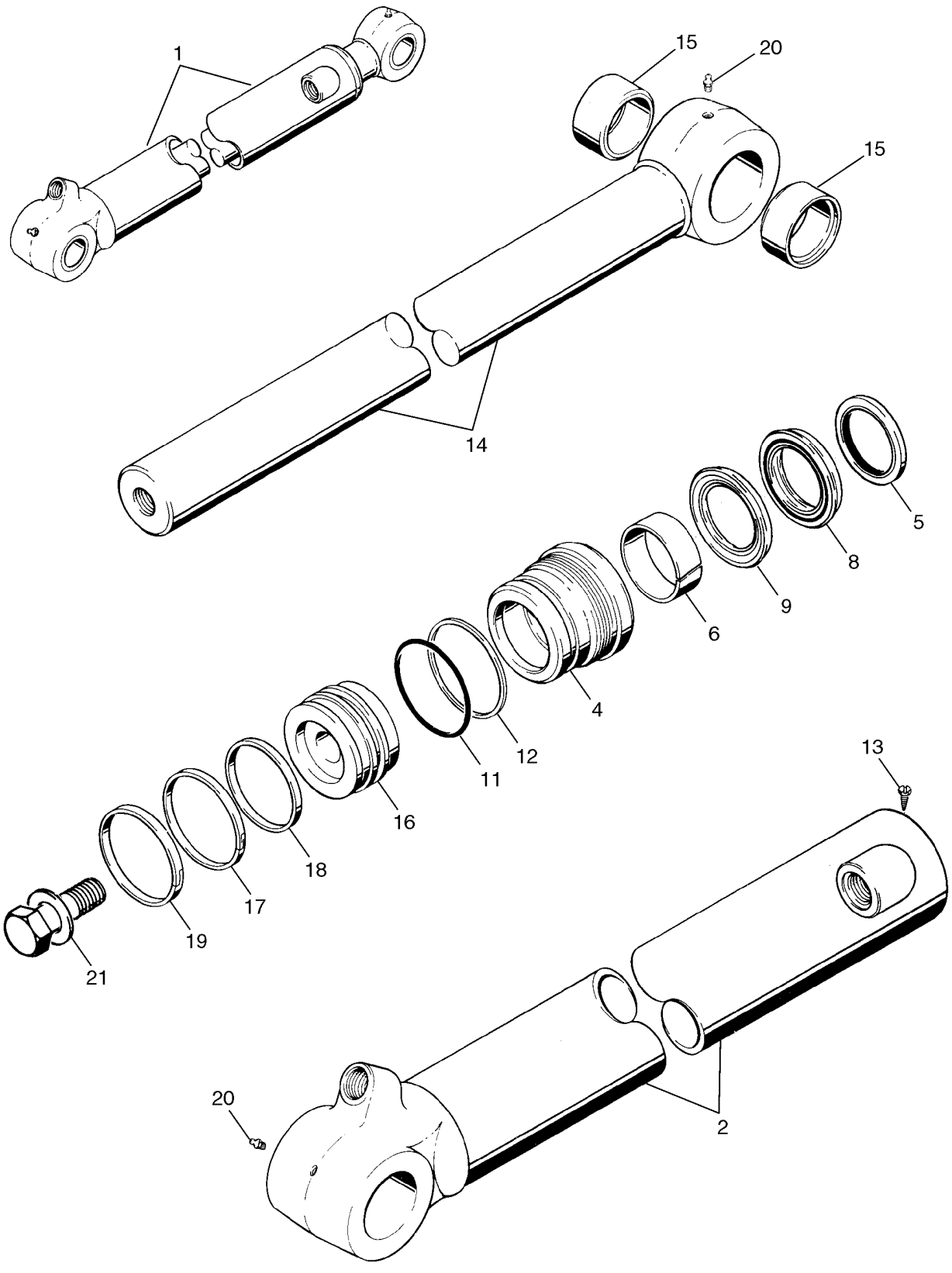

http://www.minnparbackhoeparts.com/

VERIN - GODET DE LA RETROPELLE

REF	FN	PART NUMBER	YR/SN	QTY	DESCRIPTION
1		235916A1		1	VERIN 80 ID x 872 mm strk; Incl. Ref 2 - 21
2		235917A2		1	TUBE DE VERIN TUBE
4		235921A1		1	PALIER DE VERIN GLAND
		1542923C2		1	POCHETTE-JOINTS Incl. Ref 5 - 12, 17 - 19
5		D95146		1	RACLEUR BALAIS
6		G109908		1	BAGUE
		1542879C1		1	POCHETTE Rod and Buffer Seal; Incl. Ref 8, 9; Not Serviced Separately; Order 1542923C2 Seal Kit
8		NSS		1	NON FOURNI SEPAREMENT Rod Seal; Order 1542923C2 Seal Kit
9		NSS		1	NON FOURNI SEPAREMENT Buffer Seal; Order 1542923C2 Seal Kit
11		238-5235		1	JOINT TORIQUE 3-1/8 ID x 1/8
12		D38858		1	JOINT Backup Ring
13		276-2446		1	VIS Self-Tapping, No. 8 x 3/8
14		196164A1		1	TIGE DE VERIN 64 mm (2-1/2 in) dia; Incl. Ref 15
15		D140029		2	BAGUE
16		1986906C1		1	PISTON
17		G102286		1	JOINT
18		G100710		1	ANNEAU
19		G100711		1	BAGUE D"USURE
20		219-1		2	GRAISSEUR 1/8 PT x 21/32
21		86982442		1	BOULON SPECIAL 1,25 x 3,25 in, Includes Washer

http://www.minnparbackhoeparts.com/

08-70		p1	01/04

VERIN - BALANCIER EXTENSIBLE DE LA PELLE RETRO

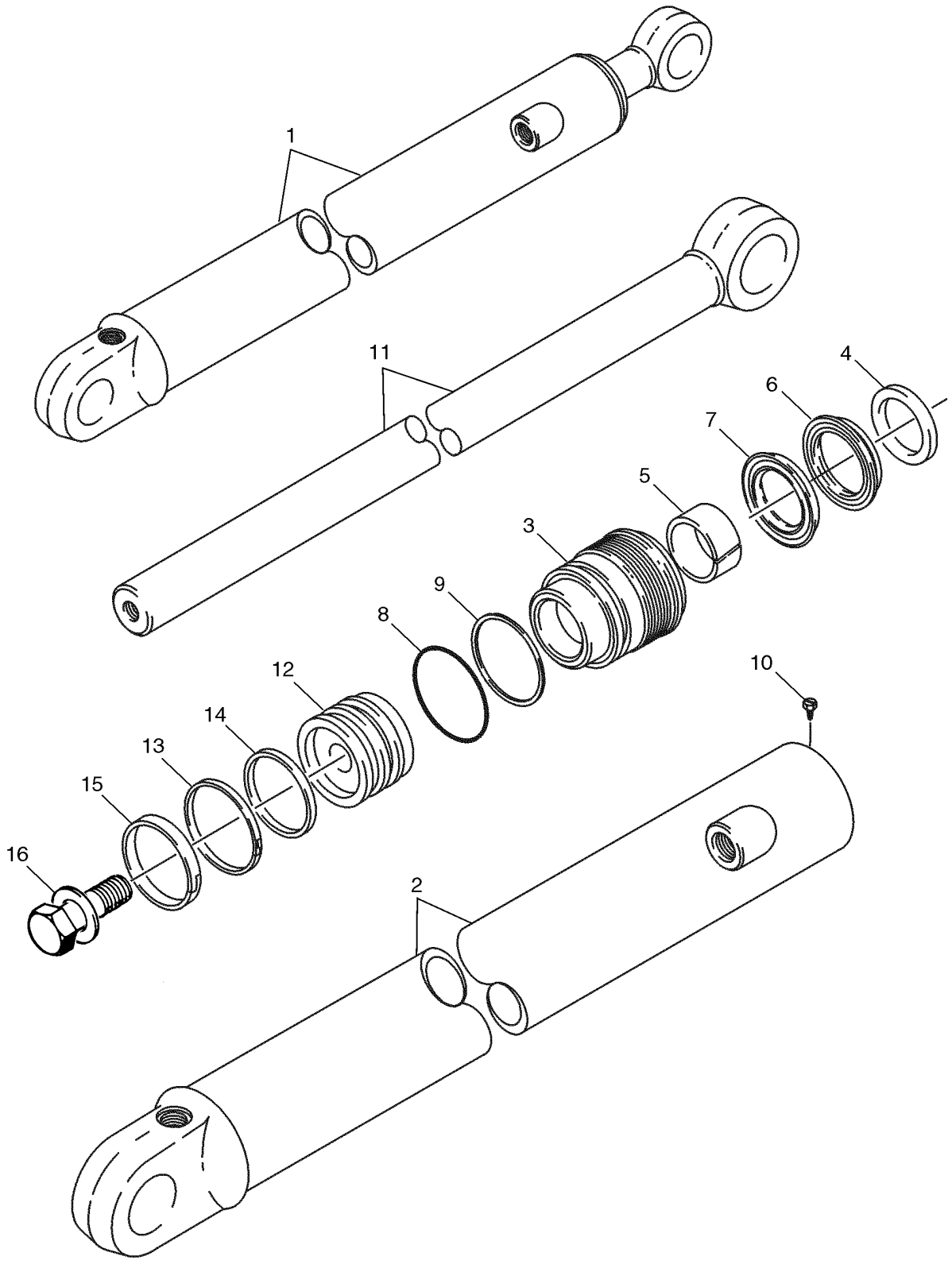

http://www.minnparbackhoeparts.com/

VERIN - BALANCIER EXTENSIBLE DE LA PELLE RETRO

REF	FN	PART NUMBER	YR/SN	QTY	DESCRIPTION
1		1340969C2		1	VERIN 76 ID x 1068 mm strk; Incl. Ref 2 - 16
2		1340970C1		1	TUBE DE VERIN TUBE
3		297281A1		1	PALIER DE VERIN GLAND
		1543267C1		1	JEU JOINTS ETANCHEITE Seal; Incl. Ref 4 - 9, 13 - 15
4		D95143		1	JOINT WIPER
5		G102425		1	BAGUE
		1542875C1		1	LOT DE PIECES Rod and Buffer Seal; Incl. Ref 6, 7; Not Serviced Separately; Order 1543267C1 Seal Kit
6		NSS		1	NON FOURNI SEPAREMENT Rod Seal; Order 1543267C1 Seal Kit
7		NSS		1	NON FOURNI SEPAREMENT Buffer Seal; Order 1543267C1 Seal Kit
8		238-5231		1	JOINT THORIQUE 2-5/8 ID x 1/8
9		G109298		1	ANNEAU Backup
10		276-2446		1	VIS Self-Tapping, No. 8 x 3/8
11		1980296C1		1	TIGE DE VERIN 44 mm (1-3/4 in) dia
12		G107277		1	PISTON
13		G102288		1	JOINT-D'ETANCH. ASS.
14		G100444		1	JOINT
15		G100449		1	BAGUE D"USURE
16		86982435		1	BOULON SPECIAL 3/4 x 2,5 in, Incl. Washer

http://www.minnparbackhoeparts.com/

SECTION INDEX

09-01	COMMANDES - RELEVAGE ET GODET DES BRAS DE RELEVAGE
09-02	COMMANDES - BENNE DE CHARGEUSE
09-03	COMMANDES - ASSIETTE AUTOMATIQUE DES BRAS DE RELEVAGE
09-04	CADRE - RELEVAGE DE LA CHARGEUSE
09-05	CADRE - TRINGLERIE DES BRAS DE RELEVAGE
09-06	GODET, CHARGEUSE À LONGUE LÈVRE (82 IN) (580SM)
09-07	GODET, CHARGEUSE À LONGUE LÈVRE (93 IN) (580SM / 580SM+)
09-08	GODET, BENNE DE CHARGEUSE (82 IN) (580SM)
09-08A	GODET, BENNE DE CHARGEUSE (93 IN) (580SM+)
09-09	GARANT - DISTRIBUTEUR, BRAS DE RELEVAGE
09-10	COUPLEUR, OUTIL, DE SÉCURITÉ
09-11	COUVERCLES - TOURELLE DE LA PELLE RETRO, SANS DE COMMANDE PILOTE
09-12	SUPPORT DE TOUR DE CONTRÔLE ET JOINTS DE PELLE RÉTRO, SANS DE COMMANDE PILOTE
09-13	TOURELLE DE LA PELLE RETRO SUPPORT, AVEC DE COMMANDE PILOTE
09-14	TOURELLE DE LA PELLE RETRO SOUFFLET DE JOINT, AVEC DE COMMANDE PILOTE
09-15	TOURELLE DE LA PELLE RETRO LEVIER (VERROU DE MAINTIEN DE BRAS DE RELEVAGE), AVEC DE COMMANDE PILOTE
09-16	COMMANDES - PELLE RETRO, AVEC DÉBATTEMENT AU PIED (MODÈLES SANS BALANCIER EXTENSIBLE)
09-17	COMMANDES - PELLE RETRO, AVEC DÉBATTEMENT AU PIED (MODÈLES AVEC BALANCIER EXTENSIBLE)
09-18	COMMANDES - PELLE RETRO, AVEC DÉBATTEMENT A LA MAIN (MODÈLES SANS BALANCIER EXTENSIBLE)
09-19	COMMANDES - PELLE RETRO, AVEC DÉBATTEMENT A LA MAIN (MODÈLES SANS BALANCIER EXTENSIBLE)
09-19A	COMMANDES - PELLE RETRO, SCHEMA DE CONTROLE DE L''EXCAVATRICE
09-20	COMMANDES - PELLE RETRO, AVEC DÉBATTEMENT A LA MAIN (MODÈLES AVEC BALANCIER EXTENSIBLE)
09-21	COMMANDES - CIRCUIT HYDRAULIQUE AUXILIAIRE POUR LA PELLE RETRO, SANS DE COMMANDE PILOTE
09-22	RETROPELLE - STABILISATEURS, PLAQUES ET PATINS (580SM)
09-22A	RETROPELLE - STABILISATEURS, PLAQUES ET PATINS (580SM+)
09-23	RETROPELLE - TOURELLE ET VERINS DE DEBATTEMENT
09-24	RETROPELLE - FLECHE ET TOURELLE DE DEBATTEMENT
09-25	VERROU DE MAINTIEN DE BRAS DE RELEVAGE (SANS DE COMMANDE PILOTE)
09-25A	VERROU DE MAINTIEN DE BRAS DE RELEVAGE (AVEC DE COMMANDE PILOTE)
09-26	RETROPELLE - BALANCIER ET GODET
09-27	RETROPELLE - BALANCIER EXTENSIBLE
09-28	BALANCIER, PELLE RÉTRO - COUPLEUR HYDRAULIQUE (COUPLEUR DE GODET DE PELLE RÉTRO HYDRAULIQUE)
09-29	GODET, PELLE RÉTRO UNIVERSELLE (305 MM (12 INCH) WIDE)
09-30	GODET, PELLE RÉTRO UNIVERSELLE (406 MM (16 INCH) WIDE)
09-31	GODET, PELLE RÉTRO UNIVERSELLE (457 MM (18 INCH) WIDE)
09-32	GODET, PELLE RÉTRO UNIVERSELLE (610 MM (24 INCH) / 762 MM (30 INCH) WIDE)
09-33	GODET, PELLE RÉTRO UNIVERSELLE (914 MM (36 INCH) WIDE)
09-34	GODET, PELLE RÉTRO UNIVERSELLE (610 MM (24 INCH) / 762 MM (30 INCH) WIDE)
09-34A	ENSEMBLE DE POINT DE GEL
09-35	CONTREPOIDS AVANT
09-36	CHASSIS / MONTAGES, COSSE - GRILLE, ADMISSION D''AIR
09-37	RÉSERVOIR, HUILE - COMPARTIMENT DE BATTERIES ET BOITE A OUTILS

http://www.minnparbackhoeparts.com/

SECTION INDEX

09-38	BOÎTIER DE RADIATEUR
09-39	CAPOT - PANNEAUX LATERAUX
09-40	CAPOT - CALANDRE
09-41	PLAQUES, PLANCHER - TAPIS DE SOL
09-42	GARDE-BOUE, GAUCHE - PANNEAU, FERMETURE ARRIERE (VIDE-POCHES AVEC PORTE-GOBELET)
09-43	EXTENSION DE GARDE BOUE
09-44	GARDE-BOUE
09-45	SIEGE - SUPPORT (MILSCO EN SEARS SUSPENSION PNEUMATIQUE)
09-45A	SIEGE - SUPPORT (SEARS, STANDARD)
09-45B	SIEGE - SUPPORT (SEARS SUSPENSION MÉCANIQUE)
09-46	SIÈGE, STANDARD (MILSCO)
09-47	SUPPORT DE SIÈGE ET BASE, STANDARD (MILSCO)
09-48	SIÈGE, SUSPENSION MÉCANIQUE (MILSCO)
09-49	BASE DE SIÈGE ET SUSPENSION, SUSPENSION MÉCANIQUE (MILSCO)
09-49A	SIÈGE, SUSPENSION MÉCANIQUE (SEARS)
09-50	SIÈGE, SUSPENSION PNEUMATIQUE (SEARS)
09-51	BASE DE SIÈGE ET SUSPENSION, SUSPENSION PNEUMATIQUE (SEARS)
09-52	CABINE - FENETRE, RETROVISEUR ET OUVERTURE
09-53	CABINE - CHASSIS ET COUVERCLES
09-54	CABINE - PORTES, SI UTILISE (VOIR VITRE / CHARNIERE; REF 4, 27, 29)
09-54A	CABINE - PORTES, SI UTILISE (VOIR VITRE / CHARNIERE; REF 4, 27, 29)
09-55	CABINE - MONTAGE DE PORTIÈRE
09-56	CABINE - FENÊTRE DROITE, POUR CADRES DE CABINE À UNE SEULE PORTIÈRE, SI UTILISE (VOIR VITRE / CHARNI
09-56A	CABINE - FENÊTRE DROITE, POUR CADRES DE CABINE À UNE SEULE PORTIÈRE, SI UTILISE (VOIR VITRE / CHARNI
09-57	CABINE - VITRE, ARRIÈRE
09-58	CABINE - LAVE-GLACE
09-59	CABINE - ESSUIE-GLACE
09-60	GARNITURE DE LA CABINE - FILTRE, DEFLECTEUR, PLAFONNIER
09-61	CABINE - FILTRE A AIR
09-62	CABINE - CARTER DE LA SOUFFLANTE, DURITS DE VENTILATION, CONDUITES DE PURGE
09-63	CABINE - CHAUFFAGE
09-64	CABINE - CONDUITES DE LA CLIMATISATION, RADIATEUR D''EVAPORATION
09-65	CABINE - CLIMATISATION, CONDENSATEUR, DESSICCATEUR
09-66	CABINE - COMPRESSEUR DE LA CLIMATISATION
09-67	STRUCTURE ROPS - CADRE, COUVERCLES, RETROVISEUR, VISIERE-ECRAN
09-68	STRUCTURE ROPS - VITRE
09-69	STRUCTURE ROPS - ESSUIE-GLACE AVANT ET LAVE-GLACE
09-70	RÉTROVISSEUR - SUPPORT, MODÈLE DE CABINE
09-71	TRIANGLE VÉHICULE LENT
09-72	AUTOCOLLANTS
09-73	AUTOCOLLANTS
09-74	AUTOCOLLANTS
09-75	AUTOCOLLANTS - ANGLAIS
09-76	AUTOCOLLANTS - ESPAGNOL D''AMÉRIQUE LATINE
09-77	AUTOCOLLANTS - FRANÇAIS CANADIEN
09-78	AUTOCOLLANTS - ANGLAIS
09-79	AUTOCOLLANTS - ESPAGNOL D''AMÉRIQUE LATINE
09-80	AUTOCOLLANTS - FRANÇAIS CANADIEN

http://www.minnparbackhoeparts.com/

COMMANDES - RELEVAGE ET GODET DES BRAS DE RELEVAGE

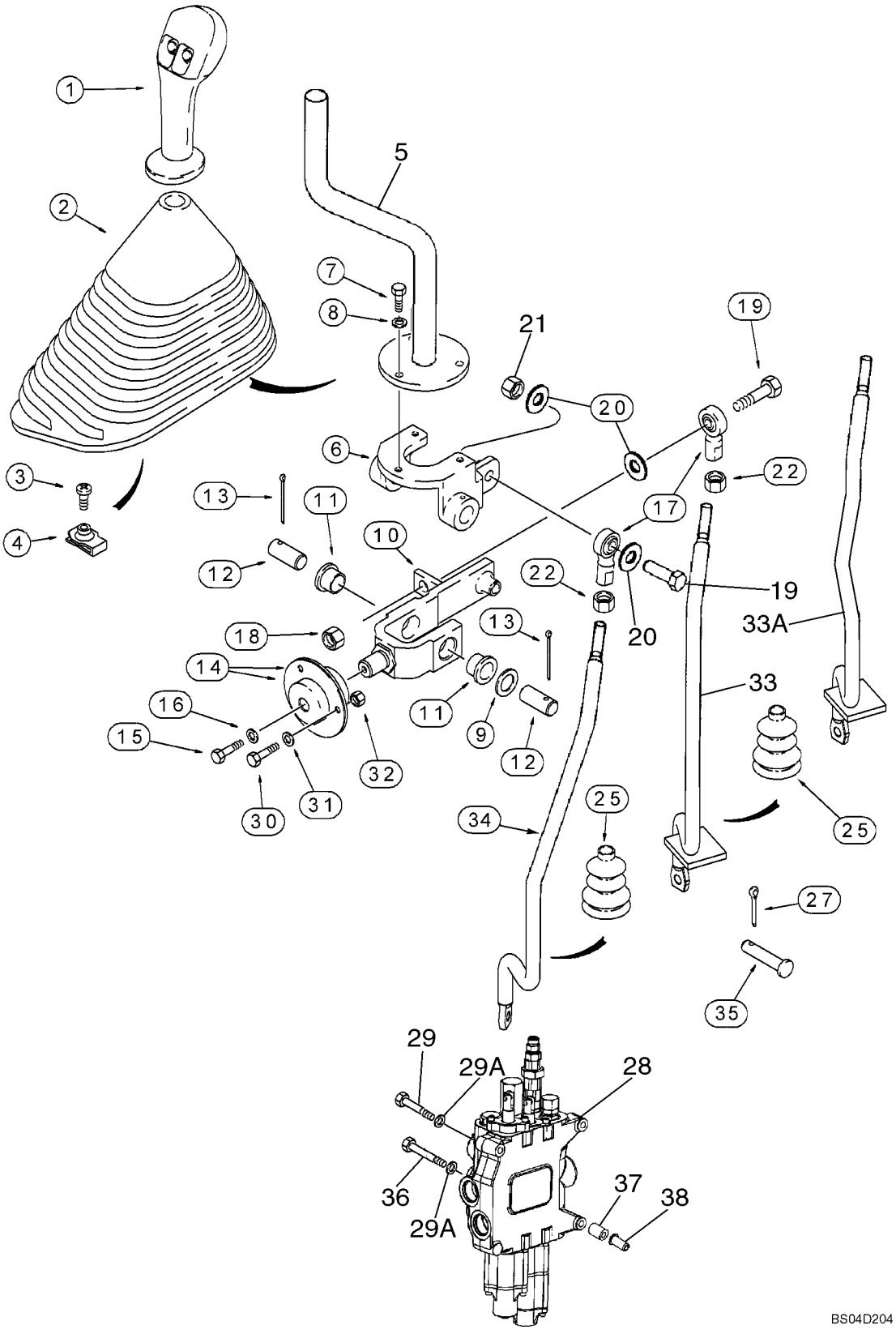

http://www.minnparbackhoeparts.com/

COMMANDES - RELEVAGE ET GODET DES BRAS DE RELEVAGE

REF	FN	PART NUMBER	YR/SN	QTY	DESCRIPTION
1		87412687		1	POIGNÉE Loader Control Lever, Two Button, Declutch and Differential Lock Switches; Models Without Powershift Transmission
1A		87412695		1	POIGNÉE Loader Control Lever, Three Button; Kick Down, Declutch and Differential Lock Switches; Models With Powershift Transmission; Not Illustrated
		256347A1		1	CONNECTEUR
		258616A1		1	SERRURE
		298176A1		1	BOUCHON Not Used With Ref 1A
		87301351		X	MASTIC Permabond Adhesive, F246, 1 ml With No. 5 Initiator
2		133615A1		1	COIFFE
3		87310126		1	VIS No. 10 x 3/4, Stainless Steel; Replaces 140-107 Non-Stainless Steel Screw Used On Some Models
4		131-861		1	ECROU No. 10
5		132661A1		1	LEVIER
6		195615A1		1	SUPPORT
7		614-6020		3	BOULON M6 x 20; Replaces 614-6016 M6 x 16 Bolt Used On Some Models
8		495-11028		3	RONDELLE 9/32 x 5/8 x 1/16
9		495-81184		1	RONDELLE
10		176311A1		1	JOINT GOMME Incl. Ref 11
11		108088A1		2	BAGUE
12		102761A1		2	AXE, GROS
13		432-828		2	GOUPILLE 1/8" x 1 3/4"
14		112380A1		2	PALIER Incl. Ref 14A
14A		465004R91		1	ROULEMENT Not Illustrated
15		614-6016		1	BOULON M6 x 16
16		396-41028		1	RONDELLE 9/32 x 7/8 x 3/32
17		D136773		2	ROTULE 3/8 NF
18		231-1446		1	CONTRE-ECROU 3/8
19		413-628		2	BOULON 3/8 x 1-3/4
20		496-21041		3	RONDELLE 13/32 x 13/16 x 3/32
21		425-106		1	ECROU 3/8
22		425-116		2	ECROU 3/8 NF
25		132931A1		2	SOUFFLET Cab Models
		189109A1		2	RESSORT Boot Retainer; Cab Models

http://www.minnparbackhoeparts.com/

COMMANDES - RELEVAGE ET GODET DES BRAS DE RELEVAGE

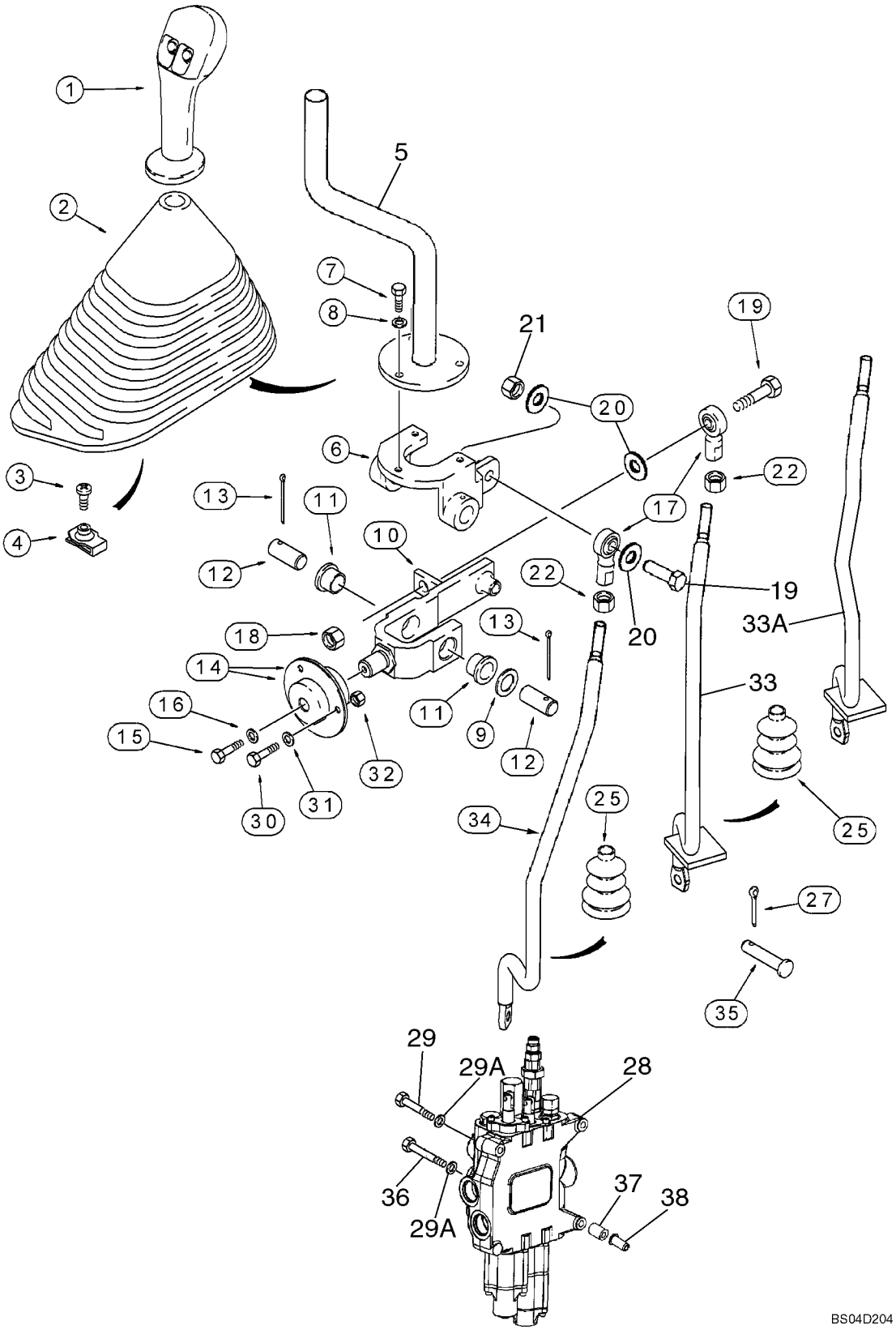

http://www.minnparbackhoeparts.com/

COMMANDES - RELEVAGE ET GODET DES BRAS DE RELEVAGE

REF	FN	PART NUMBER	YR/SN	QTY	DESCRIPTION
27		432-612		2	GOUPILLE 3/32" x 3/4"
28		REF		1	NOTICE LOADER CONTROL VALVE, Two Spool; See Figure 08-34 For Two Spool Valve Options
29		814-10090		2	BOULON M10 x 90
29A		896-11010		3	RONDELLE 11 x 21 x 2,5 mm
30		614-6020		3	BOULON M6 x 20
31		396-41028		3	RONDELLE 9/32 x 7/8 x 3/32
32		829-1406		3	ECROU M6; 10.9
33		87428151		1	TIGE FILETÉE Bucket Control Rod; Canopy Units; No Longer Available, For Service Order 87446596 Rod, Ref 33A
33A		87446596		1	TIGE FILETÉE Bucket Control Rod; Cab Units; Now Services Cab or Canopy Units
34		87428152		1	TIGE FILETÉE Lift Control Rod
35		D149287		2	AXE, GROS
36		814-10110		1	BOULON M10 x 110
37		87417599		3	ENTRETOISE
38		87417721		3	INSERT FILETE M10

http://www.minnparbackhoeparts.com/

COMMANDES - BENNE DE CHARGEUSE

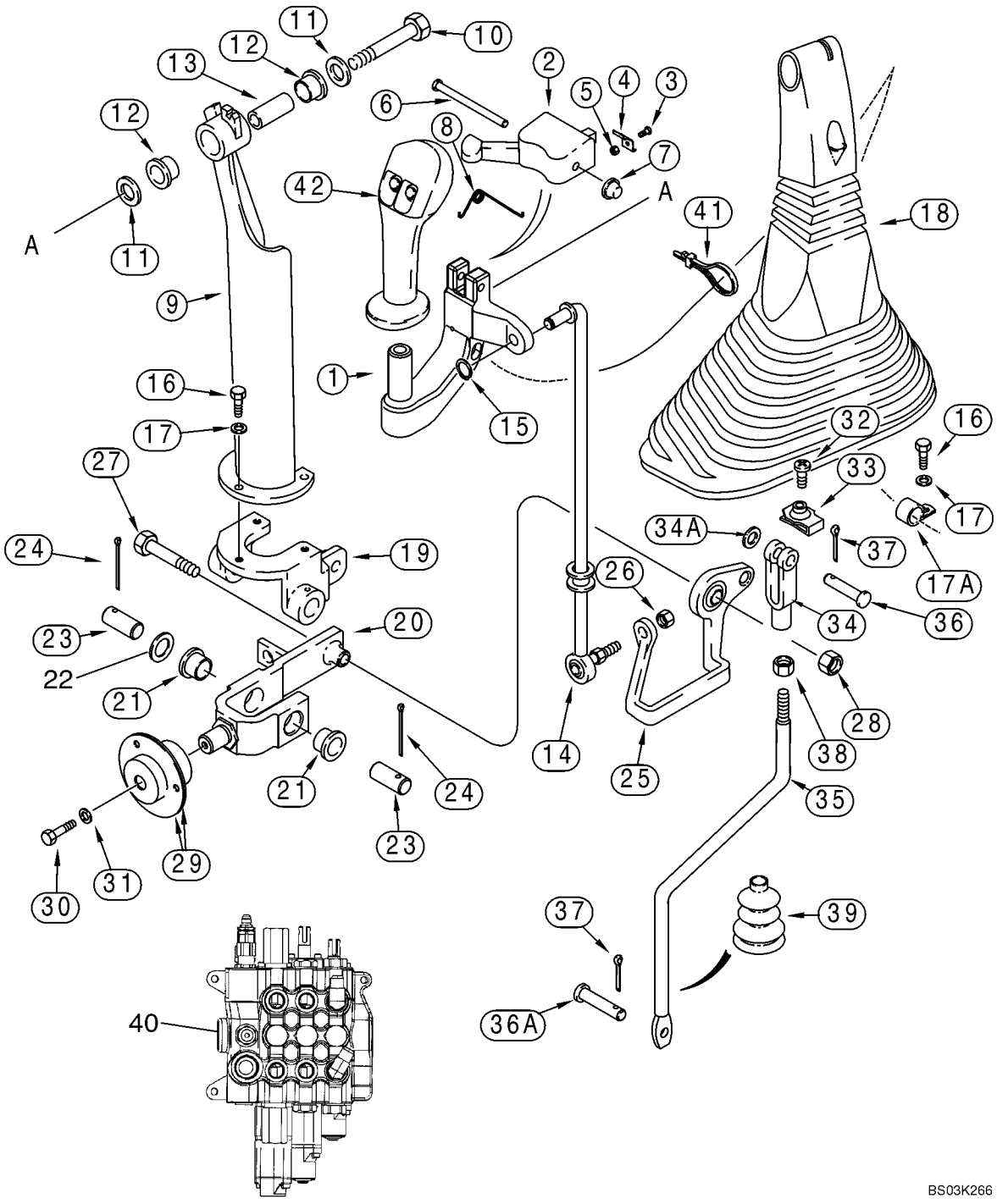

http://www.minnparbackhoeparts.com/

COMMANDES - BENNE DE CHARGEUSE

REF	FN	PART NUMBER	YR/SN	QTY	DESCRIPTION
1		297615A1		1	POIGNÉE
2		123815A1		1	LOQUET
3		170-104		2	VIS No. 5 x 3/8
4		129914A1		2	RESSORT
5		225-14105		2	ECROU No. 5
6		439-5436		1	GOUPILLE 1/4 x 2-1/4
7		143210A1		1	OBTURATEUR CAP
8		124243A1		1	RESSORT
9		123493A1		1	SUPPORT
10		413-632		1	BOULON 3/8 x 2
11		495-21044		2	RONDELLE 7/16 x 1 x 5/64
12		108088A1		2	BAGUE
13		133989A1		1	AXE, GROS SLEEVE
14		239306A1		1	TIGE-DE-COMMANDE
15		103-1437		1	CLIP RETAINING RING
16		614-6020		3	BOULON M6 x 20; Replaces 614-6016 M6 x 16 Bolt Used On Some Models
17		495-11028		3	RONDELLE 9/32 x 5/8 x 1/16
17A		515-2295		1	COLLIER 3/8 ID
18		133617A1		1	COIFFE
19		195615A1		1	SUPPORT
20		176311A1		1	JOINT GOMME Incl. Ref 21
21		108088A1		2	BAGUE
22		495-81184		1	RONDELLE
23		102761A1		2	AXE, GROS
24		432-828		2	GOUPILLE 1/8" x 1 3/4"
25		112382A1		1	ARTICULATION Bellcrank
26		425-116		1	ECROU 3/8 NF
27		413-632		1	BOULON 3/8 x 2
28		231-1446		1	CONTRE-ECROU 3/8
29		112380A1		2	PALIER Incl. (1) 465004R91 Internal Bearing
		465004R91		1	ROULEMENT
30		614-6016		1	BOULON M6 x 16
31		396-41028		1	RONDELLE 9/32 x 7/8 x 3/32
32		87310126		1	VIS No. 10 x 3/4, Stainless Steel; Replaces 140-107 Non-Stainless Steel Screw Used On Some Models
33		131-121		1	DOUILLE DE CENTRAGE No. 10

http://www.minnparbackhoeparts.com/

COMMANDES - BENNE DE CHARGEUSE

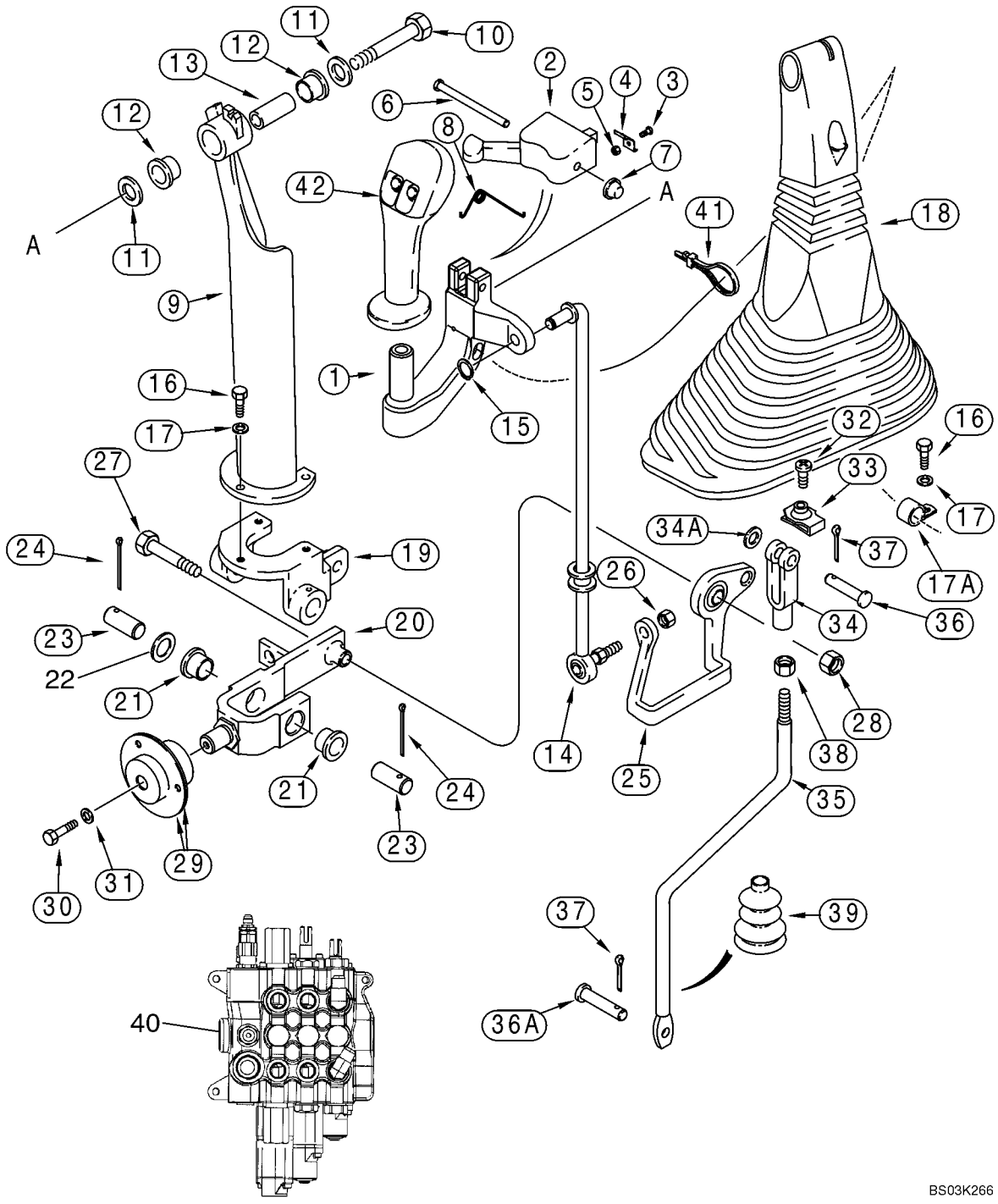

http://www.minnparbackhoeparts.com/

COMMANDES - BENNE DE CHARGEUSE

REF	FN	PART NUMBER	YR/SN	QTY	DESCRIPTION
34		213-126		1	FOURCHETTE 3/8 NF
34A		495-11041		1	RONDELLE 13/32 x 13/16 x 1/16
35		87428153		1	TIGE FILETÉE Clam Control Rod
36		D149288		1	AXE, GROS
36A		D149287		1	AXE, GROS
37		432-612		2	GOUPILLE 3/32" x 3/4"
38		425-116		1	ECROU 3/8 NF
39		132873A1		1	SOUFFLET
		189109A1		1	RESSORT Boot Retainer
40		REF		1	NOTICE LOADER CONTROL VALVE, Three Spool; See Figure 08-35 For Three Spool Valve Options
41		L18337		1	SANGLE 15 in
42		87412687		1	POIGNÉE Loader Control Lever, Two Button, Declutch and Differential Lock Switches; Models Without Powershift Transmission
42A		87412695		1	POIGNÉE Loader Control Lever, Three Button; Kick Down, Declutch and Differential Lock Switches; Models With Powershift Transmission; Not Illustrated
		256347A1		1	CONNECTEUR
		258616A1		1	SERRURE
		298176A1		1	BOUCHON Used With Ref 42 Handle
		87301351		X	MASTIC Permabond Adhesive, F246, 1 ml With No. 5 Initiator; For Attaching Ref 1 to Ref 42

http://www.minnparbackhoeparts.com/

09-03		p1	05/05

COMMANDES - ASSIETTE AUTOMATIQUE DES BRAS DE RELEVAGE

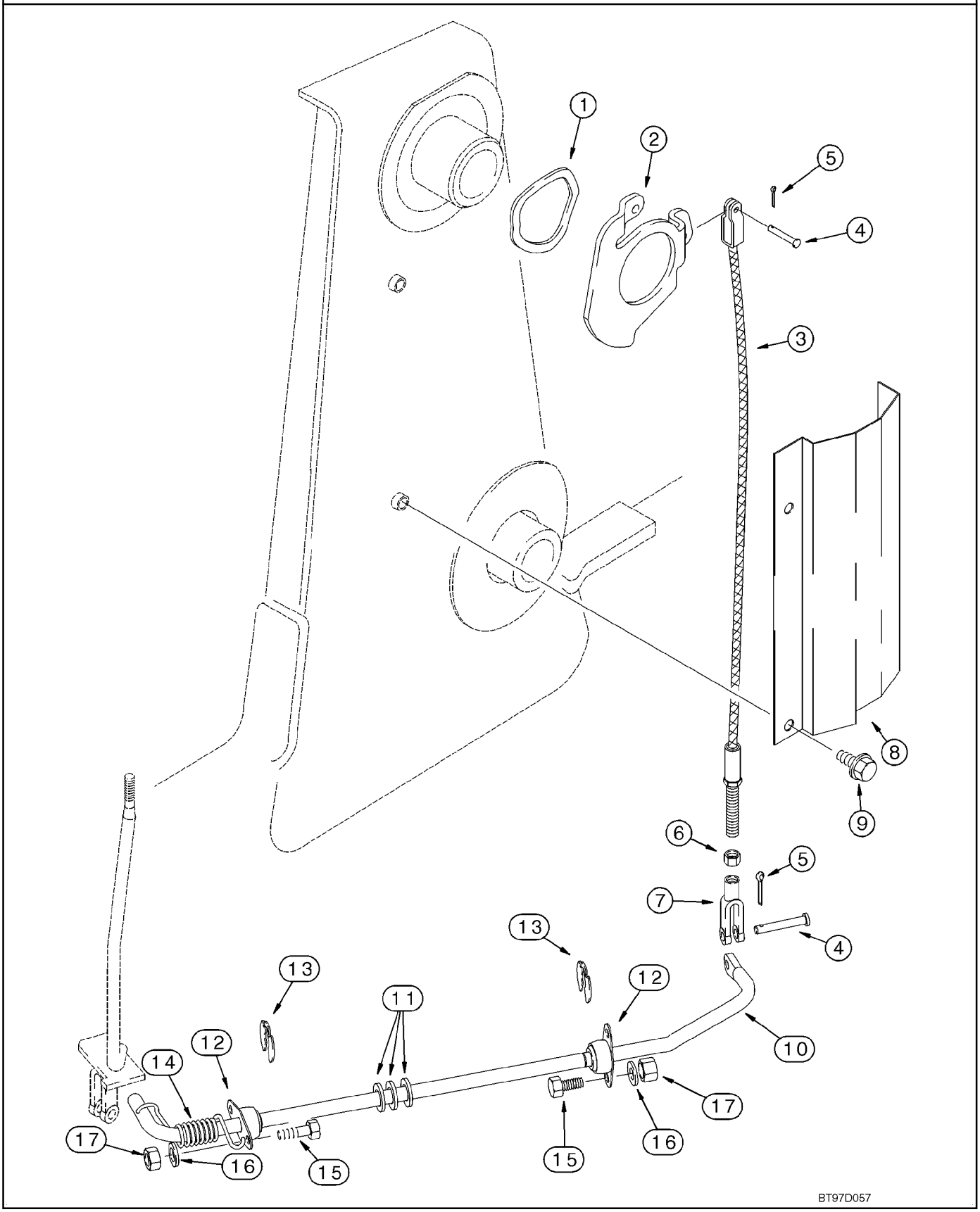

http://www.minnparbackhoeparts.com/

COMMANDES - ASSIETTE AUTOMATIQUE DES BRAS DE RELEVAGE

REF	FN	PART NUMBER	YR/SN	QTY	DESCRIPTION
1		137283A1		1	RONDELLE
2		142404A1		1	CAME
3		87428645		1	CABLE Self-Leveling Cable
4		D149287		2	AXE, GROS
5		432-612		2	GOUPILLE 3/32" x 3/4"
6		425-115		1	ECROU 5/16 NF
7		239406A1		1	FOURCHETTE 5/16
8		139865A1		1	PROTECTEUR
9		844-10020		2	VIS M10 x 20
		87417601		1	TRINGLE (ASSEMBLEE) Incl. Ref 10 - 12
10		NSS		1	NON FOURNI SEPAREMENT Rod
11		A30881		3	RONDELLE
12		L15401		2	ROULEMENT
13		D95096		2	ANNEAU
14		124721A1		1	RESSORT
15		614-8025		4	BOULON M8 x 25
16		895-11008		4	RONDELLE 9 x 17 x 1,6 mm
17		829-1408		4	ECROU M8; 10

http://www.minnparbackhoeparts.com/

09-04		p1	05/05

CADRE - RELEVAGE DE LA CHARGEUSE

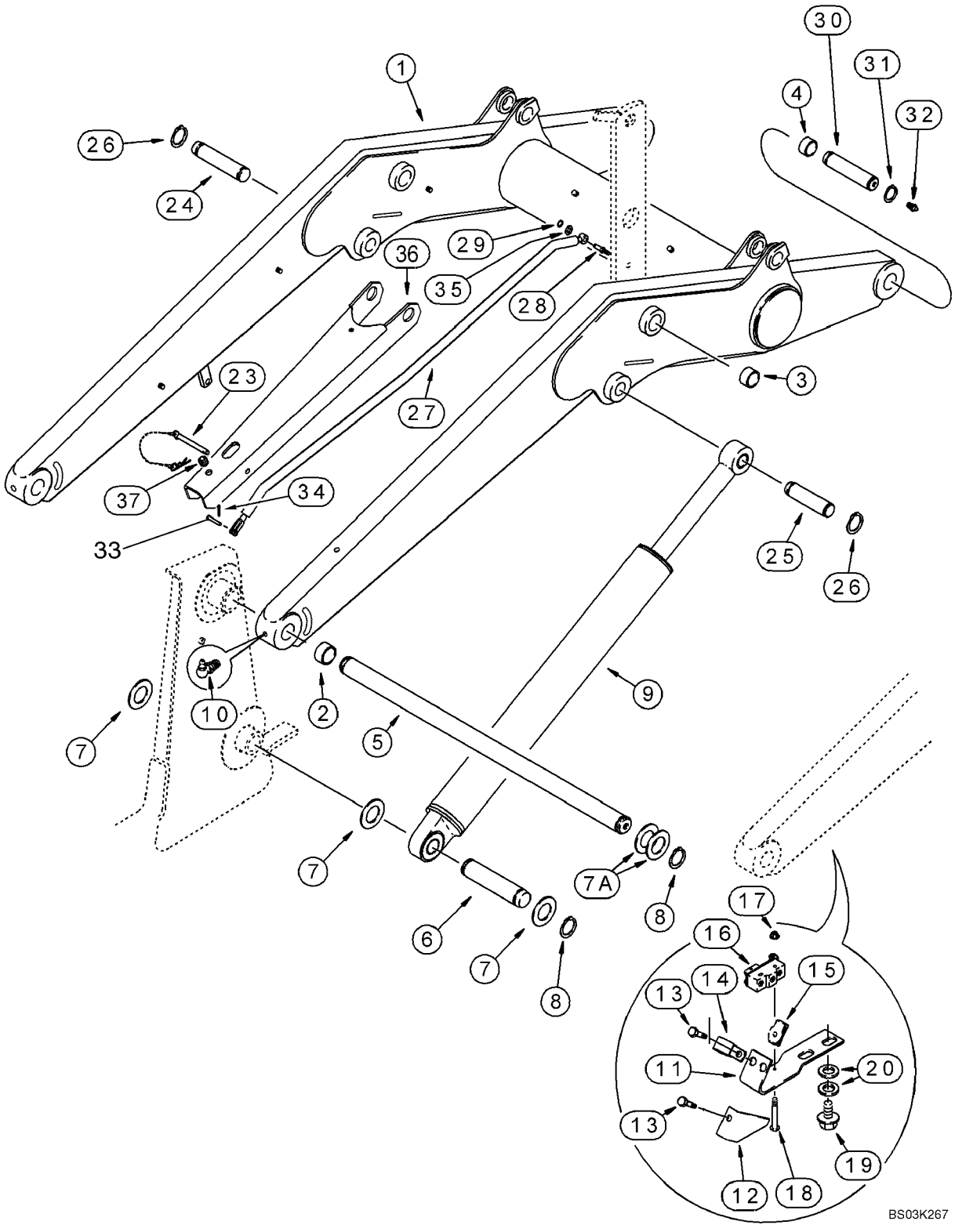

http://www.minnparbackhoeparts.com/

CADRE - RELEVAGE DE LA CHARGEUSE

REF	FN	PART NUMBER	YR/SN	QTY	DESCRIPTION
		REF			NOTICE LIFT CYLINDER, SUPPORT STRUT, RETURN-TO-DIG AND ANTIROLLBACK
1		87426379		1	BRAS (ASSEMBLE) Incl. Ref 2, 4
2		D127542		4	BAGUE
3		100696A1		4	BAGUE Bucket Cylinder Link Pivot; Not Included With Frame; Purchase Separately
4		109268A1		4	BAGUE
5		111522A1		1	AXE SHAFT
6		387019A1		2	AXE
7		495-81282		6	RONDELLE 2-1/16 x 3 x 3/32
7A		181842A1		X	RONDELLE
8		800-44050		6	ANNEAU-D'ARRET No. 50
9		384240A1		2	VERIN 82.6 ID x 766 mm strk; Loader Lift; See Figure 08-62
10		219-55		2	GRAISSEUR 90 deg, 1/8 PT x 27/32
11		128818A1		1	SUPPORT Return-To-Dig
12		142524A1		1	PROTECTEUR
13		614-6016		2	BOULON M6 x 16
14		515-2179		1	COLLIER 7,9 mm
15		833-40406		2	ECROU M6
16		D137363		1	CONTACTEUR Return-To-Dig
17		193-1003		2	ECROU No. 6
18		440-10616		2	VIS No. 6 x 1
19		128312A1		2	BOULON M10 x 15
20		895-11010		4	RONDELLE 11 x 21 x 2 mm
23		104824A1		1	AXE, GROS
24		118900A1		1	AXE, GROS
25		113629A1		1	AXE, GROS
26		800-44040		4	ANNEAU-D'ARRET
27		311200A1		1	TRINGLE (ASSEMBLEE) Antirollback
28		192815A1		1	AXE
29		103-3350		1	ANNEAU D'ARRÊT No. 50
30		118901A1		2	AXE, GROS
31		800-44040		4	ANNEAU-D'ARRET
32		219-1		2	GRAISSEUR 1/8 PT x 21/32
33		427-6100		1	AXE DE CHAPE 3/8 x 7
34		432-612		1	GOUPILLE 3/32" x 3/4"

http://www.minnparbackhoeparts.com/

09-04		p2	05/05

CADRE - RELEVAGE DE LA CHARGEUSE

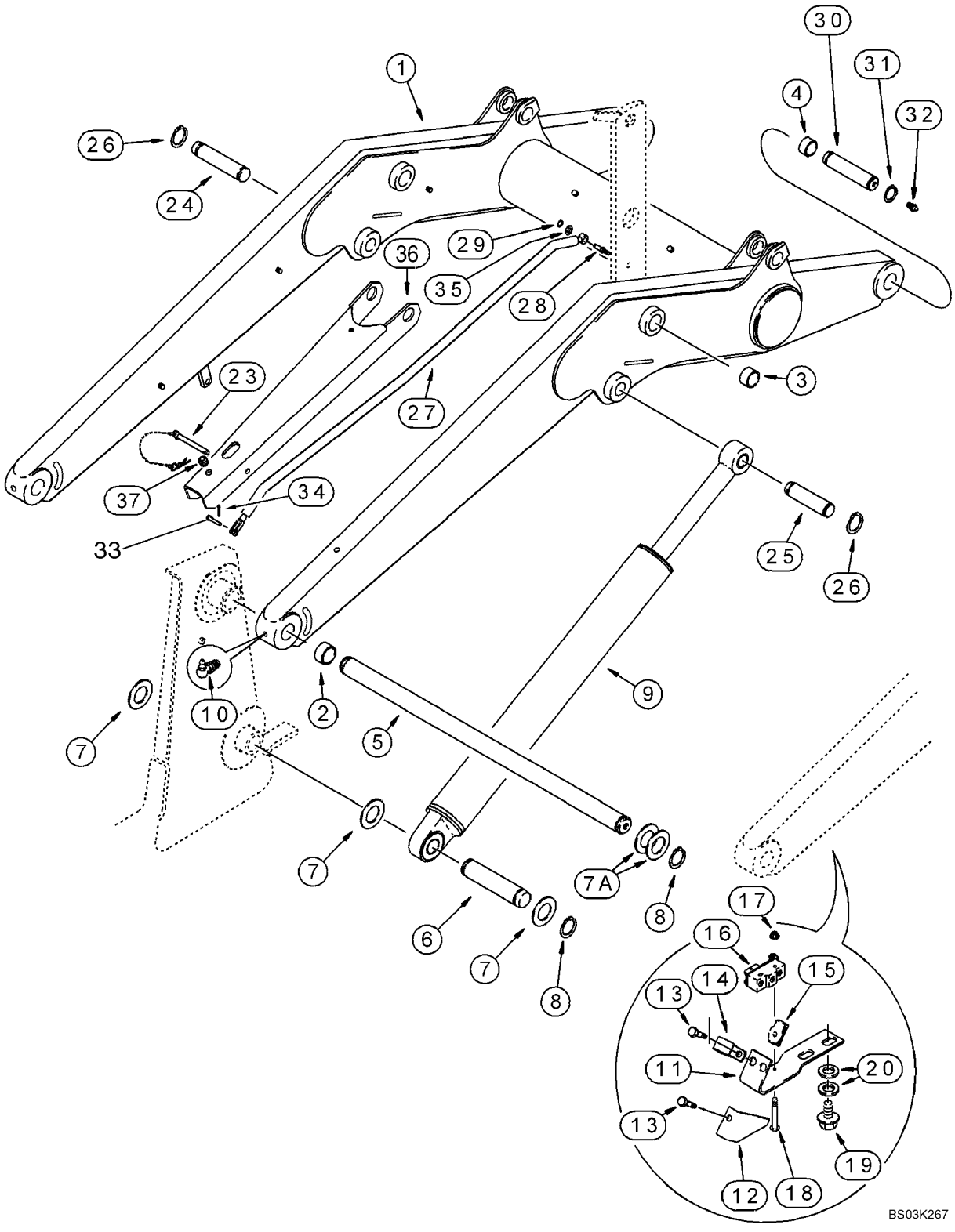

http://www.minnparbackhoeparts.com/

CADRE - RELEVAGE DE LA CHARGEUSE

REF	FN	PART NUMBER	YR/SN	QTY	DESCRIPTION
35		495-11053		1	RONDELLE 17/32 x 1-1/16 x 3/32
36		341564A2		1	PILIER-SUPPORT
37		344892A1		1	PASSE-FIL

http://www.minnparbackhoeparts.com/

09-05		p1	03/05

CADRE - TRINGLERIE DES BRAS DE RELEVAGE

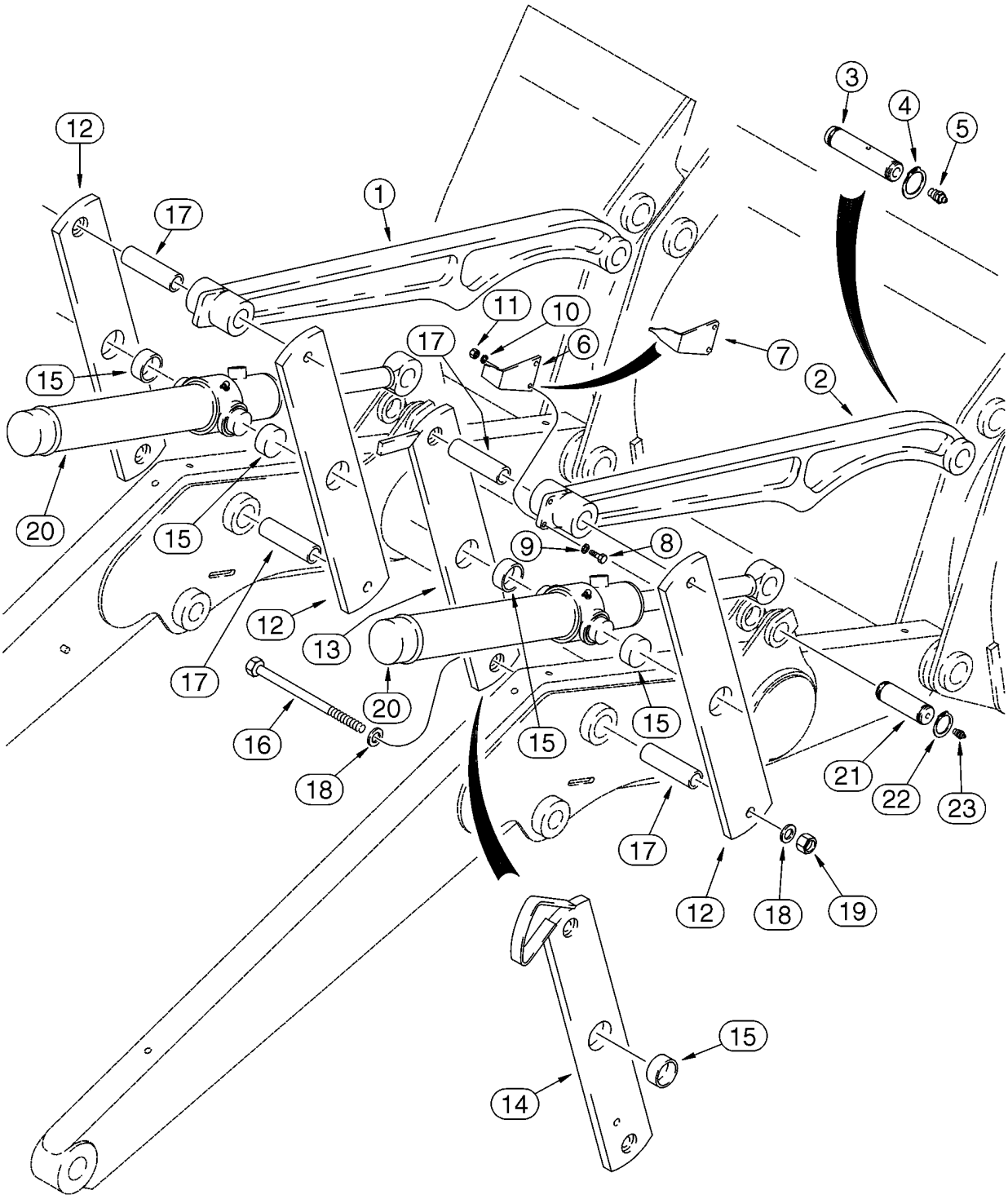

http://www.minnparbackhoeparts.com/

CADRE - TRINGLERIE DES BRAS DE RELEVAGE

REF	FN	PART NUMBER	YR/SN	QTY	DESCRIPTION
1		331621A1		1	BIELLETTE Bucket, Left-Hand; Without Mounting Holes For Bucket Position Pointer; For Service, Order 331620A1
2		331620A1		1-2	BIELLETTE Bucket, Left-Hand or Right-Hand; With Mounting Holes For Bucket Position Pointer
3		118901A1		2	AXE, GROS
4		800-44040		4	ANNEAU-D'ARRET
5		219-1		2	GRAISSEUR 1/8 PT x 21/32
6		D121194		1	PALPEUR Models Without Clam Bucket
7		250851A1		1	PALPEUR Models With Clam Bucket
8		614-8030		2	BOULON M8 x 30
9		895-11008		2	RONDELLE 9 x 17 x 1,6 mm
10		892-11008		2	RONDELLE M8
11		829-1408		2	ECROU M8; 10
12		139180A1		3	BIELLETTE Bucket Cylinder, Outer Right-Hand; Inner and Outer Left-Hand; Incl. Ref 15
13		139235A1		1	BIELLETTE Bucket Cylinder, Inner Right-Hand; With Extra Hole For Antirollback Rod; Models Without Clam Bucket; Incl. Ref 15
14		139195A1		1	BIELLETTE 580SM, Bucket Cylinder, Inner Right-Hand; With Extra Hole For Antirollback Rod; Models With Clam Bucket; Incl. Ref 15
14		275937A1		1	MAILLON (ASSEMBLE) 580SM+, Bucket Cylinder, Inner Right-Hand; With Extra Hole For Antirollback Rod; Models With Clam Bucket; Incl. Ref 15
15		D151034		1	BAGUE
16		827-20190		4	VIS M20 x 190; 10.9
17		D132076		4	ENTRETOISE
18		896-11020		8	RONDELLE 22 x 37 x 4 mm
19		829-1420		4	ECROU M20, Cl 10
20		113133A2		2	VERIN 76 ID x 522 mm strk; Loader Bucket; See Figure 08-63
21		116339A1		2	AXE, GROS
22		800-44040		4	ANNEAU-D'ARRET
23		219-1		2	GRAISSEUR 1/8 PT x 21/32

http://www.minnparbackhoeparts.com/

09-06		p1	09/03

GODET, CHARGEUSE À LONGUE LÈVRE (82 IN) (580SM)

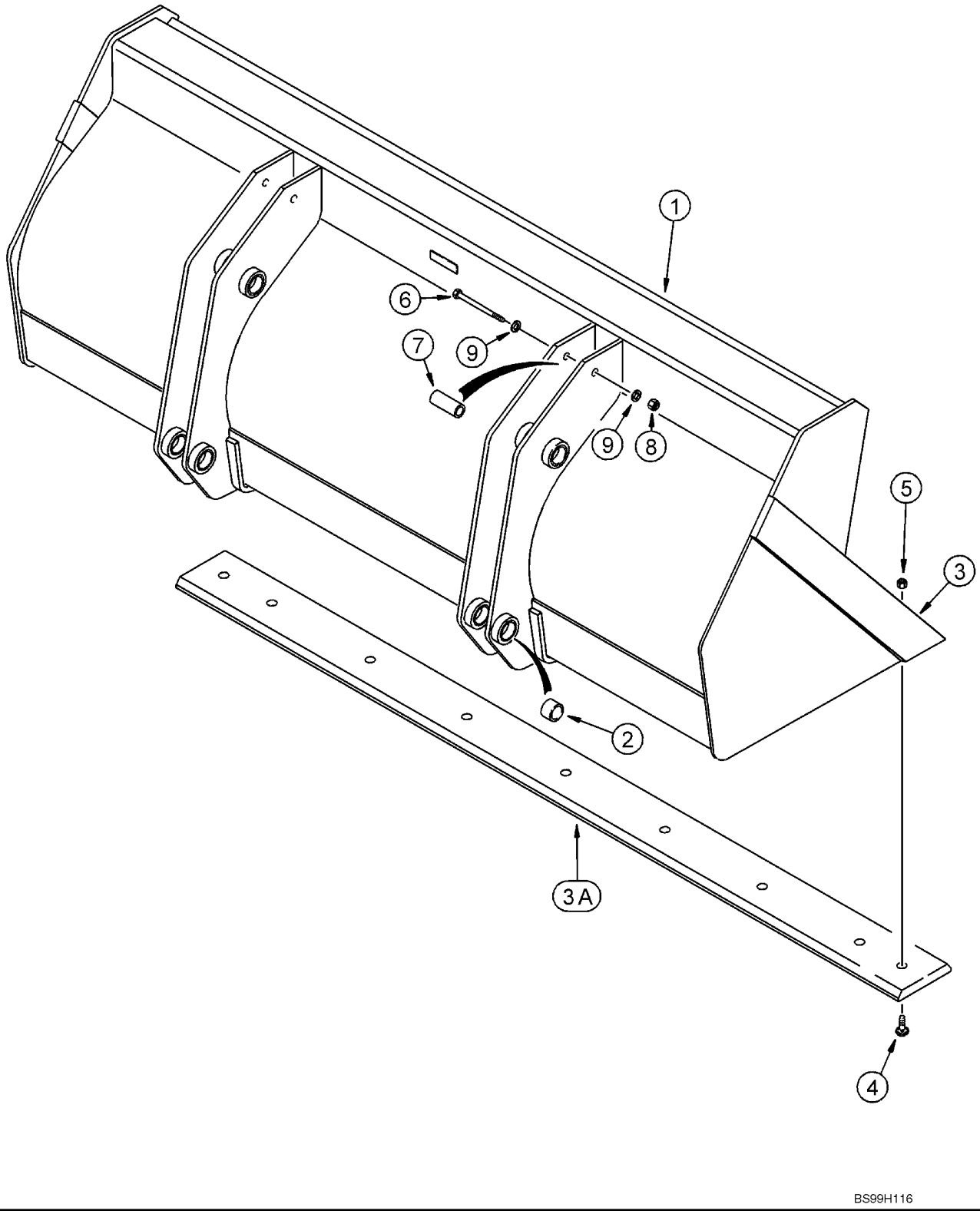

http://www.minnparbackhoeparts.com/

GODET, CHARGEUSE À LONGUE LÈVRE (82 IN) (580SM)

REF	FN	PART NUMBER	YR/SN	QTY	DESCRIPTION
		141473A1		1	GODET 2083 mm (82 in); Assembly Includes Bolt-On Cutting Edge; Without Bucket Teeth; Incl. 1 - 9; Order Through Parts Marketing
1		NSS		1	NON FOURNI SEPAREMENT Bucket; Incl. Ref 2, 3
2		D129264		8	BAGUE
3		113457A1		1	PLAQUE, GRANDE Weld-On
3A		112946A1		1	LAME D'ATTAQUE
4		20-21232		10	VIS
5		429-1012		10	ECROU 3/4; 8
6		828-20160		2	VIS M20 x 160; 10.9
7		142538A1		2	ENTRETOISE
8		832-10420		2	ECROU M20
9		896-11020		4	RONDELLE 22 x 37 x 4 mm

http://www.minnparbackhoeparts.com/

09-07		p1	03/05

GODET, CHARGEUSE À LONGUE LÈVRE (93 IN) (580SM / 580SM+)

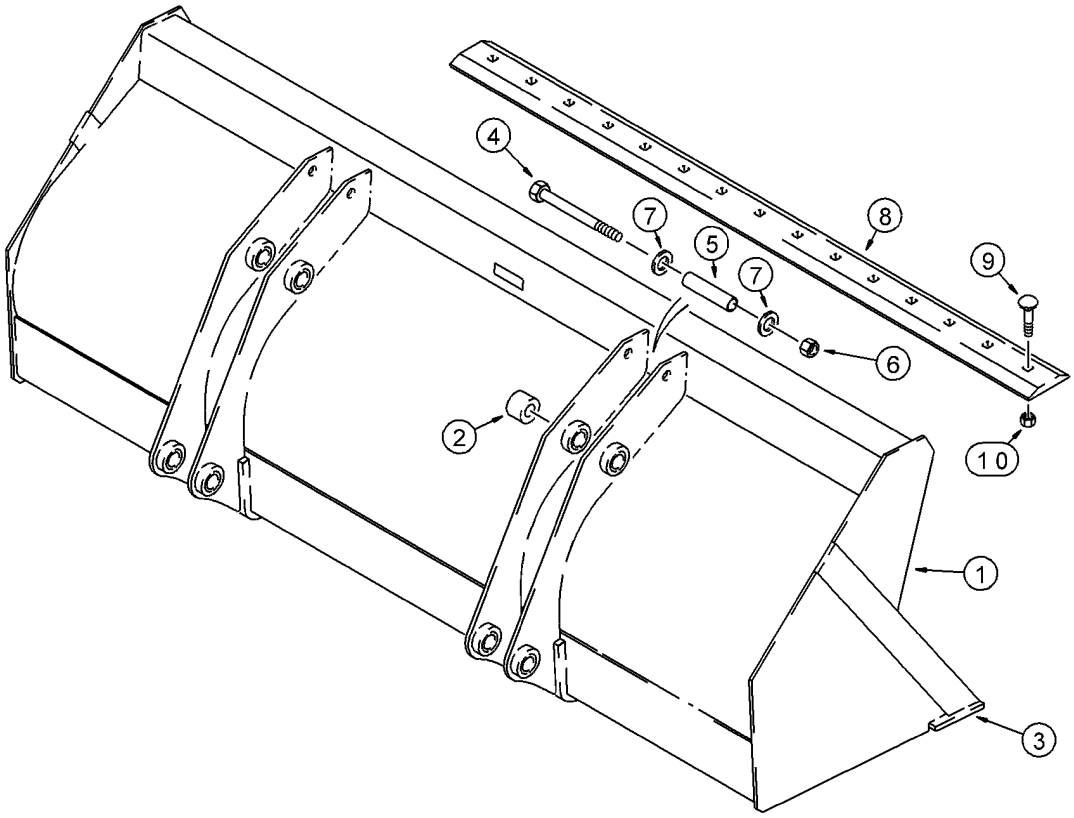

BS00C247

http://www.minnparbackhoeparts.com/

GODET, CHARGEUSE À LONGUE LÈVRE (93 IN) (580SM / 580SM+)

REF	FN	PART NUMBER	YR/SN	QTY	DESCRIPTION
		87441059		1	GODET 2362 mm (93 in); Without Bucket Teeth; Assembly Includes Bolt-On Cutting Edge; Incl. Ref 1 - 10; Order Through Parts Marketing; Replaces 142687A1
1		NSS		1	NON FOURNI SEPAREMENT Bucket; Incl. Ref 2, 3
2		D129264		8	BAGUE
3		134844A1		1	PLAQUE, GRANDE Weld-On
4		828-20160		2	VIS M20 x 160; 10.9
5		142538A1		2	ENTRETOISE
6		832-10420		2	ECROU M20
7		896-11020		4	RONDELLE 22 x 37 x 4 mm
8		185506A1		1	BORD BLADE, Bolt-On
9		20-21232		10	VIS
10		429-1012		10	ECROU 3/4; 8

http://www.minnparbackhoeparts.com/

09-08		p1	03/05

GODET, BENNE DE CHARGEUSE (82 IN) (580SM)

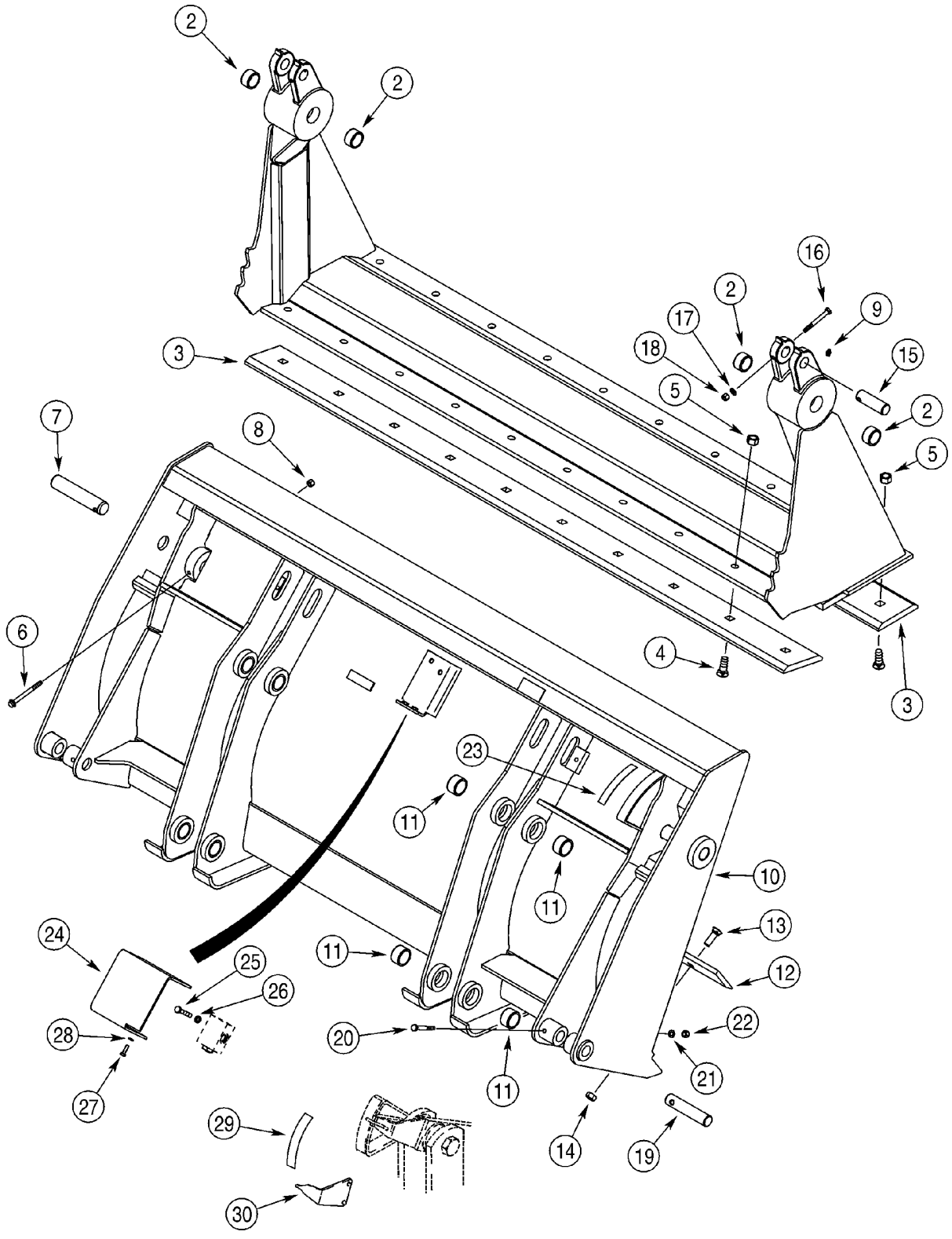

http://www.minnparbackhoeparts.com/

GODET, BENNE DE CHARGEUSE (82 IN) (580SM)

REF	FN	PART NUMBER	YR/SN	QTY	DESCRIPTION
		87455509		1	GODET ASSEMBLY; 2083 mm (82 in); With Hydraulics; Includes 376288A2 Bucket Assembly, Ref 1 - 28; Also Includes Hydraulics on Figure 08-07, Ref 1 - 29; Order Through Parts Marketing; Replaces 376528A4
		{376288A2}		1	BUCKET ASSEMBLY; 2083 mm (82 in); Without Hydraulics; Includes 411668A1 Bucket and (2) Ref 7 Pins; Order Through Parts Marketing
		411668A1		1	GODET BUCKET ASSEMBLY; 2083 mm (82 in; Without Hydraulics; Incl. Ref 1 - 6, 8 - 14
		175156A1		1	COQUILLE CLAM, Incl. Ref 1, 2
1		NSS		1	NON FOURNI SEPAREMENT Clam Assy
2		D31140		4	BAGUE
3		142300A1		2	DEMI-LAME
4		20-21232		20	VIS 3/4 x 2
5		29-1012		20	ECROU 3/4; 8
6		844-10110		2	VIS Flange, M10 x 110
7		D51391		2	AXE, GROS
8		832-10410		2	ECROU M10
9		219-1		2	GRAISSEUR 1/8 PT x 21/32
		376286A2		1	GODET BLADE, Incl. Ref 10, 11
10		NSS		1	NON FOURNI SEPAREMENT Blade Assy, Dozer
11		D129264		8	BAGUE
12		121920A1		1	BORD Cutting
13		20-21032		10	BOULON 5/8 x 2
14		29-1010		10	ECROU 5/8
15		D51392		2	AXE
16		814-10090		2	BOULON M10 x 90
17		895-11010		2	RONDELLE 11 x 21 x 2 mm
18		832-10410		2	ECROU M10
19		D51393		2	AXE, GROS
20		814-10080		2	VIS M10 x 80
21		895-11010		2	RONDELLE 11 x 21 x 2 mm
22		832-10410		2	ECROU M10
23		321-1708		1	DECALCOMANIE
24		388848A1		1	GARANT Pilot Operated Check Valve
25		814-10060		2	BOULON M10 x 60

http://www.minnparbackhoeparts.com/

09-08		p2	03/05

GODET, BENNE DE CHARGEUSE (82 IN) (580SM)

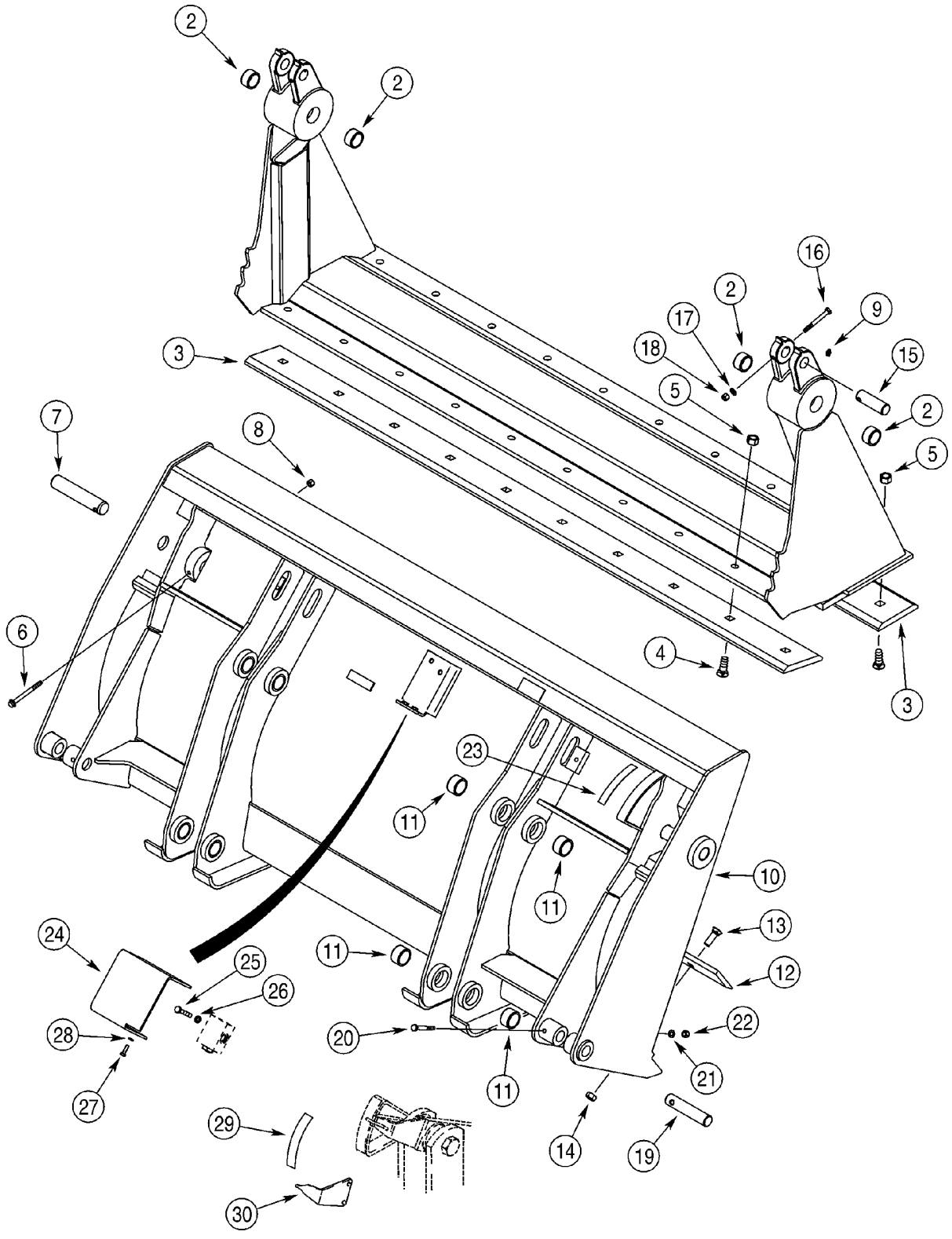

http://www.minnparbackhoeparts.com/

GODET, BENNE DE CHARGEUSE (82 IN) (580SM)

REF	FN	PART NUMBER	YR/SN	QTY	DESCRIPTION
26		892-11010		2	RONDELLE FREIN M10
27		614-8025		2	BOULON M8 x 25
28		892-11008		2	RONDELLE M8
29		321-1707		1	DECALCOMANIE
30		250851A1		1	PALPEUR

http://www.minnparbackhoeparts.com/

09-08A		p1	03/05

GODET, BENNE DE CHARGEUSE (93 IN) (580SM+)

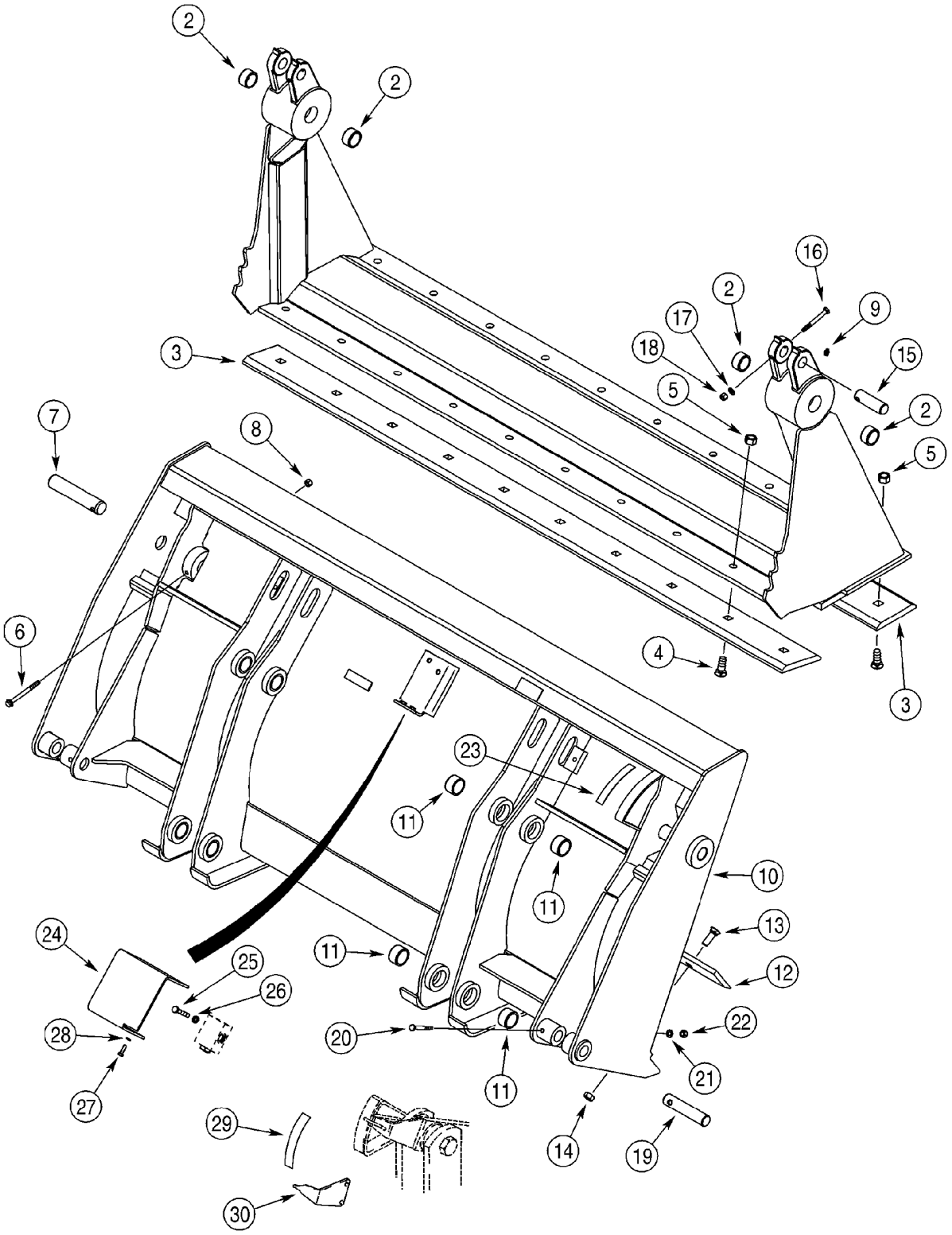

http://www.minnparbackhoeparts.com/

GODET, BENNE DE CHARGEUSE (93 IN) (580SM+)

REF	FN	PART NUMBER	YR/SN	QTY	DESCRIPTION
		87455505		1	GODET ASSEMBLY, 2362 mm (93 in); With Hydraulics; Incl. 87441073 Bucket Assembly, Ref 1 - 28; Also Includes Hydraulics On Figure 08-07, Ref 1 - 29; Order Through Parts Marketing; Replaces 376526A4, 87441062 Bucket Assembly
		87441073		1	GODET BUCKET ASSEMBLY, 2362 mm (93 in); Without Hydraulics; Incl. Ref 1 - 14; Order Through Parts Marketing; Replaces 376287A2 Bucket Assembly
		144210A1		1	GRIFFE CLAM, Incl. Ref 1, 2
1		NSS		1	NON FOURNI SEPAREMENT Clam Assy
2		D31140		4	BAGUE
3		142301A1		2	BORD Blade
4		20-21232		20	VIS 3/4 x 2
5		29-1012		20	ECROU 3/4; 8
6		844-10110		2	VIS Flange, M10 x 110
7		D51391		2	AXE, GROS
8		832-10410		2	ECROU M10
9		219-1		4	GRAISSEUR 1/8 PT x 21/32
		376285A2		1	GODET BLADE, Incl. Ref 10, 11; Used With 376526A4, 376287A2 Bucket Assembly
		87441074		1	GODET BLADE, Incl. Ref 10, 11; Used With 87455505, 87441073 Bucket Assembly
10		NSS		1	NON FOURNI SEPAREMENT Blade Assy; Dozer
11		D129264		8	BAGUE
12		133542A1		1	BORD Cutting
13		20-21032		10	BOULON 5/8 x 2
14		29-1010		10	ECROU 5/8
15		D51392		2	AXE
16		814-10090		2	BOULON M10 x 90
17		895-11010		2	RONDELLE 11 x 21 x 2 mm
18		832-10410		2	ECROU M10
19		D51393		2	AXE, GROS
20		814-10080		2	VIS M10 x 80
21		895-11010		2	RONDELLE 11 x 21 x 2 mm
22		832-10410		2	ECROU M10
23		321-1708		1	DECALCOMANIE

http://www.minnparbackhoeparts.com/

09-08A		p2	03/05

GODET, BENNE DE CHARGEUSE (93 IN) (580SM+)

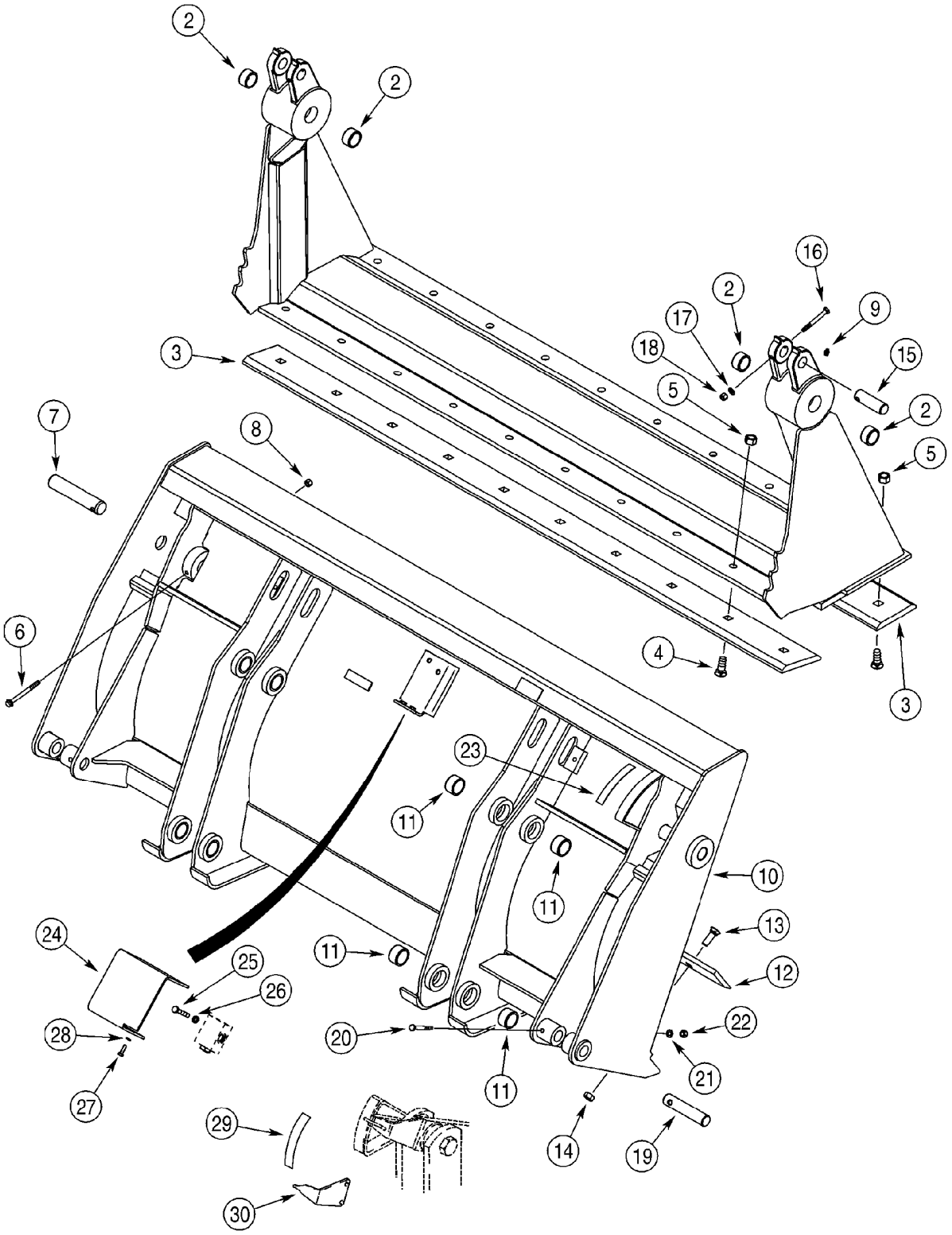

http://www.minnparbackhoeparts.com/

GODET, BENNE DE CHARGEUSE (93 IN) (580SM+)

REF	FN	PART NUMBER	YR/SN	QTY	DESCRIPTION
24		388848A1		1	GARANT Pilot Operated Check Valve
25		814-10060		2	BOULON M10 x 60
26		892-11010		2	RONDELLE FREIN M10
27		614-8025		2	BOULON M8 x 25
28		892-11008		2	RONDELLE M8
29		321-1707		1	DECALCOMANIE
30		250851A1		1	PALPEUR

http://www.minnparbackhoeparts.com/

09-09		p1	04/04

GARANT - DISTRIBUTEUR, BRAS DE RELEVAGE

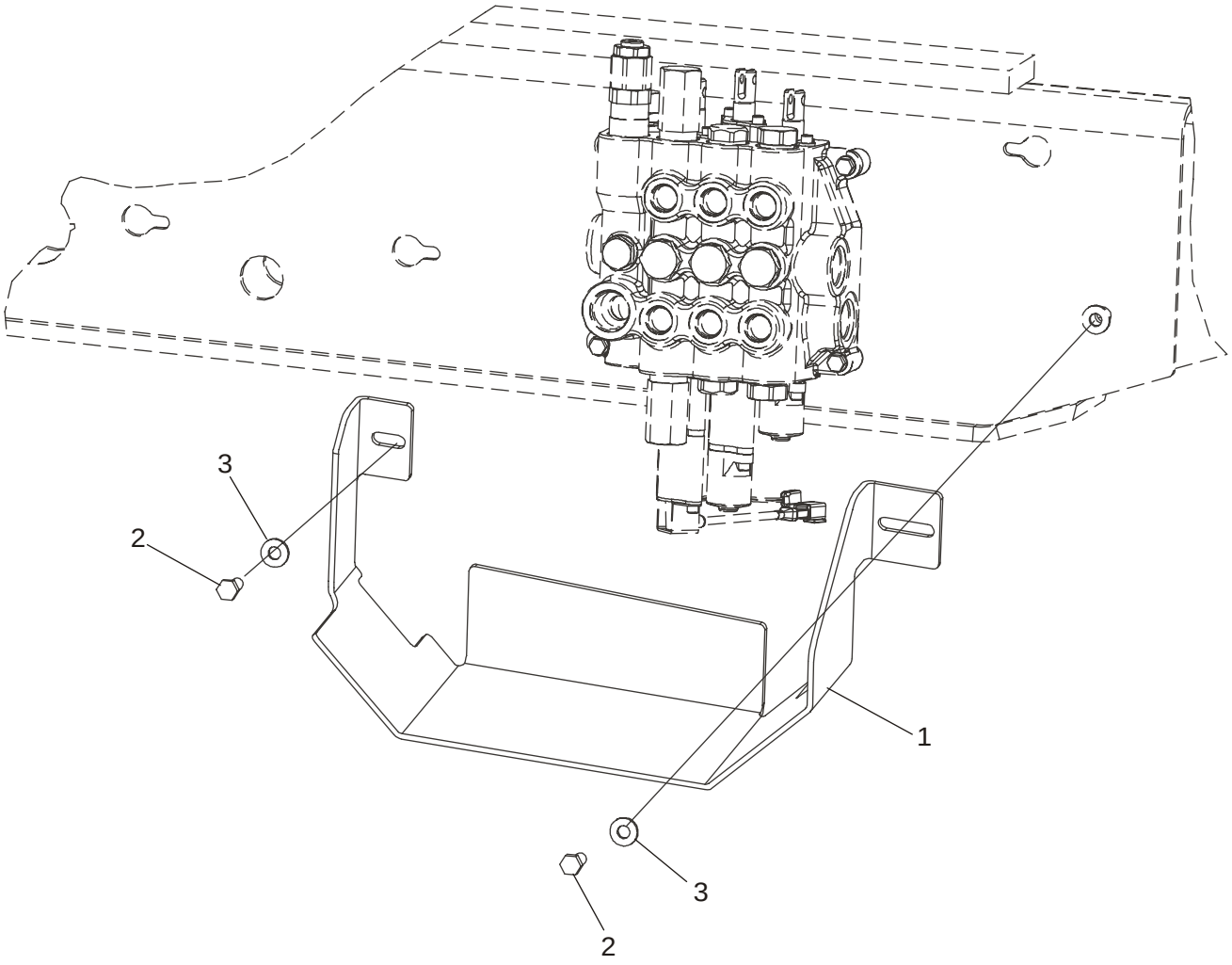

BS03K268

http://www.minnparbackhoeparts.com/

GARANT - DISTRIBUTEUR, BRAS DE RELEVAGE

REF	FN	PART NUMBER	YR/SN	QTY	DESCRIPTION
1		87444379		1	PROTECTION
2		614-10025		2	BOULON M10 x 25
3		896-15010		2	RONDELLE 11 x 24 x 3 mm

http://www.minnparbackhoeparts.com/

09-10		p1	04/05

COUPLEUR, OUTIL, DE SÉCURITÉ

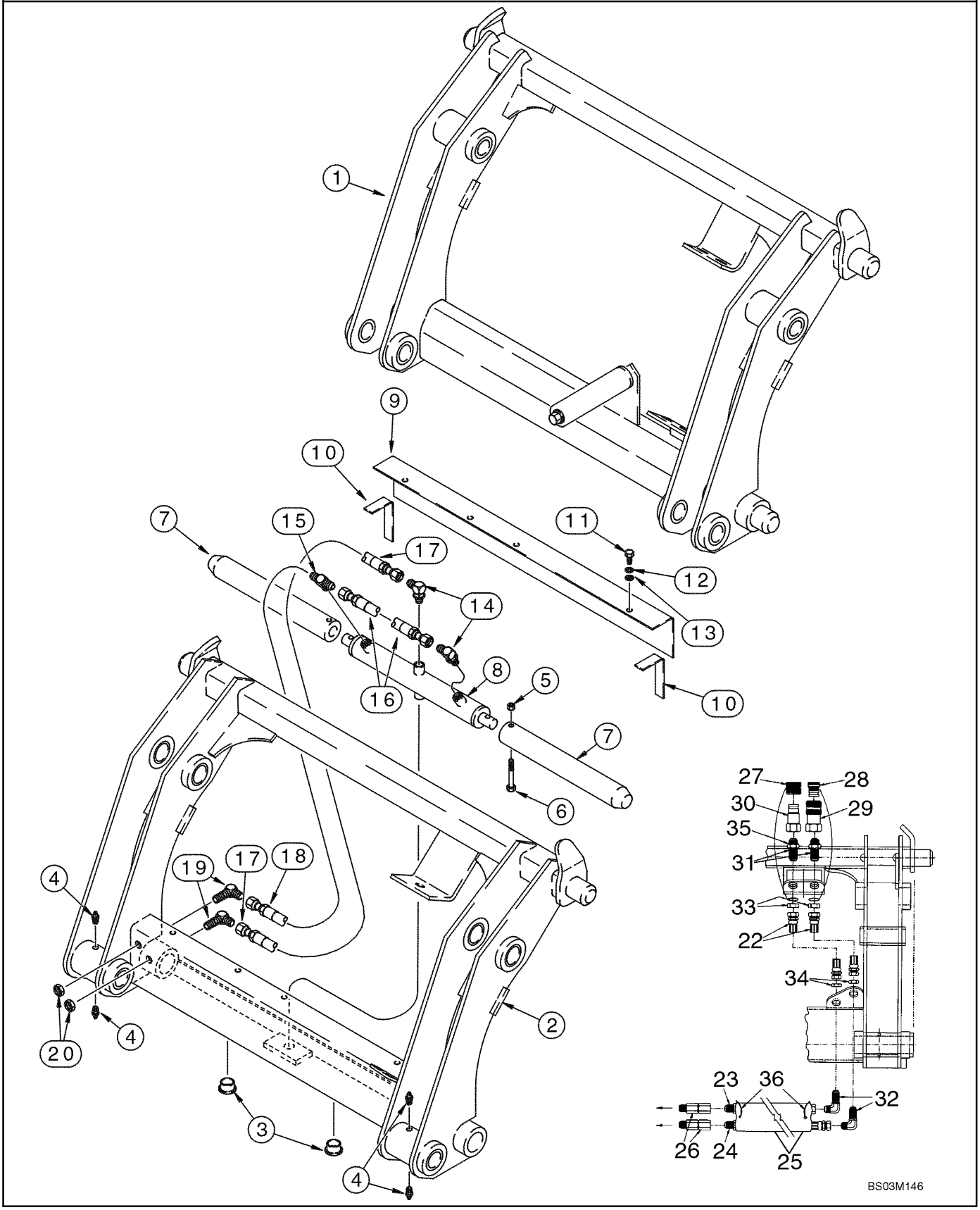

http://www.minnparbackhoeparts.com/

COUPLEUR, OUTIL, DE SÉCURITÉ

REF	FN	PART NUMBER	YR/SN	QTY	DESCRIPTION
		REF			NOTICE MANUAL COUPLER
1		191239A1		1	CHAPE Loader, Complete; Component Parts Not Serviced Separately; Used With D121194 Bucket Position Pointer and 139235A1 Bucket Cylinder Link; See Figure 09-05, Ref 6, 13
		REF			NOTICE HYDRAULIC COUPLER
		292969A2		1	CHAPE Loader; Incl. Ref 2 - 35; With Auxiliary Hydraulics; For Complete Assembly, Order From Machinery Price List; Category III; For Hydraulic Tool Quick Coupler Hydraulics, See Figure 08-26, 08-27
2		NSS		1	NON FOURNI SEPAREMENT Frame
3		305497A1		2	BOUCHON 1-1/4 ID x 1/2 in OD; Plastic
4		219-87		4	RACCORD 1/4 st x 9/16
5		231-4246		2	ECROU 3/8
6		326-640		2	BOULON 3/8 x 2-1/2; 8
7		305496A1		2	AXE 1-15/16 OD x 15 in lg
8		305499A1		1	VERIN Double Acting; Component Parts Not Serviced Separately
9		305495A1		1	COUVERCLE
10		NSS		2	NON FOURNI SEPAREMENT Seal; Foam
11		413-516		3	BOULON 5/16 x 1
12		492-11031		3	RONDELLE FREIN 5/16"
13		495-11034		3	RONDELLE 11/32 x 11/16 x 1/16
14		218-5105		2	COUDE 9/16 fl x Or; Includes 237-6006 O-Ring
		237-6006		1	JOINT THORIQUE 15/32 ID x 5/64, Boss Seal
15		218-5182		1	TE 9/16 adj Or x fl x fl; Includes 237-6006 O-Ring
		237-6006		1	JOINT THORIQUE 15/32 ID x 5/64, Boss Seal
16		305492A1		1	FLEXIBLE (ASSEMBLE) 260 mm (10-1/4 in)
17		305494A1		1	FLEXIBLE (ASSEMBLE) 387 mm (15-1/4 in)
18		305493A1		1	FLEXIBLE (ASSEMBLE) 235 mm (9-1/4 in)
19		218-693		2	COUDE 9/16 fl x blkhd fl
20		218-1254		2	CONTRE-ECROU 9/16 NF
21		305508A1		1	POCHETTE Decal; Includes Four Decals; Not Illustrated
22		307385A1		2	FLEXIBLE (ASSEMBLE) 387 mm (15-1/4 in)
23		307386A1		1	FLEXIBLE (ASSEMBLE) 629 mm (24-3/4 in)

http://www.minnparbackhoeparts.com/

09-10		p2	04/05

COUPLEUR, OUTIL, DE SÉCURITÉ

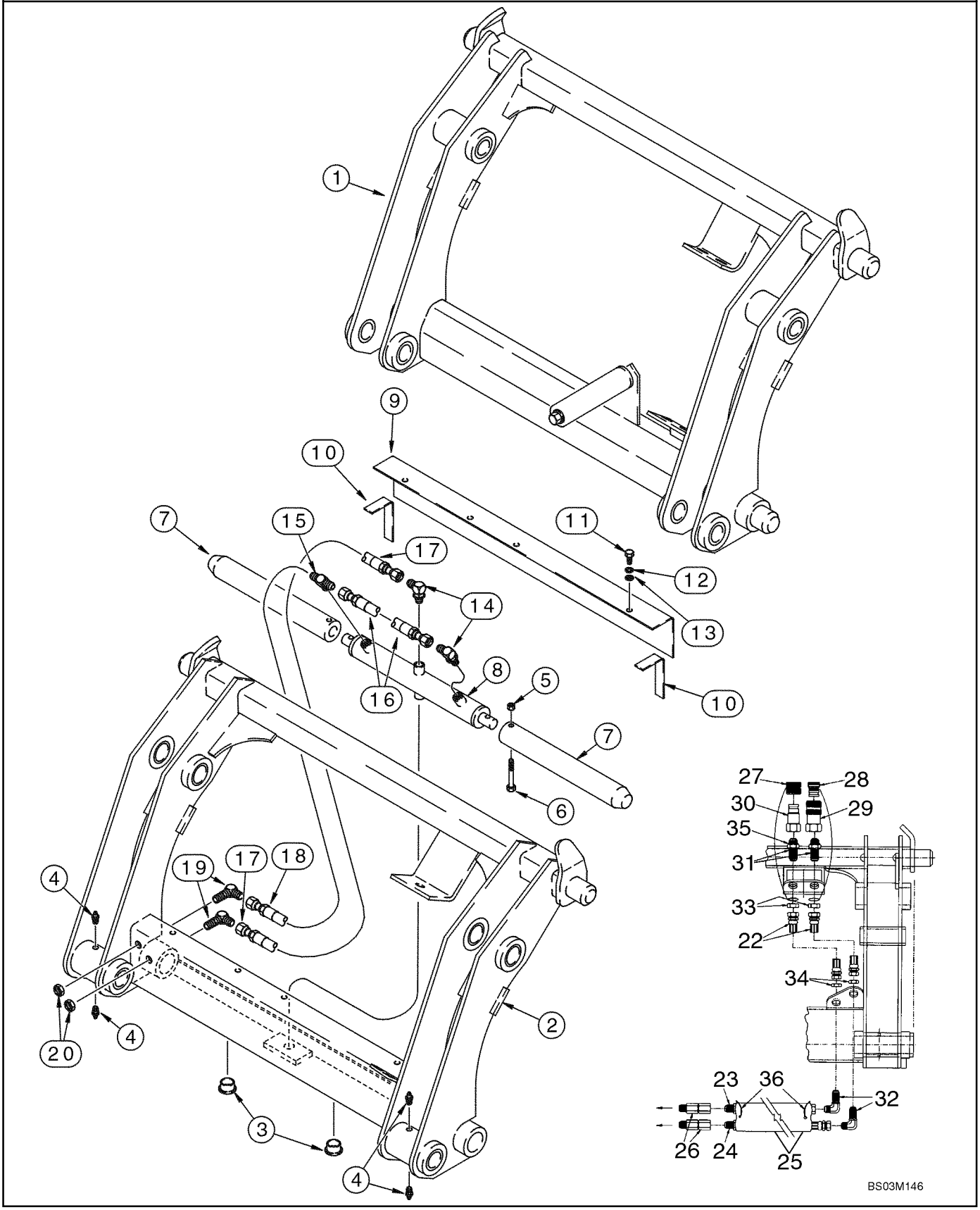

http://www.minnparbackhoeparts.com/

COUPLEUR, OUTIL, DE SÉCURITÉ

REF	FN	PART NUMBER	YR/SN	QTY	DESCRIPTION
24		307387A1		1	FLEXIBLE (ASSEMBLE) 718 mm (28-1/4 in)
25		307388A1		1	FLEXIBLE SLEEVE, 660 mm (26 in)
26		307389A1		2	PIVOT Swivel
27		137344A1		1	BOUCHON Male Coupling
28		137343A1		1	BOUCHON Female Coupling
29		123537A1		1	RACCORD Quick Disconnect; Female
30		245423A1		1	RACCORD
31		126155A1		2	RACCORD 1-1/16 blkhd fl x Or
32		218-695		2	RACCORD ELBOW, 90 deg, 7/8 fl x bkhd fl
33		218-1256		2	CONTRE-ECROU 1-1/16
34		218-1279		2	ECROU 7/8
35		237-6012		2	JOINT TORIQUE 59/64 ID x 7/64
36		L18337		2	SANGLE Tie

http://www.minnparbackhoeparts.com/

09-11		p1	05/05

COUVERCLES - TOURELLE DE LA PELLE RETRO, SANS DE COMMANDE PILOTE

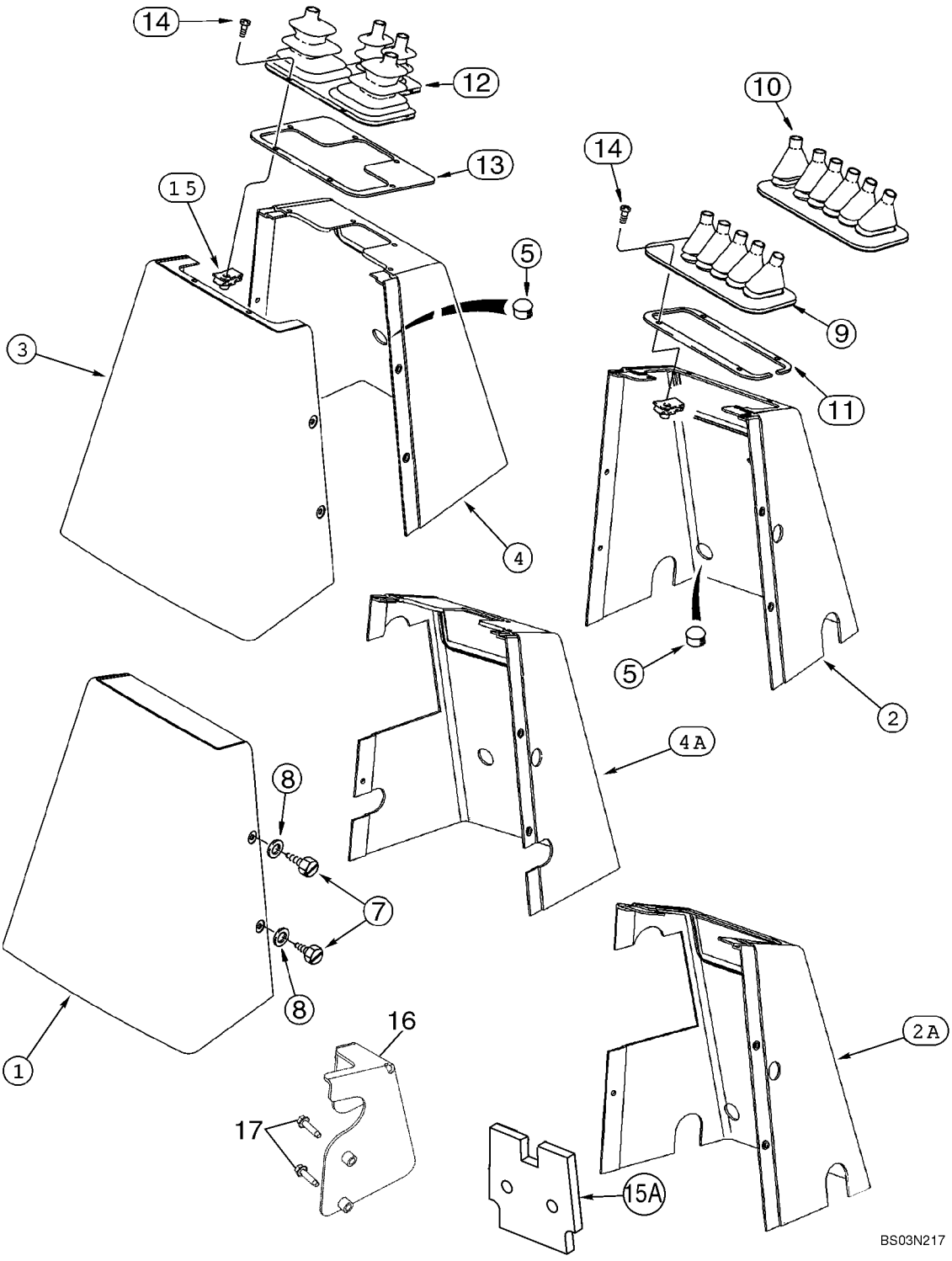

http://www.minnparbackhoeparts.com/

COUVERCLES - TOURELLE DE LA PELLE RETRO, SANS DE COMMANDE PILOTE

REF	FN	PART NUMBER	YR/SN	QTY	DESCRIPTION
1		390759A1		1	RECOUVREMENT Rear; All Models With Foot Swing
2		390760A1		1	RECOUVREMENT Front; Foot Swing; Without Auxiliary Hydraulics
2A		87411083		1	RECOUVREMENT Front; Foot Swing; With Auxiliary Hydraulics
3		390758A1		1	RECOUVREMENT Rear; All Models With Hand Swing
4		390690A1		1	RECOUVREMENT Front; Hand Swing; Without Auxiliary Hydraulics
4A		87411084		1	RECOUVREMENT Front; Hand Swing; With Auxiliary Hydraulics
5		353-411		1-2	BOUCHON 1 in dia
7		87310156		5	VIS M6.3 x 16 st, Stainless Steel; Replaces 779-37616 Non-Stainless Steel Screw Used On Some Models
8		87310139		5	RONDELLE 9/32 ID x 5/8 OD x 1/16 thk, Stainless Steel; Replaces 195-140 Non-Stainless Steel Washer Used On Some Models
9		D149866		1	MANCHETTE 5 Control Levers
10		D149867		1	MANCHETTE 6 Control Levers
11		136822A1		1	JONC
12		D149868		1	SOUFFLET 4 Control Levers
13		136824A1		1	PLAQUE, GRANDE Used With Ref 12 Only
14		87310124		4	VIS No. 10 x 1/2, Stainless Steel; Replaces 140-106 Non-Stainless Steel Screw Used On Some Models
14		87310126		6	VIS No. 10 x 3/4, Stainless Steel; Replaces 140-107 Non-Stainless Steel Screw Used On Some Models
15		131-861		4-6	ECROU No. 10, 4; Used With Ref 11 Retainer; (6) Used With Ref 13 Retainer
15A		397870A3		2	JOINT Front and Rear Console Covers; Noise Barrier; Adhesive Back
16		87425122		1	PATTE FIXATION Models With Backhoe Auxiliary Hydraulics
		87430677		1	DECALCOMANIE Auxiliary Hydraulics
17		281-14716		2	VIS

http://www.minnparbackhoeparts.com/

09-12		p1	05/05

SUPPORT DE TOUR DE CONTRÔLE ET JOINTS DE PELLE RÉTRO, SANS DE COMMANDE PILOTE

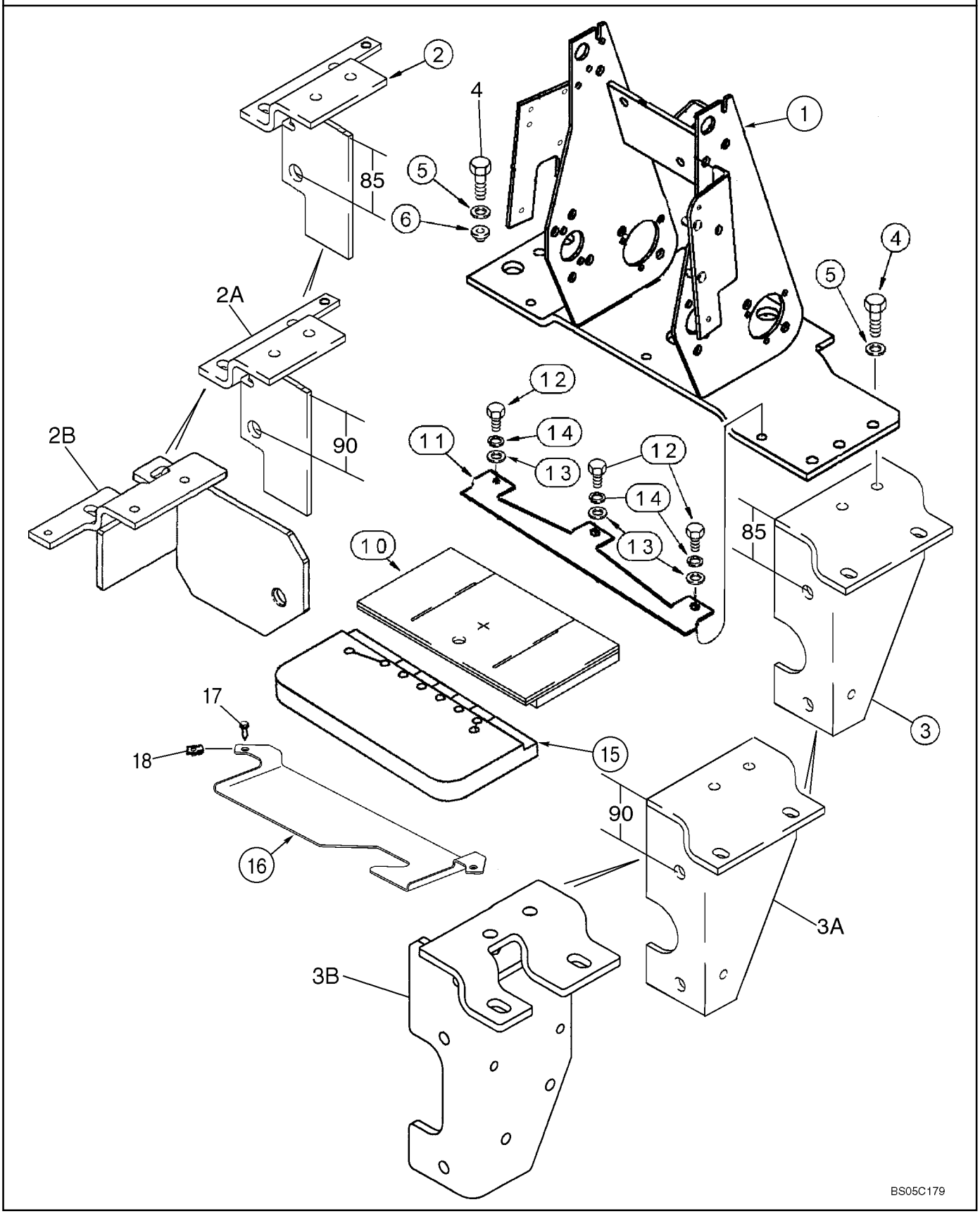

http://www.minnparbackhoeparts.com/

SUPPORT DE TOUR DE CONTRÔLE ET JOINTS DE PELLE RÉTRO, SANS DE COMMANDE PILOTE

REF	FN	PART NUMBER	YR/SN	QTY	DESCRIPTION
1		87418516		1	EQUERRE
2		86985341		1	EQUERRE Left-Hand; Distance Between Center of Hole and Top Edge Is 85 mm (3-11/32 in); Used With Ref 3; No Longer Used, When Replacing This Bracket, You Must Also Replace Ref 3 Bracket With Ref 2A and 3A
2A		87448057		1	EQUERRE Left-Hand; Distance Between Center of Hole and Top Edge Is 90 mm (3-35/64 in); Used With Ref 3A; If Used
2B		87448059		1	EQUERRE Left-Hand; Used With Ref 3B; If Used
3		86985339		1	EQUERRE Right-Hand; Distance Between Center Hole and Top Edge Is 85 mm (3-11/32 in); Used With Ref 2; No Longer Used, When Replacing This Bracket, You Must Also Replace Ref 2 Bracket With Ref 2A and 3A
3A		87448055		1	EQUERRE Right-Hand; Distance Between Center Hole and Top Edge Is 90 mm (3-35/64 in); Used With Ref 2A; If Used
3B		87452627		1	EQUERRE Right-Hand; Used With Ref 2B; If Used
4		614-10035		8	VIS M10 x 35
5		496-41041		8	RONDELLE 13/32 x 1-1/8 x 9/64
6		179956A1		2	SILENTBLOC
10		400069A1		1	MOUSSE
11		87418518		1	EQUERRE
12		614-8020		3	BOULON M8 x 20
13		895-11008		3	RONDELLE 9 x 17 x 1,6 mm
14		892-11008		3	RONDELLE M8
15		87439210		1	MOUSSE
16		397911A1		1	PATTE FIXATION
17		87310096		2	BOULON M6 x 25, Includes Washer, Stainless Steel; Replaces 233724A1 Non-Stainless Steel Screw Used On Some Models
18		833-40406		2	ECROU M6

http://www.minnparbackhoeparts.com/

09-13		p1	05/04

TOURELLE DE LA PELLE RETRO SUPPORT, AVEC DE COMMANDE PILOTE

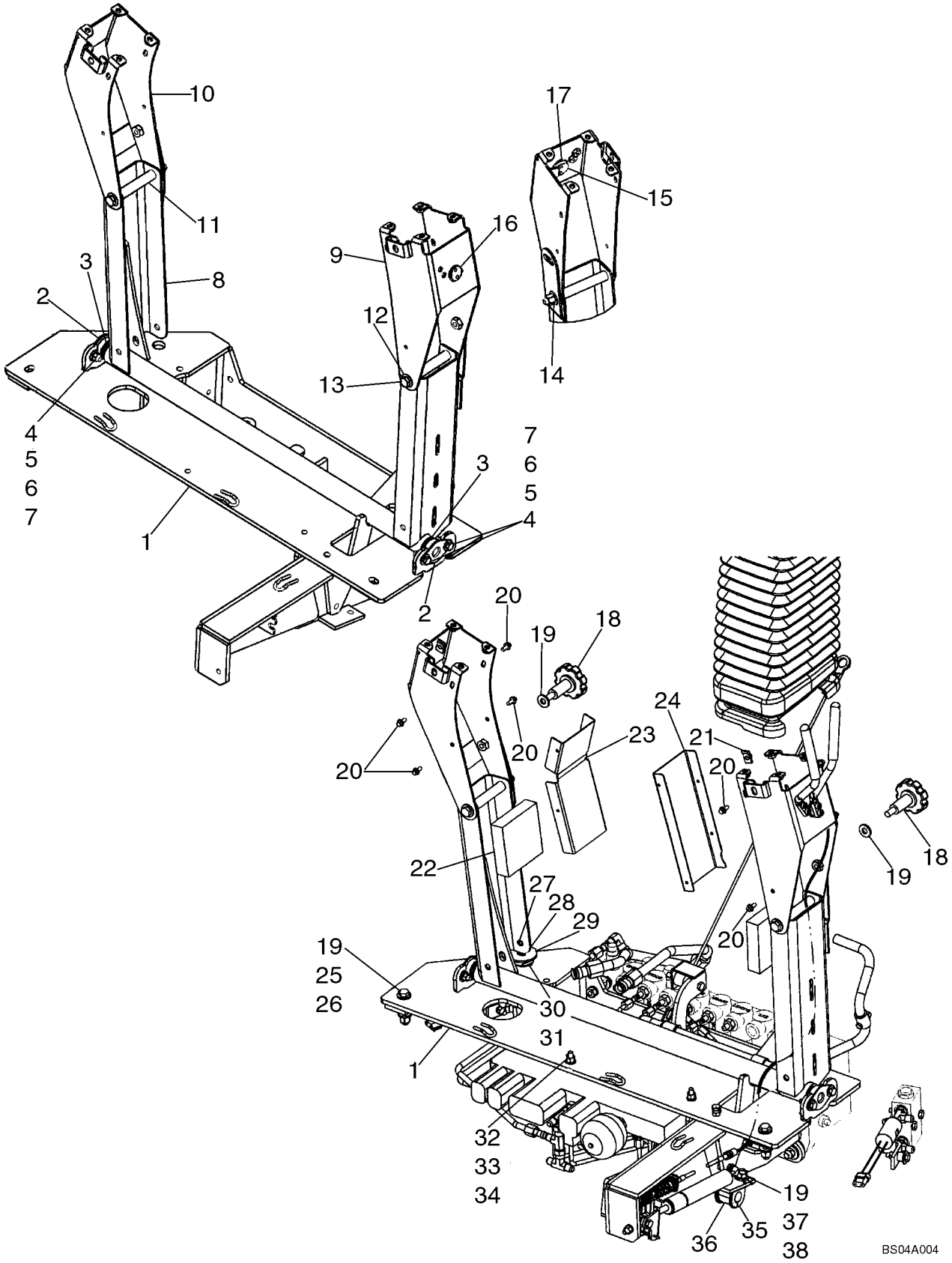

http://www.minnparbackhoeparts.com/

TOURELLE DE LA PELLE RETRO SUPPORT, AVEC DE COMMANDE PILOTE

REF	FN	PART NUMBER	YR/SN	QTY	DESCRIPTION
		87440711		1	TOURELLE Tower Assembly; Pilot Controls; Includes Ref 1 - 17
1		87440710		1	EQUERRE Bracket, Tower
2		D148993		2	ROULEMENT
3		A30881		4	RONDELLE Seal
4		895-15008		8	RONDELLE 9 x 20 x 1.6 mm
5		614-8025		4	BOULON M8 x 25
6		892-11008		4	RONDELLE Lock, M8
7		829-1408		4	ECROU M8
8		87435275		1	PIVOT (ASSEMBLE)
9		87440704		1	EQUERRE Right-Hand Joystick Mounting
10		87440706		1	EQUERRE Left-Hand Joystick Mounting
11		86983278		2	TUBE Spacer
12		895-15010		4	RONDELLE 11 x 24 x 2 mm
13		814-10130		2	BOULON M10 x 130
14		832-10410		2	ECROU M10
15		87431529		1	LEVIER (ASSEMBLE) Control Tower Release
16		103-11100		1	ANNEAU Retaining, No. 100
17		87405706		1	RONDELLE Wave, 1 inch
18		87437688		2	POMMEAU Lateral Adjustment Pilot Control Tower
19		896-15010		8	RONDELLE 11 x 24 x 3 mm
20		781-24613		8	VIS Flange Head, M6 x 13, Self-Tapping
21		833-40406		2	ECROU M6, Spring
22		87425696		2	JOINT, CAOUTCHOUC
23		87431301		1	GARANT Shield, Left-Hand
24		87431300		1	GARANT Shield, Right-Hand
25		814-10060		2	BOULON M10 x 60
26		832-10410		2	ECROU M10
27		87450914		2	BOULON Locking, M10 x 40; Replaces 87040885 M10 x 45 Bolt Used On Some Models
28		892-11010		2	RONDELLE FREIN M10
29		496-81018		1	RONDELLE 17/32 x 2 x 1/8
30		D148962		1	RONDELLE Belleville
31		87440381		1	ENTRETOISE Spacer
32		896-11008		2	RONDELLE 9 x 17 x 2 mm
33		832-10408		2	ECROU M8
34		864-8055		2	VIS Socket, M8 x 55

http://www.minnparbackhoeparts.com/

09-13		p2	05/04

TOURELLE DE LA PELLE RETRO SUPPORT, AVEC DE COMMANDE PILOTE

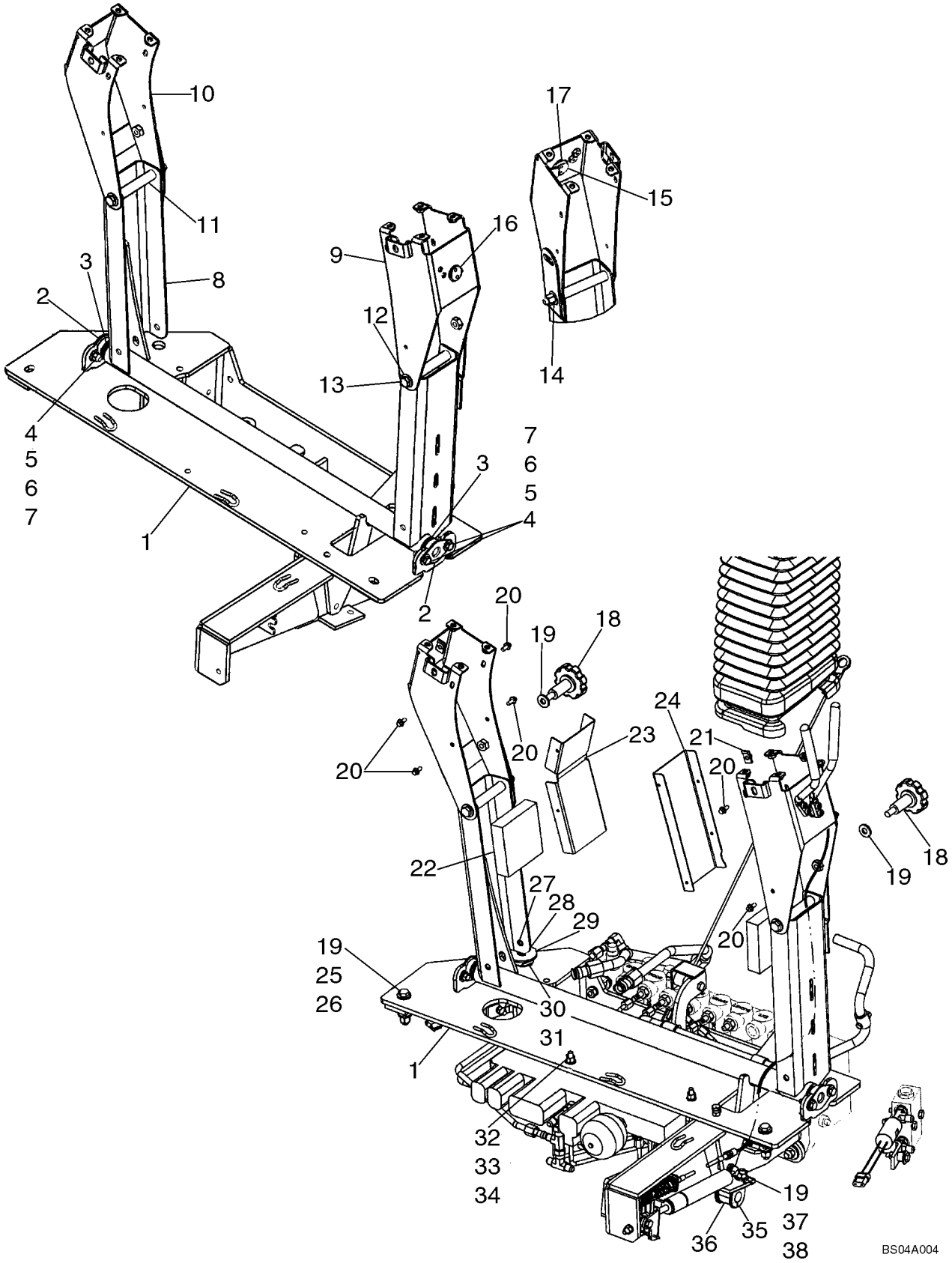

http://www.minnparbackhoeparts.com/

TOURELLE DE LA PELLE RETRO SUPPORT, AVEC DE COMMANDE PILOTE

REF	FN	PART NUMBER	YR/SN	QTY	DESCRIPTION
35		D143411		1	COLLIER
36		D74182		1	PASSE-FIL Isolation Block
37		829-1410		1	ECROU M10
38		614-10025		1	BOULON M10 x 25

http://www.minnparbackhoeparts.com/

09-14		p1	05/05

TOURELLE DE LA PELLE RETRO SOUFFLET DE JOINT, AVEC DE COMMANDE PILOTE

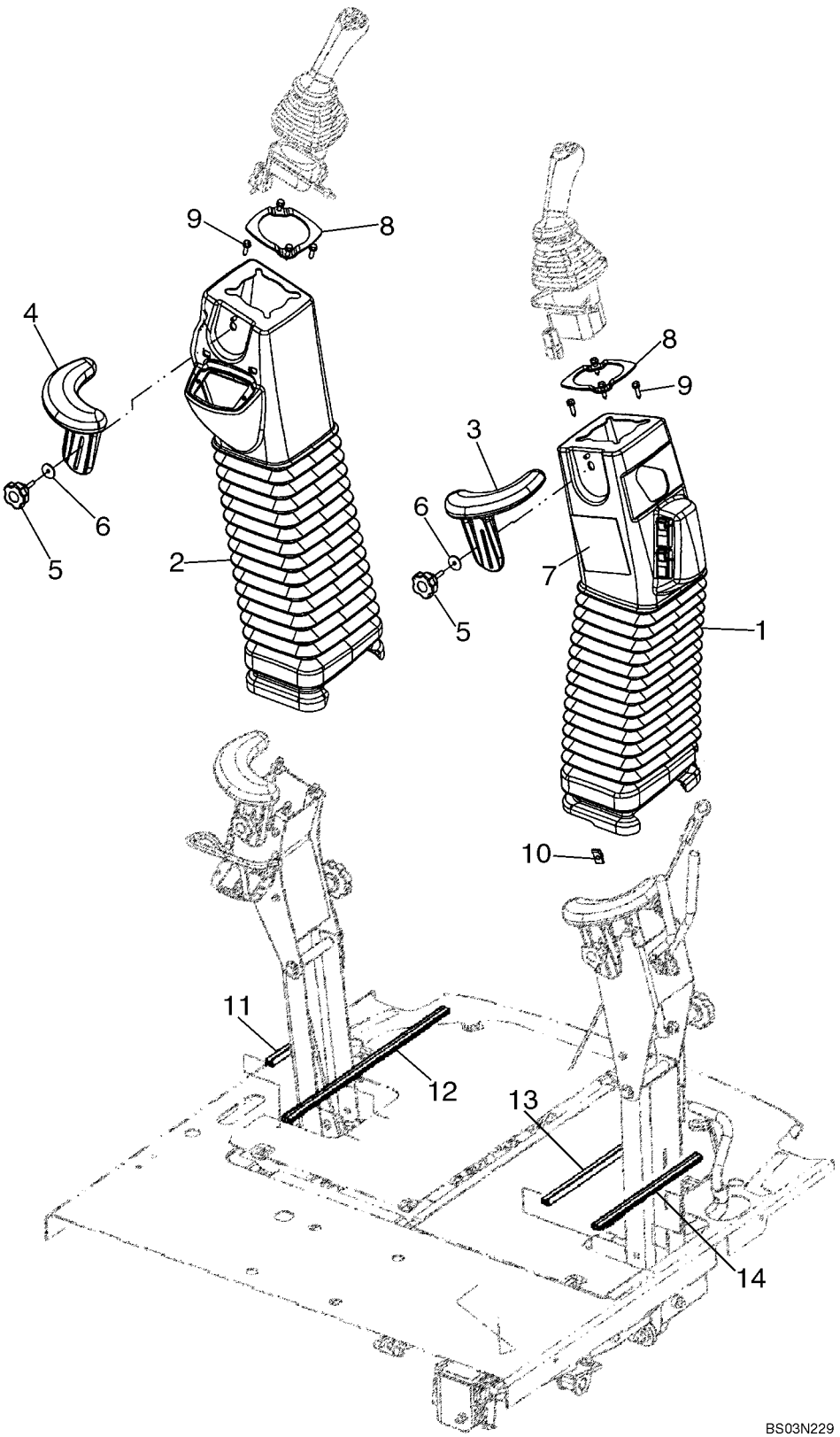

http://www.minnparbackhoeparts.com/

TOURELLE DE LA PELLE RETRO SOUFFLET DE JOINT, AVEC DE COMMANDE PILOTE

REF	FN	PART NUMBER	YR/SN	QTY	DESCRIPTION
1		87309924		1	MANCHETTE Replaces 87422678 Boot, Which Included (1) 87422679 Boot and (1) 86992675 Pin
2		87309923		1	MANCHETTE Replaces 87422675 Boot, Which Included (1) 87422676 Boot, (1) 86992675 Pin, (2) 87418520 No. 10 Threaded Inserts
3		87437366		1	ACCOUDOIR Wrist
4		87437369		1	SUPPORT Wrist
5		87437689		2	POMMEAU
6		87310186		2	RONDELLE 6.6 ID x 25 OD x 1.6 mm thk, Stainless Steel; Replaces 895-30109 Non-Stainless Steel Washer Used On Some Models
7		87414205		1	DECALCOMANIE Pattern Selecting; If Used
7		87305413		1	DECALCOMANIE Pattern Selecting; With Backhoe/Excavator Black Silhouette on Decal; If Used; Not Illustrated
8		87435372		2	PATTE FIXATION
9		87310096		8	BOULON With Washer, M6 x 25, Stainless Steel; Replaces 233724A1 Non-Stainless Steel Screw Used On Some Models
10		833-40406		2	ECROU M6
11		87433008		1	JOINT, CAOUTCHOUC 183 mm (7-1/4 in); Cut From 87438002
12		87433006		1	JOINT, CAOUTCHOUC 428 mm (16-7/8 in); Cut From 87438002
13		87433005		1	JOINT, CAOUTCHOUC 335 mm (13-3/16 in); Cut From 87438002
14		87433007		1	JOINT, CAOUTCHOUC 275 mm (10-7/8 in); Cut From 87438002

http://www.minnparbackhoeparts.com/

09-15		p1	05/05

TOURELLE DE LA PELLE RETRO LEVIER (VERROU DE MAINTIEN DE BRAS DE RELEVAGE), AVEC DE COMMANDE PILOTE

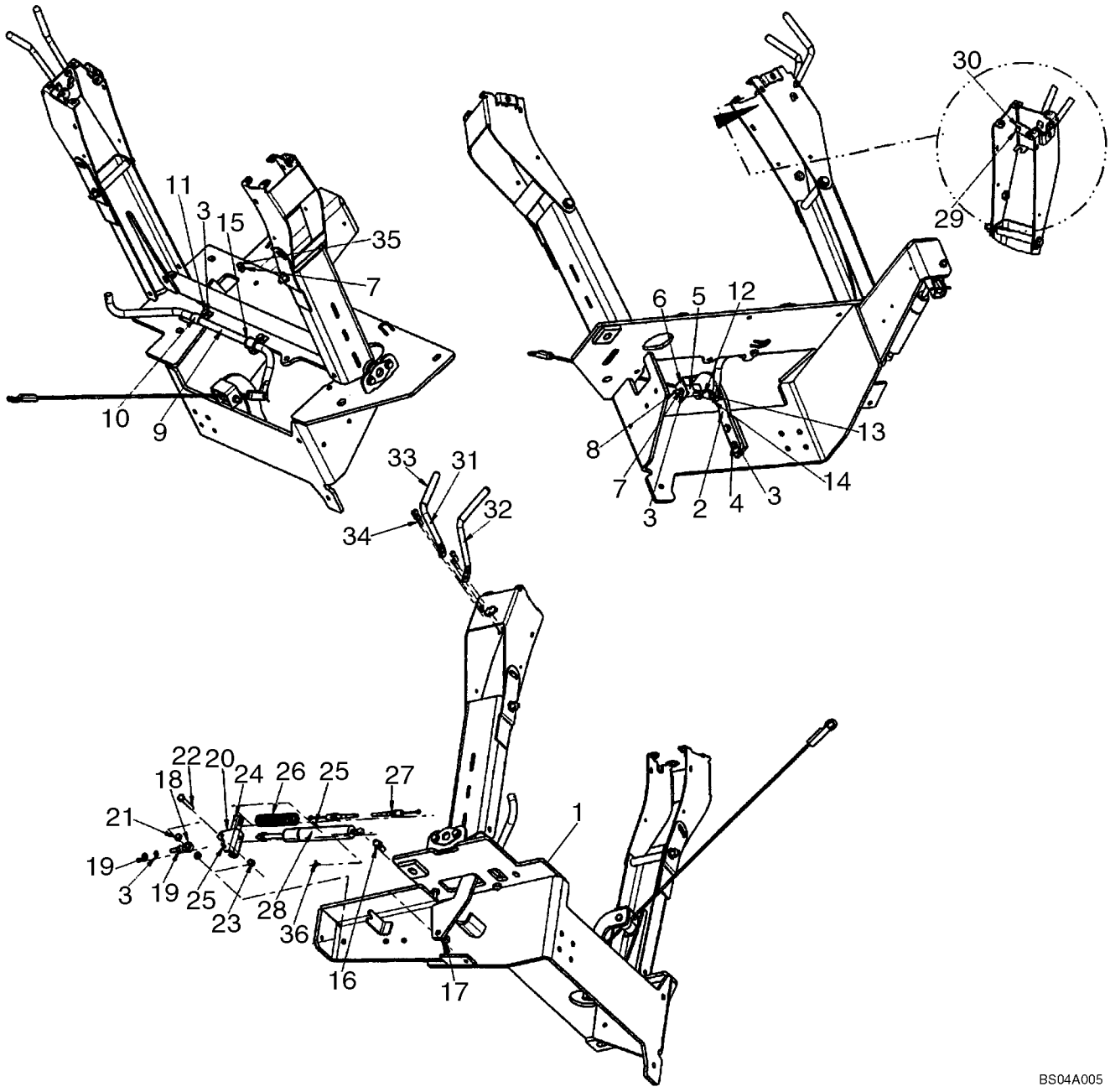

http://www.minnparbackhoeparts.com/

TOURELLE DE LA PELLE RETRO LEVIER (VERROU DE MAINTIEN DE BRAS DE RELEVAGE), AVEC DE COMMANDE PILOTE

REF	FN	PART NUMBER	YR/SN	QTY	DESCRIPTION
1		87440711		1	TOURELLE Pilot Control Tower Assembly; See Figure 09-13
2		86984544		1	PATTE FIXATION Roller Mounting
3		892-11008		6	RONDELLE Lock, M8
4		614-8030		2	BOULON M8 x 30
5		86984547		2	GUIDE
6		86984545		1	PATTE FIXATION
7		829-1408		2	ECROU M8
8		814-8070		1	BOULON M8 x 70
9		87422696		1	TRINGLE Boom Latch Release, See Figure 09-25A; 6.50 mm (1/32 in) Mounting Hole At Ref 2 Lever, If Used
9		87441850		1	TRINGLE Boom Latch Release, See Figure 09-25A; 6.00 mm (1/64 in) Mounting Hole At Ref 2 Lever, If Used
10		D143723		2	BRIDE Clamp
11		614-8025		2	BOULON M8 x 25
12		87435924		1	CABLE Boom Latch
13		427-5094		1	AXE DE CHAPE 5/16 x 15/16
		895-11008		1	RONDELLE 9 x 16 x 1.6 mm; Used With Ref 13 and 14
14		432-612		1	GOUPILLE 3/32" x 3/4"
15		D143591		2	ANNEAU-D'ARRET
16		85824067		1	JOINT ARTICULE Stud
17		832-10410		1	ECROU M10
18		85824081		1	ROTULE
19		425-115		2	ECROU 5/16
20		85824080		1	PATTE FIXATION
21		85821520		2	ENTRETOISE
22		413-528		1	BOULON 5/16 x 1-3/4
23		231-1445		1	CONTRE-ECROU 5/16
24		86984549		1	PROFILE Channel
25		432-828		2	GOUPILLE 1/8" x 1 3/4"
26		87443692		1	RESSORT DE TENSION
27		87437806		1	CABLE FLEXIBLE Pilot Control Positioner
28		86989616		1	COMPAS Cylinder
29		140-108		1	VIS No. 10 x 3/4

http://www.minnparbackhoeparts.com/

09-15		p2	05/05

TOURELLE DE LA PELLE RETRO LEVIER (VERROU DE MAINTIEN DE BRAS DE RELEVAGE), AVEC DE COMMANDE PILOTE

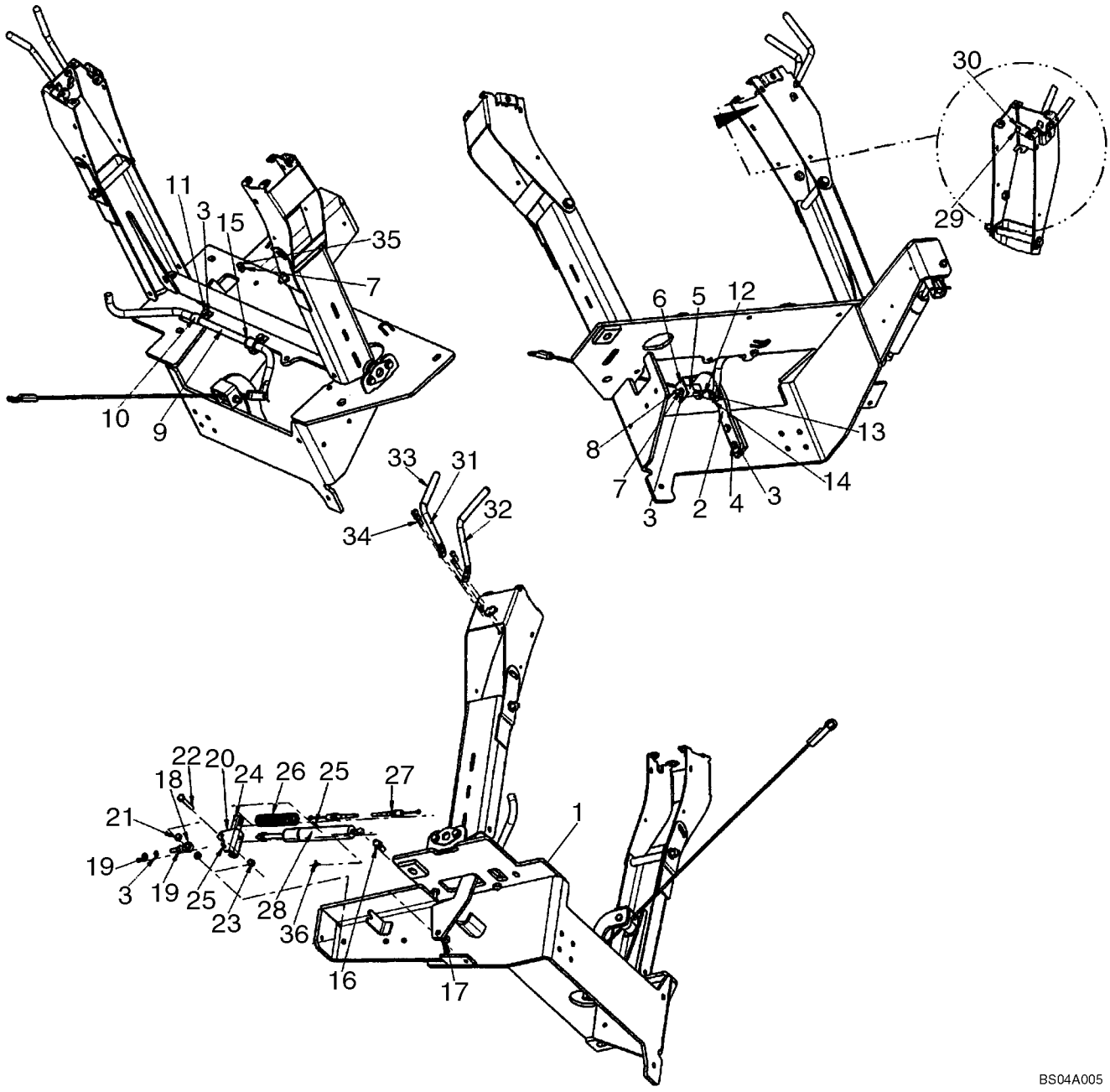

http://www.minnparbackhoeparts.com/

TOURELLE DE LA PELLE RETRO LEVIER (VERROU DE MAINTIEN DE BRAS DE RELEVAGE), AVEC DE COMMANDE PILOTE

REF	FN	PART NUMBER	YR/SN	QTY	DESCRIPTION
30		231-14409		1	CONTRE-ECROU No. 10
31		87418368		1	TRINGLE Tower Stationary
32		87418369		1	TRINGLE Tower Position
33		87442409		2	POIGNEE DE MANETTE
34		565-104		4	VIS Socket, M6 x 20; If Used
34		87303781		4	BOULON TETE BOMBEE HEX FLANGE, M6 x 20, Polished; If Used
34		87310098		4	BOULON Hex Flange, M6 x 20, Black Oxide; If Used
35		614-8050		1	VIS M8 x 50
36		3233348R1		1	CLIP

http://www.minnparbackhoeparts.com/

09-16		p1	05/05

COMMANDES - PELLE RETRO, AVEC DÉBATTEMENT AU PIED (MODÈLES SANS BALANCIER EXTENSIBLE)

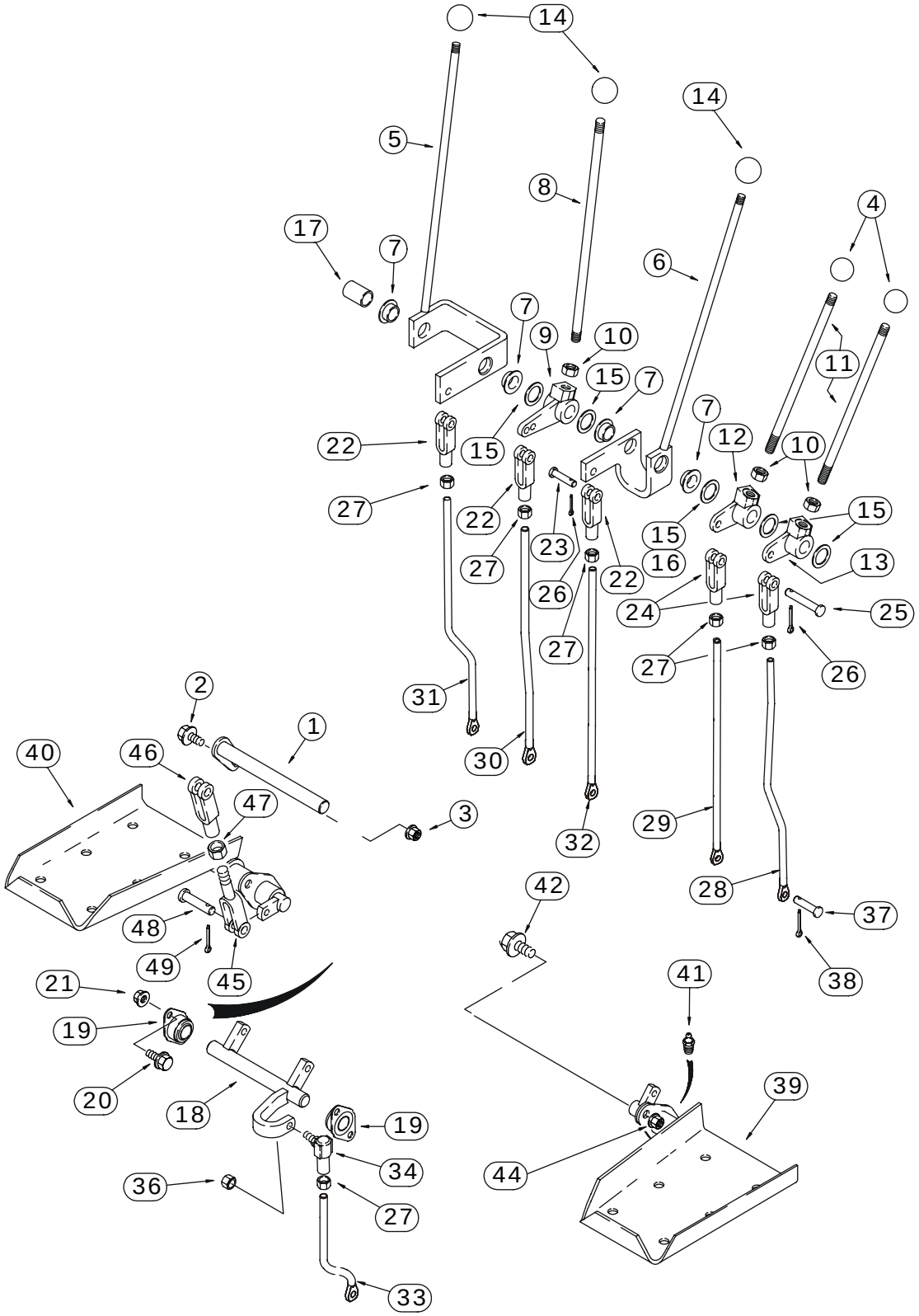

BS03M099

http://www.minnparbackhoeparts.com/

COMMANDES - PELLE RETRO, AVEC DÉBATTEMENT AU PIED (MODÈLES SANS BALANCIER EXTENSIBLE)

REF	FN	PART NUMBER	YR/SN	QTY	DESCRIPTION
1		129015A1		1	ARBRE
2		614-8025		1	BOULON M8 x 25
3		832-10408		1	ECROU Lock, M8
4		D59912		2	PLAQUE Stabilizer Control Levers
5		136267A1		1	LEVIER Boom; Incl. Ref 7
6		136269A1		1	LEVIER Bucket; Incl. Ref 7
7		D148992		2	BAGUE
8		136263A1		1	TRINGLE Dipper
9		D150397		1	RENVOI Dipper
10		425-118		3	ECROU 1/2 NF
11		136261A1		2	TIGE-DE-COMMANDE Stabilizer
12		D150435		1	RENVOI Right-Hand Stabilizer Control
13		D150434		1	RENVOI Left-Hand Stabilizer Control
14		L54563		3	PLAQUE Boom, Dipper, and Bucket
15		A30881		X	RONDELLE 49/64 x 1-15/64 x 1/32; Used As A Shim
16		D34666		1	RONDELLE 25/32 x 1-3/8 x 9/64; May Be Used In Place Of Ref 15
17		D150486		1	ENTRETOISE Not Used On Models With Extendable Dipper
18		D148994		1	ARBRE Swing
19		D139039		2	ROULEMENT
20		614-8025		4	BOULON M8 x 25
21		832-10408		4	ECROU Lock, M8
22		213-126		3	FOURCHETTE 3/8 NF
23		D149288		3	AXE, GROS Special
24		D150493		2	FOURCHETTE
25		427-6088		2	AXE, GROS 3/8 x 7/8
26		432-612		5	GOUPILLE 3/32" x 3/4"
27		425-156		6	ECROU 3/8 NF
28		87422243		1	TIGE FILETÉE Left-Hand Stabilizer Control
29		87422245		1	TIGE FILETÉE Right-Hand Stabilizer Control
30		87422247		1	TIGE FILETÉE Dipper
31		87422241		1	TIGE FILETÉE Boom
32		87422249		1	TIGE FILETÉE Bucket
33		87422239		1	TIGE FILETÉE Swing
34		D149295		1	ROTULE 3/8
36		425-116		1	ECROU 3/8 NF

http://www.minnparbackhoeparts.com/

09-16		p2	05/05

COMMANDES - PELLE RETRO, AVEC DÉBATTEMENT AU PIED (MODÈLES SANS BALANCIER EXTENSIBLE)

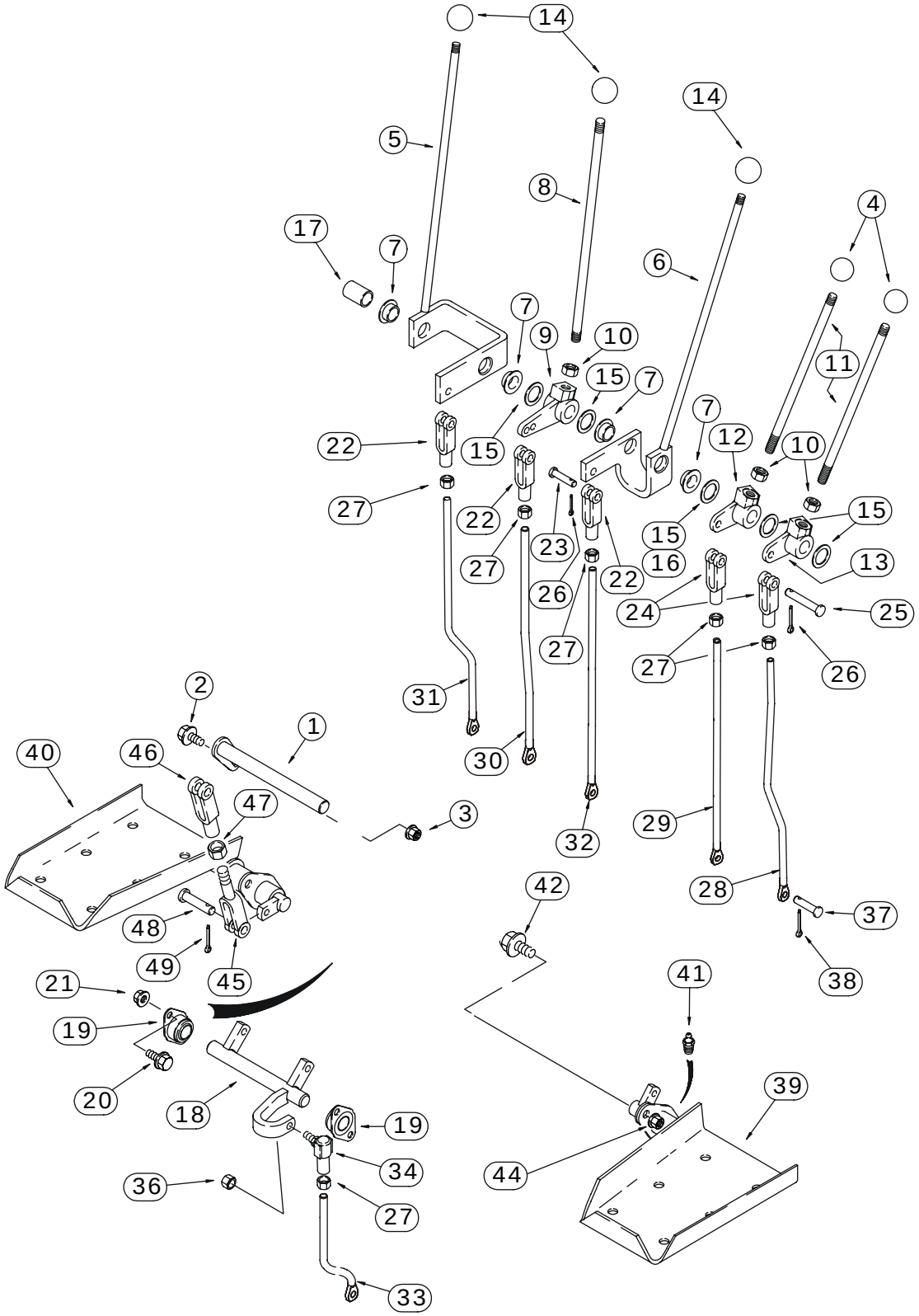

http://www.minnparbackhoeparts.com/

COMMANDES - PELLE RETRO, AVEC DÉBATTEMENT AU PIED (MODÈLES SANS BALANCIER EXTENSIBLE)

REF	FN	PART NUMBER	YR/SN	QTY	DESCRIPTION
37		D149287		6	AXE, GROS 5/16
38		432-612		6	GOUPILLE 3/32" x 3/4"
39		136271A2		1	PEDALE (ASSEMBLEE) Left-Hand Swing; Without Pilot Controls
40		136270A2		1	PEDALE (ASSEMBLEE) Right-Hand Swing; Without Pilot Controls
41		219-1		2	GRAISSEUR 1/8 PT x 21/32
42		614-10025		4	BOULON M10 x 25
44		832-10410		4	ECROU Lock, M10
45		D150503		2	EXTRÉMITÉ Yoke
46		D149262		2	FOURCHETTE 3/8
47		425-156		2	ECROU 3/8 NF
48		D149288		4	AXE, GROS 3/8
49		432-612		4	GOUPILLE 3/32" x 3/4"

http://www.minnparbackhoeparts.com/

09-17		p1	05/05

COMMANDES - PELLE RETRO, AVEC DÉBATTEMENT AU PIED (MODÈLES AVEC BALANCIER EXTENSIBLE)

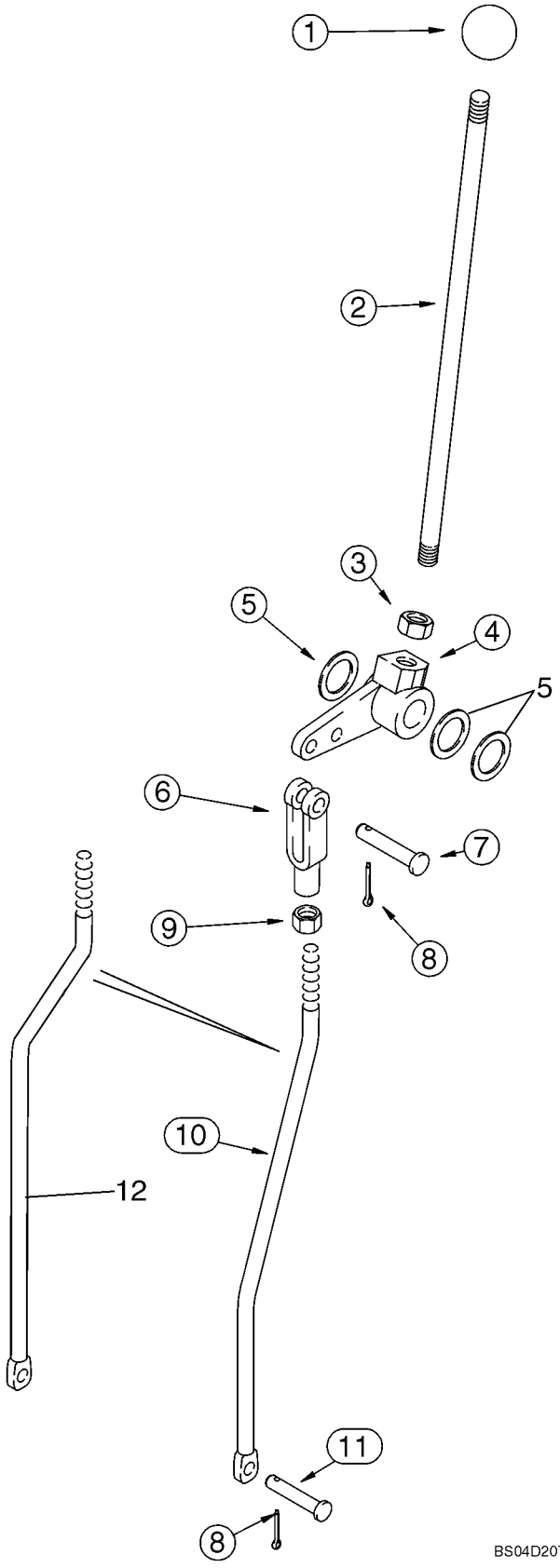

http://www.minnparbackhoeparts.com/

COMMANDES - PELLE RETRO, AVEC DÉBATTEMENT AU PIED (MODÈLES AVEC BALANCIER EXTENSIBLE)

REF	FN	PART NUMBER	YR/SN	QTY	DESCRIPTION
1		L54563		1	PLAQUE Extendahoe
2		136263A1		1	TRINGLE Extendahoe
3		425-118		1	ECROU 1/2 NF
4		182006A1		1	LEVIER Bellcrank
5		A30881		X	RONDELLE 49/64 x 1-15/64 x 1/32
6		213-126		1	FOURCHETTE 3/8 NF
7		427-6088		1	AXE, GROS 3/8 x 7/8
8		432-612		2	GOUPILLE 3/32" x 3/4"
9		425-156		1	ECROU 3/8 NF
10		87440076		1	TIGE FILETÉE Extendahoe Rod; Mounts In Outer Bellcrank Lever Hole; If Used; No Longer Available, Order 87446113 Rod, Ref 12
11		D149287		1	AXE, GROS
12		87446113		1	TIGE FILETÉE Extendahoe Rod; Mounts In Inner Bellcrank Lever Hole; If Used

http://www.minnparbackhoeparts.com/

09-18		p1	05/05

COMMANDES - PELLE RETRO, AVEC DÉBATTEMENT A LA MAIN (MODÈLES SANS BALANCIER EXTENSIBLE)

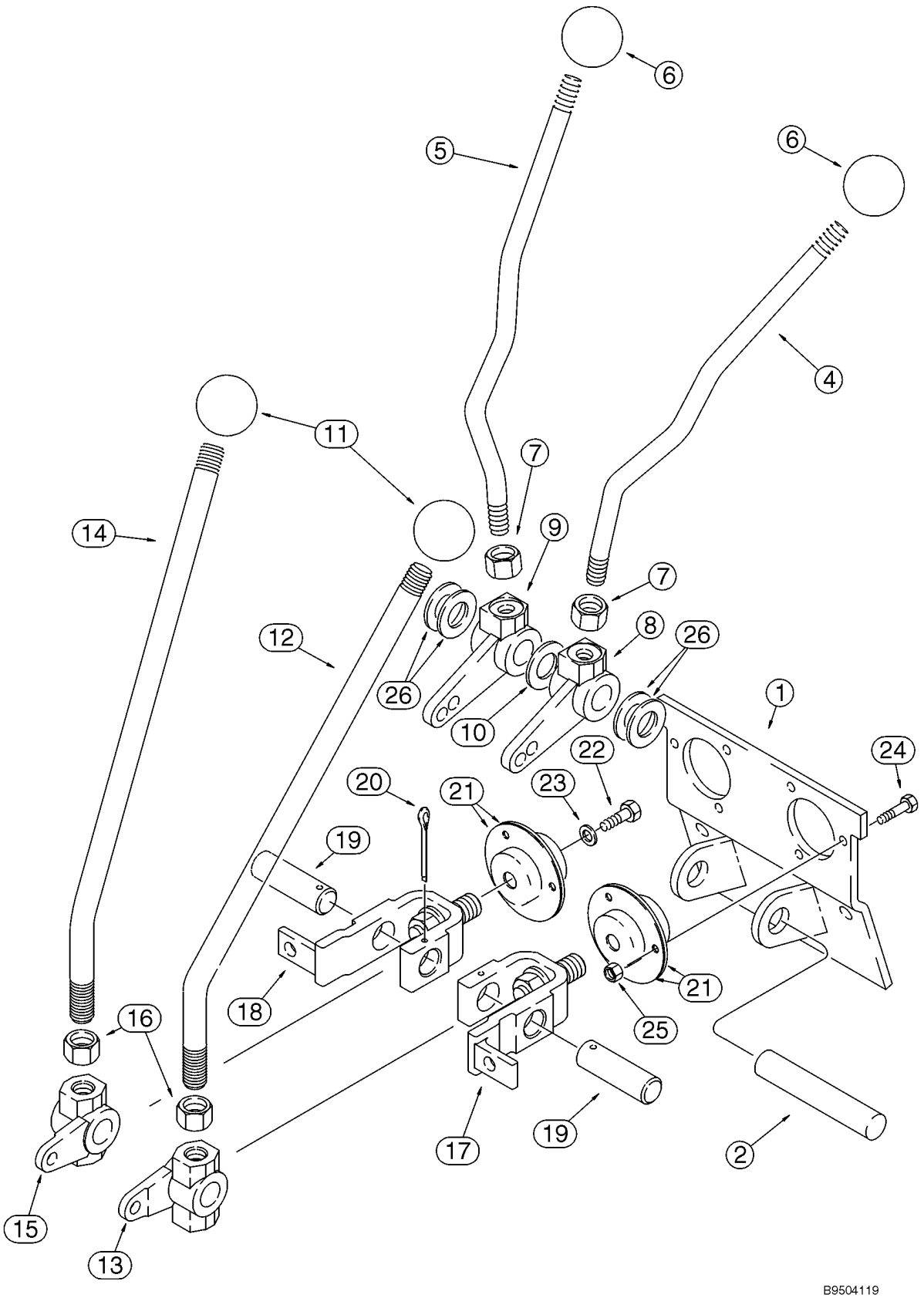

http://www.minnparbackhoeparts.com/

COMMANDES - PELLE RETRO, AVEC DÉBATTEMENT A LA MAIN (MODÈLES SANS BALANCIER EXTENSIBLE)

REF	FN	PART NUMBER	YR/SN	QTY	DESCRIPTION
		REF			NOTICE UPPER CONTROL LEVERS
1		108864A1		1	SUPPORT
2		D148947		1	AXE, GROS Stabilizer
4		409672A1		1	LEVIER Left-Hand; Stabilizer
5		409673A1		1	LEVIER Right-Hand; Stabilizer
6		D59912		2	PLAQUE Stabilizer
7		425-118		2	ECROU 1/2 NF
8		108924A1		1	LEVIER
9		108923A1		1	LEVIER
10		495-11081		1	RONDELLE 13/16 x 1-15/32 x 1/8
11		D39118		2	PLAQUE
12		125113A1		1	LEVIER Boom and Swing
13		106989A1		1	LEVIER Left-Hand Boom and Swing Lever
14		125113A1		1	LEVIER Bucket and Dipper
15		106990A1		1	LEVIER Right-Hand Bucket and Dipper Lever
16		425-1110		2	ECROU 5/8 NF
17		178006A1		1	LEVIER Boom and Swing
18		178004A1		1	LEVIER Bucket and Dipper
19		102765A1		2	AXE, GROS Bellcrank
20		432-828		2	GOUPILLE 1/8" x 1 3/4"
21		112380A1		4	PALIER
22		614-6016		2	BOULON M6 x 16
23		396-41028		2	RONDELLE 9/32 x 7/8 x 3/32
24		614-6020		6	BOULON M6 x 20
25		829-1406		6	ECROU M6; 10.9
26		A30881		X	RONDELLE 49/64 x 1-15/64 x 1/32

http://www.minnparbackhoeparts.com/

09-19		p1	05/05

COMMANDES - PELLE RETRO, AVEC DÉBATTEMENT A LA MAIN (MODÈLES SANS BALANCIER EXTENSIBLE)

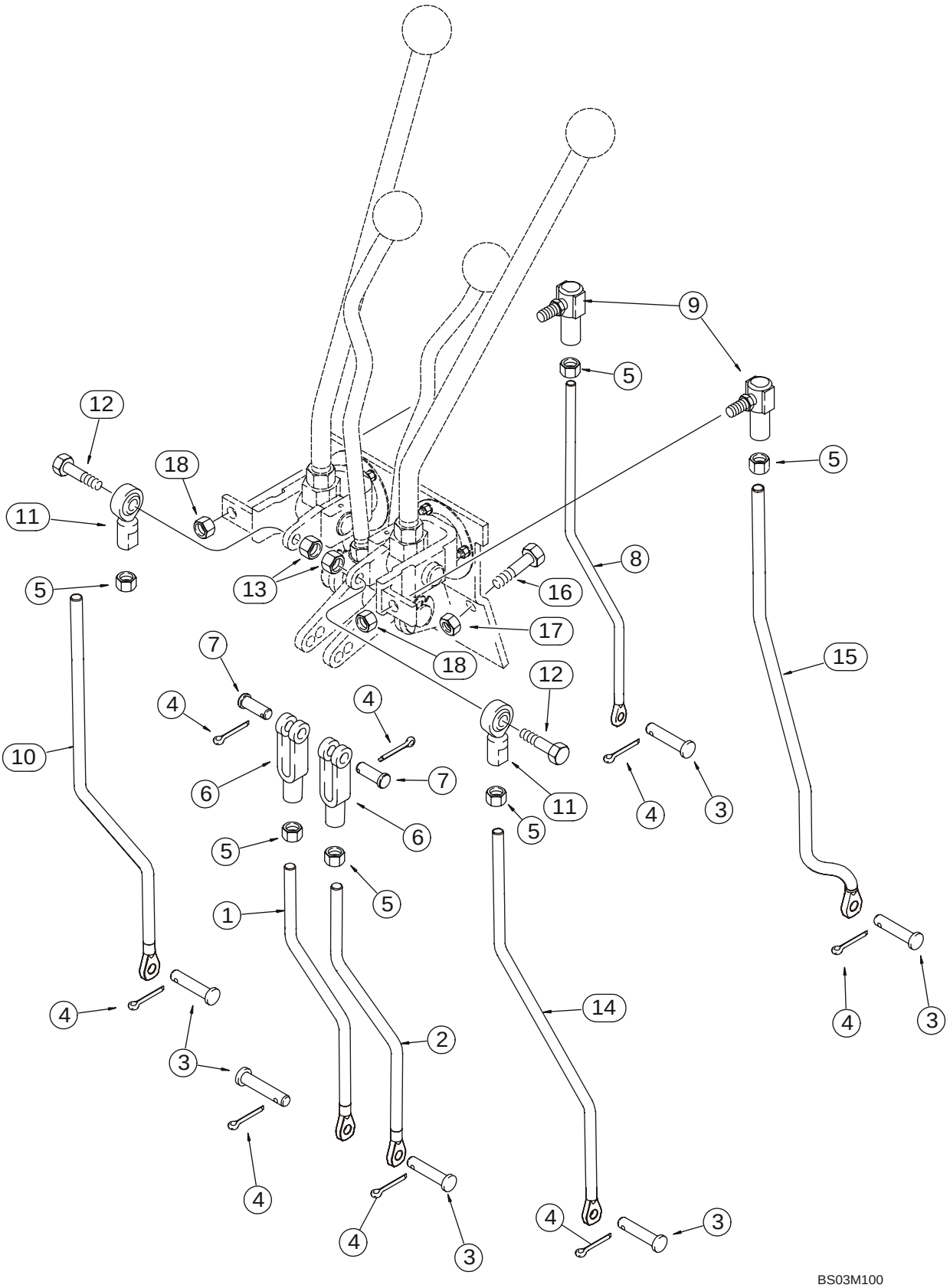

http://www.minnparbackhoeparts.com/

COMMANDES - PELLE RETRO, AVEC DÉBATTEMENT A LA MAIN (MODÈLES SANS BALANCIER EXTENSIBLE)

REF	FN	PART NUMBER	YR/SN	QTY	DESCRIPTION
		REF			NOTICE LOWER CONTROL LEVERS
1		87422260		1	TIGE FILETÉE Right-Hand; Stabilizer; 262.6 mm (10-11/32 in) Long; No Longer Available, Order 87452406 Rod; If Replacing Either LH or RH 10-11/32 Inch Rod, You Must Order Both LH and RH 11-9/32 Inch Rods
1		87452406		1	TIGE FILETÉE Right-Hand; Stabilizer; 286.6 mm (11-9/32 in) Long
2		87422258		1	TIGE FILETÉE Left-Hand; Stabilizer; 262.6 mm (10-11/32 in) Long; No Longer Available, Order 87452404 Rod; If Replacing Either LH or RH 10-11/32 Inch Rod, You Must Order Both LH and RH 11-9/32 Inch Rods
2		87452404		1	TIGE FILETÉE Left-Hand; Stabilizer; 286.6 mm (11-9/32 in) Long
3		D149287		6	AXE, GROS
4		432-612		8	GOUPILLE 3/32" x 3/4"
5		425-116		6	ECROU 3/8 NF
6		213-126		2	FOURCHETTE 3/8 NF
7		D149288		2	AXE, GROS Special
8		87422264		1	TIGE FILETÉE Bucket
9		D149295		2	ROTULE
10		87422262		1	TIGE FILETÉE Dipper
11		D136773		2	ROTULE 3/8 NF
12		413-624		2	BOULON 3/8 x 1-1/2
13		425-106		2	ECROU 3/8
14		87422256		1	TIGE FILETÉE Boom
15		87422253		1	TIGE FILETÉE Swing
16		614-10025		2	BOULON M10 x 25
17		832-10410		2	ECROU M10
18		231-2446		2	ECROU 3/8 NF

http://www.minnparbackhoeparts.com/

COMMANDES - PELLE RETRO, SCHEMA DE CONTROLE DE L'EXCAVATRICE

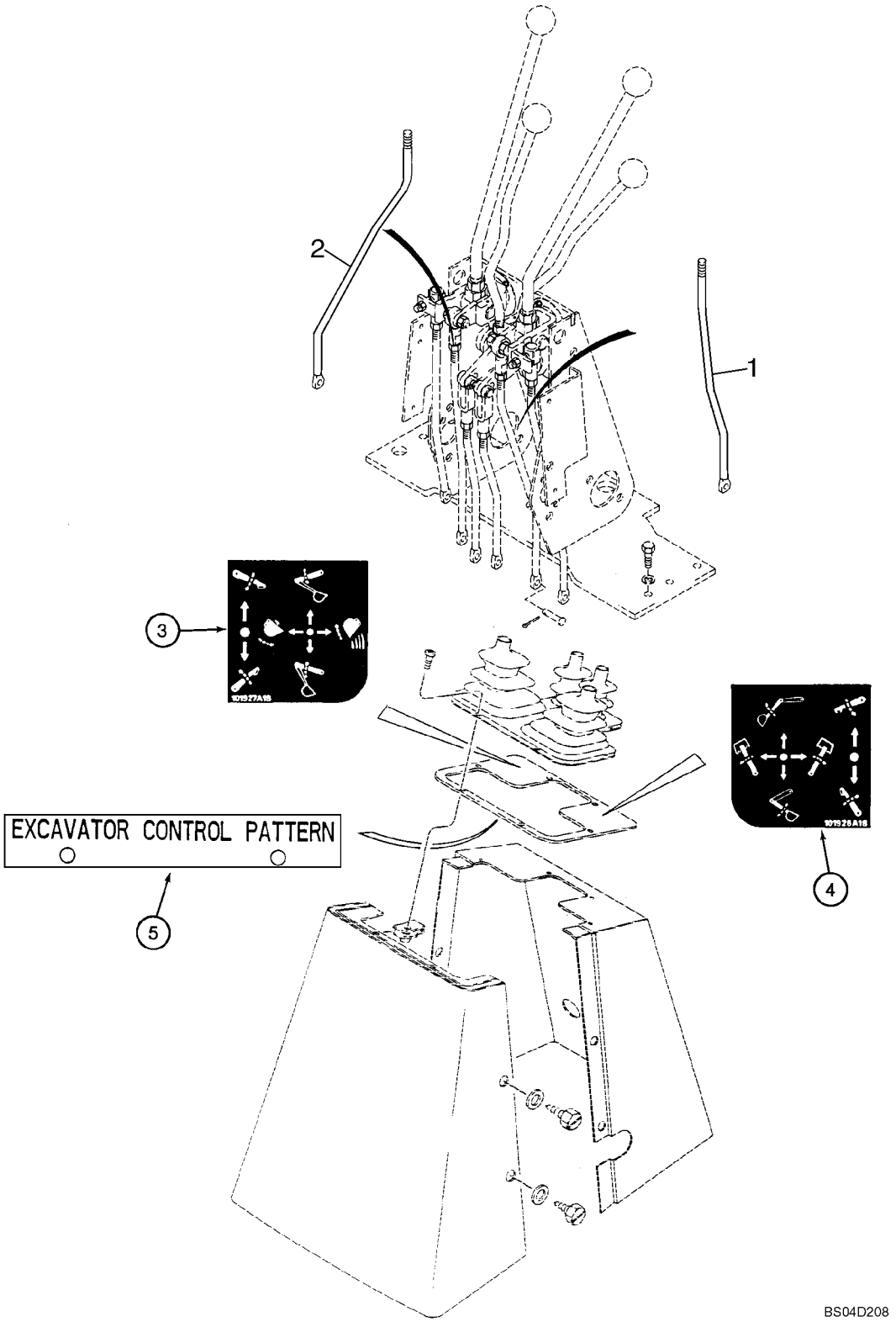

http://www.minnparbackhoeparts.com/

COMMANDES - PELLE RETRO, SCHEMA DE CONTROLE DE L'EXCAVATRICE

REF	FN	PART NUMBER	YR/SN	QTY	DESCRIPTION
		87447088		1	KIT ASSISTANCE Excavator Control Pattern; Incl. Ref 1 - 5; Purchase From Parts and Components; Machine Must Be Equipped With Hand Swing Controls; If Machine Is Equipped With Foot Swing Controls, Foot Swing to Hand Swing Controls Kit Must Be Ordered and Installed First
1		87422272		1	TIGE FILETÉE Dipper; Replaces Existing Boom Control Rod; Right-Hand Control Lever Which Used To Control The Dipper, Now Controls The Boom
2		87422270		1	TIGE FILETÉE Boom; Replaces Existing Dipper Control Rod; The Left-Hand Control Lever Which Used To Control The Boom, Now Controls The Dipper
3		E49498		1	DECALCOMANIE Control; Right-Hand
4		E49497		1	DECALCOMANIE Control; Left-Hand
5		198410A1		1	PLAQUE, GRANDE Excavator Control Pattern

http://www.minnparbackhoeparts.com/

COMMANDES - PELLE RETRO, AVEC DÉBATTEMENT A LA MAIN (MODÈLES AVEC BALANCIER EXTENSIBLE)

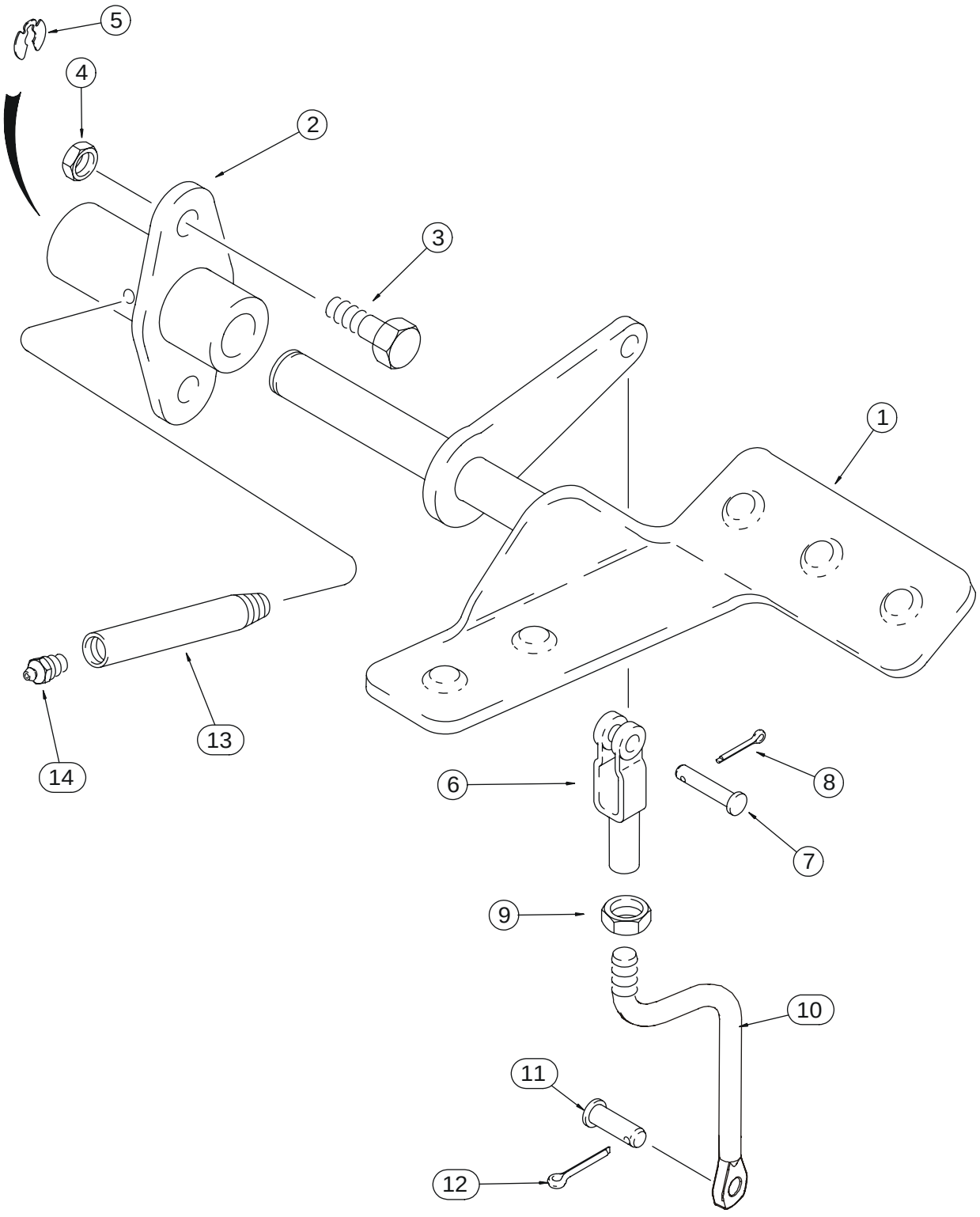

BS03M101

http://www.minnparbackhoeparts.com/

COMMANDES - PELLE RETRO, AVEC DÉBATTEMENT A LA MAIN (MODÈLES AVEC BALANCIER EXTENSIBLE)

REF	FN	PART NUMBER	YR/SN	QTY	DESCRIPTION
1		179029A1		1	PEDALE Right-Hand; Extendahoe
2		126918A1		1	SUPPORT (ASSEMBLE)
3		614-10025		2	BOULON M10 x 25
4		832-10410		2	ECROU M10
5		D143416		1	ANNEAU-D'ARRET
6		D134900		1	FOURCHETTE
7		427-6088		1	AXE, GROS 3/8 x 7/8
8		432-612		1	GOUPILLE 3/32" x 3/4"
9		425-156		1	ECROU 3/8 NF
10		87440058		1	TIGE FILETÉE Extendahoe Rod
11		D149287		1	AXE, GROS
12		432-612		1	GOUPILLE 3/32" x 3/4"
13		D150032		1	TUBE Lube
14		219-1		1	GRAISSEUR 1/8 PT x 21/32

http://www.minnparbackhoeparts.com/

COMMANDES - CIRCUIT HYDRAULIQUE AUXILIAIRE POUR LA PELLE RETRO, SANS DE COMMANDE PILOTE

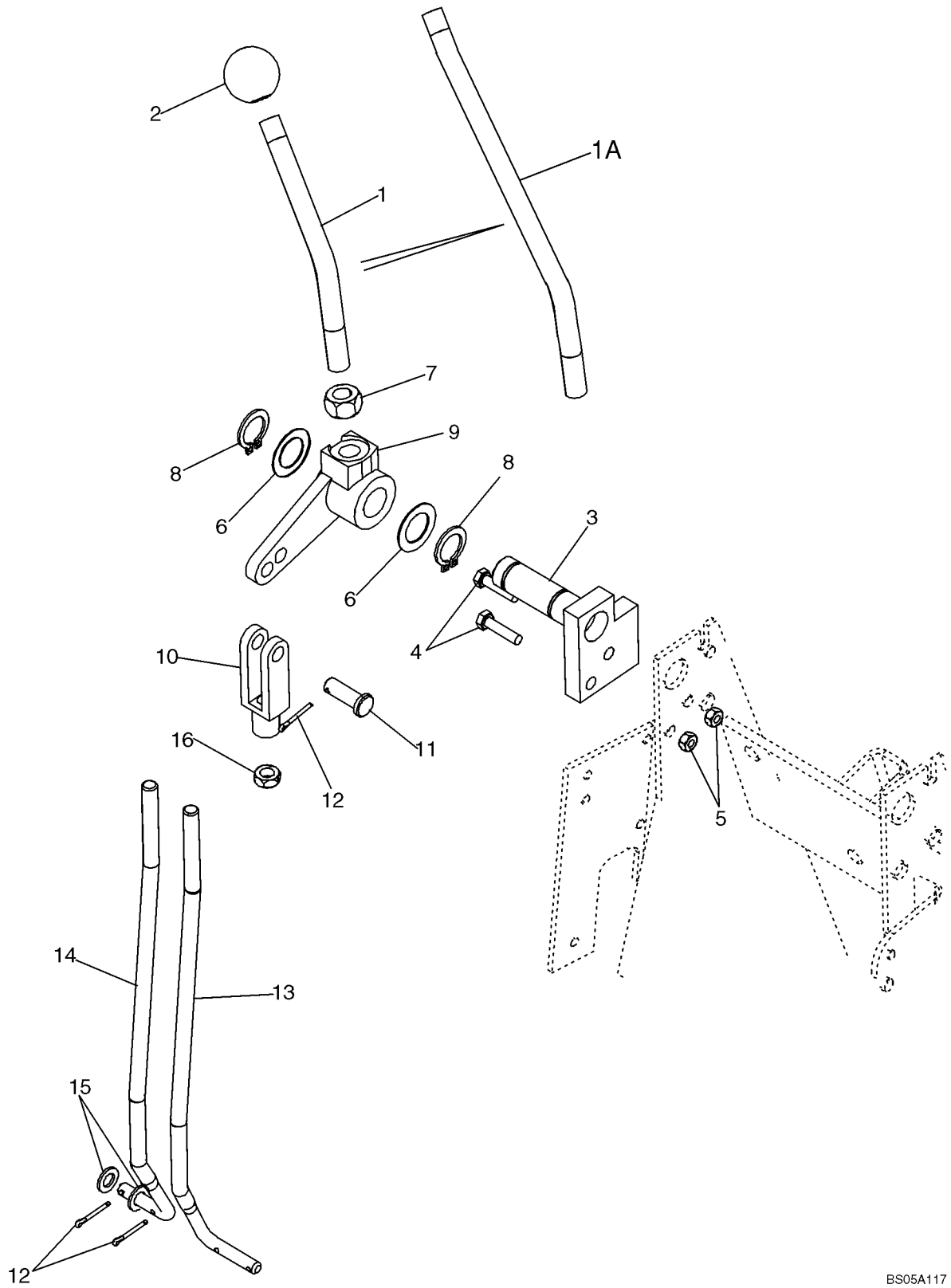

http://www.minnparbackhoeparts.com/

COMMANDES - CIRCUIT HYDRAULIQUE AUXILIAIRE POUR LA PELLE RETRO, SANS DE COMMANDE PILOTE

REF	FN	PART NUMBER	YR/SN	QTY	DESCRIPTION
1		87425118		1	TIGE FILETÉE Auxiliary Control; 143 mm (5-5/8 in) long; If Used
1A		221477A1		1	TIGE-DE-COMMANDE Auxiliary Control; 250 mm (9-27/32 in) long; If Used
2		D59912		1	PLAQUE
3		87425117		1	PIVOT (ASSEMBLE) 7 or 8 Spool Valve
4		614-6025		2	BOULON M6 x 25
5		829-1406		2	ECROU M6; 10.9
6		A30881		2	RONDELLE Used As A Shim
7		425-118		1	ECROU Hex, 1/2
8		103-1475		2	ANNEAU-D'ARRET No. 75
9		182006A1		1	LEVIER
10		213-126		1	FOURCHETTE 3/8
11		D149288		1	AXE, GROS Clevis, 3/8
12		432-612		3	GOUPILLE 3/32" x 3/4"
13		87439135		1	TIGE FILETÉE 7 Spool Valve; If Used
14		87438157		1	TIGE FILETÉE 8 Spool Valve; If Used
15		895-11008		2	RONDELLE 9 x 17 x 1,6 mm
16		425-156		1	ECROU Hex, Jam, 3/8 NF

http://www.minnparbackhoeparts.com/

RETROPELLE - STABILISATEURS, PLAQUES ET PATINS (580SM)

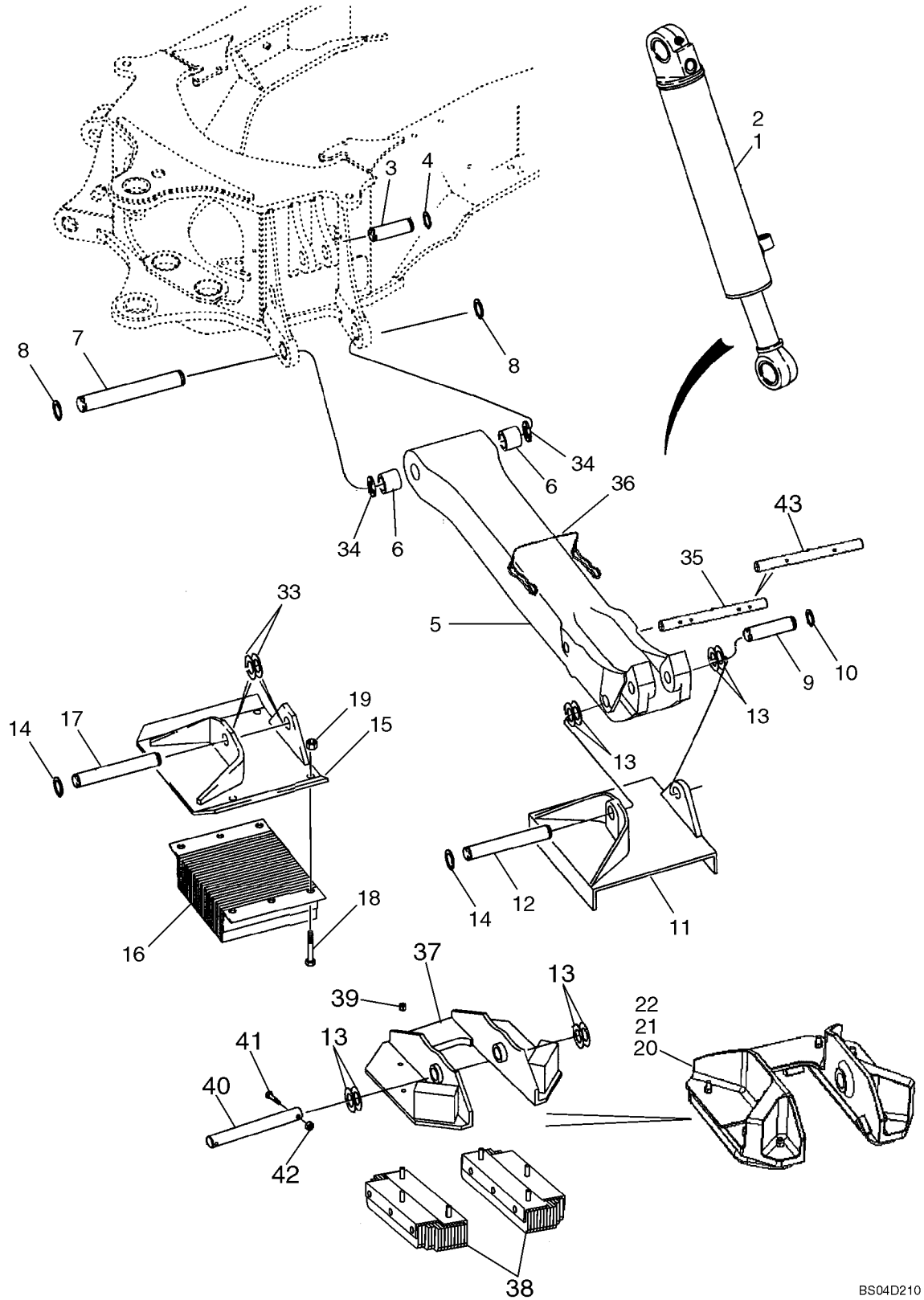

http://www.minnparbackhoeparts.com/

RETROPELLE - STABILISATEURS, PLAQUES ET PATINS (580SM)

REF	FN	PART NUMBER	YR/SN	QTY	DESCRIPTION
1		199720A1		1	VERIN 108 ID x 553 mm strk; Stabilizer; Right-Hand; See Figure 08-65; 580SM Models
2		199721A1		1	VERIN 108 ID x 553 mm strk; Stabilizer; Left-Hand; See Figure 08-65; 580SM Models
3		D38907		2	AXE Stabilizer Cylinder to Chassis
4		103-16175		4	ANNEAU-D'ARRET No. 175
5		446222A1		2	STABILISATEUR 1135 mm (44-11/16 in); Incl. Ref 6
6		D50146		2	BAGUE
7		121665A1		2	AXE, GROS Stabilizer Leg to Chassis
8		103-16175		4	ANNEAU-D'ARRET No. 175
9		D26002		2	AXE Stabilizer Cylinder
10		D25279		4	ANNEAU-D'ARRET
11		D88427		2	PLAQUE Cleated; If Used
12		D28648		2	AXE Plate/Pad to Leg
13		D143406		X	RONDELLE Used as a Spacer
14		D25279		4	ANNEAU-D'ARRET
15		D142519		2	SABOT (ASSEMBLE) Street or Cemetery; If Used
16		D61368		2	SILENTBLOC Rubber; If Used
17		D39256		2	PIVOT D'ESSIEU Plate to Leg
18		413-1228		8	VIS 3/4 x 1-3/4
19		425-1012		8	ECROU 3/4
20		408398A1		2	TAMPON PLATE, Anti-Flipover; No Longer Available, Order Ref 37 - 43
21		339680A2		4	PLAQUE CAOUTCHOUC Anti-Flipover; Used With 408398A1 Plate, Ref 20
22		832-41312		16	ECROU M12; If Used
33		D143406		X	RONDELLE Used as a Spacer
34		495-81282		X	RONDELLE 2-1/16 x 3 x 3/32; Used as a Spacer
35		408405A1		2	CHEVILLE PIVOT Anti-Flip; Used With 408398A1 Pad, Ref 20
36		446454A1		2	CHEVILLE Used With 408398A1 Pad, Ref 20 or 386000A2 Pad, Ref 37
37		386000A2		2	PLAQUE DE GARNISSAGE Anti-Flipover
38		395753A2		4	PLAQUE CAOUTCHOUC Used With 386000A2 Pad
39		231-4247		12	ECROU
40		D149033		2	AXE, GROS
41		413-632		4	BOULON 3/8 x 2

http://www.minnparbackhoeparts.com/

RETROPELLE - STABILISATEURS, PLAQUES ET PATINS (580SM)

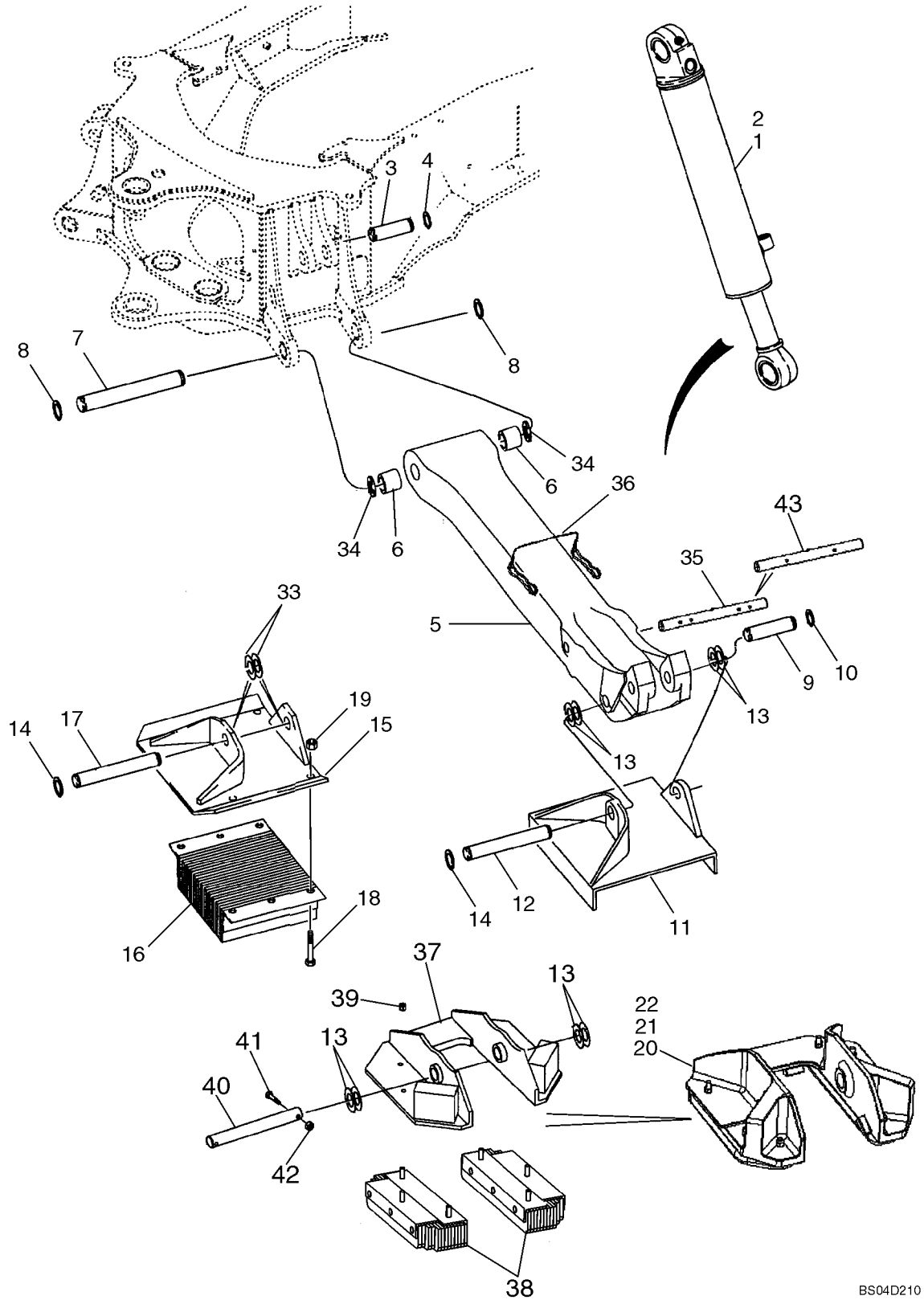

http://www.minnparbackhoeparts.com/

RETROPELLE - STABILISATEURS, PLAQUES ET PATINS (580SM)

REF	FN	PART NUMBER	YR/SN	QTY	DESCRIPTION
42		230-4216		4	ECROU 3/8
43		87436782		2	CHEVILLE PIVOT Anti-Flipover; Used With 386000A2 Pad, Ref 37
43		87436782		2	CHEVILLE PIVOT Anti-Flipover; Used With 386000A2 Pad, Ref 37

http://www.minnparbackhoeparts.com/

09-22A		p1	04/04

RETROPELLE - STABILISATEURS, PLAQUES ET PATINS (580SM+)

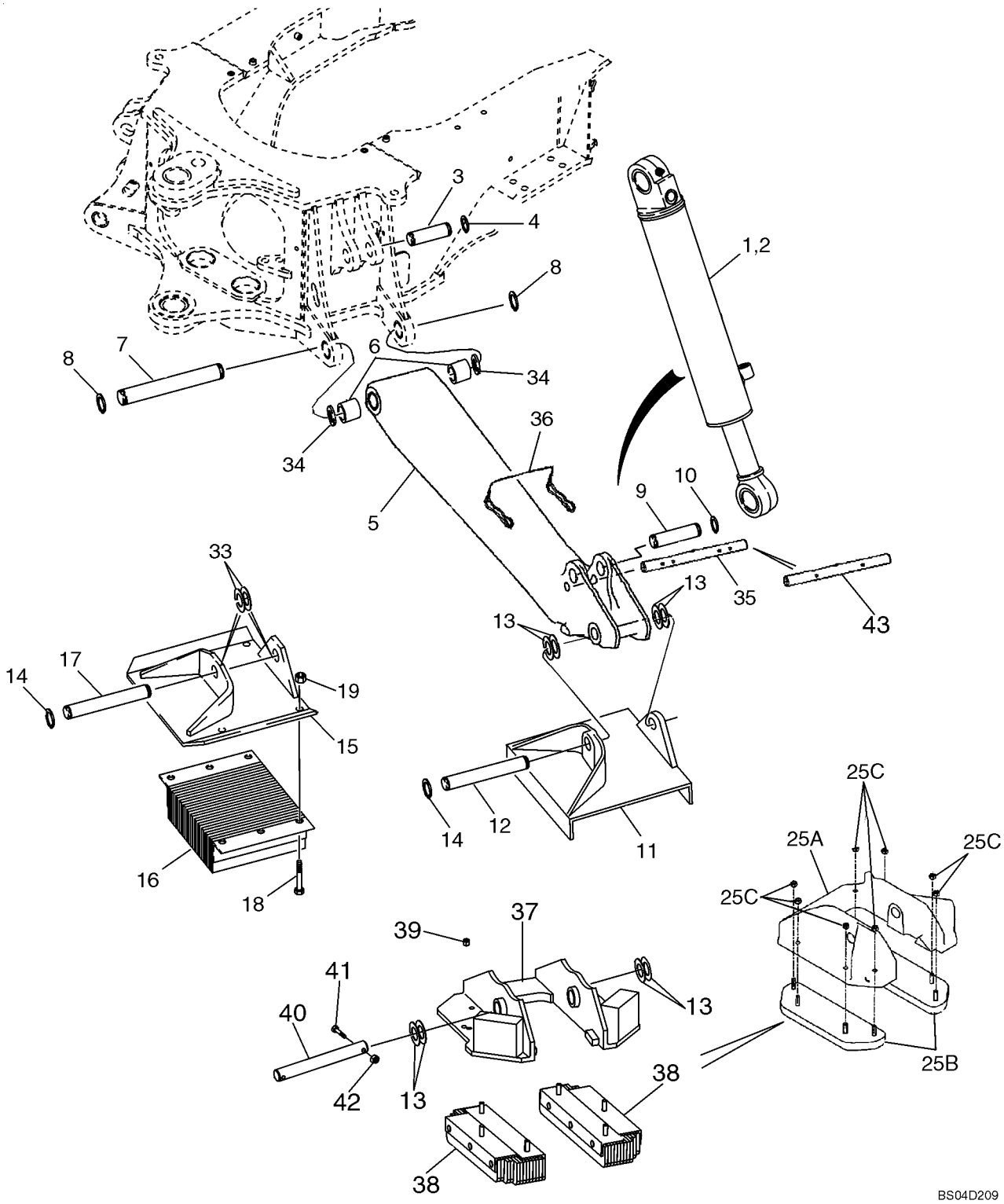

http://www.minnparbackhoeparts.com/

RETROPELLE - STABILISATEURS, PLAQUES ET PATINS (580SM+)

REF	FN	PART NUMBER	YR/SN	QTY	DESCRIPTION
1		177256A1		1	VERIN 127 ID x 519 mm strk; Stabilizer; Right-Hand; See Figure 08-65A; 580SM+ Models
2		177257A1		1	VERIN 127 ID x 519 mm strk; Stabilizer; Left-Hand; See Figure 08-65A; 580SM+ Models
3		D38907		2	AXE Stabilizer Cylinder to Chassis
4		103-16175		4	ANNEAU-D'ARRET No. 175
5		446220A1		2	STABILISATEUR 1307 mm (51-7/16 in); Incl. Ref 6
6		D50146		2	BAGUE
7		121665A1		2	AXE, GROS Stabilizer Leg to Chassis
8		103-16175		4	ANNEAU-D'ARRET No. 175
9		R26725		2	AXE, GROS Stabilizer Cylinder
10		D25279		4	ANNEAU-D'ARRET
11		D88427		2	PLAQUE Cleated; If Used
12		D28648		2	AXE Plate/Pad to Leg
13		D143406		X	RONDELLE Used as a Spacer
14		D25279		4	ANNEAU-D'ARRET
15		D142519		2	SABOT (ASSEMBLE) Street or Cemetery; If Used
16		D61368		2	SILENTBLOC Rubber; If Used
17		D39256		2	PIVOT D'ESSIEU Plate to Leg
18		413-1228		8	VIS 3/4 x 1-3/4
19		425-1012		8	ECROU 3/4
25A		408399A1		2	TAMPON PLATE, Anti-Flipover; No Longer Available, Order Ref 37 - 43
25B		339680A2		4	PLAQUE CAOUTCHOUC Anti-Flipover; Used With 408399A1 Plate, Ref 25A
25C		832-41312		16	ECROU M12; If Used
33		D143406		X	RONDELLE Used as a Spacer
34		495-81282		X	RONDELLE 2-1/16 x 3 x 3/32; Used as a Spacer
35		408405A1		2	CHEVILLE PIVOT Used With 408399A1 Pad, Ref 25A
36		446454A1		2	CHEVILLE Used With 408399A1 Pad or 400880A1 Pad
37		400880A1		2	PLAQUE DE GARNISSAGE PLATE, Anti-Flipover
38		395753A2		4	PLAQUE CAOUTCHOUC Used With 400880A1 Pad
39		231-4247		12	ECROU
40		D149033		2	AXE, GROS
41		413-632		4	BOULON 3/8 x 2
42		230-4216		4	ECROU 3/8

http://www.minnparbackhoeparts.com/

09-22A		p2	04/04

RETROPELLE - STABILISATEURS, PLAQUES ET PATINS (580SM+)

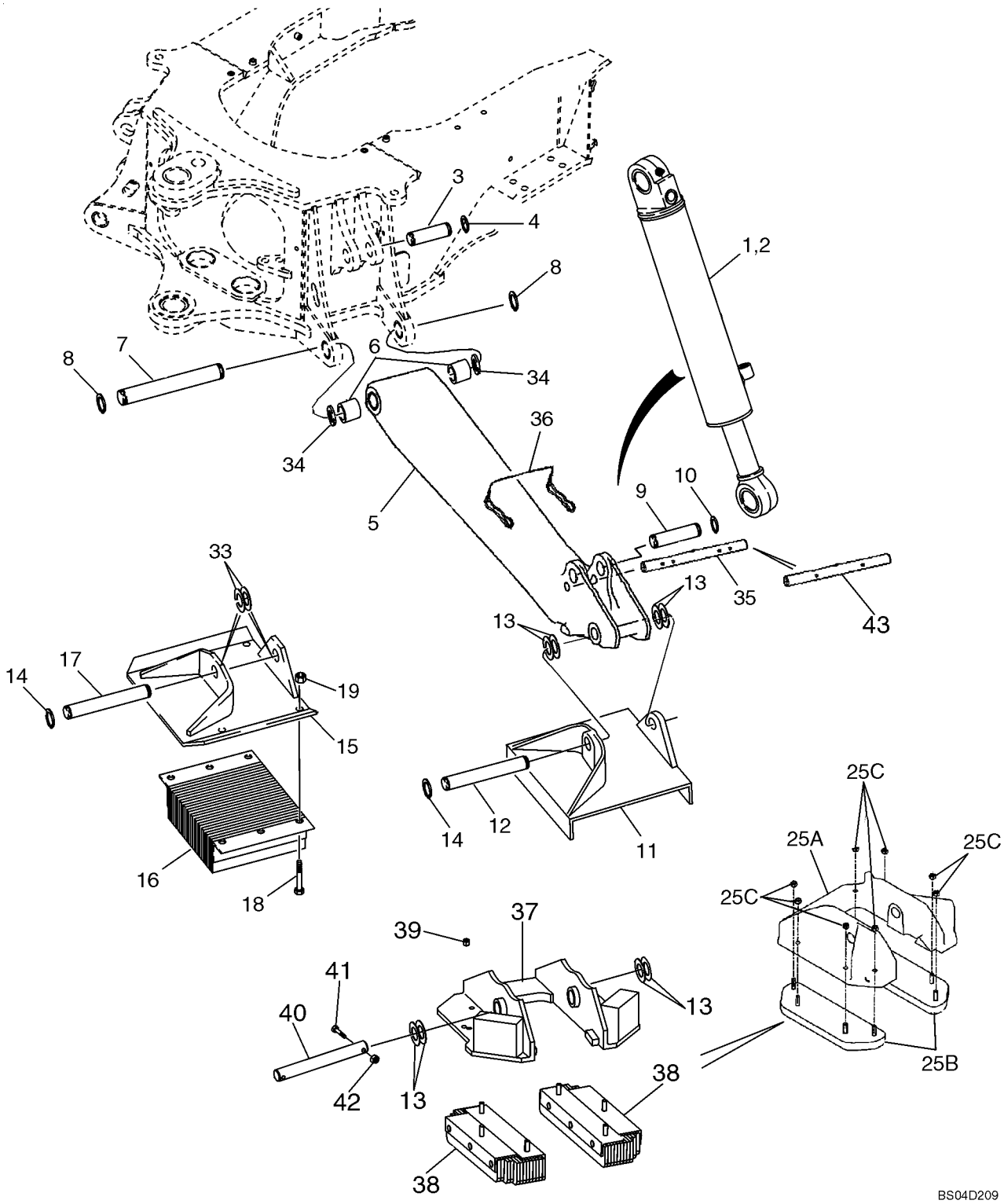

http://www.minnparbackhoeparts.com/

RETROPELLE - STABILISATEURS, PLAQUES ET PATINS (580SM+)

REF	FN	PART NUMBER	YR/SN	QTY	DESCRIPTION
43		87436783		2	CHEVILLE PIVOT Anti-Flipover; Used With 400880A1 Pad, Ref 37

http://www.minnparbackhoeparts.com/

RETROPELLE - TOURELLE ET VERINS DE DEBATTEMENT

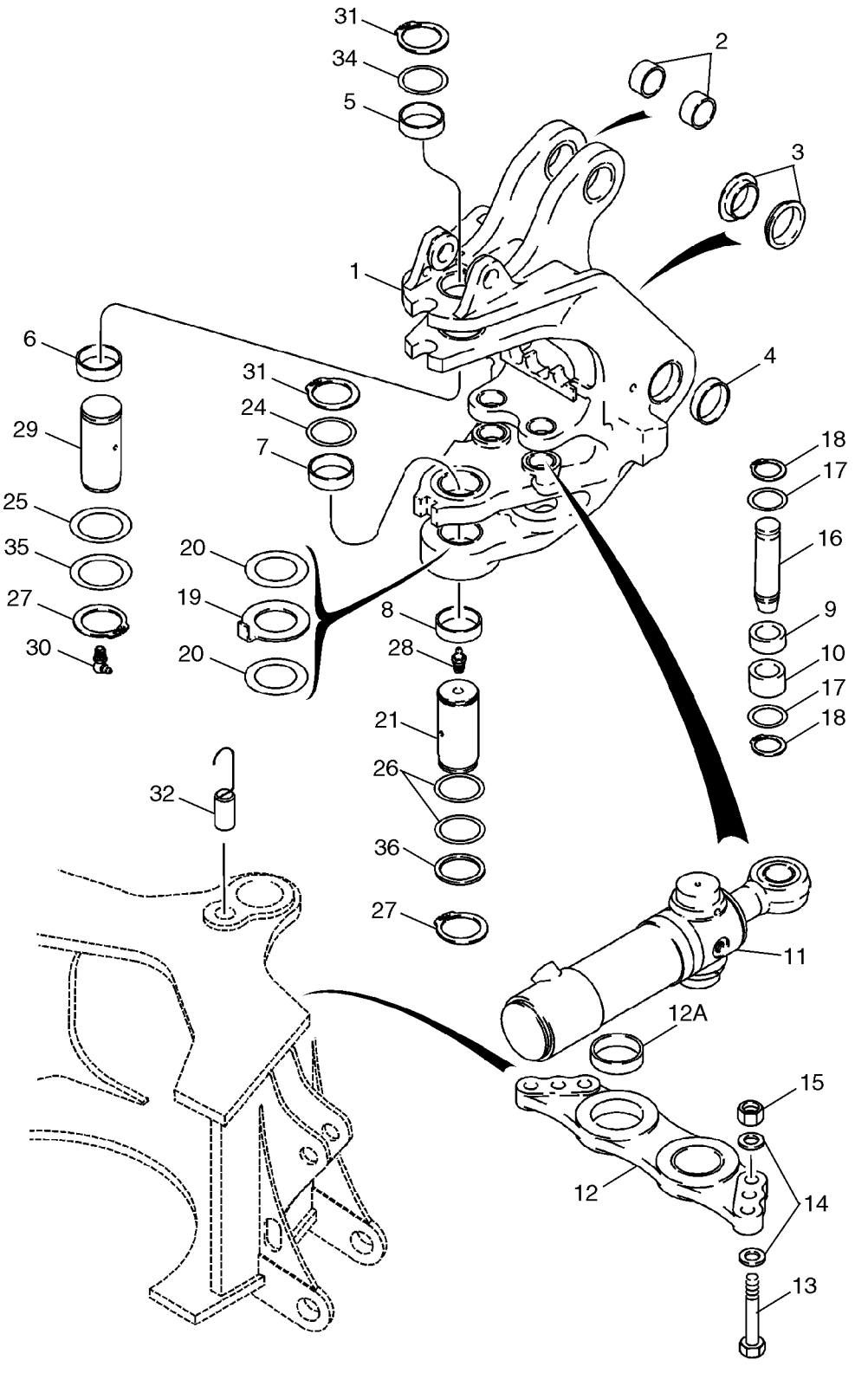

http://www.minnparbackhoeparts.com/

RETROPELLE - TOURELLE ET VERINS DE DEBATTEMENT

REF	FN	PART NUMBER	YR/SN	QTY	DESCRIPTION
1		326805A1		1	CHASSIS SWING TOWER; Incl. Ref 2 - 10
2		191017A1		2	BAGUE
3		121778A1		2	BAGUE
4		D135741		2	BAGUE
5		D135557		1	BAGUE
6		D135559		1	BAGUE
7		D151073		1	BAGUE
8		D151074		1	BAGUE 70 x 86 x 28 mm lg
9		135249A1		2	BAGUE 28.6 mm lg
10		135248A1		2	BAGUE 38.1 mm lg
11		139808A2		2	VERIN 102 ID x 292 mm strk; Swing; See Figure 08-66
12		198976A1		1	PLAQUE, GRANDE Incl. Ref 12A
12A		114318A1		2	BAGUE 80 x 90 x 29.3 mm
13		827-20075		6	VIS M20 x 75; 10.9
14		896-11020		12	RONDELLE 22 x 37 x 4 mm
15		829-1420		6	ECROU M20, Cl 10
16		386092A1		2	AXE, GROS Swing Cylinder Rod End
17		495-81227		4	RONDELLE 2-1/16 x 2-15/16 x 1/16
18		103-16200		4	ANNEAU-D'ARRET No. 200
19		243084A1		1	RONDELLE 5 mm thk
20		134167A1		X	CALE D'EPAISSEUR 2.05 mm (.08 in) thk
21		D151065		1	AXE, GROS
24		D136392		X	CALE D'EPAISSEUR 72 x 89 x 3.0 mm; Upper
25		D136700		X	CALE D'EPAISSEUR 67 x 83 x 2.0 mm
26		D136391		X	CALE D'EPAISSEUR 72 x 89 x 1.6 mm
27		800-40065		2	ANNEAU-D'ARRET
28		219-1		1	GRAISSEUR 1/8 PT x 21/32
29		292385A1		1	AXE, GROS
30		219-55		1	GRAISSEUR 90 deg, 1/8 PT x 27/32
31		800-40070		2	ANNEAU-D'ARRET
32		384815A1		1	CHEVILLE (ASSEMBLEE) Swing Stop
34		293636A1		1	RONDELLE Upper
35		D144423		X	RONDELLE 2-5/8 x 3-3/8 x 1/8; Used As A Shim
36		D136700		1	CALE D'EPAISSEUR Washer

http://www.minnparbackhoeparts.com/

RETROPELLE - FLECHE ET TOURELLE DE DEBATTEMENT

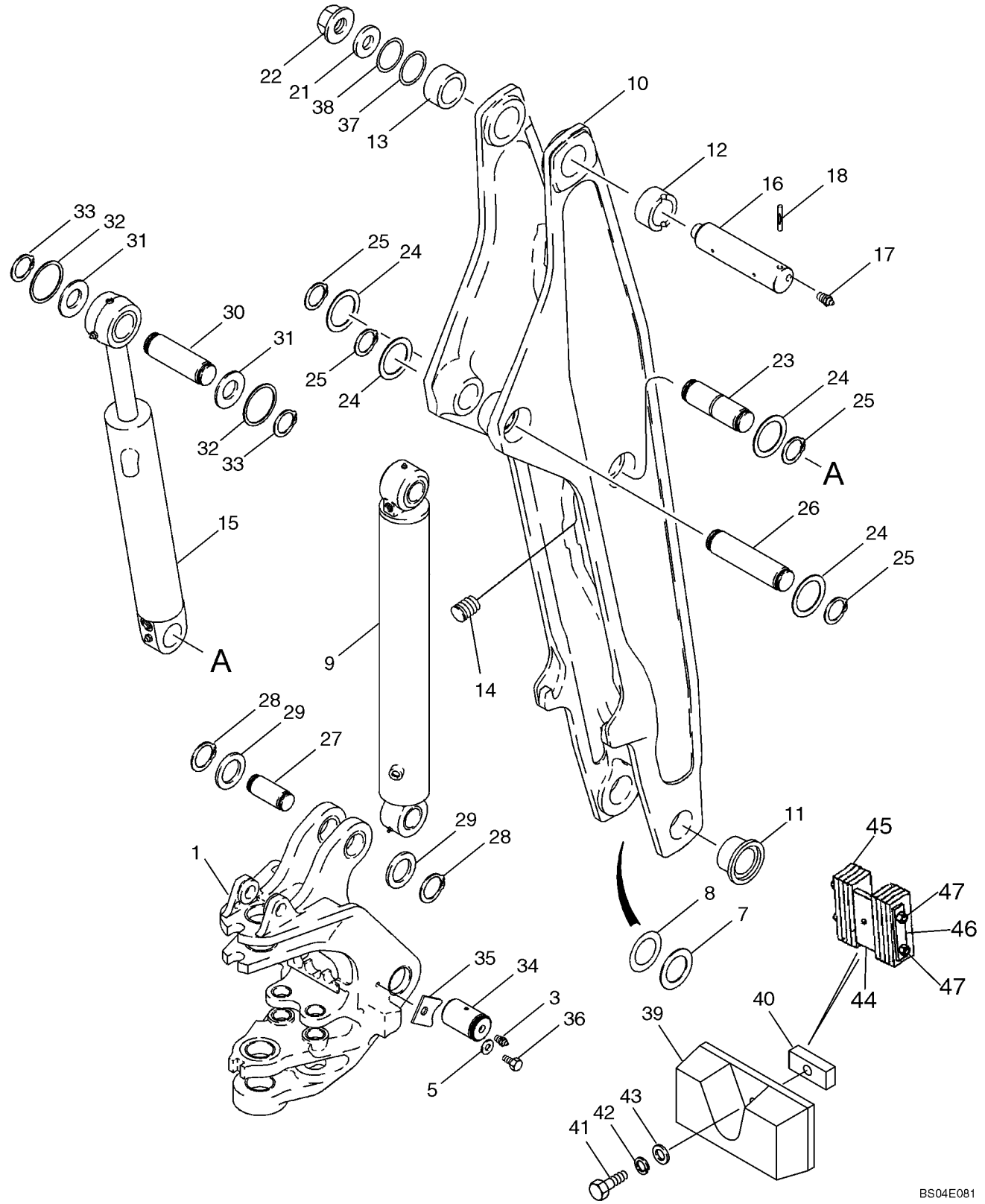

http://www.minnparbackhoeparts.com/

RETROPELLE - FLECHE ET TOURELLE DE DEBATTEMENT

REF	FN	PART NUMBER	YR/SN	QTY	DESCRIPTION
1		326805A1		1	CHASSIS SWING TOWER; See Figure 09-23 For Bushings
3		219-1		2	GRAISSEUR 1/8 PT x 21/32
5		896-11020		2	RONDELLE 22 x 37 x 4 mm; Replaces 496-41081 13/16 x 1-3/4 x 7/32 in Washer Used On Some Models
7		H71514		X	RONDELLE
8		R32119		X	RONDELLE 71 ID x 114 mm
9		87417644		1	VERIN 133 ID x 843 mm strk, Boom; See Figure 08-67
10		122284A2		1	FLECHE Incl. Ref 11 - 14
11		D151071		2	BAGUE 70 ID x 34 mm lg
12		D135739		1	BAGUE 70 ID x 44 mm lg; With Slot For Groove Pin; Right-Hand Side
13		D137218		1	BAGUE 70 ID x 44 mm lg; Without Slot For Groove Pin; Left-Hand Side
14		D120450		7	BOUCHON
15		183795A3		1	VERIN 127 ID x 583 mm strk; Dipper; See Figure 08-68; If Used
15		183795A4		1	VERIN 127 ID x 583 mm strk; Dipper; See Figure 08-68; If Used
16		D132494		1	AXE, GROS Boom to Dipper
17		219-1		2	GRAISSEUR 1/8 PT x 21/32
18		135-51652		1	GOUPILLE CANNELÉES 1/2 x 3-1/4 lg; Center Groove
21		D133632		1	RONDELLE
22		181042A1		1	ECROU Flange, Special
23		123167A2		1	AXE, GROS Dipper Cylinder Closed End to Boom
24		H433285		4	ENTRETOISE
25		800-4155		4	ANNEAU-D'ARRET
26		123168A2		1	AXE, GROS Boom Cylinder Closed End to Boom
27		190313A1		1	AXE, GROS Boom Cylinder Rod End to Swing Tower
28		103-11237		2	CIRCLIP
29		123318A1		2	RONDELLE 62 mm ID
30		D138022		1	AXE, GROS
31		495-81227		X	RONDELLE 2-1/16 x 2-15/16 x 1/16
32		495-81226		2	RONDELLE 1-13/16 x 2-1/2 x 1/8

http://www.minnparbackhoeparts.com/

09-24		p2	04/05

RETROPELLE - FLECHE ET TOURELLE DE DEBATTEMENT

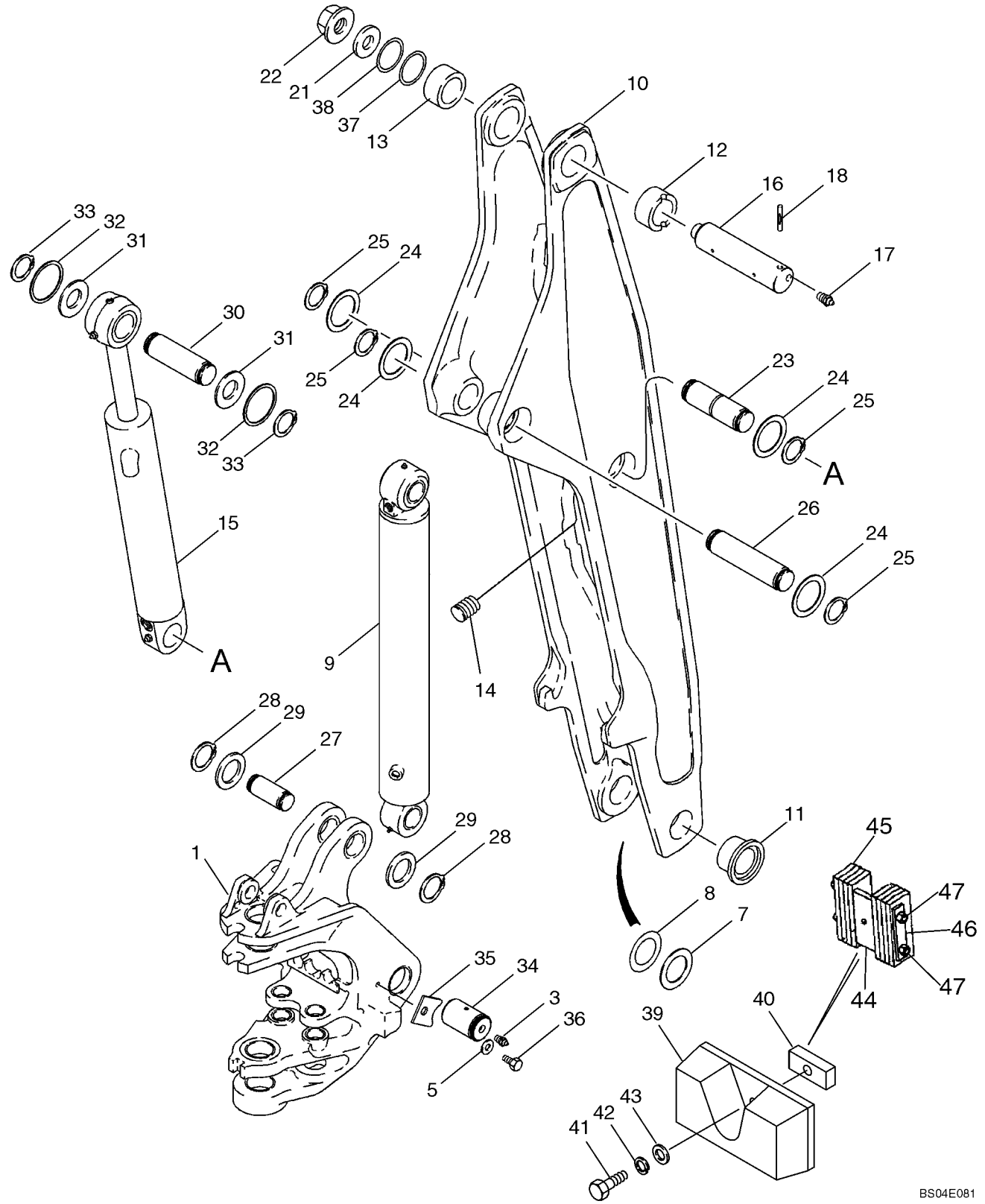

http://www.minnparbackhoeparts.com/

RETROPELLE - FLECHE ET TOURELLE DE DEBATTEMENT

REF	FN	PART NUMBER	YR/SN	QTY	DESCRIPTION
33		103-16175		2	ANNEAU-D'ARRET No. 175
34		87326813		2	GOUPILLE CANNELÉES Boom to Swing Tower; Replaces 250663A1
35		303646A1		2	PATTE FIXATION
36		604-20035		2	BOULON M20 x 35
37		404834A1		X	CALE D'EPAISSEUR Concave
38		404835A1		X	CALE D'EPAISSEUR Concave
39		122995A1		1	PARE-CHOCS Bumper, Boom; If Used; No Longer Available, Order 87443971 Bumper, Ref 44 - 47
40		122993A1		1	BARRE
41		614-10050		1	BOULON M10 x 50
42		892-11010		1	RONDELLE FREIN M10
43		895-11010		1	RONDELLE 11 x 21 x 2 mm
		87443971		1	PARE-CHOCS Boom Bumper; If Used; Incl. Ref 44 - 47
44		87443847		1	PLAQUE DORSALE Plate
45		87443912		8	PLAQUE CAOUTCHOUC Pad
46		87443661		2	PLAQUE DE FERMETURE Plate
47		825-1412		4	ECROU M12; Replaces 832-46412 M12 Nut Used On Some Models

http://www.minnparbackhoeparts.com/

09-25		p1	05/05

VERROU DE MAINTIEN DE BRAS DE RELEVAGE (SANS DE COMMANDE PILOTE)

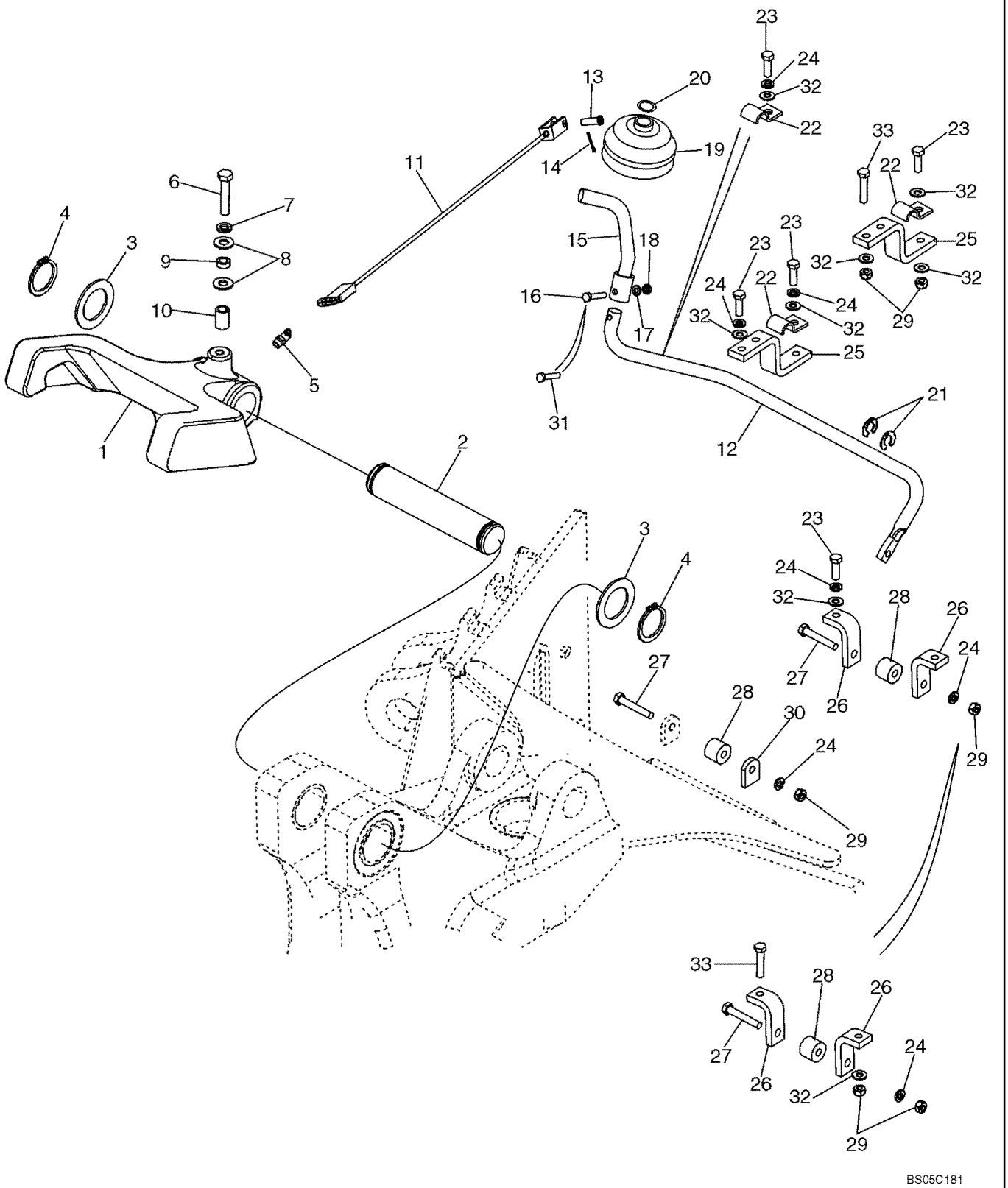

http://www.minnparbackhoeparts.com/

VERROU DE MAINTIEN DE BRAS DE RELEVAGE (SANS DE COMMANDE PILOTE)

REF	FN	PART NUMBER	YR/SN	QTY	DESCRIPTION
1		122974A1		1	VERROU-BLOCAGE ASS.
2		D129227		1	AXE, GROS
3		D144592		2	RONDELLE
4		800-44040		2	ANNEAU-D'ARRET
5		219-55		1	GRAISSEUR 90 deg, 1/8 PT x 27/32
6		614-10050		1	BOULON M10 x 50
7		892-11010		1	RONDELLE FREIN M10
8		895-15010		2	RONDELLE 11 x 24 x 2 mm
9		87445245		1	ENTRETOISE 15.88 OD x 6.4 W x 2.41 mm thick wall; Replaces D143417 15.88 OD x 6.4 W x 2.77 mm thick wall Spacer Used On Some Models
10		396092A1		1	ENTRETOISE
11		87435924		1	CABLE
12		87422696		1	TRINGLE Boom Latch Release; 6.5 mm Mounting Hole; If Used
12		87441850		1	TRINGLE Boom Latch Release; 6.0 mm Mounting Hole; If Used
13		427-5094		1	AXE DE CHAPE 5/16 x 15/16
14		432-612		1	GOUPILLE 3/32" x 3/4"
15		87444149		1	TRINGLE (ASSEMBLEE)
16		814-6030		1	BOULON M6 x 30; If Used
17		892-11006		1	RONDELLE FREIN M6; If Used
18		829-1406		1	ECROU M6; If Used
19		D86664		1	MANCHETTE
20		D143735		1	COLLIER Ring
21		D143591		2	ANNEAU-D'ARRET CLIP RING, 5/8 dia
22		D143723		2	BRIDE CLAMP, 5/8
23		614-8025		2-6	BOULON M8 x 25
24		892-11008		3-8	RONDELLE LOCK, M8
25		87449995		1	PATTE FIXATION Rod; Without Threaded Tapped Holes; Replaces 87422701 Bracket With Threaded Tapped Holes
26		87449996		2	PATTE FIXATION Cable; Without Threaded Tapped Holes; Replaces 87422702 Bracket With Threaded Tapped Holes
27		814-8050		2	BOULON M8 x 50
28		86984547		2	GUIDE Roller, Cable Guide

http://www.minnparbackhoeparts.com/

09-25		p2	05/05

VERROU DE MAINTIEN DE BRAS DE RELEVAGE (SANS DE COMMANDE PILOTE)

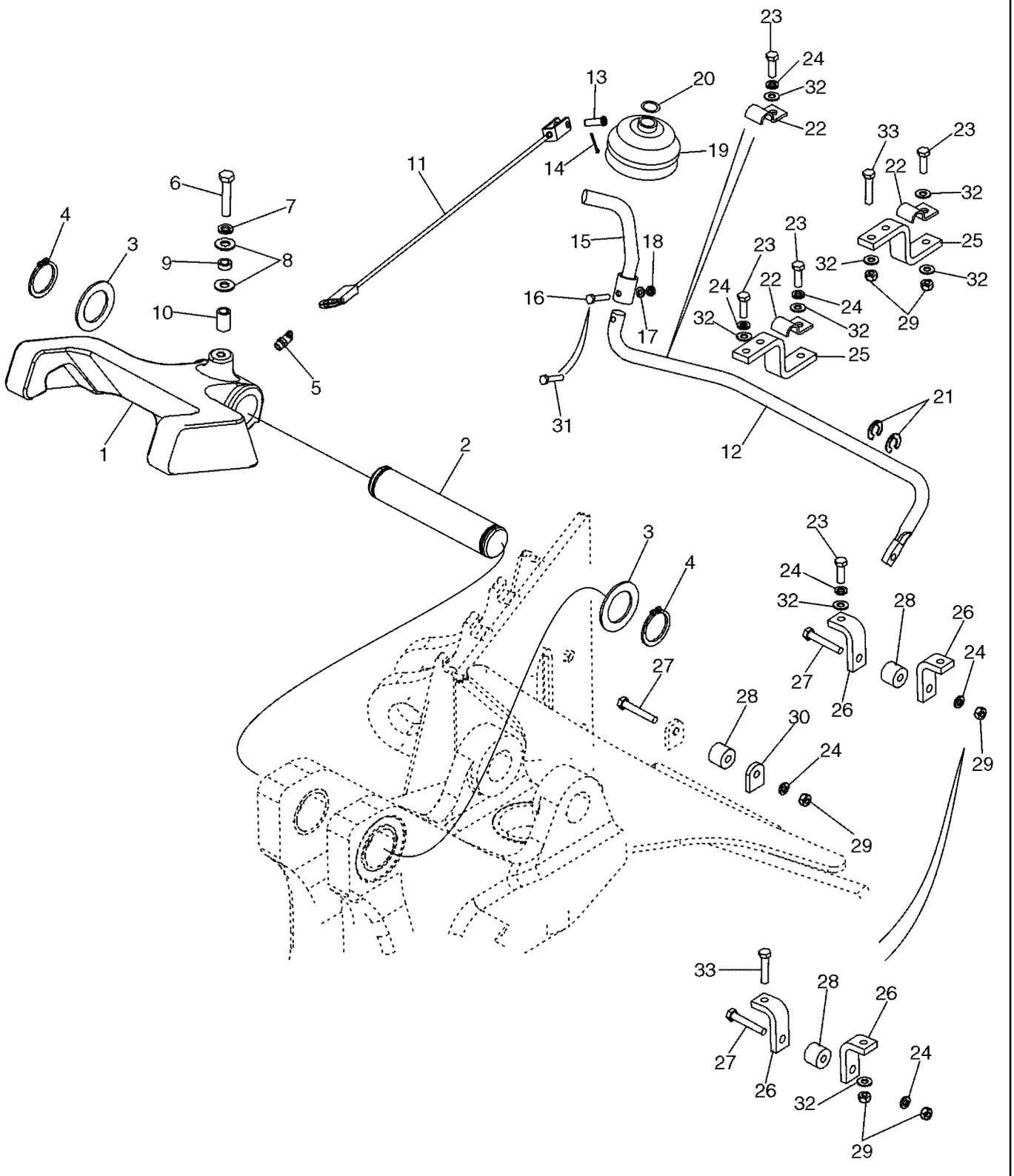

http://www.minnparbackhoeparts.com/

VERROU DE MAINTIEN DE BRAS DE RELEVAGE (SANS DE COMMANDE PILOTE)

REF	FN	PART NUMBER	YR/SN	QTY	DESCRIPTION
29		829-1408		2-7	ECROU M8
30		87432811		1	PATTE FIXATION TAB
31		87041331		1	BOULON M6 x 16, Includes Loctite; May Replace Ref 16 - 18 On Some Models
32		895-11008		6-7	RONDELLE 9 x 16 x 1.6 mm
33		614-8030		4	BOULON M8 x 30; Used With Brackets (Ref 25, 26) Without Threaded Tapped Holes

http://www.minnparbackhoeparts.com/

09-25A		p1	05/05

VERROU DE MAINTIEN DE BRAS DE RELEVAGE (AVEC DE COMMANDE PILOTE)

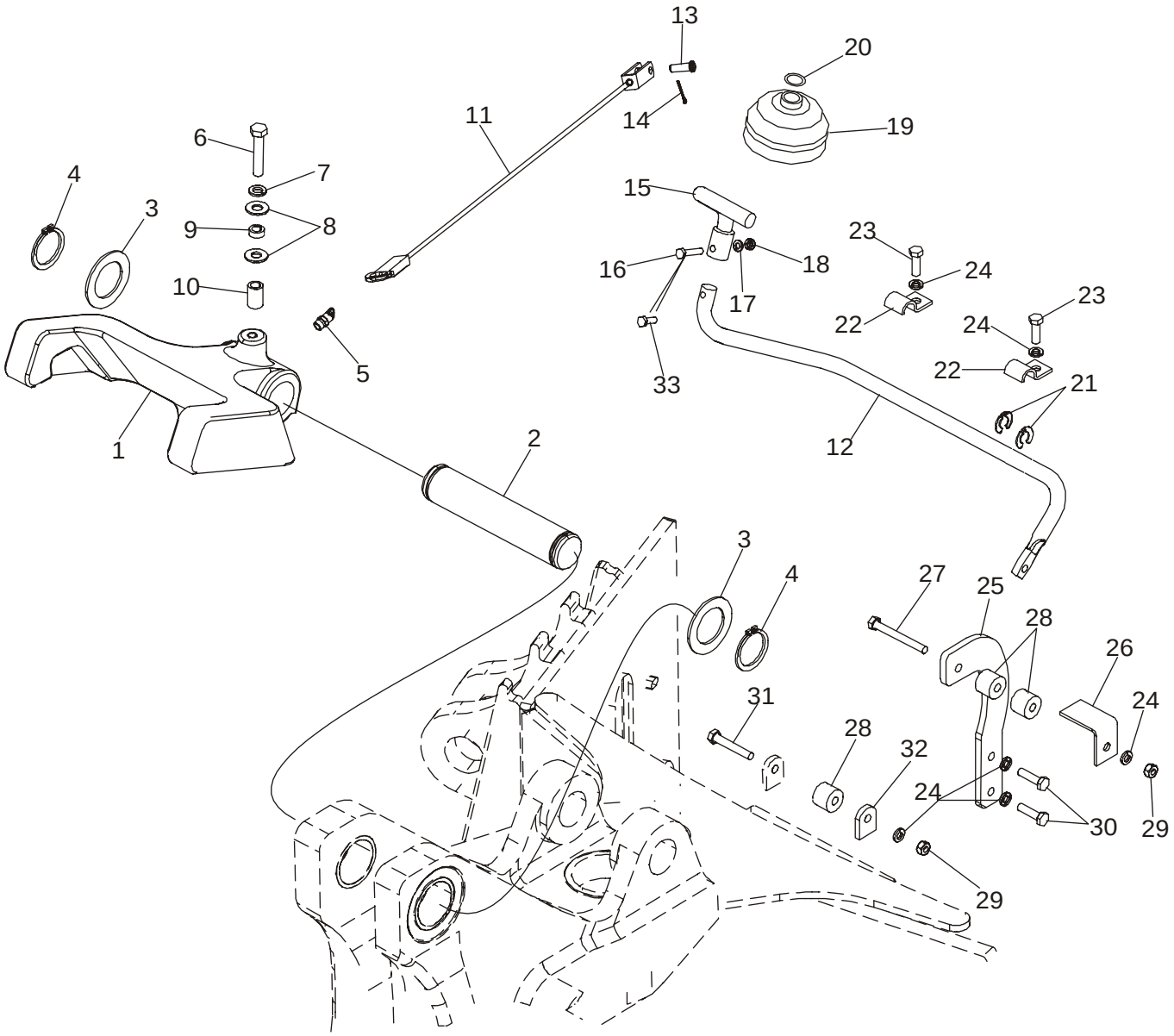

http://www.minnparbackhoeparts.com/

VERROU DE MAINTIEN DE BRAS DE RELEVAGE (AVEC DE COMMANDE PILOTE)

REF	FN	PART NUMBER	YR/SN	QTY	DESCRIPTION
1		122974A1		1	VERROU-BLOCAGE ASS.
2		D129227		1	AXE, GROS
3		D144592		2	RONDELLE
4		800-44040		2	ANNEAU-D'ARRET
5		219-55		1	GRAISSEUR 90 deg, 1/8 PT x 27/32
6		614-10050		1	BOULON M10 x 50
7		892-11010		1	RONDELLE FREIN M10
8		895-15010		2	RONDELLE 11 x 24 x 2 mm
9		D143417		1	ENTRETOISE
10		396092A1		1	ENTRETOISE
11		87435924		1	CABLE
12		87422696		1	TRINGLE Boom Latch Release; 6.50 mm (1/32 in) Mounting Hole At Ref 25 Lever; If Used
12		87441850		1	TRINGLE Boom Latch Release; 6.00 mm (1/64 in) Mounting Hole At Ref 25 Lever; If Used
13		427-5094		1	AXE DE CHAPE 5/16 x 15/16
14		432-612		1	GOUPILLE 3/32" x 3/4"
15		87427775		1	TRINGLE (ASSEMBLEE)
16		814-6030		1	BOULON M6 x 30; If Used
17		892-11006		1	RONDELLE FREIN M6; If Used
18		829-1406		1	ECROU M6; If Used
19		D86664		1	MANCHETTE
20		D143735		1	COLLIER Ring
21		D143591		2	ANNEAU-D'ARRET CLIP RING, 5/8 dia
22		D143723		2	BRIDE CLAMP, 5/8
23		614-8025		2	BOULON M8 x 25
24		892-11008		6	RONDELLE LOCK, M8
25		86984544		1	PATTE FIXATION Roller Mounting
26		86984545		1	PATTE FIXATION Cable
27		814-8070		1	BOULON M8 x 70
28		86984547		3	GUIDE Roller, Cable Guide
29		829-1408		2	ECROU M8
30		614-8030		2	BOULON M8 x 30
31		814-8050		1	BOULON M8 x 50
32		87432811		1	PATTE FIXATION TAB
33		87041331		1	BOULON M6 x 16, Includes Loctite; May Replace Ref 16 - 18 On Some Models

http://www.minnparbackhoeparts.com/

09-26		p1	01/04

RETROPELLE - BALANCIER ET GODET

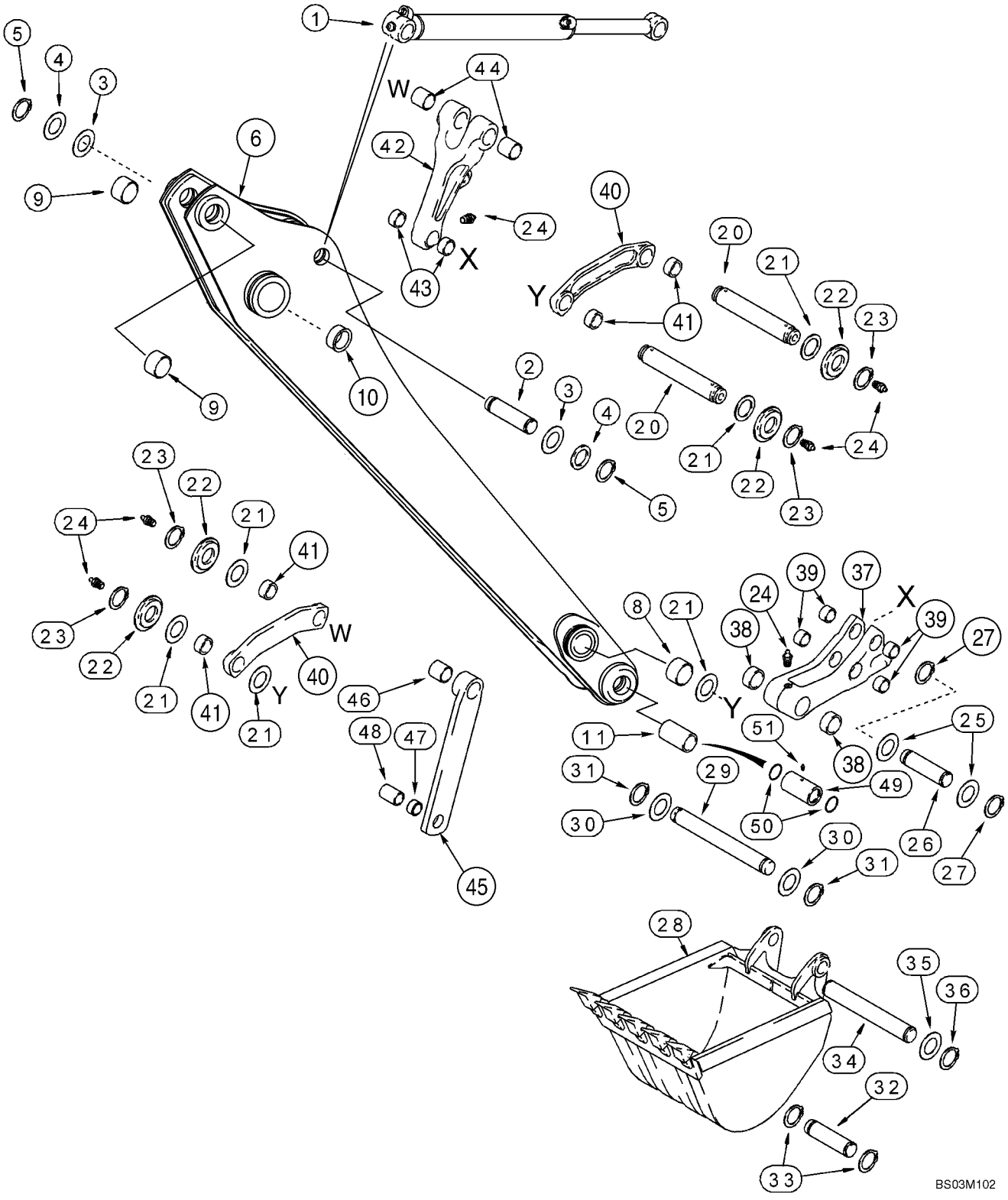

http://www.minnparbackhoeparts.com/

RETROPELLE - BALANCIER ET GODET

REF	FN	PART NUMBER	YR/SN	QTY	DESCRIPTION
1		235916A1		1	VERIN 80 ID x 872 mm strk; Bucket; See Figure 08-69
2		D138022		1	AXE, GROS
3		495-81227		X	RONDELLE 2-1/16 x 2-15/16 x 1/16
4		495-81226		2	RONDELLE 1-13/16 x 2-1/2 x 1/8
5		103-16175		2	ANNEAU-D'ARRET No. 175
		403353A1		1	BALANCÍN Incl. Ref 6 - 10; Models Without Hydraulic Backhoe Bucket Coupler; For Models With Hydraulic Backhoe Bucket Coupler, See Figure 09-28
6		NSS		1	NON FOURNI SEPAREMENT Dipper
7		D120450		6	BOUCHON Not Illustrated
8		D140029		2	BAGUE 50 x 60 x 25.5 mm lg
9		D138047		2	BAGUE 54 mm (2-1/8 in) lg
10		D150121		2	BAGUE 70 ID x 36 mm lg
11		307186A1		2	BAGUE 104 mm lg; Not Included In Assembly; Purchase Separately
20		D141142		2	AXE, GROS 306 mm lg; Guide Link
21		495-81282		X	RONDELLE 2-1/16 x 3 x 3/32
22		D141164		4	ENTRETOISE
23		103-16175		4	ANNEAU-D'ARRET No. 175
24		219-1		7	GRAISSEUR 1/8 PT x 21/32
25		495-81226		2	RONDELLE 1-13/16 x 2-1/2 x 1/8
26		D146288		1	AXE, GROS Dump Link to Coupler
27		103-16175		2	ANNEAU-D'ARRET No. 175
28		REF		1	NOTICE Bucket; See Figures 09-29 - 09-34
29		D37614		1	AXE, GROS Bucket
30		D143324		2	RONDELLE
31		D25279		2	ANNEAU-D'ARRET
32		D149298		1	AXE 305 mm (12 inch) Universal Bucket Only
33		103-16175		2	ANNEAU-D'ARRET No. 175
34		D150619		1	AXE, GROS All Buckets Except 12 Inch (305 mm) Buckets
35		495-81226		X	RONDELLE 1-13/16 x 2-1/2 x 1/8
36		103-16175		2	ANNEAU-D'ARRET No. 175
		281185A1		1	CHAPE Bucket; Incl. Ref 37 - 39
37		NSS		1	NON FOURNI SEPAREMENT Coupler, Quick

http://www.minnparbackhoeparts.com/

RETROPELLE - BALANCIER ET GODET

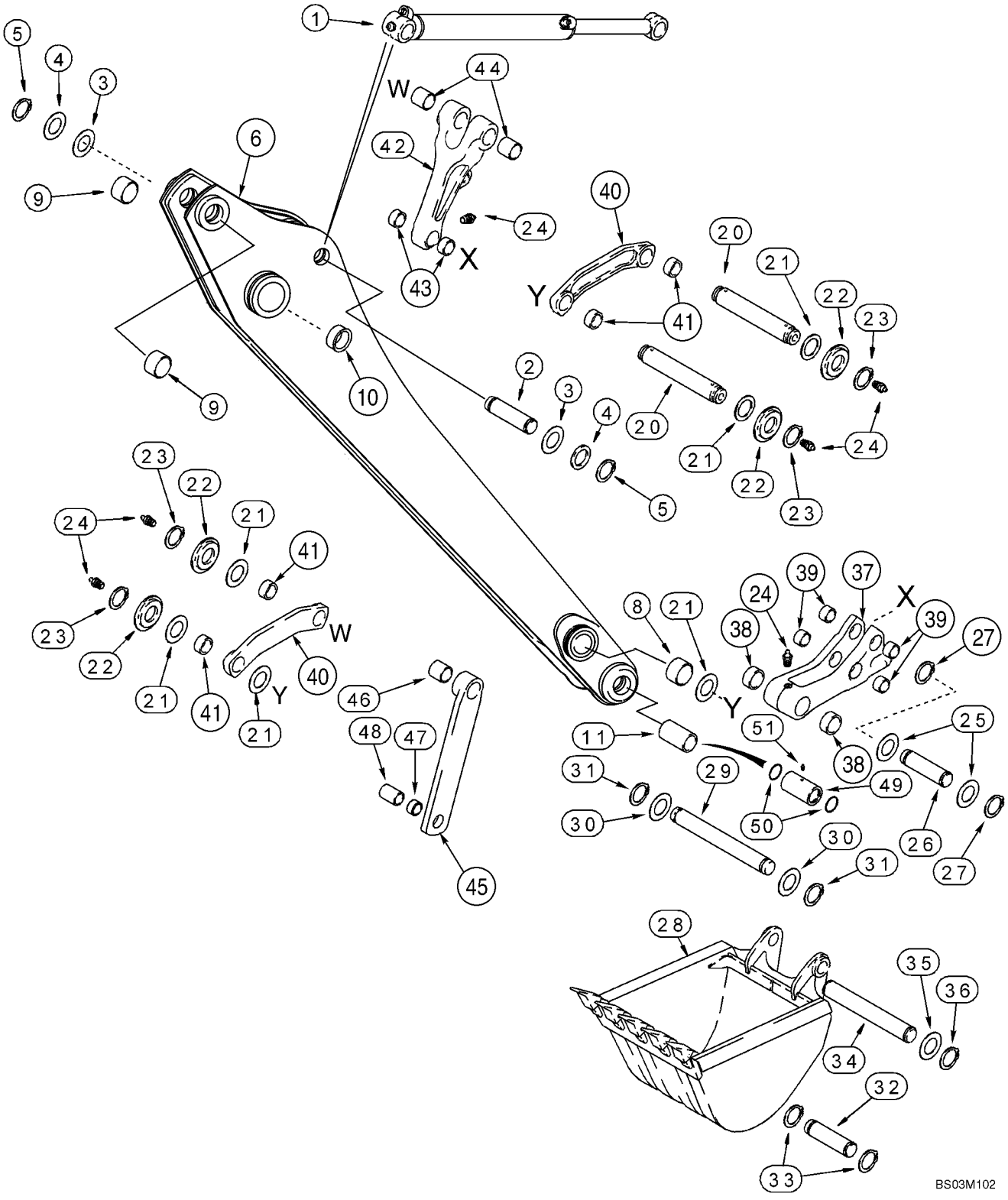

http://www.minnparbackhoeparts.com/

RETROPELLE - BALANCIER ET GODET

REF	FN	PART NUMBER	YR/SN	QTY	DESCRIPTION
38		D127167		2	BAGUE 30 mm lg
39		107124A1		4	BAGUE 29 mm lg
40		348706A1		2	MAILLON (ASSEMBLE) Bucket Guide; Incl. Ref 41
41		D149079		2	BAGUE 50 x 34 mm lg
42		400398A1		1	MAILLON (ASSEMBLE) Bucket Dump; Incl. Ref 43, 44
43		107124A1		2	BAGUE
44		D138047		2	BAGUE 54 mm (2-1/8 in) lg
45		244790A1		2	MAILLON (ASSEMBLE) Bucket Dump; Incl. Ref 46, 47
46		D138047		1	BAGUE 54 mm (2-1/8 in) lg
47		D31140		1	BAGUE
48		D141075		1	ENTRETOISE
49		D141076		1	ENTRETOISE
50		238-5228		2	JOINT TORIQUE 2-1/4 ID x 1/8
51		219-1		1	GRAISSEUR 1/8 PT x 21/32

http://www.minnparbackhoeparts.com/

RETROPELLE - BALANCIER EXTENSIBLE

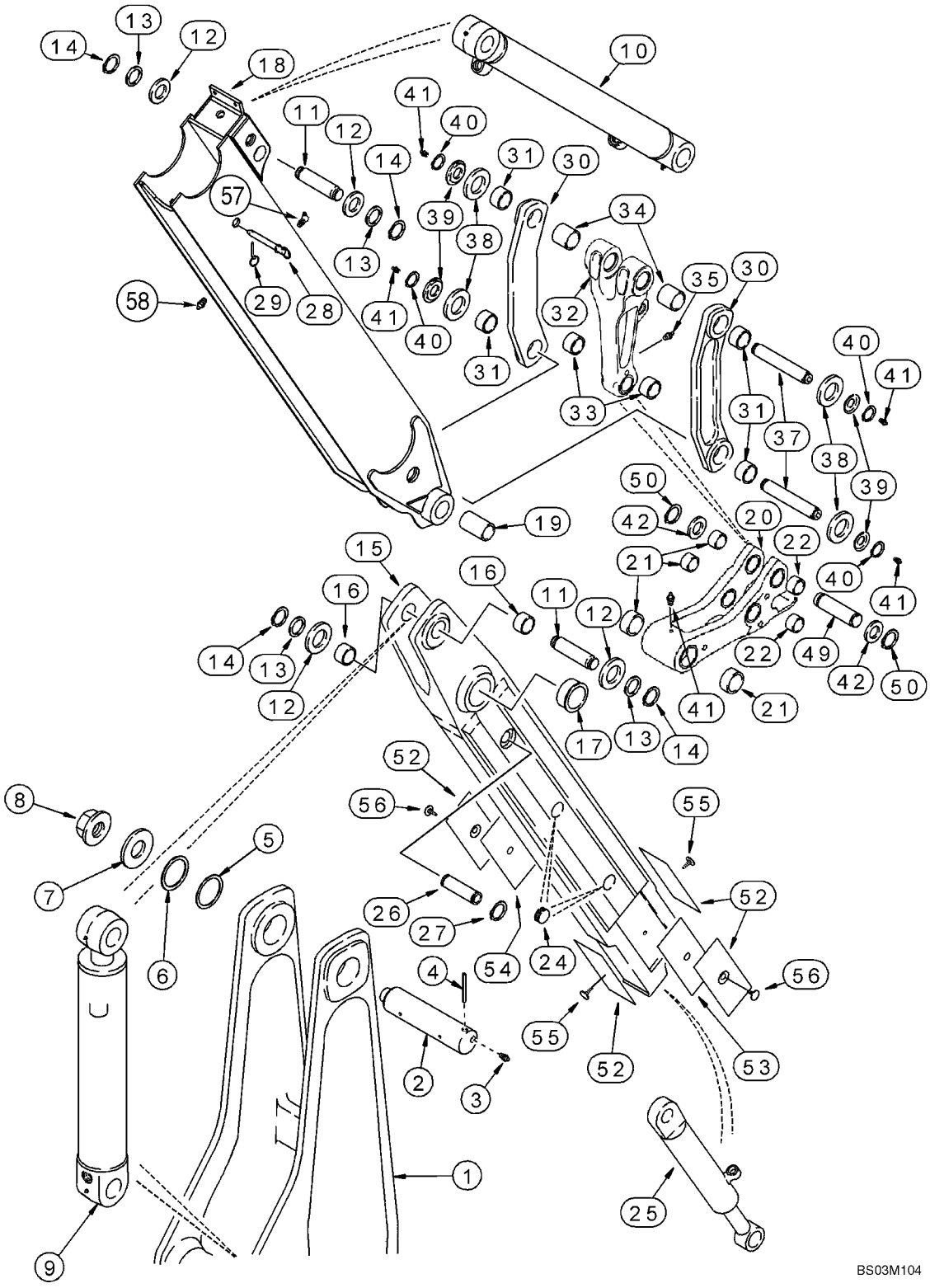

http://www.minnparbackhoeparts.com/

RETROPELLE - BALANCIER EXTENSIBLE

REF	FN	PART NUMBER	YR/SN	QTY	DESCRIPTION
1		122284A2		1	FLECHE Boom; See Figure 09-24
2		D132494		1	AXE, GROS Boom to Dipper
3		219-1		2	GRAISSEUR 1/8 PT x 21/32
4		135-51652		1	GOUPILLE CANNELÉES 1/2 x 3-1/4 lg; Center Groove
5		404834A1		X	CALE D'EPAISSEUR
6		404835A1		X	CALE D'EPAISSEUR
7		D133632		1	RONDELLE
8		181042A1		1	ECROU Flange, Special
9		183795A3		1	VERIN 127 ID x 583 mm strk; Dipper; See Figure 08-68; If Used
9		183795A4		1	VERIN 127 ID x 583 mm strk; Dipper; See Figure 08-68; If Used
10		235916A1		1	VERIN 80 ID x 872 mm strk; Bucket; See Figure 08-69
11		D141666		2	AXE, GROS
12		495-81227		X	RONDELLE 2-1/16 x 2-15/16 x 1/16
13		495-81226		4	RONDELLE 1-13/16 x 2-1/2 x 1/8
14		103-16175		4	ANNEAU-D'ARRET No. 175
		244536A1		1	BALANCÍN Inner; Incl. Ref 15 - 17
15		NSS		1	NON FOURNI SEPAREMENT Dipper
16		D149079		2	BAGUE 50 x 34 mm lg
17		D150121		2	BAGUE 70 ID x 36 mm lg
18		87436234		1	BALANCÍN Outer; Incl. Ref 57, 58; Models Without Hydraulic Backhoe Bucket Coupler; For Models With Hydraulic Backhoe Bucket Coupler, See Figure 09-28
19		307186A1		2	BAGUE 104 mm lg
		281185A1		1	CHAPE Bucket; Incl. Ref 20 - 22
20		NSS		1	NON FOURNI SEPAREMENT Coupler, Quick
21		D127167		2	BAGUE 30 mm lg
22		107124A1		4	BAGUE 29 mm lg
24		D133865		4	BOUCHON
25		1340969C2		1	VERIN 76 ID x 1068 mm strk; Extendable Dipper; See Figure 08-70
26		300588A1		1	AXE, GROS
27		800-44040		2	ANNEAU-D'ARRET

http://www.minnparbackhoeparts.com/

RETROPELLE - BALANCIER EXTENSIBLE

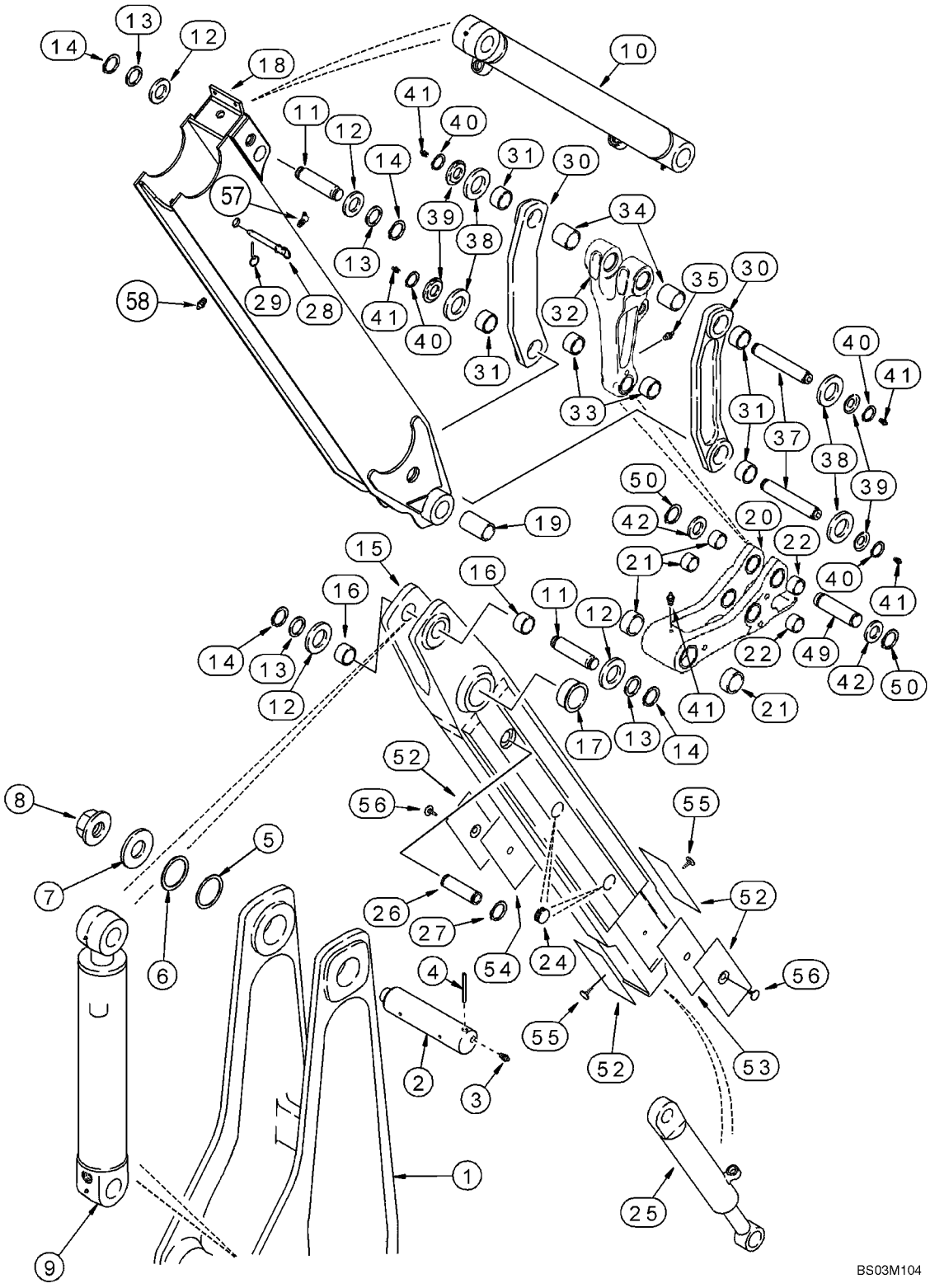

http://www.minnparbackhoeparts.com/

RETROPELLE - BALANCIER EXTENSIBLE

REF	FN	PART NUMBER	YR/SN	QTY	DESCRIPTION
28		D140247		1	AXE, GROS Lock, Transport
29		A33509		1	AXE, GROS
30		348706A1		2	MAILLON (ASSEMBLE) Bucket Guide; Incl. Ref 31
31		D149079		2	BAGUE 50 x 34 mm lg
32		400398A1		1	MAILLON (ASSEMBLE) Bucket Dump; Incl. Ref 33, 34
33		107124A1		2	BAGUE
34		D138047		2	BAGUE 54 mm (2-1/8 in) lg
35		219-1		1	GRAISSEUR 1/8 PT x 21/32
37		D141142		2	AXE, GROS 306 mm lg
38		495-81282		4	RONDELLE 2-1/16 x 3 x 3/32
39		D141164		4	ENTRETOISE
40		103-16175		4	ANNEAU-D'ARRET No. 175
41		219-1		5	GRAISSEUR 1/8 PT x 21/32
42		495-81226		2	RONDELLE 1-13/16 x 2-1/2 x 1/8
49		D146288		1	AXE, GROS
50		103-16175		2	ANNEAU-D'ARRET No. 175
52		451384A1		4	PLAQUE D'USURE
53		132844A1		1	CALE D'EPAISSEUR 0.8 mm
54		132842A1		1	CALE D'EPAISSEUR 1.6 mm
55		183443A1		2	AXE, GROS
56		183509A1		2	AXE, GROS
57		219-89		1	GRAISSEUR 1/8 PT x 25/32
58		219-86		1	RACCORD 1/8 PT x 5/8

http://www.minnparbackhoeparts.com/

BALANCIER, PELLE RÉTRO - COUPLEUR HYDRAULIQUE (COUPLEUR DE GODET DE PELLE RÉTRO HYDRAULIQUE)

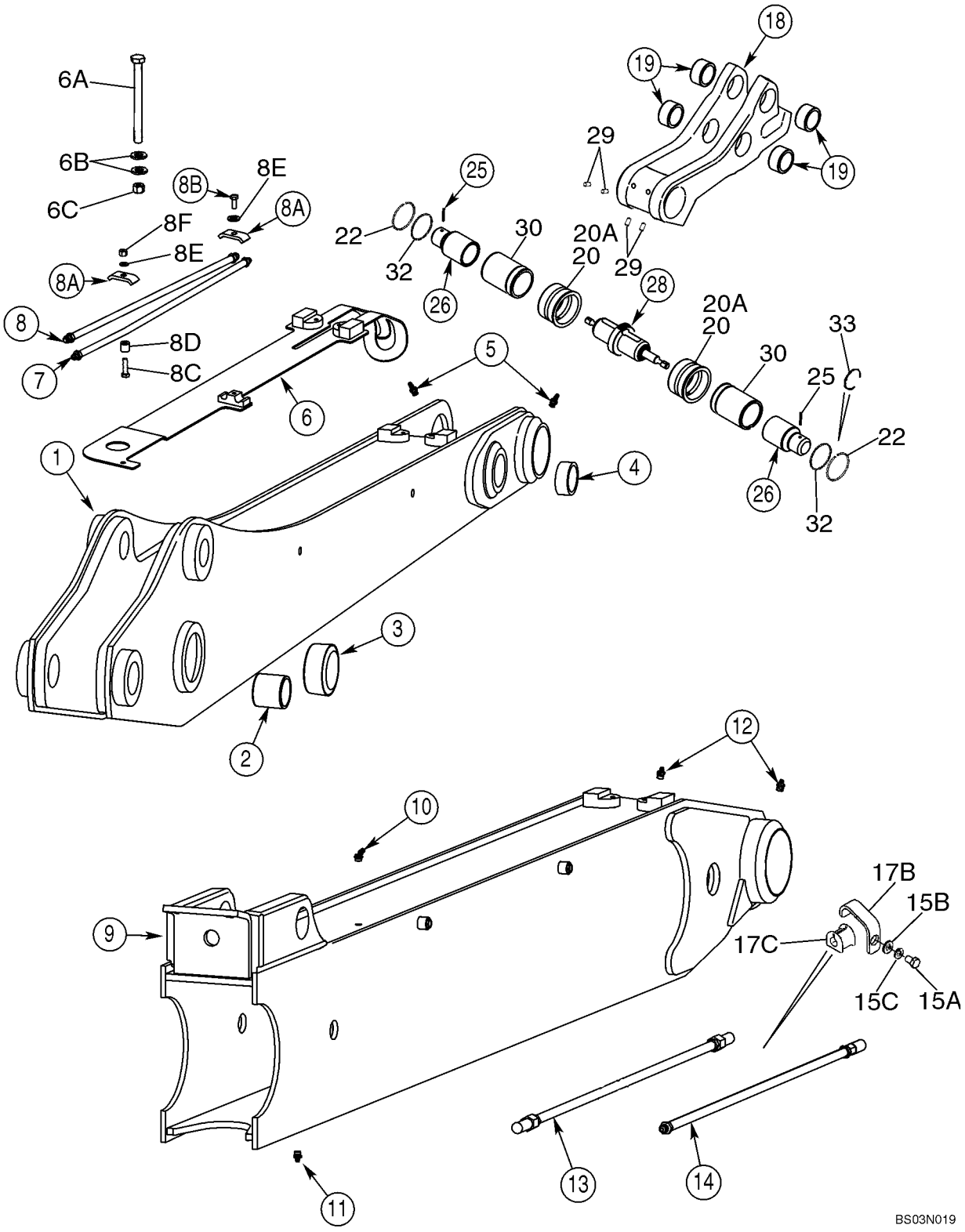

http://www.minnparbackhoeparts.com/

BALANCIER, PELLE RÉTRO - COUPLEUR HYDRAULIQUE (COUPLEUR DE GODET DE PELLE RÉTRO HYDRAULIQUE)

REF	FN	PART NUMBER	YR/SN	QTY	DESCRIPTION
		REF			NOTICE STANDARD DIPPER
1		404807A1		1	BALANCÍN Standard Dipper; Incl. Ref 2 - 5, 20A
2		D138047		2	BAGUE 54 mm (2-1/8 in) lg
3		D150121		2	BAGUE 70 ID x 36 mm lg
3A		D120450		4	BOUCHON Not Illustrated
4		D140029		2	BAGUE 50 x 60 x 25.5 mm lg
5		219-86		2	RACCORD 5/8 PT x 5/8
6		405716A1		1	PLAQUE (ASSEMBLEE)
6A		827-12240		1	BOULON M12 x 240
6B		378921A1		2	RONDELLE SPÉCIALE
6C		829-1412		1	ECROU M12
7		406168A1		1	TUYAUTERIE See Figure 08-30
8		406172A1		1	TUYAUTERIE See Figure 08-30
8A		D138055		2	COLLIER
8B		607-8020		1	BOULON M8 x 20; 10,9; Lock
8C		607-8035		1	BOULON M8 x 35; Lock
8D		407962A1		1	ENTRETOISE
8E		895-11008		2	RONDELLE 9 x 16 x 1,6 mm
8F		829-1408		1	ECROU M8
		REF			NOTICE EXTENDABLE DIPPER
9		392559A3		1	BALANCÍN Outer; Extendable Dipper; Incl. Ref 10 - 12, 20
10		219-89		1	GRAISSEUR 1/8 PT x 25/32
11		219-86		1	RACCORD 1/8 PT x 5/8
12		219-1		2	GRAISSEUR 1/8 PT x 21/32
13		403840A1		1	TUYAUTERIE See Figure 08-30
14		403400A1		1	TUYAUTERIE See Figure 08-30
15A		607-10020		4	BOULON M10 x 20; Lock
15B		896-15010		4	RONDELLE 11 x 24 x 2 mm
15C		892-11010		4	RONDELLE FREIN M10
17B		445757A1		4	PATTE FIXATION
17C		D67296		4	PASSE-FIL
		REF			NOTICE HYDRAULIC BACKHOE BUCKET COUPLER
18		417681A1		1	NOIX Incl. Ref 19
19		107124A1		4	BAGUE
20		400934A2		2	BAGUE Models With Extendable Dipper

http://www.minnparbackhoeparts.com/

BALANCIER, PELLE RÉTRO - COUPLEUR HYDRAULIQUE (COUPLEUR DE GODET DE PELLE RÉTRO HYDRAULIQUE)

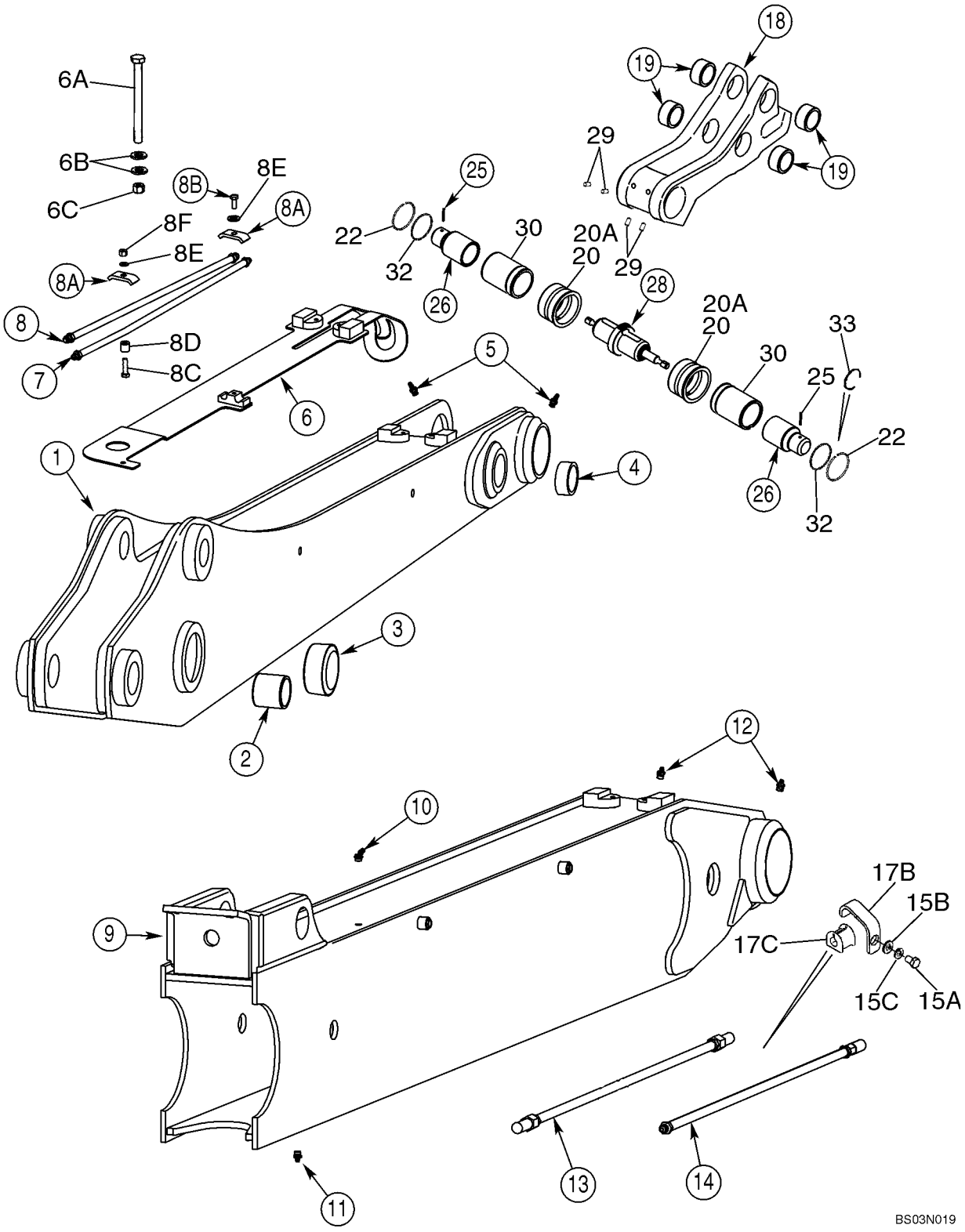

http://www.minnparbackhoeparts.com/

BALANCIER, PELLE RÉTRO - COUPLEUR HYDRAULIQUE (COUPLEUR DE GODET DE PELLE RÉTRO HYDRAULIQUE)

REF	FN	PART NUMBER	YR/SN	QTY	DESCRIPTION
20A		400935A3		2	BAGUE Models Without Extendable Dipper
22		406624A1		2	ANNEAU
25		135-1233		2	GOUPILLE CANNELÉES 7/32 x 1-1/2
26		400932A4		2	AXE
28		87423867		1	VERIN Coupler; See Figure 08-32
29		418070A1		4	VIS DE RÉGLAGE M10 x 20; Hex Socket
30		448676A1		2	TUBE DE VERIN
32		434891A1		2	JOINT-RACLEUR Wiper
33		445364A1		2	JOINT ANNULAIRE Service Ring; Included In Coupler Cylinder Seal Kit

http://www.minnparbackhoeparts.com/

09-29		p1	01/04

GODET, PELLE RÉTRO UNIVERSELLE (305 MM (12 INCH) WIDE)

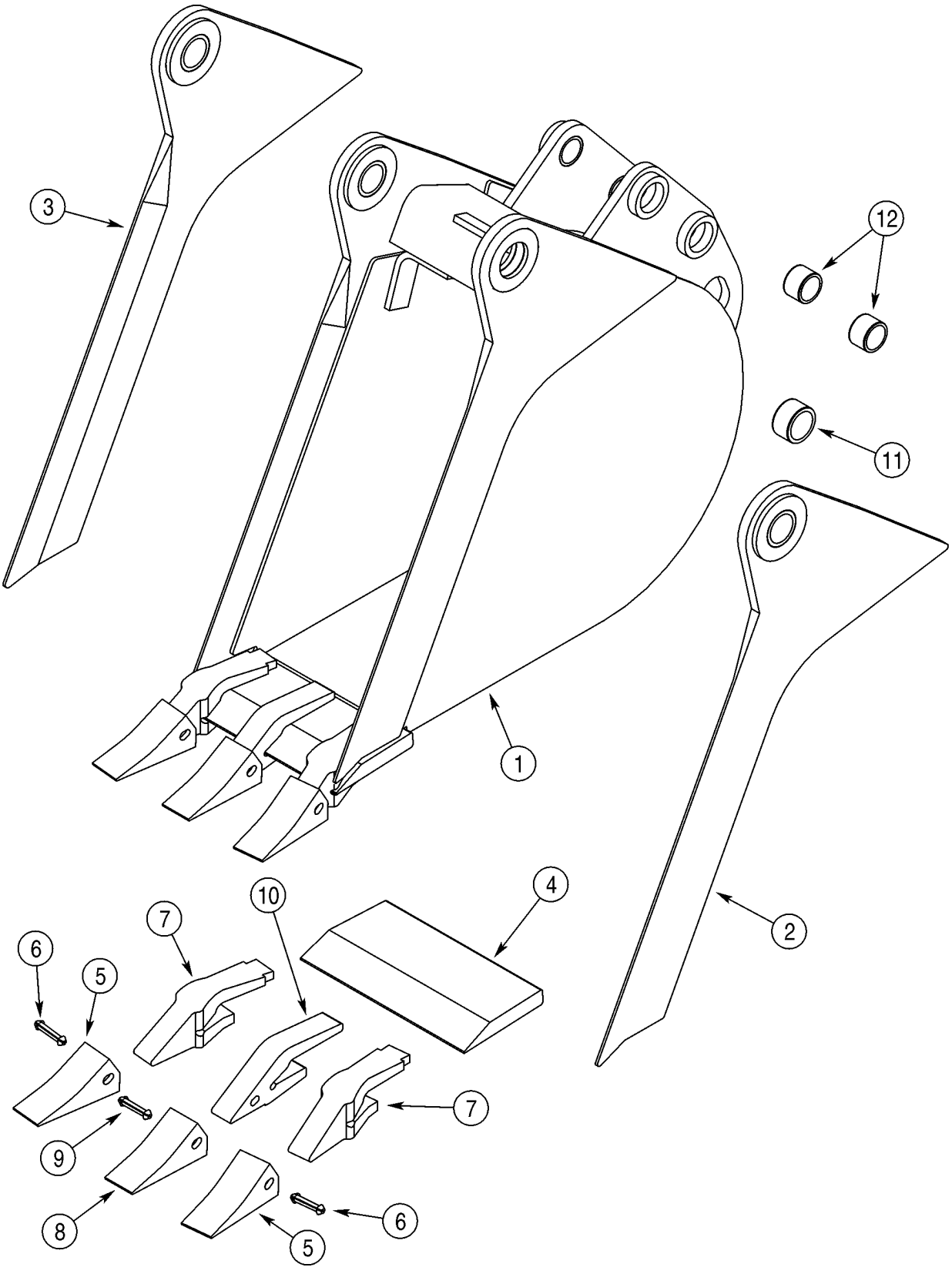

http://www.minnparbackhoeparts.com/

GODET, PELLE RÉTRO UNIVERSELLE (305 MM (12 INCH) WIDE)

REF	FN	PART NUMBER	YR/SN	QTY	DESCRIPTION
1		381488A4		1	GODET 305 mm (12 in), With 3 Teeth; Order Through Parts Marketing; Incl. Ref 2 - 12
2		NSS		1	NON FOURNI SEPAREMENT Edge; Right-Hand; Incl. Ref 11
3		NSS		1	NON FOURNI SEPAREMENT Edge; Left-Hand; Incl. Ref 11
4		D147409		1	LAME D'ATTAQUE
		D139851		2	DENT Outer; Incl. Ref 5 - 7
5		D51750		1	POINTE
6		245466A1		1	GOUPILLE
7		D138157		1	JAMBE
		D139849		1	DENT Center; Incl. Ref 8 - 10; Order Ref 8 - 10
8		D51750		1	POINTE
9		245466A1		1	GOUPILLE
10		D48212		1	JAMBE
11		D43940		2	BAGUE 1-3/4 x 2-1/4 x 1
12		D30933		4	BAGUE

http://www.minnparbackhoeparts.com/

GODET, PELLE RÉTRO UNIVERSELLE (406 MM (16 INCH) WIDE)

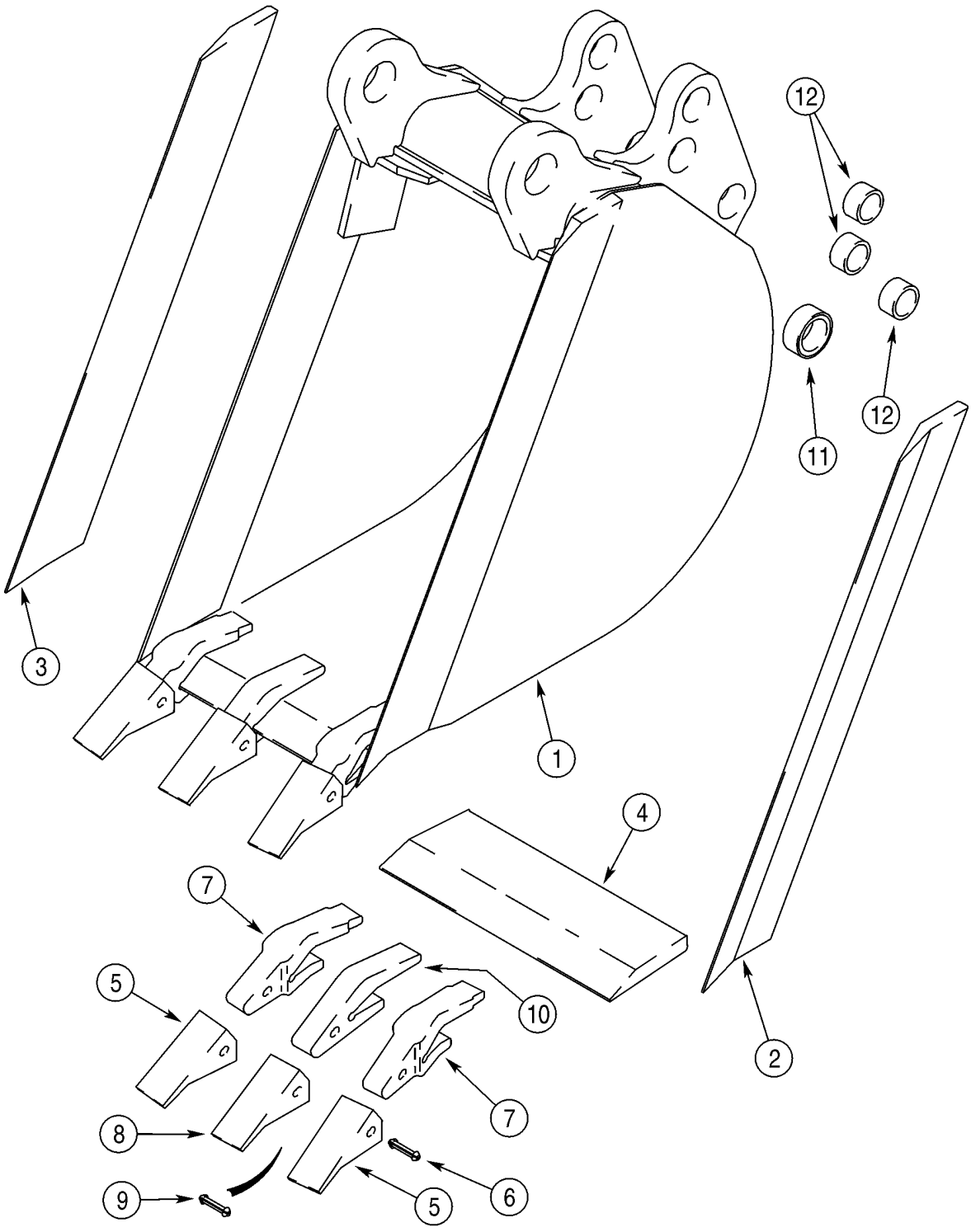

http://www.minnparbackhoeparts.com/

GODET, PELLE RÉTRO UNIVERSELLE (406 MM (16 INCH) WIDE)

REF	FN	PART NUMBER	YR/SN	QTY	DESCRIPTION
1		388843A1		1	GODET 406 mm (16 in), With 3 Teeth; Order Through Parts Marketing; Incl. Ref 2 - 12
2		D146421		1	LAME D'ATTAQUE Right-Hand
3		D146420		1	LAME D'ATTAQUE Left-Hand
4		D147249		1	BORD
		D139851		2	DENT Outer; Incl. Ref 5 - 7
5		D51750		1	POINTE
6		245466A1		1	GOUPILLE
7		D138157		1	JAMBE
		D139849		1	DENT Center; Incl. Ref 8 - 10; Order Ref 8 - 10
8		D51750		1	POINTE
9		245466A1		1	GOUPILLE
10		D48212		1	JAMBE
11		D37495		2	BAGUE
12		D30933		6	BAGUE

http://www.minnparbackhoeparts.com/

09-31		p1	01/04

GODET, PELLE RÉTRO UNIVERSELLE (457 MM (18 INCH) WIDE)

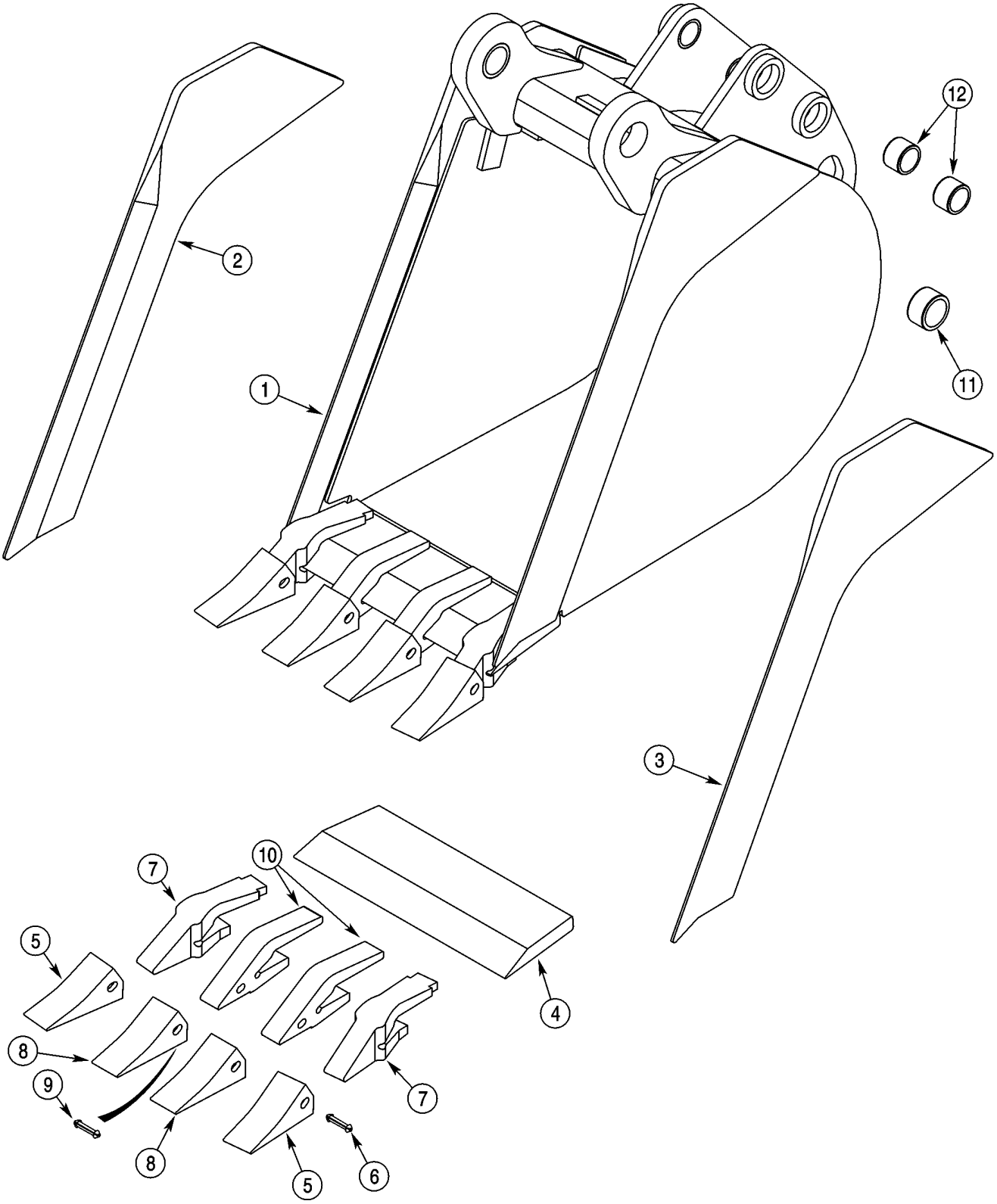

http://www.minnparbackhoeparts.com/

GODET, PELLE RÉTRO UNIVERSELLE (457 MM (18 INCH) WIDE)

REF	FN	PART NUMBER	YR/SN	QTY	DESCRIPTION
1		376384A1		1	GODET 457 mm (18 in), With 4 Teeth; Order Through Parts Marketing; Incl. Ref 2 - 12
2		NSS		1	NON FOURNI SEPAREMENT Edge; Right-Hand
3		NSS		1	NON FOURNI SEPAREMENT Edge; Left-Hand
4		NSS		1	NON FOURNI SEPAREMENT Edge
		D139851		2	DENT Outer; Incl. Ref 5 - 7
5		D51750		1	POINTE
6		245466A1		1	GOUPILLE
7		D138157		1	JAMBE
		D139849		2	DENT Center; Incl. Ref 8 - 10; Order Ref 8 - 10
8		D51750		1	POINTE
9		245466A1		1	GOUPILLE
10		D48212		1	JAMBE
11		D37495		2	BAGUE
12		D30933		4	BAGUE

http://www.minnparbackhoeparts.com/

09-32		p1	01/04

GODET, PELLE RÉTRO UNIVERSELLE (610 MM (24 INCH) / 762 MM (30 INCH) WIDE)

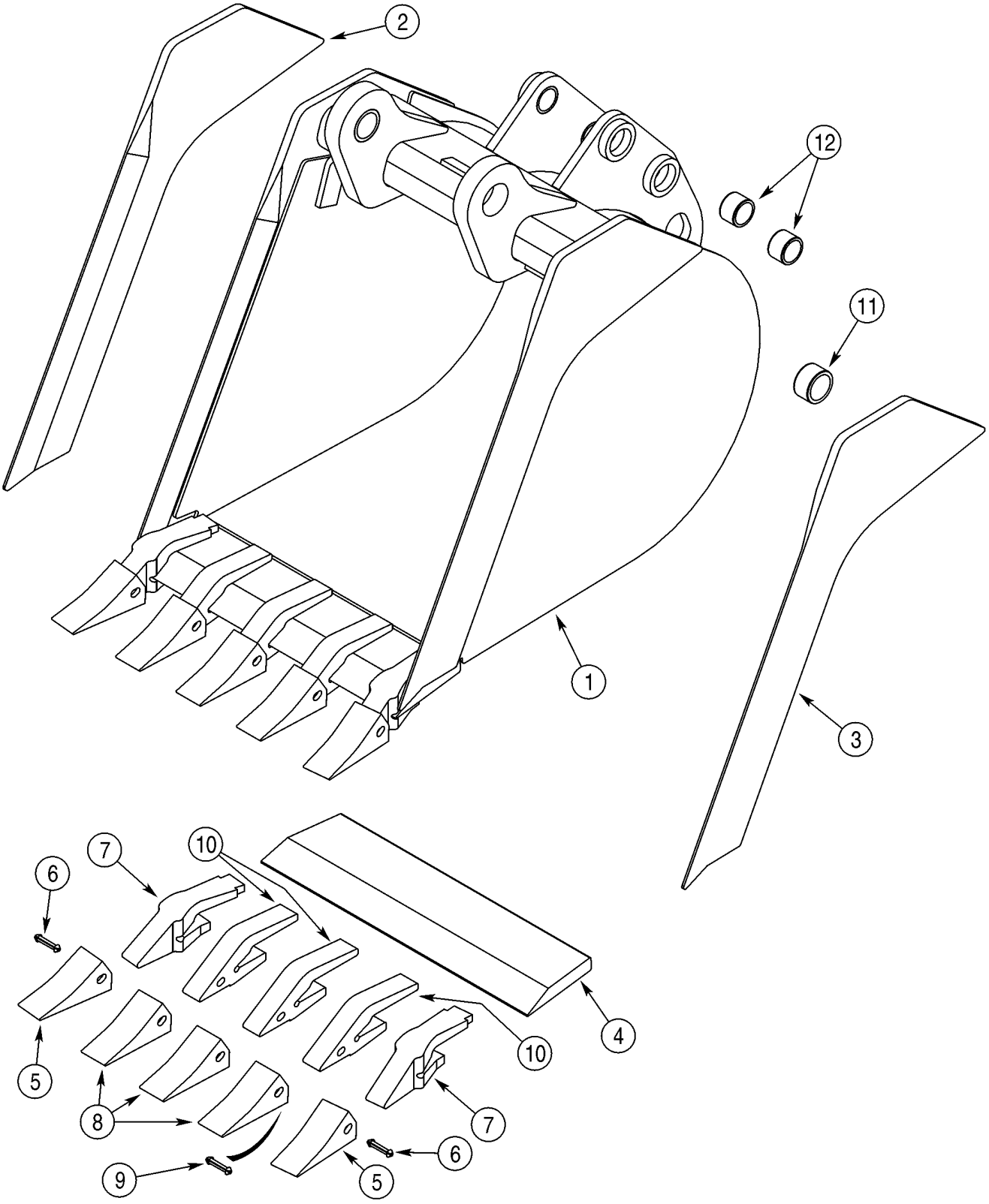

http://www.minnparbackhoeparts.com/

GODET, PELLE RÉTRO UNIVERSELLE (610 MM (24 INCH) / 762 MM (30 INCH) WIDE)

REF	FN	PART NUMBER	YR/SN	QTY	DESCRIPTION
1		365328A1		1	GODET 610 mm (24 in), With 5 Teeth; Order Through Parts Marketing; Incl. Ref 2 - 12
2		NSS		1	NON FOURNI SEPAREMENT Edge; Right-Hand
3		NSS		1	NON FOURNI SEPAREMENT Edge; Left-Hand
4		NSS		1	NON FOURNI SEPAREMENT Edge
		D139851		2	DENT Outer; Incl. Ref 5 - 7
5		D51750		1	POINTE
6		245466A1		1	GOUPILLE
7		D138157		1	JAMBE
		D139849		3	DENT Center; Incl. Ref 8 - 10; Order Ref 8 - 10
8		D51750		1	POINTE
9		245466A1		1	GOUPILLE
10		D48212		1	JAMBE
11		D37495		2	BAGUE
12		D30933		4	BAGUE
		REF			NOTICE 610 mm (24 Inch) and 762 mm (30 Inch) Wide
1		376385A1		1	GODET 762 mm (30 in), With 6 Teeth; Not Illustrated; Order Through Parts Marketing; Incl. Ref 2 - 12
2		NSS		1	NON FOURNI SEPAREMENT Edge; Right-Hand
3		NSS		1	NON FOURNI SEPAREMENT Edge; Left-Hand
4		NSS		1	NON FOURNI SEPAREMENT Edge
		D139851		2	DENT Outer; Incl. Ref 5 - 7
5		D51750		1	POINTE
6		245466A1		1	GOUPILLE
7		D138157		1	JAMBE
		D139849		4	DENT Center; Incl. Ref 8 - 10; Order Ref 8 - 10
8		D51750		1	POINTE
9		245466A1		1	GOUPILLE
10		D48212		1	JAMBE
11		D37495		2	BAGUE
12		D30933		4	BAGUE

http://www.minnparbackhoeparts.com/

09-33		p1	01/04

GODET, PELLE RÉTRO UNIVERSELLE (914 MM (36 INCH) WIDE)

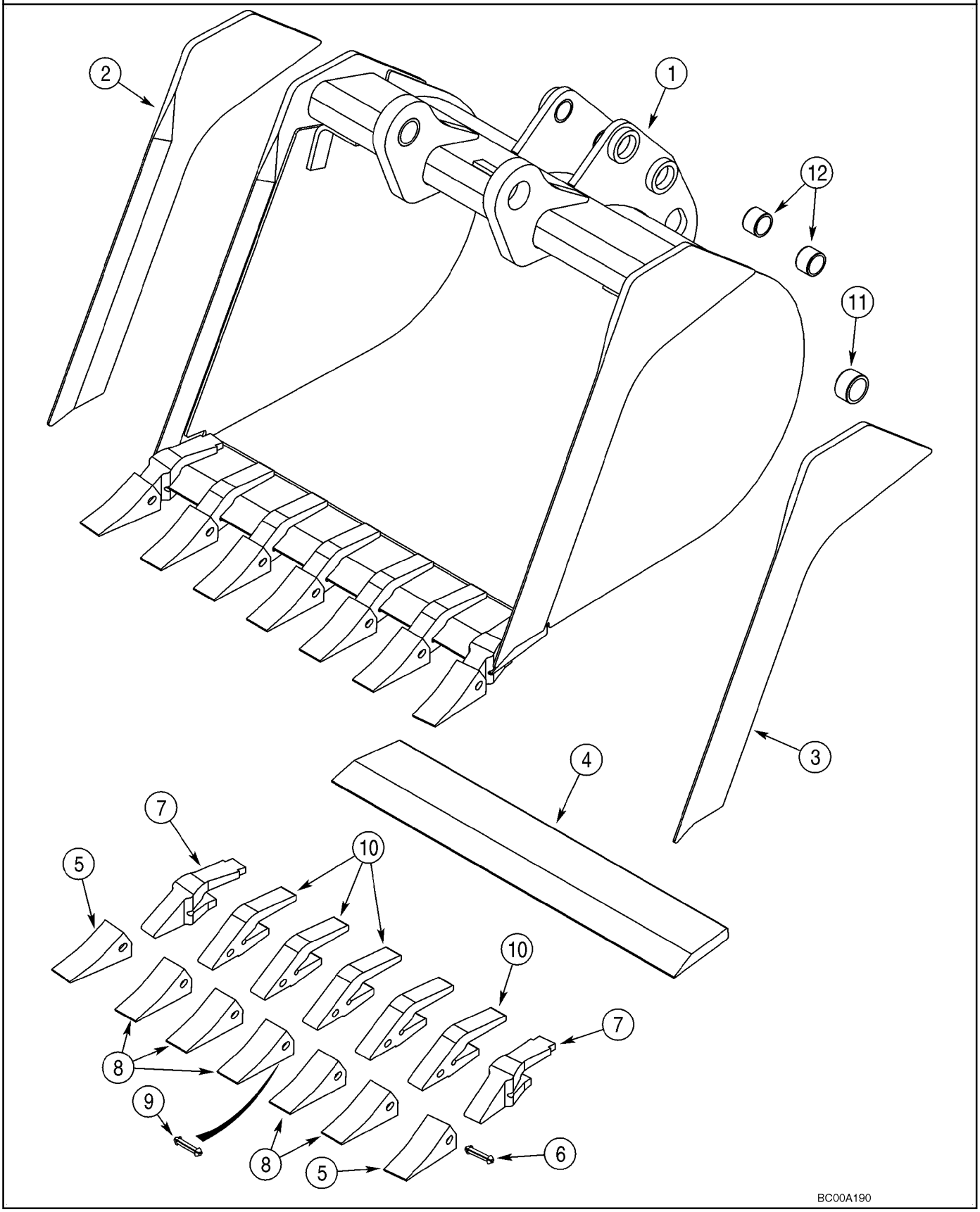

http://www.minnparbackhoeparts.com/

GODET, PELLE RÉTRO UNIVERSELLE (914 MM (36 INCH) WIDE)

REF	FN	PART NUMBER	YR/SN	QTY	DESCRIPTION
1		376386A1		1	GODET 914 mm (36 in), With 7 Teeth; Order Through Parts Marketing; Incl. Ref 2 - 12
2		NSS		1	NON FOURNI SEPAREMENT Edge; Right-Hand
3		NSS		1	NON FOURNI SEPAREMENT Edge; Left-Hand
4		NSS		1	NON FOURNI SEPAREMENT Edge
		D139851		2	DENT Outer; Incl. Ref 5 - 7
5		D51750		1	POINTE
6		245466A1		1	GOUPILLE
7		D138157		1	JAMBE
		D139849		5	DENT Center; Incl. Ref 8 - 10; Order Ref 8 - 10
8		D51750		1	POINTE
9		245466A1		1	GOUPILLE
10		D48212		1	JAMBE
11		D37495		2	BAGUE
12		D30933		4	BAGUE

http://www.minnparbackhoeparts.com/

09-34		p1	01/04

GODET, PELLE RÉTRO UNIVERSELLE (610 MM (24 INCH) / 762 MM (30 INCH) WIDE)

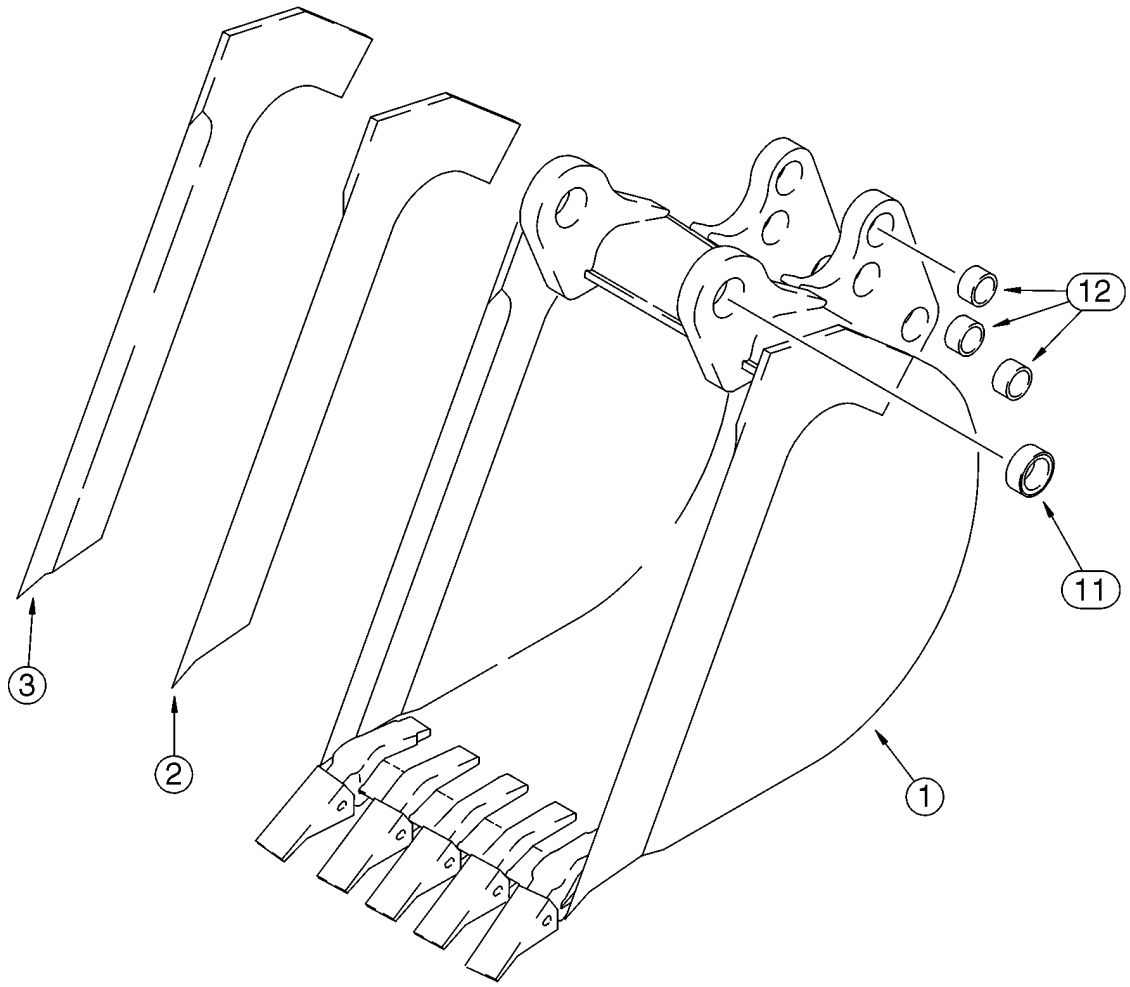

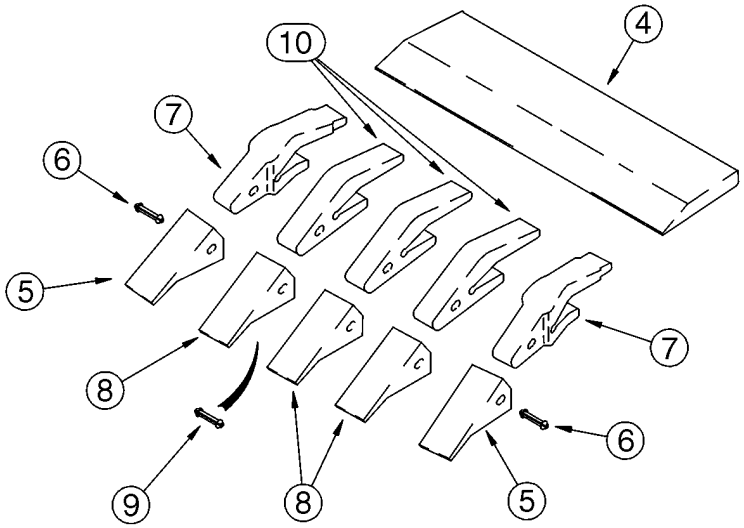

B9405159

http://www.minnparbackhoeparts.com/

GODET, PELLE RÉTRO UNIVERSELLE (610 MM (24 INCH) / 762 MM (30 INCH) WIDE)

REF	FN	PART NUMBER	YR/SN	QTY	DESCRIPTION
1		141232A2		1	GODET 610 mm (24 in), With 5 Teeth; Order Through Parts Marketing; Incl. Ref 2 - 12
2		141234A1		1	LAME D'ATTAQUE Right-Hand
3		141233A1		1	LAME D'ATTAQUE Left-Hand
4		D142012		1	LAME D'ATTAQUE
		D139851		2	DENT Outer; Incl. Ref 5 - 7
5		D51750		1	POINTE
6		245466A1		1	GOUPILLE
7		D138157		1	JAMBE
		D139849		3	DENT Center; Incl. Ref 8 - 10; Order Ref 8 - 10
8		D51750		1	POINTE
9		245466A1		1	GOUPILLE
10		D48212		1	JAMBE
11		D37495		2	BAGUE
12		D30933		6	BAGUE
1		190267A2		1	GODET 762 mm (30 in), With 5 Teeth; Not Illustrated; Order Through Parts Marketing; Incl. Ref 2 - 12
2		141234A1		1	LAME D'ATTAQUE Right-Hand
3		141233A1		1	LAME D'ATTAQUE Left-Hand
4		D145061		1	LAME D'ATTAQUE
		D139851		2	DENT Outer; Incl. Ref 5 - 7
5		D51750		1	POINTE
6		245466A1		1	GOUPILLE
7		D138157		1	JAMBE
		D139849		3	DENT Center; Incl. Ref 8 - 10; Order Ref 8 - 10
8		D51750		1	POINTE
9		245466A1		1	GOUPILLE
10		D48212		1	JAMBE
11		D37495		2	BAGUE
12		D30933		6	BAGUE

http://www.minnparbackhoeparts.com/

ENSEMBLE DE POINT DE GEL

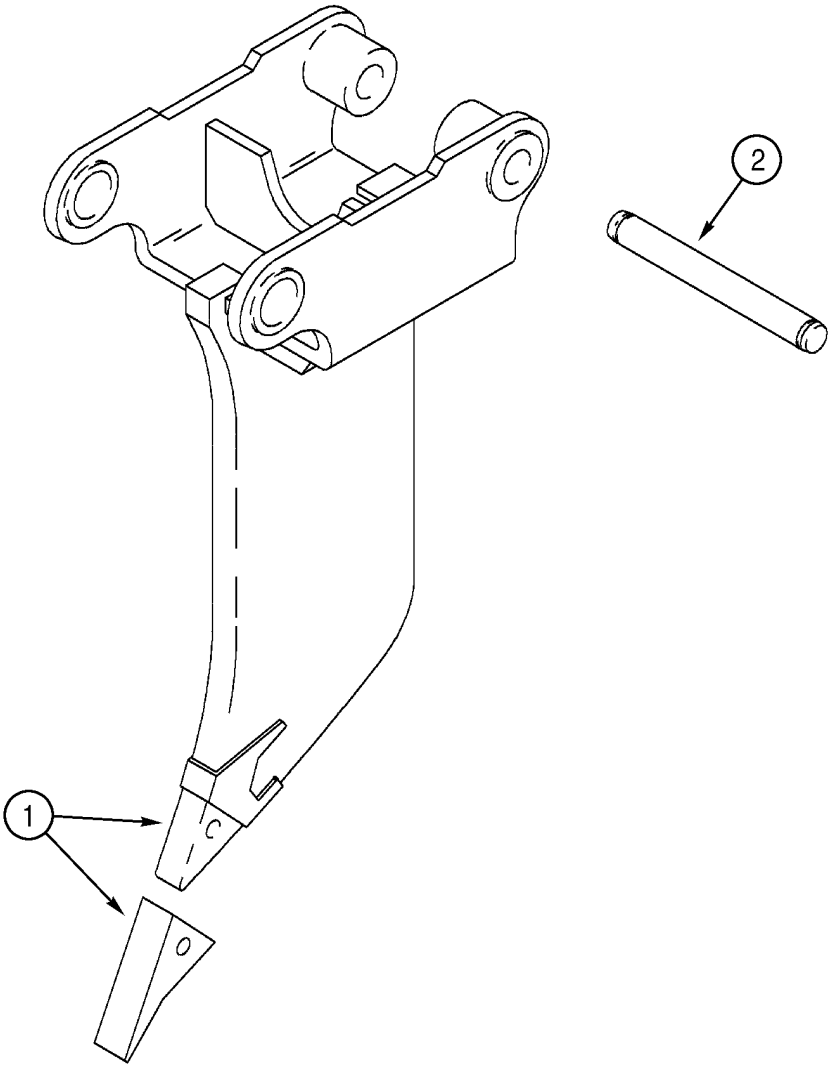

BS00H128

http://www.minnparbackhoeparts.com/

ENSEMBLE DE POINT DE GEL

REF	FN	PART NUMBER	YR/SN	QTY	DESCRIPTION
1		319467A1		1	POINTE Frost Point Assembly; Includes (2) Pin Retaining Bolts; Component Parts Not Serviced Separately
2		D50696		1	AXE

http://www.minnparbackhoeparts.com/

09-35		p1	03/05

CONTREPOIDS AVANT

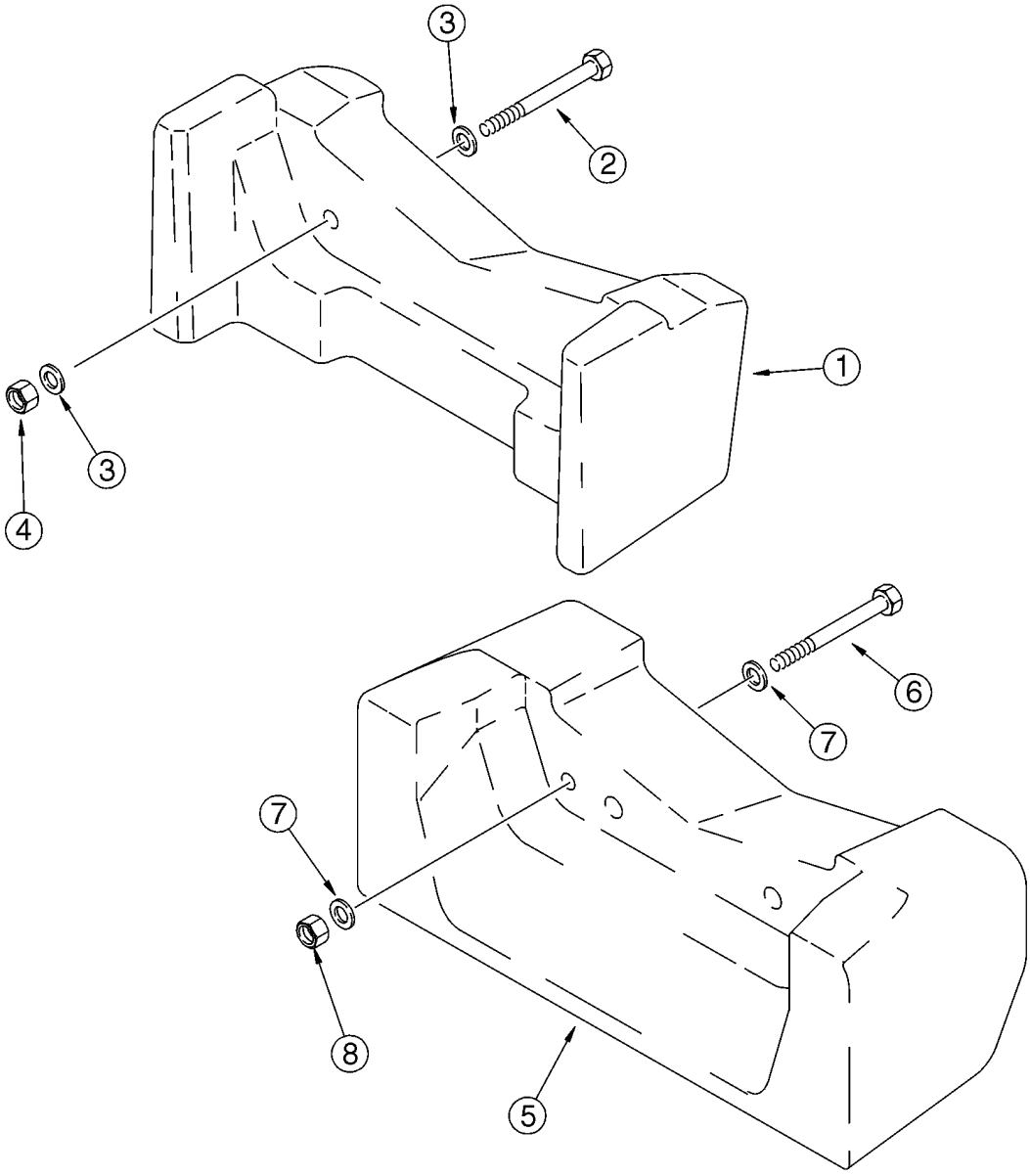

BT97N084

http://www.minnparbackhoeparts.com/

CONTREPOIDS AVANT

REF	FN	PART NUMBER	YR/SN	QTY	DESCRIPTION
1		360867A1		1	POIDS 200 kg (441 lbs); If Used
2		827-20170		2	VIS
3		896-11020		4	RONDELLE 22 x 37 x 4 mm
4		829-1420		2	ECROU M20, Cl 10
5		87425456		1	MASSELOTTE 408 kg (900 lbs); If Used
6		827-20170		2	VIS
7		896-11020		4	RONDELLE 22 x 37 x 4 mm
8		829-1420		2	ECROU M20, Cl 10

http://www.minnparbackhoeparts.com/

CHASSIS / MONTAGES, COSSE - GRILLE, ADMISSION D'AIR

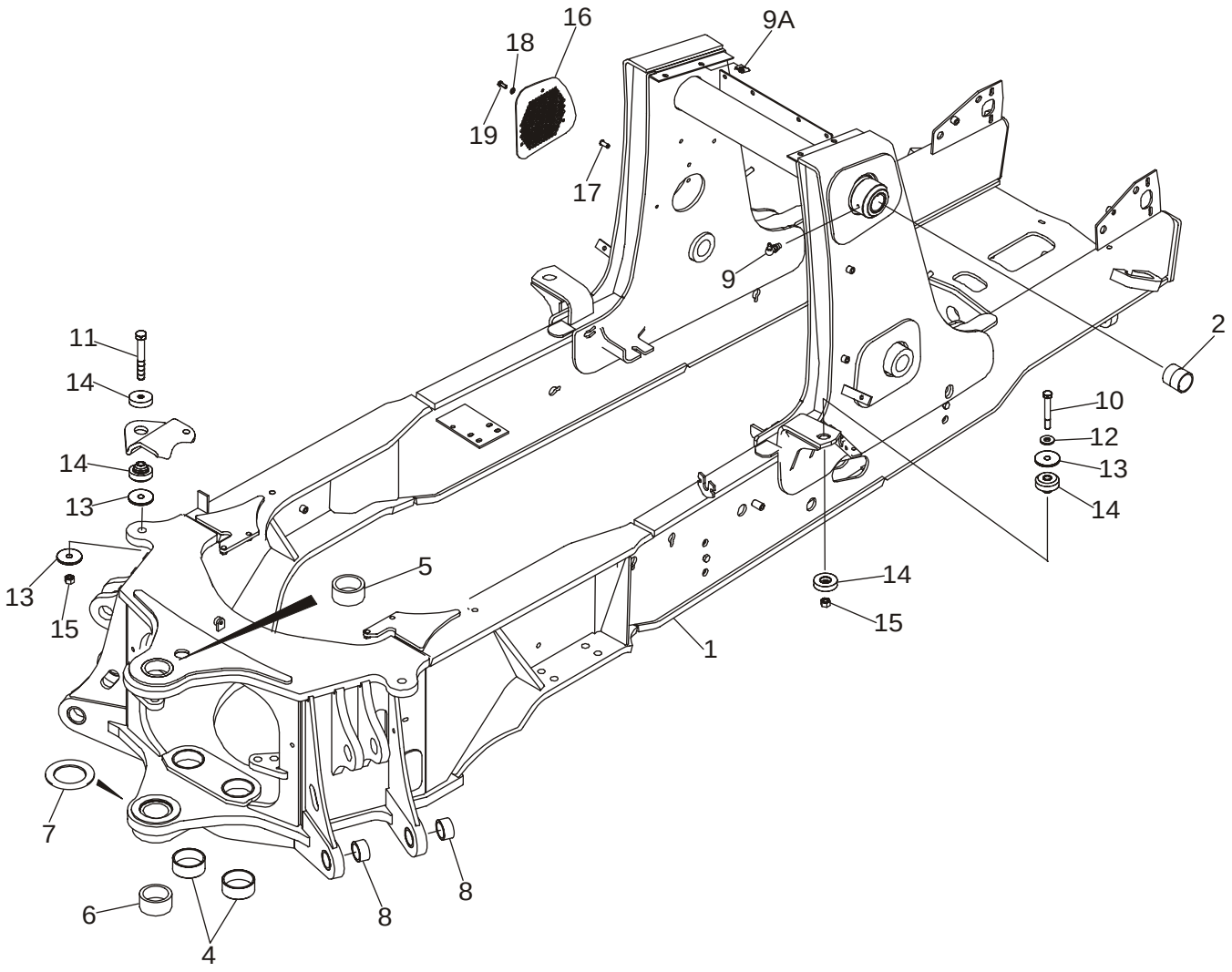

BS03J143

http://www.minnparbackhoeparts.com/

CHASSIS / MONTAGES, COSSE - GRILLE, ADMISSION D'AIR

REF	FN	PART NUMBER	YR/SN	QTY	DESCRIPTION
1		87423004		1	CHASSIS 580SM; Incl. Ref 2 - 8
1		87423006		1	CHASSIS 580SM+; Incl. Ref 2 - 8; Not Illustrated
2		180427A1		2	BAGUE
4		114318A1		2	BAGUE 80 x 5 x 28.8
5		D151069		1	BAGUE 70 x 10 x 32 mm
6		D151070		1	BAGUE 70 x 10 x 38 mm
7		220413A1		1	ENTRETOISE 93 x 135 x 5 mm; Welded-On
8		107124A1		4	BAGUE
9		219-55		2	GRAISSEUR 90 deg, 1/8 PT x 27/32
9A		833-40310		4	ECROU J-Type, M10
10		827-16085		2	BOULON M16 x 85; 10.9
11		827-16100		2	BOULON M16 x 100; 10.9
12		896-11016		2	RONDELLE 17,5 x 30 x 4 mm
13		186977A1		6	RONDELLE 4,5 mm thick
14		411892A1		4	PALIER CAOUTCHOUC M16; Operator Compartment Pod Mounts
15		829-1416		4	ECROU M16; 10
16		87423668		1	ECRAN Air Inlet
17		87417383		3	INSERT FILETE Nut, M8
18		895-11008		3	RONDELLE Flat, 8 mm
19		614-8030		3	BOULON M8 x 30

http://www.minnparbackhoeparts.com/

09-37		p1	04/05

RÉSERVOIR, HUILE - COMPARTIMENT DE BATTERIES ET BOITE A OUTILS

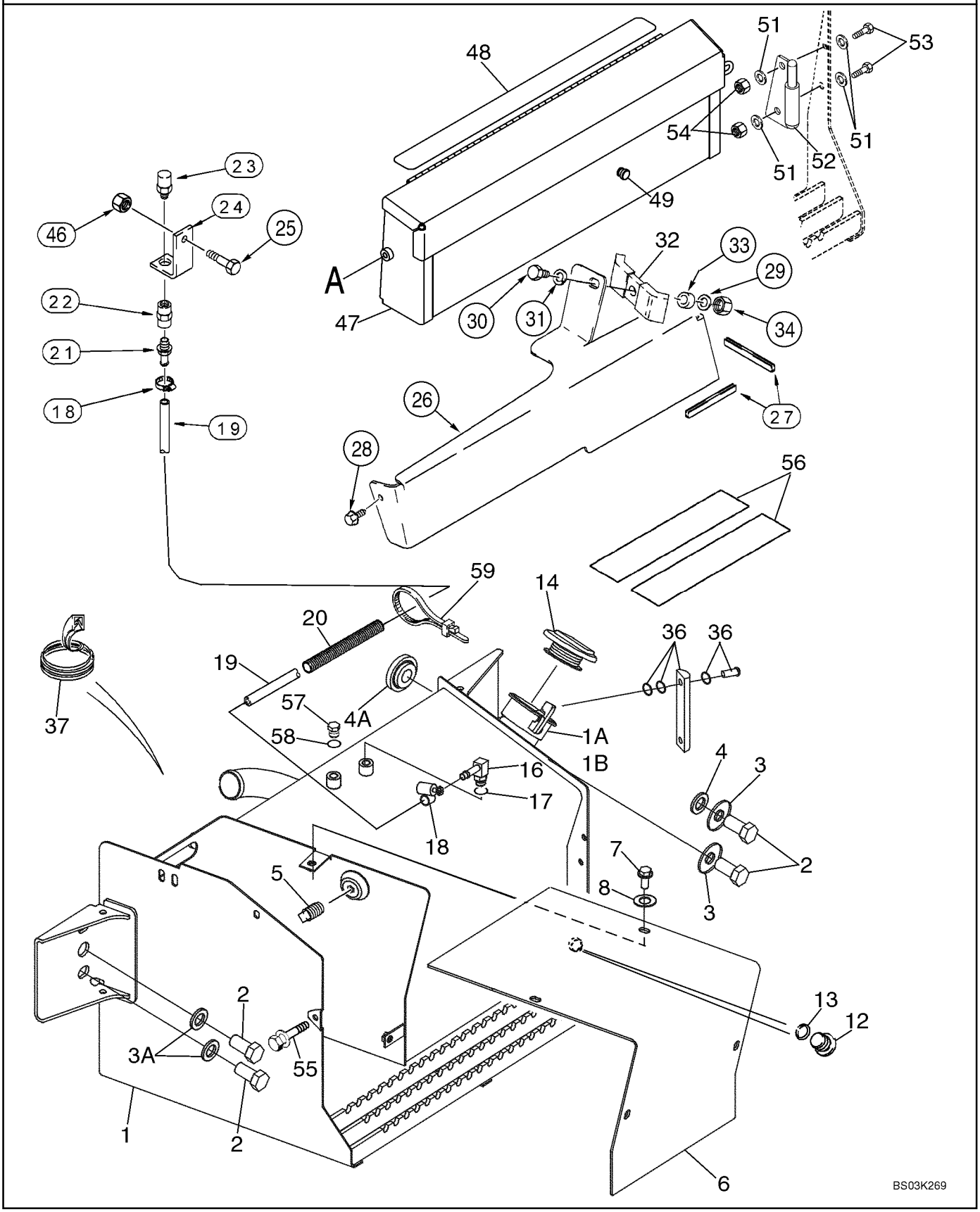

http://www.minnparbackhoeparts.com/

RÉSERVOIR, HUILE - COMPARTIMENT DE BATTERIES ET BOITE A OUTILS

REF	FN	PART NUMBER	YR/SN	QTY	DESCRIPTION
		87434746		1	RESERVOIR HUILE HYD. ASSEMBLY; Incl. Ref 1, 14, 16, 35, 36, 56, 57; Plus 321-229 Hydraulic Fluid Decal
1		87434745		1	RESERVOIR HUILE HYD. Right-Hand Side of Chassis; Incl. Ref 1A, 1B, 12
1A		230857A1		1	TAMIS-FILTRE Strainer; Fill Tube
1B		440-1066		2	VIS No. 6 x 3/8
2		627-20060		4	VIS M20 x 60; 10.9; Use With Loctite 345-49
3		302358A1		2	RONDELLE Right-Hand
3A		896-11020		2	RONDELLE 22 x 37 x 4 mm; Left-Hand
4		185926A1		1	ENTRETOISE Right-Hand; Upper
4A		409472A1		1	ENTRETOISE Right-Hand; Lower
5		217-436		1	BOUCHON 3/8 PT; If Used
6		231656A1		1	COUVERCLE Battery
7		614-10020		4	VIS M10 x 20; Use With 345-56 Loctite No. 767
8		495-21044		4	RONDELLE 7/16 x 1 x 5/64
12		218-5211		1	BOUCHON 7/8 Or, Drain; Incl. Ref 13
13		237-6010		1	JOINT TORIQUE 3/4 ID x 3/32, Boss Seal
14		138595A1		1	BOUCHON CAP
16		217-347		1	RACCORD 3/8 stem x 9/16 Or; Incl. Ref 17
17		237-6006		1	JOINT THORIQUE 15/32 ID x 5/64, Boss Seal
18		214-1406		2	COLLIER 7/16 - 25/32
19		393161A1		1	FLEXIBLE 912 mm (35-29/32 in); Vent
20		87452021		1	GAINE PLASTIQUE 650 mm (25-19/32 in); Replaces 143219A1 380 mm (15 in) Sleeve
21		217-380		1	RACCORD 3/8 stem x PT; Use With 345-147 Sealant
22		217-1102		1	RACCORD 3/8 in
23		361776A1		1	RENIFLARD Use With 345-147 Sealant
24		122603A1		1	SUPPORT
25		711-10030		1	VIS M10 x 30
26		399959A2		1	COUVERCLE Right-Hand Loader Lift Frame Tubing
27		191047A1		1	MOULURE 305 mm (12 in) lg; Apply 65 mm (2-9/16 in) Of Trim To Front Lower Edge and 240 mm (9-1/2 in) Of Trim To Outisde Lower Edge of Cover
28		307577A1		1	BOULON With Washer, M8 x 20
29		895-11010		1	RONDELLE 11 x 21 x 2 mm

http://www.minnparbackhoeparts.com/

09-37		p2	04/05

RÉSERVOIR, HUILE - COMPARTIMENT DE BATTERIES ET BOITE A OUTILS

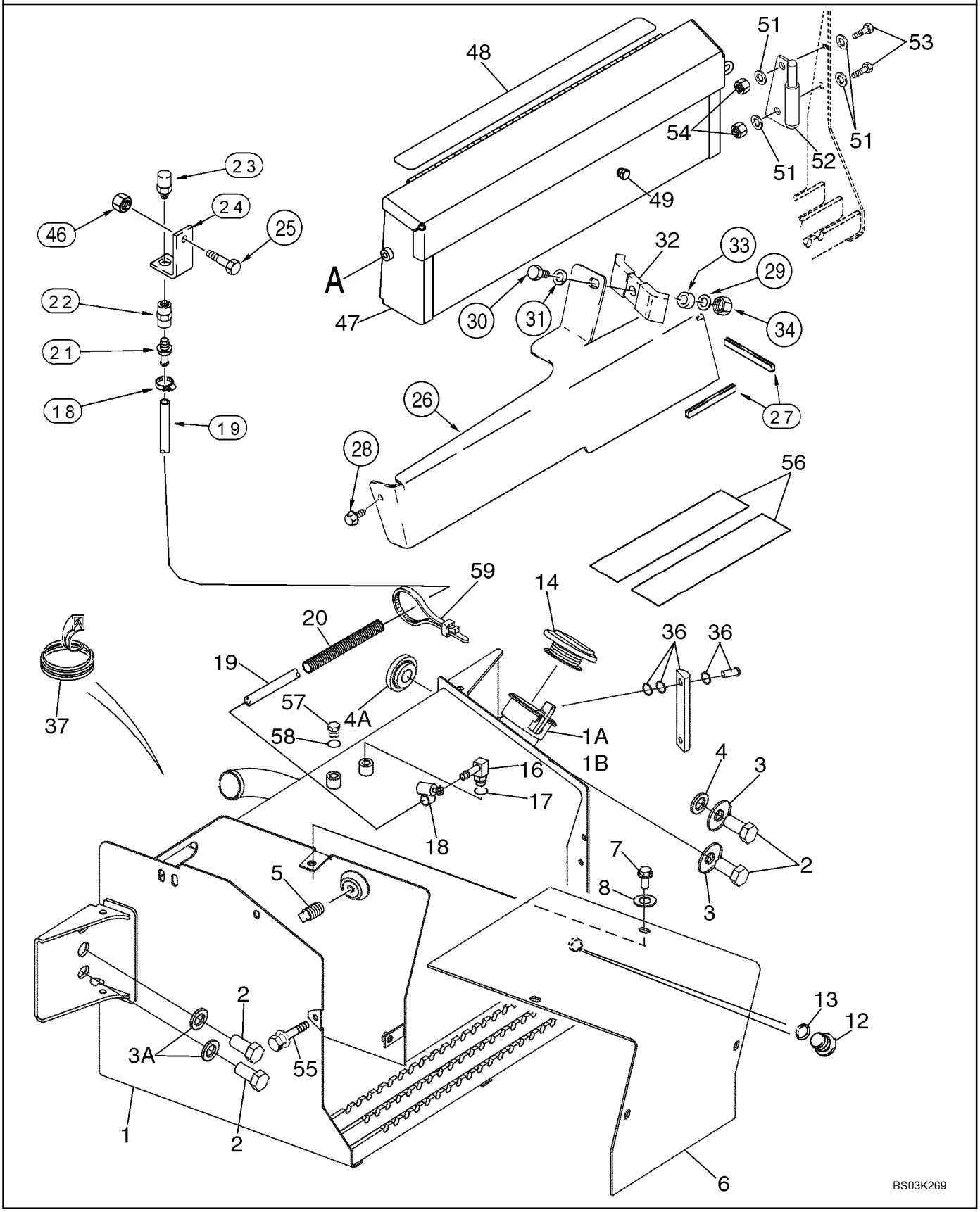

http://www.minnparbackhoeparts.com/

RÉSERVOIR, HUILE - COMPARTIMENT DE BATTERIES ET BOITE A OUTILS

REF	FN	PART NUMBER	YR/SN	QTY	DESCRIPTION
30		814-10045		1	BOULON M10 x 45
31		892-11010		1	RONDELLE FREIN M10
32		D138055		1	COLLIER
33		120303A1		1	ENTRETOISE
34		829-1410		1	ECROU M10; 10.9
35		345-49		1	LOCTITE 242; 1 ml
36		226456A1		1	JAUGE Aluminum; Includes (2) Hollow Head Bolts and (4) O-Rings; Component Parts Not Serviced Separately, Used With Ref 35
37		D40442		1	MOULURE 305 mm (12 in); Cut From F42827
46		829-1410		1	ECROU M10; 10.9
47		380807A4		1	CAISSE A OUTILS
48		D80270		1	RUBAN 635 mm (25 in)
49		L60224		1	PARE-CHOCS 1/2 in Hole; Bumper
51		895-11010		4	RONDELLE 11 x 21 x 2 mm
52		382202A2		1	CHARNIERE
53		614-10025		2	BOULON M10 x 25
54		829-1410		2	ECROU M10; 10.9
55		121856A1		1	VIS M10 x 30; Includes Washer
56		D55216		2	TAMPON Non-Slip, 2 x 9
57		218-5155		1	BOUCHON Hex, 9/16, Incl. Ref 58; Models Without Pilot Controls
58		237-6006		1	JOINT THORIQUE
59		L18337		2	SANGLE

http://www.minnparbackhoeparts.com/

09-38		p1	03/05

BOÎTIER DE RADIATEUR

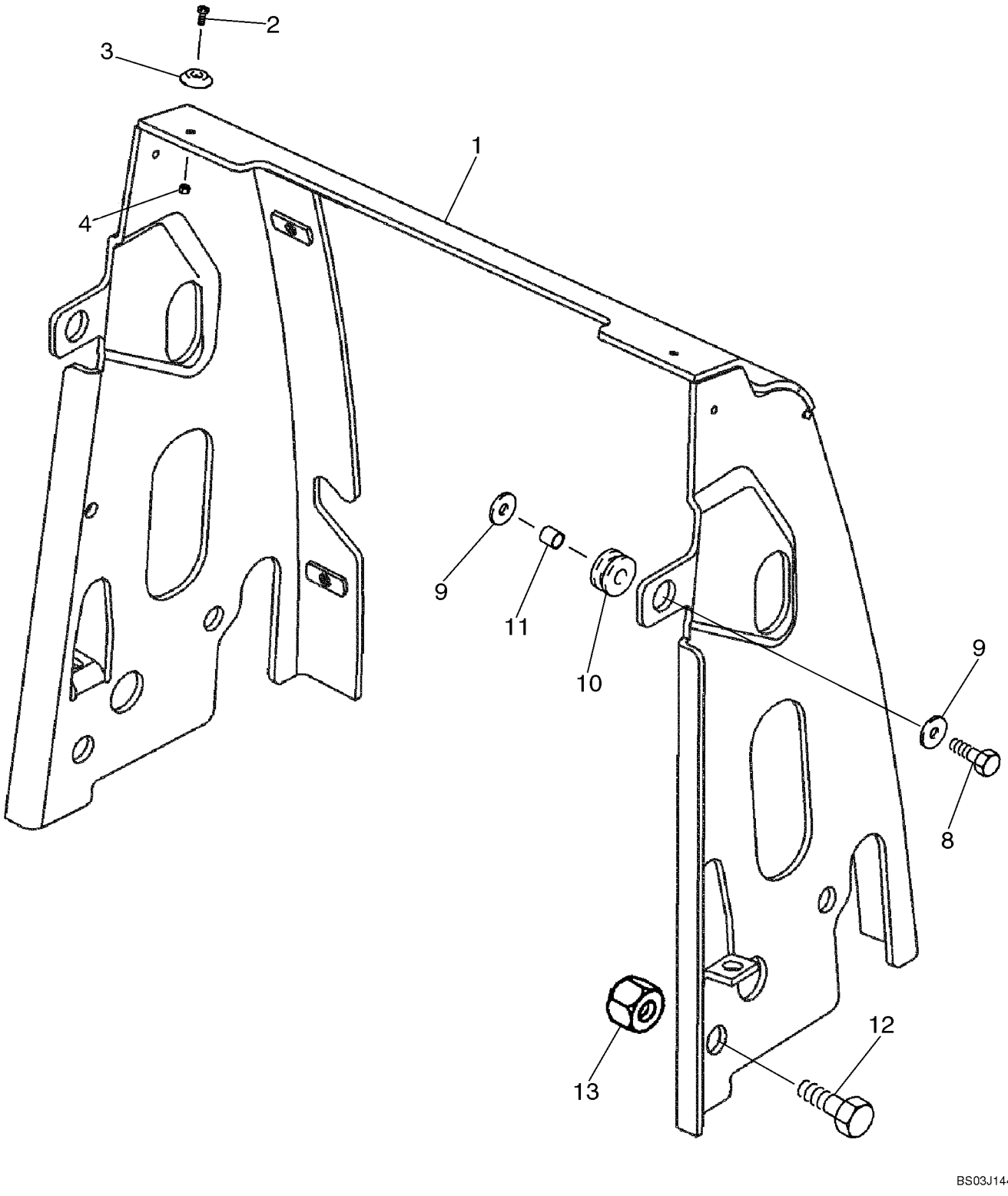

http://www.minnparbackhoeparts.com/

BOÎTIER DE RADIATEUR

REF	FN	PART NUMBER	YR/SN	QTY	DESCRIPTION
1		87433659		1	PLAQUE (ASSEMBLEE)
2		440-11010		2-4	VIS No. 10 x 5/8
3		109879A1		2-4	ENTRETOISE Hood; Plastic
4		231-14109		2-4	ECROU No. 10
8		614-10035		2	VIS M10 x 35
9		K691987		4	RONDELLE Flat, 10 mm
10		86982682		2	PASSE-FIL Rubber Grommet
11		D76209		2	ENTRETOISE
12		614-20030		4	VIS M20 x 30
13		829-1420		4	ECROU M20, Cl 10

http://www.minnparbackhoeparts.com/

09-39		p1	04/04

CAPOT - PANNEAUX LATERAUX

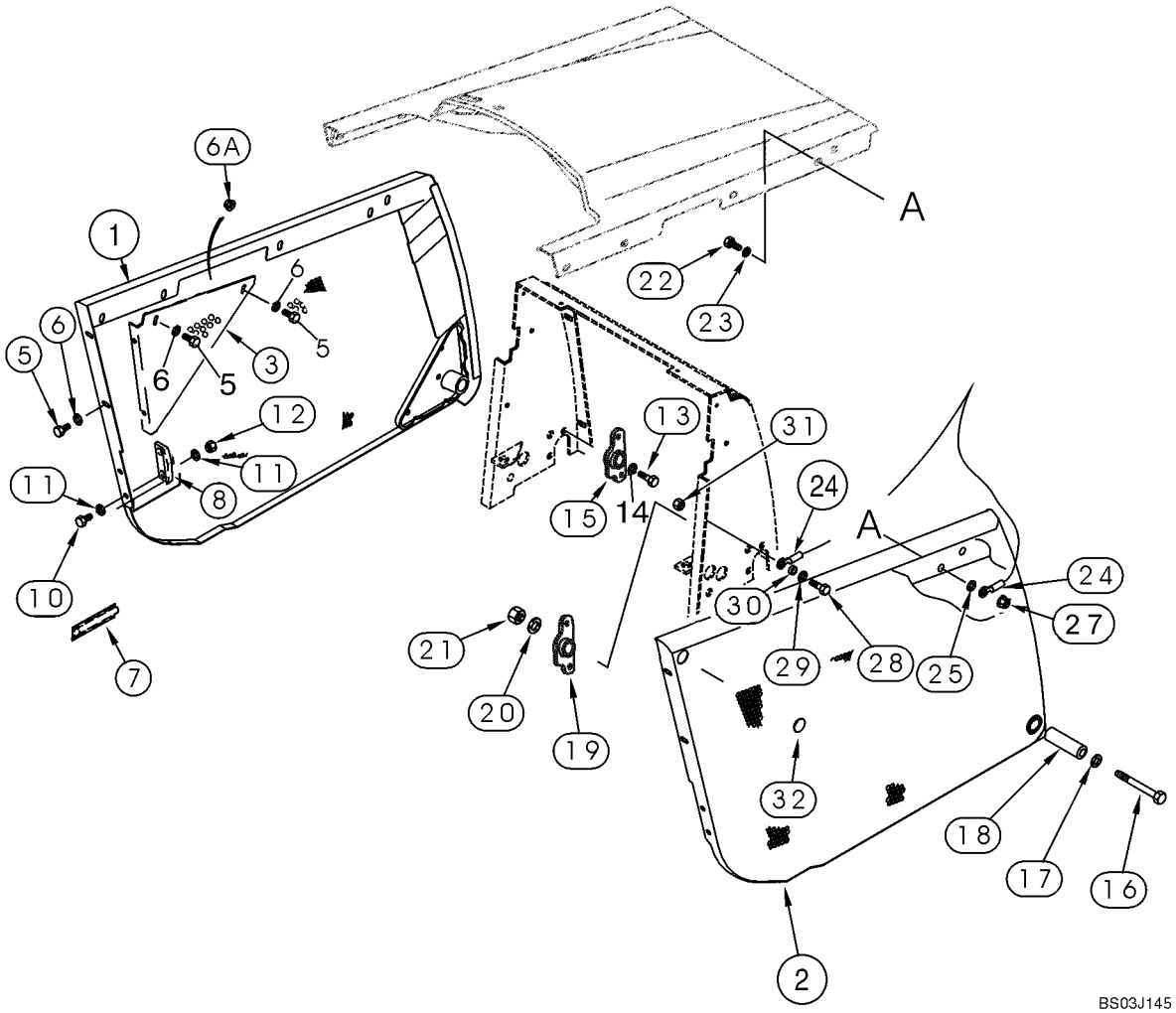

http://www.minnparbackhoeparts.com/

CAPOT - PANNEAUX LATERAUX

REF	FN	PART NUMBER	YR/SN	QTY	DESCRIPTION
1		87444148		1	PANNEAU LATÉRAL Left-Hand Side
2		87444147		1	PANNEAU LATÉRAL Right-Hand Side
3		362609A1		1	JAMBE-DE-FORCE Left-Hand
4		362607A1		1	JAMBE-DE-FORCE Right-Hand; Not Illustrated
5		614-10025		8	BOULON M10 x 25
6		895-11010		8	RONDELLE 11 x 21 x 2 mm
6A		825-2410		4	ECROU M10
7		183168A1		1	POIGNÉE Left-Hand
8		D143715		1	SUPPORT Guide, Left-Hand
9		D143714		1	SUPPORT Guide, Right-Hand; Not Illustrated
10		614-10025		4	BOULON M10 x 25
11		895-11010		8	RONDELLE 11 x 21 x 2 mm
12		832-10410		4	ECROU M10
13		614-10020		4	VIS M10 x 20
14		895-11010		4	RONDELLE Flat, 10 mm
15		87407769		1	PIVOT Left-Hand
16		814-12100		2	BOULON M12 x 100
17		896-15012		2	RONDELLE 13,5 x 28 x 4 mm
18		87412060		2	TUBE Spacer
19		87407770		1	PIVOT Right-Hand
20		896-15012		2	RONDELLE 13,5 x 28 x 4 mm
21		829-1412		2	ECROU M12; 10
22		614-10025		1	BOULON M10 x 25
23		895-11010		1	RONDELLE 11 x 21 x 2 mm
24		144908A2		1	CABLE
25		D143417		1	ENTRETOISE
27		825-2410		1	ECROU M10
28		614-10030		1	VIS M10 x 30
29		895-11010		1	RONDELLE 11 x 21 x 2 mm
30		396605A1		1	ENTRETOISE
31		825-2410		1	ECROU M10
32		D140267		2	BOUCHON

http://www.minnparbackhoeparts.com/

09-40		p1	05/04

CAPOT - CALANDRE

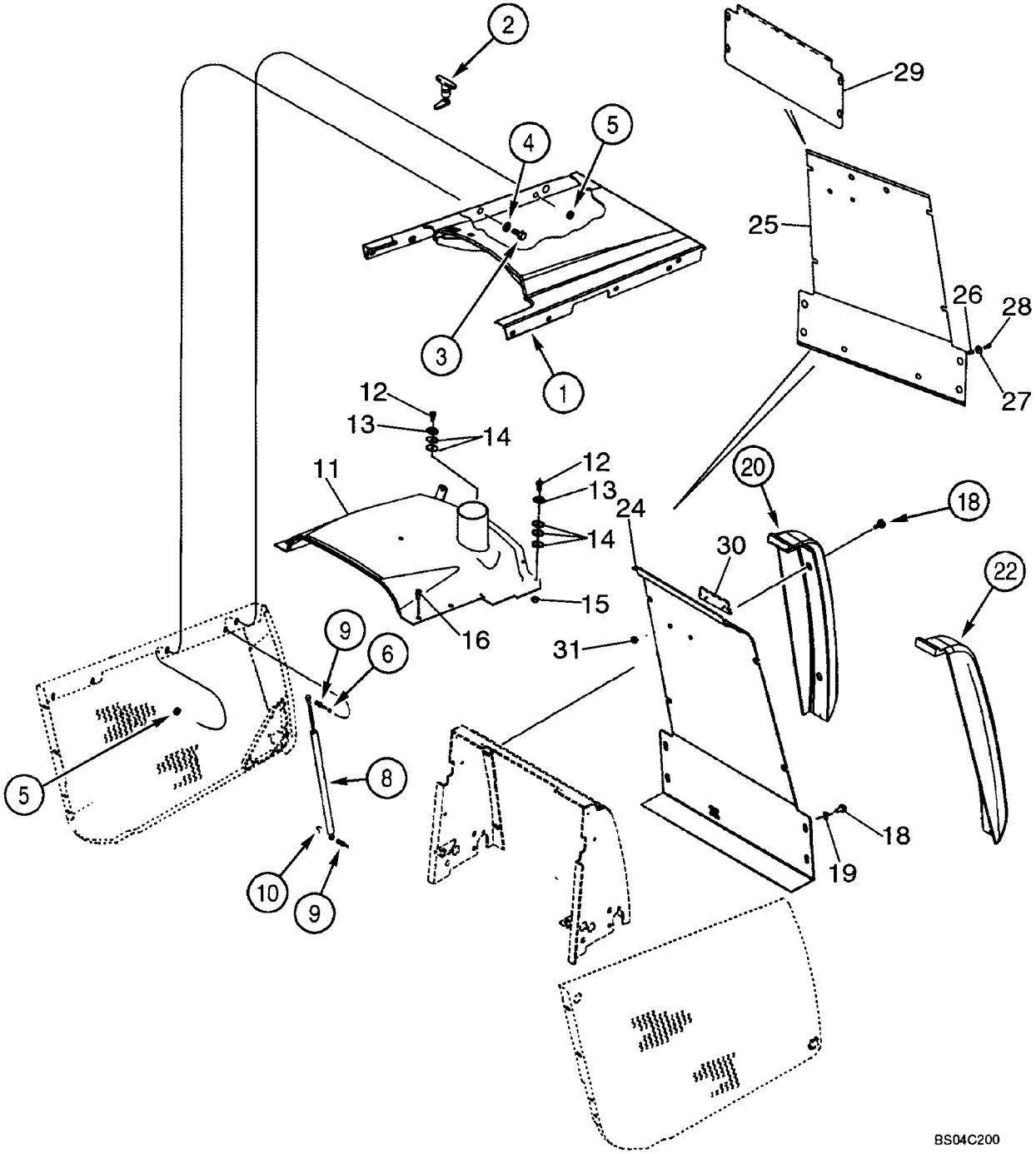

http://www.minnparbackhoeparts.com/

CAPOT - CALANDRE

REF	FN	PART NUMBER	YR/SN	QTY	DESCRIPTION
1		362340A6		1	TÔLE DE FERMETURE Engine; Tilt
2		175599A1		1	LOQUET
3		614-10025		3	BOULON M10 x 25
4		895-11010		3	RONDELLE 11 x 21 x 2 mm
5		825-2410		5	ECROU M10
6		895-11010		2	RONDELLE 11 x 21 x 2 mm
8		114980A1		2	AMORTISSEUR Spring; Counterbalance
9		139363A1		4	ROTULE Stud
10		F44883		4	CLIP
11		87439448		1	PLAQUE (ASSEMBLEE) Fixed Hood
12		440-11012		3	VIS No. 10 x 3/4
13		109879A1		3	ENTRETOISE
14		185325A1		8	ENTRETOISE
15		231-14109		3	ECROU No. 10
16		392828A2		4	BOULON With Washer, M10 x 40
18		392828A2		8	BOULON With Washer, M10 x 40
19		87423817		4	RONDELLE
20		381927A1		1	PARE-CHOCS Left-Hand
22		381926A1		1	PARE-CHOCS Right-Hand
24		87402618		1	ECRAN GRILLE
		87431128		1	ECRAN Chaff Screen Kit; Incl. Ref 25 - 28, Plus Instructions; No Longer Includes 87402618 Grille or Ref 30, 31
25		87444040		1	ECRAN Chaff Screen; If Used
26		255447A1		4	RIVET Threaded Insert
27		257382A1		4	RONDELLE 6.6 x 25 x 1.6 mm
28		257381A1		4	VIS Hex, 1/4 x 3/4
29		87445597		1	ECRAN Lower Chaff Screen; Models With Air Conditioning; If Used
30		186989A1		1	DECALCOMANIE Case Emblem
31		131-431		2	ECROU 1/4

http://www.minnparbackhoeparts.com/

09-41		p1	05/05

PLAQUES, PLANCHER - TAPIS DE SOL

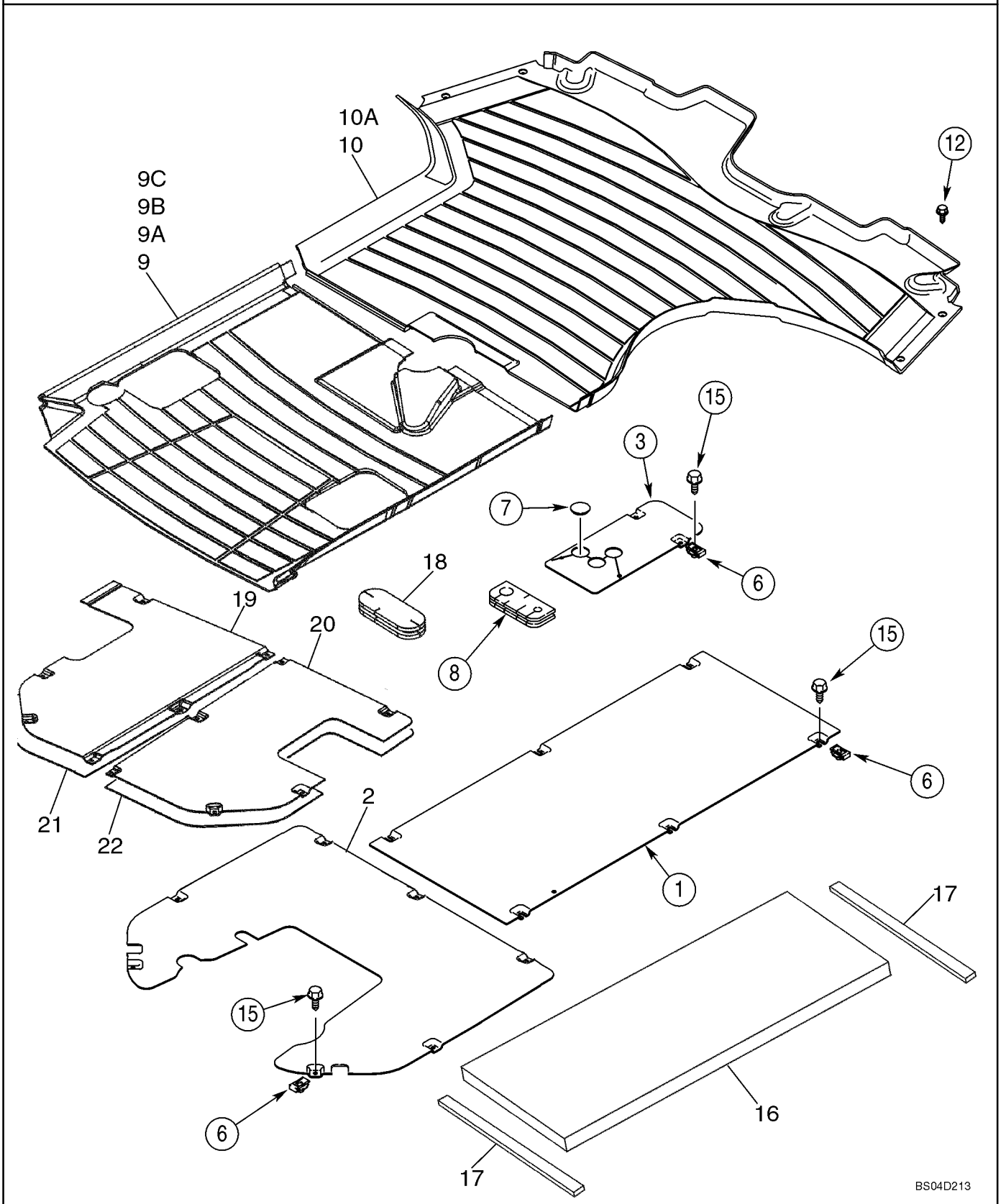

http://www.minnparbackhoeparts.com/

PLAQUES, PLANCHER - TAPIS DE SOL

REF	FN	PART NUMBER	YR/SN	QTY	DESCRIPTION
1		355984A2		1	PLAQUE, GRANDE Front
2		86983190		1	PLAQUETTE Rear; Without Pilot Controls
3		87436076		1	PLAQUETTE Loader Control Lever
6		833-40406		16-17	ECROU M6
7		353-422		1	BOUCHON Models Without Clam Bucket
8		393623A1		1	BLOC Floor
9		86983325		1	TAPIS DE PLANCHER Rear, 580SM Canopy Models, Without Pilot Controls
9A		86983269		1	TAPIS DE PLANCHER Rear, 580SM Canopy Models, With Pilot Controls; Not Illustrated
9B		86993773		1	TAPIS DE PLANCHER Rear, 580SM+ Canopy Models, Without Pilot Controls; Not Illustrated
9C		86993774		1	TAPIS DE PLANCHER Rear, 580SM+ Canopy Models, With Pilot Controls; Not Illustrated
10		390551A2		1	TAPIS DE PLANCHER Front, 580SM Cab or Canopy Models
10A		391625A2		1	TAPIS DE PLANCHER Front, 580SM+ Cab or Canopy Models; Not Illustrated
12		87310085		4	VIS AUTO-TARAUDEUSE Hex Washer Head, No. 10 x 1, Self-Tapping, Stainless Steel; Replaces 280-16516 Non-Stainless Steel Screw Used On Some Models
15		87310096		16-17	BOULON M6 x 25, Includes Washer, Stainless Steel; Replaces 233724A1 Non-Stainless Steel Screw Used On Some Models
16		411074A1		1	JOINT Cab Models
17		181981A1		2	JOINT Foam; Adhesive Back; Cab Models
18		87407927		1	PLOT SUSPENSION Rubber Grommet
19		87434049		1	PLAQUETTE Rear, With Pilot Controls
20		87434050		1	PLAQUETTE Rear, With Pilot Controls
21		87442376		1	MOUSSE ISOLANTE Heat Barrier, Left-Hand, Canopy Models With Pilot Controls
22		87442377		1	MOUSSE ISOLANTE Heat Barrier, Right-Hand, Canopy Models With Pilot Controls

http://www.minnparbackhoeparts.com/

09-42		p1	05/05

GARDE-BOUE, GAUCHE - PANNEAU, FERMETURE ARRIERE (VIDE-POCHES AVEC PORTE-GOBELET)

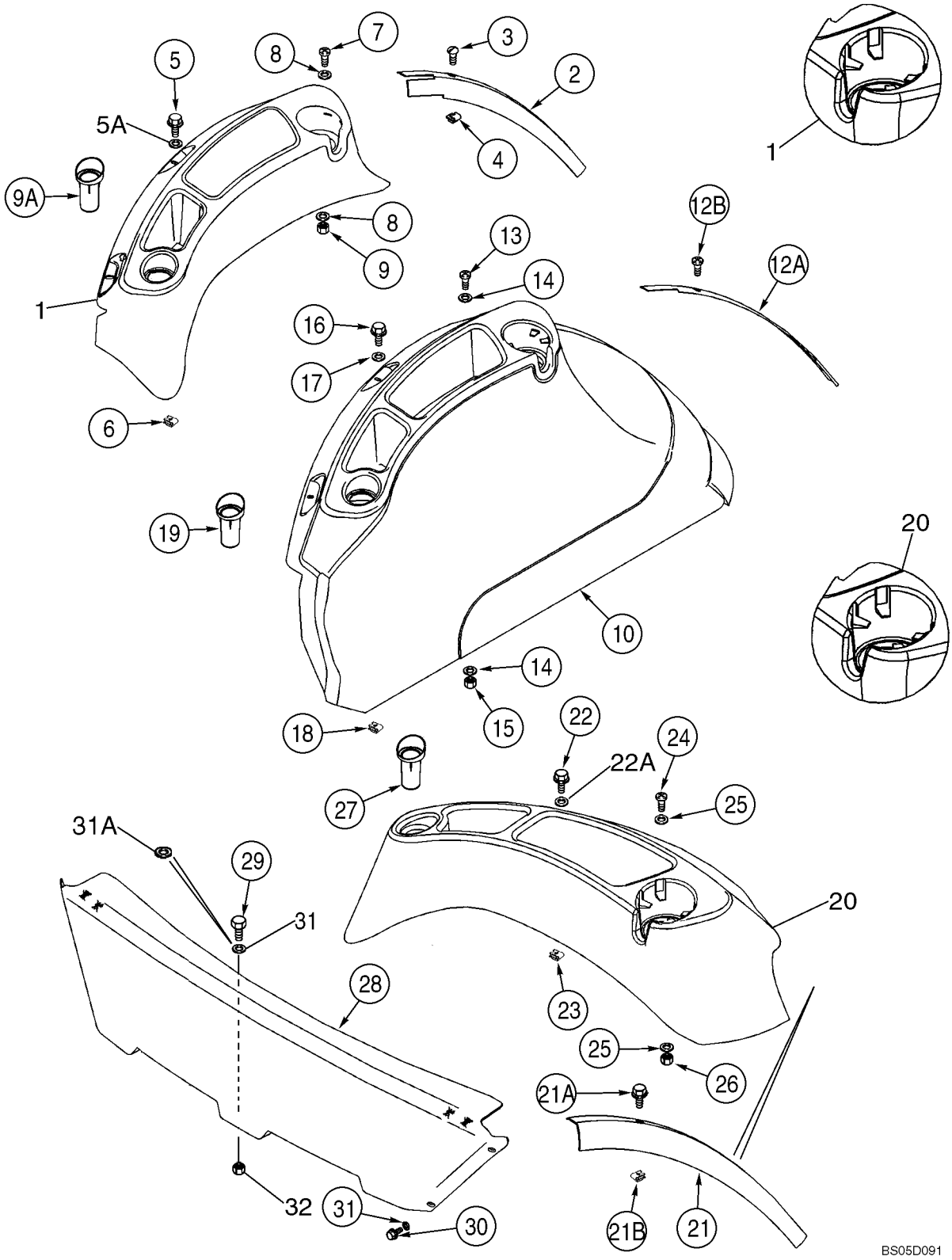

http://www.minnparbackhoeparts.com/

GARDE-BOUE, GAUCHE - PANNEAU, FERMETURE ARRIERE (VIDE-POCHES AVEC PORTE-GOBELET)

REF	FN	PART NUMBER	YR/SN	QTY	DESCRIPTION
1		86992247		1	PLATEAU Cab Models, With Standard Interior; Includes 86992284, 400077A1
		NSS		1	NON FOURNI SEPAREMENT Tray
		86992284		4	PARE-CHOCS
		400077A1		1	MARCHANDISE AU METRE 1300 mm (51-3/16 in); Cut From 1977224C1
2		397026A3		1	PROFIL PROTECTEUR Trim, Left-Hand Fender, Cab Models With Standard Interior
3		87310088		3	VIS No. 10 x 3/4, Stainless Steel; Replaces 398113A1 Non-Stainless Steel Screw Used On Some Models
4		131-869		3	ECROU No. 10
5		87310098		2	BOULON Flange, M6 x 20, Stainless Steel; Replaces 555-2 Non-Stainless Steel Screw Used On Some Models
5A		87310186		2	RONDELLE 6.6 ID x 25 OD x 1.6 mm thk, Stainless Steel; Replaces 895-30109 Non-Stainless Steel Washer Used On Some Models
6		833-40406		2	ECROU M6
7		87310127		2	VIS No. 10 x 1, Stainless Steel; Replaces 140-117 Non-Stainless Steel Screw Used On Some Models
8		87310146		4	RONDELLE 13/64 x 3/4 x 1/16, Stainless Steel; Replaces 495-61020 Non-Stainless Steel Washer Used On Some Models
9		231-14109		2	ECROU No. 10
9A		378742A3		1	INSERT Swing Pin Holder
10		86992245		1	COUVERCLE (ASSEMBLE) 580SM Cab Models With Deluxe Interior; Includes (4) 86992284 Bumpers
10		86992248		1	COUVERCLE (ASSEMBLE) 580SM+ Cab Models With Deluxe Interior; Includes (4) 86992284 Bumpers
12A		397774A3		1	RUBAN Deluxe Interior
12B		87310088		3	VIS No. 10 x 3/4, Stainless Steel; Replaces 398113A1 Non-Stainless Steel Screw Used On Some Models
13		87310127		2	VIS No. 10 x 1, Stainless Steel; Replaces 140-117 Non-Stainless Steel Screw Used On Some Models

http://www.minnparbackhoeparts.com/

09-42		p2	05/05

GARDE-BOUE, GAUCHE - PANNEAU, FERMETURE ARRIERE (VIDE-POCHES AVEC PORTE-GOBELET)

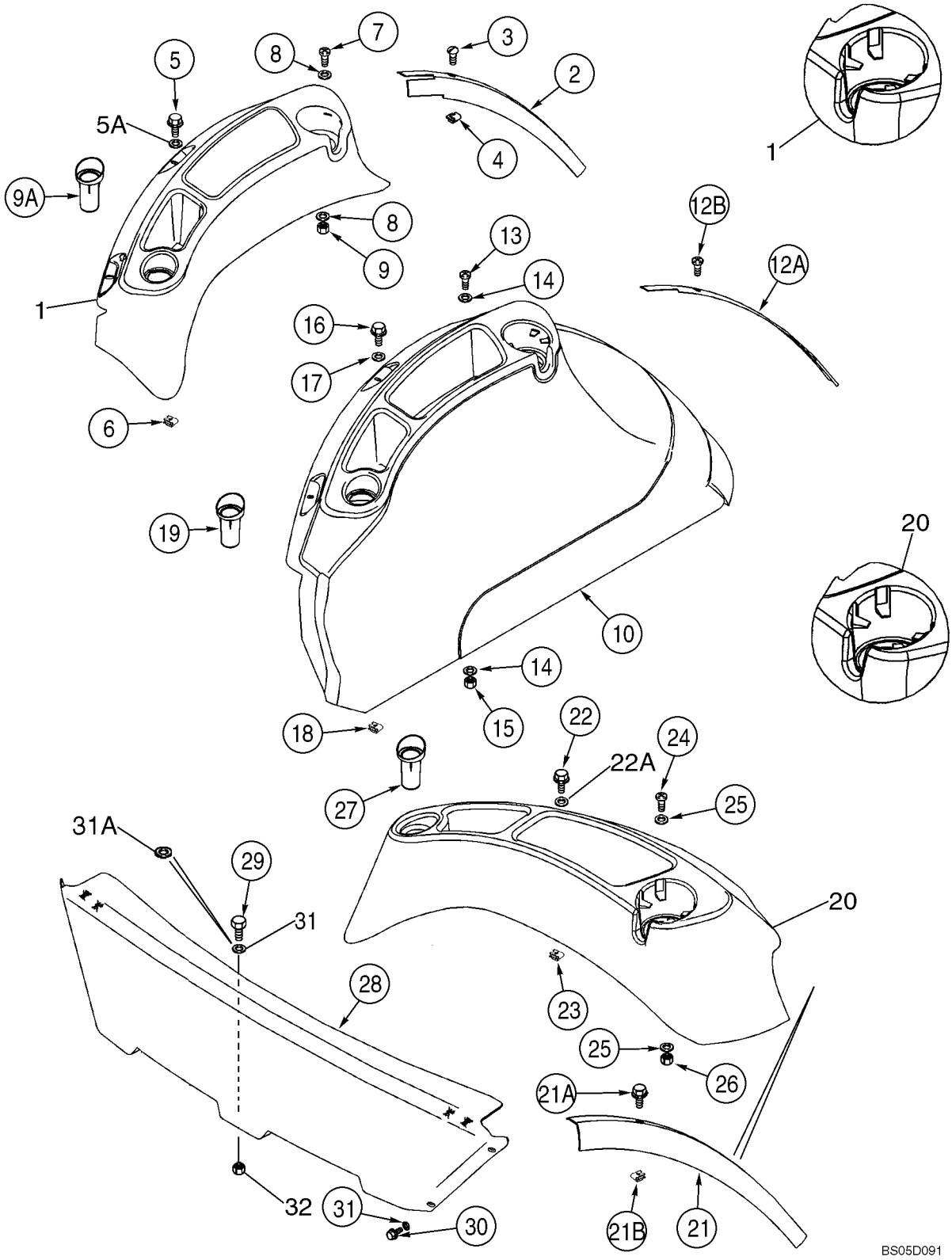

http://www.minnparbackhoeparts.com/

GARDE-BOUE, GAUCHE - PANNEAU, FERMETURE ARRIERE (VIDE-POCHES AVEC PORTE-GOBELET)

REF	FN	PART NUMBER	YR/SN	QTY	DESCRIPTION
14		87310146		4	RONDELLE 13/64 x 3/4 x 1/16, Stainless Steel; Replaces 495-61020 Non-Stainless Steel Washer Used On Some Models
15		231-14109		2	ECROU No. 10
16		87310098		2	BOULON Flange, M6 x 20, Stainless Steel; Replaces 555-2 Non-Stainless Steel Screw Used On Some Models
17		87310186		2	RONDELLE 6.6 ID x 25 OD x 1.6 mm thk, Stainless Steel; Replaces 895-30109 Non-Stainless Steel Washer Used On Some Models
18		833-40406		2	ECROU M6
19		378742A3		1	INSERT Swing Pin Holder
20		86992243		1	PLATEAU (ASSEMBLE) Canopy Models; Includes 86992284, 4000077A1
		NSS		1	NON FOURNI SEPAREMENT Tray
		86992284		4	PARE-CHOCS
		400077A1		1	MARCHANDISE AU METRE 1300 mm (51-3/16 in); Cut From 1977224C1
21		397025A2		1	PROFIL PROTECTEUR Trim, Canopy Models
21A		87310088		3	VIS No. 10 x 3/4, Stainless Steel; Replaces 398113A1 Non-Stainless Steel Screw Used On Some Models
21B		131-869		3	ECROU No. 10
22		87310098		2	BOULON Flange, M6 x 20, Stainless Steel; Replaces 555-2 Non-Stainless Steel Screw Used On Some Models
22A		87310186		2	RONDELLE 6.6 ID x 25 OD x 1.6 mm thk, Stainless Steel; Replaces 895-30109 Non-Stainless Steel Washer Used On Some Models
23		833-40406		2	ECROU M6
24		87310127		2	VIS No. 10 x 1, Stainless Steel; Replaces 140-117 Non-Stainless Steel Screw Used On Some Models
25		87310146		4	RONDELLE 13/64 x 3/4 x 1/16, Stainless Steel; Replaces 495-61020 Non-Stainless Steel Washer Used On Some Models
26		231-14109		2	ECROU No. 10
27		378742A3		1	INSERT Swing Pin Holder

http://www.minnparbackhoeparts.com/

09-42		p3	05/05

GARDE-BOUE, GAUCHE - PANNEAU, FERMETURE ARRIERE (VIDE-POCHES AVEC PORTE-GOBELET)

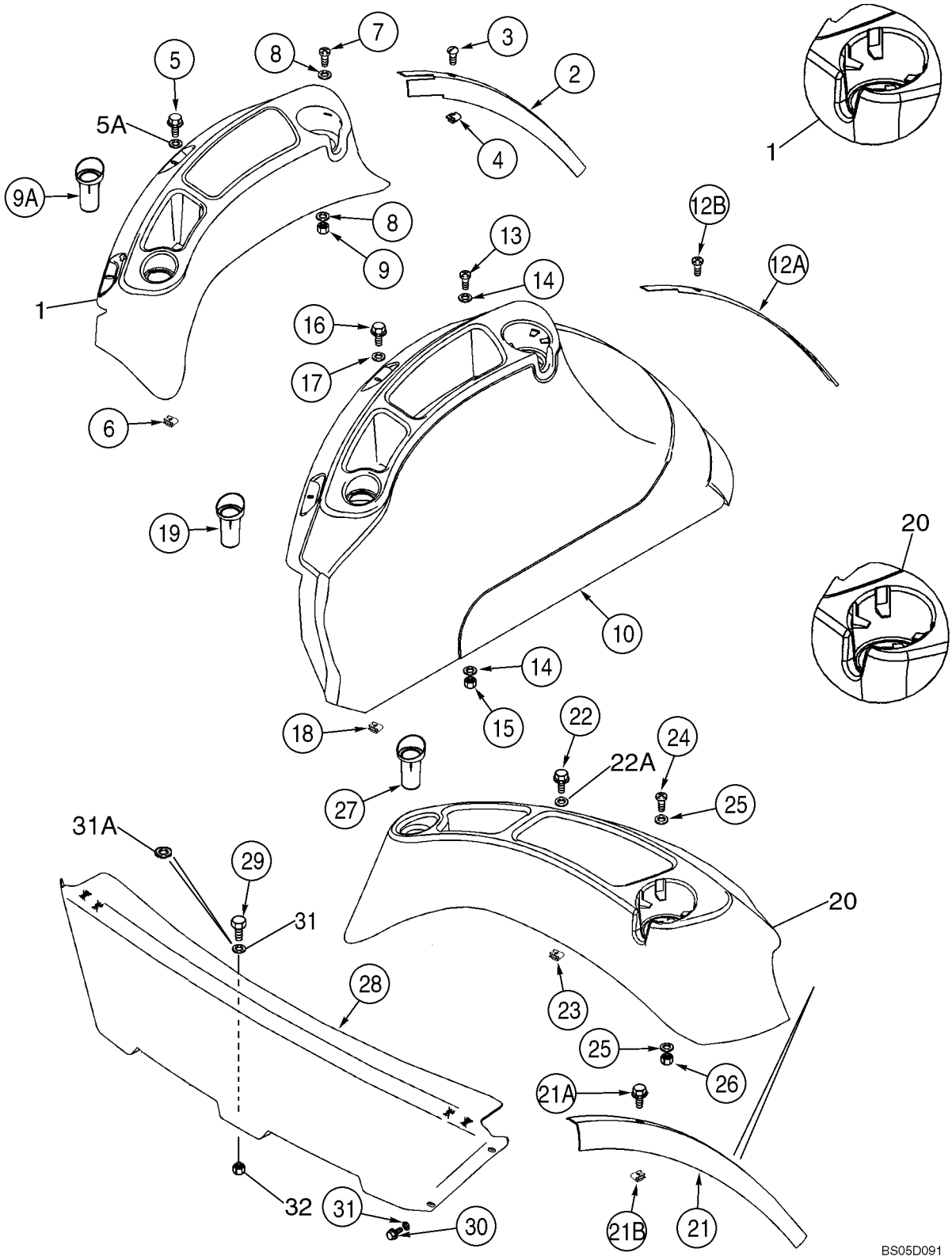

http://www.minnparbackhoeparts.com/

GARDE-BOUE, GAUCHE - PANNEAU, FERMETURE ARRIERE (VIDE-POCHES AVEC PORTE-GOBELET)

REF	FN	PART NUMBER	YR/SN	QTY	DESCRIPTION
28		86992977		1	PANNEAU Rear Closure Panel; Canopy Models
29		87310154		1	BOULON M8 x 25, Stainless Steel; Replaces 614-8025 Non-Stainless Steel Screw Used On Some Models
30		781-24820		4	VIS Flange, M8 x 20
31		895-15008		4-5	RONDELLE 9 x 16 x 1,6 mm
31A		87310185		1	RONDELLE 9 x 20 x 1,6 mm, Stainless Steel; Replaces (1) 895-15008 9 x 16 x 1,6 mm Washer Used On Some Models
32		832-10408		1	ECROU M8

http://www.minnparbackhoeparts.com/

09-43		p1	01/04

EXTENSION DE GARDE BOUE

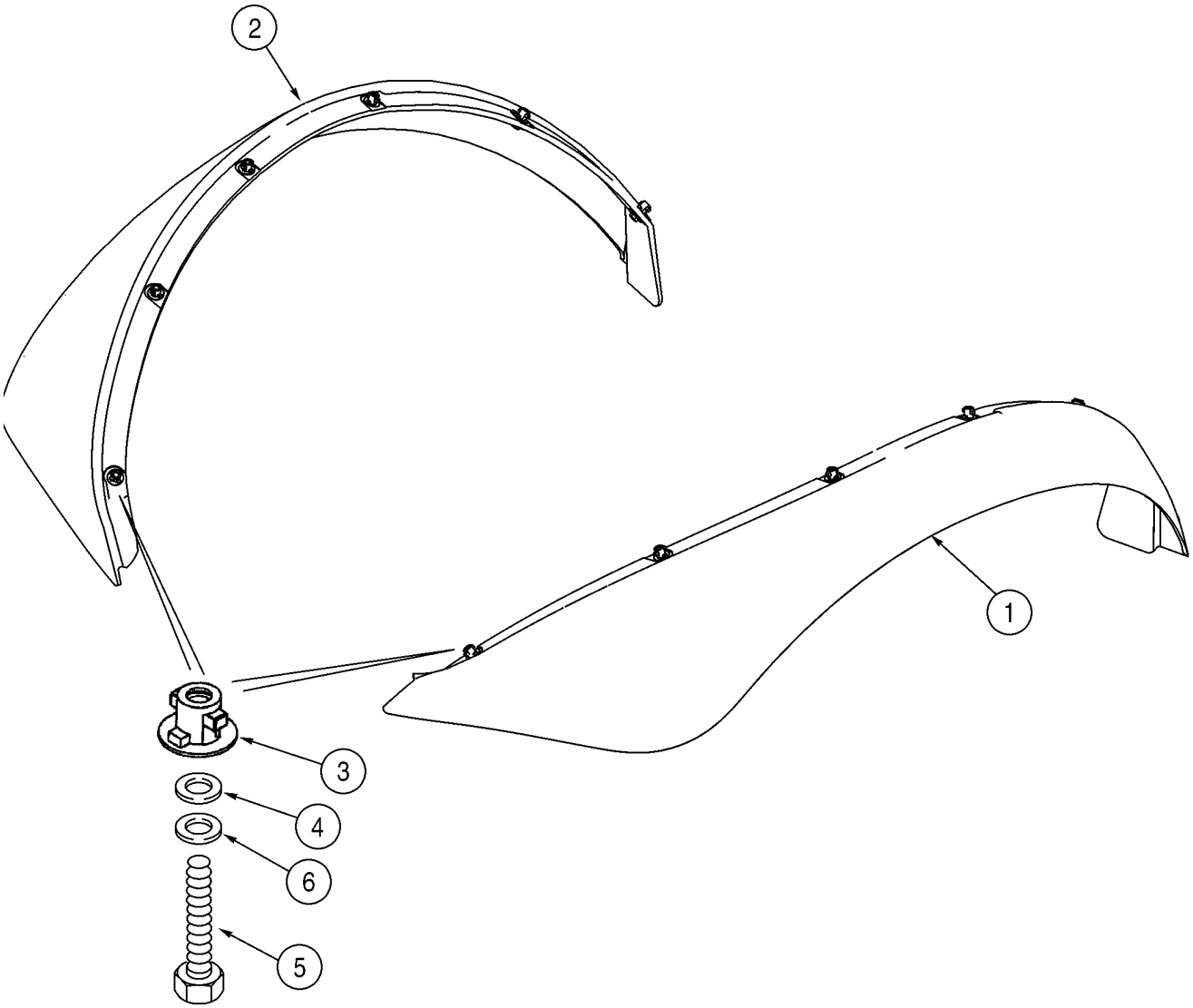

BC00F002

http://www.minnparbackhoeparts.com/

EXTENSION DE GARDE BOUE

REF	FN	PART NUMBER	YR/SN	QTY	DESCRIPTION
1		340998A3		1	GARDE-BOUE Right-Hand
2		340997A3		1	GARDE-BOUE Left-Hand
3		345231A1		12	ATTACHE
4		496-41041		12	RONDELLE 13/32 x 1-1/8 x 9/64
5		614-8030		12	BOULON M8 x 30
6		892-11008		12	RONDELLE 8 mm; Lock

http://www.minnparbackhoeparts.com/

09-44		p1	02/05

GARDE-BOUE

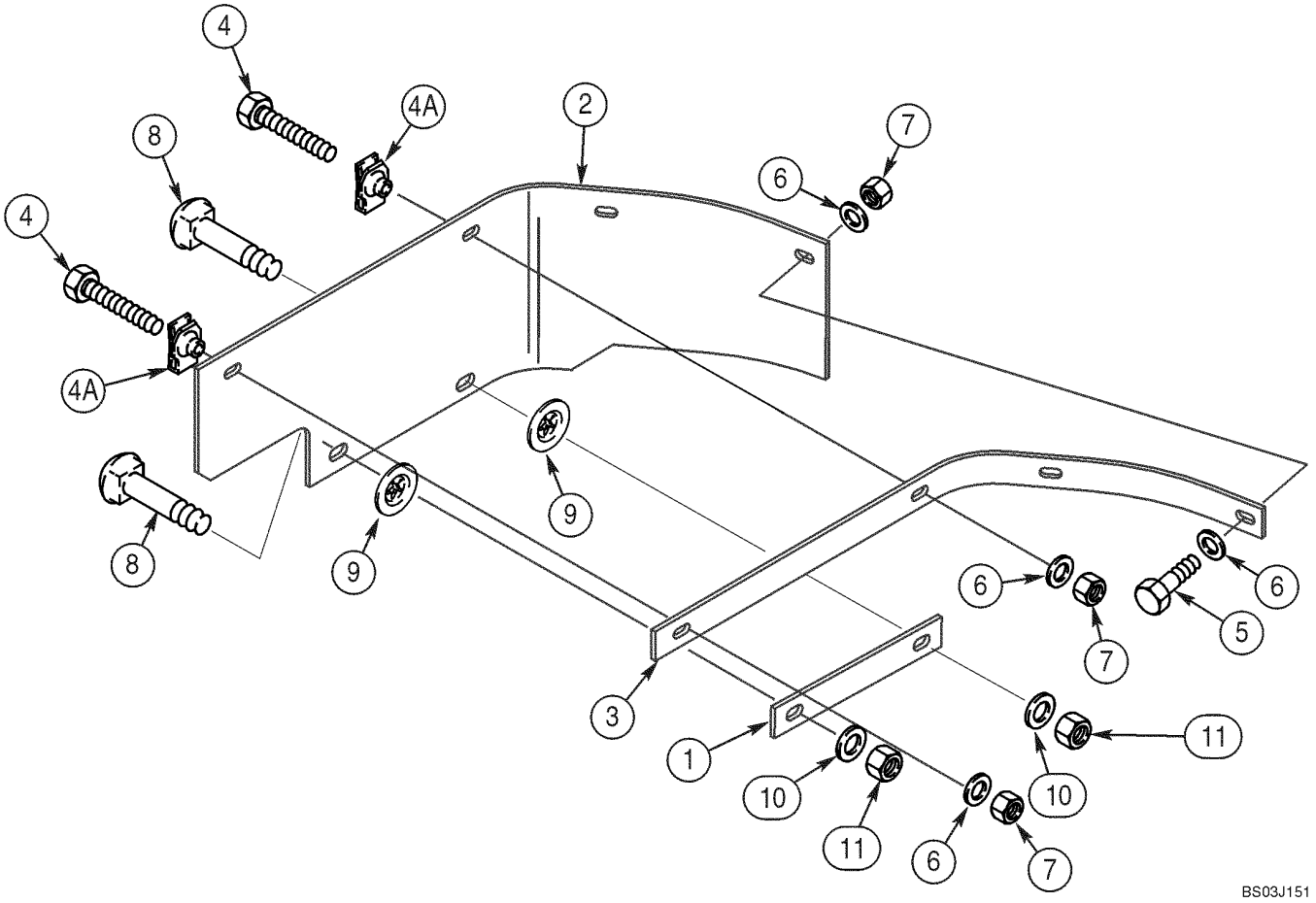

http://www.minnparbackhoeparts.com/

GARDE-BOUE

REF	FN	PART NUMBER	YR/SN	QTY	DESCRIPTION
1		362557A1		1	RUBAN Plate
2		362556A2		1	GARANT Mounts At Right-Hand Fender
3		362558A1		1	RUBAN Angle
4		614-8040		2	BOULON Hex, M8 x 40, 8.8, Full Thd
4A		833-40408		2	ECROU M8
5		614-8030		2	BOULON M8 x 30
6		495-21038		6	RONDELLE 3/8 x 7/8 x 3/32
7		832-10408		4	ECROU M8
8		711-10040		2	BOULON M10 x 40
9		368417A1		2	RONDELLE
10		895-11010		2	RONDELLE 11 x 21 x 2 mm
11		832-10410		2	ECROU M10

http://www.minnparbackhoeparts.com/

SIEGE - SUPPORT (MILSCO EN SEARS SUSPENSION PNEUMATIQUE)

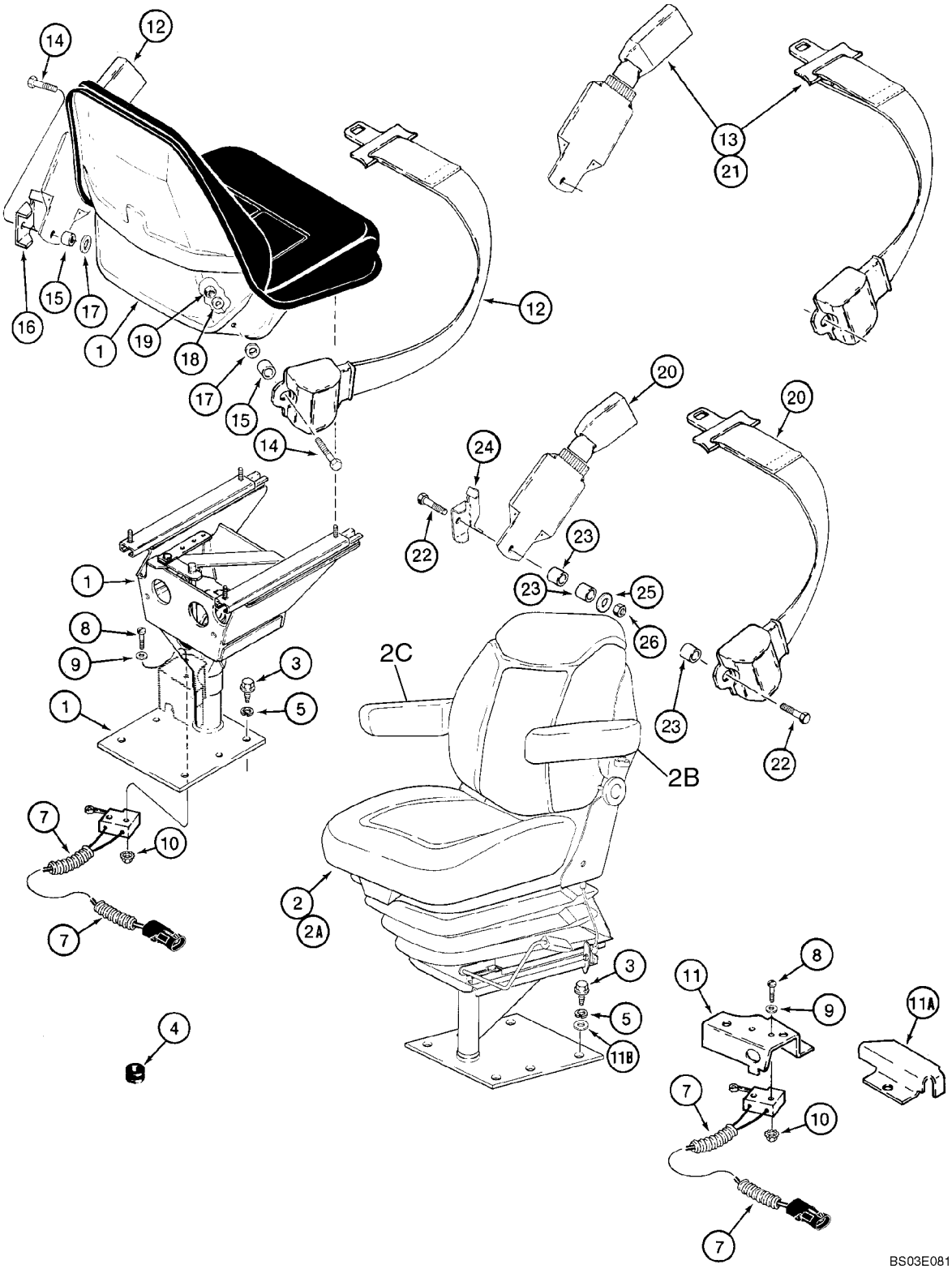

http://www.minnparbackhoeparts.com/

SIEGE - SUPPORT (MILSCO EN SEARS SUSPENSION PNEUMATIQUE)

REF	FN	PART NUMBER	YR/SN	QTY	DESCRIPTION
1		397132A1		1	SIEGE (ASSEMBLE) Standard, Vinyl, Without Armrest, Includes Seat, Pedestal, and Support, See Figures 09-46, 09-47
2		397137A1		1	SIEGE (ASSEMBLE) Air Suspension, Cloth, Deluxe, With Armrests On Figure 09-50, See Figures 09-50, 09-51
2A		397136A2		1	SIEGE (ASSEMBLE) Suspension, Cloth, Without Armrests, Includes Seat, Suspension, and Pedestal, See Figures 09-48, 09-49; Order 397407A1 Service Kit For Seat Assy With Armrests
2A		397134A2		1	SIEGE (ASSEMBLE) Suspension, Vinyl, Without Armrests, Includes Seat, Suspension, and Pedestal, See Figures 09-48, 09-49; Order 397408A1 Service Kit For Seat Assy With Armrests
2B		292262A1		1	ACCOUDOIR (ASSEMBLE) Kit, Left-Hand
2C		292263A2		1	ACCOUDOIR (ASSEMBLE) Kit, Right-Hand
3		604-12030		4	BOULON M12 x 30
4		248-2373		1	PASSE-FIL 1-1/4
5		896-15012		4	RONDELLE 13,5 x 28 x 4 mm
7		118769A1		1	CONTACTEUR Limit Switch
8		470-10620		2	VIS No. 6 x 1-1/4
9		495-31016		2	RONDELLE 5/32 x 3/8 x 3/64
10		193-1003		2	ECROU No. 6
11		119211A1		1	PATTE FIXATION Switch Mounting, Suspension Seat
11A		186351A1		1	GARANT Harness
11B		896-11012		1	RONDELLE Flat, 13,5 x 24 x 3 mm
12		87408889		1	CEINTURE DE SÉCURITÉ 51 mm (2 in), If Used; Standard Seat Belt Mounting
13		87408888		1	CEINTURE DE SÉCURITÉ 76 mm (3 in), Retractable, If Used; Standard Seat Belt Mounting
14		414-724		2	VIS 7/16 x 1-1/2; 5
15		D150391		2	ENTRETOISE
16		D150392		1	PATTE FIXATION Left-Hand
17		495-81169		2	RONDELLE 17/32 x 2,5 x 1/8, Not Used On Deluxe Air Suspension Seat
18		496-81010		4	RONDELLE 15/32 x 1 x 7/64

http://www.minnparbackhoeparts.com/

SIEGE - SUPPORT (MILSCO EN SEARS SUSPENSION PNEUMATIQUE)

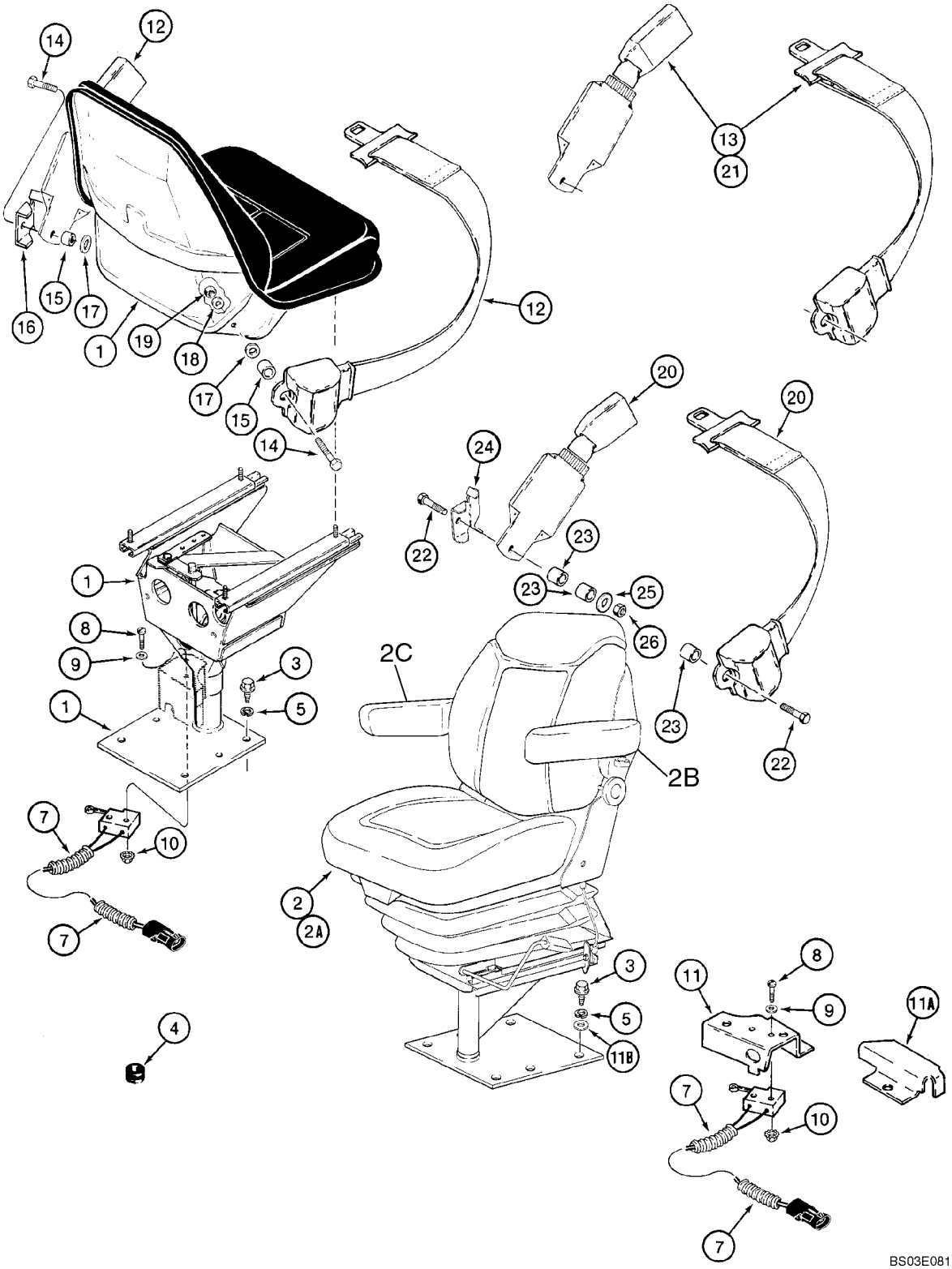

http://www.minnparbackhoeparts.com/

SIEGE - SUPPORT (MILSCO EN SEARS SUSPENSION PNEUMATIQUE)

REF	FN	PART NUMBER	YR/SN	QTY	DESCRIPTION
19		232-4617		2	ECROU 7/16 NF; 8
20		87408889		1	CEINTURE DE SÉCURITÉ 51 mm (2 in), If Used; Suspension Seat Belt Mounting
21		87408888		1	CEINTURE DE SÉCURITÉ 76 mm (3 in), Retractable, If Used; Suspension Seat Belt Mounting
22		414-724		2	VIS 7/16 x 1-1/2; 5
23		D150391		2	ENTRETOISE
24		D150392		1	PATTE FIXATION Left-Hand
25		496-81010		2	RONDELLE 15/32 x 1 x 7/64
26		232-4617		2	ECROU 7/16 NF; 8

http://www.minnparbackhoeparts.com/

09-45A		p1	06/05

SIEGE - SUPPORT (SEARS, STANDARD)

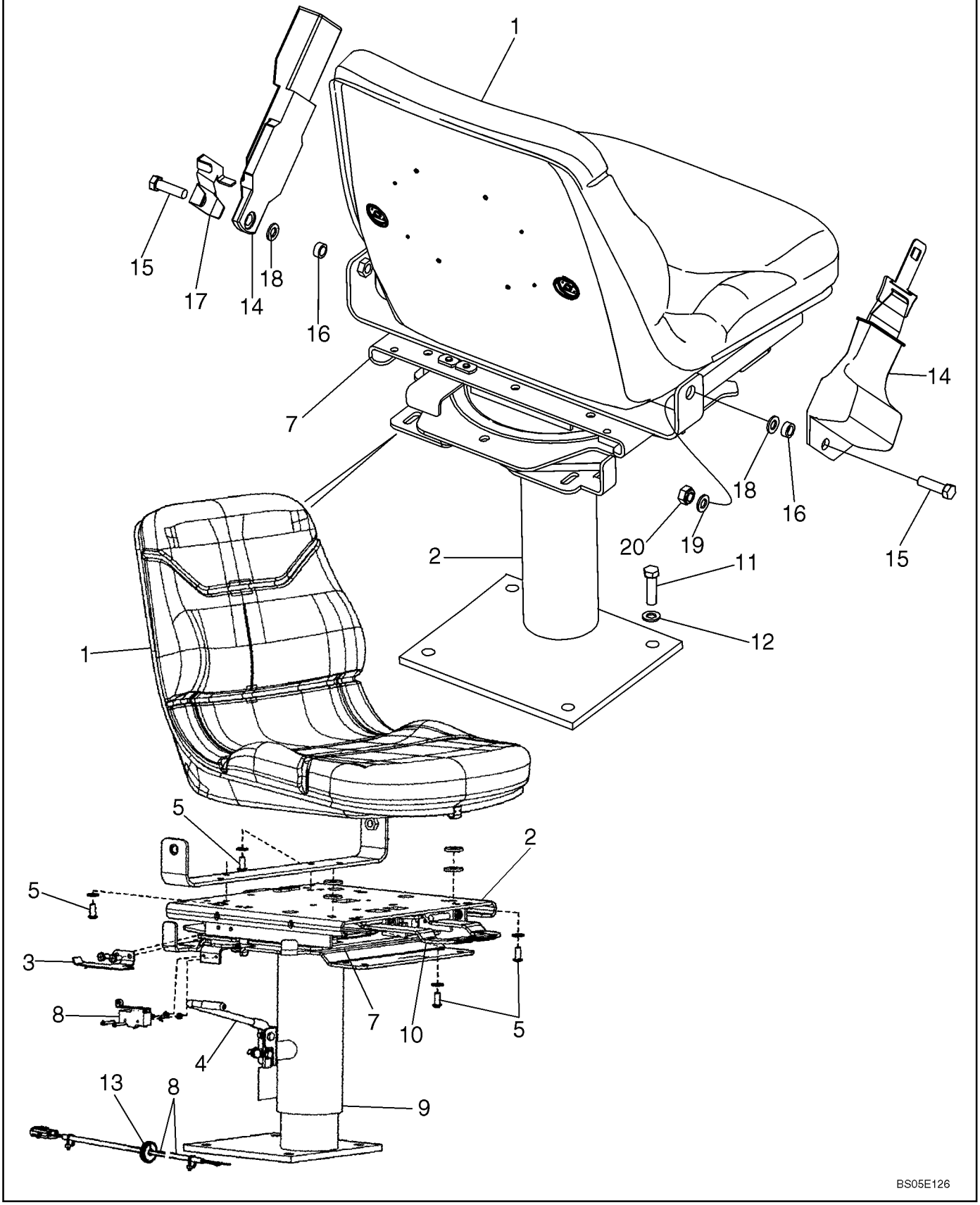

http://www.minnparbackhoeparts.com/

SIEGE - SUPPORT (SEARS, STANDARD)

REF	FN	PART NUMBER	YR/SN	QTY	DESCRIPTION
		{87454292}		1	Standard, Vinyl, Without Armrest, Sears Brand; Includes Seat, Swivel and Pedestal, and Swivel Bearing Kit, Ref 1 - 10
1		87338681		1	SIEGE, COMPOSANTS Seat Only
2		{87346606}		1	Swivel and Pedestal; Component Parts Not Serviced Separately
3		{87346607}		1	Lever, Switch Actuator
4		{87346611}		1	Handle, Height Adjustment
5		{87346612}		4	Button Head Screw, 5/16 x 3/4
6		{87346615}		1	Spring Not Illustrated
7		87308132		1	ROULEMENT Swivel Bearing Kit; Includes (1) Bolt, (8) Bearings, (1) Clip, (1) Nut, (1) Cotter Pin, (1) Plastic Washer, (1) Ball Retainer; Component Parts Not Serviced Separately
8		{87346625}		1	Kit, Switch/Harness, Adj. Height
9		{87346633}		1	Kit, Pedestal
10		{87346634}		1	Kit, Slide/Swivel
11		604-12030		4	BOULON Locking, M12 x 30
12		896-15012		4	RONDELLE 13.5 x 28 x 4 mm
13		248-2373		1	PASSE-FIL Rubber, 1/2 ID
14		87408888		1	CEINTURE DE SÉCURITÉ 76 mm (3 in); Retractable, If Used
14		87408889		1	CEINTURE DE SÉCURITÉ 51 mm (2 in), Retractable, If Used
15		414-724		2	VIS 7/16 x 1-1/2; 5
16		87311572		2	ENTRETOISE
17		87310149		1	PATTE FIXATION Left-Hand; Seat Belt Mounting/Standard Seat
18		495-81169		2	RONDELLE 17/32 x 2,5 x 1/8
19		496-81010		4	RONDELLE 15/32 x 1 x 7/64
20		232-4617		2	ECROU 7/16 NF; 8

http://www.minnparbackhoeparts.com/

09-45B		p1	05/05

SIEGE - SUPPORT (SEARS SUSPENSION MÉCANIQUE)

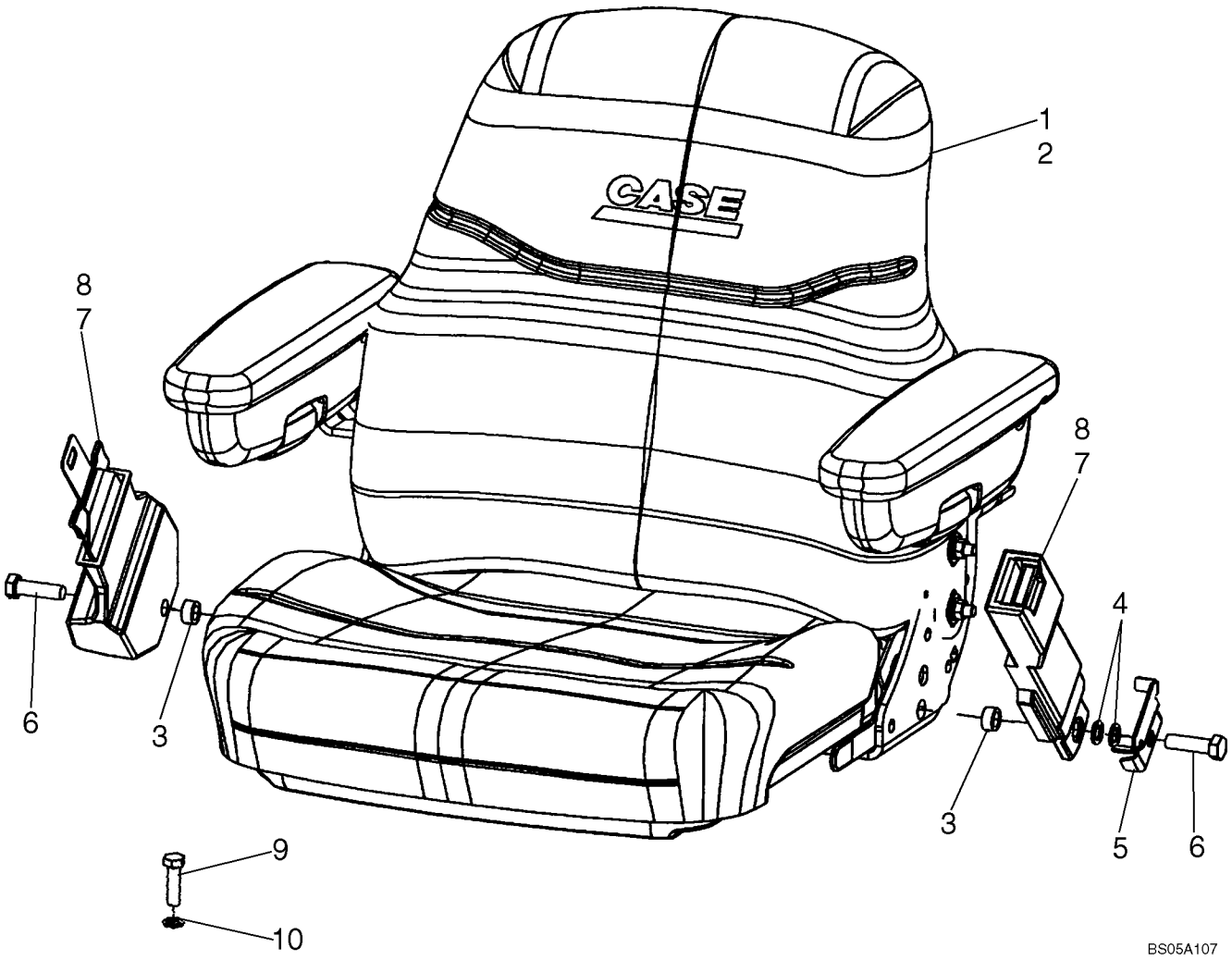

http://www.minnparbackhoeparts.com/

SIEGE - SUPPORT (SEARS SUSPENSION MÉCANIQUE)

REF	FN	PART NUMBER	YR/SN	QTY	DESCRIPTION
1		87454295		1	SIEGE (ASSEMBLE) Mechanical Suspension, Sears, Vinyl, With Armrests; See Figure 09-49A
2		87454294		1	SIEGE (ASSEMBLE) Mechanical Suspension, Sears, Cloth, With Armrests; See Figure 09-49A
3		87311572		2	ENTRETOISE
4		895-18012		2	RONDELLE 13.5 x 20 x 2 mm; Left-Hand Side
5		87310149		1	PATTE FIXATION Belt Mounting
6		614-12040		2	BOULON Thread to Head, M12 x 40
7		87408888		1	CEINTURE DE SÉCURITÉ 76 mm (3 in), Retractable, If Used
8		87408889		1	CEINTURE DE SÉCURITÉ 51 mm (2 in), If Used
9		604-12030		4	BOULON Locking, M12 x 30; Seat Pedestal to Floor
10		896-15012		4	RONDELLE 13.5 x 28 x 4 mm

http://www.minnparbackhoeparts.com/

SIÈGE, STANDARD (MILSCO)

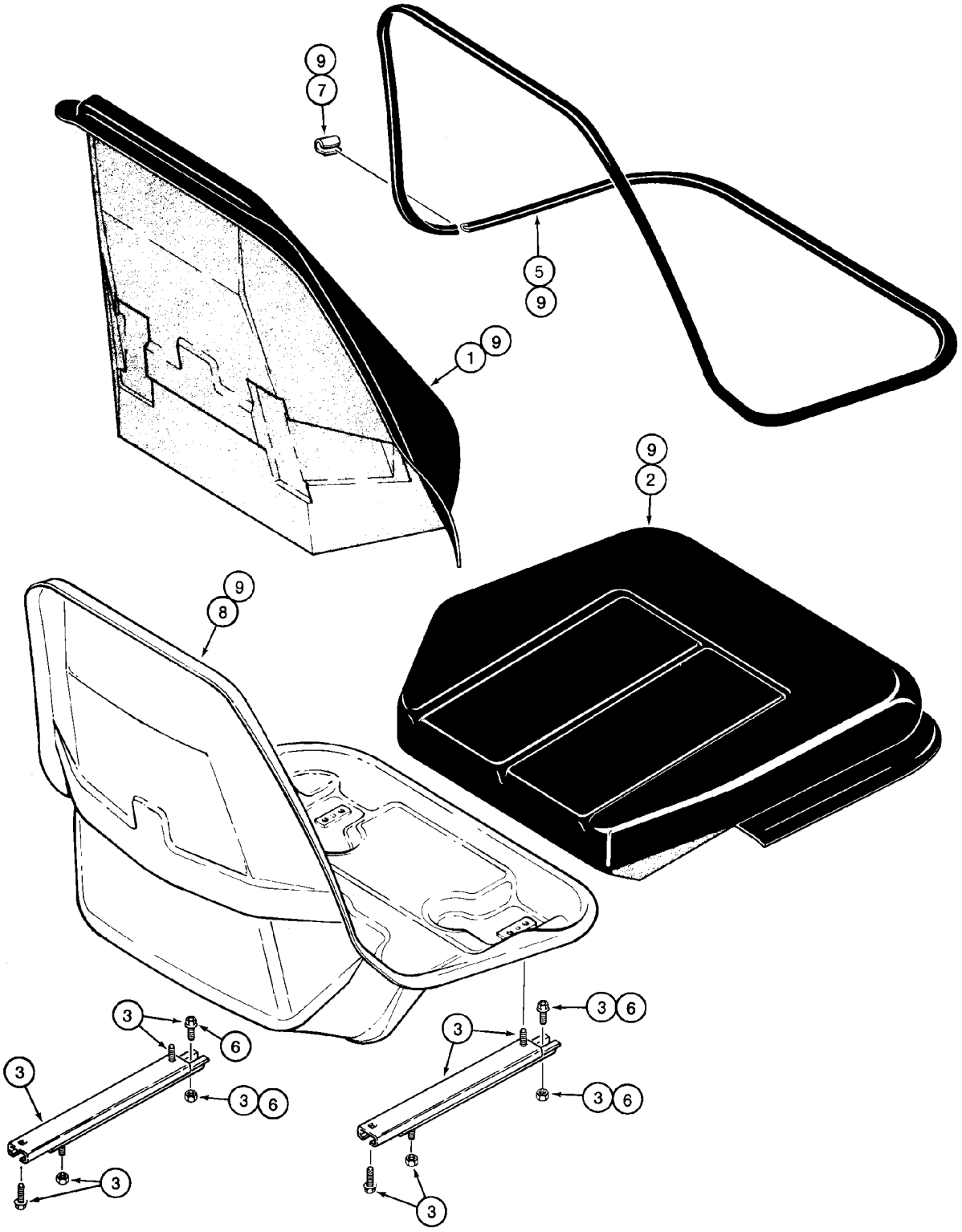

BS00J117

http://www.minnparbackhoeparts.com/

SIÈGE, STANDARD (MILSCO)

REF	FN	PART NUMBER	YR/SN	QTY	DESCRIPTION
		397132A1		1	SIEGE (ASSEMBLE) Vinyl, Standard Seat; Incl. Ref 1 - 9; Also Includes Parts On Figure 09-47
1		NSS		1	NON FOURNI SEPAREMENT Cushion, Backrest; Order 406700A1 Cushion Assy, Ref 9
2		NSS		1	NON FOURNI SEPAREMENT Cushion, Seat; Order 406700A1 Cushion Assy, Ref 9
3		399777A1		1	POCHETTE Seat Slide Adjusters
5		176924A1		1	LOT DE PIECES Trim
6		181169A1		1	POCHETTE Cable, Fore-Aft/Swivel Mechanism, For Cable, See Figure 09-47
7		NSS		1	NON FOURNI SEPAREMENT Clip, Order N7802 Clip Kit
8		NSS		1	NON FOURNI SEPAREMENT Shell, Seat Frame, Order 406700A1 Cushion Assy, Ref 9
9		406700A1		1	COUSSIN (ASSEMBLE) Seat Shell, Cushions, and Trim, Incl. Ref 1, 2, 5, 8
		N7802		1	CLIP Clip, Incl. Ref 7 Clip, Plus 6 Additional Narrow Clips

http://www.minnparbackhoeparts.com/

SUPPORT DE SIÈGE ET BASE, STANDARD (MILSCO)

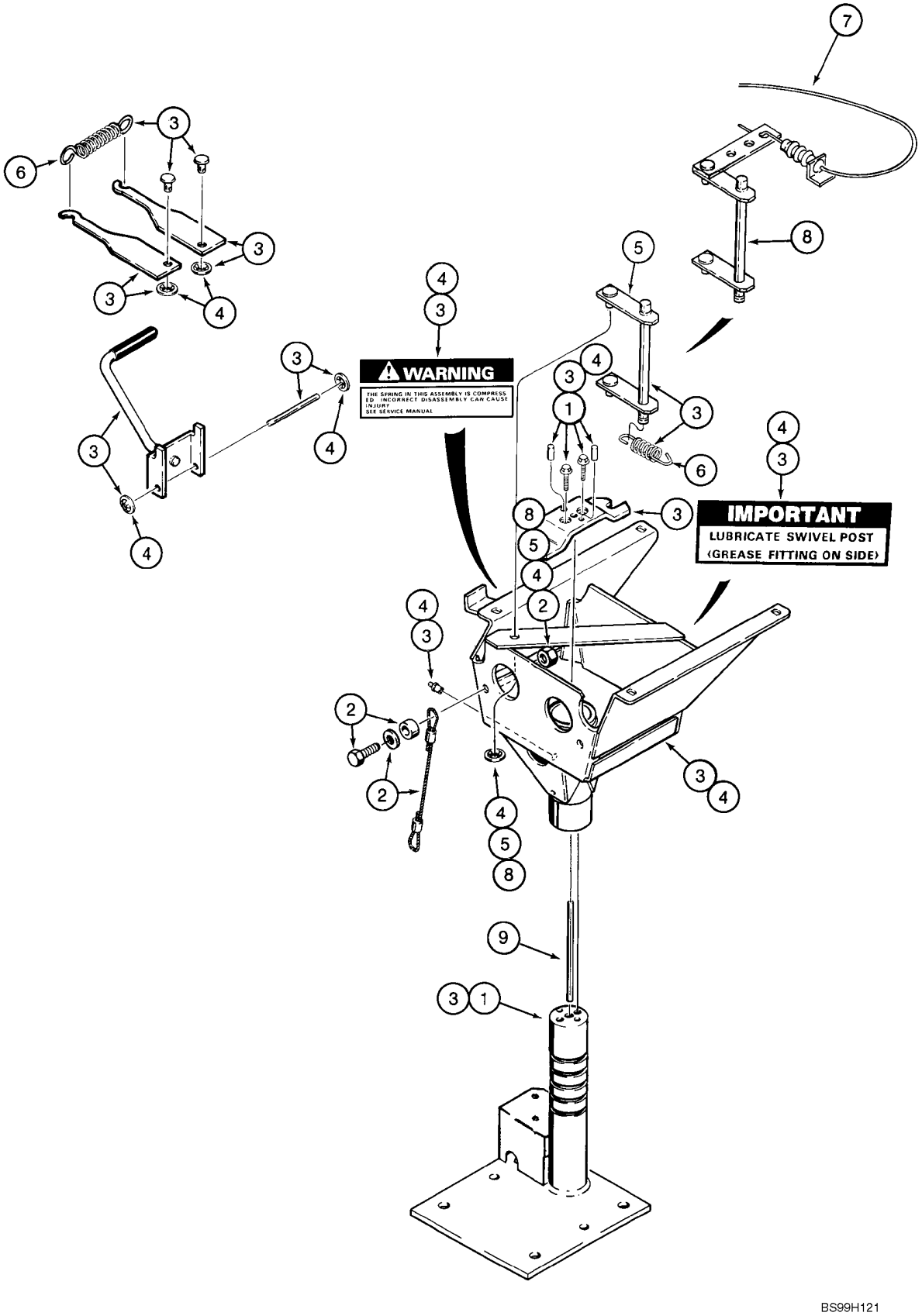

http://www.minnparbackhoeparts.com/

SUPPORT DE SIÈGE ET BASE, STANDARD (MILSCO)

REF	FN	PART NUMBER	YR/SN	QTY	DESCRIPTION
		397132A1		1	SIEGE (ASSEMBLE) Vinyl, Standard Seat, Incl. Ref 1 - 9, Also Includes Parts On Figure 09-46
1		116761A3		1	POCHETTE Support, Base, Includes (6) Lock Nuts, (2) Pins, (1) Rivet, (1) Washer, (1) Spacer, 2 Screws
2		116763A1		1	POCHETTE Cable, Anchor, Includes Hardware For Both Ends
3		116764A3		1	POCHETTE Pedestal, Includes (4) Lock Nuts, (1) Rivet, (1) Washer, (1) Spacer, (1) Tie, (2) Screws
		219-16		1	GRAISSEUR 5/16 dr type x 19/32; If Used
4		116766A2		1	POCHETTE Pedestal Box, Includes (4) Lock Nuts For Seat Adjuster Slide, Includes 219-16
		219-16		1	GRAISSEUR 5/16 dr type x 19/32
5		116767A1		1	POCHETTE Swivel Latch, Includes (6) Lock Nuts, (1) Push Nut, (1) Swivel Latch; Also Includes (4) Lock Nuts For Seat Adjuster Slide
6		119171A1		1	POCHETTE Spring
7		181169A1		1	POCHETTE Cable, Fore-Aft/Swivel Mechanism, Also Includes (4) Nuts
8		253209A1		1	POCHETTE Swivel Latch, Includes (4) Lock Nuts, (1) Rivet, (1) Spacer, (1) Washer, (1) Push Nut, (1) Swivel Latch
9		NSS		1	NON FOURNI SEPAREMENT Pin, Seat

http://www.minnparbackhoeparts.com/

09-48		p1	01/05

SIÈGE, SUSPENSION MÉCANIQUE (MILSCO)

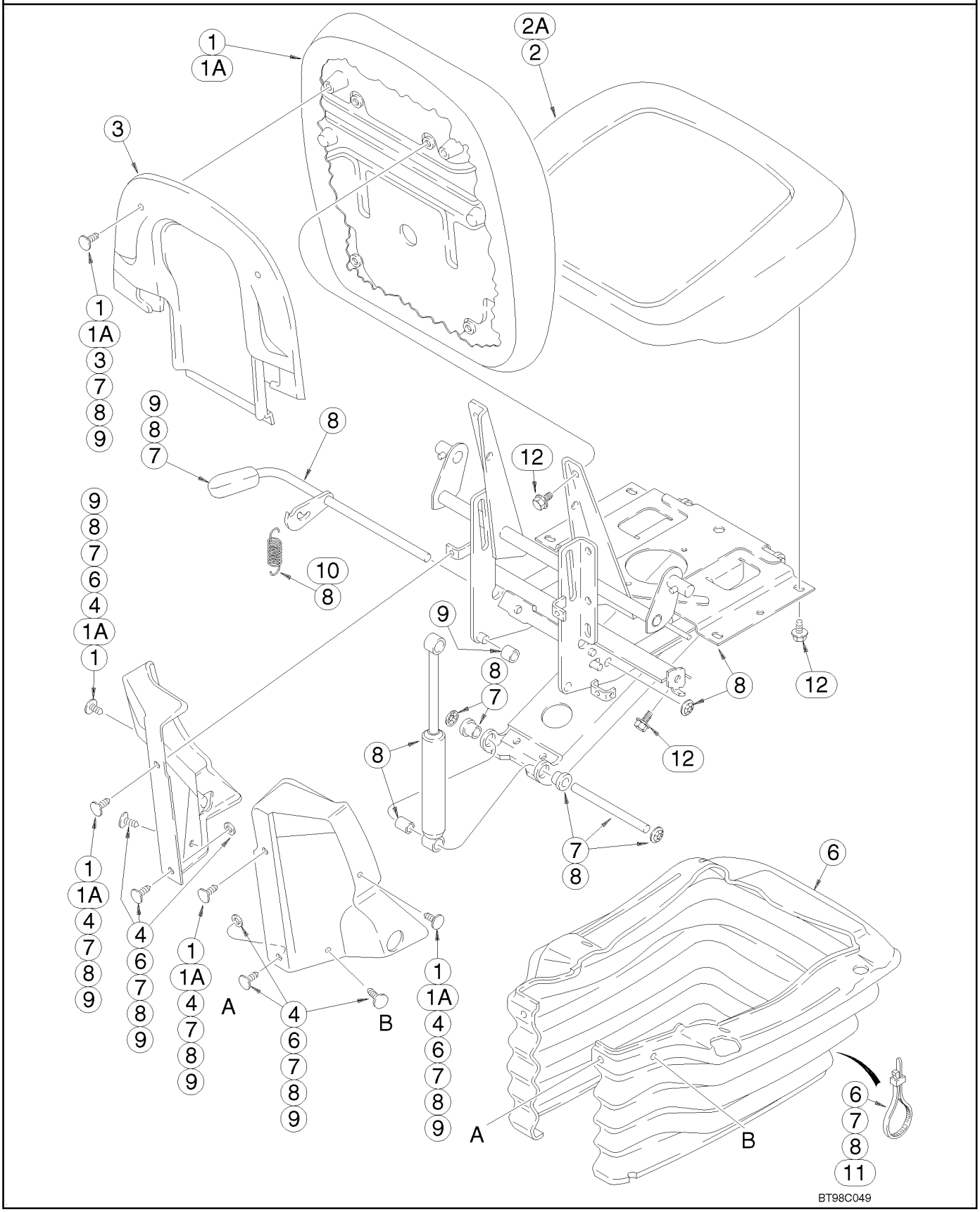

http://www.minnparbackhoeparts.com/

SIÈGE, SUSPENSION MÉCANIQUE (MILSCO)

REF	FN	PART NUMBER	YR/SN	QTY	DESCRIPTION
		397136A2		1	SIEGE (ASSEMBLE) Cloth, Includes Seat, Suspension, Pedestal and Weight Adjuster, Without Armrests, Incl. Ref 1 - 11; Also Includes Parts On Figure 09-49
		397134A2		1	SIEGE (ASSEMBLE) Vinyl, Includes Seat, Suspension, Pedestal and Weight Adjuster, Without Armrests, Incl. Ref 1 - 11; Also Includes Parts On Figure 09-49
1		399757A1		1	POCHETTE Cushion, Backrest, Cloth, Includes Lumbar Knob, (6) Clips and (4) Screws
1A		399759A1		1	POCHETTE Cushion, Backrest, Vinyl, Includes Lumbar Knob, (6) Clips and (4) Screws
2		399758A1		1	POCHETTE Cushion, Seat, Cloth, Includes (6) Screws
2A		399760A1		1	POCHETTE Cushion, Seat, Vinyl, Includes (6) Screws
3		307091A1		1	ENSEMBLE Kit, Backrest Shroud, Includes (2) Clips
4		307090A1		1	POCHETTE Side Shroud, Left-Hand and Right-Hand, Includes (6) Clips, (2) Washers, (1) Height Adjustment Grip, (1) Back Angle Grip
6		307098A1		1	POCHETTE Boot, Includes (2) Ties, (2) Washers, (4) Clips
7		176919A1		1	POCHETTE Swing Arm Pivot Shaft, Includes (2) Flanged Bearings, (4) Push Nuts, (2) Clips, (2) Washers, (1) Grip, (2) Ties
8		307092A1		1	POCHETTE Suspension, Includes Suspension, Back Angle Adjust, (2) Groove Pins, (1) Handle, (8) Screws, (2) Springs, (3) Washers, (1) Rivet; Includes Parts From Seat Frame To Adjuster Slides; For Additional Kit Parts See Figure 09-49, Ref 1
8		307092A1		1	POCHETTE 307092A1 Suspension Kit Also Includes (1) Spacer, (2) Ties, (8) Clips, (12) Nuts, (1) Height Adjust Grip, (1) Back Angle Grip, (1) Rake Grip, (1) Fore/Aft/Swivel Grip, (1) Decal

http://www.minnparbackhoeparts.com/

09-48		p2	01/05

SIÈGE, SUSPENSION MÉCANIQUE (MILSCO)

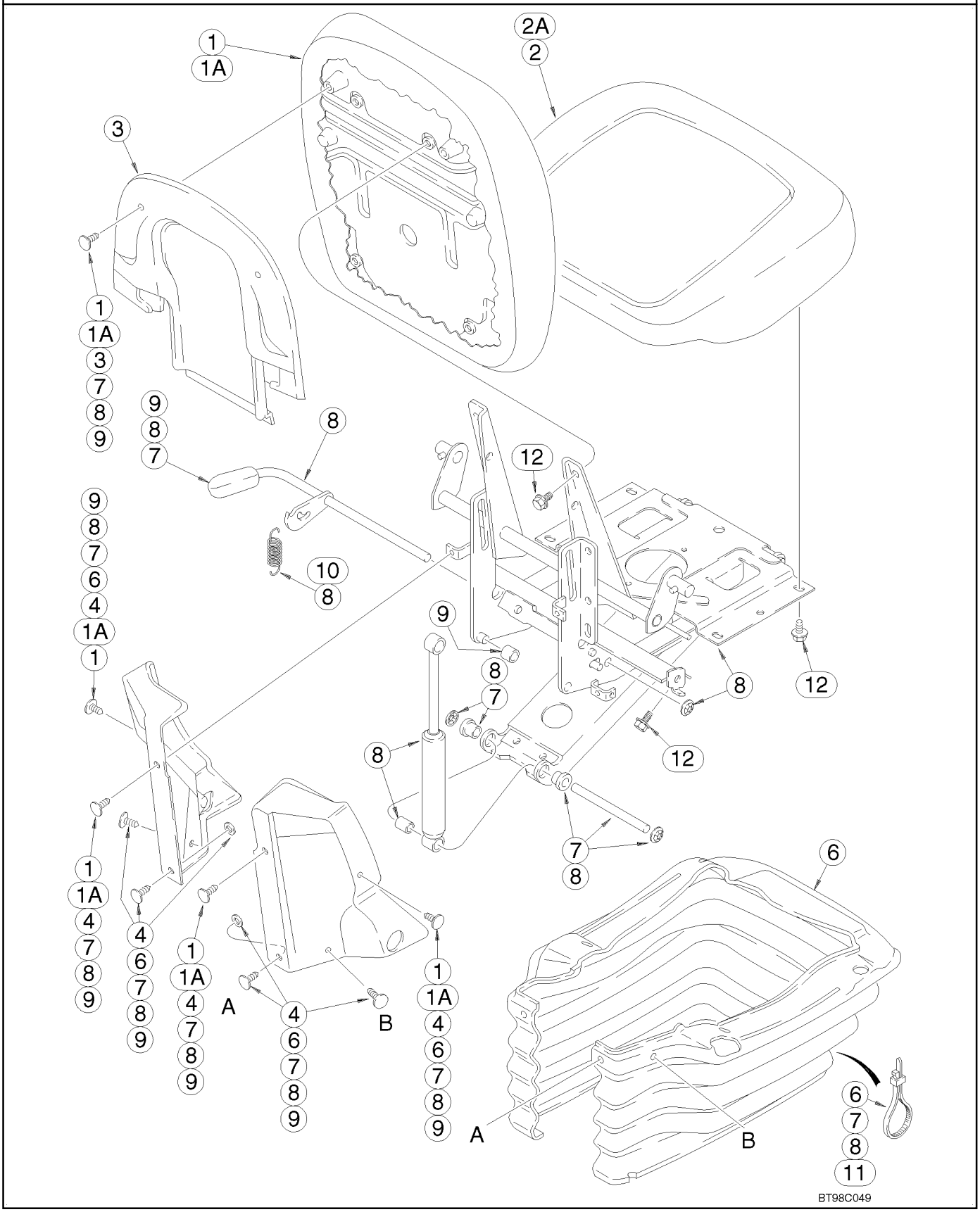

http://www.minnparbackhoeparts.com/

SIÈGE, SUSPENSION MÉCANIQUE (MILSCO)

REF	FN	PART NUMBER	YR/SN	QTY	DESCRIPTION
9		176921A1		1	POCHETTE Plastic Components, Includes (2) Rollers, (4) Downstops, (2) Roller Guides, (2) Bearings, (1) Bumper, (4) Nuts, (10) Clips, (2) Washers, (1) Grip; For Additional Kit Parts, See Figure 09-49, Ref 2
10		116547A1		1	POCHETTE Height Adjusting Spring, Includes (10) Shroud Retainers, (2) Washers, (2) Springs, (1) Wear Strip; For Additional Kit Parts, See Figure 09-49, Ref 6
11		181170A1		1	POCHETTE Cable, Fore-Aft/Swivel Mechanism, Includes (2) Screws, (2) Ties, Cable, (4) Nuts
12		NSS		8	NON FOURNI SEPAREMENT Bolt, 5/16 Inch Thread, Length As Required, Purchase Locally, Seat Cushion and Backrest

http://www.minnparbackhoeparts.com/

BASE DE SIÈGE ET SUSPENSION, SUSPENSION MÉCANIQUE (MILSCO)

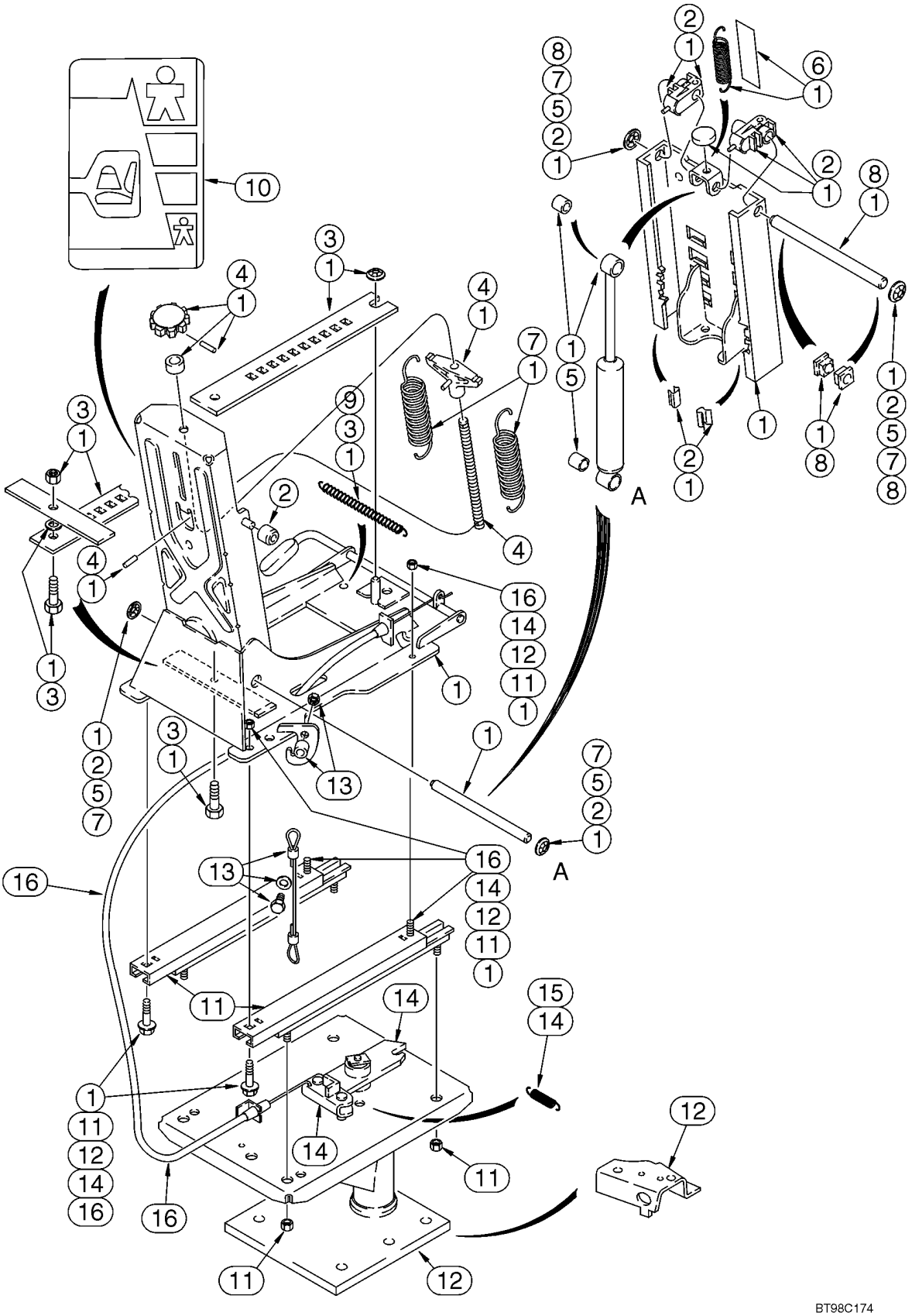

http://www.minnparbackhoeparts.com/

BASE DE SIÈGE ET SUSPENSION, SUSPENSION MÉCANIQUE (MILSCO)

REF	FN	PART NUMBER	YR/SN	QTY	DESCRIPTION
		397136A2		1	SIEGE (ASSEMBLE) Cloth, Includes Seat, Suspension, Pedestal and Weight Adjuster, Without Armrests; Incl. Ref 1 - 16; Also Includes Parts On Figure 09-48
		397134A2		1	SIEGE (ASSEMBLE) Vinyl, Includes Seat, Suspension, Pedestal and Weight Adjuster, Without Armrests; Incl. Ref 1 - 16; Also Includes Parts On Figure 09-48
1		307092A1		1	POCHETTE Suspension, Includes Suspension, Back Angle Adjust, (2) Groove Pins, (1) Handle, (8) Screws, (2) Springs, (3) Washers and (1) Rivet; Includes Parts From Seat Frame To Adjuster Slides; For Additional Kit Parts, See Figure 09-48, Ref 8
1		307092A1		1	POCHETTE Suspension; Also Includes (1) Spacer, (2) Ties, (8) Clips, (12) Nuts, (1) Height Adjust Grip, (1) Back Angle Grip, (1) Rake Grip, (1) Fore/Aft/Swivel Grip, (1) Decal
2		176921A1		1	POCHETTE Plastic Components, Includes (2) Rollers, (4) Downstops, (2) Roller Guides, (2) Bearings, (1) Bumper, (4) Nuts, (10) Clips, (2) Washers, (1) Grip; For Additional Kit Parts, See Figure 09-48, Ref 9
3		116521A1		1	POCHETTE Fore/Aft Adjuster Latch, Includes (1) Latch Bar, (1) Bolt, (1) Spacer, (2) Nuts, (1) Spring and (2) Ties, Includes 131-435 Nut
		131-435		X	ECROU 3/8
4		176916A1		1	POCHETTE Weight Adjuster, Includes Adjusting Knob, (1) Spacer, (2) Roll Pins, (1) Shaft, (1) Spring, (10) Clips, (2) Washers, (1) Grip and (2) Ties; Also Includes (10) Shroud Retainers, (2) Washers, (2) Ties, See Figure 09-48
5		176914A1		1	POCHETTE Suspension Damper, Includes Damper, (2) Spacers, (4) Nuts, (10) Clips, (2) Washers, (1) Grip and (2) Ties; Also Includes (10) Shroud Retainers, (2) Washers, (2) Ties, See Figure 09-48

http://www.minnparbackhoeparts.com/

BASE DE SIÈGE ET SUSPENSION, SUSPENSION MÉCANIQUE (MILSCO)

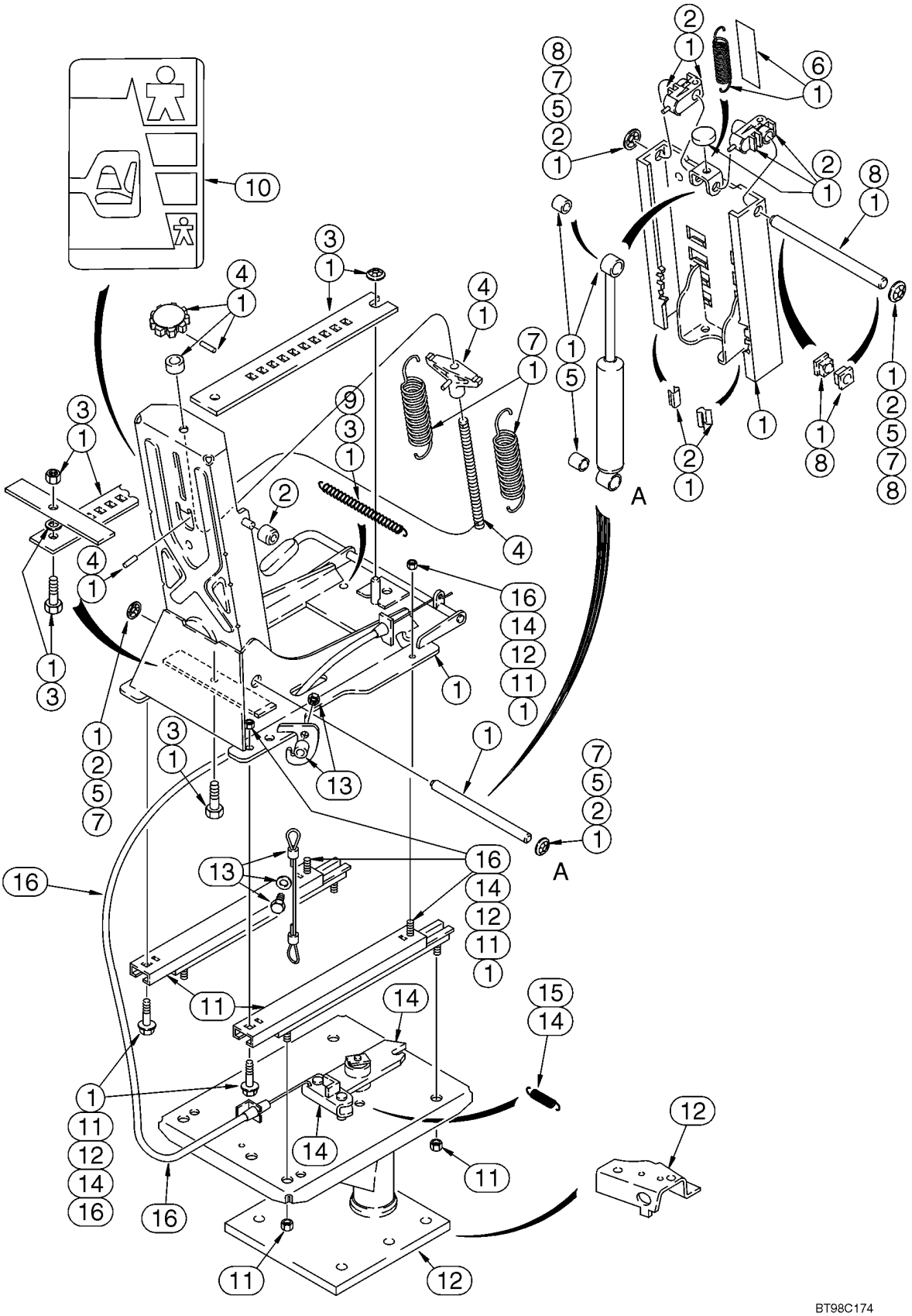

http://www.minnparbackhoeparts.com/

BASE DE SIÈGE ET SUSPENSION, SUSPENSION MÉCANIQUE (MILSCO)

REF	FN	PART NUMBER	YR/SN	QTY	DESCRIPTION
6		116547A1		1	POCHETTE Height Adjusting Spring, Includes (10) Shroud Retainers, (2) Washers, (2) Springs, (1) Wear Strip; For Additional Kit Parts, See Figure 09-48, Ref 10
7		176920A1		1	POCHETTE Main Extension Springs, Includes (2) Springs, (4) Nuts, (2) Washers, (10) Clips, (1) Grip, (2) Ties
8		116551A1		1	POCHETTE Upper Suspension Tower Shaft, Includes Shaft, (2) Bearings, (2) Nuts, (10) Clips, (2) Washers
9		116545A1		1	POCHETTE Fore/Aft Latch Spring, Includes (1) Spring, (2) Ties
10		116534A1		1	POCHETTE Decal, Seat Weight Adjustment
11		399764A1		1	POCHETTE Fore/Aft Adjuster Slides
12		116538A2		1	POCHETTE Pedestal, Includes Pedestal, (4) Screws, (4) Nuts and 119211A1 Bracket
13		116552A1		1	POCHETTE Cable, Includes (2) Cables, (2) Screws, (2) Spacers, (2) Washers, (2) Nuts
14		116550A1		1	POCHETTE Swivel Latch Bar, Includes Latch Bar, (1) Spring, (1) Ring, (4) Screws, (4) Nuts
14		336375A1		1	POCHETTE Swivel Latch Plate, Includes Latch, Swivel Plate Latch, (5) Screws, (6) Nuts, (2) Pins
15		116548A1		1	POCHETTE Swivel Latch Spring Only
16		181170A1		1	POCHETTE Cable, Fore-Aft/Swivel Mechanism, Includes (2) Screws, (2) Ties, Cable, (4) Nuts

http://www.minnparbackhoeparts.com/

09-49A		p1	06/05

SIÈGE, SUSPENSION MÉCANIQUE (SEARS)

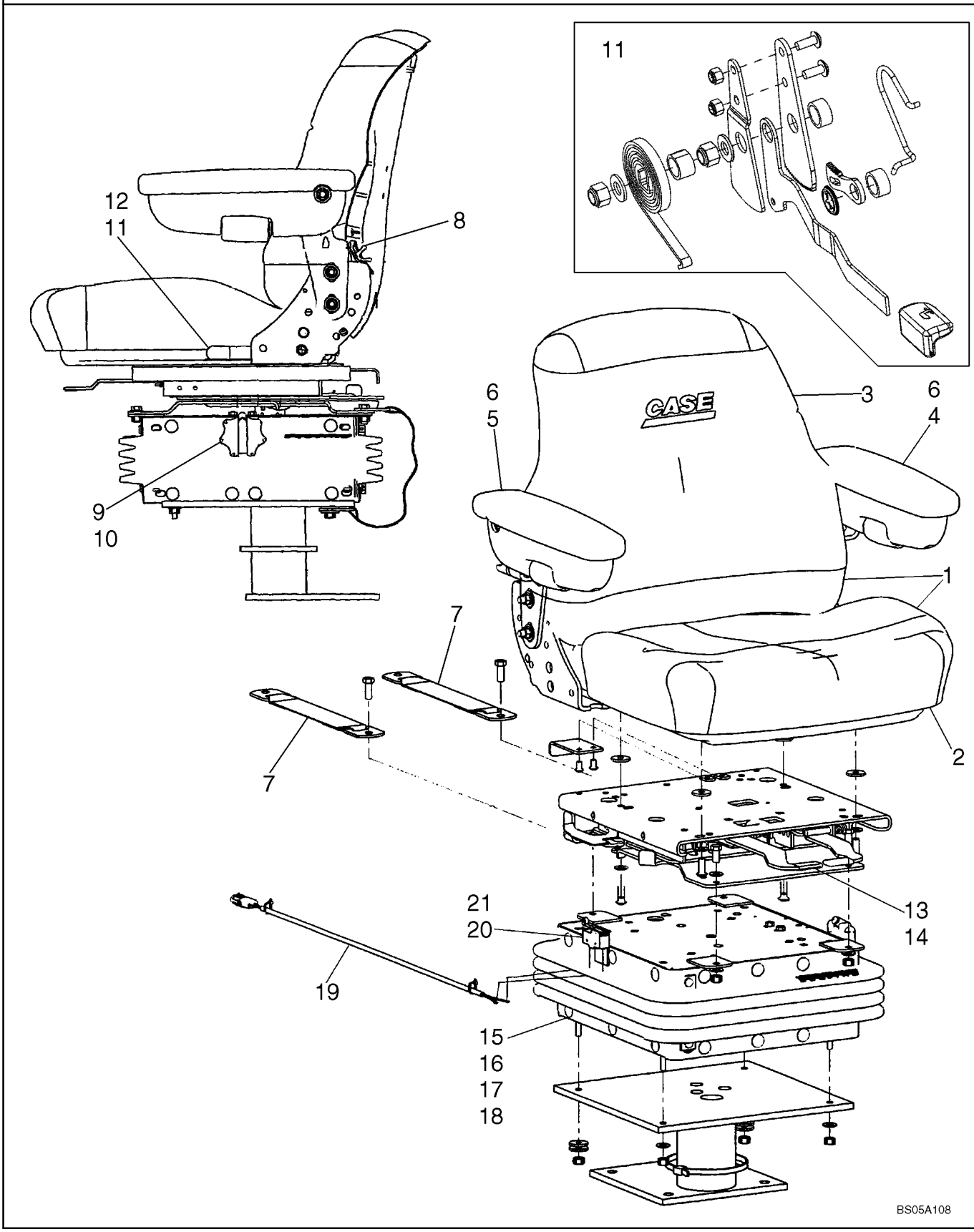

http://www.minnparbackhoeparts.com/

SIÈGE, SUSPENSION MÉCANIQUE (SEARS)

REF	FN	PART NUMBER	YR/SN	QTY	DESCRIPTION
		87454295		1	SIEGE (ASSEMBLE) Vinyl, Mechanical Suspension, Sears; Incl. Ref 1 - 21; Also Includes 87349995 Pedestal Assy
		87454294		1	SIEGE (ASSEMBLE) Cloth, Mechanical Suspension, Sears; Incl. Ref 1 - 21; Also Includes 87349995 Pedestal Assy
		{87349995}		1	Pedestal Assembly
1		87308118		1	SIEGE, COMPOSANTS Seat Top Assy, Vinyl; Includes Back and Seat Cushions
1		87308157		1	SIEGE, COMPOSANTS Seat Top Assy, Cloth; Includes Back and Seat Cushions
2		87308119		1	COUSSIN DE SIEGE Vinyl
2		87308158		1	COUSSIN DE SIEGE Cloth
3		87308127		1	SIEGE, COMPOSANTS Vinyl
3		87308159		1	SIEGE, COMPOSANTS Cloth
4		87308153		1	BRAS (ASSEMBLE) Left-Hand
5		87308152		1	BRAS (ASSEMBLE) Right-Hand
6		87308154		2	SIEGE, ACCESSOIRES Kit, Arm Pad; Includes (1) Arm Pad, (1) Screw
7		87308128		1	SIEGE, ACCESSOIRES Kit, Tether Belt; Includes (2) Tether Belts, (2) Bolts, (4) Washers, (2) Lock Nuts
8		87037462		1	DISP.DE REGLAGE DOSSIER Lumbar Knob Kit; Includes Knob, 1/8 x 5/8 Roll Pin
		87308130		1	DISP.DE REGLAGE DOSSIER Kit, Lumbar; Includes (2) Screws, (2) Rivets, (1) Back Support, (1) Lumbar Shaft Yoke
9		123969A1		1	BOUTON Kit, Height/Weight Adjustment; Includes (1) Knob, (1) Shaft, (1) 5/32 x 1 in Roll Pin
10		38-11016		1	GOUPILLE Roll Pin, 5/32 x 1 in
		130674A1		1	JEU Kit, Weight Adjustment; Includes (1) Thrust Washer, (2) Shaft and Gear
		87308145		1	RONDELLE DE BUTÉE 2 OD x .6 in ID
11		86994165		1	SIEGE, ACCESSOIRES Recliner Kit; Includes (2) Brackets, (3) Spacers, (2) Springs, Knob, Latch, Lever, (2) Bolts, (2) Washers, (5) Nuts
12		87416475		1	POMMEAU Recliner Cap

http://www.minnparbackhoeparts.com/

09-49A		p2	06/05

SIÈGE, SUSPENSION MÉCANIQUE (SEARS)

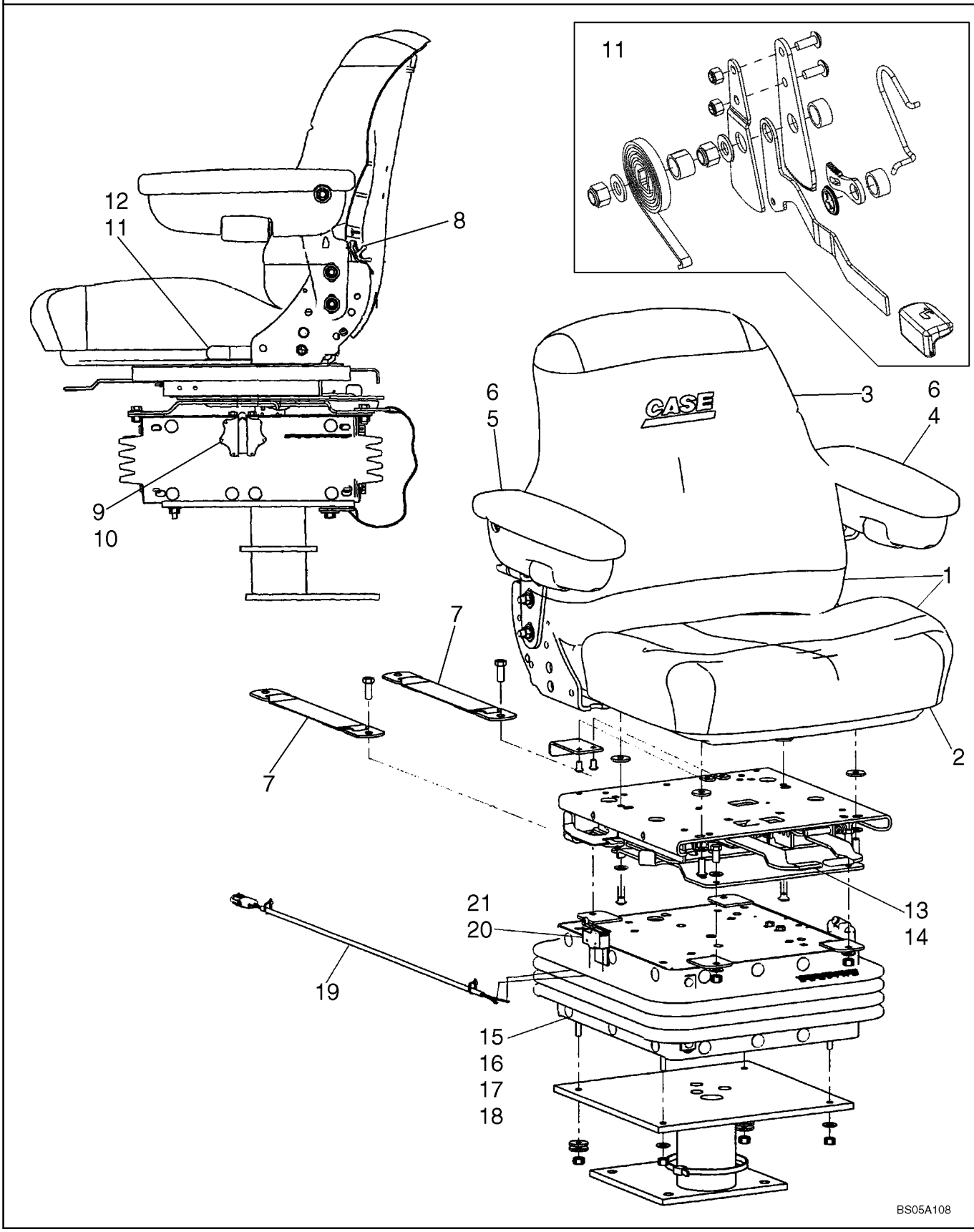

http://www.minnparbackhoeparts.com/

SIÈGE, SUSPENSION MÉCANIQUE (SEARS)

REF	FN	PART NUMBER	YR/SN	QTY	DESCRIPTION
		87308143		1	SUPPORT DE SIÈGE Upper Housing, Boxed
		1977725C1		1	REGLETTE Kit, Bearing, Slider Block; Includes (4) Tube Bearings, (1) Ride Indicator, (1) A45512 Slider Block, (1) A45515 Slider Block, (1) A45516 Slider Block, (1) NSS Slider Block
13		87308131		1	SIEGE, ACCESSOIRES Swivel Assembly
14		87308132		1	ROULEMENT Kit, Swivel Bearing; Includes (1) Bolt, (8) Ball Bearings, (1) Clip, (1) Nut, (1) Cotter Pin, (1) Plastic Washer, (1) Ball Retainer
15		87308141		1	SUPPORT DE SIÈGE Kit, Suspension Assembly, Boxed
16		87308144		1	SUPPORT DE SIÈGE Suspension Arm, Boxed
17		87308146		1	SIEGE, ACCESSOIRES Kit, Spring, Suspension
18		87308147		1	SIEGE, ACCESSOIRES Kit, Boot, Suspension, Boxed; Includes (1) Boot, (26) Buttons
		87308148		1	SIEGE, ACCESSOIRES Kit, Shock Absorber, Boxed; Includes (1) Shock Absorber, (2) Bushings
		51200906		1	PATTE FIXATION Shaft, Suspension
		112884A1		2	ARBRE Bearing Shaft Weldment, Boxed
		A45504		1	RONDELLE Spring, Square, With Weldnut
		A45505		1	PIGNON Large Gear and Shaft Weldment
		A45513		1	PIGNON Gear and Shaft Weldment
		A45054		2	PARE-CHOCS Rubber, Black
		87308142		1	SUPPORT DE SIÈGE Lower Housing, Boxed
19		87308149		1	FAISCEAU COMPLET
20		87308150		1	CONTACTEUR Seat
21		87308151		1	SIEGE, ACCESSOIRES Kit, Switch and Actuator Lever; Includes Switch, Actuator, (4) Screws, (2) Lock Washers, (2) Nuts

http://www.minnparbackhoeparts.com/

09-50		p1	01/05

SIÈGE, SUSPENSION PNEUMATIQUE (SEARS)

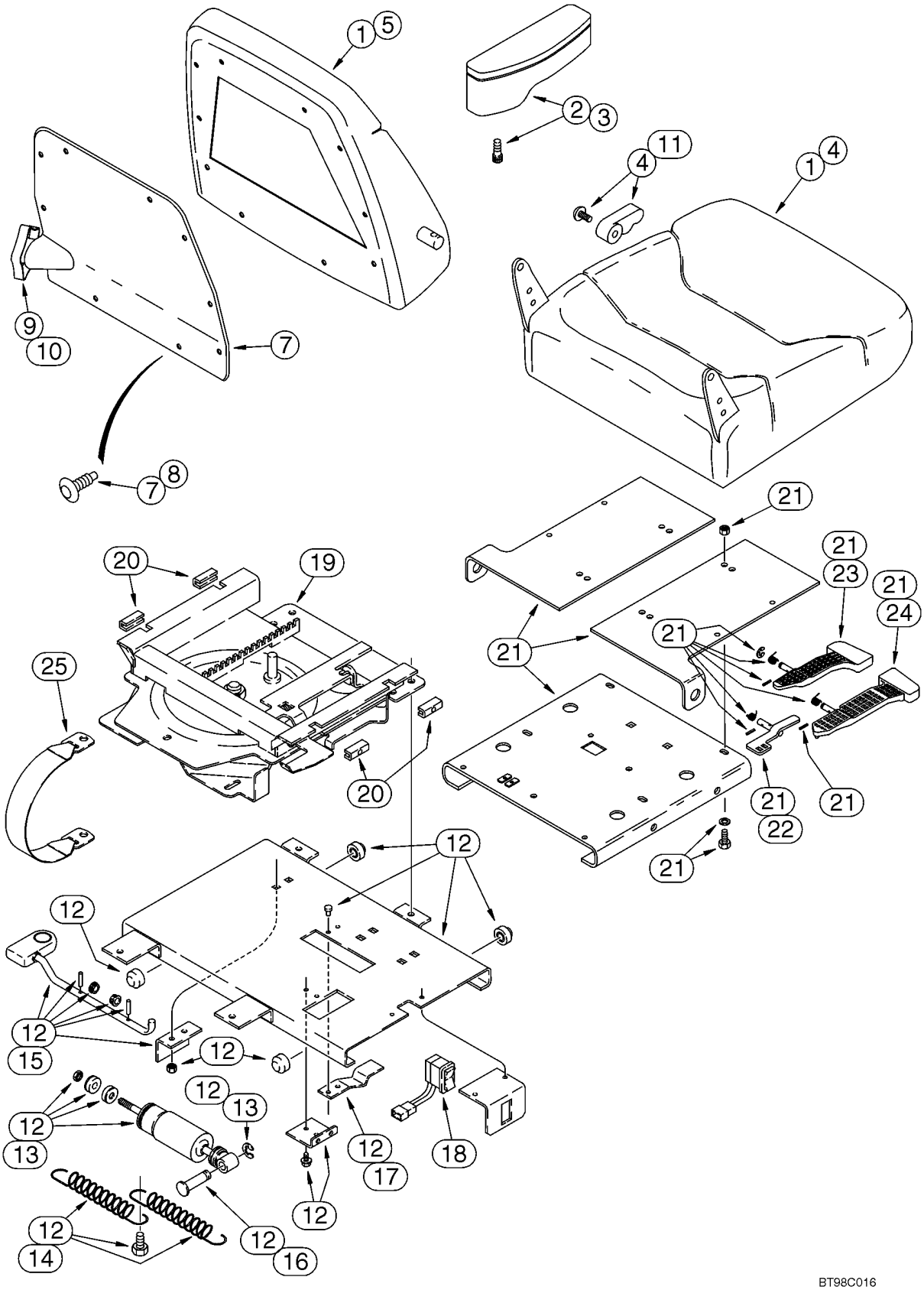

http://www.minnparbackhoeparts.com/

SIÈGE, SUSPENSION PNEUMATIQUE (SEARS)

REF	FN	PART NUMBER	YR/SN	QTY	DESCRIPTION
		121414A1		1	FUSIBLE 20 amp, Not Illustrated
		604-12030		4	BOULON M12 x 30
		896-15012		4	RONDELLE 13,5 x 28 x 4 mm
		397137A1		1	SIEGE (ASSEMBLE) Air Suspension Seat, Cloth, With Armrests, Incl. Ref 1 - 25; Also Includes Parts On Figure 09-51
1		400981A1		1	POCHETTE Seat Cushion and Backrest, Includes Seat, Backrest, Backrest Cover and Hardware
2		300659A1		1	POCHETTE Armrest, Right-Hand, Includes Armrest Knob and Shaft, Groove Pin, Pivot Stud and Screw
3		300661A1		1	POCHETTE Armrest, Left-Hand, Includes Armrest Knob and Shaft, Groove Pin, Pivot Stud and Screw
4		400837A1		1	POCHETTE Seat Cushion, With Frame, Includes (5) Clips, (18) Rings, (1) Screw and Recliner Handle
5		400838A1		1	POCHETTE Backrest Cushion, With Frame, Includes (23) Rings, Lumbar, (2) Screws and (2) Clips
6		176091A1		1	COLIS POUR RECHANGE Package of 48 Rings For Cushions, Not Illustrated
7		300664A1		1	POCHETTE Backrest Cover and Retainers, Incl. Ref 8
8		1999693C1		1	POCHETTE Clip, Package of 14
9		300665A1		1	POCHETTE Lumbar, With Knob
10		300667A1		1	PLAQUE Lumbar Knob, Includes Knob, Actuator and (2) Screws
11		1987212C1		1	COLIS Seat Cushion Back Tilt Knob, Includes Knob, Recliner Handle and (1) Screw
12		300670A1		1	POCHETTE Lateral Isolator Assy, Incl. Ref 13 - 17
13		1987219C2		1	LOT DE PIECES Lateral Isolator Shock, Includes Shock Absorber, (1) Bearing, (2) Bushings, (1) Nut, (2) Washers, (1) Spacer, (1) Ring
14		1987290C1		1	LOT DE PIECES Spring, Includes (2) Springs, (1) Bolt
15		259054A1		1	LOT DE PIECES Lock, Includes Latch Rod, Bracket, (2) Bearings, Knob, (2) Roll Pins
16		1344025C1		1	AXE, GROS Pivot
17		1344026C1		1	RESSORT

http://www.minnparbackhoeparts.com/

09-50		p2	01/05

SIÈGE, SUSPENSION PNEUMATIQUE (SEARS)

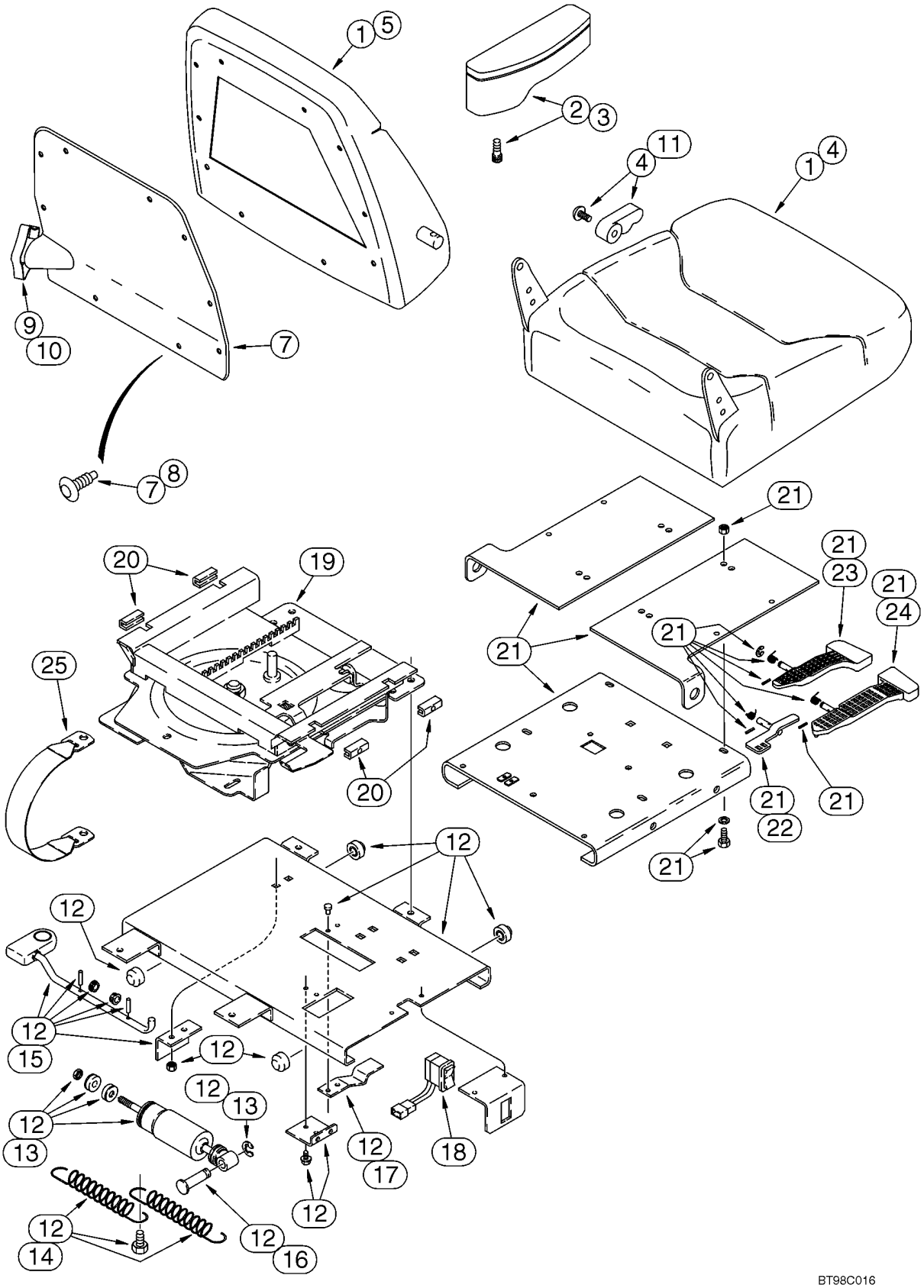

http://www.minnparbackhoeparts.com/

SIÈGE, SUSPENSION PNEUMATIQUE (SEARS)

REF	FN	PART NUMBER	YR/SN	QTY	DESCRIPTION
18		300672A1		1	CONTACTEUR Rocker, Height Adjustment
		300674A1		1	FAISCEAU Swivel Switch, Not Illustrated
19		300675A1		1	POCHETTE Slide/Swivel Assy, Incl. Ref 21
20		300680A1		1	POCHETTE Slide Blocks, Includes (2) Adjustable Slider Blocks, (2) Stationary Slider Blocks, (2) Setscrews
21		300677A1		1	POCHETTE Upper Slide Plate Assy, Includes Upper Slide Plate, Slide and Swivel Levers, (3) Springs, (3) Roll Pins, (3) E-Rings and Slide Latch, Incl. Ref 22 - 24
22		300679A1		1	GLISSIÈRE Latch
23		300681A1		1	LEVIER DE COMMANDE Slide
24		300683A1		1	LEVIER Swivel
25		300684A1		1	CEINTURE DE SECURITE Tether

http://www.minnparbackhoeparts.com/

09-51		p1	01/05

BASE DE SIÈGE ET SUSPENSION, SUSPENSION PNEUMATIQUE (SEARS)

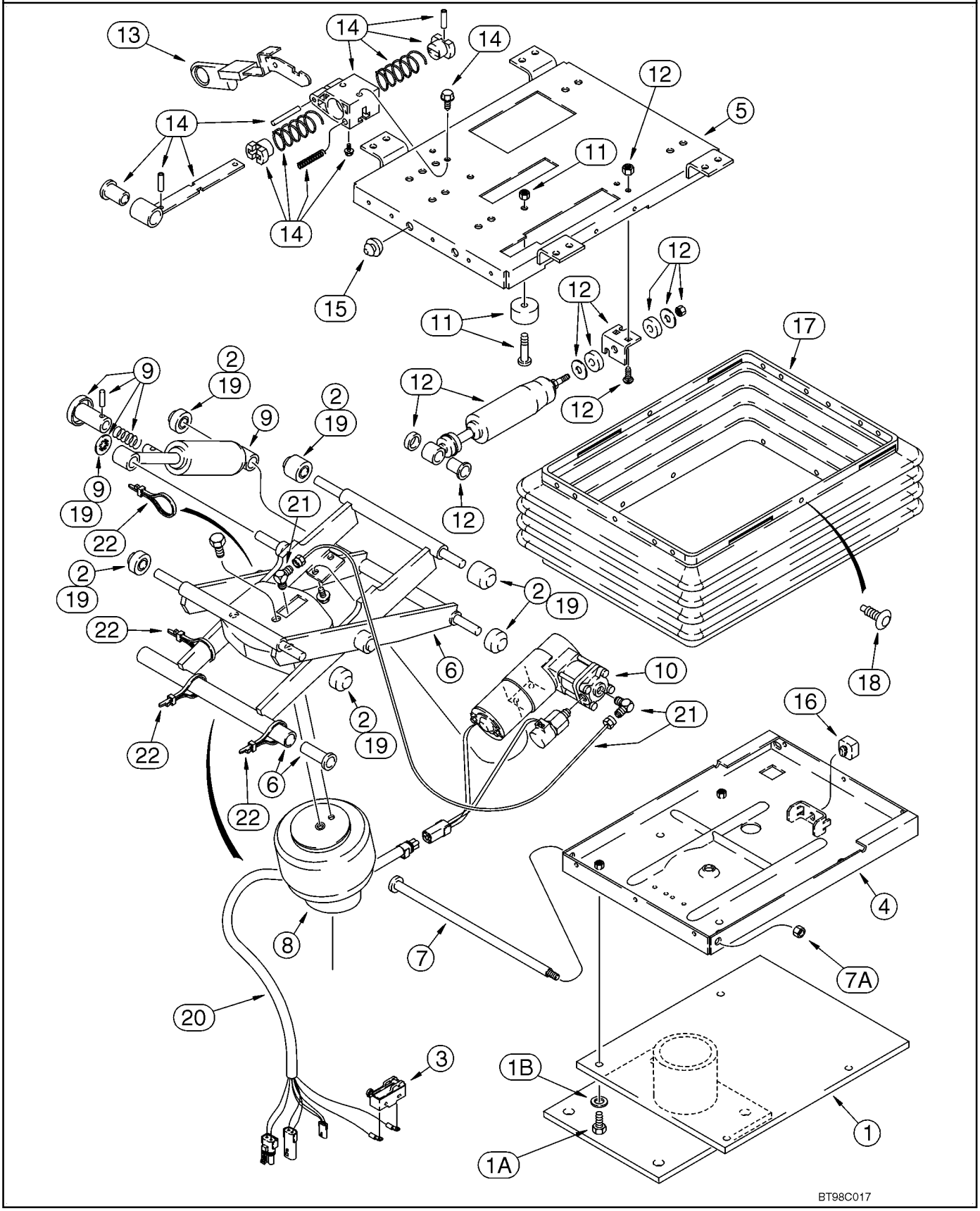

http://www.minnparbackhoeparts.com/

BASE DE SIÈGE ET SUSPENSION, SUSPENSION PNEUMATIQUE (SEARS)

REF	FN	PART NUMBER	YR/SN	QTY	DESCRIPTION
		397137A1		1	SIEGE (ASSEMBLE) Air Suspension Seat, Cloth, With Armrests, Incl. Ref 1 - 22; Also Includes Parts On Figure 09-50
1		300669A1		1	SOCLE Support, Base
1A		614-8025		4	BOULON M8 x 25
1B		NSS		2	NON FOURNI SEPAREMENT Washer
		300685A1		1	POCHETTE Air Suspension Assembly, Includes Parts From Upper To Lower Housing Plates, Incl. Ref 2 - 16, 18 - 22, Includes all items shown except for the boot and pedestal, Ref 1 and 17
2		135512A3		1	COLIS Roller Bearing, Isolator, Includes (4) Narrow Rollers, (2) Wide Rollers, (1) Bushing, (1) Spacer, (1) Retaining Ring, Isolator
3		D137363		1	CONTACTEUR Contact, Swivel Limit Switch
4		226560A1		1	CARTER Lower, With Upper Stop Bracket
5		300688A1		1	CARTER Upper
6		132862A1		1	BALANCÍN Arm, Suspension
7		143786A1		1	ARBRE
7A		230-4216		1	ECROU 3/8
8		197793A1		1	RESSORT Air Spring, Includes Air Spring, J-Clip and (3) Ties
9		132866A1		1	SILENTBLOC Kit, Includes Shock, (2) Bearings, Fastener, Actuator Arm, Roll Pin, Bracket and Retaining Ring
		132864A1		1	COMPRESSEUR Kit, Compressor/Valve, Includes Compressor, Valve, Mount, Air Line Tubing, (2) Screws, (2) Sleeves and (2) Nuts, Includes 300689A1, 300690A1
10		300689A1		1	POCHETTE Compressor/Valve
		300690A1		1	PIÈCES DE FIXATION Compressor
11		180593A1		1	KIT DE REVISION Bumper, Includes 231-1444, 340-12520
		231-1444		2	CONTRE-ECROU 1/4
		340-12520		2	VIS 1/4 x 1-1/4
12		300691A1		1	LOT-PR Fore/Aft Isolator Latch, Includes Shock Absorber, (3) Nuts, (2) Washers, (2) Grommets, (1) Bearing and (15) Clips

http://www.minnparbackhoeparts.com/

09-51		p2	01/05

BASE DE SIÈGE ET SUSPENSION, SUSPENSION PNEUMATIQUE (SEARS)

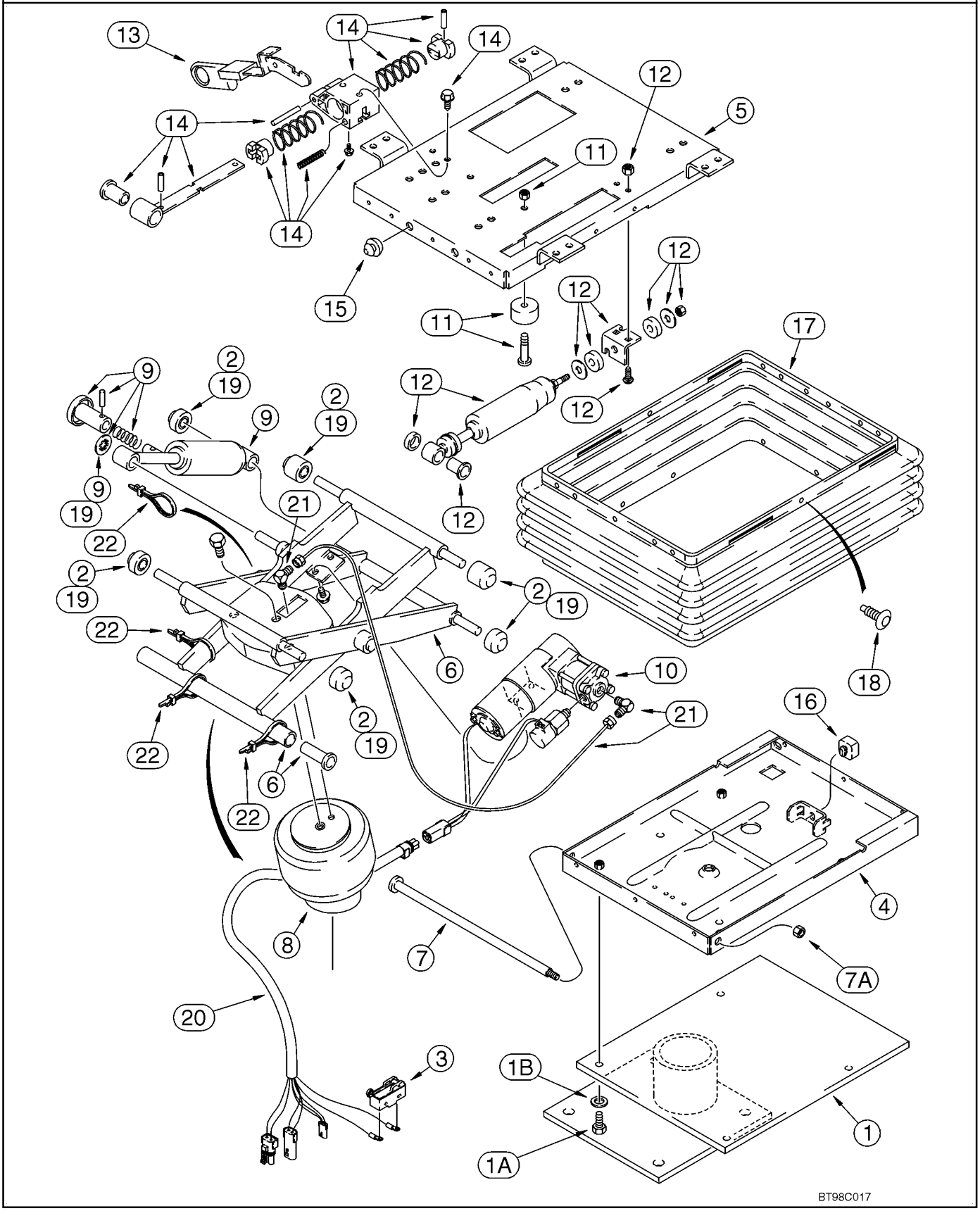

http://www.minnparbackhoeparts.com/

BASE DE SIÈGE ET SUSPENSION, SUSPENSION PNEUMATIQUE (SEARS)

REF	FN	PART NUMBER	YR/SN	QTY	DESCRIPTION
13		1981850C1		1	POIGNEE DE MANETTE Knob, Isolator Control, Fore/Aft
14		300692A1		1	LOT-PR Fore/Aft Isolator Latch, Includes Latch Assy and (2) Screws
15		133422A1		2	PARE-CHOCS Rubber
16		A45054		1	PARE-CHOCS Seat
17		133421A1		1	COLIS Boot, With Pins
18		132872A1		1	LOT DE PIECES Boot Pin, Package of 23 Retainers and (3) Dome Nuts
19		180594A3		1	COLIS Rollers and Bearings, Includes (2) Bushings, (6) Rollers, (1) Push Nut, (5) Bearings and (2) Spacers, Includes 131-425 Nut
		131-425		1	ECROU 1/2
20		300896A1		1	FAISCEAU
21		1990548C4		1	COLIS Air Line and Fittings, Includes (2) Elbows, (1) Tee, (2) Adapters, 3.5 Feet Nylon Tubing, (5) Ties and (1) J-Clip, Incl. Ref 22
22		L18337		4	SANGLE 15 in

http://www.minnparbackhoeparts.com/

CABINE - FENETRE, RETROVISEUR ET OUVERTURE

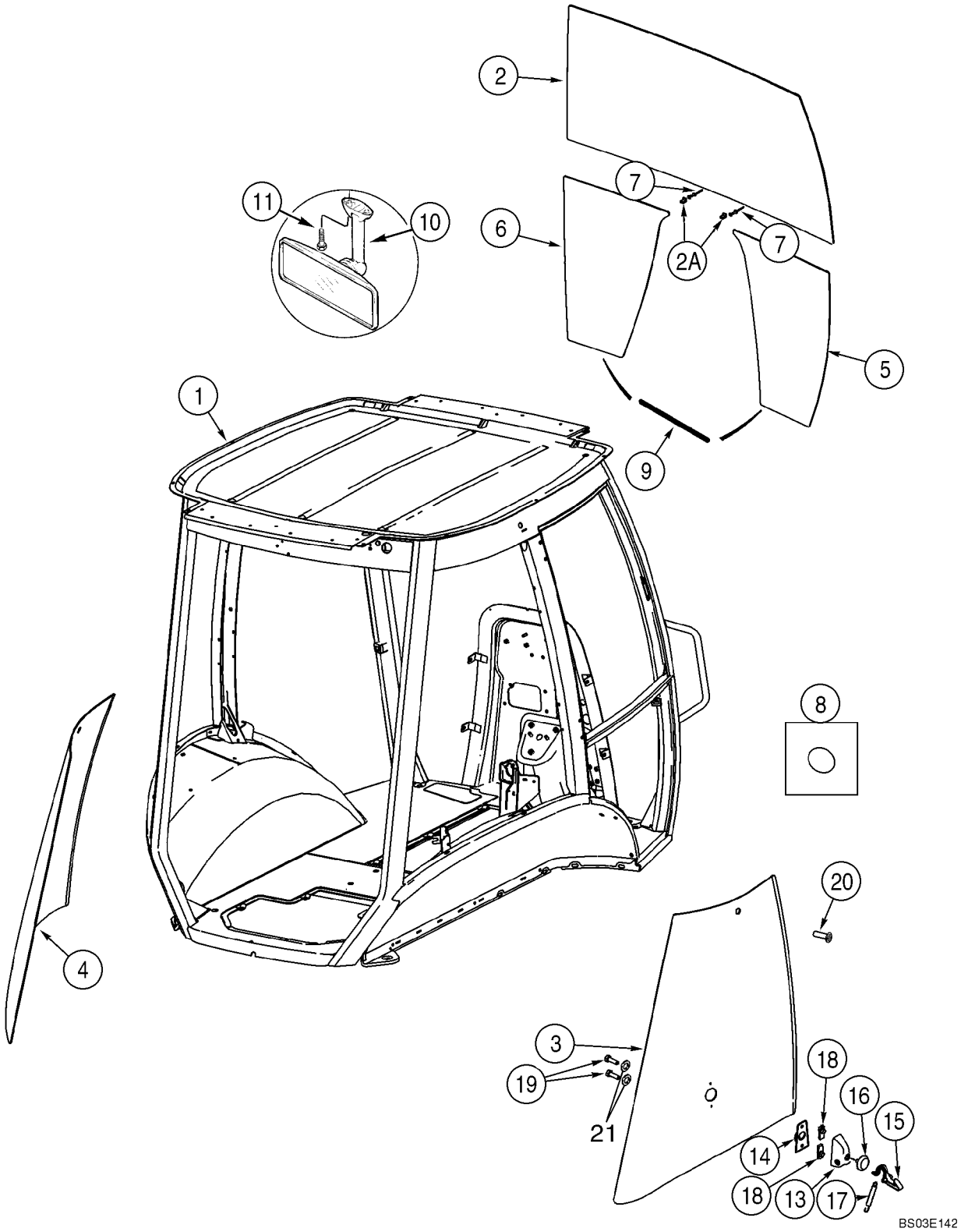

http://www.minnparbackhoeparts.com/

CABINE - FENETRE, RETROVISEUR ET OUVERTURE

REF	FN	PART NUMBER	YR/SN	QTY	DESCRIPTION
1		87443430		1	CABINE 580SM Single Door; Includes Frame, Left-Hand Door, 341746A2 Right-Hand Window on Figure 09-56, All Glass, Front and Rear Wipers and Exterior Lamps; Order From Machinery Price List; Replaces 87434979 Cab/A; No Longer Available, Order 87448272 Cab/A
1		87448272		1	CABINE 580SM Single Door; Includes Frame, Left-Hand Door, 87442204 Right-Hand Window on Figure 09-56A, All Glass, Front and Rear Wipers and Exterior Lamps; Order From Machinery Price List
1		87443432		1	CABINE 580SM+ Single Door; Includes Frame, Left-Hand Door, 341746A2 Right-Hand Window on Figure 09-56, All Glass, Front and Rear Wipers and Exterior Lamps; Order From Machinery Price List; Replaces 87434981 Cab/A; No Longer Available, Order 87448274 Cab/A
1		87448274		1	CABINE 580SM+ Single Door; Includes Frame, Left-Hand Door, 87442204 Right-Hand Window on Figure 09-56A, All Glass, Front and Rear Wipers and Exterior Lamps; Order From Machinery Price List
1		87443431		1	CABINE 580SM Two Door; Includes Frame, Left-Hand Door, 394585A3 Right-Hand Door on Figure 09-54, All Glass, Front and Rear Wipers and Exterior Lamps; Order From Machinery Price List; Replaces 87434980 Cab/A; No Longer Available, Order 87448273 Cab/A
1		87448273		1	CABINE 580SM Two Door; Includes Frame, Left-Hand Door, 87439726 Right-Hand Door on Figure 09-54A, All Glass, Front and Rear Wipers and Exterior Lamps; Order From Machinery Price List

http://www.minnparbackhoeparts.com/

CABINE - FENETRE, RETROVISEUR ET OUVERTURE

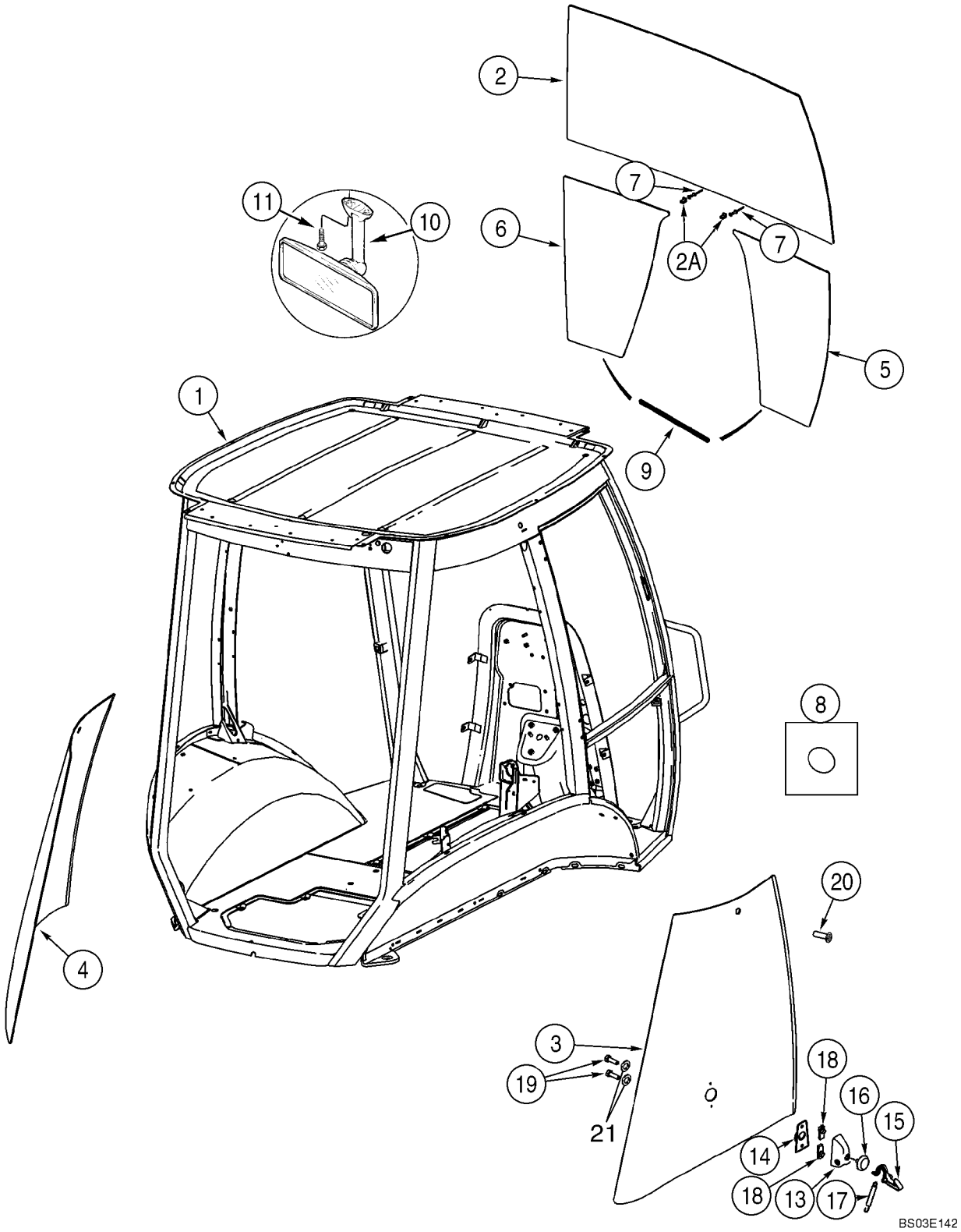

http://www.minnparbackhoeparts.com/

CABINE - FENETRE, RETROVISEUR ET OUVERTURE

REF	FN	PART NUMBER	YR/SN	QTY	DESCRIPTION
1		87443433		1	CABINE 580SM+ Two Door; Includes Frame, Left-Hand Door, 394585A3 Right-Hand Door on Figure 09-54, All Glass, Front and Rear Wipers and Exterior Lamps; Order From Machinery Price List; Replaces 87434982 Cab/A; No Longer Available, Order 87448275 Cab/A
1		87448275		1	CABINE 580SM+ Two Door; Includes Frame, Left-Hand Door, 87439726 Right-Hand Door on Figure 09-54A, All Glass, Front and Rear Wipers and Exterior Lamps; Order From Machinery Price List
2		448607A1		1	PARE-BRISE
2A		279482A1		2	ATTACHE ASSEMBLEE Windshield
3		338425A1		1	FENETRE Right Rear Quarter Panel
4		338424A1		1	FENETRE Left Rear Quarter Panel
5		448609A1		1	PARE-BRISE Lower Right-Hand
6		448608A1		1	PARE-BRISE Lower Left-Hand
7		151-516		2	RIVET
8		391827A1		36	ENTRETOISE
9		395793A1		2	PROFIL PROTECTEUR
10		87406924		1	RÉTROVISEUR Interior
11		286-56520		2	VIS No. 10 x 1-1/4
13		405740A1		2	COUVERCLE
14		405739A1		2	CORPS
15		405738A1		2	LEVIER Hold Open
16		400573A1		2	PASSE-FIL
17		405741A1		2	RESSORT HÉLICOÏDAL Latch Back
18		405742A1		4	ECROU M8
19		400572A1		4	BOULON M8; Nylon
20		400571A2		2	PARE-CHOCS
21		431801A1		4	RONDELLE Black Nylon

http://www.minnparbackhoeparts.com/

09-53		p1	05/05

CABINE - CHASSIS ET COUVERCLES

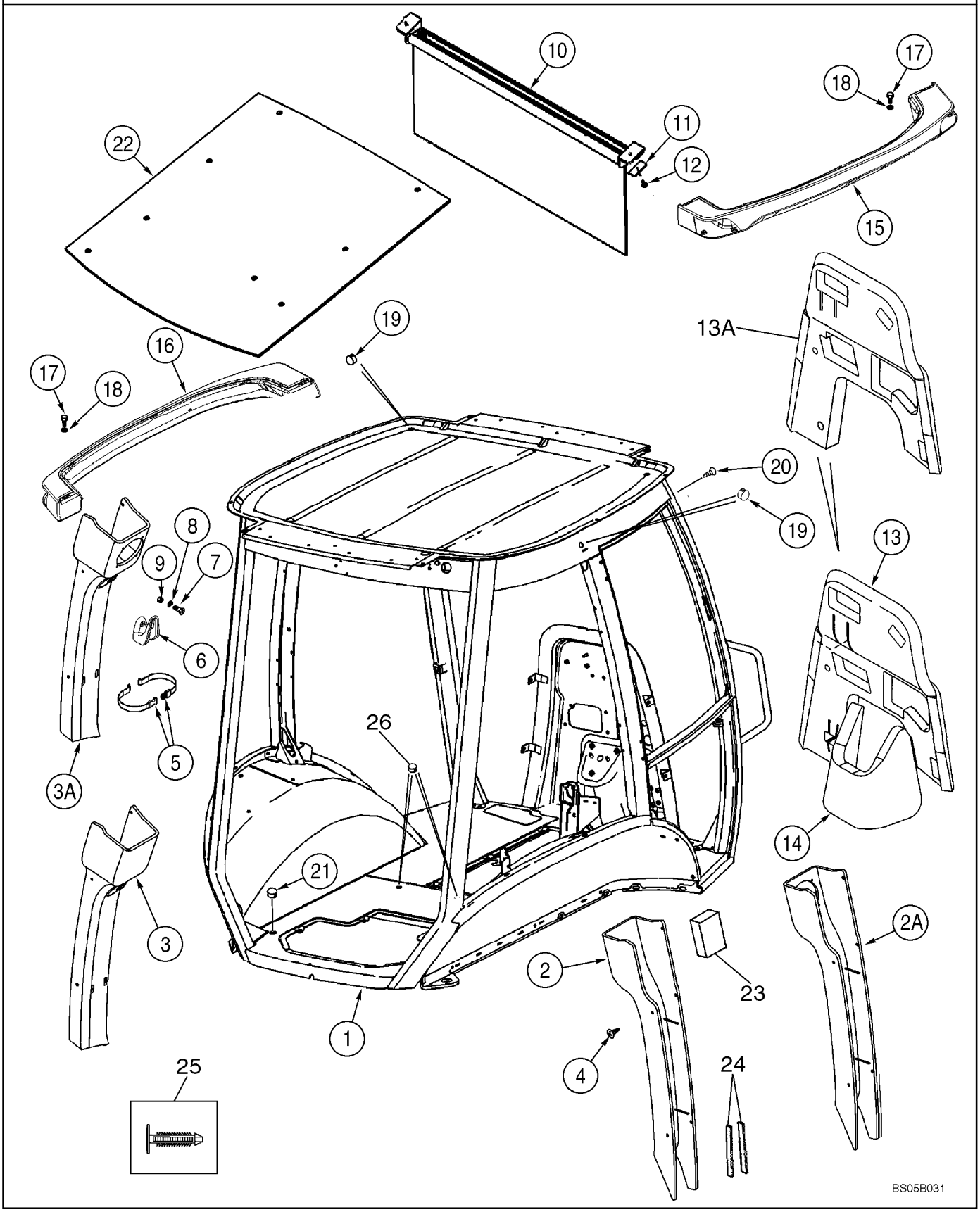

http://www.minnparbackhoeparts.com/

CABINE - CHASSIS ET COUVERCLES

REF	FN	PART NUMBER	YR/SN	QTY	DESCRIPTION
1		87435108		1	CABINE-CHASSIS 580SM Single Door; Replaces 87407908
1		87435110		1	CABINE-CHASSIS 580SM+ Single Door; Replaces 87407910
1		87435109		1	CABINE-CHASSIS 580SM Two Door; Replaces 87407909
1		87435112		1	CABINE-CHASSIS 580SM+ Two Door; Replaces 87407911
2		360267A3		1	COUVERCLE Plastic; Right-Hand Post; Standard Interior
2A		379425A3		1	COUVERCLE Vinyl; With Speaker Holes; Right-Hand Post; Deluxe Interior
3		360266A2		1	COUVERCLE Plastic; Left-Hand Post; Standard Interior
3A		379424A2		1	COUVERCLE Vinyl; With Speaker Holes; Left-Hand Post; Deluxe Interior
4		401949A1		10	ATTACHE
5		378227A1		1	SANGLE Garment Strap
6		114549A1		1	PORTE-MANTEAU
7		87310147		2	VIS M4 x 16, Stainless Steel; Replaces 540-720 Non-Stainless Steel Screw Used On Some Models
8		895-11004		2	RONDELLE 4,3 x 9 x 0,8 mm
9		832-10404		2	ECROU M4
10		364180A1		1	PARE-SOLEIL
11		409618A1		2	PLAQUE 1/4 in Mounting Hole
12		396516A1		3	POINTEAU No. 10 x 1; With Washer; Phillips
13		87440282		1	RECOUVREMENT Firewall; If Used
13A		87451021		1	RECOUVREMENT Firewall; If Used
14		87440283		1	RECOUVREMENT Firewall, Lower
15		360247A3		1	FEU (ASSEMBLE) Right-Hand
16		360246A3		1	FEU (ASSEMBLE) Left-Hand
17		394863A1		10	VIS M6 x 20
18		395387A1		10	RONDELLE 6.4 ID; Nylon
19		395388A1		3	BOUCHON
		353-415		1	BOUCHON 1-1/2 in; Cab Roof; Models Without Radio Antenna

http://www.minnparbackhoeparts.com/

09-53		p2	05/05

CABINE - CHASSIS ET COUVERCLES

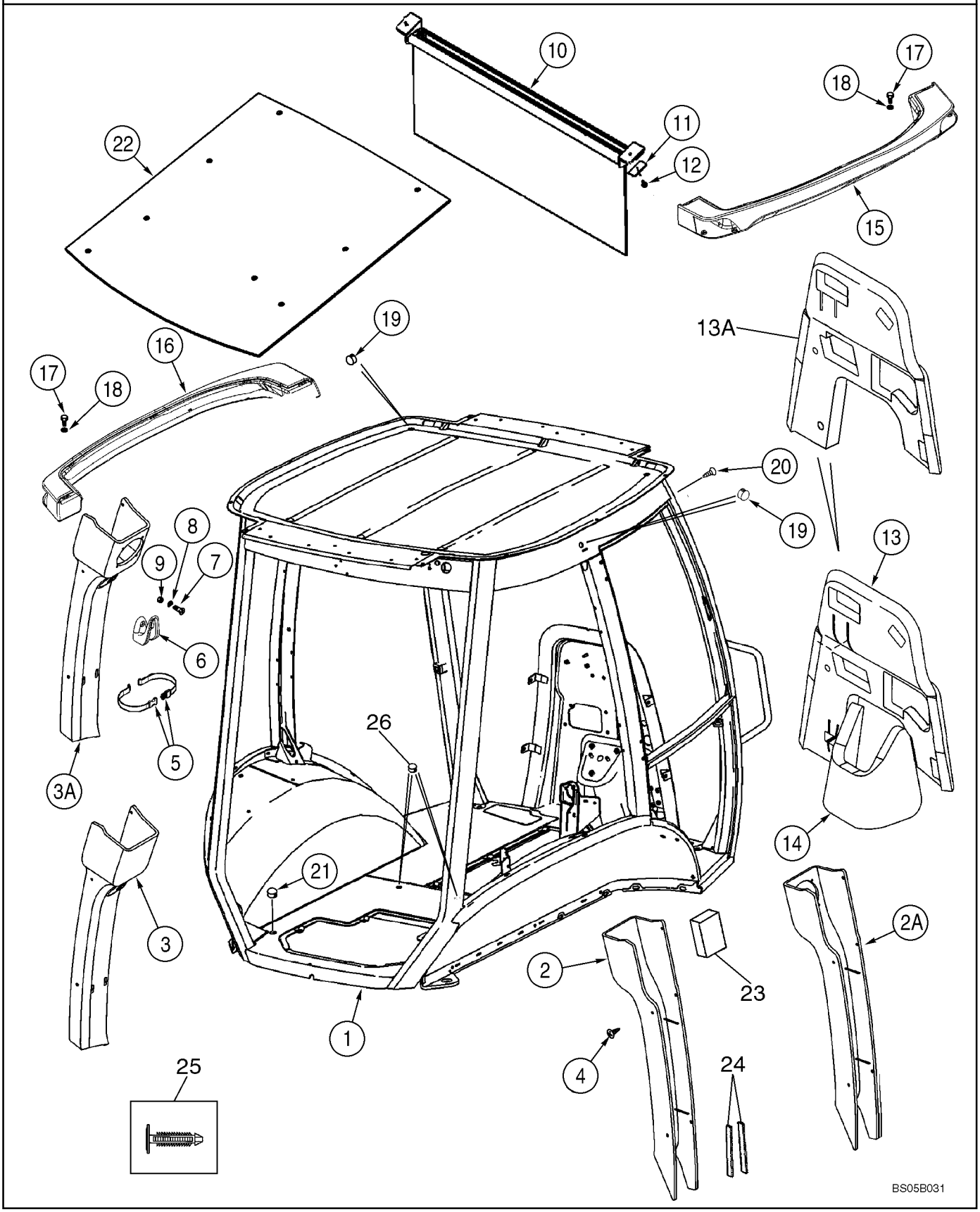

http://www.minnparbackhoeparts.com/

CABINE - CHASSIS ET COUVERCLES

REF	FN	PART NUMBER	YR/SN	QTY	DESCRIPTION
		353-410		1	BOUCHON 7/8; Upper Windshield Frame; Models Without Radio Antenna
		353-407		1	BOUCHON 11/16; Rear Filter Plate On Models Without Windshield Washer
		353-425		2	BOUCHON 7/16 in dia
		353-421		1	BOUCHON 3/16
		353-405		1	BOUCHON 9/16
		353-408		1	BOUCHON 3/4
20		402610A1		8	ATTACHE Cab Frame; Models Without Exterior Mirrors
21		382298A1		2	BOUCHON
22		368809A1		1	ISOLANT Insulation
23		412285A1		1	RUBAN Foam; Adhesive Back; B-Post
24		414939A1		2	BANDE D'ETANCHEITE Adhesive Back; B Post
25		411399A1		1	ATTACHE For 1/4 in dia Hole; Christmas Tree Clip
26		87301515		2	BOUCHON PLASTIQUE Flat Top, Black Glossy, 1-3/16 Hole Size; Brake Bleeder

http://www.minnparbackhoeparts.com/

09-54		p1	04/05

CABINE - PORTES, SI UTILISE (VOIR VITRE / CHARNIERE; REF 4, 27, 29)

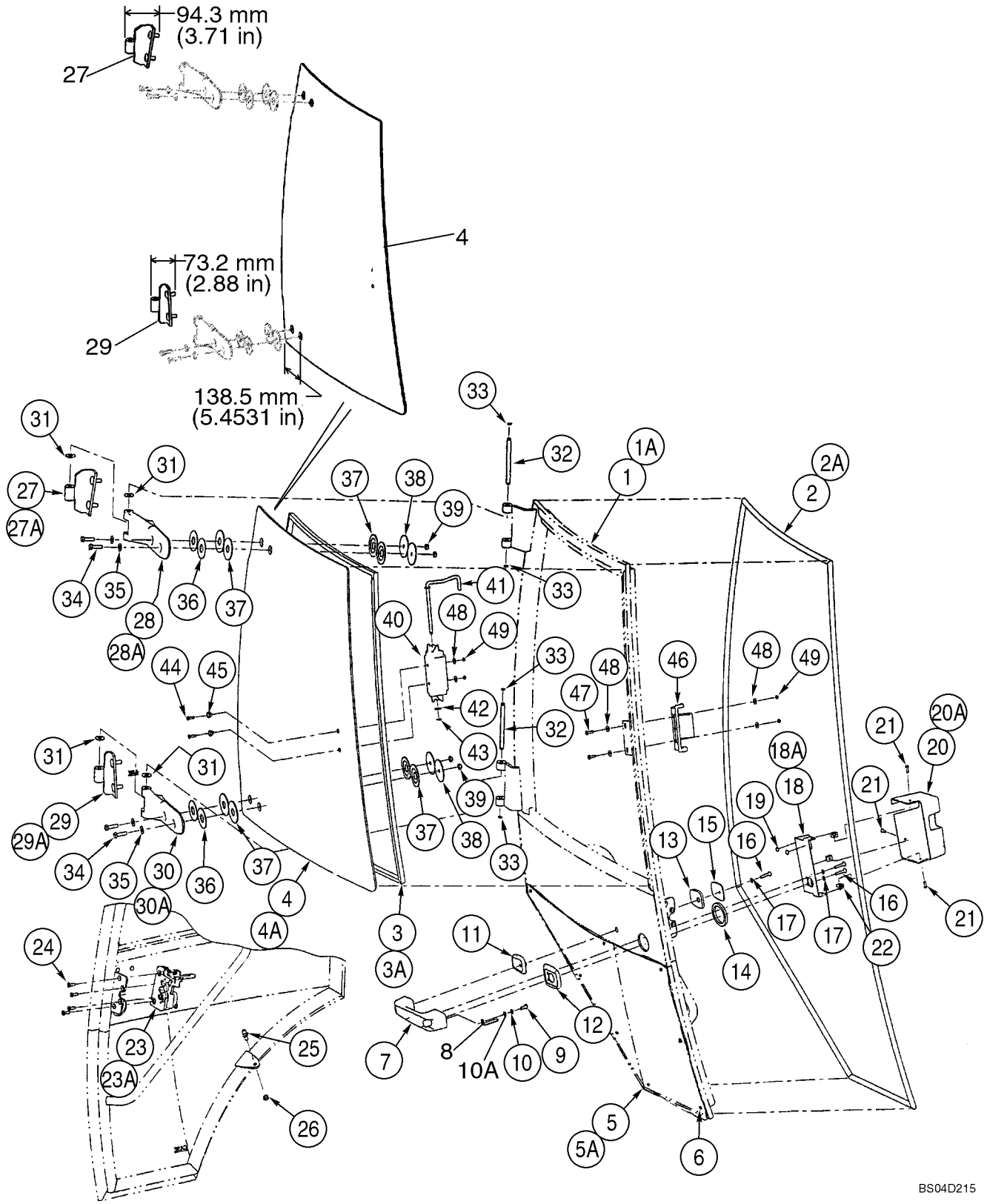

http://www.minnparbackhoeparts.com/

CABINE - PORTES, SI UTILISE (VOIR VITRE / CHARNIERE; REF 4, 27, 29)

REF	FN	PART NUMBER	YR/SN	QTY	DESCRIPTION
		REF			NOTICE Left-Hand and Right-Hand Cab Doors; Left-Hand Door Not Illustrated
		394585A3		1	PORTE CABINE, DROITE Right-Hand Door; Incl. Ref 1 - 49, Except Where Noted For Left-Hand Door
		341743A3		1	PORTE CABINE, GAUCHE Left-Hand Door; Incl. Ref 1A - 49, Except Where Noted For Right-Hand Door
1		NSS		1	NON FOURNI SEPAREMENT Frame; Right-Hand Door
1A		87443691		1	BATI (ASSEMBLE) Frame; Left-Hand Door
2		394707A1		1	PROFILE CAOUTCHOUC Right-Hand Door
2A		390838A1		1	PROFILE CAOUTCHOUC Left-Hand Door
3		394708A1		1	JOINT-DE-GLACE Window; Upper; Right-Hand Door
3A		391850A1		1	JOINT-DE-GLACE Window; Upper; Left-Hand Door
4		394700A1		1	VITRE Upper; Right-Hand Door; Distance From Edge to Second Hole 138.5 mm (5-29/64 in)
4A		338429A1		1	VITRE Upper; Left-Hand Door
5		338427A1		1	VITRE DE CABINE Lower; Right-Hand Door
5A		338426A1		1	VITRE DE CABINE Lower; Left-Hand Door
6		391827A1		4	ENTRETOISE 4 Per Door; Cut Bumpers In Half For 8 Locations
7		60-7083T1		1	POIGNÉE Outer
8		442718A1		1	BOUTON Release
9		440-12510		1	VIS 1/4 x 5/8
10		492-11025		1	RONDELLE FREIN 1/4"
10A		895-11006		1	RONDELLE 6,6 x 12,5 x 1,6 mm
11		315276A1		1	ENCADREMENT Small
12		315273A1		1	ENCADREMENT Large
13		391847A1		1	JOINT Small
14		391838A1		1	JOINT Large
15		391848A1		1	PLAQUE DORSALE
16		393203A1		3	VIS
17		393202A1		3	RONDELLE 6 mm
18		394704A1		1	PATTE FIXATION Cover Mounting; Right-Hand Door
18A		391841A1		1	PATTE FIXATION Cover Mounting; Left-Hand Door
19		391827A1		2	ENTRETOISE
20		394705A1		1	COUVERCLE Latch; Right-Hand Door

http://www.minnparbackhoeparts.com/

09-54		p2	04/05

CABINE - PORTES, SI UTILISE (VOIR VITRE / CHARNIERE; REF 4, 27, 29)

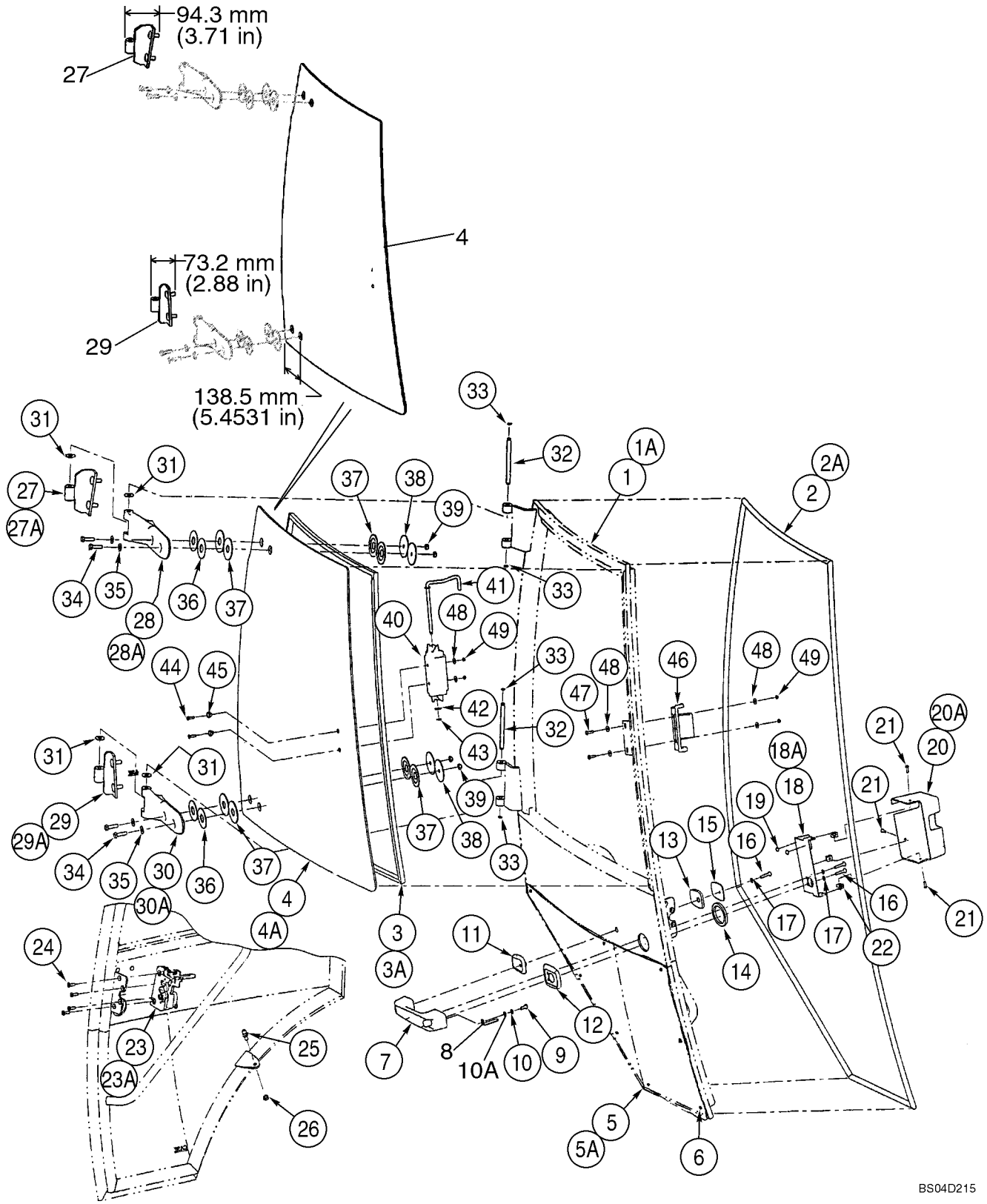

http://www.minnparbackhoeparts.com/

CABINE - PORTES, SI UTILISE (VOIR VITRE / CHARNIERE; REF 4, 27, 29)

REF	FN	PART NUMBER	YR/SN	QTY	DESCRIPTION
20A		391842A1		1	COUVERCLE Latch; Left-Hand Door
21		390-100		3	VIS
22		393209A1		3	DOUILLE DE CENTRAGE
23		382777A1		1	LOQUET Right-Hand Door
23A		382775A1		1	LOQUET Left-Hand Door
24		569-4		4	VIS
25		3234063R1		1	ROTULE
26		832-10408		1	ECROU M8
27		394701A1		1	CHARNIERE Upper; Right-Hand Door
27A		390840A1		1	CHARNIERE Upper; Left-Hand Door
28		364134A2		1	CHARNIERE Plastic; Upper; Right-Hand Door
28A		364132A2		1	CHARNIERE Plastic; Upper; Left-Hand Door
29		394702A1		1	CHARNIERE Lower; Right-Hand Door
29A		390841A1		1	CHARNIERE Lower; Left-Hand Door
30		364135A2		1	CHARNIERE Plastic; Lower; Right-Hand Door
30A		364133A2		1	CHARNIERE Plastic; Lower; Left-Hand Door
31		391845A1		4	RONDELLE Nylon
32		391843A1		2	AXE
33		442773A1		4	CIRCLIP
34		514-633		4	VIS M8 x 30
35		895-30107		4	RONDELLE
36		376334A1		4	RONDELLE 55 mm OD; Yellow
37		376336A1		8	RONDELLE ELASTIQUE Rubber
38		376332A1		4	RONDELLE 60 mm OD; Black
39		832-10508		4	ECROU M8
40		368147A1		1	POIGNÉE Slam Latch
41		391849A1		1	TRINGLE
42		906086R1		1	RONDELLE 8.4 x 16 x 1.6 thk
43		100-39001		1	ANNEAU
44		140-104		2	VIS No. 8 x 3/4
45		F64198		2	BAGUE Nylon
46		368146A1		1	LOQUET Slam Latch
47		142-103		2	VIS
48		195-81023		6	RONDELLE 1/4 x 9/16 x 3/64
49		F45165		4	ECROU-DE-SECURITE No. 10

http://www.minnparbackhoeparts.com/

09-54A		p1	04/05

CABINE - PORTES, SI UTILISE (VOIR VITRE / CHARNIERE; REF 4, 27, 29)

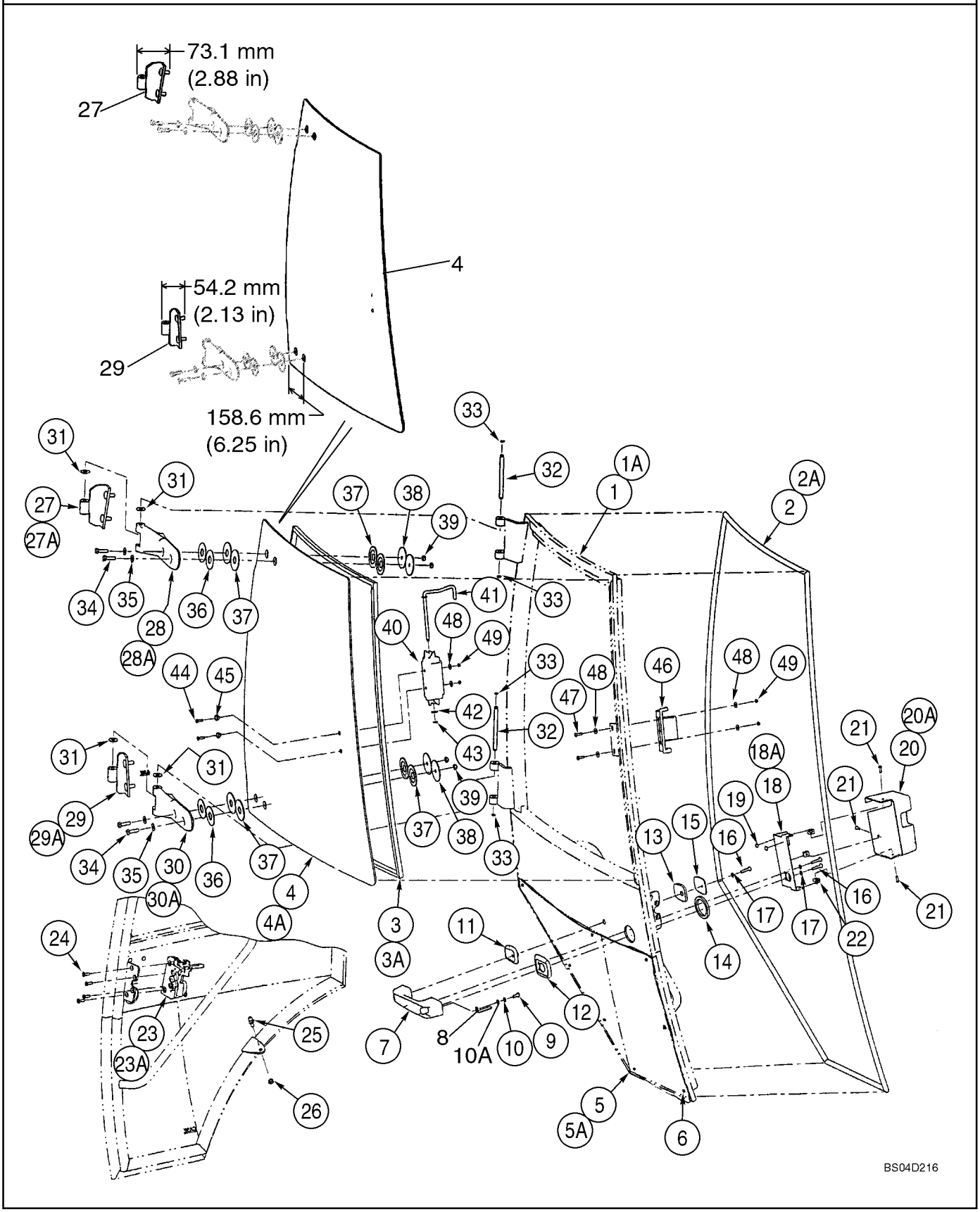

http://www.minnparbackhoeparts.com/

CABINE - PORTES, SI UTILISE (VOIR VITRE / CHARNIERE; REF 4, 27, 29)

REF	FN	PART NUMBER	YR/SN	QTY	DESCRIPTION
		REF			NOTICE Left-Hand and Right-Hand Cab Doors; Left-Hand Door Not Illustrated
		87439726		1	PORTE CABINE, DROITE Right-Hand Door; Incl. Ref 1 - 49, Except Where Noted For Left-Hand Door
		341743A3		1	PORTE CABINE, GAUCHE Left-Hand Door; Incl. Ref 1A - 49, Except Where Noted For Right-Hand Door
1		NSS		1	NON FOURNI SEPAREMENT Frame; Right-Hand Door
1A		87443691		1	BATI (ASSEMBLE) Frame; Left-Hand Door
2		394707A1		1	PROFILE CAOUTCHOUC Right-Hand Door
2A		390838A1		1	PROFILE CAOUTCHOUC Left-Hand Door
3		394708A1		1	JOINT-DE-GLACE Window; Upper; Right-Hand Door
3A		391850A1		1	JOINT-DE-GLACE Window; Upper; Left-Hand Door
		87448199		1	FENETRE (ASSEMBLEE) SERVICE KIT, Right-Hand Door Window and Hinges; Includes Ref 4, 27, 29, Plus Instructions
4		87439725		1	VITRE Upper; Right-Hand Door; Distance From Edge to Second Hole 158.6 mm (6-1/4 in)
4A		338429A1		1	VITRE Upper; Left-Hand Door
5		338427A1		1	VITRE DE CABINE Lower; Right-Hand Door
5A		338426A1		1	VITRE DE CABINE Lower; Left-Hand Door
6		391827A1		4	ENTRETOISE 4 Per Door; Cut Bumpers In Half For 8 Locations
7		60-7083T1		1	POIGNÉE Outer
8		442718A1		1	BOUTON Release
9		440-12510		1	VIS 1/4 x 5/8
10		492-11025		1	RONDELLE FREIN 1/4"
10A		895-11006		1	RONDELLE 6,6 x 12,5 x 1,6 mm
11		315276A1		1	ENCADREMENT Small
12		315273A1		1	ENCADREMENT Large
13		391847A1		1	JOINT Small
14		391838A1		1	JOINT Large
15		391848A1		1	PLAQUE DORSALE
16		393203A1		3	VIS
17		393202A1		3	RONDELLE 6 mm
18		394704A1		1	PATTE FIXATION Cover Mounting; Right-Hand Door

http://www.minnparbackhoeparts.com/

09-54A		p2	04/05

CABINE - PORTES, SI UTILISE (VOIR VITRE / CHARNIERE; REF 4, 27, 29)

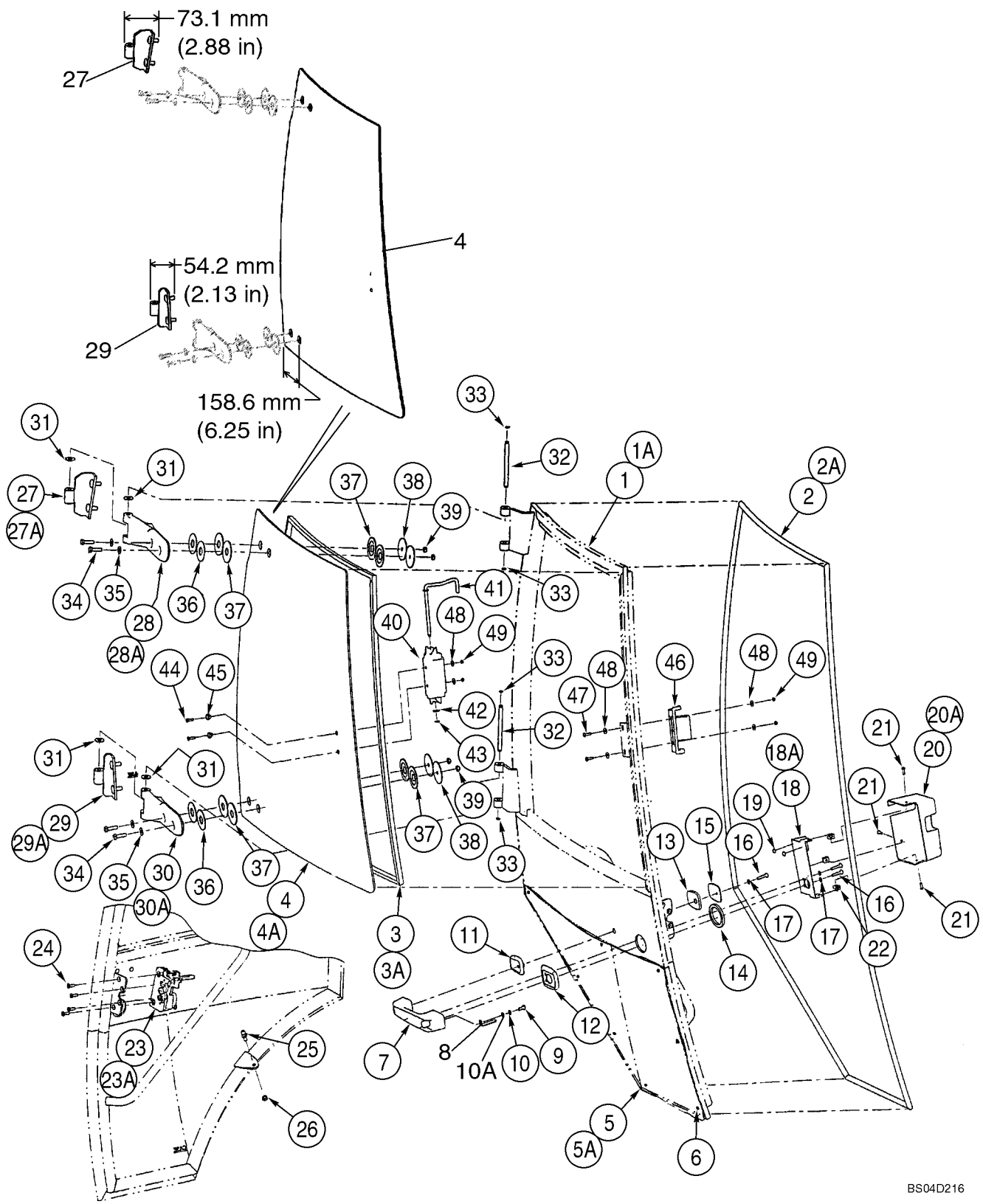

http://www.minnparbackhoeparts.com/

CABINE - PORTES, SI UTILISE (VOIR VITRE / CHARNIERE; REF 4, 27, 29)

REF	FN	PART NUMBER	YR/SN	QTY	DESCRIPTION
18A		391841A1		1	PATTE FIXATION Cover Mounting; Left-Hand Door
19		391827A1		2	ENTRETOISE
20		394705A1		1	COUVERCLE Latch; Right-Hand Door
20A		391842A1		1	COUVERCLE Latch; Left-Hand Door
21		390-100		3	VIS
22		393209A1		3	DOUILLE DE CENTRAGE
23		382777A1		1	LOQUET Right-Hand Door
23A		382775A1		1	LOQUET Left-Hand Door
24		569-4		4	VIS
25		3234063R1		1	ROTULE
26		832-10408		1	ECROU M8
27		87439722		1	CHARNIERE Upper; Right-Hand Door
27A		390840A1		1	CHARNIERE Upper; Left-Hand Door
28		364134A2		1	CHARNIERE Plastic; Upper; Right-Hand Door
28A		364132A2		1	CHARNIERE Plastic; Upper; Left-Hand Door
29		87439723		1	CHARNIERE Lower; Right-Hand Door
29A		390841A1		1	CHARNIERE Lower; Left-Hand Door
30		364135A2		1	CHARNIERE Plastic; Lower; Right-Hand Door
30A		364133A2		1	CHARNIERE Plastic; Lower; Left-Hand Door
31		391845A1		4	RONDELLE Nylon
32		391843A1		2	AXE
33		442773A1		4	CIRCLIP
34		514-633		4	VIS M8 x 30
35		895-30107		4	RONDELLE
36		376334A1		4	RONDELLE 55 mm OD; Yellow
37		376336A1		8	RONDELLE ELASTIQUE Rubber
38		376332A1		4	RONDELLE 60 mm OD; Black
39		832-10508		4	ECROU M8
40		368147A1		1	POIGNÉE Slam Latch
41		391849A1		1	TRINGLE
42		906086R1		1	RONDELLE 8.4 x 16 x 1.6 thk
43		100-39001		1	ANNEAU
44		140-104		2	VIS No. 8 x 3/4
45		F64198		2	BAGUE Nylon
46		368146A1		1	LOQUET Slam Latch
47		142-103		2	VIS
48		195-81023		6	RONDELLE 1/4 x 9/16 x 3/64

http://www.minnparbackhoeparts.com/

09-54A		p3	04/05

CABINE - PORTES, SI UTILISE (VOIR VITRE / CHARNIERE; REF 4, 27, 29)

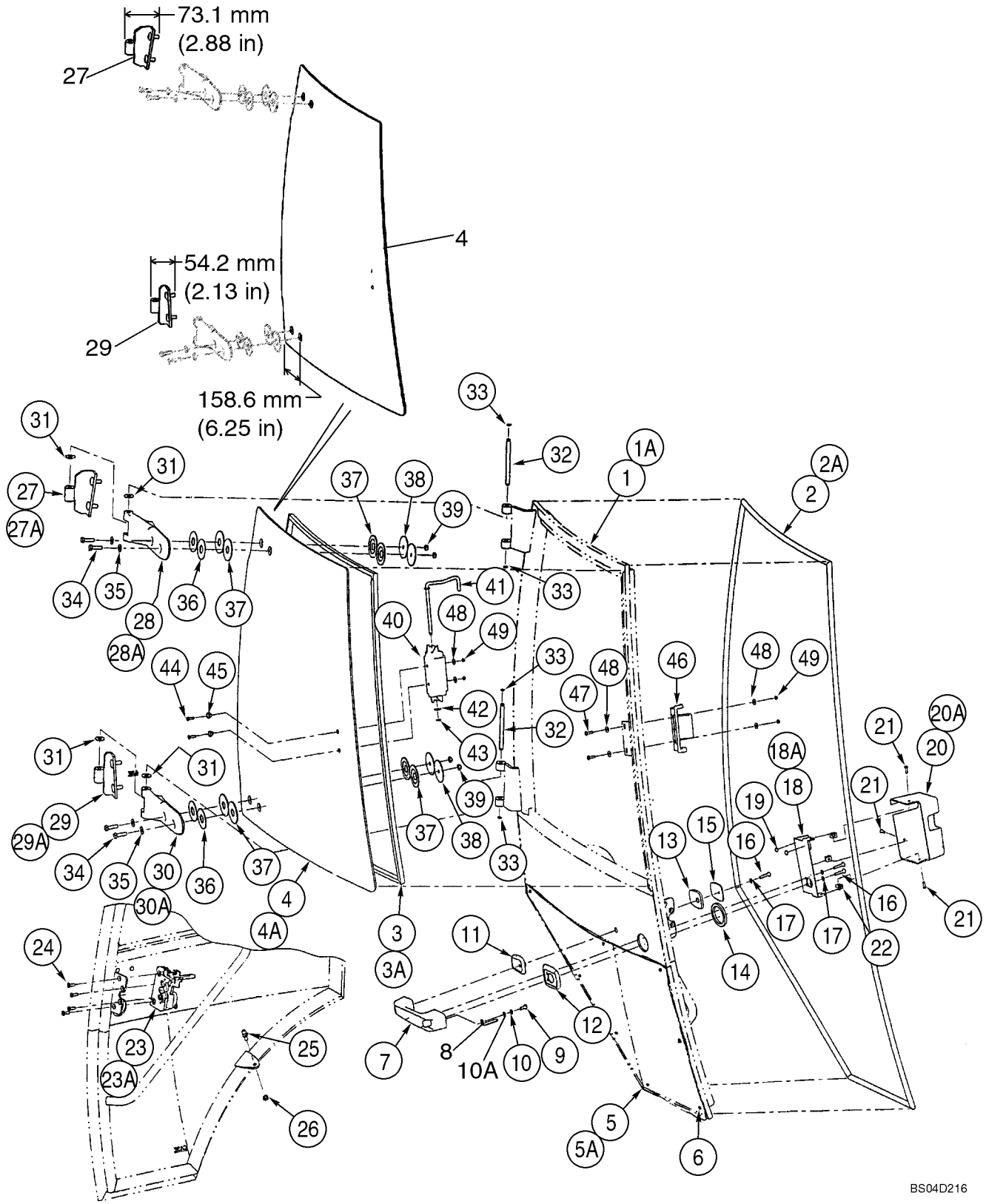

http://www.minnparbackhoeparts.com/

CABINE - PORTES, SI UTILISE (VOIR VITRE / CHARNIERE; REF 4, 27, 29)

REF	FN	PART NUMBER	YR/SN	QTY	DESCRIPTION
49		F45165		4	ECROU-DE-SECURITE No. 10

http://www.minnparbackhoeparts.com/

09-55		p1	01/04

CABINE - MONTAGE DE PORTIÈRE

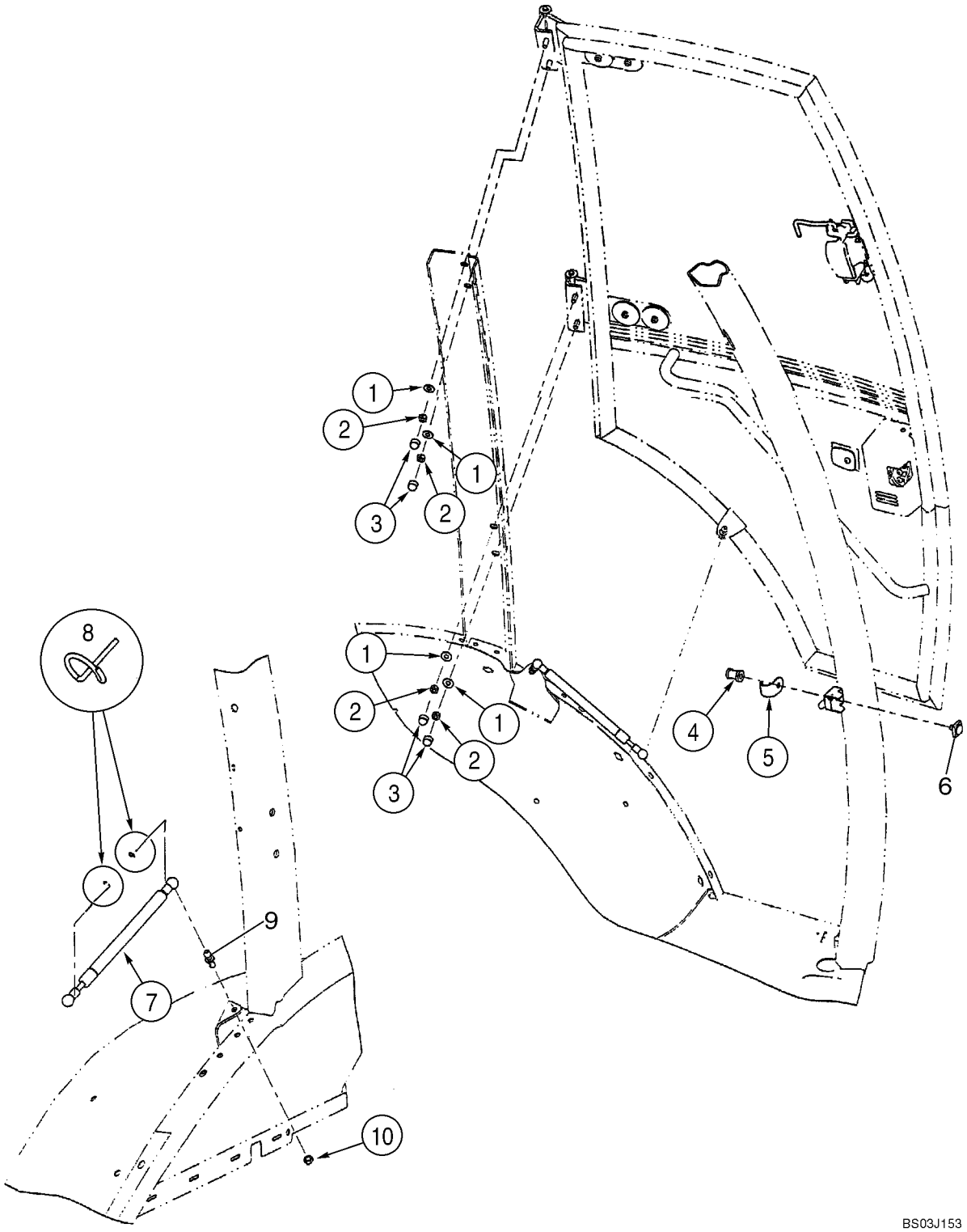

http://www.minnparbackhoeparts.com/

CABINE - MONTAGE DE PORTIÈRE

REF	FN	PART NUMBER	YR/SN	QTY	DESCRIPTION
		REF			NOTICE Left-Hand and Right-Hand Cab Doors; Left-Hand Cab Door Shown
1		397064A1		4-8	RONDELLE SPÉCIALE 3/8 x 7/8 x 1/16 thk
2		232-1446		4-8	CONTRE-ECROU 3/8
3		396841A1		4-8	CHAPEAU
4		87411108		1-2	BOULON SPECIAL Striker
5		393211A1		1-2	GARANT
6		442842A1		1-2	BLOC (ASSEMBLE) Striker
7		394800A1		1-2	RESSORT Gas Spring
8		3233348R1		2-4	CLIP
9		432431A1		1-2	GOUJON Ball
10		832-10408		1-2	ECROU M8

http://www.minnparbackhoeparts.com/

09-56		p1	04/04

CABINE - FENÊTRE DROITE, POUR CADRES DE CABINE À UNE SEULE PORTIÈRE, SI UTILISE (VOIR VITRE / CHARNI

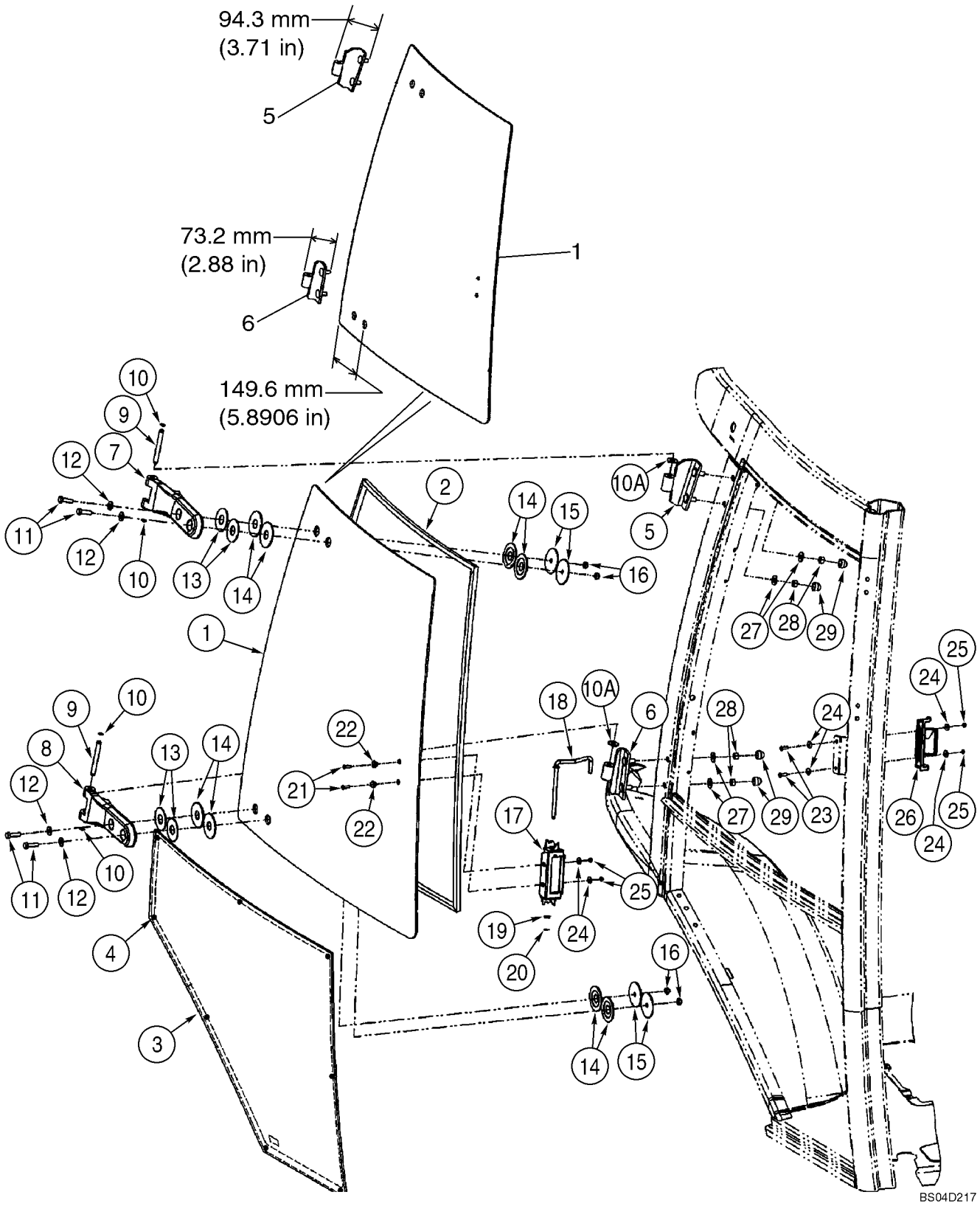

http://www.minnparbackhoeparts.com/

CABINE - FENÊTRE DROITE, POUR CADRES DE CABINE À UNE SEULE PORTIÈRE, SI UTILISE (VOIR VITRE / CHARNI

REF	FN	PART NUMBER	YR/SN	QTY	DESCRIPTION
		341746A2		1	FENETRE (ASSEMBLEE) Right-Hand; Incl. Ref 1 - 29
1		360046A1		1	VITRE DE CABINE Upper; Distance From Edge to Second Hole 149.6 mm (5-57/64 in)
2		394864A1		1	JOINT-DE-GLACE
3		338428A1		1	FENETRE (ASSEMBLEE) Lower
4		391827A1		4	ENTRETOISE Cut Bumpers In Half For 8 Locations
5		394701A1		1	CHARNIERE Upper
6		394702A1		1	CHARNIERE Lower
7		364134A2		1	CHARNIERE Plastic; Upper
8		364135A2		1	CHARNIERE Plastic; Lower
9		394865A1		2	AXE
10		393330A1		4	ANNEAU
10A		391845A1		4	RONDELLE Nylon
11		514-633		4	VIS M8 x 30
12		895-30107		4	RONDELLE
13		376334A1		4	RONDELLE 55 mm OD; Yellow
14		376336A1		8	RONDELLE ELASTIQUE Rubber
15		376332A1		4	RONDELLE 60 mm OD; Black
16		832-10508		4	ECROU M8
17		368147A1		1	POIGNÉE Slam Latch
18		391849A1		1	TRINGLE
19		906086R1		1	RONDELLE 8.4 x 16 x 1.6 thk
20		100-39001		1	ANNEAU
21		140-104		2	VIS No. 8 x 3/4
22		F64198		2	BAGUE Nylon
23		142-103		2	VIS
24		195-81023		6	RONDELLE 1/4 x 9/16 x 3/64
25		F45165		4	ECROU-DE-SECURITE No. 10
26		368146A1		1	LOQUET Slam Latch
27		397064A1		4	RONDELLE SPÉCIALE 3/8 x 7/8 x 1/16 thk
28		232-1446		4	CONTRE-ECROU 3/8
29		396841A1		4	CHAPEAU

http://www.minnparbackhoeparts.com/

09-56A		p1	04/04

CABINE - FENÊTRE DROITE, POUR CADRES DE CABINE À UNE SEULE PORTIÈRE, SI UTILISE (VOIR VITRE / CHARNI

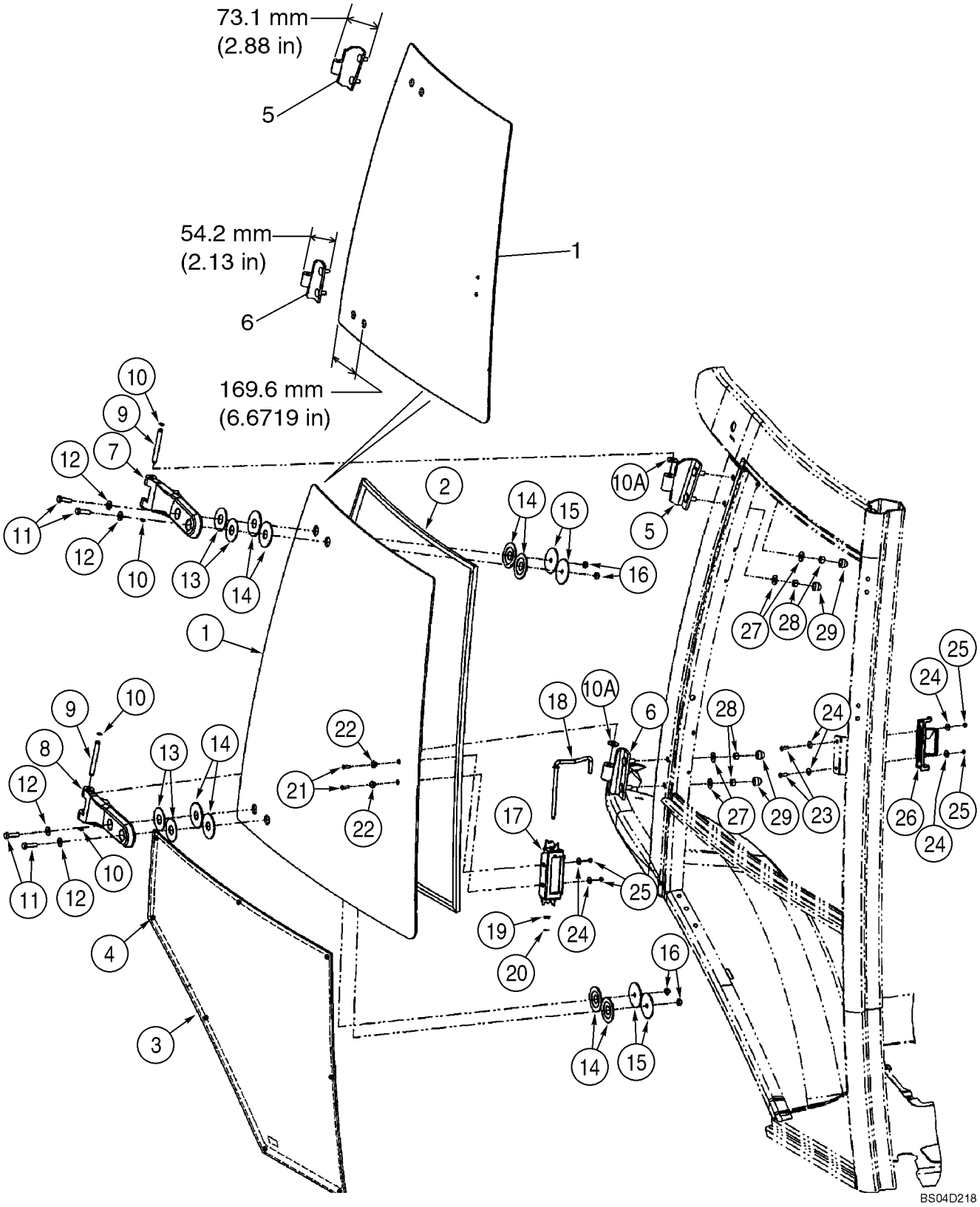

http://www.minnparbackhoeparts.com/

CABINE - FENÊTRE DROITE, POUR CADRES DE CABINE À UNE SEULE PORTIÈRE, SI UTILISE (VOIR VITRE / CHARNI

REF	FN	PART NUMBER	YR/SN	QTY	DESCRIPTION
		{87442204}		1	Right-Hand; Incl. Ref 1 - 29
		87448198		1	FENETRE (ASSEMBLEE) SERVICE KIT, Right-Hand Window and Hinges; Incl. Ref 1, 5, 6, Plus Instructions
1		87439724		1	VITRE DE CABINE Upper; Distance From Edge to Second Hole 169.6 mm (6-43/64 in)
2		394864A1		1	JOINT-DE-GLACE
3		338428A1		1	FENETRE (ASSEMBLEE) Lower
4		391827A1		4	ENTRETOISE Cut Bumpers In Half For 8 Locations
5		87439722		1	CHARNIERE Upper
6		87439723		1	CHARNIERE Lower
7		364134A2		1	CHARNIERE Plastic; Upper
8		364135A2		1	CHARNIERE Plastic; Lower
9		394865A1		2	AXE
10		393330A1		4	ANNEAU
10A		391845A1		4	RONDELLE Nylon
11		514-633		4	VIS M8 x 30
12		895-30107		4	RONDELLE
13		376334A1		4	RONDELLE 55 mm OD; Yellow
14		376336A1		8	RONDELLE ELASTIQUE Rubber
15		376332A1		4	RONDELLE 60 mm OD; Black
16		832-10508		4	ECROU M8
17		368147A1		1	POIGNÉE Slam Latch
18		391849A1		1	TRINGLE
19		906086R1		1	RONDELLE 8.4 x 16 x 1.6 thk
20		100-39001		1	ANNEAU
21		140-104		2	VIS No. 8 x 3/4
22		F64198		2	BAGUE Nylon
23		142-103		2	VIS
24		195-81023		6	RONDELLE 1/4 x 9/16 x 3/64
25		F45165		4	ECROU-DE-SECURITE No. 10
26		368146A1		1	LOQUET Slam Latch
27		397064A1		4	RONDELLE SPÉCIALE 3/8 x 7/8 x 1/16 thk
28		232-1446		4	CONTRE-ECROU 3/8
29		396841A1		4	CHAPEAU

http://www.minnparbackhoeparts.com/

09-57		p1	04/04

CABINE - VITRE, ARRIÈRE

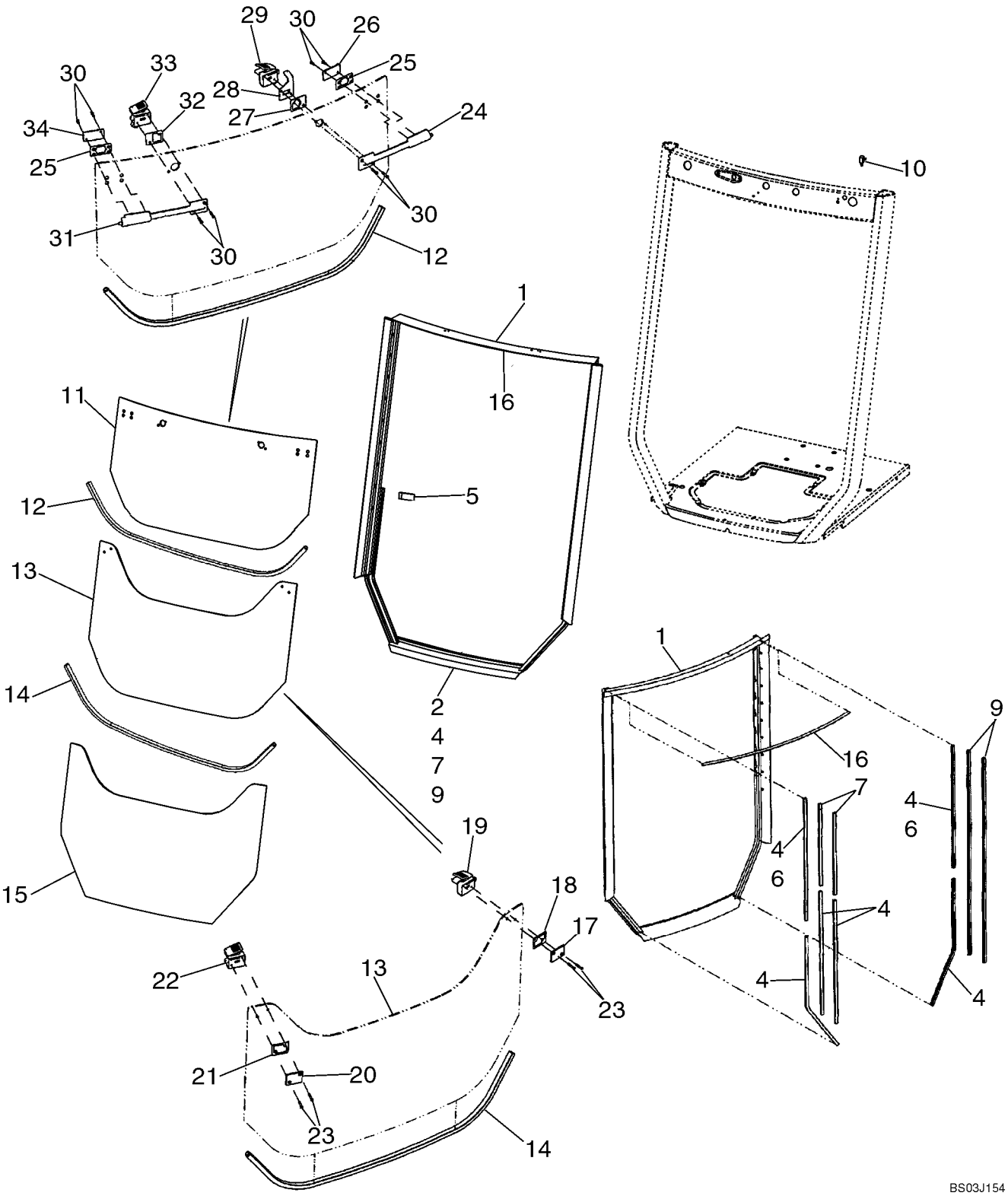

http://www.minnparbackhoeparts.com/

CABINE - VITRE, ARRIÈRE

REF	FN	PART NUMBER	YR/SN	QTY	DESCRIPTION
		411850A1		1	POCHETTE Frame and Seal; Incl. 1, 4, 7, 9, 16
1		87435929		1	BATI (ASSEMBLE) Included in 411850A1 Frame and Seal Kit; Replaces 403948A1 Frame
2		410867A1		1	JOINT Rubber Seal; Bulb Type
		411851A1		1	POCHETTE Seal; Incl. 4, 7, 9, 16
4		404228A1		6	JOINT 760 mm (29-15/16 in), Flocked Channel Seals; Cut From 402852A1; Included in 411851A1 Seal Kit and 411850A1 Frame and Seal Kit
5		400200A1		2	PROFILE CAOUTCHOUC Stop
6		404226A1		2	JOINT 787 mm (31 in), Flocked Channel Seals; Cut From 402852A1
7		404229A1		2	JOINT 508 mm (20 in), Flocked Channel Seals; Cut From 402852A1; Included In 411851A1 Seal Kit and 411850A1 Frame and Seal Kit
9		404227A1		2	JOINT 1270 mm (50 in), Flocked Channel Seals; Cut From 402852A1; Included in 411851A1 Seal Kit and 411850A1 Frame and Seal Kit
10		A187714		1	CONTACTEUR Rear Wiper Cutout
		495-11047		2	RONDELLE 15/32 x 59/64 x 1/16
		425-147		1	ECROU 7/16
11		352208A1		1	VITRE DE CABINE Upper
12		395348A1		1	BANDE, ENJOLIVEUR 1210 mm (47-21/32 in), Lower Glass Edge; Cut From 404426A1
		87434783		1	FENETRE (ASSEMBLEE) Center; Includes Ref 13, 19, 22, 23; Plus (1) 87426969 Backing Plate and (4) Backing Plates and (4) Grommets Which Are Not Serviced Separately; Includes Instructions
13		352209A1		1	VITRE DE CABINE Center
14		395348A1		1	BANDE, ENJOLIVEUR 1210 mm (47-21/32 in), Lower Glass Edge; Cut From 404426A1
15		352210A1		1	VITRE DE CABINE Lower
16		400494A1		1	JOINT 1095 mm (43-1/8 in), Hollow Seal; Cut From 404231A1; Included in 411851A1 Seal Kit and 411850A1 Frame and Seal Kit
17		411917A1		1	PLAQUE DORSALE Kit; Includes 1 Each 402849A1 Plate, 411942A1 Gasket Pad
18		402847A1		1	PLAQUE PLASTIQUE Bushing

http://www.minnparbackhoeparts.com/

09-57		p2	04/04

CABINE - VITRE, ARRIÈRE

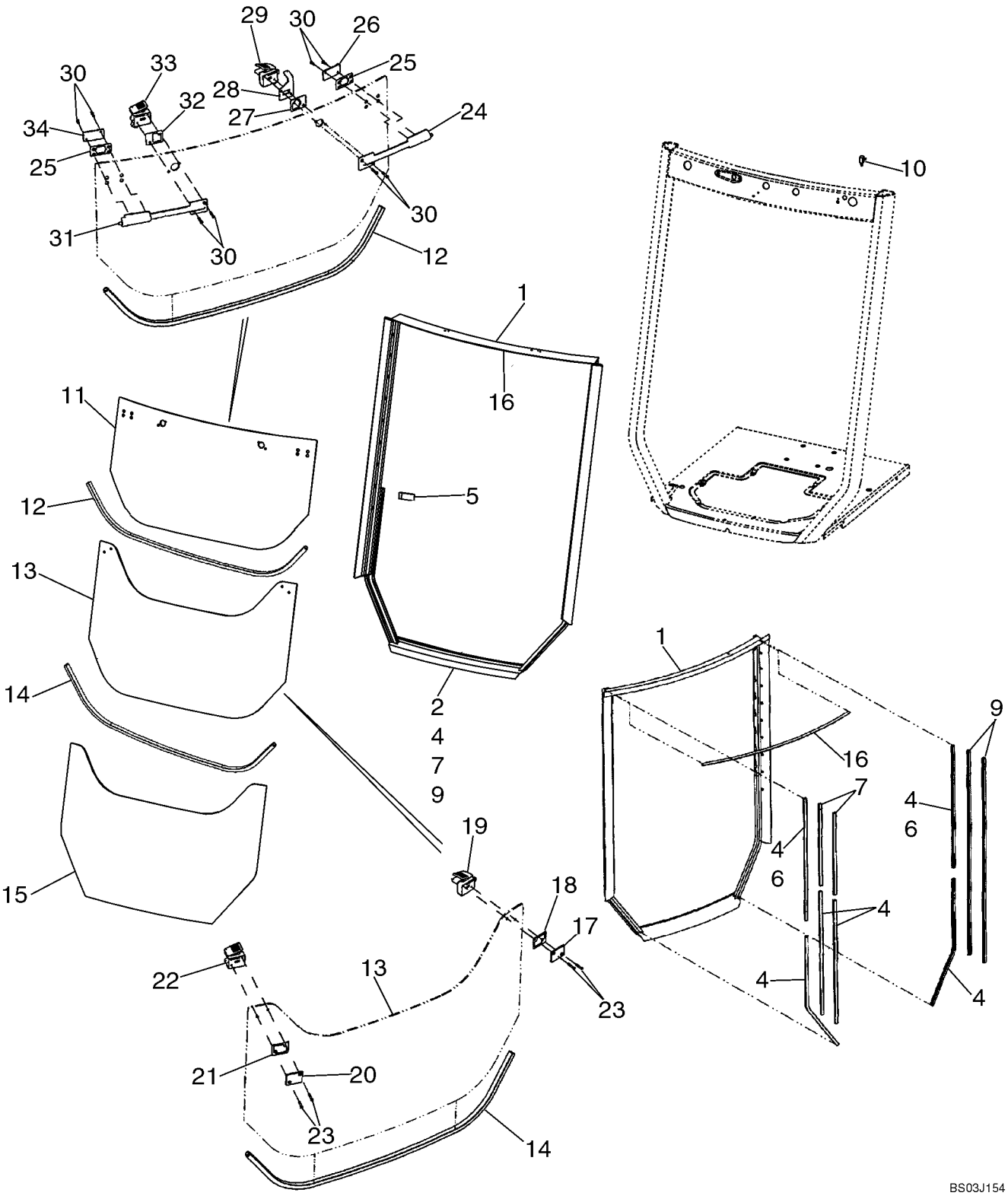

http://www.minnparbackhoeparts.com/

CABINE - VITRE, ARRIÈRE

REF	FN	PART NUMBER	YR/SN	QTY	DESCRIPTION
19		411909A1		1	LOQUET Kit, Includes 1 Each 402868A1 Cover, 402867A1 Lever, 402833A1 Plunger, 402831A1 Housing, 402830A1 Bushing, 402870A1 Spring, 402869A1 Rivet, 402865A1 Bumper
20		411916A1		1	PLAQUE DORSALE Kit; Includes 1 Each 402848A1 Plate, 411942A1 Gasket Pad
21		402846A1		1	PLAQUE PLASTIQUE Bushing
22		411908A1		1	LOQUET Kit, Includes 1 Each 402871A1 Cover, 402872A1 Lever, 402873A1 Plunger, 402832A1 Housing, 402830A1 Bushing, 402870A1 Spring, 402869A1 Rivet, 402865A1 Bumper
23		87435453		4	VIS Flat Head Socket, M5 x 30
24		411910A1		1	LOQUET Kit, Bolt Assy; Includes 1 Each 402860A1 Housing, 402840A1 Gasket, 402837A1 Bolt, 402861A1 Insert, 402838A1 Rod, 402856A1 Spring
25		402843A1		2	PLAQUE PLASTIQUE
26		87423503		1	PLAQUE DORSALE Backing Plate
27		402844A1		1	PLAQUE PLASTIQUE
28		402836A1		1	PATTE FIXATION Rear Wiper Cutout Switch
29		411914A1		1	LOQUET Kit, Includes 1 Each 402831A1 Housing, 402866A1 Bumper, 402830A1 Bushing, 402833A1 Plunger, 402867A1 Lever, 402868A1 Cover
30		87445051		8	VIS Flat Head Socket, M5 x 16
31		411911A1		1	LOQUET Kit, Bolt Assy; Includes 1 Each 402863A1 Housing, 402851A1 Gasket, 402856A1 Spring, 402841A1 Bolt, 402861A1 Insert, 402838A1 Rod
32		402845A1		1	PLAQUE PLASTIQUE
33		411912A1		1	LOQUET Kit, Includes 1 Each 402832A1 Housing, 402866A1 Bumper, 402830A1 Bushing, 402873A1 Plunger, 402872A1 Lever, 402871A1 Cover
34		87423502		1	PLAQUE DORSALE Backing Plate
		411844A1		1	POCHETTE Upper Bolt Latch; Includes 1 Each 411910A1 Bolt Assy Ref 24, 87423502 Backing Plate Ref 34, 87423503 Backing Plate Ref 26, (2) 402843A1 Bushing late Ref 25

http://www.minnparbackhoeparts.com/

09-57		p3	04/04

CABINE - VITRE, ARRIÈRE

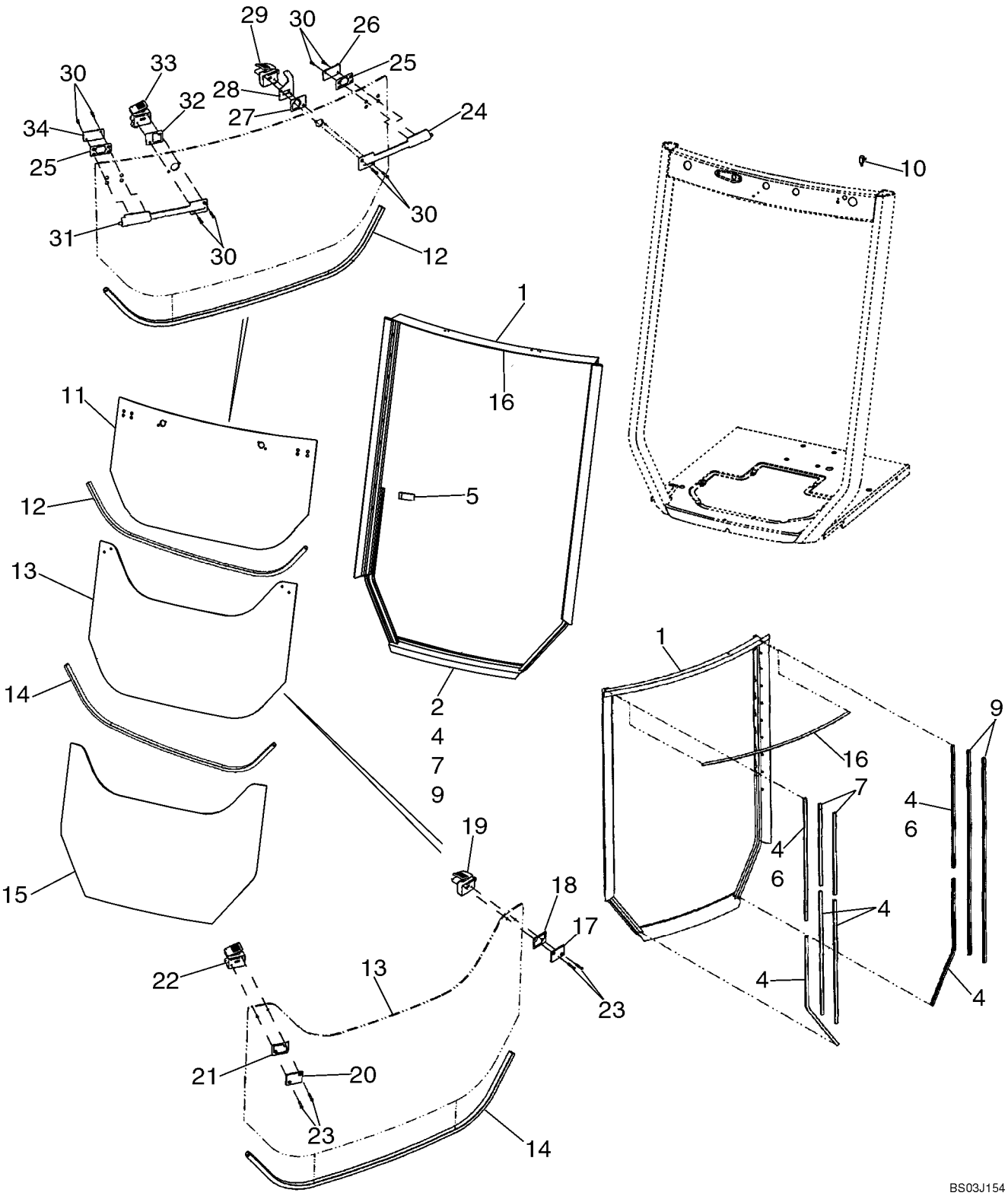

http://www.minnparbackhoeparts.com/

CABINE - VITRE, ARRIÈRE

REF	FN	PART NUMBER	YR/SN	QTY	DESCRIPTION
		411845A1		1	POCHETTE Upper Bolt Latch; Includes 1 Each 411911A1 Bolt Assy Ref 31, 87423502 Backing Plate Ref 34, 87423503 Backing Plate Ref 26, (2) 402843A1 Bushing Plate Ref 25
		411846A1		1	POCHETTE Mid Catch; Includes 1 Each 411908A1 Catch Kit Ref 22, 411916A1 Backing Plate Kit Ref 20, 402846A1 Bushing Plate Ref 21
		411847A1		1	POCHETTE Mid Catch; Includes 1 Each 411909A1 Catch Kit Ref 19, 411917A1 Backing Plate Ref 17, 402847A1 Bushing Plate Ref 18
		411848A1		1	POCHETTE Upper Catch; Includes 1 Each 411912A1 Upper Catch Kit Ref 33, 402845A1 Bushing Plate Ref 32
		411849A1		1	POCHETTE Upper Catch; Includes 1 Each 411914A1 Upper Catch Kit Ref 29, 402844A1 Bushing Plate Ref 27

http://www.minnparbackhoeparts.com/

09-58		p1	05/05

CABINE - LAVE-GLACE

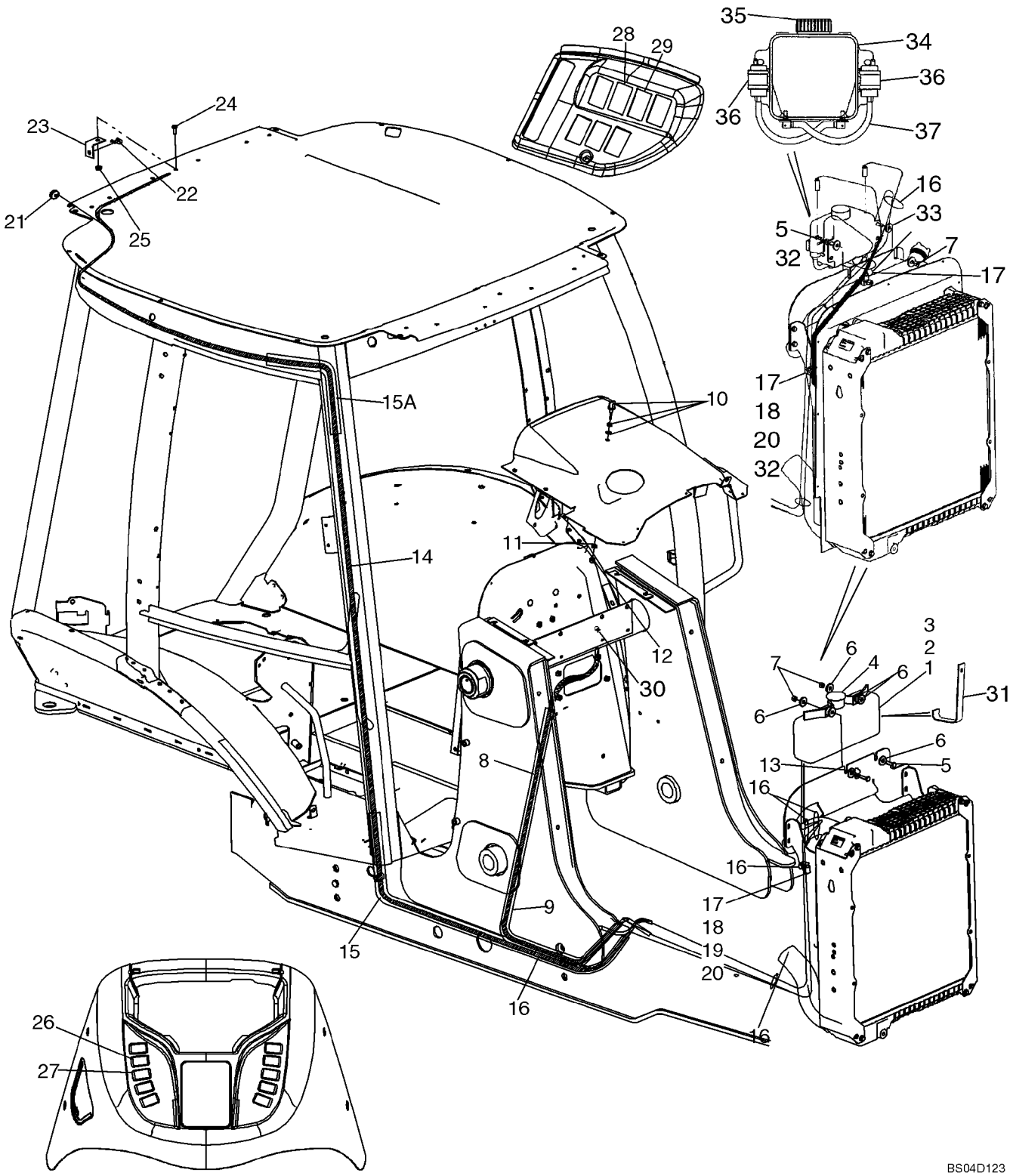

http://www.minnparbackhoeparts.com/

CABINE - LAVE-GLACE

REF	FN	PART NUMBER	YR/SN	QTY	DESCRIPTION
		E46560		1	RÉSERVOIR Incl. Ref 1 - 4; If Used
1		NSS		1	NON FOURNI SEPAREMENT RESERVOIR
2		E47239		2	JOINT
3		E47238		2	POMPE MOTOR, 12 Volt
4		E47240		1	BOUCHON Cap
5		614-8030		2	BOULON M8 x 30
6		496-41041		7	RONDELLE 13/32 x 1-1/8 x 1/8
7		832-10408		2	ECROU M8
8		87428316		1	FLEXIBLE AU METRE HOSE 3150 mm (124-1/64 in); Front Washer; Cut From 1968141CX
9		386718A3		1	GARANT 1630 mm (64-3/16 in); Cut From 397155A2
10		284154A1		1	INJECTEUR Includes A Steel and Rubber Washer Which Are Not Serviced Separately
11		492-11038		1	RONDELLE FREIN 3/8"
12		425-106		1	ECROU 3/8
13		D147383		1	CLIP J-Clamp, 5/8
14		87423346		1	FLEXIBLE 6325 mm (249-1/64 in); Rear Washer; Cut From 1968141CX
15		408966A1		1	GARANT 2200 mm (86-5/8 in); Rear Washer Hose; Lower; Cut From 397155A2
15A		408965A1		1	GARANT 550 mm (21-11/16 in); Rear Washer Hose, Upper; Cut From 397155A2
16		L18337		6	SANGLE 15 in
17		D147383		1	CLIP J-Clamp, 5/8
18		614-8016		1	VIS M8 x 16
19		895-11008		1	RONDELLE Flat
20		829-1408		1	ECROU M8
21		87442441		1	PASSE-FIL Washer, Hose
22		E43769		1	VAPORISATEUR Rear Nozzle; Includes Rubber Seal Which Is Not Serviced Separately
23		386720A1		1	PATTE FIXATION Rear Nozzle
24		614-8020		1	BOULON M8 x 20
25		825-2408		1	ECROU M8
26		386785A1		1	CONTACTEUR Front Wiper
27		386787A1		1	CONTACTEUR Front Washer
28		386786A1		1	CONTACTEUR Rear Wiper
29		386788A1		1	CONTACTEUR Rear Washer

http://www.minnparbackhoeparts.com/

09-58		p2	05/05

CABINE - LAVE-GLACE

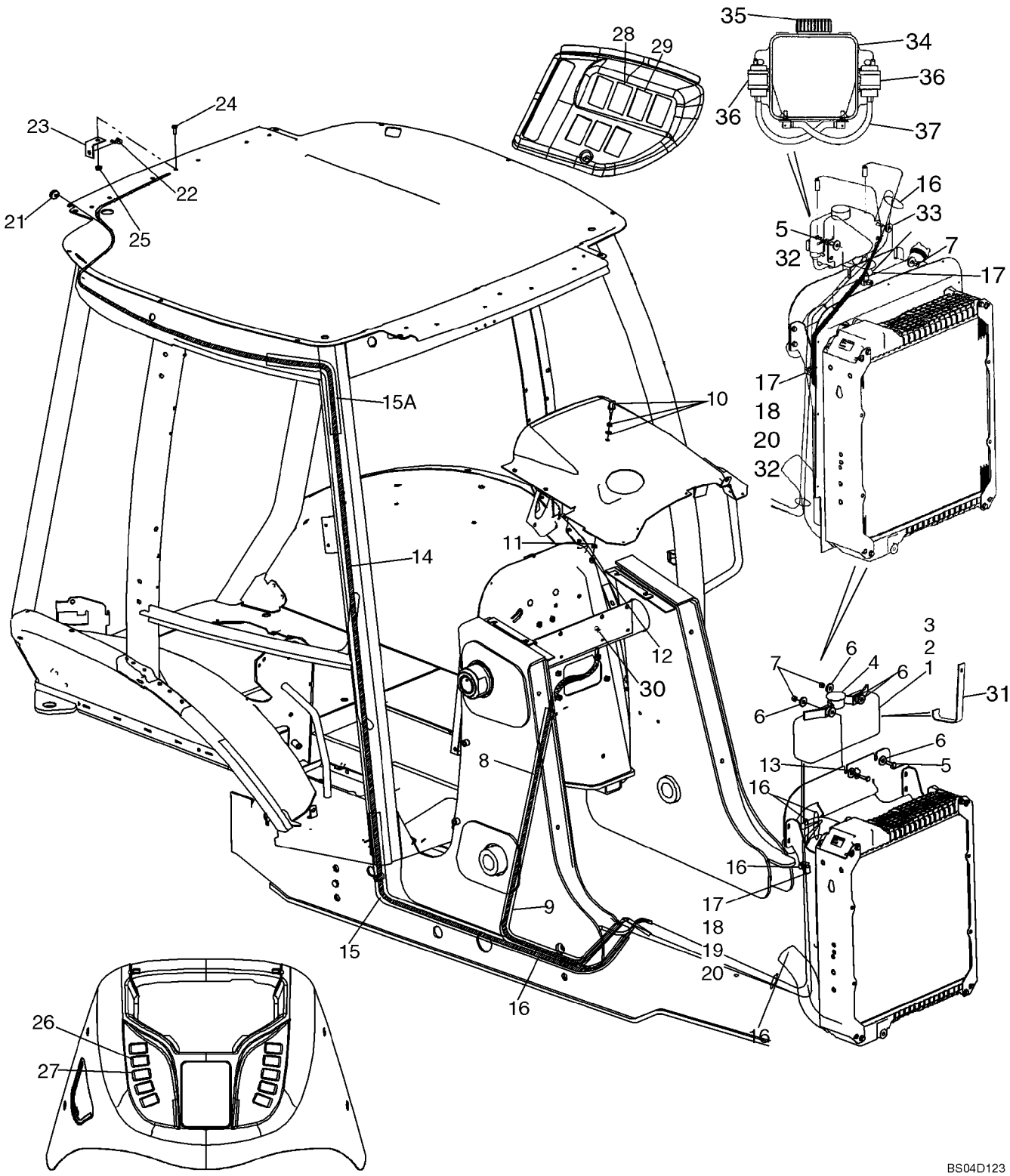

http://www.minnparbackhoeparts.com/

CABINE - LAVE-GLACE

REF	FN	PART NUMBER	YR/SN	QTY	DESCRIPTION
30		87444176		1	COLLIER
31		87442924		1	JAMBE-DE-FORCE Used With E46560 Reservoir; If Used
32		896-11008		3	RONDELLE 9 x 17 x 2
33		496-41041		4	RONDELLE 13/32 x 1-1/8 x 1/8
		87448685		1	LAVE-GLACE RESERVOIR; Incl. Ref 34 - 38; If Used
34		87449514		1	RESERVOIR DE LAVE-GLACE 20 Quart
35		86507190		1	CACHE-BOUCHON
36		86507198		2	POMPE-PETITE Component Parts Not Serviced Separately
37		87449517		1	FLEXIBLE AU METRE 203 mm (8 in)
38		L18337		1	SANGLE Not Illustrated

http://www.minnparbackhoeparts.com/

CABINE - ESSUIE-GLACE

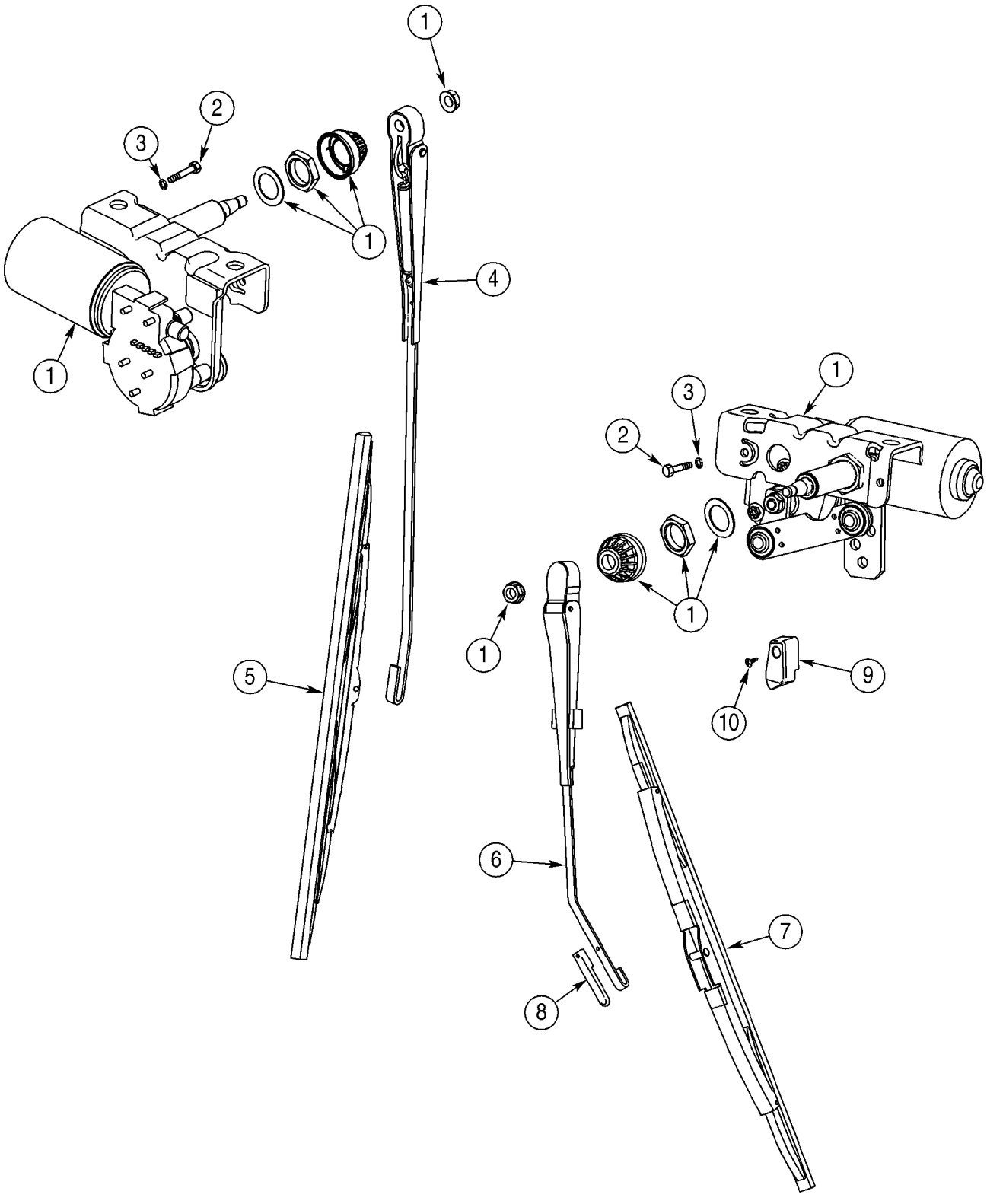

http://www.minnparbackhoeparts.com/

CABINE - ESSUIE-GLACE

REF	FN	PART NUMBER	YR/SN	QTY	DESCRIPTION
1		450037A1		2	MOTEUR ESSUIE-GLACE 12V
		404617A1		1	FAISCEAU Front Lamps and Wiper
		396018A3		1	FAISCEAU Cab, B-Post, Rear Wiper, Radio, Blower, Dome Lamp; Replaces 396018A2 Harness
		386786A1		1	CONTACTEUR Rear Wiper
		386785A1		1	CONTACTEUR Front Wiper
		A187714		1	CONTACTEUR Rear Wiper Cutout Switch
		495-11047		2	RONDELLE 15/32 x 59/64 x 1/16
		425-147		1	ECROU 7/16
2		814-6050		4	BOULON M6 x 50
3		892-11006		4	RONDELLE FREIN M6
4		D128745		1	BRAS D'ESSUIE-GLACE Front Wiper
5		414426A1		1	BALAI D'ESSUIE-GLACE Front Wiper
6		395136A1		1	BRAS D'ESSUIE-GLACE Rear Wiper
7		D128022		1	BALAI D'ESSUIE-GLACE Rear Wiper; 13.77 inch; If Used
7		A187603		1	BALAI D'ESSUIE-GLACE Rear Wiper; 16 inch; If Used
8		395033A1		1	CLIP
9		395026A1		1	RAMPE Block
10		395389A1		1	VIS M6

http://www.minnparbackhoeparts.com/

09-60		p1	01/04

GARNITURE DE LA CABINE - FILTRE, DEFLECTEUR, PLAFONNIER

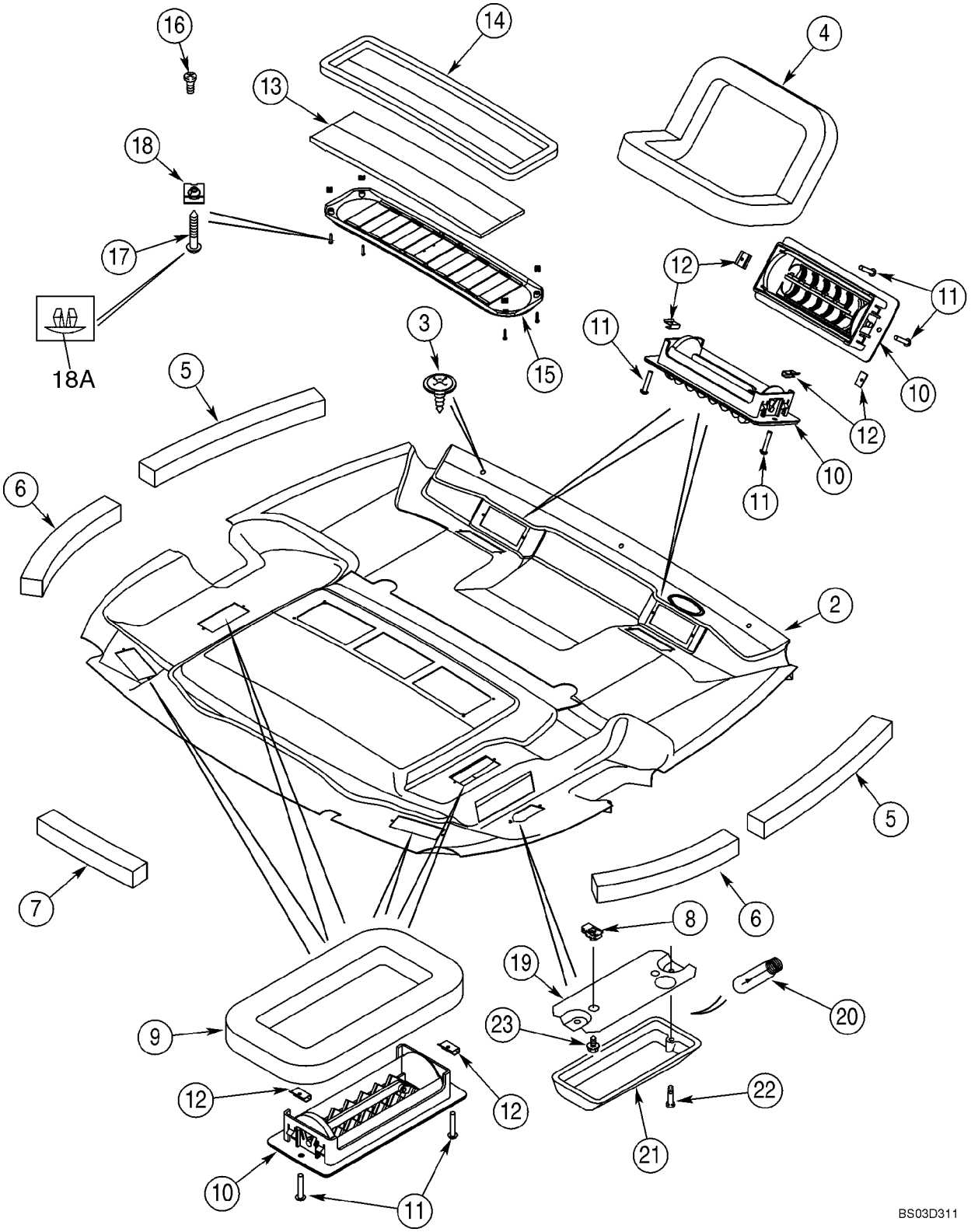

http://www.minnparbackhoeparts.com/

GARNITURE DE LA CABINE - FILTRE, DEFLECTEUR, PLAFONNIER

REF	FN	PART NUMBER	YR/SN	QTY	DESCRIPTION
		367705A6		1	HABILLEMENT DE TOIT HEADLINER ASSY, Standard Interior; Incl. Ref 1, 4 - 18A
		360272A6		1	HABILLEMENT DE TOIT HEADLINER ASSY, Deluxe Interior; Incl. Ref 2, 4 - 18A
1		367704A4		1	HABILLEMENT DE TOIT Shell; Standard Interior; Not Illustrated
2		381696A5		1	HABILLEMENT DE TOIT Shell With Foam and Fabric Covering; Deluxe Interior
3		396516A1		3	POINTEAU
4		368813A2		2	JOINT Defrost
5		379160A1		2	JOINT 494 mm; Foam; Adhesive Back; Front
6		379161A1		2	JOINT 379 mm; Foam; Adhesive Back; Rear
7		379209A1		1	JOINT 303 mm; Foam; Adhesive Back, Center, Rear
8		131-861		2	ECROU No. 10; Dome Lamp
9		377194A1		4	JOINT Heat and Air
10		363883A1		8	GRILLE (ASSEMBLEE)
11		140-103		16	VIS No. 6 x 3/4
12		125749A1		16	ECROU J-Type, No. 6
13		377594A5		1	FILTRE Air Recirculation
14		381972A1		1	JOINT
15		369450A1		1	CALANDRE Air Recirculation; Incl. Ref 16
16		260-1436		2	VIS
17		414600A1		4	VIS
18		177269A1		4	ECROU
18A		409723A1		4	BOUCHON Plastic; Fits 5,5 mm Hole
		380719A2		1	ECLAIRAGE INTERIEUR Dome Lamp; Incl. Ref 19 - 21
19		NSS		1	NON FOURNI SEPAREMENT Base
20		N14466		1	AMPOULE
21		NSS		1	NON FOURNI SEPAREMENT Lens; With Switch
22		440-1088		2	VIS No. 8 x 1/2 in; Base To Lens
23		281-54512		2	VIS No. 10 x 3/4; Lamp To Headliner

http://www.minnparbackhoeparts.com/

09-61		p1	01/04

CABINE - FILTRE A AIR

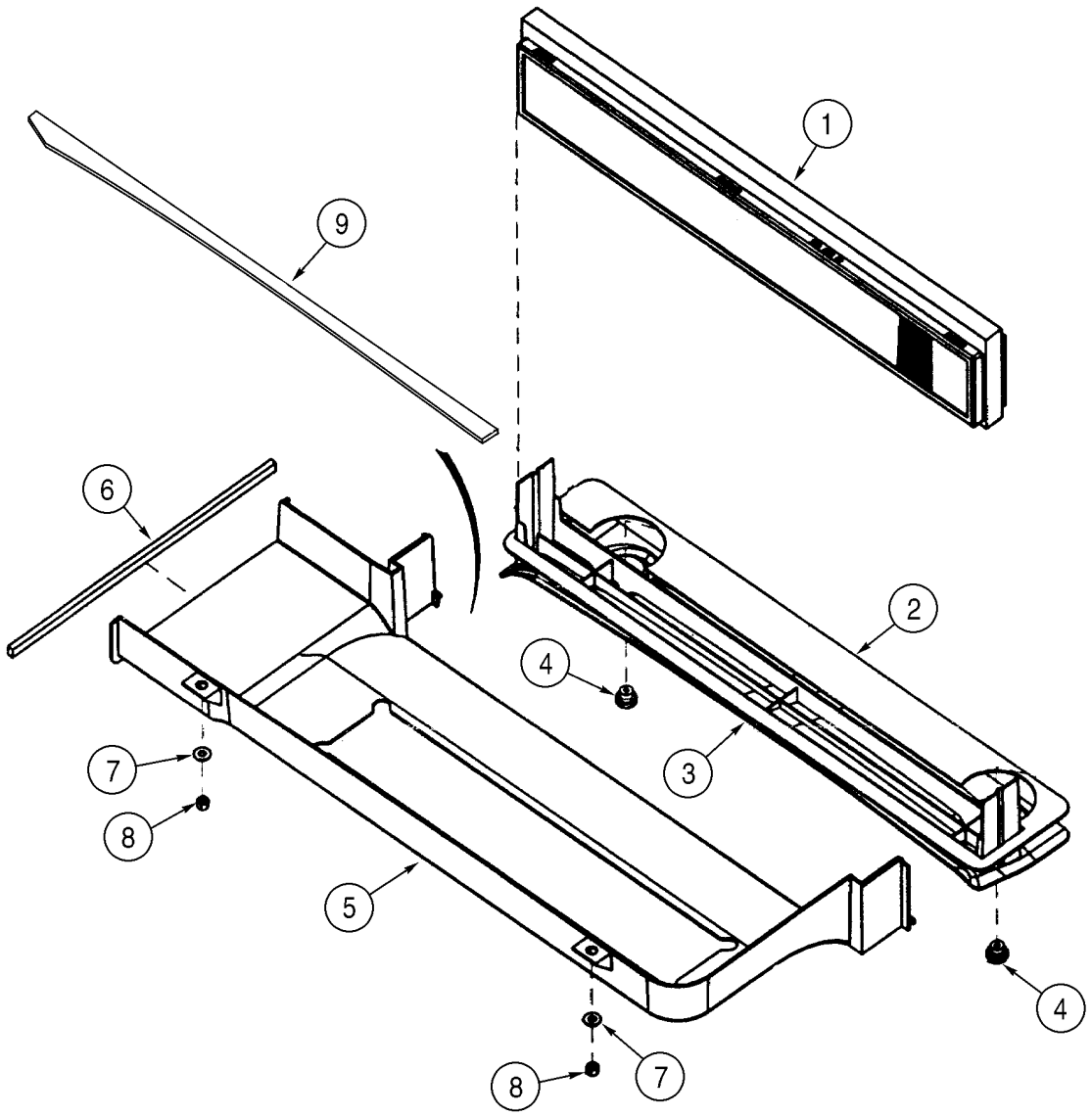

BS00F073

http://www.minnparbackhoeparts.com/

CABINE - FILTRE A AIR

REF	FN	PART NUMBER	YR/SN	QTY	DESCRIPTION
1		360260A2		1	ELÉMENT FILTRANT Includes Foam Seal
2		382770A2		1	JOINT
3		360261A1		1	PLATEAU
4		398738A1		2	PLAQUE Fresh Air Duct Retainer
5		360252A2		1	CONDUIT Fresh Air Intake
6		368990A1		1	JOINT
7		895-15008		2	RONDELLE 9 x 20 x 1,6 mm
8		832-10408		2	ECROU M8
9		403271A1		1	JOINT 882 mm; Adhesive Back

http://www.minnparbackhoeparts.com/

09-62		p1	05/04

CABINE - CARTER DE LA SOUFFLANTE, DURITS DE VENTILATION, CONDUITES DE PURGE

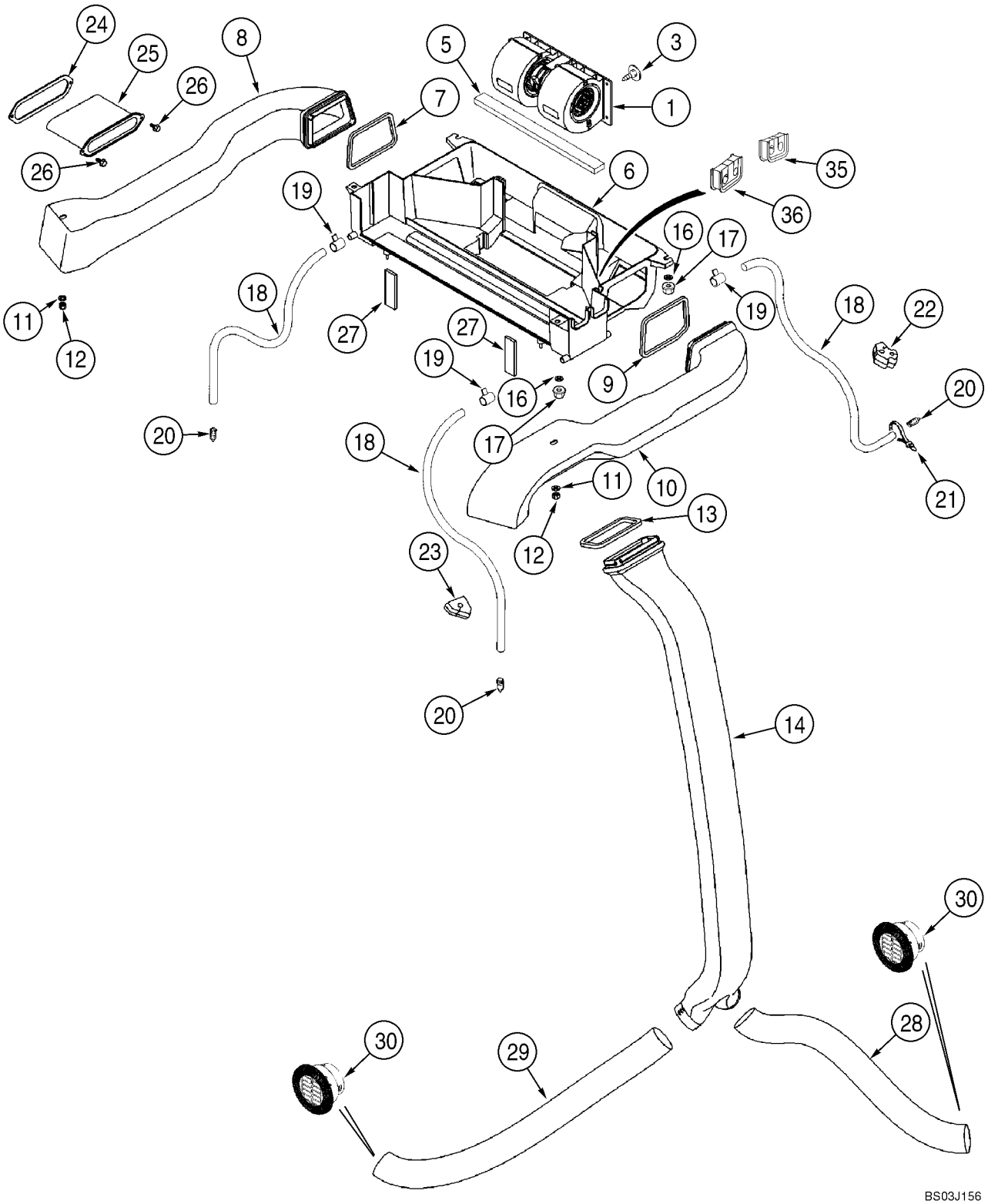

http://www.minnparbackhoeparts.com/

CABINE - CARTER DE LA SOUFFLANTE, DURITS DE VENTILATION, CONDUITES DE PURGE

REF	FN	PART NUMBER	YR/SN	QTY	DESCRIPTION
1		377220A2		1	SOUFFLERIE ASSEMBLEE Component Parts Not Serviced Separately; Kysor/Westran Brand; If Used; For Blower Switch, See Figure 04-10
1		377241A2		1	SOUFFLERIE ASSEMBLEE Component Parts Not Serviced Separately; Aurora Brand; If Used; For Blower Switch, See Figure 04-10
3		182697A1		1	AGRAFE
5		181981A1		1	JOINT 6 x 20 x 355 mm; Adhesive Back; Under Blower
6		360251A3		1	CARTER (ASSEMBLE) Heat and Air; Includes 373995A1
		373995A1		2	INSERT
7		368805A1		1	JOINT Left-Hand Duct
8		360253A3		1	CONDUIT Left-Hand
9		369249A1		1	JOINT Right-Hand Duct
10		360254A3		1	CONDUIT Right-Hand
11		895-15010		2	RONDELLE 11 x 24 x 2 mm
12		832-10408		2	ECROU M8
13		368807A1		1	JOINT
14		360255A1		1	CONDUIT
16		895-15008		4	RONDELLE 9 x 20 x 1,6 mm
17		832-10408		4	ECROU M8
18		368821A1		4	FLEXIBLE 3050 mm; Drain
19		214-1406		4	COLLIER 7/16 - 25/32
20		365789A1		4	SOUPAPE DE VIDANGE Drain
21		L18337		2	SANGLE 15 in
22		383794A2		2	BOUCHON
23		383795A2		2	BOUCHON 580SM Models
23		395470A1		2	BOUCHON 580SM+ Models
24		381113A2		1	JOINT
25		381111A2		1	MANCHON
26		281-18712		2	VIS 1/4 st x 3/4
27		377230A3		2	JOINT 16 mm thk; Fresh Air Duct To Ventilation Housing
28		375392A1		1	DURITE 750 mm; Cut From 236559A1
29		368818A1		1	DURITE 1015 mm; Cut From 236559A1
30		398986A1		2	BUSE D'AÉRATION

http://www.minnparbackhoeparts.com/

09-62		p2	05/04

CABINE - CARTER DE LA SOUFFLANTE, DURITS DE VENTILATION, CONDUITES DE PURGE

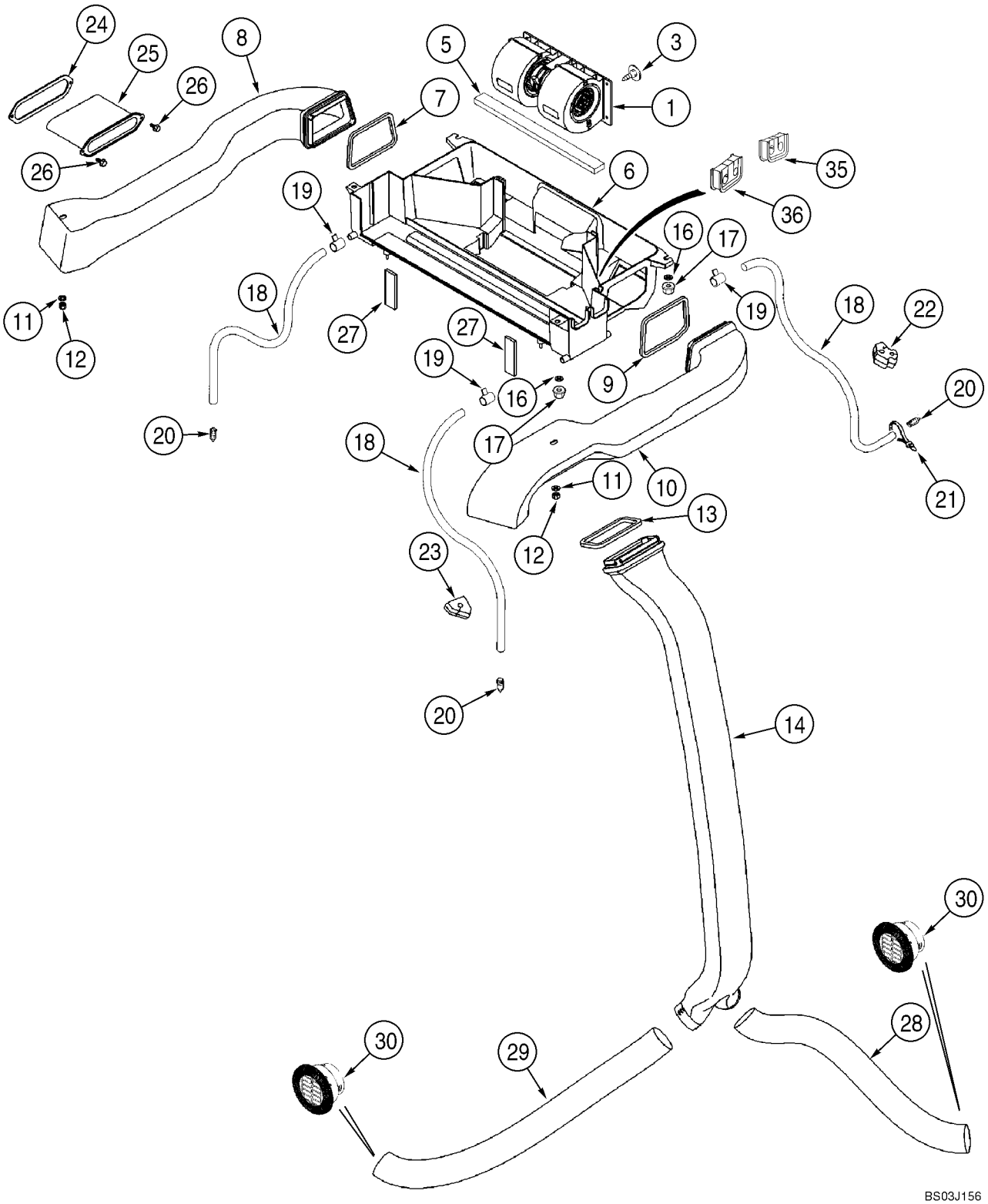

http://www.minnparbackhoeparts.com/

CABINE - CARTER DE LA SOUFFLANTE, DURITS DE VENTILATION, CONDUITES DE PURGE

REF	FN	PART NUMBER	YR/SN	QTY	DESCRIPTION
35		403225A1		1	JOINT Heater Tubes At Housing
36		403193A1		1	JOINT Air Conditioning Tubes At Housing

http://www.minnparbackhoeparts.com/

09-63		p1	02/05

CABINE - CHAUFFAGE

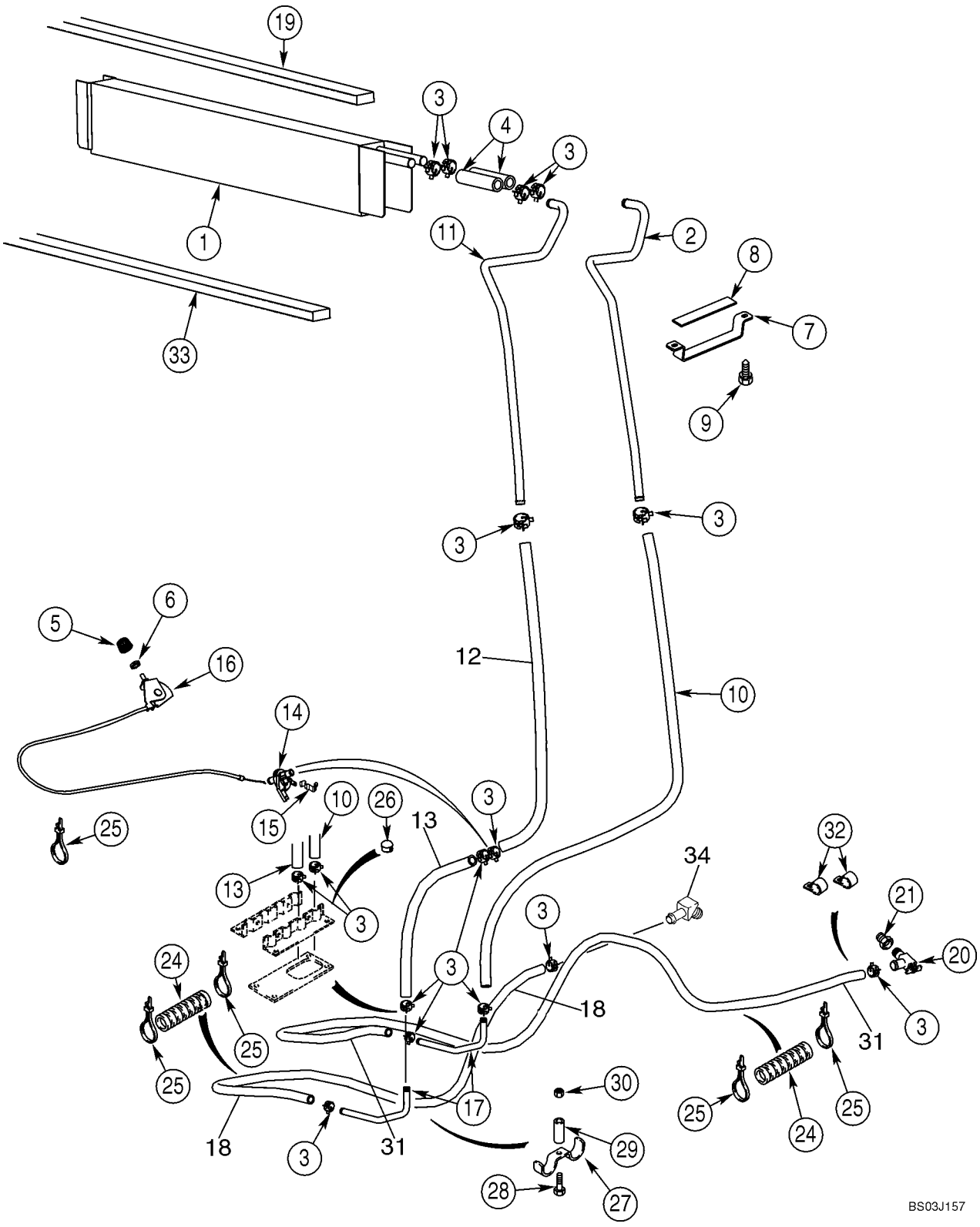

http://www.minnparbackhoeparts.com/

CABINE - CHAUFFAGE

REF	FN	PART NUMBER	YR/SN	QTY	DESCRIPTION
1		360262A2		1	ECHANGEUR DE CHALEUR Core, Mounts In Blower Housing Box; Seal Mounts On Top Of Core On Models With Heat Only
2		400282A1		1	TUBE Front
3		1954736C1		14	BRIDE No. 24
4		377222A1		2	FLEXIBLE 100 mm; Cut From 97252CX
5		400379A1		1	PLAQUE 23 mm
6		A42561		1	ECROU
7		388762A1		1	PATTE FIXATION
8		389402A1		1	JOINT
9		281-14520		2	VIS AUTO-TARAUDEUSE With Washer, No. 10 x 1, 25
10		368801A2		1	FLEXIBLE 1361 mm; Cut From 97252CX
11		400280A1		1	TUBE Rear
12		448428A1		1	FLEXIBLE AU METRE 1175 mm (46-1/4 in); Heater Valve To Core; Cut From 97252CX
13		448429A1		1	FLEXIBLE AU METRE 150 mm (5-29/32 in) Floor To Valve; Cut From 97252CX
14		1331087C1		1	SOUPAPE Heater Control
15		1954626C1		1	COLLIER
16		1999666C1		1	COMMANDE Heater; Includes 1999667C1, 1999668C1
		1999667C1		1	COMMANDE
		1999668C1		1	CABLE
17		190675A1		2	TUYAU
18		377232A2		1	DURITE HOSE 2650 mm (104-21/64 in); Heater; Return To Water Pump; Cut From 97252CX
19		406287A1		1	JOINT 19 x 19 x 736 mm; Location Of Seal On Models With Heat Only; On Models With Air Conditioning, Seal Is Located On Evaporator Core
20		301803R1		1	VALVE D'ARRET
21		221-89		1	RÉDUCTION 1/2 x 3/8; Replaces Existing Plug
24		D132982		7	GAINE Sleeve, 400 mm (15-3/4 in)
25		L18337		6	SANGLE 15 in
26		353-410		2	BOUCHON 7/8; Models With Heat Only
27		D143427		1	COLLIER
28		614-8030		1	BOULON M8 x 30

http://www.minnparbackhoeparts.com/

09-63		p2	02/05

CABINE - CHAUFFAGE

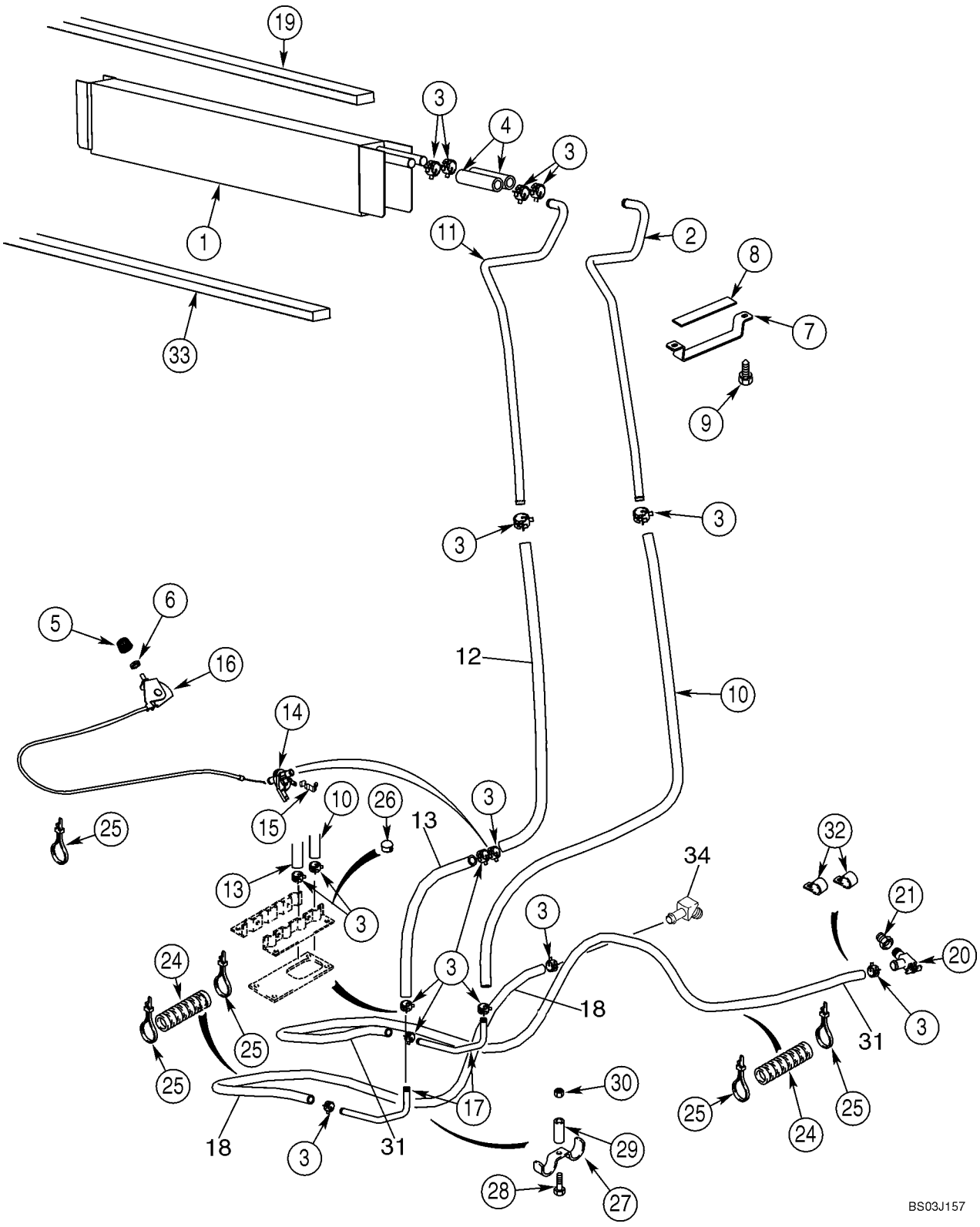

http://www.minnparbackhoeparts.com/

CABINE - CHAUFFAGE

REF	FN	PART NUMBER	YR/SN	QTY	DESCRIPTION
29		D143417		1	ENTRETOISE
30		825-2408		1	ECROU M8
31		377233A2		1	DURITE HOSE 1830 mm (72-3/64 in); Heater; Inlet From Engine; Cut From 97252CX
32		D88052		2	COLLIER
33		1987096C1		1	PLAQUE, GRANDE Seal, Below Heater Core; Location Of Seal On Models With Heat Only; On Models With Air Conditioning, Seal Is Located At Rear Of Housing
34		217-144		1	COUDE 45 deg, 5/8 stm x 1/2 NPTF

http://www.minnparbackhoeparts.com/

09-64		p1	01/04

CABINE - CONDUITES DE LA CLIMATISATION, RADIATEUR D'EVAPORATION

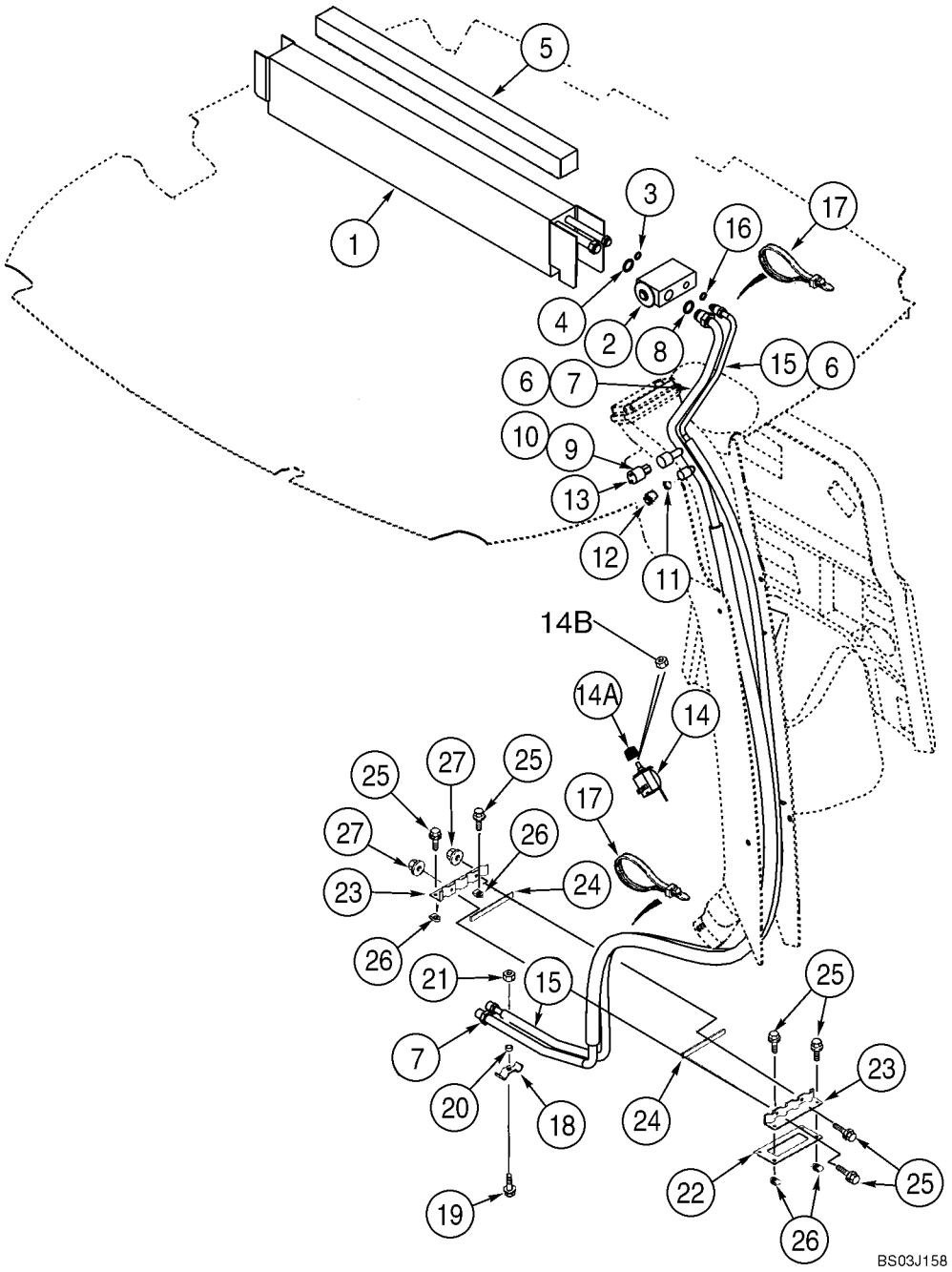

http://www.minnparbackhoeparts.com/

CABINE - CONDUITES DE LA CLIMATISATION, RADIATEUR D'EVAPORATION

REF	FN	PART NUMBER	YR/SN	QTY	DESCRIPTION
		363832A5		1	EVAPORATEUR Incl. Ref 1 - 4; Not Available as An Assembly; Order Components
1		360263A4		1	EVAPORATEUR Core
2		386535A1		1	SOUPAPE
3		128484A1		1	JOINT THORIQUE 7/16 ID x 1/16
4		128485A1		1	JOINT THORIQUE 9/16 ID x 1/16
		83822C1		3	RUBAN ADHESIF Insulation; 63,5 (2-1/2 in) x 610 mm (24-1/64 in)
5		406287A1		1	JOINT 19 x 19 x 736 mm; Adhesive Back; Models With Heat and Air, Locate Seal On Top Of Core
		345-621		2	RUBAN ADHESIF 2 x 6 in
7		360257A1		1	GAINE PLASTIQUE Suction; Incl. Ref 8 - 12
8		128485A1		1	JOINT THORIQUE 9/16 ID x 1/16
9		128483A1		1	JOINT THORIQUE 5/16 ID x 1/16; Valve Core
10		1250594C1		1	NOYAU Low Pressure Switch
11		1250594C1		1	NOYAU Low Side Service Port
12		122553A1		1	CHAPEAU
13		122579A1		1	CONTACTEUR Low Pressure
14		370381A1		1	CONTACTEUR Temperature Control; Air Conditioning
14A		400379A1		1	PLAQUE 23 mm
14B		A42561		1	ECROU 7/16
15		360256A1		1	GAINE PLASTIQUE Pressure; Incl. Ref 16
16		128483A1		1	JOINT THORIQUE 5/16 ID x 1/16
17		L18337		4	SANGLE 15 in
18		D143427		1	COLLIER
19		614-8030		1	BOULON M8 x 30
20		D143417		1	ENTRETOISE
21		825-2408		1	ECROU M8
22		124011A1		1	JOINT
23		123980A1		2	BRIDE CLAMP, Heater and Air Conditioning Hoses
24		181979A1		2	JOINT
25		845-6020		6	VIS M6 x 20
26		833-40406		4	ECROU M6
27		825-2406		2	ECROU M6

http://www.minnparbackhoeparts.com/

09-65		p1	05/04

CABINE - CLIMATISATION, CONDENSATEUR, DESSICCATEUR

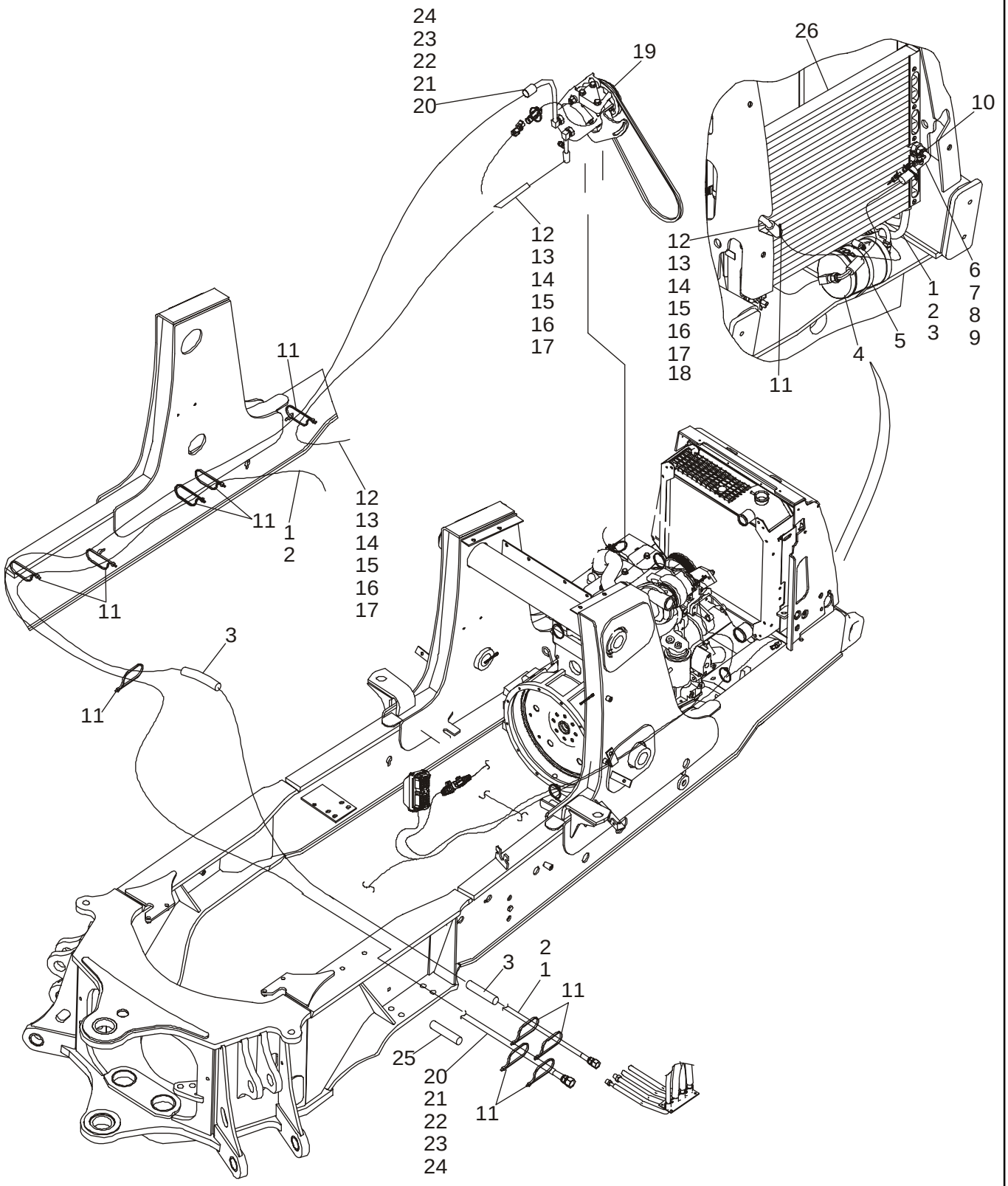

http://www.minnparbackhoeparts.com/

CABINE - CLIMATISATION, CONDENSATEUR, DESSICCATEUR

REF	FN	PART NUMBER	YR/SN	QTY	DESCRIPTION
1		87421777		1	FLEXIBLE (ASSEMBLE) 2730 mm (107-1/2 in), Receiver Drier to Cab; Incl. Ref 2
2		128483A1		2	JOINT THORIQUE 5/16 ID x 1/16
3		191704A1		4	GAINE 460 mm (18-1/8 in)
4		86984155		1	RECEVEUR-DÉSHYDRAT. Receiver-Drier
5		214-1464		2	COLLIER No. 64
6		87421775		1	FLEXIBLE (ASSEMBLE) 431 mm (17 in), Condenser to Drier; Incl. Ref 7 - 9
7		128483A1		3	JOINT THORIQUE 5/16 ID x 1/16
8		1250594C1		1	NOYAU Valve, High Pressure Switch
9		122081A1		1	RACCORD Switch
10		232948A1		1	PRESSOSTAT High Pressure
11		L18337		15	SANGLE
12		87421776		1	FLEXIBLE (ASSEMBLE) 1542 mm (60-3/4 in), Compressor to Condenser; Incl. Ref 13 - 17
13		128484A1		1	JOINT THORIQUE 7/16 D x 1/16
14		128485A1		1	JOINT THORIQUE 9/16 ID x 1/16
15		1999926C1		1	EMBOUT DE TUYAUTERIE
16		1250594C1		1	NOYAU Valve
17		122554A1		1	CHAPEAU Sealing Cap
18		193913A1		1	PROTECTEUR Guard, 1200 mm (47-1/4 in)
19		87430122		1	COMPRESSEUR CLIMATIS. Component Parts Not Serviced Separately, See Figure 09-66 for Mounting
20		87427294		1	FLEXIBLE (ASSEMBLE) 2240 mm (88-3/16 in), Cab to Compressor; Incl. Ref 21 - 24
21		128485A1		2	JOINT THORIQUE 9/16 ID x 1/16
22		1999927C1		1	EMBOUT DE TUYAUTERIE
23		1250594C1		1	NOYAU Valve
24		122553A1		1	CHAPEAU Sealing
25		191703A1		2	GAINE Sleeve, 400 mm (15-3/4 in)
26		87417329		1	CONDENSATEUR Condenser
		895-11008		4	RONDELLE 9 x 16 x 1,6 mm
		829-1408		4	ECROU M8

http://www.minnparbackhoeparts.com/

09-66		p1	03/04

CABINE - COMPRESSEUR DE LA CLIMATISATION

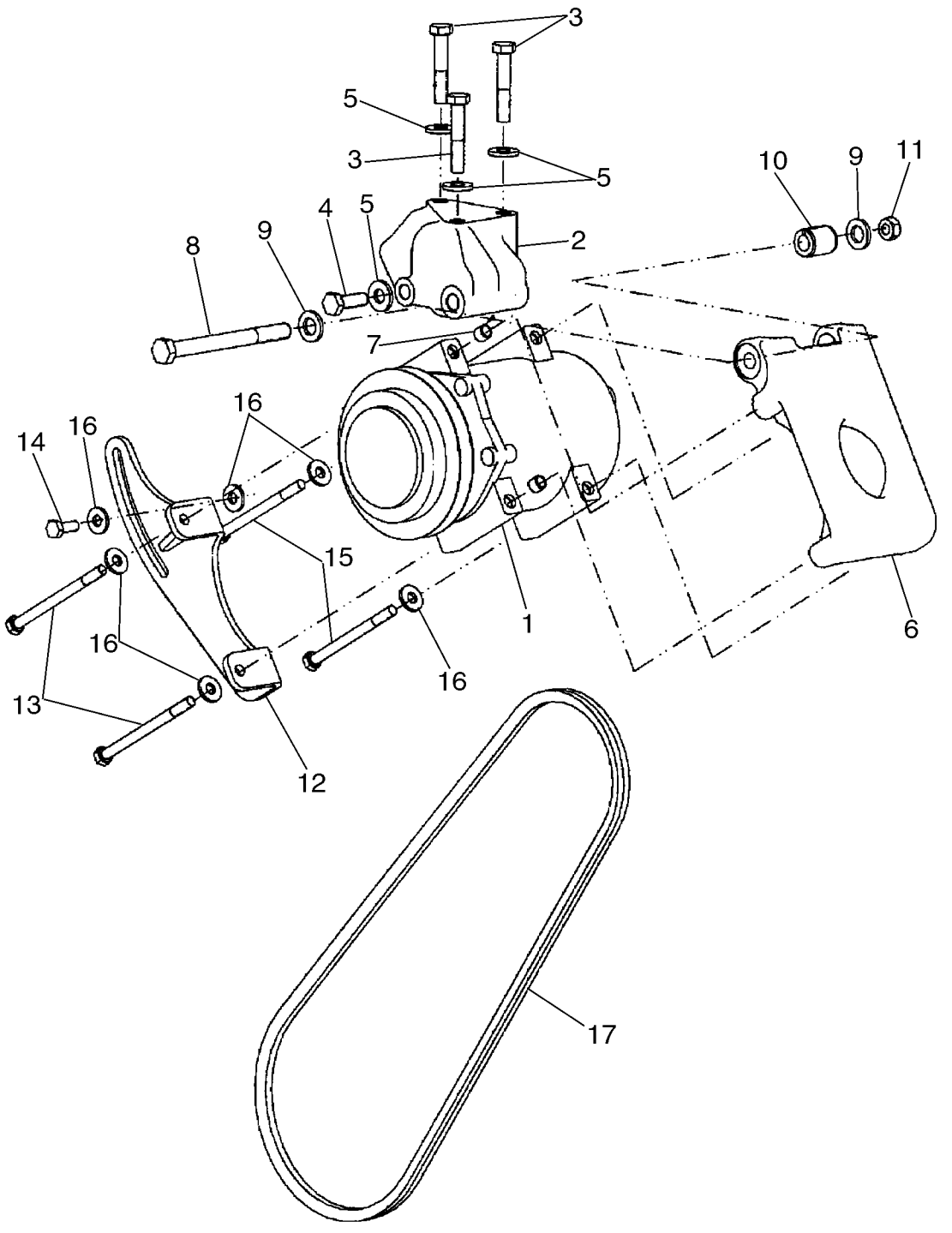

http://www.minnparbackhoeparts.com/

CABINE - COMPRESSEUR DE LA CLIMATISATION

REF	FN	PART NUMBER	YR/SN	QTY	DESCRIPTION
1		87430122		1	COMPRESSEUR CLIMATIS. Compressor Component Parts Not Serviced Separately
2		87429950		1	SUPPORT Mounting Support
3		814-10055		3	BOULON M10 x 55
4		614-10030		1	VIS M10 x 30
5		896-15010		4	RONDELLE 11 x 24 x 3mm
6		87429948		1	SUPPORT
7		87429952		2	ANNEAU
8		814-12130		1	BOULON M12 x 130
9		896-11012		2	RONDELLE 13,5 x 24 x 3 mm
10		87429951		1	ENTRETOISE Pivot
11		829-1412		1	ECROU M12
12		87429949		1	EQUERRE
13		814-8110		2	BOULON M8 x 110
14		614-8020		1	BOULON M8 x 20
15		814-8100		2	BOULON M8 x 100
16		896-15008		6	RONDELLE 9 x 21 x 2,5 mm
17		87429954		1	COURROIE DE TRANSMISS. V-Belt

http://www.minnparbackhoeparts.com/

09-67		p1	05/05

STRUCTURE ROPS - CADRE, COUVERCLES, RETROVISEUR, VISIERE-ECRAN

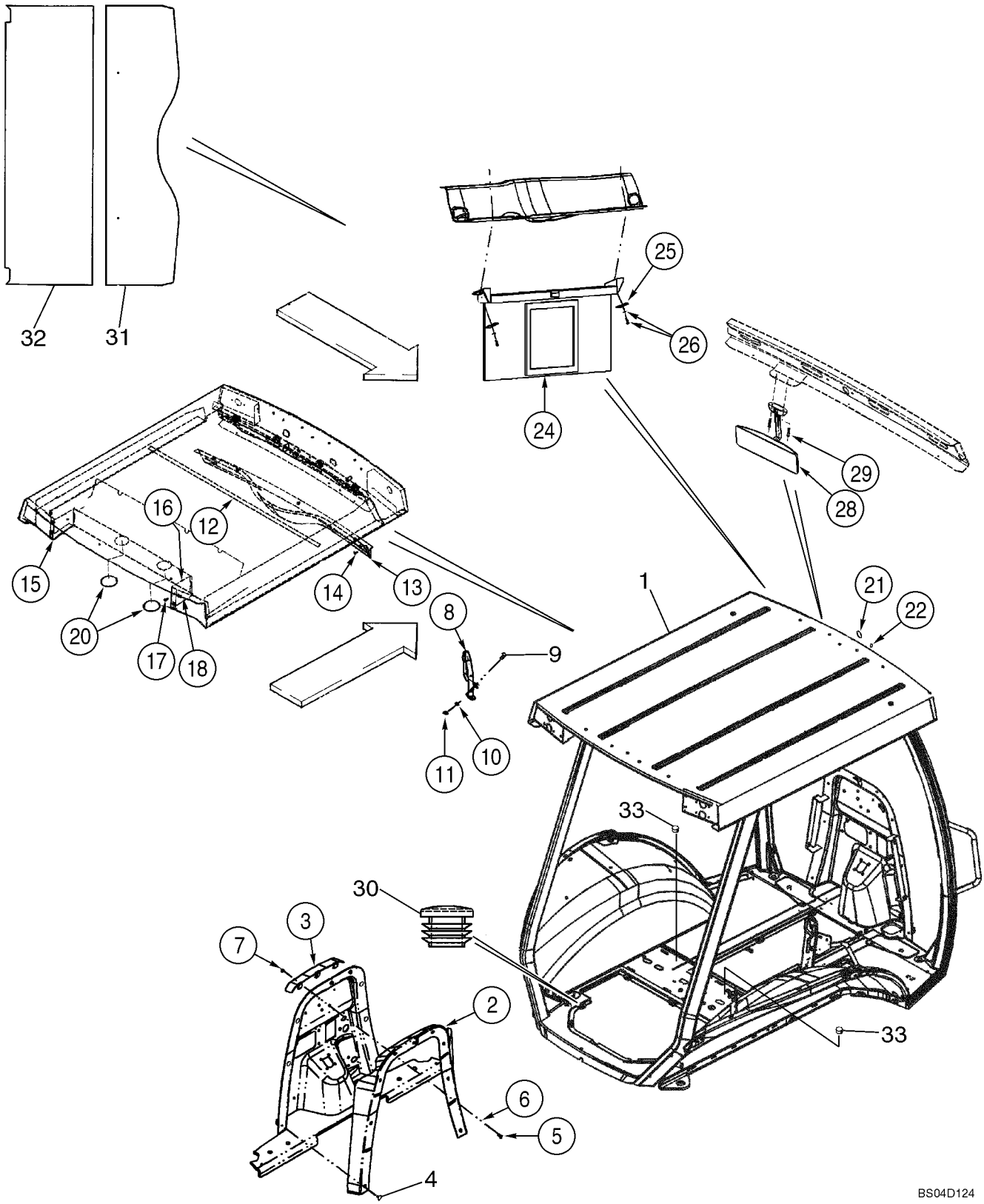

http://www.minnparbackhoeparts.com/

STRUCTURE ROPS - CADRE, COUVERCLES, RETROVISEUR, VISIERE-ECRAN

REF	FN	PART NUMBER	YR/SN	QTY	DESCRIPTION
		87449825		1	CANOPY ASSEMBLY, Includes 87443434 580SM Frame, Glass, Wiper and Roof Foam Panels; Replaces 87434983 and 87443436 Canopy Assembly
1		87443434		1	CABINE-CHASSIS 580SM ROPS Canopy Frame; Order From Machinery Price List; Replaces 87434974 Frame
		87443437		1	CANOPY ASSEMBLY, Includes 87443435 580SM+ Frame, Glass, Wiper and Roof Foam Panels; Replaces 87434984 Canopy Assembly
1		87443435		1	ARCEAU/SECURITE ASS 580SM+ Canopy Frame; Order From Machinery Price List; Replaces 87434975 Frame
2		396938A3		1	MOULURE Firewall
3		395478A3		1	PATTE FIXATION
4		D143242		6	BOUCHON Push-In Fastener
5		614-8020		3	BOULON M8 x 20
6		495-81001		3	RONDELLE ,375 x 1,125 x ,065
7		832-10408		3	ECROU M8
8		392930A1		1	RAMBARDE Grab Handle
9		87310177		2	BOULON M10 x 25; 8.8, Round Head Square Neck, Stainless Steel; Replaces 811-10025 Non-Stainless Steel Screw Used On Some Models
10		495-81267		2	RONDELLE ,469 x 1,5
11		832-10410		2	ECROU M10
12		385506A1		1	PROFIL PROTECTEUR 127 mm; Foam; Adhesive Back
13		367712A3		1	COUVERCLE Harness
14		F64519		5	VIS No. 10 x 3/4; For Service, Order 265-16512, F64315
15		357099A1		1	COUVERCLE Left-Hand
16		357100A1		1	COUVERCLE Right-Hand
17		87310098		4	BOULON Flange, M6 x 20, Stainless Steel; Replaces 555-2 Non-Stainless Steel Screw Used On Some Models
18		833-40406		4	ECROU Spring, M6
20		1302758C1		2	BOUCHON 3 in

http://www.minnparbackhoeparts.com/

09-67		p2	05/05

STRUCTURE ROPS - CADRE, COUVERCLES, RETROVISEUR, VISIERE-ECRAN

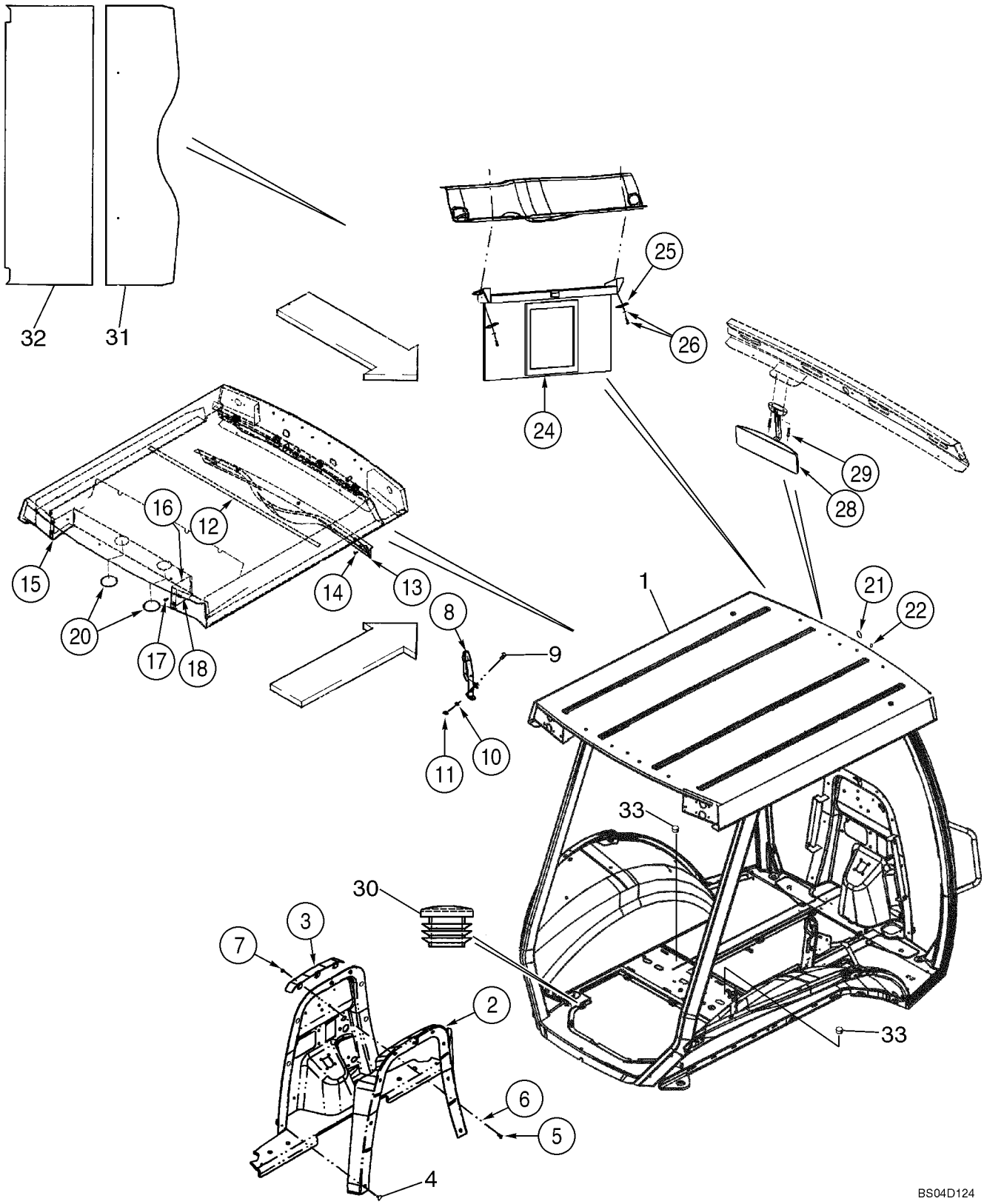

http://www.minnparbackhoeparts.com/

STRUCTURE ROPS - CADRE, COUVERCLES, RETROVISEUR, VISIERE-ECRAN

REF	FN	PART NUMBER	YR/SN	QTY	DESCRIPTION
		353-410		1	BOUCHON Dome, 7/8 Black Nylon
21		411549A1		1	BOUCHON 1 in; Windshield Frame
22		353-421		2	BOUCHON 3/16; Upper Windshield Frame
24		364180A1		1	PARE-SOLEIL
25		409618A1		2	PLAQUE 1/4 in Mounting Hole
26		396516A1		2	POINTEAU No 10 x 1 st; With Washer; Phillips
28		87406924		1	RÉTROVISEUR
29		286-56520		2	VIS No. 10 x 1-1/4
30		382298A1		2	BOUCHON 7/8 in
31		431583A1		1	PANNEAU Foam; Roof Front
32		431584A1		1	PANNEAU Foam: Roof Rear
33		87301515		2	BOUCHON PLASTIQUE Flat Top, Black Glossy, 1-3/16 in Hole Size; Brake Bleeder

http://www.minnparbackhoeparts.com/

09-68		p1	01/04

STRUCTURE ROPS - VITRE

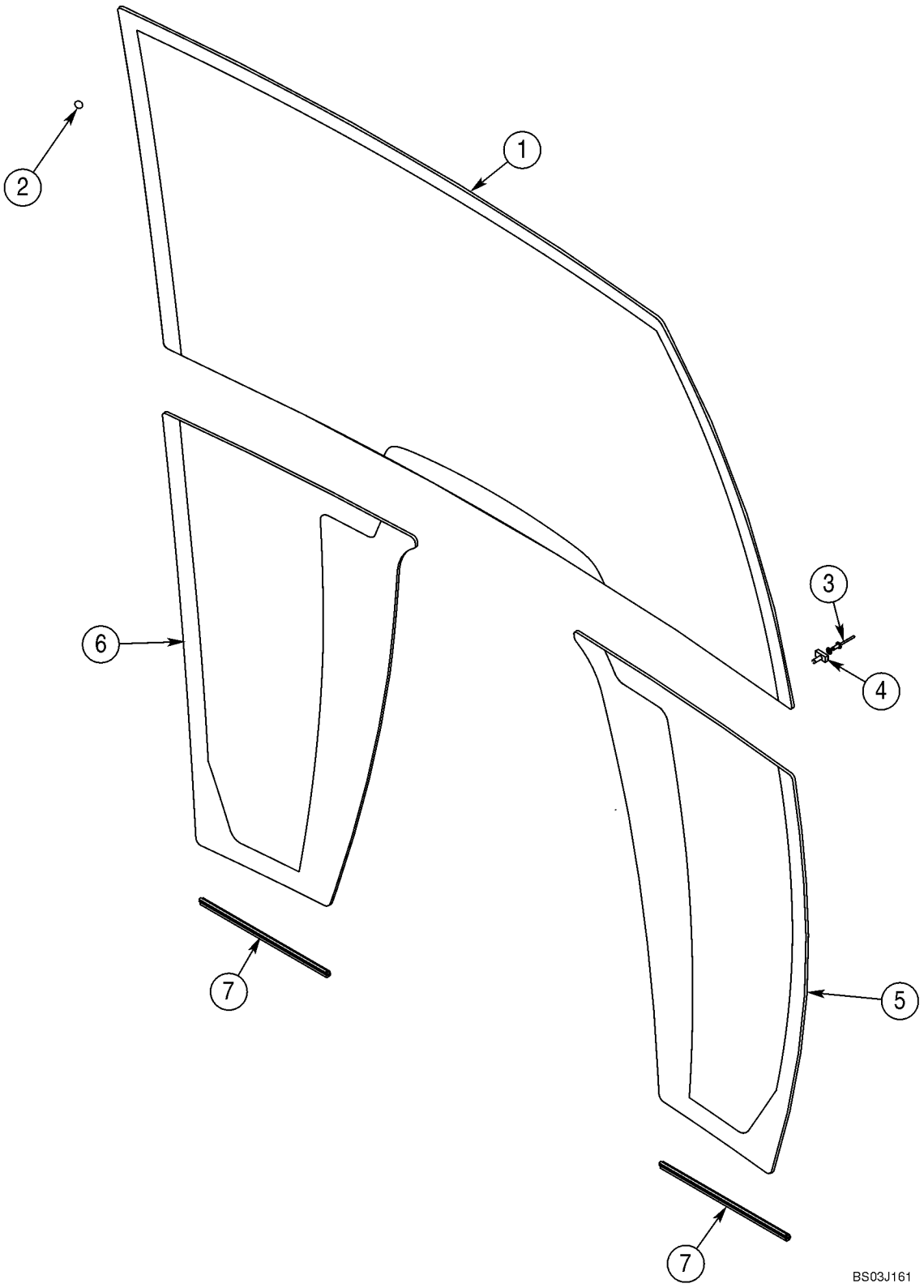

http://www.minnparbackhoeparts.com/

STRUCTURE ROPS - VITRE

REF	FN	PART NUMBER	YR/SN	QTY	DESCRIPTION
1		448607A1		1	PARE-BRISE
2		391827A1		28	ENTRETOISE
3		151-516		2	RIVET
4		279482A1		2	ATTACHE ASSEMBLEE
5		448609A1		1	PARE-BRISE Lower; Right-Hand
6		448608A1		1	PARE-BRISE Lower; Left-Hand
7		395793A1		2	PROFIL PROTECTEUR Lower Glass Trim

http://www.minnparbackhoeparts.com/

09-69		p1	05/05

STRUCTURE ROPS - ESSUIE-GLACE AVANT ET LAVE-GLACE

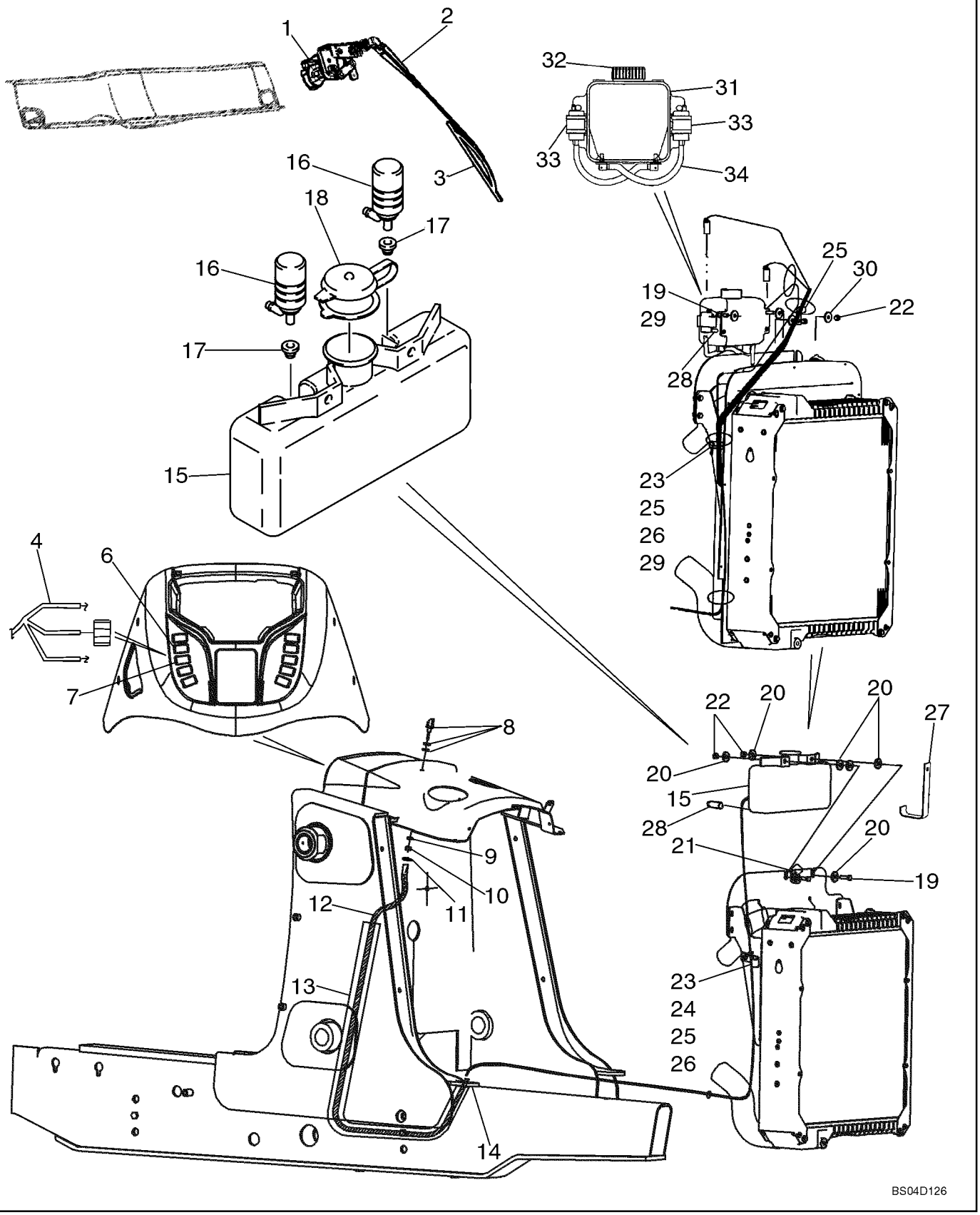

http://www.minnparbackhoeparts.com/

STRUCTURE ROPS - ESSUIE-GLACE AVANT ET LAVE-GLACE

REF	FN	PART NUMBER	YR/SN	QTY	DESCRIPTION
1		450037A1		1	MOTEUR ESSUIE-GLACE 12V
		814-6050		2	BOULON M6 x 50; Wiper Motor Mounting
		892-11006		2	RONDELLE FREIN M6
2		D128745		1	BRAS D'ESSUIE-GLACE
3		414426A1		1	BALAI D'ESSUIE-GLACE 600 mm
		404617A1		1	FAISCEAU Front Lamps and Wiper
4		87433546		1	FAISCEAU COMPLET Front Console Options; Includes (1) L71879 Diode
5		87436675		1	FAISCEAU COMPLET Chassis Options; Includes (4) L71879 Diodes
6		386785A1		1	CONTACTEUR Front Wiper
7		386787A1		1	CONTACTEUR Windshield Washer
8		284154A1		1	INJECTEUR Includes A Steel and Rubber Washer Which Are Not Serviced Separately
9		492-11038		1	RONDELLE FREIN 3/8"
10		425-106		1	ECROU 3/8
11		87444176		1	COLLIER
12		87428316		1	FLEXIBLE AU METRE 3150 mm (124-1/64 in); Cut From 1968141CX
13		386718A3		1	GARANT 1630 mm (64-3/16 in); Cut From 397155A2
14		L18337		6	SANGLE 15 in
		E46560		1	RÉSERVOIR Windshield Washer; Incl. Ref 15 - 18; If Used
15		NSS		1	NON FOURNI SEPAREMENT Reservoir
16		E47238		2	POMPE 12 Volt
17		E47239		2	JOINT Pump to Reservoir
18		E47240		1	BOUCHON Cap
19		614-8030		2	BOULON M8 x 30
20		496-41041		7	RONDELLE 13/32 x 1-1/8 x 1/8
21		D147383		1	CLIP J-Clamp, 5/8
22		832-10408		2	ECROU M8
23		614-8016		1	VIS M8 x 16
24		895-11008		1	RONDELLE Flat, 8 mm
25		D147383		1	CLIP J-Clamp, 5/8
26		829-1408		1	ECROU M8
27		87442924		1	JAMBE-DE-FORCE Used With E46560 Reservoir; If Used

http://www.minnparbackhoeparts.com/

09-69		p2	05/05

STRUCTURE ROPS - ESSUIE-GLACE AVANT ET LAVE-GLACE

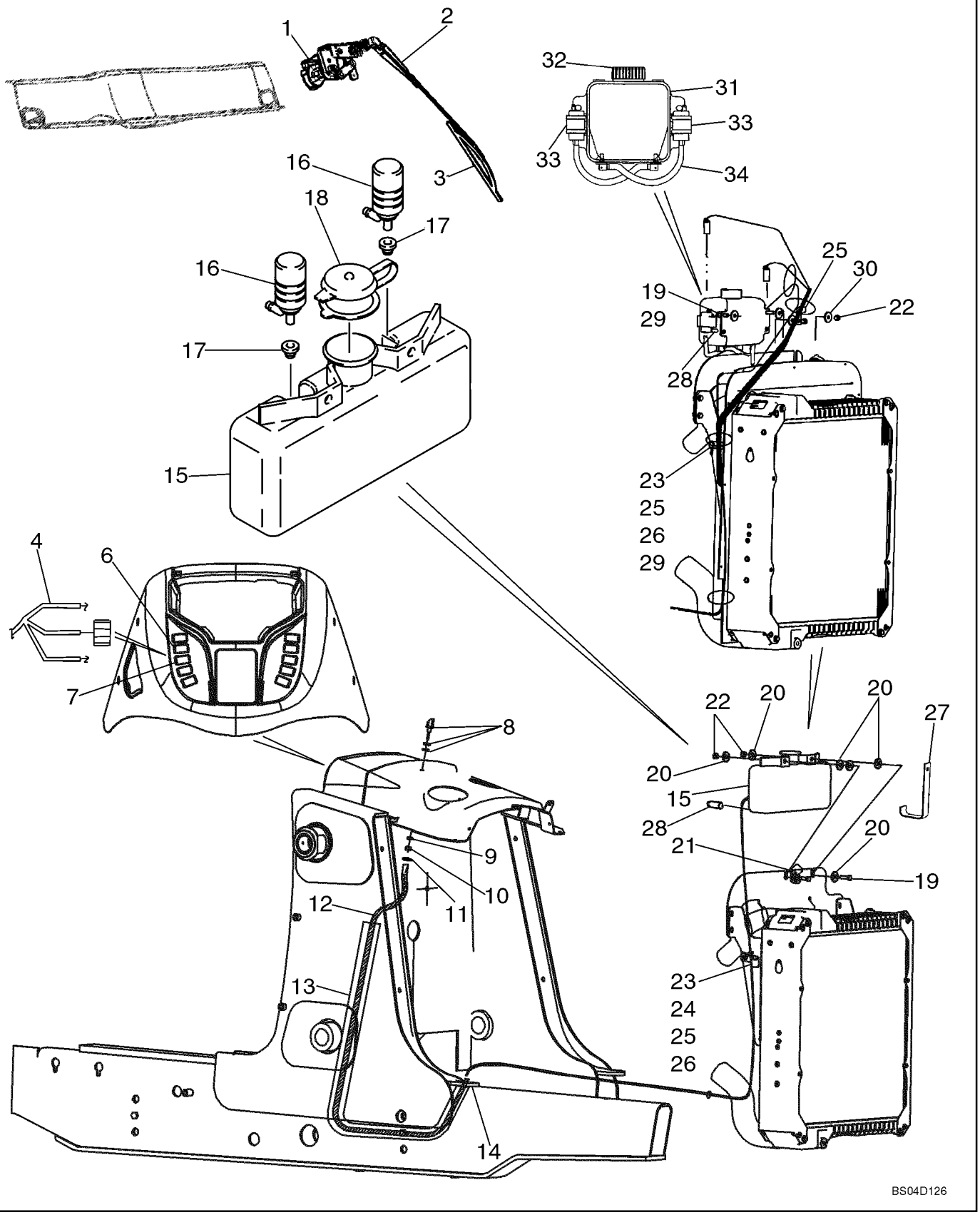

http://www.minnparbackhoeparts.com/

STRUCTURE ROPS - ESSUIE-GLACE AVANT ET LAVE-GLACE

REF	FN	PART NUMBER	YR/SN	QTY	DESCRIPTION
28		87441758		1	COUPELLE PLUG, Unused Pump Port
29		896-11008		3	RONDELLE 9 x 17 x 2
30		496-41041		4	RONDELLE 13/32 x 1-1/8 x 1/8
		87448685		1	LAVE-GLACE RESERVOIR; Incl. Ref 31 - 35; If Used
31		87449514		1	RESERVOIR DE LAVE-GLACE 20 Quart
32		86507190		1	CACHE-BOUCHON
33		86507198		2	POMPE-PETITE Component Parts Not Serviced Separately
34		87449517		1	FLEXIBLE AU METRE 203 mm (8 in)
35		L18337		1	SANGLE Not Illustrated

http://www.minnparbackhoeparts.com/

RÉTROVISSEUR - SUPPORT, MODÈLE DE CABINE

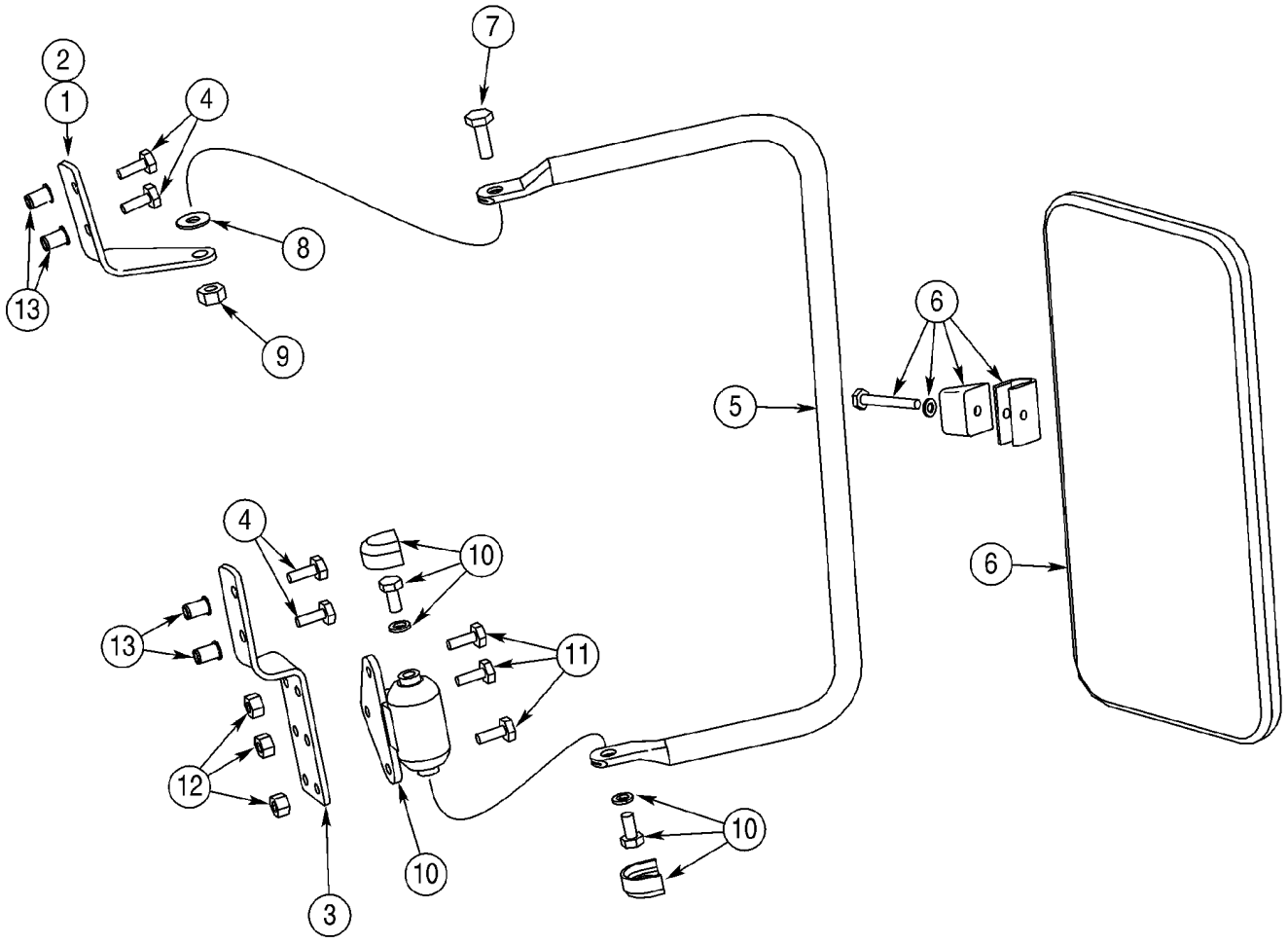

BC00H065

http://www.minnparbackhoeparts.com/

RÉTROVISSEUR - SUPPORT, MODÈLE DE CABINE

REF	FN	PART NUMBER	YR/SN	QTY	DESCRIPTION
		397974A1		1	POCHETTE Outside Mirror; Incl. Ref 1 - 14 and Instructions
1		402933A1		1	PATTE FIXATION Upper; Right-Hand
2		402934A1		1	PATTE FIXATION Upper; Left-Hand; Not Illustrated
3		402936A1		2	PATTE FIXATION Lower
4		413-412		8	BOULON 1/4 x 3/4
5		402935A1		2	TUBE PORTEUR
6		R54682		2	RETROVISEUR Exterior
7		413-516		2	BOULON 5/16 x 1
8		A167037		2	RONDELLE
9		231-4115		2	CONTRE-ECROU 5/16
10		D142144		2	FUSEE Includes Hardware
11		413-412		6	BOULON 1/4 x 3/4
12		231-1444		6	CONTRE-ECROU 1/4
13		255447A1		10	RIVET Threaded Insert; Cab Front ROPS Post
14		NSS		1	NON FOURNI SEPAREMENT Tool, Insert Nut; Not Illustrated

http://www.minnparbackhoeparts.com/

09-71		p1	01/04

TRIANGLE VÉHICULE LENT

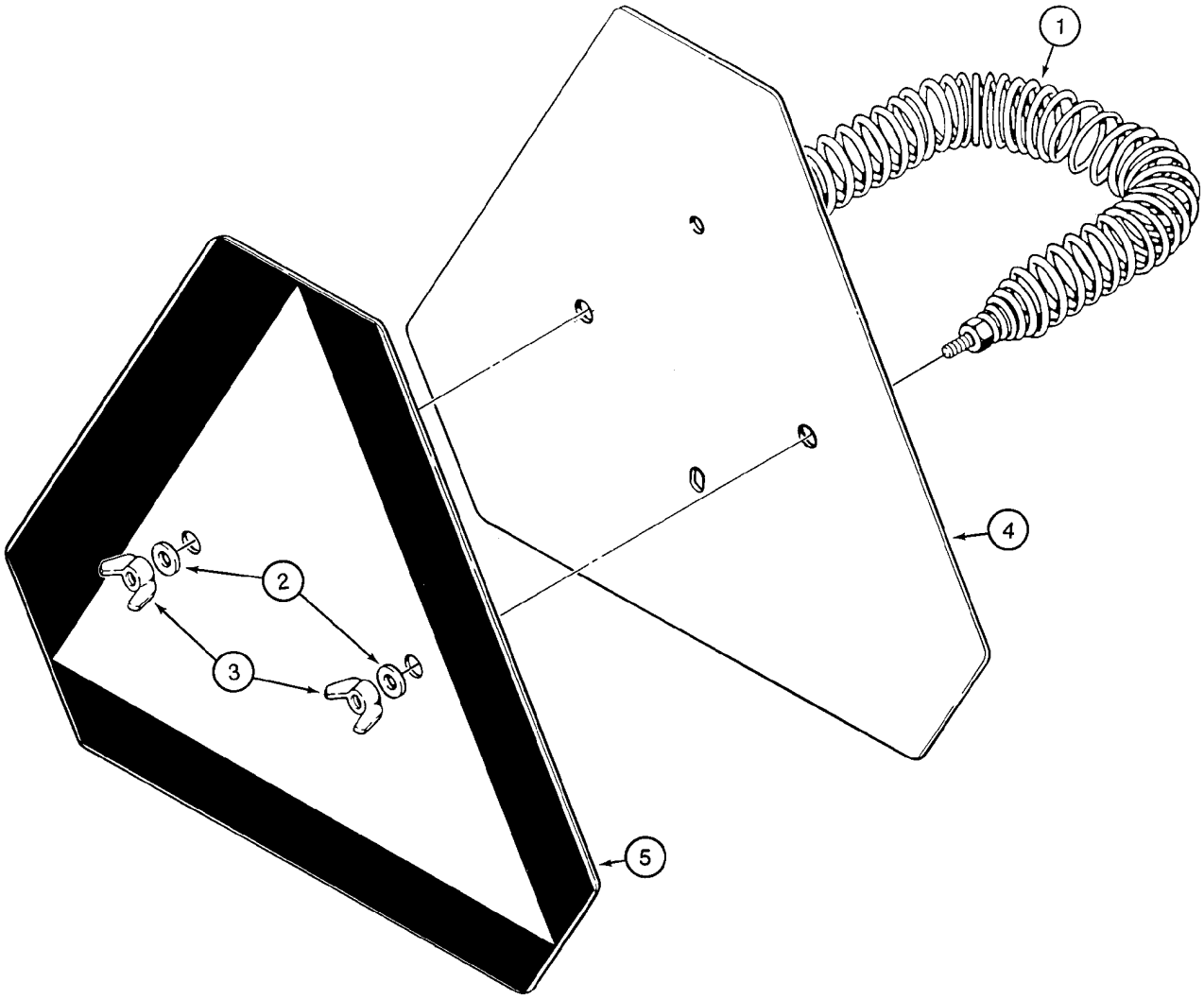

B9409034

http://www.minnparbackhoeparts.com/

TRIANGLE VÉHICULE LENT

REF	FN	PART NUMBER	YR/SN	QTY	DESCRIPTION
1		D52564		1	RESSORT
2		495-11028		2	RONDELLE 9/32 x 5/8 x 1/16
3		126177		2	ECROU A OREILLES 1/4
4		D123347		1	SIGNAL D'AVERTISSEME Incl. Ref 5
5		321-4311		1	DECALCOMANIE Slow Moving Vehicle

http://www.minnparbackhoeparts.com/

AUTOCOLLANTS

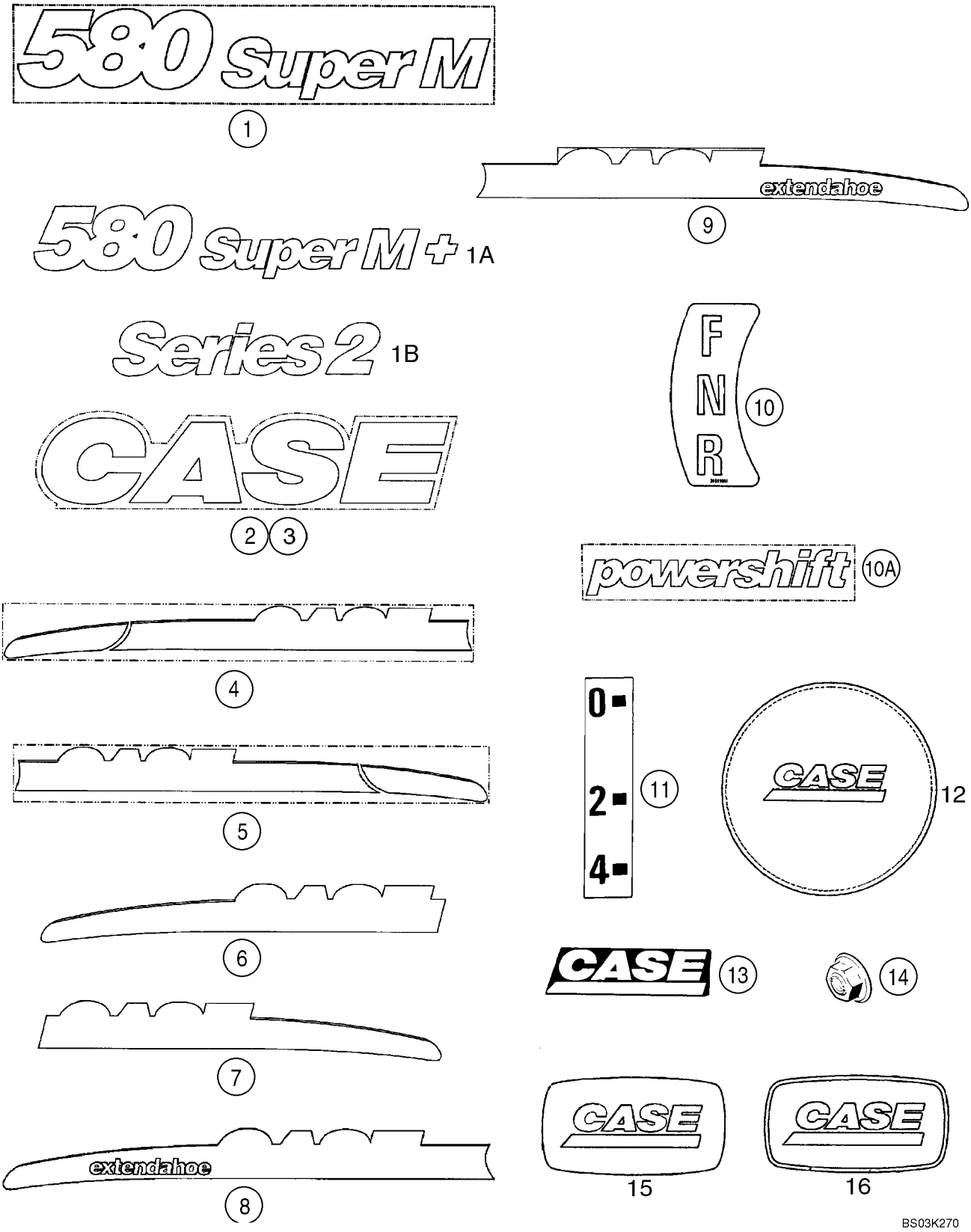

http://www.minnparbackhoeparts.com/

AUTOCOLLANTS

REF	FN	PART NUMBER	YR/SN	QTY	DESCRIPTION
1		401461A1		2	DECALCOMANIE 580 Super M Model Designation
1A		87438735		2	DECALCOMANIE 580 Super M + Model Designation
1B		87436192		2	DECALCOMANIE Series 2
2		401457A1		2	DECALCOMANIE 525 mm (20-11/16 in); Case Logo; Loader Arm
3		401458A1		4	DECALCOMANIE 655 mm (25-13/16 in); Case Logo; Backhoe Dipper
4		401459A2		1	DECALCOMANIE Case; Loader Arm Pin Stripe; Left-Hand Stripe
5		401460A2		1	DECALCOMANIE Case; Loader Arm Pin Stripe; Right-Hand Stripe
6		407009A2		1	DECALCOMANIE Case; Standard Dipper; Left-Hand Stripe
7		407010A2		1	DECALCOMANIE Case; Standard Dipper; Right-Hand Stripe
8		373698A2		1	DECALCOMANIE Case; Extendahoe Dipper; Left-Hand Stripe
9		373699A2		1	DECALCOMANIE Case; Extendahoe Dipper; Right-Hand Stripe
10		395910A2		1	DECALCOMANIE FNR (Forward/Neutral/Reverse); Shuttle Shift Lever Control Pattern
10A		373696A1		2	DECALCOMANIE Powershift
11		321-1708		1	DECALCOMANIE 0-2-4; Clam Bucket Opening Indicator
12		87435569		1	EMBLÈME Insert, Case, Steering Wheel
13		186989A1		1	DECALCOMANIE EMBLEM, Case
14		131-431		2	ECROU 1/4
15		87415931		2	DECALCOMANIE Case, 37 x 70 mm; Located on Engine Filters
16		87429186		1	EMBLÈME Case, 37 x 70 mm; Located on Engine

http://www.minnparbackhoeparts.com/

AUTOCOLLANTS

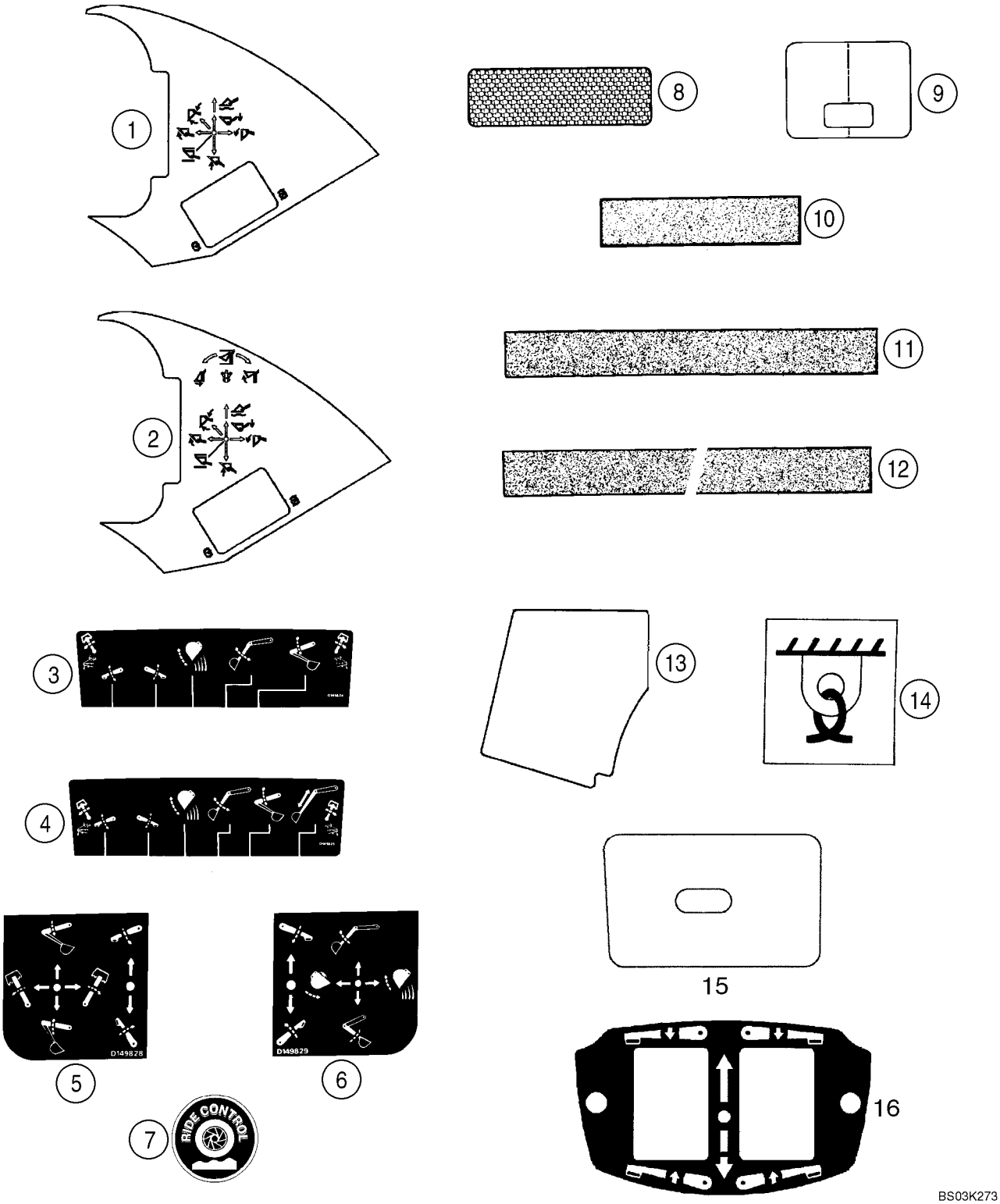

http://www.minnparbackhoeparts.com/

AUTOCOLLANTS

REF	FN	PART NUMBER	YR/SN	QTY	DESCRIPTION
1		384930A2		1	DECALCOMANIE Two Function Loader Control
2		384931A2		1	DECALCOMANIE Three Function Loader Control
3		D149824		1	DECALCOMANIE Upper; Standard Backhoe Control Pattern
4		D149825		1	DECALCOMANIE Upper; Extendahoe Control Pattern; With Foot Swing
5		D149828		1	DECALCOMANIE Upper; Standard Backhoe Control Pattern; With Hand Swing; Left-Hand Side Of Console
6		D149829		1	DECALCOMANIE Upper; Standard Backhoe Control Pattern; With Hand Swing; Right-Hand Side Of Console
7		304083A1		2	DECALCOMANIE Ride Control
8		449842A1		2	DECALCOMANIE 2 x 6-5/16 in; Red, Reflector
9		192450A1		1	DECALCOMANIE Clear Vinyl; Hood
10		D55216		2-11	TAMPON 2 x 9 in; Anti-Skid
11		D80270		3-4	RUBAN 635 mm (25 in); Anti-Skid
12		307348A1		2	RUBAN 700 mm (27-9/16 in); Anti-Skid; 40 gallon fuel tank
13		367848A2		1	PLAQUE DE GARNISSAGE Anti-Skid; Canopy Models
14		139728A1		4	DECALCOMANIE Tie Down
15		406723A1		1	DECALCOMANIE Poly Film; Lockup Cover; Canopy Models
16		87423812		1	DECALCOMANIE Stabilizer Switch; Models With Pilot Controls

http://www.minnparbackhoeparts.com/

AUTOCOLLANTS



1

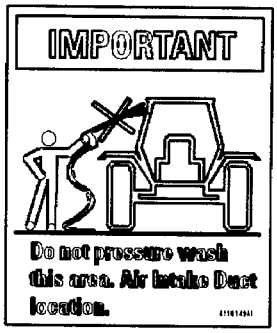

2

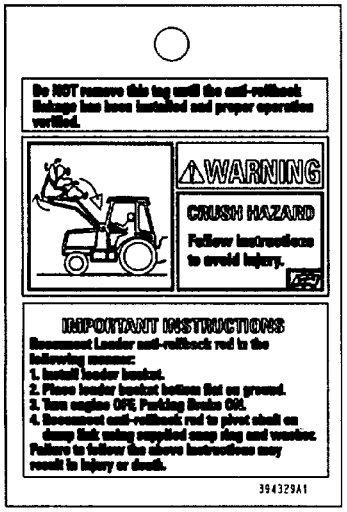

3

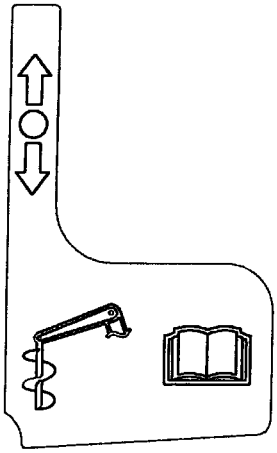

4

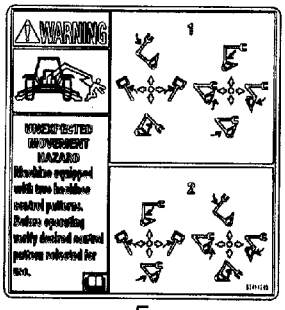

5

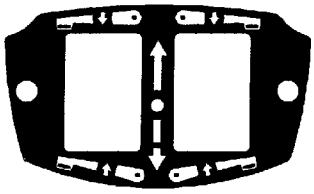

6

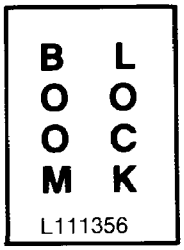

7

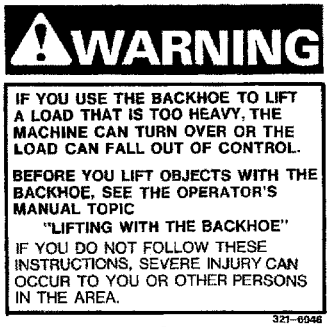

8

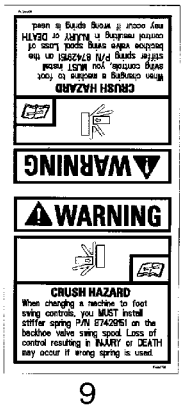

9

BS04C201

http://www.minnparbackhoeparts.com/

AUTOCOLLANTS

REF	FN	PART NUMBER	YR/SN	QTY	DESCRIPTION
1		116534A1		1	POCHETTE Decal; Seat Weight Adjustment; Included In Seat Assy
2		411049A1		1	DECALCOMANIE Important; Do Not Pressure Wash This Area
3		394329A1		1	ETIQUETTE Warning; Anti-Rollback Hazard
4		87430677		1	DECALCOMANIE Auxiliary Hydraulics
5		87414205		1	DECALCOMANIE Warning, Unexpected Movement; If Used
5		87305413		1	DECALCOMANIE Warning, Unexpected Movement; Pattern Selecting; With Backhoe/Excavator Black Silhouette on Decal; If Used; Not Illustrated
6		87423812		1	DECALCOMANIE Stabilizer Control Switch
7		L111356		1	DECALCOMANIE Boom Lock; Included In 399221A1 Backhoe Boom Lock Kit
8		321-6046		2	DECALCOMANIE Warning, If You Use The Backhoe To Lift A Load That Is Too Heavy; Included With 189957A1 Boom Lock Valve Used In 399221A1 Backhoe Boom Lock Kit
9		87444776		1	DECALCOMANIE Warning, Crush Hazard; When Changing A Machine to Foot Swing Controls; English
9		87307893		1	DECALCOMANIE Warning, Crush Hazard; When Changing A Machine to Foot Swing Controls; Latin American spanish
9		87307896		1	DECALCOMANIE Warning, Crush Hazard; When Changing A Machine to Foot Swing Controls; Canadian French

http://www.minnparbackhoeparts.com/

AUTOCOLLANTS - ANGLAIS

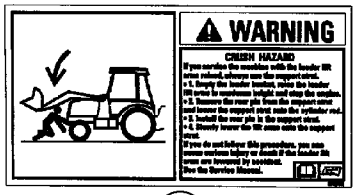

1

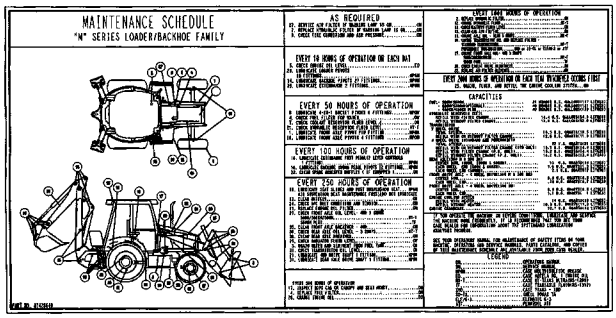

2

FUSES			87423410
SPARE	----	----	----
SPARE	POWER OUTLET 30A	----	PILOT CONTROLS BH AUX (OPT.) 15AMP
FRONT WORK LIGHTS 20A	POWER OUTLET 30A	AIR SUSP. SEAT-AIR COMP. (OPT) 20A	RETURN TO DIG 10A
REAR WORK LIGHTS 20A	SPARE	SPARE	DRIVING LIGHTS 15A
FUEL SHUTOFF 10A	BLOWER 25A	DOME LIGHT 10A	ROTATING BEACON (OPT) 10A
INSTRUMENTS ALARM SYS. 10A	SIGNAL LIGHTS 15A	HORN 10A	4WD (OPT) 10A
STARTING TRANSMISSION CONTROL 10A	RADIO, RIDE CONTROL, HAND AUX HYD'S 15A	RADIO (BATT) (OPT) 10A	WIPERS 15A

8

RELAYS			87423409
POWER RELAY #1	POWER RELAY #4	FLASHER RELAY	STARTER RELAY
POWER RELAY #2	LDR LVR DIFF LK RELAY	SHUTTLE INTLK TIMING RELAY	NEUTRAL RELAY
POWER RELAY #3	CLUTCH RELAY	SHUTTLE INTLK RELAY	FORWARD RELAY
----	----	----	REVERSE RELAY
----	----	AC RELAY (OPTION)	----

9



3

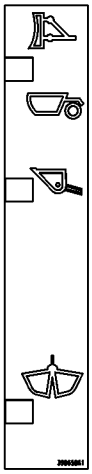

5

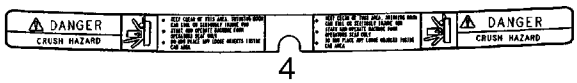

4

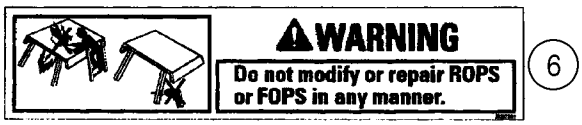

6

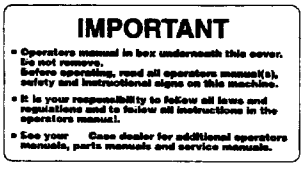

7

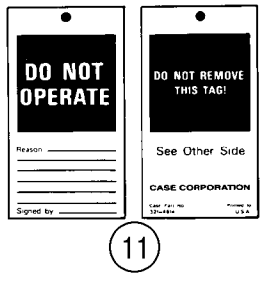

11

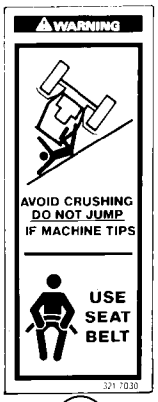

10



12

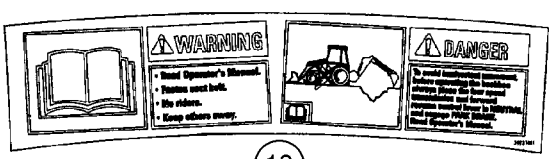

13

BS03K274

http://www.minnparbackhoeparts.com/

AUTOCOLLANTS - ANGLAIS

REF	FN	PART NUMBER	YR/SN	QTY	DESCRIPTION
1		384264A1		1	DECALCOMANIE Warning; Crush Hazard; Loader Arm Support Strut
2		87308996		1	DECALCOMANIE Maintenance Schedule; Supplied by Parts and Components; Replaces 87428640, 87445785
3		8603092		1	DECALCOMANIE Warning; Explosion Hazard, Do Not Use Ether
4		86992976		1	DECALCOMANIE Danger; Crush Hazard
5		398658A1		1	DECALCOMANIE Clam Bucket Position
6		383972A1		1	DECALCOMANIE Warning; Do Not Modify or Repair ROPS or FOPS In Any Manner
7		144193A3		1	DECALCOMANIE Important; Operator's Manual In Box Underneath This Cover; Glove Box Lid
8		87423410		1	DECALCOMANIE Fuse Location
9		87423409		1	DECALCOMANIE Relay
10		321-7030		2	DECALCOMANIE Warning; Avoid Crushing; Do Not Jump / Use Seat Belt
11		321-4614		1	DECALCOMANIE TAG, Do Not Operate
12		86992975		2	DECALCOMANIE Warning; No Step/Not An Exit; Canopy
13		392374A1		1	DECALCOMANIE Warning/Danger; Read the Operator's Manual

http://www.minnparbackhoeparts.com/

AUTOCOLLANTS - ESPAGNOL D'AMÉRIQUE LATINE

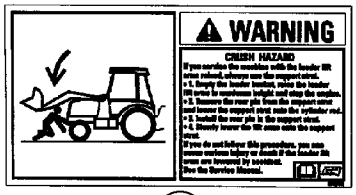

1

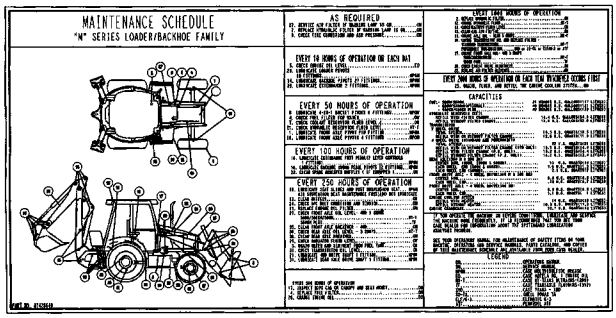

2

FUSES 87423410			
SPARE	----	----	----
SPARE	POWER OUTLET 30A	----	PILOT CONTROLS BH AUX (OPT.) 15AMP
FRONT WORK LIGHTS 20A	POWER OUTLET 30A	AIR SUSP. SEAT-AIR COMP. (OPT) 20A	RETURN TO DIG 10A
REAR WORK LIGHTS 20A	SPARE	SPARE	DRIVING LIGHTS 15A
FUEL SHUTOFF 10A	BLOWER 25A	DOME LIGHT 10A	ROTATING BEACON (OPT) 10A
INSTRUMENTS ALARM SYS. 10A	SIGNAL LIGHTS 15A	HORN 10A	4WD (OPT) 10A
STARTING TRANSMISSION CONTROL 10A	RADIO, RIDE CONTROL, HAND AUX HYD'S 15A	RADIO (BATT) (OPT) 10A	WIPERS 15A

8

RELAYS 87423409			
POWER RELAY #1	POWER RELAY #4	FLASHER RELAY	STARTER RELAY
POWER RELAY #2	LDR LVR DIFF LK RELAY	SHUTTLE INTLK TIMING RELAY	NEUTRAL RELAY
POWER RELAY #3	CLUTCH RELAY	SHUTTLE INTLK RELAY	FORWARD RELAY
----	----	----	REVERSE RELAY
----	----	AC RELAY (OPTION)	----

9



3

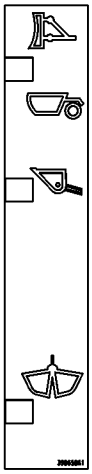

5

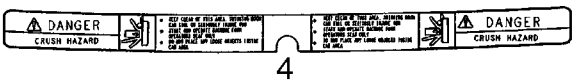

4

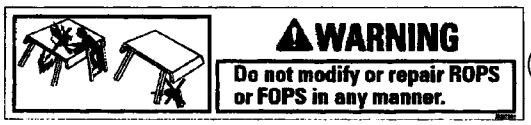

6

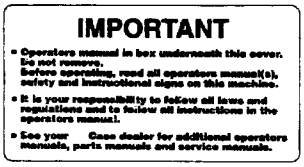

7

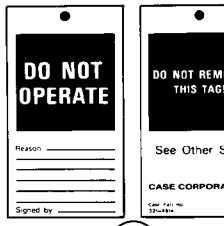

11

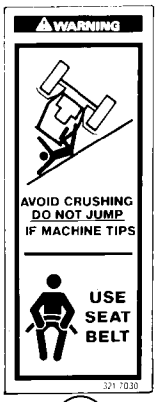

10



12

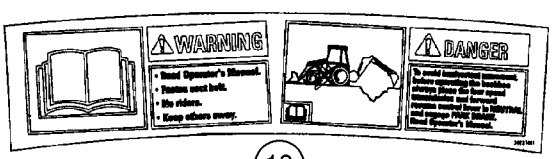

13

BS03K274

http://www.minnparbackhoeparts.com/

AUTOCOLLANTS - ESPAGNOL D'AMÉRIQUE LATINE

REF	FN	PART NUMBER	YR/SN	QTY	DESCRIPTION
		87307893		1	DECALCOMANIE Warning, Crush Hazard; When Changing A Machine to Foot Swing Controls; For Illustration See ref 9 on Figure 09-74
1		398576A1		1	DECALCOMANIE Warning; Crush Hazard; Loader Arm Support Strut
2		87308998		1	DECALCOMANIE Maintenance Schedule; Supplied by Parts and Components; Replaces 87430921, 87446006
3		8603094		1	DECALCOMANIE Warning; Explosion Hazard, Do Not Use Ether
4		86992981		1	DECALCOMANIE Danger; Crush Hazard
5		398658A1		1	DECALCOMANIE Clam Bucket Position
6		389729A1		1	DECALCOMANIE Warning; Do Not Modify or Repair ROPS or FOPS In Any Manner
7		398662A1		1	DECALCOMANIE Important; Operator's Manual In Box Underneath This Cover; Glove Box Lid
8		87431078		1	DECALCOMANIE Fuse Location
9		87431081		1	DECALCOMANIE Relay
10		398672A1		2	DECALCOMANIE Warning; Avoid Crushing; Do Not Jump / Use Seat Belt
11		298521A1		1	ETIQUETTE Do Not Operate
12		86992980		2	DECALCOMANIE Warning; No Step/Not An Exit; Canopy
13		398598A1		1	DECALCOMANIE Warning/Danger; Read the Operator's Manual
14		148093A1		1	DECALCOMANIE DECAL, Important; Lubrication; Not Illustrated
15		148095A1		1	DECALCOMANIE DECAL, Attention; Welding; Not Illustrated

http://www.minnparbackhoeparts.com/

AUTOCOLLANTS - FRANÇAIS CANADIEN

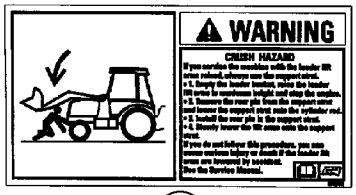

1

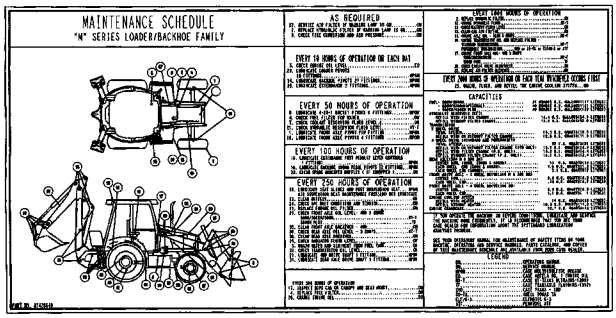

2

FUSES			87423410
SPARE	----	----	----
SPARE	POWER OUTLET 30A	----	PILOT CONTROLS BH AUX (OPT.) 15AMP
FRONT WORK LIGHTS 20A	POWER OUTLET 30A	AIR SUSP. SEAT-AIR COMP. (OPT) 20A	RETURN TO DIG 10A
REAR WORK LIGHTS 20A	SPARE	SPARE	DRIVING LIGHTS 15A
FUEL SHUTOFF 10A	BLOWER 25A	DOME LIGHT 10A	ROTATING BEACON (OPT) 10A
INSTRUMENTS ALARM SYS. 10A	SIGNAL LIGHTS 15A	HORN 10A	4WD (OPT) 10A
STARTING TRANSMISSION CONTROL 10A	RADIO, RIDE CONTROL, HAND AUX HYD'S 15A	RADIO (BATT) (OPT) 10A	WIPERS 15A

8

RELAYS			87423409
POWER RELAY #1	POWER RELAY #4	FLASHER RELAY	STARTER RELAY
POWER RELAY #2	LDR LVR DIFF LK RELAY	SHUTTLE INTLK TIMING RELAY	NEUTRAL RELAY
POWER RELAY #3	CLUTCH RELAY	SHUTTLE INTLK RELAY	FORWARD RELAY
----	----	----	REVERSE RELAY
----	----	AC RELAY (OPTION)	----

9



3

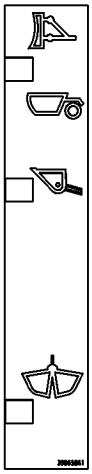

5

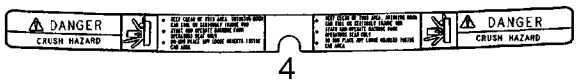

4

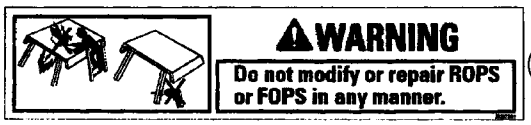

6

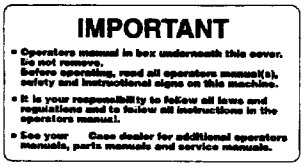

7

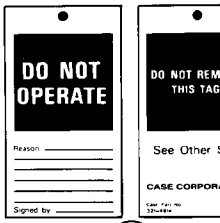

11

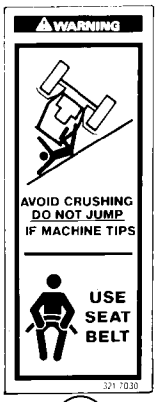

10



12

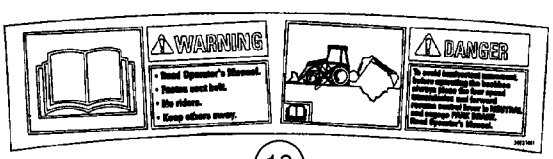

13

BS03K274

http://www.minnparbackhoeparts.com/

AUTOCOLLANTS - FRANÇAIS CANADIEN

REF	FN	PART NUMBER	YR/SN	QTY	DESCRIPTION
		87307896		1	DECALCOMANIE Warning, Crush Hazard; When Changing A Machine to Foot Swing Controls; For Illustration See ref 9 On Figure 09-74
1		398577A1		1	DECALCOMANIE Warning; Crush Hazard; Loader Arm Support Strut
2		87308997		1	DECALCOMANIE Maintenance Schedule; Supplied by Parts and Components; Replaces 87430922, 874469009
3		8603093		1	DECALCOMANIE Warning; Explosion Hazard, Do Not Use Ether
4		86992979		1	DECALCOMANIE Danger; Crush Hazard
5		398658A1		1	DECALCOMANIE Clam Bucket Position
6		389730A1		1	DECALCOMANIE Warning; Do Not Modify or Repair ROPS or FOPS In Any Manner
7		398663A1		1	DECALCOMANIE Important; Operator's Manual In Box Underneath This Cover; Glove Box Lid
8		87431077		1	DECALCOMANIE Fuse Location
9		87431080		1	DECALCOMANIE Relay
10		398673A1		2	DECALCOMANIE Warning; Avoid Crushing; Do Not Jump / Use Seat Belt
11		321-5675		1	DECALCOMANIE Do Not Operate
12		86992978		2	DECALCOMANIE Warning; No Step/Not An Exit; Canopy
13		398599A1		1	DECALCOMANIE Warning/Danger; Read the Operator's Manual

http://www.minnparbackhoeparts.com/

AUTOCOLLANTS - ANGLAIS

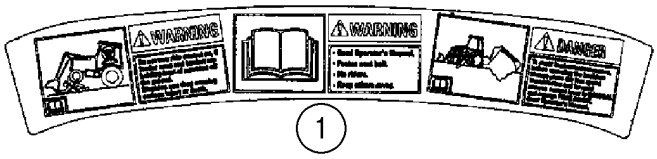

1



2

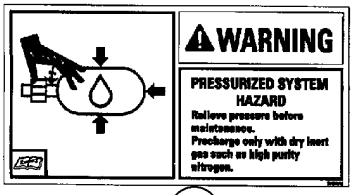

9



10



11

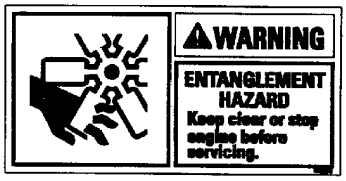

3

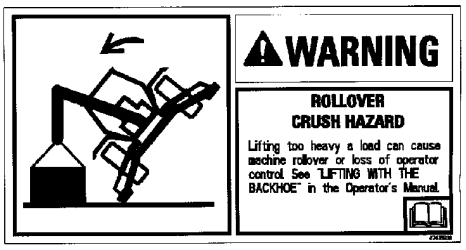

12

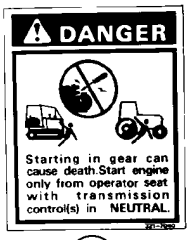

4



5

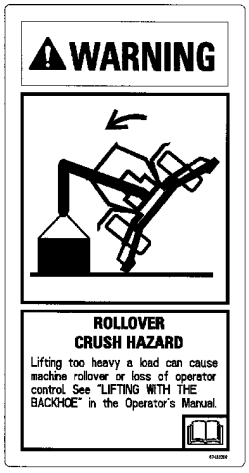

12A



14

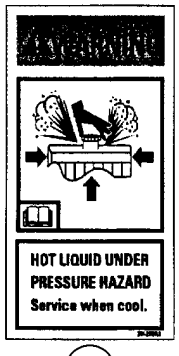

6



7

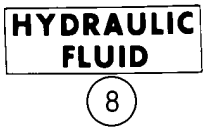

8



13



8A

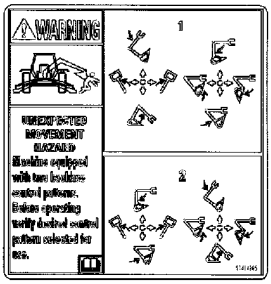

15

BS03K275

http://www.minnparbackhoeparts.com/

AUTOCOLLANTS - ANGLAIS

REF	FN	PART NUMBER	YR/SN	QTY	DESCRIPTION
1		392375A1		1	DECALCOMANIE Warning/Warning/Danger; Front, With Ride Control; Do Not Turn Ride Control On/Read Operator's Manual/To Avoid Inadvertent Movement
2		384265A1		1	DECALCOMANIE Warning; Crush Hazard; Keep Clear; Support Loader Lift Arms During Maintenance
3		384267A1		2	DECALCOMANIE Warning; Entanglement Hazard, Fan; Keep Clear or Stop Engine Before Servicing
4		321-7040		1	DECALCOMANIE Danger; Starting In Gear
5		384269A1		2	DECALCOMANIE Danger; Jump Start
6		384258A1		1	DECALCOMANIE Warning; Hot Liquid Under Pressure
7		321-230		1	DECALCOMANIE Diesel Fuel
8		321-229		1	DECALCOMANIE Hydraulic Fluid; Used In Production; For Service, Order 321-6376, English Decal Only
8A		321-6376		1	DECALCOMANIE Hydraulic Fluid
9		384260A1		1	DECALCOMANIE Warning; Ride Control Accumulator
10		D149826		1	DECALCOMANIE Caution/Important; For All Models With Foot Swing Backhoe Controls and Standard Backhoe Models With Hand Swing
11		D149827		1	DECALCOMANIE Caution/Important; Extendahoe Backhoe Models With Hand Swing
12		87435938		1	DECALCOMANIE Warning; Rollover Crush Hazard; Lifting Too Heavy A Load; Models Without Pilot Controls
12A		87433209		1	DECALCOMANIE Warning; Rollover Crush Hazard; Lifting Too Heavy A Load; Models With Pilot Controls
13		321-6774		1	DECALCOMANIE Warning; Seat Spring
14		87423813		2	DECALCOMANIE Warning; Unexpected Movement Hazard; Before Adjusting Windows
15		87414205		1	DECALCOMANIE Pilot Control Pattern; If Used
15		87305413		1	DECALCOMANIE Warning, Unexpected Movement; Pattern Selecting; With Backhoe/Excavator Black Silhouette on Decal; If Used; Not Illustrated

http://www.minnparbackhoeparts.com/

AUTOCOLLANTS - ESPAGNOL D'AMÉRIQUE LATINE

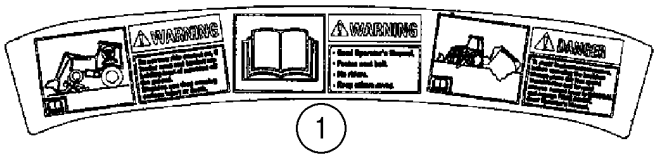

1



2

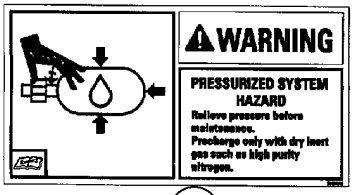

9



10



11

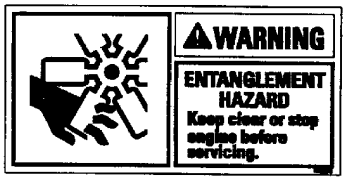

3

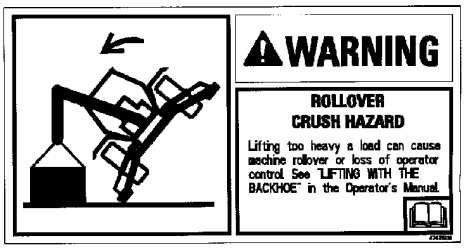

12

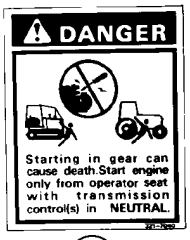

4



5

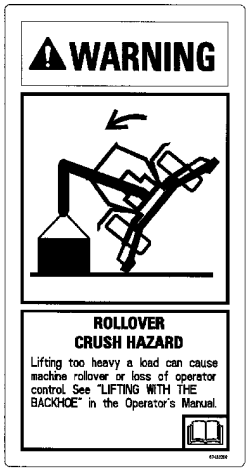

12A



14

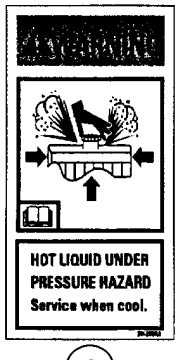

6

DIESEL FUEL

7

HYDRAULIC FLUID

8



13

HYDRAULIC FLUID

8A

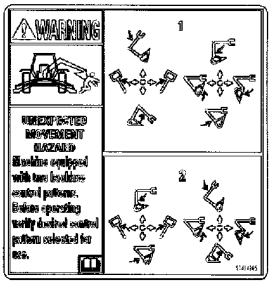

15

BS03K275

http://www.minnparbackhoeparts.com/

AUTOCOLLANTS - ESPAGNOL D'AMÉRIQUE LATINE

REF	FN	PART NUMBER	YR/SN	QTY	DESCRIPTION
1		398600A1		1	DECALCOMANIE Warning/Warning/Danger; Front, With Ride Control; Do Not Turn Ride Control On/Read Operator's Manual/To Avoid Inadvertent Movement
2		398578A1		1	DECALCOMANIE Warning; Crush Hazard; Keep Clear; Support Loader Lift Arms During Maintenance
3		398580A1		2	DECALCOMANIE Warning; Entanglement Hazard, Fan; Keep Clear or Stop Engine Before Servicing
4		398674A1		1	DECALCOMANIE Danger; Starting In Gear
5		398582A1		2	DECALCOMANIE Danger; Jump Start
6		398570A1		1	DECALCOMANIE Warning; Hot Liquid Under Pressure
7		398667A1		1	DECALCOMANIE Diesel Fuel
8		398665A1		1	DECALCOMANIE Hydraulic Fluid
8A		321-6376		1	DECALCOMANIE Hydraulic Fluid, English Decal Only
9		398572A1		1	DECALCOMANIE Warning; Ride Control Accumulator
10		398677A1		1	DECALCOMANIE Caution/Important; For All Models With Foot Swing Backhoe Controls and Standard Backhoe Models With Hand Swing
11		398669A1		1	DECALCOMANIE Caution/Important; Extendahoe Backhoe Models With Hand Swing
12		87435939		1	DECALCOMANIE Warning; Rollover Crush Hazard; Lifting Too Heavy A Load; Models Without Pilot Controls
12A		87434771		1	DECALCOMANIE Warning; Rollover Crush Hazard; Lifting Too Heavy A Load; Models With Pilot Controls
13		398670A1		1	DECALCOMANIE Warning; Seat Spring
14		87429163		2	DECALCOMANIE Warning; Unexpected Movement Hazard; Before Adjusting Windows
15		87429165		1	DECALCOMANIE Pilot Control Pattern; If Used
15		87336843		1	DECALCOMANIE Warning, Unexpected Movement; Pattern Selecting; With Backhoe/Excavator Black Silhouette on Decal; If Used; Not Illustrated

http://www.minnparbackhoeparts.com/

AUTOCOLLANTS - FRANÇAIS CANADIEN

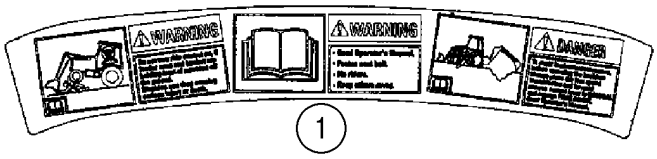

1



2

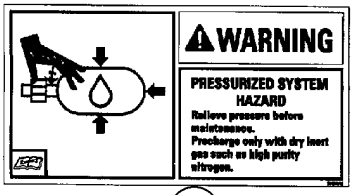

9



10



11

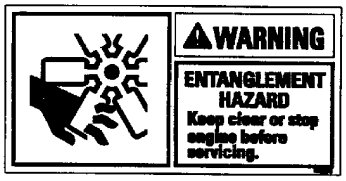

3

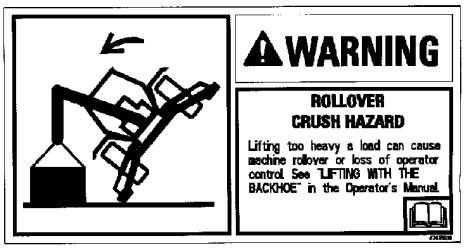

12

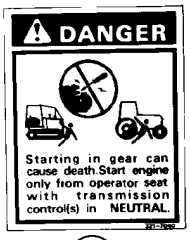

4



5

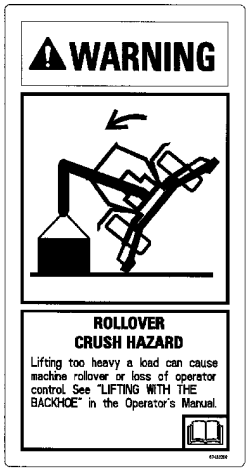

12A



14

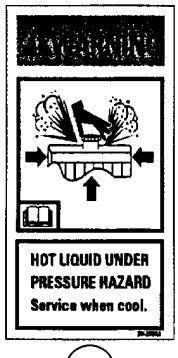

6

DIESEL FUEL

7

HYDRAULIC FLUID

8



13

HYDRAULIC FLUID

8A

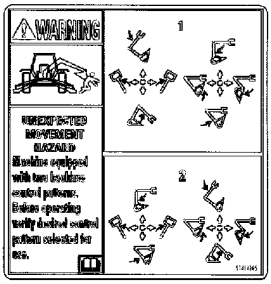

15

BS03K275

http://www.minnparbackhoeparts.com/

AUTOCOLLANTS - FRANÇAIS CANADIEN

REF	FN	PART NUMBER	YR/SN	QTY	DESCRIPTION
1		398601A1		1	DECALCOMANIE Warning/Warning/Danger; Front, With Ride Control; Do Not Turn Ride Control On/Read Operator's Manual/To Avoid Inadvertent Movement
2		398579A1		1	DECALCOMANIE Warning; Crush Hazard; Keep Clear; Support Loader Lift Arms During Maintenance
3		398581A1		2	DECALCOMANIE Warning; Entanglement Hazard, Fan; Keep Clear or Stop Engine Before Servicing
4		398676A1		1	DECALCOMANIE Danger; Starting In Gear
5		398583A1		2	DECALCOMANIE Danger; Jump Start
6		398571A1		1	DECALCOMANIE Warning; Hot Liquid Under Pressure
7		398668A1		1	DECALCOMANIE Diesel Fuel
8		398666A1		1	DECALCOMANIE Hydraulic Fluid
8A		321-6376		1	DECALCOMANIE Hydraulic Fluid, English Decal Only
9		398573A1		1	DECALCOMANIE Warning; Ride Control Accumulator
10		398656A1		1	DECALCOMANIE Caution/Important; For All Models With Foot Swing Backhoe Controls and Standard Backhoe Models With Hand Swing
11		398654A1		1	DECALCOMANIE Caution/Important; Extendahoe Backhoe Models With Hand Swing
12		87435940		1	DECALCOMANIE Warning; Rollover Crush Hazard; Lifting Too Heavy A Load; Models Without Pilot Controls
12A		87434772		1	DECALCOMANIE Warning; Rollover Crush Hazard; Lifting Too Heavy A Load; Models With Pilot Controls
13		398671A1		1	DECALCOMANIE Warning; Seat Spring
14		87429164		2	DECALCOMANIE Warning; Unexpected Movement Hazard; Before Adjusting Windows
15		87429166		1	DECALCOMANIE Pilot Control Pattern; If Used
15		87336844		1	DECALCOMANIE Warning, Unexpected Movement; Pattern Selecting; With Backhoe/Excavator Black Silhouette on Decal; If Used; Not Illustrated

http://www.minnparbackhoeparts.com/

Number	Figure	Sequence	Ref.	Number	Figure	Sequence	Ref.
{2853407}	02-30		6	106989A1	09-18		13
{2853410}	02-30			106990A1	09-18		15
{2853671}	02-12		5	107071A1	06-46		17
{2853960}	02-25		2	107124A1	09-26		39
{376288A2}	09-08				09-26		43
{87307656}	04-21		5		09-27		22
{87346606}	09-45A		2		09-27		33
{87346607}	09-45A		3		09-28		19
{87346611}	09-45A		4		09-36		8
{87346612}	09-45A		5	108088A1	09-01		11
{87346615}	09-45A		6		09-02		12
{87346625}	09-45A		8		09-02		21
{87346633}	09-45A		9	108335A1	08-13		33
{87346634}	09-45A		10	108336A1	08-13		34
{87349995}	09-49A			108366A1	04-18		4
{87442204}	09-56A			108864A1	09-18		1
{87454292}	09-45A			108923A1	09-18		9
100-11196	06-29		24	108924A1	09-18		8
	06-29		8	109268A1	09-04		4
	06-30		22	109511A1	04-17		9
	06-30		8	109879A1	09-38		3
	06-32		8		09-40		13
	06-33		8	110307A1	08-63		12
100-21315	08-66		13A	111522A1	09-04		5
100-39001	09-54		43	112370A3	08-66		14
	09-54A		43	112380A1	09-01		14
	09-56		20		09-02		29
	09-56A		20		09-18		21
100016	04-01		39	112382A1	09-02		25
100520A1	06-02		12	112486A1	06-07		10
100532A1	06-03		3		06-41		10
100533A1	05-06		11		06-42		10
	06-03		8	112509A1	05-06		5
100552A1	06-06		5		06-04		3
100553A1	06-06				06-04		3
100554A1	06-06			112517A1	06-22		4
100555A1	06-06		18	112884A1	09-49A		
100556A1	06-06		4	112946A1	09-06		3A
100557A1	06-06		22	113133A2	08-05		34
	06-15		8		08-63		1
	06-16		9		09-05		20
	06-40		1	113135A2	08-63		2
	06-46		7	113457A1	09-06		3
100559A1	06-06		6	113629A1	09-04		25
100561A1	06-06		13	114295A1	06-06		20
100562A1	06-06		19	114296A1	06-04		9
100696A1	09-04		3	114318A1	09-23		12A
100748A1	06-14		9		09-36		4
100753A1	06-22		17	114549A1	09-53		6
101479A1	08-13		40	114882A2	05-01		2
101531A1	04-18		9	114980A1	09-40		8
102-12125	08-32		16	116339A1	09-05		21
102-1387	05-03		4	116425A1	06-06		12
102-23150	08-32		14	116426A1	06-06		7
102-23206	08-33		5	116427A1	06-06		8
102761A1	09-01		12	116521A1	09-49		3
	09-02		23	116534A1	09-49		10
102765A1	09-18		19		09-74		1
103-11100	09-13		16	116538A2	09-49		12
103-11237	09-24		28	116545A1	09-49		9
103-1437	09-02		15	116547A1	09-48		10
103-1475	09-21		8		09-49		6
103-1518	03-03		7	116548A1	09-49		15
103-16175	09-22		4	116550A1	09-49		14
	09-22		8	116551A1	09-49		8
	09-22A		4	116552A1	09-49		13
	09-22A		8	116761A3	09-47		1
	09-24		33	116763A1	09-47		2
	09-26		23	116764A3	09-47		3
	09-26		27	116766A2	09-47		4
	09-26		33	116767A1	09-47		5
	09-26		36	117933A1	06-38		6
	09-26		5	118769A1	09-45		7
	09-27		14	118900A1	09-04		24
	09-27		40	118901A1	09-04		30
	09-27		50		09-05		3
103-16200	09-23		18	119171A1	09-47		6
103-3350	09-04		29	119211A1	09-45		11
103670A1	08-13		36	119241A1	06-37		1
	08-24		18	119243A1	05-09		4
104824A1	09-04		23	120303A1	05-02		25
104907A1	06-37		1		08-04		10

http://www.minnparbackhoeparts.com/

Number	Figure	Sequence	Ref.
120303A1	08-05		8
	08-06		8
	08-26		32
	08-27		14
	09-37		33
121-145	07-03		20
121412A1	04-07		2
	04-10		
	04-18		16
121413A1	04-07		3
	04-20		1
	04-21		13
	08-25		27
121414A1	04-07		4
	09-50		
121415A1	04-10		
121416A1	04-07		5
121478A1	08-66		14A
121665A1	09-22		7
	09-22A		7
121729A1	07-04		8
121778A1	09-23		3
121856A1	09-37		55
121920A1	09-08		12
122081A1	09-65		9
122259A1	05-06		10
122261A1	05-05		9
122264A1	06-03		10
122265A1	05-06		9
	06-03		9
122268A1	06-02		13
122270A1	05-05		5
	06-02		7
122284A2	09-24		10
	09-27		1
122535A1	08-66		
122553A1	09-64		12
	09-65		24
122554A1	09-65		17
122579A1	09-64		13
122603A1	09-37		24
122974A1	09-25		1
	09-25A		1
122993A1	09-24		40
122995A1	09-24		39
123097A1	04-04		32
	04-07		31
	06-12		42
123167A2	09-24		23
123168A2	09-24		26
123318A1	09-24		29
123407A1	08-67		17
123493A1	09-02		9
123537A1	09-10		29
123726A1	08-65		12
123732A1	08-65		13
123809A2	04-04		31
	04-07		30
	06-12		43
123815A1	09-02		2
123969A1	09-49A		9
123980A1	09-64		23
124011A1	09-64		22
124243A1	09-02		8
124462A1	08-66		
124463A1	08-66		22
124568A2	08-66		3
124690A1	08-09		15
	08-09A		15
124721A1	09-03		14
1250594C1	09-64		10
	09-64		11
	09-65		16
	09-65		23
	09-65		8
125113A1	09-18		12
	09-18		14
125749A1	09-60		12
126-116	06-12		12
126155A1	09-10		31
126177	09-71		3
126844A1	04-07		17
126844A1	04-07		21
	04-10		10
	04-10		16
	04-10		20
126918A1	09-20		2
127009A1	04-11		6
127158A1	04-18		6
128312A1	04-04		38
	04-08		3
	04-14		13
	04-15		3
	09-04		19
128376A1	06-44		11
	06-45		11
128483A1	09-64		16
	09-64		9
	09-65		2
	09-65		7
128484A1	09-64		3
	09-65		13
128485A1	09-64		4
	09-64		8
	09-65		14
	09-65		21
128570A1	06-08		11
	06-43		9
128818A1	09-04		11
129-667	08-61		2
129015A1	09-16		1
129914A1	09-02		4
130047A1	03-01		15
130049A1	03-01		5
130245A1	04-05		17
	07-06		32
1302758C1	04-12		35
	09-67		20
130674A1	09-49A		
131-121	04-11		15
	09-02		33
131-425	09-51		
131-431	09-40		31
	09-72		14
131-435	09-49		
131-619	04-12		17
	04-12		20
131-861	04-11		7
	09-01		4
	09-11		15
	09-60		8
131-869	09-42		21B
	09-42		4
1312210C2	04-14		
	04-14		
	04-15		
	04-15		
132212A1	08-10		17
	08-11		17
	08-12		16
	08-13		16
132661A1	09-01		5
132842A1	09-27		54
132844A1	09-27		53
132862A1	09-51		6
132864A1	09-51		
132866A1	09-51		9
132872A1	09-51		18
132873A1	09-02		39
132930A1	08-10		38
	08-11		32
	08-12		24
	08-13		24
132931A1	03-03		2
	09-01		25
132953A1	06-37		1
133083A1	08-62		12
1331087C1	09-63		14
133421A1	09-51		17
133422A1	09-51		15
133542A1	09-08A		12
133604A1	08-12		26
	08-13		26
133605A1	08-10		36

http://www.minnparbackhoeparts.com/

Number	Figure	Sequence	Ref.	Number	Figure	Sequence	Ref.
133605A1	08-11		30	140954A1	06-08		7
	08-12		22	141232A2	09-34		1
	08-13		22	141233A1	09-34		3
133615A1	09-01		2		09-34		3
133617A1	09-02		18	141234A1	09-34		2
133715A1	04-10		11		09-34		2
133716A1	04-10		13	141473A1	09-06		
133989A1	09-02		13	141801A1	08-12		21
1340798C1	08-64		15	141806A1	08-12		20
1340969C2	08-14		22	141809A1	08-14		11
	08-70		1	141811A1	08-14		12
	09-27		25	142-103	09-54		47
1340970C1	08-70		2		09-54A		47
134167A1	09-23		20		09-56		23
1344025C1	09-50		16		09-56A		23
1344026C1	09-50		17	142122A1	08-10		35
1346189C1	08-07		2	142124A1	08-11		29
	08-64		1	142300A1	09-08		3
1346190C1	08-07		1	142301A1	09-08A		3
	08-64		1	142404A1	09-03		2
1346191C1	08-64		2	142524A1	09-04		12
1346192C1	08-64		2	142538A1	09-06		7
1346195C1	08-64		13		09-07		5
1348264C1	02-02		5	142815A1	08-10		31
134844A1	09-07		3	14302921	08-51		5
1349058C1	06-08		5		08-52		5
1349059C1	06-08		6		08-53		6
	06-43		5	14304021	08-51		1
1349265C1	06-46		24	143210A1	09-02		7
135-1233	09-28		25	143219A1	08-21		
135-51652	09-24		18	143439A1	08-10		12
	09-27		4		08-11		12
135161A1	08-62		13		08-12		11
135248A1	09-23		10		08-13		11
135249A1	09-23		9	14358921	08-52		1
135512A3	09-51		2	143786A1	09-51		7
136-54	04-18		14	144173A1	08-33		7
136261A1	09-16		11	144193A3	09-75		7
136263A1	09-16		8	144210A1	09-08A		
	09-17		2	144279A1	06-09		7
136267A1	09-16		5		06-47		7
136269A1	09-16		6	144454A1	06-02		
136270A2	09-16		40	144457A1	06-04		
136271A2	09-16		39	144458A1	06-04		5
136822A1	09-11		11	144459A1	06-04		7
136824A1	09-11		13	144460A1	06-08		
137219A1	04-20		3	144461A1	06-05		
137223A2	06-01		13	144462A1	06-05		1
137248A1	08-66		13	144463A1	06-05		5
137283A1	09-03		1	144465A1	06-05		4
137343A1	09-10		28		06-05		4
137344A1	09-10		27	144466A1	06-06		
138595A1	09-37		14	144477A1	08-23		14
139080A1	05-09		4		08-23		7
	05-09		4	144479A1	08-23		8
139180A1	09-05		12	144908A2	09-39		24
139195A1	09-05		14	148093A1	09-76		14
139235A1	09-05		13	148095A1	09-76		15
139363A1	09-40		9	151-516	09-52		7
139728A1	09-73		14		09-68		3
139808A2	08-09		13	1530028C1	06-15		2
	08-09A		13		06-16		3
	08-66		1	1537663C1	06-03		5
	09-23		11	1537664C1	06-03		6
139810A2	08-66		2	1542830C2	08-59		
139865A1	09-03		8	1542874C1	08-63		
140-103	09-60		11	1542875C1	08-62		
140-104	09-54		44		08-64		
	09-54A		44		08-70		
	09-56		21	1542876C1	08-65		
	09-56A		21		08-66		
140-108	09-15		29	1542877C1	08-65A		
140-119	04-10		15	1542879C1	08-67		
140943A1	06-08		7		08-68		
140944A1	06-08		7		08-69		
140945A1	06-08		7	1542914C1	08-68		4
140946A1	06-08		7	1542915C2	08-68		
140947A1	06-08		7	1542918C3	08-65A		4
140948A1	06-08		7	1542923C2	08-69		
140949A1	06-08		7	1543256C1	08-63		
140951A1	06-08		7	1543260C1	08-62		
140953A1	06-08		7	1543267C1	08-64		

http://www.minnparbackhoeparts.com/

Number	Figure	Sequence	Ref.
1543267C1	08-70		
1543275C1	08-65		
1543289C2	08-65A		
15687475	08-54		9
	08-55		9
	08-56		9
	08-57		7
	08-58		9
168-71	04-18		7
170-104	09-02		3
17278781	02-12		7
175156A1	09-08		
175599A1	09-40		2
175959A1	06-41		11
	06-42		11
175961A1	06-41		19
	06-42		19
175964A2	06-44		9
175965A1	06-44		10
	06-45		10
175966A1	06-44		8
	06-45		8
175968A1	06-44		12
	06-45		12
175976A1	06-46		4
175982A1	06-46		14
175984A1	06-46		19
176091A1	09-50		6
176226A1	08-10		13
	08-11		13
	08-12		12
	08-13		12
176311A1	09-01		10
	09-02		20
176857A1	04-09		4
176914A1	09-49		5
176916A1	09-49		4
176919A1	09-48		7
176920A1	09-49		7
176921A1	09-48		9
	09-49		2
176924A1	09-46		5
177256A1	08-08		30
	08-08A		30
	08-65A		1
	09-22A		1
177257A1	08-08		29
	08-08A		29
	08-65A		1
	09-22A		2
177258A1	08-65A		2
177259A1	08-65A		2
177261A1	08-65A		12
177269A1	04-19		14
	09-60		18
177634A1	08-10		34
178004A1	09-18		18
178006A1	09-18		17
178051A1	08-33		8
178850A1	08-68		14
179029A1	09-20		1
179956A1	09-12		6
180427A1	09-36		2
180593A1	09-51		11
180594A3	09-51		19
181042A1	09-24		22
	09-27		8
181100A1	06-15		4
	06-16		5
	06-23		35
	06-23A		35
	06-24		5
181101A1	06-14		2
	06-16		20
181102A1	06-14		12
	06-16		22
181103A1	06-23		20
	06-23A		20
181104A1	07-02		27
181105A1	06-15		12
	06-16		16
181107A1	06-23		19
181107A1	06-23A		19
181108A1	06-20		24
	06-21		26
181111A1	06-20		13
181116A1	06-20		9
181118A1	06-21		1
181122A1	06-22		5
181123A1	06-21		31
181126A1	06-19		3
	06-22		9
181128A1	06-20		3
181130A1	06-21		30
181132A1	06-19		5
	06-21		2
181136A1	06-23		5
	06-23A		5
181137A1	06-23		28
	06-23A		28
181138A1	06-18		12
181139A1	06-18		5
181141A1	06-15		14
	06-16		19
181142A1	06-17		19
181144A1	06-21		33
181146A1	06-23		18
	06-23A		18
181158A1	06-20		12
181159A1	06-20		11
181161A1	06-20		14
181165A1	06-21		34
181166A1	06-23		22
	06-23A		22
181169A1	09-46		6
	09-47		7
181170A1	09-48		11
	09-49		16
181171A1	06-18		7
181173A1	06-18		16
181174A2	06-18		22
181175A1	06-18		18
181176A1	06-16		18
181177A1	06-18		11
181179A1	06-15		11
	06-16		15
181198A1	06-22		3
181202A1	06-14		13
181203A1	06-18		21
181207A1	06-23		23
	06-23A		23
181208A1	06-23		24
	06-23A		24
181219A1	06-14		10
181232A1	06-15		13
	06-16		17
181234A2	06-23		15
	06-23A		15
181245A2	06-18		1
181251A1	06-23		9
	06-23A		9
181253A1	06-23		31
	06-23A		31
181254A1	06-23		25
	06-23A		25
181255A2	06-23		27
	06-23A		27
181256A1	06-23		10
	06-23A		10
181258A1	06-23		29
	06-23A		29
181260A1	06-23		26
	06-23A		26
181261A1	06-23		17
	06-23A		17
181272A1	06-23		7
	06-23A		7
181273A1	06-23		6
	06-23A		6
181274A1	06-14		3
181842A1	09-04		7A
181979A1	09-64		24
181981A1	09-41		17
	09-62		5

http://www.minnparbackhoeparts.com/

Number	Figure	Sequence	Ref.
182006A1	09-17		4
	09-21		9
182445A1	07-03		1
	07-04		1
	07-05		
182594A1	04-12		11
182697A1	09-62		3
182721A2	04-19		11
183168A1	09-39		7
183443A1	09-27		55
183509A1	09-27		56
183736A1	08-13		52
183795A3	08-11		25
	08-68		1
	09-24		15
	09-27		9
183795A4	08-11		25
	08-68		1
	09-24		15
	09-27		9
184297A1	08-13		38
184497A1	04-06		3
184616A1	08-14		18
184617A1	08-14		17
184627A2	07-04		13
184726A1	04-12		10
185325A1	09-40		14
185377A1	02-01		27
185506A1	09-07		8
185926A1	03-01		4
	09-37		4
186351A1	09-45		11A
186977A1	09-36		13
186989A1	09-40		30
	09-72		13
187281A1	04-19		12
187612A1	08-10A		25
187637A1	08-13		20
187639A1	08-13		21
187677A1	08-10A		10
187714A1	06-12		1
187715A1	06-12		2
187845A1	08-10		23
188009A3	03-01		29A
188311A2	03-01		11
189103A1	08-10A		20
189109A1	03-03		2A
	09-01		
	09-02		
189263A1	08-10A		21
189414A1	08-10A		33
189602A3	03-01		29
189709A1	08-10A		12
189957A1	08-10A		1
	08-59A		
190267A2	09-34		1
190313A1	09-24		27
190427A1	06-21		
190428A3	06-18		8
190431A1	06-24		10
190435A1	06-23		37
	06-23A		37
190436A1	06-23		13
	06-23A		13
190437A1	06-23		4
190438A2	06-23		12
	06-23A		12
190439A2	06-23		11
	06-23A		11
190440A1	06-23		38
	06-23A		38
190441A1	06-23		14
	06-23A		14
190442A1	06-23		2
	06-23A		2
190443A1	06-23		3
190447A1	07-01		15
190449A1	07-01		7
190450A1	07-01		9
190451A1	07-02		1
190452A1	06-41		14
	06-42		14
190463A1	07-02		2
190468A1	06-41		16
	06-42		16
190469A1	06-41		6
	06-42		6
190471A1	06-41		4
	06-42		4
190476A2	07-02		4
190477A2	07-02		4
190493A1	07-01		14
190496A1	07-01		8
190500A1	07-01		20
190506A1	06-43		7
190508A1	06-43		7
190509A1	06-43		7
190510A1	06-43		7
190511A1	06-43		7
190512A1	06-43		7
190513A1	06-43		7
190514A1	06-43		7
190515A1	06-43		7
190516A1	06-43		7
190675A1	09-63		17
190682A1	06-06		10
190684A1	06-06		9
191017A1	09-23		2
191046A1	03-01		30
191047A1	09-37		27
191067A1	06-41		15
	06-42		15
191239A1	09-10		1
191703A1	08-21		
	08-21		
	09-65		25
191704A1	03-01		44
	09-65		3
191796A1	05-04		2
	06-01		8
192025A1	08-10A		9
192345A1	08-07		4
192352A1	08-07		3
192450A1	09-73		9
192815A1	09-04		28
192895A1	08-60		2
193-1000	04-04		18
	04-04		3
	04-07		
193-1003	09-04		17
	09-45		10
193913A1	09-65		18
195-81023	09-54		48
	09-54A		48
	09-56		24
	09-56A		24
195210A1	06-08		
1954626C1	09-63		15
1954736C1	09-63		3
195552A1	04-19		3
195615A1	09-01		6
	09-02		19
1958028C1	08-67		19
1959509C1	05-01		4
196065A1	06-46		21
196066A1	06-46		22
196085A1	07-02		9
196090A1	06-46		2
196092A1	06-46		20
196164A1	08-69		14
196454A1	06-21		3A
196466A1	02-07A		4
1966136C1	06-02		16
1966138C1	06-02		17
1966149C2	06-02		5
	06-40		13
1966153C1	06-07		9
1966154C1	06-07		4A
1966155C1	06-07		14
1966156C1	06-07		15
1966169C1	06-06		2
1966186C1	06-02		10
1966559C1	06-07		11
1966993C1	06-18		4

http://www.minnparbackhoeparts.com/

Number	Figure	Sequence	Ref.	Number	Figure	Sequence	Ref.
1967003C1	06-07		4	214-1464	08-14		27
1967531C1	06-18		24		09-65		5
1967581C1	06-18		10	214-1472	08-04		21
1967585C1	06-18		9		08-12		34
196813A1	08-05		25		08-13		47
196815A1	08-05		24	214-1492	08-09		22
196821A1	08-06		13		08-09A		22
196824A1	08-06		12	214-1496	08-08		28
1976955C1	08-59		2A		08-08A		28
197745A1	04-19		4	214-1704	02-02		5A
1977725C1	09-49A				03-01		7A
197793A1	09-51		8		07-04		10
1978141C1	08-60		8	214-1706	03-01		48
1978142C1	08-60				03-01		7
1978143C1	08-60		5		07-04		11
1978144C1	08-60		6	214-31104	08-10A		16
1978158C1	08-60		7	214-3132	08-13		37
1980296C1	08-70		11		08-13		39
1980321C3	08-62		4		08-24		19
1981850C1	09-51		13	214-3156	08-24		16
198410A1	09-19A		5	214-3188	08-08		28
1986753C1	08-65A		14		08-08A		28
	08-68		17	217-1102	09-37		22
1986906C1	08-69		16	217-144	09-63		34
1987096C1	09-63		33	217-314	06-10		11
1987212C1	09-50		11	217-347	09-37		16
1987219C2	09-50		13	217-349	06-10		22
1987290C1	09-50		14	217-363	06-11		11
198976A1	09-23		12	217-380	09-37		21
1990548C4	09-51		21	217-436	09-37		5
199720A1	08-08		30	218-1023	06-16		11
	08-08A		30	218-1254	09-10		20
	08-65		1	218-1256	08-24		22
	09-22		1		09-10		33
199721A1	08-08		29	218-1275	05-04		10
	08-08A		29		06-01		29
	08-65		1	218-1279	09-10		34
	09-22		2	218-335	08-23		30
199722A1	08-65		2		08-24		23
199723A1	08-65		2	218-459	06-12		38
1999528C1	08-10A		29	218-5027	05-02		3
199953A2	08-66		2	218-5050	08-23		24
1999666C1	09-63		16	218-5052	08-30		22
1999667C1	09-63			218-5053	05-04		8
1999668C1	09-63				06-01		26
1999693C1	09-50		8		08-17		5
1999926C1	09-65		15		08-18		7
1999927C1	09-65		22		08-19		7
20-21032	09-08		13		08-20		7
	09-08A		13		08-22		38
20-21232	09-06		4		08-26		23
	09-07		9		08-29		23
	09-08		4		08-30		20
	09-08A		4	218-5056	08-26		25
211-1024	06-25		2		08-29		30
213-123	03-02		14	218-5057	05-02		15
	03-03		17		06-39		2
213-126	07-06		19		06-39		4
	09-02		34		08-08		5
	09-16		22		08-21		1
	09-17		6		08-22		33
	09-19		6		08-26		13
	09-21		10		08-29		13
214-1406	09-37		18	218-5059	05-02		8
	09-62		19		08-07		23
214-14104	08-10		33		08-08		11
214-1412	02-04		6		08-08		33
	06-10		16		08-08A		11
	06-11		35	218-5062	06-11A		4
	06-11A		7		08-04		2
214-1416	02-02		8		08-05		28
	02-06A		15		08-09		8
214-1420	08-03		24		08-09A		8
214-1424	02-06A		18		08-14		24
214-1432	02-01		15	218-5063	08-09A		6
214-1440	02-01		17		08-22		7
214-1456	02-04		12	218-5064	08-01		22
	02-06A		26		08-01		49
214-1464	02-04		11		08-02		19
	08-04		21		08-09A		29
	08-05		40		08-10		8
	08-07		21		08-11		26

http://www.minnparbackhoeparts.com/

Number	Figure	Sequence	Ref.
218-5064	08-11		8
	08-12		31
	08-12		8
	08-13		45
	08-13		8
	08-14		8
	08-23		28
	08-23		42
218-5069	08-02		4
218-5070	08-08A		36
218-5086	08-03		20
218-5089	08-17		4
	08-18		4
	08-19		5
	08-20		5
	08-21		2
	08-22		1
218-5103	07-04		19
218-5105	06-39		6
	08-08		8
	08-08A		8
	08-21		3
	08-22		39
	08-22		5
	08-26		11
	08-29		11
	09-10		14
218-5106	05-02		6
	08-08		20
	08-08A		20
	08-09		11
	08-09		24
	08-09A		11
	08-09A		24
218-5107	08-01		12
	08-01		40
	08-01		45
	08-04		16
	08-05		2
	08-05		32
	08-06		2
	08-07		18
	08-09		27
	08-09A		27
	08-14		20
218-5108	08-10		24
218-5110	06-13		3
	08-02		14
218-5117	08-25		11
218-5118	08-10A		7
218-5119	08-09		19
	08-09A		19
218-5123	08-10		29
218-5135	08-08A		5
218-5136	05-02		11
	08-08		35
218-5137	08-07		16
218-5140	08-01		24
218-5155	09-37		57
218-5157	08-01		47
218-5170	05-02		2
218-5174	08-25		14
218-5176	08-02		12
218-5182	08-22		49
	09-10		15
218-5183	08-26		20
	08-29		20
218-5185	08-01		19
218-5209	06-25		45
	08-59		7
218-5211	03-01		6
	09-37		12
218-5213	08-33		16
218-5216	08-23		34
218-5220	08-05		18
218-5222	08-22		34
218-5228	07-04		27
218-5230	05-02		21
218-5232	08-04		26
	08-22		8
218-5242	08-07		25
218-5243	08-22		32
218-5280	05-02		28
	08-23		26
218-5283	08-10A		13
	08-22		3
218-5335	08-29		25
218-5351	05-02		19
	05-04		14
	06-01		4
	08-08		11
	08-08A		11
	08-23		31
	08-26		9
	08-29		9
218-5359	08-10A		18
218-5365	08-22		4
	08-22		44B
218-5382	08-10A		23
218-5511	08-23		44
218-5529	06-01		5
218-5584	08-01		27
	08-02		1
	08-02		10
	08-03		4
218-5600	08-25		18
218-5650	08-07		28
218-595	08-04		22
218-655	08-25		15
218-676	08-24		21
218-693	09-10		19
218-695	09-10		32
218-754	08-22		50
218-765	08-01		41
218-776	08-06		17
218-836	08-22		35
218-840	08-07		27
	08-23		33
218-845	08-26		22
	08-29		22
218-980	08-01		44
	08-22		6
219-1	05-04		13
	06-01		6
	08-04		27
	08-62		17
	08-64		21
	08-65		17
	08-65A		17
	08-66		20
	08-67		24
	08-68		20
	08-69		20
	09-04		32
	09-05		23
	09-05		5
	09-08		9
	09-08A		9
	09-16		41
	09-20		14
	09-23		28
	09-24		17
	09-24		3
	09-26		24
	09-26		51
	09-27		3
	09-27		35
	09-27		41
	09-28		12
219-10	06-09		8
	06-47		8
219-16	09-47		
	09-47		
219-36	08-68		21
219-55	08-04		28
	08-05		41
	08-63		17
	08-64		22
	08-66		21
	09-04		10
	09-23		30
	09-25		5
	09-25A		5
	09-36		9

http://www.minnparbackhoeparts.com/

Number	Figure	Sequence	Ref.	Number	Figure	Sequence	Ref.
219-86	09-27		58	237-6003	08-30		23
	09-28		11	237-6004	05-02		4
	09-28		5		05-04		8A
219-87	09-10		4		06-01		27
219-89	09-27		57		07-04		19A
	09-28		10		07-04		25
220276A1	08-10A		28		08-17		
220413A1	09-36		7		08-18		
221-89	09-63		21		08-19		
221168A1	08-59A		15		08-20		
221330A1	08-10A		27		08-26		24
221477A1	09-21		1A		08-29		24
222889A1	04-09		19		08-30		21
	07-04		24		08-59		11A
225-14105	09-02		5	237-6005	08-26		26
225-14210	03-02		13		08-29		26
	03-03		20		08-29		31
225315C1	08-54		6	237-6006	05-02		16
	08-55		6		05-02		18
	08-56		6		05-02		20
225318C1	08-54		7		05-02		29
	08-55		7		05-04		14A
	08-56		7		06-01		4A
225350C1	08-56		14		06-01		5A
	08-58		6		06-25		46
225353C1	08-56		15		06-39		3
	08-58		7		06-39		5
226456A1	09-37		36		06-39		7
226560A1	09-51		4		08-07		29
226582A1	08-10A		35		08-08		12
227389A1	04-19		2		08-08		6
228133A2	02-01		27		08-08		9
230-4216	09-22		42		08-08A		12
	09-22A		42		08-08A		6
	09-51		7A		08-08A		9
230857A1	09-37		1A		08-10A		14
230973A1	07-03		26		08-17		
231-14109	09-38		4		08-18		
	09-40		15		08-19		
	09-42		15		08-20		
	09-42		26		08-23		27
	09-42		9		08-23		32
231-14409	09-15		30		08-23		45
231-1444	09-51				08-26		10
	09-70		12		08-26		12
231-1445	09-15		23		08-26		14
231-1446	08-10A		6		08-26		19
	09-01		18		08-29		10
	09-02		28		08-29		12
231-24409	04-07		12		08-29		14
	04-08		19		08-29		19
231-2446	09-19		18		08-59		8
231-4115	09-70		9		08-61		4
231-4246	09-10		5		08-67		20
231-4247	09-22		39		09-10		
	09-22A		39		09-10		
231397A1	06-07				09-37		17
231520A2	04-07		27		09-37		58
	04-09		10	237-6008	05-02		12
231656A1	09-37		6		05-02		7
232-1446	09-55		2		05-02		9
	09-56		28		06-23		40
	09-56A		28		06-23A		40
232-4617	09-45		19		06-25		48
	09-45		26		08-07		24
	09-45A		20		08-07		26
232948A1	09-65		10		08-08		12
233283A1	06-22		1		08-08		21
233284A1	06-21		32		08-08		34
234412A1	08-25		9		08-08		36
	08-60				08-08A		12
234892A1	03-01		14		08-08A		21
235002A1	04-10		12		08-09		12
	08-25		26		08-09		25
235916A1	08-12		33		08-09A		12
	08-13		44		08-09A		25
	08-69		1		08-10A		19
	09-26		1		08-25		12
	09-27		10		08-25		19
235917A2	08-69		2		08-26		21
235921A1	08-69		4		08-29		21
237-6002	08-59		14		08-59		6

http://www.minnparbackhoeparts.com/

Number	Figure	Sequence	Ref.	Number	Figure	Sequence	Ref.
237-6010	03-01		6A	238-5014	06-23		41
	06-10		12		06-23A		41
	06-10		23		06-25		49
	06-11A		5	238-5020	06-25		35
	08-01		13	238-5115	06-35		42
	08-01		46	238-5150	06-25		17
	08-01		48	238-5152	06-08		10
	08-03		10		06-43		11
	08-04		17	238-5227	05-01		3
	08-04		3	238-5228	08-01		7
	08-05		29		09-26		50
	08-05		3	238-5230	08-61		9
	08-05		33	238-5231	08-63		9
	08-06		3		08-64		10
	08-07		17		08-70		8
	08-07		19	238-5233	08-62		9
	08-09		28	238-5235	08-69		11
	08-09		9	238-5239	08-66		9
	08-09A		28	238-5241	08-65		9
	08-09A		9	238-5242	08-66		23
	08-10		30	238-5247	08-65A		9
	08-10A		34		08-68		11
	08-14		21	238-5249	08-67		13
	08-14		25	238-5270	06-40		2
	08-27		11	238-5336	06-32		28
	09-37		13		06-33		29
237-6012	06-11		12	238-6018	08-59A		3
	08-01		20	238-6121	06-06		22A
	08-01		23		06-15		8A
	08-01		50		06-16		10
	08-02		20		06-40		1A
	08-08A		37		06-46		7A
	08-09		20	238-6218	08-32		12
	08-09A		20	238-7011	06-25		11
	08-09A		30		06-26		8
	08-09A		7	238-7013	06-25		36
	08-10		25	238-7116	06-25		15
	08-10		9		06-26		4
	08-10A		11	238-7123	06-25		9
	08-11		27	238-7210	06-26		6
	08-11		35	238-7218	06-25		30
	08-11		9	238-8217	06-22		22
	08-12		32	238-9119	06-25		5
	08-12		36	238-9213	06-35		43
	08-12		9	239306A1	09-02		14
	08-13		35	239406A1	09-03		7
	08-13		46	239408A1	04-10		13
	08-13		9	239606A1	06-16		2
	08-14		9	242459A1	08-24		9
	08-23		25	243084A1	09-23		19
	08-23		29	243679A2	08-24		14
	08-23		43	244109A1	06-21		6
	08-59A		13	244536A1	09-27		
	09-10		35	244790A1	09-26		45
237-6014	08-33		11	245258A1	04-10		7
	08-33		17	245423A1	09-10		30
237-6016	06-13		4	245466A1	09-29		6
	08-01		18		09-29		9
	08-01		25		09-30		6
	08-01		28		09-30		9
	08-02		11		09-31		6
	08-02		15		09-31		9
	08-02		17		09-32		6
	08-02		2		09-32		6
	08-02		5		09-32		9
	08-02		8		09-32		9
	08-03		5		09-33		6
	08-10A		24		09-33		9
	08-10A		8		09-34		6
237-6020	08-03		21		09-34		6
237-8008	06-40				09-34		9
237021A1	07-01		1		09-34		9
237022A1	07-01		2	246151A1	08-24		17
237025A1	07-01		21	246158A1	08-24		15
237026A1	07-01		11	246526A1	04-04		31A
237582A1	04-17		1	247104A1	05-09		1
238-5005	04-18		8	247546A1	06-46		24A
238-5011	04-06A		5	247550A1	06-46		13
	08-61		5	248-2373	09-45		4
238-5013	06-23		42		09-45A		13
	06-23A		42	250851A1	09-05		7
	06-25		50		09-08		30

http://www.minnparbackhoeparts.com/

Number	Figure	Sequence	Ref.	Number	Figure	Sequence	Ref.
250851A1	09-08A		30	282428A1	05-02		17
250854A1	04-06		10		08-26		18
252883A1	08-24		2		08-29		18
252885A1	08-24		1	282775A1	04-10		
253038A1	08-24		4	2830082	02-09		1
253209A1	09-47		8	2830156	03-09		2
254409A1	02-03		2	2830158	02-23		4
	02-03A		2	2830266	03-09		1
254686A2	06-14		1	2830281	02-17		2
255051A1	08-24		5	2830411	02-27		8
255447A1	09-40		26	2830433	02-26		7
	09-70		13	2830445	02-20		2
256210A2	08-24		14A	2830559	02-34		10
256347A1	09-01			2830734	02-37		5
	09-02			2830775	02-17		5
256478A1	07-02		13	2830784	02-17		7
256481A1	07-02		14	2830894	02-36		4
256482A1	07-02		17	2830905	02-27		4
256485A1	07-02		18	2830919	02-16		15
256776A1	03-03		5	2830920	02-16		15
257381A1	09-40		28	2830934	02-27		5
257382A1	09-40		27	2830948	02-27		3
258616A1	09-01			2830952	02-26		10
	09-02				02-27		
259044A1	08-01		1	2830953	02-26		12
259054A1	09-50		15	2831023	02-26		9
259254A1	07-02		24	2831031	02-26		8
260-1436	09-60		16	2831101	02-27		6
261-14310	04-16		11	2831297	02-22		3
	04-16		4	2831298	02-22		1
27549R1	06-37		2	2831300	02-26		10A
	06-37		2	283462A1	07-02		6
	06-37		2	283466A1	07-02		19
	06-37		2	283779A1	04-10		22
275937A1	09-05		14	283781A1	04-10		23
276-2446	08-62		11	284154A1	09-58		10
	08-63		11		09-69		8
	08-64		12	2852009	02-21		1
	08-65		11	2852011	02-11		4
	08-65A		11	2852012	02-11		7
	08-66		11	2852013	02-11		9
	08-67		15	2852016	02-11		8
	08-68		13	2852023	02-14		10
	08-69		13	2852025	02-14		12
	08-70		10	2852027	02-15		1
276-2456	08-60		3	2852028	02-15		2
276-26512	04-19		10	2852029	02-19		3
276498A1	04-14			2852030	02-19		6
	04-15			2852032	02-17		4
277800A1	02-01		39	2852033	02-17		6
278316A2	04-09			2852036	02-23		4
	04-11		9	2852037	02-23		4
278328A1	04-07		27	2852044	02-19		1
278532A1	06-18		14	2852046	03-04		1
278533A1	06-18		13	2852047	02-35		2
278534A1	06-14		8	2852049	02-24		1
279039A1	06-18		15	2852051	02-24		2
279223A1	04-15		6	2852054	02-25		3
279224A1	04-15		5	2852057	03-06		8
279265A2	04-15		15	2852059	03-06		5
279482A1	09-52		2A	2852062	02-28		2
	09-68		4	2852063	02-28		7
279645A1	07-02			2852065	03-11		3
279916A1	04-15		16	2852068	02-29		3
280436A1	07-02		3	2852071	02-29		5
280443A1	07-02		25	2852072	02-29		4
280450A1	07-02		20	2852075	03-07		1
280452A1	07-02		21	2852087	03-04		2
280457A1	07-02		22	2852088	03-04		3
280681A1	07-06		9	2852089	03-04		4
281-14520	09-63		9	2852091	03-06		9
281-14716	09-11		17	2852098	03-08		1
281-18712	09-62		26	2852099	03-08		2
281-54512	09-60		23	2852100	02-33		14
281185A1	09-26			2852101	02-33		13
	09-27			2852102	02-33		10
281952A1	07-02			2852105	03-10		1
281960A1	07-02		23	2852111	03-10		3
282-16512	04-19		7	2852122	02-30		1
282033A1	06-01		19	2852125	02-30		2
282038A2	06-01		18	2852134	02-30		7
282242A1	03-03		1	2852135	02-30		8

http://www.minnparbackhoeparts.com/

Number	Figure	Sequence	Ref.	Number	Figure	Sequence	Ref.
2852136	02-30		9	291533A1	06-30		27
2852140	02-30		10		06-32		13
2852145	02-36		3	291535A1	06-28		5
2852151	02-37		1	291540A1	06-33		21
2852152	02-37		3	291541A1	06-32		20
2852153	02-37		2	291543A1	06-25		34
2852154	02-37		4	291545A1	06-34		3
2852155	02-37		1	291548A1	06-31		9
2852157	02-37		6	291549A1	06-31		3
2852161	02-38		2	291550A1	06-32		24
2852162	02-38		3	291551A1	06-29		39
2852163	02-38		1	291552A1	06-30		37
2852170	02-39		3	291553A1	06-32		25
2852171	02-39			291554A1	06-33		16
2852172	02-39			291555A1	06-32		16
2852175	02-40		1	291556A1	06-29		44
2852180	02-08		2	291557A1	06-30		39
2852181	02-08		6	291558A1	06-30		31
2852183	02-41		1	291559A1	06-33		25
2852195	02-33		8	291563A1	06-31		1
2852196	02-33		15	291565A1	06-25		31
2852197	02-33		12	291566A1	06-30		13
2852202	02-10		10	291567A1	06-29		15
2852270	02-20		1	291568A1	06-25		3
2852294	03-06		3	291570A1	06-26		1
2852511	02-36		5	291571A1	06-29		29
2852515	02-12		6		06-30		28
2852516	02-12				06-32		14
2852517	02-12				06-33		13
2852518	02-12			291573A1	06-30		32
2852521	03-11		4	291575A1	06-33		22
2852594	03-10		2	291577A1	06-34		4
2852741	03-04			291578A1	06-29		12
2852744	02-20		3		06-29		25
2852759	02-12				06-29		28
2852865	02-14		13		06-29		9
2852866	02-18		3		06-30		12
2852869	03-05		1		06-30		23
2852885	03-06		2		06-30		26
2852889	02-30		12		06-30		9
2853225	02-26		12		06-32		12
2853226	02-26		9A		06-32		9
2853728	02-11		5		06-33		12
286-56520	09-52		11		06-33		9
	09-67		29	291579A1	06-29		11
29-1010	09-08		14		06-29		27
	09-08A		14		06-30		11
29-1012	09-08		5		06-30		25
	09-08A		5		06-32		11
291010A1	04-19		6		06-33		11
291520A1	06-29		17	291580A1	06-29		10
	06-29		2		06-29		26
	06-30		17		06-30		10
	06-30		2		06-30		24
	06-32		2		06-32		10
	06-33		2		06-33		10
291523A1	06-28		1	291591A1	06-30		21
291524A1	06-32		27	291861A1	06-35		37
	06-33		28	291862A1	06-35		36
291525A1	06-25		7	292164A1	06-25		10
291527A1	06-25		43		06-26		7
	06-26		13	292165A1	06-25		14
291528A1	06-29		49		06-26		3
	06-30		45	292166A1	06-25		8
	06-31		11	292170A1	06-26		5
	06-31		7	292171A1	06-26		12
	06-32		22	292173A1	06-26		14
291529A1	06-29		20	292174A1	06-28		3
	06-29		5	292175A1	06-33		23
	06-30		5	292176A1	06-35		32
	06-32		5	292177A1	06-35		33
	06-33		5	292207A1	06-41		12
291530A1	06-29		22		06-42		12
	06-29		7	292208A1	06-41		13
	06-30		7		06-42		13
	06-32		7	292210A1	06-44		3
	06-33		7		06-45		3
291531A1	06-29		21	292212A1	06-44		4
	06-29		6		06-45		4
	06-30		6	292213A1	06-44		1
	06-32		6	292214A1	06-44		6
	06-33		6		06-45		6

http://www.minnparbackhoeparts.com/

Number	Figure	Sequence	Ref.	Number	Figure	Sequence	Ref.
292262A1	09-45		2B	2992155	02-21		3
292263A2	09-45		2C	299324A1	06-23		16
292268A1	06-41				06-23A		16
	06-42			300030A1	04-20		4
292385A1	09-23		29	300588A1	09-27		26
292412A1	06-26		2	300659A1	09-50		2
292413A1	06-25		4	300661A1	09-50		3
292414A1	06-26		9	300664A1	09-50		7
292415A1	06-29		14	300665A1	09-50		9
	06-29		31	300667A1	09-50		10
	06-30		14	300669A1	09-51		1
	06-30		29	300670A1	09-50		12
	06-32		15	300672A1	09-50		18
	06-33		14	300674A1	09-50		
292417A1	06-26		10	300675A1	09-50		19
292419A1	06-25		16	300677A1	09-50		21
292420A1	06-28		2	300679A1	09-50		22
292423A1	06-30		44	300680A1	09-50		20
	06-31		10	300681A1	09-50		23
	06-31		6	300683A1	09-50		24
	06-32		21	300684A1	09-50		25
292424A1	06-33		27	300685A1	09-51		
292425A1	06-30		41	300688A1	09-51		5
	06-32		18	300689A1	09-51		10
292426A1	06-29		36	300690A1	09-51		
	06-30		34	300691A1	09-51		12
292428A1	06-30		42	300692A1	09-51		14
	06-32		19	300896A1	09-51		20
292429A1	06-29		48	300996A3	08-27		3
292431A1	06-29		37	301104A1	08-03		9
	06-30		35	301803R1	09-63		20
292432A1	06-29		40	302358A1	03-01		3
	06-30		38		09-37		3
292433A1	06-32		26	302820A2	08-27		5
292434A1	06-33		19	303192A1	02-01		36
292890A1	06-41		17	303465A2	04-11		10B
	06-42		17	303466A1	04-11		10C
292891A1	06-46		5	303467A1	04-11		10D
292893A1	06-46		10	303646A1	09-24		35
292894A1	06-46		11	304083A1	09-73		7
292896A1	06-46		23	304424A1	08-27		9
292897A1	06-45		9	304890A1	08-27		10
292898A1	06-46		12	305152A1	06-44		2
292899A1	06-46		27		06-45		2
292900A1	06-46		28	305153A1	06-45		1
292901A1	06-46		29	305342A1	04-04		35
292902A1	06-44		7	305492A1	09-10		16
	06-45		7	305493A1	09-10		18
292969A2	09-10			305494A1	09-10		17
293636A1	09-23		34	305495A1	09-10		9
294013A1	06-34		5	305496A1	09-10		7
294080A1	06-29		41	305497A1	09-10		3
	06-29		47	305499A1	09-10		8
294189A1	06-43			305508A1	09-10		21
294190A1	06-43			305725A1	06-25		21
294192A1	06-41			305728A1	06-32		1
	06-41			305729A1	06-33		1
	06-42			305730A1	06-30		20
	06-42			30634	08-64		14
294245A1	06-40		26	307090A1	09-48		4
294933A1	06-07			307091A1	09-48		3
295110A1	06-43		6	307092A1	09-48		8
295111A1	07-01		18		09-48		8
295112A1	07-01		23		09-49		1
295113A1	07-01		24		09-49		1
297280A1	08-63		4	307098A1	09-48		6
297281A1	08-64		4	307123A1	02-06A		16
	08-70		3	307186A1	09-26		11
297283A1	08-66		4		09-27		19
297284A1	08-65		4	307277A1	08-27		17
297615A1	09-02		1	307348A1	03-01		39
298176A1	09-01				09-73		12
	09-02			307385A1	09-10		22
298521A1	09-76		11	307386A1	09-10		23
298614A1	06-23		44	307387A1	09-10		24
	06-23A		44	307388A1	09-10		25
	06-25		52	307389A1	09-10		26
2992147	02-21		4	307577A1	03-01		31
2992148	02-21		4		09-37		28
2992149	02-21		4	308029A1	07-01		3
2992153	02-21		3	308030A1	07-01		16
2992154	02-21		3	308036A1	07-01		12

http://www.minnparbackhoeparts.com/

Number	Figure	Sequence	Ref.	Number	Figure	Sequence	Ref.
308040A1	07-02		5	329032A1	04-14		3
308042A1	07-01		17	329797A1	08-23		5
308254A1	08-27		2	329799A1	08-23		4
308255A1	08-27		1	331620A1	09-05		2
309674A1	08-27		11A	331621A1	09-05		1
309747A1	06-12			334724A1	06-23		30
310492A1	06-46		18		06-23A		30
310519A1	06-20		8	334725A1	06-23		32
310772A1	06-15				06-23A		32
	06-15		10B	335640A2	06-23		
	06-16			336375A1	09-49		14
	06-16		14	338424A1	09-52		4
310994A1	08-68		2	338425A1	09-52		3
310994A2	08-68		2A	338426A1	09-54		5A
311046A1	06-08				09-54A		5A
311047A1	06-08			338427A1	09-54		5
311109A1	08-68		16		09-54A		5
311200A1	09-04		27	338428A1	09-56		3
311459A2	08-32				09-56A		3
311484A1	06-40		11A	338429A1	09-54		4A
311485A1	06-40		12A		09-54A		4A
311486A1	07-01		18	338886A4	07-03		35
311488A1	06-46		4	339046A3	07-03		34
311565A1	06-02		11	339047A3	07-03		33
311569A1	05-08		1	339680A2	09-22		21
	06-06		1		09-22A		25B
3125705R1	04-18		10	340-12520	09-51		
313259A1	06-06		8	340997A3	09-43		2
313260A1	06-04			340998A3	09-43		1
313277A1	06-05			341564A2	09-04		36
313648A1	08-02		3	341743A3	09-54		
314607A1	08-24		27		09-54A		
314608A1	08-24		28	341746A2	09-56		
314772A1	08-12		30	344892A1	09-04		37
	08-13		51	345-49	09-37		35
315273A1	09-54		12	345-621	09-64		
	09-54A		12	345061A2	07-04		2
315276A1	09-54		11	345231A1	09-43		3
	09-54A		11	345325A2	07-04		3
317989A1	08-24		30	346583A1	06-40		21
319467A1	09-34A		1	346584A1	06-40		20
319597A1	06-35		35	346585A1	06-40		4
319598A1	06-35		40	347706A3	04-07		7
319599A1	06-35		46	347959A1	06-40		23
321-1707	09-08		29	347960A1	06-40		24
	09-08A		29	348706A1	09-26		40
321-1708	09-08		23		09-27		30
	09-08A		23	348794A1	05-01		18
	09-72		11		05-03		
321-229	09-78		8	349291A1	06-25		51
321-230	09-78		7	349292A1	06-25		53
321-4311	09-71		5	349295A1	06-23		39
321-4614	09-75		11		06-23A		39
321-5675	09-77		11		06-25		47
321-6046	08-59A		16	352208A1	09-57		11
	09-74		8	352209A1	09-57		13
321-6376	09-78		8A	352210A1	09-57		15
	09-79		8A	352401A1	05-01		7
	09-80		8A	352568A1	05-01		6
321-6774	09-78		13		05-03		
321-7030	09-75		10	352569A4	05-01		6A
321-7040	09-78		4		05-03		10
321183A1	07-02		12	352727A1	05-01		15
321428A1	06-24		8		05-01		23
322357	04-06A		19	353-405	09-53		
322860A1	03-03		4	353-407	09-53		
3233348R1	09-15		36	353-408	09-53		
	09-55		8	353-410	09-53		
3234063R1	09-54		25		09-63		26
	09-54A		25		09-67		
324213A1	05-08		2	353-411	09-11		5
325465A2	08-07		22	353-415	09-53		
326-640	09-10		6	353-421	09-53		
326348A1	07-06		16		09-67		22
326805A1	09-23		1	353-422	09-41		7
	09-24		1	353-425	09-53		
326865A1	06-21		13	353068A2	04-12		18
328186A1	06-10		14	353078A1	08-32		4
	06-10		21	353079A1	08-32		5
	06-11		27	353102A1	08-07		5A
	06-11		33	353103A1	08-07		5A
	08-03		11	353167A1	08-07		5

http://www.minnparbackhoeparts.com/

Number	Figure	Sequence	Ref.	Number	Figure	Sequence	Ref.
355197A2	04-12		2	363832A5	09-64		
355198A2	04-12		1A	363883A1	09-60		10
355827A2	04-11		1	364132A2	09-54		28A
355984A2	09-41		1		09-54A		28A
356743A1	08-07		12	364133A2	09-54		30A
357099A1	09-67		15		09-54A		30A
357100A1	09-67		16	364134A2	09-54		28
357278A1	04-08		17		09-54A		28
357540A1	04-15		7		09-56		7
357541A1	04-15		8		09-56A		7
357966A1	04-08		16	364135A2	09-54		30
358212A1	07-01				09-54A		30
358279A1	06-40		11		09-56		8
	06-40		12A		09-56A		8
358280A1	06-40		11A	364180A1	09-53		10
358281A1	06-40		12		09-67		24
358282A1	06-21		19	365328A1	09-32		1
358283A1	06-21		28	365789A1	09-62		20
358632A1	06-20		7	366230A1	06-22		13
358633A1	06-20		6	366231A1	06-22		18
358635A1	06-20		4	366232A1	06-22		15
358636A1	06-19		2	366234A1	06-22		11
358637A1	06-20		15	366235A1	06-22		12
358638A1	06-20		21	366236A1	06-22		14
358639A1	06-21		29	366366A1	06-21		27
358640A1	06-20		10	366632A2	04-12		21
358641A1	06-20		16	366633A3	04-12		25
358642A1	06-20		19	366663A1	06-35		29
358643A1	06-20		18	366889A2	04-07		28
358644A1	06-20		17	366910A1	06-24		9
358645A1	06-20		1	367195A1	06-40		4A
	06-20		29	367233A1	06-46		1
	06-22		7	367352A1	08-07		5B
358646A1	06-19		4	367704A4	09-60		1
358647A1	06-21		16	367705A6	09-60		
358648A1	06-21		4	367712A3	09-67		13
358649A1	06-21		3	367848A2	09-73		13
358650A1	06-21		3A	367859A2	06-13		18
358651A1	06-21		3A		06-47		
358652A1	06-21		3A	367860A3	06-12		35
358653A1	06-21		27		06-47		
358654A1	06-21		18A	367861A2	06-01		11
358655A1	06-20		31		06-09		
	06-21		18B	367977A1	07-06		
358656A1	06-21		18	368146A1	09-54		46
359653A1	07-01		13		09-54A		46
360046A1	09-56		1		09-56		26
360242A2	04-11		10A		09-56A		26
360243A2	04-11		11	368147A1	09-54		40
360244A1	04-11		4		09-54A		40
360245A2	04-11		8		09-56		17
360246A3	09-53		16		09-56A		17
360247A3	09-53		15	368417A1	09-44		9
360250A2	04-12		1	368436A1	06-23		16A
360251A3	09-62		6		06-23A		16A
360252A2	09-61		5	368437A2	06-23		
360253A3	09-62		8		06-23A		
360254A3	09-62		10	368438A2	06-23		
360255A1	09-62		14		06-23A		
360256A1	09-64		15	368801A2	09-63		10
360257A1	09-64		7	368805A1	09-62		7
360260A2	09-61		1	368807A1	09-62		13
360261A1	09-61		3	368809A1	09-53		22
360262A2	09-63		1	368813A2	09-60		4
360263A4	09-64		1	368818A1	09-62		29
360266A2	09-53		3	368821A1	09-62		18
360267A3	09-53		2	368990A1	09-61		6
360272A6	09-60			369249A1	09-62		9
360867A1	09-35		1	369263A1	08-32		
361776A1	09-37		23	369372A1	08-59		3
361900A1	04-07		9	369450A1	09-60		15
361940A1	06-25		1	370381A1	09-64		14
362140A1	06-25		18	370755A1	04-13		1
362340A6	09-40		1	370756A1	04-13		2
362556A2	09-44		2	370760A1	04-13		5
362557A1	09-44		1	370915A1	08-24		
362558A1	09-44		3	371031A1	08-05		26
362607A1	09-39		4	372167A3	04-12		1B
362609A1	09-39		3	372246A1	06-25		44
362930A2	04-08		7	373689A2	04-11		10
363227A2	04-09		5	373693A1	04-11		10E
	04-11		8A	373696A1	09-72		10A

http://www.minnparbackhoeparts.com/

Number	Figure	Sequence	Ref.	Number	Figure	Sequence	Ref.
373698A2	09-72		8	382298A1	09-67		30
373699A2	09-72		9	382664A2	04-19		1
373833A1	08-10		16	382770A2	09-61		2
	08-11		16	382775A1	09-54		23A
	08-12		15		09-54A		23A
	08-13		15	382777A1	09-54		23
373995A1	09-62				09-54A		23
375112A1	04-12		26	383619R1	04-05		5
375392A1	09-62		28	383794A2	09-62		22
376157A1	08-07		5	383795A2	09-62		23
376158A1	08-07		5B	383972A1	09-75		6
376285A2	09-08A			384240A1	08-04		18
376286A2	09-08				08-62		1
376332A1	09-54		38		09-04		9
	09-54A		38	384241A1	08-62		2
	09-56		15	384258A1	09-78		6
	09-56A		15	384260A1	09-78		9
376334A1	09-54		36	384264A1	09-75		1
	09-54A		36	384265A1	09-78		2
	09-56		13	384267A1	09-78		3
	09-56A		13	384269A1	09-78		5
376336A1	09-54		37	384769A1	06-21		14
	09-54A		37	384773A1	06-21		9
	09-56		14	384815A1	09-23		32
	09-56A		14	384844A1	08-32		7
376384A1	09-31		1	384930A2	09-73		1
376385A1	09-32		1	384931A2	09-73		2
376386A1	09-33		1	384956A1	06-38		1
377194A1	09-60		9		06-40		
377220A2	09-62		1		06-41		
377222A1	09-63		4		06-43		
377230A3	09-62		27		06-44		
377232A2	09-63		18		06-46		
377233A2	09-63		31		07-01		
377241A2	09-62		1		07-02		
377594A5	09-60		13	384958A1	06-38		1A
378227A1	09-53		5		06-40		
378742A3	09-42		19		06-42		
	09-42		27		06-43		
	09-42		9A		06-45		
378921A1	09-28		6B		06-46		
378955A1	03-03		8A		07-01		
378956A3	03-03		15		07-02		
378957A3	03-02		17	385420A2	08-30		5
378958A1	03-03		13	385506A1	09-67		12
378960A1	03-03		3	385614A4	04-12		31
379160A1	09-60		5	386000A2	09-22		37
379161A1	09-60		6	386092A1	09-23		16
379209A1	09-60		7	386368A2	04-12		29
379314A4	06-12		6	386369A2	04-12		28
379424A2	09-53		3A	386502A1	04-12		
379425A3	09-53		2A	386535A1	09-64		2
379846A1	05-01		14	386718A3	09-58		9
	05-01		22		09-69		13
38-11016	09-49A		10	386720A1	09-58		23
380003A1	06-35		45	386785A1	04-07		22
380004A1	06-35		41		09-58		26
380005A1	06-34		1		09-59		
	06-35				09-69		6
380483A2	03-03		12	386786A1	04-10		19
380484A3	03-03		15A		09-58		28
380485A3	03-02		17A		09-59		
380537A2	06-12		13	386787A1	04-07		23
380609A1	08-67		16		09-58		27
380621A1	08-67		14		09-69		7
380627A1	08-67		23	386788A1	04-10		18
380692A1	08-30		6		09-58		29
380719A2	09-60			386789A2	04-10		21
380807A4	09-37		47		08-29		29
381111A2	09-62		25	386849A1	04-07		18
381113A2	09-62		24	386850A1	04-07		19
381261A1	04-05		13	386851A1	04-07		20
381442A1	05-04		12		04-18		15
	06-01		31	386852A2	04-10		17
381488A4	09-29		1	386927A1	04-19		9
381659A1	04-19		5	387019A1	09-04		6
381696A5	09-60		2	387897R91	05-09		3
381926A1	09-40		22		05-09		6
381927A1	09-40		20	387940A1	04-18		
381972A1	09-60		14	388053A2	04-13		6
382202A2	09-37		52	388116A2	05-01		8
382298A1	09-53		21	388712A2	08-59		9

http://www.minnparbackhoeparts.com/

Number	Figure	Sequence	Ref.
388713A1	08-59		
388762A1	09-63		7
388843A1	09-30		1
388848A1	09-08		24
	09-08A		24
388881A1	08-59		4
389402A1	09-63		8
389487A1	04-07		13
389541A1	08-59		12
389729A1	09-76		6
389730A1	09-77		6
390-100	09-54		21
	09-54A		21
390027A1	06-05		1
390028A1	06-05		5
390029A1	06-05		2
	06-05		2
390030A1	06-04		2
390031A1	06-04		1
390255A2	04-12		15A
390258A1	04-12		
	04-12		
390320A4	08-32		
390551A2	09-41		10
390690A1	09-11		4
390758A1	09-11		3
390759A1	09-11		1
390760A1	09-11		2
390838A1	09-54		2A
	09-54A		2A
390840A1	09-54		27A
	09-54A		27A
390841A1	09-54		29A
	09-54A		29A
391625A2	09-41		10A
391818A2	04-12		15
391827A1	09-52		8
	09-54		19
	09-54		6
	09-54A		19
	09-54A		6
	09-56		4
	09-56A		4
	09-68		2
391838A1	09-54		14
	09-54A		14
391841A1	09-54		18A
	09-54A		18A
391842A1	09-54		20A
	09-54A		20A
391843A1	09-54		32
	09-54A		32
391845A1	09-54		31
	09-54A		31
	09-56		10A
	09-56A		10A
391847A1	09-54		13
	09-54A		13
391848A1	09-54		15
	09-54A		15
391849A1	09-54		41
	09-54A		41
	09-56		18
	09-56A		18
391850A1	09-54		3A
	09-54A		3A
392353A1	04-08		8
392374A1	09-75		13
392375A1	09-78		1
392559A3	09-28		9
392828A2	09-40		16
	09-40		18
392882A4	04-09		1
392930A1	09-67		8
393161A1	09-37		19
393202A1	09-54		17
	09-54A		17
393203A1	09-54		16
	09-54A		16
393209A1	09-54		22
	09-54A		22
393211A1	09-55		5
393231A1	06-09		
	06-47		
393232A1	06-47		6
393233A1	06-47		6
393234A1	06-09		6
393330A1	09-56		10
	09-56A		10
393380A1	08-10		11
	08-10		11A
	08-11		11
	08-11		11A
	08-12		10
	08-12		10A
	08-13		10
	08-13		10A
	08-14		10
	08-14		10A
393623A1	09-41		8
393826A1	06-40		19
393999A1	06-13		2
394329A1	09-74		3
394585A3	09-54		
394700A1	09-54		4
394701A1	09-54		27
	09-56		5
394702A1	09-54		29
	09-56		6
394704A1	09-54		18
	09-54A		18
394705A1	09-54		20
	09-54A		20
394707A1	09-54		2
	09-54A		2
394708A1	09-54		3
	09-54A		3
394800A1	09-55		7
394863A1	04-15		9
	09-53		17
394864A1	09-56		2
	09-56A		2
394865A1	09-56		9
	09-56A		9
395026A1	09-59		9
395033A1	09-59		8
395136A1	09-59		6
395189A2	03-02		1
395344A1	06-12		39
395348A1	09-57		12
	09-57		14
395387A1	09-53		18
395388A1	09-53		19
395389A1	09-59		10
395470A1	09-62		23
395478A3	09-67		3
395609A1	08-32		6
395753A2	09-22		38
	09-22A		38
395793A1	09-52		9
	09-68		7
395910A2	09-72		10
396-41028	09-01		16
	09-01		31
	09-02		31
	09-18		23
396018A3	04-15		13
	09-59		
396023A2	04-14		10
396092A1	09-25		10
	09-25A		10
396422A2	08-59		10
396516A1	09-53		12
	09-60		3
	09-67		26
396591A1	05-02		
396592A1	05-02		
396593A1	05-02		
396605A1	09-39		30
396620A2	07-04		17
396634A1	08-12		30
	08-13		51
396841A1	09-55		3
	09-56		29

http://www.minnparbackhoeparts.com/

Number	Figure	Sequence	Ref.	Number	Figure	Sequence	Ref.
396841A1	09-56A		29	399221A1	08-10A		
396938A3	09-67		2	399246A1	08-10A		32
397025A2	09-42		21	399757A1	09-48		1
397026A3	09-42		2	399758A1	09-48		2
397064A1	09-55		1	399759A1	09-48		1A
	09-56		27	399760A1	09-48		2A
	09-56A		27	399764A1	09-49		11
397065A2	03-03		22	399777A1	09-46		3
397076A1	07-04		9	399907A2	08-32		3
397132A1	09-45		1	399959A2	09-37		26
	09-46			399963A1	08-07		
	09-47			400016A1	08-10A		30
397134A2	09-45		2A	400069A1	09-12		10
	09-48			400077A1	09-42		
	09-49				09-42		
397136A2	09-45		2A	400092A1	06-37		1
	09-48			400200A1	09-57		5
	09-49			400280A1	09-63		11
397137A1	09-45		2	400282A1	09-63		2
	09-50			400296A2	08-59		11
	09-51			400376A1	04-09		13
397158A2	03-03		22A	400379A1	04-10		9
397177A2	07-04		16		09-63		5
397443A2	04-09		11		09-64		14A
397493A2	04-09		12	400398A1	09-26		42
397548A4	03-01		40		09-27		32
397569A1	04-10		5	400494A1	09-57		16
397570A1	04-10		6	400571A2	09-52		20
397653A1	06-03		1	400572A1	09-52		19
397654A1	06-03		2	400573A1	09-52		16
397774A3	09-42		12A	400588A2	06-12		7
397782A1	08-11		28	400657A1	08-59		13
397870A3	09-11		15A	400837A1	09-50		4
397876A1	04-08		13	400838A1	09-50		5
397911A1	09-12		16	400880A1	09-22A		37
397974A1	09-70			400932A4	09-28		26
397990A1	04-07		29	400934A2	09-28		20
398380A3	04-15		12	400935A3	09-28		20A
398570A1	09-79		6	400981A1	09-50		1
398571A1	09-80		6	401052A1	05-06		
398572A1	09-79		9	401054A1	05-06		3
398573A1	09-80		9	401055A1	05-06		7
398576A1	09-76		1		05-07		1
398577A1	09-77		1	401059A1	05-06		13
398578A1	09-79		2	401060A1	05-06		14
398579A1	09-80		2	401061A1	05-07		4
398580A1	09-79		3	401062A1	05-07		3
398581A1	09-80		3	401063A1	05-07		5
398582A1	09-79		5	401064A1	05-07		6
398583A1	09-80		5	401065A1	05-08		3
398598A1	09-76		13	401066A1	05-08		4
398599A1	09-77		13	401067A1	05-08		5
398600A1	09-79		1	401457A1	09-72		2
398601A1	09-80		1	401458A1	09-72		3
398654A1	09-80		11	401459A2	09-72		4
398656A1	09-80		10	401460A2	09-72		5
398658A1	09-75		5	401461A1	09-72		1
	09-76		5	401949A1	09-53		4
	09-77		5	402344A1	06-03		1
398662A1	09-76		7	402346A1	06-03		2
398663A1	09-77		7	402359A1	06-03		4
398665A1	09-79		8	402361A3	08-30		26
398666A1	09-80		8	402610A1	09-53		20
398667A1	09-79		7	402836A1	09-57		28
398668A1	09-80		7	402843A1	09-57		25
398669A1	09-79		11	402844A1	09-57		27
398670A1	09-79		13	402845A1	09-57		32
398671A1	09-80		13	402846A1	09-57		21
398672A1	09-76		10	402847A1	09-57		18
398673A1	09-77		10	402854A1	08-30		19
398674A1	09-79		4	402855A1	08-30		18
398675A2	04-07		24	402933A1	09-70		1
	08-26		34	402934A1	09-70		2
398676A1	09-80		4	402935A1	09-70		5
398677A1	09-79		10	402936A1	09-70		3
398738A1	09-61		4	402940A2	08-30		25
398846A3	04-14		5	403193A1	09-62		36
	04-15		1	403225A1	09-62		35
398847A3	04-14		8	403271A1	09-61		9
	04-15		2	403353A1	09-26		
398986A1	09-62		30	403400A1	08-30		30A
399004A1	08-21				09-28		14

http://www.minnparbackhoeparts.com/

Number	Figure	Sequence	Ref.
403840A1	08-30		29A
	09-28		13
404226A1	09-57		6
404227A1	09-57		9
404228A1	09-57		4
404229A1	09-57		7
404471A1	04-19		
404617A1	04-14		12
	04-15		10
	09-59		
	09-69		
404807A1	09-28		1
404816A1	04-07		14
404834A1	09-24		37
	09-27		5
404835A1	09-24		38
	09-27		6
404907A1	08-10A		28A
405716A1	09-28		6
405738A1	09-52		15
405739A1	09-52		14
405740A1	09-52		13
405741A1	09-52		17
405742A1	09-52		18
406168A1	08-30		30
	09-28		7
406172A1	08-30		29
	09-28		8
406287A1	09-63		19
	09-64		5
406624A1	09-28		22
406700A1	09-46		9
406723A1	09-73		15
407009A2	09-72		6
407010A2	09-72		7
407660A1	04-12		8A
407734A1	08-30		44
407735A1	08-30		45
407745A1	08-30		42
407746A1	08-30		43
407804A1	08-30		31
407962A1	02-01		11
	04-06A		4
	09-28		8D
407975A1	08-30		16
408398A1	09-22		20
408399A1	09-22A		25A
408405A1	09-22		35
	09-22A		35
408535A1	04-06		12
408965A1	09-58		15A
408966A1	09-58		15
409025A1	08-59		5
409318A1	07-04		18
409370A1	07-03		38
409469A1	08-30		10
409470A1	08-30		10A
409471A1	08-30		9
409472A1	03-01		4A
	09-37		4A
409499A1	08-30		8A
409618A1	09-53		11
	09-67		25
409672A1	09-18		4
409673A1	09-18		5
409691A2	08-30		33
409723A1	09-60		18A
410561A1	06-12		44
410867A1	09-57		2
411049A1	09-74		2
411074A1	09-41		16
411399A1	09-53		25
411549A1	09-67		21
411668A1	09-08		
411844A1	09-57		
411845A1	09-57		
411846A1	09-57		
411847A1	09-57		
411848A1	09-57		
411849A1	09-57		
411850A1	09-57		
411851A1	09-57		
411892A1	09-36		14
411908A1	09-57		22
411909A1	09-57		19
411910A1	09-57		24
411911A1	09-57		31
411912A1	09-57		33
411914A1	09-57		29
411916A1	09-57		20
411917A1	09-57		17
412285A1	09-53		23
412510A1	04-12		40
413-1228	09-22		18
	09-22A		18
413-412	09-70		11
	09-70		4
413-516	09-10		11
	09-70		7
413-528	09-15		22
413-624	09-19		12
413-628	09-01		19
413-632	09-02		10
	09-02		27
	09-22		41
	09-22A		41
413-648	08-10A		4
413778A1	08-23		9
	08-30		36
413870A1	07-03		27
414-724	09-45		14
	09-45		22
	09-45A		15
414033A1	04-11		18
414034A1	04-11		17
414071A1	04-12		39
414092A1	04-12		38
414174A1	04-08		21
414415A1	08-30		3
414426A1	09-59		5
	09-69		3
414572A1	04-11		16
414600A1	09-60		17
414939A1	09-53		24
417681A1	09-28		18
418070A1	09-28		29
418789A1	08-05		13
418791A1	08-05		14
425-1012	09-22		19
	09-22A		19
425-105	07-03		21
425-106	04-08		2
	04-08		20
	09-01		21
	09-19		13
	09-58		12
	09-69		10
425-1110	09-18		16
425-115	09-03		6
	09-15		19
425-116	09-01		22
	09-02		26
	09-02		38
	09-16		36
	09-19		5
425-118	09-16		10
	09-17		3
	09-18		7
	09-21		7
425-147	09-57		
	09-59		
425-155	08-59A		12
425-156	07-03		5
	07-06		17
	09-16		27
	09-16		47
	09-17		9
	09-20		9
	09-21		16
427-3058	03-02		15
	03-03		18
427-5094	09-15		13
	09-25		13
	09-25A		13

http://www.minnparbackhoeparts.com/

Number	Figure	Sequence	Ref.	Number	Figure	Sequence	Ref.
427-6088	09-16		25	448609A1	09-68		5
	09-17		7	448676A1	09-28		30
	09-20		7	449842A1	09-73		8
427-6100	09-04		33	450037A1	09-59		1
427107A1	06-02		1		09-69		1
429-1012	09-06		5	451384A1	09-27		52
	09-07		10	465004R91	09-01		14A
429230A1	05-05		1		09-02		
429231A1	05-06		1	470-10620	09-45		8
429232A1	05-06		2	47132002	04-06A		8
430471A1	04-12		37	484-43120	08-59A		11
431583A1	09-67		31	484-6316	06-12		3
431584A1	09-67		32	4890343	02-01		44
431801A1	09-52		21	4890732	02-39		
432-48	03-02		10	4890832	02-13		4
	03-02		16	4890833	02-14		8
	03-03		19	4890964	03-09		4
432-612	07-03		8	4891209	02-13		5
	07-06		18		02-27		7
	07-06		3	4891353	02-09		6
	09-01		27	4892426	02-39		
	09-02		37	4892708	02-22		2
	09-03		5	4892712	02-23		2
	09-04		34	4892713	02-23		3
	09-15		14	4892714	02-22		4
	09-16		26	4892715	02-22		4
	09-16		38	4892732	02-39		
	09-16		49	4892774	02-34		
	09-17		8	4892836	02-27		1
	09-19		4	4892859	02-16		2
	09-20		12	4892860	02-18		4
	09-20		8	4892861	02-16		1
	09-21		12	4893386	02-21		2
	09-25		14	4893391	02-34		8
	09-25A		14	4893518	03-06		6
432-828	09-01		13	4894095	03-10		4
	09-02		24	4894139	02-11		6
	09-15		25	4894218	02-10		1
	09-18		20	4894641	02-24		3
432431A1	09-55		9	4894721	03-09		5
434605A1	08-27		8	4894774	03-06		1
434891A1	09-28		32	4895038	02-09		4
438-12040	07-03		24	4895039	02-09		3
439-5436	09-02		6	4895040	02-09		7
440-10616	09-04		18	4895043	02-34		3
440-1066	04-12		27	4895045	02-34		5
	09-37		1B	4895049	02-10		8
440-1088	09-60		22	4895078	02-16		16
440-11010	09-38		2	4895079	02-14		14
440-11012	09-40		12	4895107	02-33		2
440-12510	09-54		9	4895121	02-36		2
	09-54A		9	4895133	02-29		2
440038A1	04-06A		9	4895164	02-33		1
442718A1	09-54		8	4895166	02-08		5
	09-54A		8		03-08		5
442773A1	09-54		33	4895179	02-16		12
	09-54A		33	4895180	02-10		9
442842A1	09-55		6	4895183	02-16		4
443375A1	03-01		2	4895184	02-16		9
443432A1	08-59			4895187	02-16		6
444640A1	08-67		22	4895188	02-16		5
445266A1	06-40		7	4895195	02-18		1
445267A1	06-40		3	4895196	02-18		7
445310A1	06-29		1	4895198	02-18		9
445311A1	06-29		33	4895199	02-18		10
445312A1	06-29		13	4895200	02-18		11
445313A1	06-29		34	4895204	02-18		12
445314A1	06-30		1	4895214	02-17		3
445364A1	09-28		33	4895215	02-16		8
445757A1	09-28		17B	4895228	02-09		5
446220A1	09-22A		5	4895244	03-11		1
446222A1	09-22		5	4895291	02-08		3
446454A1	09-22		36		02-39		2
	09-22A		36	4895294	02-19		7
448284A1	08-25		9	4895297	03-05		2
448428A1	09-63		12	4895301	02-39		4
448429A1	09-63		13	4895305	03-11		2
448607A1	09-52		2	4895323	02-27		8
	09-68		1		02-28		1
448608A1	09-52		6	4895336	02-20		4
	09-68		6	4895347	02-16		7
448609A1	09-52		5	4895355	02-12		8

http://www.minnparbackhoeparts.com/

Number	Figure	Sequence	Ref.	Number	Figure	Sequence	Ref.
4895358	02-14		11	4899093	03-08		4
4895360	02-17		1	4899103	02-14		9
4895361	02-18		2	4899106	02-33		7
4895363	02-18		5	4899107	02-33		3
4895364	02-18		6	4899108	02-33		4
4895365	02-18		8	4899109	02-14		2
4895378	02-14		4		02-26		11
4895379	02-14		5		02-36		1
4895392	02-10		6		02-38		6
	02-36		6	4899110	02-15		3
4895393	02-10		7	4899115	02-10		3
	02-36		7		02-30		11
4895489	02-11		2	4899118	02-29		1
4895538	02-08		4	4899119	02-20		5
	02-11		10	4899121	02-33		11
4895586	02-26		6	4899143	02-14		
4895605	02-10		2	4899467	02-33		5
4895610	02-30		5	4899519	02-33		6
4895623	02-36		8	4899610	02-28		5
4895625	02-36		9	4899629	02-19		8
4895648	02-19		4	4899643	02-34		2
4895790	02-16		3	4899921	02-19		5
4896153	02-10		13	490-11012	04-08		18
4896404	02-34		4	490-1106	04-07		11A
4896406	02-34		9	490-1108	04-07		
4896409	02-34		11	492-11025	09-54		10
4896410	02-34		7		09-54A		10
4896770	03-06		7	492-11031	09-10		12
4896773	02-25		1	492-11038	09-58		11
4896897	02-40		2		09-69		9
4896947	02-26		5	493-11026	04-18		2
4897024	02-13		1	493-11039	04-05		12
4897048	02-26		4	493-21020	04-04		9
4897071	02-26		3		08-61		3
4897123	02-26		2	493-21033	04-04		7
4897125	02-26		1	493-41020	06-12		5
4897178	02-16		13	495-11028	09-01		8
4897179	02-16		14		09-02		17
4897330	02-30		4		09-71		2
4897457	02-28		4	495-11034	09-10		13
4897480	02-31		1	495-11041	04-05		9
4897934	02-26		11		04-06		8
4897980	02-23		1		08-10A		5
4898301	02-11		3		09-02		34A
4898482	02-29		6	495-11047	05-04		11
4899003	03-06		4		06-01		30
4899004	02-14				09-57		
4899009	02-10		4		09-59		
	02-16		10	495-11053	09-04		35
4899019	02-34		1	495-11081	09-18		10
4899020	02-11		1	495-21031	04-18		3
	02-14		13	495-21038	07-06		4
4899026	02-09		2		09-44		6
	02-12		1	495-21044	09-02		11
	02-14		1		09-37		8
4899027	02-27		2	495-31016	09-45		9
4899031	02-35		3	495-31022	03-02		9
	02-38		5		04-14		4
	03-09		3	495-81001	02-04		17
4899035	02-34		6		09-67		6
4899036	02-30		3	495-81025	06-01		15
4899037	02-40		3		06-01		20
4899039	02-19		2	495-81153	04-08		6
4899053	02-39		1	495-81169	09-45		17
4899058	02-33		9		09-45A		18
4899063	02-13		3	495-81184	09-01		9
4899068	02-28		3		09-02		22
	03-07		2	495-81226	09-24		32
	03-08		3		09-26		25
4899072	02-10		5		09-26		35
	02-16		11		09-26		4
4899073	02-12		4		09-27		13
	02-41		2		09-27		42
4899074	02-14		7	495-81227	09-23		17
4899075	02-14		3		09-24		31
4899076	02-14		6		09-26		3
4899078	02-13		2		09-27		12
4899080	02-28		6	495-81261	07-03		30
4899090	02-31		2	495-81267	09-67		10
4899091	02-11		2	495-81282	09-04		7
	02-12		2		09-22		34
4899093	02-12		3		09-22A		34

http://www.minnparbackhoeparts.com/

Number	Figure	Sequence	Ref.
495-81282	09-26		21
	09-27		38
496-21041	02-01		29
	06-12		17
	06-13		7
	09-01		20
496-41041	08-08		
	08-08		3
	08-08A		
	08-08A		3
	08-10		6
	08-11		6
	08-12		6
	08-13		6
	08-14		6
	08-22		12
	08-22		21
	09-12		5
	09-43		4
	09-58		33
	09-58		6
	09-69		20
	09-69		30
496-81000	05-09		9
	06-01		3
	06-06		24
496-81010	09-45		18
	09-45		25
	09-45A		19
496-81018	03-02		7
	09-13		29
496-81028	05-01		11
510828	06-26		31
	08-01		10
511-10250	06-25		6
51200906	09-49A		
514-633	09-54		34
	09-54A		34
	09-56		11
	09-56A		11
514-634	07-02		26
514-832	08-01		8
514-847	03-02		3
515-2179	09-04		14
515-22190	04-06A		2
515-22254	02-02		17
515-2295	08-22		29
	09-02		17A
515-23127	03-01		16
	04-04		13
	04-04		15
515-23143	08-30		4
515-23159	05-02		23
515-23254	04-04		26
515-23444	04-10		27
515-2379	07-04		15
515-25190	04-06A		31
	08-10A		22
515-25254	02-04		7
	08-07		13
565-104	09-15		34
569-4	09-54		24
	09-54A		24
60-7083T1	09-54		7
	09-54A		7
604-12030	09-45		3
	09-45A		11
	09-45B		9
	09-50		
604-20035	09-24		36
604-20045	08-23		6
604-8050	03-03		9
607-10020	09-28		15A
607-8020	08-30		34
	09-28		8B
607-8035	09-28		8C
614-10020	02-04		8
	03-01		38
	03-01		41
	04-03		12
	05-01		19
	05-01		9
614-10020	06-12		26
	08-03		2
	09-37		7
	09-39		13
614-10025	07-03		10
	07-06		24
	08-23		11
	09-09		2
	09-13		38
	09-16		42
	09-19		16
	09-20		3
	09-37		53
	09-39		10
	09-39		22
	09-39		5
	09-40		3
614-10030	02-01		37
	04-10		28
	04-17		6
	06-15		7
	06-16		8
	08-13		53
	08-22		15
	08-30		38
	09-39		28
	09-66		4
614-10035	03-03		23
	05-01		20
	08-10		5
	08-11		5
	08-12		5
	08-13		5
	08-14		5
	08-26		2
	08-29		2
	09-12		4
	09-38		8
614-10040	08-24		29
614-10050	09-24		41
	09-25		6
	09-25A		6
614-10080	02-06		3
	02-06A		3
614-12016	06-18		2
614-12025	04-06A		32
	05-04		6
	06-01		32
614-12035	02-07		3
	06-12		27
	06-13		9
	06-26		32
	08-01		8
614-12040	02-07		10
	09-45B		6
614-18035	08-09		6
614-20030	09-38		12
614-6016	03-03		32
	09-01		15
	09-02		30
	09-04		13
	09-18		22
614-6020	04-06A		13
	04-18		13
	09-01		30
	09-01		7
	09-02		16
	09-18		24
614-6025	03-03		32
	09-21		4
614-6035	04-06A		11
614-8012	02-03		7
	02-03A		7
	06-10		2
	06-11		2
	06-11A		2
614-8016	02-01		19
	02-01		40
	08-30		9A
	09-58		18
	09-69		23
614-8018	06-14		11

http://www.minnparbackhoeparts.com/

Number	Figure	Sequence	Ref.
614-8020	02-02		12
	02-02		18
	02-04		2
	03-03		9A
	04-08		9
	04-09		15
	04-17		3
	07-03		36
	07-04		5
	09-12		12
	09-58		24
	09-66		14
	09-67		5
614-8022	06-22		2
614-8025	04-03		10
	04-03		4
	04-08		10
	04-17		10
	08-10		14
	08-11		14
	08-12		13
	08-13		13
	08-22		28
	09-03		15
	09-08		27
	09-08A		27
	09-13		5
	09-15		11
	09-16		2
	09-16		20
	09-25		23
	09-25A		23
	09-51		1A
614-8030	02-01		9
	03-01		17
	06-44		13
	06-45		13
	07-03		2
	07-04		26
	09-05		8
	09-15		4
	09-25		33
	09-25A		30
	09-36		19
	09-43		5
	09-44		5
	09-58		5
	09-63		28
	09-64		19
	09-69		19
614-8040	02-02		21
	04-06A		3
	09-44		4
614-8050	09-15		35
615-10016	06-25		24
627-10030	02-06		11
	02-06A		11
	06-12		16
	06-13		6
627-12025	03-03		26
627-20060	09-37		2
627-8020	02-07A		3
628-10030	06-25		40
	06-26		18
628-10035	06-26		16
711-10030	09-37		25
711-10040	09-44		8
711-10050	05-02		24
712998R91	05-06		12
	06-03		7
761-17325	04-19		13
781-24613	04-04		34
	04-08		15
	09-13		20
781-24820	09-42		30
800-11115	06-29		16
	06-30		16
800-1134	06-06		17
800-1140	06-31		5
800-1145	06-30		43
800-1150	06-20		26
	06-29		32
800-1150	06-29		38
	06-30		30
	06-30		36
	06-31		4
	06-31		8
800-1160	06-33		18
	06-33		20
800-1165	06-33		15
	06-33		17
800-21100	06-33		26
800-2136	06-46		26
800-2168	06-26		21
800-2175	06-30		40
	06-32		17
800-2180	06-29		35
	06-30		33
800-40065	09-23		27
800-40070	09-23		31
800-4155	09-24		25
800-44040	09-04		26
	09-04		31
	09-05		22
	09-05		4
	09-25		4
	09-25A		4
	09-27		27
800-44050	05-04		5
	06-01		7
	09-04		8
800-5120	06-44		5
	06-45		5
800-5145	06-22		19
800-5150	06-31		2
800-5160	06-32		23
	06-33		24
800-6138	08-32		2
806-8016	02-02		15
806-8025	02-04		16
811-6016	04-06A		16
814-10040	08-04		9
	08-06		6
	08-07		8
	08-09		3
	08-23		10
	08-25		6
	08-30		39
814-10045	02-06		16
	02-06A		22
	03-01		38
	06-15		15
	06-16		21
	08-04		19
	08-05		7
	08-06		5
	08-09A		3
	08-13		41
	08-22		9
	09-37		30
814-10050	02-01		20
	05-01		10
	08-14		14
814-10055	08-12		38
	08-13		30
	08-13		49
	09-66		3
814-10060	04-04		27
	07-06		30
	08-22		10
	08-26		6
	08-29		6
	09-08		25
	09-08A		25
	09-13		25
814-10070	08-08		22
	08-08A		22
	08-26		30
814-10080	08-10		2
	08-11		2
	08-12		2
	08-13		2
	08-14		2
	08-25		2

http://www.minnparbackhoeparts.com/

Number	Figure	Sequence	Ref.
814-10080	09-08		20
	09-08A		20
814-10090	02-01		28
	08-26		29
	08-27		13
	09-01		29
	09-08		16
	09-08A		16
814-10110	09-01		36
814-10130	09-13		13
814-10150	06-15		9
814-10245	04-05		6
	04-06		7
814-12050	08-23		17
814-12060	08-12		27
	08-13		27
814-12070	08-24		10
	08-30		7
814-12080	02-07		5
	06-12		31
	06-13		14
	08-10		37
	08-10		41
	08-11		31
	08-11		37
	08-12		23
	08-12		42
	08-13		23
	08-13		57
814-12090	08-24		6
814-12100	08-10		18
	08-11		18
	08-12		17
	08-13		17
	09-39		16
814-12130	09-66		8
814-14140	06-40		9
814-6030	09-25		16
	09-25A		16
814-6050	09-59		2
	09-69		
814-8035	08-08A		2A
	08-22		20
814-8040	07-03		15
814-8050	09-25		27
	09-25A		31
814-8055	08-08A		2
	08-22		19
814-8060	06-17		16
	06-24		7
	07-04		35
	08-08		2
814-8070	08-23		21
	09-15		8
	09-25A		27
814-8080	06-23		34
	06-23A		34
	06-44		14
	06-45		14
814-8100	09-66		15
814-8110	09-66		13
81465471	02-01		13
815-8055	06-28		4
81868381	08-34		8
	08-35		9
	08-36		18
	08-37		18
	08-38		19
	08-39		19
82017872	04-06A		26
824-1405	04-04		10
	04-20		7
825-11412	03-02		8
825-11418	05-09		8
	06-01		2
	06-06		25
825-1412	09-24		47
825-2406	09-64		27
825-2408	09-58		25
	09-63		30
	09-64		21
825-2410	09-39		27
825-2410	09-39		31
	09-39		6A
	09-40		5
827-10040	02-06		14
	02-06A		20
827-10075	06-07		3
827-10130	04-03		15
827-12045	06-01		14
	06-01		21
827-12065	06-12		9
827-12240	09-28		6A
827-16085	09-36		10
827-16100	09-36		11
827-20075	09-23		13
827-20170	09-35		2
	09-35		6
827-20190	09-05		16
827-20230	06-38		4
827-8050	07-06		10
828-10050	06-25		38
828-10080	06-25		42
828-20160	09-06		6
	09-07		4
829-1406	04-06A		20
	04-06A		30
	09-01		32
	09-18		25
	09-21		5
	09-25		18
	09-25A		18
829-1408	02-02		20
	03-03		11A
	04-04		8
	04-06A		18
	04-08		12
	04-17		5
	07-03		28
	07-03		4
	07-06		15
	08-08		4
	08-08A		4
	08-22		23
	08-23		23
	09-03		17
	09-05		11
	09-13		7
	09-15		7
	09-25		29
	09-25A		29
	09-28		8F
	09-58		20
	09-65		
	09-69		26
829-1410	02-04		14
	02-06		13
	02-06		6
	02-06A		13
	02-06A		6
	03-01		35
	03-01		43
	04-10		29
	05-02		27
	06-10		25
	06-11		26
	07-03		12
	07-06		21
	08-03		25
	08-04		13
	08-05		11
	08-05		17
	08-05		36
	08-06		10
	08-06		15
	08-08		26
	08-08A		26
	08-09		5
	08-09A		5
	08-10		4
	08-11		4
	08-12		4
	08-13		4
	08-14		4

http://www.minnparbackhoeparts.com/

Number	Figure	Sequence	Ref.	Number	Figure	Sequence	Ref.
829-1410	08-22		41	832-10412	08-10		39
	08-23		13		08-11		19
	08-26		8		08-11		33
	08-27		16		08-12		18
	08-27		7		08-12		25
	08-29		8		08-12		28
	08-30		41		08-13		18
	09-13		37		08-13		25
	09-37		34		08-13		28
	09-37		46	832-10420	09-06		8
	09-37		54		09-07		6
829-1412	06-01		22	832-10508	09-54		39
	08-23		19		09-54A		39
	09-28		6C		09-56		16
	09-39		21		09-56A		16
	09-66		11	832-41312	09-22		22
829-1416	09-36		15		09-22A		25C
829-1420	06-38		7	833-40310	09-36		9A
	09-05		19	833-40406	04-11		3
	09-23		15		04-12		23
	09-35		4		04-12		4
	09-35		8		09-04		15
	09-38		13		09-12		18
832-10404	04-12		14		09-13		21
	09-53		9		09-14		10
832-10406	04-06A		15		09-41		6
	04-07		34		09-42		18
	04-10		31		09-42		23
	04-12		9		09-42		6
832-10408	02-02		14		09-64		26
	02-02		25		09-67		18
	04-12		34	833-40408	02-04		18
	04-17		12		09-44		4A
	05-01		17	838-3640	03-03		16
	05-01		25	83822C1	09-64		
	07-03		17	83981068	08-35		19
	09-13		33		08-37		21I
	09-16		21		08-37		22
	09-16		3		08-38		20
	09-42		32		08-39		20
	09-44		7		08-39		25I
	09-54		26	840-1416	04-21		12
	09-54A		26		08-15		
	09-55		10		08-16		
	09-58		7		08-17		
	09-61		8		08-18		
	09-62		12		08-19		
	09-62		17		08-20		
	09-67		7		08-22		37
	09-69		22	843-1516	04-20		5
832-10410	02-01		24	844-10020	04-04		16
	04-03		18		04-05		11
	05-01		13		04-05		3
	08-07		15		04-06		13
	08-12		39		04-10		32
	08-13		32		04-15		11
	08-13		43		09-03		9
	08-13		50	844-10035	04-03		2
	08-13		54	844-10110	09-08		6
	08-14		16		09-08A		6
	08-24		26	844-6025	04-07		33
	08-26		33		04-10		30
	09-08		18		04-12		7
	09-08		22	845-6020	09-64		25
	09-08		8	85801585	02-07		6
	09-08A		18		06-12		32
	09-08A		22		06-13		12
	09-08A		8	85802618	02-07		8
	09-13		14		06-12		32A
	09-13		26		06-13		12A
	09-15		17	85802820	08-08		1
	09-16		44		08-08A		1
	09-19		17	85803019	02-02		
	09-20		4	85808333	06-26		22
	09-39		12	85811921	08-43A		11
	09-44		11	85811922	08-43A		10
	09-67		11	85811923	08-43A		3
832-10412	02-07		9	85811933	08-44		8
	06-12		11		08-45		8
	06-12		34		08-47		8
	06-13		11		08-48		8
	08-10		19		08-49		7

http://www.minnparbackhoeparts.com/

Number	Figure	Sequence	Ref.
85811933	08-50		8
85811934	08-43A		9
	08-44		7
	08-45		7
	08-47		7
	08-48		7
	08-50		7
85811935	08-43A		9
	08-44		7
	08-45		7
	08-47		7
	08-48		7
	08-50		7
85811937	08-49		6
85811938	08-44		4
	08-45		4
	08-46		4
	08-47		4
	08-48		4
	08-49		4
	08-50		4
85811946	08-43A		4
85812114	08-44		6
85812115	08-45		6
	08-50		6
85812116	08-47		6
	08-48		6
85817669	08-43A		7
85819148	08-44		9
	08-45		9
	08-46		9
	08-47		9
	08-48		9
	08-49		8
	08-50		9
85819378	08-45		3
	08-46		3
	08-48		3
	08-49		3
	08-50		3
85820128	08-43A		6
85820129	08-43A		2
85821235	08-43A		8
85821236	08-43A		5
85821520	09-15		21
85824067	09-15		16
85824080	09-15		20
85824081	09-15		18
85824281	08-45		10
	08-46		10
	08-47		10
	08-48		10
	08-49		9
	08-50		10
85824282	08-44		10
85825473	08-43A		13
85825477	08-43A		12
85826229	02-01		30
85826230	02-01		31
85826337	08-40		3
	08-41		3
	08-42		3
	08-43		3
	08-45		
85826338	08-40		5
	08-41		5
	08-42		5
	08-43		5
	08-47		
85826339	08-40		2
	08-41		2
	08-42		2
	08-43		2
	08-44		
85826340	08-40		4
	08-41		4
	08-42		4
	08-43		4
	08-46		
85826341	08-41		7
	08-43		7
	08-49		
85826342	08-42		7
	08-43		8
	08-50		
85826343	08-47		6A
85826344	08-44		5
	08-45		5
	08-46		5
	08-47		5
	08-48		5
	08-49		5
	08-50		5
85826345	08-44		3
	08-47		3
85826346	08-45		6A
85826365	08-40		6
	08-41		6
	08-42		6
	08-43		6
	08-48		
85826905	08-48		6A
85827471	08-17		3
	08-18		6
	08-19		6
	08-52		
85827472	08-15		5
	08-16		5
	08-51		
85827991	08-51		2
85827992	08-51		4
	08-52		4
	08-53		5
85827993	08-51		6
	08-52		6
	08-53		7
85827994	08-51		7
	08-52		7
	08-53		8
85827995	08-51		8
	08-52		8
	08-53		9
85827996	08-51		9
	08-52		9
	08-53		10
85827997	08-51		10
	08-52		10
	08-53		11
85827998	08-51		12
	08-52		12
	08-53		13
85827999	08-51		13
	08-52		13
	08-53		14
85828000	08-51		14
	08-52		14
	08-53		15
85828001	08-51		15
	08-52		15
	08-53		16
85828002	08-51		16
	08-52		16
	08-53		17
85828003	08-51		17
	08-52		17
	08-53		18
85828004	08-52		2
85828005	08-51		11
	08-52		11
	08-53		12
85828013	08-51		3
85828015	08-52		3
	08-53		3
85828048	08-53		2
85828054	08-53		4
85828061	08-53		1
86014151	04-06A		27
8602005	02-07A		1
8603092	09-75		3
8603093	09-77		3
8603094	09-76		3
863-10016	06-25		23
	06-25		33
863-10025	06-25		20

http://www.minnparbackhoeparts.com/

Number	Figure	Sequence	Ref.	Number	Figure	Sequence	Ref.
863-16070	05-06		8	86987460	08-41		
863-6020	07-01		25	86987461	08-20		1
864-10025	06-18		17		08-43		
864-12030	08-01		6	86988086	04-21		1
864-12130	06-40		10	86989616	09-15		28
864-5010	06-35		48	86989676	03-01		10
864-5012	06-35		28	86990837	05-04		1
	06-35		39		05-05		
864-6012	06-34		6		05-06		
864-6020	06-23		8		05-07		
	06-23A		8		05-08		
864-6035	07-01		10	86991496	07-04		14
	07-01		19	86992243	09-42		20
864-8020	06-23		21	86992245	09-42		10
	06-23A		21	86992247	09-42		1
864-8025	06-18		6	86992248	09-42		10
864-8030	06-35		30	86992284	09-42		
864-8055	09-13		34		09-42		
864-8065	06-34		2	86992395	04-01		
86507190	09-58		35		04-03		1
	09-69		32	86992557	08-08A		38
86507198	09-58		36		08-22		25
	09-69		33	86992975	09-75		12
86596853	08-22		31	86992976	09-75		4
86619908	04-06A		7	86992977	09-42		28
86625128	08-54		13	86992978	09-77		12
	08-55		13	86992979	09-77		4
	08-57		10	86992980	09-76		12
86982435	08-63		18	86992981	09-76		4
	08-70		16	86993546	06-12		23
86982437	08-62		18	86993773	09-41		9B
	08-64		23	86993774	09-41		9C
86982439	08-66		25	86994165	09-49A		11
86982441	08-65		18	87000312	08-54		17
86982442	08-65A		18		08-55		18
	08-69		21		08-56		19
86982443	08-67		25		08-58		15
86982444	08-68		22	87019767	06-12		23A
86982682	09-38		10	87020181	06-12		4
86983190	09-41		2	87021704	06-13		23
86983269	09-41		9A	87021705	06-13		22
86983278	09-13		11	87032428	07-06		38
86983311	08-54		1	87037462	09-49A		8
	08-55		1	87037944	08-54		4
	08-56		1		08-55		4
	08-57		1		08-56		4
	08-58		1		08-57		4
86983325	09-41		9		08-58		4
86984097	06-23			87041331	09-25		31
86984098	06-23				09-25A		33
86984107	06-38		1A	87301325	02-02		4
	06-40			87301351	09-01		
	06-42				09-02		
	06-43			87301355	02-01		4A
	06-45			87301356	02-01		7
	06-46			87301515	09-53		26
	07-01				09-67		33
	07-02			87301687	04-07		11
86984108	06-38		1	87303781	09-15		34
	06-40			87303784	04-21		3
	06-41			87305413	09-14		7
	06-43				09-74		5
	06-44				09-78		15
	06-46			87306274	08-01		2
	07-01			87306306	02-02		3
	07-02			87306307	08-01		4
86984155	09-65		4	87307476	08-10		40
86984544	09-15		2		08-11		36
	09-25A		25		08-12		41
86984545	09-15		6		08-13		56
	09-25A		26	87307635	08-12		35
86984547	09-15		5	87307636	08-12		29
	09-25		28	87307893	09-74		9
	09-25A		28		09-76		
86984549	09-15		24	87307896	09-74		9
86985339	09-12		3		09-77		
86985341	09-12		2	87308118	09-49A		1
86987459	08-15		1	87308119	09-49A		2
	08-16		1	87308127	09-49A		3
	08-40			87308128	09-49A		7
86987460	08-17		1	87308130	09-49A		
	08-18		1	87308131	09-49A		13

http://www.minnparbackhoeparts.com/

Number	Figure	Sequence	Ref.
87308132	09-45A		7
	09-49A		14
87308141	09-49A		15
87308142	09-49A		
87308143	09-49A		
87308144	09-49A		16
87308145	09-49A		
87308146	09-49A		17
87308147	09-49A		18
87308148	09-49A		
87308149	09-49A		19
87308150	09-49A		20
87308151	09-49A		21
87308152	09-49A		5
87308153	09-49A		4
87308154	09-49A		6
87308157	09-49A		1
87308158	09-49A		2
87308159	09-49A		3
87308472	08-03		22
87308838	08-54		8
	08-55		8
	08-56		8
	08-57		5
	08-58		8
87308839	08-54		10
	08-55		10
	08-56		10
	08-57		6
	08-58		10
87308840	08-15		4
	08-16		4
	08-19		4
	08-57		
87308844	08-15		3
	08-17		8
	08-54		
87308845	08-19		3
	08-20		3
	08-56		
87308846	08-16		3
	08-18		2
	08-55		
87308847	08-17		9
	08-18		3
	08-20		4
	08-58		
87308996	09-75		2
87308997	09-77		2
87308998	09-76		2
87309656	02-06		1
	02-06A		1
87309923	09-14		2
87309924	09-14		1
87310083	04-21		6
87310085	09-41		12
87310086	04-11		5
87310088	09-42		12B
	09-42		21A
	09-42		3
87310096	06-12		8
	09-12		17
	09-14		9
	09-41		15
87310098	04-12		22
	04-12		3
	09-15		34
	09-42		16
	09-42		22
	09-42		5
	09-67		17
87310124	04-11		12
	04-11		13
	09-11		14
87310126	04-09		3
	04-12		16A
	04-12		19
	09-01		3
	09-02		32
	09-11		14
87310127	09-42		13
	09-42		24
87310127	09-42		7
87310128	04-12		16
	04-12		30
87310139	09-11		8
87310142	04-11		14
87310144	04-12		36
87310146	09-42		14
	09-42		25
	09-42		8
87310147	09-53		7
87310149	09-45A		17
	09-45B		5
87310152	04-11		2
	04-12		6
87310154	09-42		29
87310156	09-11		7
87310176	04-12		32
87310177	09-67		9
87310184	04-12		12
87310185	04-12		33
	09-42		31A
87310186	09-14		6
	09-42		17
	09-42		22A
	09-42		5A
87311219	06-11A		8
87311572	09-45A		16
	09-45B		3
87312712	04-04		32
	04-07		31
	06-12		42
87313164	02-06A		14
87313544	06-38		3
87316049	08-05		27
87316264	08-05		31
87316270	08-05		30
87326813	09-24		34
87327489	07-06		39
87330322	03-02		11
87330325	03-03		21
87331077	07-06		9
87333648	08-30		46
87336843	09-79		15
87336844	09-80		15
87338681	09-45A		1
87340008	02-01		42
87400112	06-12		21
87400286	05-05		7
	06-02		9
87402618	09-40		24
87402623	08-67		21
87403386	08-38		
87403387	08-39		
87403835	04-05		1
87404197	05-04		4
	06-01		9
87405706	09-13		17
87406924	09-52		10
	09-67		28
87406934	06-12		22
87407206	04-05		10
87407272	02-01		16
87407758	06-13		21
87407769	09-39		15
87407770	09-39		19
87407771	02-01		18
87407927	09-41		18
87407965	08-19		1
	08-42		
87408480	03-01		10A
87408888	09-45		13
	09-45		21
	09-45A		14
	09-45B		7
87408889	09-45		12
	09-45		20
	09-45A		14
	09-45B		8
87409201	06-12		24
87410096	02-01		1
	02-03		
87410098	02-01		1

http://www.minnparbackhoeparts.com/

Number	Figure	Sequence	Ref.	Number	Figure	Sequence	Ref.
87410098	02-03A			87417391	06-03		
87410105	04-21		9		06-04		
87410265	04-06A		21		06-05		
87410602	04-06A		10		06-06		
87410603	04-06A		1		06-07		
87410613	06-36		1		06-08		
87411083	09-11		2A	87417599	09-01		37
87411084	09-11		4A	87417601	09-03		
87411108	09-55		4	87417644	08-10		28
87411319	02-07		1		08-67		1
87411320	02-07		2		09-24		9
87411720	08-30		28A	87417649	08-67		3
87411722	08-30		27A	87417651	08-67		18
87412060	09-39		18	87417721	04-17		8
87412139	02-02		1		08-25		8
87412635	02-05		1		08-26		4
87412687	09-01		1		08-29		4
	09-02		42		09-01		38
87412695	09-01		1A	87417762	08-67		2
	09-02		42A	87418279	08-67		6
87413144	08-36			87418297	08-67		
87413145	08-38			87418359	02-02		19
87413146	08-39			87418360	02-02		22
87413162	04-06A		28	87418364	02-05		2
87413237	02-01		14	87418365	02-05		3
87413722	08-66		12	87418368	09-15		31
87414205	09-14		7	87418369	09-15		32
	09-74		5	87418516	09-12		1
	09-78		15	87418518	09-12		11
87414237	04-06A		12	87418541	04-07		1
87414277	08-37				04-08		1
87414278	08-37			87418542	04-10		1
87414560	03-01		20	87418551	08-30		15
87415774	02-01		43	87418552	08-30		13
87415781	04-05		8	87418553	08-30		14
87415931	09-72		15	87419229	04-04		23
87416024	08-04		23	87419256	08-25		24
87416108	06-46		1A	87419257	04-05		4
87416475	09-49A		12	87419259	04-05		2
87416476	08-36			87419320	04-10		14
87416966	02-07		7		04-13		
87416967	06-12		33	87419385	02-01		
	06-13		13	87419454	08-15		2
87416977	06-12		29		08-16		2
87416978	06-12		30		08-17		2
87416981	06-13		15		08-18		5
87416982	06-13		8	87419455	08-19		2
87417224	02-02		11		08-20		2
87417225	02-02		10	87419615	04-06A		23
87417299	02-02		7	87419616	04-06A		22
87417300	02-02		3	87419634	05-02		14
87417301	02-01		2	87420672	08-08		25
87417329	09-65		26		08-08A		25
87417383	03-01		18	87420673	08-08		23
	04-06A		6		08-08A		23
	09-36		17	87420696	08-25		17
87417387	06-01		1	87421213	08-25		4
	06-02			87421471	03-03		29
	06-03			87421488	04-09		2
	06-04			87421775	09-65		6
	06-05			87421776	09-65		12
	06-06			87421777	09-65		1
	06-07			87421807	03-03		28
	06-08			87421836	08-23		20
87417389	06-01		1	87421918	08-05		4
	06-02			87421920	08-05		5
	06-03			87421928	08-04		7
	06-04			87421930	08-04		4
	06-05			87421932	08-04		5
	06-06			87421934	08-04		6
	06-07			87421938	08-25		13
	06-08			87422239	09-16		33
87417390	06-01		1	87422241	09-16		31
	06-02			87422243	09-16		28
	06-03			87422245	09-16		29
	06-04			87422247	09-16		30
	06-05			87422249	09-16		32
	06-06			87422253	09-19		15
	06-07			87422256	09-19		14
	06-08			87422258	09-19		2
87417391	06-01		1	87422260	09-19		1
	06-02			87422262	09-19		10

http://www.minnparbackhoeparts.com/

Number	Figure	Sequence	Ref.	Number	Figure	Sequence	Ref.
87422264	09-19		8	87425636	04-21		10
87422270	09-19A		2	87425696	09-13		22
87422272	09-19A		1	87425869	04-17		13
87422597	06-10		5	87426221	08-34		6
87422598	06-10		6		08-35		7
87422696	09-15		9	87426227	08-34		9
	09-25		12		08-35		10
	09-25A		12	87426232	08-36		11
87422777	04-02				08-37		11
	04-03		3		08-38		16
87422948	08-23		35		08-39		16
87422977	08-23		38	87426233	08-34		5
87423004	09-36		1		08-35		6
87423006	09-36		1	87426235	08-34		11A
87423033	08-08A		39		08-35		12A
	08-22		24	87426238	08-34		15
87423034	08-08A		1A		08-35		16
	08-22		18		08-36		21
87423044	06-11		18		08-37		23
87423067	08-25		5		08-38		8
87423343	08-30		27		08-39		8
87423345	08-30		28	87426241	08-35		18
87423346	09-58		14		08-36		7
87423356	08-09		10		08-36		8A
	08-09		14		08-37		7
87423396	04-13		3		08-37		8A
87423397	04-13		4		08-38		10A
87423401	08-22		2		08-38		11
87423409	09-75		9		08-39		10A
87423410	09-75		8		08-39		11
87423496	04-17		2	87426379	09-04		1
87423502	09-57		34	87426488	08-22		16
87423503	09-57		26	87426716	08-34		12
87423531	02-06		9		08-35		13
	02-06A		9	87426717	08-34		11
87423668	09-36		16		08-35		12
87423675	04-06		2	87426965	08-03		12
87423676	04-06		5	87426966	08-03		14
87423677	04-05		16	87427158	06-10		1
	04-06		11		06-11		1
87423802	04-21		8	87427294	09-65		20
87423812	04-21		4	87427537	08-26		28
	09-73		16	87427539	08-26		27
	09-74		6	87427775	09-25A		15
87423813	09-78		14	87427948	08-22		17
87423817	09-40		19	87428023	08-54		3
87423867	08-30		24		08-55		3
	08-32				08-56		3
	09-28		28		08-57		3
87423868	08-32		1		08-58		2
87423926	04-04		6	87428140	08-09		2
87423969	08-23		40	87428151	09-01		33
87423970	08-23		41	87428152	09-01		34
87424240	06-11		5	87428153	09-02		35
87424241	06-11		6	87428158	08-09		26
87424267	08-54		14	87428316	09-58		8
	08-55		15		09-69		12
	08-56		16	87428476	08-37		13
	08-58		13		08-39		22
87424794	07-06		29	87428477	08-37		14
87424815	06-13		5		08-39		23
	06-25			87428486	08-36		22
	06-26				08-37		24
	06-27				08-38		9
	06-28				08-39		9
	06-29			87428488	08-36		20
	06-30				08-37		20
	06-31				08-38		18
	06-32				08-39		18
	06-33			87428490	08-36		19
	06-34				08-37		19
	06-35				08-38		17
	06-36				08-39		17
87424864	06-27		1	87428491	08-36		13
87424865	06-27		2		08-38		23
87425117	09-21		3	87428492	08-36		14
87425118	09-21		1		08-38		24
87425122	09-11		16	87428495	08-36		12
87425225	08-22		36		08-37		12
87425456	09-35		5		08-37		21F
87425631	04-20		2		08-38		21
87425635	04-20		8		08-39		21

http://www.minnparbackhoeparts.com/

Number	Figure	Sequence	Ref.	Number	Figure	Sequence	Ref.
87428495	08-39		25F	87431128	09-40		
87428497	08-36		9	87431300	09-13		24
	08-37		9	87431301	09-13		23
	08-38		12	87431529	09-13		15
	08-39		12	87431630	08-23		3
87428500	08-36		8	87431701	06-39		10
	08-37		8	87431702	06-39		1
	08-38		10	87431799	02-07		11
	08-39		10	87432547	03-03		25
87428501	08-37		21	87432811	09-25		30
	08-39		25		09-25A		32
87428645	09-03		3	87433005	09-14		13
87428814	08-23		39	87433006	09-14		12
87428998	06-10		18	87433007	09-14		14
	06-11		37	87433008	09-14		11
87429150	08-37		21D	87433028	08-37		21A
	08-39		25D		08-39		25A
87429163	09-79		14	87433029	08-36		10
87429164	09-80		14		08-37		10
87429165	09-79		15		08-38		13
87429166	09-80		15		08-39		13
87429186	09-72		16	87433030	08-36		23
87429287	08-05		12		08-37		25
	08-06		11		08-37		25A
87429310	03-01		1		08-38		22
87429314	03-01		1A		08-39		26
87429318	03-01		1B		08-39		26A
87429382	05-02		10	87433209	09-78		12A
87429387	08-23		2	87433240	08-25		1
87429584	08-08		19	87433386	08-30		11
	08-08A		19	87433387	08-30		12
87429654	08-08		32	87433389	08-30		12A
87429690	02-03		3	87433390	08-30		11A
87429691	02-03A		3	87433401	04-03		6
87429692	02-03		5	87433503	02-02		6
	02-03A		5	87433543	04-04		1
87429693	02-03		6		04-07		32
	02-03A		6		04-08		14
87429694	02-03		1	87433544	04-06A		24
	02-03A		1	87433546	04-07		16
87429695	02-03		4		09-69		4
	02-03A		4	87433659	09-38		1
87429948	09-66		6	87433730	05-04		9
87429949	09-66		12		06-01		28
87429950	09-66		2	87434049	09-41		19
87429951	09-66		10	87434050	09-41		20
87429952	09-66		7	87434072	08-33		
87429954	09-66		17	87434075	08-33		2
87429970	06-17		1	87434076	08-33		3
87429971	06-17		15	87434077	08-33		4
87429972	06-16		1	87434099	02-04		15
87429973	06-20		20	87434257	08-01		5
87429974	06-21			87434265	08-26		15
87429978	06-24				08-29		15
87429981	06-20		28	87434614	02-01		5
87429982	06-15		16	87434621	08-20		6
	06-16		23		08-53		
	08-01		10	87434649	02-01		6
87429983	06-20		30	87434673	08-01		11
87429984	06-20		27		08-33		
87429985	06-18		23	87434745	09-37		1
87429986	06-16		12	87434746	09-37		
87429987	06-15		6	87434766	08-34		
	06-16		7	87434767	08-35		
87429988	06-15		10	87434768	08-34		
87429989	06-15		1	87434769	08-35		
87429994	06-18		3	87434771	09-79		12A
87430051	06-40		11A	87434772	09-80		12A
87430122	09-65		19	87434774	02-01		4
	09-66		1	87434775	02-01		3
87430345	06-02		1	87434777	08-22		26
87430618	06-12		20	87434783	09-57		
	06-13		1	87434793	02-01		
87430677	09-11			87434880	03-01		21
	09-74		4	87434978	02-01		12
87430867	04-06			87435076	06-11A		9
87430868	04-06A			87435078	06-11A		6
87430972	08-23		1	87435080	06-11A		10
87431077	09-77		8	87435082	06-11A		11
87431078	09-76		8	87435108	09-53		1
87431080	09-77		9	87435109	09-53		1
87431081	09-76		9	87435110	09-53		1

http://www.minnparbackhoeparts.com/

Number	Figure	Sequence	Ref.	Number	Figure	Sequence	Ref.
87435112	09-53		1	87437633	08-17		6
87435242	08-57		9		08-18		8
	08-58		11		08-20		8
87435243	08-54		11	87437635	08-17		7
	08-55		11		08-18		9
	08-56		11		08-20		9
87435275	09-13		8	87437641	08-22		51
87435372	09-14		8	87437655	08-01		39
87435381	04-21		2	87437657	08-01		39
87435409	02-02		2	87437685	08-09A		14
87435453	09-57		23	87437688	09-13		18
87435506	08-54		15	87437689	09-14		5
	08-55		16	87437804	02-06		2
	08-56		17		02-06A		2
	08-57		12	87437806	09-15		27
	08-58		14	87437840	08-08		
87435569	05-01		1		08-08A		4A
	09-72		12		08-22		21A
87435761	08-01		3	87437899	08-33		10
87435909	08-26		5	87437905	08-33		12
	08-28			87437906	08-33		13
	08-29		5	87437914	08-33		14
87435910	08-29		5A	87437917	08-33		15
	08-31			87437923	08-21		6
87435923	08-25		20	87437924	08-21		5
87435924	09-15		12	87437925	08-21		7
	09-25		11	87437926	08-21		9
	09-25A		11	87437927	08-21		4
87435929	09-57		1	87437928	08-21		8
87435938	09-78		12	87437929	08-21		10
87435939	09-79		12	87437930	08-21		11
87435940	09-80		12	87437933	08-21		12
87436066	08-01		17	87437934	08-02		13
	08-02		16	87437935	08-21		13
	08-02		7	87437938	08-08A		33
87436076	09-41		3	87437939	08-08A		32
87436192	09-72		1B	87437940	08-08A		35
87436225	08-54		2	87437941	08-08A		34
	08-55		2	87437980	08-01		42
	08-56		2	87437982	08-01		43
	08-57		2	87438012	08-19		8
	08-58		3	87438015	08-19		9
87436234	09-27		18	87438021	08-28		2
87436675	04-07				08-31		2
	04-10			87438022	08-28		
	08-25		23		08-31		
	09-69		5	87438023	08-28		
87436676	04-21		7		08-31		
87436782	09-22		43	87438024	08-28		
	09-22		43		08-31		
87436783	09-22A		43	87438025	08-28		3
87436836	04-07		15		08-31		3
	04-07		8	87438026	08-28		
	04-21		11		08-31		
87437108	08-04		24	87438027	08-28		
87437203	02-07				08-31		
	02-08		1	87438028	08-28		
87437230	08-01		16		08-28		
87437231	08-02		18		08-31		
	08-02		6		08-31		
	08-23		37	87438029	08-28		4
87437232	08-02		18		08-31		4
	08-02		6	87438031	08-28		5
	08-23		36		08-31		5
87437263	08-26		1	87438032	08-28		
	08-29		1		08-31		
87437265	08-25		22	87438045	08-33		
87437366	09-14		3	87438046	08-54		16
87437369	09-14		4		08-55		17
87437371	08-56		13		08-56		18
	08-58		12		08-58		
87437372	08-54		12	87438157	09-21		14
	08-55		12	87438735	09-72		1A
	08-56		12	87438925	04-01		3
87437373	08-55		14	87438926	04-01		4
87437441	08-02		6	87438927	04-01		5
87437621	08-22		45	87438928	04-01		6
87437623	08-22		30	87438929	04-01		8
87437625	08-22		47	87438930	04-01		9
87437627	08-22		43	87438931	04-01		10
87437629	08-22		46	87438932	04-01		11
87437631	08-22		44	87438933	04-01		12

http://www.minnparbackhoeparts.com/

Number	Figure	Sequence	Ref.	Number	Figure	Sequence	Ref.
87438935	04-01		13	87440045	05-02		22
87438937	04-01		14		08-03		1
87438940	04-01		15		08-61		
87438941	04-01		16	87440058	09-20		10
87438942	04-01		17	87440076	09-17		10
87438944	04-01		18	87440282	09-53		13
87438946	04-01		19	87440283	09-53		14
87438948	04-01		20	87440381	09-13		31
87438950	04-01		22	87440554	02-06		7
87438951	04-01		32	87440694	08-23		16
87438954	04-01		36	87440704	09-13		9
87438956	04-01		38	87440706	09-13		10
87438960	04-02		1	87440710	09-13		1
87438963	04-02		2	87440711	09-13		
87438965	04-02		3		09-15		1
87438967	04-02		4	87440712	08-22		14
87438969	04-02		5	87440812	08-09A		10
87438970	04-02		6	87440814	08-34		14
87438971	04-02		7		08-35		15
87438972	04-02		8		08-36		17
87438973	04-02		9		08-37		17
87438974	04-02		10		08-38		15
87438975	04-02		11		08-39		15
87438976	04-02		12	87440815	08-34		13
87438977	04-02		13		08-35		14
87438978	04-02		14		08-36		16
87438979	04-02		15		08-37		16
87438980	04-02		16		08-38		14
87438981	04-02		17		08-39		14
87438982	04-02		18	87440835	08-20		10
87438983	04-02		19	87440837	08-20		11
87438984	04-02		20	87441059	09-07		
87438985	04-02		21	87441073	09-08A		
87438986	04-02		22	87441074	09-08A		
87438987	04-02		23	87441076	08-09		23
87438989	04-02		24		08-09A		23
87438992	04-01		1	87441285	02-06		10
87438993	04-01		2		02-06A		10
87438994	04-01			87441372	08-24		31
87438995	04-01		21		08-30		31
87438996	04-01		23	87441495	08-40		1
87438997	04-01		24		08-41		1
87438999	04-01		25		08-42		1
87439000	04-01		26		08-43		1
87439001	04-01		27		08-43A		
87439002	04-01		28	87441758	09-69		28
87439003	04-01		29	87441850	09-15		9
87439004	04-01		30		09-25		12
87439005	04-01		31		09-25A		12
87439006	04-01		33	87441876	06-11A		1
87439007	04-01		34	87442357	02-06		15
87439008	04-01		35		02-06A		21
87439009	04-01		37	87442376	09-41		21
87439010	04-01		41	87442377	09-41		22
87439011	04-01		43	87442409	09-15		33
87439032	08-21		14	87442419	02-01		45
87439033	08-21		15	87442441	09-58		21
87439061	04-01		42	87442601	02-05		4
87439135	09-21		13	87442618	02-04		1
87439136	05-02		13		02-05		
87439137	05-02		1	87442924	09-58		31
87439138	05-02		5		09-69		27
87439163	08-08A		38	87443080	04-14		8
	08-22		25		04-15		2
87439210	09-12		15	87443149	08-04		15
87439213	08-22		48	87443150	08-04		14
87439215	08-22		40	87443430	09-52		1
87439306	08-08		10	87443431	09-52		1
	08-08A		10	87443432	09-52		1
87439448	09-40		11	87443433	09-52		1
87439537	08-14		23	87443434	09-67		1
87439660	08-11		22	87443435	09-67		1
87439665	08-08		24	87443437	09-67		
	08-08A		24	87443661	09-24		46
87439722	09-54A		27	87443691	09-54		1A
	09-56A		5		09-54A		1A
87439723	09-54A		29	87443692	09-15		26
	09-56A		6	87443721	08-54		5
87439724	09-56A		1		08-55		5
87439725	09-54A		4		08-56		5
87439726	09-54A				08-58		5
87439842	08-11		34	87443722	08-57		8

http://www.minnparbackhoeparts.com/

Number	Figure	Sequence	Ref.
87443847	09-24		44
87443912	09-24		45
87443971	09-24		
87444040	09-40		25
87444147	09-39		2
87444148	09-39		1
87444149	09-25		15
87444169	02-06A		17
87444176	09-58		30
	09-69		11
87444379	09-09		1
87444776	09-74		9
87444942	03-01		19
87445051	09-57		30
87445245	09-25		9
87445557	08-22		44A
87445597	09-40		29
87446081	02-01		6
87446082	02-01		5
87446095	03-03		25
87446113	09-17		12
87446330	06-10		20
	06-11		39
87446332	06-10		20A
	06-11		40
87446333	06-10		19
	06-11		38
87446335	06-10		15
	06-11		34
87446337	06-10		17
	06-11		36
87446338	06-10		13
	06-11		32
87446596	09-01		33A
87447044	08-06		23
87447052	02-06A		7
87447088	09-19A		
87447135	02-07A		
87447313	02-06A		25
87447450	05-01		12
87447887	08-06		24
87448055	09-12		3A
87448057	09-12		2A
87448059	09-12		2B
87448198	09-56A		
87448199	09-54A		
87448272	09-52		1
87448273	09-52		1
87448274	09-52		1
87448275	09-52		1
87448489	02-02		9
87448526	08-29		27
	08-30		1
87448527	08-29		28
	08-30		2
87448658	07-04		32
87448661	07-04		30
87448668	08-30		17
87448685	09-58		
	09-69		
87448990	08-22		39A
87449373	08-09		1
	08-09A		1
	08-59		
87449374	08-59		2
87449514	09-58		34
	09-69		31
87449517	09-58		37
	09-69		34
87449579	07-04		34
87449825	09-67		
87449995	09-25		25
87449996	09-25		26
87450318	08-08A		1B
	08-22		18A
87450456	08-02		13
87450481	04-04		1
	04-07		32
	04-08		14
87450698	08-09A		14
87450910	07-04		31
87450914	09-13		27
87450931	04-04		1A
	04-07		32A
	04-08		14A
87450932	04-04		
	04-07		
	04-08		
87450978	08-34		7
	08-35		8
	08-36		11A
	08-37		11A
	08-38		16A
	08-39		16A
87450979	08-36		11B
	08-37		11B
	08-38		16B
	08-39		16B
87450980	08-36		11C
	08-37		11C
	08-38		16C
	08-39		16C
87451021	09-53		13A
87451448	08-57		11
87451751	07-04		33
87452021	09-37		20
87452257	04-03		16
87452258	04-03		14
87452399	08-01		21
87452400	08-01		26
87452402	08-26		16
	08-29		16
87452403	08-26		17
	08-29		17
87452404	09-19		2
87452405	08-21		16
87452406	09-19		1
87452511	04-21		15
87452627	09-12		3B
87452823	03-03		29A
87453949	07-06		37
87454016	08-07		1
	08-64		1
87454017	08-07		2
	08-64		1
87454053	03-01		45
87454054	03-01		47
87454055	03-01		46
87454294	09-45B		2
	09-49A		
87454295	09-45B		1
	09-49A		
87454376	02-02		7
87454377	02-01		14
87454378	02-01		16
87454380	02-04		9
87454381	02-04		5
87454383	02-04		10
87454545	05-02		
87454547	08-37		21B
	08-39		25B
87454548	08-37		21C
	08-39		25C
87454907	08-64		2
87454908	08-64		2
87455441	08-10		22
87455443	08-11		21
87455505	09-08A		
87455509	09-08		
87455541	08-37		21E
	08-39		25E
87455564	08-37		21G
	08-39		25G
87455565	08-37		21H
	08-39		25H
87455832	08-02		18
87456843	06-12		14
	06-14		
	06-15		
	06-17		
	06-18		
	06-19		
	06-20		
	06-21		

http://www.minnparbackhoeparts.com/

Number	Figure	Sequence	Ref.
87456843	06-23A		
87456844	06-12		15
	06-14		
	06-16		
	06-17		
	06-18		
	06-19		
	06-20		
	06-21		
	06-22		
	06-23A		
	06-24		
87456899	06-23A		
87456900	06-23A		3
87456901	06-24		11
87456944	04-04		1
	04-07		32
	04-08		14
87456948	04-04		1B
	04-07		32B
	04-08		14B
87456949	04-04		
	04-07		
	04-08		
87456968	06-23A		4
87456969	06-24		12
87803065	02-35		1
87803194	03-08		6
87803261	02-32		1
892-10010	06-25		19
	06-25		22
	06-25		32
	06-25		37
	06-25		39
	06-25		41
	06-26		15
	06-26		17
892-11005	03-03		30
	04-20		6
892-11006	03-03		31
	09-25		17
	09-25A		17
	09-59		3
	09-69		
892-11008	02-01		41
	03-01		17A
	03-03		10
	04-03		11
	04-03		5
	04-06A		17
	04-08		11
	04-09		16
	04-17		4
	07-03		3
	07-03		37
	07-04		6
	07-06		14
	08-10		15
	08-11		15
	08-12		14
	08-13		14
	08-23		22
	08-30		9B
	09-05		10
	09-08		28
	09-08A		28
	09-12		14
	09-13		6
	09-15		3
	09-25		24
	09-25A		24
	09-43		6
892-11010	02-06		5
	02-06A		5
	03-01		32
	03-03		24
	04-01		40
	05-02		26
	07-03		11
	07-06		22
	08-04		12
	08-05		10
892-11010	08-05		16
	08-05		37
	08-06		16
	08-06		9
	08-07		9
	08-22		42
	08-23		12
	08-27		15
	08-27		6
	08-30		40
	09-08		26
	09-08A		26
	09-13		28
	09-24		42
	09-25		7
	09-25A		7
	09-28		15C
	09-37		31
893-11005	04-19		8
895-11004	04-12		13
	09-53		8
895-11005	03-03		6
	06-35		47
895-11006	04-06A		14
	04-06A		29
	09-54		10A
	09-54A		10A
895-11008	02-01		10
	02-02		13
	02-02		16
	02-02		23
	02-03		8
	02-03A		8
	02-04		3
	03-03		11
	04-17		11
	06-10		3
	06-11		3
	06-11A		3
	07-03		2A
	07-06		34
	08-08A		3A
	08-22		22
	08-22		27
	09-03		16
	09-05		9
	09-12		13
	09-15		
	09-21		15
	09-25		32
	09-28		8E
	09-36		18
	09-58		19
	09-65		
	09-69		24
895-11010	02-01		23
	03-01		34
	03-01		42
	04-17		7
	07-06		31
	08-03		3
	08-04		11
	08-05		38
	08-05		9
	08-07		14
	08-08		31
	08-08A		31
	08-09		4
	08-09A		4
	08-25		3
	09-04		20
	09-08		17
	09-08		21
	09-08A		17
	09-08A		21
	09-24		43
	09-37		29
	09-37		51
	09-39		11
	09-39		14
	09-39		23
	09-39		29

http://www.minnparbackhoeparts.com/

Number	Figure	Sequence	Ref.
895-11010	09-39		6
	09-40		4
	09-40		6
	09-44		10
895-11018	08-09		7
895-15006	04-12		8
895-15008	05-01		16
	05-01		24
	09-13		4
	09-42		31
	09-61		7
	09-62		16
895-15010	05-01		21
	07-06		36
	08-25		7
	09-13		12
	09-25		8
	09-25A		8
	09-62		11
895-18012	09-45B		4
895-30107	09-54		35
	09-54A		35
	09-56		12
	09-56A		12
896-11008	02-07A		2
	08-30		35
	09-13		32
	09-58		32
	09-69		29
896-11010	02-01		38
	02-06		17
	02-06		18
	02-06A		23
	02-06A		24
	04-03		13
	04-03		17
	08-10		3
	08-11		3
	08-12		3
	08-13		3
	08-14		3
	08-24		25
	08-26		3
	08-26		7
	08-29		3
	08-29		7
	09-01		29A
896-11012	04-06A		33
	06-12		10
	08-23		18
	09-45		11B
	09-66		9
896-11016	09-36		12
896-11020	03-01		3A
	06-38		5
	09-05		18
	09-06		9
	09-07		7
	09-23		14
	09-24		5
	09-35		3
	09-35		7
	09-37		3A
896-15008	07-06		33
	09-66		16
896-15010	02-04		13
	02-06		12
	02-06		4
	02-06A		12
	02-06A		4
	06-12		25
	08-22		11
	09-09		3
	09-13		19
	09-28		15B
	09-66		5
896-15012	02-07		4
	03-03		27
	06-12		28
	06-13		10
	09-39		17
	09-39		20
896-15012	09-45		5
	09-45A		12
	09-45B		10
	09-50		
90-6682T1	06-01		16
	06-09		12
	06-12		40
	06-13		19
	06-47		12
905794R1	06-18		20
905839R1	05-06		6
	06-04		4
906086R1	09-54		42
	09-54A		42
	09-56		19
	09-56A		19
934667R1	06-15		3
	06-16		4
	06-23		36
	06-23A		36
	06-24		6
934727R1	05-06		4
	06-04		2
9827902	07-06		35
9969021	06-26		23
9969022	06-26		24
9969023	06-26		25
A13240	08-25		10
A156873	06-02		6
A166057	04-04		17
	04-04		2
A167037	09-70		8
A170467	02-06		8
	02-06A		8
A177435	03-02		2
A178460	06-29		43
	06-29		45
A183452	06-29		42
	06-29		46
A187542	04-18		5
A187575	04-18		11
A187603	09-59		7
A187714	09-57		10
	09-59		
A187990	04-08		5
	07-03		32
A188028	07-06		23
A23870	04-18		1
A30881	09-03		11
	09-13		3
	09-16		15
	09-17		5
	09-18		26
	09-21		6
A33509	09-27		29
A38208	05-04		15
	05-09		7
A41264	04-16		9
A42561	04-10		8
	09-63		6
	09-64		14B
A44641	08-32		15
A44651	08-32		11
A45035	08-32		13
A45054	09-49A		
	09-51		16
A45504	09-49A		
A45505	09-49A		
A45513	09-49A		
A48041	06-06		11
	06-19		6
	06-20		2
A65544	05-01		5
A77310	07-03		14
B17575	06-02		
	06-02		
	06-03		
	06-04		
	06-06		
	06-06		
	06-07		
	06-08		

http://www.minnparbackhoeparts.com/

Number	Figure	Sequence	Ref.
B506395	06-07		16
BMF28S	04-06		1
D120450	09-24		14
	09-26		7
	09-28		3A
D121152	04-14		2
	04-16		
D121194	09-05		6
D121608	07-06		12
D123347	09-71		4
D123684	05-04		3
	06-01		10
D124528	07-03		19
D124529	07-03		13
D124530	07-03		23
D124857	03-03		8
D125079	04-05		7
D125223	05-09		1
D126409	04-06		4
D127167	09-26		38
	09-27		21
D127335	04-12		24
D127542	09-04		2
D128022	09-59		7
D128745	09-59		4
	09-69		2
D129227	09-25		2
	09-25A		2
D129264	09-06		2
	09-07		2
	09-08		11
	09-08A		11
D129747	07-06		13
D132076	09-05		17
D132494	09-24		16
	09-27		2
D132982	06-11		31
	07-04		22
	08-03		15
	09-63		24
D133632	09-24		21
	09-27		7
D133865	09-27		24
D134900	09-20		6
D135384	04-14		1
	04-16		
D135557	09-23		5
D135559	09-23		6
D135739	09-24		12
D135741	09-23		4
D136391	09-23		26
D136392	09-23		24
D136700	09-23		25
	09-23		36
D136773	09-01		17
	09-19		11
D137077	07-03		6
D137218	09-24		13
D137363	04-04		12
	09-04		16
	09-51		3
D137468	04-10		26
D137625	08-01		14
D137627	06-01		17
	06-09		13
	06-12		41
	06-13		20
	06-47		13
D138022	09-24		30
	09-26		2
D138047	09-26		44
	09-26		46
	09-26		9
	09-27		34
	09-28		2
D138055	08-04		8
	08-05		15
	08-05		35
	08-05		6
	08-06		14
	08-06		7
	08-26		31
D138055	08-27		12
	09-28		8A
	09-37		32
D138157	09-29		7
	09-30		7
	09-31		7
	09-32		7
	09-32		7
	09-33		7
	09-34		7
	09-34		7
D138380	06-37		4
D138492	06-37		5
	06-38		2
D138955	04-09		18
D139039	09-16		19
D139849	09-29		
	09-30		
	09-31		
	09-32		
	09-32		
	09-33		
	09-34		
	09-34		
D139851	09-29		
	09-30		
	09-31		
	09-32		
	09-32		
	09-33		
	09-34		
	09-34		
D140029	08-69		15
	09-26		8
	09-28		4
D140035	07-03		9
D140247	09-27		28
D140267	09-39		32
D141075	09-26		48
D141076	09-26		49
D141142	09-26		20
	09-27		37
D141164	09-26		22
	09-27		39
D141555	08-68		15
D141666	09-27		11
D142012	09-34		4
D142144	09-70		10
D142519	09-22		15
	09-22A		15
D142787	08-04		20
	08-08		27
	08-08A		27
	08-09		21
	08-09A		21
	08-10		32
	08-10A		15
D142898	05-08		6
	06-22		16
	06-40		22
D142971	06-41		5
	06-42		5
D142986	06-46		2
D143033	06-41		18
	06-42		18
D143242	09-67		4
D143324	09-26		30
D143406	09-22		13
	09-22		33
	09-22A		13
	09-22A		33
D143411	09-13		35
D143412	08-13		31
D143416	09-20		5
D143417	09-25A		9
	09-39		25
	09-63		29
	09-64		20
D143426	08-13		29
D143427	09-63		27
	09-64		18
D143591	09-15		15

http://www.minnparbackhoeparts.com/

Number	Figure	Sequence	Ref.	Number	Figure	Sequence	Ref.
D143591	09-25		21	D150121	09-26		10
	09-25A		21		09-27		17
D143714	09-39		9		09-28		3
D143715	09-39		8	D150214	05-06		11A
D143723	09-15		10	D150391	09-45		15
	09-25		22		09-45		23
	09-25A		22	D150392	09-45		16
D143735	09-25		20		09-45		24
	09-25A		20	D150397	09-16		9
D143846	08-07		6	D150434	09-16		13
	08-12		37	D150435	09-16		12
	08-13		48	D150486	09-16		17
	08-26		31A	D150493	09-16		24
D144423	09-23		35	D150503	09-16		45
D144592	09-25		3	D150619	09-26		34
	09-25A		3	D150633	07-06		11
D145061	09-34		4	D150781	08-59A		
D146288	09-26		26	D150810	08-59A		
	09-27		49	D151034	09-05		15
D146420	09-30		3	D151065	09-23		21
D146421	09-30		2	D151069	09-36		5
D147166	04-07		6	D151070	09-36		6
D147249	09-30		4	D151071	09-24		11
D147383	04-04		33	D151073	09-23		7
	09-58		13	D151074	09-23		8
	09-58		17	D25279	09-22		10
	09-69		21		09-22		14
	09-69		25		09-22A		10
D147409	09-29		4		09-22A		14
D147773	08-10A		26		09-26		31
D148108	04-07		35	D26002	09-22		9
	04-08		4	D28648	09-22		12
	07-03		31		09-22A		12
D148947	09-18		2	D30933	09-29		12
D148962	03-02		6		09-30		12
	09-13		30		09-31		12
D148992	09-16		7		09-32		12
D148993	09-13		2		09-32		12
D148994	09-16		18		09-33		12
D149033	09-22		40		09-34		12
	09-22A		40		09-34		12
D149079	09-26		41	D31140	09-08		2
	09-27		16		09-08A		2
	09-27		31		09-26		47
D149262	09-16		46	D34666	09-16		16
D149287	09-01		35	D35908	06-13		16
	09-02		36A	D37495	09-30		11
	09-03		4		09-31		11
	09-16		37		09-32		11
	09-17		11		09-32		11
	09-19		3		09-33		11
	09-20		11		09-34		11
D149288	07-06		20		09-34		11
	09-02		36	D37614	09-26		29
	09-16		23	D38435	08-03		23
	09-16		48	D38648	08-07		20
	09-19		7		08-14		26
	09-21		11	D38858	08-69		12
D149295	09-16		34	D38907	09-22		3
	09-19		9		09-22A		3
D149298	09-26		32	D39118	09-18		11
D149725	05-05		4	D39256	09-22		17
	06-02		2		09-22A		17
D149726	05-05		3	D39696	06-10		24
	06-02		4		06-11		20
D149737	06-04		8		08-03		18
D149738	06-04		6	D40236	08-14		13
D149739	06-04			D40442	03-01		37
D149824	09-73		3		09-37		37
D149825	09-73		4	D43940	09-29		11
D149826	09-78		10	D48212	09-29		10
D149827	09-78		11		09-30		10
D149828	09-73		5		09-31		10
D149829	09-73		6		09-32		10
D149860	06-09				09-32		10
	06-47				09-33		10
D149866	09-11		9		09-34		10
D149867	09-11		10		09-34		10
D149868	09-11		12	D49498	08-30		37
D150032	09-20		13	D50146	09-22		6
D150053	08-10A		3		09-22A		6
D150054	08-10A		2	D50696	09-34A		2

http://www.minnparbackhoeparts.com/

Number	Figure	Sequence	Ref.	Number	Figure	Sequence	Ref.
D51391	09-08		7	E135809	06-16		1A
	09-08A		7		06-39		9
D51392	09-08		15	E135810	07-02		7
	09-08A		15	E43769	09-58		22
D51393	09-08		19	E46560	09-58		
	09-08A		19		09-69		
D51750	09-29		5	E47238	09-58		3
	09-29		8		09-69		16
	09-30		5	E47239	09-58		2
	09-30		8		09-69		17
	09-31		5	E47240	09-58		4
	09-31		8		09-69		18
	09-32		5	E49497	09-19A		4
	09-32		5	E49498	09-19A		3
	09-32		8	F22426	04-12		
	09-32		8	F44883	09-40		10
	09-33		5	F45165	09-54		49
	09-33		8		09-54A		49
	09-34		5		09-56		25
	09-34		5		09-56A		25
	09-34		8	F64198	09-54		45
	09-34		8		09-54A		45
D52276	02-01		22		09-56		22
	08-10		7		09-56A		22
	08-11		7	F64519	09-67		14
	08-12		7	G100440	08-66		16
	08-13		7	G100444	08-63		15
	08-14		7		08-64		17
	08-22		13		08-70		14
D52564	09-71		1	G100448	08-66		17
D55216	09-37		56	G100449	08-63		16
	09-73		10		08-64		18
D59912	09-16		4		08-70		15
	09-18		6	G100710	08-69		18
	09-21		2	G100711	08-69		19
D61368	09-22		16	G101533	08-65		6
	09-22A		16		08-66		6
D67296	09-28		17C	G102090	08-65A		16
D74182	09-13		36		08-68		19
D75465	03-01		12	G102092	08-65A		15
D76209	09-38		11		08-68		18
D80270	03-01		39	G102285	08-66		15
	09-37		48	G102286	08-69		17
	09-73		11	G102287	08-62		14
D83187	08-32		10	G102288	08-63		14
D86664	09-25		19		08-64		16
	09-25A		19		08-70		13
D88052	09-63		32	G102424	08-63		6
D88427	09-22		11	G102425	08-62		6
	09-22A		11		08-64		6
D95096	09-03		13		08-70		5
D95142	08-63		5	G102426	08-65A		6
D95143	08-62		5	G102427	08-67		8
	08-64		5		08-68		6
	08-70		4	G107277	08-70		12
D95144	08-65		5	G107970	08-65A		10
	08-66		5		08-68		12
D95145	08-65A		5	G108512	08-63		3
D95146	08-67		7	G108518	08-63		13
	08-68		5	G109298	08-63		10
	08-69		5		08-64		11
E114385	06-29		18		08-70		9
	06-29		3	G109299	08-66		10
	06-30		18	G109908	08-69		6
	06-30		3	G110077	08-59A		
	06-32		3	G110467	08-59A		
	06-33		3	G110529	08-65		15
E114386	06-29		19	G110530	08-65		16
	06-29		4	G110531	08-65		14
	06-30		19	G110594	08-65A		13
	06-30		4	G32122	08-62		10
	06-32		4	G32176	08-65		10
	06-33		4		08-66		24
E135750	06-40		18	G35540	08-59A		4
E135762	06-43		8	H433285	09-24		24
E135777	06-41		3	H434163	08-01		15
	06-42		3	H71514	09-24		7
E135785	06-41		8	K260177	06-15		5
	06-42		8		06-16		6
E135809	06-15		10A	K261014	06-08		4
	06-15		1A		06-43		4
	06-16		13	K261065	06-08		3

http://www.minnparbackhoeparts.com/

Number	Figure	Sequence	Ref.	Number	Figure	Sequence	Ref.
K261065	06-43		3	L71879	04-10		
K262143	06-08		9	L79937	08-05		39
	06-43		12	N13505	05-06		12A
K395027	06-07		12		06-03		11
K395075	06-07		21	N13582	08-33		6
	06-07		8	N14283	04-16		10
K395082	06-06		23	N14367	05-05		2
	06-46		8		06-02		3
K395086	06-07		13	N14373	05-05		8
	06-07		19	N14407	06-07		5
K395087	06-07		6	N14408	06-07		7
K395090	06-08		8	N14410	06-05		3
	06-43		10		06-05		3
K395091	06-06		21	N14466	09-60		20
K395093	06-06		16	N14784	07-05		
	06-46		9	N6755	08-61		
K395101	06-46		25	N6836	04-16		3
K395131	06-46		15	N6941	08-61		
K691987	02-01		21	N7802	09-46		
	09-38		9	N9025	08-61		
L111356	08-10A		31	NSS	04-04		31B
	09-74		7		04-10		2
L15401	09-03		12		04-10		25
L17985	02-04		4		04-10		3
L18331	02-07A		5		04-10		4
	04-19		15		04-13		
L18337	02-02		24		04-13		
	02-04		19		04-13		
	02-06A		19		04-16		1
	03-01		22		04-16		5
	03-02		12		04-16		6
	04-04		28		04-16		7
	04-06A		25		04-16		8
	04-07		26		04-18		12
	04-14		11		05-03		1
	04-15		14		05-03		3
	04-21		14		05-03		5
	06-10		10		05-03		6
	06-11		10		05-07		2
	06-39		8		06-02		14
	07-04		23		06-04		1
	08-03		16		06-04		10
	08-09		29		06-04		11
	08-10		20		06-04		12
	08-10A		17		06-04		13
	08-11		20		06-04		14
	08-12		19		06-04		15
	08-13		19		06-04		16
	08-14		19		06-06		14
	08-21				06-06		15
	08-23		15		06-06		3
	08-24		32		06-07		1
	08-25		25		06-07		17
	08-27		18		06-07		18
	08-30		32		06-07		2
	08-30		8		06-07		20
	09-02		41		06-08		1
	09-10		36		06-08		2
	09-37		59		06-09		10
	09-51		22		06-09		11
	09-58		16		06-09		2
	09-58		38		06-09		3
	09-62		21		06-09		4
	09-63		25		06-09		9
	09-64		17		06-12		
	09-65		11		06-17		10
	09-69		14		06-17		11
	09-69		35		06-17		12
L26209	07-03		7		06-17		13
L30039	06-26		11		06-17		14
L32100	08-33		9		06-17		17
L32418	08-33		1		06-17		18
L54563	09-16		14		06-17		2
	09-17		1		06-17		20
L60224	04-12		5		06-17		21
	09-37		49		06-17		3
L71879	04-04		21		06-17		3A
	04-07				06-17		4
	04-07				06-17		5
	04-07				06-17		6
	04-07		10		06-17		7
	04-08				06-17		8

http://www.minnparbackhoeparts.com/

Number	Figure	Sequence	Ref.	Number	Figure	Sequence	Ref.
NSS	06-17		9	NSS	06-47		4
	06-21		10		06-47		9
	06-21		11		07-05		1
	06-21		12		07-05		10
	06-21		15		07-05		11
	06-21		20		07-05		12
	06-21		21		07-05		13
	06-21		22		07-05		14
	06-21		23		07-05		15
	06-21		24		07-05		16
	06-21		25		07-05		17
	06-21		25A		07-05		18
	06-21		7		07-05		2
	06-21		8		07-05		3
	06-23		1		07-05		4
	06-23		38A		07-05		5
	06-23		43		07-05		6
	06-23		45		07-05		7
	06-23A		1		07-05		8
	06-23A		38A		07-05		9
	06-23A		43		07-06		1
	06-23A		45		07-06		2
	06-24		1		08-28		1
	06-24		2		08-31		1
	06-24		3		08-32		
	06-24		4		08-32		8
	06-25		12		08-32		9
	06-25		13		08-34		1
	06-26		26		08-34		2
	06-26		27		08-34		3
	06-26		28		08-34		4
	06-26		29		08-35		1
	06-26		30		08-35		2
	06-35		1		08-35		3
	06-35		10		08-35		4
	06-35		11		08-35		5
	06-35		12		08-36		1
	06-35		13		08-36		2
	06-35		14		08-36		3
	06-35		15		08-36		4
	06-35		16		08-36		5
	06-35		17		08-36		6
	06-35		18		08-37		1
	06-35		19		08-37		2
	06-35		2		08-37		3
	06-35		20		08-37		4
	06-35		21		08-37		5
	06-35		22		08-37		6
	06-35		23		08-38		1
	06-35		24		08-38		2
	06-35		25		08-38		3
	06-35		26		08-38		4
	06-35		27		08-38		5
	06-35		3		08-38		6
	06-35		31		08-38		7
	06-35		34		08-39		1
	06-35		38		08-39		2
	06-35		4		08-39		3
	06-35		44		08-39		4
	06-35		5		08-39		5
	06-35		6		08-39		6
	06-35		7		08-39		7
	06-35		8		08-40		7
	06-35		9		08-40		8
	06-36		2		08-40		9
	06-36		3		08-41		10
	06-36		4		08-41		8
	06-36		5		08-41		9
	06-41		1		08-42		10
	06-41		2		08-42		8
	06-42		1		08-42		9
	06-42		2		08-43		10
	06-43		1		08-43		11
	06-43		1A		08-43		9
	06-44		15		08-43A		1
	06-45		15		08-44		1
	06-46		20		08-44		2
	06-46		6		08-45		1
	06-47		10		08-45		2
	06-47		11		08-46		1
	06-47		2		08-46		2
	06-47		3		08-47		1

http://www.minnparbackhoeparts.com/

Number	Figure	Sequence	Ref.	Number	Figure	Sequence	Ref.
NSS	08-47		2	NSS	09-48		12
	08-48		1		09-51		1B
	08-48		2		09-54		1
	08-49		1		09-54A		1
	08-49		2		09-58		1
	08-50		1		09-60		19
	08-50		2		09-60		21
	08-59		1		09-69		15
	08-59A		1		09-70		14
	08-59A		10	P2230493	06-40		25
	08-59A		14	P2745466	06-22		21
	08-59A		2	P2745478	06-22		10
	08-59A		5	P2930467	06-46		3
	08-59A		6	P3034505	06-41		9
	08-59A		7		06-42		9
	08-59A		8	P3533055	06-21		35
	08-59A		9		06-22		20
	08-60		1	R26725	09-22A		9
	08-60		10	R32119	09-24		8
	08-60		11	R46493	08-07		7
	08-60		12	R54682	09-70		6
	08-60		13	REF	02-10		11
	08-60		4		02-10		12
	08-60		9		02-14		15
	08-61		1		02-15		4
	08-61		6		02-20		6
	08-61		7		02-22		5
	08-61		8		02-22		6
	08-62		7		02-29		7
	08-62		8		02-34		12
	08-63		7		02-38		10
	08-63		8		02-38		4
	08-64		8		02-38		7
	08-64		9		02-38		8
	08-65		7		02-38		9
	08-65		8		02-39		5
	08-65A		7		02-41		3
	08-65A		8		03-04		5
	08-66		7		03-06		10
	08-66		8		04-03		
	08-67		10		05-09		2
	08-67		11		05-09		5
	08-68		8		06-29		
	08-68		9		06-30		
	08-69		8		06-37		3
	08-69		9		06-37		3
	08-70		6		06-37		3
	08-70		7		06-37		3
	09-03		10		08-02		
	09-06		1		08-02		
	09-07		1		08-03		13
	09-08		1		08-04		1
	09-08		10		08-05		1
	09-08A		1		08-06		1
	09-08A		10		08-08		
	09-10		10		08-08A		
	09-10		2		08-09		
	09-26		37		08-09A		
	09-26		6		08-10		1
	09-27		15		08-11		1
	09-27		20		08-12		1
	09-29		2		08-13		1
	09-29		3		08-14		1
	09-31		2		08-15		
	09-31		3		08-16		
	09-31		4		08-17		
	09-32		2		08-18		
	09-32		2		08-19		
	09-32		3		08-20		
	09-32		3		08-24		
	09-32		4		08-25		
	09-32		4		08-25		16
	09-33		2		08-25		21
	09-33		3		08-27		
	09-33		4		08-27		4
	09-42				08-30		
	09-42				08-36		
	09-46		1		08-37		
	09-46		2		08-38		
	09-46		7		08-39		
	09-46		8		09-01		28
	09-47		9		09-02		40

http://www.minnparbackhoeparts.com/

Number	Figure	Sequence	Ref.	Number	Figure	Sequence	Ref.
REF	09-04						
	09-10						
	09-10						
	09-18						
	09-19						
	09-26		28				
	09-28						
	09-28						
	09-28						
	09-32						
	09-54						
	09-54A						
	09-55						
S109444	08-62		15				
S109445	08-62		16				
S115351	05-03		2				
S300976	06-41		7				
	06-42		7				
S301064	06-02		18				
S301065	06-02		15				
S89695	06-32		30				
	06-33		31				
S89696	06-32		29				
	06-33		30				
ST205A	06-19		1				
	06-22		6				
ST264	06-20		23				
T34857	04-16		2				

http://www.minnparbackhoeparts.com/

NOTES

http://www.minnparbackhoeparts.com/

580 SUPER M SERIES 2
580 SUPER M+ SERIES 2
RETROEXCAVADOR DE LA CARGADORA
CATÁLOGO DE PIEZAS

Número de pieza de la publicación: 7-9042 LAS



DB04A007

L'illustration peut montrer l'installation de l'équipement en option.

Esta unidad estuvo disponible por primera vez en 02-2004.

Contenidos
Información de carácter General
Sección 2 – Motor
Sección 3 – Sistema De Combustible
Sección 4 – Sistema Eléctrico
Sección 5 – Orugas / Dirección
Sección 6 – Tren De Fuerza
Sección 7 – Frenos
Sección 8 – Hidraulica
Sección 9 – Bastidor/accesorios
Índice

Issued 02-2004 (Revised 05-2005)
Printed in U.S.A. • Bur • Book/Form Number 7-9032 LAS
Copyright © 2005. CNH America LLC. All Rights Reserved.

http://www.minnparbackhoeparts.com/

CNH América, LLC reserva la derecha de llevar a cabo mejoras en diseño o cambia en especificaciones en cualquier momento sin incurrir en ninguna obligación de instalarlas en las unidades vendidas previamente.

Todos los datos dados en esta publicación están conforme a variaciones de la producción. Las dimensiones y los pesos son solamente aproximados.Las ilustraciones no demuestran necesariamente productos en condiciones estándares.Para la información exacta sobre cualquier producto particular, consulte por favor a su distribuidor.

Historia De la Revisión			
Issue	Issue Date	Applicable Machines	Remarks
First Edition	02-2004	580Super M / 580 Super M+ Series 2	7-9040 LAS
Revision 1	05-2004	580Super M / 580 Super M+ Series 2	7-9041 LAS
Revision 2	05-2005	580Super M / 580 Super M+ Series 2	7-9042 LAS

Cualquier uso del contenido editorial o ilustrado se prohíbe terminantemente sin el permiso escrito expreso de CNH America, LLC. Racine, WI 53403 U.S.A..

http://www.minnparbackhoeparts.com/

TABLE OF CONTENTS

02-01	RADIADOR - SOPORTE
02-02	SISTEMA DE PURGA DE AIRE - SOPORTE
02-03	CONJUNTO DEL RADIADOR (SIN AIRE ACONICIONADO)
02-03A	CONJUNTO DEL RADIADOR (CON AIRE ACONICIONADO)
02-04	FILTRO DE AIRE - PIEZAS DE ENTRADA DE AIRE
02-05	FILTRO DE AIRE
02-06	SILENCIADOR - SISTEMA DE ESCAPE
02-06A	SILENCIADOR, ASPIRADOR - SISTEMA DE ESCAPE
02-07	MOTOR - SOPORTE
02-07A	MOTOR - CALENTADOR DEL BLOQUE
02-08	MOTOR
02-09	BLOQUE DE CILINDROS
02-10	BLOQUE DE CILINDROS
02-11	BOMBA DE ACEITE, BANDEJA
02-12	BLOQUE DE CILINDROS - CUBIERTAS
02-13	BLOQUE DE CILINDROS - CUBIERTAS
02-14	BLOQUE DE CILINDROS - CUBIERTAS
02-15	RESPIRADERO - MOTOR
02-16	CULATA DEL CILINDROS
02-17	CULATA DE CILINDRO
02-18	CULATA DEL CILINDROS - MECANISMO DE LA VALVULA
02-19	COLECTOR ESCAPE
02-20	COLECTOR ESCAPE
02-21	CIGUENAL
02-22	PISTONES - VARILLAS CONECTORAS
02-23	PISTONES - VARILLAS CONECTORAS
02-24	VOLANTE MOTOR
02-25	POLEA - CIGUENAL
02-26	EQUILIBRADOR, ENGRENAJES Y ARBOLES
02-27	EQUILIBRADOR, ENGRENAJES Y ARBOLES (2830952)
02-28	EJE DE LEVAS
02-29	TURBOCOMPRESOR
02-30	MOTOR, ACEITE
02-31	BOMBA DE ACEITE - MOTOR
02-32	FILTRO DE ACEITE - MOTOR
02-33	TUBERIAS - ACEITE DEL MOTOR
02-34	FILTRO Y REFRIGERADOR DE ACEITE
02-35	BOMBA DE AGUA
02-36	SISTEMA DE REFRIGERACIÓN - MOTOR
02-37	TERMOSTATO - REFRIGERACION DEL MOTOR
02-38	BOMBA DE AGUA - MANDO
02-39	POLEA DEL VENTILADOR
02-40	TOMA DE FUERZA
02-41	MOTOR - GANCHO DE ELEVACION
03-01	CONDUCTOS DE COMBUSTIBLE, DEPÓSITO - FILTRO, COMBUSTIBLE EN LINEA
03-02	CONTROLES - ACELERADOR, MANUAL
03-03	CONTROLES - ACELERADOR, PIE
03-04	BOMBA DE INYECCION
03-05	SISTEMA DE INYECCION DE COMBUSTIBLE
03-06	SISTEMA DE INYECCION DE COMBUSTIBLE
03-07	SISTEMA DE INYECCION DE COMBUSTIBLE
03-08	FILTRO COMBUSTIBLE

http://www.minnparbackhoeparts.com/

TABLE OF CONTENTS

03-09	BOMBA DE ALIMENTACION
03-10	SISTEMA DE INYECCION DE COMBUSTIBLE
03-11	SISTEMA DE INYECCION DE COMBUSTIBLE
04-01	MOTOR DE ARRANQUE
04-02	ALTERNADOR
04-03	MONTAJE DEL ARRANQUE - MONTAJE DEL ALTERNADOR
04-04	MAZO DE CABLES, MOTOR - MONTAJE Y CONEXIONES
04-05	BATERIA CABLES (MODELOS SIN ARRANQUE EN FRÍO)
04-06	BATERIA, DOBLE - ARRANQUE EN FRÍO
04-06A	CALENTADOR DE REJILLA PARA ARRANQUE EN FRÍO
04-07	MAZO DE CABLES, CONSOLA FRONTAL - INTERRUPTORES
04-08	MAZO DE CABLES, CONSOLA FRONTAL - SOPORTE
04-09	ELECTRICO - TRANSMISIÓN, SERVOASISTIDA
04-10	MAZO DE CABLES, CONSOLA LATERAL - INTERRUPTORES
04-11	PANEL DE INSTRUMENTOS, DELANTERO - CUBIERTAS
04-12	PANEL DE INSTRUMENTOS, LATERAL - CUBIERTAS (LADO DERECHO)
04-13	VELOCIMETRO COMB.
04-14	ELECTRICO - LUCES, TECHO DE LA ROPS
04-15	ELECTRICO - LUCES, CABINA DE LA ROPS
04-16	CONJUNTO DE LA LAMPARA (MODELOS CON TECHO ROPS)
04-17	BOCINA - ALARMA, RETROCESO
04-18	FARO, GIRATORIO (MODELOS CON CABINA O CON TECHO)
04-19	ANTENA, RADIO - MAZO DE CABLES, RADIO
04-20	ELECTRICO SISTEMA - HIDRÁULICO AUXILIAR DE LA RETROEXCAVADORA
04-21	ELECTRICO SISTEMA - HIDRÁULICO AUXILIAR DE LA RETROEXCAVADORA, CON DE CONTROL PILOTO
05-01	VOLANTE - COLUMNA
05-02	HIDRAULICA - DIRECCION
05-03	TUBO DE LA DIRECCION
05-04	EJE, DELANTERO (86990837) - SOPORTE
05-05	EJE, DELANTERO (86990837) - ALOJAMIENTO
05-06	EJE, DELANTERO (86990837) - ALOJAMIENTO, ARTICULACIÓN GIRATORIA
05-07	EJE, DELANTERO (86990837) - CILINDRO, DIRECCION
05-08	EJE, DELANTERO (86990837) - CUBO Y COJINETES
05-09	NEUMÁTICOS, FRONTALES - NEUMÁTICOS
06-01	EJE, TRANSMISIÓN DELANTERA - SOPORTE
06-02	EJE, TRANSMISIÓN DELANTERA - ALOJAMIENTO
06-03	EJE, TRANSMISIÓN DELANTERA - ALOJAMIENTO, ARTICULACIÓN GIRATORIA
06-04	EJE, TRANSMISIÓN DELANTERA - CILINDRO, DIRECCION
06-05	EJE, TRANSMISIÓN DELANTERA - VARILLAS, EJE
06-06	EJE, TRANSMISIÓN DELANTERA - PLANETARIO
06-07	EJE, TRANSMISIÓN DELANTERA - DIFERENCIAL
06-08	EJE, TRANSMISIÓN DELANTERA - ANILLO Y PIÑÓN
06-09	EJE DE TRANSMISIÓN, EJE DELANTERO
06-10	SISTEMA DE REFRIGERACIÓN - TRANSMISION (MODELOS SIN SERVOASISTIDA)(WITH CUT HOSES AT COOLER)
06-11	SISTEMA DE REFRIGERACIÓN - TRANSMISION (MODELOS CON SERVOASISTIDA)(WITH CUT HOSES AT COOLER)
06-11A	SISTEMA DE REFRIGERACIÓN - TRANSMISION (WITH FLARED FITTINGS AT COOLER)
06-12	TRANSMISION - SOPORTE (MODELOS SIN SERVOASISTIDA)
06-13	TRANSMISION - SOPORTE (MODELOS CON SERVOASISTIDA)

http://www.minnparbackhoeparts.com/

TABLE OF CONTENTS

06-14	CONJUNTO DE LA TRANSMISION - FILTRO, ACEITE (MODELOS SIN SERVOASISTIDA)
06-15	CONJUNTO DE LA TRANSMISION (2WD) - ALOJAMIENTO (MODELOS SIN SERVOASISTIDA)
06-16	CONJUNTO DE LA TRANSMISION (4WD) - ALOJAMIENTO (MODELOS SIN SERVOASISTIDA)
06-17	CONJUNTO DE LA TRANSMISION - BOMBA, ACEITE (MODELOS SIN SERVOASISTIDA)
06-18	CONJUNTO DE LA TRANSMISION - MECANISMO DE CAMBIO (MODELOS SIN SERVOASISTIDA)
06-19	CONJUNTO DE LA TRANSMISION - EJE, RUEDA GUÍA Y PRIMARIA (MODELOS SIN SERVOASISTIDA)
06-20	CONJUNTO DE LA TRANSMISION - EJE, ENTRADA (MODELOS SIN SERVOASISTIDA)
06-21	CONJUNTO DE LA TRANSMISION - EJE, SECUNDARIO (MODELOS SIN SERVOASISTIDA)
06-22	CONJUNTO DE LA TRANSMISION (4WD) - EJE, SALIDA (MODELOS SIN SERVOASISTIDA)
06-23	CONJUNTO DE LA TRANSMISION (86984097 OR 86984098) - VALVULA, CONTROL (MODELOS SIN SERVOASISTIDA)
06-23A	CONJUNTO DE LA TRANSMISION (87456843 OR 87456844) - VALVULA, CONTROL (MODELOS SIN SERVOASISTIDA)
06-24	CONJUNTO DE LA TRANSMISION (4WD) - VÁLVULA, SOLENOIDE (MODELOS SIN SERVOASISTIDA)
06-25	CONJUNTO DE LA TRANSMISIÓN, SERVOTRANSMISIÓN - ALOJAMIENTO
06-26	CONJUNTO DE LA TRANSMISIÓN, SERVOTRANSMISIÓN - ALOJAMIENTO, TRASERO
06-27	CONJUNTO DE LA TRANSMISIÓN, SERVOTRANSMISIÓN - COVERTIDOR DE PAR
06-28	CONJUNTO DE LA TRANSMISIÓN, SERVOTRANSMISIÓN - BOMBA, ACEITE
06-29	CONJUNTO DE LA TRANSMISIÓN, SERVOTRANSMISIÓN - EMBRAGUE, TRANSMISIÓN HACIA DELANTE
06-30	CONJUNTO DE LA TRANSMISIÓN, SERVOTRANSMISIÓN - EMBRAGUE, TRANSMISIÓN HACIA ATRÁS
06-31	CONJUNTO DE LA TRANSMISIÓN, SERVOTRANSMISIÓN - EMBRAGUE, TRANSMISIÓN DE LA BOMBA
06-32	CONJUNTO DE LA TRANSMISIÓN, SERVOTRANSMISIÓN - EMBRAGUE, SEGUNDA MARCHA
06-33	CONJUNTO DE LA TRANSMISIÓN, SERVOTRANSMISIÓN - EMBRAGUE, EJE DE SALIDA
06-34	CONJUNTO DE LA TRANSMISIÓN, SERVOTRANSMISIÓN - MONTAJE, VÁLVULA
06-35	CONJUNTO DE LA TRANSMISIÓN, SERVOTRANSMISIÓN - VALVULA, CONTROL
06-36	CONJUNTO DE LA TRANSMISIÓN, SERVOTRANSMISIÓN - PLACA, TRANSMISIÓN
06-37	RUEDAS, PARTE TRASERA - NEUMÁTICOS
06-38	EJE, TRANSMISIÓN TRASERA - SOPORTE
06-39	EJE, TRASERO - BLOQUEO DEL DIFERENCIAL
06-40	EJE, TRANSMISIÓN TRASERA - ALOJAMIENTO
06-41	EJE, TRANSMISIÓN TRASERA - DIFERENCIAL (ENTRADA EN SENTIDO HORARIO, MODELOS SIN SERVOASISTIDA)
06-42	EJE, TRANSMISIÓN TRASERA - DIFERENCIAL (ENTRADA EN SENTIDO ANTIHORARIO, MODELOS CON SERVOASISTIDA)
06-43	EJE, TRANSMISIÓN TRASERA - ANILLO Y PIÑÓN
06-44	EJE, TRANSMISIÓN TRASERA - BLOQUEO DEL DIFERENCIAL (ENTRADA EN SENTIDO HORARIO, MODELOS SIN SERVOASI

http://www.minnparbackhoeparts.com/

TABLE OF CONTENTS

06-45	EJE, TRANSMISIÓN TRASERA - BLOQUEO DEL DIFERENCIAL (ENTRADA EN SENTIDO ANTIHORARIO, MODELOS CON SER
06-46	EJE, TRANSMISIÓN TRASERA - PLANETARIO
06-47	EJE DE TRANSMISIÓN, EJE TRASERO
07-01	EJE, TRANSMISIÓN TRASERA - FRENO, DIFERENCIAL
07-02	EJE, TRANSMISIÓN TRASERA - FRENO, ESTACIONAMIENTO
07-03	FRENO - PEDALES
07-04	HIDRAULICA - CILINDRO PRINCIPAL DEL FRENO
07-05	CONJUNTO DE CILINDRO FRENO PRINCIPAL
07-06	CONTROLES - FRENO, ESTACIONAMIENTO
08-01	HIDRAULICA - BOMBA, FILTRO Y VÁLVULA DE LA CARGADORA
08-02	HIDRAULICA - VÁLVULA DE LA CARGADORA AL FILTRO A LA VÁLVULA DE LA RETROEXCAVADORA
08-03	HIDRAULICA - REFRIGERADOR, LÍNEAS DE RETORNO Y FILTRO
08-04	HIDRAULICA - CILINDRO, ELEVACIÓN DE LA CARGADORA
08-05	HIDRAULICA - CILINDRO, CUCHARÓN DE LA CARGADORA
08-06	HIDRAULICA - CILINDRO, ALMEJA DE LA CARGADORA
08-07	HIDRAULICA - CILINDRO, ALMEJA DE LA CARGADORA
08-08	HIDRAULICA - CILINDRO, ESTABILIZADOR DE LA RETROEXCAVADORA (SIN DE CONTROL PILOTO)
08-08A	HIDRAULICA - CILINDRO, ESTABILIZADOR DE LA RETROEXCAVADORA (CON DE CONTROL PILOTO)
08-09	HIDRAULICA - CILINDRO, BALANCÍN DE LA RETROEXCAVADORA (SIN DE CONTROL PILOTO)
08-09A	HIDRAULICA - CILINDRO, BALANCÍN DE LA RETROEXCAVADORA (CON DE CONTROL PILOTO)
08-10	HIDRAULICA - CILINDRO, AGUILÓN DE LA RETROEXCAVADORA
08-10A	HIDRAULICA - EL PICAPORTE DEL ESTAMPIDO DE BACKHOE Y EL CIRCUITO ELECTRICO
08-11	HIDRAULICA - CILINDRO, PALA DE LA RETROEXCAVADORA
08-12	HIDRAULICA - CILINDRO, CUCHARÓN DE LA RETROEXCAVADORA (MODELOS SIN PALA EXTENDIBLE)
08-13	HIDRAULICA - CILINDRO, CUCHARÓN DE LA RETROEXCAVADORA (MODELOS CON PALA EXTENDIBLE)
08-14	HIDRAULICA - CILINDRO, PALA EXTENSIBLE DE LA RETROEXCAVADORA
08-15	HIDRAULICA - VÁLVULA, CONTROL PILOTO DE PALANCA DE CONTROL (6 SPOOL, W/O EXT DIPPER, W/O AUX HYDS)
08-16	HIDRAULICA - VÁLVULA, CONTROL PILOTO DE PALANCA DE CONTROL (6 SPOOL, W/O EXT DIPPER, W/ AUX HYDS)
08-17	HIDRAULICA - VÁLVULA, CONTROL PILOTO DE PALANCA DE CONTROL (7 SPOOL, W/ EXT DIPPER, W/O AUX HYDS)
08-18	HIDRAULICA - VÁLVULA, CONTROL PILOTO DE PALANCA DE CONTROL (7 SPOOL, W/ EXT DIPPER, W/ AUX HYDS)
08-19	HIDRAULICA - VÁLVULA, CONTROL PILOTO DE PALANCA DE CONTROL (7 SPOOL, W/O EXT DIPPER, W/ AUX HYDS)
08-20	HIDRAULICA - VÁLVULA, CONTROL PILOTO DE PALANCA DE CONTROL (8 SPOOL, W/ EXT DIPPER, W/ AUX HYDS)
08-21	HIDRAULICA - CONTROL PILOTO DE PALANCA DE CONTROL
08-22	HIDRAULICA - CONTROL PILOTO
08-23	HIDRAULICA - AUXILIAR DE LA RETROEXCAVADORA
08-24	HIDRAULICA - AUXILIAR DE LA RETROEXCAVADORA
08-25	HIDRAULICA - DISPOSITIVO ANTICABECEO

http://www.minnparbackhoeparts.com/

TABLE OF CONTENTS

08-26	HIDRAULICA - ACOPLADOR, HERRAMIENTA RÁPIDA DE LA CARGADORA
08-27	HIDRAULICA - ACOPLADOR, HERRAMIENTA RÁPIDA DE LA CARGADORA
08-28	CONJUNTO DE LA VÁLVULA DEL ACOPLADOR - HERRAMIENTA RÁPIDA DE LA CARGADORA / RETROEXCAVADORA
08-29	HIDRAULICA - CILINDRO, CUCHARÓN DE LA RETROEXCAVADORA
08-30	HIDRAULICA - CILINDRO, CUCHARÓN DE LA RETROEXCAVADORA
08-31	CONJUNTO DE LA VÁLVULA DEL ACOPLADOR - HERRAMIENTA RÁPIDA DE LA CARGADORA CON DECUCHARÓN DE LA RETRO
08-32	CILINDRO - CILINDRO, CUCHARÓN DE LA RETROEXCAVADORA
08-33	BOMBA, EQUIPAMIENTO HIDRÁULICO
08-34	CONJUNTO DE LA VALVULA - CONTROL DE LA CARGADORA, DOS CORREDERAS
08-35	CONJUNTO DE LA VALVULA - CONTROL DE LA CARGADORA, TRES CORREDERAS
08-36	CONJUNTO DE LA VALVULA - CONTROL DE LA RETROEXCAVADORA, 6 BOBINAS (SIN PALA EXTENSIBLE Y SIN SISTEM)
08-37	CONJUNTO DE LA VALVULA - CONTROL DE LA RETROEXCAVADORA, 7 BOBINAS (SIN PALA EXTENSIBLE Y CON SISTEM)
08-38	CONJUNTO DE LA VALVULA - CONTROL DE LA RETROEXCAVADORA, 7 BOBINAS (CON PALA EXTENSIBLE Y SIN SISTEM)
08-39	CONJUNTO DE LA VALVULA - CONTROL DE LA RETROEXCAVADORA, 8 BOBINAS (CON PALA EXTENSIBLE Y CON SISTEM)
08-40	CONJUNTO DE LA VALVULA - CONTROL DE LA RETROEXCAVADORA, 6 BOBINAS
08-41	CONJUNTO DE LA VALVULA - CONTROL DE LA RETROEXCAVADORA, 7 BOBINAS
08-42	CONJUNTO DE LA VALVULA - CONTROL DE LA RETROEXCAVADORA, 7 BOBINAS
08-43	CONJUNTO DE LA VALVULA - CONTROL DE LA RETROEXCAVADORA, 8 BOBINAS
08-43A	SECCION DE LA VALVULA - ENTRADA (CON DE CONTROL PILOTO)
08-44	SECCION DE LA VALVULA - DE LA RETROEXCAVADORA (CON DE CONTROL PILOTO)
08-45	SECCION DE LA VALVULA - AGUILON DE LA RETROEXCAVADORA (CON DE CONTROL PILOTO)
08-46	SECCION DE LA VALVULA - ESTABILIZADOR DE LA RETROEXCAVADORA (CON DE CONTROL PILOTO)
08-47	SECCION DE LA VALVULA - BRAZO DE LA RETROEXCAVADORA (CON DE CONTROL PILOTO)
08-48	SECCION DE LA VALVULA - CUCHARON DE LA RETROEXCAVADORA (CON DE CONTROL PILOTO)
08-49	SECCION DE LA VALVULA - PALA EXTENSIBLE (CON DE CONTROL PILOTO)
08-50	SECCION DE LA VALVULA - OPCIONES, SISTEMA HIDRÁULICO AUXILIAR (CON DE CONTROL PILOTO)
08-51	VALVULA DE REDUCCION DEPRESION (2 SPOOL) (CON DE CONTROL PILOTO)
08-52	VALVULA DE REDUCCION DEPRESION (3 SPOOL) (CON DE CONTROL PILOTO)
08-53	VALVULA DE REDUCCION DEPRESION (4 SPOOL) (CON DE CONTROL PILOTO)
08-54	VÁLVULA, PALANCA DE CONTROL (CONTROL PILOTO) (IZQUIERDO) BOCINA
08-55	VÁLVULA, PALANCA DE CONTROL (CONTROL PILOTO) (IZQUIERDO) BOCINA & UNI-DIR
08-56	VÁLVULA, PALANCA DE CONTROL (CONTROL PILOTO) (IZQUIERDO) BOCINA & BI-DIR
08-57	VÁLVULA, PALANCA DE CONTROL (CONTROL PILOTO) (DERECHA/O) SIN PALA EXTENDIBLE
08-58	VÁLVULA, PALANCA DE CONTROL (CONTROL PILOTO) (DERECHA/O) CON PALA EXTENDIBLE
08-59	CONJUNTO DE LA VALVULA - ALMOHADILLA DE OSCILACIÓN
08-59A	SOLENOIDE VALVE CONJUNTO - TRABA DEL AGUILON

http://www.minnparbackhoeparts.com/

TABLE OF CONTENTS

08-60	ACUMULADOR CONJ. - DISPOSITIVO ANTICABECEO
08-61	FILTRO DE ACEITE
08-62	CONJUNTO DE CILINDRO - ELEVADOR DE LA CARGADORA
08-63	CONJUNTO DE CILINDRO - CUCHARON DE LA CARGADORA
08-64	CONJUNTO DE CILINDRO - ALMEJA DE LA CARGADORA
08-65	CONJUNTO DE CILINDRO - ESTABILIZADOR DE LA RETROEXCAVADORA (580SM)
08-65A	CONJUNTO DE CILINDRO - ESTABILIZADOR DE LA RETROEXCAVADORA (580SM+)
08-66	CONJUNTO DE CILINDRO - DE LA RETROEXCAVADORA
08-67	CONJUNTO DE CILINDRO - AGUILON DE LA RETROEXCAVADORA
08-68	CONJUNTO DE CILINDRO - BRAZO DE LA RETROEXCAVADORA
08-69	CONJUNTO DE CILINDRO - CUCHARON DE LA RETROEXCAVADORA
08-70	CONJUNTO DE CILINDRO - PALA EXTENSIBLE DE LA RETROEXCAVADORA
09-01	CONTROLES - ELEVACIÓN DE LA CARGADORA Y CUCHARÓN
09-02	CONTROLES - ALMEJA DE LA CARGADORA
09-03	CONTROLES - CARGADORA AUTO-NIVELADORA
09-04	MARCO - ELEVADOR DE LA CARGADORA
09-05	MARCO - VARILLAJE DE LA CARGADORA
09-06	CUCHARÓN, BORDE ANCHO DE LA CARGADORA (82 IN) (580SM)
09-07	CUCHARÓN, BORDE ANCHO DE LA CARGADORA (93 IN) (580SM / 580SM+)
09-08	CUCHARÓN, ALMEJA DE LA CARGADORA (82 IN) (580SM)
09-08A	CUCHARÓN, ALMEJA DE LA CARGADORA (93 IN) (580SM+)
09-09	PROTECTOR - VÁLVULA, CARGADORA
09-10	ACOPLADOR RÁPIDO, HERRAMIENTA
09-11	CUBIERTAS - TORRE DE CONTROL DE LA RETROEXCAVADORA, SIN DE CONTROL PILOTO
09-12	APOYO DE LA TORRE DE CONTROL DE LA RETROEXCAVADORA Y JUNTAS, SIN DE CONTROL PILOTO
09-13	TORRE DE CONTROL DE LA RETROEXCAVADORA SOPORTE, CON DE CONTROL PILOTO
09-14	TORRE DE CONTROL DE LA RETROEXCAVADORA SOPORTE DE JUNTA, CON DE CONTROL PILOTO
09-15	TORRE DE CONTROL DE LA RETROEXCAVADORA PALANCA (TRABA DEL AGUILÓN), CON DE CONTROL PILOTO
09-16	CONTROLES - RETROEXCAVADORA, CON PEDAL DE OSCILACIÓN (MODELOS SIN PALA EXTENDIBLE)
09-17	CONTROLES - RETROEXCAVADORA, CON PEDAL DE OSCILACIÓN (MODELOS CON PALA EXTENDIBLE)
09-18	CONTROLES - RETROEXCAVADORA, CON OSCILACIÓN MANUAL (MODELOS SIN PALA EXTENDIBLE)
09-19	CONTROLES - RETROEXCAVADORA, CON OSCILACIÓN MANUAL (MODELOS SIN PALA EXTENDIBLE)
09-19A	CONTROLES - RETROEXCAVADORA, PATRÓN DE CONTROL DE LA EXCAVADORA
09-20	CONTROLES - RETROEXCAVADORA, CON OSCILACIÓN MANUAL (MODELOS CON PALA EXTENDIBLE)
09-21	CONTROLES - SISTEMA HIDRÁULICO AUXILIAR DE LA RETROEXCAVADORA, SIN DE CONTROL PILOTO
09-22	RETROEXCAVADORA - ESTABILIZADORES, PLACAS Y ALMOHADILLAS(580SM)
09-22A	RETROEXCAVADORA - ESTABILIZADORES, PLACAS Y ALMOHADILLAS (580SM+)
09-23	RETROEXCAVADORA - TORRE DE OSCILACIÓN Y CILINDROS DE OSCILACIÓN
09-24	RETROEXCAVADORA - AGUILÓN Y TORRE DE OSCILACIÓN
09-25	TRABA DEL AGUILÓN (SIN DE CONTROL PILOTO)
09-25A	TRABA DEL AGUILÓN (CON DE CONTROL PILOTO)

http://www.minnparbackhoeparts.com/

TABLE OF CONTENTS

09-26	RETROEXCAVADORA - PALA Y CUCHARÓN
09-27	RETROEXCAVADORA - PALA, EXTENSIBLE
09-28	PALA, RETROEXCAVADORA - ACOPLADOR, HIDRÁULICO (ACOPLADOR DEL CUCHARÓN DE LA RETROEXCAVADORA HIDRÁULI
09-29	CUCHARÓN, RETROEXCAVADORA UNIVERSAL (305 MM (12 INCH) WIDE)
09-30	CUCHARÓN, RETROEXCAVADORA UNIVERSAL (406 MM (16 INCH) WIDE)
09-31	CUCHARÓN, RETROEXCAVADORA UNIVERSAL (457 MM (18 INCH) WIDE)
09-32	CUCHARÓN, RETROEXCAVADORA UNIVERSAL (610 MM (24 INCH) / 762 MM (30 INCH) WIDE)
09-33	CUCHARÓN, RETROEXCAVADORA UNIVERSAL (914 MM (36 INCH) WIDE)
09-34	CUCHARÓN, RETROEXCAVADORA UNIVERSAL (610 MM (24 INCH) / 762 MM (30 INCH) WIDE)
09-34A	CONJUNTO DEL PUNTO DE HIELO
09-35	CONTRAPESO, DELANTERO
09-36	CHASIS / SOPORTES, RECEPTÁCULO - PANTALLA, ENTRADA DE AIRE
09-37	DEPÓSITO, ACEITE - CAJA, BATERÍA Y HERRAMIENTA
09-38	REVESTIMIENTO DEL RADIADOR
09-39	CAPO - PANELES, LATERALES
09-40	CAPO - PARRILLA
09-41	PLACAS, SUELO - ALFOMBRILLAS
09-42	CUBIERTA DEL GUARDABARROS, LADO IZQUIERDO - PANEL, CIERRE TRASERO (BANDEJA DE ALMACENAMIENTO CON SUJ
09-43	EXTENSIONES DEL GUARDABARROS
09-44	GUARDABARROS
09-45	ASIENTO - SOPORTE (MILSCO EN SEARS SUSPENSIÓN DE AIRE)
09-45A	ASIENTO - SOPORTE (SEARS, ESTÁNDAR)
09-45B	ASIENTO - SOPORTE (SEARS SUSPENSION MECANICA)
09-46	CONJUNTO DEL ASIENTO, ESTÁNDAR (MILSCO)
09-47	SOPORTE DEL ASIENTO Y PEDESTAL, ESTÁNDAR (MILSCO)
09-48	CONJUNTO DEL ASIENTO, SUSPENSION MECANICA (MILSCO)
09-49	PEDESTAL DEL ASIENTO Y SUSPENSIÓN, SUSPENSIÓN MECÁNICA (MILSCO)
09-49A	CONJUNTO DEL ASIENTO, SUSPENSION MECANICA (SEARS)
09-50	CONJUNTO DEL ASIENTO, SUSPENSION DE AIRE (SEARS)
09-51	PEDESTAL DEL ASIENTO Y SUSPENSIÓN, SUSPENSIÓN DE AIRE (SEARS)
09-52	CABINA - CRISTAL, ESPEJO Y MANTENER ABIERTO
09-53	CABINA - CHASIS Y CUBIERTAS
09-54	CABINA - PUERTAS, SI UTILIZADO (VER LAS CRISTAL / BISAGRA; REF 4, 27, 29)
09-54A	CABINA - PUERTAS, SI UTILIZADO (VER LAS CRISTAL / BISAGRA; REF 4, 27, 29)
09-55	CABINA - MONTAJE DE LA PUERTA
09-56	CABINA - VENTANILLA, DERECHA, PARA MARCOS DE CABINA DE PUERTA ÚNICA, SI UTILIZADO (VER LAS CRISTAL /
09-56A	CABINA - VENTANILLA, DERECHA, PARA MARCOS DE CABINA DE PUERTA ÚNICA, SI UTILIZADO (VER LAS CRISTAL /
09-57	CABINA - VENTANA, TRASERA
09-58	CABINA - ARANDELA, PARABRISAS
09-59	CABINA - LIMPIA PARABRISAS
09-60	REVESTIMIENTO DE LA CABINA - FILTRO, REJILLAS, LÁMPARA DEL TECHO
09-61	CABINA - FILTRO, AIRE
09-62	CABINA - ALOJAMIENTO DEL SOPLADOR, CONDUCTOS DE VENTILACIÓN, TUBOS DE DRENADO
09-63	CABINA - CALENTADOR
09-64	CABINA - TUBOS DE AIRE ACONDICIONADO, NÚCLEO DEL EVAPORADOR

http://www.minnparbackhoeparts.com/

TABLE OF CONTENTS

09-65	CABINA - AIRE ACONDICIONADOR, CONDENSADOR, RECIBIDOR-SECADOR
09-66	CABINA - COMPRESOR DEL AIRE ACONDICIONADO
09-67	TECHO Y ROPS - CHASIS, CUBIERTAS, ESPEJOS, VISOR
09-68	TECHO Y ROPS - VIDRIO
09-69	TECHO Y ROPS - LIMPIAPARABRISAS, DELANTERO Y LAVAPARABRISAS
09-70	ESPEJO, VISTA TRASERA - SOPORTE, MODELLE MIT KABINE
09-71	EMBLEMA DE VEHICULO LENTO
09-72	CALCOMANIAS
09-73	CALCOMANIAS
09-74	CALCOMANIAS
09-75	CALCOMANIAS - INGLES
09-76	CALCOMANIAS - CASTELLANO PARA LATINOAMERICA
09-77	CALCOMANIAS - FRANCES CANADIENSE
09-78	CALCOMANIAS - INGLES
09-79	CALCOMANIAS - CASTELLANO PARA LATINOAMERICA
09-80	CALCOMANIAS - FRANCES CANADIENSE

http://www.minnparbackhoeparts.com/

INFORMACIÓN GENERAL

NOTA DE PATENTE

El contenido de este manual es propiedad de esta compañía. La reproducción o el uso de cualquier parte para cualquier otro propósito que no sea el funcionamiento y mantenimiento de nuestro equipo está permitido solamente si se autoriza expresamente por escrito.

Pueden obtenerse copias adicionales en su concesionario. Dirigir sus pedidos a su concesionario y hacer referencia al número de publicación que aparece en la parte inferior de la contraportada o en la cubierta de su manual.

POLÍTICA DE LA COMPAÑÍA

La política de la compañía, de mejora continua, se reserva el derecho a cambiar los precios y a realizar cambios en el diseño y las especificaciones en cualquier momento sin previo aviso ni obligación de modificar las unidades fabricadas con anterioridad.

Todos los datos que se dan en este libro están sujetos a variaciones de producción. Las dimensiones y los pesos son aproximados solamente y las ilustraciones no muestran necesariamente las máquinas en condiciones estándar. Para información exacta sobre cualquier máquina en particular, ponerse en contacto con el concesionario.

PIEZAS Y ACCESORIOS

Se han diseñado piezas y accesorios específicamente para estas máquinas.

Quisiéramos señalar que la compañía NO ha examinado y aprobado otras piezas y accesorios “no genuinos”. La instalación y/o el uso de tales productos puede tener efectos negativos en las características de diseño de su máquina y, por lo tanto, afectar su seguridad. La compañía no se responsabiliza por los daños causados por el uso de piezas y accesorios “no genuinos”.

MEJORAS

Estamos continuamente intentando mejorar nuestros productos. Se reserva el derecho a mejorar el diseño o realizar cambios cuando resulte práctico y posible llevarlo a cabo, sin incurrir por ello en la obligación de realizar estos cambios o actualizar las unidades vendidas previamente.

CÓDIGOS DE LOS MODELOS

El rango de las máquinas que se incluyen puede que no esté disponible en todos los países o mercados. Por lo tanto, para obtener la información más actualizada consultar con su concesionario local.

AYUDA AL PROPIETARIO

Deseamos que esté completamente satisfecho con su inversión. Normalmente, cualquier problema con el equipo, será resuelto por el departamento de mantenimiento del concesionario. Sin embargo, pueden producirse malentendidos. Si el problema no ha sido resuelto a su satisfacción, le sugerimos lo siguiente:

1. Hablar con el propietario o gerente general del concesionario, explicar el problema y solicitar su ayuda. Cuando se necesite de ayuda especial, el concesionario tiene acceso directo con nuestras oficinas.
2. Proporcione al concesionario la siguiente información:
   - Su nombre, dirección y número de teléfono
   - Modelo de la máquina y número de serie
   - Nombre del concesionario y dirección
   - Fecha de compra de la máquina y tiempo de uso
   - Naturaleza del problema

Recuerde que el problema probablemente será resuelto en el concesionario, utilizando las instalaciones, equipo y personal del mismo. Así que es importante que el primer contacto sea con el concesionario.

PIEZAS DE REPUESTO

Para mantener la eficacia operativa, usar piezas de repuesto originales.

Al pedir piezas, proporcionar la siguiente información:

- Modelo de la máquina
- Números de serie de la máquina y el motor
- Número de pieza del catálogo de piezas

http://www.minnparbackhoeparts.com/

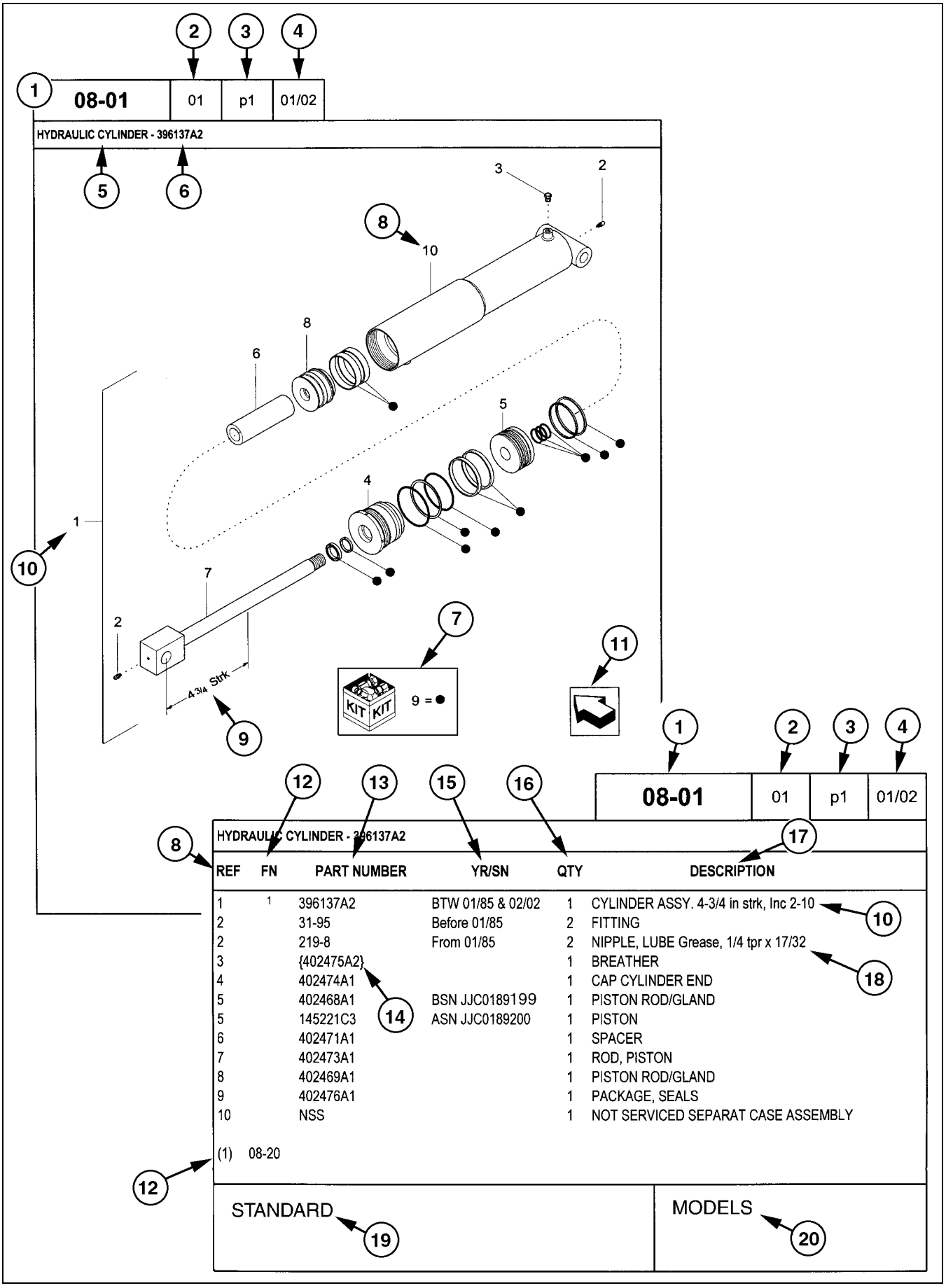

REF	FN	PART NUMBER	YR/SN	QTY	DESCRIPTION
1	1	396137A2	BTW 01/85 & 02/02	1	CYLINDER ASSY. 4-3/4 in strk, Inc 2-10
2		31-95	Before 01/85	2	FITTING
2		219-8	From 01/85	2	NIPPLE, LUBE Grease, 1/4 tpr x 17/32
3		{402475A2}		1	BREATHER
4		402474A1		1	CAP CYLINDER END
5		402468A1	BSN JJC0189199	1	PISTON ROD/GLAND
5		145221C3	ASN JJC0189200	1	PISTON
6		402471A1		1	SPACER
7		402473A1		1	ROD, PISTON
8		402469A1		1	PISTON ROD/GLAND
9		402476A1		1	PACKAGE, SEALS
10		NSS		1	NOT SERVICED SEPARAT CASE ASSEMBLY

(1) 08-20

STANDARD

MODELS

http://www.minnparbackhoeparts.com/

CÓMO USAR EL CATÁLOGO DE PIEZAS

1. Número de figura
2. Código de secuencia con número de figura
3. Número de página en el código de secuencia
4. Fecha de impresión (mes/año)
5. Descripción de la figura
6. Información general sobre la figura
7. Piezas suministradas en los juegos de reparación según la referencia del símbolo
8. Leyenda de referencia del número de pieza (REF)
9. Especificaciones técnicas referentes a la pieza indicada
10. Leyenda de figura que incluye artículos en paréntesis, los artículos incluidos pueden encontrarse también en el área de descripción adicional
11. Orientación – La flecha muestra la parte delantera de la máquina.
12. Pie de página – Información adicional referente al número de pieza. En este ejemplo, 08-20 equivale a otra figura en la que se muestra esta pieza.
13. Número de pieza
    NSS = Piezas que no reciben mantenimiento por separado (piezas sin mantenimiento)
    Números en paréntesis = No disponibles como piezas de mantenimiento en este mercado
14. No disponibles como piezas de mantenimiento en este mercado
15. YR/SN
    Año
    Antes de 01/85 = Pieza en fabricación en enero de 1985 y anteriormente
    Desde 01/85 = Pieza en fabricación desde enero de 1985 y posteriormente
    BTW 01/85 & 02/02 = Pieza válida para máquinas fabricadas entre enero de 1985 y febrero de 2002
    Número de serie (N.I.P.)
    BSN JJC0268800 = Pieza válida para el número de serie JJC0268800 y anteriores
    ASN JJC0268800 = Pieza válida para el número de serie JJC0268800 y posteriores
    BTW JJC0178000 & JJC0179000 = Pieza válida para los números de serie entre JJC0178000 y JJC0179000
16. Cantidad total de piezas referidas en la página. La cantidad puede reemplazarse por las siguientes instrucciones:
    SR = Según se requiera
    X = Según se requiera
17. Descripción de la pieza
18. Información adicional sobre la pieza para ayudar a confirmar la identificación
19. Notas de figura
20. Número(s) de modelo

LADO DERECHO E IZQUIERDO

La referencia al lado derecho e izquierdo en este catálogo se identifica con el operador de pie en la parte trasera de la unidad básica (sin accesorio trasero), mirando hacia el frente de la máquina (con desplazamiento de avance normal).

Para las páginas que cubren los accesorios de la máquina, el lado derecho e izquierdo se definen con el operador sentado en la posición correcta de funcionamiento del accesorio.

DIMENSIONES

Las dimensiones métricas e imperiales de la tornillería no muestran el número de medida de roscas anchas estándares. El número después de un punto y coma (;) es la clase o el grado de la tornillería. Una coma (,) representa el punto decimal (.) usando en dimensiones imperiales (EE.UU.).

http://www.minnparbackhoeparts.com/

EXPLICACIÓN DE LAS ABREVIATURAS

AC	corriente alterna
adj	ajustable
amp	amperios
AR	según sea necesario
ASN	número de serie y posterior NIP y posterior
blkhd	mamparo
br	sucursal
BSN	antes del número de serie antes del NIP
BTW	entre
cc	centímetros cúbicos
cl	clase
cmprsn	compresión
cn pt	punto de cono
cp pt	punto de copa
CRS	acero de aleación de cromo
CST	acero al carbono
cu yd	yarda cúbica
DC	corriente continua
deg	grados
dg pt	punto de garra
dia	diámetro
dr type	tipo de transmisión
fc	superficie
fc sl	superficie de sellado
fem	hembra
fem PT	rosca hembra de tubería
fl	ensanche
flat pt	punto plano
ft	pies (o pie)
ga	calibre
gal	galón o galones
gpm	galones por minuto
gr	grado
hd	cabeza
hdg pt	punto de media garra
hp	potencia en C.V.
ID	diámetro interior
in	pulgada o pulgadas
Incl.	incluye
inv fl	ensanche invertido
K	kilo
kg	kilogramo
km/h	kilómetros por hora
L	litro
lb	libras
lb-ft	libra pie
lg	largo
LH	lado izquierdo
LH thd	rosca izquierda
M	(prefijo) tamaño de rosca en métrico
m	metro
ml	milímetro
mm	milímetros
NF	National Fine
No.	número
NPT	National Pipe Thread
NS	National Super Fine
OD	diámetro exterior
ohm	unidad eléctrica de resistencia
Or	junta tórica
ORB	refuerzo de junta tórica
ORFS	superficie de sellado de junta tórica
ov cntr	sobre el centro
ov pt	punto oval
oz	onza
P	pitch
psi	libras por pulgada cuadrada
pt	pinta
PT	rosca de la tubería
rd	redondo/a
rd holes	agujeros redondos
RH	lado derecho
RH thd	rosca derecha
rpm	revoluciones por minuto
sl	autobloqueante
sq	cuadrado/a
SST	acero inoxidable
st	autorroscante
strk	carrera
sw	balancín
T	dientes
thk	grueso/a
tpr	ahusado/a
tube OD	diámetro exterior del tubo
V	voltio o voltios
W	vatio o vatios
X	según sea necesario
yd	yardas

http://www.minnparbackhoeparts.com/

SECTION INDEX

02-01	RADIADOR - SOPORTE
02-02	SISTEMA DE PURGA DE AIRE - SOPORTE
02-03	CONJUNTO DEL RADIADOR (SIN AIRE ACONICIONADO)
02-03A	CONJUNTO DEL RADIADOR (CON AIRE ACONICIONADO)
02-04	FILTRO DE AIRE - PIEZAS DE ENTRADA DE AIRE
02-05	FILTRO DE AIRE
02-06	SILENCIADOR - SISTEMA DE ESCAPE
02-06A	SILENCIADOR, ASPIRADOR - SISTEMA DE ESCAPE
02-07	MOTOR - SOPORTE
02-07A	MOTOR - CALENTADOR DEL BLOQUE
02-08	MOTOR
02-09	BLOQUE DE CILINDROS
02-10	BLOQUE DE CILINDROS
02-11	BOMBA DE ACEITE, BANDEJA
02-12	BLOQUE DE CILINDROS - CUBIERTAS
02-13	BLOQUE DE CILINDROS - CUBIERTAS
02-14	BLOQUE DE CILINDROS - CUBIERTAS
02-15	RESPIRADERO - MOTOR
02-16	CULATA DEL CILINDROS
02-17	CULATA DE CILINDRO
02-18	CULATA DEL CILINDROS - MECANISMO DE LA VALVULA
02-19	COLECTOR ESCAPE
02-20	COLECTOR ESCAPE
02-21	CIGUENAL
02-22	PISTONES - VARILLAS CONECTORAS
02-23	PISTONES - VARILLAS CONECTORAS
02-24	VOLANTE MOTOR
02-25	POLEA - CIGUENAL
02-26	EQUILIBRADOR, ENGRENAJES Y ARBOLES
02-27	EQUILIBRADOR, ENGRENAJES Y ARBOLES (2830952)
02-28	EJE DE LEVAS
02-29	TURBOCOMPRESOR
02-30	MOTOR, ACEITE
02-31	BOMBA DE ACEITE - MOTOR
02-32	FILTRO DE ACEITE - MOTOR
02-33	TUBERIAS - ACEITE DEL MOTOR
02-34	FILTRO Y REFRIGERADOR DE ACEITE
02-35	BOMBA DE AGUA
02-36	SISTEMA DE REFRIGERACIÓN - MOTOR
02-37	TERMOSTATO - REFRIGERACION DEL MOTOR
02-38	BOMBA DE AGUA - MANDO
02-39	POLEA DEL VENTILADOR
02-40	TOMA DE FUERZA
02-41	MOTOR - GANCHO DE ELEVACION

http://www.minnparbackhoeparts.com/

02-01		p1	05/05

RADIADOR - SOPORTE

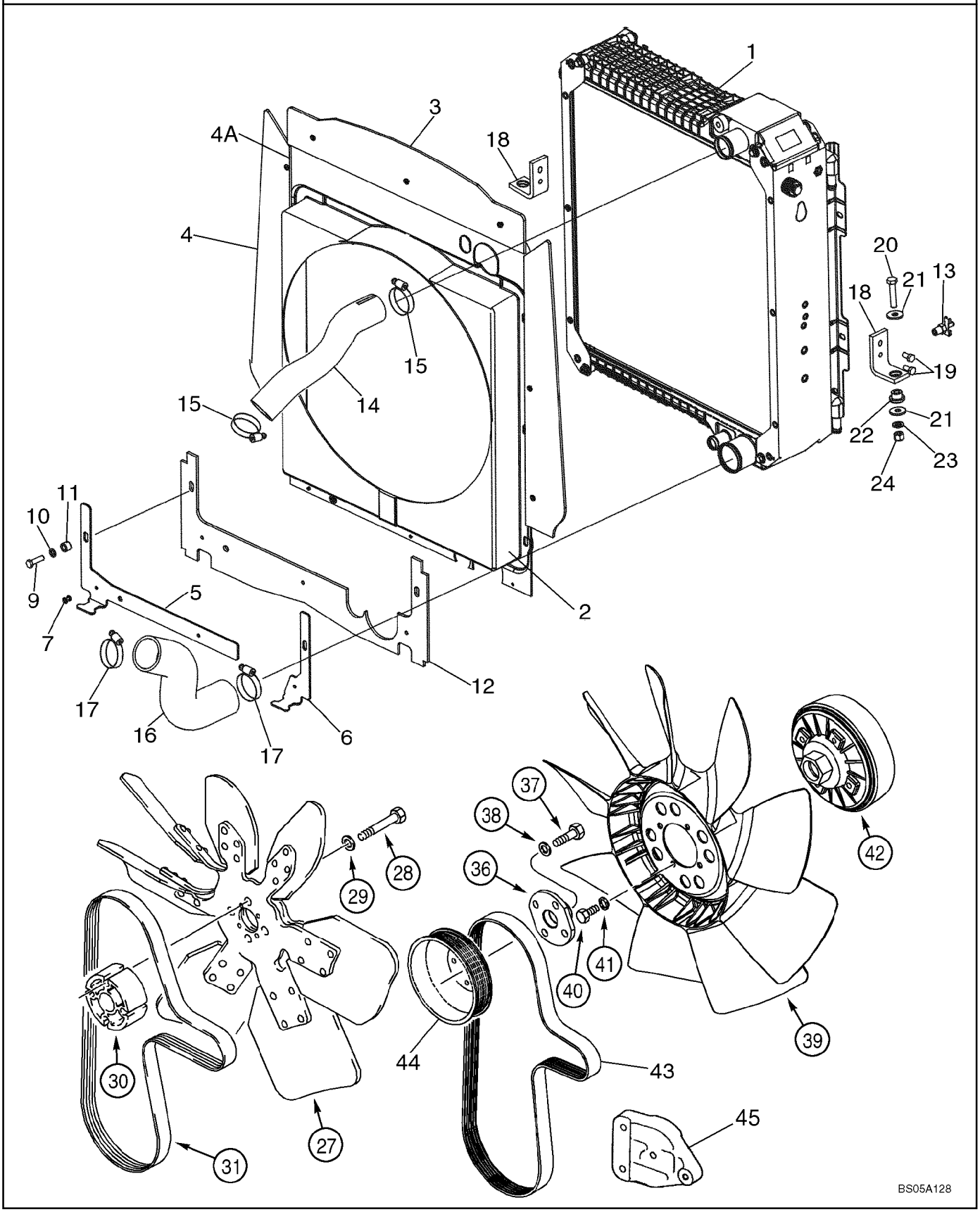

http://www.minnparbackhoeparts.com/

RADIADOR - SOPORTE

REF	FN	PART NUMBER	YR/SN	QTY	DESCRIPTION
1		87410096		1	RADIADOR 3 Row Radiator, Models Without Air Conditioning; See Figure 02-03
1		87410098		1	CONDENSADOR 5 Row Radiator, Models With Air Conditioning; See Figure 02-03A
		87434793		1	BOQUILLA ASSEMBLY; Incl. Ref 2 - 4A
2		87417301		1	BOQUILLA Fan
3		87434775		1	JUNTA DE CAUCHO Top
4		87434774		2	JUNTA DE CAUCHO Sides
4A		87301355		9	REMACHE 3/16 x 37/64
5		87434614		1	PLACA DE SUJECION Plate, Lower Left-Hand Shroud; With 1 Slot, 3 Holes; If Used
5		87446082		1	PLACA DE SUJECION Plate, Lower Left-Hand Shroud; With 2 Slots, 2 Holes; If Used
6		87434649		1	PLACA DE SUJECION Plate, Lower Right-Hand Shroud; 199 mm (7-27/32 in) Long; If Used
6		87446081		1	PLACA DE SUJECION Plate, Lower Right-Hand Shroud; 195 mm (7-11/16 in) Long; If Used
7		87301356		3	REMACHE 3/16 x 11/16
9		614-8030		2	TORNILLO M8 x 30
10		895-11008		2	ARANDELA 9 x 16 x 1,6 mm
11		407962A1		2	ESPACIADOR
12		87434978		1	JUNTA DE CAUCHO Lower Seal
13		81465471		1	GRIFO Drain, 1/4
14		87413237		1	MANGUITO Upper; Part Number Stamped On Hose; If Used
14		87454377		1	MANGUITO Upper; Part Number Stamped On Hose; If Used
15		214-1432		2	COLLAR 1-9/16 x 2-1/2
16		87407272		1	MANGUITO Lower; 6.4 mm (1/4 in) Thick; Part Number Stamped On Hose; If Used
16		87454378		1	MANGUITO Lower; 5.6 mm (7/32 in) Thick; Part Number Stamped On Hose; If Used
17		214-1440		2	COLLAR 2-1/16 - 3
18		87407771		2	PIEZA DE APOYO Radiator Mounting Support
19		614-8016		4	TORNILLO M8 x 16
20		814-10050		2	TORNILLO M10 x 50
21		K691987		4	ARANDELA Flat, 10 mm

http://www.minnparbackhoeparts.com/

02-01		p2	05/05

RADIADOR - SOPORTE

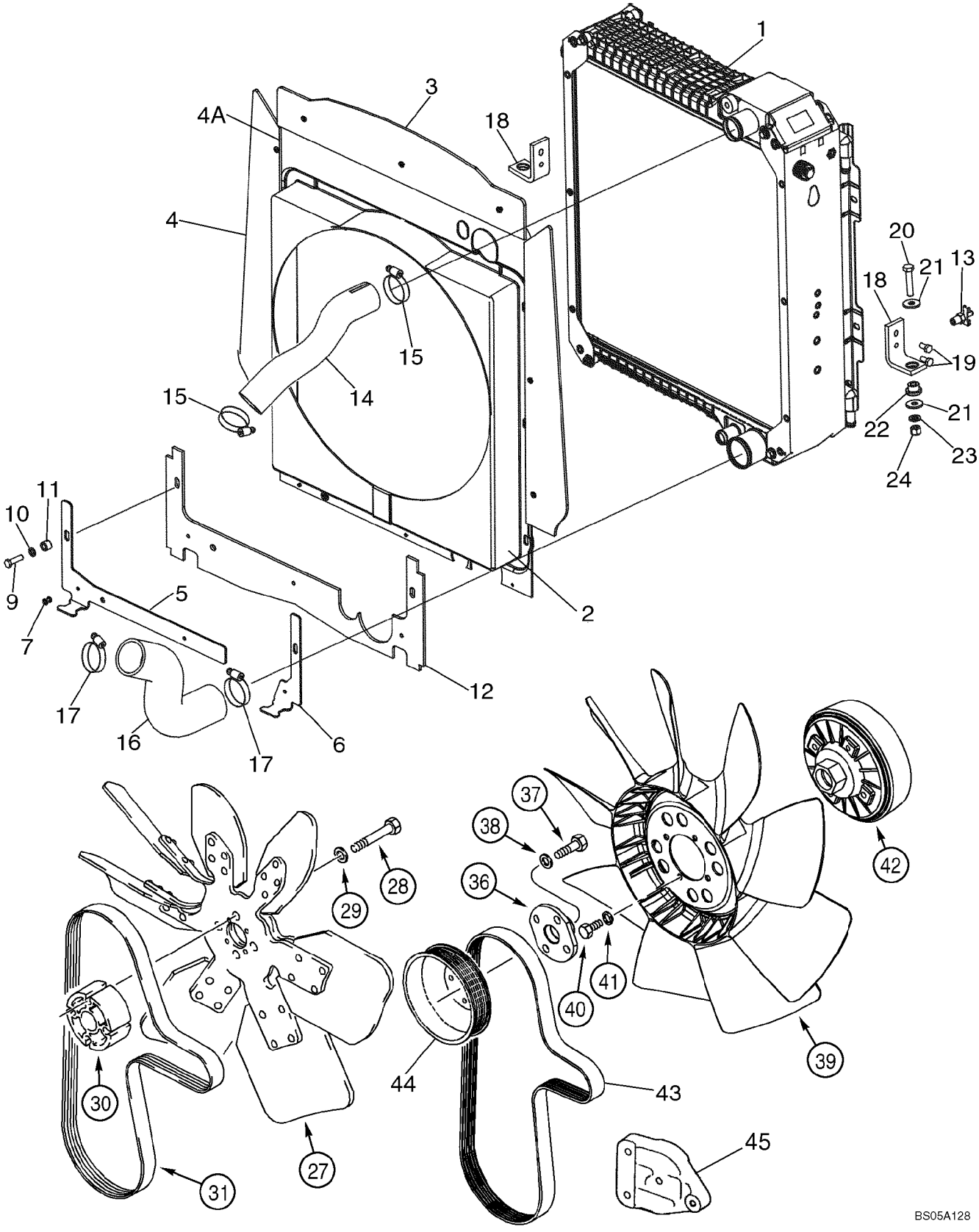

http://www.minnparbackhoeparts.com/

RADIADOR - SOPORTE

REF	FN	PART NUMBER	YR/SN	QTY	DESCRIPTION
22		D52276		2	AISLADOR Rubber
23		895-11010		2	ARANDELA 11 x 20 x 2 mm
24		832-10410		2	TUERCA M10
27		228133A2		1	VENTILADOR 39 Degrees; Standard Fan Drive; With Air Conditioning
27		185377A1		1	VENTILADOR 33 Degrees; Standard Fan Drive; Without Air Conditioning
28		814-10090		4	TORNILLO M10 x 90
29		496-21041		4	ARANDELA 13/32 x 13/16 x 3/32
30		85826229		1	SEPARADOR 59 mm Long, Standard Fan Drive; With Or Without Air Conditioning
31		85826230		1	CORREA V-Type, Standard Fan Drive; With Or Without Air Conditioning
36		303192A1		1	ADAPTOR Viscous Fan Drive, With Air Conditioning
37		614-10030		4	TORNILLO M10 x 30
38		896-11010		4	ARANDELA 11 x 21 x 2,5 mm
39		277800A1		1	VENTILADOR 9 Blade, Viscous Fan Drive; With Air Conditioning
40		614-8016		4	TORNILLO M8 x 16
41		892-11008		4	ARANDELA M8
42		87340008		1	APARATO MOTRIZ Fan Drive; Component Parts Not Serviced Separately; Viscous Fan Drive; With Air Conditioning; Replaces 303195A1, 47049810
43		87415774		1	COURROIE DE TRANSMISS. V-Type; Viscous Fan Drive, With Air Conditioning
		87419385		1	CUERPO Fan 1.4:1 Ratio Pulley Kit; Includes Ref 44, 45; Viscous Fan Drive; With Air Conditioning; No Longer Available For Service, Order Components
44		4890343		1	POLEA
45		87442419		1	PIEZA DE SOPORTE Pulley Tensioner Support, Painted, Replaces 2852621, 504069572 Which Were Used With 86990710 Engine

http://www.minnparbackhoeparts.com/

02-02		p1	02/05

SISTEMA DE PURGA DE AIRE - SOPORTE

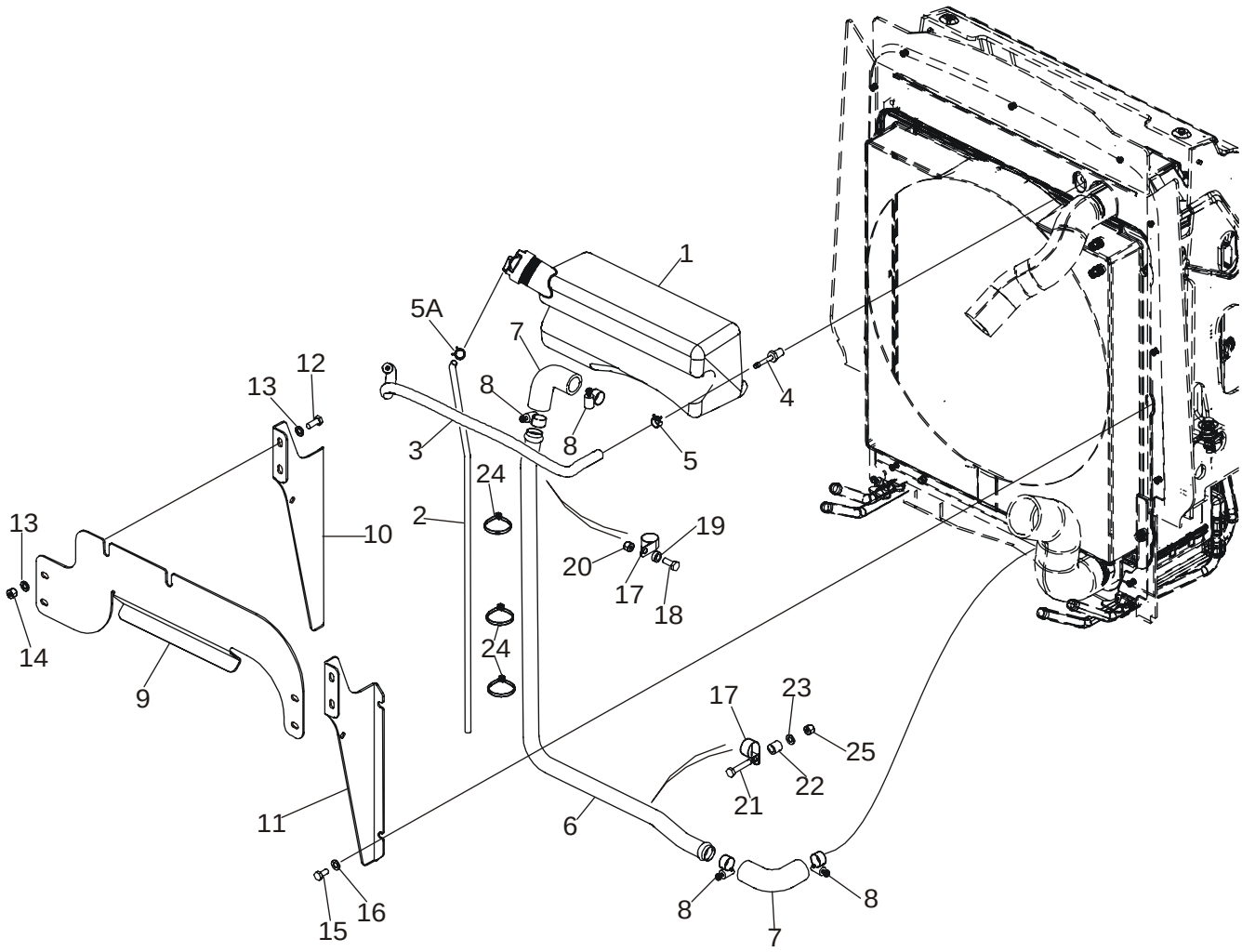

BS04D111

http://www.minnparbackhoeparts.com/

SISTEMA DE PURGA DE AIRE - SOPORTE

REF	FN	PART NUMBER	YR/SN	QTY	DESCRIPTION
1		87412139		1	DEPOSITO DE VACIO Deaeration Reservoir, 3.5 Liters; Includes 85803019 Cap
		85803019		1	CACHUCHA (CONJUNTO) Cap, 13 psi
2		87435409		1	MANGA Overflow Hose
3		87417300		1	MANGA Recovery, 5/16 ID x 19/32 OD x 22-11/64; Reservoir to Radiator; If Used
3		87306306		1	MANGA Recovery, 5/16 ID x 19/32 OD x 22-1/4; Reservoir to Radiator; If Used
4		87301325		1	RACOR Fitting, 5/16 Stem x 1/4 NPTF
5		1348264C1		1	ABRAZADERA MANGUERA
5A		214-1704		1	COLLAR Type M, No. 04
6		87433503		1	TUBO
7		87417299		2	MANGA R31.8 Bend Radius; Part Number Not Stamped On Hose; If Used
7		87454376		2	MANGA R33 Bend Radius; Part Number Stamped On Hose; If Used
8		214-1416		4	COLLAR Type F, No. 16
9		87448489		1	PIEZA DE SOPORTE Replaces 87417223 Bracket
10		87417225		1	PIEZA DE SOPORTE Left-Hand Bracket
11		87417224		1	PIEZA DE SOPORTE Right-Hand Bracket
12		614-8020		4	TORNILLO M8 x 20
13		895-11008		8	ARANDELA 9 x 16 x 1,6 mm
14		832-10408		4	TUERCA M8
15		806-8016		4	TORNILLO M8 x 16
16		895-11008		4	ARANDELA 9 x 16 x 1,6 mm
17		515-22254		2	COLLAR
18		614-8020		1	TORNILLO M8 x 20
19		87418359		1	SEPARADOR 8 x 6 mm
20		829-1408		1	TUERCA M8
21		614-8040		1	TORNILLO Hex, M8 x 40, 8.8, Full Thd
22		87418360		1	SEPARADOR 8 x 16 mm
23		895-11008		1	ARANDELA 9 x 16 x 1,6 mm
24		L18337		3	BANDA Tie
25		832-10408		1	TUERCA M8

http://www.minnparbackhoeparts.com/

02-03		p1	03/04

CONJUNTO DEL RADIADOR (SIN AIRE ACONICIONADO)

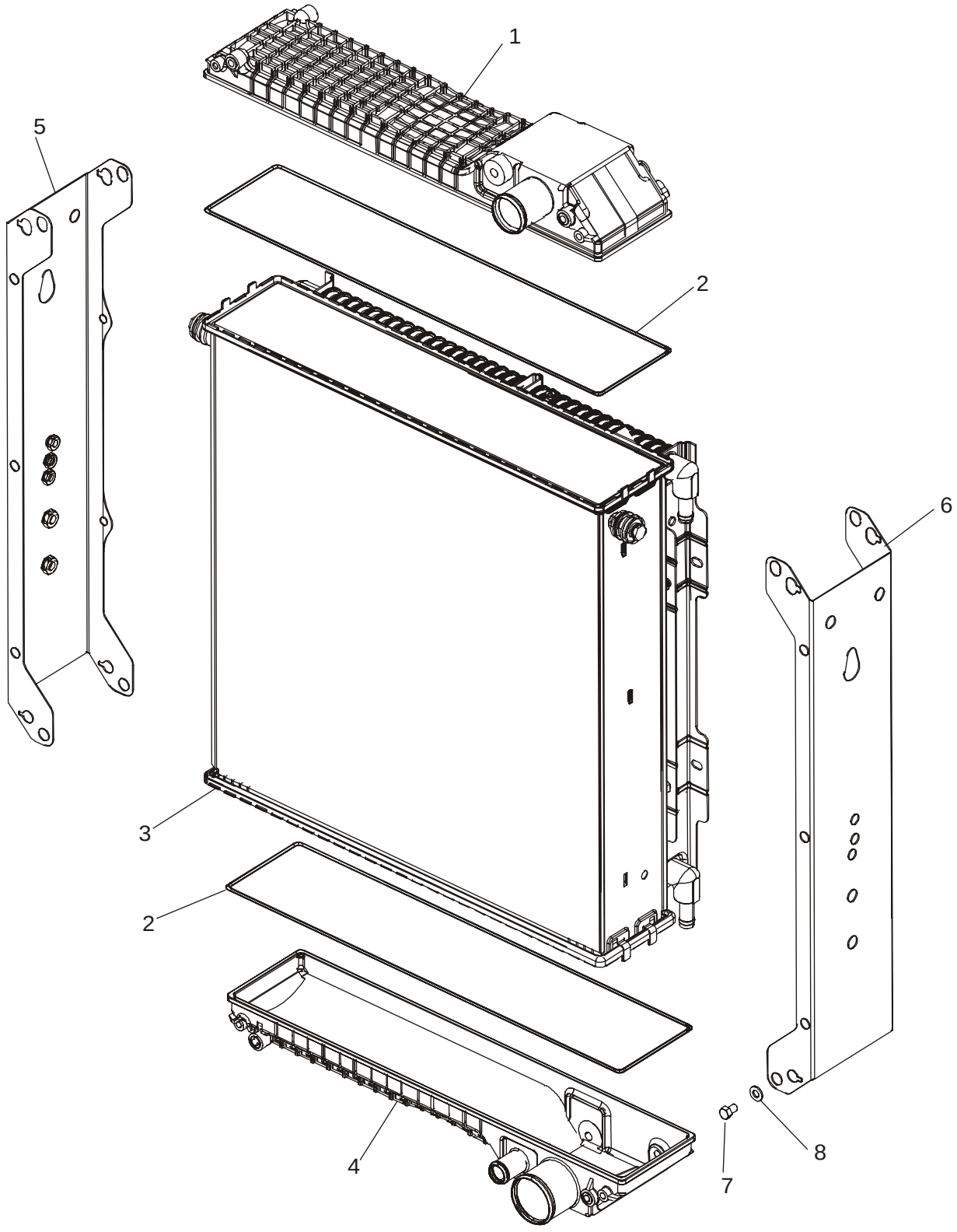

http://www.minnparbackhoeparts.com/

CONJUNTO DEL RADIADOR (SIN AIRE ACONICIONADO)

REF	FN	PART NUMBER	YR/SN	QTY	DESCRIPTION
		87410096		1	RADIADOR 3 Row Radiator, Models Without Air Conditioning; Incl. Ref 1 - 8
1		87429694		1	DEPOSITO DE VACIO Upper Reservoir
2		254409A1		2	ANILLO DE CIERRE
3		87429690		1	CUERPO DE RADIATOR Core
4		87429695		1	DEPOSITO DE VACIO Lower Reservoir
5		87429692		1	LARGUERO Left-Hand
6		87429693		1	LARGUERO Right-Hand
7		614-8012		8	TORNILLO M8 x 12
8		895-11008		8	ARANDELA 9 x 17 x 1,6 mm

http://www.minnparbackhoeparts.com/

02-03A		p1	03/04

CONJUNTO DEL RADIADOR (CON AIRE ACONICIONADO)

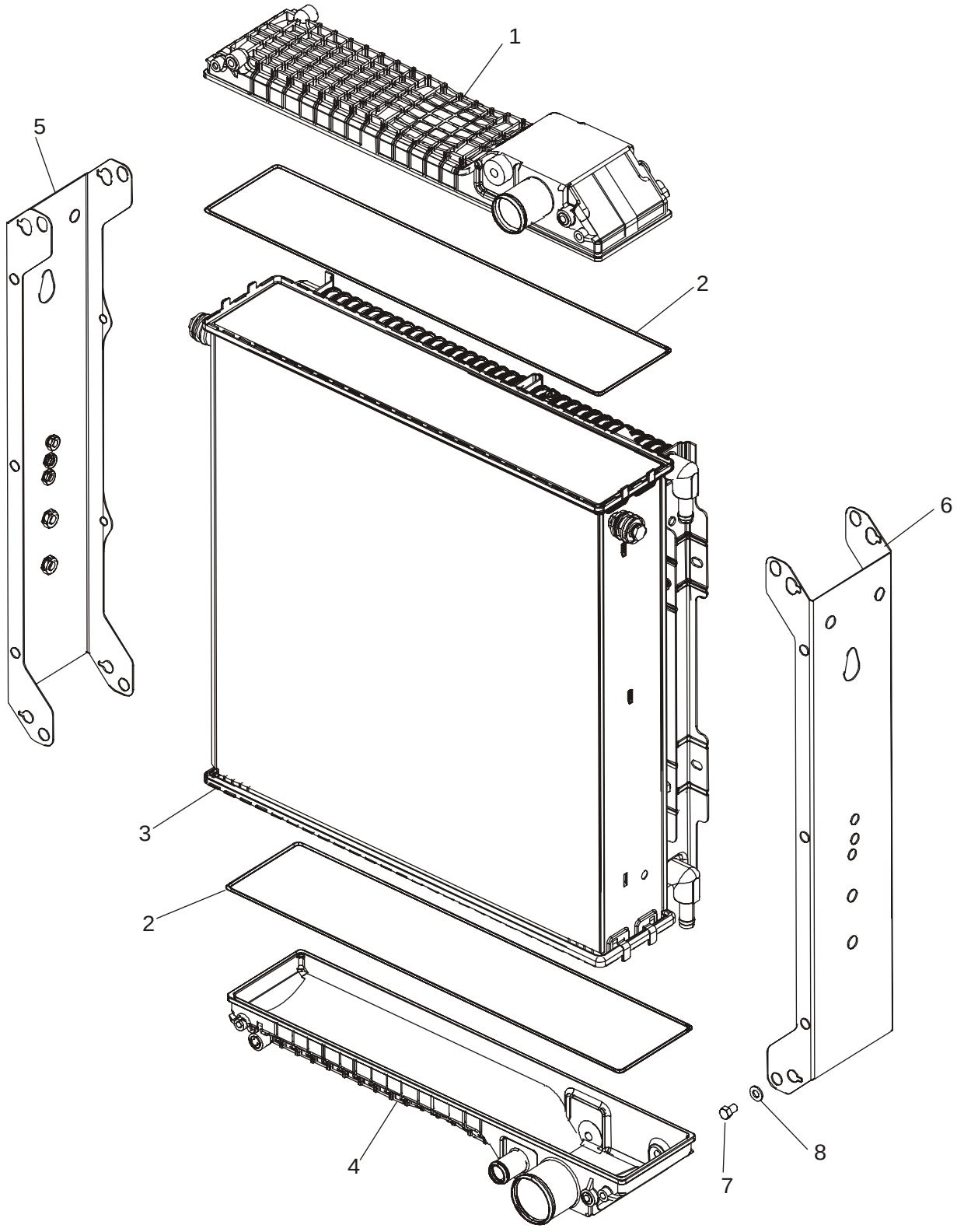

http://www.minnparbackhoeparts.com/

CONJUNTO DEL RADIADOR (CON AIRE ACONICIONADO)

REF	FN	PART NUMBER	YR/SN	QTY	DESCRIPTION
		87410098		1	CONDENSADOR 5 Row Radiator, Models With Air Conditioning; Incl. Ref 1 - 8
1		87429694		1	DEPOSITO DE VACIO Upper Reservoir
2		254409A1		2	ANILLO DE CIERRE
3		87429691		1	CUERPO DE RADIATOR Core
4		87429695		1	DEPOSITO DE VACIO Lower Reservoir
5		87429692		1	LARGUERO Left-Hand
6		87429693		1	LARGUERO Right-Hand
7		614-8012		8	TORNILLO M8 x 12
8		895-11008		8	ARANDELA 9 x 17 x 1,6 mm

http://www.minnparbackhoeparts.com/

02-04		p1	03/05

FILTRO DE AIRE - PIEZAS DE ENTRADA DE AIRE

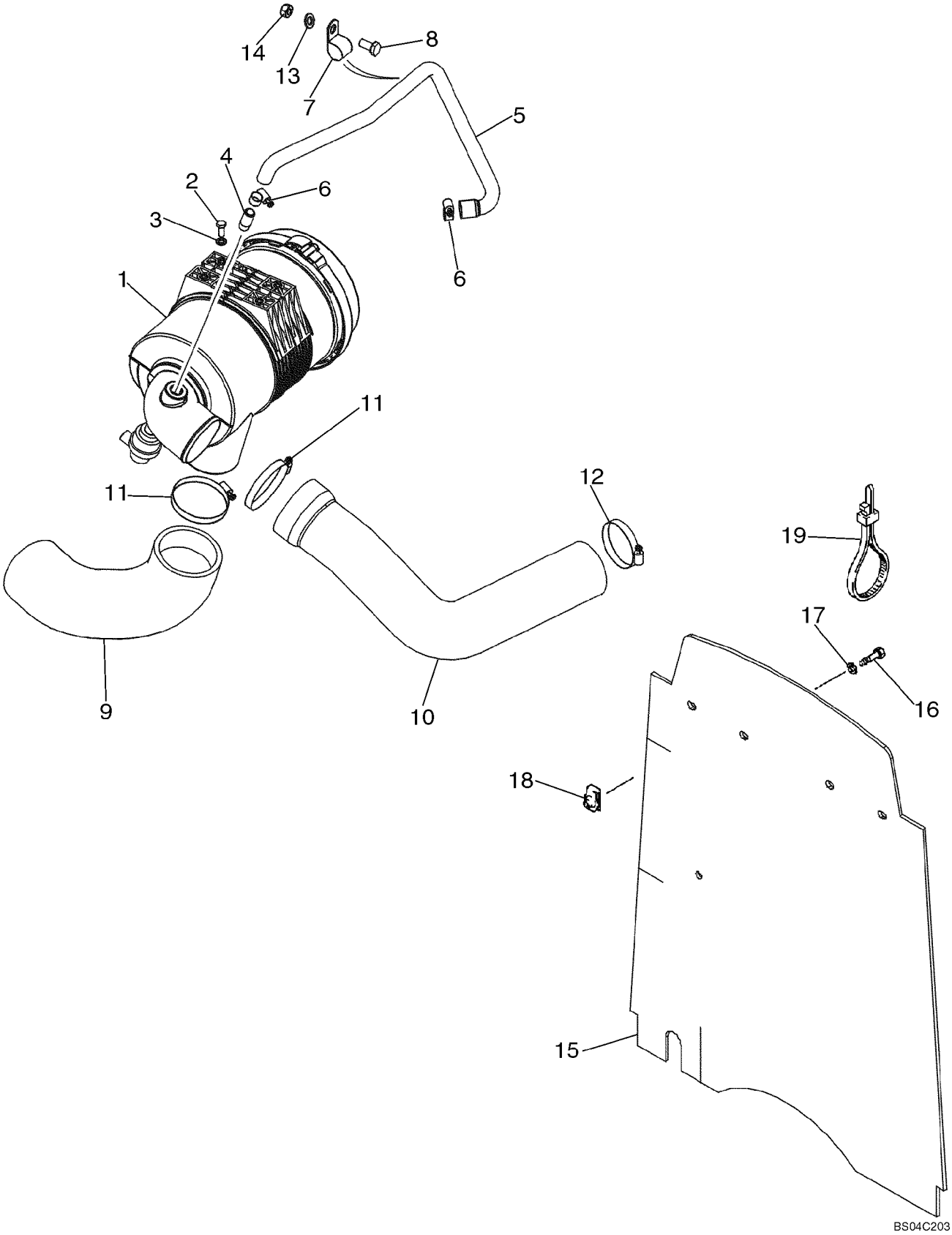

http://www.minnparbackhoeparts.com/

FILTRO DE AIRE - PIEZAS DE ENTRADA DE AIRE

REF	FN	PART NUMBER	YR/SN	QTY	DESCRIPTION
1		87442618		1	DEPURADOR Air Cleaner; See Figure 02-05
2		614-8020		4	TORNILLO M8 x 20
3		895-11008		4	ARANDELA 9 x 16 x 1,6 mm
4		L17985		1	CONEXION
5		87454381		1	MANGA Replaces 87442308
6		214-1412		2	COLLAR Type F, No. 12
7		515-25254		1	COLLAR P
8		614-10020		1	TORNILLO M10 x 20
9		87454380		1	MANGUITO Inlet; Replaces 87420834
10		87454383		1	MANGUITO To Turbocharger; Replaces 87442306, 87412489
11		214-1464		2	COLLAR Type F, No. 64, 3-9/16 - 4-1/2
12		214-1456		1	COLLAR Type F, No. 56
13		896-15010		1	ARANDELA 11 x 24 x 3 mm
14		829-1410		1	TUERCA M10
15		87434099		1	CORTINA Barrier, Heat and Noise Reduction
16		806-8025		4	TORNILLO M8 x 25; 10.9
17		495-81001		4	ARANDELA 9,5 x 29 x 1,6 mm
18		833-40408		4	TUERCA U-Type, M8
19		L18337		2	BANDA 15 in

http://www.minnparbackhoeparts.com/

FILTRO DE AIRE

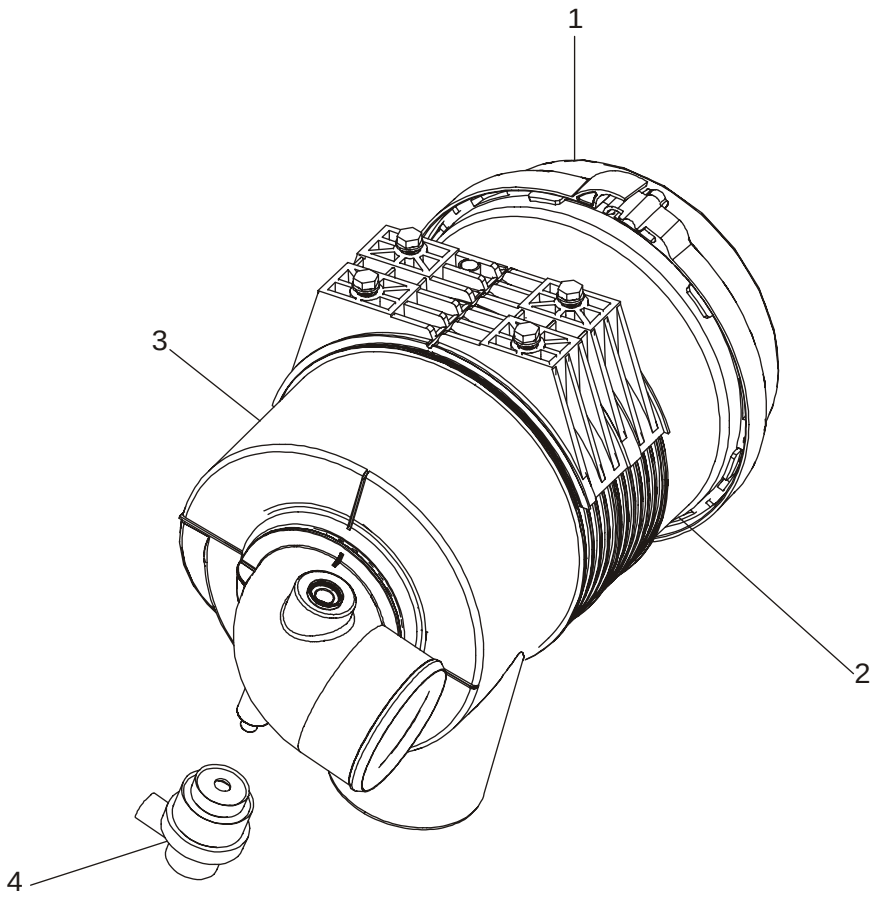

BS03K151

http://www.minnparbackhoeparts.com/

FILTRO DE AIRE

REF	FN	PART NUMBER	YR/SN	QTY	DESCRIPTION
		87442618		1	DEPURADOR Air Cleaner; Incl. Ref 1 - 4
1		87412635		1	DEPURADOR Includes Rear Cover
2		87418364		1	ELEMENTO DE FILTRADO Primary
3		87418365		1	ELEMENTO DE FILTRADO Secondary
4		87442601		1	CONTACTOR Air Restriction Switch

http://www.minnparbackhoeparts.com/

02-06		p1	04/05

SILENCIADOR - SISTEMA DE ESCAPE

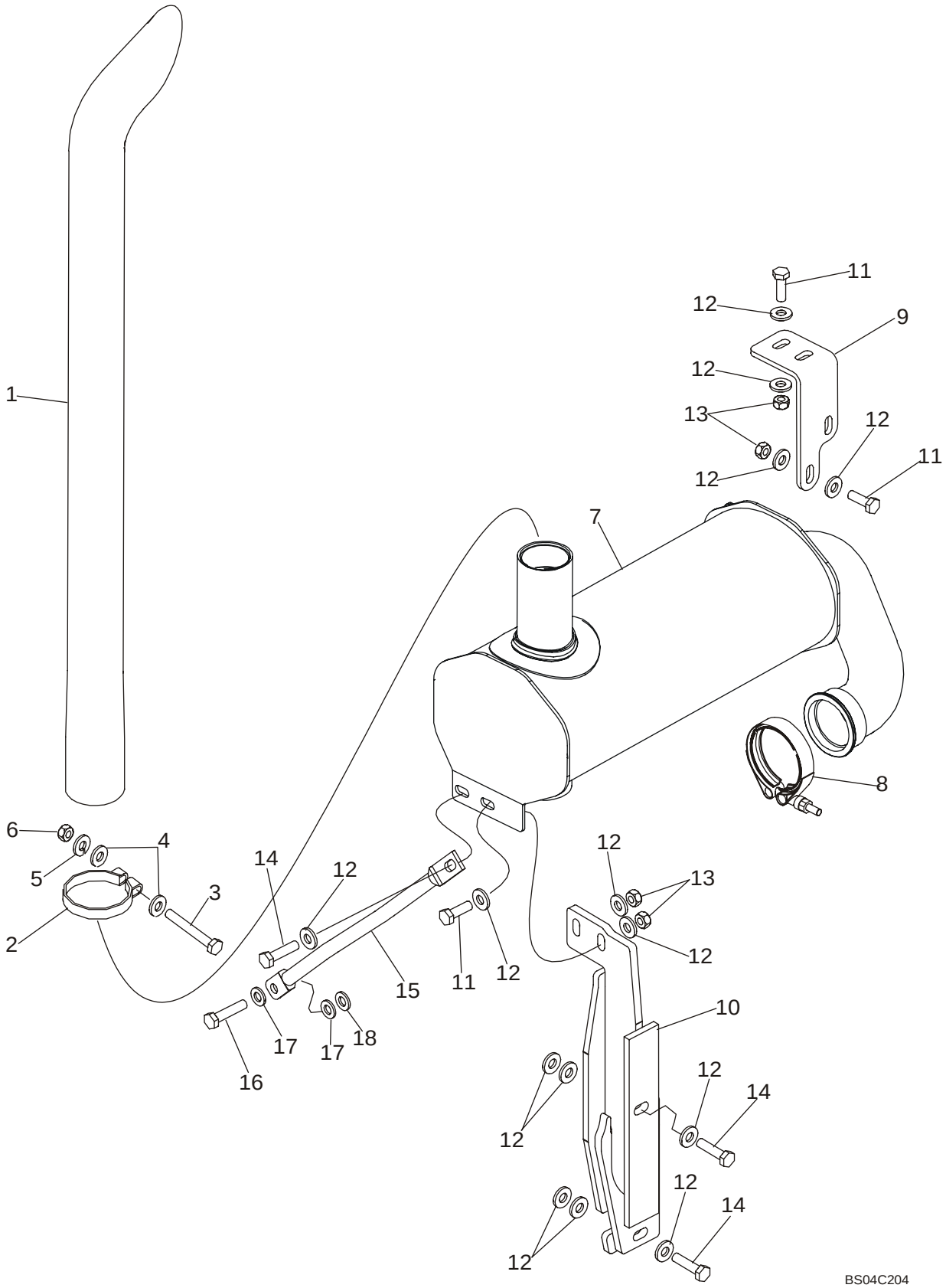

http://www.minnparbackhoeparts.com/

SILENCIADOR - SISTEMA DE ESCAPE

REF	FN	PART NUMBER	YR/SN	QTY	DESCRIPTION
1		87309656		1	ESCAPE VERTICAL 844 mm (33-1/4 in) Long Exhaust Stack; Replaces 87437805 868 mm (34-11/64 in) Long Stack
2		87437804		1	SOPORTE CIERRA TUBO Stack Clamp
3		614-10080		1	TORNILLO M10 x 80
4		896-15010		2	ARANDELA Flat
5		892-11010		1	ARANDELA DE FRENO M10
6		829-1410		1	TUERCA M10
7		87440554		1	AUSPUFFTOPF Turbo Engine
8		A170467		1	COLLAR Includes Hardware
9		87423531		1	PIEZA DE APOYO Front Support Bracket
10		87441285		1	PIEZA DE APOYO Rear Support Bracket
11		627-10030		5	TORNILLO M10 x 30
12		896-15010		18	ARANDELA 11 x 24 x 3 mm
13		829-1410		6	TUERCA M10
14		827-10040		3	TORNILLO M10 x 40
15		87442357		1	TENSOR
16		814-10045		1	TORNILLO M10 x 45
17		896-11010		2	ARANDELA 11 x 21 x 2.5 mm
18		896-11010		X	ARANDELA 11 x 21 x 2.5 mm; Used As A Shim

http://www.minnparbackhoeparts.com/

02-06A		p1	04/05

SILENCIADOR, ASPIRADOR - SISTEMA DE ESCAPE

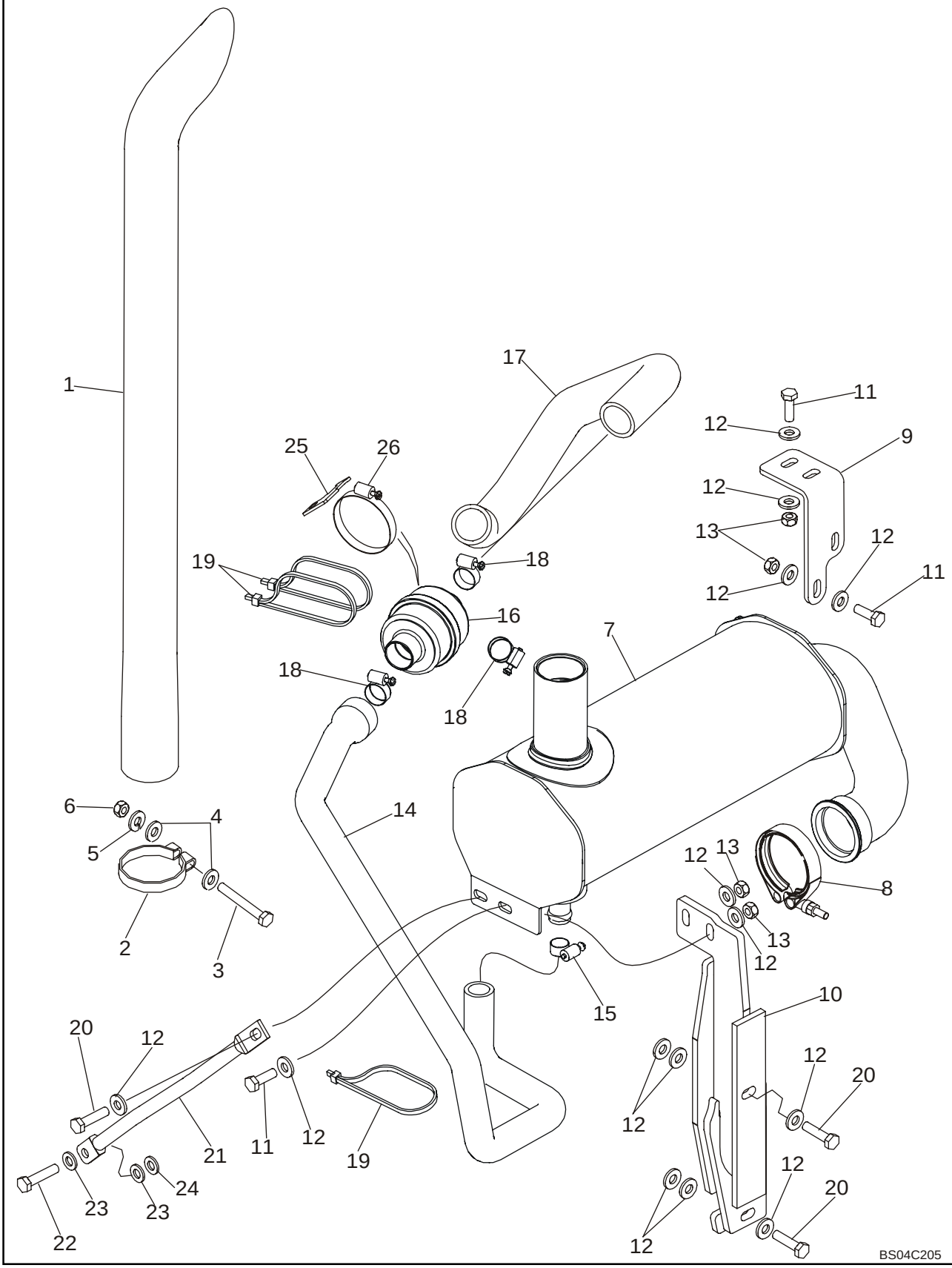

http://www.minnparbackhoeparts.com/

SILENCIADOR, ASPIRADOR - SISTEMA DE ESCAPE

REF	FN	PART NUMBER	YR/SN	QTY	DESCRIPTION
1		87309656		1	ESCAPE VERTICAL 844 mm (33-1/4 in) Long Exhaust Stack; Replaces 87437805 868 mm (34-11/64 in) Long Stack
2		87437804		1	SOPORTE CIERRA TUBO Stack Clamp
3		614-10080		1	TORNILLO M10 x 80
4		896-15010		2	ARANDELA Flat
5		892-11010		1	ARANDELA DE FRENO M10
6		829-1410		1	TUERCA M10
7		87447052		1	AUSPUFFTOPF Aspirated and Spark Arrestor
8		A170467		1	COLLAR Includes Hardware
9		87423531		1	PIEZA DE APOYO Front Support Bracket
10		87441285		1	PIEZA DE APOYO Rear Support Bracket
11		627-10030		5	TORNILLO M10 x 30
12		896-15010		18	ARANDELA 11 x 24 x 3 mm
13		829-1410		6	TUERCA M10
14		87313164		1	MANGA Aspiration Hose, Check Valve to Muffler; Replaces 87436615
15		214-1416		1	COLLAR #16, Type F
16		307123A1		1	VALVULA Aspirator Check
17		87444169		1	MANGA Aspiration Hose, Air Cleaner to Valve
18		214-1424		3	COLLAR #24, Type F
19		L18337		3	BANDA Tie
20		827-10040		3	TORNILLO M10 x 40
21		87442357		1	TENSOR
22		814-10045		1	TORNILLO M10 x 45
23		896-11010		2	ARANDELA 11 x 21 x 2.5 mm
24		896-11010		X	ARANDELA 11 x 21 x 2.5 mm; Used As A Shim
25		87447313		1	PLACA DE MONTAJE Aspirator Check Valve Mounting Plate
26		214-1456		1	COLLAR #56, Type F

http://www.minnparbackhoeparts.com/

MOTOR - SOPORTE

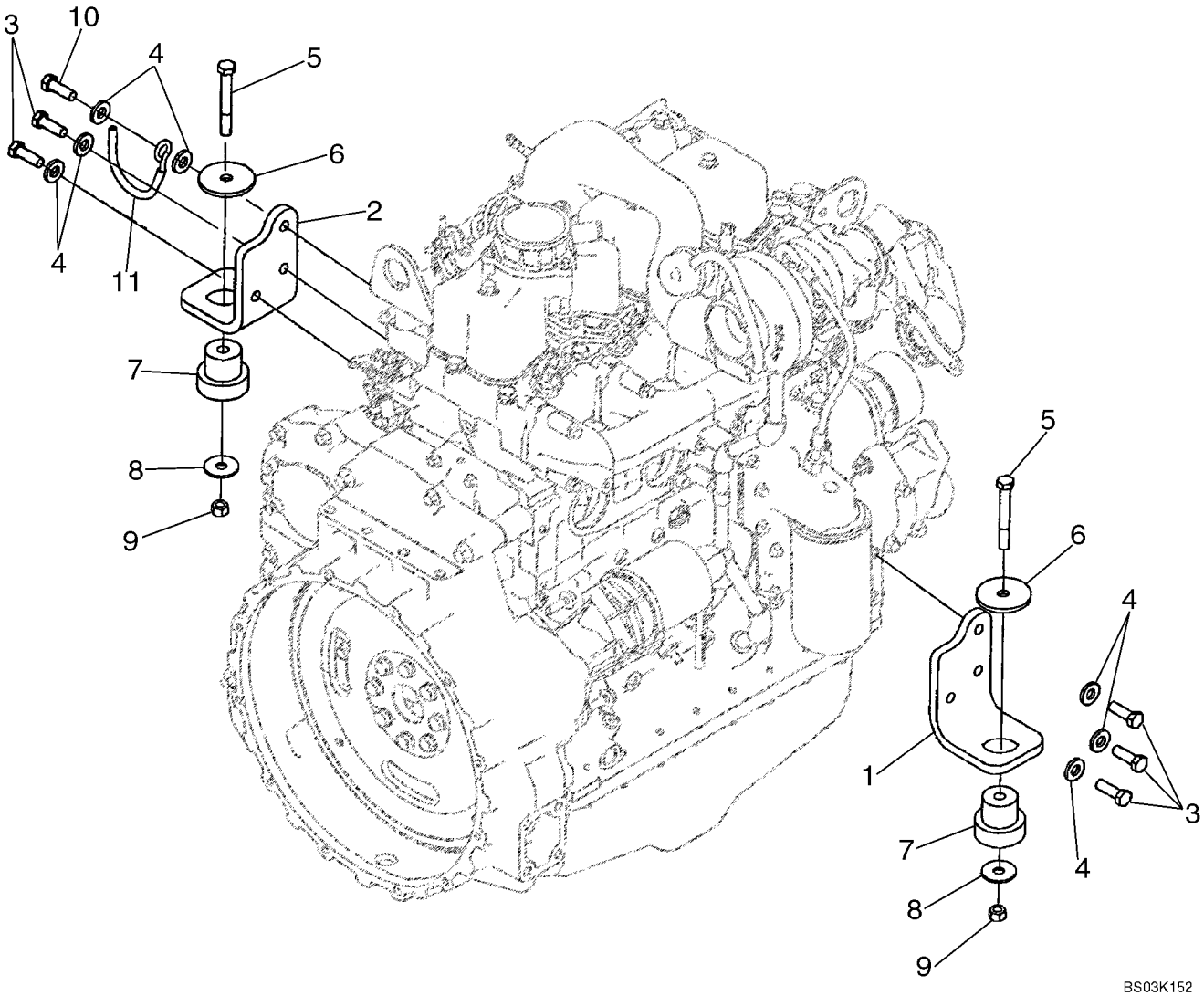

http://www.minnparbackhoeparts.com/

MOTOR - SOPORTE

REF	FN	PART NUMBER	YR/SN	QTY	DESCRIPTION
		87437203		1	MOTOR 95 hp, Turbocharged Engine; Includes Parts On Figures 02-08 - 02-41, 03-04 - 03-11; Replaces 86990710 Engine
1		87411319		1	PIEZA DE SOPORTE Right-Hand
2		87411320		1	PIEZA DE SOPORTE Left-Hand
3		614-12035		5	TORNILLO M12 x 35
4		896-15012		7	ARANDELA 13,5 x 28 x 4 mm
5		814-12080		2	TORNILLO M12 x 80
6		85801585		2	JUNTA HERMETICA
7		87416966		2	SOPORTE Insulator, Rubber Mount
8		85802618		2	JUNTA HERMETICA
9		832-10412		2	TUERCA M12
10		614-12040		1	TORNILLO M12 x 40
11		87431799		1	SOPORTE Hose Support

http://www.minnparbackhoeparts.com/

MOTOR - CALENTADOR DEL BLOQUE

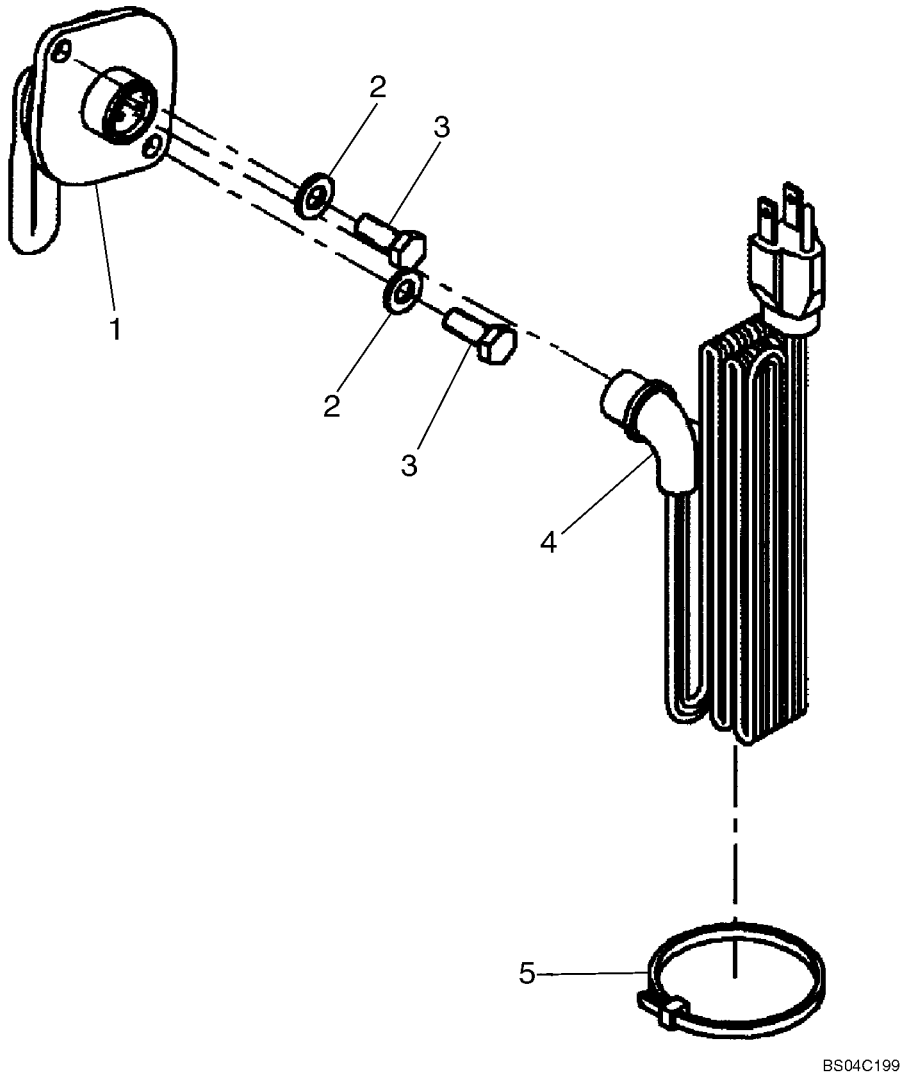

http://www.minnparbackhoeparts.com/

MOTOR - CALENTADOR DEL BLOQUE

REF	FN	PART NUMBER	YR/SN	QTY	DESCRIPTION
		87447135		1	KIT, SERVICE Engine Block Heater Kit; Incl. Ref 1 - 5 and Instructions
1		8602005		1	RECALENTADOR Block Heater; 750W, 120V
2		896-11008		2	ARANDELA 9 x 17 x 2 mm
3		627-8020		2	TORNILLO Thd to Hd; M8 x 20; 10.9
4		196466A1		1	CABLE ELECTRICO 1829 mm (72 in)
5		L18331		1	BANDA Tie

http://www.minnparbackhoeparts.com/

MOTOR

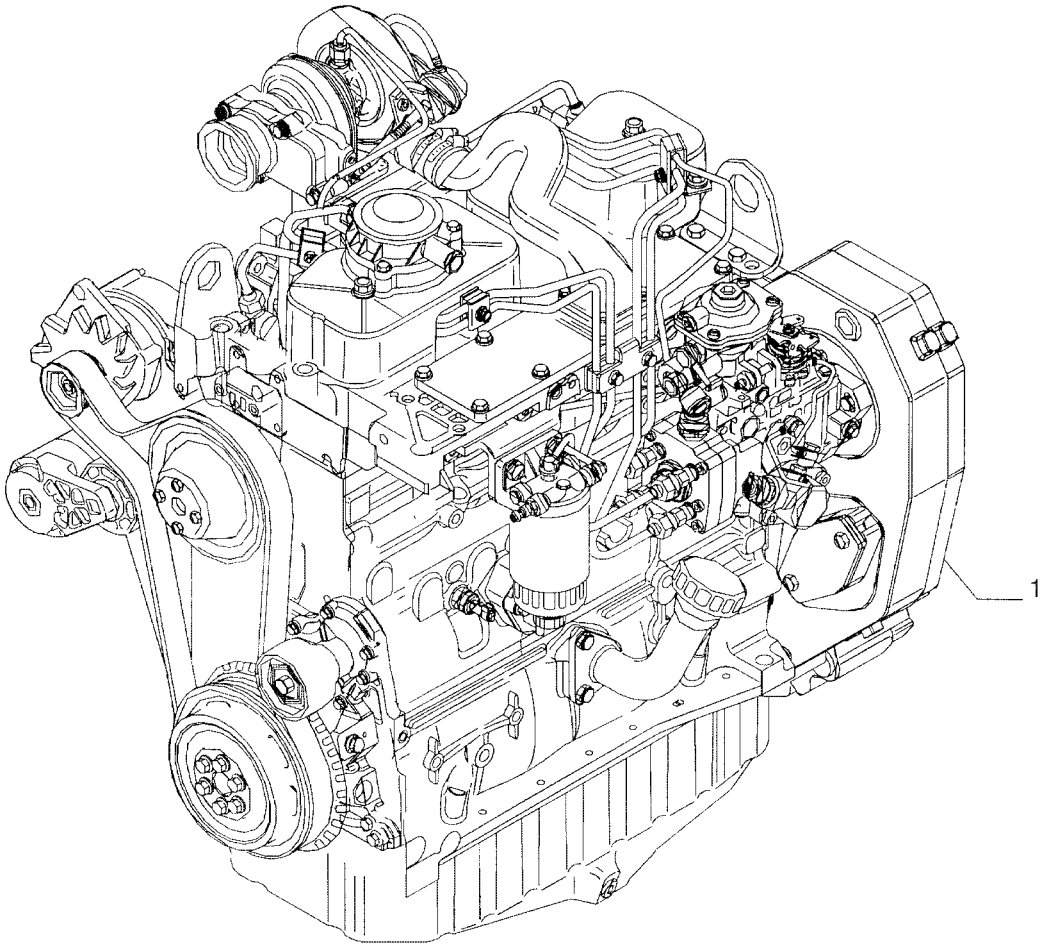

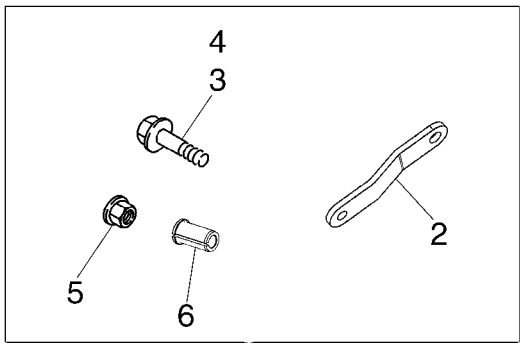

BS04D183

http://www.minnparbackhoeparts.com/

MOTOR

REF	FN	PART NUMBER	YR/SN	QTY	DESCRIPTION
1		87437203		1	MOTOR 95hp Turbocharged Engine; Includes Parts On Figures 02-08 - 02-41, 03-04 - 03-11; Replaces 86990710 Engine
2		2852180		1	PIEZA DE SOPORTE Alternator Mounting Strap; Used With 86990710 Engine; For Alternator Mounting Used With 87437203 Engine, See Figure 04-03
3		4895291		1	TORNILLO Flange, M10 x 20; If Used
4		4895538		1	TORNILLO Flange, M10 x 120; If Used
5		4895166		1	TUERCA Flange, M10; If Used
6		2852181		1	SEPARADOR If Used

http://www.minnparbackhoeparts.com/

BLOQUE DE CILINDROS

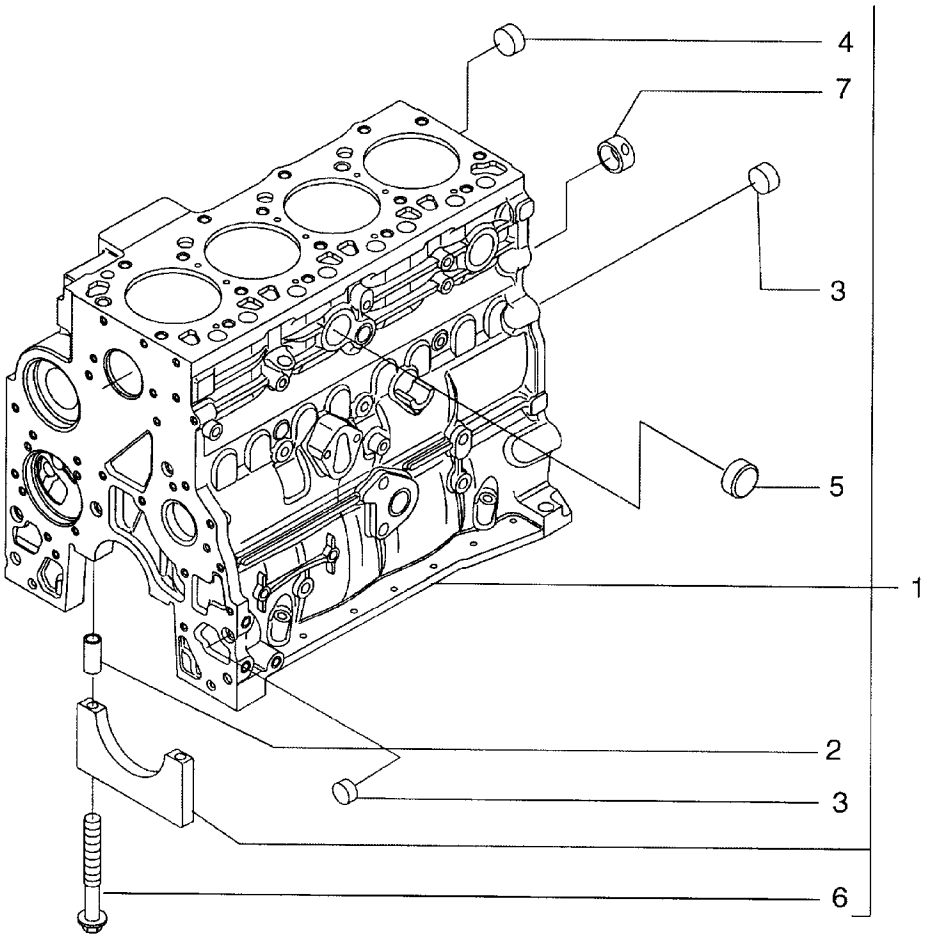

BS04A024

http://www.minnparbackhoeparts.com/

BLOQUE DE CILINDROS

REF	FN	PART NUMBER	YR/SN	QTY	DESCRIPTION
1		2830082		1	BLOQUE DE CILINDROS - ASSY; Incl. Ref 2 - 7
2		4899026		10	PITON
3		4895039		3	TAPÓN
4		4895038		4	TAPÓN
5		4895228		2	TAPÓN
6		4891353		10	TORNILLO Flange, M12 x 120
7		4895040		1	CASQUILLO

http://www.minnparbackhoeparts.com/

BLOQUE DE CILINDROS

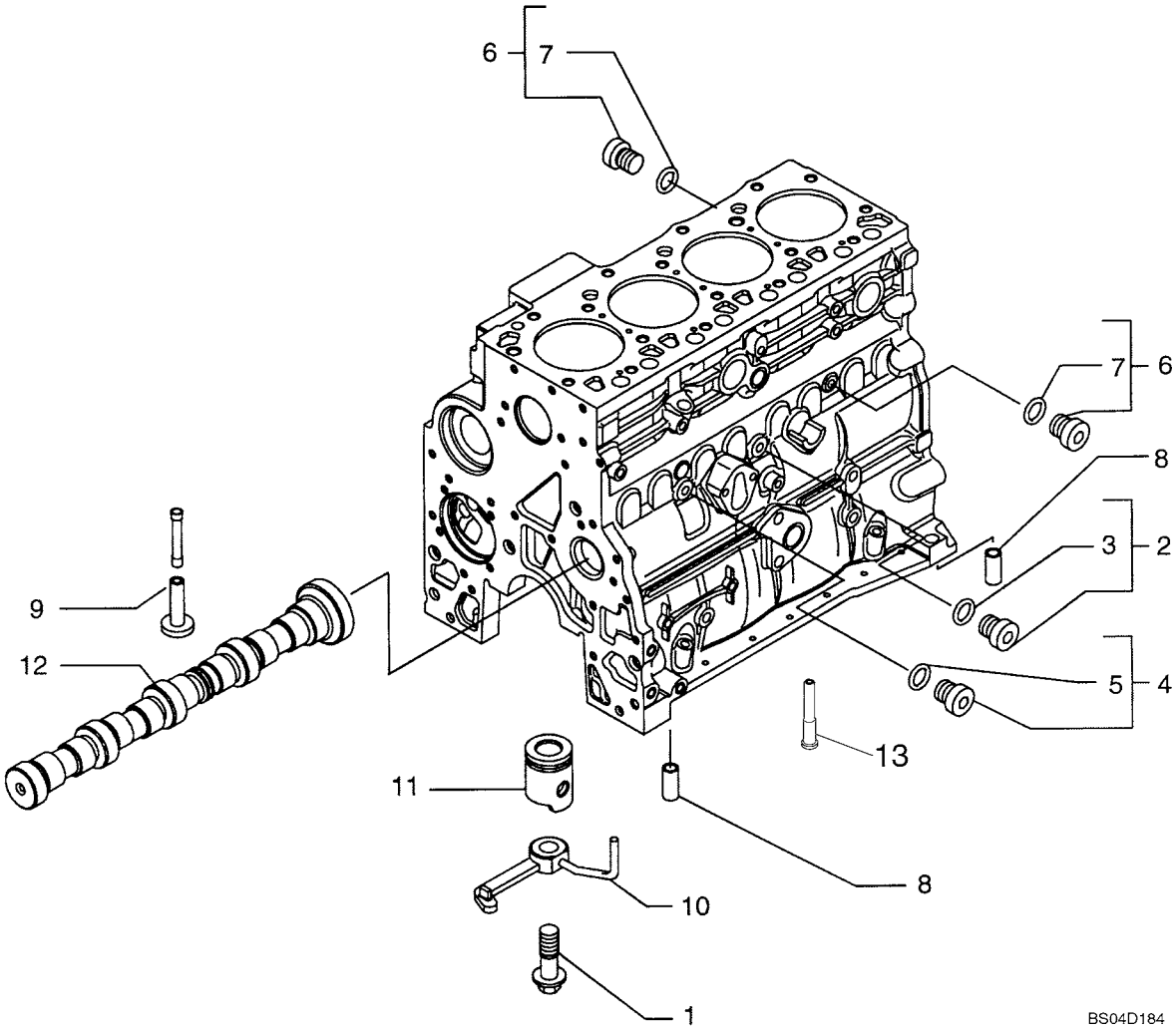

http://www.minnparbackhoeparts.com/

BLOQUE DE CILINDROS

REF	FN	PART NUMBER	YR/SN	QTY	DESCRIPTION
1		4894218		4	TORNILLO
2		4895605		1	TAPÓN 14 x 1.5 - ASSY; Incl. Ref 3
3		4899115		1	JUNTA HERMETICA
4		4899009		1	TAPÓN 10 x 1.5 - ASSY; Incl. Ref 5
5		4899072		1	JUNTA HERMETICA
6		4895392		2	TAPÓN 18 x 1.5 - ASSY; Incl. Ref 7
7		4895393		1	JUNTA HERMETICA
8		4895049		2	PITON
9		4895180		8	EMPUJADOR
10		2852202		4	TOBERA Incl. Ref 1
11		REF		1	MANUAL PISTON; See Figure 02-23
12		REF		1	MANUAL CAMSHAFT; See Figure 02-28
13		4896153		1	TAPÓN Piston Cooling, M6.08 OD x 30 mm lg; If Used

http://www.minnparbackhoeparts.com/

BOMBA DE ACEITE, BANDEJA

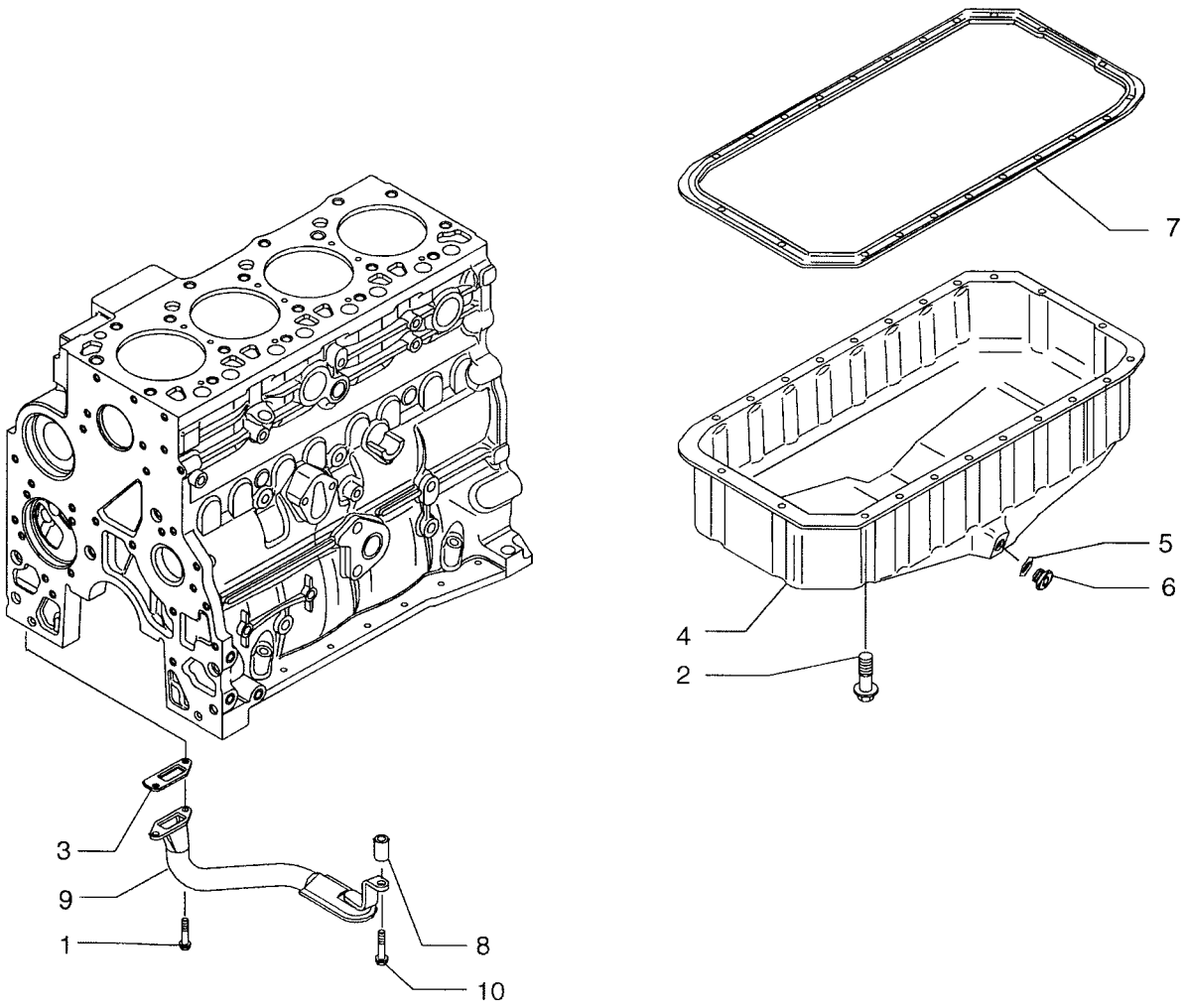

BS04A026

http://www.minnparbackhoeparts.com/

BOMBA DE ACEITE, BANDEJA

REF	FN	PART NUMBER	YR/SN	QTY	DESCRIPTION
1		4899020		2	TORNILLO Flange, M8 x 20
2		4899091		22	TORNILLO Flange, M8 x 40
2		4895489		2	TORNILLO Flange, M8 x 110
3		4898301		1	JUNTA HERMETICA
4		2852011		1	CARTER DE ACEITE
5		2853728		1	JUNTA HERMETICA Seal
6		4894139		1	TAPÓN 22 x 1.5; Does Not Include Seal, Purchase Seal Separately
7		2852012		1	JUNTA HERMETICA
8		2852016		1	SEPARADOR
9		2852013		1	COLADOR CONJ Tube; Oil Suction, Includes Screen Which Is Not Serviced Separately
10		4895538		1	TORNILLO Flange, M10 x 120

http://www.minnparbackhoeparts.com/

BLOQUE DE CILINDROS - CUBIERTAS

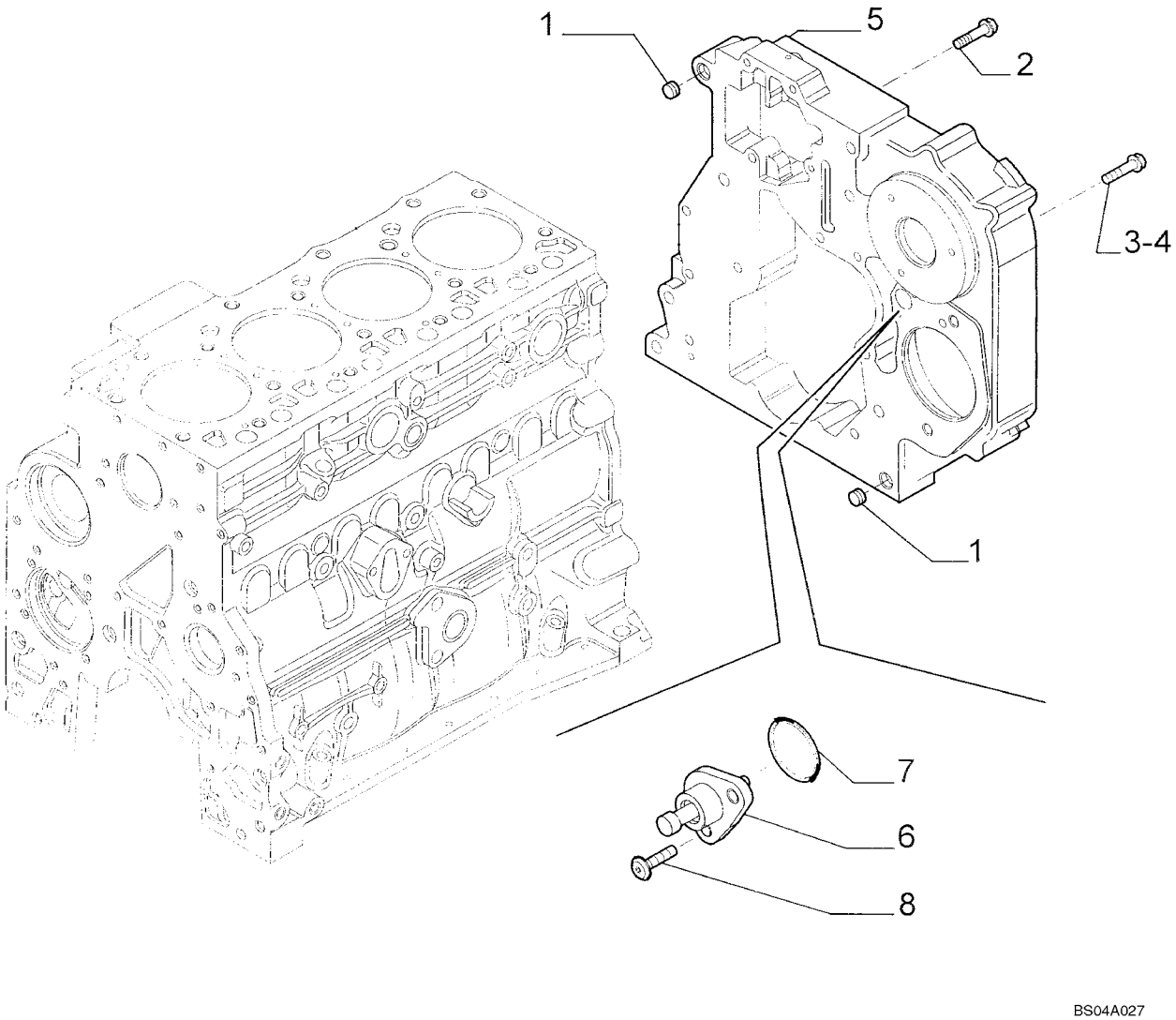

http://www.minnparbackhoeparts.com/

BLOQUE DE CILINDROS - CUBIERTAS

REF	FN	PART NUMBER	YR/SN	QTY	DESCRIPTION
1		4899026		2	PITON
2		4899091		4	TORNILLO Flange, M8 x 40
3		4899093		5	TORNILLO Flange, M10 x 30
4		4899073		2	TORNILLO Flange, M12 x 30
5		{2853671}		1	Rear Cover
6		2852515		1	PERNO Timing Pin and Housing; Includes (1) 2852517 Internal O-Ring, (1) 2852759 Ring, (1) 2852516 Pin, (1) 2852518 Housing
		2852517		1	JUNTA HERMETICA
		2852759		1	ANILLO
		2852516		1	PERNO
		2852518		1	CAVIDAD Housing
7		17278781		1	JUNTA HERMETICA
8		4895355		2	TORNILLO Round Head, M5 x 17

http://www.minnparbackhoeparts.com/

BLOQUE DE CILINDROS - CUBIERTAS

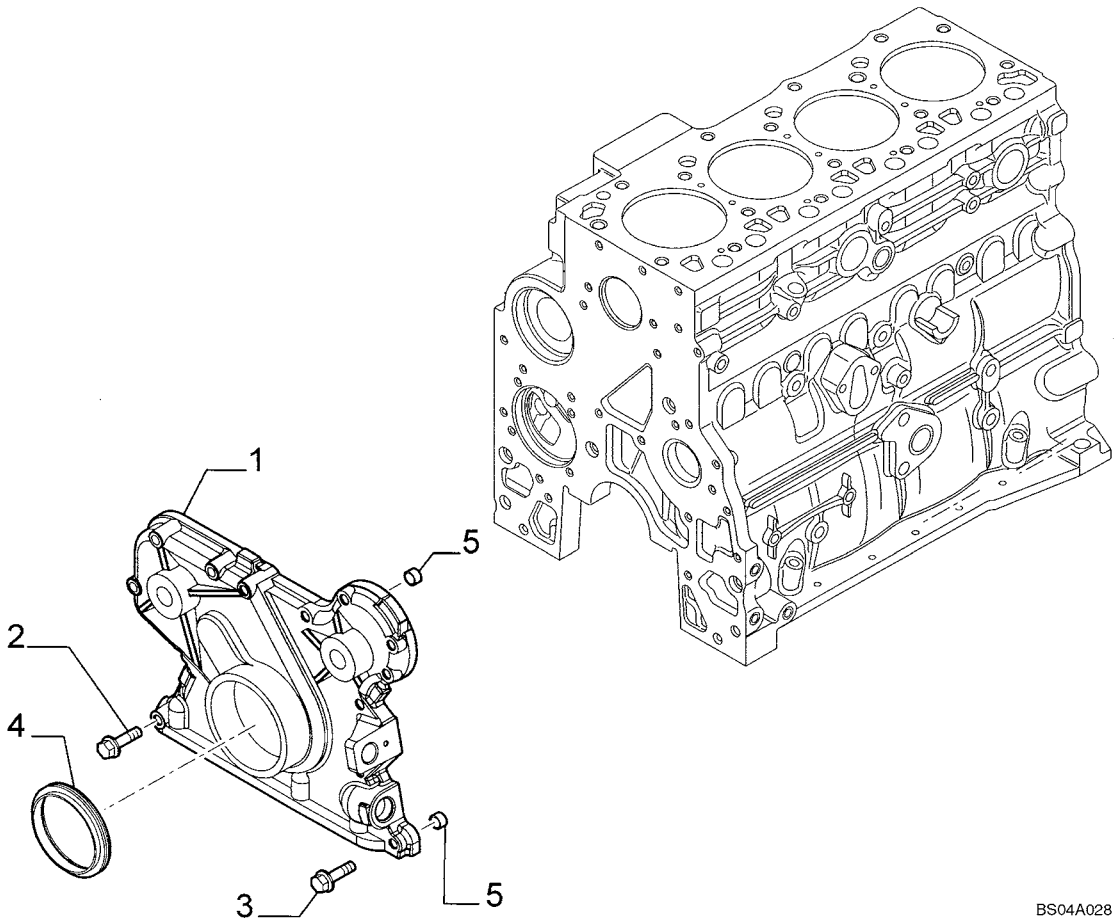

http://www.minnparbackhoeparts.com/

BLOQUE DE CILINDROS - CUBIERTAS

REF	FN	PART NUMBER	YR/SN	QTY	DESCRIPTION
1		4897024		1	TAPADERA Front Gear
2		4899078		5	TORNILLO Flange, M8 x 45
3		4899063		8	TORNILLO Flange, M8 x 30
4		4890832		1	JUNTA HERMETICA
5		4891209		2	PITON

http://www.minnparbackhoeparts.com/

BLOQUE DE CILINDROS - CUBIERTAS

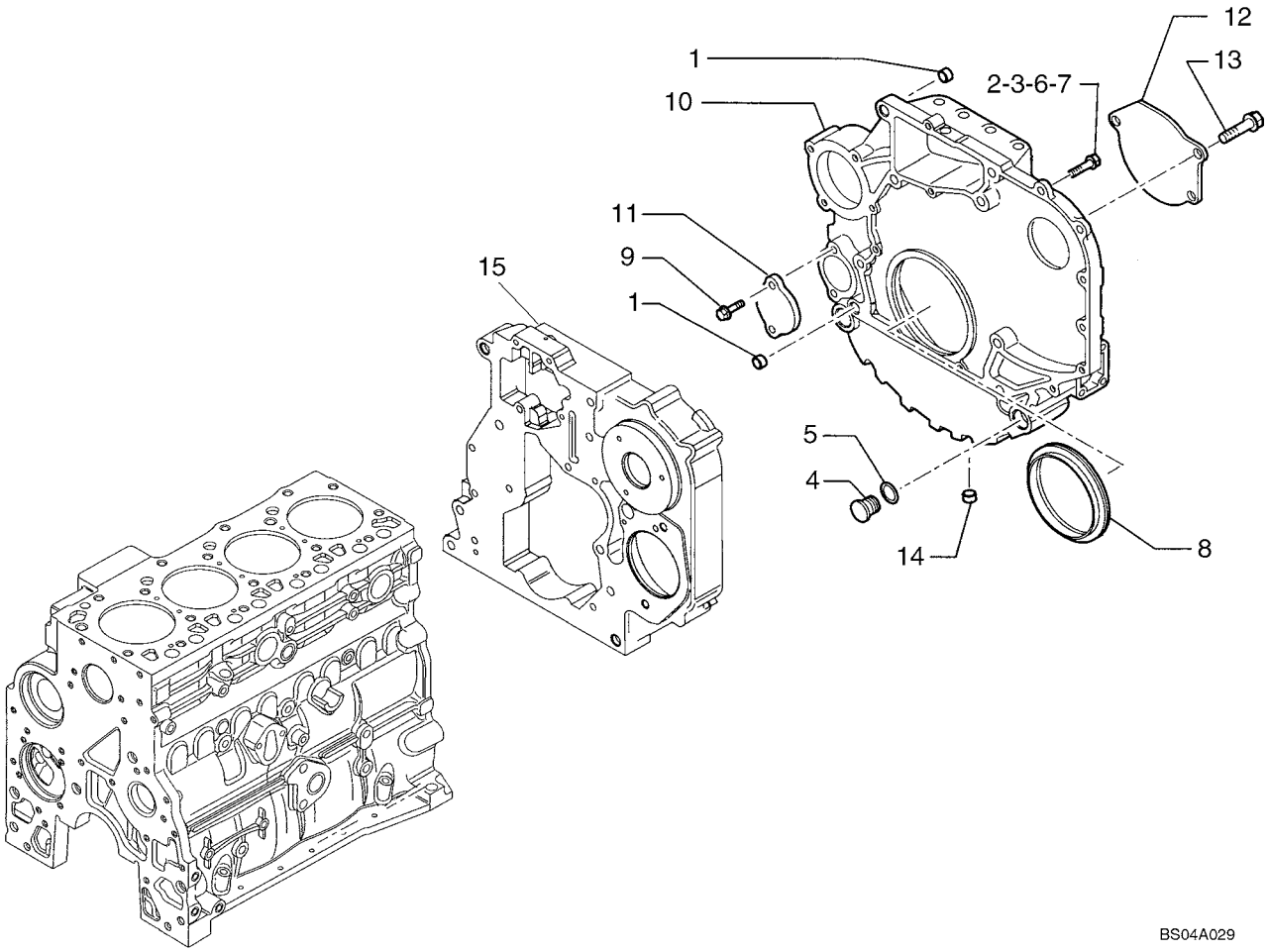

http://www.minnparbackhoeparts.com/

BLOQUE DE CILINDROS - CUBIERTAS

REF	FN	PART NUMBER	YR/SN	QTY	DESCRIPTION
1		4899026		2	PITON Ring
2		4899109		3	TORNILLO Flange, M10 x 80
3		4899075		8	TORNILLO Flange, M10 x 40
4		4895378		2	TAPÓN Does Not Include Seal, Purchase Seal Separately
5		4895379		2	JUNTA HERMETICA
6		4899076		5	TORNILLO Flange, M12 x 80
7		4899074		2	TORNILLO Flange, M12 x 120
8		4890833		1	JUNTA HERMETICA Oil Seal
9		4899103		2	TORNILLO Flange, M8 x 12
10		2852023		1	TAPADERA Flywheel Housing
11		4895358		1	TAPADERA
12		2852025		1	TAPADERA Fuel Pump Gear
13		4899020		3	TORNILLO Flange, M8 x 20
13		2852865		2	TORNILLO
14		4895079		1	TAPÓN
15		REF		1	MANUAL COVER; See Figure 02-12
		4899143		1	TORNILLO Flange, M10 x 140
		4899004		1	TUERCA Flange, M10; If Used

http://www.minnparbackhoeparts.com/

RESPIRADERO - MOTOR

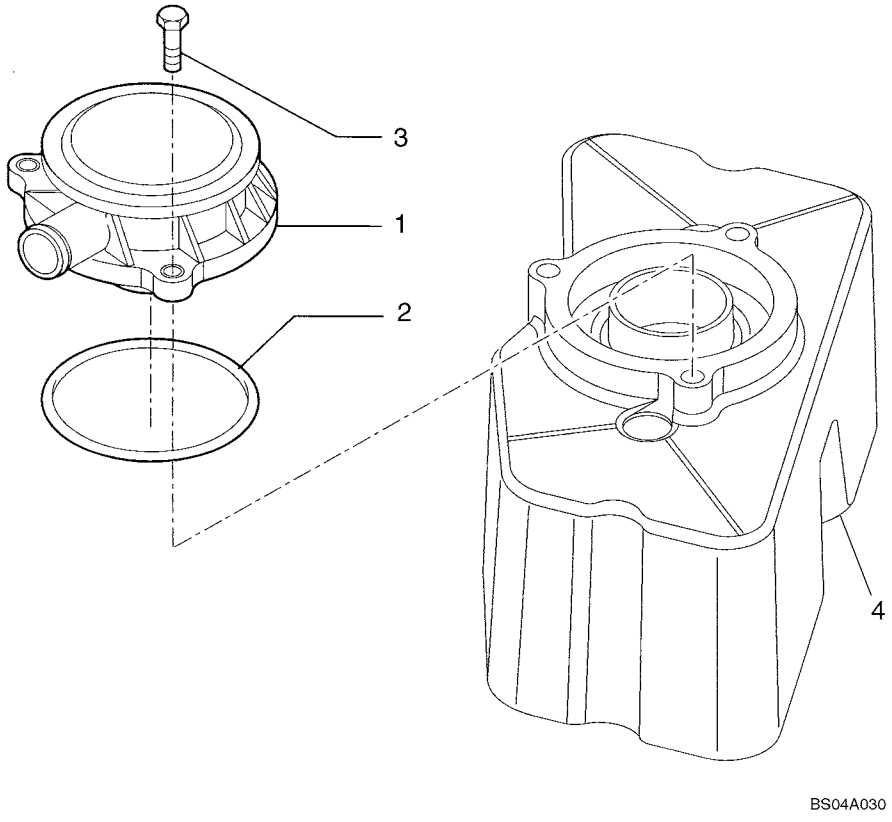

http://www.minnparbackhoeparts.com/

RESPIRADERO - MOTOR

REF	FN	PART NUMBER	YR/SN	QTY	DESCRIPTION
1		2852027		1	RESPIRADERO
2		2852028		1	JUNTA HERMETICA
3		4899110		3	TORNILLO Flange, M6 x 20
4		REF		1	MANUAL COVER; See Figure 02-17

http://www.minnparbackhoeparts.com/

CULATA DEL CILINDROS

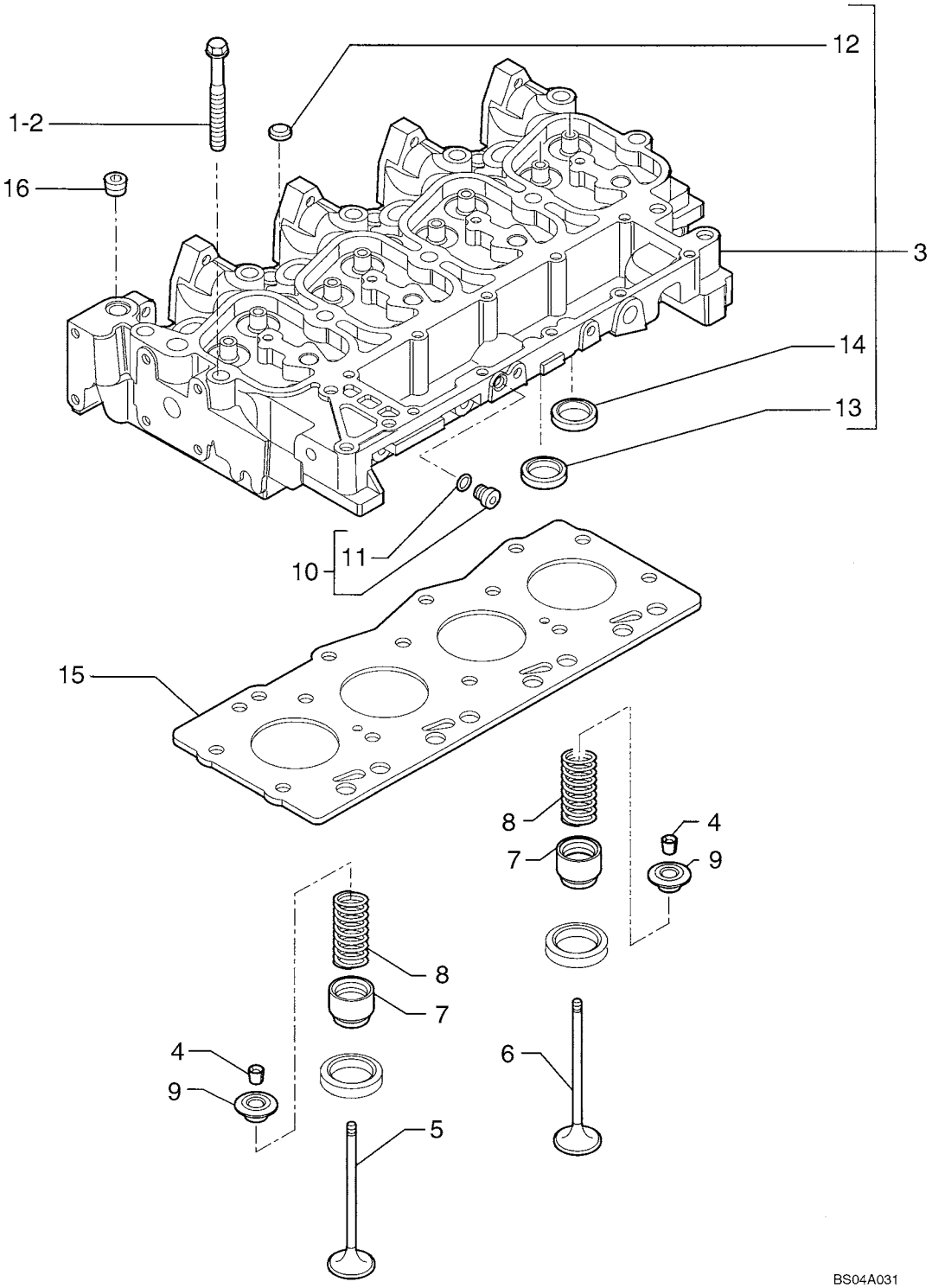

http://www.minnparbackhoeparts.com/

CULATA DEL CILINDROS

REF	FN	PART NUMBER	YR/SN	QTY	DESCRIPTION
1		4892861		4	TORNILLO With Washer; M12 x 73
2		4892859		10	TORNILLO With Washer; M12 x 143
3		4895790		1	CULATA - ASSY; Incl. Ref 12 - 14
4		4895183		16	CHAVETA CONICA
5		4895188		4	VALVULA DE ESCAPE
6		4895187		4	VÁLVULA DE ADMISIÓN
7		4895347		8	TAZA
8		4895215		8	RESORTE
9		4895184		8	TAZA
10		4899009		1	TAPÓN - ASSY 10 x 1.5; Incl. Ref 11
11		4899072		1	JUNTA HERMETICA
12		4895179		3	TAPÓN
13		4897178		4	ASIENTO DE VALVULA
14		4897179		4	ASIENTO DE VALVULA
15		2830919		1	JUNTA DE CULATA 1,25 mm
15		2830920		1	JUNTA HERMETICA 1.15 mm
16		4895078		5	TAPÓN

http://www.minnparbackhoeparts.com/

CULATA DE CILINDRO

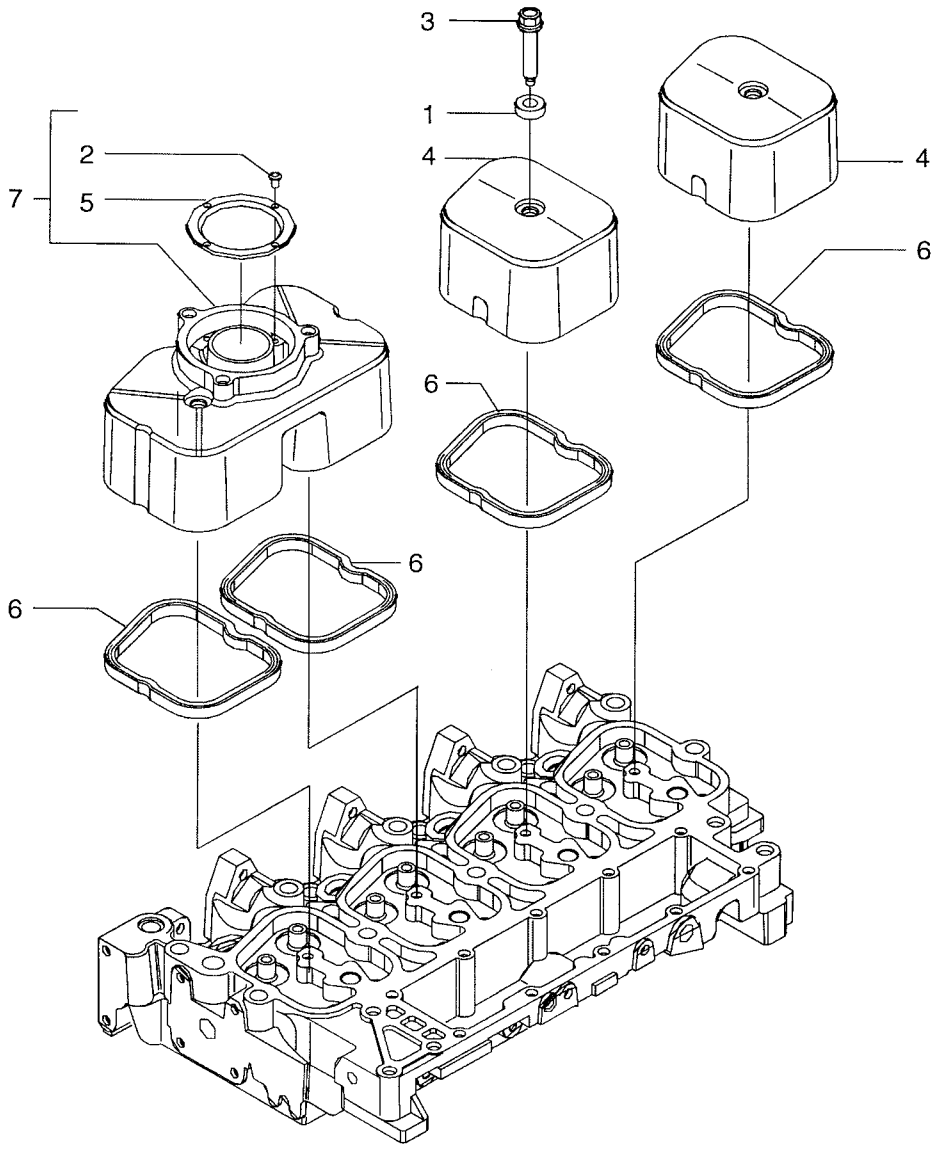

BS04A032

http://www.minnparbackhoeparts.com/

CULATA DE CILINDRO

REF	FN	PART NUMBER	YR/SN	QTY	DESCRIPTION
1		4895360		4	CASQUILLO
2		2830281		4	TORNILLO Self-Tapping
3		4895214		4	TORNILLO Flange, M8 x 33
4		2852032		2	TAPADERA
5		2830775		1	PANTALLA (CONJ)
6		2852033		4	JUNTA HERMETICA
7		2830784		1	TAPADERA - ASSY; Incl. Ref 2, 5

http://www.minnparbackhoeparts.com/

CULATA DEL CILINDROS - MECANISMO DE LA VALVULA

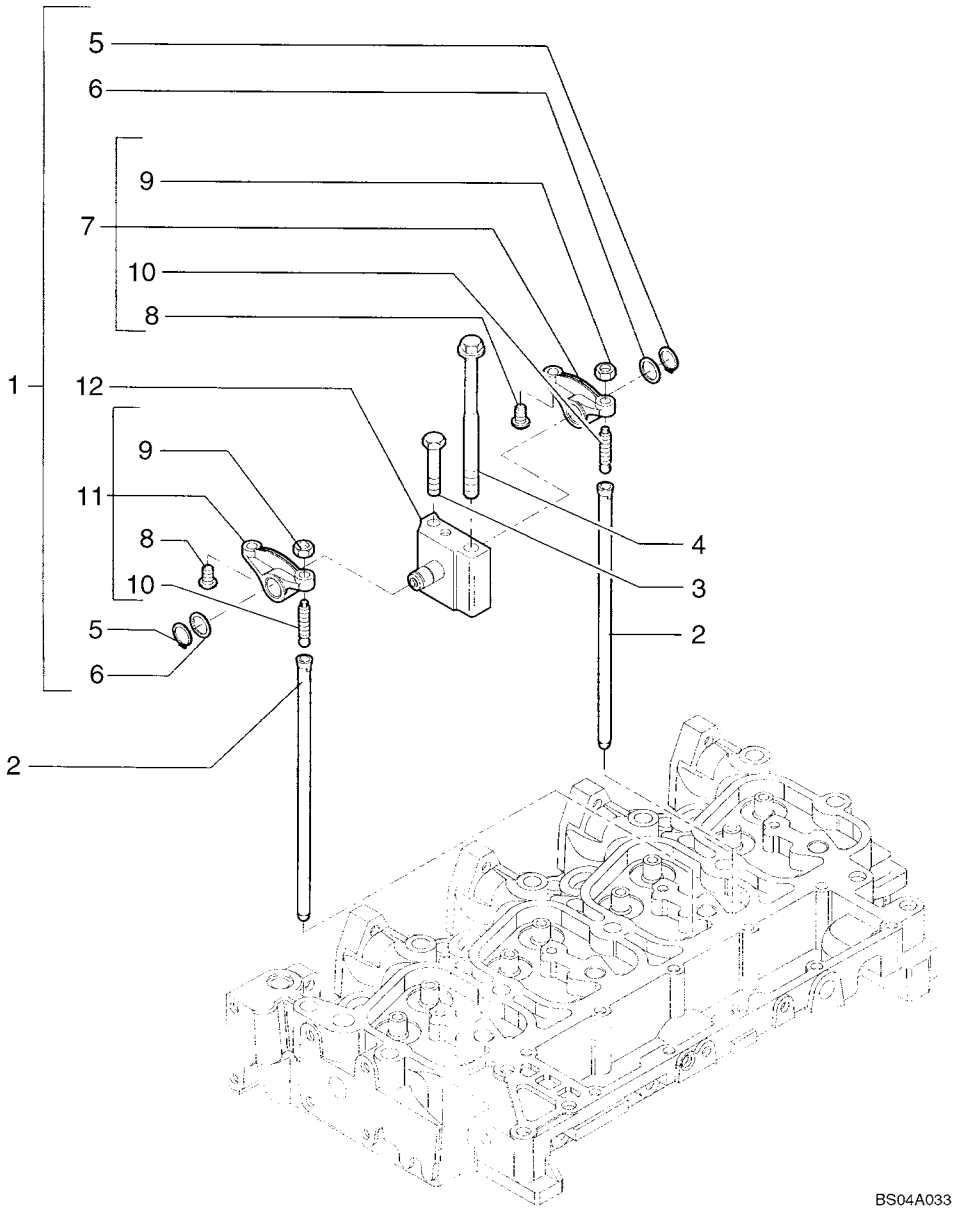

http://www.minnparbackhoeparts.com/

CULATA DEL CILINDROS - MECANISMO DE LA VALVULA

REF	FN	PART NUMBER	YR/SN	QTY	DESCRIPTION
1		4895195		4	BALANCIN - ASSY; Incl. Ref 5 - 12
2		4895361		8	VARILLA DE EMPUJE
3		2852866		4	TORNILLO Hex Flange, M8 x 75
4		4892860		4	TORNILLO With Washer, M12 x 183
5		4895363		2	ANILLO
6		4895364		2	ARANDELA
7		4895196		1	BALANCIN - ASSY; Incl. Ref 8 - 10
8		4895365		2	SEPARADOR
9		4895198		2	TUERCA
10		4895199		2	TORNILLO
11		4895200		1	BALANCIN - ASSY; Incl. Ref 8 - 10
12		4895204		1	SOPORTE

http://www.minnparbackhoeparts.com/

02-19		p1	05/04

COLECTOR ESCAPE

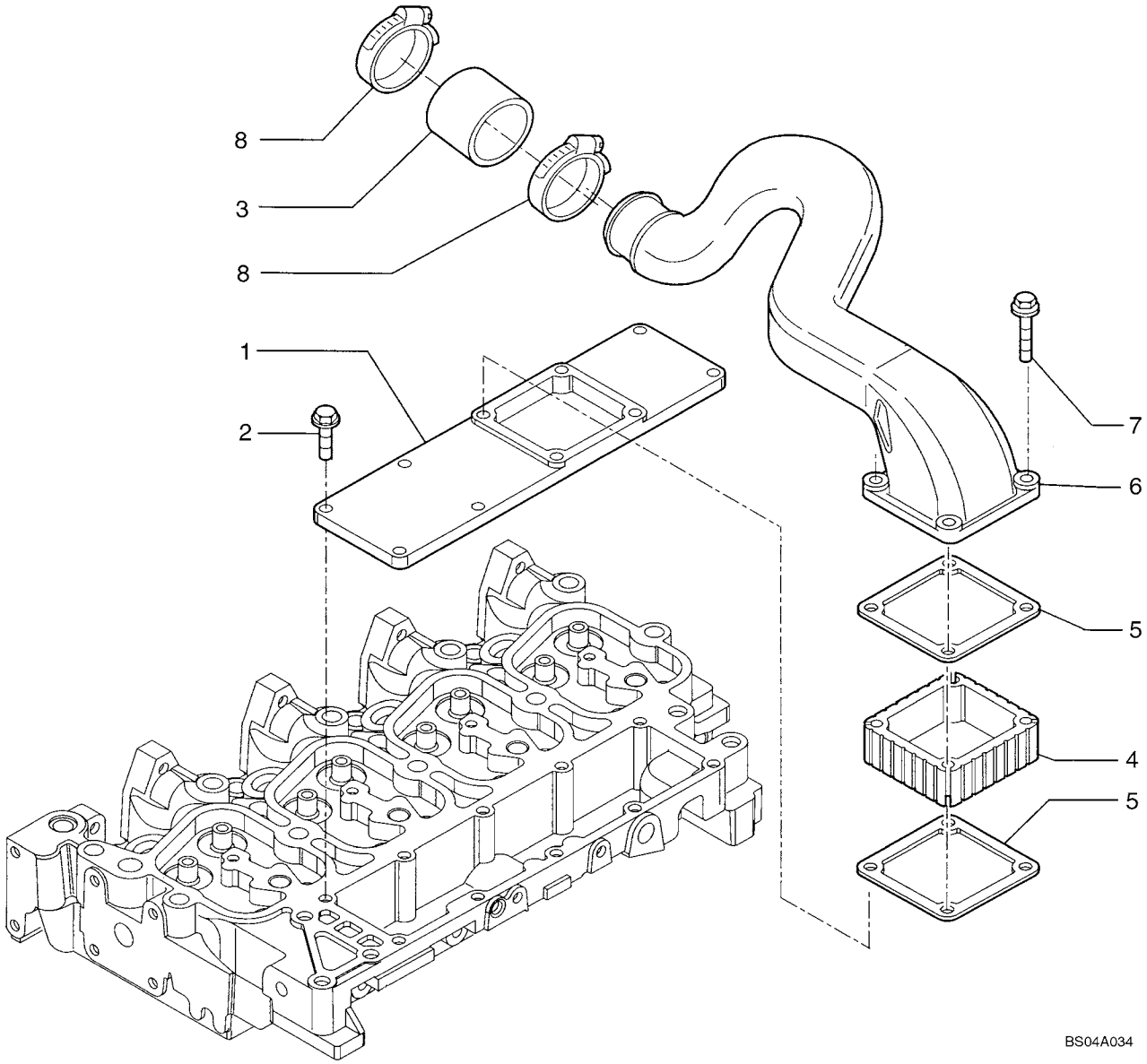

http://www.minnparbackhoeparts.com/

COLECTOR ESCAPE

REF	FN	PART NUMBER	YR/SN	QTY	DESCRIPTION
1		2852044		1	TAPADERA
2		4899039		6	TORNILLO Flange, M8 x 25
3		2852029		1	MANGUITO
4		4895648		1	SEPARADOR
5		4899921		2	JUNTA HERMETICA
6		2852030		1	TUBO DE ASPIRACION
7		4895294		4	TORNILLO Flange, M8 x 80
8		4899629		2	PLACA DE SUJECION Clamp

http://www.minnparbackhoeparts.com/

02-20		p1	05/04

COLECTOR ESCAPE

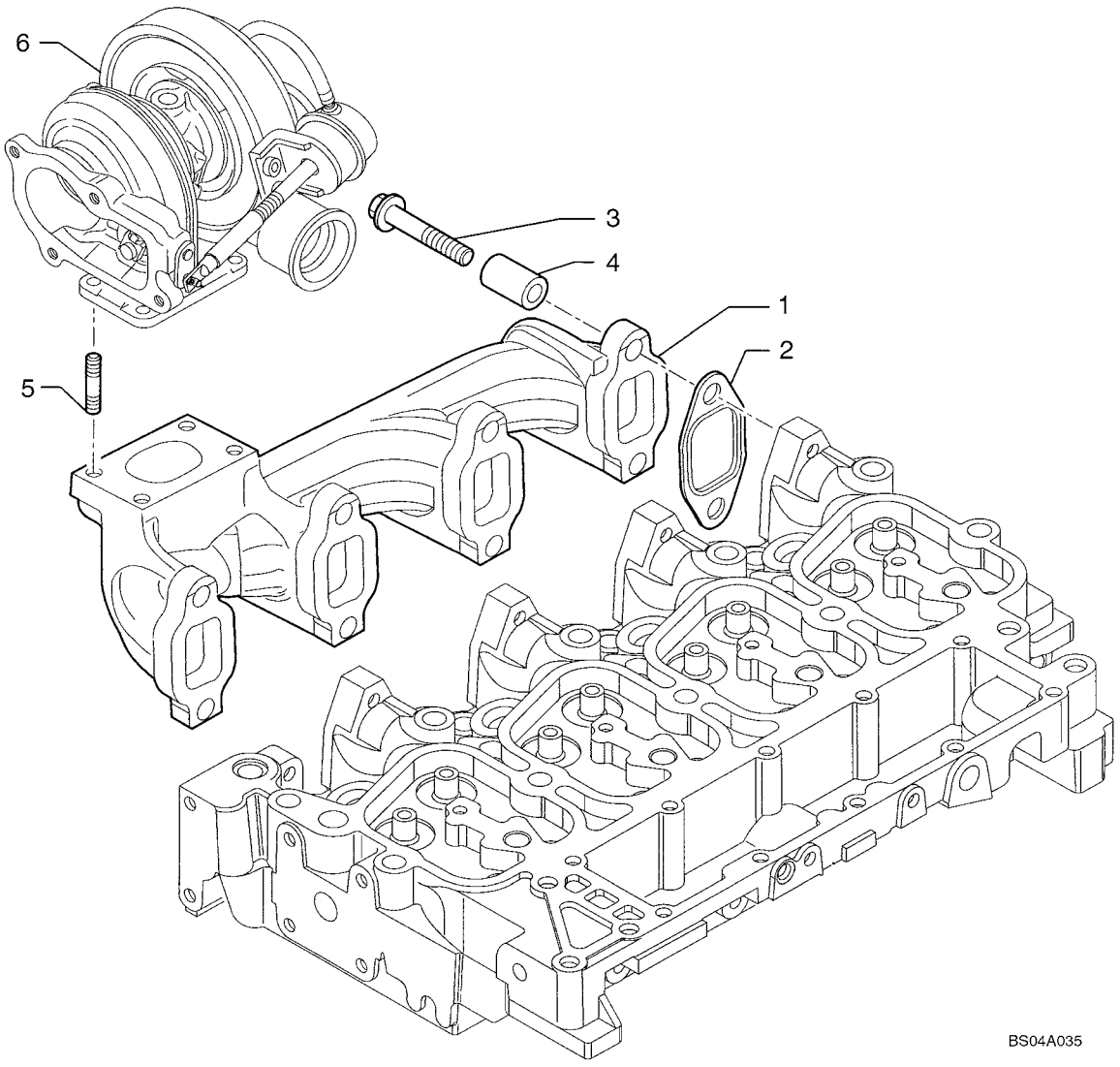

http://www.minnparbackhoeparts.com/

COLECTOR ESCAPE

REF	FN	PART NUMBER	YR/SN	QTY	DESCRIPTION
1		2852270		1	COLECTOR DE ESCAPE
2		2830445		4	JUNTA HERMETICA
3		2852744		8	TORNILLO Flange, M10 x 65
4		4895336		8	SEPARADOR
5		4899119		4	PRISIONERO
6		REF		1	MANUAL TURBOCHARGER; See Figure 2-29

http://www.minnparbackhoeparts.com/

CIGUENAL

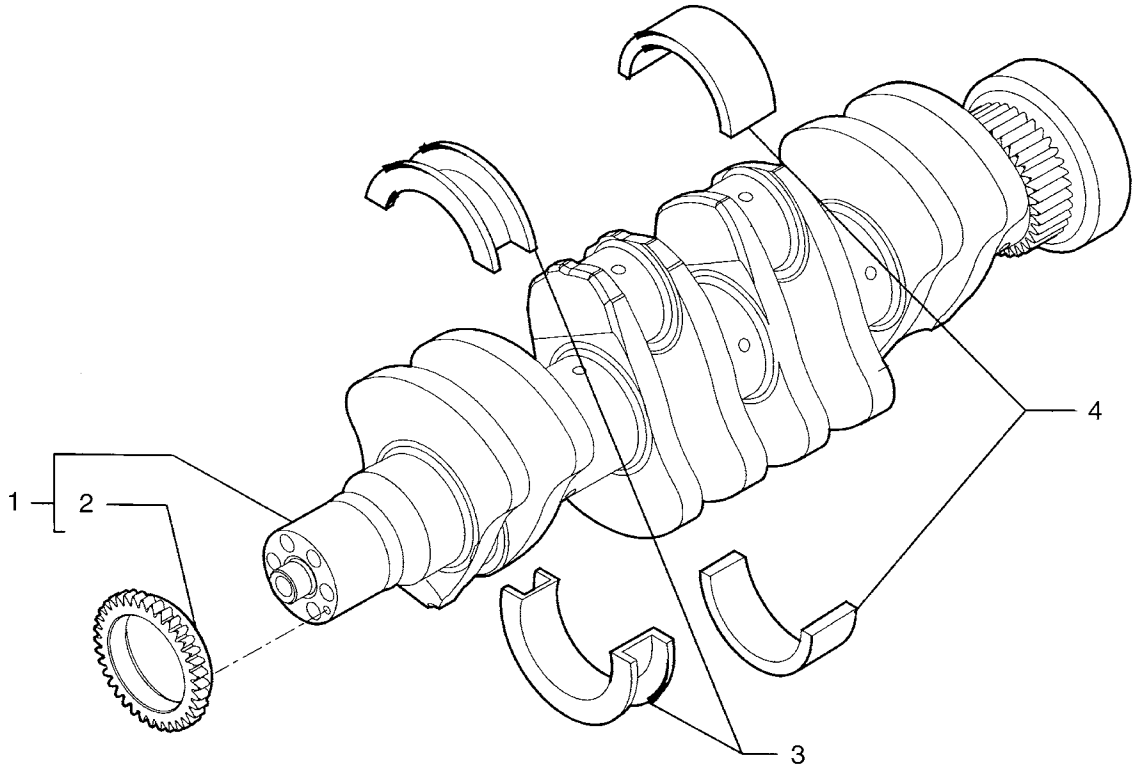

BS04A036

http://www.minnparbackhoeparts.com/

CIGUENAL

REF	FN	PART NUMBER	YR/SN	QTY	DESCRIPTION
1		2852009		1	CIGÜEÑAL - ASSY; Incl. Ref 2
2		4893386		1	ENGRANAJE
4		2992147		4	SERIE SEMICOJIN. BANCO (-0.000) (-0.000)
4		2992148		4	SERIE SEMICOJENET. -0.254 (-0.254) (-0.250)
4		2992149		4	SERIE SEMICOJIN. BANCO (-0.508) (-0.500)
3		2992153		1	SERIE SEMICOJIN. BANCO (+0.000) (+0.000)
3		2992154		1	SERIE SEMICOJIN. BANCO (+0.254) (+0.250)
3		2992155		1	COJINETE DE EMBRAGUE (+0.508) (+0.500)

http://www.minnparbackhoeparts.com/

PISTONES - VARILLAS CONECTORAS

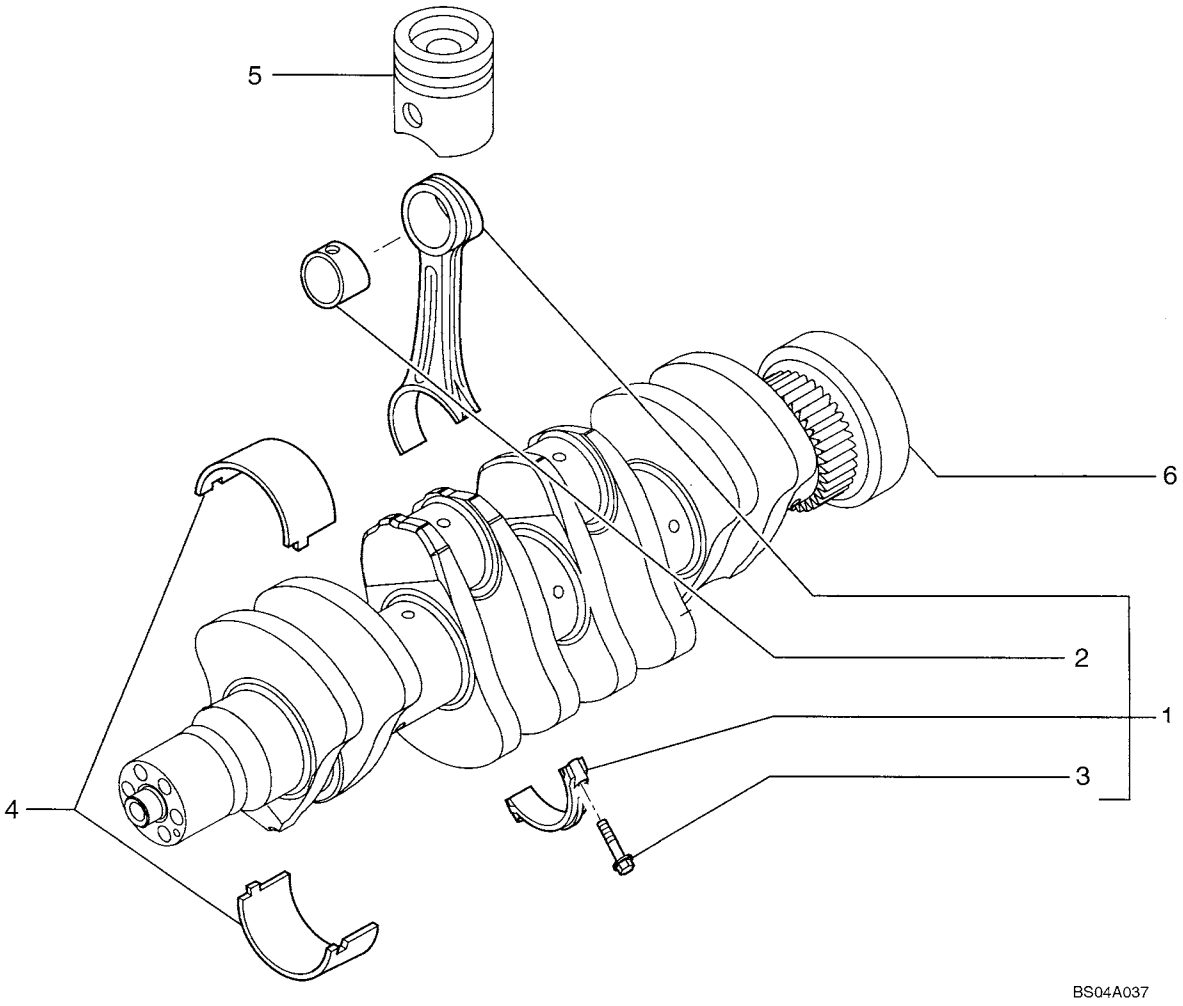

http://www.minnparbackhoeparts.com/

PISTONES - VARILLAS CONECTORAS

REF	FN	PART NUMBER	YR/SN	QTY	DESCRIPTION
1		2831298		4	BIELA Connecting Rod; Incl. Ref 2, 3
2		4892708		1	CASQUILLO
3		2831297		2	TORNILLO
4		4892714		4	COJINETTE CIGUENAL
4		4892715		4	COJINETTE CIGUENAL
5		REF		1	MANUAL PISTON; See Figure 02-23
6		REF		1	MANUAL CRANKSHAFT; See Figure 02-21

http://www.minnparbackhoeparts.com/

PISTONES - VARILLAS CONECTORAS

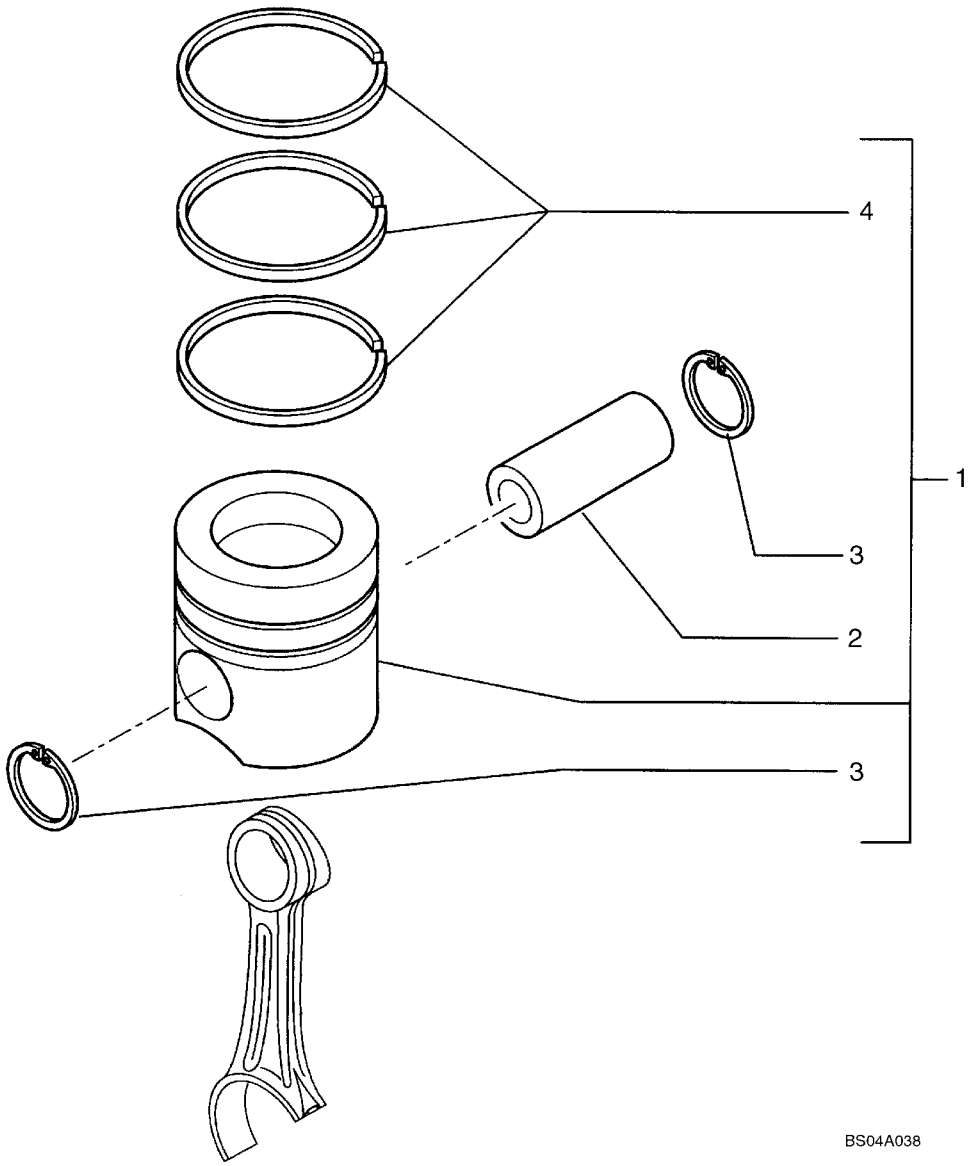

http://www.minnparbackhoeparts.com/

PISTONES - VARILLAS CONECTORAS

REF	FN	PART NUMBER	YR/SN	QTY	DESCRIPTION
1		4897980		4	EMBOLO COMPL Does Not Include Rings
2		4892712		4	BULON DEL EMBOLO
3		4892713		8	ANILLO DE FRENO
4		2852037		4	ARO RASCADOR DE ACEITE
4		2830158		4	ARO DE EMBOLO Compression; 2.39 mm Wide; Yellow Identification Mark
4		2852036		4	ARO DE EMBOLO Compression; 3.00 mm Wide; Red Identification Mark

http://www.minnparbackhoeparts.com/

VOLANTE MOTOR

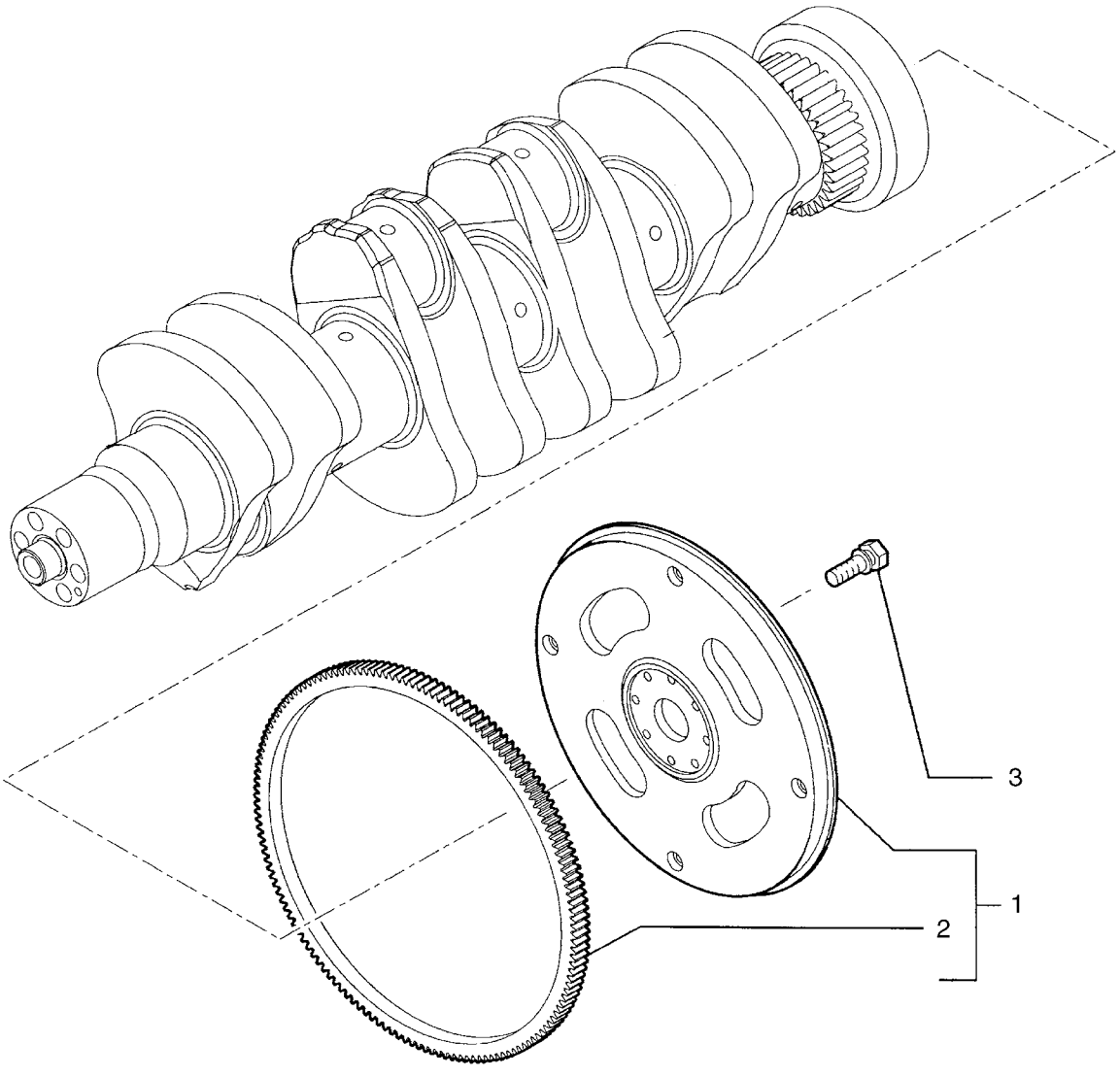

http://www.minnparbackhoeparts.com/

VOLANTE MOTOR

REF	FN	PART NUMBER	YR/SN	QTY	DESCRIPTION
1		2852049		1	VOLANTE DEL MOTOR - ASSY; Incl. Ref 2
2		2852051		1	CORONA DENTADA
3		4894641		8	TORNILLO With Washer, M12 x 30

http://www.minnparbackhoeparts.com/

POLEA - CIGUENAL

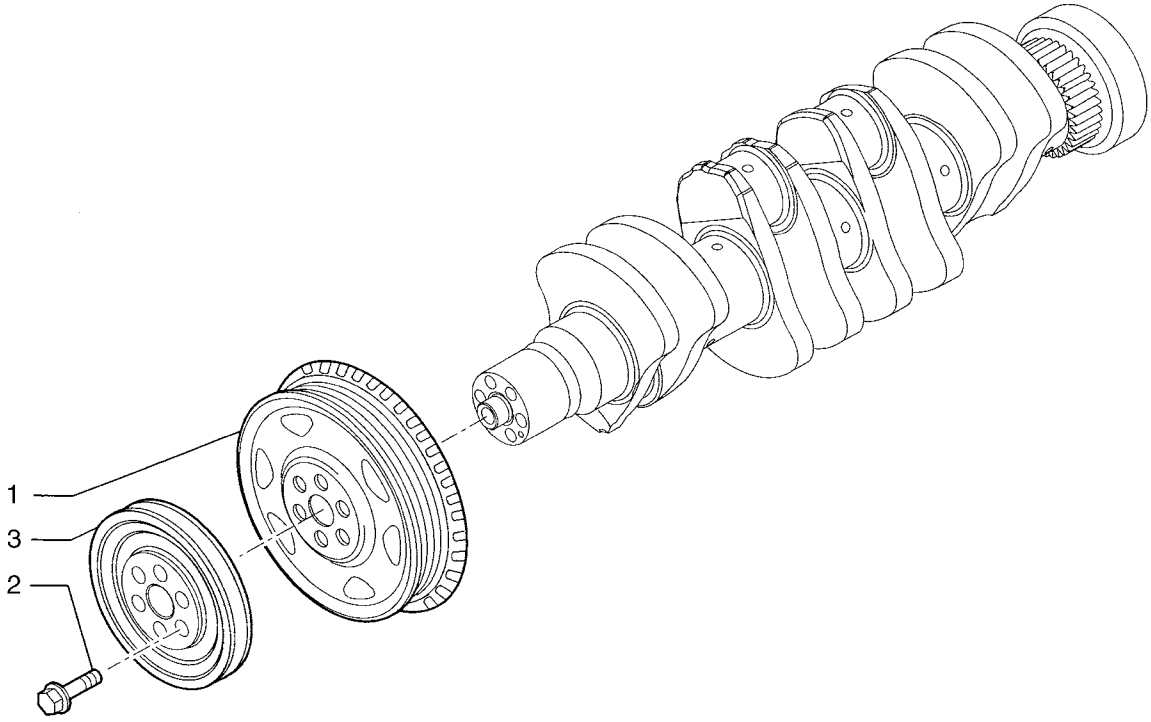

BS04A040

http://www.minnparbackhoeparts.com/

POLEA - CIGUENAL

REF	FN	PART NUMBER	YR/SN	QTY	DESCRIPTION
1		4896773		1	POLEA
2		{2853960}		6	M12 x 77 Screw
3		2852054		1	POLEA

http://www.minnparbackhoeparts.com/

EQUILIBRADOR, ENGRENAJES Y ARBOLES

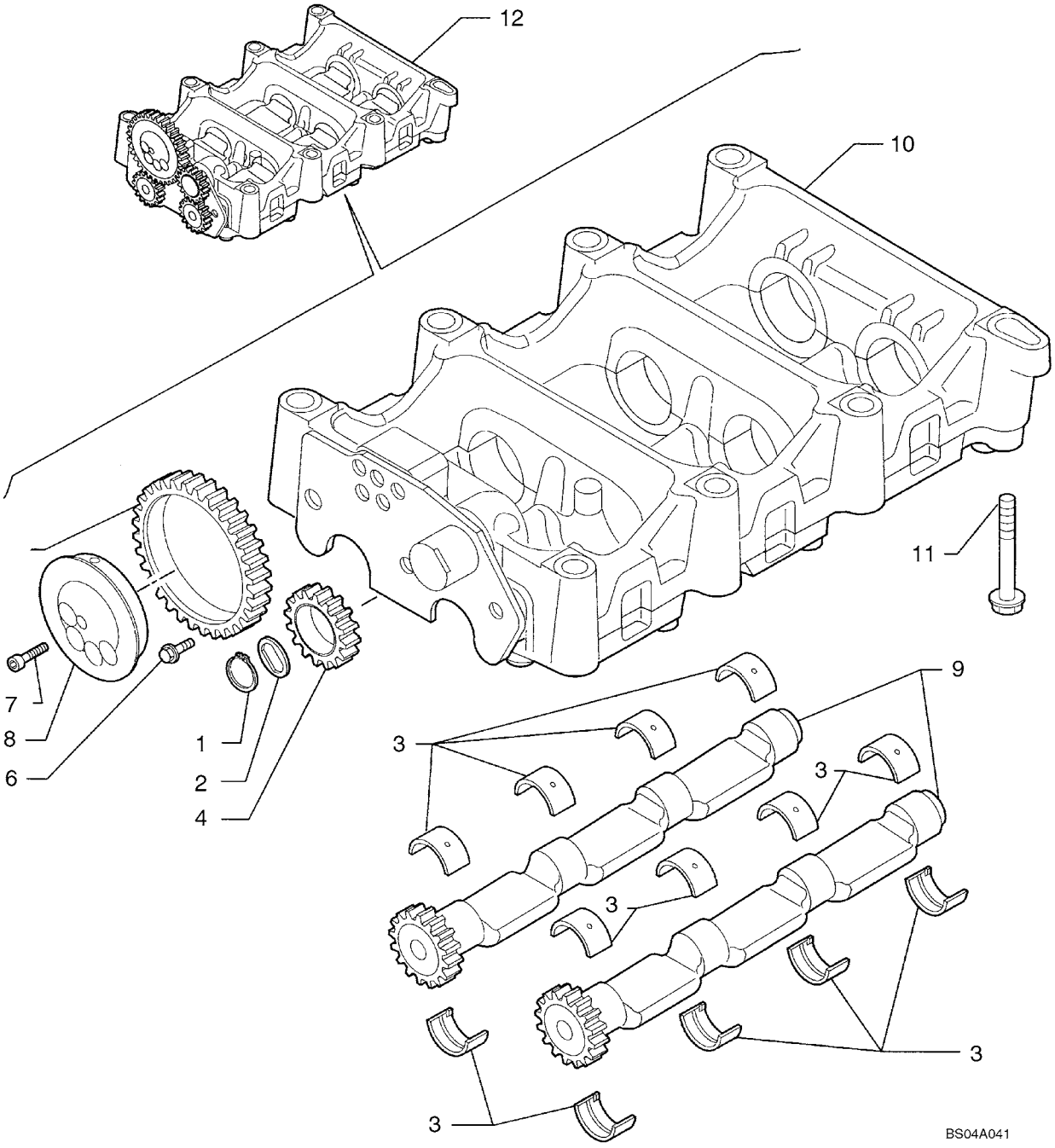

http://www.minnparbackhoeparts.com/

EQUILIBRADOR, ENGRENAJES Y ARBOLES

REF	FN	PART NUMBER	YR/SN	QTY	DESCRIPTION
1		4897125		1	ANILLO DE FRENO
2		4897123		1	PLACA DE APOYO
3		4897071		16	CASQUILLO
4		4897048		1	PINON CONDUCIDO
5		4896947		1	PINON CONDUCIDO
6		4895586		3	TORNILLO Flange, M8 x 16
7		2830433		4-5	TORNILLO Socket; (4) Used With 2830953 Balancer Assy
8		2831031		1	ARBOL DE REENVIO
9		2831023		2	EJE 2830953 Balancer Assy
9A		2853226		2	ARBOL (CONJUNTO) Shaft; 2853225 Balancer Assy
10		2830952		1	CAVIDAD - ASSY; See Figure 02-27; 2830953 Balancer Assy
10A		2831300		1	CAVIDAD Housing; 2853225 Balancer Assy; Component Parts Not Available At Time Of Printing
11		4899109		7	TORNILLO Flange, M10 x 80
11		4897934		1	TORNILLO Flange, M10 x 100
12		2830953		1	EQUILIBRADOR - ASSY; Incl. Ref 1 - 10; If Used
12		2853225		1	EQUILIBRADOR Balancer Assy Incl. Ref 1 - 8, 9A, 10A; Includes (5) Ref 7 Screws; Fifth Screw Is Used During Assy Under Balancer to Lock Shaft, But Must Be Removed After Balancer Is Assembled to Block; If Used

http://www.minnparbackhoeparts.com/

EQUILIBRADOR, ENGRENAJES Y ARBOLES (2830952)

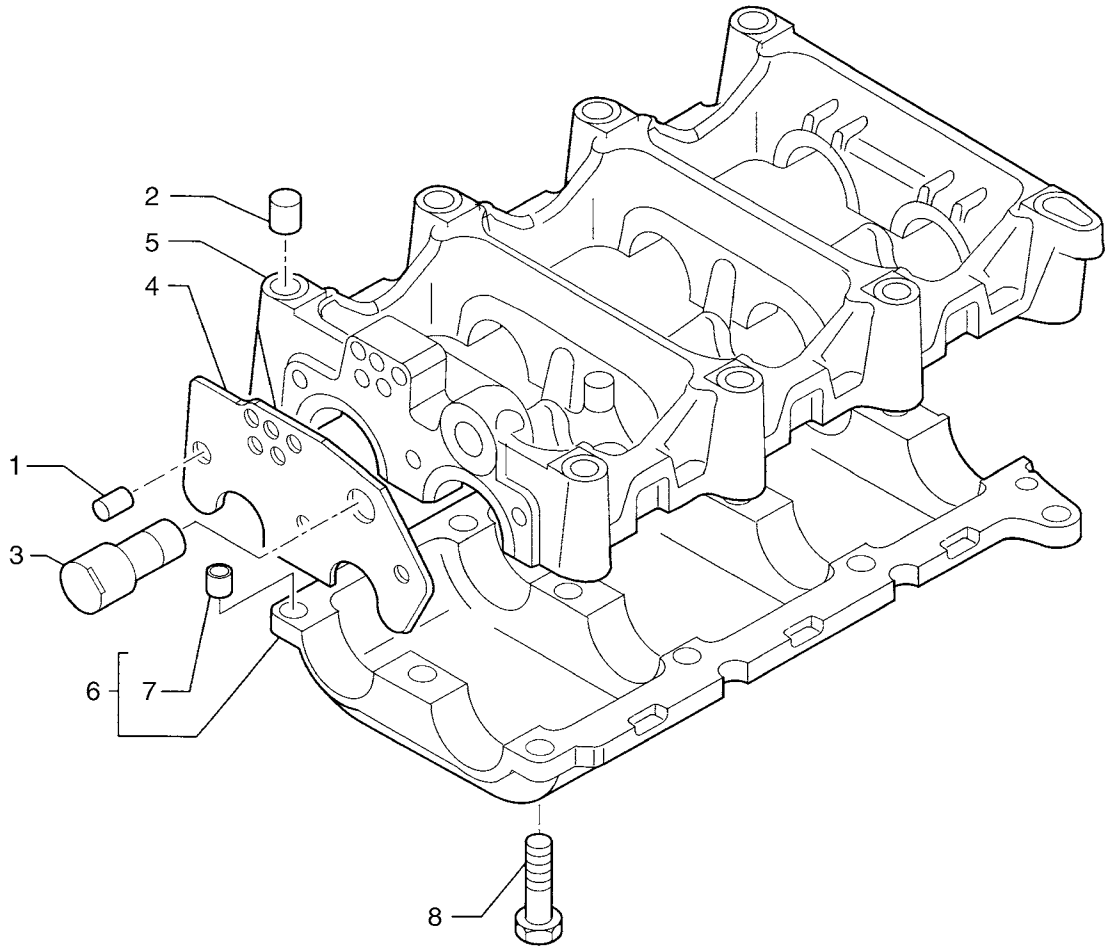

http://www.minnparbackhoeparts.com/

EQUILIBRADOR, ENGRENAJES Y ARBOLES (2830952)

REF	FN	PART NUMBER	YR/SN	QTY	DESCRIPTION
		2830952		1	CAVIDAD Assy; Incl. Ref 1 - 8; 2830953 Balancer Assy
1		4892836		1	PITON
2		4899027		2	PITON
3		2830948		1	ARBOL DE REENVIO
4		2830905		1	PLACA DE APOYO
5		2830934		1	CAVIDAD
6		2831101		1	CAVIDAD - ASSY; Incl. Ref 7
7		4891209		2	PITON
8		2830411		3	TORNILLO Flange, M8 x 30
8		4895323		9	TORNILLO Flange, M8 x 40

http://www.minnparbackhoeparts.com/

EJE DE LEVAS

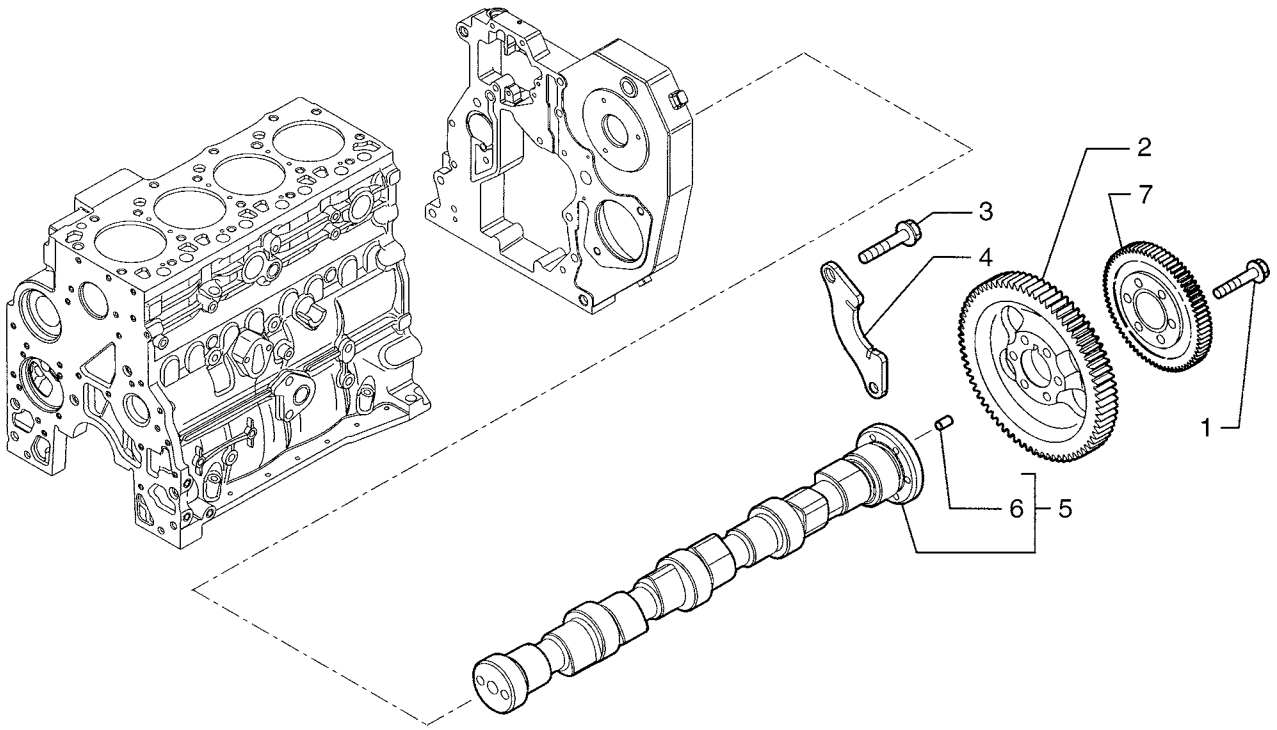

BS04A043

http://www.minnparbackhoeparts.com/

EJE DE LEVAS

REF	FN	PART NUMBER	YR/SN	QTY	DESCRIPTION
1		4895323		6	TORNILLO Flange, M8 x 40
2		2852062		1	ENGRANAJE
3		4899068		2	TORNILLO Flange, M8 x 16
4		4897457		1	BRIDA Support
5		4899610		1	ARBOL DE LEVAS - ASSY; Incl. Ref 6
6		4899080		1	PITON
7		2852063		1	PINON CONDUCIDO 52T

http://www.minnparbackhoeparts.com/

02-29		p1	05/04

TURBOCOMPRESOR

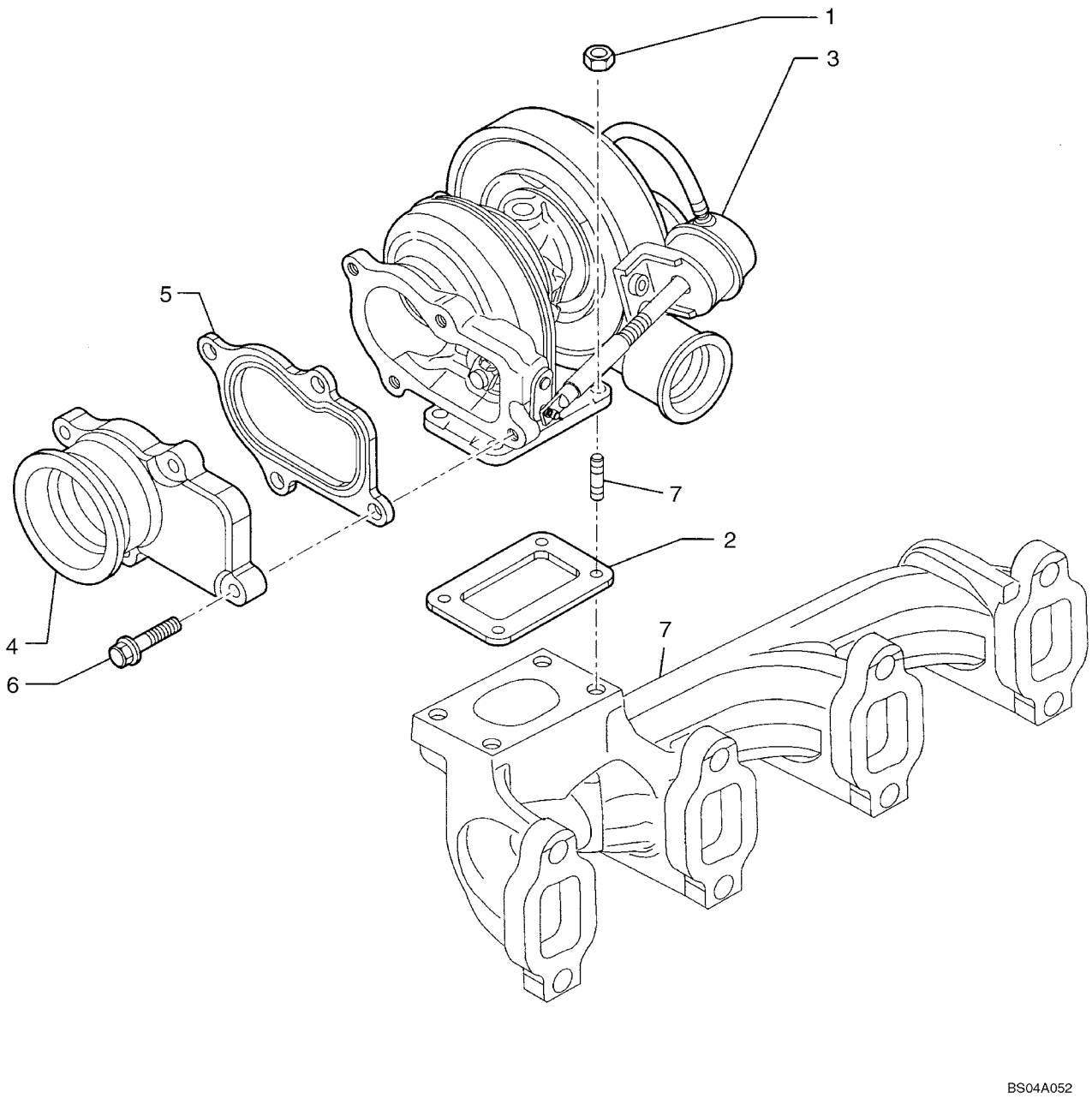

http://www.minnparbackhoeparts.com/

TURBOCOMPRESOR

REF	FN	PART NUMBER	YR/SN	QTY	DESCRIPTION
1		4899118		4	TUERCA Flange, M8
2		4895133		1	JUNTA HERMETICA
3		2852068		1	TURBOCOMPRESOR Assembly
4		2852072		1	COLECTOR DE ESCAPE
5		2852071		1	JUNTA HERMETICA
6		4898482		4	TORNILLO Flange
7		REF		1	MANUAL EXHAUST MANIFOLD; See Figure 02-20

http://www.minnparbackhoeparts.com/

02-30		p1	10/04

MOTOR, ACEITE

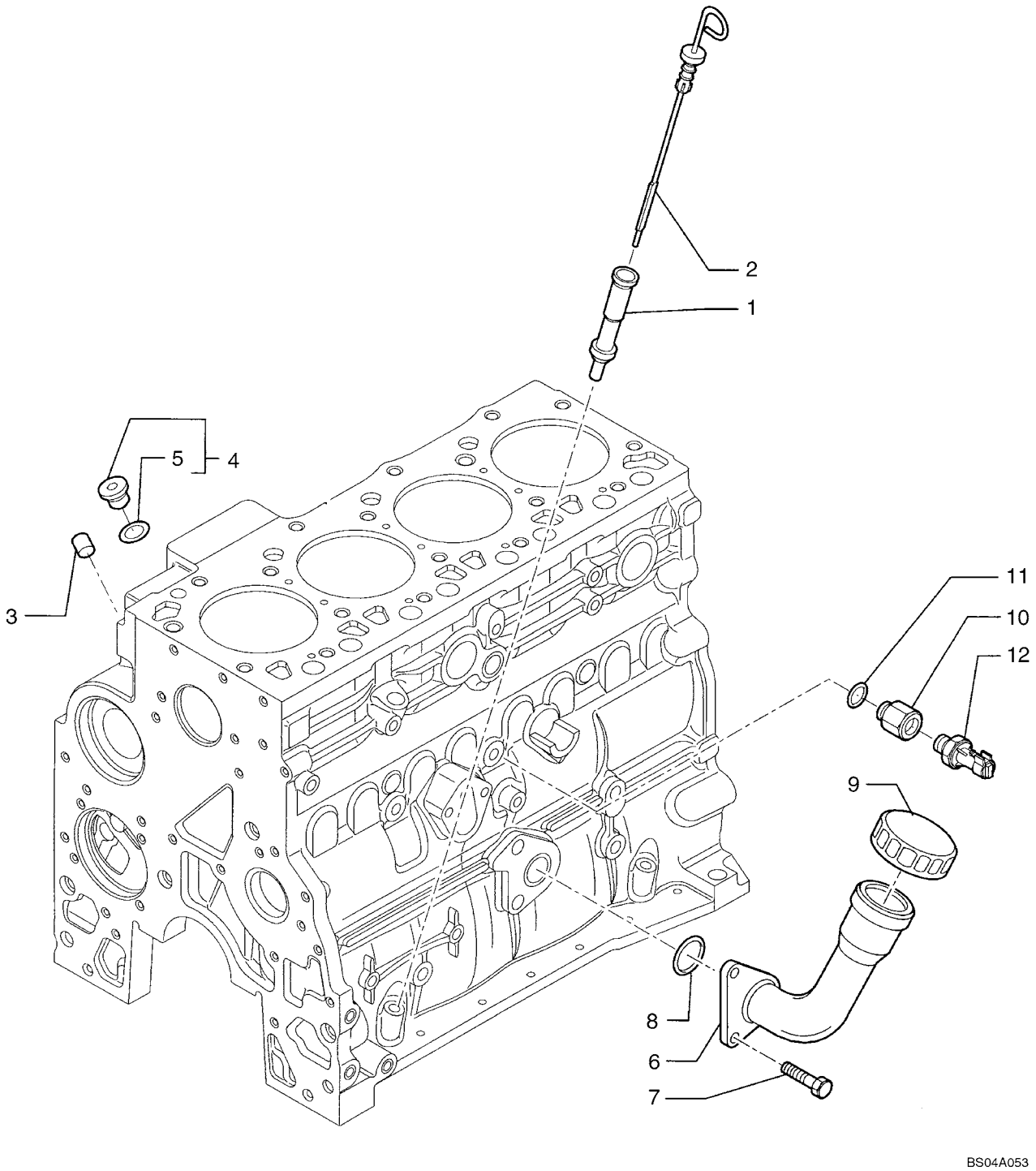

http://www.minnparbackhoeparts.com/

MOTOR, ACEITE

REF	FN	PART NUMBER	YR/SN	QTY	DESCRIPTION
1		2852122		1	TUBO RIGIDO
2		2852125		1	VARILLA DE NIVEL Includes 2852127 Seal
3		4899036		1	TAPÓN Expansion
4		4897330		2	TAPÓN - ASSY; Incl. Ref 5
5		4895610		1	JUNTA HERMETICA
6		{2853407}		1	Tube
7		2852134		2	TORNILLO Flange, M12 x 25
8		2852135		1	JUNTA HERMETICA O-Ring
9		2852136		1	TAPON DE LLENADO
10		2852140		1	RACOR Reducer
11		4899115		1	JUNTA HERMETICA
12		2852889		1	INTERRUPTOR DE PRESION Oil Pressure
		{2853410}		1	Oil Filler Plug, Includes 2853412 O-Ring

http://www.minnparbackhoeparts.com/

BOMBA DE ACEITE - MOTOR

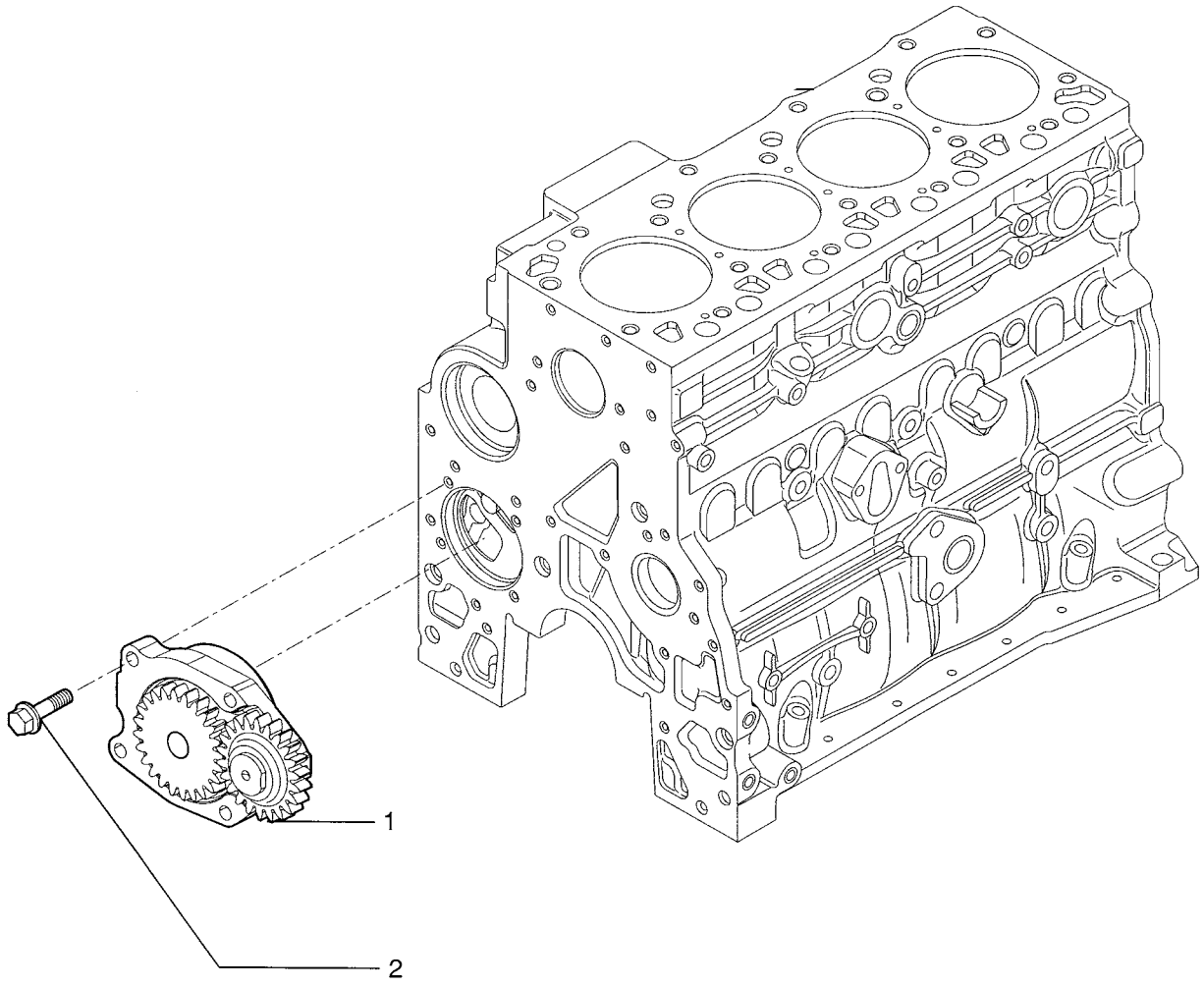

http://www.minnparbackhoeparts.com/

BOMBA DE ACEITE - MOTOR

REF	FN	PART NUMBER	YR/SN	QTY	DESCRIPTION
1		4897480		1	BOMBA DE ACEITE
2		4899090		4	TORNILLO Hex, M8 x 30

http://www.minnparbackhoeparts.com/

FILTRO DE ACEITE - MOTOR

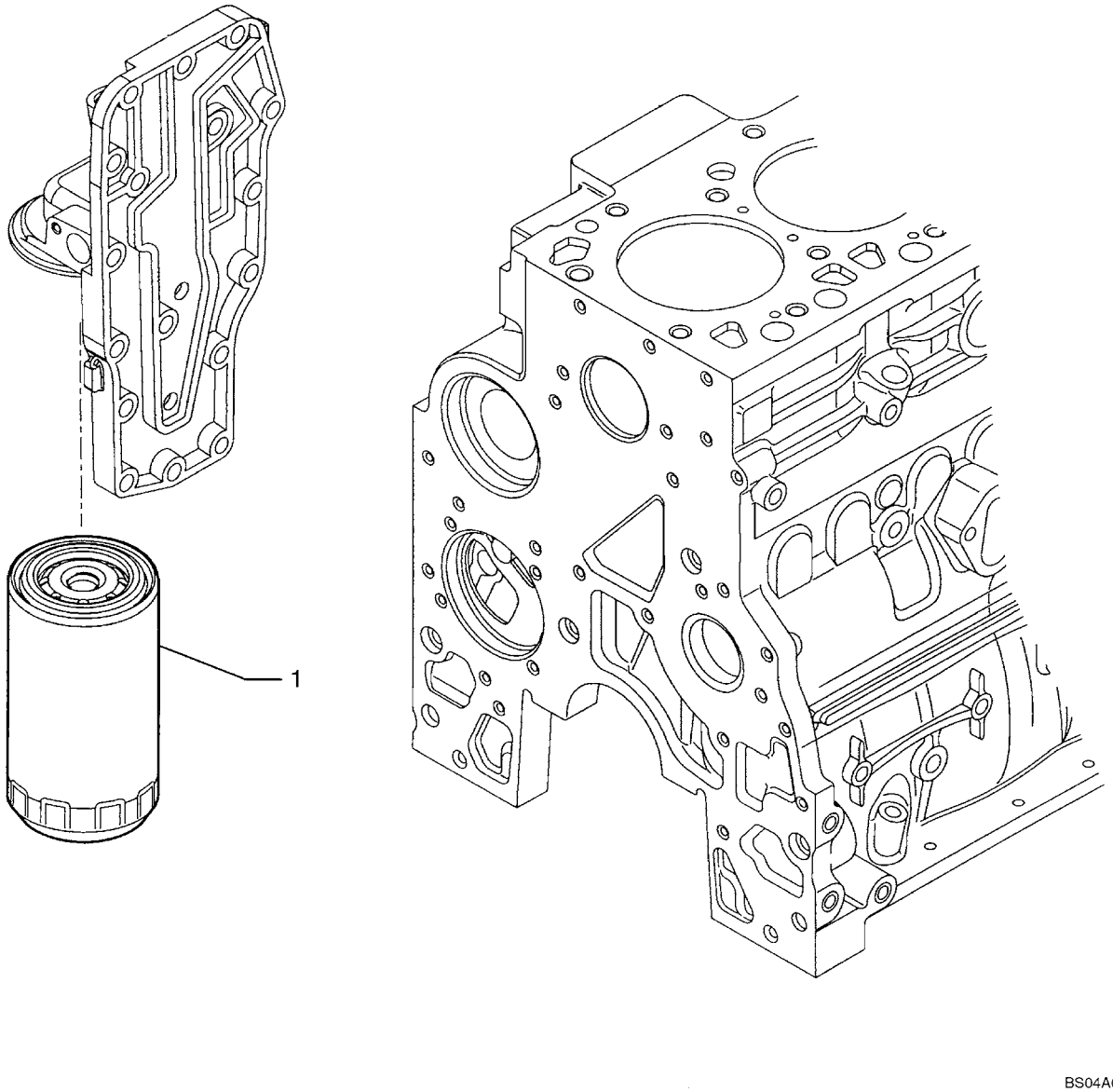

http://www.minnparbackhoeparts.com/

FILTRO DE ACEITE - MOTOR

REF	FN	PART NUMBER	YR/SN	QTY	DESCRIPTION
1		87803261		1	FILTRO DE ACEITE

http://www.minnparbackhoeparts.com/

02-33		p1	10/04

TUBERIAS - ACEITE DEL MOTOR

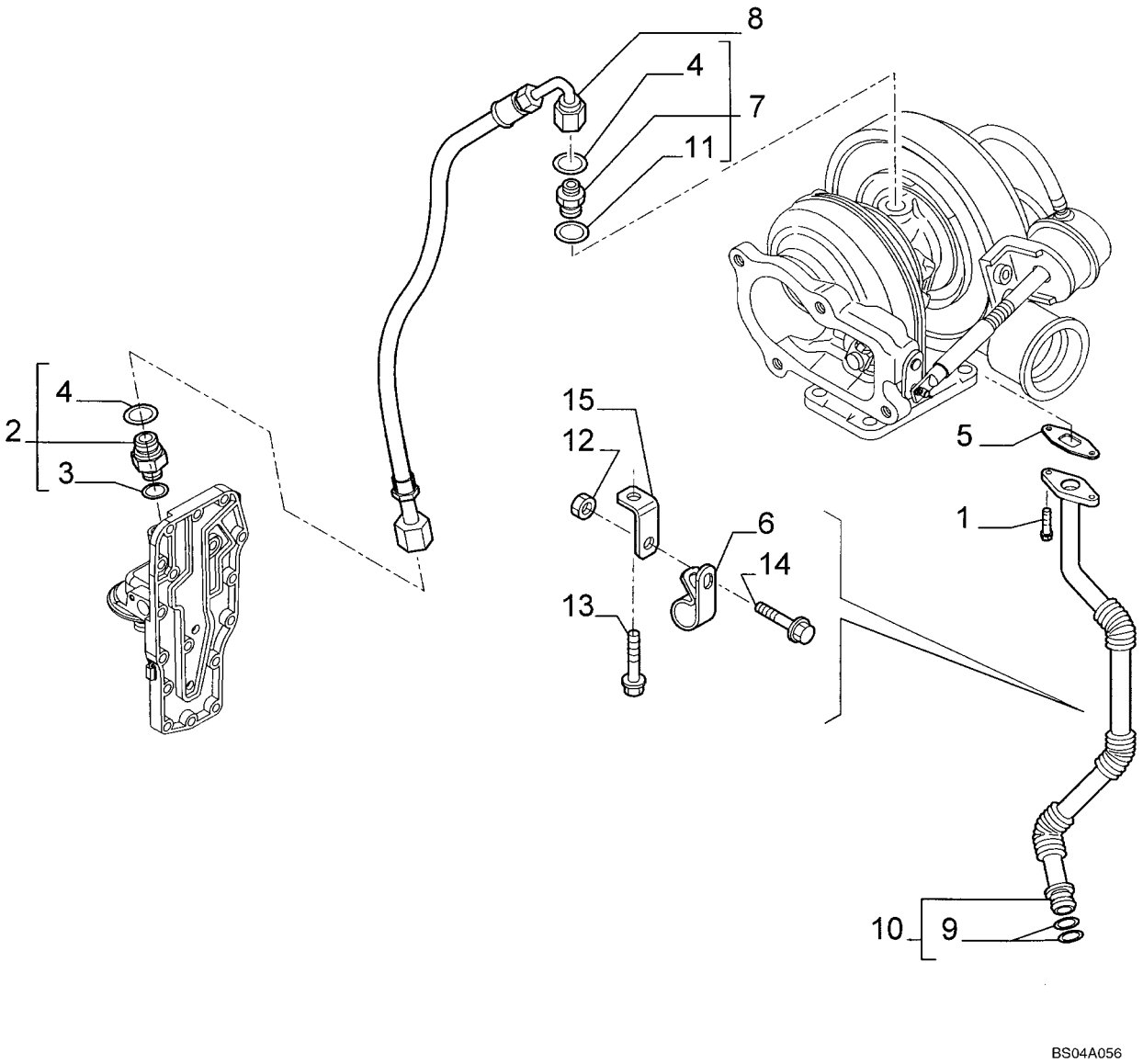

http://www.minnparbackhoeparts.com/

TUBERIAS - ACEITE DEL MOTOR

REF	FN	PART NUMBER	YR/SN	QTY	DESCRIPTION
1		4895164		2	TORNILLO Flange, M6 x 16
2		4895107		1	RACOR - ASSY; Incl. Ref 3, 4
3		4899107		1	JUNTA HERMETICA
4		4899108		1	JUNTA HERMETICA
5		4899467		1	JUNTA HERMETICA Oil Drain
6		4899519		1	PIEZA DE SOPORTE Clamp
7		4899106		1	RACOR Incl. Ref 4, 11
8		2852195		1	MANGUERA (CONJUNTO)
9		4899058		2	JUNTA HERMETICA
10		2852102		1	TUBO (CONJUNTO) - ASSY; Tube; Incl. Ref 9
11		4899121		1	JUNTA HERMETICA Washer
12		2852197		1	TUERCA Flange, M6
13		2852101		1	TORNILLO Flange; M6 x 16
14		2852100		1	TORNILLO Flange; M8 x 16
15		2852196		1	PIEZA DE SOPORTE

http://www.minnparbackhoeparts.com/

FILTRO Y REFRIGERADOR DE ACEITE

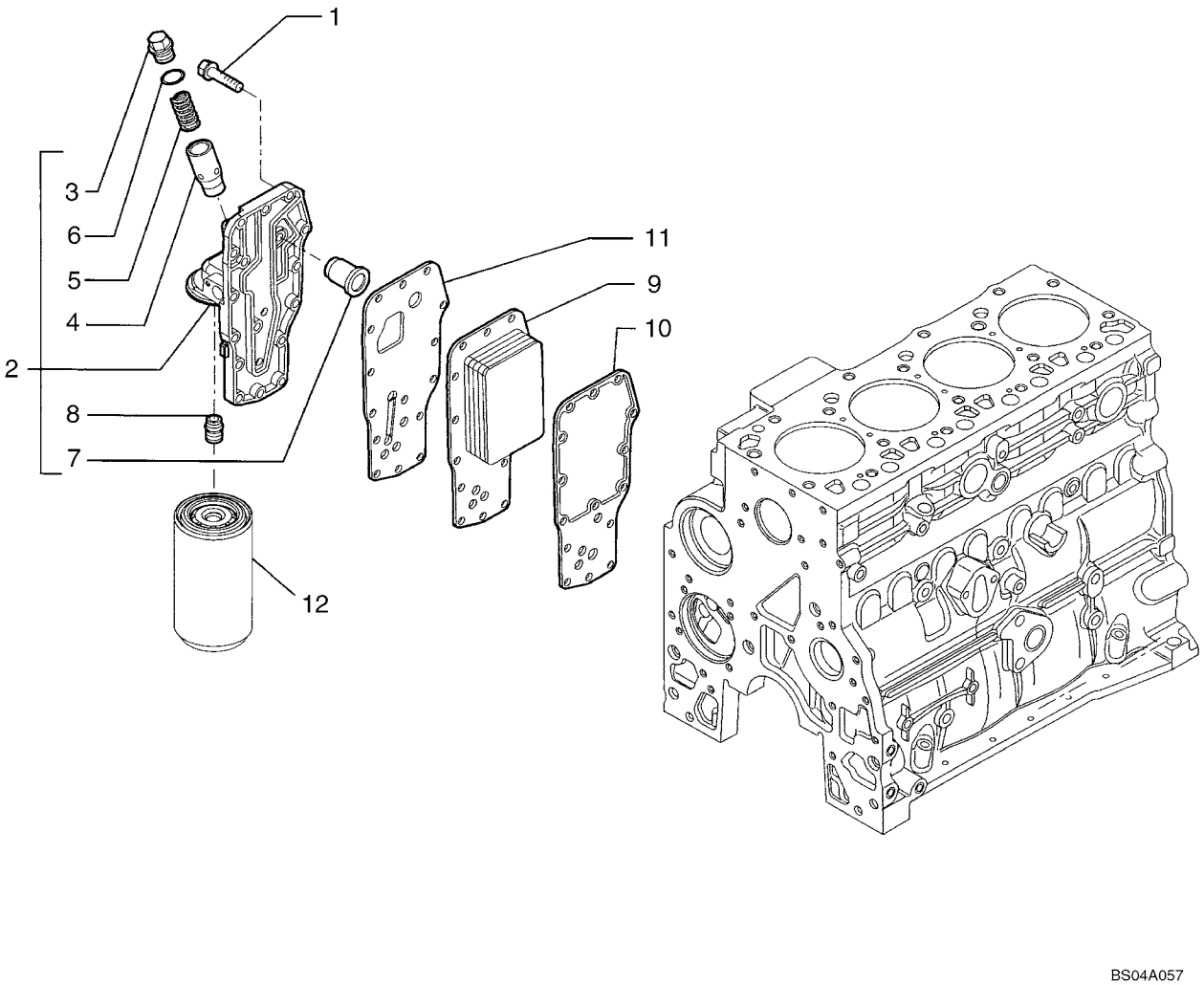

http://www.minnparbackhoeparts.com/

FILTRO Y REFRIGERADOR DE ACEITE

REF	FN	PART NUMBER	YR/SN	QTY	DESCRIPTION
1		4899019		15	TORNILLO Flange, M8 x 35
		4892774		1	CAMBIADOR DE CALOR - ASSY; Head, Incl. Ref 2 - 8
2		4899643		1	CABEZA DE FILTRO Incl. Ref 8
3		4895043		1	TAPÓN
4		4896404		1	CAVIDAD Plunger, Pressure Regulator
5		4895045		1	MUELLE, VALVULA
6		4899035		1	JUNTA HERMETICA
7		4896410		1	VALVULA HIDRAULICA Pressure Relief
8		4893391		1	RACOR
9		4896406		1	RADIADOR Cooler Core
10		2830559		1	JUNTA HERMETICA Core
11		4896409		1	JUNTA HERMETICA Head
12		REF		1	MANUAL FILTER, ENGINE OIL; See Figure 02-32

http://www.minnparbackhoeparts.com/

BOMBA DE AGUA

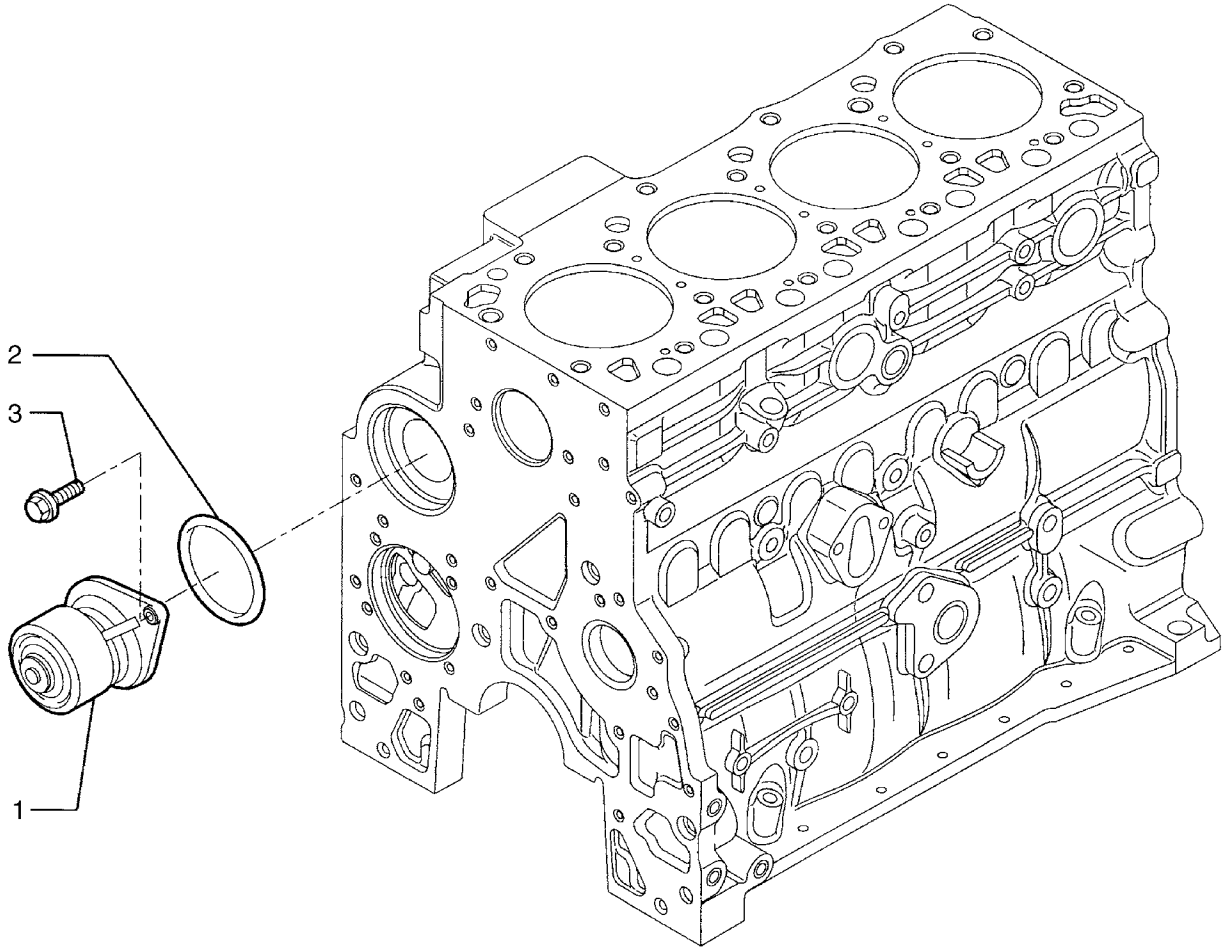

BS04A058

http://www.minnparbackhoeparts.com/

BOMBA DE AGUA

REF	FN	PART NUMBER	YR/SN	QTY	DESCRIPTION
1		87803065		1	BOMBA DE AGUA
2		2852047		1	JUNTA HERMETICA
3		4899031		2	TORNILLO Flange, M8 x 25

http://www.minnparbackhoeparts.com/

SISTEMA DE REFRIGERACIÓN - MOTOR

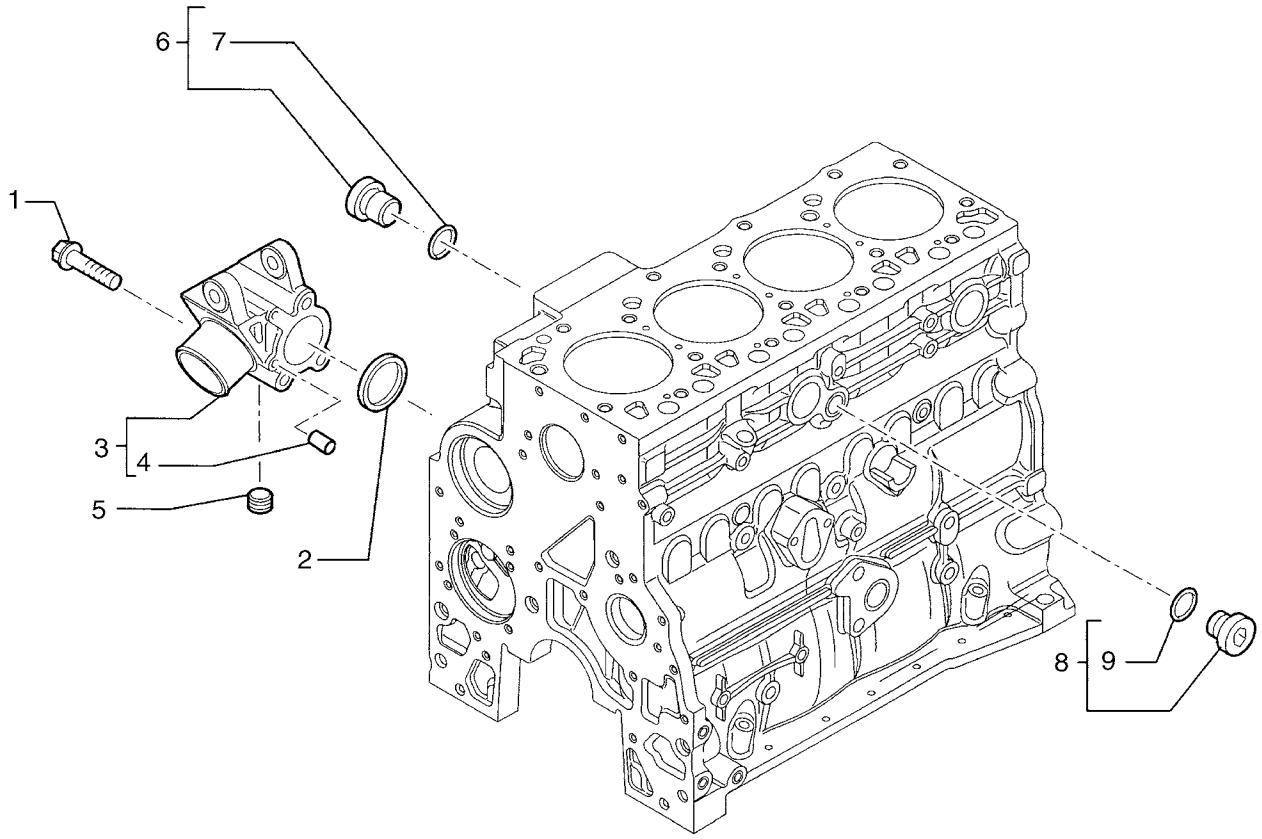

http://www.minnparbackhoeparts.com/

SISTEMA DE REFRIGERACIÓN - MOTOR

REF	FN	PART NUMBER	YR/SN	QTY	DESCRIPTION
1		4899109		3	TORNILLO Flange, M10 x 80
2		4895121		1	JUNTA HERMETICA
3		2852145		1	SOPORTE - ASSY; Water Inlet; Incl. Ref 4
4		2830894		2	PITON Dowel
5		2852511		1	TAPÓN
6		4895392		1	TAPÓN - ASSY M18; Torque Converter Oil; Incl. Ref 7
7		4895393		1	JUNTA HERMETICA
8		4895623		1	TAPÓN - ASSY; Compressor Plumbing; Incl. Ref 9
9		4895625		1	JUNTA HERMETICA

http://www.minnparbackhoeparts.com/

TERMOSTATO - REFRIGERACION DEL MOTOR

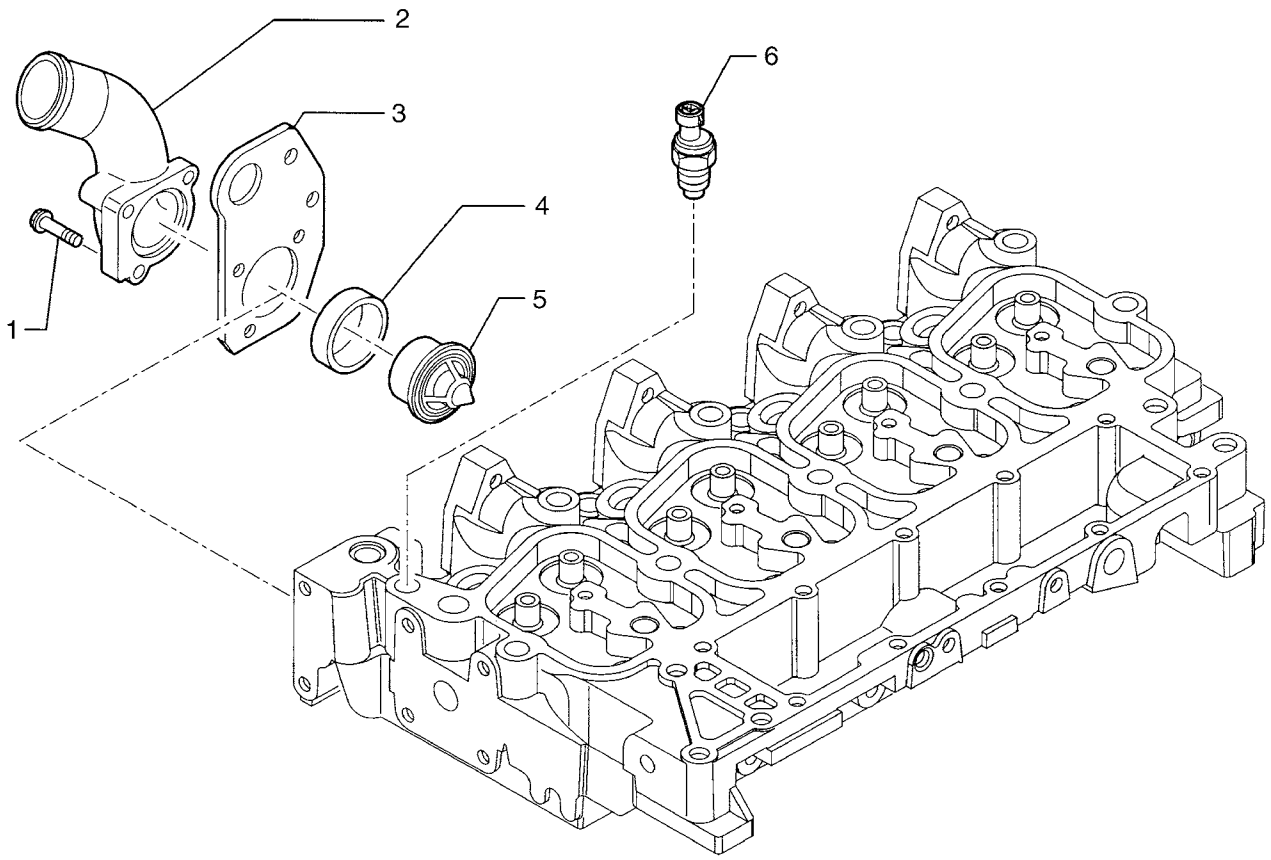

http://www.minnparbackhoeparts.com/

TERMOSTATO - REFRIGERACION DEL MOTOR

REF	FN	PART NUMBER	YR/SN	QTY	DESCRIPTION
1		2852151		1	TORNILLO Flange; M8 x 35
1		2852155		2	TORNILLO Flange; M8 x 80
2		2852153		1	CODO Thermostat Housing
3		2852152		1	ANILLO DE ELEVACIÓN
4		2852154		1	JUNTA HERMETICA
5		2830734		1	TERMOSTATO
6		2852157		1	TERMOSONDA Water; Grid Heater

http://www.minnparbackhoeparts.com/

BOMBA DE AGUA - MANDO

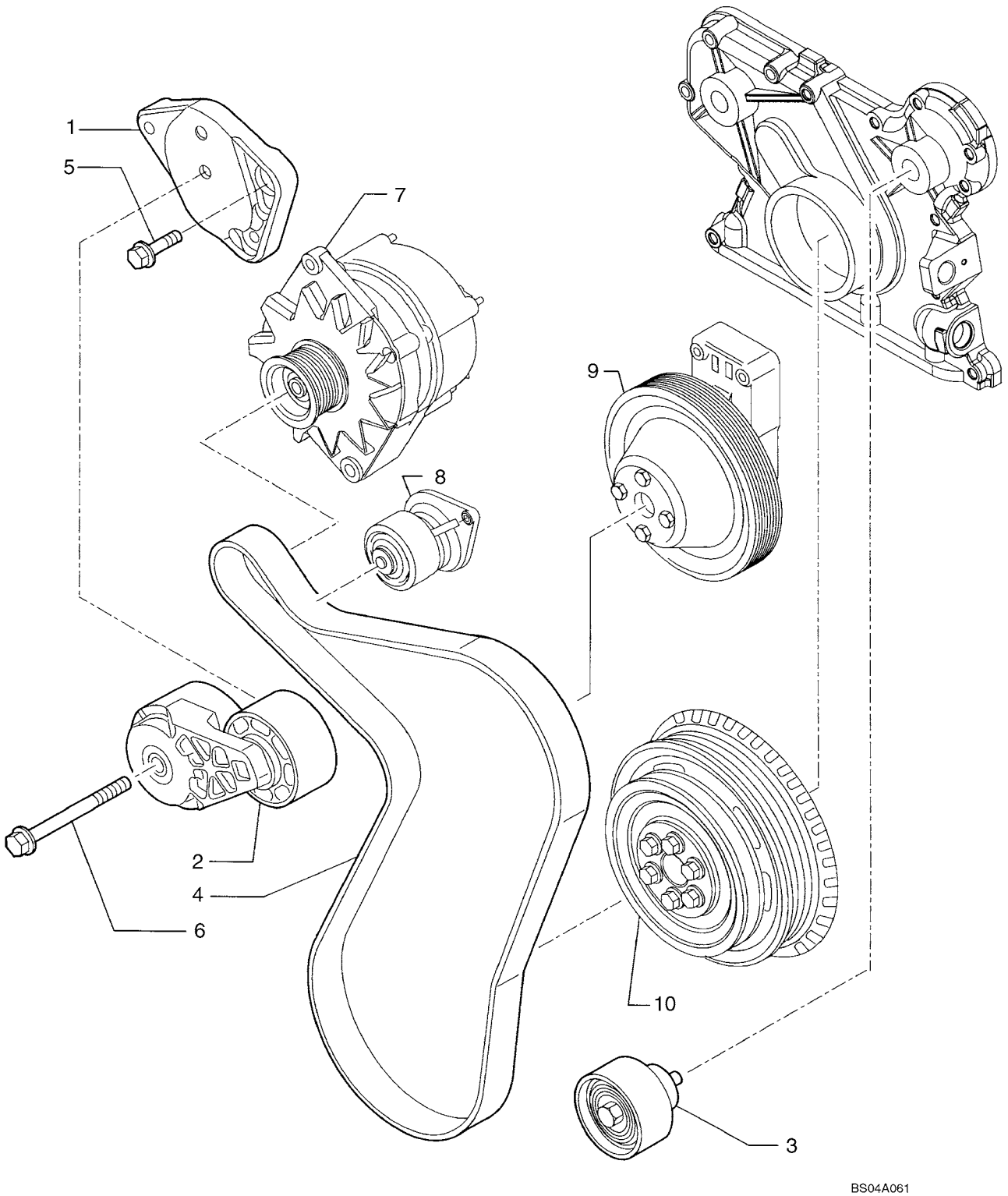

http://www.minnparbackhoeparts.com/

BOMBA DE AGUA - MANDO

REF	FN	PART NUMBER	YR/SN	QTY	DESCRIPTION
1		2852163		1	PIEZA DE SOPORTE Support
2		2852161		1	TENSOR DE CORREA
3		2852162		1	POLEA Pulley
4		REF		1	MANUAL BELT; See Figure 02-01
5		4899031		2	TORNILLO Flange, M8 x 25
6		4899109		1	TORNILLO Flange, M10 x 80
7		REF		1	MANUAL ALTERNATOR; See Figure 04-02
8		REF		1	MANUAL WATER PUMP; See Figure 02-35
9		REF		1	MANUAL FAN DRIVE; See Figure 02-39
10		REF		1	MANUAL CRANKSHAFT PULLEY; See Figure 02-25

http://www.minnparbackhoeparts.com/

POLEA DEL VENTILADOR

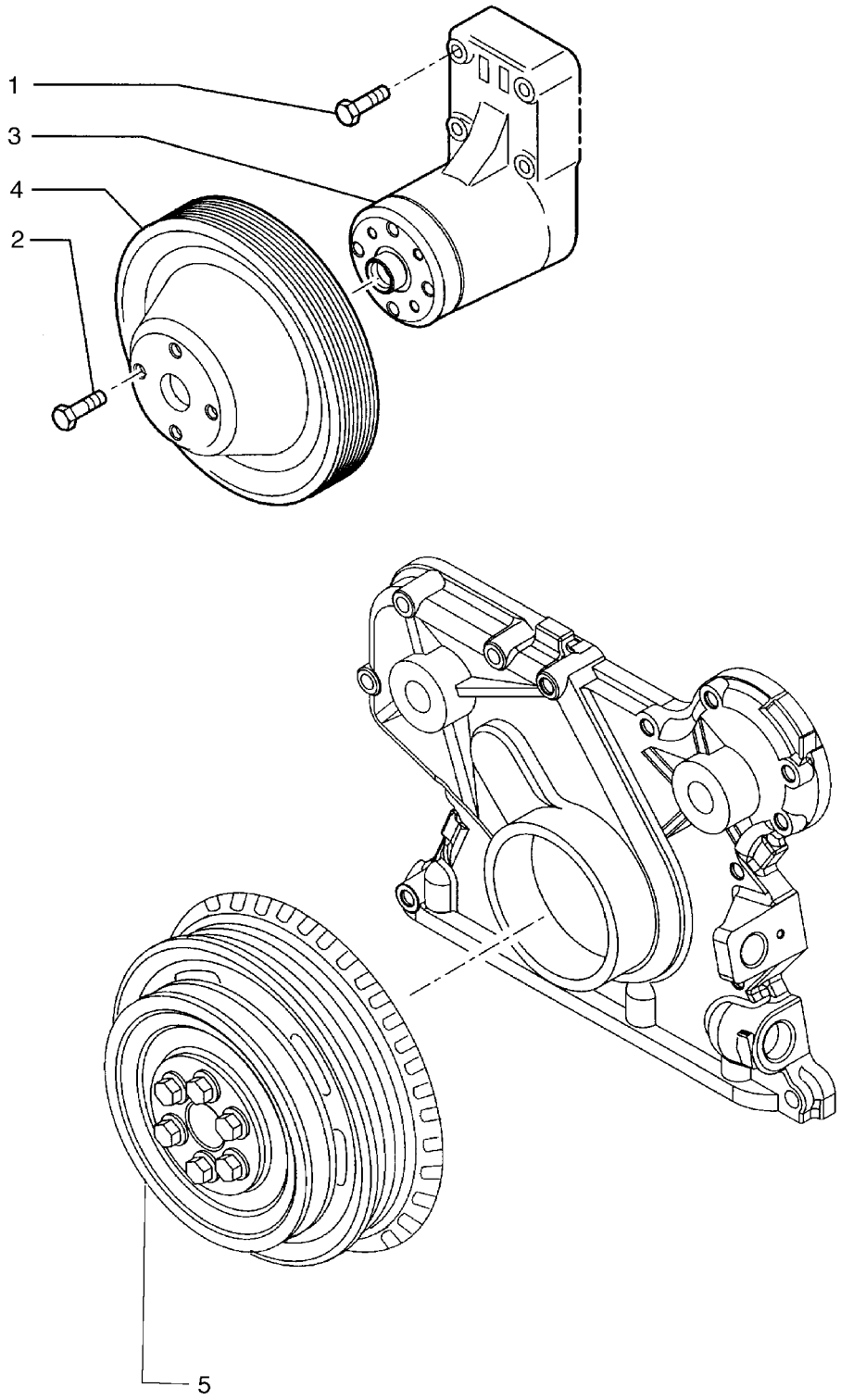

http://www.minnparbackhoeparts.com/

POLEA DEL VENTILADOR

REF	FN	PART NUMBER	YR/SN	QTY	DESCRIPTION
1		4899053		4	TORNILLO Flange, M8 x 45
2		4895291		4	TORNILLO Flange, M10 x 20
3		2852170		1	SOPORTE Includes (1) 2852171 Split Ring, (1) 2852172 Screw, (1) 4892732 Bearing, (1) 4892426 Hub, (1) 4890732 Hub Retainer
		2852171		1	RETENEDOR
		2852172		1	TORNILLO
		4892732		1	RODAMIENTO DE BOLAS
		4892426		1	CUBO
		4890732		1	SEPARADOR Hub Retainer
4		4895301		1	POLEA
5		REF		1	MANUAL CRANKSHAFT PULLEY; See Figure 02-25

http://www.minnparbackhoeparts.com/

TOMA DE FUERZA

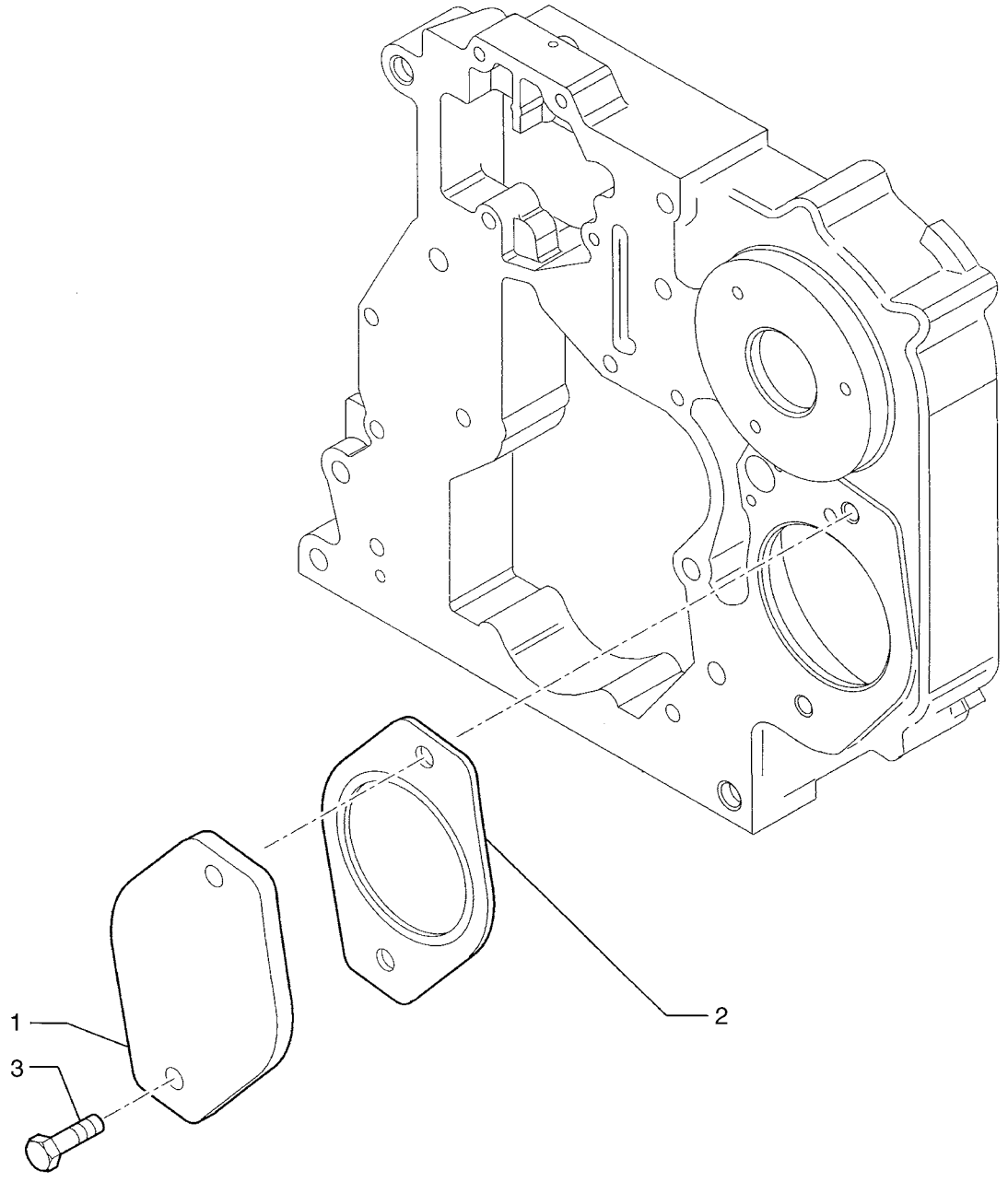

http://www.minnparbackhoeparts.com/

TOMA DE FUERZA

REF	FN	PART NUMBER	YR/SN	QTY	DESCRIPTION
1		2852175		1	TAPADERA If Used
2		4896897		1	JUNTA HERMETICA
3		4899037		2	TORNILLO Flange; M12 x 25

http://www.minnparbackhoeparts.com/

MOTOR - GANCHO DE ELEVACION

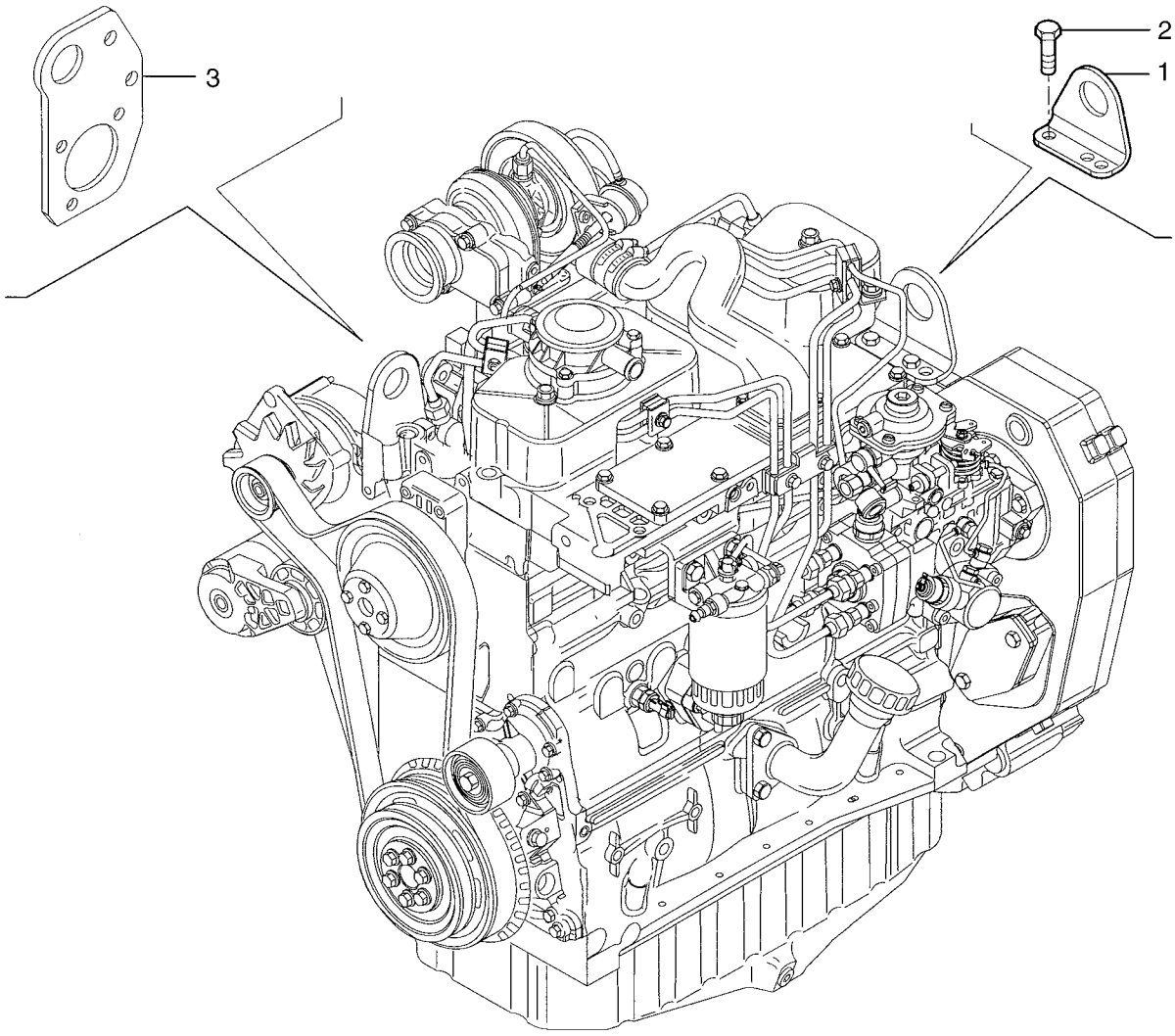

http://www.minnparbackhoeparts.com/

MOTOR - GANCHO DE ELEVACION

REF	FN	PART NUMBER	YR/SN	QTY	DESCRIPTION
1		2852183		1	ANILLO DE ELEVACIÓN
2		4899073		2	TORNILLO Flange, M12 x 30
3		REF		1	MANUAL LIFT RING; See Figure 02-37

http://www.minnparbackhoeparts.com/

NOTES

http://www.minnparbackhoeparts.com/

SECTION INDEX

03-01	CONDUCTOS DE COMBUSTIBLE, DEPÓSITO - FILTRO, COMBUSTIBLE EN LINEA
03-02	CONTROLES - ACELERADOR, MANUAL
03-03	CONTROLES - ACELERADOR, PIE
03-04	BOMBA DE INYECCION
03-05	SISTEMA DE INYECCION DE COMBUSTIBLE
03-06	SISTEMA DE INYECCION DE COMBUSTIBLE
03-07	SISTEMA DE INYECCION DE COMBUSTIBLE
03-08	FILTRO COMBUSTIBLE
03-09	BOMBA DE ALIMENTACION
03-10	SISTEMA DE INYECCION DE COMBUSTIBLE
03-11	SISTEMA DE INYECCION DE COMBUSTIBLE

http://www.minnparbackhoeparts.com/

03-01		p1	06/05

CONDUCTOS DE COMBUSTIBLE, DEPÓSITO - FILTRO, COMBUSTIBLE EN LINEA

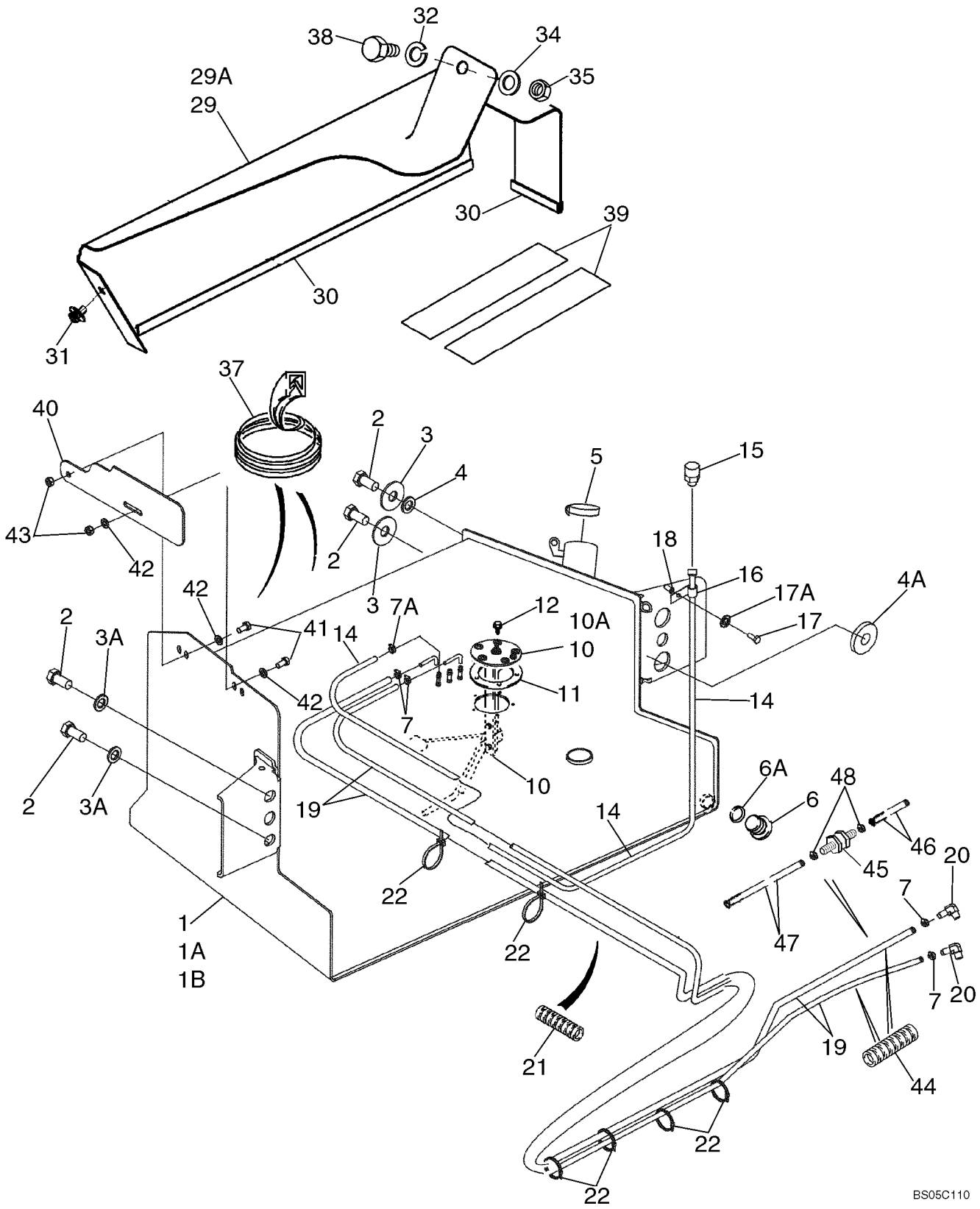

http://www.minnparbackhoeparts.com/

CONDUCTOS DE COMBUSTIBLE, DEPÓSITO - FILTRO, COMBUSTIBLE EN LINEA

REF	FN	PART NUMBER	YR/SN	QTY	DESCRIPTION
1		87429310		1	TANQUE COMBUSTIBLE 580SM Models, 31 gal; Incl. Ref 6; With Welded Fuel Sender Tubes; Includes Left Hand Steps, Mounts to Left Hand Side of Chassis
1A		87429314		1	TANQUE COMBUSTIBLE 580SM Models, 40 gal; Incl. Ref 6; Optional; With Welded Fuel Sender Tubes; Includes Left Hand Steps, Mounts to Left Hand Side of Chassis; If Used
1B		87429318		1	TANQUE COMBUSTIBLE 580SM+ Models, 42 gal; Incl. Ref 6; With Welded Fuel Sender Tubes; Includes Left Hand Steps, Mounts to Left Hand Side of Chassis
2		443375A1		4	TORNILLO M20 x 60; With Loctite
3		302358A1		2	ARANDELA
3A		896-11020		2	ARANDELA 22 x 37 x 4 mm
4		185926A1		1	ESPACIADOR Upper Left Hand Side of Tank
4A		409472A1		1	ESPACIADOR Lower Left Hand Side of Tank
5		130049A1		1	TAPA DE DEPOSITO Cap; Non-Vented
6		218-5211		1	TAPÓN Hex Socket, 7/8 Or, Drain, Incl. Ref 6A; Included With Ref 1, 1A, 1B
6A		237-6010		1	JUNTA HERMETICA 3/4 ID x 3/32
7		214-1706		4	COLLAR
7A		214-1704		1	COLLAR
10		86989676		1	CONTACTOR Fuel Level, 31 Gallon Tank, Without Tubes, Includes Seal and Grounding Hardware, If Used
10A		87408480		1	CONTACTOR Fuel Level, 40 or 42 Gallon Tank, Without Tubes, Includes Seal and Grounding Hardware, If Used
11		188311A2		1	JUNTA HERMETICA No Longer Used
12		D75465		5	TORNILLO No. 10 NF x 5/8
14		234892A1		1	MANGUITO 1/4 ID x 1100 mm (43-5/16 in), Vent
15		130047A1		1	RESPIRADERO (CONJUNT Vent
16		515-23127		1	COLLAR 1/2 ID
17		614-8030		1	TORNILLO M8 x 30
17A		892-11008		1	ARANDELA Lock, M8
18		87417383		1	ROSCA POSTIZA M8 Nut

http://www.minnparbackhoeparts.com/

03-01		p2	06/05

CONDUCTOS DE COMBUSTIBLE, DEPÓSITO - FILTRO, COMBUSTIBLE EN LINEA

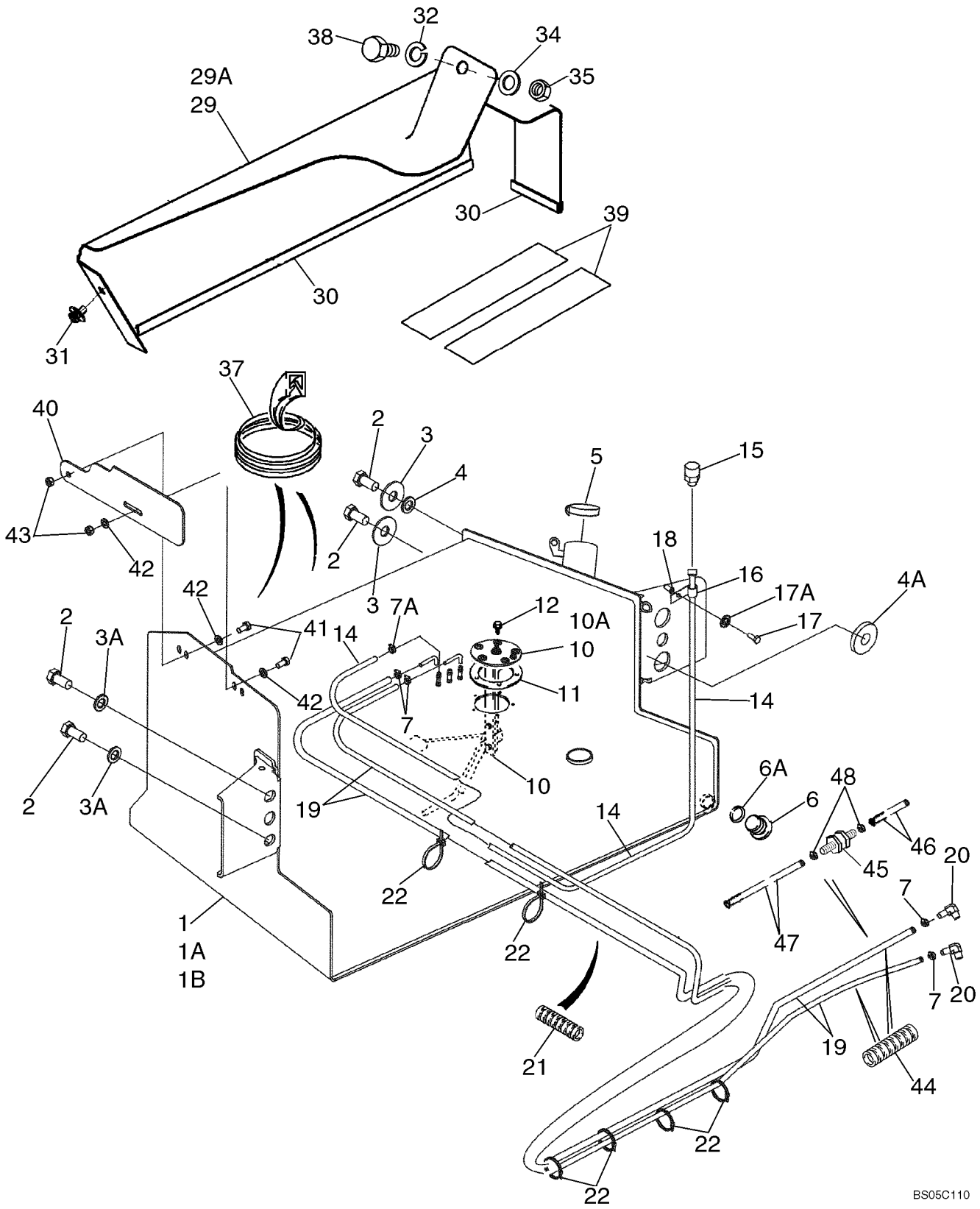

http://www.minnparbackhoeparts.com/

CONDUCTOS DE COMBUSTIBLE, DEPÓSITO - FILTRO, COMBUSTIBLE EN LINEA

REF	FN	PART NUMBER	YR/SN	QTY	DESCRIPTION
19		87444942		1-2	MANGA 3/8 ID x 5/8 OD x 1650 mm (65 in); To Fuel Lift Pump and Injector Pump; Two Used On Models Without In-Line Fuel Check Valve
20		87414560		2	RACOR ELBOW, 90 deg, Includes O-Ring
21		87434880		1	PROTECTOR DE TUBO 450 mm (17-3/4 in)
22		L18337		X	BANDA 15 in
29		189602A3		1	TAPA Mounted Above Fuel Reservoir; Models With Two Spool Loader Valve
29A		188009A3		1	TAPA Mounted Above Fuel Reservoir, Models With Three Spool Loader Valve
30		191046A1		1	CINTA DE ADEREZO Trim, 650 mm (25-5/8 in), Cut From A165860; Apply 65 mm (2-9/16 in) of Trim to Front Lower Edge and 575 mm (22-11/16 in) of Trim to Outside Lower Edge of Cover
31		307577A1		1	TORNILLO Special, M8 x 20
32		892-11010		1	ARANDELA DE FRENO M10
34		895-11010		1	ARANDELA 11 x 21 x 2 mm
35		829-1410		1	TUERCA M10; 10.9
37		D40442		1	MOLDURA Trim, 305 mm (12 in), Cut From F42827; If Used
38		814-10045		1	TORNILLO M10 x 45; Models With Three Spool Loader Valve
38		614-10020		1	TORNILLO M10 x 20; Models With Two Spool Loader Valve
39		D80270		2	CINTA 635 mm (25 in), 31 or 42 Gallon Tank
39		307348A1		2	CINTA 700 mm (27-9/16 in), 40 Gallon Tank
40		397548A4		1	PLACA Mud
41		614-10020		2	TORNILLO M10 x 20
42		895-11010		3	ARANDELA 11 x 21 x 2 mm
43		829-1410		2	TUERCA M10; 10.9
44		191704A1		2	TUBO AISLANTE Hose Sleeve
45		87454053		1	VALVULA ANTIRRETORNO Fuel Line; Install With Flow Arrow Pointed Toward Tank; If Used
46		87454055		1	MANGA 3/8 ID x 5/8 OD x 5-29/32; Fuel Return to Check Valve; If Used
47		87454054		1	MANGA 3/8 ID x 5/8 OD x 59-1/16; Check Valve to Tank; If Used

http://www.minnparbackhoeparts.com/

CONDUCTOS DE COMBUSTIBLE, DEPÓSITO - FILTRO, COMBUSTIBLE EN LINEA

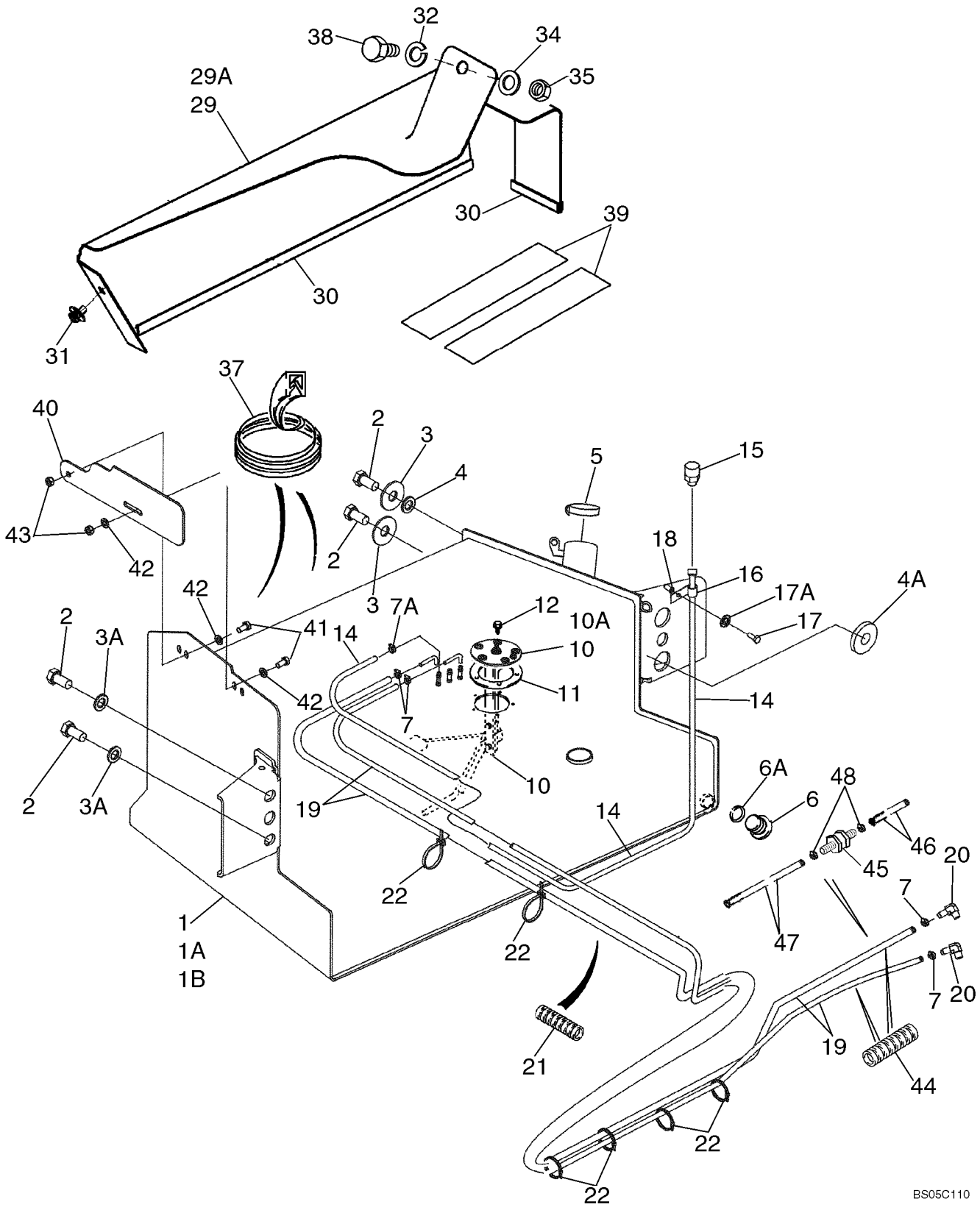

http://www.minnparbackhoeparts.com/

CONDUCTOS DE COMBUSTIBLE, DEPÓSITO - FILTRO, COMBUSTIBLE EN LINEA

REF	FN	PART NUMBER	YR/SN	QTY	DESCRIPTION
48		214-1706		2	COLLAR If Used

http://www.minnparbackhoeparts.com/

CONTROLES - ACELERADOR, MANUAL

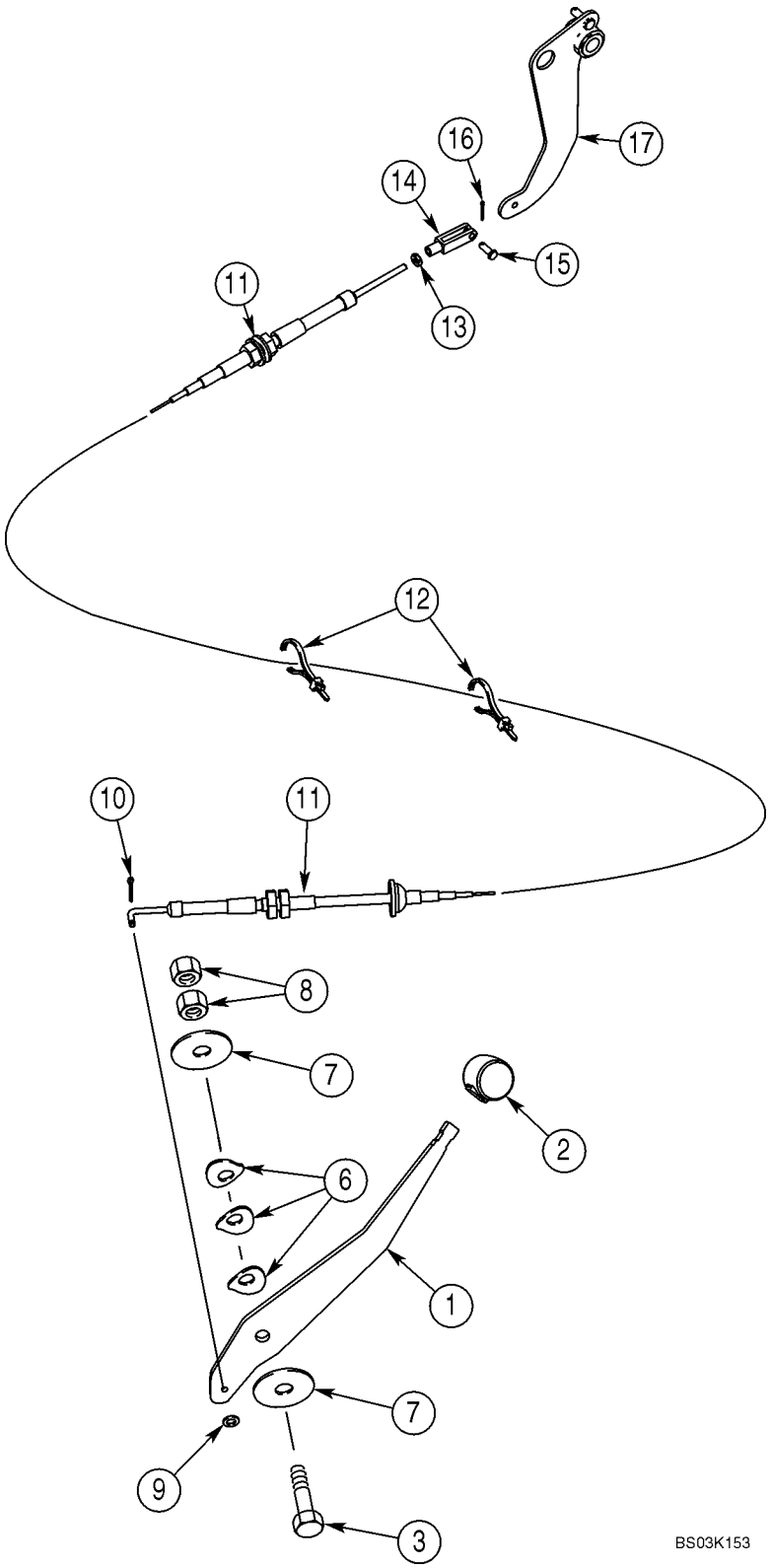

http://www.minnparbackhoeparts.com/

CONTROLES - ACELERADOR, MANUAL

REF	FN	PART NUMBER	YR/SN	QTY	DESCRIPTION
1		395189A2		1	PALANCA
2		A177435		1	BOLA Lever
3		514-847		1	TORNILLO M12 x 50
6		D148962		3	ARANDELA
7		496-81018		2	ARANDELA 33/64 x 2 x 1/8
8		825-11412		2	TUERCA M12
9		495-31022		1	ARANDELA 7/32 x 1/2 x 3/64
10		432-48		1	PASADOR ABIERTO 1/16" x 1/2"
11		87330322		1	CABLE Replaces 350014A3
12		L18337		4	BANDA 15 in, Nylon, Retaining
13		225-14210		1	TUERCA No. 10 NF
14		213-123		1	HORQUILLA PEQUENA No. 10 NF
15		427-3058		1	PASADOR DE HORQUILLA 3/16 x 9/16
16		432-48		1	PASADOR ABIERTO 1/16" x 1/2"
17		378957A3		1	PALANCA (CONJUNTO) Models Without Powershift Transmission
17A		380485A3		1	PALANCA (CONJUNTO) Models With Powershift Transmission, Not Illustrated

http://www.minnparbackhoeparts.com/

03-03		p1	05/05

CONTROLES - ACELERADOR, PIE

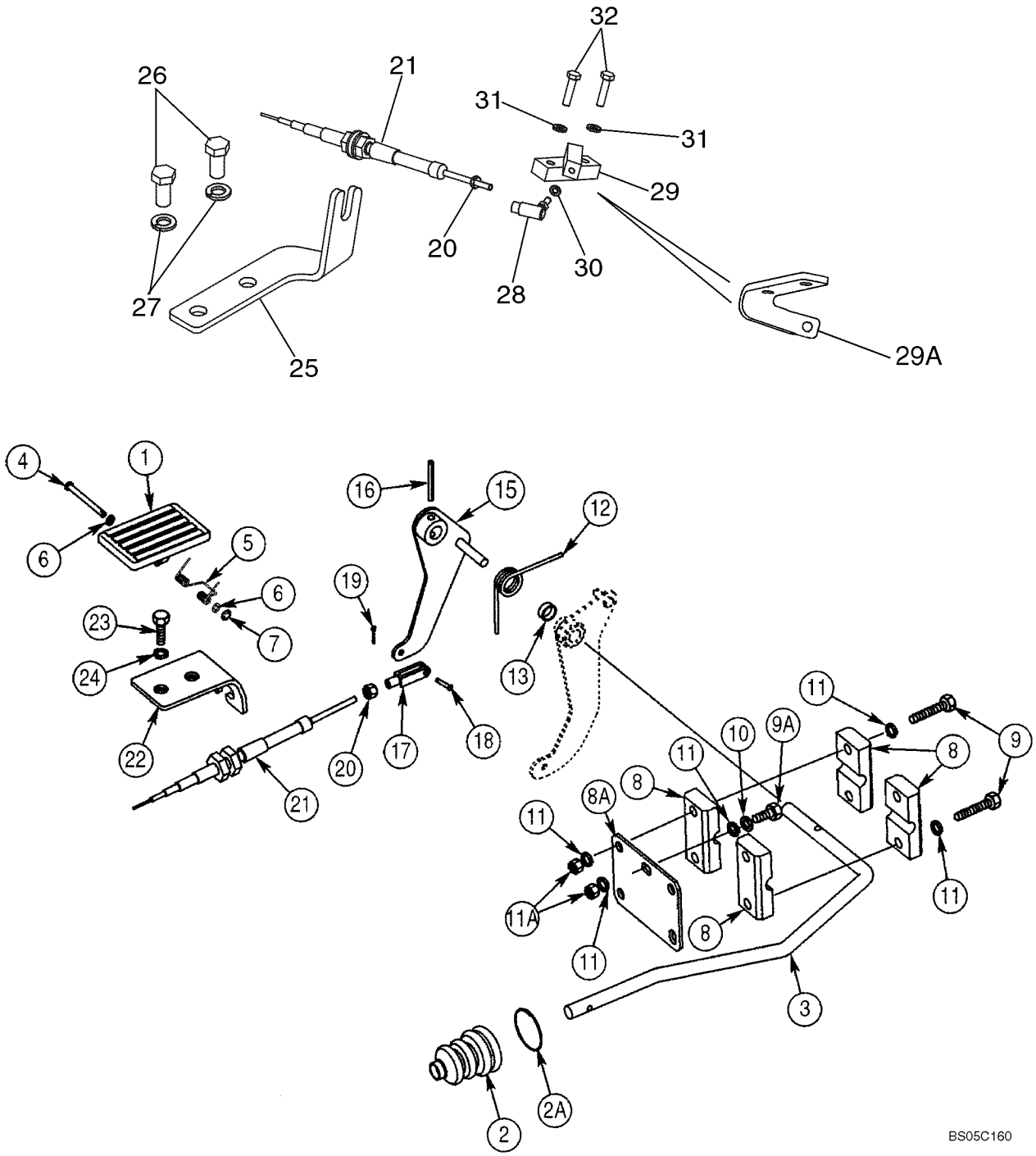

http://www.minnparbackhoeparts.com/

CONTROLES - ACELERADOR, PIE

REF	FN	PART NUMBER	YR/SN	QTY	DESCRIPTION
1		282242A1		1	PEDAL Accelerator, Plastic
2		132931A1		1	FUELLE Boot, Accelerator Pedal Rod
2A		189109A1		1	RESORTE Retainer
3		378960A1		1	VARILLA
4		322860A1		1	BULON/PIN, LARGO
5		256776A1		1	RESORTE
6		895-11005		2	ARANDELA 5,5 x 10 x 1 mm
7		103-1518		1	ANILLO DE CIERRE No. 18
8		D124857		4	COLLAR Block
8A		378955A1		1	PLACA
9		604-8050		4	TORNILLO Locking, M8 x 50
9A		614-8020		1	TORNILLO M8 x 20
10		892-11008		1	ARANDELA M8
11		895-11008		7	ARANDELA 9 x 17 x 1,6 mm
11A		829-1408		2	TUERCA M8; 10
12		380483A2		1	RESORTE
13		378958A1		1	CASQUILLO ESPACIADOR
15		378956A3		1	PALANCA (CONJUNTO) Models Without Powershift Transmission
15A		380484A3		1	PALANCA (CONJUNTO) Models With Powershift Transmission, Not Illustrated
16		838-3640		1	PERNO 6 x 40 mm
17		213-123		1	HORQUILLA PEQUENA No. 10 NF
18		427-3058		1	PASADOR DE HORQUILLA 3/16 x 9/16
19		432-48		1	PASADOR ABIERTO 1/16" x 1/2"
20		225-14210		2-3	TUERCA No. 10 NF
21		87330325		1	CABLE To Injection Pump; Replaces 380021A1
22		397065A2		1	PIEZA DE SOPORTE Models Without Powershift Transmission
22A		397158A2		1	PIEZA DE SOPORTE Models With Powershift Transmission, Not Illustrated
23		614-10035		2	TORNILLO M10 x 35
24		892-11010		2	ARANDELA DE FRENO M10
25		87432547		1	PIEZA DE SOPORTE With Holes; If Used
25		87446095		1	PIEZA DE SOPORTE With Slots; Not Illustrated; If Used
26		627-12025		2	TORNILLO M12 x 25

http://www.minnparbackhoeparts.com/

CONTROLES - ACELERADOR, PIE

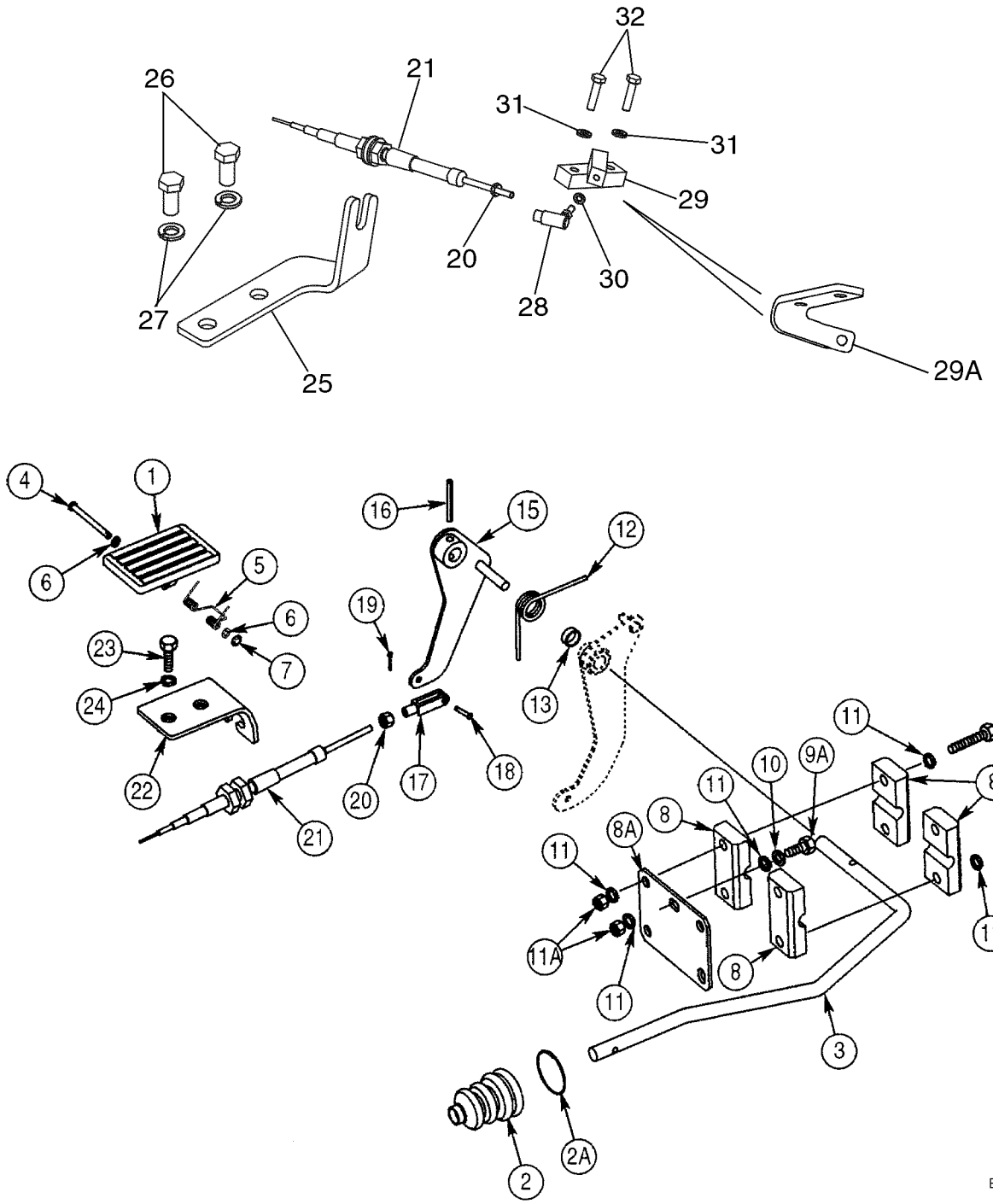

http://www.minnparbackhoeparts.com/

CONTROLES - ACELERADOR, PIE

REF	FN	PART NUMBER	YR/SN	QTY	DESCRIPTION
27		896-15012		2	ARANDELA 13,5 x 28 x 4 mm
28		87421807		1	UNION (CONJUNTO)
29		87421471		1	BLOQUE (CONJUNTO) No Longer Available, Order 87452823 Bracket, Ref 29A
29A		87452823		1	BLOQUE (CONJUNTO) BRACKET, Throttle Cable
30		892-11005		1	ARANDELA DE FRENO M5
31		892-11006		2	ARANDELA DE FRENO M6
32		614-6025		2	TORNILLO M6 x 25; Used With 87421471 Block, Ref 29; If Used
32		614-6016		2	TORNILLO M6 x 15; Used With 87452823 Bracket, Ref 29A; If Used

http://www.minnparbackhoeparts.com/

BOMBA DE INYECCION

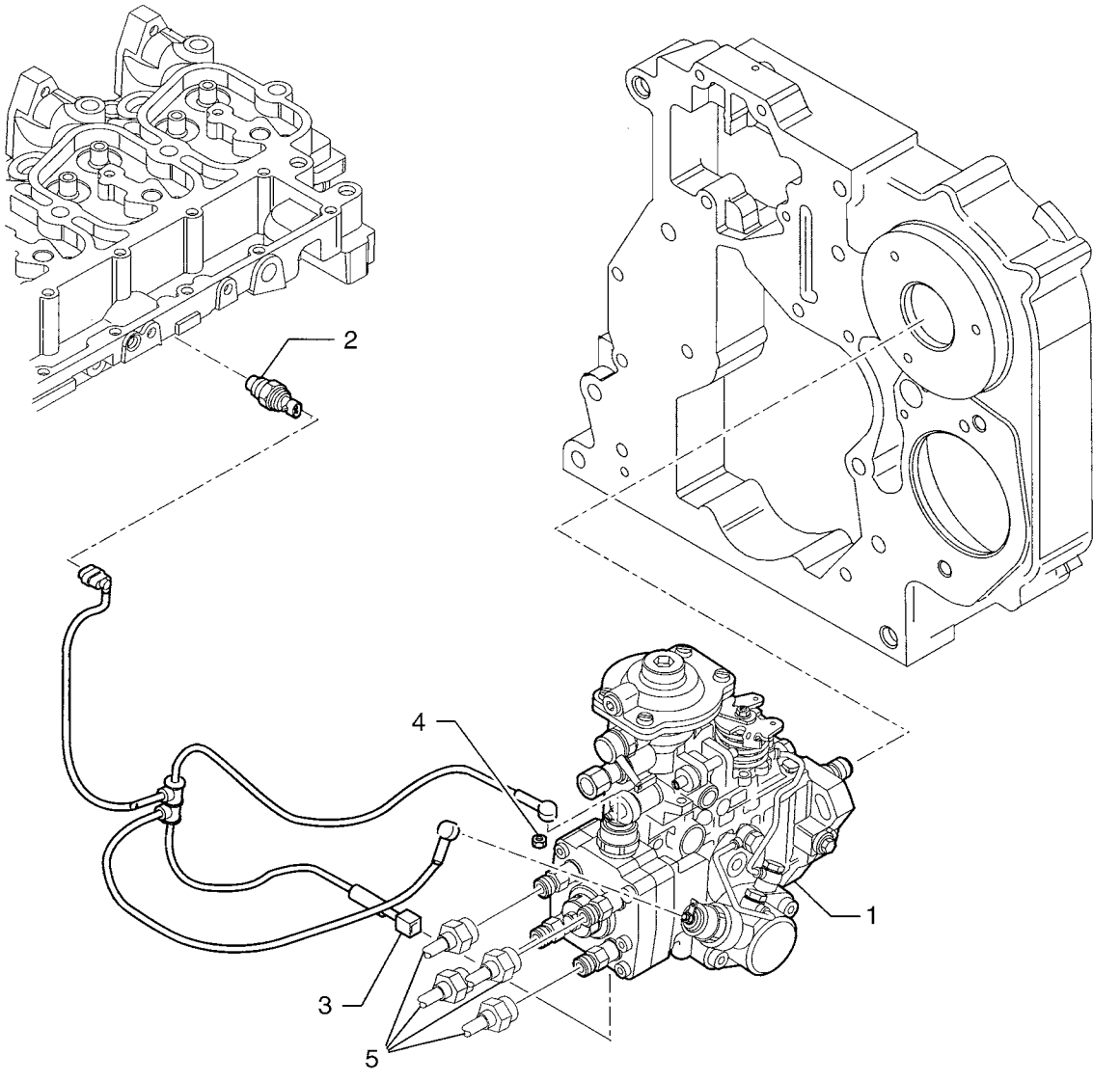

http://www.minnparbackhoeparts.com/

BOMBA DE INYECCION

REF	FN	PART NUMBER	YR/SN	QTY	DESCRIPTION
1		2852046		1	BOMBA DE ALIMENTACION - ASSY; Injection Pump; Includes 2852741 Fuel Shut-Off Solenoid
		2852741		1	SOLENOIDE Fuel Shut-Off
2		2852087		1	CONTACTOR Temperature
3		2852088		1	CONTACTO
4		2852089		2	TUERCA Lock, M5
5		REF		1	MANUAL TUBE; See Figure 03-07 for Tube Kit

http://www.minnparbackhoeparts.com/

SISTEMA DE INYECCION DE COMBUSTIBLE

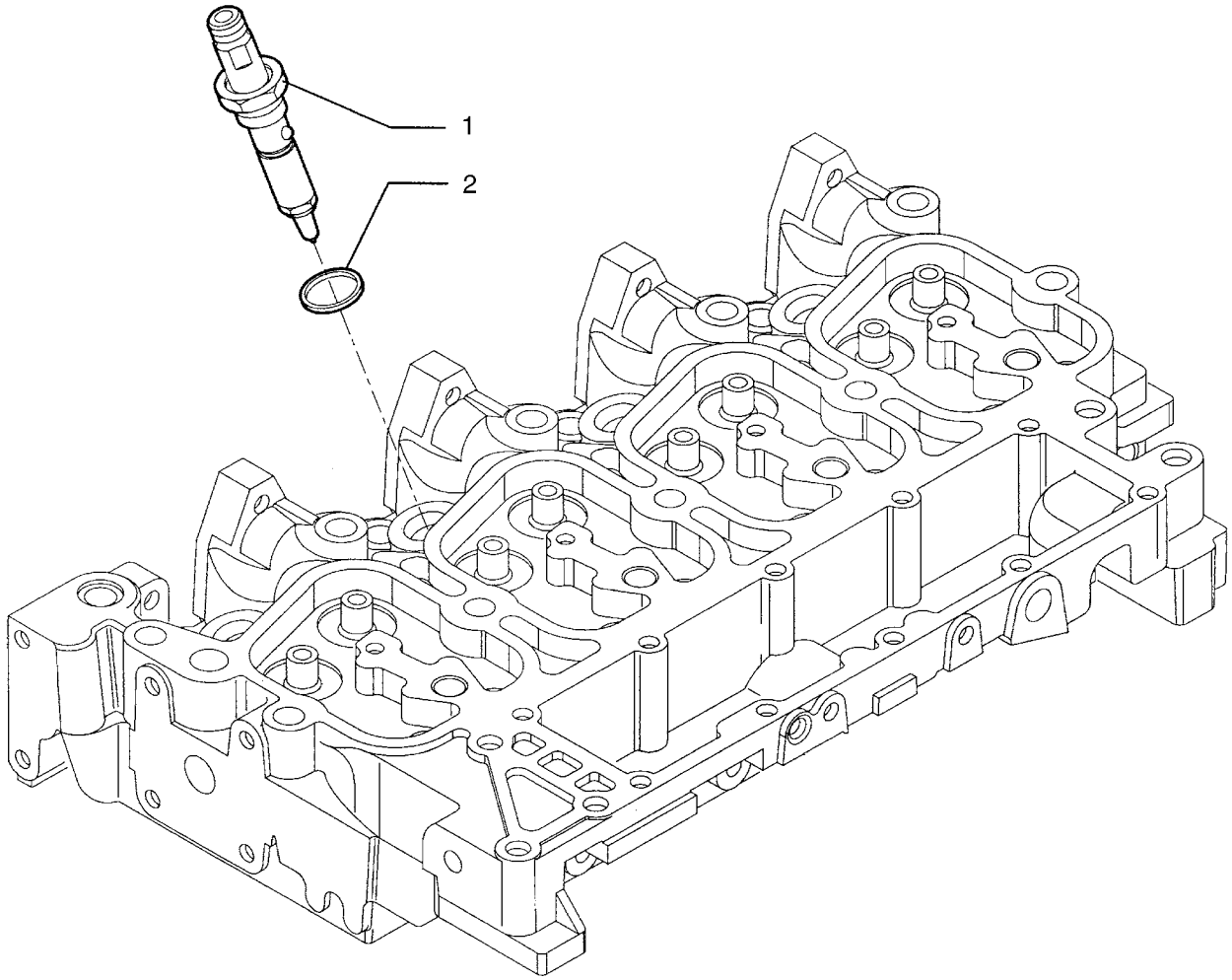

BS04A045

http://www.minnparbackhoeparts.com/

SISTEMA DE INYECCION DE COMBUSTIBLE

REF	FN	PART NUMBER	YR/SN	QTY	DESCRIPTION
1		2852869		4	INYECTOR Injector
2		4895297		4	JUNTA HERMETICA Seal

http://www.minnparbackhoeparts.com/

SISTEMA DE INYECCION DE COMBUSTIBLE

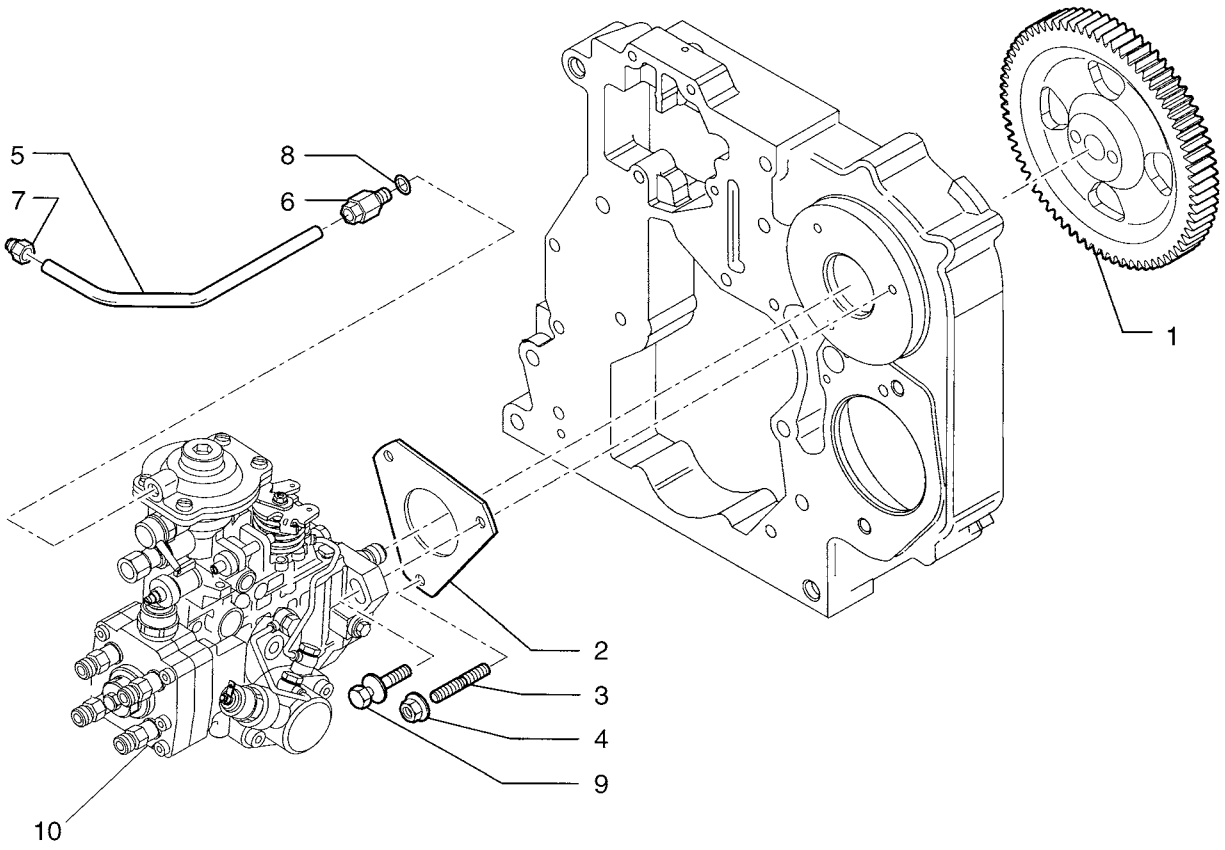

http://www.minnparbackhoeparts.com/

SISTEMA DE INYECCION DE COMBUSTIBLE

REF	FN	PART NUMBER	YR/SN	QTY	DESCRIPTION
1		4894774		1	PINON CONDUCIDO
2		2852885		1	JUNTA HERMETICA
3		2852294		2-3	PRISIONERO M8 x 30
4		4899003		2-3	TUERCA Flange, M8
5		2852059		1	TUBO RIGIDO
6		4893518		1	RACOR 8 x 1
7		4896770		1	RACOR 10 x 1
8		2852057		1	JUNTA HERMETICA
9		2852091		1	TORNILLO M8 x 31; No Longer Used, Order Ref 3 Stud
10		REF		1	MANUAL INJECTION PUMP; See Figure 03-04

http://www.minnparbackhoeparts.com/

SISTEMA DE INYECCION DE COMBUSTIBLE

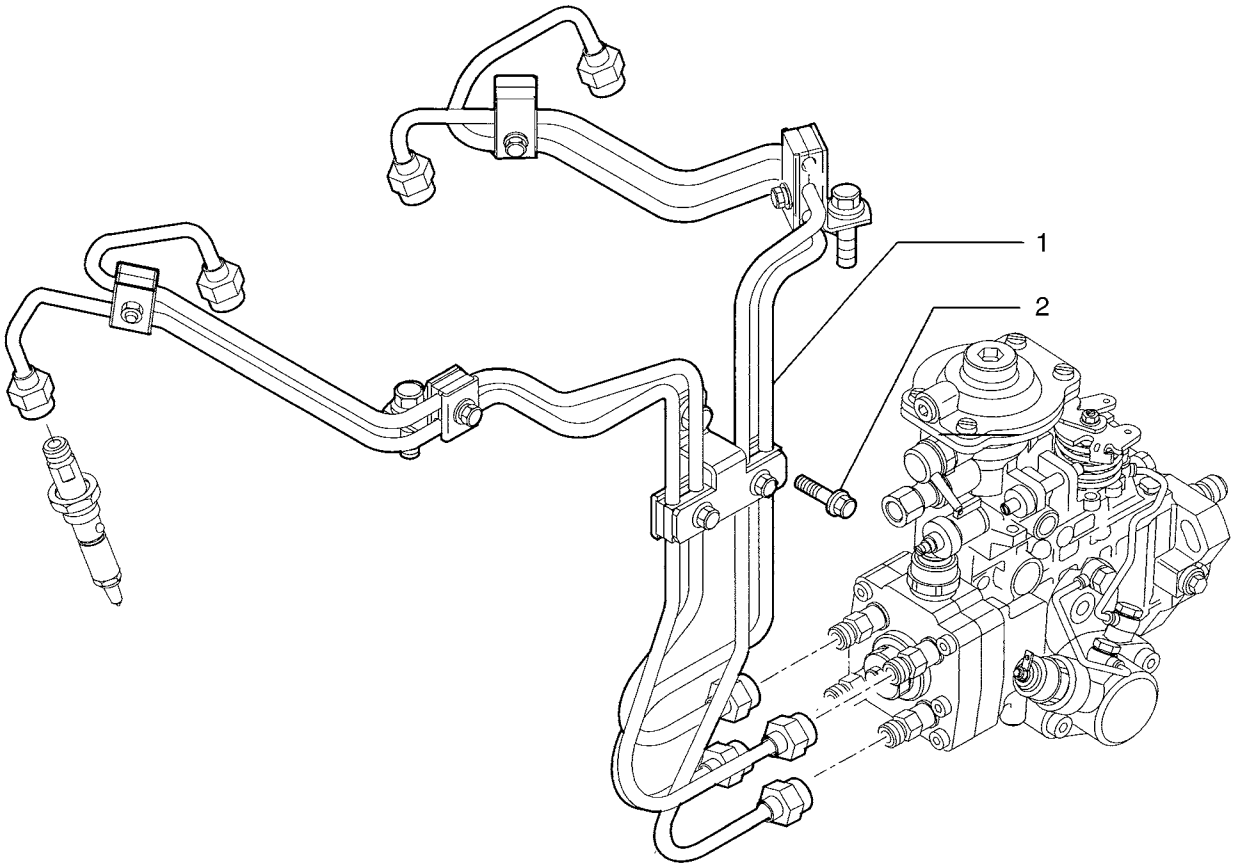

BS04A047

http://www.minnparbackhoeparts.com/

SISTEMA DE INYECCION DE COMBUSTIBLE

REF	FN	PART NUMBER	YR/SN	QTY	DESCRIPTION
1		2852075		1	EQUIPO - ASSY; Fuel Injection Tube
2		4899068		1	TORNILLO Flange, M8 x 16

http://www.minnparbackhoeparts.com/

FILTRO COMBUSTIBLE

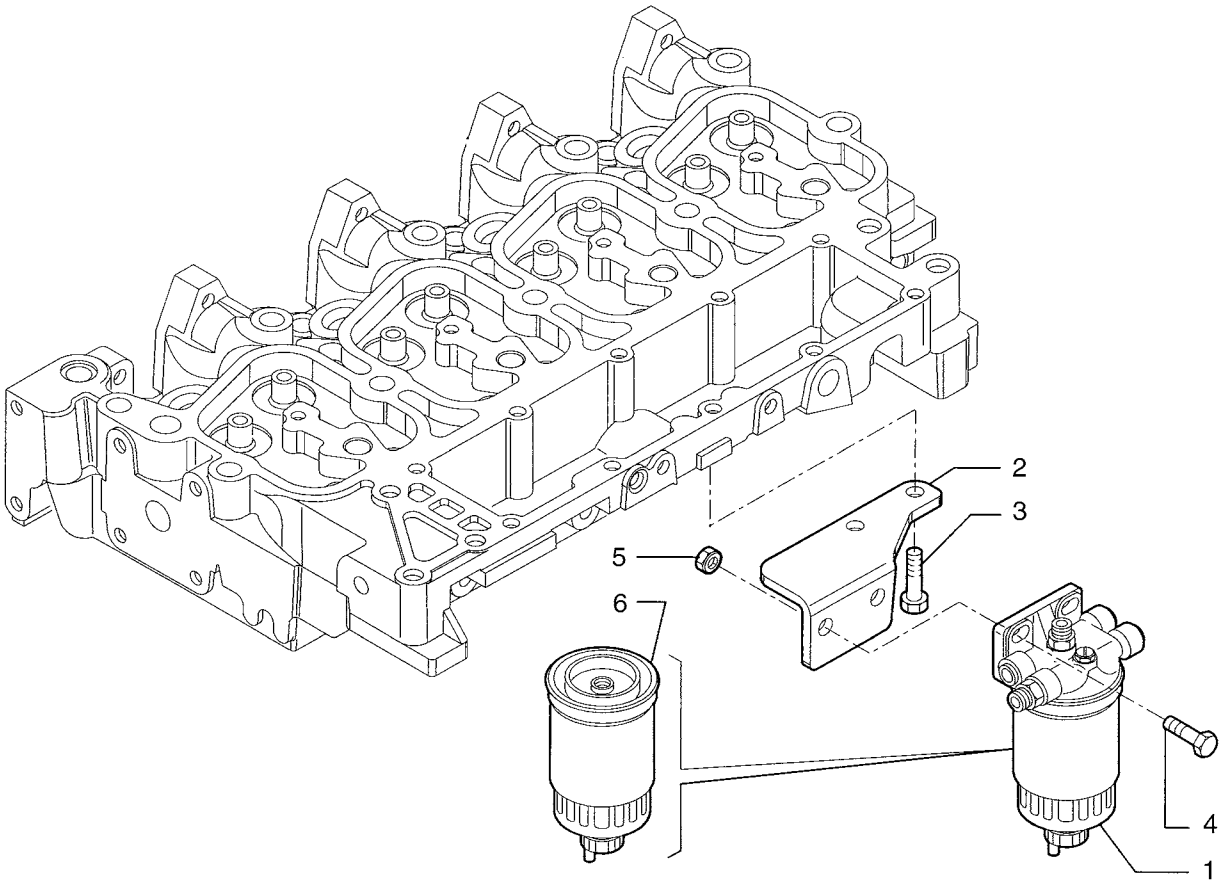

http://www.minnparbackhoeparts.com/

FILTRO COMBUSTIBLE

REF	FN	PART NUMBER	YR/SN	QTY	DESCRIPTION
1		2852098		1	FILTRO CONJ - ASSY
2		2852099		1	SOPORTE
3		4899068		2	TORNILLO Flange, M8 x 16
4		4899093		2	TORNILLO Flange, M10 x 30
5		4895166		2	TUERCA Flange, M10
6		87803194		1	FILTRO DE COMBUSTIBLE

http://www.minnparbackhoeparts.com/

BOMBA DE ALIMENTACION

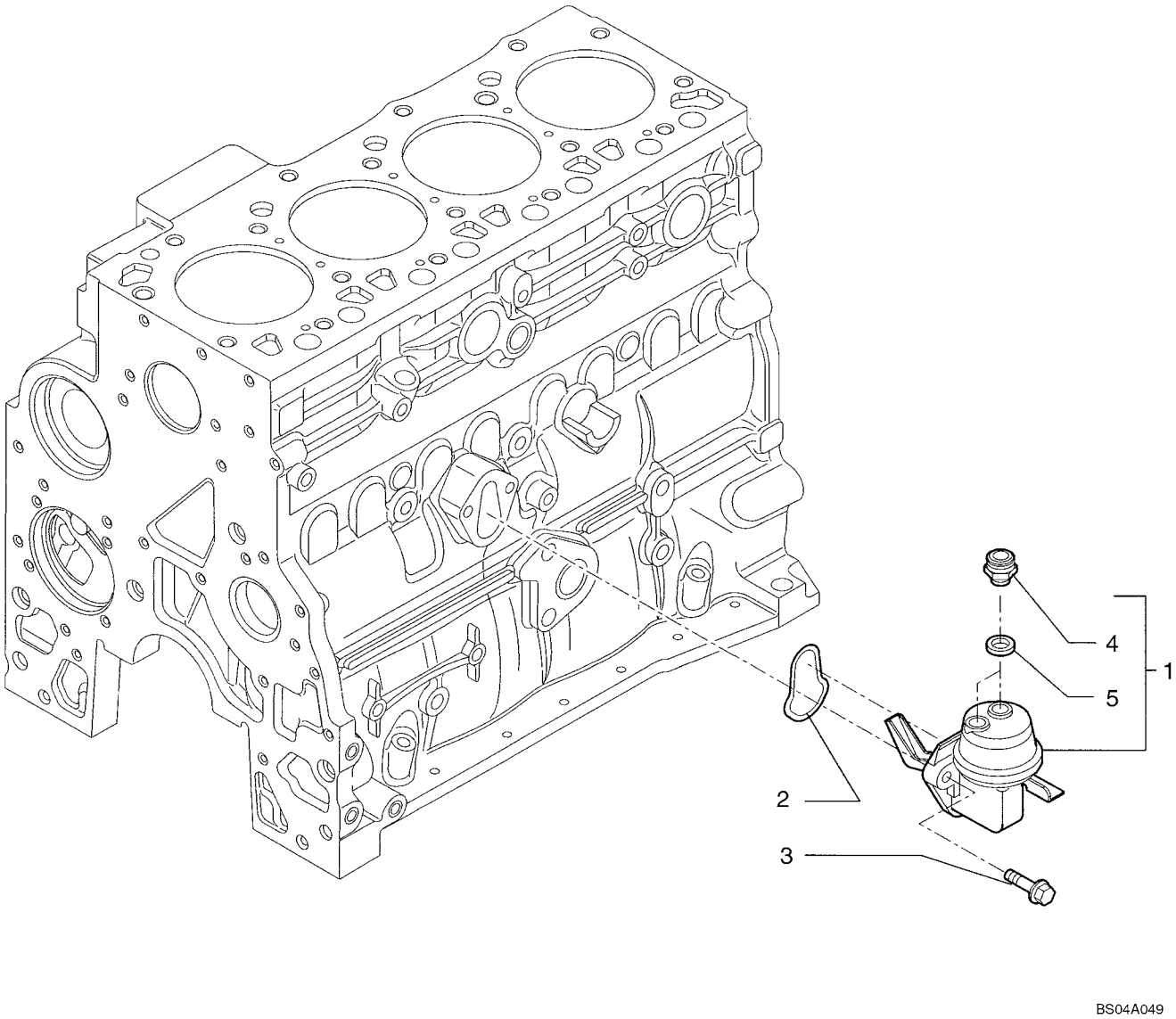

http://www.minnparbackhoeparts.com/

BOMBA DE ALIMENTACION

REF	FN	PART NUMBER	YR/SN	QTY	DESCRIPTION
1		2830266		1	BOMBA DE ALIMENTACION - ASSY, Fuel Transfer, Incl. Ref 4, 5
2		2830156		1	JUNTA HERMETICA
3		4899031		2	TORNILLO Flange, M8 x 25
4		4890964		2	RACOR
5		4894721		2	JUNTA HERMETICA

http://www.minnparbackhoeparts.com/

SISTEMA DE INYECCION DE COMBUSTIBLE

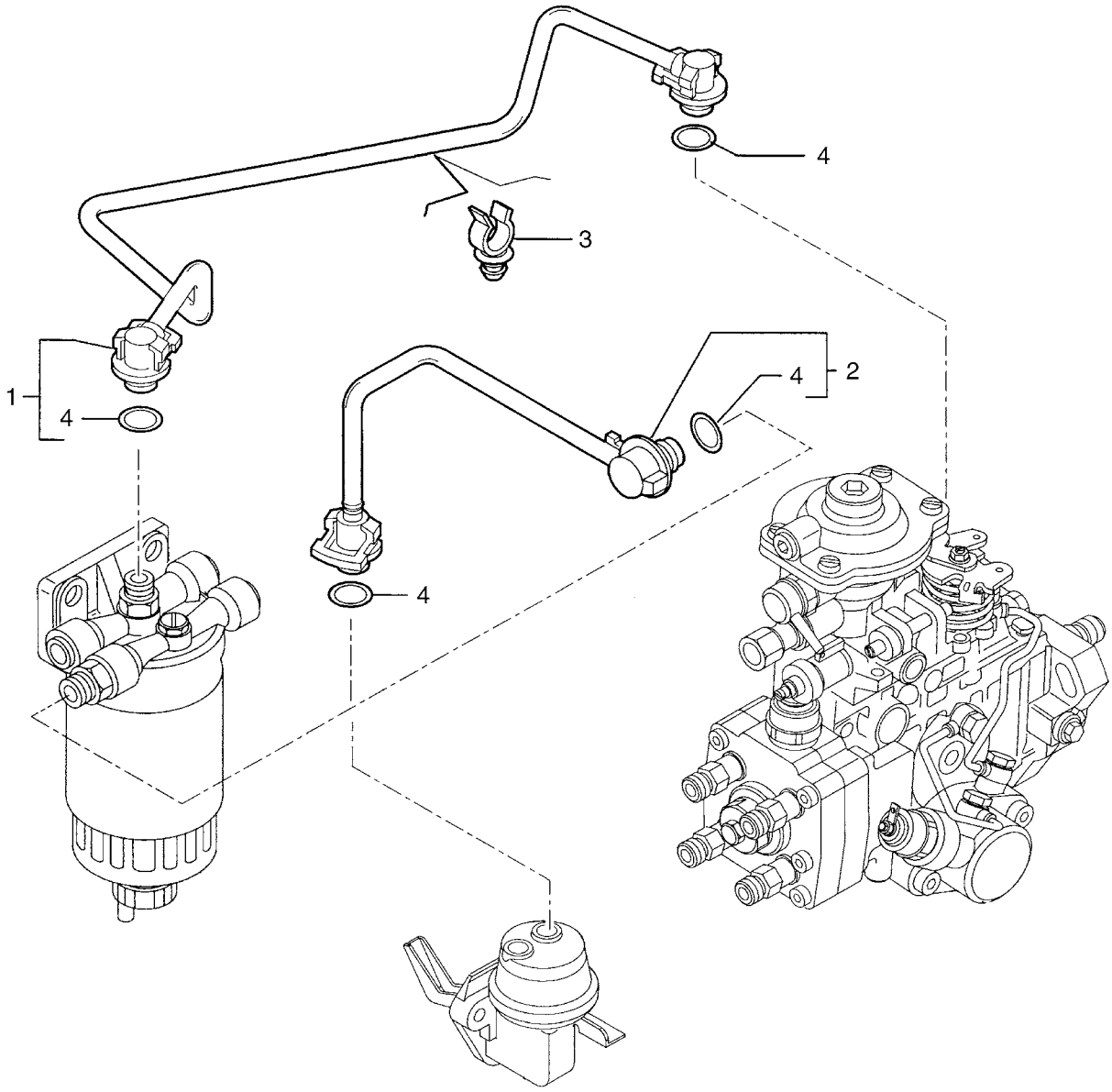

http://www.minnparbackhoeparts.com/

SISTEMA DE INYECCION DE COMBUSTIBLE

REF	FN	PART NUMBER	YR/SN	QTY	DESCRIPTION
1		2852105		1	TUBO (CONJUNTO) - ASSY; Tube; Incl. Ref 4
2		2852594		1	TUBO RIGIDO - ASSY; Incl. Ref 4
3		2852111		1	BORNE
4		4894095		2	JUNTA HERMETICA

http://www.minnparbackhoeparts.com/

SISTEMA DE INYECCION DE COMBUSTIBLE

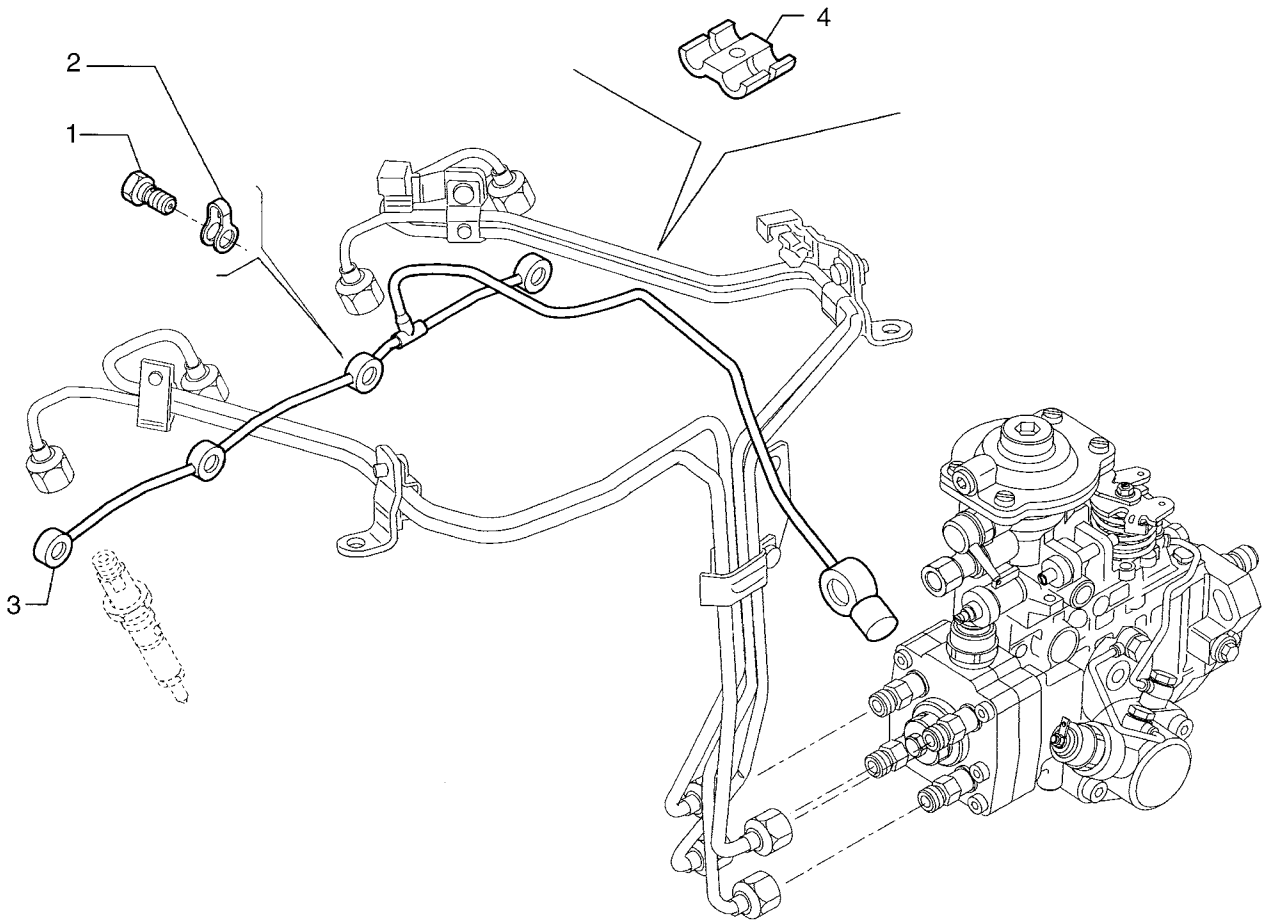

http://www.minnparbackhoeparts.com/

SISTEMA DE INYECCION DE COMBUSTIBLE

REF	FN	PART NUMBER	YR/SN	QTY	DESCRIPTION
1		4895244		4	TORNILLO HUECO
2		4895305		4	JUNTA HERMETICA
3		2852065		1	TUBO RIGIDO
4		2852521		1	SUJETADOR DE RESORTE

http://www.minnparbackhoeparts.com/

NOTES

http://www.minnparbackhoeparts.com/

SECTION INDEX

04-01	MOTOR DE ARRANQUE
04-02	ALTERNADOR
04-03	MONTAJE DEL ARRANQUE - MONTAJE DEL ALTERNADOR
04-04	MAZO DE CABLES, MOTOR - MONTAJE Y CONEXIONES
04-05	BATERIA CABLES (MODELOS SIN ARRANQUE EN FRÍO)
04-06	BATERIA, DOBLE - ARRANQUE EN FRÍO
04-06A	CALENTADOR DE REJILLA PARA ARRANQUE EN FRÍO
04-07	MAZO DE CABLES, CONSOLA FRONTAL - INTERRUPTORES
04-08	MAZO DE CABLES, CONSOLA FRONTAL - SOPORTE
04-09	ELECTRICO - TRANSMISIÓN, SERVOASISTIDA
04-10	MAZO DE CABLES, CONSOLA LATERAL - INTERRUPTORES
04-11	PANEL DE INSTRUMENTOS, DELANTERO - CUBIERTAS
04-12	PANEL DE INSTRUMENTOS, LATERAL - CUBIERTAS (LADO DERECHO)
04-13	VELOCIMETRO COMB.
04-14	ELECTRICO - LUCES, TECHO DE LA ROPS
04-15	ELECTRICO - LUCES, CABINA DE LA ROPS
04-16	CONJUNTO DE LA LAMPARA (MODELOS CON TECHO ROPS)
04-17	BOCINA - ALARMA, RETROCESO
04-18	FARO, GIRATORIO (MODELOS CON CABINA O CON TECHO)
04-19	ANTENA, RADIO - MAZO DE CABLES, RADIO
04-20	ELECTRICO SISTEMA - HIDRÁULICO AUXILIAR DE LA RETROEXCAVADORA
04-21	ELECTRICO SISTEMA - HIDRÁULICO AUXILIAR DE LA RETROEXCAVADORA, CON DE CONTROL PILOTO

http://www.minnparbackhoeparts.com/

04-01		p1	08/04

MOTOR DE ARRANQUE

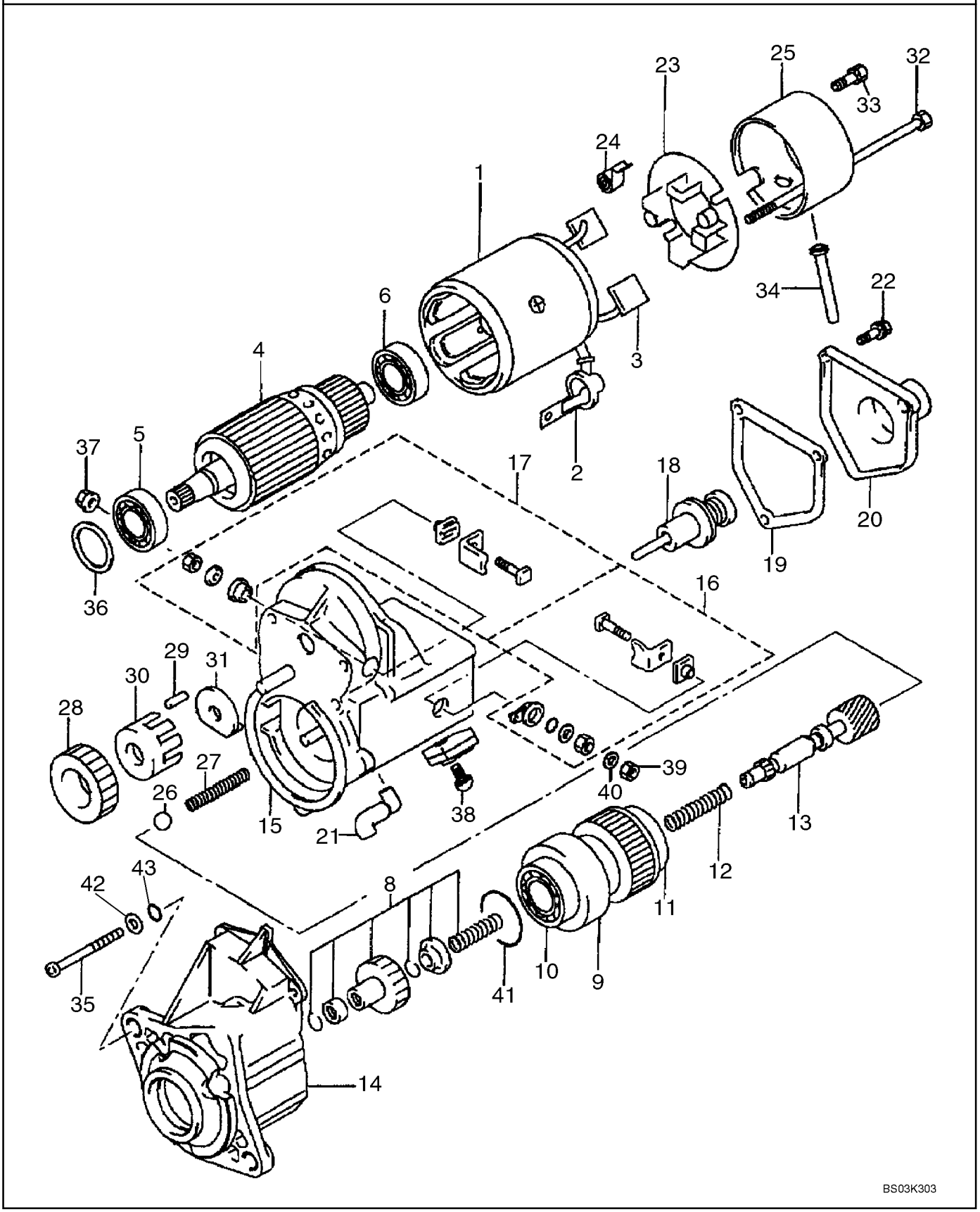

http://www.minnparbackhoeparts.com/

MOTOR DE ARRANQUE

REF	FN	PART NUMBER	YR/SN	QTY	DESCRIPTION
		86992395		1	MOTOR DE ARRANQUE 12 V, 2.7 kw; Incl. Ref 1 - 43
1		87438992		1	HORQUILLA Housing, Yoke; Incl. Ref 2, 3
2		87438993		1	TABA (CONJUNTO) Cover/Ring
3		87438925		2	ESCOBILLA Brush Kit
4		87438926		1	INDUCIDO Armature; Incl. Ref 5, 6
5		87438927		1	RODAMIENTO DE BOLAS Ball Bearing, 35 mm OD
6		87438928		1	RODAMIENTO DE BOLAS Ball Bearing, 30 mm OD
		87438994		1	EMBRAGUE (CONJUNTO) Clutch; Incl. Ref 8 - 13
8		87438929		1	JUEGO REP.MOTOR ARRANQUE Clutch Pinion Kit
9		87438930		1	JUEGO REP.MOTOR ARRANQUE Clutch Assembly; Incl. Ref 10, 11
10		87438931		1	RODAMIENTO DE BOLAS Ball Bearing, 47 mm OD
11		87438932		1	RODAMIENTO DE BOLAS Ball Bearing, 47 mm OD
12		87438933		1	MUELLE COMPRESOR Compression Spring
13		87438935		1	EJE Clutch Shaft
14		87438937		1	CAVIDAD Housing
15		87438940		1	INTERRUPTOR Magnetic Switch Assembly; Incl. Ref 16 - 22
16		87438941		1	JUEGO REP.MOTOR ARRANQUE Kit, Terminal M
17		87438942		1	JUEGO REP.MOTOR ARRANQUE Kit, Terminal C
18		87438944		1	EMBOLO BUZO Plunger
19		87438946		1	JUNTA HERMETICA Solenoid Switch Gasket
20		87438948		1	TAPADERA Solenoid Cover
21		87438995		1	CASQUILLO Bushing, Drain
22		87438950		3	TORNILLO Bolt With Washer; M5 x 14
23		87438996		1	SOPORTE Brush Holder; Incl. Ref 24
24		87438997		4	RESORTE Brush Tension Spring
25		87438999		1	BASTIDOR Housing
26		87439000		1	BOLA Ball
27		87439001		1	MUELLE COMPRESOR Compression Spring
28		87439002		1	PINON Pinion Gear
29		87439003		5	RODILLO Roller, Clutch
30		87439004		1	RETENEDOR Retainer
31		87439005		1	RETENEDOR Snap Retainer
32		87438951		2	TORNILLO M6 x 182 Bolt
33		87439006		2	TORNILLO Bolt With Washer; M5 x 9.4

http://www.minnparbackhoeparts.com/

04-01		p2	08/04

MOTOR DE ARRANQUE

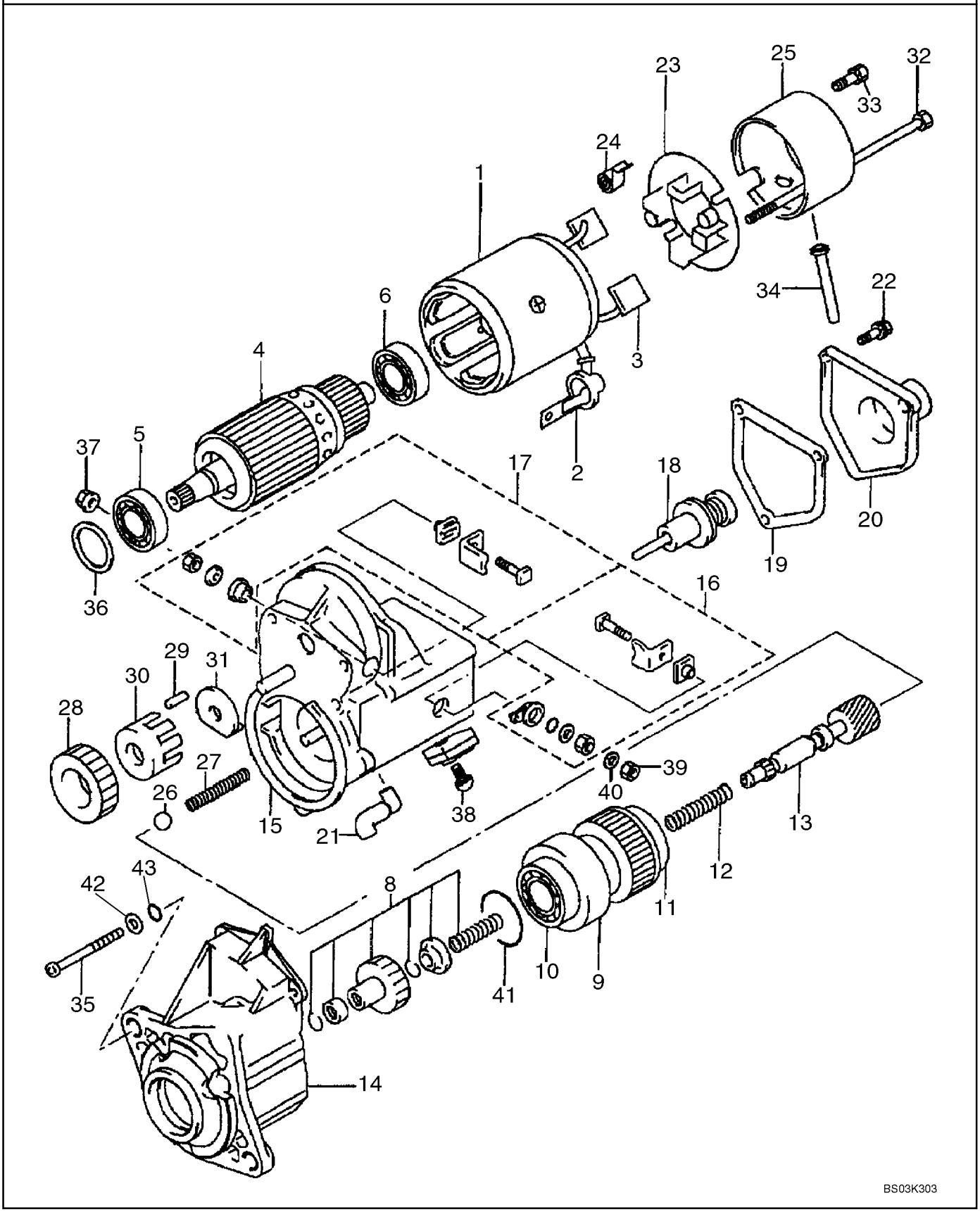

http://www.minnparbackhoeparts.com/

MOTOR DE ARRANQUE

REF	FN	PART NUMBER	YR/SN	QTY	DESCRIPTION
34		87439007		1	CASQUILLO Bushing, Drain
35		87439008		3	TORNILLO Adapter Screw, M6 x 70
36		87438954		1	ARANDELA Felt Washer
37		87439009		1	TUERCA M10 Nut
38		87438956		1	TORNILLO M5 x 10 Bolt
39		100016		1	TUERCA M10
40		892-11010		1	ARANDELA DE FRENO Lock, M10
41		87439010		1	ANILLO DE CIERRE Seal
42		87439061		3	ARANDELA Washer, 9/32 x 1/2 x 3/64
43		87439011		3	JUNTA HERMETICA O-Ring, 4.8 ID

http://www.minnparbackhoeparts.com/

ALTERNADOR

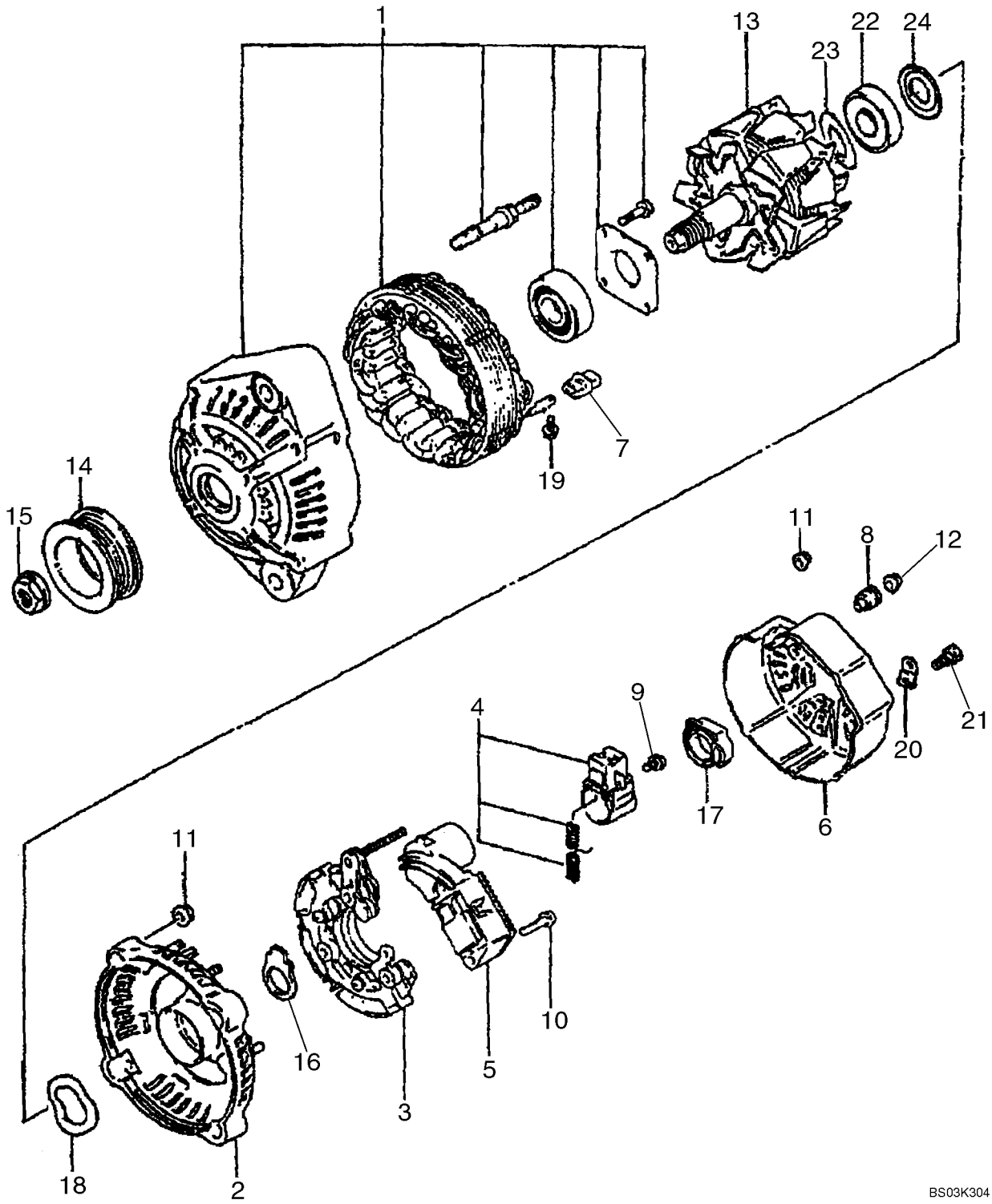

http://www.minnparbackhoeparts.com/

ALTERNADOR

REF	FN	PART NUMBER	YR/SN	QTY	DESCRIPTION
		87422777		1	ALTERNADOR 12V, 90 amp; Incl. Ref 1 - 24
1		87438960		1	BASTIDOR (CONJUNTO) Housing; Drive End, Includes Stator
2		87438963		1	BASTIDOR Housing
3		87438965		1	SOPORTE Rectifier
4		87438967		1	SOPORTE Brush and Holder
5		87438969		1	REGULADOR Regulator
6		87438970		1	TRASERA TAPA Cover
7		87438971		4	CASQUILLO Insulation Bushing
8		87438972		1	CASQUILLO Insulation Bushing
9		87438973		3	TORNILLO Screw
10		87438974		2	TORNILLO Bolt With Washer
11		87438975		7	TUERCA Nut
12		87438976		1	TUERCA Nut
13		87438977		1	ROTOR (CONJUNTO) Rotor
14		87438978		1	POLEA Pulley
15		87438979		1	TUERCA Nut
16		87438980		1	RETEN Seal
17		87438981		1	RETEN Seal
18		87438982		1	ARANDELA Wave Washer
19		87438983		4	TORNILLO Bolt With Washer
20		87438984		1	PLACA Terminal Plate
21		87438985		1	TORNILLO Screw
22		87438986		1	RODAMIENTO DE BOLAS Ball Bearing
23		87438987		1	COBERTURA Cover, Bearing
24		87438989		1	COBERTURA Cover, Bearing

http://www.minnparbackhoeparts.com/

MONTAJE DEL ARRANQUE - MONTAJE DEL ALTERNADOR

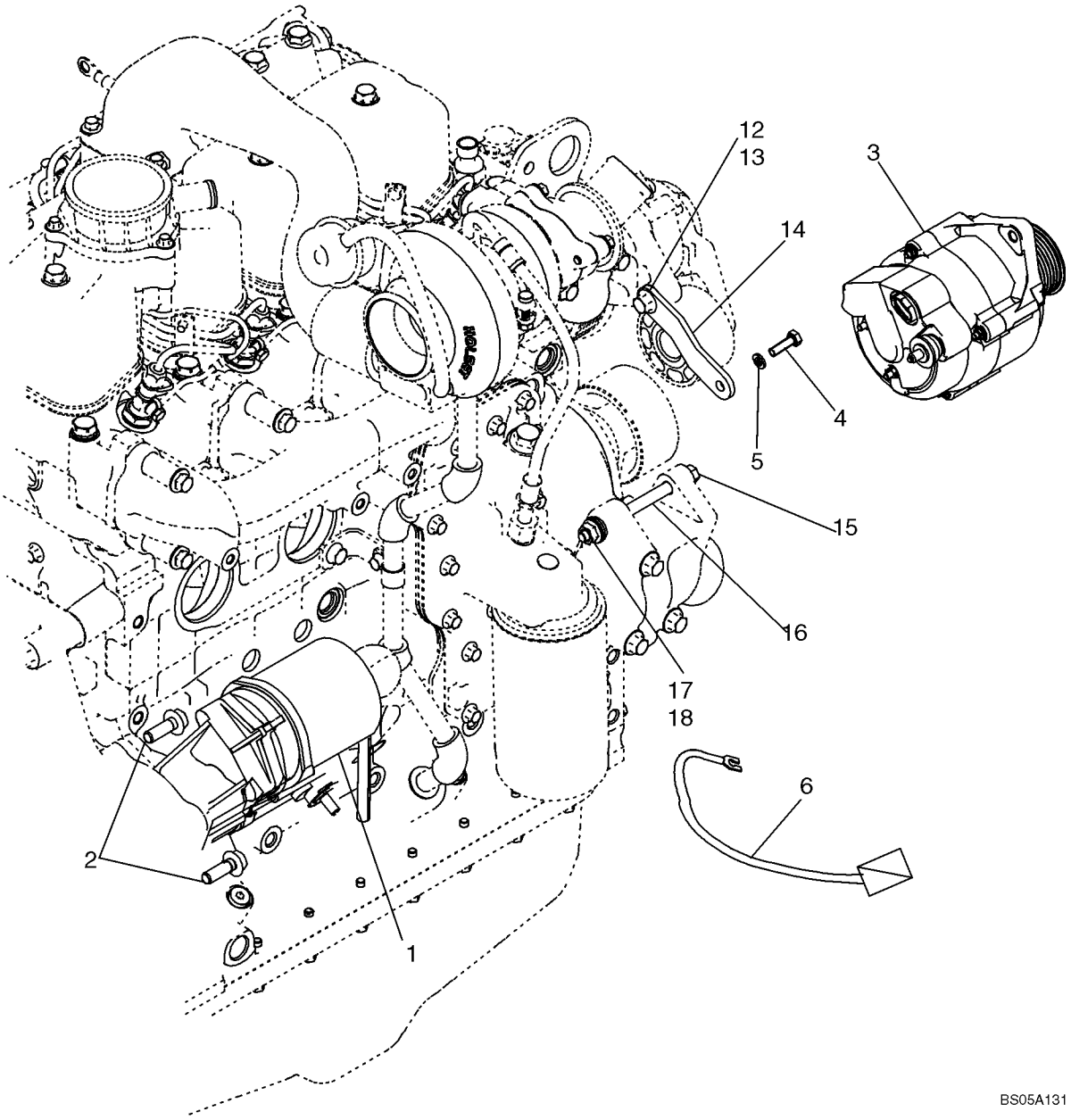

http://www.minnparbackhoeparts.com/

MONTAJE DEL ARRANQUE - MONTAJE DEL ALTERNADOR

REF	FN	PART NUMBER	YR/SN	QTY	DESCRIPTION
1		86992395		1	MOTOR DE ARRANQUE See Figure 04-01
2		844-10035		2	TORNILLO M10 x 35
3		87422777		1	ALTERNADOR See Figure 04-02; Mounting Hardware Included With 86990710 Engine Assembly; See Below For Alternator Mounting Used With 87437203 Engine
4		614-8025		1	TORNILLO M8 x 25
5		892-11008		1	ARANDELA Lock, M8
6		87433401		1	CABLE ELECTRICO Starter Solenoid Jumper Cable
		REF			MANUAL ALTERNATOR MOUNTING FOR 87437203 ENGINE
10		614-8025		1	TORNILLO M8 x 25
11		892-11008		1	ARANDELA Lock, M8
12		614-10020		1	TORNILLO M10 x 20
13		896-11010		1	ARANDELA Flat, M10
14		87452258		1	CORREA DE FIJACION
15		827-10130		1	TORNILLO M10 x 130
16		87452257		1	SEPARADOR
17		896-11010		2	ARANDELA Flat, M10
18		832-10410		1	TUERCA Lock, M10

http://www.minnparbackhoeparts.com/

04-04		p1	05/05

MAZO DE CABLES, MOTOR - MONTAJE Y CONEXIONES

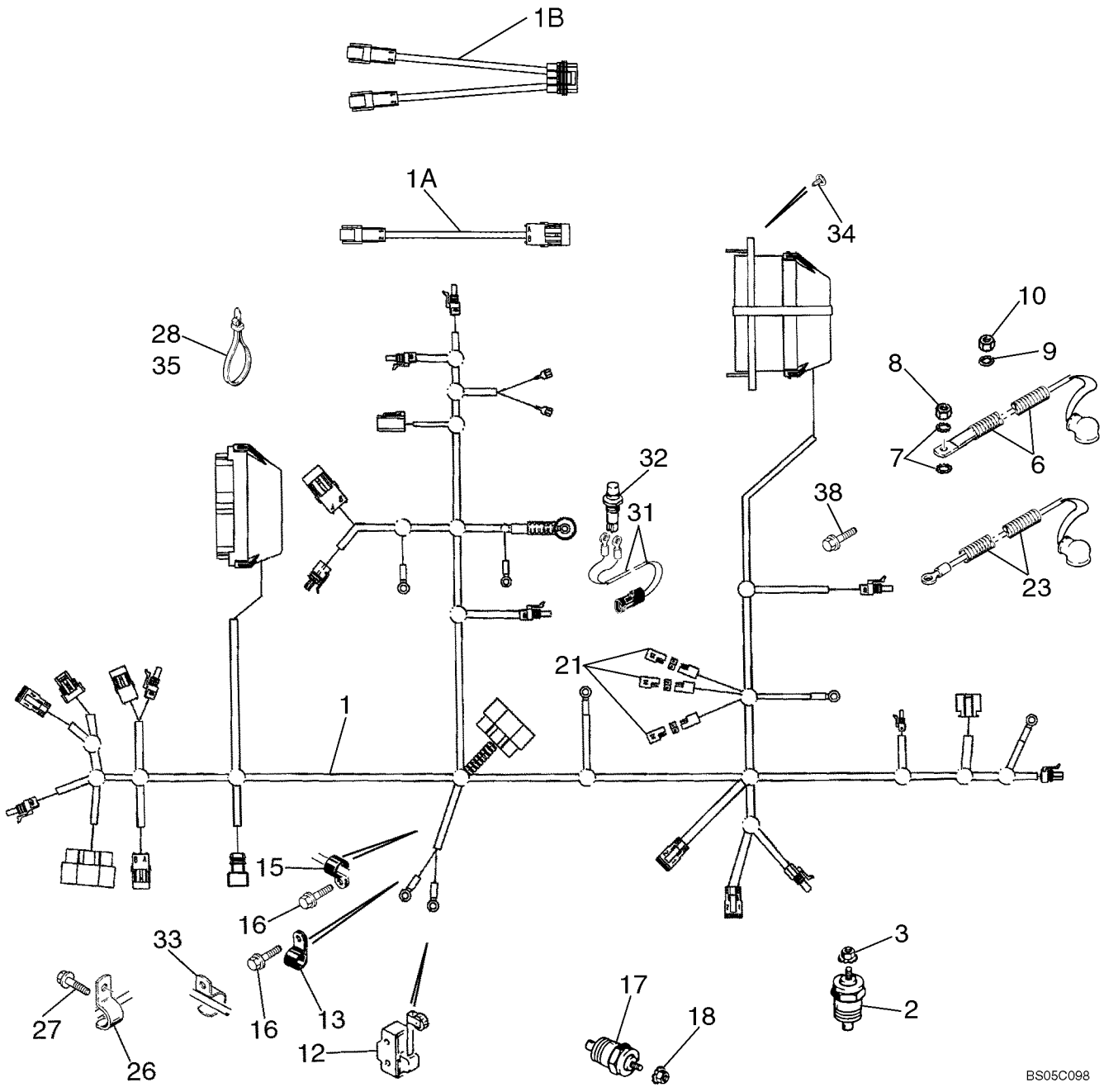

http://www.minnparbackhoeparts.com/

MAZO DE CABLES, MOTOR - MONTAJE Y CONEXIONES

REF	FN	PART NUMBER	YR/SN	QTY	DESCRIPTION
1		87433543		1	GRUPO DE CABLES Engine, Main Chassis; Packard Connectors At Trans. Control Valve & 4WD Solenoids; No Longer Available, Order 87450932 Service Kit; 87450932 Service Kit Is No Longer Available, Order 87456949 Harness Service Kit
		87450932		1	GRUPO DE CABLES Service Kit, Includes 87450481 Main Chassis Harness and 87450931Transmission Jumper Harness; No Longer Available, Order 87456944 Chassis Harness & 87450931 4WD Transmission Jumper Harness
1		87450481		1	GRUPO DE CABLES Main Chassis Harness; Packard Connectors At Trans. Control Valve Solenoid & Deutsch Connector At 4WD Solenoid; No Longer Available, Order 87456949 Chassis Harness Service Kit
1		87456944		1	GRUPO DE CABLES Main Chassis; Deutsch Connectors At Fwd/Rev & 4WD Solenoids; For Service Order 87456949 Chassis Harness Service Kit; Not Illustrated
		87456949		1	KIT, SERVICE Main Chassis; Includes 87456944 Chassis Harness, 87450931 4WD Jumper Harness, 87456948 Fwd/Rev Jumper Harness
1A		87450931		1	GRUPO DE CABLES 4WD Transmission Jumper Harness; 1 Packard / 1 Deutsch Connector; Attaches to 4WD Connection on Main Chassis Harness
1B		87456948		1	GRUPO DE CABLES Fwd/Rev Transmission Jumper Harness; 2 Deutsch / 1 Packard Connector; Attaches to Transmission Control Valve Solenoid Connection On Main Chassis Harness
2		A166057		1	SONDA Engine Water Coolant Temperature
3		193-1000		1	TUERCA No. 10 NF; With External Tooth Lock Washer
6		87423926		1	GRUPO DE CABLES Alternator Cable
7		493-21033		2	ARANDELA FRENO 5/16
8		829-1408		1	TUERCA M8; 10
9		493-21020		1	ARANDELA DE FRENO 3/16

http://www.minnparbackhoeparts.com/

MAZO DE CABLES, MOTOR - MONTAJE Y CONEXIONES

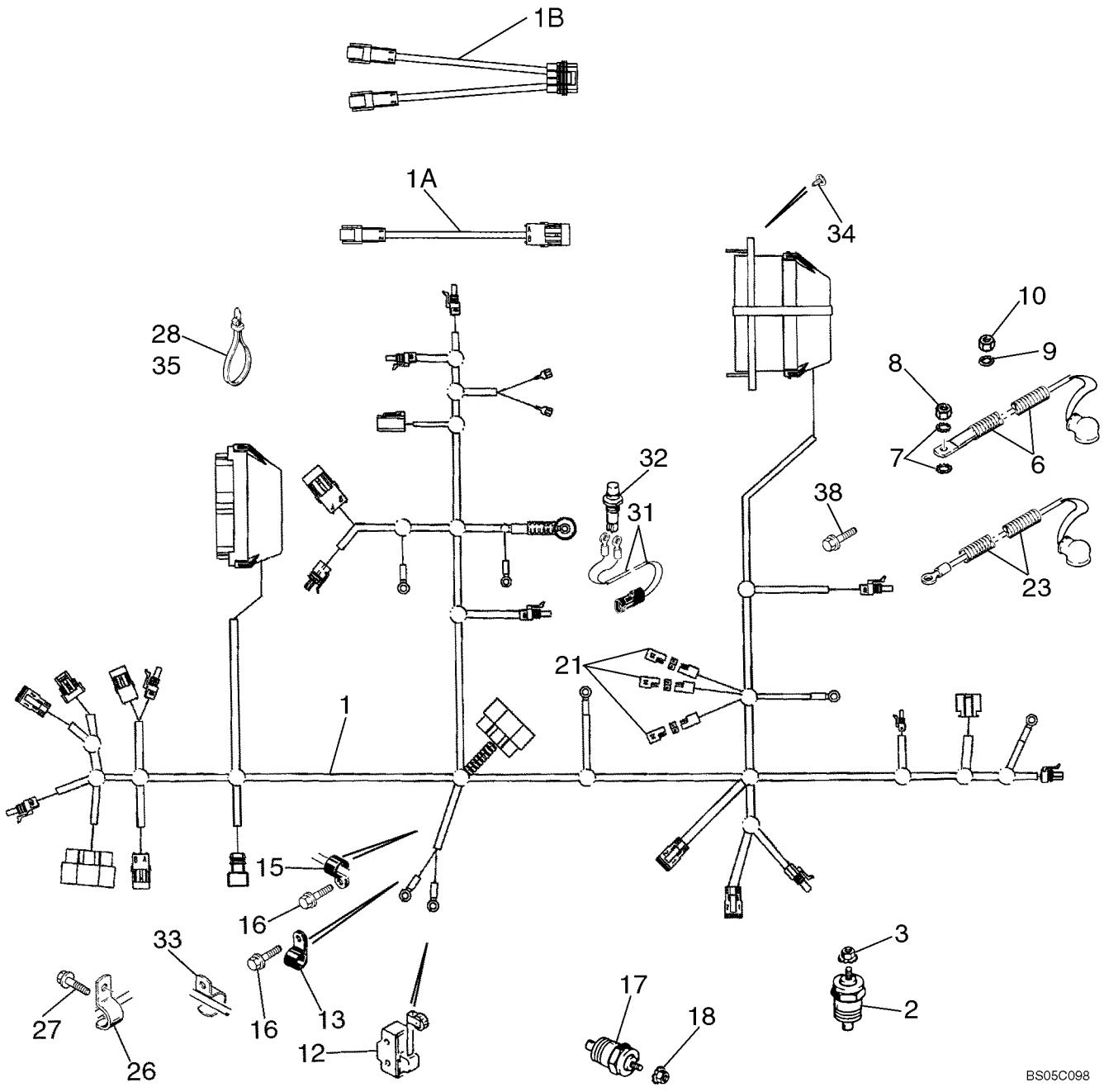

http://www.minnparbackhoeparts.com/

MAZO DE CABLES, MOTOR - MONTAJE Y CONEXIONES

REF	FN	PART NUMBER	YR/SN	QTY	DESCRIPTION
10		824-1405		1	TUERCA M5
12		D137363		1	CONTACTOR Return To Dig; For Mounting; See Figure 09-04
13		515-23127		1	COLLAR 1/2 ID
15		515-23127		1	COLLAR 1/2 ID
16		844-10020		2	TORNILLO M10 x 20
17		A166057		1	SONDA Transmission Temperature
18		193-1000		1	TUERCA No. 10 NF; With External Tooth Lock Washer
21		L71879		3	SOPORTE DE DIODO
23		87419229		1	GRUPO DE CABLES Power Wire
26		515-23254		1	COLLAR P; Replaces 87032428 J-Clip Used On Some Models; For Brake Cable Bracket, See Figure 07-06
27		814-10060		1	TORNILLO M10 x 60
28		L18337		29	BANDA 15 in
31		123809A2		1	HAZ Clutch Cutout; Transmission Gear Shift Lever; Incl. Ref 31A, 31B
31A		246526A1		1	CONECTOR Not Illustrated
31B		NSS		2	NO SE REPARA SEPARADAM. Eye; Not Illustrated
32		123097A1		1	CONTACTOR Push Button; Clutch Cutout; Transmission Gear Shift Lever; For Lever and Knob, See Figure 06-12; If Used
32		87312712		1	CONTACTOR Push Button; Clutch Cutout; Transmission Gear Shift Lever; For Lever and Knob, See Figure 06-12; Otto 21649 Marking; If Used
33		D147383		1	SUJETADOR Use Existing Hardware
34		781-24613		4	TORNILLO M6 x 13
35		305342A1		1	BANDA 450 mm (18 in); Air Filter Restriction Branch to Air Filter Inlet Tube
38		128312A1		1	TORNILLO M10 x 15; Ground to Firewall

http://www.minnparbackhoeparts.com/

04-05		p1	01/05

BATERIA CABLES (MODELOS SIN ARRANQUE EN FRÍO)

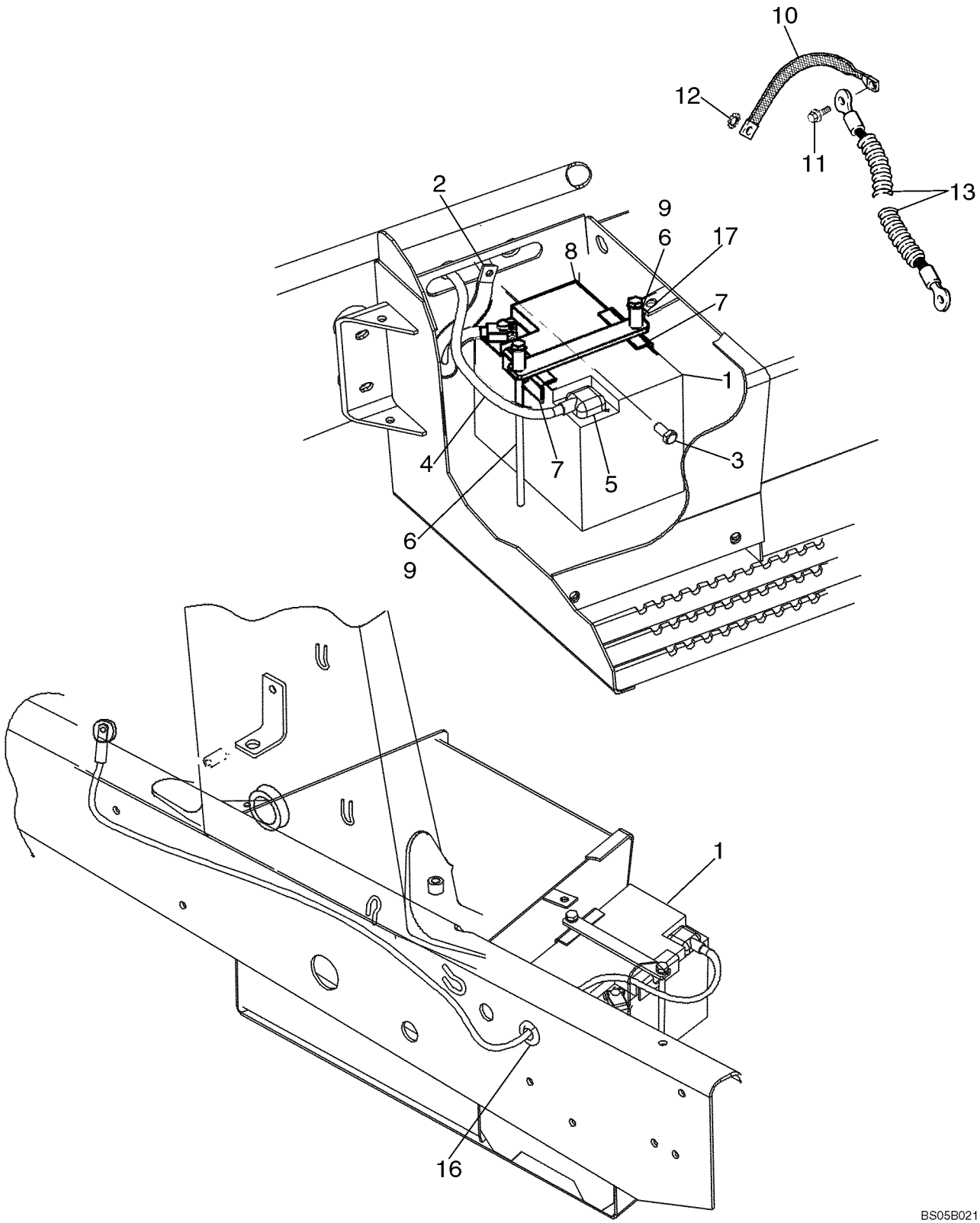

http://www.minnparbackhoeparts.com/

BATERIA CABLES (MODELOS SIN ARRANQUE EN FRÍO)

REF	FN	PART NUMBER	YR/SN	QTY	DESCRIPTION
1		87403835		1	BATERIA CARGA HUMEDA 12V; Models Without Cold Start; Used In Production, For Service Order B4960W Through Ship Direct
2		87419259		1	ATADURA 350 mm; Negative Ground
3		844-10020		1	TORNILLO M10 x 20; Negative Battery Cable Ground; Bolt To Chassis
4		87419257		1	CABLE ELECTRICO 1550 mm; Positive; Incl. Ref 5; Battery to Starter
5		383619R1		1	TAPA
6		814-10245		2	TORNILLO M10 x 245 mm
7		D125079		2	PIEZA DE SOPORTE Battery Hold-Down
8		87415781		1	PIEZA DE SOPORTE Plate
9		495-11041		2	ARANDELA 13/32 x 13/16 x 1/16
10		87407206		2	CABLE. MASA 330 mm; Ground Strap to Chassis
11		844-10020		1	TORNILLO M10 x 20
12		493-11039		1	ARANDELA 3/8; Internal External Tooth Lock Washer
13		381261A1		1	HILO Ground; Cab to Chassis
16		87423677		2	PASACABLES Battery Cable Grommet; Mounts In Chassis Side Channel
17		130245A1		2	ESPACIADOR 10 x 30 mm

http://www.minnparbackhoeparts.com/

BATERIA, DOBLE - ARRANQUE EN FRÍO

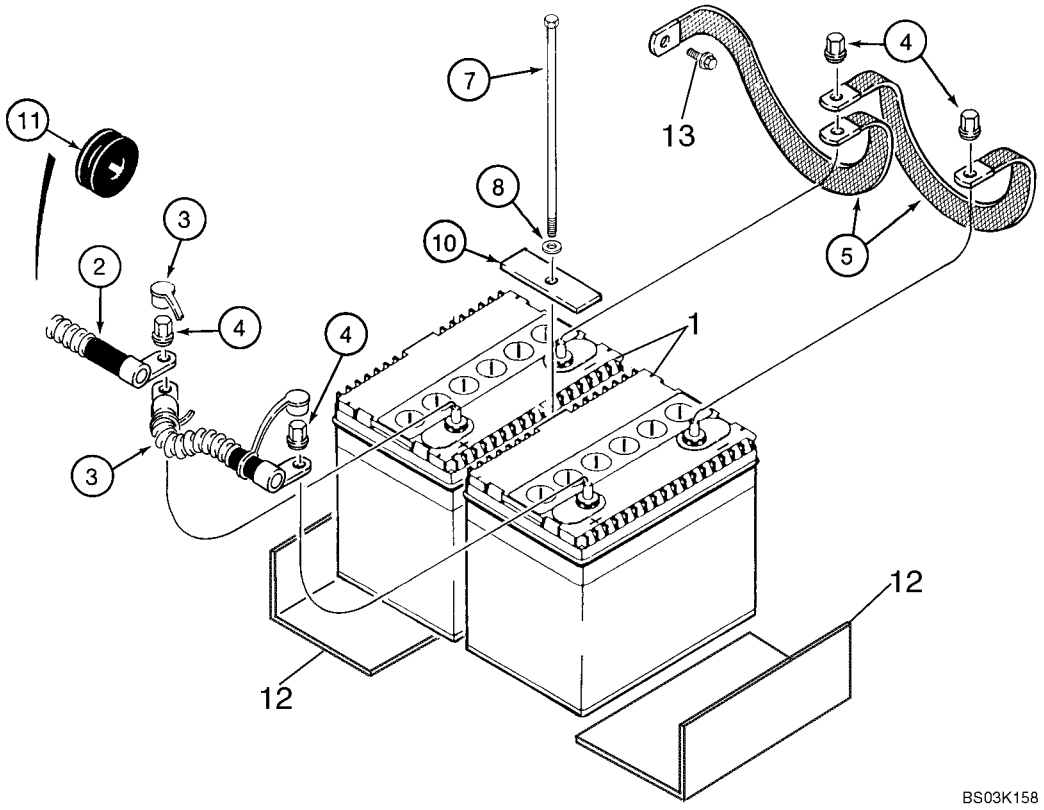

http://www.minnparbackhoeparts.com/

BATERIA, DOBLE - ARRANQUE EN FRÍO

REF	FN	PART NUMBER	YR/SN	QTY	DESCRIPTION
		87430867		1	BATERIA CONTROL ELECTRIC Dual Battery Kit; Incl. Ref 1 - 13 and Instructions
1		BMF28S		2	BATERIA CARGA SECA 12V
2		87423675		1	CABLE ELECTRICO 1460 mm, Positive Cable; Chassis
3		184497A1		1	CABLE 227 mm, Positive Jumper
4		D126409		4	TUERCA 3/8
5		87423676		2	ATADURA 324 mm Flat Ground Strap
7		814-10245		1	TORNILLO M10 x 245 mm
8		495-11041		1	ARANDELA 13/32 x 13/16 x 1/16
10		250854A1		1	BANDA
11		87423677		2	PASACABLES Battery Cable Grommet; Mounts In Chassis Side Channel
12		408535A1		2	PLACA 255 mm (10-1/32 in); Battery Support
13		844-10020		1	TORNILLO Flange, M10 x 20

http://www.minnparbackhoeparts.com/

CALENTADOR DE REJILLA PARA ARRANQUE EN FRÍO

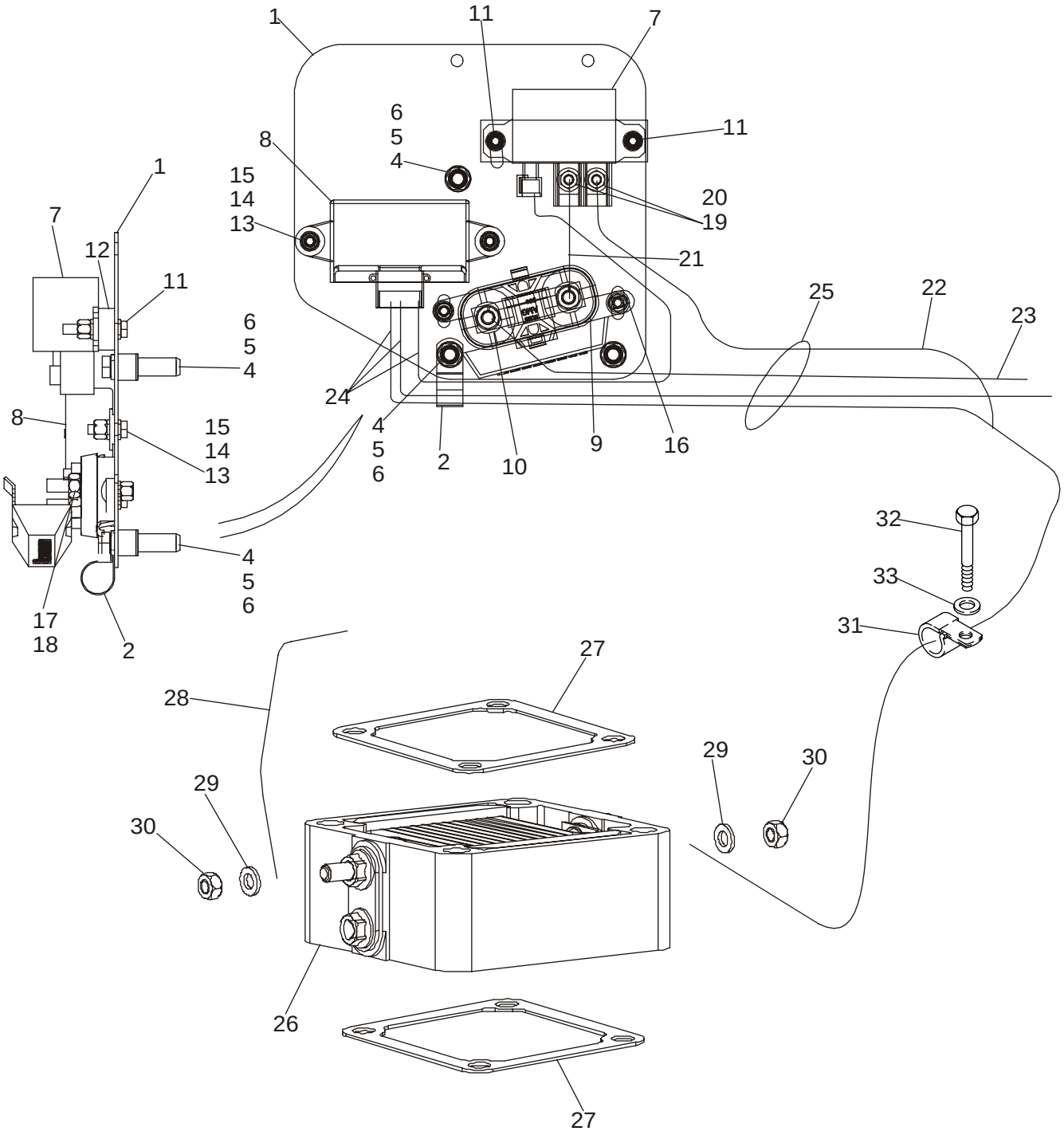

http://www.minnparbackhoeparts.com/

CALENTADOR DE REJILLA PARA ARRANQUE EN FRÍO

REF	FN	PART NUMBER	YR/SN	QTY	DESCRIPTION
		87430868		1	KIT, SERVICE Grid Heater Kit; Incl. Ref 1 - 33 and Instructions; Also Includes 8603092 Warning Decal, Explosion Hazard, Do Not Use Ether
1		87410603		1	PLACA Cold Start Plate
2		515-22190		1	COLLAR
3		614-8040		3	TORNILLO Hex, M8 x 40, 8.8, Full Thd
4		407962A1		3	ESPACIADOR
5		238-5011		3	JUNTA HERMETICA -011, 70 Duro, .301" ID x .070" Thk
6		87417383		3	ROSCA POSTIZA M8 x 1-1/4
7		86619908		1	CONECTADOR Cold Start Relay
8		47132002		1	CAJA ELECTRONICA Electronic Unit Controller, Grid Heater; Replaces 87409046
9		440038A1		1	CONEXION Fuse Block
10		87410602		1	FUSIBLE 300 amp Fuse
11		614-6035		2	TORNILLO M6 x 35
12		87414237		1	PLACA 10 mm Thick Spacer Bar
13		614-6020		3	TORNILLO M6 x 20
14		895-11006		11	ARANDELA Flat, 6,6 x 12 x 1,6 mm
15		832-10406		6	TUERCA M6
16		811-6016		1	TORNILLO Round Head, M6 x 16
17		892-11008		5	ARANDELA Lock, M8
18		829-1408		2	TUERCA M8
19		322357		2	ARANDELA DE FRENO Belleville, M6
20		829-1406		2	TUERCA M6
21		87410265		1	CABLE. MASA 90 mm Jumper Wire; Fuse to Relay
22		87419616		1	CABLE (CONJUNTO) 500 mm Wire; Relay to Grid Heater
23		87419615		1	CABLE (CONJUNTO) 1250 mm Wire; Starter to Fuse Block
24		87433544		1	GRUPO DE CABLES Controller Harness, Cold Start Control; Attaches to Engine Harness
25		L18337		1	BANDA Replaces D150521 292 mm Long Nylon Tie Strap Used On Some Models
26		82017872		1	RECALENTADOR Grid
27		86014151		2	JUNTA HERMETICA
28		87413162		1	CABLE. MASA 150 mm Ground Wire

http://www.minnparbackhoeparts.com/

CALENTADOR DE REJILLA PARA ARRANQUE EN FRÍO

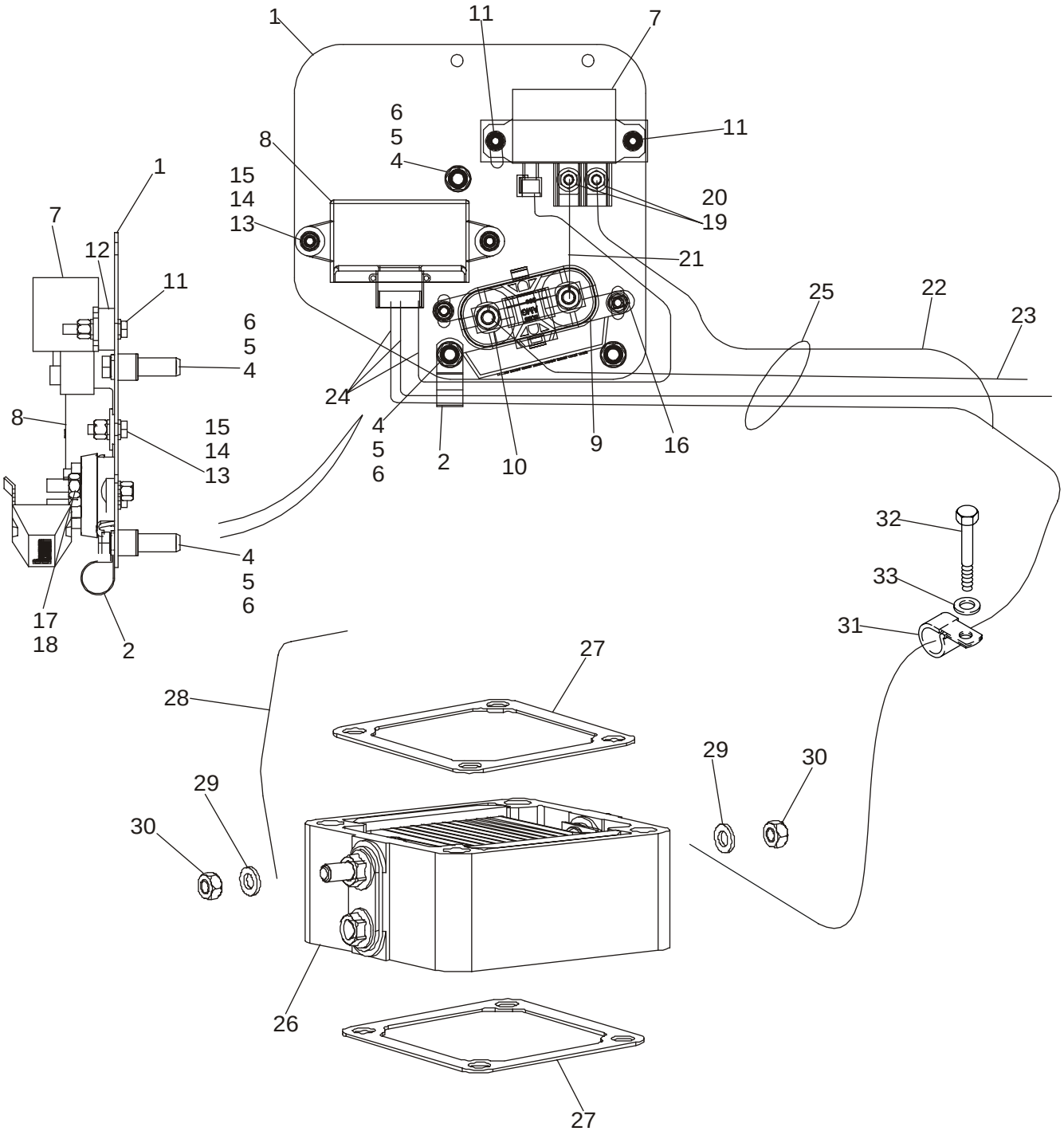

http://www.minnparbackhoeparts.com/

CALENTADOR DE REJILLA PARA ARRANQUE EN FRÍO

REF	FN	PART NUMBER	YR/SN	QTY	DESCRIPTION
29		895-11006		2	ARANDELA Flat, 6,6 x 12 x 1,6 mm
30		829-1406		2	TUERCA M6
31		515-25190		1	COLLAR
32		614-12025		1	TORNILLO M12 x 25
33		896-11012		1	ARANDELA

http://www.minnparbackhoeparts.com/

MAZO DE CABLES, CONSOLA FRONTAL - INTERRUPTORES

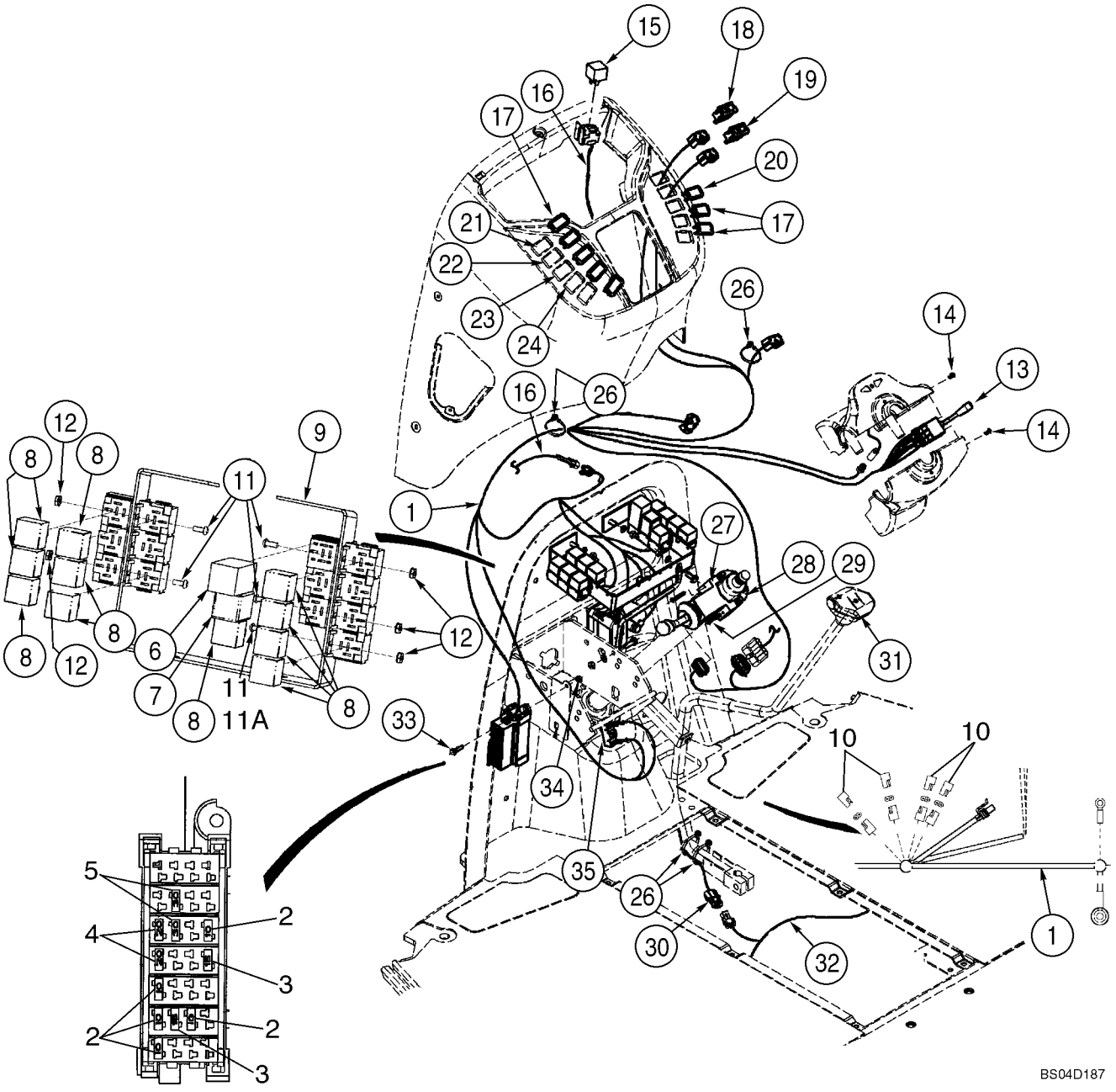

http://www.minnparbackhoeparts.com/

MAZO DE CABLES, CONSOLA FRONTAL - INTERRUPTORES

REF	FN	PART NUMBER	YR/SN	QTY	DESCRIPTION
1		87418541		1	GRUPO DE CABLES Front Console Harness, Incl. Ref 13
2		121412A1		5-6	FUSIBLE 10 amp; Mini, Red
3		121413A1		2-3	FUSIBLE 15 amp; Mini, Blue
4		121414A1		2	FUSIBLE 20 amp; Mini, Yellow
5		121416A1		2	FUSIBLE 30 amp; Mini, Green
6		D147166		1	CONJUNTO INTERMITENT Relay, Flasher, Hazard; Turn Signal
7		347706A3		1	CONECTADOR Sealed Time Delay, Shuttle Interlock Timing Relay, Forward Reverse Control
8		87436836		11	CONECTADOR 40 amp, 12V
9		361900A1		1	PIEZA DE SOPORTE Relay Mounting
10		L71879		4	SOPORTE DE DIODO
11		87301687		6-7	TORNILLO Hex Washer Head, No. 10 NF x 1/2; Replaces 490-1108 Washerless Screw Used On Some Models
11A		490-1106		1	TORNILLO No 10 x 3/8; No Longer Used, Order 87301687 1/2 inch Long Screw, Ref 11
12		231-24409		7	CONTRA TUERCA No. 10 NF; Replaces 193-1000 Nut With External Tooth Lock Washer Used On Some Models
13		389487A1		1	CONTACTOR DE NIVEL Turn Signal/Driving Lamp High/Low Beam
14		404816A1		2	TORNILLO M4 x 12
15		87436836		1	CONECTADOR 40 amp, 12V; Air Conditioning; Attaches To Front Console Options Harness
16		87433546		1	GRUPO DE CABLES Front Console Options; Includes (1) L71879 Diode
		L71879		1	SOPORTE DE DIODO
		490-1108		1	TORNILLO No. 10 NF x 1/2; Mounts Relay Recepticle
		193-1000		1	TUERCA No. 10 NF; Mounts Relay Recepticle
17		126844A1		2-8	TAPÓN Accessory; If Used
18		386849A1		1	CONTACTOR Front Work Lamps
19		386850A1		1	CONTACTOR Hazard Lamps
20		386851A1		1	CONTACTOR Rotating Beacon; If Used
21		126844A1		1	TAPÓN If Used
22		386785A1		1	CONTACTOR Front Wiper; If Used

http://www.minnparbackhoeparts.com/

MAZO DE CABLES, CONSOLA FRONTAL - INTERRUPTORES

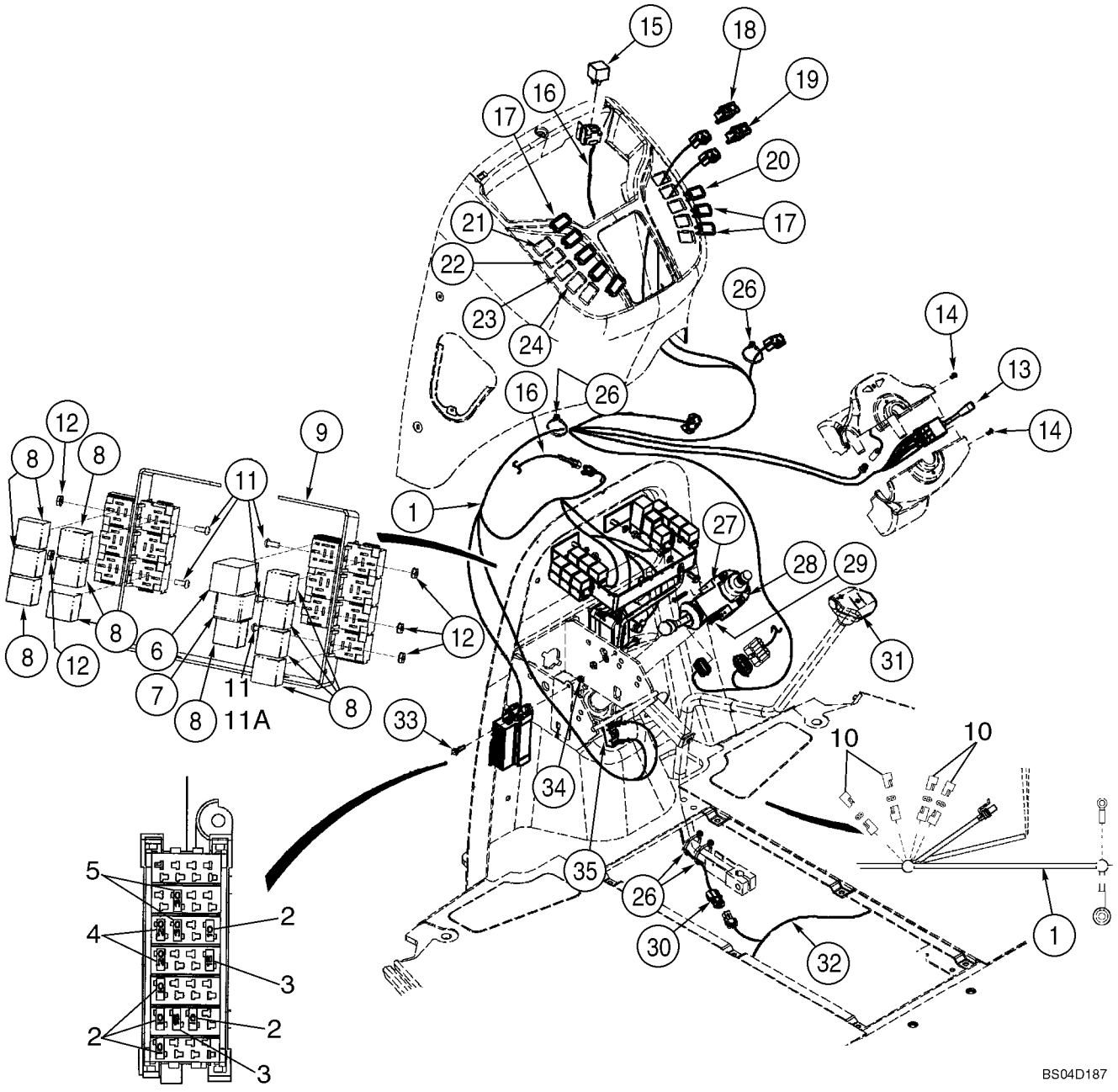

http://www.minnparbackhoeparts.com/

MAZO DE CABLES, CONSOLA FRONTAL - INTERRUPTORES

REF	FN	PART NUMBER	YR/SN	QTY	DESCRIPTION
23		386787A1		1	CONTACTOR Front Windshield Washer; If Used
24		398675A2		1	CONTACTOR Loader Tool Quick Coupler; If Used
26		L18337		4	BANDA 15 in
27		278328A1		1	CONTACTOR Shuttle Shift; Transmission Forward/Neutral/Reverse Switch; Models Without Powershift Transmission
27		231520A2		1	CONTACTOR Shuttle Shift; Transmission Forward/Neutral/Reverse Switch; Models With Powershift Transmission
28		366889A2		1	MEDIA ABRAZADERA Shuttle Lever; Includes Threaded Insert
29		397990A1		2	TORNILLO M5 x 35
30		123809A2		1	HAZ Clutch Cutout; Transmission Gear Shift Lever; For Lever, See Figure 06-12
31		123097A1		1	CONTACTOR Clutch Cutout; For Lever and Knob, See Figure 06-12; If Used
31		87312712		1	CONTACTOR Clutch Cutout; For Lever and Knob, See Figure 06-12; Otto 21649 Marking; If Used
32		87433543		1	GRUPO DE CABLES Engine, Main Chassis; Packard Connectors At Trans. Control Valve & 4WD Solenoids; No Longer Available, Order 87450932 Service Kit; 87450932 Service Kit Is No Longer Available, Order 87456949 Harness Service Kit
		87450932		1	GRUPO DE CABLES Service Kit, Includes 87450481 Main Chassis Harness and 87450931Transmission Jumper Harness; No Longer Available, Order 87456944 Chassis Harness & 87450931 4WD Transmission Jumper Harness
32		87450481		1	GRUPO DE CABLES Main Chassis Harness; Packard Connectors At Trans. Control Valve Solenoid & Deutsch Connector At 4WD Solenoid; No Longer Available, Order 87456949 Chassis Harness Service Kit
32		87456944		1	GRUPO DE CABLES Main Chassis; Deutsch Connectors At Fwd/Rev & 4WD Solenoids; For Service Order 87456949 Chassis Harness Service Kit; Not Illustrated

http://www.minnparbackhoeparts.com/

MAZO DE CABLES, CONSOLA FRONTAL - INTERRUPTORES

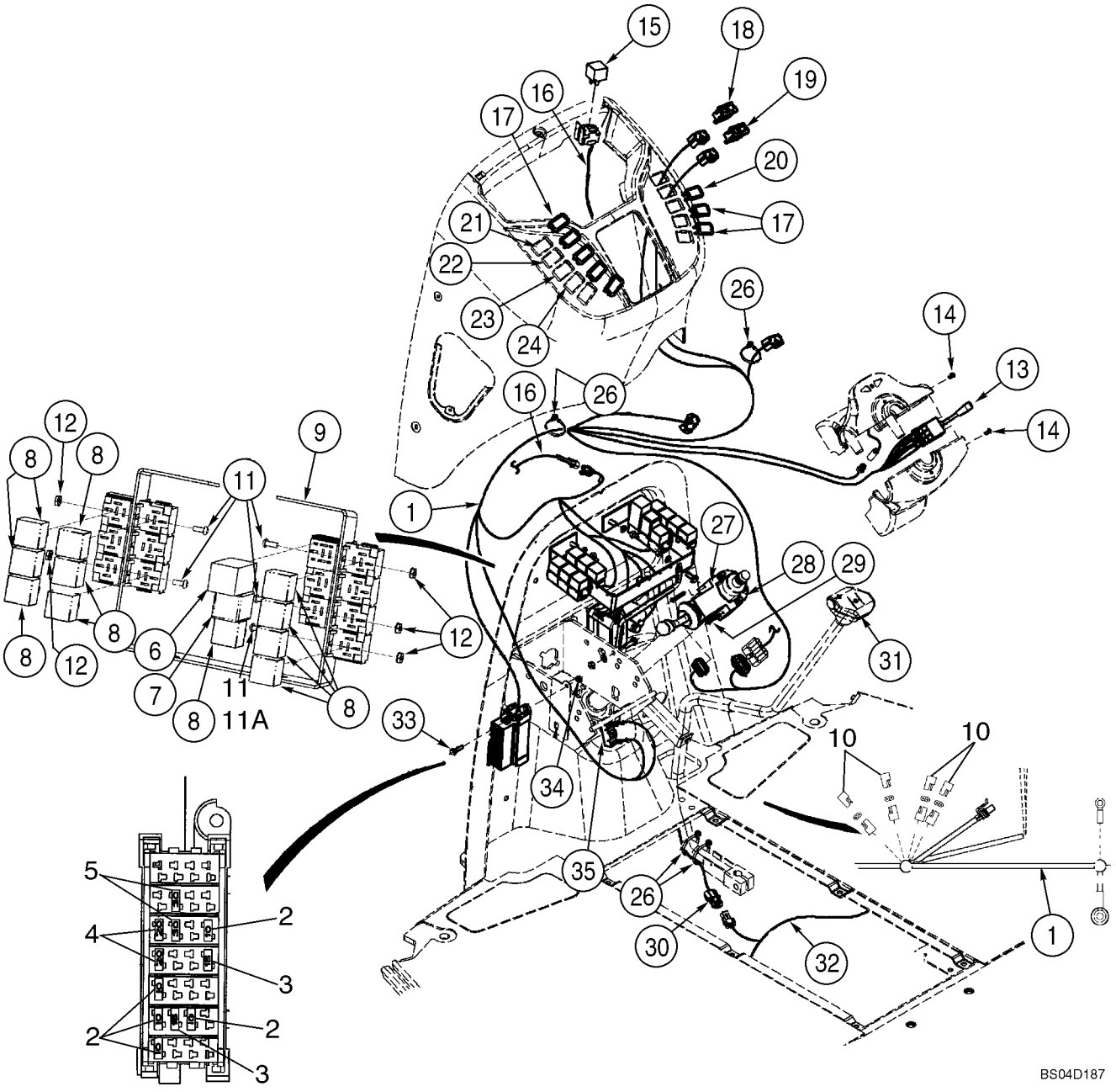

http://www.minnparbackhoeparts.com/

MAZO DE CABLES, CONSOLA FRONTAL - INTERRUPTORES

REF	FN	PART NUMBER	YR/SN	QTY	DESCRIPTION
		87456949		1	KIT, SERVICE Main Chassis; Includes 87456944 Chassis Harness, 87450931 4WD Jumper Harness, 87456948 Fwd/Rev Jumper Harness
32A		87450931		1	GRUPO DE CABLES 4WD Transmission Jumper Harness; 1 Packard / 1 Deutsch Connector; Attaches to 4WD Connection on Main Chassis Harness, Not Illustrated
32B		87456948		1	GRUPO DE CABLES Fwd/Rev Transmission Jumper Harness; 2 Deutsch / 1 Packard Connector; Attaches to Transmission Control Valve Solenoid Connection On Main Chassis Harness; Not Illustrated
		L71879		3	SOPORTE DE DIODO
33		844-6025		1	TORNILLO M6 x 25
34		832-10406		1	TUERCA M6
35		D148108		1	CONTACTOR Brake Lamp; Includes Hardware; For Mounting, See Figure 07-03
		87436675		1	GRUPO DE CABLES Chassis Options; Includes (4) L71879 Diodes
		L71879		4	SOPORTE DE DIODO

http://www.minnparbackhoeparts.com/

04-08		p1	03/05

MAZO DE CABLES, CONSOLA FRONTAL - SOPORTE

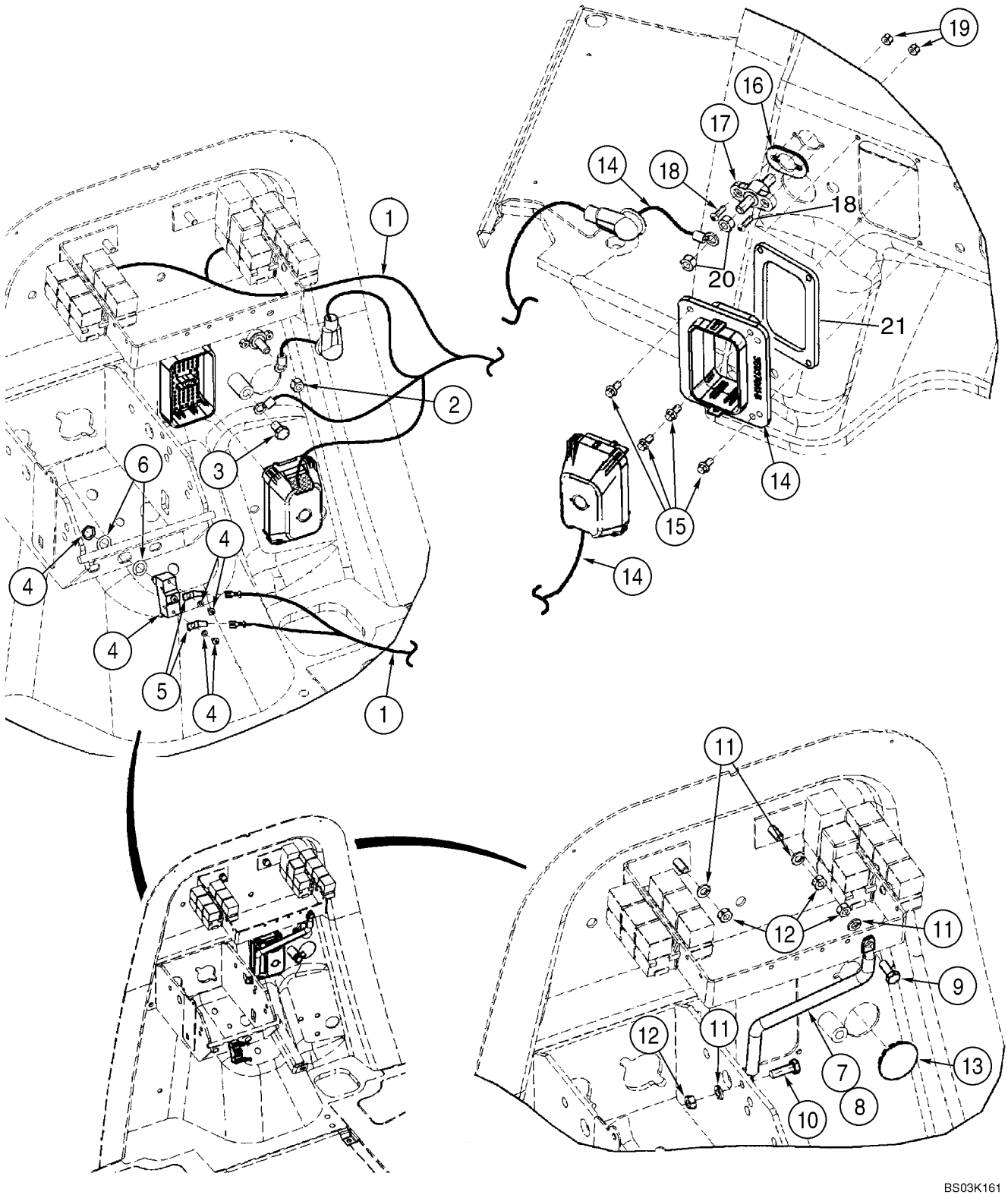

http://www.minnparbackhoeparts.com/

MAZO DE CABLES, CONSOLA FRONTAL - SOPORTE

REF	FN	PART NUMBER	YR/SN	QTY	DESCRIPTION
1		87418541		1	GRUPO DE CABLES Front Console Harness; Mounts To Front Firewall
2		425-106		1	TUERCA 3/8
3		128312A1		1	TORNILLO M10 x 15; Mounts To Front Firewall
4		D148108		1	CONTACTOR Brake Lamp; Includes Hardware
5		A187990		2	TERMINAL Male
6		495-81153		2	ARANDELA 15/32 x 3/4 x 1/32
7		362930A2		1	TENSOR Relay Mounting
8		392353A1		1	TUBERIA
9		614-8020		1	TORNILLO M8 x 20
10		614-8025		1	TORNILLO M8 x 25
11		892-11008		4	ARANDELA M8
12		829-1408		4	TUERCA M8; 10
13		397876A1		1	TAPÓN 1-5/8 in, Button
14		87433543		1	GRUPO DE CABLES Engine, Main Chassis; Packard Connectors At Trans. Control Valve & 4WD Solenoids; No Longer Available, Order 87450932 Service Kit; 87450932 Service Kit Is No Longer Available, Order 87456949 Harness Service Kit
		87450932		1	GRUPO DE CABLES Service Kit, Includes 87450481 Main Chassis Harness and 87450931Transmission Jumper Harness; No Longer Available, Order 87456944 Chassis Harness & 87450931 4WD Transmission Jumper Harness
14		87450481		1	GRUPO DE CABLES Main Chassis Harness; Packard Connectors At Trans. Control Valve Solenoid & Deutsch Connector At 4WD Solenoid; No Longer Available, Order 87456949 Chassis Harness Service Kit
14		87456944		1	GRUPO DE CABLES Main Chassis; Deutsch Connectors At Fwd/Rev & 4WD Solenoids; For Service Order 87456949 Chassis Harness Service Kit; Not Illustrated
		87456949		1	KIT, SERVICE Main Chassis; Includes 87456944 Chassis Harness, 87450931 4WD Jumper Harness, 87456948 Fwd/Rev Jumper Harness

http://www.minnparbackhoeparts.com/

04-08		p2	03/05

MAZO DE CABLES, CONSOLA FRONTAL - SOPORTE

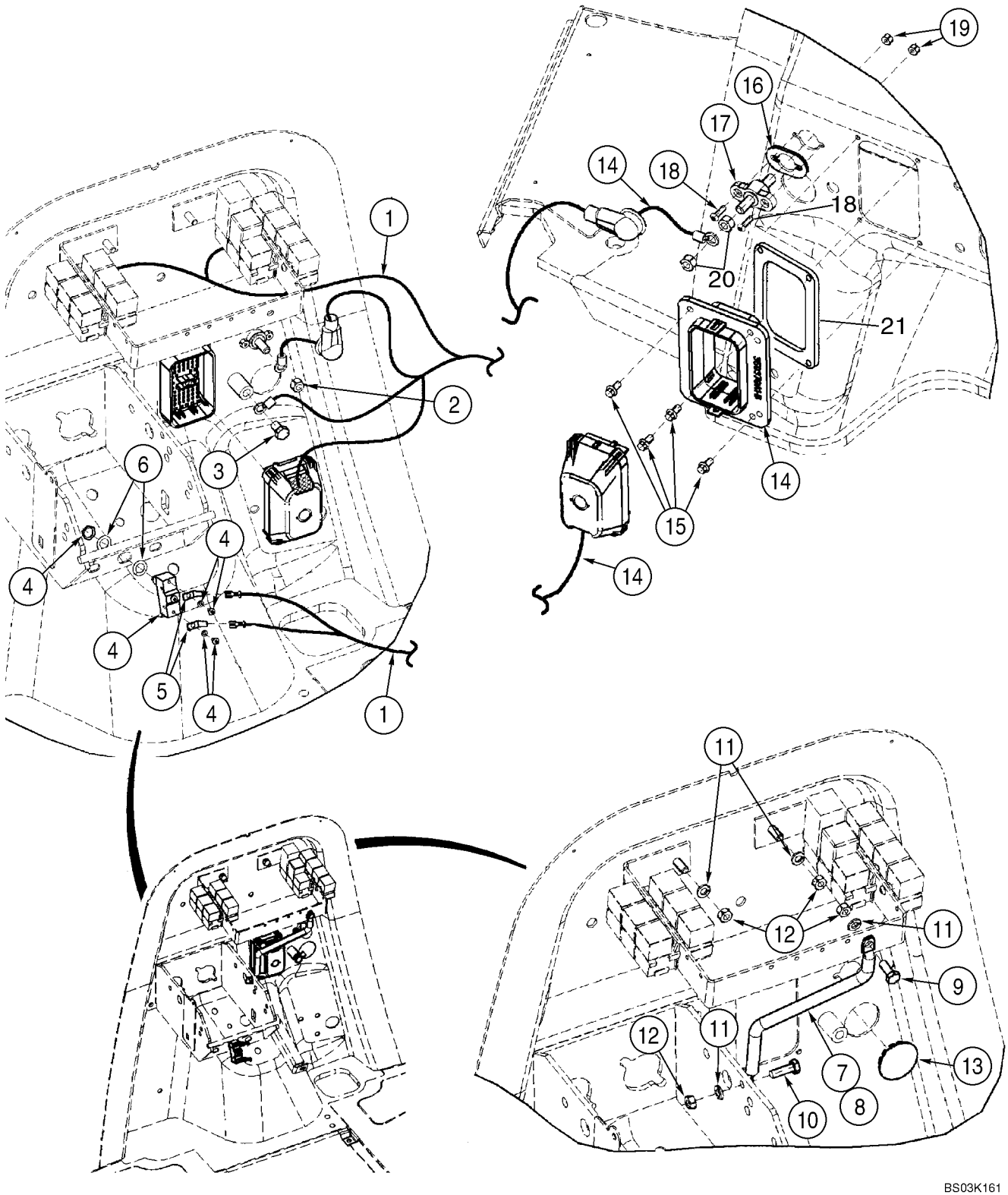

http://www.minnparbackhoeparts.com/

MAZO DE CABLES, CONSOLA FRONTAL - SOPORTE

REF	FN	PART NUMBER	YR/SN	QTY	DESCRIPTION
14A		87450931		1	GRUPO DE CABLES 4WD Transmission Jumper Harness; 1 Packard / 1 Deutsch Connector; Attaches to 4WD Connection on Main Chassis Harness, Not Illustrated
14B		87456948		1	GRUPO DE CABLES Fwd/Rev Transmission Jumper Harness; 2 Deutsch / 1 Packard Connector; Attaches to Transmission Control Valve Solenoid Connection On Main Chassis Harness; Not Illustrated
		L71879		3	SOPORTE DE DIODO
15		781-24613		4	TORNILLO Flange, M6 x 13
16		357966A1		1	JUNTA HERMETICA
17		357278A1		1	RACOR Positive Battery
18		490-11012		2	TORNILLO No. 10 NF x 3/4
19		231-24409		2	CONTRA TUERCA No. 10
20		425-106		2	TUERCA 3/8
21		414174A1		1	JUNTA HERMETICA

http://www.minnparbackhoeparts.com/

ELECTRICO - TRANSMISIÓN, SERVOASISTIDA

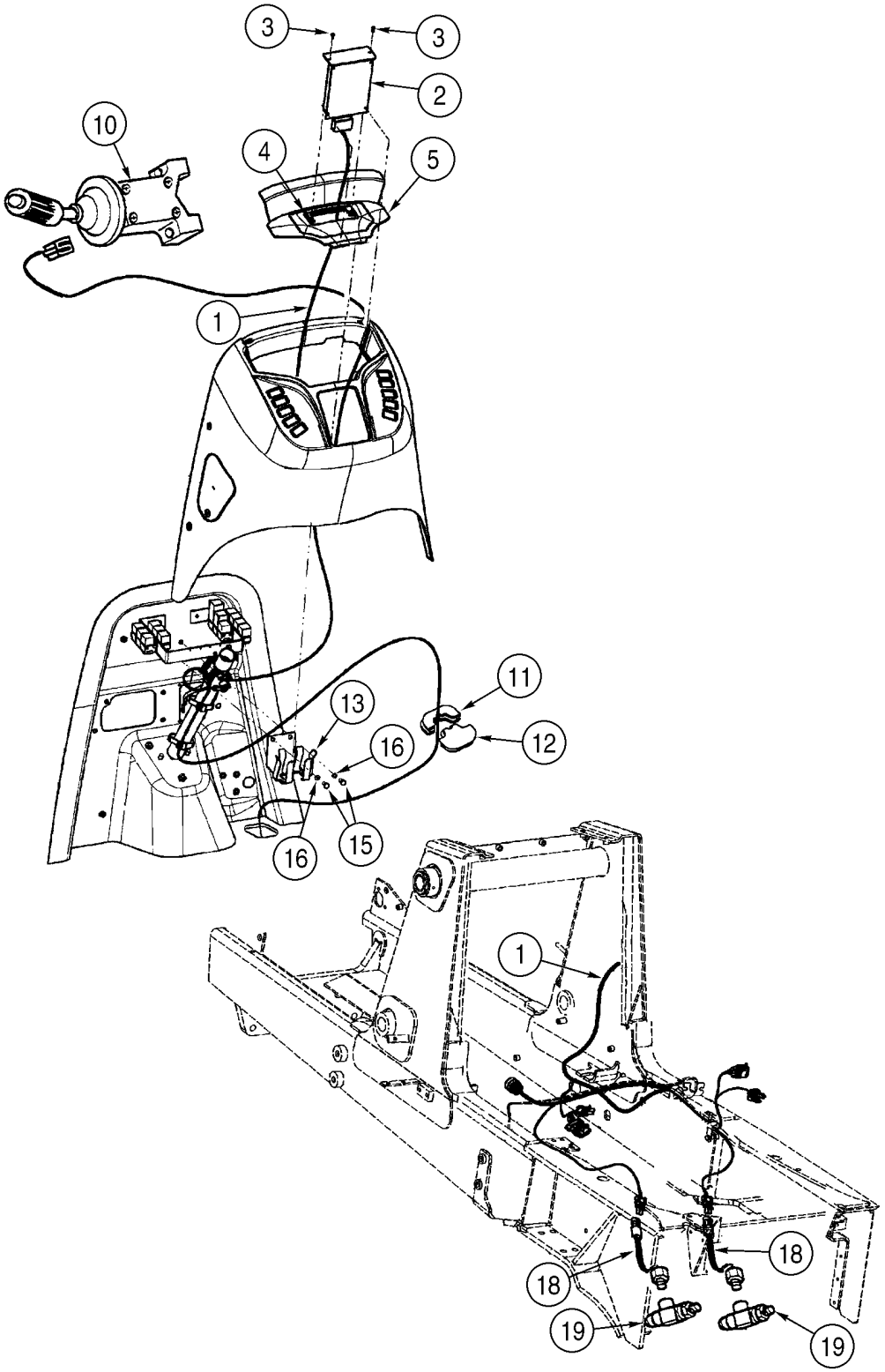

http://www.minnparbackhoeparts.com/

ELECTRICO - TRANSMISIÓN, SERVOASISTIDA

REF	FN	PART NUMBER	YR/SN	QTY	DESCRIPTION
1		392882A4		1	HAZ Powershift Transmission
2		87421488		1	MANDO Controller, Transmission, APC73
3		87310126		2	TORNILLO No. 10 x 3/4, Stainless Steel; Replaces 140-107 Non-Stainless Steel Screw Used On Some Models
4		176857A1		2	TUERCA No. 10, J-Type
5		363227A2		1	TAPA Relay Access
		278316A2		2	SUJETADOR Relay Access Cover
10		231520A2		1	CONTACTOR Shuttle Shift; Transmission; Forward/Neutral/Reverse, See Figure 04-07
11		397443A2		1	ANILLO DE CIERRE
12		397493A2		1	ANILLO DE CIERRE
13		400376A1		1	SOPORTE
15		614-8020		2	TORNILLO M8 x 20
16		892-11008		2	ARANDELA M8
18		D138955		2	CONTACTOR Pressure; Stop Lamp
19		222889A1		2	CONEXION At Rear Axle Brakes, See Figure 07-04

http://www.minnparbackhoeparts.com/

MAZO DE CABLES, CONSOLA LATERAL - INTERRUPTORES

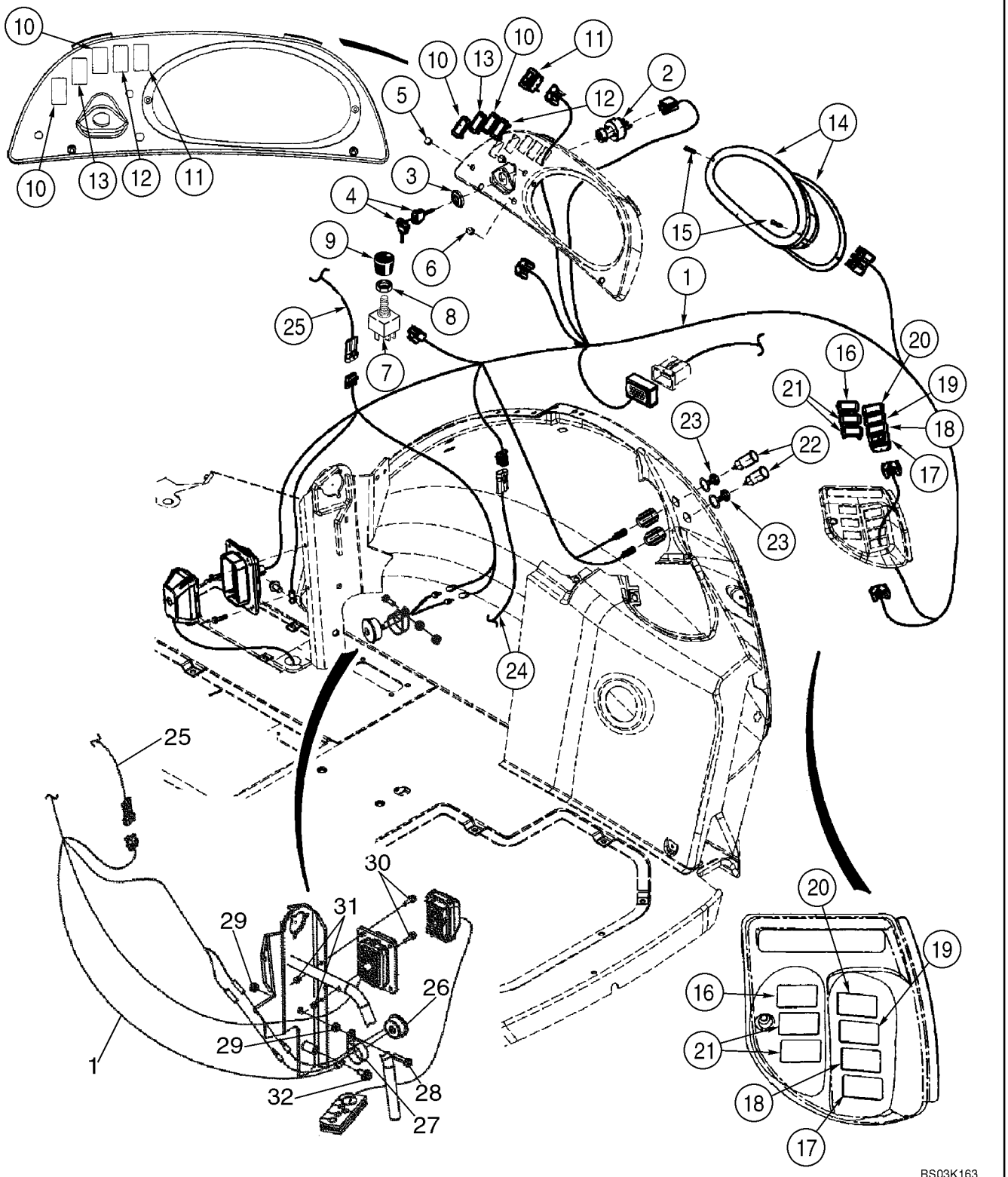

http://www.minnparbackhoeparts.com/

MAZO DE CABLES, CONSOLA LATERAL - INTERRUPTORES

REF	FN	PART NUMBER	YR/SN	QTY	DESCRIPTION
1		87418542		1	GRUPO DE CABLES Side Console
		282775A1		1	CONMUTADOR DE ARRANQ Incl. Ref 2 - 4
2		NSS		1	NO SE REPARA SEPARADAM. Switch; Without Keys
3		NSS		1	NO SE REPARA SEPARADAM. Nut
4		NSS		1	NO SE REPARA SEPARADAM. Key, Ignition; Set Of Two; Padded
5		397569A1		2	TAPÓN 7/16 in, Dome; If Used; For Air Conditioning Switch and Knob, See Figure 09-64
6		397570A1		1	TAPÓN 1/2 in, Dome; If Used; For Heater Switch and Knob, See Figure 09-63
7		245258A1		1	CONTACTOR Blower
		121415A1		1	FUSIBLE 25 amp; Blower And Wiper
8		A42561		1	TUERCA
9		400379A1		1	PLACA
10		126844A1		1-4	TAPÓN If Used
11		133715A1		1	CONTACTOR Rear Work Lamps
12		235002A1		1	CONTACTOR Ride Control; If Used
13		133716A1		1	CONTACTOR Four Wheel Drive; Models Without Powershift Transmission; If Used
13		239408A1		1	CONTACTOR Four Wheel Drive; Models With Powershift Transmission; If Used
		121412A1		1	FUSIBLE 10 amp, Four Wheel Drive
14		87419320		1	CUADRO DE SENAL.MULTIPLE See Figure 04-13
15		140-119		2	TORNILLO No. 10 x 1-1/4
16		126844A1		1-6	TAPÓN If Used
17		386852A2		1	CONTACTOR Horn
18		386788A1		1	CONTACTOR Rear Window Washer; If Used
19		386786A1		1	CONTACTOR Rear Wiper; If Used
20		126844A1		1	TAPÓN If Used
21		386789A2		2	CONTACTOR Backhoe Quick Coupler and Hydraulic Backhoe Bucket Coupler; If Used
22		283779A1		2	SALIDA Power Plug Outlet; 30 amp Maximum
23		283781A1		2	TAPON DEL DEPOSITO Power Plug Outlet
25		NSS		1	NO SE REPARA SEPARADAM. Harness; Loader Control Lever; Included In Loader Control Lever Handle

http://www.minnparbackhoeparts.com/

MAZO DE CABLES, CONSOLA LATERAL - INTERRUPTORES

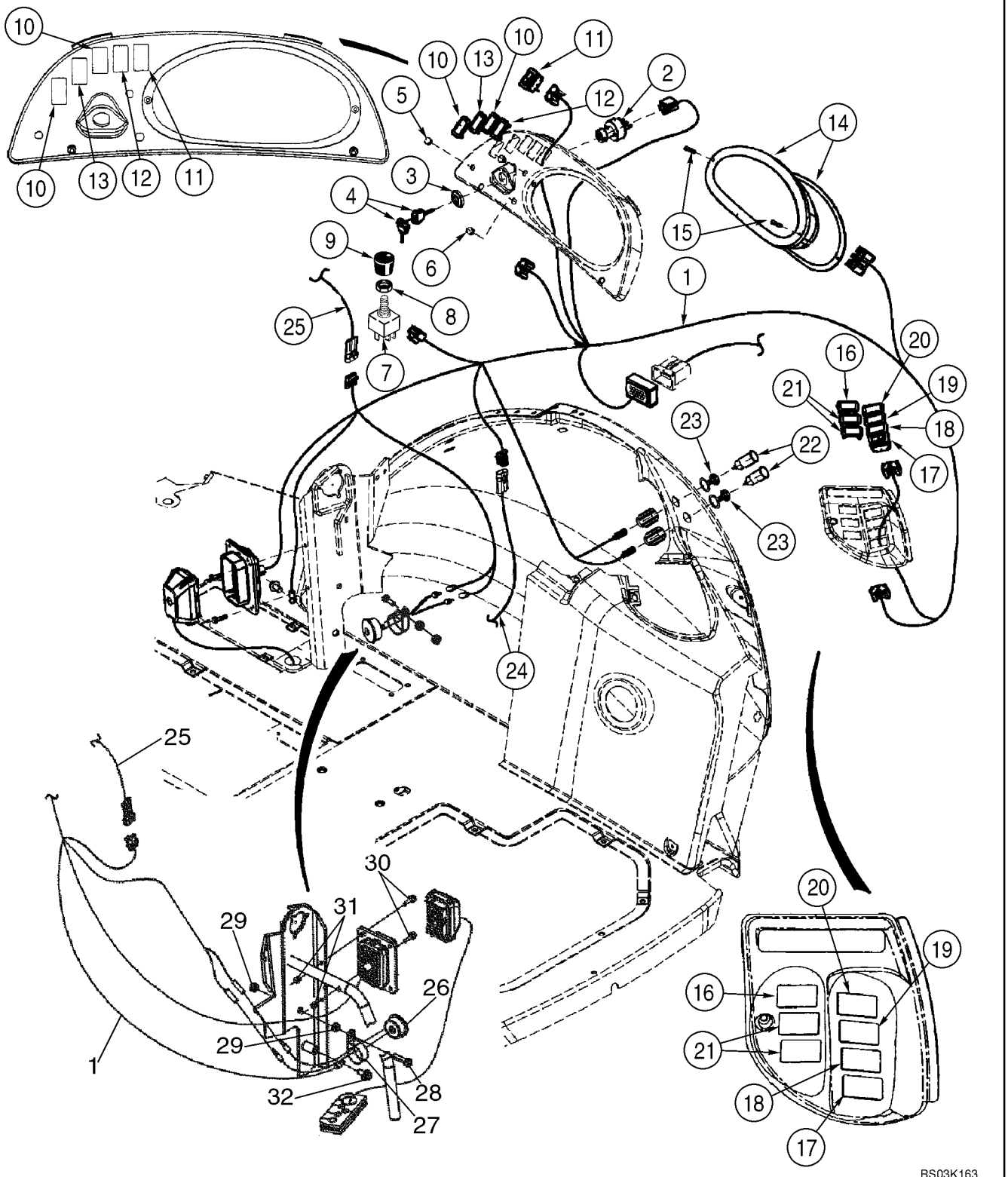

http://www.minnparbackhoeparts.com/

MAZO DE CABLES, CONSOLA LATERAL - INTERRUPTORES

REF	FN	PART NUMBER	YR/SN	QTY	DESCRIPTION
26		D137468		1	TIMBRE ZUMBADOR Engine Water Temperature, Engine Oil Pressure and Parking Brake
27		515-23444		1	COLLAR 1-3/4
28		614-10030		1	TORNILLO M10 x 30
29		829-1410		2	TUERCA M10; 10.9
30		844-6025		2	TORNILLO M6 x 25
31		832-10406		2	TUERCA M6
32		844-10020		1	TORNILLO M10 x 20
		87436675		1	GRUPO DE CABLES Chassis Options Harness; Includes (4) L71879 Diodes
		L71879		4	SOPORTE DE DIODO

http://www.minnparbackhoeparts.com/

PANEL DE INSTRUMENTOS, DELANTERO - CUBIERTAS

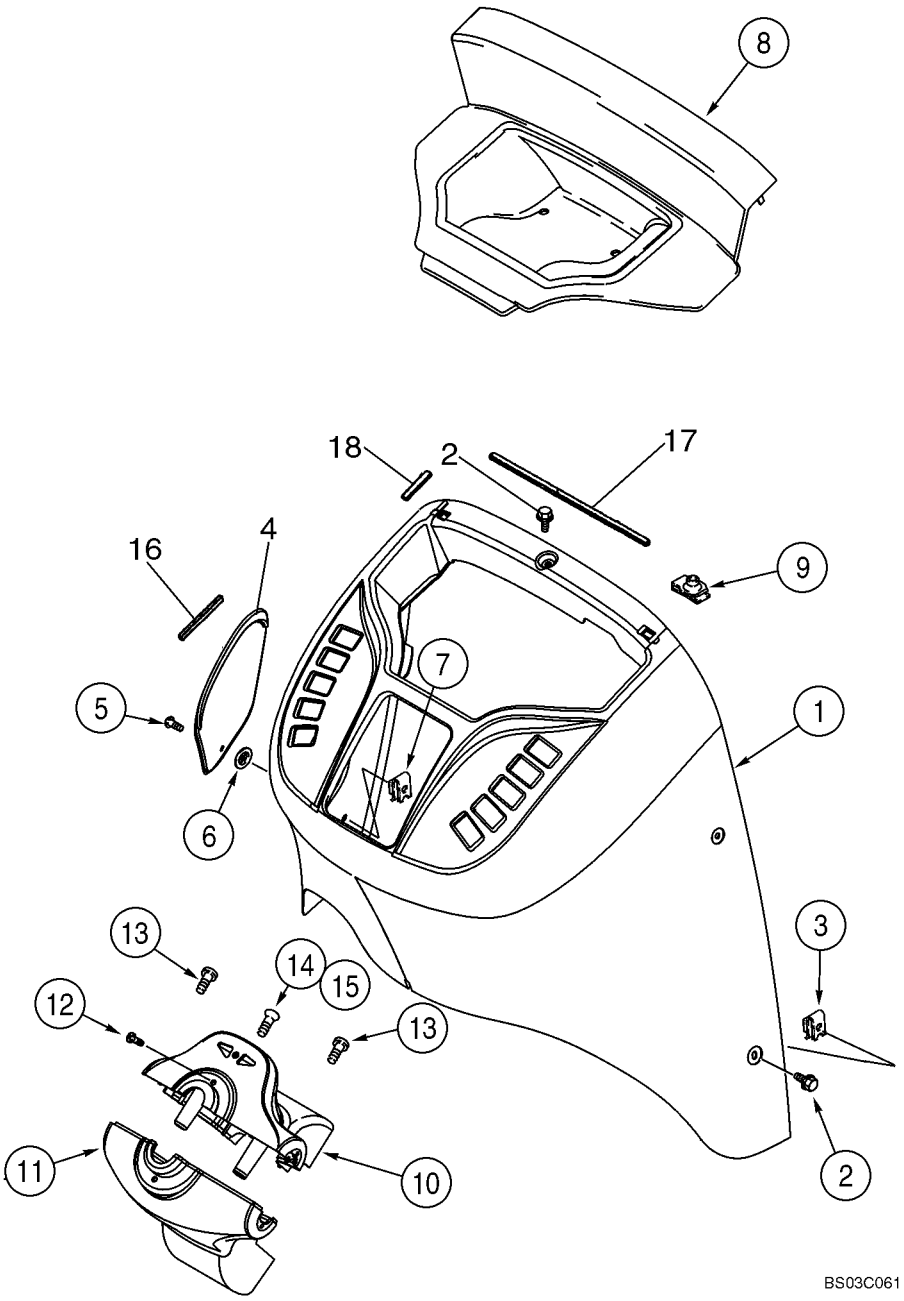

http://www.minnparbackhoeparts.com/

PANEL DE INSTRUMENTOS, DELANTERO - CUBIERTAS

REF	FN	PART NUMBER	YR/SN	QTY	DESCRIPTION
1		355827A2		1	TAPA Front
2		87310152		6	TORNILLO Hex Flange, M6 x 16, Stainless Steel; Replaces 555-10 Non-Stainless Steel Screw Used On Some Models
3		833-40406		6	TUERCA M6
4		360244A1		1	TAPA Fuse Access
5		87310086		1	TORNILLO Includes Washer, Stainless Steel; Replaces 182276A1 Non-Stainless Steel Screw Used On Some Models
6		127009A1		1	CLIP ELECTRICO
7		131-861		1	TUERCA No. 10
8		360245A2		1	TAPA Relay Access; Models Without Powershift Transmission
8A		363227A2		1	TAPA Relay Access; Models With Powershift Transmission; Not Illustrated
9		278316A2		2	SUJETADOR
10		373689A2		1	TABA (CONJUNTO) Steering Column, Upper; Incl. Ref 10A - 10E; Components Not Illustrated
10A		360242A2		1	TAPA
10B		303465A2		1	FARO Blinker
10C		303466A1		1	IDEOGRAMA Right Flasher
10D		303467A1		1	IDEOGRAMA Left Flasher
10E		373693A1		1	TORNILLO Flat Head, No. 8 x 7/16
11		360243A2		1	TAPA Steering Column, Lower
12		87310124		2	TORNILLO No. 10 x 1/2, Stainless Steel; Replaces 140-106 Non-Stainless Steel Screw Used On Some Models
13		87310124		2	TORNILLO No. 10 x 1/2, Stainless Steel; Replaces 140-106 Non-Stainless Steel Screw Used On Some Models
14		87310142		1	TORNILLO No. 10-16 x 1/2, Stainless Steel; Replaces 260-1358 Non-Stainless Steel Screw Used On Some Models
15		131-121		1	TUERCA ESPECIAL No. 10
16		414572A1		1	CINTA 100 mm, Adhesive Back
17		414034A1		1	CINTA 330 mm, Adhesive Back
18		414033A1		4	CINTA 60 mm, Adhesive Back

http://www.minnparbackhoeparts.com/

04-12		p1	05/05

PANEL DE INSTRUMENTOS, LATERAL - CUBIERTAS (LADO DERECHO)

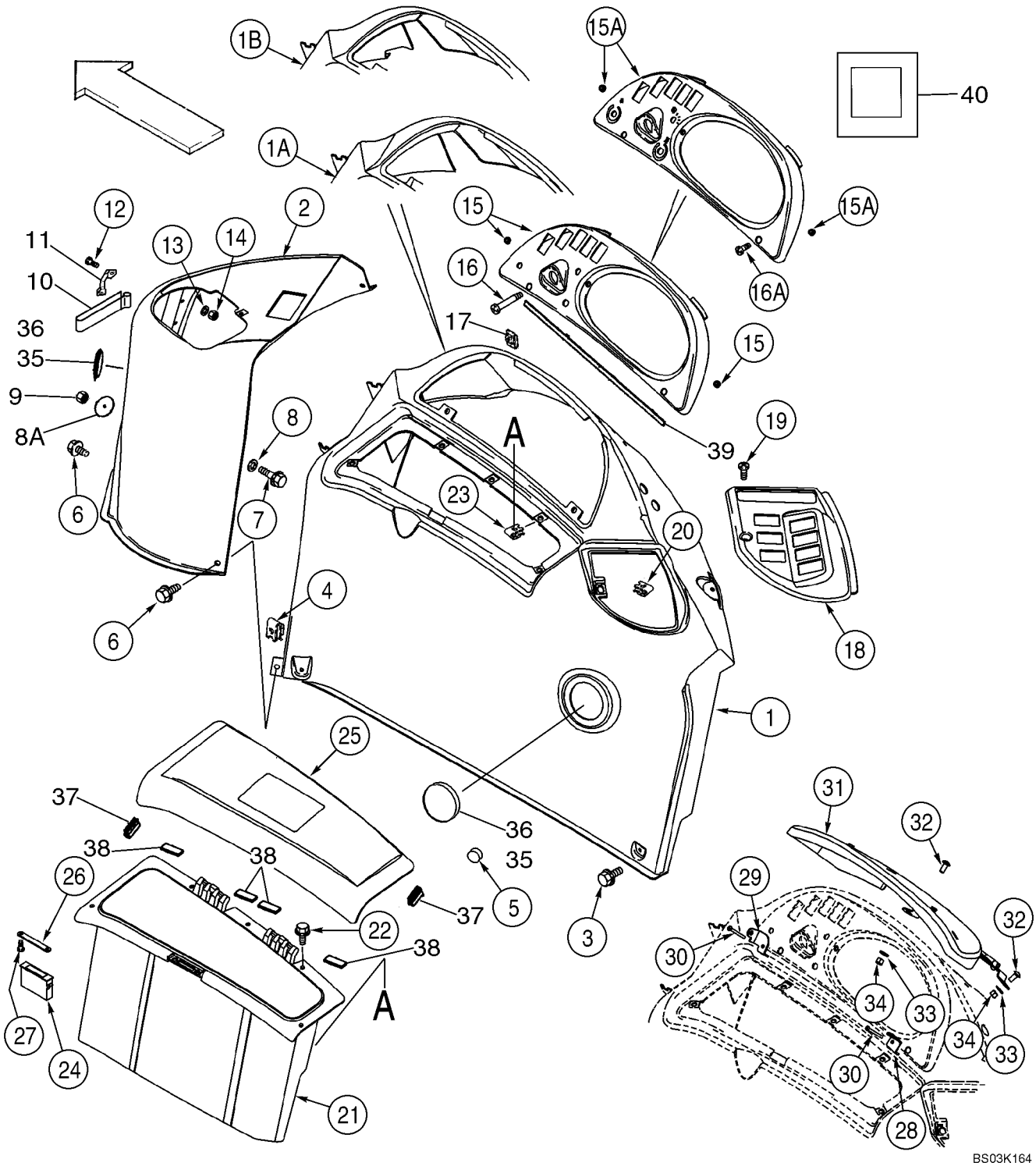

http://www.minnparbackhoeparts.com/

PANEL DE INSTRUMENTOS, LATERAL - CUBIERTAS (LADO DERECHO)

REF	FN	PART NUMBER	YR/SN	QTY	DESCRIPTION
1		360250A2		1	REPISA Canopy Models
1A		355198A2		1	REPISA Cab, Single Door
1B		372167A3		1	REPISA Cab, Two Door
2		355197A2		1	REPISA Loader Control
3		87310098		6	TORNILLO Flange, M6 x 20, Stainless Steel; Replaces 555-2 Non-Stainless Steel Screw Used On Some Models
4		833-40406		5	TUERCA M6
5		L60224		1	PARACHOQUES Rubber
6		87310152		2	TORNILLO Flange, M6 x 16, Stainless Steel; Replaces 555-10 Non-Stainless Steel Screw Used On Some Models
7		844-6025		1	TORNILLO Flange, M6 x 25
8		895-15006		1	ARANDELA 6,6 x 25 x 1,6 mm
8A		407660A1		1	ARANDELA 7 mm ID x 50 mm OD
9		832-10406		1	TUERCA M6
10		184726A1		1	BANDA DE FIJACTION Velcro
11		182594A1		2	MANECILLA Velcro Retainer
12		87310184		4	TORNILLO M4 x 16; 4.8, Stainless Steel; Replaces 842-1416 Non-Stainless Steel Screw Used On Some Models
13		895-11004		4	ARANDELA 4,3 x 9 x 0,8 mm
14		832-10404		4	TUERCA M4
15		391818A2		1	MARCO Instrument Cluster Mounting; Canopy Models, Includes 390258A1
		390258A1		2	INTRODUCTOR No. 10, Threaded
15A		390255A2		1	MARCO Instrument Cluster Mounting; Cab Models, Includes 390258A1
		390258A1		2	INTRODUCTOR No. 10, Threaded
16		87310128		2	TORNILLO No. 10 x 2-1/4, Stainless Steel; Canopy Models; Replaces 140-120 Non-Stainless Steel Screw Used On Some Models
16A		87310126		2	TORNILLO No. 10 x 3/4, Stainless Steel; Cab Models; Replaces 140-107 Non-Stainless Steel Screw Used On Some Models
17		131-619		2	TUERCA No. 10; Cab or Canopy
18		353068A2		1	MARCO Rear Switches

http://www.minnparbackhoeparts.com/

PANEL DE INSTRUMENTOS, LATERAL - CUBIERTAS (LADO DERECHO)

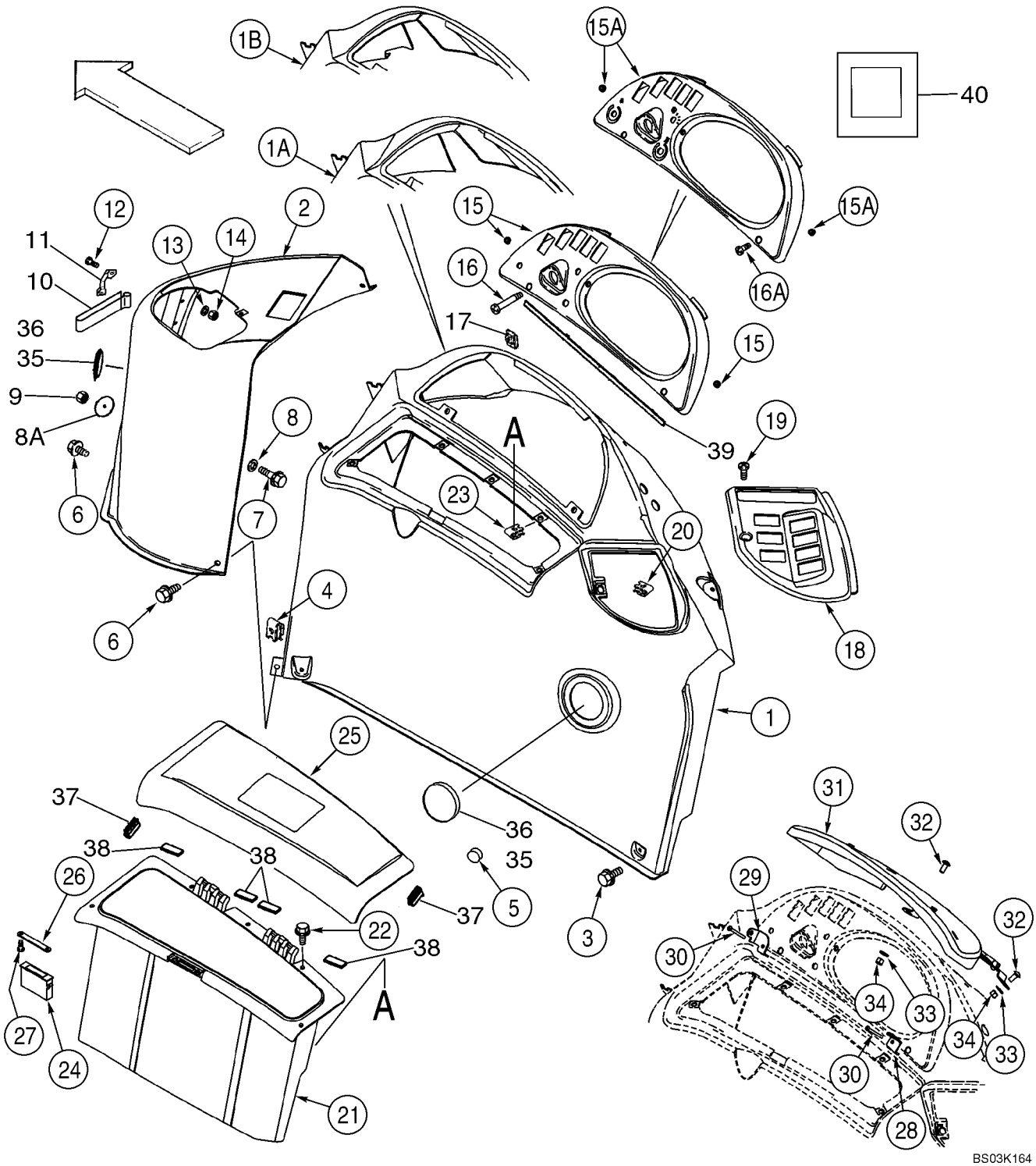

http://www.minnparbackhoeparts.com/

PANEL DE INSTRUMENTOS, LATERAL - CUBIERTAS (LADO DERECHO)

REF	FN	PART NUMBER	YR/SN	QTY	DESCRIPTION
19		87310126		1	TORNILLO No. 10 x 3/4, Stainless Steel; Replaces 140-107 Non-Stainless Steel Screw Used On Some Models
20		131-619		1	TUERCA No. 10
21		366632A2		1	CAJA HERRAMIENTAS Right-Hand
22		87310098		5	TORNILLO Flange, M6 x 20, Stainless Steel; Replaces 555-2 Non-Stainless Steel Screw Used On Some Models
23		833-40406		5	TUERCA M6
24		D127335		1	RETENEDOR Magnetic Catch
25		366633A3		1	TAPA Storage Box
26		375112A1		1	CERRADERO Striker
27		440-1066		2	TORNILLO No. 6 x 3/8
28		386369A2		1	PIEZA DE SOPORTE
29		386368A2		1	PIEZA DE SOPORTE
30		87310128		2	TORNILLO No. 10 x 2-1/4, Stainless Steel; Replaces 140-120 Non-Stainless Steel Screw Used On Some Models
31		385614A4		1	TABA (CONJUNTO) Instrument Cluster; Anti-Vandalism, Canopy Models; Includes 386502A1, F22426
		386502A1		2	PARACHOQUES
		F22426		3	DISPOSITIVO DE TOPE
32		87310176		2	TORNILLO Round Head, M8 x 20, Stainless Steel; Replaces 811-8020 Non-Stainless Steel Screw Used On Some Models
33		87310185		2	ARANDELA 9 x 20 x 1,6 mm, Stainless Steel; Replaces 895-15008 Non-Stainless Steel Washer Used On Some Models
34		832-10408		2	TUERCA M8
35		1302758C1		2	TAPÓN 3 inch
36		87310144		4	TORNILLO AUTOROSCANTE No. 6 x 1/2, Stainless Steel; Replaces 413054A1 Non-Stainless Steel Screw Used On Some Models
37		430471A1		2	ANILLO DE CIERRE 40 mm, Bulb; Storage Lid Bumper
38		414092A1		4	CINTA 50 mm, Storage Box; Adhesive Back

http://www.minnparbackhoeparts.com/

04-12		p3	05/05

PANEL DE INSTRUMENTOS, LATERAL - CUBIERTAS (LADO DERECHO)

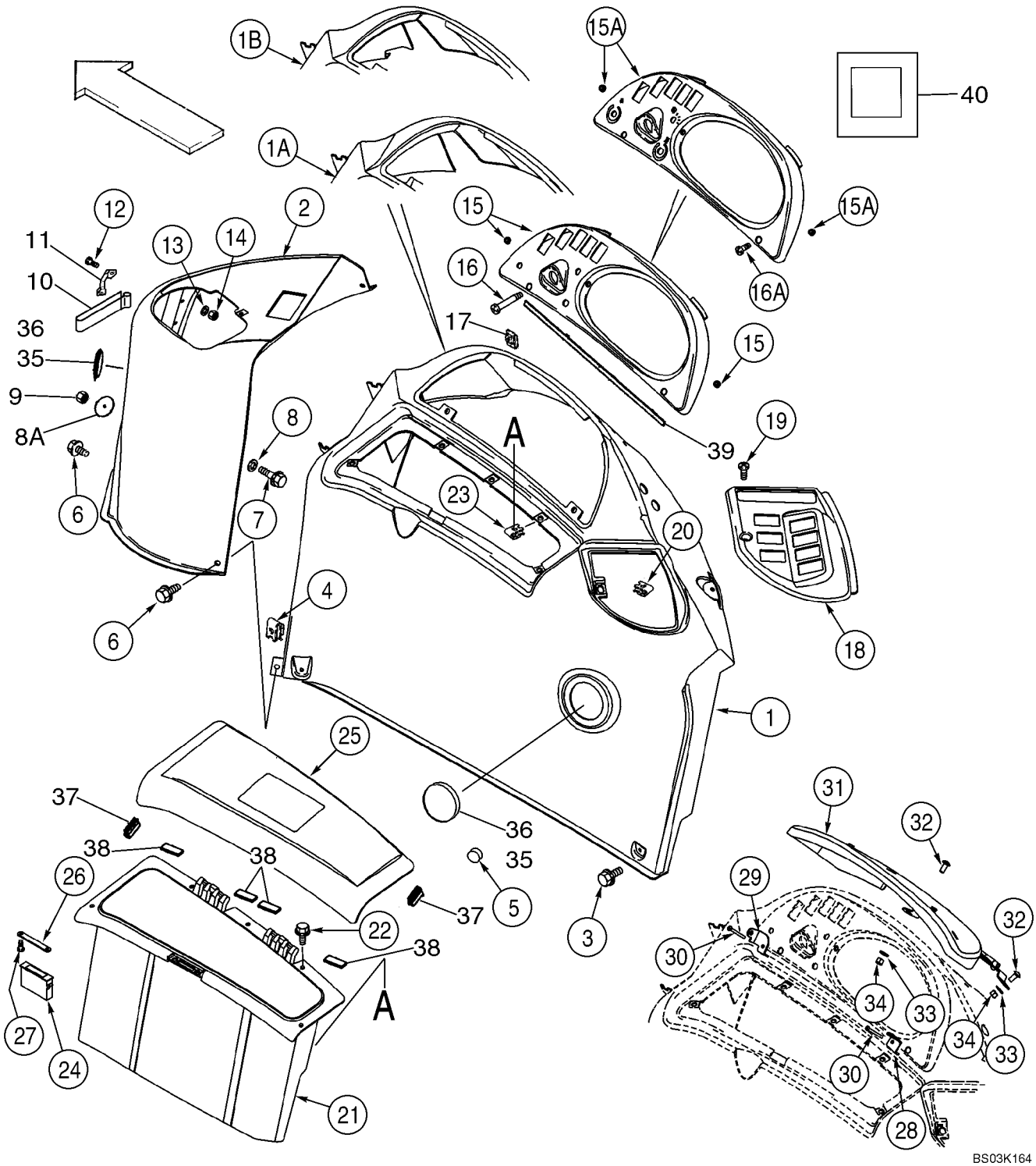

http://www.minnparbackhoeparts.com/

PANEL DE INSTRUMENTOS, LATERAL - CUBIERTAS (LADO DERECHO)

REF	FN	PART NUMBER	YR/SN	QTY	DESCRIPTION
39		414071A1		1	BANDA HERMETICIDAD 480 mm, Adhesive Back
40		412510A1		1	ANILLO DE CIERRE 25 x 25 x 3 mm; Adhesive Back; Console To Fender

http://www.minnparbackhoeparts.com/

04-13		p1	10/03

VELOCIMETRO COMB.

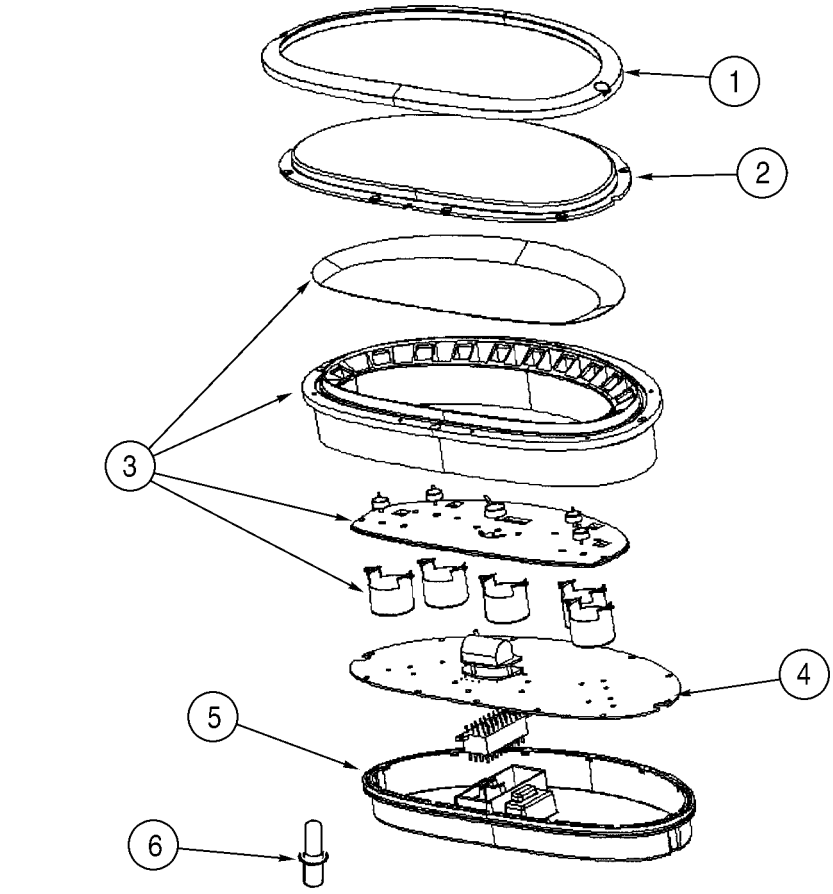

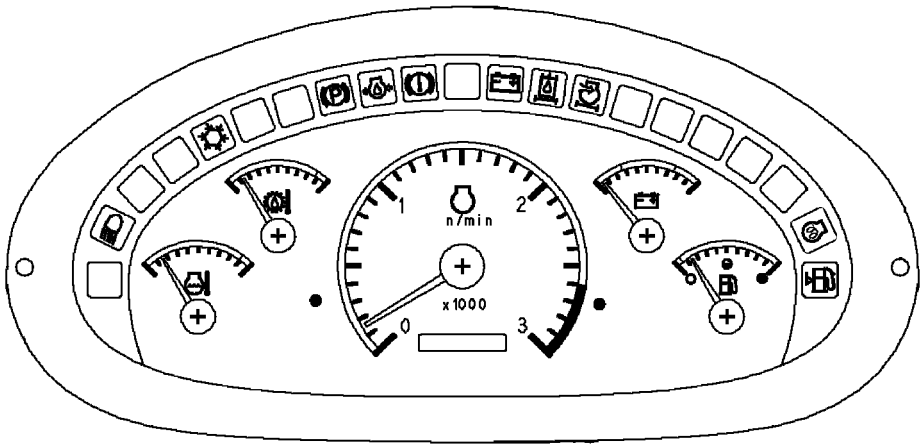

BS03K165

http://www.minnparbackhoeparts.com/

VELOCIMETRO COMB.

REF	FN	PART NUMBER	YR/SN	QTY	DESCRIPTION
		87419320		1	CUADRO DE SENAL.MULTIPLE Incl. Ref 1 - 6
1		370755A1		1	MARCO Black
		NSS		2	NO SE REPARA SEPARADAM. No. 6 x 1/4, Screw; Trim
2		370756A1		1	TAPA TRANSLUCIDA Clear; Includes O-Ring Which Is Not Serviced Separately
3		87423396		1	APARATO MEDIDOR Gauge Includes Overlay, Seal and Gauges Which Are Not Serviced Separately
4		87423397		1	CUENTAHORAS Hourmeter, Circuit Board; Includes Seal and Hourmeter Which Are Not Serviced Separately
		NSS		25	NO SE REPARA SEPARADAM. No. 6 x 3/8, Screw
5		370760A1		1	TRASERA TAPA Rear; Includes O-Ring Which Is Not Serviced Separately
		NSS		2	NO SE REPARA SEPARADAM. No. 6 x 3/4, Screw; Rear Cover
6		388053A2		1	AMPOLLA 1W, 14V; Includes Socket

http://www.minnparbackhoeparts.com/

ELECTRICO - LUCES, TECHO DE LA ROPS

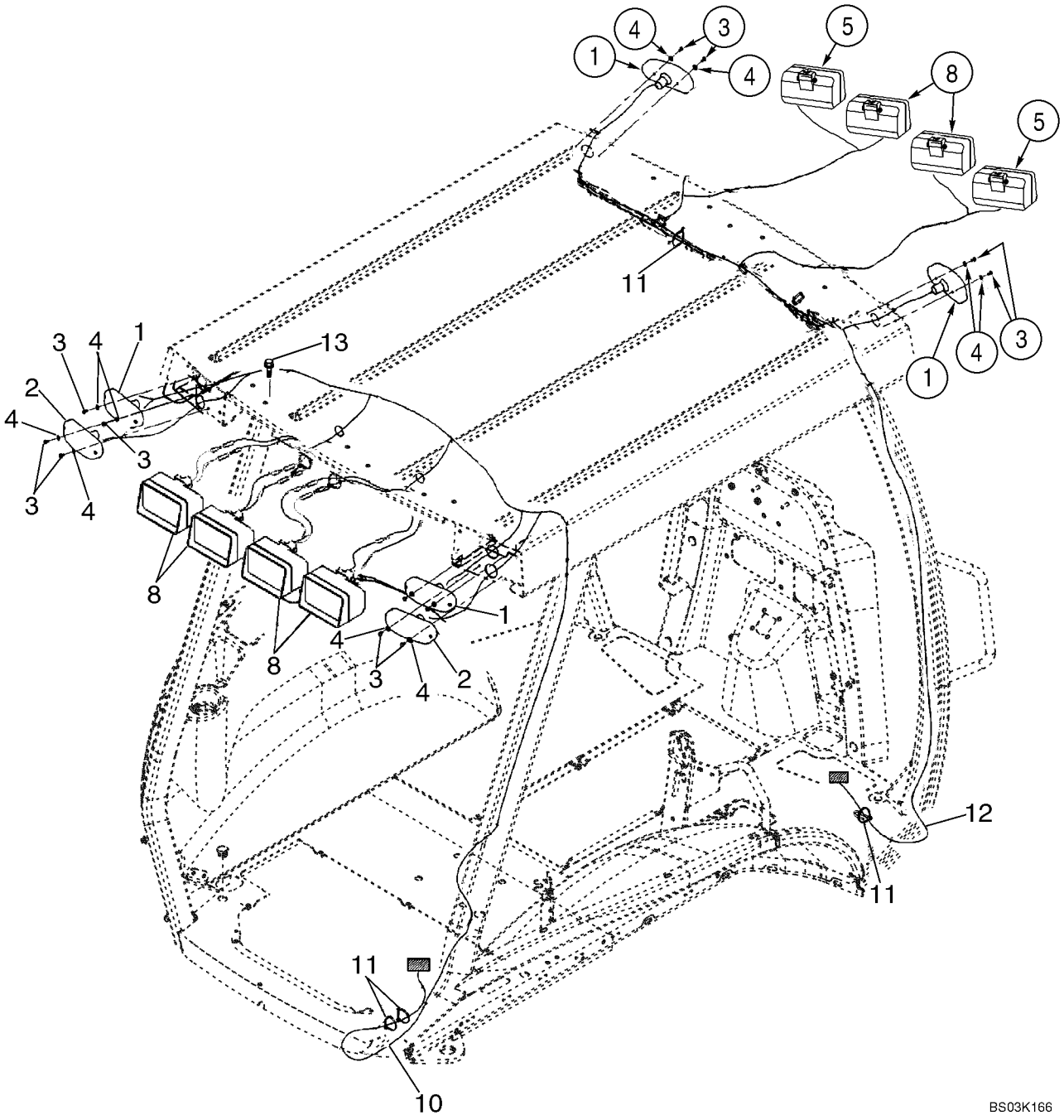

http://www.minnparbackhoeparts.com/

ELECTRICO - LUCES, TECHO DE LA ROPS

REF	FN	PART NUMBER	YR/SN	QTY	DESCRIPTION
1		D135384		4	LAMPARA Turn Signal and Flasher; See Figure 04-16
2		D121152		2	LAMPARA Stop And Tail; See Figure 04-16
3		329032A1		12	TORNILLO No. 10 x 3/8
4		495-31022		12	ARANDELA 7/32 x 1/2 x 3/64
5		398846A3		2	FARO (CONJ) Front Driving; Includes 1312210C2
		1312210C2		1	BOMBILLA 12V, 55W
8		398847A3		6	FARO (CONJ) Front and Rear Flood and Work Lamps; Includes 1312210C2, 276498A1; ABL Brand, If Used
8		87443080		6	FARO (CONJ) Front and Rear Flood and Work Lamps; Includes 1312210C2 Bulb; Cobo Brand, If Used
		1312210C2		1	BOMBILLA 12V, 55W
		276498A1		1	TAPA TRANSLUCIDA With Hardened Glass; Replaces 1964801C1 Non-Hardened Lens Used In Production
10		396023A2		1	HAZ Canopy Lamps; Rear
11		L18337		X	BANDA 15 in
12		404617A1		1	HAZ Canopy Lamps and Wiper; Front
13		128312A1		8	TORNILLO Flange, M10 x 15

http://www.minnparbackhoeparts.com/

04-15		p1	04/04

ELECTRICO - LUCES, CABINA DE LA ROPS

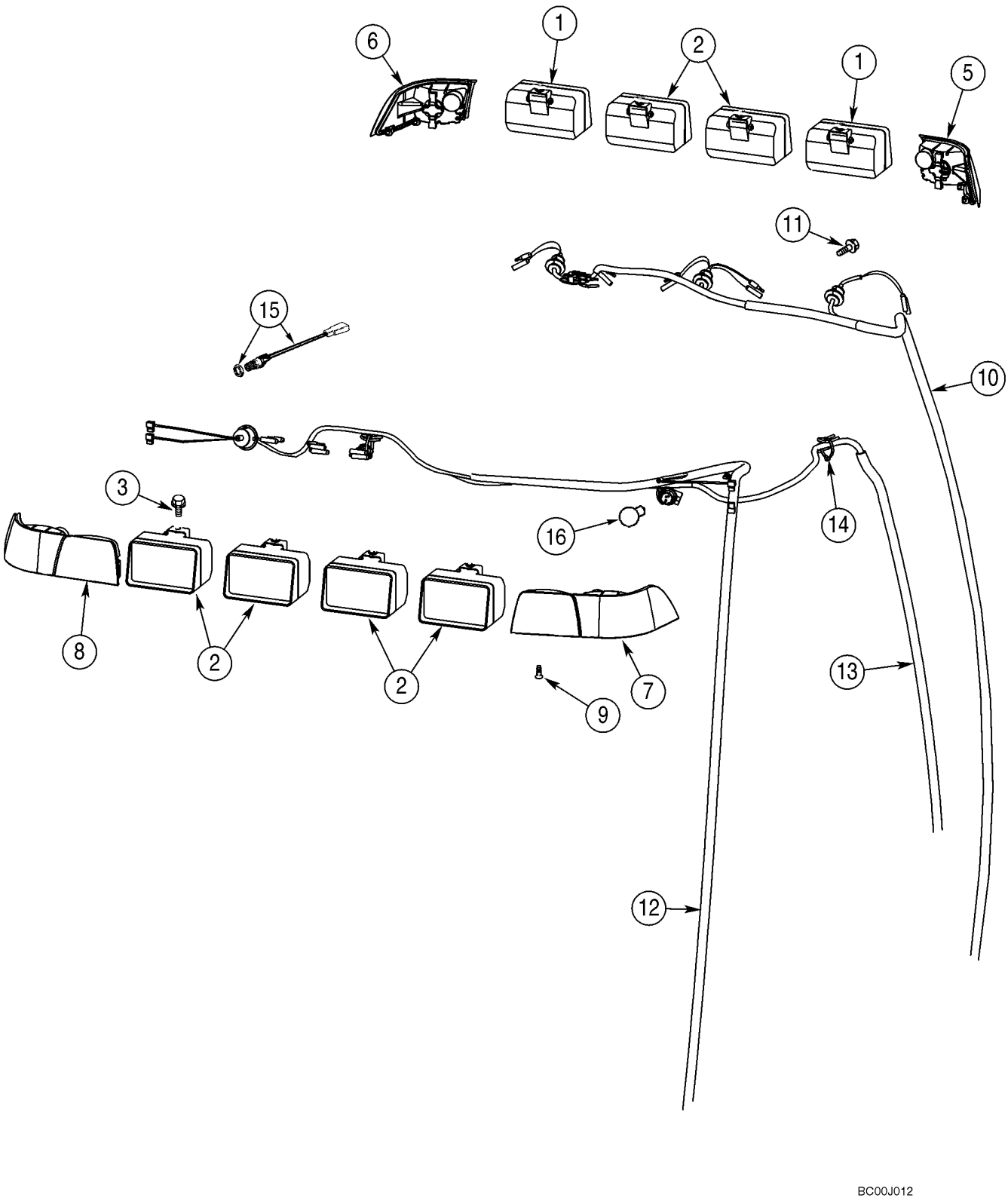

http://www.minnparbackhoeparts.com/

ELECTRICO - LUCES, CABINA DE LA ROPS

REF	FN	PART NUMBER	YR/SN	QTY	DESCRIPTION
1		398846A3		2	FARO (CONJ) Front Driving; Includes 1312210C2
		1312210C2		1	BOMBILLA 12V, 55W
2		398847A3		6	FARO (CONJ) Front and Rear Flood and Work Lamps; Includes 1312210C2, 276498A1; ABL Brand, If Used
2		87443080		6	FARO (CONJ) Front and Rear Flood and Work Lamps; Includes 1312210C2 Bulb; Cobo Brand, If Used
		1312210C2		1	BOMBILLA 12V, 55W
		276498A1		1	TAPA TRANSLUCIDA With Hardened Glass; Replaces 1964801C1 Non-Hardened Lens Used In Production
3		128312A1		8	TORNILLO M10 x 15
5		279224A1		1	LUNA FARO Amber; Right Front Corner
6		279223A1		1	LUNA FARO Amber; Left Front Corner
7		357540A1		1	FARO (CONJ) Amber and Red; Right Rear Corner
8		357541A1		1	FARO (CONJ) Amber and Red; Left Rear Corner
9		394863A1		10	TORNILLO M6 x 20
10		404617A1		1	HAZ Front
11		844-10020		2	TORNILLO M10 x 20
12		398380A3		1	HAZ Rear
13		396018A3		1	HAZ B-Post, Dome Lamp, Radio, Rear Wiper; Replaces 396018A2 Harness
14		L18337		5	BANDA 15 in
15		279265A2		1	CONTACTOR Dome Lamp
16		279916A1		2	BOMBILLA

http://www.minnparbackhoeparts.com/

04-16		p1	08/03

CONJUNTO DE LA LAMPARA (MODELOS CON TECHO ROPS)

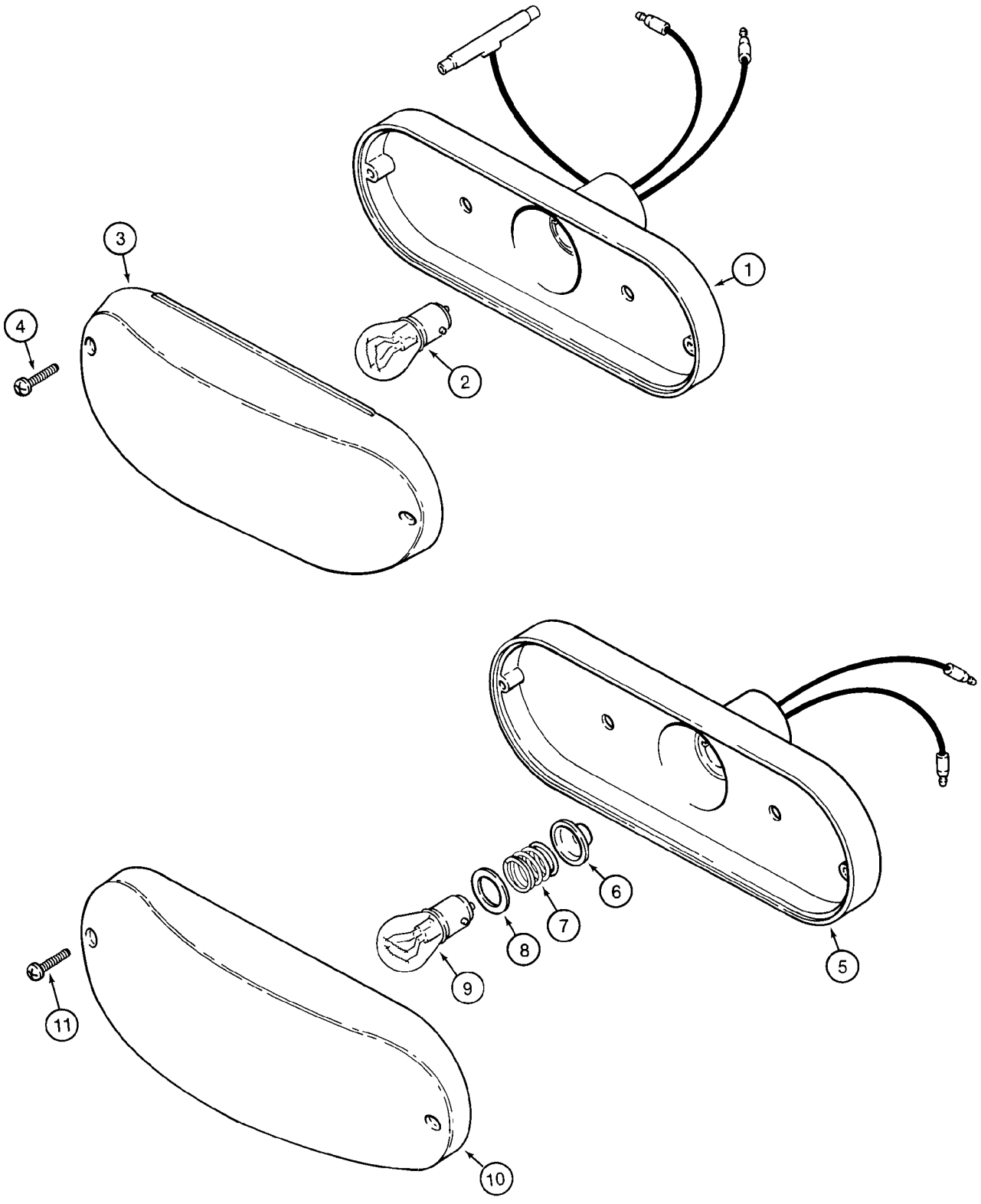

http://www.minnparbackhoeparts.com/

CONJUNTO DE LA LAMPARA (MODELOS CON TECHO ROPS)

REF	FN	PART NUMBER	YR/SN	QTY	DESCRIPTION
		D121152		2	LAMPARA Stop And Tail Lamp; Red; Incl. Ref 1 - 4
1		NSS		1	NO SE REPARA SEPARADAM. Housing
2		T34857		1	AMPOLLA No. 1157
3		N6836		1	TAPA TRANSLUCIDA Red
4		261-14310		2	TORNILLO No. 6 st x 5/8
		D135384		4	LAMPARA Turn Signal and Flasher; Amber; Incl. Ref 5 - 11
5		NSS		1	NO SE REPARA SEPARADAM. Housing
6		NSS		1	NO SE REPARA SEPARADAM. Seal
7		NSS		1	NO SE REPARA SEPARADAM. Spring
8		NSS		1	NO SE REPARA SEPARADAM. Insulator
9		A41264		1	BOMBILLA 12V, No. 1156
10		N14283		1	TAPA TRANSLUCIDA Amber
11		261-14310		2	TORNILLO No. 6 st x 5/8

http://www.minnparbackhoeparts.com/

04-17		p1	04/04

BOCINA - ALARMA, RETROCESO

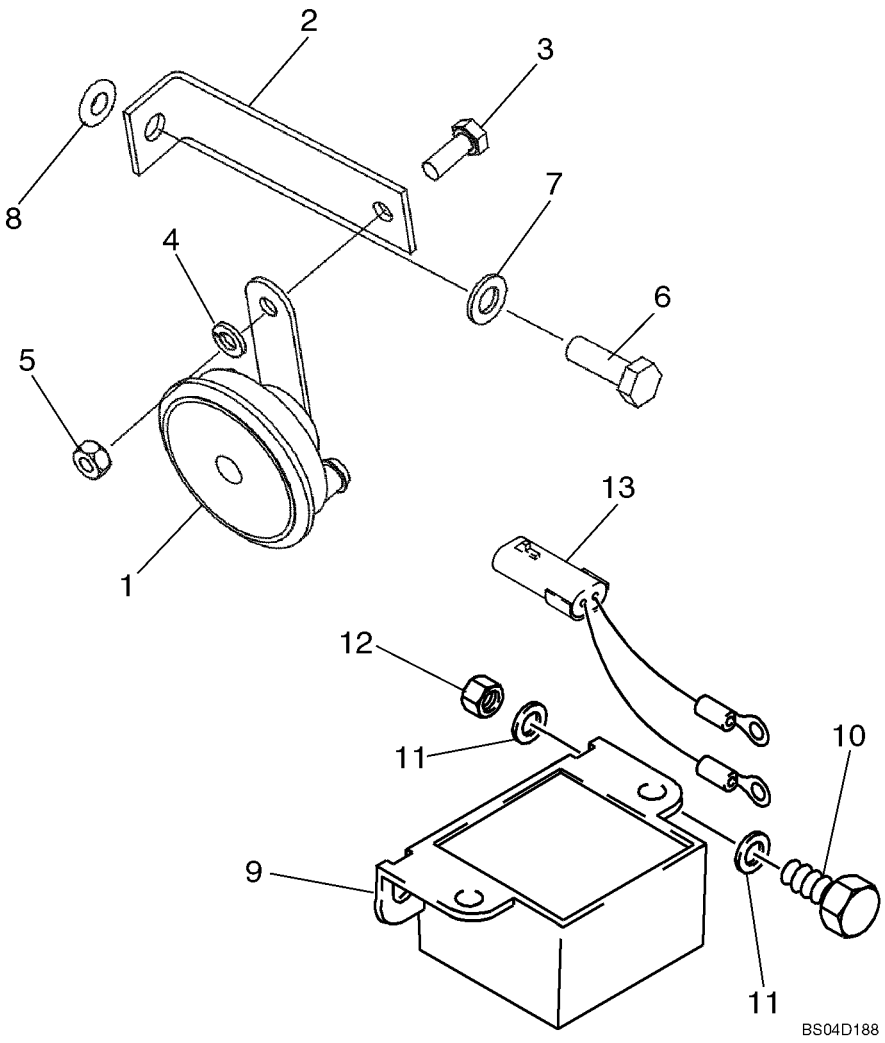

http://www.minnparbackhoeparts.com/

BOCINA - ALARMA, RETROCESO

REF	FN	PART NUMBER	YR/SN	QTY	DESCRIPTION
1		237582A1		1	BOCINA Black
2		87423496		1	PIEZA DE SOPORTE Bracket
3		614-8020		1	TORNILLO M8 x 20
4		892-11008		1	ARANDELA M8
5		829-1408		1	TUERCA M8; 10
6		614-10030		1	TORNILLO M10 x 30
7		895-11010		1	ARANDELA
8		87417721		1	ROSCA POSTIZA M10 Rivnut
9		109511A1		1	ALARMA Backup Alarm; Includes Nuts
10		614-8025		2	TORNILLO M8 x 25
11		895-11008		4	ARANDELA 9 x 17 x 1,6 mm
12		832-10408		2	TUERCA M8
13		87425869		1	GRUPO DE CABLES Pigtail Wire; Backup Alarm

http://www.minnparbackhoeparts.com/

04-18		p1	03/04

FARO, GIRATORIO (MODELOS CON CABINA O CON TECHO)

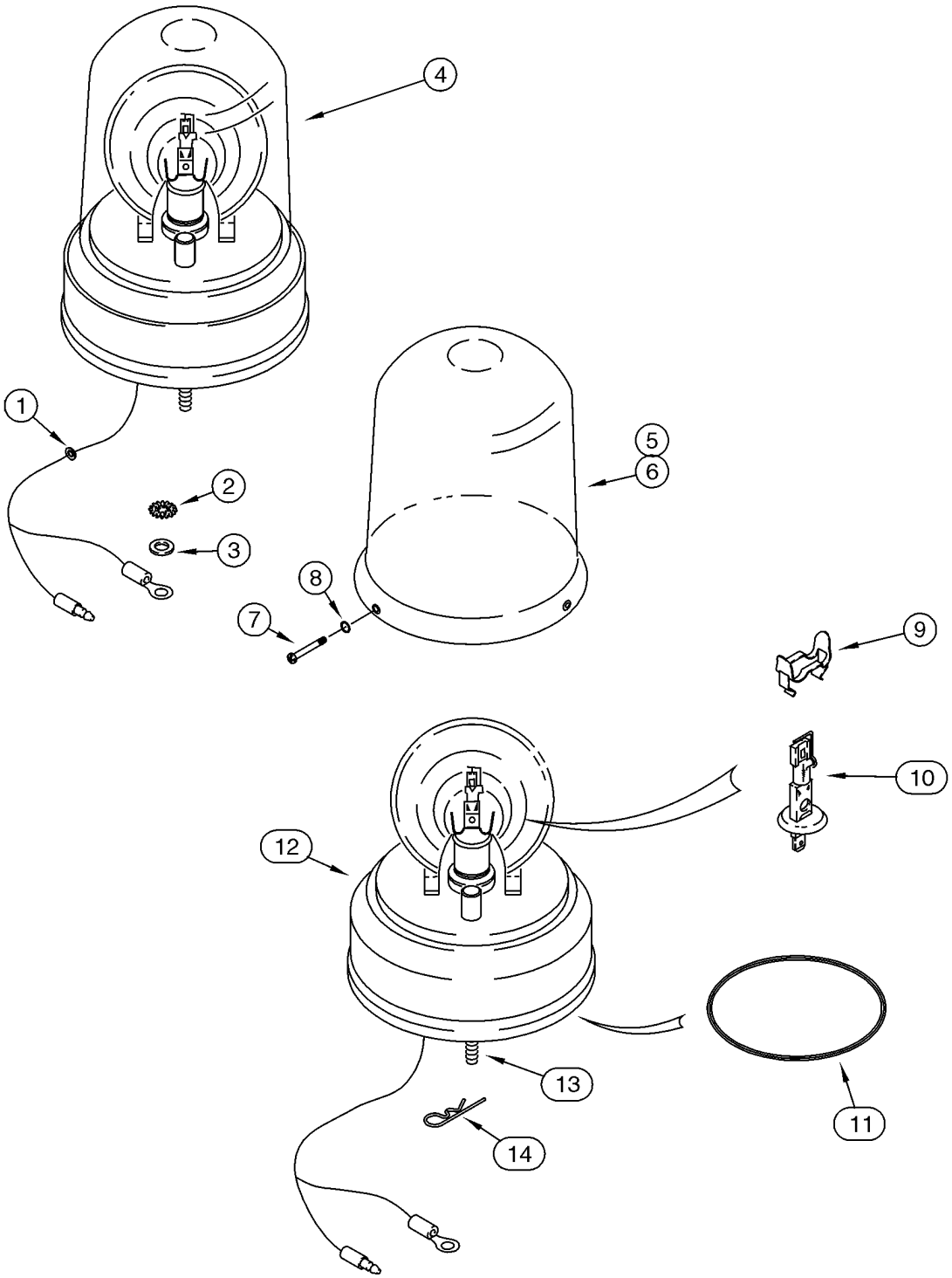

http://www.minnparbackhoeparts.com/

FARO, GIRATORIO (MODELOS CON CABINA O CON TECHO)

REF	FN	PART NUMBER	YR/SN	QTY	DESCRIPTION
		387940A1		1	JEUGO Rotating Beacon; Amber, 12V; Incl. Ref 1 - 5, 7 - 16 and Instructions
1		A23870		1	PASACABLES
2		493-11026		1	ARANDELA 1/4; Internal External Tooth Lock Washer; Ground
3		495-21031		1	ARANDELA 5/16 x 3/4 x 1/16
4		108366A1		1	LAMPARA DE SENALES Rotating Beacon Assembly; Amber, 12V; Incl. Ref 5, 7 - 14
5		A187542		1	TAPA TRANSLUCIDA Amber; If Used
6		127158A1		1	TAPA TRANSLUCIDA Blue; Optional; Not Included In Kit, Purchase Separately; If Used
7		168-71		3	TORNILLO No. 8 x 1/2
8		238-5005		3	JUNTA HERMETICA 3/32 ID x 1/16
9		101531A1		1	SUJETADOR
10		3125705R1		1	BOMBILLA 12V, 55W
11		A187575		1	CORREA Drive Motor
12		NSS		1	NO SE REPARA SEPARADAM. Base; With Drive Motor
13		614-6020		3	TORNILLO M6 x 20
14		136-54		3	PERNO 1/4 x 11/16
15		386851A1		1	CONTACTOR Rotating Beacon; Not Illustrated
16		121412A1		1	FUSIBLE Fuse, 10 amp; Not Illustrated

http://www.minnparbackhoeparts.com/

04-19		p1	03/04

ANTENA, RADIO - MAZO DE CABLES, RADIO

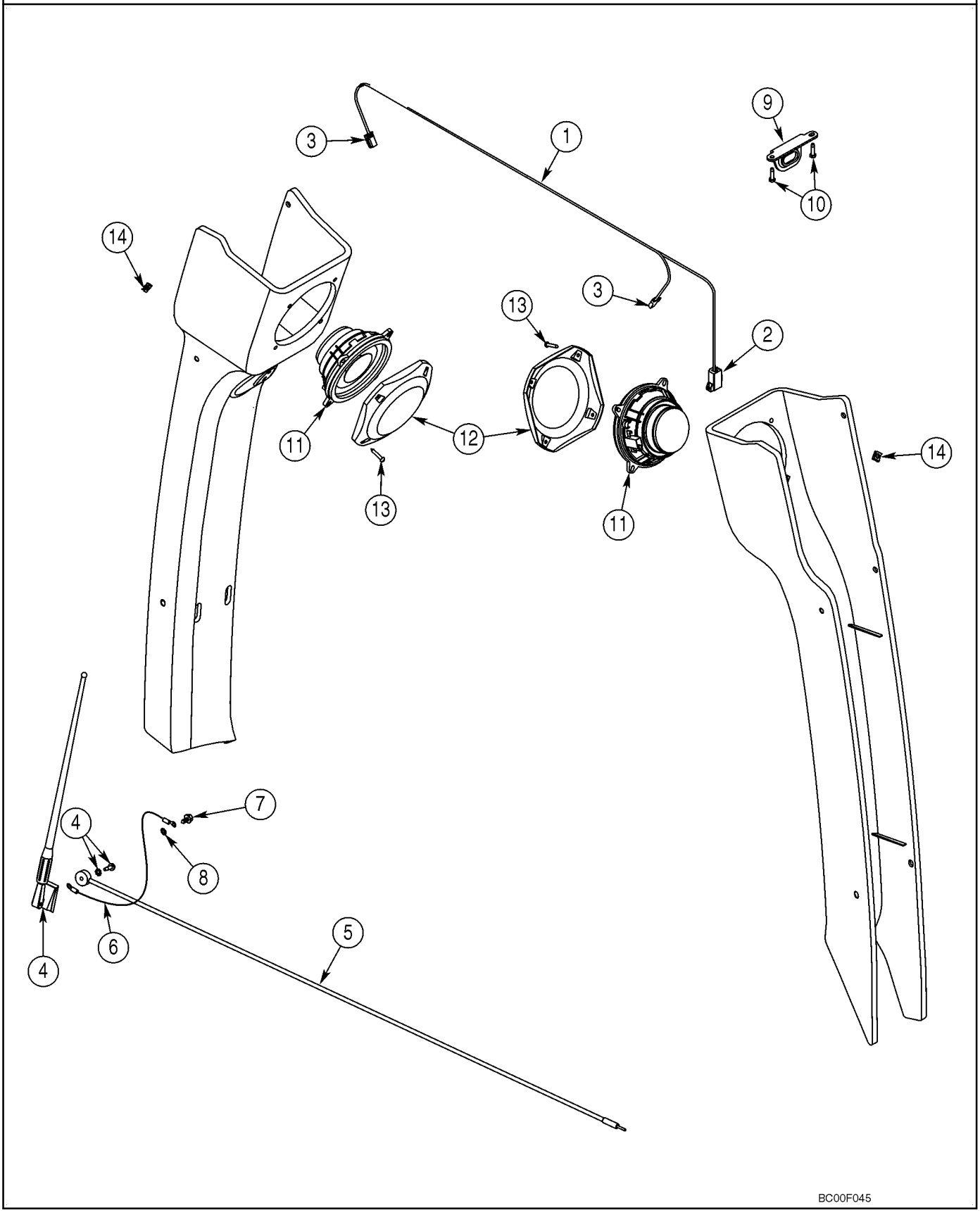

http://www.minnparbackhoeparts.com/

ANTENA, RADIO - MAZO DE CABLES, RADIO

REF	FN	PART NUMBER	YR/SN	QTY	DESCRIPTION
		404471A1		1	JEUGO Speakers and Antenna; Incl. Ref 1 - 15 and Instructions
1		382664A2		1	HAZ Speaker; Incl. Ref 2, 3
2		227389A1		1	CONECTOR To Cab Harness
3		195552A1		2	CONEXION Speaker
4		197745A1		1	ANTENA Radio; Includes Flat Washer and Nut Which Are Not Serviced Separately
5		381659A1		1	CABLE (CONJUNTO)
6		291010A1		1	HILO Ground
7		282-16512		2	TORNILLO No. 10 x 3/4
8		893-11005		1	ARANDELA External Tooth Lock, M5
9		386927A1		1	PIEZA DE SOPORTE Radio Mounting
10		276-26512		2	TORNILLO No. 10 x 3/4
11		182721A2		2	ALTAVOZ
12		187281A1		2	TAPA
13		761-17325		8	TORNILLO M4,2 x 25
14		177269A1		8	TUERCA Spring
15		L18331		1	BANDA Tie, Not Illustrated

http://www.minnparbackhoeparts.com/

ELECTRICO SISTEMA - HIDRÁULICO AUXILIAR DE LA RETROEXCAVADORA

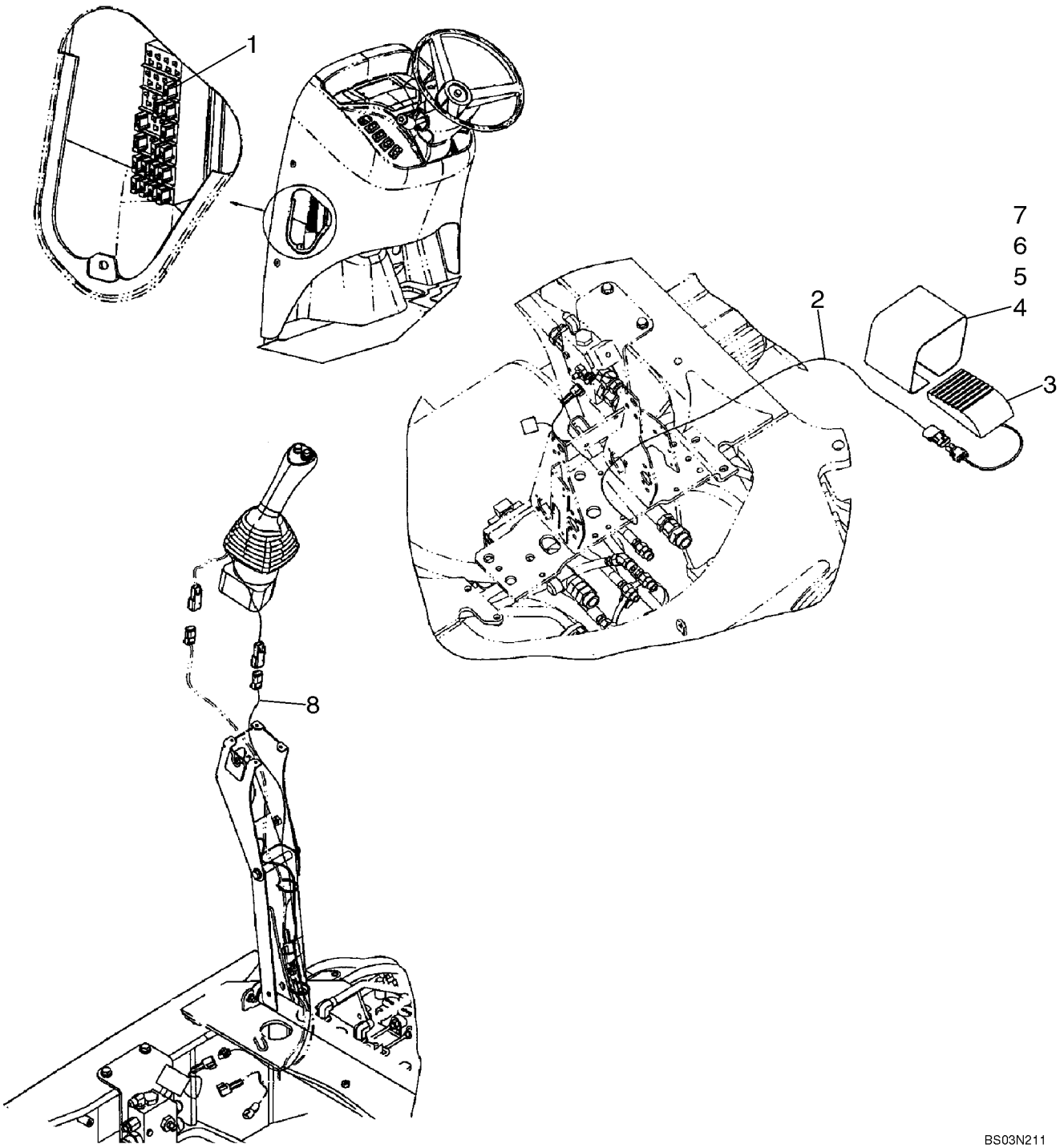

http://www.minnparbackhoeparts.com/

ELECTRICO SISTEMA - HIDRÁULICO AUXILIAR DE LA RETROEXCAVADORA

REF	FN	PART NUMBER	YR/SN	QTY	DESCRIPTION
1		121413A1		1	FUSIBLE 15 amp
2		87425631		1	GRUPO DE CABLES Auxiliary Hydraulic Harness, Uni-Directional; Models Without Pilot Controls
3		137219A1		1	CONTACTOR Foot; Without Pilot Controls
4		300030A1		1	TAPA Without Pilot Controls
5		843-1516		2	TORNILLO M5 x 16
6		892-11005		2	ARANDELA DE FRENO M5
7		824-1405		2	TUERCA M5
8		87425635		1	GRUPO DE CABLES Auxiliary Hydraulic; Uni-Directional; Models With Pilot Controls

http://www.minnparbackhoeparts.com/

ELECTRICO SISTEMA - HIDRÁULICO AUXILIAR DE LA RETROEXCAVADORA, CON DE CONTROL PILOTO

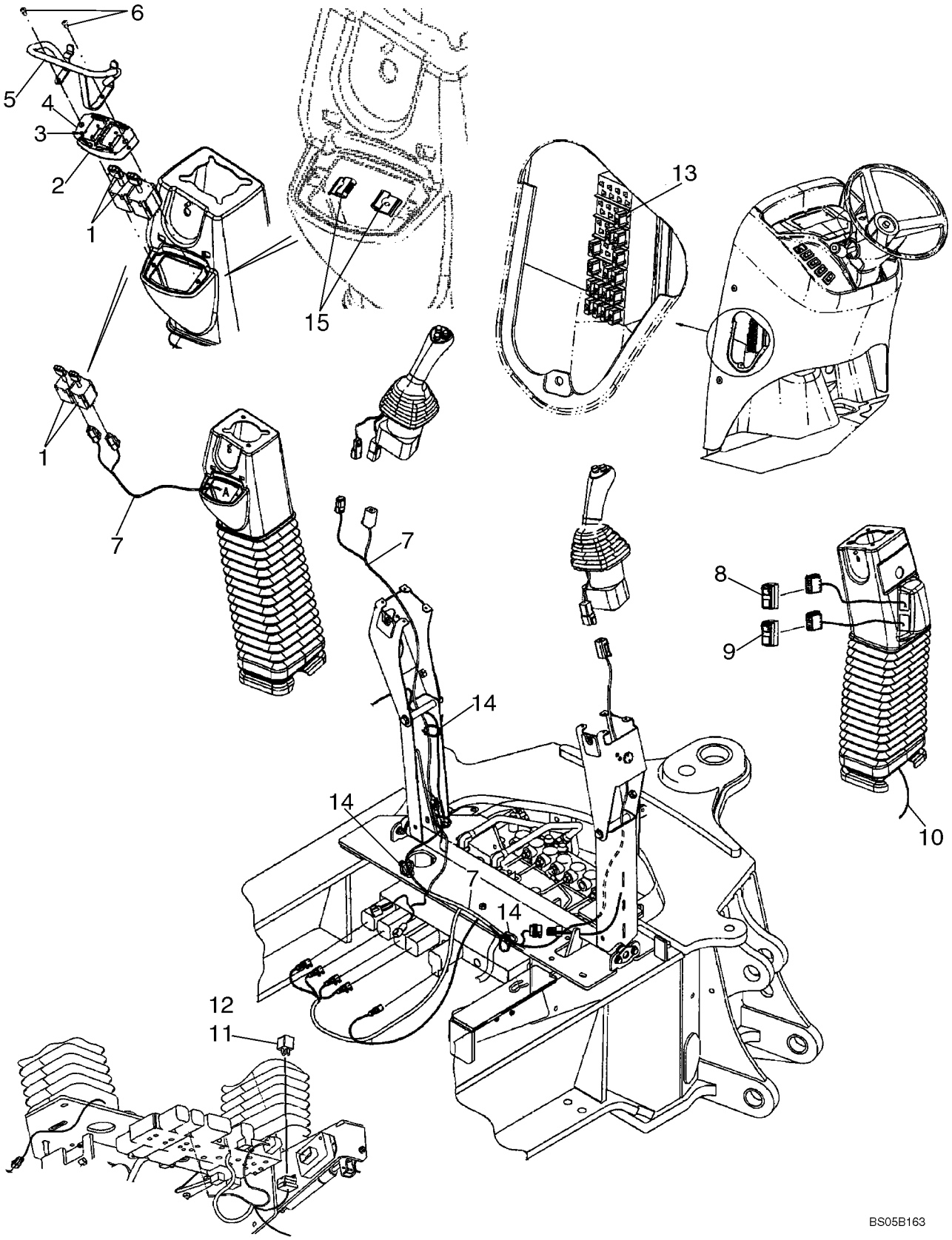

http://www.minnparbackhoeparts.com/

ELECTRICO SISTEMA - HIDRÁULICO AUXILIAR DE LA RETROEXCAVADORA, CON DE CONTROL PILOTO

REF	FN	PART NUMBER	YR/SN	QTY	DESCRIPTION
1		86988086		2	INTERRUPTOR DE PALANCA Stabilizer
2		87435381		1	PLACA DE MONTAJE
3		87303784		8	TORNILLO M3 x 8, Pol; Replaces 87022296 Screw With BZN Finish Used On Some Models
4		87423812		1	CALCOMANIA Stabilizer Switch
5		{87307656}		1	Stabilizer Switch Guard; Replaces 87436396
6		87310083		2	TORNILLO AUTOROSCANTE Hex Washer Head, Self-Tapping, No. 10 x 1/2; Replaces 140-106 Pan Head Cross Recess Screw Used On Some Models
7		87436676		1	GRUPO DE CABLES Pilot Control Joystick, Left-Hand
8		87423802		1	CONTACTOR Pilot Control, On/Off
9		87410105		1	CONTACTOR Pilot Control Pattern Selection
10		87425636		1	GRUPO DE CABLES Pilot Control Joystick, Right-Hand
11		87436836		1	CONECTADOR Mini, 12V
12		840-1416		3	TORNILLO M4 x 16
13		121413A1		1	FUSIBLE Mini, 15 amp
14		L18337		6	BANDA
15		87452511		2	TUERCA J-Type Nut; If Used

http://www.minnparbackhoeparts.com/

NOTES

http://www.minnparbackhoeparts.com/

SECTION INDEX

05-01	VOLANTE - COLUMNA
05-02	HIDRAULICA - DIRECCION
05-03	TUBO DE LA DIRECCION
05-04	EJE, DELANTERO (86990837) - SOPORTE
05-05	EJE, DELANTERO (86990837) - ALOJAMIENTO
05-06	EJE, DELANTERO (86990837) - ALOJAMIENTO, ARTICULACIÓN GIRATORIA
05-07	EJE, DELANTERO (86990837) - CILINDRO, DIRECCION
05-08	EJE, DELANTERO (86990837) - CUBO Y COJINETES
05-09	NEUMÁTICOS, FRONTALES - NEUMÁTICOS

http://www.minnparbackhoeparts.com/

VOLANTE - COLUMNA

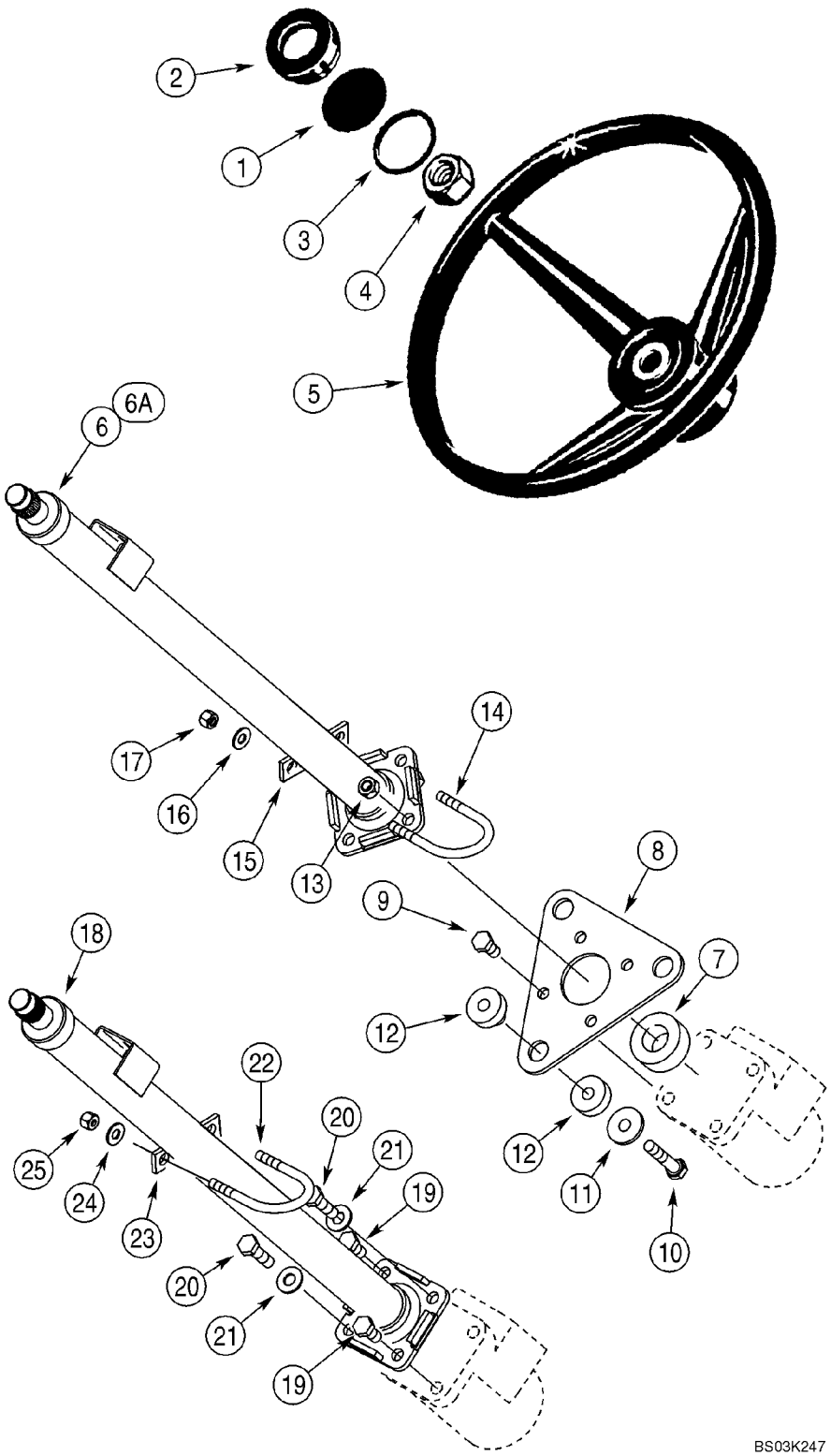

http://www.minnparbackhoeparts.com/

VOLANTE - COLUMNA

REF	FN	PART NUMBER	YR/SN	QTY	DESCRIPTION
1		87435569		1	SIMBOLO Insert, Case
2		114882A2		1	TAPON DEL DEPOSITO
3		238-5227		1	JUNTA HERMETICA 2-1/8 ID x 2-3/8
4		1959509C1		1	TUERCA
5		A65544		1	VOLANTE DIRECCION
6		352568A1		1	COLUMNA DE DIRECCION Cab Models, Without Tilt Steering, See Figure 05-03
6A		352569A4		1	COLUMNA DE DIRECCION Cab Models, With Tilt Steering, 712 mm Long, See Figure 05-03
7		352401A1		1	ANILLO DE CIERRE 25 x 40 x 19 mm, Sound Insulation
8		388116A2		1	PLACA
9		614-10020		4	TORNILLO M10 x 20
10		814-10050		3	TORNILLO M10 x 50
11		496-81028		3	ARANDELA 13/32 x 1-1/4 x 1/8 in
12		87447450		3	AISLADOR 10 mm Hole; Replaces 141747A1 Isolator With 9.5 mm Hole Used On Some Models
13		832-10410		2	TUERCA Lock, M10
14		379846A1		1	HORQUILLA
15		352727A1		1	ESPACIADOR
16		895-15008		2	ARANDELA 9 x 20 x 1,6 mm
17		832-10408		2	TUERCA Lock, M8
18		348794A1		1	COLUMNA DE DIRECCION Canopy Models, See Figure 05-03
19		614-10020		2	TORNILLO M10 x 20
20		614-10035		2	TORNILLO M10 x 35
21		895-15010		2	ARANDELA 11 x 24 x 2 mm
22		379846A1		1	HORQUILLA
23		352727A1		1	ESPACIADOR
24		895-15008		2	ARANDELA 9 x 20 x 1,6 mm
25		832-10408		2	TUERCA Lock, M8

http://www.minnparbackhoeparts.com/

05-02		p1	02/05

HIDRAULICA - DIRECCION

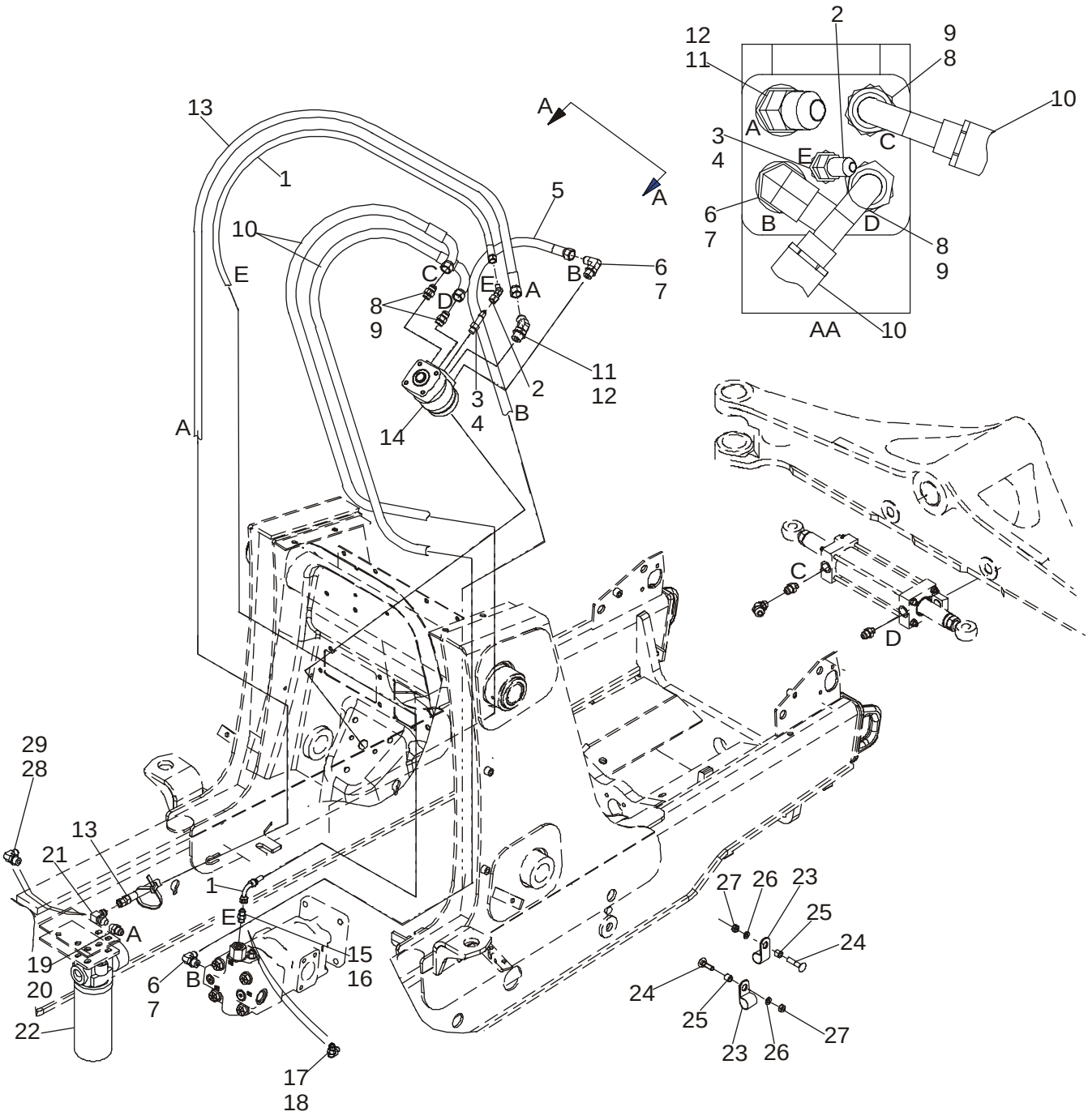

BS04D115

http://www.minnparbackhoeparts.com/

HIDRAULICA - DIRECCION

REF	FN	PART NUMBER	YR/SN	QTY	DESCRIPTION
1		87439137		1	MANGUERA (CONJUNTO) 1675 mm (66 in), Steering Pilot Hose
2		218-5170		1	CONEXION Elbow, 45 deg, 7/16 fl x fem
3		218-5027		1	CONECTOR 7/16 fl x Or, Incl. Ref 4
4		237-6004		1	JUNTA HERMETICA 23/64 ID x 5/64
5		87439138		1	MANGUERA (CONJUNTO) 1600 mm (63 in), Steering Pressure
6		218-5106		2	CONEXION Elbow, 90 deg, 3/4 Or, Incl. Ref 7
7		237-6008		1	JUNTA HERMETICA
8		218-5059		2	RACOR 3/4 fl x Or, Incl. Ref 9
9		237-6008		1	JUNTA HERMETICA 41/64 ID x 3/32
10		87429382		2	MANGUERA (CONJUNTO) 1520 mm (59-7/8 in), To Steering Cylinder
11		218-5136		1	CODO 45 deg, 3/4 Or; Incl. Ref 12
12		237-6008		1	JUNTA HERMETICA
13		87439136		1	MANGUERA (CONJUNTO) 1550 mm (61-1/16 in), Return
14		87419634		1	BOMBA Steering Control Valve; Includes 87454545 Seal Kit, 396592A1 Anti-Cavitation Valve Kit, 396593A1 Bolt Kit
		396591A1		1	JEUGO Seal; Includes (2) Seals, (3) O-Rings; No Longer Available, For Service Order 87454545 Seal Kit
		87454545		1	KIT SERVODIRECCION Seal; Includes (2) Seals, (8) O-Rings
		396592A1		1	JEUGO Anti-Cavitation Valve; Includes (2) Balls, (4) Springs, (2) Retainers
		396593A1		1	JEUGO Bolt; Includes (7) Bolts
15		218-5057		1	RACOR 9/16 fl x Or, Incl. Ref 16, Standard Equipment, Models Without Auxiliary Hydraulics
16		237-6006		1	JUNTA HERMETICA
17		282428A1		1	VÁLVULA DE PASO CHECK, Tee, 9/16; Incl. Ref 18; Models With Auxiliary Hydraulics
18		237-6006		1	JUNTA HERMETICA
19		218-5351		1	RACOR 3/4 fl x 9/16 Or; Incl. Ref 20; If Used
20		237-6006		1	JUNTA HERMETICA 15/32 ID x 5/64
21		218-5230		1	CODO 90 deg, 3/4 fl x sw; If Used

http://www.minnparbackhoeparts.com/

05-02		p2	02/05

HIDRAULICA - DIRECCION

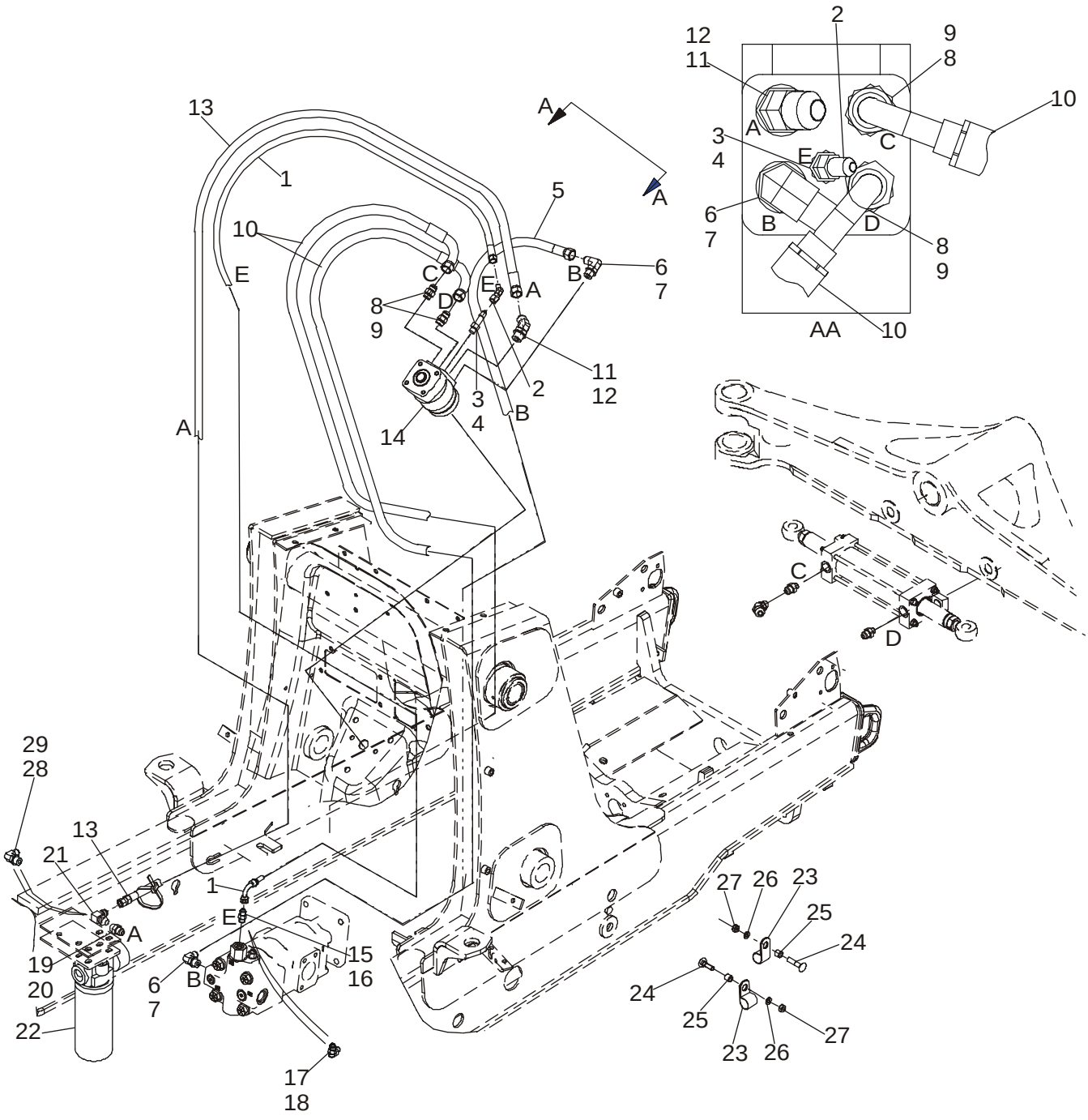

http://www.minnparbackhoeparts.com/

HIDRAULICA - DIRECCION

REF	FN	PART NUMBER	YR/SN	QTY	DESCRIPTION
22		87440045		1	FILTRO CONJ Hydraulic Oil, See Figure 08-61
23		515-23159		2	COLLAR P-Type
24		711-10050		2	TORNILLO M10 x 50
25		120303A1		2	ESPACIADOR
26		892-11010		2	ARANDELA DE FRENO M10
27		829-1410		2	TUERCA M10; 10.9
28		218-5280		1	CONEXION ELBOW, 90 deg; 3/4 fl x 9/16 Or; Incl. Ref 29; If Used
29		237-6006		1	JUNTA HERMETICA 15/32 ID x 5/64

http://www.minnparbackhoeparts.com/

TUBO DE LA DIRECCION

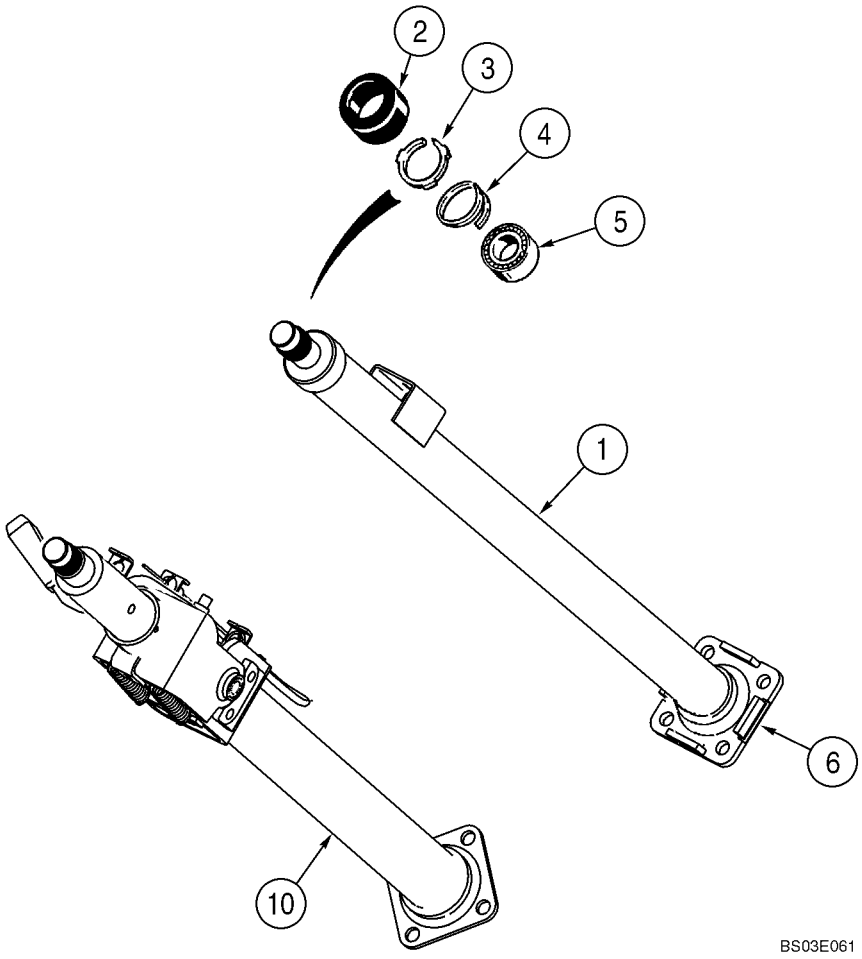

http://www.minnparbackhoeparts.com/

TUBO DE LA DIRECCION

REF	FN	PART NUMBER	YR/SN	QTY	DESCRIPTION
		348794A1		1	COLUMNA DE DIRECCION Canopy Models, Incl. Ref 1 - 6
		352568A1		1	COLUMNA DE DIRECCION Cab Models, Without Tilt Steering, Incl. Ref 1 - 6
1		NSS		1	NO SE REPARA SEPARADAM. Column
2		S115351		1	TAPON DEL DEPOSITO
3		NSS		1	NO SE REPARA SEPARADAM. Retainer
4		102-1387		1	ANILLO DE CIERRE No. 87
5		NSS		1	NO SE REPARA SEPARADAM. Bearing
6		NSS		1	NO SE REPARA SEPARADAM. Flange
10		352569A4		1	COLUMNA DE DIRECCION 712 mm Long, Cab Models, With Tilt Steering, Component Parts Not Serviced Separately

http://www.minnparbackhoeparts.com/

05-04		p1	01/04

EJE, DELANTERO (86990837) - SOPORTE

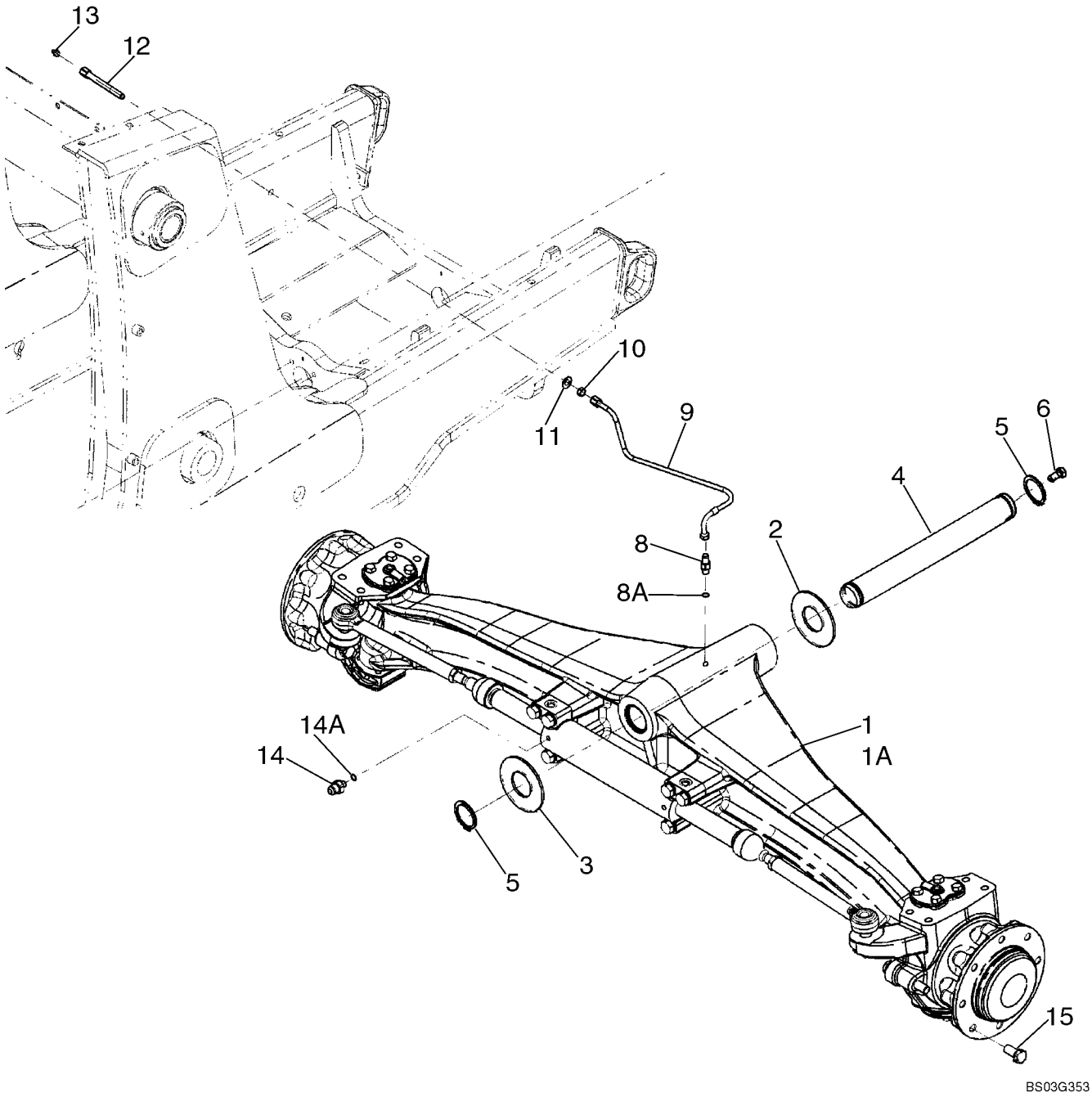

http://www.minnparbackhoeparts.com/

EJE, DELANTERO (86990837) - SOPORTE

REF	FN	PART NUMBER	YR/SN	QTY	DESCRIPTION
1		86990837		1	EJE, DIRECTOR Front, Two Wheel Drive, See Figures 05-05 - 05-08
2		191796A1		X	ARANDELA 2 x 4 x 1/16
3		D123684		1	ARANDELA Thrust, 2-1/2 x 4-1/2 x 3/16
4		87404197		1	PERNO DE PIVOTE
5		800-44050		2	ANILLO DE CIERRE No. 50
6		614-12025		1	TORNILLO M12 x 25
8		218-5053		1	RACOR 7/16 fl x adj Or; Incl. Ref 8A
8A		237-6004		1	JUNTA HERMETICA 23/64 ID x 5/64
9		87433730		1	MANGUERA (CONJUNTO) 500 mm (19-11/16 in), Lubrication Line
10		218-1275		1	CONTRA TUERCA 7/16
11		495-11047		1	ARANDELA 15/32 x 59/64 x 1/16
12		381442A1		1	TERMINAL
13		219-1		1	ENGRASADOR 1/8 PT x 21/32 Grease Fitting
14		218-5351		2	RACOR 3/4 fl x 9/16 Or, Incl. Ref 14A
14A		237-6006		1	JUNTA HERMETICA 15/32 ID x 5/64
15		A38208		16	TORNILLO Wheel Bolt

http://www.minnparbackhoeparts.com/

05-05		p1	01/04

EJE, DELANTERO (86990837) - ALOJAMIENTO

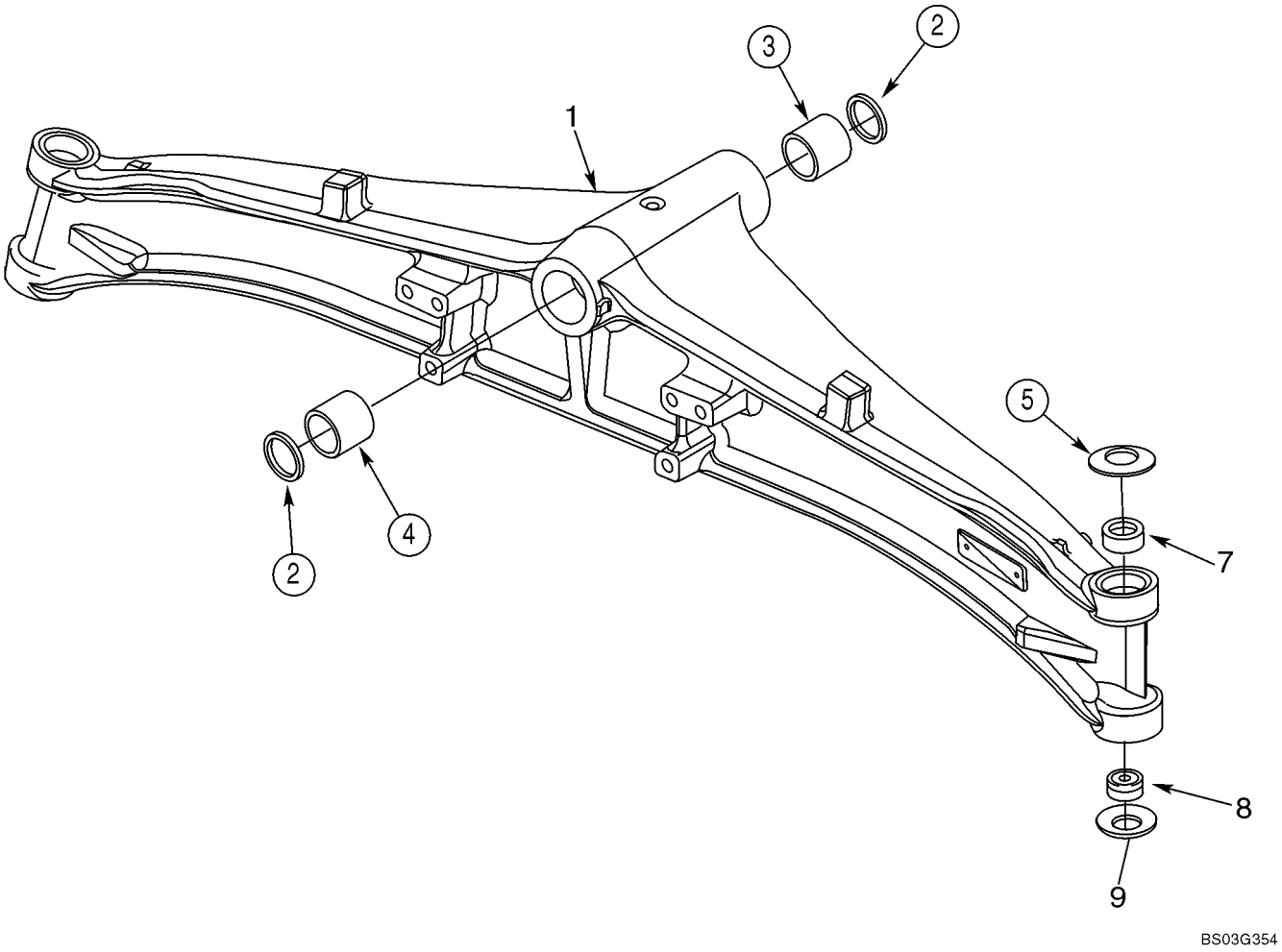

http://www.minnparbackhoeparts.com/

EJE, DELANTERO (86990837) - ALOJAMIENTO

REF	FN	PART NUMBER	YR/SN	QTY	DESCRIPTION
		86990837		1	EJE, DIRECTOR Front, Two Wheel Drive, Incl. Figures 05-05 - 05-08
1		429230A1		1	CÁRTER DE PUENTE
2		N14367		2	ANILLO DE CIERRE
3		D149726		1	CASQUILLO Front
4		D149725		1	CASQUILLO Rear
5		122270A1		2	ARANDELA Belleville
7		87400286		2	CASQUILLO
8		N14373		2	COJINETE Bushing; Two Piece; 28 ID x 50 OD x 16
9		122261A1		2	ARANDELA Belleville

http://www.minnparbackhoeparts.com/

EJE, DELANTERO (86990837) - ALOJAMIENTO, ARTICULACIÓN GIRATORIA

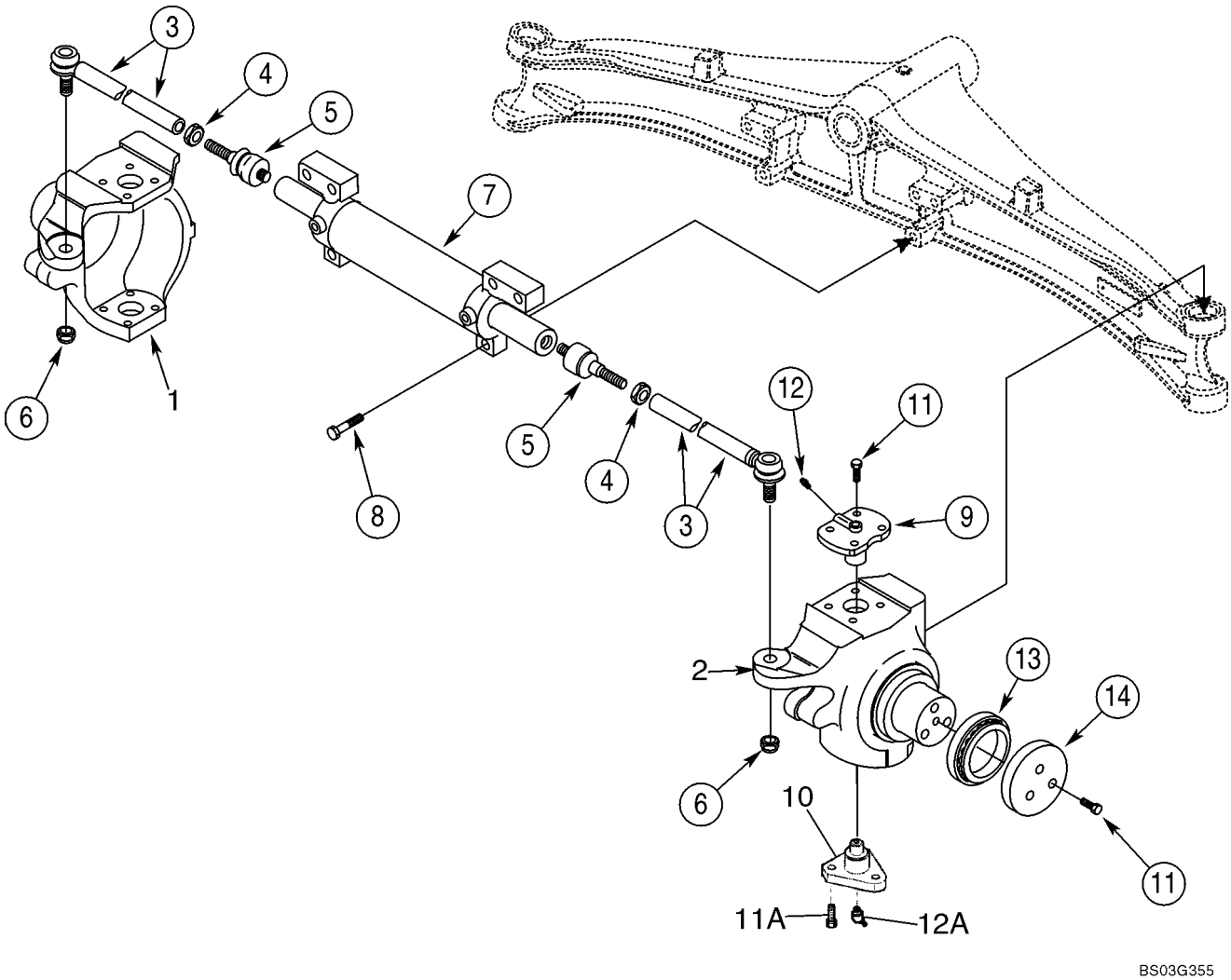

http://www.minnparbackhoeparts.com/

EJE, DELANTERO (86990837) - ALOJAMIENTO, ARTICULACIÓN GIRATORIA

REF	FN	PART NUMBER	YR/SN	QTY	DESCRIPTION
		86990837		1	EJE, DIRECTOR Front, Two Wheel Drive, Incl. Figures 05-05 - 05-08
1		429231A1		1	CAVIDAD Swivel, Left-Hand
2		429232A1		1	CAVIDAD Swivel, Right-Hand
		401052A1		2	DIRECCION (CJTO) Arm, Incl. Ref 3 - 5
3		401054A1		1	TIRANTE
4		934727R1		1	TUERCA M18
5		112509A1		1	JUNTA DE ROTULA
6		905839R1		2	TUERCA M18
7		401055A1		1	CILINDRO DIRECTION See Figure 05-07
8		863-16070		6	TORNILLO Socket Head, M16 x 70; 12.9
9		122265A1		2	BULON/PIN, LARGO King Pin, Upper
10		122259A1		2	PIVOTE King Pin, Lower; Triangular Shape
11		100533A1		14	TORNILLO Lock, M12 x 30
11A		D150214		6	TORNILLO Lock, M14 x 35; Lower King Pin
12		712998R91		2	ENGRASADOR M6x1, Grease Fitting
12A		N13505		2	ENGRASADOR M6x1, 45 deg Grease Fitting; Lower King Pin
13		401059A1		2	RODAMIENTO DE RODILLOS Thrust
14		401060A1		2	ARANDELA

http://www.minnparbackhoeparts.com/

EJE, DELANTERO (86990837) - CILINDRO, DIRECCION

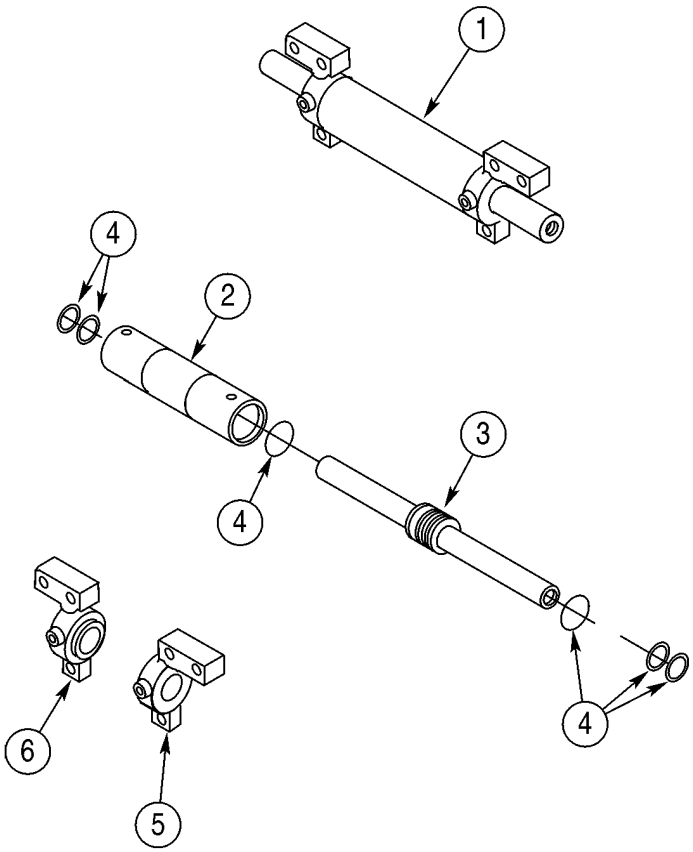

BC00G065

http://www.minnparbackhoeparts.com/

EJE, DELANTERO (86990837) - CILINDRO, DIRECCION

REF	FN	PART NUMBER	YR/SN	QTY	DESCRIPTION
		86990837		1	EJE, DIRECTOR Front, Two Wheel Drive, Incl. Figures 05-05 - 05-08
1		401055A1		1	CILINDRO DIRECTION Incl. Ref 2 - 6
2		NSS		1	NO SE REPARA SEPARADAM. Tube, Cylinder
3		401062A1		1	VASTAGO CILINDRO
4		401061A1		1	JUEGO JUNTAS Seal, Component Parts Not Serviced Separately
5		401063A1		1	CABEZA (CONJUNTO) Right-Hand
6		401064A1		1	CABEZA (CONJUNTO) Left-Hand

http://www.minnparbackhoeparts.com/

EJE, DELANTERO (86990837) - CUBO Y COJINETES

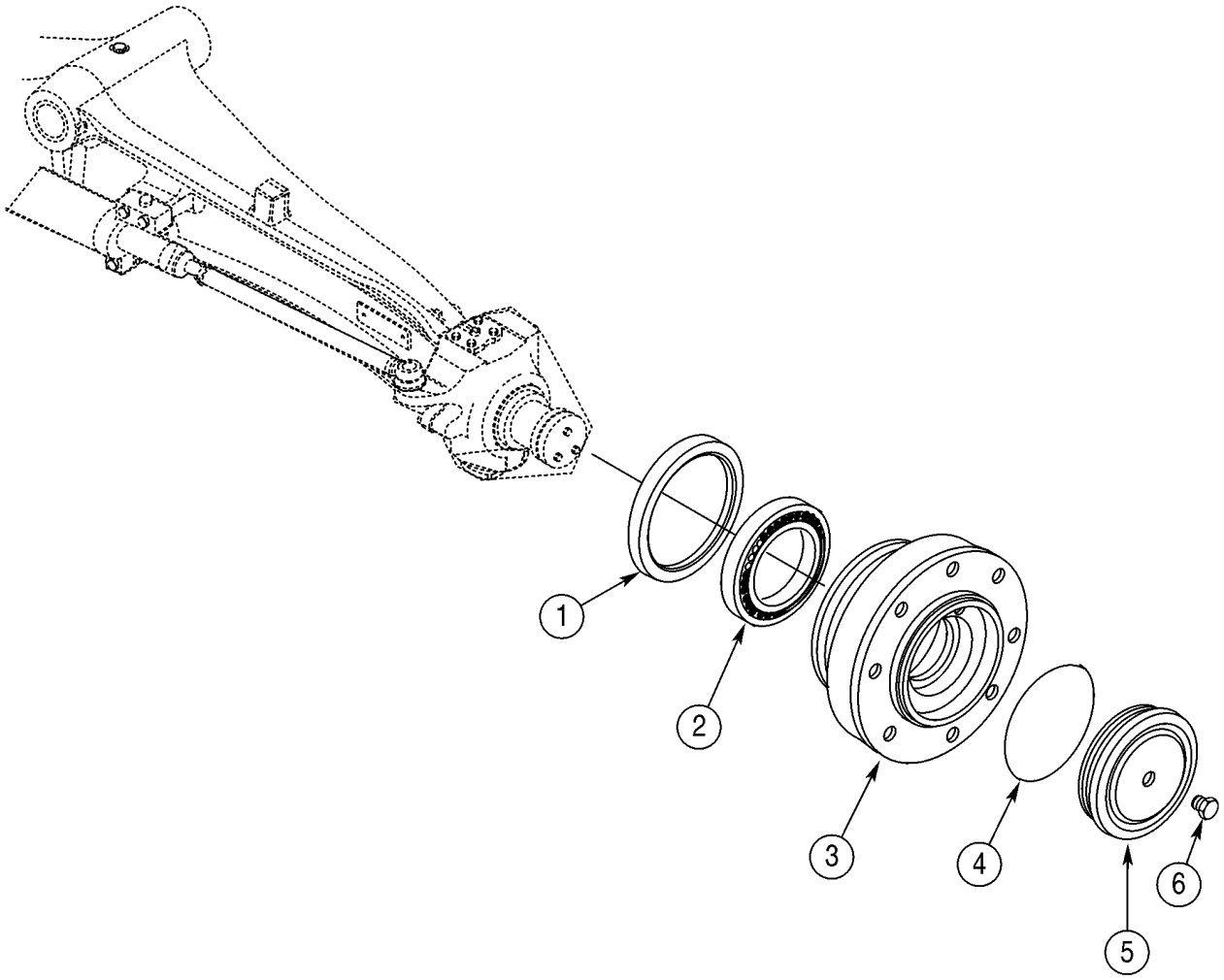

http://www.minnparbackhoeparts.com/

EJE, DELANTERO (86990837) - CUBO Y COJINETES

REF	FN	PART NUMBER	YR/SN	QTY	DESCRIPTION
		86990837		1	EJE, DIRECTOR Front, Two Wheel Drive; Incl. Figures 05-05 - 05-08
1		311569A1		2	JUNTA DE ACEITE
2		324213A1		2	COJINETE
3		401065A1		2	CUBO
4		401066A1		2	JUNTA HERMETICA
5		401067A1		2	TAPA
6		D142898		2	TAPÓN 10 x 1 mm

http://www.minnparbackhoeparts.com/

NEUMÁTICOS, FRONTALES - NEUMÁTICOS

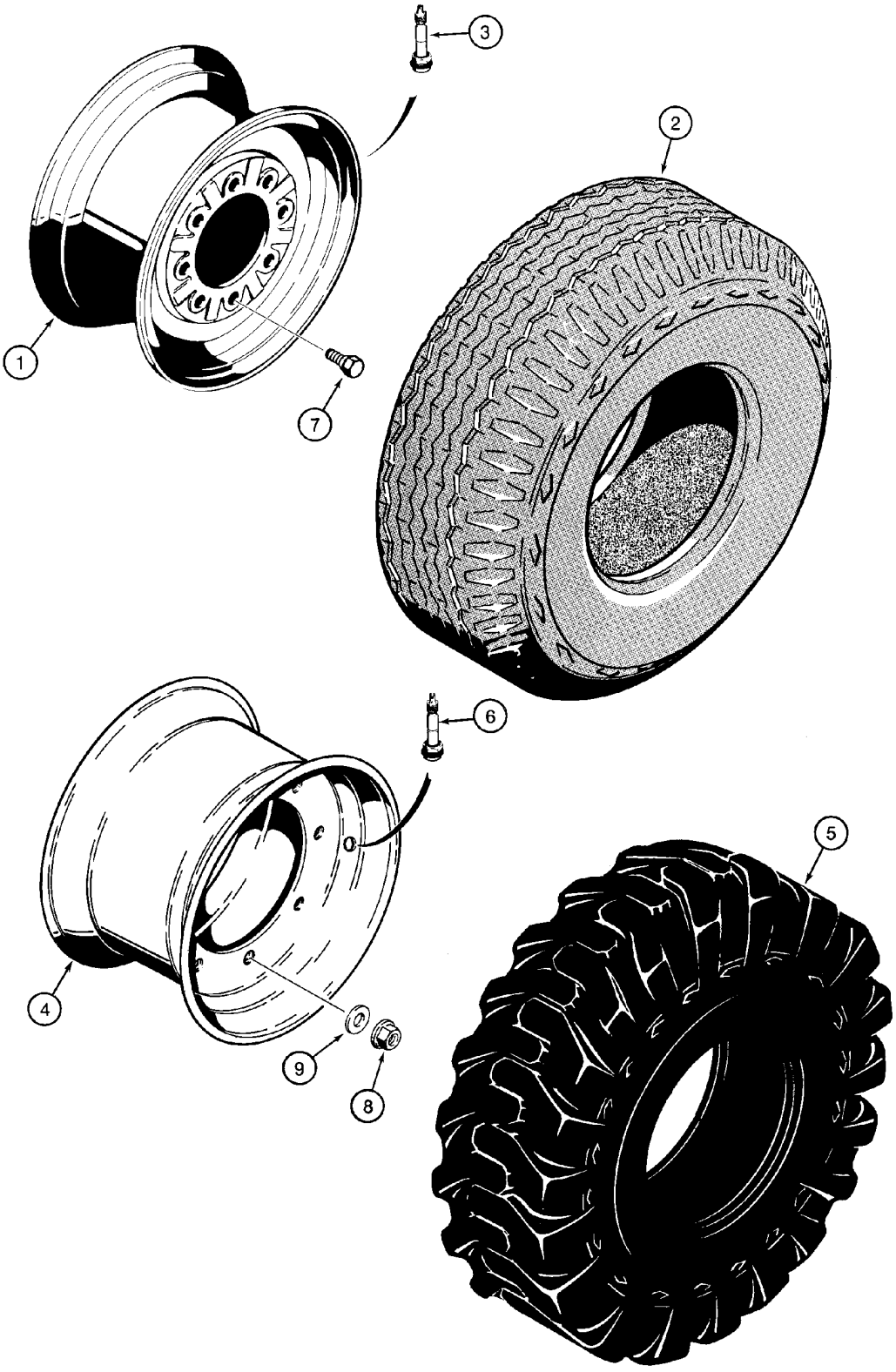

http://www.minnparbackhoeparts.com/

NEUMÁTICOS, FRONTALES - NEUMÁTICOS

REF	FN	PART NUMBER	YR/SN	QTY	DESCRIPTION
1		D125223		2	RIN For 580SM 11L x 16 - 10 PR F3 Tires; Two Wheel Drive Models
1		247104A1		2	RUEDA RIM, For 580SM Plus 14.5/.75 x 16.1 - 10 Ply F3; Two Wheel or Four Wheel Drive
2		REF		2	MANUAL Tire, Purchase Locally
3		387897R91		2	VASTAGO DE VALVULA
4		119243A1		2	RIN For 580SM 12 x 16.5 - 8 or 10 PR Tires; Four Wheel Drive Models
4		139080A1		2	RIN For 580SM 10.5/80x18x10 Ply Tires
4		139080A1		2	RIN For 580SM Plus 12.5/80 x 18 - 10 PR SG; Four Wheel Drive Models
5		REF		2	MANUAL Tire, Purchase Locally
6		387897R91		2	VASTAGO DE VALVULA
7		A38208		16	TORNILLO Wheel Bolts; Two Wheel Drive Models
8		825-11418		16	TUERCA M18; Wheel Nuts; Four Wheel Drive Models
9		496-81000		16	ARANDELA 25/32 x 1-3/8 x 1/8; Four Wheel Drive Models

http://www.minnparbackhoeparts.com/

SECTION INDEX

06-01	EJE, TRANSMISIÓN DELANTERA - SOPORTE
06-02	EJE, TRANSMISIÓN DELANTERA - ALOJAMIENTO
06-03	EJE, TRANSMISIÓN DELANTERA - ALOJAMIENTO, ARTICULACIÓN GIRATORIA
06-04	EJE, TRANSMISIÓN DELANTERA - CILINDRO, DIRECCION
06-05	EJE, TRANSMISIÓN DELANTERA - VARILLAS, EJE
06-06	EJE, TRANSMISIÓN DELANTERA - PLANETARIO
06-07	EJE, TRANSMISIÓN DELANTERA - DIFERENCIAL
06-08	EJE, TRANSMISIÓN DELANTERA - ANILLO Y PIÑÓN
06-09	EJE DE TRANSMISIÓN, EJE DELANTERO
06-10	SISTEMA DE REFRIGERACIÓN - TRANSMISION (MODELOS SIN SERVOASISTIDA)(WITH CUT HOSES AT COOLER)
06-11	SISTEMA DE REFRIGERACIÓN - TRANSMISION (MODELOS CON SERVOASISTIDA)(WITH CUT HOSES AT COOLER)
06-11A	SISTEMA DE REFRIGERACIÓN - TRANSMISION (WITH FLARED FITTINGS AT COOLER)
06-12	TRANSMISION - SOPORTE (MODELOS SIN SERVOASISTIDA)
06-13	TRANSMISION - SOPORTE (MODELOS CON SERVOASISTIDA)
06-14	CONJUNTO DE LA TRANSMISION - FILTRO, ACEITE (MODELOS SIN SERVOASISTIDA)
06-15	CONJUNTO DE LA TRANSMISION (2WD) - ALOJAMIENTO (MODELOS SIN SERVOASISTIDA)
06-16	CONJUNTO DE LA TRANSMISION (4WD) - ALOJAMIENTO (MODELOS SIN SERVOASISTIDA)
06-17	CONJUNTO DE LA TRANSMISION - BOMBA, ACEITE (MODELOS SIN SERVOASISTIDA)
06-18	CONJUNTO DE LA TRANSMISION - MECANISMO DE CAMBIO (MODELOS SIN SERVOASISTIDA)
06-19	CONJUNTO DE LA TRANSMISION - EJE, RUEDA GUÍA Y PRIMARIA (MODELOS SIN SERVOASISTIDA)
06-20	CONJUNTO DE LA TRANSMISION - EJE, ENTRADA (MODELOS SIN SERVOASISTIDA)
06-21	CONJUNTO DE LA TRANSMISION - EJE, SECUNDARIO (MODELOS SIN SERVOASISTIDA)
06-22	CONJUNTO DE LA TRANSMISION (4WD) - EJE, SALIDA (MODELOS SIN SERVOASISTIDA)
06-23	CONJUNTO DE LA TRANSMISION (86984097 OR 86984098) - VALVULA, CONTROL (MODELOS SIN SERVOASISTIDA)
06-23A	CONJUNTO DE LA TRANSMISION (87456843 OR 87456844) - VALVULA, CONTROL (MODELOS SIN SERVOASISTIDA)
06-24	CONJUNTO DE LA TRANSMISION (4WD) - VÁLVULA, SOLENOIDE (MODELOS SIN SERVOASISTIDA)
06-25	CONJUNTO DE LA TRANSMISIÓN, SERVOTRANSMISIÓN - ALOJAMIENTO
06-26	CONJUNTO DE LA TRANSMISIÓN, SERVOTRANSMISIÓN - ALOJAMIENTO, TRASERO
06-27	CONJUNTO DE LA TRANSMISIÓN, SERVOTRANSMISIÓN - COVERTIDOR DE PAR
06-28	CONJUNTO DE LA TRANSMISIÓN, SERVOTRANSMISIÓN - BOMBA, ACEITE
06-29	CONJUNTO DE LA TRANSMISIÓN, SERVOTRANSMISIÓN - EMBRAGUE, TRANSMISIÓN HACIA DELANTE
06-30	CONJUNTO DE LA TRANSMISIÓN, SERVOTRANSMISIÓN - EMBRAGUE, TRANSMISIÓN HACIA ATRÁS
06-31	CONJUNTO DE LA TRANSMISIÓN, SERVOTRANSMISIÓN - EMBRAGUE, TRANSMISIÓN DE LA BOMBA
06-32	CONJUNTO DE LA TRANSMISIÓN, SERVOTRANSMISIÓN - EMBRAGUE, SEGUNDA MARCHA

http://www.minnparbackhoeparts.com/

SECTION INDEX

06-33	CONJUNTO DE LA TRANSMISIÓN, SERVOTRANSMISIÓN - EMBRAGUE, EJE DE SALIDA
06-34	CONJUNTO DE LA TRANSMISIÓN, SERVOTRANSMISIÓN - MONTAJE, VÁLVULA
06-35	CONJUNTO DE LA TRANSMISIÓN, SERVOTRANSMISIÓN - VALVULA, CONTROL
06-36	CONJUNTO DE LA TRANSMISIÓN, SERVOTRANSMISIÓN - PLACA, TRANSMISIÓN
06-37	RUEDAS, PARTE TRASERA - NEUMÁTICOS
06-38	EJE, TRANSMISIÓN TRASERA - SOPORTE
06-39	EJE, TRASERO - BLOQUEO DEL DIFERENCIAL
06-40	EJE, TRANSMISIÓN TRASERA - ALOJAMIENTO
06-41	EJE, TRANSMISIÓN TRASERA - DIFERENCIAL (ENTRADA EN SENTIDO HORARIO, MODELOS SIN SERVOASISTIDA)
06-42	EJE, TRANSMISIÓN TRASERA - DIFERENCIAL (ENTRADA EN SENTIDO ANTIHORARIO, MODELOS CON SERVOASISTIDA)
06-43	EJE, TRANSMISIÓN TRASERA - ANILLO Y PIÑÓN
06-44	EJE, TRANSMISIÓN TRASERA - BLOQUEO DEL DIFERENCIAL (ENTRADA EN SENTIDO HORARIO, MODELOS SIN SERVOASI
06-45	EJE, TRANSMISIÓN TRASERA - BLOQUEO DEL DIFERENCIAL (ENTRADA EN SENTIDO ANTIHORARIO, MODELOS CON SER
06-46	EJE, TRANSMISIÓN TRASERA - PLANETARIO
06-47	EJE DE TRANSMISIÓN, EJE TRASERO

http://www.minnparbackhoeparts.com/

EJE, TRANSMISIÓN DELANTERA - SOPORTE

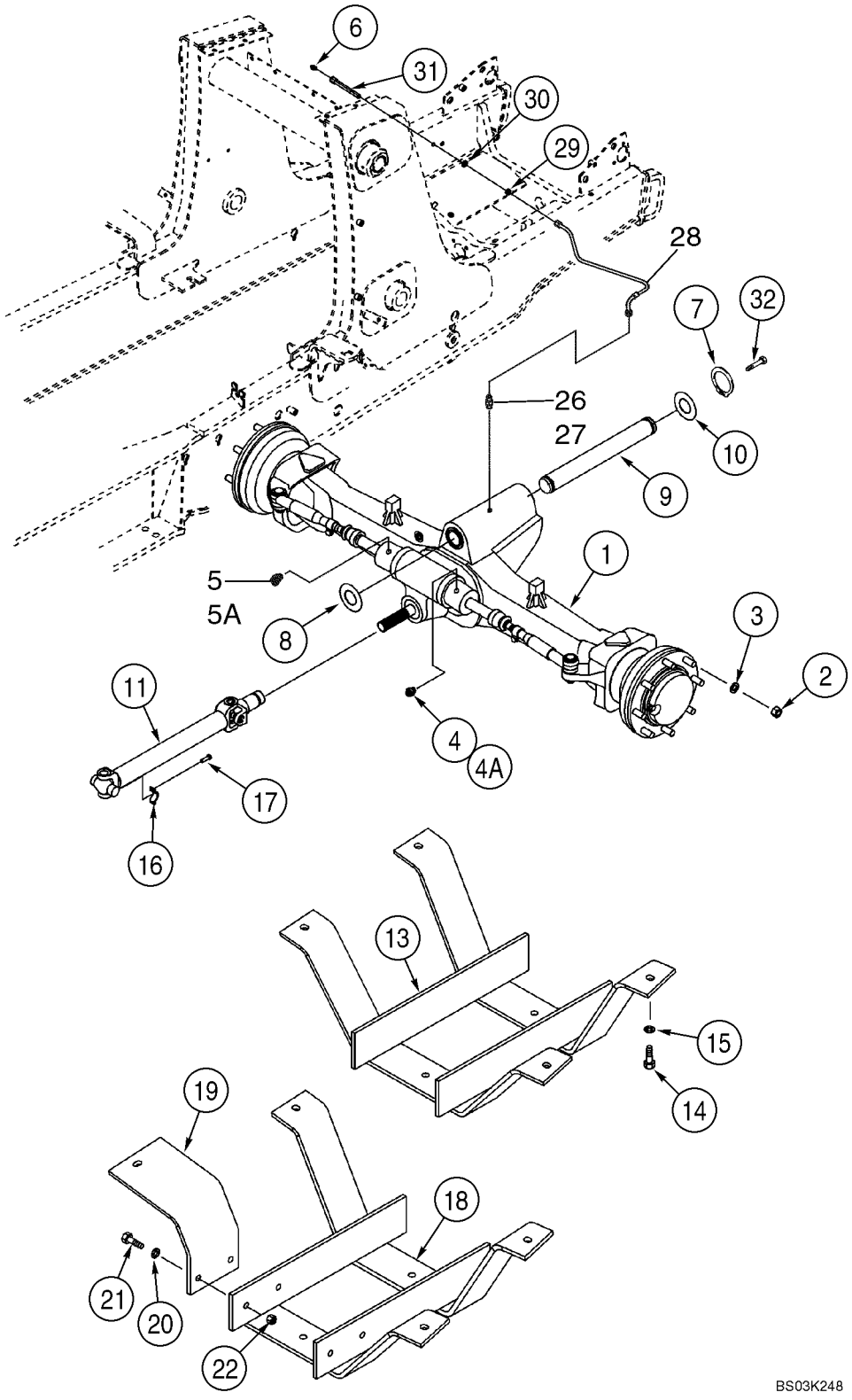

http://www.minnparbackhoeparts.com/

EJE, TRANSMISIÓN DELANTERA - SOPORTE

REF	FN	PART NUMBER	YR/SN	QTY	DESCRIPTION
1		87417387		1	EJE (CONJUNTO) Front, 580SM Models Without Powershift Transmission, See Figure 06-02 - 06-08
1		87417390		1	EJE (CONJUNTO) Front, With Limited Slip, 580SM+ Models Without Powershift Transmission, See Figure 06-02 - 06-08
1		87417389		1	EJE (CONJUNTO) Front, 580SM Models With Powershift Transmission, See Figure 06-02 - 06-08
1		87417391		1	EJE (CONJUNTO) Front, With Limited Slip, 580SM+ Models With Powershift Transmission, See Figure 06-02 - 06-08
2		825-11418		16	TUERCA M18
3		496-81000		16	ARANDELA 25/32 x 1-3/8 x 1/8
4		218-5351		1	RACOR 3/4 fl x 9/16 Or; Incl. Ref 4A
4A		237-6006		1	JUNTA HERMETICA 15/32 ID x 5/64
5		218-5529		1	CODO Elbow, 45 deg, 3/4 fl x 9/16 Or; Incl. Ref 5A
5A		237-6006		1	JUNTA HERMETICA 15/32 ID x 5/64
6		219-1		1	ENGRASADOR 1/8 PT x 21/32
7		800-44050		2	ANILLO DE CIERRE No. 50
8		191796A1		X	ARANDELA 2 x 4 x 1/16
9		87404197		1	PERNO DE PIVOTE Pivot Pin
10		D123684		1	ARANDELA Thrust, 2-1/2 x 4-1/2 x 3/16
11		367861A2		1	ARBOL DE MANDO See Figure 06-09
13		137223A2		1	DEFENSA Drive Shaft, Used On Models With 31 Gallon Fuel Tank
14		827-12045		4	TORNILLO M12 x 45; 10.9
15		495-81025		4	ARANDELA 17/32 x 1-1/4 x 3/16
16		90-6682T1		2	COLLAR
17		D137627		4	TORNILLO
18		282038A2		1	GUARDA (CONJUNTO) Drive Shaft, Used On Models With 40 Gallon Fuel Tank
19		282033A1		1	PIEZA DE SOPORTE
20		495-81025		8	ARANDELA 17/32 x 1-1/4 x 3/16
21		827-12045		6	TORNILLO M12 x 45; 10.9
22		829-1412		2	TUERCA M12; 10
26		218-5053		1	RACOR 7/16 fl x adj Or; Incl. Ref 27
27		237-6004		1	JUNTA HERMETICA 23/64 ID x 5/64

http://www.minnparbackhoeparts.com/

EJE, TRANSMISIÓN DELANTERA - SOPORTE

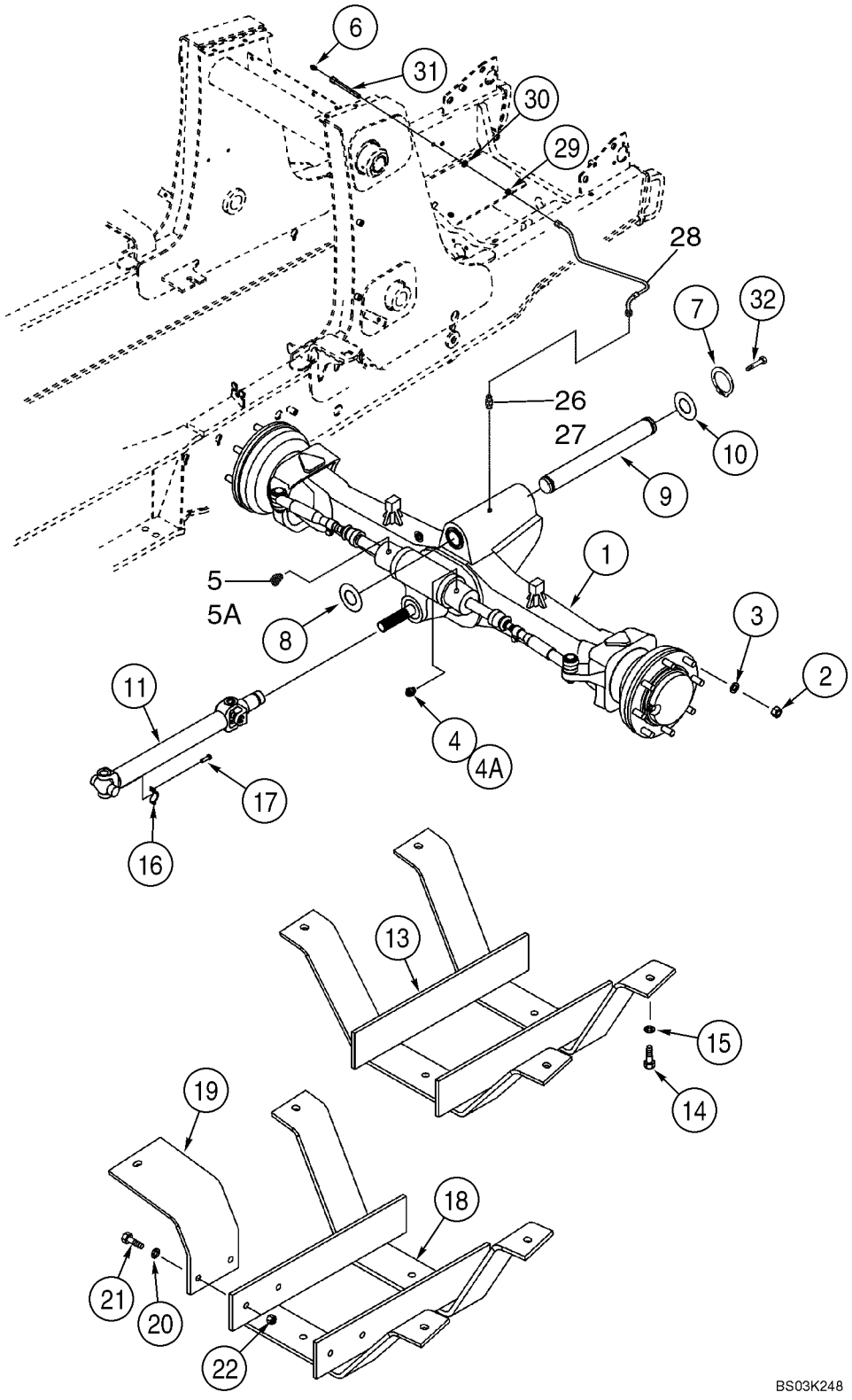

http://www.minnparbackhoeparts.com/

EJE, TRANSMISIÓN DELANTERA - SOPORTE

REF	FN	PART NUMBER	YR/SN	QTY	DESCRIPTION
28		87433730		1	MANGUERA (CONJUNTO) 500 mm (19-11/16 in), Lubrication Line
29		218-1275		1	CONTRA TUERCA 7/16
30		495-11047		1	ARANDELA 15/32 x 59/64 x 1/16
31		381442A1		1	TERMINAL Lubrication Line
32		614-12025		1	TORNILLO M12 x 25

http://www.minnparbackhoeparts.com/

EJE, TRANSMISIÓN DELANTERA - ALOJAMIENTO

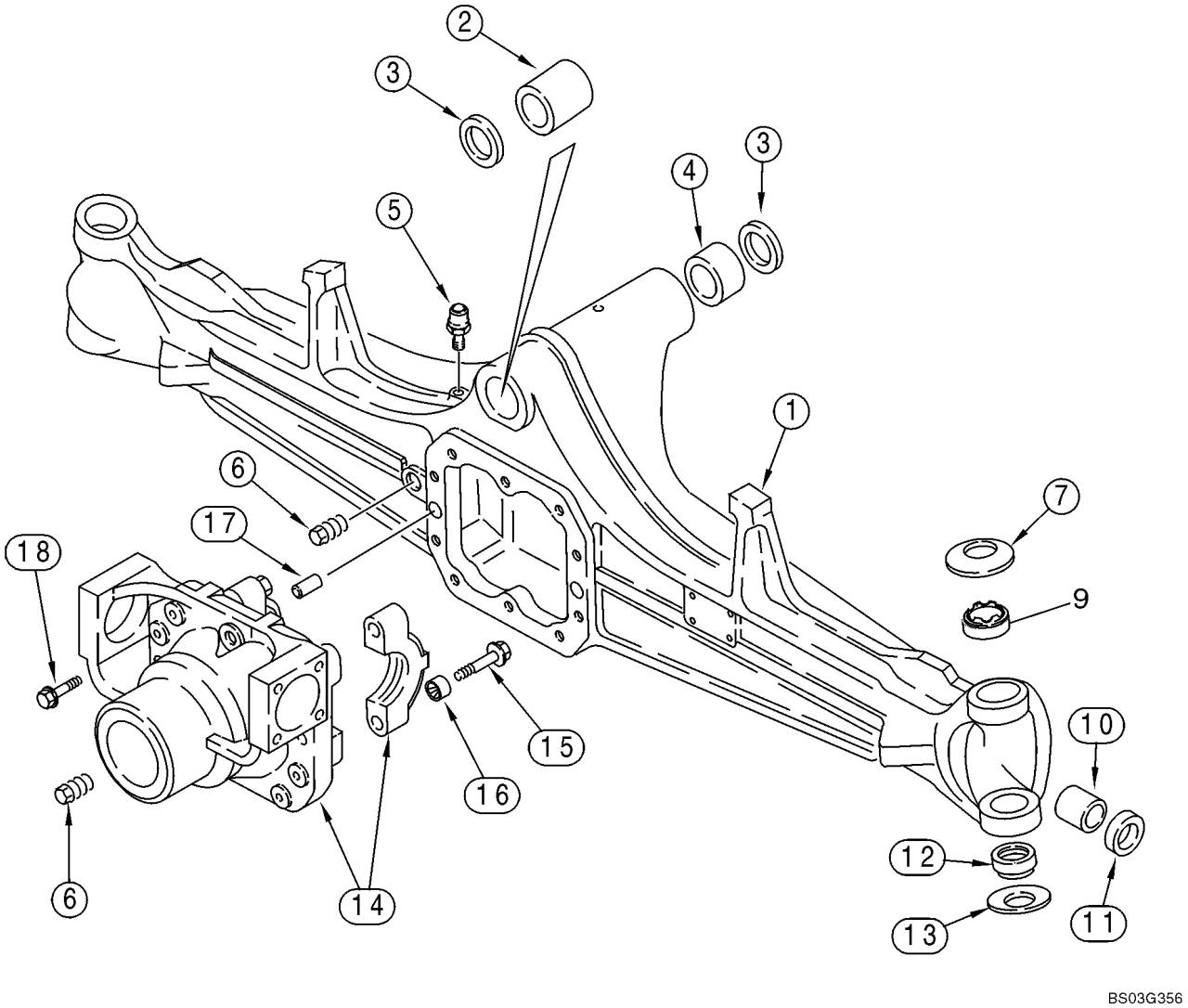

http://www.minnparbackhoeparts.com/

EJE, TRANSMISIÓN DELANTERA - ALOJAMIENTO

REF	FN	PART NUMBER	YR/SN	QTY	DESCRIPTION
		87417387		1	EJE (CONJUNTO) Front, 580SM Models Without Powershift Transmission, Incl. Ref 1 - 18; Also Includes Parts On Figures 06-02 - 06-08
		87417390		1	EJE (CONJUNTO) Front, With Limited Slip, 580SM+ Models Without Powershift Transmission, Incl. Ref 1 - 18; Also Includes Parts On Figures 06-02 - 06-08
		87417389		1	EJE (CONJUNTO) Front, 580SM Models With Powershift Transmission, Incl. Ref 1 - 18; Also Includes Parts On Figures 06-02 - 06-08
		87417391		1	EJE (CONJUNTO) Front, With Limited Slip, 580SM+ Models With Powershift Transmission, Incl. Ref 1 - 18; Also Includes Parts On Figures 06-02 - 06-08
1		427107A1		1	CÁRTER DE PUENTE 87417387 or 87417389 580SM Axle
1		87430345		1	CÁRTER DE PUENTE 87417390 or 87417391 580SM+ Axle
		B17575		X	FLÚIDO 89 ml, Black RTV Silicone; Differential Carrier to Axle Housing
2		D149725		1	CASQUILLO
3		N14367		2	ANILLO DE CIERRE
4		D149726		1	CASQUILLO
5		1966149C2		1	RESPIRADERO
6		A156873		2	TAPON DE VIACIADO 22 mm
7		122270A1		2	ARANDELA Belleville
9		87400286		2	CASQUILLO
10		1966186C1		2	CASQUILLO
11		311565A1		2	ANILLO DE CIERRE Oil, 30 x 44 x 14 mm thk, Triple Lip, Used In 15 mm Deep Counterbore
12		100520A1		2	JUNTA DE ROTULA Bushing, Two Piece
13		122268A1		2	ARANDELA Belleville
		144454A1		1	APOYADERO (CONJUNTO) Differential Carrier; Incl. Ref 14 - 16
14		NSS		1	NO SE REPARA SEPARADAM. Carrier
15		S301065		4	TORNILLO 14 x 75 mm
16		1966136C1		4	CASQUILLO Bushing
17		1966138C1		2	BULON/PIN, LARGO Dowel
18		S301064		10	TORNILLO Flange, M12 x 33; 12.9

http://www.minnparbackhoeparts.com/

EJE, TRANSMISIÓN DELANTERA - ALOJAMIENTO

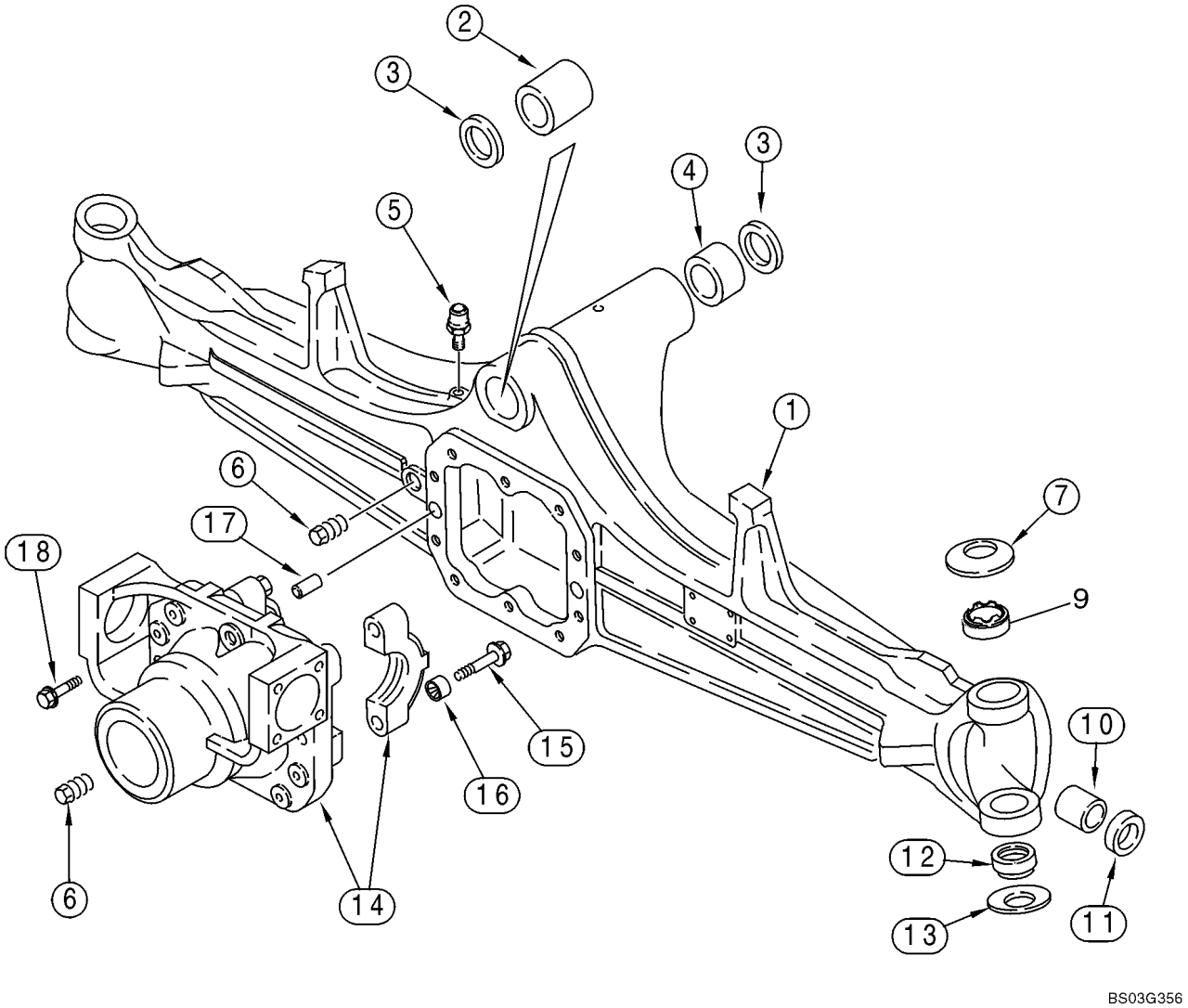

http://www.minnparbackhoeparts.com/

EJE, TRANSMISIÓN DELANTERA - ALOJAMIENTO

REF	FN	PART NUMBER	YR/SN	QTY	DESCRIPTION
		B17575		X	FLÚIDO 89 ml, Black RTV Silicone, Differential Carrier to Axle Housing

http://www.minnparbackhoeparts.com/

EJE, TRANSMISIÓN DELANTERA - ALOJAMIENTO, ARTICULACIÓN GIRATORIA

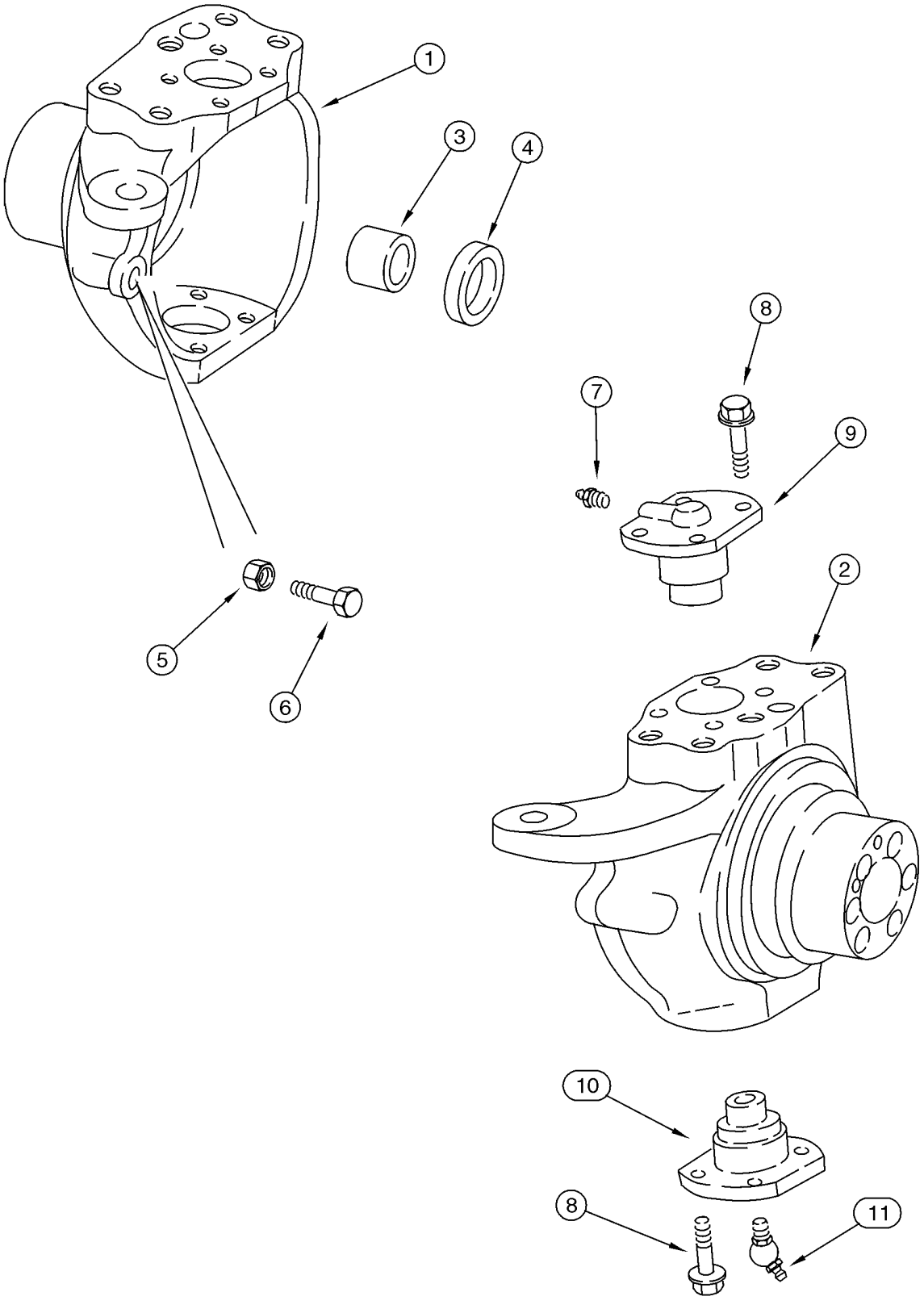

http://www.minnparbackhoeparts.com/

EJE, TRANSMISIÓN DELANTERA - ALOJAMIENTO, ARTICULACIÓN GIRATORIA

REF	FN	PART NUMBER	YR/SN	QTY	DESCRIPTION
		87417387		1	EJE (CONJUNTO) Front, 580SM Models Without Powershift Transmission, Incl. Ref 1 - 11; Also Includes Parts On Figures 06-02 - 06-08
		87417390		1	EJE (CONJUNTO) Front, With Limited Slip, 580SM+ Models Without Powershift Transmission, Incl. Ref 1 - 11; Also Includes Parts On Figures 06-02 - 06-08
		87417389		1	EJE (CONJUNTO) Front, 580SM Models With Powershift Transmission, Incl. Ref 1 - 11; Also Includes Parts On Figures 06-02 - 06-08
		87417391		1	EJE (CONJUNTO) Front, With Limited Slip, 580SM+ Models With Powershift Transmission, Incl. Ref 1 - 11; Also Includes Parts On Figures 06-02 - 06-08
1		397653A1		1	CÁRTER DE PUENTE Left-Hand, 60 mm Diameter Axle Shaft Seal Counterbore; 87417387 or 87417389 580SM Axle
1		402344A1		1	CAVIDAD Left-Hand, 87417390 or 87417391 580SM+ Axle
		B17575		X	FLÚIDO 89 ml, Black RTV Silicone, Wear Ring to Swivel Housing
2		397654A1		1	CÁRTER DE PUENTE Right-Hand, 60 mm Diameter Axle Shaft Seal Counterbore; 87417387 or 87417389 580SM Axle
2		402346A1		1	CAVIDAD Right-Hand, 87417390 or 87417391 580SM+ Axle
3		100532A1		2	CASQUILLO Used With Right-Hand or Left-Hand Swivel Housing, Not Included With Housing, Purchase Separately
4		402359A1		2	ANILLO DE CIERRE 45 x 60 x 16 mm thk, Triple Lip
5		1537663C1		2	TUERCA M16
6		1537664C1		2	TORNILLO
7		712998R91		2	ENGRASADOR M6 x 1
8		100533A1		16	TORNILLO M12 x 30
9		122265A1		2	BULON/PIN, LARGO King Pin
10		122264A1		2	BULON/PIN, LARGO King Pin
11		N13505		2	ENGRASADOR 45 deg, M6x1

http://www.minnparbackhoeparts.com/

EJE, TRANSMISIÓN DELANTERA - CILINDRO, DIRECCION

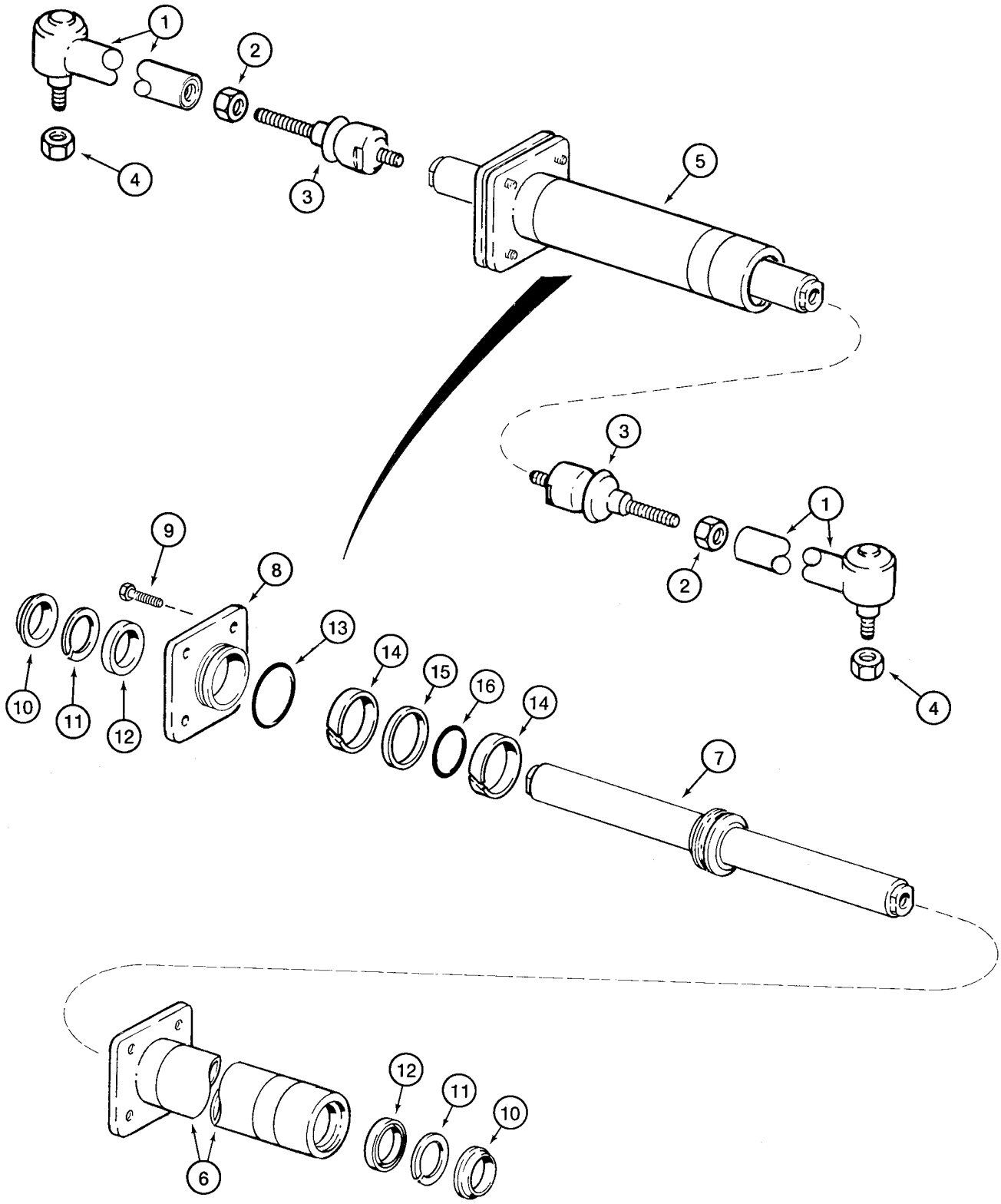

http://www.minnparbackhoeparts.com/

EJE, TRANSMISIÓN DELANTERA - CILINDRO, DIRECCION

REF	FN	PART NUMBER	YR/SN	QTY	DESCRIPTION
		87417387		1	EJE (CONJUNTO) Front, 580SM Models Without Powershift Transmission, Incl. Ref 1 - 16; Also Includes Parts On Figures 06-02 - 06-08
		87417390		1	EJE (CONJUNTO) Front, With Limited Slip, 580SM+ Models Without Powershift Transmission, Incl. Ref 1 - 16; Also Includes Parts On Figures 06-02 - 06-08
		87417389		1	EJE (CONJUNTO) Front, 580SM Models With Powershift Transmission, Incl. Ref 1 - 16; Also Includes Parts On Figures 06-02 - 06-08
		87417391		1	EJE (CONJUNTO) Front, With Limited Slip, 580SM+ Models With Powershift Transmission, Incl. Ref 1 - 16; Also Includes Parts On Figures 06-02 - 06-08
		144457A1		2	BRAZO Incl. Ref 1 - 3; 87417387 or 87417389 580SM Axle; See Below for 580SM+ Axle Arm
1		NSS		1	NO SE REPARA SEPARADAM. Ball Joint
2		934727R1		1	TUERCA M18
3		112509A1		1	JUNTA DE ROTULA
		313260A1		2	BIELA DE CONEXION Arm, Incl. Ref 1 - 3; 87417390 or 87417391 580SM+ Axle
1		390031A1		1	BRAZO
2		390030A1		1	TUERCA
3		112509A1		1	JUNTA DE ROTULA
4		905839R1		2	TUERCA M18
5		144458A1		1	CILINDRO Steering, Incl. Ref 6 - 16, Order D149739 Kit to Service Seals
6		D149738		1	CILINDRO DIRECTION TUBE
7		144459A1		1	VARILLA Piston
8		D149737		1	EMPAQUETADURA GLAND
		B17575		X	FLÚIDO 89 ml, Black RTV Silicone, Cylinder Flange to Cylinder
9		114296A1		4	TORNILLO For Service Order 100524A1 Bolt and 892-11012 Washer
10		NSS		2	NO SE REPARA SEPARADAM. Seal, Wiper
11		NSS		2	NO SE REPARA SEPARADAM. Ring, Backup
12		NSS		2	NO SE REPARA SEPARADAM. Seal
13		NSS		1	NO SE REPARA SEPARADAM. O-Ring
14		NSS		2	NO SE REPARA SEPARADAM. Ring, Wear

http://www.minnparbackhoeparts.com/

EJE, TRANSMISIÓN DELANTERA - CILINDRO, DIRECCION

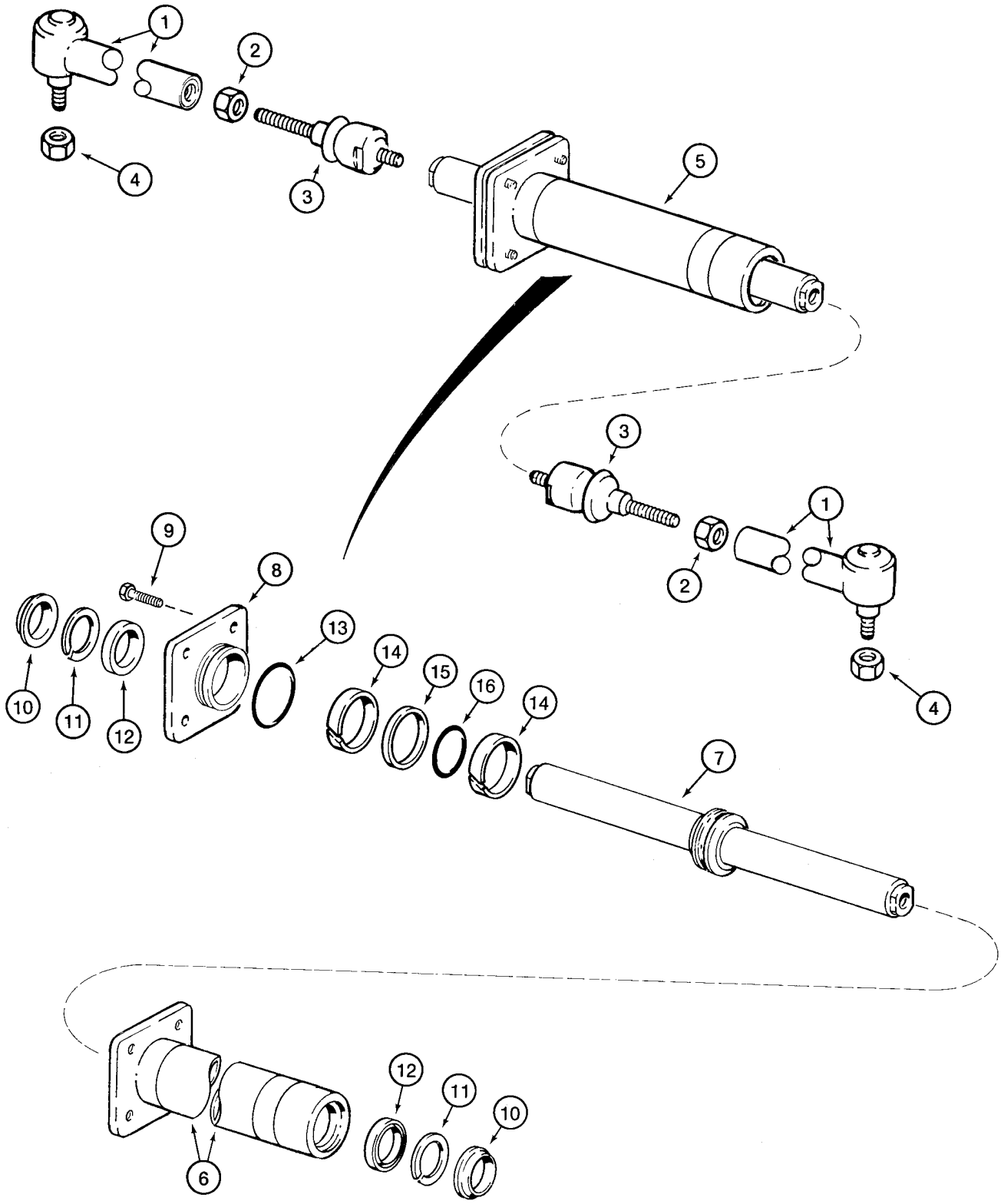

http://www.minnparbackhoeparts.com/

EJE, TRANSMISIÓN DELANTERA - CILINDRO, DIRECCION

REF	FN	PART NUMBER	YR/SN	QTY	DESCRIPTION
15		NSS		1	NO SE REPARA SEPARADAM. Seal
16		NSS		1	NO SE REPARA SEPARADAM. O-Ring
		D149739		1	JUEGO JUNTAS Incl. Ref 10 - 16

http://www.minnparbackhoeparts.com/

EJE, TRANSMISIÓN DELANTERA - VARILLAS, EJE

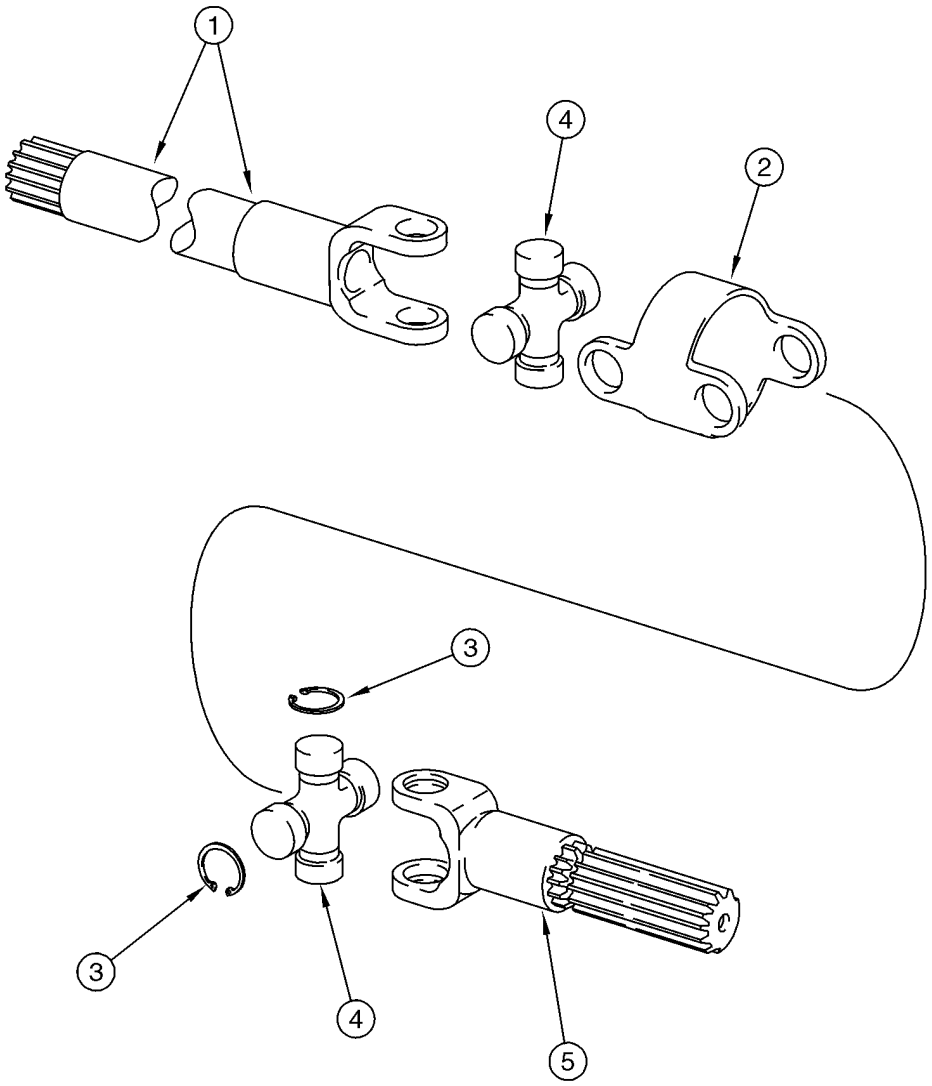

B9407022

http://www.minnparbackhoeparts.com/

EJE, TRANSMISIÓN DELANTERA - VARILLAS, EJE

REF	FN	PART NUMBER	YR/SN	QTY	DESCRIPTION
		87417387		1	EJE (CONJUNTO) Front, 580SM Models Without Powershift Transmission, Incl. Ref 1 - 5; Also Includes Parts On Figures 06-02 - 06-08
		87417390		1	EJE (CONJUNTO) Front, With Limited Slip, 580SM+ Models Without Powershift Transmission, Incl. Ref 1 - 5; Also Includes Parts On Figures 06-02 - 06-08
		87417389		1	EJE (CONJUNTO) Front, 580SM Models With Powershift Transmission, Incl. Ref 1 - 5; Also Includes Parts On Figures 06-02 - 06-08
		87417391		1	EJE (CONJUNTO) Front, With Limited Slip, 580SM+ Models With Powershift Transmission, Incl. Ref 1 - 5; Also Includes Parts On Figures 06-02 - 06-08
		144461A1		2	SEMIEJE Incl. Ref 1 - 5; Not Available As An Assembly, Order Components; 87417387 or 87417389 580SM Axle; See Below for 580SM+ Axle Shaft
1		144462A1		2	HORQUETA Shaft, Long, Differential Side; 580SM
2		390029A1		2	CUERPO
3		N14410		16	ANILLO
4		144465A1		4	CRUCETA DE CARDÁN Incl. Ref 3
5		144463A1		2	EJE Short, Wheel Side; 580SM
		313277A1		2	ARBOL DE MANDO Incl. Ref 1 - 5; 87417390 or 87417391 580SM+ Axle Shaft
1		390027A1		1	EJE Fork, Long, Differential Side; 580SM+
2		390029A1		1	CUERPO
3		N14410		8	ANILLO
4		144465A1		2	CRUCETA DE CARDÁN Incl. Ref 3
5		390028A1		1	EJE Short, Wheel Side; 580SM+

http://www.minnparbackhoeparts.com/

EJE, TRANSMISIÓN DELANTERA - PLANETARIO

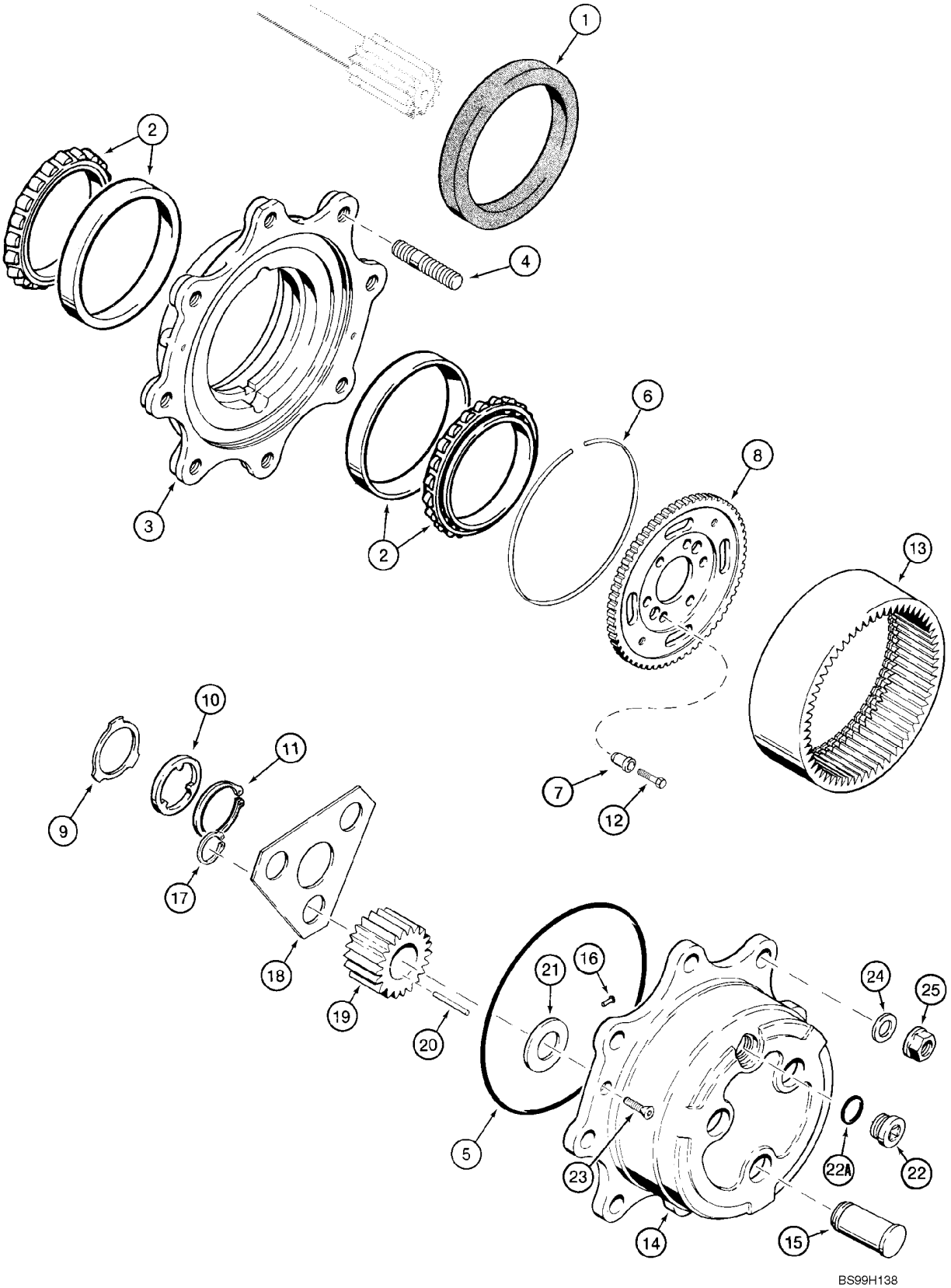

http://www.minnparbackhoeparts.com/

EJE, TRANSMISIÓN DELANTERA - PLANETARIO

REF	FN	PART NUMBER	YR/SN	QTY	DESCRIPTION
		87417387		1	EJE (CONJUNTO) Front, 580SM Models Without Powershift Transmission, Incl. Ref 1 - 25; Also Includes Parts On Figures 06-02 - 06-08
		87417390		1	EJE (CONJUNTO) Front, With Limited Slip, 580SM+ Models Without Powershift Transmission, Incl. Ref 1 - 25; Also Includes Parts On Figures 06-02 - 06-08
		87417389		1	EJE (CONJUNTO) Front, 580SM Models With Powershift Transmission, Incl. Ref 1 - 25; Also Includes Parts On Figures 06-02 - 06-08
		87417391		1	EJE (CONJUNTO) Front, With Limited Slip, 580SM+ Models With Powershift Transmission, Incl. Ref 1 - 25; Also Includes Parts On Figures 06-02 - 06-08
1		311569A1		2	JUNTA DE ACEITE Triple Lip
2		1966169C1		4	COJINETE
		144466A1		2	CUBO Incl. Ref 3, 4
3		NSS		1	NO SE REPARA SEPARADAM. Hub
4		100556A1		8	PRISIONERO
		B17575		X	FLÚIDO 89 ml, RTV Silicone, Planetary Cover to Hub
5		100552A1		2	JUNTA HERMETICA
6		100559A1		2	JUNQUILLO
7		116426A1		12	CASQUILLO CENTRAJE Bushing
8		116427A1		2	ENGRANAJE CARRIER, Ring Gear; 87417387 or 87417389 580SM Axle
8		313259A1		2	ENGRANAJE CARRIER, Ring Gear; 87417390 or 87417391 580SM+ Axle
9		190684A1		2	ARANDELA Thrust
10		190682A1		2	ARANDELA Thrust
11		A48041		2	RETENEDOR
12		116425A1		12	TORNILLO
13		100561A1		2	ENGRANAJE Ring
		100554A1		2	EJE DE SATELITE PLANETARY, Includes 100553A1, Ref 14 - 22A
		100553A1		2	CUBIERTA PRINCIPAL Carrier, Incl. Ref 14 - 16
14		NSS		1	NO SE REPARA SEPARADAM. Carrier
15		NSS		3	NO SE REPARA SEPARADAM. Shaft, Pinion
16		K395093		1	EJE CON CABEZA Lock
17		800-1134		6	ANILLO DE CIERRE No. 34

http://www.minnparbackhoeparts.com/

EJE, TRANSMISIÓN DELANTERA - PLANETARIO

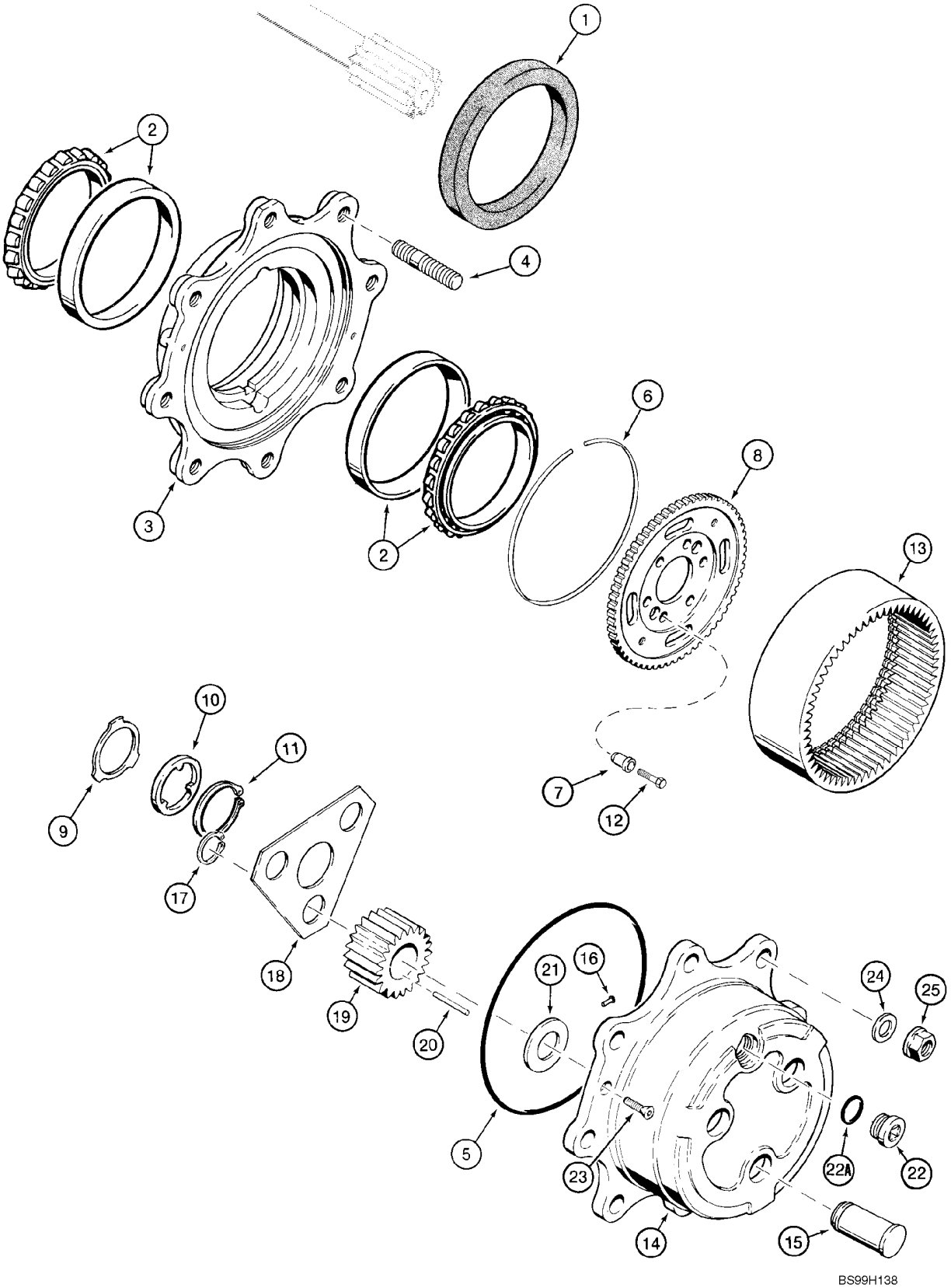

http://www.minnparbackhoeparts.com/

EJE, TRANSMISIÓN DELANTERA - PLANETARIO

REF	FN	PART NUMBER	YR/SN	QTY	DESCRIPTION
18		100555A1		2	PLACA, GRANDE Retainer
19		100562A1		6	PINON PLANETARIO Pinion Gear
		B17575		X	FLÚIDO 89 ml, Black RTV Silicone, Planetary Cover to Hub
20		114295A1		9	KIT, 10 NEEDLE BRGS
21		K395091		6	ARANDELA Thrust
22		100557A1		2	TAPON DE VIACIADO Incl. Ref 22A
22A		238-6121		1	JUNTA HERMETICA 1-1/16 ID x 3/32
23		K395082		4	TORNILLO M8 x 20
24		496-81000		16	ARANDELA 25/32 x 1-3/8 x 1/8, Not Included In Assembly, Purchase Separately
25		825-11418		16	TUERCA M18, Not Included In Assembly, Purchase Separately

http://www.minnparbackhoeparts.com/

EJE, TRANSMISIÓN DELANTERA - DIFERENCIAL

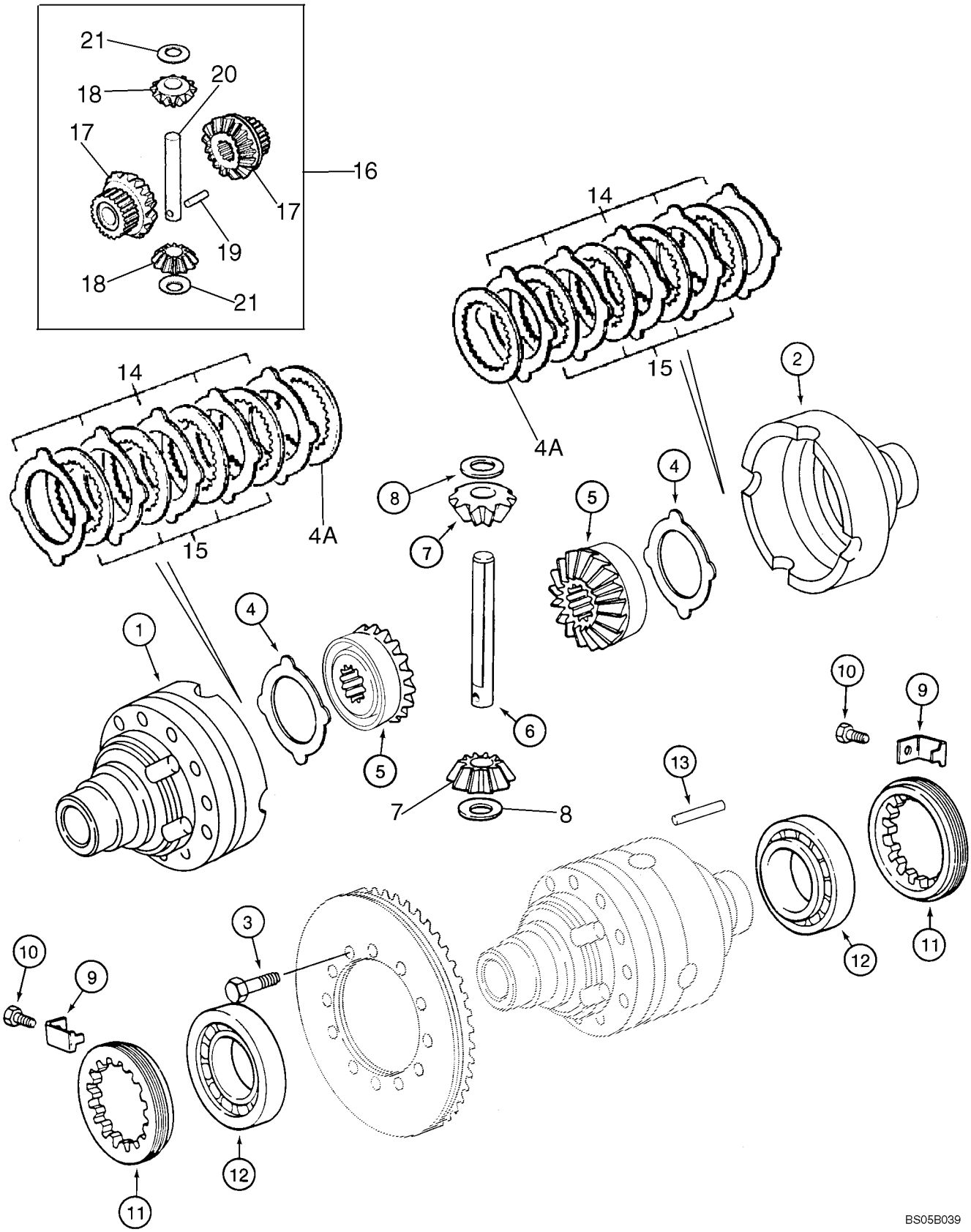

http://www.minnparbackhoeparts.com/

EJE, TRANSMISIÓN DELANTERA - DIFERENCIAL

REF	FN	PART NUMBER	YR/SN	QTY	DESCRIPTION
		87417387		1	EJE (CONJUNTO) Front, 580SM Models Without Powershift Transmission, Incl. Ref 1 - 13; Also Includes Parts On Figures 06-02 - 06-08
		87417390		1	EJE (CONJUNTO) Front, With Limited Slip, 580SM+ Models Without Powershift Transmission, Incl. Ref 1 - 4A, 9 - 21; Also Includes Parts On Figures 06-02 - 06-08
		87417389		1	EJE (CONJUNTO) Front, 580SM Models With Powershift Transmission, Incl. Ref 1 - 13; Also Includes Parts On Figures 06-02 - 06-08
		87417391		1	EJE (CONJUNTO) Front, With Limited Slip, 580SM+ Models With Powershift Transmission, Incl. Ref 1 - 4A, 9 - 21; Also Includes Parts On Figures 06-02 - 06-08
		294933A1		1	APOYADERO (CONJUNTO) Differential Housing, Incl. Ref 1, 2
1		NSS		1	NO SE REPARA SEPARADAM. Housing, Flange Half
2		NSS		1	NO SE REPARA SEPARADAM. Housing, Plain Half
		B17575		X	FLÚIDO 89 ml, Black RTV Silicone, Bolt to Differential Housing
3		827-10075		12	TORNILLO M10 x 75; 10.9
4		1967003C1		2	ARANDELA 87417387 or 87417389 580SM Axle Only
4A		1966154C1		2	PLACA Backing; 87417390 or 87417391 580SM+ Limited Slip Axle Only; Used With Ref 14, 15
		231397A1		1	JUEGO DE PIEZAS Differential Gear Set, Service Replacement, Incl. Ref 5 - 8, 13; Used On 580SM Models; No Longer Used On 580SM+ Models, For 580SM+ Gear Set, Order B506395 Gear Set, Ref 16 - 21
5		N14407		2	ENGRANAJE Side, No Longer Available, Order 231397A1 Differential Gear Set Kit
6		K395087		1	BULON/PIN, LARGO Shaft, Pinion Gear, No Longer Available, Order 231397A1 Differential Gear Set Kit
7		N14408		2	PIÑÓN SOLAR Pinion Gear, No Longer Available, Order 231397A1 Differential Gear Set Kit

http://www.minnparbackhoeparts.com/

EJE, TRANSMISIÓN DELANTERA - DIFERENCIAL

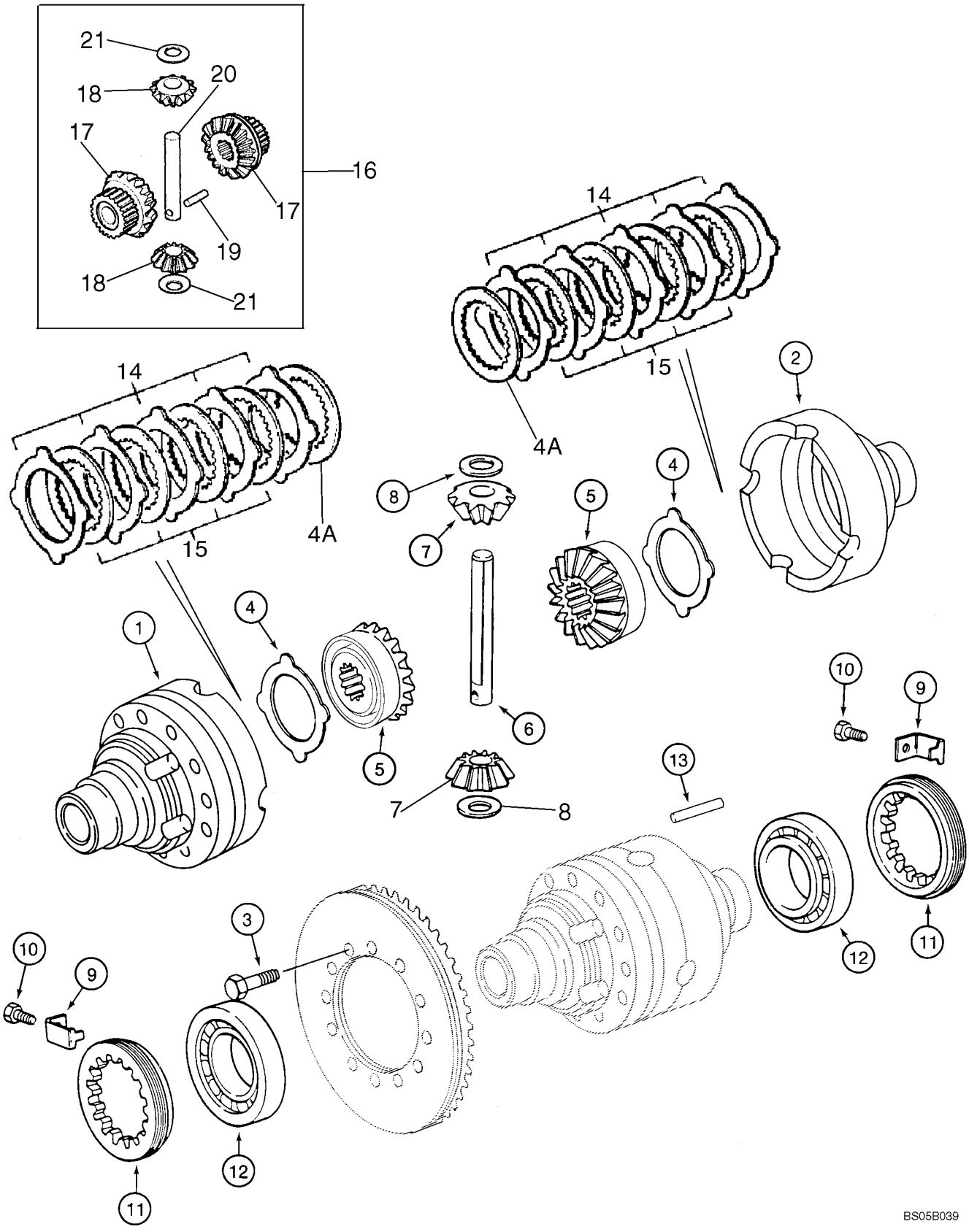

http://www.minnparbackhoeparts.com/

EJE, TRANSMISIÓN DELANTERA - DIFERENCIAL

REF	FN	PART NUMBER	YR/SN	QTY	DESCRIPTION
8		K395075		2	ARANDELA Thrust, No Longer Available, Order 231397A1 Differential Gear Set Kit
9		1966153C1		2	PLACA DE FRENO Bracket
10		112486A1		2	TORNILLO M6 x 12
11		1966559C1		2	TUERCA Locking Ring
12		K395027		2	COJINETE
13		K395086		1	BULON/PIN, LARGO Dowel, No Longer Available, Order 231397A1 Differential Gear Set Kit
14		1966155C1		10	PLACA Drive; 580SM+ 87417390 or 87417391 Limited Slip Axle Only; Used With Ref 4A, 15
15		1966156C1		8	ARANDELA PLATE, Driven; 580SM+ 87417390 or 87417391 Limited Slip Axle Only; Used With Ref 4A, 14
16		B506395		1	JUEGO DE PIEZAS Differential Gear Set; Incl. Ref 17 - 21; Used On 580SM+ Models
17		NSS		2	NO SE REPARA SEPARADAM. Gear, Side; Order B506395 Gear Set
18		NSS		2	NO SE REPARA SEPARADAM. Gear, Pinion; Order B506395 Gear Set
19		K395086		1	BULON/PIN, LARGO Locking
20		NSS		1	NO SE REPARA SEPARADAM. Pin, Pinion; Order B506395 Gear Set
21		K395075		2	ARANDELA Thrust

http://www.minnparbackhoeparts.com/

EJE, TRANSMISIÓN DELANTERA - ANILLO Y PIÑÓN

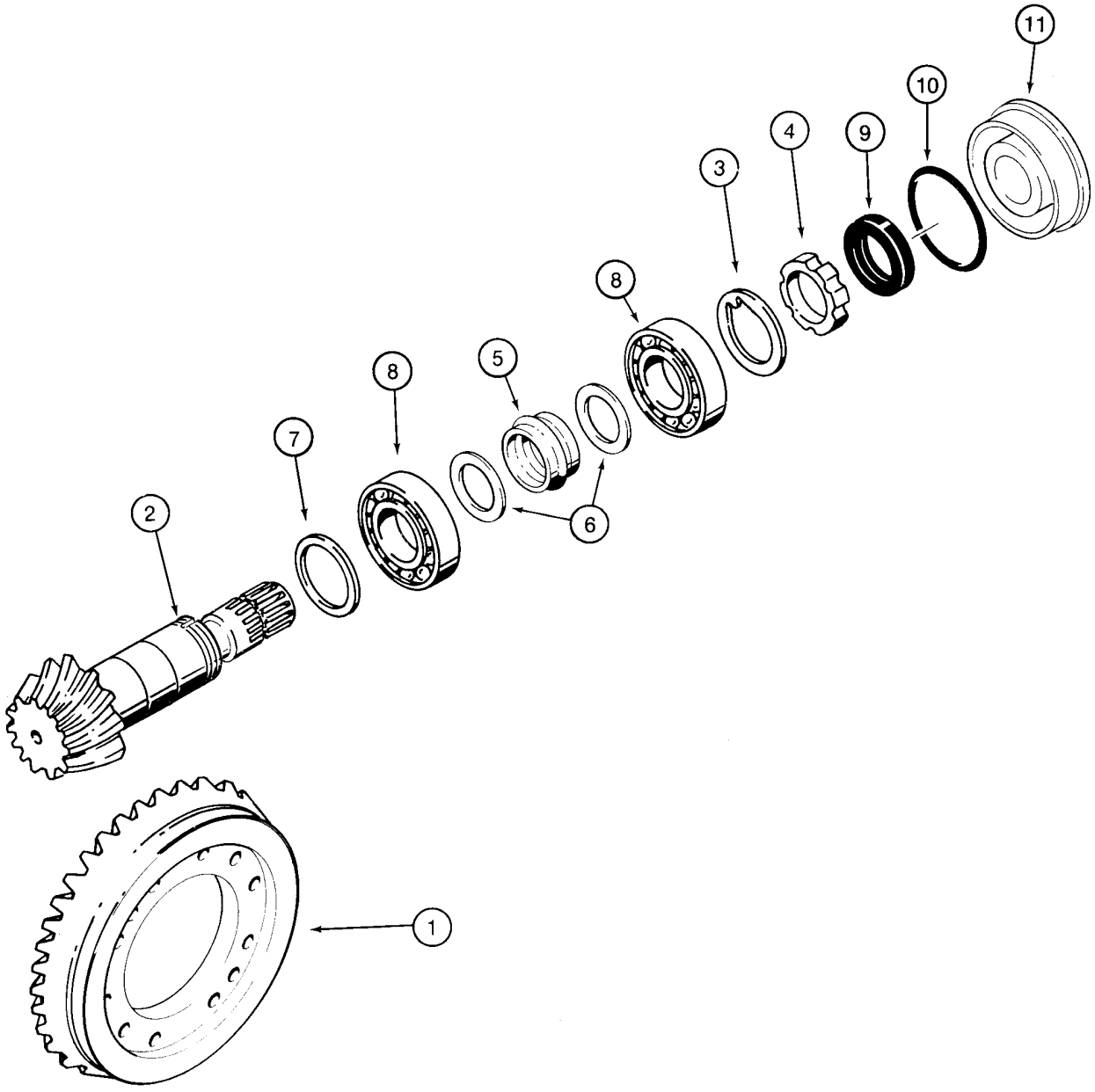

B9407025

http://www.minnparbackhoeparts.com/

EJE, TRANSMISIÓN DELANTERA - ANILLO Y PIÑÓN

REF	FN	PART NUMBER	YR/SN	QTY	DESCRIPTION
		87417387		1	EJE (CONJUNTO) Front, 580SM Models Without Powershift Transmission, Incl. Ref 1 - 11; Also Includes Parts On Figures 06-02 - 06-08
		87417390		1	EJE (CONJUNTO) Front, With Limited Slip, 580SM+ Models Without Powershift Transmission, Incl. Ref 1 - 11; Also Includes Parts On Figures 06-02 - 06-08
		87417389		1	EJE (CONJUNTO) Front, 580SM Models With Powershift Transmission, Incl. Ref 1 - 11; Also Includes Parts On Figures 06-02 - 06-08
		87417391		1	EJE (CONJUNTO) Front, With Limited Slip, 580SM+ Models With Powershift Transmission, Incl. Ref 1 - 11; Also Includes Parts On Figures 06-02 - 06-08
		144460A1		1	JEUGO Ring and Pinion Gear Set, Incl. Ref 1 - 6; 87417387 580SM Axle Without Powershift
		195210A1		1	JEUGO Ring and Pinion Gear Set, Incl. Ref 1 - 6; 87417390 580SM+ Axle Without Powershift
		311046A1		1	JUEGO DE PINONES KIT, Ring and Pinion, Incl. Ref 1 - 6; 87417389 580SM Axle With Powershift
		311047A1		1	GRUPO CONICO Ring and Pinion Gear Set, Incl. Ref 1 - 6; 87417391 580SM+ Axle With Powershift
1		NSS		1	NO SE REPARA SEPARADAM. Ring, Gear
2		NSS		1	NO SE REPARA SEPARADAM. Gear, Pinion Gear
3		K261065		1	ARANDELA
4		K261014		1	TUERCA Ring
5		1349058C1		1	ESPACIADOR Collapsible
6		1349059C1		2	ARANDELA
7		140954A1		X	SUPLEMENTO 2,5 mm (0,098 in)
7		140953A1		X	SUPLEMENTO 2,6 mm (0,102 in)
7		140951A1		X	SUPLEMENTO 2,7 mm (0,106 in)
7		140949A1		X	SUPLEMENTO 2,8 mm (0,110 in)
7		140948A1		X	SUPLEMENTO 2,9 mm (0,114 in)
7		140943A1		X	SUPLEMENTO 3,0 mm (0,118 in)
7		140944A1		X	SUPLEMENTO 3,1 mm (0,122 in)
7		140945A1		X	SUPLEMENTO 3,2 mm (0,125 in)
7		140946A1		X	SUPLEMENTO 3,3 mm (0,129 in)
7		140947A1		X	SUPLEMENTO 3,4 mm (0,133 in)
8		K395090		2	RODAMIENTO DE BOLAS

http://www.minnparbackhoeparts.com/

EJE, TRANSMISIÓN DELANTERA - ANILLO Y PIÑÓN

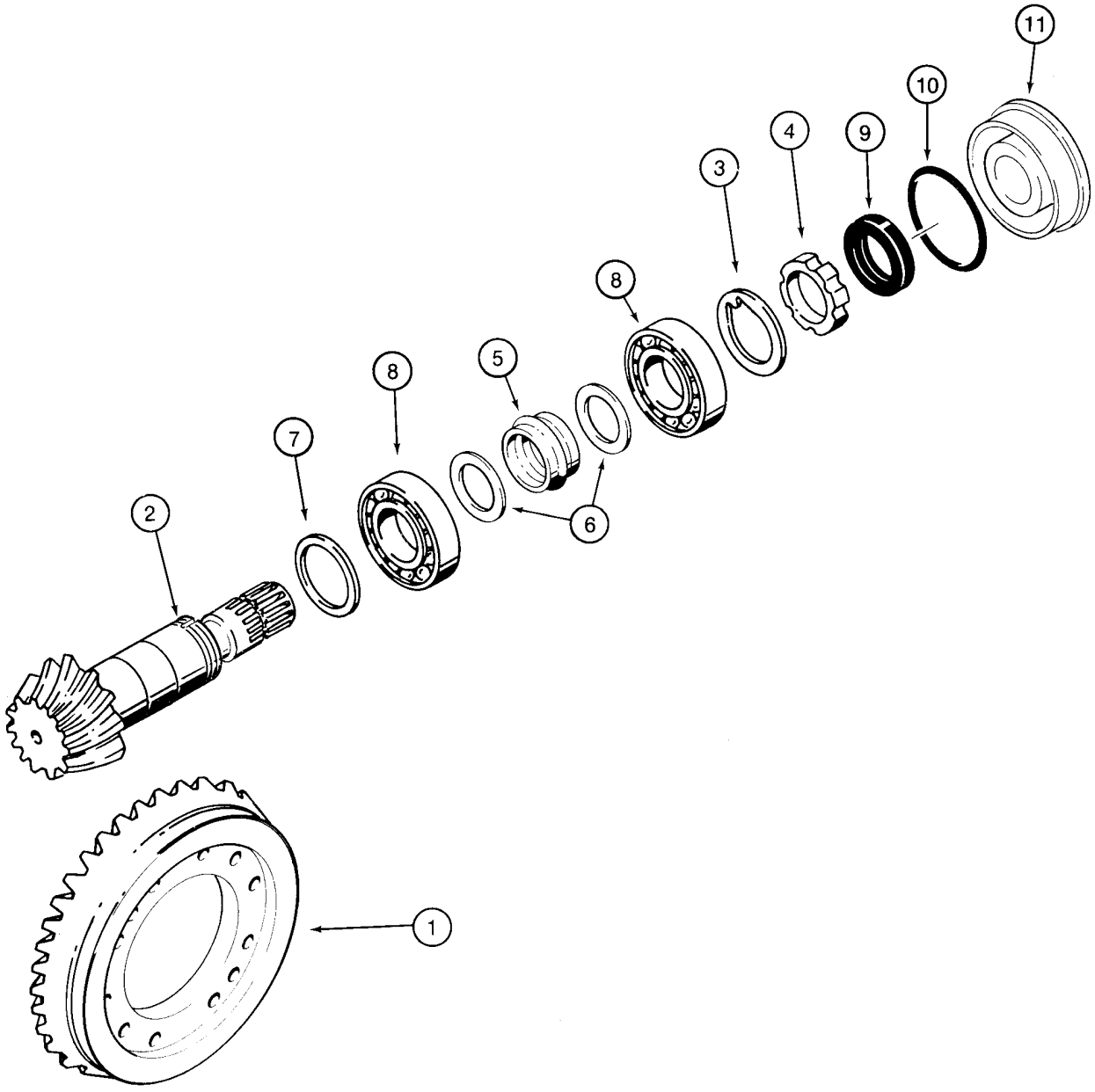

B9407025

http://www.minnparbackhoeparts.com/

EJE, TRANSMISIÓN DELANTERA - ANILLO Y PIÑÓN

REF	FN	PART NUMBER	YR/SN	QTY	DESCRIPTION
9		K262143		1	ANILLO DE CIERRE Oil
10		238-5152		1	JUNTA HERMETICA 3-1/4 ID x 3/32
11		128570A1		1	TAPA Cover, Differential
		B17575		X	FLÚIDO 89 ml, Black RTV Silicone, Differential Cover to Differential Carrier

http://www.minnparbackhoeparts.com/

EJE DE TRANSMISIÓN, EJE DELANTERO

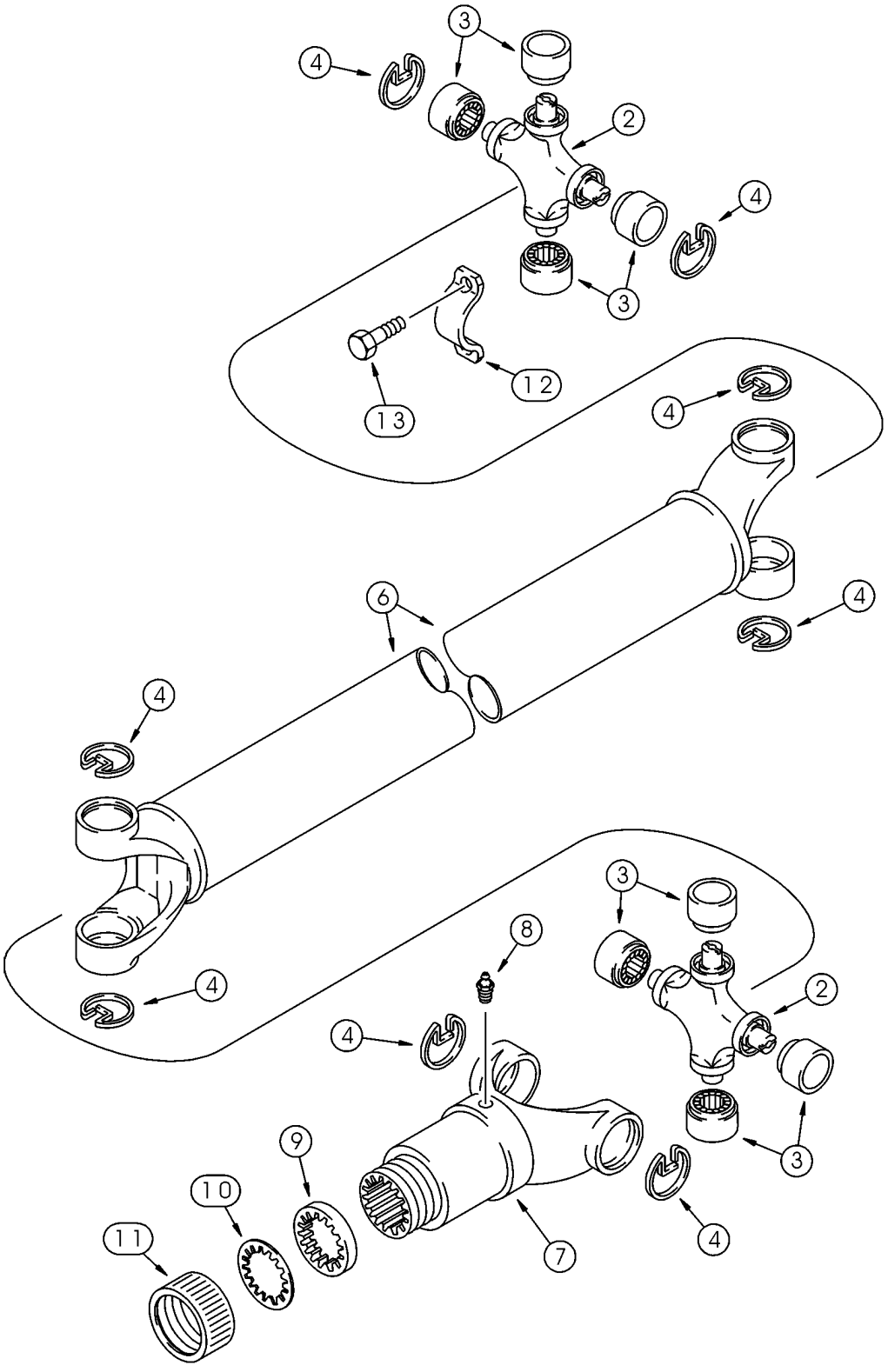

http://www.minnparbackhoeparts.com/

EJE DE TRANSMISIÓN, EJE DELANTERO

REF	FN	PART NUMBER	YR/SN	QTY	DESCRIPTION
		367861A2		1	ARBOL DE MANDO With or Without Powershift Transmission, Incl. 393231A1, Ref 2 - 13
		393231A1		2	JEUGO Universal Joint, Incl. Ref 2 - 4
2		NSS		1	NO SE REPARA SEPARADAM. Joint, Universal
3		NSS		4	NO SE REPARA SEPARADAM. Bearing, Journal
4		NSS		4	NO SE REPARA SEPARADAM. Ring, Retaining
6		393234A1		1	ARBOL DE MANDO
7		144279A1		1	HORQUILLA
8		219-10		1	ENGRASADOR 1/4 tpr x 11/16
		D149860		1	EMPAQUETADURA Incl. Ref 9 - 11
9		NSS		1	NO SE REPARA SEPARADAM. Washer, Cork
10		NSS		1	NO SE REPARA SEPARADAM. Washer, Steel
11		NSS		1	NO SE REPARA SEPARADAM. Cap
12		90-6682T1		2	COLLAR
13		D137627		4	TORNILLO

http://www.minnparbackhoeparts.com/

06-10		p1	02/05

SISTEMA DE REFRIGERACIÓN - TRANSMISION (MODELOS SIN SERVOASISTIDA)(WITH CUT HOSES AT COOLER)

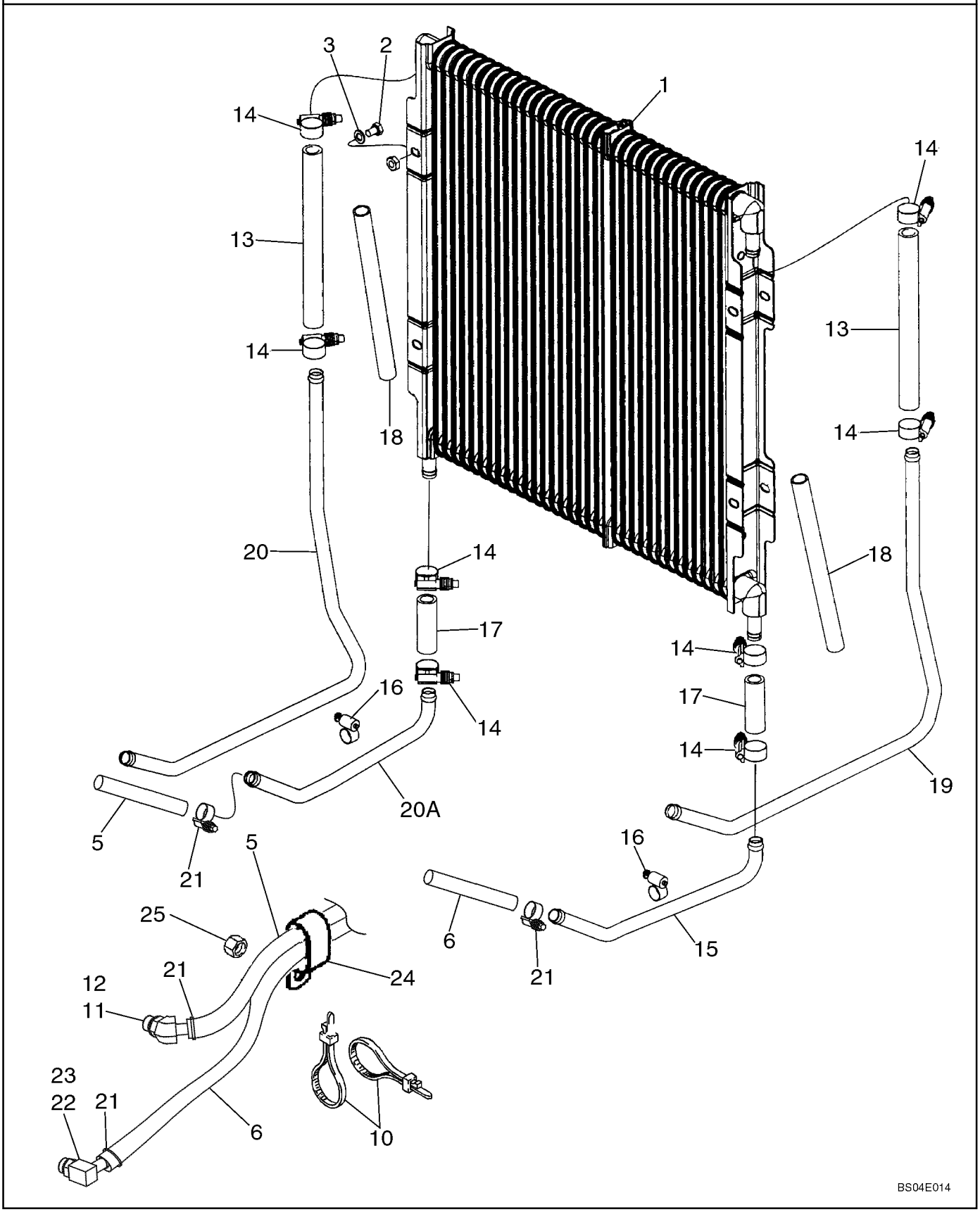

http://www.minnparbackhoeparts.com/

SISTEMA DE REFRIGERACIÓN - TRANSMISION (MODELOS SIN SERVOASISTIDA)(WITH CUT HOSES AT COOLER)

REF	FN	PART NUMBER	YR/SN	QTY	DESCRIPTION
1		87427158		1	RADIADOR ACEITE Hydraulic Oil Cooler
2		614-8012		4	TORNILLO M8 x 12
3		895-11008		4	ARANDELA 9 x 16 x 1,6 mm
5		87422597		1	MANGUERA (CONJUNTO) 975 mm (38-13/32 in), Transmission to Cooler Inlet
6		87422598		1	MANGUERA (CONJUNTO) 1225 mm (48-1/4 in), Cooler Outlet to Transmission
10		L18337		2	BANDA 15 in
11		217-314		1	CODO 45 deg, 5/8 stem x 7/8 Or; Incl. Ref 12
12		237-6010		1	JUNTA HERMETICA 3/4 ID x 3/32
13		87446338		2	MANGA 235 mm (9-9/32 in); Replaces 87417238 Hose
14		328186A1		8	ABRAZADERA MANGUERA
15		87446335		1	TUBO Lower Tube; Replaces 87435277 Tube
16		214-1412		2	COLLAR No. 12
17		87446337		2	MANGA 68 mm (2-11/16 in); Replaces 87426742 Hose
18		87428998		2	FUNDA DE PLÁSTICO 250 mm (9-7/8 in) Sleeve
19		87446333		1	TUBO Right-Hand Upper Cooler; Replaces 87435278 Tube
20		87446330		1	TUBO Left-Hand Upper Cooler; Replaces 87435280 Tube
20A		87446332		1	TUBO Lower; Replaces 87435279 Tube
21		328186A1		4	ABRAZADERA MANGUERA
22		217-349		1	CODO 90 deg, Incl. Ref 23
23		237-6010		1	JUNTA HERMETICA
24		D39696		1	COLLAR Double P
25		829-1410		1	TUERCA M10

http://www.minnparbackhoeparts.com/

06-11		p1	02/05

SISTEMA DE REFRIGERACIÓN - TRANSMISION (MODELOS CON SERVOASISTIDA)(WITH CUT HOSES AT COOLER)

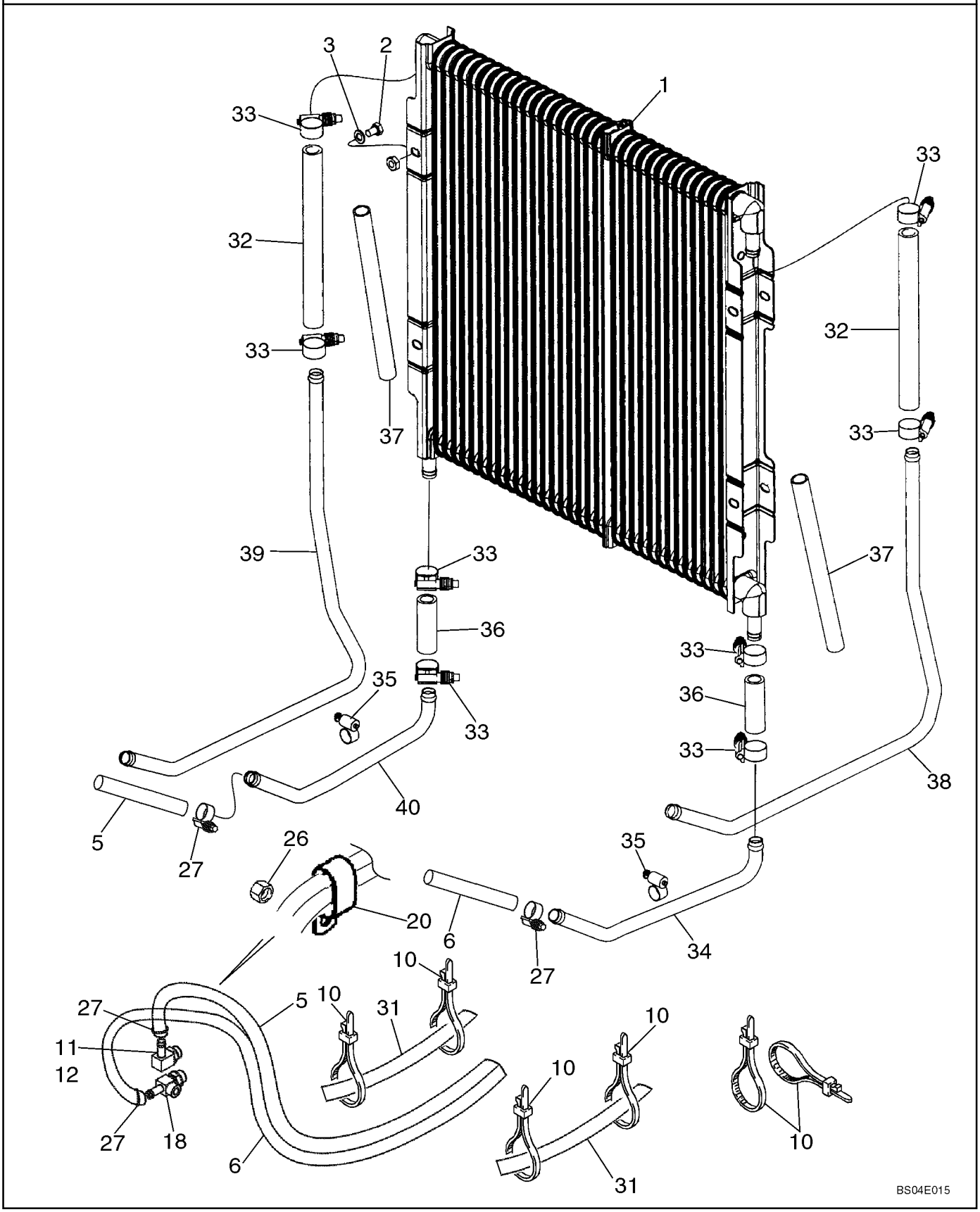

http://www.minnparbackhoeparts.com/

SISTEMA DE REFRIGERACIÓN - TRANSMISION (MODELOS CON SERVOASISTIDA)(WITH CUT HOSES AT COOLER)

REF	FN	PART NUMBER	YR/SN	QTY	DESCRIPTION
1		87427158		1	RADIADOR ACEITE Hydraulic Oil Cooler
2		614-8012		4	TORNILLO M8 x 12
3		895-11008		4	ARANDELA 9 x 16 x 1,6 mm
5		87424240		1	MANGA 1900 mm (74-13/16 in), Transmission to Cooler Inlet
6		87424241		1	MANGA 2150 mm (84-11/16 in), Cooler Outlet to Transmission
10		L18337		6	BANDA 15 in
11		217-363		1	CONEXION Elbow, 90 deg, Incl. Ref 12
12		237-6012		1	JUNTA HERMETICA
18		87423044		1	RACOR-T Tee
20		D39696		1	COLLAR
26		829-1410		1	TUERCA M10
27		328186A1		4	ABRAZADERA MANGUERA
31		D132982		2	TUBO AISLANTE Hose Sleeve
32		87446338		2	MANGA 235 mm (9-9/32 in) hose; Replaces 87417238 Hose
33		328186A1		8	ABRAZADERA MANGUERA
34		87446335		1	TUBO Lower Tube; Replaces 87435277 Tube
35		214-1412		2	COLLAR No. 12
36		87446337		2	MANGA 68 mm (2-11/16 in); Replaces 87426742 Hose
37		87428998		2	FUNDA DE PLÁSTICO 250 mm (9-7/8 in) Sleeve
38		87446333		1	TUBO Right-Hand Upper Cooler; Replaces 87435278 Tube
39		87446330		1	TUBO Left-Hand Upper Cooler; Replaces 87435280 Tube
40		87446332		1	TUBO Lower; Replaces 87435279 Tube

http://www.minnparbackhoeparts.com/

06-11A		p1	02/05

SISTEMA DE REFRIGERACIÓN - TRANSMISION (WITH FLARED FITTINGS AT COOLER)

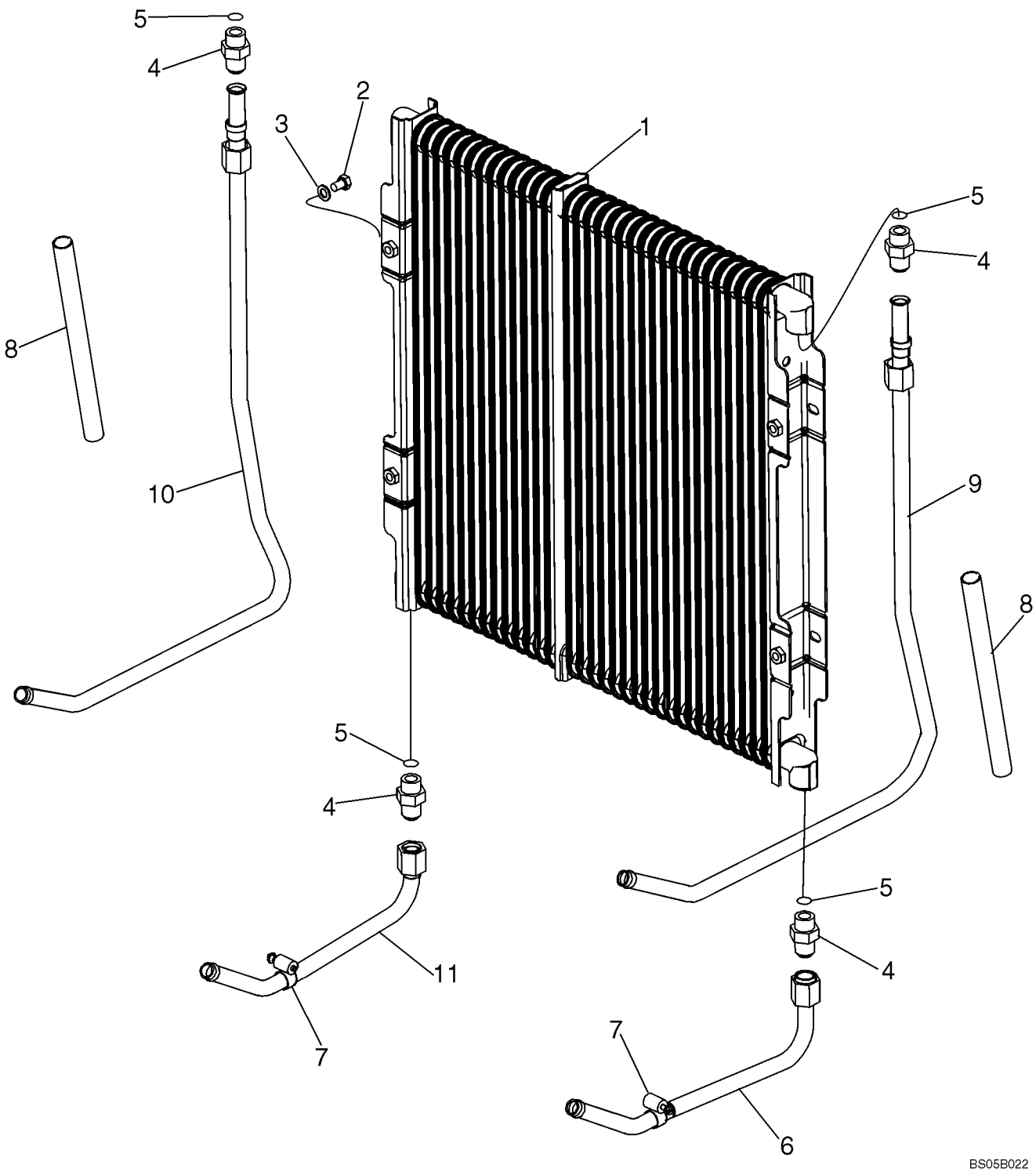

http://www.minnparbackhoeparts.com/

SISTEMA DE REFRIGERACIÓN - TRANSMISION (WITH FLARED FITTINGS AT COOLER)

REF	FN	PART NUMBER	YR/SN	QTY	DESCRIPTION
1		87441876		1	RADIADOR ACEITE Hydraulic Oil Cooler
2		614-8012		4	TORNILLO M8 x 12
3		895-11008		4	ARANDELA 9 x 16 x 1,6 mm
4		218-5062		4	RACOR 7/8 fl x Or; Incl. Ref 5
5		237-6010		1	JUNTA HERMETICA 3/4 ID x 3/32
6		87435078		1	TUBO Lower Right-Hand Tube
7		214-1412		2	COLLAR No. 12
8		87311219		2	FUNDA DE PLÁSTICO 250 mm (9-7/8 in) Sleeve
9		87435076		1	TUBO Right-Hand Upper Cooler
10		87435080		1	TUBO Left-Hand Upper Cooler
11		87435082		1	TUBO Left-Hand Lower

http://www.minnparbackhoeparts.com/

06-12		p1	05/05

TRANSMISION - SOPORTE (MODELOS SIN SERVOASISTIDA)

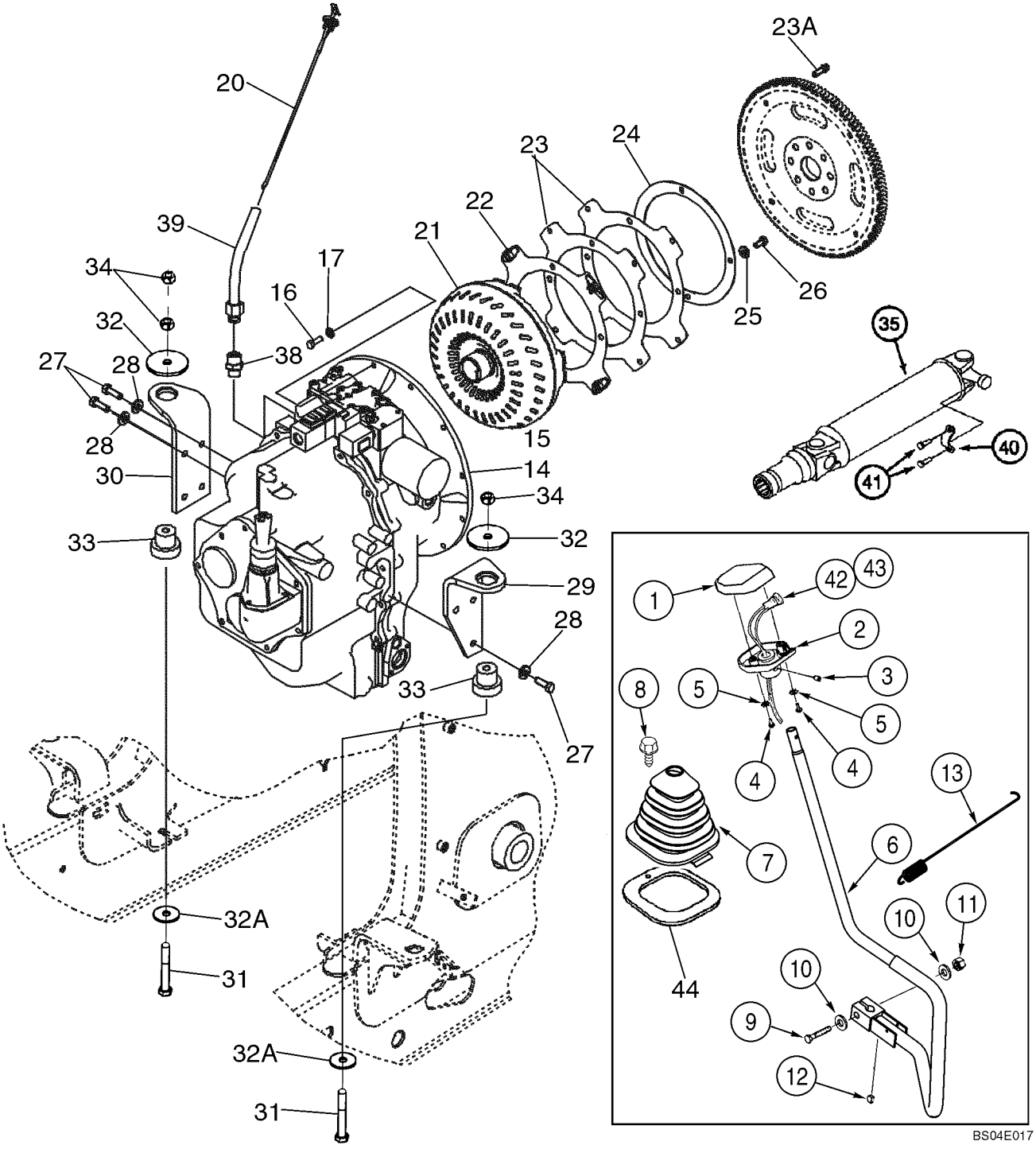

http://www.minnparbackhoeparts.com/

TRANSMISION - SOPORTE (MODELOS SIN SERVOASISTIDA)

REF	FN	PART NUMBER	YR/SN	QTY	DESCRIPTION
		309747A1		1	PLACA Gear Shift Lever, Includes NSS Gasket, Incl. Ref 1, 2, 4, 5
		NSS		2	NO SE REPARA SEPARADAM. GASKET, Knob
1		187714A1		1	BOTON Knob, Upper
2		187715A1		1	BOTON Knob, Lower
3		484-6316		1	TORNILLO Setscrew, 5/16 NF x 3/8; hdg pt
4		87020181		2	TORNILLO No. 10 NF x 7/8
5		493-41020		2	ARANDELA DE FRENO 3/16
6		379314A4		1	PALANCA (CONJUNTO) Gear Shift Lever
7		400588A2		1	PROTECTOR
8		87310096		1	TORNILLO M6 x 25, Includes Washer, Stainless Steel; Replaces 233724A1 Non-Stainless Steel Screw Used On Some Models
9		827-12065		1	TORNILLO M12 x 65; 10.9
10		896-11012		2	ARANDELA 13,5 x 24 x 3 mm
11		832-10412		1	TUERCA M12
12		126-116		1	CHAVETA 3/16 x 3/4 Woodruff Key
13		380537A2		1	RESORTE
14		87456843		1	CAMBIO DE VELOCIDAD Two Wheel Drive Models, See Figure 06-14 - 06-23A; Replaces 86984097
15		87456844		1	CAMBIO DE VELOCIDAD Four Wheel Drive Models, See Figure 06-14 - 06-24; Replaces 86984098
16		627-10030		12	TORNILLO M10 x 30; 10.9
17		496-21041		12	ARANDELA 13/32 x 13/16 x 3/32
20		87430618		1	VARILLA DE NIVEL
21		87400112		1	CONVERTIDOR Torque Converter, New
22		87406934		1	PLACA DE SUJECION Flex Plate, With Caged Nuts
23		86993546		2	PLACA DE SUJECION Flex Plate
23A		87019767		4	TORNILLO Flange, M10 x 30
24		87409201		1	PLACA DE SUJECION Backing Plate
25		896-15010		4	ARANDELA 11 x 24 x 3 mm
26		614-10020		4	TORNILLO M10 x 20
27		614-12035		7	TORNILLO M12 x 35
28		896-15012		7	ARANDELA 13,5 x 28 x 4 mm
29		87416977		1	SOPORTE Right-Hand Bracket
30		87416978		1	SOPORTE Left-Hand Bracket
31		814-12080		2	TORNILLO M20 x 80

http://www.minnparbackhoeparts.com/

06-12		p2	05/05

TRANSMISION - SOPORTE (MODELOS SIN SERVOASISTIDA)

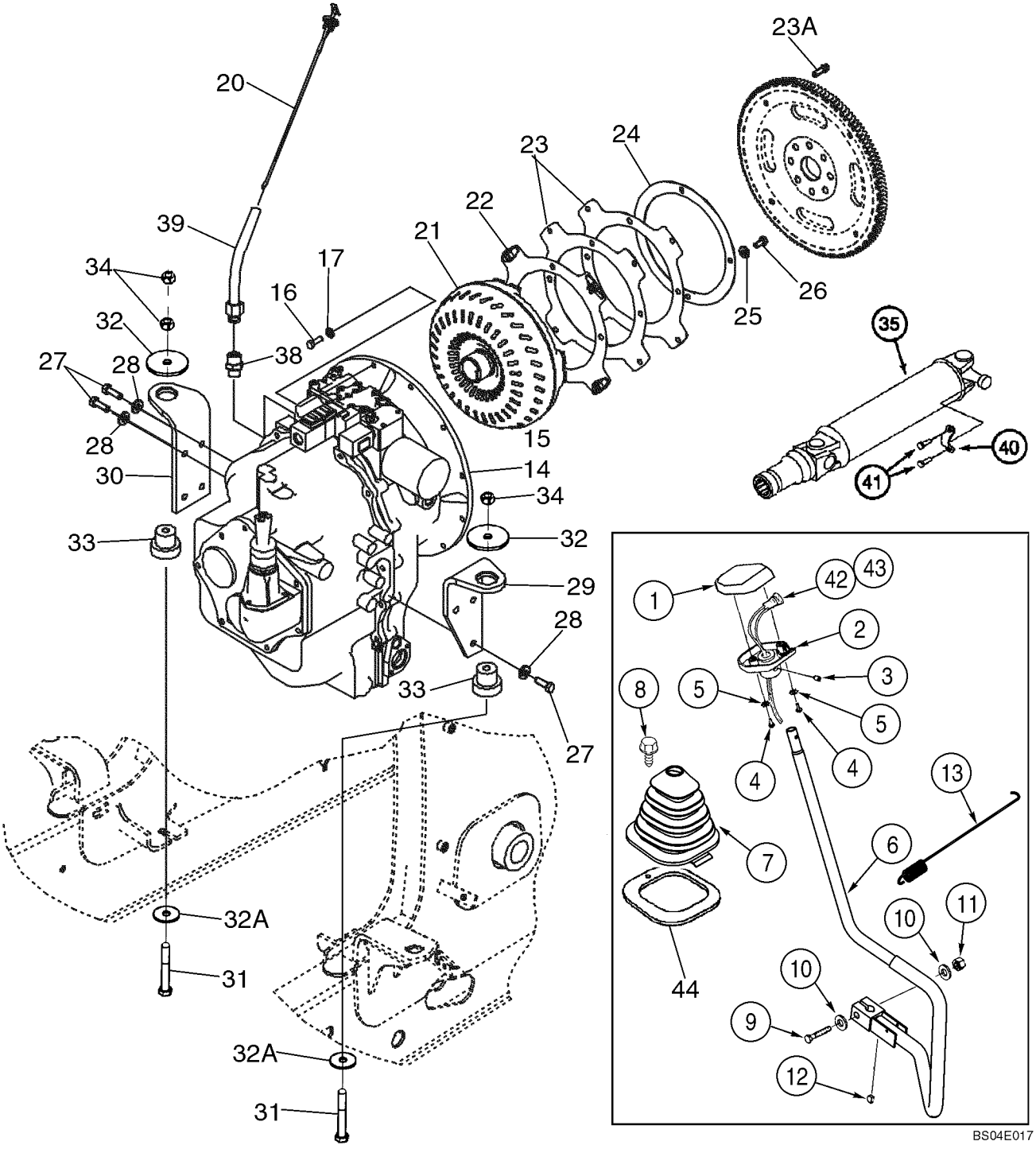

http://www.minnparbackhoeparts.com/

TRANSMISION - SOPORTE (MODELOS SIN SERVOASISTIDA)

REF	FN	PART NUMBER	YR/SN	QTY	DESCRIPTION
32		85801585		2	JUNTA HERMETICA Special
32A		85802618		2	JUNTA HERMETICA
33		87416967		2	SOPORTE
34		832-10412		3	TUERCA Lock, M12
35		367860A3		1	ARBOL DE MANDO Transmission to Rear Axle, See Figure 06-47
38		218-459		1	CONEXION 1-5/16 fl x 3/4 PT
39		395344A1		1	TUBO (CONJUNTO) Dipstick
40		90-6682T1		2	COLLAR
41		D137627		4	TORNILLO
42		123097A1		1	CONTACTOR Push Button, Clutch Cutout; If Used
42		87312712		1	CONTACTOR Push Button, Clutch Cutout; Otto 21649 Marking; If Used
43		123809A2		1	HAZ Clutch Cutout, Transmission Gear Shift Lever
44		410561A1		1	ANILLO DE CIERRE Shift Lever Boot, Cab Models

http://www.minnparbackhoeparts.com/

TRANSMISION - SOPORTE (MODELOS CON SERVOASISTIDA)

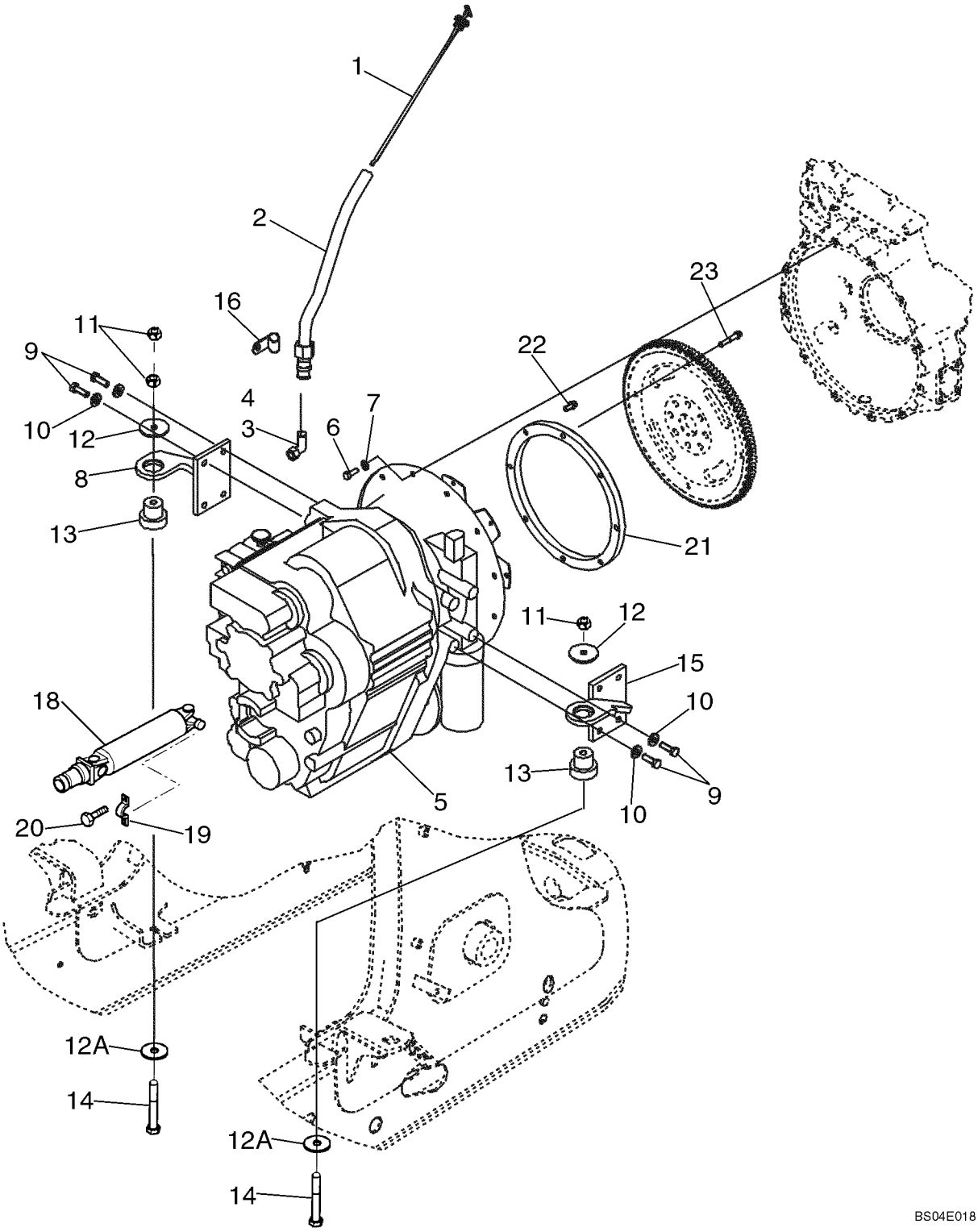

http://www.minnparbackhoeparts.com/

TRANSMISION - SOPORTE (MODELOS CON SERVOASISTIDA)

REF	FN	PART NUMBER	YR/SN	QTY	DESCRIPTION
1		87430618		1	VARILLA DE NIVEL
2		393999A1		1	TUBO (CONJUNTO) Dipstick
3		218-5110		1	CONEXION Elbow, 90 deg, 1-5/16 fl x Or; Incl. Ref 4
4		237-6016		1	JUNTA HERMETICA 1-11/64 ID x 7/64
5		87424815		1	CAMBIO DE VELOCIDAD New, Four Wheel Drive Models, See Figure 06-25 - 06-36
6		627-10030		12	TORNILLO M10 x 30; 10.9
7		496-21041		12	ARANDELA 13/32 x 13/16 x 3/32
8		87416982		1	PIEZAS DE FIJACIÓN Left-Hand Bracket
9		614-12035		8	TORNILLO M12 x 35
10		896-15012		8	ARANDELA 13,5 x 28 x 4 mm
11		832-10412		3	TUERCA M12
12		85801585		2	JUNTA HERMETICA Special
12A		85802618		2	JUNTA HERMETICA
13		87416967		2	SOPORTE Insulator
14		814-12080		2	TORNILLO M12 x 80
15		87416981		1	PIEZAS DE FIJACIÓN Right-Hand Bracket
16		D35908		1	COLLAR
18		367859A2		1	ARBOL DE MANDO Transmission to Rear Axle, See Figure 06-47
19		90-6682T1		2	COLLAR
20		D137627		4	TORNILLO
21		87407758		1	ANILLO Adapter Ring, Flywheel
22		87021705		4	TORNILLO Flange, M10 x 20
23		87021704		4	TORNILLO Flange, M10 x 50

http://www.minnparbackhoeparts.com/

CONJUNTO DE LA TRANSMISION - FILTRO, ACEITE (MODELOS SIN SERVOASISTIDA)

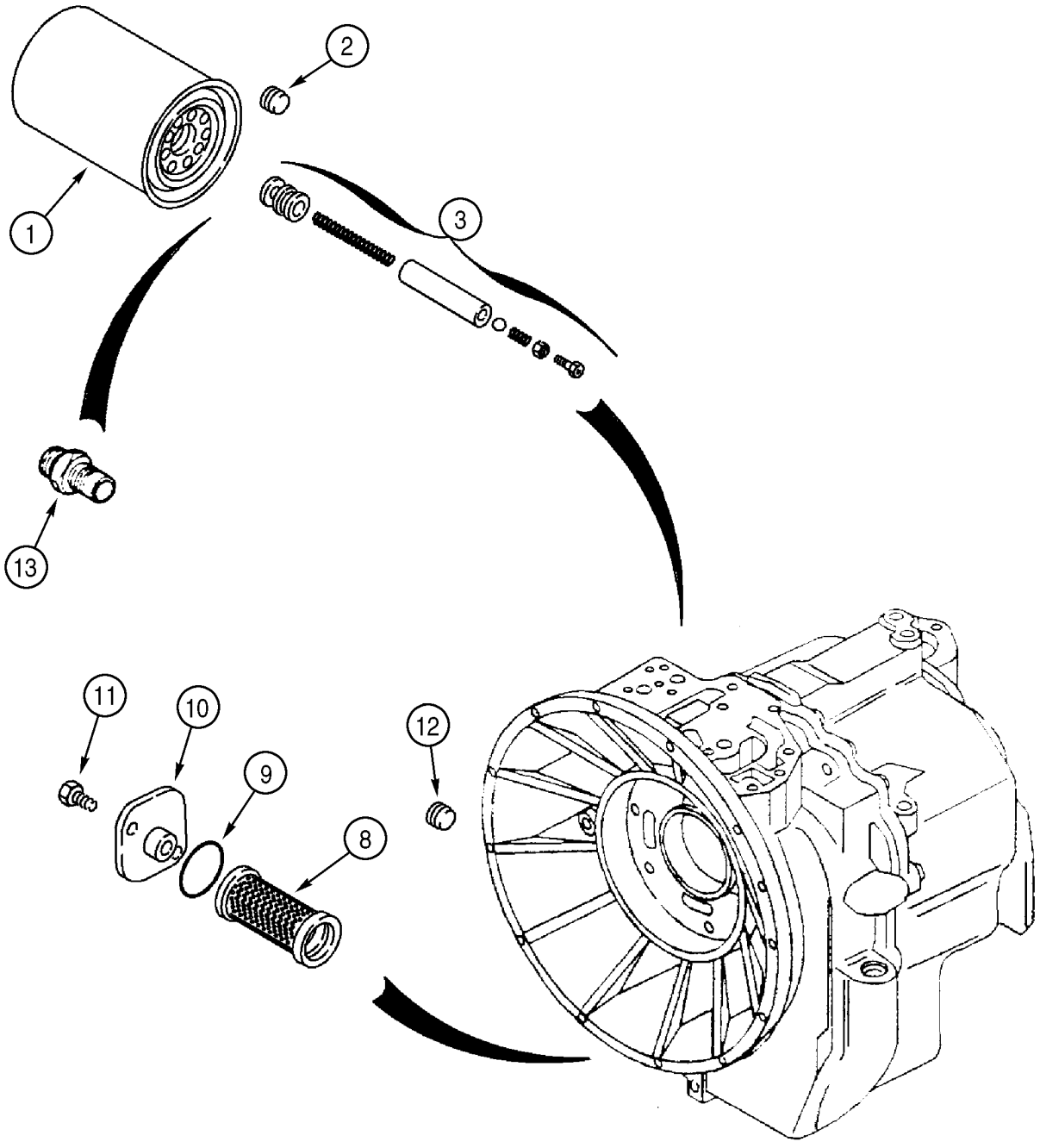

http://www.minnparbackhoeparts.com/

CONJUNTO DE LA TRANSMISION - FILTRO, ACEITE (MODELOS SIN SERVOASISTIDA)

REF	FN	PART NUMBER	YR/SN	QTY	DESCRIPTION
		87456843		1	CAMBIO DE VELOCIDAD Two Wheel Drive, Incl. Ref 1, 8 - 11, 13; Also Includes Parts On Figures 06-14 - 06-23A; Replaces 86984097
		87456844		1	CAMBIO DE VELOCIDAD Four Wheel Drive, Incl. Ref 1 - 13; Also Includes Parts On Figures 06-14 - 06-24; Replaces 86984098
1		254686A2		1	FILTRO Oil
2		181101A1		1	TAPÓN 14 - 1.5 mm; Four Wheel Drive Models Only
3		181274A1		1	JUEGO DE PIEZAS Valve; Four Wheel Drive Models Only
8		278534A1		1	REJILLA Oil
9		100748A1		1	JUNTA HERMETICA
10		181219A1		1	TAPA
11		614-8018		2	TORNILLO M8 x 18
12		181102A1		1	TAPÓN Four Wheel Drive Models Only
13		181202A1		1	CONEXION

http://www.minnparbackhoeparts.com/

CONJUNTO DE LA TRANSMISION (2WD) - ALOJAMIENTO (MODELOS SIN SERVOASISTIDA)

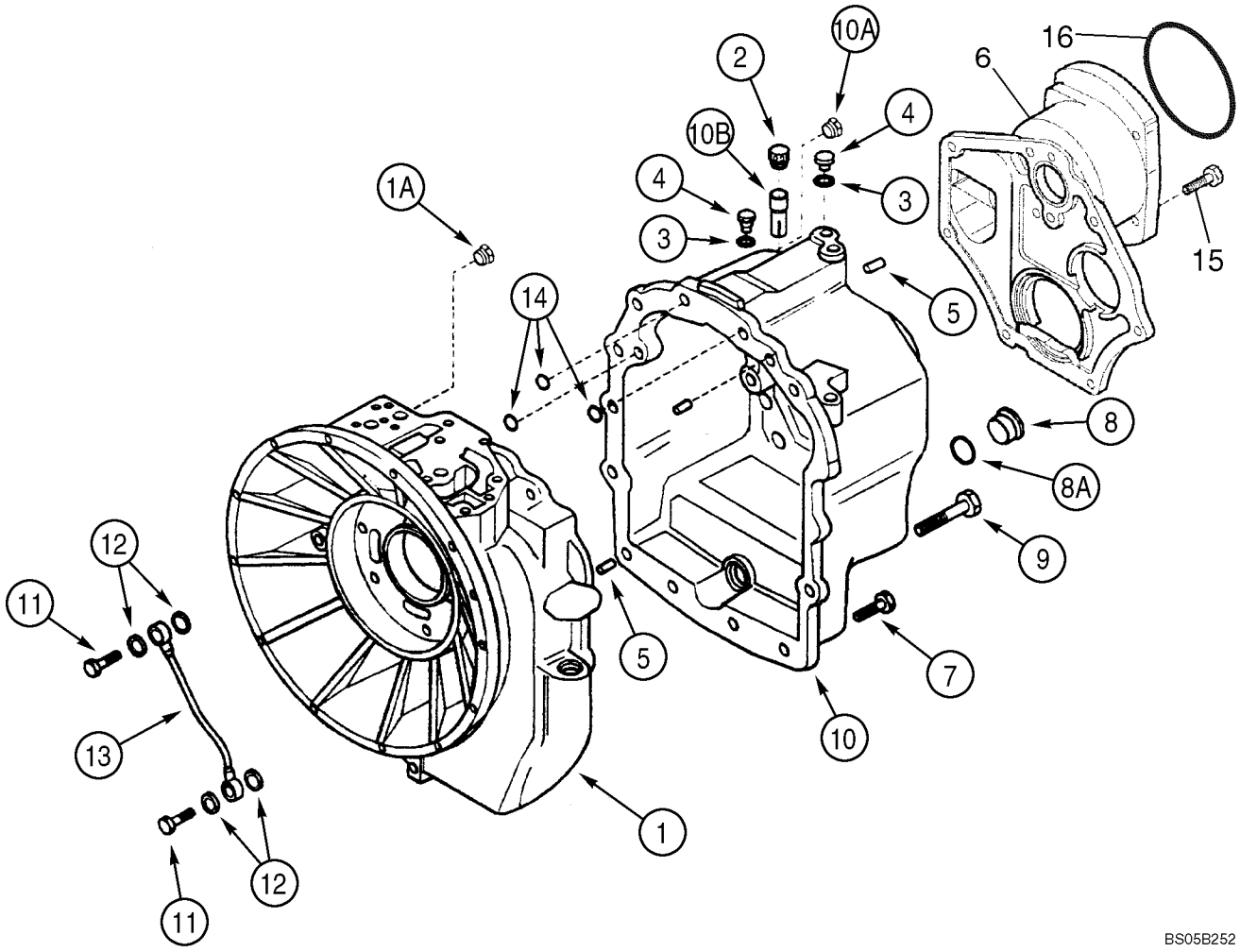

http://www.minnparbackhoeparts.com/

CONJUNTO DE LA TRANSMISION (2WD) - ALOJAMIENTO (MODELOS SIN SERVOASISTIDA)

REF	FN	PART NUMBER	YR/SN	QTY	DESCRIPTION
		87456843		1	CAMBIO DE VELOCIDAD Two Wheel Drive, Incl. Ref 1 - 14, 16; Also Includes Parts On Figures 06-14 - 06-23A; Replaces 86984097
1		87429989		1	CAVIDAD Housing, Front Half, Use With Loctite 510 or 518 as a Gasket Eliminator; Incl. Ref 1A
1A		E135809		1	TAPÓN If Used
2		1530028C1		1	RESPIRADERO (CONJUNT
		310772A1		1	CUELLO DE CARGA 18 OD x 42 mm lg, Breather, Not Illustrated
3		934667R1		4	JUNTA HERMETICA Copper Washer, 10 x 14 x 1.5 mm
4		181100A1		3	TAPÓN
5		K260177		3	PERNO Dowel, 10 x 25 mm
6		87429987		1	ADAPTOR Adapter Cover, Pump, Copper
7		614-10030		19	TORNILLO M10 x 30
8		100557A1		1	TAPON DE VIACIADO Incl. Ref 8A
8A		238-6121		1	JUNTA HERMETICA 1-1/16 ID x 3/32
9		814-10150		2	TORNILLO M10 x 150
10		87429988		1	CAVIDAD HOUSING, Rear Half, Use With Superbond 539 as a Gasket Eliminator; Incl. Ref 10A, 10B
10A		E135809		1	TAPÓN If Used
10B		310772A1		1	CUELLO DE CARGA 18 OD x 42 mm lg, Breather, Not Illustrated
11		181179A1		2	TORNILLO HUECO
12		181105A1		4	ARANDELA DE COBRE 14 x 20 x 1.5 mm; Sealing
13		181232A1		1	CUELLO DE CARGA Lubrication Tube
14		181141A1		3	JUNTA HERMETICA
15		814-10045		4	TORNILLO M10 x 45
16		87429982		1	JUNTA HERMETICA Pump Mounting

http://www.minnparbackhoeparts.com/

CONJUNTO DE LA TRANSMISION (4WD) - ALOJAMIENTO (MODELOS SIN SERVOASISTIDA)

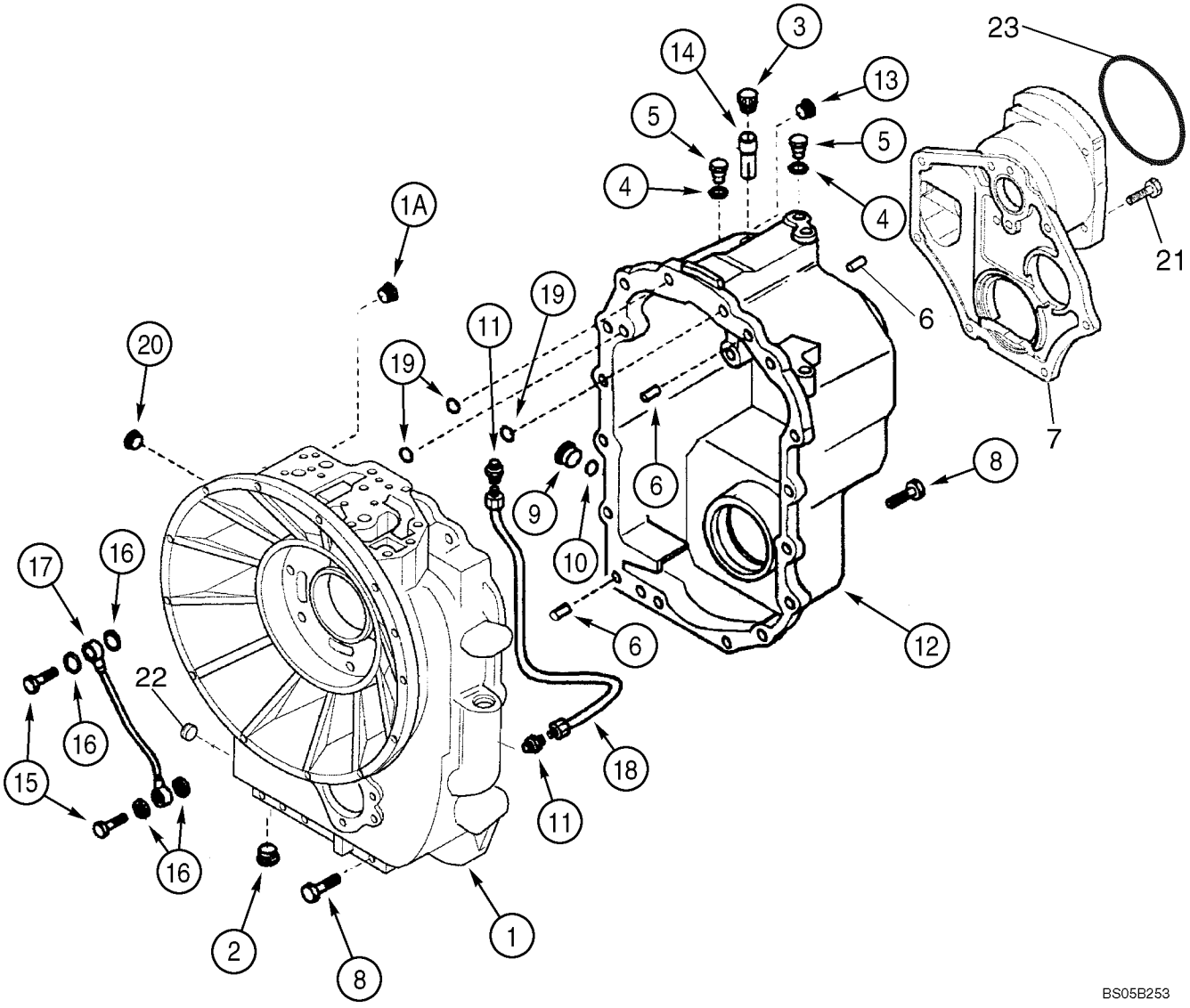

http://www.minnparbackhoeparts.com/

CONJUNTO DE LA TRANSMISION (4WD) - ALOJAMIENTO (MODELOS SIN SERVOASISTIDA)

REF	FN	PART NUMBER	YR/SN	QTY	DESCRIPTION
		87456844		1	CAMBIO DE VELOCIDAD Four Wheel Drive, Incl. Ref 1 - 20, 23; Also Includes Parts On Figures 06-14 - 06-24; Replaces 86984098
1		87429972		1	CAVIDAD Housing, Front Half, Use With Loctite 510 or 518 as a Gasket Eliminator; Incl. Ref 1A
1A		E135809		1	TAPÓN
2		239606A1		1	TAPÓN
3		1530028C1		1	RESPIRADERO (CONJUNT
		310772A1		1	CUELLO DE CARGA 18 OD x 42 mm lg, Breather, Not Illustrated
4		934667R1		3	JUNTA HERMETICA Copper Washer, 10 x 14 x 1.5 mm
5		181100A1		3	TAPÓN
6		K260177		3	PERNO Dowel, 10 x 25 mm
7		87429987		1	ADAPTOR Adapter Cover, Pump
8		614-10030		23	TORNILLO M10 x 30
9		100557A1		1	TAPON DE VIACIADO Incl. Ref 10
10		238-6121		1	JUNTA HERMETICA 1-1/16 ID x 3/32
11		218-1023		2	RACOR 1/2 fl x 1/4 PT
12		87429986		1	CAVIDAD HOUSING, Rear Half, Use With Superbond 539 as a Gasket Eliminator; Incl. Ref 13, 14
13		E135809		1	TAPÓN If Used
14		310772A1		1	CUELLO DE CARGA 18 OD x 42 mm lg, Breather
15		181179A1		2	TORNILLO HUECO
16		181105A1		4	ARANDELA DE COBRE 14 x 20 x 1.5 mm
17		181232A1		1	CUELLO DE CARGA Lubrication Tube
18		181176A1		1	CUELLO DE CARGA Oil Tube
19		181141A1		3	JUNTA HERMETICA
20		181101A1		1	TAPÓN 14 - 1.5 mm
21		814-10045		4	TORNILLO M10 x 45
22		181102A1		1	TAPÓN
23		87429982		1	JUNTA HERMETICA Pump Mounting

http://www.minnparbackhoeparts.com/

06-17		p1	03/05

CONJUNTO DE LA TRANSMISION - BOMBA, ACEITE (MODELOS SIN SERVOASISTIDA)

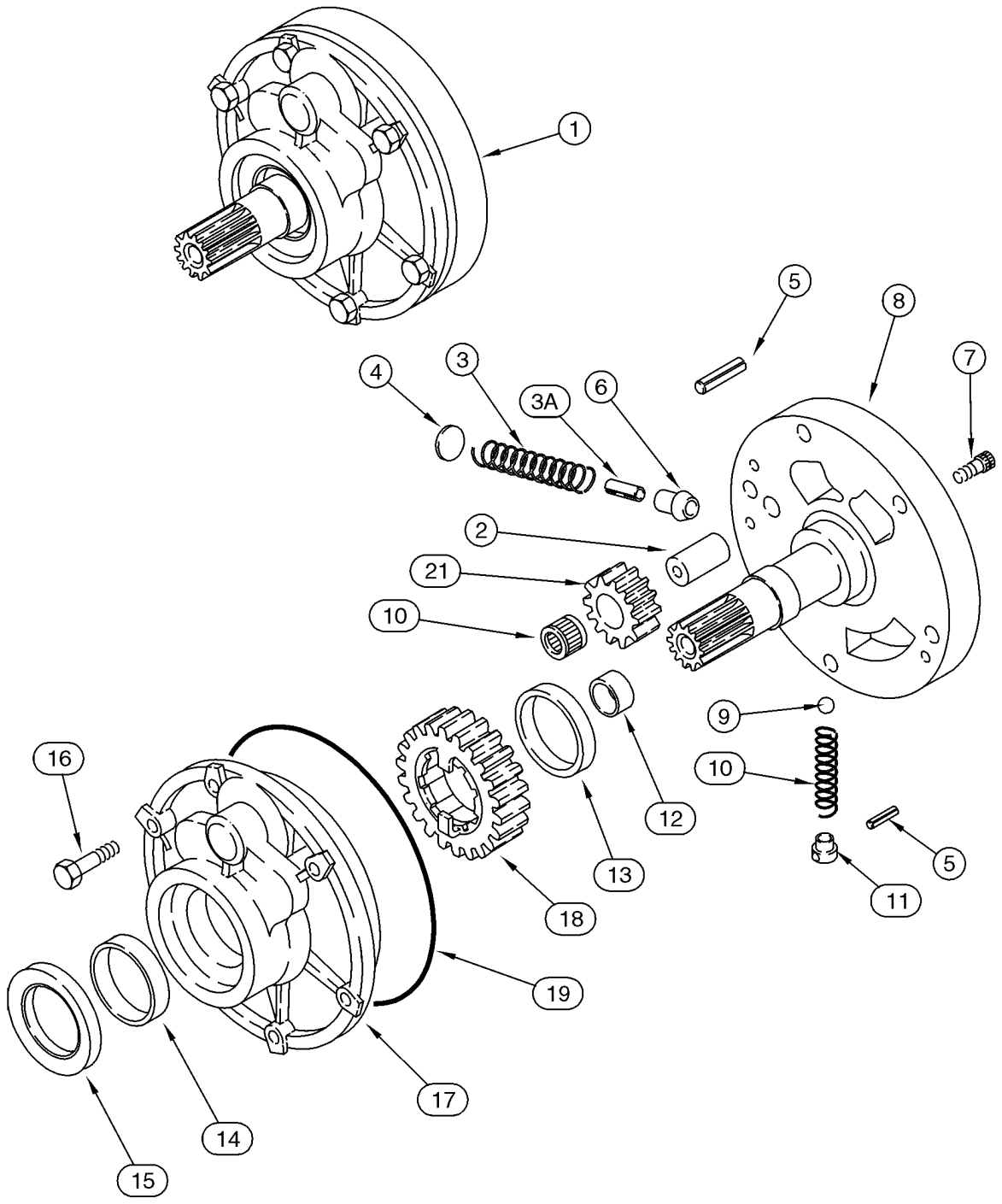

http://www.minnparbackhoeparts.com/

CONJUNTO DE LA TRANSMISION - BOMBA, ACEITE (MODELOS SIN SERVOASISTIDA)

REF	FN	PART NUMBER	YR/SN	QTY	DESCRIPTION
		87456843		1	CAMBIO DE VELOCIDAD Two Wheel Drive, Incl. Ref 1 - 21; Also Includes Parts On Figures 06-14 - 06-23A; Replaces 86984097
		87456844		1	CAMBIO DE VELOCIDAD Four Wheel Drive, Incl. Ref 1 - 21; Also Includes Parts On Figures 06-14 - 06-24; Replaces 86984098
1		87429970		1	BOMBA Charge, Incl. Ref 2 - 21
2		NSS		1	NO SE REPARA SEPARADAM. Shaft
3		NSS		1	NO SE REPARA SEPARADAM. Spring
3A		NSS		1	NO SE REPARA SEPARADAM. Pin
4		NSS		1	NO SE REPARA SEPARADAM. Stop
5		NSS		2	NO SE REPARA SEPARADAM. Pin, Roll
6		NSS		1	NO SE REPARA SEPARADAM. Piston
7		NSS		2	NO SE REPARA SEPARADAM. Bolt
8		NSS		1	NO SE REPARA SEPARADAM. Support
9		NSS		1	NO SE REPARA SEPARADAM. Ball
10		NSS		1	NO SE REPARA SEPARADAM. Spring
11		NSS		1	NO SE REPARA SEPARADAM. Guide
12		NSS		1	NO SE REPARA SEPARADAM. Bushing
13		NSS		1	NO SE REPARA SEPARADAM. Bushing
14		NSS		1	NO SE REPARA SEPARADAM. Bushing
15		87429971		1	JUNTA DE ACEITE Oil Seal
16		814-8060		6	TORNILLO M8 x 60
17		NSS		1	NO SE REPARA SEPARADAM. Housing
18		NSS		1	NO SE REPARA SEPARADAM. Gear, 23T
19		181142A1		1	JUNTA HERMETICA
20		NSS		1	NO SE REPARA SEPARADAM. Bearing, Needle
21		NSS		1	NO SE REPARA SEPARADAM. Gear, 12T

http://www.minnparbackhoeparts.com/

06-18		p1	03/05

CONJUNTO DE LA TRANSMISION - MECANISMO DE CAMBIO (MODELOS SIN SERVOASISTIDA)

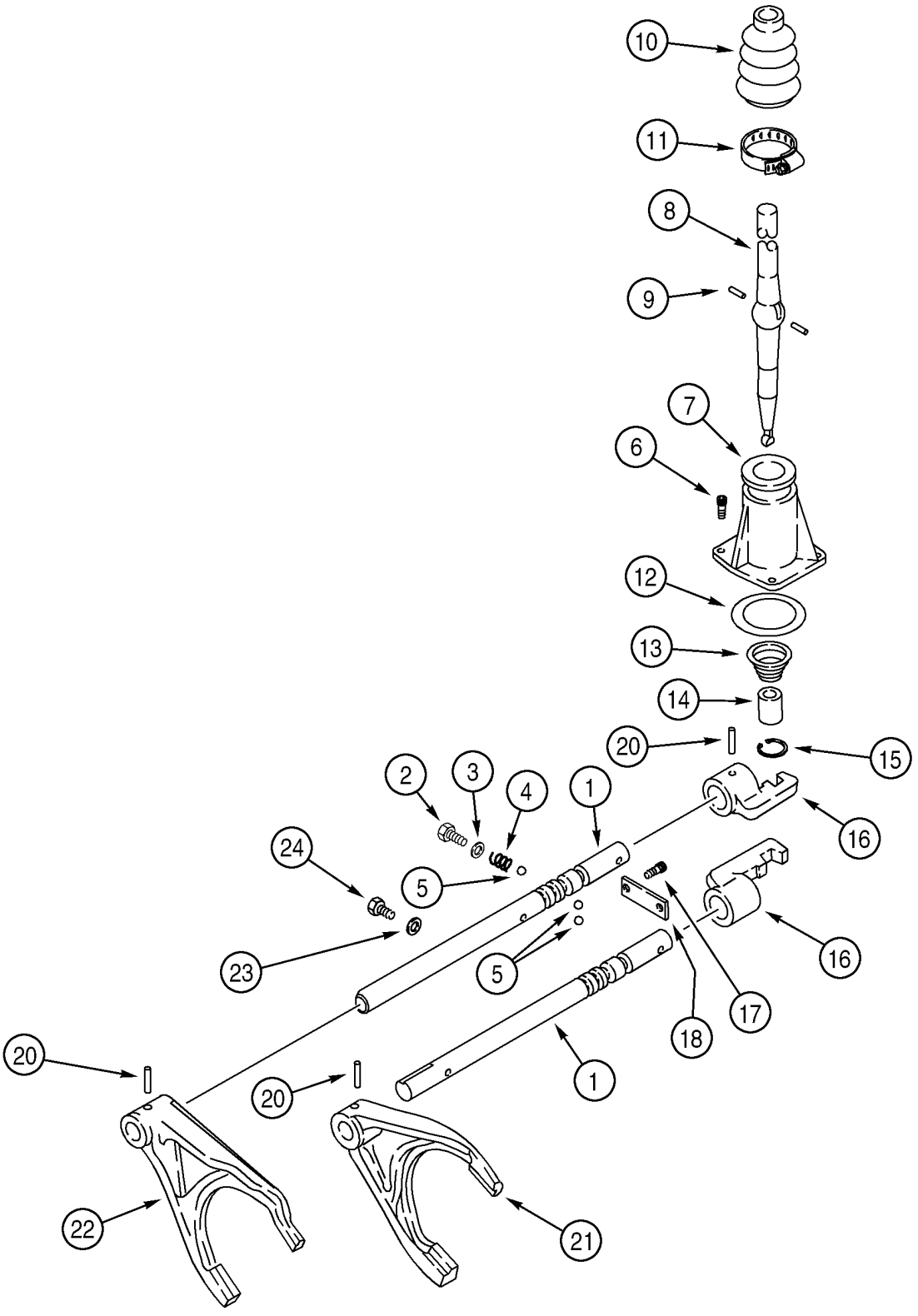

http://www.minnparbackhoeparts.com/

CONJUNTO DE LA TRANSMISION - MECANISMO DE CAMBIO (MODELOS SIN SERVOASISTIDA)

REF	FN	PART NUMBER	YR/SN	QTY	DESCRIPTION
		87456843		1	CAMBIO DE VELOCIDAD Two Wheel Drive, Incl. Ref 1 - 24; Also Includes Parts On Figures 06-14 - 06-23A; Replaces 86984097
		87456844		1	CAMBIO DE VELOCIDAD Four Wheel Drive, Incl. Ref 1 - 24; Also Includes Parts On Figures 06-14 - 06-24; Replaces 86984098
1		181245A2		2	VARILLA Shifter Fork Rail
2		614-12016		2	TORNILLO M12 x 16
3		87429994		2	JUNTA HERMETICA 12 x 20 x 1.5 mm
4		1966993C1		2	RESORTE
5		181139A1		4	BOLA
6		864-8025		3	TORNILLO M8 x 25
7		181171A1		1	TAPA
8		190428A3		1	PALANCA MANDO
9		1967585C1		2	PERNO Pin
10		1967581C1		1	CASQUETE
11		181177A1		1	COLLAR
12		181138A1		1	JUNTA HERMETICA
13		278533A1		1	RESORTE
14		278532A1		1	CASQUILLO
15		279039A1		1	ANILLO DE CIERRE
16		181173A1		2	SELECTOR Shifter
17		864-10025		2	TORNILLO M10 x 25
18		181175A1		1	PLACA, GRANDE
20		905794R1		4	PERNO 6 x 30 mm
21		181203A1		1	HORQUILLA First and Second
22		181174A2		1	HORQUILLA Third and Fourth
23		87429985		1	JUNTA HERMETICA Washer
24		1967531C1		1	TORNILLO M10 x 1 x 25

http://www.minnparbackhoeparts.com/

CONJUNTO DE LA TRANSMISION - EJE, RUEDA GUÍA Y PRIMARIA (MODELOS SIN SERVOASISTIDA)

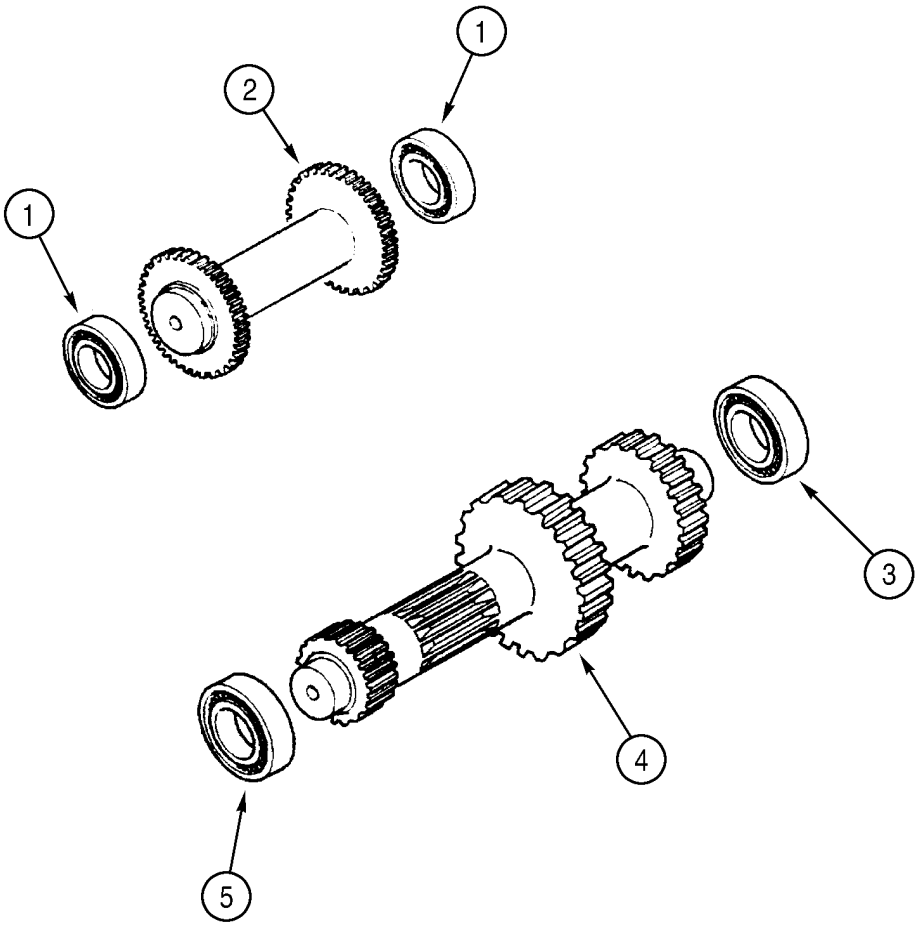

BS99H168

http://www.minnparbackhoeparts.com/

CONJUNTO DE LA TRANSMISION - EJE, RUEDA GUÍA Y PRIMARIA (MODELOS SIN SERVOASISTIDA)

REF	FN	PART NUMBER	YR/SN	QTY	DESCRIPTION
		87456843		1	CAMBIO DE VELOCIDAD Two Wheel Drive, Incl. Ref 1 - 6; Also Includes Parts On Figures 06-14 - 06-23A; Replaces 86984097
		87456844		1	CAMBIO DE VELOCIDAD Four Wheel Drive, Incl. Ref 1 - 6; Also Includes Parts On Figures 06-14 - 06-24; Replaces 86984098
1		ST205A		2	RODAMIENTO DE BOLAS
2		358636A1		1	EJE Idler Shaft
3		181126A1		1	RODAMIENTO DE BOLAS
4		358646A1		1	EJE Primary Shaft
5		181132A1		1	RODAMIENTO DE BOLAS
6		A48041		1	RETENEDOR Not Illustrated

http://www.minnparbackhoeparts.com/

CONJUNTO DE LA TRANSMISION - EJE, ENTRADA (MODELOS SIN SERVOASISTIDA)

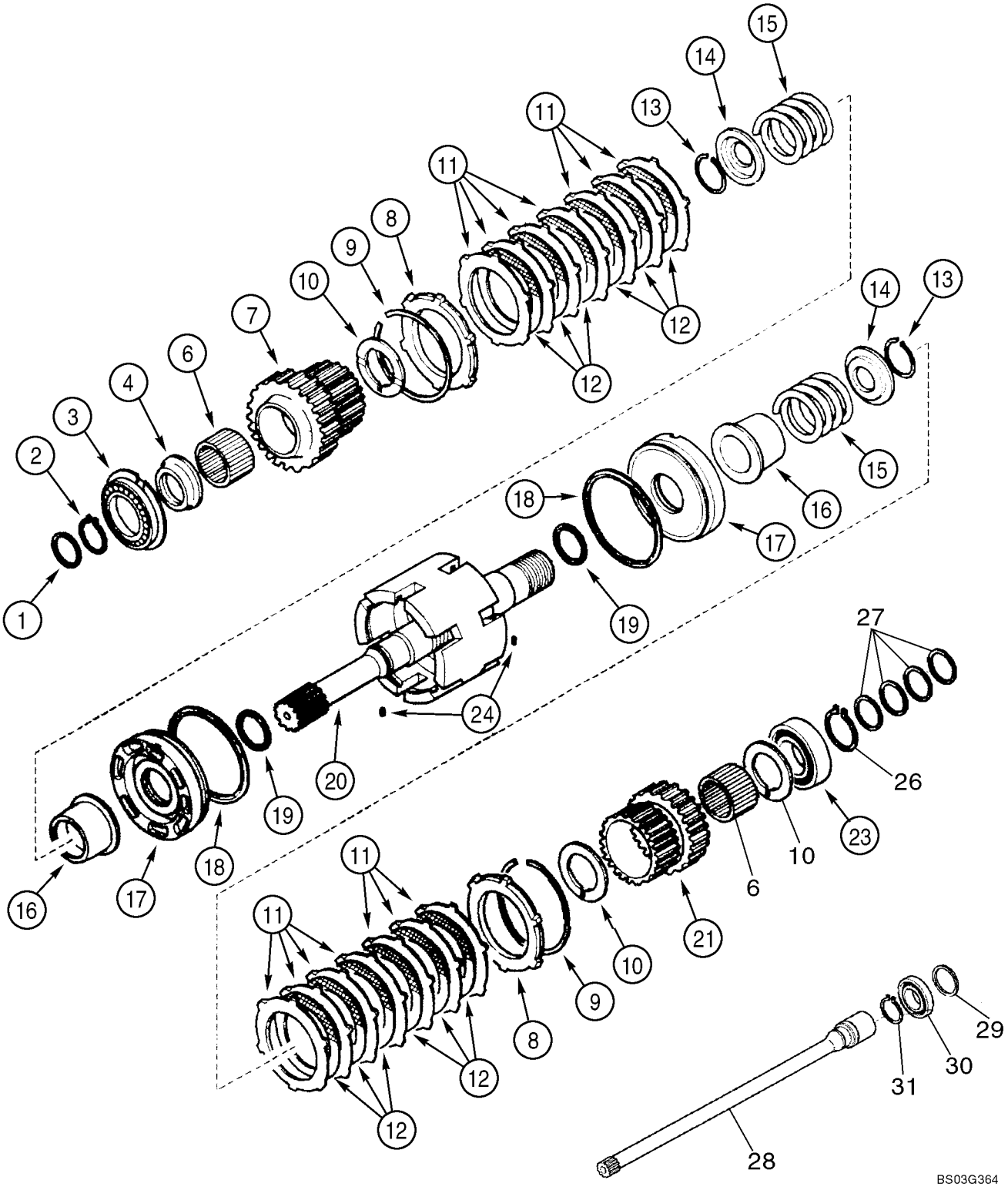

http://www.minnparbackhoeparts.com/

CONJUNTO DE LA TRANSMISION - EJE, ENTRADA (MODELOS SIN SERVOASISTIDA)

REF	FN	PART NUMBER	YR/SN	QTY	DESCRIPTION
		87456843		1	CAMBIO DE VELOCIDAD Two Wheel Drive, Incl. Ref 1 - 25; Also Includes Parts On Figures 06-14 - 06-23A; Replaces 86984097
		87456844		1	CAMBIO DE VELOCIDAD Four Wheel Drive, Incl. Ref 1 - 25; Also Includes Parts On Figures 06-14 - 06-24; Replaces 86984098
1		358645A1		1	JUNTA DE ACEITE
2		A48041		1	RETENEDOR
3		181128A1		1	RODAMIENTO DE BOLAS
4		358635A1		1	ESPACIADOR 68 x 45 x 105 mm
6		358633A1		2	RODAMIENTO DE AGUJA
7		358632A1		1	PINON Gear, 35T
8		310519A1		2	PLACA
9		181116A1		2	ANILLO DE FRENO
10		358640A1		3	ARANDELA Thrust
11		181159A1		14	DISCO Plate
12		181158A1		12	DISCO (CONJUNTO) Plate
13		181111A1		2	ANILLO DE FRENO
14		181161A1		2	PLACA DE APOYO Pressure
15		358637A1		2	RESORTE
16		358641A1		2	ACOPLAMIENTO
17		358644A1		2	EMBOLO
18		358643A1		2	ANILLO DE CIERRE
19		358642A1		2	RETEN
20		87429973		1	EJE Input Shaft, Charge; Includes D6x5,84 Rivet in Shaft End Which Is Not Serviced Separately
21		358638A1		1	PINON Gear, 29T
23		ST264		1	RODAMIENTO DE BOLAS
24		181108A1		2	ANILLO ELASTICO
26		800-1150		1	RETENEDOR
27		87429984		4	ANILLO Seal Ring
28		87429981		1	EJE
29		358645A1		1	JUNTA DE ACEITE
30		87429983		1	RODAMIENTO DE BOLAS
31		358655A1		1	ANILLO DE CIERRE

http://www.minnparbackhoeparts.com/

CONJUNTO DE LA TRANSMISION - EJE, SECUNDARIO (MODELOS SIN SERVOASISTIDA)

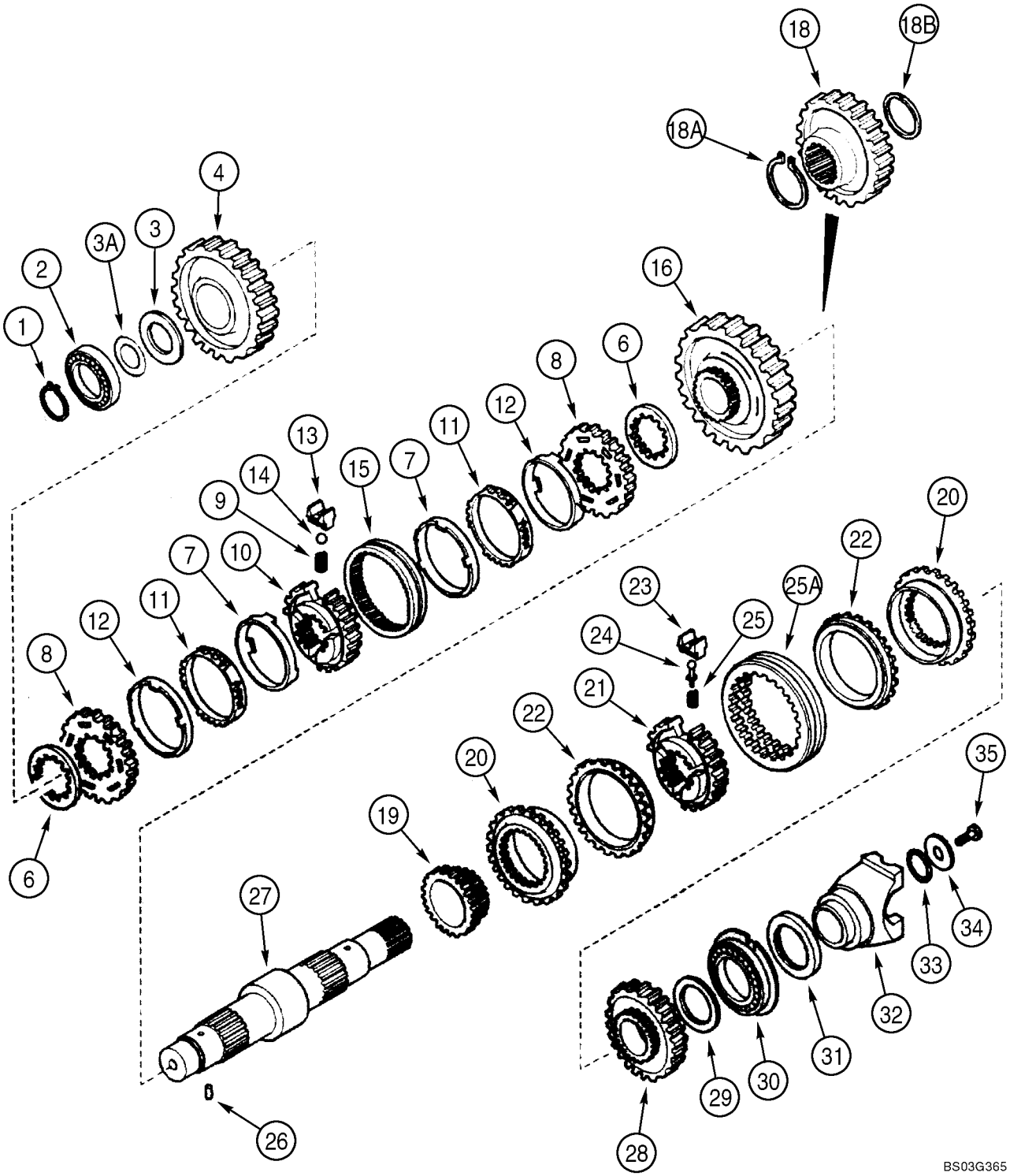

http://www.minnparbackhoeparts.com/

CONJUNTO DE LA TRANSMISION - EJE, SECUNDARIO (MODELOS SIN SERVOASISTIDA)

REF	FN	PART NUMBER	YR/SN	QTY	DESCRIPTION
		87456843		1	CAMBIO DE VELOCIDAD Two Wheel Drive, Incl. Ref 1 - 35; Also Includes Parts On Figures 06-14 - 06-23A; Replaces 86984097
		87456844		1	CAMBIO DE VELOCIDAD Four Wheel Drive, Incl. Ref 1 - 35; Also Includes Parts On Figures 06-14 - 06-24; Replaces 86984098
1		181118A1		1	ANILLO DE FRENO
2		181132A1		1	RODAMIENTO DE BOLAS
3		358649A1		1	ARANDELA Thrust
3A		358650A1		X	SUPLEMENTO 0,05 mm
3A		358651A1		X	SUPLEMENTO 0,10 mm
3A		358652A1		X	SUPLEMENTO 0,30 mm
3A		196454A1		X	SUPLEMENTO 0,50 mm
4		358648A1		1	PINON Gear, Driven, Second, 43T
6		244109A1		2	ESPACIADOR
		190427A1		1	SINCRONIZADOR Synchronizing Service Kit, Incl. Ref 7 - 15
7		NSS		2	NO SE REPARA SEPARADAM. Ring
8		NSS		2	NO SE REPARA SEPARADAM. Ring
9		384773A1		3	MUELLE HELICOIDAL
10		NSS		1	NO SE REPARA SEPARADAM. Hub
11		NSS		2	NO SE REPARA SEPARADAM. Ring
12		NSS		2	NO SE REPARA SEPARADAM. Ring
13		326865A1		3	PLAQUETA
14		384769A1		3	BOLA
15		NSS		1	NO SE REPARA SEPARADAM. Sleeve
16		358647A1		1	PINON Gear, Driven, First, 49T
18		358656A1		1	ENGRANAJE Drive, Four Wheel Drive Models
18A		358654A1		1	ANILLO DE CIERRE Four Wheel Drive Models
18B		358655A1		1	ANILLO DE CIERRE Four Wheel Drive Models
19		358282A1		1	ENGRANAJE Driven, Fourth, 23T
		87429974		1	SINCRONIZADOR Synchronizing Service Kit, Incl. Ref 20 - 25A
20		NSS		2	NO SE REPARA SEPARADAM. Ring
21		NSS		1	NO SE REPARA SEPARADAM. Hub
22		NSS		2	NO SE REPARA SEPARADAM. Ring
23		NSS		3	NO SE REPARA SEPARADAM. Plate

http://www.minnparbackhoeparts.com/

CONJUNTO DE LA TRANSMISION - EJE, SECUNDARIO (MODELOS SIN SERVOASISTIDA)

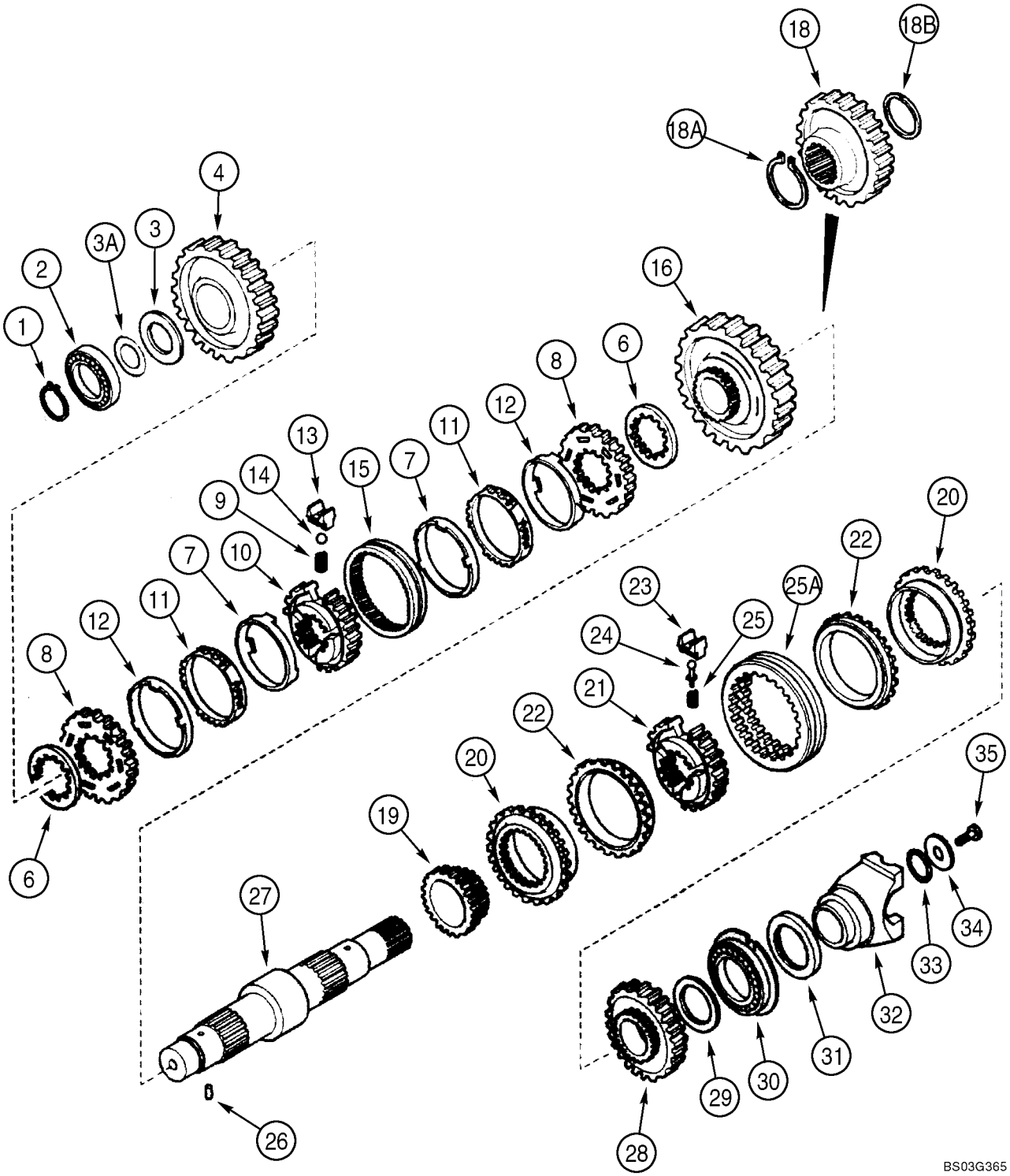

http://www.minnparbackhoeparts.com/

CONJUNTO DE LA TRANSMISION - EJE, SECUNDARIO (MODELOS SIN SERVOASISTIDA)

REF	FN	PART NUMBER	YR/SN	QTY	DESCRIPTION
24		NSS		3	NO SE REPARA SEPARADAM. Pin
25		NSS		3	NO SE REPARA SEPARADAM. Spring
25A		NSS		1	NO SE REPARA SEPARADAM. Sleeve
26		181108A1		1	ANILLO ELASTICO
27		366366A1		1	EJE Secondary, Two Wheel Drive Models
27		358653A1		1	EJE Secondary, Four Wheel Drive Models
28		358283A1		1	PINON Gear, Driven, Third, 33T
29		358639A1		1	ARANDELA Thrust, 68 x 45 x 4 mm
30		181130A1		1	RODAMIENTO DE BOLAS
31		181123A1		1	JUNTA DE ACEITE 60 x 75 x 8 mm; Two Wheel Drive Models
32		233284A1		1	HORQUETA Yoke
33		181144A1		1	JUNTA HERMETICA
34		181165A1		1	ARANDELA 52 x 12.5 x 5 mm
35		P3533055		1	TORNILLO 12 x 25 mm

http://www.minnparbackhoeparts.com/

CONJUNTO DE LA TRANSMISION (4WD) - EJE, SALIDA (MODELOS SIN SERVOASISTIDA)

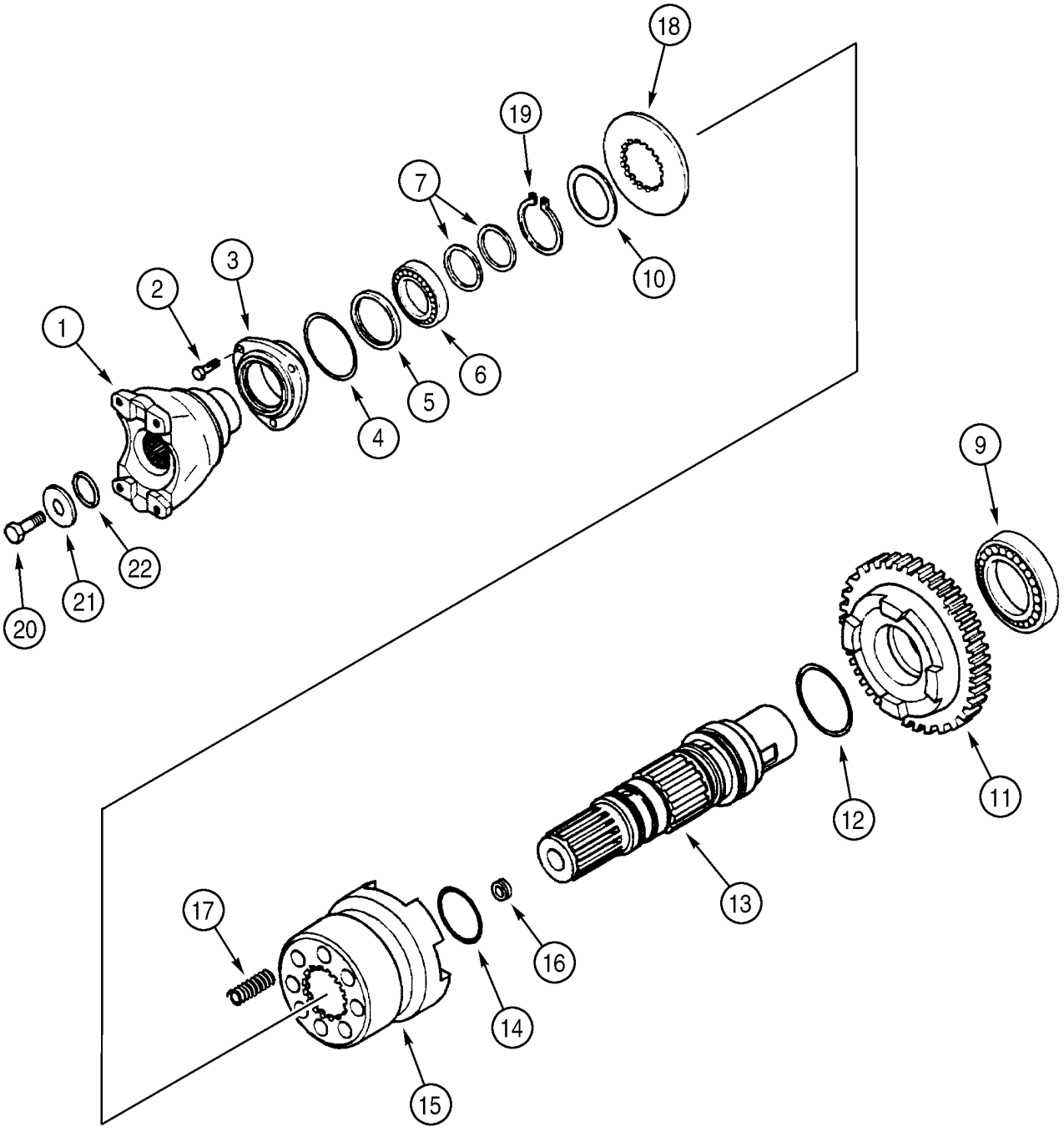

http://www.minnparbackhoeparts.com/

CONJUNTO DE LA TRANSMISION (4WD) - EJE, SALIDA (MODELOS SIN SERVOASISTIDA)

REF	FN	PART NUMBER	YR/SN	QTY	DESCRIPTION
		87456844		1	CAMBIO DE VELOCIDAD Four Wheel Drive, Incl. Ref 1 - 22; Also Includes Parts On Figures 06-14 - 06-24; Replaces 86984098
1		233283A1		1	HORQUETA Yoke, Front
2		614-8022		3	TORNILLO M8 x 22
3		181198A1		1	TAPA
4		112517A1		1	JUNTA HERMETICA
5		181122A1		1	JUNTA DE ACEITE 50 x 65 x 8 mm
6		ST205A		1	RODAMIENTO DE BOLAS
7		358645A1		2	JUNTA DE ACEITE
9		181126A1		1	RODAMIENTO DE BOLAS
10		P2745478		1	ARANDELA
11		366234A1		1	PINON Gear, Driven, 36T
12		366235A1		1	JUNTA HERMETICA
13		366230A1		1	EJE Output Shaft
14		366236A1		2	JUNTA HERMETICA
15		366232A1		1	ACOPLAMIENTO
16		D142898		1	TAPÓN 10 x 1 mm
17		100753A1		8	RESORTE
18		366231A1		1	ARANDELA
19		800-5145		1	ANILLO DE CIERRE
20		P3533055		1	TORNILLO 12 x 25 mm
21		P2745466		1	ARANDELA
22		238-8217		1	JUNTA HERMETICA 1-3/16 ID x 1/8

http://www.minnparbackhoeparts.com/

CONJUNTO DE LA TRANSMISION (86984097 OR 86984098) - VALVULA, CONTROL (MODELOS SIN SERVOASISTIDA)

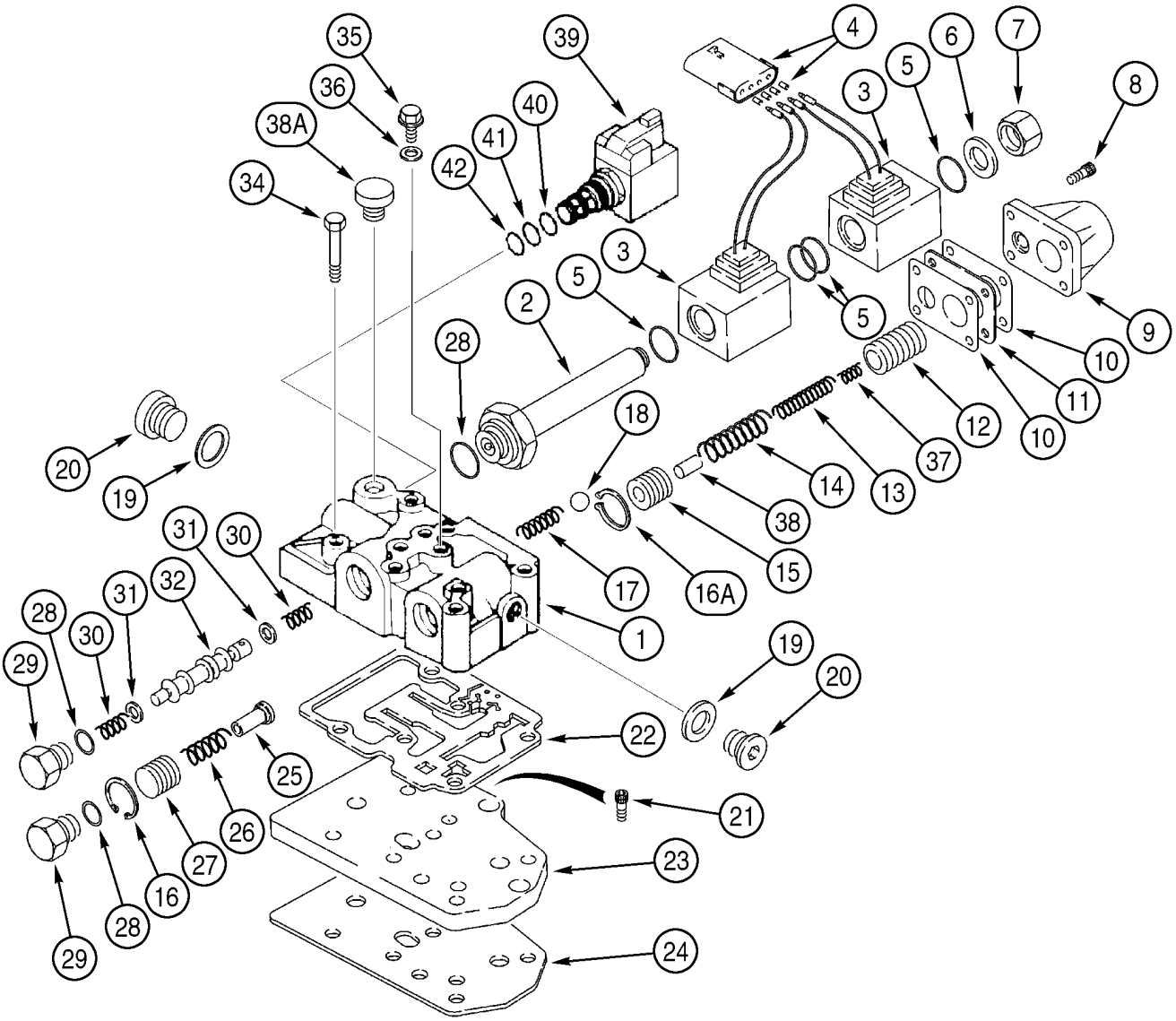

http://www.minnparbackhoeparts.com/

CONJUNTO DE LA TRANSMISION (86984097 OR 86984098) - VALVULA, CONTROL (MODELOS SIN SERVOASISTIDA)

REF	FN	PART NUMBER	YR/SN	QTY	DESCRIPTION
		86984097		1	CAMBIO DE VELOCIDAD Two Wheel Drive, Incl. Ref 1 - 45; Also Includes Parts On Figures 06-14 - 06-23
		86984098		1	CAMBIO DE VELOCIDAD Four Wheel Drive, Incl. Ref 1 - 45; Also Includes Parts On Figures 06-14 - 06-24
		335640A2		1	VALVULA Transmission Control, Incl. Ref 1 - 45
1		NSS		1	NO SE REPARA SEPARADAM. Housing
2		190442A1		1	EMBOLO
3		190443A1		2	BOBINA
4		190437A1		1	CONEXION
5		181136A1		4	JUNTA HERMETICA
6		181273A1		1	ARANDELA DE COBRE
7		181272A1		1	TAPÓN
8		864-6020		4	TORNILLO M6 x 20
9		181251A1		1	TAPA
10		181256A1		2	ANILLO DE CIERRE Cover Gasket
11		190439A2		1	ESPACIADOR
12		190438A2		1	EMBOLO
13		190436A1		1	RESORTE
14		190441A1		1	RESORTE
15		181234A2		1	EMBOLO
16		299324A1		1	RETENEDOR
16A		368436A1		1	RETENEDOR
17		181261A1		1	RESORTE
18		181146A1		1	BOLA
19		181107A1		2	ARANDELA DE COBRE
20		181103A1		2	TAPÓN
21		864-8020		3	TORNILLO M8 x 20, Not Included In Assembly, Purchase Separately
22		181166A1		1	ANILLO DE CIERRE Not Included In Assembly, Purchase Separately
23		181207A1		1	PLACA, GRANDE Not Included In Assembly, Purchase Separately
24		181208A1		1	ANILLO DE CIERRE Not Included In Assembly, Purchase Separately
25		181254A1		1	EJE

http://www.minnparbackhoeparts.com/

CONJUNTO DE LA TRANSMISION (86984097 OR 86984098) - VALVULA, CONTROL (MODELOS SIN SERVOASISTIDA)

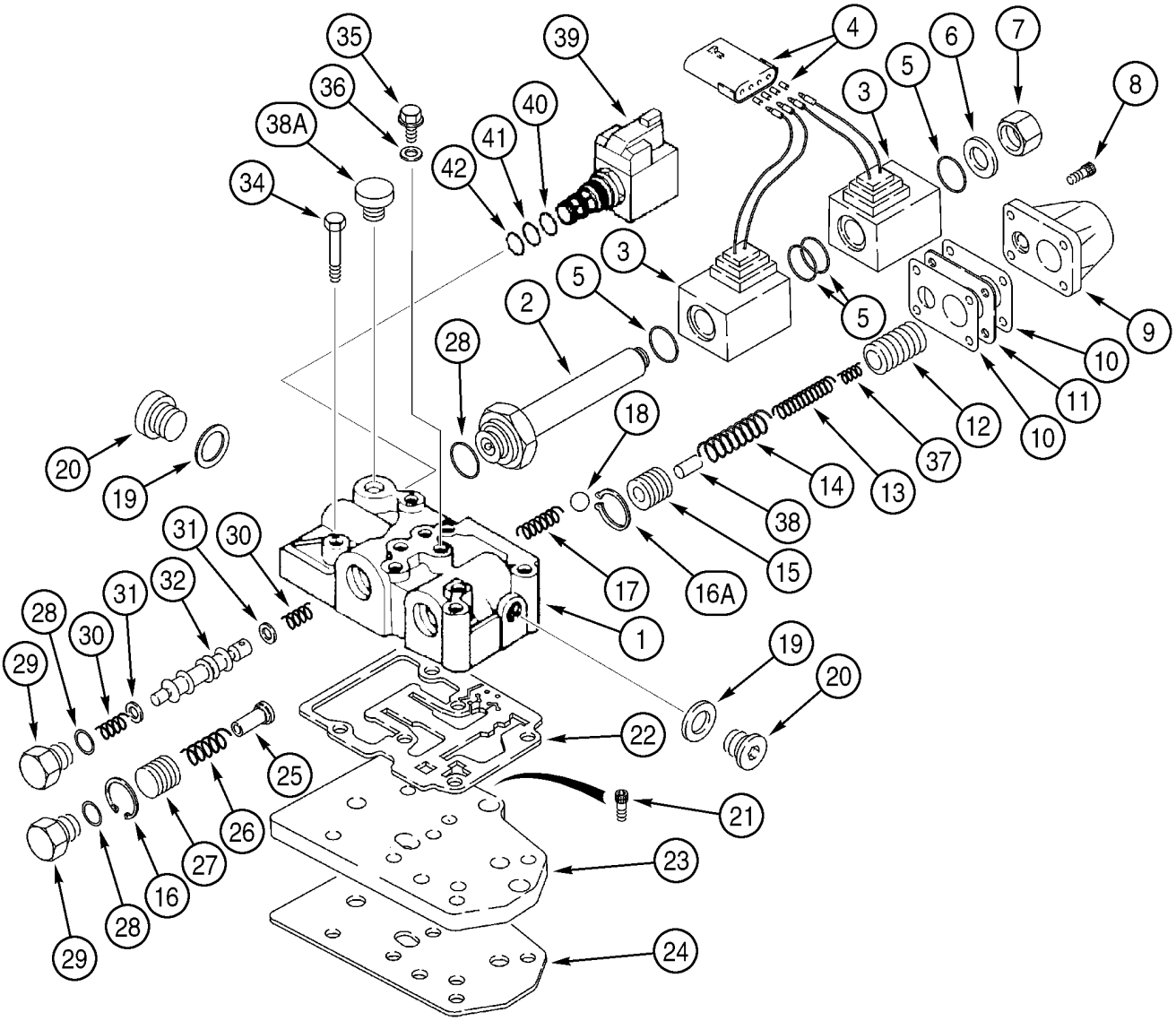

BS99J194

http://www.minnparbackhoeparts.com/

CONJUNTO DE LA TRANSMISION (86984097 OR 86984098) - VALVULA, CONTROL (MODELOS SIN SERVOASISTIDA)

REF	FN	PART NUMBER	YR/SN	QTY	DESCRIPTION
26		181260A1		1	RESORTE
27		181255A2		1	EMBOLO Flow Divider
28		181137A1		3	JUNTA HERMETICA
29		181258A1		2	TAPÓN PLUG
30		334724A1		2	RESORTE
31		181253A1		2	ESPACIADOR
32		334725A1		1	EMBOLO Spool, Forward/Reverse
34		814-8080		6	TORNILLO M8 x 80, Not Included In Assembly, Purchase Separately
35		181100A1		4	TAPÓN
36		934667R1		4	JUNTA HERMETICA Copper Washer, 10 x 14 x 1.5 mm
37		190435A1		1	RESORTE
38		190440A1		1	PERNO
38A		NSS		1	NO SE REPARA SEPARADAM. Plug
39		349295A1		1	SOLENOIDE Differential Lock Solenoid Valve; Incl. Ref 40 - 45
40		237-6008		1	JUNTA HERMETICA 41/64 ID x 3/32
41		238-5014		1	JUNTA HERMETICA 1/2 ID x 1/16
42		238-5013		1	JUNTA HERMETICA 7/16 ID x 1/16
43		NSS		1	NO SE REPARA SEPARADAM. Solenoid Valve, Cartridge, Component Parts Not Serviced Separately, Not Illustrated
44		298614A1		1	BOBINA Not Illustrated
45		NSS		1	NO SE REPARA SEPARADAM. Nut, Not Illustrated
		368437A2		1	JEUGO Snap Ring, Without Tools, Includes 10, 15, 16A, 22, 25, Plus Instructions
		368438A2		1	JEUGO Snap Ring, With Tools, Includes 10, 15, 16A, 22, 25, Plus 368439A1 Guide Tool and 368440A1 Pushing Tool for Snap Ring Service

http://www.minnparbackhoeparts.com/

CONJUNTO DE LA TRANSMISION (87456843 OR 87456844) - VALVULA, CONTROL (MODELOS SIN SERVOASISTIDA)

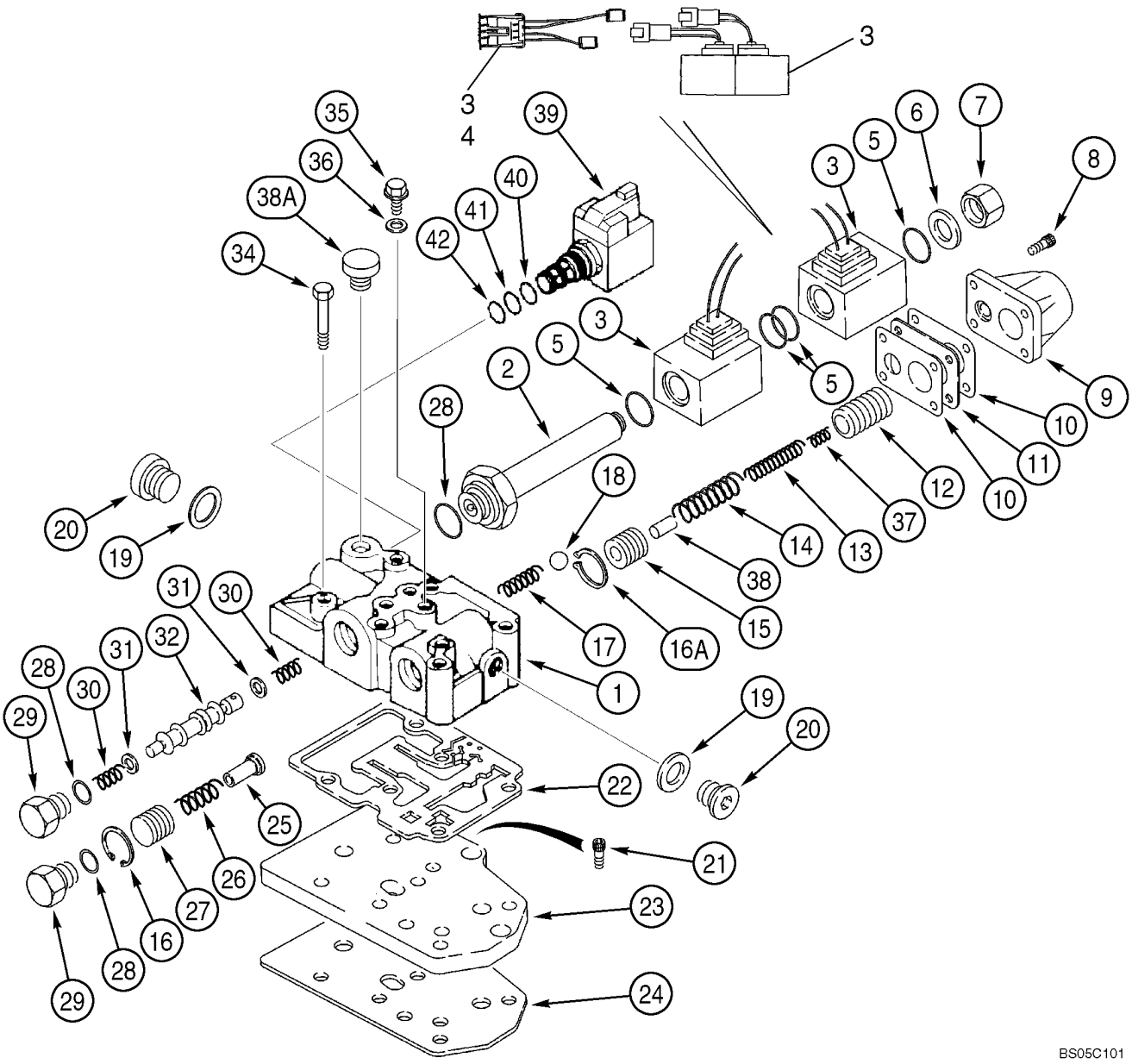

http://www.minnparbackhoeparts.com/

CONJUNTO DE LA TRANSMISION (87456843 OR 87456844) - VALVULA, CONTROL (MODELOS SIN SERVOASISTIDA)

REF	FN	PART NUMBER	YR/SN	QTY	DESCRIPTION
		87456843		1	CAMBIO DE VELOCIDAD Two Wheel Drive, Incl. Ref 1 - 45; Also Includes Parts On Figures 06-14 - 06-23A
		87456844		1	CAMBIO DE VELOCIDAD Four Wheel Drive, Incl. Ref 1 - 45; Also Includes Parts On Figures 06-14 - 06-24
		87456899		1	VALVULA Transmission Control, Incl. Ref 1 - 45
1		NSS		1	NO SE REPARA SEPARADAM. Housing
2		190442A1		1	EMBOLO
3		87456900		1	KIT, SERVICE KIT, Solenoid; Includes (2) Solenoids, (1) Jumper Wire Used For Transmissions Prior to Ones With The Solenoids With Plastic Connections; See Figure 06-23, Ref 3 For Solenoids With Bullet Connectors
4		87456968		1	GRUPO DE CABLES Jumper; If Used; Required On Transmissions Prior To Ones With Deutsch Connector Type Solenoids
5		181136A1		4	JUNTA HERMETICA
6		181273A1		1	ARANDELA DE COBRE
7		181272A1		1	TAPÓN
8		864-6020		4	TORNILLO M6 x 20
9		181251A1		1	TAPA
10		181256A1		2	ANILLO DE CIERRE Cover Gasket
11		190439A2		1	ESPACIADOR
12		190438A2		1	EMBOLO
13		190436A1		1	RESORTE
14		190441A1		1	RESORTE
15		181234A2		1	EMBOLO
16		299324A1		1	RETENEDOR
16A		368436A1		1	RETENEDOR
17		181261A1		1	RESORTE
18		181146A1		1	BOLA
19		181107A1		2	ARANDELA DE COBRE
20		181103A1		2	TAPÓN
21		864-8020		3	TORNILLO M8 x 20, Not Included In Assembly, Purchase Separately

http://www.minnparbackhoeparts.com/

CONJUNTO DE LA TRANSMISION (87456843 OR 87456844) - VALVULA, CONTROL (MODELOS SIN SERVOASISTIDA)

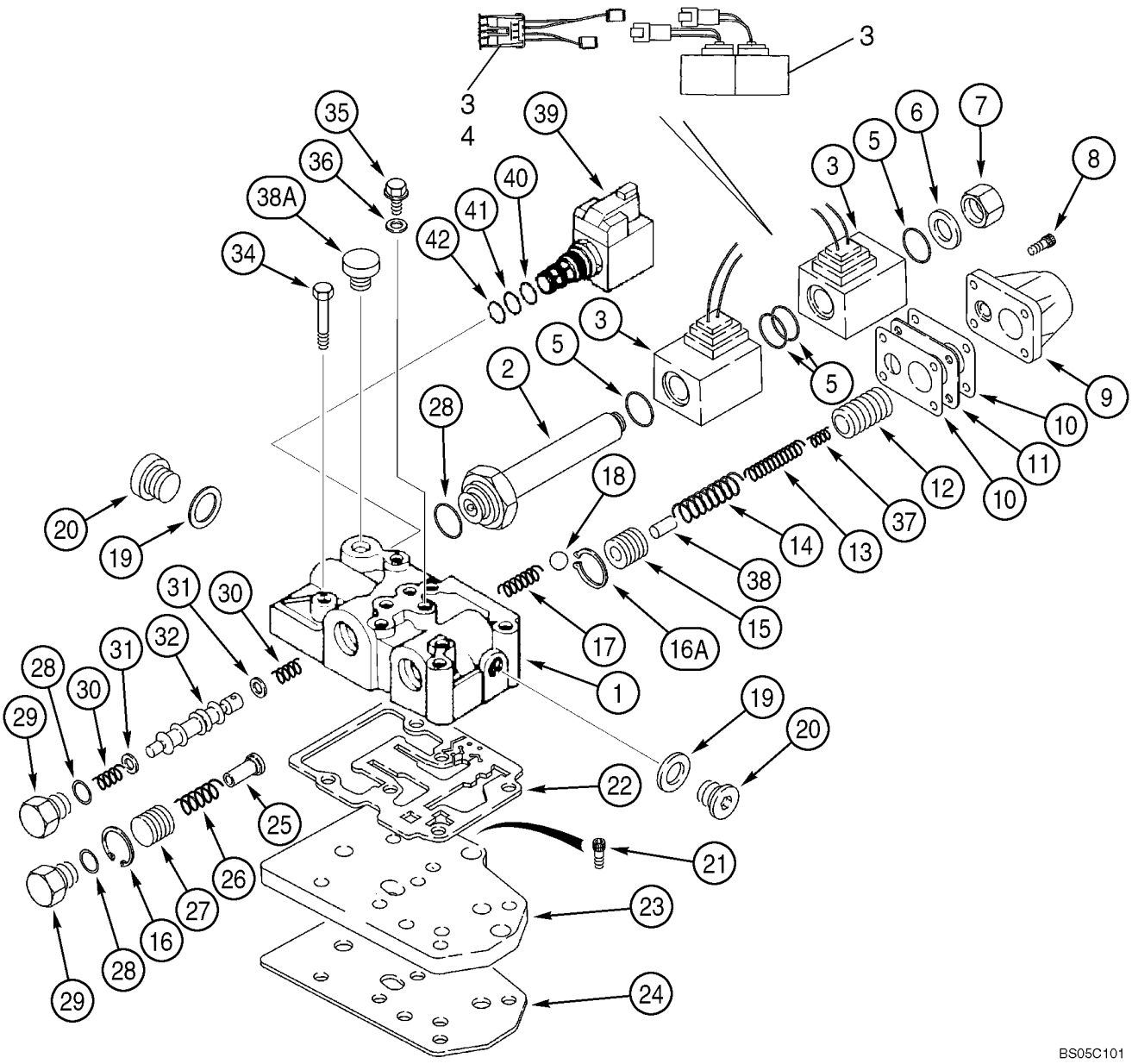

http://www.minnparbackhoeparts.com/

CONJUNTO DE LA TRANSMISION (87456843 OR 87456844) - VALVULA, CONTROL (MODELOS SIN SERVOASISTIDA)

REF	FN	PART NUMBER	YR/SN	QTY	DESCRIPTION
22		181166A1		1	ANILLO DE CIERRE Not Included In Assembly, Purchase Separately
23		181207A1		1	PLACA, GRANDE Not Included In Assembly, Purchase Separately
24		181208A1		1	ANILLO DE CIERRE Not Included In Assembly, Purchase Separately
25		181254A1		1	EJE
26		181260A1		1	RESORTE
27		181255A2		1	EMBOLO Flow Divider
28		181137A1		3	JUNTA HERMETICA
29		181258A1		2	TAPÓN PLUG
30		334724A1		2	RESORTE
31		181253A1		2	ESPACIADOR
32		334725A1		1	EMBOLO Spool, Forward/Reverse
34		814-8080		6	TORNILLO M8 x 80, Not Included In Assembly, Purchase Separately
35		181100A1		4	TAPÓN
36		934667R1		4	JUNTA HERMETICA Copper Washer, 10 x 14 x 1.5 mm
37		190435A1		1	RESORTE
38		190440A1		1	PERNO
38A		NSS		1	NO SE REPARA SEPARADAM. Plug
39		349295A1		1	SOLENOIDE Differential Lock Solenoid Valve; Incl. Ref 40 - 45
40		237-6008		1	JUNTA HERMETICA 41/64 ID x 3/32
41		238-5014		1	JUNTA HERMETICA 1/2 ID x 1/16
42		238-5013		1	JUNTA HERMETICA 7/16 ID x 1/16
43		NSS		1	NO SE REPARA SEPARADAM. Solenoid Valve, Cartridge, Component Parts Not Serviced Separately, Not Illustrated
44		298614A1		1	BOBINA Not Illustrated
45		NSS		1	NO SE REPARA SEPARADAM. Nut, Not Illustrated
		368437A2		1	JEUGO Snap Ring, Without Tools, Includes 10, 15, 16A, 22, 25, Plus Instructions
		368438A2		1	JEUGO Snap Ring, With Tools, Includes 10, 15, 16A, 22, 25, Plus 368439A1 Guide Tool and 368440A1 Pushing Tool for Snap Ring Service

http://www.minnparbackhoeparts.com/

CONJUNTO DE LA TRANSMISION (4WD) - VÁLVULA, SOLENOIDE (MODELOS SIN SERVOASISTIDA)

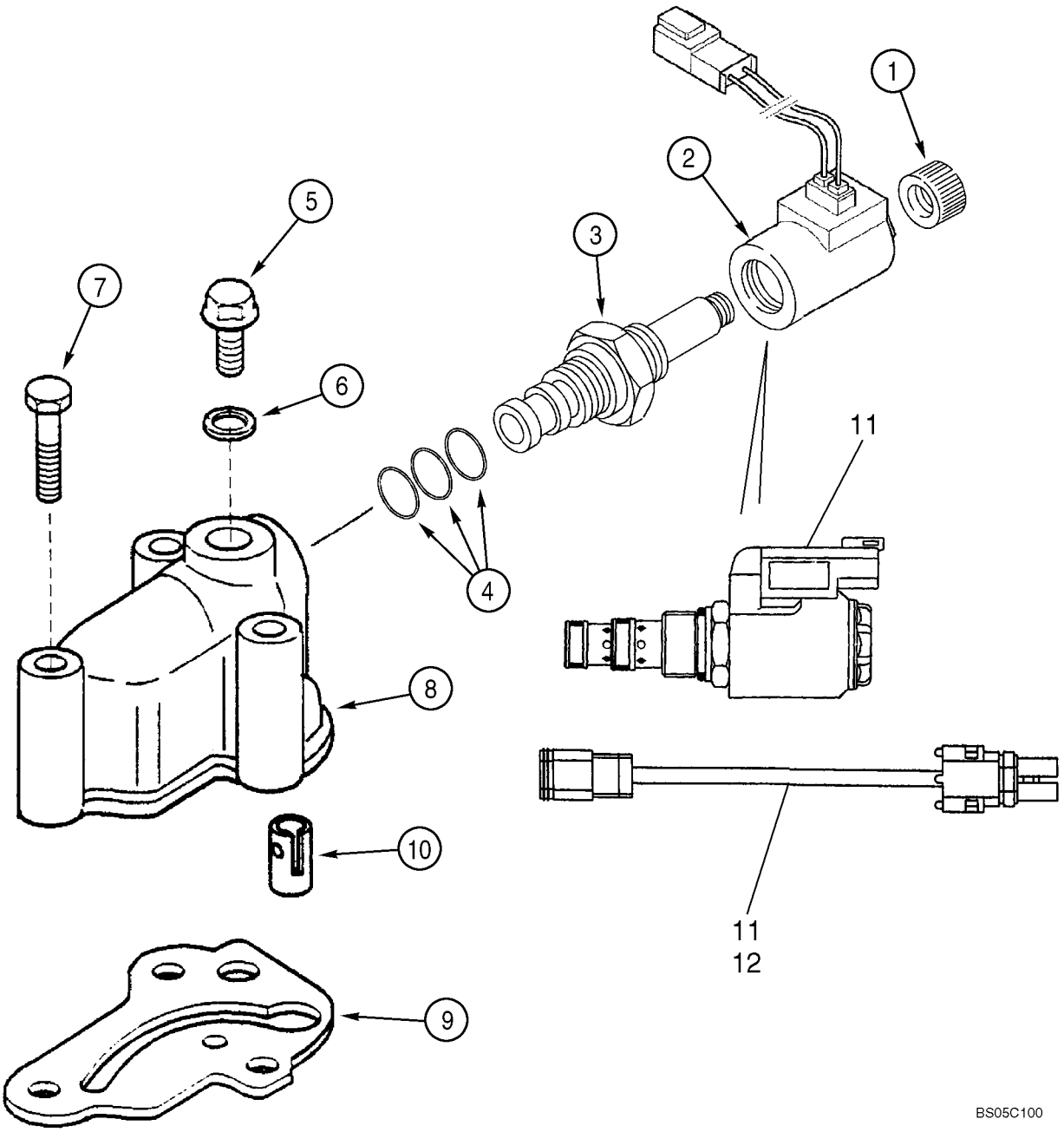

http://www.minnparbackhoeparts.com/

CONJUNTO DE LA TRANSMISION (4WD) - VÁLVULA, SOLENOIDE (MODELOS SIN SERVOASISTIDA)

REF	FN	PART NUMBER	YR/SN	QTY	DESCRIPTION
		87456844		1	CAMBIO DE VELOCIDAD Four Wheel Drive, Incl. Ref 1 - 10; Also Includes Parts On Figures 06-14 - 06-24; Replaces 86984098
		87429978		1	ELECTROVÁLVULA Valve, Incl. Ref 1 - 4; Used In 86984098 Transmission
1		NSS		1	NO SE REPARA SEPARADAM. Nut
2		NSS		1	NO SE REPARA SEPARADAM. Coil
3		NSS		1	NO SE REPARA SEPARADAM. Valve, Solenoid
4		NSS		1	NO SE REPARA SEPARADAM. Kit, Seal, Includes 238-5014, 238-5015, 237-6010 O-Rings, Kit Not Serviced Separately, Order 190432A1 Solenoid Valve
5		181100A1		1	TAPÓN
6		934667R1		1	JUNTA HERMETICA Copper Washer, 10 x 14 x 1.5 mm
7		814-8060		3	TORNILLO M8 x 60
8		321428A1		1	CAVIDAD
9		366910A1		1	ANILLO DE CIERRE
10		190431A1		1	VALVULA Installed Between Ref 8 and 9
11		87456901		1	SOLENOIDE Component Parts Not Serviced Separately; Includes Solenoid and Ref 12 Jumper Harness; Jumper Is For Coverting Transmissions Prior to Connector Change From Weather Pack to Deutsch
12		87456969		1	GRUPO DE CABLES Jumper; Weather Pack Connector/Deutsch Connector

http://www.minnparbackhoeparts.com/

CONJUNTO DE LA TRANSMISIÓN, SERVOTRANSMISIÓN - ALOJAMIENTO

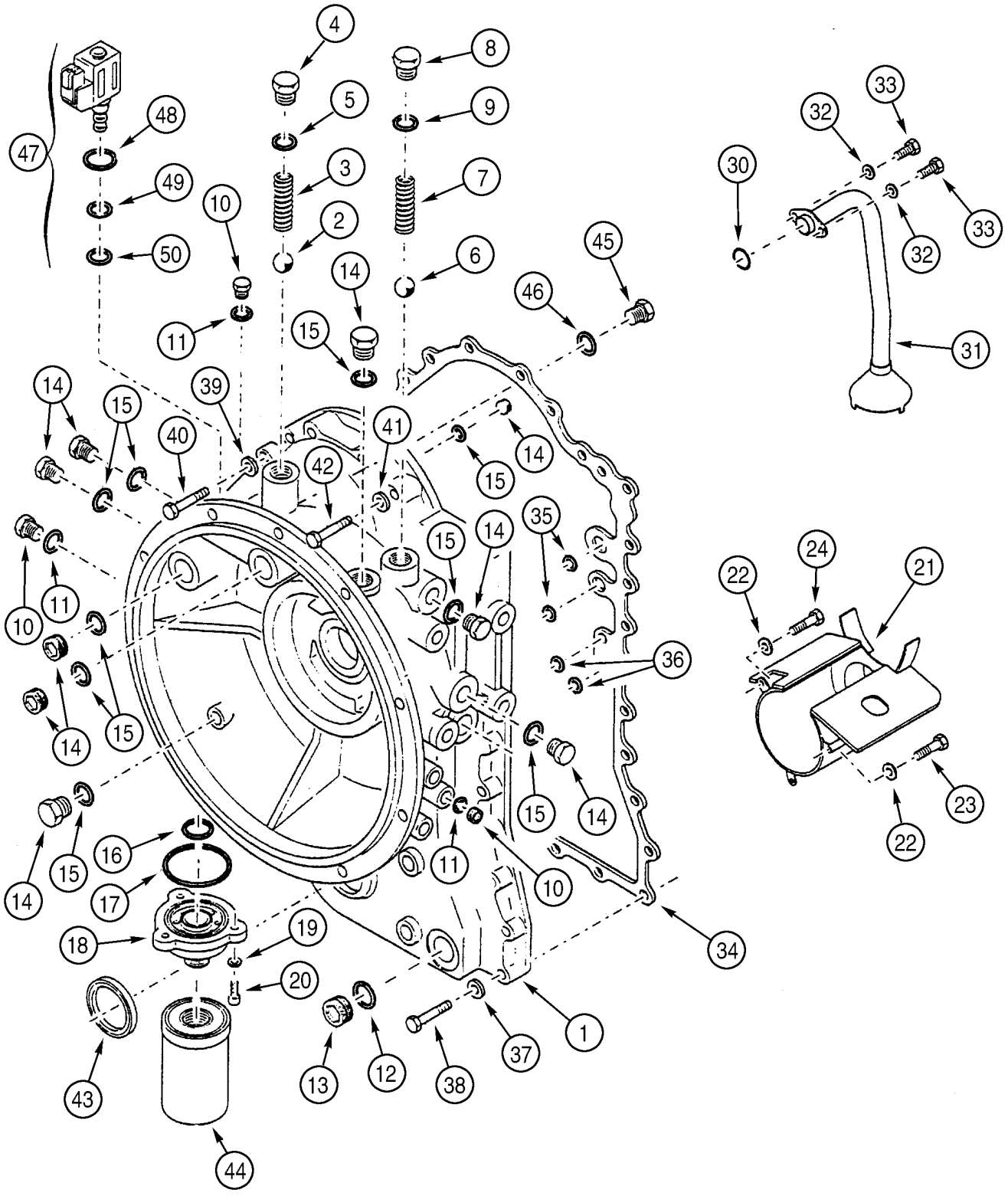

http://www.minnparbackhoeparts.com/

CONJUNTO DE LA TRANSMISIÓN, SERVOTRANSMISIÓN - ALOJAMIENTO

REF	FN	PART NUMBER	YR/SN	QTY	DESCRIPTION
		87424815		1	CAMBIO DE VELOCIDAD Powershift Transmission, Four Wheel Drive, Incl. Ref 1 - 53; Also Includes Parts On Figures 06-25 - 06-36
1		361940A1		1	CAVIDAD Converter
2		211-1024		1	BOLA 3/4; 24,CRS
3		291568A1		1	RESORTE
4		292413A1		1	TAPÓN Incl. Ref 5
5		238-9119		1	JUNTA HERMETICA 15/16 ID x 3/32
6		511-10250		1	BOLA 25 mm; 28, CRS
7		291525A1		1	RESORTE
8		292166A1		1	TAPÓN Incl. Ref 9
9		238-7123		1	JUNTA HERMETICA 1-3/16 ID x 3/32
10		292164A1		3	TAPÓN Incl. Ref 11
11		238-7011		1	JUNTA HERMETICA 5/16 ID x 1/16
12		NSS		1	NO SE REPARA SEPARADAM. Seal, Not Used
13		NSS		1	NO SE REPARA SEPARADAM. Plug, Not Used
14		292165A1		9	TAPÓN Incl. Ref 15
15		238-7116		1	JUNTA HERMETICA 3/4 ID x 3/32
16		292419A1		1	JUNTA HERMETICA
17		238-5150		1	JUNTA HERMETICA 2-7/8 ID x 3/32
18		362140A1		1	APOYADERO Adapter
19		892-10010		3	ARANDELA DE FRENO M10
20		863-10025		3	TORNILLO M10 x 25; 12.9
21		305725A1		1	DEFLECTOR
22		892-10010		3	ARANDELA DE FRENO M10
23		863-10016		2	TORNILLO M10 x 16; 12.9
24		615-10016		1	TORNILLO M10 x 16
30		238-7218		1	JUNTA HERMETICA 1-1/4 ID x 1/8
31		291565A1		1	TUBO DE ASPIRACION Tube
32		892-10010		2	ARANDELA DE FRENO M10
33		863-10016		2	TORNILLO M10 x 16; 12.9
34		291543A1		1	JUNTA HERMETICA
35		238-5020		2	JUNTA HERMETICA 7/8 ID x 1/16
36		238-7013		2	JUNTA HERMETICA 7/16 ID x 1/16
37		892-10010		14	ARANDELA DE FRENO M10
38		828-10050		14	TORNILLO M10 x 50; 10.9
39		892-10010		2	ARANDELA DE FRENO M10

http://www.minnparbackhoeparts.com/

CONJUNTO DE LA TRANSMISIÓN, SERVOTRANSMISIÓN - ALOJAMIENTO

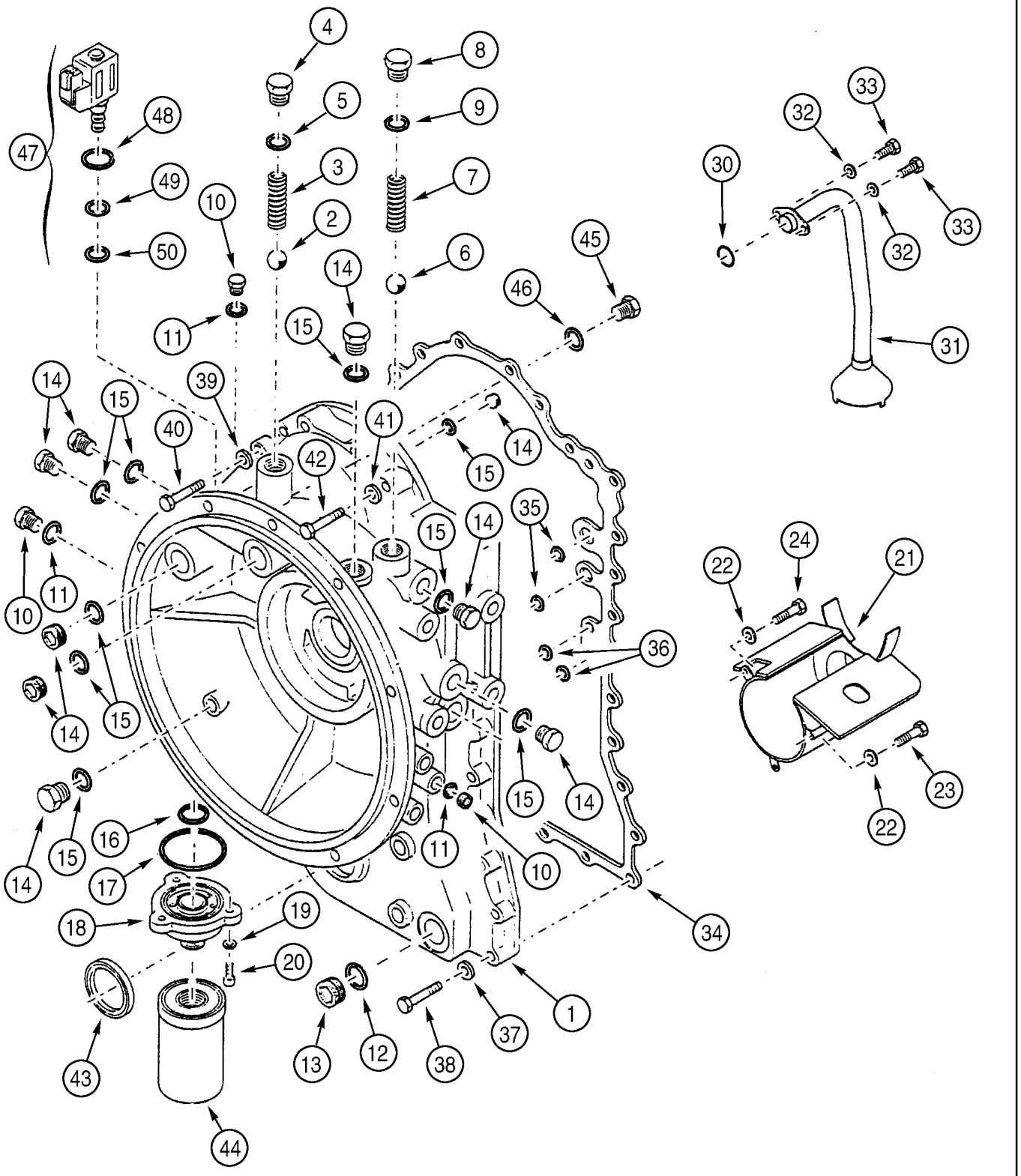

http://www.minnparbackhoeparts.com/

CONJUNTO DE LA TRANSMISIÓN, SERVOTRANSMISIÓN - ALOJAMIENTO

REF	FN	PART NUMBER	YR/SN	QTY	DESCRIPTION
40		628-10030		2	TORNILLO M10 x 30; 10.9
41		892-10010		4	ARANDELA DE FRENO M10
42		828-10080		4	TORNILLO M10 x 80; 10.9
43		291527A1		1	JUNTA DE LABIOS
44		372246A1		1	FILTRO CONJ
45		218-5209		1	TAPÓN 9/16 Or; Incl. Ref 46
46		237-6006		1	JUNTA HERMETICA 15/32 ID x 5/64
47		349295A1		1	SOLENOIDE Differential Lock Solenoid Valve; Incl. Ref 48 - 53
48		237-6008		1	JUNTA HERMETICA 41/64 ID x 3/32
49		238-5014		1	JUNTA HERMETICA 1/2 ID x 1/16
50		238-5013		1	JUNTA HERMETICA 7/16 ID x 1/16
51		349291A1		1	SOLENOIDE Valve, Cartridge, Component Parts Not Serviced Separately, Not Illustrated
52		298614A1		1	BOBINA Not Illustrated
53		349292A1		1	TUERCA Not Illustrated

http://www.minnparbackhoeparts.com/

CONJUNTO DE LA TRANSMISIÓN, SERVOTRANSMISIÓN - ALOJAMIENTO, TRASERO

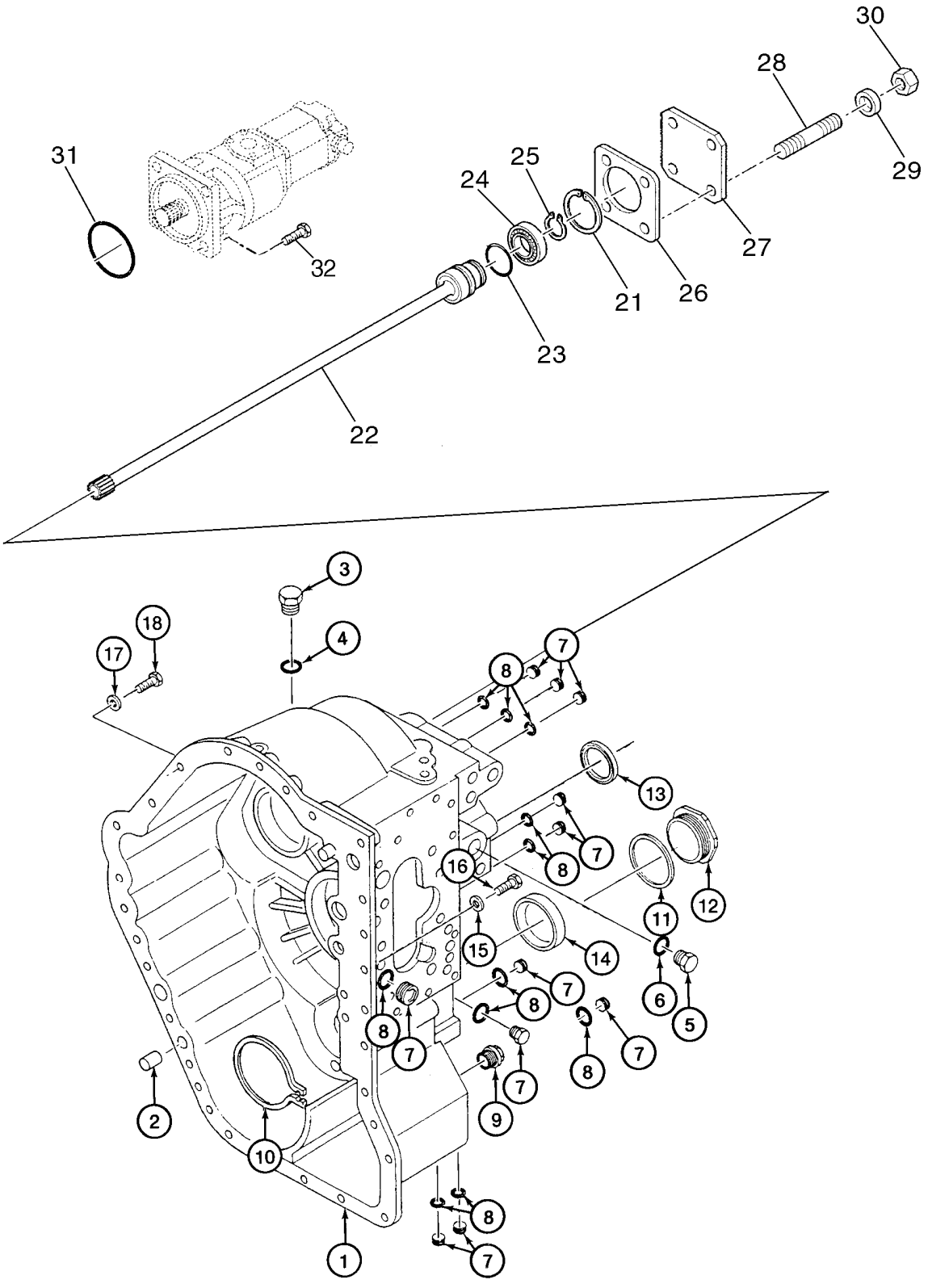

BS03G367

http://www.minnparbackhoeparts.com/

CONJUNTO DE LA TRANSMISIÓN, SERVOTRANSMISIÓN - ALOJAMIENTO, TRASERO

REF	FN	PART NUMBER	YR/SN	QTY	DESCRIPTION
		87424815		1	CAMBIO DE VELOCIDAD Powershift Transmission, Four Wheel Drive, Incl. Ref 1 - 21; Also Includes Parts On Figures 06-25 - 06-36
1		291570A1		1	CAVIDAD
2		292412A1		2	PITON
3		292165A1		1	TAPÓN Incl. Ref 4
4		238-7116		1	JUNTA HERMETICA 3/4 ID x 3/32
5		292170A1		1	TAPÓN Incl. Ref 6
6		238-7210		1	JUNTA HERMETICA 3/4 ID x 9/64
7		292164A1		11	TAPÓN Incl. Ref 8
8		238-7011		1	JUNTA HERMETICA 5/16 ID x 1/16
9		292414A1		1	TAPÓN Drain, Magnetic
10		292417A1		1	RETENEDOR
11		L30039		1	JUNTA HERMETICA
12		292171A1		1	TAPÓN
13		291527A1		1	JUNTA DE LABIOS Output
14		292173A1		1	CASQUILLO PLUG, Output Shaft
15		892-10010		2	ARANDELA DE FRENO M10
16		628-10035		2	TORNILLO M10 x 35; 10,9
17		892-10010		7	ARANDELA DE FRENO M10
18		628-10030		7	TORNILLO M10 x 30; 10.9
21		800-2168		1	RETENEDOR No. 68
22		85808333		1	VARILLA Shaft, Pump
23		9969021		1	ARO DE EMBOLO Seal Ring
24		9969022		1	COJINETE
25		9969023		1	ANILLO DE RESORTE
26		NSS		1	NO SE REPARA SEPARADAM. Plate; For Shipping Purposes Only
27		NSS		1	NO SE REPARA SEPARADAM. Plate; For Shipping Purposes Only
28		NSS		4	NO SE REPARA SEPARADAM. Stud, Pump Mounting; For Shipping Purposes Only
29		NSS		4	NO SE REPARA SEPARADAM. Washer; For Shipping Purposes Only
30		NSS		4	NO SE REPARA SEPARADAM. Nut, Pump Mounting; For Shipping Purposes Only

http://www.minnparbackhoeparts.com/

CONJUNTO DE LA TRANSMISIÓN, SERVOTRANSMISIÓN - ALOJAMIENTO, TRASERO

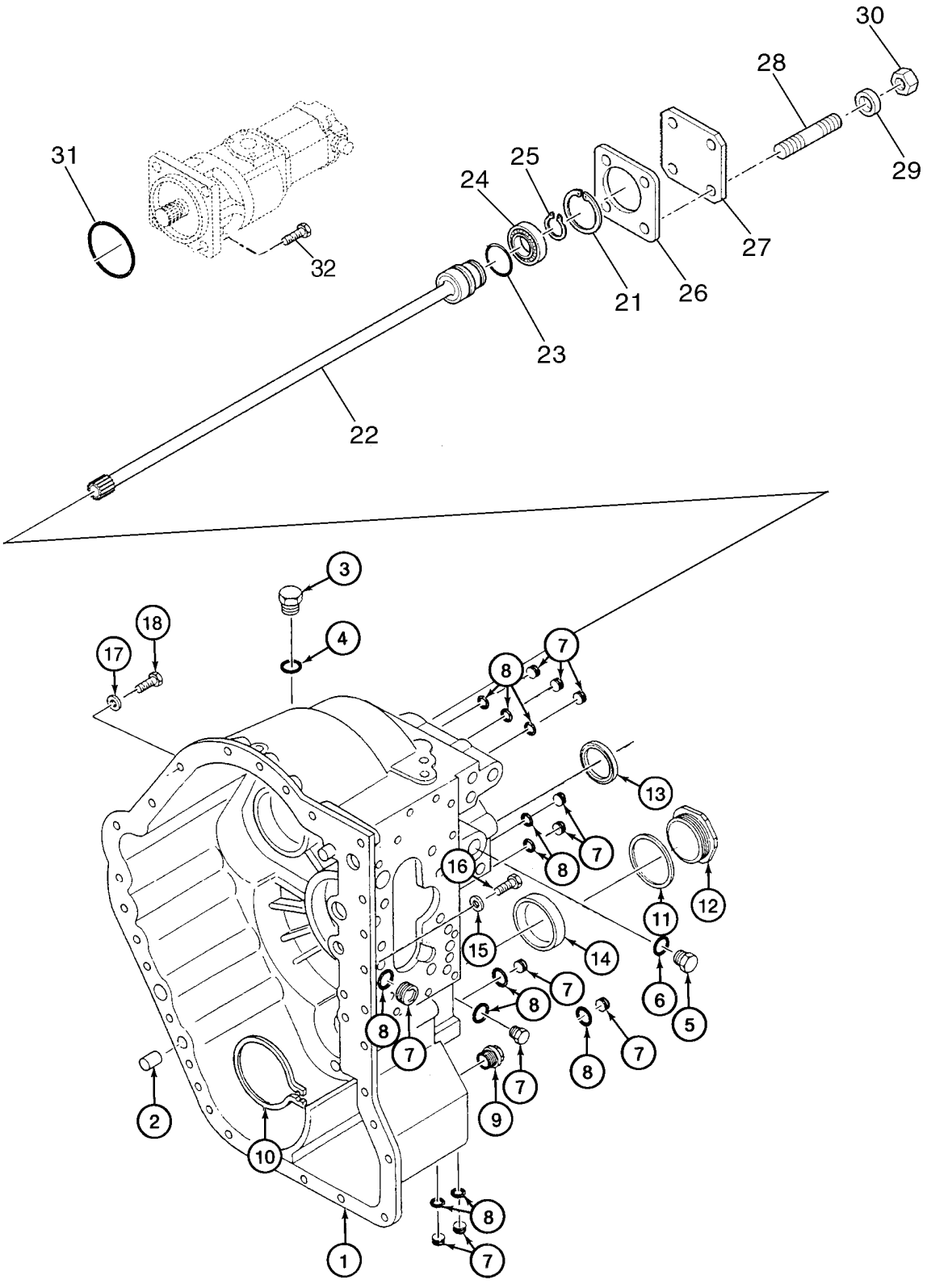

http://www.minnparbackhoeparts.com/

CONJUNTO DE LA TRANSMISIÓN, SERVOTRANSMISIÓN - ALOJAMIENTO, TRASERO

REF	FN	PART NUMBER	YR/SN	QTY	DESCRIPTION
31		510828		1	JUNTA HERMETICA Pump, Not Included With Assembly; Purchase Separately
32		614-12035		4	TORNILLO M12 x 35; Pump Mounting

http://www.minnparbackhoeparts.com/

CONJUNTO DE LA TRANSMISIÓN, SERVOTRANSMISIÓN - COVERTIDOR DE PAR

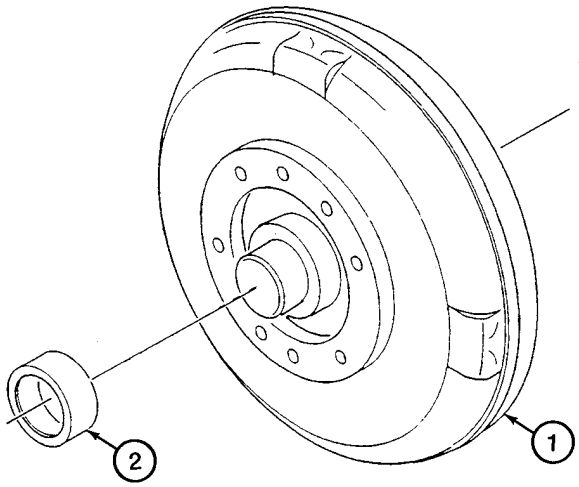

BS98D043

http://www.minnparbackhoeparts.com/

CONJUNTO DE LA TRANSMISIÓN, SERVOTRANSMISIÓN - COVERTIDOR DE PAR

REF	FN	PART NUMBER	YR/SN	QTY	DESCRIPTION
		87424815		1	CAMBIO DE VELOCIDAD Powershift Transmission, Four Wheel Drive, Incl. Ref 1, 2; Also Includes Parts On Figures 06-25 - 06-36
1		87424864		1	CONVERTIDOR Incl. Ref 2
2		87424865		1	CASQUILLO

http://www.minnparbackhoeparts.com/

CONJUNTO DE LA TRANSMISIÓN, SERVOTRANSMISIÓN - BOMBA, ACEITE

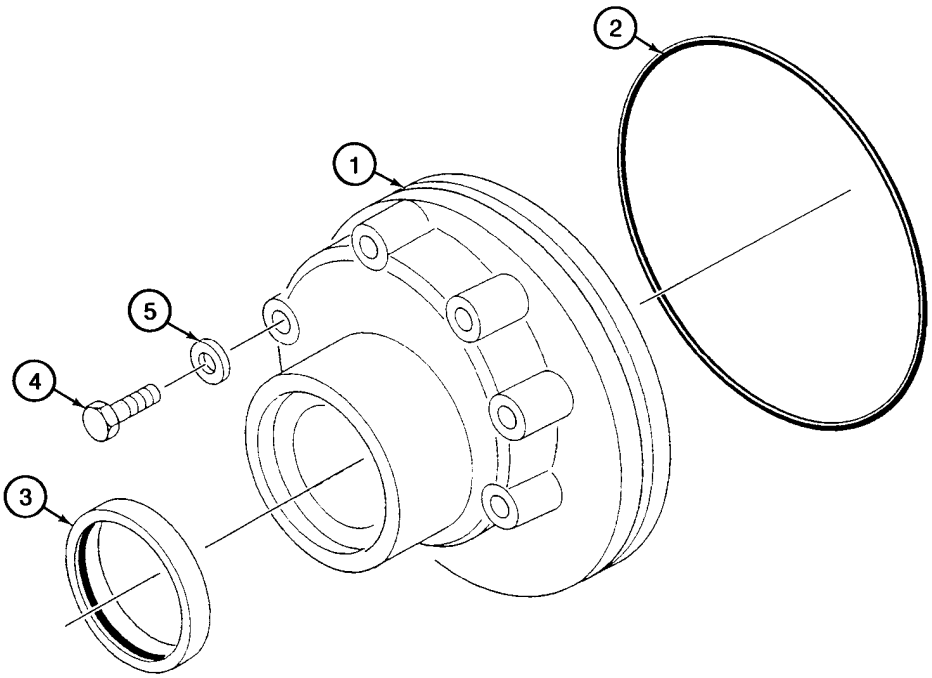

BS98D044

http://www.minnparbackhoeparts.com/

CONJUNTO DE LA TRANSMISIÓN, SERVOTRANSMISIÓN - BOMBA, ACEITE

REF	FN	PART NUMBER	YR/SN	QTY	DESCRIPTION
		87424815		1	CAMBIO DE VELOCIDAD Powershift Transmission, Four Wheel Drive, Incl. Ref 1 - 5; Also Includes Parts On Figures 06-25 - 06-36
1		291523A1		1	BOMBA Charge, Incl. Ref 2 - 5
2		292420A1		1	JUNTA HERMETICA Seal
3		292174A1		1	JUNTA DE LABIOS
4		815-8055		6	TORNILLO M8 x 55
5		291535A1		6	ARANDELA

http://www.minnparbackhoeparts.com/

CONJUNTO DE LA TRANSMISIÓN, SERVOTRANSMISIÓN - EMBRAGUE, TRANSMISIÓN HACIA DELANTE

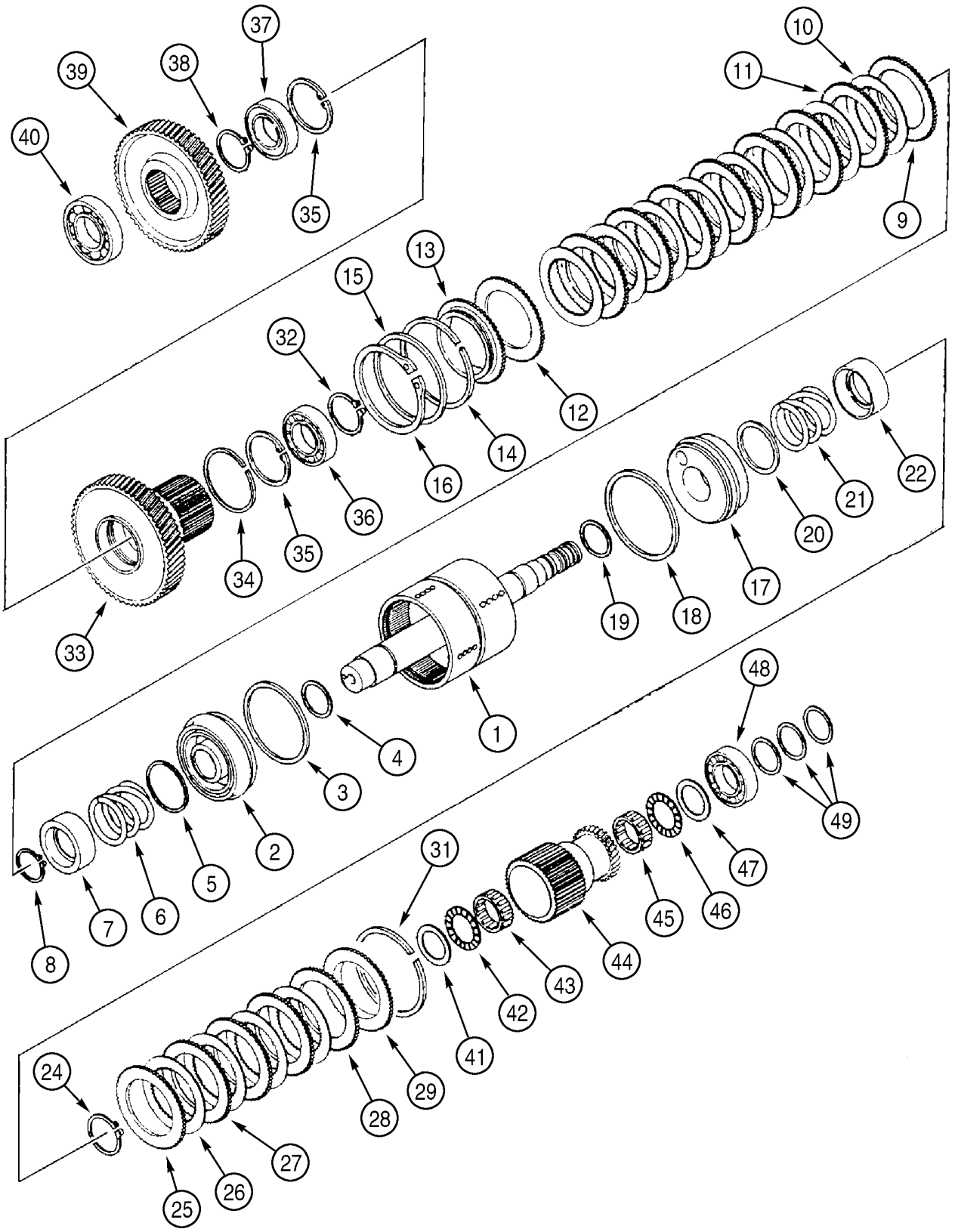

http://www.minnparbackhoeparts.com/

CONJUNTO DE LA TRANSMISIÓN, SERVOTRANSMISIÓN - EMBRAGUE, TRANSMISIÓN HACIA DELANTE

REF	FN	PART NUMBER	YR/SN	QTY	DESCRIPTION
		REF			MANUAL HIGH AND LOW SPEED - FORWARD DRIVE, CLUTCH AND PINIONS
		87424815		1	CAMBIO DE VELOCIDAD Powershift Transmission, Four Wheel Drive, Incl. Ref 1 - 49; Also Includes Parts On Figures 06-25 - 06-36
1		445310A1		1	ARBOL (CONJUNTO) Drum, High and Low, Forward
2		291520A1		1	EMBOLO Incl. Ref 3, 4
3		E114385		1	ANILLO DE CIERRE Ring
4		E114386		1	ANILLO DE CIERRE
5		291529A1		1	ARANDELA Wear Ring
6		291531A1		1	RESORTE
7		291530A1		1	CLIP ELECTRICO Seat
8		100-11196		1	ANILLO No. 196
9		291578A1		1	DISCO Friction
10		291580A1		8	DISCO Friction, Clutch Separator Plate
11		291579A1		7	DISCO Friction
12		291578A1		1	DISCO Friction
13		445312A1		1	DISCO CONDUCTOR EMBRAG. Backing Plate
14		292415A1		1	ANILLO DE CIERRE RETAINING RING
15		291567A1		1	ESPACIADOR
16		800-11115		1	ANILLO DE CIERRE No. 115
17		291520A1		1	EMBOLO Incl. Ref 18, 19
18		E114385		1	ANILLO DE CIERRE Ring
19		E114386		1	ANILLO DE CIERRE
20		291529A1		1	ARANDELA Wear Ring
21		291531A1		1	RESORTE
22		291530A1		1	CLIP ELECTRICO Seat
24		100-11196		1	ANILLO No. 196
25		291578A1		1	DISCO Friction
26		291580A1		4	DISCO Friction, Clutch Separator Plate
27		291579A1		3	DISCO Friction
28		291578A1		1	DISCO Friction
29		291571A1		1	DISCO Backing Plate
31		292415A1		1	ANILLO DE CIERRE Retaining Ring
32		800-1150		1	RETENEDOR No. 50
33		445311A1		1	ENGRANAJE Forward/Reverse Clutch, 54T
34		445313A1		1	ANILLO DE CIERRE Lip Seal

http://www.minnparbackhoeparts.com/

CONJUNTO DE LA TRANSMISIÓN, SERVOTRANSMISIÓN - EMBRAGUE, TRANSMISIÓN HACIA DELANTE

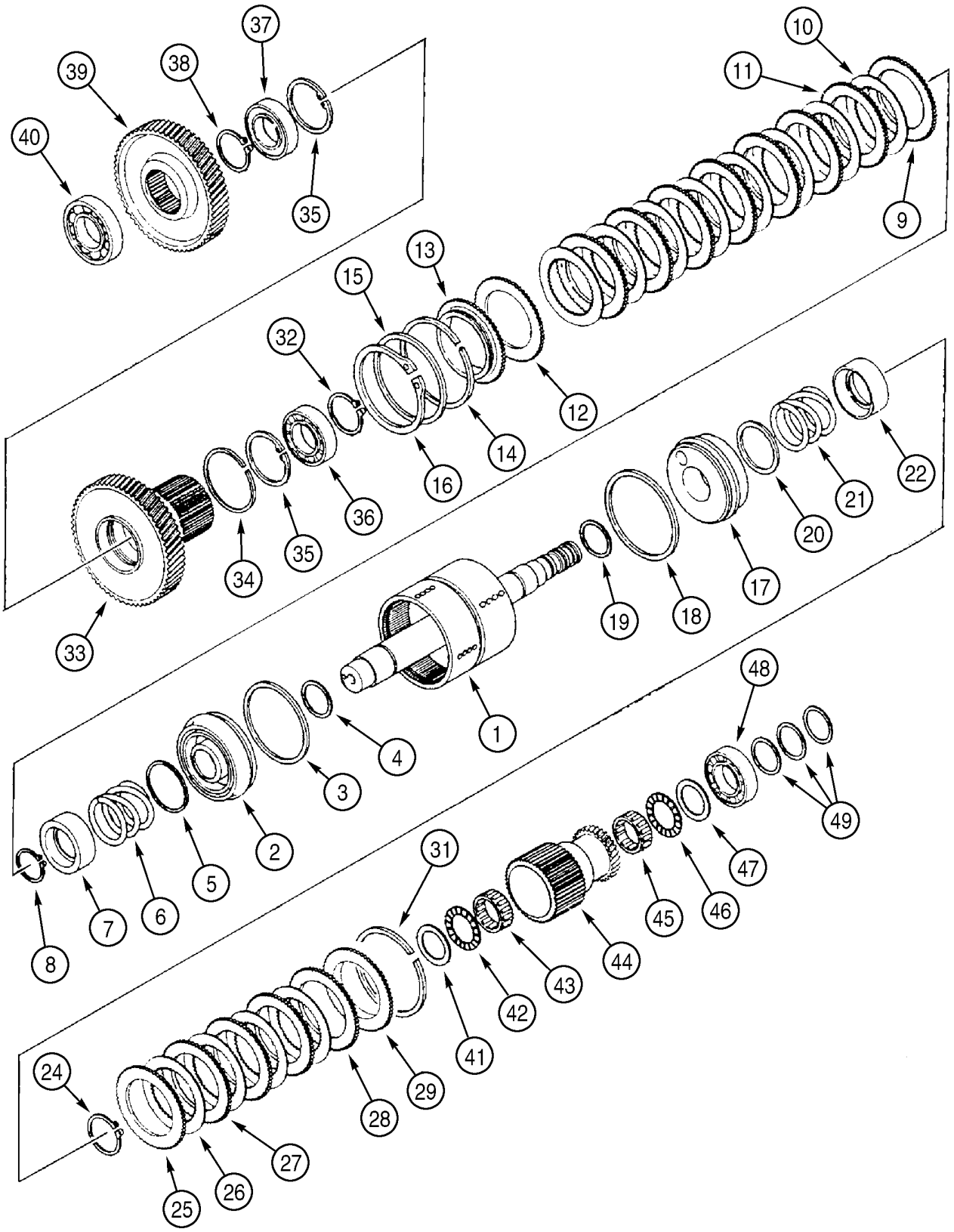

http://www.minnparbackhoeparts.com/

CONJUNTO DE LA TRANSMISIÓN, SERVOTRANSMISIÓN - EMBRAGUE, TRANSMISIÓN HACIA DELANTE

REF	FN	PART NUMBER	YR/SN	QTY	DESCRIPTION
35		800-2180		2	RETENEDOR No. 80
36		292426A1		1	COJINETE
37		292431A1		1	COJINETE
38		800-1150		1	RETENEDOR No. 50
39		291551A1		1	PINON Gear, Driven, 42T
40		292432A1		1	COJINETE
41		294080A1		1	ESPACIADOR Thrust Washer
42		A183452		1	COJINETE
43		A178460		1	COJINETE
44		291556A1		1	PINON Gear, High Clutch, 34T
45		A178460		1	COJINETE
46		A183452		1	COJINETE
47		294080A1		1	ESPACIADOR Thrust Washer
48		292429A1		1	COJINETE
49		291528A1		3	CASQUILLO Seal Ring

http://www.minnparbackhoeparts.com/

CONJUNTO DE LA TRANSMISIÓN, SERVOTRANSMISIÓN - EMBRAGUE, TRANSMISIÓN HACIA ATRÁS

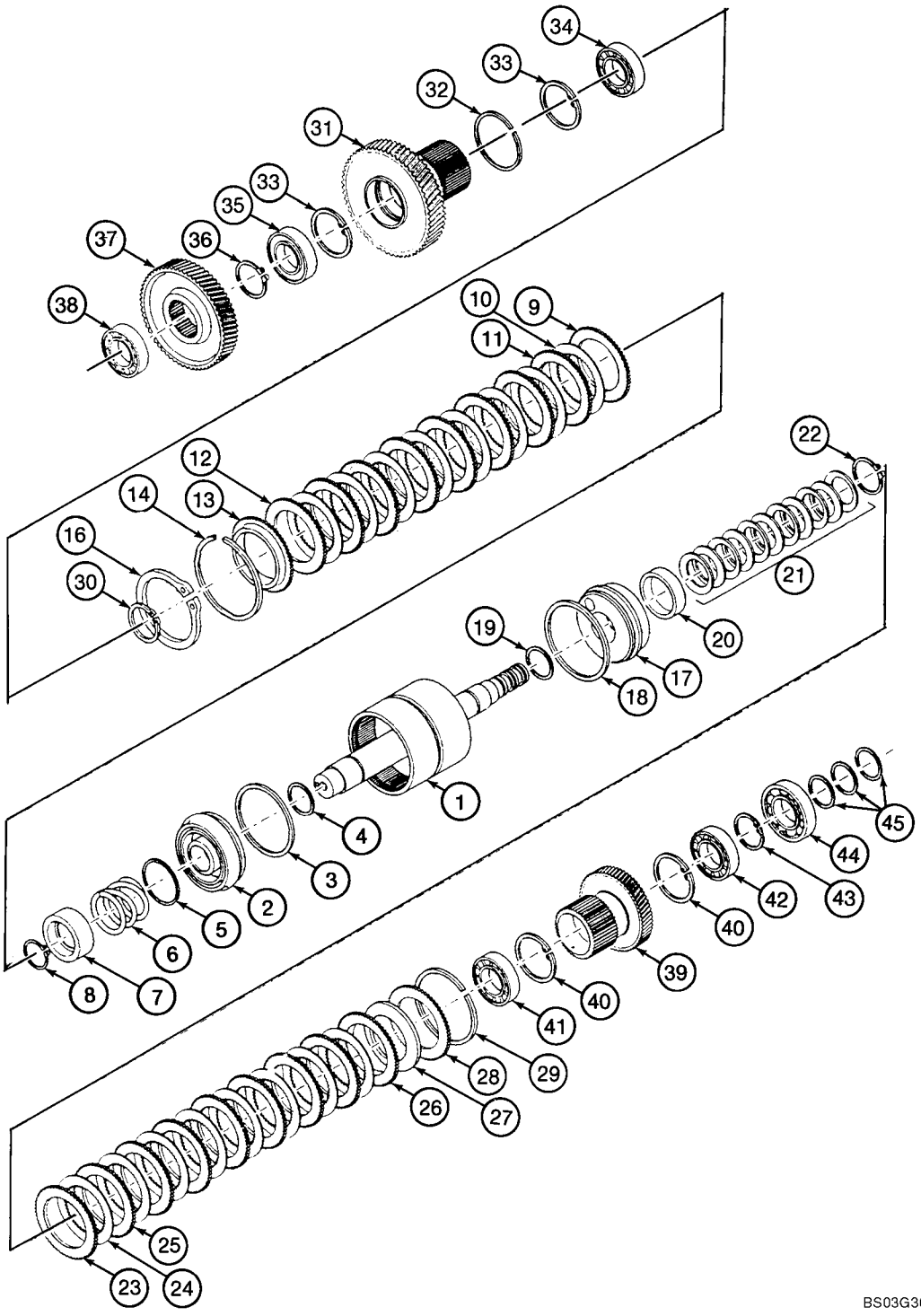

http://www.minnparbackhoeparts.com/

CONJUNTO DE LA TRANSMISIÓN, SERVOTRANSMISIÓN - EMBRAGUE, TRANSMISIÓN HACIA ATRÁS

REF	FN	PART NUMBER	YR/SN	QTY	DESCRIPTION
		REF			MANUAL FIRST GEAR - REVERSE DRIVE, CLUTCH AND PINIONS
		87424815		1	CAMBIO DE VELOCIDAD Powershift Transmission, Four Wheel Drive, Incl. Ref 1 - 495 Also Includes Parts On Figures 06-25 - 06-36
1		445314A1		1	ARBOL (CONJUNTO) Drum, First Gear - Reverse
2		291520A1		1	EMBOLO Incl. Ref 3, 4
3		E114385		1	ANILLO DE CIERRE Ring
4		E114386		1	ANILLO DE CIERRE
5		291529A1		1	ARANDELA Wear Ring
6		291531A1		1	RESORTE
7		291530A1		1	CLIP ELECTRICO Seat
8		100-11196		1	ANILLO No. 196
9		291578A1		1	DISCO Friction
10		291580A1		8	DISCO Friction
11		291579A1		7	DISCO Friction
12		291578A1		1	DISCO Friction
13		291566A1		1	DISCO Backing Plate
14		292415A1		1	ANILLO DE CIERRE Retaining Ring
16		800-11115		1	ANILLO DE CIERRE No. 115
17		291520A1		1	EMBOLO Incl. Ref 18, 19
18		E114385		1	ANILLO DE CIERRE Ring
19		E114386		1	ANILLO DE CIERRE
20		305730A1		1	PLACA Wear Ring
21		291591A1		1	ARANDELA Kit, Belleville Springs
22		100-11196		1	ANILLO No. 196
23		291578A1		1	DISCO Friction
24		291580A1		8	DISCO Friction
25		291579A1		7	DISCO Friction
26		291578A1		1	DISCO Friction
27		291533A1		1	ARANDELA Spacer
28		291571A1		1	DISCO Backing Plate
29		292415A1		1	ANILLO DE CIERRE Retaining Ring
30		800-1150		1	RETENEDOR No. 50
31		291558A1		1	PINON Gear, Forward/Reverse Clutch, 54T
32		291573A1		1	RETENEDOR Retaining Ring
33		800-2180		2	RETENEDOR No. 80

http://www.minnparbackhoeparts.com/

CONJUNTO DE LA TRANSMISIÓN, SERVOTRANSMISIÓN - EMBRAGUE, TRANSMISIÓN HACIA ATRÁS

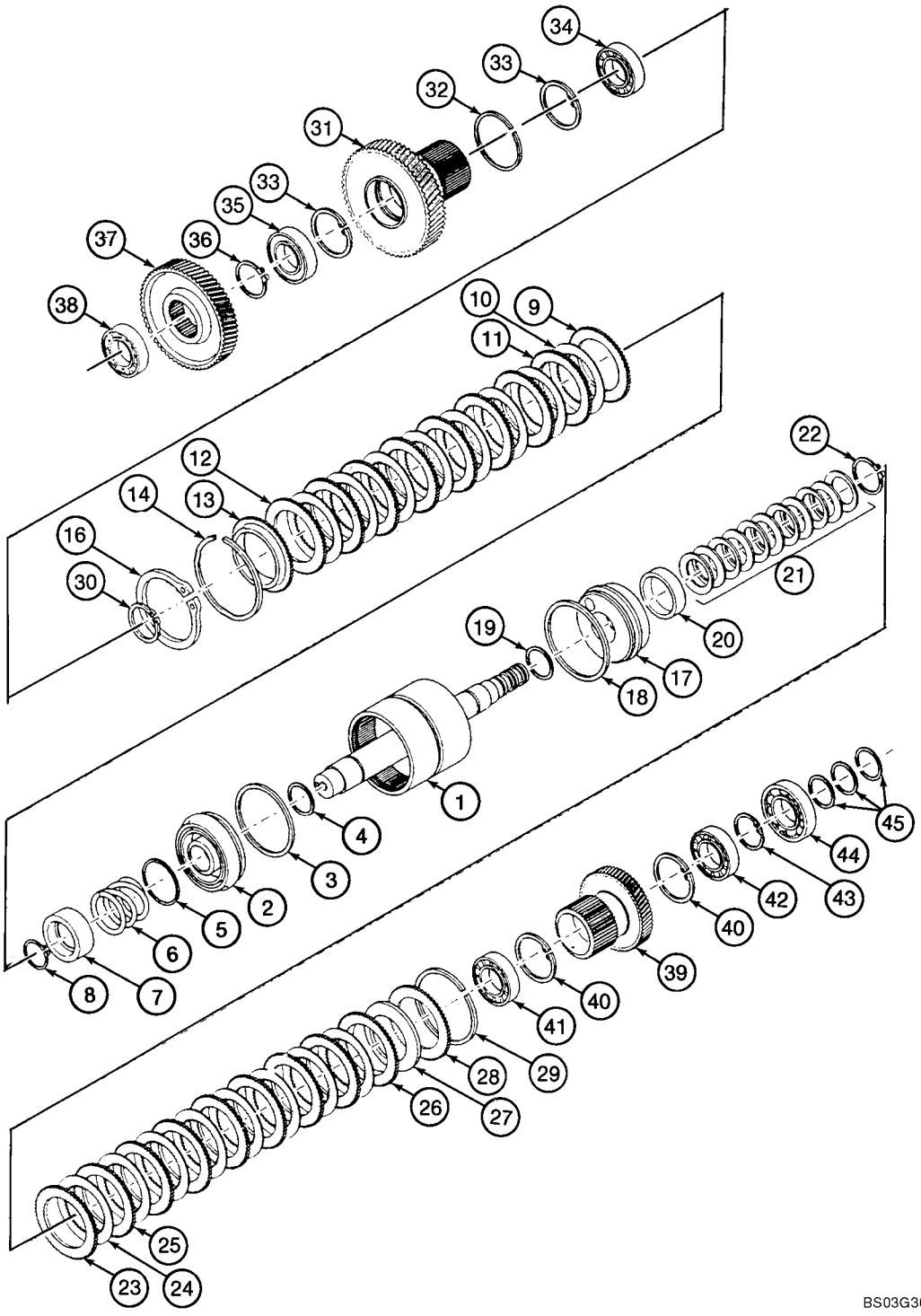

http://www.minnparbackhoeparts.com/

CONJUNTO DE LA TRANSMISIÓN, SERVOTRANSMISIÓN - EMBRAGUE, TRANSMISIÓN HACIA ATRÁS

REF	FN	PART NUMBER	YR/SN	QTY	DESCRIPTION
34		292426A1		1	COJINETE
35		292431A1		1	COJINETE
36		800-1150		1	RETENEDOR No. 50
37		291552A1		1	PINON Gear, Reverse Driven, 50T
38		292432A1		1	COJINETE
39		291557A1		1	PINON Gear, First Clutch, 30T
40		800-2175		2	ANILLO DE RESORTE No. 75
41		292425A1		1	COJINETE
42		292428A1		1	COJINETE
43		800-1145		1	RETENEDOR No. 45
44		292423A1		1	COJINETE
45		291528A1		3	CASQUILLO Seal Ring

http://www.minnparbackhoeparts.com/

CONJUNTO DE LA TRANSMISIÓN, SERVOTRANSMISIÓN - EMBRAGUE, TRANSMISIÓN DE LA BOMBA

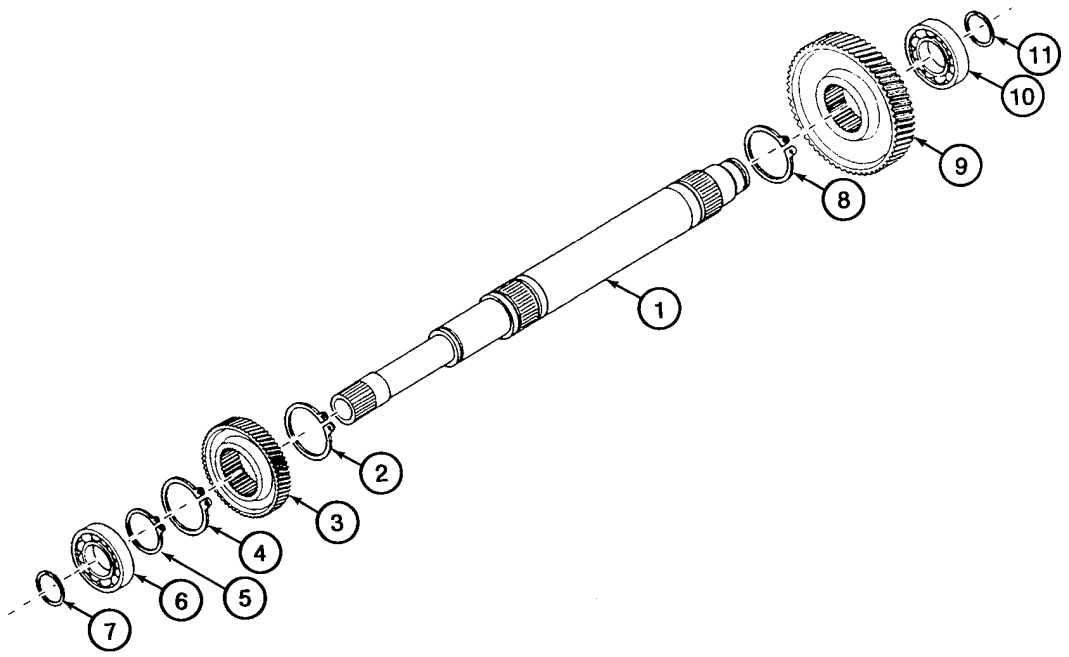

BS98D047

http://www.minnparbackhoeparts.com/

CONJUNTO DE LA TRANSMISIÓN, SERVOTRANSMISIÓN - EMBRAGUE, TRANSMISIÓN DE LA BOMBA

REF	FN	PART NUMBER	YR/SN	QTY	DESCRIPTION
		87424815		1	CAMBIO DE VELOCIDAD Powershift Transmission, Four Wheel Drive, Incl. Ref 1 - 11; Also Includes Parts On Figures 06-25 - 06-36
1		291563A1		1	EJE Input Shaft
2		800-5150		1	RETENEDOR No. 50
3		291549A1		1	PINON Gear, Forward Low, 26T
4		800-1150		1	RETENEDOR No. 50
5		800-1140		1	ANILLO DE CIERRE
6		292423A1		1	COJINETE
7		291528A1		1	CASQUILLO Seal Ring
8		800-1150		1	RETENEDOR No. 50
9		291548A1		1	PINON Gear, Forward High, 62T
10		292423A1		1	COJINETE
11		291528A1		1	CASQUILLO Seal Ring

http://www.minnparbackhoeparts.com/

CONJUNTO DE LA TRANSMISIÓN, SERVOTRANSMISIÓN - EMBRAGUE, SEGUNDA MARCHA

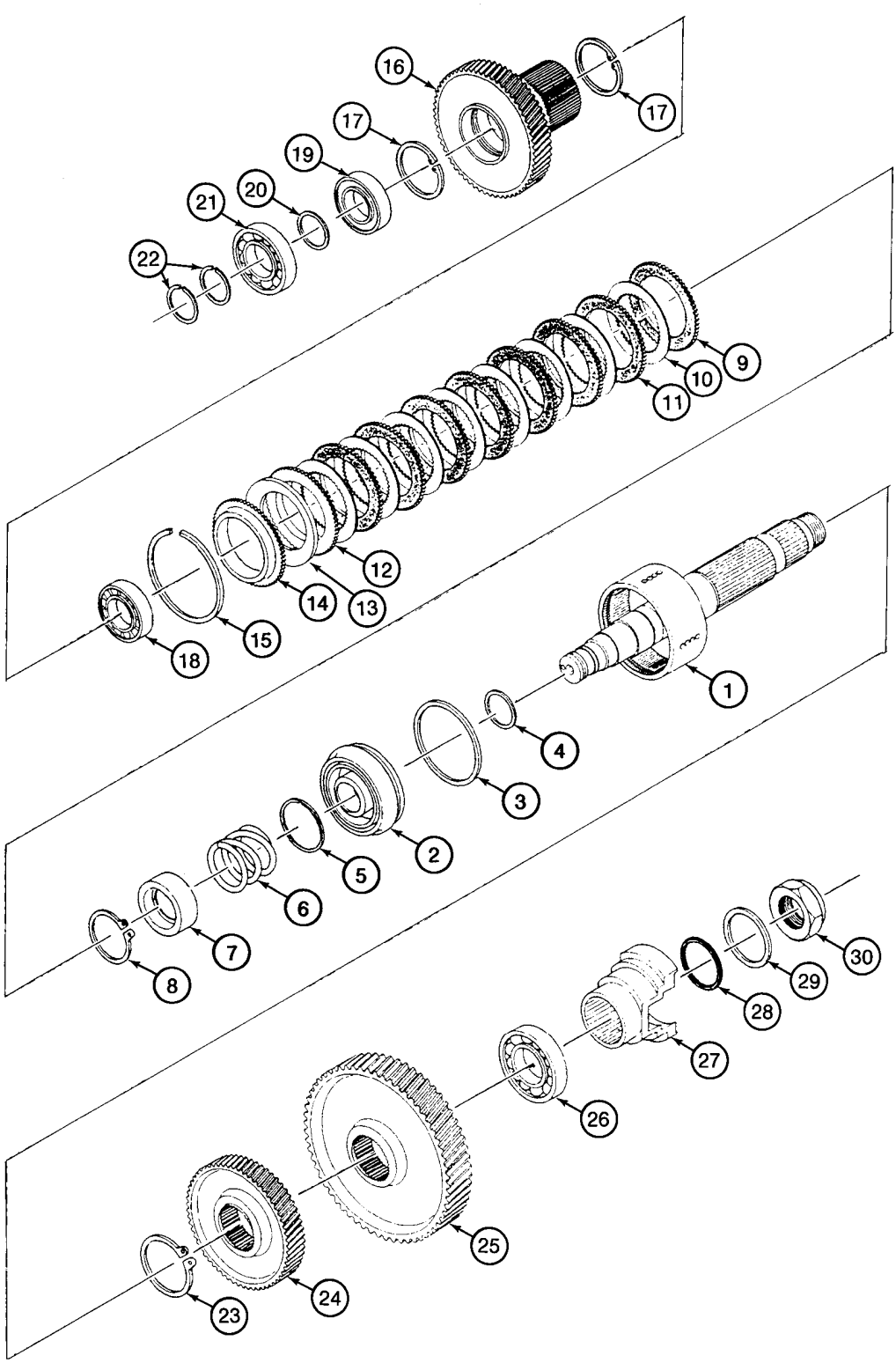

BS98D048

http://www.minnparbackhoeparts.com/

CONJUNTO DE LA TRANSMISIÓN, SERVOTRANSMISIÓN - EMBRAGUE, SEGUNDA MARCHA

REF	FN	PART NUMBER	YR/SN	QTY	DESCRIPTION
		87424815		1	CAMBIO DE VELOCIDAD Powershift Transmission, Four Wheel Drive, Incl. Ref 1 - 30; Also Includes Parts On Figures 06-25 - 06-36
1		305728A1		1	EJE Drum, Second Clutch
2		291520A1		1	EMBOLO Incl. Ref 3, 4
3		E114385		1	ANILLO DE CIERRE Ring
4		E114386		1	ANILLO DE CIERRE
5		291529A1		1	ARANDELA Wear Ring
6		291531A1		1	RESORTE
7		291530A1		1	CLIP ELECTRICO Seat
8		100-11196		1	ANILLO No. 196
9		291578A1		1	DISCO Friction
10		291580A1		8	DISCO Friction
11		291579A1		7	DISCO Friction
12		291578A1		1	DISCO Friction
13		291533A1		1	ARANDELA Spacer
14		291571A1		1	DISCO Backing Plate
15		292415A1		1	ANILLO DE CIERRE Retaining Ring
16		291555A1		1	PINON Gear, Second Clutch, 52T
17		800-2175		2	ANILLO DE RESORTE No. 75
18		292425A1		1	COJINETE
19		292428A1		1	COJINETE
20		291541A1		1	ESPACIADOR Ring
21		292423A1		1	COJINETE
22		291528A1		2	CASQUILLO Seal Ring
23		800-5160		1	RETENEDOR No. 60
24		291550A1		1	PINON Gear, Drive, Lower Output, 41T
25		291553A1		1	PINON Gear, Upper Output, 59T
26		292433A1		1	COJINETE
27		291524A1		1	BRIDA YOKE, Output
28		238-5336		1	JUNTA HERMETICA 2-7/8 ID x 3/16
29		S89696		1	ARANDELA
30		S89695		1	TUERCA 1-1/4 NF

http://www.minnparbackhoeparts.com/

CONJUNTO DE LA TRANSMISIÓN, SERVOTRANSMISIÓN - EMBRAGUE, EJE DE SALIDA

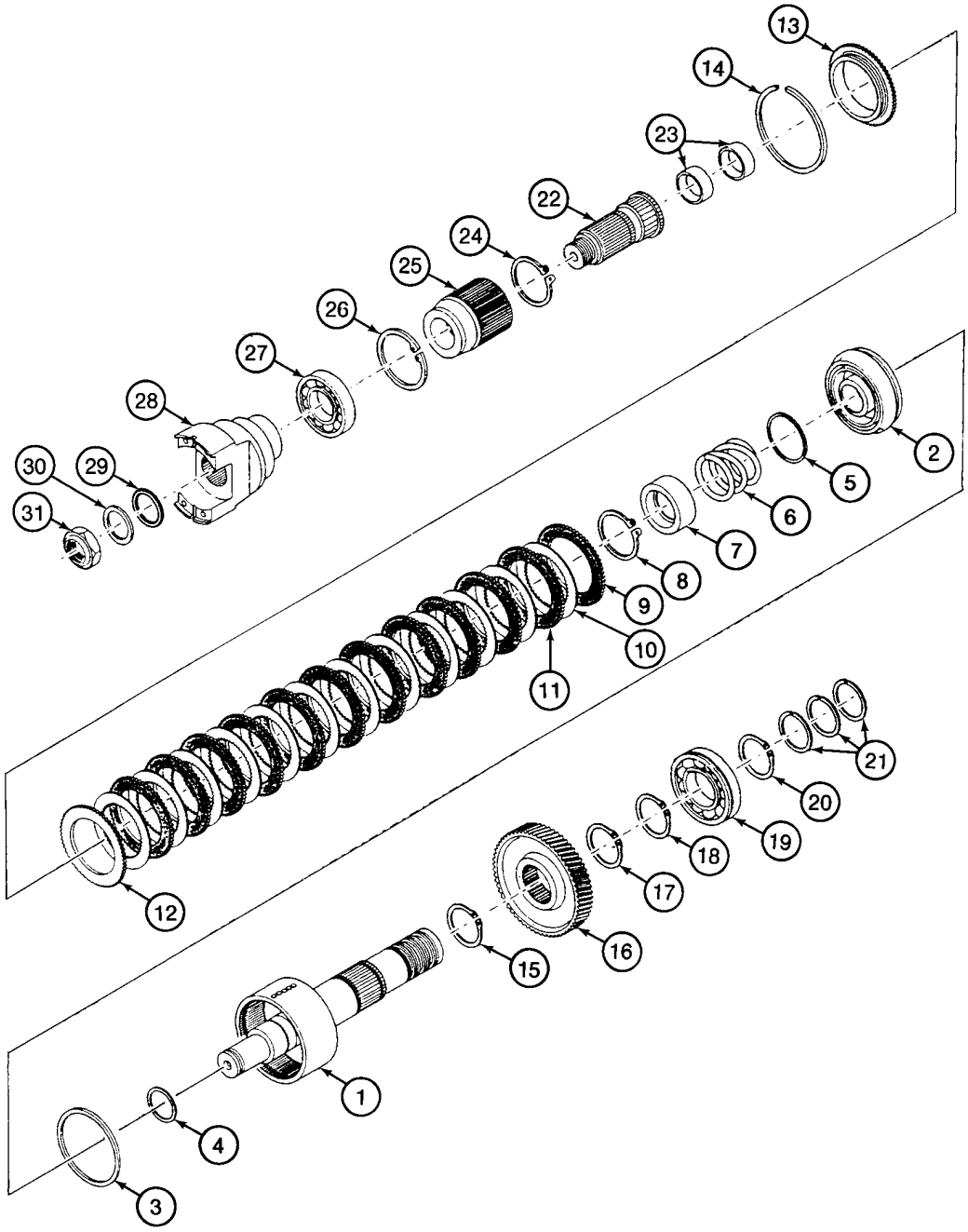

BS98D049

http://www.minnparbackhoeparts.com/

CONJUNTO DE LA TRANSMISIÓN, SERVOTRANSMISIÓN - EMBRAGUE, EJE DE SALIDA

REF	FN	PART NUMBER	YR/SN	QTY	DESCRIPTION
		87424815		1	CAMBIO DE VELOCIDAD Powershift Transmission, Four Wheel Drive, Incl. Ref 1 - 31; Also Includes Parts On Figures 06-25 - 06-36
1		305729A1		1	EJE Drum, Front Output, Rear Assy
2		291520A1		1	EMBOLO Incl. Ref 3, 4
3		E114385		1	ANILLO DE CIERRE Ring
4		E114386		1	ANILLO DE CIERRE
5		291529A1		1	ARANDELA Wear Ring
6		291531A1		1	RESORTE
7		291530A1		1	CLIP ELECTRICO Seat
8		100-11196		1	ANILLO No. 196
9		291578A1		1	DISCO Friction
10		291580A1		12	DISCO Friction
11		291579A1		11	DISCO Friction
12		291578A1		1	DISCO Friction
13		291571A1		1	DISCO Backing Plate
14		292415A1		1	ANILLO DE CIERRE Retaining Ring
15		800-1165		1	RETENEDOR No. 65
16		291554A1		1	PINON Gear, Lower Output, 39T
17		800-1165		1	RETENEDOR No. 65
18		800-1160		1	RETENEDOR No. 60
19		292434A1		1	COJINETE
20		800-1160		1	RETENEDOR No. 60
21		291540A1		3	ARANDELA Seal Ring
22		291575A1		1	PINON Shaft, Front Output, Front Assy; Incl. Ref 23
23		292175A1		2	CASQUILLO
24		800-5160		1	RETENEDOR No. 60
25		291559A1		1	PINON HUB
26		800-21100		1	RETENEDOR No. 100
27		292424A1		1	COJINETE
28		291524A1		1	BRIDA YOKE
29		238-5336		1	JUNTA HERMETICA 2-7/8 ID x 3/16
30		S89696		1	ARANDELA
31		S89695		1	TUERCA 1-1/4 NF

http://www.minnparbackhoeparts.com/

CONJUNTO DE LA TRANSMISIÓN, SERVOTRANSMISIÓN - MONTAJE, VÁLVULA

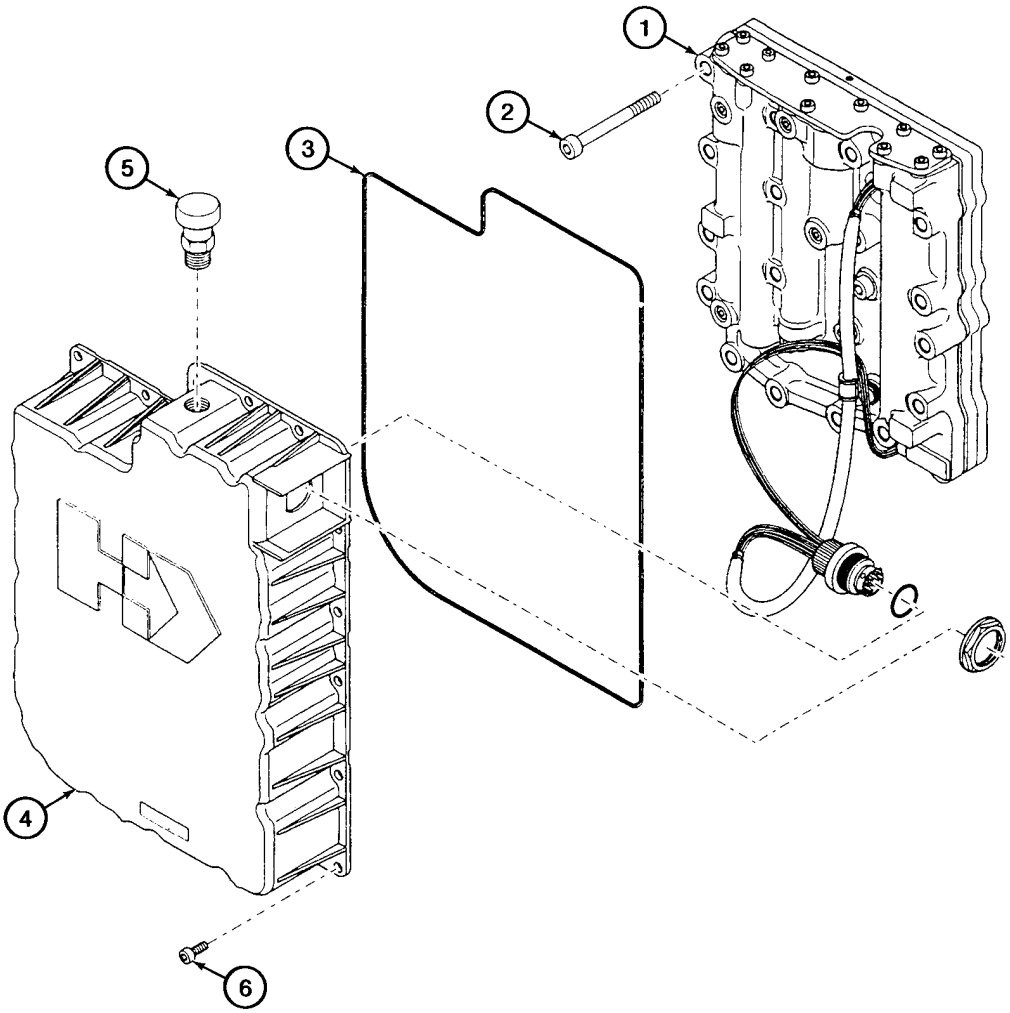

BS98D050

http://www.minnparbackhoeparts.com/

CONJUNTO DE LA TRANSMISIÓN, SERVOTRANSMISIÓN - MONTAJE, VÁLVULA

REF	FN	PART NUMBER	YR/SN	QTY	DESCRIPTION
		87424815		1	CAMBIO DE VELOCIDAD Powershift Transmission, Four Wheel Drive, Incl. Ref 1 - 6; Also Includes Parts On Figures 06-25 - 06-36
1		380005A1		1	VALVULA DISTRIBUIDORA Transmission Control Valve, See Figure 06-35
2		864-8065		17	TORNILLO M8 x 65
3		291545A1		1	ANILLO DE CIERRE
4		291577A1		1	CAVIDAD Incl. Ref 5
5		294013A1		1	RESPIRADERO
6		864-6012		20	TORNILLO M6 x 12

http://www.minnparbackhoeparts.com/

CONJUNTO DE LA TRANSMISIÓN, SERVOTRANSMISIÓN - VALVULA, CONTROL

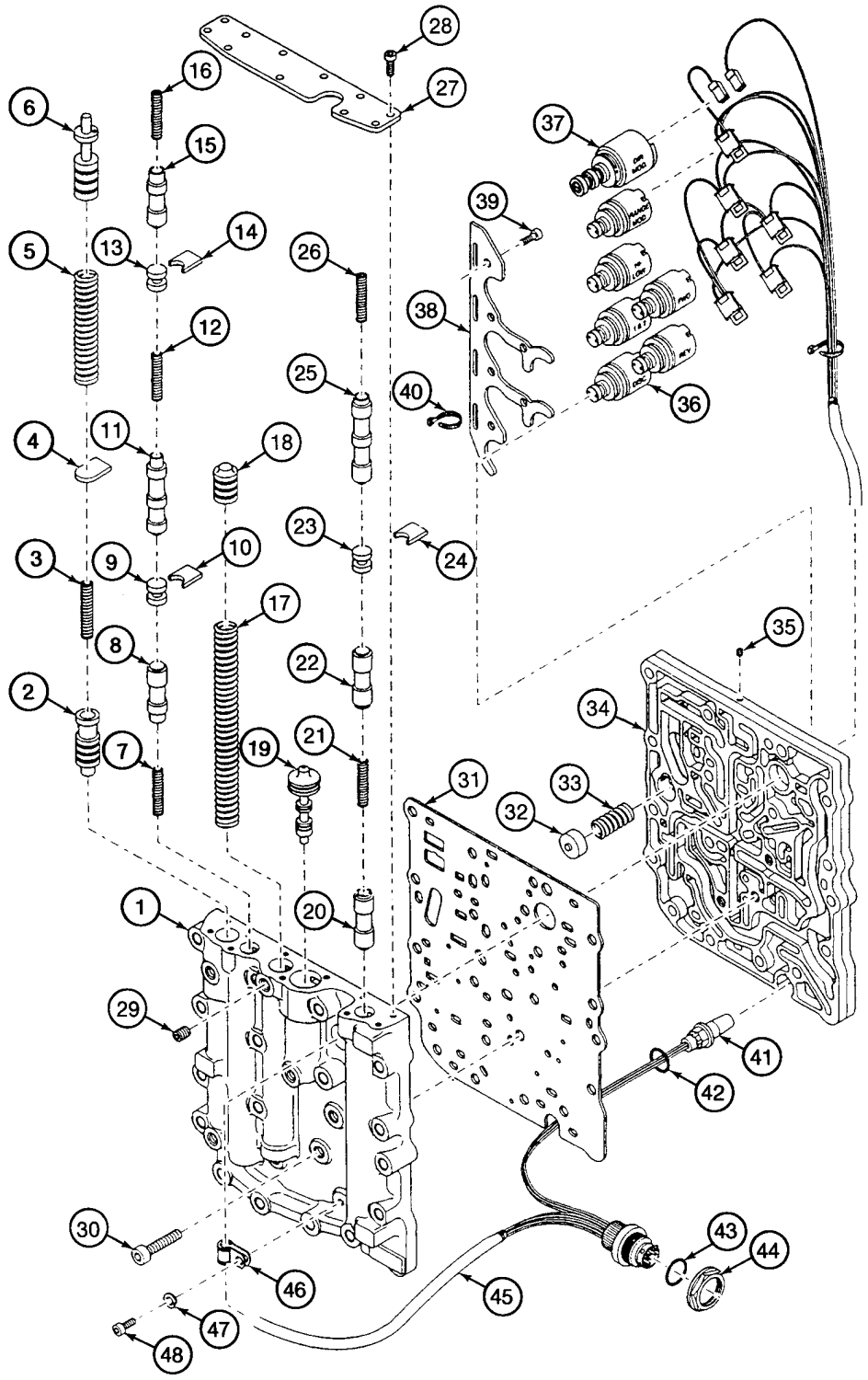

http://www.minnparbackhoeparts.com/

CONJUNTO DE LA TRANSMISIÓN, SERVOTRANSMISIÓN - VALVULA, CONTROL

REF	FN	PART NUMBER	YR/SN	QTY	DESCRIPTION
		87424815		1	CAMBIO DE VELOCIDAD Powershift Transmission, Four Wheel Drive, Incl. Ref 1 - 48; Also Includes Parts On Figures 06-25 - 06-36
		380005A1		1	VALVULA DISTRIBUIDORA Transmission Control Valve, Incl. Ref 1 - 48
1		NSS		1	NO SE REPARA SEPARADAM. Body
2		NSS		1	NO SE REPARA SEPARADAM. Spool, Pressure Reducing
3		NSS		1	NO SE REPARA SEPARADAM. Spring
4		NSS		1	NO SE REPARA SEPARADAM. Plate
5		NSS		1	NO SE REPARA SEPARADAM. Spring
6		NSS		1	NO SE REPARA SEPARADAM. Spool, Pressure Regulator
7		NSS		1	NO SE REPARA SEPARADAM. Spring
8		NSS		1	NO SE REPARA SEPARADAM. Spool, Disconnect
9		NSS		1	NO SE REPARA SEPARADAM. Stop
10		NSS		1	NO SE REPARA SEPARADAM. Plate
11		NSS		1	NO SE REPARA SEPARADAM. Spool, First/Second
12		NSS		1	NO SE REPARA SEPARADAM. Spring
13		NSS		1	NO SE REPARA SEPARADAM. Stop
14		NSS		1	NO SE REPARA SEPARADAM. Plate
15		NSS		1	NO SE REPARA SEPARADAM. Spool, Range Modulation
16		NSS		1	NO SE REPARA SEPARADAM. Spring
17		NSS		1	NO SE REPARA SEPARADAM. Spring
18		NSS		1	NO SE REPARA SEPARADAM. Spool, Accumulator
19		NSS		1	NO SE REPARA SEPARADAM. Spool, Booster
20		NSS		1	NO SE REPARA SEPARADAM. Spool, Reverse
21		NSS		1	NO SE REPARA SEPARADAM. Spring
22		NSS		1	NO SE REPARA SEPARADAM. Spool, Forward
23		NSS		1	NO SE REPARA SEPARADAM. Stop
24		NSS		1	NO SE REPARA SEPARADAM. Plate
25		NSS		1	NO SE REPARA SEPARADAM. Spool, High/Low Forward
26		NSS		1	NO SE REPARA SEPARADAM. Spring
27		NSS		1	NO SE REPARA SEPARADAM. Cover
28		864-5012		11	TORNILLO M5 x 12

http://www.minnparbackhoeparts.com/

CONJUNTO DE LA TRANSMISIÓN, SERVOTRANSMISIÓN - VALVULA, CONTROL

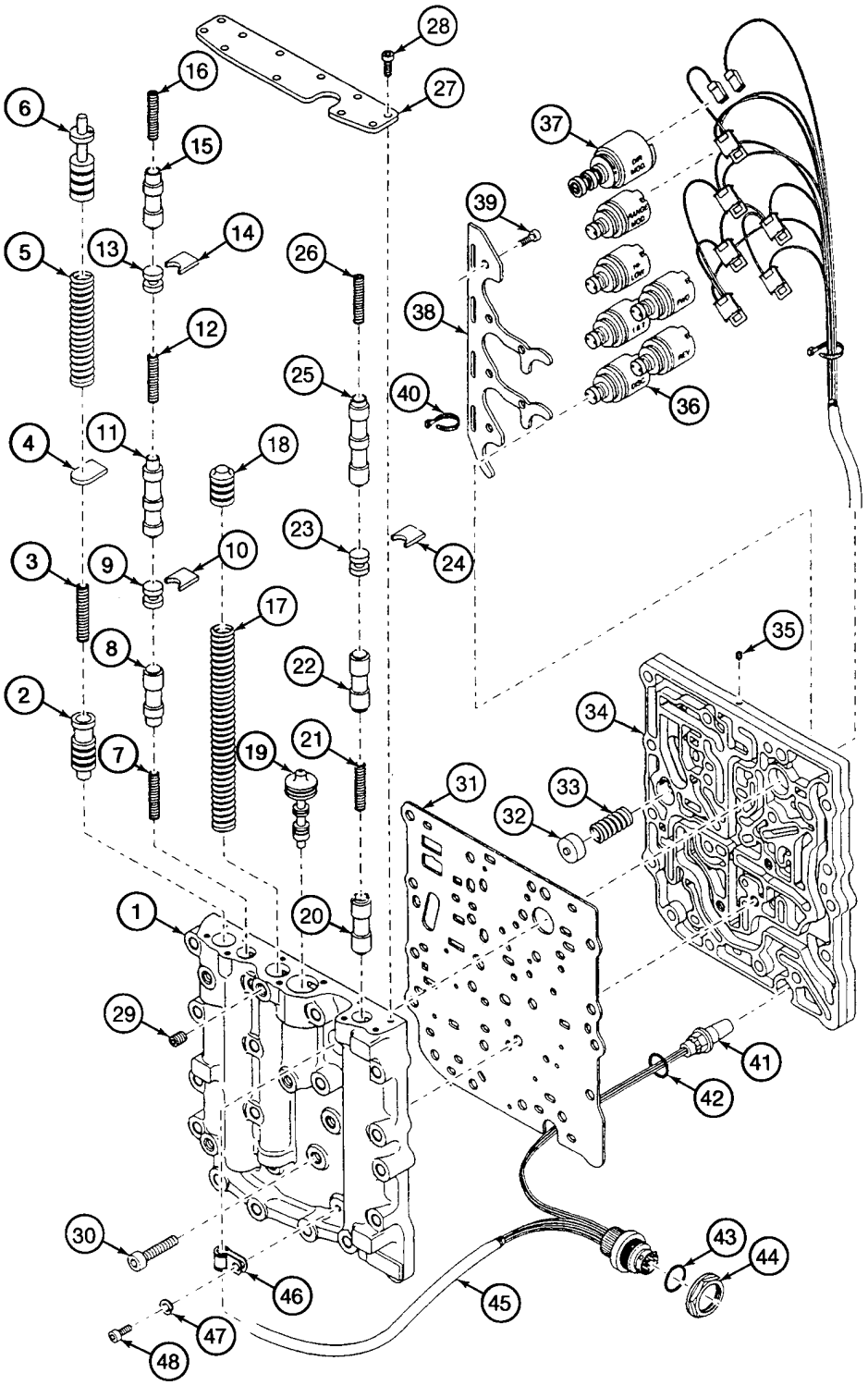

BS98D051

http://www.minnparbackhoeparts.com/

CONJUNTO DE LA TRANSMISIÓN, SERVOTRANSMISIÓN - VALVULA, CONTROL

REF	FN	PART NUMBER	YR/SN	QTY	DESCRIPTION
29		366663A1		2	TAPÓN Check Port
30		864-8030		3	TORNILLO M8 x 30
31		NSS		1	NO SE REPARA SEPARADAM. Plate, Spacer
32		292176A1		1	VÁLVULA DE PASO Spool, Bypass Valve
33		292177A1		1	RESORTE
34		NSS		1	NO SE REPARA SEPARADAM. Plate
35		319597A1		6	TAPÓN
36		291862A1		6	SOLENOIDE
37		291861A1		1	SOLENOIDE MODULE
38		NSS		1	NO SE REPARA SEPARADAM. Bail
39		864-5012		6	TORNILLO M5 x 12
40		319598A1		6	BANDA
41		380004A1		1	CAPTADOR Speed Sensor
42		238-5115		1	JUNTA HERMETICA 11/16 ID x 7/8
43		238-9213		1	JUNTA HERMETICA 15/16 ID x 1/8
44		NSS		1	NO SE REPARA SEPARADAM. Nut
45		380003A1		1	HAZ Incl. Ref 41 - 44
46		319599A1		1	COLLAR
47		895-11005		1	ARANDELA 5,5 x 10 x 1 mm
48		864-5010		1	TORNILLO M5 x 10

http://www.minnparbackhoeparts.com/

CONJUNTO DE LA TRANSMISIÓN, SERVOTRANSMISIÓN - PLACA, TRANSMISIÓN

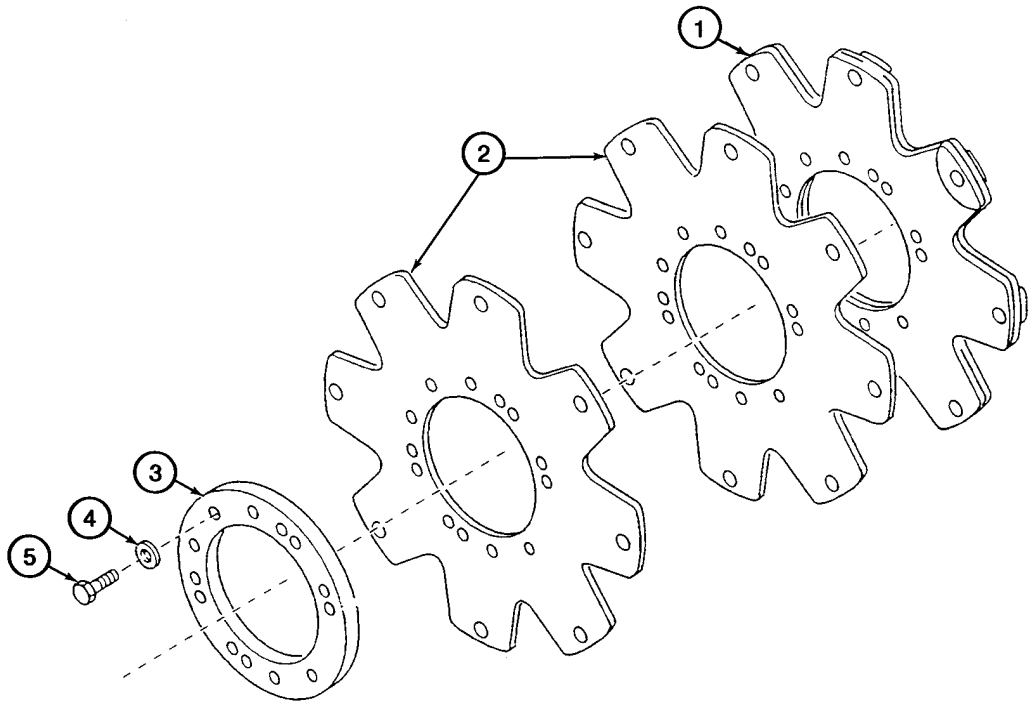

BS98D052

http://www.minnparbackhoeparts.com/

CONJUNTO DE LA TRANSMISIÓN, SERVOTRANSMISIÓN - PLACA, TRANSMISIÓN

REF	FN	PART NUMBER	YR/SN	QTY	DESCRIPTION
		87424815		1	CAMBIO DE VELOCIDAD Powershift Transmission, Four Wheel Drive, Incl. Ref 1 - 5; Also Includes Parts On Figures 06-25 - 06-36
1		87410613		1	PLACA DE SUJECION Drive Plate Assy, Incl. Ref 2 - 5
2		NSS		2	NO SE REPARA SEPARADAM. Face Plate
3		NSS		1	NO SE REPARA SEPARADAM. Drive Plate Backing Ring
4		NSS		6	NO SE REPARA SEPARADAM. Washer, 3/8
5		NSS		6	NO SE REPARA SEPARADAM. Bolt, 3/8 NF x 1/2

http://www.minnparbackhoeparts.com/

RUEDAS, PARTE TRASERA - NEUMÁTICOS

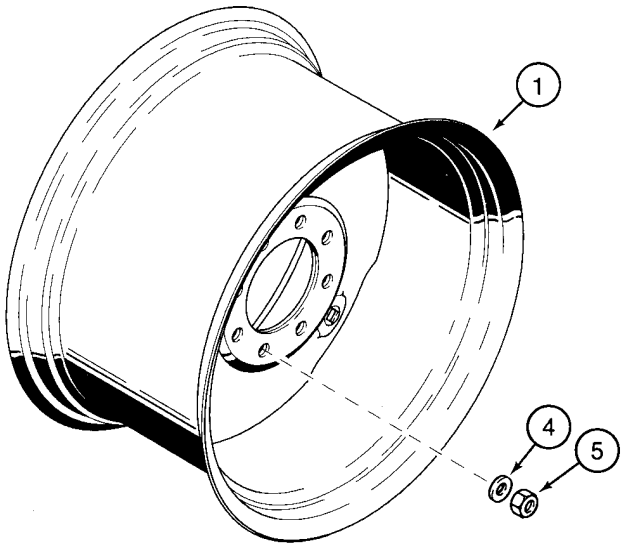

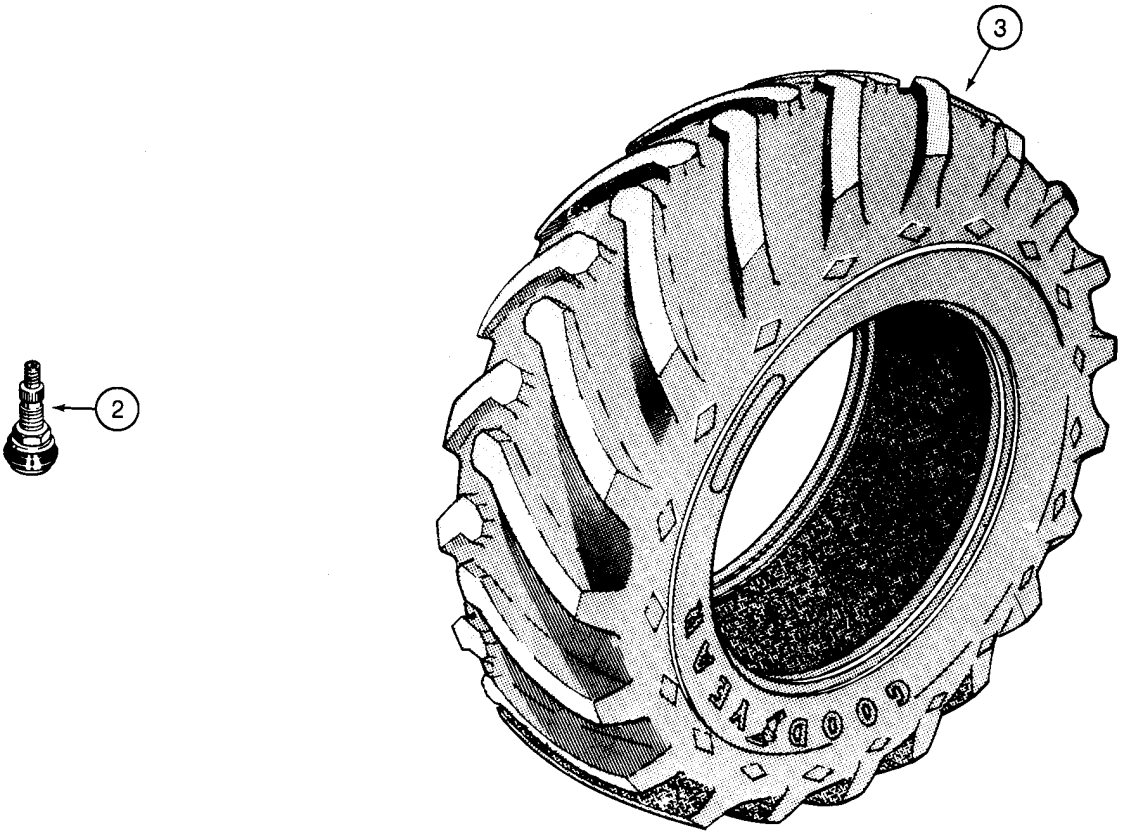

B9408129

http://www.minnparbackhoeparts.com/

RUEDAS, PARTE TRASERA - NEUMÁTICOS

REF	FN	PART NUMBER	YR/SN	QTY	DESCRIPTION
1		104907A1		2	RIN 580SM Models; 19.5L x 24 Tires - 10 Ply R4; Two Wheel or Four Wheel Drive
2		27549R1		2	VALVULA
3		REF		2	MANUAL Tire, Purchase Locally
1		400092A1		2	RIN 580SM Models; 19.5 x 24 Tires - 12 Ply (Wide); Two Wheel or Four Wheel Drive
2		27549R1		2	VALVULA
3		REF		2	MANUAL Tire, Purchase Locally
1		119241A1		2	RIN 580SM Models; 17.5L x 24 Tires - 10 Ply; Two Wheel or Four Wheel Drive
2		27549R1		2	VALVULA
3		REF		2	MANUAL Tire, Purchase Locally
1		132953A1		2	RIN 580SM+ Models; 21L x 24 - 10 Ply; Two Wheel or Four Wheel Drive
2		27549R1		2	VALVULA
3		REF		2	MANUAL Tire, Purchase Locally
4		D138380		20	ARANDELA
5		D138492		20	TUERCA M22; Wheel Nuts

http://www.minnparbackhoeparts.com/

EJE, TRANSMISIÓN TRASERA - SOPORTE

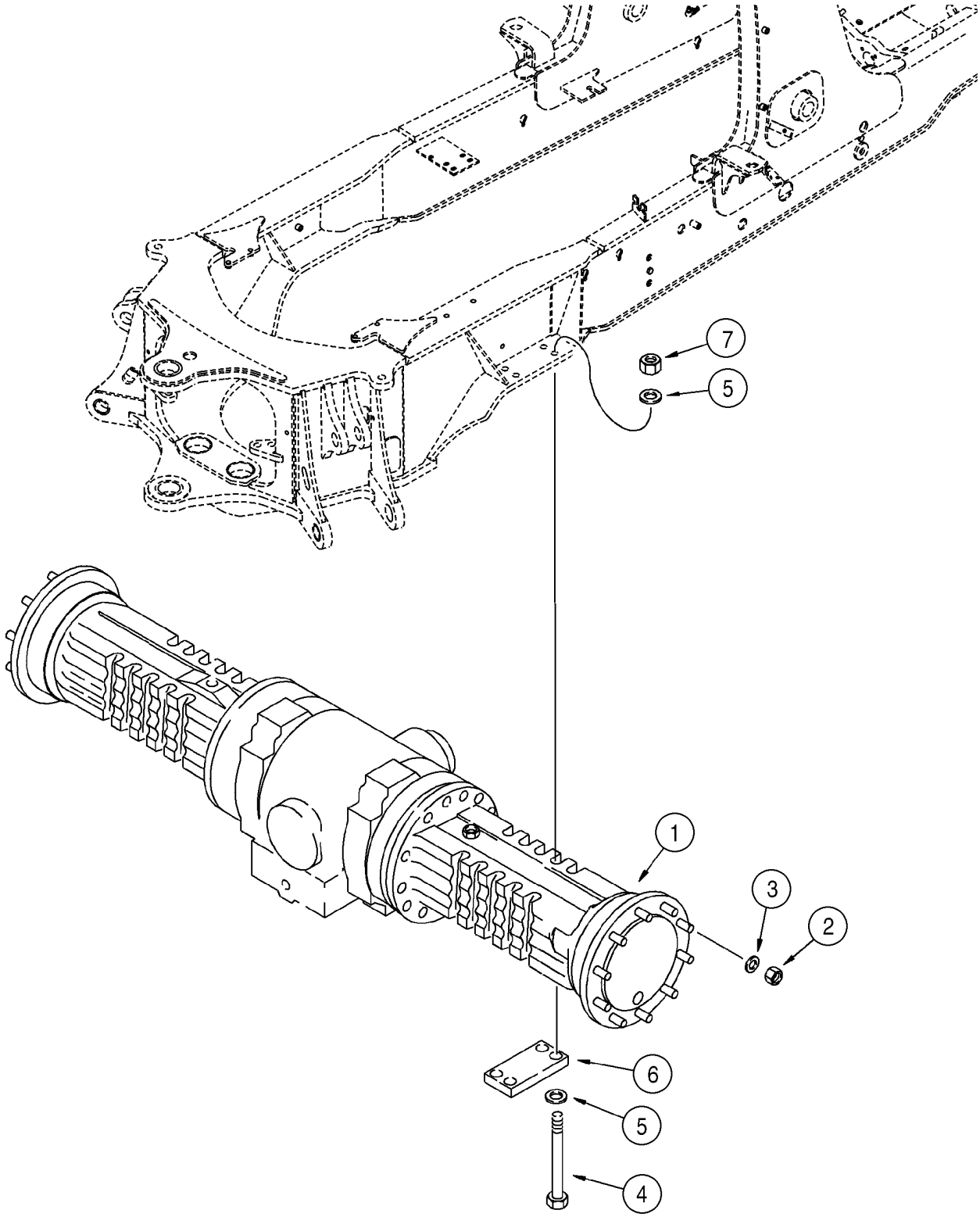

http://www.minnparbackhoeparts.com/

EJE, TRANSMISIÓN TRASERA - SOPORTE

REF	FN	PART NUMBER	YR/SN	QTY	DESCRIPTION
1		384956A1		1	PUENTE POSTERIOR 580SM Models Without Powershift Transmission, See Figures 06-40 - 06-46, 07-01, 07-02
1		86984108		1	EJE MOTOR 580SM+ Models Without Powershift Transmission, See Figures 06-40 - 06-46, 07-01, 07-02
1A		384958A1		1	PUENTE POSTERIOR 580SM Models With Powershift Transmission, See Figures 06-40 - 06-46, 07-01, 07-02; Not Illustrated
1A		86984107		1	EJE MOTOR 580SM+ Models With Powershift Transmission, See Figures 06-40 - 06-46, 07-01, 07-02; Not Illustrated
2		D138492		20	TUERCA 22 mm
3		87313544		20	ARANDELA 22.52 ID x 44.0 OD x 5.0 mm thk, Hardened; Replaces D138380 22.80 ID x 44.5 OD x 5.56 mm thk Hardened Washer Used On Some Models
4		827-20230		8	TORNILLO M20 x 230; 10.9
5		896-11020		16	ARANDELA 22 x 37 x 4 mm, Hardened
6		117933A1		2	PLACA, GRANDE
7		829-1420		8	TUERCA M20, Cl 10

http://www.minnparbackhoeparts.com/

EJE, TRASERO - BLOQUEO DEL DIFERENCIAL

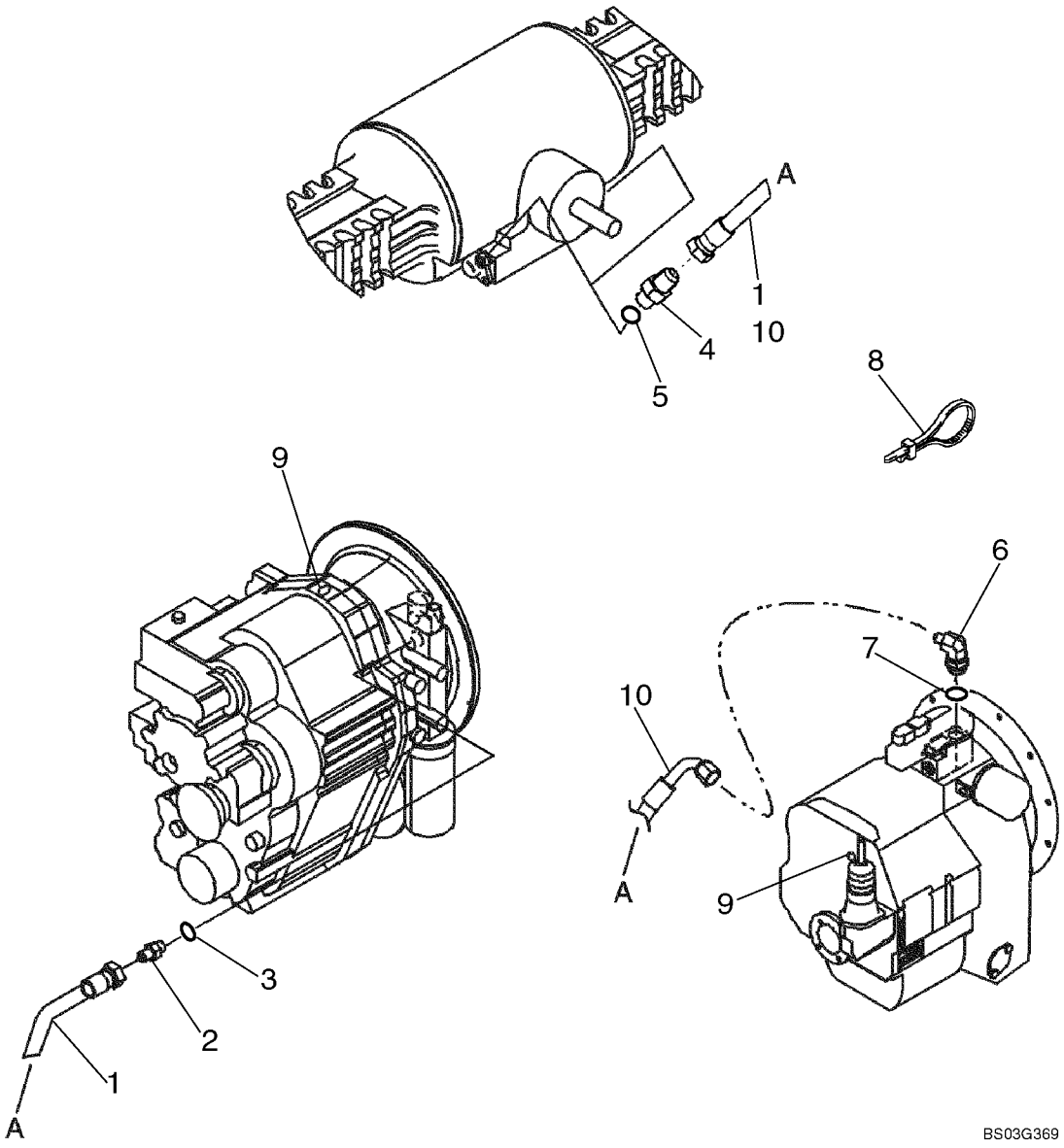

http://www.minnparbackhoeparts.com/

EJE, TRASERO - BLOQUEO DEL DIFERENCIAL

REF	FN	PART NUMBER	YR/SN	QTY	DESCRIPTION
1		87431702		1	MANGUERA (CONJUNTO) 1500 mm (59-9/16 in); Models With Powershift Transmission
2		218-5057		1	RACOR 9/16 fl x Or; Incl. Ref 3; Models With Powershift Transmission
3		237-6006		1	JUNTA HERMETICA 15/32 ID x 5/64
4		218-5057		1	RACOR 9/16 fl x Or; Incl. Ref 5; Axle Port Location Shown Is For Models Without Powershift Transmission
5		237-6006		1	JUNTA HERMETICA 15/32 ID x 5/64
6		218-5105		1	CODO 90 deg, 9/16 fl x Or; Incl. Ref 7; Models Without Powershift Transmission
7		237-6006		1	JUNTA HERMETICA 15/32 ID x 5/64
8		L18337		2	BANDA 15 in
9		E135809		1	TAPÓN If Used
10		87431701		1	MANGUERA (CONJUNTO) 1500 mm (59-9/16 in); Models Without Powershift Transmission

http://www.minnparbackhoeparts.com/

EJE, TRANSMISIÓN TRASERA - ALOJAMIENTO

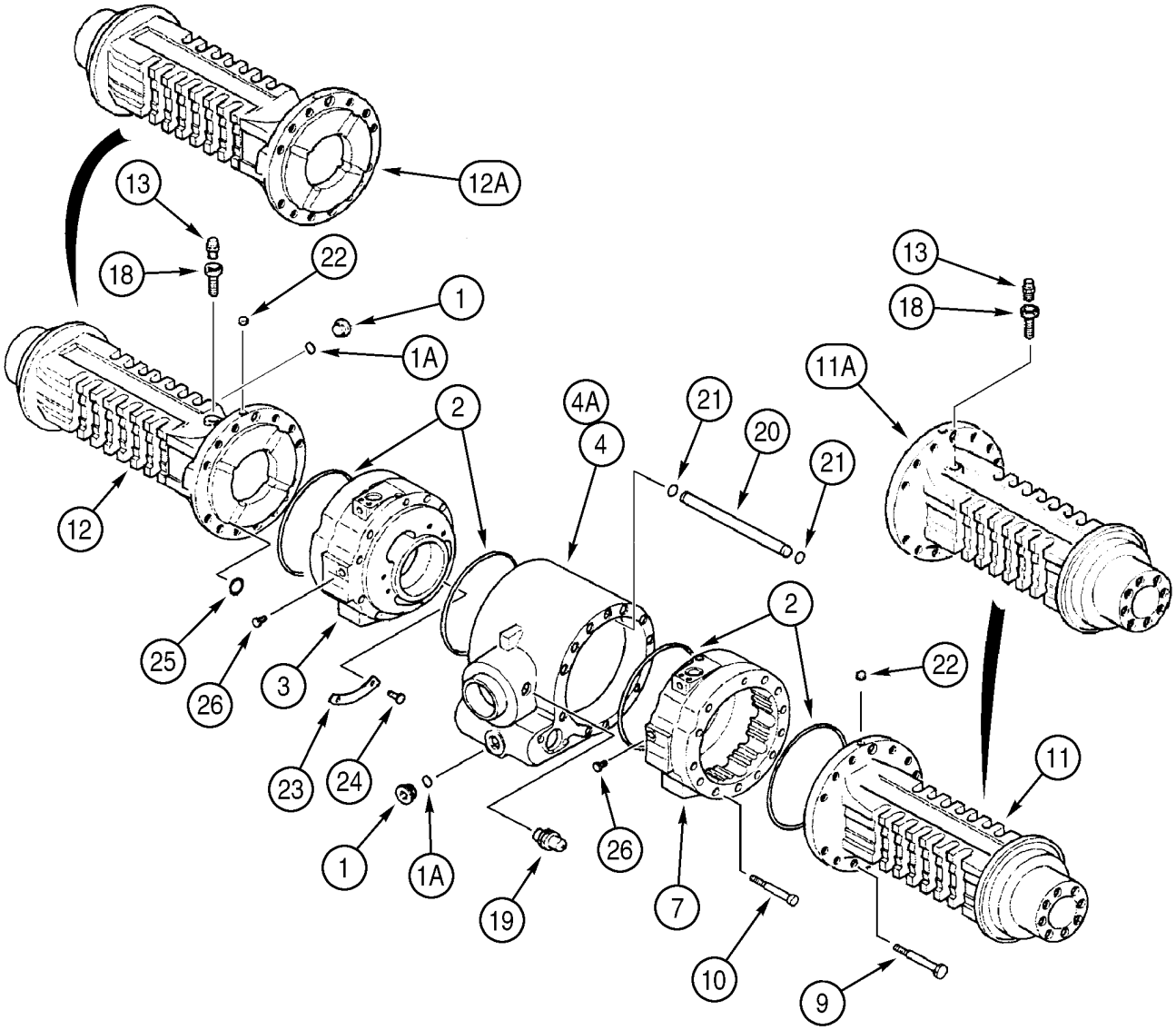

http://www.minnparbackhoeparts.com/

EJE, TRANSMISIÓN TRASERA - ALOJAMIENTO

REF	FN	PART NUMBER	YR/SN	QTY	DESCRIPTION
		384956A1		1	PUENTE POSTERIOR 580SM Models Without Powershift Transmission, Incl. Ref 1 - 26; Also Includes Parts On Figures 06-40 - 06-46, 07-01, 07-02
		86984108		1	EJE MOTOR 580SM+ Models Without Powershift Transmission, Incl. Ref 1 - 26; Also Includes Parts On Figures 06-40 - 06-46, 07-01, 07-02
		384958A1		1	PUENTE POSTERIOR 580SM Models With Powershift Transmission, Incl. Ref 1 - 26; Also Includes Parts On Figures 06-40 - 06-46, 07-01, 07-02
		86984107		1	EJE MOTOR 580SM+ Models With Powershift Transmission, Incl. Ref 1 - 26; Also Includes Parts On Figures 06-40 - 06-46, 07-01, 07-02
1		100557A1		2	TAPON DE VIACIADO Incl. Ref 1A
1A		238-6121		1	JUNTA HERMETICA 1-1/16 ID x 3/32
2		238-5270		4	JUNTA HERMETICA 1-1/16 ID x 3/32
3		445267A1		1	BRIDA Brake Cylinder, Right-Hand
4		346585A1		1	CAVIDAD Center, 384956A1 or 86984108 Axle
4A		367195A1		1	CUBO HOUSING, Center, 384958A1 or 86984107 Axle
7		445266A1		1	BRIDA Brake Cylinder, Left-Hand
9		814-14140		22	TORNILLO M14 x 140
10		864-12130		2	TORNILLO M12 x 130
11		358279A1		1	CUBO Left-Hand, Without Breather Port, 384958A1 Axle
11A		358280A1		1	CUBO Left-Hand, With Breather Port, 384956A1 Axle
11A		87430051		1	CÁRTER DE PUENTE Left-Hand, With Breather Port, 86984107 Axle
11A		311484A1		1	CAVIDAD Left-Hand, With Breather Port, 86984108 Axle
12		358281A1		1	CUBO Right-Hand, With Breather Port, 384958A1 Axle
12A		358279A1		1	CUBO Right-Hand, Without Breather Port, 384956A1 Axle
12A		311485A1		1	CAVIDAD Right-Hand, Without Breather Port, 86984107 or 86984108 Axle

http://www.minnparbackhoeparts.com/

EJE, TRANSMISIÓN TRASERA - ALOJAMIENTO

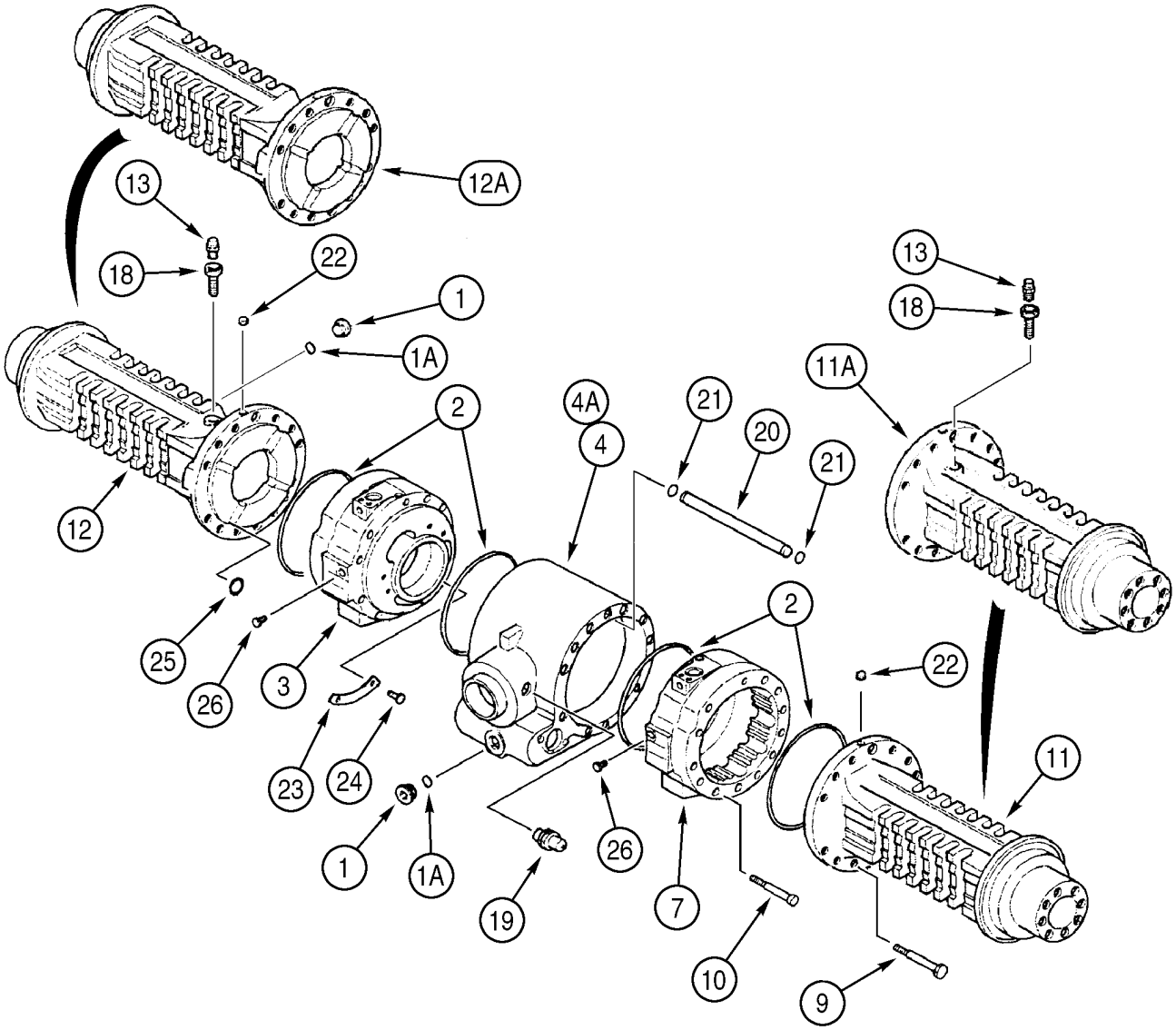

BS00C244

http://www.minnparbackhoeparts.com/

EJE, TRANSMISIÓN TRASERA - ALOJAMIENTO

REF	FN	PART NUMBER	YR/SN	QTY	DESCRIPTION
13		1966149C2		1	RESPIRADERO
18		E135750		1	PIVOTE DE EJE Breather Extension
19		393826A1		1	CONTACTOR Oil Temperature, Incl. 237-8008 O-Ring
		237-8008		1	JUNTA HERMETICA 41/64 ID x 3/32
20		346584A1		1	TUBO Internal
21		346583A1		2	JUNTA HERMETICA
22		D142898		2	TAPÓN 10 x 1 mm
23		347959A1		2	PLACA
24		347960A1		4	REMACHE 4,8 x 6 mm
25		P2230493		8	ANILLO DE CIERRE
26		294245A1		2	TAPON DEL DEPOSITO 7/16, If Used

http://www.minnparbackhoeparts.com/

EJE, TRANSMISIÓN TRASERA - DIFERENCIAL (ENTRADA EN SENTIDO HORARIO, MODELOS SIN SERVOASISTIDA)

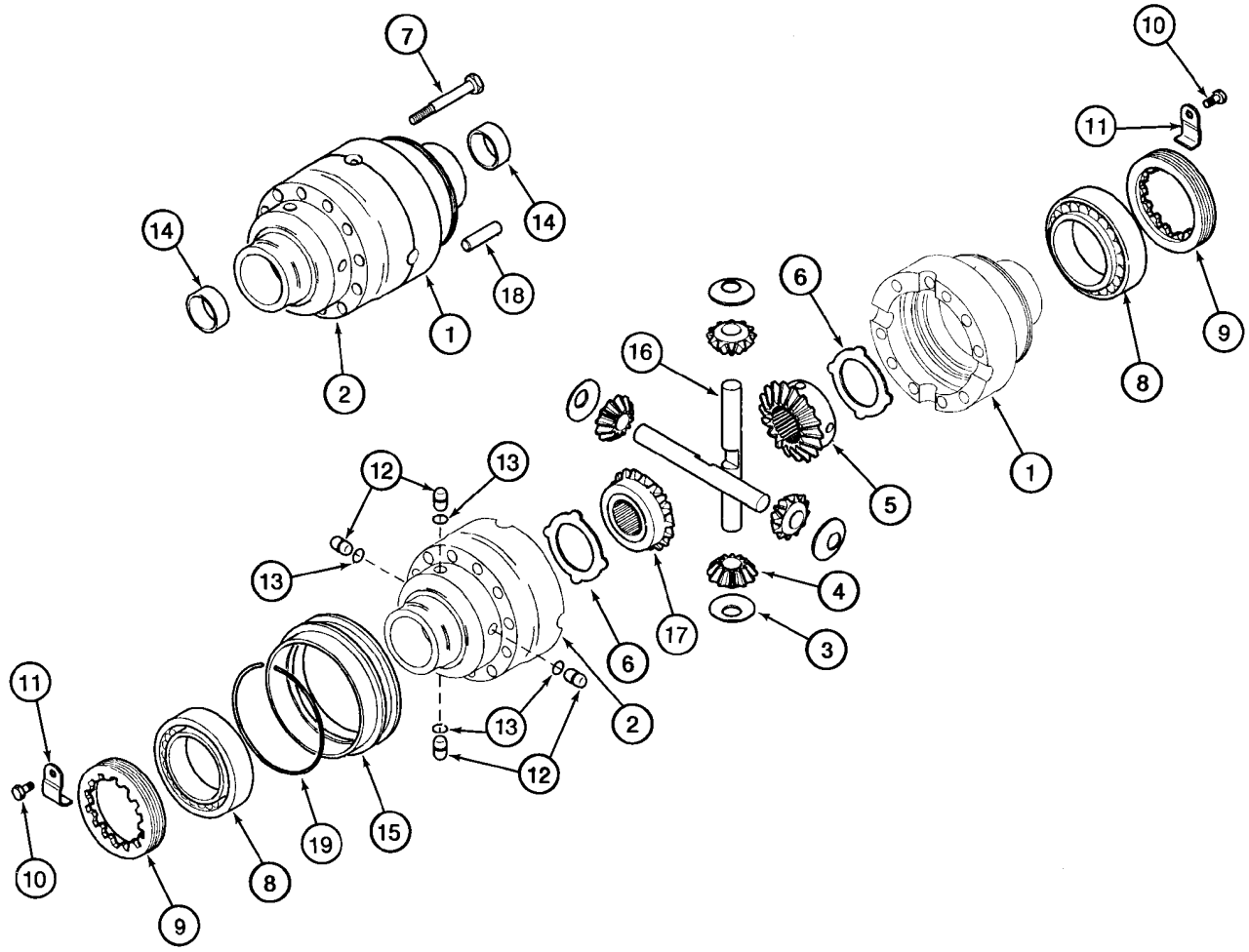

BS98D053

http://www.minnparbackhoeparts.com/

EJE, TRANSMISIÓN TRASERA - DIFERENCIAL (ENTRADA EN SENTIDO HORARIO, MODELOS SIN SERVOASISTIDA)

REF	FN	PART NUMBER	YR/SN	QTY	DESCRIPTION
		384956A1		1	PUENTE POSTERIOR 580SM Models, Incl. Ref 1 - 19; Also Includes Parts On Figures 06-40 - 06-46, 07-01, 07-02
		86984108		1	EJE MOTOR 580SM+ Models, Incl. Ref 1 - 19; Also Includes Parts On Figures 06-40 - 06-46, 07-01, 07-02
		292268A1		1	CAVIDAD Differential, Incl. Ref 1, 2
1		NSS		1	NO SE REPARA SEPARADAM. Housing, Flange Half
2		NSS		1	NO SE REPARA SEPARADAM. Housing, Plain Half
		294192A1		1	JUEGO Differential Gear Set, Service Replacement, Incl. Ref 3 - 6, 16, 17
3		E135777		4	ARANDELA Thrust
4		190471A1		4	PINON Sun Gear, 12T, No Longer Sold Separately, Must Be Replaced As a Set, For Service, Order 294192A1 Gear Set Kit
5		D142971		1	PINON Side Pinion Gear, No Longer Sold Separately, Must Be Replaced As a Set, For Service, Order 294192A1 Gear Set Kit
6		190469A1		2	ARANDELA
7		S300976		10	TORNILLO M12 x 90; 12.9
8		E135785		2	COJINETE
9		P3034505		2	TUERCA Lock Ring
10		112486A1		2	TORNILLO M6 x 12
11		175959A1		2	PIEZA DE SOPORTE Bracket
12		292207A1		4	BULON/PIN, LARGO
13		292208A1		4	JUNTA HERMETICA
14		190452A1		2	CASQUILLO
15		191067A1		1	MANGUITO
		294192A1		1	JUEGO Differential Gear Set, Service Replacement, Incl. Ref 3 - 6, 16, 17
16		190468A1		2	EJE Sun Gear, No Longer Sold Separately, Must Be Replaced As a Set, For Service, Order 294192A1 Gear Set Kit
17		292890A1		1	ENGRANAJE Side Pinion Gear, No Longer Sold Separately, Must Be Replaced As a Set, For Service, Order 294192A1 Gear Set Kit

http://www.minnparbackhoeparts.com/

EJE, TRANSMISIÓN TRASERA - DIFERENCIAL (ENTRADA EN SENTIDO HORARIO, MODELOS SIN SERVOASISTIDA)

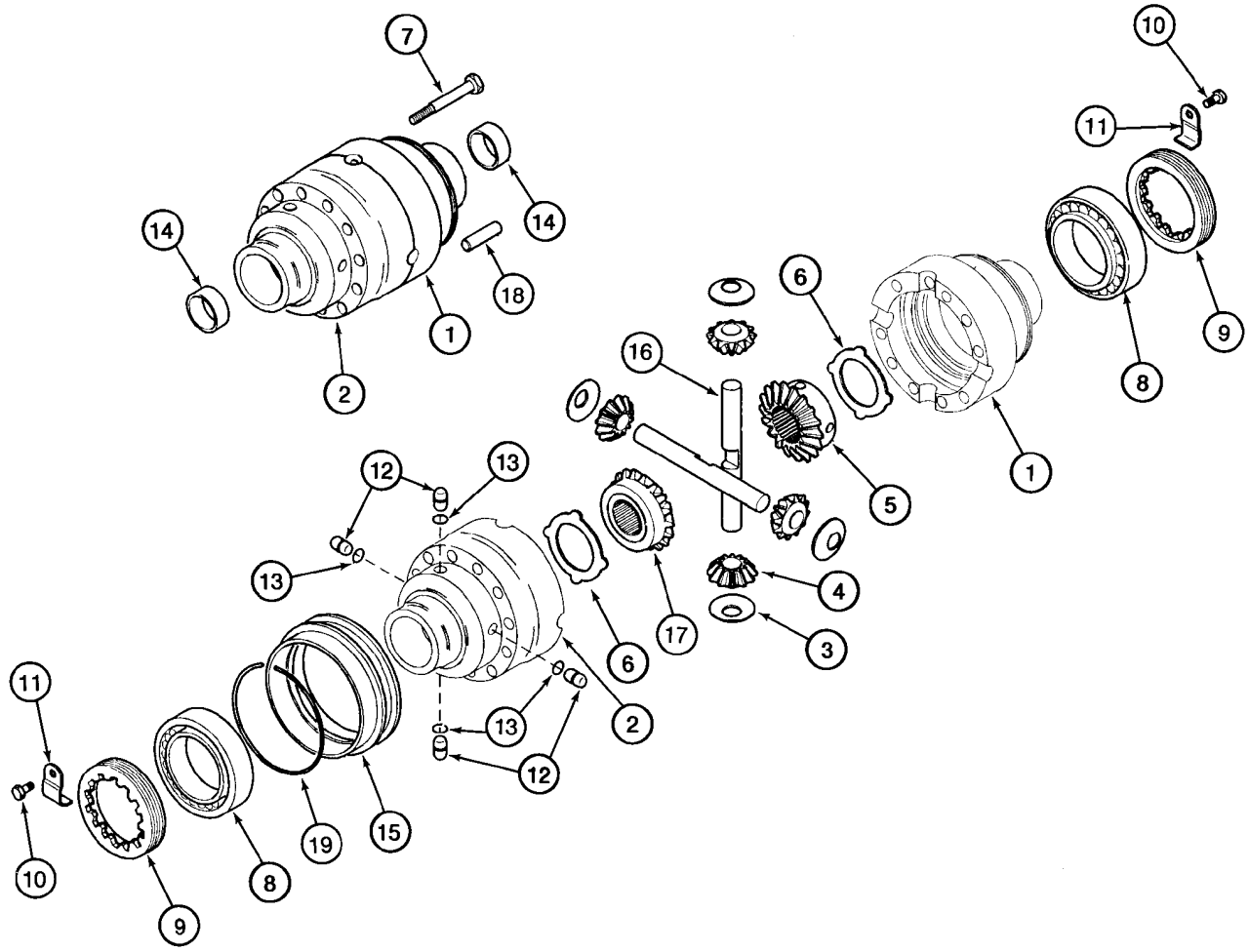

BS98D053

http://www.minnparbackhoeparts.com/

EJE, TRANSMISIÓN TRASERA - DIFERENCIAL (ENTRADA EN SENTIDO HORARIO, MODELOS SIN SERVOASISTIDA)

REF	FN	PART NUMBER	YR/SN	QTY	DESCRIPTION
18		D143033		2	PITON 12 x 40 mm
19		175961A1		1	ANILLO DE FRENO

http://www.minnparbackhoeparts.com/

EJE, TRANSMISIÓN TRASERA - DIFERENCIAL (ENTRADA EN SENTIDO ANTIHORARIO, MODELOS CON SERVOASISTIDA)

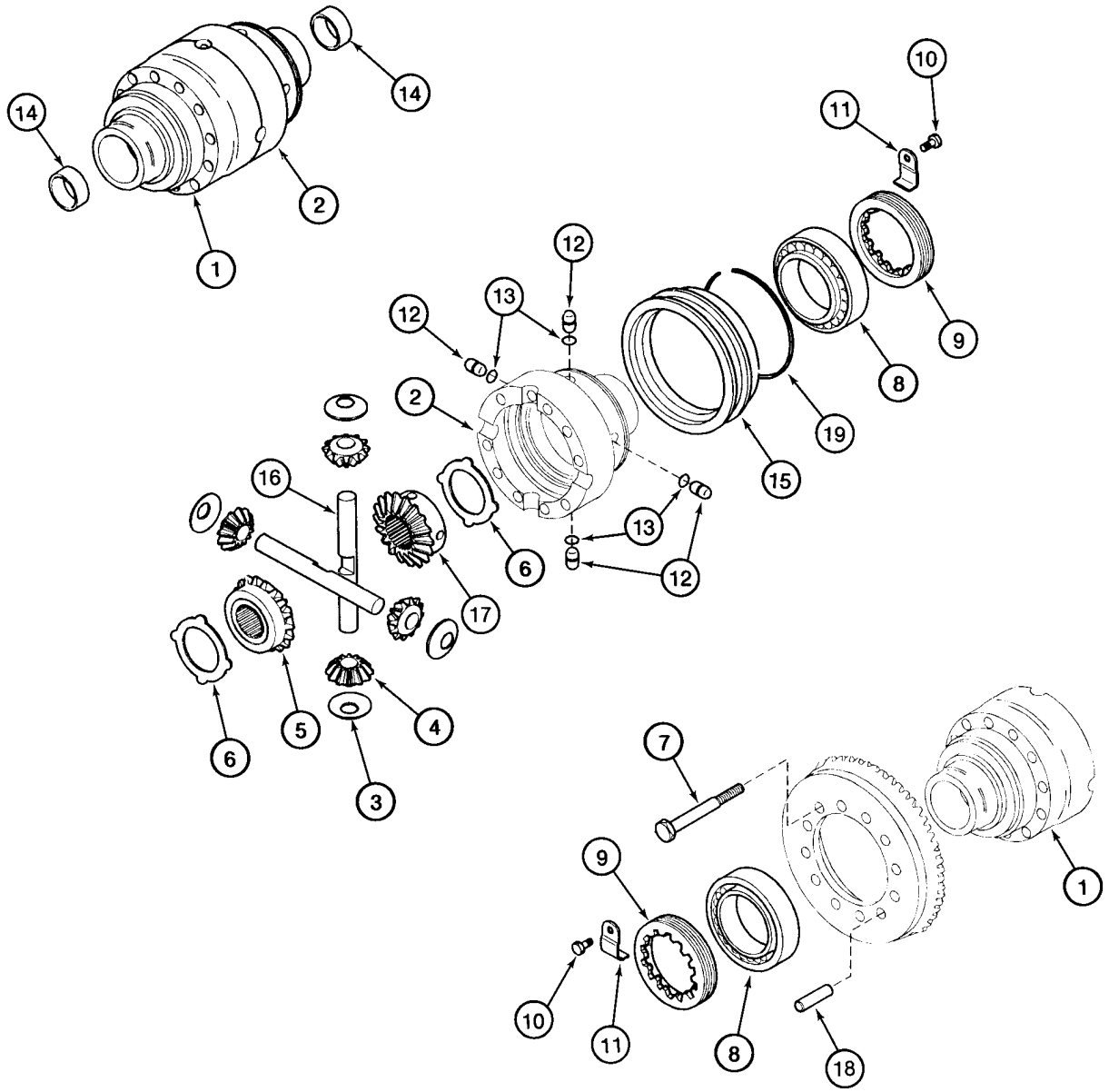

http://www.minnparbackhoeparts.com/

EJE, TRANSMISIÓN TRASERA - DIFERENCIAL (ENTRADA EN SENTIDO ANTIHORARIO, MODELOS CON SERVOASISTIDA)

REF	FN	PART NUMBER	YR/SN	QTY	DESCRIPTION
		384958A1		1	PUENTE POSTERIOR 580SM Model, Incl. Ref 1 - 19; Also Includes Parts On Figures 06-40 - 06-46, 07-01, 07-02
		86984107		1	EJE MOTOR 580SM+ Model, Incl. Ref 1 - 19; Also Includes Parts On Figures 06-40 - 06-46, 07-01, 07-02
		292268A1		1	CAVIDAD Differential, Incl. Ref 1, 2
1		NSS		1	NO SE REPARA SEPARADAM. Housing, Flange Half
2		NSS		1	NO SE REPARA SEPARADAM. Housing, Plain Half
		294192A1		1	JUEGO Differential Gear Set, Service Replacement, Incl. Ref 3 - 6, 16, 17
3		E135777		4	ARANDELA Thrust
4		190471A1		4	PINON Sun Gear, 12T, No Longer Sold Separately, Must Be Replaced As a Set, For Service, Order 294192A1 Gear Set Kit
5		D142971		1	PINON Side Pinion Gear, No Longer Sold Separately, Must Be Replaced As a Set, For Service, Order 294192A1 Gear Set Kit
6		190469A1		2	ARANDELA
7		S300976		10	TORNILLO M12 x 90; 12.9
8		E135785		2	COJINETE
9		P3034505		2	TUERCA Lock Ring
10		112486A1		2	TORNILLO M6 x 12
11		175959A1		2	PIEZA DE SOPORTE Bracket
12		292207A1		4	BULON/PIN, LARGO
13		292208A1		4	JUNTA HERMETICA
14		190452A1		2	CASQUILLO
15		191067A1		1	MANGUITO
		294192A1		1	JUEGO Differential Gear Set, Service Replacement, Incl. Ref 3 - 6, 16, 17
16		190468A1		2	EJE Sun Gear, No Longer Sold Separately, Must Be Replaced As a Set, For Service, Order 294192A1 Gear Set Kit
17		292890A1		1	ENGRANAJE Side Pinion Gear, No Longer Sold Separately, Must Be Replaced As a Set, For Service, Order 294192A1 Gear Set Kit

http://www.minnparbackhoeparts.com/

EJE, TRANSMISIÓN TRASERA - DIFERENCIAL (ENTRADA EN SENTIDO ANTIHORARIO, MODELOS CON SERVOASISTIDA)

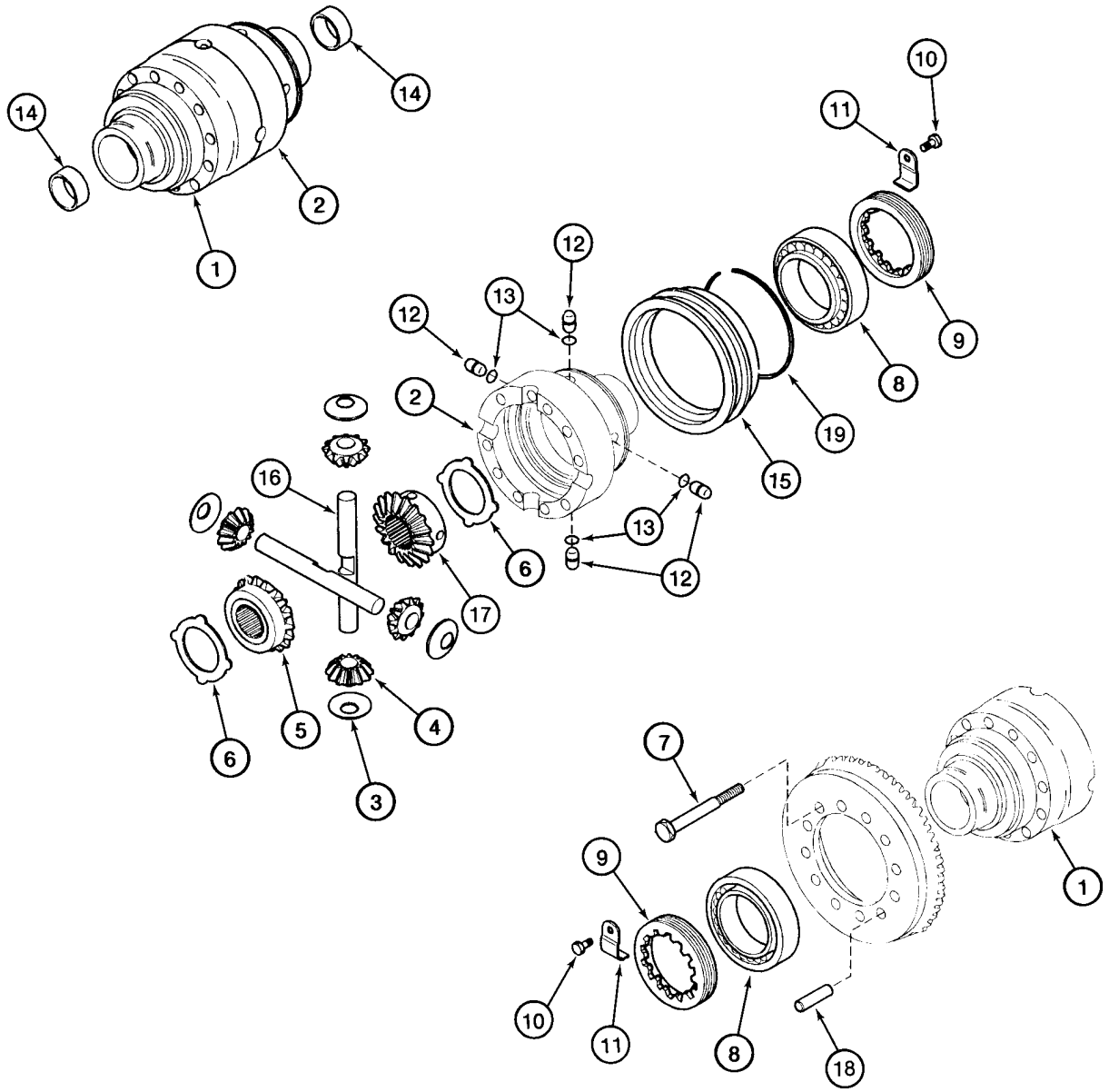

http://www.minnparbackhoeparts.com/

EJE, TRANSMISIÓN TRASERA - DIFERENCIAL (ENTRADA EN SENTIDO ANTIHORARIO, MODELOS CON SERVOASISTIDA)

REF	FN	PART NUMBER	YR/SN	QTY	DESCRIPTION
18		D143033		2	PITON 12 x 40 mm
19		175961A1		1	ANILLO DE FRENO

http://www.minnparbackhoeparts.com/

EJE, TRANSMISIÓN TRASERA - ANILLO Y PIÑÓN

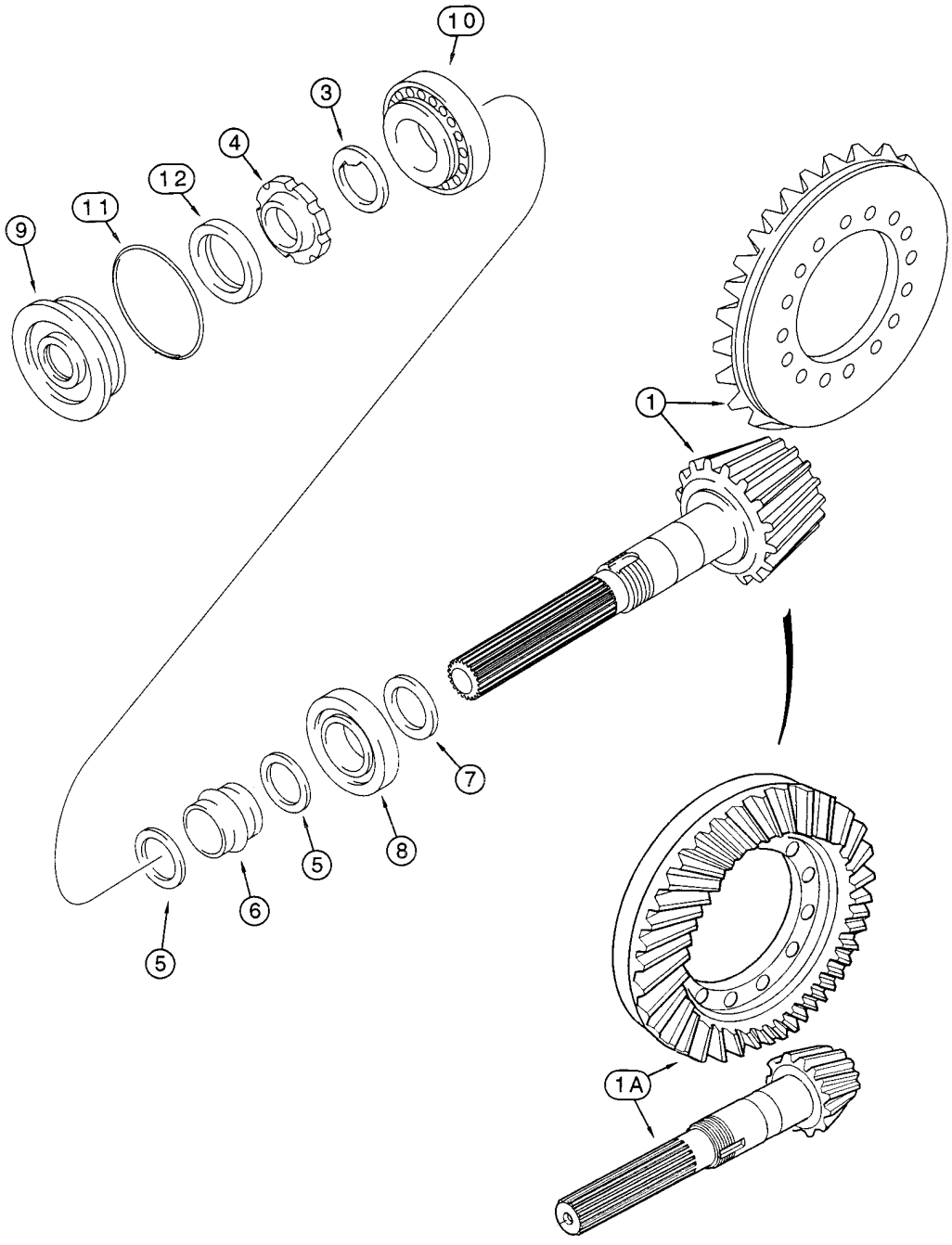

BS98D009

http://www.minnparbackhoeparts.com/

EJE, TRANSMISIÓN TRASERA - ANILLO Y PIÑÓN

REF	FN	PART NUMBER	YR/SN	QTY	DESCRIPTION
		384956A1		1	PUENTE POSTERIOR 580SM Models Without Powershift Transmission, Incl. Ref 1 - 12; Also Includes Parts On Figures 06-40 - 06-46, 07-01, 07-02
		86984108		1	EJE MOTOR 580SM+ Models Without Powershift Transmission, Incl. Ref 1 - 12; Also Includes Parts On Figures 06-40 - 06-46, 07-01, 07-02
		384958A1		1	PUENTE POSTERIOR 580SM Models With Powershift Transmission, Incl. Ref 1 - 12; Also Includes Parts On Figures 06-40 - 06-46, 07-01, 07-02
		86984107		1	EJE MOTOR 580SM+ Models With Powershift Transmission, Incl. Ref 1 - 12; Also Includes Parts On Figures 06-40 - 06-46, 07-01, 07-02
		294189A1		1	JUEGO Ring and Pinion Gear Set, Clockwise, Incl. Ref 1, 3 - 6; 384956A1 or 86984108 Axle
		294190A1		1	JUEGO Ring and Pinion Gear Set, Counter Clockwise, Incl. Ref 1A, 3 - 6; 384958A1or 86984107 Axle
1		NSS		1	NO SE REPARA SEPARADAM. Gear Set, 294189A1 Gear Set
1A		NSS		1	NO SE REPARA SEPARADAM. Gear Set, 294190A1 Gear Set
3		K261065		1	ARANDELA
4		K261014		1	TUERCA Ring
5		1349059C1		2	ARANDELA
6		295110A1		1	ESPACIADOR Collapsible
7		190506A1		X	SUPLEMENTO 2,5 mm (0,098 in)
7		190508A1		X	SUPLEMENTO 2,6 mm (0,102 in)
7		190509A1		X	SUPLEMENTO 2,7 mm (0,106 in)
7		190510A1		X	SUPLEMENTO 2,8 mm (0,110 in)
7		190511A1		X	SUPLEMENTO 2,9 mm (0,114 in)
7		190512A1		X	SUPLEMENTO 3,0 mm (0,118 in)
7		190513A1		X	SUPLEMENTO 3,1 mm (0,122 in)
7		190514A1		X	SUPLEMENTO 3,2 mm (0,125 in)
7		190515A1		X	SUPLEMENTO 3,3 mm (0,129 in)
7		190516A1		X	SUPLEMENTO 3,4 mm (0,133 in)

http://www.minnparbackhoeparts.com/

EJE, TRANSMISIÓN TRASERA - ANILLO Y PIÑÓN

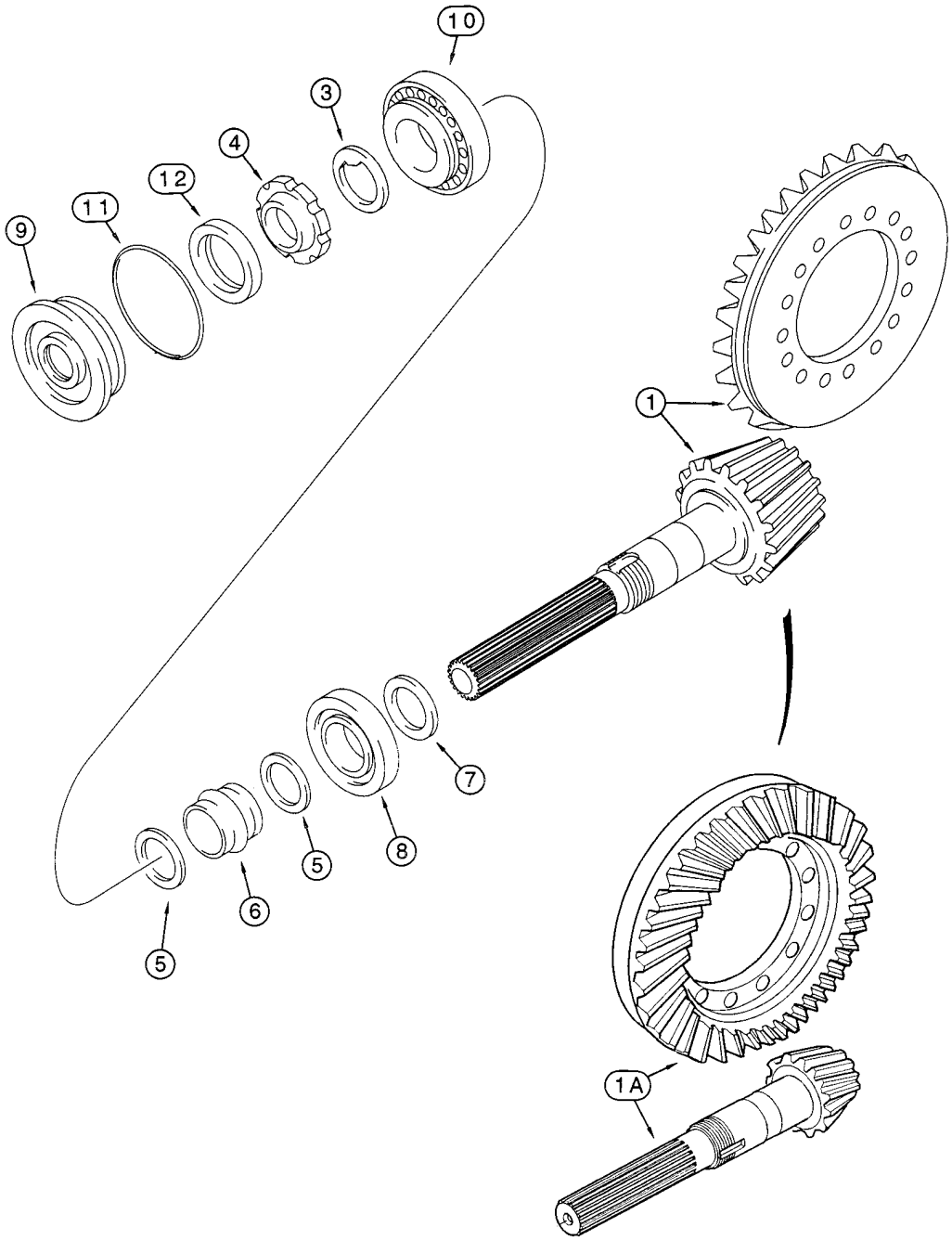

BS98D009

http://www.minnparbackhoeparts.com/

EJE, TRANSMISIÓN TRASERA - ANILLO Y PIÑÓN

REF	FN	PART NUMBER	YR/SN	QTY	DESCRIPTION
8		E135762		1	COJINETE 45 x 100 mm
9		128570A1		1	TAPA Cover
10		K395090		1	RODAMIENTO DE BOLAS
11		238-5152		1	JUNTA HERMETICA 3-1/4 ID x 3/32
12		K262143		1	ANILLO DE CIERRE

http://www.minnparbackhoeparts.com/

EJE, TRANSMISIÓN TRASERA - BLOQUEO DEL DIFERENCIAL (ENTRADA EN SENTIDO HORARIO, MODELOS SIN SERVOASI

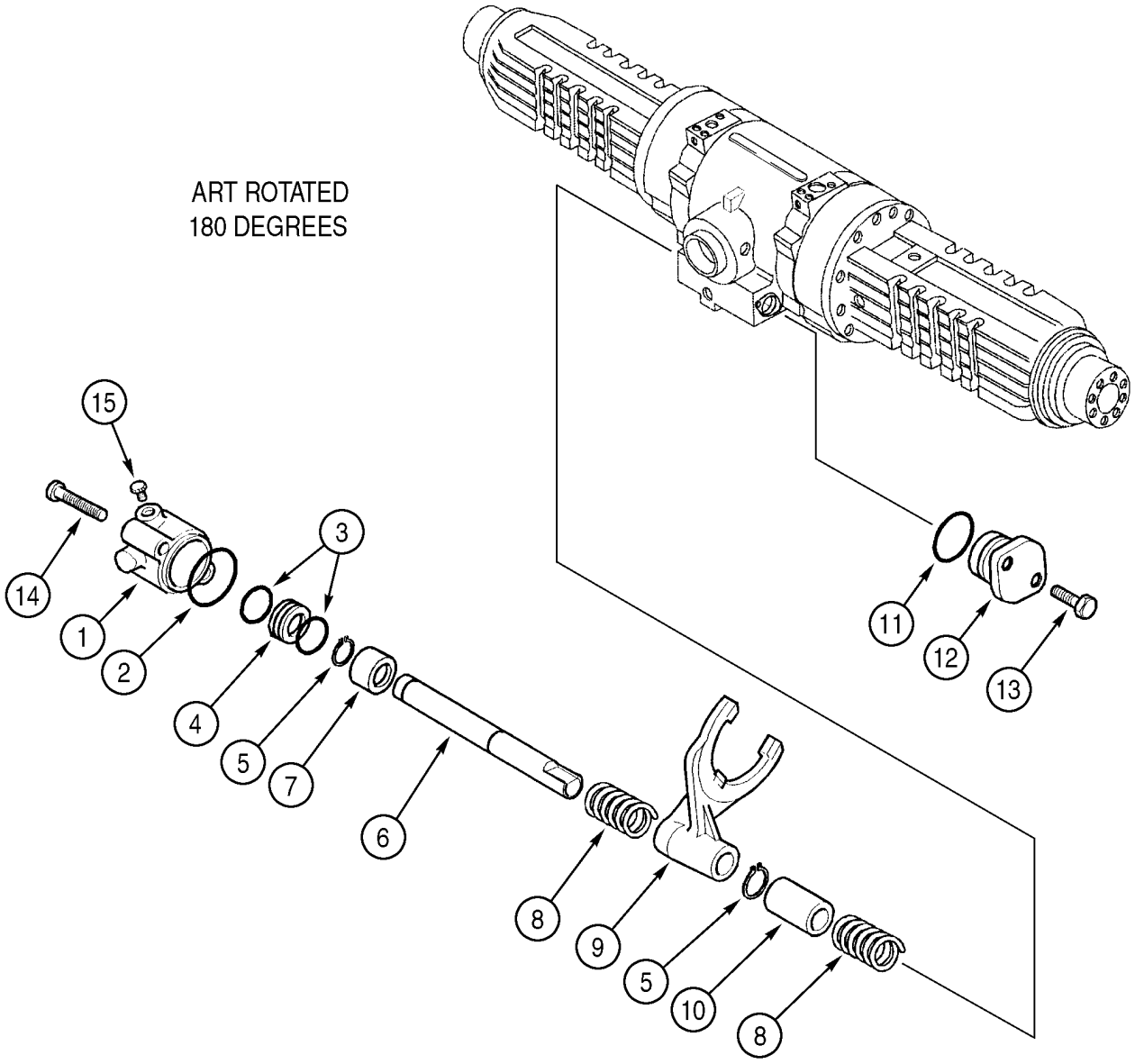

http://www.minnparbackhoeparts.com/

EJE, TRANSMISIÓN TRASERA - BLOQUEO DEL DIFERENCIAL (ENTRADA EN SENTIDO HORARIO, MODELOS SIN SERVOASI

REF	FN	PART NUMBER	YR/SN	QTY	DESCRIPTION
		384956A1		1	PUENTE POSTERIOR 580SM Models, Incl. Ref 1 - 15; Also Includes Parts On Figures 06-40 - 06-46, 07-01, 07-02
		86984108		1	EJE MOTOR 580SM+ Models, Incl. Ref 1 - 15; Also Includes Parts On Figures 06-40 - 06-46, 07-01, 07-02
1		292213A1		1	CILINDRO
2		305152A1		1	JUNTA HERMETICA
3		292210A1		2	ANILLO DE CIERRE
4		292212A1		1	EMBOLO
5		800-5120		2	ANILLO DE CIERRE No. 20
6		292214A1		1	EJE Rail, Shifter Fork
7		292902A1		1	ANILLO Bushing
8		175966A1		2	RESORTE
9		175964A2		1	HORQUETA
10		175965A1		1	CASQUILLO
11		128376A1		1	JUNTA HERMETICA
12		175968A1		1	APOYADERO Cover
13		614-8030		2	TORNILLO M8 x 30
14		814-8080		2	TORNILLO M8 x 80
15		NSS		1	NO SE REPARA SEPARADAM. Plug

http://www.minnparbackhoeparts.com/

EJE, TRANSMISIÓN TRASERA - BLOQUEO DEL DIFERENCIAL (ENTRADA EN SENTIDO ANTIHORARIO, MODELOS CON SER

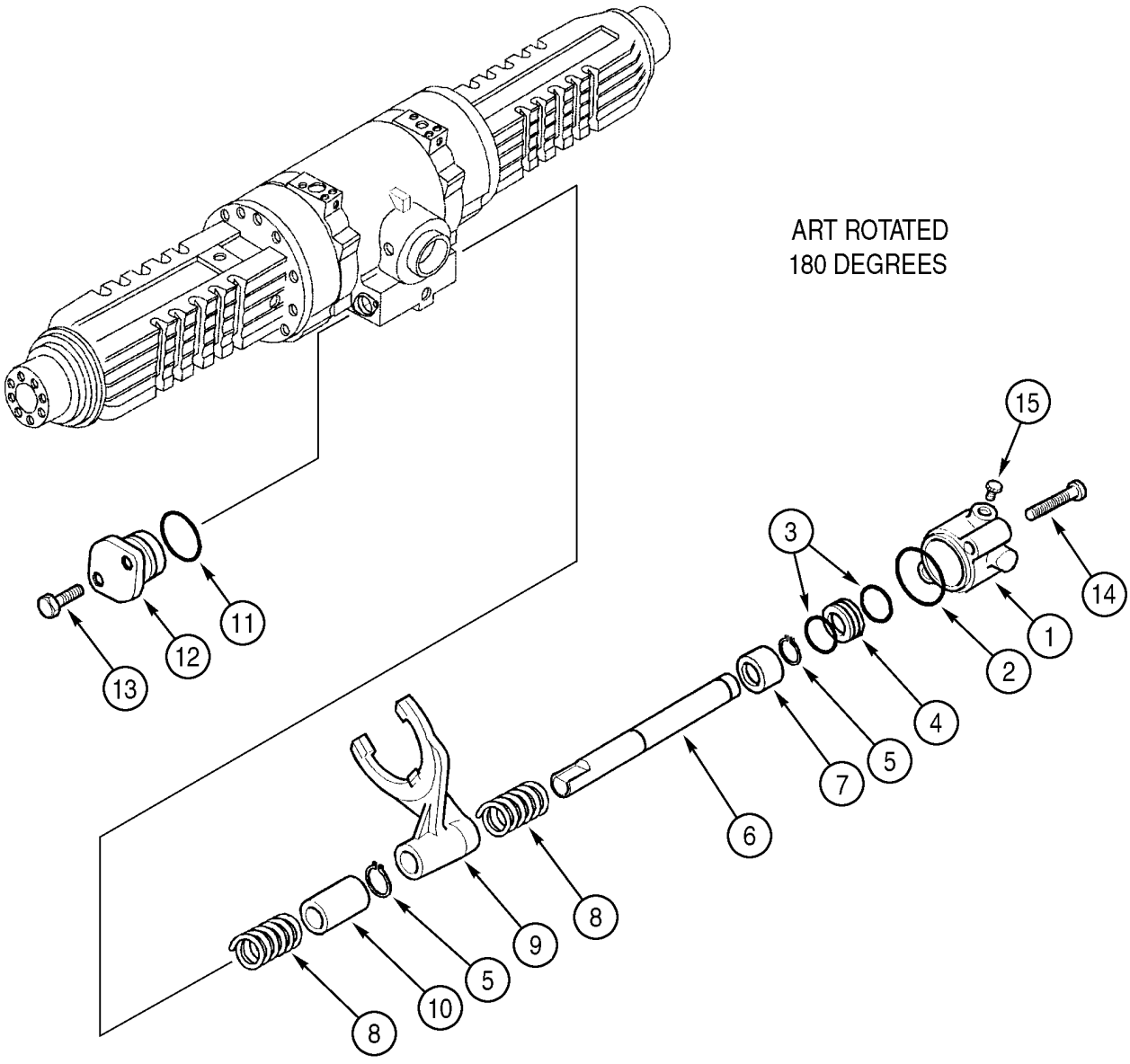

BS99H142

http://www.minnparbackhoeparts.com/

EJE, TRANSMISIÓN TRASERA - BLOQUEO DEL DIFERENCIAL (ENTRADA EN SENTIDO ANTIHORARIO, MODELOS CON SER

REF	FN	PART NUMBER	YR/SN	QTY	DESCRIPTION
		384958A1		1	PUENTE POSTERIOR 580SM Models, Incl. Ref 1 - 15; Also Includes Parts On Figures 06-40 - 06-46, 07-01, 07-02
		86984107		1	EJE MOTOR 580SM+ Models, Incl. Ref 1 - 15; Also Includes Parts On Figures 06-40 - 06-46, 07-01, 07-02
1		305153A1		1	CILINDRO
2		305152A1		1	JUNTA HERMETICA
3		292210A1		2	ANILLO DE CIERRE
4		292212A1		1	EMBOLO
5		800-5120		2	ANILLO DE CIERRE No. 20
6		292214A1		1	EJE Rail, Shifter Fork
7		292902A1		1	ANILLO Bushing
8		175966A1		2	RESORTE
9		292897A1		1	HORQUETA
10		175965A1		1	CASQUILLO
11		128376A1		1	JUNTA HERMETICA
12		175968A1		1	APOYADERO Cover
13		614-8030		2	TORNILLO M8 x 30
14		814-8080		2	TORNILLO M8 x 80
15		NSS		1	NO SE REPARA SEPARADAM. Plug

http://www.minnparbackhoeparts.com/

EJE, TRANSMISIÓN TRASERA - PLANETARIO

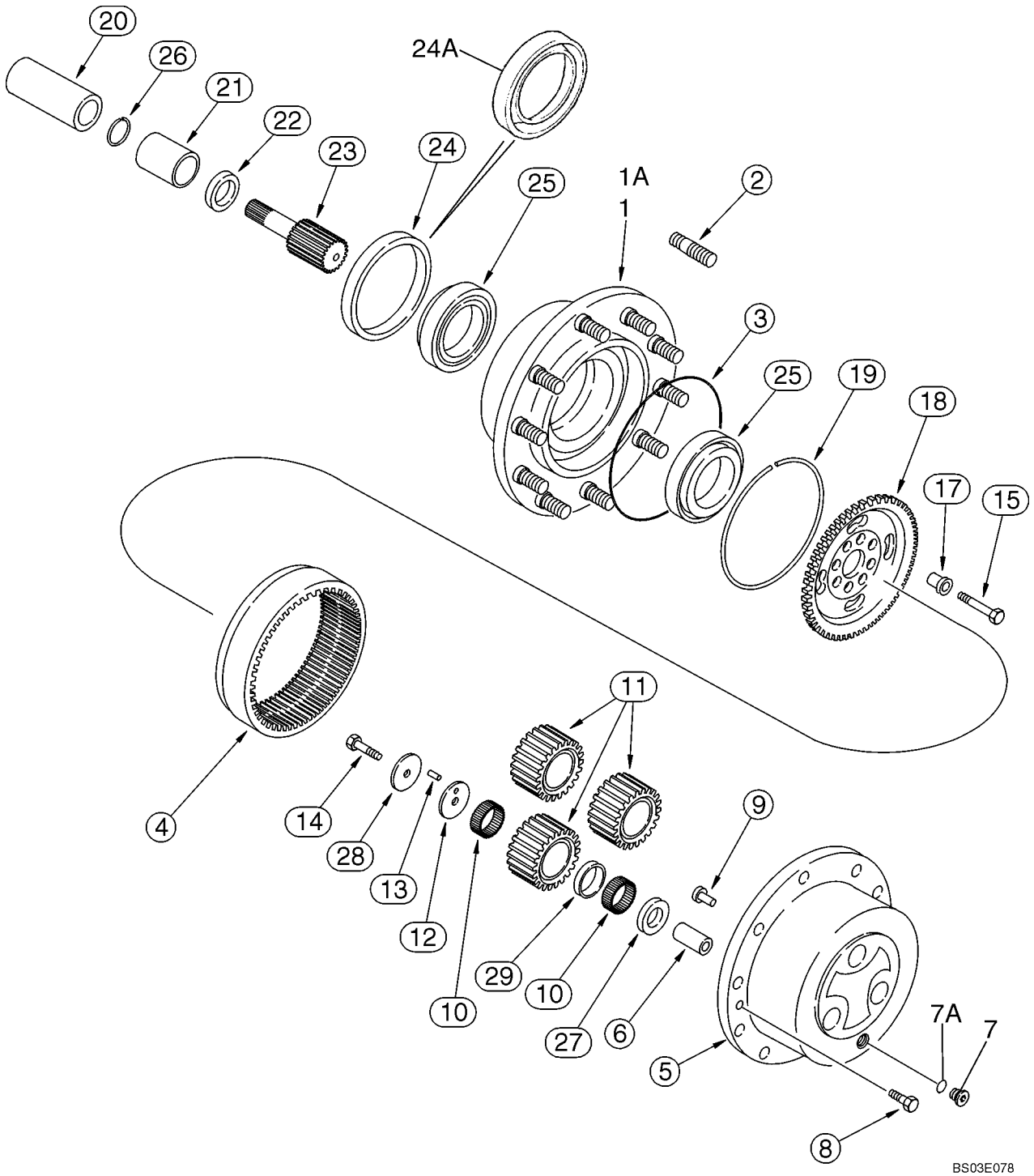

http://www.minnparbackhoeparts.com/

EJE, TRANSMISIÓN TRASERA - PLANETARIO

REF	FN	PART NUMBER	YR/SN	QTY	DESCRIPTION
		384956A1		1	PUENTE POSTERIOR 580SM Models Without Powershift Transmission, Incl. Ref 1 - 29; Also Includes Parts On Figures 06-40 - 06-46, 07-01, 07-02
		86984108		1	EJE MOTOR 580SM+ Models Without Powershift Transmission, Incl. Ref 1 - 29; Also Includes Parts On Figures 06-40 - 06-46, 07-01, 07-02
		384958A1		1	PUENTE POSTERIOR 580SM Models With Powershift Transmission, Incl. Ref 1 - 29; Also Includes Parts On Figures 06-40 - 06-46, 07-01, 07-02
		86984107		1	EJE MOTOR 580SM+ Models With Powershift Transmission, Incl. Ref 1 - 29; Also Includes Parts On Figures 06-40 - 06-46, 07-01, 07-02
1		367233A1		2	MAZA (CONJUNTO) Includes (10) D142986 Studs, Ref 2; Used With 1349265C1 Seal, Ref 24; 384956A1 or 384958A1 Axle; If Used; When Stock of 367233A1 Hub is Exhausted, Order 87416108 Hub & 87415728 seal
1A		87416108		2	KIT, SERVICE HUB ASSY, Includes (10) D142986 Stud, Ref 2; Used With 247546A1 Seal, Ref 24A; If Used
2		D142986		10	PRISIONERO Without Flanged Collar, If Used
2		196090A1		10	PRISIONERO With Flanged Collar, For Recessed Bolt Holes, If Used
3		P2930467		2	ANILLO DE CIERRE
4		175976A1		2	PINON Ring Gear; 384956A1 or 384958A1 Axle
4		311488A1		2	CORONA DENTADA Ring Gear; 86984107 or 86984108 Axle
5		292891A1		2	APOYADERO Planetary Carrier, Incl. Ref 6, Use With Liquid Gasket Silastic 732, Carrier to Hub
6		NSS		6	NO SE REPARA SEPARADAM. Shaft
7		100557A1		2	TAPON DE VIACIADO Incl. Ref 7A
7A		238-6121		1	JUNTA HERMETICA 1-1/16 ID x 3/32
8		K395082		4	TORNILLO
9		K395093		2	EJE CON CABEZA

http://www.minnparbackhoeparts.com/

EJE, TRANSMISIÓN TRASERA - PLANETARIO

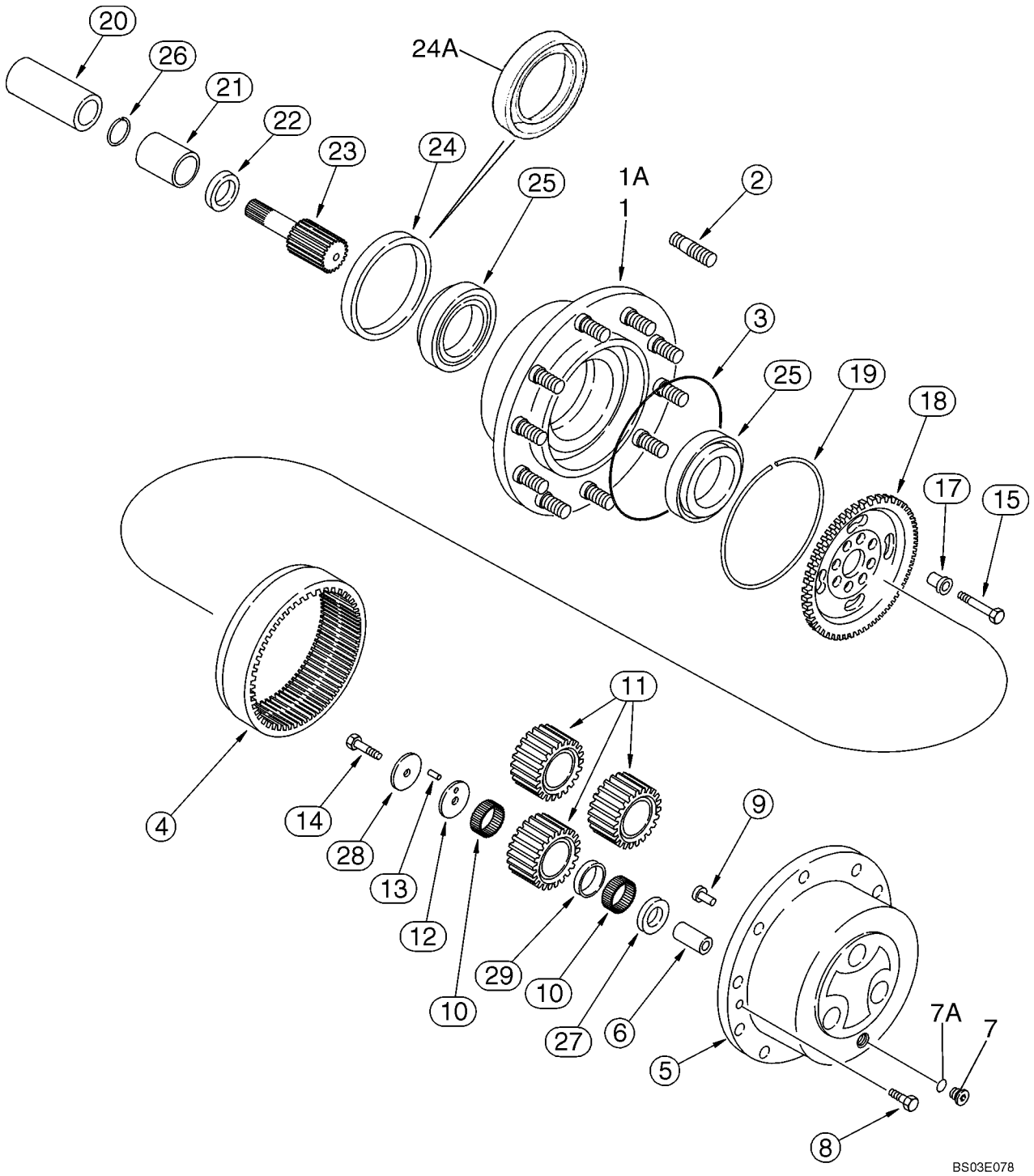

http://www.minnparbackhoeparts.com/

EJE, TRANSMISIÓN TRASERA - PLANETARIO

REF	FN	PART NUMBER	YR/SN	QTY	DESCRIPTION
10		292893A1		38	AGUJA Package of 10 Needles, 372 Needles Required
11		292894A1		6	ENGRANAJE Pinion
12		292898A1		6	ARANDELA Thrust
13		247550A1		1	COJINETE Package of 10 Needles, Used As Pins, 6 Needles Required
14		175982A1		6	TORNILLO M10 x 50; 10.9
15		K395131		16	TORNILLO M14 x 65
17		107071A1		16	CASQUILLO CENTRAJE Bushing, 20 mm OD
18		310492A1		2	PORTA SATELITE Ring Gear, With Two Extraction Holes
19		175984A1		2	ANILLO DE FRENO
20		NSS		2	NO SE REPARA SEPARADAM. Coupling, Welded To and Included With the Differential Brake Oil Auger; 384956A1 or 384958A1 Axle
20		196092A1		2	CASQUILLO 86984107 or 86984108 Axle
21		196065A1		2	CASQUILLO
22		196066A1		2	JUNTA DE ACEITE 38 ID x 50 OD
23		292896A1		2	EJE
24		1349265C1		2	ANILLO DE CIERRE Used With Ref 1 367233A1 Hub, If Used
24A		247546A1		2	ANILLO DE CIERRE With Internal Garter Spring Seal, Used With Ref 1A 87416108 Hub, If Used
25		K395101		4	COJINETE
26		800-2136		2	ANILLO DE CIERRE No. 36
27		292899A1		6	ARANDELA Thrust
28		292900A1		6	ARANDELA Thrust
29		292901A1		6	ARANDELA

http://www.minnparbackhoeparts.com/

EJE DE TRANSMISIÓN, EJE TRASERO

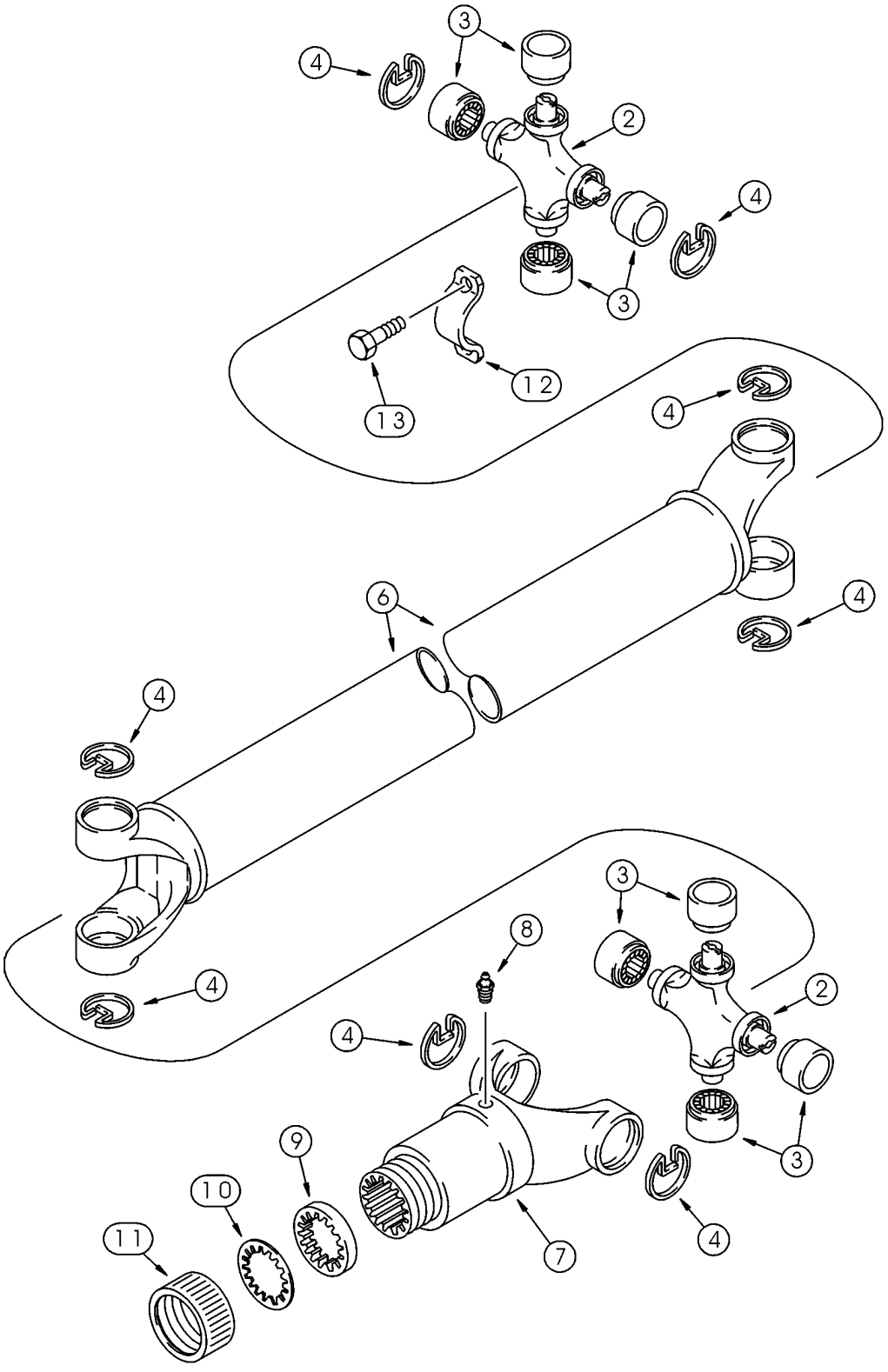

http://www.minnparbackhoeparts.com/

EJE DE TRANSMISIÓN, EJE TRASERO

REF	FN	PART NUMBER	YR/SN	QTY	DESCRIPTION
		367860A3		1	ARBOL DE MANDO Models Without Powershift Transmission, Incl. 393231A1, Ref 2 - 13
		367859A2		1	ARBOL DE MANDO Models With Powershift Transmission, Incl. 393231A1, Ref 2 - 13
		393231A1		2	JEUGO Universal Joint, Incl. Ref 2 - 4
2		NSS		1	NO SE REPARA SEPARADAM. Joint, Universal
3		NSS		4	NO SE REPARA SEPARADAM. Bearing, Journal
4		NSS		4	NO SE REPARA SEPARADAM. Ring
6		393233A1		1	ARBOL DE MANDO 367860A3 Drive Shaft
6		393232A1		1	ARBOL DE MANDO 367859A2 Drive Shaft
7		144279A1		1	HORQUILLA
8		219-10		1	ENGRASADOR 1/4 tpr x 11/16
		D149860		1	EMPAQUETADURA Incl. Ref 9 - 11
9		NSS		1	NO SE REPARA SEPARADAM. Washer, Cork
10		NSS		1	NO SE REPARA SEPARADAM. Washer, Steel
11		NSS		1	NO SE REPARA SEPARADAM. Cap
12		90-6682T1		2	COLLAR
13		D137627		4	TORNILLO

http://www.minnparbackhoeparts.com/

NOTES

http://www.minnparbackhoeparts.com/

SECTION INDEX

07-01	EJE, TRANSMISIÓN TRASERA - FRENO, DIFERENCIAL
07-02	EJE, TRANSMISIÓN TRASERA - FRENO, ESTACIONAMIENTO
07-03	FRENO - PEDALES
07-04	HIDRAULICA - CILINDRO PRINCIPAL DEL FRENO
07-05	CONJUNTO DE CILINDRO FRENO PRINCIPAL
07-06	CONTROLES - FRENO, ESTACIONAMIENTO

http://www.minnparbackhoeparts.com/

EJE, TRANSMISIÓN TRASERA - FRENO, DIFERENCIAL

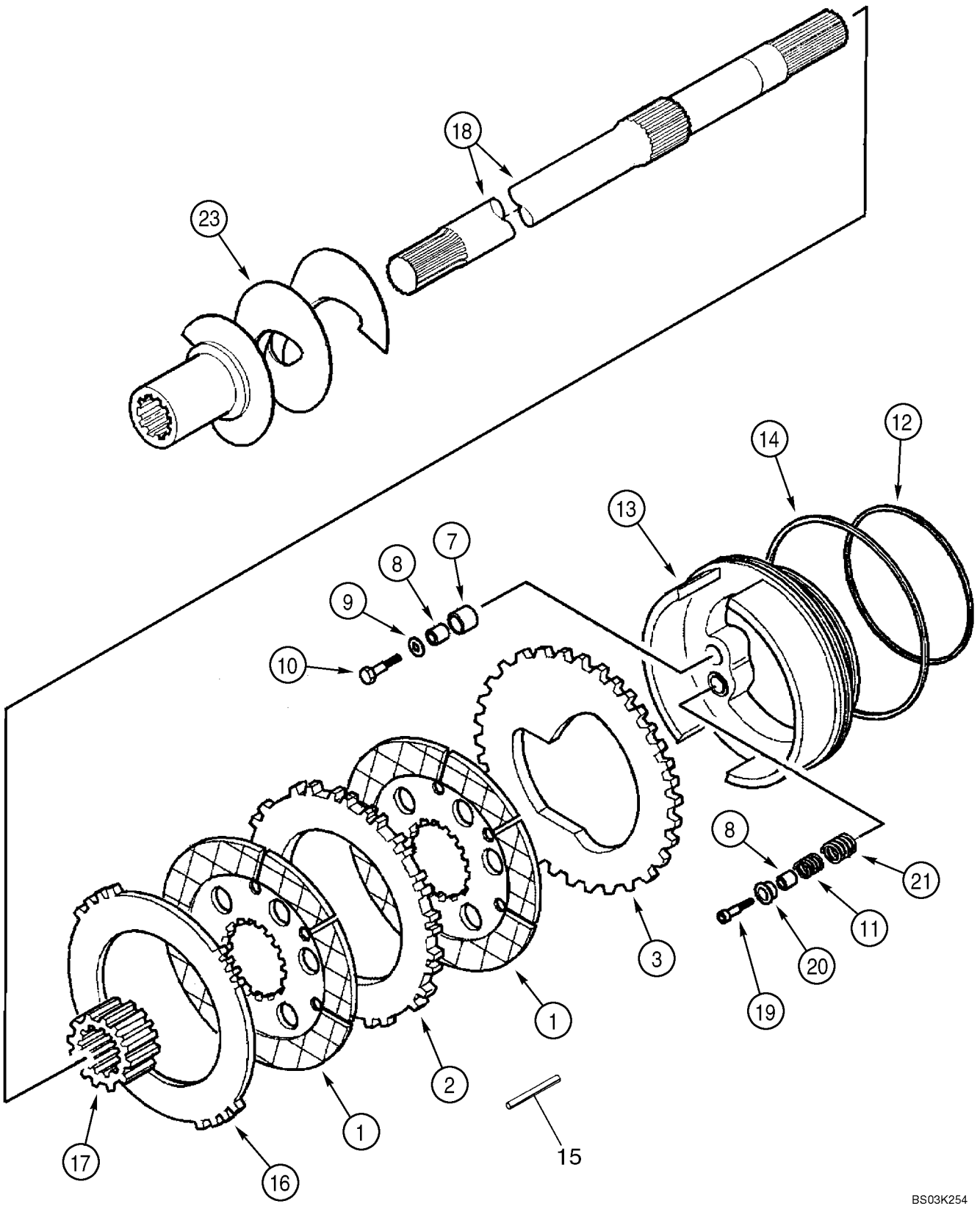

http://www.minnparbackhoeparts.com/

EJE, TRANSMISIÓN TRASERA - FRENO, DIFERENCIAL

REF	FN	PART NUMBER	YR/SN	QTY	DESCRIPTION
		384956A1		1	PUENTE POSTERIOR 580SM Models Without Powershift Transmission, Incl. Ref 1 - 25; Also Includes Parts On Figures 06-40 - 06-46, 07-01, 07-02
		86984108		1	EJE MOTOR 580SM+ Models Without Powershift Transmission, Incl. Ref 1 - 25; Also Includes Parts On Figures 06-40 - 06-46, 07-01, 07-02
		384958A1		1	PUENTE POSTERIOR 580SM Models With Powershift Transmission, Incl. Ref 1 - 25; Also Includes Parts On Figures 06-40 - 06-46, 07-01, 07-02
		86984107		1	EJE MOTOR 580SM+ Models With Powershift Transmission, Incl. Ref 1 - 25; Also Includes Parts On Figures 06-40 - 06-46, 07-01, 07-02
1		237021A1		4	PLACA, GRANDE Brake Disc
2		237022A1		2	PLACA, GRANDE Friction
3		308029A1		2	PLACA Piston
		358212A1		1	JEUGO Brake Self Adjuster, Incl. Ref 7, 8, Plus An Instruction Sheet
7		190449A1		6	ANILLO ELASTICO 18 x 20 mm, No Longer Sold Separately, Order 358212A1 Kit
8		190496A1		12	CASQUILLO No Longer Sold Separately, Order 358212A1 Kit
9		190450A1		6	ARANDELA
10		864-6035		6	TORNILLO M6 x 35
11		237026A1		6	RESORTE
12		308036A1		2	JUNTA HERMETICA
13		359653A1		2	EMBOLO
14		190493A1		2	JUNTA HERMETICA
15		190447A1		6	ANILLO ELASTICO 6 x 14 mm; 86984107 or 86984108 Axle Only
16		308030A1		2	PLACA Friction
17		308042A1		2	APOYADERO Sleeve
18		295111A1		2	EJE 384956A1 or 384958A1 Axle
18		311486A1		2	ARBOL DE MANDO 86984107 or 86984108 Axle
19		864-6035		6	TORNILLO M6 x 35
20		190500A1		6	TAPA

http://www.minnparbackhoeparts.com/

EJE, TRANSMISIÓN TRASERA - FRENO, DIFERENCIAL

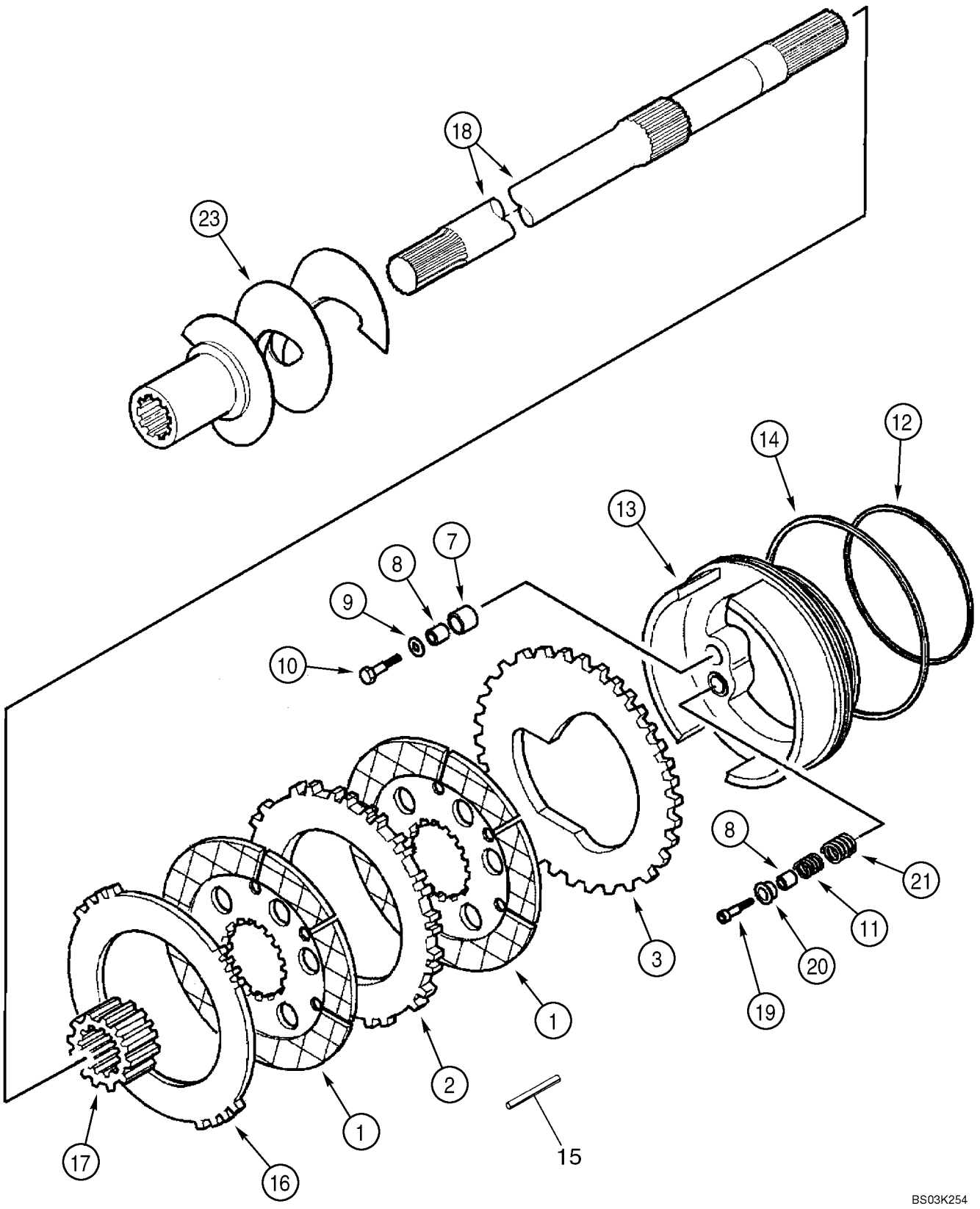

http://www.minnparbackhoeparts.com/

EJE, TRANSMISIÓN TRASERA - FRENO, DIFERENCIAL

REF	FN	PART NUMBER	YR/SN	QTY	DESCRIPTION
21		237025A1		6	RESORTE
23		295112A1		1	SINFIN Auger, Oil, Right-Hand, Includes Welded-On Clamp and Bolt, Plus Welded-On Drive Coupling, Incl. Ref 25
24		295113A1		1	SINFIN Auger, Oil, Left-Hand, Includes Welded-On Clamp and Bolt, Plus Welded-On Drive Coupling, Incl. Ref 25
25		863-6020		2	TORNILLO M6 x 20; 12.9, Not Illustrated

http://www.minnparbackhoeparts.com/

EJE, TRANSMISIÓN TRASERA - FRENO, ESTACIONAMIENTO

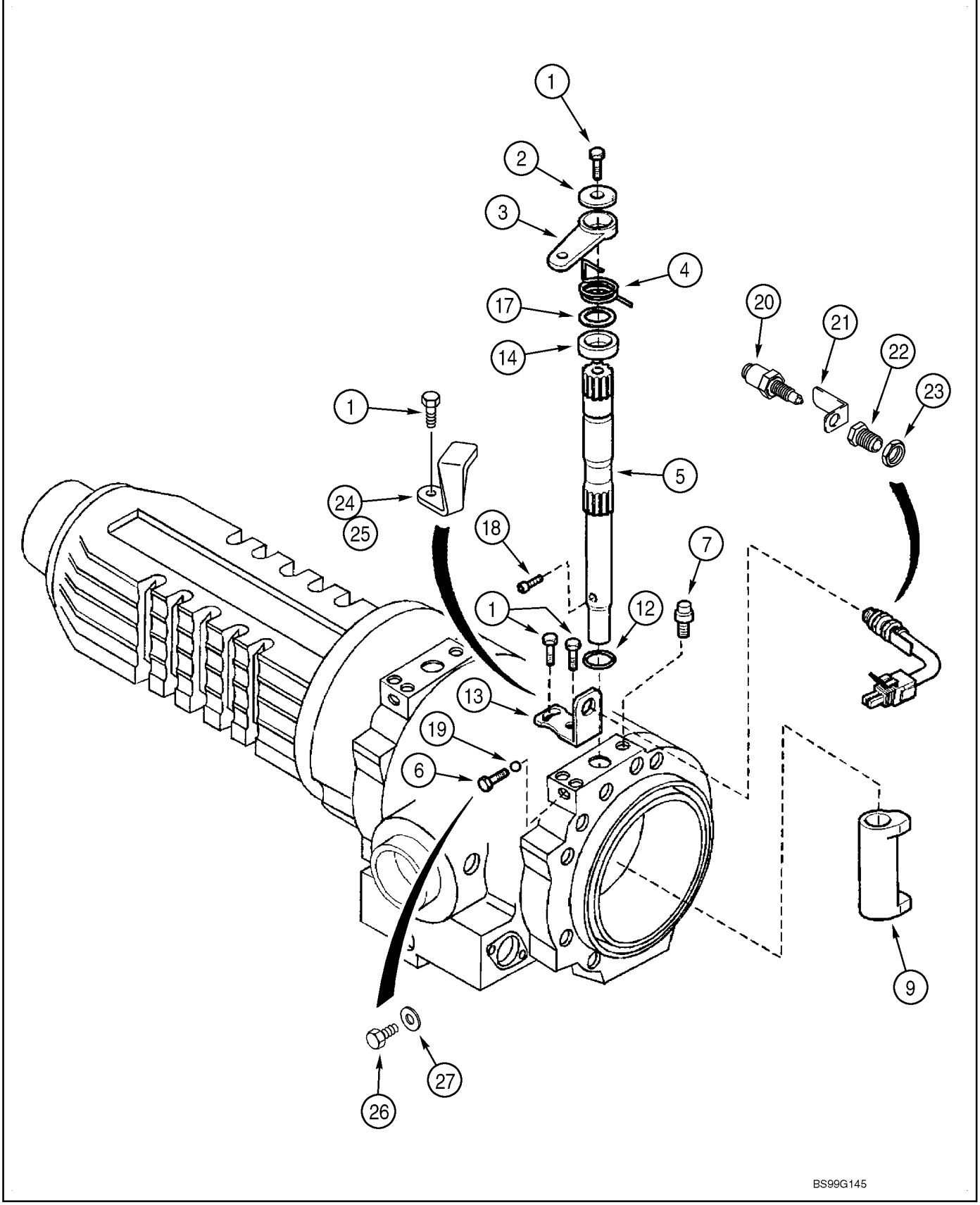

http://www.minnparbackhoeparts.com/

EJE, TRANSMISIÓN TRASERA - FRENO, ESTACIONAMIENTO

REF	FN	PART NUMBER	YR/SN	QTY	DESCRIPTION
		384956A1		1	PUENTE POSTERIOR 580SM Models Without Powershift Transmission, Incl. Ref 1 - 27; Also Includes Parts On Figures 06-40 - 06-46, 07-01, 07-02
		86984108		1	EJE MOTOR 580SM+ Models Without Powershift Transmission, Incl. Ref 1 - 27; Also Includes Parts On Figures 06-40 - 06-46, 07-01, 07-02
		384958A1		1	PUENTE POSTERIOR 580SM Models With Powershift Transmission, Incl. Ref 1 - 27; Also Includes Parts On Figures 06-40 - 06-46, 07-01, 07-02
		86984107		1	EJE MOTOR 580SM+ Models With Powershift Transmission, Incl. Ref 1 - 27; Also Includes Parts On Figures 06-40 - 06-46, 07-01, 07-02
1		190451A1		6	TORNILLO M8 x 20
2		190463A1		2	ARANDELA
3		280436A1		2	PALANCA Brake
4		190476A2		1	RESORTE Left-Hand
4		190477A2		1	RESORTE Right-Hand, Not Illustrated
5		308040A1		2	EJE
6		283462A1		2	TORNILLO M8 x 23.5
7		E135810		2	TORNILLO RESPIRADERO Brake Bleeder
9		196085A1		2	LEVA
12		321183A1		2	JUNTA HERMETICA
13		256478A1		2	APOYADERO Stop
14		256481A1		2	ESPACIADOR Bushing
17		256482A1		2	SUPLEMENTO Shim
18		256485A1		2	TORNILLO M6 x 16
19		283466A1		2	BOLA
		281952A1		2	EQUIPO KIT, Incl. Ref 20 - 23
20		280450A1		1	CONMUTADOR DE ARRANQ
21		280452A1		1	PIEZA DE SOPORTE
22		280457A1		1	PALANCA Sleeve
23		281960A1		1	TUERCA
		279645A1		1	JEUGO REPARACION Parking Brake, External Adjustment Parts, Incl. Ref 1, 12 - 17, 281952A1, 20 - 23, 24 - 27, Includes Instructions, If Used

http://www.minnparbackhoeparts.com/

EJE, TRANSMISIÓN TRASERA - FRENO, ESTACIONAMIENTO

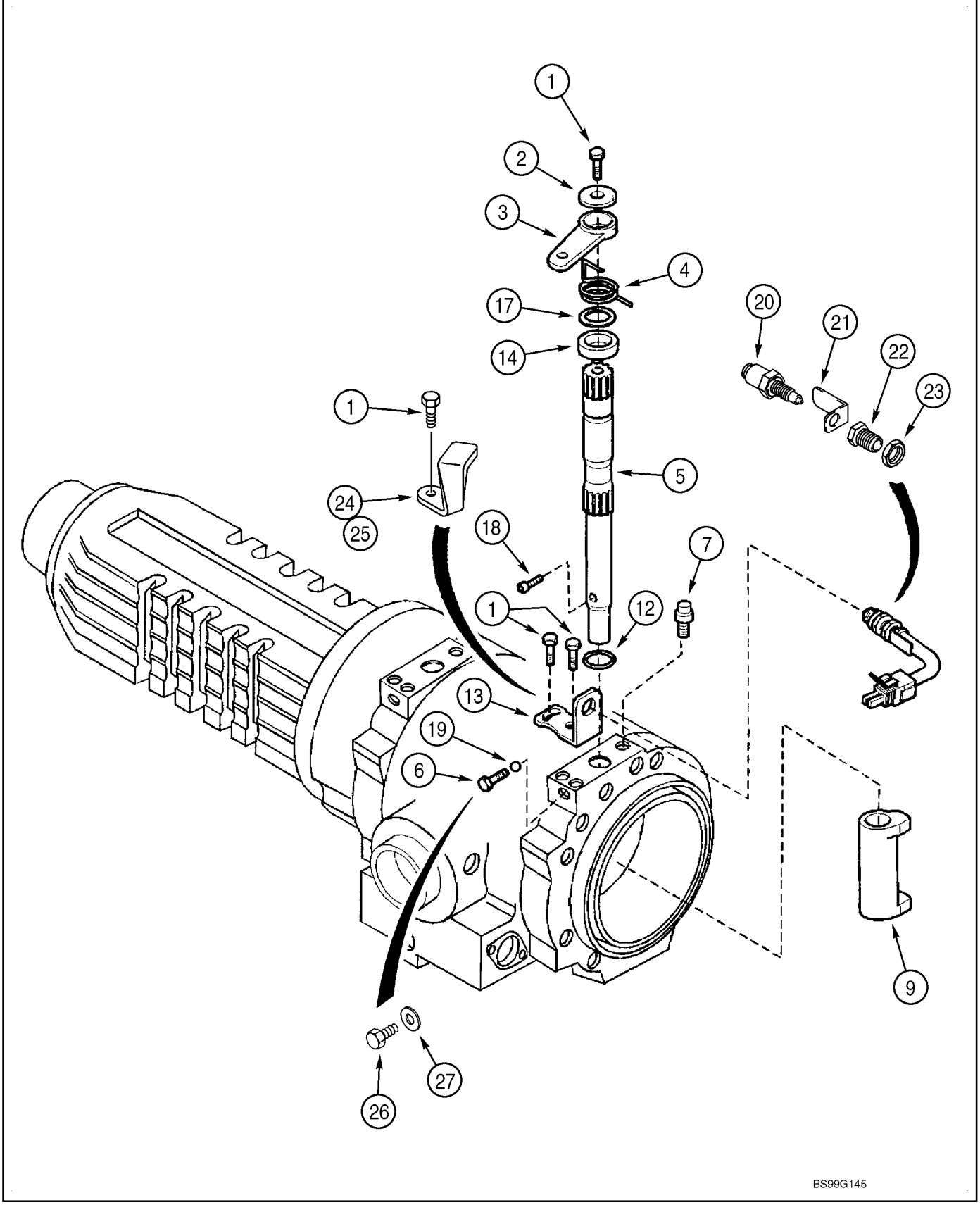

http://www.minnparbackhoeparts.com/

EJE, TRANSMISIÓN TRASERA - FRENO, ESTACIONAMIENTO

REF	FN	PART NUMBER	YR/SN	QTY	DESCRIPTION
24		259254A1		1	RETENEDOR Left-Hand
25		280443A1		1	RETENEDOR Right-Hand
26		514-634		2	TORNILLO M8 x 16
27		181104A1		2	ARANDELA DE COBRE

http://www.minnparbackhoeparts.com/

07-03		p1	05/05

FRENO - PEDALES

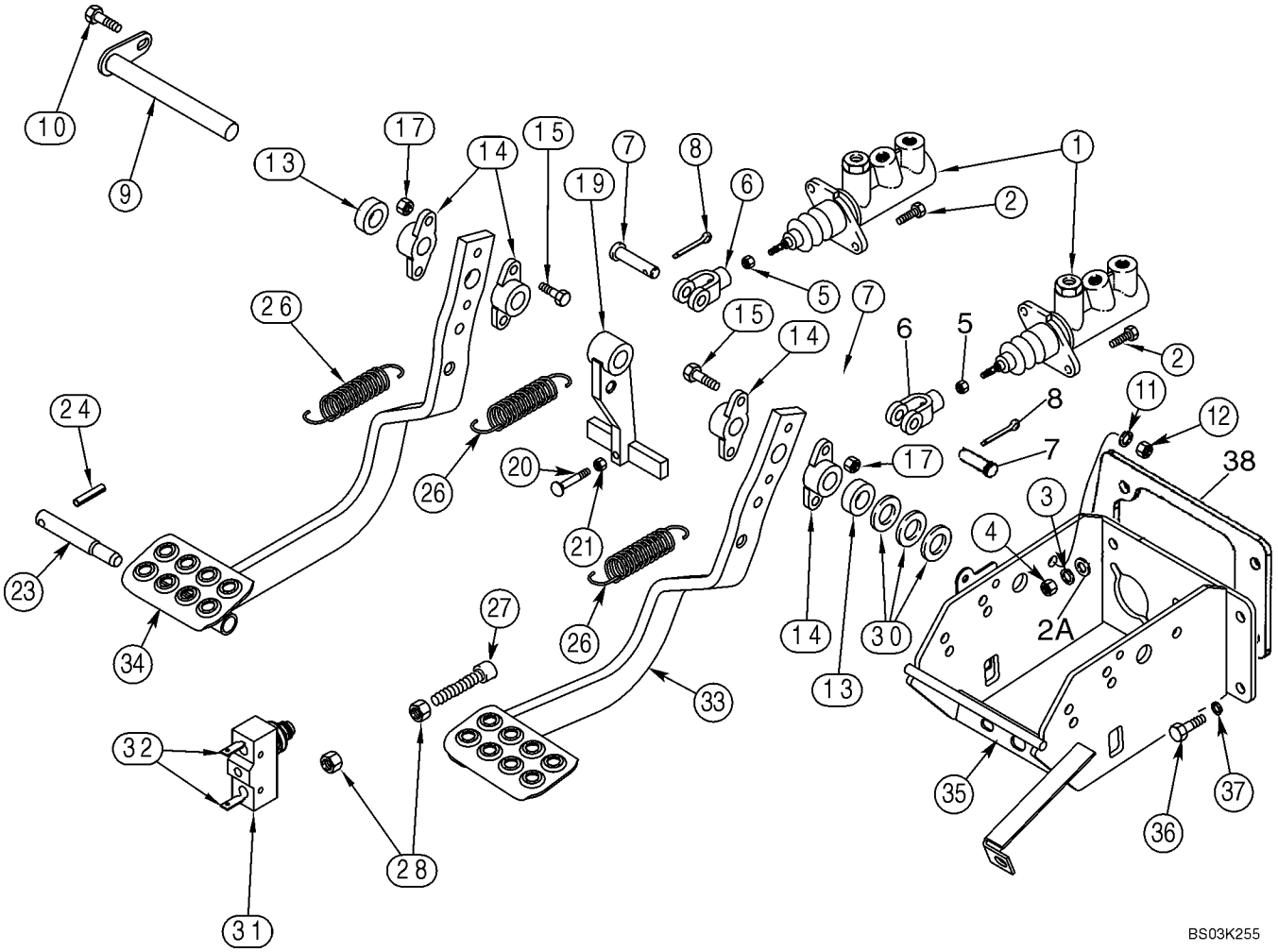

http://www.minnparbackhoeparts.com/

FRENO - PEDALES

REF	FN	PART NUMBER	YR/SN	QTY	DESCRIPTION
1		182445A1		2	CILINDRO PRINCIPAL See Figure 07-05
2		614-8030		4	TORNILLO M8 x 30
2A		895-11008		4	ARANDELA 9 x 17 x 1,6 mm
3		892-11008		4	ARANDELA M8
4		829-1408		4	TUERCA M8; 10
5		425-156		2	TUERCA 3/8 NF
6		D137077		2	HORQUILLA PEQUENA
7		L26209		2	PERNO 3/8
8		432-612		2	PASADOR ABIERTO 3/32" x 3/4"
9		D140035		1	BULON/PIN, LARGO Shaft
10		614-10025		1	TORNILLO M10 x 25
11		892-11010		1	ARANDELA DE FRENO M10
12		829-1410		1	TUERCA M10; 10.9
13		D124529		2	ESPACIADOR
14		A77310		4	PIVOTE Bearing
15		814-8040		4	TORNILLO Hex, M8 x 40, 8.8
17		832-10408		4	TUERCA M8
19		D124528		1	PALANCA Brake Lamp
20		121-145		1	TORNILLO 5/16 X 2-1/2, Flat Countersunk Head
21		425-105		1	TUERCA 5/16
23		D124530		1	PERNO Brake Pedal Lock
24		438-12040		1	PASADOR 5/16 x 2-1/2
26		230973A1		3	RESORTE
27		413870A1		2	AISLADOR Rubber Head, M8 x 45, Brake Pedal
28		829-1408		4	TUERCA M8; 10
30		495-81261		X	ARANDELA 13/16 x 1-1/2 x 1/16; Used As A Spacer
31		D148108		1	CONTACTOR Push Button, Brake Lamp, Attaches To Front Console Wiring Harness
32		A187990		2	TERMINAL Male
33		339047A3		1	PEDAL (CONJUNTO) Right-Hand
34		339046A3		1	PEDAL (CONJUNTO) Left-Hand
35		338886A4		1	PIEZA DE SOPORTE Brake Pedal and Brake Master Cylinder Mounting
36		614-8020		4	TORNILLO M8 x 20
37		892-11008		4	ARANDELA M8
38		409370A1		1	ANILLO DE CIERRE

http://www.minnparbackhoeparts.com/

07-04		p1	02/05

HIDRAULICA - CILINDRO PRINCIPAL DEL FRENO

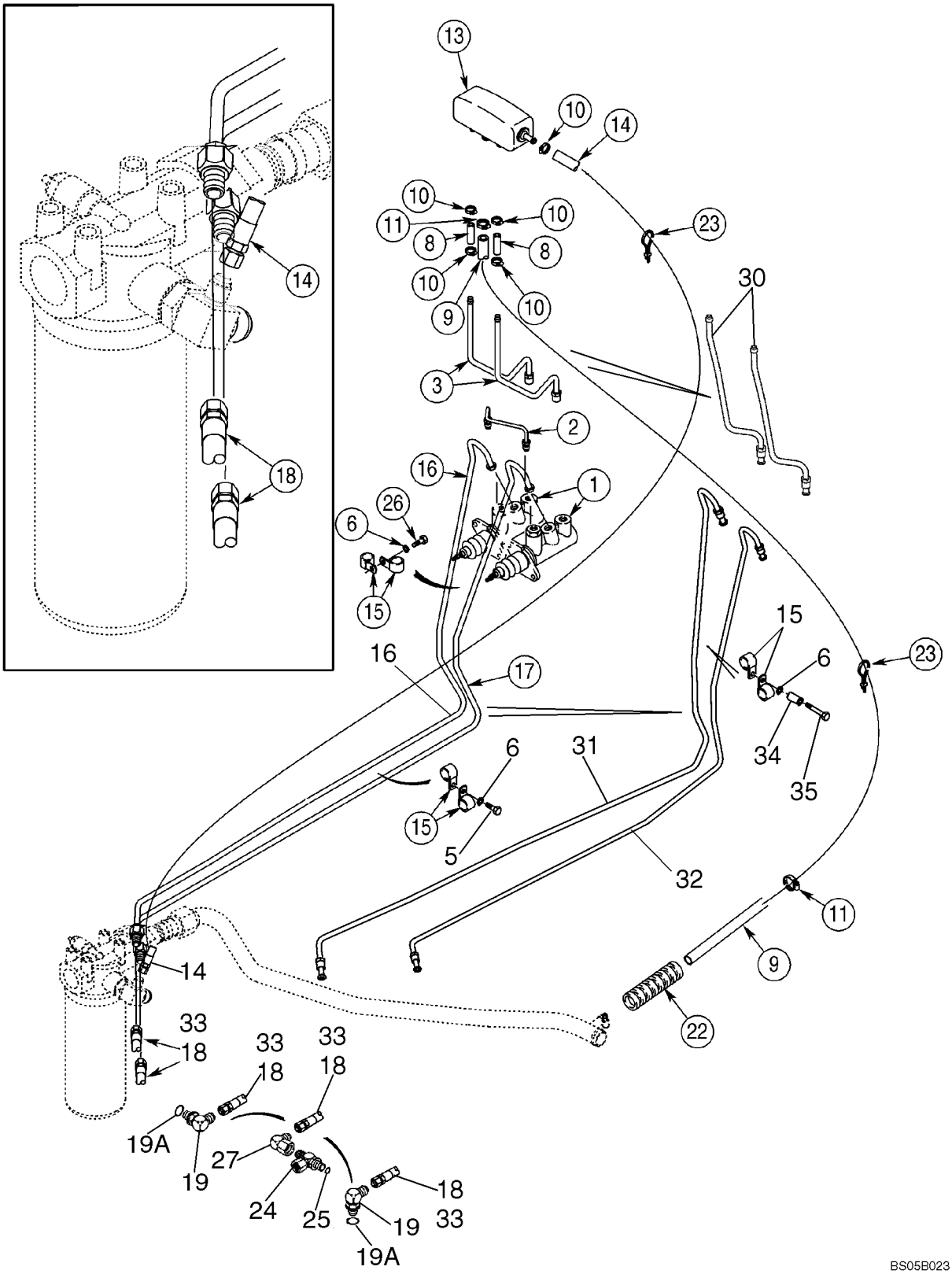

http://www.minnparbackhoeparts.com/

HIDRAULICA - CILINDRO PRINCIPAL DEL FRENO

REF	FN	PART NUMBER	YR/SN	QTY	DESCRIPTION
1		182445A1		2	CILINDRO PRINCIPAL See Figure 07-05
2		345061A2		1	TUBO (CONJUNTO) Crossover
3		345325A2		2	TUBO (CONJUNTO) No Longer Available, If Replacing This Tube, Must Also Replace Ref 16, 17 Tubes; Order Ref 30 - 35 For Service
5		614-8020		1	TORNILLO M8 x 20
6		892-11008		2	ARANDELA M8
8		121729A1		2	MANGA 52 mm (2-3/64 in); To Master Cylinder
9		397076A1		1	MANGA 1500 mm (59-1/16 in), Reservoir Outlet, Attaches To Return To Tank Tube, See Figure 08-03
10		214-1704		5	COLLAR 1/4 - 5/8
11		214-1706		2	COLLAR 7/16 - 3/4
13		184627A2		1	CUBA
14		86991496		1	MANGUERA (CONJUNTO) 1666 mm (65-19/32 in), Reservoir Inlet, See Figure 08-03 for Fitting
15		515-2379		4	COLLAR 7,9 mm
16		397177A2		1	TUBO (CONJUNTO) Left-Hand, No Longer Available, If Replacing This Tube, Must Also Replace Ref 3, 17 Tubes; Order Ref 30 - 35 For Service
17		396620A2		1	TUBO (CONJUNTO) Right-Hand, No Longer Available, If Replacing This Tube, Must Also Replace Ref 3, 16 Tubes; Order Ref 30 - 35 For Service
18		409318A1		2	MANGUERA (CONJUNTO) 565 mm (22-1/4 in), Brake Tube To Adapter On Rear Axle; Used With Ref 3, 16, 17 Tubes; If Used
19		218-5103		2	CODO 90 deg, 7/16 fl x Or, Incl. Ref 19A, Models Without Powershift Transmission
19A		237-6004		1	JUNTA HERMETICA 23/64 ID x 5/64
22		D132982		1	TUBO AISLANTE 400 mm (15-3/4 in)
23		L18337		3	BANDA 15 in
24		222889A1		2	CONEXION Tee, Incl. Ref 25, Models With Powershift Transmission; See Figure 04-09 For Powershift Pressure Switch
25		237-6004		1	JUNTA HERMETICA 23/64 ID x 5/64
26		614-8030		1	TORNILLO M8 x 30; If Used

http://www.minnparbackhoeparts.com/

HIDRAULICA - CILINDRO PRINCIPAL DEL FRENO

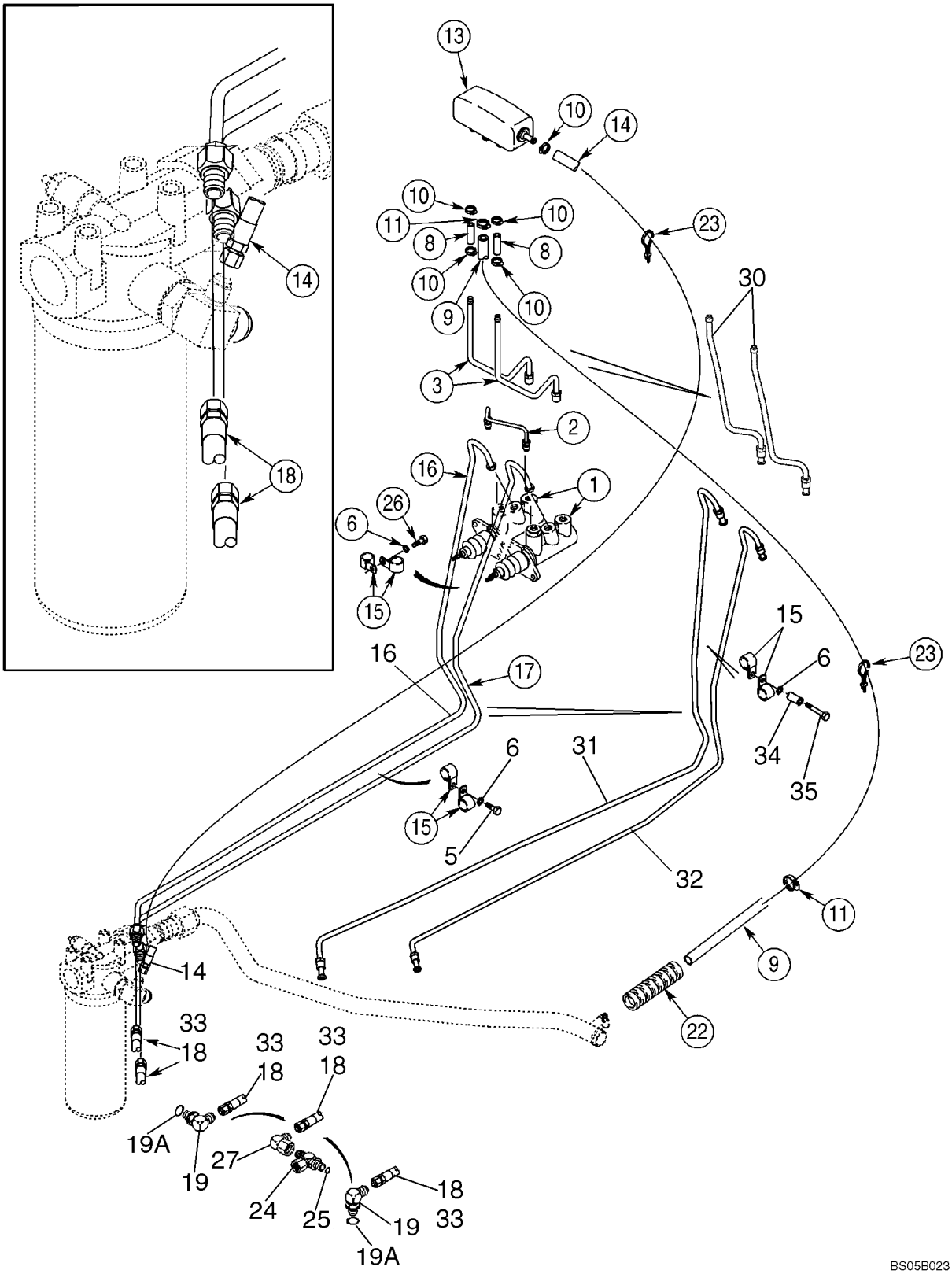

http://www.minnparbackhoeparts.com/

HIDRAULICA - CILINDRO PRINCIPAL DEL FRENO

REF	FN	PART NUMBER	YR/SN	QTY	DESCRIPTION
27		218-5228		2	CONEXION ELBOW, 90 deg, 7/16 fl x 7/16 sw fl; Models With Powershift Transmission
30		87448661		2	TUBO (CONJUNTO)
31		87450910		1	TUBO (CONJUNTO) Left-Hand
32		87448658		1	TUBO (CONJUNTO) Right-Hand
33		87451751		2	MANGUERA (CONJUNTO) 520 mm (20-1/2 in); Brake Tube To Adapter On Rear Axle; Used With Ref 30 - 32 Tubes
34		87449579		1	SEPARADOR 9.5 ID x 19.05 OD x 40 mm
35		814-8060		1	TORNILLO M8 x 60

http://www.minnparbackhoeparts.com/

07-05		p1	09/03

CONJUNTO DE CILINDRO FRENO PRINCIPAL

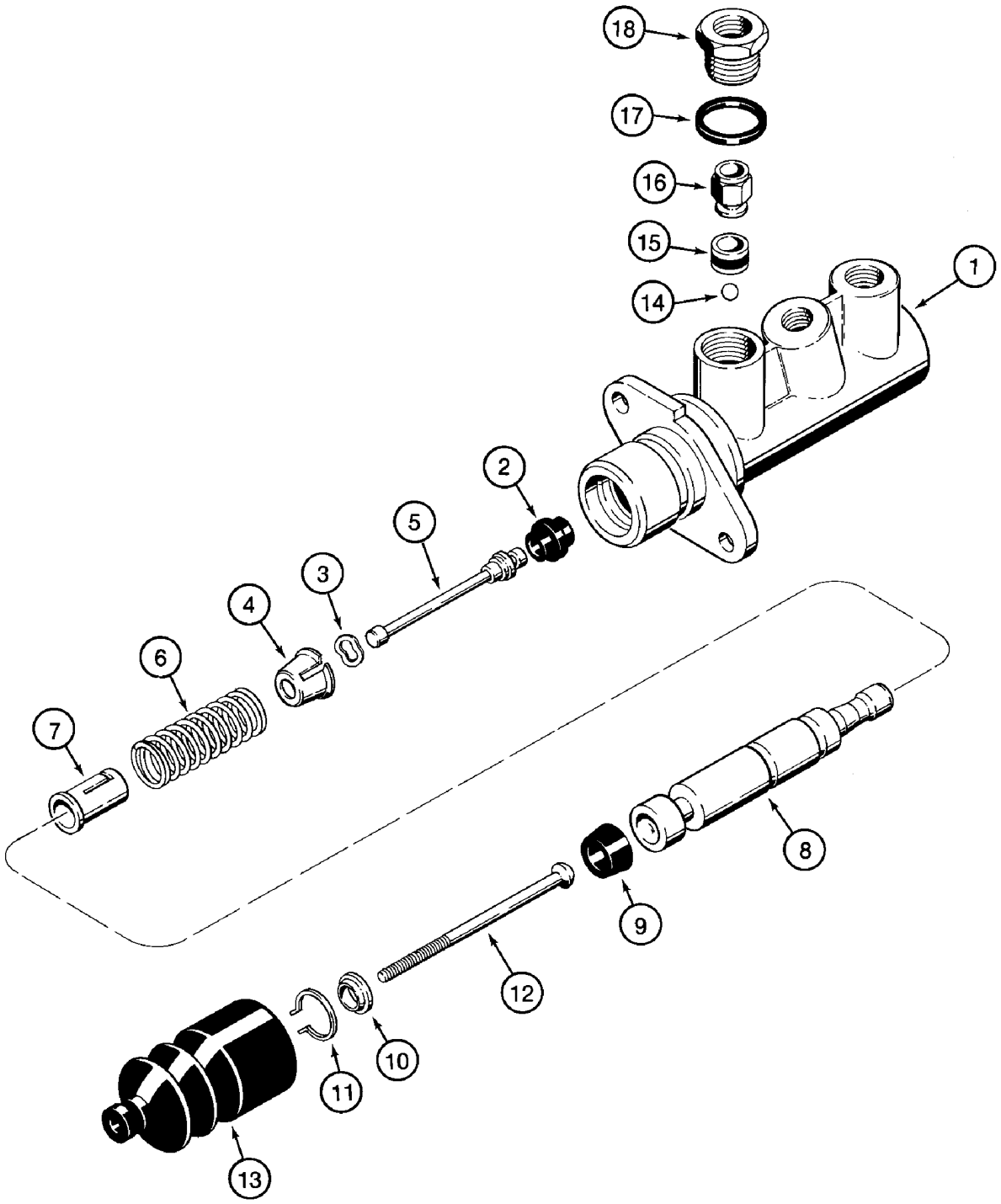

http://www.minnparbackhoeparts.com/

CONJUNTO DE CILINDRO FRENO PRINCIPAL

REF	FN	PART NUMBER	YR/SN	QTY	DESCRIPTION
		182445A1		2	CILINDRO PRINCIPAL Incl. Ref 1 - 18
1		NSS		1	NO SE REPARA SEPARADAM. Housing
2		NSS		1	NO SE REPARA SEPARADAM. Seal
3		NSS		1	NO SE REPARA SEPARADAM. Washer
4		NSS		1	NO SE REPARA SEPARADAM. Seat
5		NSS		1	NO SE REPARA SEPARADAM. Plunger
6		NSS		1	NO SE REPARA SEPARADAM. Spring
7		NSS		1	NO SE REPARA SEPARADAM. Seat
8		NSS		1	NO SE REPARA SEPARADAM. Piston
9		NSS		1	NO SE REPARA SEPARADAM. Seal
10		NSS		1	NO SE REPARA SEPARADAM. Washer
11		NSS		1	NO SE REPARA SEPARADAM. Ring, Retaining
12		NSS		1	NO SE REPARA SEPARADAM. Rod
13		NSS		1	NO SE REPARA SEPARADAM. Boot
14		NSS		1	NO SE REPARA SEPARADAM. Ball
15		NSS		1	NO SE REPARA SEPARADAM. Seal
16		NSS		1	NO SE REPARA SEPARADAM. Valve, Check
17		NSS		1	NO SE REPARA SEPARADAM. Seal
18		NSS		1	NO SE REPARA SEPARADAM. Adapter
		N14784		1	JEUGO Seal, Incl. Ref 2, 3, 9, 11, 13 - 15, 17

http://www.minnparbackhoeparts.com/

07-06		p1	05/05

CONTROLES - FRENO, ESTACIONAMIENTO

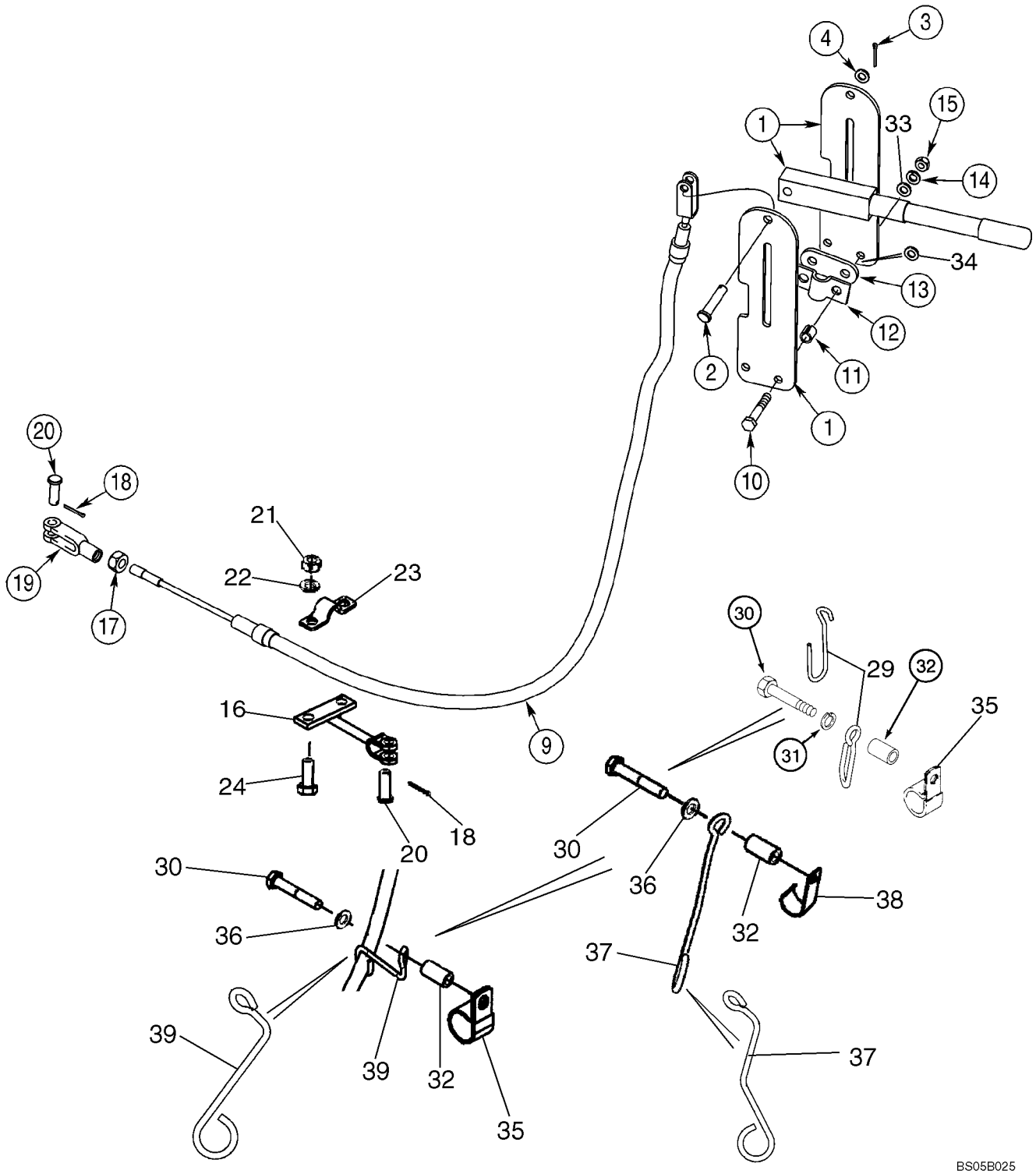

http://www.minnparbackhoeparts.com/

CONTROLES - FRENO, ESTACIONAMIENTO

REF	FN	PART NUMBER	YR/SN	QTY	DESCRIPTION
		367977A1		1	PALANCA Incl. Ref 1 - 4
1		NSS		1	NO SE REPARA SEPARADAM. Lever
2		NSS		1	NO SE REPARA SEPARADAM. Pin, Clevis
3		432-612		1	PASADOR ABIERTO 3/32" x 3/4"
4		495-21038		1	ARANDELA 3/8 x 7/8 x 3/32
9		280681A1		1	CABLE 1325 mm (52-3/16 in); If Used
9		87331077		1	CABLE (CONJUNTO) 1262 mm (49-11/16 in); If Used
10		827-8050		2	TORNILLO M8 x 50; 10.9
11		D150633		2	ESPACIADOR
12		D121608		1	COLLAR
13		D129747		1	PLACA
14		892-11008		2	ARANDELA M8
15		829-1408		2	TUERCA M8; 10
16		326348A1		1	APOYADERO Yoke, 151 mm (6 in)
17		425-156		1	TUERCA 3/8 NF
18		432-612		2	PASADOR ABIERTO 3/32" x 3/4"
19		213-126		1	HORQUILLA PEQUENA 3/8 NF
20		D149288		2	BULON/PIN, LARGO
21		829-1410		2	TUERCA M10; 10.9
22		892-11010		2	ARANDELA DE FRENO M10
23		A188028		1	COLLAR
24		614-10025		2	TORNILLO M10 x 25
29		87424794		1	SOPORTE If Used
30		814-10060		1	TORNILLO M10 x 60
31		895-11010		1	ARANDELA 11 x 21 x 2 mm; If Used
32		130245A1		1	ESPACIADOR
33		896-15008		2	ARANDELA 9 x 21 x 2,5 mm
34		895-11008		X	ARANDELA 9 x 16 x 1,6 mm
35		9827902		1	BORNE P-Type, 1 inch Insulated Closed Clamping; Replaces 515-23254 & R14668 1 in P-Clamps; If Used
36		895-15010		1	ARANDELA 11 x 24 x 2 mm; If Used
37		87453949		1	SOPORTE If Used
38		87032428		1	BORNE J-Type, 22.2 mm Clamp diameter; If Used
39		87327489		1	SOPORTE If Used

http://www.minnparbackhoeparts.com/

NOTES

http://www.minnparbackhoeparts.com/

SECTION INDEX

08-01	HIDRAULICA - BOMBA, FILTRO Y VÁLVULA DE LA CARGADORA
08-02	HIDRAULICA - VÁLVULA DE LA CARGADORA AL FILTRO A LA VÁLVULA DE LA RETROEXCAVADORA
08-03	HIDRAULICA - REFRIGERADOR, LÍNEAS DE RETORNO Y FILTRO
08-04	HIDRAULICA - CILINDRO, ELEVACIÓN DE LA CARGADORA
08-05	HIDRAULICA - CILINDRO, CUCHARÓN DE LA CARGADORA
08-06	HIDRAULICA - CILINDRO, ALMEJA DE LA CARGADORA
08-07	HIDRAULICA - CILINDRO, ALMEJA DE LA CARGADORA
08-08	HIDRAULICA - CILINDRO, ESTABILIZADOR DE LA RETROEXCAVADORA (SIN DE CONTROL PILOTO)
08-08A	HIDRAULICA - CILINDRO, ESTABILIZADOR DE LA RETROEXCAVADORA (CON DE CONTROL PILOTO)
08-09	HIDRAULICA - CILINDRO, BALANCÍN DE LA RETROEXCAVADORA (SIN DE CONTROL PILOTO)
08-09A	HIDRAULICA - CILINDRO, BALANCÍN DE LA RETROEXCAVADORA (CON DE CONTROL PILOTO)
08-10	HIDRAULICA - CILINDRO, AGUILÓN DE LA RETROEXCAVADORA
08-10A	HIDRAULICA - EL PICAPORTE DEL ESTAMPIDO DE BACKHOE Y EL CIRCUITO ELECTRICO
08-11	HIDRAULICA - CILINDRO, PALA DE LA RETROEXCAVADORA
08-12	HIDRAULICA - CILINDRO, CUCHARÓN DE LA RETROEXCAVADORA (MODELOS SIN PALA EXTENDIBLE)
08-13	HIDRAULICA - CILINDRO, CUCHARÓN DE LA RETROEXCAVADORA (MODELOS CON PALA EXTENDIBLE)
08-14	HIDRAULICA - CILINDRO, PALA EXTENSIBLE DE LA RETROEXCAVADORA
08-15	HIDRAULICA - VÁLVULA, CONTROL PILOTO DE PALANCA DE CONTROL (6 SPOOL, W/O EXT DIPPER, W/O AUX HYDS)
08-16	HIDRAULICA - VÁLVULA, CONTROL PILOTO DE PALANCA DE CONTROL (6 SPOOL, W/O EXT DIPPER, W/ AUX HYDS)
08-17	HIDRAULICA - VÁLVULA, CONTROL PILOTO DE PALANCA DE CONTROL (7 SPOOL, W/ EXT DIPPER, W/O AUX HYDS)
08-18	HIDRAULICA - VÁLVULA, CONTROL PILOTO DE PALANCA DE CONTROL (7 SPOOL, W/ EXT DIPPER, W/ AUX HYDS)
08-19	HIDRAULICA - VÁLVULA, CONTROL PILOTO DE PALANCA DE CONTROL (7 SPOOL, W/O EXT DIPPER, W/ AUX HYDS)
08-20	HIDRAULICA - VÁLVULA, CONTROL PILOTO DE PALANCA DE CONTROL (8 SPOOL, W/ EXT DIPPER, W/ AUX HYDS)
08-21	HIDRAULICA - CONTROL PILOTO DE PALANCA DE CONTROL
08-22	HIDRAULICA - CONTROL PILOTO
08-23	HIDRAULICA - AUXILIAR DE LA RETROEXCAVADORA
08-24	HIDRAULICA - AUXILIAR DE LA RETROEXCAVADORA
08-25	HIDRAULICA - DISPOSITIVO ANTICABECEO
08-26	HIDRAULICA - ACOPLADOR, HERRAMIENTA RÁPIDA DE LA CARGADORA
08-27	HIDRAULICA - ACOPLADOR, HERRAMIENTA RÁPIDA DE LA CARGADORA
08-28	CONJUNTO DE LA VÁLVULA DEL ACOPLADOR - HERRAMIENTA RÁPIDA DE LA CARGADORA / RETROEXCAVADORA
08-29	HIDRAULICA - CILINDRO, CUCHARÓN DE LA RETROEXCAVADORA
08-30	HIDRAULICA - CILINDRO, CUCHARÓN DE LA RETROEXCAVADORA
08-31	CONJUNTO DE LA VÁLVULA DEL ACOPLADOR - HERRAMIENTA RÁPIDA DE LA CARGADORA CON DECUCHARÓN DE LA RETRO
08-32	CILINDRO - CILINDRO, CUCHARÓN DE LA RETROEXCAVADORA
08-33	BOMBA, EQUIPAMIENTO HIDRÁULICO

http://www.minnparbackhoeparts.com/

SECTION INDEX

08-34	CONJUNTO DE LA VALVULA - CONTROL DE LA CARGADORA, DOS CORREDERAS
08-35	CONJUNTO DE LA VALVULA - CONTROL DE LA CARGADORA, TRES CORREDERAS
08-36	CONJUNTO DE LA VALVULA - CONTROL DE LA RETROEXCAVADORA, 6 BOBINAS (SIN PALA EXTENSIBLE Y SIN SISTEM)
08-37	CONJUNTO DE LA VALVULA - CONTROL DE LA RETROEXCAVADORA, 7 BOBINAS (SIN PALA EXTENSIBLE Y CON SISTEM)
08-38	CONJUNTO DE LA VALVULA - CONTROL DE LA RETROEXCAVADORA, 7 BOBINAS (CON PALA EXTENSIBLE Y SIN SISTEM)
08-39	CONJUNTO DE LA VALVULA - CONTROL DE LA RETROEXCAVADORA, 8 BOBINAS (CON PALA EXTENSIBLE Y CON SISTEM)
08-40	CONJUNTO DE LA VALVULA - CONTROL DE LA RETROEXCAVADORA, 6 BOBINAS
08-41	CONJUNTO DE LA VALVULA - CONTROL DE LA RETROEXCAVADORA, 7 BOBINAS
08-42	CONJUNTO DE LA VALVULA - CONTROL DE LA RETROEXCAVADORA, 7 BOBINAS
08-43	CONJUNTO DE LA VALVULA - CONTROL DE LA RETROEXCAVADORA, 8 BOBINAS
08-43A	SECCION DE LA VALVULA - ENTRADA (CON DE CONTROL PILOTO)
08-44	SECCION DE LA VALVULA - DE LA RETROEXCAVADORA (CON DE CONTROL PILOTO)
08-45	SECCION DE LA VALVULA - AGUILON DE LA RETROEXCAVADORA (CON DE CONTROL PILOTO)
08-46	SECCION DE LA VALVULA - ESTABILIZADOR DE LA RETROEXCAVADORA (CON DE CONTROL PILOTO)
08-47	SECCION DE LA VALVULA - BRAZO DE LA RETROEXCAVADORA (CON DE CONTROL PILOTO)
08-48	SECCION DE LA VALVULA - CUCHARON DE LA RETROEXCAVADORA (CON DE CONTROL PILOTO)
08-49	SECCION DE LA VALVULA - PALA EXTENSIBLE (CON DE CONTROL PILOTO)
08-50	SECCION DE LA VALVULA - OPCIONES, SISTEMA HIDRÁULICO AUXILIAR (CON DE CONTROL PILOTO)
08-51	VALVULA DE REDUCCION DEPRESION (2 SPOOL) (CON DE CONTROL PILOTO)
08-52	VALVULA DE REDUCCION DEPRESION (3 SPOOL) (CON DE CONTROL PILOTO)
08-53	VALVULA DE REDUCCION DEPRESION (4 SPOOL) (CON DE CONTROL PILOTO)
08-54	VÁLVULA, PALANCA DE CONTROL (CONTROL PILOTO) (IZQUIERDO) BOCINA
08-55	VÁLVULA, PALANCA DE CONTROL (CONTROL PILOTO) (IZQUIERDO) BOCINA & UNI-DIR
08-56	VÁLVULA, PALANCA DE CONTROL (CONTROL PILOTO) (IZQUIERDO) BOCINA & BI-DIR
08-57	VÁLVULA, PALANCA DE CONTROL (CONTROL PILOTO) (DERECHA/O) SIN PALA EXTENDIBLE
08-58	VÁLVULA, PALANCA DE CONTROL (CONTROL PILOTO) (DERECHA/O) CON PALA EXTENDIBLE
08-59	CONJUNTO DE LA VALVULA - ALMOHADILLA DE OSCILACIÓN
08-59A	SOLENOIDE VALVE CONJUNTO - TRABA DEL AGUILON
08-60	ACUMULADOR CONJ. - DISPOSITIVO ANTICABECEO
08-61	FILTRO DE ACEITE
08-62	CONJUNTO DE CILINDRO - ELEVADOR DE LA CARGADORA
08-63	CONJUNTO DE CILINDRO - CUCHARON DE LA CARGADORA
08-64	CONJUNTO DE CILINDRO - ALMEJA DE LA CARGADORA
08-65	CONJUNTO DE CILINDRO - ESTABILIZADOR DE LA RETROEXCAVADORA (580SM)
08-65A	CONJUNTO DE CILINDRO - ESTABILIZADOR DE LA RETROEXCAVADORA (580SM+)
08-66	CONJUNTO DE CILINDRO - DE LA RETROEXCAVADORA
08-67	CONJUNTO DE CILINDRO - AGUILON DE LA RETROEXCAVADORA
08-68	CONJUNTO DE CILINDRO - BRAZO DE LA RETROEXCAVADORA

http://www.minnparbackhoeparts.com/

SECTION INDEX

08-69	CONJUNTO DE CILINDRO - CUCHARON DE LA RETROEXCAVADORA
08-70	CONJUNTO DE CILINDRO - PALA EXTENSIBLE DE LA RETROEXCAVADORA

http://www.minnparbackhoeparts.com/

08-01		p1	04/05

HIDRAULICA - BOMBA, FILTRO Y VÁLVULA DE LA CARGADORA

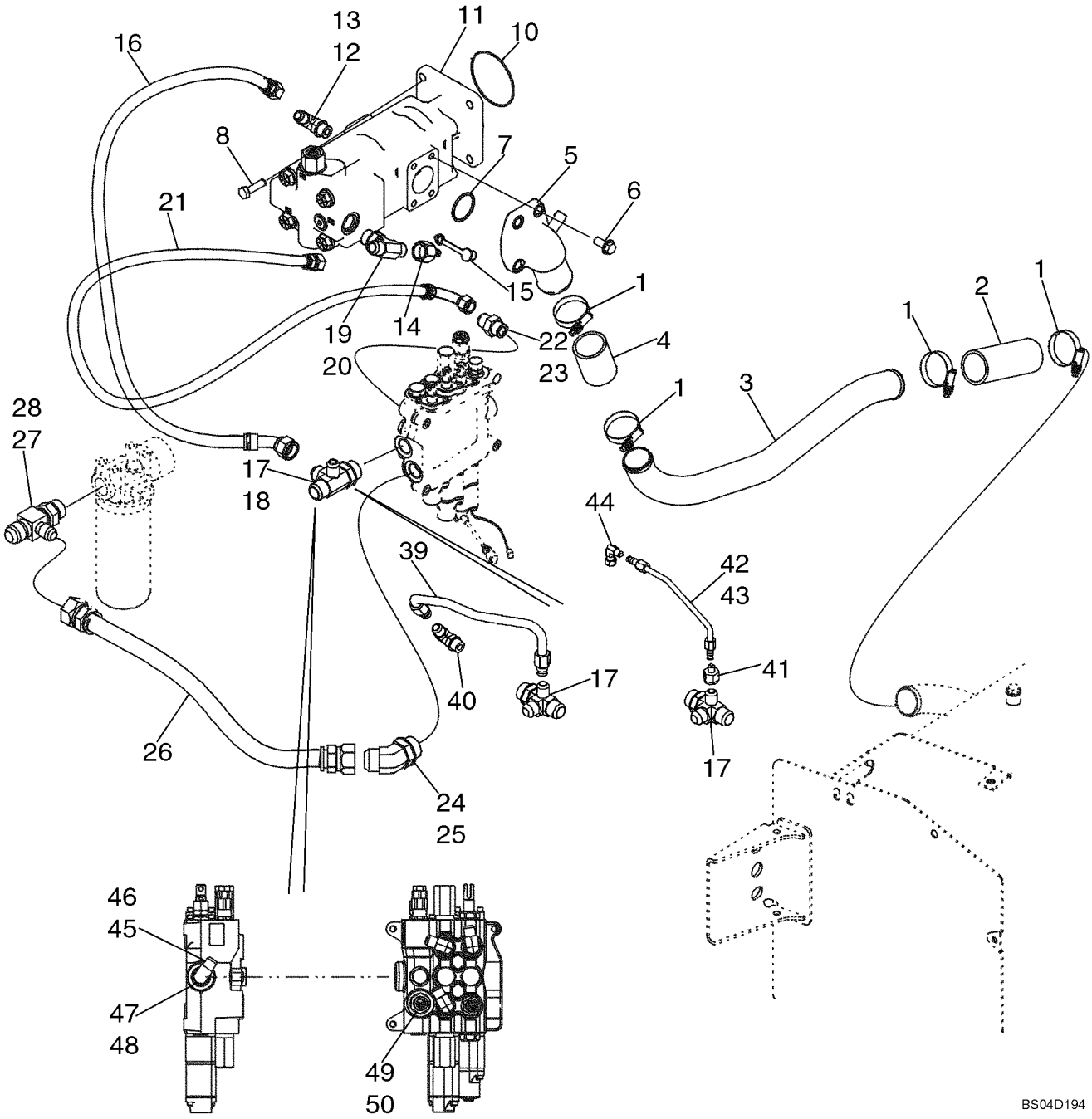

http://www.minnparbackhoeparts.com/

HIDRAULICA - BOMBA, FILTRO Y VÁLVULA DE LA CARGADORA

REF	FN	PART NUMBER	YR/SN	QTY	DESCRIPTION
1		259044A1		4	COLLAR
2		87306274		1	MANGA Suction Hose, At Hydraulic Tank; Replaces 282496A1
3		87435761		1	TUBERIA RIGIDA Suction Tube
4		87306307		1	MANGA 105 mm lg Hose; Replaces 87446433
5		87434257		1	CEJA (CONJUNTO) Pump Flange
6		864-12030		3	TORNILLO M12 x 30
7		238-5228		1	JUNTA HERMETICA
8		514-832		4	TORNILLO M12 x 35; Models Without Powershift Transmission
8		614-12035		4	TORNILLO M12 x 35; Models With Powershift Transmission
10		87429982		1	JUNTA HERMETICA Pump Mounting; Models Without Powershift Transmission; Included In Transmission Assembly
10		510828		1	JUNTA HERMETICA Pump Mounting; Models With Powershift Transmission
11		87434673		1	BOMBA HIDRÁULICA Equipment, Tandem; See Figure 08-33
12		218-5107		1	CODO 90 deg, 7/8 fl x Or; Incl. Ref 13
13		237-6010		1	JUNTA HERMETICA 3/4 ID x 3/32
14		D137625		1	ACOPLAMIENTO Quick Disconnect; Includes (1) 425-1120 Nut
15		H434163		1	TAPON DEL DEPOSITO Dust
16		87437230		1	MANGUERA (CONJUNTO) 740 mm (29-5/32 in) Hose; Large Pump Section to Loader Valve
17		87436066		1	CONEXION 4-Way Special Fitting; Incl. Ref 18
18		237-6016		1	JUNTA HERMETICA 1-11/64 ID x 7/64 wide
19		218-5185		1	CONEXION TEE, 1-1/16 adj Or br x fl x fl; Incl. Ref 20
20		237-6012		1	JUNTA HERMETICA 59/64 ID x 7/64 wide
21		87452399		1	MANGUERA (CONJUNTO) 775 mm (30-9/16 in) Hose, Small Pump Section; Replaces 87429895 Hose
22		218-5064		1	RACOR 1-1/16 fl x Or; Incl. Ref 23
23		237-6012		1	JUNTA HERMETICA 59/64 ID x 7/65
24		218-5140		1	CONEXION Elbow, 45 Degree, 1-5/16 fl x Or; Incl. Ref 25

http://www.minnparbackhoeparts.com/

HIDRAULICA - BOMBA, FILTRO Y VÁLVULA DE LA CARGADORA

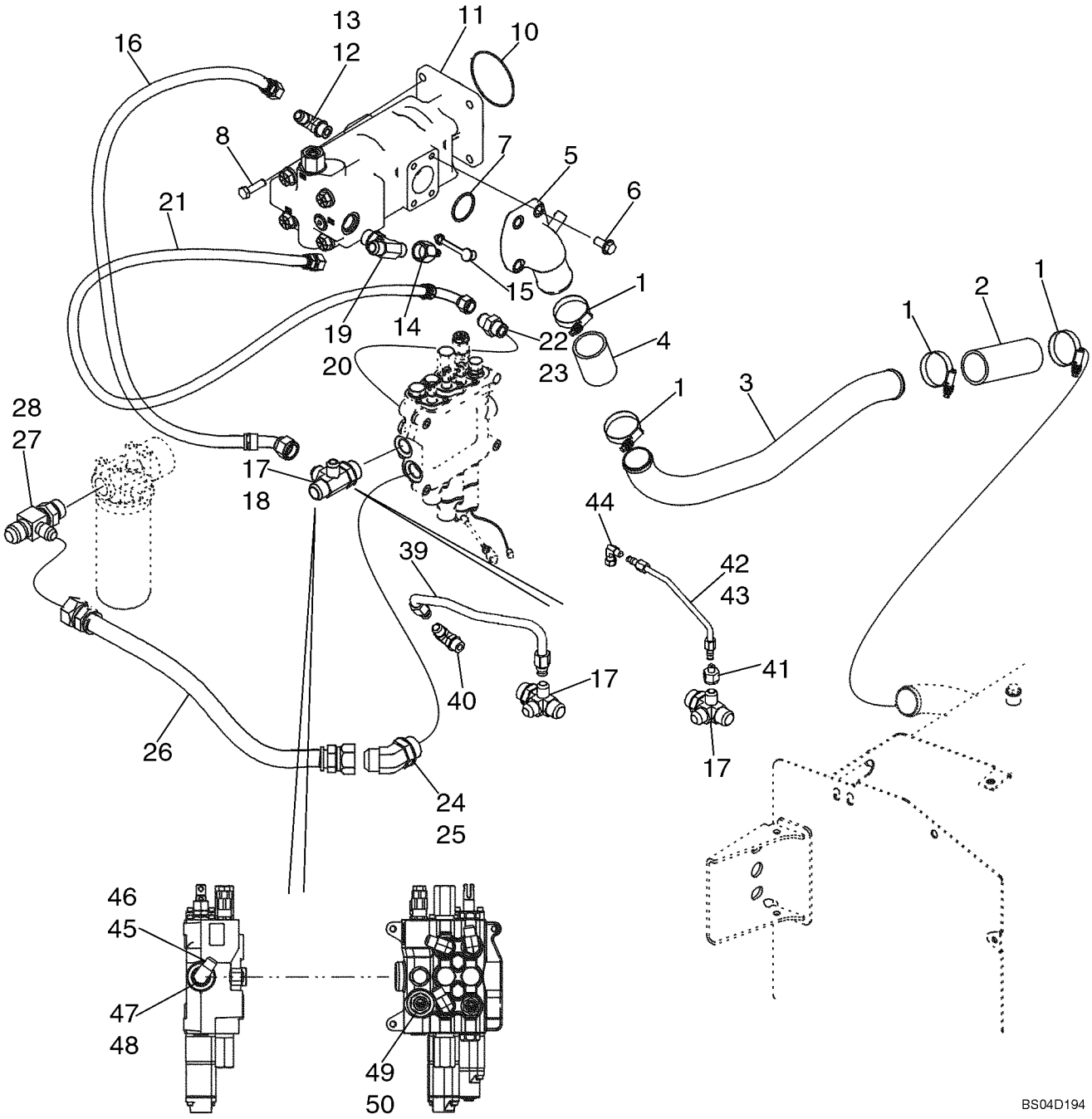

http://www.minnparbackhoeparts.com/

HIDRAULICA - BOMBA, FILTRO Y VÁLVULA DE LA CARGADORA

REF	FN	PART NUMBER	YR/SN	QTY	DESCRIPTION
25		237-6016		1	JUNTA HERMETICA 1-11/64 ID x 7/64 wide
26		87452400		1	MANGUERA (CONJUNTO) 635 mm (25 in), Loader Valve to Filter; Replaces 87437228 Hose
27		218-5584		1	CONEXION TEE, 1-1/16 fl branch x 1-5/16 fl x Or; Incl. Ref 28
28		237-6016		1	JUNTA HERMETICA 1-11/64 ID x 7/64 wide
39		87437655		1	TUBO (CONJUNTO) Two Spool Loader Valve; Models Without Pilot Controls
39		87437657		1	TUBO (CONJUNTO) Three Spool Loader Valve; Models Without Pilot Controls
40		218-5107		1	CODO 90 deg, 7/8 fl x Or; Includes 237-6010 O-Ring
41		218-765		1	REDUCTOR Models With Pilot Controls
42		87437980		1	TUBO (CONJUNTO) Two Spool Loader Valve; Models With Pilot Controls
43		87437982		1	TUBO (CONJUNTO) Three Spool Loader Valve; Models With Pilot Controls
44		218-980		1	CODO 90 deg, 9/16 fl x sw fl
45		218-5107		1	CODO 90 deg, 7/8 fl x Or; Incl. Ref 46; Models Without Pilot Controls
46		237-6010		1	JUNTA HERMETICA 3/4 ID x 3/32
47		218-5157		1	TAPÓN Hex, 7/8 Or; Incl. Ref 48; Models With Pilot Controls
48		237-6010		1	JUNTA HERMETICA 3/4 ID x 3/32
49		218-5064		1	RACOR 1-1/16 fl x Or; Incl. Ref 50
50		237-6012		1	JUNTA HERMETICA 59/64 ID x 7/64

http://www.minnparbackhoeparts.com/

HIDRAULICA - VÁLVULA DE LA CARGADORA AL FILTRO A LA VÁLVULA DE LA RETROEXCAVADORA

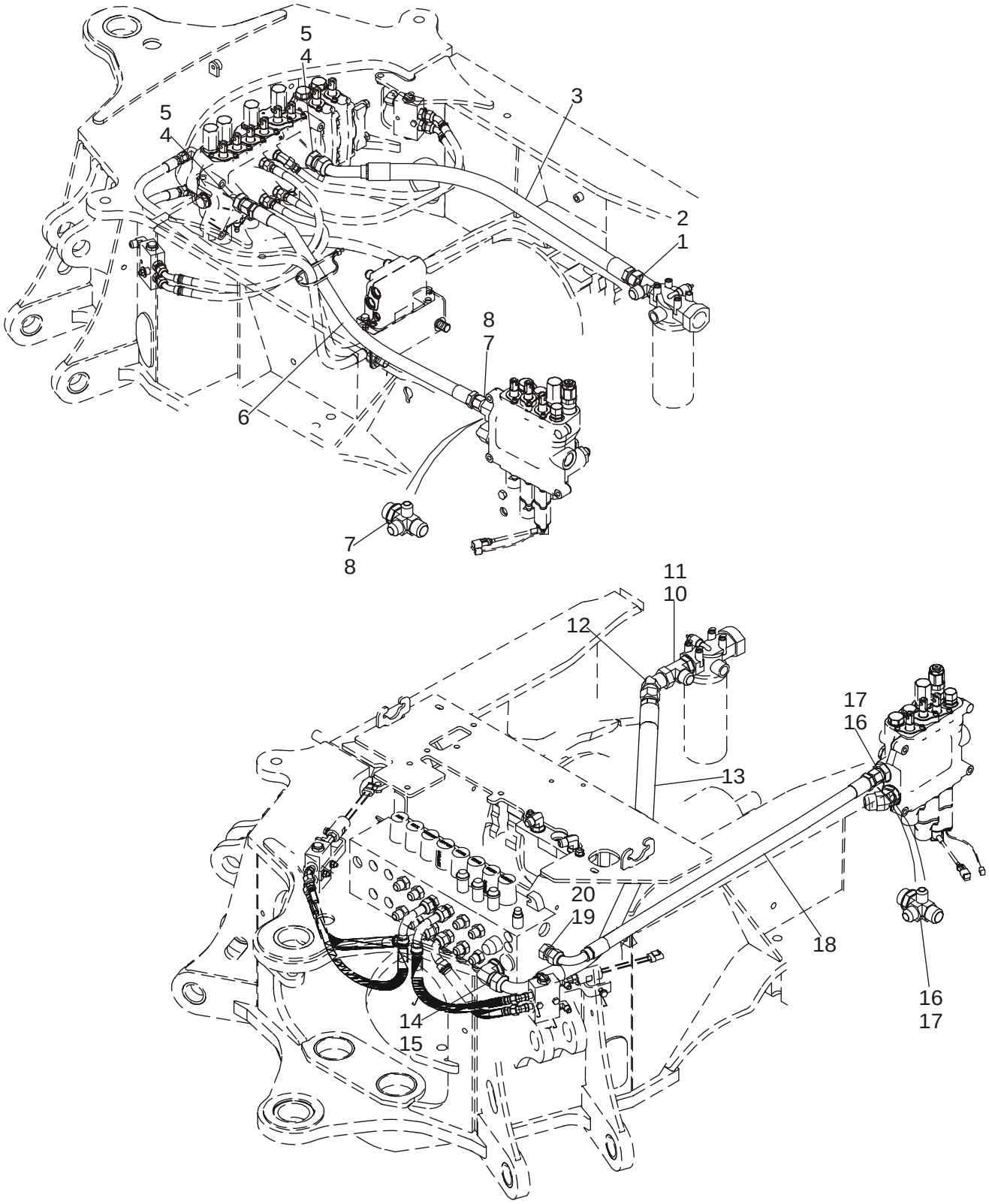

BS03M095

http://www.minnparbackhoeparts.com/

HIDRAULICA - VÁLVULA DE LA CARGADORA AL FILTRO A LA VÁLVULA DE LA RETROEXCAVADORA

REF	FN	PART NUMBER	YR/SN	QTY	DESCRIPTION
		REF			MANUAL MODELS WITHOUT PILOT CONTROLS
1		218-5584		1	CONEXION TEE, 1-1/16 fl br x 1-5/16 fl x Or; Incl. Ref 2
2		237-6016		1	JUNTA HERMETICA 1-11/64 ID x 7/64
3		313648A1		1	MANGA 910 mm (35-7/8 in); Return; Models Without Pilot Controls
4		218-5069		2	RACOR 1-5/16 fl x Or; Incl. Ref 5
5		237-6016		1	JUNTA HERMETICA 1-11/64 ID x 7/64
6		87437441		1	MANGUERA (CONJUNTO) 1025 mm (40-3/8 in); 2 or 3 Spool Valve; Without Auxiliary Hydraulics, Without Pilot Controls; Loader Valve Power Beyond to Backhoe Valve
6		87437232		1	MANGUERA (CONJUNTO) 420 mm (16-9/16 in); 2 Spool Valve; With Auxiliary Hydraulics; With or Without Pilot Controls; Loader Valve Power Beyond to Backhoe Valve
6		87437231		1	MANGUERA (CONJUNTO) 370 mm (14-5/8 in); 3 Spool Valve; With Auxiliary Hydraulics; With or Without Pilot Controls; Loader Valve Power Beyond to Backhoe Valve
7		87436066		1	CONEXION 4-Way Special Tee; Incl. Ref 8
8		237-6016		1	JUNTA HERMETICA 1-11/64 ID x 7/64
		REF			MANUAL MODELS WITH PILOT CONTROLS
10		218-5584		1	CONEXION TEE, 1-1/16 fl br x 1-5/16 fl x Or; Incl. Ref 11
11		237-6016		1	JUNTA HERMETICA 1-11/64 ID x 7/64
12		218-5176		1	CONEXION ELBOW, 45 deg, 1-5/16 fl x sw str thrd; Used With 87437934 1230 mm Hose; If Used
13		87437934		1	MANGUERA (CONJUNTO) 1230 mm (48-7/16 in); Return; Models With Pilot Controls; Used With Ref 12 Elbow; If Used
13		87450456		1	MANGUERA (CONJUNTO) 1254 mm (49-3/8 in); Return; Models With Pilot Controls; Replaces Ref 12 Elbow and 87437934 1230 mm Hose Used On Some Models
14		218-5110		1	CONEXION ELBOW, 90 deg, 1-5/16 fl x adj Or; Incl. Ref 15

http://www.minnparbackhoeparts.com/

HIDRAULICA - VÁLVULA DE LA CARGADORA AL FILTRO A LA VÁLVULA DE LA RETROEXCAVADORA

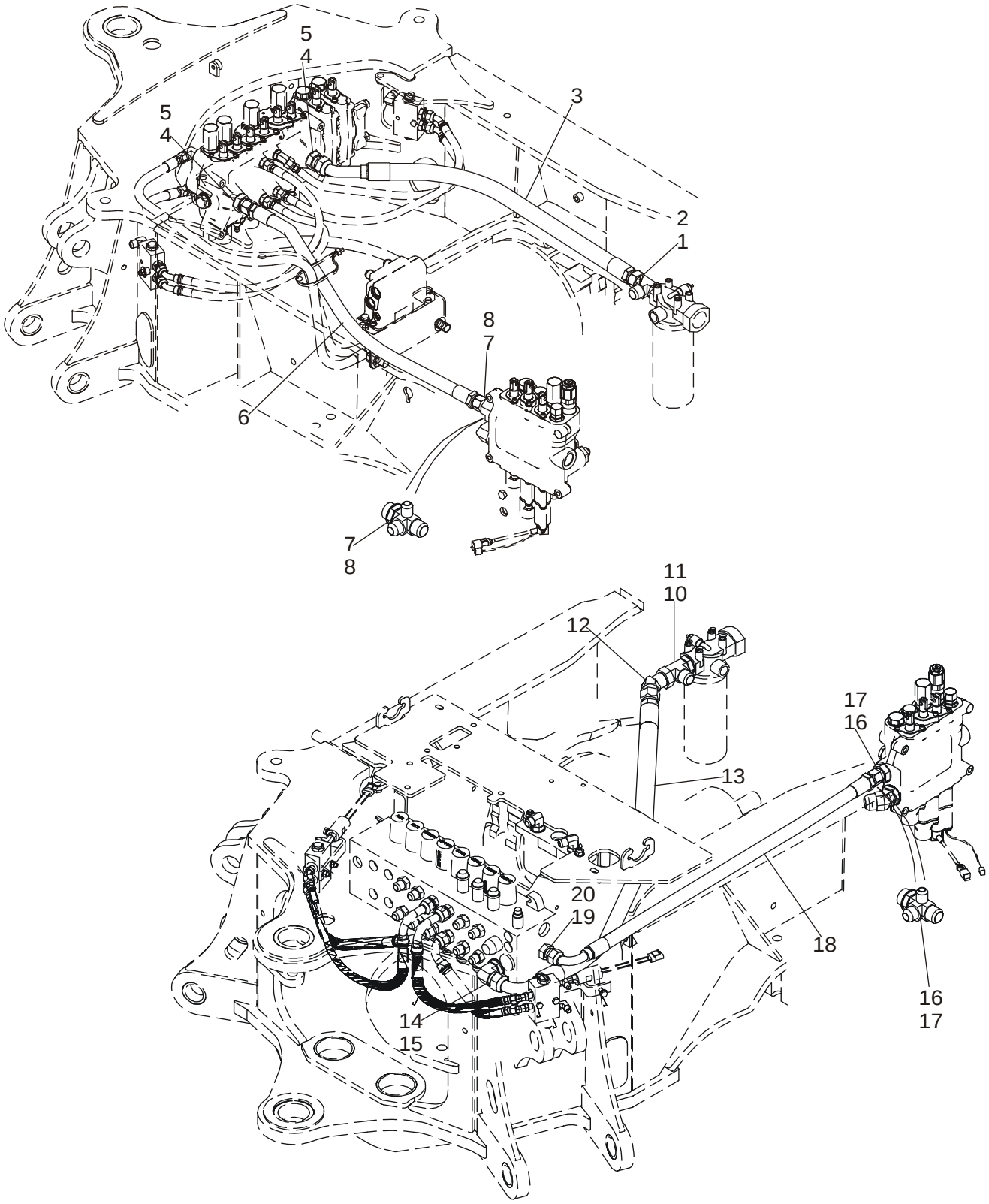

http://www.minnparbackhoeparts.com/

HIDRAULICA - VÁLVULA DE LA CARGADORA AL FILTRO A LA VÁLVULA DE LA RETROEXCAVADORA

REF	FN	PART NUMBER	YR/SN	QTY	DESCRIPTION
15		237-6016		1	JUNTA HERMETICA 1-11/64 ID x 7/64
16		87436066		1	CONEXION 4-Way Tee, Special, 1-5/16 fl x Or; Incl. Ref 17
17		237-6016		1	JUNTA HERMETICA 1-11/64 ID x 7/64
18		87455832		1	MANGUERA (CONJUNTO) 1020 mm (40-5/32 in); 2 or 3 Spool Valve; Without Auxiliary Hydraulics, With Pilot Controls; Power Beyond; Replaces 87437442 1050 mm (41-3/8 in) Hose
18		87437232		1	MANGUERA (CONJUNTO) 420 mm (16-9/16 in); 2 Spool Valve; With Auxiliary Hydraulics; With or Without Pilot Controls; Loader Valve Power Beyond to Backhoe Valve
18		87437231		1	MANGUERA (CONJUNTO) 370 mm (14-5/8 in); 3 Spool Valve; With Auxiliary Hydraulics; With or Without Pilot Controls; Loader Valve Power Beyond to Backhoe Valve
19		218-5064		1	RACOR 1-1/16 fl x Or; Incl. Ref 20
20		237-6012		1	JUNTA HERMETICA 59/64 ID x 7/64

http://www.minnparbackhoeparts.com/

08-03		p1	02/05

HIDRAULICA - REFRIGERADOR, LÍNEAS DE RETORNO Y FILTRO

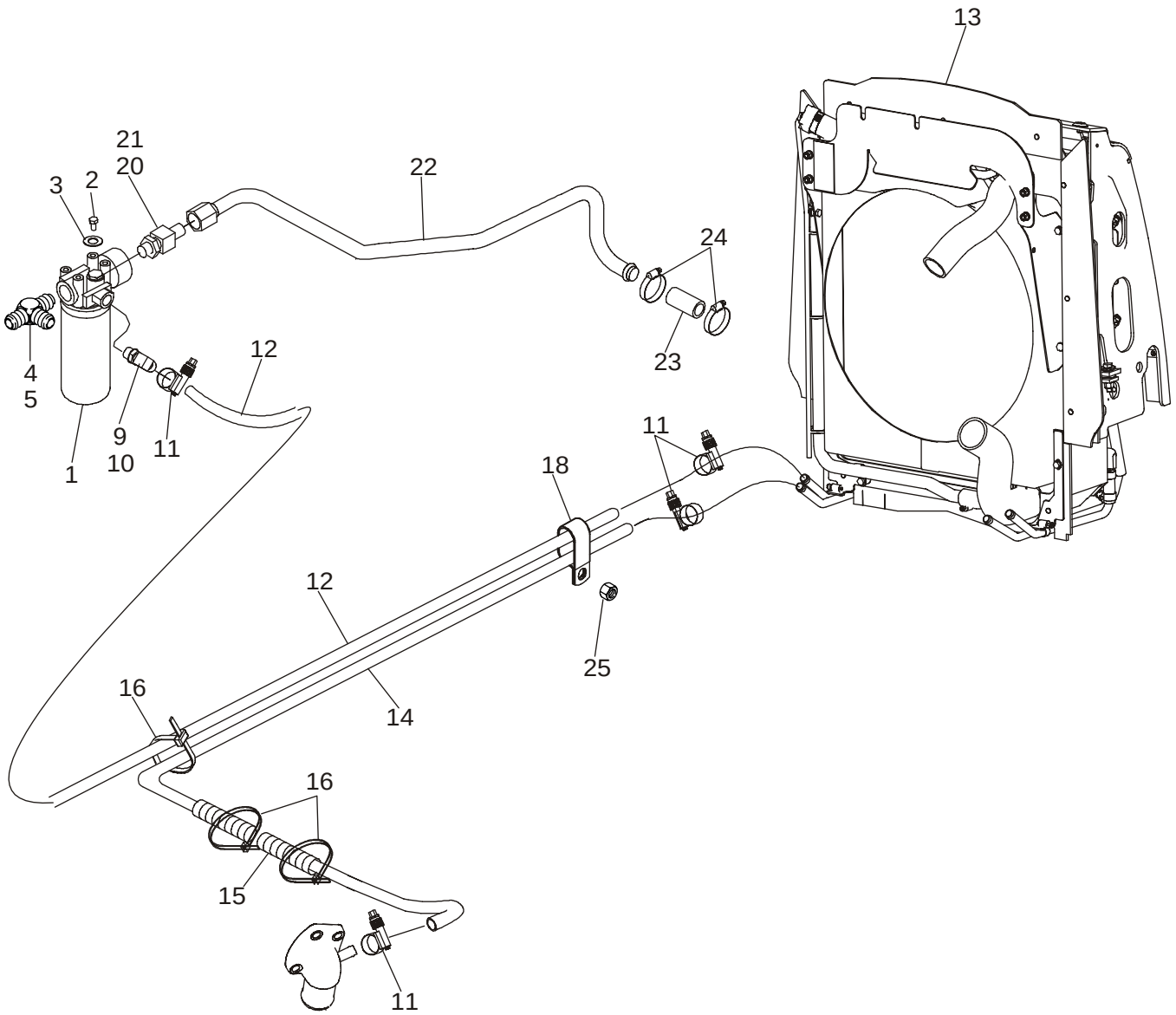

BS04D116

http://www.minnparbackhoeparts.com/

HIDRAULICA - REFRIGERADOR, LÍNEAS DE RETORNO Y FILTRO

REF	FN	PART NUMBER	YR/SN	QTY	DESCRIPTION
1		87440045		1	FILTRO CONJ Hydraulic Oil; See Figure 08-61
2		614-10020		4	TORNILLO M10 x 20
3		895-11010		4	ARANDELA 11 x 21 x 2 mm
4		218-5584		1	CONEXION TEE, 1-1/16 fl br x 1-5/16 fl x Or; Incl. Ref 5
5		237-6016		1	JUNTA HERMETICA 1-11/64 ID x 7/64 wide
9		301104A1		1	CONEXION Special; Incl. Ref 10
10		237-6010		1	JUNTA HERMETICA 3/4 ID x 3/32 wide
11		328186A1		4	ABRAZADERA MANGUERA
12		87426965		1	MANGA 1785 mm (70-5/16 in)
13		REF		1	MANUAL Hydraulic Oil Cooler; For Cooler and Attaching Parts, See Figure 06-10 - 06-11A
14		87426966		1	MANGA 1860 mm (73-1/4 in), Return
15		D132982		2	TUBO AISLANTE Hose Sleeve
16		L18337		4	BANDA
18		D39696		1	COLLAR Double P-Type
20		218-5086		1	CONECTOR 5/16-12 fl x 1-5/8; Incl. Ref 21
21		237-6020		1	JUNTA HERMETICA 1-15/32 ID x 1/8
22		87308472		1	TUBO (CONJUNTO) Return To Tank; Replaces 87421940
23		D38435		1	MANGUITO 89 mm (3-5/8 in); Cut From S118383X; Return To Tank; For Attaching Brake Line Clamp, See Figure 07-04
24		214-1420		2	COLLAR No. 20
25		829-1410		1	TUERCA M10

http://www.minnparbackhoeparts.com/

08-04		p1	05/05

HIDRAULICA - CILINDRO, ELEVACIÓN DE LA CARGADORA

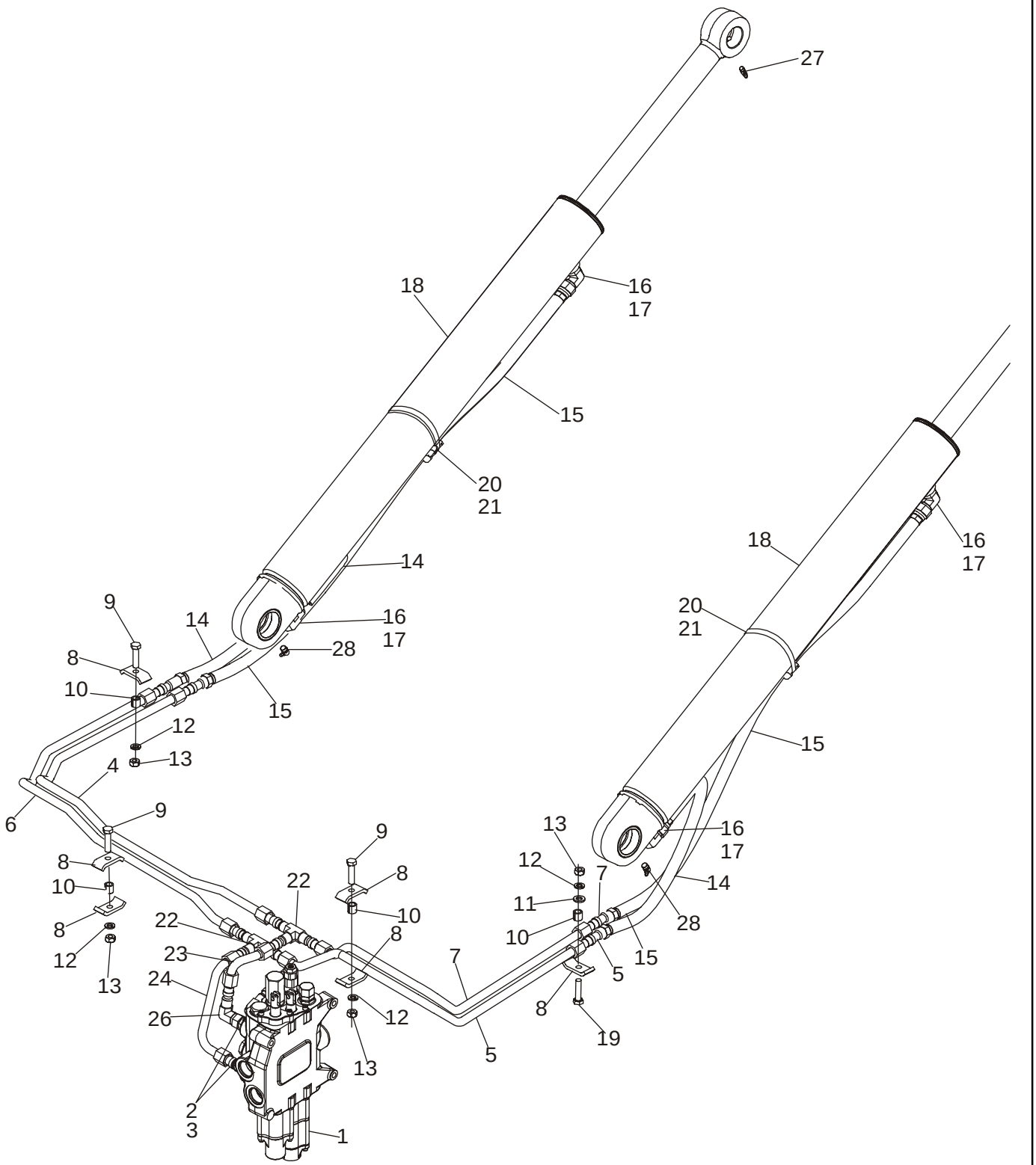

BS03M016

http://www.minnparbackhoeparts.com/

HIDRAULICA - CILINDRO, ELEVACIÓN DE LA CARGADORA

REF	FN	PART NUMBER	YR/SN	QTY	DESCRIPTION
1		REF		1	MANUAL LOADER CONTROL VALVE; For Correct Assembly and Components, See Figures 08-34, 08-35
2		218-5062		2	RACOR 7/8 fl x Or; Incl. Ref 3
3		237-6010		1	JUNTA HERMETICA 3/4 ID x 3/32
4		87421930		1	TUBO (CONJUNTO) Upper Lift Port
5		87421932		1	TUBO (CONJUNTO) Lower Lift Port
6		87421934		1	TUBO (CONJUNTO) Lower Lift Port
7		87421928		1	TUBO (CONJUNTO) Upper Lift Port
8		D138055		6	COLLAR
9		814-10040		3	TORNILLO M10 x 40
10		120303A1		4	ESPACIADOR
11		895-11010		1	ARANDELA 11 x 21 x 2 mm
12		892-11010		4	ARANDELA DE FRENO M10
13		829-1410		4	TUERCA M10; 10.9
14		87443150		2	MANGUERA (CONJUNTO) 740 mm (29-5/32 in)
15		87443149		2	MANGUERA (CONJUNTO) 1130 mm (44-1/2 in)
16		218-5107		4	CODO 7/8 fl x adj Or; Incl. Ref 17
17		237-6010		1	JUNTA HERMETICA 3/4 ID x 3/32
18		384240A1		2	CILINDRO (CONJUNTO) 82.6 ID x 766 mm strk; Loader Lift Cylinder; See Figure 08-62
19		814-10045		1	TORNILLO M10 x 45
20		D142787		2	ESPACIADOR
21		214-1472		2	COLLAR 4-1/16 - 5; If Used
21		214-1464		2	COLLAR 3-9/16 - 4-1/2 in dia; If Used
22		218-595		2	CONEXION TEE, 7/8 fl
23		87416024		1	TUBO (CONJUNTO) Upper Lift Port
24		87437108		1	TUBO (CONJUNTO) Lower Lift Port
26		218-5232		1	CODO 90 Deg, 7/8 fl x sw fl
27		219-1		2	ENGRASADOR Straight, 1/8 PT x 21/32
28		219-55		2	ENGRASADOR 90 Deg, 1/8 PT x 27/32

http://www.minnparbackhoeparts.com/

08-05		p1	06/05

HIDRAULICA - CILINDRO, CUCHARÓN DE LA CARGADORA

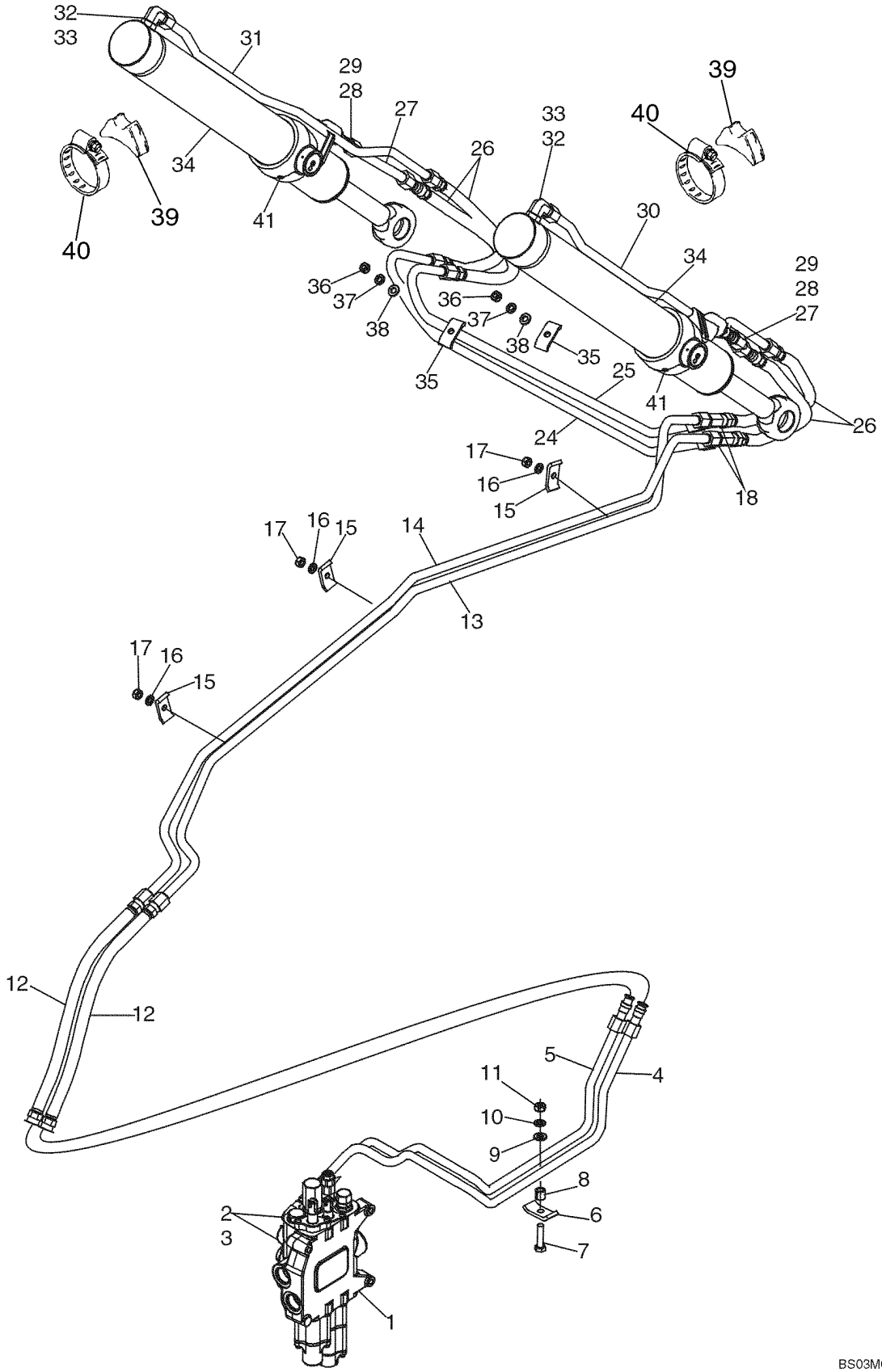

http://www.minnparbackhoeparts.com/

HIDRAULICA - CILINDRO, CUCHARÓN DE LA CARGADORA

REF	FN	PART NUMBER	YR/SN	QTY	DESCRIPTION
1		REF		1	MANUAL LOADER CONTROL VALVE; For Correct Assembly and Components, See Figures 08-34, 08-35; For Mounting, See Figure 09-01
2		218-5107		2	CODO 90 Deg, 7/8 fl x Or; Incl. Ref 3
3		237-6010		1	JUNTA HERMETICA 3/4 ID x 3/32, Boss Seal
4		87421918		1	TUBO (CONJUNTO) Upper Bucket Port
5		87421920		1	TUBO (CONJUNTO) Lower Bucket Port
6		D138055		1	COLLAR
7		814-10045		1	TORNILLO M10 x 45
8		120303A1		1	ESPACIADOR
9		895-11010		1	ARANDELA 11 x 21 x 2 mm
10		892-11010		1	ARANDELA DE FRENO M10
11		829-1410		1	TUERCA M10; 10.9
12		87429287		2	MANGUERA (CONJUNTO) 710 mm (28 in)
13		418789A1		1	TUBO (CONJUNTO) To Upper Port
14		418791A1		1	TUBO (CONJUNTO)
15		D138055		3	COLLAR
16		892-11010		3	ARANDELA DE FRENO M10
17		829-1410		3	TUERCA M10; 10.9
18		218-5220		2	RACOR-T 7/8 fl br x fl x sw
24		196815A1		1	CUELLO DE CARGA Rear
25		196813A1		1	CUELLO DE CARGA Front
26		371031A1		4	MANGUERA (CONJUNTO) 840 mm (33 in)
27		87316049		2	TUBO (CONJUNTO) Bucket Cylinder Rod End; Replaces 192152A1
28		218-5062		2	RACOR 7/8 fl x Or; Incl. Ref 29
29		237-6010		1	JUNTA HERMETICA 3/4 ID x 3/32, Boss Seal
30		87316270		1	TUBO (CONJUNTO) Right-Hand Cylinder Closed End; Replaces 192156A1
31		87316264		1	TUBO (CONJUNTO) Left-Hand Cylinder Closed End; Replaces 192154A1
32		218-5107		2	CODO 90 Deg, 7/8 fl x adj Or; Incl. Ref 33
33		237-6010		1	JUNTA HERMETICA 3/4 ID x 3/32, Boss Seal
34		113133A2		2	CILINDRO (CONJUNTO) 76 ID x 522 mm strk; Loader Bucket Cylinder; See Figure 08-63
35		D138055		2	COLLAR
36		829-1410		2	TUERCA M10; 10.9

http://www.minnparbackhoeparts.com/

08-05		p2	06/05

HIDRAULICA - CILINDRO, CUCHARÓN DE LA CARGADORA

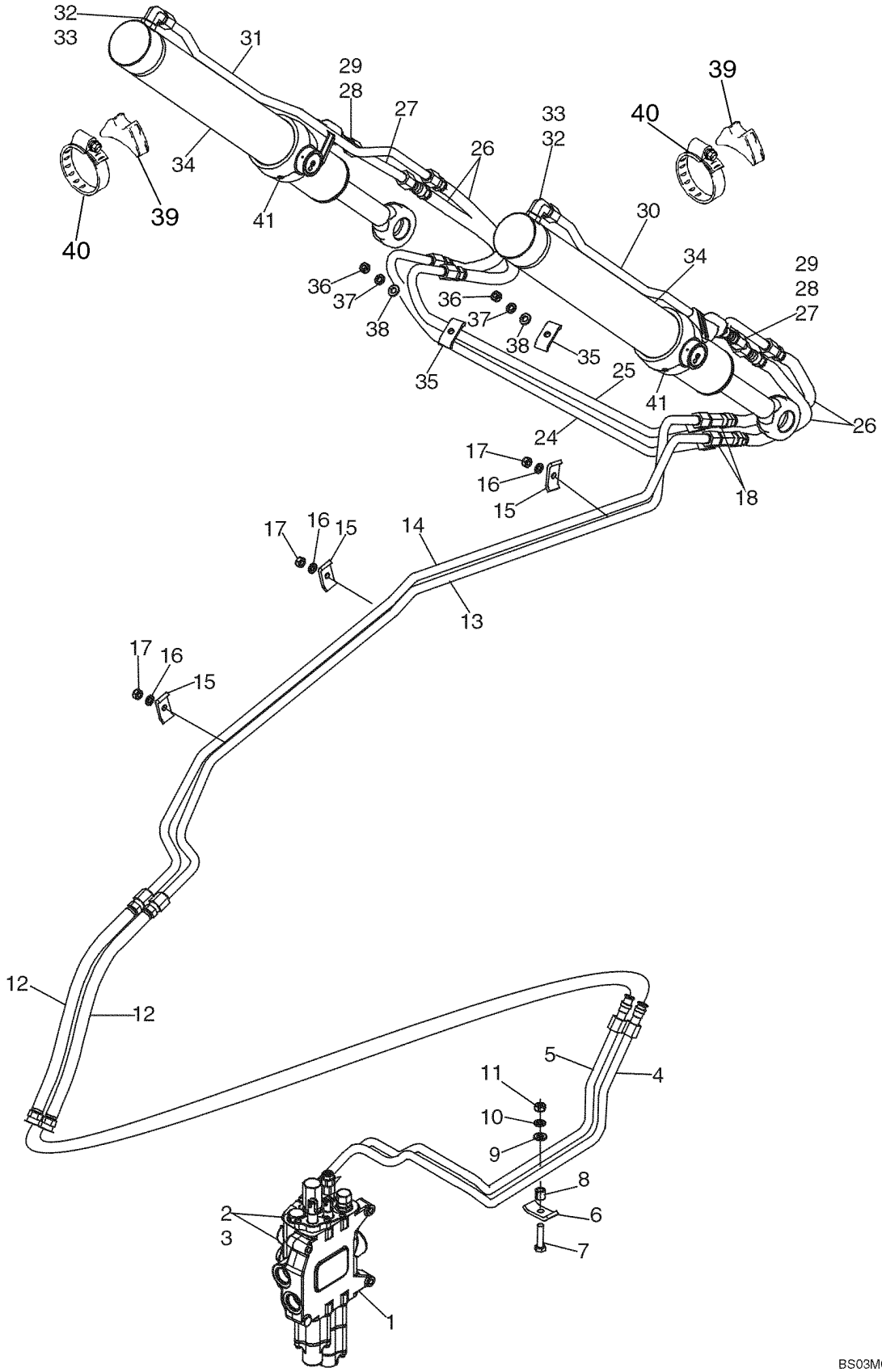

http://www.minnparbackhoeparts.com/

HIDRAULICA - CILINDRO, CUCHARÓN DE LA CARGADORA

REF	FN	PART NUMBER	YR/SN	QTY	DESCRIPTION
37		892-11010		2	ARANDELA DE FRENO M10
38		895-11010		2	ARANDELA 11 x 21 x 2 mm
39		L79937		2	SILLA
40		214-1464		2	COLLAR 3-9/16 - 4-1/2 in dia
41		219-55		2	ENGRASADOR 90 Deg, 1/8 PT x 27/32

http://www.minnparbackhoeparts.com/

08-06		p1	01/05

HIDRAULICA - CILINDRO, ALMEJA DE LA CARGADORA

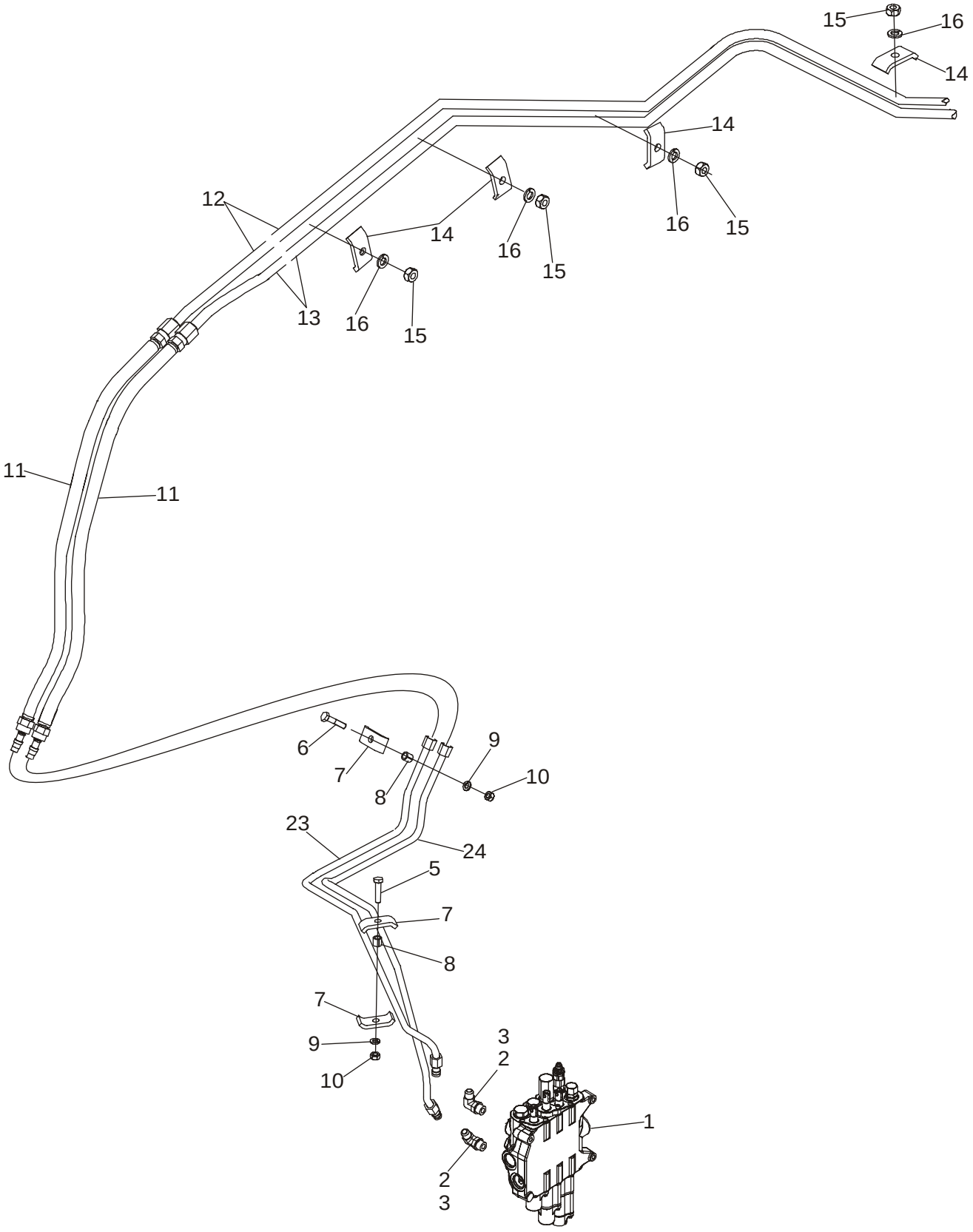

http://www.minnparbackhoeparts.com/

HIDRAULICA - CILINDRO, ALMEJA DE LA CARGADORA

REF	FN	PART NUMBER	YR/SN	QTY	DESCRIPTION
1		REF		1	MANUAL LOADER CONTROL VALVE; Three Spool; See Figure 08-35 for Valve Options; For Mounting, See Figure 09-01
2		218-5107		2	CODO 90 deg, 7/8 fl x Or; Incl. Ref 3
3		237-6010		1	JUNTA HERMETICA 3/4 ID x 3/32, Boss Seal
5		814-10045		1	TORNILLO M10 x 45
6		814-10040		1	TORNILLO M10 x 40
7		D138055		3	COLLAR
8		120303A1		2	ESPACIADOR
9		892-11010		2	ARANDELA DE FRENO M10
10		829-1410		2	TUERCA M10; 10.9
11		87429287		2	MANGUERA (CONJUNTO) 710 mm (28 in)
12		196824A1		1	CUELLO DE CARGA Upper Clam Port
13		196821A1		1	CUELLO DE CARGA Lower Clam Port
14		D138055		4	COLLAR
15		829-1410		4	TUERCA M10; 10.9
16		892-11010		4	ARANDELA DE FRENO M10
17		218-776		2	TAPÓN 7/8 fl; Located on the End of Ref 13 Tube; Not Used On Models With Clam Bucket; Not Illustrated
23		87447044		1	TUBO (CONJUNTO) Upper Clam Port; Replaces 87436908 Tube
24		87447887		1	TUBO (CONJUNTO) Lower Clam Port; Replaces 87436910 Tube

http://www.minnparbackhoeparts.com/

08-07		p1	03/05

HIDRAULICA - CILINDRO, ALMEJA DE LA CARGADORA

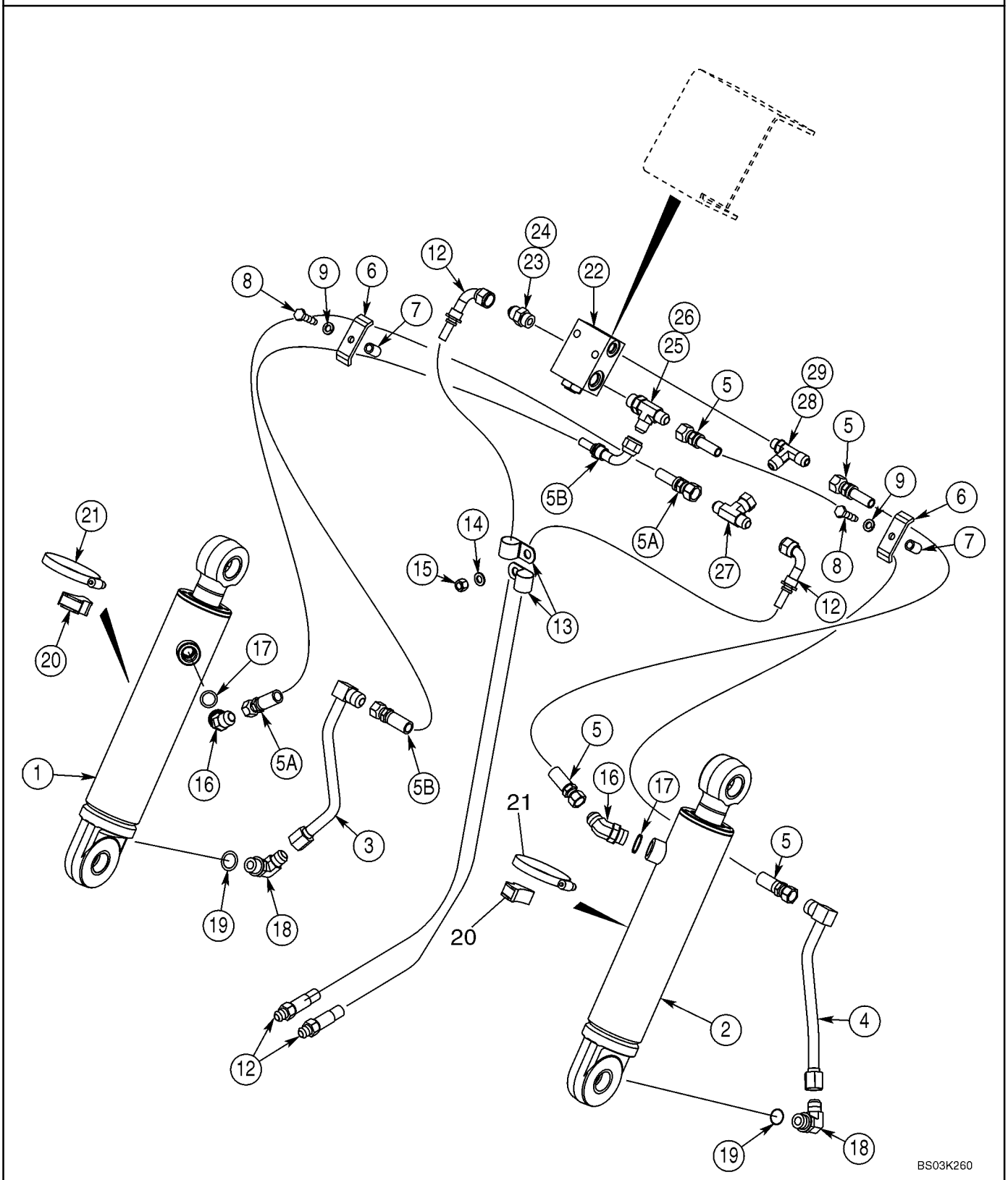

http://www.minnparbackhoeparts.com/

HIDRAULICA - CILINDRO, ALMEJA DE LA CARGADORA

REF	FN	PART NUMBER	YR/SN	QTY	DESCRIPTION
1		1346190C1		1	CILINDRO (CONJUNTO) 76 ID x 231 mm strk: Loader Clam Cylinder; Left-Hand; See Figure 08-64; If Used
1		87454016		1	CILINDRO (CONJUNTO) 76 ID x 231 mm strk: Loader Clam Cylinder; Left-Hand; See Figure 08-64; If Used
2		1346189C1		1	CILINDRO (CONJUNTO) 76 ID x 231 mm strk; Loader Clam Cylinder; Right-Hand; See Figure 08-64; If Used
2		87454017		1	CILINDRO (CONJUNTO) 76 ID x 231 mm strk; Loader Clam Cylinder; Right-Hand; See Figure 08-64; If Used
3		192352A1		1	CUELLO DE CARGA Left-Hand Cylinder
4		192345A1		1	CUELLO DE CARGA Right-Hand Cylinder
5		353167A1		2	MANGUERA (CONJUNTO) 1100 mm (43-5/16 in); Right-Hand Cylinder; 580SM Models
5		376157A1		2	MANGUERA (CONJUNTO) 1240 mm (48-7/8 in); Right-Hand Cylinder; 580SM+ Models
5A		353103A1		1	MANGUERA (CONJUNTO) 1200 mm (47-1/4 in); Left-Hand Cylinder; 580SM Models
5A		353102A1		1	MANGUERA (CONJUNTO) 1340 mm (52-13/16 in); Left-Hand Cylinder; 580SM+ Models
5B		367352A1		1	MANGUERA (CONJUNTO) 1200 mm (47-1/4 in); Left-Hand Cylinder; 580SM Models
5B		376158A1		1	MANGUERA (CONJUNTO) 1340 mm (52-13/16 in); Left-Hand Cylinder; 580SM+ Models
6		D143846		2	BRIDA CLAMP
7		R46493		2	ESPACIADOR
8		814-10040		2	TORNILLO M10 x 40
9		892-11010		2	ARANDELA DE FRENO M10
12		356743A1		2	MANGUERA (CONJUNTO) 1170 mm (46-1/16 in); Lift Frame
13		515-25254		2	COLLAR 1 in ID
14		895-11010		1	ARANDELA 11 x 21 x 2 mm
15		832-10410		1	TUERCA M10
16		218-5137		2	CONEXION 7/8 fl x Or; Incl. Ref 17
17		237-6010		1	JUNTA HERMETICA 3/4 ID x 3/32, Boss Seal

http://www.minnparbackhoeparts.com/

08-07		p2	03/05

HIDRAULICA - CILINDRO, ALMEJA DE LA CARGADORA

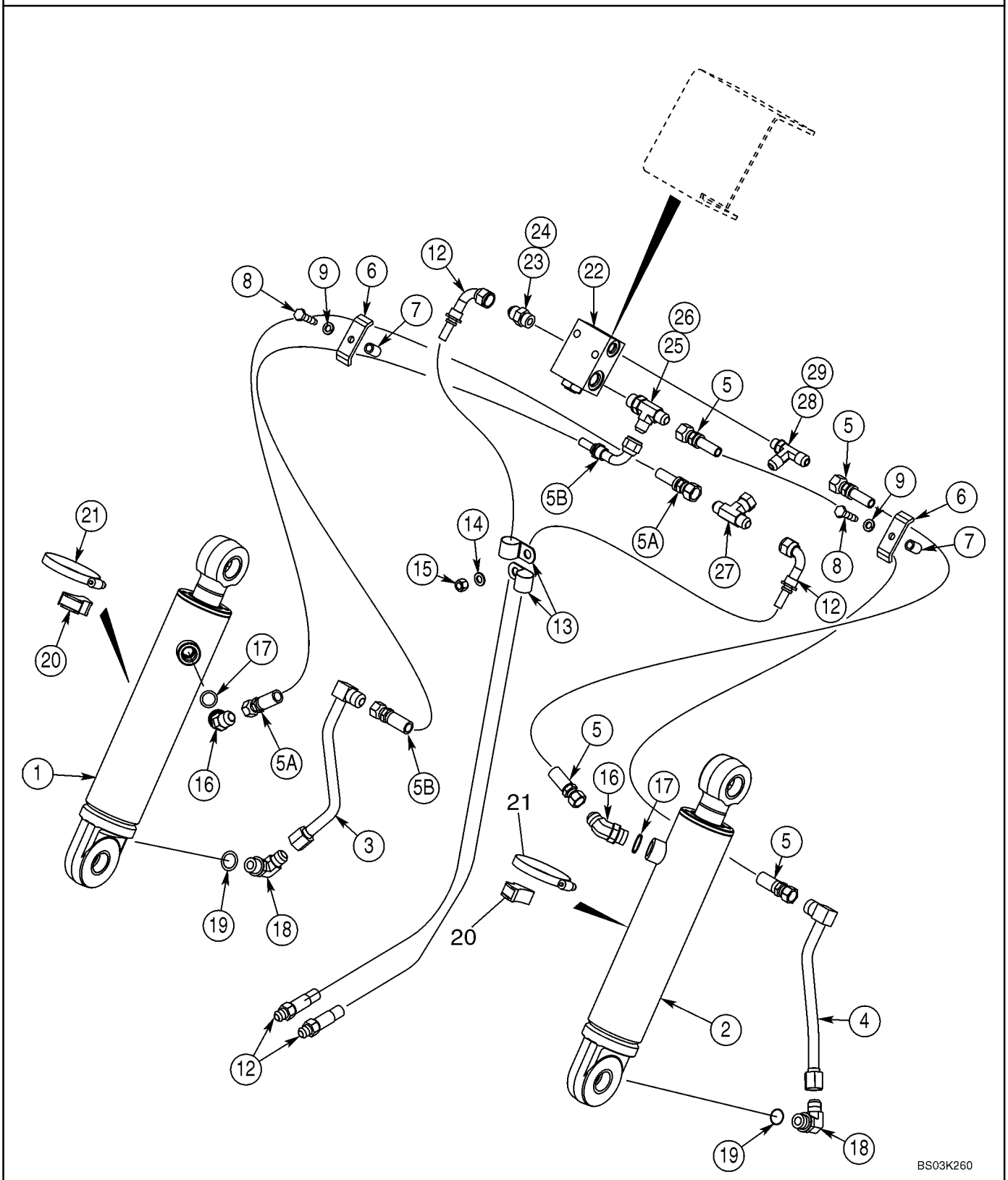

http://www.minnparbackhoeparts.com/

HIDRAULICA - CILINDRO, ALMEJA DE LA CARGADORA

REF	FN	PART NUMBER	YR/SN	QTY	DESCRIPTION
18		218-5107		2	CODO 7/8 fl x adj Or; Incl. Ref 19
19		237-6010		1	JUNTA HERMETICA 3/4 ID x 3/32, Boss Seal
20		D38648		2	BLOQUE MOTOR
21		214-1464		2	COLLAR 3-9/16 - 4-1/2 in dia
22		325465A2		1	VALVULA ANTIRRETORNO Pilot Operated Check Valve; For Mounting, See Figure 09-08, 09-08A
		399963A1		1	JEUGO Seal; For Use With 325465A2 Valve; Includes (1) Piston, (1) Backup Ring, (2) O-Rings and Instructions
23		218-5059		1	RACOR 3/4 fl x Or; Incl. Ref 24
24		237-6008		1	JUNTA HERMETICA 41/64 ID x 3/32, Boss Seal
25		218-5242		1	RACOR 3/4 fl br x fl x Or; Incl. Ref 26
26		237-6008		1	JUNTA HERMETICA 41/64 ID x 3/32, Boss Seal
27		218-840		1	RACOR-T 3/4 NF sw x fl x fl
28		218-5650		1	RACOR-T 3/4 fl x fl x 9/16 Or; Incl. Ref 29
29		237-6006		1	JUNTA HERMETICA 15/32 ID x 5/64, Boss Seal

http://www.minnparbackhoeparts.com/

HIDRAULICA - CILINDRO, ESTABILIZADOR DE LA RETROEXCAVADORA (SIN DE CONTROL PILOTO)

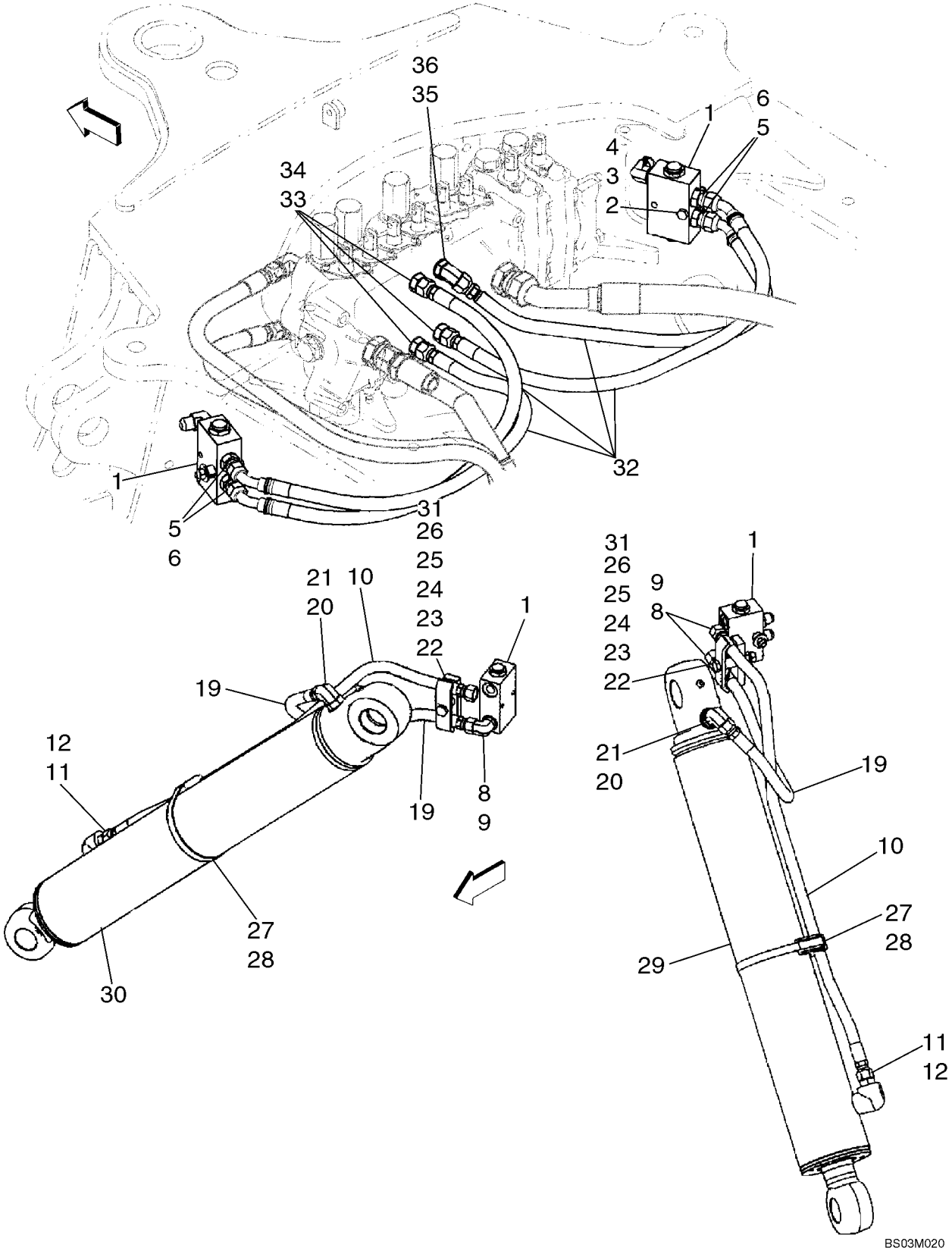

http://www.minnparbackhoeparts.com/

HIDRAULICA - CILINDRO, ESTABILIZADOR DE LA RETROEXCAVADORA (SIN DE CONTROL PILOTO)

REF	FN	PART NUMBER	YR/SN	QTY	DESCRIPTION
		REF			MANUAL MODELS WITHOUT PILOT CONTROLS
1		85802820		2	VALVULA HIDRAULICA Load Check; Component Parts Not Serviced Separately
2		814-8060		2	TORNILLO M8 x 60
3		496-41041		2	ARANDELA 13/32 x 1-1/8 x 1/8
		87437840		2	SEPARADOR
4		829-1408		2	TUERCA M8
5		218-5057		4	RACOR 9/16 fl x Or; Incl. Ref 6
6		237-6006		1	JUNTA HERMETICA 15/32 ID x 5/64
8		218-5105		4	CODO 90 deg, 9/16 fl x Or; Incl. Ref 9
9		237-6006		1	JUNTA HERMETICA 15/32 ID x 5/64
10		87439306		2	MANGUERA (CONJUNTO) 830 mm (32-11/16 in)
11		218-5351		2	RACOR 3/4 fl x 9/16 Or; Incl. Ref 12; 580SM Models
12		237-6006		1	JUNTA HERMETICA 15/32 ID x 5/64
11		218-5059		2	RACOR 3/4 fl x Or; Incl. Ref 12; 580SM+ Models
12		237-6008		1	JUNTA HERMETICA 41/64 ID x 3/32
19		87429584		2	MANGUERA (CONJUNTO) 500 mm (19-11/16 in) Hose
20		218-5106		2	CONEXION 3/4 fl x Or, Incl. Ref 21
21		237-6008		1	JUNTA HERMETICA 41/64 ID x 3/32
22		814-10070		2	TORNILLO M10 x 70
23		87420673		2	ABRAZADERA MANGUERA Clamp
		496-41041		2	ARANDELA 13/32 x 1-1/8 x 1/8
24		87439665		2	SEPARADOR
25		87420672		2	SEPARADOR Spacer, Clamp
26		829-1410		2	TUERCA M10; 10.9
27		D142787		2	ESPACIADOR
28		214-3188		2	COLLAR 4-3/4 - 5-5/8; 580SM Models
28		214-1496		2	COLLAR 5-9/16 - 6-1/2; 580SM+ Models
29		199721A1		1	CILINDRO (CONJUNTO) 108 ID x 553 mm strk; Stabilizer Cylinder; Left-Hand; 580SM Models; See Figure 08-65
29		177257A1		1	CILINDRO (CONJUNTO) 127 ID x 519 mm strk; Stabilizer Cylinder; Left-Hand; 580SM+ Models; See Figure 08-65A

http://www.minnparbackhoeparts.com/

HIDRAULICA - CILINDRO, ESTABILIZADOR DE LA RETROEXCAVADORA (SIN DE CONTROL PILOTO)

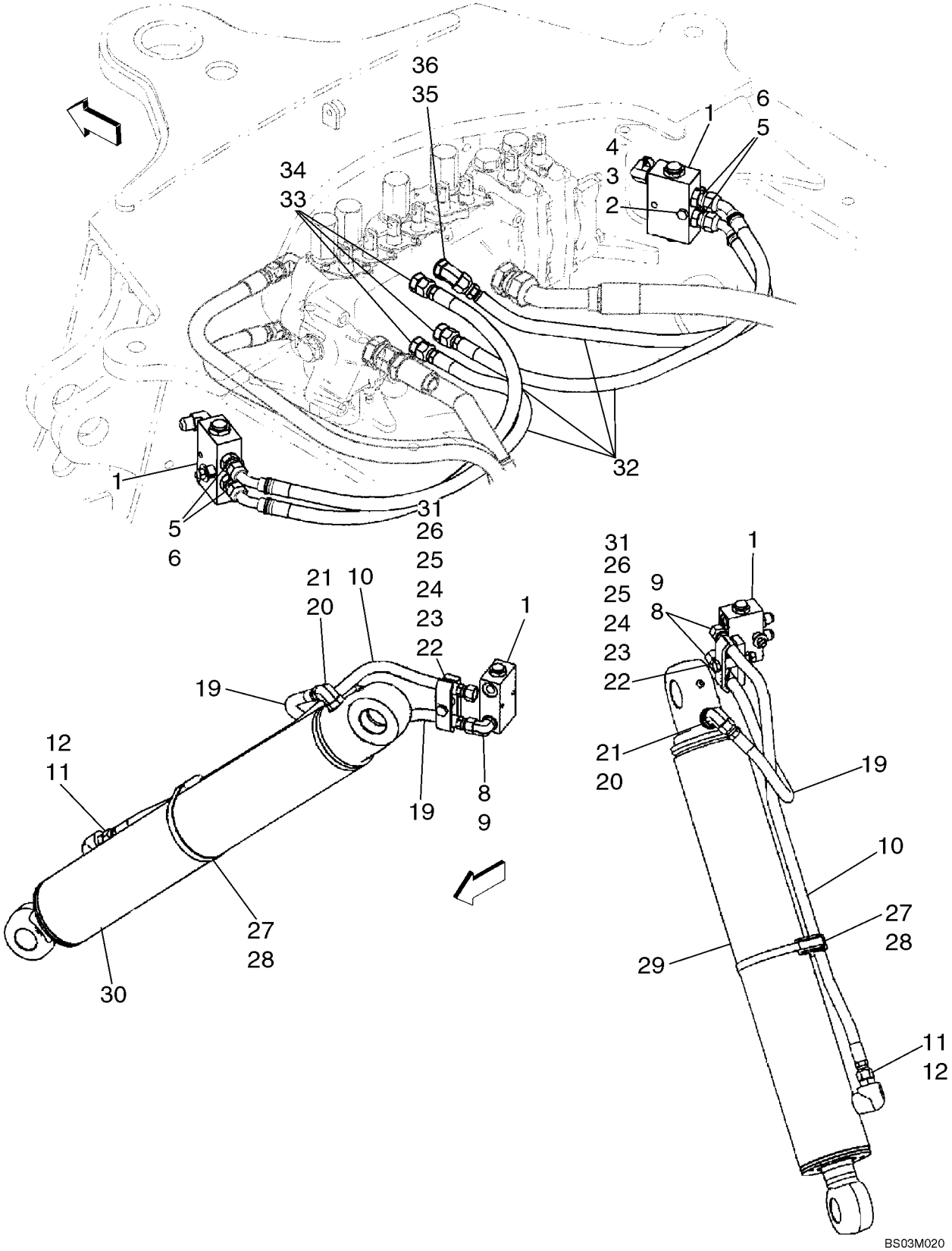

http://www.minnparbackhoeparts.com/

HIDRAULICA - CILINDRO, ESTABILIZADOR DE LA RETROEXCAVADORA (SIN DE CONTROL PILOTO)

REF	FN	PART NUMBER	YR/SN	QTY	DESCRIPTION
30		199720A1		1	CILINDRO (CONJUNTO) 108 ID x 553 mm strk; Stabilizer Cylinder; Right-Hand; 580SM Models; See Figure 08-65
30		177256A1		1	CILINDRO 127 ID x 519 mm strk; Stabilizer Cylinder; Right-Hand; 580SM+ Models; See Figure 08-65A
31		895-11010		2	ARANDELA 11 x 24 x 2 mm
32		87429654		4	MANGUERA (CONJUNTO) 720 mm (28-3/8 in)
33		218-5059		3	RACOR 3/4 fl x Or; Incl. Ref 34
34		237-6008		1	JUNTA HERMETICA 41/64 ID x 3/32
35		218-5136		1	CODO 45 deg, 3/4 fl x adj Or; Incl. Ref 36
36		237-6008		1	JUNTA HERMETICA 41/64 ID x 3/32

http://www.minnparbackhoeparts.com/

08-08A		p1	05/04

HIDRAULICA - CILINDRO, ESTABILIZADOR DE LA RETROEXCAVADORA (CON DE CONTROL PILOTO)

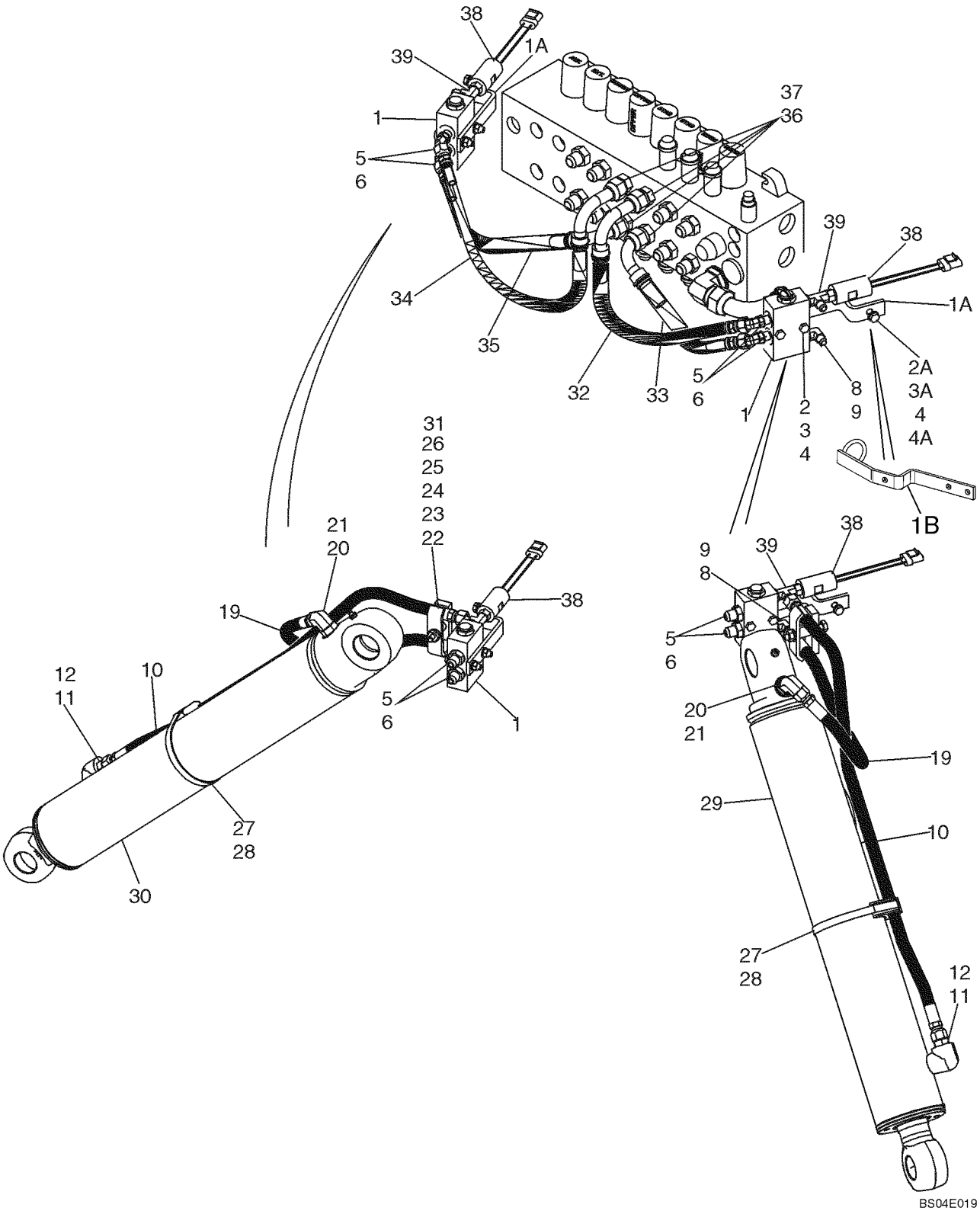

http://www.minnparbackhoeparts.com/

HIDRAULICA - CILINDRO, ESTABILIZADOR DE LA RETROEXCAVADORA (CON DE CONTROL PILOTO)

REF	FN	PART NUMBER	YR/SN	QTY	DESCRIPTION
		REF			MANUAL MODELS WITH PILOT CONTROLS
1		85802820		2	VALVULA HIDRAULICA Load Check; Component Parts Not Serviced Separately
1A		87423034		2	PIEZA DE APOYO No Longer Available, Order 87450318 Bracket, Ref 1B
1B		87450318		2	PIEZA DE APOYO
2		814-8055		4	TORNILLO M8 x 55
2A		814-8035		2	TORNILLO M8 x 35
3		496-41041		2	ARANDELA 13/32 x 1-1/8 x 1/8
3A		895-11008		6	ARANDELA 9 x 16 x 1.6 mm
4		829-1408		6	TUERCA M8
4A		87437840		2	SEPARADOR
5		218-5135		4	CODO 45 deg, 9/16 fl x Or; Incl. Ref 6
6		237-6006		1	JUNTA HERMETICA 15/32 ID x 5/64
8		218-5105		2-4	CODO 90 deg, 9/16 fl x Or; Incl. Ref 9; (2) Used On Models With Auto-Up; (4) Used On Models Without Auto-Up
9		237-6006		1	JUNTA HERMETICA 15/32 ID x 5/64
10		87439306		2	MANGUERA (CONJUNTO) 830 mm (32-11/16 in) Hose
11		218-5351		2	RACOR 3/4 fl x 9/16 Or; Incl. Ref 12; 580SM Models
12		237-6006		1	JUNTA HERMETICA 15/32 ID x 5/64
11		218-5059		2	RACOR 3/4 fl x Or; Incl. Ref 12; 580SM+ Models
12		237-6008		1	JUNTA HERMETICA 41/64 ID x 3/32
19		87429584		2	MANGUERA (CONJUNTO) 500 mm (19-11/16 in) Hose
20		218-5106		2	CONEXION 3/4 fl x Or, Incl. Ref 21
21		237-6008		1	JUNTA HERMETICA 41/64 ID x 3/32
22		814-10070		2	TORNILLO M10 x 70
23		87420673		2	ABRAZADERA MANGUERA Clamp
		496-41041		2	ARANDELA 13/32 x 1-1/8 x 1/8
24		87439665		2	SEPARADOR
25		87420672		2	SEPARADOR Spacer, Clamp
26		829-1410		2	TUERCA M10; 10.9
27		D142787		2	ESPACIADOR
28		214-3188		2	COLLAR 4-3/4 - 5-5/8; 580SM Models
28		214-1496		2	COLLAR 5-9/16 - 6-1/2; 580SM+ Models

http://www.minnparbackhoeparts.com/

08-08A		p2	05/04

HIDRAULICA - CILINDRO, ESTABILIZADOR DE LA RETROEXCAVADORA (CON DE CONTROL PILOTO)

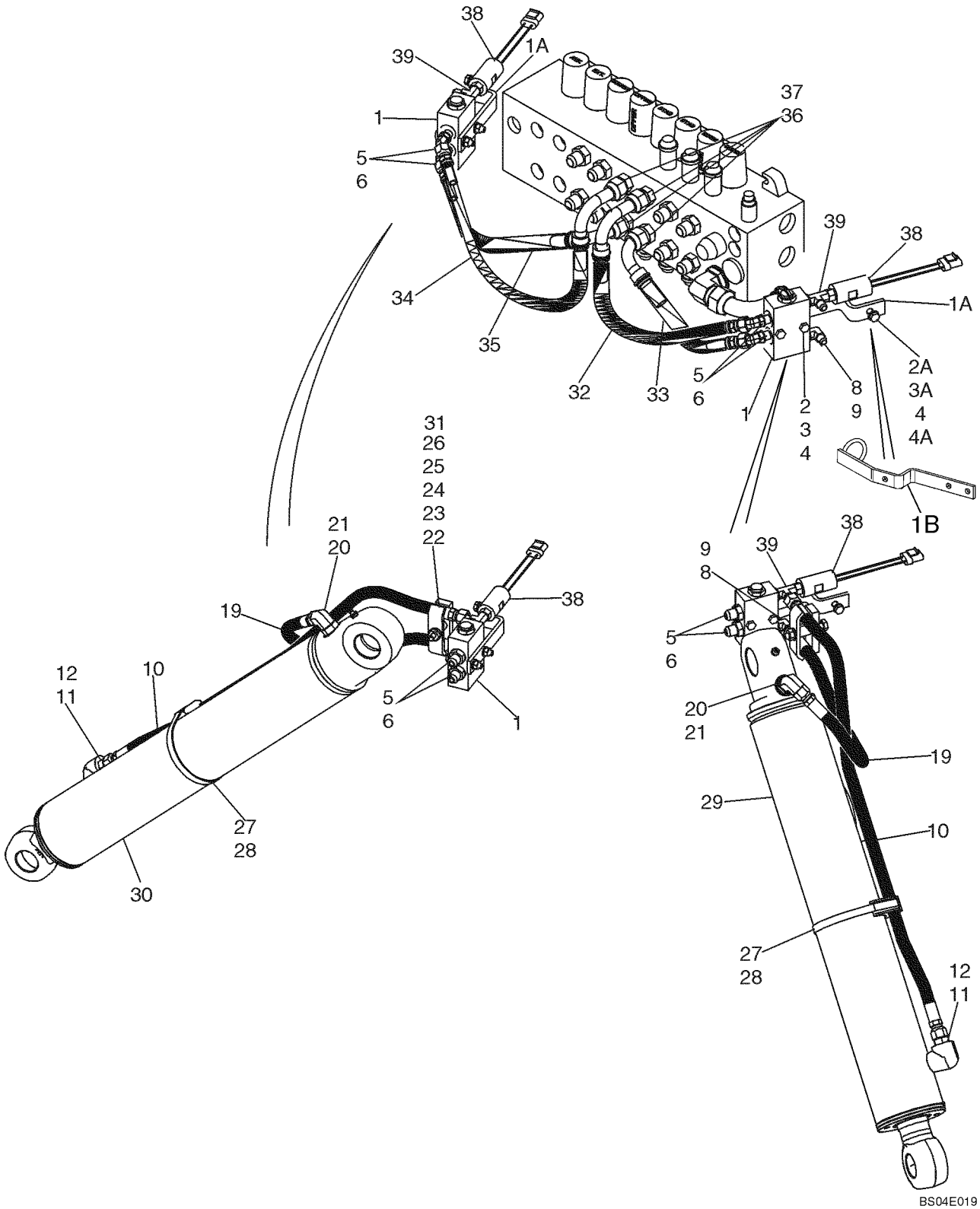

http://www.minnparbackhoeparts.com/

HIDRAULICA - CILINDRO, ESTABILIZADOR DE LA RETROEXCAVADORA (CON DE CONTROL PILOTO)

REF	FN	PART NUMBER	YR/SN	QTY	DESCRIPTION
29		199721A1		1	CILINDRO (CONJUNTO) 108 ID x 553 mm strk; Stabilizer Cylinder; Left-Hand; 580SM Models; See Figure 08-65
29		177257A1		1	CILINDRO (CONJUNTO) 127 ID x 519 mm strk; Stabilizer Cylinder; Left-Hand; 580SM+ Models; See Figure 08-65A
30		199720A1		1	CILINDRO (CONJUNTO) 108 ID x 553 mm strk; Stabilizer Cylinder; Right-Hand; 580SM Models; See Figure 08-65
30		177256A1		1	CILINDRO 127 ID x 519 mm strk; Stabilizer Cylinder; Right-Hand; 580SM+ Models; See Figure 08-65A
31		895-11010		2	ARANDELA 11 x 24 x 2 mm
32		87437939		1	MANGUERA (CONJUNTO) 440 mm (17-3/8 in)
33		87437938		1	MANGUERA (CONJUNTO) 350 mm (13-13/16 in)
34		87437941		1	MANGUERA (CONJUNTO) 485 mm (19-1/8 in)
35		87437940		1	MANGUERA (CONJUNTO) 400 mm (15-3/4 in)
36		218-5070		4	CONECTOR 3/4 fl x 1-1/16 Or; Incl. Ref 37
37		237-6012		1	JUNTA HERMETICA 59/64 ID x 7/64
38		87439163		2	INTERRUPTOR DE PRESION Pilot Control; Includes 237-6004 O-Ring; If Used; Used On Models With Auto-Up
38		86992557		2	CONTACTOR PRESSURE, Pilot Control; Includes 237-6004 O-Ring; If Used; Used On Models With Auto-Up
39		87423033		2	RACOR-T 9/16 x 9/16 Or x 7/16 Or; Includes 237-6004, 237-6006 O-Ring; Used On Models With Auto-Up

http://www.minnparbackhoeparts.com/

08-09		p1	05/04

HIDRAULICA - CILINDRO, BALANCÍN DE LA RETROEXCAVADORA (SIN DE CONTROL PILOTO)

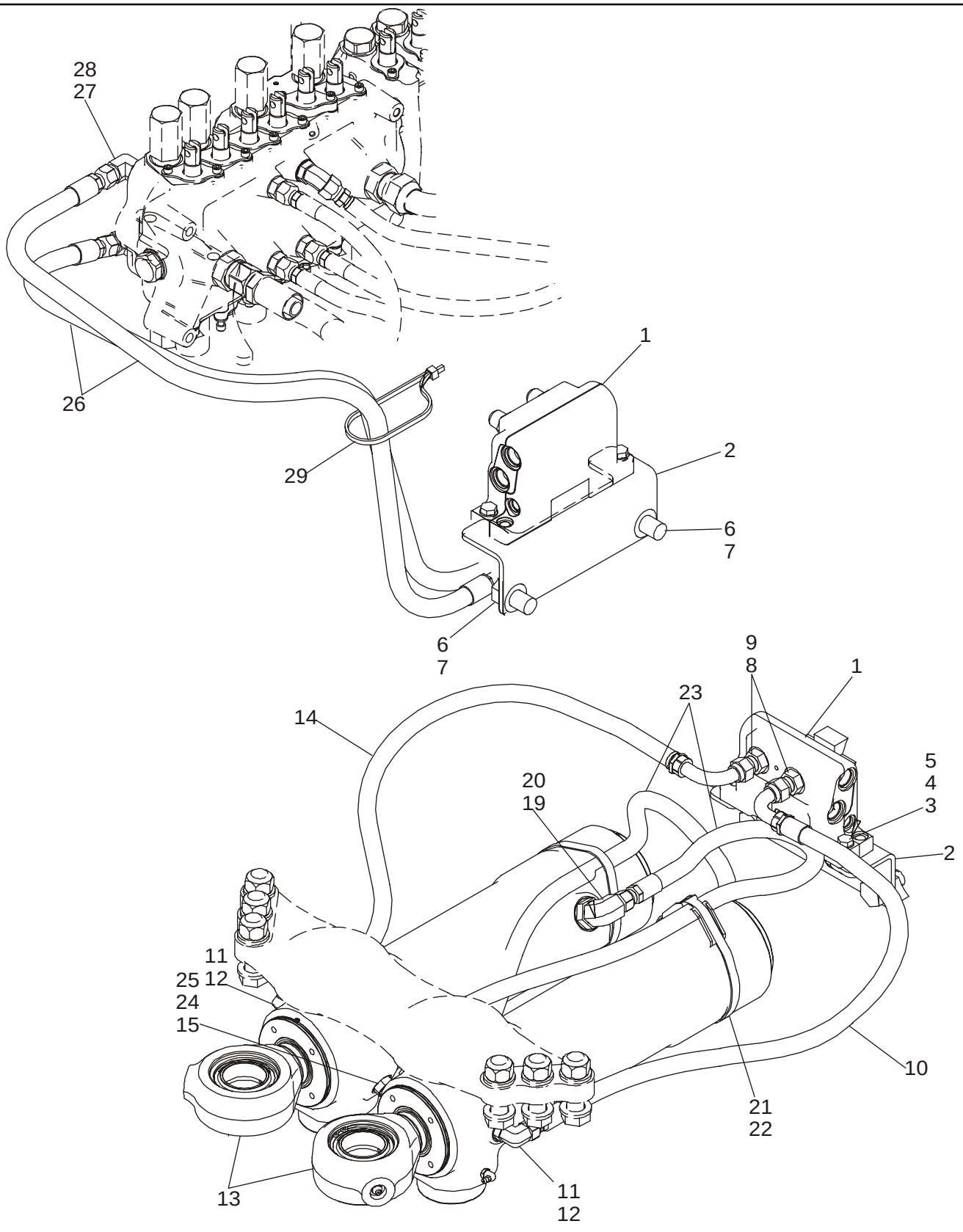

http://www.minnparbackhoeparts.com/

HIDRAULICA - CILINDRO, BALANCÍN DE LA RETROEXCAVADORA (SIN DE CONTROL PILOTO)

REF	FN	PART NUMBER	YR/SN	QTY	DESCRIPTION
		REF			MANUAL MODELS WITHOUT PILOT CONTROLS
1		87449373		1	VALVULA AMORTIGUADORA Swing Cushion; See Figure 08-59; Replaces 87416975 Valve
2		87428140		1	PIEZA DE APOYO Valve Bracket
3		814-10040		2	TORNILLO M10 x 40
4		895-11010		4	ARANDELA
5		829-1410		2	TUERCA M10
6		614-18035		2	TORNILLO M18 x 35
7		895-11018		4	ARANDELA
8		218-5062		4	RACOR 7/8 fl x Or; Incl. Ref 9
9		237-6010		1	JUNTA HERMETICA 3/4 ID x 3/32
10		87423356		1	MANGUERA (CONJUNTO) 850 mm (33-1/2 in)
11		218-5106		2	CONEXION 3/4 fl x Or, Incl. Ref 12
12		237-6008		1	JUNTA HERMETICA 41/64 ID x 3/32, Boss Seal
13		139808A2		2	CILINDRO (CONJUNTO) 102 ID x 292 mm strk; Swing Cylinder, See Figure 08-66
14		87423356		1	MANGUERA (CONJUNTO) 850 mm (33-1/2 in)
15		124690A1		2	UNION REDUCCION Orifice
19		218-5119		2	CONEXION 7/8 fl x 1-1/16 Or, Incl. Ref 20
20		237-6012		1	JUNTA HERMETICA 59/64 ID x 7/64, Boss Seal
21		D142787		2	ESPACIADOR
22		214-1492		2	COLLAR
23		87441076		2	MANGUERA (CONJUNTO) 802 mm (31-19/32 in)
24		218-5106		2	CONEXION 3/4 fl x Or, Incl. Ref 25
25		237-6008		1	JUNTA HERMETICA 41/64 ID x 3/32, Boss Seal
26		87428158		2	MANGUERA (CONJUNTO) 1194 mm (47 in)
27		218-5107		2	CODO 90 deg, 7/8 fl x Or; Incl. Ref 28
28		237-6010		1	JUNTA HERMETICA
29		L18337		1	BANDA

http://www.minnparbackhoeparts.com/

08-09A		p1	05/04

HIDRAULICA - CILINDRO, BALANCÍN DE LA RETROEXCAVADORA (CON DE CONTROL PILOTO)

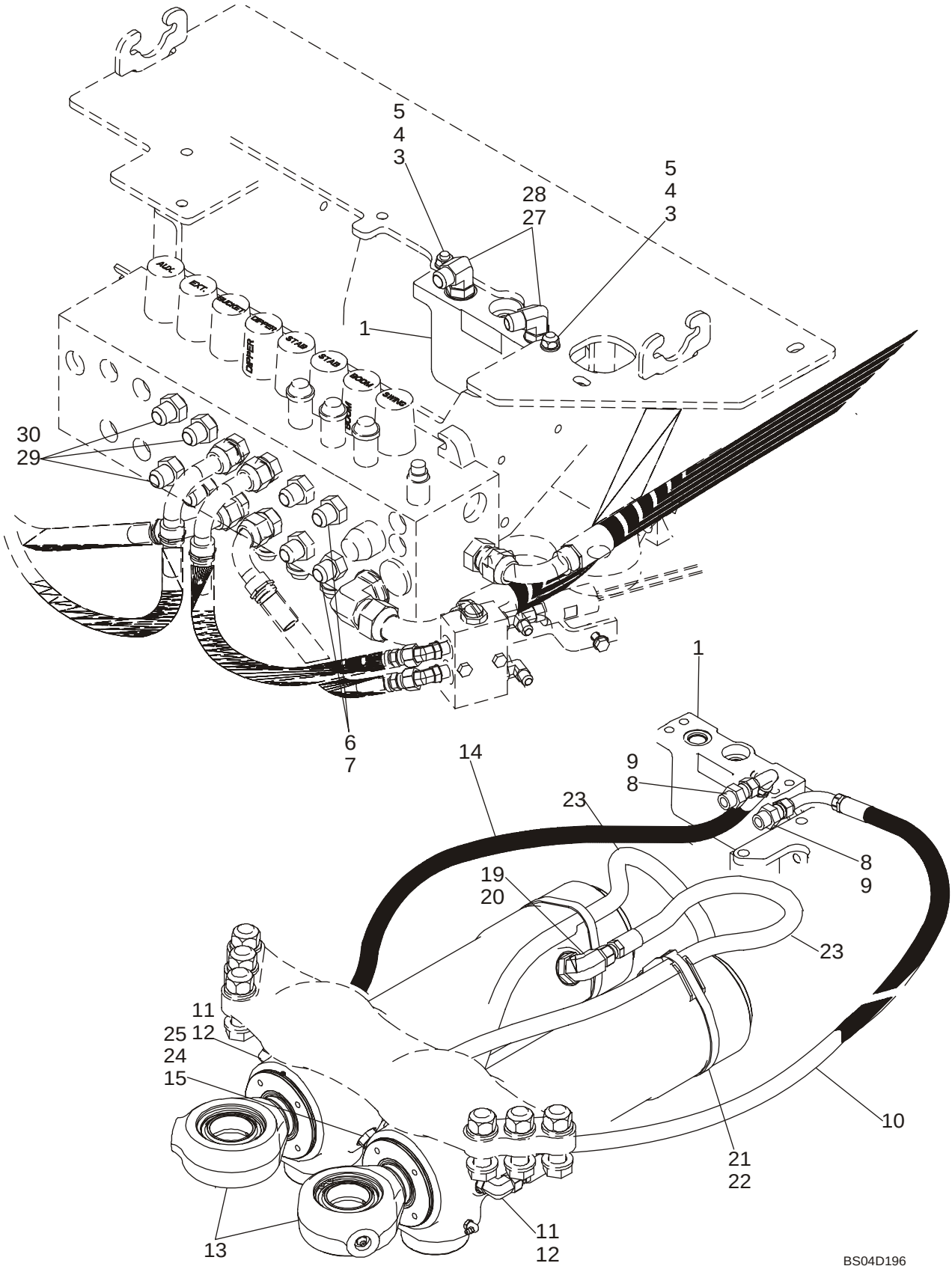

http://www.minnparbackhoeparts.com/

HIDRAULICA - CILINDRO, BALANCÍN DE LA RETROEXCAVADORA (CON DE CONTROL PILOTO)

REF	FN	PART NUMBER	YR/SN	QTY	DESCRIPTION
		REF			MANUAL MODELS WITH PILOT CONTROLS
1		87449373		1	VALVULA AMORTIGUADORA Swing Cushion; See Figure 08-59; Replaces 87416975 Valve
3		814-10045		2	TORNILLO M10 x 45
4		895-11010		4	ARANDELA
5		829-1410		2	TUERCA M10
6		218-5063		2	RACOR 7/8 fl x 1-1/16 Or; Incl. Ref 7
7		237-6012		1	JUNTA HERMETICA
8		218-5062		2	RACOR 7/8 fl x Or; Incl. Ref 9
9		237-6010		1	JUNTA HERMETICA 3/4 ID x 3/32
10		87440812		1	MANGUERA (CONJUNTO) 950 mm (37-13/32 in)
11		218-5106		2	CONEXION 3/4 fl x Or, Incl. Ref 12
12		237-6008		1	JUNTA HERMETICA 41/64 ID x 3/32, Boss Seal
13		139808A2		2	CILINDRO (CONJUNTO) 102 ID x 292 mm strk; Swing Cylinder, See Figure 08-66
14		87437685		1	MANGUERA (CONJUNTO) 1310 mm (51-5/8 in); No Longer Available, Order 87450698 Hose and 87450318 Bracket on Figure 08-8A
14		87450698		1	MANGUERA (CONJUNTO) 1285 mm (50-19/32 in); Replaces 1310 mm 87437685 Hose Used On Some Models
15		124690A1		2	UNION REDUCCION Orifice
19		218-5119		2	CONEXION 7/8 fl x 1-1/16 Or, Incl. Ref 20
20		237-6012		1	JUNTA HERMETICA 59/64 ID x 7/64, Boss Seal
21		D142787		2	ESPACIADOR
22		214-1492		2	COLLAR
23		87441076		2	MANGUERA (CONJUNTO) 802 mm (31-19/32 in)
24		218-5106		2	CONEXION 3/4 fl x Or, Incl. Ref 25
25		237-6008		1	JUNTA HERMETICA 41/64 ID x 3/32, Boss Seal
27		218-5107		2	CODO 90 deg, 7/8 fl x Or; Incl. Ref 28
28		237-6010		1	JUNTA HERMETICA
29		218-5064		6	RACOR 1-1/16 fl x Or; Incl. Ref 30
30		237-6012		1	JUNTA HERMETICA

http://www.minnparbackhoeparts.com/

08-10		p1	06/05

HIDRAULICA - CILINDRO, AGUILÓN DE LA RETROEXCAVADORA

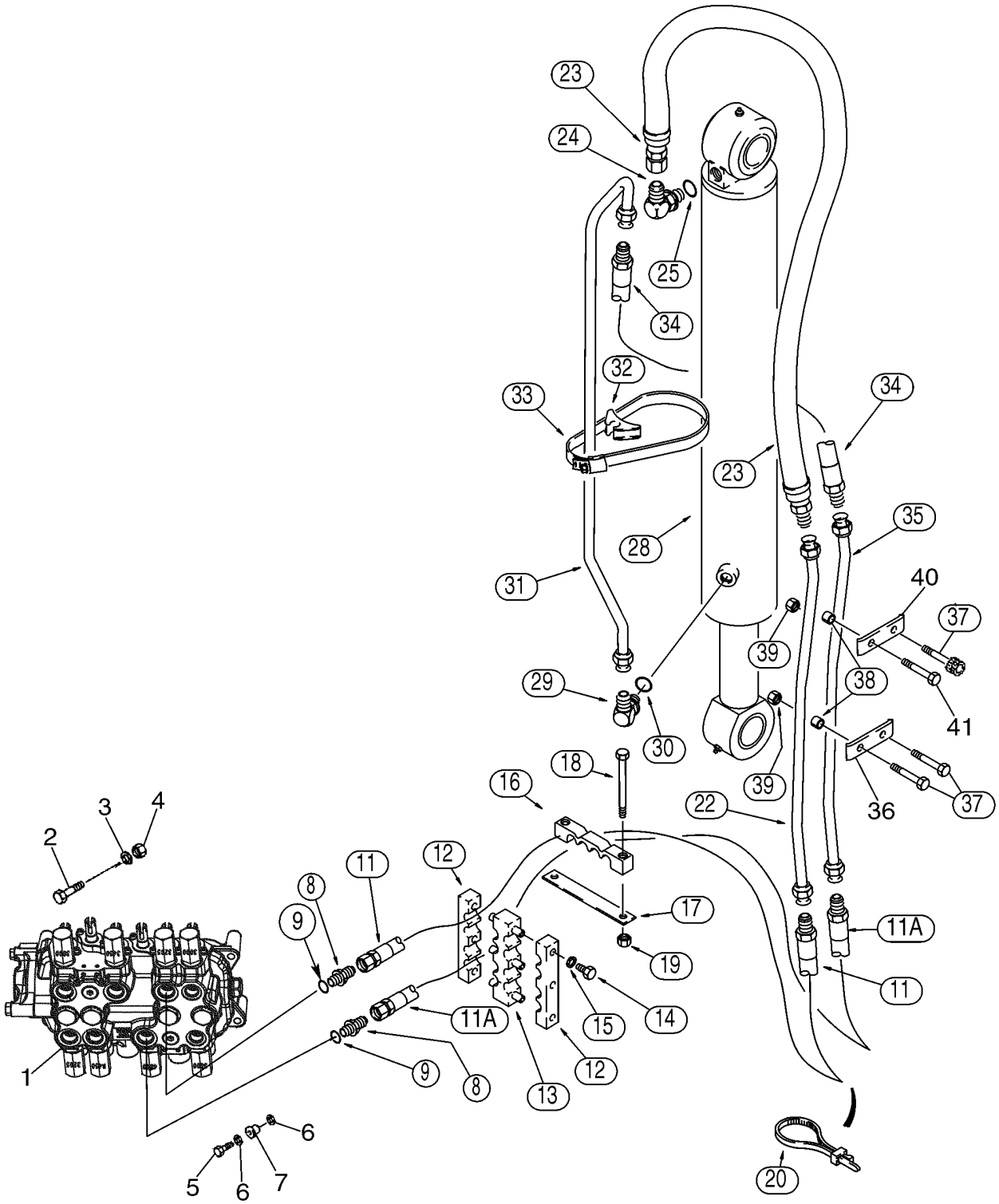

http://www.minnparbackhoeparts.com/

HIDRAULICA - CILINDRO, AGUILÓN DE LA RETROEXCAVADORA

REF	FN	PART NUMBER	YR/SN	QTY	DESCRIPTION
1		REF		1	MANUAL Valve Assy, Control; Backhoe Control Valve; For Correct Assembly and Components, See Figures 08-36 - 08-43
2		814-10080		2	TORNILLO M10 x 80
3		896-11010		2	ARANDELA
4		829-1410		2	TUERCA M10
5		614-10035		1	TORNILLO M10 x 35; Replaces 614-10040 M10 x 40 Bolt Used On Some Models
6		496-41041		2	ARANDELA 13/32 x 1-1/8 x 9/64
7		D52276		1	AISLADOR
8		218-5064		2	RACOR 1-1/16 fl x Or; Incl. Ref 9
9		237-6012		1	JUNTA HERMETICA 59/64 ID x 7/64, Boss Seal
11		393380A1		1	MANGUERA (CONJUNTO) 1295 mm (51 in); Upper Valve Port
11A		393380A1		1	MANGUERA (CONJUNTO) 1295 mm (51 in); Lower Valve Port
12		143439A1		2	BRIDA Clamp
13		176226A1		1	BRIDA DE FIJACION Clamp
14		614-8025		6	TORNILLO M8 x 25
15		892-11008		6	ARANDELA M8
16		373833A1		1	COLLAR
17		132212A1		1	PLACA, GRANDE
18		814-12100		2	TORNILLO M12 x 100
19		832-10412		2	TUERCA M12
20		L18337		1	BANDA 15 in
22		87455441		1	TUBO (CONJUNTO) Replaces 87412076
23		187845A1		1	MANGA 1000 mm (39-3/8 in)
24		218-5108		1	CODO 1-1/16 fl x 0r; Incl. Ref 25
25		237-6012		1	JUNTA HERMETICA 59/64 ID x 7/64, Boss Seal
28		87417644		1	CILINDRO (CONJUNTO) 133 ID x 843 strk; Boom Cylinder; See Figure 08-67
29		218-5123		1	CONEXION 1-1/16 fl x 7/8 Or; Incl. Ref 30
30		237-6010		1	JUNTA HERMETICA 3/4 ID x 3/32, Boss Seal
31		142815A1		1	CUELLO DE CARGA TUBE
32		D142787		1	ESPACIADOR
33		214-14104		1	COLLAR 6-1/8 - 7 in dia
34		177634A1		1	MANGA 440 mm (17-3/8 in)

http://www.minnparbackhoeparts.com/

08-10		p2	06/05

HIDRAULICA - CILINDRO, AGUILÓN DE LA RETROEXCAVADORA

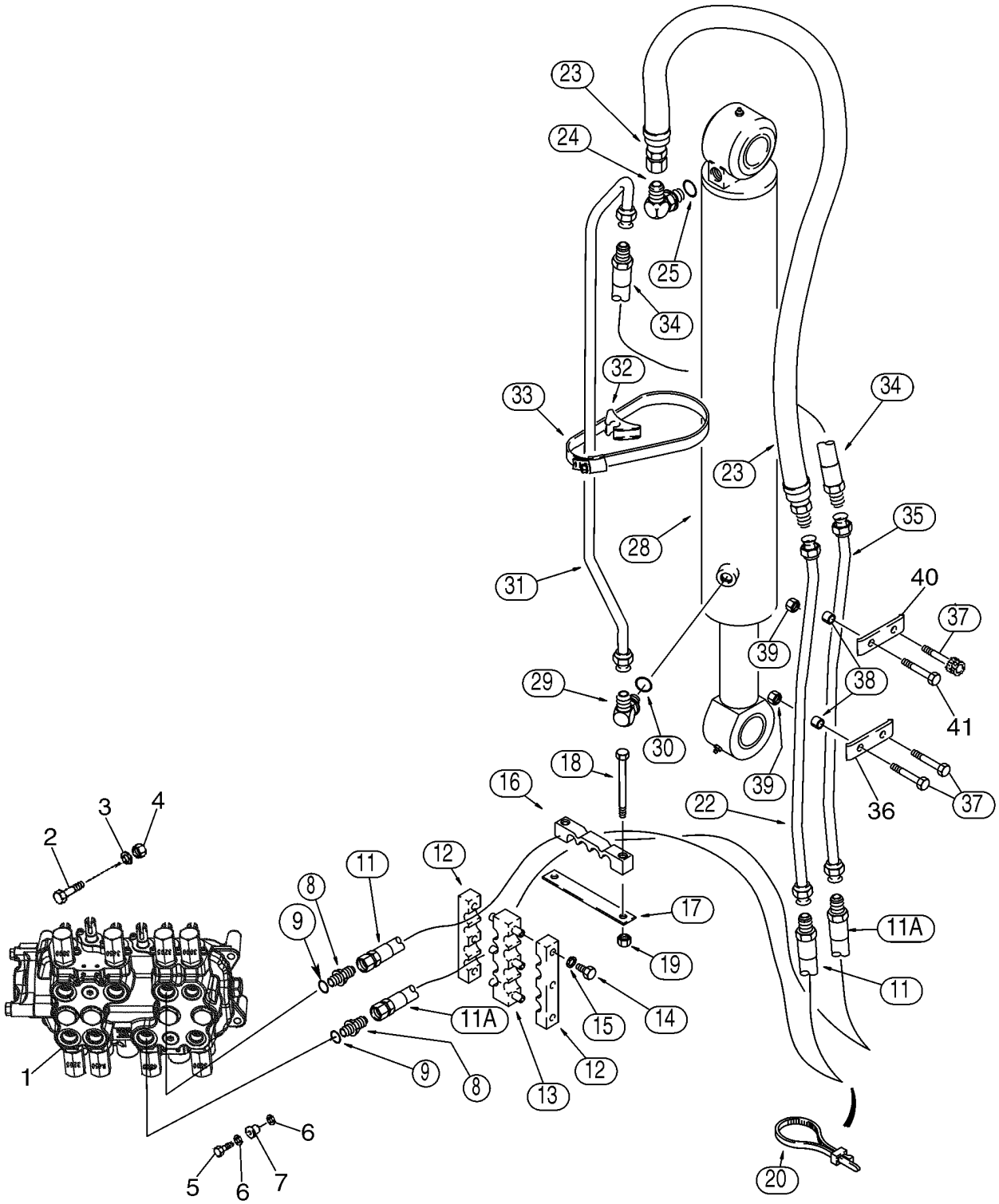

http://www.minnparbackhoeparts.com/

HIDRAULICA - CILINDRO, AGUILÓN DE LA RETROEXCAVADORA

REF	FN	PART NUMBER	YR/SN	QTY	DESCRIPTION
35		142122A1		1	CUELLO DE CARGA TUBE
36		133605A1		1	BRIDA Clamp
37		814-12080		3	TORNILLO Hex, M12 x 80
38		132930A1		4	ESPACIADOR
39		832-10412		4	TUERCA M12
40		87307476		1	BORNE Replaces 451605A1 Clamp Used On Some Models
41		814-12080		1	TORNILLO Hex, M12 x 80; Replaces 869-12080 M12 x 80 Flat Socket Head Screw Used On Some Models

http://www.minnparbackhoeparts.com/

08-10A		p1	03/04

HIDRAULICA - EL PICAPORTE DEL ESTAMPIDO DE BACKHOE Y EL CIRCUITO ELECTRICO

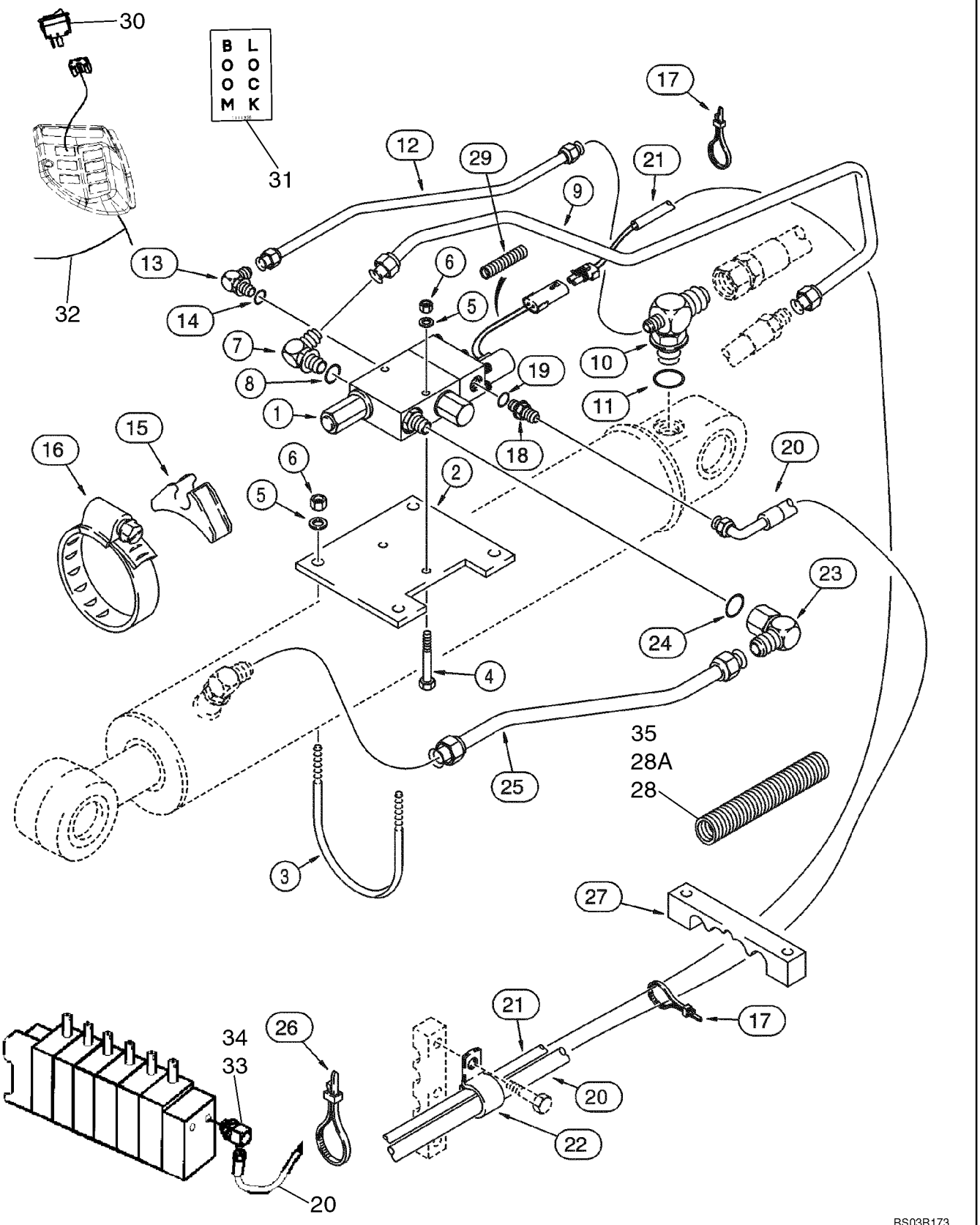

http://www.minnparbackhoeparts.com/

HIDRAULICA - EL PICAPORTE DEL ESTAMPIDO DE BACKHOE Y EL CIRCUITO ELECTRICO

REF	FN	PART NUMBER	YR/SN	QTY	DESCRIPTION
		399221A1		1	JEUGO Backhoe Boom Lock; Incl. Ref 1 - 35 and an Instruction Sheet; Also Includes Backhoe Boom Lock Valve On Figure 08-59A
1		189957A1		1	VALVULA Solenoid; Backhoe Boom Lock; Incl. (2) 321-6046 Warning Decals; See Figure 08-59A
2		D150054		1	PLACA, GRANDE Valve Mounting
3		D150053		2	TORNILLO 3/8 in
4		413-648		2	TORNILLO 3/8 NC x 3 in; Hex
5		495-11041		6	ARANDELA 13/32 x 13/16 x 1/16 in; Flat
6		231-1446		6	CONTRA TUERCA 3/8 NC
7		218-5118		1	CONEXION 90 deg, 1-11/64 ID fl x 1-5/16 in adj, Incl. Ref 8
8		237-6016		1	JUNTA HERMETICA 1-11/64 ID x 7/64, Boss Seal
9		192025A1		1	TUBO Valve Port; Attaches to Ref 34 Hose on Figure 8-10
10		187677A1		1	RACOR-T Reducer; Boom Cylinder Closed End; Attaches to Ref 23 Hose on Figure 08-10; Incl. Ref 11
11		237-6012		1	JUNTA HERMETICA 59/64 ID x 7/64, Boss Seal
12		189709A1		1	TUBO Pilot Port
13		218-5283		1	CODO 90 deg, 7/16 fl x 9/16 in adj, Incl. Ref 14
14		237-6006		1	JUNTA HERMETICA 15/32 x 5/64, Boss Seal
15		D142787		1	ESPACIADOR Rubber
16		214-31104		1	COLLAR 5-3/4 - 6-5/8 in dia adj
17		L18337		15	BANDA 15 in
18		218-5359		1	CONEXION 7/16 fl x 3/16 in; Incl. Ref 19
19		237-6008		1	JUNTA HERMETICA 41/64 ID x 3/32, Boss Seal
20		189103A1		1	MANGA 3700 mm (145-11/16 in), Return; Attaches to Elbow at Backhoe Valve
21		189263A1		1	HAZ Boom Lock Valve to Control Tower Harness
22		515-25190		1	COLLAR 3/4 in ID; Return Hose
23		218-5382		1	CONEXION 90 deg, 1-1/16 fl x 1-5/16 in swl; Incl. Ref 24
24		237-6016		1	JUNTA HERMETICA 1-11/64 ID x 7/64, Boss Seal
25		187612A1		1	TUBO Boom Lock Valve to Boom Cylinder Rod End; See Figure 08-10 For Elbow
26		D147773		1	COLLAR Tie, 11 in

http://www.minnparbackhoeparts.com/

08-10A		p2	03/04

HIDRAULICA - EL PICAPORTE DEL ESTAMPIDO DE BACKHOE Y EL CIRCUITO ELECTRICO

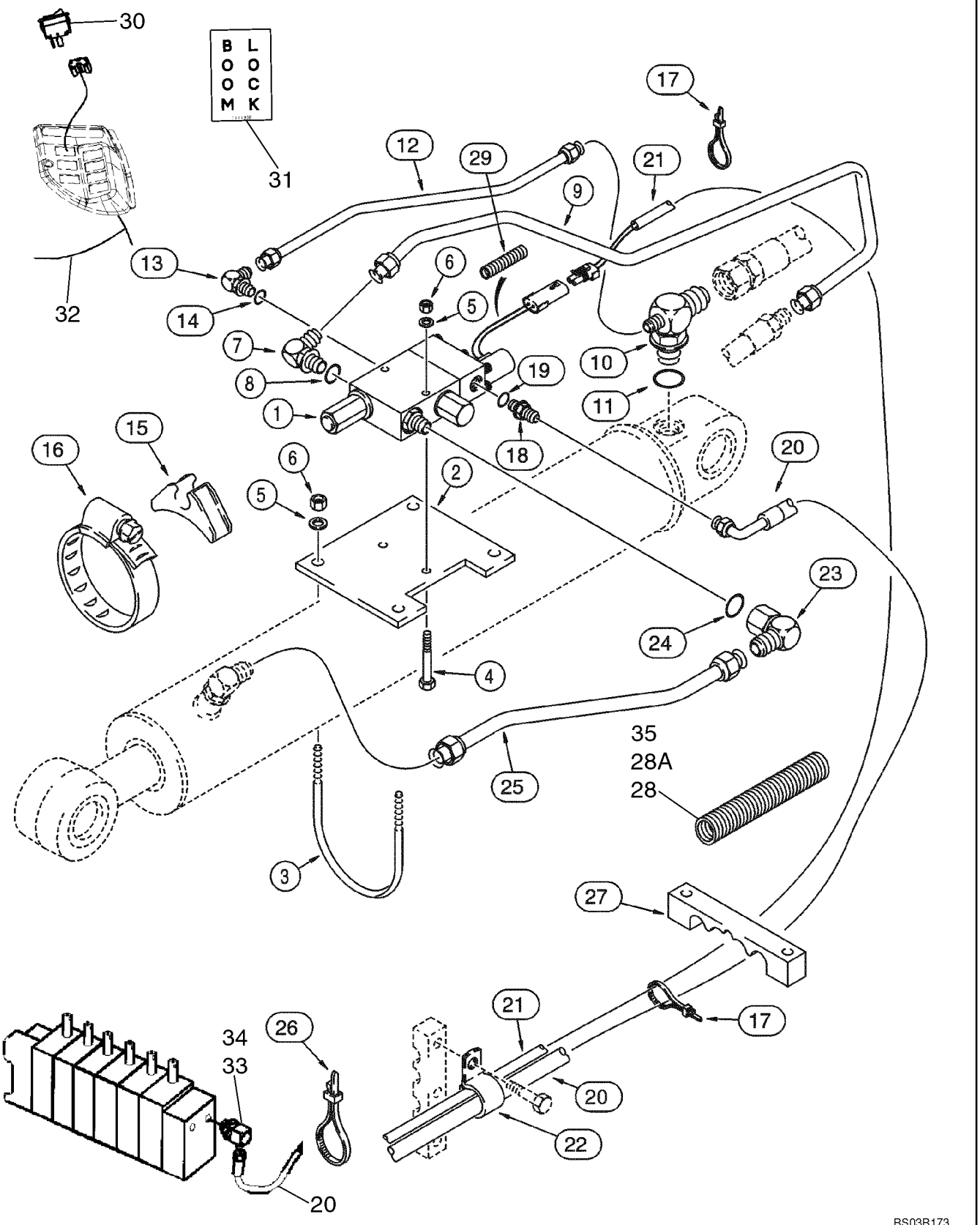

http://www.minnparbackhoeparts.com/

HIDRAULICA - EL PICAPORTE DEL ESTAMPIDO DE BACKHOE Y EL CIRCUITO ELECTRICO

REF	FN	PART NUMBER	YR/SN	QTY	DESCRIPTION
27		221330A1		1	COLLAR Hose and Harness
28		220276A1		1	MANGUITO 610 mm long, Hose Guard; Ref 20 Hose and Ref 21 Harness, Ahead of Clamp
28A		404907A1		1	MANGUITO 740 mm long, Hose Guard; Ref 20 Hose and Ref 21 Harness, Behind Clamp
29		1999528C1		1	TUBERIA 455 mm long; Harness Protection
30		400016A1		1	CONTACTOR Rocker; Boom Lock
31		L111356		1	CALCOMANIA Boom Lock
32		399246A1		1	HAZ Cab to Solenoid
33		189414A1		1	CODO 90 deg; Incl. Ref 34
34		237-6010		1	JUNTA HERMETICA 7/8 - 14, Boss Seal
35		226582A1		1	PROTECTOR 1850 mm long; Harness Below Floor Plate

http://www.minnparbackhoeparts.com/

08-11		p1	06/05

HIDRAULICA - CILINDRO, PALA DE LA RETROEXCAVADORA

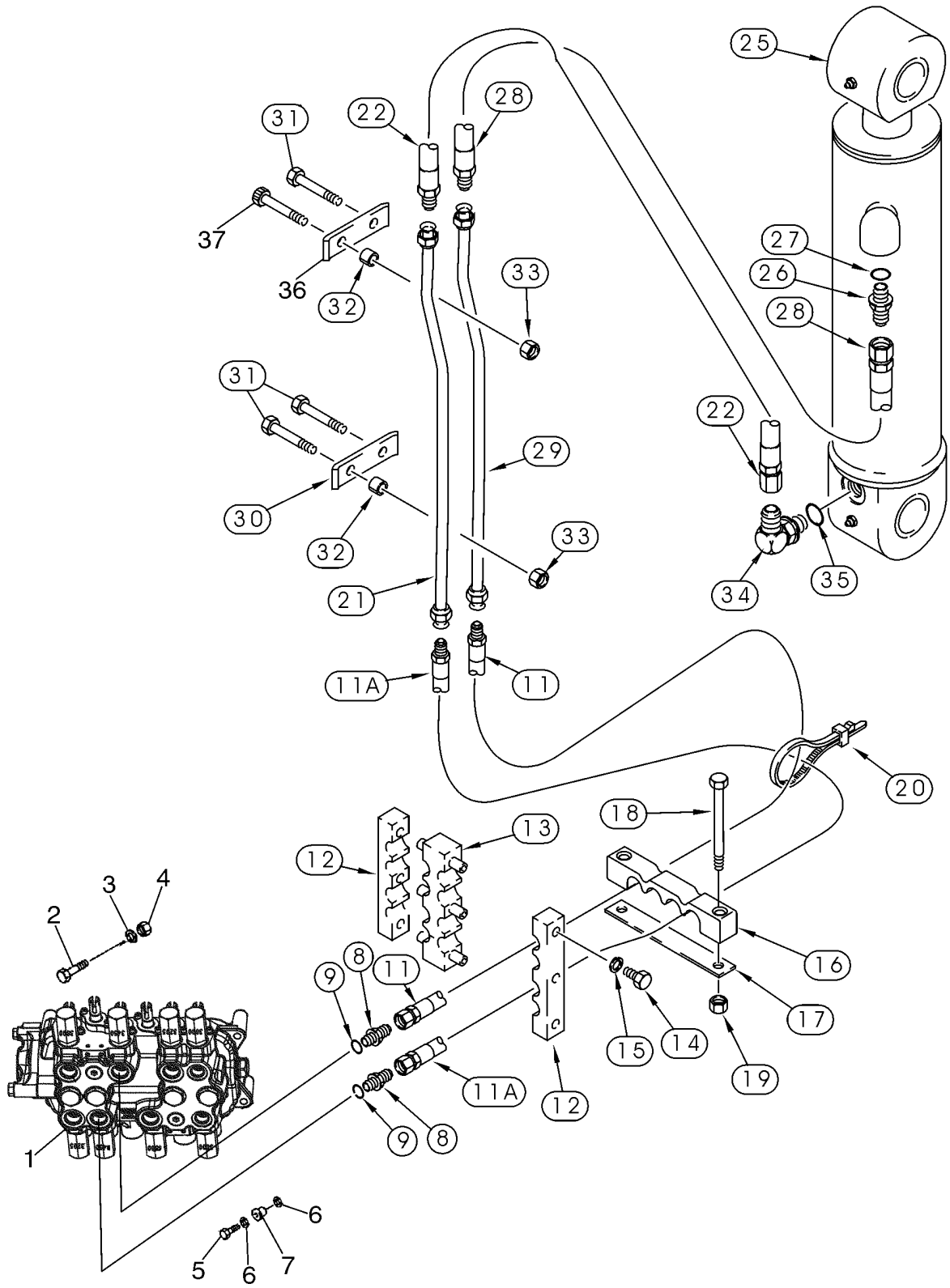

http://www.minnparbackhoeparts.com/

HIDRAULICA - CILINDRO, PALA DE LA RETROEXCAVADORA

REF	FN	PART NUMBER	YR/SN	QTY	DESCRIPTION
1		REF		1	MANUAL Valve Assy; Control, Backhoe Control Valve; For Correct Assembly and Components, See Figures 08-36 - 08-43
2		814-10080		2	TORNILLO M10 x 80
3		896-11010		2	ARANDELA
4		829-1410		2	TUERCA M10
5		614-10035		1	TORNILLO M10 x 35; Replaces 614-10040 M10 x 40 Bolt Used On Some Models
6		496-41041		2	ARANDELA 13/32 x 1-1/8 x 9/64
7		D52276		1	AISLADOR
8		218-5064		2	RACOR 1-1/16 fl x Or; Incl. Ref 9
9		237-6012		1	JUNTA HERMETICA 59/64 ID x 7/64, Boss Seal
11		393380A1		1	MANGUERA (CONJUNTO) 1295 mm (51 in); Upper Valve Port
11A		393380A1		1	MANGUERA (CONJUNTO) 1295 mm (51 in); Lower Valve Port
12		143439A1		2	BRIDA Clamp
13		176226A1		1	BRIDA DE FIJACION Clamp
14		614-8025		6	TORNILLO M8 x 25
15		892-11008		6	ARANDELA M8
16		373833A1		1	COLLAR
17		132212A1		1	PLACA, GRANDE
18		814-12100		2	TORNILLO M12 x 100
19		832-10412		2	TUERCA M12
20		L18337		1	BANDA 15 in
21		87455443		1	TUBO (CONJUNTO) Replaces 87412079
22		87439660		1	MANGUERA (CONJUNTO) 660 mm (26 in)
25		183795A3		1	CILINDRO (CONJUNTO) 127 ID x 583 mm strk; Dipper Cylinder; See Figure 08-68; If Used
25		183795A4		1	CILINDRO (CONJUNTO) 127 ID x 583 mm strk; Dipper Cylinder; See Figure 08-68; If Used
26		218-5064		1	RACOR 1-1/16 fl x Or; Incl. Ref 27
27		237-6012		1	JUNTA HERMETICA 59/64 ID x 7/64, Boss Seal
28		397782A1		1	MANGUERA (CONJUNTO) 780 mm (30-3/4 in)
29		142124A1		1	CUELLO DE CARGA TUBE
30		133605A1		1	BRIDA Clamp
31		814-12080		3	TORNILLO Hex, M12 x 80

http://www.minnparbackhoeparts.com/

08-11		p2	06/05

HIDRAULICA - CILINDRO, PALA DE LA RETROEXCAVADORA

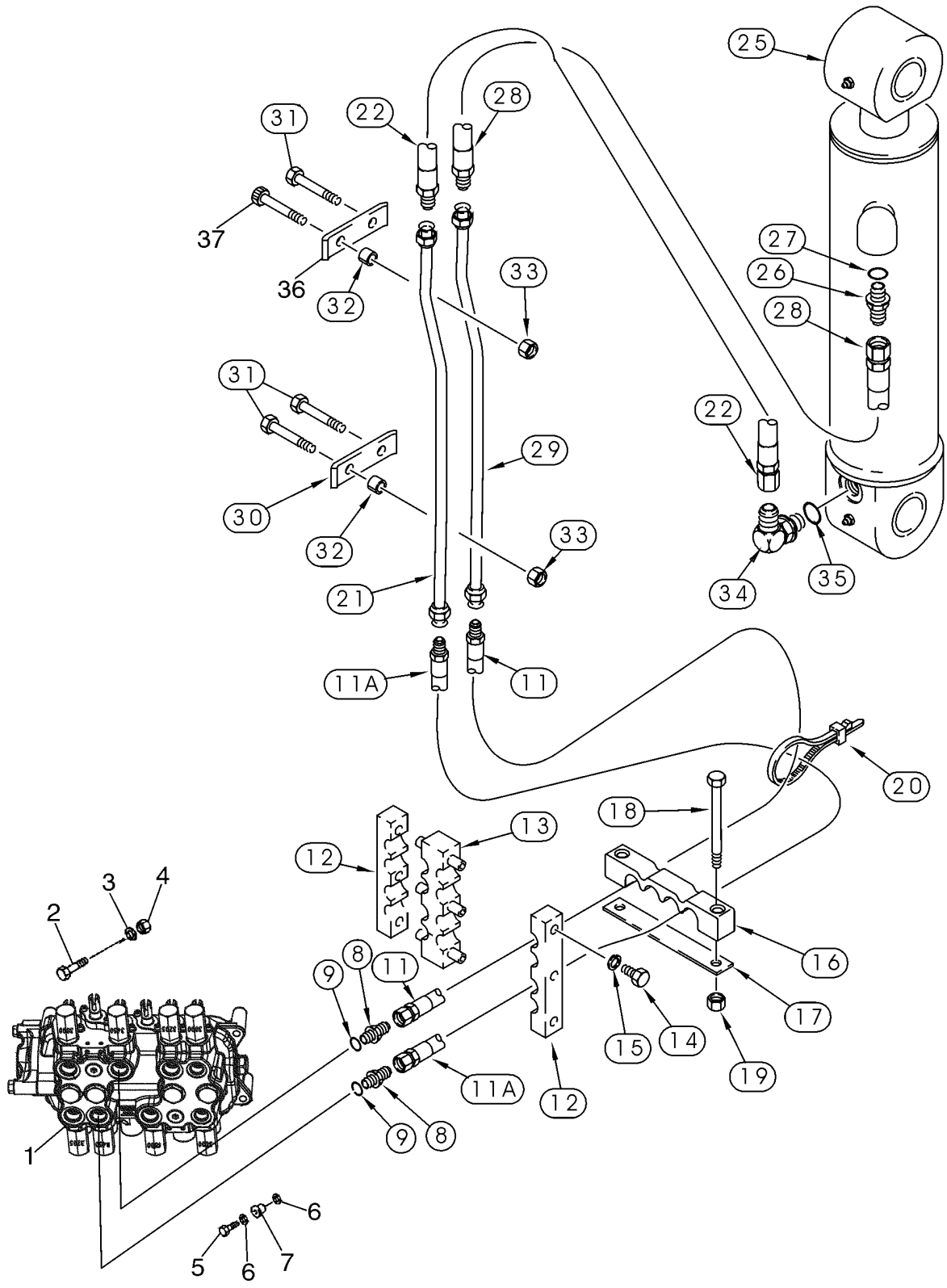

http://www.minnparbackhoeparts.com/

HIDRAULICA - CILINDRO, PALA DE LA RETROEXCAVADORA

REF	FN	PART NUMBER	YR/SN	QTY	DESCRIPTION
32		132930A1		4	ESPACIADOR
33		832-10412		4	TUERCA M12
34		87439842		1	CONEXION ELBOW, 90 deg, 7/8 fl x 1-1/16 0r; Incl. Ref 35
35		237-6012		1	JUNTA HERMETICA 59/64 ID x 7/64, Boss Seal
36		87307476		1	BORNE Replaces 451605A1 Clamp Used On Some Models
37		814-12080		1	TORNILLO Hex, M12 x 80; Replaces 869-12080 M12 x 80 Flat Socket Head Screw Used On Some Models

http://www.minnparbackhoeparts.com/

08-12		p1	06/05

HIDRAULICA - CILINDRO, CUCHARÓN DE LA RETROEXCAVADORA (MODELOS SIN PALA EXTENDIBLE)

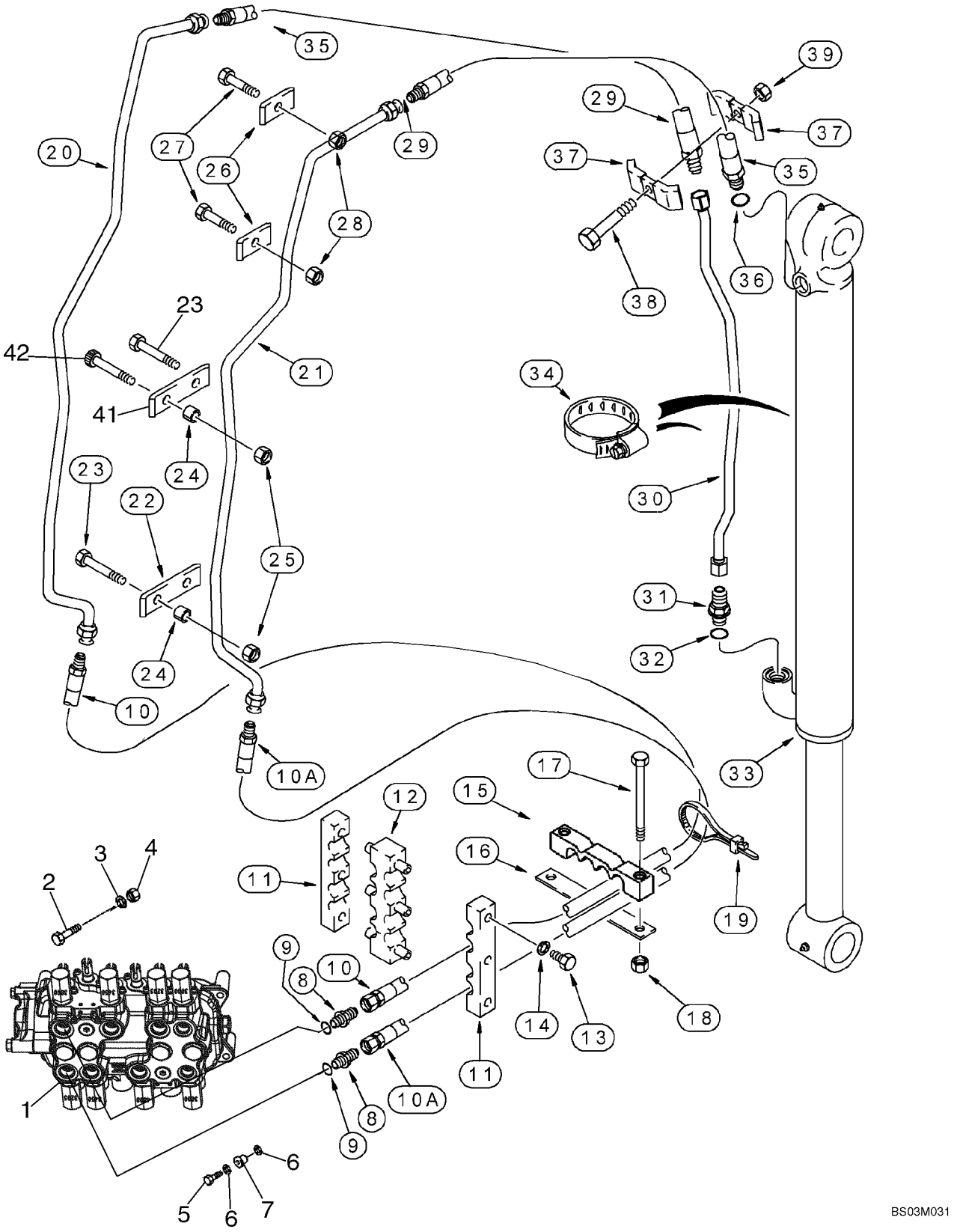

http://www.minnparbackhoeparts.com/

HIDRAULICA - CILINDRO, CUCHARÓN DE LA RETROEXCAVADORA (MODELOS SIN PALA EXTENDIBLE)

REF	FN	PART NUMBER	YR/SN	QTY	DESCRIPTION
1		REF		1	MANUAL Valve Assy, Control; Backhoe Control Valve; For Correct Assembly and Components, See Figures 08-36 - 08-43
2		814-10080		2	TORNILLO M10 x 80
3		896-11010		2	ARANDELA
4		829-1410		2	TUERCA M10
5		614-10035		1	TORNILLO M10 x 35; Replaces 614-10040 M10 x 40 Bolt Used On Some Models
6		496-41041		2	ARANDELA 13/32 x 1-1/8 x 9/64
7		D52276		1	AISLADOR
8		218-5064		2	RACOR 1-1/16 fl x Or; Incl. Ref 9
9		237-6012		1	JUNTA HERMETICA 59/64 ID x 7/64, Boss Seal
10		393380A1		1	MANGUERA (CONJUNTO) 1295 mm (51 in)
10A		393380A1		1	MANGUERA (CONJUNTO) 1295 mm (51 in)
11		143439A1		2	BRIDA Clamp
12		176226A1		1	BRIDA DE FIJACION Clamp
13		614-8025		6	TORNILLO M8 x 25
14		892-11008		6	ARANDELA M8
15		373833A1		1	COLLAR
16		132212A1		1	PLACA, GRANDE
17		814-12100		2	TORNILLO M12 x 100
18		832-10412		2	TUERCA M12
19		L18337		1	BANDA 15 in
20		141806A1		1	CUELLO DE CARGA TUBE
21		141801A1		1	CUELLO DE CARGA TUBE
22		133605A1		2	BRIDA Clamp
23		814-12080		6	TORNILLO Hex, M12 x 80
24		132930A1		8	ESPACIADOR
25		832-10412		8	TUERCA M12
26		133604A1		4	BRIDA Clamp
27		814-12060		4	TORNILLO M12 x 60
28		832-10412		4	TUERCA M12
29		87307636		1	MANGUERA (CONJUNTO) 691 mm (27-1/4 in); Replaces 183660A1 640 mm (25-3/16 in) Long Hose Used On Some Models
30		396634A1		1	TUBO (CONJUNTO) Models Without Backhoe Auxiliary Hydraulics

http://www.minnparbackhoeparts.com/

08-12		p2	06/05

HIDRAULICA - CILINDRO, CUCHARÓN DE LA RETROEXCAVADORA (MODELOS SIN PALA EXTENDIBLE)

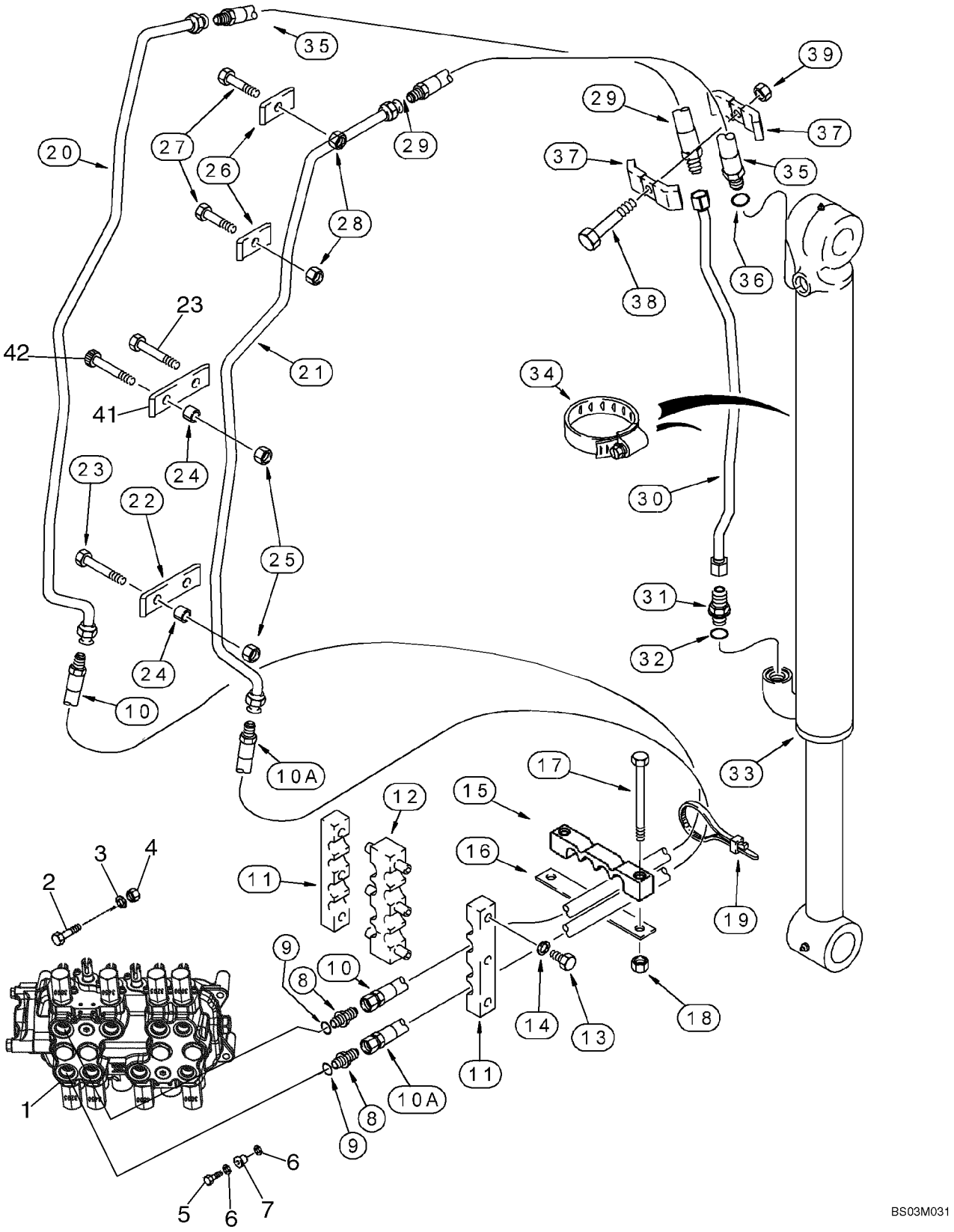

http://www.minnparbackhoeparts.com/

HIDRAULICA - CILINDRO, CUCHARÓN DE LA RETROEXCAVADORA (MODELOS SIN PALA EXTENDIBLE)

REF	FN	PART NUMBER	YR/SN	QTY	DESCRIPTION
30		314772A1		1	CUELLO DE CARGA Models With Backhoe Auxiliary Hydraulics
31		218-5064		1	RACOR 1-1/16 fl x Or; Incl. Ref 32
32		237-6012		1	JUNTA HERMETICA 59/64 ID x 7/64, Boss Seal
33		235916A1		1	CILINDRO (CONJUNTO) 80 ID x 872 mm strk; Bucket Cylinder; See Figure 08-69
34		214-1472		1	COLLAR 4-1/16 - 5
35		87307635		1	MANGUERA (CONJUNTO) 691 mm (27-1/4 in); Incl. Ref 36; Replaces 183658A1 640 mm (25-3/16 in) Long Hose Used On Some Models
36		237-6012		1	JUNTA HERMETICA 59/64 ID x 7/64, Boss Seal
37		D143846		2	BRIDA Clamp
38		814-10055		1	TORNILLO M10 x 55
39		832-10410		1	TUERCA M10
41		87307476		2	BORNE Replaces 451605A1 Clamp Used On Some Models
42		814-12080		2	TORNILLO Hex, M12 x 80; Replaces 869-12080 M12 x 80 Flat Socket Head Screw Used On Some Models

http://www.minnparbackhoeparts.com/

08-13		p1	06/05

HIDRAULICA - CILINDRO, CUCHARÓN DE LA RETROEXCAVADORA (MODELOS CON PALA EXTENDIBLE)

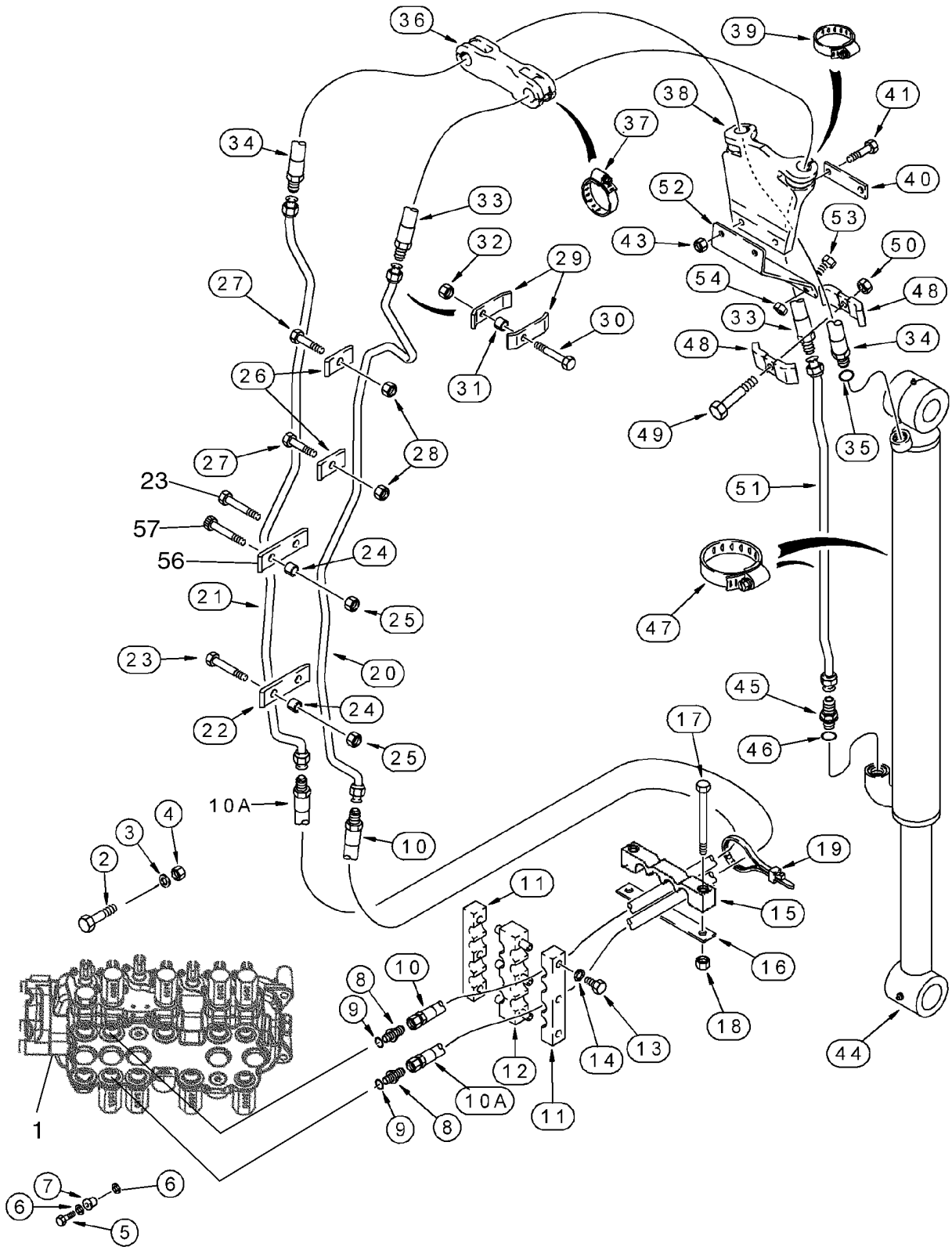

http://www.minnparbackhoeparts.com/

HIDRAULICA - CILINDRO, CUCHARÓN DE LA RETROEXCAVADORA (MODELOS CON PALA EXTENDIBLE)

REF	FN	PART NUMBER	YR/SN	QTY	DESCRIPTION
1		REF		1	MANUAL Valve Assy, Control; Backhoe Control Valve; For Correct Assembly and Components, See Figures 08-38, 08-39, 08-41, 08-43
2		814-10080		2	TORNILLO M10 x 80
3		896-11010		2	ARANDELA
4		829-1410		2	TUERCA M10
5		614-10035		1	TORNILLO M10 x 35; Replaces 614-10040 M10 x 40 Bolt Used On Some Models
6		496-41041		2	ARANDELA 13/32 x 1-1/8 x 9/64
7		D52276		1	AISLADOR
8		218-5064		2	RACOR 1-1/16 fl x Or; Incl. Ref 9
9		237-6012		1	JUNTA HERMETICA 59/64 ID x 7/64
10		393380A1		1	MANGUERA (CONJUNTO) 1295 mm (51 in)
10A		393380A1		1	MANGUERA (CONJUNTO) 1295 mm (51 in)
11		143439A1		2	BRIDA Clamp
12		176226A1		1	BRIDA DE FIJACION Clamp
13		614-8025		6	TORNILLO M8 x 25
14		892-11008		6	ARANDELA M8
15		373833A1		1	COLLAR
16		132212A1		1	PLACA, GRANDE
17		814-12100		2	TORNILLO M12 x 100
18		832-10412		2	TUERCA M12
19		L18337		1	BANDA 15 in
20		187637A1		1	TUBO (CONJUNTO)
21		187639A1		1	CUELLO DE CARGA
22		133605A1		2	BRIDA Clamp
23		814-12080		6	TORNILLO HexM12 x 80
24		132930A1		8	ESPACIADOR
25		832-10412		8	TUERCA M12
26		133604A1		4	BRIDA Clamp
27		814-12060		4	TORNILLO M12 x 60
28		832-10412		4	TUERCA M12
29		D143426		4	COLLAR
30		814-10055		2	TORNILLO M10 x 55
31		D143412		2	ESPACIADOR
32		832-10410		2	TUERCA M10
33		108335A1		1	MANGA 1960 mm (77-1/8 in)

http://www.minnparbackhoeparts.com/

08-13		p2	06/05

HIDRAULICA - CILINDRO, CUCHARÓN DE LA RETROEXCAVADORA (MODELOS CON PALA EXTENDIBLE)

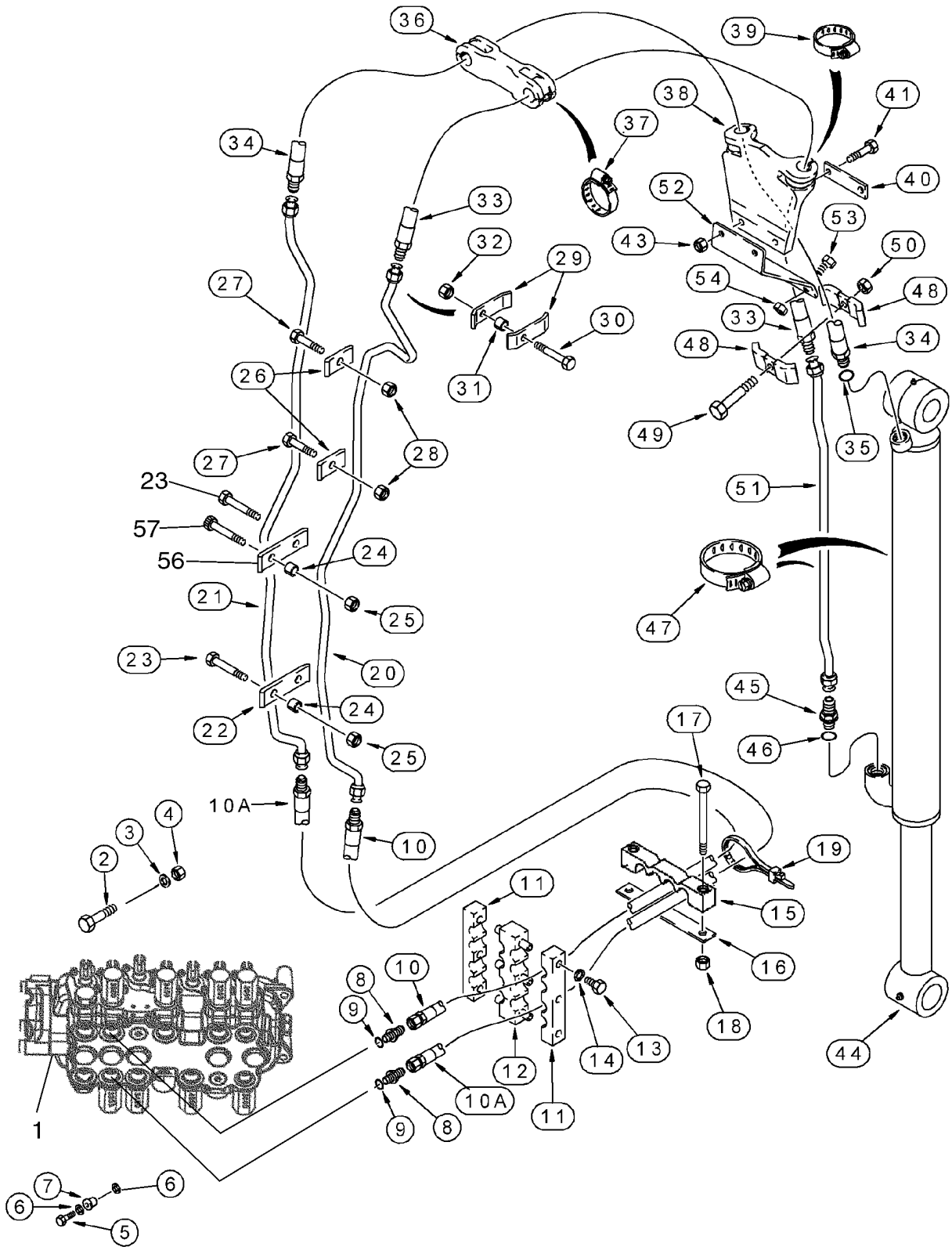

http://www.minnparbackhoeparts.com/

HIDRAULICA - CILINDRO, CUCHARÓN DE LA RETROEXCAVADORA (MODELOS CON PALA EXTENDIBLE)

REF	FN	PART NUMBER	YR/SN	QTY	DESCRIPTION
34		108336A1		1	MANGA 1930 mm (76 in); Incl. Ref 35
35		237-6012		1	JUNTA HERMETICA 59/64 ID x 7/64
36		103670A1		1	ABRAZADERA MANGUERA
37		214-3132		2	COLLAR 2,0 in
38		184297A1		1	APOYADERO
39		214-3132		2	COLLAR 2,0 in
40		101479A1		1	APOYADERO
41		814-10045		2	TORNILLO M10 x 45
43		832-10410		2	TUERCA M10
44		235916A1		1	CILINDRO (CONJUNTO) 80 ID x 872 mm strk; Bucket Cylinder; See Figure 08-69
45		218-5064		1	RACOR 1-1/16 fl x Or; Incl. Ref 46
46		237-6012		1	JUNTA HERMETICA 59/64 ID x 7/64
47		214-1472		1	COLLAR 4-1/16 - 5
48		D143846		2	BRIDA Clamp
49		814-10055		1	TORNILLO M10 x 55
50		832-10410		1	TUERCA M10
51		396634A1		1	TUBO (CONJUNTO) Models Without Auxiliary Hydraulics
51		314772A1		1	CUELLO DE CARGA Models With Auxiliary Hydraulics
52		183736A1		1	APOYADERO
53		614-10030		2	TORNILLO M10 x 30
54		832-10410		2	TUERCA M10
56		87307476		2	BORNE Replaces 451605A1 Clamp Used On Some Models
57		814-12080		2	TORNILLO Hex, M12 x 80; Replaces 869-12080 M12 x 80 Flat Socket Head Screw Used On Some Models

http://www.minnparbackhoeparts.com/

HIDRAULICA - CILINDRO, PALA EXTENSIBLE DE LA RETROEXCAVADORA

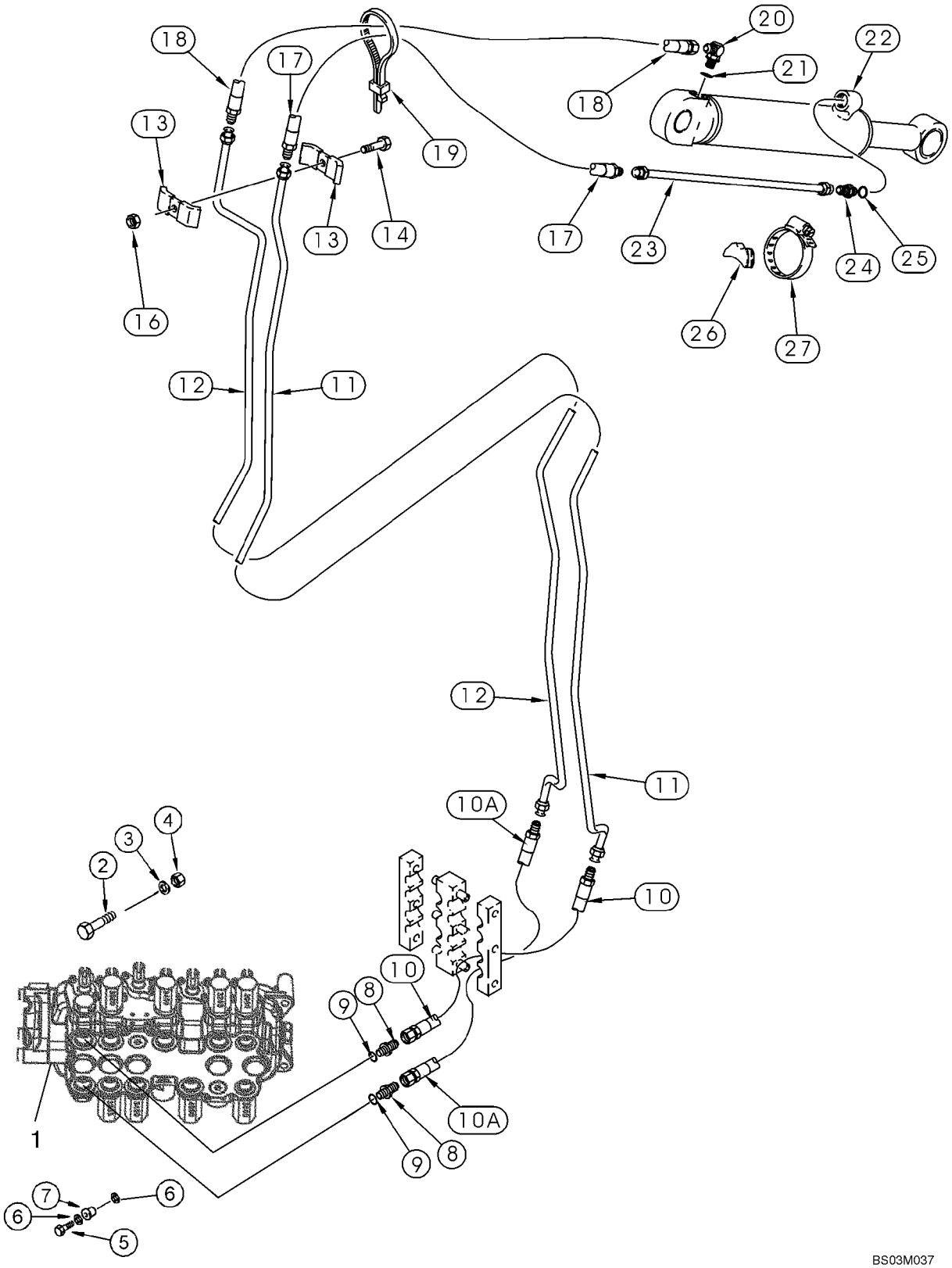

http://www.minnparbackhoeparts.com/

HIDRAULICA - CILINDRO, PALA EXTENSIBLE DE LA RETROEXCAVADORA

REF	FN	PART NUMBER	YR/SN	QTY	DESCRIPTION
1		REF		1	MANUAL Valve Assy, Control; Backhoe Control Valve; For Correct Assembly and Components, See Figures 08-38, 08-39, 08-41, 08-43
2		814-10080		2	TORNILLO M10 x 80
3		896-11010		2	ARANDELA
4		829-1410		2	TUERCA M10
5		614-10035		1	TORNILLO M10 x 35; Replaces 614-10040 M10 x 40 Bolt Used On Some Models
6		496-41041		2	ARANDELA 13/32 x 1-1/8 x 9/64
7		D52276		1	AISLADOR
8		218-5064		2	RACOR 1-1/16 fl x Or; Incl. Ref 9
9		237-6012		1	JUNTA HERMETICA 59/64 ID x 7/64
10		393380A1		1	MANGUERA (CONJUNTO) 1295 mm (51 in)
10A		393380A1		1	MANGUERA (CONJUNTO) 1295 mm (51 in)
11		141809A1		1	CUELLO DE CARGA Tube
12		141811A1		1	CUELLO DE CARGA Tube
13		D40236		2	COLLAR
14		814-10050		1	TORNILLO M10 x 50
16		832-10410		1	TUERCA M10
17		184617A1		1	MANGA 850 mm (33-1/2 in)
18		184616A1		1	MANGA 700 mm (27-9/16 in)
19		L18337		1	BANDA 15 in
20		218-5107		1	CODO 7/8 fl x adj Or; Incl. Ref 21
21		237-6010		1	JUNTA HERMETICA 3/4 ID x 3/32
22		1340969C2		1	CILINDRO (CONJUNTO) 76 ID x 1068 mm strk; Extendable Dipper Cylinder; See Figure 08-70
23		87439537		1	TUBO (CONJUNTO) Tube; Replaces D140706
24		218-5062		1	RACOR 7/8 fl x Or; Incl. Ref 25
25		237-6010		1	JUNTA HERMETICA 3/4 ID x 3/32
26		D38648		1	BLOQUE MOTOR
27		214-1464		1	COLLAR 3-9/16 - 4-1/2 in dia

http://www.minnparbackhoeparts.com/

08-15		p1	04/05

HIDRAULICA - VÁLVULA, CONTROL PILOTO DE PALANCA DE CONTROL (6 SPOOL, W/O EXT DIPPER, W/O AUX HYDS)

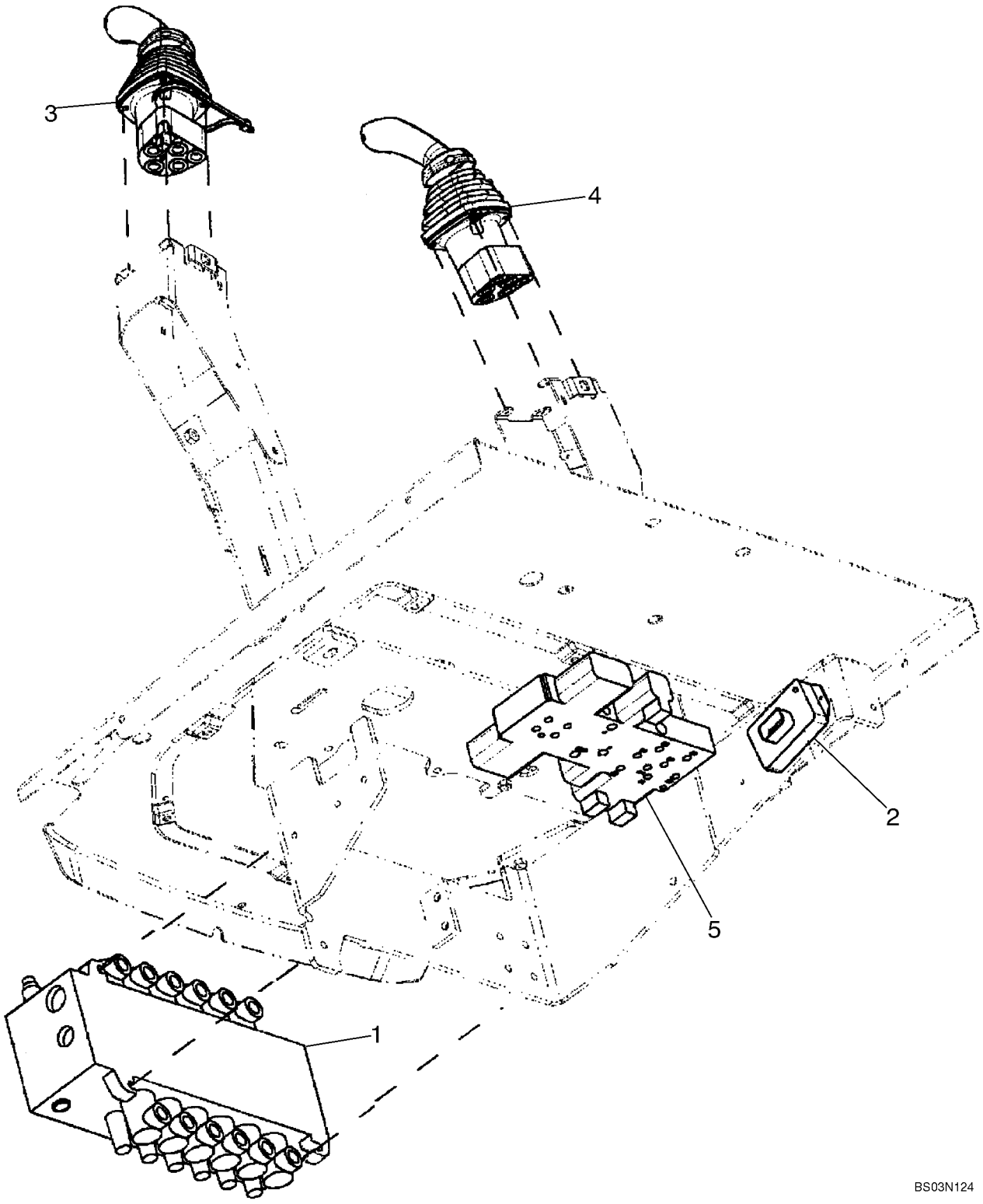

http://www.minnparbackhoeparts.com/

HIDRAULICA - VÁLVULA, CONTROL PILOTO DE PALANCA DE CONTROL (6 SPOOL, W/O EXT DIPPER, W/O AUX HYDS)

REF	FN	PART NUMBER	YR/SN	QTY	DESCRIPTION
		REF			MANUAL SIX SPOOL VALVE WITHOUT EXTENDABLE DIPPER; WITH AUTO-UP; WITHOUT AUXILIARY HYDRAULICS, WITHOUT UNI-DIRECTIONAL OR BI-DIRECTIONAL
1		86987459		1	VALVULA DISTRIBUIDORA Backhoe, 6 Spool; See Figure 08-40; For Mounting See Figure 08-22
2		87419454		1	CAJA Box, Pilot Control Power Supply Module
		840-1416		2	TORNILLO M4 x 16
3		87308844		1	VALVULA DISTRIBUIDORA JOYSTICK; Left-Hand; With Horn Button; See Figure 08-54; Replaces 87443740
4		87308840		1	VALVULA DISTRIBUIDORA JOYSTICK; Right-Hand; See Figure 08-57; Replaces 87443739
5		85827472		1	VALVULA HIDRAULICA Pressure Reducing, 2 Spool; See Figure 08-51

http://www.minnparbackhoeparts.com/

08-16		p1	04/05

HIDRAULICA - VÁLVULA, CONTROL PILOTO DE PALANCA DE CONTROL (6 SPOOL, W/O EXT DIPPER, W/ AUX HYDS)

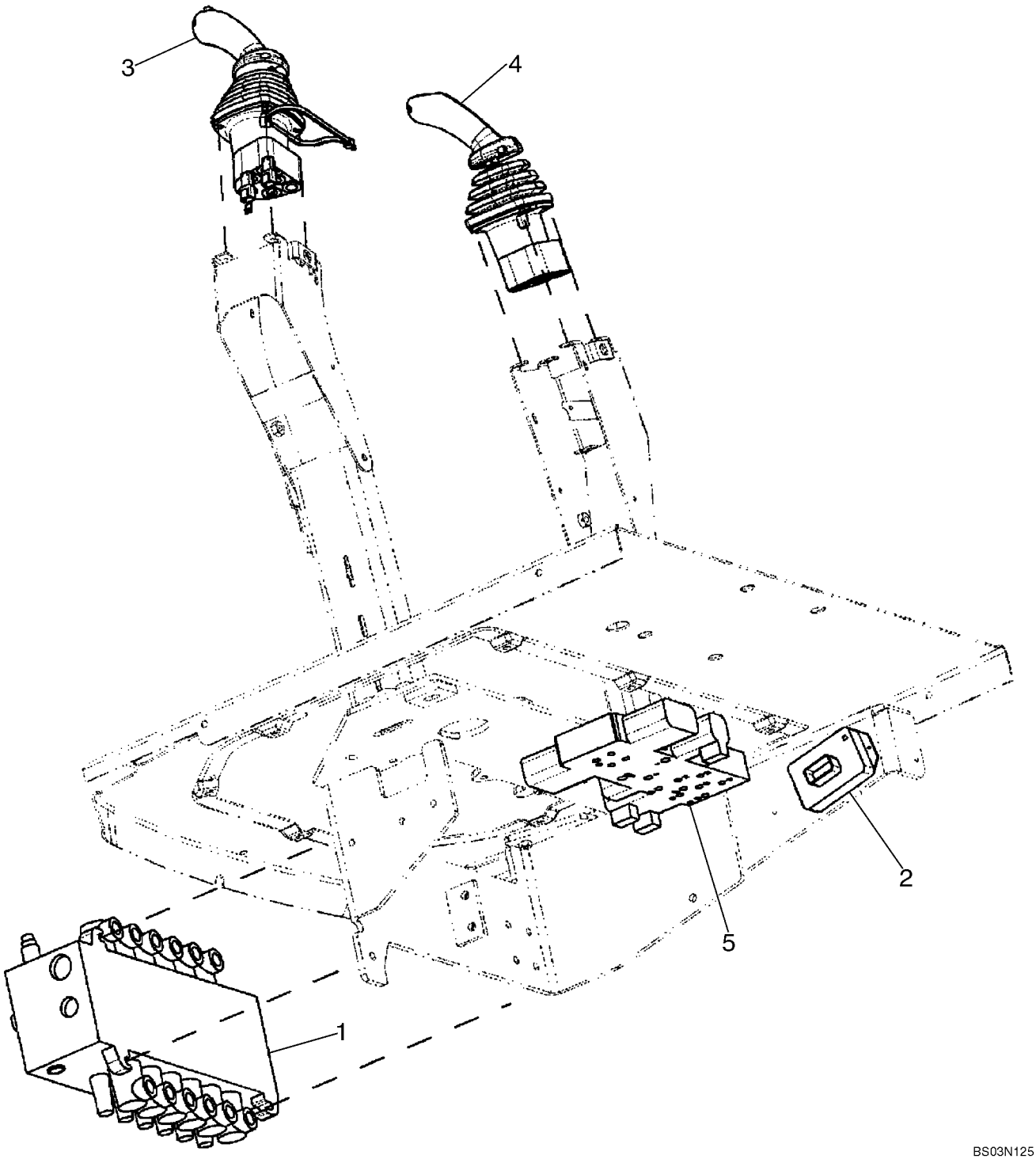

http://www.minnparbackhoeparts.com/

HIDRAULICA - VÁLVULA, CONTROL PILOTO DE PALANCA DE CONTROL (6 SPOOL, W/O EXT DIPPER, W/ AUX HYDS)

REF	FN	PART NUMBER	YR/SN	QTY	DESCRIPTION
		REF			MANUAL SIX SPOOL VALVE WITHOUT EXTENDABLE DIPPER; WITH AUTO-UP; WITH AUXILIARY HYDRAULICS, WITH UNI-DIRECTIONAL
1		86987459		1	VALVULA DISTRIBUIDORA Backhoe, 6 Spool; See Figure 08-40; For Mounting See Figure 08-22
2		87419454		1	CAJA Box, Pilot Control Power Supply Module
		840-1416		2	TORNILLO M4 x 16
3		87308846		1	VALVULA DISTRIBUIDORA JOYSTICK; Left-Hand; With Horn and Uni-Directional Buttons; See Figure 08-55; Replaces 87443742
4		87308840		1	VALVULA DISTRIBUIDORA JOYSTICK; Right-Hand; See Figure 08-57; Replaces 87443739
5		85827472		1	VALVULA HIDRAULICA Pressure Reducing, 2 Spool; See Figure 08-51

http://www.minnparbackhoeparts.com/

08-17		p1	04/05

HIDRAULICA - VÁLVULA, CONTROL PILOTO DE PALANCA DE CONTROL (7 SPOOL, W/ EXT DIPPER, W/O AUX HYDS)

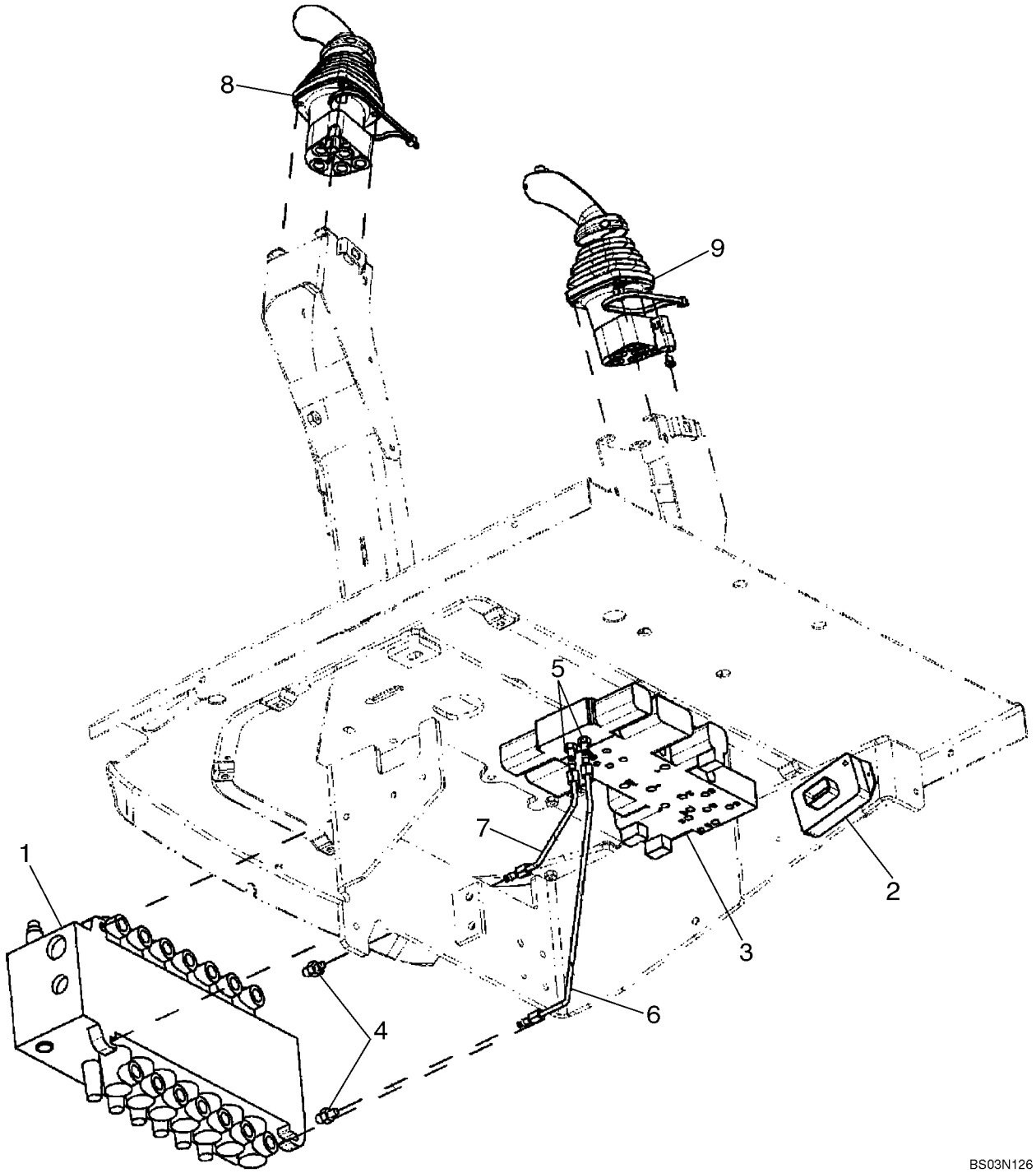

http://www.minnparbackhoeparts.com/

HIDRAULICA - VÁLVULA, CONTROL PILOTO DE PALANCA DE CONTROL (7 SPOOL, W/ EXT DIPPER, W/O AUX HYDS)

REF	FN	PART NUMBER	YR/SN	QTY	DESCRIPTION
		REF			MANUAL SEVEN SPOOL VALVE WITH EXTENDABLE DIPPER; WITHOUT AUXILIARY HYDRAULICS; WITH AUTO-UP; WITHOUT UNI-DIRECTIONAL OR BI-DIRECTIONAL
1		86987460		1	VALVULA DISTRIBUIDORA Backhoe, 7 Spool; See Figure 08-41; For Mounting See Figure 08-22
2		87419454		1	CAJA Box, Pilot Control Power Supply Module
		840-1416		2	TORNILLO M4 x 16
3		85827471		1	VALVULA HIDRAULICA Pressure Reducing, 3 Spool; See Figure 08-52
4		218-5089		2	CONECTOR 7/16 fl x 9/16 Or; Includes 237-6006 O-Ring
		237-6006		1	JUNTA HERMETICA 15/32 ID x 5/64
5		218-5053		2	RACOR 7/16 fl x Or; Includes 237-6004 O-Ring
		237-6004		1	JUNTA HERMETICA 23/64 ID x 5/64
6		87437633		1	TUBO (CONJUNTO) To Lower Extendable Dipper Port
7		87437635		1	TUBO (CONJUNTO) To Upper Extendable Dipper Port
8		87308844		1	VALVULA DISTRIBUIDORA JOYSTICK; Left-Hand; With Horn Button; See Figure 08-54; Replaces 87443740
9		87308847		1	VALVULA DISTRIBUIDORA JOYSTICK; Right-Hand; See Figure 08-58; Replaces 87443743

http://www.minnparbackhoeparts.com/

08-18		p1	04/05

HIDRAULICA - VÁLVULA, CONTROL PILOTO DE PALANCA DE CONTROL (7 SPOOL, W/ EXT DIPPER, W/ AUX HYDS)

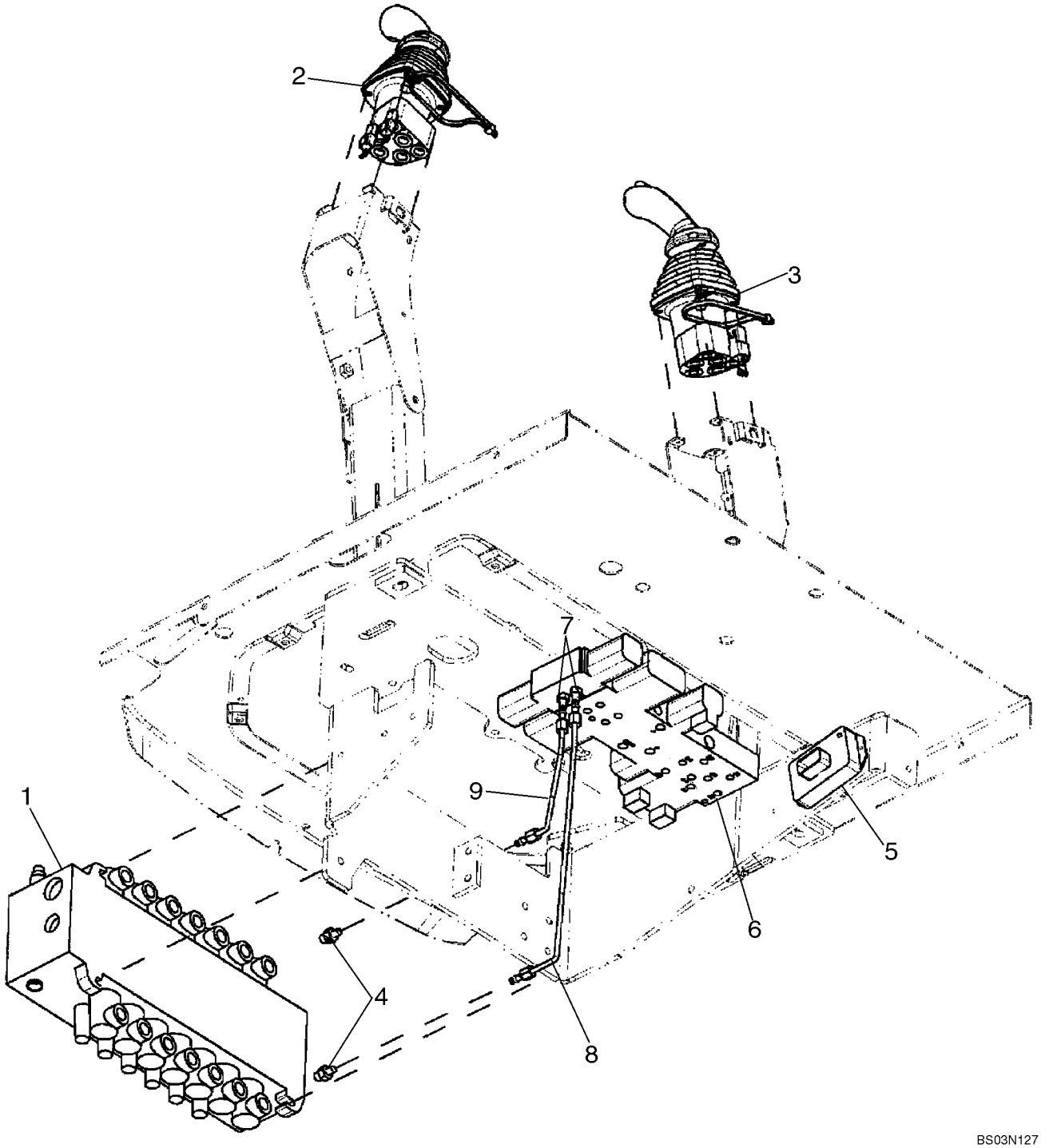

http://www.minnparbackhoeparts.com/

HIDRAULICA - VÁLVULA, CONTROL PILOTO DE PALANCA DE CONTROL (7 SPOOL, W/ EXT DIPPER, W/ AUX HYDS)

REF	FN	PART NUMBER	YR/SN	QTY	DESCRIPTION
		REF			MANUAL SEVEN SPOOL VALVE WITH EXTENDABLE DIPPER; WITH AUXILIARY HYDRAULICS; WITH AUTO-UP; WITH UNI-DIRECTIONAL
1		86987460		1	VALVULA DISTRIBUIDORA Backhoe, 7 Spool; See Figure 08-41; For Mounting See Figure 08-22
2		87308846		1	VALVULA DISTRIBUIDORA JOYSTICK; Left-Hand; With Horn and Uni-Directional Buttons; See Figure 08-55; Replaces 87443742
3		87308847		1	VALVULA DISTRIBUIDORA JOYSTICK; Right-Hand; See Figure 08-58; Replaces 87443743
4		218-5089		2	CONECTOR 7/16 fl x 9/16 Or; Includes 237-6006 O-Ring
		237-6006		1	JUNTA HERMETICA 15/32 ID x 5/64
5		87419454		1	CAJA Box, Pilot Control Power Supply Module
		840-1416		2	TORNILLO M4 x 16
6		85827471		1	VALVULA HIDRAULICA Pressure Reducing, 3 Spool; See Figure 08-52
7		218-5053		2	RACOR 7/16 fl x Or; Includes 237-6004 O-Ring
		237-6004		1	JUNTA HERMETICA 23/64 ID x 5/64
8		87437633		1	TUBO (CONJUNTO) To Lower Extendable Dipper Port
9		87437635		1	TUBO (CONJUNTO) To Upper Extendable Dipper Port

http://www.minnparbackhoeparts.com/

08-19		p1	04/05

HIDRAULICA - VÁLVULA, CONTROL PILOTO DE PALANCA DE CONTROL (7 SPOOL, W/O EXT DIPPER, W/ AUX HYDS)

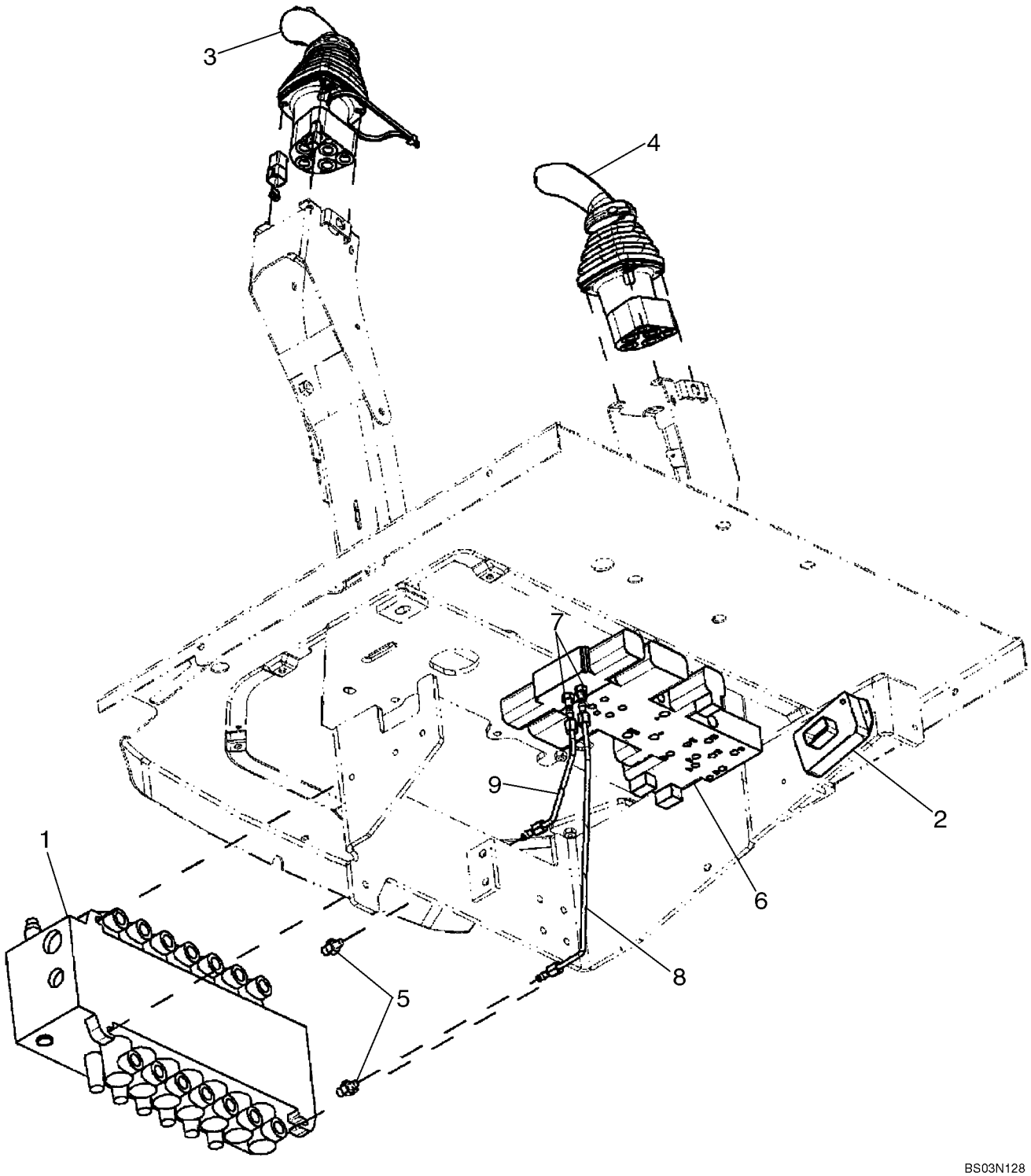

http://www.minnparbackhoeparts.com/

HIDRAULICA - VÁLVULA, CONTROL PILOTO DE PALANCA DE CONTROL (7 SPOOL, W/O EXT DIPPER, W/ AUX HYDS)

REF	FN	PART NUMBER	YR/SN	QTY	DESCRIPTION
		REF			MANUAL SEVEN SPOOL VALVE WITHOUT EXTENDABLE DIPPER; WITH AUXILIARY HYDRAULICS; WITH AUTO-UP; WITH BI-DIRECTIONAL
1		87407965		1	VALVULA DISTRIBUIDORA Backhoe, 7 Spool; See Figure 08-42; For Mounting See Figure 08-22
2		87419455		1	GRUPO REGULADOR Box, Pilot Control Power Supply Module
		840-1416		2	TORNILLO M4 x 16
3		87308845		1	VALVULA DISTRIBUIDORA JOYSTICK; Left-Hand; With Horn and Bi-Directional Buttons; See Figure 08-56; Replaces 87443741
4		87308840		1	VALVULA DISTRIBUIDORA JOYSTICK; Right-Hand; See Figure 08-57; Replaces 87443739
5		218-5089		2	CONECTOR 7/16 fl x 9/16 Or; Includes 237-6006 O-Ring
		237-6006		1	JUNTA HERMETICA 15/32 ID x 5/64
6		85827471		1	VALVULA HIDRAULICA Pressure Reducing, 3 Spool; See Figure 08-52
7		218-5053		2	RACOR 7/16 fl x Or; Includes 237-6004 O-Ring
		237-6004		1	JUNTA HERMETICA 23/64 ID x 5/64
8		87438012		1	TUBO (CONJUNTO) To Lower Auxiliary Port
9		87438015		1	TUBO (CONJUNTO) To Upper Auxiliary Port

http://www.minnparbackhoeparts.com/

08-20		p1	04/05

HIDRAULICA - VÁLVULA, CONTROL PILOTO DE PALANCA DE CONTROL (8 SPOOL, W/ EXT DIPPER, W/ AUX HYDS)

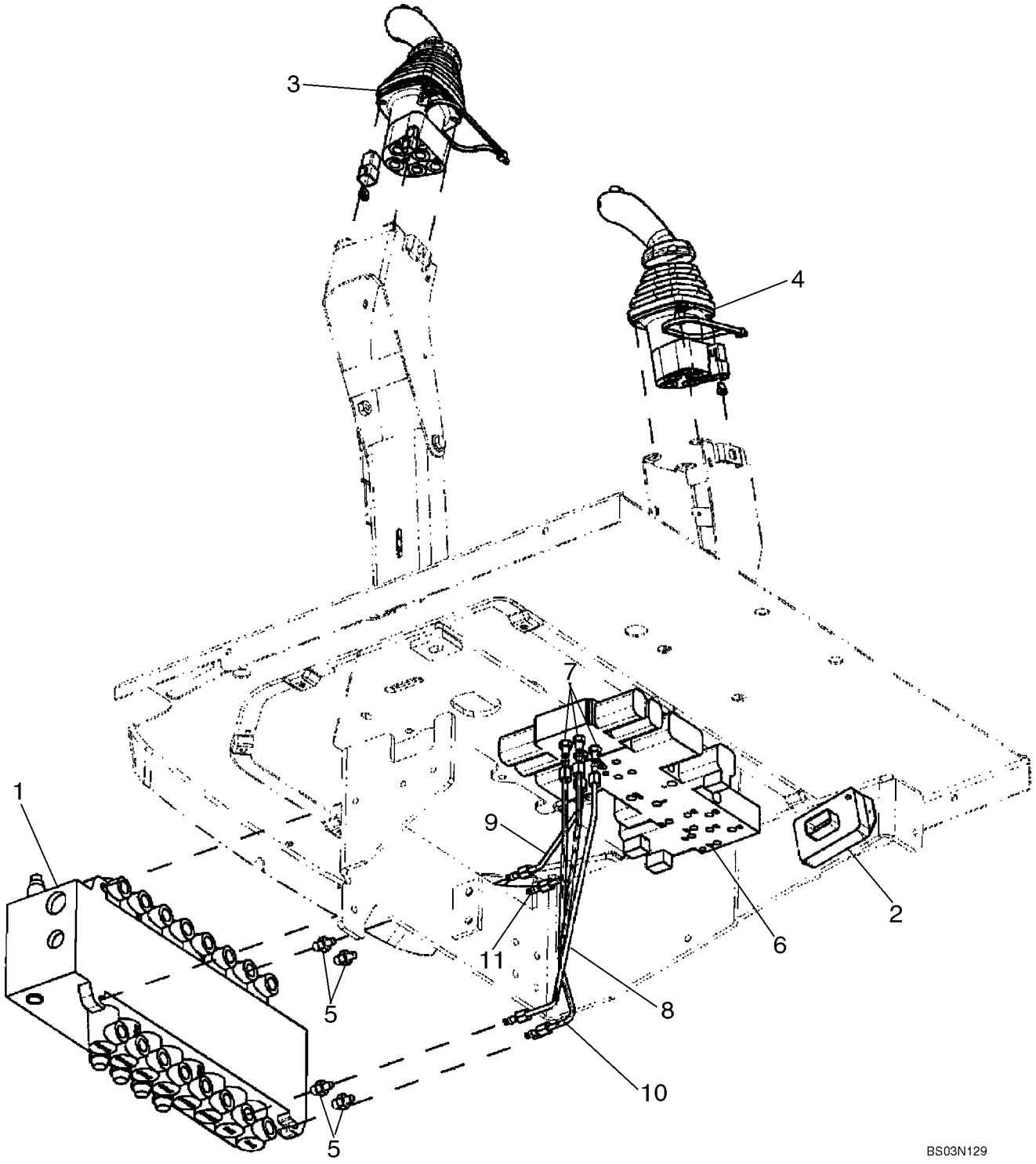

http://www.minnparbackhoeparts.com/

HIDRAULICA - VÁLVULA, CONTROL PILOTO DE PALANCA DE CONTROL (8 SPOOL, W/ EXT DIPPER, W/ AUX HYDS)

REF	FN	PART NUMBER	YR/SN	QTY	DESCRIPTION
		REF			MANUAL EIGHT SPOOL VALVE WITH EXTENDABLE DIPPER; WITH AUXILIARY HYDRAULICS; WITH AUTO-UP; WITH BI-DIRECTIONAL
1		86987461		1	VALVULA HIDRAULICA Backhoe, 8 Spool; See Figure 08-43; For Mounting See Figure 08-22
2		87419455		1	GRUPO REGULADOR Box, Pilot Control Power Supply Module
		840-1416		2	TORNILLO M4 x 16
3		87308845		1	VALVULA DISTRIBUIDORA JOYSTICK; Left-Hand; With Horn and Bi-Directional Buttons; See Figure 08-56; Replaces 87443741
4		87308847		1	VALVULA DISTRIBUIDORA JOYSTICK; Right-Hand; See Figure 08-58; Replaces 87443743
5		218-5089		4	CONECTOR 7/16 fl x 9/16 Or; Includes 237-6006 O-Ring
		237-6006		1	JUNTA HERMETICA 15/32 ID x 5/64
6		87434621		1	VALVULA DISTRIBUIDORA Pressure Reducing, 4 Spool; SeeFigure 08-53
7		218-5053		4	RACOR 7/16 fl x Or; Includes 237-6004 O-Ring
		237-6004		1	JUNTA HERMETICA 23/64 ID x 5/64
8		87437633		1	TUBO (CONJUNTO) To Lower Extendable Dipper Port
9		87437635		1	TUBO (CONJUNTO) To Upper Extendable Dipper Port
10		87440835		1	TUBO (CONJUNTO) Tube, To Lower Auxiliary Port
11		87440837		1	TUBO (CONJUNTO) Tube, To Upper Auxiliary Port

http://www.minnparbackhoeparts.com/

08-21		p1	01/05

HIDRAULICA - CONTROL PILOTO DE PALANCA DE CONTROL

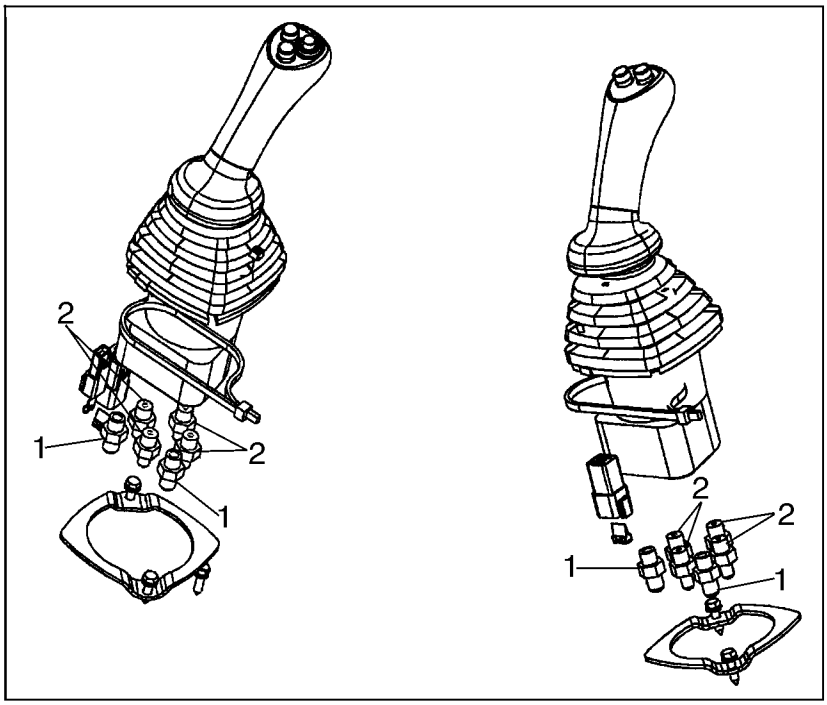

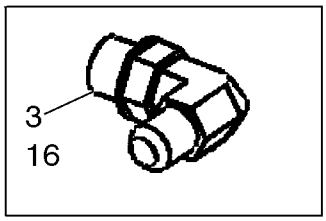

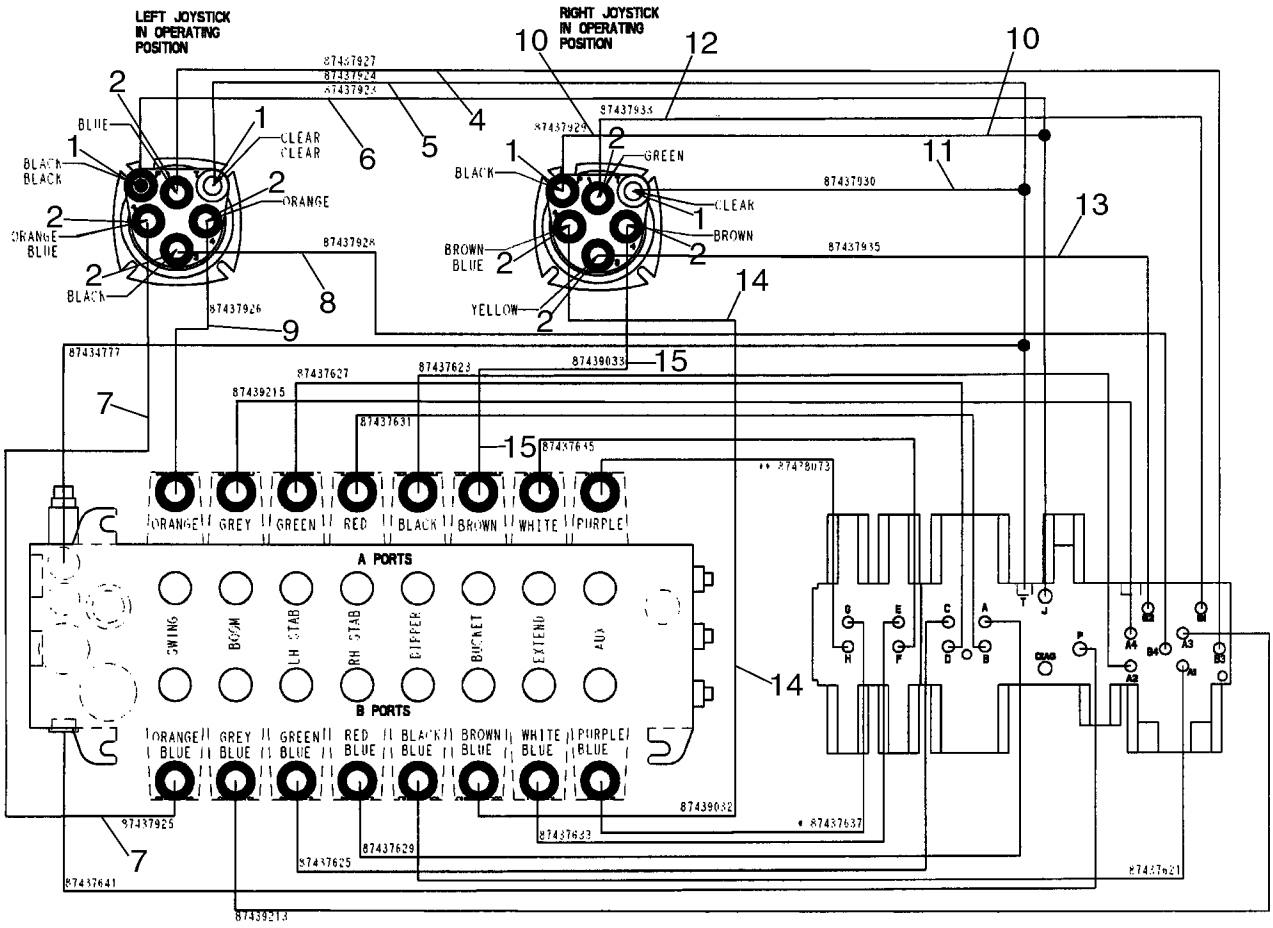

BS04A002

http://www.minnparbackhoeparts.com/

HIDRAULICA - CONTROL PILOTO DE PALANCA DE CONTROL

REF	FN	PART NUMBER	YR/SN	QTY	DESCRIPTION
1		218-5057		4	RACOR 9/16 fl x Or; Includes 237-6006 O-Ring
2		218-5089		8	CONECTOR 7/16 fl x 9/16 Or; Includes 237-6006 O-Ring
3		218-5105		1	CODO 90 deg, 9/16 fl x Or; Includes 237-6006; Installs in Hydraulic Tank for Pilot Return
4		87437927		1	MANGUERA (CONJUNTO) 1295 mm (51 in); Left-Hand Joystick No. 1 to Selector Valve B3
5		87437924		1	MANGUERA (CONJUNTO) 1000 mm (39-3/8 in); Left-Hand Joystick Tank to Pressure Reducing Valve T
6		87437923		1	MANGUERA (CONJUNTO) 1035 mm (40-3/4 in); Left-Hand Joystick Pressure to Pressure Reducing Valve J
7		87437925		1	MANGUERA (CONJUNTO) 1075 mm (42-3/8 in); Left-Hand Joystick No. 2 to Swing Port B
8		87437928		1	MANGUERA (CONJUNTO) 1270 mm (50 in); Left-Hand Joystick No. 3 to Selector Valve B4
		399004A1		1	DEFENSA Hose, 38.9 ID x 270 mm long; Used With Ref 4 - 8
9		87437926		1	MANGUERA (CONJUNTO) 825 mm (32-1/2 in); Left-Hand Joystick No. 4 to Swing Port A
10		87437929		1	MANGUERA (CONJUNTO) 1105 mm (43-1/2 in); Right-Hand Joystick Pressure to Pressure Reducing Valve J
11		87437930		1	MANGUERA (CONJUNTO) 1345 mm (53 in); Right-Hand Joystick Tank to Pressure Reducing Valve T
		191703A1		1	TUBO AISLANTE Hose Guard, 28 ID x 400 mm long; Used With Ref 10, 11
12		87437933		1	MANGUERA (CONJUNTO) 1185 mm (46-11/16 in); Right-Hand Joystick No. 1 to Selector Valve B1
13		87437935		1	MANGUERA (CONJUNTO) 1175 mm (46-5/16 in); Right-Hand Joystick No. 3 to Selector Valve B2
14		87439032		1	MANGUERA (CONJUNTO) 1090 mm (42-15/16 in); Right-Hand Joystick No. 2 to Bucket Port B
15		87439033		1	MANGUERA (CONJUNTO) 915 mm (36-1/32 in); Right-Hand Joystick No. 4 to Bucket Port A

http://www.minnparbackhoeparts.com/

HIDRAULICA - CONTROL PILOTO DE PALANCA DE CONTROL

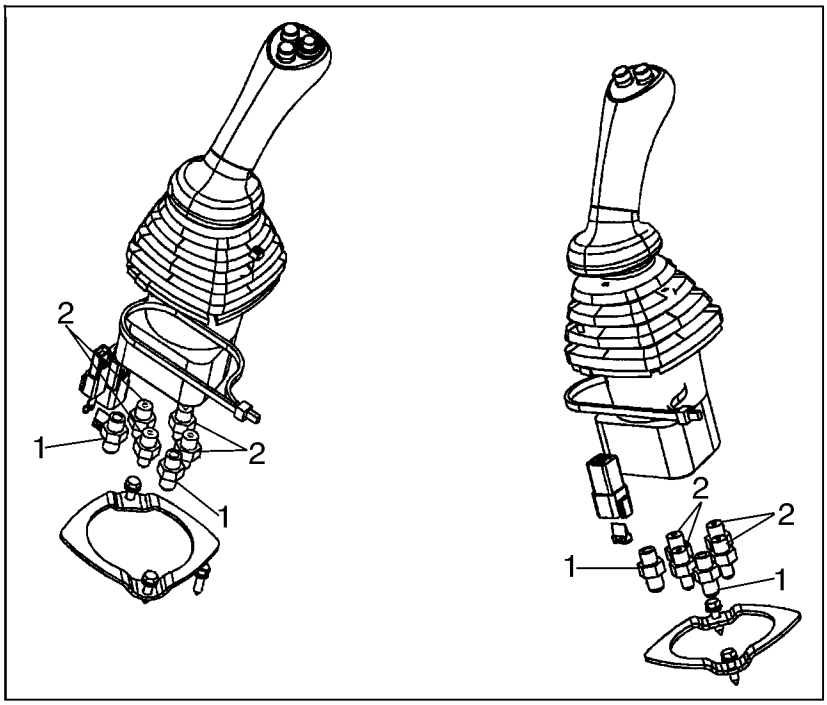

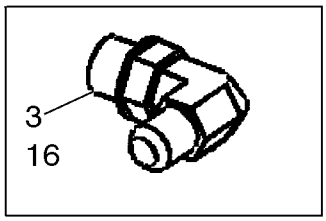

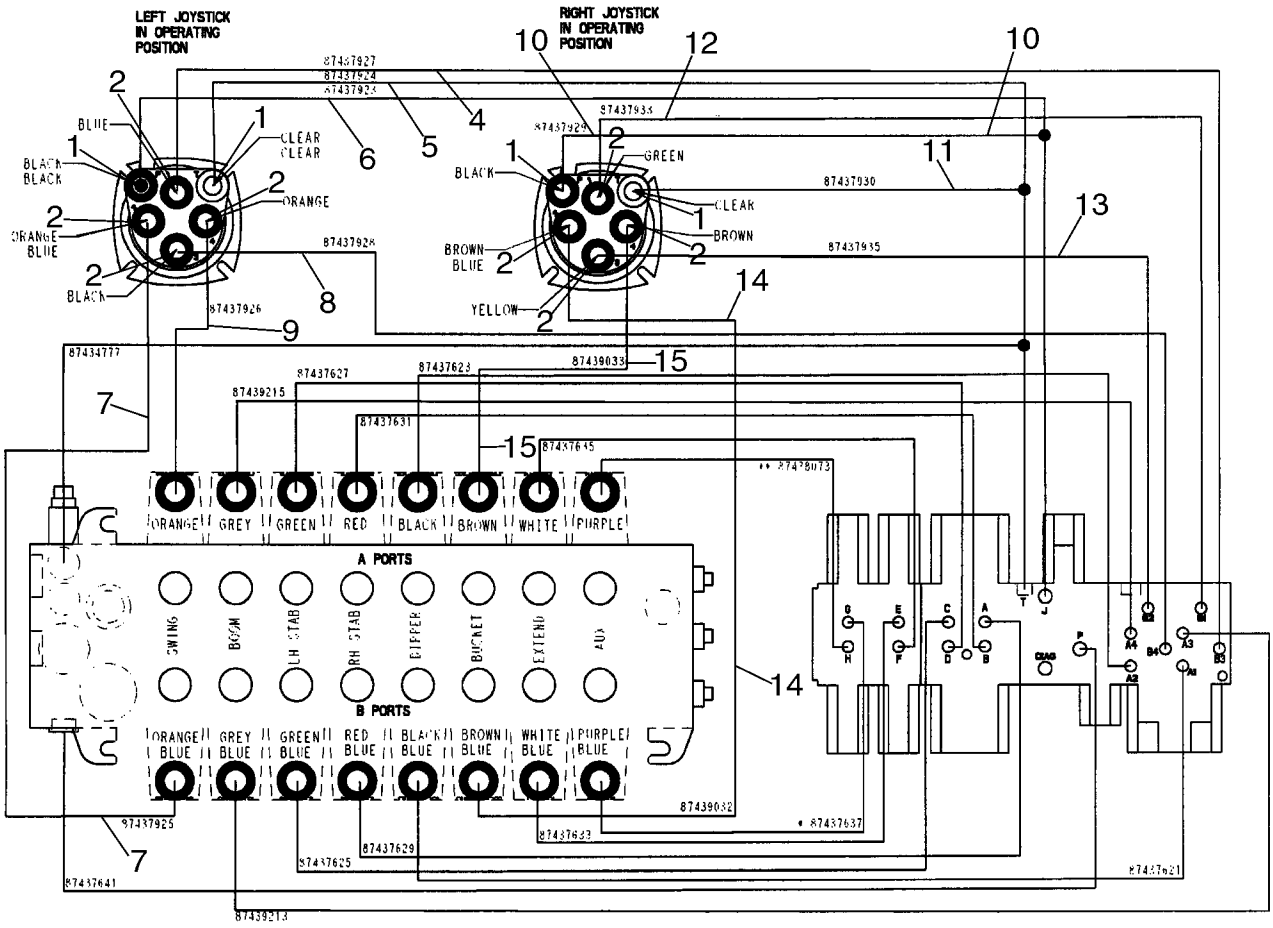

BS04A002

http://www.minnparbackhoeparts.com/

HIDRAULICA - CONTROL PILOTO DE PALANCA DE CONTROL

REF	FN	PART NUMBER	YR/SN	QTY	DESCRIPTION
		191703A1		1	TUBO AISLANTE Hose Guard, 28 ID x 400 mm long; Used With Ref 12 - 15
16		87452405		1	MANGUERA (CONJUNTO) 1520 mm (59-7/8 in); Pressure Reducing Valve T to Tank; Replaces 87435073
		143219A1		1	PROTECTOR HOSE GUARD, 19 ID x 450 mm long; Used With Ref 16
		L18337		X	BANDA Tie

http://www.minnparbackhoeparts.com/

08-22		p1	05/04

HIDRAULICA - CONTROL PILOTO

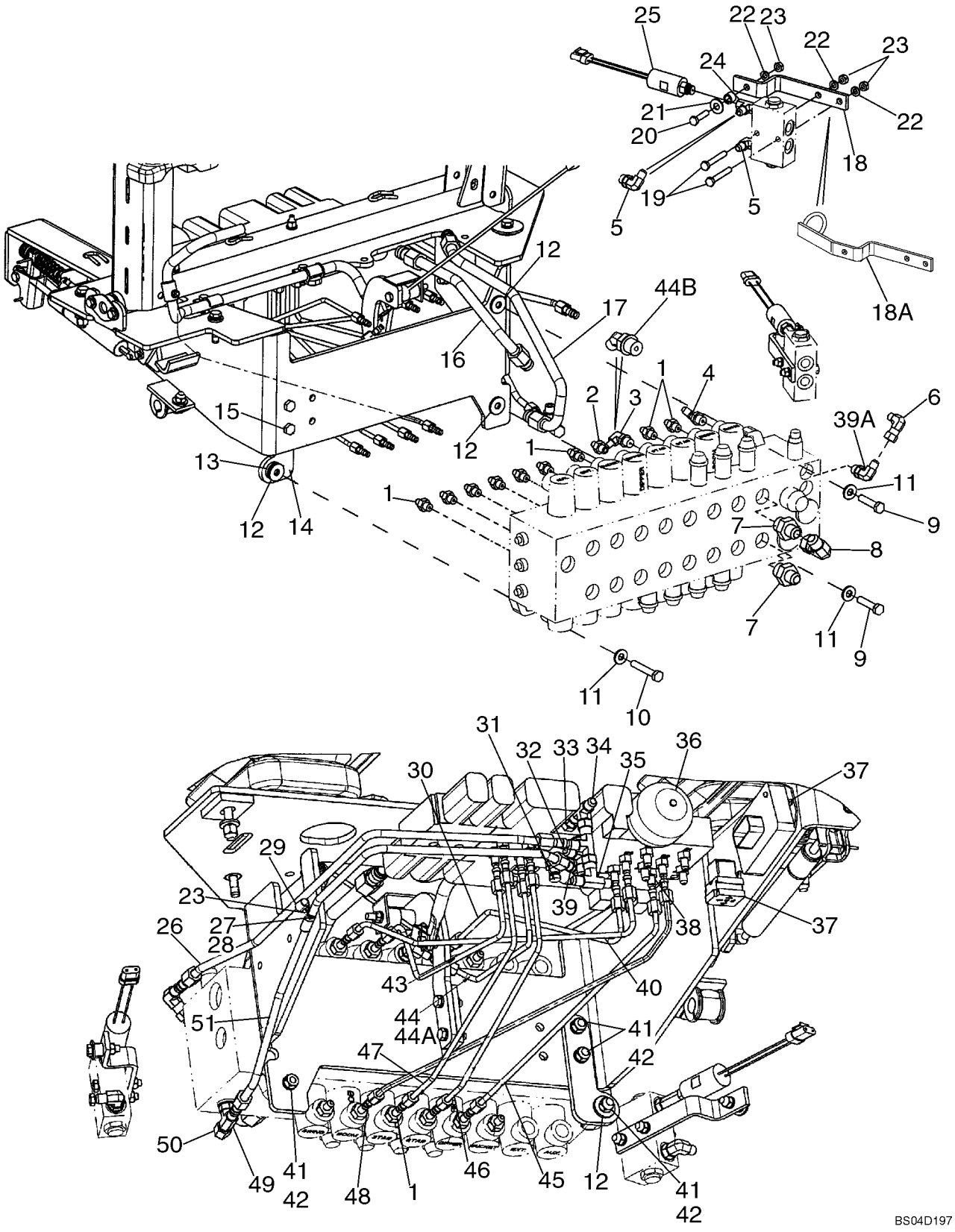

http://www.minnparbackhoeparts.com/

HIDRAULICA - CONTROL PILOTO

REF	FN	PART NUMBER	YR/SN	QTY	DESCRIPTION
1		218-5089		9	CONECTOR 7/16 fl x 9/16 Or; Includes 237-6006 O-Ring
2		87423401		1	CONEXION Special Orifice
3		218-5283		1	CODO 90 deg, 7/16 fl x 9/16 Or; Includes 237-6006 O-Ring
4		218-5365		1	CONEXION ELBOW, 45 deg, 7/16 fl x 9/16 Or; Includes 237-6006 O-Ring
5		218-5105		2-4	CODO 90 deg, 9/16 fl x Or; Includes 237-6006; 2 Used on Models With Auto Up; 4 Used on Models Without Auto Up
6		218-980		1	CODO 90 deg, 9/16 fl x sw fl
7		218-5063		2	RACOR 7/8 fl x 1-1/16 Or; Includes 237-6012 O-Ring
8		218-5232		1	CODO 90 deg, 7/8 fl x sw fl
9		814-10045		2	TORNILLO M10 x 45
10		814-10060		1	TORNILLO M10 x 60
11		896-15010		3	ARANDELA 11 x 24 x 3 mm
12		496-41041		5	ARANDELA 13/32 x 1-1/8 x 1/8
13		D52276		1	AISLADOR Mount
14		87440712		1	PIEZA DE APOYO Valve Mounting Bracket
15		614-10030		2	TORNILLO M10 x 30
16		87426488		1	TUBO (CONJUNTO) Swing Dampening Upper Port
17		87427948		1	TUBO (CONJUNTO) Swing Dampening Lower Port
18		87423034		2	PIEZA DE APOYO No Longer Available, Order 87450318 Bracket, Ref 18A
18A		87450318		2	PIEZA DE APOYO
19		814-8055		4	TORNILLO M8 x 55
20		814-8035		2	TORNILLO M8 x 35
21		496-41041		2	ARANDELA 13/32 x 1-1/8 x 1/8
21A		87437840		2	SEPARADOR Not Illustrated
22		895-11008		6	ARANDELA 9 x 16 x 1.6 mm
23		829-1408		7	TUERCA M8
24		87423033		2	RACOR-T Includes 237-6004 O-Ring, 237-6006 O-Ring; Models With Auto Up, If Used
25		87439163		2	INTERRUPTOR DE PRESION Includes 237-6004 O-Ring; Models With Auto Up, If Used
25		86992557		2	CONTACTOR PRESSURE, Includes 237-6004 O-Ring; Models With Auto Up, If Used

http://www.minnparbackhoeparts.com/

08-22		p2	05/04

HIDRAULICA - CONTROL PILOTO

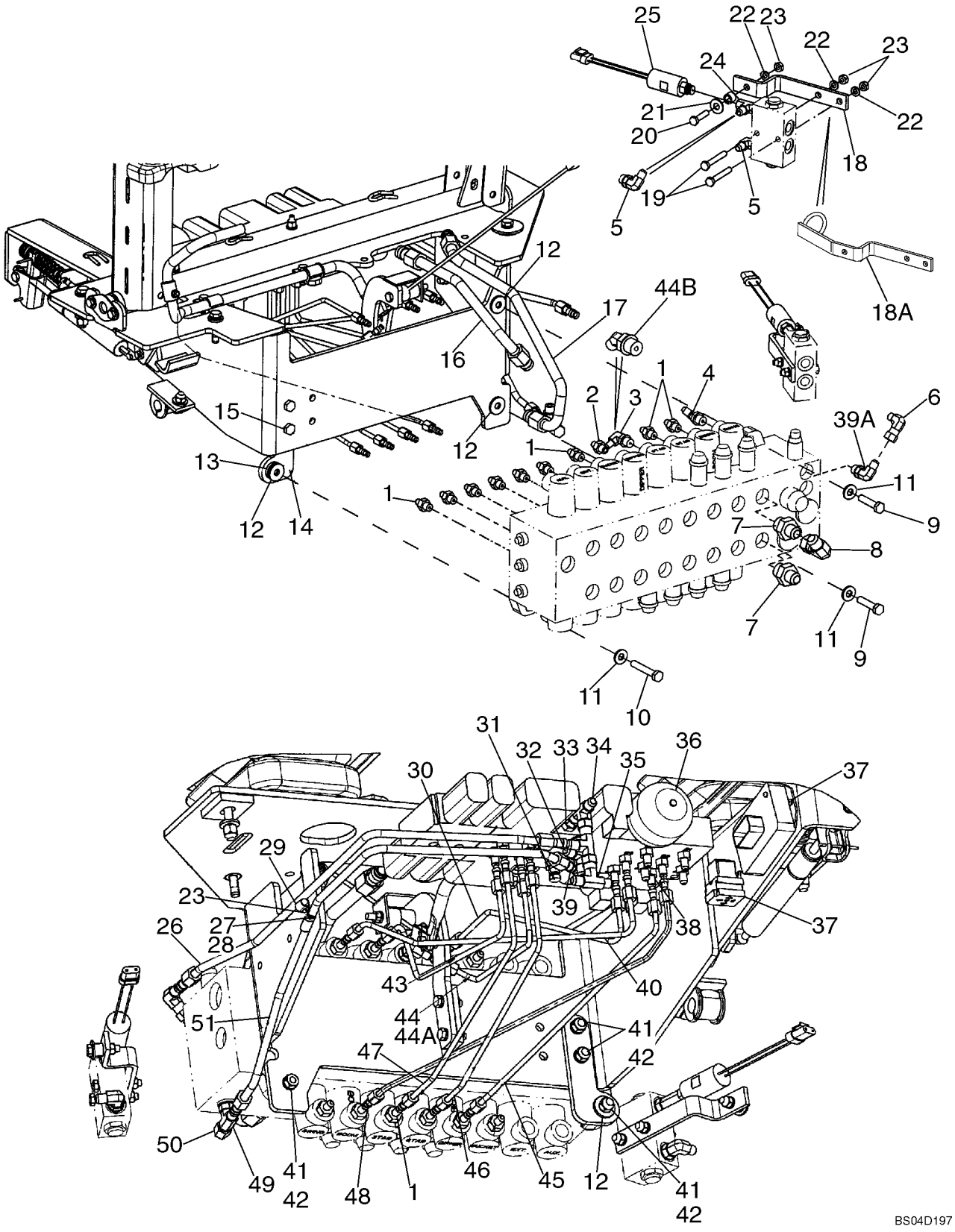

http://www.minnparbackhoeparts.com/

HIDRAULICA - CONTROL PILOTO

REF	FN	PART NUMBER	YR/SN	QTY	DESCRIPTION
26		87434777		1	TUBO (CONJUNTO) Reducing Valve Tank to Backhoe Valve
27		895-11008		1	ARANDELA 9 x 16 x 1.6 mm
28		614-8025		1	TORNILLO M8 x 25
29		515-2295		2	COLLAR
30		87437623		1	TUBO (CONJUNTO) Selector A2 to Dipper Port A
31		86596853		1	EMPALME RAPIDO Includes 9617873 O-Ring
32		218-5243		1	CONEXION TEE; Includes 237-6006 O-Ring
33		218-5057		1	RACOR 9/16 fl x Or; Includes 237-6006 O-Ring
34		218-5222		2	CONEXION TEE
35		218-836		1	RACOR-T
36		87425225		1	ACUMULADOR Includes 237-6008 O-Ring
37		840-1416		3	TORNILLO M4 x 16; See Figure 08-15 - 08-20 For Pilot Control Power Supply Control Unit; See Figure 04-21 For Relay
38		218-5053		12	RACOR 7/16 fl x Or; Includes 237-6004 O-Ring
39		218-5105		1	CODO 90 deg, 9/16 fl x Or; Includes 237-6006 O-Ring
39A		87448990		1	CODO 90 deg, 9/16 fl x Or; Includes Orifice; Includes 237-6006 O-Ring
40		87439215		1	TUBO (CONJUNTO) Selector A4 to Boom Port A
41		829-1410		5	TUERCA M10
42		892-11010		4	ARANDELA DE FRENO M10
43		87437627		1	TUBO (CONJUNTO) Reducing Valve to Left-Hand Stabilizer Port A
44		87437631		1	TUBO (CONJUNTO) Reducing Valve to Right-Hand Stabilizer Port A; Used With 90 deg 218-5283 Elbow (Ref 3); No Longer Available, Order 87445557 Tube and 218-5365 45 deg Elbow, Ref 44A, 44B
44A		87445557		1	TUBO (CONJUNTO) Reducing Valve to Right-Hand Stabilizer Port A; Used With 45 deg Elbow, Ref 44B
44B		218-5365		1	CONEXION ELBOW, 45 deg, 7/16 fl x 9/16 Or; Includes 237-6006 O-Ring
45		87437621		1	TUBO (CONJUNTO) Selector A1 to Dipper Port B
46		87437629		1	TUBO (CONJUNTO) Reducing Valve to Right-Hand Stabilizer Port B

http://www.minnparbackhoeparts.com/

08-22		p3	05/04

HIDRAULICA - CONTROL PILOTO

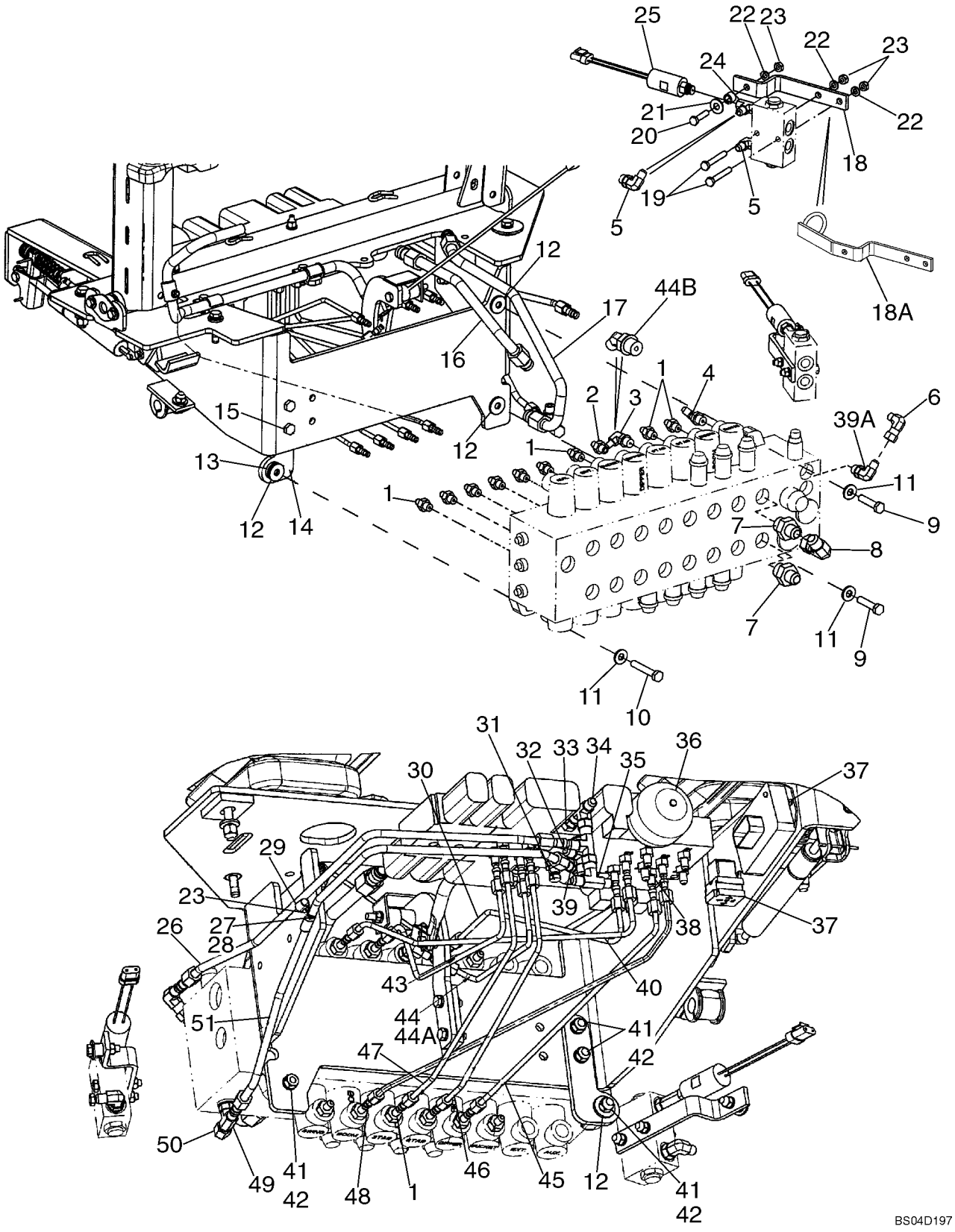

http://www.minnparbackhoeparts.com/

HIDRAULICA - CONTROL PILOTO

REF	FN	PART NUMBER	YR/SN	QTY	DESCRIPTION
47		87437625		1	TUBO (CONJUNTO) Reducing Valve to Left-Hand Stabilizer Port B
48		87439213		1	TUBO (CONJUNTO) Selector A3 to Boom Port B
49		218-5182		1	RACOR-T Includes 237-6006 O-Ring
50		218-754		1	TAPON DEL DEPOSITO Hex, 9/16
51		87437641		1	TUBO (CONJUNTO) Reducing Valve Pressure to Backhoe Valve

http://www.minnparbackhoeparts.com/

08-23		p1	04/04

HIDRAULICA - AUXILIAR DE LA RETROEXCAVADORA

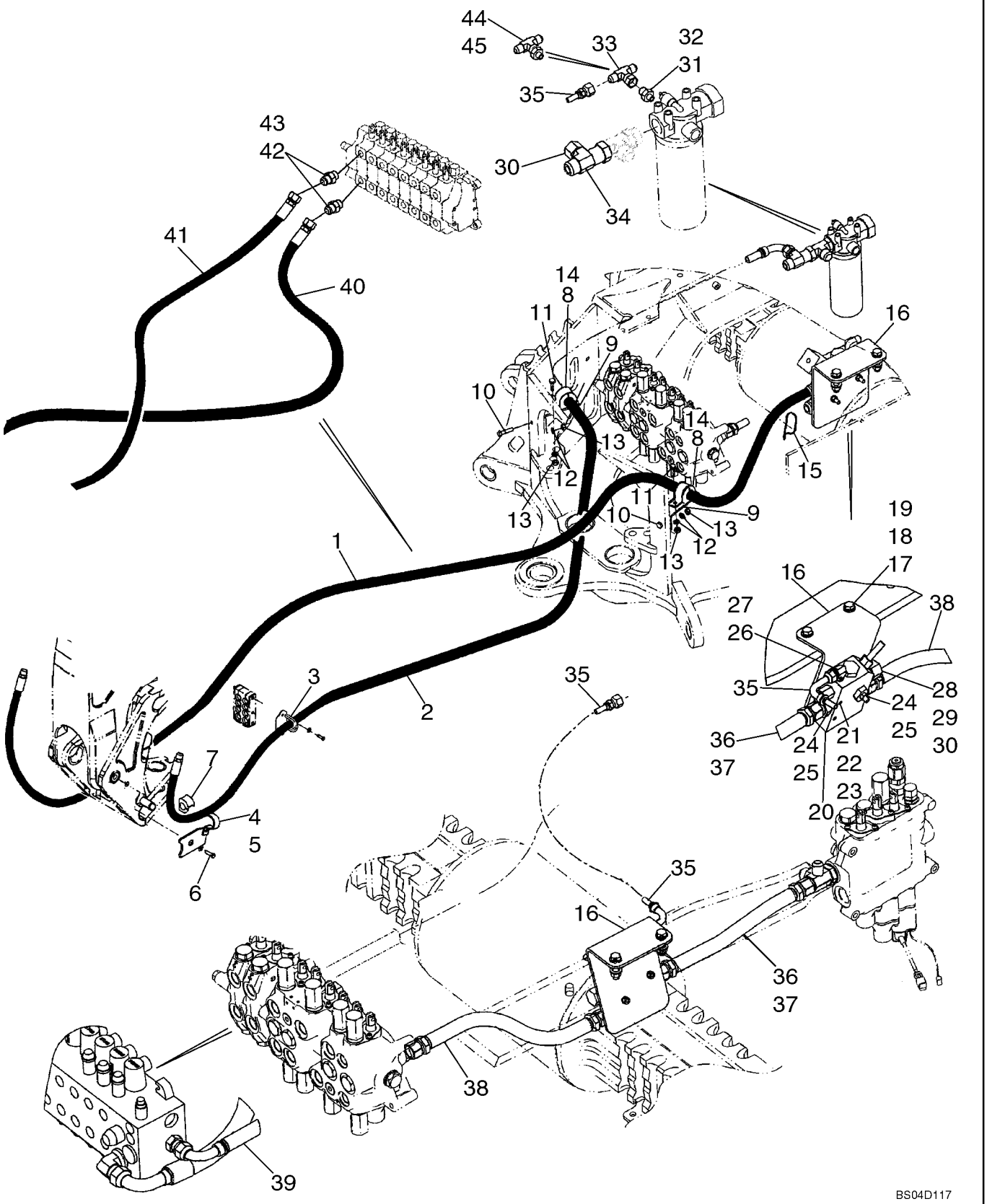

http://www.minnparbackhoeparts.com/

HIDRAULICA - AUXILIAR DE LA RETROEXCAVADORA

REF	FN	PART NUMBER	YR/SN	QTY	DESCRIPTION
1		87430972		1	MANGUERA (CONJUNTO) 2467 mm (97-1/8 in) Hose; Models With Uni-Directional
2		87429387		1	MANGUERA (CONJUNTO) 2890 mm (113-13/16 in) Hose; Models With Uni-Directional
3		87431630		2	PIEZA DE SOPORTE
4		329799A1		1	APOYADERO Left-Hand
5		329797A1		1	APOYADERO Right-Hand
6		604-20045		2	TORNILLO M20 x 45
7		144477A1		2	AMORTIGUADOR
8		144479A1		2	COLLAR
9		413778A1		2	PIEZA DE SOPORTE
10		814-10040		2	TORNILLO M10 x 40
11		614-10025		2	TORNILLO M10 x 25
12		892-11010		4	ARANDELA DE FRENO M10
13		829-1410		4	TUERCA M10
14		144477A1		2	AMORTIGUADOR
15		L18337		1	BANDA
16		87440694		1	PIEZA DE APOYO Bracket
17		814-12050		2	TORNILLO M12 x 50
18		896-11012		4	ARANDELA
19		829-1412		2	TUERCA M12
20		87421836		1	VALVULA HIDRAULICA Auxiliary Uni-Directional Valve; Component Parts Not Available At Time Of Printing
21		814-8070		2	TORNILLO M8 x 70
22		892-11008		2	ARANDELA Lock, M8
23		829-1408		2	TUERCA M8
24		218-5050		2	CONEXION 1-5/16 fl x 1-1/16 Or; Incl. Ref 25
25		237-6012		1	JUNTA HERMETICA 59/64 ID x 7/64
26		218-5280		1	CONEXION ELBOW, 90 deg, 3/4 fl x 9/16 Or; Incl. Ref 27
27		237-6006		1	JUNTA HERMETICA 15/32 ID x 5/64
28		218-5064		1	RACOR 1-1/16 fl x Or; Incl. Ref 29
29		237-6012		1	JUNTA HERMETICA 59/64 ID x 7/64
30		218-335		2	TAPON DEL DEPOSITO Hex, 1-1/16
31		218-5351		1	RACOR 3/4 fl x 9/16 Or; Incl. Ref 32; If Used
32		237-6006		1	JUNTA HERMETICA 15/32 ID x 5/64

http://www.minnparbackhoeparts.com/

08-23		p2	04/04

HIDRAULICA - AUXILIAR DE LA RETROEXCAVADORA

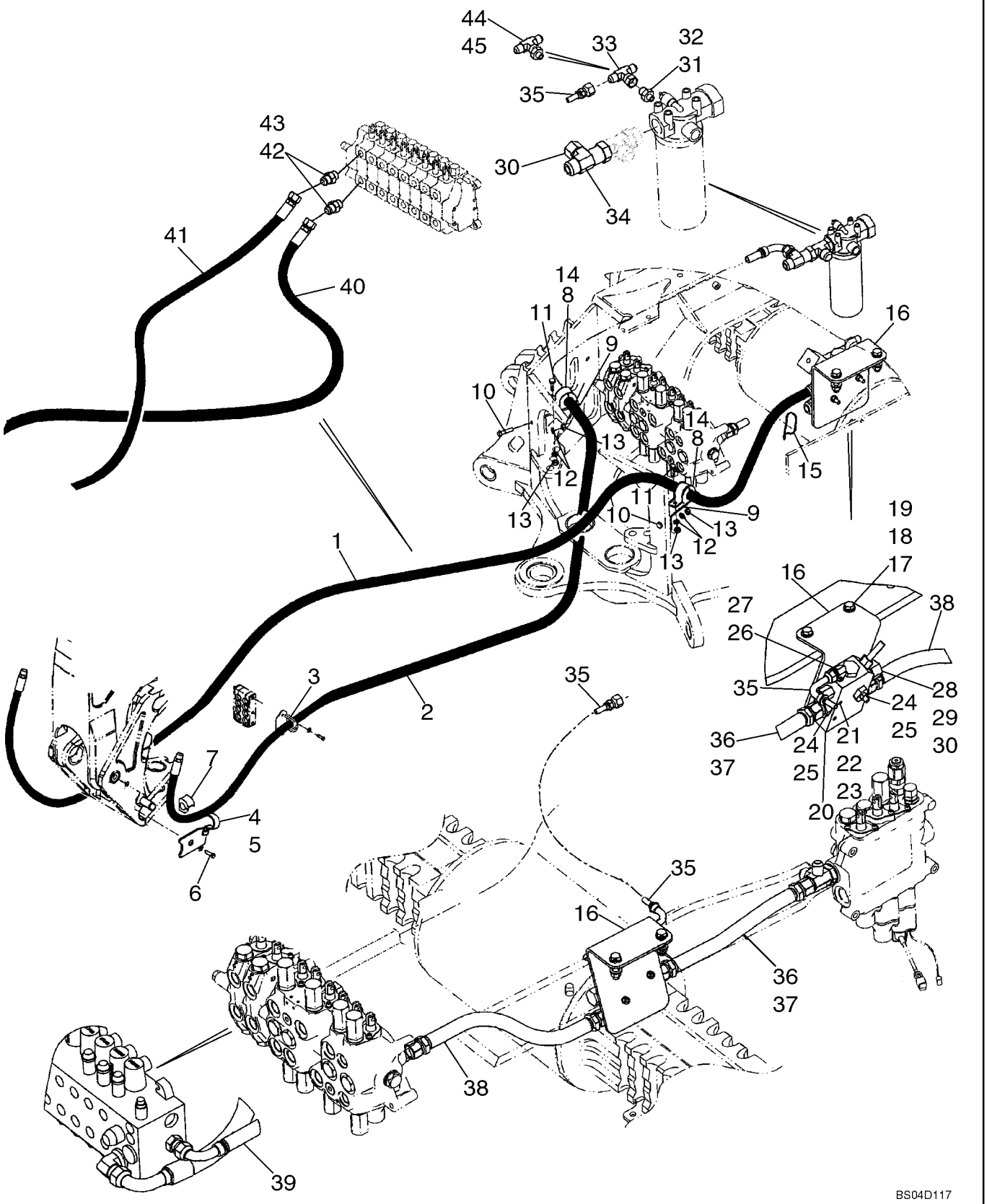

http://www.minnparbackhoeparts.com/

HIDRAULICA - AUXILIAR DE LA RETROEXCAVADORA

REF	FN	PART NUMBER	YR/SN	QTY	DESCRIPTION
33		218-840		1	RACOR-T 3/4 sw str br x fl x fl; If Used
34		218-5216		1	CONEXION Tee, 1-1/16 fl br x 15/16 fl x adj str thrd
35		87422948		1	MANGUERA (CONJUNTO) 930 mm (36-5/8 in)
36		87437232		1	MANGUERA (CONJUNTO) 420 mm (16-9/16 in); Two Spool Loader Valve
37		87437231		1	MANGUERA (CONJUNTO) 370 mm (14-19/32 in); Three Spool Loader Valve
38		87422977		1	MANGUERA (CONJUNTO) 465 mm (18-5/16 in); Power Beyond; Models Without Pilot Controls
39		87428814		1	MANGUERA (CONJUNTO) 458 mm (18-1/32 in); Power Beyond; Models With Pilot Controls
40		87423969		1	MANGUERA (CONJUNTO) 1500 mm (59-1/16 in); Models With Bi-Directional
41		87423970		1	MANGUERA (CONJUNTO) 1725 mm (67-15/16 in); Models With Bi Directional
42		218-5064		2	RACOR 1-1/16 fl x Or; Incl. Ref 43
43		237-6012		1	JUNTA HERMETICA 59/64 ID x 7/64
44		218-5511		1	RACOR-T Incl. Ref 45; If Used
45		237-6006		1	JUNTA HERMETICA 15/32 ID x 5/64

http://www.minnparbackhoeparts.com/

HIDRAULICA - AUXILIAR DE LA RETROEXCAVADORA

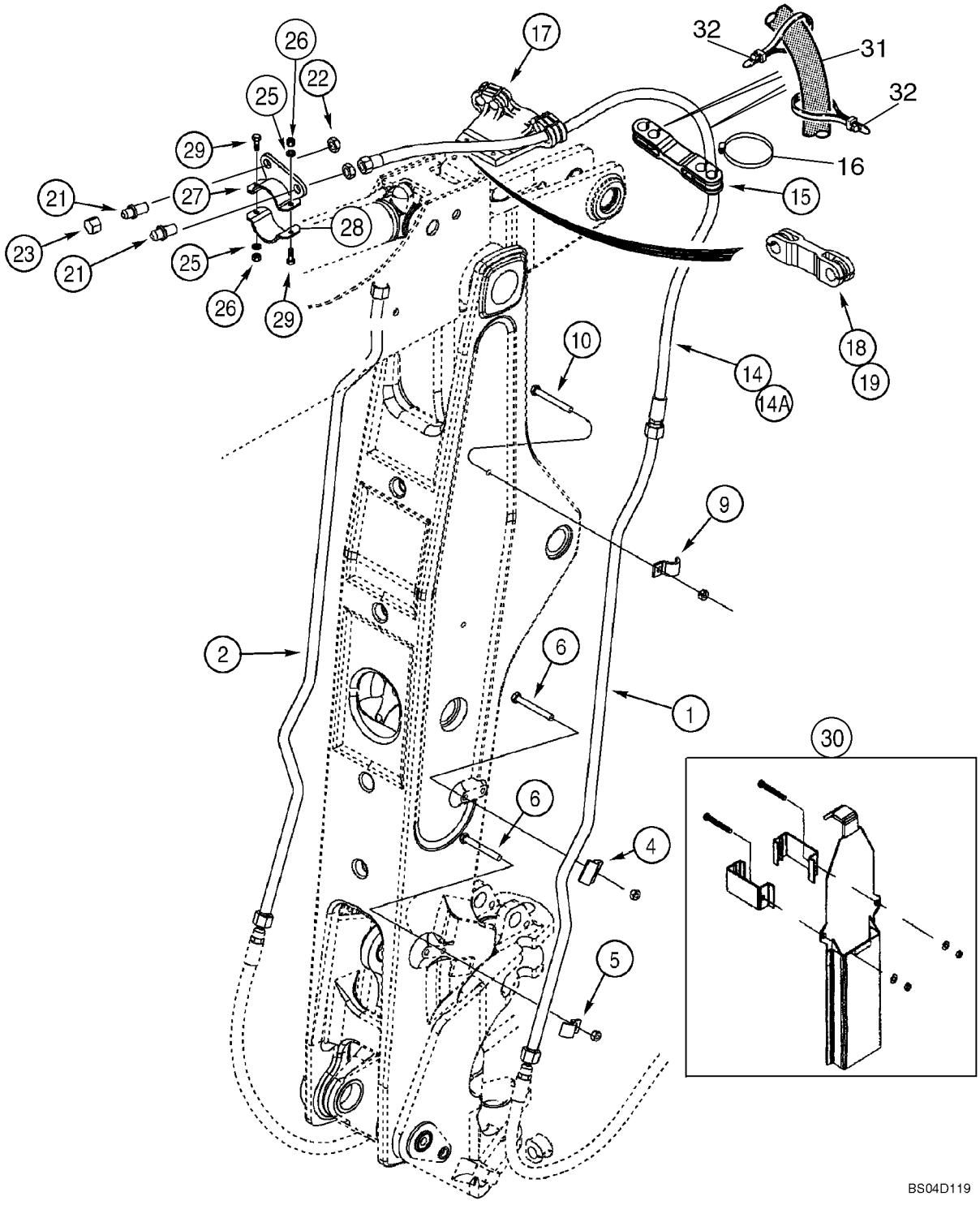

http://www.minnparbackhoeparts.com/

HIDRAULICA - AUXILIAR DE LA RETROEXCAVADORA

REF	FN	PART NUMBER	YR/SN	QTY	DESCRIPTION
		REF			MANUAL AT BOOM AND DIPPER
1		252885A1		1	TUBO
2		252883A1		1	TUBO (CONJUNTO)
4		253038A1		2	PIEZA DE SOPORTE
5		255051A1		2	COLLAR
6		814-12090		4	TORNILLO M12 x 90
9		242459A1		2	BRIDA Clamp
10		814-12070		2	TORNILLO M12 x 70
14		243679A2		2	MANGA 2665 mm (104-15/16 in); Models With Extendable Dipper
14A		256210A2		2	MANGA 1285 mm (50-19/32 in); Models Without Extendable Dipper
15		246158A1		1	BRIDA Models With Extendable Dipper
16		214-3156		4	COLLAR 2-3/4 x 3-5/8; Models With Extendable Dipper
17		246151A1		1	APOYADERO Models With Extendable Dipper
18		103670A1		1	ABRAZADERA MANGUERA Rubber
19		214-3132		2	COLLAR
21		218-676		2	CONEXION 1-1/16 fl x bkhd fl
22		218-1256		2	CONTRA TUERCA 1-1/16
23		218-335		2	TAPON DEL DEPOSITO 1/16
25		896-11010		2	ARANDELA 11 x 21 x 2,5 mm
26		832-10410		2	TUERCA M10
27		314607A1		1	ABRAZADERA
28		314608A1		1	ABRAZADERA
29		614-10040		2	TORNILLO M10 x 40
		370915A1		1	JEUGO Boom Guard; Incl. Ref 30 and Instructions
30		317989A1		1	DEFENSA Boom; Component Parts Not Serviced Separately
31		87441372		2	MANGUITO 2044 mm (80-1/2 in)
32		L18337		4	BANDA

http://www.minnparbackhoeparts.com/

HIDRAULICA - DISPOSITIVO ANTICABECEO

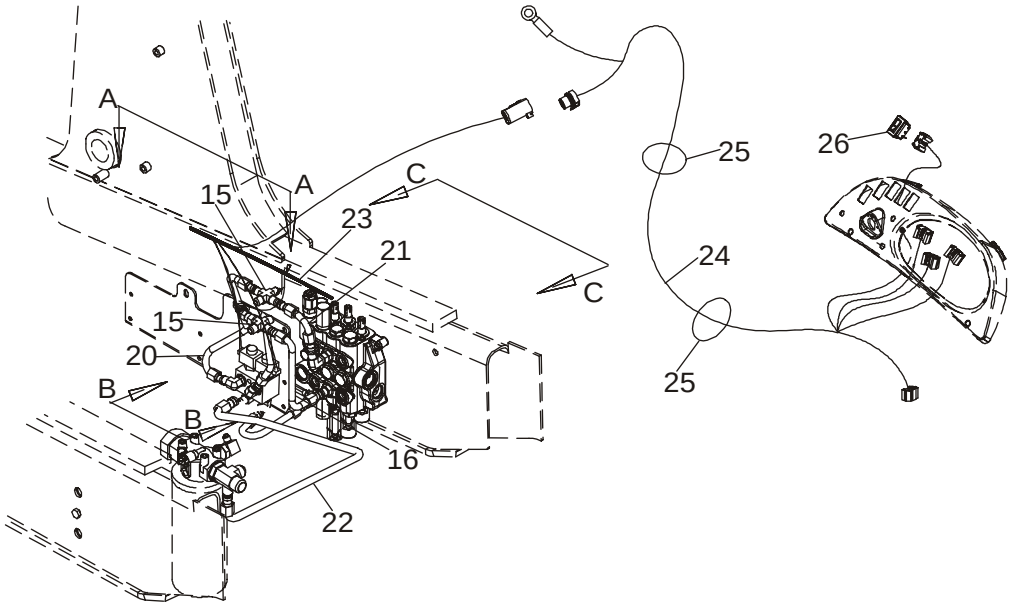

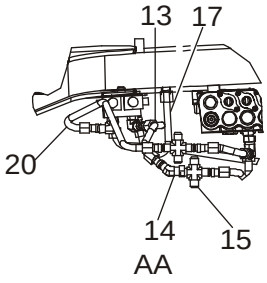

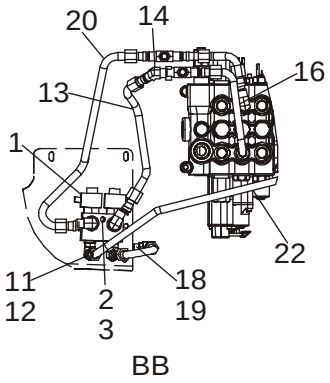

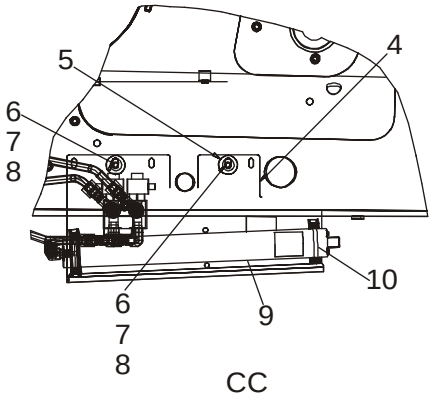

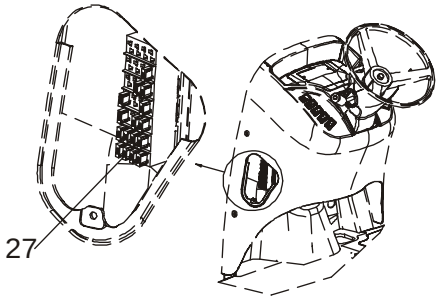

BS03M139

http://www.minnparbackhoeparts.com/

HIDRAULICA - DISPOSITIVO ANTICABECEO

REF	FN	PART NUMBER	YR/SN	QTY	DESCRIPTION
		REF			MANUAL RIDE CONTROL HYDRAULIC AND ELECTRICAL CIRCUIT
1		87433240		1	ELECTROVÁLVULA Ride Control; Component Parts Not Available At Time Of Printing
2		814-10080		1	TORNILLO M10 x 80
3		895-11010		1	ARANDELA 11 x 21 x 2 mm
4		87421213		1	PIEZA DE APOYO Plate
5		87423067		2	SEPARADOR
6		814-10040		2	TORNILLO M10 x 40
7		895-15010		2	ARANDELA 11 x 24 x 2 mm
8		87417721		2	ROSCA POSTIZA M10; Replaces 829-1410 Hex Nut Used On Some Models
9		448284A1		1	ACUMULADOR Ride Control; Component Parts Not Serviced Separately; Used In Production, For Service, Order 234412A1 Accumulator
9		234412A1		1	ACUMULADOR Ride Control; See Figure 08-60
10		A13240		2	COLLAR Two Piece; Includes Hardware
11		218-5117		4	CONEXION ELBOW, 90 deg, 7/8 fl x 3/4 adj Or; Incl. Ref 12
12		237-6008		1	JUNTA HERMETICA 41/64 ID x 3/32
13		87421938		1	TUBO (CONJUNTO) Solenoid Valve to Loader Control Valve Lower Lift Section Port
14		218-5174		1	CONEXION ELBOW, 45 deg, 7/8 fl x sw str thrd
15		218-655		2	CONEXION TEE
16		REF		1	MANUAL TUBE, For Tube and Fitting At Loader Valve, See Figure 08-04
17		87420696		1	TUBO (CONJUNTO) Accumulator to Solenoid Valve
18		218-5600		1	CONEXION ELBOW, 90 deg, 7/8 fl x 3/4 Or; Incl. Ref 19
19		237-6008		1	JUNTA HERMETICA 41/64 ID x 3/32
20		87435923		1	TUBO (CONJUNTO) Solenoid Valve To Loader Control Valve Upper Lift Section Port
21		REF		1	MANUAL TUBE, For Tube and Fitting At Loader Valve, See Figure 08-04
22		87437265		1	TUBO (CONJUNTO) Solenoid Valve To Filter
23		87436675		1	GRUPO DE CABLES Chassis Options Harness; Includes (4) L71879 Diodes

http://www.minnparbackhoeparts.com/

HIDRAULICA - DISPOSITIVO ANTICABECEO

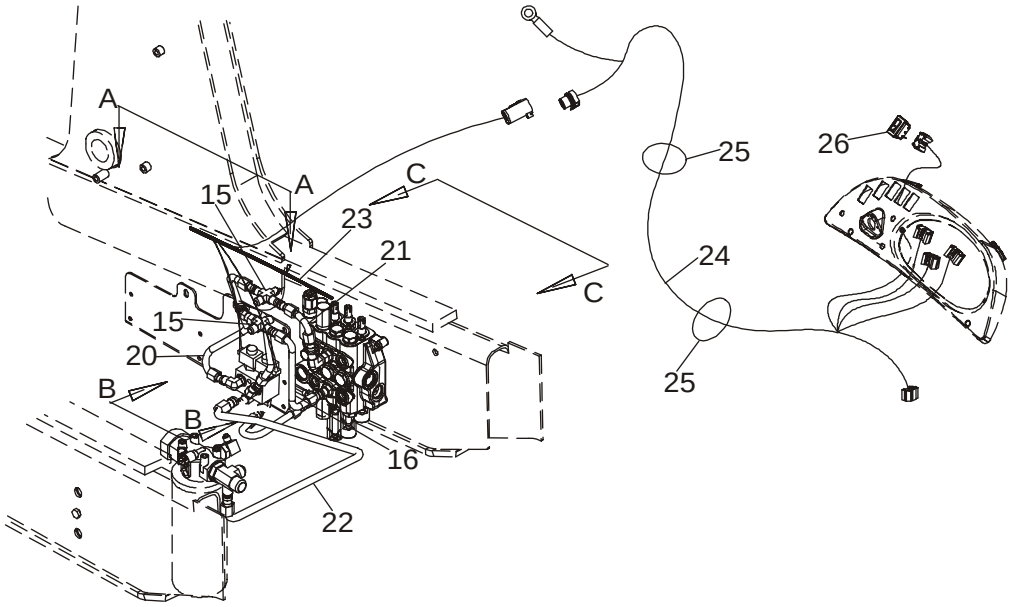

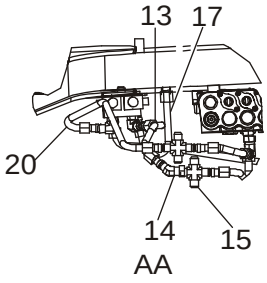

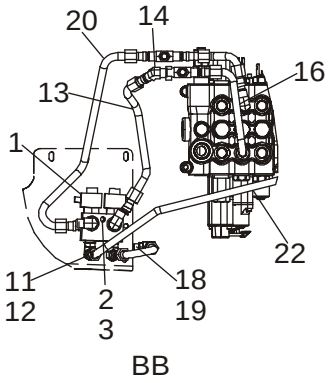

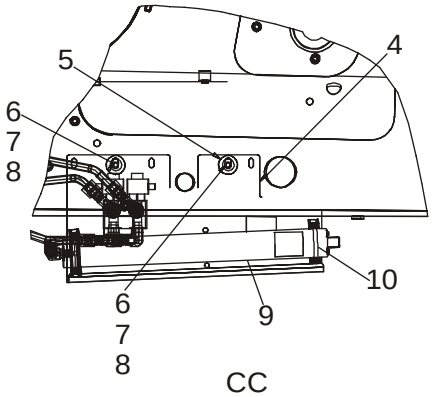

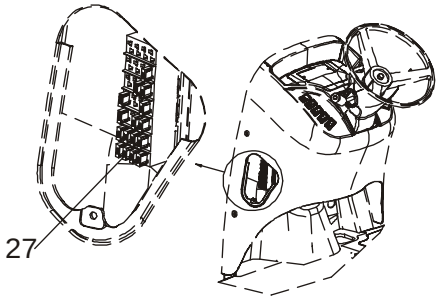

BS03M139

http://www.minnparbackhoeparts.com/

HIDRAULICA - DISPOSITIVO ANTICABECEO

REF	FN	PART NUMBER	YR/SN	QTY	DESCRIPTION
24		87419256		1	GRUPO DE CABLES Side Console Options Harness; Includes (1) L71879 Diode; Attaches to Side Console Harness and Main Chassis Options Harness
25		L18337		2	BANDA Tie
26		235002A1		1	CONTACTOR Ride Control
27		121413A1		1	FUSIBLE 15 amp, Mini, Blue

http://www.minnparbackhoeparts.com/

08-26		p1	01/05

HIDRAULICA - ACOPLADOR, HERRAMIENTA RÁPIDA DE LA CARGADORA

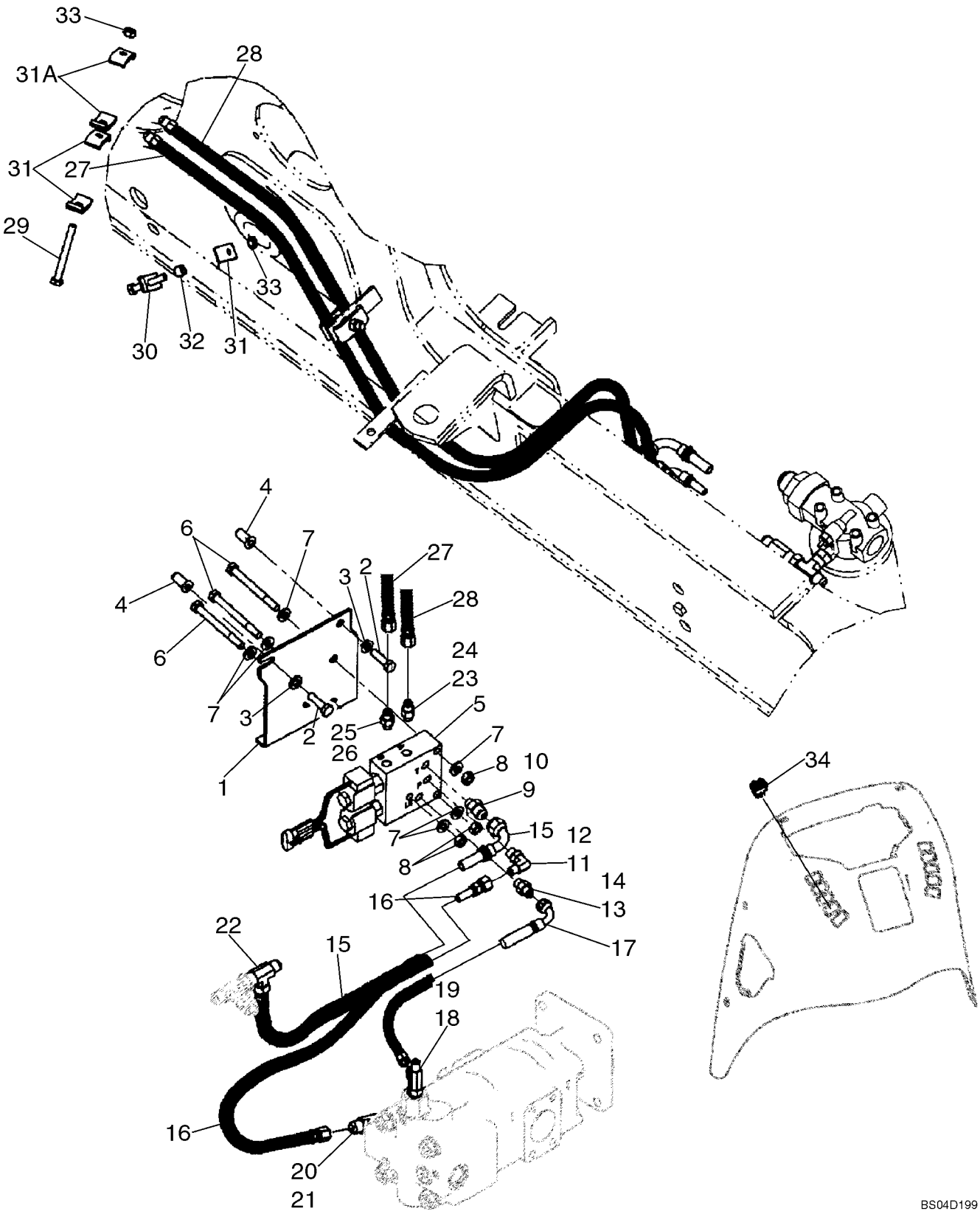

http://www.minnparbackhoeparts.com/

HIDRAULICA - ACOPLADOR, HERRAMIENTA RÁPIDA DE LA CARGADORA

REF	FN	PART NUMBER	YR/SN	QTY	DESCRIPTION
1		87437263		1	PIEZA DE APOYO Coupler Valve Mounting
2		614-10035		2	TORNILLO M10 x 35
3		896-11010		2	ARANDELA
4		87417721		2	ROSCA POSTIZA M10
5		87435909		1	ELECTROVÁLVULA Coupler; Loader Tool; See Figure 08-28
6		814-10060		3	TORNILLO M10 x 60
7		896-11010		6	ARANDELA
8		829-1410		3	TUERCA M10
9		218-5351		1	RACOR 3/4 fl x 9/16 Or; Incl. Ref 10
10		237-6006		1	JUNTA HERMETICA 15/32 ID x 5/64
11		218-5105		1	CODO 90 deg, 9/16 fl x Or; Incl. Ref 12
12		237-6006		1	JUNTA HERMETICA 15/32 ID x 5/64
13		218-5057		1	RACOR 9/16 fl x Or; Incl. Ref 14
14		237-6006		1	JUNTA HERMETICA 15/32 ID x 5/64
15		87434265		1	MANGUERA (CONJUNTO) 500 mm (19-11/16 in); Coupler Valve to Filter
16		87452402		1	MANGUERA (CONJUNTO) 830 mm (32-11/16 in); Pump to Coupler Pressure Port; Replaces 87434262
17		87452403		1	MANGUERA (CONJUNTO) 600 mm (23-5/8 in); Pump to Coupler Valve Load Sense Port; Replaces 87434261
18		282428A1		1	VÁLVULA DE PASO TEE, Check; Incl. Ref 19
19		237-6006		1	JUNTA HERMETICA 15/32 ID x 5/64
20		218-5183		1	RACOR-T TEE, 3/4 adj Or br x 3/4 fl x fl; Incl. Ref 21; Replaces Standard Steering Fitting
21		237-6008		1	JUNTA HERMETICA 41/64 ID x 3/32
22		218-845		1	RACOR-T 3/4 fl br x fl x adj str thrd; Attaches to Tee At Back Of Filter
23		218-5053		1	RACOR 7/16 fl x Or; Incl. Ref 24
24		237-6004		1	JUNTA HERMETICA 23/64 ID x 5/64
25		218-5056		1	RACOR 1/2 fl x Or; Incl. Ref 26
26		237-6005		1	JUNTA HERMETICA 13/32 ID x 5/64
27		87427539		1	MANGUERA (CONJUNTO) 1815 mm (71-1/2 in); B Port
28		87427537		1	MANGUERA (CONJUNTO) 1815 mm (71-1/2 in); A Port

http://www.minnparbackhoeparts.com/

HIDRAULICA - ACOPLADOR, HERRAMIENTA RÁPIDA DE LA CARGADORA

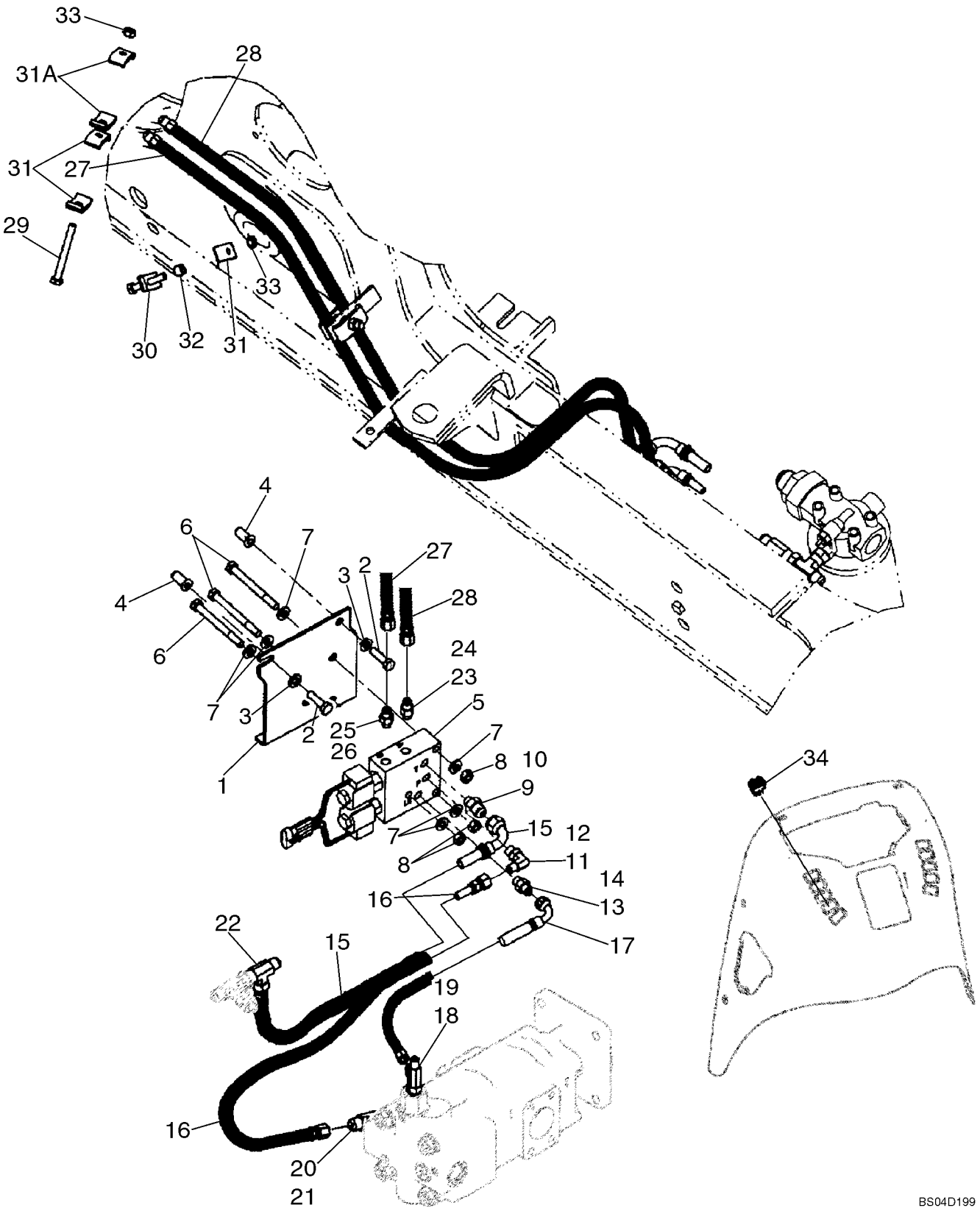

http://www.minnparbackhoeparts.com/

HIDRAULICA - ACOPLADOR, HERRAMIENTA RÁPIDA DE LA CARGADORA

REF	FN	PART NUMBER	YR/SN	QTY	DESCRIPTION
29		814-10090		1	TORNILLO M10 x 90
30		814-10070		1	TORNILLO M10 x 70
31		D138055		6	COLLAR
31A		D143846		2	BRIDA CLAMP
32		120303A1		1	ESPACIADOR
33		832-10410		2	TUERCA M10
34		398675A2		1	CONTACTOR Loader Tool Quick Coupler

http://www.minnparbackhoeparts.com/

HIDRAULICA - ACOPLADOR, HERRAMIENTA RÁPIDA DE LA CARGADORA

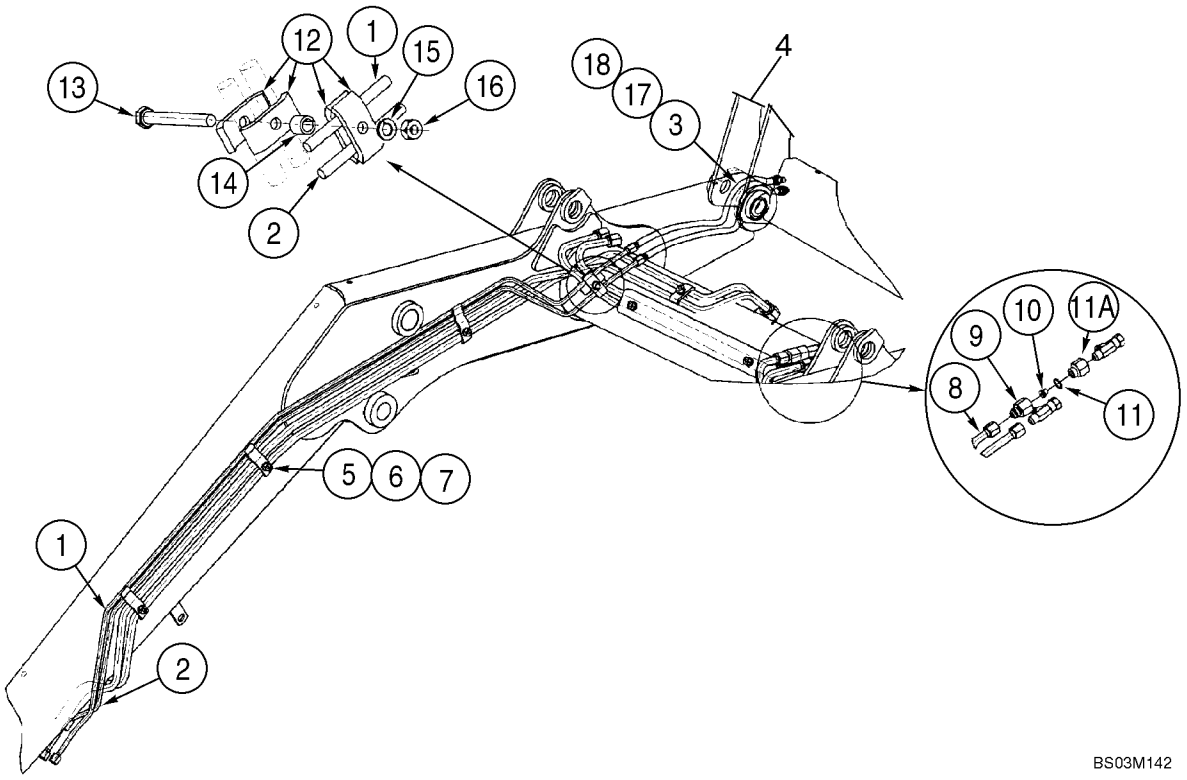

http://www.minnparbackhoeparts.com/

HIDRAULICA - ACOPLADOR, HERRAMIENTA RÁPIDA DE LA CARGADORA

REF	FN	PART NUMBER	YR/SN	QTY	DESCRIPTION
		REF			MANUAL AT LOADER LIFT FRAME
1		308255A1		1	TUBO (CONJUNTO)
2		308254A1		1	TUBO (CONJUNTO)
3		300996A3		2	MANGUERA (CONJUNTO) 772 mm (30-13/32 in)
4		REF		1	MANUAL Coupler, Hydr., Loader Tool Quick Coupler; For Complete Assembly, See Figure 09-10; Order From Machinery Price List; Use Standard Loader Bucket Pins To Mount Coupler
5		302820A2		3	COLLAR
6		892-11010		3	ARANDELA DE FRENO M10
7		829-1410		3	TUERCA M10; 10.9
8		434605A1		1	TUBO (CONJUNTO)
9		304424A1		1	CONECTOR
10		304890A1		1	UNION REDUCCION
11		237-6010		1	JUNTA HERMETICA 3/4 ID x 3/32
11A		309674A1		1	CONECTOR 7/8 male x 7/8 female
12		D138055		4	COLLAR
13		814-10090		1	TORNILLO M10 x 90
14		120303A1		1	ESPACIADOR
15		892-11010		1	ARANDELA DE FRENO M10
16		829-1410		1	TUERCA M10; 10.9
17		307277A1		1	MANGUITO
18		L18337		2	BANDA 15 in

http://www.minnparbackhoeparts.com/

CONJUNTO DE LA VÁLVULA DEL ACOPLADOR - HERRAMIENTA RÁPIDA DE LA CARGADORA / RETROEXCAVADORA

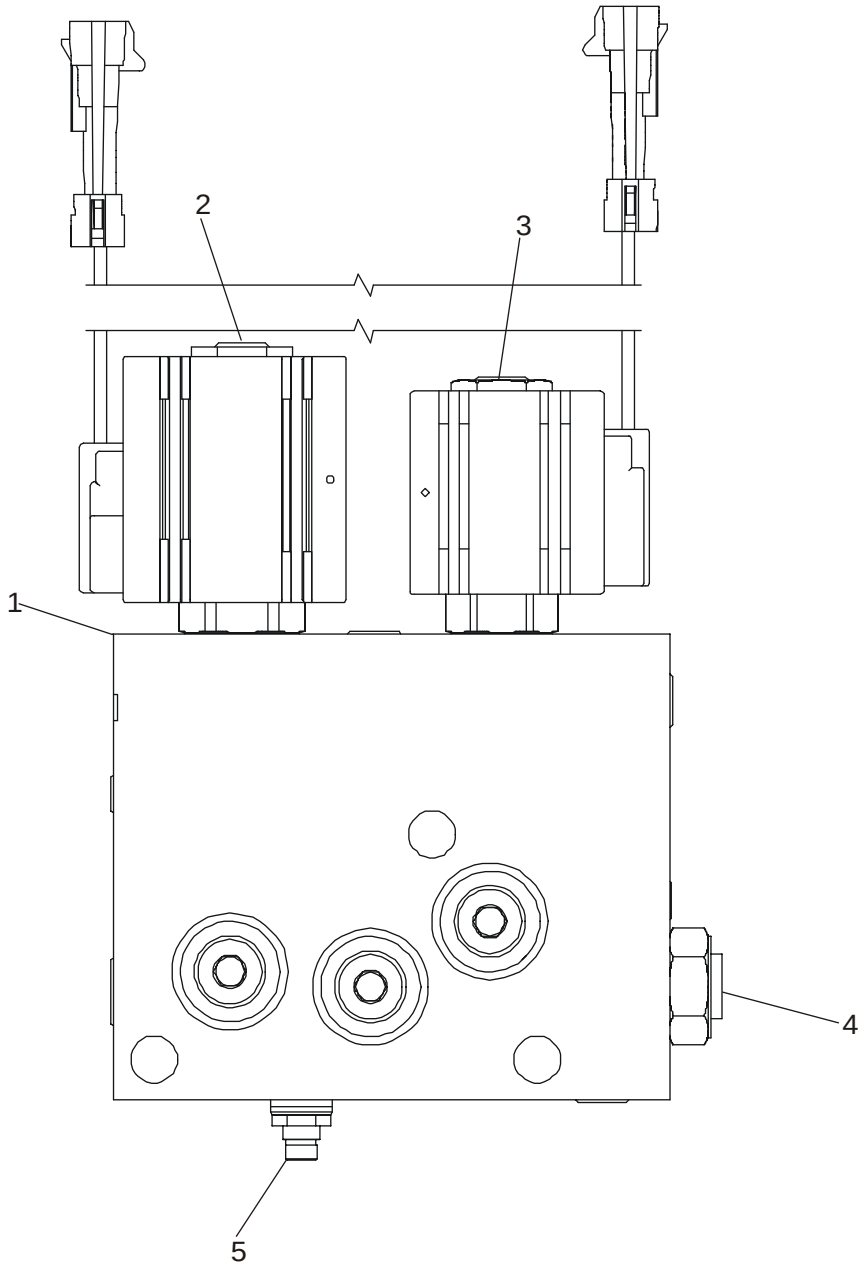

BS03M143

http://www.minnparbackhoeparts.com/

CONJUNTO DE LA VÁLVULA DEL ACOPLADOR - HERRAMIENTA RÁPIDA DE LA CARGADORA / RETROEXCAVADORA

REF	FN	PART NUMBER	YR/SN	QTY	DESCRIPTION
		87435909		1	ELECTROVÁLVULA Incl. Ref 1 - 5
1		NSS		1	NO SE REPARA SEPARADAM. Body
2		87438021		1	ELECTROVÁLVULA 4-Way Cartridge With Coil; Includes 87438022, 87438023, 87438024
		87438022		1	VALVULA HIDRAULICA Valve, Cartridge
		87438023		1	BOBINA Coil, Solenoid
		87438024		1	SERIE DE JUNTAS Seal Kit, 4-Way Solenoid
3		87438025		1	ELECTROVÁLVULA 2-Way 2-Position Cartridge With Coil; Includes 87438026, 87438027, 87438028
		87438026		1	VALVULA HIDRAULICA Valve, Cartridge
		87438027		1	BOBINA Coil, Solenoid
		87438028		1	SERIE DE JUNTAS Seal Kit, 2-Way Solenoid
4		87438029		1	VALVULA ANTIRRETORNO Check Valve; Includes 87438028 Seal Kit
		87438028		1	SERIE DE JUNTAS Seal Kit, 2-Way Solenoid
5		87438031		1	VÁLVULA, DESCARGA Relief Valve; Includes 87438032
		87438032		1	SERIE DE JUNTAS Seal Kit, Relief Valve

http://www.minnparbackhoeparts.com/

08-29		p1	01/05

HIDRAULICA - CILINDRO, CUCHARÓN DE LA RETROEXCAVADORA

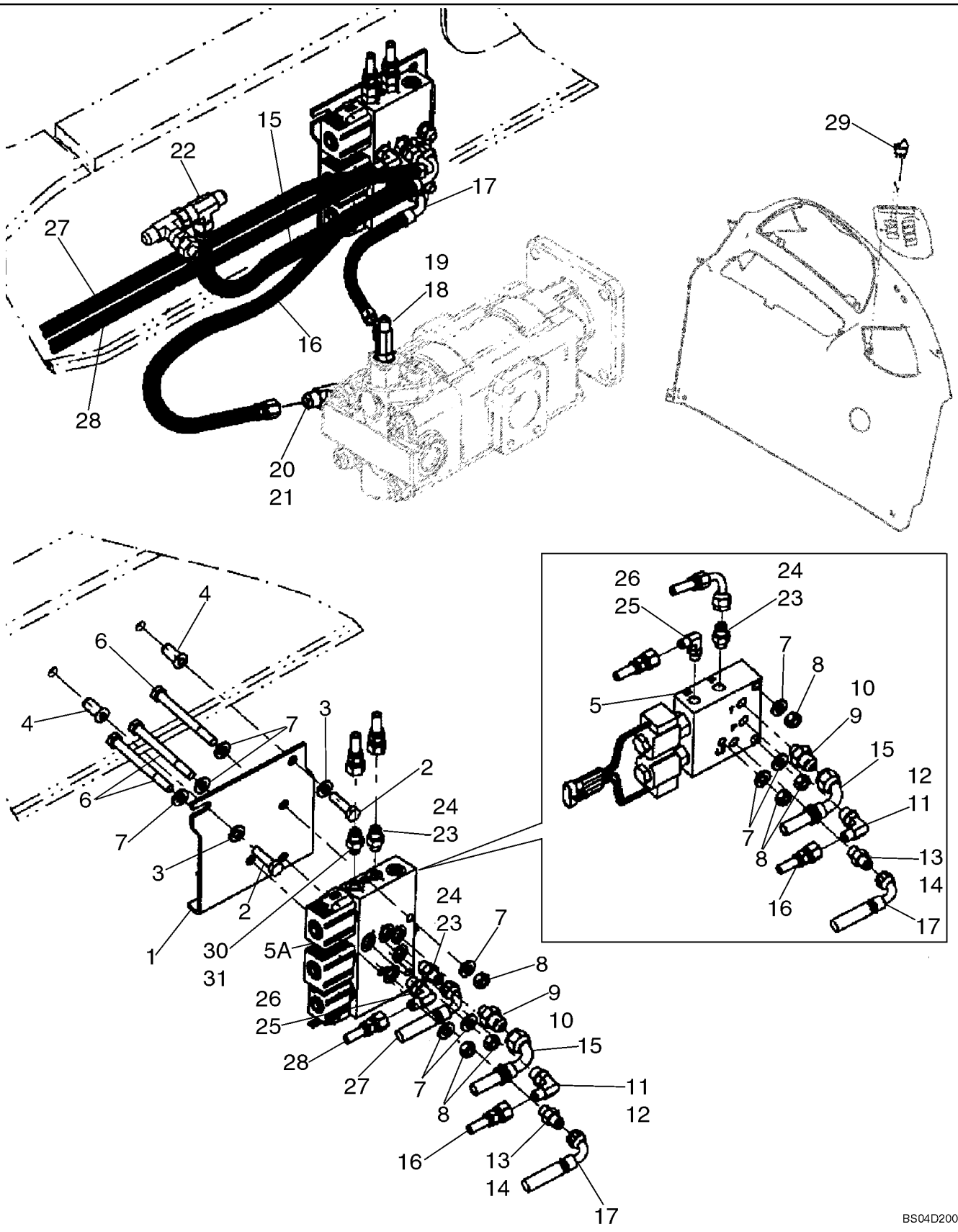

http://www.minnparbackhoeparts.com/

HIDRAULICA - CILINDRO, CUCHARÓN DE LA RETROEXCAVADORA

REF	FN	PART NUMBER	YR/SN	QTY	DESCRIPTION
1		87437263		1	PIEZA DE APOYO Coupler Valve Mounting
2		614-10035		2	TORNILLO M10 x 35
3		896-11010		2	ARANDELA
4		87417721		2	ROSCA POSTIZA M10
5		87435909		1	ELECTROVÁLVULA Coupler; Backhoe Bucket; See Figure 08-28
5A		87435910		1	ELECTROVÁLVULA Coupler; Models With Both Loader Tool and Backhoe Bucket Coupler; See Figure 08-31
6		814-10060		3	TORNILLO M10 x 60
7		896-11010		6	ARANDELA
8		829-1410		3	TUERCA M10
9		218-5351		1	RACOR 3/4 fl x 9/16 Or; Incl. Ref 10
10		237-6006		1	JUNTA HERMETICA 15/32 ID x 5/64
11		218-5105		1	CODO 90 deg, 9/16 fl x Or; Incl. Ref 12
12		237-6006		1	JUNTA HERMETICA 15/32 ID x 5/64
13		218-5057		1	RACOR 9/16 fl x Or; Incl. Ref 14
14		237-6006		1	JUNTA HERMETICA 15/32 ID x 5/64
15		87434265		1	MANGUERA (CONJUNTO) 500 mm (19-11/16 in); Coupler Valve to Filter
16		87452402		1	MANGUERA (CONJUNTO) 830 mm (32-11/16 in); Pump to Coupler Pressure Port; Replaces 87434262
17		87452403		1	MANGUERA (CONJUNTO) 600 mm (23-5/8 in); Pump to Coupler Valve Load Sense Port; Replaces 87434261
18		282428A1		1	VÁLVULA DE PASO TEE, Check; Incl. Ref 19
19		237-6006		1	JUNTA HERMETICA 15/32 ID x 5/64
20		218-5183		1	RACOR-T TEE, 3/4 adj Or br x 3/4 fl x fl; Incl. Ref 21; Replaces Standard Steering Fitting
21		237-6008		1	JUNTA HERMETICA 41/64 ID x 3/32
22		218-845		1	RACOR-T 3/4 fl br x fl x adj str thrd; Attaches to Tee At Back Of Filter
23		218-5053		1-2	RACOR 7/16 fl x Or; Incl. Ref 24; One Used On Models With Backhoe Bucket Coupler Only; Two Used On Models With Both Loader Tool and Backhoe Bucket Coupler
24		237-6004		1	JUNTA HERMETICA 23/64 ID x 5/64

http://www.minnparbackhoeparts.com/

08-29		p2	01/05

HIDRAULICA - CILINDRO, CUCHARÓN DE LA RETROEXCAVADORA

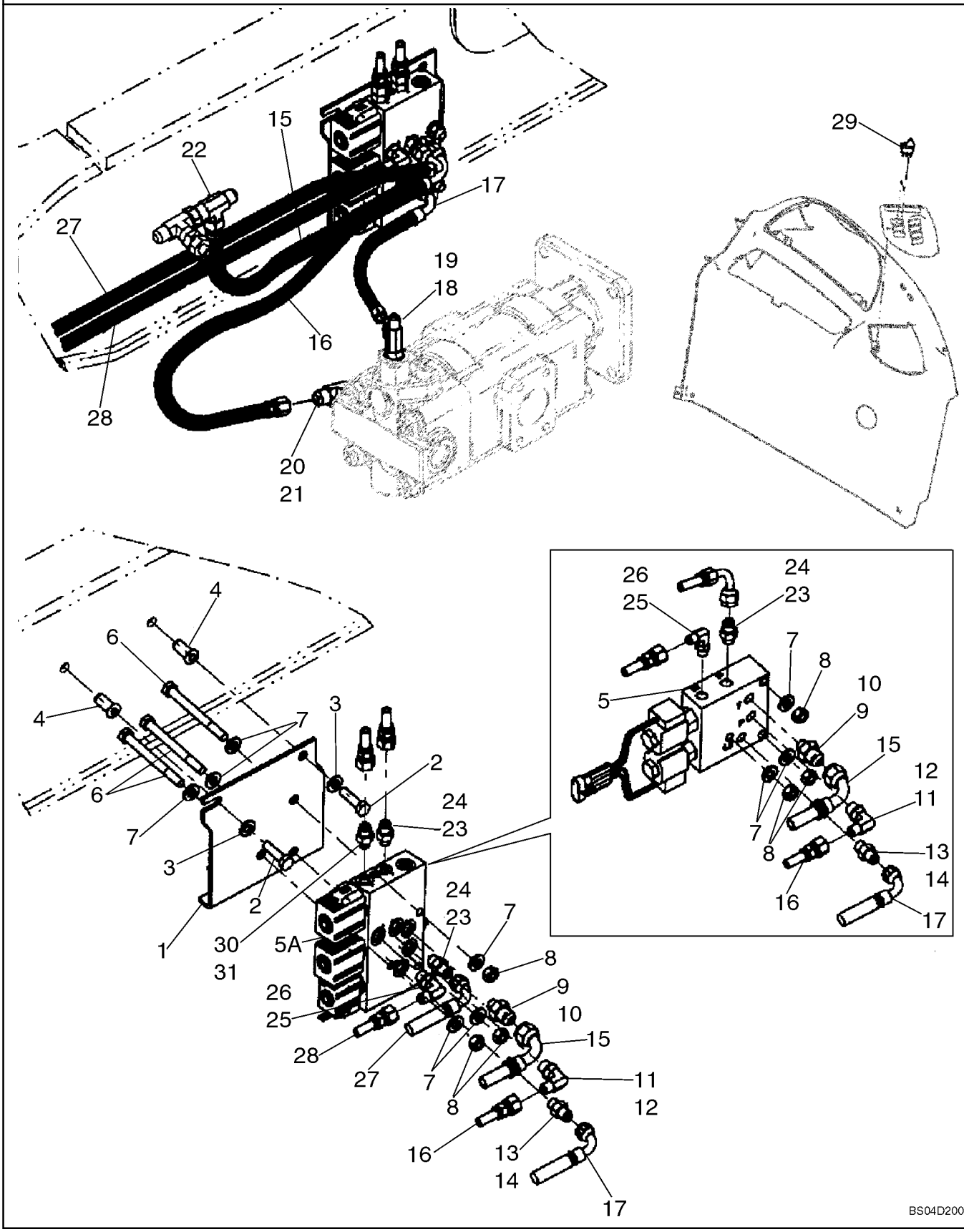

http://www.minnparbackhoeparts.com/

HIDRAULICA - CILINDRO, CUCHARÓN DE LA RETROEXCAVADORA

REF	FN	PART NUMBER	YR/SN	QTY	DESCRIPTION
25		218-5335		1	CONEXION ELBOW, 90 deg, 9/16 fl x 1/2 Or; Incl. Ref 26
26		237-6005		1	JUNTA HERMETICA 13/32 ID x 5/64
27		87448526		1	MANGUERA (CONJUNTO) 3125 mm (123-1/32 in); used with straight fitting
28		87448527		1	MANGUERA (CONJUNTO) 3100 mm (122-1/16 in); used with elbow fitting
29		386789A2		1	CONTACTOR Backhoe Bucket Hydraulic Coupler; For Switch Used With Loader Tool Quick Coupler, See Figure 08-26
30		218-5056		1	RACOR 1/2 fl x Or; Incl. Ref 31
31		237-6005		1	JUNTA HERMETICA 13/32 ID x 5/64

http://www.minnparbackhoeparts.com/

08-30		p1	06/05

HIDRAULICA - CILINDRO, CUCHARÓN DE LA RETROEXCAVADORA

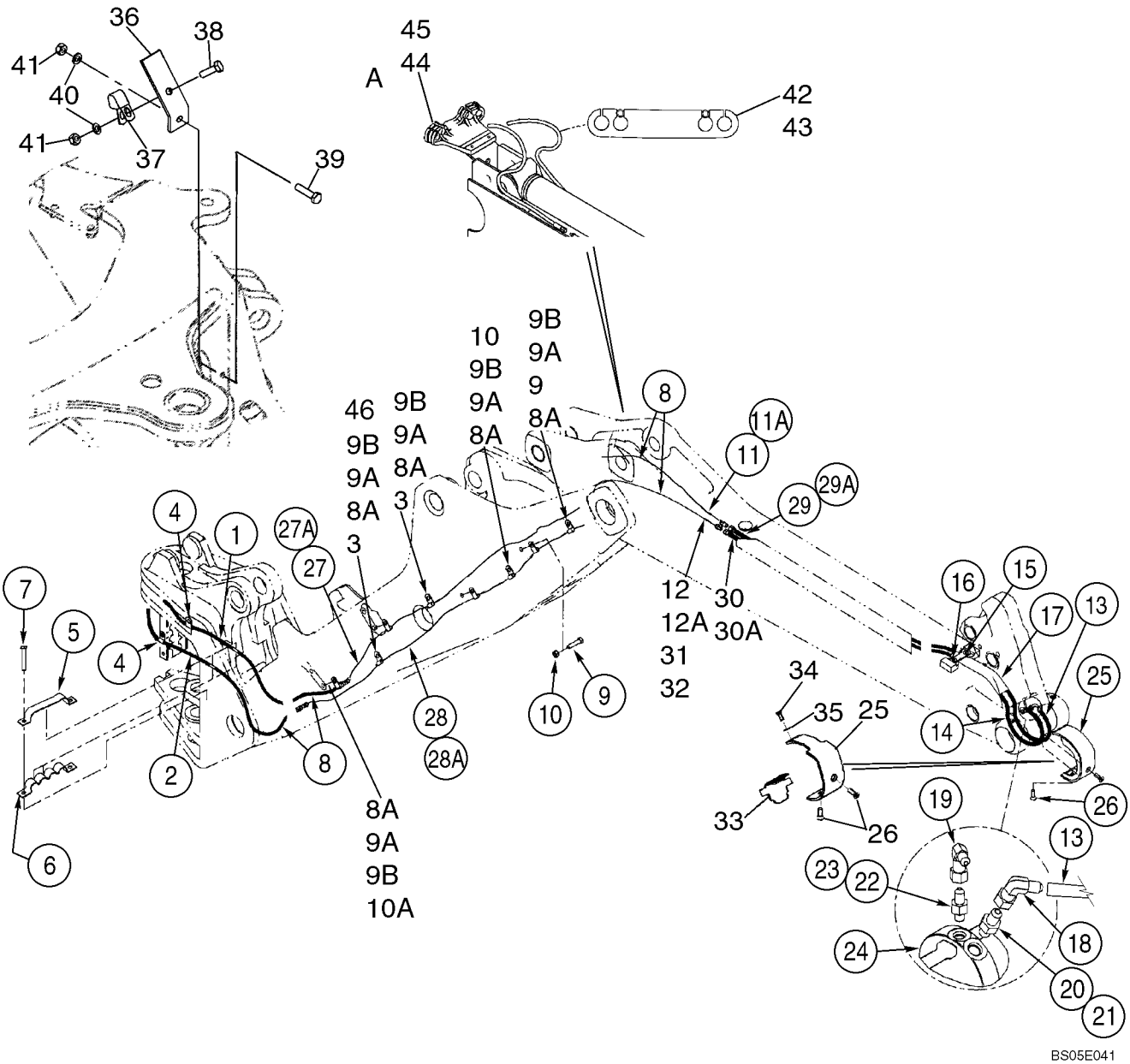

http://www.minnparbackhoeparts.com/

HIDRAULICA - CILINDRO, CUCHARÓN DE LA RETROEXCAVADORA

REF	FN	PART NUMBER	YR/SN	QTY	DESCRIPTION
		REF			MANUAL AT BOOM AND DIPPER
1		87448526		1	MANGUERA (CONJUNTO) 3125 mm (123-1/32 in); From Coupler Solenoid Valve
2		87448527		1	MANGUERA (CONJUNTO) 3100 mm (122-1/16 in); From Coupler Solenoid Valve
3		414415A1		4	COLLAR 3/8 ID
4		515-23143		2	COLLAR
5		385420A2		1	BANDA At Swing Tower
6		380692A1		1	COLLAR
7		814-12070		2	TORNILLO M12 x 70
8		L18337		X	BANDA 15 in
8A		409499A1		8-10	COLLAR (10) Used With Extendable Dipper Models
9		409471A1		2	BRIDA DE APRIETE Used With Extendable Dipper Models
9A		614-8016		8-10	TORNILLO M8 x 16
9B		892-11008		8-10	ARANDELA M8, Lock
10		409469A1		2	COLLAR
10A		409470A1		2	COLLAR
11		87433386		1	MANGUERA (CONJUNTO) 1180 mm (46-1/2 in); Standard Dipper
11A		87433390		1	MANGUERA (CONJUNTO) 2415 mm (95-1/8 in); Extendable Dipper
12		87433387		1	MANGUERA (CONJUNTO) 1180 mm (46-1/2 in); Standard Dipper
12A		87433389		1	MANGUERA (CONJUNTO) 2415 mm (95-1/8 in); Extendable Dipper
13		87418552		1	MANGUERA (CONJUNTO) 1080 mm (42-9/16 in); To Coupler Cylinder
14		87418553		1	MANGUERA (CONJUNTO) 1120 mm (44-1/8 in); To Coupler Cylinder
15		87418551		1	COLLAR
16		407975A1		2	TORNILLO M8 x 16
17		87448668		1	MANGUITO 560 mm (22-3/64 in); Replaces 87419105 440 mm (17-21/64 in) long Sleeve
18		402855A1		1	CODO Attaches To Ref 13 Hose
19		402854A1		1	CODO Attaches To Ref 14 Hose
20		218-5053		1	RACOR 7/16 fl x Or; Incl. Ref 21

http://www.minnparbackhoeparts.com/

08-30		p2	06/05

HIDRAULICA - CILINDRO, CUCHARÓN DE LA RETROEXCAVADORA

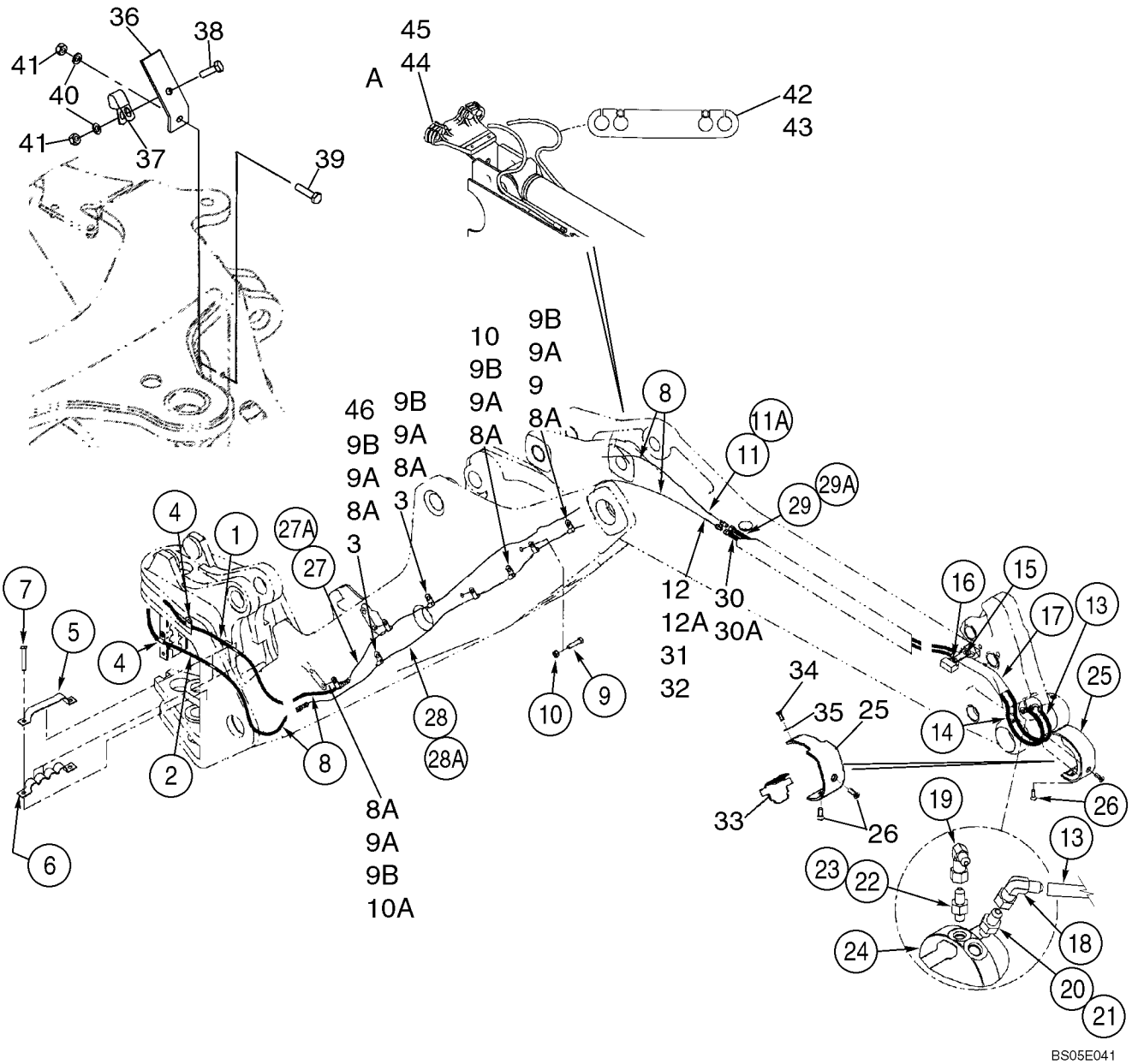

http://www.minnparbackhoeparts.com/

HIDRAULICA - CILINDRO, CUCHARÓN DE LA RETROEXCAVADORA

REF	FN	PART NUMBER	YR/SN	QTY	DESCRIPTION
21		237-6004		1	JUNTA HERMETICA 23/64 ID x 5/64
22		218-5052		1	RACOR 3/8 fl x Or; Incl. Ref 23
23		237-6003		1	JUNTA HERMETICA 5/16 ID x 1/16
24		87423867		1	CILINDRO (CONJUNTO) Backhoe Bucket Coupler Cylinder; See Figure 08-32
25		402940A2		1	GUARDA (CONJUNTO)
26		402361A3		2	TORNILLO
27		87423343		1	TUBO (CONJUNTO) Standard Dipper; Left-Hand
27A		87411722		1	TUBERIA RIGIDA Extendable Dipper; Left-Hand
28		87423345		1	TUBO (CONJUNTO) Standard Dipper; Right-Hand
28A		87411720		1	TUBERIA RIGIDA Extendable Dipper; Right-Hand
29		406172A1		1	TUBO (CONJUNTO) Standard Dipper; See Figure 09-28
29A		403840A1		1	TUBO (CONJUNTO) Extendable Dipper; See Figure 09-28
30		406168A1		1	TUBO (CONJUNTO) Standard Dipper
30A		403400A1		1	TUBO (CONJUNTO) Extendable Dipper
31		407804A1		1	MANGUITO 600 mm (23-5/8 in); Standard Dipper
31		87441372		2	MANGUITO 2044 mm (80-1/2 in); Extendable Dipper; Replaces 408158A2 1980 mm (78 in) long Sleeve
32		L18337		4	BANDA
33		409691A2		1	DEFENSA
34		607-8020		2	TORNILLO M8 x 20; Lock
35		896-11008		2	ARANDELA
36		413778A1		1	PIEZA DE SOPORTE
37		D49498		1	GRAPON
38		614-10030		1	TORNILLO M10 x 30
39		814-10040		1	TORNILLO M10 x 40
40		892-11010		2	ARANDELA DE FRENO M10
41		829-1410		2	TUERCA M10
42		407745A1		1	ABRAZADERA MANGUERA Extendable Dipper; Models With Hydraulic Coupler
43		407746A1		1	ABRAZADERA MANGUERA Extendable Dipper; Models With Hydraulic Coupler and Auxiliary Hydraulics

http://www.minnparbackhoeparts.com/

08-30		p3	06/05

HIDRAULICA - CILINDRO, CUCHARÓN DE LA RETROEXCAVADORA

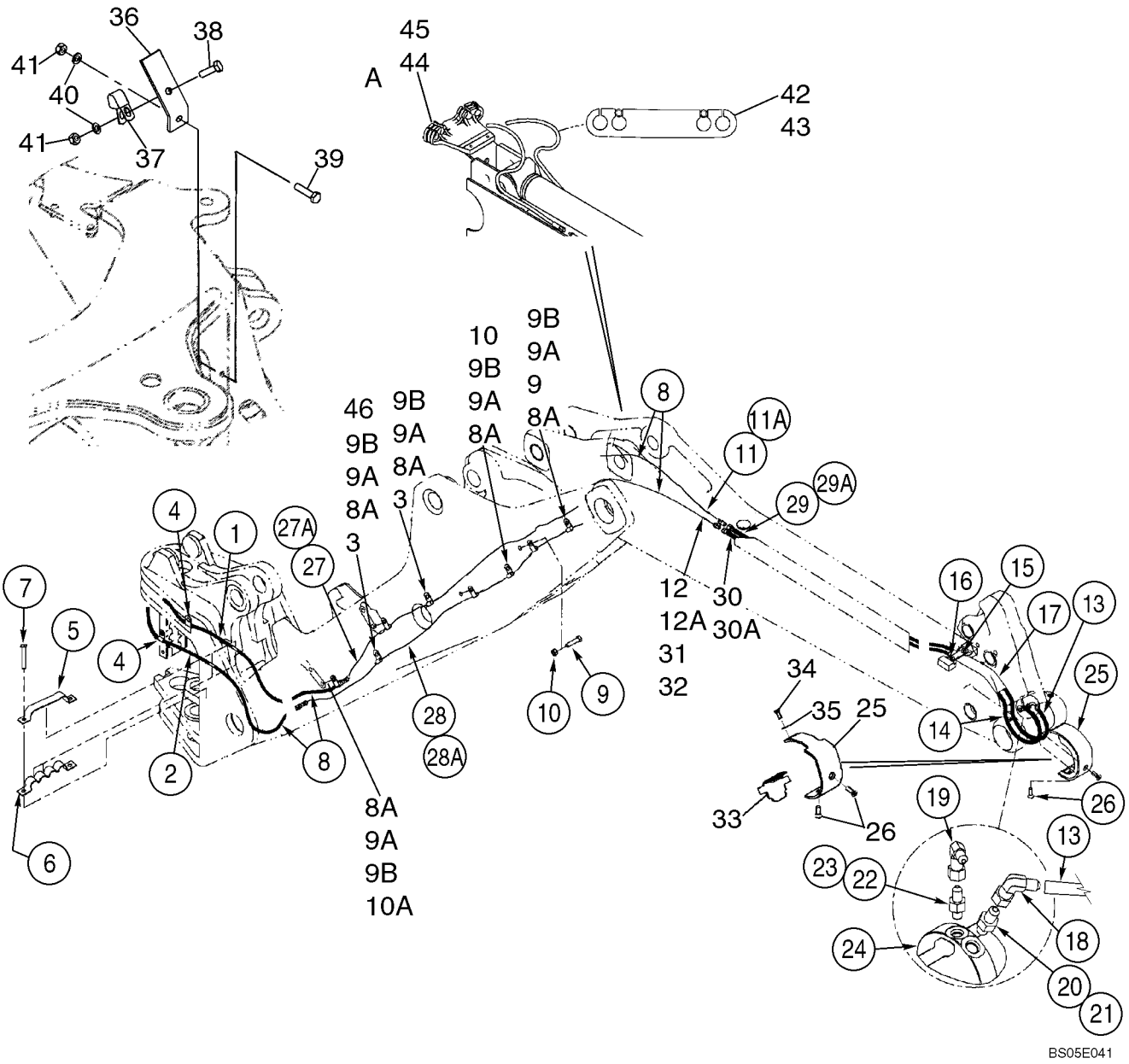

http://www.minnparbackhoeparts.com/

HIDRAULICA - CILINDRO, CUCHARÓN DE LA RETROEXCAVADORA

REF	FN	PART NUMBER	YR/SN	QTY	DESCRIPTION
44		407734A1		1	APOYADERO Extendable Dipper; Models With Hydraulic Coupler
45		407735A1		1	APOYADERO Extendable Dipper; Models With Hydraulic Coupler and Auxiliary Hydraulics
46		87333648		1	BORNE Replaces 86983643 Clamp Used On Some Models

http://www.minnparbackhoeparts.com/

CONJUNTO DE LA VÁLVULA DEL ACOPLADOR - HERRAMIENTA RÁPIDA DE LA CARGADORA CON DECUCHARÓN DE LA RETRO

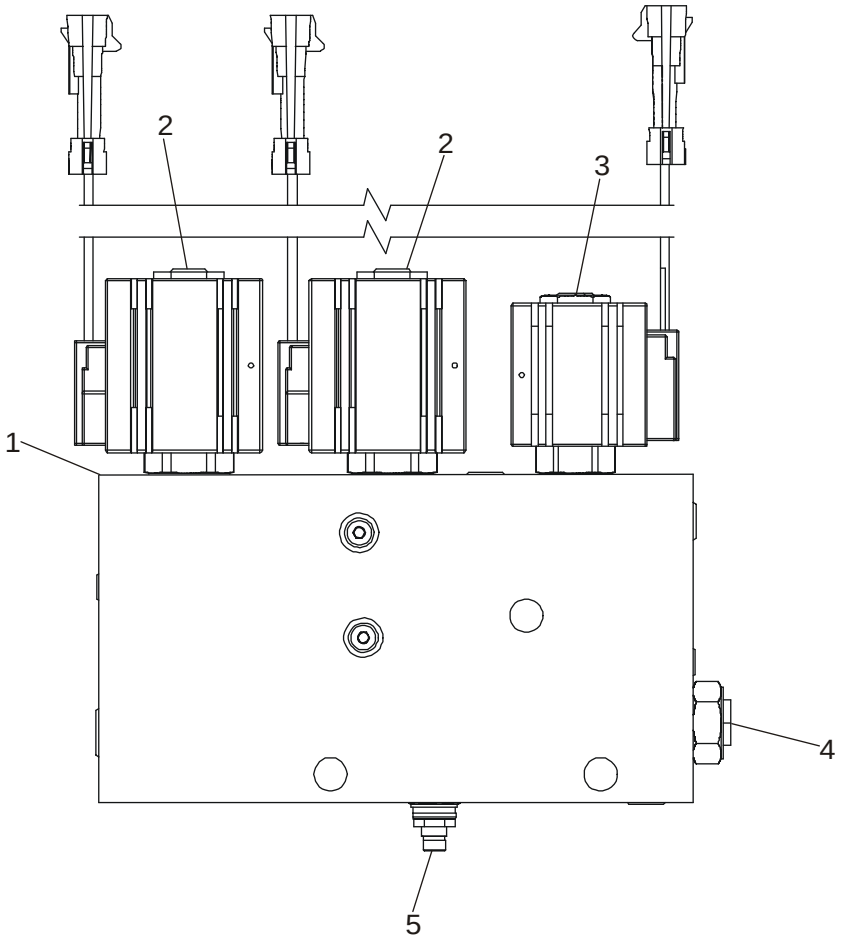

BS03M145

http://www.minnparbackhoeparts.com/

CONJUNTO DE LA VÁLVULA DEL ACOPLADOR - HERRAMIENTA RÁPIDA DE LA CARGADORA CON DECUCHARÓN DE LA RETRO

REF	FN	PART NUMBER	YR/SN	QTY	DESCRIPTION
		87435910		1	ELECTROVÁLVULA Incl. Ref 1 - 5; Models With Both Loader Tool and Backhoe Bucket Coupler
1		NSS		1	NO SE REPARA SEPARADAM. Body
2		87438021		2	ELECTROVÁLVULA 4-Way Cartridge With Coil; Includes 87438022, 87438023, 87438024
		87438022		1	VALVULA HIDRAULICA Valve, Cartridge
		87438023		1	BOBINA Coil, Solenoid
		87438024		1	SERIE DE JUNTAS Seal Kit, 4-Way Solenoid
3		87438025		1	ELECTROVÁLVULA 2-Way 2-Position Cartridge With Coil; Includes 87438026, 87438027, 87438028
		87438026		1	VALVULA HIDRAULICA Valve, Cartridge
		87438027		1	BOBINA Coil, Solenoid
		87438028		1	SERIE DE JUNTAS Seal Kit, 2-Way Solenoid
4		87438029		1	VALVULA ANTIRRETORNO Check Valve; Includes 87438028 Seal Kit
		87438028		1	SERIE DE JUNTAS Seal Kit, 2-Way Solenoid
5		87438031		1	VÁLVULA, DESCARGA Relief Valve; Includes 87438032
		87438032		1	SERIE DE JUNTAS Seal Kit, Relief Valve

http://www.minnparbackhoeparts.com/

CILINDRO - CILINDRO, CUCHARÓN DE LA RETROEXCAVADORA

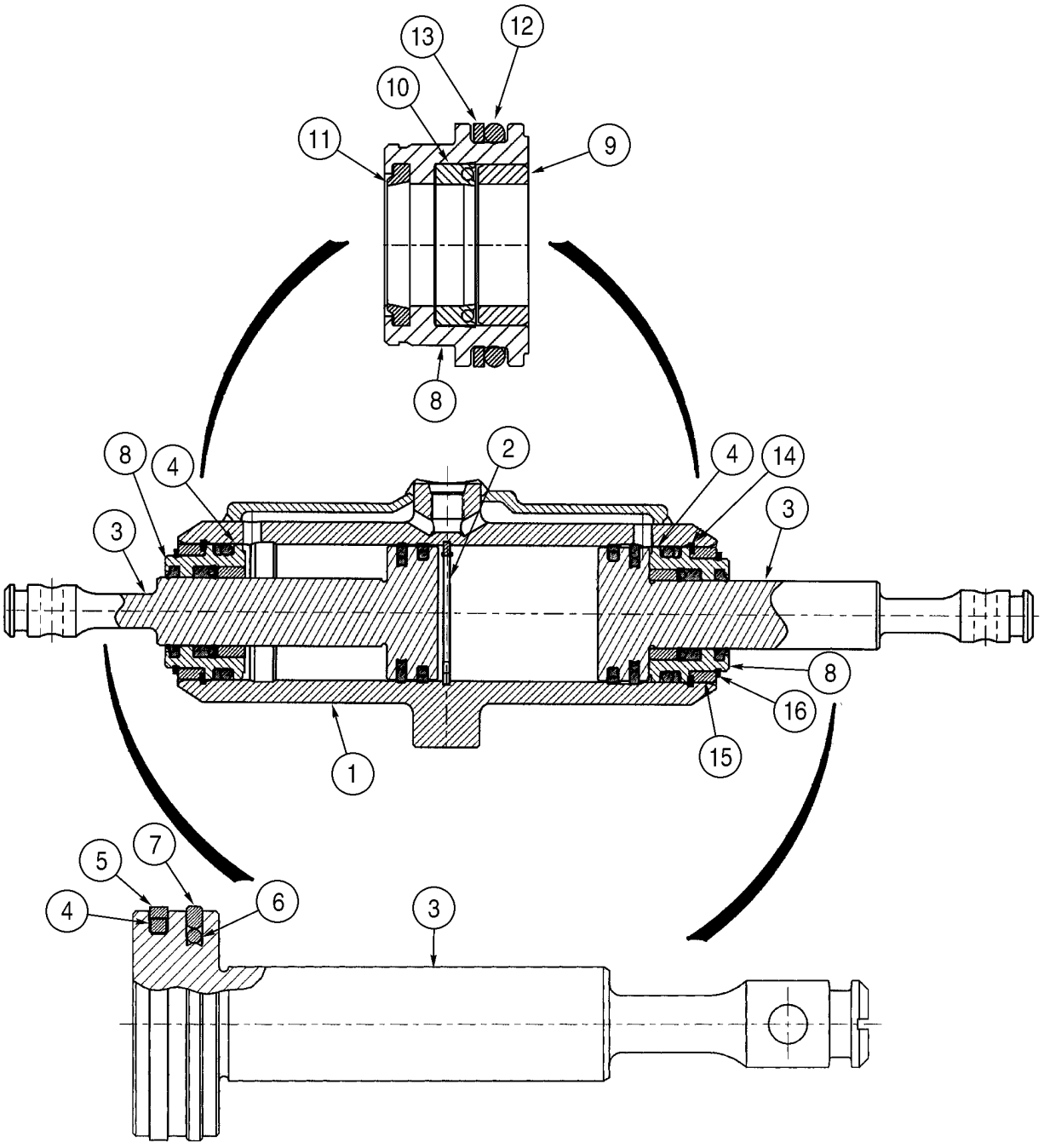

http://www.minnparbackhoeparts.com/

CILINDRO - CILINDRO, CUCHARÓN DE LA RETROEXCAVADORA

REF	FN	PART NUMBER	YR/SN	QTY	DESCRIPTION
		87423867		1	CILINDRO (CONJUNTO) Backhoe Bucket Coupler Cylinder; Incl. Ref 1 - 16 and 390320A4 Seal Kit
1		87423868		1	TUBO Includes 369263A1 Plug
		369263A1		4	TAPÓN Expansion
2		800-6138		1	RETENEDOR
		NSS		2	NO SE REPARA SEPARADAM. Rod Assy; Incl. Ref 3 - 7
3		399907A2		1	VARILLA Chrome
4		353078A1		1	ANILLO
5		353079A1		1	ANILLO DE CIERRE 38,1 dia; Replaces 404203A1, Seal Used On Some Cylinders
6		395609A1		1	JUNTA HERMETICA
7		384844A1		1	ANILLO Detent
		311459A2		2	EMPAQUETADURA Incl. Ref 8 - 13
8		NSS		1	NO SE REPARA SEPARADAM. Gland, Cylinder
9		NSS		1	NO SE REPARA SEPARADAM. Bushing
10		D83187		1	ANILLO DE CIERRE Rod
11		A44651		1	LIMPIADOR
12		238-6218		1	JUNTA HERMETICA 1-1/4 ID x 1/8 in
13		A45035		1	JUNTA HERMETICA Backup Ring
14		102-23150		2	ANILLO DE CIERRE
15		A44641		2	CASQUILLO Spacer
16		102-12125		2	RETENEDOR Retaining Ring
		390320A4		1	SERIE DE JUNTAS Incl. Ref 4 - 16; Also Includes (2) 390317A1 Rings; (1) 445364A1 Service Ring For Cylinder Tube End Coupler Outer Sleeve End

http://www.minnparbackhoeparts.com/

BOMBA, EQUIPAMIENTO HIDRÁULICO

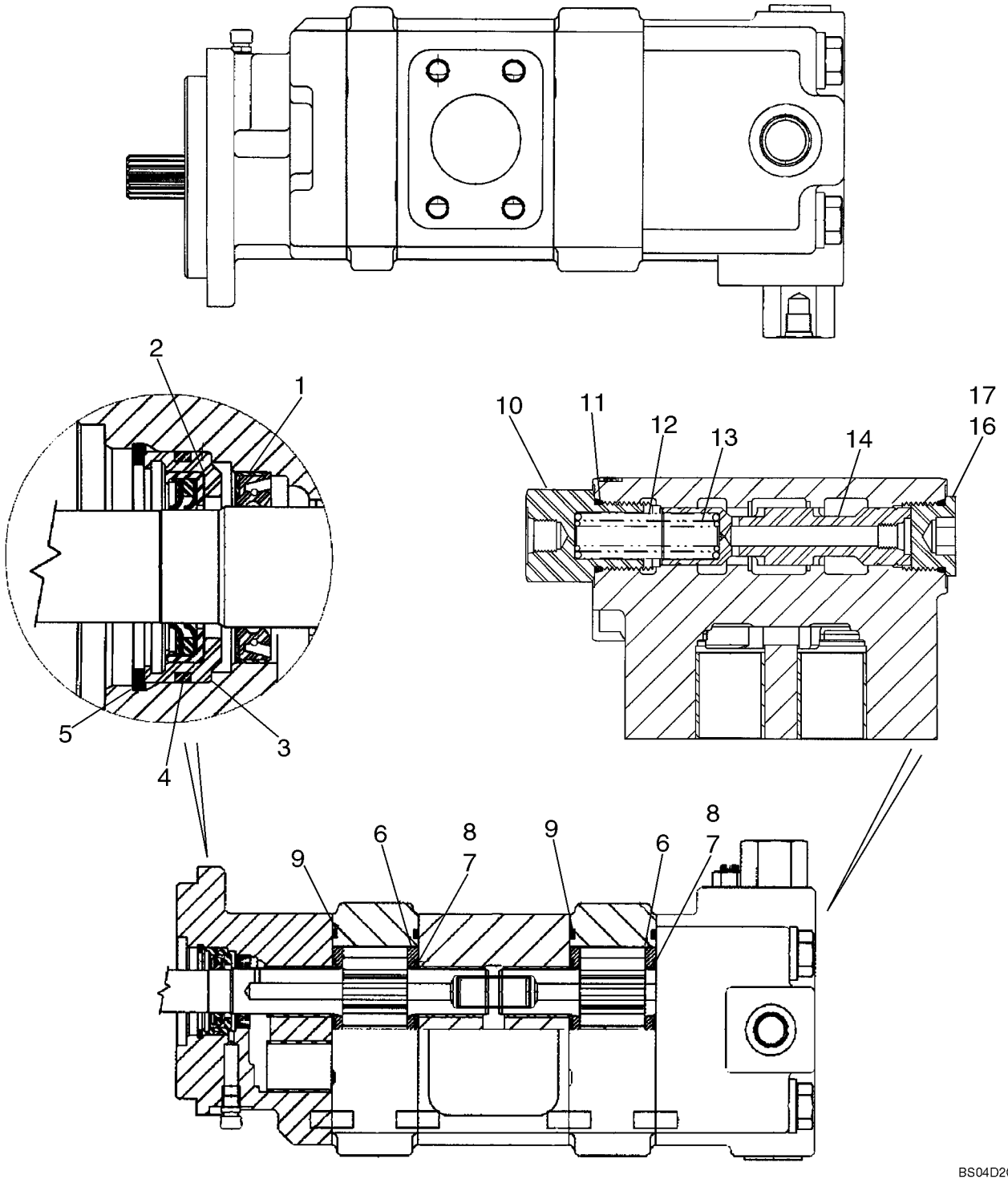

http://www.minnparbackhoeparts.com/

BOMBA, EQUIPAMIENTO HIDRÁULICO

REF	FN	PART NUMBER	YR/SN	QTY	DESCRIPTION
		87434673		1	BOMBA HIDRÁULICA Tandem; Component Parts Not Serviced Separately, Except for 87434072 and 87438045 Service Kits, Ref 1 - 17, See Below
		87434072		1	JUEGO REPAR.BOMBA HIDRAU Pump Service Kit, Dual Section; Incl. Ref 1 - 9
1		L32418		1	ANILLO DE CIERRE Double Lip
2		87434075		1	ANILLO DE CIERRE Lip Seal
3		87434076		1	RETENADOR DE JUNTA Seal Retainer
4		87434077		1	RETEN O-Ring Seal
5		102-23206		1	RETENEDOR Retaining Ring
6		N13582		4	PLACA Thrust
7		144173A1		4	ANILLO DE CIERRE
8		178051A1		4	JUNTA
9		L32100		4	ANILLO DE CIERRE Gear Housing Gasket
		87438045		1	JUEGO REPAR.BOMBA HIDRAU Priority Valve Service Kit, Single; Incl. Ref 10 - 17
10		87437899		1	TAPÓN Load Sense Plug
11		237-6014		1	JUNTA HERMETICA 1-3/64 ID x 7/64
12		87437905		1	GARFIO DE MUELLE Spool Spring, 100 psi
13		87437906		1	GARFIO DE MUELLE Spool Spring, 50 psi
14		87437914		1	PISTONCILLO Priority Valve Spool
15		87437917		1	TAPÓN Orifice, Hex Socket Plug, Spool; Not Illustrated; No Longer Used; No Longer In Service Kit
16		218-5213		1	TAPÓN Hex Socket, 1-3/16 Or; Incl. Ref 17
17		237-6014		1	JUNTA HERMETICA 1-3/64 ID x 7/64

http://www.minnparbackhoeparts.com/

CONJUNTO DE LA VALVULA - CONTROL DE LA CARGADORA, DOS CORREDERAS

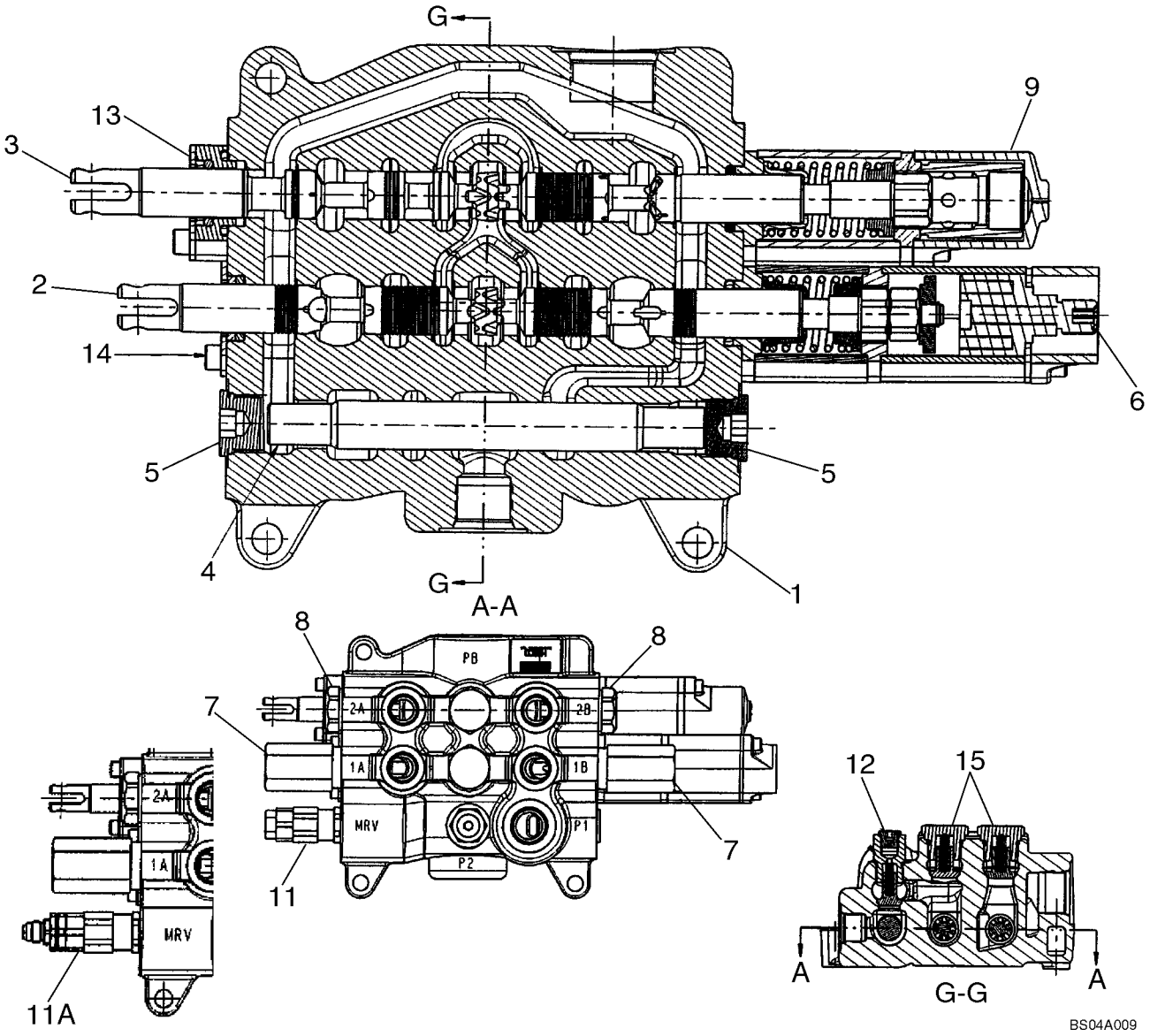

http://www.minnparbackhoeparts.com/

CONJUNTO DE LA VALVULA - CONTROL DE LA CARGADORA, DOS CORREDERAS

REF	FN	PART NUMBER	YR/SN	QTY	DESCRIPTION
		87434766		1	VALVULA HIDRAULICA Two Spool Loader Valve, Used On Models Without Pilot Controls; Incl. Ref 1 - 11, 12 - 15
		87434768		1	VALVULA HIDRAULICA Two Spool Loader Valve, Used On Models With Pilot Controls; Incl. Ref 1 - 9, 11A - 15
1		NSS		1	NO SE REPARA SEPARADAM. HOUSING
2		NSS		1	NO SE REPARA SEPARADAM. SPOOL, Bucket
3		NSS		1	NO SE REPARA SEPARADAM. SPOOL, Lift
4		NSS		1	NO SE REPARA SEPARADAM. SPOOL
5		87426233		2	TAPÓN 7/8 - 14 NF Plug, Serviceable Includes (1) 87455974 O-Ring
6		87426221		1	TRINQUETE Magnetic Detent Kit, Bucket; Some Component Parts Not Serviced Separately; Serviceable Includes (1) 87454547 O-Ring, (1) 87310277 Magnet, (2) 87310278 Screw
7		87450978		2	VÁLVULA, DESCARGA Relief Valve Assembly; Replaces 87426232; Some Component Parts Not Serviced Separately; Includes Serviceable 87455549 Seal Kit
8		81868381		2	VALVULA ANTIRRETORNO Load Check Valve, Anti-Void; Component Parts Not Serviced Separately; Includes Serviceable 87455580 Seal Kit
9		87426227		1	TRINQUETE Manual Detent Assembly, Lift; Some Component Parts Not Serviced Separately; Serviceable Includes (1) 87454547 O-Ring, (2) 87310275 Scew, (4) 87310276 Ball Bearing
11		87426717		1	VÁLVULA, DESCARGA Main Relief Valve Assembly, Single Stage; 87434766 Loader Valve, Models Without Pilot Controls; Component Parts Not Serviced Separately; Includes Serviceable 87455551 Seal Kit
11A		87426235		1	VÁLVULA, DESCARGA Main Relief Valve Assembly, Two Stage; 87434768 Loader Valve, Models With Pilot Controls; Component Parts Not Serviced Separately; Includes Serviceable 87455550 Seal Kit

http://www.minnparbackhoeparts.com/

CONJUNTO DE LA VALVULA - CONTROL DE LA CARGADORA, DOS CORREDERAS

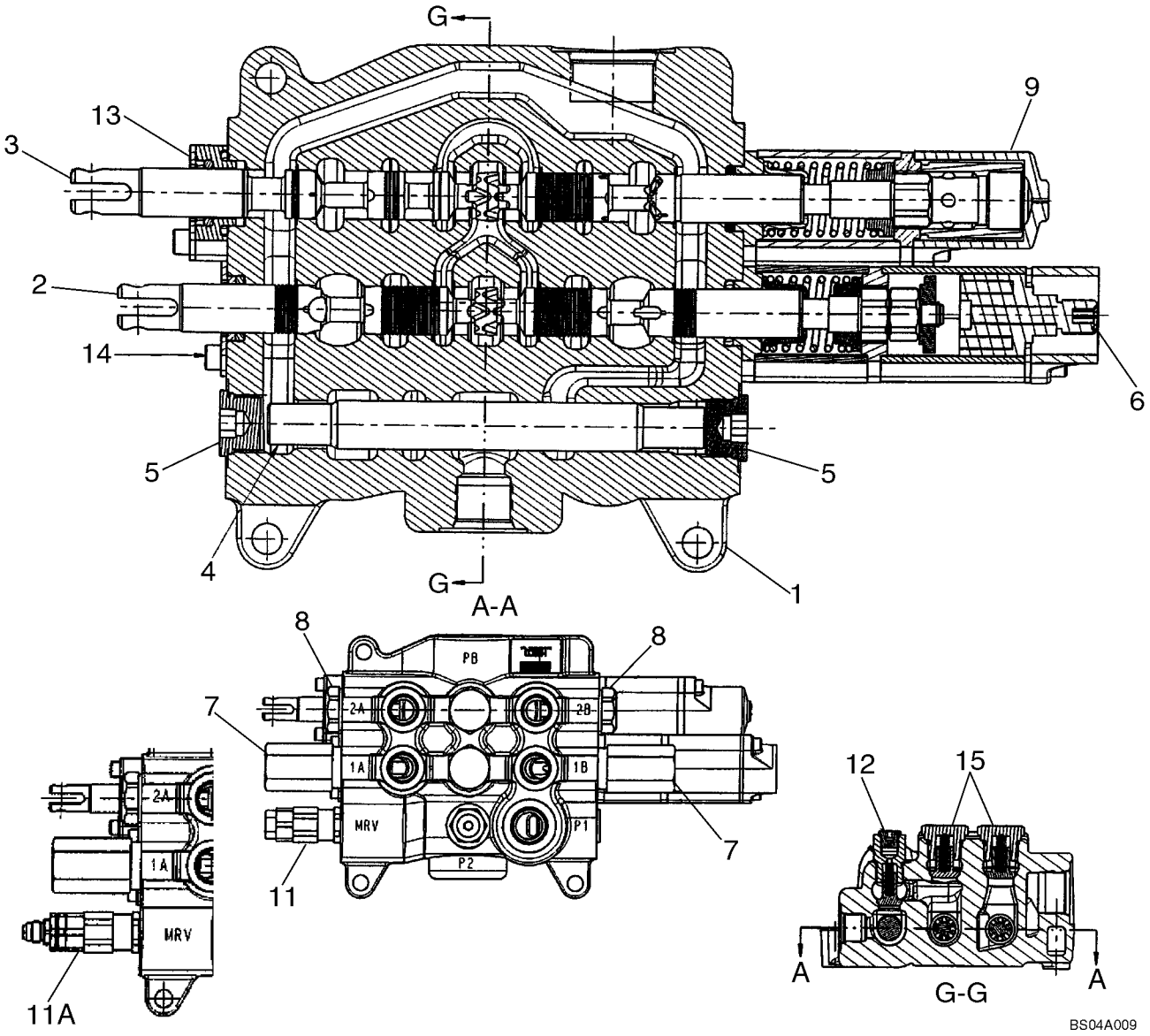

http://www.minnparbackhoeparts.com/

CONJUNTO DE LA VALVULA - CONTROL DE LA CARGADORA, DOS CORREDERAS

REF	FN	PART NUMBER	YR/SN	QTY	DESCRIPTION
12		87426716		1	VALVULA ANTIRRETORNO Check Valve; Some Component Parts Not Serviced Separately; Includes Serviceable (1) 87455974 O-Ring, (1) 87309001 O-Ring, (1) 87446002 Poppet, (1) 87446003 Spring
13		87440815		1	PLACA (CONJUNTO) Lift Spool Plate and Seal Assembly; Some Component Parts Not Serviced Separately; Serviceable Includes (1) 87454547 O-Ring, (1) 87454548 Seal, (1) 87455538 O-Ring, (2) 87455534 Screw
14		87440814		1	PLACA (CONJUNTO) Bucket Spool Plate and Seal Assembly; Some Component Parts Not Serviced Separately; Serviceable Includes (1) 87454547 O-Ring, (1) 87454548 Seal, (2) 87455540 Screw
15		87426238		2	VALVULA ANTIRRETORNO Check Valve; Component Parts Not Serviced Separately; Includes Serviceable 87455975 O-Ring

http://www.minnparbackhoeparts.com/

CONJUNTO DE LA VALVULA - CONTROL DE LA CARGADORA, TRES CORREDERAS

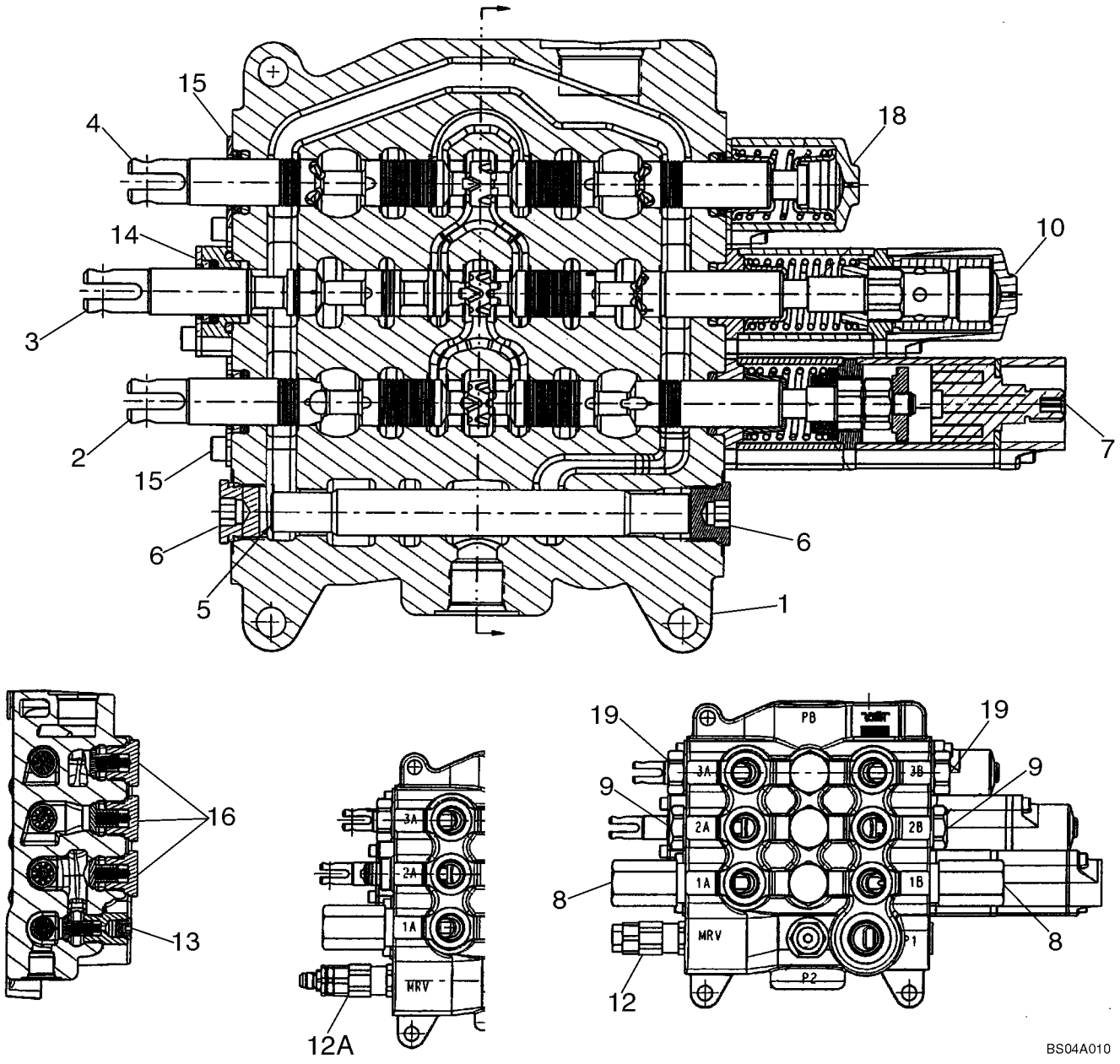

http://www.minnparbackhoeparts.com/

CONJUNTO DE LA VALVULA - CONTROL DE LA CARGADORA, TRES CORREDERAS

REF	FN	PART NUMBER	YR/SN	QTY	DESCRIPTION
		87434767		1	VALVULA HIDRAULICA Three Spool Loader Valve, Used On Models Without Pilot Controls; Incl. Ref 1 - 12, 13 - 19
		87434769		1	VALVULA HIDRAULICA Three Spool Loader Valve, Used On Models With Pilot Controls; Incl. Ref 1 -10, 12A - 19
1		NSS		1	NO SE REPARA SEPARADAM. HOUSING
2		NSS		1	NO SE REPARA SEPARADAM. SPOOL, Bucket
3		NSS		1	NO SE REPARA SEPARADAM. SPOOL, Lift
4		NSS		1	NO SE REPARA SEPARADAM. SPOOL, Clam
5		NSS		1	NO SE REPARA SEPARADAM. SPOOL
6		87426233		2	TAPÓN 7/8 - 14 NF Plug, Serviceable Includes (1) 87455974 O-Ring
7		87426221		1	TRINQUETE Magnetic Detent Kit, Bucket; Some Component Parts Not Serviced Separately; Serviceable Includes (1) 87454547 O-Ring, (1) 87310277 Magnet, (2) 87310278 Screw
8		87450978		2	VÁLVULA, DESCARGA Relief Valve Assembly; Replaces 87426232; Some Component Parts Not Serviced Separately; Includes Serviceable 87455549 Seal Kit
9		81868381		2	VALVULA ANTIRRETORNO Load Check Valve, Anti-Void; Component Parts Not Serviced Separately; Includes Serviceable 87455580 Seal Kit
10		87426227		1	TRINQUETE Manual Detent Assembly, Lift; Some Component Parts Not Serviced Separately; Serviceable Includes (1) 87454547 O-Ring, (2) 87310275 Screw, (4) 87310276 Ball Bearing
12		87426717		1	VÁLVULA, DESCARGA Main Relief Valve Assembly, Single Stage; 87434767 Loader Valve, Models Without Pilot Controls; Component Parts Not Serviced Separately; Includes Serviceable 87455551 Seal Kit
12A		87426235		1	VÁLVULA, DESCARGA Main Relief Valve Assembly, Two Stage; 87434769 Loader Valve, Models With Pilot Controls; Component Parts Not Serviced Separately; Includes Serviceable 87455550 Seal Kit

http://www.minnparbackhoeparts.com/

CONJUNTO DE LA VALVULA - CONTROL DE LA CARGADORA, TRES CORREDERAS

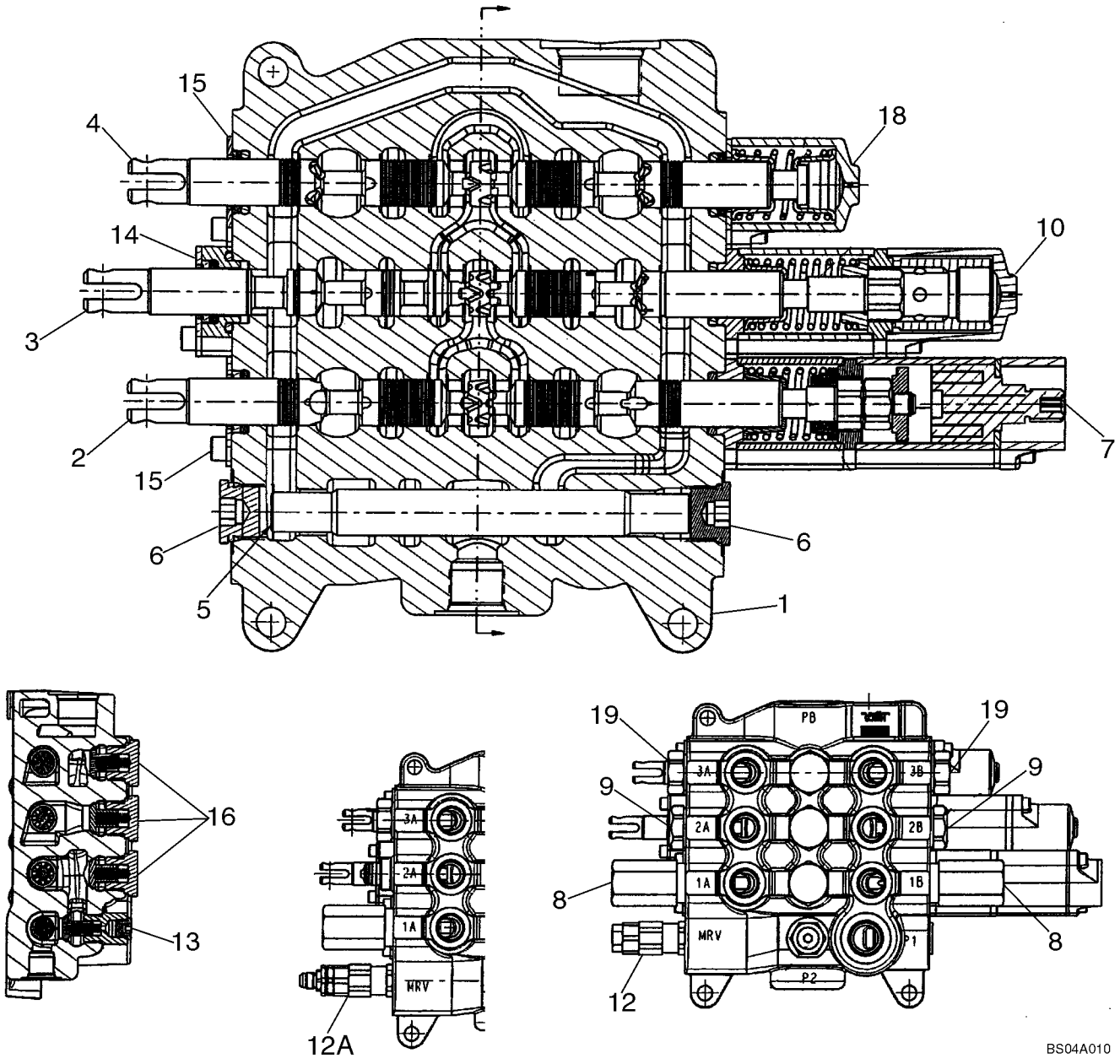

http://www.minnparbackhoeparts.com/

CONJUNTO DE LA VALVULA - CONTROL DE LA CARGADORA, TRES CORREDERAS

REF	FN	PART NUMBER	YR/SN	QTY	DESCRIPTION
13		87426716		1	VALVULA ANTIRRETORNO Check Valve; Some Component Parts Not Serviced Separately; Serviceable Includes (1) 87455974 O-Ring, (1) 87309001 O-Ring, (1) 87446002 Poppet, (1) 87446003 Spring
14		87440815		1	PLACA (CONJUNTO) Lift Spool Plate and Seal Assembly; Some Component Parts Not Serviced Separately; Serviceable Includes (1) 87454547 O-Ring, (1) 87454548 Seal, (1) 87455538 O-Ring, (2) 87455534 Screw
15		87440814		2	PLACA (CONJUNTO) Bucket and Clam Spool Plate and Seal Assembly; Some Component Parts Not Serviced Separately; Serviceable Includes (1) 87454547 O-Ring, (1) 87454548 Seal, (2) 87455540 Screw
16		87426238		3	VALVULA ANTIRRETORNO Check Valve; Component Parts Not Serviced Separately; Includes Serviceable 87455975 O-Ring
18		87426241		1	FINAL(CONJ) Clam Spool End Cap Assembly; Some Component Parts Not Serviced Separately; Serviceable Includes (1) 87454547 O-Ring, (1) 87454548 Seal, (1) 87444567 Spring, (2) 87455541 Screw
19		83981068		2	CILINDROS DE CERRADURA Shut-Off Plug Assembly Includes Seal; Component Parts Not Serviced Separately

http://www.minnparbackhoeparts.com/

CONJUNTO DE LA VALVULA - CONTROL DE LA RETROEXCAVADORA, 6 BOBINAS (SIN PALA EXTENSIBLE Y SIN SISTEM)

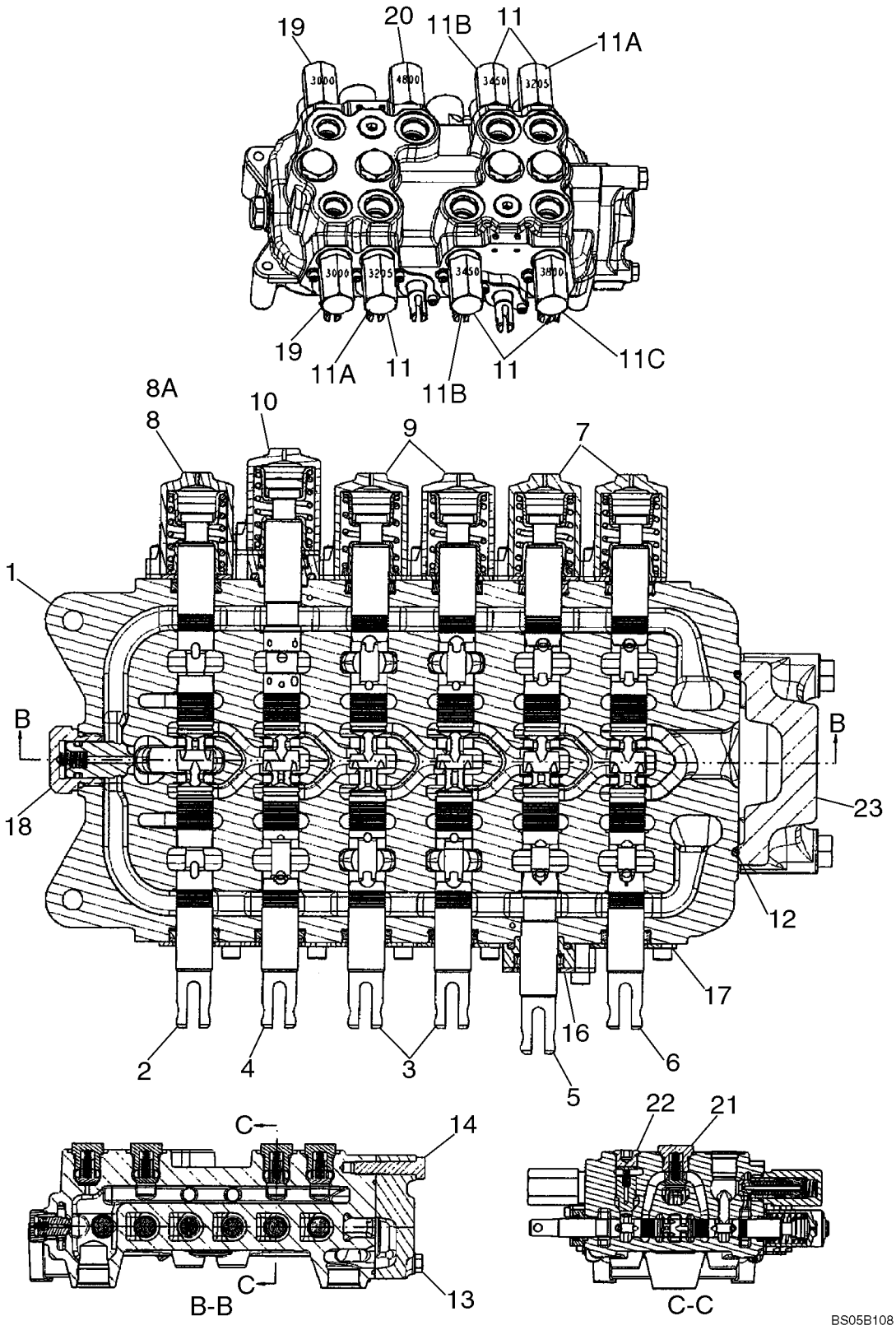

http://www.minnparbackhoeparts.com/

CONJUNTO DE LA VALVULA - CONTROL DE LA RETROEXCAVADORA, 6 BOBINAS (SIN PALA EXTENSIBLE Y SIN SISTEM)

REF	FN	PART NUMBER	YR/SN	QTY	DESCRIPTION
		REF			MANUAL MODELS WITHOUT EXTENDABLE DIPPER, WITHOUT AUXILIARY HYDRAULICS, WITHOUT PILOT CONTROLS
		87413144		1	VALVULA HIDRAULICA 6 Spool, Foot Swing; Incl. Ref 1 - 8, 9 - 23; If Used
		87416476		1	VALVULA HIDRAULICA 6 Spool, Hand Swing; Incl. Ref 1 - 7, 8A, 9 - 23; If Used
1		NSS		1	NO SE REPARA SEPARADAM. HOUSING
2		NSS		1	NO SE REPARA SEPARADAM. SPOOL, SWING
3		NSS		2	NO SE REPARA SEPARADAM. SPOOL, STABILIZER, Right-hand and Left-Hand
4		NSS		1	NO SE REPARA SEPARADAM. SPOOL, BOOM
5		NSS		1	NO SE REPARA SEPARADAM. SPOOL, DIPPER
6		NSS		1	NO SE REPARA SEPARADAM. SPOOL, BUCKET
7		87426241		2	FINAL(CONJ) Cap Assembly, Bucket and Dipper Spool End; Some Component Parts Not Serviced Separately; Serviceable Includes (1) 87454547 O-Ring, (1) 87454548 Seal, (1) 87444567 Spring, (2) 87455541 Screw; Replaces 87433028 End
8		87428500		1	FINAL(CONJ) Cap Assembly, Swing Spool End; 87413144 Foot Swing Valve; Some Component Parts Not Serviced Separately; Serviceable Includes (1) 87454547 O-Ring, (1) 87454548 Seal, (1) 87429151 Centering Spring, (2) 87455541 Screw
8A		87426241		1	FINAL(CONJ) Cap Assembly, Swing Spool End; 87416476 Hand Swing Valve; Some Component Parts Not Serviced Separately; Serviceable Includes (1) 87454547 O-Ring, (1) 87454548 Seal, (1) 87444567 Spring, (2) 87455541 Screw; Replaces 87433028 End
9		87428497		2	FINAL(CONJ) Cap Assembly, Stabilizer Spool Ends; Some Component Parts Not Serviced Separately; Serviceable Includes (2) 87454547 O-Rings, (1) 87454548 Seal, (1) 87455533 Spring, (2) 87455541 Screw

http://www.minnparbackhoeparts.com/

CONJUNTO DE LA VALVULA - CONTROL DE LA RETROEXCAVADORA, 6 BOBINAS (SIN PALA EXTENSIBLE Y SIN SISTEM)

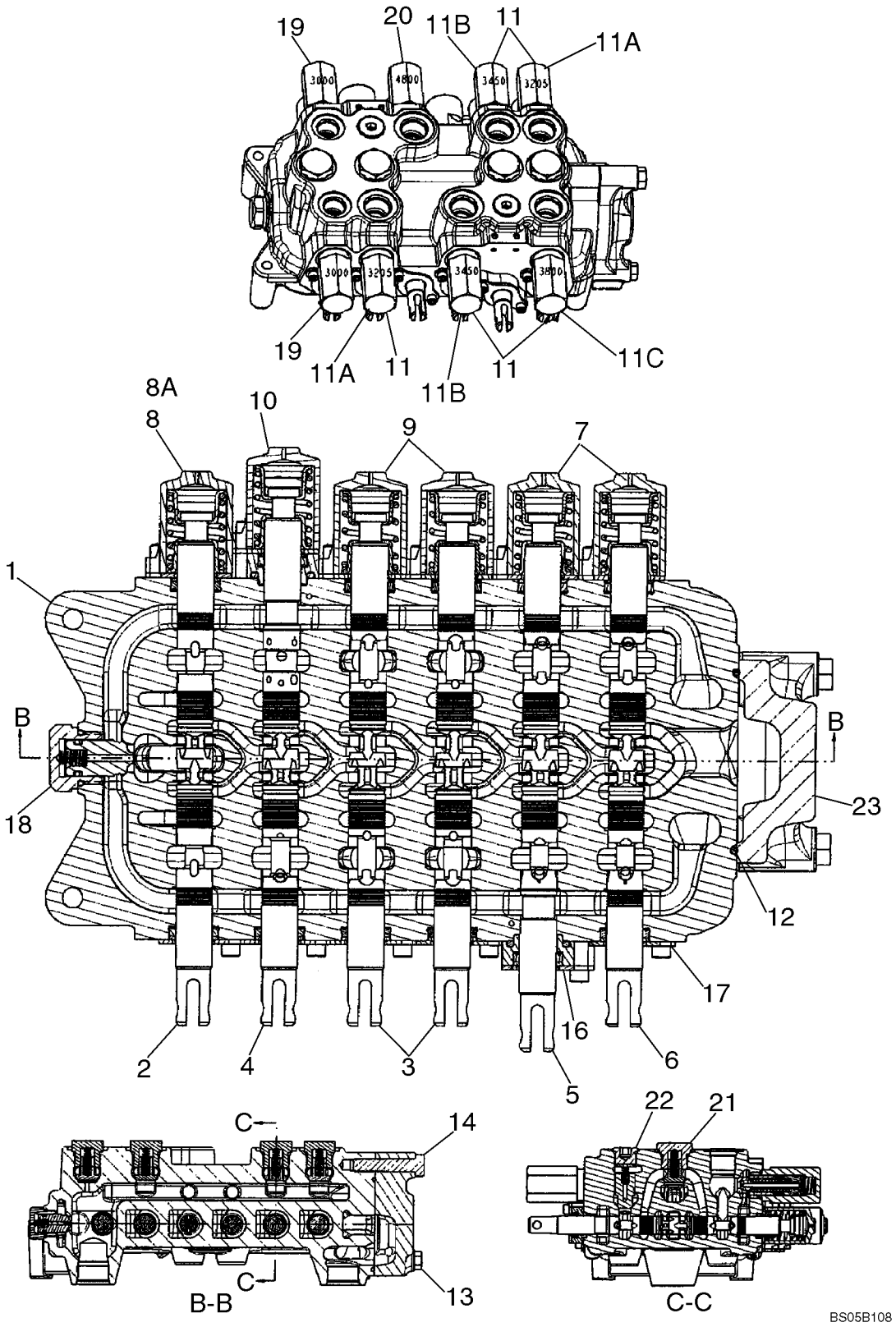

http://www.minnparbackhoeparts.com/

CONJUNTO DE LA VALVULA - CONTROL DE LA RETROEXCAVADORA, 6 BOBINAS (SIN PALA EXTENSIBLE Y SIN SISTEM)

REF	FN	PART NUMBER	YR/SN	QTY	DESCRIPTION
10		87433029		1	FINAL(CONJ) Cap Assembly, Boom Spool End; Some Component Parts Not Serviced Separately; Serviceable Includes (1) 87454547 O-Ring, (1) 87454548 Seal, (1) 87444567 Spring, (1) 87455538 O-Ring, (2) 87455545 Screw
11		87426232		5	VÁLVULA, DESCARGA Relief Valve Assembly; (2) 3205 psi, (2) 3450 psi, (1) 3800 psi; Component Parts Not Serviced Separately; No Longer Used, See Ref 11A - 11C
11A		87450978		2	VÁLVULA, DESCARGA Circuit; 3205 psi; Component Parts Not Serviced Separately; Includes 87455549 Seal Kit
11B		87450979		2	VÁLVULA, DESCARGA Circuit; 3450 psi; Component Parts Not Serviced Separately; Includes 87455549 Seal Kit
11C		87450980		1	VÁLVULA, DESCARGA Circuit; 3800 psi; Component Parts Not Serviced Separately; Includes 87455549 Seal Kit
12		87428495		1	JUNTA HERMETICA O-Ring Seal, Outlet Section
13		87428491		2	TORNILLO Bolt
14		87428492		1	TORNILLO Bolt
16		87440815		1	PLACA (CONJUNTO) Seal Plate Assembly, Dipper Spool; Some Component Parts Not Serviced Separately; Serviceable Includes (1) 87454547 O-Ring, (1) 87454548 Seal, (1) 87455538 O-Ring, (2) 87455534 Screw
17		87440814		5	PLACA (CONJUNTO) Seal Plate Assembly; Some Component Parts Not Serviced Separately; Serviceable Includes (1) 87454547 O-Ring, (1) 87454548 Seal, (2) 87455540 Screw
18		81868381		1	VALVULA ANTIRRETORNO Anti-Void Valve; Component Parts Not Serviced Separately; Includes 87455580 Seal Kit
19		87428490		2	VÁLVULA, DESCARGA Relief Valve Assembly; 3000 psi; Component Parts Not Serviced Separately; Includes 87455549 Seal Kit

http://www.minnparbackhoeparts.com/

CONJUNTO DE LA VALVULA - CONTROL DE LA RETROEXCAVADORA, 6 BOBINAS (SIN PALA EXTENSIBLE Y SIN SISTEM)

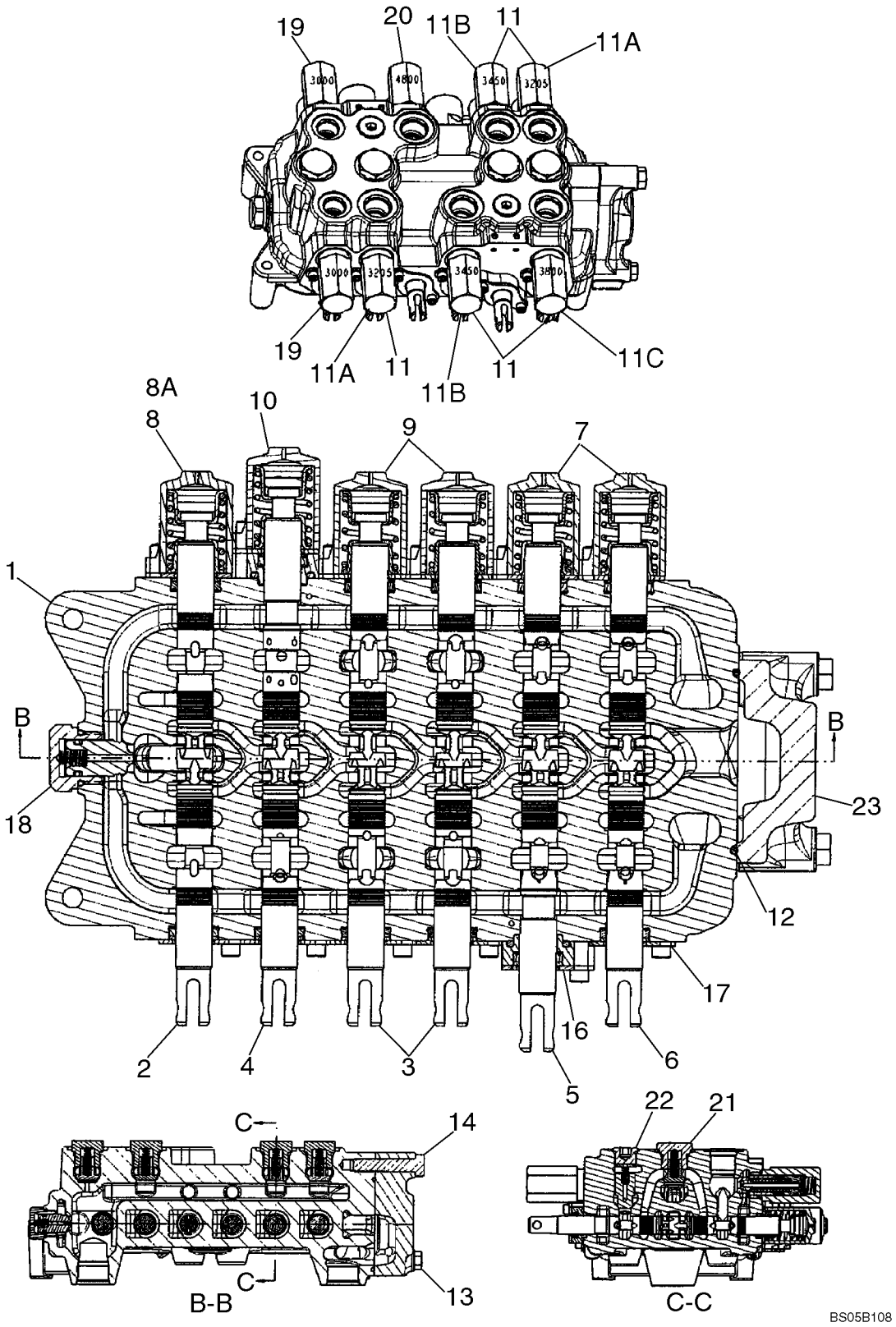

http://www.minnparbackhoeparts.com/

CONJUNTO DE LA VALVULA - CONTROL DE LA RETROEXCAVADORA, 6 BOBINAS (SIN PALA EXTENSIBLE Y SIN SISTEM)

REF	FN	PART NUMBER	YR/SN	QTY	DESCRIPTION
20		87428488		1	VÁLVULA, DESCARGA Relief Valve Assembly; 4800 psi; Component Parts Not Serviced Separately; Includes 87455549 Seal Kit
21		87426238		4	VALVULA ANTIRRETORNO Check Valve Assembly; Hex Head; Component Parts Not Serviced Separately; Includes (1) 87455975 O-Ring
22		87428486		2	VALVULA ANTIRRETORNO Check Valve Assembly; Hex Socket Head; Component Parts Not Serviced Separately; Includes (1) 87455974 O-Ring
23		87433030		1	DISTRIBUIDOR HYDR Outlet Section Assembly; Component Parts Not Serviced Separately

http://www.minnparbackhoeparts.com/

08-37		p1	04/05

CONJUNTO DE LA VALVULA - CONTROL DE LA RETROEXCAVADORA, 7 BOBINAS (SIN PALA EXTENSIBLE Y CON SISTEM)

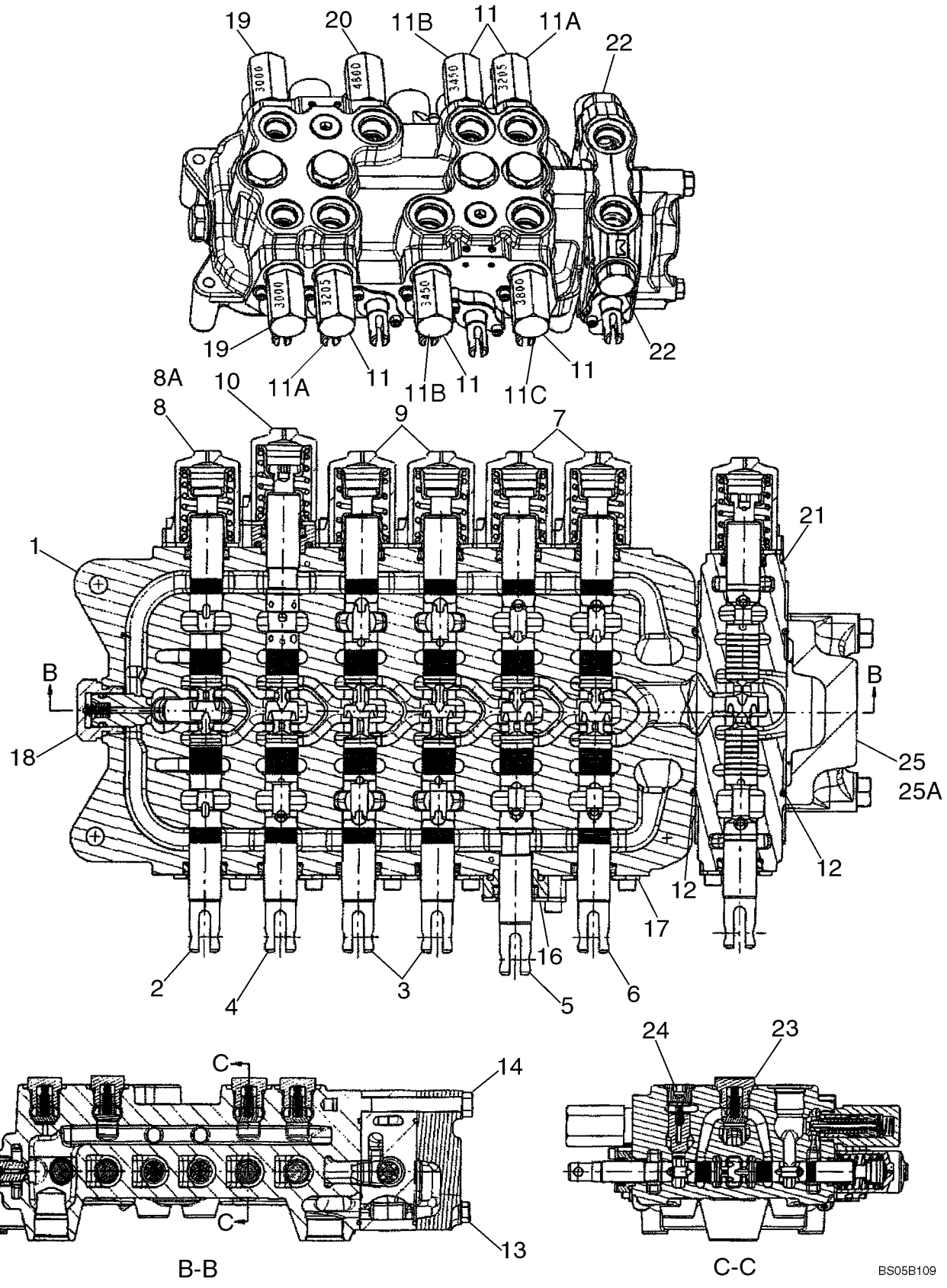

http://www.minnparbackhoeparts.com/

CONJUNTO DE LA VALVULA - CONTROL DE LA RETROEXCAVADORA, 7 BOBINAS (SIN PALA EXTENSIBLE Y CON SISTEM)

REF	FN	PART NUMBER	YR/SN	QTY	DESCRIPTION
		REF			MANUAL MODELS WITHOUT EXTENDABLE DIPPER, WITH AUXILIARY HYDRAULICS, WITHOUT PILOT CONTROLS
		87414278		1	VALVULA HIDRAULICA 7 Spool, Foot Swing; Incl. Ref 1 - 8, 9 - 25; If Used
		87414277		1	VALVULA HIDRAULICA 7 Spool, Hand Swing; Incl. Ref 1 - 7, 8A, 9 - 24, 25A; If Used
1		NSS		1	NO SE REPARA SEPARADAM. HOUSING
2		NSS		1	NO SE REPARA SEPARADAM. SPOOL, SWING
3		NSS		2	NO SE REPARA SEPARADAM. SPOOL, STABILIZER, Left-Hand and Right-Hand
4		NSS		1	NO SE REPARA SEPARADAM. SPOOL, BOOM
5		NSS		1	NO SE REPARA SEPARADAM. SPOOL, DIPPER
6		NSS		1	NO SE REPARA SEPARADAM. SPOOL, BUCKET
7		87426241		2	FINAL(CONJ) Cap Assembly, Bucket and Dipper Spool End; Some Component Parts Not Serviced Separately; Serviceable Includes (1) 87454547 O-Ring, (1) 87454548 Seal, (1) 87444567 Spring, (2) 87455541 Screw; Replaces 87433028 End
8		87428500		1	FINAL(CONJ) Cap Assembly, Swing Spool End; 87414278 Foot Swing Valve; Some Component Parts Not Serviced Separately; Serviceable Includes (1) 87454547 O-Ring, (1) 87454548 Seal, (1) 87429151 Centering Spring, (2) 87455541 Screw
8A		87426241		1	FINAL(CONJ) Cap Assembly, Swing Spool End; 87414277 Hand Swing Valve; Some Component Parts Not Serviced Separately; Serviceable Includes (1) 87454547 O-Ring, (1) 87454548 Seal, (1) 87444567 Spring, (2) 87455541 Screw; Replaces 87433028 End
9		87428497		2	FINAL(CONJ) Cap Assembly, Stabilizer Spool Ends; Some Component Parts Not Serviced Separately; Serviceable Includes (2) 87454547 O-Ring, (1) 87454548 Seal, (1) 87455533 Spring, (2) 87455541 Screw

http://www.minnparbackhoeparts.com/

CONJUNTO DE LA VALVULA - CONTROL DE LA RETROEXCAVADORA, 7 BOBINAS (SIN PALA EXTENSIBLE Y CON SISTEM)

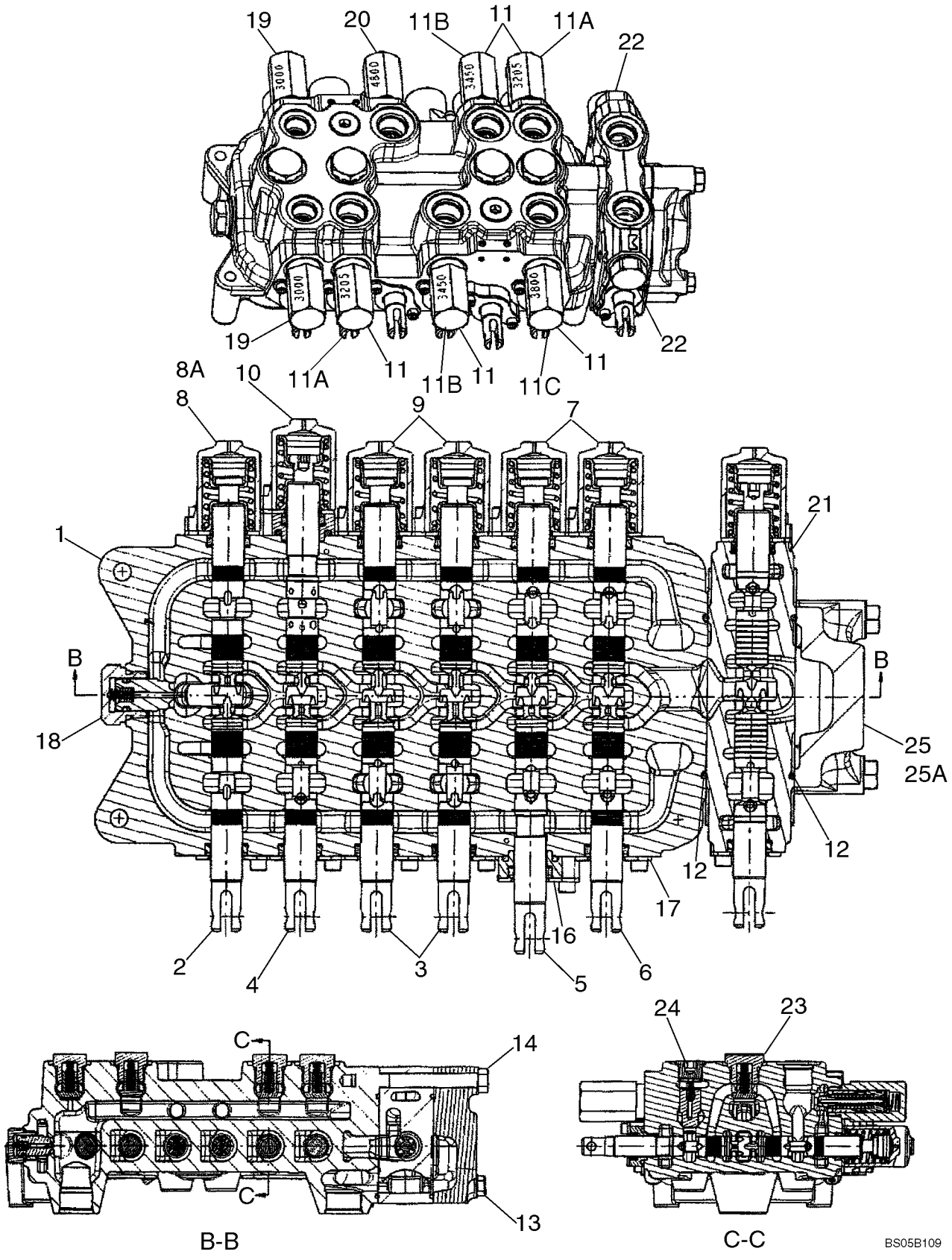

http://www.minnparbackhoeparts.com/

CONJUNTO DE LA VALVULA - CONTROL DE LA RETROEXCAVADORA, 7 BOBINAS (SIN PALA EXTENSIBLE Y CON SISTEM)

REF	FN	PART NUMBER	YR/SN	QTY	DESCRIPTION
10		87433029		1	FINAL(CONJ) Cap Assembly, Boom Spool End; Some Component Parts Not Serviced Separately; Serviceable Includes (1) 87454547 O-Ring, (1) 87454548 Seal, (1) 87444567 Spring, (1) 87455538 O-Ring, (2) 87455545 Screw
11		87426232		5	VÁLVULA, DESCARGA Relief Valve Assembly; (2) 3205 psi, (2) 3450 psi, (1) 3800 psi; Component Parts Not Serviced Separately; No Longer Used, See Ref 11A - 11C
11A		87450978		2	VÁLVULA, DESCARGA Circuit; 3205 psi; Component Parts Not Serviced Separately; Includes 87455549 Seal Kit
11B		87450979		2	VÁLVULA, DESCARGA Circuit; 3450 psi; Component Parts Not Serviced Separately; Includes 87455549 Seal Kit
11C		87450980		1	VÁLVULA, DESCARGA Circuit; 3800 psi; Component Parts Not Serviced Separately; Includes 87455549 Seal Kit
12		87428495		2	JUNTA HERMETICA O-Ring Seal, Auxiliary/Outlet Section
13		87428476		2	TORNILLO Bolt
14		87428477		1	TORNILLO Bolt
16		87440815		1	PLACA (CONJUNTO) Seal Plate Assembly, Dipper Spool; Some Component Parts Not Serviced Separately; Serviceable Includes (1) 87454547 O-Ring, (1) 87454548 Seal, (1) 87455538 O-Ring, (2) 87455534 Screw
17		87440814		5	PLACA (CONJUNTO) Seal Plate Assembly; Some Component Parts Not Serviced Separately; Serviceable Includes (1) 87454547 O-Ring, (1) 87454548 Seal, (2) 87455540 Screw
18		81868381		1	VALVULA ANTIRRETORNO Anti-Void Valve; Component Parts Not Serviced Separately; Includes 87455580 Seal Kit
19		87428490		2	VÁLVULA, DESCARGA Relief Valve Assembly; 3000 psi; Component Parts Not Serviced Separately; Includes 87455549 Seal Kit

http://www.minnparbackhoeparts.com/

CONJUNTO DE LA VALVULA - CONTROL DE LA RETROEXCAVADORA, 7 BOBINAS (SIN PALA EXTENSIBLE Y CON SISTEM)

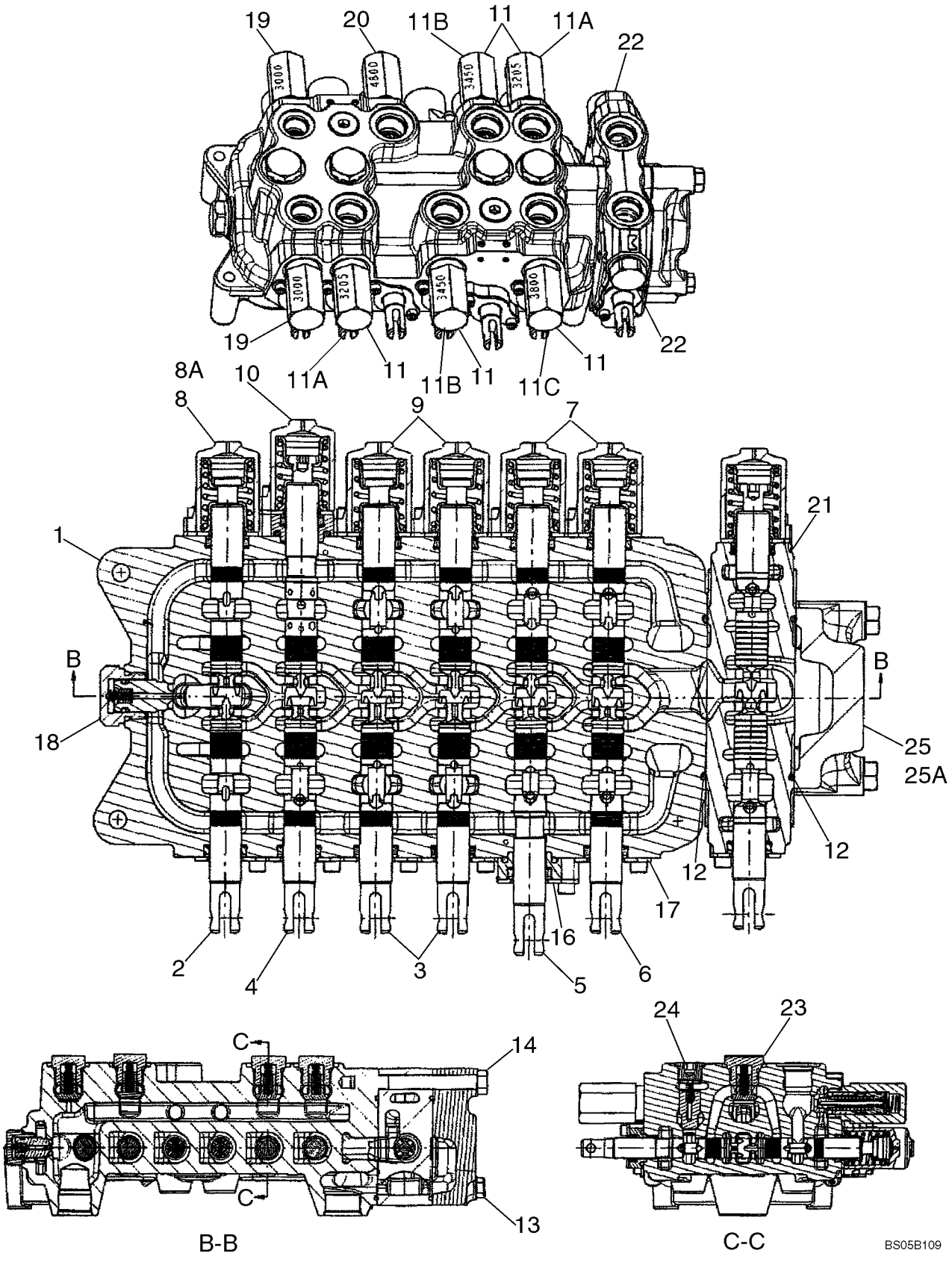

http://www.minnparbackhoeparts.com/

CONJUNTO DE LA VALVULA - CONTROL DE LA RETROEXCAVADORA, 7 BOBINAS (SIN PALA EXTENSIBLE Y CON SISTEM)

REF	FN	PART NUMBER	YR/SN	QTY	DESCRIPTION
20		87428488		1	VÁLVULA, DESCARGA Relief Valve Assembly; 4800 psi; Component Parts Not Serviced Separately; Includes 87455549 Seal Kit
21		87428501		1	DISTRIBUIDOR HYDR Spool Section Assembly; Auxiliary Hydraulics; Incl. Ref 21A - 21I, Which Are Not Illustrated; Remainder Component Parts Not Serviced Separately
21A		87433028		1	FINAL(CONJ) Spool; Incl. Ref 21B - 21E, Which Are Not Illustrated; Remainder Components Not Serviced Separately
21B		87454547		1	JUNTA HERMETICA
21C		87454548		1	ANILLO DE CIERRE Wiper
21D		87429150		1	MUELLE, VALVULA
21E		87455541		2	TORNILLO
21F		87428495		1	JUNTA HERMETICA
21G		87455564		1	VÁLVULA DE PASO Load Check
21H		87455565		1	MUELLE, VALVULA Load Check
21I		83981068		2	CILINDROS DE CERRADURA Shut-Off
22		83981068		2	CILINDROS DE CERRADURA Shut-Off Plug; Component Parts Not Serviced Separately; Now Included With Ref 21
23		87426238		4	VALVULA ANTIRRETORNO Check Valve Assembly; Hex Head; Component Parts Not Serviced Separately; Includes (1) 87455975 O-Ring
24		87428486		2	VALVULA ANTIRRETORNO Check Valve Assembly; Hex Socket Head; Component Parts Not Serviced Separately; Includes (1) 87455974 O-Ring
25		87433030		1	DISTRIBUIDOR HYDR Outlet Section Assembly; 87414278 Foot Swing Valve; Component Parts Not Serviced Separately
25A		87433030		1	DISTRIBUIDOR HYDR Outlet Section Assembly; 87414277 Hand Swing Valve; Component Parts Not Serviced Separately

http://www.minnparbackhoeparts.com/

CONJUNTO DE LA VALVULA - CONTROL DE LA RETROEXCAVADORA, 7 BOBINAS (CON PALA EXTENSIBLE Y SIN SISTEM)

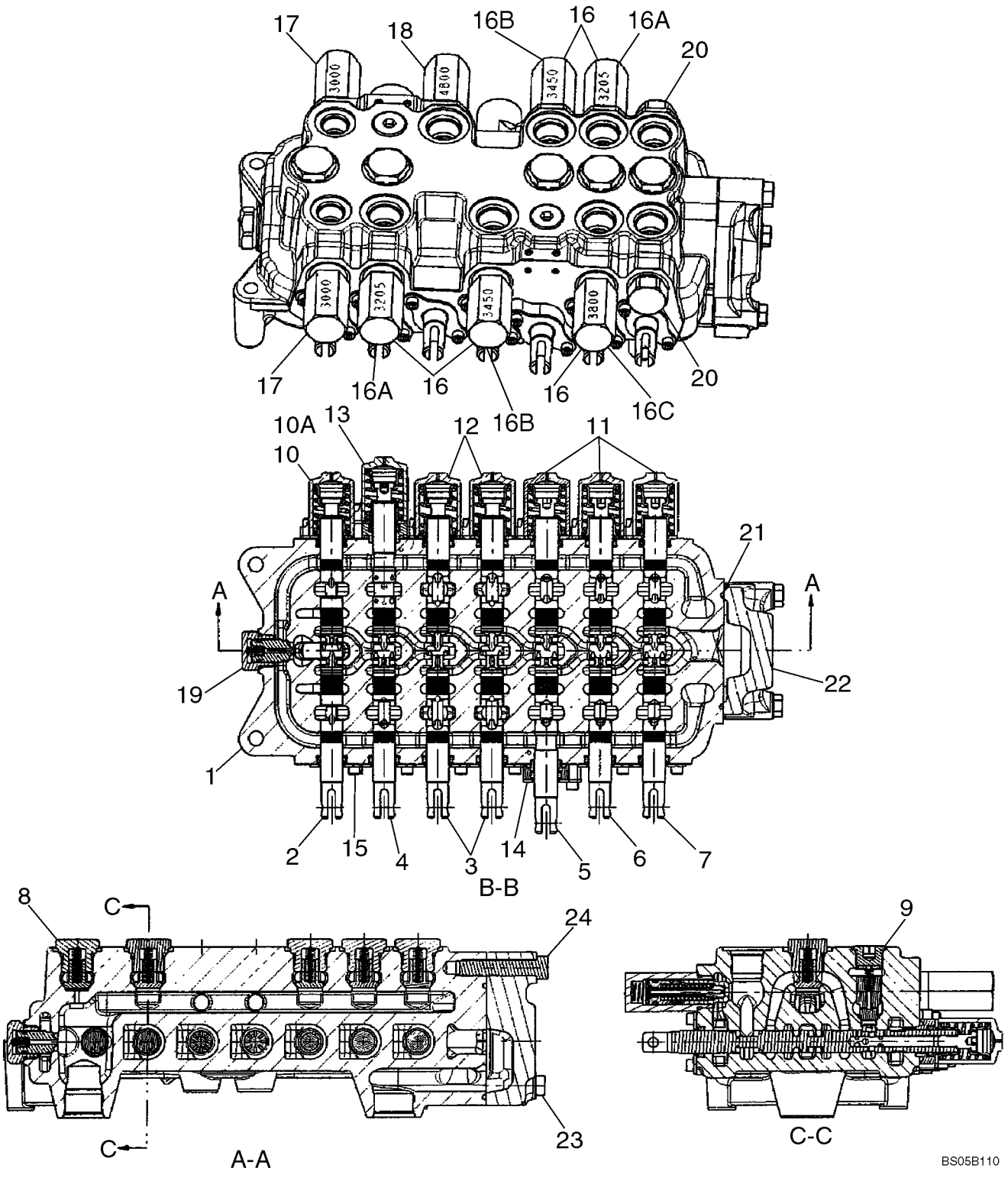

http://www.minnparbackhoeparts.com/

CONJUNTO DE LA VALVULA - CONTROL DE LA RETROEXCAVADORA, 7 BOBINAS (CON PALA EXTENSIBLE Y SIN SISTEM)

REF	FN	PART NUMBER	YR/SN	QTY	DESCRIPTION
		REF			MANUAL MODELS WITH EXTENDABLE DIPPER, WITHOUT AUXILIARY HYDRAULICS, WITHOUT PILOT CONTROLS
		87413145		1	VALVULA HIDRAULICA 7 Spool, Foot Swing; Incl. Ref 1 - 10, 11 - 24; If Used
		87403386		1	VALVULA HIDRAULICA 7 Spool, Hand Swing; Incl. Ref 1 - 9, 10A, 11 - 24; If Used
1		NSS		1	NO SE REPARA SEPARADAM. HOUSING
2		NSS		1	NO SE REPARA SEPARADAM. SPOOL, SWING
3		NSS		2	NO SE REPARA SEPARADAM. SPOOL, STABILIZER, Right-Hand and Left-Hand
4		NSS		1	NO SE REPARA SEPARADAM. SPOOL, BOOM
5		NSS		1	NO SE REPARA SEPARADAM. SPOOL, DIPPER
6		NSS		1	NO SE REPARA SEPARADAM. SPOOL, BUCKET
7		NSS		1	NO SE REPARA SEPARADAM. SPOOL, EXTENDABLE DIPPER
8		87426238		5	VALVULA ANTIRRETORNO Check Valve Assembly; Hex Head; Component Parts Not Serviced Separately; Includes (1) 87455975 O-Ring
9		87428486		2	VALVULA ANTIRRETORNO Check Valve Assembly; Hex Socket Head; Component Parts Not Serviced Separately; Includes (1) 87455974 O-Ring
10		87428500		1	FINAL(CONJ) Cap Assembly, Swing Spool End; 87413145 Foot Swing Valve; Some Component Parts Not Serviced Separately; Serviceable Includes (1) 87454547 O-Ring, (1) 87454548 Seal, (1) 87429151 Centering Spring, (2) 87455541 Screw
10A		87426241		1	FINAL(CONJ) Cap Assembly, Swing Spool End; 87403386 Hand Swing Valve; Some Component Parts Not Serviced Separately; Serviceable Includes (1) 87454547 O-Ring, (1) 87454548 Seal, (1) 87444567 Spring, (2) 87455541 Screw; Replaces 87433028 End

http://www.minnparbackhoeparts.com/

CONJUNTO DE LA VALVULA - CONTROL DE LA RETROEXCAVADORA, 7 BOBINAS (CON PALA EXTENSIBLE Y SIN SISTEM)

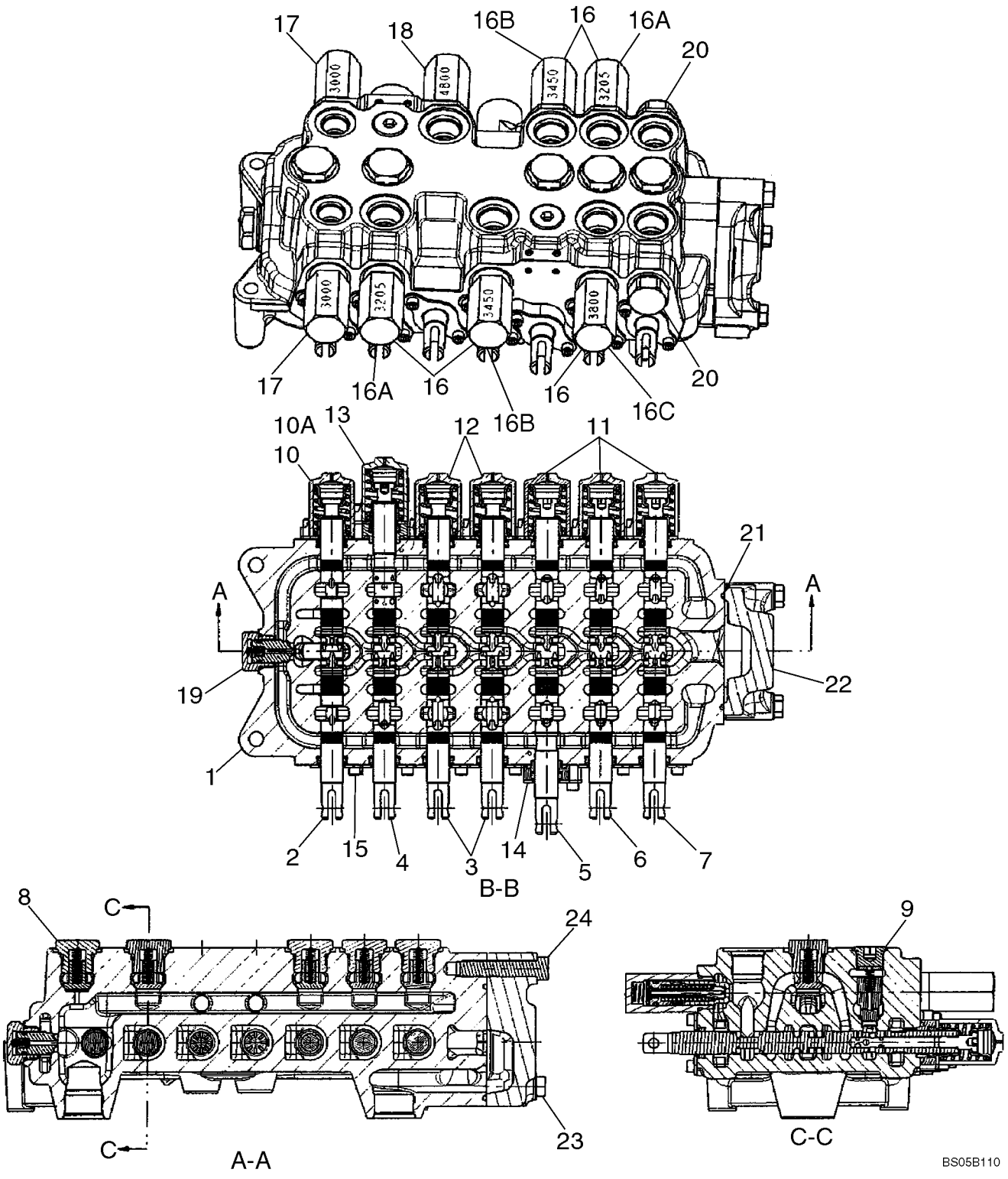

http://www.minnparbackhoeparts.com/

CONJUNTO DE LA VALVULA - CONTROL DE LA RETROEXCAVADORA, 7 BOBINAS (CON PALA EXTENSIBLE Y SIN SISTEM)

REF	FN	PART NUMBER	YR/SN	QTY	DESCRIPTION
11		87426241		3	FINAL(CONJ) Cap Assembly, Bucket, Dipper, and Extendahoe Spool End; Some Component Parts Not Serviced Separately; Serviceable Includes (1) 87454547 O-Ring, (1) 87454548 Seal, (1) 87444567 Spring, (2) 87455541 Screw; Replaces 87433028 End
12		87428497		2	FINAL(CONJ) Cap Assembly, Stabilizer Spool Ends; Some Component Parts Not Serviced Separately; Serviceable Includes (2) 87454547 O-Ring, (1) 87454548 Seal, (1) 87455533 Spring, (2) 87455541 Screw
13		87433029		1	FINAL(CONJ) Cap Assembly, Boom Spool End; Some Component Parts Not Serviced Separately; Serviceable Includes (1) 87454547 O-Ring, (1) 87454548 Seal, (1) 87444567 Spring, (1) 87455538 O-Ring, (2) 87455545 Screw
14		87440815		1	PLACA (CONJUNTO) Seal Plate Assembly, Dipper Spool; Some Component Parts Not Serviced Separately; Serviceable Includes (1) 87454547 O-Ring, (1) 87454548 Seal, (1) 87455538 O-Ring, (2) 87455534 Screw
15		87440814		6	PLACA (CONJUNTO) Seal Plate Assembly; Some Component Parts Not Serviced Separately; Serviceable Includes (1) 87454547 O-Ring, (1) 87454548 Seal, (2) 87455540 Screw
16		87426232		5	VÁLVULA, DESCARGA Relief Valve Assembly; (2) 3205 psi, (2) 3450 psi, (1) 3800 psi; Component Parts Not Serviced Separately; No Longer Used, See Ref 16A - 16C
16A		87450978		2	VÁLVULA, DESCARGA Circuit; 3205 psi; Component Parts Not Serviced Separately; Includes 87455549 Seal Kit
16B		87450979		2	VÁLVULA, DESCARGA Circuit; 3450 psi; Component Parts Not Serviced Separately; Includes 87455549 Seal Kit

http://www.minnparbackhoeparts.com/

CONJUNTO DE LA VALVULA - CONTROL DE LA RETROEXCAVADORA, 7 BOBINAS (CON PALA EXTENSIBLE Y SIN SISTEM)

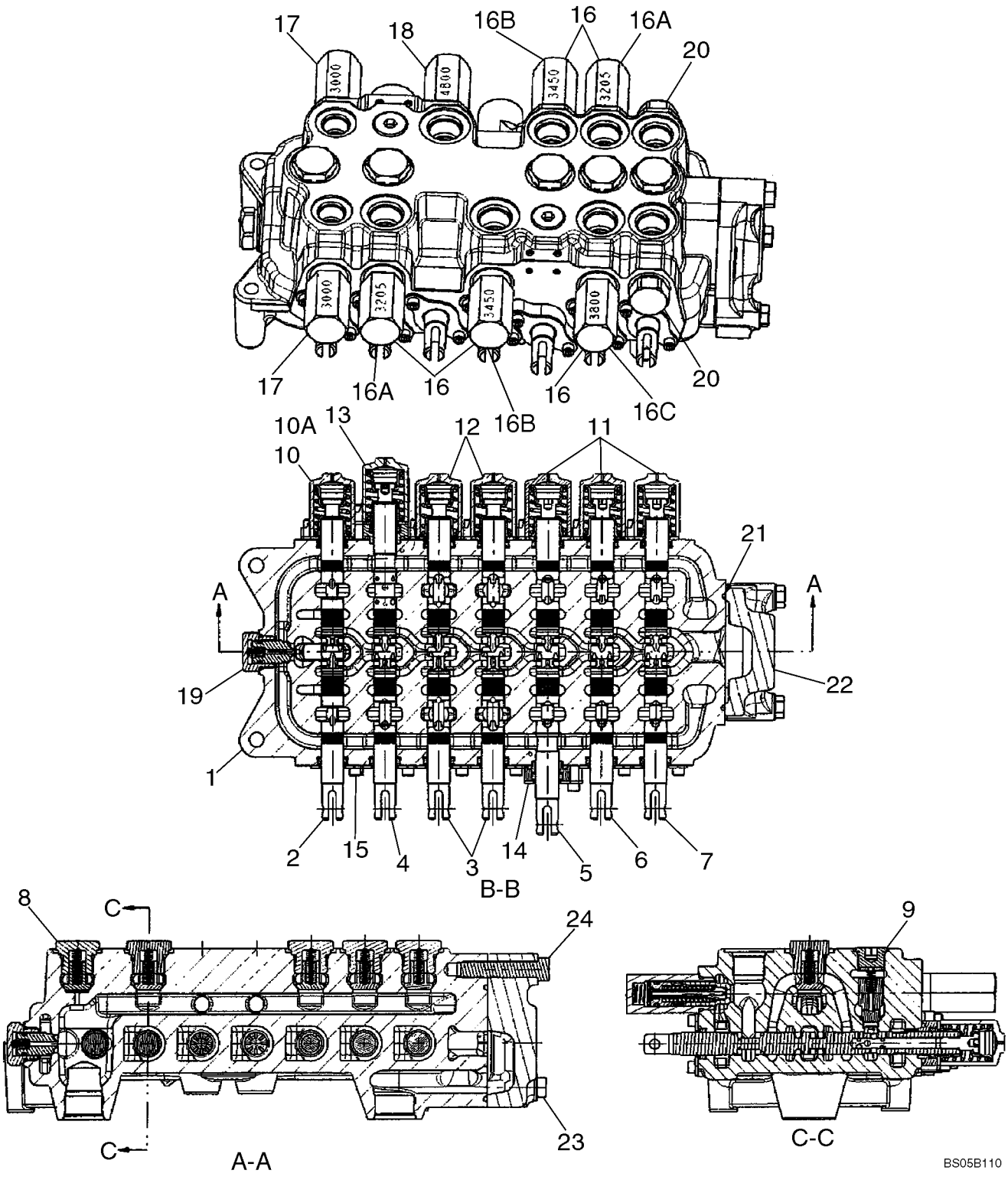

http://www.minnparbackhoeparts.com/

CONJUNTO DE LA VALVULA - CONTROL DE LA RETROEXCAVADORA, 7 BOBINAS (CON PALA EXTENSIBLE Y SIN SISTEM)

REF	FN	PART NUMBER	YR/SN	QTY	DESCRIPTION
16C		87450980		1	VÁLVULA, DESCARGA Circuit; 3800 psi; Component Parts Not Serviced Separately; Includes 87455549 Seal Kit
17		87428490		2	VÁLVULA, DESCARGA Relief Valve Assembly; 3000 psi; Component Parts Not Serviced Separately; Includes 87455549 Seal Kit
18		87428488		1	VÁLVULA, DESCARGA Relief Valve Assembly; 4800 psi; Component Parts Not Serviced Separately; Includes 87455549 Seal Kit
19		81868381		1	VALVULA ANTIRRETORNO Anti-Void Plug; Component Parts Not Serviced Separately; Includes 87455580 Seal Kit
20		83981068		2	CILINDROS DE CERRADURA Shut-Off Plug; Component Parts Not Serviced Separately
21		87428495		1	JUNTA HERMETICA O-Ring Seal; Outlet Section
22		87433030		1	DISTRIBUIDOR HYDR Outlet Section Assembly; Component Parts Not Serviced Separately
23		87428491		2	TORNILLO Bolt
24		87428492		1	TORNILLO Bolt

http://www.minnparbackhoeparts.com/

CONJUNTO DE LA VALVULA - CONTROL DE LA RETROEXCAVADORA, 8 BOBINAS (CON PALA EXTENSIBLE Y CON SISTEM)

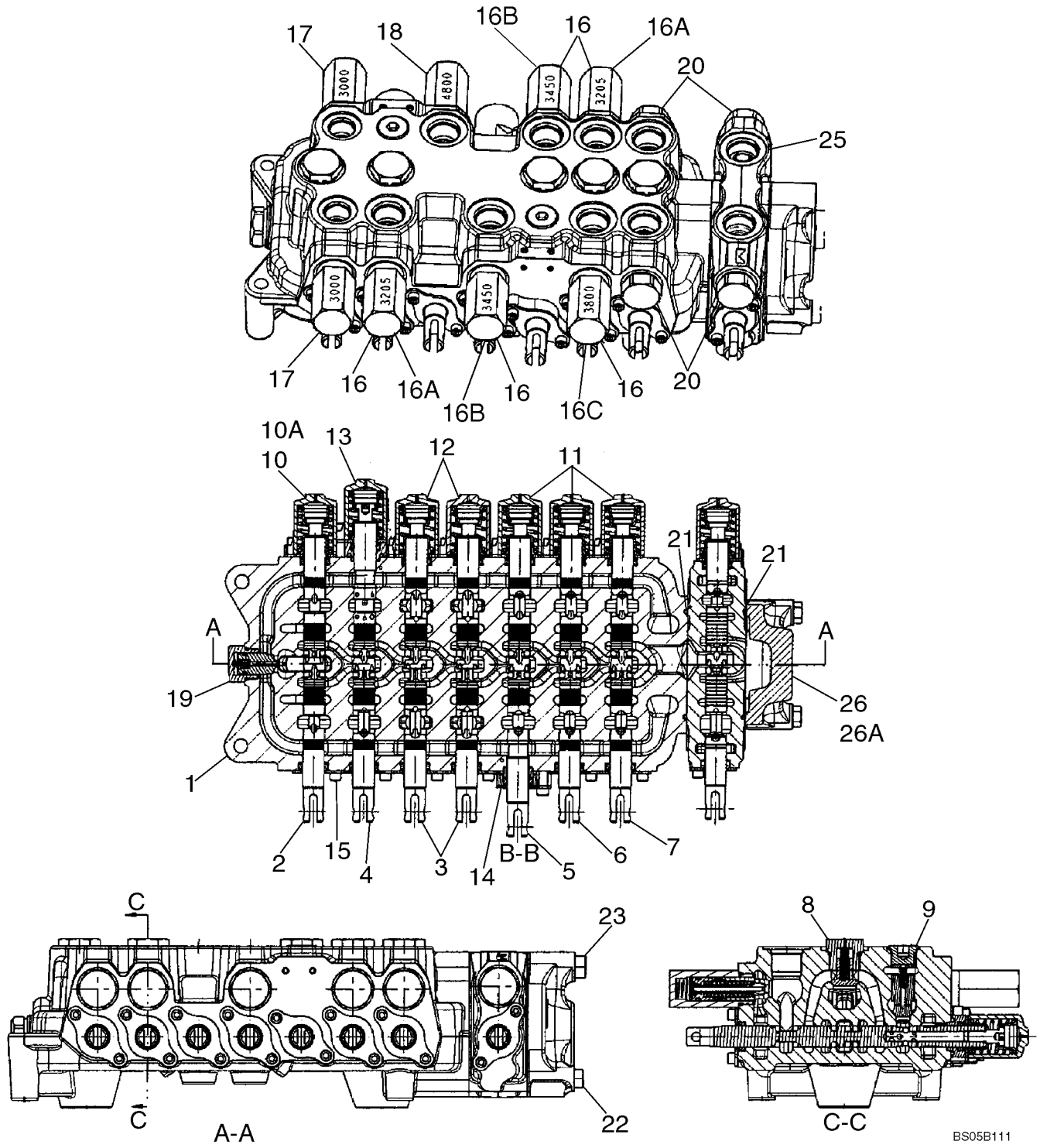

http://www.minnparbackhoeparts.com/

CONJUNTO DE LA VALVULA - CONTROL DE LA RETROEXCAVADORA, 8 BOBINAS (CON PALA EXTENSIBLE Y CON SISTEM)

REF	FN	PART NUMBER	YR/SN	QTY	DESCRIPTION
		REF			MANUAL MODELS WITH EXTENDABLE DIPPER, WITH AUXILIARY HYDRAULICS, WITHOUT PILOT CONTROLS
		87413146		1	VALVULA HIDRAULICA 8 Spool, Foot Swing; Incl. Ref 1 - 10, 12 - 26; If Used
		87403387		1	VALVULA HIDRAULICA 8 Spool, Hand Swing; Incl. Ref 1 - 9, 10A, 11 - 25, 26A; If Used
1		NSS		1	NO SE REPARA SEPARADAM. HOUSING
2		NSS		1	NO SE REPARA SEPARADAM. SPOOL, SWING
3		NSS		2	NO SE REPARA SEPARADAM. SPOOL, STABILIZER, Right-Hand and Left-Hand
4		NSS		1	NO SE REPARA SEPARADAM. SPOOL, BOOM
5		NSS		1	NO SE REPARA SEPARADAM. SPOOL, DIPPER
6		NSS		1	NO SE REPARA SEPARADAM. SPOOL, BUCKET
7		NSS		1	NO SE REPARA SEPARADAM. SPOOL, EXTENDABLE DIPPER
8		87426238		5	VALVULA ANTIRRETORNO Check Valve Assembly; Hex Head; Component Parts Not Serviced Separately; Includes (1) 87455975 O-Ring
9		87428486		2	VALVULA ANTIRRETORNO Check Valve Assembly; Hex Socket Head; Component Parts Not Serviced Separately; Includes (1) 87455974 O-Ring
10		87428500		1	FINAL(CONJ) Cap Assembly, Swing Spool End; 87413146 Foot Swing Valve; Component Parts Not Serviced Separately; Includes 87429151 Centering Spring
10A		87426241		1	FINAL(CONJ) Cap Assembly, Swing Spool End; 87403387 Hand Swing Valve; Some Component Parts Not Serviced Separately; Serviceable Includes (1) 87454547 O-Ring, (1) 87454548 Seal, (1) 87444567 Spring, (2) 87455541 Screw; Replaces 87433028 End
11		87426241		3	FINAL(CONJ) Cap Assembly, Bucket, Dipper and Extendahoe Spool Ends; Some Component Parts Not Serviced Separately; Serviceable Includes (1) 87454547 O-Ring, (1) 87454548 Seal, (1) 87444567 Spring, (2) 87455541 Screw; Replaces 87433028 End

http://www.minnparbackhoeparts.com/

CONJUNTO DE LA VALVULA - CONTROL DE LA RETROEXCAVADORA, 8 BOBINAS (CON PALA EXTENSIBLE Y CON SISTEM)

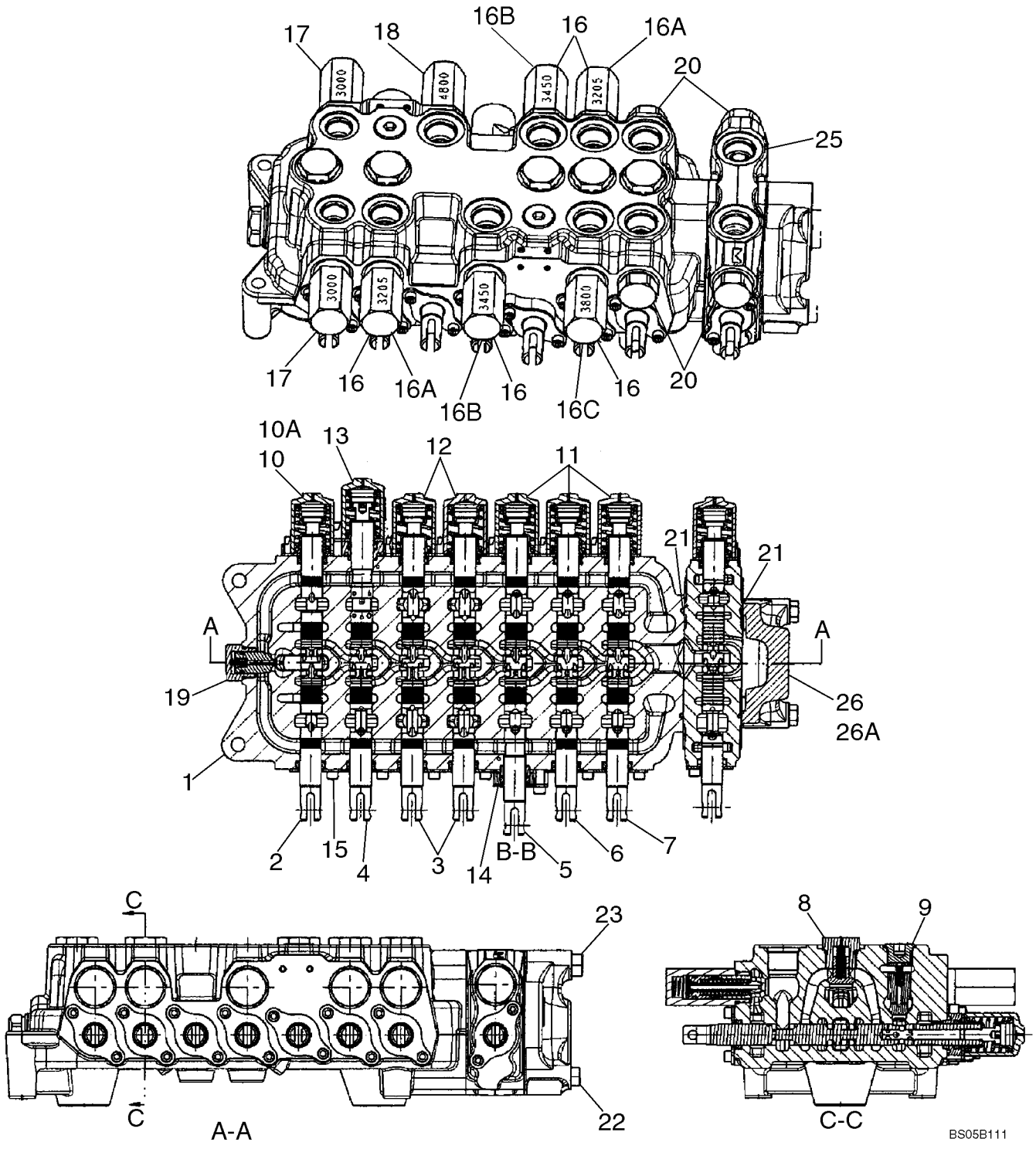

http://www.minnparbackhoeparts.com/

CONJUNTO DE LA VALVULA - CONTROL DE LA RETROEXCAVADORA, 8 BOBINAS (CON PALA EXTENSIBLE Y CON SISTEM)

REF	FN	PART NUMBER	YR/SN	QTY	DESCRIPTION
12		87428497		2	FINAL(CONJ) Cap Assembly, Stabilizer Spool Ends; Some Component Parts Not Serviced Separately; Serviceable Includes (2) 87454547 O-Ring, (1) 87454548 Seal, (1) 87455533 Spring, (2) 87455541 Screw
13		87433029		1	FINAL(CONJ) Cap Assembly, Boom Spool End; Some Component Parts Not Serviced Separately; Serviceable Includes (1) 87454547 O-Ring, (1) 87454548 Seal, (1) 87444567 Spring, (1) 87455538 O-Ring, (2) 87455545 Screw
14		87440815		1	PLACA (CONJUNTO) Seal Plate Assembly, Dipper Spool; Some Component Parts Not Serviced Separately; Serviceable Includes (1) 87454547 O-Ring, (1) 87454548 Seal, (1) 87455538 O-Ring, (2) 87455534 Screw
15		87440814		6	PLACA (CONJUNTO) Seal Plate Assembly; Some Component Parts Not Serviced Separately; Serviceable Includes (1) 87454547 O-Ring, (1) 87454548 Seal, (2) 87455540 Screw
16		87426232		5	VÁLVULA, DESCARGA Relief Valve Assembly; (2) 3205 psi, (2) 3450 psi, (1) 3800 psi; Component Parts Not Serviced Separately; No Longer Used, See Ref 16A - 16C
16A		87450978		2	VÁLVULA, DESCARGA Circuit; 3205 psi; Component Parts Not Serviced Separately; Includes 87455549 Seal Kit
16B		87450979		2	VÁLVULA, DESCARGA Circuit; 3450 psi; Component Parts Not Serviced Separately; Includes 87455549 Seal Kit
16C		87450980		1	VÁLVULA, DESCARGA Circuit; 3800 psi; Component Parts Not Serviced Separately; Includes 87455549 Seal Kit
17		87428490		2	VÁLVULA, DESCARGA Relief Valve Assembly; 3000 psi; Component Parts Not Serviced Separately; Includes 87455549 Seal Kit

http://www.minnparbackhoeparts.com/

CONJUNTO DE LA VALVULA - CONTROL DE LA RETROEXCAVADORA, 8 BOBINAS (CON PALA EXTENSIBLE Y CON SISTEM)

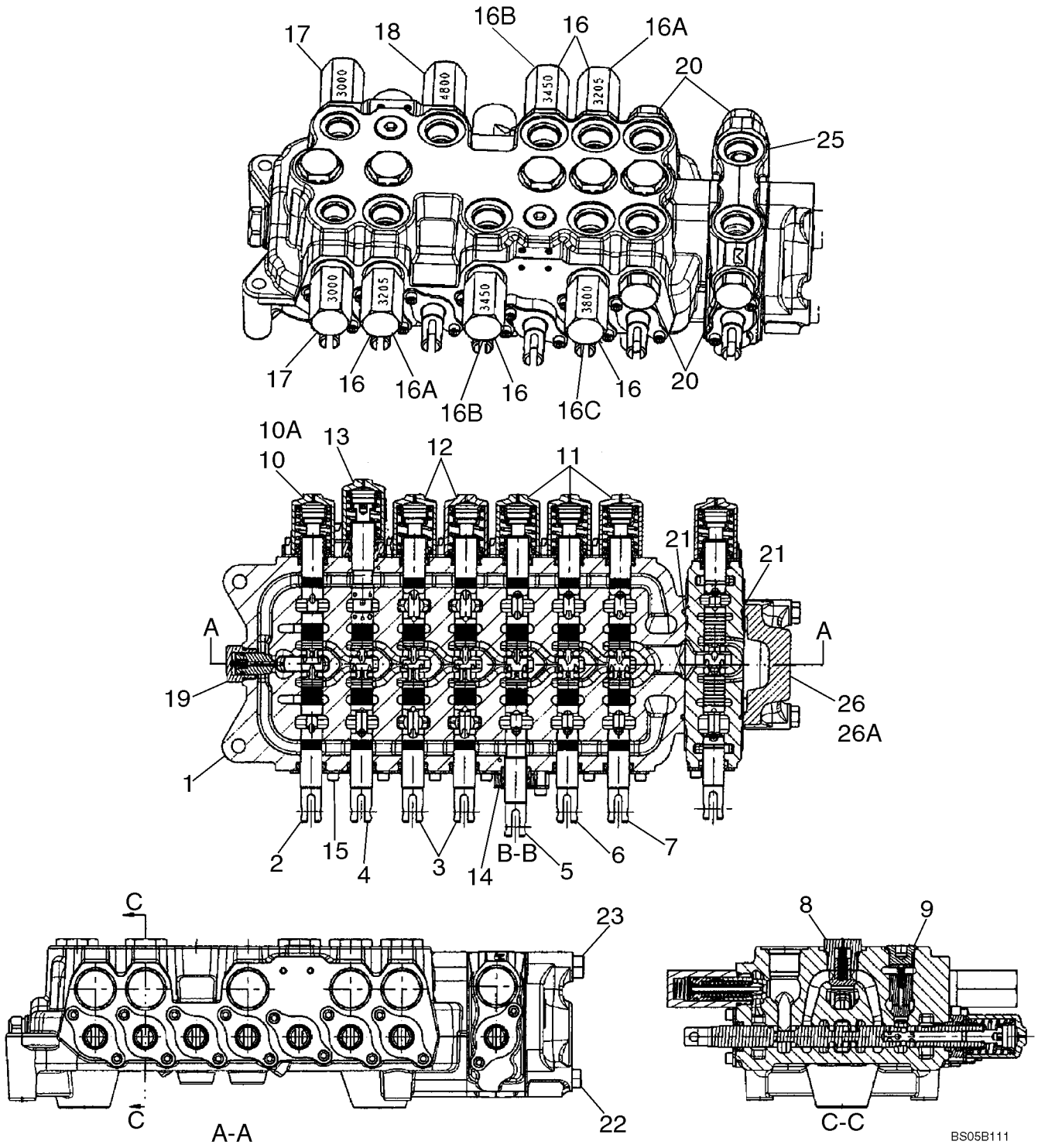

http://www.minnparbackhoeparts.com/

CONJUNTO DE LA VALVULA - CONTROL DE LA RETROEXCAVADORA, 8 BOBINAS (CON PALA EXTENSIBLE Y CON SISTEM)

REF	FN	PART NUMBER	YR/SN	QTY	DESCRIPTION
18		87428488		1	VÁLVULA, DESCARGA Relief Valve Assembly; 4800 psi; Component Parts Not Serviced Separately; Includes 87455549 Seal Kit
19		81868381		1	VALVULA ANTIRRETORNO Anti-Void Valve; Component Parts Not Serviced Separately; Includes 87455580 Seal Kit
20		83981068		4	CILINDROS DE CERRADURA Shut-Off Plug; Component Parts Not Serviced Separately; (2) Are Now Included With Ref 25
21		87428495		2	JUNTA HERMETICA O-Ring Seal, Auxiliary/Outlet Section
22		87428476		2	TORNILLO Bolt
23		87428477		1	TORNILLO Bolt
25		87428501		1	DISTRIBUIDOR HYDR Spool Section Assembly; Auxiliary Hydraulics; Includes Ref 25A - 25I, Which Are Not Illustrated; Remainder Component Parts Not Serviced Separately
25A		87433028		1	FINAL(CONJ) Spool; Incl. Ref 21B - 21E, Which Are Not Illustrated; Remainder Component Parts Not Serviced Separately
25B		87454547		1	JUNTA HERMETICA
25C		87454548		1	ANILLO DE CIERRE Wiper
25D		87429150		1	MUELLE, VALVULA
25E		87455541		2	TORNILLO
25F		87428495		1	JUNTA HERMETICA
25G		87455564		1	VÁLVULA DE PASO Load Check
25H		87455565		1	MUELLE, VALVULA Load Check
25I		83981068		2	CILINDROS DE CERRADURA Shut-Off
26		87433030		1	DISTRIBUIDOR HYDR Outlet Section Assembly; 87413146 Foot Swing Valve; Component Parts Not Serviced Separately
26A		87433030		1	DISTRIBUIDOR HYDR Outlet Section Assembly; 87403387 Hand Swing Valve; Component Parts Not Serviced Separately

http://www.minnparbackhoeparts.com/

08-40		p1	02/05

CONJUNTO DE LA VALVULA - CONTROL DE LA RETROEXCAVADORA, 6 BOBINAS

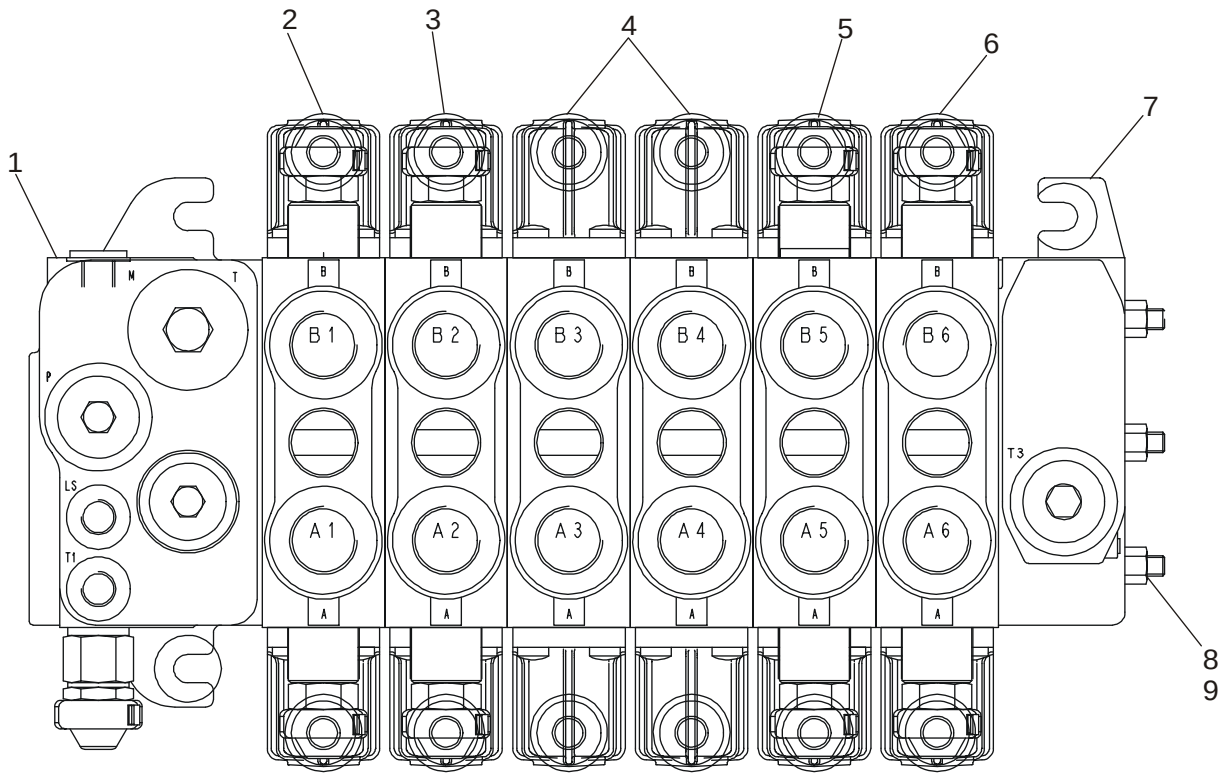

BS03N130

http://www.minnparbackhoeparts.com/

CONJUNTO DE LA VALVULA - CONTROL DE LA RETROEXCAVADORA, 6 BOBINAS

REF	FN	PART NUMBER	YR/SN	QTY	DESCRIPTION
		86987459		1	VALVULA DISTRIBUIDORA Backhoe, 6 Spool; Incl. Ref 1 - 9
1		87441495		1	DISTRIBUIDOR HYDR Inlet Section; With Orifice Threaded In LS Cavity; See Figure 08-43A
2		85826339		1	DISTRIBUIDOR HYDR Swing Section; See Figure 08-44
3		85826337		1	DISTRIBUIDOR HYDR Boom Section; See Figure 08-45
4		85826340		2	DISTRIBUIDOR HYDR Stabilizer Section; See Figure 08-46
5		85826338		1	DISTRIBUIDOR HYDR Dipper Section; See Figure 08-47
6		85826365		1	DISTRIBUIDOR HYDR Bucket Section; See Figure 08-48
7		NSS		1	NO SE REPARA SEPARADAM. Outlet Section
8		NSS		3	NO SE REPARA SEPARADAM. Tie Bolt
9		NSS		3	NO SE REPARA SEPARADAM. Nut

http://www.minnparbackhoeparts.com/

08-41		p1	02/05

CONJUNTO DE LA VALVULA - CONTROL DE LA RETROEXCAVADORA, 7 BOBINAS

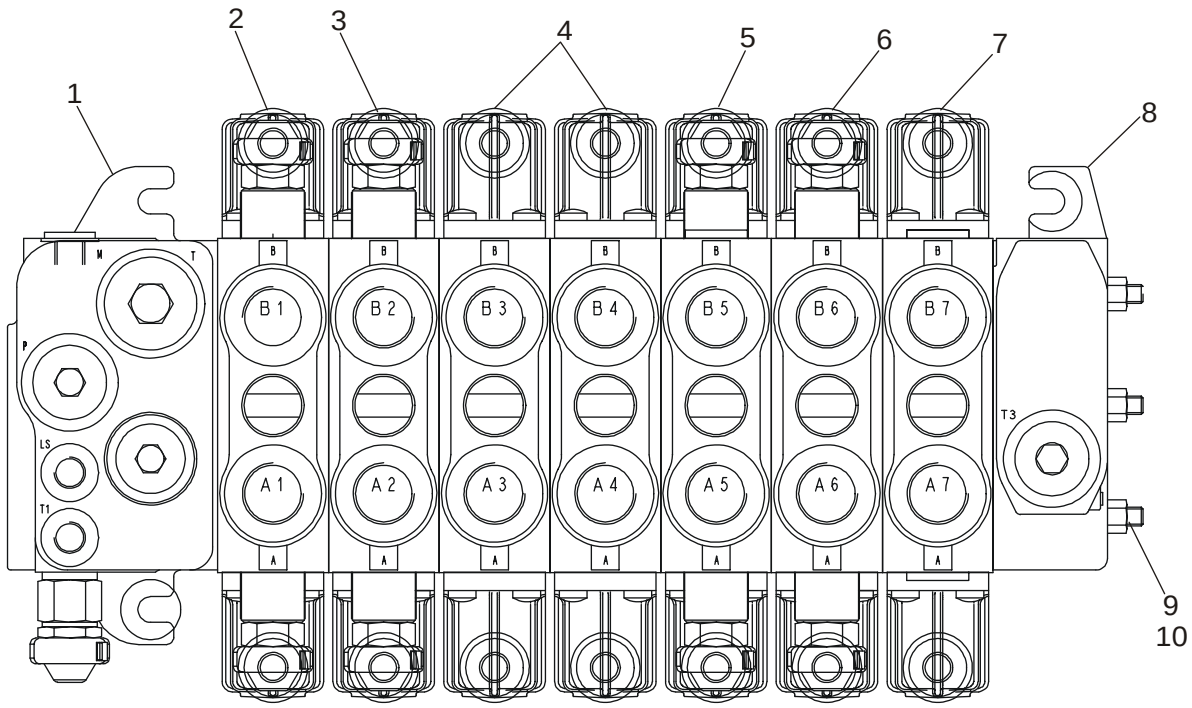

BS03N131

http://www.minnparbackhoeparts.com/

CONJUNTO DE LA VALVULA - CONTROL DE LA RETROEXCAVADORA, 7 BOBINAS

REF	FN	PART NUMBER	YR/SN	QTY	DESCRIPTION
		86987460		1	VALVULA DISTRIBUIDORA Backhoe, 7 Spool; Incl. Ref 1 - 10
1		87441495		1	DISTRIBUIDOR HYDR Inlet Section; With Orifice Threaded In LS Cavity; See Figure 08-43A
2		85826339		1	DISTRIBUIDOR HYDR Swing Section; See Figure 08-44
3		85826337		1	DISTRIBUIDOR HYDR Boom Section; See Figure 08-45
4		85826340		2	DISTRIBUIDOR HYDR Stabilizer Section; See Figure 08-46
5		85826338		1	DISTRIBUIDOR HYDR Dipper Section; See Figure 08-47
6		85826365		1	DISTRIBUIDOR HYDR Bucket Section; See Figure 08-48
7		85826341		1	DISTRIBUIDOR HYDR Extendable Dipper Section; See Figure 08-49
8		NSS		1	NO SE REPARA SEPARADAM. Outlet Section
9		NSS		3	NO SE REPARA SEPARADAM. Tie Bolt
10		NSS		3	NO SE REPARA SEPARADAM. Nut

http://www.minnparbackhoeparts.com/

08-42		p1	02/05

CONJUNTO DE LA VALVULA - CONTROL DE LA RETROEXCAVADORA, 7 BOBINAS

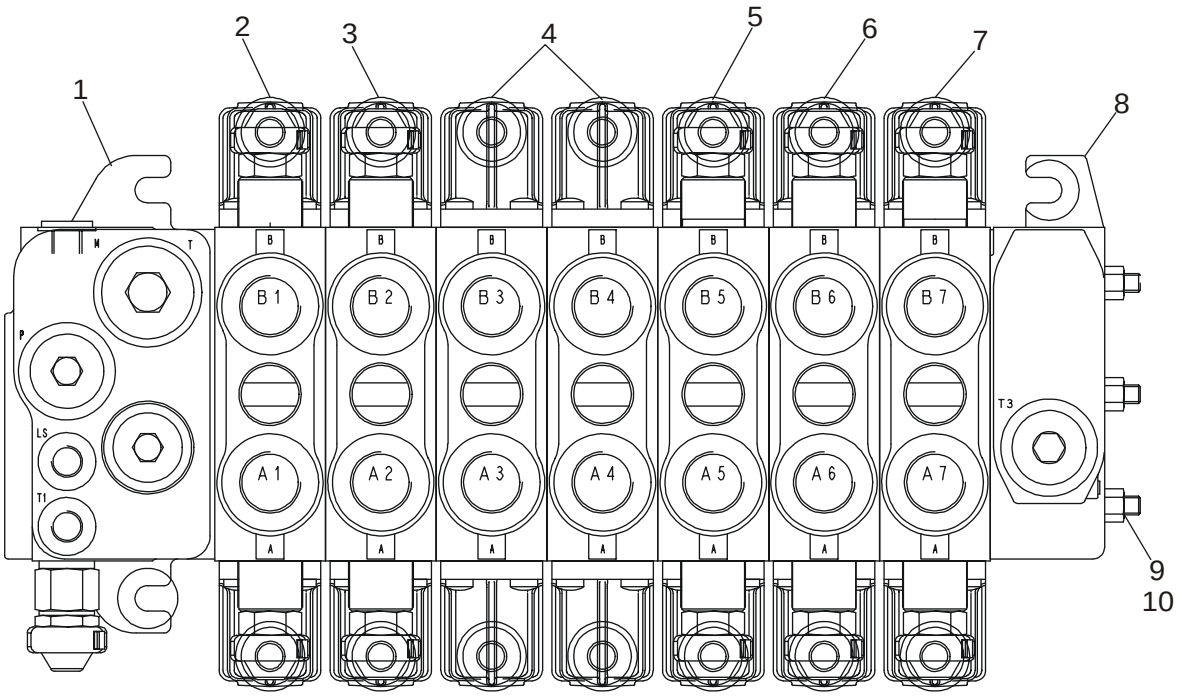

BS03N132

http://www.minnparbackhoeparts.com/

CONJUNTO DE LA VALVULA - CONTROL DE LA RETROEXCAVADORA, 7 BOBINAS

REF	FN	PART NUMBER	YR/SN	QTY	DESCRIPTION
		87407965		1	VALVULA DISTRIBUIDORA Backhoe, 7 Spool; Incl. Ref 1 - 10
1		87441495		1	DISTRIBUIDOR HYDR Inlet Section; With Orifice Threaded In LS Cavity; See Figure 08-43A
2		85826339		1	DISTRIBUIDOR HYDR Swing Section; See Figure 08-44
3		85826337		1	DISTRIBUIDOR HYDR Boom Section; See Figure 08-45
4		85826340		2	DISTRIBUIDOR HYDR Stabilizer Section; See Figure 08-46
5		85826338		1	DISTRIBUIDOR HYDR Dipper Section; See Figure 08-47
6		85826365		1	DISTRIBUIDOR HYDR Bucket Section; See Figure 08-48
7		85826342		1	DISTRIBUIDOR HYDR Auxiliary Section; See Figure 08-50
8		NSS		1	NO SE REPARA SEPARADAM. Outlet Section
9		NSS		3	NO SE REPARA SEPARADAM. Tie Bolt
10		NSS		3	NO SE REPARA SEPARADAM. Nut

http://www.minnparbackhoeparts.com/

CONJUNTO DE LA VALVULA - CONTROL DE LA RETROEXCAVADORA, 8 BOBINAS

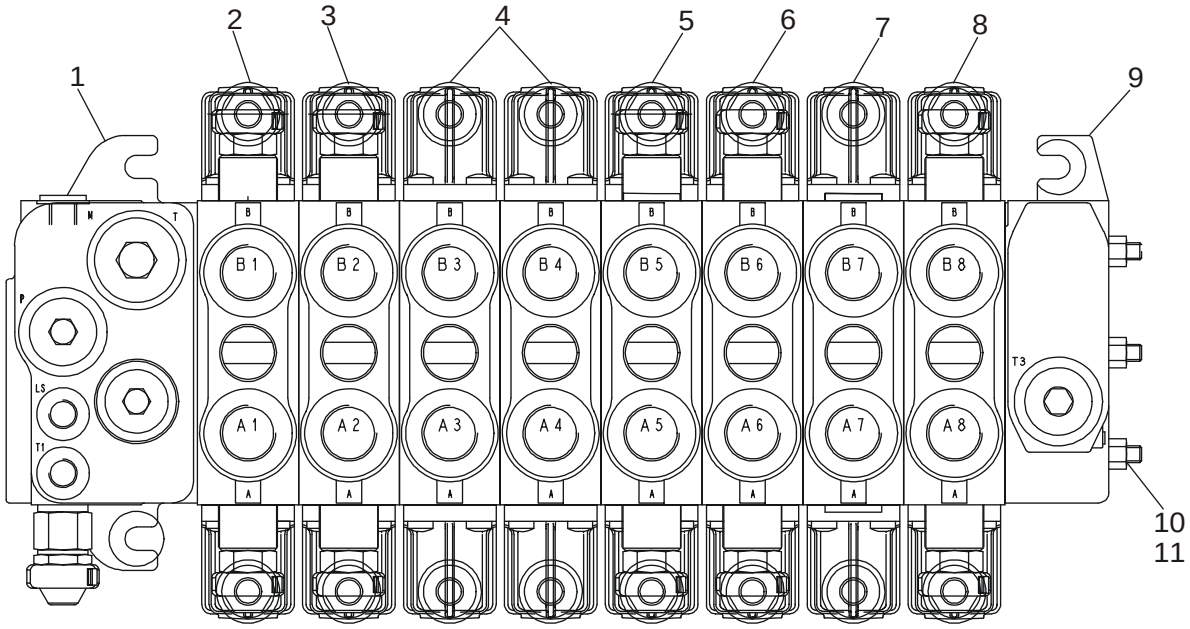

BS03N133

http://www.minnparbackhoeparts.com/

CONJUNTO DE LA VALVULA - CONTROL DE LA RETROEXCAVADORA, 8 BOBINAS

REF	FN	PART NUMBER	YR/SN	QTY	DESCRIPTION
		86987461		1	VALVULA HIDRAULICA Backhoe, 8 Spool; Incl. Ref 1 - 11
1		87441495		1	DISTRIBUIDOR HYDR Inlet Section; With Orifice Threaded In LS Cavity; See Figure 08-43A
2		85826339		1	DISTRIBUIDOR HYDR Swing Section; See Figure 08-44
3		85826337		1	DISTRIBUIDOR HYDR Boom Section; See Figure 08-45
4		85826340		2	DISTRIBUIDOR HYDR Stabilizer Section; See Figure 08-46
5		85826338		1	DISTRIBUIDOR HYDR Dipper Section; See Figure 08-47
6		85826365		1	DISTRIBUIDOR HYDR Bucket Section; See Figure 08-48
7		85826341		1	DISTRIBUIDOR HYDR Extendable Dipper Section; See Figure 08-49
8		85826342		1	DISTRIBUIDOR HYDR Auxiliary Section; See Figure 08-50
9		NSS		1	NO SE REPARA SEPARADAM. Outlet Section
10		NSS		3	NO SE REPARA SEPARADAM. Tie Bolt
11		NSS		3	NO SE REPARA SEPARADAM. Nut

http://www.minnparbackhoeparts.com/

SECCION DE LA VALVULA - ENTRADA (CON DE CONTROL PILOTO)

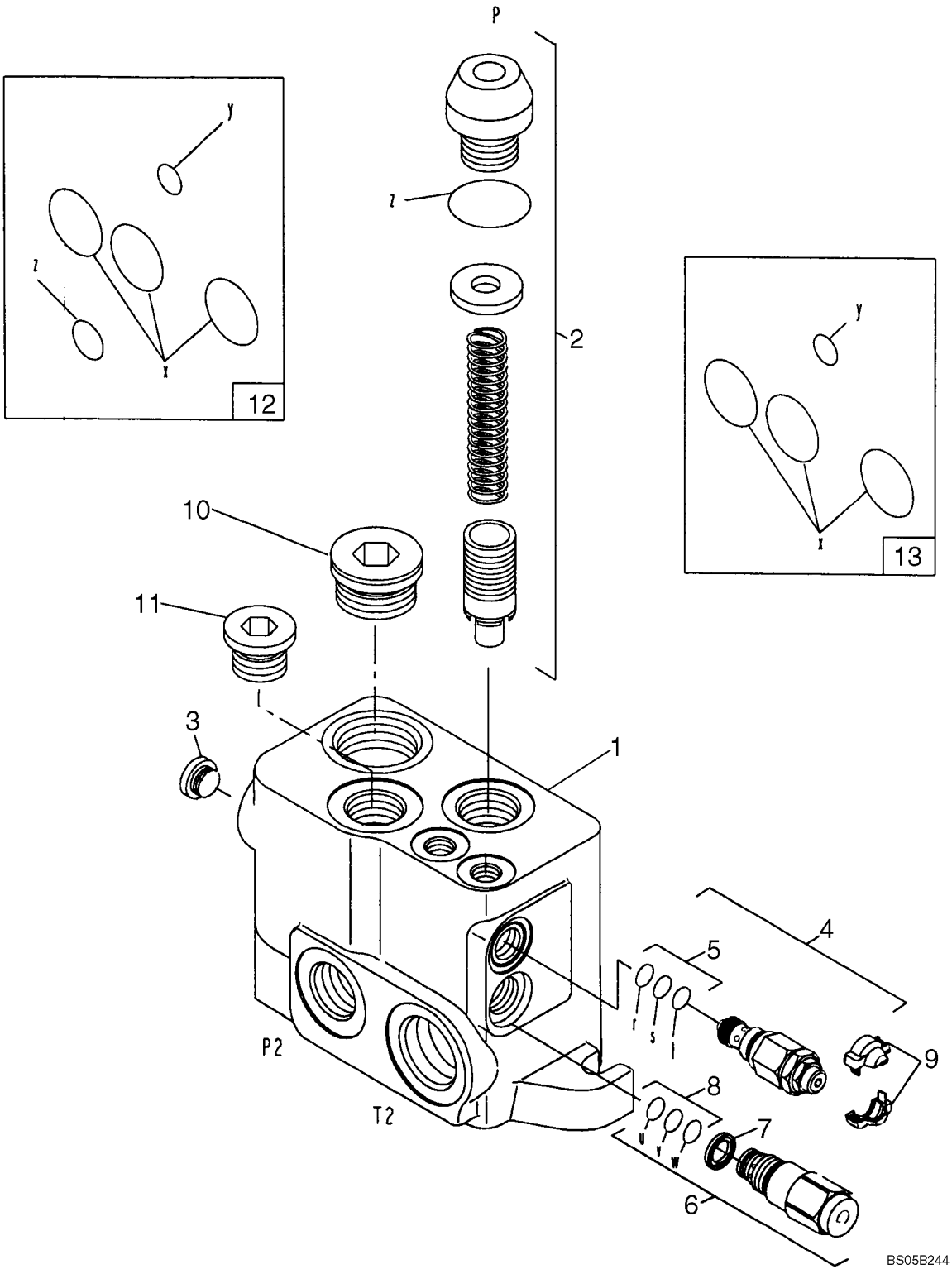

http://www.minnparbackhoeparts.com/

SECCION DE LA VALVULA - ENTRADA (CON DE CONTROL PILOTO)

REF	FN	PART NUMBER	YR/SN	QTY	DESCRIPTION
		87441495		1	DISTRIBUIDOR HYDR Inlet Section; With Orifice Threaded In LS Cavity; Incl. Ref 1 - 13
1		NSS		1	NO SE REPARA SEPARADAM. Housing
2		85820129		1	EQUIPO Relief Valve Regulator; Component Parts Not Serviced Separately
3		85811923		1	TAPÓN
4		85811946		2	VALVULA HIDRAULICA RELIEF; LS Port; Incl. Ref 5
5		85821236		1	EQUIPO LS Relief Valve; Includes (2) O-Rings, (1) Thrust Ring
6		85820128		1	VALVULA HIDRAULICA Regulator, Flow; Incl. Ref 7, 8
7		85817669		1	JUNTA HERMETICA Filter, For Regulated Drain Flow
8		85821235		1	EQUIPO Seal; Includes (2) O-Rings, (1) Thrust Ring
9		85811934		1	EQUIPO COVER; Two Piece; Orange; If Used
9		85811935		1	EQUIPO COVER; Two Piece; Blue; If Used
10		85811922		1	TAPÓN 1-5/16
11		85811921		1	TAPÓN 1-1/16
12		85825477		1	EQUIPO Seal; Low Pressure Inlet Elements; Includes (5) O-Rings
13		85825473		1	EQUIPO Seal; Between Elements; Includes (4) O-Rings

http://www.minnparbackhoeparts.com/

08-44		p1	06/05

SECCION DE LA VALVULA - DE LA RETROEXCAVADORA (CON DE CONTROL PILOTO)

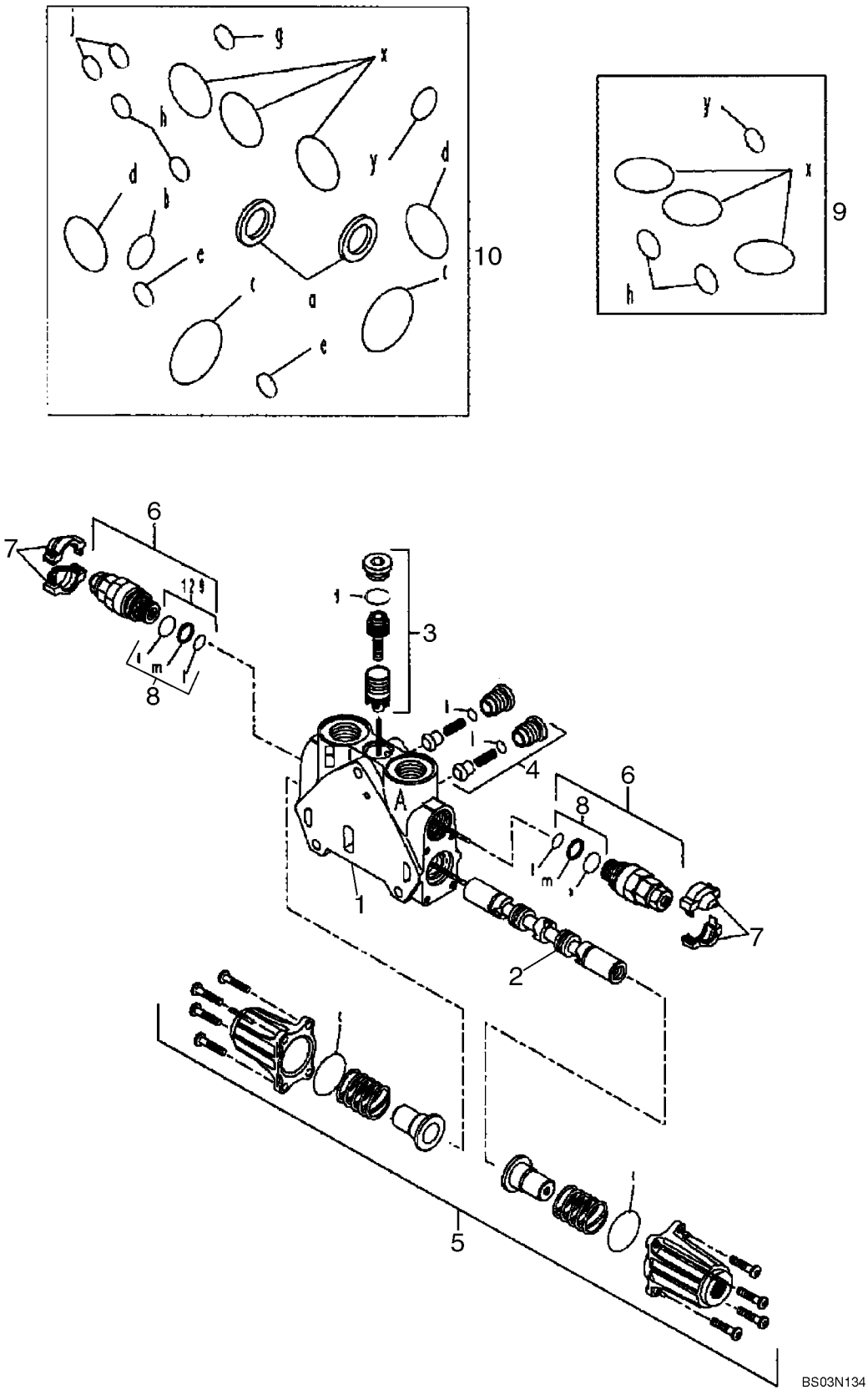

http://www.minnparbackhoeparts.com/

SECCION DE LA VALVULA - DE LA RETROEXCAVADORA (CON DE CONTROL PILOTO)

REF	FN	PART NUMBER	YR/SN	QTY	DESCRIPTION
		85826339		1	DISTRIBUIDOR HYDR Swing; Incl. Ref 1 - 10
1		NSS		1	NO SE REPARA SEPARADAM. HOUSING
2		NSS		1	NO SE REPARA SEPARADAM. SPOOL
3		85826345		1	EQUIPO Pressure Compensator Kit; Component Parts Not Serviced Separately
4		85811938		2	EQUIPO Check Valve Kit; Component Parts Not Serviced Separately
5		85826344		1	EQUIPO End Cap Kit; Component Parts Not Serviced Separately
6		85812114		2	VALVULA HIDRAULICA Pressure Relief Valve; Some Component Parts Not Serviced Separately; Serviceable Includes 85811933, Ref 8 Kit
7		85811934		2	EQUIPO Cover, Orange
7		85811935		2	EQUIPO Cover, Blue
8		85811933		2	EQUIPO Seal Kit Includes (2) O-Rings, (1) Thrust Ring; Component Parts Not Serviced Separately
9		85819148		1	EQUIPO Seal Kit Includes (6) O-Rings; Component Parts Not Serviced Separately
10		85824282		1	EQUIPO Seal Kit Includes (15) O-Rings, (2) Lip Seals; Component Parts Not Serviced Separately

http://www.minnparbackhoeparts.com/

SECCION DE LA VALVULA - AGUILON DE LA RETROEXCAVADORA (CON DE CONTROL PILOTO)

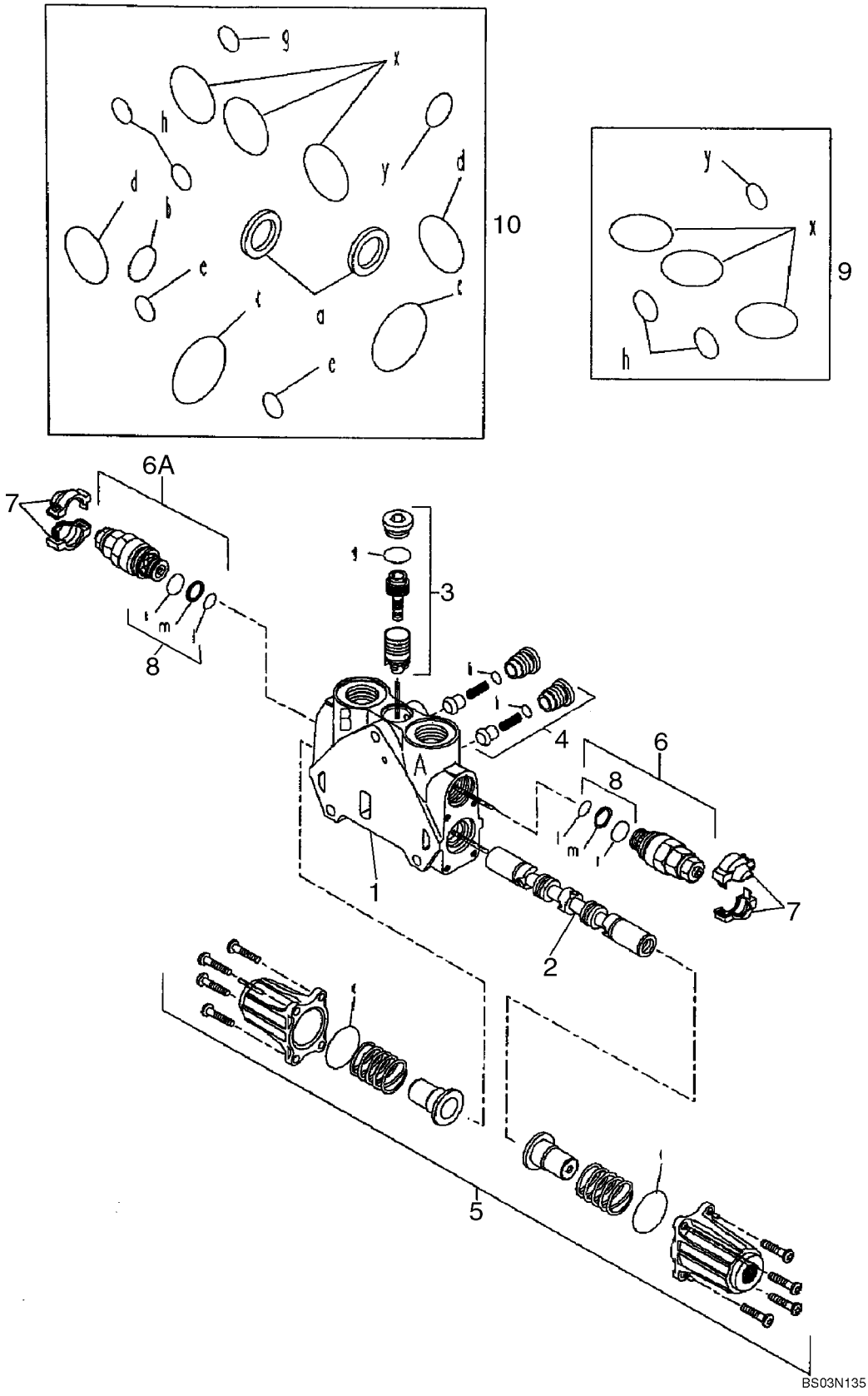

http://www.minnparbackhoeparts.com/

SECCION DE LA VALVULA - AGUILON DE LA RETROEXCAVADORA (CON DE CONTROL PILOTO)

REF	FN	PART NUMBER	YR/SN	QTY	DESCRIPTION
		85826337		1	DISTRIBUIDOR HYDR Boom; Incl. Ref 1 - 10
1		NSS		1	NO SE REPARA SEPARADAM. HOUSING
2		NSS		1	NO SE REPARA SEPARADAM. SPOOL
3		85819378		1	EQUIPO Pressure Compensator Kit; Component Parts Not Serviced Separately
4		85811938		2	EQUIPO Check Valve Kit; Component Parts Not Serviced Separately
5		85826344		1	EQUIPO End Cap Kit; Component Parts Not Serviced Separately
6		85812115		1	VALVULA HIDRAULICA Pressure Relief Valve Kit; Side A; Some Component Parts Not Serviced Separately; Serviceable Includes 85811933, Ref 8 Kit
6A		85826346		1	VÁLVULA, DESCARGA Pressure Relief Valve Kit; Side B; Some Component Parts Not Serviced Separately; Serviceable Includes 85811933, Ref 8 Kit
7		85811934		2	EQUIPO Cover, Orange
7		85811935		2	EQUIPO Cover, Blue
8		85811933		2	EQUIPO Seal Kit Includes (2) O-Rings, (1) Thrust Ring; Component Parts Not Serviced Separately
9		85819148		1	EQUIPO Seal Kit Includes (6) O-Rings; Component Parts Not Serviced Separately
10		85824281		1	EQUIPO Seal Kit Includes (13) O-Rings, (2) Lip Seals; Component Parts Not Serviced Separately

http://www.minnparbackhoeparts.com/

SECCION DE LA VALVULA - ESTABILIZADOR DE LA RETROEXCAVADORA (CON DE CONTROL PILOTO)

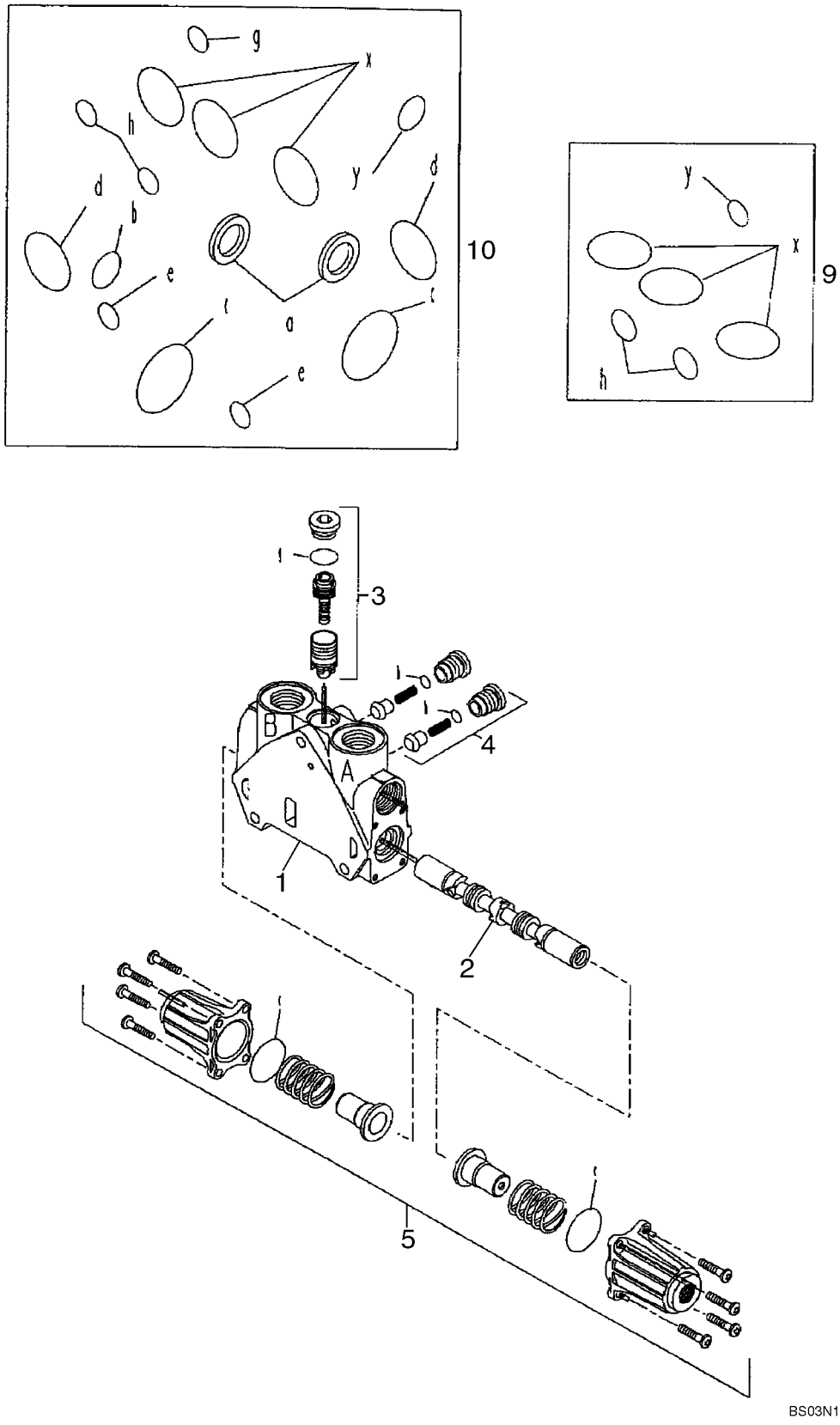

http://www.minnparbackhoeparts.com/

SECCION DE LA VALVULA - ESTABILIZADOR DE LA RETROEXCAVADORA (CON DE CONTROL PILOTO)

REF	FN	PART NUMBER	YR/SN	QTY	DESCRIPTION
		85826340		2	DISTRIBUIDOR HYDR Stabilizer; Left-Hand and Right-Hand; Incl. Ref 1 - 10
1		NSS		1	NO SE REPARA SEPARADAM. HOUSING
2		NSS		1	NO SE REPARA SEPARADAM. SPOOL
3		85819378		1	EQUIPO Pressure Compensator Kit; Component Parts Not Serviced Separately
4		85811938		2	EQUIPO Check Valve Kit; Component Parts Not Serviced Separately
5		85826344		1	EQUIPO End Cap Kit; Component Parts Not Serviced Separately
9		85819148		1	EQUIPO Seal Kit Includes (6) O-Rings; Component Parts Not Serviced Separately
10		85824281		1	EQUIPO Seal Kit Includes (13) O-Rings, (2) Lip Seals; Component Parts Not Serviced Separately

http://www.minnparbackhoeparts.com/

SECCION DE LA VALVULA - BRAZO DE LA RETROEXCAVADORA (CON DE CONTROL PILOTO)

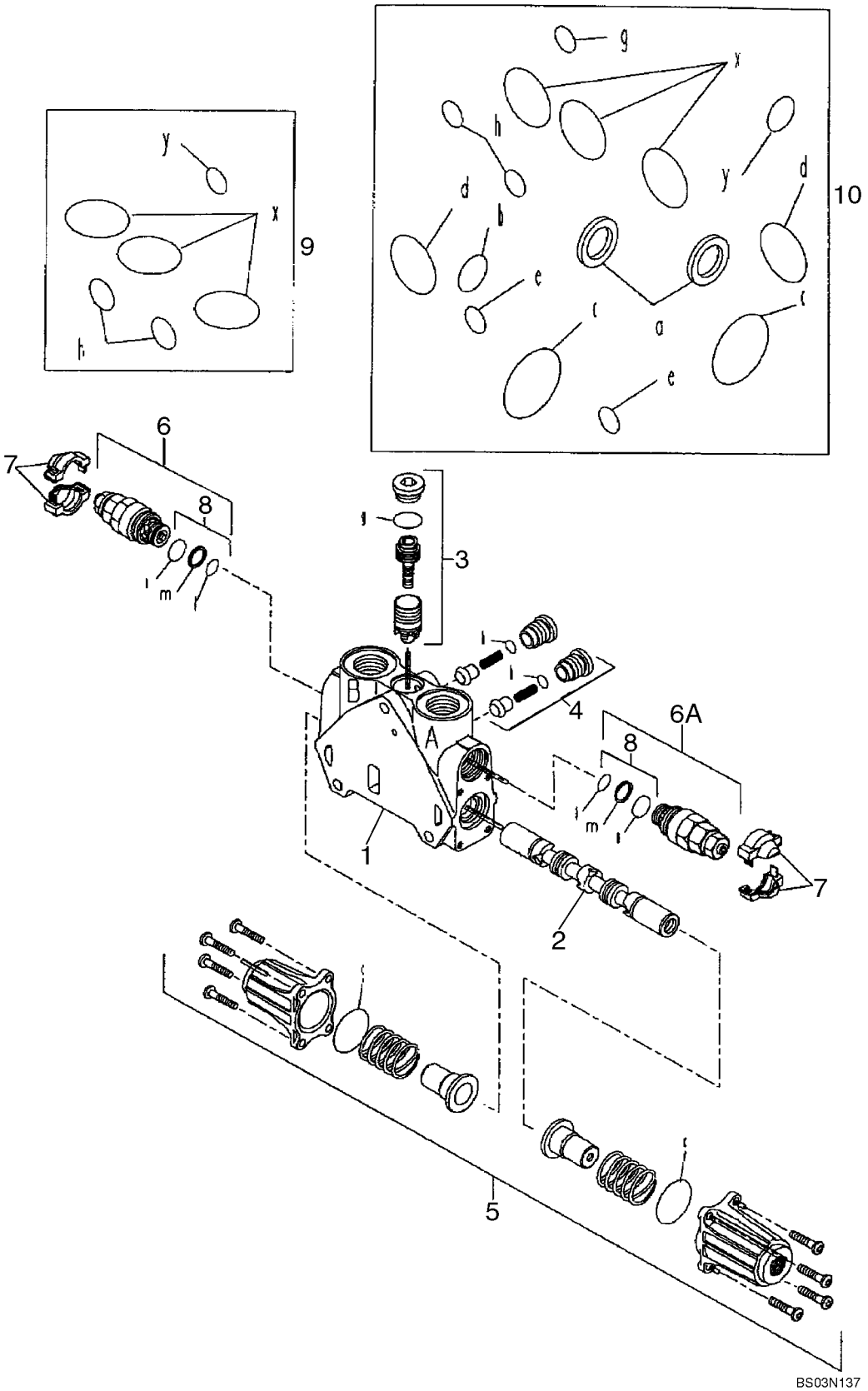

http://www.minnparbackhoeparts.com/

SECCION DE LA VALVULA - BRAZO DE LA RETROEXCAVADORA (CON DE CONTROL PILOTO)

REF	FN	PART NUMBER	YR/SN	QTY	DESCRIPTION
		85826338		1	DISTRIBUIDOR HYDR Dipper; Incl. Ref 1 - 10
1		NSS		1	NO SE REPARA SEPARADAM. HOUSING
2		NSS		1	NO SE REPARA SEPARADAM. SPOOL
3		85826345		1	EQUIPO Pressure Compensator Kit; Component Parts Not Serviced Separately
4		85811938		2	EQUIPO Check Valve Kit; Component Parts Not Serviced Separately
5		85826344		1	EQUIPO End Cap Kit; Component Parts Not Serviced Separately
6		85812116		1	VALVULA HIDRAULICA Pressure Relief Valve; Side B; Some Component Parts Not Serviced Separately; Serviceable Includes 85811933, Ref 8 Kit
6A		85826343		1	VÁLVULA, DESCARGA Pressure Relief Valve; Side A; Some Component Parts Not Serviced Separately; Serviceable Includes 85811933, Ref 8 Kit
7		85811934		2	EQUIPO Cover, Orange
7		85811935		2	EQUIPO Cover, Blue
8		85811933		2	EQUIPO Seal Kit Includes (2) O-Rings, (1) Thrust Ring; Component Parts Not Serviced Separately
9		85819148		1	EQUIPO Seal Kit Includes (6) O-Rings; Component Parts Not Serviced Separately
10		85824281		1	EQUIPO Seal Kit Includes (13) O-Rings, (2) Lip Seals; Component Parts Not Serviced Separately

http://www.minnparbackhoeparts.com/

08-48		p1	06/05

SECCION DE LA VALVULA - CUCHARON DE LA RETROEXCAVADORA (CON DE CONTROL PILOTO)

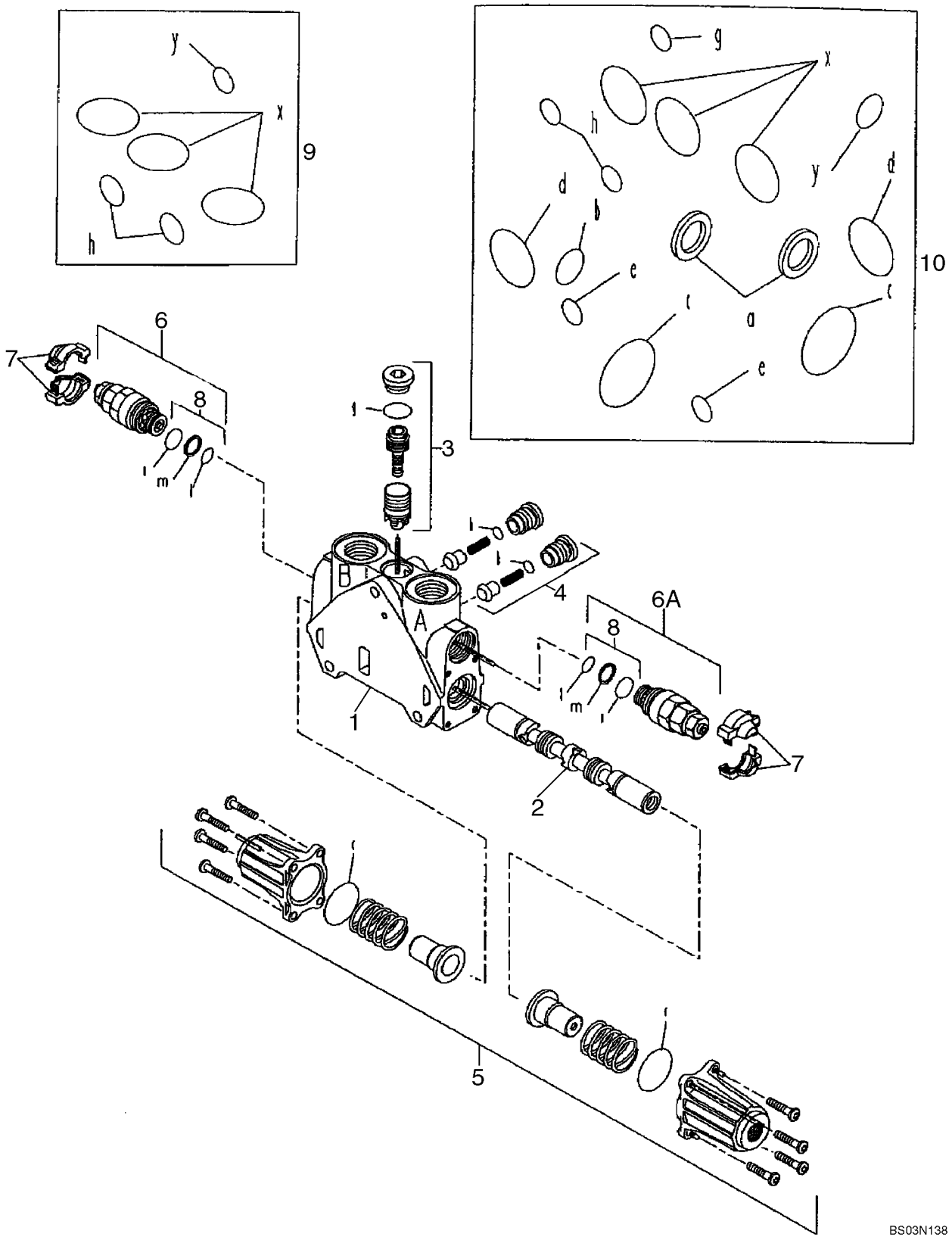

http://www.minnparbackhoeparts.com/

SECCION DE LA VALVULA - CUCHARON DE LA RETROEXCAVADORA (CON DE CONTROL PILOTO)

REF	FN	PART NUMBER	YR/SN	QTY	DESCRIPTION
		85826365		1	DISTRIBUIDOR HYDR Bucket; Incl. Ref 1 - 10
1		NSS		1	NO SE REPARA SEPARADAM. HOUSING
2		NSS		1	NO SE REPARA SEPARADAM. SPOOL
3		85819378		1	EQUIPO Pressure Compensator Kit; Component Parts Not Serviced Separately
4		85811938		2	EQUIPO Check Valve Kit; Component Parts Not Serviced Separately
5		85826344		1	EQUIPO End Cap Kit; Component Parts Not Serviced Separately
6		85812116		1	VALVULA HIDRAULICA Pressure Relief Valve; Side B; Some Component Parts Not Serviced Separately; Serviceable Includes 85811933, Ref 8 Kit
6A		85826905		1	VÁLVULA, DESCARGA Pressure Relief Valve; Side A; Some Component Parts Not Serviced Separately; Serviceable Includes 85811933, Ref 8 Kit
7		85811934		2	EQUIPO Cover, Orange
7		85811935		2	EQUIPO Cover, Blue
8		85811933		2	EQUIPO Seal Kit Includes (2) O-Rings, (1) Thrust Ring; Component Parts Not Serviced Separately
9		85819148		1	EQUIPO Seal Kit Includes (6) O-Rings; Component Parts Not Serviced Separately
10		85824281		1	EQUIPO Seal Kit Includes (13) O-Rings, (2) Lip Seals; Component Parts Not Serviced Separately

http://www.minnparbackhoeparts.com/

SECCION DE LA VALVULA - PALA EXTENSIBLE (CON DE CONTROL PILOTO)

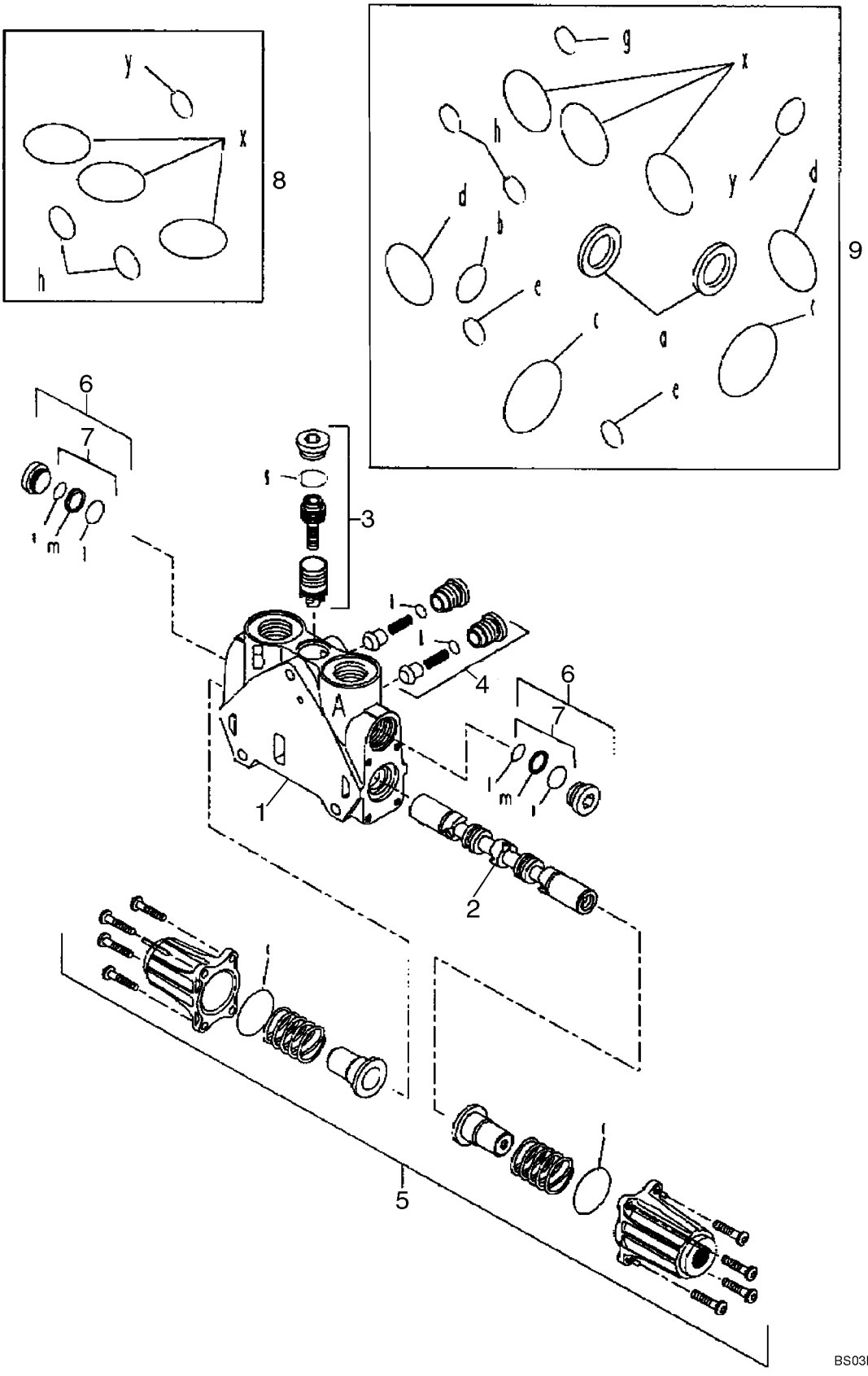

http://www.minnparbackhoeparts.com/

SECCION DE LA VALVULA - PALA EXTENSIBLE (CON DE CONTROL PILOTO)

REF	FN	PART NUMBER	YR/SN	QTY	DESCRIPTION
		85826341		1	DISTRIBUIDOR HYDR Extendable Dipper; Incl. Ref 1 - 9
1		NSS		1	NO SE REPARA SEPARADAM. HOUSING
2		NSS		1	NO SE REPARA SEPARADAM. SPOOL
3		85819378		1	EQUIPO Pressure Compensator Kit; Component Parts Not Serviced Separately
4		85811938		2	EQUIPO Check Valve Kit; Component Parts Not Serviced Separately
5		85826344		1	EQUIPO End Cap Kit; Component Parts Not Serviced Separately
6		85811937		2	TAPÓN Plug Assembly Kit; Some Component Parts Not Serviced Separately; Serviceable Includes 85811933, Ref 7 Kit
7		85811933		2	EQUIPO Seal Kit Includes (2) O-Rings, (1) Thrust Ring; Component Parts Not Serviced Separately
8		85819148		1	EQUIPO Seal Kit Includes (6) O-Rings; Component Parts Not Serviced Separately
9		85824281		1	EQUIPO Seal Kit Includes (13) O-Rings, (2) Lip Seals; Component Parts Not Serviced Separately

http://www.minnparbackhoeparts.com/

SECCION DE LA VALVULA - OPCIONES, SISTEMA HIDRÁULICO AUXILIAR (CON DE CONTROL PILOTO)

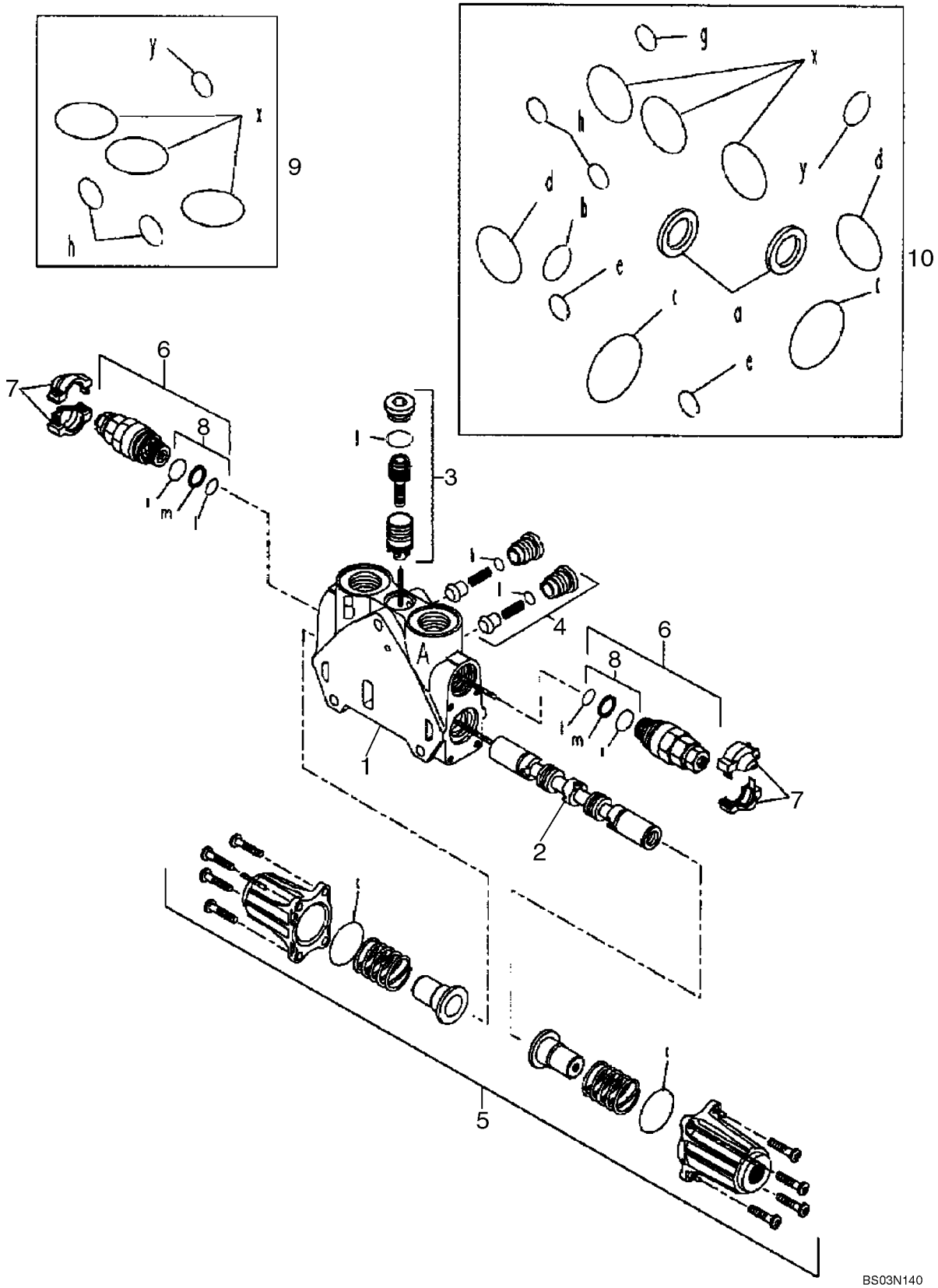

http://www.minnparbackhoeparts.com/

SECCION DE LA VALVULA - OPCIONES, SISTEMA HIDRÁULICO AUXILIAR (CON DE CONTROL PILOTO)

REF	FN	PART NUMBER	YR/SN	QTY	DESCRIPTION
		85826342		1	DISTRIBUIDOR HYDR Options, Auxiliary Hydraulics; Incl. Ref 1 - 10
1		NSS		1	NO SE REPARA SEPARADAM. HOUSING
2		NSS		1	NO SE REPARA SEPARADAM. SPOOL
3		85819378		1	EQUIPO Pressure Compensator Kit; Component Parts Not Serviced Separately
4		85811938		2	EQUIPO Check Valve Kit; Component Parts Not Serviced Separately
5		85826344		1	EQUIPO End Cap Kit; Component Parts Not Serviced Separately
6		85812115		2	VALVULA HIDRAULICA Pressure Relief Valve; Some Component Parts Not Serviced Separately; Serviceable Includes 85811933, Ref 8 Kit
7		85811934		2	EQUIPO Cover, Orange
7		85811935		2	EQUIPO Cover, Blue
8		85811933		2	EQUIPO Seal Kit Includes (2) O-Rings, (1) Thrust Ring; Component Parts Not Serviced Separately
9		85819148		1	EQUIPO Seal Kit Includes (6) O-Rings; Component Parts Not Serviced Separately
10		85824281		1	EQUIPO Seal Kit Includes (13) O-Rings, (2) LIp Seals; Component Parts Not Serviced Separately

http://www.minnparbackhoeparts.com/

VALVULA DE REDUCCION DEPRESION (2 SPOOL) (CON DE CONTROL PILOTO)

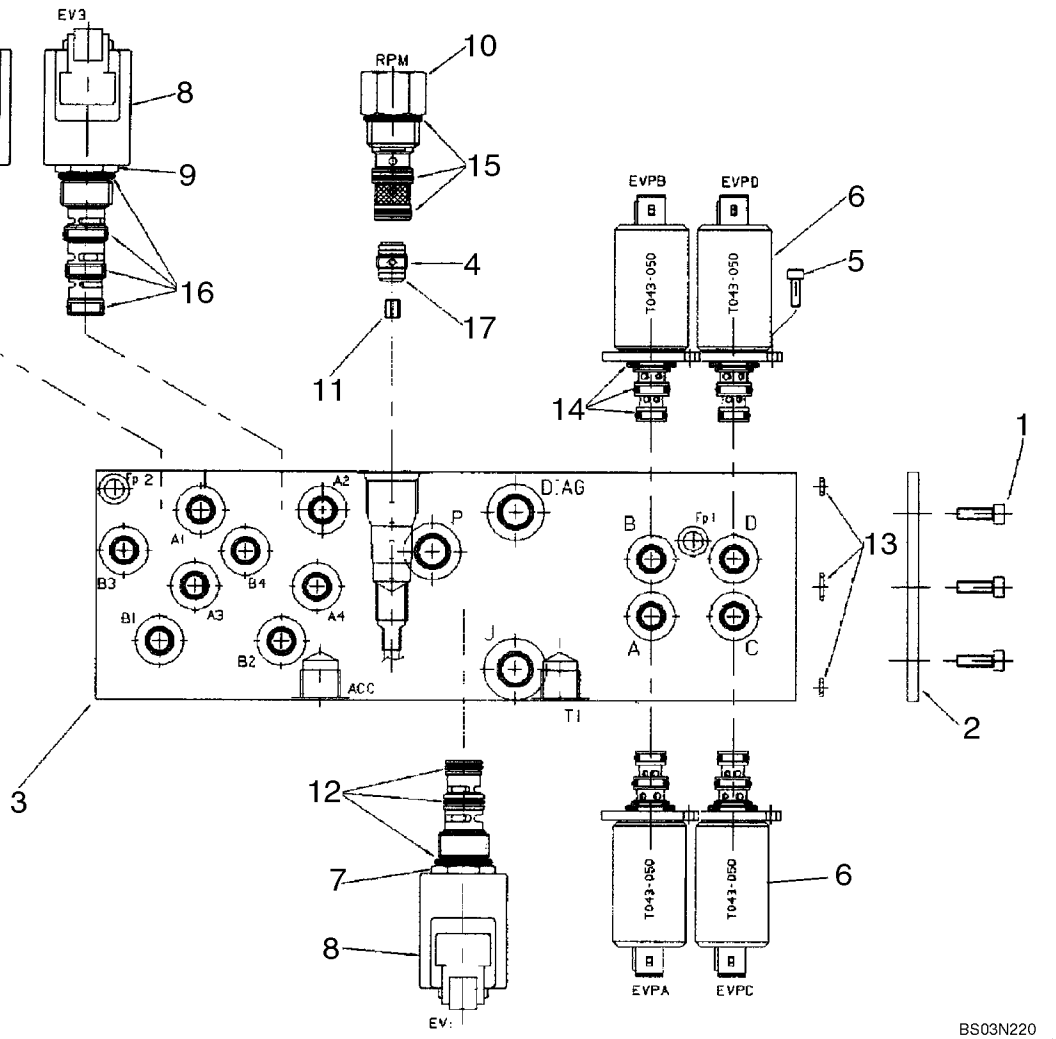

http://www.minnparbackhoeparts.com/

VALVULA DE REDUCCION DEPRESION (2 SPOOL) (CON DE CONTROL PILOTO)

REF	FN	PART NUMBER	YR/SN	QTY	DESCRIPTION
		85827472		1	VALVULA HIDRAULICA Pressure Reducing, Two Spool, Pilot Controls; Incl. Ref 1 - 17
1		14304021		3	TORNILLO M5 x 10 Screw
2		85827991		1	PLACA Sealing Plate
3		85828013		1	CUERPO Manifold Block
4		85827992		1	VALVULA HIDRAULICA Check Valve
5		14302921		8	TORNILLO M4 x 10 Screw
6		85827993		4	VALVULA DE SOLENOIDE Pressure Reducing Valve
7		85827994		1	SOLENOIDE Solenoid Valve Cartridge, 3 Way, 2 Position
8		85827995		3	BOBINA Coil With Diode
9		85827996		2	SOLENOIDE Solenoid Valve Cartridge, 4 Way, 2 Position
10		85827997		1	REDUCTOR Mechanical Pressure Reducing Valve With Fixed Setting
11		85828005		1	ORIFICIO 1.8 mm Orifice
12		85827998		1	EQUIPO O-Ring Kit
13		85827999		1	EQUIPO O-Ring Kit
14		85828000		4	EQUIPO O-Ring Kit
15		85828001		1	EQUIPO O-Ring Kit
16		85828002		2	EQUIPO O-Ring Kit
17		85828003		1	JUNTA HERMETICA O-Ring, D9x1

http://www.minnparbackhoeparts.com/

08-52		p1	07/04

VALVULA DE REDUCCION DEPRESION (3 SPOOL) (CON DE CONTROL PILOTO)

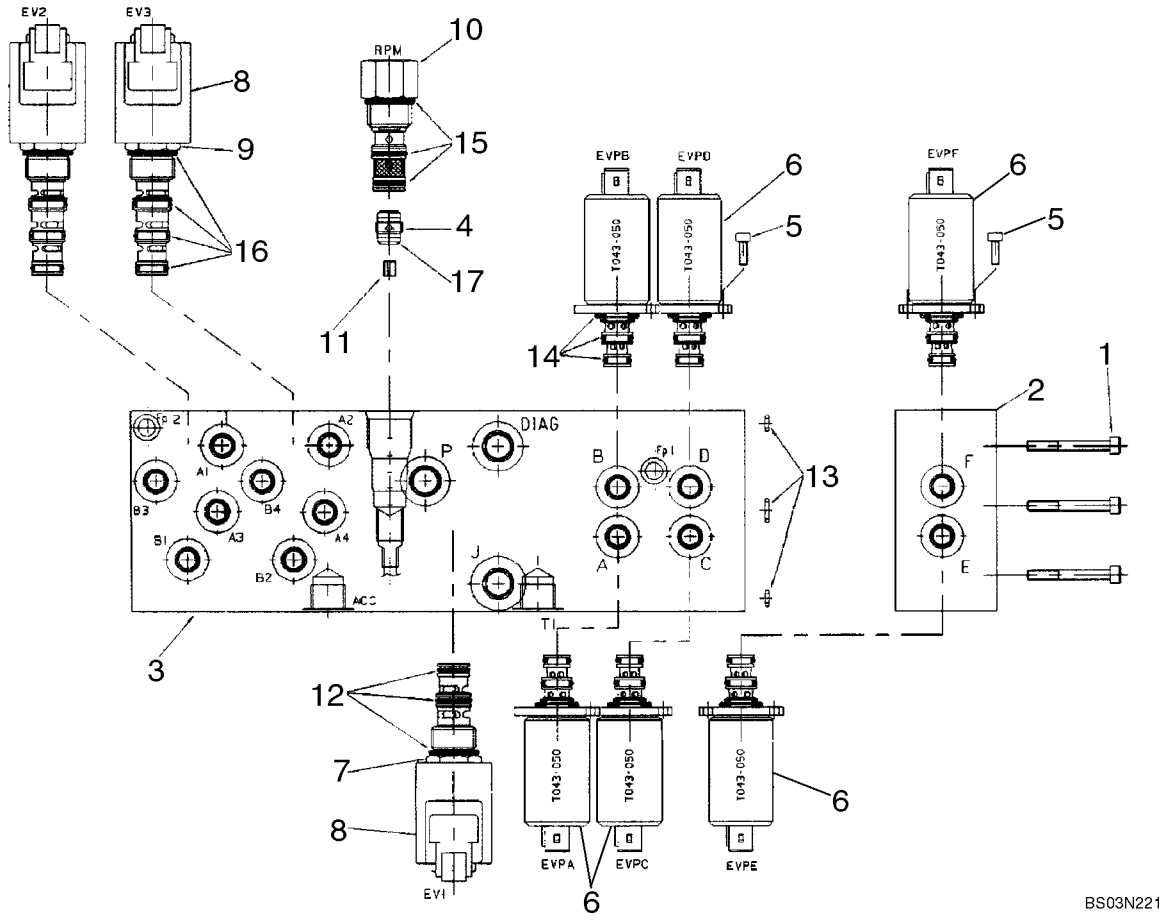

http://www.minnparbackhoeparts.com/

VALVULA DE REDUCCION DEPRESION (3 SPOOL) (CON DE CONTROL PILOTO)

REF	FN	PART NUMBER	YR/SN	QTY	DESCRIPTION
		85827471		1	VALVULA HIDRAULICA Pressure Reducing, Three Spool, Pilot Controls; Incl. Ref 1 - 17
1		14358921		3	TORNILLO M5 x 45 Screw
2		85828004		1	CUERPO One Function Add-On Manifold Block
3		85828015		1	CUERPO Manifold Block
4		85827992		1	VALVULA HIDRAULICA Check Valve
5		14302921		12	TORNILLO M4 x 10 Screw
6		85827993		6	VALVULA DE SOLENOIDE Pressure Reducing Valve
7		85827994		1	SOLENOIDE Solenoid Valve Cartridge, 3 Way, 2 Position
8		85827995		3	BOBINA Coil With Diode
9		85827996		2	SOLENOIDE Solenoid Valve Cartridge, 4 Way, 2 Position
10		85827997		1	REDUCTOR Mechanical Pressure Reducing Valve With Fixed Setting
11		85828005		1	ORIFICIO 1.8 mm Orifice
12		85827998		1	EQUIPO O-Ring Kit
13		85827999		1	EQUIPO O-Ring Kit
14		85828000		6	EQUIPO O-Ring Kit
15		85828001		1	EQUIPO O-Ring Kit
16		85828002		2	EQUIPO O-Ring Kit
17		85828003		1	JUNTA HERMETICA O-Ring, D9x1

http://www.minnparbackhoeparts.com/

08-53		p1	07/04

VALVULA DE REDUCCION DEPRESION (4 SPOOL) (CON DE CONTROL PILOTO)

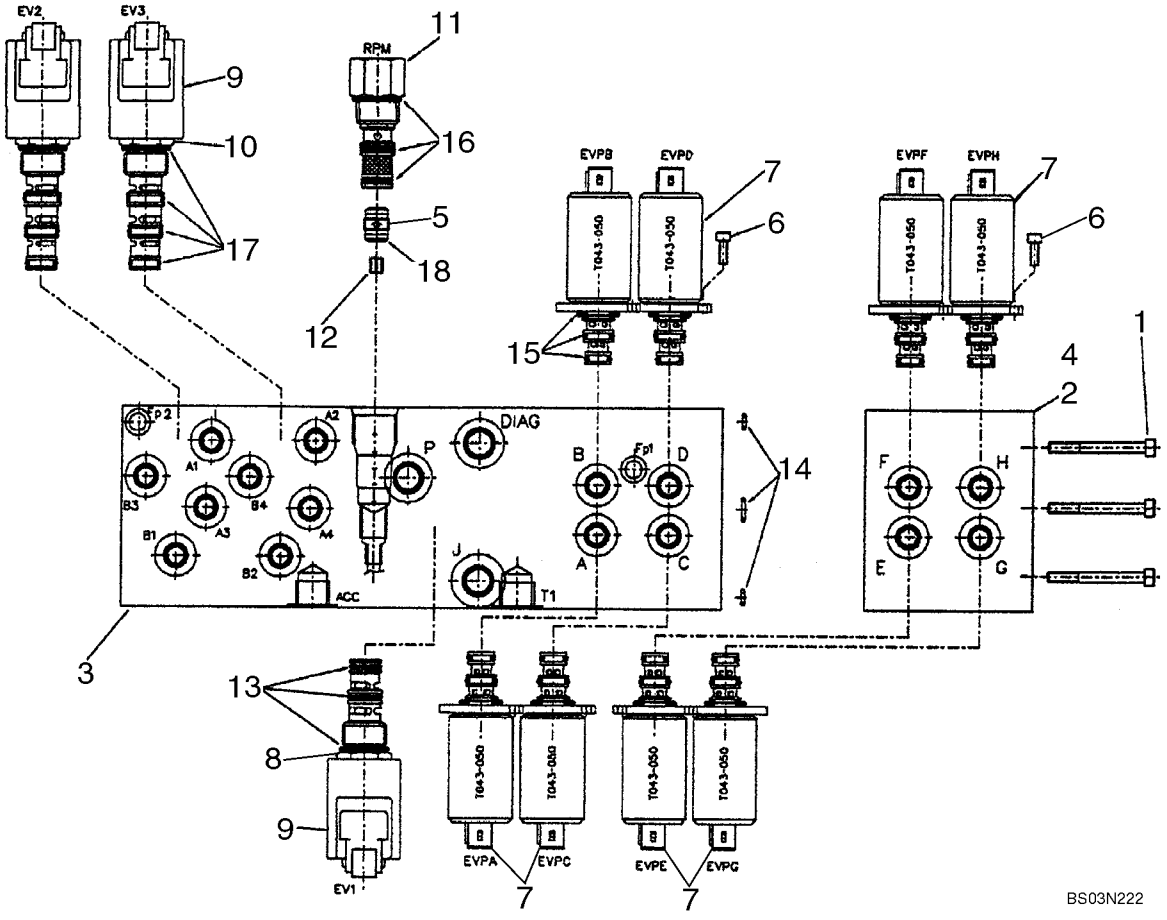

http://www.minnparbackhoeparts.com/

VALVULA DE REDUCCION DEPRESION (4 SPOOL) (CON DE CONTROL PILOTO)

REF	FN	PART NUMBER	YR/SN	QTY	DESCRIPTION
		87434621		1	VALVULA DISTRIBUIDORA Pressure Reducing, Four Spool, Pilot Controls; Incl. Ref 1 - 18
1		85828061		3	TORNILLO M5 x 80 Screw
2		85828048		1	BLOQUE COLECTOR Manifold Block
3		85828015		1	CUERPO Manifold Block
4		85828054		1	BLOQUE COLECTOR Manifold Block
5		85827992		1	VALVULA HIDRAULICA Check Valve
6		14302921		16	TORNILLO M4 x 10 Screw
7		85827993		8	VALVULA DE SOLENOIDE Pressure Reducing Valve
8		85827994		1	SOLENOIDE Solenoid Valve Cartridge, 3 Way, 2 Position
9		85827995		3	BOBINA Coil With Diode
10		85827996		2	SOLENOIDE Solenoid Valve Cartridge, 4 Way, 2 Position
11		85827997		1	REDUCTOR Mechanical Pressure Reducing Valve With Fixed Setting
12		85828005		1	ORIFICIO 1.8 mm Orifice
13		85827998		1	EQUIPO O-Ring Kit
14		85827999		1	EQUIPO O-Ring Kit
15		85828000		8	EQUIPO O-Ring Kit
16		85828001		1	EQUIPO O-Ring Kit
17		85828002		2	EQUIPO O-Ring Kit
18		85828003		1	JUNTA HERMETICA O-Ring, D9x1

http://www.minnparbackhoeparts.com/

VÁLVULA, PALANCA DE CONTROL (CONTROL PILOTO) (IZQUIERDO) BOCINA

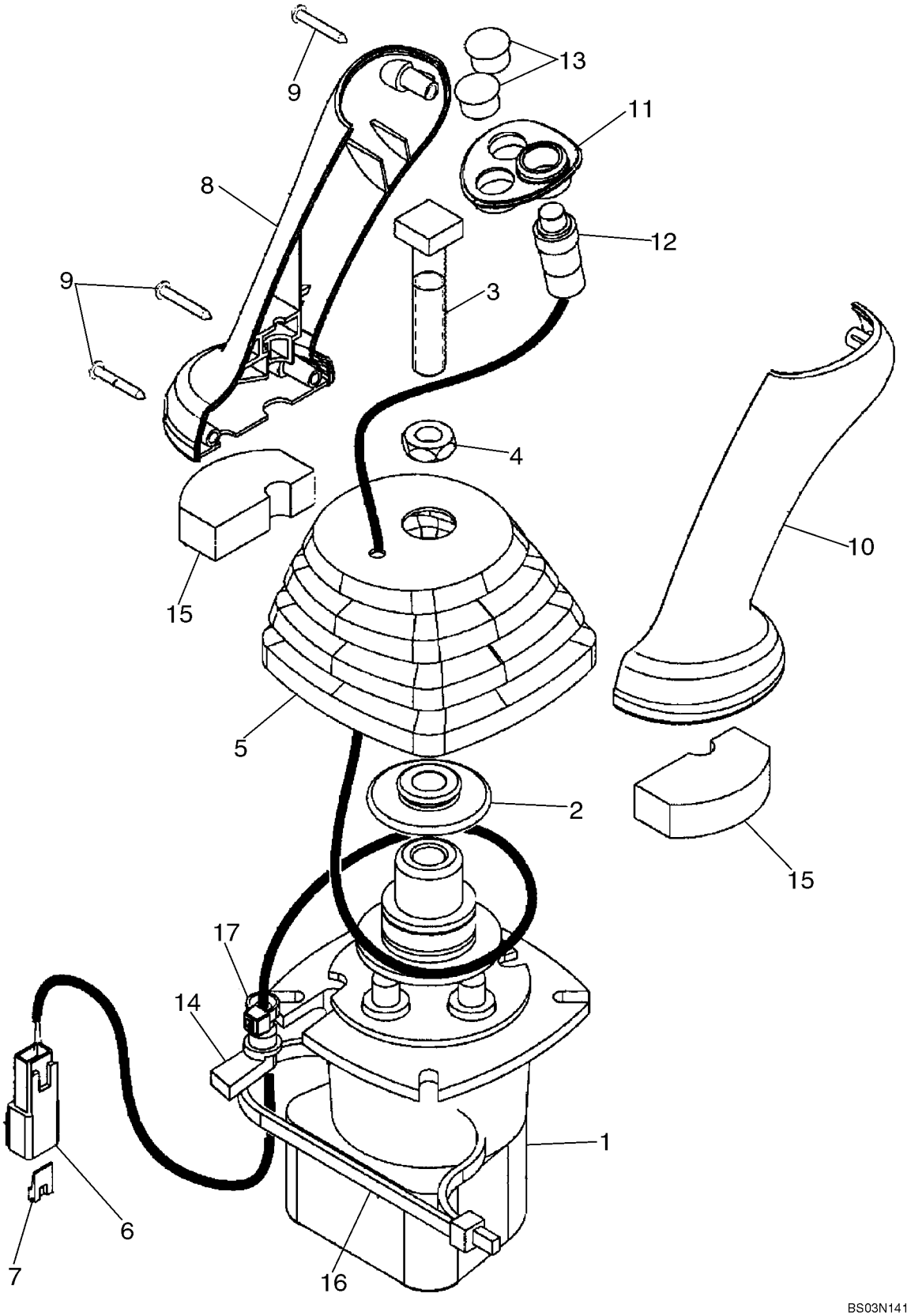

http://www.minnparbackhoeparts.com/

VÁLVULA, PALANCA DE CONTROL (CONTROL PILOTO) (IZQUIERDO) BOCINA

REF	FN	PART NUMBER	YR/SN	QTY	DESCRIPTION
		87308844		1	VALVULA DISTRIBUIDORA JOYSTICK; Pilot Controls, Left-Hand, With Horn Button; Incl. Ref 1 - 17; Replaces 87443740
1		86983311		1	VALVULA DISTRIBUIDORA Pilot Control Joystick Valve; Component Parts Not Serviced Separately
2		87436225		1	RETENEDOR Control Boot Retainer
3		87428023		1	TORNILLO Square Head Bolt
4		87037944		1	TUERCA Thin M12 Nut
5		87443721		1	PROTECTOR Control Handle Boot
6		225315C1		1	CONECTOR
7		225318C1		1	CUNA Connector
8		87308838		1	PERILLA Joystick Control Handle; Replaces 87428164
9		15687475		3	TORNILLO AUTOROSCANTE M3.5 x 25 Pan Head Cross Recess, Self Tapping, Stainless Steel With Nerinox Coating; Replaces 87032819 Black Zinc Plated Screw, Which Is Used In Other Applications
10		87308839		1	PERILLA Joystick Control Handle; Replaces 87428165
11		87435243		1	MARCO Switch Mounting Bezel
12		87437372		1	CONTACTOR Push Button Horn Switch
13		86625128		2	TAPÓN Dome Plug, .562 inch, Black Nylon
14		87424267		1	PASACABLES Wire Grommet
15		87435506		2	JUNTA HERMETICA Pilot Control Handle Seal, Lower
16		87438046		1	BANDA Tie Strap
17		87000312		1	RETENEDOR Black Tie Strap

http://www.minnparbackhoeparts.com/

08-55		p1	04/05

VÁLVULA, PALANCA DE CONTROL (CONTROL PILOTO) (IZQUIERDO) BOCINA & UNI-DIR

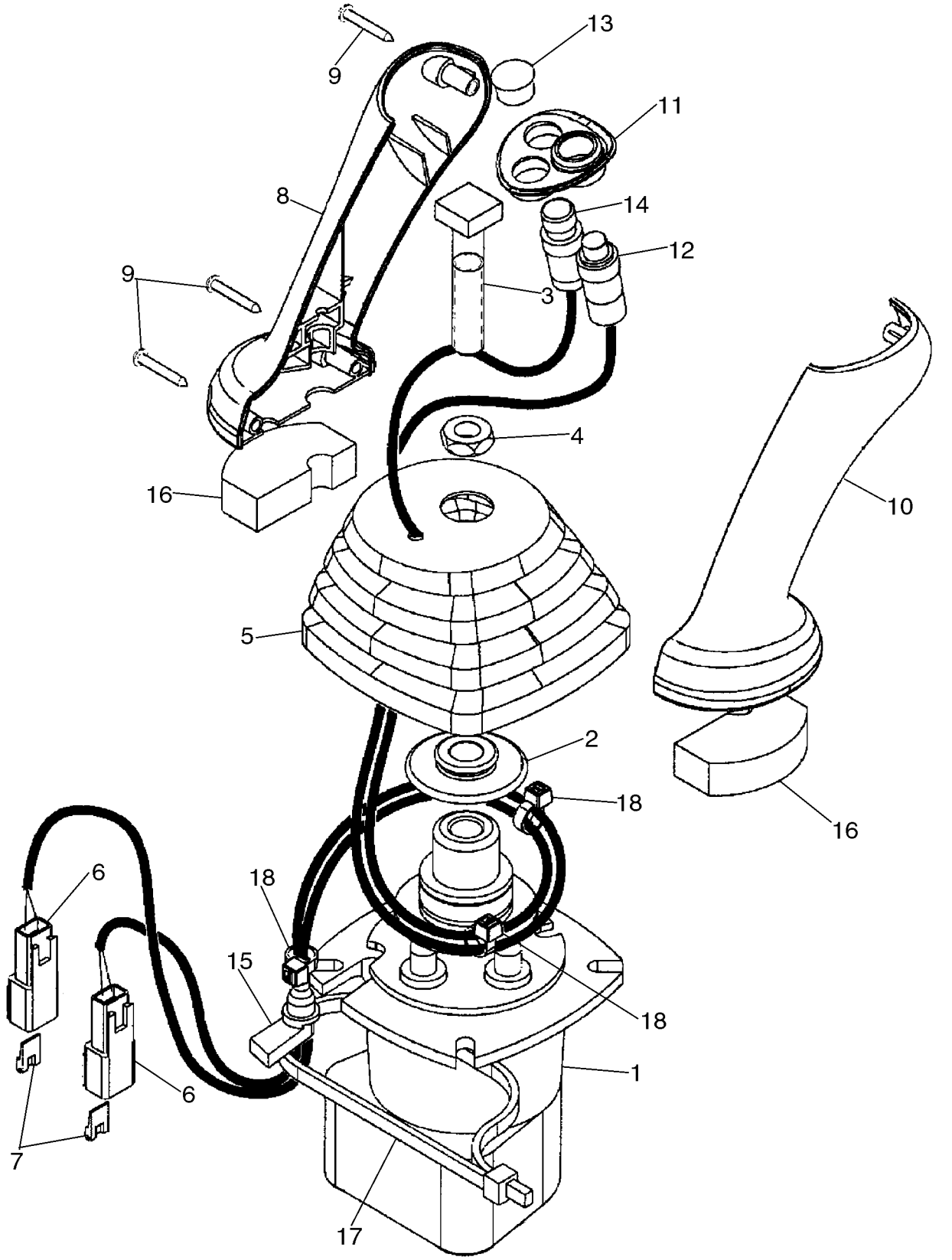

http://www.minnparbackhoeparts.com/

VÁLVULA, PALANCA DE CONTROL (CONTROL PILOTO) (IZQUIERDO) BOCINA & UNI-DIR

REF	FN	PART NUMBER	YR/SN	QTY	DESCRIPTION
		87308846		1	VALVULA DISTRIBUIDORA JOYSTICK; Pilot Controls, Left-Hand, With Horn and Uni-Directional Buttons; Incl. Ref 1 - 18; Replaces 87443742
1		86983311		1	VALVULA DISTRIBUIDORA Pilot Control Joystick Valve; Component Parts Not Serviced Separately
2		87436225		1	RETENEDOR Control Boot Retainer
3		87428023		1	TORNILLO Square Head Bolt
4		87037944		1	TUERCA Thin M12 Nut
5		87443721		1	PROTECTOR Control Handle Boot
6		225315C1		2	CONECTOR
7		225318C1		2	CUNA Connector
8		87308838		1	PERILLA Joystick Control Handle; Replaces 87428164
9		15687475		3	TORNILLO AUTOROSCANTE M3.5 x 25 Pan Head Cross Recess, Self Tapping, Stainless Steel With Nerinox Coating; Replaces 87032819 Black Zinc Plated Screw, Which Is Used In Other Applications
10		87308839		1	PERILLA Joystick Control Handle; Replaces 87428165
11		87435243		1	MARCO Switch Mounting Bezel
12		87437372		1	CONTACTOR Push Button Horn Switch
13		86625128		1	TAPÓN Dome Plug, .562 inch, Black Nylon
14		87437373		1	INTERRUPTOR Push Button Uni-Directional Auxiliary Hydraulic Switch
15		87424267		1	PASACABLES Wire Grommet
16		87435506		2	JUNTA HERMETICA Pilot Control Handle Seal, Lower
17		87438046		1	BANDA Tie Strap
18		87000312		3	RETENEDOR Black Tie Strap

http://www.minnparbackhoeparts.com/

08-56		p1	04/05

VÁLVULA, PALANCA DE CONTROL (CONTROL PILOTO) (IZQUIERDO) BOCINA & BI-DIR

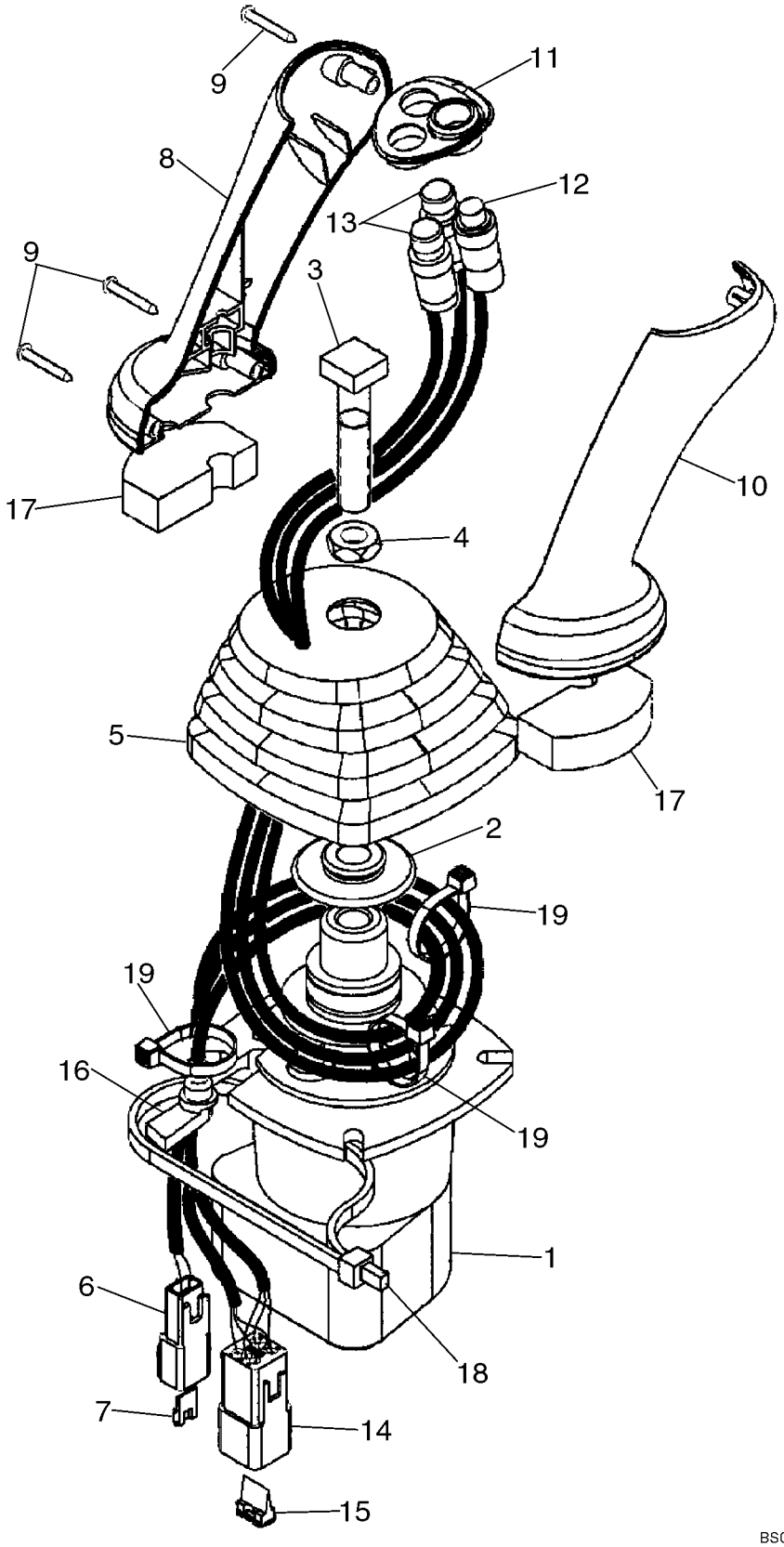

http://www.minnparbackhoeparts.com/

VÁLVULA, PALANCA DE CONTROL (CONTROL PILOTO) (IZQUIERDO) BOCINA & BI-DIR

REF	FN	PART NUMBER	YR/SN	QTY	DESCRIPTION
		87308845		1	VALVULA DISTRIBUIDORA JOYSTICK; Pilot Controls, Left-Hand, With Horn and Bi-Directional Buttons; Incl. Ref 1 - 19; Replaces 87443741
1		86983311		1	VALVULA DISTRIBUIDORA Pilot Control Joystick Valve; Component Parts Not Serviced Separately
2		87436225		1	RETENEDOR Control Boot Retainer
3		87428023		1	TORNILLO Square Head Bolt
4		87037944		1	TUERCA Thin M12 Nut
5		87443721		1	PROTECTOR Control Handle Boot
6		225315C1		1	CONECTOR
7		225318C1		1	CUNA Connector
8		87308838		1	PERILLA Joystick Control Handle; Replaces 87428164
9		15687475		3	TORNILLO AUTOROSCANTE M3.5 x 25 Pan Head Cross Recess, Self Tapping, Stainless Steel With Nerinox Coating; Replaces 87032819 Black Zinc Plated Screw, Which Is Used In Other Applications
10		87308839		1	PERILLA Joystick Control Handle; Replaces 87428165
11		87435243		1	MARCO Switch Mounting Bezel
12		87437372		1	CONTACTOR Push Button Horn Switch
13		87437371		2	INTERRUPTOR Push Button Bi-Directional Auxiliary Hydraulic Switch
14		225350C1		1	CONECTOR
15		225353C1		1	CUNA Connector
16		87424267		1	PASACABLES Wire Grommet
17		87435506		2	JUNTA HERMETICA Pilot Control Handle Seal, Lower
18		87438046		1	BANDA Tie Strap
19		87000312		3	RETENEDOR Black Tie Strap

http://www.minnparbackhoeparts.com/

08-57		p1	04/05

VÁLVULA, PALANCA DE CONTROL (CONTROL PILOTO) (DERECHA/O) SIN PALA EXTENDIBLE

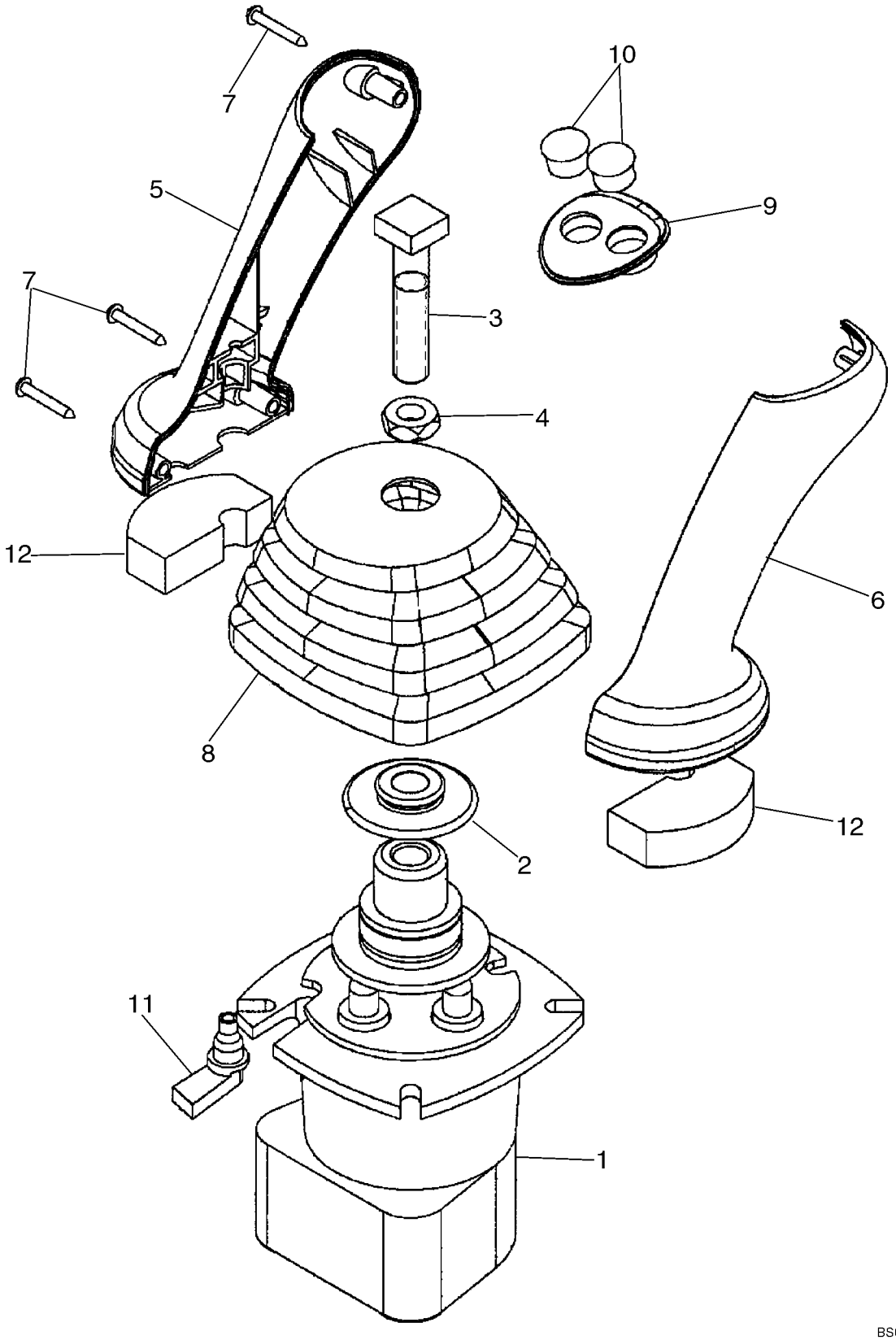

http://www.minnparbackhoeparts.com/

VÁLVULA, PALANCA DE CONTROL (CONTROL PILOTO) (DERECHA/O) SIN PALA EXTENDIBLE

REF	FN	PART NUMBER	YR/SN	QTY	DESCRIPTION
		87308840		1	VALVULA DISTRIBUIDORA JOYSTICK; Pilot Controls, Right-Hand; Without Extendable Dipper; Incl. Ref 1 - 12; Replaces 87443739
1		86983311		1	VALVULA DISTRIBUIDORA Pilot Control Joystick Valve; Component Parts Not Serviced Separately
2		87436225		1	RETENEDOR Control Boot Retainer
3		87428023		1	TORNILLO Square Head Bolt
4		87037944		1	TUERCA Thin M12 Nut
5		87308838		1	PERILLA Joystick Control Handle; Replaces 87428164
6		87308839		1	PERILLA Joystick Control Handle; Replaces 87428165
7		15687475		3	TORNILLO AUTOROSCANTE M3.5 x 25 Pan Head Cross Recess, Self Tapping, Stainless Steel With Nerinox Coating; Replaces 87032819 Black Zinc Plated Screw, Which Is Used In Other Applications
8		87443722		1	PROTECTOR Joystick Control Boot
9		87435242		1	MARCO Switch Mounting Bezel
10		86625128		2	TAPÓN Dome Plug, .562 inch, Black Nylon; Replaces 353-405 Plug Which Is Used In Other Applications
11		87451448		1	PASACABLES Wire Grommet; Replaces 87424267 Grommet, Which Is Used In Other Applications
12		87435506		2	JUNTA HERMETICA Pilot Control Handle Seal, Lower

http://www.minnparbackhoeparts.com/

VÁLVULA, PALANCA DE CONTROL (CONTROL PILOTO) (DERECHA/O) CON PALA EXTENDIBLE

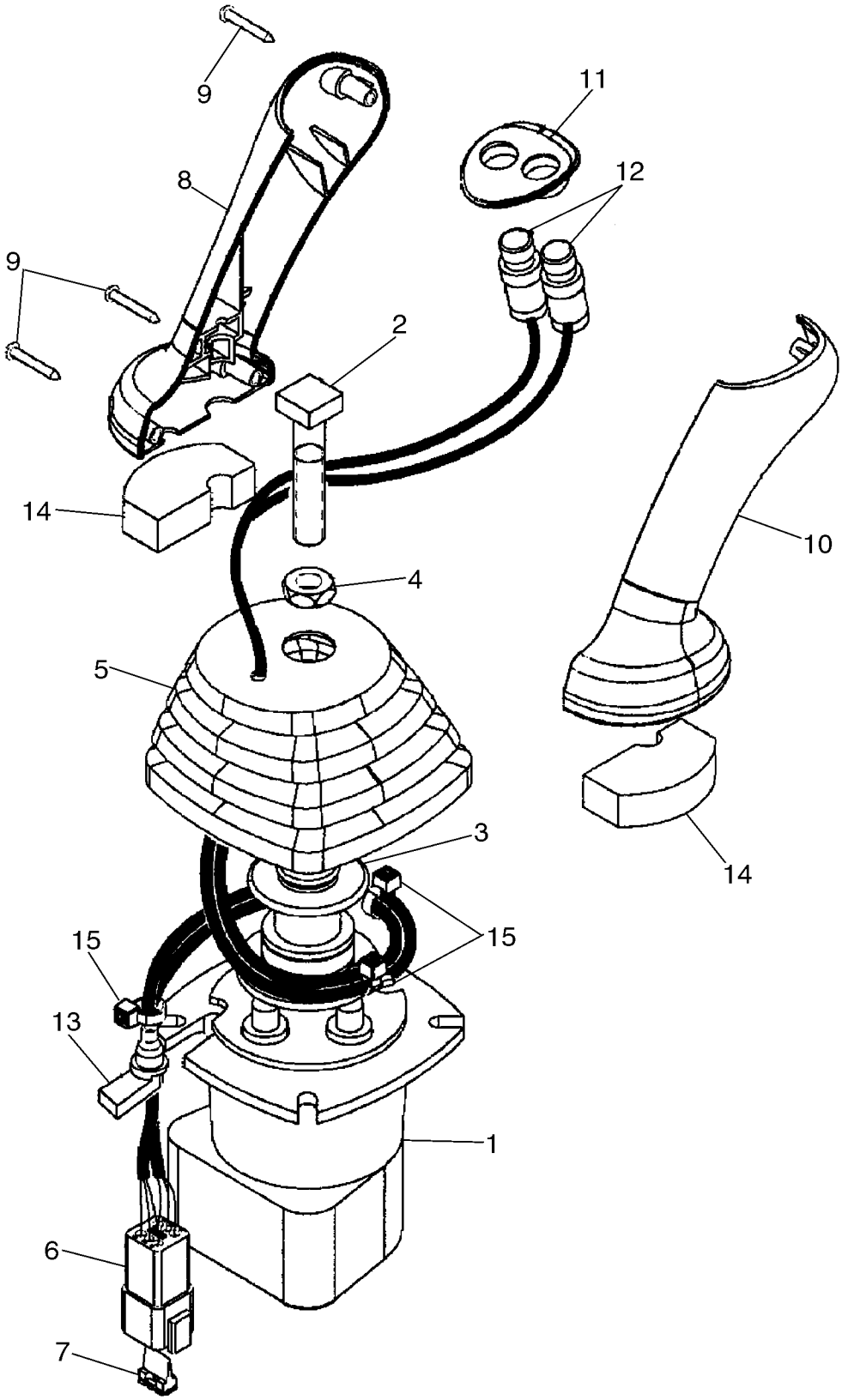

http://www.minnparbackhoeparts.com/

VÁLVULA, PALANCA DE CONTROL (CONTROL PILOTO) (DERECHA/O) CON PALA EXTENDIBLE

REF	FN	PART NUMBER	YR/SN	QTY	DESCRIPTION
		87308847		1	VALVULA DISTRIBUIDORA JOYSTICK; Pilot Controls, Right-Hand; With Extendable Dipper; Incl. Ref 1 - 15; Replaces 87443743
1		86983311		1	VALVULA DISTRIBUIDORA Pilot Control Joystick Valve; Component Parts Not Serviced Separately
2		87428023		1	TORNILLO Square Head Bolt
3		87436225		1	RETENEDOR Control Boot Retainer
4		87037944		1	TUERCA Thin M12 Nut
5		87443721		1	PROTECTOR Joystick Control Boot
6		225350C1		1	CONECTOR
7		225353C1		1	CUNA Connector
8		87308838		1	PERILLA Joystick Control Handle; Replaces 87428164
9		15687475		3	TORNILLO AUTOROSCANTE M3.5 x 25 Pan Head Cross Recess, Self Tapping, Stainless Steel With Nerinox Coating; Replaces 87032819 Black Zinc Plated Screw, Which Is Used In Other Applications
10		87308839		1	PERILLA Joystick Control Handle; Replaces 87428165
11		87435242		1	MARCO Switch Mounting Bezel
12		87437371		2	INTERRUPTOR Push Button Retract and Extendahoe Switches
13		87424267		1	PASACABLES Wire Grommet
14		87435506		2	JUNTA HERMETICA Pilot Control Handle Seal, Lower
15		87000312		3	RETENEDOR Black Nylon
		87438046		1	BANDA Tie

http://www.minnparbackhoeparts.com/

CONJUNTO DE LA VALVULA - ALMOHADILLA DE OSCILACIÓN

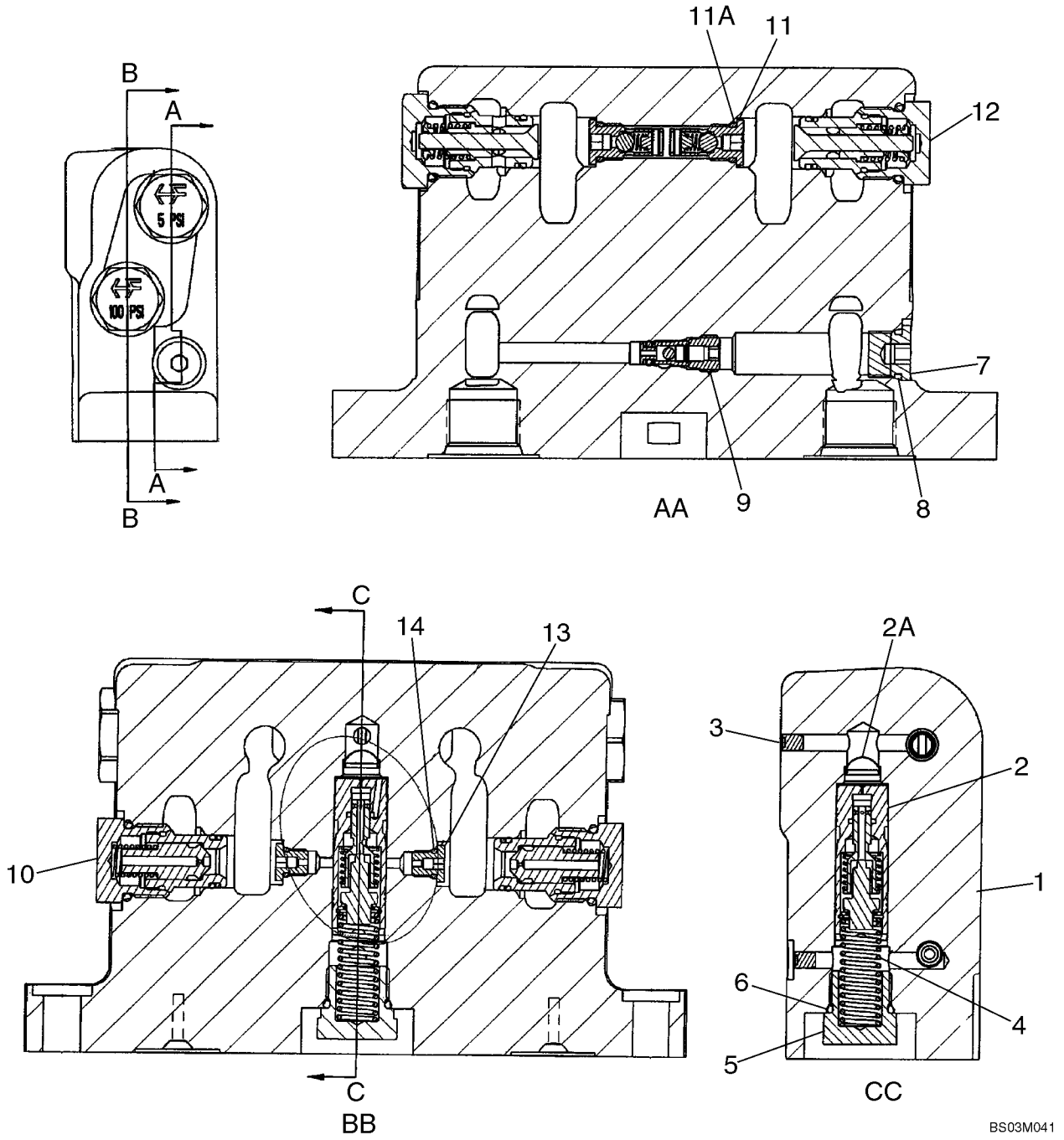

http://www.minnparbackhoeparts.com/

CONJUNTO DE LA VALVULA - ALMOHADILLA DE OSCILACIÓN

REF	FN	PART NUMBER	YR/SN	QTY	DESCRIPTION
		87449373		1	VALVULA AMORTIGUADORA Swing Cushion; Incl. Ref 1 - 14; Replaces 87416975 Valve
1		NSS		1	NO SE REPARA SEPARADAM. Housing
2		87449374		1	PISTONCILLO Thermal Compensating; Component Parts Not Serviced Separately; Replaces 388876A6 Spool
2A		1976955C1		1	CARTUCHO FILTRO Screen, Filter
3		369372A1		2	TAPÓN M5; Plug, Expansion
4		388881A1		1	MUELLE HELICOIDAL
5		409025A1		1	TAPÓN Relief Check; Incl. Ref 6
6		237-6008		1	JUNTA HERMETICA 41/64 ID x 3/32, Boss Seal
7		218-5209		1	TAPÓN 9/16 Or; Incl. Ref 8
8		237-6006		1	JUNTA HERMETICA 15/32 ID x 5/64, Boss Seal
9		388712A2		1	VALVULA Bi-Directional Check Valve; Includes 388713A1 Seal Kit
		388713A1		1	JEUGO Seal; Includes An O-Ring and Backup Ring; Component Parts Not Serviced Separately
10		396422A2		2	VALVULA ANTIRRETORNO 100 psi, Orifice Check Valve; Component Parts Not Serviced Separately; Order 1542830C2 Seal Kit To Service External Seals
		443432A1		1	SERIE DE JUNTAS For Servicing External Seals on Ref 9, 10, 11 or 12 Valve; If Used
11		400296A2		2	VALVULA ANTIRRETORNO In-Line Check Valve; Component Parts Not Serviced Separately; Incl. Ref 11A
11A		237-6004		1	JUNTA HERMETICA 23/64 ID x 5/64, Boss Seal
12		389541A1		2	VALVULA ANTIRRETORNO 5 psi; Component Parts Not Serviced Separately; Order 1542830C2 Seal Kit To Service External Seals
13		400657A1		2	TAPÓN Orifice 1.85 mm; Incl. Ref 14
14		237-6002		1	JUNTA HERMETICA 1/4 ID x 1/16
		1542830C2		1	EMPAQUE DE JUNTAS For Servicing External Seals on Ref 10 or 12 Valve

http://www.minnparbackhoeparts.com/

08-59A		p1	03/04

SOLENOIDE VALVE CONJUNTO - TRABA DEL AGUILON

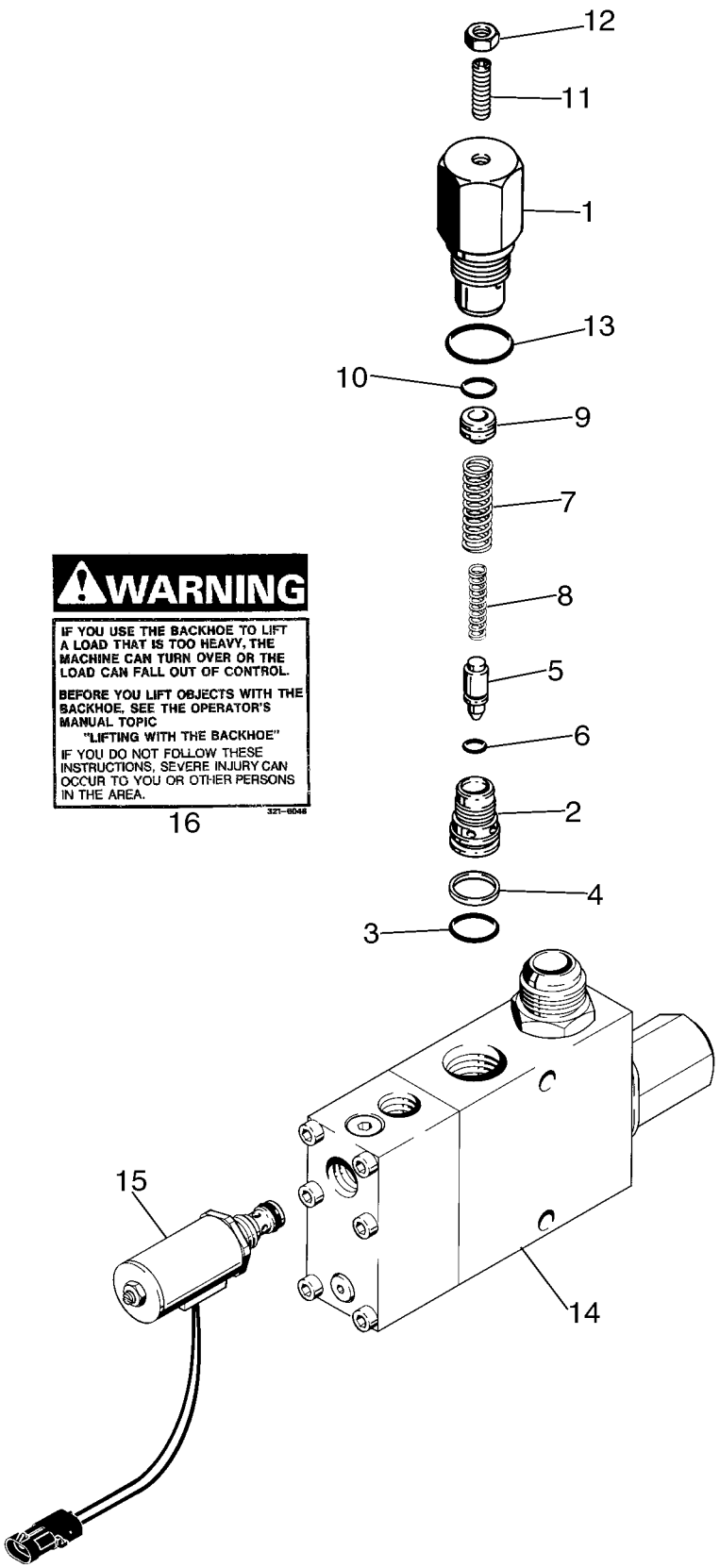

BS03B174

http://www.minnparbackhoeparts.com/

SOLENOIDE VALVE CONJUNTO - TRABA DEL AGUILON

REF	FN	PART NUMBER	YR/SN	QTY	DESCRIPTION
		189957A1		1	VALVULA Solenoid, Backhoe Boom Lock; Incl. Ref 1 - 16; Included In 399221A1 Backhoe Boom Lock Kit
		G110467		1	VÁLVULA, DESCARGA Circuit, Solenoid; Used In Production; Order G110077, Kit For Service
1		NSS		1	NO SE REPARA SEPARADAM. Body, Relief Valve
2		NSS		1	NO SE REPARA SEPARADAM. Seat, Relief Valve
3		238-6018		1	JUNTA HERMETICA 3/4 ID x 1/16 in, Face Seal
4		G35540		1	ANILLO Backup, Seat
5		NSS		1	NO SE REPARA SEPARADAM. Poppet
6		NSS		1	NO SE REPARA SEPARADAM. O-Ring
7		NSS		1	NO SE REPARA SEPARADAM. Spring, Relief, Outer
8		NSS		1	NO SE REPARA SEPARADAM. Spring, Relief, Inner
9		NSS		1	NO SE REPARA SEPARADAM. Piston
10		NSS		1	NO SE REPARA SEPARADAM. O-Ring
11		484-43120		1	TORNILLO 5/16 NF x 1-1/4 in, Hex Socket, Headless
12		425-155		1	TUERCA 5/16 in NF
13		237-6012		1	JUNTA HERMETICA 59/64 ID x 7/64, Boss Seal
14		NSS		1	NO SE REPARA SEPARADAM. Body, Solenoid
15		221168A1		1	SOLENOIDE 12 Volt; Relief, With Connector
		D150781		1	JEUGO Repair; Includes (3) Springs, (1) Ball, (1) Poppet, (1) Plug; Not Serviced Separately; and D150810 Seal Kit, Not Shown
		D150810		1	ANILLO DE CIERRE Kit, Includes (8) O-Rings and (2) Backup Rings; Which Are Not Serviced Separately, Not Shown
		G110077		1	JEUGO Service For G110467, Circuit Relief Valve; Includes G110078, Circuit Relief Valve Assembly (Ref. 1 - 13) and an Instruction Sheet
16		321-6046		2	CALCOMANIA Warning, If You Use The Backhoe To Lift A Load That Is Too Heavy

http://www.minnparbackhoeparts.com/

ACUMULADOR CONJ. - DISPOSITIVO ANTICABECEO

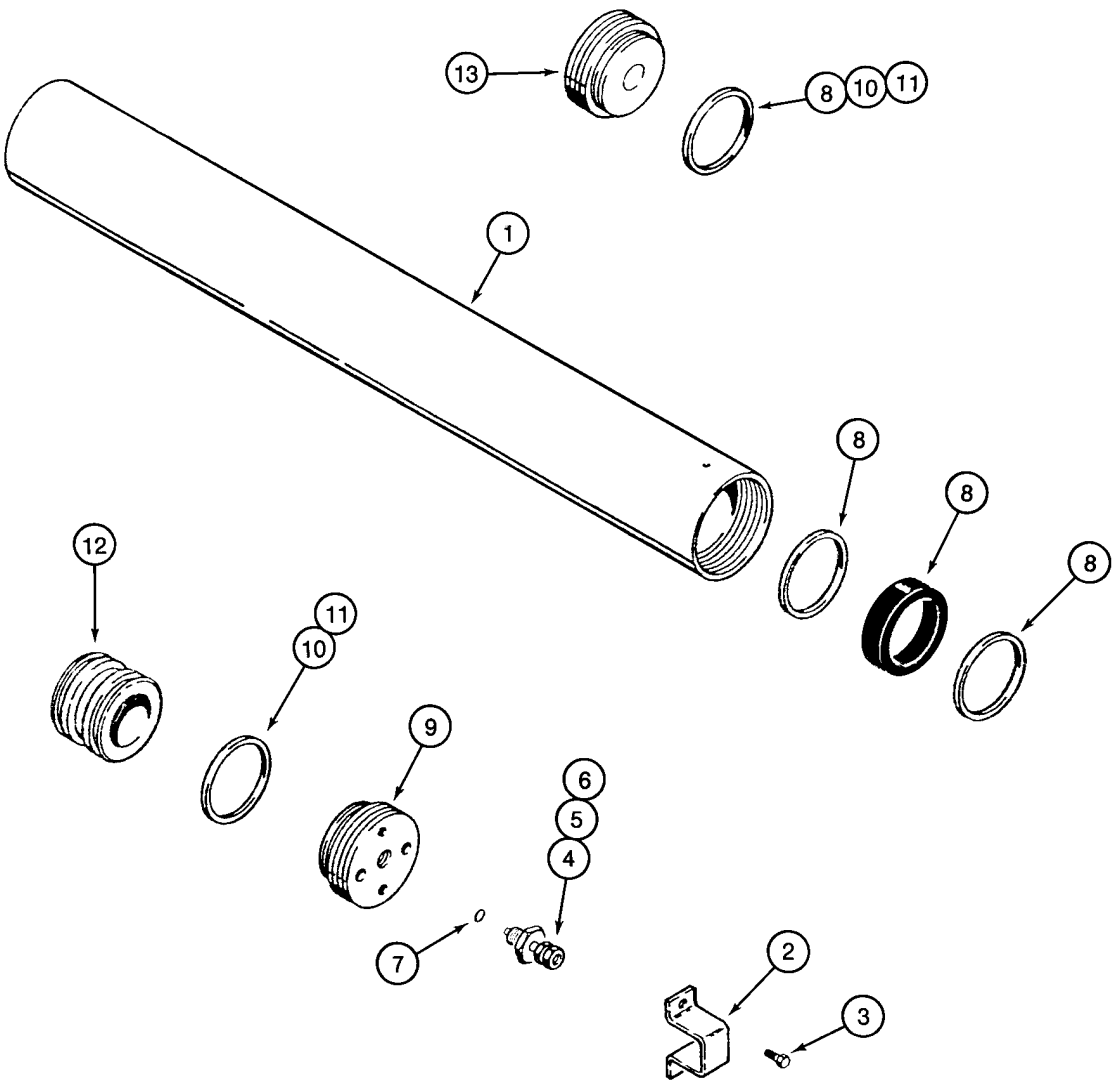

BS97C154

http://www.minnparbackhoeparts.com/

ACUMULADOR CONJ. - DISPOSITIVO ANTICABECEO

REF	FN	PART NUMBER	YR/SN	QTY	DESCRIPTION
		234412A1		1	ACUMULADOR Incl. Ref 1 - 13
1		NSS		1	NO SE REPARA SEPARADAM. Body
2		192895A1		1	PROTECTOR
3		276-2456		2	TORNILLO No. 10 x 3/8
		1978142C1		1	VALVULA Incl. Ref 4 - 6
4		NSS		1	NO SE REPARA SEPARADAM. Valve, Pressure
5		1978143C1		1	EMBOLO
6		1978144C1		1	TAPON DEL DEPOSITO
7		1978158C1		1	JUNTA HERMETICA
8		1978141C1		1	JUEGO JUNTAS Includes (1) V-Type O-Ring, (2) Teflon Bearing Rings and (1) Body End Seal Ring; Component Parts Not Serviced Separately
9		NSS		1	NO SE REPARA SEPARADAM. Gland, Cylinder
10		NSS		2	NO SE REPARA SEPARADAM. O-Ring
11		NSS		2	NO SE REPARA SEPARADAM. Ring, Backup, If Used
12		NSS		1	NO SE REPARA SEPARADAM. Piston
13		NSS		1	NO SE REPARA SEPARADAM. Cap

http://www.minnparbackhoeparts.com/

08-61		p1	03/05

FILTRO DE ACEITE

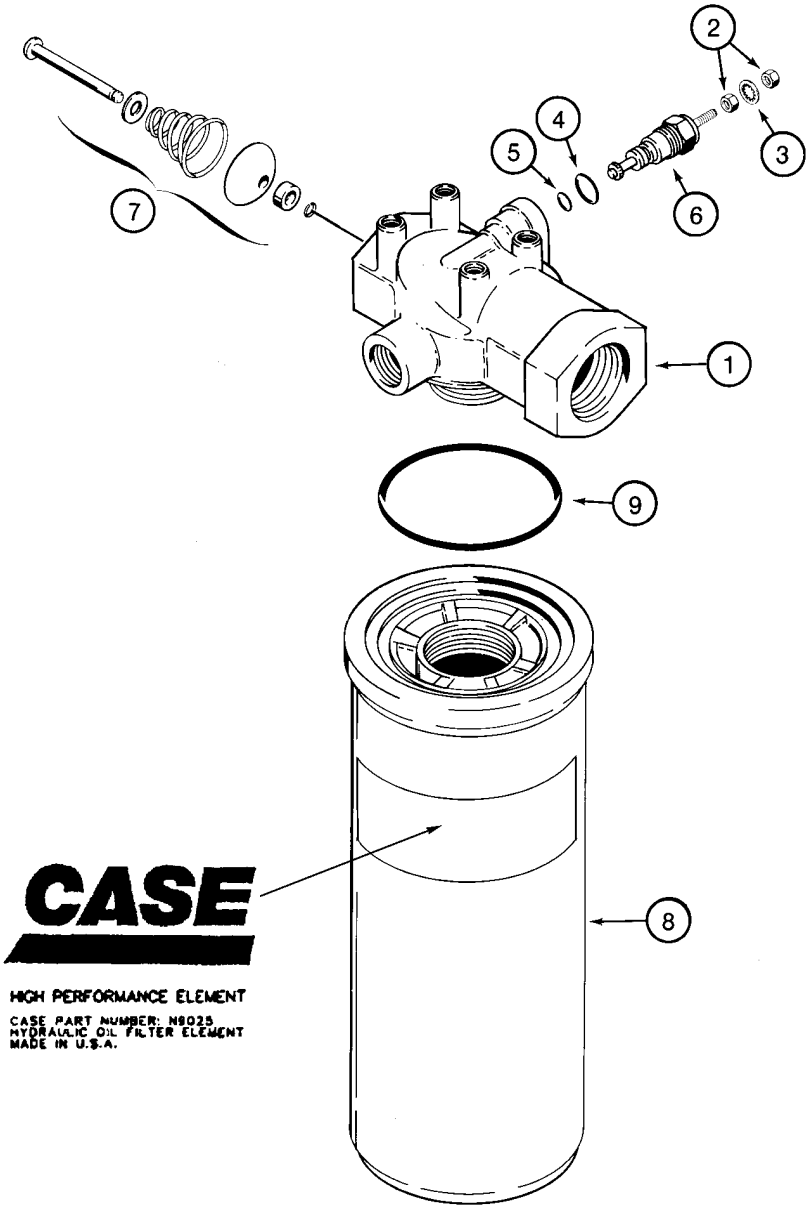

BS00D009

http://www.minnparbackhoeparts.com/

FILTRO DE ACEITE

REF	FN	PART NUMBER	YR/SN	QTY	DESCRIPTION
		87440045		1	FILTRO CONJ Hydraulic Oil Filter; Incl. Ref 1 - 9
1		NSS		1	NO SE REPARA SEPARADAM. Head, Filter
		N6755		1	TESTIGO Restriction; Includes N6941, Ref 6
		N6941		1	JEUGO Restriction Indicator Repair; Incl. Ref 2 - 5; Order Ref 2 - 5
2		129-667		2	TUERCA No. 10 NF
3		493-21020		1	ARANDELA DE FRENO 3/16
4		237-6006		1	JUNTA HERMETICA 15/32 ID x 5/64, Boss Seal
5		238-5011		1	JUNTA HERMETICA -011, 70 Duro, .301" ID x .070" Thk
6		NSS		1	NO SE REPARA SEPARADAM. Indicator
7		NSS		1	NO SE REPARA SEPARADAM. Valve, By-Pass
		N9025		1	ELEMENTO DE FILTRADO Incl. Ref 8, 9
8		NSS		1	NO SE REPARA SEPARADAM. Element
9		238-5230		1	JUNTA HERMETICA 2-1/2 ID x 1/8

http://www.minnparbackhoeparts.com/

08-62		p1	01/04

CONJUNTO DE CILINDRO - ELEVADOR DE LA CARGADORA

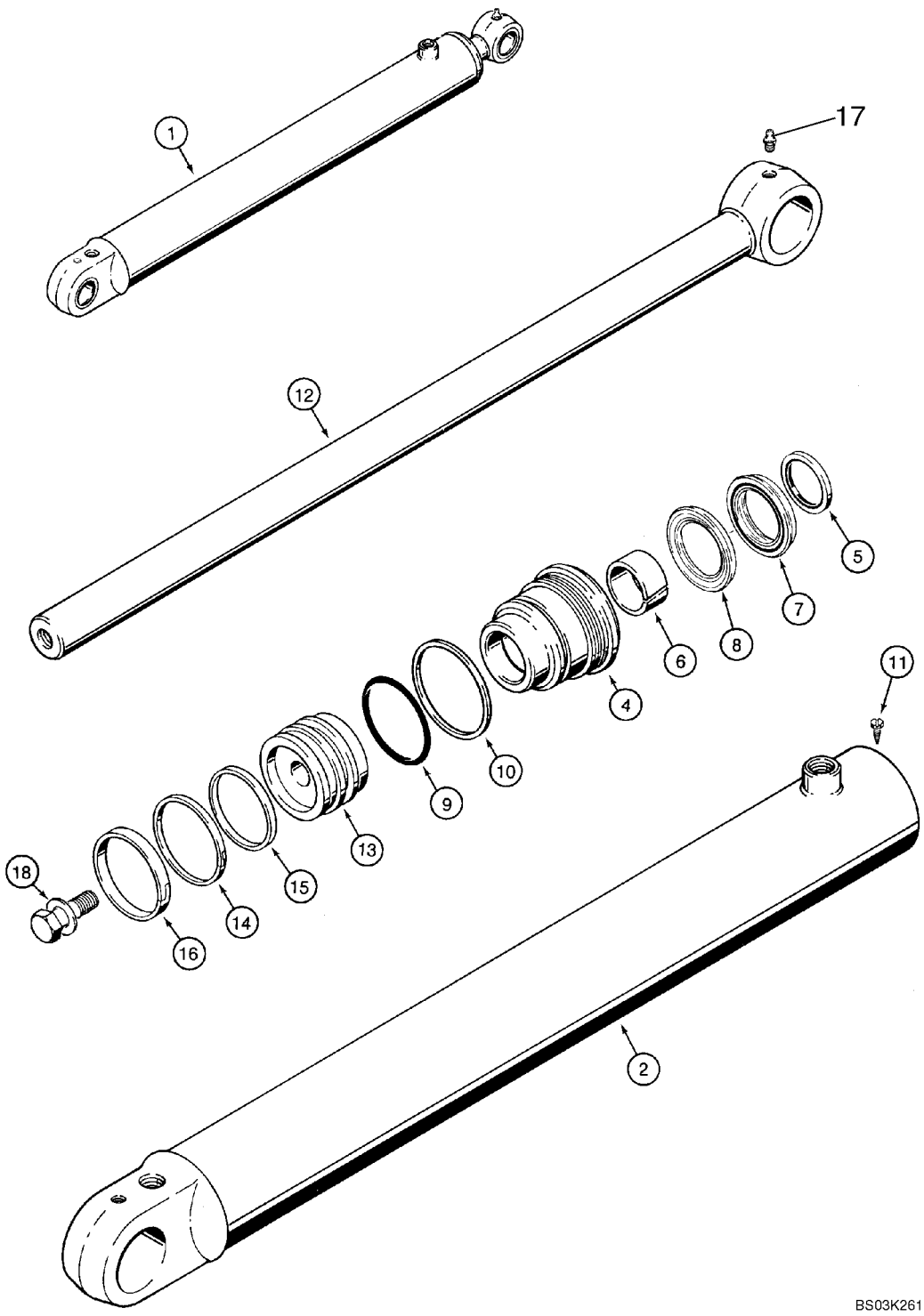

http://www.minnparbackhoeparts.com/

CONJUNTO DE CILINDRO - ELEVADOR DE LA CARGADORA

REF	FN	PART NUMBER	YR/SN	QTY	DESCRIPTION
1		384240A1		2	CILINDRO (CONJUNTO) 82.6 ID x 766 mm strk; Loader Lift; Incl. Ref 2 - 18
2		384241A1		1	CILINDRO DE GATO TUBE, Without Bushings
4		1980321C3		1	EMPAQUETADURA
		1543260C1		1	EMPAQUE DE JUNTAS Seal Repair, Incl. Ref 5 - 10, 14 - 16
5		D95143		1	ANILLO DE CIERRE Wiper
6		G102425		1	CASQUILLO
		1542875C1		1	JUEGO DE PIEZAS Rod and Buffer Seal Kit; Incl. Ref 7, 8; Not Serviced Separately; Order 1543260C1 Seal Kit
7		NSS		1	NO SE REPARA SEPARADAM. Rod Seal; Order 1543260C1 Seal Kit
8		NSS		1	NO SE REPARA SEPARADAM. Buffer Seal; Order 1543260C1 Seal Kit
9		238-5233		1	JUNTA HERMETICA 2-7/8 ID x 1/8 in
10		G32122		1	ANILLO
11		276-2446		1	TORNILLO No. 8 x 3/8, self-tapping
12		133083A1		1	VASTAGO CILINDRO 44 mm (1-3/4 in) dia
13		135161A1		1	EMBOLO
14		G102287		1	ANILLO DE CIERRE
15		S109444		1	ANILLO
16		S109445		1	ANILLO
17		219-1		1	ENGRASADOR 1/8 PT x 21/32
18		86982437		1	PERNO ESPECIAL 1 x 2,5 in; Includes Washer

http://www.minnparbackhoeparts.com/

08-63		p1	01/04

CONJUNTO DE CILINDRO - CUCHARON DE LA CARGADORA

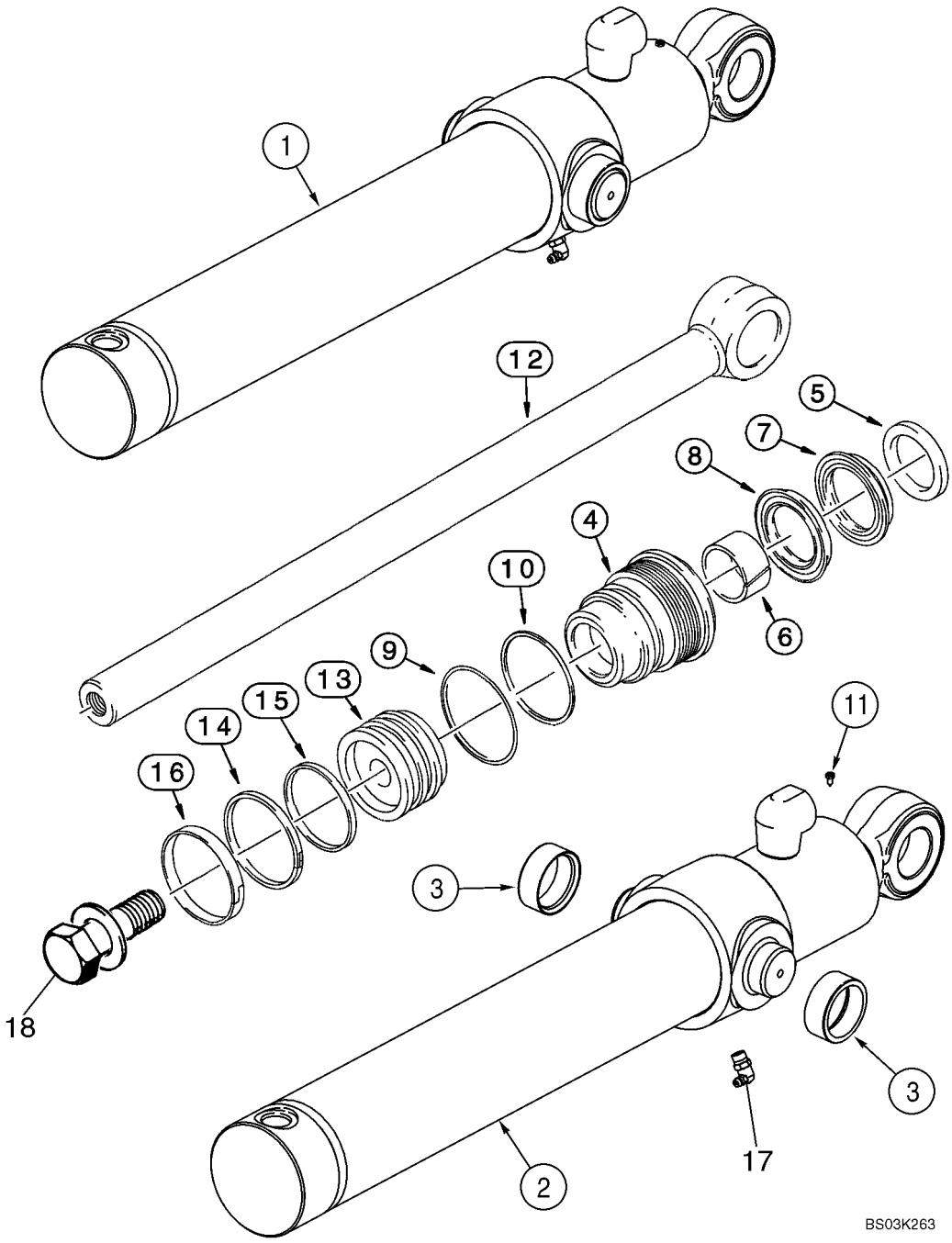

http://www.minnparbackhoeparts.com/

CONJUNTO DE CILINDRO - CUCHARON DE LA CARGADORA

REF	FN	PART NUMBER	YR/SN	QTY	DESCRIPTION
1		113133A2		2	CILINDRO (CONJUNTO) 76 ID x 522 mm strk; Loader Bucket; Incl. Ref 2- 18
2		113135A2		1	CILINDRO DE GATO TUBE, Incl. Ref 3
3		G108512		2	CASQUILLO
4		297280A1		1	EMPAQUETADURA
		1543256C1		1	EMPAQUE DE JUNTAS Seal Repair; Incl. Ref 5 - 10, 14 - 16
5		D95142		1	ANILLO DE CIERRE Wiper
6		G102424		1	CASQUILLO
		1542874C1		1	PAQUETE Rod and Buffer Seal Kit; Incl. Ref 7, 8; Not Serviced Separately; Order 1543256C1 Seal Kit
7		NSS		1	NO SE REPARA SEPARADAM. Rod Seal; Order 1543256C1 Seal Kit
8		NSS		1	NO SE REPARA SEPARADAM. Buffer Seal; Order 1543256C1 Seal Kit
9		238-5231		1	JUNTA HERMETICA 2-5/8 ID x 1/8
10		G109298		1	ANILLO
11		276-2446		1	TORNILLO No. 8 x 3/8, self-tapping
12		110307A1		1	VASTAGO CILINDRO 38 mm (1-1/2 in) dia
13		G108518		1	EMBOLO
14		G102288		1	SELLO (CONJUNTO)
15		G100444		1	ANILLO DE CIERRE
16		G100449		1	ANILLO DE DESGASTE
17		219-55		1	ENGRASADOR 90 deg, 1/8 PT x 27/32
18		86982435		1	PERNO ESPECIAL 3/4 x 2,5 in, Includes Washer

http://www.minnparbackhoeparts.com/

08-64		p1	05/05

CONJUNTO DE CILINDRO - ALMEJA DE LA CARGADORA

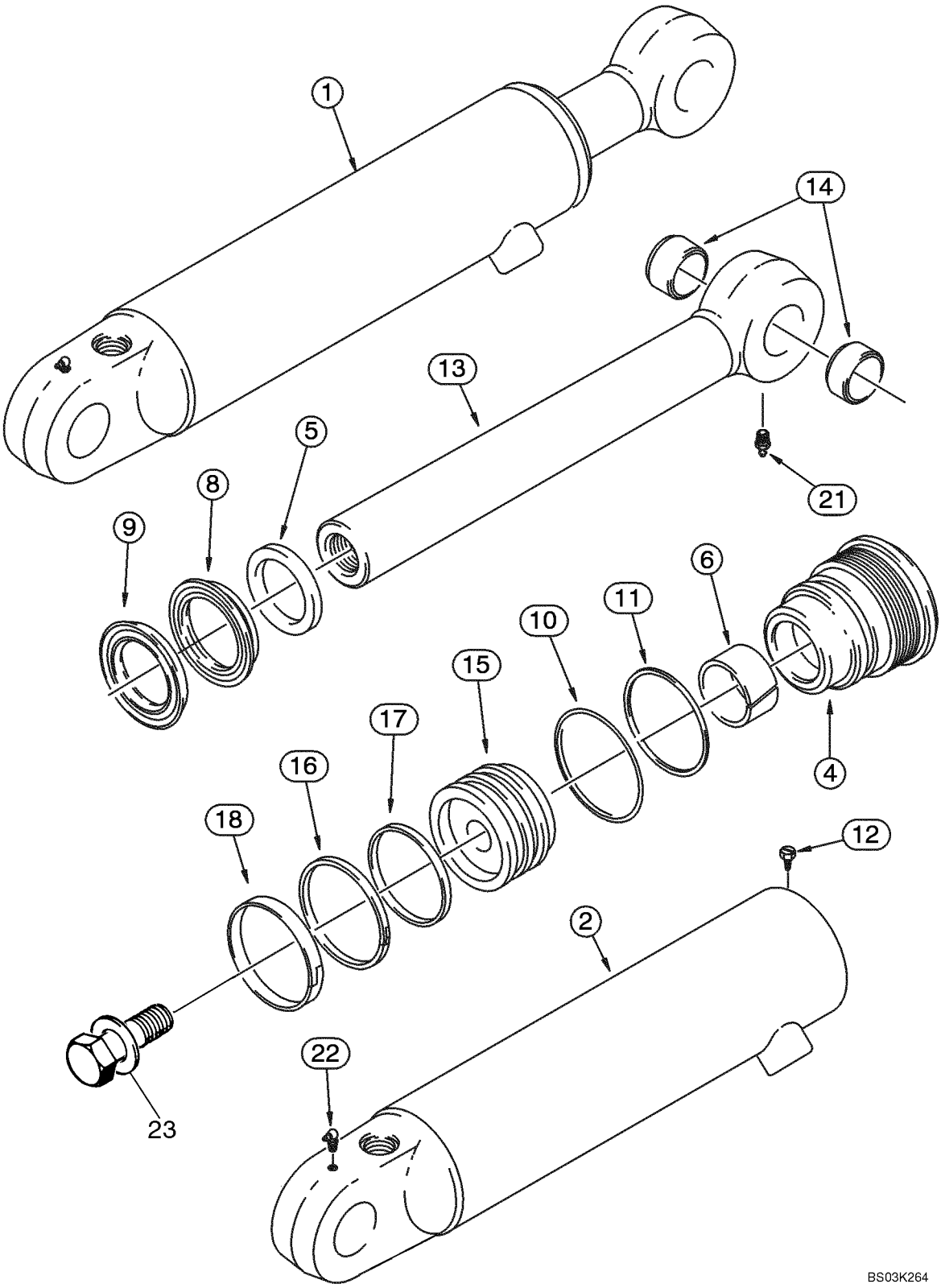

http://www.minnparbackhoeparts.com/

CONJUNTO DE CILINDRO - ALMEJA DE LA CARGADORA

REF	FN	PART NUMBER	YR/SN	QTY	DESCRIPTION
1		1346189C1		1	CILINDRO (CONJUNTO) 76 ID x 231 mm strk; Right-Hand; Incl. Ref 2 - 23; If Used
1		87454017		1	CILINDRO (CONJUNTO) 76 ID x 231 mm strk; Right-Hand; Incl. Ref 2 - 23; If Used
1		1346190C1		1	CILINDRO (CONJUNTO) 76 ID x 231 mm strk; Left-Hand; Incl. Ref 2 - 23; If Used
1		87454016		1	CILINDRO (CONJUNTO) 76 ID x 231 mm strk; Left-Hand; Incl. Ref 2 - 23; If Used
2		1346191C1		1	CILINDRO DE GATO TUBE, Right-Hand; 1346189C1 Cylinder; Includes (2) 30634 Bushings; If Used
2		87454907		1	TUBO (CONJUNTO) TUBE, Right-Hand; 87454017 Cylinder; Includes (2) 30634 Bushings; If Used
2		1346192C1		1	CILINDRO DE GATO TUBE, Left-Hand; 1346190C1 Cylinder; Includes (2) 30634 Bushings; If Used
2		87454908		1	TUBO (CONJUNTO) TUBE, Left-Hand; 87454016 Cylinder; Includes (2) 30634 Bushings; If Used
4		297281A1		1	PALIER Gland
		1543267C1		1	EMPAQUE DE JUNTAS Seal Repair; Incl. Ref 5 - 11, 16 - 18
5		D95143		1	ANILLO DE CIERRE
6		G102425		1	CASQUILLO
		1542875C1		1	JUEGO DE PIEZAS Rod and Buffer Seal; Incl. Ref 8, 9; Not Serviced Separately; Order 1543267C1 Seal Kit
8		NSS		1	NO SE REPARA SEPARADAM. Rod Seal; Order 1543267C1 Seal Kit
9		NSS		1	NO SE REPARA SEPARADAM. Buffer Seal; Order 1543267C1 Seal Kit
10		238-5231		1	JUNTA HERMETICA 2-5/8 ID x 1/8
11		G109298		1	ANILLO
12		276-2446		1	TORNILLO Self-Tapping, No. 8 x 3/8
13		1346195C1		1	VASTAGO CILINDRO 44 mm (1-3/4 in) dia; Incl. Ref 14
14		30634		2	CASQUILLO
15		1340798C1		1	EMBOLO
16		G102288		1	SELLO (CONJUNTO)

http://www.minnparbackhoeparts.com/

08-64		p2	05/05

CONJUNTO DE CILINDRO - ALMEJA DE LA CARGADORA

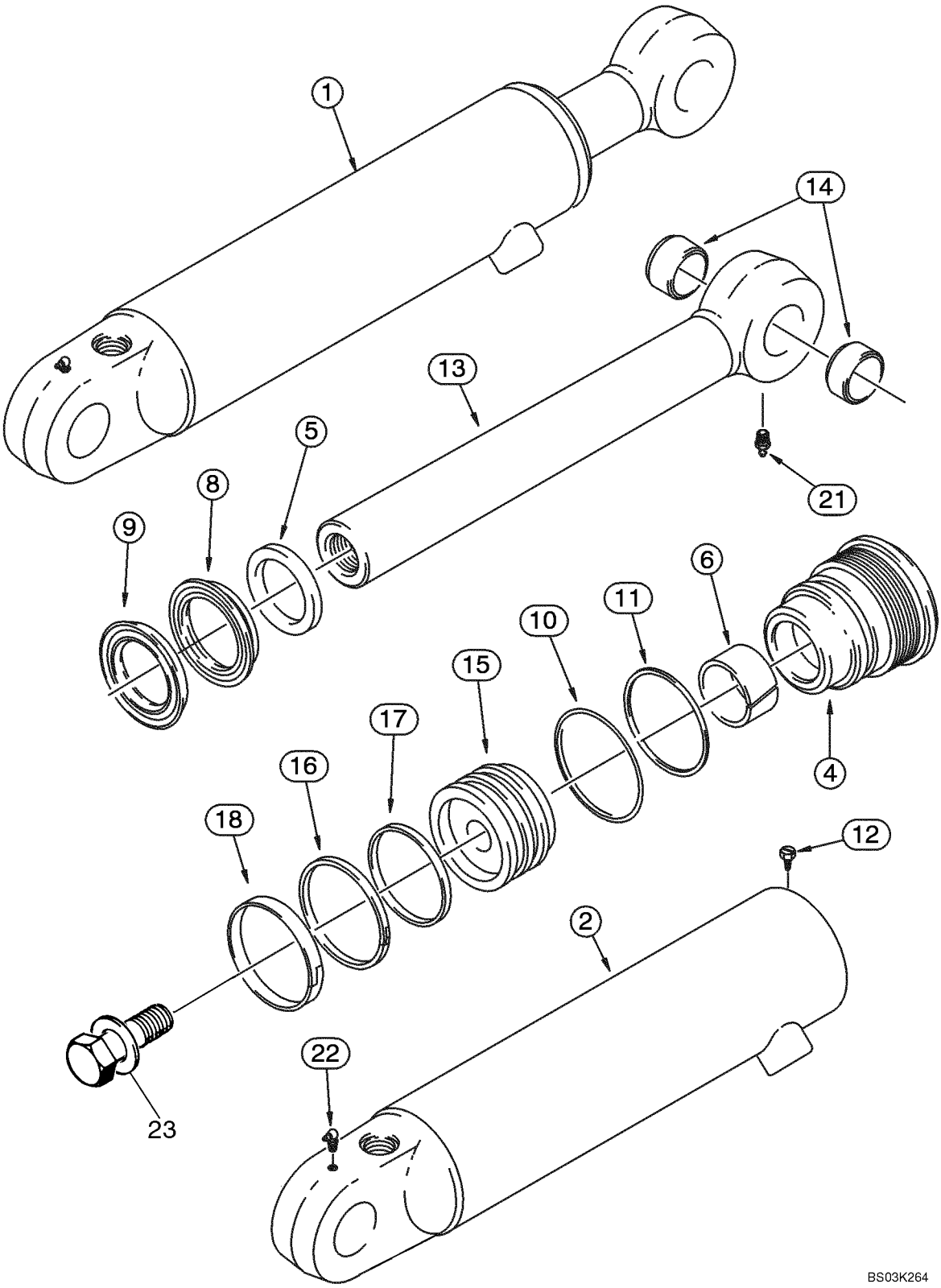

http://www.minnparbackhoeparts.com/

CONJUNTO DE CILINDRO - ALMEJA DE LA CARGADORA

REF	FN	PART NUMBER	YR/SN	QTY	DESCRIPTION
17		G100444		1	ANILLO DE CIERRE
18		G100449		1	ANILLO DE DESGASTE
21		219-1		1	ENGRASADOR 1/8 PT x 21/32
22		219-55		1	ENGRASADOR 90 deg, 1/8 PT x 27/32
23		86982437		1	PERNO ESPECIAL 1,0 x 2,5 in, Includes Washer

http://www.minnparbackhoeparts.com/

08-65		p1	01/04

CONJUNTO DE CILINDRO - ESTABILIZADOR DE LA RETROEXCAVADORA (580SM)

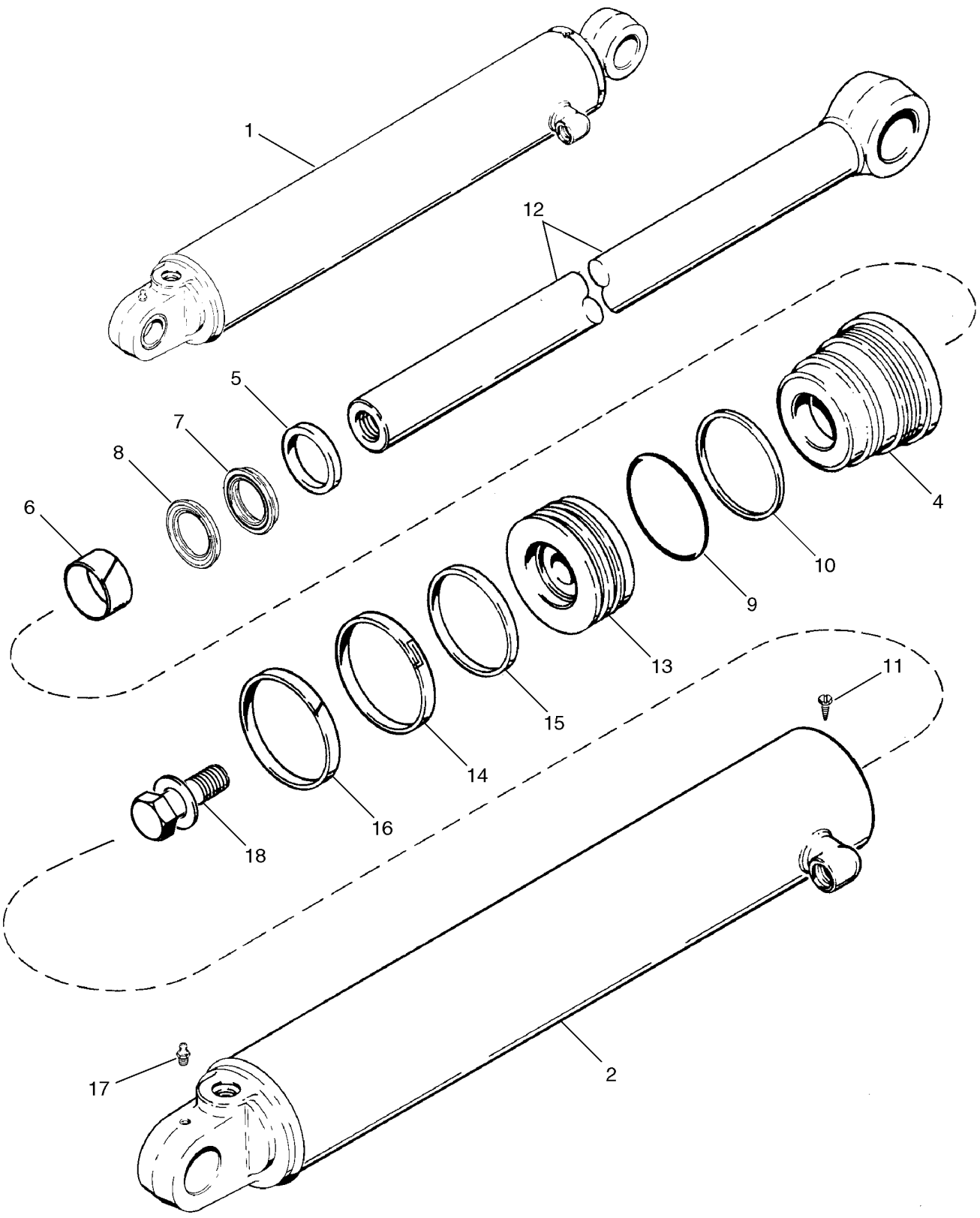

http://www.minnparbackhoeparts.com/

CONJUNTO DE CILINDRO - ESTABILIZADOR DE LA RETROEXCAVADORA (580SM)

REF	FN	PART NUMBER	YR/SN	QTY	DESCRIPTION
1		199720A1		1	CILINDRO (CONJUNTO) 108 ID x 553 mm strk; Right-Hand; Incl. Ref 2- 18
1		199721A1		1	CILINDRO (CONJUNTO) 108 ID x 553 mm strk; Left-Hand; Incl. Ref 2 - 18
2		199722A1		1	CILINDRO DE GATO Right-Hand
2		199723A1		1	CILINDRO DE GATO Left-Hand
4		297284A1		1	PALIER GLAND
		1543275C1		1	EMPAQUE DE JUNTAS Seal Repair; Incl. Ref 5 - 10, 14 - 16
5		D95144		1	RETEN WIPER
6		G101533		1	CASQUILLO
		1542876C1		1	EMPAQUETADURA Rod and Buffer Seal; Incl. Ref 7, 8; Not Serviced Separately; Order 1543275C1 Seal Kit
7		NSS		1	NO SE REPARA SEPARADAM. Rod Seal; Order 1543275C1 Seal Kit
8		NSS		1	NO SE REPARA SEPARADAM. Buffer Seal; Order 1543275C1 Seal Kit
9		238-5241		1	JUNTA HERMETICA 3-7/8 ID x 1/8
10		G32176		1	ANILLO Backup
11		276-2446		1	TORNILLO Self-Tapping, No. 8 x 3/8
12		123726A1		1	VASTAGO CILINDRO 51 mm (2 in) dia
13		123732A1		1	EMBOLO
14		G110531		1	ANILLO DE CIERRE
15		G110529		1	ANILLO
16		G110530		1	ANILLO
17		219-1		1	ENGRASADOR 1/8 PT x 21/32
18		86982441		1	PERNO ESPECIAL 1,25 x 3,00 in, Includes Washer

http://www.minnparbackhoeparts.com/

08-65A		p1	01/04

CONJUNTO DE CILINDRO - ESTABILIZADOR DE LA RETROEXCAVADORA (580SM+)

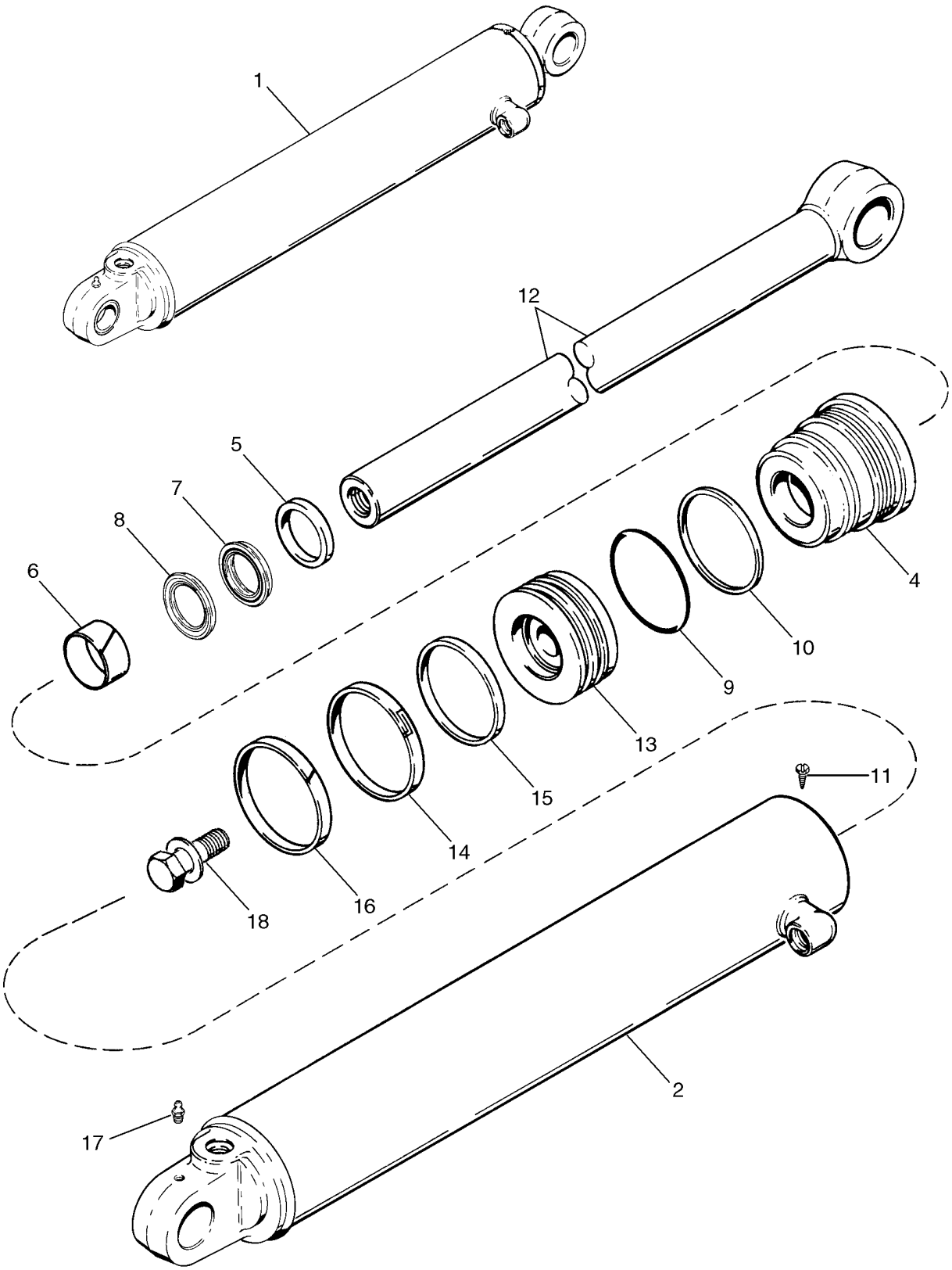

http://www.minnparbackhoeparts.com/

CONJUNTO DE CILINDRO - ESTABILIZADOR DE LA RETROEXCAVADORA (580SM+)

REF	FN	PART NUMBER	YR/SN	QTY	DESCRIPTION
1		177256A1		1	CILINDRO 127 ID x 519 mm strk; Right-Hand; Incl. Ref 2 - 18
1		177257A1		1	CILINDRO (CONJUNTO) 127 ID x 519 mm strk; Left-Hand; Incl. Ref 2 - 18
2		177258A1		1	TUBO Right-Hand
2		177259A1		1	TUBO Left-Hand
4		1542918C3		1	PALIER GLAND
		1543289C2		1	JUEGO JUNTAS Seal; Incl. Ref 5 - 10, 14 - 16; Plus An Additional Seal Not Used In This Application
5		D95145		1	LIMPIADOR
6		G102426		1	CASQUILLO
		1542877C1		1	JEUGO Rod and Buffer Seal; Incl. Ref 7, 8; Not Serviced Separately; Order 1543289C2 Seal Kit
7		NSS		1	NO SE REPARA SEPARADAM. Rod Seal; Order 1543289C2 Seal Kit
8		NSS		1	NO SE REPARA SEPARADAM. Buffer Seal; Order 1543289C2 Seal Kit
9		238-5247		1	JUNTA HERMETICA 4-5/8 ID x 1/8
10		G107970		1	ANILLO Backup
11		276-2446		1	TORNILLO Self-Tapping, No. 8 x 3/8
12		177261A1		1	VARILLA 57 mm (2-1/4 in) dia
13		G110594		1	EMBOLO
14		1986753C1		1	ANILLO DE CIERRE
15		G102092		1	ANILLO
16		G102090		1	ANILLO
17		219-1		1	ENGRASADOR 1/8 PT x 21/32
18		86982442		1	PERNO ESPECIAL 1,25 x 3,25 lg; Incl. Washer

http://www.minnparbackhoeparts.com/

08-66		p1	06/04

CONJUNTO DE CILINDRO - DE LA RETROEXCAVADORA

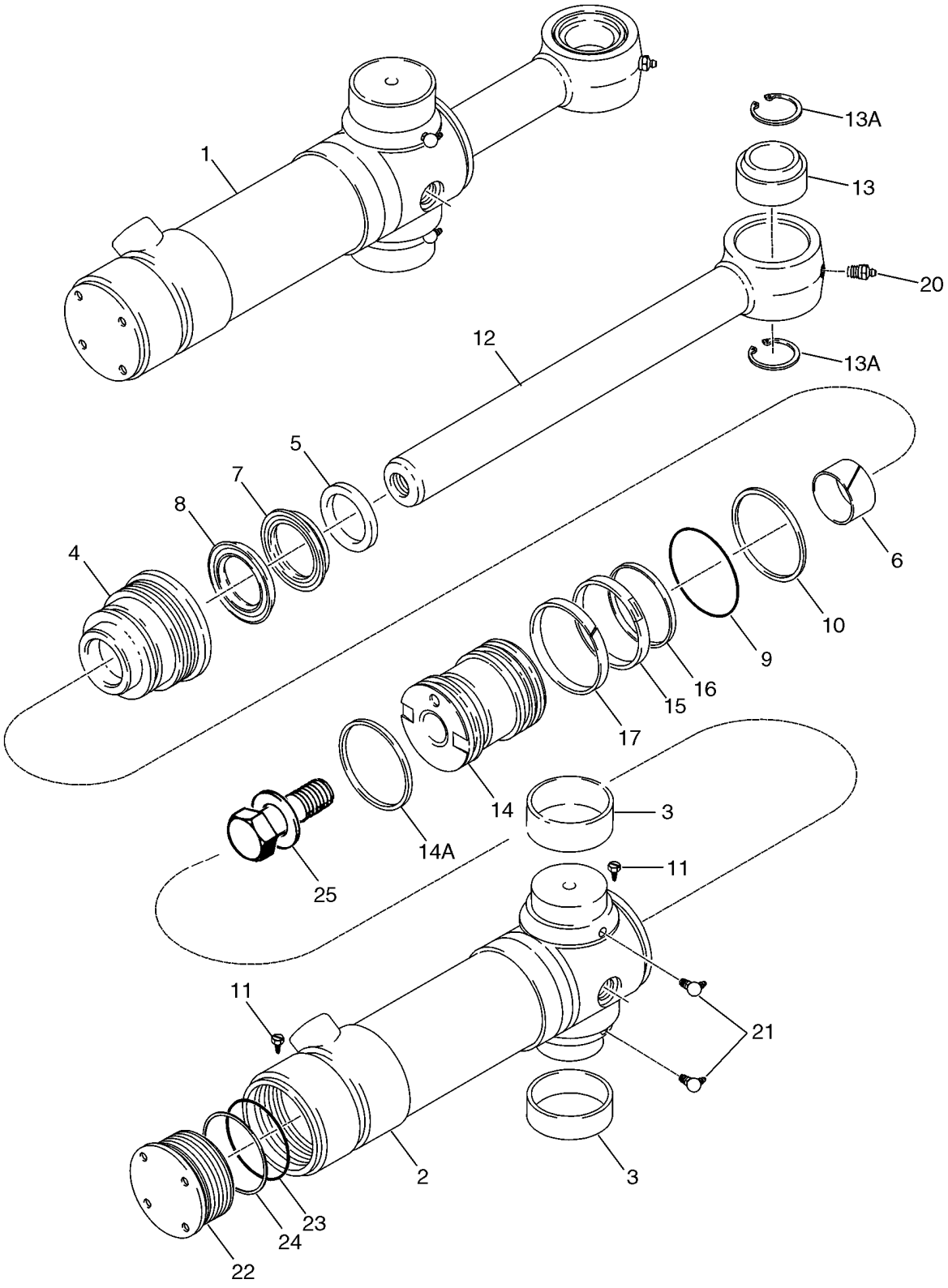

http://www.minnparbackhoeparts.com/

CONJUNTO DE CILINDRO - DE LA RETROEXCAVADORA

REF	FN	PART NUMBER	YR/SN	QTY	DESCRIPTION
1		139808A2		2	CILINDRO (CONJUNTO) 102 ID x 292 mm strk; Incl. Ref 2- 25
2		199953A2		1	TUBO Incl. Ref 2, 3, 11, 22 - 24; Not Available As An Assembly; Order Components
2		139810A2		1	CILINDRO DE GATO Incl. Ref 3
3		124568A2		2	ANILLO Bushing
4		297283A1		1	PALIER GLAND
		122535A1		1	EMPAQUE DE JUNTAS Seal Repair; Incl. Ref 5 - 10, 14A - 17, 23, 24
5		D95144		1	RETEN WIPER
6		G101533		1	CASQUILLO
		1542876C1		1	EMPAQUETADURA Rod and Buffer Seal; Incl. Ref 7, 8; Not Serviced Separately; Order 122535A1 Seal Kit
7		NSS		1	NO SE REPARA SEPARADAM. Rod Seal; Order 122535A1 Seal Kit
8		NSS		1	NO SE REPARA SEPARADAM. Buffer Seal; Order 122535A1 Seal Kit
9		238-5239		1	JUNTA HERMETICA 3-5/8 x 1/8
10		G109299		1	ANILLO Backup
11		276-2446		2	TORNILLO Self-Tapping, No. 8 x 3/8
12		87413722		1	VASTAGO CILINDRO 51 mm (2 in) dia; Incl. 13, 13A
13		137248A1		1	ANILLO
13A		100-21315		2	ANILLO DE CIERRE No. 315
14		112370A3		1	PISTON CILINDRO
14A		121478A1		1	ANILLO 4 in OD, Cast Iron
15		G102285		1	ANILLO DE CIERRE
16		G100440		1	ANILLO
17		G100448		1	ANILLO
20		219-1		1	ENGRASADOR 1/8 PT x 21/32
21		219-55		2	ENGRASADOR 90 deg, 1/8 PT x 27/32
		124462A1		1	PALIER CAP ASSEMBLY, End; Incl. Ref 22 - 24; Not Available As An Assembly, Order Components
22		124463A1		1	PALIER END CAP
23		238-5242		1	JUNTA HERMETICA 4 ID x 1/8
24		G32176		1	ANILLO Backup
25		86982439		1	PERNO ESPECIAL 1 x 4,00 in, Includes Washer

http://www.minnparbackhoeparts.com/

08-67		p1	05/04

CONJUNTO DE CILINDRO - AGUILON DE LA RETROEXCAVADORA

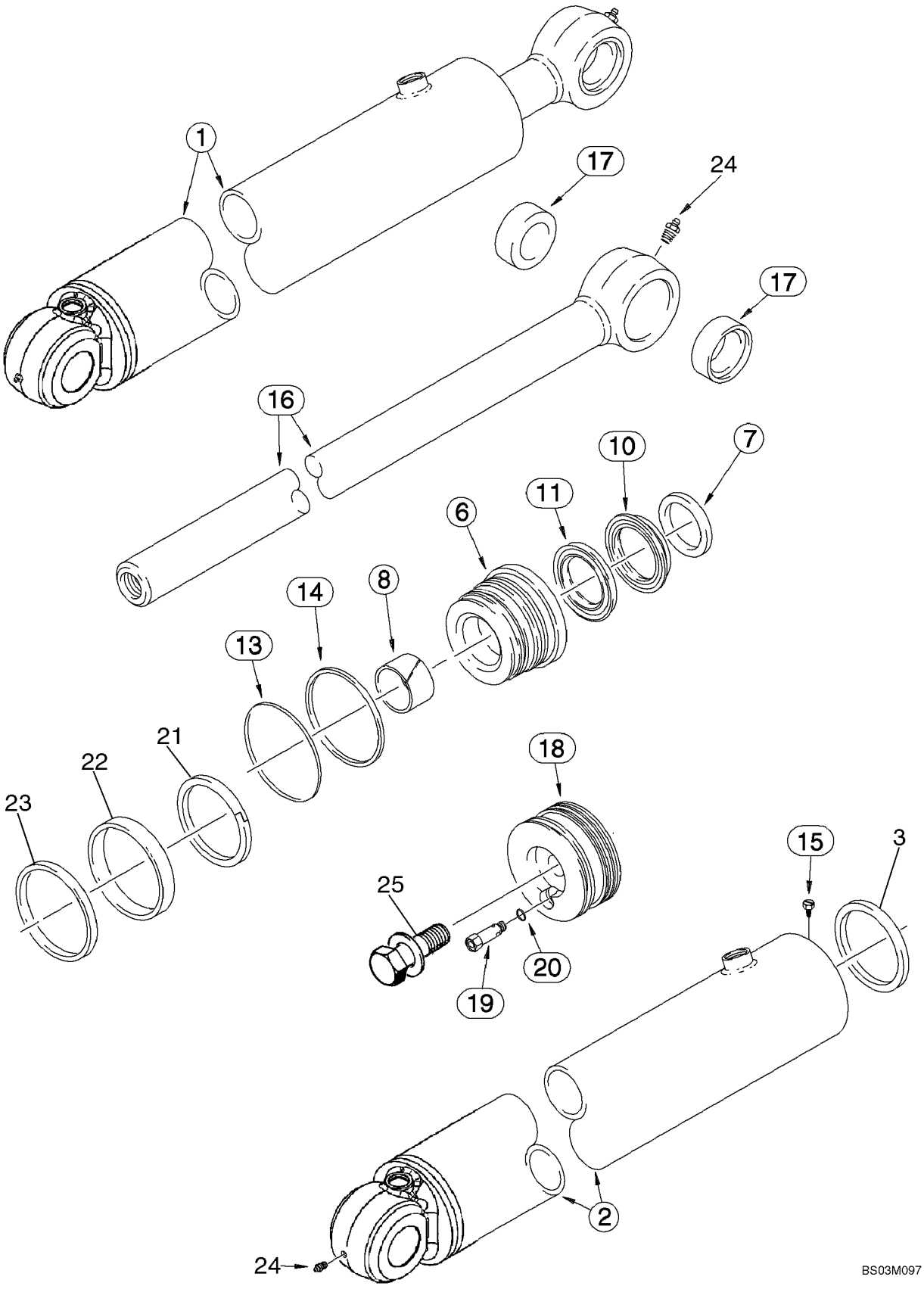

http://www.minnparbackhoeparts.com/

CONJUNTO DE CILINDRO - AGUILON DE LA RETROEXCAVADORA

REF	FN	PART NUMBER	YR/SN	QTY	DESCRIPTION
1		87417644		1	CILINDRO (CONJUNTO) 133 ID x 843 mm strk; Incl. Ref 2 - 25
2		87417762		1	TUBO (CONJUNTO) Replaces 87417647 Tube Used In Production
3		87417649		1	JUNTA GANCHO Internal Tube Seal; Not Included With Tube, Purchase Separately
6		87418279		1	EMPAQUETADURA
		87418297		1	SERIE DE JUNTAS Incl. Ref 7 - 14, 21 - 23
7		D95146		1	LIMPIADOR
8		G102427		1	CASQUILLO
		1542879C1		1	JEUGO Rod and Buffer Seal; Incl. Ref 10, 11; Not Serviced Separately; Order 87418297 Seal Kit
10		NSS		1	NO SE REPARA SEPARADAM. Rod Seal; Order 87418297 Seal Kit
11		NSS		1	NO SE REPARA SEPARADAM. Buffer Seal; Order 87418297 Seal Kit
13		238-5249		1	JUNTA HERMETICA 4-7/8 ID x 1/8
14		380621A1		1	JUNTA
15		276-2446		1	TORNILLO Self-Tapping, No. 8 x 3/8
16		380609A1		1	VASTAGO CILINDRO 63.5 mm (2-1/2 in) dia; Incl. Ref 17
17		123407A1		2	ANILLO Bushing
18		87417651		1	EMBOLO
19		1958028C1		1	VALVULA Cartridge; Component Parts Not Serviced Separately; Incl. Ref 20
20		237-6006		1	JUNTA HERMETICA 15/32 ID x 5/64
21		87402623		1	ANILLO Cast Iron
22		444640A1		1	ANILLO DE CIERRE Wear Ring
23		380627A1		1	SELLO (CONJUNTO) Piston
24		219-1		2	ENGRASADOR 1/8 PT x 21/32
25		86982443		1	PERNO ESPECIAL Includes Washer

http://www.minnparbackhoeparts.com/

08-68		p1	04/04

CONJUNTO DE CILINDRO - BRAZO DE LA RETROEXCAVADORA

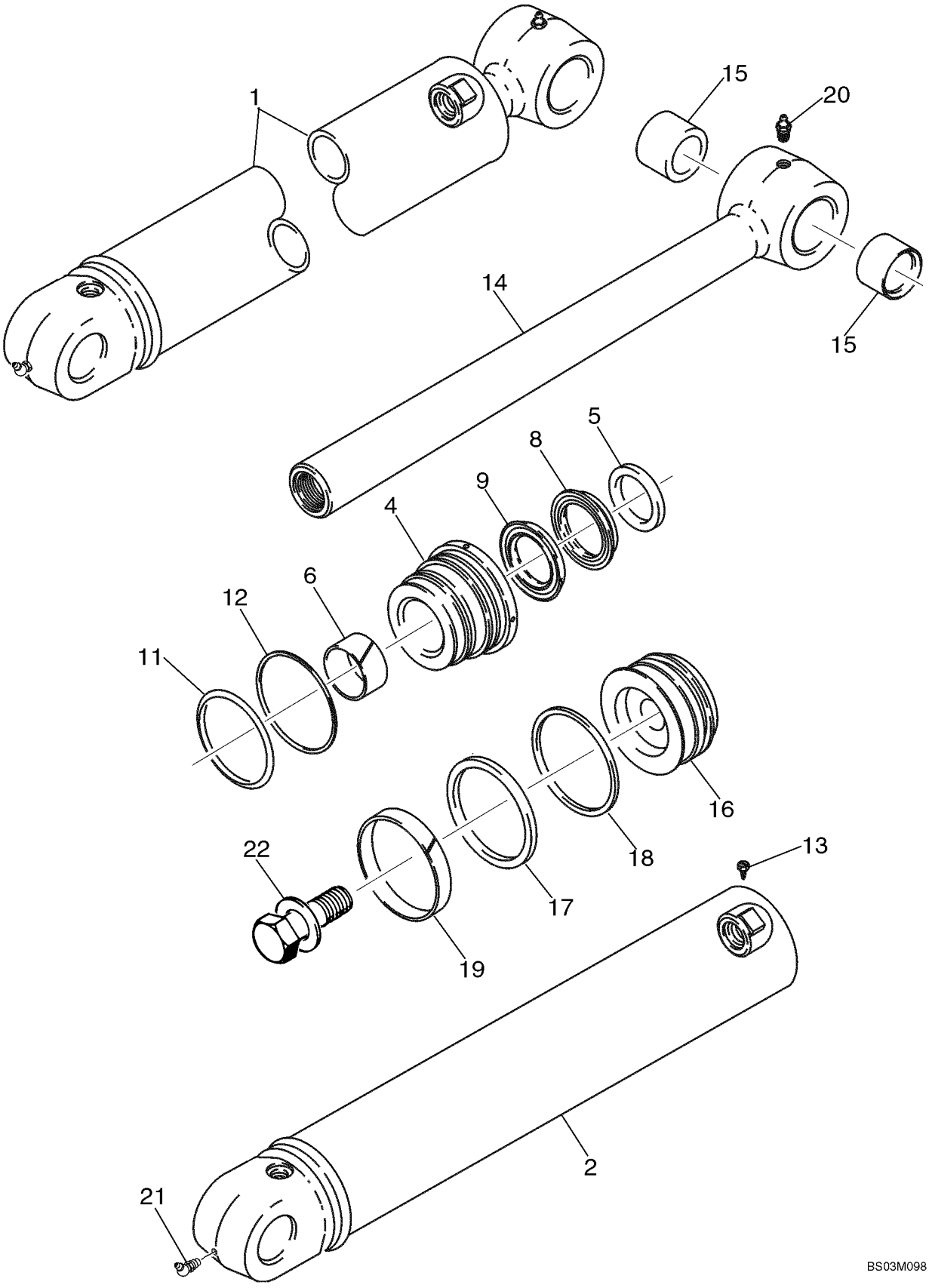

http://www.minnparbackhoeparts.com/

CONJUNTO DE CILINDRO - BRAZO DE LA RETROEXCAVADORA

REF	FN	PART NUMBER	YR/SN	QTY	DESCRIPTION
1		183795A3		1	CILINDRO (CONJUNTO) 127 ID x 583 mm strk; Incl. Ref 2, 4 - 22; If Used
1		183795A4		1	CILINDRO (CONJUNTO) 127 ID x 583 mm strk; Incl. Ref 2A, 4 - 22; If Used
2		310994A1		1	TUBO 183795A3 Cylinder; If Used
2A		310994A2		1	TUBO 183795A4 Cylinder; If Used
4		1542914C1		1	EMPAQUETADURA
		1542915C2		1	JUEGO JUNTAS Seal; Incl. Ref 5 - 12, 17 - 19; Plus Two Additional Seals Not Used In This Application
5		D95146		1	LIMPIADOR
6		G102427		1	CASQUILLO
		1542879C1		1	JEUGO Rod and Buffer Seal; Incl. Ref 8, 9; Not Serviced Separately; Order 1542915C2 Seal Kit
8		NSS		1	NO SE REPARA SEPARADAM. Rod Seal; Order 1542915C2 Seal Kit
9		NSS		1	NO SE REPARA SEPARADAM. Buffer Seal; Order 1542915C2 Seal Kit
11		238-5247		1	JUNTA HERMETICA 4-5/8 ID x 1/8
12		G107970		1	ANILLO Backup
13		276-2446		1	TORNILLO Self-Tapping, No. 8 x 3/8
14		178850A1		1	VASTAGO CILINDRO 64 mm (2-1/2 in) dia; Incl. Ref 15
15		D141555		2	CASQUILLO
16		311109A1		1	EMBOLO
17		1986753C1		1	ANILLO DE CIERRE
18		G102092		1	ANILLO
19		G102090		1	ANILLO
20		219-1		2	ENGRASADOR 1/8 PT x 21/32
21		219-36		1	ENGRASADOR 45 deg, 1/8 PTF x 7/8
22		86982444		1	PERNO ESPECIAL 1,5 x 3,5 in, Includes Washer

http://www.minnparbackhoeparts.com/

CONJUNTO DE CILINDRO - CUCHARON DE LA RETROEXCAVADORA

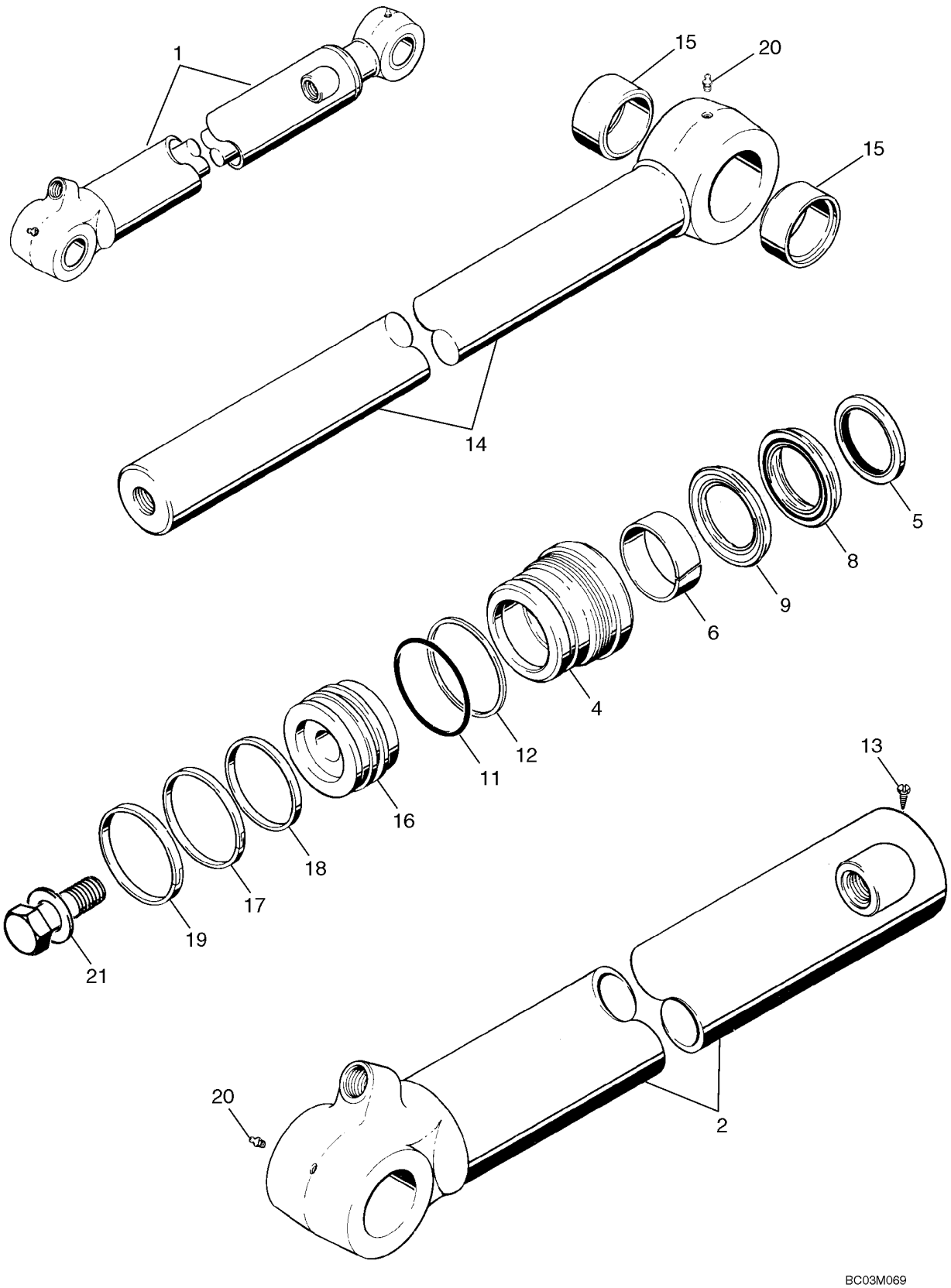

http://www.minnparbackhoeparts.com/

CONJUNTO DE CILINDRO - CUCHARON DE LA RETROEXCAVADORA

REF	FN	PART NUMBER	YR/SN	QTY	DESCRIPTION
1		235916A1		1	CILINDRO (CONJUNTO) 80 ID x 872 mm strk; Incl. Ref 2 - 21
2		235917A2		1	CILINDRO DE GATO TUBE
4		235921A1		1	PALIER GLAND
		1542923C2		1	JUEGO JUNTAS Incl. Ref 5 - 12, 17 - 19
5		D95146		1	LIMPIADOR
6		G109908		1	CASQUILLO
		1542879C1		1	JEUGO Rod and Buffer Seal; Incl. Ref 8, 9; Not Serviced Separately; Order 1542923C2 Seal Kit
8		NSS		1	NO SE REPARA SEPARADAM. Rod Seal; Order 1542923C2 Seal Kit
9		NSS		1	NO SE REPARA SEPARADAM. Buffer Seal; Order 1542923C2 Seal Kit
11		238-5235		1	JUNTA HERMETICA 3-1/8 ID x 1/8
12		D38858		1	JUNTA HERMETICA Backup Ring
13		276-2446		1	TORNILLO Self-Tapping, No. 8 x 3/8
14		196164A1		1	VASTAGO CILINDRO 64 mm (2-1/2 in) dia; Incl. Ref 15
15		D140029		2	CASQUILLO
16		1986906C1		1	EMBOLO
17		G102286		1	ANILLO DE CIERRE
18		G100710		1	ANILLO
19		G100711		1	ANILLO DE DESGASTE
20		219-1		2	ENGRASADOR 1/8 PT x 21/32
21		86982442		1	PERNO ESPECIAL 1,25 x 3,25 in, Includes Washer

http://www.minnparbackhoeparts.com/

08-70		p1	01/04

CONJUNTO DE CILINDRO - PALA EXTENSIBLE DE LA RETROEXCAVADORA

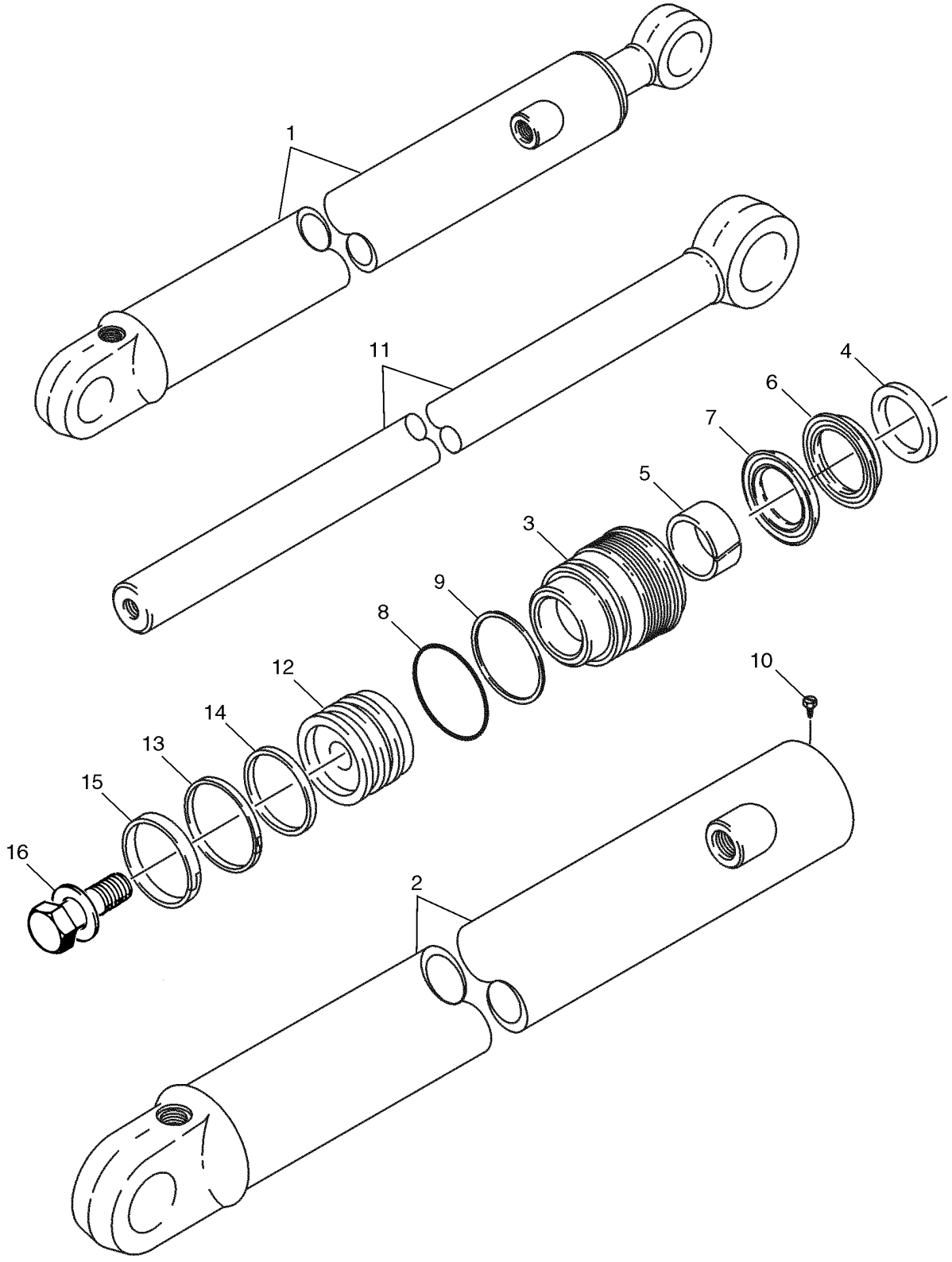

http://www.minnparbackhoeparts.com/

CONJUNTO DE CILINDRO - PALA EXTENSIBLE DE LA RETROEXCAVADORA

REF	FN	PART NUMBER	YR/SN	QTY	DESCRIPTION
1		1340969C2		1	CILINDRO (CONJUNTO) 76 ID x 1068 mm strk; Incl. Ref 2 - 16
2		1340970C1		1	CILINDRO DE GATO TUBE
3		297281A1		1	PALIER GLAND
		1543267C1		1	EMPAQUE DE JUNTAS Seal; Incl. Ref 4 - 9, 13 - 15
4		D95143		1	ANILLO DE CIERRE WIPER
5		G102425		1	CASQUILLO
		1542875C1		1	JUEGO DE PIEZAS Rod and Buffer Seal; Incl. Ref 6, 7; Not Serviced Separately; Order 1543267C1 Seal Kit
6		NSS		1	NO SE REPARA SEPARADAM. Rod Seal; Order 1543267C1 Seal Kit
7		NSS		1	NO SE REPARA SEPARADAM. Buffer Seal; Order 1543267C1 Seal Kit
8		238-5231		1	JUNTA HERMETICA 2-5/8 ID x 1/8
9		G109298		1	ANILLO Backup
10		276-2446		1	TORNILLO Self-Tapping, No. 8 x 3/8
11		1980296C1		1	VASTAGO CILINDRO 44 mm (1-3/4 in) dia
12		G107277		1	EMBOLO
13		G102288		1	SELLO (CONJUNTO)
14		G100444		1	ANILLO DE CIERRE
15		G100449		1	ANILLO DE DESGASTE
16		86982435		1	PERNO ESPECIAL 3/4 x 2,5 in, Incl. Washer

http://www.minnparbackhoeparts.com/

NOTES

http://www.minnparbackhoeparts.com/

SECTION INDEX

09-01	CONTROLES - ELEVACIÓN DE LA CARGADORA Y CUCHARÓN
09-02	CONTROLES - ALMEJA DE LA CARGADORA
09-03	CONTROLES - CARGADORA AUTO-NIVELADORA
09-04	MARCO - ELEVADOR DE LA CARGADORA
09-05	MARCO - VARILLAJE DE LA CARGADORA
09-06	CUCHARÓN, BORDE ANCHO DE LA CARGADORA (82 IN) (580SM)
09-07	CUCHARÓN, BORDE ANCHO DE LA CARGADORA (93 IN) (580SM / 580SM+)
09-08	CUCHARÓN, ALMEJA DE LA CARGADORA (82 IN) (580SM)
09-08A	CUCHARÓN, ALMEJA DE LA CARGADORA (93 IN) (580SM+)
09-09	PROTECTOR - VÁLVULA, CARGADORA
09-10	ACOPLADOR RÁPIDO, HERRAMIENTA
09-11	CUBIERTAS - TORRE DE CONTROL DE LA RETROEXCAVADORA, SIN DE CONTROL PILOTO
09-12	APOYO DE LA TORRE DE CONTROL DE LA RETROEXCAVADORA Y JUNTAS, SIN DE CONTROL PILOTO
09-13	TORRE DE CONTROL DE LA RETROEXCAVADORA SOPORTE, CON DE CONTROL PILOTO
09-14	TORRE DE CONTROL DE LA RETROEXCAVADORA SOPORTE DE JUNTA, CON DE CONTROL PILOTO
09-15	TORRE DE CONTROL DE LA RETROEXCAVADORA PALANCA (TRABA DEL AGUILÓN), CON DE CONTROL PILOTO
09-16	CONTROLES - RETROEXCAVADORA, CON PEDAL DE OSCILACIÓN (MODELOS SIN PALA EXTENDIBLE)
09-17	CONTROLES - RETROEXCAVADORA, CON PEDAL DE OSCILACIÓN (MODELOS CON PALA EXTENDIBLE)
09-18	CONTROLES - RETROEXCAVADORA, CON OSCILACIÓN MANUAL (MODELOS SIN PALA EXTENDIBLE)
09-19	CONTROLES - RETROEXCAVADORA, CON OSCILACIÓN MANUAL (MODELOS SIN PALA EXTENDIBLE)
09-19A	CONTROLES - RETROEXCAVADORA, PATRÓN DE CONTROL DE LA EXCAVADORA
09-20	CONTROLES - RETROEXCAVADORA, CON OSCILACIÓN MANUAL (MODELOS CON PALA EXTENDIBLE)
09-21	CONTROLES - SISTEMA HIDRÁULICO AUXILIAR DE LA RETROEXCAVADORA, SIN DE CONTROL PILOTO
09-22	RETROEXCAVADORA - ESTABILIZADORES, PLACAS Y ALMOHADILLAS(580SM)
09-22A	RETROEXCAVADORA - ESTABILIZADORES, PLACAS Y ALMOHADILLAS (580SM+)
09-23	RETROEXCAVADORA - TORRE DE OSCILACIÓN Y CILINDROS DE OSCILACIÓN
09-24	RETROEXCAVADORA - AGUILÓN Y TORRE DE OSCILACIÓN
09-25	TRABA DEL AGUILÓN (SIN DE CONTROL PILOTO)
09-25A	TRABA DEL AGUILÓN (CON DE CONTROL PILOTO)
09-26	RETROEXCAVADORA - PALA Y CUCHARÓN
09-27	RETROEXCAVADORA - PALA, EXTENSIBLE
09-28	PALA, RETROEXCAVADORA - ACOPLADOR, HIDRÁULICO (ACOPLADOR DEL CUCHARÓN DE LA RETROEXCAVADORA HIDRÁULI
09-29	CUCHARÓN, RETROEXCAVADORA UNIVERSAL (305 MM (12 INCH) WIDE)
09-30	CUCHARÓN, RETROEXCAVADORA UNIVERSAL (406 MM (16 INCH) WIDE)
09-31	CUCHARÓN, RETROEXCAVADORA UNIVERSAL (457 MM (18 INCH) WIDE)
09-32	CUCHARÓN, RETROEXCAVADORA UNIVERSAL (610 MM (24 INCH) / 762 MM (30 INCH) WIDE)
09-33	CUCHARÓN, RETROEXCAVADORA UNIVERSAL (914 MM (36 INCH) WIDE)
09-34	CUCHARÓN, RETROEXCAVADORA UNIVERSAL (610 MM (24 INCH) / 762 MM (30 INCH) WIDE)

http://www.minnparbackhoeparts.com/

SECTION INDEX

09-34A	CONJUNTO DEL PUNTO DE HIELO
09-35	CONTRAPESO, DELANTERO
09-36	CHASIS / SOPORTES, RECEPTÁCULO - PANTALLA, ENTRADA DE AIRE
09-37	DEPÓSITO, ACEITE - CAJA, BATERÍA Y HERRAMIENTA
09-38	REVESTIMIENTO DEL RADIADOR
09-39	CAPO - PANELES, LATERALES
09-40	CAPO - PARRILLA
09-41	PLACAS, SUELO - ALFOMBRILLAS
09-42	CUBIERTA DEL GUARDABARROS, LADO IZQUIERDO - PANEL, CIERRE TRASERO (BANDEJA DE ALMACENAMIENTO CON SUJ
09-43	EXTENSIONES DEL GUARDABARROS
09-44	GUARDABARROS
09-45	ASIENTO - SOPORTE (MILSCO EN SEARS SUSPENSIÓN DE AIRE)
09-45A	ASIENTO - SOPORTE (SEARS, ESTÁNDAR)
09-45B	ASIENTO - SOPORTE (SEARS SUSPENSION MECANICA)
09-46	CONJUNTO DEL ASIENTO, ESTÁNDAR (MILSCO)
09-47	SOPORTE DEL ASIENTO Y PEDESTAL, ESTÁNDAR (MILSCO)
09-48	CONJUNTO DEL ASIENTO, SUSPENSION MECANICA (MILSCO)
09-49	PEDESTAL DEL ASIENTO Y SUSPENSIÓN, SUSPENSIÓN MECÁNICA (MILSCO)
09-49A	CONJUNTO DEL ASIENTO, SUSPENSION MECANICA (SEARS)
09-50	CONJUNTO DEL ASIENTO, SUSPENSION DE AIRE (SEARS)
09-51	PEDESTAL DEL ASIENTO Y SUSPENSIÓN, SUSPENSIÓN DE AIRE (SEARS)
09-52	CABINA - CRISTAL, ESPEJO Y MANTENER ABIERTO
09-53	CABINA - CHASIS Y CUBIERTAS
09-54	CABINA - PUERTAS, SI UTILIZADO (VER LAS CRISTAL / BISAGRA; REF 4, 27, 29)
09-54A	CABINA - PUERTAS, SI UTILIZADO (VER LAS CRISTAL / BISAGRA; REF 4, 27, 29)
09-55	CABINA - MONTAJE DE LA PUERTA
09-56	CABINA - VENTANILLA, DERECHA, PARA MARCOS DE CABINA DE PUERTA ÚNICA, SI UTILIZADO (VER LAS CRISTAL /
09-56A	CABINA - VENTANILLA, DERECHA, PARA MARCOS DE CABINA DE PUERTA ÚNICA, SI UTILIZADO (VER LAS CRISTAL /
09-57	CABINA - VENTANA, TRASERA
09-58	CABINA - ARANDELA, PARABRISAS
09-59	CABINA - LIMPIA PARABRISAS
09-60	REVESTIMIENTO DE LA CABINA - FILTRO, REJILLAS, LÁMPARA DEL TECHO
09-61	CABINA - FILTRO, AIRE
09-62	CABINA - ALOJAMIENTO DEL SOPLADOR, CONDUCTOS DE VENTILACIÓN, TUBOS DE DRENADO
09-63	CABINA - CALENTADOR
09-64	CABINA - TUBOS DE AIRE ACONDICIONADO, NÚCLEO DEL EVAPORADOR
09-65	CABINA - AIRE ACONDICIONADOR, CONDENSADOR, RECIBIDOR-SECADOR
09-66	CABINA - COMPRESOR DEL AIRE ACONDICIONADO
09-67	TECHO Y ROPS - CHASIS, CUBIERTAS, ESPEJOS, VISOR
09-68	TECHO Y ROPS - VIDRIO
09-69	TECHO Y ROPS - LIMPIAPARABRISAS, DELANTERO Y LAVAPARABRISAS
09-70	ESPEJO, VISTA TRASERA - SOPORTE, MODELLE MIT KABINE
09-71	EMBLEMA DE VEHICULO LENTO
09-72	CALCOMANIAS
09-73	CALCOMANIAS
09-74	CALCOMANIAS
09-75	CALCOMANIAS - INGLES
09-76	CALCOMANIAS - CASTELLANO PARA LATINOAMERICA

http://www.minnparbackhoeparts.com/

SECTION INDEX

09-77	CALCOMANIAS - FRANCES CANADIENSE
09-78	CALCOMANIAS - INGLES
09-79	CALCOMANIAS - CASTELLANO PARA LATINOAMERICA
09-80	CALCOMANIAS - FRANCES CANADIENSE

http://www.minnparbackhoeparts.com/

CONTROLES - ELEVACIÓN DE LA CARGADORA Y CUCHARÓN

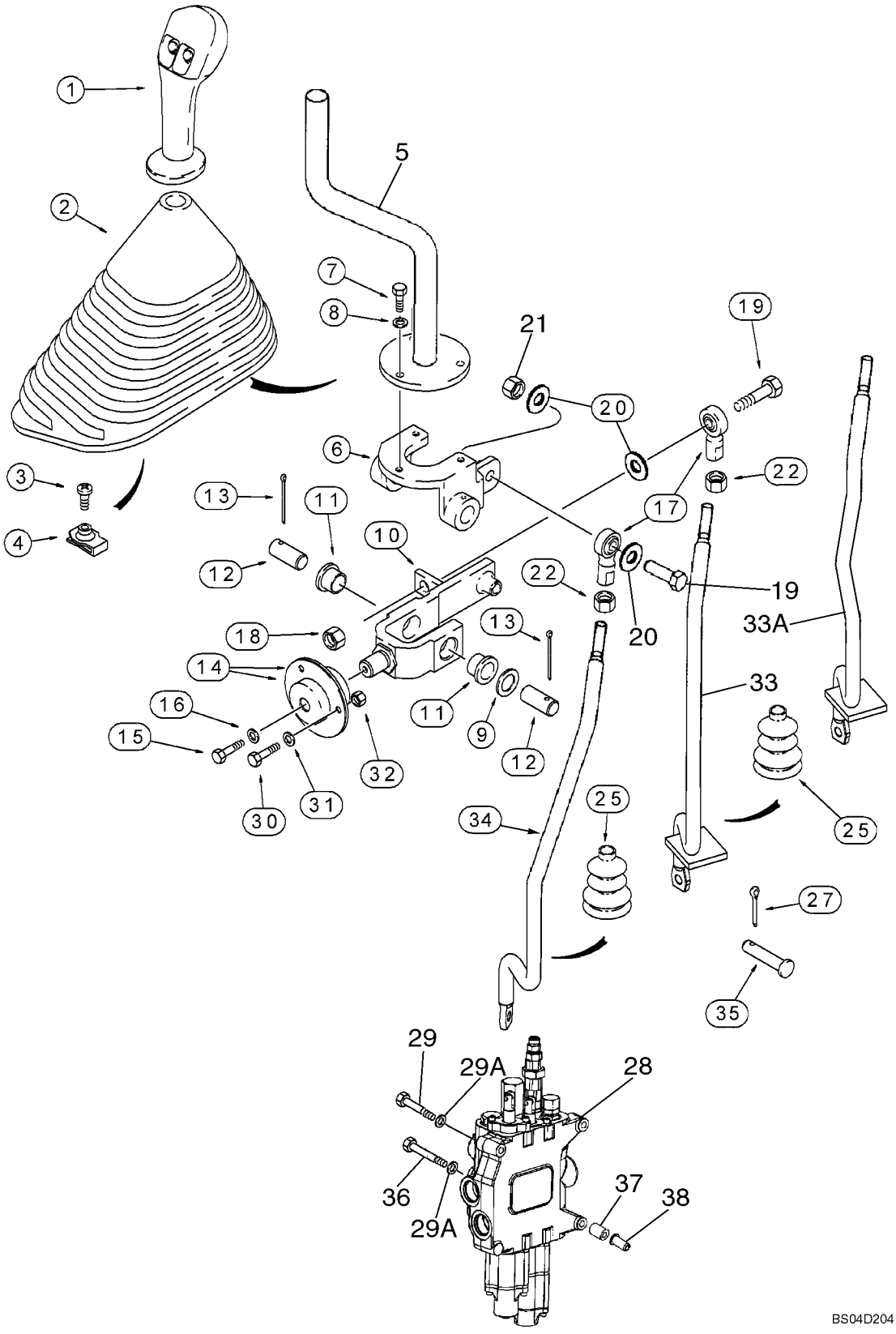

http://www.minnparbackhoeparts.com/

CONTROLES - ELEVACIÓN DE LA CARGADORA Y CUCHARÓN

REF	FN	PART NUMBER	YR/SN	QTY	DESCRIPTION
1		87412687		1	MANECILLA Loader Control Lever, Two Button, Declutch and Differential Lock Switches; Models Without Powershift Transmission
1A		87412695		1	MANECILLA Loader Control Lever, Three Button; Kick Down, Declutch and Differential Lock Switches; Models With Powershift Transmission; Not Illustrated
		256347A1		1	CONECTOR
		258616A1		1	CERRADURA
		298176A1		1	TAPÓN Not Used With Ref 1A
		87301351		X	MASILLA Permabond Adhesive, F246, 1 ml With No. 5 Initiator
2		133615A1		1	CASQUETE
3		87310126		1	TORNILLO No. 10 x 3/4, Stainless Steel; Replaces 140-107 Non-Stainless Steel Screw Used On Some Models
4		131-861		1	TUERCA No. 10
5		132661A1		1	PALANCA
6		195615A1		1	APOYADERO
7		614-6020		3	TORNILLO M6 x 20; Replaces 614-6016 M6 x 16 Bolt Used On Some Models
8		495-11028		3	ARANDELA 9/32 x 5/8 x 1/16
9		495-81184		1	ARANDELA
10		176311A1		1	JUNTA, GOMMA Incl. Ref 11
11		108088A1		2	CASQUILLO
12		102761A1		2	BULON/PIN, LARGO
13		432-828		2	PASADOR ABIERTO 1/8" x 1 3/4"
14		112380A1		2	COJINETE Incl. Ref 14A
14A		465004R91		1	COJINETE Not Illustrated
15		614-6016		1	TORNILLO M6 x 16
16		396-41028		1	ARANDELA 9/32 x 7/8 x 3/32
17		D136773		2	JUNTA DE ROTULA 3/8 NF
18		231-1446		1	CONTRA TUERCA 3/8
19		413-628		2	TORNILLO 3/8 x 1-3/4
20		496-21041		3	ARANDELA 13/32 x 13/16 x 3/32
21		425-106		1	TUERCA 3/8
22		425-116		2	TUERCA 3/8 NF
25		132931A1		2	FUELLE Cab Models

http://www.minnparbackhoeparts.com/

CONTROLES - ELEVACIÓN DE LA CARGADORA Y CUCHARÓN

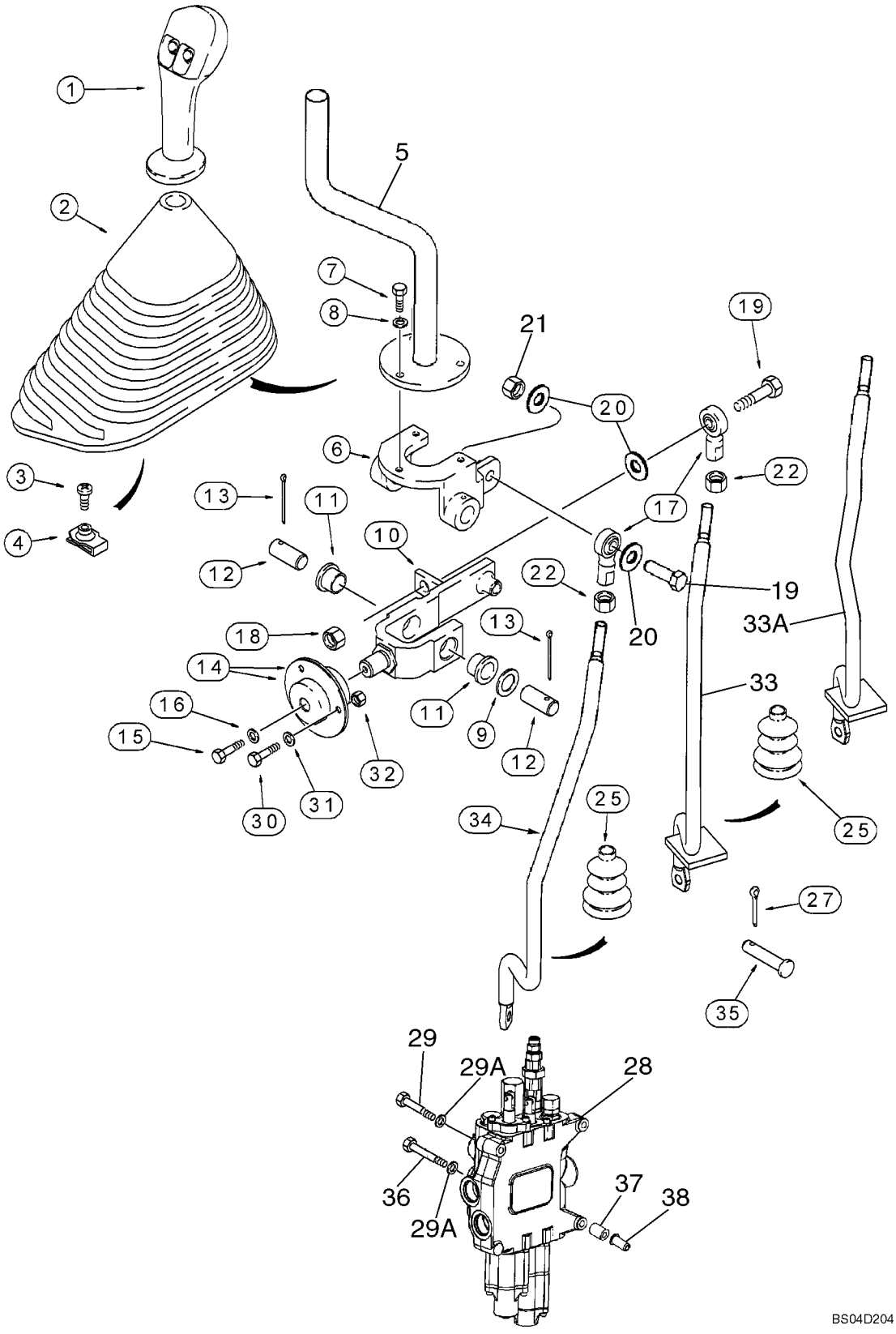

http://www.minnparbackhoeparts.com/

CONTROLES - ELEVACIÓN DE LA CARGADORA Y CUCHARÓN

REF	FN	PART NUMBER	YR/SN	QTY	DESCRIPTION
		189109A1		2	RESORTE Boot Retainer; Cab Models
27		432-612		2	PASADOR ABIERTO 3/32" x 3/4"
28		REF		1	MANUAL LOADER CONTROL VALVE, Two Spool; See Figure 08-34 For Two Spool Valve Options
29		814-10090		2	TORNILLO M10 x 90
29A		896-11010		3	ARANDELA 11 x 21 x 2,5 mm
30		614-6020		3	TORNILLO M6 x 20
31		396-41028		3	ARANDELA 9/32 x 7/8 x 3/32
32		829-1406		3	TUERCA M6; 10.9
33		87428151		1	VARILLA ROSCADA Bucket Control Rod; Canopy Units; No Longer Available, For Service Order 87446596 Rod, Ref 33A
33A		87446596		1	VARILLA ROSCADA Bucket Control Rod; Cab Units; Now Services Cab or Canopy Units
34		87428152		1	VARILLA ROSCADA Lift Control Rod
35		D149287		2	BULON/PIN, LARGO
36		814-10110		1	TORNILLO M10 x 110
37		87417599		3	SEPARADOR
38		87417721		3	ROSCA POSTIZA M10

http://www.minnparbackhoeparts.com/

CONTROLES - ALMEJA DE LA CARGADORA

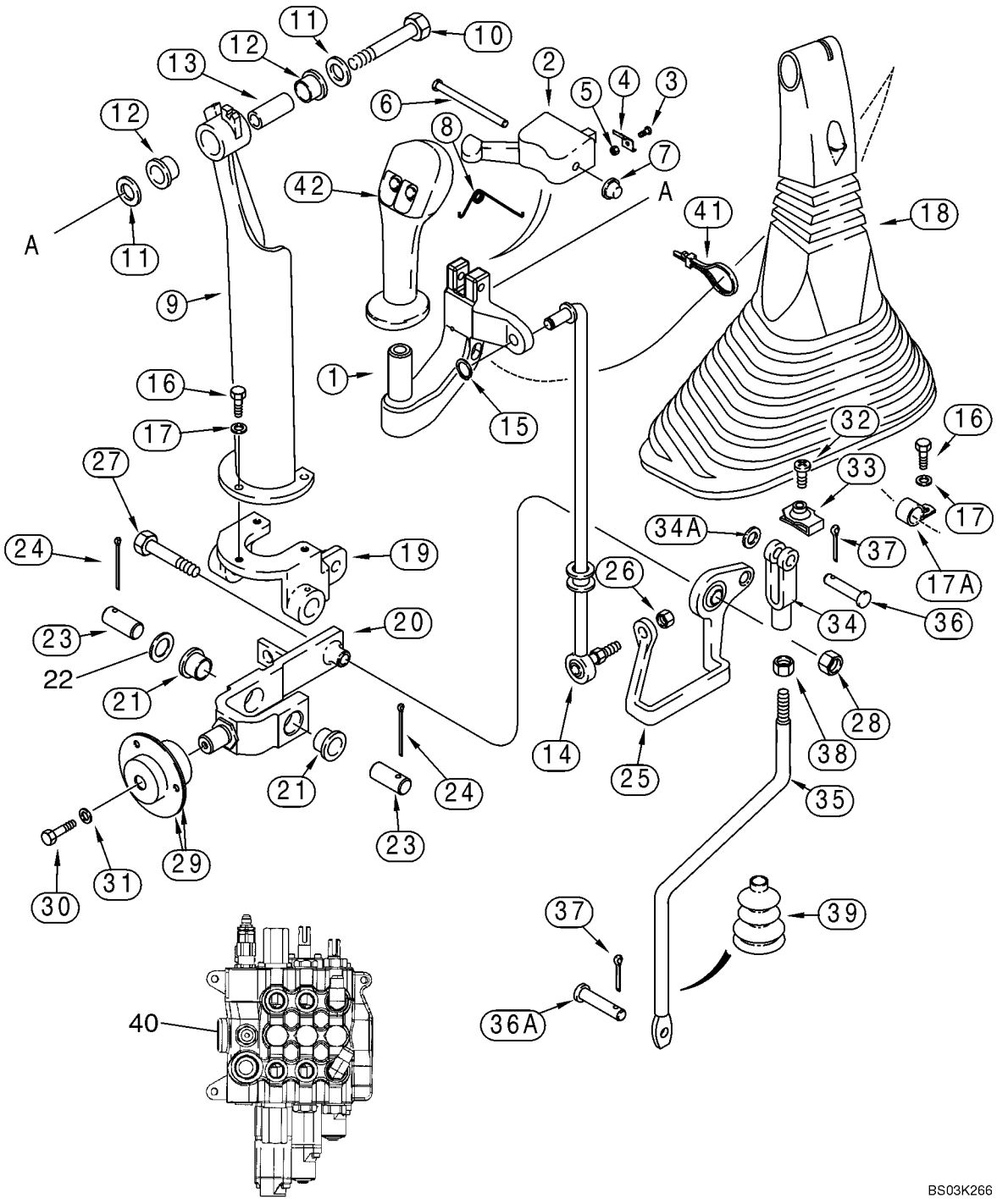

http://www.minnparbackhoeparts.com/

CONTROLES - ALMEJA DE LA CARGADORA

REF	FN	PART NUMBER	YR/SN	QTY	DESCRIPTION
1		297615A1		1	MANECILLA
2		123815A1		1	PESTILLO
3		170-104		2	TORNILLO No. 5 x 3/8
4		129914A1		2	RESORTE
5		225-14105		2	TUERCA No. 5
6		439-5436		1	PASADOR 1/4 x 2-1/4
7		143210A1		1	OBTURADOR CAP
8		124243A1		1	RESORTE
9		123493A1		1	APOYADERO
10		413-632		1	TORNILLO 3/8 x 2
11		495-21044		2	ARANDELA 7/16 x 1 x 5/64
12		108088A1		2	CASQUILLO
13		133989A1		1	BULON/PIN, LARGO SLEEVE
14		239306A1		1	PALANCA MANDO
15		103-1437		1	CLIP ELECTRICO RETAINING RING
16		614-6020		3	TORNILLO M6 x 20; Replaces 614-6016 M6 x 16 Bolt Used On Some Models
17		495-11028		3	ARANDELA 9/32 x 5/8 x 1/16
17A		515-2295		1	COLLAR 3/8 ID
18		133617A1		1	CASQUETE
19		195615A1		1	APOYADERO
20		176311A1		1	JUNTA, GOMMA Incl. Ref 21
21		108088A1		2	CASQUILLO
22		495-81184		1	ARANDELA
23		102761A1		2	BULON/PIN, LARGO
24		432-828		2	PASADOR ABIERTO 1/8" x 1 3/4"
25		112382A1		1	ARTICULACION Bellcrank
26		425-116		1	TUERCA 3/8 NF
27		413-632		1	TORNILLO 3/8 x 2
28		231-1446		1	CONTRA TUERCA 3/8
29		112380A1		2	COJINETE Incl. (1) 465004R91 Internal Bearing
		465004R91		1	COJINETE
30		614-6016		1	TORNILLO M6 x 16
31		396-41028		1	ARANDELA 9/32 x 7/8 x 3/32
32		87310126		1	TORNILLO No. 10 x 3/4, Stainless Steel; Replaces 140-107 Non-Stainless Steel Screw Used On Some Models

http://www.minnparbackhoeparts.com/

CONTROLES - ALMEJA DE LA CARGADORA

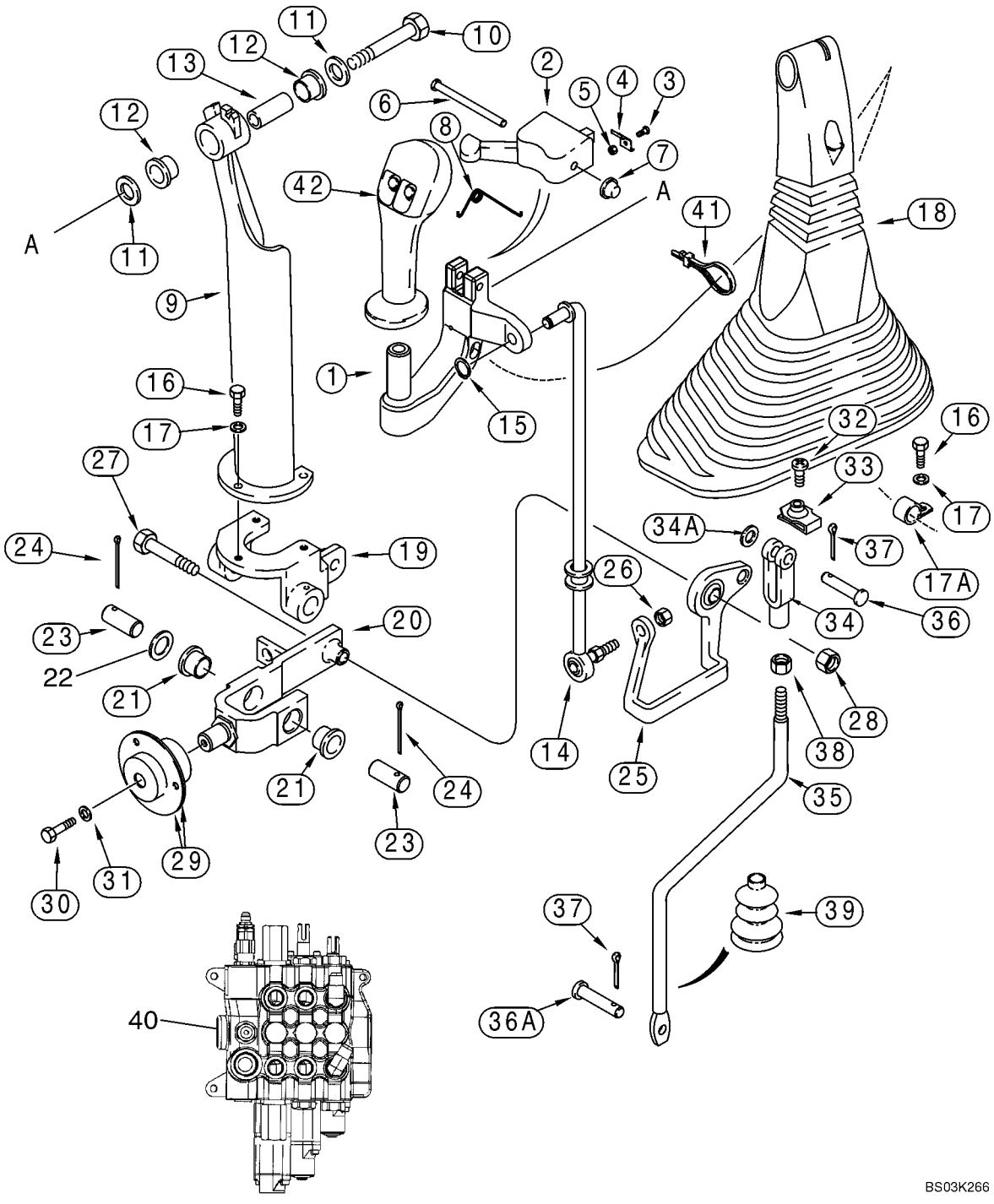

http://www.minnparbackhoeparts.com/

CONTROLES - ALMEJA DE LA CARGADORA

REF	FN	PART NUMBER	YR/SN	QTY	DESCRIPTION
33		131-121		1	TUERCA ESPECIAL No. 10
34		213-126		1	HORQUILLA PEQUENA 3/8 NF
34A		495-11041		1	ARANDELA 13/32 x 13/16 x 1/16
35		87428153		1	VARILLA ROSCADA Clam Control Rod
36		D149288		1	BULON/PIN, LARGO
36A		D149287		1	BULON/PIN, LARGO
37		432-612		2	PASADOR ABIERTO 3/32" x 3/4"
38		425-116		1	TUERCA 3/8 NF
39		132873A1		1	FUELLE
		189109A1		1	RESORTE Boot Retainer
40		REF		1	MANUAL LOADER CONTROL VALVE, Three Spool; See Figure 08-35 For Three Spool Valve Options
41		L18337		1	BANDA 15 in
42		87412687		1	MANECILLA Loader Control Lever, Two Button, Declutch and Differential Lock Switches; Models Without Powershift Transmission
42A		87412695		1	MANECILLA Loader Control Lever, Three Button; Kick Down, Declutch and Differential Lock Switches; Models With Powershift Transmission; Not Illustrated
		256347A1		1	CONECTOR
		258616A1		1	CERRADURA
		298176A1		1	TAPÓN Used With Ref 42 Handle
		87301351		X	MASILLA Permabond Adhesive, F246, 1 ml With No. 5 Initiator; For Attaching Ref 1 to Ref 42

http://www.minnparbackhoeparts.com/

09-03		p1	05/05

CONTROLES - CARGADORA AUTO-NIVELADORA

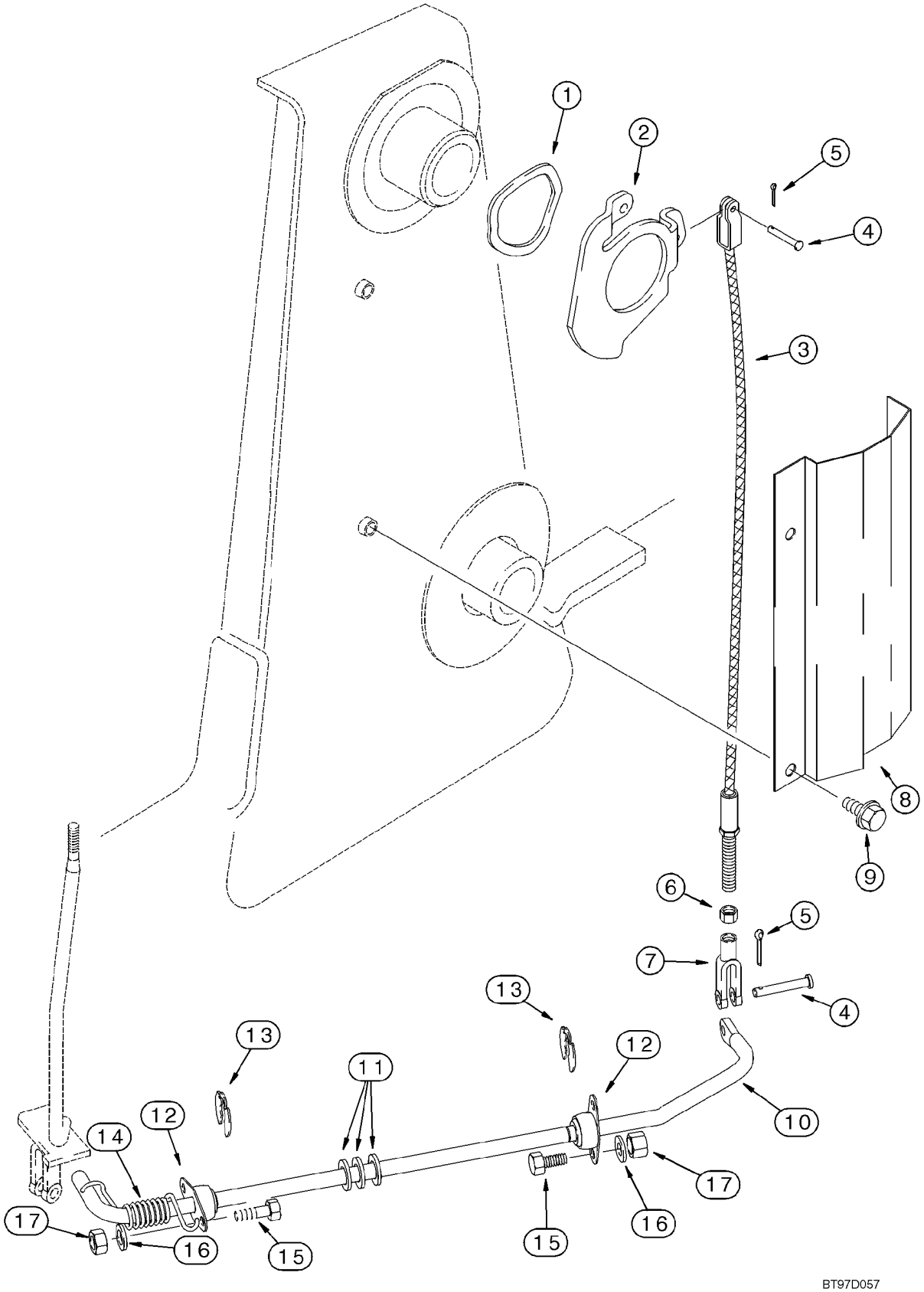

http://www.minnparbackhoeparts.com/

CONTROLES - CARGADORA AUTO-NIVELADORA

REF	FN	PART NUMBER	YR/SN	QTY	DESCRIPTION
1		137283A1		1	ARANDELA
2		142404A1		1	LEVA
3		87428645		1	CABLE Self-Leveling Cable
4		D149287		2	BULON/PIN, LARGO
5		432-612		2	PASADOR ABIERTO 3/32" x 3/4"
6		425-115		1	TUERCA 5/16 NF
7		239406A1		1	HORQUILLA PEQUENA 5/16
8		139865A1		1	PROTECTOR
9		844-10020		2	TORNILLO M10 x 20
		87417601		1	VARILLA (CONJUNTO) Incl. Ref 10 - 12
10		NSS		1	NO SE REPARA SEPARADAM. Rod
11		A30881		3	ARANDELA
12		L15401		2	COJINETE
13		D95096		2	ANILLO
14		124721A1		1	RESORTE
15		614-8025		4	TORNILLO M8 x 25
16		895-11008		4	ARANDELA 9 x 17 x 1,6 mm
17		829-1408		4	TUERCA M8; 10

http://www.minnparbackhoeparts.com/

09-04		p1	05/05

MARCO - ELEVADOR DE LA CARGADORA

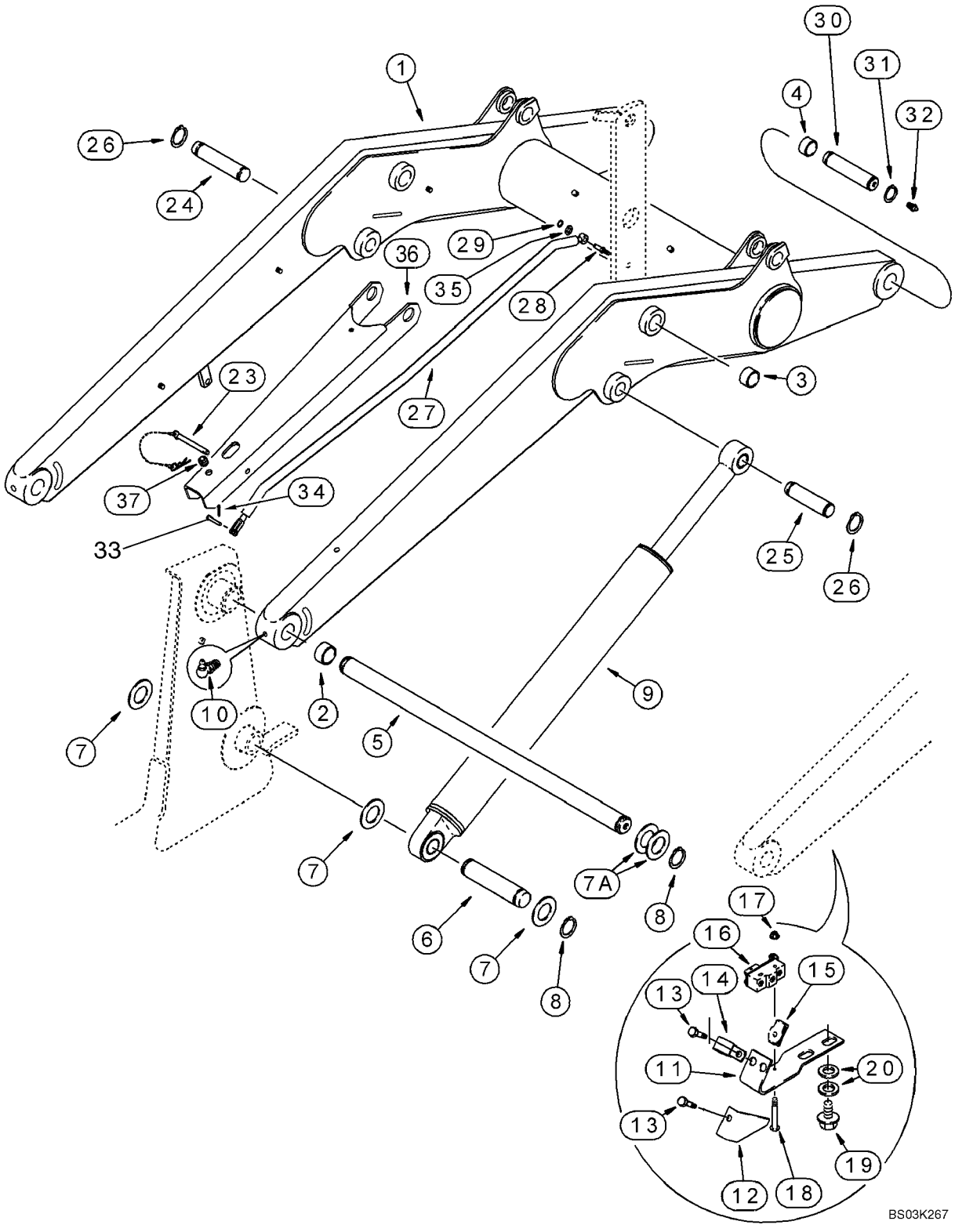

http://www.minnparbackhoeparts.com/

MARCO - ELEVADOR DE LA CARGADORA

REF	FN	PART NUMBER	YR/SN	QTY	DESCRIPTION
		REF			MANUAL LIFT CYLINDER, SUPPORT STRUT, RETURN-TO-DIG AND ANTIROLLBACK
1		87426379		1	BRAZO (CONJUNTO) Incl. Ref 2, 4
2		D127542		4	CASQUILLO
3		100696A1		4	CASQUILLO Bucket Cylinder Link Pivot; Not Included With Frame; Purchase Separately
4		109268A1		4	CASQUILLO
5		111522A1		1	PERNO SHAFT
6		387019A1		2	PERNO
7		495-81282		6	ARANDELA 2-1/16 x 3 x 3/32
7A		181842A1		X	ARANDELA
8		800-44050		6	ANILLO DE CIERRE No. 50
9		384240A1		2	CILINDRO (CONJUNTO) 82.6 ID x 766 mm strk; Loader Lift; See Figure 08-62
10		219-55		2	ENGRASADOR 90 deg, 1/8 PT x 27/32
11		128818A1		1	APOYADERO Return-To-Dig
12		142524A1		1	PROTECTOR
13		614-6016		2	TORNILLO M6 x 16
14		515-2179		1	COLLAR 7,9 mm
15		833-40406		2	TUERCA M6
16		D137363		1	CONTACTOR Return-To-Dig
17		193-1003		2	TUERCA No. 6
18		440-10616		2	TORNILLO No. 6 x 1
19		128312A1		2	TORNILLO M10 x 15
20		895-11010		4	ARANDELA 11 x 21 x 2 mm
23		104824A1		1	BULON/PIN, LARGO
24		118900A1		1	BULON/PIN, LARGO
25		113629A1		1	BULON/PIN, LARGO
26		800-44040		4	ANILLO DE CIERRE
27		311200A1		1	VARILLA (CONJUNTO) Antirollback
28		192815A1		1	PERNO
29		103-3350		1	ANILLO DE RESORTE No. 50
30		118901A1		2	BULON/PIN, LARGO
31		800-44040		4	ANILLO DE CIERRE
32		219-1		2	ENGRASADOR 1/8 PT x 21/32
33		427-6100		1	PASADOR DE HORQUILLA 3/8 x 7
34		432-612		1	PASADOR ABIERTO 3/32" x 3/4"

http://www.minnparbackhoeparts.com/

09-04		p2	05/05

MARCO - ELEVADOR DE LA CARGADORA

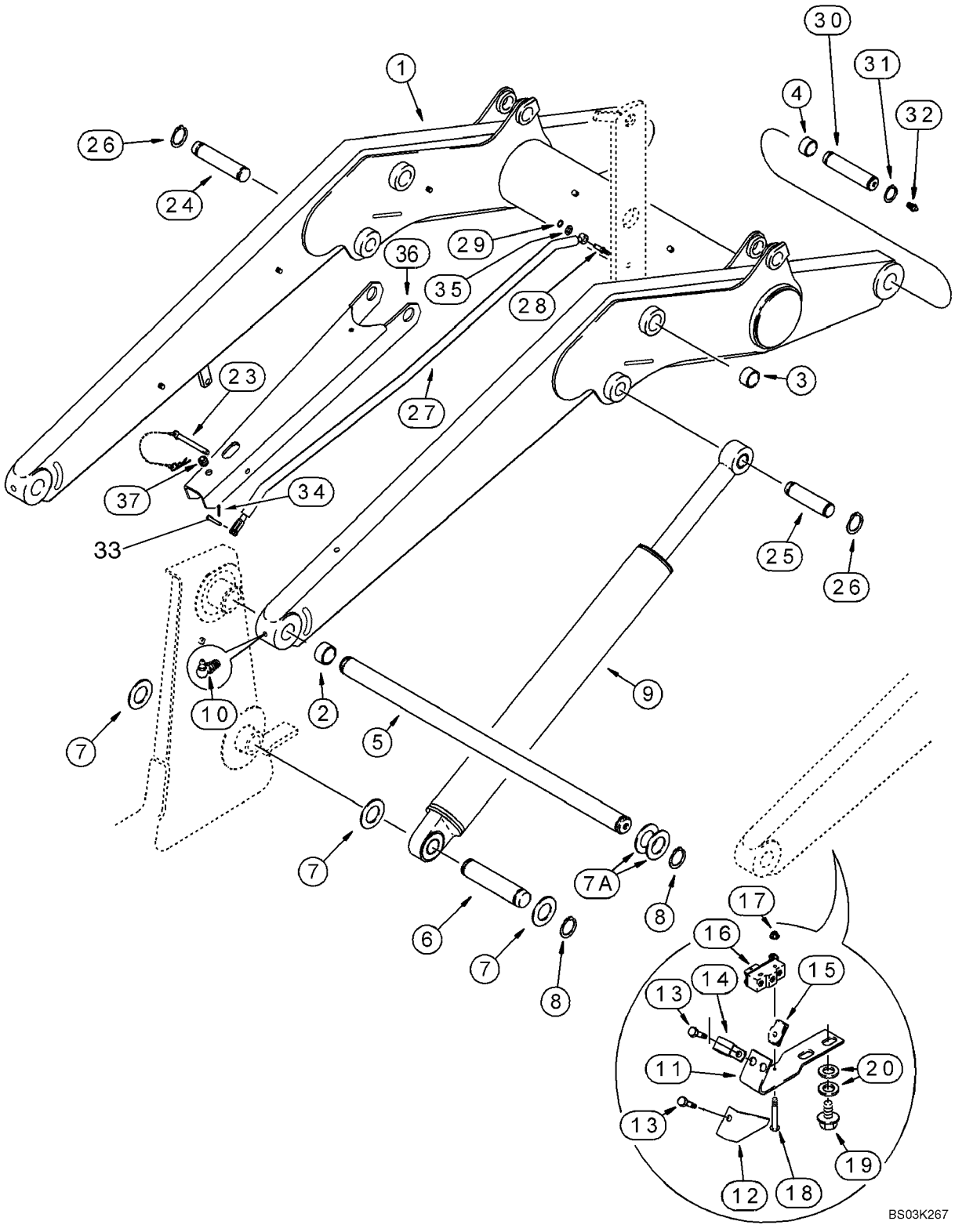

http://www.minnparbackhoeparts.com/

MARCO - ELEVADOR DE LA CARGADORA

REF	FN	PART NUMBER	YR/SN	QTY	DESCRIPTION
35		495-11053		1	ARANDELA 17/32 x 1-1/16 x 3/32
36		341564A2		1	RESISTIDOR DE PRESIO
37		344892A1		1	PASACABLES

http://www.minnparbackhoeparts.com/

09-05		p1	03/05

MARCO - VARILLAJE DE LA CARGADORA

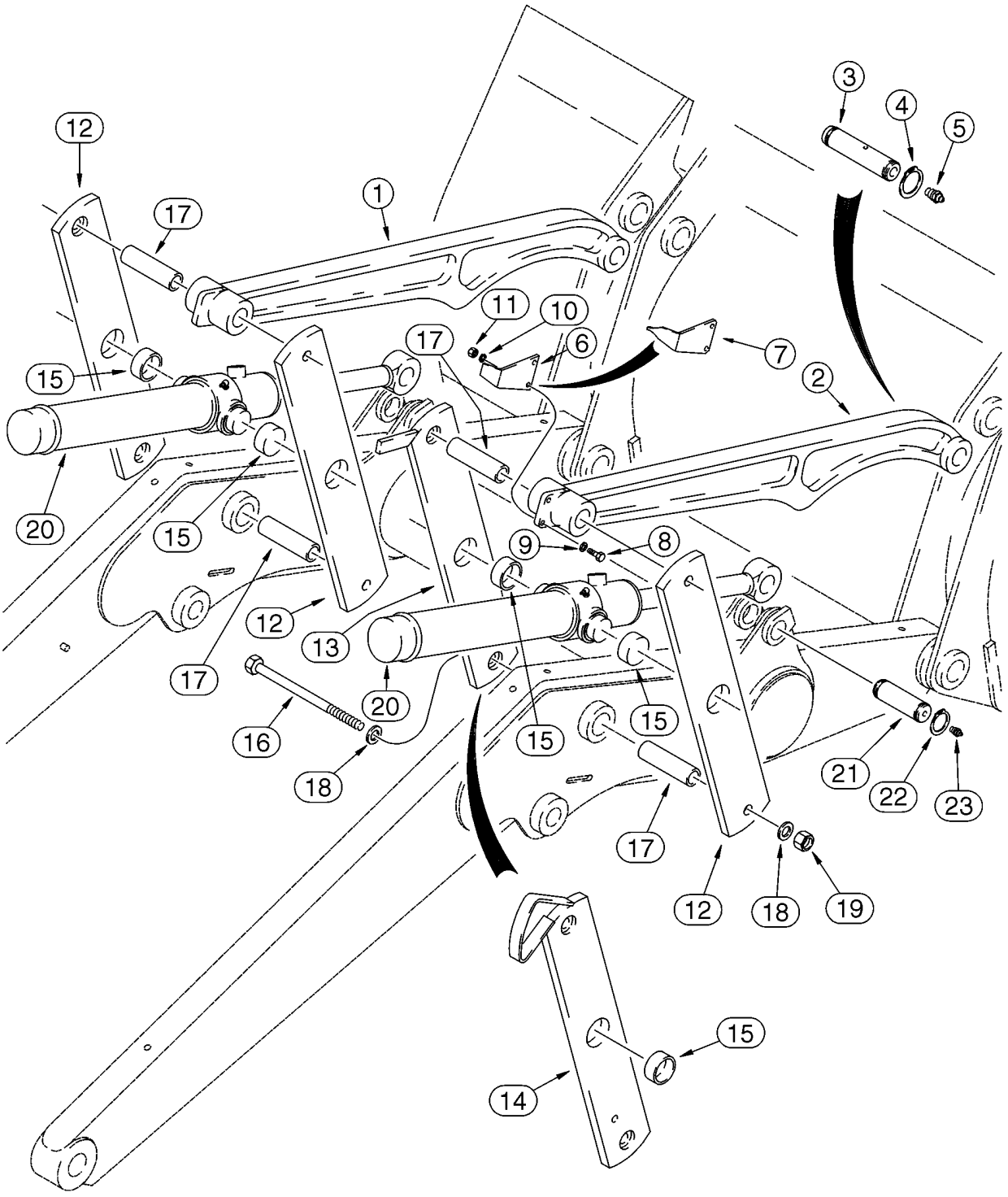

http://www.minnparbackhoeparts.com/

MARCO - VARILLAJE DE LA CARGADORA

REF	FN	PART NUMBER	YR/SN	QTY	DESCRIPTION
1		331621A1		1	BIELA DE CONEXION Bucket, Left-Hand; Without Mounting Holes For Bucket Position Pointer; For Service, Order 331620A1
2		331620A1		1-2	BIELA DE CONEXION Bucket, Left-Hand or Right-Hand; With Mounting Holes For Bucket Position Pointer
3		118901A1		2	BULON/PIN, LARGO
4		800-44040		4	ANILLO DE CIERRE
5		219-1		2	ENGRASADOR 1/8 PT x 21/32
6		D121194		1	INDICADOR Models Without Clam Bucket
7		250851A1		1	INDICADOR Models With Clam Bucket
8		614-8030		2	TORNILLO M8 x 30
9		895-11008		2	ARANDELA 9 x 17 x 1,6 mm
10		892-11008		2	ARANDELA M8
11		829-1408		2	TUERCA M8; 10
12		139180A1		3	BIELA DE CONEXION Bucket Cylinder, Outer Right-Hand; Inner and Outer Left-Hand; Incl. Ref 15
13		139235A1		1	BIELA DE CONEXION Bucket Cylinder, Inner Right-Hand; With Extra Hole For Antirollback Rod; Models Without Clam Bucket; Incl. Ref 15
14		139195A1		1	BIELA DE CONEXION 580SM, Bucket Cylinder, Inner Right-Hand; With Extra Hole For Antirollback Rod; Models With Clam Bucket; Incl. Ref 15
14		275937A1		1	ESLABON (CONJUNTO) 580SM+, Bucket Cylinder, Inner Right-Hand; With Extra Hole For Antirollback Rod; Models With Clam Bucket; Incl. Ref 15
15		D151034		1	CASQUILLO
16		827-20190		4	TORNILLO M20 x 190; 10.9
17		D132076		4	ESPACIADOR
18		896-11020		8	ARANDELA 22 x 37 x 4 mm
19		829-1420		4	TUERCA M20, Cl 10
20		113133A2		2	CILINDRO (CONJUNTO) 76 ID x 522 mm strk; Loader Bucket; See Figure 08-63
21		116339A1		2	BULON/PIN, LARGO
22		800-44040		4	ANILLO DE CIERRE
23		219-1		2	ENGRASADOR 1/8 PT x 21/32

http://www.minnparbackhoeparts.com/

09-06		p1	09/03

CUCHARÓN, BORDE ANCHO DE LA CARGADORA (82 IN) (580SM)

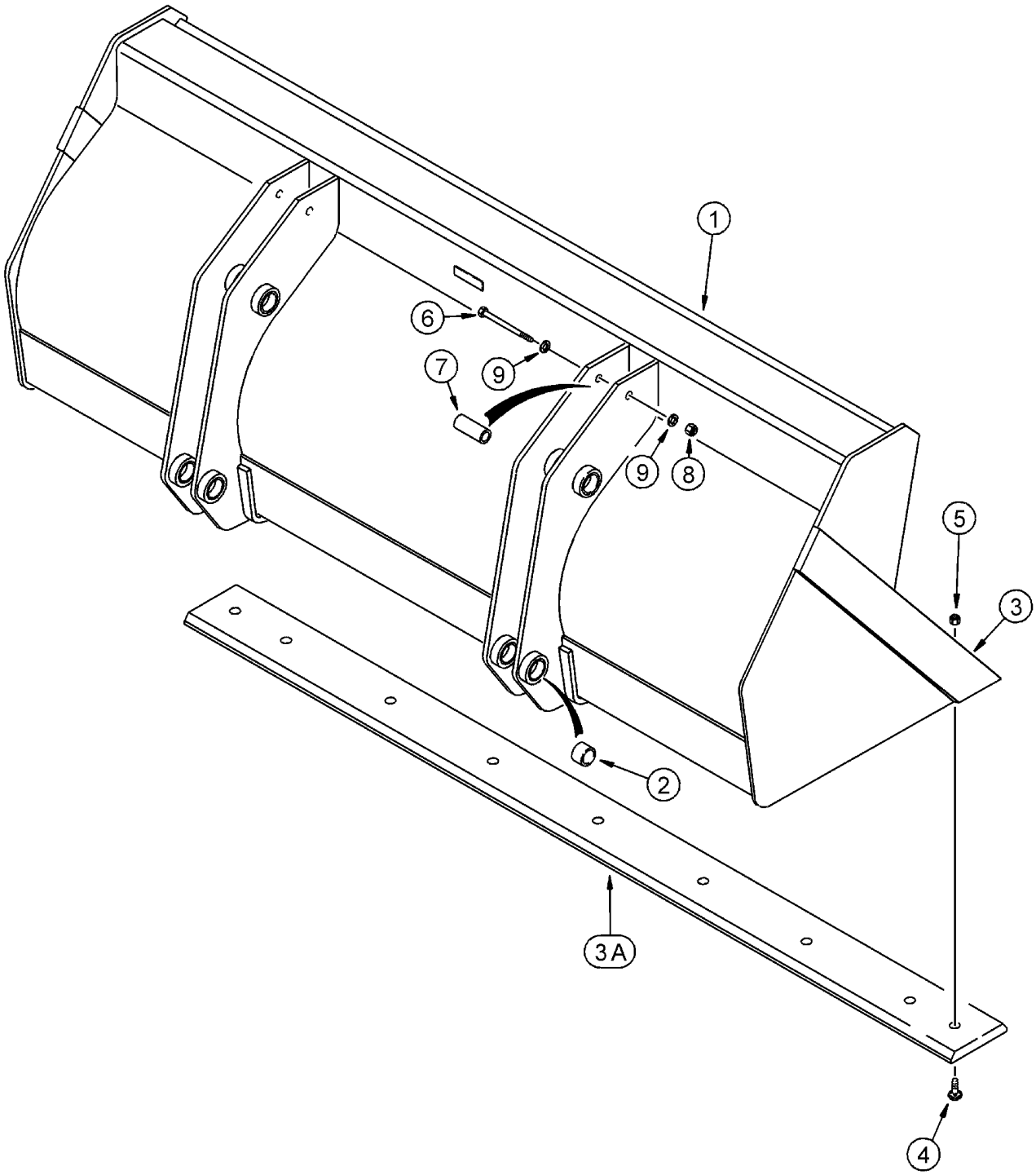

http://www.minnparbackhoeparts.com/

CUCHARÓN, BORDE ANCHO DE LA CARGADORA (82 IN) (580SM)

REF	FN	PART NUMBER	YR/SN	QTY	DESCRIPTION
		141473A1		1	CUCHARA 2083 mm (82 in); Assembly Includes Bolt-On Cutting Edge; Without Bucket Teeth; Incl. 1 - 9; Order Through Parts Marketing
1		NSS		1	NO SE REPARA SEPARADAM. Bucket; Incl. Ref 2, 3
2		D129264		8	CASQUILLO
3		113457A1		1	PLACA, GRANDE Weld-On
3A		112946A1		1	CUCHILLA DE ATAQUE
4		20-21232		10	TORNILLO
5		429-1012		10	TUERCA 3/4; 8
6		828-20160		2	TORNILLO M20 x 160; 10.9
7		142538A1		2	ESPACIADOR
8		832-10420		2	TUERCA M20
9		896-11020		4	ARANDELA 22 x 37 x 4 mm

http://www.minnparbackhoeparts.com/

09-07		p1	03/05

CUCHARÓN, BORDE ANCHO DE LA CARGADORA (93 IN) (580SM / 580SM+)

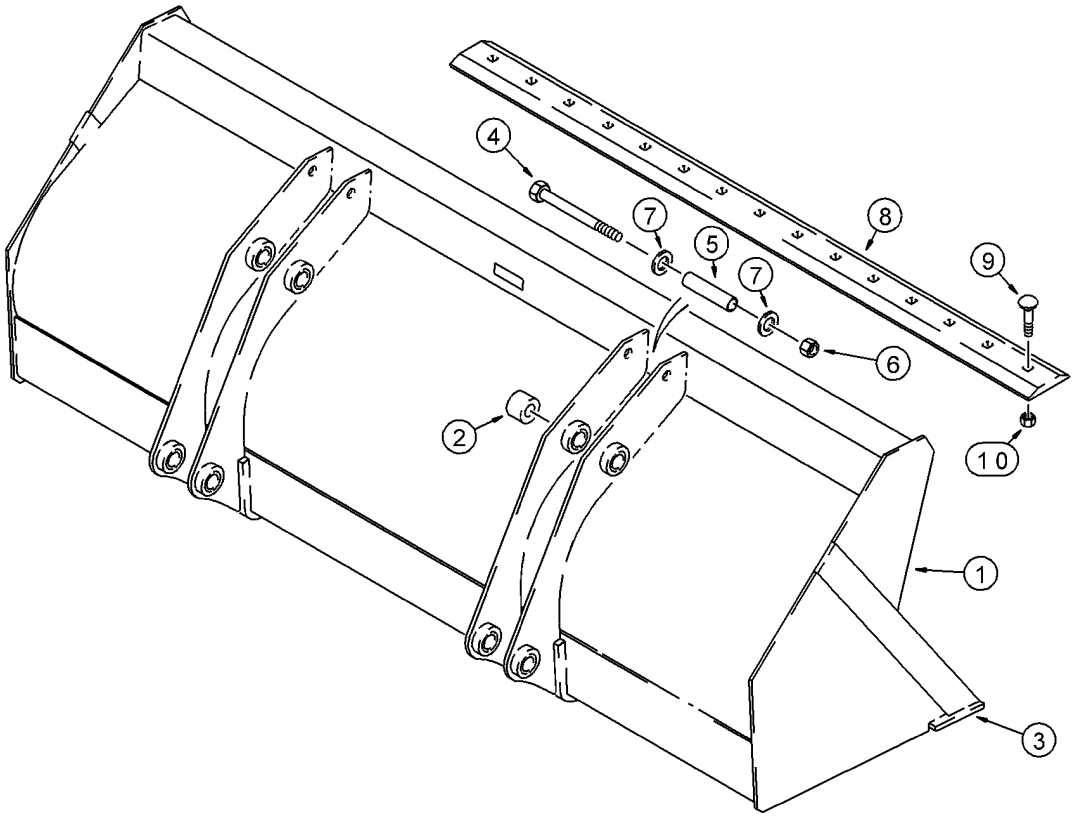

BS00C247

http://www.minnparbackhoeparts.com/

CUCHARÓN, BORDE ANCHO DE LA CARGADORA (93 IN) (580SM / 580SM+)

REF	FN	PART NUMBER	YR/SN	QTY	DESCRIPTION
		87441059		1	CUCHARA 2362 mm (93 in); Without Bucket Teeth; Assembly Includes Bolt-On Cutting Edge; Incl. Ref 1 - 10; Order Through Parts Marketing; Replaces 142687A1
1		NSS		1	NO SE REPARA SEPARADAM. Bucket; Incl. Ref 2, 3
2		D129264		8	CASQUILLO
3		134844A1		1	PLACA, GRANDE Weld-On
4		828-20160		2	TORNILLO M20 x 160; 10.9
5		142538A1		2	ESPACIADOR
6		832-10420		2	TUERCA M20
7		896-11020		4	ARANDELA 22 x 37 x 4 mm
8		185506A1		1	BORDE BLADE, Bolt-On
9		20-21232		10	TORNILLO
10		429-1012		10	TUERCA 3/4; 8

http://www.minnparbackhoeparts.com/

09-08		p1	03/05

CUCHARÓN, ALMEJA DE LA CARGADORA (82 IN) (580SM)

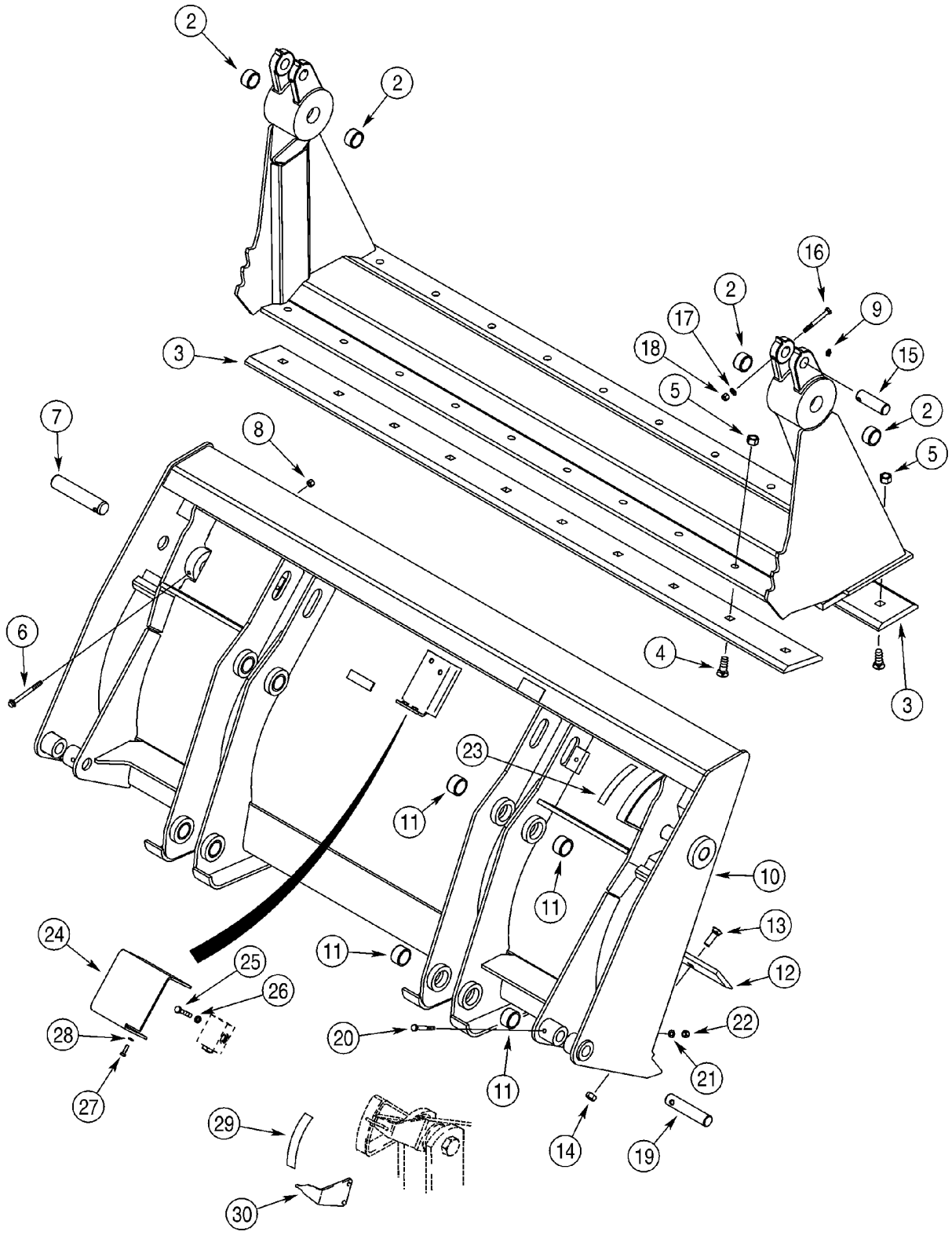

http://www.minnparbackhoeparts.com/

CUCHARÓN, ALMEJA DE LA CARGADORA (82 IN) (580SM)

REF	FN	PART NUMBER	YR/SN	QTY	DESCRIPTION
		87455509		1	CUCHARA ASSEMBLY; 2083 mm (82 in); With Hydraulics; Includes 376288A2 Bucket Assembly, Ref 1 - 28; Also Includes Hydraulics on Figure 08-07, Ref 1 - 29; Order Through Parts Marketing; Replaces 376528A4
		{376288A2}		1	BUCKET ASSEMBLY; 2083 mm (82 in); Without Hydraulics; Includes 411668A1 Bucket and (2) Ref 7 Pins; Order Through Parts Marketing
		411668A1		1	CUCHARA BUCKET ASSEMBLY; 2083 mm (82 in; Without Hydraulics; Incl. Ref 1 - 6, 8 - 14
		175156A1		1	COQUILLA CLAM, Incl. Ref 1, 2
1		NSS		1	NO SE REPARA SEPARADAM. Clam Assy
2		D31140		4	CASQUILLO
3		142300A1		2	MADIA HOJA
4		20-21232		20	TORNILLO 3/4 x 2
5		29-1012		20	TUERCA 3/4; 8
6		844-10110		2	TORNILLO Flange, M10 x 110
7		D51391		2	BULON/PIN, LARGO
8		832-10410		2	TUERCA M10
9		219-1		2	ENGRASADOR 1/8 PT x 21/32
		376286A2		1	CUCHARA BLADE, Incl. Ref 10, 11
10		NSS		1	NO SE REPARA SEPARADAM. Blade Assy, Dozer
11		D129264		8	CASQUILLO
12		121920A1		1	BORDE Cutting
13		20-21032		10	TORNILLO 5/8 x 2
14		29-1010		10	TUERCA 5/8
15		D51392		2	PERNO
16		814-10090		2	TORNILLO M10 x 90
17		895-11010		2	ARANDELA 11 x 21 x 2 mm
18		832-10410		2	TUERCA M10
19		D51393		2	BULON/PIN, LARGO
20		814-10080		2	TORNILLO M10 x 80
21		895-11010		2	ARANDELA 11 x 21 x 2 mm
22		832-10410		2	TUERCA M10
23		321-1708		1	CALCOMANIA
24		388848A1		1	DEFENSA Pilot Operated Check Valve
25		814-10060		2	TORNILLO M10 x 60

http://www.minnparbackhoeparts.com/

09-08		p2	03/05

CUCHARÓN, ALMEJA DE LA CARGADORA (82 IN) (580SM)

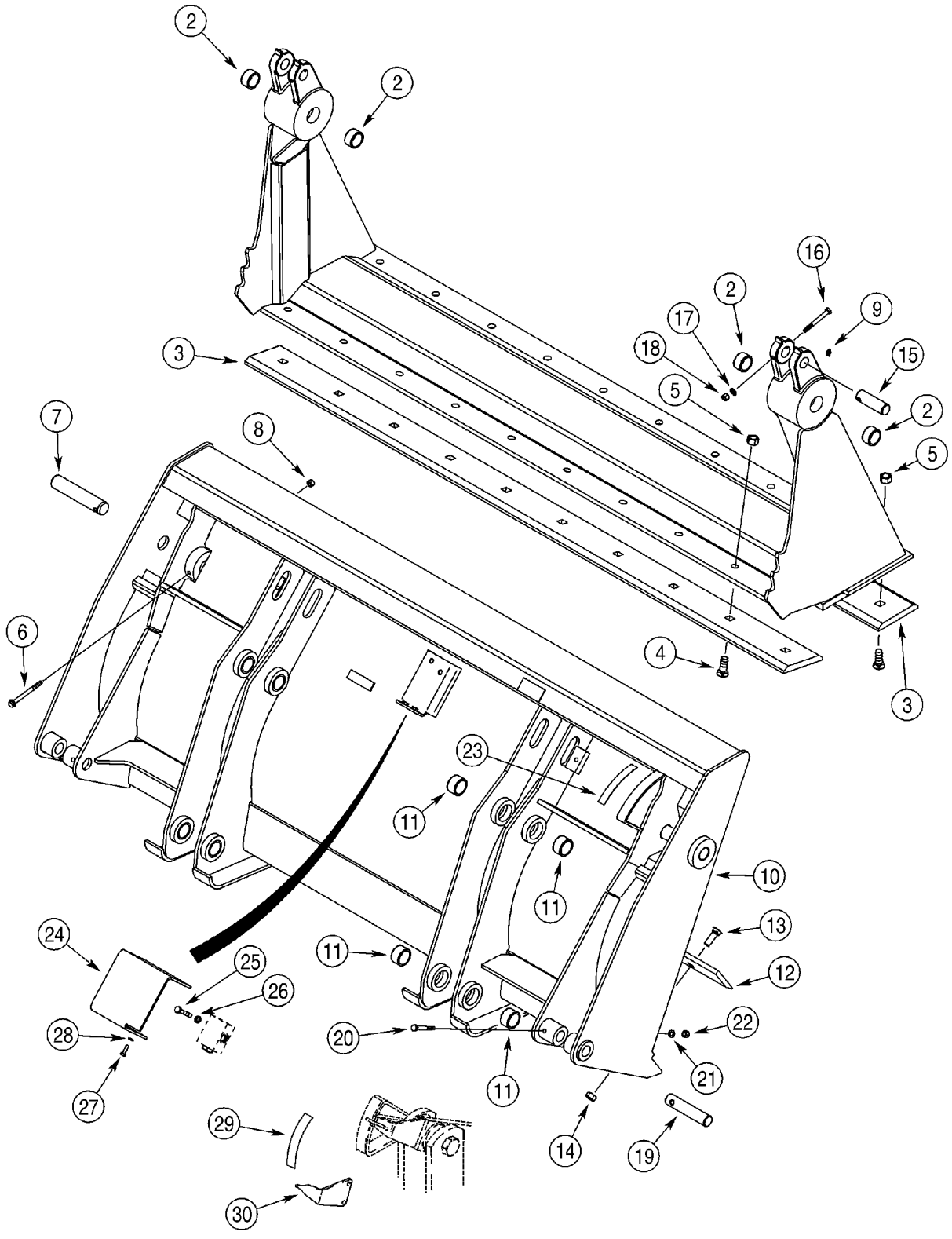

http://www.minnparbackhoeparts.com/

CUCHARÓN, ALMEJA DE LA CARGADORA (82 IN) (580SM)

REF	FN	PART NUMBER	YR/SN	QTY	DESCRIPTION
26		892-11010		2	ARANDELA DE FRENO M10
27		614-8025		2	TORNILLO M8 x 25
28		892-11008		2	ARANDELA M8
29		321-1707		1	CALCOMANIA
30		250851A1		1	INDICADOR

http://www.minnparbackhoeparts.com/

09-08A		p1	03/05

CUCHARÓN, ALMEJA DE LA CARGADORA (93 IN) (580SM+)

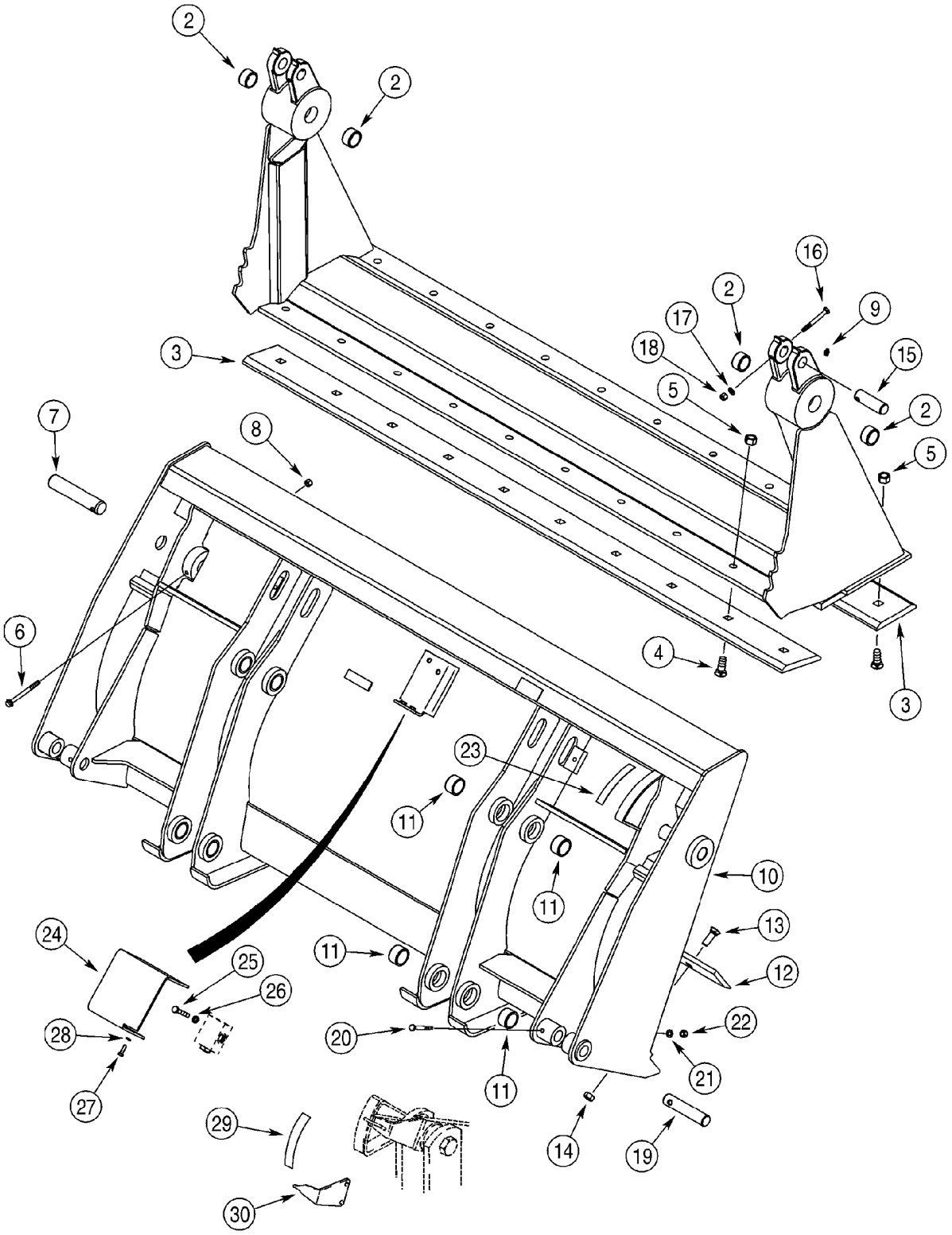

http://www.minnparbackhoeparts.com/

CUCHARÓN, ALMEJA DE LA CARGADORA (93 IN) (580SM+)

REF	FN	PART NUMBER	YR/SN	QTY	DESCRIPTION
		87455505		1	CUCHARA ASSEMBLY, 2362 mm (93 in); With Hydraulics; Incl. 87441073 Bucket Assembly, Ref 1 - 28; Also Includes Hydraulics On Figure 08-07, Ref 1 - 29; Order Through Parts Marketing; Replaces 376526A4, 87441062 Bucket Assembly
		87441073		1	CUCHARA BUCKET ASSEMBLY, 2362 mm (93 in); Without Hydraulics; Incl. Ref 1 - 14; Order Through Parts Marketing; Replaces 376287A2 Bucket Assembly
		144210A1		1	GARRA CLAM, Incl. Ref 1, 2
1		NSS		1	NO SE REPARA SEPARADAM. Clam Assy
2		D31140		4	CASQUILLO
3		142301A1		2	BORDE Blade
4		20-21232		20	TORNILLO 3/4 x 2
5		29-1012		20	TUERCA 3/4; 8
6		844-10110		2	TORNILLO Flange, M10 x 110
7		D51391		2	BULON/PIN, LARGO
8		832-10410		2	TUERCA M10
9		219-1		4	ENGRASADOR 1/8 PT x 21/32
		376285A2		1	CUCHARA BLADE, Incl. Ref 10, 11; Used With 376526A4, 376287A2 Bucket Assembly
		87441074		1	CUCHARA BLADE, Incl. Ref 10, 11; Used With 87455505, 87441073 Bucket Assembly
10		NSS		1	NO SE REPARA SEPARADAM. Blade Assy; Dozer
11		D129264		8	CASQUILLO
12		133542A1		1	BORDE Cutting
13		20-21032		10	TORNILLO 5/8 x 2
14		29-1010		10	TUERCA 5/8
15		D51392		2	PERNO
16		814-10090		2	TORNILLO M10 x 90
17		895-11010		2	ARANDELA 11 x 21 x 2 mm
18		832-10410		2	TUERCA M10
19		D51393		2	BULON/PIN, LARGO
20		814-10080		2	TORNILLO M10 x 80
21		895-11010		2	ARANDELA 11 x 21 x 2 mm
22		832-10410		2	TUERCA M10
23		321-1708		1	CALCOMANIA

http://www.minnparbackhoeparts.com/

09-08A		p2	03/05

CUCHARÓN, ALMEJA DE LA CARGADORA (93 IN) (580SM+)

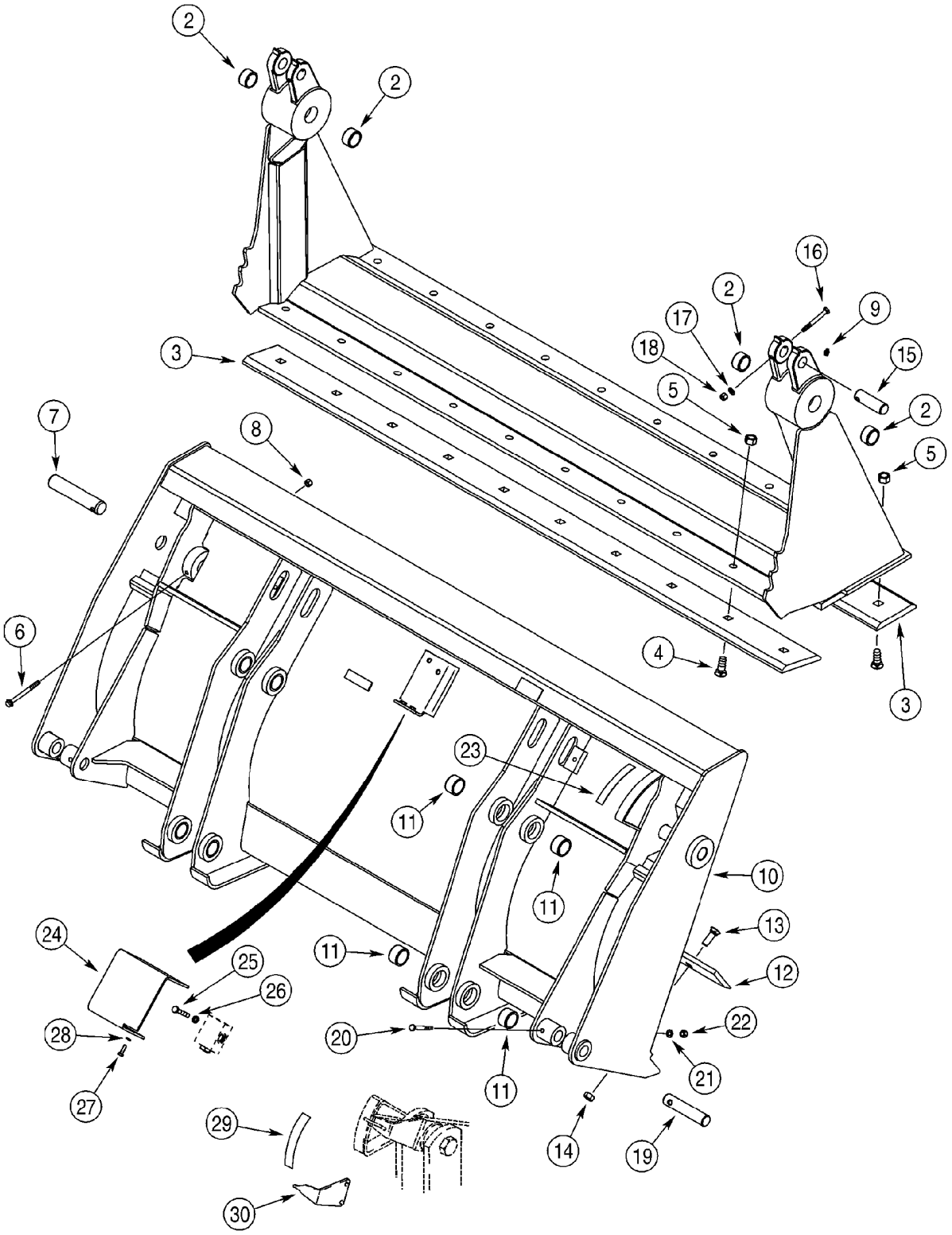

http://www.minnparbackhoeparts.com/

CUCHARÓN, ALMEJA DE LA CARGADORA (93 IN) (580SM+)

REF	FN	PART NUMBER	YR/SN	QTY	DESCRIPTION
24		388848A1		1	DEFENSA Pilot Operated Check Valve
25		814-10060		2	TORNILLO M10 x 60
26		892-11010		2	ARANDELA DE FRENO M10
27		614-8025		2	TORNILLO M8 x 25
28		892-11008		2	ARANDELA M8
29		321-1707		1	CALCOMANIA
30		250851A1		1	INDICADOR

http://www.minnparbackhoeparts.com/

PROTECTOR - VÁLVULA, CARGADORA

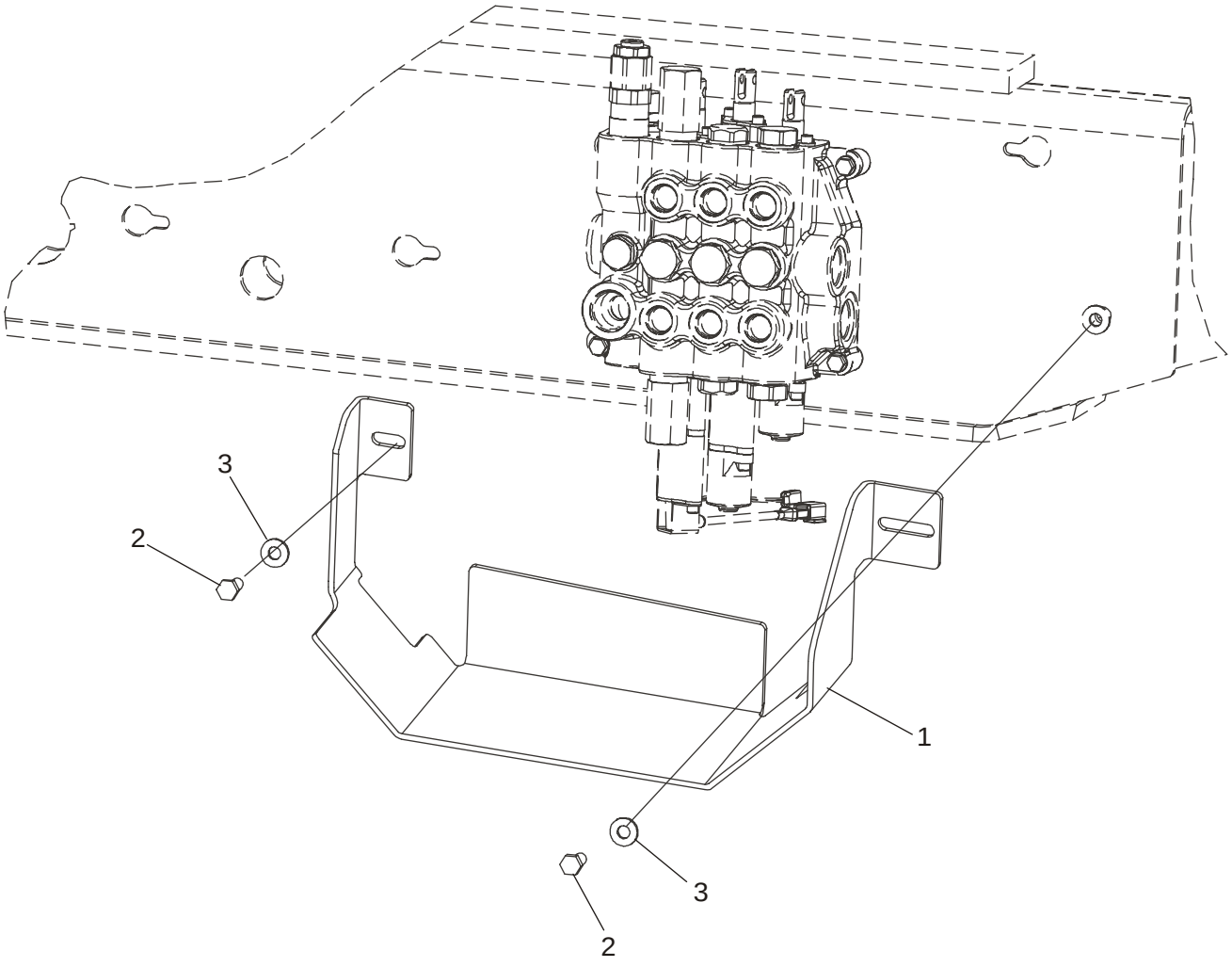

http://www.minnparbackhoeparts.com/

PROTECTOR - VÁLVULA, CARGADORA

REF	FN	PART NUMBER	YR/SN	QTY	DESCRIPTION
1		87444379		1	PROTECCION
2		614-10025		2	TORNILLO M10 x 25
3		896-15010		2	ARANDELA 11 x 24 x 3 mm

http://www.minnparbackhoeparts.com/

09-10		p1	04/05

ACOPLADOR RÁPIDO, HERRAMIENTA

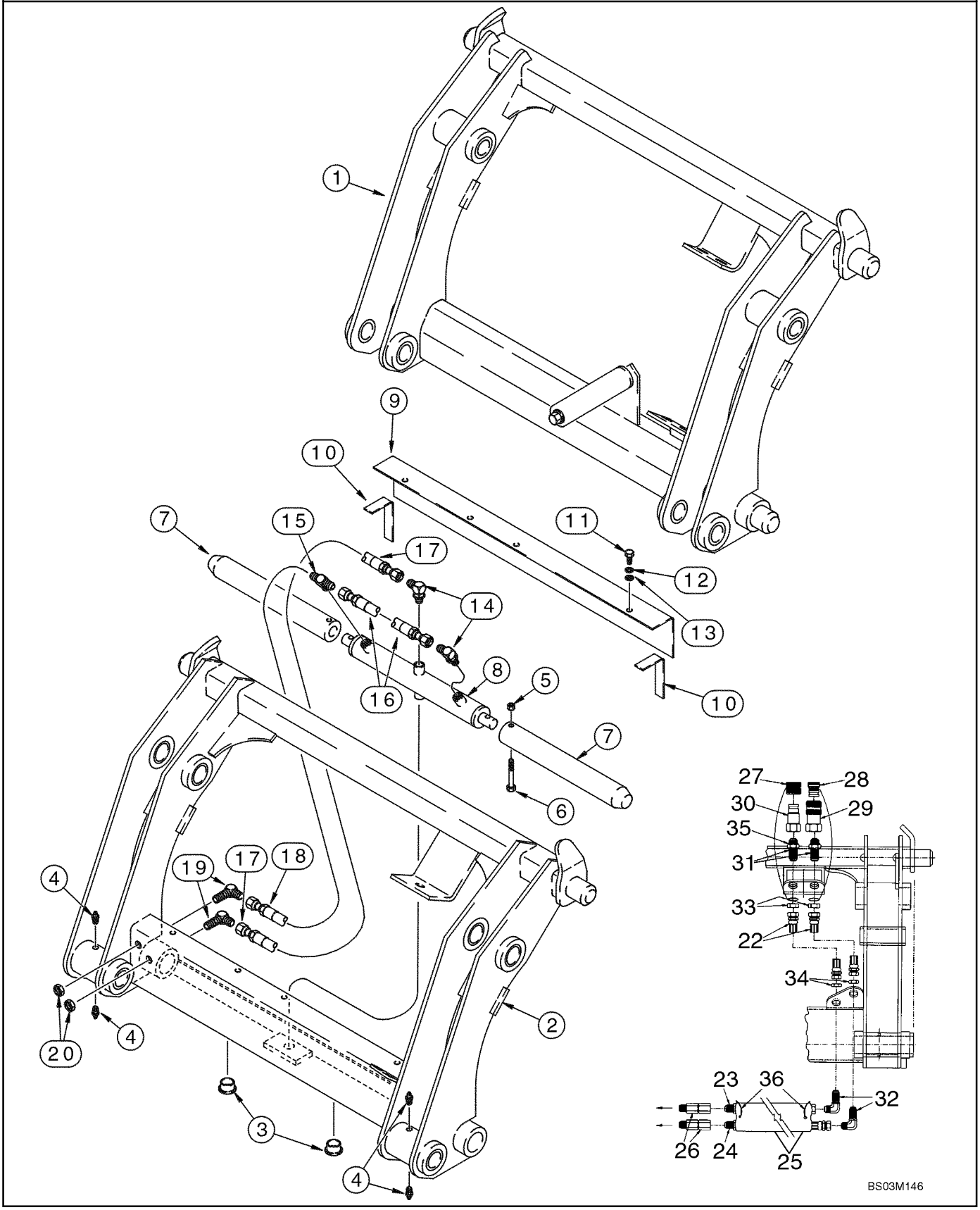

http://www.minnparbackhoeparts.com/

ACOPLADOR RÁPIDO, HERRAMIENTA

REF	FN	PART NUMBER	YR/SN	QTY	DESCRIPTION
		REF			MANUAL MANUAL COUPLER
1		191239A1		1	ELEMENTO DE ACOPLAM. Loader, Complete; Component Parts Not Serviced Separately; Used With D121194 Bucket Position Pointer and 139235A1 Bucket Cylinder Link; See Figure 09-05, Ref 6, 13
		REF			MANUAL HYDRAULIC COUPLER
		292969A2		1	ELEMENTO DE ACOPLAM. Loader; Incl. Ref 2 - 35; With Auxiliary Hydraulics; For Complete Assembly, Order From Machinery Price List; Category III; For Hydraulic Tool Quick Coupler Hydraulics, See Figure 08-26, 08-27
2		NSS		1	NO SE REPARA SEPARADAM. Frame
3		305497A1		2	TAPÓN 1-1/4 ID x 1/2 in OD; Plastic
4		219-87		4	CONEXION 1/4 st x 9/16
5		231-4246		2	TUERCA 3/8
6		326-640		2	TORNILLO 3/8 x 2-1/2; 8
7		305496A1		2	PERNO 1-15/16 OD x 15 in lg
8		305499A1		1	CILINDRO (CONJUNTO) Double Acting; Component Parts Not Serviced Separately
9		305495A1		1	TAPA
10		NSS		2	NO SE REPARA SEPARADAM. Seal; Foam
11		413-516		3	TORNILLO 5/16 x 1
12		492-11031		3	ARANDELA DE FRENO 5/16"
13		495-11034		3	ARANDELA 11/32 x 11/16 x 1/16
14		218-5105		2	CODO 9/16 fl x Or; Includes 237-6006 O-Ring
		237-6006		1	JUNTA HERMETICA 15/32 ID x 5/64, Boss Seal
15		218-5182		1	RACOR-T 9/16 adj Or x fl x fl; Includes 237-6006 O-Ring
		237-6006		1	JUNTA HERMETICA 15/32 ID x 5/64, Boss Seal
16		305492A1		1	MANGUERA (CONJUNTO) 260 mm (10-1/4 in)
17		305494A1		1	MANGUERA (CONJUNTO) 387 mm (15-1/4 in)
18		305493A1		1	MANGUERA (CONJUNTO) 235 mm (9-1/4 in)
19		218-693		2	CODO 9/16 fl x blkhd fl
20		218-1254		2	CONTRA TUERCA 9/16 NF
21		305508A1		1	JEUGO Decal; Includes Four Decals; Not Illustrated
22		307385A1		2	MANGUERA (CONJUNTO) 387 mm (15-1/4 in)

http://www.minnparbackhoeparts.com/

09-10		p2	04/05

ACOPLADOR RÁPIDO, HERRAMIENTA

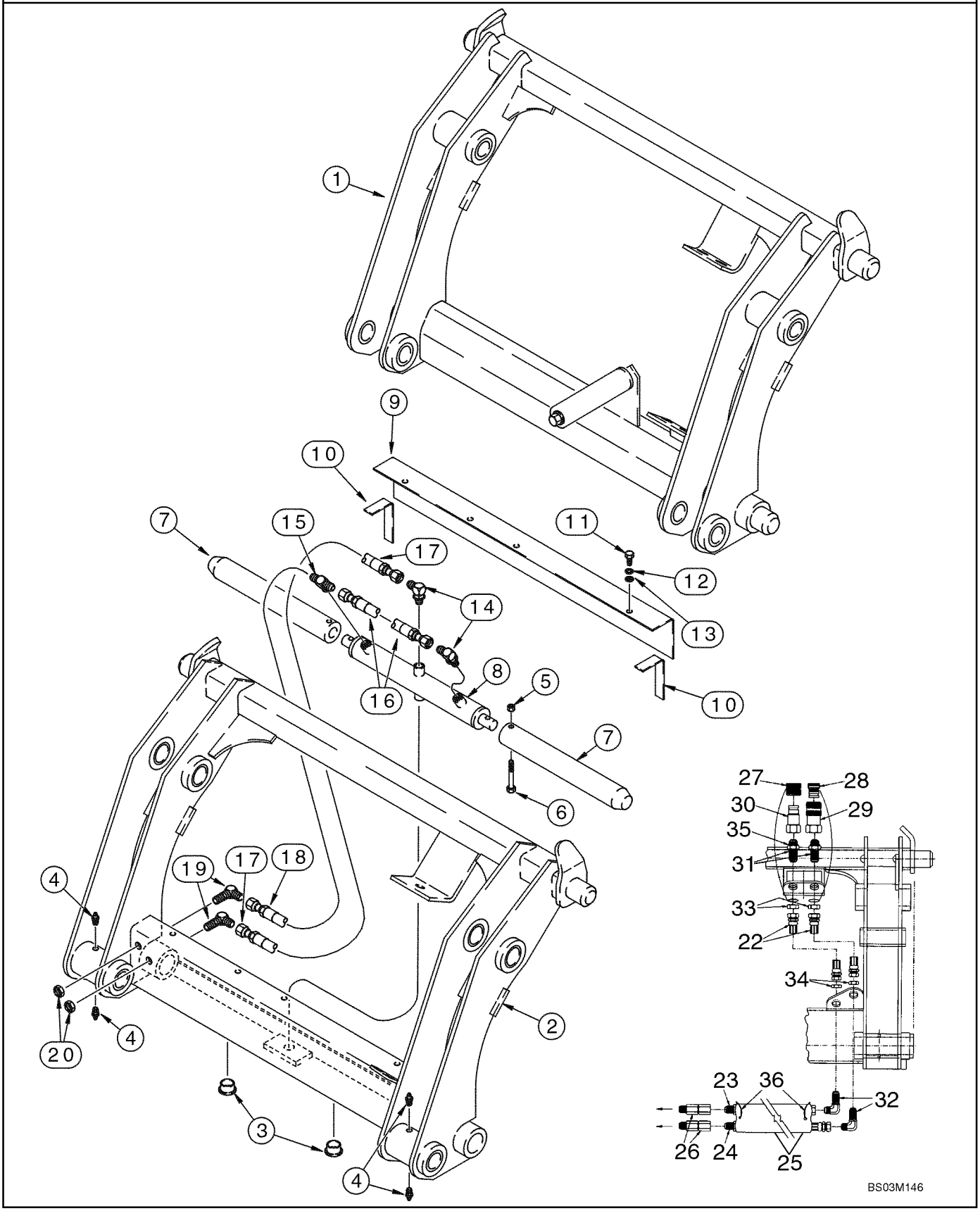

http://www.minnparbackhoeparts.com/

ACOPLADOR RÁPIDO, HERRAMIENTA

REF	FN	PART NUMBER	YR/SN	QTY	DESCRIPTION
23		307386A1		1	MANGUERA (CONJUNTO) 629 mm (24-3/4 in)
24		307387A1		1	MANGUERA (CONJUNTO) 718 mm (28-1/4 in)
25		307388A1		1	MANGA SLEEVE, 660 mm (26 in)
26		307389A1		2	PIVOTE Swivel
27		137344A1		1	TAPÓN Male Coupling
28		137343A1		1	TAPÓN Female Coupling
29		123537A1		1	CONEXION Quick Disconnect; Female
30		245423A1		1	CONEXION
31		126155A1		2	CONEXION 1-1/16 blkhd fl x Or
32		218-695		2	CONEXION ELBOW, 90 deg, 7/8 fl x bkhd fl
33		218-1256		2	CONTRA TUERCA 1-1/16
34		218-1279		2	TUERCA 7/8
35		237-6012		2	JUNTA HERMETICA 59/64 ID x 7/64
36		L18337		2	BANDA Tie

http://www.minnparbackhoeparts.com/

09-11		p1	05/05

CUBIERTAS - TORRE DE CONTROL DE LA RETROEXCAVADORA, SIN DE CONTROL PILOTO

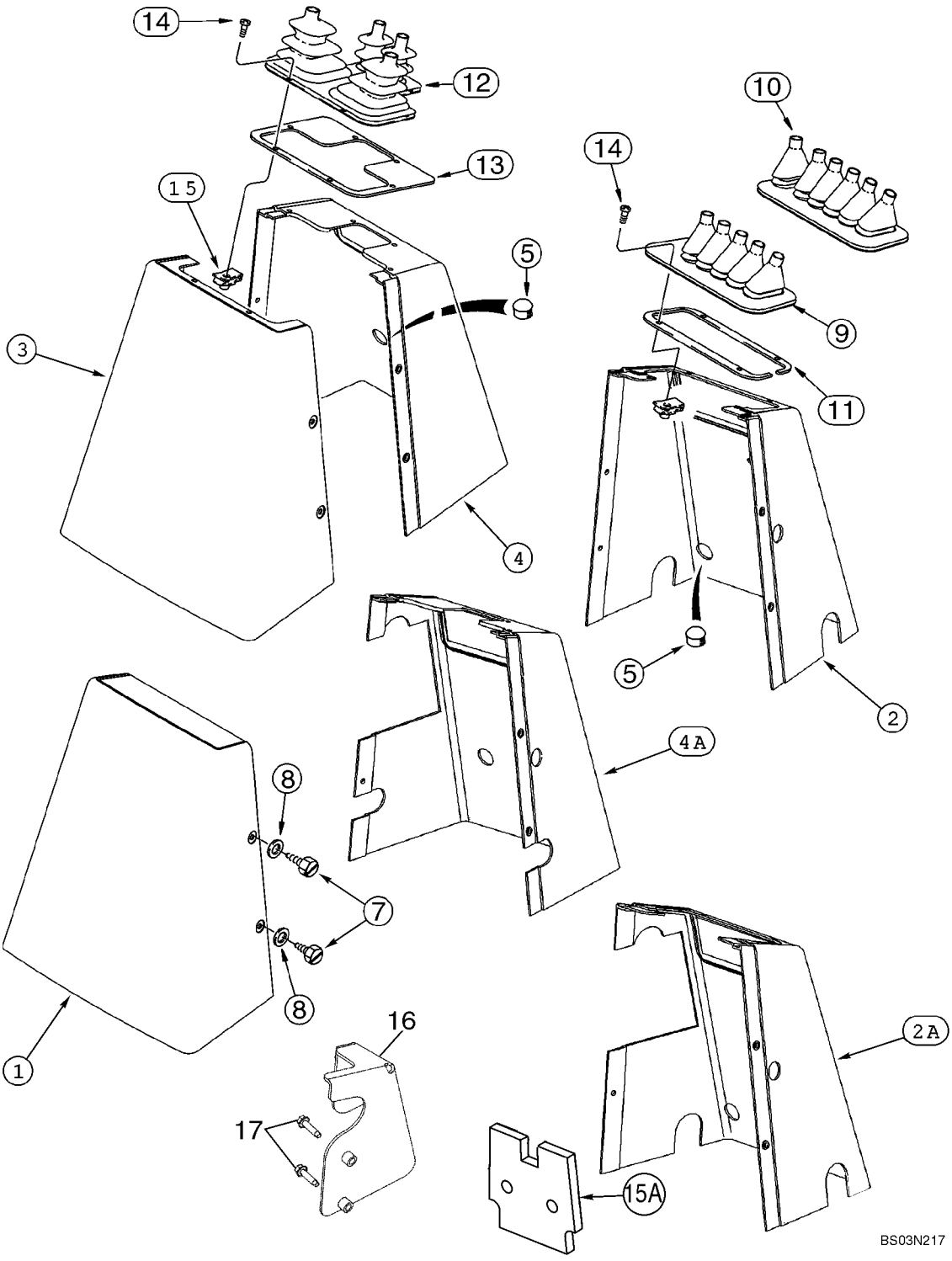

http://www.minnparbackhoeparts.com/

CUBIERTAS - TORRE DE CONTROL DE LA RETROEXCAVADORA, SIN DE CONTROL PILOTO

REF	FN	PART NUMBER	YR/SN	QTY	DESCRIPTION
1		390759A1		1	PROTECTOR Rear; All Models With Foot Swing
2		390760A1		1	PROTECTOR Front; Foot Swing; Without Auxiliary Hydraulics
2A		87411083		1	PROTECTOR Front; Foot Swing; With Auxiliary Hydraulics
3		390758A1		1	PROTECTOR Rear; All Models With Hand Swing
4		390690A1		1	PROTECTOR Front; Hand Swing; Without Auxiliary Hydraulics
4A		87411084		1	PROTECTOR Front; Hand Swing; With Auxiliary Hydraulics
5		353-411		1-2	TAPÓN 1 in dia
7		87310156		5	TORNILLO M6.3 x 16 st, Stainless Steel; Replaces 779-37616 Non-Stainless Steel Screw Used On Some Models
8		87310139		5	ARANDELA 9/32 ID x 5/8 OD x 1/16 thk, Stainless Steel; Replaces 195-140 Non-Stainless Steel Washer Used On Some Models
9		D149866		1	PROTECTOR 5 Control Levers
10		D149867		1	PROTECTOR 6 Control Levers
11		136822A1		1	JUNQUILLO
12		D149868		1	FUELLE 4 Control Levers
13		136824A1		1	PLACA, GRANDE Used With Ref 12 Only
14		87310124		4	TORNILLO No. 10 x 1/2, Stainless Steel; Replaces 140-106 Non-Stainless Steel Screw Used On Some Models
14		87310126		6	TORNILLO No. 10 x 3/4, Stainless Steel; Replaces 140-107 Non-Stainless Steel Screw Used On Some Models
15		131-861		4-6	TUERCA No. 10, 4; Used With Ref 11 Retainer; (6) Used With Ref 13 Retainer
15A		397870A3		2	ANILLO DE CIERRE Front and Rear Console Covers; Noise Barrier; Adhesive Back
16		87425122		1	PIEZA DE SOPORTE Models With Backhoe Auxiliary Hydraulics
		87430677		1	CALCOMANIA Auxiliary Hydraulics
17		281-14716		2	TORNILLO

http://www.minnparbackhoeparts.com/

09-12		p1	05/05

APOYO DE LA TORRE DE CONTROL DE LA RETROEXCAVADORA Y JUNTAS, SIN DE CONTROL PILOTO

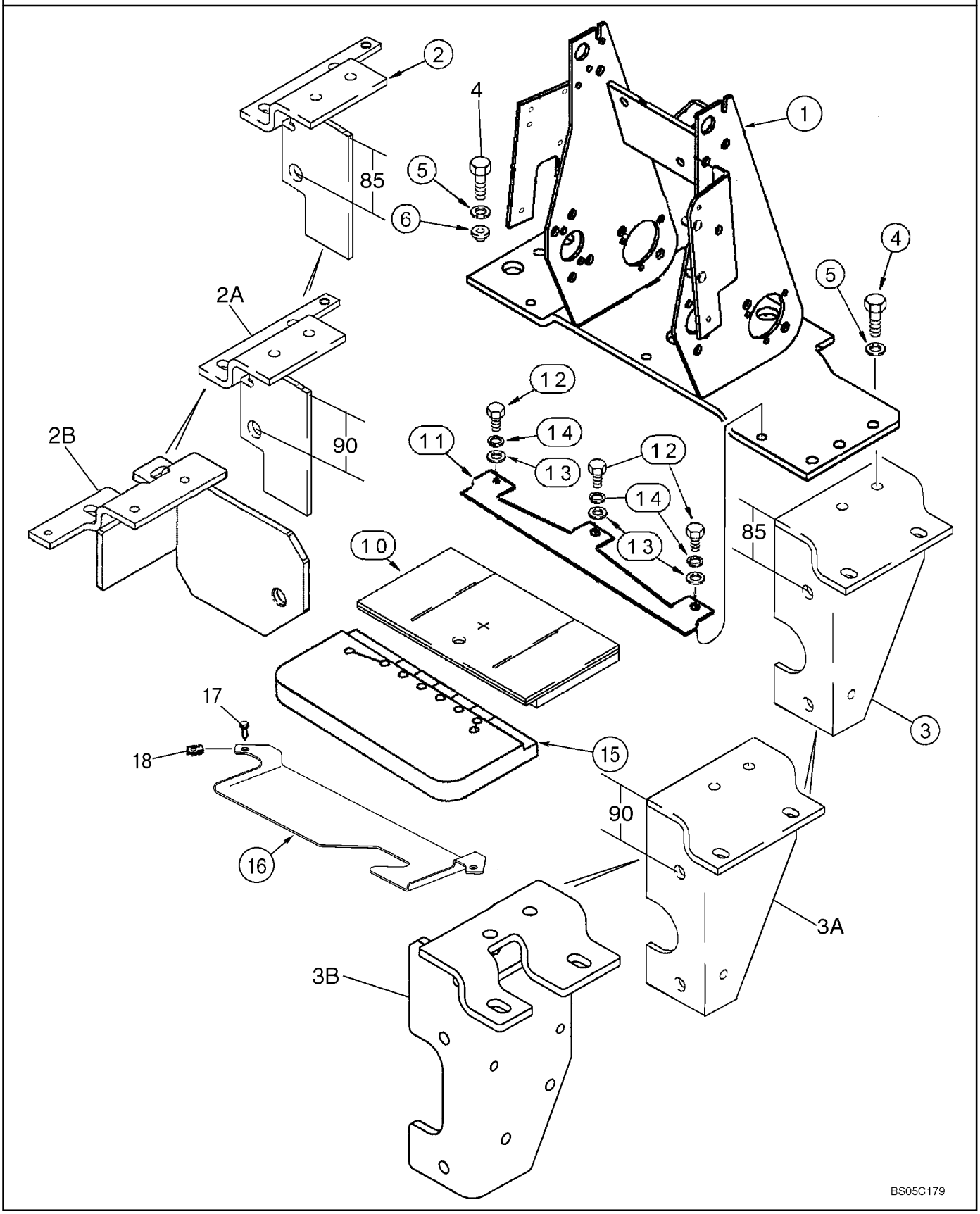

http://www.minnparbackhoeparts.com/

APOYO DE LA TORRE DE CONTROL DE LA RETROEXCAVADORA Y JUNTAS, SIN DE CONTROL PILOTO

REF	FN	PART NUMBER	YR/SN	QTY	DESCRIPTION
1		87418516		1	PIEZA DE APOYO
2		86985341		1	PIEZA DE APOYO Left-Hand; Distance Between Center of Hole and Top Edge Is 85 mm (3-11/32 in); Used With Ref 3; No Longer Used, When Replacing This Bracket, You Must Also Replace Ref 3 Bracket With Ref 2A and 3A
2A		87448057		1	PIEZA DE APOYO Left-Hand; Distance Between Center of Hole and Top Edge Is 90 mm (3-35/64 in); Used With Ref 3A; If Used
2B		87448059		1	PIEZA DE APOYO Left-Hand; Used With Ref 3B; If Used
3		86985339		1	PIEZA DE APOYO Right-Hand; Distance Between Center Hole and Top Edge Is 85 mm (3-11/32 in); Used With Ref 2; No Longer Used, When Replacing This Bracket, You Must Also Replace Ref 2 Bracket With Ref 2A and 3A
3A		87448055		1	PIEZA DE APOYO Right-Hand; Distance Between Center Hole and Top Edge Is 90 mm (3-35/64 in); Used With Ref 2A; If Used
3B		87452627		1	PIEZA DE APOYO Right-Hand; Used With Ref 2B; If Used
4		614-10035		8	TORNILLO M10 x 35
5		496-41041		8	ARANDELA 13/32 x 1-1/8 x 9/64
6		179956A1		2	AMORTIGUADOR
10		400069A1		1	ESPUMA
11		87418518		1	PIEZA DE APOYO
12		614-8020		3	TORNILLO M8 x 20
13		895-11008		3	ARANDELA 9 x 17 x 1,6 mm
14		892-11008		3	ARANDELA M8
15		87439210		1	ESPUMA
16		397911A1		1	PIEZA DE SOPORTE
17		87310096		2	TORNILLO M6 x 25, Includes Washer, Stainless Steel; Replaces 233724A1 Non-Stainless Steel Screw Used On Some Models
18		833-40406		2	TUERCA M6

http://www.minnparbackhoeparts.com/

09-13		p1	05/04

TORRE DE CONTROL DE LA RETROEXCAVADORA SOPORTE, CON DE CONTROL PILOTO

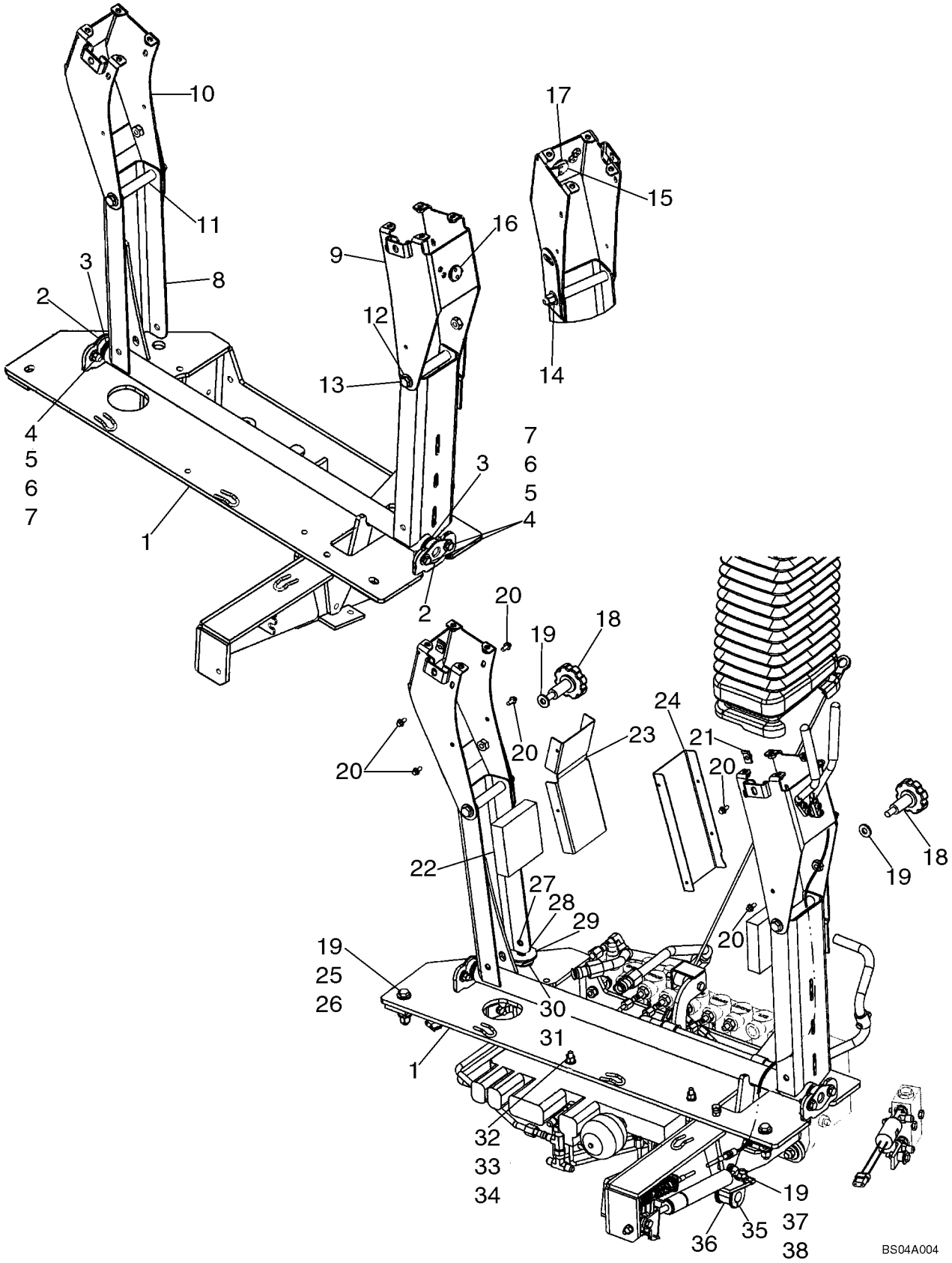

http://www.minnparbackhoeparts.com/

TORRE DE CONTROL DE LA RETROEXCAVADORA SOPORTE, CON DE CONTROL PILOTO

REF	FN	PART NUMBER	YR/SN	QTY	DESCRIPTION
		87440711		1	TORRECILLA Tower Assembly; Pilot Controls; Includes Ref 1 - 17
1		87440710		1	PIEZA DE APOYO Bracket, Tower
2		D148993		2	COJINETE
3		A30881		4	ARANDELA Seal
4		895-15008		8	ARANDELA 9 x 20 x 1.6 mm
5		614-8025		4	TORNILLO M8 x 25
6		892-11008		4	ARANDELA Lock, M8
7		829-1408		4	TUERCA M8
8		87435275		1	PIVOTE (CONJUNTO)
9		87440704		1	PIEZA DE APOYO Right-Hand Joystick Mounting
10		87440706		1	PIEZA DE APOYO Left-Hand Joystick Mounting
11		86983278		2	TUBO Spacer
12		895-15010		4	ARANDELA 11 x 24 x 2 mm
13		814-10130		2	TORNILLO M10 x 130
14		832-10410		2	TUERCA M10
15		87431529		1	PALANCA (CONJUNTO) Control Tower Release
16		103-11100		1	ANILLO Retaining, No. 100
17		87405706		1	ARANDELA Wave, 1 inch
18		87437688		2	POMO Lateral Adjustment Pilot Control Tower
19		896-15010		8	ARANDELA 11 x 24 x 3 mm
20		781-24613		8	TORNILLO Flange Head, M6 x 13, Self-Tapping
21		833-40406		2	TUERCA M6, Spring
22		87425696		2	JUNTA DE CAUCHO
23		87431301		1	DEFENSA Shield, Left-Hand
24		87431300		1	DEFENSA Shield, Right-Hand
25		814-10060		2	TORNILLO M10 x 60
26		832-10410		2	TUERCA M10
27		87450914		2	TORNILLO Locking, M10 x 40; Replaces 87040885 M10 x 45 Bolt Used On Some Models
28		892-11010		2	ARANDELA DE FRENO M10
29		496-81018		1	ARANDELA 17/32 x 2 x 1/8
30		D148962		1	ARANDELA Belleville
31		87440381		1	SEPARADOR Spacer
32		896-11008		2	ARANDELA 9 x 17 x 2 mm
33		832-10408		2	TUERCA M8
34		864-8055		2	TORNILLO Socket, M8 x 55

http://www.minnparbackhoeparts.com/

09-13		p2	05/04

TORRE DE CONTROL DE LA RETROEXCAVADORA SOPORTE, CON DE CONTROL PILOTO

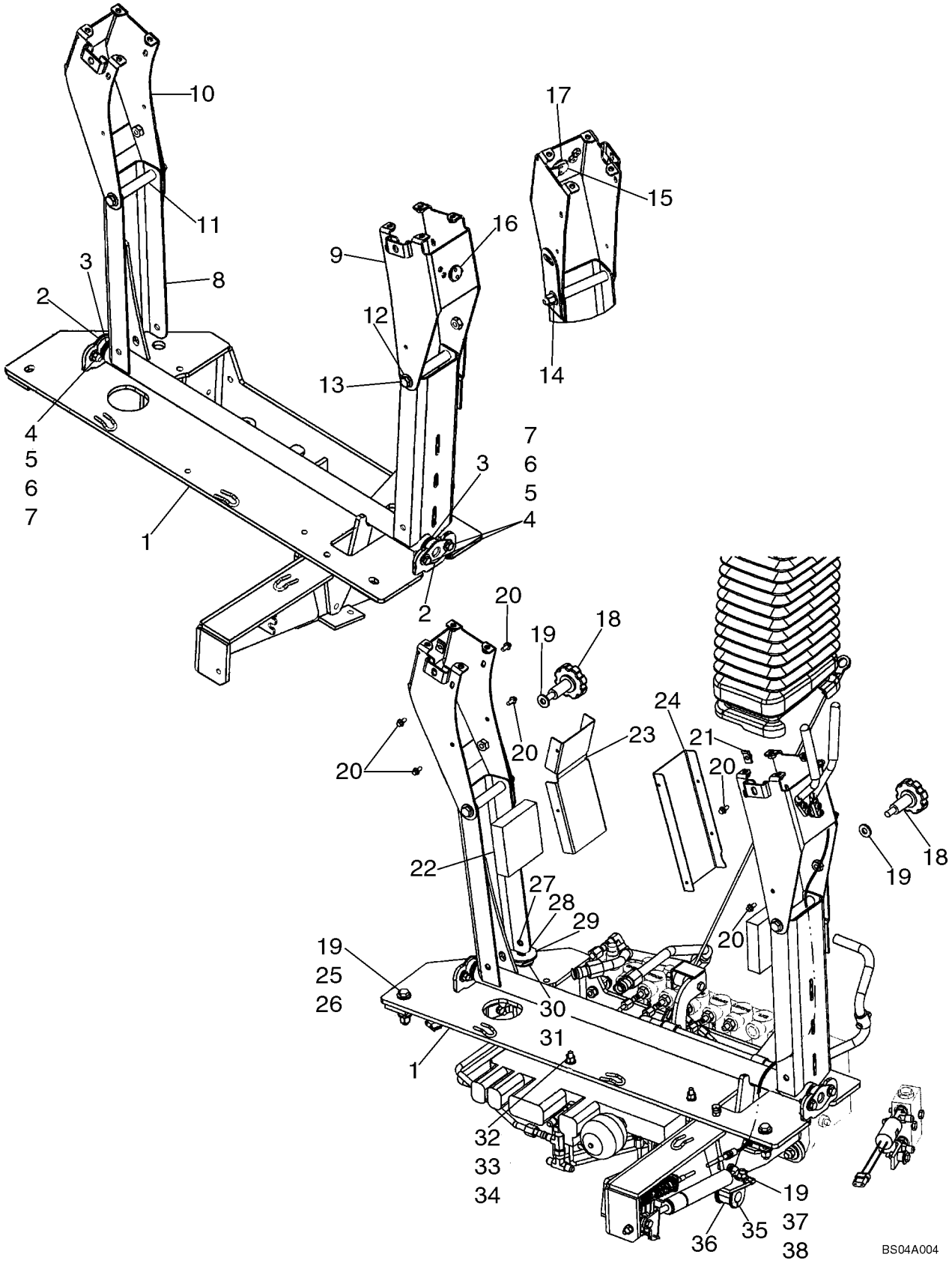

http://www.minnparbackhoeparts.com/

TORRE DE CONTROL DE LA RETROEXCAVADORA SOPORTE, CON DE CONTROL PILOTO

REF	FN	PART NUMBER	YR/SN	QTY	DESCRIPTION
35		D143411		1	COLLAR
36		D74182		1	PASACABLES Isolation Block
37		829-1410		1	TUERCA M10
38		614-10025		1	TORNILLO M10 x 25

http://www.minnparbackhoeparts.com/

09-14		p1	05/05

TORRE DE CONTROL DE LA RETROEXCAVADORA SOPORTE DE JUNTA, CON DE CONTROL PILOTO

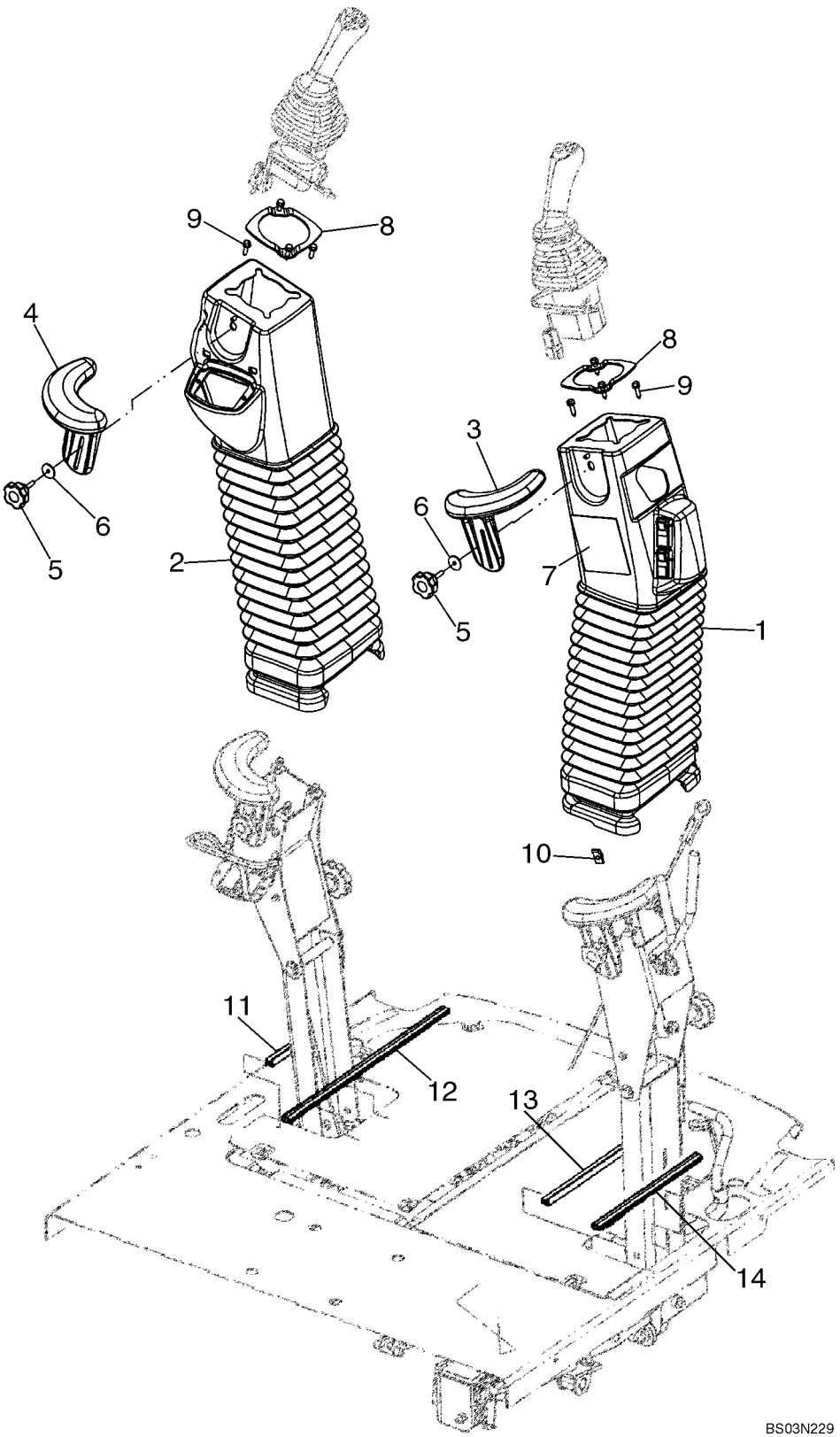

http://www.minnparbackhoeparts.com/

TORRE DE CONTROL DE LA RETROEXCAVADORA SOPORTE DE JUNTA, CON DE CONTROL PILOTO

REF	FN	PART NUMBER	YR/SN	QTY	DESCRIPTION
1		87309924		1	PROTECTOR Replaces 87422678 Boot, Which Included (1) 87422679 Boot and (1) 86992675 Pin
2		87309923		1	PROTECTOR Replaces 87422675 Boot, Which Included (1) 87422676 Boot, (1) 86992675 Pin, (2) 87418520 No. 10 Threaded Inserts
3		87437366		1	APOYABRAZOS Wrist
4		87437369		1	SOPORTE Wrist
5		87437689		2	POMO
6		87310186		2	ARANDELA 6.6 ID x 25 OD x 1.6 mm thk, Stainless Steel; Replaces 895-30109 Non-Stainless Steel Washer Used On Some Models
7		87414205		1	CALCOMANIA Pattern Selecting; If Used
7		87305413		1	CALCOMANIA Pattern Selecting; With Backhoe/Excavator Black Silhouette on Decal; If Used; Not Illustrated
8		87435372		2	PIEZA DE SOPORTE
9		87310096		8	TORNILLO With Washer, M6 x 25, Stainless Steel; Replaces 233724A1 Non-Stainless Steel Screw Used On Some Models
10		833-40406		2	TUERCA M6
11		87433008		1	JUNTA DE CAUCHO 183 mm (7-1/4 in); Cut From 87438002
12		87433006		1	JUNTA DE CAUCHO 428 mm (16-7/8 in); Cut From 87438002
13		87433005		1	JUNTA DE CAUCHO 335 mm (13-3/16 in); Cut From 87438002
14		87433007		1	JUNTA DE CAUCHO 275 mm (10-7/8 in); Cut From 87438002

http://www.minnparbackhoeparts.com/

09-15		p1	05/05

TORRE DE CONTROL DE LA RETROEXCAVADORA PALANCA (TRABA DEL AGUILÓN), CON DE CONTROL PILOTO

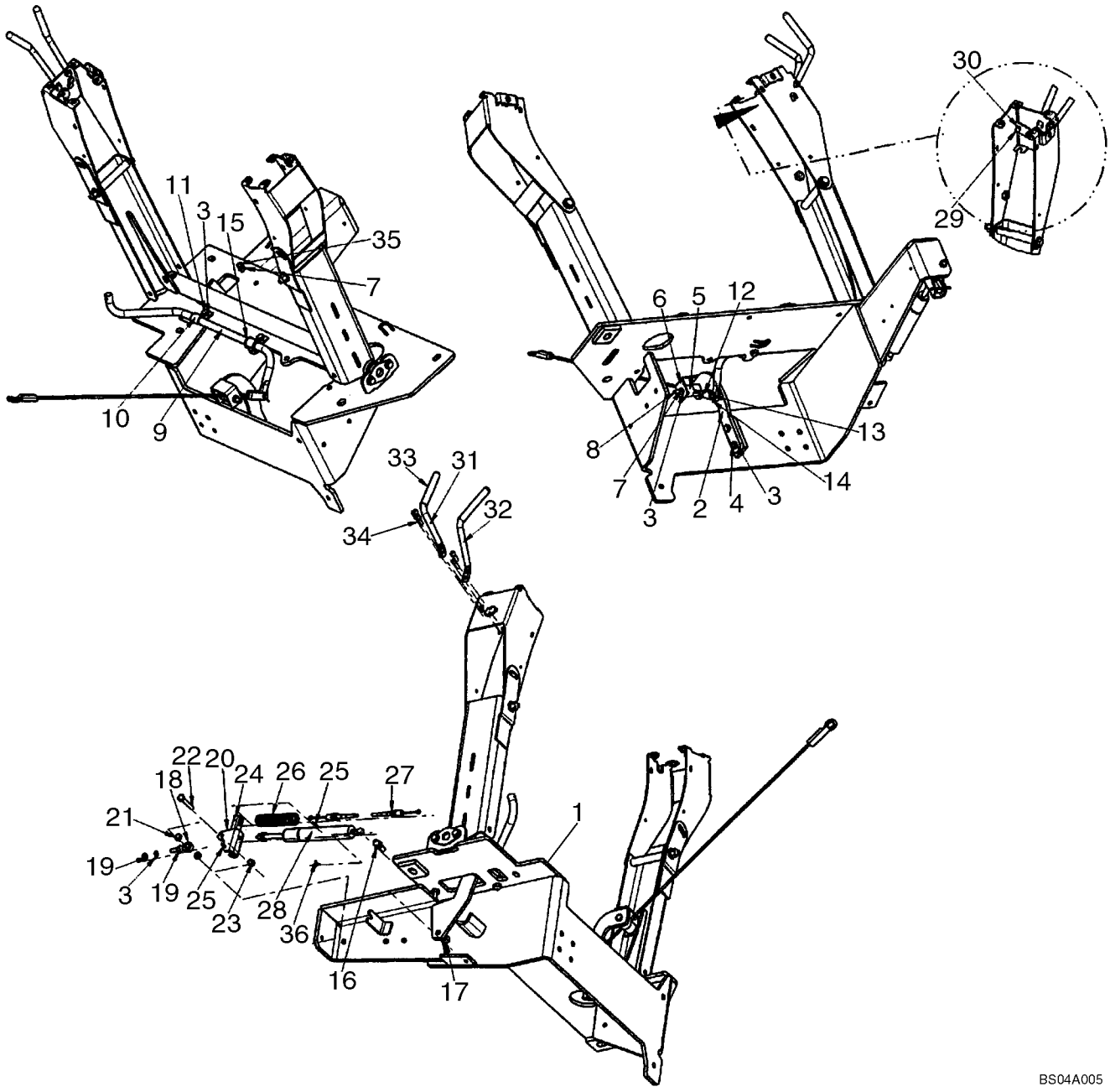

http://www.minnparbackhoeparts.com/

TORRE DE CONTROL DE LA RETROEXCAVADORA PALANCA (TRABA DEL AGUILÓN), CON DE CONTROL PILOTO

REF	FN	PART NUMBER	YR/SN	QTY	DESCRIPTION
1		87440711		1	TORRECILLA Pilot Control Tower Assembly; See Figure 09-13
2		86984544		1	PIEZA DE SOPORTE Roller Mounting
3		892-11008		6	ARANDELA Lock, M8
4		614-8030		2	TORNILLO M8 x 30
5		86984547		2	GUIA
6		86984545		1	PIEZA DE SOPORTE
7		829-1408		2	TUERCA M8
8		814-8070		1	TORNILLO M8 x 70
9		87422696		1	VARILLA Boom Latch Release, See Figure 09-25A; 6.50 mm (1/32 in) Mounting Hole At Ref 2 Lever, If Used
9		87441850		1	VARILLA Boom Latch Release, See Figure 09-25A; 6.00 mm (1/64 in) Mounting Hole At Ref 2 Lever, If Used
10		D143723		2	BRIDA Clamp
11		614-8025		2	TORNILLO M8 x 25
12		87435924		1	CABLE Boom Latch
13		427-5094		1	PASADOR DE HORQUILLA 5/16 x 15/16
		895-11008		1	ARANDELA 9 x 16 x 1.6 mm; Used With Ref 13 and 14
14		432-612		1	PASADOR ABIERTO 3/32" x 3/4"
15		D143591		2	ANILLO DE CIERRE
16		85824067		1	CABEZA DE ARTICULACION Stud
17		832-10410		1	TUERCA M10
18		85824081		1	JUNTA DE ROTULA
19		425-115		2	TUERCA 5/16
20		85824080		1	PIEZA DE SOPORTE
21		85821520		2	SEPARADOR
22		413-528		1	TORNILLO 5/16 x 1-3/4
23		231-1445		1	CONTRA TUERCA 5/16
24		86984549		1	PERFIL Channel
25		432-828		2	PASADOR ABIERTO 1/8" x 1 3/4"
26		87443692		1	MUELLE DE TENSIÓN
27		87437806		1	CABLE FLEXIBLE Pilot Control Positioner
28		86989616		1	COMPAS Cylinder
29		140-108		1	TORNILLO No. 10 x 3/4

http://www.minnparbackhoeparts.com/

09-15		p2	05/05

TORRE DE CONTROL DE LA RETROEXCAVADORA PALANCA (TRABA DEL AGUILÓN), CON DE CONTROL PILOTO

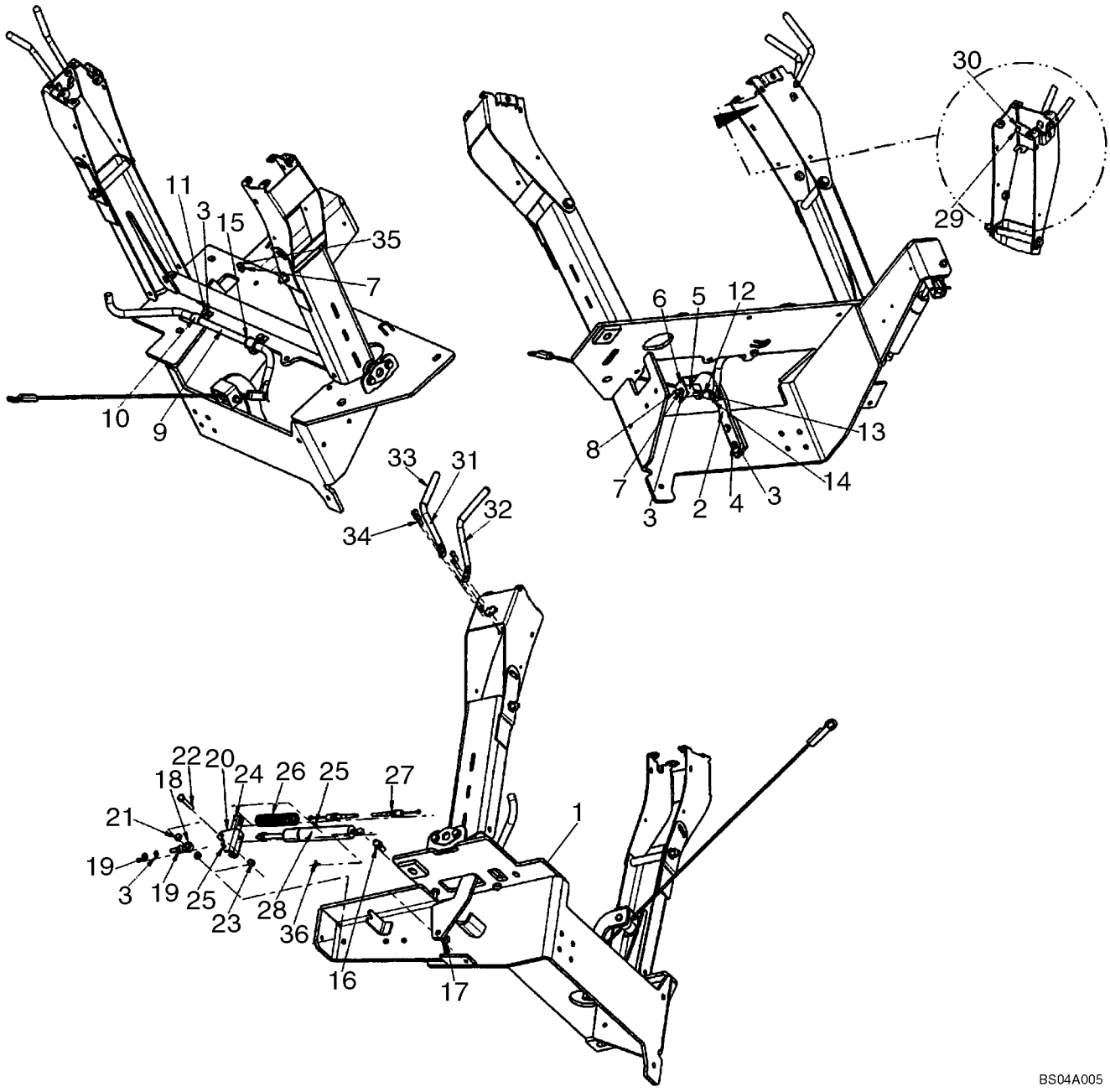

http://www.minnparbackhoeparts.com/

TORRE DE CONTROL DE LA RETROEXCAVADORA PALANCA (TRABA DEL AGUILÓN), CON DE CONTROL PILOTO

REF	FN	PART NUMBER	YR/SN	QTY	DESCRIPTION
30		231-14409		1	CONTRA TUERCA No. 10
31		87418368		1	VARILLA Tower Stationary
32		87418369		1	VARILLA Tower Position
33		87442409		2	MANGO
34		565-104		4	TORNILLO Socket, M6 x 20; If Used
34		87303781		4	PERNO, CABEZA RONDA HEX FLANGE, M6 x 20, Polished; If Used
34		87310098		4	TORNILLO Hex Flange, M6 x 20, Black Oxide; If Used
35		614-8050		1	TORNILLO M8 x 50
36		3233348R1		1	CLIP ELECTRICO

http://www.minnparbackhoeparts.com/

CONTROLES - RETROEXCAVADORA, CON PEDAL DE OSCILACIÓN (MODELOS SIN PALA EXTENDIBLE)

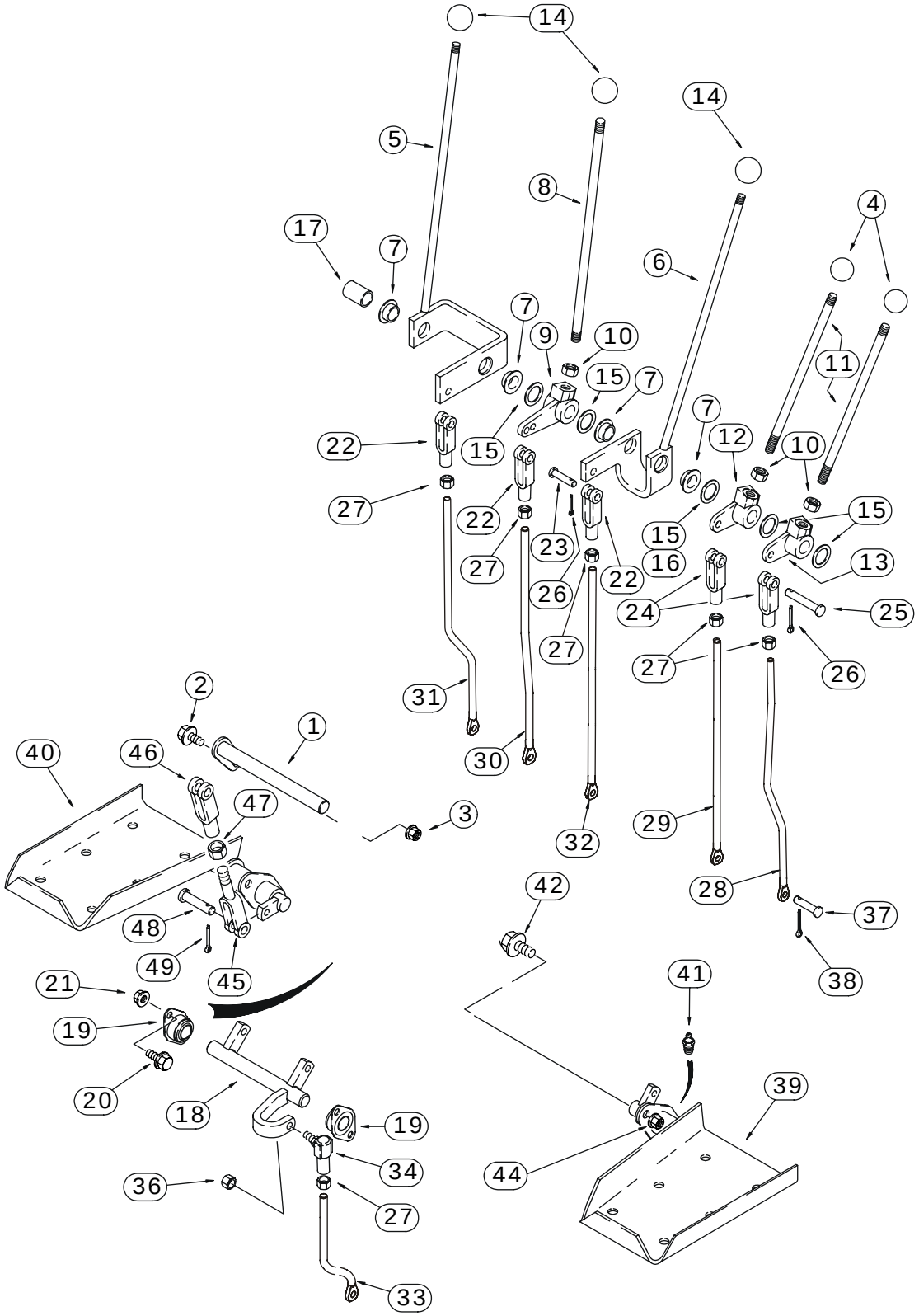

http://www.minnparbackhoeparts.com/

CONTROLES - RETROEXCAVADORA, CON PEDAL DE OSCILACIÓN (MODELOS SIN PALA EXTENDIBLE)

REF	FN	PART NUMBER	YR/SN	QTY	DESCRIPTION
1		129015A1		1	EJE
2		614-8025		1	TORNILLO M8 x 25
3		832-10408		1	TUERCA Lock, M8
4		D59912		2	PLACA Stabilizer Control Levers
5		136267A1		1	PALANCA Boom; Incl. Ref 7
6		136269A1		1	PALANCA Bucket; Incl. Ref 7
7		D148992		2	CASQUILLO
8		136263A1		1	VARILLA Dipper
9		D150397		1	PALANCA-REENVIO Dipper
10		425-118		3	TUERCA 1/2 NF
11		136261A1		2	PALANCA MANDO Stabilizer
12		D150435		1	PALANCA-REENVIO Right-Hand Stabilizer Control
13		D150434		1	PALANCA-REENVIO Left-Hand Stabilizer Control
14		L54563		3	PLACA Boom, Dipper, and Bucket
15		A30881		X	ARANDELA 49/64 x 1-15/64 x 1/32; Used As A Shim
16		D34666		1	ARANDELA 25/32 x 1-3/8 x 9/64; May Be Used In Place Of Ref 15
17		D150486		1	ESPACIADOR Not Used On Models With Extendable Dipper
18		D148994		1	EJE Swing
19		D139039		2	COJINETE
20		614-8025		4	TORNILLO M8 x 25
21		832-10408		4	TUERCA Lock, M8
22		213-126		3	HORQUILLA PEQUENA 3/8 NF
23		D149288		3	BULON/PIN, LARGO Special
24		D150493		2	HORQUILLA PEQUENA
25		427-6088		2	BULON/PIN, LARGO 3/8 x 7/8
26		432-612		5	PASADOR ABIERTO 3/32" x 3/4"
27		425-156		6	TUERCA 3/8 NF
28		87422243		1	VARILLA ROSCADA Left-Hand Stabilizer Control
29		87422245		1	VARILLA ROSCADA Right-Hand Stabilizer Control
30		87422247		1	VARILLA ROSCADA Dipper
31		87422241		1	VARILLA ROSCADA Boom
32		87422249		1	VARILLA ROSCADA Bucket
33		87422239		1	VARILLA ROSCADA Swing
34		D149295		1	JUNTA DE ROTULA 3/8
36		425-116		1	TUERCA 3/8 NF

http://www.minnparbackhoeparts.com/

09-16		p2	05/05

CONTROLES - RETROEXCAVADORA, CON PEDAL DE OSCILACIÓN (MODELOS SIN PALA EXTENDIBLE)

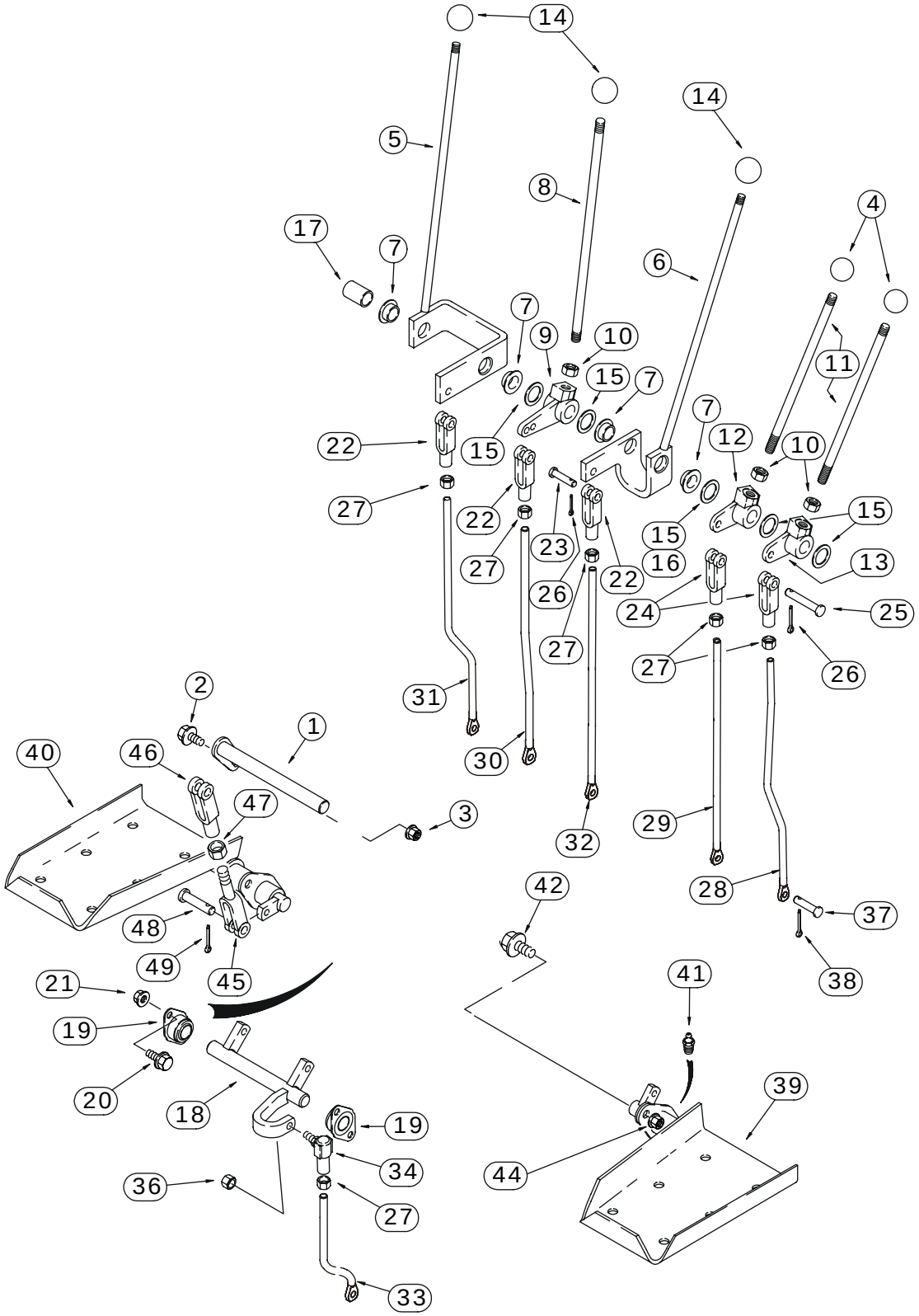

BS03M099

http://www.minnparbackhoeparts.com/

CONTROLES - RETROEXCAVADORA, CON PEDAL DE OSCILACIÓN (MODELOS SIN PALA EXTENDIBLE)

REF	FN	PART NUMBER	YR/SN	QTY	DESCRIPTION
37		D149287		6	BULON/PIN, LARGO 5/16
38		432-612		6	PASADOR ABIERTO 3/32" x 3/4"
39		136271A2		1	PEDAL (CONJUNTO) Left-Hand Swing; Without Pilot Controls
40		136270A2		1	PEDAL (CONJUNTO) Right-Hand Swing; Without Pilot Controls
41		219-1		2	ENGRASADOR 1/8 PT x 21/32
42		614-10025		4	TORNILLO M10 x 25
44		832-10410		4	TUERCA Lock, M10
45		D150503		2	EXTREMIDAD Yoke
46		D149262		2	HORQUILLA PEQUENA 3/8
47		425-156		2	TUERCA 3/8 NF
48		D149288		4	BULON/PIN, LARGO 3/8
49		432-612		4	PASADOR ABIERTO 3/32" x 3/4"

http://www.minnparbackhoeparts.com/

09-17		p1	05/05

CONTROLES - RETROEXCAVADORA, CON PEDAL DE OSCILACIÓN (MODELOS CON PALA EXTENDIBLE)

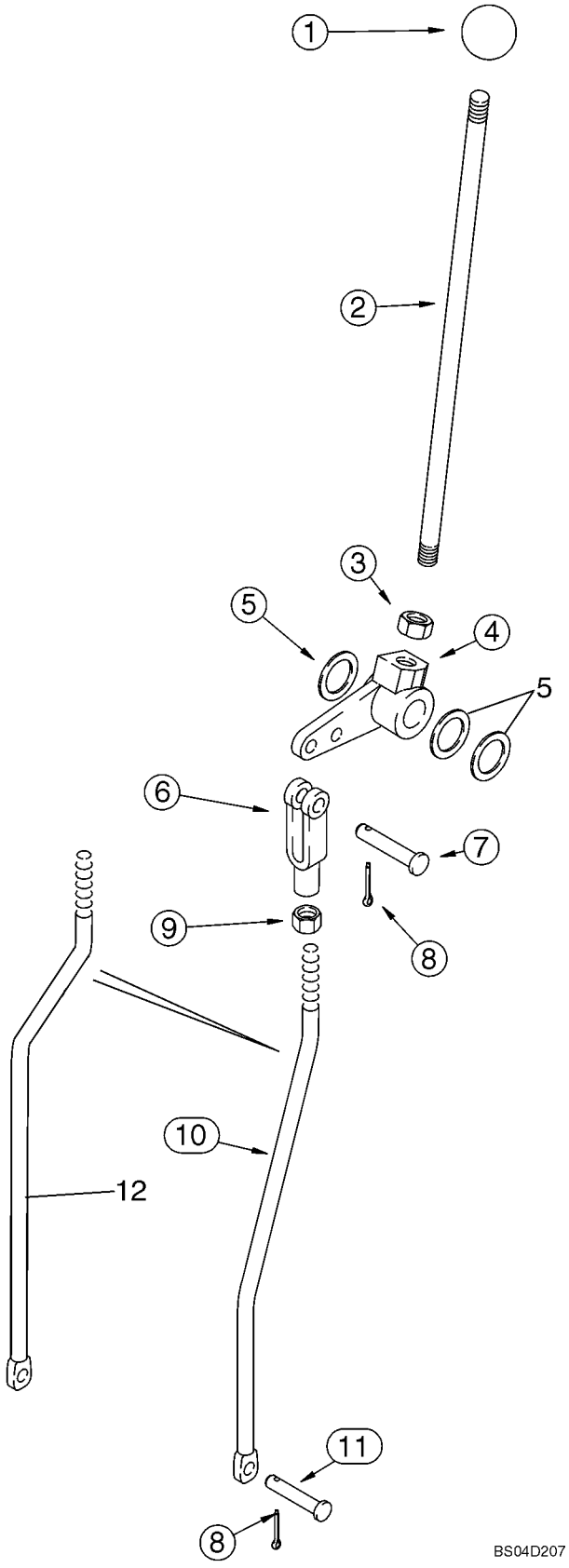

http://www.minnparbackhoeparts.com/

CONTROLES - RETROEXCAVADORA, CON PEDAL DE OSCILACIÓN (MODELOS CON PALA EXTENDIBLE)

REF	FN	PART NUMBER	YR/SN	QTY	DESCRIPTION
1		L54563		1	PLACA Extendahoe
2		136263A1		1	VARILLA Extendahoe
3		425-118		1	TUERCA 1/2 NF
4		182006A1		1	PALANCA Bellcrank
5		A30881		X	ARANDELA 49/64 x 1-15/64 x 1/32
6		213-126		1	HORQUILLA PEQUENA 3/8 NF
7		427-6088		1	BULON/PIN, LARGO 3/8 x 7/8
8		432-612		2	PASADOR ABIERTO 3/32" x 3/4"
9		425-156		1	TUERCA 3/8 NF
10		87440076		1	VARILLA ROSCADA Extendahoe Rod; Mounts In Outer Bellcrank Lever Hole; If Used; No Longer Available, Order 87446113 Rod, Ref 12
11		D149287		1	BULON/PIN, LARGO
12		87446113		1	VARILLA ROSCADA Extendahoe Rod; Mounts In Inner Bellcrank Lever Hole; If Used

http://www.minnparbackhoeparts.com/

09-18		p1	05/05

CONTROLES - RETROEXCAVADORA, CON OSCILACIÓN MANUAL (MODELOS SIN PALA EXTENDIBLE)

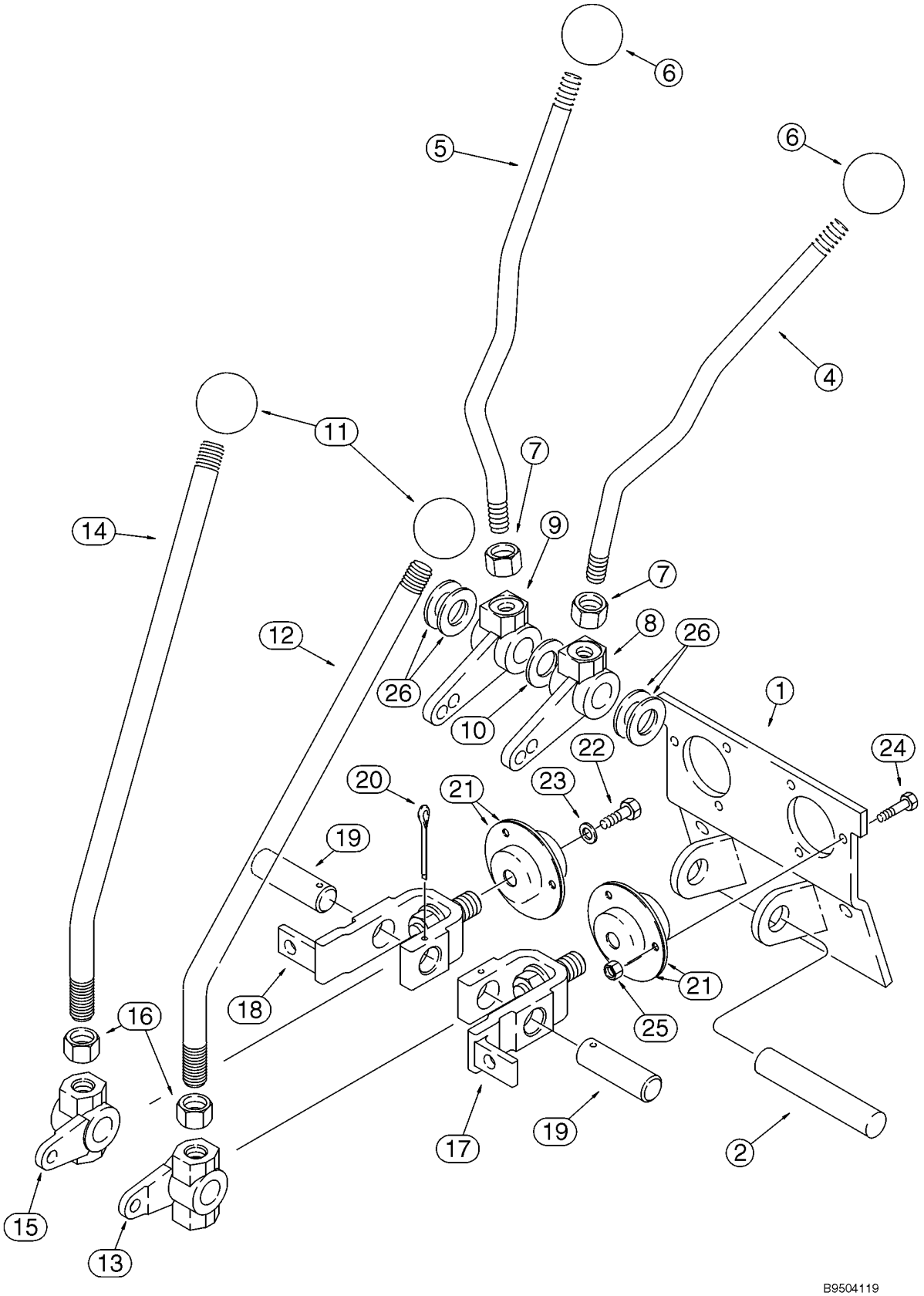

http://www.minnparbackhoeparts.com/

CONTROLES - RETROEXCAVADORA, CON OSCILACIÓN MANUAL (MODELOS SIN PALA EXTENDIBLE)

REF	FN	PART NUMBER	YR/SN	QTY	DESCRIPTION
		REF			MANUAL UPPER CONTROL LEVERS
1		108864A1		1	APOYADERO
2		D148947		1	BULON/PIN, LARGO Stabilizer
4		409672A1		1	PALANCA Left-Hand; Stabilizer
5		409673A1		1	PALANCA Right-Hand; Stabilizer
6		D59912		2	PLACA Stabilizer
7		425-118		2	TUERCA 1/2 NF
8		108924A1		1	PALANCA
9		108923A1		1	PALANCA
10		495-11081		1	ARANDELA 13/16 x 1-15/32 x 1/8
11		D39118		2	PLACA
12		125113A1		1	PALANCA Boom and Swing
13		106989A1		1	PALANCA Left-Hand Boom and Swing Lever
14		125113A1		1	PALANCA Bucket and Dipper
15		106990A1		1	PALANCA Right-Hand Bucket and Dipper Lever
16		425-1110		2	TUERCA 5/8 NF
17		178006A1		1	PALANCA Boom and Swing
18		178004A1		1	PALANCA Bucket and Dipper
19		102765A1		2	BULON/PIN, LARGO Bellcrank
20		432-828		2	PASADOR ABIERTO 1/8" x 1 3/4"
21		112380A1		4	COJINETE
22		614-6016		2	TORNILLO M6 x 16
23		396-41028		2	ARANDELA 9/32 x 7/8 x 3/32
24		614-6020		6	TORNILLO M6 x 20
25		829-1406		6	TUERCA M6; 10.9
26		A30881		X	ARANDELA 49/64 x 1-15/64 x 1/32

http://www.minnparbackhoeparts.com/

09-19		p1	05/05

CONTROLES - RETROEXCAVADORA, CON OSCILACIÓN MANUAL (MODELOS SIN PALA EXTENDIBLE)

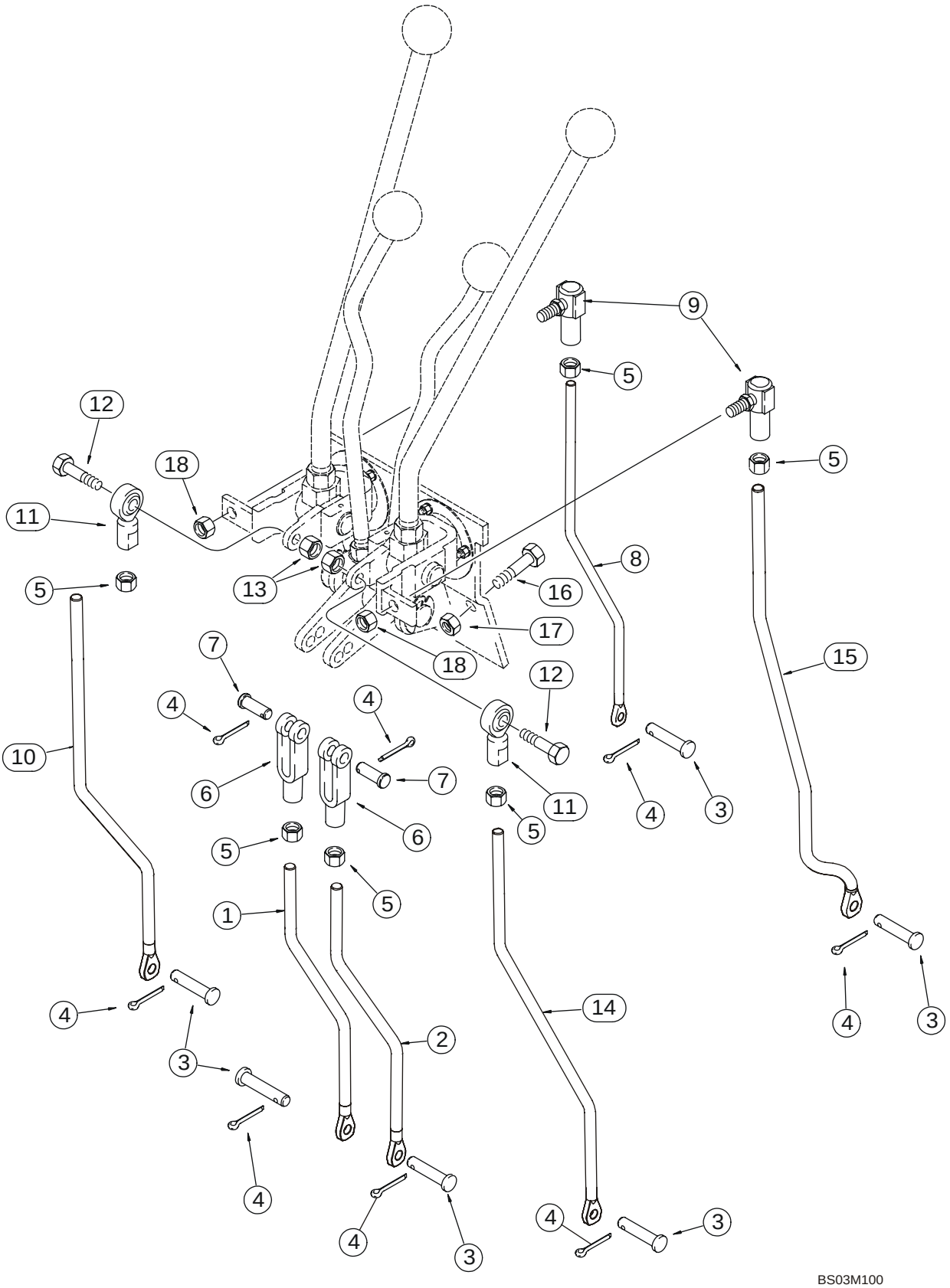

http://www.minnparbackhoeparts.com/

CONTROLES - RETROEXCAVADORA, CON OSCILACIÓN MANUAL (MODELOS SIN PALA EXTENDIBLE)

REF	FN	PART NUMBER	YR/SN	QTY	DESCRIPTION
		REF			MANUAL LOWER CONTROL LEVERS
1		87422260		1	VARILLA ROSCADA Right-Hand; Stabilizer; 262.6 mm (10-11/32 in) Long; No Longer Available, Order 87452406 Rod; If Replacing Either LH or RH 10-11/32 Inch Rod, You Must Order Both LH and RH 11-9/32 Inch Rods
1		87452406		1	VARILLA ROSCADA Right-Hand; Stabilizer; 286.6 mm (11-9/32 in) Long
2		87422258		1	VARILLA ROSCADA Left-Hand; Stabilizer; 262.6 mm (10-11/32 in) Long; No Longer Available, Order 87452404 Rod; If Replacing Either LH or RH 10-11/32 Inch Rod, You Must Order Both LH and RH 11-9/32 Inch Rods
2		87452404		1	VARILLA ROSCADA Left-Hand; Stabilizer; 286.6 mm (11-9/32 in) Long
3		D149287		6	BULON/PIN, LARGO
4		432-612		8	PASADOR ABIERTO 3/32" x 3/4"
5		425-116		6	TUERCA 3/8 NF
6		213-126		2	HORQUILLA PEQUENA 3/8 NF
7		D149288		2	BULON/PIN, LARGO Special
8		87422264		1	VARILLA ROSCADA Bucket
9		D149295		2	JUNTA DE ROTULA
10		87422262		1	VARILLA ROSCADA Dipper
11		D136773		2	JUNTA DE ROTULA 3/8 NF
12		413-624		2	TORNILLO 3/8 x 1-1/2
13		425-106		2	TUERCA 3/8
14		87422256		1	VARILLA ROSCADA Boom
15		87422253		1	VARILLA ROSCADA Swing
16		614-10025		2	TORNILLO M10 x 25
17		832-10410		2	TUERCA M10
18		231-2446		2	TUERCA 3/8 NF

http://www.minnparbackhoeparts.com/

CONTROLES - RETROEXCAVADORA, PATRÓN DE CONTROL DE LA EXCAVADORA

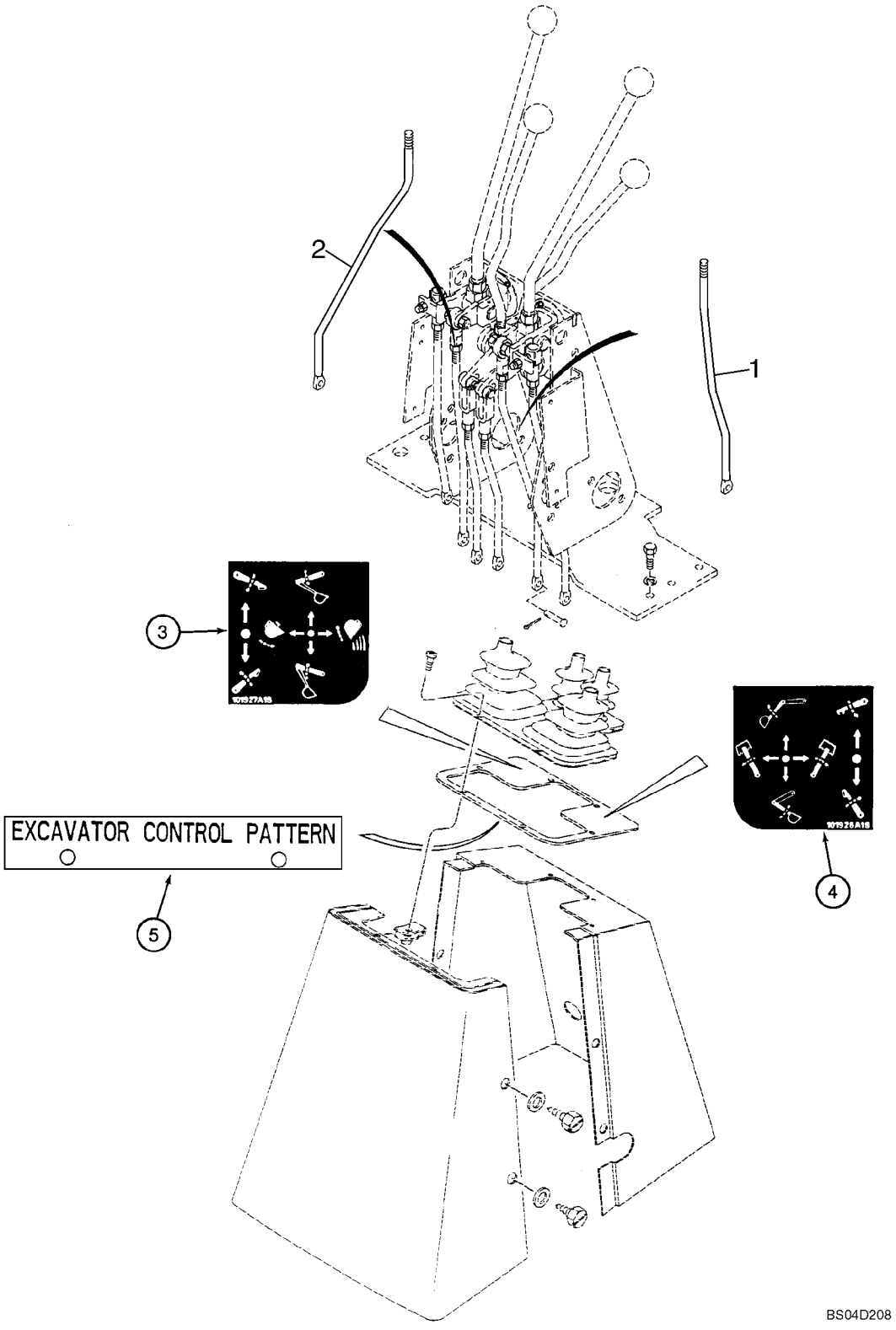

http://www.minnparbackhoeparts.com/

CONTROLES - RETROEXCAVADORA, PATRÓN DE CONTROL DE LA EXCAVADORA

REF	FN	PART NUMBER	YR/SN	QTY	DESCRIPTION
		87447088		1	KIT, SERVICE Excavator Control Pattern; Incl. Ref 1 - 5; Purchase From Parts and Components; Machine Must Be Equipped With Hand Swing Controls; If Machine Is Equipped With Foot Swing Controls, Foot Swing to Hand Swing Controls Kit Must Be Ordered and Installed First
1		87422272		1	VARILLA ROSCADA Dipper; Replaces Existing Boom Control Rod; Right-Hand Control Lever Which Used To Control The Dipper, Now Controls The Boom
2		87422270		1	VARILLA ROSCADA Boom; Replaces Existing Dipper Control Rod; The Left-Hand Control Lever Which Used To Control The Boom, Now Controls The Dipper
3		E49498		1	CALCOMANIA Control; Right-Hand
4		E49497		1	CALCOMANIA Control; Left-Hand
5		198410A1		1	PLACA, GRANDE Excavator Control Pattern

http://www.minnparbackhoeparts.com/

CONTROLES - RETROEXCAVADORA, CON OSCILACIÓN MANUAL (MODELOS CON PALA EXTENDIBLE)

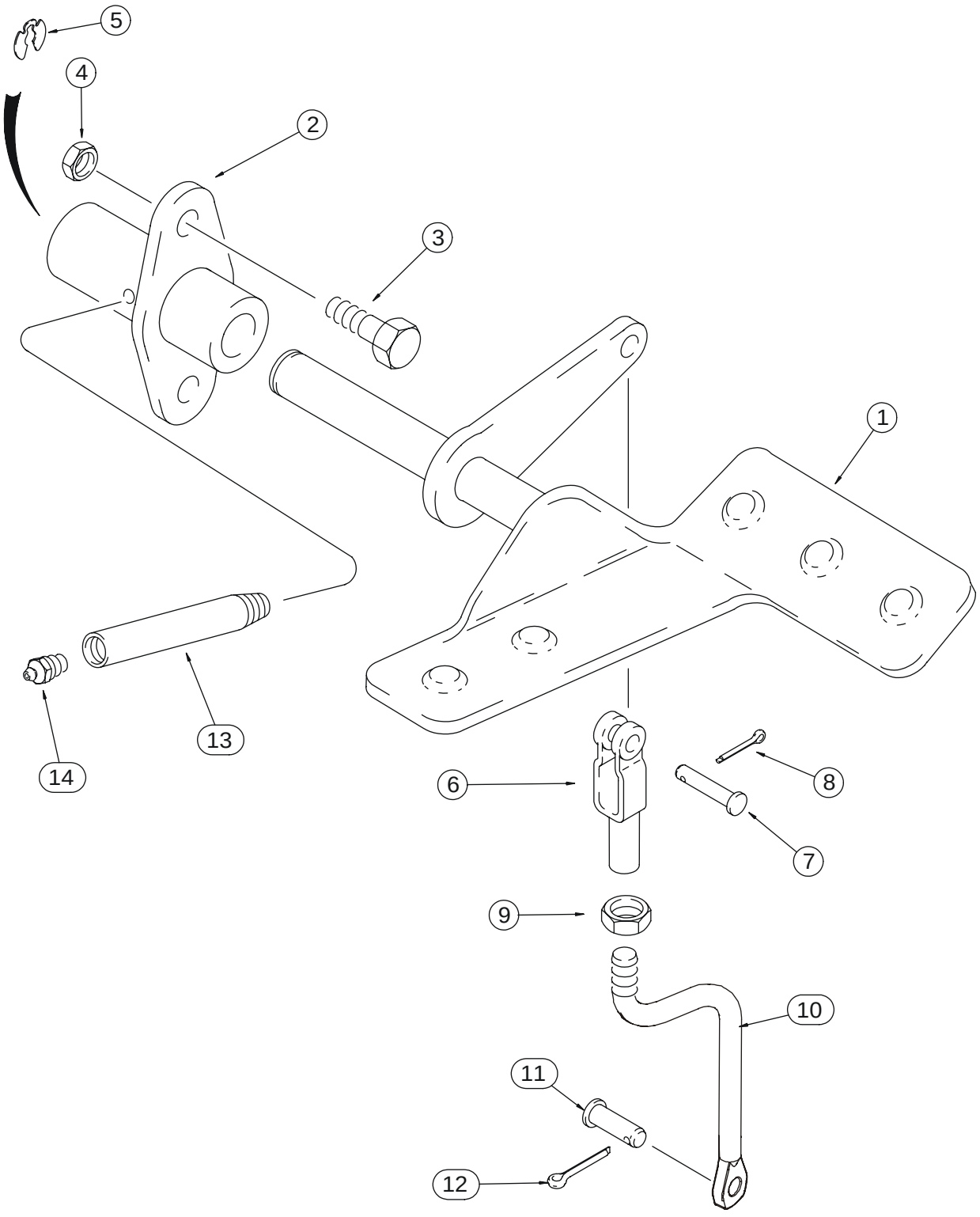

BS03M101

http://www.minnparbackhoeparts.com/

CONTROLES - RETROEXCAVADORA, CON OSCILACIÓN MANUAL (MODELOS CON PALA EXTENDIBLE)

REF	FN	PART NUMBER	YR/SN	QTY	DESCRIPTION
1		179029A1		1	PEDAL Right-Hand; Extendahoe
2		126918A1		1	APOYADERO (CONJUNTO)
3		614-10025		2	TORNILLO M10 x 25
4		832-10410		2	TUERCA M10
5		D143416		1	ANILLO DE CIERRE
6		D134900		1	HORQUILLA PEQUENA
7		427-6088		1	BULON/PIN, LARGO 3/8 x 7/8
8		432-612		1	PASADOR ABIERTO 3/32" x 3/4"
9		425-156		1	TUERCA 3/8 NF
10		87440058		1	VARILLA ROSCADA Extendahoe Rod
11		D149287		1	BULON/PIN, LARGO
12		432-612		1	PASADOR ABIERTO 3/32" x 3/4"
13		D150032		1	TUBO Lube
14		219-1		1	ENGRASADOR 1/8 PT x 21/32

http://www.minnparbackhoeparts.com/

CONTROLES - SISTEMA HIDRÁULICO AUXILIAR DE LA RETROEXCAVADORA, SIN DE CONTROL PILOTO

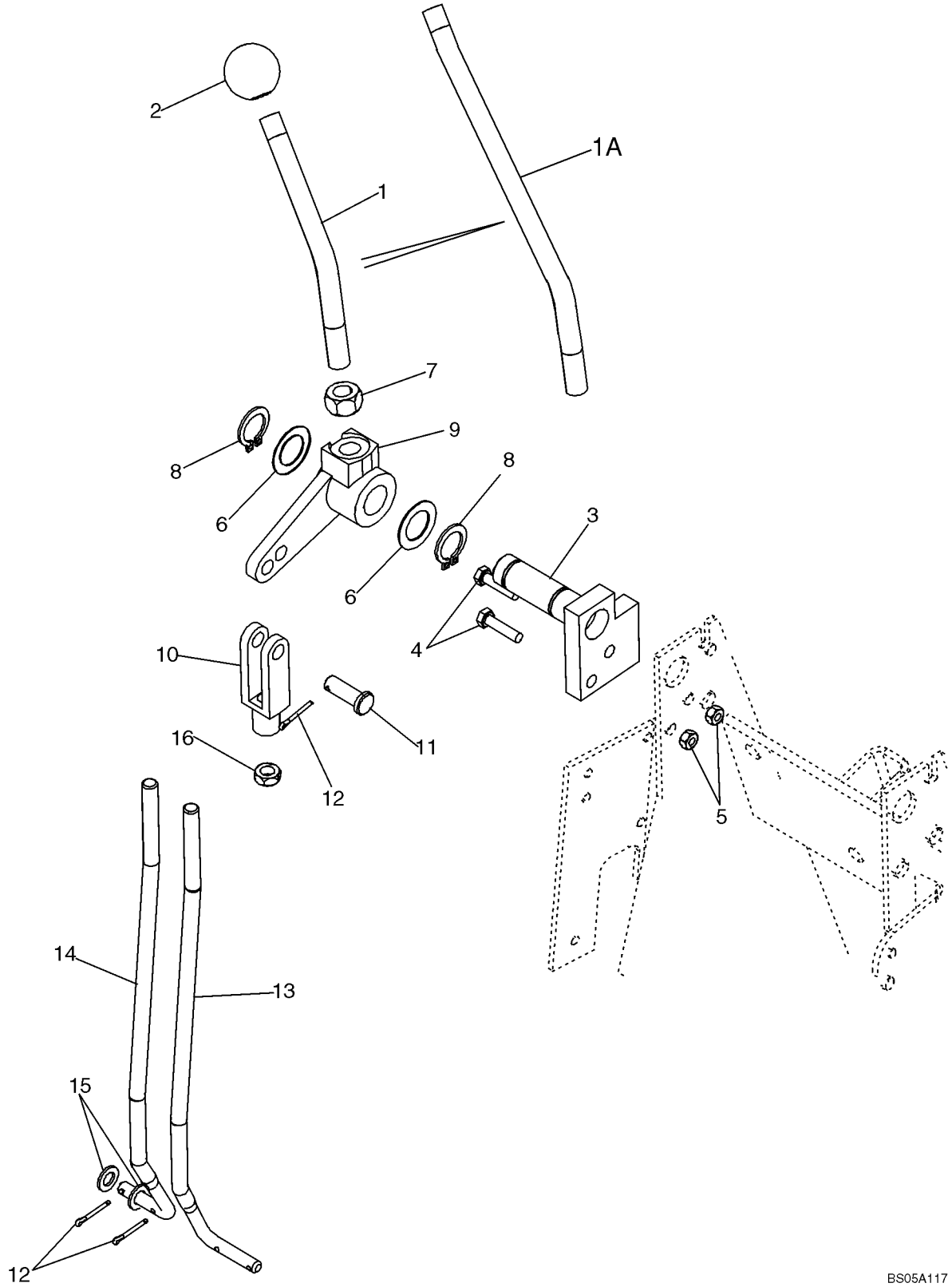

http://www.minnparbackhoeparts.com/

CONTROLES - SISTEMA HIDRÁULICO AUXILIAR DE LA RETROEXCAVADORA, SIN DE CONTROL PILOTO

REF	FN	PART NUMBER	YR/SN	QTY	DESCRIPTION
1		87425118		1	VARILLA ROSCADA Auxiliary Control; 143 mm (5-5/8 in) long; If Used
1A		221477A1		1	PALANCA MANDO Auxiliary Control; 250 mm (9-27/32 in) long; If Used
2		D59912		1	PLACA
3		87425117		1	PIVOTE (CONJUNTO) 7 or 8 Spool Valve
4		614-6025		2	TORNILLO M6 x 25
5		829-1406		2	TUERCA M6; 10.9
6		A30881		2	ARANDELA Used As A Shim
7		425-118		1	TUERCA Hex, 1/2
8		103-1475		2	ANILLO DE CIERRE No. 75
9		182006A1		1	PALANCA
10		213-126		1	HORQUILLA PEQUENA 3/8
11		D149288		1	BULON/PIN, LARGO Clevis, 3/8
12		432-612		3	PASADOR ABIERTO 3/32" x 3/4"
13		87439135		1	VARILLA ROSCADA 7 Spool Valve; If Used
14		87438157		1	VARILLA ROSCADA 8 Spool Valve; If Used
15		895-11008		2	ARANDELA 9 x 17 x 1,6 mm
16		425-156		1	TUERCA Hex, Jam, 3/8 NF

http://www.minnparbackhoeparts.com/

RETROEXCAVADORA - ESTABILIZADORES, PLACAS Y ALMOHADILLAS(580SM)

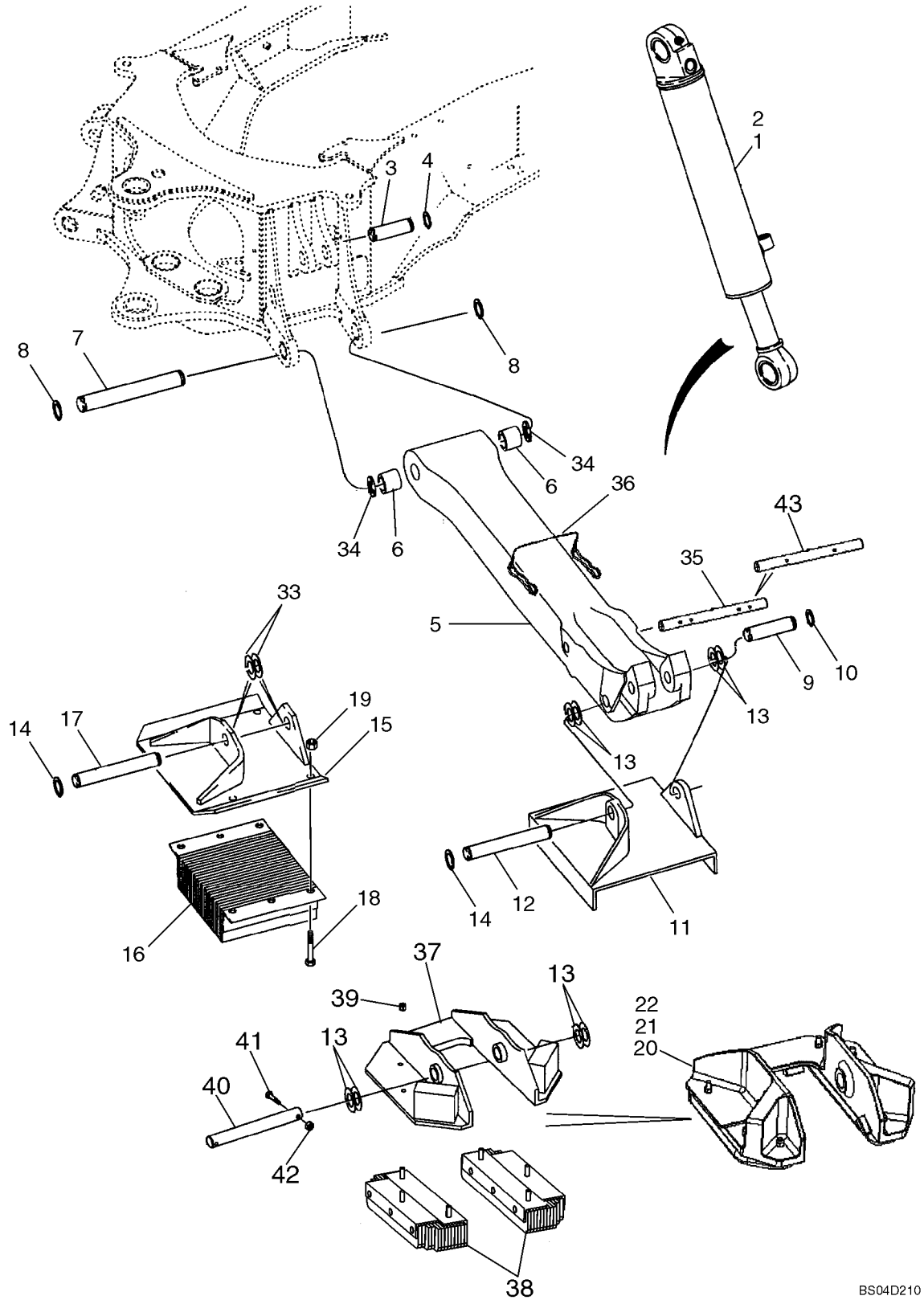

http://www.minnparbackhoeparts.com/

RETROEXCAVADORA - ESTABILIZADORES, PLACAS Y ALMOHADILLAS(580SM)

REF	FN	PART NUMBER	YR/SN	QTY	DESCRIPTION
1		199720A1		1	CILINDRO (CONJUNTO) 108 ID x 553 mm strk; Stabilizer; Right-Hand; See Figure 08-65; 580SM Models
2		199721A1		1	CILINDRO (CONJUNTO) 108 ID x 553 mm strk; Stabilizer; Left-Hand; See Figure 08-65; 580SM Models
3		D38907		2	PERNO Stabilizer Cylinder to Chassis
4		103-16175		4	ANILLO DE CIERRE No. 175
5		446222A1		2	ESTABILIZADOR 1135 mm (44-11/16 in); Incl. Ref 6
6		D50146		2	CASQUILLO
7		121665A1		2	BULON/PIN, LARGO Stabilizer Leg to Chassis
8		103-16175		4	ANILLO DE CIERRE No. 175
9		D26002		2	PERNO Stabilizer Cylinder
10		D25279		4	ANILLO DE CIERRE
11		D88427		2	PLACA Cleated; If Used
12		D28648		2	PERNO Plate/Pad to Leg
13		D143406		X	ARANDELA Used as a Spacer
14		D25279		4	ANILLO DE CIERRE
15		D142519		2	ZAPATA (CONJUNTO) Street or Cemetery; If Used
16		D61368		2	AMORTIGUADOR Rubber; If Used
17		D39256		2	PIVOTE DE EJE Plate to Leg
18		413-1228		8	TORNILLO 3/4 x 1-3/4
19		425-1012		8	TUERCA 3/4
20		408398A1		2	TACO PLATE, Anti-Flipover; No Longer Available, Order Ref 37 - 43
21		339680A2		4	PLACA, CAUCHO Anti-Flipover; Used With 408398A1 Plate, Ref 20
22		832-41312		16	TUERCA M12; If Used
33		D143406		X	ARANDELA Used as a Spacer
34		495-81282		X	ARANDELA 2-1/16 x 3 x 3/32; Used as a Spacer
35		408405A1		2	PERNO DE PIVOTE Anti-Flip; Used With 408398A1 Pad, Ref 20
36		446454A1		2	PASADOR DE FIJACION Used With 408398A1 Pad, Ref 20 or 386000A2 Pad, Ref 37
37		386000A2		2	TACO Anti-Flipover
38		395753A2		4	PLACA, CAUCHO Used With 386000A2 Pad
39		231-4247		12	TUERCA

http://www.minnparbackhoeparts.com/

RETROEXCAVADORA - ESTABILIZADORES, PLACAS Y ALMOHADILLAS(580SM)

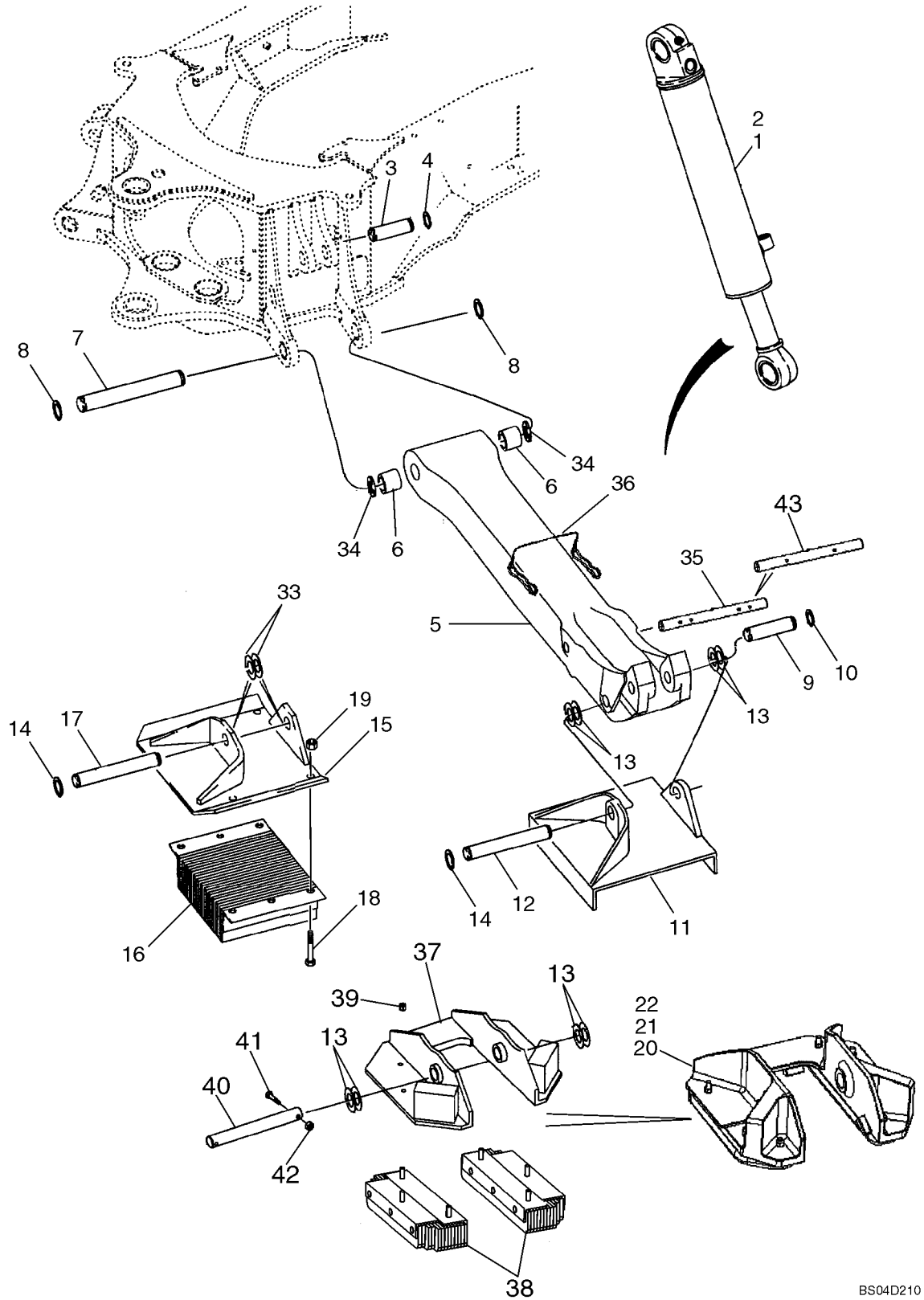

http://www.minnparbackhoeparts.com/

RETROEXCAVADORA - ESTABILIZADORES, PLACAS Y ALMOHADILLAS(580SM)

REF	FN	PART NUMBER	YR/SN	QTY	DESCRIPTION
40		D149033		2	BULON/PIN, LARGO
41		413-632		4	TORNILLO 3/8 x 2
42		230-4216		4	TUERCA 3/8
43		87436782		2	PERNO DE PIVOTE Anti-Flipover; Used With 386000A2 Pad, Ref 37
43		87436782		2	PERNO DE PIVOTE Anti-Flipover; Used With 386000A2 Pad, Ref 37

http://www.minnparbackhoeparts.com/

RETROEXCAVADORA - ESTABILIZADORES, PLACAS Y ALMOHADILLAS (580SM+)

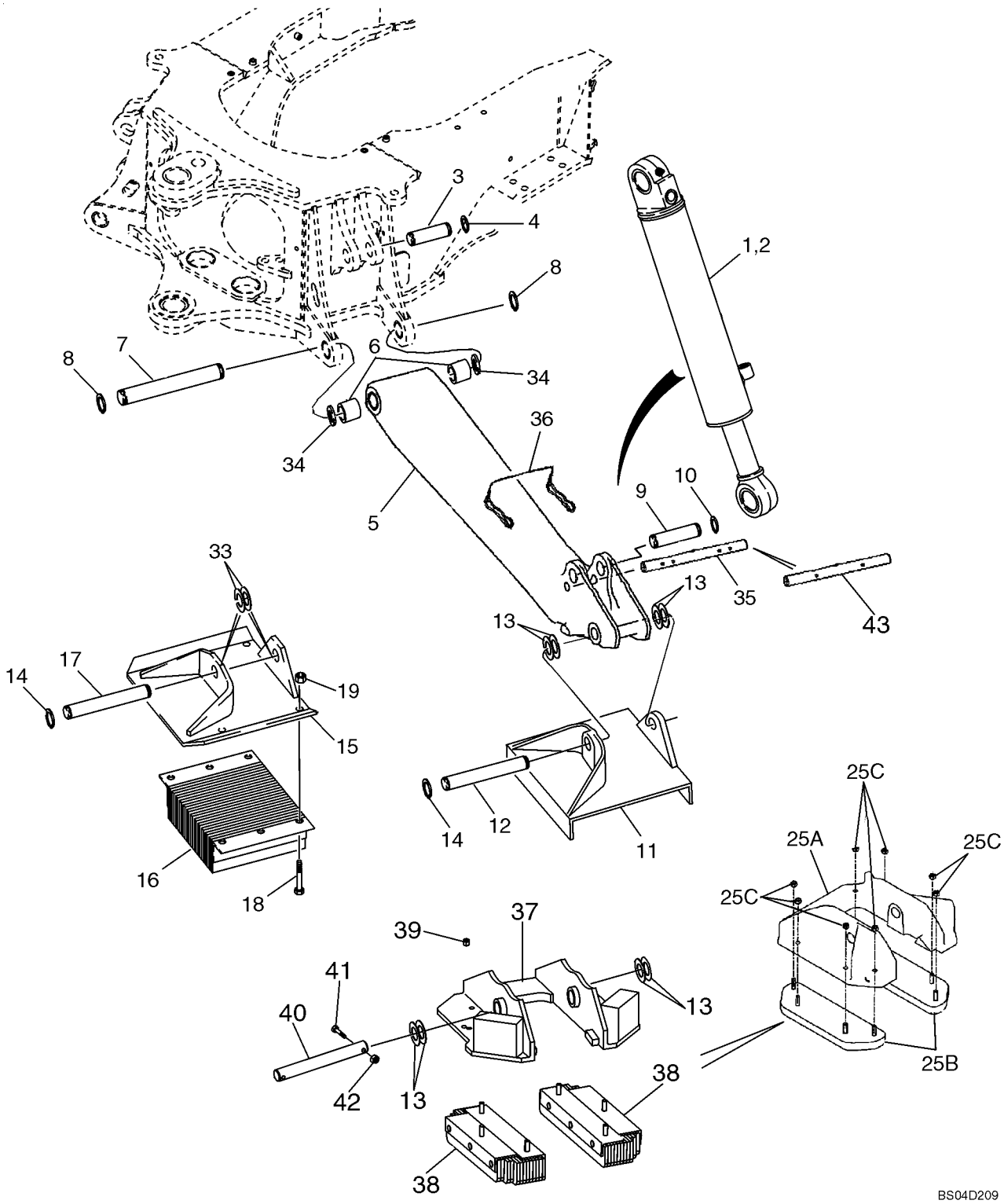

http://www.minnparbackhoeparts.com/

RETROEXCAVADORA - ESTABILIZADORES, PLACAS Y ALMOHADILLAS (580SM+)

REF	FN	PART NUMBER	YR/SN	QTY	DESCRIPTION
1		177256A1		1	CILINDRO 127 ID x 519 mm strk; Stabilizer; Right-Hand; See Figure 08-65A; 580SM+ Models
2		177257A1		1	CILINDRO (CONJUNTO) 127 ID x 519 mm strk; Stabilizer; Left-Hand; See Figure 08-65A; 580SM+ Models
3		D38907		2	PERNO Stabilizer Cylinder to Chassis
4		103-16175		4	ANILLO DE CIERRE No. 175
5		446220A1		2	ESTABILIZADOR 1307 mm (51-7/16 in); Incl. Ref 6
6		D50146		2	CASQUILLO
7		121665A1		2	BULON/PIN, LARGO Stabilizer Leg to Chassis
8		103-16175		4	ANILLO DE CIERRE No. 175
9		R26725		2	BULON/PIN, LARGO Stabilizer Cylinder
10		D25279		4	ANILLO DE CIERRE
11		D88427		2	PLACA Cleated; If Used
12		D28648		2	PERNO Plate/Pad to Leg
13		D143406		X	ARANDELA Used as a Spacer
14		D25279		4	ANILLO DE CIERRE
15		D142519		2	ZAPATA (CONJUNTO) Street or Cemetery; If Used
16		D61368		2	AMORTIGUADOR Rubber; If Used
17		D39256		2	PIVOTE DE EJE Plate to Leg
18		413-1228		8	TORNILLO 3/4 x 1-3/4
19		425-1012		8	TUERCA 3/4
25A		408399A1		2	TACO PLATE, Anti-Flipover; No Longer Available, Order Ref 37 - 43
25B		339680A2		4	PLACA, CAUCHO Anti-Flipover; Used With 408399A1 Plate, Ref 25A
25C		832-41312		16	TUERCA M12; If Used
33		D143406		X	ARANDELA Used as a Spacer
34		495-81282		X	ARANDELA 2-1/16 x 3 x 3/32; Used as a Spacer
35		408405A1		2	PERNO DE PIVOTE Used With 408399A1 Pad, Ref 25A
36		446454A1		2	PASADOR DE FIJACION Used With 408399A1 Pad or 400880A1 Pad
37		400880A1		2	TACO PLATE, Anti-Flipover
38		395753A2		4	PLACA, CAUCHO Used With 400880A1 Pad
39		231-4247		12	TUERCA
40		D149033		2	BULON/PIN, LARGO

http://www.minnparbackhoeparts.com/

09-22A		p2	04/04

RETROEXCAVADORA - ESTABILIZADORES, PLACAS Y ALMOHADILLAS (580SM+)

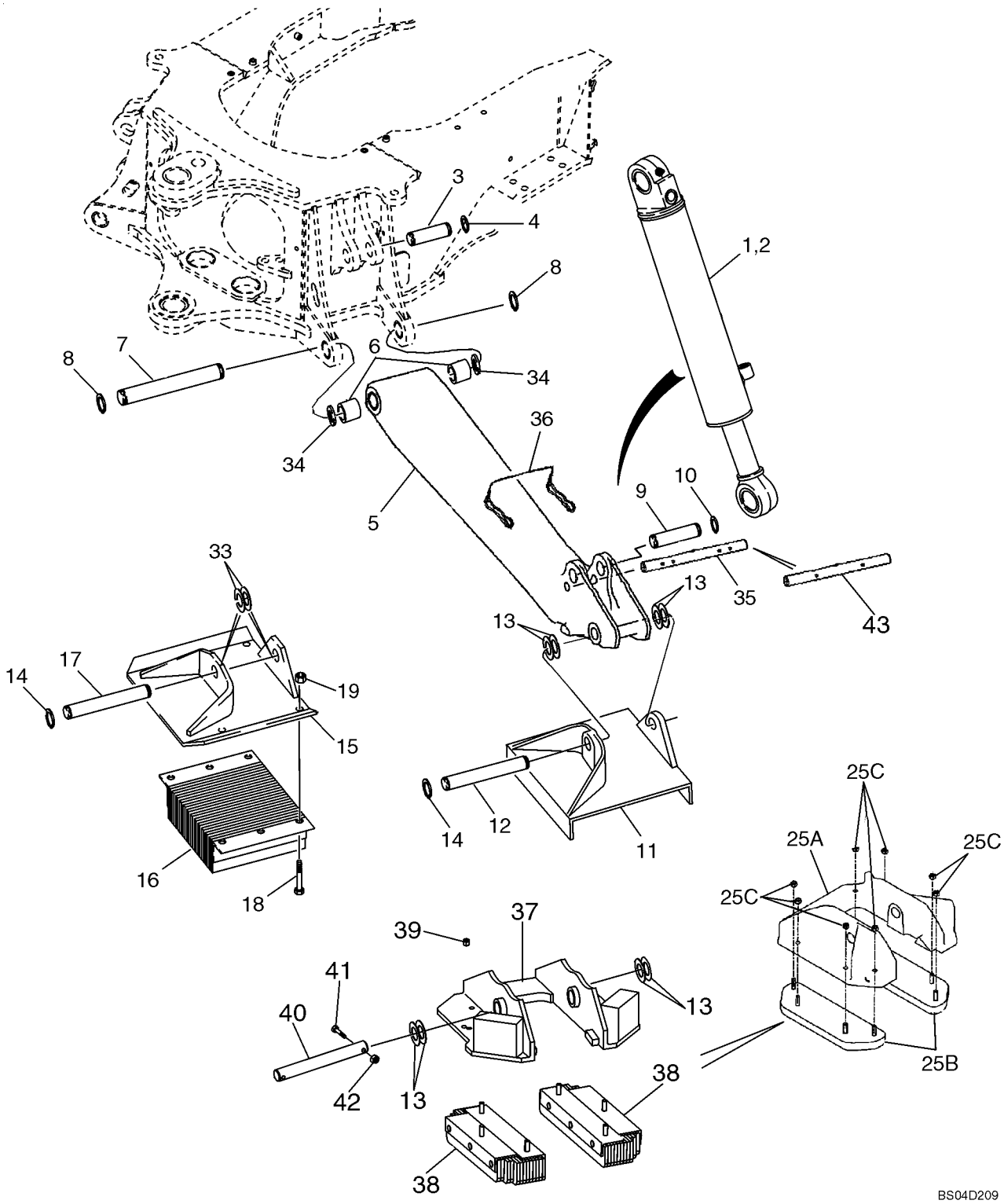

http://www.minnparbackhoeparts.com/

RETROEXCAVADORA - ESTABILIZADORES, PLACAS Y ALMOHADILLAS (580SM+)

REF	FN	PART NUMBER	YR/SN	QTY	DESCRIPTION
41		413-632		4	TORNILLO 3/8 x 2
42		230-4216		4	TUERCA 3/8
43		87436783		2	PERNO DE PIVOTE Anti-Flipover; Used With 400880A1 Pad, Ref 37

http://www.minnparbackhoeparts.com/

RETROEXCAVADORA - TORRE DE OSCILACIÓN Y CILINDROS DE OSCILACIÓN

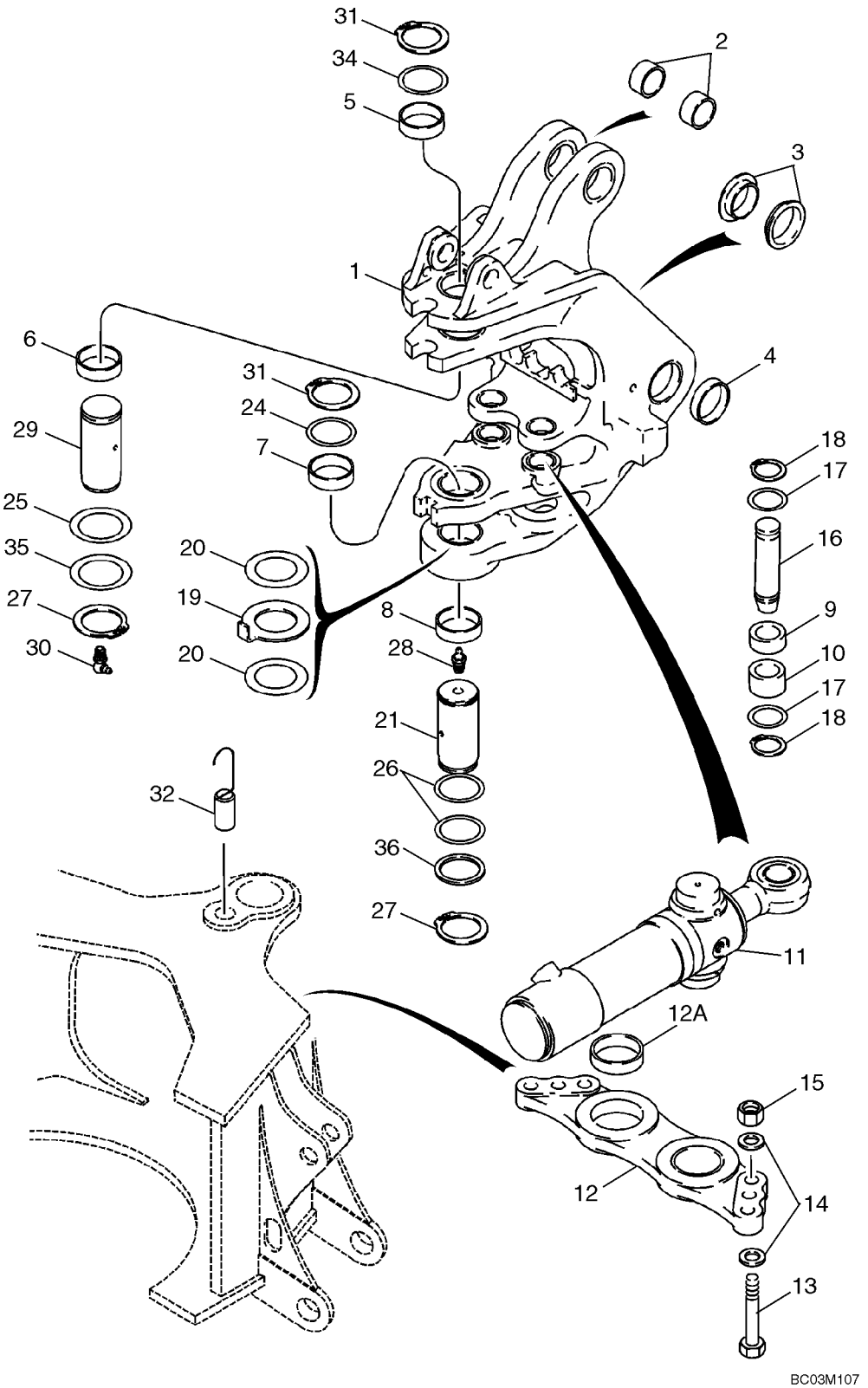

http://www.minnparbackhoeparts.com/

RETROEXCAVADORA - TORRE DE OSCILACIÓN Y CILINDROS DE OSCILACIÓN

REF	FN	PART NUMBER	YR/SN	QTY	DESCRIPTION
1		326805A1		1	CHASIS SWING TOWER; Incl. Ref 2 - 10
2		191017A1		2	CASQUILLO
3		121778A1		2	CASQUILLO
4		D135741		2	CASQUILLO
5		D135557		1	CASQUILLO
6		D135559		1	CASQUILLO
7		D151073		1	CASQUILLO
8		D151074		1	CASQUILLO 70 x 86 x 28 mm lg
9		135249A1		2	CASQUILLO 28.6 mm lg
10		135248A1		2	CASQUILLO 38.1 mm lg
11		139808A2		2	CILINDRO (CONJUNTO) 102 ID x 292 mm strk; Swing; See Figure 08-66
12		198976A1		1	PLACA, GRANDE Incl. Ref 12A
12A		114318A1		2	CASQUILLO 80 x 90 x 29.3 mm
13		827-20075		6	TORNILLO M20 x 75; 10.9
14		896-11020		12	ARANDELA 22 x 37 x 4 mm
15		829-1420		6	TUERCA M20, Cl 10
16		386092A1		2	BULON/PIN, LARGO Swing Cylinder Rod End
17		495-81227		4	ARANDELA 2-1/16 x 2-15/16 x 1/16
18		103-16200		4	ANILLO DE CIERRE No. 200
19		243084A1		1	ARANDELA 5 mm thk
20		134167A1		X	SUPLEMENTO 2.05 mm (.08 in) thk
21		D151065		1	BULON/PIN, LARGO
24		D136392		X	SUPLEMENTO 72 x 89 x 3.0 mm; Upper
25		D136700		X	SUPLEMENTO 67 x 83 x 2.0 mm
26		D136391		X	SUPLEMENTO 72 x 89 x 1.6 mm
27		800-40065		2	ANILLO DE CIERRE
28		219-1		1	ENGRASADOR 1/8 PT x 21/32
29		292385A1		1	BULON/PIN, LARGO
30		219-55		1	ENGRASADOR 90 deg, 1/8 PT x 27/32
31		800-40070		2	ANILLO DE CIERRE
32		384815A1		1	PASADOR (CONJUNTO) Swing Stop
34		293636A1		1	ARANDELA Upper
35		D144423		X	ARANDELA 2-5/8 x 3-3/8 x 1/8; Used As A Shim
36		D136700		1	SUPLEMENTO Washer

http://www.minnparbackhoeparts.com/

09-24		p1	04/05

RETROEXCAVADORA - AGUILÓN Y TORRE DE OSCILACIÓN

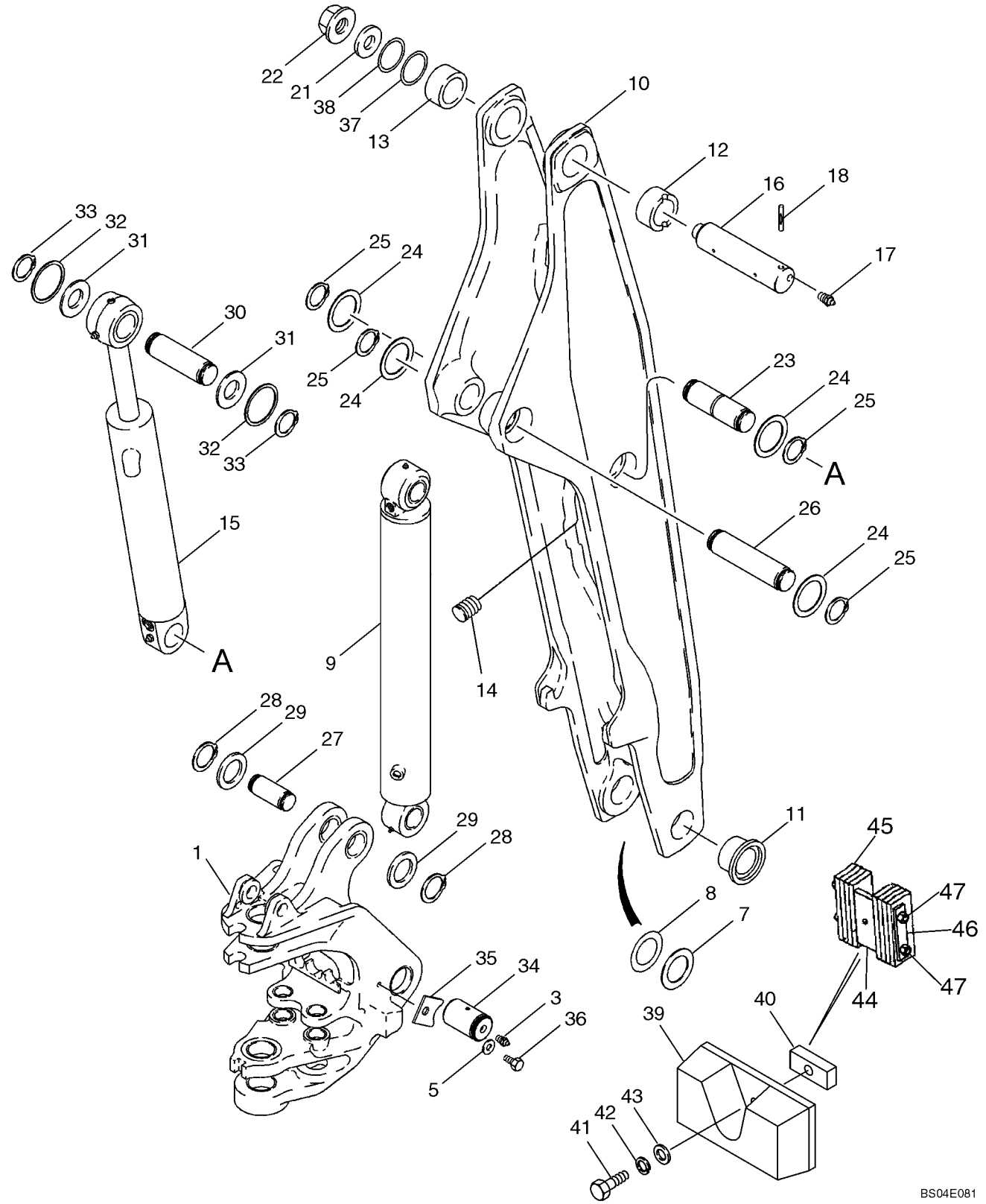

http://www.minnparbackhoeparts.com/

RETROEXCAVADORA - AGUILÓN Y TORRE DE OSCILACIÓN

REF	FN	PART NUMBER	YR/SN	QTY	DESCRIPTION
1		326805A1		1	CHASIS SWING TOWER; See Figure 09-23 For Bushings
3		219-1		2	ENGRASADOR 1/8 PT x 21/32
5		896-11020		2	ARANDELA 22 x 37 x 4 mm; Replaces 496-41081 13/16 x 1-3/4 x 7/32 in Washer Used On Some Models
7		H71514		X	ARANDELA
8		R32119		X	ARANDELA 71 ID x 114 mm
9		87417644		1	CILINDRO (CONJUNTO) 133 ID x 843 mm strk, Boom; See Figure 08-67
10		122284A2		1	PLUMA Incl. Ref 11 - 14
11		D151071		2	CASQUILLO 70 ID x 34 mm lg
12		D135739		1	CASQUILLO 70 ID x 44 mm lg; With Slot For Groove Pin; Right-Hand Side
13		D137218		1	CASQUILLO 70 ID x 44 mm lg; Without Slot For Groove Pin; Left-Hand Side
14		D120450		7	TAPÓN
15		183795A3		1	CILINDRO (CONJUNTO) 127 ID x 583 mm strk; Dipper; See Figure 08-68; If Used
15		183795A4		1	CILINDRO (CONJUNTO) 127 ID x 583 mm strk; Dipper; See Figure 08-68; If Used
16		D132494		1	BULON/PIN, LARGO Boom to Dipper
17		219-1		2	ENGRASADOR 1/8 PT x 21/32
18		135-51652		1	PASADOR RANURADO 1/2 x 3-1/4 lg; Center Groove
21		D133632		1	ARANDELA
22		181042A1		1	TUERCA Flange, Special
23		123167A2		1	BULON/PIN, LARGO Dipper Cylinder Closed End to Boom
24		H433285		4	ESPACIADOR
25		800-4155		4	ANILLO DE CIERRE
26		123168A2		1	BULON/PIN, LARGO Boom Cylinder Closed End to Boom
27		190313A1		1	BULON/PIN, LARGO Boom Cylinder Rod End to Swing Tower
28		103-11237		2	RETENEDOR
29		123318A1		2	ARANDELA 62 mm ID

http://www.minnparbackhoeparts.com/

RETROEXCAVADORA - AGUILÓN Y TORRE DE OSCILACIÓN

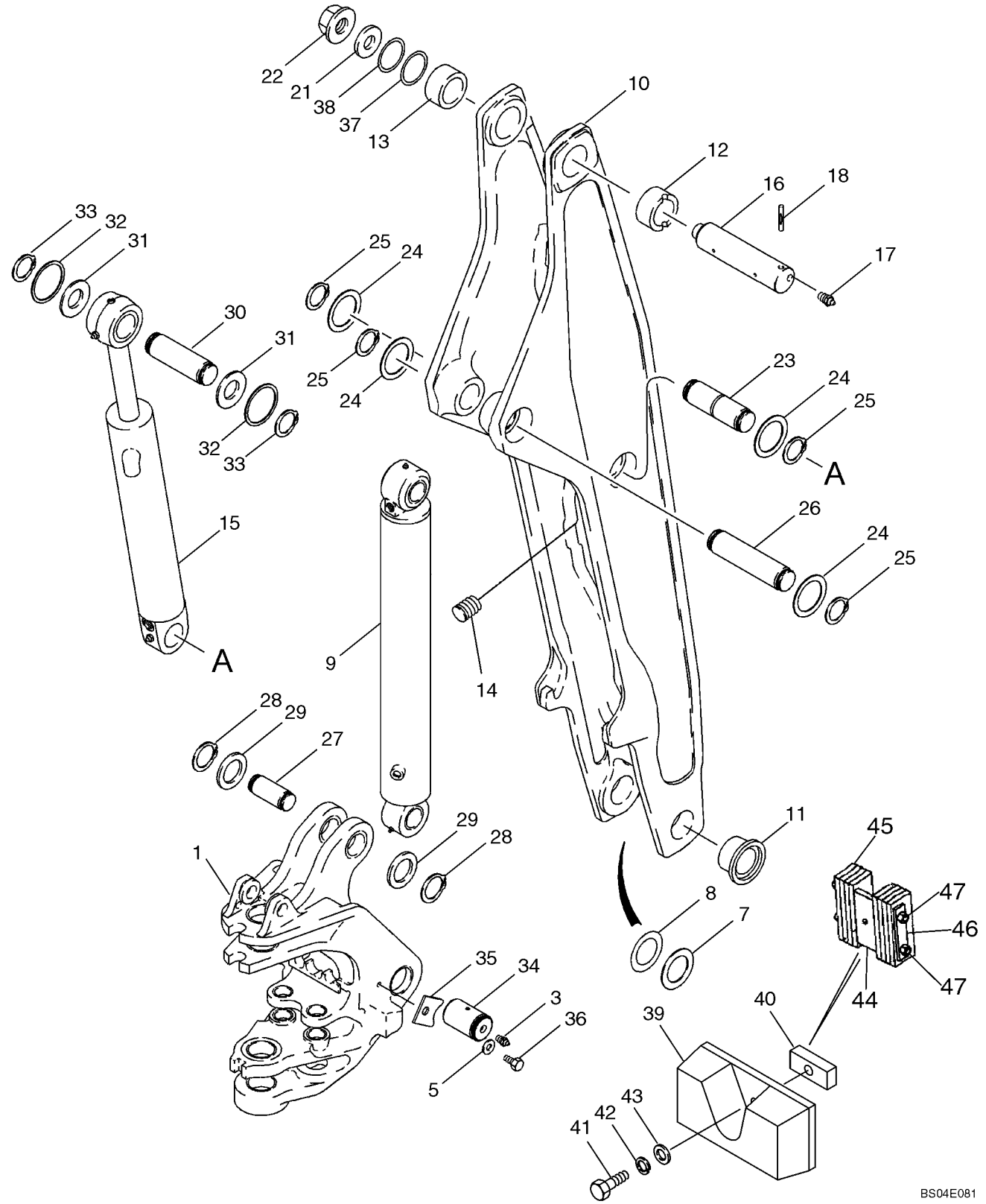

http://www.minnparbackhoeparts.com/

RETROEXCAVADORA - AGUILÓN Y TORRE DE OSCILACIÓN

REF	FN	PART NUMBER	YR/SN	QTY	DESCRIPTION
30		D138022		1	BULON/PIN, LARGO
31		495-81227		X	ARANDELA 2-1/16 x 2-15/16 x 1/16
32		495-81226		2	ARANDELA 1-13/16 x 2-1/2 x 1/8
33		103-16175		2	ANILLO DE CIERRE No. 175
34		87326813		2	PASADOR RANURADO Boom to Swing Tower; Replaces 250663A1
35		303646A1		2	PIEZA DE SOPORTE
36		604-20035		2	TORNILLO M20 x 35
37		404834A1		X	SUPLEMENTO Concave
38		404835A1		X	SUPLEMENTO Concave
39		122995A1		1	PARACHOQUES Bumper, Boom; If Used; No Longer Available, Order 87443971 Bumper, Ref 44 - 47
40		122993A1		1	BARRA
41		614-10050		1	TORNILLO M10 x 50
42		892-11010		1	ARANDELA DE FRENO M10
43		895-11010		1	ARANDELA 11 x 21 x 2 mm
		87443971		1	PARACHOQUES Boom Bumper; If Used; Incl. Ref 44 - 47
44		87443847		1	PLACA DORSAL Plate
45		87443912		8	PLACA, CAUCHO Pad
46		87443661		2	CULATA Plate
47		825-1412		4	TUERCA M12; Replaces 832-46412 M12 Nut Used On Some Models

http://www.minnparbackhoeparts.com/

09-25		p1	05/05

TRABA DEL AGUILÓN (SIN DE CONTROL PILOTO)

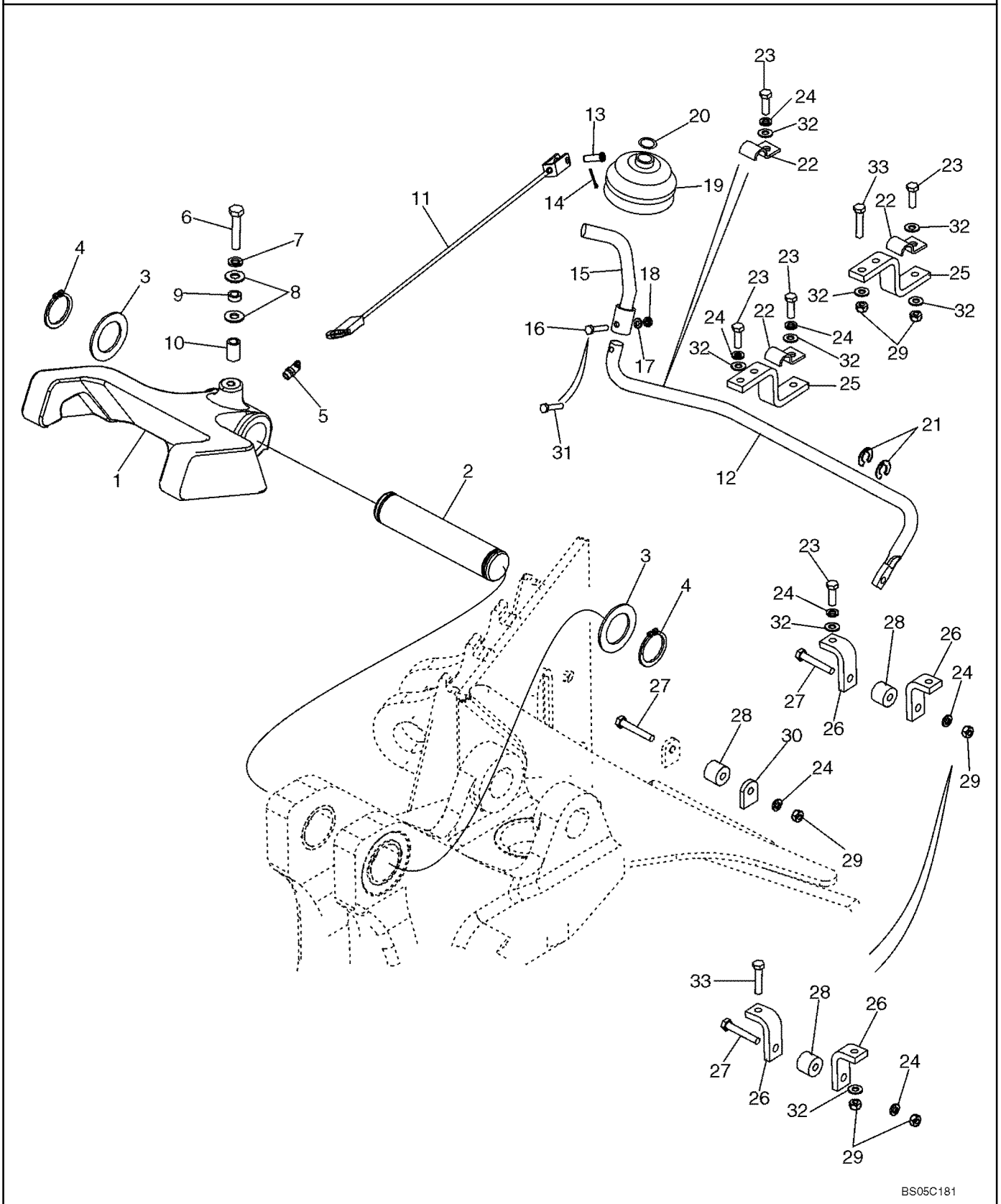

http://www.minnparbackhoeparts.com/

TRABA DEL AGUILÓN (SIN DE CONTROL PILOTO)

REF	FN	PART NUMBER	YR/SN	QTY	DESCRIPTION
1		122974A1		1	CERROJO (CONJUNTO)
2		D129227		1	BULON/PIN, LARGO
3		D144592		2	ARANDELA
4		800-44040		2	ANILLO DE CIERRE
5		219-55		1	ENGRASADOR 90 deg, 1/8 PT x 27/32
6		614-10050		1	TORNILLO M10 x 50
7		892-11010		1	ARANDELA DE FRENO M10
8		895-15010		2	ARANDELA 11 x 24 x 2 mm
9		87445245		1	SEPARADOR 15.88 OD x 6.4 W x 2.41 mm thick wall; Replaces D143417 15.88 OD x 6.4 W x 2.77 mm thick wall Spacer Used On Some Models
10		396092A1		1	ESPACIADOR
11		87435924		1	CABLE
12		87422696		1	VARILLA Boom Latch Release; 6.5 mm Mounting Hole; If Used
12		87441850		1	VARILLA Boom Latch Release; 6.0 mm Mounting Hole; If Used
13		427-5094		1	PASADOR DE HORQUILLA 5/16 x 15/16
14		432-612		1	PASADOR ABIERTO 3/32" x 3/4"
15		87444149		1	VARILLA (CONJUNTO)
16		814-6030		1	TORNILLO M6 x 30; If Used
17		892-11006		1	ARANDELA DE FRENO M6; If Used
18		829-1406		1	TUERCA M6; If Used
19		D86664		1	PROTECTOR
20		D143735		1	COLLAR Ring
21		D143591		2	ANILLO DE CIERRE CLIP RING, 5/8 dia
22		D143723		2	BRIDA CLAMP, 5/8
23		614-8025		2-6	TORNILLO M8 x 25
24		892-11008		3-8	ARANDELA LOCK, M8
25		87449995		1	PIEZA DE SOPORTE Rod; Without Threaded Tapped Holes; Replaces 87422701 Bracket With Threaded Tapped Holes
26		87449996		2	PIEZA DE SOPORTE Cable; Without Threaded Tapped Holes; Replaces 87422702 Bracket With Threaded Tapped Holes
27		814-8050		2	TORNILLO M8 x 50
28		86984547		2	GUIA Roller, Cable Guide

http://www.minnparbackhoeparts.com/

09-25		p2	05/05

TRABA DEL AGUILÓN (SIN DE CONTROL PILOTO)

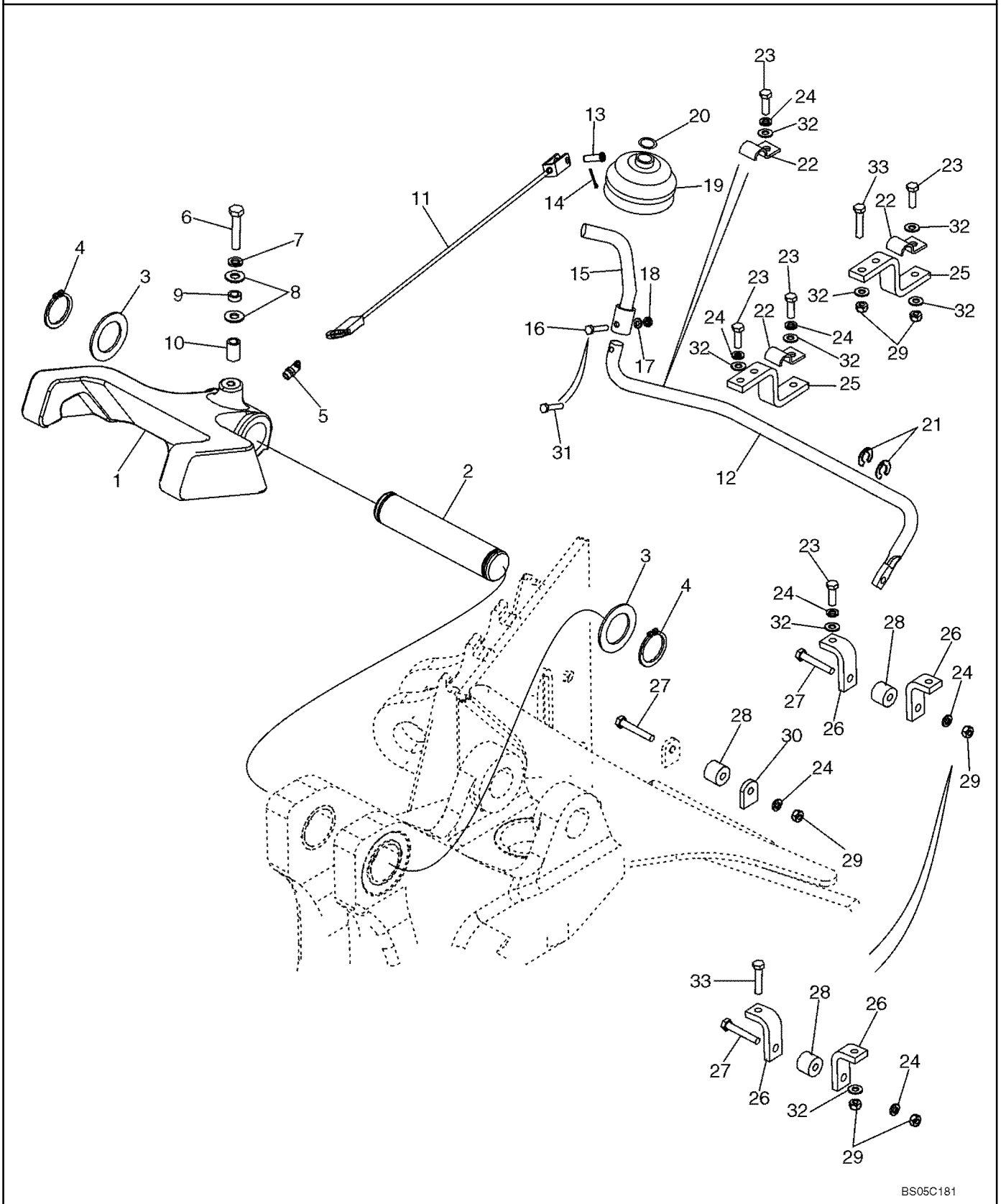

http://www.minnparbackhoeparts.com/

TRABA DEL AGUILÓN (SIN DE CONTROL PILOTO)

REF	FN	PART NUMBER	YR/SN	QTY	DESCRIPTION
29		829-1408		2-7	TUERCA M8
30		87432811		1	PIEZA DE SOPORTE TAB
31		87041331		1	TORNILLO M6 x 16, Includes Loctite; May Replace Ref 16 - 18 On Some Models
32		895-11008		6-7	ARANDELA 9 x 16 x 1.6 mm
33		614-8030		4	TORNILLO M8 x 30; Used With Brackets (Ref 25, 26) Without Threaded Tapped Holes

http://www.minnparbackhoeparts.com/

09-25A		p1	05/05

TRABA DEL AGUILÓN (CON DE CONTROL PILOTO)

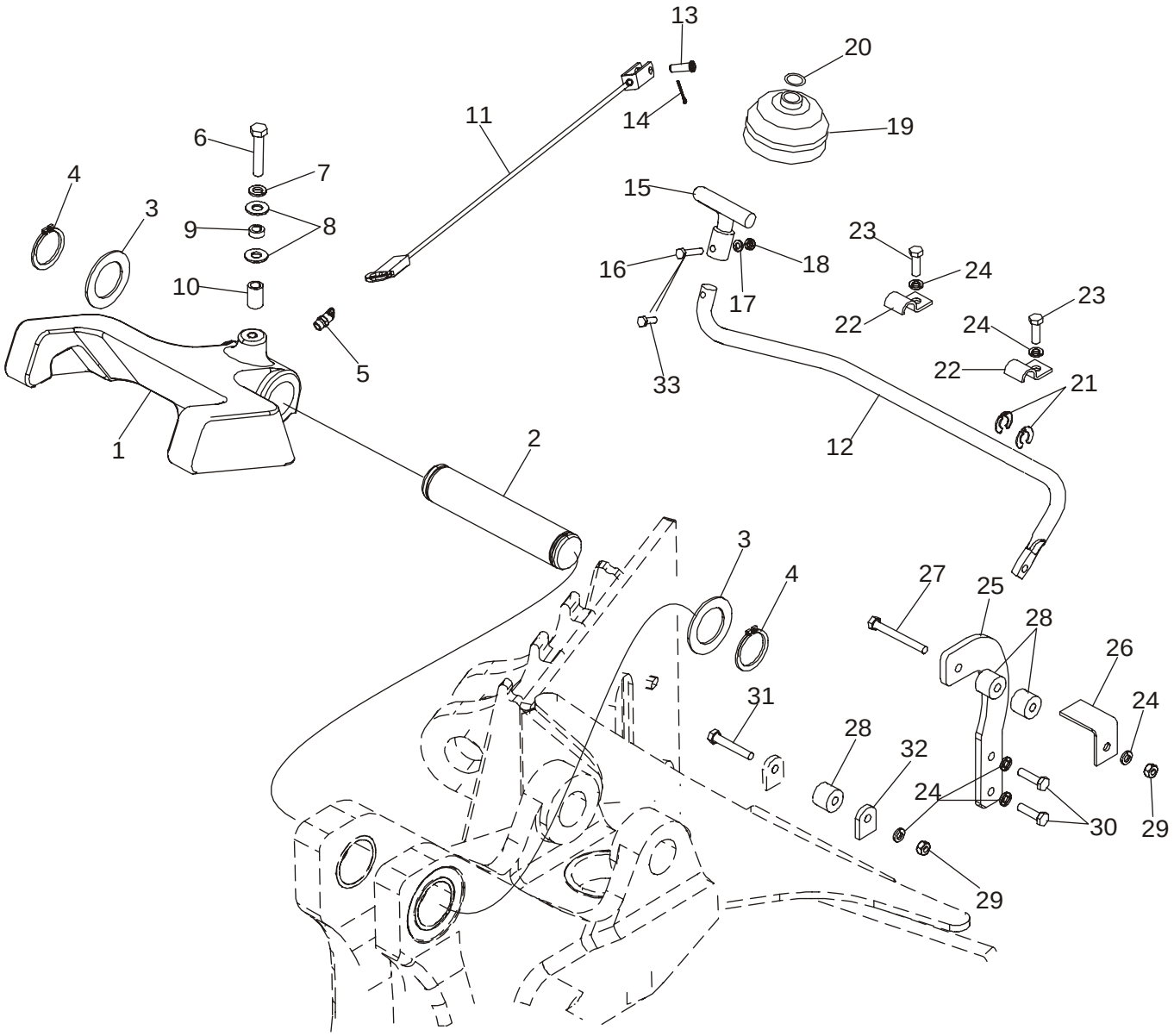

http://www.minnparbackhoeparts.com/

TRABA DEL AGUILÓN (CON DE CONTROL PILOTO)

REF	FN	PART NUMBER	YR/SN	QTY	DESCRIPTION
1		122974A1		1	CERROJO (CONJUNTO)
2		D129227		1	BULON/PIN, LARGO
3		D144592		2	ARANDELA
4		800-44040		2	ANILLO DE CIERRE
5		219-55		1	ENGRASADOR 90 deg, 1/8 PT x 27/32
6		614-10050		1	TORNILLO M10 x 50
7		892-11010		1	ARANDELA DE FRENO M10
8		895-15010		2	ARANDELA 11 x 24 x 2 mm
9		D143417		1	ESPACIADOR
10		396092A1		1	ESPACIADOR
11		87435924		1	CABLE
12		87422696		1	VARILLA Boom Latch Release; 6.50 mm (1/32 in) Mounting Hole At Ref 25 Lever; If Used
12		87441850		1	VARILLA Boom Latch Release; 6.00 mm (1/64 in) Mounting Hole At Ref 25 Lever; If Used
13		427-5094		1	PASADOR DE HORQUILLA 5/16 x 15/16
14		432-612		1	PASADOR ABIERTO 3/32" x 3/4"
15		87427775		1	VARILLA (CONJUNTO)
16		814-6030		1	TORNILLO M6 x 30; If Used
17		892-11006		1	ARANDELA DE FRENO M6; If Used
18		829-1406		1	TUERCA M6; If Used
19		D86664		1	PROTECTOR
20		D143735		1	COLLAR Ring
21		D143591		2	ANILLO DE CIERRE CLIP RING, 5/8 dia
22		D143723		2	BRIDA CLAMP, 5/8
23		614-8025		2	TORNILLO M8 x 25
24		892-11008		6	ARANDELA LOCK, M8
25		86984544		1	PIEZA DE SOPORTE Roller Mounting
26		86984545		1	PIEZA DE SOPORTE Cable
27		814-8070		1	TORNILLO M8 x 70
28		86984547		3	GUIA Roller, Cable Guide
29		829-1408		2	TUERCA M8
30		614-8030		2	TORNILLO M8 x 30
31		814-8050		1	TORNILLO M8 x 50
32		87432811		1	PIEZA DE SOPORTE TAB
33		87041331		1	TORNILLO M6 x 16, Includes Loctite; May Replace Ref 16 - 18 On Some Models

http://www.minnparbackhoeparts.com/

RETROEXCAVADORA - PALA Y CUCHARÓN

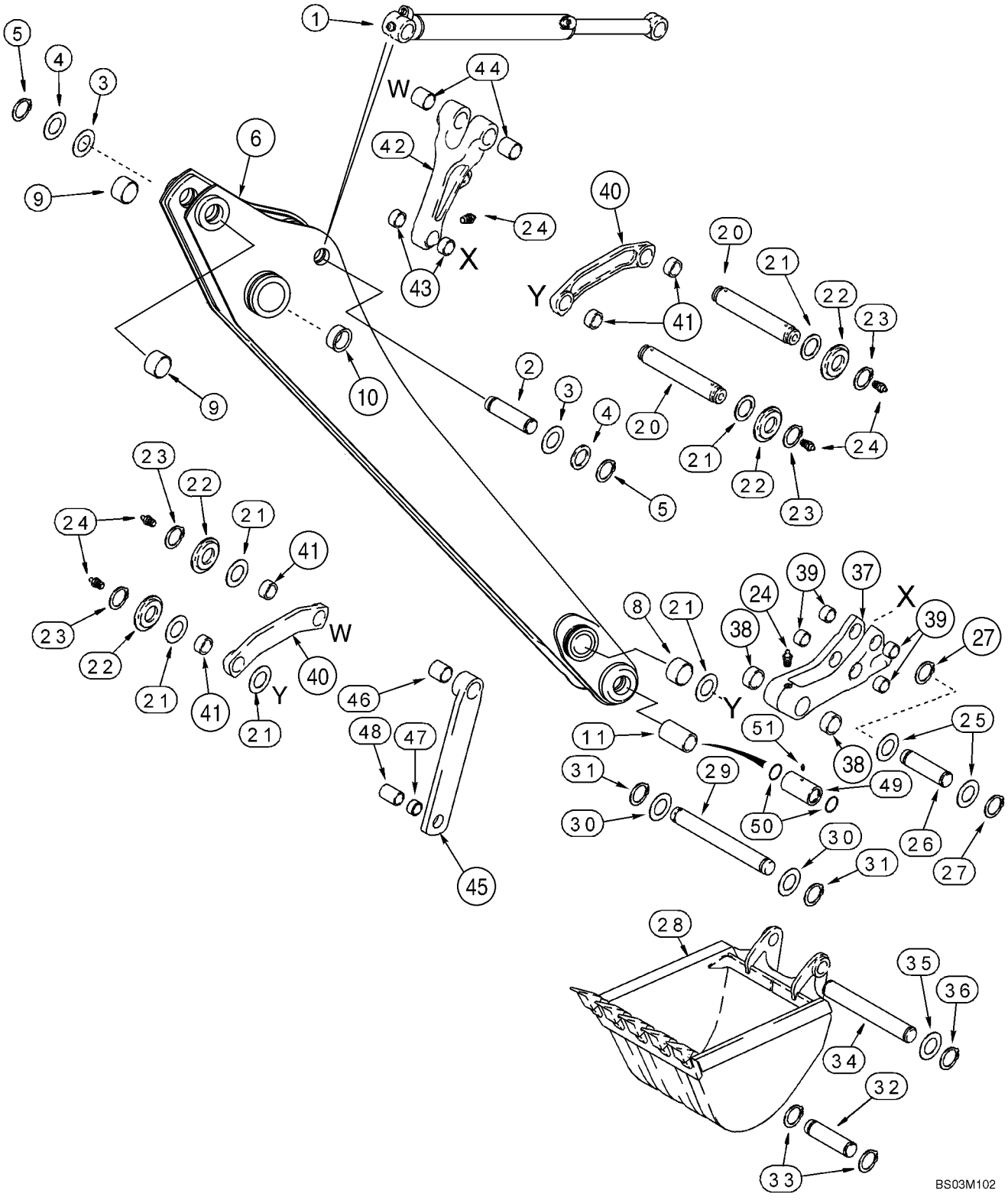

http://www.minnparbackhoeparts.com/

RETROEXCAVADORA - PALA Y CUCHARÓN

REF	FN	PART NUMBER	YR/SN	QTY	DESCRIPTION
1		235916A1		1	CILINDRO (CONJUNTO) 80 ID x 872 mm strk; Bucket; See Figure 08-69
2		D138022		1	BULON/PIN, LARGO
3		495-81227		X	ARANDELA 2-1/16 x 2-15/16 x 1/16
4		495-81226		2	ARANDELA 1-13/16 x 2-1/2 x 1/8
5		103-16175		2	ANILLO DE CIERRE No. 175
		403353A1		1	ESCUADRA DE TRANSMIS Incl. Ref 6 - 10; Models Without Hydraulic Backhoe Bucket Coupler; For Models With Hydraulic Backhoe Bucket Coupler, See Figure 09-28
6		NSS		1	NO SE REPARA SEPARADAM. Dipper
7		D120450		6	TAPÓN Not Illustrated
8		D140029		2	CASQUILLO 50 x 60 x 25.5 mm lg
9		D138047		2	CASQUILLO 54 mm (2-1/8 in) lg
10		D150121		2	CASQUILLO 70 ID x 36 mm lg
11		307186A1		2	CASQUILLO 104 mm lg; Not Included In Assembly; Purchase Separately
20		D141142		2	BULON/PIN, LARGO 306 mm lg; Guide Link
21		495-81282		X	ARANDELA 2-1/16 x 3 x 3/32
22		D141164		4	ESPACIADOR
23		103-16175		4	ANILLO DE CIERRE No. 175
24		219-1		7	ENGRASADOR 1/8 PT x 21/32
25		495-81226		2	ARANDELA 1-13/16 x 2-1/2 x 1/8
26		D146288		1	BULON/PIN, LARGO Dump Link to Coupler
27		103-16175		2	ANILLO DE CIERRE No. 175
28		REF		1	MANUAL Bucket; See Figures 09-29 - 09-34
29		D37614		1	BULON/PIN, LARGO Bucket
30		D143324		2	ARANDELA
31		D25279		2	ANILLO DE CIERRE
32		D149298		1	PERNO 305 mm (12 inch) Universal Bucket Only
33		103-16175		2	ANILLO DE CIERRE No. 175
34		D150619		1	BULON/PIN, LARGO All Buckets Except 12 Inch (305 mm) Buckets
35		495-81226		X	ARANDELA 1-13/16 x 2-1/2 x 1/8
36		103-16175		2	ANILLO DE CIERRE No. 175
		281185A1		1	ELEMENTO DE ACOPLAM. Bucket; Incl. Ref 37 - 39
37		NSS		1	NO SE REPARA SEPARADAM. Coupler, Quick

http://www.minnparbackhoeparts.com/

RETROEXCAVADORA - PALA Y CUCHARÓN

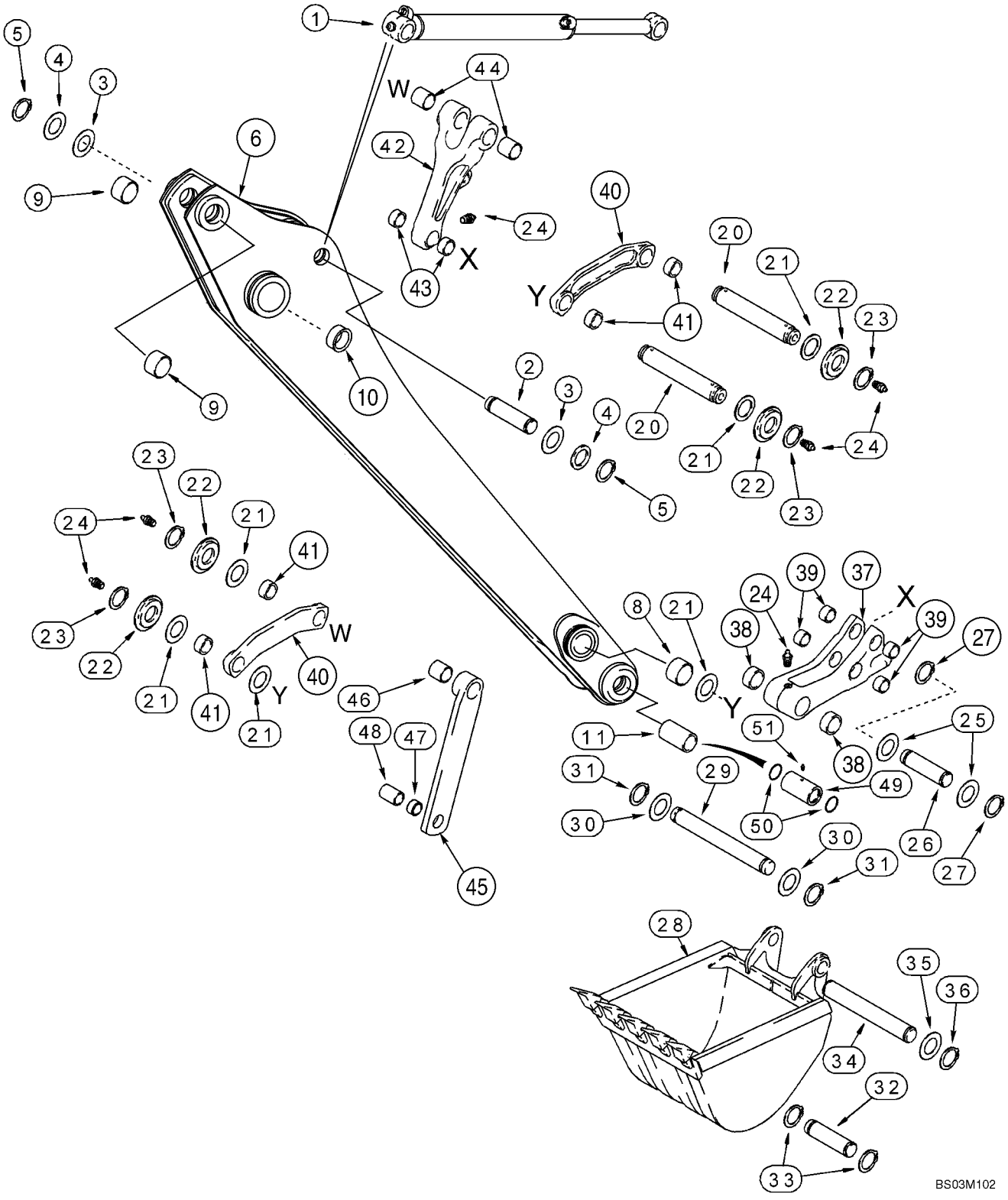

http://www.minnparbackhoeparts.com/

RETROEXCAVADORA - PALA Y CUCHARÓN

REF	FN	PART NUMBER	YR/SN	QTY	DESCRIPTION
38		D127167		2	CASQUILLO 30 mm lg
39		107124A1		4	CASQUILLO 29 mm lg
40		348706A1		2	ESLABON (CONJUNTO) Bucket Guide; Incl. Ref 41
41		D149079		2	CASQUILLO 50 x 34 mm lg
42		400398A1		1	ESLABON (CONJUNTO) Bucket Dump; Incl. Ref 43, 44
43		107124A1		2	CASQUILLO
44		D138047		2	CASQUILLO 54 mm (2-1/8 in) lg
45		244790A1		2	ESLABON (CONJUNTO) Bucket Dump; Incl. Ref 46, 47
46		D138047		1	CASQUILLO 54 mm (2-1/8 in) lg
47		D31140		1	CASQUILLO
48		D141075		1	ESPACIADOR
49		D141076		1	ESPACIADOR
50		238-5228		2	JUNTA HERMETICA 2-1/4 ID x 1/8
51		219-1		1	ENGRASADOR 1/8 PT x 21/32

http://www.minnparbackhoeparts.com/

09-27		p1	04/04

RETROEXCAVADORA - PALA, EXTENSIBLE

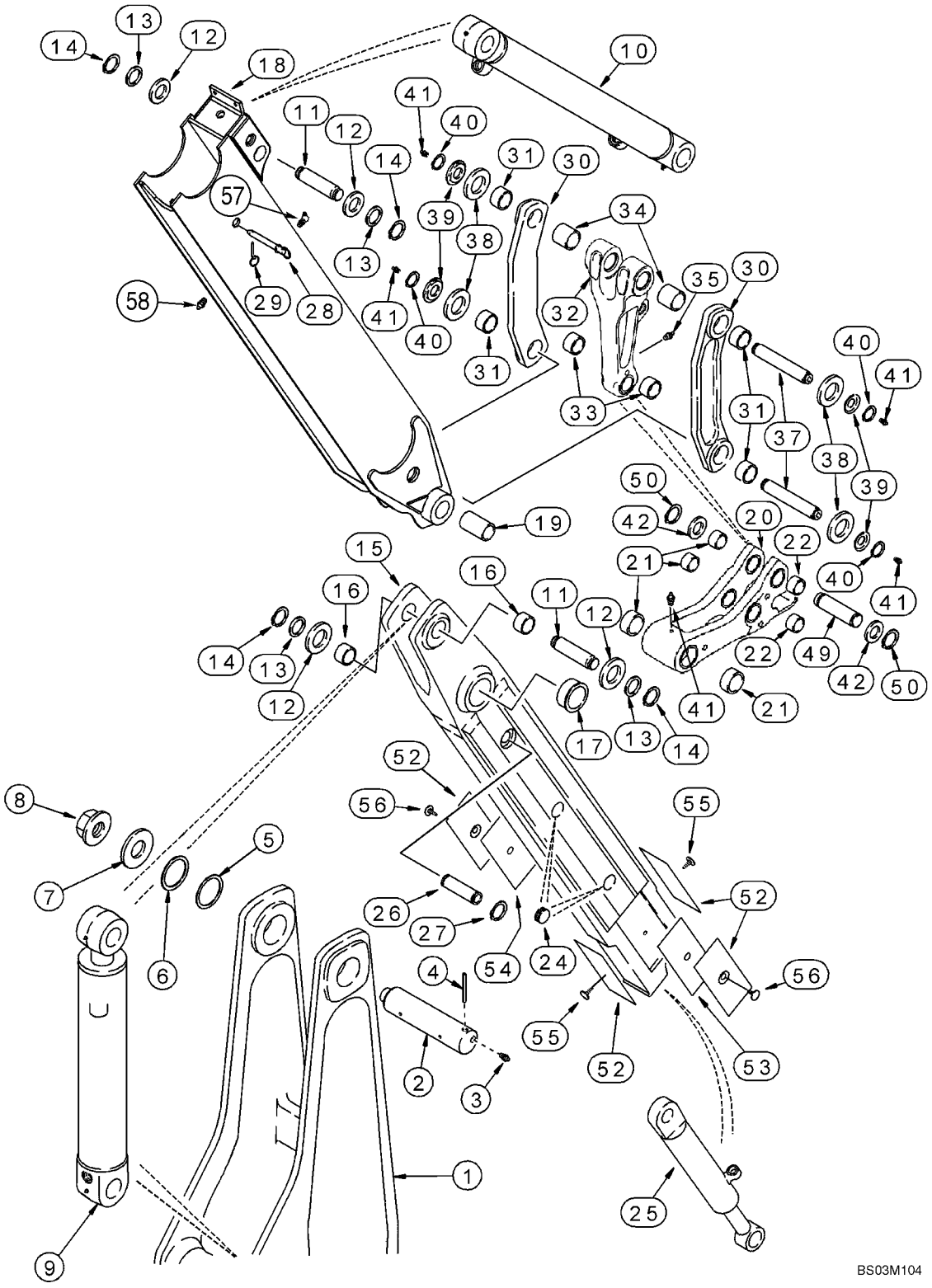

http://www.minnparbackhoeparts.com/

RETROEXCAVADORA - PALA, EXTENSIBLE

REF	FN	PART NUMBER	YR/SN	QTY	DESCRIPTION
1		122284A2		1	PLUMA Boom; See Figure 09-24
2		D132494		1	BULON/PIN, LARGO Boom to Dipper
3		219-1		2	ENGRASADOR 1/8 PT x 21/32
4		135-51652		1	PASADOR RANURADO 1/2 x 3-1/4 lg; Center Groove
5		404834A1		X	SUPLEMENTO
6		404835A1		X	SUPLEMENTO
7		D133632		1	ARANDELA
8		181042A1		1	TUERCA Flange, Special
9		183795A3		1	CILINDRO (CONJUNTO) 127 ID x 583 mm strk; Dipper; See Figure 08-68; If Used
9		183795A4		1	CILINDRO (CONJUNTO) 127 ID x 583 mm strk; Dipper; See Figure 08-68; If Used
10		235916A1		1	CILINDRO (CONJUNTO) 80 ID x 872 mm strk; Bucket; See Figure 08-69
11		D141666		2	BULON/PIN, LARGO
12		495-81227		X	ARANDELA 2-1/16 x 2-15/16 x 1/16
13		495-81226		4	ARANDELA 1-13/16 x 2-1/2 x 1/8
14		103-16175		4	ANILLO DE CIERRE No. 175
		244536A1		1	ESCUADRA DE TRANSMIS Inner; Incl. Ref 15 - 17
15		NSS		1	NO SE REPARA SEPARADAM. Dipper
16		D149079		2	CASQUILLO 50 x 34 mm lg
17		D150121		2	CASQUILLO 70 ID x 36 mm lg
18		87436234		1	ESCUADRA DE TRANSMIS Outer; Incl. Ref 57, 58; Models Without Hydraulic Backhoe Bucket Coupler; For Models With Hydraulic Backhoe Bucket Coupler, See Figure 09-28
19		307186A1		2	CASQUILLO 104 mm lg
		281185A1		1	ELEMENTO DE ACOPLAM. Bucket; Incl. Ref 20 - 22
20		NSS		1	NO SE REPARA SEPARADAM. Coupler, Quick
21		D127167		2	CASQUILLO 30 mm lg
22		107124A1		4	CASQUILLO 29 mm lg
24		D133865		4	TAPÓN
25		1340969C2		1	CILINDRO (CONJUNTO) 76 ID x 1068 mm strk; Extendable Dipper; See Figure 08-70
26		300588A1		1	BULON/PIN, LARGO
27		800-44040		2	ANILLO DE CIERRE

http://www.minnparbackhoeparts.com/

RETROEXCAVADORA - PALA, EXTENSIBLE

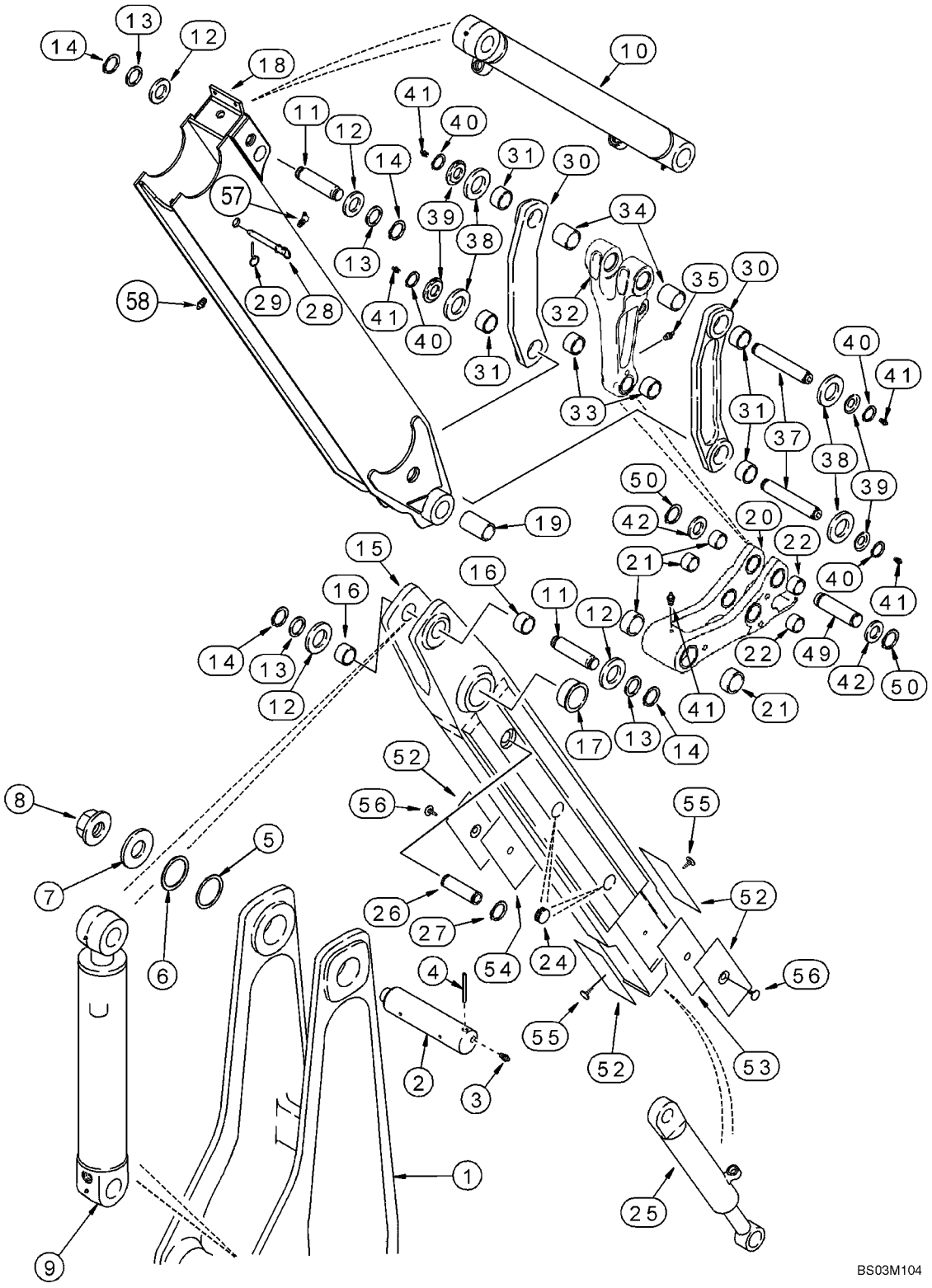

http://www.minnparbackhoeparts.com/

RETROEXCAVADORA - PALA, EXTENSIBLE

REF	FN	PART NUMBER	YR/SN	QTY	DESCRIPTION
28		D140247		1	BULON/PIN, LARGO Lock, Transport
29		A33509		1	BULON/PIN, LARGO
30		348706A1		2	ESLABON (CONJUNTO) Bucket Guide; Incl. Ref 31
31		D149079		2	CASQUILLO 50 x 34 mm lg
32		400398A1		1	ESLABON (CONJUNTO) Bucket Dump; Incl. Ref 33, 34
33		107124A1		2	CASQUILLO
34		D138047		2	CASQUILLO 54 mm (2-1/8 in) lg
35		219-1		1	ENGRASADOR 1/8 PT x 21/32
37		D141142		2	BULON/PIN, LARGO 306 mm lg
38		495-81282		4	ARANDELA 2-1/16 x 3 x 3/32
39		D141164		4	ESPACIADOR
40		103-16175		4	ANILLO DE CIERRE No. 175
41		219-1		5	ENGRASADOR 1/8 PT x 21/32
42		495-81226		2	ARANDELA 1-13/16 x 2-1/2 x 1/8
49		D146288		1	BULON/PIN, LARGO
50		103-16175		2	ANILLO DE CIERRE No. 175
52		451384A1		4	PLACA DE DESGASTE
53		132844A1		1	SUPLEMENTO 0.8 mm
54		132842A1		1	SUPLEMENTO 1.6 mm
55		183443A1		2	BULON/PIN, LARGO
56		183509A1		2	BULON/PIN, LARGO
57		219-89		1	ENGRASADOR 1/8 PT x 25/32
58		219-86		1	CONEXION 1/8 PT x 5/8

http://www.minnparbackhoeparts.com/

09-28		p1	01/04

PALA, RETROEXCAVADORA - ACOPLADOR, HIDRÁULICO (ACOPLADOR DEL CUCHARÓN DE LA RETROEXCAVADORA HIDRÁULI

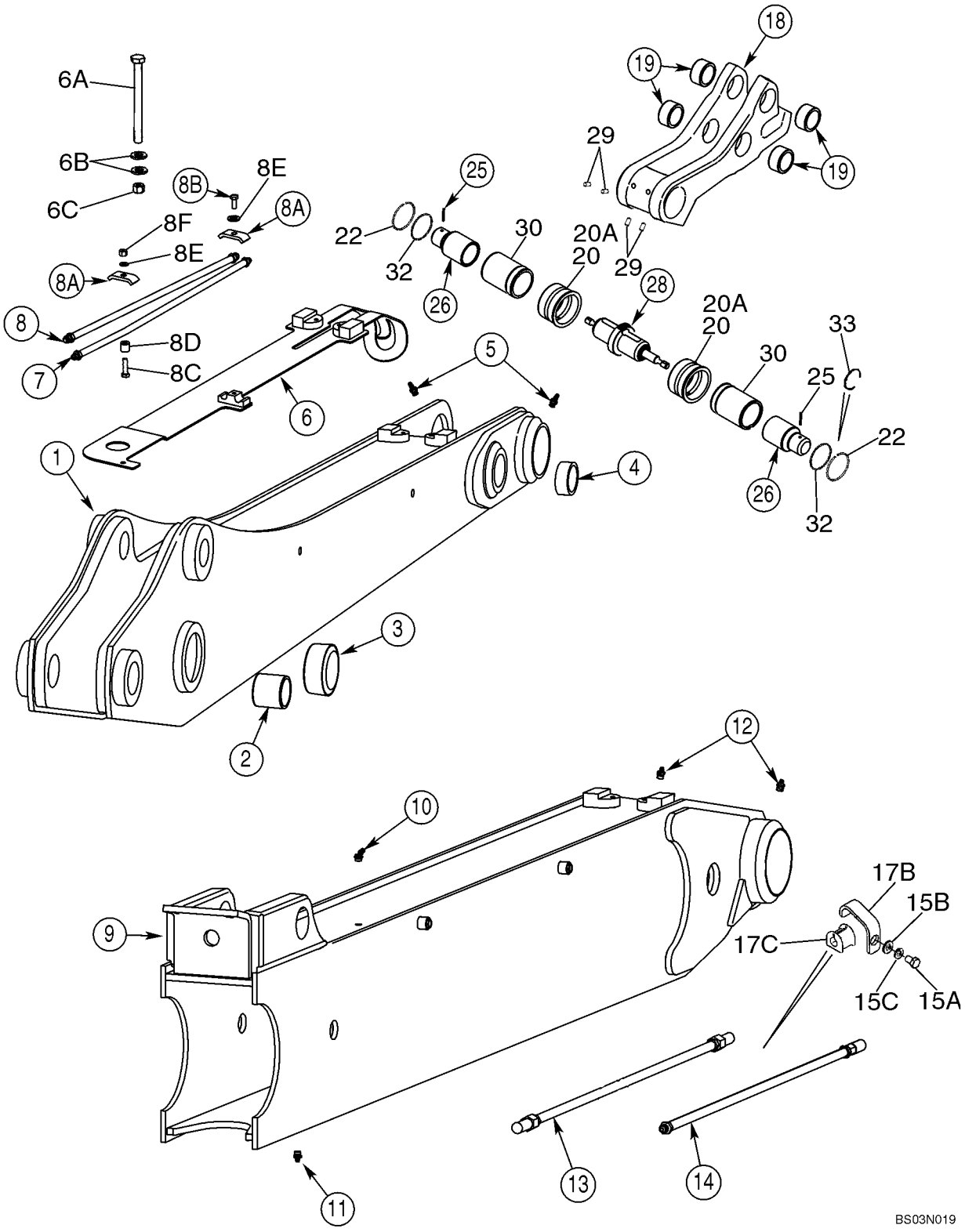

http://www.minnparbackhoeparts.com/

PALA, RETROEXCAVADORA - ACOPLADOR, HIDRÁULICO (ACOPLADOR DEL CUCHARÓN DE LA RETROEXCAVADORA HIDRÁULI

REF	FN	PART NUMBER	YR/SN	QTY	DESCRIPTION
		REF			MANUAL STANDARD DIPPER
1		404807A1		1	ESCUADRA DE TRANSMIS Standard Dipper; Incl. Ref 2 - 5, 20A
2		D138047		2	CASQUILLO 54 mm (2-1/8 in) lg
3		D150121		2	CASQUILLO 70 ID x 36 mm lg
3A		D120450		4	TAPÓN Not Illustrated
4		D140029		2	CASQUILLO 50 x 60 x 25.5 mm lg
5		219-86		2	CONEXION 5/8 PT x 5/8
6		405716A1		1	PLACA (CONJUNTO)
6A		827-12240		1	TORNILLO M12 x 240
6B		378921A1		2	ARANDELA FRENO
6C		829-1412		1	TUERCA M12
7		406168A1		1	TUBO (CONJUNTO) See Figure 08-30
8		406172A1		1	TUBO (CONJUNTO) See Figure 08-30
8A		D138055		2	COLLAR
8B		607-8020		1	TORNILLO M8 x 20; 10,9; Lock
8C		607-8035		1	TORNILLO M8 x 35; Lock
8D		407962A1		1	ESPACIADOR
8E		895-11008		2	ARANDELA 9 x 16 x 1,6 mm
8F		829-1408		1	TUERCA M8
		REF			MANUAL EXTENDABLE DIPPER
9		392559A3		1	ESCUADRA DE TRANSMIS Outer; Extendable Dipper; Incl. Ref 10 - 12, 20
10		219-89		1	ENGRASADOR 1/8 PT x 25/32
11		219-86		1	CONEXION 1/8 PT x 5/8
12		219-1		2	ENGRASADOR 1/8 PT x 21/32
13		403840A1		1	TUBO (CONJUNTO) See Figure 08-30
14		403400A1		1	TUBO (CONJUNTO) See Figure 08-30
15A		607-10020		4	TORNILLO M10 x 20; Lock
15B		896-15010		4	ARANDELA 11 x 24 x 2 mm
15C		892-11010		4	ARANDELA DE FRENO M10
17B		445757A1		4	PIEZA DE SOPORTE
17C		D67296		4	PASACABLES
		REF			MANUAL HYDRAULIC BACKHOE BUCKET COUPLER
18		417681A1		1	CRUCETA Incl. Ref 19
19		107124A1		4	CASQUILLO

http://www.minnparbackhoeparts.com/

PALA, RETROEXCAVADORA - ACOPLADOR, HIDRÁULICO (ACOPLADOR DEL CUCHARÓN DE LA RETROEXCAVADORA HIDRÁULI

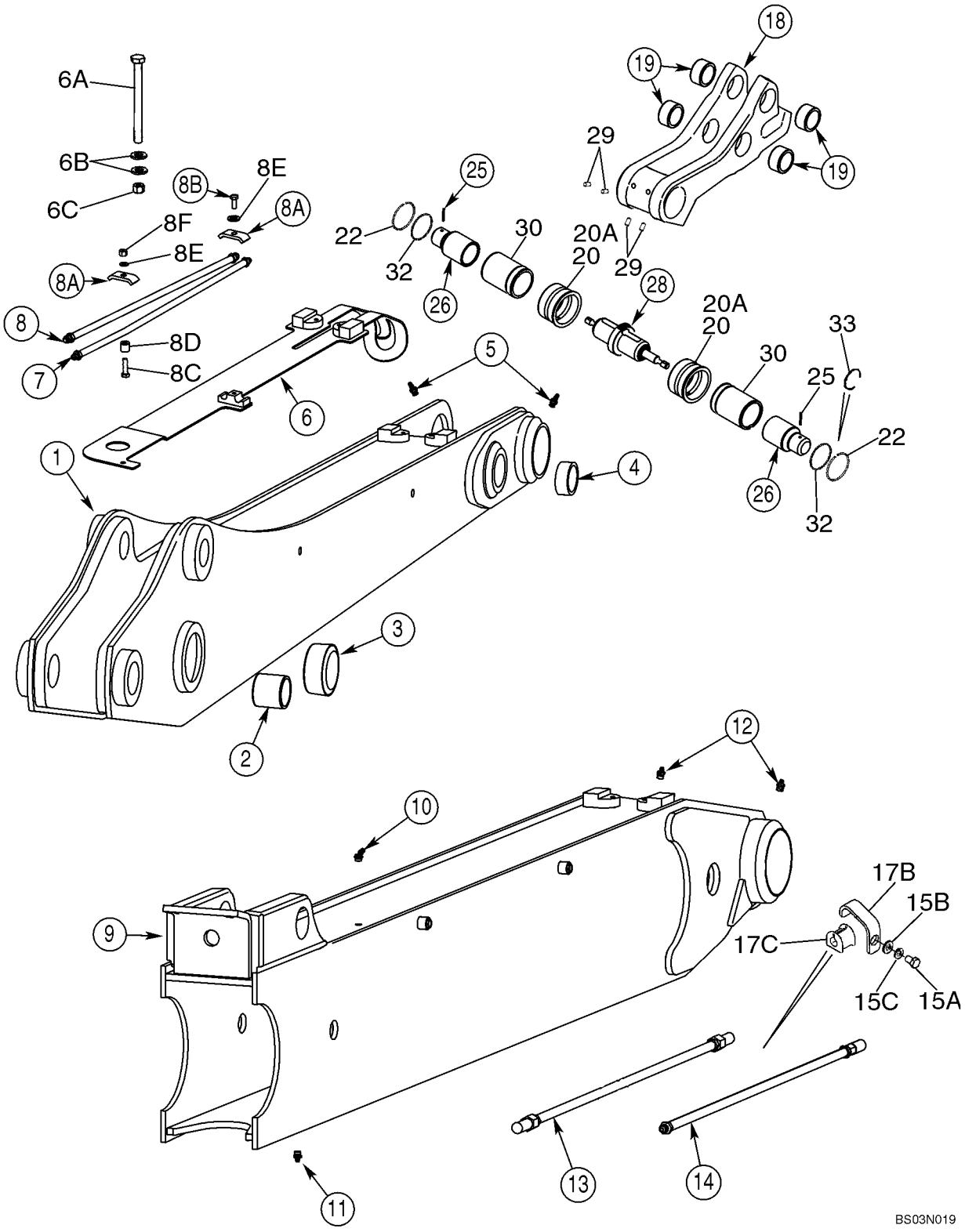

http://www.minnparbackhoeparts.com/

PALA, RETROEXCAVADORA - ACOPLADOR, HIDRÁULICO (ACOPLADOR DEL CUCHARÓN DE LA RETROEXCAVADORA HIDRÁULI

REF	FN	PART NUMBER	YR/SN	QTY	DESCRIPTION
20		400934A2		2	CASQUILLO Models With Extendable Dipper
20A		400935A3		2	CASQUILLO Models Without Extendable Dipper
22		406624A1		2	ANILLO
25		135-1233		2	PASADOR RANURADO 7/32 x 1-1/2
26		400932A4		2	PERNO
28		87423867		1	CILINDRO (CONJUNTO) Coupler; See Figure 08-32
29		418070A1		4	TORNILLO DE AJUSTE M10 x 20; Hex Socket
30		448676A1		2	CILINDRO DE GATO
32		434891A1		2	JUNTA GANCHO Wiper
33		445364A1		2	RETEN Service Ring; Included In Coupler Cylinder Seal Kit

http://www.minnparbackhoeparts.com/

09-29		p1	01/04

CUCHARÓN, RETROEXCAVADORA UNIVERSAL (305 MM (12 INCH) WIDE)

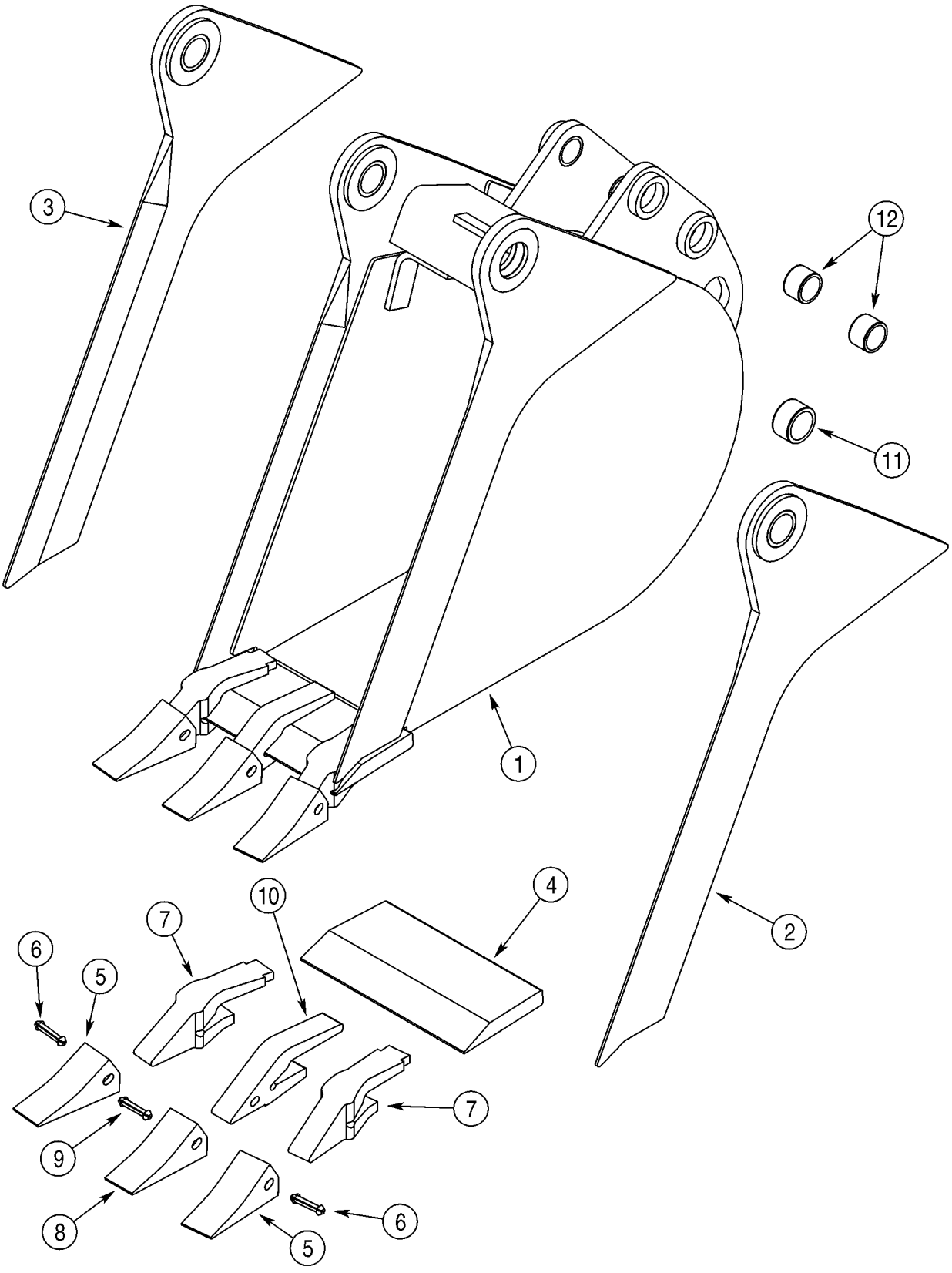

http://www.minnparbackhoeparts.com/

CUCHARÓN, RETROEXCAVADORA UNIVERSAL (305 MM (12 INCH) WIDE)

REF	FN	PART NUMBER	YR/SN	QTY	DESCRIPTION
1		381488A4		1	CUCHARA 305 mm (12 in), With 3 Teeth; Order Through Parts Marketing; Incl. Ref 2 - 12
2		NSS		1	NO SE REPARA SEPARADAM. Edge; Right-Hand; Incl. Ref 11
3		NSS		1	NO SE REPARA SEPARADAM. Edge; Left-Hand; Incl. Ref 11
4		D147409		1	CUCHILLA DE ATAQUE
		D139851		2	DIENTE Outer; Incl. Ref 5 - 7
5		D51750		1	PUNTA
6		245466A1		1	PASADOR
7		D138157		1	PIE
		D139849		1	DIENTE Center; Incl. Ref 8 - 10; Order Ref 8 - 10
8		D51750		1	PUNTA
9		245466A1		1	PASADOR
10		D48212		1	PIE
11		D43940		2	CASQUILLO 1-3/4 x 2-1/4 x 1
12		D30933		4	CASQUILLO

http://www.minnparbackhoeparts.com/

CUCHARÓN, RETROEXCAVADORA UNIVERSAL (406 MM (16 INCH) WIDE)

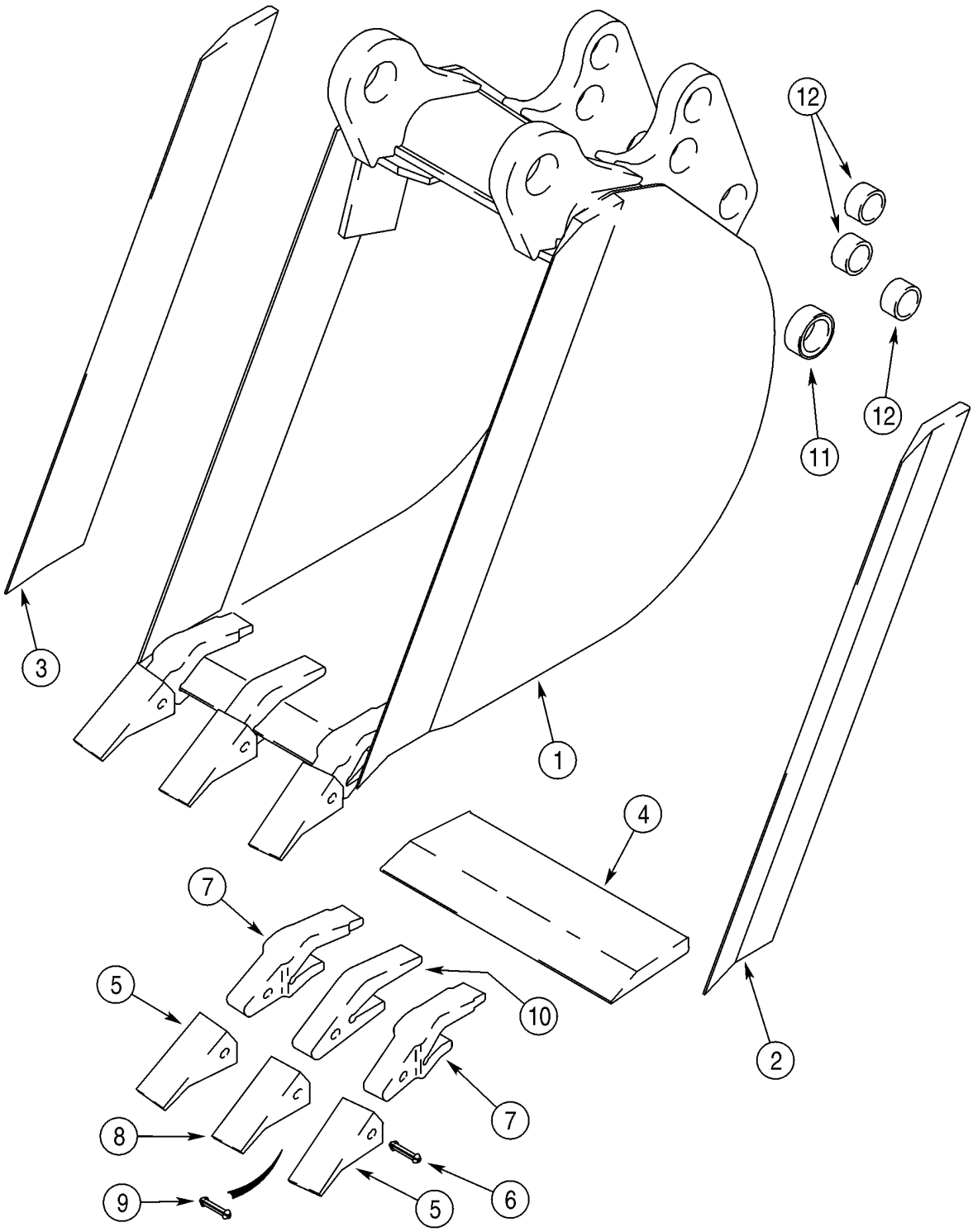

http://www.minnparbackhoeparts.com/

CUCHARÓN, RETROEXCAVADORA UNIVERSAL (406 MM (16 INCH) WIDE)

REF	FN	PART NUMBER	YR/SN	QTY	DESCRIPTION
1		388843A1		1	CUCHARA 406 mm (16 in), With 3 Teeth; Order Through Parts Marketing; Incl. Ref 2 - 12
2		D146421		1	CUCHILLA DE ATAQUE Right-Hand
3		D146420		1	CUCHILLA DE ATAQUE Left-Hand
4		D147249		1	BORDE
		D139851		2	DIENTE Outer; Incl. Ref 5 - 7
5		D51750		1	PUNTA
6		245466A1		1	PASADOR
7		D138157		1	PIE
		D139849		1	DIENTE Center; Incl. Ref 8 - 10; Order Ref 8 - 10
8		D51750		1	PUNTA
9		245466A1		1	PASADOR
10		D48212		1	PIE
11		D37495		2	CASQUILLO
12		D30933		6	CASQUILLO

http://www.minnparbackhoeparts.com/

09-31		p1	01/04

CUCHARÓN, RETROEXCAVADORA UNIVERSAL (457 MM (18 INCH) WIDE)

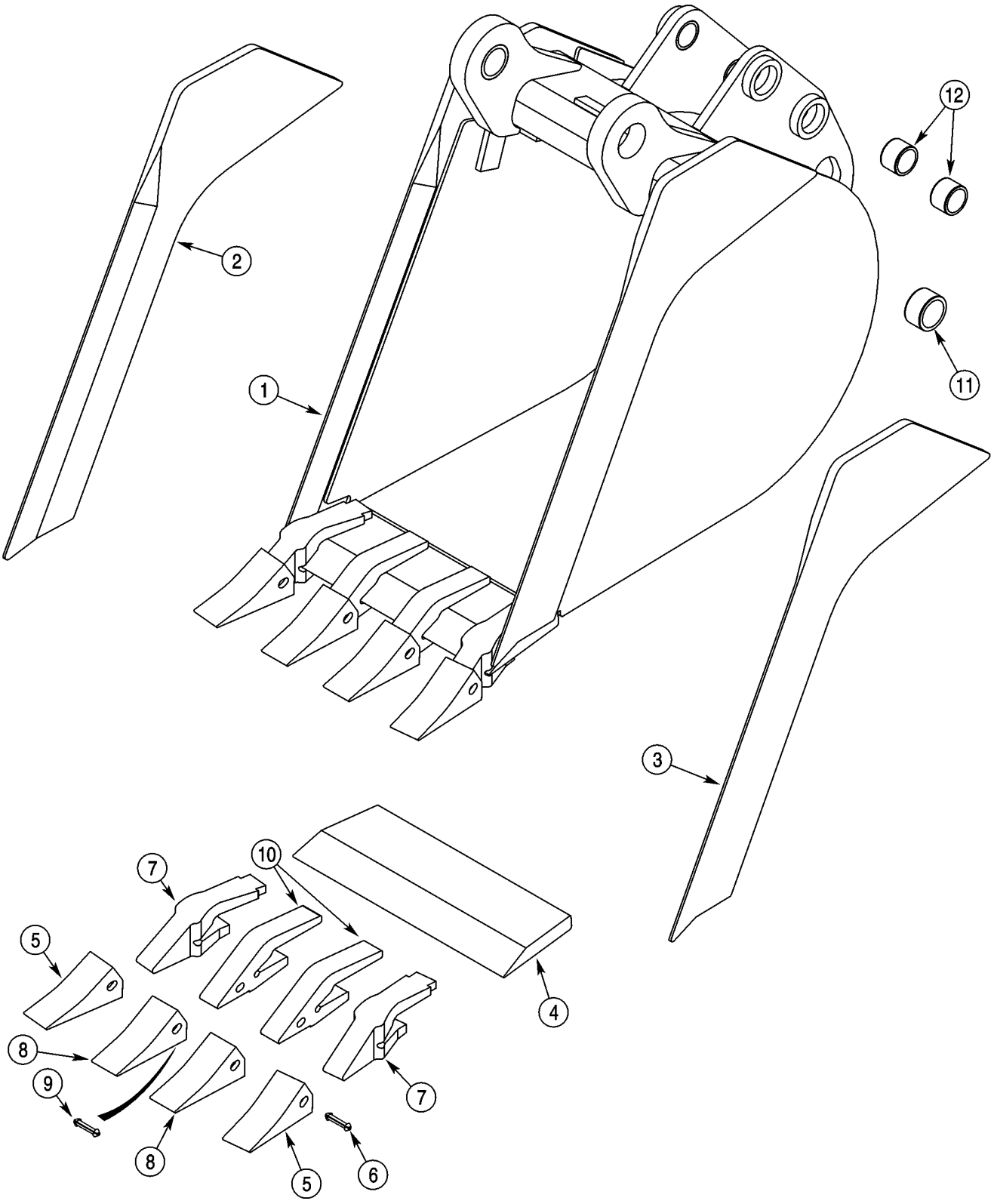

http://www.minnparbackhoeparts.com/

CUCHARÓN, RETROEXCAVADORA UNIVERSAL (457 MM (18 INCH) WIDE)

REF	FN	PART NUMBER	YR/SN	QTY	DESCRIPTION
1		376384A1		1	CUCHARA 457 mm (18 in), With 4 Teeth; Order Through Parts Marketing; Incl. Ref 2 - 12
2		NSS		1	NO SE REPARA SEPARADAM. Edge; Right-Hand
3		NSS		1	NO SE REPARA SEPARADAM. Edge; Left-Hand
4		NSS		1	NO SE REPARA SEPARADAM. Edge
		D139851		2	DIENTE Outer; Incl. Ref 5 - 7
5		D51750		1	PUNTA
6		245466A1		1	PASADOR
7		D138157		1	PIE
		D139849		2	DIENTE Center; Incl. Ref 8 - 10; Order Ref 8 - 10
8		D51750		1	PUNTA
9		245466A1		1	PASADOR
10		D48212		1	PIE
11		D37495		2	CASQUILLO
12		D30933		4	CASQUILLO

http://www.minnparbackhoeparts.com/

09-32		p1	01/04

CUCHARÓN, RETROEXCAVADORA UNIVERSAL (610 MM (24 INCH) / 762 MM (30 INCH) WIDE)

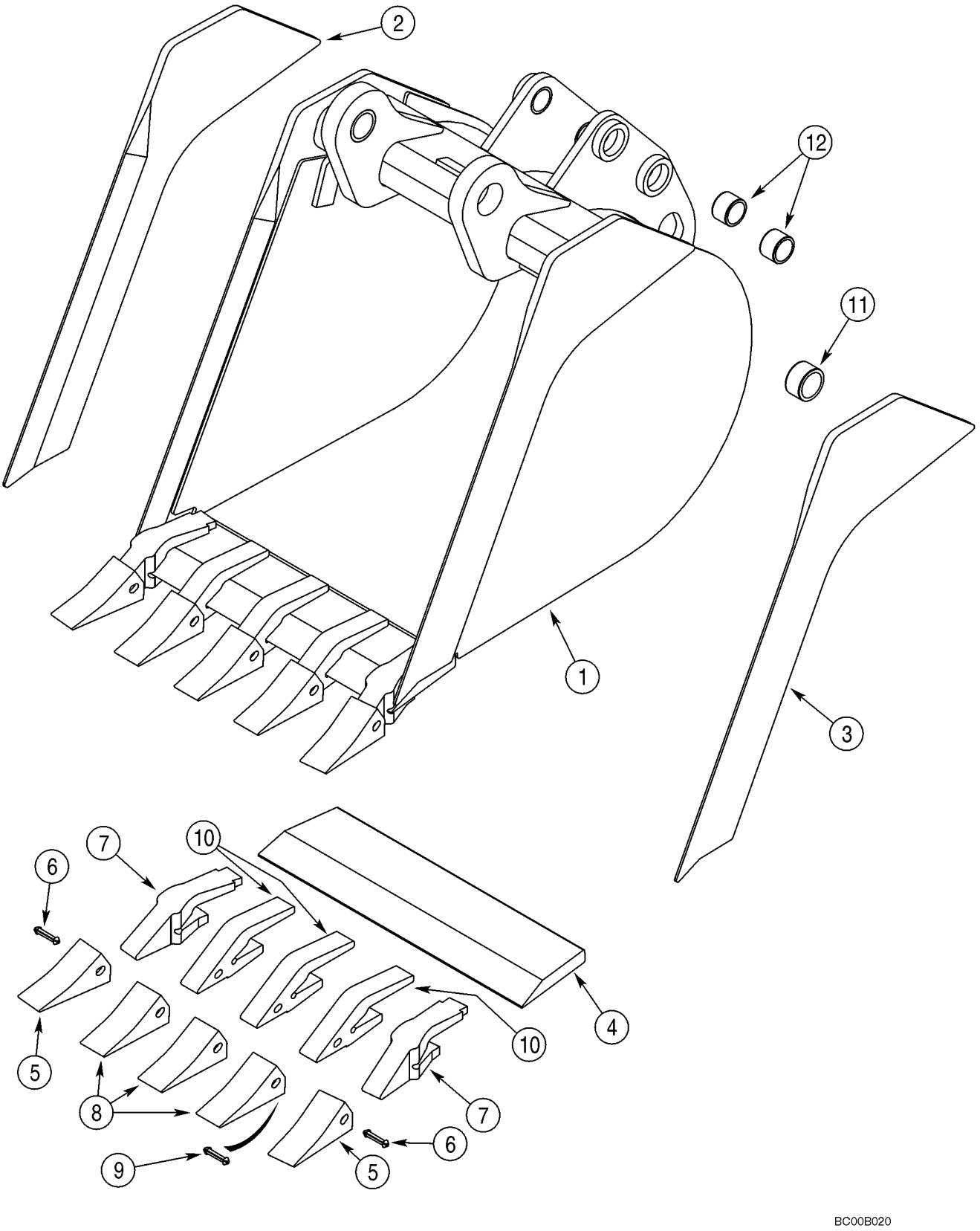

http://www.minnparbackhoeparts.com/

CUCHARÓN, RETROEXCAVADORA UNIVERSAL (610 MM (24 INCH) / 762 MM (30 INCH) WIDE)

REF	FN	PART NUMBER	YR/SN	QTY	DESCRIPTION
1		365328A1		1	CUCHARA 610 mm (24 in), With 5 Teeth; Order Through Parts Marketing; Incl. Ref 2 - 12
2		NSS		1	NO SE REPARA SEPARADAM. Edge; Right-Hand
3		NSS		1	NO SE REPARA SEPARADAM. Edge; Left-Hand
4		NSS		1	NO SE REPARA SEPARADAM. Edge
		D139851		2	DIENTE Outer; Incl. Ref 5 - 7
5		D51750		1	PUNTA
6		245466A1		1	PASADOR
7		D138157		1	PIE
		D139849		3	DIENTE Center; Incl. Ref 8 - 10; Order Ref 8 - 10
8		D51750		1	PUNTA
9		245466A1		1	PASADOR
10		D48212		1	PIE
11		D37495		2	CASQUILLO
12		D30933		4	CASQUILLO
		REF			MANUAL 610 mm (24 Inch) and 762 mm (30 Inch) Wide
1		376385A1		1	CUCHARA 762 mm (30 in), With 6 Teeth; Not Illustrated; Order Through Parts Marketing; Incl. Ref 2 - 12
2		NSS		1	NO SE REPARA SEPARADAM. Edge; Right-Hand
3		NSS		1	NO SE REPARA SEPARADAM. Edge; Left-Hand
4		NSS		1	NO SE REPARA SEPARADAM. Edge
		D139851		2	DIENTE Outer; Incl. Ref 5 - 7
5		D51750		1	PUNTA
6		245466A1		1	PASADOR
7		D138157		1	PIE
		D139849		4	DIENTE Center; Incl. Ref 8 - 10; Order Ref 8 - 10
8		D51750		1	PUNTA
9		245466A1		1	PASADOR
10		D48212		1	PIE
11		D37495		2	CASQUILLO
12		D30933		4	CASQUILLO

http://www.minnparbackhoeparts.com/

09-33		p1	01/04

CUCHARÓN, RETROEXCAVADORA UNIVERSAL (914 MM (36 INCH) WIDE)

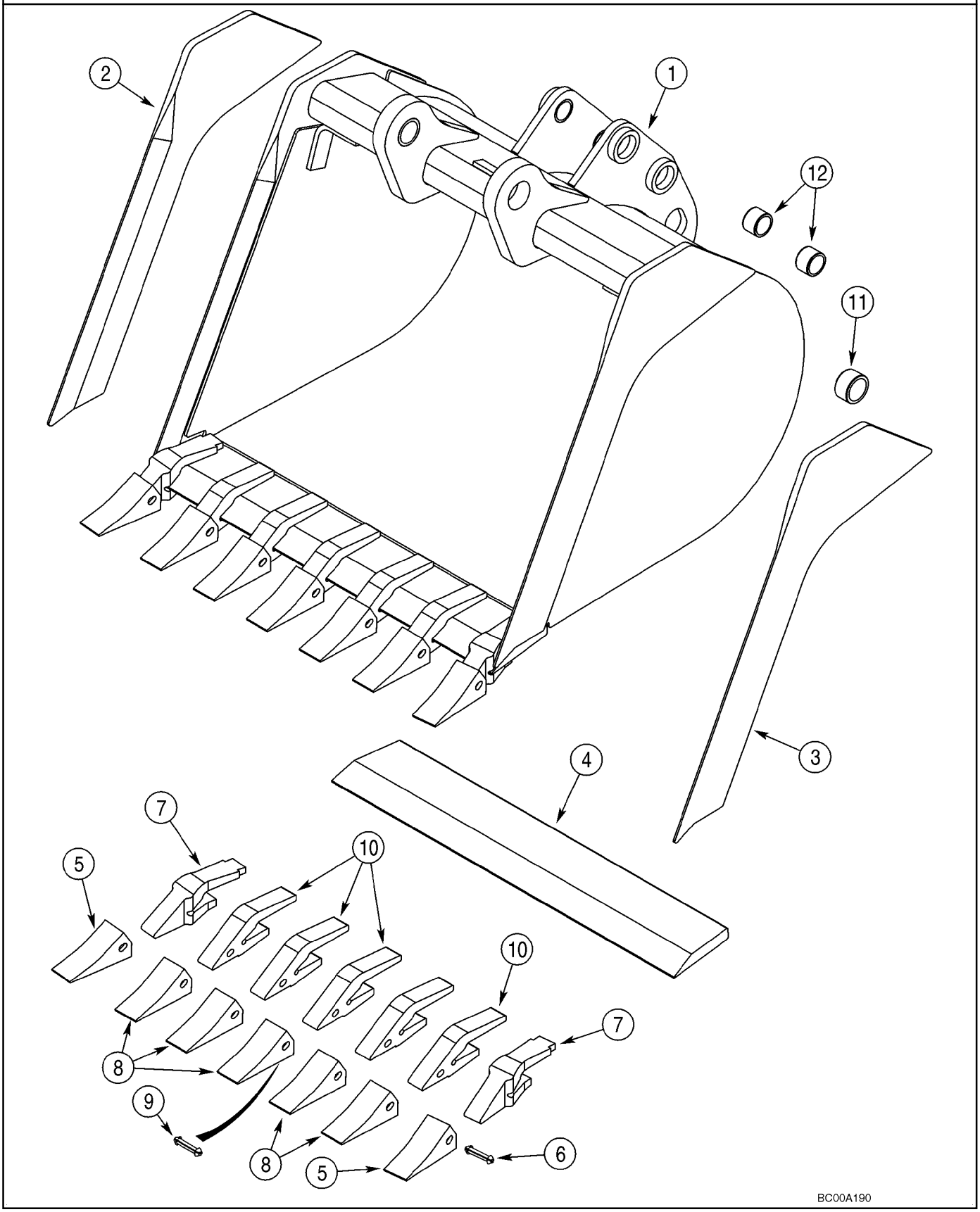

http://www.minnparbackhoeparts.com/

CUCHARÓN, RETROEXCAVADORA UNIVERSAL (914 MM (36 INCH) WIDE)

REF	FN	PART NUMBER	YR/SN	QTY	DESCRIPTION
1		376386A1		1	CUCHARA 914 mm (36 in), With 7 Teeth; Order Through Parts Marketing; Incl. Ref 2 - 12
2		NSS		1	NO SE REPARA SEPARADAM. Edge; Right-Hand
3		NSS		1	NO SE REPARA SEPARADAM. Edge; Left-Hand
4		NSS		1	NO SE REPARA SEPARADAM. Edge
		D139851		2	DIENTE Outer; Incl. Ref 5 - 7
5		D51750		1	PUNTA
6		245466A1		1	PASADOR
7		D138157		1	PIE
		D139849		5	DIENTE Center; Incl. Ref 8 - 10; Order Ref 8 - 10
8		D51750		1	PUNTA
9		245466A1		1	PASADOR
10		D48212		1	PIE
11		D37495		2	CASQUILLO
12		D30933		4	CASQUILLO

http://www.minnparbackhoeparts.com/

09-34		p1	01/04

CUCHARÓN, RETROEXCAVADORA UNIVERSAL (610 MM (24 INCH) / 762 MM (30 INCH) WIDE)

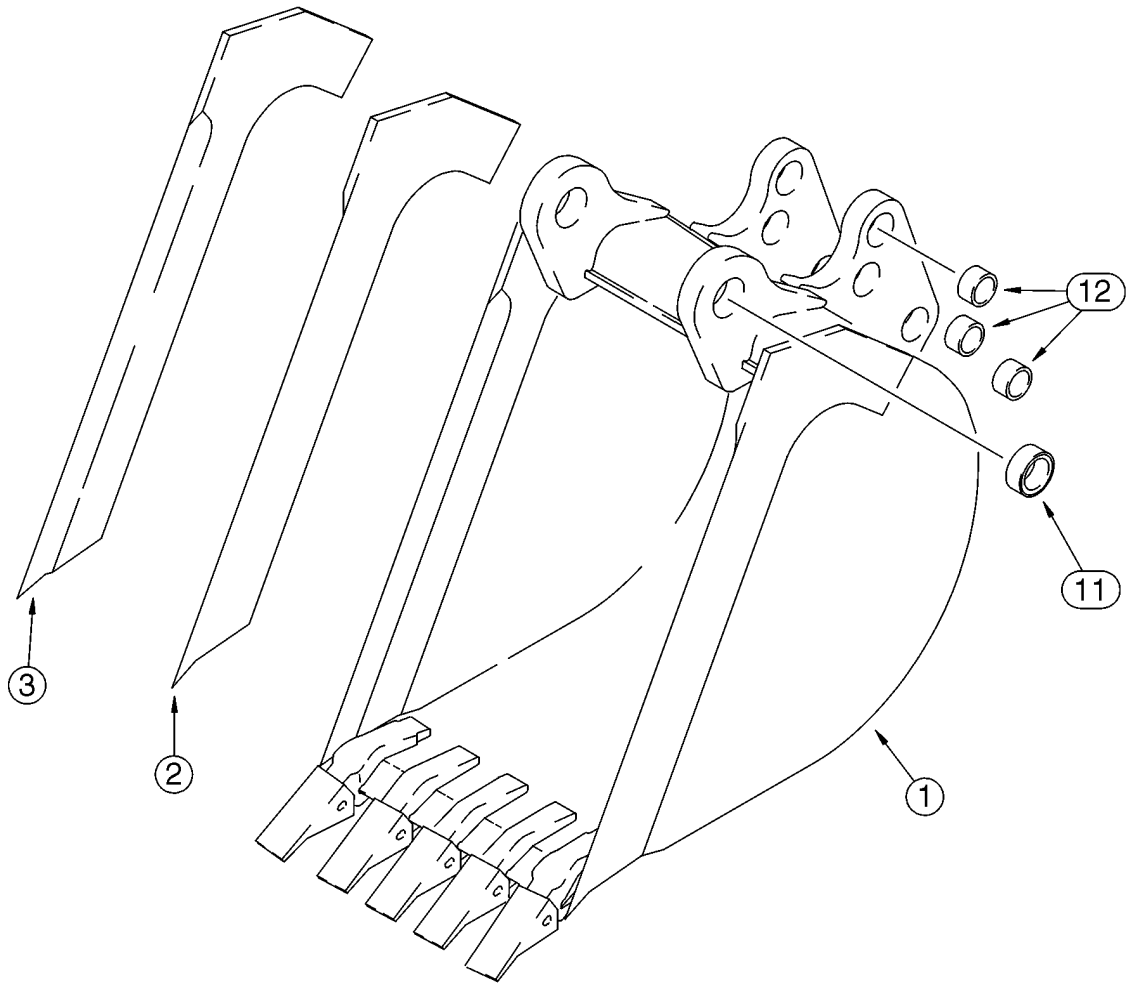

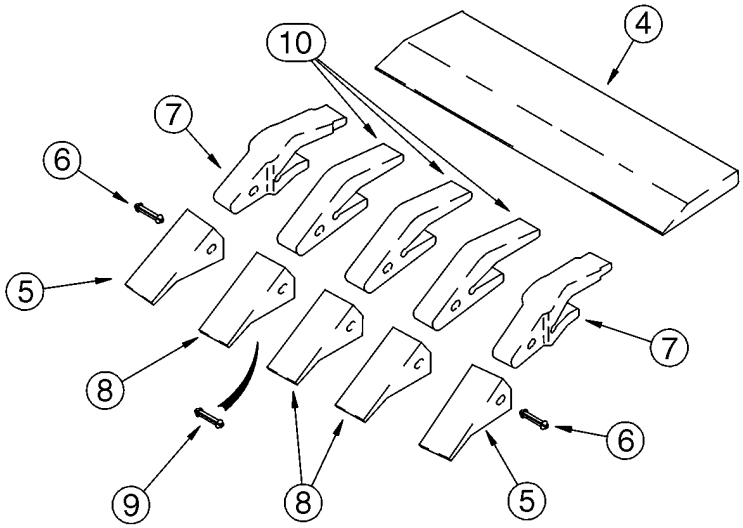

B9405159

http://www.minnparbackhoeparts.com/

CUCHARÓN, RETROEXCAVADORA UNIVERSAL (610 MM (24 INCH) / 762 MM (30 INCH) WIDE)

REF	FN	PART NUMBER	YR/SN	QTY	DESCRIPTION
1		141232A2		1	CUCHARA 610 mm (24 in), With 5 Teeth; Order Through Parts Marketing; Incl. Ref 2 - 12
2		141234A1		1	CUCHILLA DE ATAQUE Right-Hand
3		141233A1		1	CUCHILLA DE ATAQUE Left-Hand
4		D142012		1	CUCHILLA DE ATAQUE
		D139851		2	DIENTE Outer; Incl. Ref 5 - 7
5		D51750		1	PUNTA
6		245466A1		1	PASADOR
7		D138157		1	PIE
		D139849		3	DIENTE Center; Incl. Ref 8 - 10; Order Ref 8 - 10
8		D51750		1	PUNTA
9		245466A1		1	PASADOR
10		D48212		1	PIE
11		D37495		2	CASQUILLO
12		D30933		6	CASQUILLO
1		190267A2		1	CUCHARA 762 mm (30 in), With 5 Teeth; Not Illustrated; Order Through Parts Marketing; Incl. Ref 2 - 12
2		141234A1		1	CUCHILLA DE ATAQUE Right-Hand
3		141233A1		1	CUCHILLA DE ATAQUE Left-Hand
4		D145061		1	CUCHILLA DE ATAQUE
		D139851		2	DIENTE Outer; Incl. Ref 5 - 7
5		D51750		1	PUNTA
6		245466A1		1	PASADOR
7		D138157		1	PIE
		D139849		3	DIENTE Center; Incl. Ref 8 - 10; Order Ref 8 - 10
8		D51750		1	PUNTA
9		245466A1		1	PASADOR
10		D48212		1	PIE
11		D37495		2	CASQUILLO
12		D30933		6	CASQUILLO

http://www.minnparbackhoeparts.com/

CONJUNTO DEL PUNTO DE HIELO

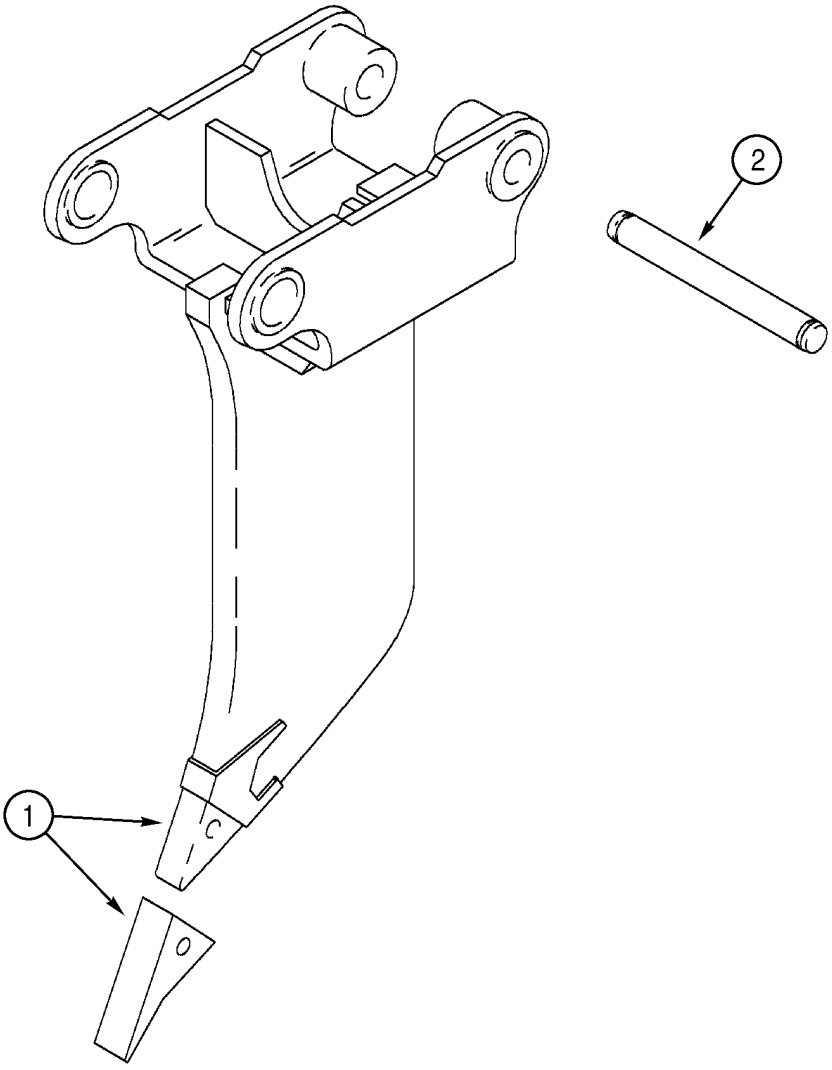

BS00H128

http://www.minnparbackhoeparts.com/

CONJUNTO DEL PUNTO DE HIELO

REF	FN	PART NUMBER	YR/SN	QTY	DESCRIPTION
1		319467A1		1	PUNTA Frost Point Assembly; Includes (2) Pin Retaining Bolts; Component Parts Not Serviced Separately
2		D50696		1	PERNO

http://www.minnparbackhoeparts.com/

09-35		p1	03/05

CONTRAPESO, DELANTERO

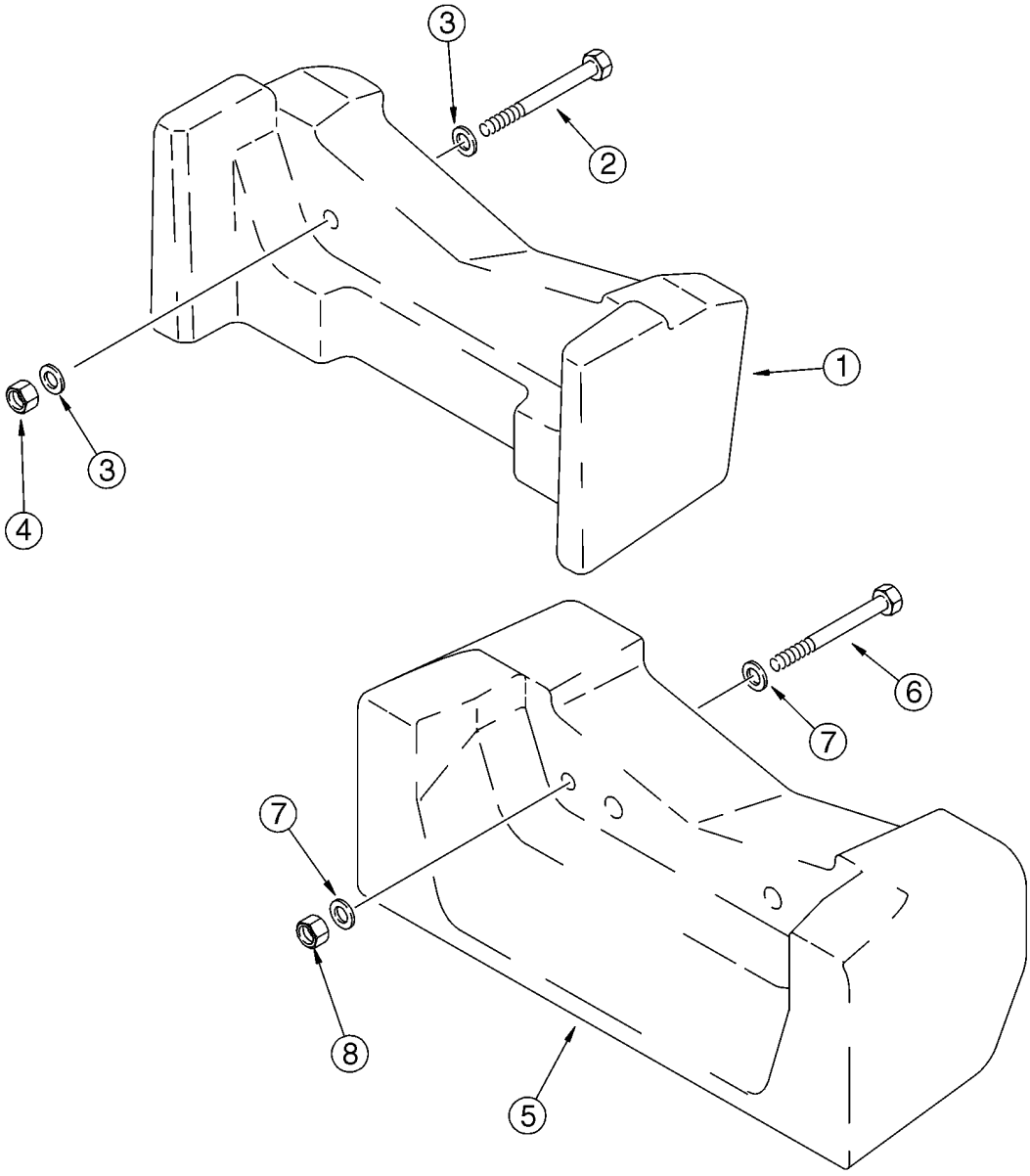

BT97N084

http://www.minnparbackhoeparts.com/

CONTRAPESO, DELANTERO

REF	FN	PART NUMBER	YR/SN	QTY	DESCRIPTION
1		360867A1		1	CONTRAPESO 200 kg (441 lbs); If Used
2		827-20170		2	TORNILLO
3		896-11020		4	ARANDELA 22 x 37 x 4 mm
4		829-1420		2	TUERCA M20, Cl 10
5		87425456		1	EQUILIBRADOR 408 kg (900 lbs); If Used
6		827-20170		2	TORNILLO
7		896-11020		4	ARANDELA 22 x 37 x 4 mm
8		829-1420		2	TUERCA M20, Cl 10

http://www.minnparbackhoeparts.com/

09-36		p1	04/04

CHASIS / SOPORTES, RECEPTÁCULO - PANTALLA, ENTRADA DE AIRE

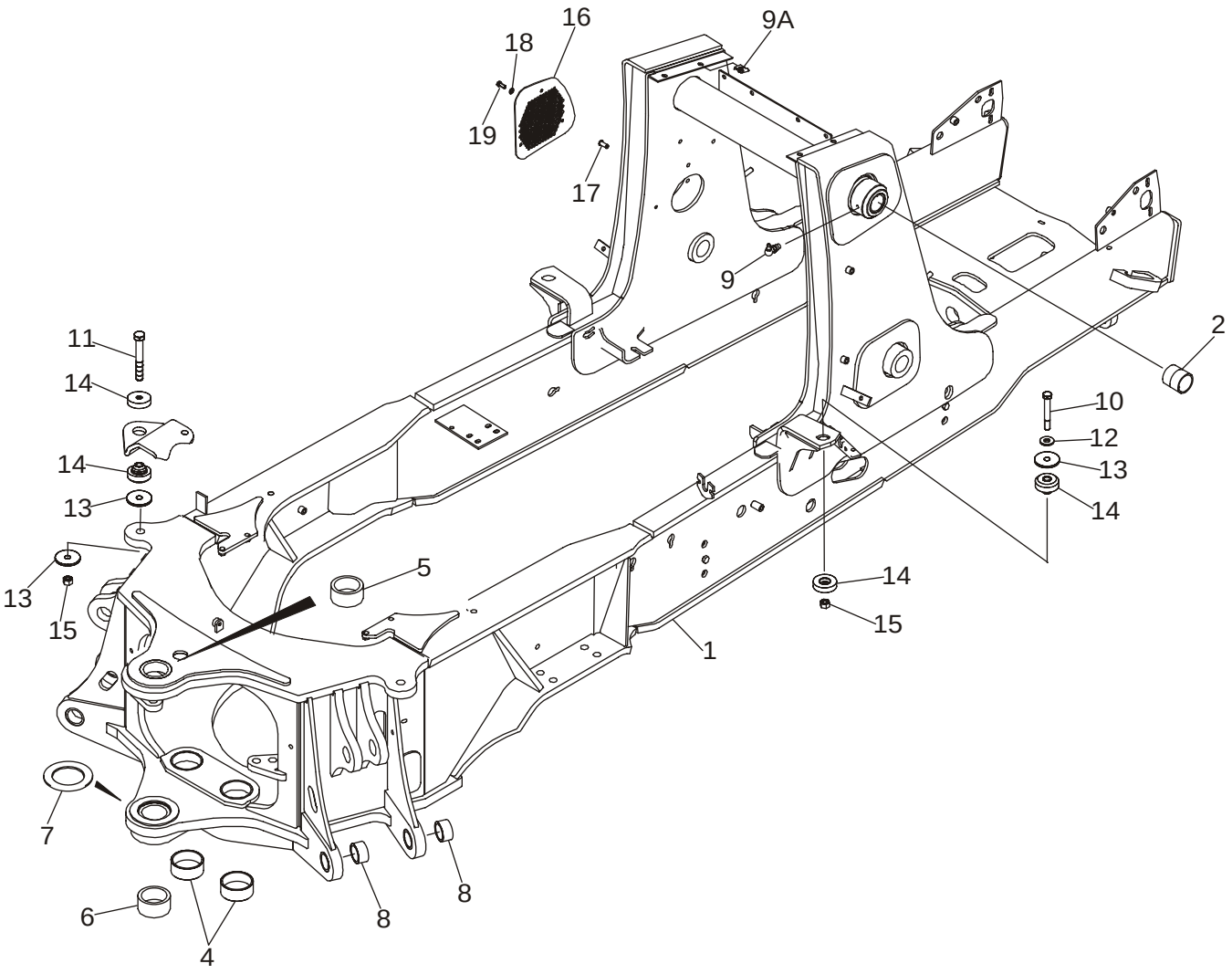

http://www.minnparbackhoeparts.com/

CHASIS / SOPORTES, RECEPTÁCULO - PANTALLA, ENTRADA DE AIRE

REF	FN	PART NUMBER	YR/SN	QTY	DESCRIPTION
1		87423004		1	CHASIS 580SM; Incl. Ref 2 - 8
1		87423006		1	CHASIS 580SM+; Incl. Ref 2 - 8; Not Illustrated
2		180427A1		2	CASQUILLO
4		114318A1		2	CASQUILLO 80 x 5 x 28.8
5		D151069		1	CASQUILLO 70 x 10 x 32 mm
6		D151070		1	CASQUILLO 70 x 10 x 38 mm
7		220413A1		1	ESPACIADOR 93 x 135 x 5 mm; Welded-On
8		107124A1		4	CASQUILLO
9		219-55		2	ENGRASADOR 90 deg, 1/8 PT x 27/32
9A		833-40310		4	TUERCA J-Type, M10
10		827-16085		2	TORNILLO M16 x 85; 10.9
11		827-16100		2	TORNILLO M16 x 100; 10.9
12		896-11016		2	ARANDELA 17,5 x 30 x 4 mm
13		186977A1		6	ARANDELA 4,5 mm thick
14		411892A1		4	TEJUELO, GOMA M16; Operator Compartment Pod Mounts
15		829-1416		4	TUERCA M16; 10
16		87423668		1	PANTALLA PROTECTORA Air Inlet
17		87417383		3	ROSCA POSTIZA Nut, M8
18		895-11008		3	ARANDELA Flat, 8 mm
19		614-8030		3	TORNILLO M8 x 30

http://www.minnparbackhoeparts.com/

09-37		p1	04/05

DEPÓSITO, ACEITE - CAJA, BATERÍA Y HERRAMIENTA

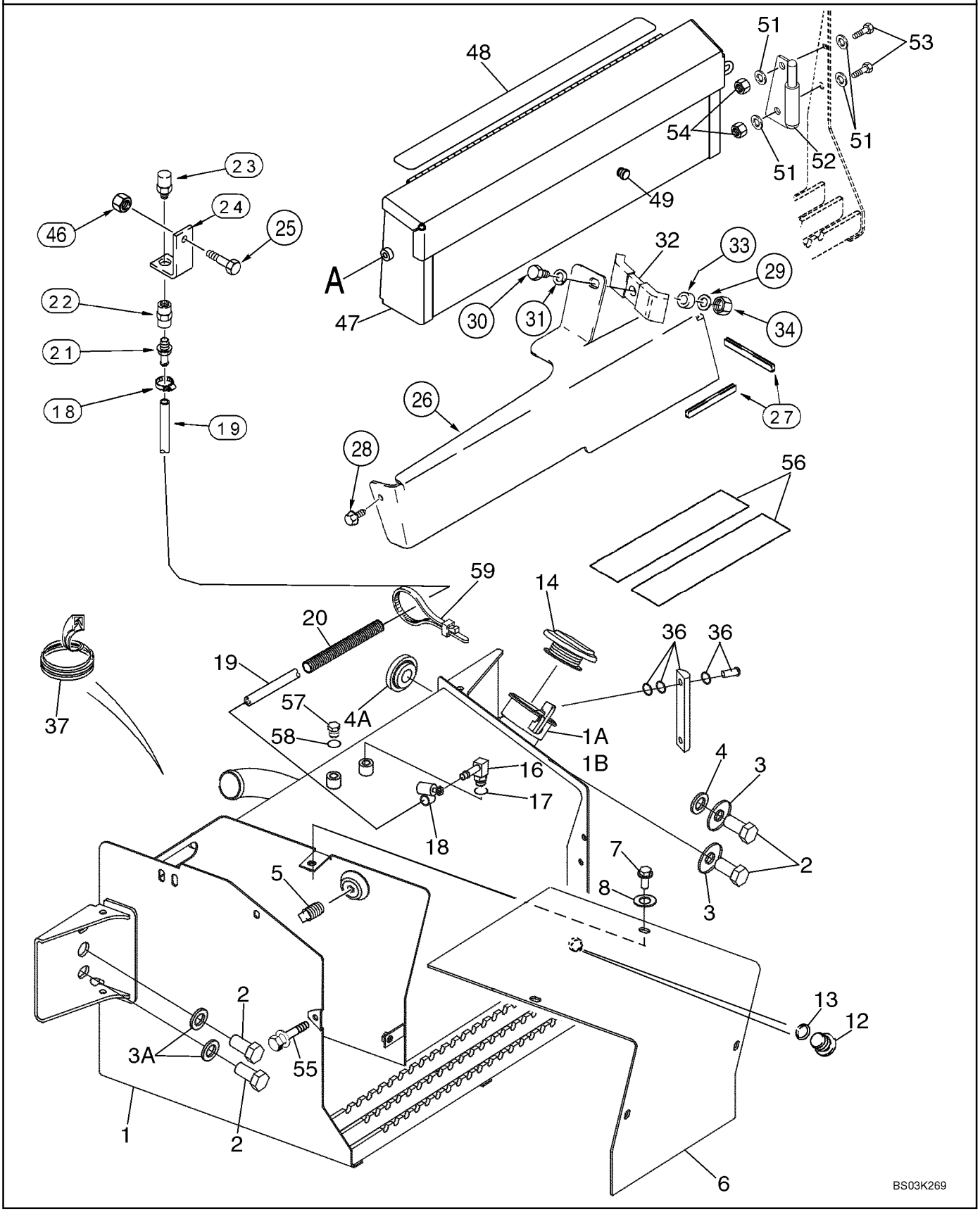

http://www.minnparbackhoeparts.com/

DEPÓSITO, ACEITE - CAJA, BATERÍA Y HERRAMIENTA

REF	FN	PART NUMBER	YR/SN	QTY	DESCRIPTION
		87434746		1	DESPOSITO ACEITE ASSEMBLY; Incl. Ref 1, 14, 16, 35, 36, 56, 57; Plus 321-229 Hydraulic Fluid Decal
1		87434745		1	DESPOSITO ACEITE Right-Hand Side of Chassis; Incl. Ref 1A, 1B, 12
1A		230857A1		1	REJILLA Strainer; Fill Tube
1B		440-1066		2	TORNILLO No. 6 x 3/8
2		627-20060		4	TORNILLO M20 x 60; 10.9; Use With Loctite 345-49
3		302358A1		2	ARANDELA Right-Hand
3A		896-11020		2	ARANDELA 22 x 37 x 4 mm; Left-Hand
4		185926A1		1	ESPACIADOR Right-Hand; Upper
4A		409472A1		1	ESPACIADOR Right-Hand; Lower
5		217-436		1	TAPÓN 3/8 PT; If Used
6		231656A1		1	TAPA Battery
7		614-10020		4	TORNILLO M10 x 20; Use With 345-56 Loctite No. 767
8		495-21044		4	ARANDELA 7/16 x 1 x 5/64
12		218-5211		1	TAPÓN 7/8 Or, Drain; Incl. Ref 13
13		237-6010		1	JUNTA HERMETICA 3/4 ID x 3/32, Boss Seal
14		138595A1		1	TAPÓN CAP
16		217-347		1	CONEXION 3/8 stem x 9/16 Or; Incl. Ref 17
17		237-6006		1	JUNTA HERMETICA 15/32 ID x 5/64, Boss Seal
18		214-1406		2	COLLAR 7/16 - 25/32
19		393161A1		1	MANGA 912 mm (35-29/32 in); Vent
20		87452021		1	FUNDA DE PLÁSTICO 650 mm (25-19/32 in); Replaces 143219A1 380 mm (15 in) Sleeve
21		217-380		1	CONEXION 3/8 stem x PT; Use With 345-147 Sealant
22		217-1102		1	CONEXION 3/8 in
23		361776A1		1	RESPIRADERO Use With 345-147 Sealant
24		122603A1		1	APOYADERO
25		711-10030		1	TORNILLO M10 x 30
26		399959A2		1	TAPA Right-Hand Loader Lift Frame Tubing
27		191047A1		1	MOLDURA 305 mm (12 in) lg; Apply 65 mm (2-9/16 in) Of Trim To Front Lower Edge and 240 mm (9-1/2 in) Of Trim To Outisde Lower Edge of Cover
28		307577A1		1	TORNILLO With Washer, M8 x 20

http://www.minnparbackhoeparts.com/

09-37		p2	04/05

DEPÓSITO, ACEITE - CAJA, BATERÍA Y HERRAMIENTA

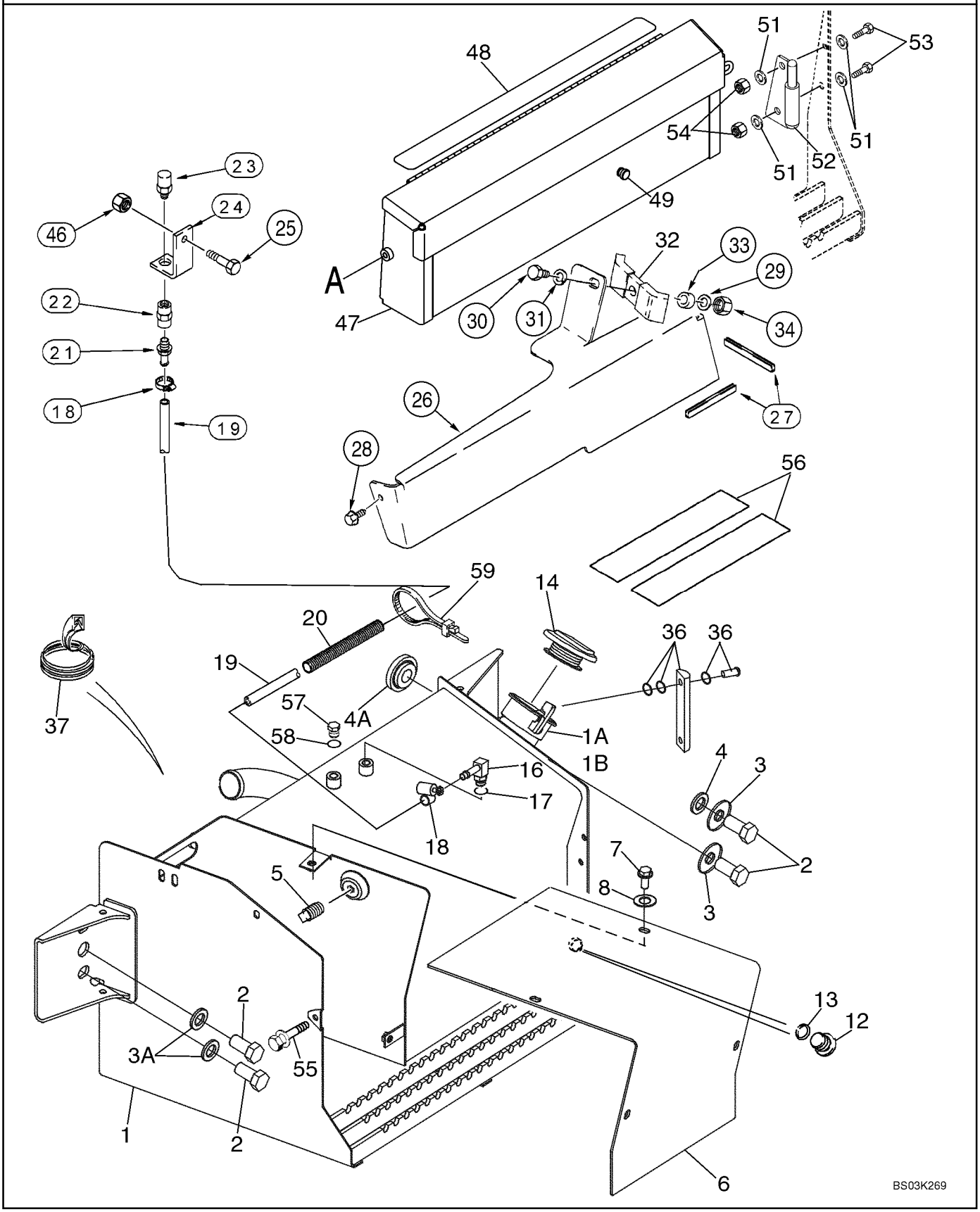

http://www.minnparbackhoeparts.com/

DEPÓSITO, ACEITE - CAJA, BATERÍA Y HERRAMIENTA

REF	FN	PART NUMBER	YR/SN	QTY	DESCRIPTION
29		895-11010		1	ARANDELA 11 x 21 x 2 mm
30		814-10045		1	TORNILLO M10 x 45
31		892-11010		1	ARANDELA DE FRENO M10
32		D138055		1	COLLAR
33		120303A1		1	ESPACIADOR
34		829-1410		1	TUERCA M10; 10.9
35		345-49		1	LOCTITE 242; 1 ml
36		226456A1		1	CALIBRE Aluminum; Includes (2) Hollow Head Bolts and (4) O-Rings; Component Parts Not Serviced Separately, Used With Ref 35
37		D40442		1	MOLDURA 305 mm (12 in); Cut From F42827
46		829-1410		1	TUERCA M10; 10.9
47		380807A4		1	CAJA HERRAMIENTAS
48		D80270		1	CINTA 635 mm (25 in)
49		L60224		1	PARACHOQUES 1/2 in Hole; Bumper
51		895-11010		4	ARANDELA 11 x 21 x 2 mm
52		382202A2		1	BISAGRA
53		614-10025		2	TORNILLO M10 x 25
54		829-1410		2	TUERCA M10; 10.9
55		121856A1		1	TORNILLO M10 x 30; Includes Washer
56		D55216		2	TACO Non-Slip, 2 x 9
57		218-5155		1	TAPÓN Hex, 9/16, Incl. Ref 58; Models Without Pilot Controls
58		237-6006		1	JUNTA HERMETICA
59		L18337		2	BANDA

http://www.minnparbackhoeparts.com/

09-38		p1	03/05

REVESTIMIENTO DEL RADIADOR

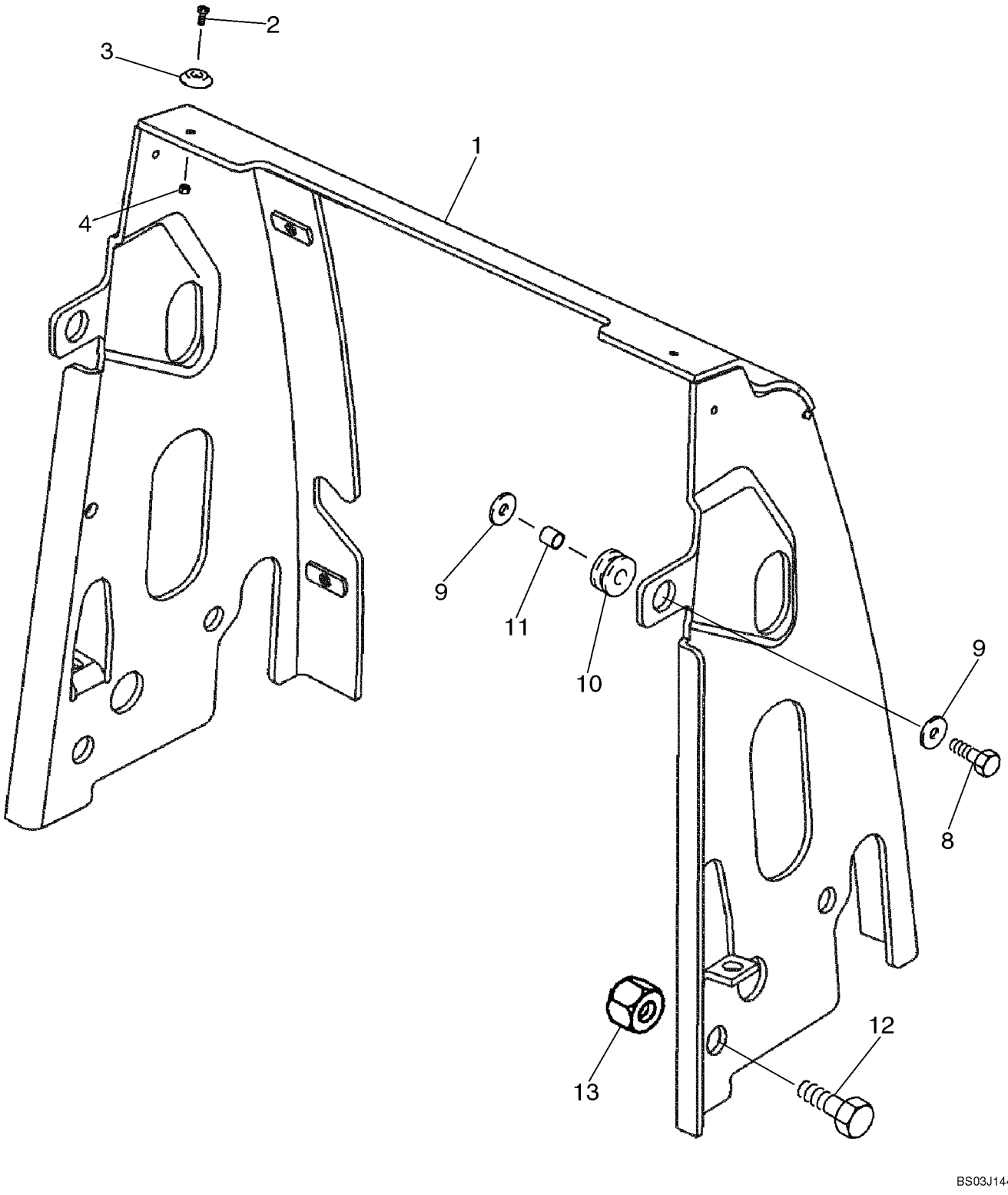

http://www.minnparbackhoeparts.com/

REVESTIMIENTO DEL RADIADOR

REF	FN	PART NUMBER	YR/SN	QTY	DESCRIPTION
1		87433659		1	PLACA (CONJUNTO)
2		440-11010		2-4	TORNILLO No. 10 x 5/8
3		109879A1		2-4	ESPACIADOR Hood; Plastic
4		231-14109		2-4	TUERCA No. 10
8		614-10035		2	TORNILLO M10 x 35
9		K691987		4	ARANDELA Flat, 10 mm
10		86982682		2	PASACABLES Rubber Grommet
11		D76209		2	ESPACIADOR
12		614-20030		4	TORNILLO M20 x 30
13		829-1420		4	TUERCA M20, Cl 10

http://www.minnparbackhoeparts.com/

09-39		p1	04/04

CAPO - PANELES, LATERALES

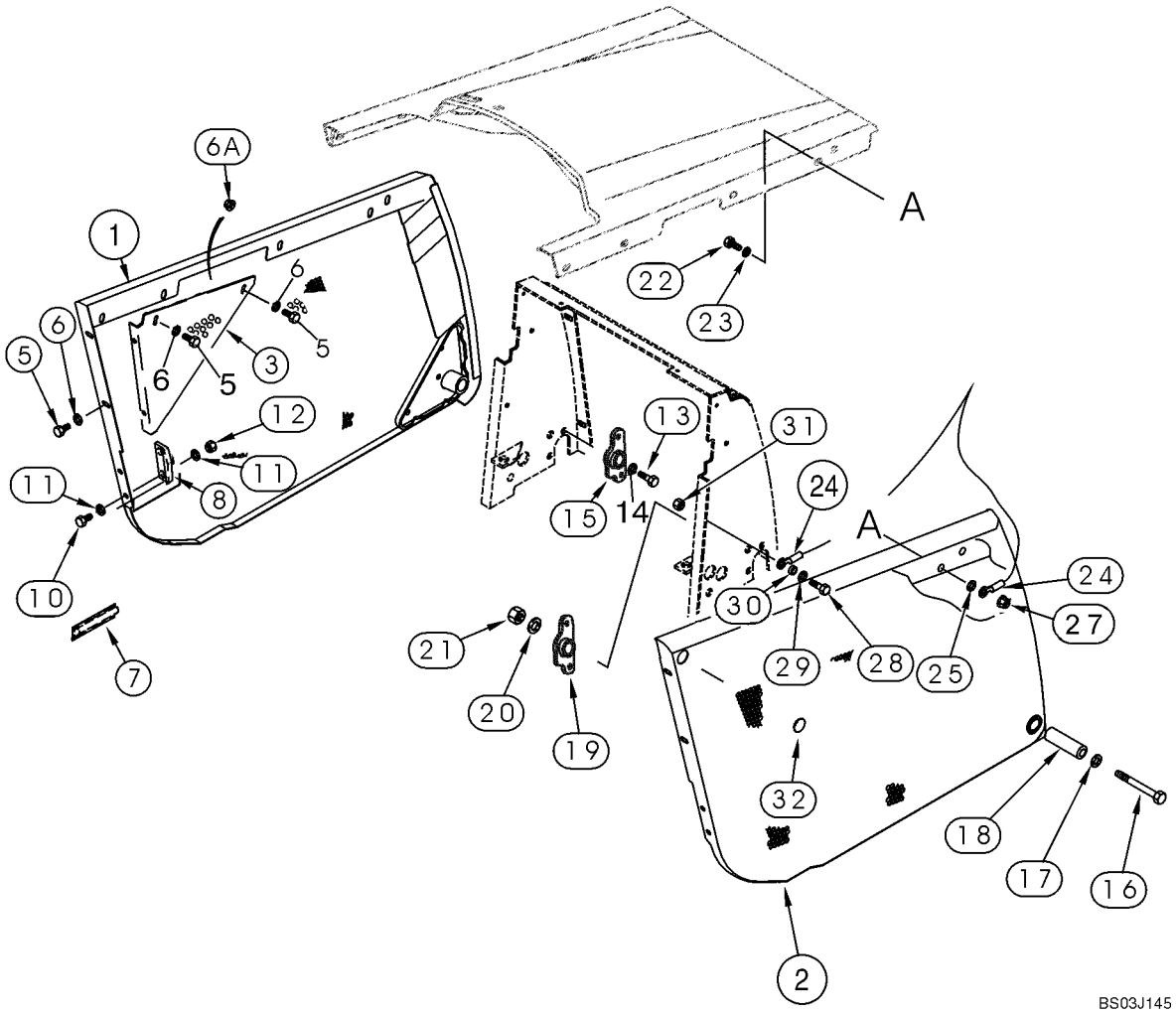

http://www.minnparbackhoeparts.com/

CAPO - PANELES, LATERALES

REF	FN	PART NUMBER	YR/SN	QTY	DESCRIPTION
1		87444148		1	PANEL LATERAL Left-Hand Side
2		87444147		1	PANEL LATERAL Right-Hand Side
3		362609A1		1	TENSOR Left-Hand
4		362607A1		1	TENSOR Right-Hand; Not Illustrated
5		614-10025		8	TORNILLO M10 x 25
6		895-11010		8	ARANDELA 11 x 21 x 2 mm
6A		825-2410		4	TUERCA M10
7		183168A1		1	MANECILLA Left-Hand
8		D143715		1	APOYADERO Guide, Left-Hand
9		D143714		1	APOYADERO Guide, Right-Hand; Not Illustrated
10		614-10025		4	TORNILLO M10 x 25
11		895-11010		8	ARANDELA 11 x 21 x 2 mm
12		832-10410		4	TUERCA M10
13		614-10020		4	TORNILLO M10 x 20
14		895-11010		4	ARANDELA Flat, 10 mm
15		87407769		1	PIVOTE Left-Hand
16		814-12100		2	TORNILLO M12 x 100
17		896-15012		2	ARANDELA 13,5 x 28 x 4 mm
18		87412060		2	TUBO Spacer
19		87407770		1	PIVOTE Right-Hand
20		896-15012		2	ARANDELA 13,5 x 28 x 4 mm
21		829-1412		2	TUERCA M12; 10
22		614-10025		1	TORNILLO M10 x 25
23		895-11010		1	ARANDELA 11 x 21 x 2 mm
24		144908A2		1	CABLE
25		D143417		1	ESPACIADOR
27		825-2410		1	TUERCA M10
28		614-10030		1	TORNILLO M10 x 30
29		895-11010		1	ARANDELA 11 x 21 x 2 mm
30		396605A1		1	ESPACIADOR
31		825-2410		1	TUERCA M10
32		D140267		2	TAPÓN

http://www.minnparbackhoeparts.com/

09-40		p1	05/04

CAPO - PARRILLA

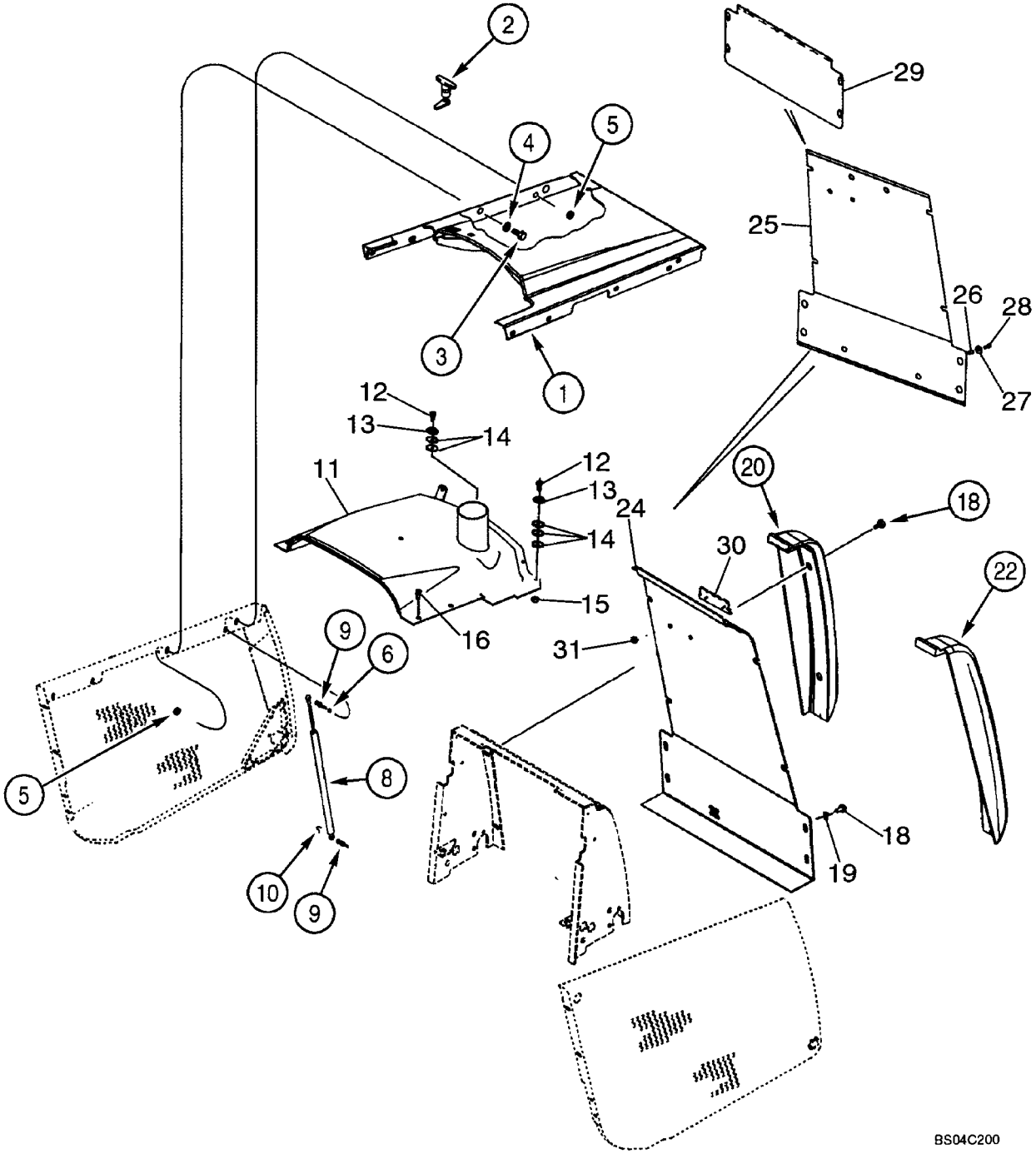

http://www.minnparbackhoeparts.com/

CAPO - PARRILLA

REF	FN	PART NUMBER	YR/SN	QTY	DESCRIPTION
1		362340A6		1	CAPO Engine; Tilt
2		175599A1		1	PESTILLO
3		614-10025		3	TORNILLO M10 x 25
4		895-11010		3	ARANDELA 11 x 21 x 2 mm
5		825-2410		5	TUERCA M10
6		895-11010		2	ARANDELA 11 x 21 x 2 mm
8		114980A1		2	AMORTIGUADOR Spring; Counterbalance
9		139363A1		4	JUNTA DE ROTULA Stud
10		F44883		4	CLIP ELECTRICO
11		87439448		1	PLACA (CONJUNTO) Fixed Hood
12		440-11012		3	TORNILLO No. 10 x 3/4
13		109879A1		3	ESPACIADOR
14		185325A1		8	ESPACIADOR
15		231-14109		3	TUERCA No. 10
16		392828A2		4	TORNILLO With Washer, M10 x 40
18		392828A2		8	TORNILLO With Washer, M10 x 40
19		87423817		4	ARANDELA
20		381927A1		1	PARACHOQUES Left-Hand
22		381926A1		1	PARACHOQUES Right-Hand
24		87402618		1	PANTALLA PROTECTORA GRILLE
		87431128		1	PANTALLA PROTECTORA Chaff Screen Kit; Incl. Ref 25 - 28, Plus Instructions; No Longer Includes 87402618 Grille or Ref 30, 31
25		87444040		1	PANTALLA PROTECTORA Chaff Screen; If Used
26		255447A1		4	REMACHE Threaded Insert
27		257382A1		4	ARANDELA 6.6 x 25 x 1.6 mm
28		257381A1		4	TORNILLO Hex, 1/4 x 3/4
29		87445597		1	PANTALLA PROTECTORA Lower Chaff Screen; Models With Air Conditioning; If Used
30		186989A1		1	CALCOMANIA Case Emblem
31		131-431		2	TUERCA 1/4

http://www.minnparbackhoeparts.com/

09-41		p1	05/05

PLACAS, SUELO - ALFOMBRILLAS

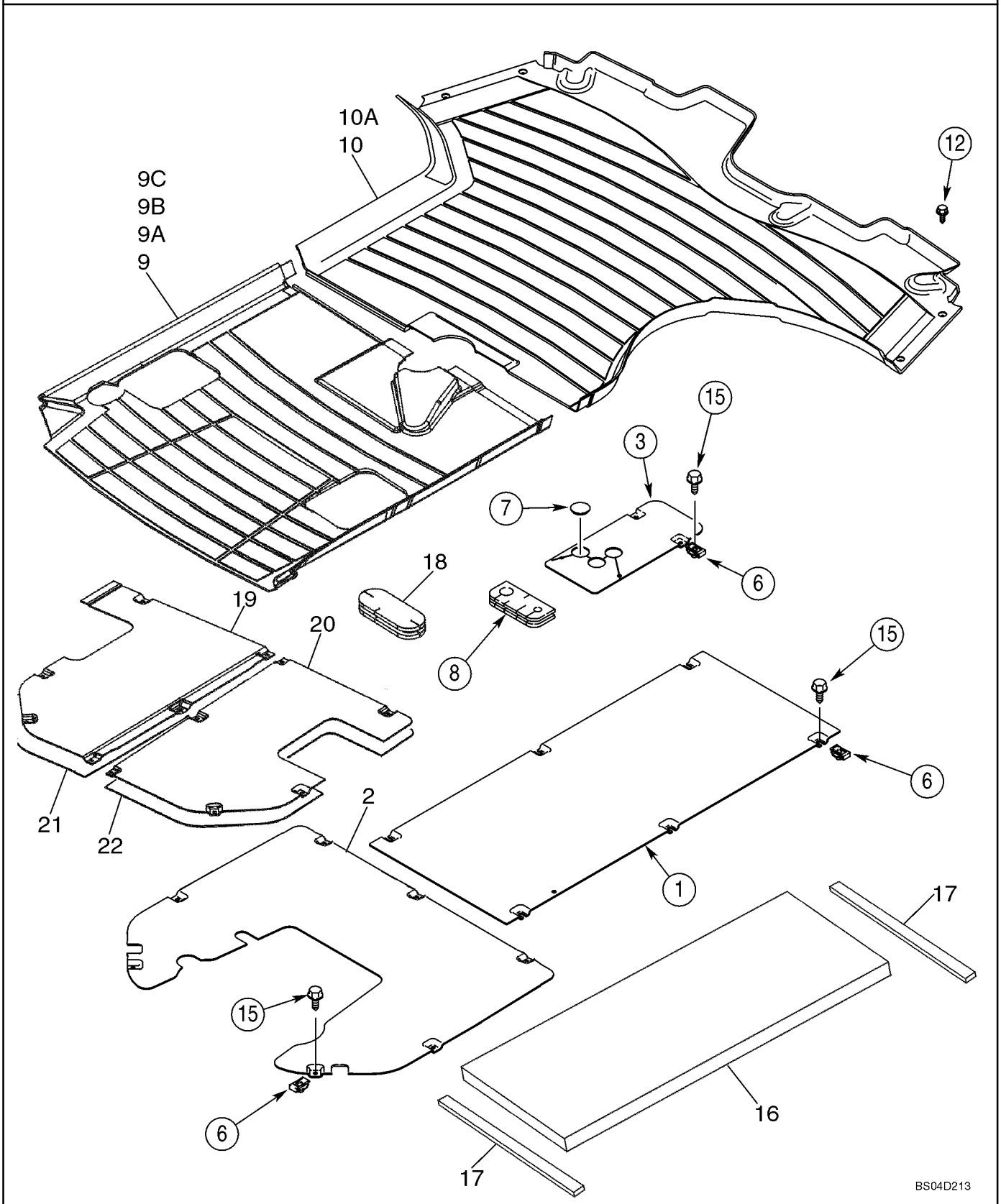

http://www.minnparbackhoeparts.com/

PLACAS, SUELO - ALFOMBRILLAS

REF	FN	PART NUMBER	YR/SN	QTY	DESCRIPTION
1		355984A2		1	PLACA, GRANDE Front
2		86983190		1	PLAQUITA Rear; Without Pilot Controls
3		87436076		1	PLAQUITA Loader Control Lever
6		833-40406		16-17	TUERCA M6
7		353-422		1	TAPÓN Models Without Clam Bucket
8		393623A1		1	BLOQUE MOTOR Floor
9		86983325		1	TAPETE DE SUELO Rear, 580SM Canopy Models, Without Pilot Controls
9A		86983269		1	TAPETE DE SUELO Rear, 580SM Canopy Models, With Pilot Controls; Not Illustrated
9B		86993773		1	TAPETE DE SUELO Rear, 580SM+ Canopy Models, Without Pilot Controls; Not Illustrated
9C		86993774		1	TAPETE DE SUELO Rear, 580SM+ Canopy Models, With Pilot Controls; Not Illustrated
10		390551A2		1	TAPETE DE SUELO Front, 580SM Cab or Canopy Models
10A		391625A2		1	TAPETE DE SUELO Front, 580SM+ Cab or Canopy Models; Not Illustrated
12		87310085		4	TORNILLO AUTOROSCANTE Hex Washer Head, No. 10 x 1, Self-Tapping, Stainless Steel; Replaces 280-16516 Non-Stainless Steel Screw Used On Some Models
15		87310096		16-17	TORNILLO M6 x 25, Includes Washer, Stainless Steel; Replaces 233724A1 Non-Stainless Steel Screw Used On Some Models
16		411074A1		1	ANILLO DE CIERRE Cab Models
17		181981A1		2	JUNTA HERMETICA Foam; Adhesive Back; Cab Models
18		87407927		1	PLOT DE SUSPENSIÓN Rubber Grommet
19		87434049		1	PLAQUITA Rear, With Pilot Controls
20		87434050		1	PLAQUITA Rear, With Pilot Controls
21		87442376		1	ESPUMA AISLANTE Heat Barrier, Left-Hand, Canopy Models With Pilot Controls
22		87442377		1	ESPUMA AISLANTE Heat Barrier, Right-Hand, Canopy Models With Pilot Controls

http://www.minnparbackhoeparts.com/

09-42		p1	05/05

CUBIERTA DEL GUARDABARROS, LADO IZQUIERDO - PANEL, CIERRE TRASERO (BANDEJA DE ALMACENAMIENTO CON SUJ

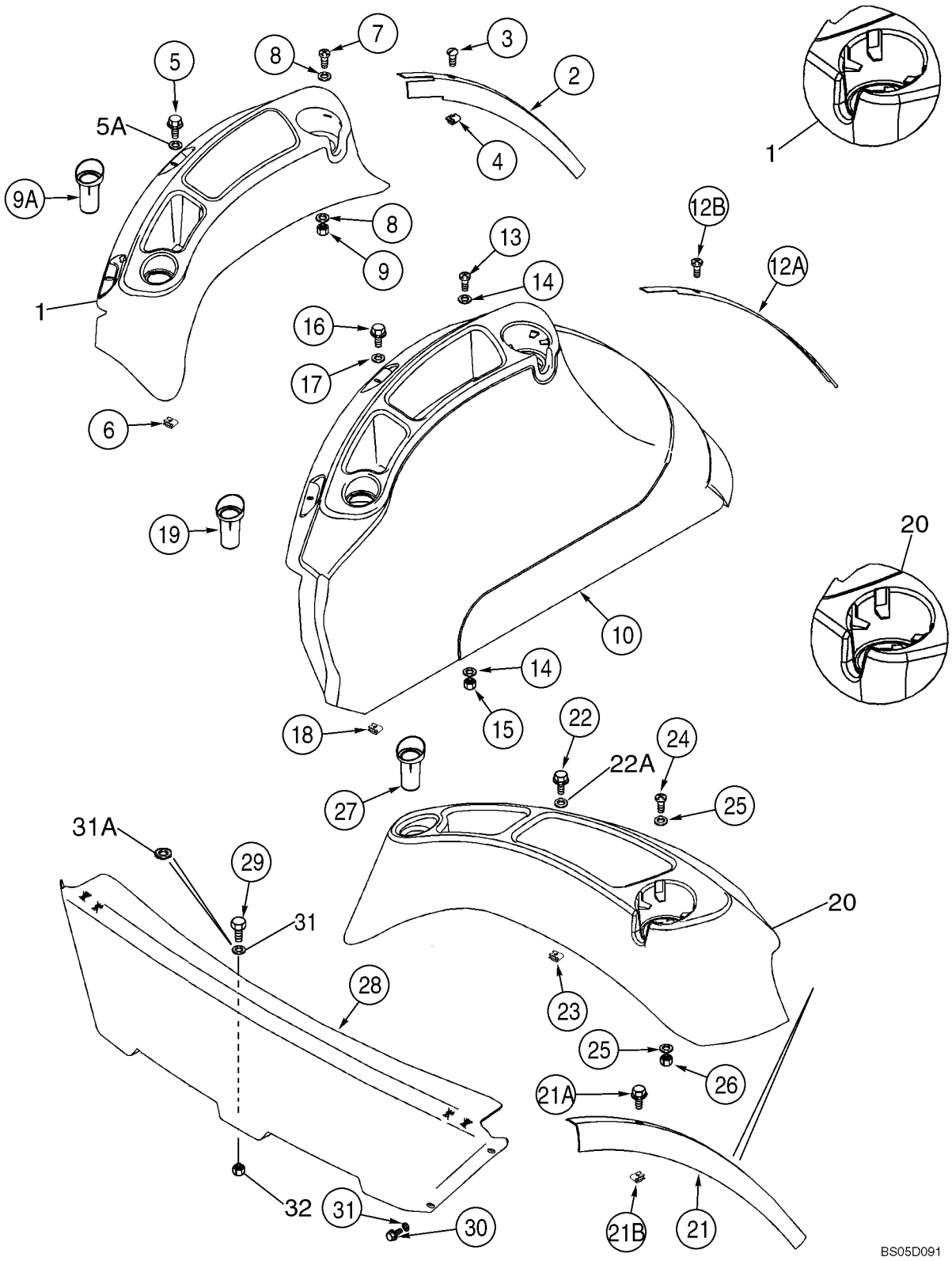

http://www.minnparbackhoeparts.com/

CUBIERTA DEL GUARDABARROS, LADO IZQUIERDO - PANEL, CIERRE TRASERO (BANDEJA DE ALMACENAMIENTO CON SUJ

REF	FN	PART NUMBER	YR/SN	QTY	DESCRIPTION
1		86992247		1	BANDEJA Cab Models, With Standard Interior; Includes 86992284, 400077A1
		NSS		1	NO SE REPARA SEPARADAM. Tray
		86992284		4	PARACHOQUES
		400077A1		1	BANDA POR METRO 1300 mm (51-3/16 in); Cut From 1977224C1
2		397026A3		1	BANDA DE PROTECCIÓN Trim, Left-Hand Fender, Cab Models With Standard Interior
3		87310088		3	TORNILLO No. 10 x 3/4, Stainless Steel; Replaces 398113A1 Non-Stainless Steel Screw Used On Some Models
4		131-869		3	TUERCA No. 10
5		87310098		2	TORNILLO Flange, M6 x 20, Stainless Steel; Replaces 555-2 Non-Stainless Steel Screw Used On Some Models
5A		87310186		2	ARANDELA 6.6 ID x 25 OD x 1.6 mm thk, Stainless Steel; Replaces 895-30109 Non-Stainless Steel Washer Used On Some Models
6		833-40406		2	TUERCA M6
7		87310127		2	TORNILLO No. 10 x 1, Stainless Steel; Replaces 140-117 Non-Stainless Steel Screw Used On Some Models
8		87310146		4	ARANDELA 13/64 x 3/4 x 1/16, Stainless Steel; Replaces 495-61020 Non-Stainless Steel Washer Used On Some Models
9		231-14109		2	TUERCA No. 10
9A		378742A3		1	INTRODUCTOR Swing Pin Holder
10		86992245		1	TABA (CONJUNTO) 580SM Cab Models With Deluxe Interior; Includes (4) 86992284 Bumpers
10		86992248		1	TABA (CONJUNTO) 580SM+ Cab Models With Deluxe Interior; Includes (4) 86992284 Bumpers
12A		397774A3		1	CINTA Deluxe Interior
12B		87310088		3	TORNILLO No. 10 x 3/4, Stainless Steel; Replaces 398113A1 Non-Stainless Steel Screw Used On Some Models

http://www.minnparbackhoeparts.com/

09-42		p2	05/05

CUBIERTA DEL GUARDABARROS, LADO IZQUIERDO - PANEL, CIERRE TRASERO (BANDEJA DE ALMACENAMIENTO CON SUJ

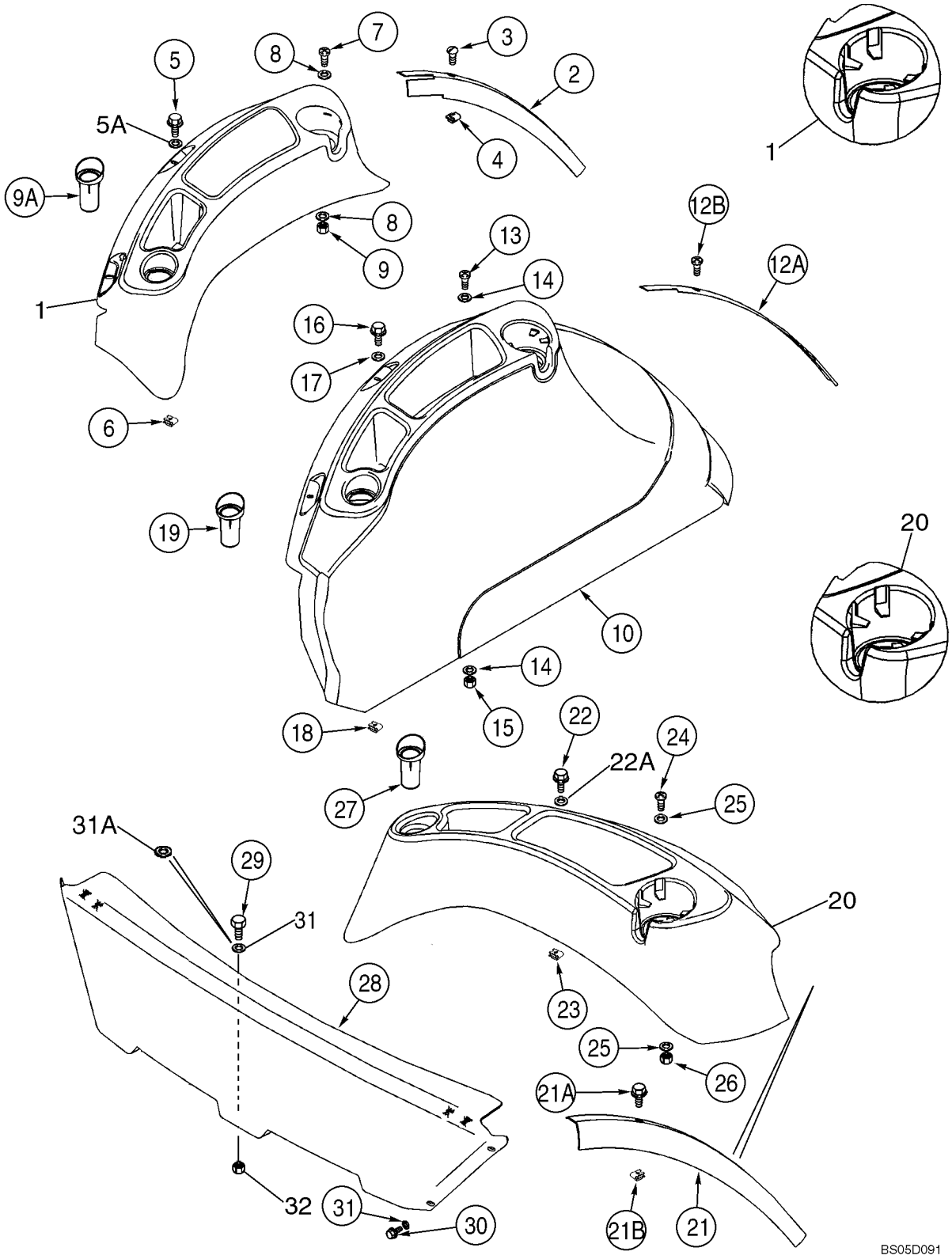

http://www.minnparbackhoeparts.com/

CUBIERTA DEL GUARDABARROS, LADO IZQUIERDO - PANEL, CIERRE TRASERO (BANDEJA DE ALMACENAMIENTO CON SUJ

REF	FN	PART NUMBER	YR/SN	QTY	DESCRIPTION
13		87310127		2	TORNILLO No. 10 x 1, Stainless Steel; Replaces 140-117 Non-Stainless Steel Screw Used On Some Models
14		87310146		4	ARANDELA 13/64 x 3/4 x 1/16, Stainless Steel; Replaces 495-61020 Non-Stainless Steel Washer Used On Some Models
15		231-14109		2	TUERCA No. 10
16		87310098		2	TORNILLO Flange, M6 x 20, Stainless Steel; Replaces 555-2 Non-Stainless Steel Screw Used On Some Models
17		87310186		2	ARANDELA 6.6 ID x 25 OD x 1.6 mm thk, Stainless Steel; Replaces 895-30109 Non-Stainless Steel Washer Used On Some Models
18		833-40406		2	TUERCA M6
19		378742A3		1	INTRODUCTOR Swing Pin Holder
20		86992243		1	BANDEJA (CONJUNTO) Canopy Models; Includes 86992284, 4000077A1
		NSS		1	NO SE REPARA SEPARADAM. Tray
		86992284		4	PARACHOQUES
		400077A1		1	BANDA POR METRO 1300 mm (51-3/16 in); Cut From 1977224C1
21		397025A2		1	BANDA DE PROTECCIÓN Trim, Canopy Models
21A		87310088		3	TORNILLO No. 10 x 3/4, Stainless Steel; Replaces 398113A1 Non-Stainless Steel Screw Used On Some Models
21B		131-869		3	TUERCA No. 10
22		87310098		2	TORNILLO Flange, M6 x 20, Stainless Steel; Replaces 555-2 Non-Stainless Steel Screw Used On Some Models
22A		87310186		2	ARANDELA 6.6 ID x 25 OD x 1.6 mm thk, Stainless Steel; Replaces 895-30109 Non-Stainless Steel Washer Used On Some Models
23		833-40406		2	TUERCA M6
24		87310127		2	TORNILLO No. 10 x 1, Stainless Steel; Replaces 140-117 Non-Stainless Steel Screw Used On Some Models

http://www.minnparbackhoeparts.com/

09-42		p3	05/05

CUBIERTA DEL GUARDABARROS, LADO IZQUIERDO - PANEL, CIERRE TRASERO (BANDEJA DE ALMACENAMIENTO CON SUJ

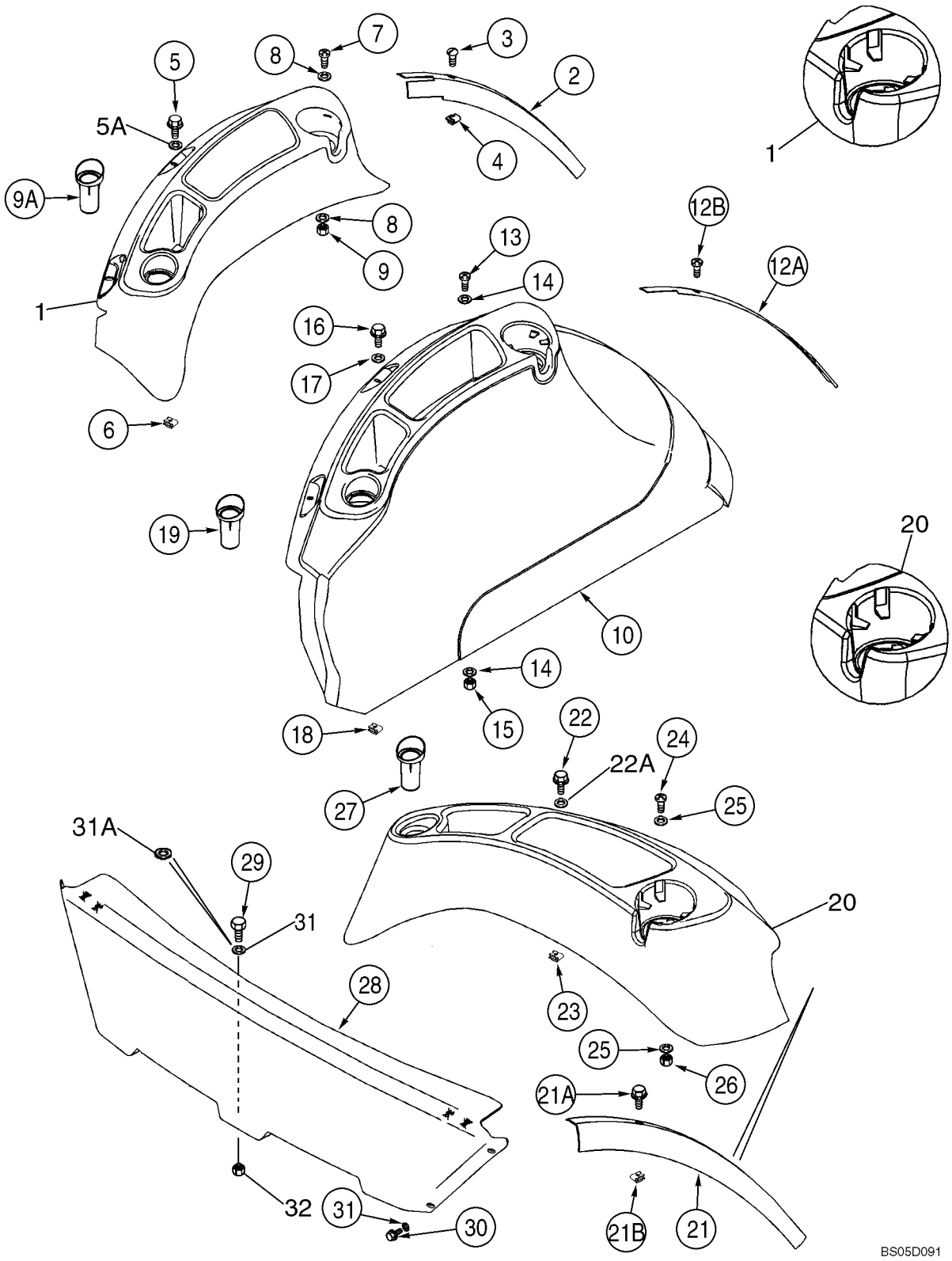

http://www.minnparbackhoeparts.com/

CUBIERTA DEL GUARDABARROS, LADO IZQUIERDO - PANEL, CIERRE TRASERO (BANDEJA DE ALMACENAMIENTO CON SUJ

REF	FN	PART NUMBER	YR/SN	QTY	DESCRIPTION
25		87310146		4	ARANDELA 13/64 x 3/4 x 1/16, Stainless Steel; Replaces 495-61020 Non-Stainless Steel Washer Used On Some Models
26		231-14109		2	TUERCA No. 10
27		378742A3		1	INTRODUCTOR Swing Pin Holder
28		86992977		1	CONTRAPANEL Rear Closure Panel; Canopy Models
29		87310154		1	TORNILLO M8 x 25, Stainless Steel; Replaces 614-8025 Non-Stainless Steel Screw Used On Some Models
30		781-24820		4	TORNILLO Flange, M8 x 20
31		895-15008		4-5	ARANDELA 9 x 16 x 1,6 mm
31A		87310185		1	ARANDELA 9 x 20 x 1,6 mm, Stainless Steel; Replaces (1) 895-15008 9 x 16 x 1,6 mm Washer Used On Some Models
32		832-10408		1	TUERCA M8

http://www.minnparbackhoeparts.com/

09-43		p1	01/04

EXTENSIONES DEL GUARDABARROS

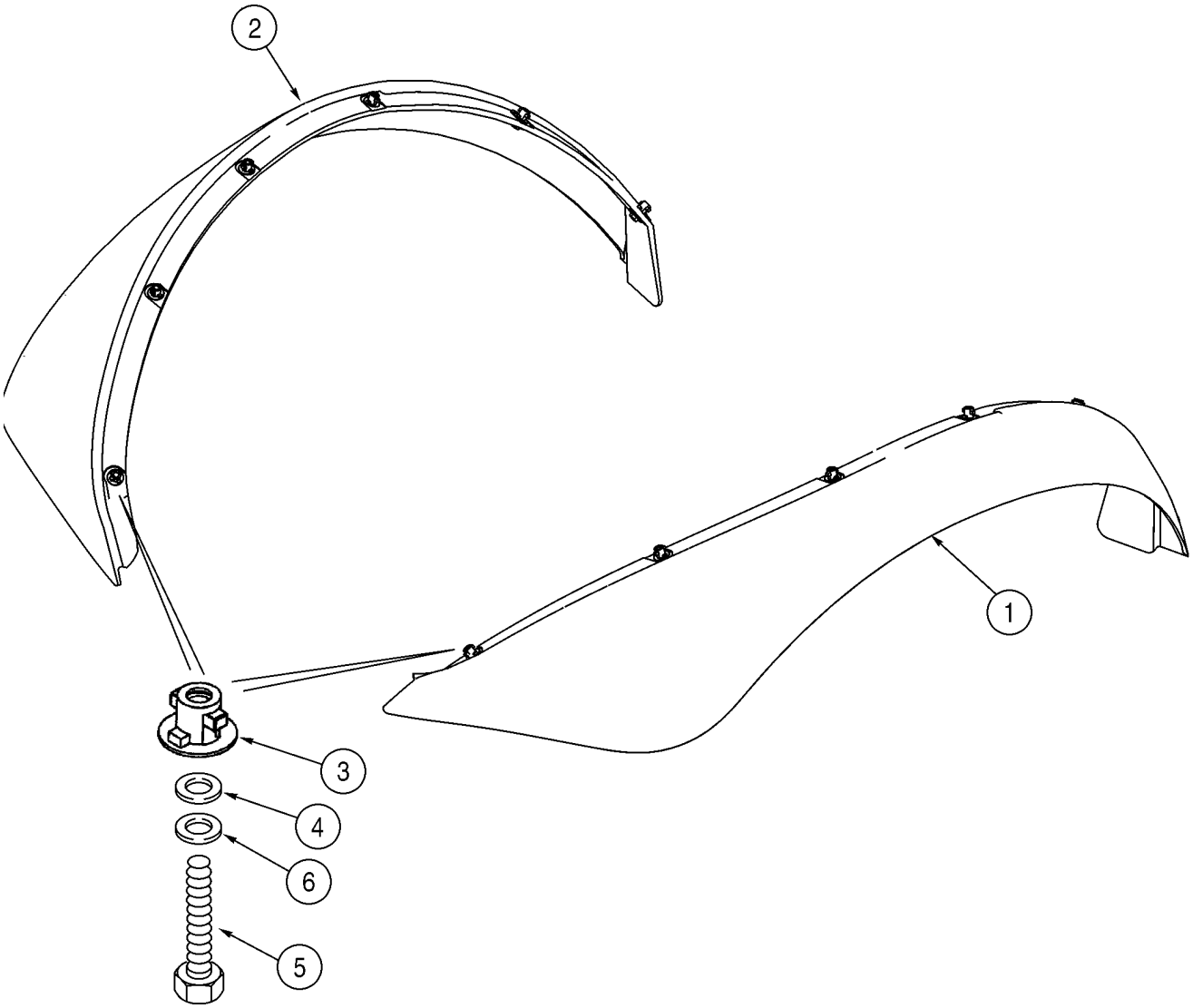

BC00F002

http://www.minnparbackhoeparts.com/

EXTENSIONES DEL GUARDABARROS

REF	FN	PART NUMBER	YR/SN	QTY	DESCRIPTION
1		340998A3		1	GUARDABARROS Right-Hand
2		340997A3		1	GUARDABARROS Left-Hand
3		345231A1		12	BOTON DE RESORTE
4		496-41041		12	ARANDELA 13/32 x 1-1/8 x 9/64
5		614-8030		12	TORNILLO M8 x 30
6		892-11008		12	ARANDELA 8 mm; Lock

http://www.minnparbackhoeparts.com/

09-44		p1	02/05

GUARDABARROS

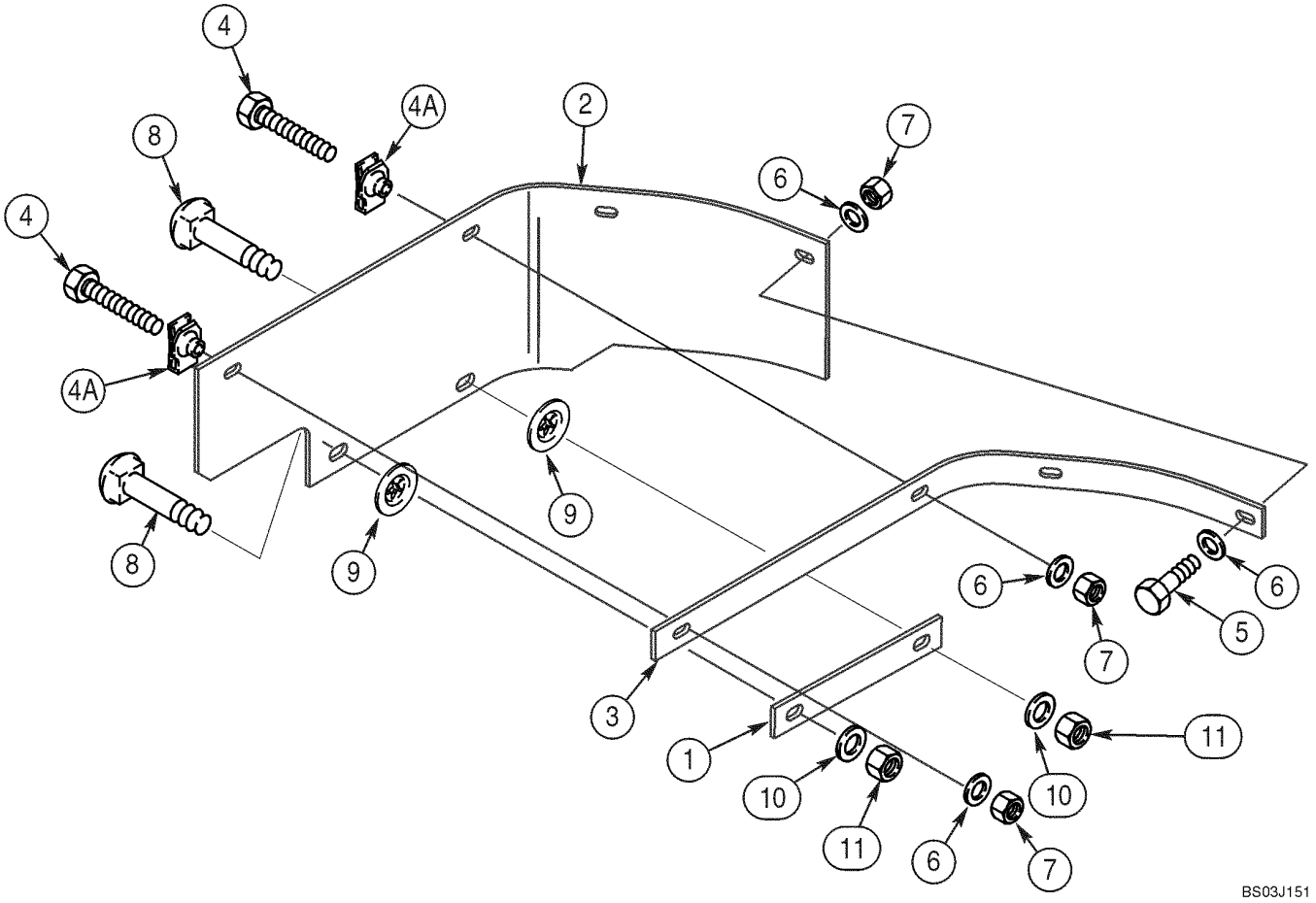

http://www.minnparbackhoeparts.com/

GUARDABARROS

REF	FN	PART NUMBER	YR/SN	QTY	DESCRIPTION
1		362557A1		1	CINTA Plate
2		362556A2		1	DEFENSA Mounts At Right-Hand Fender
3		362558A1		1	CINTA Angle
4		614-8040		2	TORNILLO Hex, M8 x 40, 8.8, Full Thd
4A		833-40408		2	TUERCA M8
5		614-8030		2	TORNILLO M8 x 30
6		495-21038		6	ARANDELA 3/8 x 7/8 x 3/32
7		832-10408		4	TUERCA M8
8		711-10040		2	TORNILLO M10 x 40
9		368417A1		2	ARANDELA
10		895-11010		2	ARANDELA 11 x 21 x 2 mm
11		832-10410		2	TUERCA M10

http://www.minnparbackhoeparts.com/

ASIENTO - SOPORTE (MILSCO EN SEARS SUSPENSIÓN DE AIRE)

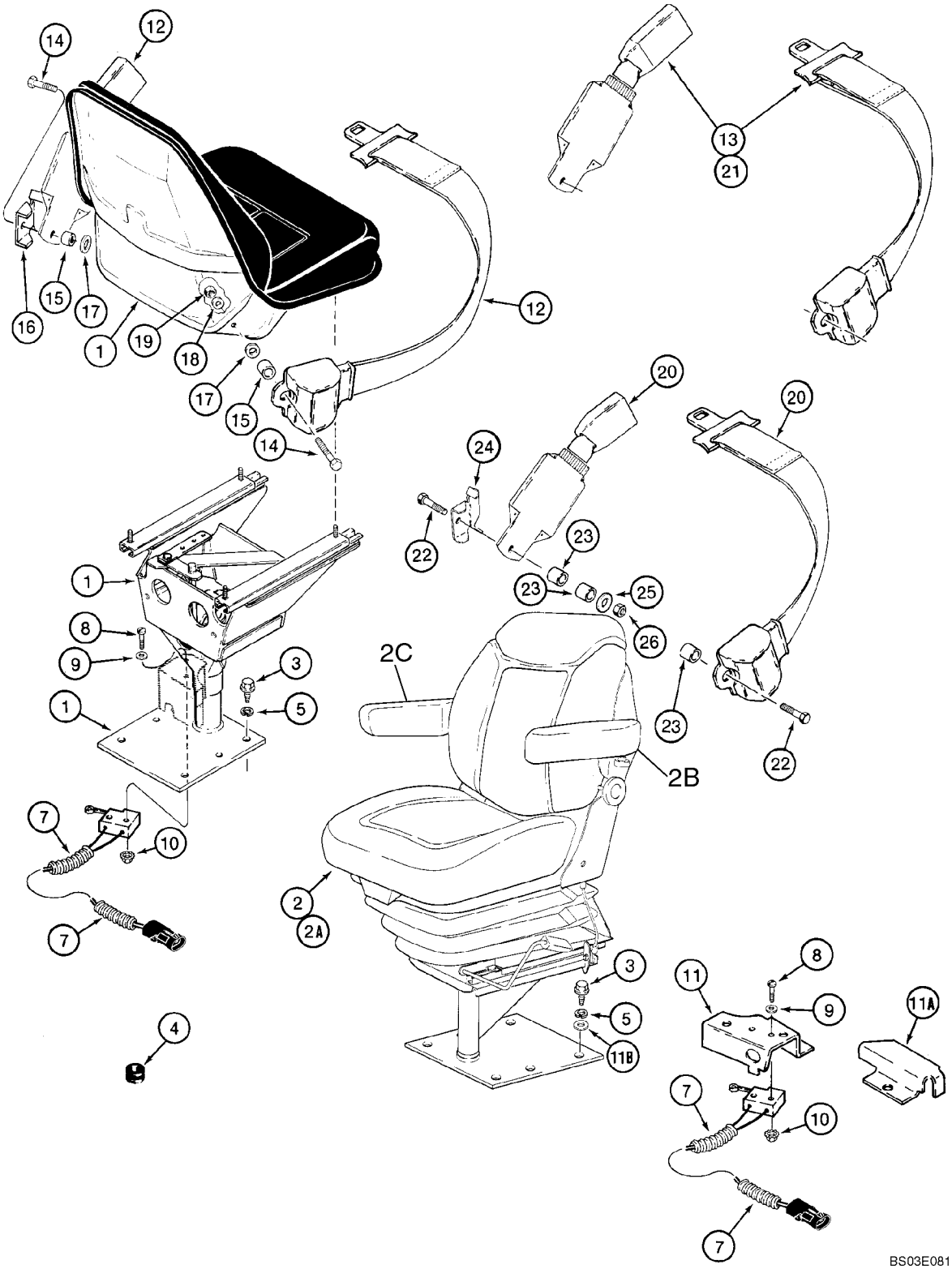

http://www.minnparbackhoeparts.com/

ASIENTO - SOPORTE (MILSCO EN SEARS SUSPENSIÓN DE AIRE)

REF	FN	PART NUMBER	YR/SN	QTY	DESCRIPTION
1		397132A1		1	ASIENTO (CONJUNTO) Standard, Vinyl, Without Armrest, Includes Seat, Pedestal, and Support, See Figures 09-46, 09-47
2		397137A1		1	ASIENTO (CONJUNTO) Air Suspension, Cloth, Deluxe, With Armrests On Figure 09-50, See Figures 09-50, 09-51
2A		397136A2		1	ASIENTO (CONJUNTO) Suspension, Cloth, Without Armrests, Includes Seat, Suspension, and Pedestal, See Figures 09-48, 09-49; Order 397407A1 Service Kit For Seat Assy With Armrests
2A		397134A2		1	ASIENTO (CONJUNTO) Suspension, Vinyl, Without Armrests, Includes Seat, Suspension, and Pedestal, See Figures 09-48, 09-49; Order 397408A1 Service Kit For Seat Assy With Armrests
2B		292262A1		1	APOYO DE BRAZO (CONJ Kit, Left-Hand
2C		292263A2		1	APOYO DE BRAZO (CONJ Kit, Right-Hand
3		604-12030		4	TORNILLO M12 x 30
4		248-2373		1	PASACABLES 1-1/4
5		896-15012		4	ARANDELA 13,5 x 28 x 4 mm
7		118769A1		1	CONTACTOR Limit Switch
8		470-10620		2	TORNILLO No. 6 x 1-1/4
9		495-31016		2	ARANDELA 5/32 x 3/8 x 3/64
10		193-1003		2	TUERCA No. 6
11		119211A1		1	PIEZA DE SOPORTE Switch Mounting, Suspension Seat
11A		186351A1		1	DEFENSA Harness
11B		896-11012		1	ARANDELA Flat, 13,5 x 24 x 3 mm
12		87408889		1	CINTURÓN, SEGURIDAD 51 mm (2 in), If Used; Standard Seat Belt Mounting
13		87408888		1	CINTURÓN, SEGURIDAD 76 mm (3 in), Retractable, If Used; Standard Seat Belt Mounting
14		414-724		2	TORNILLO 7/16 x 1-1/2; 5
15		D150391		2	ESPACIADOR
16		D150392		1	PIEZA DE SOPORTE Left-Hand
17		495-81169		2	ARANDELA 17/32 x 2,5 x 1/8, Not Used On Deluxe Air Suspension Seat
18		496-81010		4	ARANDELA 15/32 x 1 x 7/64

http://www.minnparbackhoeparts.com/

ASIENTO - SOPORTE (MILSCO EN SEARS SUSPENSIÓN DE AIRE)

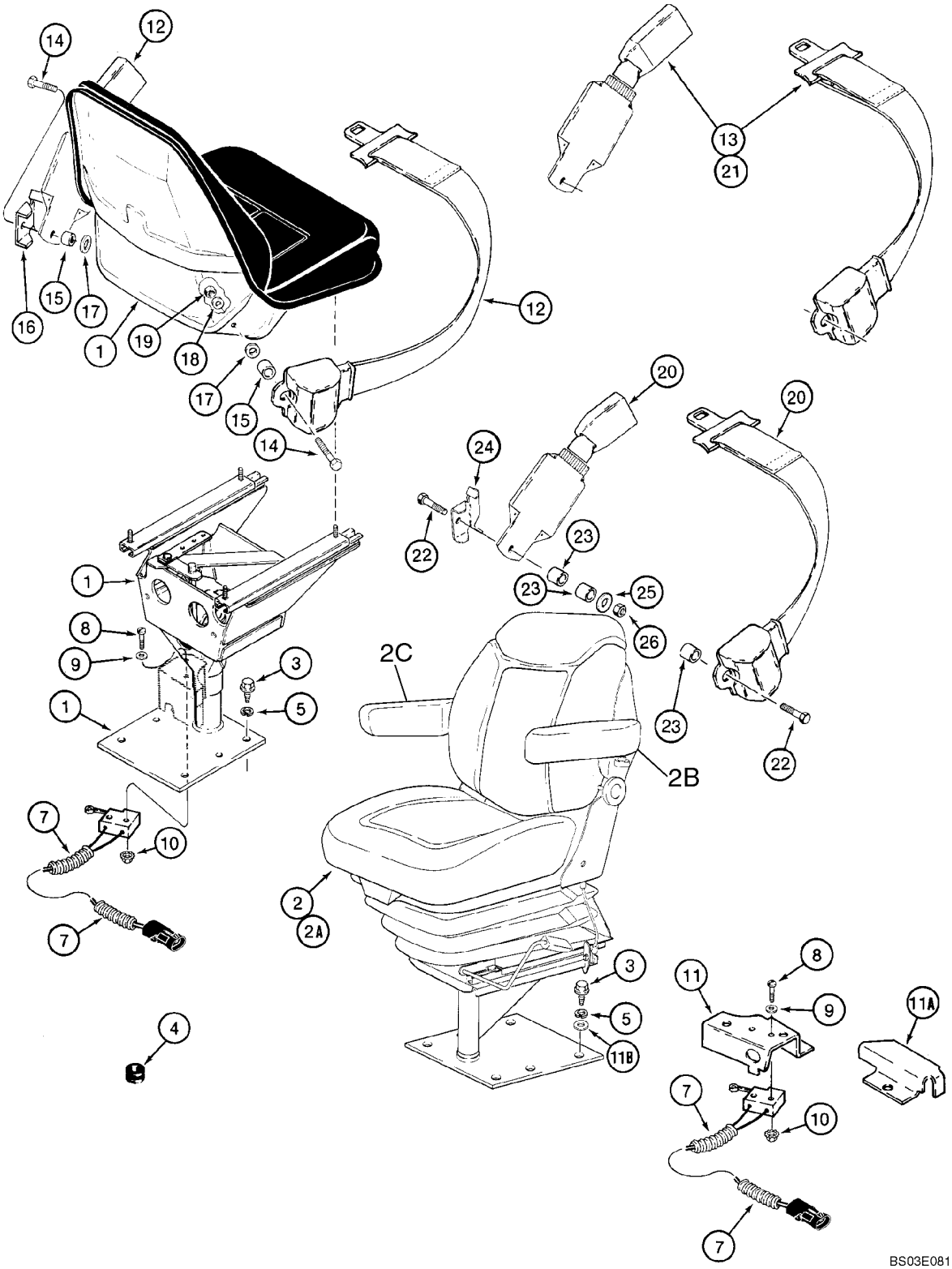

http://www.minnparbackhoeparts.com/

ASIENTO - SOPORTE (MILSCO EN SEARS SUSPENSIÓN DE AIRE)

REF	FN	PART NUMBER	YR/SN	QTY	DESCRIPTION
19		232-4617		2	TUERCA 7/16 NF; 8
20		87408889		1	CINTURÓN, SEGURIDAD 51 mm (2 in), If Used; Suspension Seat Belt Mounting
21		87408888		1	CINTURÓN, SEGURIDAD 76 mm (3 in), Retractable, If Used; Suspension Seat Belt Mounting
22		414-724		2	TORNILLO 7/16 x 1-1/2; 5
23		D150391		2	ESPACIADOR
24		D150392		1	PIEZA DE SOPORTE Left-Hand
25		496-81010		2	ARANDELA 15/32 x 1 x 7/64
26		232-4617		2	TUERCA 7/16 NF; 8

http://www.minnparbackhoeparts.com/

09-45A		p1	06/05

ASIENTO - SOPORTE (SEARS, ESTÁNDAR)

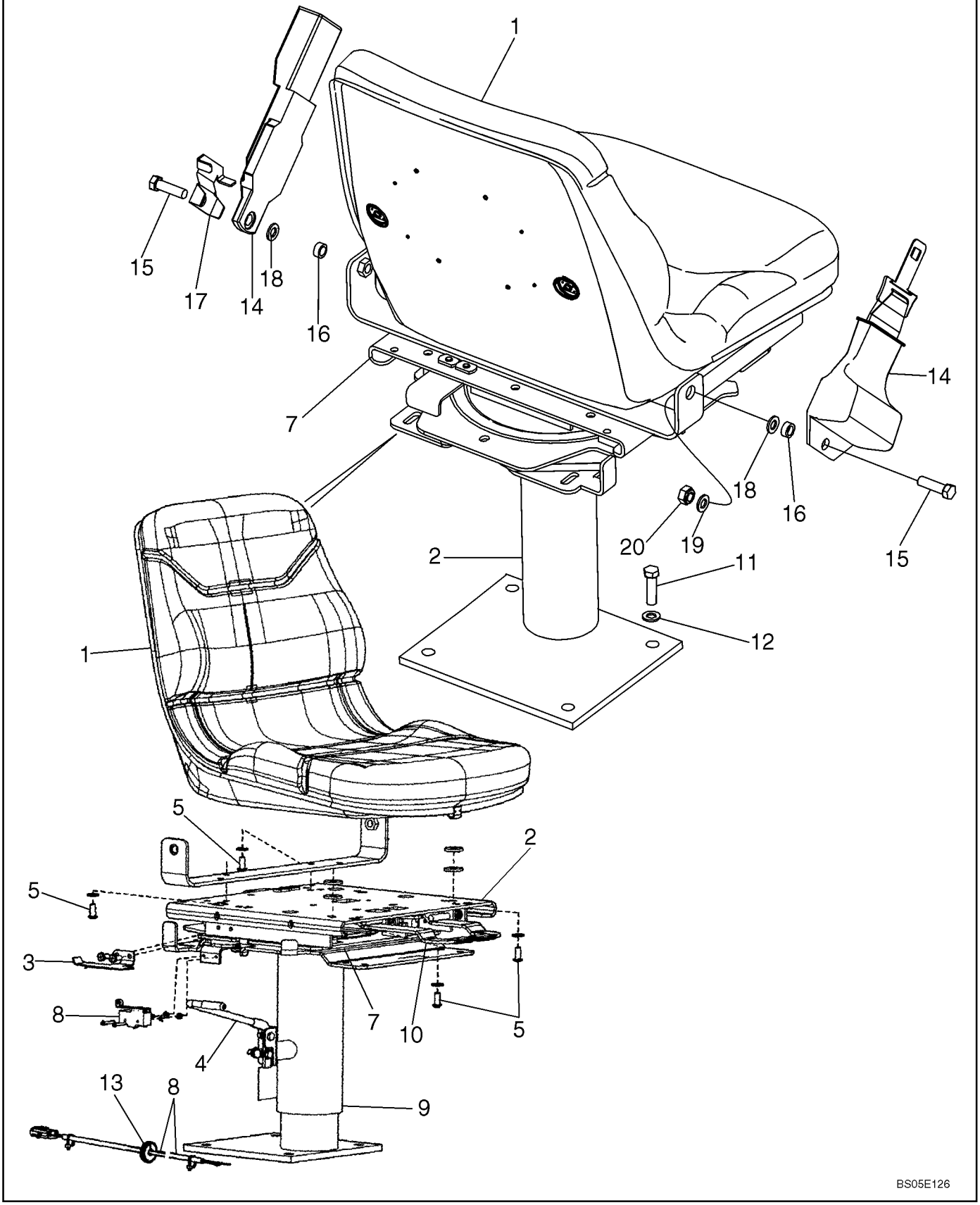

http://www.minnparbackhoeparts.com/

ASIENTO - SOPORTE (SEARS, ESTÁNDAR)

REF	FN	PART NUMBER	YR/SN	QTY	DESCRIPTION
		{87454292}		1	Standard, Vinyl, Without Armrest, Sears Brand; Includes Seat, Swivel and Pedestal, and Swivel Bearing Kit, Ref 1 - 10
1		87338681		1	RESPALDO Seat Only
2		{87346606}		1	Swivel and Pedestal; Component Parts Not Serviced Separately
3		{87346607}		1	Lever, Switch Actuator
4		{87346611}		1	Handle, Height Adjustment
5		{87346612}		4	Button Head Screw, 5/16 x 3/4
6		{87346615}		1	Spring Not Illustrated
7		87308132		1	COJINETE Swivel Bearing Kit; Includes (1) Bolt, (8) Bearings, (1) Clip, (1) Nut, (1) Cotter Pin, (1) Plastic Washer, (1) Ball Retainer; Component Parts Not Serviced Separately
8		{87346625}		1	Kit, Switch/Harness, Adj. Height
9		{87346633}		1	Kit, Pedestal
10		{87346634}		1	Kit, Slide/Swivel
11		604-12030		4	TORNILLO Locking, M12 x 30
12		896-15012		4	ARANDELA 13.5 x 28 x 4 mm
13		248-2373		1	PASACABLES Rubber, 1/2 ID
14		87408888		1	CINTURÓN, SEGURIDAD 76 mm (3 in); Retractable, If Used
14		87408889		1	CINTURÓN, SEGURIDAD 51 mm (2 in), Retractable, If Used
15		414-724		2	TORNILLO 7/16 x 1-1/2; 5
16		87311572		2	SEPARADOR
17		87310149		1	PIEZA DE SOPORTE Left-Hand; Seat Belt Mounting/Standard Seat
18		495-81169		2	ARANDELA 17/32 x 2,5 x 1/8
19		496-81010		4	ARANDELA 15/32 x 1 x 7/64
20		232-4617		2	TUERCA 7/16 NF; 8

http://www.minnparbackhoeparts.com/

ASIENTO - SOPORTE (SEARS SUSPENSION MECANICA)

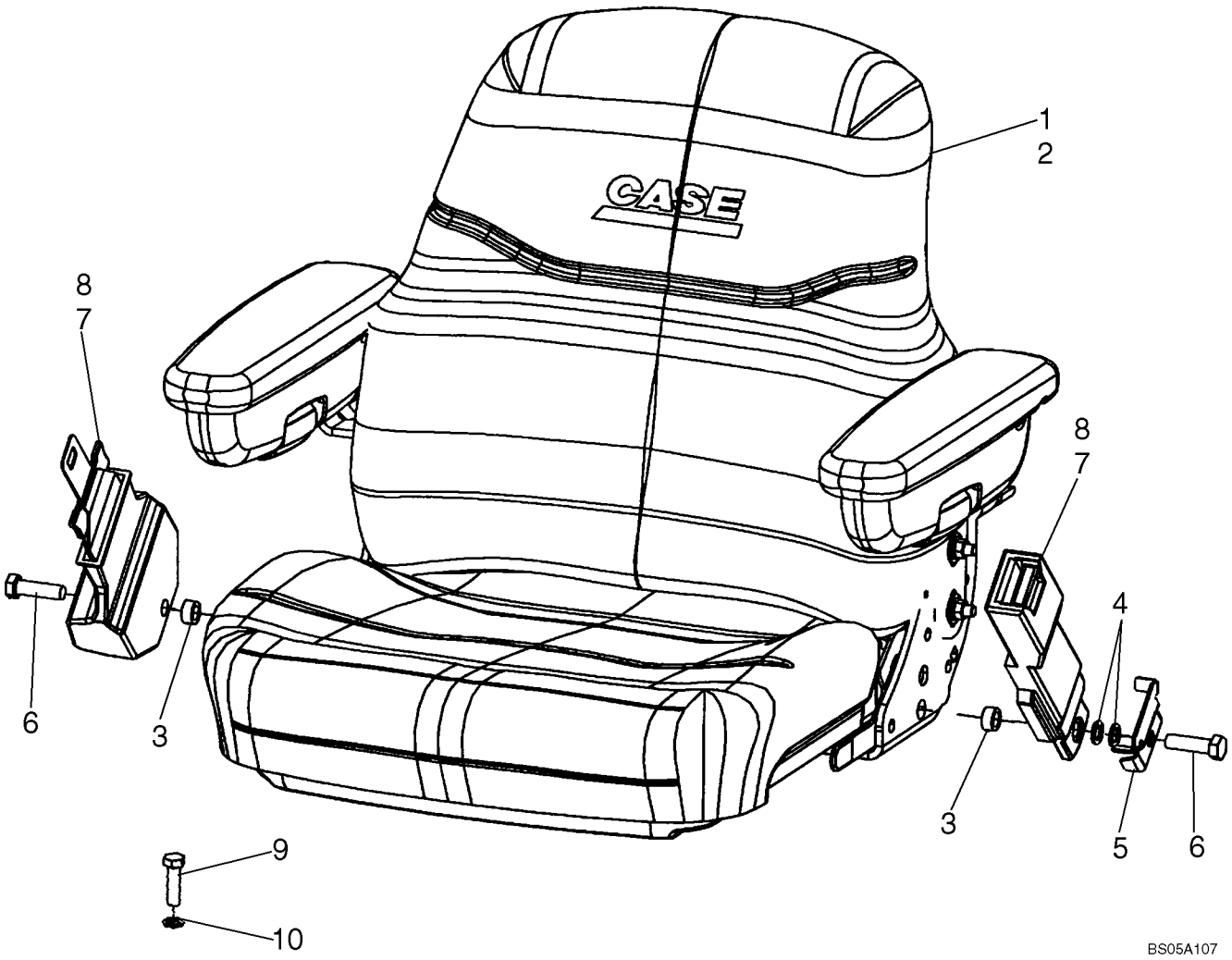

http://www.minnparbackhoeparts.com/

ASIENTO - SOPORTE (SEARS SUSPENSION MECANICA)

REF	FN	PART NUMBER	YR/SN	QTY	DESCRIPTION
1		87454295		1	ASIENTO (CONJUNTO) Mechanical Suspension, Sears, Vinyl, With Armrests; See Figure 09-49A
2		87454294		1	ASIENTO (CONJUNTO) Mechanical Suspension, Sears, Cloth, With Armrests; See Figure 09-49A
3		87311572		2	SEPARADOR
4		895-18012		2	ARANDELA 13.5 x 20 x 2 mm; Left-Hand Side
5		87310149		1	PIEZA DE SOPORTE Belt Mounting
6		614-12040		2	TORNILLO Thread to Head, M12 x 40
7		87408888		1	CINTURÓN, SEGURIDAD 76 mm (3 in), Retractable, If Used
8		87408889		1	CINTURÓN, SEGURIDAD 51 mm (2 in), If Used
9		604-12030		4	TORNILLO Locking, M12 x 30; Seat Pedestal to Floor
10		896-15012		4	ARANDELA 13.5 x 28 x 4 mm

http://www.minnparbackhoeparts.com/

CONJUNTO DEL ASIENTO, ESTÁNDAR (MILSCO)

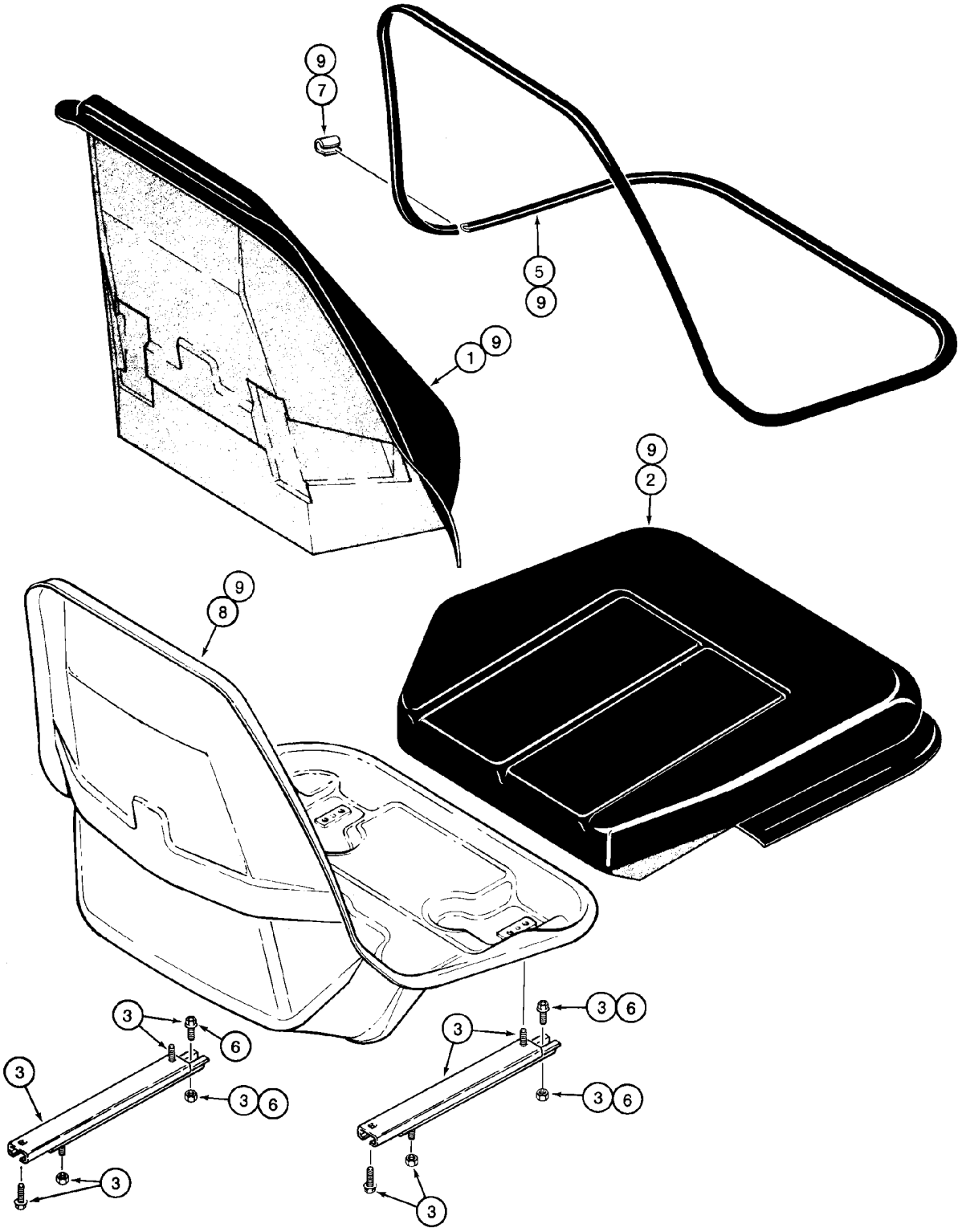

BS00J117

http://www.minnparbackhoeparts.com/

CONJUNTO DEL ASIENTO, ESTÁNDAR (MILSCO)

REF	FN	PART NUMBER	YR/SN	QTY	DESCRIPTION
		397132A1		1	ASIENTO (CONJUNTO) Vinyl, Standard Seat; Incl. Ref 1 - 9; Also Includes Parts On Figure 09-47
1		NSS		1	NO SE REPARA SEPARADAM. Cushion, Backrest; Order 406700A1 Cushion Assy, Ref 9
2		NSS		1	NO SE REPARA SEPARADAM. Cushion, Seat; Order 406700A1 Cushion Assy, Ref 9
3		399777A1		1	JEUGO Seat Slide Adjusters
5		176924A1		1	JUEGO DE PIEZAS Trim
6		181169A1		1	JEUGO Cable, Fore-Aft/Swivel Mechanism, For Cable, See Figure 09-47
7		NSS		1	NO SE REPARA SEPARADAM. Clip, Order N7802 Clip Kit
8		NSS		1	NO SE REPARA SEPARADAM. Shell, Seat Frame, Order 406700A1 Cushion Assy, Ref 9
9		406700A1		1	COJIN (CONJUNTO) Seat Shell, Cushions, and Trim, Incl. Ref 1, 2, 5, 8
		N7802		1	SUJETADOR Clip, Incl. Ref 7 Clip, Plus 6 Additional Narrow Clips

http://www.minnparbackhoeparts.com/

09-47		p1	01/05

SOPORTE DEL ASIENTO Y PEDESTAL, ESTÁNDAR (MILSCO)

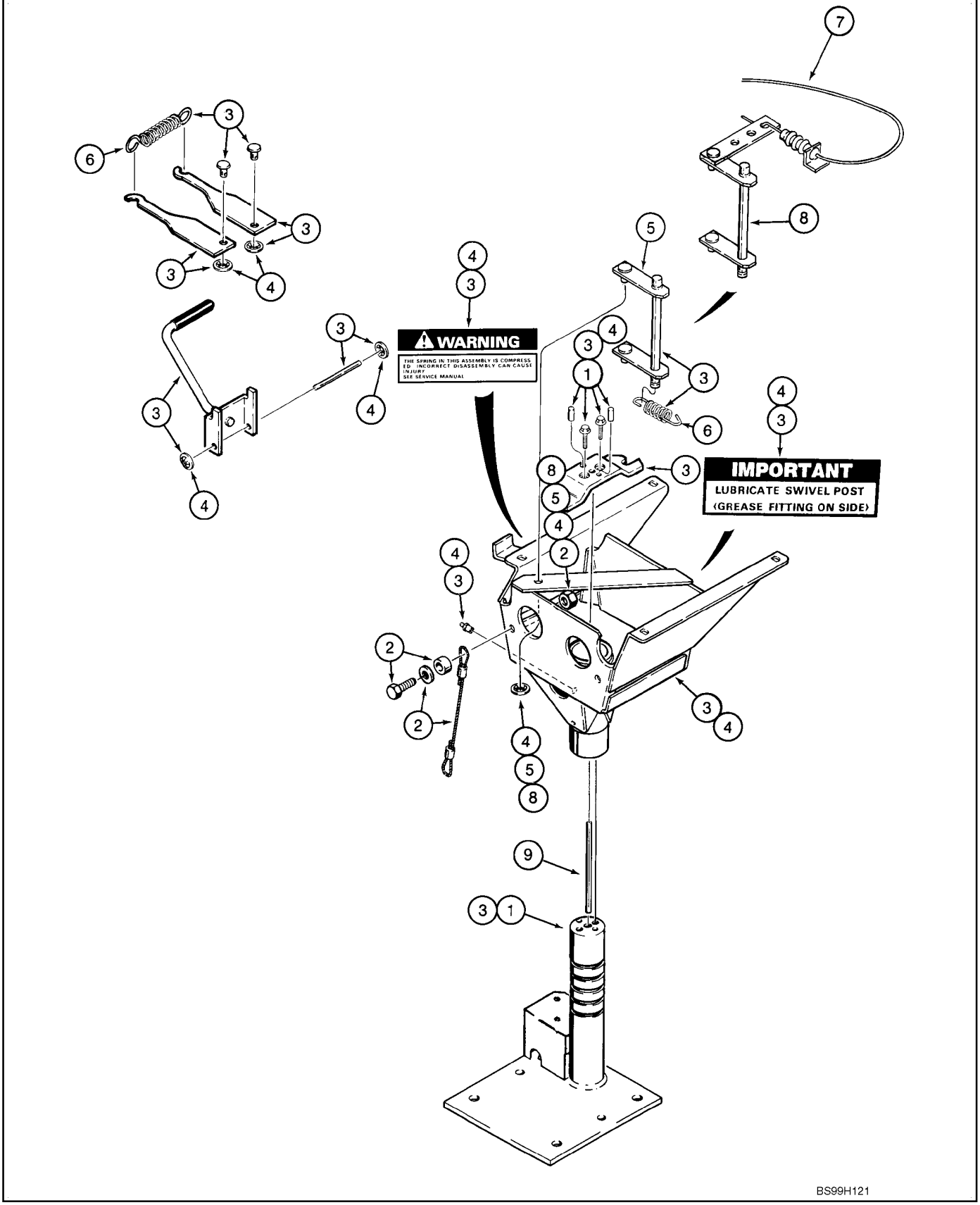

http://www.minnparbackhoeparts.com/

SOPORTE DEL ASIENTO Y PEDESTAL, ESTÁNDAR (MILSCO)

REF	FN	PART NUMBER	YR/SN	QTY	DESCRIPTION
		397132A1		1	ASIENTO (CONJUNTO) Vinyl, Standard Seat, Incl. Ref 1 - 9, Also Includes Parts On Figure 09-46
1		116761A3		1	JEUGO Support, Base, Includes (6) Lock Nuts, (2) Pins, (1) Rivet, (1) Washer, (1) Spacer, 2 Screws
2		116763A1		1	JEUGO Cable, Anchor, Includes Hardware For Both Ends
3		116764A3		1	JEUGO Pedestal, Includes (4) Lock Nuts, (1) Rivet, (1) Washer, (1) Spacer, (1) Tie, (2) Screws
		219-16		1	ENGRASADOR 5/16 dr type x 19/32; If Used
4		116766A2		1	JEUGO Pedestal Box, Includes (4) Lock Nuts For Seat Adjuster Slide, Includes 219-16
		219-16		1	ENGRASADOR 5/16 dr type x 19/32
5		116767A1		1	JEUGO Swivel Latch, Includes (6) Lock Nuts, (1) Push Nut, (1) Swivel Latch; Also Includes (4) Lock Nuts For Seat Adjuster Slide
6		119171A1		1	JEUGO Spring
7		181169A1		1	JEUGO Cable, Fore-Aft/Swivel Mechanism, Also Includes (4) Nuts
8		253209A1		1	JEUGO Swivel Latch, Includes (4) Lock Nuts, (1) Rivet, (1) Spacer, (1) Washer, (1) Push Nut, (1) Swivel Latch
9		NSS		1	NO SE REPARA SEPARADAM. Pin, Seat

http://www.minnparbackhoeparts.com/

09-48		p1	01/05

CONJUNTO DEL ASIENTO, SUSPENSION MECANICA (MILSCO)

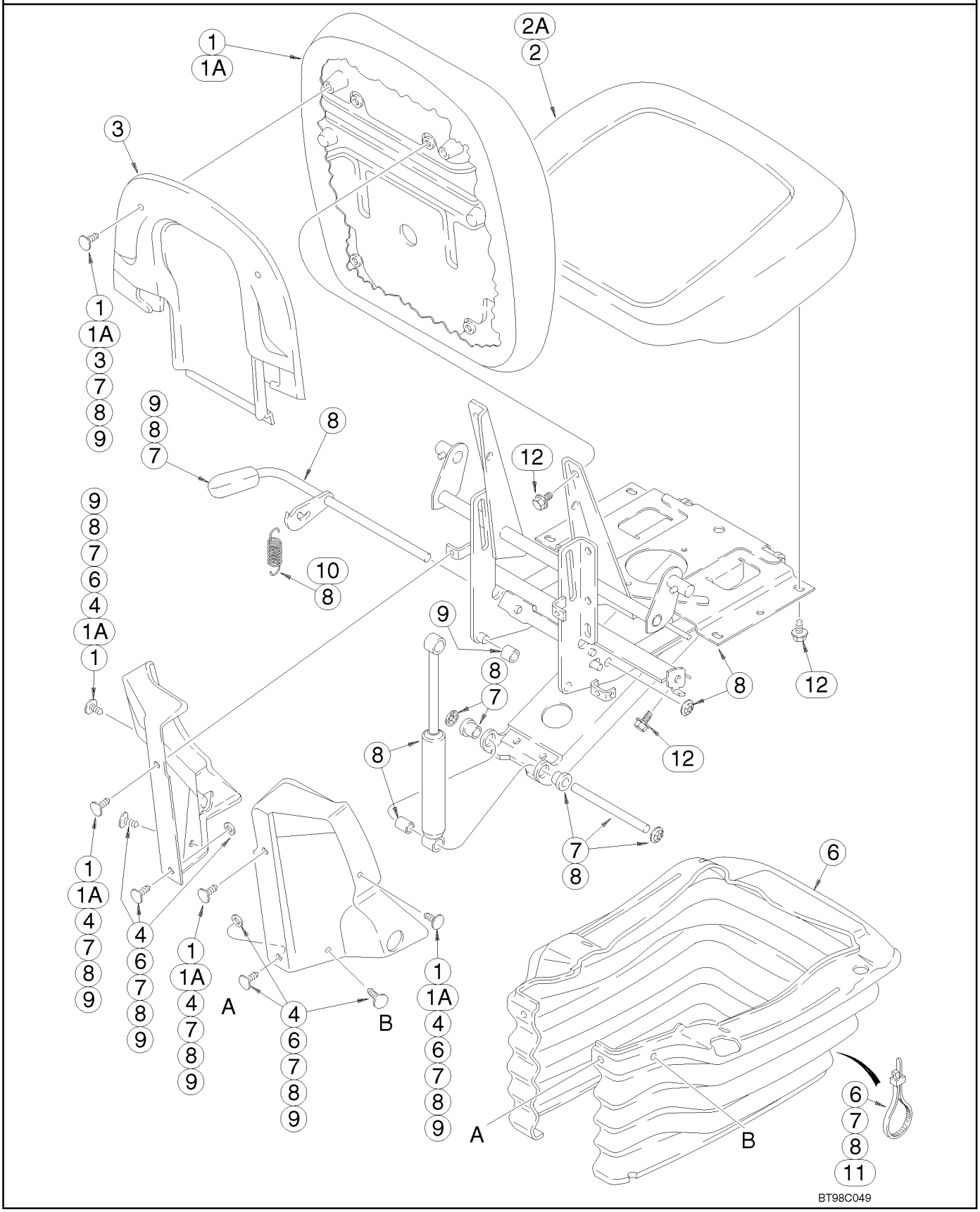

http://www.minnparbackhoeparts.com/

CONJUNTO DEL ASIENTO, SUSPENSION MECANICA (MILSCO)

REF	FN	PART NUMBER	YR/SN	QTY	DESCRIPTION
		397136A2		1	ASIENTO (CONJUNTO) Cloth, Includes Seat, Suspension, Pedestal and Weight Adjuster, Without Armrests, Incl. Ref 1 - 11; Also Includes Parts On Figure 09-49
		397134A2		1	ASIENTO (CONJUNTO) Vinyl, Includes Seat, Suspension, Pedestal and Weight Adjuster, Without Armrests, Incl. Ref 1 - 11; Also Includes Parts On Figure 09-49
1		399757A1		1	JEUGO Cushion, Backrest, Cloth, Includes Lumbar Knob, (6) Clips and (4) Screws
1A		399759A1		1	JEUGO Cushion, Backrest, Vinyl, Includes Lumbar Knob, (6) Clips and (4) Screws
2		399758A1		1	JEUGO Cushion, Seat, Cloth, Includes (6) Screws
2A		399760A1		1	JEUGO Cushion, Seat, Vinyl, Includes (6) Screws
3		307091A1		1	CONJUNTO Kit, Backrest Shroud, Includes (2) Clips
4		307090A1		1	JEUGO Side Shroud, Left-Hand and Right-Hand, Includes (6) Clips, (2) Washers, (1) Height Adjustment Grip, (1) Back Angle Grip
6		307098A1		1	JEUGO Boot, Includes (2) Ties, (2) Washers, (4) Clips
7		176919A1		1	JEUGO Swing Arm Pivot Shaft, Includes (2) Flanged Bearings, (4) Push Nuts, (2) Clips, (2) Washers, (1) Grip, (2) Ties
8		307092A1		1	JEUGO Suspension, Includes Suspension, Back Angle Adjust, (2) Groove Pins, (1) Handle, (8) Screws, (2) Springs, (3) Washers, (1) Rivet; Includes Parts From Seat Frame To Adjuster Slides; For Additional Kit Parts See Figure 09-49, Ref 1
8		307092A1		1	JEUGO 307092A1 Suspension Kit Also Includes (1) Spacer, (2) Ties, (8) Clips, (12) Nuts, (1) Height Adjust Grip, (1) Back Angle Grip, (1) Rake Grip, (1) Fore/Aft/Swivel Grip, (1) Decal
9		176921A1		1	JEUGO Plastic Components, Includes (2) Rollers, (4) Downstops, (2) Roller Guides, (2) Bearings, (1) Bumper, (4) Nuts, (10) Clips, (2) Washers, (1) Grip; For Additional Kit Parts, See Figure 09-49, Ref 2

http://www.minnparbackhoeparts.com/

09-48		p2	01/05

CONJUNTO DEL ASIENTO, SUSPENSION MECANICA (MILSCO)

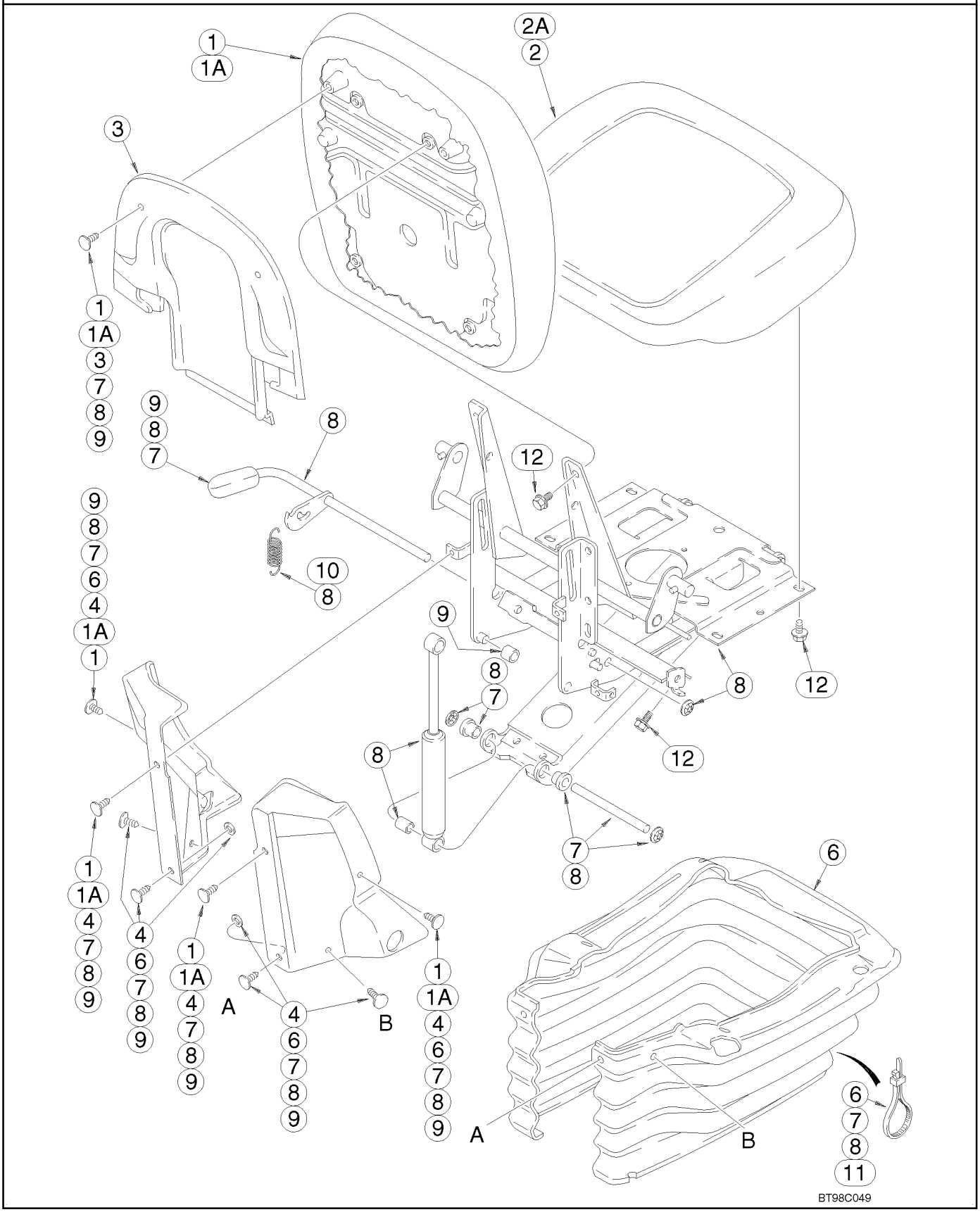

http://www.minnparbackhoeparts.com/

CONJUNTO DEL ASIENTO, SUSPENSION MECANICA (MILSCO)

REF	FN	PART NUMBER	YR/SN	QTY	DESCRIPTION
10		116547A1		1	JEUGO Height Adjusting Spring, Includes (10) Shroud Retainers, (2) Washers, (2) Springs, (1) Wear Strip; For Additional Kit Parts, See Figure 09-49, Ref 6
11		181170A1		1	JEUGO Cable, Fore-Aft/Swivel Mechanism, Includes (2) Screws, (2) Ties, Cable, (4) Nuts
12		NSS		8	NO SE REPARA SEPARADAM. Bolt, 5/16 Inch Thread, Length As Required, Purchase Locally, Seat Cushion and Backrest

http://www.minnparbackhoeparts.com/

PEDESTAL DEL ASIENTO Y SUSPENSIÓN, SUSPENSIÓN MECÁNICA (MILSCO)

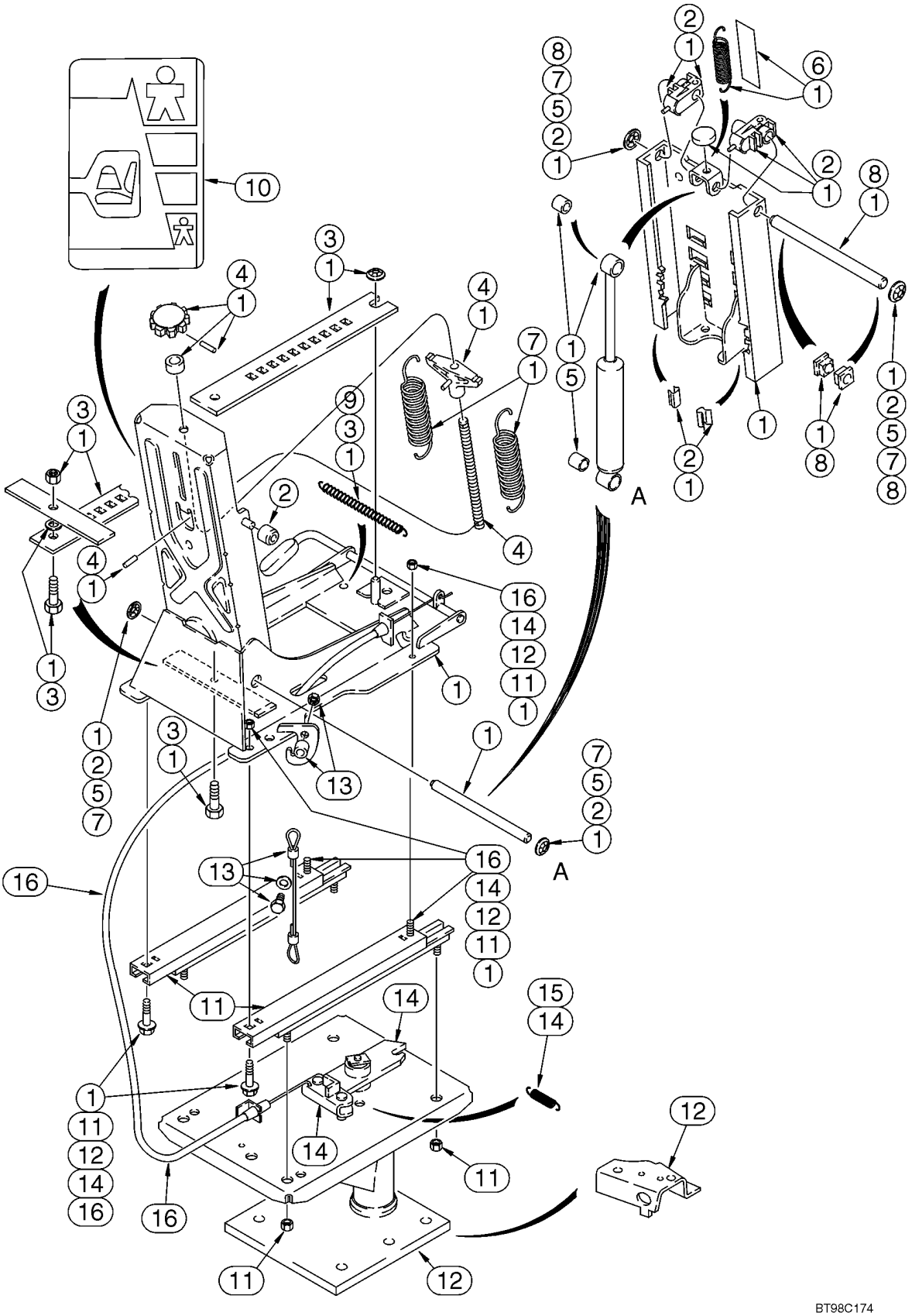

http://www.minnparbackhoeparts.com/

PEDESTAL DEL ASIENTO Y SUSPENSIÓN, SUSPENSIÓN MECÁNICA (MILSCO)

REF	FN	PART NUMBER	YR/SN	QTY	DESCRIPTION
		397136A2		1	ASIENTO (CONJUNTO) Cloth, Includes Seat, Suspension, Pedestal and Weight Adjuster, Without Armrests; Incl. Ref 1 - 16; Also Includes Parts On Figure 09-48
		397134A2		1	ASIENTO (CONJUNTO) Vinyl, Includes Seat, Suspension, Pedestal and Weight Adjuster, Without Armrests; Incl. Ref 1 - 16; Also Includes Parts On Figure 09-48
1		307092A1		1	JEUGO Suspension, Includes Suspension, Back Angle Adjust, (2) Groove Pins, (1) Handle, (8) Screws, (2) Springs, (3) Washers and (1) Rivet; Includes Parts From Seat Frame To Adjuster Slides; For Additional Kit Parts, See Figure 09-48, Ref 8
1		307092A1		1	JEUGO Suspension; Also Includes (1) Spacer, (2) Ties, (8) Clips, (12) Nuts, (1) Height Adjust Grip, (1) Back Angle Grip, (1) Rake Grip, (1) Fore/Aft/Swivel Grip, (1) Decal
2		176921A1		1	JEUGO Plastic Components, Includes (2) Rollers, (4) Downstops, (2) Roller Guides, (2) Bearings, (1) Bumper, (4) Nuts, (10) Clips, (2) Washers, (1) Grip; For Additional Kit Parts, See Figure 09-48, Ref 9
3		116521A1		1	JEUGO Fore/Aft Adjuster Latch, Includes (1) Latch Bar, (1) Bolt, (1) Spacer, (2) Nuts, (1) Spring and (2) Ties, Includes 131-435 Nut
		131-435		X	TUERCA 3/8
4		176916A1		1	JEUGO Weight Adjuster, Includes Adjusting Knob, (1) Spacer, (2) Roll Pins, (1) Shaft, (1) Spring, (10) Clips, (2) Washers, (1) Grip and (2) Ties; Also Includes (10) Shroud Retainers, (2) Washers, (2) Ties, See Figure 09-48
5		176914A1		1	JEUGO Suspension Damper, Includes Damper, (2) Spacers, (4) Nuts, (10) Clips, (2) Washers, (1) Grip and (2) Ties; Also Includes (10) Shroud Retainers, (2) Washers, (2) Ties, See Figure 09-48

http://www.minnparbackhoeparts.com/

PEDESTAL DEL ASIENTO Y SUSPENSIÓN, SUSPENSIÓN MECÁNICA (MILSCO)

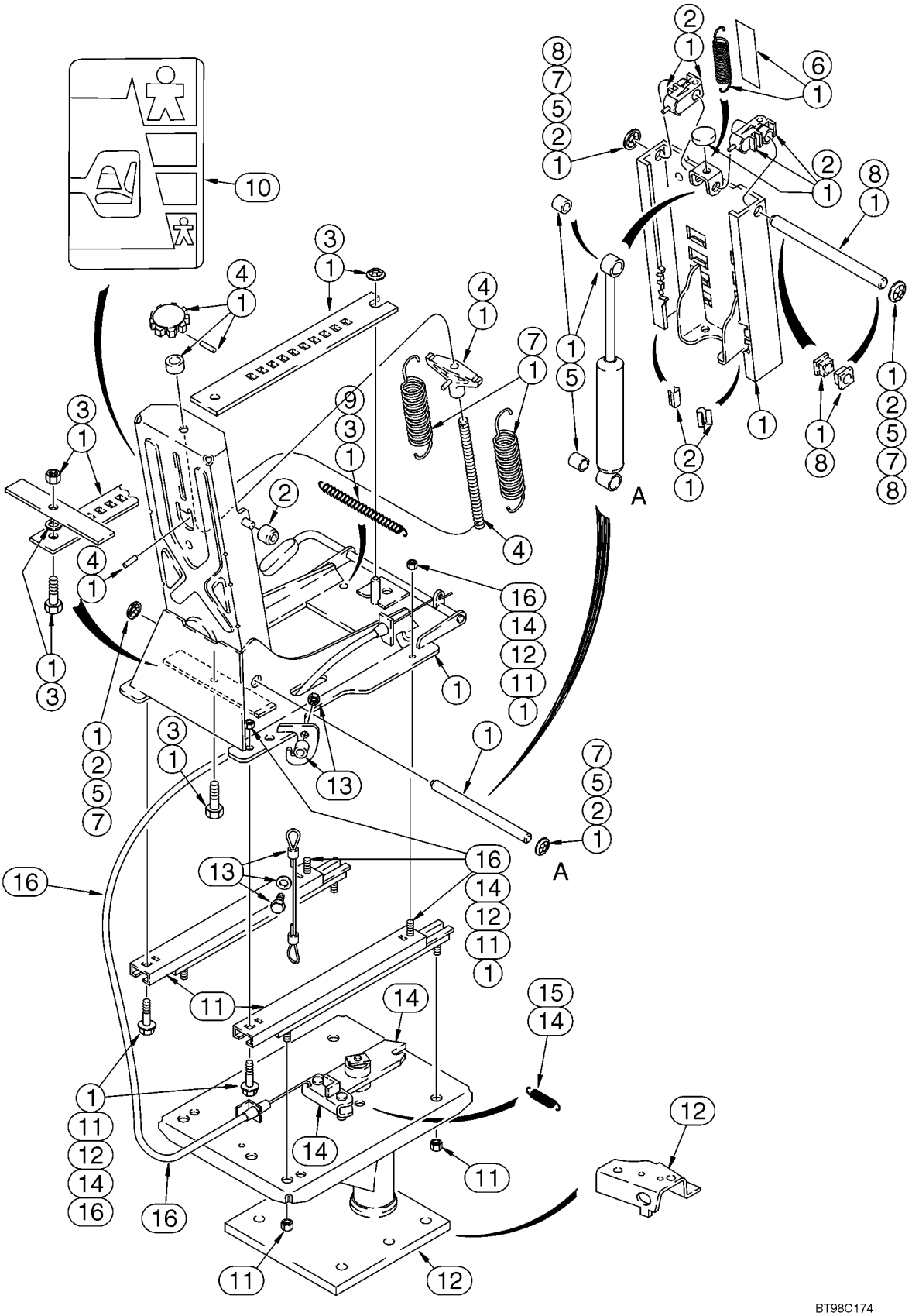

http://www.minnparbackhoeparts.com/

PEDESTAL DEL ASIENTO Y SUSPENSIÓN, SUSPENSIÓN MECÁNICA (MILSCO)

REF	FN	PART NUMBER	YR/SN	QTY	DESCRIPTION
6		116547A1		1	JEUGO Height Adjusting Spring, Includes (10) Shroud Retainers, (2) Washers, (2) Springs, (1) Wear Strip; For Additional Kit Parts, See Figure 09-48, Ref 10
7		176920A1		1	JEUGO Main Extension Springs, Includes (2) Springs, (4) Nuts, (2) Washers, (10) Clips, (1) Grip, (2) Ties
8		116551A1		1	JEUGO Upper Suspension Tower Shaft, Includes Shaft, (2) Bearings, (2) Nuts, (10) Clips, (2) Washers
9		116545A1		1	JEUGO Fore/Aft Latch Spring, Includes (1) Spring, (2) Ties
10		116534A1		1	JEUGO Decal, Seat Weight Adjustment
11		399764A1		1	JEUGO Fore/Aft Adjuster Slides
12		116538A2		1	JEUGO Pedestal, Includes Pedestal, (4) Screws, (4) Nuts and 119211A1 Bracket
13		116552A1		1	JEUGO Cable, Includes (2) Cables, (2) Screws, (2) Spacers, (2) Washers, (2) Nuts
14		116550A1		1	JEUGO Swivel Latch Bar, Includes Latch Bar, (1) Spring, (1) Ring, (4) Screws, (4) Nuts
14		336375A1		1	JEUGO Swivel Latch Plate, Includes Latch, Swivel Plate Latch, (5) Screws, (6) Nuts, (2) Pins
15		116548A1		1	JEUGO Swivel Latch Spring Only
16		181170A1		1	JEUGO Cable, Fore-Aft/Swivel Mechanism, Includes (2) Screws, (2) Ties, Cable, (4) Nuts

http://www.minnparbackhoeparts.com/

09-49A		p1	06/05

CONJUNTO DEL ASIENTO, SUSPENSION MECANICA (SEARS)

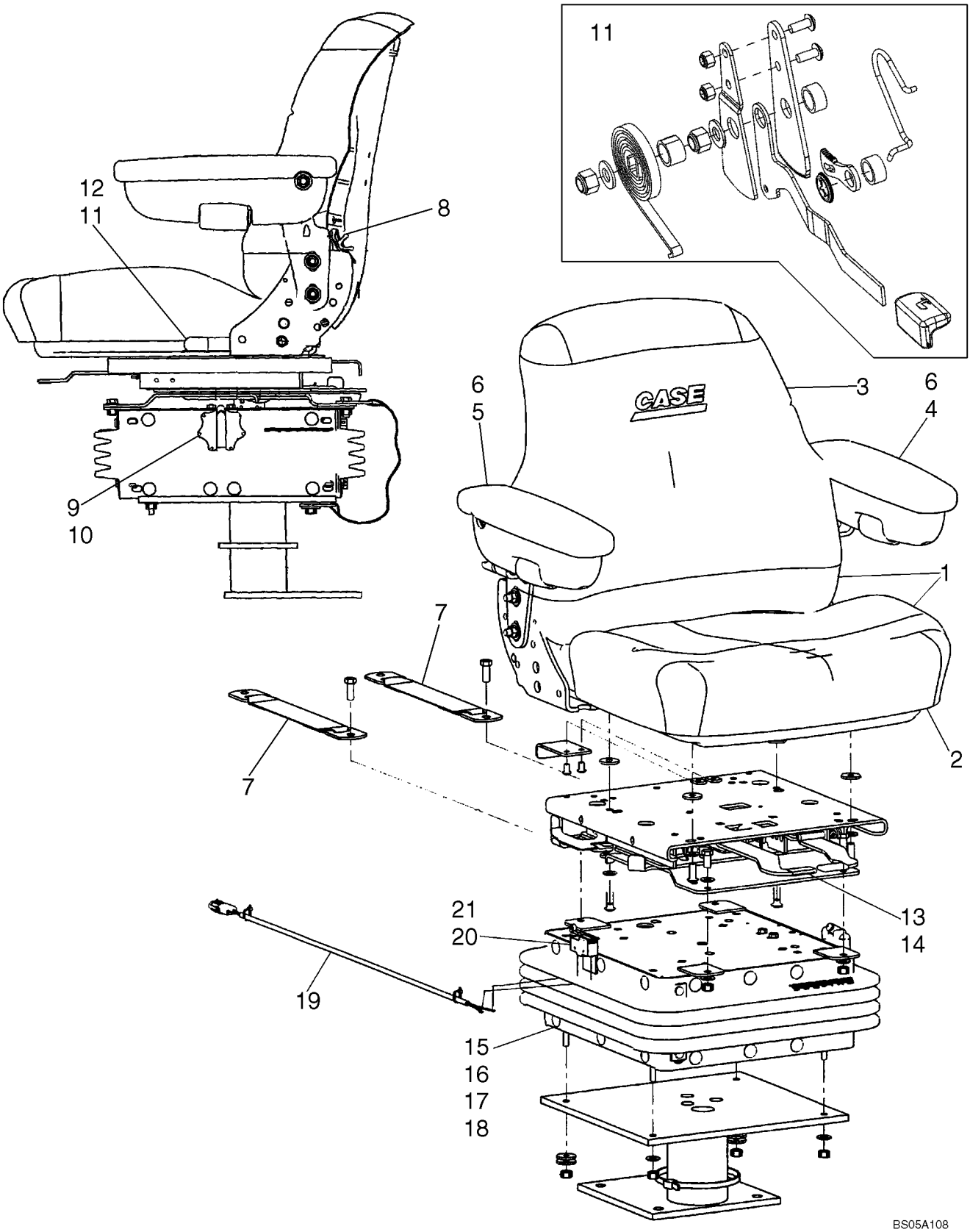

http://www.minnparbackhoeparts.com/

CONJUNTO DEL ASIENTO, SUSPENSION MECANICA (SEARS)

REF	FN	PART NUMBER	YR/SN	QTY	DESCRIPTION
		87454295		1	ASIENTO (CONJUNTO) Vinyl, Mechanical Suspension, Sears; Incl. Ref 1 - 21; Also Includes 87349995 Pedestal Assy
		87454294		1	ASIENTO (CONJUNTO) Cloth, Mechanical Suspension, Sears; Incl. Ref 1 - 21; Also Includes 87349995 Pedestal Assy
		{87349995}		1	Pedestal Assembly
1		87308118		1	RESPALDO Seat Top Assy, Vinyl; Includes Back and Seat Cushions
1		87308157		1	RESPALDO Seat Top Assy, Cloth; Includes Back and Seat Cushions
2		87308119		1	COJIN Vinyl
2		87308158		1	COJIN Cloth
3		87308127		1	RESPALDO Vinyl
3		87308159		1	RESPALDO Cloth
4		87308153		1	BRAZO (CONJUNTO) Left-Hand
5		87308152		1	BRAZO (CONJUNTO) Right-Hand
6		87308154		2	ACCESORIOS ASIENTO Kit, Arm Pad; Includes (1) Arm Pad, (1) Screw
7		87308128		1	ACCESORIOS ASIENTO Kit, Tether Belt; Includes (2) Tether Belts, (2) Bolts, (4) Washers, (2) Lock Nuts
8		87037462		1	DISP. REGULACION RES Lumbar Knob Kit; Includes Knob, 1/8 x 5/8 Roll Pin
		87308130		1	DISP. REGULACION RES Kit, Lumbar; Includes (2) Screws, (2) Rivets, (1) Back Support, (1) Lumbar Shaft Yoke
9		123969A1		1	BOTON Kit, Height/Weight Adjustment; Includes (1) Knob, (1) Shaft, (1) 5/32 x 1 in Roll Pin
10		38-11016		1	PASADOR Roll Pin, 5/32 x 1 in
		130674A1		1	JUEGO Kit, Weight Adjustment; Includes (1) Thrust Washer, (2) Shaft and Gear
		87308145		1	ARANDELA DE TOPE 2 OD x .6 in ID
11		86994165		1	ACCESORIOS ASIENTO Recliner Kit; Includes (2) Brackets, (3) Spacers, (2) Springs, Knob, Latch, Lever, (2) Bolts, (2) Washers, (5) Nuts
12		87416475		1	POMO Recliner Cap

http://www.minnparbackhoeparts.com/

09-49A		p2	06/05

CONJUNTO DEL ASIENTO, SUSPENSION MECANICA (SEARS)

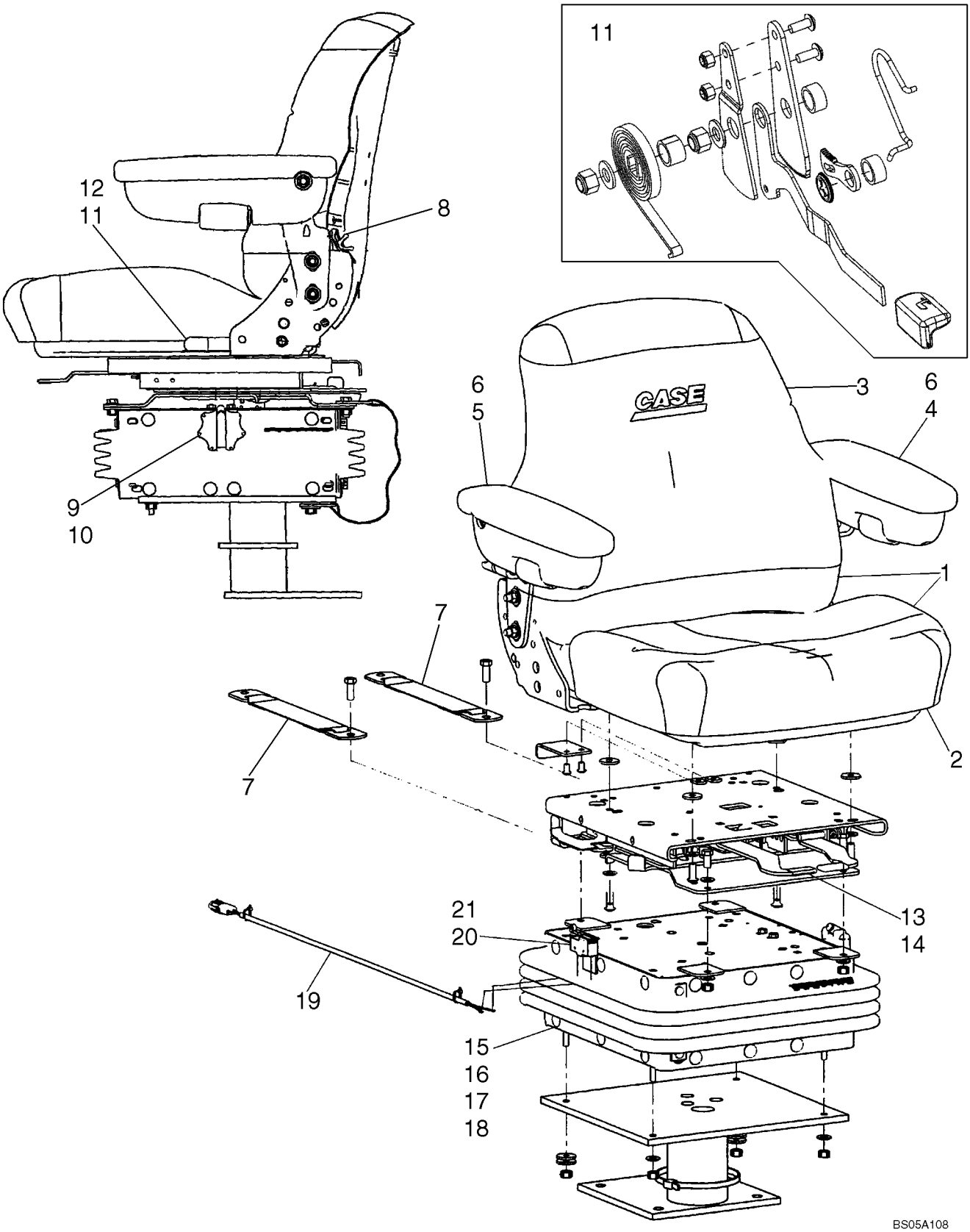

http://www.minnparbackhoeparts.com/

CONJUNTO DEL ASIENTO, SUSPENSION MECANICA (SEARS)

REF	FN	PART NUMBER	YR/SN	QTY	DESCRIPTION
		87308143		1	SOPORTE DE ASIENTO Upper Housing, Boxed
		1977725C1		1	REGLETA Kit, Bearing, Slider Block; Includes (4) Tube Bearings, (1) Ride Indicator, (1) A45512 Slider Block, (1) A45515 Slider Block, (1) A45516 Slider Block, (1) NSS Slider Block
13		87308131		1	ACCESORIOS ASIENTO Swivel Assembly
14		87308132		1	COJINETE Kit, Swivel Bearing; Includes (1) Bolt, (8) Ball Bearings, (1) Clip, (1) Nut, (1) Cotter Pin, (1) Plastic Washer, (1) Ball Retainer
15		87308141		1	SOPORTE DE ASIENTO Kit, Suspension Assembly, Boxed
16		87308144		1	SOPORTE DE ASIENTO Suspension Arm, Boxed
17		87308146		1	ACCESORIOS ASIENTO Kit, Spring, Suspension
18		87308147		1	ACCESORIOS ASIENTO Kit, Boot, Suspension, Boxed; Includes (1) Boot, (26) Buttons
		87308148		1	ACCESORIOS ASIENTO Kit, Shock Absorber, Boxed; Includes (1) Shock Absorber, (2) Bushings
		51200906		1	PIEZA DE SOPORTE Shaft, Suspension
		112884A1		2	EJE Bearing Shaft Weldment, Boxed
		A45504		1	ARANDELA Spring, Square, With Weldnut
		A45505		1	ENGRANAJE Large Gear and Shaft Weldment
		A45513		1	ENGRANAJE Gear and Shaft Weldment
		A45054		2	PARACHOQUES Rubber, Black
		87308142		1	SOPORTE DE ASIENTO Lower Housing, Boxed
19		87308149		1	GRUPO DE CABLES
20		87308150		1	CONTACTOR Seat
21		87308151		1	ACCESORIOS ASIENTO Kit, Switch and Actuator Lever; Includes Switch, Actuator, (4) Screws, (2) Lock Washers, (2) Nuts

http://www.minnparbackhoeparts.com/

09-50		p1	01/05

CONJUNTO DEL ASIENTO, SUSPENSION DE AIRE (SEARS)

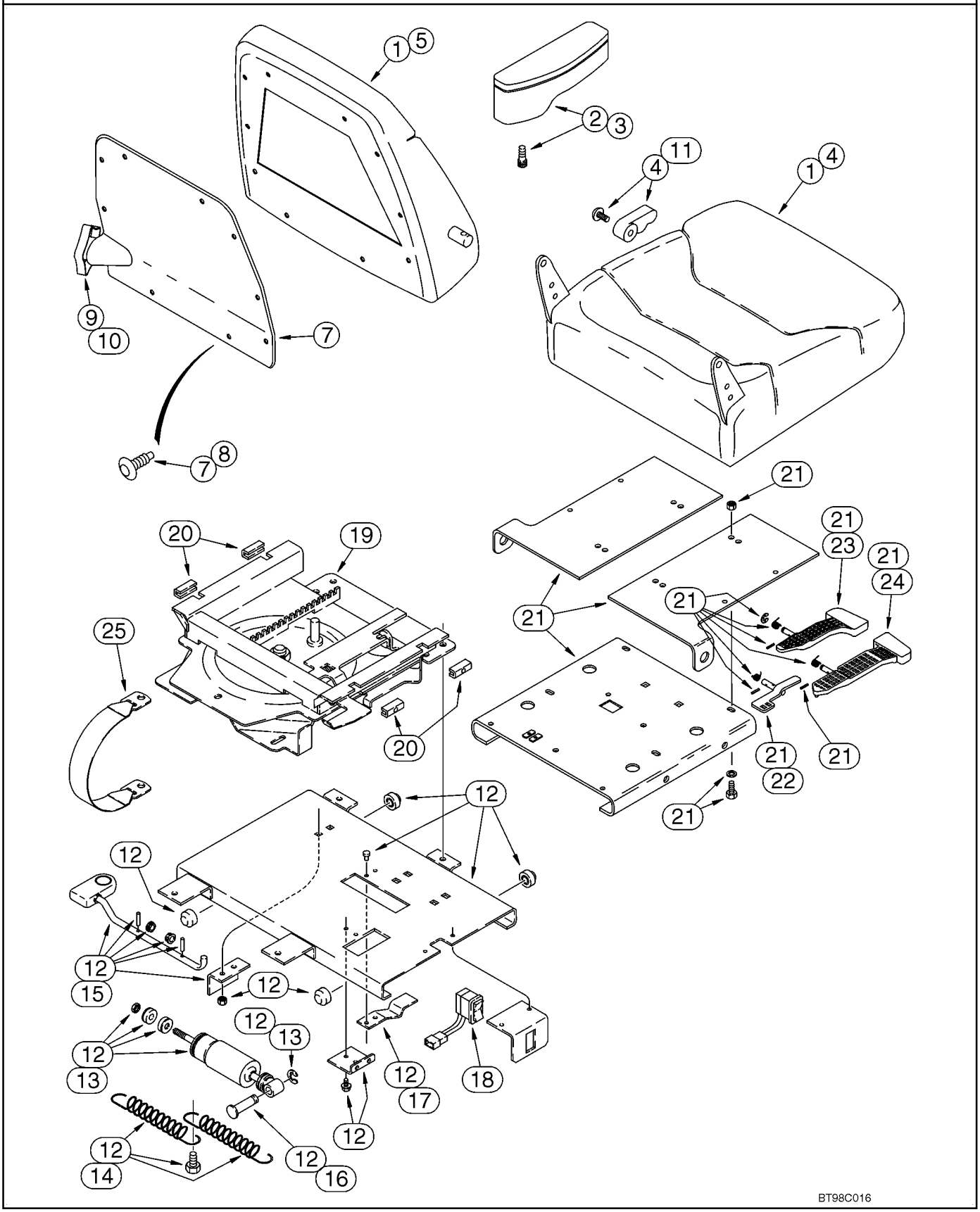

http://www.minnparbackhoeparts.com/

CONJUNTO DEL ASIENTO, SUSPENSION DE AIRE (SEARS)

REF	FN	PART NUMBER	YR/SN	QTY	DESCRIPTION
		121414A1		1	FUSIBLE 20 amp, Not Illustrated
		604-12030		4	TORNILLO M12 x 30
		896-15012		4	ARANDELA 13,5 x 28 x 4 mm
		397137A1		1	ASIENTO (CONJUNTO) Air Suspension Seat, Cloth, With Armrests, Incl. Ref 1 - 25; Also Includes Parts On Figure 09-51
1		400981A1		1	JEUGO Seat Cushion and Backrest, Includes Seat, Backrest, Backrest Cover and Hardware
2		300659A1		1	JEUGO Armrest, Right-Hand, Includes Armrest Knob and Shaft, Groove Pin, Pivot Stud and Screw
3		300661A1		1	JEUGO Armrest, Left-Hand, Includes Armrest Knob and Shaft, Groove Pin, Pivot Stud and Screw
4		400837A1		1	JEUGO Seat Cushion, With Frame, Includes (5) Clips, (18) Rings, (1) Screw and Recliner Handle
5		400838A1		1	JEUGO Backrest Cushion, With Frame, Includes (23) Rings, Lumbar, (2) Screws and (2) Clips
6		176091A1		1	EMPAQUETADURA Package of 48 Rings For Cushions, Not Illustrated
7		300664A1		1	JEUGO Backrest Cover and Retainers, Incl. Ref 8
8		1999693C1		1	JEUGO Clip, Package of 14
9		300665A1		1	JEUGO Lumbar, With Knob
10		300667A1		1	PLACA Lumbar Knob, Includes Knob, Actuator and (2) Screws
11		1987212C1		1	PAQUETE Seat Cushion Back Tilt Knob, Includes Knob, Recliner Handle and (1) Screw
12		300670A1		1	JEUGO Lateral Isolator Assy, Incl. Ref 13 - 17
13		1987219C2		1	JUEGO DE PIEZAS Lateral Isolator Shock, Includes Shock Absorber, (1) Bearing, (2) Bushings, (1) Nut, (2) Washers, (1) Spacer, (1) Ring
14		1987290C1		1	JUEGO DE PIEZAS Spring, Includes (2) Springs, (1) Bolt
15		259054A1		1	JUEGO DE PIEZAS Lock, Includes Latch Rod, Bracket, (2) Bearings, Knob, (2) Roll Pins
16		1344025C1		1	BULON/PIN, LARGO Pivot
17		1344026C1		1	RESORTE
18		300672A1		1	CONTACTOR Rocker, Height Adjustment
		300674A1		1	HAZ Swivel Switch, Not Illustrated

http://www.minnparbackhoeparts.com/

09-50		p2	01/05

CONJUNTO DEL ASIENTO, SUSPENSION DE AIRE (SEARS)

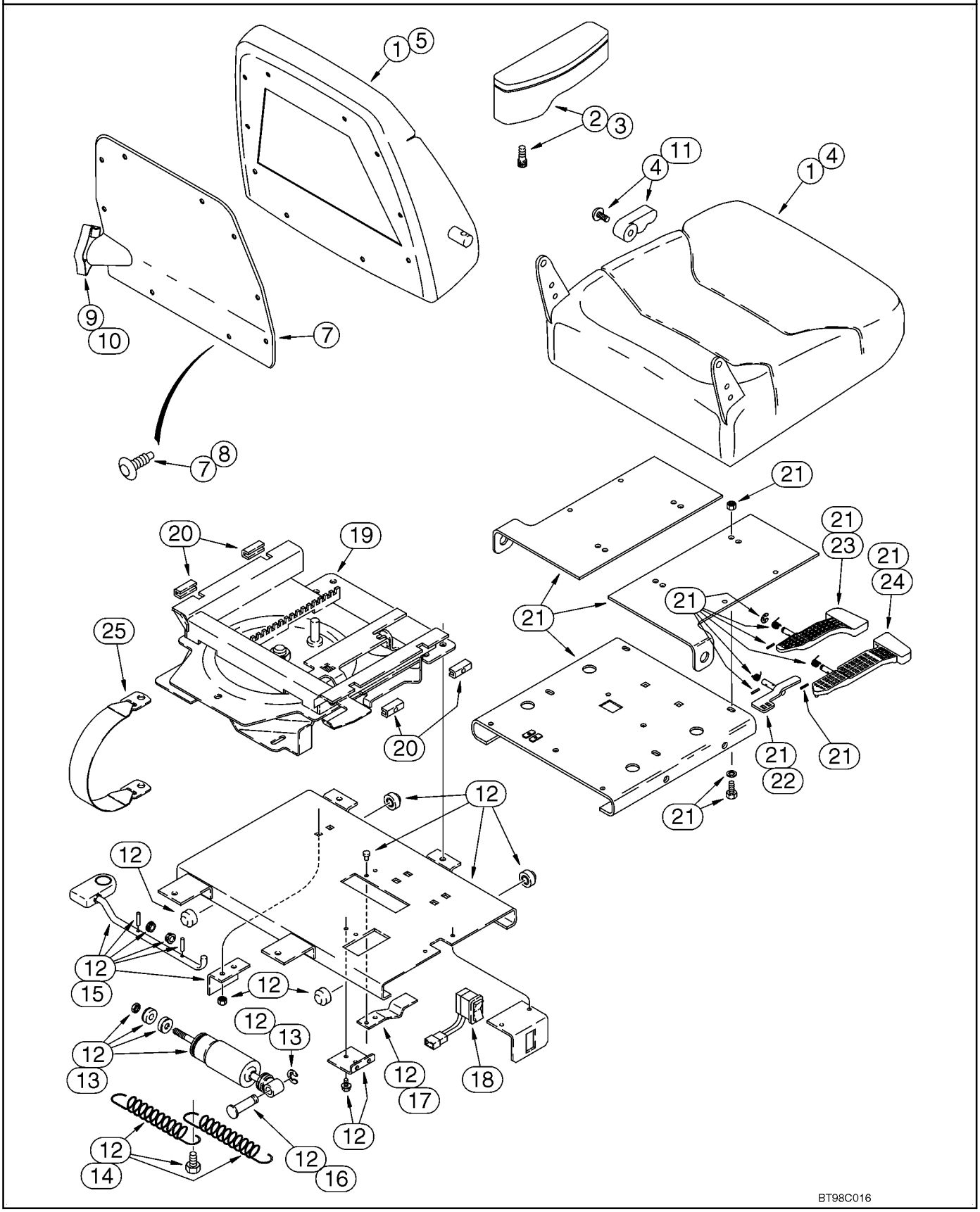

http://www.minnparbackhoeparts.com/

CONJUNTO DEL ASIENTO, SUSPENSION DE AIRE (SEARS)

REF	FN	PART NUMBER	YR/SN	QTY	DESCRIPTION
19		300675A1		1	JEUGO Slide/Swivel Assy, Incl. Ref 21
20		300680A1		1	JEUGO Slide Blocks, Includes (2) Adjustable Slider Blocks, (2) Stationary Slider Blocks, (2) Setscrews
21		300677A1		1	JEUGO Upper Slide Plate Assy, Includes Upper Slide Plate, Slide and Swivel Levers, (3) Springs, (3) Roll Pins, (3) E-Rings and Slide Latch, Incl. Ref 22 - 24
22		300679A1		1	DESLIZADOR Latch
23		300681A1		1	PALANCA MANDO Slide
24		300683A1		1	PALANCA Swivel
25		300684A1		1	CINTURON, SECURITAD Tether

http://www.minnparbackhoeparts.com/

09-51		p1	01/05

PEDESTAL DEL ASIENTO Y SUSPENSIÓN, SUSPENSIÓN DE AIRE (SEARS)

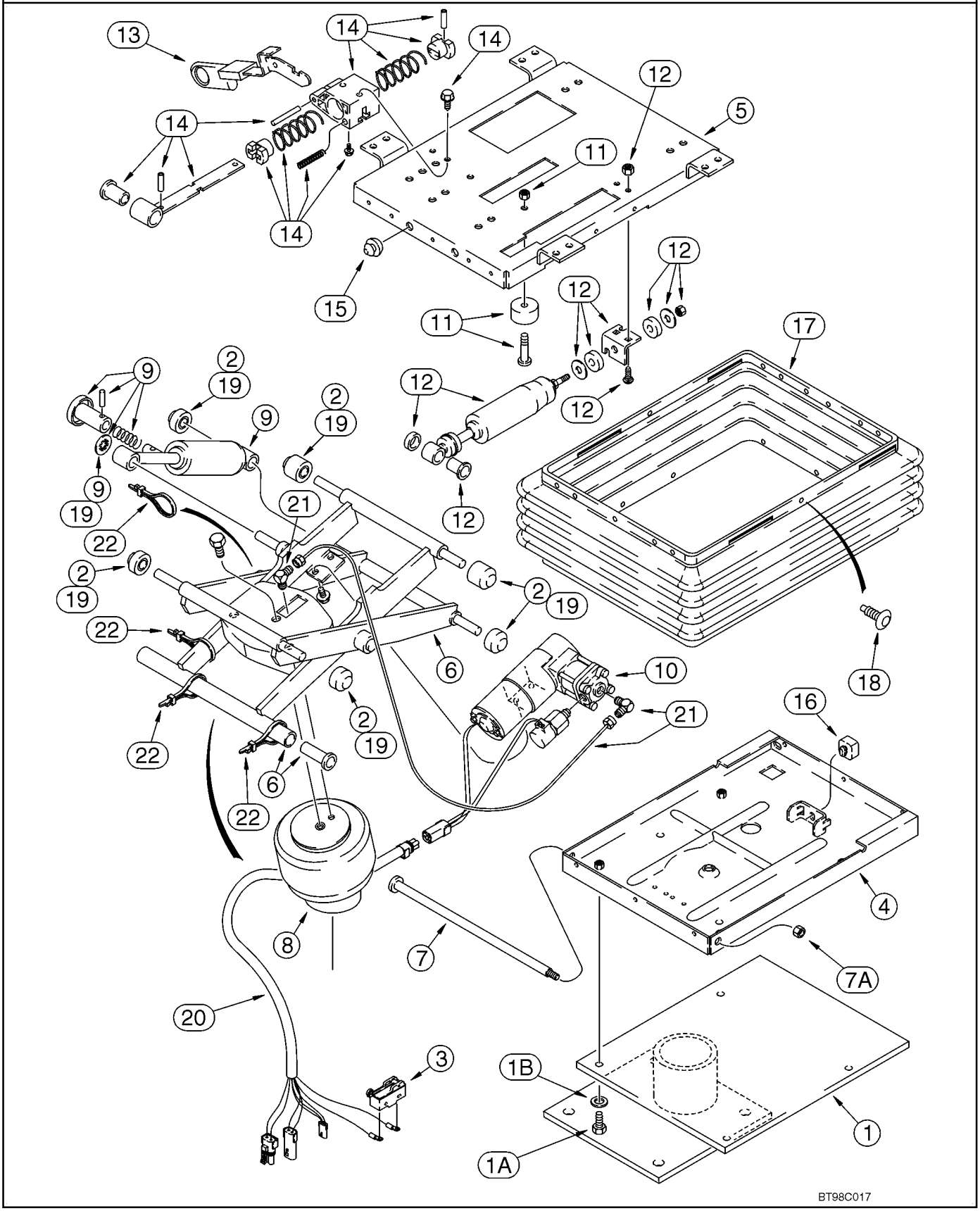

http://www.minnparbackhoeparts.com/

PEDESTAL DEL ASIENTO Y SUSPENSIÓN, SUSPENSIÓN DE AIRE (SEARS)

REF	FN	PART NUMBER	YR/SN	QTY	DESCRIPTION
		397137A1		1	ASIENTO (CONJUNTO) Air Suspension Seat, Cloth, With Armrests, Incl. Ref 1 - 22; Also Includes Parts On Figure 09-50
1		300669A1		1	ZÓCALO Support, Base
1A		614-8025		4	TORNILLO M8 x 25
1B		NSS		2	NO SE REPARA SEPARADAM. Washer
		300685A1		1	JEUGO Air Suspension Assembly, Includes Parts From Upper To Lower Housing Plates, Incl. Ref 2 - 16, 18 - 22, Includes all items shown except for the boot and pedestal, Ref 1 and 17
2		135512A3		1	PAQUETE Roller Bearing, Isolator, Includes (4) Narrow Rollers, (2) Wide Rollers, (1) Bushing, (1) Spacer, (1) Retaining Ring, Isolator
3		D137363		1	CONTACTOR Contact, Swivel Limit Switch
4		226560A1		1	CAVIDAD Lower, With Upper Stop Bracket
5		300688A1		1	CAVIDAD Upper
6		132862A1		1	ESCUADRA DE TRANSMIS Arm, Suspension
7		143786A1		1	EJE
7A		230-4216		1	TUERCA 3/8
8		197793A1		1	RESORTE Air Spring, Includes Air Spring, J-Clip and (3) Ties
9		132866A1		1	AMORTIGUADOR Kit, Includes Shock, (2) Bearings, Fastener, Actuator Arm, Roll Pin, Bracket and Retaining Ring
		132864A1		1	COMPRESSOR Kit, Compressor/Valve, Includes Compressor, Valve, Mount, Air Line Tubing, (2) Screws, (2) Sleeves and (2) Nuts, Includes 300689A1, 300690A1
10		300689A1		1	JEUGO Compressor/Valve
		300690A1		1	PIEZAS DE FIJACIÓN Compressor
11		180593A1		1	KIT DE REVISION Bumper, Includes 231-1444, 340-12520
		231-1444		2	CONTRA TUERCA 1/4
		340-12520		2	TORNILLO 1/4 x 1-1/4
12		300691A1		1	CONJUNTO REPUESTOS Fore/Aft Isolator Latch, Includes Shock Absorber, (3) Nuts, (2) Washers, (2) Grommets, (1) Bearing and (15) Clips

http://www.minnparbackhoeparts.com/

09-51		p2	01/05

PEDESTAL DEL ASIENTO Y SUSPENSIÓN, SUSPENSIÓN DE AIRE (SEARS)

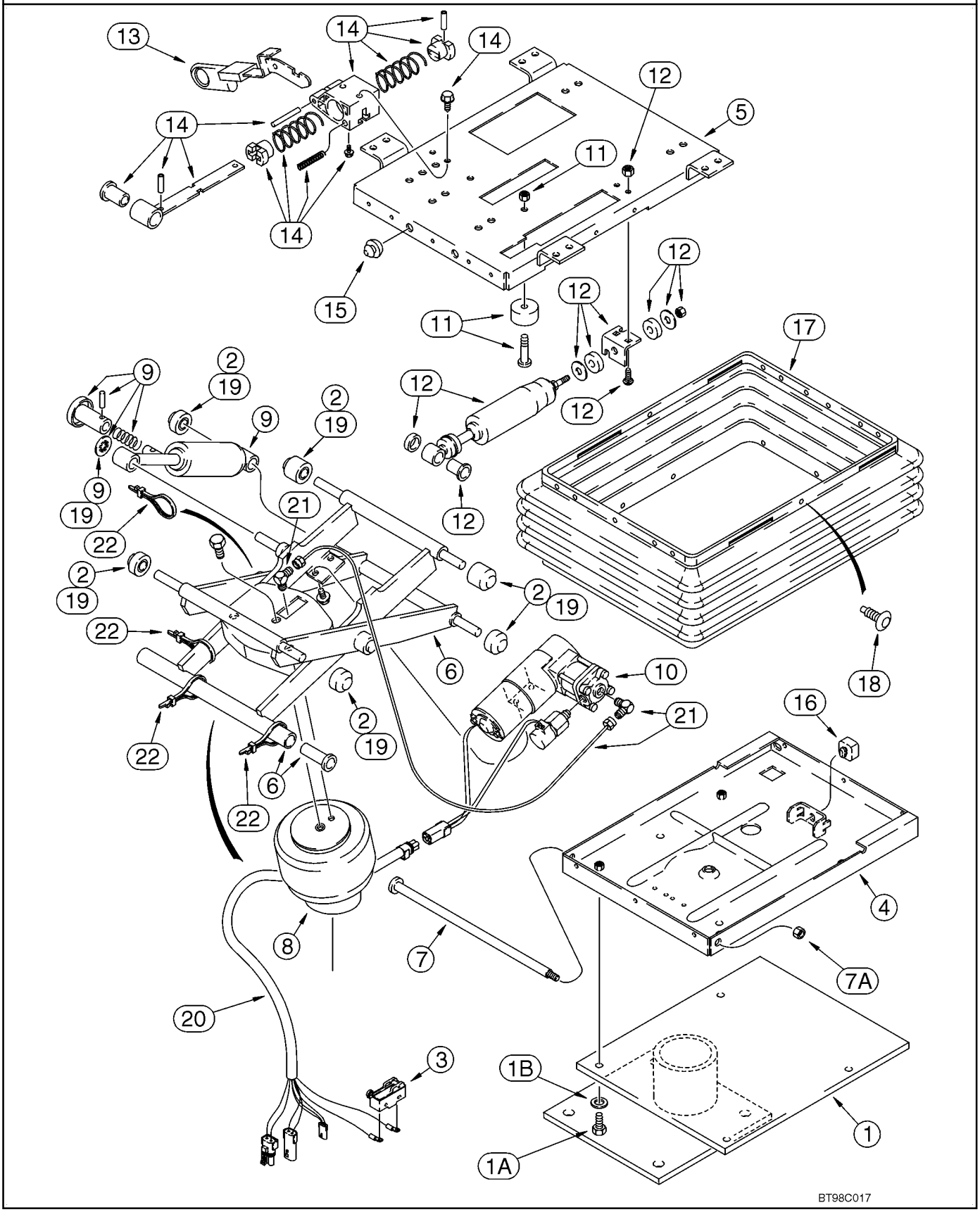

http://www.minnparbackhoeparts.com/

PEDESTAL DEL ASIENTO Y SUSPENSIÓN, SUSPENSIÓN DE AIRE (SEARS)

REF	FN	PART NUMBER	YR/SN	QTY	DESCRIPTION
13		1981850C1		1	MANGO Knob, Isolator Control, Fore/Aft
14		300692A1		1	CONJUNTO REPUESTOS Fore/Aft Isolator Latch, Includes Latch Assy and (2) Screws
15		133422A1		2	PARACHOQUES Rubber
16		A45054		1	PARACHOQUES Seat
17		133421A1		1	PAQUETE Boot, With Pins
18		132872A1		1	JUEGO DE PIEZAS Boot Pin, Package of 23 Retainers and (3) Dome Nuts
19		180594A3		1	PAQUETE Rollers and Bearings, Includes (2) Bushings, (6) Rollers, (1) Push Nut, (5) Bearings and (2) Spacers, Includes 131-425 Nut
		131-425		1	TUERCA 1/2
20		300896A1		1	HAZ
21		1990548C4		1	PAQUETE Air Line and Fittings, Includes (2) Elbows, (1) Tee, (2) Adapters, 3.5 Feet Nylon Tubing, (5) Ties and (1) J-Clip, Incl. Ref 22
22		L18337		4	BANDA 15 in

http://www.minnparbackhoeparts.com/

CABINA - CRISTAL, ESPEJO Y MANTENER ABIERTO

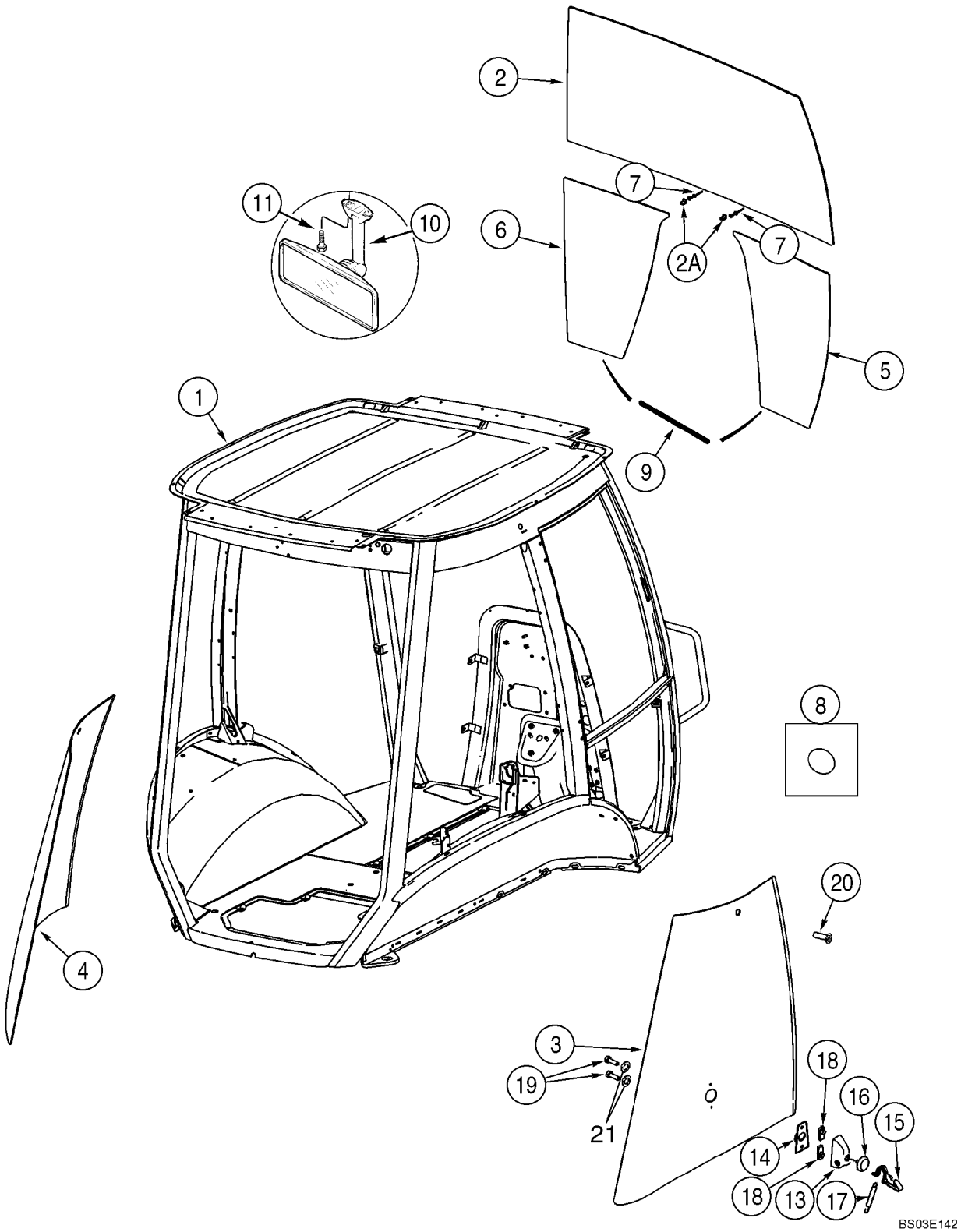

http://www.minnparbackhoeparts.com/

CABINA - CRISTAL, ESPEJO Y MANTENER ABIERTO

REF	FN	PART NUMBER	YR/SN	QTY	DESCRIPTION
1		87443430		1	CABINA 580SM Single Door; Includes Frame, Left-Hand Door, 341746A2 Right-Hand Window on Figure 09-56, All Glass, Front and Rear Wipers and Exterior Lamps; Order From Machinery Price List; Replaces 87434979 Cab/A; No Longer Available, Order 87448272 Cab/A
1		87448272		1	CABINA 580SM Single Door; Includes Frame, Left-Hand Door, 87442204 Right-Hand Window on Figure 09-56A, All Glass, Front and Rear Wipers and Exterior Lamps; Order From Machinery Price List
1		87443432		1	CABINA 580SM+ Single Door; Includes Frame, Left-Hand Door, 341746A2 Right-Hand Window on Figure 09-56, All Glass, Front and Rear Wipers and Exterior Lamps; Order From Machinery Price List; Replaces 87434981 Cab/A; No Longer Available, Order 87448274 Cab/A
1		87448274		1	CABINA 580SM+ Single Door; Includes Frame, Left-Hand Door, 87442204 Right-Hand Window on Figure 09-56A, All Glass, Front and Rear Wipers and Exterior Lamps; Order From Machinery Price List
1		87443431		1	CABINA 580SM Two Door; Includes Frame, Left-Hand Door, 394585A3 Right-Hand Door on Figure 09-54, All Glass, Front and Rear Wipers and Exterior Lamps; Order From Machinery Price List; Replaces 87434980 Cab/A; No Longer Available, Order 87448273 Cab/A
1		87448273		1	CABINA 580SM Two Door; Includes Frame, Left-Hand Door, 87439726 Right-Hand Door on Figure 09-54A, All Glass, Front and Rear Wipers and Exterior Lamps; Order From Machinery Price List

http://www.minnparbackhoeparts.com/

CABINA - CRISTAL, ESPEJO Y MANTENER ABIERTO

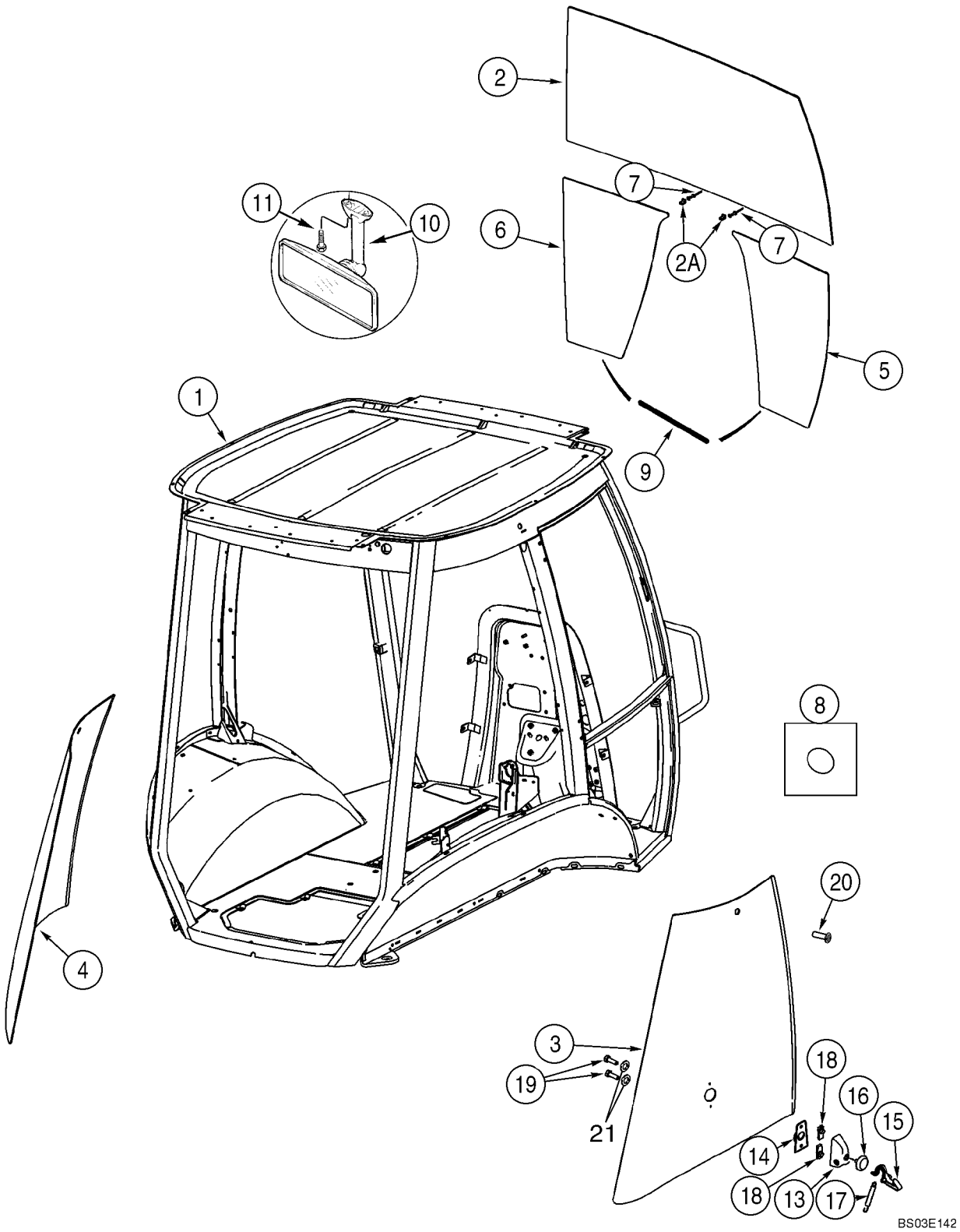

http://www.minnparbackhoeparts.com/

CABINA - CRISTAL, ESPEJO Y MANTENER ABIERTO

REF	FN	PART NUMBER	YR/SN	QTY	DESCRIPTION
1		87443433		1	CABINA 580SM+ Two Door; Includes Frame, Left-Hand Door, 394585A3 Right-Hand Door on Figure 09-54, All Glass, Front and Rear Wipers and Exterior Lamps; Order From Machinery Price List; Replaces 87434982 Cab/A; No Longer Available, Order 87448275 Cab/A
1		87448275		1	CABINA 580SM+ Two Door; Includes Frame, Left-Hand Door, 87439726 Right-Hand Door on Figure 09-54A, All Glass, Front and Rear Wipers and Exterior Lamps; Order From Machinery Price List
2		448607A1		1	PARABRISAS
2A		279482A1		2	TORNILLO DE SUJECTIO Windshield
3		338425A1		1	VENTANILLA Right Rear Quarter Panel
4		338424A1		1	VENTANILLA Left Rear Quarter Panel
5		448609A1		1	PARABRISAS Lower Right-Hand
6		448608A1		1	PARABRISAS Lower Left-Hand
7		151-516		2	REMACHE
8		391827A1		36	ESPACIADOR
9		395793A1		2	BANDA DE PROTECCIÓN
10		87406924		1	ESPEJO RETROVISOR Interior
11		286-56520		2	TORNILLO No. 10 x 1-1/4
13		405740A1		2	TAPA
14		405739A1		2	CUERPO
15		405738A1		2	PALANCA Hold Open
16		400573A1		2	PASACABLES
17		405741A1		2	MUELLE HELICOIDAL Latch Back
18		405742A1		4	TUERCA M8
19		400572A1		4	TORNILLO M8; Nylon
20		400571A2		2	PARACHOQUES
21		431801A1		4	ARANDELA Black Nylon

http://www.minnparbackhoeparts.com/

09-53		p1	05/05

CABINA - CHASIS Y CUBIERTAS

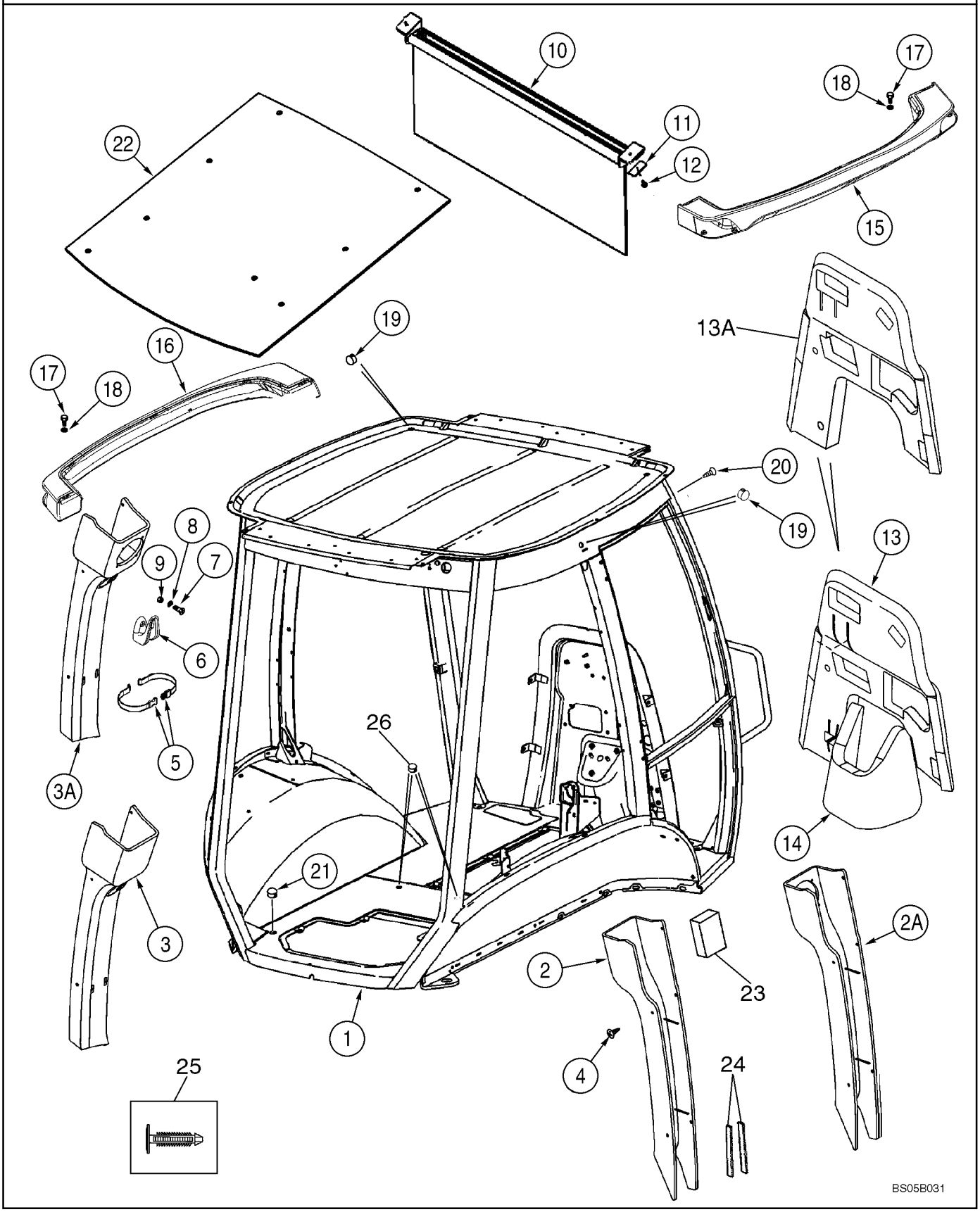

http://www.minnparbackhoeparts.com/

CABINA - CHASIS Y CUBIERTAS

REF	FN	PART NUMBER	YR/SN	QTY	DESCRIPTION
1		87435108		1	ESTRUCTURA CABINA 580SM Single Door; Replaces 87407908
1		87435110		1	ESTRUCTURA CABINA 580SM+ Single Door; Replaces 87407910
1		87435109		1	ESTRUCTURA CABINA 580SM Two Door; Replaces 87407909
1		87435112		1	ESTRUCTURA CABINA 580SM+ Two Door; Replaces 87407911
2		360267A3		1	TAPA Plastic; Right-Hand Post; Standard Interior
2A		379425A3		1	TAPA Vinyl; With Speaker Holes; Right-Hand Post; Deluxe Interior
3		360266A2		1	TAPA Plastic; Left-Hand Post; Standard Interior
3A		379424A2		1	TAPA Vinyl; With Speaker Holes; Left-Hand Post; Deluxe Interior
4		401949A1		10	BOTON DE RESORTE
5		378227A1		1	BANDA Garment Strap
6		114549A1		1	PERCHA
7		87310147		2	TORNILLO M4 x 16, Stainless Steel; Replaces 540-720 Non-Stainless Steel Screw Used On Some Models
8		895-11004		2	ARANDELA 4,3 x 9 x 0,8 mm
9		832-10404		2	TUERCA M4
10		364180A1		1	PARASOL
11		409618A1		2	PLACA 1/4 in Mounting Hole
12		396516A1		3	PUNZON VALVULA No. 10 x 1; With Washer; Phillips
13		87440282		1	PROTECTOR Firewall; If Used
13A		87451021		1	PROTECTOR Firewall; If Used
14		87440283		1	PROTECTOR Firewall, Lower
15		360247A3		1	FARO (CONJ) Right-Hand
16		360246A3		1	FARO (CONJ) Left-Hand
17		394863A1		10	TORNILLO M6 x 20
18		395387A1		10	ARANDELA 6.4 ID; Nylon
19		395388A1		3	TAPÓN
		353-415		1	TAPÓN 1-1/2 in; Cab Roof; Models Without Radio Antenna
		353-410		1	TAPÓN 7/8; Upper Windshield Frame; Models Without Radio Antenna

http://www.minnparbackhoeparts.com/

09-53		p2	05/05

CABINA - CHASIS Y CUBIERTAS

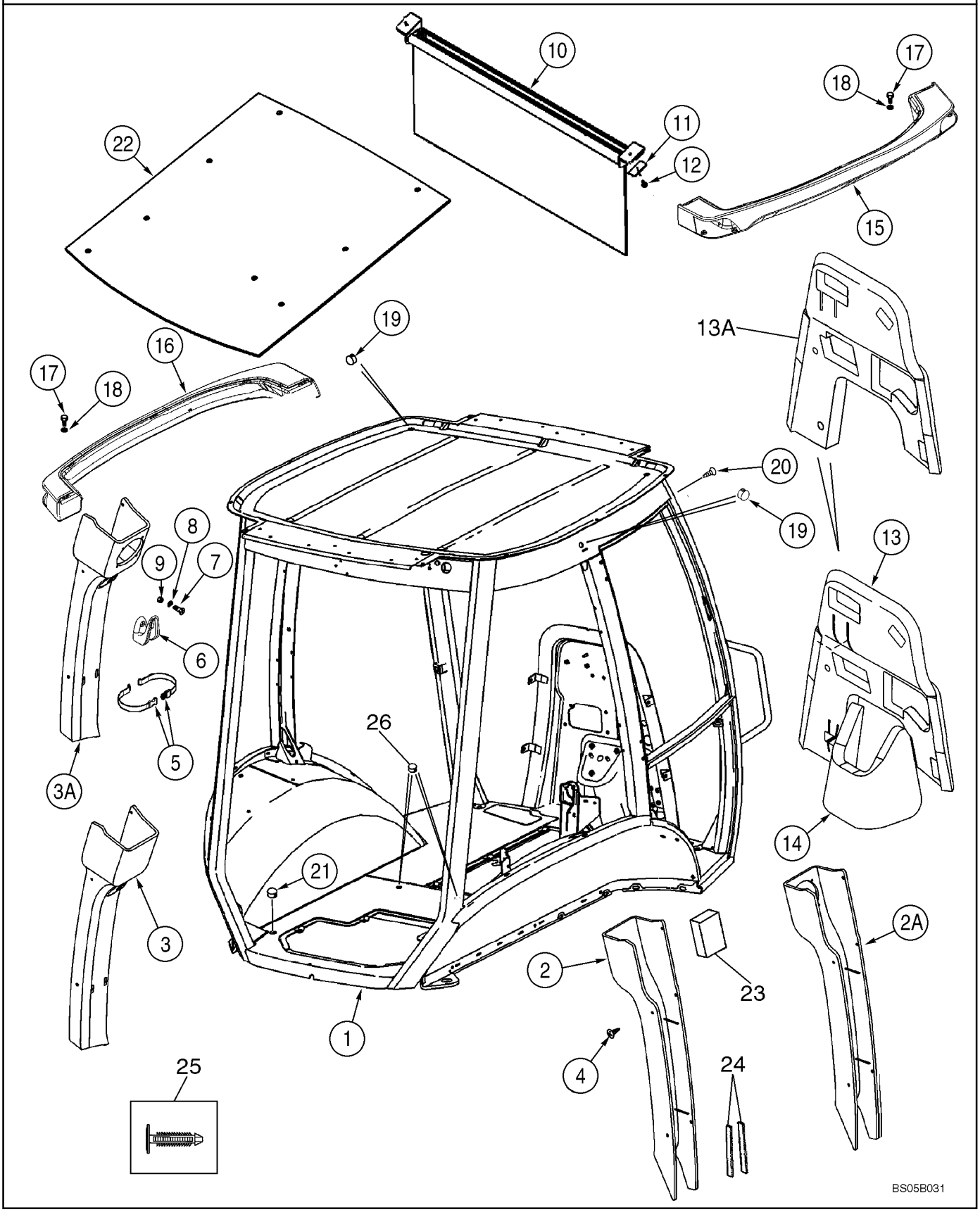

http://www.minnparbackhoeparts.com/

CABINA - CHASIS Y CUBIERTAS

REF	FN	PART NUMBER	YR/SN	QTY	DESCRIPTION
		353-407		1	TAPÓN 11/16; Rear Filter Plate On Models Without Windshield Washer
		353-425		2	TAPÓN 7/16 in dia
		353-421		1	TAPÓN 3/16
		353-405		1	TAPÓN 9/16
		353-408		1	TAPÓN 3/4
20		402610A1		8	BOTON DE RESORTE Cab Frame; Models Without Exterior Mirrors
21		382298A1		2	TAPÓN
22		368809A1		1	AISLADOR Insulation
23		412285A1		1	CINTA Foam; Adhesive Back; B-Post
24		414939A1		2	BANDA HERMETICIDAD Adhesive Back; B Post
25		411399A1		1	BOTON DE RESORTE For 1/4 in dia Hole; Christmas Tree Clip
26		87301515		2	TAPÓN PLÁSTICO Flat Top, Black Glossy, 1-3/16 Hole Size; Brake Bleeder

http://www.minnparbackhoeparts.com/

09-54		p1	04/05

CABINA - PUERTAS, SI UTILIZADO (VER LAS CRISTAL / BISAGRA; REF 4, 27, 29)

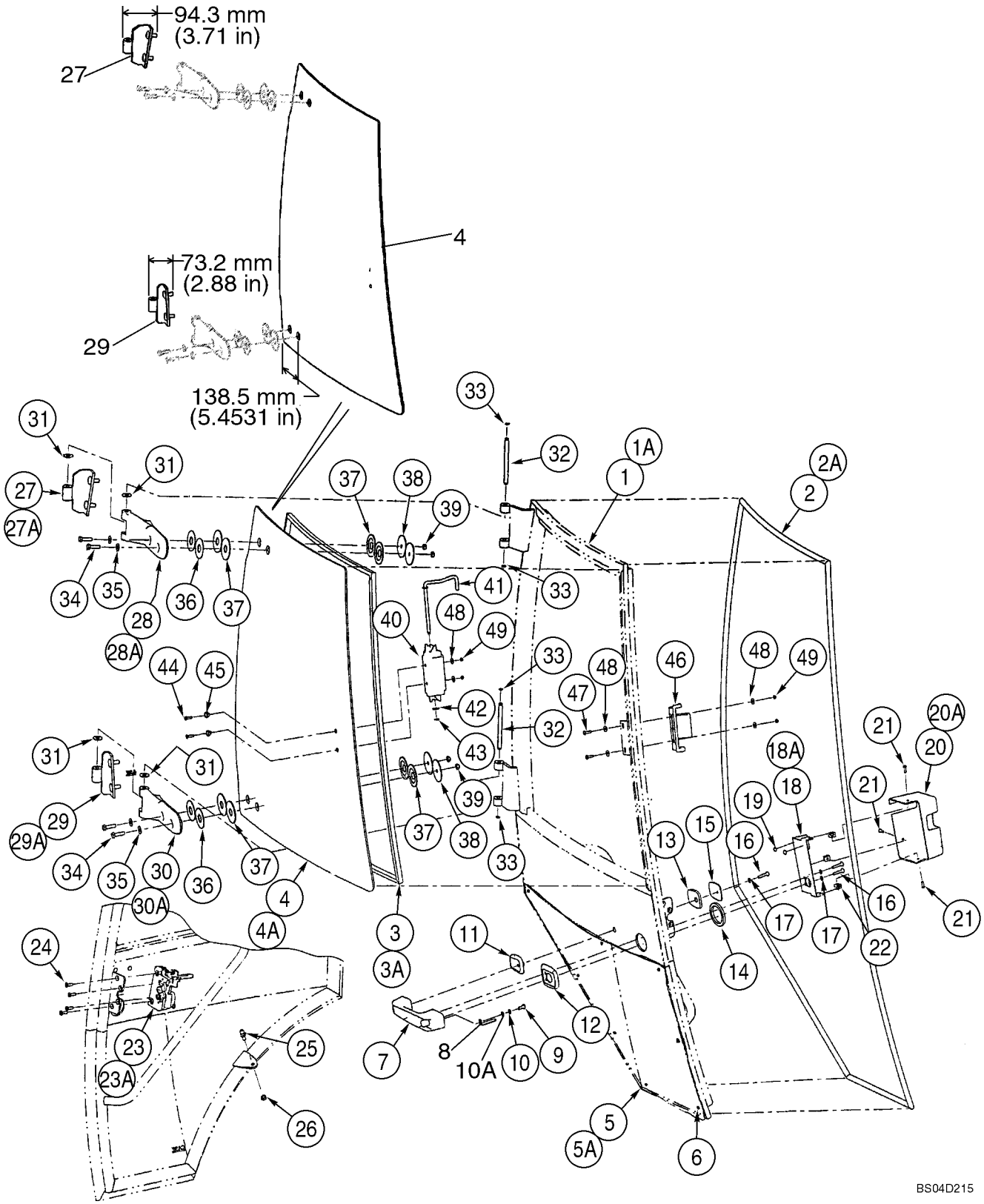

http://www.minnparbackhoeparts.com/

CABINA - PUERTAS, SI UTILIZADO (VER LAS CRISTAL / BISAGRA; REF 4, 27, 29)

REF	FN	PART NUMBER	YR/SN	QTY	DESCRIPTION
		REF			MANUAL Left-Hand and Right-Hand Cab Doors; Left-Hand Door Not Illustrated
		394585A3		1	PUERTA DE CABINA, DERECH Right-Hand Door; Incl. Ref 1 - 49, Except Where Noted For Left-Hand Door
		341743A3		1	PUERTA DE CABINA,I. Left-Hand Door; Incl. Ref 1A - 49, Except Where Noted For Right-Hand Door
1		NSS		1	NO SE REPARA SEPARADAM. Frame; Right-Hand Door
1A		87443691		1	BASTIDOR (CONJUNTO) Frame; Left-Hand Door
2		394707A1		1	PORCION DE GOMMA Right-Hand Door
2A		390838A1		1	PORCION DE GOMMA Left-Hand Door
3		394708A1		1	JUNTA DE CRISTAL Window; Upper; Right-Hand Door
3A		391850A1		1	JUNTA DE CRISTAL Window; Upper; Left-Hand Door
4		394700A1		1	VIDRIO Upper; Right-Hand Door; Distance From Edge to Second Hole 138.5 mm (5-29/64 in)
4A		338429A1		1	VIDRIO Upper; Left-Hand Door
5		338427A1		1	VENTANA Lower; Right-Hand Door
5A		338426A1		1	VENTANA Lower; Left-Hand Door
6		391827A1		4	ESPACIADOR 4 Per Door; Cut Bumpers In Half For 8 Locations
7		60-7083T1		1	MANECILLA Outer
8		442718A1		1	BOTON Release
9		440-12510		1	TORNILLO 1/4 x 5/8
10		492-11025		1	ARANDELA DE FRENO 1/4"
10A		895-11006		1	ARANDELA 6,6 x 12,5 x 1,6 mm
11		315276A1		1	MARCO Small
12		315273A1		1	MARCO Large
13		391847A1		1	JUNTA HERMETICA Small
14		391838A1		1	JUNTA HERMETICA Large
15		391848A1		1	PLACA DORSAL
16		393203A1		3	TORNILLO
17		393202A1		3	ARANDELA 6 mm
18		394704A1		1	PIEZA DE SOPORTE Cover Mounting; Right-Hand Door

http://www.minnparbackhoeparts.com/

09-54		p2	04/05

CABINA - PUERTAS, SI UTILIZADO (VER LAS CRISTAL / BISAGRA; REF 4, 27, 29)

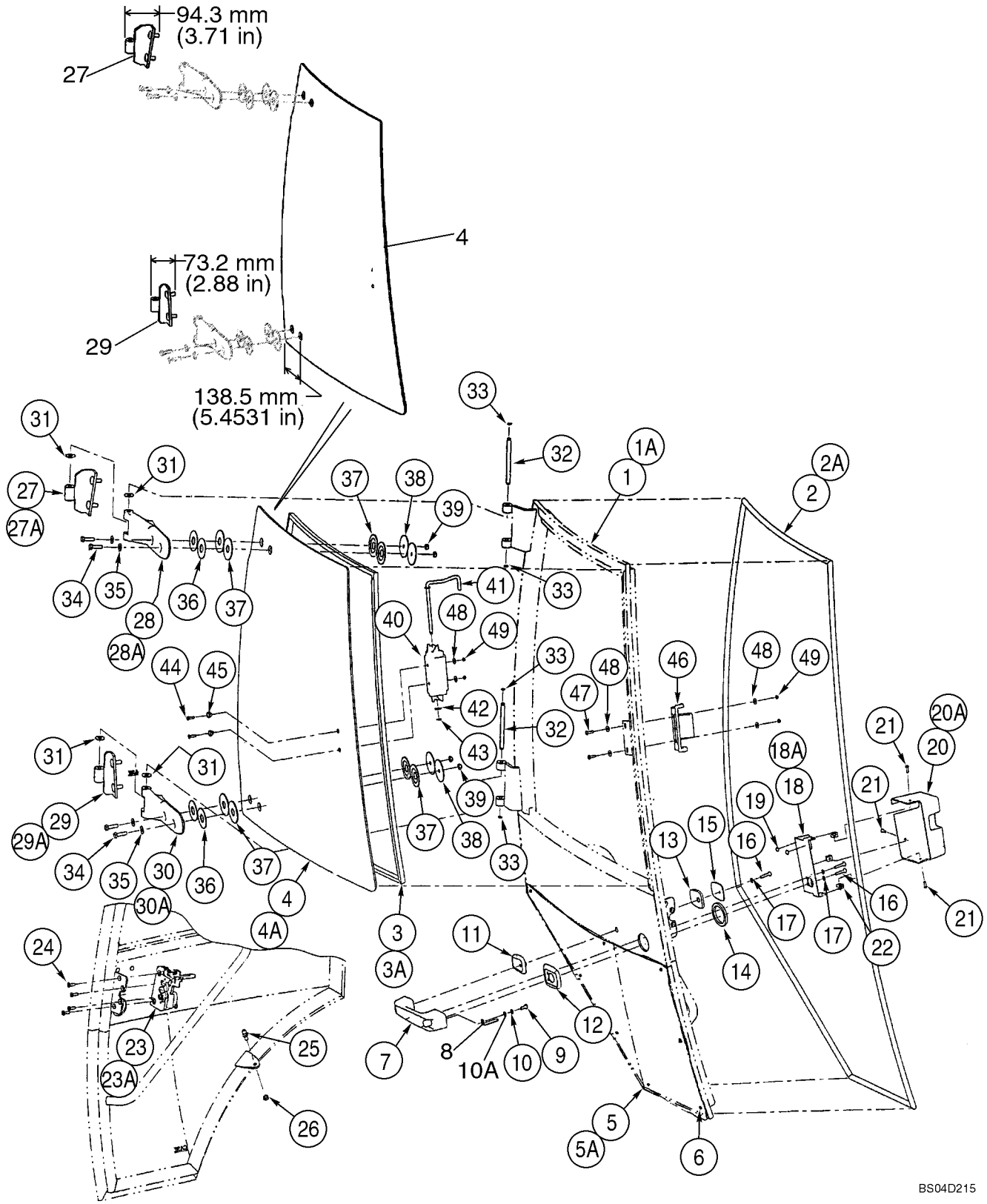

http://www.minnparbackhoeparts.com/

CABINA - PUERTAS, SI UTILIZADO (VER LAS CRISTAL / BISAGRA; REF 4, 27, 29)

REF	FN	PART NUMBER	YR/SN	QTY	DESCRIPTION
18A		391841A1		1	PIEZA DE SOPORTE Cover Mounting; Left-Hand Door
19		391827A1		2	ESPACIADOR
20		394705A1		1	TAPA Latch; Right-Hand Door
20A		391842A1		1	TAPA Latch; Left-Hand Door
21		390-100		3	TORNILLO
22		393209A1		3	TUERCA ESPECIAL
23		382777A1		1	PESTILLO Right-Hand Door
23A		382775A1		1	PESTILLO Left-Hand Door
24		569-4		4	TORNILLO
25		3234063R1		1	JUNTA DE ROTULA
26		832-10408		1	TUERCA M8
27		394701A1		1	BISAGRA Upper; Right-Hand Door
27A		390840A1		1	BISAGRA Upper; Left-Hand Door
28		364134A2		1	BISAGRA Plastic; Upper; Right-Hand Door
28A		364132A2		1	BISAGRA Plastic; Upper; Left-Hand Door
29		394702A1		1	BISAGRA Lower; Right-Hand Door
29A		390841A1		1	BISAGRA Lower; Left-Hand Door
30		364135A2		1	BISAGRA Plastic; Lower; Right-Hand Door
30A		364133A2		1	BISAGRA Plastic; Lower; Left-Hand Door
31		391845A1		4	ARANDELA Nylon
32		391843A1		2	PERNO
33		442773A1		4	RETENEDOR
34		514-633		4	TORNILLO M8 x 30
35		895-30107		4	ARANDELA
36		376334A1		4	ARANDELA 55 mm OD; Yellow
37		376336A1		8	ARANDELA ELASTICA Rubber
38		376332A1		4	ARANDELA 60 mm OD; Black
39		832-10508		4	TUERCA M8
40		368147A1		1	MANECILLA Slam Latch
41		391849A1		1	VARILLA
42		906086R1		1	ARANDELA 8.4 x 16 x 1.6 thk
43		100-39001		1	ANILLO
44		140-104		2	TORNILLO No. 8 x 3/4
45		F64198		2	CASQUILLO Nylon
46		368146A1		1	PESTILLO Slam Latch
47		142-103		2	TORNILLO

http://www.minnparbackhoeparts.com/

09-54		p3	04/05

CABINA - PUERTAS, SI UTILIZADO (VER LAS CRISTAL / BISAGRA; REF 4, 27, 29)

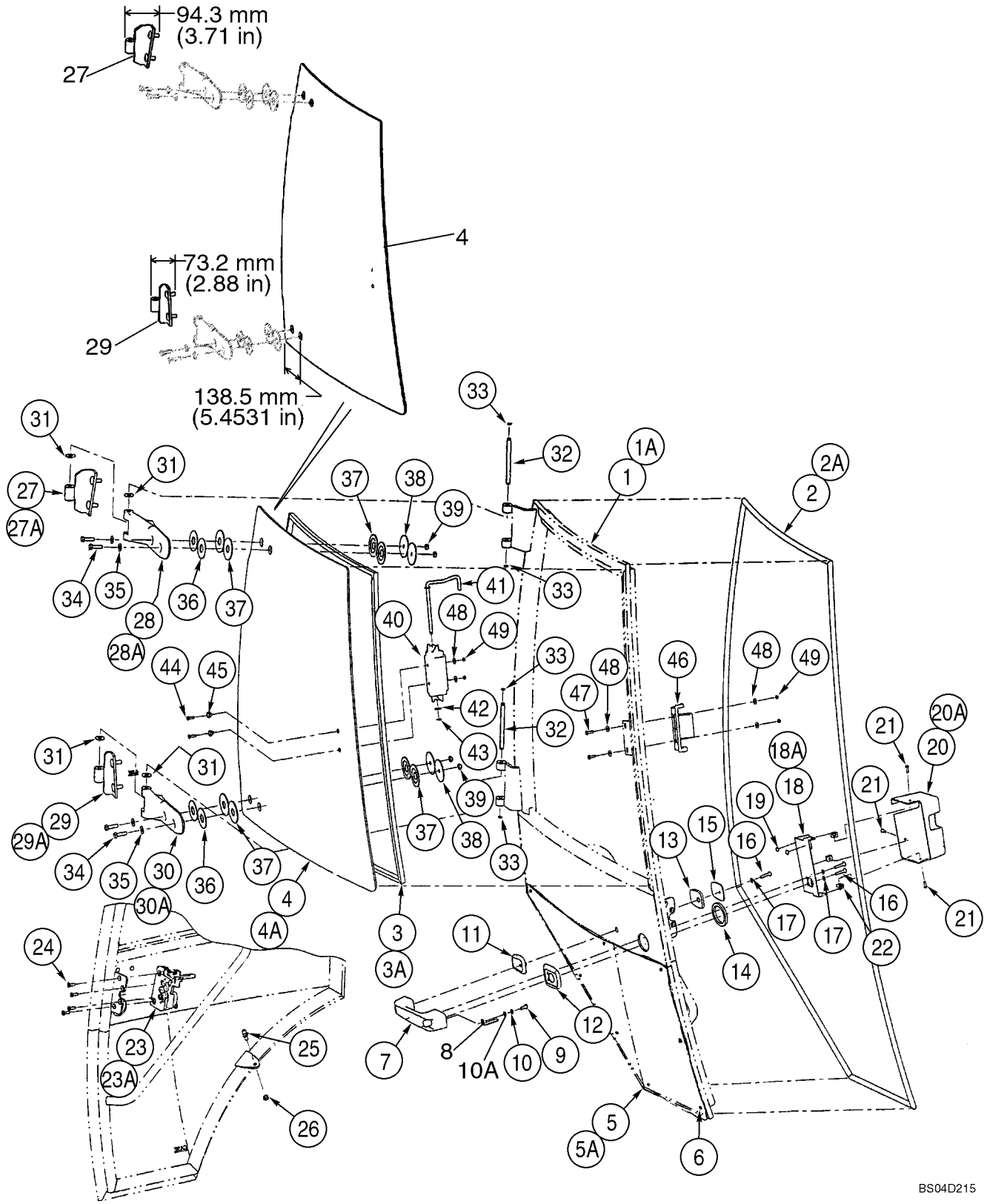

http://www.minnparbackhoeparts.com/

CABINA - PUERTAS, SI UTILIZADO (VER LAS CRISTAL / BISAGRA; REF 4, 27, 29)

REF	FN	PART NUMBER	YR/SN	QTY	DESCRIPTION
48		195-81023		6	ARANDELA 1/4 x 9/16 x 3/64
49		F45165		4	TUERCA SEGURIDAD No. 10

http://www.minnparbackhoeparts.com/

09-54A		p1	04/05

CABINA - PUERTAS, SI UTILIZADO (VER LAS CRISTAL / BISAGRA; REF 4, 27, 29)

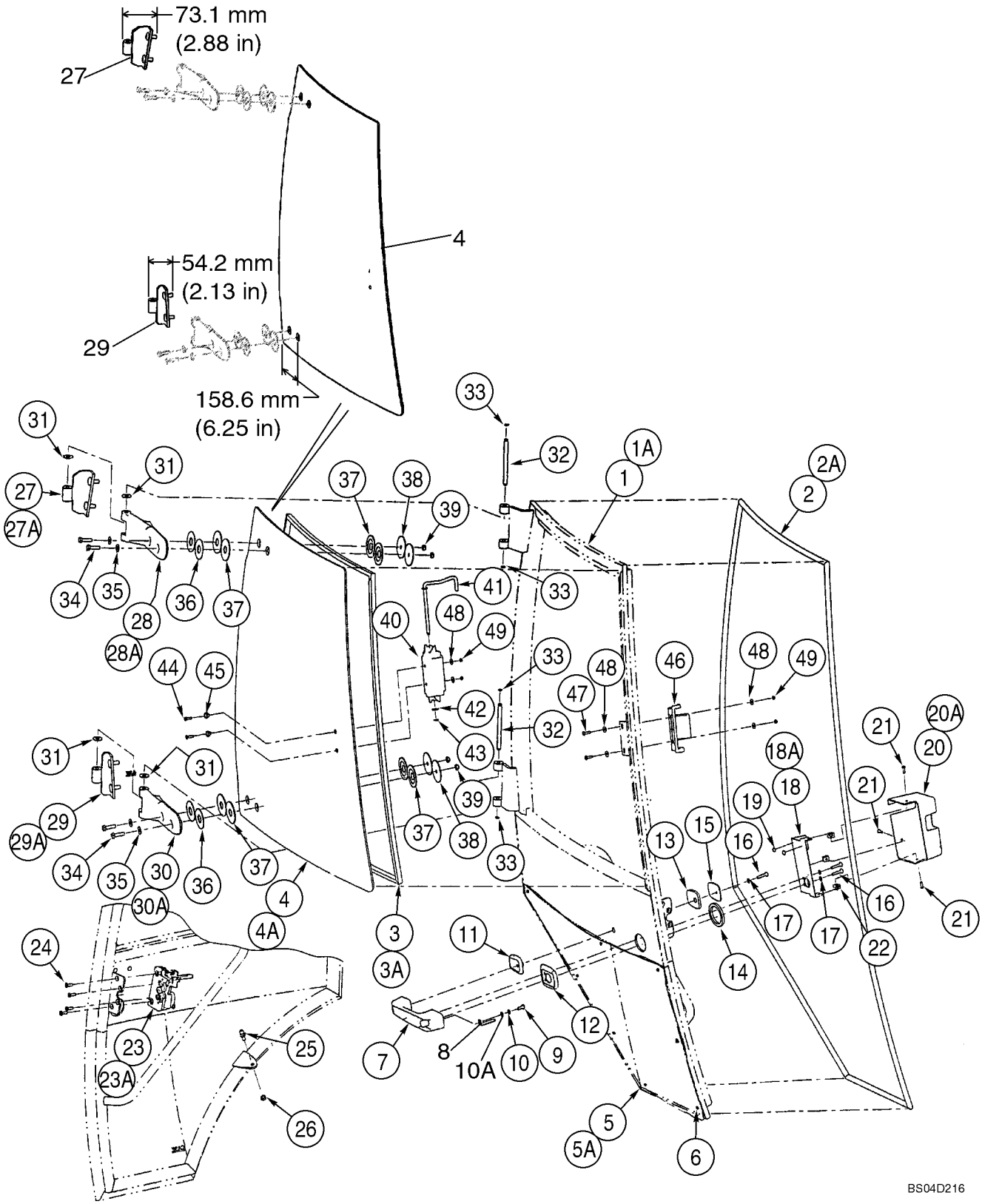

http://www.minnparbackhoeparts.com/

CABINA - PUERTAS, SI UTILIZADO (VER LAS CRISTAL / BISAGRA; REF 4, 27, 29)

REF	FN	PART NUMBER	YR/SN	QTY	DESCRIPTION
		REF			MANUAL Left-Hand and Right-Hand Cab Doors; Left-Hand Door Not Illustrated
		87439726		1	PUERTA DE CABINA, DERECH Right-Hand Door; Incl. Ref 1 - 49, Except Where Noted For Left-Hand Door
		341743A3		1	PUERTA DE CABINA,I. Left-Hand Door; Incl. Ref 1A - 49, Except Where Noted For Right-Hand Door
1		NSS		1	NO SE REPARA SEPARADAM. Frame; Right-Hand Door
1A		87443691		1	BASTIDOR (CONJUNTO) Frame; Left-Hand Door
2		394707A1		1	PORCION DE GOMMA Right-Hand Door
2A		390838A1		1	PORCION DE GOMMA Left-Hand Door
3		394708A1		1	JUNTA DE CRISTAL Window; Upper; Right-Hand Door
3A		391850A1		1	JUNTA DE CRISTAL Window; Upper; Left-Hand Door
		87448199		1	VENTANA (CJTO) SERVICE KIT, Right-Hand Door Window and Hinges; Includes Ref 4, 27, 29, Plus Instructions
4		87439725		1	VIDRIO Upper; Right-Hand Door; Distance From Edge to Second Hole 158.6 mm (6-1/4 in)
4A		338429A1		1	VIDRIO Upper; Left-Hand Door
5		338427A1		1	VENTANA Lower; Right-Hand Door
5A		338426A1		1	VENTANA Lower; Left-Hand Door
6		391827A1		4	ESPACIADOR 4 Per Door; Cut Bumpers In Half For 8 Locations
7		60-7083T1		1	MANECILLA Outer
8		442718A1		1	BOTON Release
9		440-12510		1	TORNILLO 1/4 x 5/8
10		492-11025		1	ARANDELA DE FRENO 1/4"
10A		895-11006		1	ARANDELA 6,6 x 12,5 x 1,6 mm
11		315276A1		1	MARCO Small
12		315273A1		1	MARCO Large
13		391847A1		1	JUNTA HERMETICA Small
14		391838A1		1	JUNTA HERMETICA Large
15		391848A1		1	PLACA DORSAL
16		393203A1		3	TORNILLO

http://www.minnparbackhoeparts.com/

09-54A		p2	04/05

CABINA - PUERTAS, SI UTILIZADO (VER LAS CRISTAL / BISAGRA; REF 4, 27, 29)

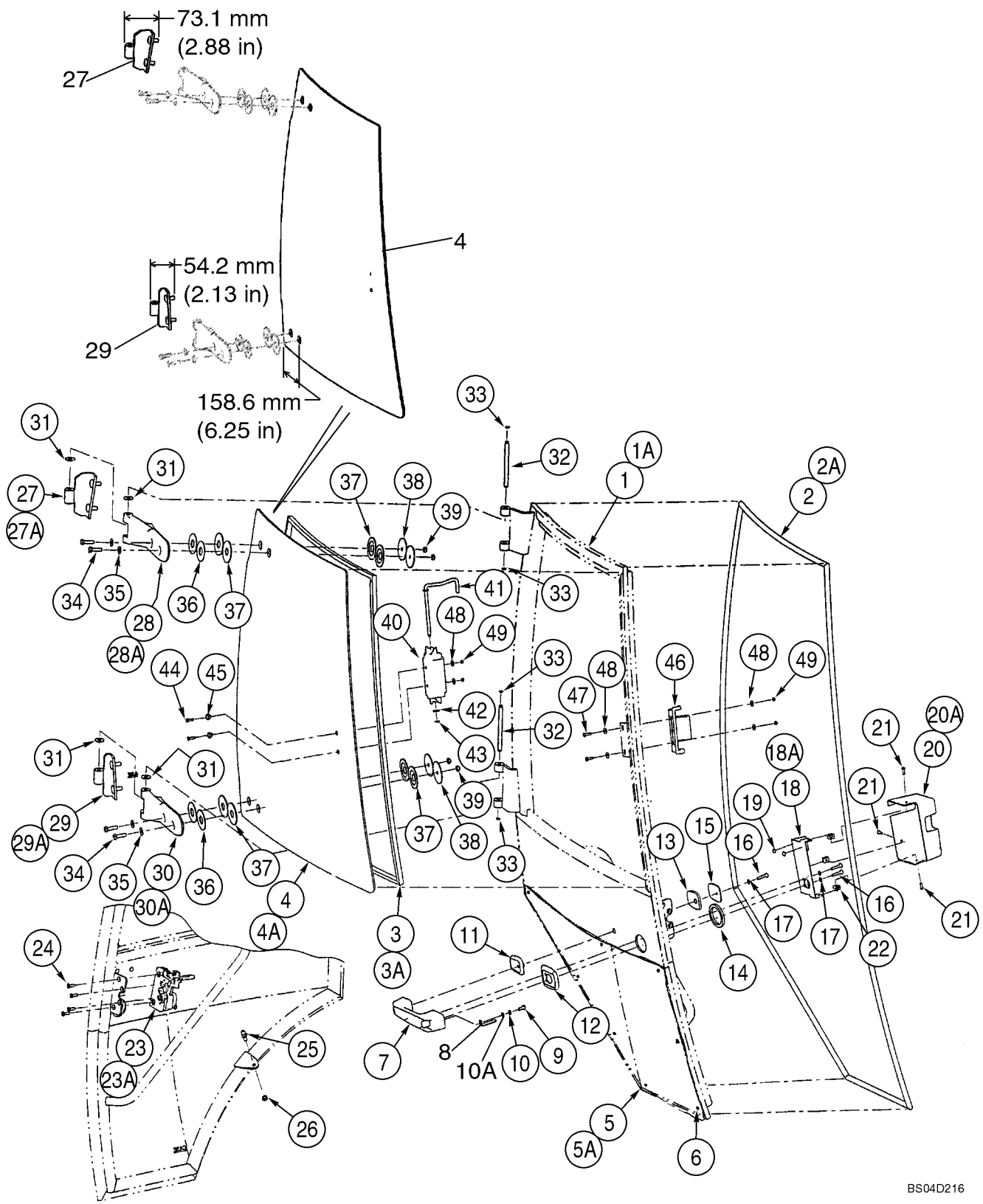

http://www.minnparbackhoeparts.com/

CABINA - PUERTAS, SI UTILIZADO (VER LAS CRISTAL / BISAGRA; REF 4, 27, 29)

REF	FN	PART NUMBER	YR/SN	QTY	DESCRIPTION
17		393202A1		3	ARANDELA 6 mm
18		394704A1		1	PIEZA DE SOPORTE Cover Mounting; Right-Hand Door
18A		391841A1		1	PIEZA DE SOPORTE Cover Mounting; Left-Hand Door
19		391827A1		2	ESPACIADOR
20		394705A1		1	TAPA Latch; Right-Hand Door
20A		391842A1		1	TAPA Latch; Left-Hand Door
21		390-100		3	TORNILLO
22		393209A1		3	TUERCA ESPECIAL
23		382777A1		1	PESTILLO Right-Hand Door
23A		382775A1		1	PESTILLO Left-Hand Door
24		569-4		4	TORNILLO
25		3234063R1		1	JUNTA DE ROTULA
26		832-10408		1	TUERCA M8
27		87439722		1	BISAGRA Upper; Right-Hand Door
27A		390840A1		1	BISAGRA Upper; Left-Hand Door
28		364134A2		1	BISAGRA Plastic; Upper; Right-Hand Door
28A		364132A2		1	BISAGRA Plastic; Upper; Left-Hand Door
29		87439723		1	BISAGRA Lower; Right-Hand Door
29A		390841A1		1	BISAGRA Lower; Left-Hand Door
30		364135A2		1	BISAGRA Plastic; Lower; Right-Hand Door
30A		364133A2		1	BISAGRA Plastic; Lower; Left-Hand Door
31		391845A1		4	ARANDELA Nylon
32		391843A1		2	PERNO
33		442773A1		4	RETENEDOR
34		514-633		4	TORNILLO M8 x 30
35		895-30107		4	ARANDELA
36		376334A1		4	ARANDELA 55 mm OD; Yellow
37		376336A1		8	ARANDELA ELASTICA Rubber
38		376332A1		4	ARANDELA 60 mm OD; Black
39		832-10508		4	TUERCA M8
40		368147A1		1	MANECILLA Slam Latch
41		391849A1		1	VARILLA
42		906086R1		1	ARANDELA 8.4 x 16 x 1.6 thk
43		100-39001		1	ANILLO
44		140-104		2	TORNILLO No. 8 x 3/4

http://www.minnparbackhoeparts.com/

09-54A		p3	04/05

CABINA - PUERTAS, SI UTILIZADO (VER LAS CRISTAL / BISAGRA; REF 4, 27, 29)

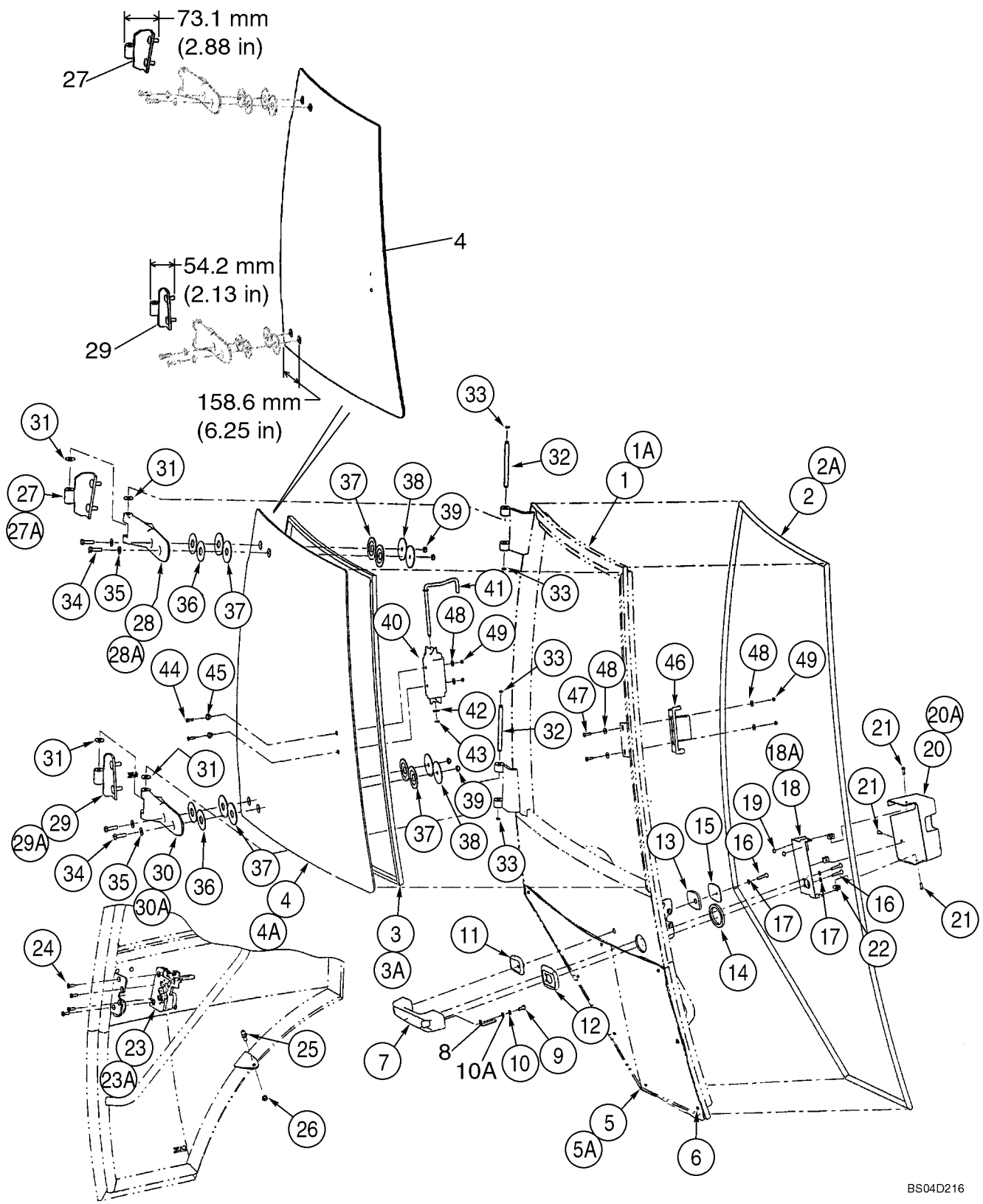

http://www.minnparbackhoeparts.com/

CABINA - PUERTAS, SI UTILIZADO (VER LAS CRISTAL / BISAGRA; REF 4, 27, 29)

REF	FN	PART NUMBER	YR/SN	QTY	DESCRIPTION
45		F64198		2	CASQUILLO Nylon
46		368146A1		1	PESTILLO Slam Latch
47		142-103		2	TORNILLO
48		195-81023		6	ARANDELA 1/4 x 9/16 x 3/64
49		F45165		4	TUERCA SEGURIDAD No. 10

http://www.minnparbackhoeparts.com/

09-55		p1	01/04

CABINA - MONTAJE DE LA PUERTA

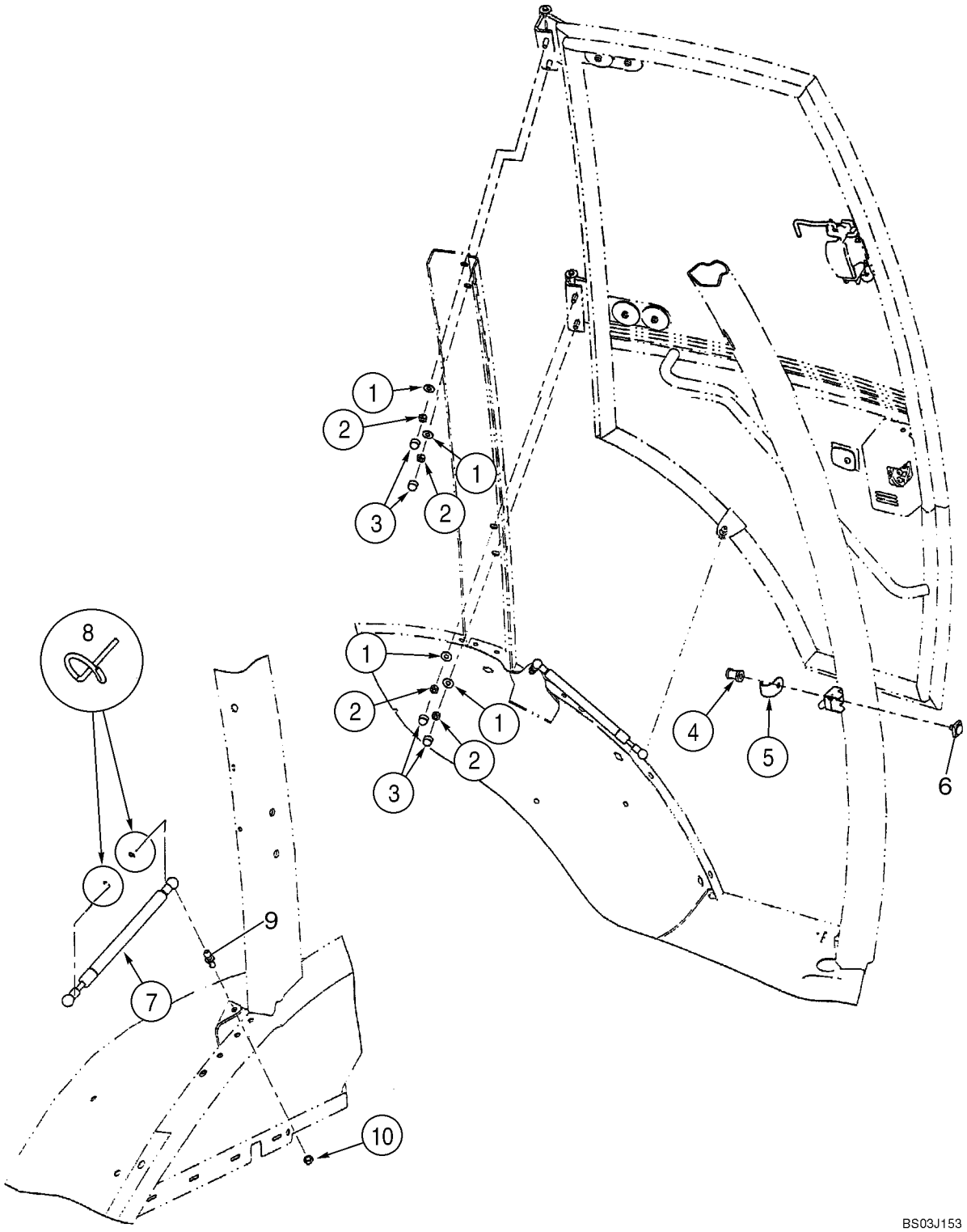

http://www.minnparbackhoeparts.com/

CABINA - MONTAJE DE LA PUERTA

REF	FN	PART NUMBER	YR/SN	QTY	DESCRIPTION
		REF			MANUAL Left-Hand and Right-Hand Cab Doors; Left-Hand Cab Door Shown
1		397064A1		4-8	ARANDELA FRENO 3/8 x 7/8 x 1/16 thk
2		232-1446		4-8	CONTRA TUERCA 3/8
3		396841A1		4-8	TAPON DEL DEPOSITO
4		87411108		1-2	PERNO ESPECIAL Striker
5		393211A1		1-2	DEFENSA
6		442842A1		1-2	BLOQUE (CONJUNTO) Striker
7		394800A1		1-2	RESORTE Gas Spring
8		3233348R1		2-4	CLIP ELECTRICO
9		432431A1		1-2	PRISIONERO Ball
10		832-10408		1-2	TUERCA M8

http://www.minnparbackhoeparts.com/

09-56		p1	04/04

CABINA - VENTANILLA, DERECHA, PARA MARCOS DE CABINA DE PUERTA ÚNICA, SI UTILIZADO (VER LAS CRISTAL /

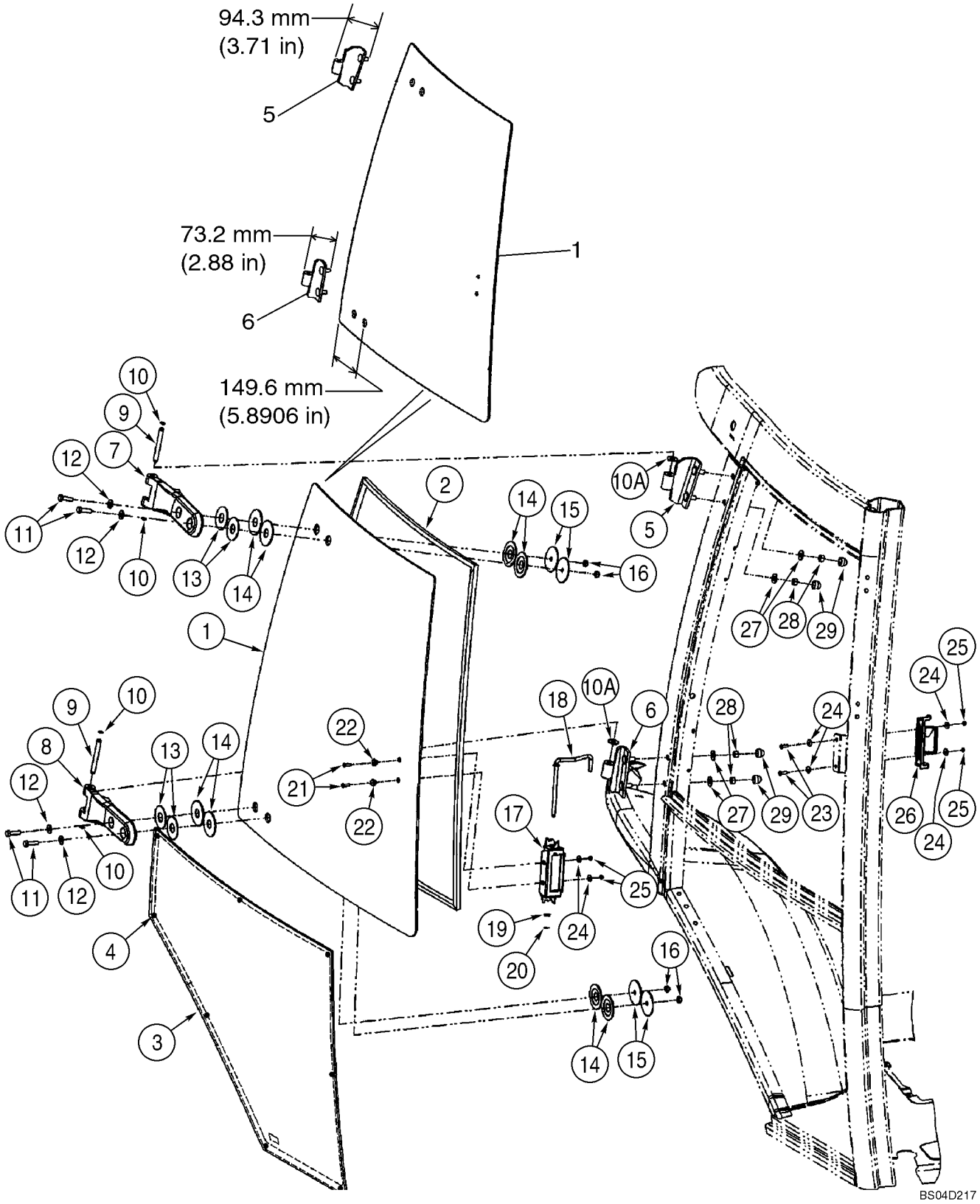

http://www.minnparbackhoeparts.com/

CABINA - VENTANILLA, DERECHA, PARA MARCOS DE CABINA DE PUERTA ÚNICA, SI UTILIZADO (VER LAS CRISTAL /

REF	FN	PART NUMBER	YR/SN	QTY	DESCRIPTION
		341746A2		1	VENTANA (CJTO) Right-Hand; Incl. Ref 1 - 29
1		360046A1		1	VENTANA Upper; Distance From Edge to Second Hole 149.6 mm (5-57/64 in)
2		394864A1		1	JUNTA DE CRISTAL
3		338428A1		1	VENTANA (CJTO) Lower
4		391827A1		4	ESPACIADOR Cut Bumpers In Half For 8 Locations
5		394701A1		1	BISAGRA Upper
6		394702A1		1	BISAGRA Lower
7		364134A2		1	BISAGRA Plastic; Upper
8		364135A2		1	BISAGRA Plastic; Lower
9		394865A1		2	PERNO
10		393330A1		4	ANILLO
10A		391845A1		4	ARANDELA Nylon
11		514-633		4	TORNILLO M8 x 30
12		895-30107		4	ARANDELA
13		376334A1		4	ARANDELA 55 mm OD; Yellow
14		376336A1		8	ARANDELA ELASTICA Rubber
15		376332A1		4	ARANDELA 60 mm OD; Black
16		832-10508		4	TUERCA M8
17		368147A1		1	MANECILLA Slam Latch
18		391849A1		1	VARILLA
19		906086R1		1	ARANDELA 8.4 x 16 x 1.6 thk
20		100-39001		1	ANILLO
21		140-104		2	TORNILLO No. 8 x 3/4
22		F64198		2	CASQUILLO Nylon
23		142-103		2	TORNILLO
24		195-81023		6	ARANDELA 1/4 x 9/16 x 3/64
25		F45165		4	TUERCA SEGURIDAD No. 10
26		368146A1		1	PESTILLO Slam Latch
27		397064A1		4	ARANDELA FRENO 3/8 x 7/8 x 1/16 thk
28		232-1446		4	CONTRA TUERCA 3/8
29		396841A1		4	TAPON DEL DEPOSITO

http://www.minnparbackhoeparts.com/

09-56A		p1	04/04

CABINA - VENTANILLA, DERECHA, PARA MARCOS DE CABINA DE PUERTA ÚNICA, SI UTILIZADO (VER LAS CRISTAL /

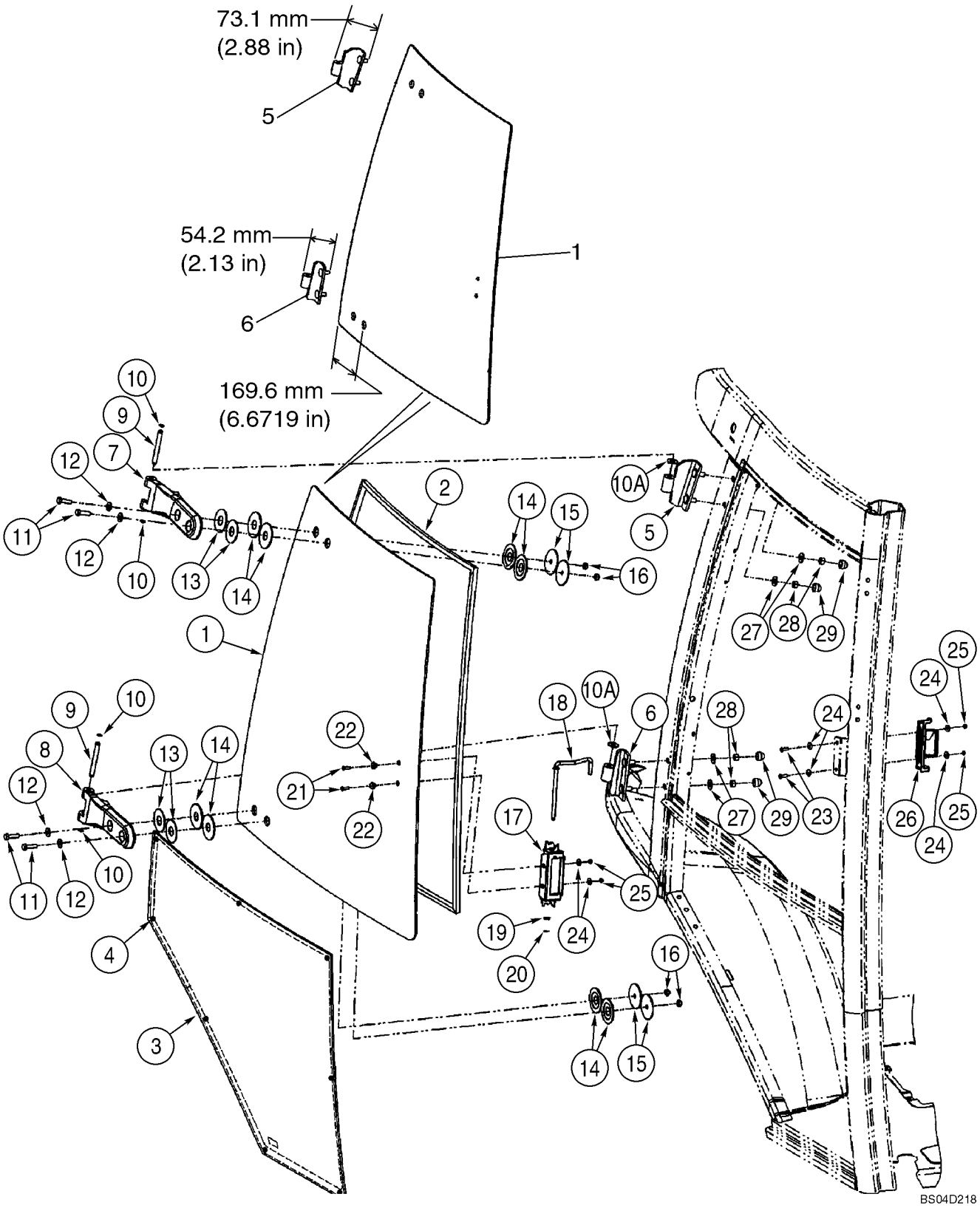

http://www.minnparbackhoeparts.com/

CABINA - VENTANILLA, DERECHA, PARA MARCOS DE CABINA DE PUERTA ÚNICA, SI UTILIZADO (VER LAS CRISTAL /

REF	FN	PART NUMBER	YR/SN	QTY	DESCRIPTION
		{87442204}		1	Right-Hand; Incl. Ref 1 - 29
		87448198		1	VENTANA (CJTO) SERVICE KIT, Right-Hand Window and Hinges; Incl. Ref 1, 5, 6, Plus Instructions
1		87439724		1	VENTANA Upper; Distance From Edge to Second Hole 169.6 mm (6-43/64 in)
2		394864A1		1	JUNTA DE CRISTAL
3		338428A1		1	VENTANA (CJTO) Lower
4		391827A1		4	ESPACIADOR Cut Bumpers In Half For 8 Locations
5		87439722		1	BISAGRA Upper
6		87439723		1	BISAGRA Lower
7		364134A2		1	BISAGRA Plastic; Upper
8		364135A2		1	BISAGRA Plastic; Lower
9		394865A1		2	PERNO
10		393330A1		4	ANILLO
10A		391845A1		4	ARANDELA Nylon
11		514-633		4	TORNILLO M8 x 30
12		895-30107		4	ARANDELA
13		376334A1		4	ARANDELA 55 mm OD; Yellow
14		376336A1		8	ARANDELA ELASTICA Rubber
15		376332A1		4	ARANDELA 60 mm OD; Black
16		832-10508		4	TUERCA M8
17		368147A1		1	MANECILLA Slam Latch
18		391849A1		1	VARILLA
19		906086R1		1	ARANDELA 8.4 x 16 x 1.6 thk
20		100-39001		1	ANILLO
21		140-104		2	TORNILLO No. 8 x 3/4
22		F64198		2	CASQUILLO Nylon
23		142-103		2	TORNILLO
24		195-81023		6	ARANDELA 1/4 x 9/16 x 3/64
25		F45165		4	TUERCA SEGURIDAD No. 10
26		368146A1		1	PESTILLO Slam Latch
27		397064A1		4	ARANDELA FRENO 3/8 x 7/8 x 1/16 thk
28		232-1446		4	CONTRA TUERCA 3/8
29		396841A1		4	TAPON DEL DEPOSITO

http://www.minnparbackhoeparts.com/

09-57		p1	04/04

CABINA - VENTANA, TRASERA

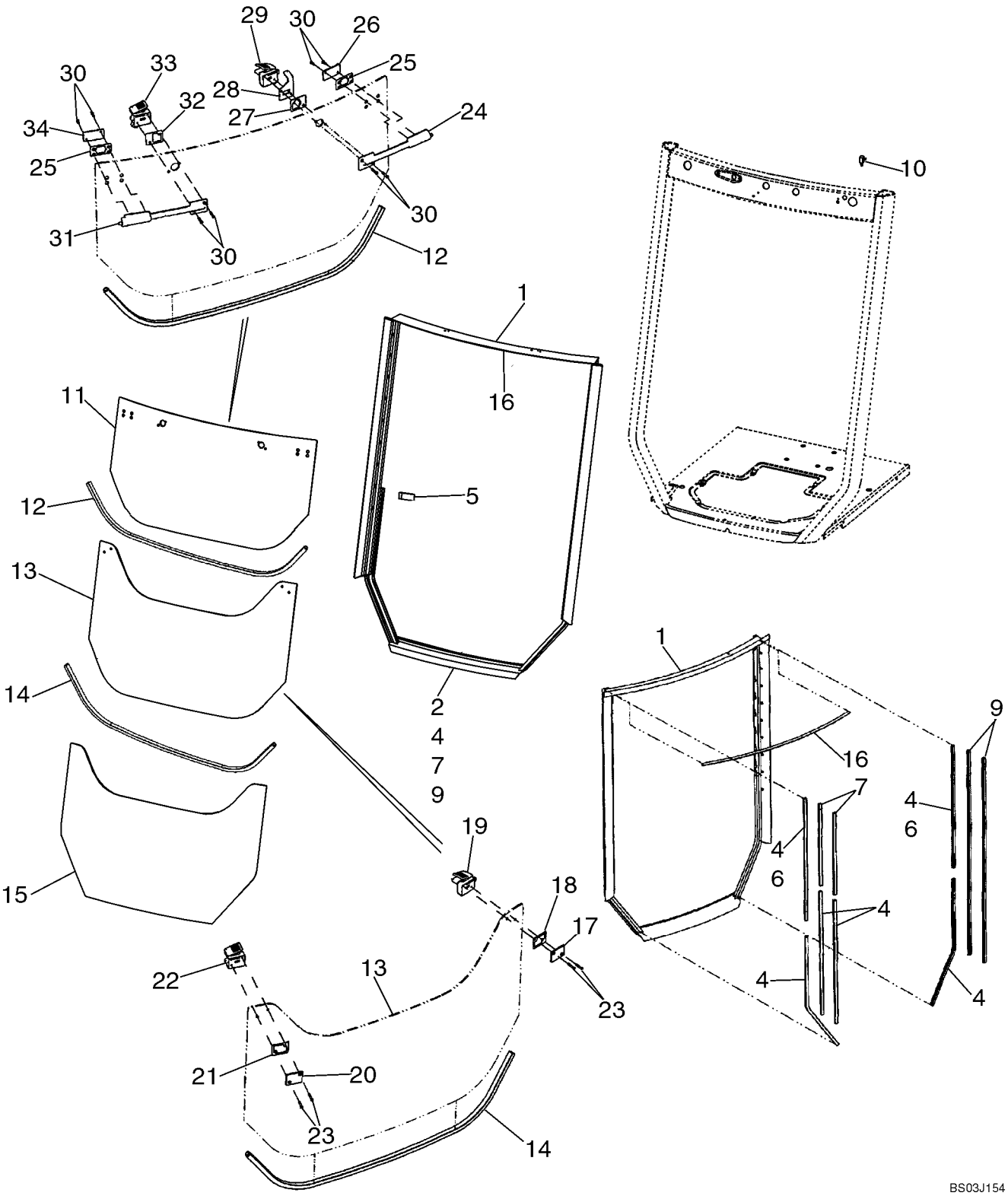

http://www.minnparbackhoeparts.com/

CABINA - VENTANA, TRASERA

REF	FN	PART NUMBER	YR/SN	QTY	DESCRIPTION
		411850A1		1	JEUGO Frame and Seal; Incl. 1, 4, 7, 9, 16
1		87435929		1	BASTIDOR (CONJUNTO) Included in 411850A1 Frame and Seal Kit; Replaces 403948A1 Frame
2		410867A1		1	JUNTA HERMETICA Rubber Seal; Bulb Type
		411851A1		1	JEUGO Seal; Incl. 4, 7, 9, 16
4		404228A1		6	ANILLO DE CIERRE 760 mm (29-15/16 in), Flocked Channel Seals; Cut From 402852A1; Included in 411851A1 Seal Kit and 411850A1 Frame and Seal Kit
5		400200A1		2	PORCION DE GOMMA Stop
6		404226A1		2	ANILLO DE CIERRE 787 mm (31 in), Flocked Channel Seals; Cut From 402852A1
7		404229A1		2	ANILLO DE CIERRE 508 mm (20 in), Flocked Channel Seals; Cut From 402852A1; Included In 411851A1 Seal Kit and 411850A1 Frame and Seal Kit
9		404227A1		2	ANILLO DE CIERRE 1270 mm (50 in), Flocked Channel Seals; Cut From 402852A1; Included in 411851A1 Seal Kit and 411850A1 Frame and Seal Kit
10		A187714		1	CONTACTOR Rear Wiper Cutout
		495-11047		2	ARANDELA 15/32 x 59/64 x 1/16
		425-147		1	TUERCA 7/16
11		352208A1		1	VENTANA Upper
12		395348A1		1	CINTA DE ADEREZO 1210 mm (47-21/32 in), Lower Glass Edge; Cut From 404426A1
		87434783		1	VENTANA (CJTO) Center; Includes Ref 13, 19, 22, 23; Plus (1) 87426969 Backing Plate and (4) Backing Plates and (4) Grommets Which Are Not Serviced Separately; Includes Instructions
13		352209A1		1	VENTANA Center
14		395348A1		1	CINTA DE ADEREZO 1210 mm (47-21/32 in), Lower Glass Edge; Cut From 404426A1
15		352210A1		1	VENTANA Lower
16		400494A1		1	ANILLO DE CIERRE 1095 mm (43-1/8 in), Hollow Seal; Cut From 404231A1; Included in 411851A1 Seal Kit and 411850A1 Frame and Seal Kit

http://www.minnparbackhoeparts.com/

09-57		p2	04/04

CABINA - VENTANA, TRASERA

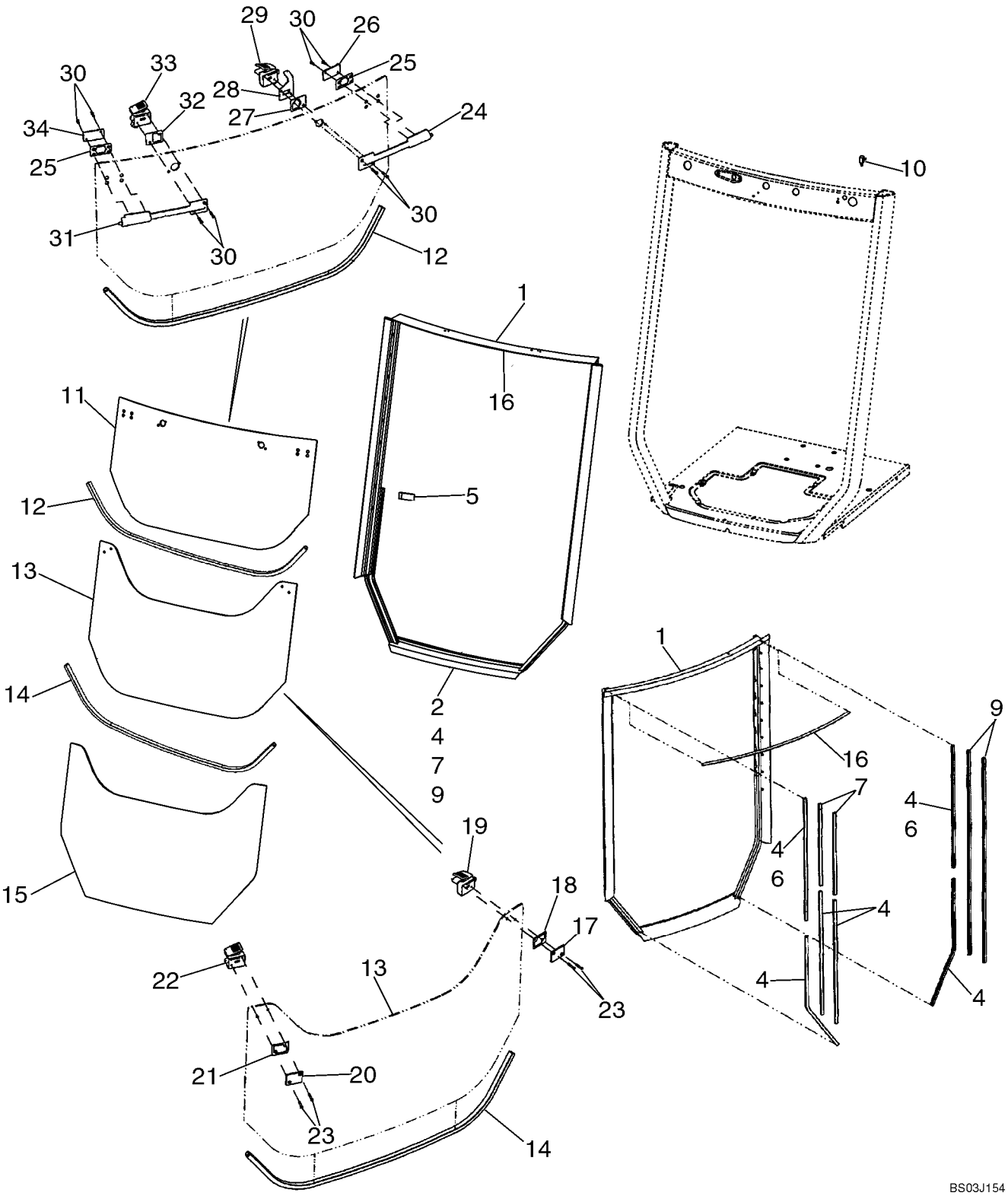

http://www.minnparbackhoeparts.com/

CABINA - VENTANA, TRASERA

REF	FN	PART NUMBER	YR/SN	QTY	DESCRIPTION
17		411917A1		1	PLACA DORSAL Kit; Includes 1 Each 402849A1 Plate, 411942A1 Gasket Pad
18		402847A1		1	PLACA PLASTICA Bushing
19		411909A1		1	PESTILLO Kit, Includes 1 Each 402868A1 Cover, 402867A1 Lever, 402833A1 Plunger, 402831A1 Housing, 402830A1 Bushing, 402870A1 Spring, 402869A1 Rivet, 402865A1 Bumper
20		411916A1		1	PLACA DORSAL Kit; Includes 1 Each 402848A1 Plate, 411942A1 Gasket Pad
21		402846A1		1	PLACA PLASTICA Bushing
22		411908A1		1	PESTILLO Kit, Includes 1 Each 402871A1 Cover, 402872A1 Lever, 402873A1 Plunger, 402832A1 Housing, 402830A1 Bushing, 402870A1 Spring, 402869A1 Rivet, 402865A1 Bumper
23		87435453		4	TORNILLO Flat Head Socket, M5 x 30
24		411910A1		1	PESTILLO Kit, Bolt Assy; Includes 1 Each 402860A1 Housing, 402840A1 Gasket, 402837A1 Bolt, 402861A1 Insert, 402838A1 Rod, 402856A1 Spring
25		402843A1		2	PLACA PLASTICA
26		87423503		1	PLACA DORSAL Backing Plate
27		402844A1		1	PLACA PLASTICA
28		402836A1		1	PIEZA DE SOPORTE Rear Wiper Cutout Switch
29		411914A1		1	PESTILLO Kit, Includes 1 Each 402831A1 Housing, 402866A1 Bumper, 402830A1 Bushing, 402833A1 Plunger, 402867A1 Lever, 402868A1 Cover
30		87445051		8	TORNILLO Flat Head Socket, M5 x 16
31		411911A1		1	PESTILLO Kit, Bolt Assy; Includes 1 Each 402863A1 Housing, 402851A1 Gasket, 402856A1 Spring, 402841A1 Bolt, 402861A1 Insert, 402838A1 Rod
32		402845A1		1	PLACA PLASTICA
33		411912A1		1	PESTILLO Kit, Includes 1 Each 402832A1 Housing, 402866A1 Bumper, 402830A1 Bushing, 402873A1 Plunger, 402872A1 Lever, 402871A1 Cover
34		87423502		1	PLACA DORSAL Backing Plate

http://www.minnparbackhoeparts.com/

09-57		p3	04/04

CABINA - VENTANA, TRASERA

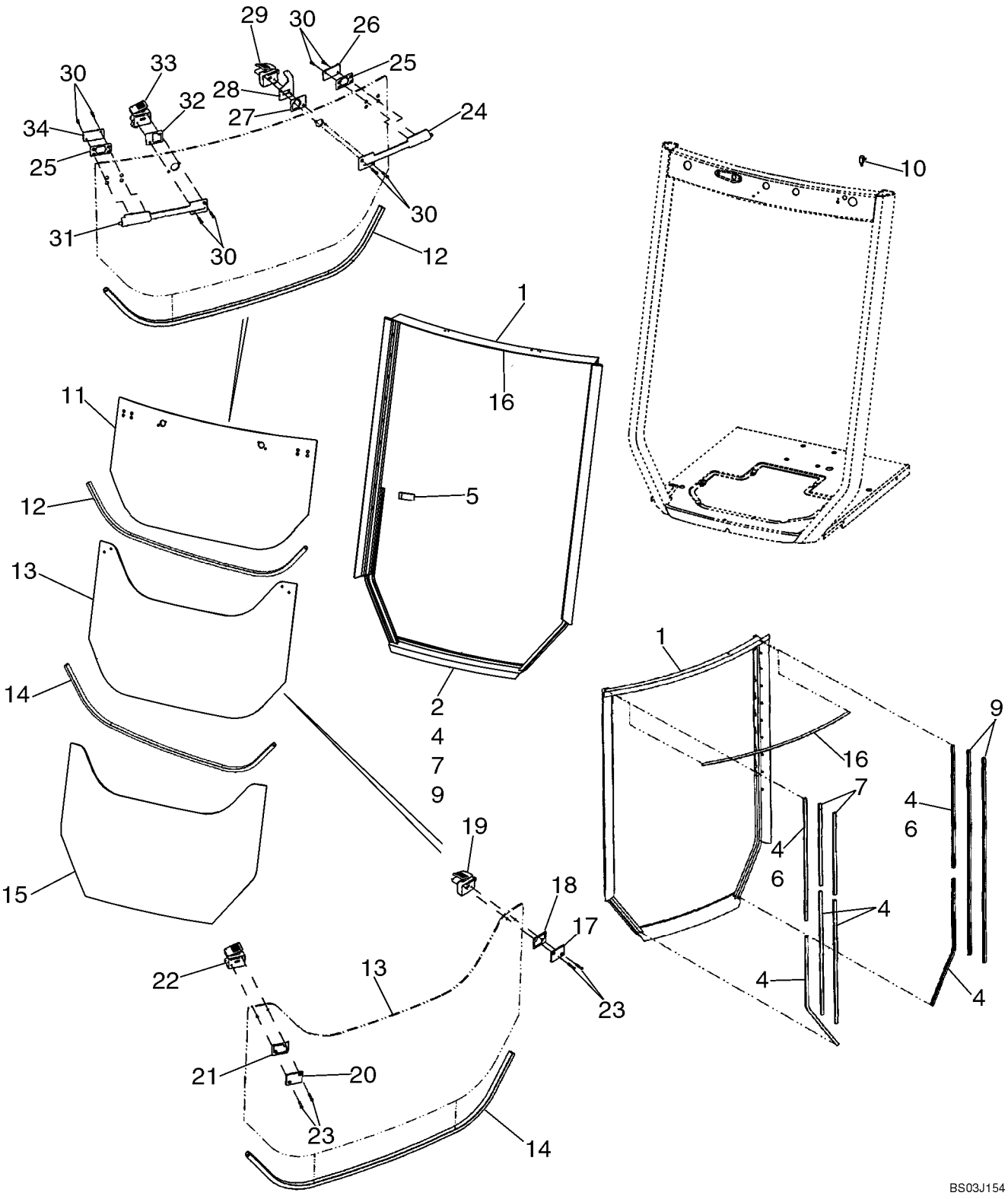

http://www.minnparbackhoeparts.com/

CABINA - VENTANA, TRASERA

REF	FN	PART NUMBER	YR/SN	QTY	DESCRIPTION
		411844A1		1	JEUGO Upper Bolt Latch; Includes 1 Each 411910A1 Bolt Assy Ref 24, 87423502 Backing Plate Ref 34, 87423503 Backing Plate Ref 26, (2) 402843A1 Bushing late Ref 25
		411845A1		1	JEUGO Upper Bolt Latch; Includes 1 Each 411911A1 Bolt Assy Ref 31, 87423502 Backing Plate Ref 34, 87423503 Backing Plate Ref 26, (2) 402843A1 Bushing Plate Ref 25
		411846A1		1	JEUGO Mid Catch; Includes 1 Each 411908A1 Catch Kit Ref 22, 411916A1 Backing Plate Kit Ref 20, 402846A1 Bushing Plate Ref 21
		411847A1		1	JEUGO Mid Catch; Includes 1 Each 411909A1 Catch Kit Ref 19, 411917A1 Backing Plate Ref 17, 402847A1 Bushing Plate Ref 18
		411848A1		1	JEUGO Upper Catch; Includes 1 Each 411912A1 Upper Catch Kit Ref 33, 402845A1 Bushing Plate Ref 32
		411849A1		1	JEUGO Upper Catch; Includes 1 Each 411914A1 Upper Catch Kit Ref 29, 402844A1 Bushing Plate Ref 27

http://www.minnparbackhoeparts.com/

09-58		p1	05/05

CABINA - ARANDELA, PARABRISAS

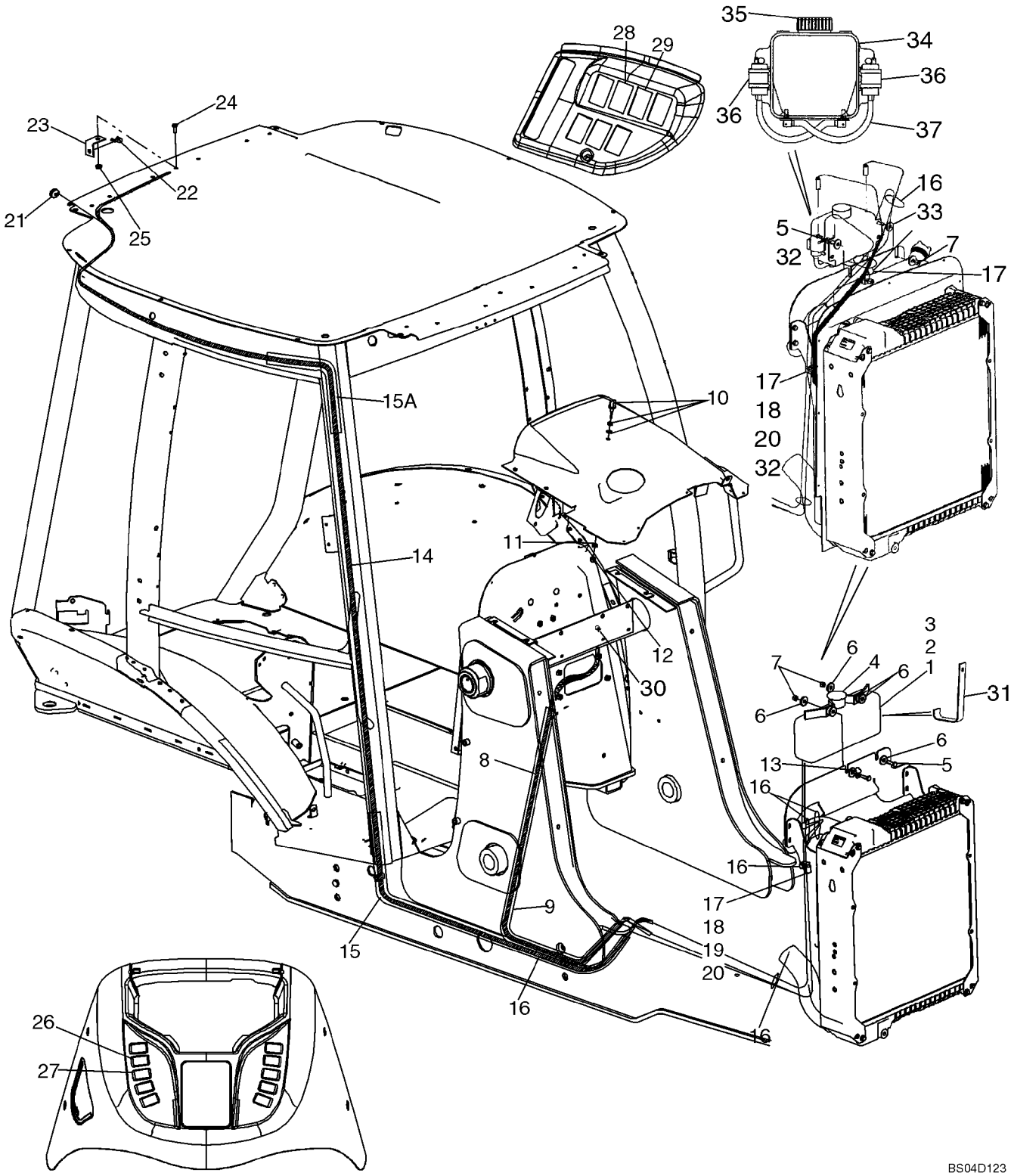

http://www.minnparbackhoeparts.com/

CABINA - ARANDELA, PARABRISAS

REF	FN	PART NUMBER	YR/SN	QTY	DESCRIPTION
		E46560		1	DEPÓSITO Incl. Ref 1 - 4; If Used
1		NSS		1	NO SE REPARA SEPARADAM. RESERVOIR
2		E47239		2	ANILLO DE CIERRE
3		E47238		2	BOMBA MOTOR, 12 Volt
4		E47240		1	TAPÓN Cap
5		614-8030		2	TORNILLO M8 x 30
6		496-41041		7	ARANDELA 13/32 x 1-1/8 x 1/8
7		832-10408		2	TUERCA M8
8		87428316		1	TUBO (METROS) HOSE 3150 mm (124-1/64 in); Front Washer; Cut From 1968141CX
9		386718A3		1	DEFENSA 1630 mm (64-3/16 in); Cut From 397155A2
10		284154A1		1	INYECTOR Includes A Steel and Rubber Washer Which Are Not Serviced Separately
11		492-11038		1	ARANDELA DE FRENO 3/8"
12		425-106		1	TUERCA 3/8
13		D147383		1	SUJETADOR J-Clamp, 5/8
14		87423346		1	MANGA 6325 mm (249-1/64 in); Rear Washer; Cut From 1968141CX
15		408966A1		1	DEFENSA 2200 mm (86-5/8 in); Rear Washer Hose; Lower; Cut From 397155A2
15A		408965A1		1	DEFENSA 550 mm (21-11/16 in); Rear Washer Hose, Upper; Cut From 397155A2
16		L18337		6	BANDA 15 in
17		D147383		1	SUJETADOR J-Clamp, 5/8
18		614-8016		1	TORNILLO M8 x 16
19		895-11008		1	ARANDELA Flat
20		829-1408		1	TUERCA M8
21		87442441		1	PASACABLES Washer, Hose
22		E43769		1	VAPORIZADOR Rear Nozzle; Includes Rubber Seal Which Is Not Serviced Separately
23		386720A1		1	PIEZA DE SOPORTE Rear Nozzle
24		614-8020		1	TORNILLO M8 x 20
25		825-2408		1	TUERCA M8
26		386785A1		1	CONTACTOR Front Wiper
27		386787A1		1	CONTACTOR Front Washer
28		386786A1		1	CONTACTOR Rear Wiper

http://www.minnparbackhoeparts.com/

09-58		p2	05/05

CABINA - ARANDELA, PARABRISAS

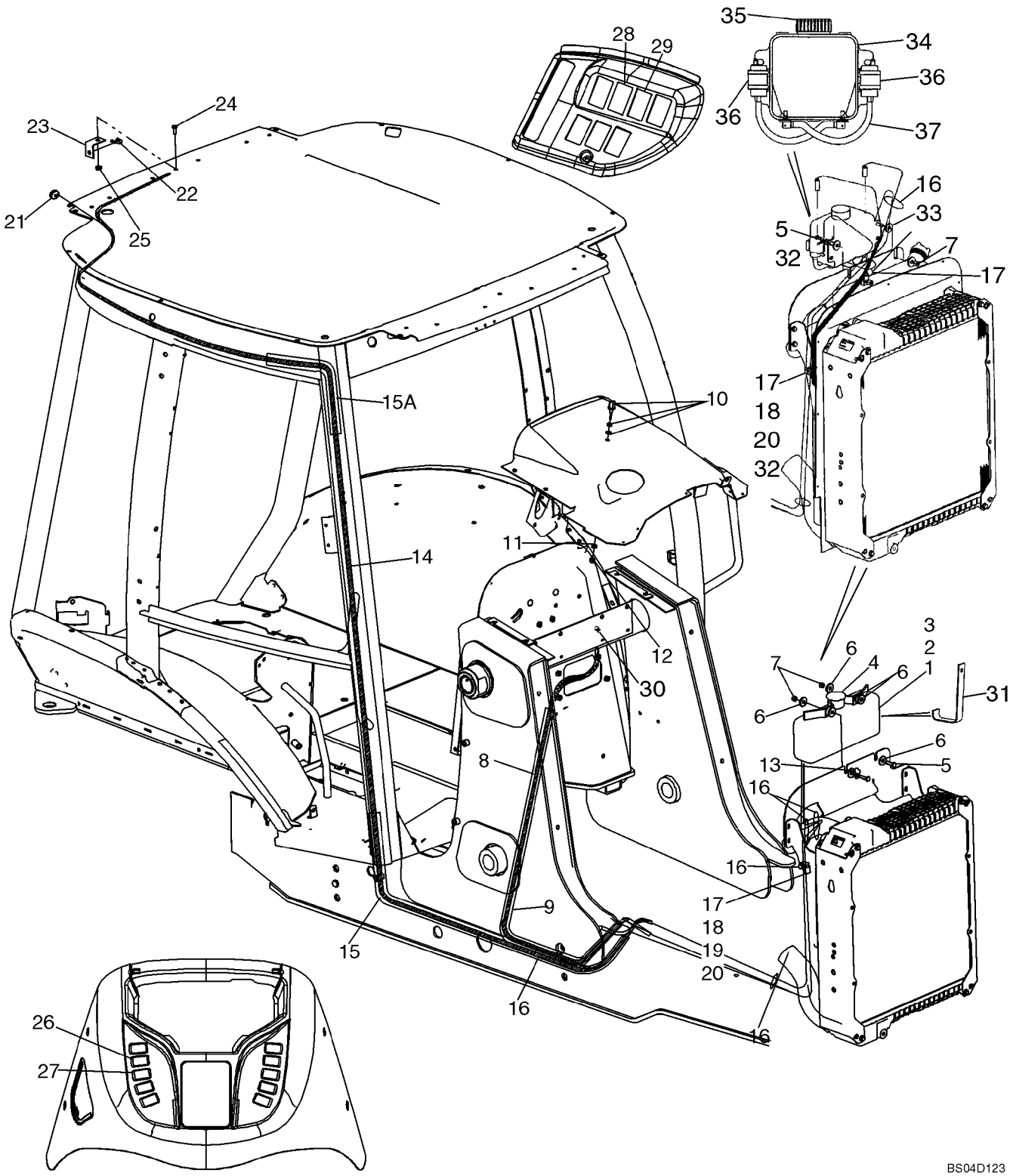

http://www.minnparbackhoeparts.com/

CABINA - ARANDELA, PARABRISAS

REF	FN	PART NUMBER	YR/SN	QTY	DESCRIPTION
29		386788A1		1	CONTACTOR Rear Washer
30		87444176		1	COLLAR
31		87442924		1	TENSOR Used With E46560 Reservoir; If Used
32		896-11008		3	ARANDELA 9 x 17 x 2
33		496-41041		4	ARANDELA 13/32 x 1-1/8 x 1/8
		87448685		1	LIMPIAPARABRISAS RESERVOIR; Incl. Ref 34 - 38; If Used
34		87449514		1	DEPOSITO LAVACRIST. 20 Quart
35		86507190		1	CAPUCHA DE TAPON
36		86507198		2	POMPILLA Component Parts Not Serviced Separately
37		87449517		1	TUBO (METROS) 203 mm (8 in)
38		L18337		1	BANDA Not Illustrated

http://www.minnparbackhoeparts.com/

CABINA - LIMPIA PARABRISAS

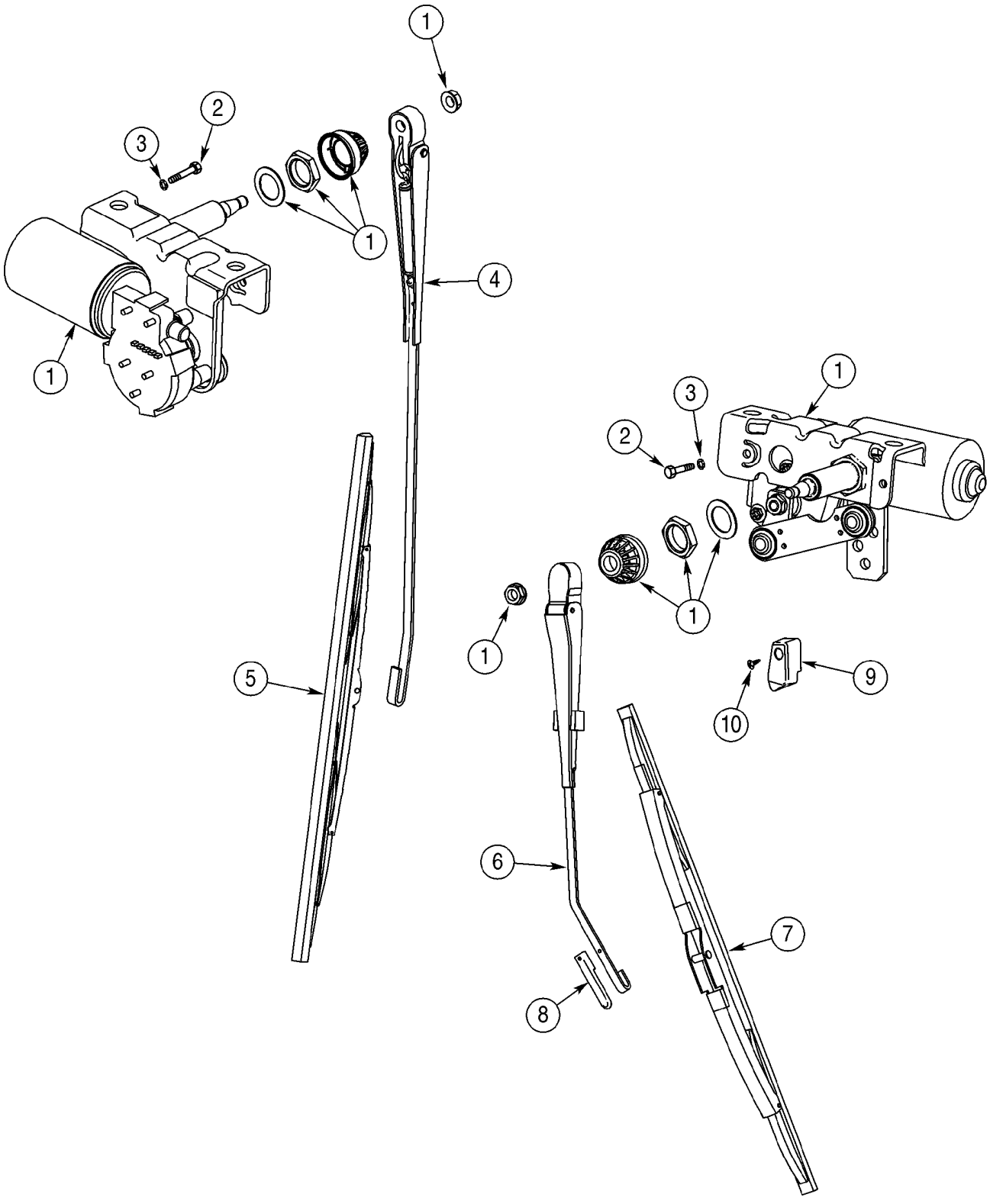

http://www.minnparbackhoeparts.com/

CABINA - LIMPIA PARABRISAS

REF	FN	PART NUMBER	YR/SN	QTY	DESCRIPTION
1		450037A1		2	LIMPIA-PARABRISAS 12V
		404617A1		1	HAZ Front Lamps and Wiper
		396018A3		1	HAZ Cab, B-Post, Rear Wiper, Radio, Blower, Dome Lamp; Replaces 396018A2 Harness
		386786A1		1	CONTACTOR Rear Wiper
		386785A1		1	CONTACTOR Front Wiper
		A187714		1	CONTACTOR Rear Wiper Cutout Switch
		495-11047		2	ARANDELA 15/32 x 59/64 x 1/16
		425-147		1	TUERCA 7/16
2		814-6050		4	TORNILLO M6 x 50
3		892-11006		4	ARANDELA DE FRENO M6
4		D128745		1	BRAZO DE ESCOBILLAS Front Wiper
5		414426A1		1	ESCOBILLA Front Wiper
6		395136A1		1	BRAZO DE ESCOBILLAS Rear Wiper
7		D128022		1	ESCOBILLA Rear Wiper; 13.77 inch; If Used
7		A187603		1	ESCOBILLA Rear Wiper; 16 inch; If Used
8		395033A1		1	SUJETADOR
9		395026A1		1	RAMPA Block
10		395389A1		1	TORNILLO M6

http://www.minnparbackhoeparts.com/

09-60		p1	01/04

REVESTIMIENTO DE LA CABINA - FILTRO, REJILLAS, LÁMPARA DEL TECHO

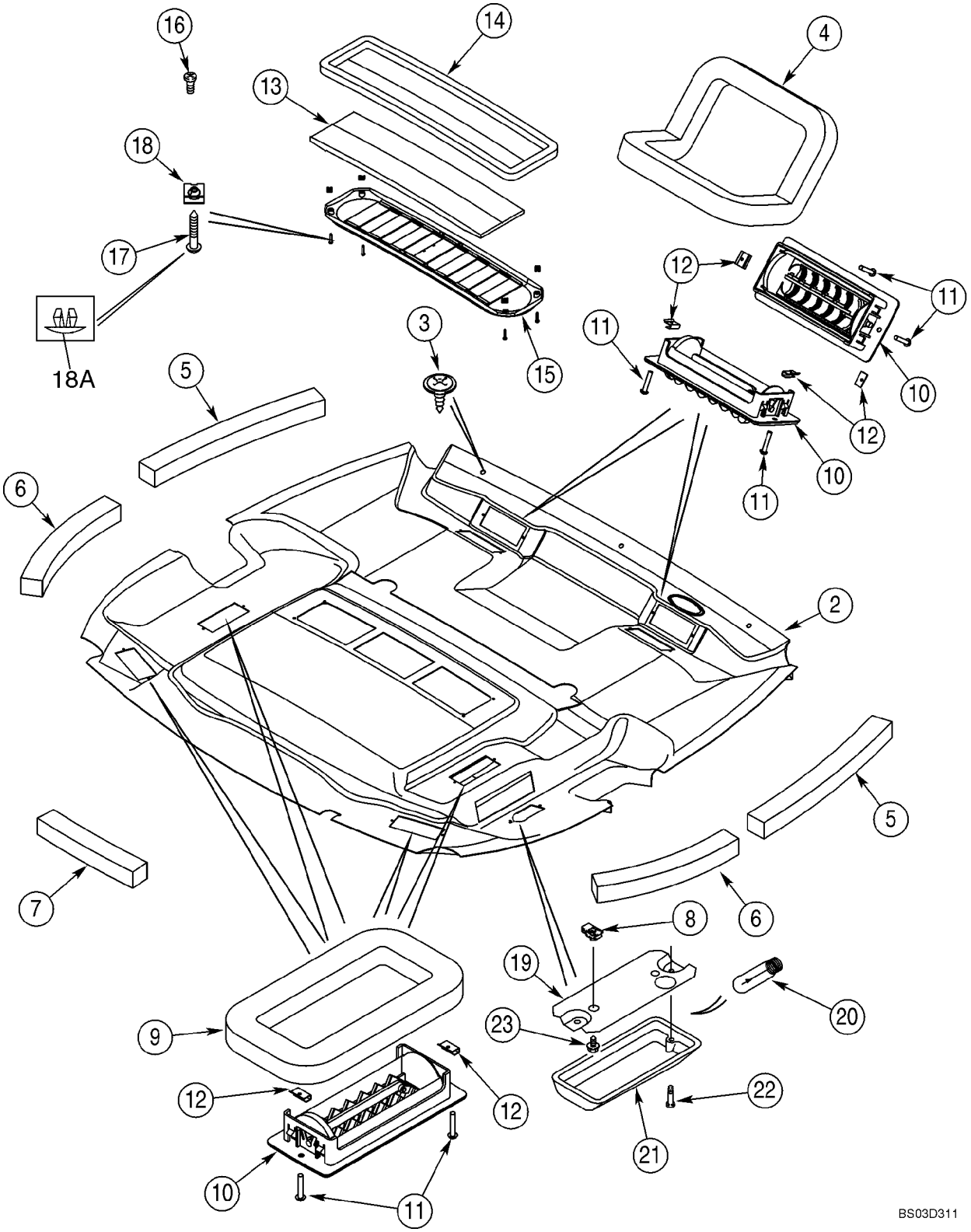

http://www.minnparbackhoeparts.com/

REVESTIMIENTO DE LA CABINA - FILTRO, REJILLAS, LÁMPARA DEL TECHO

REF	FN	PART NUMBER	YR/SN	QTY	DESCRIPTION
		367705A6		1	REVESTIMIENTO/TECHO HEADLINER ASSY, Standard Interior; Incl. Ref 1, 4 - 18A
		360272A6		1	REVESTIMIENTO/TECHO HEADLINER ASSY, Deluxe Interior; Incl. Ref 2, 4 - 18A
1		367704A4		1	REVESTIMIENTO/TECHO Shell; Standard Interior; Not Illustrated
2		381696A5		1	REVESTIMIENTO/TECHO Shell With Foam and Fabric Covering; Deluxe Interior
3		396516A1		3	PUNZON VALVULA
4		368813A2		2	ANILLO DE CIERRE Defrost
5		379160A1		2	ANILLO DE CIERRE 494 mm; Foam; Adhesive Back; Front
6		379161A1		2	ANILLO DE CIERRE 379 mm; Foam; Adhesive Back; Rear
7		379209A1		1	ANILLO DE CIERRE 303 mm; Foam; Adhesive Back, Center, Rear
8		131-861		2	TUERCA No. 10; Dome Lamp
9		377194A1		4	ANILLO DE CIERRE Heat and Air
10		363883A1		8	RERILLA (CONJUNTO)
11		140-103		16	TORNILLO No. 6 x 3/4
12		125749A1		16	TUERCA J-Type, No. 6
13		377594A5		1	FILTRO Air Recirculation
14		381972A1		1	ANILLO DE CIERRE
15		369450A1		1	CALANDRIA Air Recirculation; Incl. Ref 16
16		260-1436		2	TORNILLO
17		414600A1		4	TORNILLO
18		177269A1		4	TUERCA
18A		409723A1		4	TAPÓN Plastic; Fits 5,5 mm Hole
		380719A2		1	FARO Dome Lamp; Incl. Ref 19 - 21
19		NSS		1	NO SE REPARA SEPARADAM. Base
20		N14466		1	AMPOLLA
21		NSS		1	NO SE REPARA SEPARADAM. Lens; With Switch
22		440-1088		2	TORNILLO No. 8 x 1/2 in; Base To Lens
23		281-54512		2	TORNILLO No. 10 x 3/4; Lamp To Headliner

http://www.minnparbackhoeparts.com/

09-61		p1	01/04

CABINA - FILTRO, AIRE

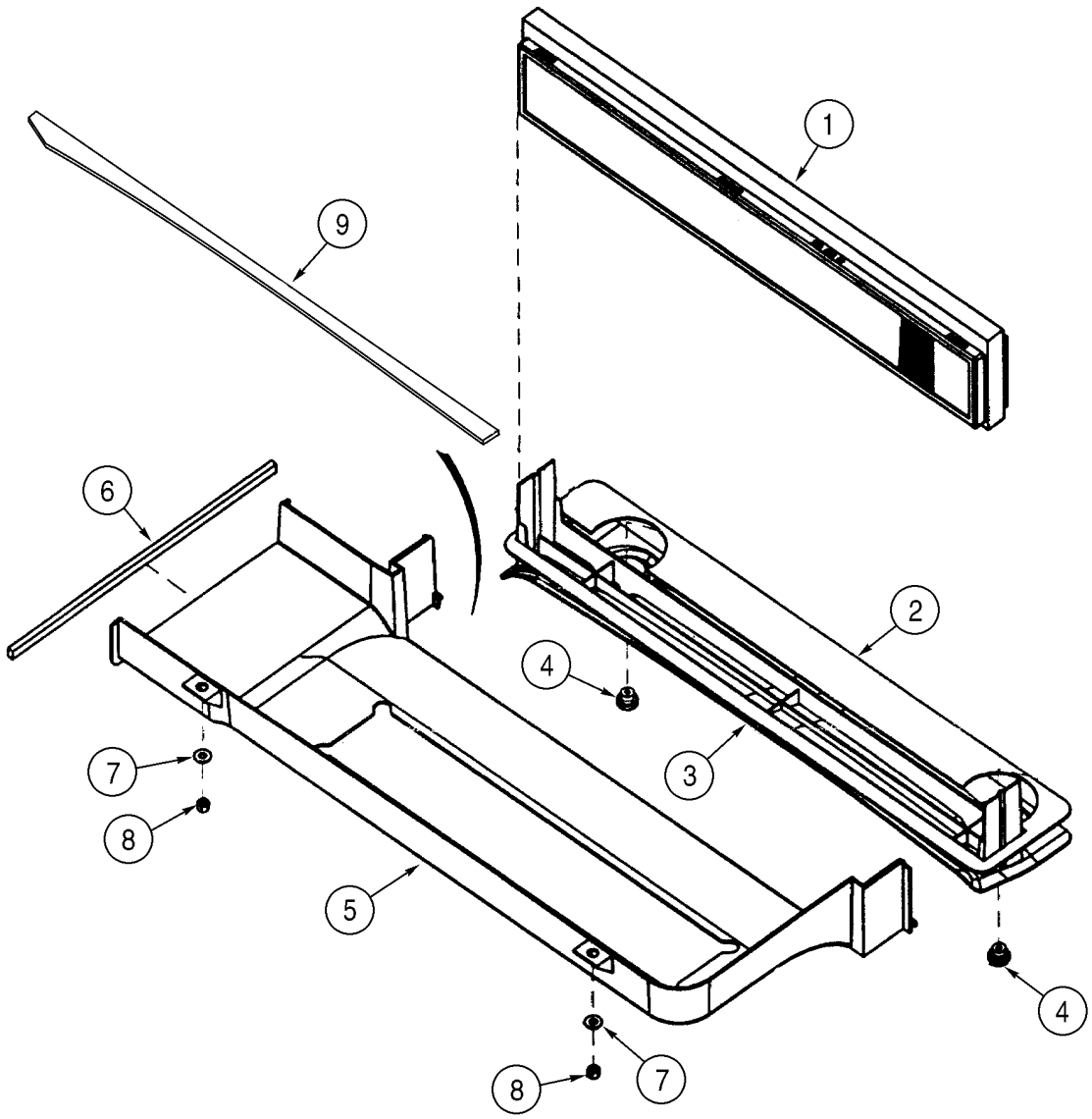

BS00F073

http://www.minnparbackhoeparts.com/

CABINA - FILTRO, AIRE

REF	FN	PART NUMBER	YR/SN	QTY	DESCRIPTION
1		360260A2		1	ELEMENTO DE FILTRADO Includes Foam Seal
2		382770A2		1	ANILLO DE CIERRE
3		360261A1		1	BANDEJA
4		398738A1		2	PLACA Fresh Air Duct Retainer
5		360252A2		1	CONDUCTO Fresh Air Intake
6		368990A1		1	ANILLO DE CIERRE
7		895-15008		2	ARANDELA 9 x 20 x 1,6 mm
8		832-10408		2	TUERCA M8
9		403271A1		1	ANILLO DE CIERRE 882 mm; Adhesive Back

http://www.minnparbackhoeparts.com/

09-62		p1	05/04

CABINA - ALOJAMIENTO DEL SOPLADOR, CONDUCTOS DE VENTILACIÓN, TUBOS DE DRENADO

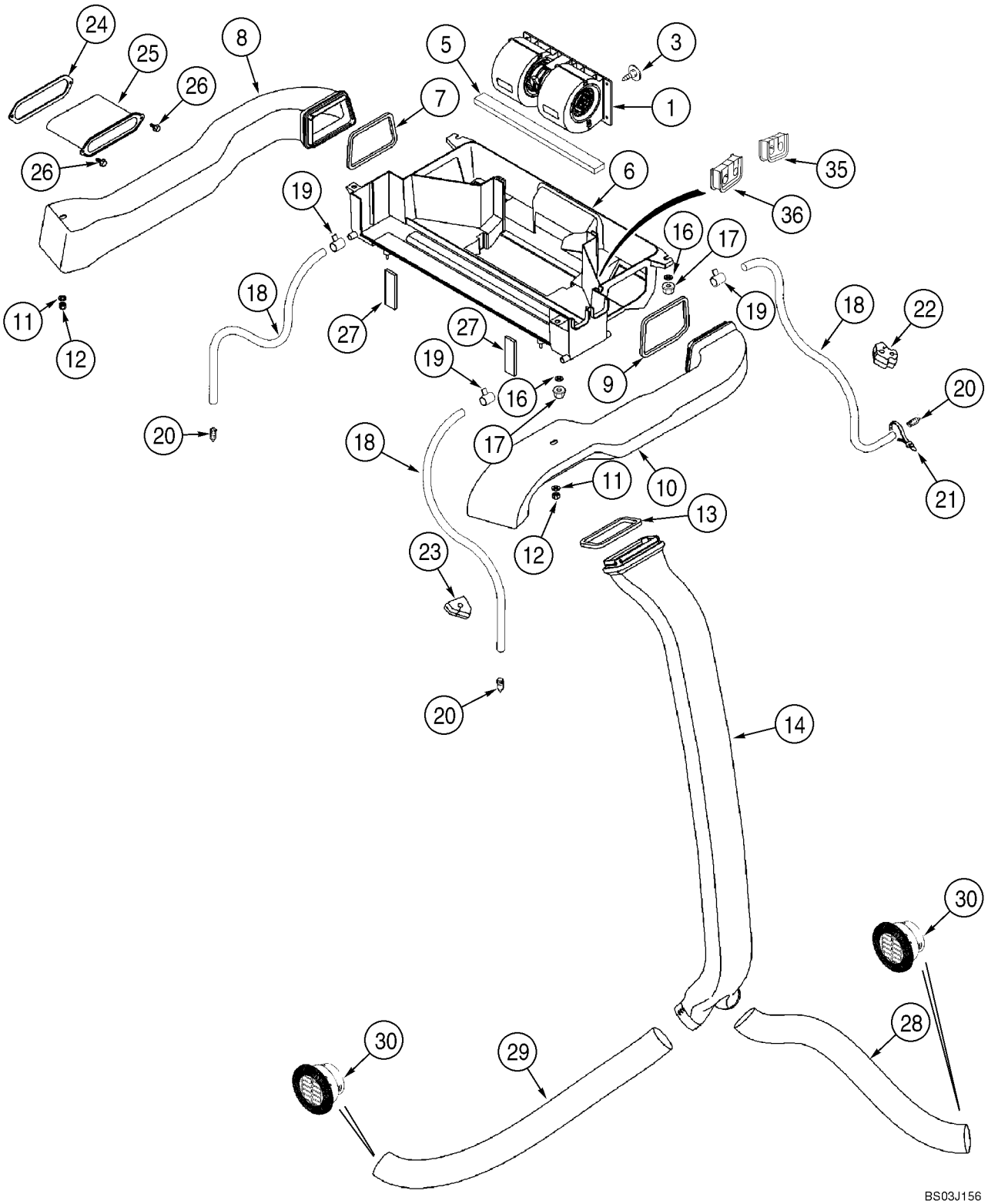

http://www.minnparbackhoeparts.com/

CABINA - ALOJAMIENTO DEL SOPLADOR, CONDUCTOS DE VENTILACIÓN, TUBOS DE DRENADO

REF	FN	PART NUMBER	YR/SN	QTY	DESCRIPTION
1		377220A2		1	VENTILADOR (CONJUNTO Component Parts Not Serviced Separately; Kysor/Westran Brand; If Used; For Blower Switch, See Figure 04-10
1		377241A2		1	VENTILADOR (CONJUNTO Component Parts Not Serviced Separately; Aurora Brand; If Used; For Blower Switch, See Figure 04-10
3		182697A1		1	GRAPA
5		181981A1		1	JUNTA HERMETICA 6 x 20 x 355 mm; Adhesive Back; Under Blower
6		360251A3		1	CUBIERTA PRINCIPAL Heat and Air; Includes 373995A1
		373995A1		2	INTRODUCTOR
7		368805A1		1	ANILLO DE CIERRE Left-Hand Duct
8		360253A3		1	CONDUCTO Left-Hand
9		369249A1		1	ANILLO DE CIERRE Right-Hand Duct
10		360254A3		1	CONDUCTO Right-Hand
11		895-15010		2	ARANDELA 11 x 24 x 2 mm
12		832-10408		2	TUERCA M8
13		368807A1		1	ANILLO DE CIERRE
14		360255A1		1	CONDUCTO
16		895-15008		4	ARANDELA 9 x 20 x 1,6 mm
17		832-10408		4	TUERCA M8
18		368821A1		4	MANGA 3050 mm; Drain
19		214-1406		4	COLLAR 7/16 - 25/32
20		365789A1		4	GRIFO DE VACIADO Drain
21		L18337		2	BANDA 15 in
22		383794A2		2	TAPÓN
23		383795A2		2	TAPÓN 580SM Models
23		395470A1		2	TAPÓN 580SM+ Models
24		381113A2		1	ANILLO DE CIERRE
25		381111A2		1	MANGUITO
26		281-18712		2	TORNILLO 1/4 st x 3/4
27		377230A3		2	ANILLO DE CIERRE 16 mm thk; Fresh Air Duct To Ventilation Housing
28		375392A1		1	MANGUITO 750 mm; Cut From 236559A1
29		368818A1		1	MANGUITO 1015 mm; Cut From 236559A1
30		398986A1		2	RESPIRADERO

http://www.minnparbackhoeparts.com/

09-62		p2	05/04

CABINA - ALOJAMIENTO DEL SOPLADOR, CONDUCTOS DE VENTILACIÓN, TUBOS DE DRENADO

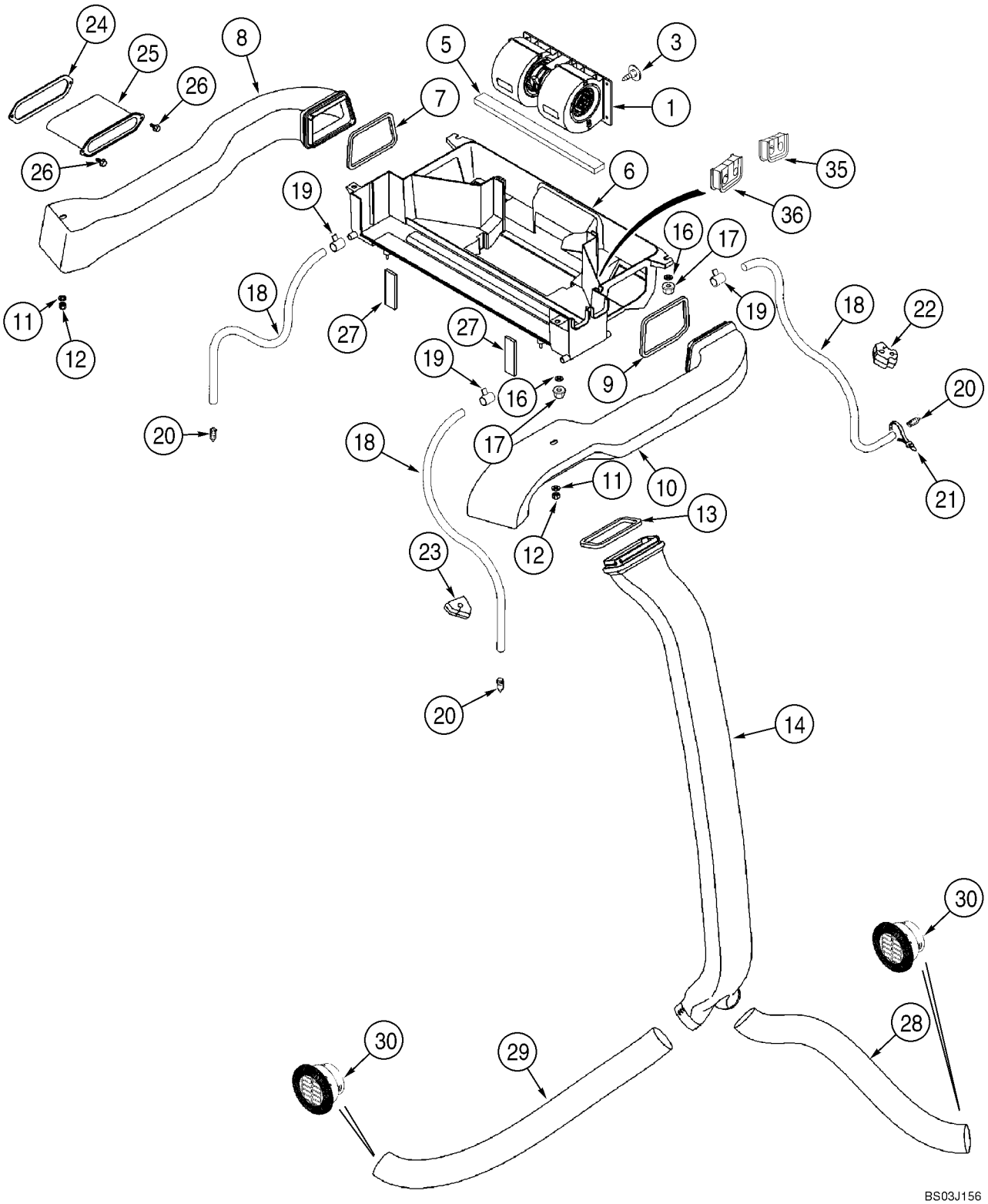

http://www.minnparbackhoeparts.com/

CABINA - ALOJAMIENTO DEL SOPLADOR, CONDUCTOS DE VENTILACIÓN, TUBOS DE DRENADO

REF	FN	PART NUMBER	YR/SN	QTY	DESCRIPTION
35		403225A1		1	ANILLO DE CIERRE Heater Tubes At Housing
36		403193A1		1	ANILLO DE CIERRE Air Conditioning Tubes At Housing

http://www.minnparbackhoeparts.com/

09-63		p1	02/05

CABINA - CALENTADOR

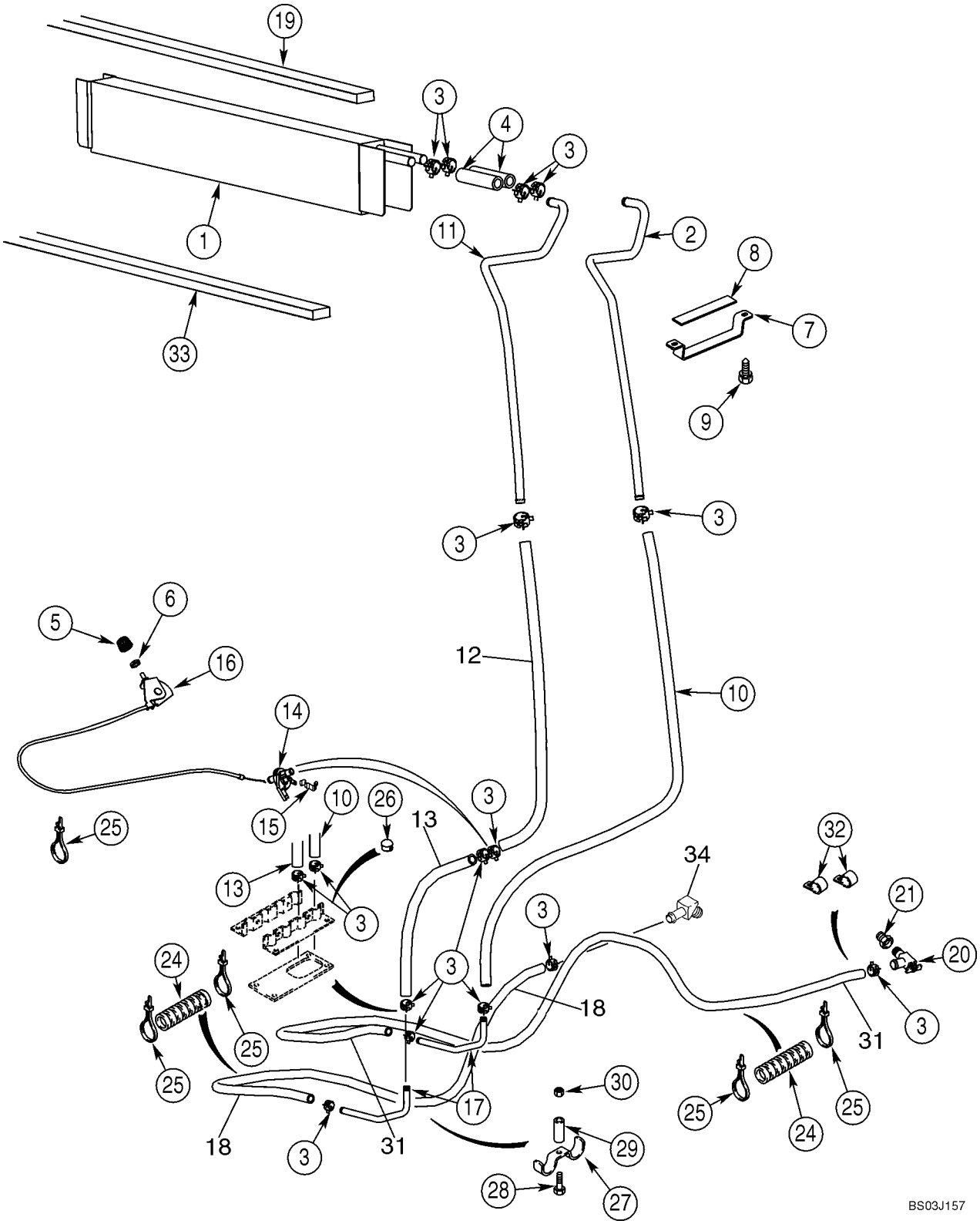

http://www.minnparbackhoeparts.com/

CABINA - CALENTADOR

REF	FN	PART NUMBER	YR/SN	QTY	DESCRIPTION
1		360262A2		1	INTERCAMBIADOR/CALOR Core, Mounts In Blower Housing Box; Seal Mounts On Top Of Core On Models With Heat Only
2		400282A1		1	TUBO Front
3		1954736C1		14	BORNE No. 24
4		377222A1		2	MANGA 100 mm; Cut From 97252CX
5		400379A1		1	PLACA 23 mm
6		A42561		1	TUERCA
7		388762A1		1	PIEZA DE SOPORTE
8		389402A1		1	ANILLO DE CIERRE
9		281-14520		2	TORNILLO AUTOROSCANTE With Washer, No. 10 x 1,25
10		368801A2		1	MANGA 1361 mm; Cut From 97252CX
11		400280A1		1	TUBO Rear
12		448428A1		1	TUBO (METROS) 1175 mm (46-1/4 in); Heater Valve To Core; Cut From 97252CX
13		448429A1		1	TUBO (METROS) 150 mm (5-29/32 in) Floor To Valve; Cut From 97252CX
14		1331087C1		1	VALVULA Heater Control
15		1954626C1		1	COLLAR
16		1999666C1		1	MANDO Heater; Includes 1999667C1, 1999668C1
		1999667C1		1	MANDO
		1999668C1		1	CABLE
17		190675A1		2	CUELLO DE CARGA
18		377232A2		1	MANGUITO HOSE 2650 mm (104-21/64 in); Heater; Return To Water Pump; Cut From 97252CX
19		406287A1		1	ANILLO DE CIERRE 19 x 19 x 736 mm; Location Of Seal On Models With Heat Only; On Models With Air Conditioning, Seal Is Located On Evaporator Core
20		301803R1		1	VALVULA DE CIERRE
21		221-89		1	UNION REDUCCION 1/2 x 3/8; Replaces Existing Plug
24		D132982		7	TUBO AISLANTE Sleeve, 400 mm (15-3/4 in)
25		L18337		6	BANDA 15 in
26		353-410		2	TAPÓN 7/8; Models With Heat Only
27		D143427		1	COLLAR

http://www.minnparbackhoeparts.com/

09-63		p2	02/05

CABINA - CALENTADOR

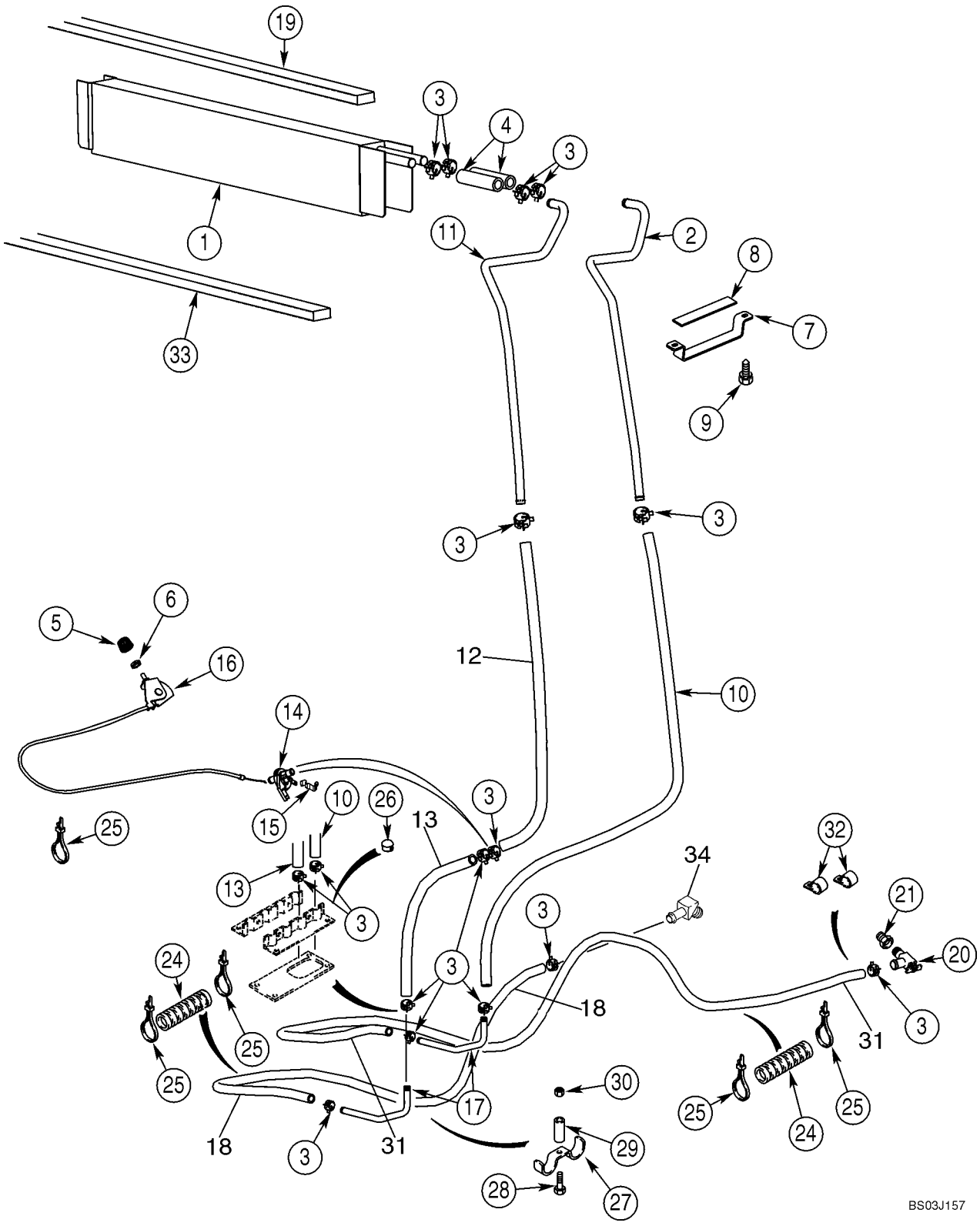

http://www.minnparbackhoeparts.com/

CABINA - CALENTADOR

REF	FN	PART NUMBER	YR/SN	QTY	DESCRIPTION
28		614-8030		1	TORNILLO M8 x 30
29		D143417		1	ESPACIADOR
30		825-2408		1	TUERCA M8
31		377233A2		1	MANGUITO HOSE 1830 mm (72-3/64 in); Heater; Inlet From Engine; Cut From 97252CX
32		D88052		2	COLLAR
33		1987096C1		1	PLACA, GRANDE Seal, Below Heater Core; Location Of Seal On Models With Heat Only; On Models With Air Conditioning, Seal Is Located At Rear Of Housing
34		217-144		1	CODO 45 deg, 5/8 stm x 1/2 NPTF

http://www.minnparbackhoeparts.com/

09-64		p1	01/04

CABINA - TUBOS DE AIRE ACONDICIONADO, NÚCLEO DEL EVAPORADOR

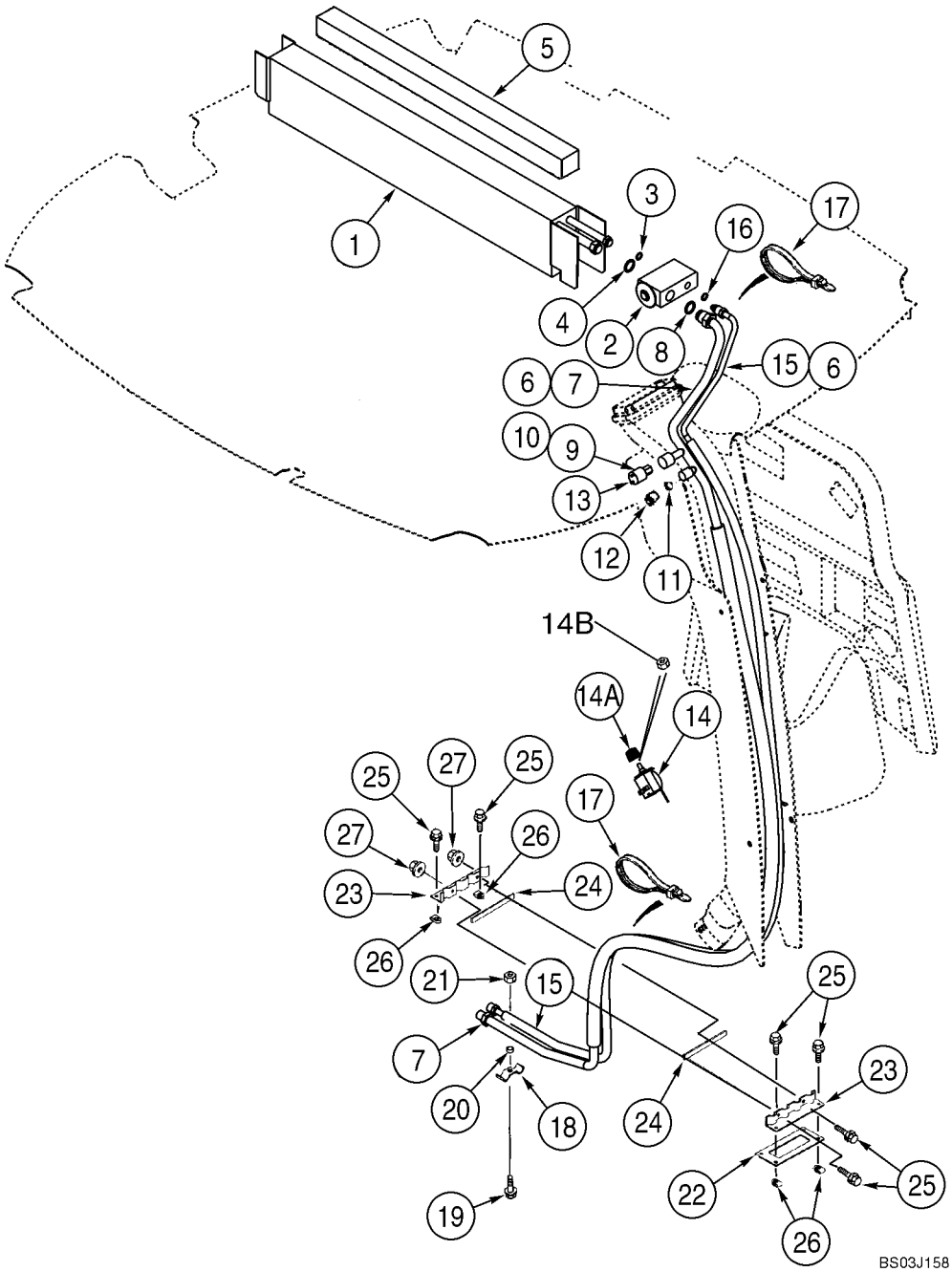

http://www.minnparbackhoeparts.com/

CABINA - TUBOS DE AIRE ACONDICIONADO, NÚCLEO DEL EVAPORADOR

REF	FN	PART NUMBER	YR/SN	QTY	DESCRIPTION
		363832A5		1	EVAPORADOR Incl. Ref 1 - 4; Not Available as An Assembly; Order Components
1		360263A4		1	EVAPORADOR Core
2		386535A1		1	VALVULA
3		128484A1		1	JUNTA HERMETICA 7/16 ID x 1/16
4		128485A1		1	JUNTA HERMETICA 9/16 ID x 1/16
		83822C1		3	CINTA Insulation; 63,5 (2-1/2 in) x 610 mm (24-1/64 in)
5		406287A1		1	ANILLO DE CIERRE 19 x 19 x 736 mm; Adhesive Back; Models With Heat and Air, Locate Seal On Top Of Core
		345-621		2	CINTA 2 x 6 in
7		360257A1		1	FUNDA DE PLÁSTICO Suction; Incl. Ref 8 - 12
8		128485A1		1	JUNTA HERMETICA 9/16 ID x 1/16
9		128483A1		1	JUNTA HERMETICA 5/16 ID x 1/16; Valve Core
10		1250594C1		1	NÚCLEO Low Pressure Switch
11		1250594C1		1	NÚCLEO Low Side Service Port
12		122553A1		1	TAPON DEL DEPOSITO
13		122579A1		1	CONTACTOR Low Pressure
14		370381A1		1	CONTACTOR Temperature Control; Air Conditioning
14A		400379A1		1	PLACA 23 mm
14B		A42561		1	TUERCA 7/16
15		360256A1		1	FUNDA DE PLÁSTICO Pressure; Incl. Ref 16
16		128483A1		1	JUNTA HERMETICA 5/16 ID x 1/16
17		L18337		4	BANDA 15 in
18		D143427		1	COLLAR
19		614-8030		1	TORNILLO M8 x 30
20		D143417		1	ESPACIADOR
21		825-2408		1	TUERCA M8
22		124011A1		1	JUNTA HERMETICA
23		123980A1		2	BRIDA CLAMP, Heater and Air Conditioning Hoses
24		181979A1		2	JUNTA HERMETICA
25		845-6020		6	TORNILLO M6 x 20
26		833-40406		4	TUERCA M6
27		825-2406		2	TUERCA M6

http://www.minnparbackhoeparts.com/

09-65		p1	05/04

CABINA - AIRE ACONDICIONADOR, CONDENSADOR, RECIBIDOR-SECADOR

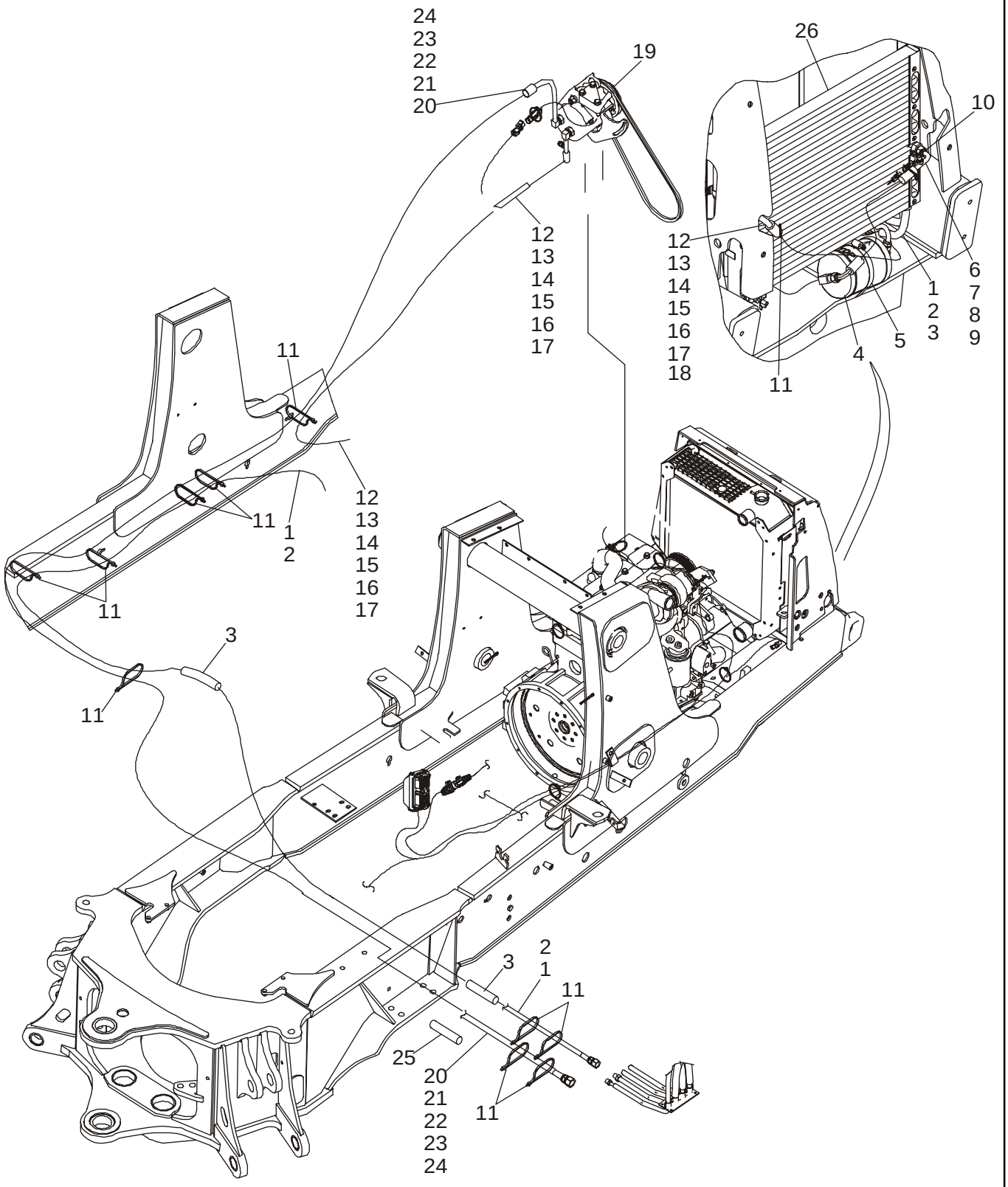

http://www.minnparbackhoeparts.com/

CABINA - AIRE ACONDICIONADOR, CONDENSADOR, RECIBIDOR-SECADOR

REF	FN	PART NUMBER	YR/SN	QTY	DESCRIPTION
1		87421777		1	MANGUERA (CONJUNTO) 2730 mm (107-1/2 in), Receiver Drier to Cab; Incl. Ref 2
2		128483A1		2	JUNTA HERMETICA 5/16 ID x 1/16
3		191704A1		4	TUBO AISLANTE 460 mm (18-1/8 in)
4		86984155		1	RECEPTOR-DESHIDRAT. Receiver-Drier
5		214-1464		2	COLLAR No. 64
6		87421775		1	MANGUERA (CONJUNTO) 431 mm (17 in), Condenser to Drier; Incl. Ref 7 - 9
7		128483A1		3	JUNTA HERMETICA 5/16 ID x 1/16
8		1250594C1		1	NÚCLEO Valve, High Pressure Switch
9		122081A1		1	CONEXION Switch
10		232948A1		1	INTERRUPTOR DE PRESION High Pressure
11		L18337		15	BANDA
12		87421776		1	MANGUERA (CONJUNTO) 1542 mm (60-3/4 in), Compressor to Condenser; Incl. Ref 13 - 17
13		128484A1		1	JUNTA HERMETICA 7/16 D x 1/16
14		128485A1		1	JUNTA HERMETICA 9/16 ID x 1/16
15		1999926C1		1	TUBO, BOQUILLA
16		1250594C1		1	NÚCLEO Valve
17		122554A1		1	TAPON DEL DEPOSITO Sealing Cap
18		193913A1		1	PROTECTOR Guard, 1200 mm (47-1/4 in)
19		87430122		1	COMPRESOR ACOND. Component Parts Not Serviced Separately, See Figure 09-66 for Mounting
20		87427294		1	MANGUERA (CONJUNTO) 2240 mm (88-3/16 in), Cab to Compressor; Incl. Ref 21 - 24
21		128485A1		2	JUNTA HERMETICA 9/16 ID x 1/16
22		1999927C1		1	TUBO, BOQUILLA
23		1250594C1		1	NÚCLEO Valve
24		122553A1		1	TAPON DEL DEPOSITO Sealing
25		191703A1		2	TUBO AISLANTE Sleeve, 400 mm (15-3/4 in)
26		87417329		1	CONDENSADOR Condenser
		895-11008		4	ARANDELA 9 x 16 x 1,6 mm
		829-1408		4	TUERCA M8

http://www.minnparbackhoeparts.com/

09-66		p1	03/04

CABINA - COMPRESOR DEL AIRE ACONDICIONADO

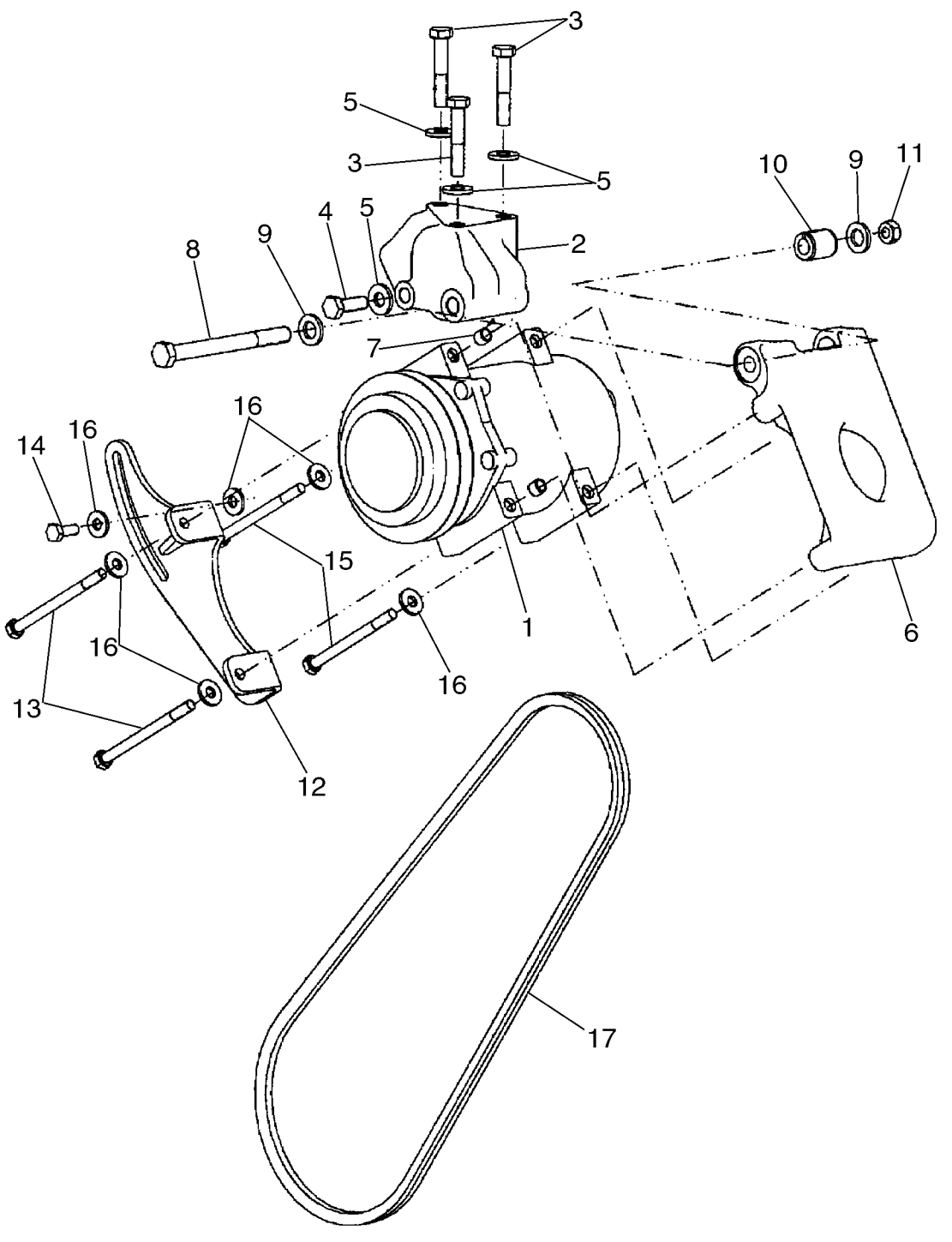

http://www.minnparbackhoeparts.com/

CABINA - COMPRESOR DEL AIRE ACONDICIONADO

REF	FN	PART NUMBER	YR/SN	QTY	DESCRIPTION
1		87430122		1	COMPRESOR ACOND. Compressor Component Parts Not Serviced Separately
2		87429950		1	SOPORTE Mounting Support
3		814-10055		3	TORNILLO M10 x 55
4		614-10030		1	TORNILLO M10 x 30
5		896-15010		4	ARANDELA 11 x 24 x 3mm
6		87429948		1	SOPORTE
7		87429952		2	ANILLO
8		814-12130		1	TORNILLO M12 x 130
9		896-11012		2	ARANDELA 13,5 x 24 x 3 mm
10		87429951		1	SEPARADOR Pivot
11		829-1412		1	TUERCA M12
12		87429949		1	PIEZA DE APOYO
13		814-8110		2	TORNILLO M8 x 110
14		614-8020		1	TORNILLO M8 x 20
15		814-8100		2	TORNILLO M8 x 100
16		896-15008		6	ARANDELA 9 x 21 x 2,5 mm
17		87429954		1	COURROIE DE TRANSMISS. V-Belt

http://www.minnparbackhoeparts.com/

09-67		p1	05/05

TECHO Y ROPS - CHASIS, CUBIERTAS, ESPEJOS, VISOR

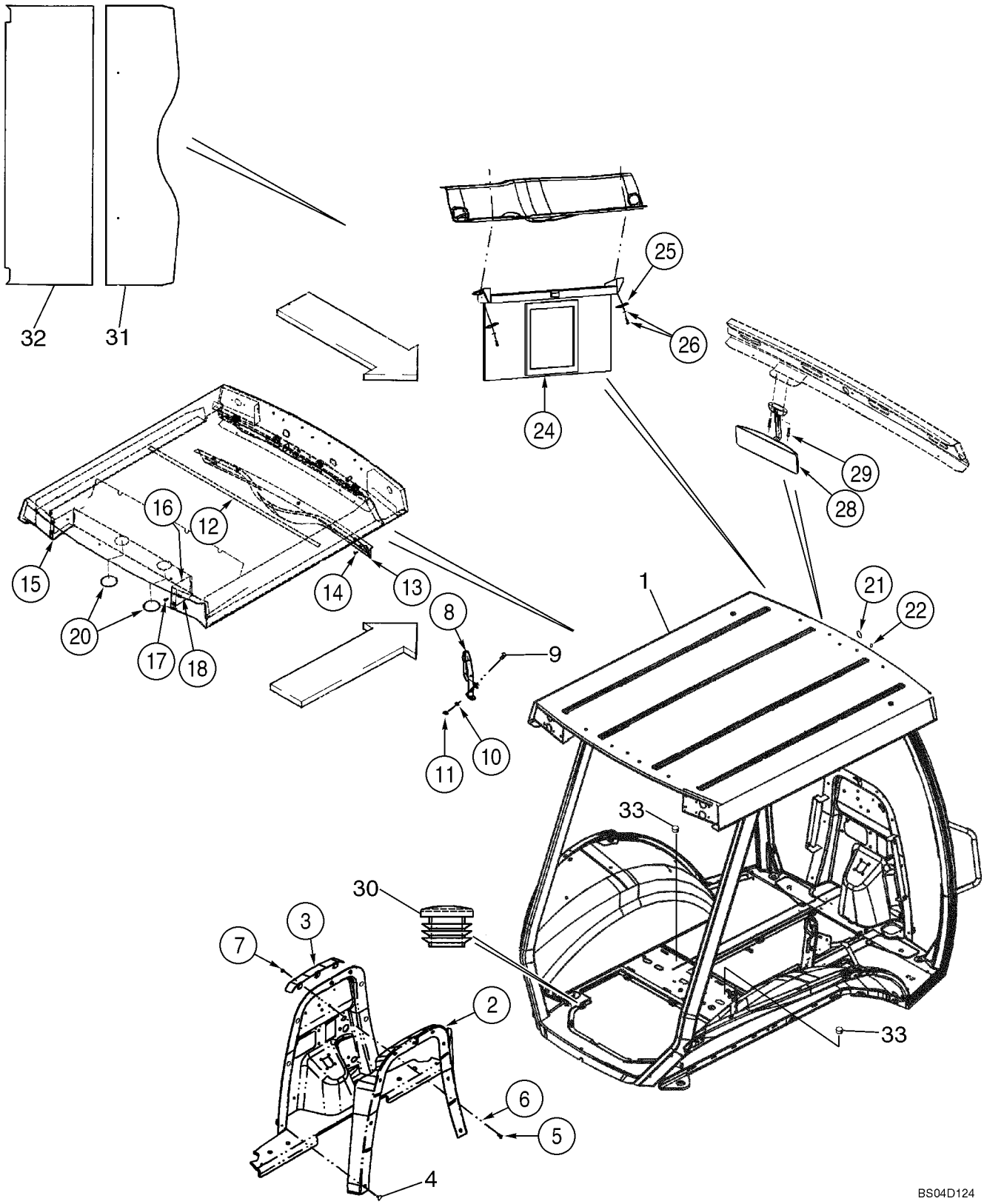

http://www.minnparbackhoeparts.com/

TECHO Y ROPS - CHASIS, CUBIERTAS, ESPEJOS, VISOR

REF	FN	PART NUMBER	YR/SN	QTY	DESCRIPTION
		87449825		1	BALDAQUIN ASSEMBLY, Includes 87443434 580SM Frame, Glass, Wiper and Roof Foam Panels; Replaces 87434983 and 87443436 Canopy Assembly
1		87443434		1	ESTRUCTURA CABINA 580SM ROPS Canopy Frame; Order From Machinery Price List; Replaces 87434974 Frame
		87443437		1	BALDAQUIN ASSEMBLY, Includes 87443435 580SM+ Frame, Glass, Wiper and Roof Foam Panels; Replaces 87434984 Canopy Assembly
1		87443435		1	ARCO CONJ 580SM+ Canopy Frame; Order From Machinery Price List; Replaces 87434975 Frame
2		396938A3		1	MOLDURA Firewall
3		395478A3		1	PIEZA DE SOPORTE
4		D143242		6	TAPÓN Push-In Fastener
5		614-8020		3	TORNILLO M8 x 20
6		495-81001		3	ARANDELA ,375 x 1,125 x ,065
7		832-10408		3	TUERCA M8
8		392930A1		1	BARANDILLA Grab Handle
9		87310177		2	TORNILLO M10 x 25; 8.8, Round Head Square Neck, Stainless Steel; Replaces 811-10025 Non-Stainless Steel Screw Used On Some Models
10		495-81267		2	ARANDELA ,469 x 1,5
11		832-10410		2	TUERCA M10
12		385506A1		1	BANDA DE PROTECCIÓN 127 mm; Foam; Adhesive Back
13		367712A3		1	TAPA Harness
14		F64519		5	TORNILLO No. 10 x 3/4; For Service, Order 265-16512, F64315
15		357099A1		1	TAPA Left-Hand
16		357100A1		1	TAPA Right-Hand
17		87310098		4	TORNILLO Flange, M6 x 20, Stainless Steel; Replaces 555-2 Non-Stainless Steel Screw Used On Some Models
18		833-40406		4	TUERCA Spring, M6
20		1302758C1		2	TAPÓN 3 in
		353-410		1	TAPÓN Dome, 7/8 Black Nylon

http://www.minnparbackhoeparts.com/

TECHO Y ROPS - CHASIS, CUBIERTAS, ESPEJOS, VISOR

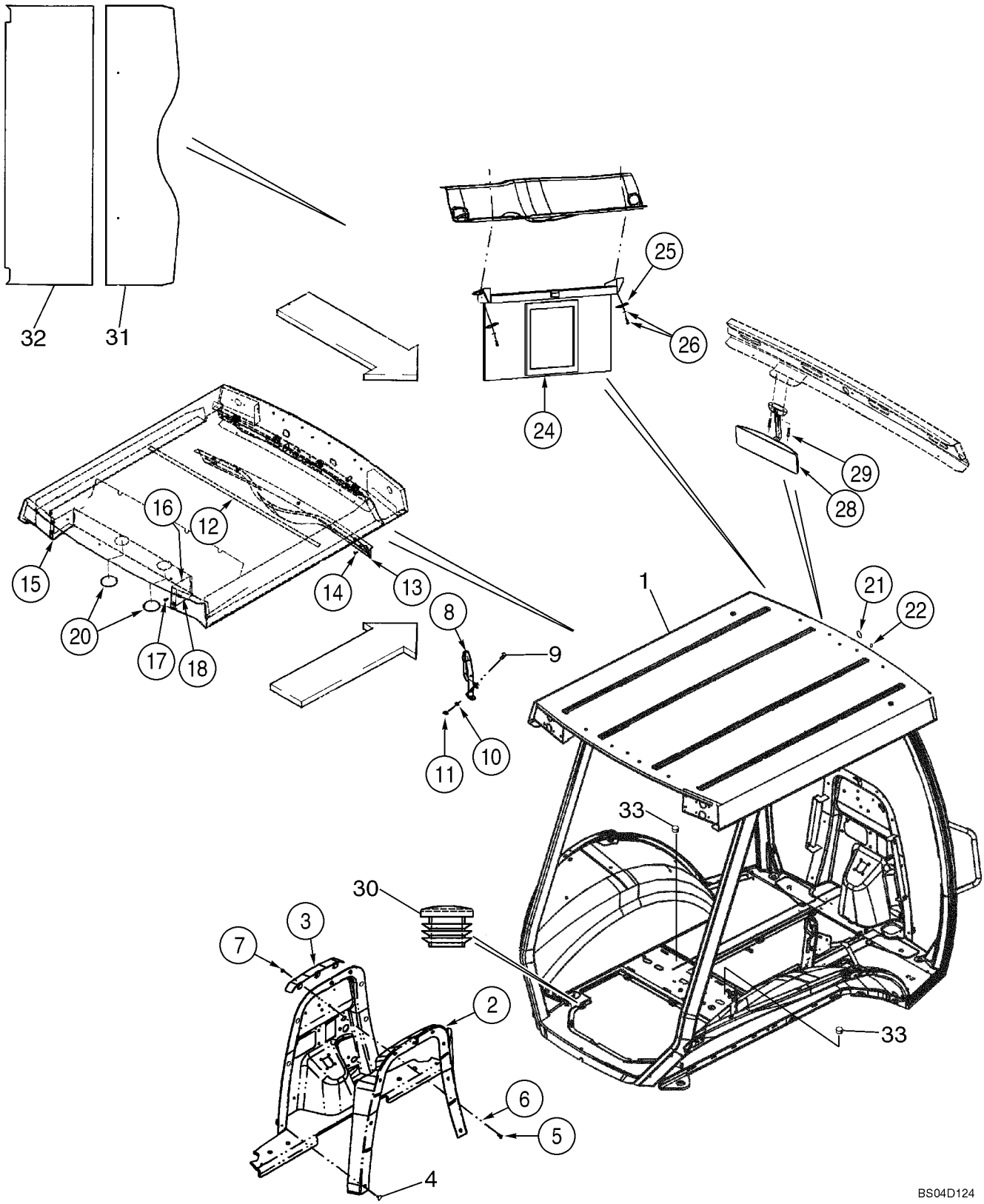

http://www.minnparbackhoeparts.com/

TECHO Y ROPS - CHASIS, CUBIERTAS, ESPEJOS, VISOR

REF	FN	PART NUMBER	YR/SN	QTY	DESCRIPTION
21		411549A1		1	TAPÓN 1 in; Windshield Frame
22		353-421		2	TAPÓN 3/16; Upper Windshield Frame
24		364180A1		1	PARASOL
25		409618A1		2	PLACA 1/4 in Mounting Hole
26		396516A1		2	PUNZON VALVULA No 10 x 1 st; With Washer; Phillips
28		87406924		1	ESPEJO RETROVISOR
29		286-56520		2	TORNILLO No. 10 x 1-1/4
30		382298A1		2	TAPÓN 7/8 in
31		431583A1		1	CONTRAPANEL Foam; Roof Front
32		431584A1		1	CONTRAPANEL Foam: Roof Rear
33		87301515		2	TAPÓN PLÁSTICO Flat Top, Black Glossy, 1-3/16 in Hole Size; Brake Bleeder

http://www.minnparbackhoeparts.com/

09-68		p1	01/04

TECHO Y ROPS - VIDRIO

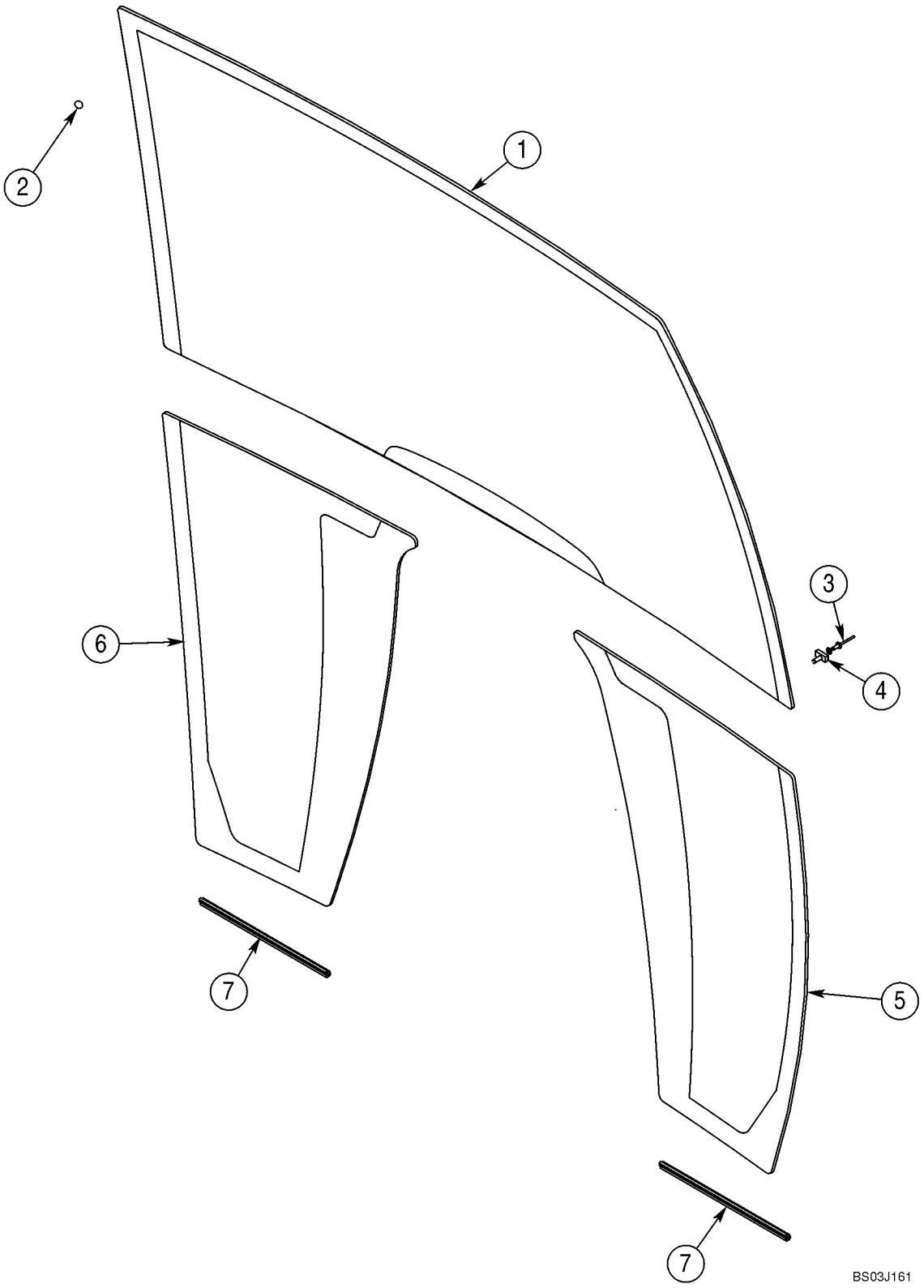

http://www.minnparbackhoeparts.com/

TECHO Y ROPS - VIDRIO

REF	FN	PART NUMBER	YR/SN	QTY	DESCRIPTION
1		448607A1		1	PARABRISAS
2		391827A1		28	ESPACIADOR
3		151-516		2	REMACHE
4		279482A1		2	TORNILLO DE SUJECTIO
5		448609A1		1	PARABRISAS Lower; Right-Hand
6		448608A1		1	PARABRISAS Lower; Left-Hand
7		395793A1		2	BANDA DE PROTECCIÓN Lower Glass Trim

http://www.minnparbackhoeparts.com/

09-69		p1	05/05

TECHO Y ROPS - LIMPIAPARABRISAS, DELANTERO Y LAVAPARABRISAS

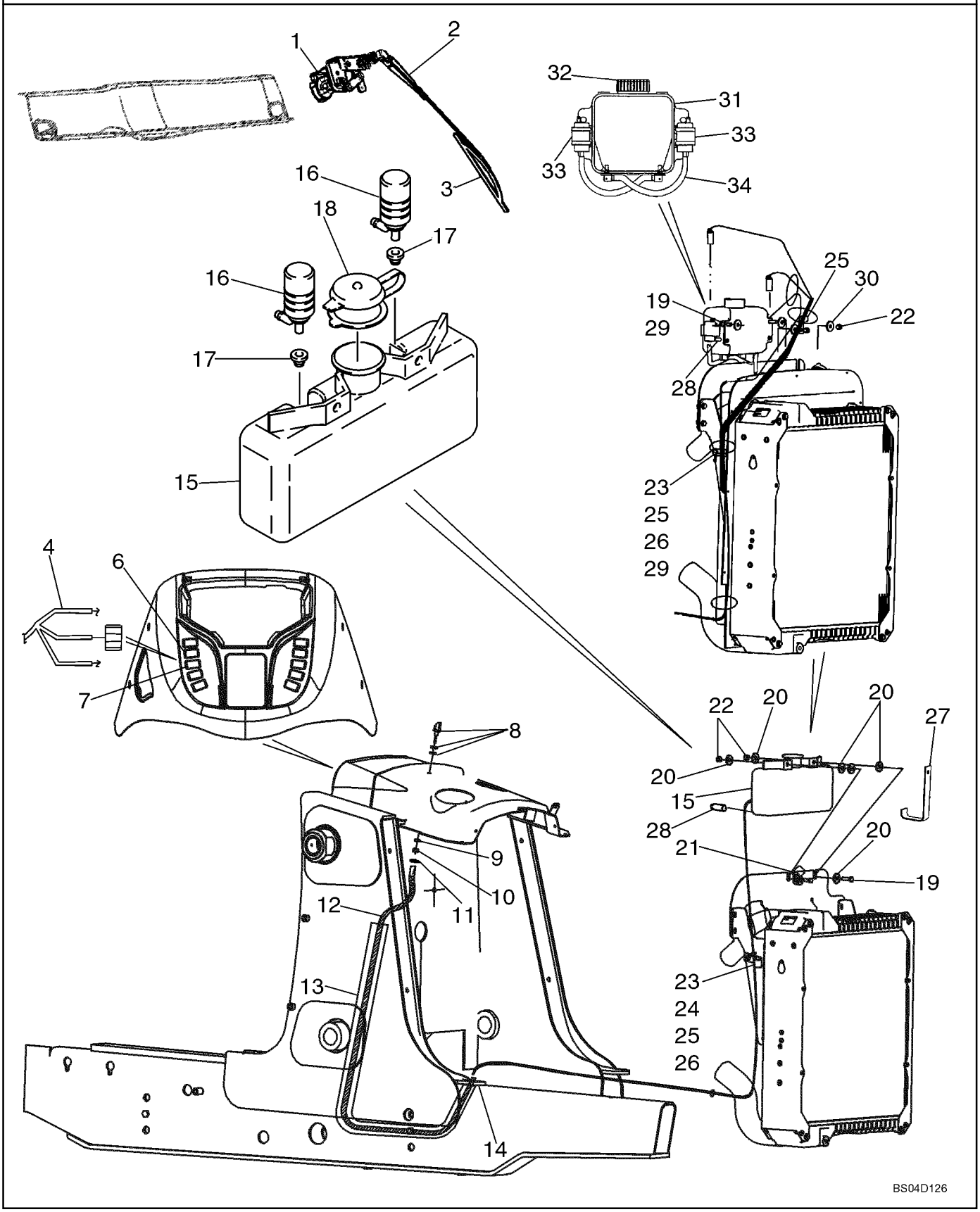

http://www.minnparbackhoeparts.com/

TECHO Y ROPS - LIMPIAPARABRISAS, DELANTERO Y LAVAPARABRISAS

REF	FN	PART NUMBER	YR/SN	QTY	DESCRIPTION
1		450037A1		1	LIMPIA-PARABRISAS 12V
		814-6050		2	TORNILLO M6 x 50; Wiper Motor Mounting
		892-11006		2	ARANDELA DE FRENO M6
2		D128745		1	BRAZO DE ESCOBILLAS
3		414426A1		1	ESCOBILLA 600 mm
		404617A1		1	HAZ Front Lamps and Wiper
4		87433546		1	GRUPO DE CABLES Front Console Options; Includes (1) L71879 Diode
5		87436675		1	GRUPO DE CABLES Chassis Options; Includes (4) L71879 Diodes
6		386785A1		1	CONTACTOR Front Wiper
7		386787A1		1	CONTACTOR Windshield Washer
8		284154A1		1	INYECTOR Includes A Steel and Rubber Washer Which Are Not Serviced Separately
9		492-11038		1	ARANDELA DE FRENO 3/8"
10		425-106		1	TUERCA 3/8
11		87444176		1	COLLAR
12		87428316		1	TUBO (METROS) 3150 mm (124-1/64 in); Cut From 1968141CX
13		386718A3		1	DEFENSA 1630 mm (64-3/16 in); Cut From 397155A2
14		L18337		6	BANDA 15 in
		E46560		1	DEPÓSITO Windshield Washer; Incl. Ref 15 - 18; If Used
15		NSS		1	NO SE REPARA SEPARADAM. Reservoir
16		E47238		2	BOMBA 12 Volt
17		E47239		2	ANILLO DE CIERRE Pump to Reservoir
18		E47240		1	TAPÓN Cap
19		614-8030		2	TORNILLO M8 x 30
20		496-41041		7	ARANDELA 13/32 x 1-1/8 x 1/8
21		D147383		1	SUJETADOR J-Clamp, 5/8
22		832-10408		2	TUERCA M8
23		614-8016		1	TORNILLO M8 x 16
24		895-11008		1	ARANDELA Flat, 8 mm
25		D147383		1	SUJETADOR J-Clamp, 5/8
26		829-1408		1	TUERCA M8
27		87442924		1	TENSOR Used With E46560 Reservoir; If Used

http://www.minnparbackhoeparts.com/

09-69		p2	05/05

TECHO Y ROPS - LIMPIAPARABRISAS, DELANTERO Y LAVAPARABRISAS

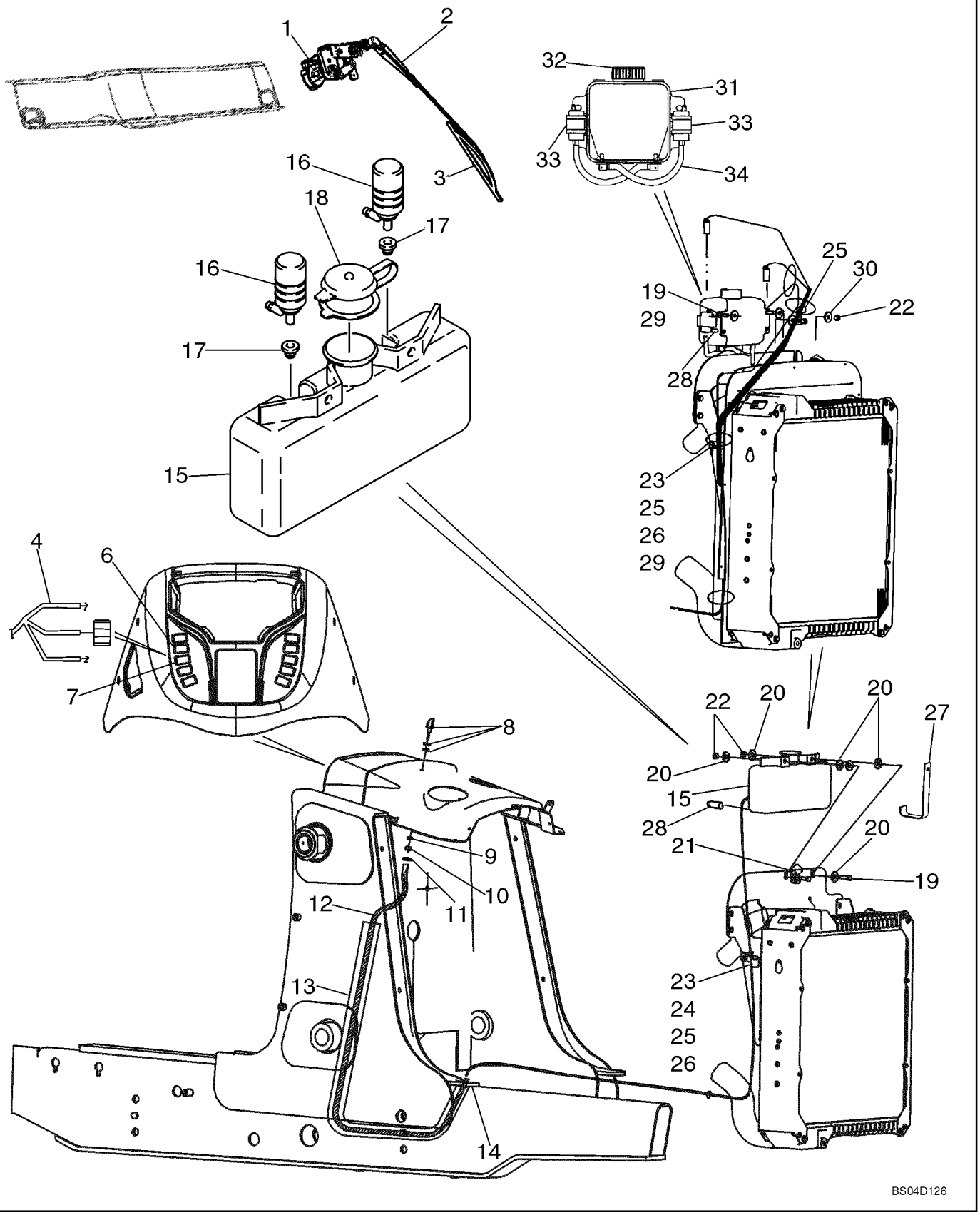

http://www.minnparbackhoeparts.com/

TECHO Y ROPS - LIMPIAPARABRISAS, DELANTERO Y LAVAPARABRISAS

REF	FN	PART NUMBER	YR/SN	QTY	DESCRIPTION
28		87441758		1	PLATILLO PLUG, Unused Pump Port
29		896-11008		3	ARANDELA 9 x 17 x 2
30		496-41041		4	ARANDELA 13/32 x 1-1/8 x 1/8
		87448685		1	LIMPIAPARABRISAS RESERVOIR; Incl. Ref 31 - 35; If Used
31		87449514		1	DEPOSITO LAVACRIST. 20 Quart
32		86507190		1	CAPUCHA DE TAPON
33		86507198		2	POMPILLA Component Parts Not Serviced Separately
34		87449517		1	TUBO (METROS) 203 mm (8 in)
35		L18337		1	BANDA Not Illustrated

http://www.minnparbackhoeparts.com/

09-70		p1	03/04

ESPEJO, VISTA TRASERA - SOPORTE, MODELLE MIT KABINE

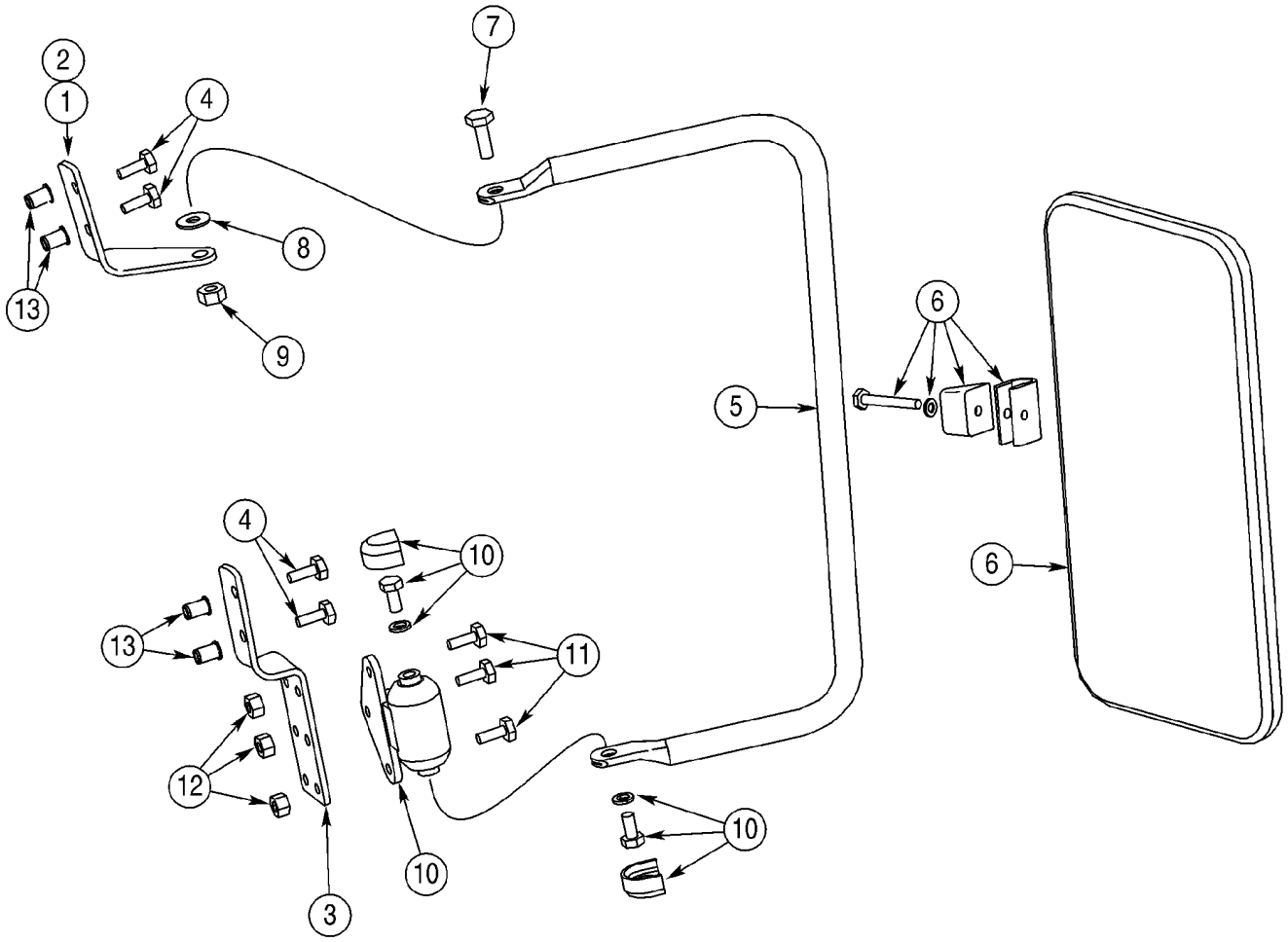

http://www.minnparbackhoeparts.com/

ESPEJO, VISTA TRASERA - SOPORTE, MODELLE MIT KABINE

REF	FN	PART NUMBER	YR/SN	QTY	DESCRIPTION
		397974A1		1	JEUGO Outside Mirror; Incl. Ref 1 - 14 and Instructions
1		402933A1		1	PIEZA DE SOPORTE Upper; Right-Hand
2		402934A1		1	PIEZA DE SOPORTE Upper; Left-Hand; Not Illustrated
3		402936A1		2	PIEZA DE SOPORTE Lower
4		413-412		8	TORNILLO 1/4 x 3/4
5		402935A1		2	TUBO PORTADOR
6		R54682		2	ESPEJO Exterior
7		413-516		2	TORNILLO 5/16 x 1
8		A167037		2	ARANDELA
9		231-4115		2	CONTRA TUERCA 5/16
10		D142144		2	CHARNELA Includes Hardware
11		413-412		6	TORNILLO 1/4 x 3/4
12		231-1444		6	CONTRA TUERCA 1/4
13		255447A1		10	REMACHE Threaded Insert; Cab Front ROPS Post
14		NSS		1	NO SE REPARA SEPARADAM. Tool, Insert Nut; Not Illustrated

http://www.minnparbackhoeparts.com/

EMBLEMA DE VEHICULO LENTO

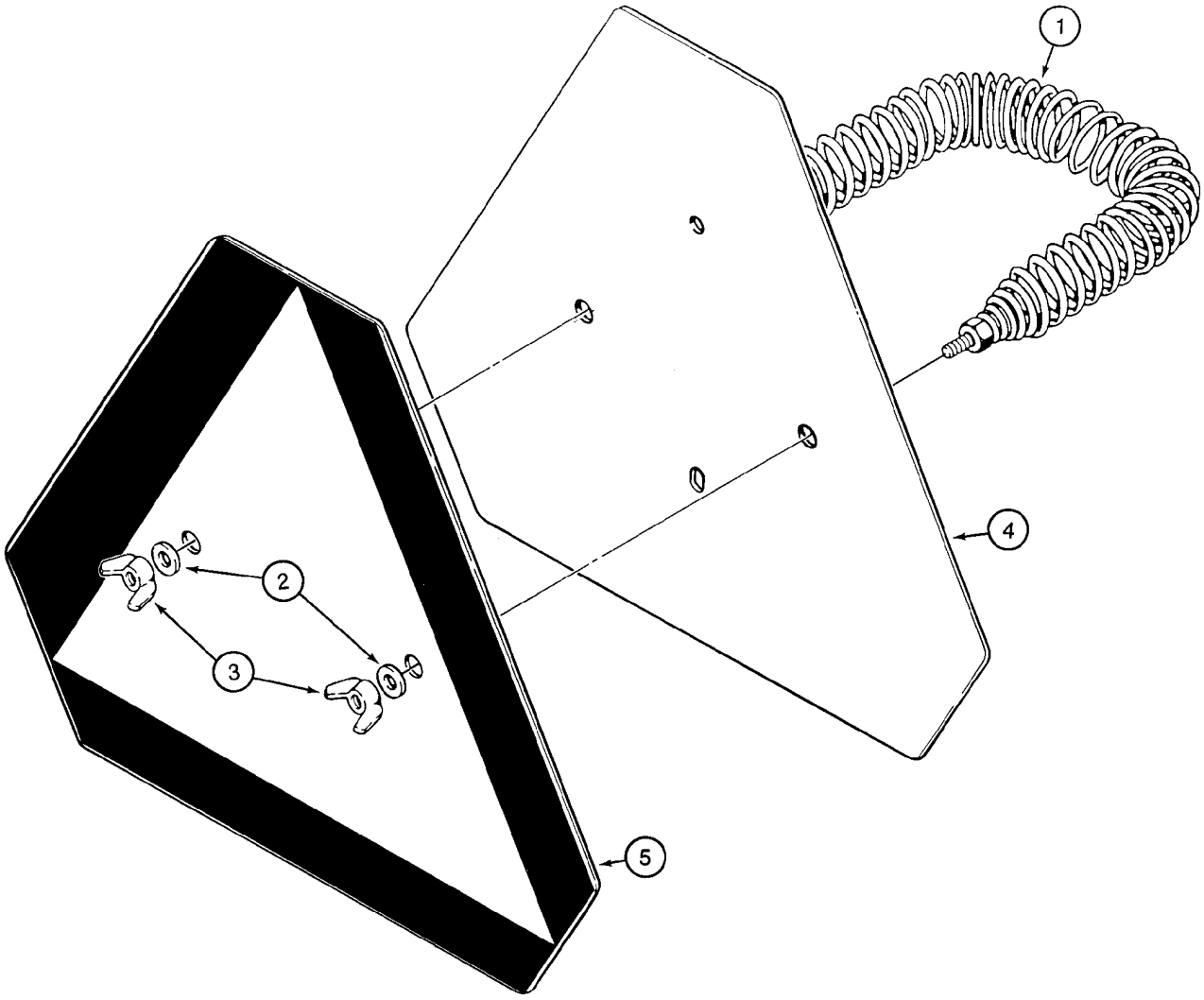

B9409034

http://www.minnparbackhoeparts.com/

EMBLEMA DE VEHICULO LENTO

REF	FN	PART NUMBER	YR/SN	QTY	DESCRIPTION
1		D52564		1	RESORTE
2		495-11028		2	ARANDELA 9/32 x 5/8 x 1/16
3		126177		2	TUERCA MARIPOSA 1/4
4		D123347		1	SENALES ADVERT Incl. Ref 5
5		321-4311		1	CALCOMANIA Slow Moving Vehicle

http://www.minnparbackhoeparts.com/

CALCOMANIAS



1

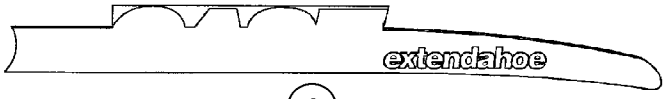

9



1A



1B

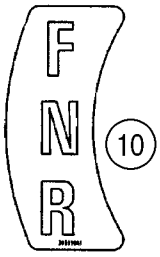

10



2 3



10A

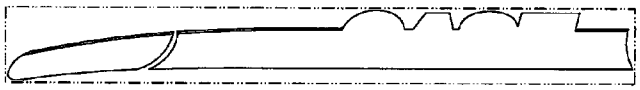

4

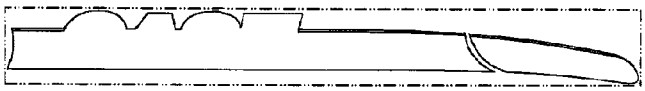

5

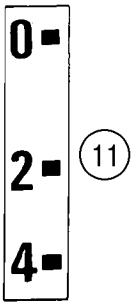

11

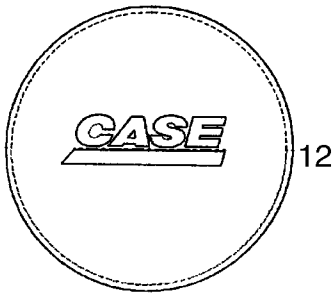

12

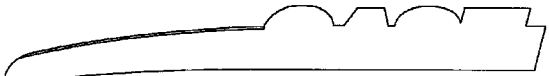

6



13



14

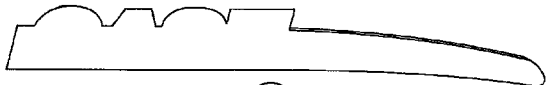

7



8

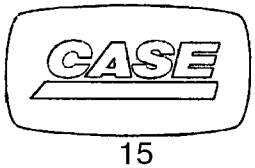

15

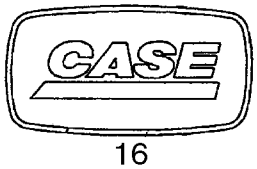

16

BS03K270

http://www.minnparbackhoeparts.com/

CALCOMANIAS

REF	FN	PART NUMBER	YR/SN	QTY	DESCRIPTION
1		401461A1		2	CALCOMANIA 580 Super M Model Designation
1A		87438735		2	CALCOMANIA 580 Super M + Model Designation
1B		87436192		2	CALCOMANIA Series 2
2		401457A1		2	CALCOMANIA 525 mm (20-11/16 in); Case Logo; Loader Arm
3		401458A1		4	CALCOMANIA 655 mm (25-13/16 in); Case Logo; Backhoe Dipper
4		401459A2		1	CALCOMANIA Case; Loader Arm Pin Stripe; Left-Hand Stripe
5		401460A2		1	CALCOMANIA Case; Loader Arm Pin Stripe; Right-Hand Stripe
6		407009A2		1	CALCOMANIA Case; Standard Dipper; Left-Hand Stripe
7		407010A2		1	CALCOMANIA Case; Standard Dipper; Right-Hand Stripe
8		373698A2		1	CALCOMANIA Case; Extendahoe Dipper; Left-Hand Stripe
9		373699A2		1	CALCOMANIA Case; Extendahoe Dipper; Right-Hand Stripe
10		395910A2		1	CALCOMANIA FNR (Forward/Neutral/Reverse); Shuttle Shift Lever Control Pattern
10A		373696A1		2	CALCOMANIA Powershift
11		321-1708		1	CALCOMANIA 0-2-4; Clam Bucket Opening Indicator
12		87435569		1	SIMBOLO Insert, Case, Steering Wheel
13		186989A1		1	CALCOMANIA EMBLEM, Case
14		131-431		2	TUERCA 1/4
15		87415931		2	CALCOMANIA Case, 37 x 70 mm; Located on Engine Filters
16		87429186		1	SIMBOLO Case, 37 x 70 mm; Located on Engine

http://www.minnparbackhoeparts.com/

CALCOMANIAS

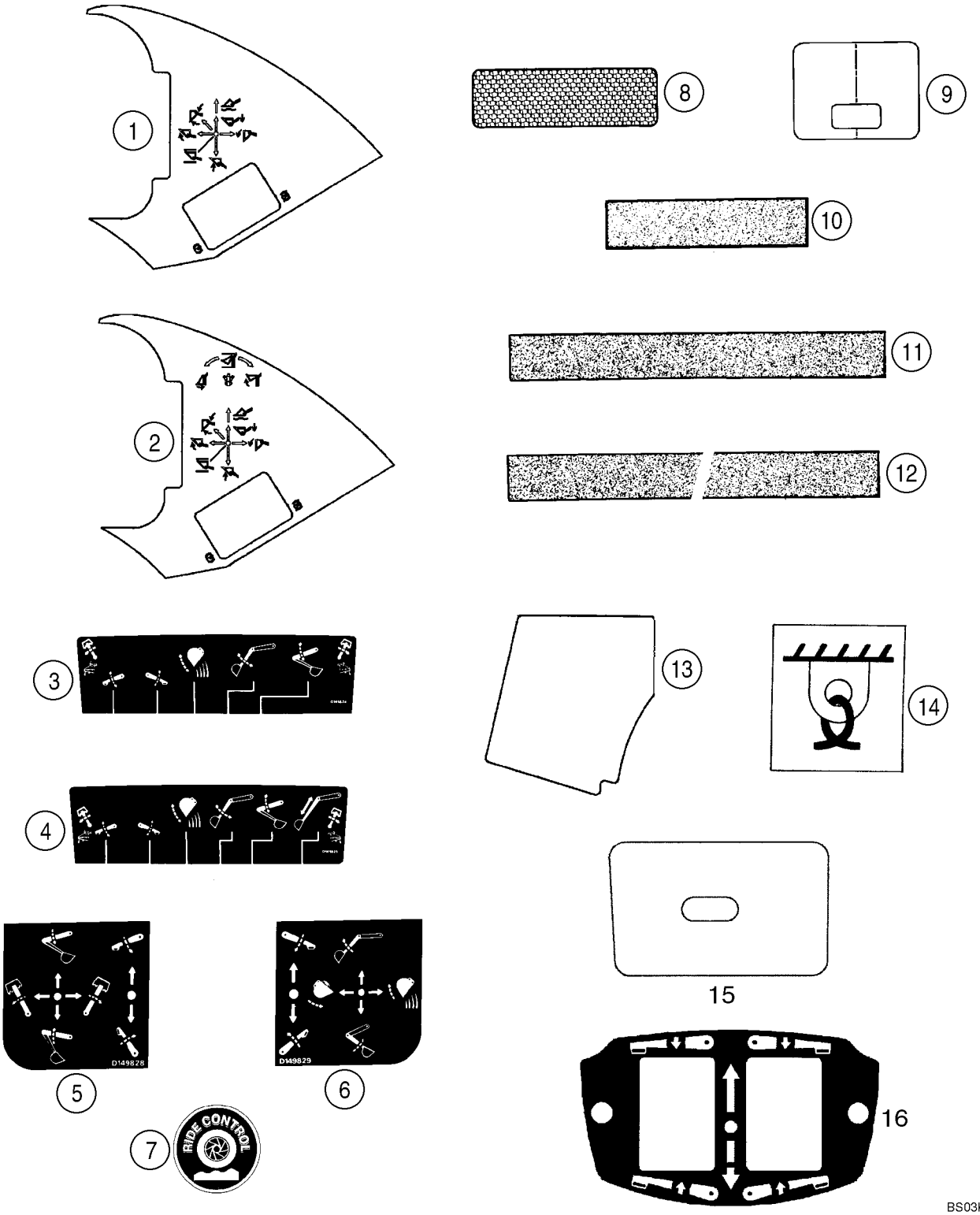

http://www.minnparbackhoeparts.com/

CALCOMANIAS

REF	FN	PART NUMBER	YR/SN	QTY	DESCRIPTION
1		384930A2		1	CALCOMANIA Two Function Loader Control
2		384931A2		1	CALCOMANIA Three Function Loader Control
3		D149824		1	CALCOMANIA Upper; Standard Backhoe Control Pattern
4		D149825		1	CALCOMANIA Upper; Extendahoe Control Pattern; With Foot Swing
5		D149828		1	CALCOMANIA Upper; Standard Backhoe Control Pattern; With Hand Swing; Left-Hand Side Of Console
6		D149829		1	CALCOMANIA Upper; Standard Backhoe Control Pattern; With Hand Swing; Right-Hand Side Of Console
7		304083A1		2	CALCOMANIA Ride Control
8		449842A1		2	CALCOMANIA 2 x 6-5/16 in; Red, Reflector
9		192450A1		1	CALCOMANIA Clear Vinyl; Hood
10		D55216		2-11	TACO 2 x 9 in; Anti-Skid
11		D80270		3-4	CINTA 635 mm (25 in); Anti-Skid
12		307348A1		2	CINTA 700 mm (27-9/16 in); Anti-Skid; 40 gallon fuel tank
13		367848A2		1	TACO Anti-Skid; Canopy Models
14		139728A1		4	CALCOMANIA Tie Down
15		406723A1		1	CALCOMANIA Poly Film; Lockup Cover; Canopy Models
16		87423812		1	CALCOMANIA Stabilizer Switch; Models With Pilot Controls

http://www.minnparbackhoeparts.com/

CALCOMANIAS



1

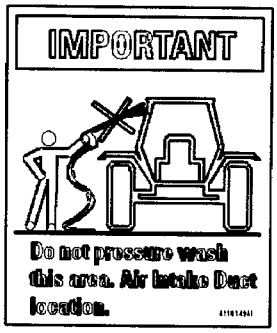

2

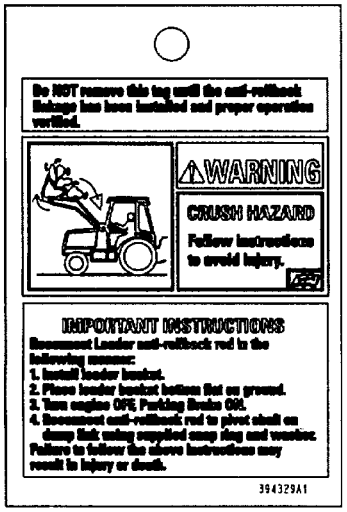

3

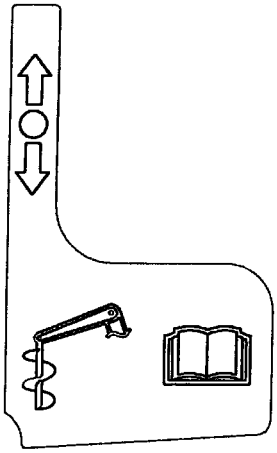

4

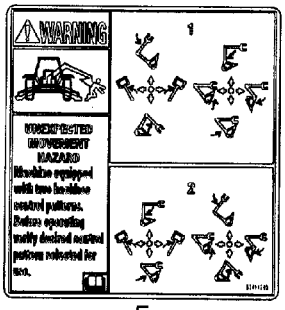

5

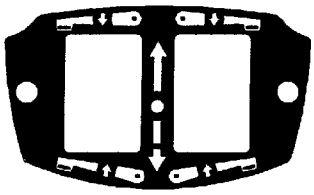

6

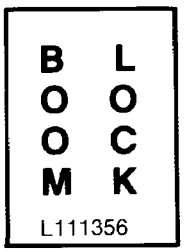

7

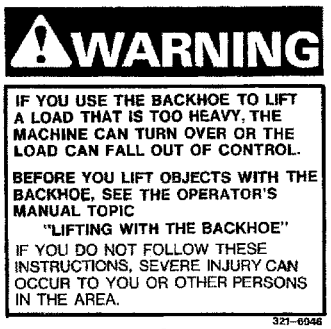

8

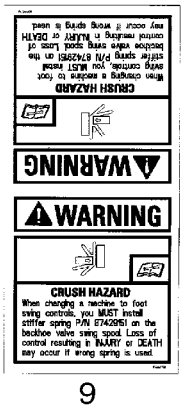

9

BS04C201

http://www.minnparbackhoeparts.com/

CALCOMANIAS

REF	FN	PART NUMBER	YR/SN	QTY	DESCRIPTION
1		116534A1		1	JEUGO Decal; Seat Weight Adjustment; Included In Seat Assy
2		411049A1		1	CALCOMANIA Important; Do Not Pressure Wash This Area
3		394329A1		1	ETIQUETA Warning; Anti-Rollback Hazard
4		87430677		1	CALCOMANIA Auxiliary Hydraulics
5		87414205		1	CALCOMANIA Warning, Unexpected Movement; If Used
5		87305413		1	CALCOMANIA Warning, Unexpected Movement; Pattern Selecting; With Backhoe/Excavator Black Silhouette on Decal; If Used; Not Illustrated
6		87423812		1	CALCOMANIA Stabilizer Control Switch
7		L111356		1	CALCOMANIA Boom Lock; Included In 399221A1 Backhoe Boom Lock Kit
8		321-6046		2	CALCOMANIA Warning, If You Use The Backhoe To Lift A Load That Is Too Heavy; Included With 189957A1 Boom Lock Valve Used In 399221A1 Backhoe Boom Lock Kit
9		87444776		1	CALCOMANIA Warning, Crush Hazard; When Changing A Machine to Foot Swing Controls; English
9		87307893		1	CALCOMANIA Warning, Crush Hazard; When Changing A Machine to Foot Swing Controls; Latin American spanish
9		87307896		1	CALCOMANIA Warning, Crush Hazard; When Changing A Machine to Foot Swing Controls; Canadian French

http://www.minnparbackhoeparts.com/

CALCOMANIAS - INGLES

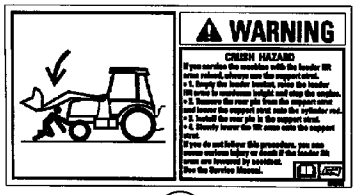

1

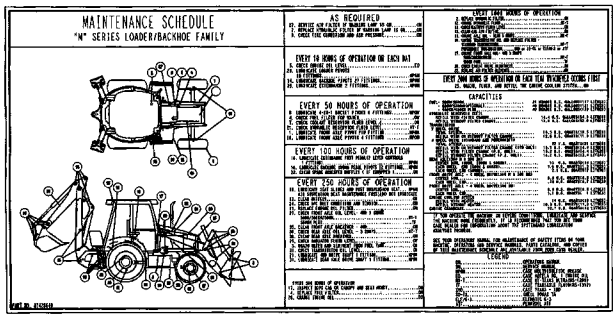

2

FUSES			87423410
SPARE	----	----	----
SPARE	POWER OUTLET 30A	----	PILOT CONTROLS BH AUX (OPT.) 15AMP
FRONT WORK LIGHTS 20A	POWER OUTLET 30A	AIR SUSP. SEAT-AIR COMP. (OPT) 20A	RETURN TO DIG 10A
REAR WORK LIGHTS 20A	SPARE	SPARE	DRIVING LIGHTS 15A
FUEL SHUTOFF 10A	BLOWER 25A	DOME LIGHT 10A	ROTATING BEACON (OPT) 10A
INSTRUMENTS ALARM SYS. 10A	SIGNAL LIGHTS 15A	HORN 10A	4WD (OPT) 10A
STARTING TRANSMISSION CONTROL 10A	RADIO, RIDE CONTROL, HAND AUX HYD'S 15A	RADIO (BATT) (OPT) 10A	WIPERS 15A

8

RELAYS			87423409
POWER RELAY #1	POWER RELAY #4	FLASHER RELAY	STARTER RELAY
POWER RELAY #2	LDR LVR DIFF LK RELAY	SHUTTLE INTLK TIMING RELAY	NEUTRAL RELAY
POWER RELAY #3	CLUTCH RELAY	SHUTTLE INTLK RELAY	FORWARD RELAY
----	----	----	REVERSE RELAY
----	----	AC RELAY (OPTION)	----

9



3

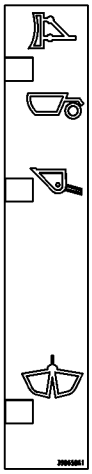

5

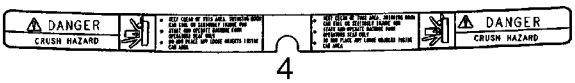

4

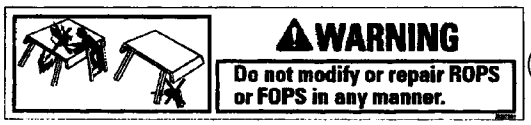

6

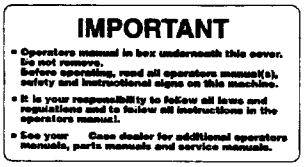

7

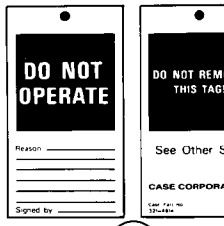

11

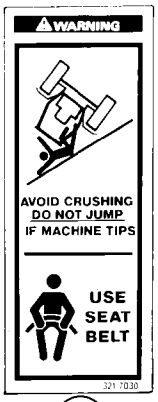

10



12

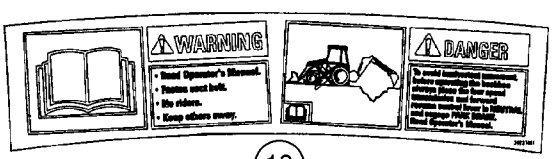

13

BS03K274

http://www.minnparbackhoeparts.com/

CALCOMANIAS - INGLES

REF	FN	PART NUMBER	YR/SN	QTY	DESCRIPTION
1		384264A1		1	CALCOMANIA Warning; Crush Hazard; Loader Arm Support Strut
2		87308996		1	CALCOMANIA Maintenance Schedule; Supplied by Parts and Components; Replaces 87428640, 87445785
3		8603092		1	CALCOMANIA Warning; Explosion Hazard, Do Not Use Ether
4		86992976		1	CALCOMANIA Danger; Crush Hazard
5		398658A1		1	CALCOMANIA Clam Bucket Position
6		383972A1		1	CALCOMANIA Warning; Do Not Modify or Repair ROPS or FOPS In Any Manner
7		144193A3		1	CALCOMANIA Important; Operator's Manual In Box Underneath This Cover; Glove Box Lid
8		87423410		1	CALCOMANIA Fuse Location
9		87423409		1	CALCOMANIA Relay
10		321-7030		2	CALCOMANIA Warning; Avoid Crushing; Do Not Jump / Use Seat Belt
11		321-4614		1	CALCOMANIA TAG, Do Not Operate
12		86992975		2	CALCOMANIA Warning; No Step/Not An Exit; Canopy
13		392374A1		1	CALCOMANIA Warning/Danger; Read the Operator's Manual

http://www.minnparbackhoeparts.com/

CALCOMANIAS - CASTELLANO PARA LATINOAMERICA

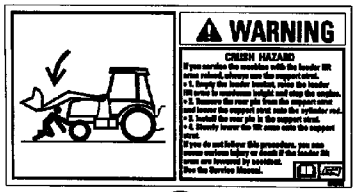

1

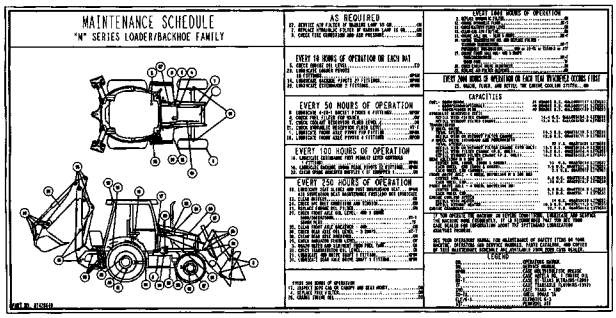

2

FUSES			87423410
SPARE	----	----	----
SPARE	POWER OUTLET 30A	----	PILOT CONTROLS BH AUX (OPT.) 15AMP
FRONT WORK LIGHTS 20A	POWER OUTLET 30A	AIR SUSP. SEAT-AIR COMP. (OPT) 20A	RETURN TO DIG 10A
REAR WORK LIGHTS 20A	SPARE	SPARE	DRIVING LIGHTS 15A
FUEL SHUTOFF 10A	BLOWER 25A	DOME LIGHT 10A	ROTATING BEACON (OPT) 10A
INSTRUMENTS ALARM SYS. 10A	SIGNAL LIGHTS 15A	HORN 10A	4WD (OPT) 10A
STARTING TRANSMISSION CONTROL 10A	RADIO, RIDE CONTROL, HAND AUX HYD'S 15A	RADIO (BATT) (OPT) 10A	WIPERS 15A

8

RELAYS			87423409
POWER RELAY #1	POWER RELAY #4	FLASHER RELAY	STARTER RELAY
POWER RELAY #2	LDR LVR DIFF LK RELAY	SHUTTLE INTLK TIMING RELAY	NEUTRAL RELAY
POWER RELAY #3	CLUTCH RELAY	SHUTTLE INTLK RELAY	FORWARD RELAY
----	----	----	REVERSE RELAY
----	----	AC RELAY (OPTION)	----

9



3

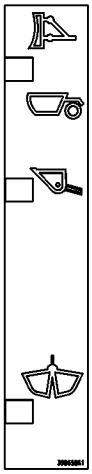

5

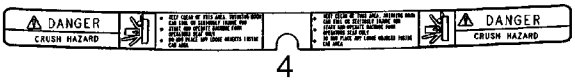

4

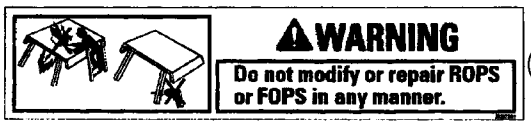

6

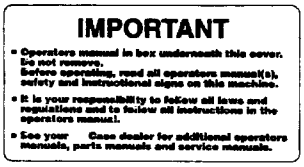

7

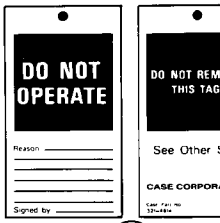

11

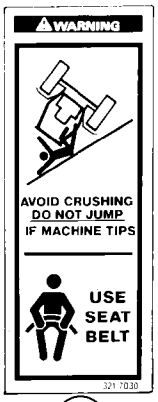

10



12

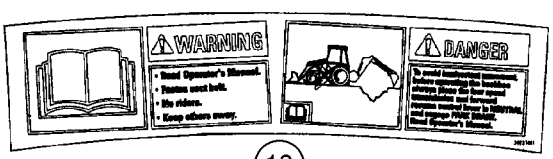

13

BS03K274

http://www.minnparbackhoeparts.com/

CALCOMANIAS - CASTELLANO PARA LATINOAMERICA

REF	FN	PART NUMBER	YR/SN	QTY	DESCRIPTION
		87307893		1	CALCOMANIA Warning, Crush Hazard; When Changing A Machine to Foot Swing Controls; For Illustration See ref 9 on Figure 09-74
1		398576A1		1	CALCOMANIA Warning; Crush Hazard; Loader Arm Support Strut
2		87308998		1	CALCOMANIA Maintenance Schedule; Supplied by Parts and Components; Replaces 87430921, 87446006
3		8603094		1	CALCOMANIA Warning; Explosion Hazard, Do Not Use Ether
4		86992981		1	CALCOMANIA Danger; Crush Hazard
5		398658A1		1	CALCOMANIA Clam Bucket Position
6		389729A1		1	CALCOMANIA Warning; Do Not Modify or Repair ROPS or FOPS In Any Manner
7		398662A1		1	CALCOMANIA Important; Operator's Manual In Box Underneath This Cover; Glove Box Lid
8		87431078		1	CALCOMANIA Fuse Location
9		87431081		1	CALCOMANIA Relay
10		398672A1		2	CALCOMANIA Warning; Avoid Crushing; Do Not Jump / Use Seat Belt
11		298521A1		1	ETIQUETA Do Not Operate
12		86992980		2	CALCOMANIA Warning; No Step/Not An Exit; Canopy
13		398598A1		1	CALCOMANIA Warning/Danger; Read the Operator's Manual
14		148093A1		1	CALCOMANIA DECAL, Important; Lubrication; Not Illustrated
15		148095A1		1	CALCOMANIA DECAL, Attention; Welding; Not Illustrated

http://www.minnparbackhoeparts.com/

CALCOMANIAS - FRANCES CANADIENSE

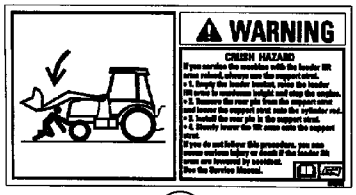

1

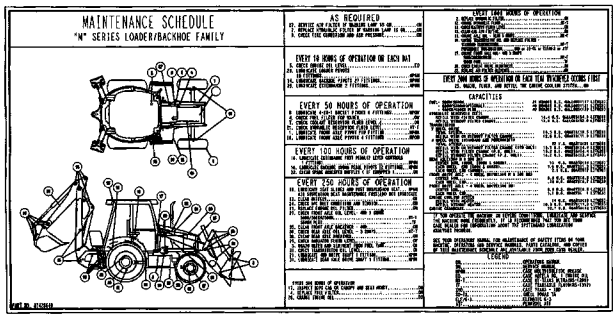

2

FUSES			87423410
SPARE	----	----	----
SPARE	POWER OUTLET 30A	----	PILOT CONTROLS RH AUX (OPT.) 15AMP
FRONT WORK LIGHTS 20A	POWER OUTLET 30A	AIR SUSP. SEAT-AIR COMP. (OPT) 20A	RETURN TO DIG 10A
REAR WORK LIGHTS 20A	SPARE	SPARE	DRIVING LIGHTS 15A
FUEL SHUTOFF 10A	BLOWER 25A	DOME LIGHT 10A	ROTATING BEACON (OPT) 10A
INSTRUMENTS ALARM SYS. 10A	SIGNAL LIGHTS 15A	HORN 10A	4WD (OPT) 10A
STARTING TRANSMISSION CONTROL 10A	RADIO, RIDE CONTROL, HAND AUX HYD'S 15A	RADIO (BATT) (OPT) 10A	WIPERS 15A

8

RELAYS			87423409
POWER RELAY #1	POWER RELAY #4	FLASHER RELAY	STARTER RELAY
POWER RELAY #2	LDR LVR DIFF LK RELAY	SHUTTLE INTLK TIMING RELAY	NEUTRAL RELAY
POWER RELAY #3	CLUTCH RELAY	SHUTTLE INTLK RELAY	FORWARD RELAY
----	----	----	REVERSE RELAY
----	----	AC RELAY (OPTION)	----

9



3

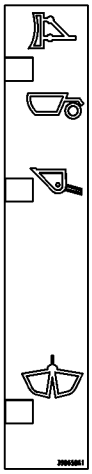

5

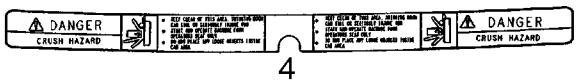

4

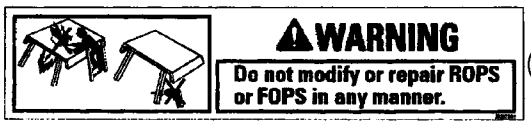

6

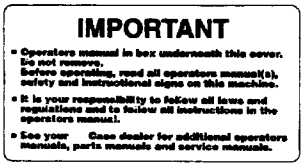

7

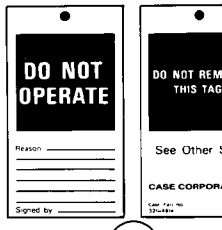

11

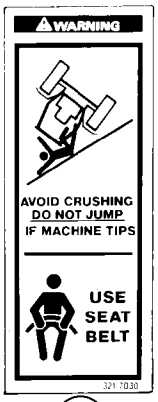

10



12

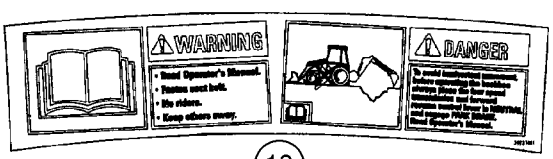

13

BS03K274

http://www.minnparbackhoeparts.com/

CALCOMANIAS - FRANCES CANADIENSE

REF	FN	PART NUMBER	YR/SN	QTY	DESCRIPTION
		87307896		1	CALCOMANIA Warning, Crush Hazard; When Changing A Machine to Foot Swing Controls; For Illustration See ref 9 On Figure 09-74
1		398577A1		1	CALCOMANIA Warning; Crush Hazard; Loader Arm Support Strut
2		87308997		1	CALCOMANIA Maintenance Schedule; Supplied by Parts and Components; Replaces 87430922, 874469009
3		8603093		1	CALCOMANIA Warning; Explosion Hazard, Do Not Use Ether
4		86992979		1	CALCOMANIA Danger; Crush Hazard
5		398658A1		1	CALCOMANIA Clam Bucket Position
6		389730A1		1	CALCOMANIA Warning; Do Not Modify or Repair ROPS or FOPS In Any Manner
7		398663A1		1	CALCOMANIA Important; Operator's Manual In Box Underneath This Cover; Glove Box Lid
8		87431077		1	CALCOMANIA Fuse Location
9		87431080		1	CALCOMANIA Relay
10		398673A1		2	CALCOMANIA Warning; Avoid Crushing; Do Not Jump / Use Seat Belt
11		321-5675		1	CALCOMANIA Do Not Operate
12		86992978		2	CALCOMANIA Warning; No Step/Not An Exit; Canopy
13		398599A1		1	CALCOMANIA Warning/Danger; Read the Operator's Manual

http://www.minnparbackhoeparts.com/

CALCOMANIAS - INGLES

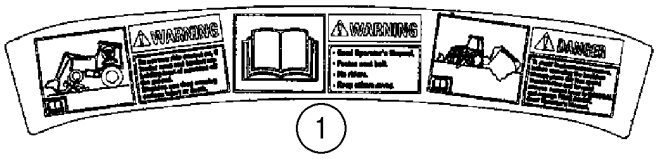

1



2

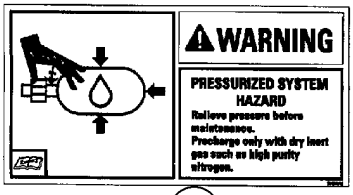

9



10



11

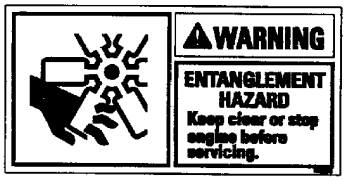

3

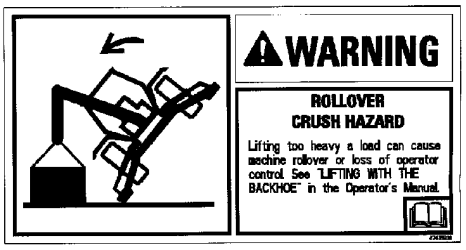

12

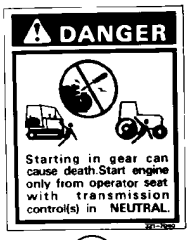

4



5

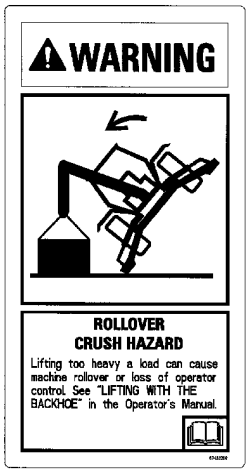

12A



14

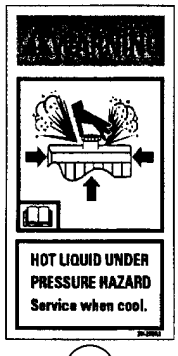

6

DIESEL FUEL

7

HYDRAULIC FLUID

8



13

HYDRAULIC FLUID

8A

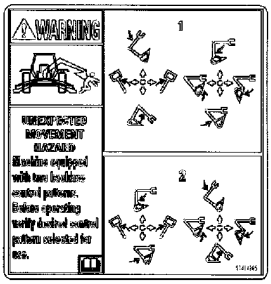

15

BS03K275

http://www.minnparbackhoeparts.com/

CALCOMANIAS - INGLES

REF	FN	PART NUMBER	YR/SN	QTY	DESCRIPTION
1		392375A1		1	CALCOMANIA Warning/Warning/Danger; Front, With Ride Control; Do Not Turn Ride Control On/Read Operator's Manual/To Avoid Inadvertent Movement
2		384265A1		1	CALCOMANIA Warning; Crush Hazard; Keep Clear; Support Loader Lift Arms During Maintenance
3		384267A1		2	CALCOMANIA Warning; Entanglement Hazard, Fan; Keep Clear or Stop Engine Before Servicing
4		321-7040		1	CALCOMANIA Danger; Starting In Gear
5		384269A1		2	CALCOMANIA Danger; Jump Start
6		384258A1		1	CALCOMANIA Warning; Hot Liquid Under Pressure
7		321-230		1	CALCOMANIA Diesel Fuel
8		321-229		1	CALCOMANIA Hydraulic Fluid; Used In Production; For Service, Order 321-6376, English Decal Only
8A		321-6376		1	CALCOMANIA Hydraulic Fluid
9		384260A1		1	CALCOMANIA Warning; Ride Control Accumulator
10		D149826		1	CALCOMANIA Caution/Important; For All Models With Foot Swing Backhoe Controls and Standard Backhoe Models With Hand Swing
11		D149827		1	CALCOMANIA Caution/Important; Extendahoe Backhoe Models With Hand Swing
12		87435938		1	CALCOMANIA Warning; Rollover Crush Hazard; Lifting Too Heavy A Load; Models Without Pilot Controls
12A		87433209		1	CALCOMANIA Warning; Rollover Crush Hazard; Lifting Too Heavy A Load; Models With Pilot Controls
13		321-6774		1	CALCOMANIA Warning; Seat Spring
14		87423813		2	CALCOMANIA Warning; Unexpected Movement Hazard; Before Adjusting Windows
15		87414205		1	CALCOMANIA Pilot Control Pattern; If Used
15		87305413		1	CALCOMANIA Warning, Unexpected Movement; Pattern Selecting; With Backhoe/Excavator Black Silhouette on Decal; If Used; Not Illustrated

http://www.minnparbackhoeparts.com/

CALCOMANIAS - CASTELLANO PARA LATINOAMERICA

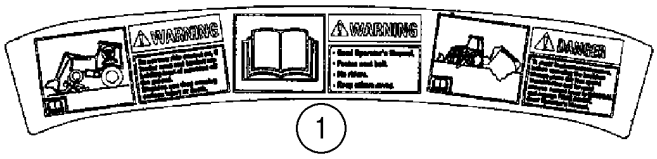

1



2

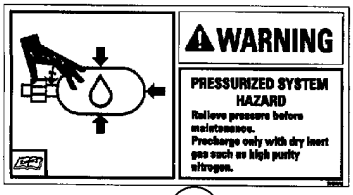

9



10



11

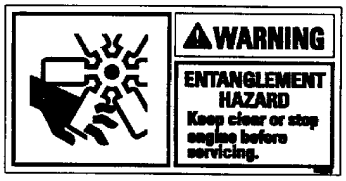

3

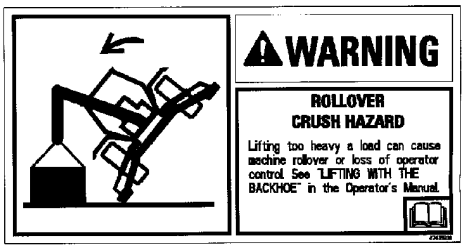

12

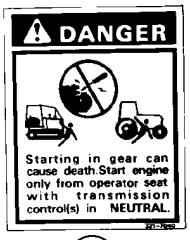

4



5

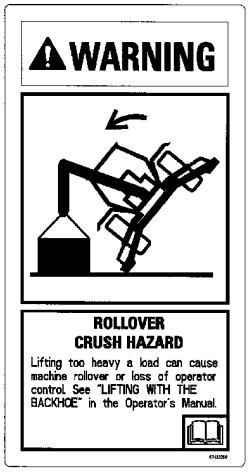

12A



14

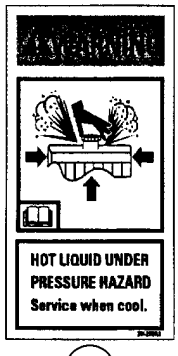

6

DIESEL FUEL

7

HYDRAULIC FLUID

8



13

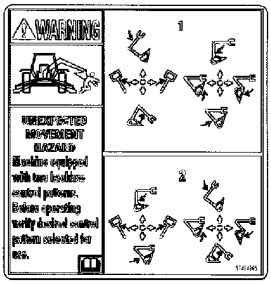

15

HYDRAULIC FLUID

8A

BS03K275

http://www.minnparbackhoeparts.com/

CALCOMANIAS - CASTELLANO PARA LATINOAMERICA

REF	FN	PART NUMBER	YR/SN	QTY	DESCRIPTION
1		398600A1		1	CALCOMANIA Warning/Warning/Danger; Front, With Ride Control; Do Not Turn Ride Control On/Read Operator's Manual/To Avoid Inadvertent Movement
2		398578A1		1	CALCOMANIA Warning; Crush Hazard; Keep Clear; Support Loader Lift Arms During Maintenance
3		398580A1		2	CALCOMANIA Warning; Entanglement Hazard, Fan; Keep Clear or Stop Engine Before Servicing
4		398674A1		1	CALCOMANIA Danger; Starting In Gear
5		398582A1		2	CALCOMANIA Danger; Jump Start
6		398570A1		1	CALCOMANIA Warning; Hot Liquid Under Pressure
7		398667A1		1	CALCOMANIA Diesel Fuel
8		398665A1		1	CALCOMANIA Hydraulic Fluid
8A		321-6376		1	CALCOMANIA Hydraulic Fluid, English Decal Only
9		398572A1		1	CALCOMANIA Warning; Ride Control Accumulator
10		398677A1		1	CALCOMANIA Caution/Important; For All Models With Foot Swing Backhoe Controls and Standard Backhoe Models With Hand Swing
11		398669A1		1	CALCOMANIA Caution/Important; Extendahoe Backhoe Models With Hand Swing
12		87435939		1	CALCOMANIA Warning; Rollover Crush Hazard; Lifting Too Heavy A Load; Models Without Pilot Controls
12A		87434771		1	CALCOMANIA Warning; Rollover Crush Hazard; Lifting Too Heavy A Load; Models With Pilot Controls
13		398670A1		1	CALCOMANIA Warning; Seat Spring
14		87429163		2	CALCOMANIA Warning; Unexpected Movement Hazard; Before Adjusting Windows
15		87429165		1	CALCOMANIA Pilot Control Pattern; If Used
15		87336843		1	CALCOMANIA Warning, Unexpected Movement; Pattern Selecting; With Backhoe/Excavator Black Silhouette on Decal; If Used; Not Illustrated

http://www.minnparbackhoeparts.com/

CALCOMANIAS - FRANCES CANADIENSE

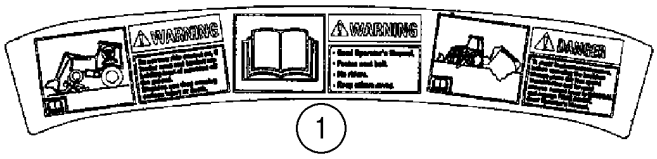

1



2

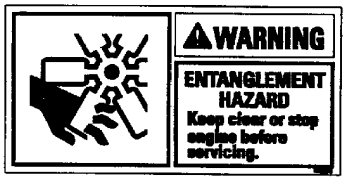

3

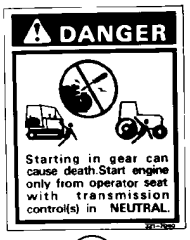

4



5

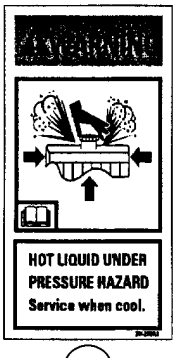

6

DIESEL FUEL

7

HYDRAULIC FLUID

8

HYDRAULIC FLUID

8A

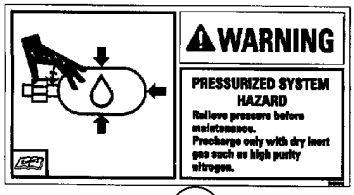

9



10



11

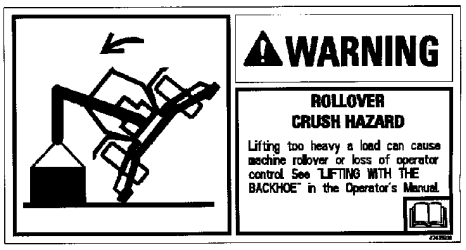

12

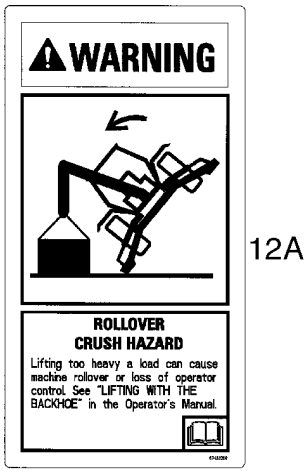

12A



14



13

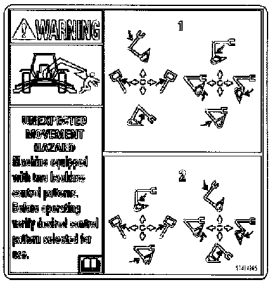

15

BS03K275

http://www.minnparbackhoeparts.com/

CALCOMANIAS - FRANCES CANADIENSE

REF	FN	PART NUMBER	YR/SN	QTY	DESCRIPTION
1		398601A1		1	CALCOMANIA Warning/Warning/Danger; Front, With Ride Control; Do Not Turn Ride Control On/Read Operator's Manual/To Avoid Inadvertent Movement
2		398579A1		1	CALCOMANIA Warning; Crush Hazard; Keep Clear; Support Loader Lift Arms During Maintenance
3		398581A1		2	CALCOMANIA Warning; Entanglement Hazard, Fan; Keep Clear or Stop Engine Before Servicing
4		398676A1		1	CALCOMANIA Danger; Starting In Gear
5		398583A1		2	CALCOMANIA Danger; Jump Start
6		398571A1		1	CALCOMANIA Warning; Hot Liquid Under Pressure
7		398668A1		1	CALCOMANIA Diesel Fuel
8		398666A1		1	CALCOMANIA Hydraulic Fluid
8A		321-6376		1	CALCOMANIA Hydraulic Fluid, English Decal Only
9		398573A1		1	CALCOMANIA Warning; Ride Control Accumulator
10		398656A1		1	CALCOMANIA Caution/Important; For All Models With Foot Swing Backhoe Controls and Standard Backhoe Models With Hand Swing
11		398654A1		1	CALCOMANIA Caution/Important; Extendahoe Backhoe Models With Hand Swing
12		87435940		1	CALCOMANIA Warning; Rollover Crush Hazard; Lifting Too Heavy A Load; Models Without Pilot Controls
12A		87434772		1	CALCOMANIA Warning; Rollover Crush Hazard; Lifting Too Heavy A Load; Models With Pilot Controls
13		398671A1		1	CALCOMANIA Warning; Seat Spring
14		87429164		2	CALCOMANIA Warning; Unexpected Movement Hazard; Before Adjusting Windows
15		87429166		1	CALCOMANIA Pilot Control Pattern; If Used
15		87336844		1	CALCOMANIA Warning, Unexpected Movement; Pattern Selecting; With Backhoe/Excavator Black Silhouette on Decal; If Used; Not Illustrated

http://www.minnparbackhoeparts.com/

Number	Figure	Sequence	Ref.	Number	Figure	Sequence	Ref.
{2853407}	02-30		6	106989A1	09-18		13
{2853410}	02-30			106990A1	09-18		15
{2853671}	02-12		5	107071A1	06-46		17
{2853960}	02-25		2	107124A1	09-26		39
{376288A2}	09-08				09-26		43
{87307656}	04-21		5		09-27		22
{87346606}	09-45A		2		09-27		33
{87346607}	09-45A		3		09-28		19
{87346611}	09-45A		4		09-36		8
{87346612}	09-45A		5	108088A1	09-01		11
{87346615}	09-45A		6		09-02		12
{87346625}	09-45A		8		09-02		21
{87346633}	09-45A		9	108335A1	08-13		33
{87346634}	09-45A		10	108336A1	08-13		34
{87349995}	09-49A			108366A1	04-18		4
{87442204}	09-56A			108864A1	09-18		1
{87454292}	09-45A			108923A1	09-18		9
100-11196	06-29		24	108924A1	09-18		8
	06-29		8	109268A1	09-04		4
	06-30		22	109511A1	04-17		9
	06-30		8	109879A1	09-38		3
	06-32		8		09-40		13
	06-33		8	110307A1	08-63		12
100-21315	08-66		13A	111522A1	09-04		5
100-39001	09-54		43	112370A3	08-66		14
	09-54A		43	112380A1	09-01		14
	09-56		20		09-02		29
	09-56A		20		09-18		21
100016	04-01		39	112382A1	09-02		25
100520A1	06-02		12	112486A1	06-07		10
100532A1	06-03		3		06-41		10
100533A1	05-06		11		06-42		10
	06-03		8	112509A1	05-06		5
100552A1	06-06		5		06-04		3
100553A1	06-06				06-04		3
100554A1	06-06			112517A1	06-22		4
100555A1	06-06		18	112884A1	09-49A		
100556A1	06-06		4	112946A1	09-06		3A
100557A1	06-06		22	113133A2	08-05		34
	06-15		8		08-63		1
	06-16		9		09-05		20
	06-40		1	113135A2	08-63		2
	06-46		7	113457A1	09-06		3
100559A1	06-06		6	113629A1	09-04		25
100561A1	06-06		13	114295A1	06-06		20
100562A1	06-06		19	114296A1	06-04		9
100696A1	09-04		3	114318A1	09-23		12A
100748A1	06-14		9		09-36		4
100753A1	06-22		17	114549A1	09-53		6
101479A1	08-13		40	114882A2	05-01		2
101531A1	04-18		9	114980A1	09-40		8
102-12125	08-32		16	116339A1	09-05		21
102-1387	05-03		4	116425A1	06-06		12
102-23150	08-32		14	116426A1	06-06		7
102-23206	08-33		5	116427A1	06-06		8
102761A1	09-01		12	116521A1	09-49		3
	09-02		23	116534A1	09-49		10
102765A1	09-18		19		09-74		1
103-11100	09-13		16	116538A2	09-49		12
103-11237	09-24		28	116545A1	09-49		9
103-1437	09-02		15	116547A1	09-48		10
103-1475	09-21		8		09-49		6
103-1518	03-03		7	116548A1	09-49		15
103-16175	09-22		4	116550A1	09-49		14
	09-22		8	116551A1	09-49		8
	09-22A		4	116552A1	09-49		13
	09-22A		8	116761A3	09-47		1
	09-24		33	116763A1	09-47		2
	09-26		23	116764A3	09-47		3
	09-26		27	116766A2	09-47		4
	09-26		33	116767A1	09-47		5
	09-26		36	117933A1	06-38		6
	09-26		5	118769A1	09-45		7
	09-27		14	118900A1	09-04		24
	09-27		40	118901A1	09-04		30
	09-27		50		09-05		3
103-16200	09-23		18	119171A1	09-47		6
103-3350	09-04		29	119211A1	09-45		11
103670A1	08-13		36	119241A1	06-37		1
	08-24		18	119243A1	05-09		4
104824A1	09-04		23	120303A1	05-02		25
104907A1	06-37		1		08-04		10

http://www.minnparbackhoeparts.com/

Number	Figure	Sequence	Ref.
120303A1	08-05		8
	08-06		8
	08-26		32
	08-27		14
	09-37		33
121-145	07-03		20
121412A1	04-07		2
	04-10		
	04-18		16
121413A1	04-07		3
	04-20		1
	04-21		13
	08-25		27
121414A1	04-07		4
	09-50		
121415A1	04-10		
121416A1	04-07		5
121478A1	08-66		14A
121665A1	09-22		7
	09-22A		7
121729A1	07-04		8
121778A1	09-23		3
121856A1	09-37		55
121920A1	09-08		12
122081A1	09-65		9
122259A1	05-06		10
122261A1	05-05		9
122264A1	06-03		10
122265A1	05-06		9
	06-03		9
122268A1	06-02		13
122270A1	05-05		5
	06-02		7
122284A2	09-24		10
	09-27		1
122535A1	08-66		
122553A1	09-64		12
	09-65		24
122554A1	09-65		17
122579A1	09-64		13
122603A1	09-37		24
122974A1	09-25		1
	09-25A		1
122993A1	09-24		40
122995A1	09-24		39
123097A1	04-04		32
	04-07		31
	06-12		42
123167A2	09-24		23
123168A2	09-24		26
123318A1	09-24		29
123407A1	08-67		17
123493A1	09-02		9
123537A1	09-10		29
123726A1	08-65		12
123732A1	08-65		13
123809A2	04-04		31
	04-07		30
	06-12		43
123815A1	09-02		2
123969A1	09-49A		9
123980A1	09-64		23
124011A1	09-64		22
124243A1	09-02		8
124462A1	08-66		
124463A1	08-66		22
124568A2	08-66		3
124690A1	08-09		15
	08-09A		15
124721A1	09-03		14
1250594C1	09-64		10
	09-64		11
	09-65		16
	09-65		23
	09-65		8
125113A1	09-18		12
	09-18		14
125749A1	09-60		12
126-116	06-12		12
126155A1	09-10		31
126177	09-71		3
126844A1	04-07		17
126844A1	04-07		21
	04-10		10
	04-10		16
	04-10		20
126918A1	09-20		2
127009A1	04-11		6
127158A1	04-18		6
128312A1	04-04		38
	04-08		3
	04-14		13
	04-15		3
	09-04		19
128376A1	06-44		11
	06-45		11
128483A1	09-64		16
	09-64		9
	09-65		2
	09-65		7
128484A1	09-64		3
	09-65		13
128485A1	09-64		4
	09-64		8
	09-65		14
	09-65		21
128570A1	06-08		11
	06-43		9
128818A1	09-04		11
129-667	08-61		2
129015A1	09-16		1
129914A1	09-02		4
130047A1	03-01		15
130049A1	03-01		5
130245A1	04-05		17
	07-06		32
1302758C1	04-12		35
	09-67		20
130674A1	09-49A		
131-121	04-11		15
	09-02		33
131-425	09-51		
131-431	09-40		31
	09-72		14
131-435	09-49		
131-619	04-12		17
	04-12		20
131-861	04-11		7
	09-01		4
	09-11		15
	09-60		8
131-869	09-42		21B
	09-42		4
1312210C2	04-14		
	04-14		
	04-15		
	04-15		
132212A1	08-10		17
	08-11		17
	08-12		16
	08-13		16
132661A1	09-01		5
132842A1	09-27		54
132844A1	09-27		53
132862A1	09-51		6
132864A1	09-51		
132866A1	09-51		9
132872A1	09-51		18
132873A1	09-02		39
132930A1	08-10		38
	08-11		32
	08-12		24
	08-13		24
132931A1	03-03		2
	09-01		25
132953A1	06-37		1
133083A1	08-62		12
1331087C1	09-63		14
133421A1	09-51		17
133422A1	09-51		15
133542A1	09-08A		12
133604A1	08-12		26
	08-13		26
133605A1	08-10		36

http://www.minnparbackhoeparts.com/

Number	Figure	Sequence	Ref.	Number	Figure	Sequence	Ref.
133605A1	08-11		30	140954A1	06-08		7
	08-12		22	141232A2	09-34		1
	08-13		22	141233A1	09-34		3
133615A1	09-01		2		09-34		3
133617A1	09-02		18	141234A1	09-34		2
133715A1	04-10		11		09-34		2
133716A1	04-10		13	141473A1	09-06		
133989A1	09-02		13	141801A1	08-12		21
1340798C1	08-64		15	141806A1	08-12		20
1340969C2	08-14		22	141809A1	08-14		11
	08-70		1	141811A1	08-14		12
	09-27		25	142-103	09-54		47
1340970C1	08-70		2		09-54A		47
134167A1	09-23		20		09-56		23
1344025C1	09-50		16		09-56A		23
1344026C1	09-50		17	142122A1	08-10		35
1346189C1	08-07		2	142124A1	08-11		29
	08-64		1	142300A1	09-08		3
1346190C1	08-07		1	142301A1	09-08A		3
	08-64		1	142404A1	09-03		2
1346191C1	08-64		2	142524A1	09-04		12
1346192C1	08-64		2	142538A1	09-06		7
1346195C1	08-64		13		09-07		5
1348264C1	02-02		5	142815A1	08-10		31
134844A1	09-07		3	14302921	08-51		5
1349058C1	06-08		5		08-52		5
1349059C1	06-08		6		08-53		6
	06-43		5	14304021	08-51		1
1349265C1	06-46		24	143210A1	09-02		7
135-1233	09-28		25	143219A1	08-21		
135-51652	09-24		18	143439A1	08-10		12
	09-27		4		08-11		12
135161A1	08-62		13		08-12		11
135248A1	09-23		10		08-13		11
135249A1	09-23		9	14358921	08-52		1
135512A3	09-51		2	143786A1	09-51		7
136-54	04-18		14	144173A1	08-33		7
136261A1	09-16		11	144193A3	09-75		7
136263A1	09-16		8	144210A1	09-08A		
	09-17		2	144279A1	06-09		7
136267A1	09-16		5		06-47		7
136269A1	09-16		6	144454A1	06-02		
136270A2	09-16		40	144457A1	06-04		
136271A2	09-16		39	144458A1	06-04		5
136822A1	09-11		11	144459A1	06-04		7
136824A1	09-11		13	144460A1	06-08		
137219A1	04-20		3	144461A1	06-05		
137223A2	06-01		13	144462A1	06-05		1
137248A1	08-66		13	144463A1	06-05		5
137283A1	09-03		1	144465A1	06-05		4
137343A1	09-10		28		06-05		4
137344A1	09-10		27	144466A1	06-06		
138595A1	09-37		14	144477A1	08-23		14
139080A1	05-09		4		08-23		7
	05-09		4	144479A1	08-23		8
139180A1	09-05		12	144908A2	09-39		24
139195A1	09-05		14	148093A1	09-76		14
139235A1	09-05		13	148095A1	09-76		15
139363A1	09-40		9	151-516	09-52		7
139728A1	09-73		14		09-68		3
139808A2	08-09		13	1530028C1	06-15		2
	08-09A		13		06-16		3
	08-66		1	1537663C1	06-03		5
	09-23		11	1537664C1	06-03		6
139810A2	08-66		2	1542830C2	08-59		
139865A1	09-03		8	1542874C1	08-63		
140-103	09-60		11	1542875C1	08-62		
140-104	09-54		44		08-64		
	09-54A		44		08-70		
	09-56		21	1542876C1	08-65		
	09-56A		21		08-66		
140-108	09-15		29	1542877C1	08-65A		
140-119	04-10		15	1542879C1	08-67		
140943A1	06-08		7		08-68		
140944A1	06-08		7		08-69		
140945A1	06-08		7	1542914C1	08-68		4
140946A1	06-08		7	1542915C2	08-68		
140947A1	06-08		7	1542918C3	08-65A		4
140948A1	06-08		7	1542923C2	08-69		
140949A1	06-08		7	1543256C1	08-63		
140951A1	06-08		7	1543260C1	08-62		
140953A1	06-08		7	1543267C1	08-64		

http://www.minnparbackhoeparts.com/

Number	Figure	Sequence	Ref.
1543267C1	08-70		
1543275C1	08-65		
1543289C2	08-65A		
15687475	08-54		9
	08-55		9
	08-56		9
	08-57		7
	08-58		9
168-71	04-18		7
170-104	09-02		3
17278781	02-12		7
175156A1	09-08		
175599A1	09-40		2
175959A1	06-41		11
	06-42		11
175961A1	06-41		19
	06-42		19
175964A2	06-44		9
175965A1	06-44		10
	06-45		10
175966A1	06-44		8
	06-45		8
175968A1	06-44		12
	06-45		12
175976A1	06-46		4
175982A1	06-46		14
175984A1	06-46		19
176091A1	09-50		6
176226A1	08-10		13
	08-11		13
	08-12		12
	08-13		12
176311A1	09-01		10
	09-02		20
176857A1	04-09		4
176914A1	09-49		5
176916A1	09-49		4
176919A1	09-48		7
176920A1	09-49		7
176921A1	09-48		9
	09-49		2
176924A1	09-46		5
177256A1	08-08		30
	08-08A		30
	08-65A		1
	09-22A		1
177257A1	08-08		29
	08-08A		29
	08-65A		1
	09-22A		2
177258A1	08-65A		2
177259A1	08-65A		2
177261A1	08-65A		12
177269A1	04-19		14
	09-60		18
177634A1	08-10		34
178004A1	09-18		18
178006A1	09-18		17
178051A1	08-33		8
178850A1	08-68		14
179029A1	09-20		1
179956A1	09-12		6
180427A1	09-36		2
180593A1	09-51		11
180594A3	09-51		19
181042A1	09-24		22
	09-27		8
181100A1	06-15		4
	06-16		5
	06-23		35
	06-23A		35
	06-24		5
181101A1	06-14		2
	06-16		20
181102A1	06-14		12
	06-16		22
181103A1	06-23		20
	06-23A		20
181104A1	07-02		27
181105A1	06-15		12
	06-16		16
181107A1	06-23		19
181107A1	06-23A		19
181108A1	06-20		24
	06-21		26
181111A1	06-20		13
181116A1	06-20		9
181118A1	06-21		1
181122A1	06-22		5
181123A1	06-21		31
181126A1	06-19		3
	06-22		9
181128A1	06-20		3
181130A1	06-21		30
181132A1	06-19		5
	06-21		2
181136A1	06-23		5
	06-23A		5
181137A1	06-23		28
	06-23A		28
181138A1	06-18		12
181139A1	06-18		5
181141A1	06-15		14
	06-16		19
181142A1	06-17		19
181144A1	06-21		33
181146A1	06-23		18
	06-23A		18
181158A1	06-20		12
181159A1	06-20		11
181161A1	06-20		14
181165A1	06-21		34
181166A1	06-23		22
	06-23A		22
181169A1	09-46		6
	09-47		7
181170A1	09-48		11
	09-49		16
181171A1	06-18		7
181173A1	06-18		16
181174A2	06-18		22
181175A1	06-18		18
181176A1	06-16		18
181177A1	06-18		11
181179A1	06-15		11
	06-16		15
181198A1	06-22		3
181202A1	06-14		13
181203A1	06-18		21
181207A1	06-23		23
	06-23A		23
181208A1	06-23		24
	06-23A		24
181219A1	06-14		10
181232A1	06-15		13
	06-16		17
181234A2	06-23		15
	06-23A		15
181245A2	06-18		1
181251A1	06-23		9
	06-23A		9
181253A1	06-23		31
	06-23A		31
181254A1	06-23		25
	06-23A		25
181255A2	06-23		27
	06-23A		27
181256A1	06-23		10
	06-23A		10
181258A1	06-23		29
	06-23A		29
181260A1	06-23		26
	06-23A		26
181261A1	06-23		17
	06-23A		17
181272A1	06-23		7
	06-23A		7
181273A1	06-23		6
	06-23A		6
181274A1	06-14		3
181842A1	09-04		7A
181979A1	09-64		24
181981A1	09-41		17
	09-62		5

http://www.minnparbackhoeparts.com/

Number	Figure	Sequence	Ref.
182006A1	09-17		4
	09-21		9
182445A1	07-03		1
	07-04		1
	07-05		
182594A1	04-12		11
182697A1	09-62		3
182721A2	04-19		11
183168A1	09-39		7
183443A1	09-27		55
183509A1	09-27		56
183736A1	08-13		52
183795A3	08-11		25
	08-68		1
	09-24		15
	09-27		9
183795A4	08-11		25
	08-68		1
	09-24		15
	09-27		9
184297A1	08-13		38
184497A1	04-06		3
184616A1	08-14		18
184617A1	08-14		17
184627A2	07-04		13
184726A1	04-12		10
185325A1	09-40		14
185377A1	02-01		27
185506A1	09-07		8
185926A1	03-01		4
	09-37		4
186351A1	09-45		11A
186977A1	09-36		13
186989A1	09-40		30
	09-72		13
187281A1	04-19		12
187612A1	08-10A		25
187637A1	08-13		20
187639A1	08-13		21
187677A1	08-10A		10
187714A1	06-12		1
187715A1	06-12		2
187845A1	08-10		23
188009A3	03-01		29A
188311A2	03-01		11
189103A1	08-10A		20
189109A1	03-03		2A
	09-01		
	09-02		
189263A1	08-10A		21
189414A1	08-10A		33
189602A3	03-01		29
189709A1	08-10A		12
189957A1	08-10A		1
	08-59A		
190267A2	09-34		1
190313A1	09-24		27
190427A1	06-21		
190428A3	06-18		8
190431A1	06-24		10
190435A1	06-23		37
	06-23A		37
190436A1	06-23		13
	06-23A		13
190437A1	06-23		4
190438A2	06-23		12
	06-23A		12
190439A2	06-23		11
	06-23A		11
190440A1	06-23		38
	06-23A		38
190441A1	06-23		14
	06-23A		14
190442A1	06-23		2
	06-23A		2
190443A1	06-23		3
190447A1	07-01		15
190449A1	07-01		7
190450A1	07-01		9
190451A1	07-02		1
190452A1	06-41		14
	06-42		14
190463A1	07-02		2
190468A1	06-41		16
	06-42		16
190469A1	06-41		6
	06-42		6
190471A1	06-41		4
	06-42		4
190476A2	07-02		4
190477A2	07-02		4
190493A1	07-01		14
190496A1	07-01		8
190500A1	07-01		20
190506A1	06-43		7
190508A1	06-43		7
190509A1	06-43		7
190510A1	06-43		7
190511A1	06-43		7
190512A1	06-43		7
190513A1	06-43		7
190514A1	06-43		7
190515A1	06-43		7
190516A1	06-43		7
190675A1	09-63		17
190682A1	06-06		10
190684A1	06-06		9
191017A1	09-23		2
191046A1	03-01		30
191047A1	09-37		27
191067A1	06-41		15
	06-42		15
191239A1	09-10		1
191703A1	08-21		
	08-21		
	09-65		25
191704A1	03-01		44
	09-65		3
191796A1	05-04		2
	06-01		8
192025A1	08-10A		9
192345A1	08-07		4
192352A1	08-07		3
192450A1	09-73		9
192815A1	09-04		28
192895A1	08-60		2
193-1000	04-04		18
	04-04		3
	04-07		
193-1003	09-04		17
	09-45		10
193913A1	09-65		18
195-81023	09-54		48
	09-54A		48
	09-56		24
	09-56A		24
195210A1	06-08		
1954626C1	09-63		15
1954736C1	09-63		3
195552A1	04-19		3
195615A1	09-01		6
	09-02		19
1958028C1	08-67		19
1959509C1	05-01		4
196065A1	06-46		21
196066A1	06-46		22
196085A1	07-02		9
196090A1	06-46		2
196092A1	06-46		20
196164A1	08-69		14
196454A1	06-21		3A
196466A1	02-07A		4
1966136C1	06-02		16
1966138C1	06-02		17
1966149C2	06-02		5
	06-40		13
1966153C1	06-07		9
1966154C1	06-07		4A
1966155C1	06-07		14
1966156C1	06-07		15
1966169C1	06-06		2
1966186C1	06-02		10
1966559C1	06-07		11
1966993C1	06-18		4

http://www.minnparbackhoeparts.com/

Number	Figure	Sequence	Ref.	Number	Figure	Sequence	Ref.
1967003C1	06-07		4	214-1464	08-14		27
1967531C1	06-18		24		09-65		5
1967581C1	06-18		10	214-1472	08-04		21
1967585C1	06-18		9		08-12		34
196813A1	08-05		25		08-13		47
196815A1	08-05		24	214-1492	08-09		22
196821A1	08-06		13		08-09A		22
196824A1	08-06		12	214-1496	08-08		28
1976955C1	08-59		2A		08-08A		28
197745A1	04-19		4	214-1704	02-02		5A
1977725C1	09-49A				03-01		7A
197793A1	09-51		8		07-04		10
1978141C1	08-60		8	214-1706	03-01		48
1978142C1	08-60				03-01		7
1978143C1	08-60		5		07-04		11
1978144C1	08-60		6	214-31104	08-10A		16
1978158C1	08-60		7	214-3132	08-13		37
1980296C1	08-70		11		08-13		39
1980321C3	08-62		4		08-24		19
1981850C1	09-51		13	214-3156	08-24		16
198410A1	09-19A		5	214-3188	08-08		28
1986753C1	08-65A		14		08-08A		28
	08-68		17	217-1102	09-37		22
1986906C1	08-69		16	217-144	09-63		34
1987096C1	09-63		33	217-314	06-10		11
1987212C1	09-50		11	217-347	09-37		16
1987219C2	09-50		13	217-349	06-10		22
1987290C1	09-50		14	217-363	06-11		11
198976A1	09-23		12	217-380	09-37		21
1990548C4	09-51		21	217-436	09-37		5
199720A1	08-08		30	218-1023	06-16		11
	08-08A		30	218-1254	09-10		20
	08-65		1	218-1256	08-24		22
	09-22		1		09-10		33
199721A1	08-08		29	218-1275	05-04		10
	08-08A		29		06-01		29
	08-65		1	218-1279	09-10		34
	09-22		2	218-335	08-23		30
199722A1	08-65		2		08-24		23
199723A1	08-65		2	218-459	06-12		38
1999528C1	08-10A		29	218-5027	05-02		3
199953A2	08-66		2	218-5050	08-23		24
1999666C1	09-63		16	218-5052	08-30		22
1999667C1	09-63			218-5053	05-04		8
1999668C1	09-63				06-01		26
1999693C1	09-50		8		08-17		5
1999926C1	09-65		15		08-18		7
1999927C1	09-65		22		08-19		7
20-21032	09-08		13		08-20		7
	09-08A		13		08-22		38
20-21232	09-06		4		08-26		23
	09-07		9		08-29		23
	09-08		4		08-30		20
	09-08A		4	218-5056	08-26		25
211-1024	06-25		2		08-29		30
213-123	03-02		14	218-5057	05-02		15
	03-03		17		06-39		2
213-126	07-06		19		06-39		4
	09-02		34		08-08		5
	09-16		22		08-21		1
	09-17		6		08-22		33
	09-19		6		08-26		13
	09-21		10		08-29		13
214-1406	09-37		18	218-5059	05-02		8
	09-62		19		08-07		23
214-14104	08-10		33		08-08		11
214-1412	02-04		6		08-08		33
	06-10		16		08-08A		11
	06-11		35	218-5062	06-11A		4
	06-11A		7		08-04		2
214-1416	02-02		8		08-05		28
	02-06A		15		08-09		8
214-1420	08-03		24		08-09A		8
214-1424	02-06A		18		08-14		24
214-1432	02-01		15	218-5063	08-09A		6
214-1440	02-01		17		08-22		7
214-1456	02-04		12	218-5064	08-01		22
	02-06A		26		08-01		49
214-1464	02-04		11		08-02		19
	08-04		21		08-09A		29
	08-05		40		08-10		8
	08-07		21		08-11		26

http://www.minnparbackhoeparts.com/

Number	Figure	Sequence	Ref.
218-5064	08-11		8
	08-12		31
	08-12		8
	08-13		45
	08-13		8
	08-14		8
	08-23		28
	08-23		42
218-5069	08-02		4
218-5070	08-08A		36
218-5086	08-03		20
218-5089	08-17		4
	08-18		4
	08-19		5
	08-20		5
	08-21		2
	08-22		1
218-5103	07-04		19
218-5105	06-39		6
	08-08		8
	08-08A		8
	08-21		3
	08-22		39
	08-22		5
	08-26		11
	08-29		11
	09-10		14
218-5106	05-02		6
	08-08		20
	08-08A		20
	08-09		11
	08-09		24
	08-09A		11
	08-09A		24
218-5107	08-01		12
	08-01		40
	08-01		45
	08-04		16
	08-05		2
	08-05		32
	08-06		2
	08-07		18
	08-09		27
	08-09A		27
	08-14		20
218-5108	08-10		24
218-5110	06-13		3
	08-02		14
218-5117	08-25		11
218-5118	08-10A		7
218-5119	08-09		19
	08-09A		19
218-5123	08-10		29
218-5135	08-08A		5
218-5136	05-02		11
	08-08		35
218-5137	08-07		16
218-5140	08-01		24
218-5155	09-37		57
218-5157	08-01		47
218-5170	05-02		2
218-5174	08-25		14
218-5176	08-02		12
218-5182	08-22		49
	09-10		15
218-5183	08-26		20
	08-29		20
218-5185	08-01		19
218-5209	06-25		45
	08-59		7
218-5211	03-01		6
	09-37		12
218-5213	08-33		16
218-5216	08-23		34
218-5220	08-05		18
218-5222	08-22		34
218-5228	07-04		27
218-5230	05-02		21
218-5232	08-04		26
	08-22		8
218-5242	08-07		25
218-5243	08-22		32
218-5280	05-02		28
	08-23		26
218-5283	08-10A		13
	08-22		3
218-5335	08-29		25
218-5351	05-02		19
	05-04		14
	06-01		4
	08-08		11
	08-08A		11
	08-23		31
	08-26		9
	08-29		9
218-5359	08-10A		18
218-5365	08-22		4
	08-22		44B
218-5382	08-10A		23
218-5511	08-23		44
218-5529	06-01		5
218-5584	08-01		27
	08-02		1
	08-02		10
	08-03		4
218-5600	08-25		18
218-5650	08-07		28
218-595	08-04		22
218-655	08-25		15
218-676	08-24		21
218-693	09-10		19
218-695	09-10		32
218-754	08-22		50
218-765	08-01		41
218-776	08-06		17
218-836	08-22		35
218-840	08-07		27
	08-23		33
218-845	08-26		22
	08-29		22
218-980	08-01		44
	08-22		6
219-1	05-04		13
	06-01		6
	08-04		27
	08-62		17
	08-64		21
	08-65		17
	08-65A		17
	08-66		20
	08-67		24
	08-68		20
	08-69		20
	09-04		32
	09-05		23
	09-05		5
	09-08		9
	09-08A		9
	09-16		41
	09-20		14
	09-23		28
	09-24		17
	09-24		3
	09-26		24
	09-26		51
	09-27		3
	09-27		35
	09-27		41
	09-28		12
219-10	06-09		8
	06-47		8
219-16	09-47		
	09-47		
219-36	08-68		21
219-55	08-04		28
	08-05		41
	08-63		17
	08-64		22
	08-66		21
	09-04		10
	09-23		30
	09-25		5
	09-25A		5
	09-36		9

http://www.minnparbackhoeparts.com/

Number	Figure	Sequence	Ref.	Number	Figure	Sequence	Ref.
219-86	09-27		58	237-6003	08-30		23
	09-28		11	237-6004	05-02		4
	09-28		5		05-04		8A
219-87	09-10		4		06-01		27
219-89	09-27		57		07-04		19A
	09-28		10		07-04		25
220276A1	08-10A		28		08-17		
220413A1	09-36		7		08-18		
221-89	09-63		21		08-19		
221168A1	08-59A		15		08-20		
221330A1	08-10A		27		08-26		24
221477A1	09-21		1A		08-29		24
222889A1	04-09		19		08-30		21
	07-04		24		08-59		11A
225-14105	09-02		5	237-6005	08-26		26
225-14210	03-02		13		08-29		26
	03-03		20		08-29		31
225315C1	08-54		6	237-6006	05-02		16
	08-55		6		05-02		18
	08-56		6		05-02		20
225318C1	08-54		7		05-02		29
	08-55		7		05-04		14A
	08-56		7		06-01		4A
225350C1	08-56		14		06-01		5A
	08-58		6		06-25		46
225353C1	08-56		15		06-39		3
	08-58		7		06-39		5
226456A1	09-37		36		06-39		7
226560A1	09-51		4		08-07		29
226582A1	08-10A		35		08-08		12
227389A1	04-19		2		08-08		6
228133A2	02-01		27		08-08		9
230-4216	09-22		42		08-08A		12
	09-22A		42		08-08A		6
	09-51		7A		08-08A		9
230857A1	09-37		1A		08-10A		14
230973A1	07-03		26		08-17		
231-14109	09-38		4		08-18		
	09-40		15		08-19		
	09-42		15		08-20		
	09-42		26		08-23		27
	09-42		9		08-23		32
231-14409	09-15		30		08-23		45
231-1444	09-51				08-26		10
	09-70		12		08-26		12
231-1445	09-15		23		08-26		14
231-1446	08-10A		6		08-26		19
	09-01		18		08-29		10
	09-02		28		08-29		12
231-24409	04-07		12		08-29		14
	04-08		19		08-29		19
231-2446	09-19		18		08-59		8
231-4115	09-70		9		08-61		4
231-4246	09-10		5		08-67		20
231-4247	09-22		39		09-10		
	09-22A		39		09-10		
231397A1	06-07				09-37		17
231520A2	04-07		27		09-37		58
	04-09		10	237-6008	05-02		12
231656A1	09-37		6		05-02		7
232-1446	09-55		2		05-02		9
	09-56		28		06-23		40
	09-56A		28		06-23A		40
232-4617	09-45		19		06-25		48
	09-45		26		08-07		24
	09-45A		20		08-07		26
232948A1	09-65		10		08-08		12
233283A1	06-22		1		08-08		21
233284A1	06-21		32		08-08		34
234412A1	08-25		9		08-08		36
	08-60				08-08A		12
234892A1	03-01		14		08-08A		21
235002A1	04-10		12		08-09		12
	08-25		26		08-09		25
235916A1	08-12		33		08-09A		12
	08-13		44		08-09A		25
	08-69		1		08-10A		19
	09-26		1		08-25		12
	09-27		10		08-25		19
235917A2	08-69		2		08-26		21
235921A1	08-69		4		08-29		21
237-6002	08-59		14		08-59		6

http://www.minnparbackhoeparts.com/

Number	Figure	Sequence	Ref.	Number	Figure	Sequence	Ref.
237-6010	03-01		6A	238-5014	06-23		41
	06-10		12		06-23A		41
	06-10		23		06-25		49
	06-11A		5	238-5020	06-25		35
	08-01		13	238-5115	06-35		42
	08-01		46	238-5150	06-25		17
	08-01		48	238-5152	06-08		10
	08-03		10		06-43		11
	08-04		17	238-5227	05-01		3
	08-04		3	238-5228	08-01		7
	08-05		29		09-26		50
	08-05		3	238-5230	08-61		9
	08-05		33	238-5231	08-63		9
	08-06		3		08-64		10
	08-07		17		08-70		8
	08-07		19	238-5233	08-62		9
	08-09		28	238-5235	08-69		11
	08-09		9	238-5239	08-66		9
	08-09A		28	238-5241	08-65		9
	08-09A		9	238-5242	08-66		23
	08-10		30	238-5247	08-65A		9
	08-10A		34		08-68		11
	08-14		21	238-5249	08-67		13
	08-14		25	238-5270	06-40		2
	08-27		11	238-5336	06-32		28
	09-37		13		06-33		29
237-6012	06-11		12	238-6018	08-59A		3
	08-01		20	238-6121	06-06		22A
	08-01		23		06-15		8A
	08-01		50		06-16		10
	08-02		20		06-40		1A
	08-08A		37		06-46		7A
	08-09		20	238-6218	08-32		12
	08-09A		20	238-7011	06-25		11
	08-09A		30		06-26		8
	08-09A		7	238-7013	06-25		36
	08-10		25	238-7116	06-25		15
	08-10		9		06-26		4
	08-10A		11	238-7123	06-25		9
	08-11		27	238-7210	06-26		6
	08-11		35	238-7218	06-25		30
	08-11		9	238-8217	06-22		22
	08-12		32	238-9119	06-25		5
	08-12		36	238-9213	06-35		43
	08-12		9	239306A1	09-02		14
	08-13		35	239406A1	09-03		7
	08-13		46	239408A1	04-10		13
	08-13		9	239606A1	06-16		2
	08-14		9	242459A1	08-24		9
	08-23		25	243084A1	09-23		19
	08-23		29	243679A2	08-24		14
	08-23		43	244109A1	06-21		6
	08-59A		13	244536A1	09-27		
	09-10		35	244790A1	09-26		45
237-6014	08-33		11	245258A1	04-10		7
	08-33		17	245423A1	09-10		30
237-6016	06-13		4	245466A1	09-29		6
	08-01		18		09-29		9
	08-01		25		09-30		6
	08-01		28		09-30		9
	08-02		11		09-31		6
	08-02		15		09-31		9
	08-02		17		09-32		6
	08-02		2		09-32		6
	08-02		5		09-32		9
	08-02		8		09-32		9
	08-03		5		09-33		6
	08-10A		24		09-33		9
	08-10A		8		09-34		6
237-6020	08-03		21		09-34		6
237-8008	06-40				09-34		9
237021A1	07-01		1		09-34		9
237022A1	07-01		2	246151A1	08-24		17
237025A1	07-01		21	246158A1	08-24		15
237026A1	07-01		11	246526A1	04-04		31A
237582A1	04-17		1	247104A1	05-09		1
238-5005	04-18		8	247546A1	06-46		24A
238-5011	04-06A		5	247550A1	06-46		13
	08-61		5	248-2373	09-45		4
238-5013	06-23		42		09-45A		13
	06-23A		42	250851A1	09-05		7
	06-25		50		09-08		30

http://www.minnparbackhoeparts.com/

Number	Figure	Sequence	Ref.	Number	Figure	Sequence	Ref.
250851A1	09-08A		30	282428A1	05-02		17
250854A1	04-06		10		08-26		18
252883A1	08-24		2		08-29		18
252885A1	08-24		1	282775A1	04-10		
253038A1	08-24		4	2830082	02-09		1
253209A1	09-47		8	2830156	03-09		2
254409A1	02-03		2	2830158	02-23		4
	02-03A		2	2830266	03-09		1
254686A2	06-14		1	2830281	02-17		2
255051A1	08-24		5	2830411	02-27		8
255447A1	09-40		26	2830433	02-26		7
	09-70		13	2830445	02-20		2
256210A2	08-24		14A	2830559	02-34		10
256347A1	09-01			2830734	02-37		5
	09-02			2830775	02-17		5
256478A1	07-02		13	2830784	02-17		7
256481A1	07-02		14	2830894	02-36		4
256482A1	07-02		17	2830905	02-27		4
256485A1	07-02		18	2830919	02-16		15
256776A1	03-03		5	2830920	02-16		15
257381A1	09-40		28	2830934	02-27		5
257382A1	09-40		27	2830948	02-27		3
258616A1	09-01			2830952	02-26		10
	09-02				02-27		
259044A1	08-01		1	2830953	02-26		12
259054A1	09-50		15	2831023	02-26		9
259254A1	07-02		24	2831031	02-26		8
260-1436	09-60		16	2831101	02-27		6
261-14310	04-16		11	2831297	02-22		3
	04-16		4	2831298	02-22		1
27549R1	06-37		2	2831300	02-26		10A
	06-37		2	283462A1	07-02		6
	06-37		2	283466A1	07-02		19
	06-37		2	283779A1	04-10		22
275937A1	09-05		14	283781A1	04-10		23
276-2446	08-62		11	284154A1	09-58		10
	08-63		11		09-69		8
	08-64		12	2852009	02-21		1
	08-65		11	2852011	02-11		4
	08-65A		11	2852012	02-11		7
	08-66		11	2852013	02-11		9
	08-67		15	2852016	02-11		8
	08-68		13	2852023	02-14		10
	08-69		13	2852025	02-14		12
	08-70		10	2852027	02-15		1
276-2456	08-60		3	2852028	02-15		2
276-26512	04-19		10	2852029	02-19		3
276498A1	04-14			2852030	02-19		6
	04-15			2852032	02-17		4
277800A1	02-01		39	2852033	02-17		6
278316A2	04-09			2852036	02-23		4
	04-11		9	2852037	02-23		4
278328A1	04-07		27	2852044	02-19		1
278532A1	06-18		14	2852046	03-04		1
278533A1	06-18		13	2852047	02-35		2
278534A1	06-14		8	2852049	02-24		1
279039A1	06-18		15	2852051	02-24		2
279223A1	04-15		6	2852054	02-25		3
279224A1	04-15		5	2852057	03-06		8
279265A2	04-15		15	2852059	03-06		5
279482A1	09-52		2A	2852062	02-28		2
	09-68		4	2852063	02-28		7
279645A1	07-02			2852065	03-11		3
279916A1	04-15		16	2852068	02-29		3
280436A1	07-02		3	2852071	02-29		5
280443A1	07-02		25	2852072	02-29		4
280450A1	07-02		20	2852075	03-07		1
280452A1	07-02		21	2852087	03-04		2
280457A1	07-02		22	2852088	03-04		3
280681A1	07-06		9	2852089	03-04		4
281-14520	09-63		9	2852091	03-06		9
281-14716	09-11		17	2852098	03-08		1
281-18712	09-62		26	2852099	03-08		2
281-54512	09-60		23	2852100	02-33		14
281185A1	09-26			2852101	02-33		13
	09-27			2852102	02-33		10
281952A1	07-02			2852105	03-10		1
281960A1	07-02		23	2852111	03-10		3
282-16512	04-19		7	2852122	02-30		1
282033A1	06-01		19	2852125	02-30		2
282038A2	06-01		18	2852134	02-30		7
282242A1	03-03		1	2852135	02-30		8

http://www.minnparbackhoeparts.com/

Number	Figure	Sequence	Ref.	Number	Figure	Sequence	Ref.
2852136	02-30		9	291533A1	06-30		27
2852140	02-30		10		06-32		13
2852145	02-36		3	291535A1	06-28		5
2852151	02-37		1	291540A1	06-33		21
2852152	02-37		3	291541A1	06-32		20
2852153	02-37		2	291543A1	06-25		34
2852154	02-37		4	291545A1	06-34		3
2852155	02-37		1	291548A1	06-31		9
2852157	02-37		6	291549A1	06-31		3
2852161	02-38		2	291550A1	06-32		24
2852162	02-38		3	291551A1	06-29		39
2852163	02-38		1	291552A1	06-30		37
2852170	02-39		3	291553A1	06-32		25
2852171	02-39			291554A1	06-33		16
2852172	02-39			291555A1	06-32		16
2852175	02-40		1	291556A1	06-29		44
2852180	02-08		2	291557A1	06-30		39
2852181	02-08		6	291558A1	06-30		31
2852183	02-41		1	291559A1	06-33		25
2852195	02-33		8	291563A1	06-31		1
2852196	02-33		15	291565A1	06-25		31
2852197	02-33		12	291566A1	06-30		13
2852202	02-10		10	291567A1	06-29		15
2852270	02-20		1	291568A1	06-25		3
2852294	03-06		3	291570A1	06-26		1
2852511	02-36		5	291571A1	06-29		29
2852515	02-12		6		06-30		28
2852516	02-12				06-32		14
2852517	02-12				06-33		13
2852518	02-12			291573A1	06-30		32
2852521	03-11		4	291575A1	06-33		22
2852594	03-10		2	291577A1	06-34		4
2852741	03-04			291578A1	06-29		12
2852744	02-20		3		06-29		25
2852759	02-12				06-29		28
2852865	02-14		13		06-29		9
2852866	02-18		3		06-30		12
2852869	03-05		1		06-30		23
2852885	03-06		2		06-30		26
2852889	02-30		12		06-30		9
2853225	02-26		12		06-32		12
2853226	02-26		9A		06-32		9
2853728	02-11		5		06-33		12
286-56520	09-52		11		06-33		9
	09-67		29	291579A1	06-29		11
29-1010	09-08		14		06-29		27
	09-08A		14		06-30		11
29-1012	09-08		5		06-30		25
	09-08A		5		06-32		11
291010A1	04-19		6		06-33		11
291520A1	06-29		17	291580A1	06-29		10
	06-29		2		06-29		26
	06-30		17		06-30		10
	06-30		2		06-30		24
	06-32		2		06-32		10
	06-33		2		06-33		10
291523A1	06-28		1	291591A1	06-30		21
291524A1	06-32		27	291861A1	06-35		37
	06-33		28	291862A1	06-35		36
291525A1	06-25		7	292164A1	06-25		10
291527A1	06-25		43		06-26		7
	06-26		13	292165A1	06-25		14
291528A1	06-29		49		06-26		3
	06-30		45	292166A1	06-25		8
	06-31		11	292170A1	06-26		5
	06-31		7	292171A1	06-26		12
	06-32		22	292173A1	06-26		14
291529A1	06-29		20	292174A1	06-28		3
	06-29		5	292175A1	06-33		23
	06-30		5	292176A1	06-35		32
	06-32		5	292177A1	06-35		33
	06-33		5	292207A1	06-41		12
291530A1	06-29		22		06-42		12
	06-29		7	292208A1	06-41		13
	06-30		7		06-42		13
	06-32		7	292210A1	06-44		3
	06-33		7		06-45		3
291531A1	06-29		21	292212A1	06-44		4
	06-29		6		06-45		4
	06-30		6	292213A1	06-44		1
	06-32		6	292214A1	06-44		6
	06-33		6		06-45		6

http://www.minnparbackhoeparts.com/

Number	Figure	Sequence	Ref.	Number	Figure	Sequence	Ref.
292262A1	09-45		2B	2992155	02-21		3
292263A2	09-45		2C	299324A1	06-23		16
292268A1	06-41				06-23A		16
	06-42			300030A1	04-20		4
292385A1	09-23		29	300588A1	09-27		26
292412A1	06-26		2	300659A1	09-50		2
292413A1	06-25		4	300661A1	09-50		3
292414A1	06-26		9	300664A1	09-50		7
292415A1	06-29		14	300665A1	09-50		9
	06-29		31	300667A1	09-50		10
	06-30		14	300669A1	09-51		1
	06-30		29	300670A1	09-50		12
	06-32		15	300672A1	09-50		18
	06-33		14	300674A1	09-50		
292417A1	06-26		10	300675A1	09-50		19
292419A1	06-25		16	300677A1	09-50		21
292420A1	06-28		2	300679A1	09-50		22
292423A1	06-30		44	300680A1	09-50		20
	06-31		10	300681A1	09-50		23
	06-31		6	300683A1	09-50		24
	06-32		21	300684A1	09-50		25
292424A1	06-33		27	300685A1	09-51		
292425A1	06-30		41	300688A1	09-51		5
	06-32		18	300689A1	09-51		10
292426A1	06-29		36	300690A1	09-51		
	06-30		34	300691A1	09-51		12
292428A1	06-30		42	300692A1	09-51		14
	06-32		19	300896A1	09-51		20
292429A1	06-29		48	300996A3	08-27		3
292431A1	06-29		37	301104A1	08-03		9
	06-30		35	301803R1	09-63		20
292432A1	06-29		40	302358A1	03-01		3
	06-30		38		09-37		3
292433A1	06-32		26	302820A2	08-27		5
292434A1	06-33		19	303192A1	02-01		36
292890A1	06-41		17	303465A2	04-11		10B
	06-42		17	303466A1	04-11		10C
292891A1	06-46		5	303467A1	04-11		10D
292893A1	06-46		10	303646A1	09-24		35
292894A1	06-46		11	304083A1	09-73		7
292896A1	06-46		23	304424A1	08-27		9
292897A1	06-45		9	304890A1	08-27		10
292898A1	06-46		12	305152A1	06-44		2
292899A1	06-46		27		06-45		2
292900A1	06-46		28	305153A1	06-45		1
292901A1	06-46		29	305342A1	04-04		35
292902A1	06-44		7	305492A1	09-10		16
	06-45		7	305493A1	09-10		18
292969A2	09-10			305494A1	09-10		17
293636A1	09-23		34	305495A1	09-10		9
294013A1	06-34		5	305496A1	09-10		7
294080A1	06-29		41	305497A1	09-10		3
	06-29		47	305499A1	09-10		8
294189A1	06-43			305508A1	09-10		21
294190A1	06-43			305725A1	06-25		21
294192A1	06-41			305728A1	06-32		1
	06-41			305729A1	06-33		1
	06-42			305730A1	06-30		20
	06-42			30634	08-64		14
294245A1	06-40		26	307090A1	09-48		4
294933A1	06-07			307091A1	09-48		3
295110A1	06-43		6	307092A1	09-48		8
295111A1	07-01		18		09-48		8
295112A1	07-01		23		09-49		1
295113A1	07-01		24		09-49		1
297280A1	08-63		4	307098A1	09-48		6
297281A1	08-64		4	307123A1	02-06A		16
	08-70		3	307186A1	09-26		11
297283A1	08-66		4		09-27		19
297284A1	08-65		4	307277A1	08-27		17
297615A1	09-02		1	307348A1	03-01		39
298176A1	09-01				09-73		12
	09-02			307385A1	09-10		22
298521A1	09-76		11	307386A1	09-10		23
298614A1	06-23		44	307387A1	09-10		24
	06-23A		44	307388A1	09-10		25
	06-25		52	307389A1	09-10		26
2992147	02-21		4	307577A1	03-01		31
2992148	02-21		4		09-37		28
2992149	02-21		4	308029A1	07-01		3
2992153	02-21		3	308030A1	07-01		16
2992154	02-21		3	308036A1	07-01		12

http://www.minnparbackhoeparts.com/

Number	Figure	Sequence	Ref.	Number	Figure	Sequence	Ref.
308040A1	07-02		5	329032A1	04-14		3
308042A1	07-01		17	329797A1	08-23		5
308254A1	08-27		2	329799A1	08-23		4
308255A1	08-27		1	331620A1	09-05		2
309674A1	08-27		11A	331621A1	09-05		1
309747A1	06-12			334724A1	06-23		30
310492A1	06-46		18		06-23A		30
310519A1	06-20		8	334725A1	06-23		32
310772A1	06-15				06-23A		32
	06-15		10B	335640A2	06-23		
	06-16			336375A1	09-49		14
	06-16		14	338424A1	09-52		4
310994A1	08-68		2	338425A1	09-52		3
310994A2	08-68		2A	338426A1	09-54		5A
311046A1	06-08				09-54A		5A
311047A1	06-08			338427A1	09-54		5
311109A1	08-68		16		09-54A		5
311200A1	09-04		27	338428A1	09-56		3
311459A2	08-32				09-56A		3
311484A1	06-40		11A	338429A1	09-54		4A
311485A1	06-40		12A		09-54A		4A
311486A1	07-01		18	338886A4	07-03		35
311488A1	06-46		4	339046A3	07-03		34
311565A1	06-02		11	339047A3	07-03		33
311569A1	05-08		1	339680A2	09-22		21
	06-06		1		09-22A		25B
3125705R1	04-18		10	340-12520	09-51		
313259A1	06-06		8	340997A3	09-43		2
313260A1	06-04			340998A3	09-43		1
313277A1	06-05			341564A2	09-04		36
313648A1	08-02		3	341743A3	09-54		
314607A1	08-24		27		09-54A		
314608A1	08-24		28	341746A2	09-56		
314772A1	08-12		30	344892A1	09-04		37
	08-13		51	345-49	09-37		35
315273A1	09-54		12	345-621	09-64		
	09-54A		12	345061A2	07-04		2
315276A1	09-54		11	345231A1	09-43		3
	09-54A		11	345325A2	07-04		3
317989A1	08-24		30	346583A1	06-40		21
319467A1	09-34A		1	346584A1	06-40		20
319597A1	06-35		35	346585A1	06-40		4
319598A1	06-35		40	347706A3	04-07		7
319599A1	06-35		46	347959A1	06-40		23
321-1707	09-08		29	347960A1	06-40		24
	09-08A		29	348706A1	09-26		40
321-1708	09-08		23		09-27		30
	09-08A		23	348794A1	05-01		18
	09-72		11		05-03		
321-229	09-78		8	349291A1	06-25		51
321-230	09-78		7	349292A1	06-25		53
321-4311	09-71		5	349295A1	06-23		39
321-4614	09-75		11		06-23A		39
321-5675	09-77		11		06-25		47
321-6046	08-59A		16	352208A1	09-57		11
	09-74		8	352209A1	09-57		13
321-6376	09-78		8A	352210A1	09-57		15
	09-79		8A	352401A1	05-01		7
	09-80		8A	352568A1	05-01		6
321-6774	09-78		13		05-03		
321-7030	09-75		10	352569A4	05-01		6A
321-7040	09-78		4		05-03		10
321183A1	07-02		12	352727A1	05-01		15
321428A1	06-24		8		05-01		23
322357	04-06A		19	353-405	09-53		
322860A1	03-03		4	353-407	09-53		
3233348R1	09-15		36	353-408	09-53		
	09-55		8	353-410	09-53		
3234063R1	09-54		25		09-63		26
	09-54A		25		09-67		
324213A1	05-08		2	353-411	09-11		5
325465A2	08-07		22	353-415	09-53		
326-640	09-10		6	353-421	09-53		
326348A1	07-06		16		09-67		22
326805A1	09-23		1	353-422	09-41		7
	09-24		1	353-425	09-53		
326865A1	06-21		13	353068A2	04-12		18
328186A1	06-10		14	353078A1	08-32		4
	06-10		21	353079A1	08-32		5
	06-11		27	353102A1	08-07		5A
	06-11		33	353103A1	08-07		5A
	08-03		11	353167A1	08-07		5

http://www.minnparbackhoeparts.com/

Number	Figure	Sequence	Ref.	Number	Figure	Sequence	Ref.
355197A2	04-12		2	363832A5	09-64		
355198A2	04-12		1A	363883A1	09-60		10
355827A2	04-11		1	364132A2	09-54		28A
355984A2	09-41		1		09-54A		28A
356743A1	08-07		12	364133A2	09-54		30A
357099A1	09-67		15		09-54A		30A
357100A1	09-67		16	364134A2	09-54		28
357278A1	04-08		17		09-54A		28
357540A1	04-15		7		09-56		7
357541A1	04-15		8		09-56A		7
357966A1	04-08		16	364135A2	09-54		30
358212A1	07-01				09-54A		30
358279A1	06-40		11		09-56		8
	06-40		12A		09-56A		8
358280A1	06-40		11A	364180A1	09-53		10
358281A1	06-40		12		09-67		24
358282A1	06-21		19	365328A1	09-32		1
358283A1	06-21		28	365789A1	09-62		20
358632A1	06-20		7	366230A1	06-22		13
358633A1	06-20		6	366231A1	06-22		18
358635A1	06-20		4	366232A1	06-22		15
358636A1	06-19		2	366234A1	06-22		11
358637A1	06-20		15	366235A1	06-22		12
358638A1	06-20		21	366236A1	06-22		14
358639A1	06-21		29	366366A1	06-21		27
358640A1	06-20		10	366632A2	04-12		21
358641A1	06-20		16	366633A3	04-12		25
358642A1	06-20		19	366663A1	06-35		29
358643A1	06-20		18	366889A2	04-07		28
358644A1	06-20		17	366910A1	06-24		9
358645A1	06-20		1	367195A1	06-40		4A
	06-20		29	367233A1	06-46		1
	06-22		7	367352A1	08-07		5B
358646A1	06-19		4	367704A4	09-60		1
358647A1	06-21		16	367705A6	09-60		
358648A1	06-21		4	367712A3	09-67		13
358649A1	06-21		3	367848A2	09-73		13
358650A1	06-21		3A	367859A2	06-13		18
358651A1	06-21		3A		06-47		
358652A1	06-21		3A	367860A3	06-12		35
358653A1	06-21		27		06-47		
358654A1	06-21		18A	367861A2	06-01		11
358655A1	06-20		31		06-09		
	06-21		18B	367977A1	07-06		
358656A1	06-21		18	368146A1	09-54		46
359653A1	07-01		13		09-54A		46
360046A1	09-56		1		09-56		26
360242A2	04-11		10A		09-56A		26
360243A2	04-11		11	368147A1	09-54		40
360244A1	04-11		4		09-54A		40
360245A2	04-11		8		09-56		17
360246A3	09-53		16		09-56A		17
360247A3	09-53		15	368417A1	09-44		9
360250A2	04-12		1	368436A1	06-23		16A
360251A3	09-62		6		06-23A		16A
360252A2	09-61		5	368437A2	06-23		
360253A3	09-62		8		06-23A		
360254A3	09-62		10	368438A2	06-23		
360255A1	09-62		14		06-23A		
360256A1	09-64		15	368801A2	09-63		10
360257A1	09-64		7	368805A1	09-62		7
360260A2	09-61		1	368807A1	09-62		13
360261A1	09-61		3	368809A1	09-53		22
360262A2	09-63		1	368813A2	09-60		4
360263A4	09-64		1	368818A1	09-62		29
360266A2	09-53		3	368821A1	09-62		18
360267A3	09-53		2	368990A1	09-61		6
360272A6	09-60			369249A1	09-62		9
360867A1	09-35		1	369263A1	08-32		
361776A1	09-37		23	369372A1	08-59		3
361900A1	04-07		9	369450A1	09-60		15
361940A1	06-25		1	370381A1	09-64		14
362140A1	06-25		18	370755A1	04-13		1
362340A6	09-40		1	370756A1	04-13		2
362556A2	09-44		2	370760A1	04-13		5
362557A1	09-44		1	370915A1	08-24		
362558A1	09-44		3	371031A1	08-05		26
362607A1	09-39		4	372167A3	04-12		1B
362609A1	09-39		3	372246A1	06-25		44
362930A2	04-08		7	373689A2	04-11		10
363227A2	04-09		5	373693A1	04-11		10E
	04-11		8A	373696A1	09-72		10A

http://www.minnparbackhoeparts.com/

Number	Figure	Sequence	Ref.	Number	Figure	Sequence	Ref.
373698A2	09-72		8	382298A1	09-67		30
373699A2	09-72		9	382664A2	04-19		1
373833A1	08-10		16	382770A2	09-61		2
	08-11		16	382775A1	09-54		23A
	08-12		15		09-54A		23A
	08-13		15	382777A1	09-54		23
373995A1	09-62				09-54A		23
375112A1	04-12		26	383619R1	04-05		5
375392A1	09-62		28	383794A2	09-62		22
376157A1	08-07		5	383795A2	09-62		23
376158A1	08-07		5B	383972A1	09-75		6
376285A2	09-08A			384240A1	08-04		18
376286A2	09-08				08-62		1
376332A1	09-54		38		09-04		9
	09-54A		38	384241A1	08-62		2
	09-56		15	384258A1	09-78		6
	09-56A		15	384260A1	09-78		9
376334A1	09-54		36	384264A1	09-75		1
	09-54A		36	384265A1	09-78		2
	09-56		13	384267A1	09-78		3
	09-56A		13	384269A1	09-78		5
376336A1	09-54		37	384769A1	06-21		14
	09-54A		37	384773A1	06-21		9
	09-56		14	384815A1	09-23		32
	09-56A		14	384844A1	08-32		7
376384A1	09-31		1	384930A2	09-73		1
376385A1	09-32		1	384931A2	09-73		2
376386A1	09-33		1	384956A1	06-38		1
377194A1	09-60		9		06-40		
377220A2	09-62		1		06-41		
377222A1	09-63		4		06-43		
377230A3	09-62		27		06-44		
377232A2	09-63		18		06-46		
377233A2	09-63		31		07-01		
377241A2	09-62		1		07-02		
377594A5	09-60		13	384958A1	06-38		1A
378227A1	09-53		5		06-40		
378742A3	09-42		19		06-42		
	09-42		27		06-43		
	09-42		9A		06-45		
378921A1	09-28		6B		06-46		
378955A1	03-03		8A		07-01		
378956A3	03-03		15		07-02		
378957A3	03-02		17	385420A2	08-30		5
378958A1	03-03		13	385506A1	09-67		12
378960A1	03-03		3	385614A4	04-12		31
379160A1	09-60		5	386000A2	09-22		37
379161A1	09-60		6	386092A1	09-23		16
379209A1	09-60		7	386368A2	04-12		29
379314A4	06-12		6	386369A2	04-12		28
379424A2	09-53		3A	386502A1	04-12		
379425A3	09-53		2A	386535A1	09-64		2
379846A1	05-01		14	386718A3	09-58		9
	05-01		22		09-69		13
38-11016	09-49A		10	386720A1	09-58		23
380003A1	06-35		45	386785A1	04-07		22
380004A1	06-35		41		09-58		26
380005A1	06-34		1		09-59		
	06-35				09-69		6
380483A2	03-03		12	386786A1	04-10		19
380484A3	03-03		15A		09-58		28
380485A3	03-02		17A		09-59		
380537A2	06-12		13	386787A1	04-07		23
380609A1	08-67		16		09-58		27
380621A1	08-67		14		09-69		7
380627A1	08-67		23	386788A1	04-10		18
380692A1	08-30		6		09-58		29
380719A2	09-60			386789A2	04-10		21
380807A4	09-37		47		08-29		29
381111A2	09-62		25	386849A1	04-07		18
381113A2	09-62		24	386850A1	04-07		19
381261A1	04-05		13	386851A1	04-07		20
381442A1	05-04		12		04-18		15
	06-01		31	386852A2	04-10		17
381488A4	09-29		1	386927A1	04-19		9
381659A1	04-19		5	387019A1	09-04		6
381696A5	09-60		2	387897R91	05-09		3
381926A1	09-40		22		05-09		6
381927A1	09-40		20	387940A1	04-18		
381972A1	09-60		14	388053A2	04-13		6
382202A2	09-37		52	388116A2	05-01		8
382298A1	09-53		21	388712A2	08-59		9

http://www.minnparbackhoeparts.com/

Number	Figure	Sequence	Ref.
388713A1	08-59		
388762A1	09-63		7
388843A1	09-30		1
388848A1	09-08		24
	09-08A		24
388881A1	08-59		4
389402A1	09-63		8
389487A1	04-07		13
389541A1	08-59		12
389729A1	09-76		6
389730A1	09-77		6
390-100	09-54		21
	09-54A		21
390027A1	06-05		1
390028A1	06-05		5
390029A1	06-05		2
	06-05		2
390030A1	06-04		2
390031A1	06-04		1
390255A2	04-12		15A
390258A1	04-12		
	04-12		
390320A4	08-32		
390551A2	09-41		10
390690A1	09-11		4
390758A1	09-11		3
390759A1	09-11		1
390760A1	09-11		2
390838A1	09-54		2A
	09-54A		2A
390840A1	09-54		27A
	09-54A		27A
390841A1	09-54		29A
	09-54A		29A
391625A2	09-41		10A
391818A2	04-12		15
391827A1	09-52		8
	09-54		19
	09-54		6
	09-54A		19
	09-54A		6
	09-56		4
	09-56A		4
	09-68		2
391838A1	09-54		14
	09-54A		14
391841A1	09-54		18A
	09-54A		18A
391842A1	09-54		20A
	09-54A		20A
391843A1	09-54		32
	09-54A		32
391845A1	09-54		31
	09-54A		31
	09-56		10A
	09-56A		10A
391847A1	09-54		13
	09-54A		13
391848A1	09-54		15
	09-54A		15
391849A1	09-54		41
	09-54A		41
	09-56		18
	09-56A		18
391850A1	09-54		3A
	09-54A		3A
392353A1	04-08		8
392374A1	09-75		13
392375A1	09-78		1
392559A3	09-28		9
392828A2	09-40		16
	09-40		18
392882A4	04-09		1
392930A1	09-67		8
393161A1	09-37		19
393202A1	09-54		17
	09-54A		17
393203A1	09-54		16
	09-54A		16
393209A1	09-54		22
	09-54A		22
393211A1	09-55		5
393231A1	06-09		
	06-47		
393232A1	06-47		6
393233A1	06-47		6
393234A1	06-09		6
393330A1	09-56		10
	09-56A		10
393380A1	08-10		11
	08-10		11A
	08-11		11
	08-11		11A
	08-12		10
	08-12		10A
	08-13		10
	08-13		10A
	08-14		10
	08-14		10A
393623A1	09-41		8
393826A1	06-40		19
393999A1	06-13		2
394329A1	09-74		3
394585A3	09-54		
394700A1	09-54		4
394701A1	09-54		27
	09-56		5
394702A1	09-54		29
	09-56		6
394704A1	09-54		18
	09-54A		18
394705A1	09-54		20
	09-54A		20
394707A1	09-54		2
	09-54A		2
394708A1	09-54		3
	09-54A		3
394800A1	09-55		7
394863A1	04-15		9
	09-53		17
394864A1	09-56		2
	09-56A		2
394865A1	09-56		9
	09-56A		9
395026A1	09-59		9
395033A1	09-59		8
395136A1	09-59		6
395189A2	03-02		1
395344A1	06-12		39
395348A1	09-57		12
	09-57		14
395387A1	09-53		18
395388A1	09-53		19
395389A1	09-59		10
395470A1	09-62		23
395478A3	09-67		3
395609A1	08-32		6
395753A2	09-22		38
	09-22A		38
395793A1	09-52		9
	09-68		7
395910A2	09-72		10
396-41028	09-01		16
	09-01		31
	09-02		31
	09-18		23
396018A3	04-15		13
	09-59		
396023A2	04-14		10
396092A1	09-25		10
	09-25A		10
396422A2	08-59		10
396516A1	09-53		12
	09-60		3
	09-67		26
396591A1	05-02		
396592A1	05-02		
396593A1	05-02		
396605A1	09-39		30
396620A2	07-04		17
396634A1	08-12		30
	08-13		51
396841A1	09-55		3
	09-56		29

http://www.minnparbackhoeparts.com/

Number	Figure	Sequence	Ref.	Number	Figure	Sequence	Ref.
396841A1	09-56A		29	399221A1	08-10A		
396938A3	09-67		2	399246A1	08-10A		32
397025A2	09-42		21	399757A1	09-48		1
397026A3	09-42		2	399758A1	09-48		2
397064A1	09-55		1	399759A1	09-48		1A
	09-56		27	399760A1	09-48		2A
	09-56A		27	399764A1	09-49		11
397065A2	03-03		22	399777A1	09-46		3
397076A1	07-04		9	399907A2	08-32		3
397132A1	09-45		1	399959A2	09-37		26
	09-46			399963A1	08-07		
	09-47			400016A1	08-10A		30
397134A2	09-45		2A	400069A1	09-12		10
	09-48			400077A1	09-42		
	09-49				09-42		
397136A2	09-45		2A	400092A1	06-37		1
	09-48			400200A1	09-57		5
	09-49			400280A1	09-63		11
397137A1	09-45		2	400282A1	09-63		2
	09-50			400296A2	08-59		11
	09-51			400376A1	04-09		13
397158A2	03-03		22A	400379A1	04-10		9
397177A2	07-04		16		09-63		5
397443A2	04-09		11		09-64		14A
397493A2	04-09		12	400398A1	09-26		42
397548A4	03-01		40		09-27		32
397569A1	04-10		5	400494A1	09-57		16
397570A1	04-10		6	400571A2	09-52		20
397653A1	06-03		1	400572A1	09-52		19
397654A1	06-03		2	400573A1	09-52		16
397774A3	09-42		12A	400588A2	06-12		7
397782A1	08-11		28	400657A1	08-59		13
397870A3	09-11		15A	400837A1	09-50		4
397876A1	04-08		13	400838A1	09-50		5
397911A1	09-12		16	400880A1	09-22A		37
397974A1	09-70			400932A4	09-28		26
397990A1	04-07		29	400934A2	09-28		20
398380A3	04-15		12	400935A3	09-28		20A
398570A1	09-79		6	400981A1	09-50		1
398571A1	09-80		6	401052A1	05-06		
398572A1	09-79		9	401054A1	05-06		3
398573A1	09-80		9	401055A1	05-06		7
398576A1	09-76		1		05-07		1
398577A1	09-77		1	401059A1	05-06		13
398578A1	09-79		2	401060A1	05-06		14
398579A1	09-80		2	401061A1	05-07		4
398580A1	09-79		3	401062A1	05-07		3
398581A1	09-80		3	401063A1	05-07		5
398582A1	09-79		5	401064A1	05-07		6
398583A1	09-80		5	401065A1	05-08		3
398598A1	09-76		13	401066A1	05-08		4
398599A1	09-77		13	401067A1	05-08		5
398600A1	09-79		1	401457A1	09-72		2
398601A1	09-80		1	401458A1	09-72		3
398654A1	09-80		11	401459A2	09-72		4
398656A1	09-80		10	401460A2	09-72		5
398658A1	09-75		5	401461A1	09-72		1
	09-76		5	401949A1	09-53		4
	09-77		5	402344A1	06-03		1
398662A1	09-76		7	402346A1	06-03		2
398663A1	09-77		7	402359A1	06-03		4
398665A1	09-79		8	402361A3	08-30		26
398666A1	09-80		8	402610A1	09-53		20
398667A1	09-79		7	402836A1	09-57		28
398668A1	09-80		7	402843A1	09-57		25
398669A1	09-79		11	402844A1	09-57		27
398670A1	09-79		13	402845A1	09-57		32
398671A1	09-80		13	402846A1	09-57		21
398672A1	09-76		10	402847A1	09-57		18
398673A1	09-77		10	402854A1	08-30		19
398674A1	09-79		4	402855A1	08-30		18
398675A2	04-07		24	402933A1	09-70		1
	08-26		34	402934A1	09-70		2
398676A1	09-80		4	402935A1	09-70		5
398677A1	09-79		10	402936A1	09-70		3
398738A1	09-61		4	402940A2	08-30		25
398846A3	04-14		5	403193A1	09-62		36
	04-15		1	403225A1	09-62		35
398847A3	04-14		8	403271A1	09-61		9
	04-15		2	403353A1	09-26		
398986A1	09-62		30	403400A1	08-30		30A
399004A1	08-21				09-28		14

http://www.minnparbackhoeparts.com/

Number	Figure	Sequence	Ref.
403840A1	08-30		29A
	09-28		13
404226A1	09-57		6
404227A1	09-57		9
404228A1	09-57		4
404229A1	09-57		7
404471A1	04-19		
404617A1	04-14		12
	04-15		10
	09-59		
	09-69		
404807A1	09-28		1
404816A1	04-07		14
404834A1	09-24		37
	09-27		5
404835A1	09-24		38
	09-27		6
404907A1	08-10A		28A
405716A1	09-28		6
405738A1	09-52		15
405739A1	09-52		14
405740A1	09-52		13
405741A1	09-52		17
405742A1	09-52		18
406168A1	08-30		30
	09-28		7
406172A1	08-30		29
	09-28		8
406287A1	09-63		19
	09-64		5
406624A1	09-28		22
406700A1	09-46		9
406723A1	09-73		15
407009A2	09-72		6
407010A2	09-72		7
407660A1	04-12		8A
407734A1	08-30		44
407735A1	08-30		45
407745A1	08-30		42
407746A1	08-30		43
407804A1	08-30		31
407962A1	02-01		11
	04-06A		4
	09-28		8D
407975A1	08-30		16
408398A1	09-22		20
408399A1	09-22A		25A
408405A1	09-22		35
	09-22A		35
408535A1	04-06		12
408965A1	09-58		15A
408966A1	09-58		15
409025A1	08-59		5
409318A1	07-04		18
409370A1	07-03		38
409469A1	08-30		10
409470A1	08-30		10A
409471A1	08-30		9
409472A1	03-01		4A
	09-37		4A
409499A1	08-30		8A
409618A1	09-53		11
	09-67		25
409672A1	09-18		4
409673A1	09-18		5
409691A2	08-30		33
409723A1	09-60		18A
410561A1	06-12		44
410867A1	09-57		2
411049A1	09-74		2
411074A1	09-41		16
411399A1	09-53		25
411549A1	09-67		21
411668A1	09-08		
411844A1	09-57		
411845A1	09-57		
411846A1	09-57		
411847A1	09-57		
411848A1	09-57		
411849A1	09-57		
411850A1	09-57		
411851A1	09-57		
411892A1	09-36		14
411908A1	09-57		22
411909A1	09-57		19
411910A1	09-57		24
411911A1	09-57		31
411912A1	09-57		33
411914A1	09-57		29
411916A1	09-57		20
411917A1	09-57		17
412285A1	09-53		23
412510A1	04-12		40
413-1228	09-22		18
	09-22A		18
413-412	09-70		11
	09-70		4
413-516	09-10		11
	09-70		7
413-528	09-15		22
413-624	09-19		12
413-628	09-01		19
413-632	09-02		10
	09-02		27
	09-22		41
	09-22A		41
413-648	08-10A		4
413778A1	08-23		9
	08-30		36
413870A1	07-03		27
414-724	09-45		14
	09-45		22
	09-45A		15
414033A1	04-11		18
414034A1	04-11		17
414071A1	04-12		39
414092A1	04-12		38
414174A1	04-08		21
414415A1	08-30		3
414426A1	09-59		5
	09-69		3
414572A1	04-11		16
414600A1	09-60		17
414939A1	09-53		24
417681A1	09-28		18
418070A1	09-28		29
418789A1	08-05		13
418791A1	08-05		14
425-1012	09-22		19
	09-22A		19
425-105	07-03		21
425-106	04-08		2
	04-08		20
	09-01		21
	09-19		13
	09-58		12
	09-69		10
425-1110	09-18		16
425-115	09-03		6
	09-15		19
425-116	09-01		22
	09-02		26
	09-02		38
	09-16		36
	09-19		5
425-118	09-16		10
	09-17		3
	09-18		7
	09-21		7
425-147	09-57		
	09-59		
425-155	08-59A		12
425-156	07-03		5
	07-06		17
	09-16		27
	09-16		47
	09-17		9
	09-20		9
	09-21		16
427-3058	03-02		15
	03-03		18
427-5094	09-15		13
	09-25		13
	09-25A		13

http://www.minnparbackhoeparts.com/

Number	Figure	Sequence	Ref.	Number	Figure	Sequence	Ref.
427-6088	09-16		25	448609A1	09-68		5
	09-17		7	448676A1	09-28		30
	09-20		7	449842A1	09-73		8
427-6100	09-04		33	450037A1	09-59		1
427107A1	06-02		1		09-69		1
429-1012	09-06		5	451384A1	09-27		52
	09-07		10	465004R91	09-01		14A
429230A1	05-05		1		09-02		
429231A1	05-06		1	470-10620	09-45		8
429232A1	05-06		2	47132002	04-06A		8
430471A1	04-12		37	484-43120	08-59A		11
431583A1	09-67		31	484-6316	06-12		3
431584A1	09-67		32	4890343	02-01		44
431801A1	09-52		21	4890732	02-39		
432-48	03-02		10	4890832	02-13		4
	03-02		16	4890833	02-14		8
	03-03		19	4890964	03-09		4
432-612	07-03		8	4891209	02-13		5
	07-06		18		02-27		7
	07-06		3	4891353	02-09		6
	09-01		27	4892426	02-39		
	09-02		37	4892708	02-22		2
	09-03		5	4892712	02-23		2
	09-04		34	4892713	02-23		3
	09-15		14	4892714	02-22		4
	09-16		26	4892715	02-22		4
	09-16		38	4892732	02-39		
	09-16		49	4892774	02-34		
	09-17		8	4892836	02-27		1
	09-19		4	4892859	02-16		2
	09-20		12	4892860	02-18		4
	09-20		8	4892861	02-16		1
	09-21		12	4893386	02-21		2
	09-25		14	4893391	02-34		8
	09-25A		14	4893518	03-06		6
432-828	09-01		13	4894095	03-10		4
	09-02		24	4894139	02-11		6
	09-15		25	4894218	02-10		1
	09-18		20	4894641	02-24		3
432431A1	09-55		9	4894721	03-09		5
434605A1	08-27		8	4894774	03-06		1
434891A1	09-28		32	4895038	02-09		4
438-12040	07-03		24	4895039	02-09		3
439-5436	09-02		6	4895040	02-09		7
440-10616	09-04		18	4895043	02-34		3
440-1066	04-12		27	4895045	02-34		5
	09-37		1B	4895049	02-10		8
440-1088	09-60		22	4895078	02-16		16
440-11010	09-38		2	4895079	02-14		14
440-11012	09-40		12	4895107	02-33		2
440-12510	09-54		9	4895121	02-36		2
	09-54A		9	4895133	02-29		2
440038A1	04-06A		9	4895164	02-33		1
442718A1	09-54		8	4895166	02-08		5
	09-54A		8		03-08		5
442773A1	09-54		33	4895179	02-16		12
	09-54A		33	4895180	02-10		9
442842A1	09-55		6	4895183	02-16		4
443375A1	03-01		2	4895184	02-16		9
443432A1	08-59			4895187	02-16		6
444640A1	08-67		22	4895188	02-16		5
445266A1	06-40		7	4895195	02-18		1
445267A1	06-40		3	4895196	02-18		7
445310A1	06-29		1	4895198	02-18		9
445311A1	06-29		33	4895199	02-18		10
445312A1	06-29		13	4895200	02-18		11
445313A1	06-29		34	4895204	02-18		12
445314A1	06-30		1	4895214	02-17		3
445364A1	09-28		33	4895215	02-16		8
445757A1	09-28		17B	4895228	02-09		5
446220A1	09-22A		5	4895244	03-11		1
446222A1	09-22		5	4895291	02-08		3
446454A1	09-22		36		02-39		2
	09-22A		36	4895294	02-19		7
448284A1	08-25		9	4895297	03-05		2
448428A1	09-63		12	4895301	02-39		4
448429A1	09-63		13	4895305	03-11		2
448607A1	09-52		2	4895323	02-27		8
	09-68		1		02-28		1
448608A1	09-52		6	4895336	02-20		4
	09-68		6	4895347	02-16		7
448609A1	09-52		5	4895355	02-12		8

http://www.minnparbackhoeparts.com/

Number	Figure	Sequence	Ref.	Number	Figure	Sequence	Ref.
4895358	02-14		11	4899093	03-08		4
4895360	02-17		1	4899103	02-14		9
4895361	02-18		2	4899106	02-33		7
4895363	02-18		5	4899107	02-33		3
4895364	02-18		6	4899108	02-33		4
4895365	02-18		8	4899109	02-14		2
4895378	02-14		4		02-26		11
4895379	02-14		5		02-36		1
4895392	02-10		6		02-38		6
	02-36		6	4899110	02-15		3
4895393	02-10		7	4899115	02-10		3
	02-36		7		02-30		11
4895489	02-11		2	4899118	02-29		1
4895538	02-08		4	4899119	02-20		5
	02-11		10	4899121	02-33		11
4895586	02-26		6	4899143	02-14		
4895605	02-10		2	4899467	02-33		5
4895610	02-30		5	4899519	02-33		6
4895623	02-36		8	4899610	02-28		5
4895625	02-36		9	4899629	02-19		8
4895648	02-19		4	4899643	02-34		2
4895790	02-16		3	4899921	02-19		5
4896153	02-10		13	490-11012	04-08		18
4896404	02-34		4	490-1106	04-07		11A
4896406	02-34		9	490-1108	04-07		
4896409	02-34		11	492-11025	09-54		10
4896410	02-34		7		09-54A		10
4896770	03-06		7	492-11031	09-10		12
4896773	02-25		1	492-11038	09-58		11
4896897	02-40		2		09-69		9
4896947	02-26		5	493-11026	04-18		2
4897024	02-13		1	493-11039	04-05		12
4897048	02-26		4	493-21020	04-04		9
4897071	02-26		3		08-61		3
4897123	02-26		2	493-21033	04-04		7
4897125	02-26		1	493-41020	06-12		5
4897178	02-16		13	495-11028	09-01		8
4897179	02-16		14		09-02		17
4897330	02-30		4		09-71		2
4897457	02-28		4	495-11034	09-10		13
4897480	02-31		1	495-11041	04-05		9
4897934	02-26		11		04-06		8
4897980	02-23		1		08-10A		5
4898301	02-11		3		09-02		34A
4898482	02-29		6	495-11047	05-04		11
4899003	03-06		4		06-01		30
4899004	02-14				09-57		
4899009	02-10		4		09-59		
	02-16		10	495-11053	09-04		35
4899019	02-34		1	495-11081	09-18		10
4899020	02-11		1	495-21031	04-18		3
	02-14		13	495-21038	07-06		4
4899026	02-09		2		09-44		6
	02-12		1	495-21044	09-02		11
	02-14		1		09-37		8
4899027	02-27		2	495-31016	09-45		9
4899031	02-35		3	495-31022	03-02		9
	02-38		5		04-14		4
	03-09		3	495-81001	02-04		17
4899035	02-34		6		09-67		6
4899036	02-30		3	495-81025	06-01		15
4899037	02-40		3		06-01		20
4899039	02-19		2	495-81153	04-08		6
4899053	02-39		1	495-81169	09-45		17
4899058	02-33		9		09-45A		18
4899063	02-13		3	495-81184	09-01		9
4899068	02-28		3		09-02		22
	03-07		2	495-81226	09-24		32
	03-08		3		09-26		25
4899072	02-10		5		09-26		35
	02-16		11		09-26		4
4899073	02-12		4		09-27		13
	02-41		2		09-27		42
4899074	02-14		7	495-81227	09-23		17
4899075	02-14		3		09-24		31
4899076	02-14		6		09-26		3
4899078	02-13		2		09-27		12
4899080	02-28		6	495-81261	07-03		30
4899090	02-31		2	495-81267	09-67		10
4899091	02-11		2	495-81282	09-04		7
	02-12		2		09-22		34
4899093	02-12		3		09-22A		34

http://www.minnparbackhoeparts.com/

Number	Figure	Sequence	Ref.
495-81282	09-26		21
	09-27		38
496-21041	02-01		29
	06-12		17
	06-13		7
	09-01		20
496-41041	08-08		
	08-08		3
	08-08A		
	08-08A		3
	08-10		6
	08-11		6
	08-12		6
	08-13		6
	08-14		6
	08-22		12
	08-22		21
	09-12		5
	09-43		4
	09-58		33
	09-58		6
	09-69		20
	09-69		30
496-81000	05-09		9
	06-01		3
	06-06		24
496-81010	09-45		18
	09-45		25
	09-45A		19
496-81018	03-02		7
	09-13		29
496-81028	05-01		11
510828	06-26		31
	08-01		10
511-10250	06-25		6
51200906	09-49A		
514-633	09-54		34
	09-54A		34
	09-56		11
	09-56A		11
514-634	07-02		26
514-832	08-01		8
514-847	03-02		3
515-2179	09-04		14
515-22190	04-06A		2
515-22254	02-02		17
515-2295	08-22		29
	09-02		17A
515-23127	03-01		16
	04-04		13
	04-04		15
515-23143	08-30		4
515-23159	05-02		23
515-23254	04-04		26
515-23444	04-10		27
515-2379	07-04		15
515-25190	04-06A		31
	08-10A		22
515-25254	02-04		7
	08-07		13
565-104	09-15		34
569-4	09-54		24
	09-54A		24
60-7083T1	09-54		7
	09-54A		7
604-12030	09-45		3
	09-45A		11
	09-45B		9
	09-50		
604-20035	09-24		36
604-20045	08-23		6
604-8050	03-03		9
607-10020	09-28		15A
607-8020	08-30		34
	09-28		8B
607-8035	09-28		8C
614-10020	02-04		8
	03-01		38
	03-01		41
	04-03		12
	05-01		19
	05-01		9
614-10020	06-12		26
	08-03		2
	09-37		7
	09-39		13
614-10025	07-03		10
	07-06		24
	08-23		11
	09-09		2
	09-13		38
	09-16		42
	09-19		16
	09-20		3
	09-37		53
	09-39		10
	09-39		22
	09-39		5
	09-40		3
614-10030	02-01		37
	04-10		28
	04-17		6
	06-15		7
	06-16		8
	08-13		53
	08-22		15
	08-30		38
	09-39		28
	09-66		4
614-10035	03-03		23
	05-01		20
	08-10		5
	08-11		5
	08-12		5
	08-13		5
	08-14		5
	08-26		2
	08-29		2
	09-12		4
	09-38		8
614-10040	08-24		29
614-10050	09-24		41
	09-25		6
	09-25A		6
614-10080	02-06		3
	02-06A		3
614-12016	06-18		2
614-12025	04-06A		32
	05-04		6
	06-01		32
614-12035	02-07		3
	06-12		27
	06-13		9
	06-26		32
	08-01		8
614-12040	02-07		10
	09-45B		6
614-18035	08-09		6
614-20030	09-38		12
614-6016	03-03		32
	09-01		15
	09-02		30
	09-04		13
	09-18		22
614-6020	04-06A		13
	04-18		13
	09-01		30
	09-01		7
	09-02		16
	09-18		24
614-6025	03-03		32
	09-21		4
614-6035	04-06A		11
614-8012	02-03		7
	02-03A		7
	06-10		2
	06-11		2
	06-11A		2
614-8016	02-01		19
	02-01		40
	08-30		9A
	09-58		18
	09-69		23
614-8018	06-14		11

http://www.minnparbackhoeparts.com/

Number	Figure	Sequence	Ref.
614-8020	02-02		12
	02-02		18
	02-04		2
	03-03		9A
	04-08		9
	04-09		15
	04-17		3
	07-03		36
	07-04		5
	09-12		12
	09-58		24
	09-66		14
	09-67		5
614-8022	06-22		2
614-8025	04-03		10
	04-03		4
	04-08		10
	04-17		10
	08-10		14
	08-11		14
	08-12		13
	08-13		13
	08-22		28
	09-03		15
	09-08		27
	09-08A		27
	09-13		5
	09-15		11
	09-16		2
	09-16		20
	09-25		23
	09-25A		23
	09-51		1A
614-8030	02-01		9
	03-01		17
	06-44		13
	06-45		13
	07-03		2
	07-04		26
	09-05		8
	09-15		4
	09-25		33
	09-25A		30
	09-36		19
	09-43		5
	09-44		5
	09-58		5
	09-63		28
	09-64		19
	09-69		19
614-8040	02-02		21
	04-06A		3
	09-44		4
614-8050	09-15		35
615-10016	06-25		24
627-10030	02-06		11
	02-06A		11
	06-12		16
	06-13		6
627-12025	03-03		26
627-20060	09-37		2
627-8020	02-07A		3
628-10030	06-25		40
	06-26		18
628-10035	06-26		16
711-10030	09-37		25
711-10040	09-44		8
711-10050	05-02		24
712998R91	05-06		12
	06-03		7
761-17325	04-19		13
781-24613	04-04		34
	04-08		15
	09-13		20
781-24820	09-42		30
800-11115	06-29		16
	06-30		16
800-1134	06-06		17
800-1140	06-31		5
800-1145	06-30		43
800-1150	06-20		26
	06-29		32
800-1150	06-29		38
	06-30		30
	06-30		36
	06-31		4
	06-31		8
800-1160	06-33		18
	06-33		20
800-1165	06-33		15
	06-33		17
800-21100	06-33		26
800-2136	06-46		26
800-2168	06-26		21
800-2175	06-30		40
	06-32		17
800-2180	06-29		35
	06-30		33
800-40065	09-23		27
800-40070	09-23		31
800-4155	09-24		25
800-44040	09-04		26
	09-04		31
	09-05		22
	09-05		4
	09-25		4
	09-25A		4
	09-27		27
800-44050	05-04		5
	06-01		7
	09-04		8
800-5120	06-44		5
	06-45		5
800-5145	06-22		19
800-5150	06-31		2
800-5160	06-32		23
	06-33		24
800-6138	08-32		2
806-8016	02-02		15
806-8025	02-04		16
811-6016	04-06A		16
814-10040	08-04		9
	08-06		6
	08-07		8
	08-09		3
	08-23		10
	08-25		6
	08-30		39
814-10045	02-06		16
	02-06A		22
	03-01		38
	06-15		15
	06-16		21
	08-04		19
	08-05		7
	08-06		5
	08-09A		3
	08-13		41
	08-22		9
	09-37		30
814-10050	02-01		20
	05-01		10
	08-14		14
814-10055	08-12		38
	08-13		30
	08-13		49
	09-66		3
814-10060	04-04		27
	07-06		30
	08-22		10
	08-26		6
	08-29		6
	09-08		25
	09-08A		25
	09-13		25
814-10070	08-08		22
	08-08A		22
	08-26		30
814-10080	08-10		2
	08-11		2
	08-12		2
	08-13		2
	08-14		2
	08-25		2

http://www.minnparbackhoeparts.com/

Number	Figure	Sequence	Ref.
814-10080	09-08		20
	09-08A		20
814-10090	02-01		28
	08-26		29
	08-27		13
	09-01		29
	09-08		16
	09-08A		16
814-10110	09-01		36
814-10130	09-13		13
814-10150	06-15		9
814-10245	04-05		6
	04-06		7
814-12050	08-23		17
814-12060	08-12		27
	08-13		27
814-12070	08-24		10
	08-30		7
814-12080	02-07		5
	06-12		31
	06-13		14
	08-10		37
	08-10		41
	08-11		31
	08-11		37
	08-12		23
	08-12		42
	08-13		23
	08-13		57
814-12090	08-24		6
814-12100	08-10		18
	08-11		18
	08-12		17
	08-13		17
	09-39		16
814-12130	09-66		8
814-14140	06-40		9
814-6030	09-25		16
	09-25A		16
814-6050	09-59		2
	09-69		
814-8035	08-08A		2A
	08-22		20
814-8040	07-03		15
814-8050	09-25		27
	09-25A		31
814-8055	08-08A		2
	08-22		19
814-8060	06-17		16
	06-24		7
	07-04		35
	08-08		2
814-8070	08-23		21
	09-15		8
	09-25A		27
814-8080	06-23		34
	06-23A		34
	06-44		14
	06-45		14
814-8100	09-66		15
814-8110	09-66		13
81465471	02-01		13
815-8055	06-28		4
81868381	08-34		8
	08-35		9
	08-36		18
	08-37		18
	08-38		19
	08-39		19
82017872	04-06A		26
824-1405	04-04		10
	04-20		7
825-11412	03-02		8
825-11418	05-09		8
	06-01		2
	06-06		25
825-1412	09-24		47
825-2406	09-64		27
825-2408	09-58		25
	09-63		30
	09-64		21
825-2410	09-39		27
825-2410	09-39		31
	09-39		6A
	09-40		5
827-10040	02-06		14
	02-06A		20
827-10075	06-07		3
827-10130	04-03		15
827-12045	06-01		14
	06-01		21
827-12065	06-12		9
827-12240	09-28		6A
827-16085	09-36		10
827-16100	09-36		11
827-20075	09-23		13
827-20170	09-35		2
	09-35		6
827-20190	09-05		16
827-20230	06-38		4
827-8050	07-06		10
828-10050	06-25		38
828-10080	06-25		42
828-20160	09-06		6
	09-07		4
829-1406	04-06A		20
	04-06A		30
	09-01		32
	09-18		25
	09-21		5
	09-25		18
	09-25A		18
829-1408	02-02		20
	03-03		11A
	04-04		8
	04-06A		18
	04-08		12
	04-17		5
	07-03		28
	07-03		4
	07-06		15
	08-08		4
	08-08A		4
	08-22		23
	08-23		23
	09-03		17
	09-05		11
	09-13		7
	09-15		7
	09-25		29
	09-25A		29
	09-28		8F
	09-58		20
	09-65		
	09-69		26
829-1410	02-04		14
	02-06		13
	02-06		6
	02-06A		13
	02-06A		6
	03-01		35
	03-01		43
	04-10		29
	05-02		27
	06-10		25
	06-11		26
	07-03		12
	07-06		21
	08-03		25
	08-04		13
	08-05		11
	08-05		17
	08-05		36
	08-06		10
	08-06		15
	08-08		26
	08-08A		26
	08-09		5
	08-09A		5
	08-10		4
	08-11		4
	08-12		4
	08-13		4
	08-14		4

http://www.minnparbackhoeparts.com/

Number	Figure	Sequence	Ref.	Number	Figure	Sequence	Ref.
829-1410	08-22		41	832-10412	08-10		39
	08-23		13		08-11		19
	08-26		8		08-11		33
	08-27		16		08-12		18
	08-27		7		08-12		25
	08-29		8		08-12		28
	08-30		41		08-13		18
	09-13		37		08-13		25
	09-37		34		08-13		28
	09-37		46	832-10420	09-06		8
	09-37		54		09-07		6
829-1412	06-01		22	832-10508	09-54		39
	08-23		19		09-54A		39
	09-28		6C		09-56		16
	09-39		21		09-56A		16
	09-66		11	832-41312	09-22		22
829-1416	09-36		15		09-22A		25C
829-1420	06-38		7	833-40310	09-36		9A
	09-05		19	833-40406	04-11		3
	09-23		15		04-12		23
	09-35		4		04-12		4
	09-35		8		09-04		15
	09-38		13		09-12		18
832-10404	04-12		14		09-13		21
	09-53		9		09-14		10
832-10406	04-06A		15		09-41		6
	04-07		34		09-42		18
	04-10		31		09-42		23
	04-12		9		09-42		6
832-10408	02-02		14		09-64		26
	02-02		25		09-67		18
	04-12		34	833-40408	02-04		18
	04-17		12		09-44		4A
	05-01		17	838-3640	03-03		16
	05-01		25	83822C1	09-64		
	07-03		17	83981068	08-35		19
	09-13		33		08-37		21I
	09-16		21		08-37		22
	09-16		3		08-38		20
	09-42		32		08-39		20
	09-44		7		08-39		25I
	09-54		26	840-1416	04-21		12
	09-54A		26		08-15		
	09-55		10		08-16		
	09-58		7		08-17		
	09-61		8		08-18		
	09-62		12		08-19		
	09-62		17		08-20		
	09-67		7		08-22		37
	09-69		22	843-1516	04-20		5
832-10410	02-01		24	844-10020	04-04		16
	04-03		18		04-05		11
	05-01		13		04-05		3
	08-07		15		04-06		13
	08-12		39		04-10		32
	08-13		32		04-15		11
	08-13		43		09-03		9
	08-13		50	844-10035	04-03		2
	08-13		54	844-10110	09-08		6
	08-14		16		09-08A		6
	08-24		26	844-6025	04-07		33
	08-26		33		04-10		30
	09-08		18		04-12		7
	09-08		22	845-6020	09-64		25
	09-08		8	85801585	02-07		6
	09-08A		18		06-12		32
	09-08A		22		06-13		12
	09-08A		8	85802618	02-07		8
	09-13		14		06-12		32A
	09-13		26		06-13		12A
	09-15		17	85802820	08-08		1
	09-16		44		08-08A		1
	09-19		17	85803019	02-02		
	09-20		4	85808333	06-26		22
	09-39		12	85811921	08-43A		11
	09-44		11	85811922	08-43A		10
	09-67		11	85811923	08-43A		3
832-10412	02-07		9	85811933	08-44		8
	06-12		11		08-45		8
	06-12		34		08-47		8
	06-13		11		08-48		8
	08-10		19		08-49		7

http://www.minnparbackhoeparts.com/

Number	Figure	Sequence	Ref.
85811933	08-50		8
85811934	08-43A		9
	08-44		7
	08-45		7
	08-47		7
	08-48		7
	08-50		7
85811935	08-43A		9
	08-44		7
	08-45		7
	08-47		7
	08-48		7
	08-50		7
85811937	08-49		6
85811938	08-44		4
	08-45		4
	08-46		4
	08-47		4
	08-48		4
	08-49		4
	08-50		4
85811946	08-43A		4
85812114	08-44		6
85812115	08-45		6
	08-50		6
85812116	08-47		6
	08-48		6
85817669	08-43A		7
85819148	08-44		9
	08-45		9
	08-46		9
	08-47		9
	08-48		9
	08-49		8
	08-50		9
85819378	08-45		3
	08-46		3
	08-48		3
	08-49		3
	08-50		3
85820128	08-43A		6
85820129	08-43A		2
85821235	08-43A		8
85821236	08-43A		5
85821520	09-15		21
85824067	09-15		16
85824080	09-15		20
85824081	09-15		18
85824281	08-45		10
	08-46		10
	08-47		10
	08-48		10
	08-49		9
	08-50		10
85824282	08-44		10
85825473	08-43A		13
85825477	08-43A		12
85826229	02-01		30
85826230	02-01		31
85826337	08-40		3
	08-41		3
	08-42		3
	08-43		3
	08-45		
85826338	08-40		5
	08-41		5
	08-42		5
	08-43		5
	08-47		
85826339	08-40		2
	08-41		2
	08-42		2
	08-43		2
	08-44		
85826340	08-40		4
	08-41		4
	08-42		4
	08-43		4
	08-46		
85826341	08-41		7
	08-43		7
	08-49		
85826342	08-42		7
	08-43		8
	08-50		
85826343	08-47		6A
85826344	08-44		5
	08-45		5
	08-46		5
	08-47		5
	08-48		5
	08-49		5
	08-50		5
85826345	08-44		3
	08-47		3
85826346	08-45		6A
85826365	08-40		6
	08-41		6
	08-42		6
	08-43		6
	08-48		
85826905	08-48		6A
85827471	08-17		3
	08-18		6
	08-19		6
	08-52		
85827472	08-15		5
	08-16		5
	08-51		
85827991	08-51		2
85827992	08-51		4
	08-52		4
	08-53		5
85827993	08-51		6
	08-52		6
	08-53		7
85827994	08-51		7
	08-52		7
	08-53		8
85827995	08-51		8
	08-52		8
	08-53		9
85827996	08-51		9
	08-52		9
	08-53		10
85827997	08-51		10
	08-52		10
	08-53		11
85827998	08-51		12
	08-52		12
	08-53		13
85827999	08-51		13
	08-52		13
	08-53		14
85828000	08-51		14
	08-52		14
	08-53		15
85828001	08-51		15
	08-52		15
	08-53		16
85828002	08-51		16
	08-52		16
	08-53		17
85828003	08-51		17
	08-52		17
	08-53		18
85828004	08-52		2
85828005	08-51		11
	08-52		11
	08-53		12
85828013	08-51		3
85828015	08-52		3
	08-53		3
85828048	08-53		2
85828054	08-53		4
85828061	08-53		1
86014151	04-06A		27
8602005	02-07A		1
8603092	09-75		3
8603093	09-77		3
8603094	09-76		3
863-10016	06-25		23
	06-25		33
863-10025	06-25		20

http://www.minnparbackhoeparts.com/

Number	Figure	Sequence	Ref.	Number	Figure	Sequence	Ref.
863-16070	05-06		8	86987460	08-41		
863-6020	07-01		25	86987461	08-20		1
864-10025	06-18		17		08-43		
864-12030	08-01		6	86988086	04-21		1
864-12130	06-40		10	86989616	09-15		28
864-5010	06-35		48	86989676	03-01		10
864-5012	06-35		28	86990837	05-04		1
	06-35		39		05-05		
864-6012	06-34		6		05-06		
864-6020	06-23		8		05-07		
	06-23A		8		05-08		
864-6035	07-01		10	86991496	07-04		14
	07-01		19	86992243	09-42		20
864-8020	06-23		21	86992245	09-42		10
	06-23A		21	86992247	09-42		1
864-8025	06-18		6	86992248	09-42		10
864-8030	06-35		30	86992284	09-42		
864-8055	09-13		34		09-42		
864-8065	06-34		2	86992395	04-01		
86507190	09-58		35		04-03		1
	09-69		32	86992557	08-08A		38
86507198	09-58		36		08-22		25
	09-69		33	86992975	09-75		12
86596853	08-22		31	86992976	09-75		4
86619908	04-06A		7	86992977	09-42		28
86625128	08-54		13	86992978	09-77		12
	08-55		13	86992979	09-77		4
	08-57		10	86992980	09-76		12
86982435	08-63		18	86992981	09-76		4
	08-70		16	86993546	06-12		23
86982437	08-62		18	86993773	09-41		9B
	08-64		23	86993774	09-41		9C
86982439	08-66		25	86994165	09-49A		11
86982441	08-65		18	87000312	08-54		17
86982442	08-65A		18		08-55		18
	08-69		21		08-56		19
86982443	08-67		25		08-58		15
86982444	08-68		22	87019767	06-12		23A
86982682	09-38		10	87020181	06-12		4
86983190	09-41		2	87021704	06-13		23
86983269	09-41		9A	87021705	06-13		22
86983278	09-13		11	87032428	07-06		38
86983311	08-54		1	87037462	09-49A		8
	08-55		1	87037944	08-54		4
	08-56		1		08-55		4
	08-57		1		08-56		4
	08-58		1		08-57		4
86983325	09-41		9		08-58		4
86984097	06-23			87041331	09-25		31
86984098	06-23				09-25A		33
86984107	06-38		1A	87301325	02-02		4
	06-40			87301351	09-01		
	06-42				09-02		
	06-43			87301355	02-01		4A
	06-45			87301356	02-01		7
	06-46			87301515	09-53		26
	07-01				09-67		33
	07-02			87301687	04-07		11
86984108	06-38		1	87303781	09-15		34
	06-40			87303784	04-21		3
	06-41			87305413	09-14		7
	06-43				09-74		5
	06-44				09-78		15
	06-46			87306274	08-01		2
	07-01			87306306	02-02		3
	07-02			87306307	08-01		4
86984155	09-65		4	87307476	08-10		40
86984544	09-15		2		08-11		36
	09-25A		25		08-12		41
86984545	09-15		6		08-13		56
	09-25A		26	87307635	08-12		35
86984547	09-15		5	87307636	08-12		29
	09-25		28	87307893	09-74		9
	09-25A		28		09-76		
86984549	09-15		24	87307896	09-74		9
86985339	09-12		3		09-77		
86985341	09-12		2	87308118	09-49A		1
86987459	08-15		1	87308119	09-49A		2
	08-16		1	87308127	09-49A		3
	08-40			87308128	09-49A		7
86987460	08-17		1	87308130	09-49A		
	08-18		1	87308131	09-49A		13

http://www.minnparbackhoeparts.com/

Number	Figure	Sequence	Ref.
87308132	09-45A		7
	09-49A		14
87308141	09-49A		15
87308142	09-49A		
87308143	09-49A		
87308144	09-49A		16
87308145	09-49A		
87308146	09-49A		17
87308147	09-49A		18
87308148	09-49A		
87308149	09-49A		19
87308150	09-49A		20
87308151	09-49A		21
87308152	09-49A		5
87308153	09-49A		4
87308154	09-49A		6
87308157	09-49A		1
87308158	09-49A		2
87308159	09-49A		3
87308472	08-03		22
87308838	08-54		8
	08-55		8
	08-56		8
	08-57		5
	08-58		8
87308839	08-54		10
	08-55		10
	08-56		10
	08-57		6
	08-58		10
87308840	08-15		4
	08-16		4
	08-19		4
	08-57		
87308844	08-15		3
	08-17		8
	08-54		
87308845	08-19		3
	08-20		3
	08-56		
87308846	08-16		3
	08-18		2
	08-55		
87308847	08-17		9
	08-18		3
	08-20		4
	08-58		
87308996	09-75		2
87308997	09-77		2
87308998	09-76		2
87309656	02-06		1
	02-06A		1
87309923	09-14		2
87309924	09-14		1
87310083	04-21		6
87310085	09-41		12
87310086	04-11		5
87310088	09-42		12B
	09-42		21A
	09-42		3
87310096	06-12		8
	09-12		17
	09-14		9
	09-41		15
87310098	04-12		22
	04-12		3
	09-15		34
	09-42		16
	09-42		22
	09-42		5
	09-67		17
87310124	04-11		12
	04-11		13
	09-11		14
87310126	04-09		3
	04-12		16A
	04-12		19
	09-01		3
	09-02		32
	09-11		14
87310127	09-42		13
	09-42		24
87310127	09-42		7
87310128	04-12		16
	04-12		30
87310139	09-11		8
87310142	04-11		14
87310144	04-12		36
87310146	09-42		14
	09-42		25
	09-42		8
87310147	09-53		7
87310149	09-45A		17
	09-45B		5
87310152	04-11		2
	04-12		6
87310154	09-42		29
87310156	09-11		7
87310176	04-12		32
87310177	09-67		9
87310184	04-12		12
87310185	04-12		33
	09-42		31A
87310186	09-14		6
	09-42		17
	09-42		22A
	09-42		5A
87311219	06-11A		8
87311572	09-45A		16
	09-45B		3
87312712	04-04		32
	04-07		31
	06-12		42
87313164	02-06A		14
87313544	06-38		3
87316049	08-05		27
87316264	08-05		31
87316270	08-05		30
87326813	09-24		34
87327489	07-06		39
87330322	03-02		11
87330325	03-03		21
87331077	07-06		9
87333648	08-30		46
87336843	09-79		15
87336844	09-80		15
87338681	09-45A		1
87340008	02-01		42
87400112	06-12		21
87400286	05-05		7
	06-02		9
87402618	09-40		24
87402623	08-67		21
87403386	08-38		
87403387	08-39		
87403835	04-05		1
87404197	05-04		4
	06-01		9
87405706	09-13		17
87406924	09-52		10
	09-67		28
87406934	06-12		22
87407206	04-05		10
87407272	02-01		16
87407758	06-13		21
87407769	09-39		15
87407770	09-39		19
87407771	02-01		18
87407927	09-41		18
87407965	08-19		1
	08-42		
87408480	03-01		10A
87408888	09-45		13
	09-45		21
	09-45A		14
	09-45B		7
87408889	09-45		12
	09-45		20
	09-45A		14
	09-45B		8
87409201	06-12		24
87410096	02-01		1
	02-03		
87410098	02-01		1

http://www.minnparbackhoeparts.com/

Number	Figure	Sequence	Ref.	Number	Figure	Sequence	Ref.
87410098	02-03A			87417391	06-03		
87410105	04-21		9		06-04		
87410265	04-06A		21		06-05		
87410602	04-06A		10		06-06		
87410603	04-06A		1		06-07		
87410613	06-36		1		06-08		
87411083	09-11		2A	87417599	09-01		37
87411084	09-11		4A	87417601	09-03		
87411108	09-55		4	87417644	08-10		28
87411319	02-07		1		08-67		1
87411320	02-07		2		09-24		9
87411720	08-30		28A	87417649	08-67		3
87411722	08-30		27A	87417651	08-67		18
87412060	09-39		18	87417721	04-17		8
87412139	02-02		1		08-25		8
87412635	02-05		1		08-26		4
87412687	09-01		1		08-29		4
	09-02		42		09-01		38
87412695	09-01		1A	87417762	08-67		2
	09-02		42A	87418279	08-67		6
87413144	08-36			87418297	08-67		
87413145	08-38			87418359	02-02		19
87413146	08-39			87418360	02-02		22
87413162	04-06A		28	87418364	02-05		2
87413237	02-01		14	87418365	02-05		3
87413722	08-66		12	87418368	09-15		31
87414205	09-14		7	87418369	09-15		32
	09-74		5	87418516	09-12		1
	09-78		15	87418518	09-12		11
87414237	04-06A		12	87418541	04-07		1
87414277	08-37				04-08		1
87414278	08-37			87418542	04-10		1
87414560	03-01		20	87418551	08-30		15
87415774	02-01		43	87418552	08-30		13
87415781	04-05		8	87418553	08-30		14
87415931	09-72		15	87419229	04-04		23
87416024	08-04		23	87419256	08-25		24
87416108	06-46		1A	87419257	04-05		4
87416475	09-49A		12	87419259	04-05		2
87416476	08-36			87419320	04-10		14
87416966	02-07		7		04-13		
87416967	06-12		33	87419385	02-01		
	06-13		13	87419454	08-15		2
87416977	06-12		29		08-16		2
87416978	06-12		30		08-17		2
87416981	06-13		15		08-18		5
87416982	06-13		8	87419455	08-19		2
87417224	02-02		11		08-20		2
87417225	02-02		10	87419615	04-06A		23
87417299	02-02		7	87419616	04-06A		22
87417300	02-02		3	87419634	05-02		14
87417301	02-01		2	87420672	08-08		25
87417329	09-65		26		08-08A		25
87417383	03-01		18	87420673	08-08		23
	04-06A		6		08-08A		23
	09-36		17	87420696	08-25		17
87417387	06-01		1	87421213	08-25		4
	06-02			87421471	03-03		29
	06-03			87421488	04-09		2
	06-04			87421775	09-65		6
	06-05			87421776	09-65		12
	06-06			87421777	09-65		1
	06-07			87421807	03-03		28
	06-08			87421836	08-23		20
87417389	06-01		1	87421918	08-05		4
	06-02			87421920	08-05		5
	06-03			87421928	08-04		7
	06-04			87421930	08-04		4
	06-05			87421932	08-04		5
	06-06			87421934	08-04		6
	06-07			87421938	08-25		13
	06-08			87422239	09-16		33
87417390	06-01		1	87422241	09-16		31
	06-02			87422243	09-16		28
	06-03			87422245	09-16		29
	06-04			87422247	09-16		30
	06-05			87422249	09-16		32
	06-06			87422253	09-19		15
	06-07			87422256	09-19		14
	06-08			87422258	09-19		2
87417391	06-01		1	87422260	09-19		1
	06-02			87422262	09-19		10

http://www.minnparbackhoeparts.com/

Number	Figure	Sequence	Ref.	Number	Figure	Sequence	Ref.
87422264	09-19		8	87425636	04-21		10
87422270	09-19A		2	87425696	09-13		22
87422272	09-19A		1	87425869	04-17		13
87422597	06-10		5	87426221	08-34		6
87422598	06-10		6		08-35		7
87422696	09-15		9	87426227	08-34		9
	09-25		12		08-35		10
	09-25A		12	87426232	08-36		11
87422777	04-02				08-37		11
	04-03		3		08-38		16
87422948	08-23		35		08-39		16
87422977	08-23		38	87426233	08-34		5
87423004	09-36		1		08-35		6
87423006	09-36		1	87426235	08-34		11A
87423033	08-08A		39		08-35		12A
	08-22		24	87426238	08-34		15
87423034	08-08A		1A		08-35		16
	08-22		18		08-36		21
87423044	06-11		18		08-37		23
87423067	08-25		5		08-38		8
87423343	08-30		27		08-39		8
87423345	08-30		28	87426241	08-35		18
87423346	09-58		14		08-36		7
87423356	08-09		10		08-36		8A
	08-09		14		08-37		7
87423396	04-13		3		08-37		8A
87423397	04-13		4		08-38		10A
87423401	08-22		2		08-38		11
87423409	09-75		9		08-39		10A
87423410	09-75		8		08-39		11
87423496	04-17		2	87426379	09-04		1
87423502	09-57		34	87426488	08-22		16
87423503	09-57		26	87426716	08-34		12
87423531	02-06		9		08-35		13
	02-06A		9	87426717	08-34		11
87423668	09-36		16		08-35		12
87423675	04-06		2	87426965	08-03		12
87423676	04-06		5	87426966	08-03		14
87423677	04-05		16	87427158	06-10		1
	04-06		11		06-11		1
87423802	04-21		8	87427294	09-65		20
87423812	04-21		4	87427537	08-26		28
	09-73		16	87427539	08-26		27
	09-74		6	87427775	09-25A		15
87423813	09-78		14	87427948	08-22		17
87423817	09-40		19	87428023	08-54		3
87423867	08-30		24		08-55		3
	08-32				08-56		3
	09-28		28		08-57		3
87423868	08-32		1		08-58		2
87423926	04-04		6	87428140	08-09		2
87423969	08-23		40	87428151	09-01		33
87423970	08-23		41	87428152	09-01		34
87424240	06-11		5	87428153	09-02		35
87424241	06-11		6	87428158	08-09		26
87424267	08-54		14	87428316	09-58		8
	08-55		15		09-69		12
	08-56		16	87428476	08-37		13
	08-58		13		08-39		22
87424794	07-06		29	87428477	08-37		14
87424815	06-13		5		08-39		23
	06-25			87428486	08-36		22
	06-26				08-37		24
	06-27				08-38		9
	06-28				08-39		9
	06-29			87428488	08-36		20
	06-30				08-37		20
	06-31				08-38		18
	06-32				08-39		18
	06-33			87428490	08-36		19
	06-34				08-37		19
	06-35				08-38		17
	06-36				08-39		17
87424864	06-27		1	87428491	08-36		13
87424865	06-27		2		08-38		23
87425117	09-21		3	87428492	08-36		14
87425118	09-21		1		08-38		24
87425122	09-11		16	87428495	08-36		12
87425225	08-22		36		08-37		12
87425456	09-35		5		08-37		21F
87425631	04-20		2		08-38		21
87425635	04-20		8		08-39		21

http://www.minnparbackhoeparts.com/

Number	Figure	Sequence	Ref.	Number	Figure	Sequence	Ref.
87428495	08-39		25F	87431128	09-40		
87428497	08-36		9	87431300	09-13		24
	08-37		9	87431301	09-13		23
	08-38		12	87431529	09-13		15
	08-39		12	87431630	08-23		3
87428500	08-36		8	87431701	06-39		10
	08-37		8	87431702	06-39		1
	08-38		10	87431799	02-07		11
	08-39		10	87432547	03-03		25
87428501	08-37		21	87432811	09-25		30
	08-39		25		09-25A		32
87428645	09-03		3	87433005	09-14		13
87428814	08-23		39	87433006	09-14		12
87428998	06-10		18	87433007	09-14		14
	06-11		37	87433008	09-14		11
87429150	08-37		21D	87433028	08-37		21A
	08-39		25D		08-39		25A
87429163	09-79		14	87433029	08-36		10
87429164	09-80		14		08-37		10
87429165	09-79		15		08-38		13
87429166	09-80		15		08-39		13
87429186	09-72		16	87433030	08-36		23
87429287	08-05		12		08-37		25
	08-06		11		08-37		25A
87429310	03-01		1		08-38		22
87429314	03-01		1A		08-39		26
87429318	03-01		1B		08-39		26A
87429382	05-02		10	87433209	09-78		12A
87429387	08-23		2	87433240	08-25		1
87429584	08-08		19	87433386	08-30		11
	08-08A		19	87433387	08-30		12
87429654	08-08		32	87433389	08-30		12A
87429690	02-03		3	87433390	08-30		11A
87429691	02-03A		3	87433401	04-03		6
87429692	02-03		5	87433503	02-02		6
	02-03A		5	87433543	04-04		1
87429693	02-03		6		04-07		32
	02-03A		6		04-08		14
87429694	02-03		1	87433544	04-06A		24
	02-03A		1	87433546	04-07		16
87429695	02-03		4		09-69		4
	02-03A		4	87433659	09-38		1
87429948	09-66		6	87433730	05-04		9
87429949	09-66		12		06-01		28
87429950	09-66		2	87434049	09-41		19
87429951	09-66		10	87434050	09-41		20
87429952	09-66		7	87434072	08-33		
87429954	09-66		17	87434075	08-33		2
87429970	06-17		1	87434076	08-33		3
87429971	06-17		15	87434077	08-33		4
87429972	06-16		1	87434099	02-04		15
87429973	06-20		20	87434257	08-01		5
87429974	06-21			87434265	08-26		15
87429978	06-24				08-29		15
87429981	06-20		28	87434614	02-01		5
87429982	06-15		16	87434621	08-20		6
	06-16		23		08-53		
	08-01		10	87434649	02-01		6
87429983	06-20		30	87434673	08-01		11
87429984	06-20		27		08-33		
87429985	06-18		23	87434745	09-37		1
87429986	06-16		12	87434746	09-37		
87429987	06-15		6	87434766	08-34		
	06-16		7	87434767	08-35		
87429988	06-15		10	87434768	08-34		
87429989	06-15		1	87434769	08-35		
87429994	06-18		3	87434771	09-79		12A
87430051	06-40		11A	87434772	09-80		12A
87430122	09-65		19	87434774	02-01		4
	09-66		1	87434775	02-01		3
87430345	06-02		1	87434777	08-22		26
87430618	06-12		20	87434783	09-57		
	06-13		1	87434793	02-01		
87430677	09-11			87434880	03-01		21
	09-74		4	87434978	02-01		12
87430867	04-06			87435076	06-11A		9
87430868	04-06A			87435078	06-11A		6
87430972	08-23		1	87435080	06-11A		10
87431077	09-77		8	87435082	06-11A		11
87431078	09-76		8	87435108	09-53		1
87431080	09-77		9	87435109	09-53		1
87431081	09-76		9	87435110	09-53		1

http://www.minnparbackhoeparts.com/

Number	Figure	Sequence	Ref.	Number	Figure	Sequence	Ref.
87435112	09-53		1	87437633	08-17		6
87435242	08-57		9		08-18		8
	08-58		11		08-20		8
87435243	08-54		11	87437635	08-17		7
	08-55		11		08-18		9
	08-56		11		08-20		9
87435275	09-13		8	87437641	08-22		51
87435372	09-14		8	87437655	08-01		39
87435381	04-21		2	87437657	08-01		39
87435409	02-02		2	87437685	08-09A		14
87435453	09-57		23	87437688	09-13		18
87435506	08-54		15	87437689	09-14		5
	08-55		16	87437804	02-06		2
	08-56		17		02-06A		2
	08-57		12	87437806	09-15		27
	08-58		14	87437840	08-08		
87435569	05-01		1		08-08A		4A
	09-72		12		08-22		21A
87435761	08-01		3	87437899	08-33		10
87435909	08-26		5	87437905	08-33		12
	08-28			87437906	08-33		13
	08-29		5	87437914	08-33		14
87435910	08-29		5A	87437917	08-33		15
	08-31			87437923	08-21		6
87435923	08-25		20	87437924	08-21		5
87435924	09-15		12	87437925	08-21		7
	09-25		11	87437926	08-21		9
	09-25A		11	87437927	08-21		4
87435929	09-57		1	87437928	08-21		8
87435938	09-78		12	87437929	08-21		10
87435939	09-79		12	87437930	08-21		11
87435940	09-80		12	87437933	08-21		12
87436066	08-01		17	87437934	08-02		13
	08-02		16	87437935	08-21		13
	08-02		7	87437938	08-08A		33
87436076	09-41		3	87437939	08-08A		32
87436192	09-72		1B	87437940	08-08A		35
87436225	08-54		2	87437941	08-08A		34
	08-55		2	87437980	08-01		42
	08-56		2	87437982	08-01		43
	08-57		2	87438012	08-19		8
	08-58		3	87438015	08-19		9
87436234	09-27		18	87438021	08-28		2
87436675	04-07				08-31		2
	04-10			87438022	08-28		
	08-25		23		08-31		
	09-69		5	87438023	08-28		
87436676	04-21		7		08-31		
87436782	09-22		43	87438024	08-28		
	09-22		43		08-31		
87436783	09-22A		43	87438025	08-28		3
87436836	04-07		15		08-31		3
	04-07		8	87438026	08-28		
	04-21		11		08-31		
87437108	08-04		24	87438027	08-28		
87437203	02-07				08-31		
	02-08		1	87438028	08-28		
87437230	08-01		16		08-28		
87437231	08-02		18		08-31		
	08-02		6		08-31		
	08-23		37	87438029	08-28		4
87437232	08-02		18		08-31		4
	08-02		6	87438031	08-28		5
	08-23		36		08-31		5
87437263	08-26		1	87438032	08-28		
	08-29		1		08-31		
87437265	08-25		22	87438045	08-33		
87437366	09-14		3	87438046	08-54		16
87437369	09-14		4		08-55		17
87437371	08-56		13		08-56		18
	08-58		12		08-58		
87437372	08-54		12	87438157	09-21		14
	08-55		12	87438735	09-72		1A
	08-56		12	87438925	04-01		3
87437373	08-55		14	87438926	04-01		4
87437441	08-02		6	87438927	04-01		5
87437621	08-22		45	87438928	04-01		6
87437623	08-22		30	87438929	04-01		8
87437625	08-22		47	87438930	04-01		9
87437627	08-22		43	87438931	04-01		10
87437629	08-22		46	87438932	04-01		11
87437631	08-22		44	87438933	04-01		12

http://www.minnparbackhoeparts.com/

Number	Figure	Sequence	Ref.	Number	Figure	Sequence	Ref.
87438935	04-01		13	87440045	05-02		22
87438937	04-01		14		08-03		1
87438940	04-01		15		08-61		
87438941	04-01		16	87440058	09-20		10
87438942	04-01		17	87440076	09-17		10
87438944	04-01		18	87440282	09-53		13
87438946	04-01		19	87440283	09-53		14
87438948	04-01		20	87440381	09-13		31
87438950	04-01		22	87440554	02-06		7
87438951	04-01		32	87440694	08-23		16
87438954	04-01		36	87440704	09-13		9
87438956	04-01		38	87440706	09-13		10
87438960	04-02		1	87440710	09-13		1
87438963	04-02		2	87440711	09-13		
87438965	04-02		3		09-15		1
87438967	04-02		4	87440712	08-22		14
87438969	04-02		5	87440812	08-09A		10
87438970	04-02		6	87440814	08-34		14
87438971	04-02		7		08-35		15
87438972	04-02		8		08-36		17
87438973	04-02		9		08-37		17
87438974	04-02		10		08-38		15
87438975	04-02		11		08-39		15
87438976	04-02		12	87440815	08-34		13
87438977	04-02		13		08-35		14
87438978	04-02		14		08-36		16
87438979	04-02		15		08-37		16
87438980	04-02		16		08-38		14
87438981	04-02		17		08-39		14
87438982	04-02		18	87440835	08-20		10
87438983	04-02		19	87440837	08-20		11
87438984	04-02		20	87441059	09-07		
87438985	04-02		21	87441073	09-08A		
87438986	04-02		22	87441074	09-08A		
87438987	04-02		23	87441076	08-09		23
87438989	04-02		24		08-09A		23
87438992	04-01		1	87441285	02-06		10
87438993	04-01		2		02-06A		10
87438994	04-01			87441372	08-24		31
87438995	04-01		21		08-30		31
87438996	04-01		23	87441495	08-40		1
87438997	04-01		24		08-41		1
87438999	04-01		25		08-42		1
87439000	04-01		26		08-43		1
87439001	04-01		27		08-43A		
87439002	04-01		28	87441758	09-69		28
87439003	04-01		29	87441850	09-15		9
87439004	04-01		30		09-25		12
87439005	04-01		31		09-25A		12
87439006	04-01		33	87441876	06-11A		1
87439007	04-01		34	87442357	02-06		15
87439008	04-01		35		02-06A		21
87439009	04-01		37	87442376	09-41		21
87439010	04-01		41	87442377	09-41		22
87439011	04-01		43	87442409	09-15		33
87439032	08-21		14	87442419	02-01		45
87439033	08-21		15	87442441	09-58		21
87439061	04-01		42	87442601	02-05		4
87439135	09-21		13	87442618	02-04		1
87439136	05-02		13		02-05		
87439137	05-02		1	87442924	09-58		31
87439138	05-02		5		09-69		27
87439163	08-08A		38	87443080	04-14		8
	08-22		25		04-15		2
87439210	09-12		15	87443149	08-04		15
87439213	08-22		48	87443150	08-04		14
87439215	08-22		40	87443430	09-52		1
87439306	08-08		10	87443431	09-52		1
	08-08A		10	87443432	09-52		1
87439448	09-40		11	87443433	09-52		1
87439537	08-14		23	87443434	09-67		1
87439660	08-11		22	87443435	09-67		1
87439665	08-08		24	87443437	09-67		
	08-08A		24	87443661	09-24		46
87439722	09-54A		27	87443691	09-54		1A
	09-56A		5		09-54A		1A
87439723	09-54A		29	87443692	09-15		26
	09-56A		6	87443721	08-54		5
87439724	09-56A		1		08-55		5
87439725	09-54A		4		08-56		5
87439726	09-54A				08-58		5
87439842	08-11		34	87443722	08-57		8

http://www.minnparbackhoeparts.com/

Number	Figure	Sequence	Ref.
87443847	09-24		44
87443912	09-24		45
87443971	09-24		
87444040	09-40		25
87444147	09-39		2
87444148	09-39		1
87444149	09-25		15
87444169	02-06A		17
87444176	09-58		30
	09-69		11
87444379	09-09		1
87444776	09-74		9
87444942	03-01		19
87445051	09-57		30
87445245	09-25		9
87445557	08-22		44A
87445597	09-40		29
87446081	02-01		6
87446082	02-01		5
87446095	03-03		25
87446113	09-17		12
87446330	06-10		20
	06-11		39
87446332	06-10		20A
	06-11		40
87446333	06-10		19
	06-11		38
87446335	06-10		15
	06-11		34
87446337	06-10		17
	06-11		36
87446338	06-10		13
	06-11		32
87446596	09-01		33A
87447044	08-06		23
87447052	02-06A		7
87447088	09-19A		
87447135	02-07A		
87447313	02-06A		25
87447450	05-01		12
87447887	08-06		24
87448055	09-12		3A
87448057	09-12		2A
87448059	09-12		2B
87448198	09-56A		
87448199	09-54A		
87448272	09-52		1
87448273	09-52		1
87448274	09-52		1
87448275	09-52		1
87448489	02-02		9
87448526	08-29		27
	08-30		1
87448527	08-29		28
	08-30		2
87448658	07-04		32
87448661	07-04		30
87448668	08-30		17
87448685	09-58		
	09-69		
87448990	08-22		39A
87449373	08-09		1
	08-09A		1
	08-59		
87449374	08-59		2
87449514	09-58		34
	09-69		31
87449517	09-58		37
	09-69		34
87449579	07-04		34
87449825	09-67		
87449995	09-25		25
87449996	09-25		26
87450318	08-08A		1B
	08-22		18A
87450456	08-02		13
87450481	04-04		1
	04-07		32
	04-08		14
87450698	08-09A		14
87450910	07-04		31
87450914	09-13		27
87450931	04-04		1A
	04-07		32A
	04-08		14A
87450932	04-04		
	04-07		
	04-08		
87450978	08-34		7
	08-35		8
	08-36		11A
	08-37		11A
	08-38		16A
	08-39		16A
87450979	08-36		11B
	08-37		11B
	08-38		16B
	08-39		16B
87450980	08-36		11C
	08-37		11C
	08-38		16C
	08-39		16C
87451021	09-53		13A
87451448	08-57		11
87451751	07-04		33
87452021	09-37		20
87452257	04-03		16
87452258	04-03		14
87452399	08-01		21
87452400	08-01		26
87452402	08-26		16
	08-29		16
87452403	08-26		17
	08-29		17
87452404	09-19		2
87452405	08-21		16
87452406	09-19		1
87452511	04-21		15
87452627	09-12		3B
87452823	03-03		29A
87453949	07-06		37
87454016	08-07		1
	08-64		1
87454017	08-07		2
	08-64		1
87454053	03-01		45
87454054	03-01		47
87454055	03-01		46
87454294	09-45B		2
	09-49A		
87454295	09-45B		1
	09-49A		
87454376	02-02		7
87454377	02-01		14
87454378	02-01		16
87454380	02-04		9
87454381	02-04		5
87454383	02-04		10
87454545	05-02		
87454547	08-37		21B
	08-39		25B
87454548	08-37		21C
	08-39		25C
87454907	08-64		2
87454908	08-64		2
87455441	08-10		22
87455443	08-11		21
87455505	09-08A		
87455509	09-08		
87455541	08-37		21E
	08-39		25E
87455564	08-37		21G
	08-39		25G
87455565	08-37		21H
	08-39		25H
87455832	08-02		18
87456843	06-12		14
	06-14		
	06-15		
	06-17		
	06-18		
	06-19		
	06-20		
	06-21		

http://www.minnparbackhoeparts.com/

Number	Figure	Sequence	Ref.
87456843	06-23A		
87456844	06-12		15
	06-14		
	06-16		
	06-17		
	06-18		
	06-19		
	06-20		
	06-21		
	06-22		
	06-23A		
	06-24		
87456899	06-23A		
87456900	06-23A		3
87456901	06-24		11
87456944	04-04		1
	04-07		32
	04-08		14
87456948	04-04		1B
	04-07		32B
	04-08		14B
87456949	04-04		
	04-07		
	04-08		
87456968	06-23A		4
87456969	06-24		12
87803065	02-35		1
87803194	03-08		6
87803261	02-32		1
892-10010	06-25		19
	06-25		22
	06-25		32
	06-25		37
	06-25		39
	06-25		41
	06-26		15
	06-26		17
892-11005	03-03		30
	04-20		6
892-11006	03-03		31
	09-25		17
	09-25A		17
	09-59		3
	09-69		
892-11008	02-01		41
	03-01		17A
	03-03		10
	04-03		11
	04-03		5
	04-06A		17
	04-08		11
	04-09		16
	04-17		4
	07-03		3
	07-03		37
	07-04		6
	07-06		14
	08-10		15
	08-11		15
	08-12		14
	08-13		14
	08-23		22
	08-30		9B
	09-05		10
	09-08		28
	09-08A		28
	09-12		14
	09-13		6
	09-15		3
	09-25		24
	09-25A		24
	09-43		6
892-11010	02-06		5
	02-06A		5
	03-01		32
	03-03		24
	04-01		40
	05-02		26
	07-03		11
	07-06		22
	08-04		12
	08-05		10
892-11010	08-05		16
	08-05		37
	08-06		16
	08-06		9
	08-07		9
	08-22		42
	08-23		12
	08-27		15
	08-27		6
	08-30		40
	09-08		26
	09-08A		26
	09-13		28
	09-24		42
	09-25		7
	09-25A		7
	09-28		15C
	09-37		31
893-11005	04-19		8
895-11004	04-12		13
	09-53		8
895-11005	03-03		6
	06-35		47
895-11006	04-06A		14
	04-06A		29
	09-54		10A
	09-54A		10A
895-11008	02-01		10
	02-02		13
	02-02		16
	02-02		23
	02-03		8
	02-03A		8
	02-04		3
	03-03		11
	04-17		11
	06-10		3
	06-11		3
	06-11A		3
	07-03		2A
	07-06		34
	08-08A		3A
	08-22		22
	08-22		27
	09-03		16
	09-05		9
	09-12		13
	09-15		
	09-21		15
	09-25		32
	09-28		8E
	09-36		18
	09-58		19
	09-65		
	09-69		24
895-11010	02-01		23
	03-01		34
	03-01		42
	04-17		7
	07-06		31
	08-03		3
	08-04		11
	08-05		38
	08-05		9
	08-07		14
	08-08		31
	08-08A		31
	08-09		4
	08-09A		4
	08-25		3
	09-04		20
	09-08		17
	09-08		21
	09-08A		17
	09-08A		21
	09-24		43
	09-37		29
	09-37		51
	09-39		11
	09-39		14
	09-39		23
	09-39		29

http://www.minnparbackhoeparts.com/

Number	Figure	Sequence	Ref.
895-11010	09-39		6
	09-40		4
	09-40		6
	09-44		10
895-11018	08-09		7
895-15006	04-12		8
895-15008	05-01		16
	05-01		24
	09-13		4
	09-42		31
	09-61		7
	09-62		16
895-15010	05-01		21
	07-06		36
	08-25		7
	09-13		12
	09-25		8
	09-25A		8
	09-62		11
895-18012	09-45B		4
895-30107	09-54		35
	09-54A		35
	09-56		12
	09-56A		12
896-11008	02-07A		2
	08-30		35
	09-13		32
	09-58		32
	09-69		29
896-11010	02-01		38
	02-06		17
	02-06		18
	02-06A		23
	02-06A		24
	04-03		13
	04-03		17
	08-10		3
	08-11		3
	08-12		3
	08-13		3
	08-14		3
	08-24		25
	08-26		3
	08-26		7
	08-29		3
	08-29		7
	09-01		29A
896-11012	04-06A		33
	06-12		10
	08-23		18
	09-45		11B
	09-66		9
896-11016	09-36		12
896-11020	03-01		3A
	06-38		5
	09-05		18
	09-06		9
	09-07		7
	09-23		14
	09-24		5
	09-35		3
	09-35		7
	09-37		3A
896-15008	07-06		33
	09-66		16
896-15010	02-04		13
	02-06		12
	02-06		4
	02-06A		12
	02-06A		4
	06-12		25
	08-22		11
	09-09		3
	09-13		19
	09-28		15B
	09-66		5
896-15012	02-07		4
	03-03		27
	06-12		28
	06-13		10
	09-39		17
	09-39		20
896-15012	09-45		5
	09-45A		12
	09-45B		10
	09-50		
90-6682T1	06-01		16
	06-09		12
	06-12		40
	06-13		19
	06-47		12
905794R1	06-18		20
905839R1	05-06		6
	06-04		4
906086R1	09-54		42
	09-54A		42
	09-56		19
	09-56A		19
934667R1	06-15		3
	06-16		4
	06-23		36
	06-23A		36
	06-24		6
934727R1	05-06		4
	06-04		2
9827902	07-06		35
9969021	06-26		23
9969022	06-26		24
9969023	06-26		25
A13240	08-25		10
A156873	06-02		6
A166057	04-04		17
	04-04		2
A167037	09-70		8
A170467	02-06		8
	02-06A		8
A177435	03-02		2
A178460	06-29		43
	06-29		45
A183452	06-29		42
	06-29		46
A187542	04-18		5
A187575	04-18		11
A187603	09-59		7
A187714	09-57		10
	09-59		
A187990	04-08		5
	07-03		32
A188028	07-06		23
A23870	04-18		1
A30881	09-03		11
	09-13		3
	09-16		15
	09-17		5
	09-18		26
	09-21		6
A33509	09-27		29
A38208	05-04		15
	05-09		7
A41264	04-16		9
A42561	04-10		8
	09-63		6
	09-64		14B
A44641	08-32		15
A44651	08-32		11
A45035	08-32		13
A45054	09-49A		
	09-51		16
A45504	09-49A		
A45505	09-49A		
A45513	09-49A		
A48041	06-06		11
	06-19		6
	06-20		2
A65544	05-01		5
A77310	07-03		14
B17575	06-02		
	06-02		
	06-03		
	06-04		
	06-06		
	06-06		
	06-07		
	06-08		

http://www.minnparbackhoeparts.com/

Number	Figure	Sequence	Ref.
B506395	06-07		16
BMF28S	04-06		1
D120450	09-24		14
	09-26		7
	09-28		3A
D121152	04-14		2
	04-16		
D121194	09-05		6
D121608	07-06		12
D123347	09-71		4
D123684	05-04		3
	06-01		10
D124528	07-03		19
D124529	07-03		13
D124530	07-03		23
D124857	03-03		8
D125079	04-05		7
D125223	05-09		1
D126409	04-06		4
D127167	09-26		38
	09-27		21
D127335	04-12		24
D127542	09-04		2
D128022	09-59		7
D128745	09-59		4
	09-69		2
D129227	09-25		2
	09-25A		2
D129264	09-06		2
	09-07		2
	09-08		11
	09-08A		11
D129747	07-06		13
D132076	09-05		17
D132494	09-24		16
	09-27		2
D132982	06-11		31
	07-04		22
	08-03		15
	09-63		24
D133632	09-24		21
	09-27		7
D133865	09-27		24
D134900	09-20		6
D135384	04-14		1
	04-16		
D135557	09-23		5
D135559	09-23		6
D135739	09-24		12
D135741	09-23		4
D136391	09-23		26
D136392	09-23		24
D136700	09-23		25
	09-23		36
D136773	09-01		17
	09-19		11
D137077	07-03		6
D137218	09-24		13
D137363	04-04		12
	09-04		16
	09-51		3
D137468	04-10		26
D137625	08-01		14
D137627	06-01		17
	06-09		13
	06-12		41
	06-13		20
	06-47		13
D138022	09-24		30
	09-26		2
D138047	09-26		44
	09-26		46
	09-26		9
	09-27		34
	09-28		2
D138055	08-04		8
	08-05		15
	08-05		35
	08-05		6
	08-06		14
	08-06		7
	08-26		31
D138055	08-27		12
	09-28		8A
	09-37		32
D138157	09-29		7
	09-30		7
	09-31		7
	09-32		7
	09-32		7
	09-33		7
	09-34		7
	09-34		7
D138380	06-37		4
D138492	06-37		5
	06-38		2
D138955	04-09		18
D139039	09-16		19
D139849	09-29		
	09-30		
	09-31		
	09-32		
	09-32		
	09-33		
	09-34		
	09-34		
D139851	09-29		
	09-30		
	09-31		
	09-32		
	09-32		
	09-33		
	09-34		
	09-34		
D140029	08-69		15
	09-26		8
	09-28		4
D140035	07-03		9
D140247	09-27		28
D140267	09-39		32
D141075	09-26		48
D141076	09-26		49
D141142	09-26		20
	09-27		37
D141164	09-26		22
	09-27		39
D141555	08-68		15
D141666	09-27		11
D142012	09-34		4
D142144	09-70		10
D142519	09-22		15
	09-22A		15
D142787	08-04		20
	08-08		27
	08-08A		27
	08-09		21
	08-09A		21
	08-10		32
	08-10A		15
D142898	05-08		6
	06-22		16
	06-40		22
D142971	06-41		5
	06-42		5
D142986	06-46		2
D143033	06-41		18
	06-42		18
D143242	09-67		4
D143324	09-26		30
D143406	09-22		13
	09-22		33
	09-22A		13
	09-22A		33
D143411	09-13		35
D143412	08-13		31
D143416	09-20		5
D143417	09-25A		9
	09-39		25
	09-63		29
	09-64		20
D143426	08-13		29
D143427	09-63		27
	09-64		18
D143591	09-15		15

http://www.minnparbackhoeparts.com/

Number	Figure	Sequence	Ref.	Number	Figure	Sequence	Ref.
D143591	09-25		21	D150121	09-26		10
	09-25A		21		09-27		17
D143714	09-39		9		09-28		3
D143715	09-39		8	D150214	05-06		11A
D143723	09-15		10	D150391	09-45		15
	09-25		22		09-45		23
	09-25A		22	D150392	09-45		16
D143735	09-25		20		09-45		24
	09-25A		20	D150397	09-16		9
D143846	08-07		6	D150434	09-16		13
	08-12		37	D150435	09-16		12
	08-13		48	D150486	09-16		17
	08-26		31A	D150493	09-16		24
D144423	09-23		35	D150503	09-16		45
D144592	09-25		3	D150619	09-26		34
	09-25A		3	D150633	07-06		11
D145061	09-34		4	D150781	08-59A		
D146288	09-26		26	D150810	08-59A		
	09-27		49	D151034	09-05		15
D146420	09-30		3	D151065	09-23		21
D146421	09-30		2	D151069	09-36		5
D147166	04-07		6	D151070	09-36		6
D147249	09-30		4	D151071	09-24		11
D147383	04-04		33	D151073	09-23		7
	09-58		13	D151074	09-23		8
	09-58		17	D25279	09-22		10
	09-69		21		09-22		14
	09-69		25		09-22A		10
D147409	09-29		4		09-22A		14
D147773	08-10A		26		09-26		31
D148108	04-07		35	D26002	09-22		9
	04-08		4	D28648	09-22		12
	07-03		31		09-22A		12
D148947	09-18		2	D30933	09-29		12
D148962	03-02		6		09-30		12
	09-13		30		09-31		12
D148992	09-16		7		09-32		12
D148993	09-13		2		09-32		12
D148994	09-16		18		09-33		12
D149033	09-22		40		09-34		12
	09-22A		40		09-34		12
D149079	09-26		41	D31140	09-08		2
	09-27		16		09-08A		2
	09-27		31		09-26		47
D149262	09-16		46	D34666	09-16		16
D149287	09-01		35	D35908	06-13		16
	09-02		36A	D37495	09-30		11
	09-03		4		09-31		11
	09-16		37		09-32		11
	09-17		11		09-32		11
	09-19		3		09-33		11
	09-20		11		09-34		11
D149288	07-06		20		09-34		11
	09-02		36	D37614	09-26		29
	09-16		23	D38435	08-03		23
	09-16		48	D38648	08-07		20
	09-19		7		08-14		26
	09-21		11	D38858	08-69		12
D149295	09-16		34	D38907	09-22		3
	09-19		9		09-22A		3
D149298	09-26		32	D39118	09-18		11
D149725	05-05		4	D39256	09-22		17
	06-02		2		09-22A		17
D149726	05-05		3	D39696	06-10		24
	06-02		4		06-11		20
D149737	06-04		8		08-03		18
D149738	06-04		6	D40236	08-14		13
D149739	06-04			D40442	03-01		37
D149824	09-73		3		09-37		37
D149825	09-73		4	D43940	09-29		11
D149826	09-78		10	D48212	09-29		10
D149827	09-78		11		09-30		10
D149828	09-73		5		09-31		10
D149829	09-73		6		09-32		10
D149860	06-09				09-32		10
	06-47				09-33		10
D149866	09-11		9		09-34		10
D149867	09-11		10		09-34		10
D149868	09-11		12	D49498	08-30		37
D150032	09-20		13	D50146	09-22		6
D150053	08-10A		3		09-22A		6
D150054	08-10A		2	D50696	09-34A		2

http://www.minnparbackhoeparts.com/

Number	Figure	Sequence	Ref.	Number	Figure	Sequence	Ref.
D51391	09-08		7	E135809	06-16		1A
	09-08A		7		06-39		9
D51392	09-08		15	E135810	07-02		7
	09-08A		15	E43769	09-58		22
D51393	09-08		19	E46560	09-58		
	09-08A		19		09-69		
D51750	09-29		5	E47238	09-58		3
	09-29		8		09-69		16
	09-30		5	E47239	09-58		2
	09-30		8		09-69		17
	09-31		5	E47240	09-58		4
	09-31		8		09-69		18
	09-32		5	E49497	09-19A		4
	09-32		5	E49498	09-19A		3
	09-32		8	F22426	04-12		
	09-32		8	F44883	09-40		10
	09-33		5	F45165	09-54		49
	09-33		8		09-54A		49
	09-34		5		09-56		25
	09-34		5		09-56A		25
	09-34		8	F64198	09-54		45
	09-34		8		09-54A		45
D52276	02-01		22		09-56		22
	08-10		7		09-56A		22
	08-11		7	F64519	09-67		14
	08-12		7	G100440	08-66		16
	08-13		7	G100444	08-63		15
	08-14		7		08-64		17
	08-22		13		08-70		14
D52564	09-71		1	G100448	08-66		17
D55216	09-37		56	G100449	08-63		16
	09-73		10		08-64		18
D59912	09-16		4		08-70		15
	09-18		6	G100710	08-69		18
	09-21		2	G100711	08-69		19
D61368	09-22		16	G101533	08-65		6
	09-22A		16		08-66		6
D67296	09-28		17C	G102090	08-65A		16
D74182	09-13		36		08-68		19
D75465	03-01		12	G102092	08-65A		15
D76209	09-38		11		08-68		18
D80270	03-01		39	G102285	08-66		15
	09-37		48	G102286	08-69		17
	09-73		11	G102287	08-62		14
D83187	08-32		10	G102288	08-63		14
D86664	09-25		19		08-64		16
	09-25A		19		08-70		13
D88052	09-63		32	G102424	08-63		6
D88427	09-22		11	G102425	08-62		6
	09-22A		11		08-64		6
D95096	09-03		13		08-70		5
D95142	08-63		5	G102426	08-65A		6
D95143	08-62		5	G102427	08-67		8
	08-64		5		08-68		6
	08-70		4	G107277	08-70		12
D95144	08-65		5	G107970	08-65A		10
	08-66		5		08-68		12
D95145	08-65A		5	G108512	08-63		3
D95146	08-67		7	G108518	08-63		13
	08-68		5	G109298	08-63		10
	08-69		5		08-64		11
E114385	06-29		18		08-70		9
	06-29		3	G109299	08-66		10
	06-30		18	G109908	08-69		6
	06-30		3	G110077	08-59A		
	06-32		3	G110467	08-59A		
	06-33		3	G110529	08-65		15
E114386	06-29		19	G110530	08-65		16
	06-29		4	G110531	08-65		14
	06-30		19	G110594	08-65A		13
	06-30		4	G32122	08-62		10
	06-32		4	G32176	08-65		10
	06-33		4		08-66		24
E135750	06-40		18	G35540	08-59A		4
E135762	06-43		8	H433285	09-24		24
E135777	06-41		3	H434163	08-01		15
	06-42		3	H71514	09-24		7
E135785	06-41		8	K260177	06-15		5
	06-42		8		06-16		6
E135809	06-15		10A	K261014	06-08		4
	06-15		1A		06-43		4
	06-16		13	K261065	06-08		3

http://www.minnparbackhoeparts.com/

Number	Figure	Sequence	Ref.	Number	Figure	Sequence	Ref.
K261065	06-43		3	L71879	04-10		
K262143	06-08		9	L79937	08-05		39
	06-43		12	N13505	05-06		12A
K395027	06-07		12		06-03		11
K395075	06-07		21	N13582	08-33		6
	06-07		8	N14283	04-16		10
K395082	06-06		23	N14367	05-05		2
	06-46		8		06-02		3
K395086	06-07		13	N14373	05-05		8
	06-07		19	N14407	06-07		5
K395087	06-07		6	N14408	06-07		7
K395090	06-08		8	N14410	06-05		3
	06-43		10		06-05		3
K395091	06-06		21	N14466	09-60		20
K395093	06-06		16	N14784	07-05		
	06-46		9	N6755	08-61		
K395101	06-46		25	N6836	04-16		3
K395131	06-46		15	N6941	08-61		
K691987	02-01		21	N7802	09-46		
	09-38		9	N9025	08-61		
L111356	08-10A		31	NSS	04-04		31B
	09-74		7		04-10		2
L15401	09-03		12		04-10		25
L17985	02-04		4		04-10		3
L18331	02-07A		5		04-10		4
	04-19		15		04-13		
L18337	02-02		24		04-13		
	02-04		19		04-13		
	02-06A		19		04-16		1
	03-01		22		04-16		5
	03-02		12		04-16		6
	04-04		28		04-16		7
	04-06A		25		04-16		8
	04-07		26		04-18		12
	04-14		11		05-03		1
	04-15		14		05-03		3
	04-21		14		05-03		5
	06-10		10		05-03		6
	06-11		10		05-07		2
	06-39		8		06-02		14
	07-04		23		06-04		1
	08-03		16		06-04		10
	08-09		29		06-04		11
	08-10		20		06-04		12
	08-10A		17		06-04		13
	08-11		20		06-04		14
	08-12		19		06-04		15
	08-13		19		06-04		16
	08-14		19		06-06		14
	08-21				06-06		15
	08-23		15		06-06		3
	08-24		32		06-07		1
	08-25		25		06-07		17
	08-27		18		06-07		18
	08-30		32		06-07		2
	08-30		8		06-07		20
	09-02		41		06-08		1
	09-10		36		06-08		2
	09-37		59		06-09		10
	09-51		22		06-09		11
	09-58		16		06-09		2
	09-58		38		06-09		3
	09-62		21		06-09		4
	09-63		25		06-09		9
	09-64		17		06-12		
	09-65		11		06-17		10
	09-69		14		06-17		11
	09-69		35		06-17		12
L26209	07-03		7		06-17		13
L30039	06-26		11		06-17		14
L32100	08-33		9		06-17		17
L32418	08-33		1		06-17		18
L54563	09-16		14		06-17		2
	09-17		1		06-17		20
L60224	04-12		5		06-17		21
	09-37		49		06-17		3
L71879	04-04		21		06-17		3A
	04-07				06-17		4
	04-07				06-17		5
	04-07				06-17		6
	04-07		10		06-17		7
	04-08				06-17		8

http://www.minnparbackhoeparts.com/

Number	Figure	Sequence	Ref.	Number	Figure	Sequence	Ref.
NSS	06-17		9	NSS	06-47		4
	06-21		10		06-47		9
	06-21		11		07-05		1
	06-21		12		07-05		10
	06-21		15		07-05		11
	06-21		20		07-05		12
	06-21		21		07-05		13
	06-21		22		07-05		14
	06-21		23		07-05		15
	06-21		24		07-05		16
	06-21		25		07-05		17
	06-21		25A		07-05		18
	06-21		7		07-05		2
	06-21		8		07-05		3
	06-23		1		07-05		4
	06-23		38A		07-05		5
	06-23		43		07-05		6
	06-23		45		07-05		7
	06-23A		1		07-05		8
	06-23A		38A		07-05		9
	06-23A		43		07-06		1
	06-23A		45		07-06		2
	06-24		1		08-28		1
	06-24		2		08-31		1
	06-24		3		08-32		
	06-24		4		08-32		8
	06-25		12		08-32		9
	06-25		13		08-34		1
	06-26		26		08-34		2
	06-26		27		08-34		3
	06-26		28		08-34		4
	06-26		29		08-35		1
	06-26		30		08-35		2
	06-35		1		08-35		3
	06-35		10		08-35		4
	06-35		11		08-35		5
	06-35		12		08-36		1
	06-35		13		08-36		2
	06-35		14		08-36		3
	06-35		15		08-36		4
	06-35		16		08-36		5
	06-35		17		08-36		6
	06-35		18		08-37		1
	06-35		19		08-37		2
	06-35		2		08-37		3
	06-35		20		08-37		4
	06-35		21		08-37		5
	06-35		22		08-37		6
	06-35		23		08-38		1
	06-35		24		08-38		2
	06-35		25		08-38		3
	06-35		26		08-38		4
	06-35		27		08-38		5
	06-35		3		08-38		6
	06-35		31		08-38		7
	06-35		34		08-39		1
	06-35		38		08-39		2
	06-35		4		08-39		3
	06-35		44		08-39		4
	06-35		5		08-39		5
	06-35		6		08-39		6
	06-35		7		08-39		7
	06-35		8		08-40		7
	06-35		9		08-40		8
	06-36		2		08-40		9
	06-36		3		08-41		10
	06-36		4		08-41		8
	06-36		5		08-41		9
	06-41		1		08-42		10
	06-41		2		08-42		8
	06-42		1		08-42		9
	06-42		2		08-43		10
	06-43		1		08-43		11
	06-43		1A		08-43		9
	06-44		15		08-43A		1
	06-45		15		08-44		1
	06-46		20		08-44		2
	06-46		6		08-45		1
	06-47		10		08-45		2
	06-47		11		08-46		1
	06-47		2		08-46		2
	06-47		3		08-47		1

http://www.minnparbackhoeparts.com/

Number	Figure	Sequence	Ref.	Number	Figure	Sequence	Ref.
NSS	08-47		2	NSS	09-48		12
	08-48		1		09-51		1B
	08-48		2		09-54		1
	08-49		1		09-54A		1
	08-49		2		09-58		1
	08-50		1		09-60		19
	08-50		2		09-60		21
	08-59		1		09-69		15
	08-59A		1		09-70		14
	08-59A		10	P2230493	06-40		25
	08-59A		14	P2745466	06-22		21
	08-59A		2	P2745478	06-22		10
	08-59A		5	P2930467	06-46		3
	08-59A		6	P3034505	06-41		9
	08-59A		7		06-42		9
	08-59A		8	P3533055	06-21		35
	08-59A		9		06-22		20
	08-60		1	R26725	09-22A		9
	08-60		10	R32119	09-24		8
	08-60		11	R46493	08-07		7
	08-60		12	R54682	09-70		6
	08-60		13	REF	02-10		11
	08-60		4		02-10		12
	08-60		9		02-14		15
	08-61		1		02-15		4
	08-61		6		02-20		6
	08-61		7		02-22		5
	08-61		8		02-22		6
	08-62		7		02-29		7
	08-62		8		02-34		12
	08-63		7		02-38		10
	08-63		8		02-38		4
	08-64		8		02-38		7
	08-64		9		02-38		8
	08-65		7		02-38		9
	08-65		8		02-39		5
	08-65A		7		02-41		3
	08-65A		8		03-04		5
	08-66		7		03-06		10
	08-66		8		04-03		
	08-67		10		05-09		2
	08-67		11		05-09		5
	08-68		8		06-29		
	08-68		9		06-30		
	08-69		8		06-37		3
	08-69		9		06-37		3
	08-70		6		06-37		3
	08-70		7		06-37		3
	09-03		10		08-02		
	09-06		1		08-02		
	09-07		1		08-03		13
	09-08		1		08-04		1
	09-08		10		08-05		1
	09-08A		1		08-06		1
	09-08A		10		08-08		
	09-10		10		08-08A		
	09-10		2		08-09		
	09-26		37		08-09A		
	09-26		6		08-10		1
	09-27		15		08-11		1
	09-27		20		08-12		1
	09-29		2		08-13		1
	09-29		3		08-14		1
	09-31		2		08-15		
	09-31		3		08-16		
	09-31		4		08-17		
	09-32		2		08-18		
	09-32		2		08-19		
	09-32		3		08-20		
	09-32		3		08-24		
	09-32		4		08-25		
	09-32		4		08-25		16
	09-33		2		08-25		21
	09-33		3		08-27		
	09-33		4		08-27		4
	09-42				08-30		
	09-42				08-36		
	09-46		1		08-37		
	09-46		2		08-38		
	09-46		7		08-39		
	09-46		8		09-01		28
	09-47		9		09-02		40

http://www.minnparbackhoeparts.com/

Number	Figure	Sequence	Ref.	Number	Figure	Sequence	Ref.
REF	09-04						
	09-10						
	09-10						
	09-18						
	09-19						
	09-26		28				
	09-28						
	09-28						
	09-28						
	09-32						
	09-54						
	09-54A						
	09-55						
S109444	08-62		15				
S109445	08-62		16				
S115351	05-03		2				
S300976	06-41		7				
	06-42		7				
S301064	06-02		18				
S301065	06-02		15				
S89695	06-32		30				
	06-33		31				
S89696	06-32		29				
	06-33		30				
ST205A	06-19		1				
	06-22		6				
ST264	06-20		23				
T34857	04-16		2				

http://www.minnparbackhoeparts.com/

NOTES