http://www.minnparbackhoeparts.com/

JANEIRO 1978

case

580C CK Loader Backhoe

S/N 8973675

RUTHZIL TRATOR COMERCIAL DE PEÇAS LTDA 11 97083-6812 ROLANDO

Parts Catalog C1283

J I Case
A Tenneco Company

TENNECO

http://www.minnparbackhoeparts.com/

REVISION RECORD LOG

REVISION NO.	DATE INSERTED
1.	
2.	
3.	
4.	
5.	
	TS/6-6-76

580C CK LOADER BACKHOE

Parts Catalog C1283

Whitehall 15,000

Published February 1978

Note: This parts catalog replaces the previous issue - B1283 - which is obsolete and should be discarded.

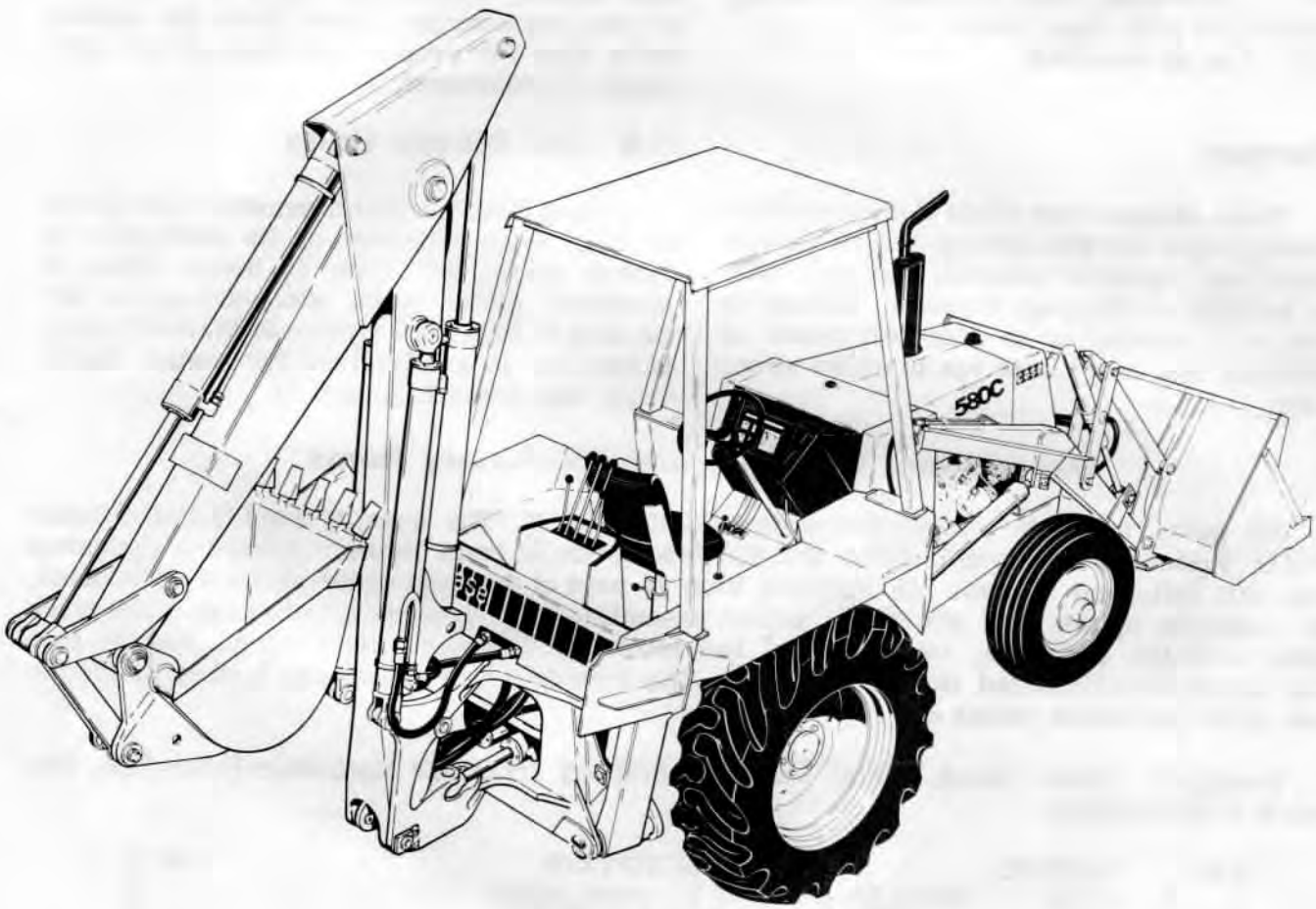

J I Case
A Tenneco Company

TENNECO

Service Parts Supply

700 State Street
Racine, Wisconsin 53404

Printed in U.S.A.

http://www.minnparbackhoeparts.com/

Indexes

This parts catalog is arranged for easy identification of parts. The Alphabetical Index at the front of the catalog gives location of major groups and assemblies. The Numerical Index at the rear of the the catalog gives part numbers and the page on which they are listed.

Abbreviations and Terms

HHCS - Hex head capscrew.
NSS- Not sold separately.
REF - Reference. Used to clarify drawing.
RESERVED - No item listed.
UAR - Use as required.

Changes

When changes are made to the machine, revised pages for this catalog will be issued. These pages must be inserted into your catalog as soon as they are received. Failure to keep your catalog up to date will result in confusion and may cause you to order wrong parts.

Orders

Orders should specify correct part number, full description, quantity required, machine and engine model, machine and engine serial numbers, method of shipment and shipping address.

Right-Hand and Left-Hand Sides

The terms right-hand and left-hand (abbreviated to L. H. and R. H.) as used in this catalog indicate the right and left sides of the machine as viewed from the operator's seat for proper operation of the machine or attachment.

U.S. and Metric Units

Sizes, lengths, and dimensions are given in U.S. units followed by its equivalent in metric units. See item 10 below. Sizes of hardware (bolts, nuts, etc.) are given according to hardware type---in inches for U.S. hardware; in millimeters for metric hardware. See items 2, 11 and 12.

Description, Quantity, and Machinery Items

All parts are briefly described under DESCRIPTION. The quantity used is listed under REQ'D. Notice in the example below that the description of some items is moved in (indented) from the left-hand margin. An indented item is part of the item under which it is indented. The example shows that six track roller assemblies are used on the machine. Each track roller contains two nuts, two washers, two block and retainers, two O-rings, and two face seal assemblies (indented items 1 thru 5). The face seal assemblies are further divided to show individual parts (items 6, 7, and 8).

Machinery items (Mach. Item) must be ordered from the Machinery Price List. See item 9 in the example.

REF.	PART NO.	DESCRIPTION	REQ'D.
	R 27948	ROLLER ASSEMBLY - track, single flange	6
1	131- 737	NUT - hex., lock (3/4" - 10 NC)	2
2	R 29429	WASHER - hardened, 1/2" thick	2
3	R 27951	BLOCK AND RETAINER - seal	2
4	A 7156	O-RING	2
5	D 35267	SEAL - face	2
6	NSS	BODY - seal, split	1
	D 36826	KIT - repair	1
7	NSS	SEAL - rubber	2
8	NSS	RETAINER - plastic	1
9	Mach. Item	FRAME - mounting (See page 2 or 3 for ordering)	1
10	D 48297	HOSE - lube, 30" (762 mm) long	1
11	13- 728	HHCS - 7/16" - 14 NC x 1-3/4"	2
12	D 51263	HHCS - M20 x 2.5 x 80 (8.8)	2

7405558

http://www.mymparbackhoeparts.com/

PARTS ORDERING INFORMATION FOR FRENCH, GERMAN, ITALIAN AND SWEDISH SPEAKING COUNTRIES

COMMANDE DE PIÈCES DE RECHANGE

Ce catalogue Pièces Rechange est conçu pour une identification facile de toutes les pièces CASE d'origine. Situe au début du catalogue, un répertoire permet de localiser rapidement les principaux groupes ou montages. **A la fin du catalogue, un index numérique de pièces de rechange précise la page sur laquelle chacune des pièces est décrite.**
Les pièces sont mentionnées par ordre du numéro de référence suivies du numéro de la pièce, de la description et de la quantité nécessaire. Les quantités mentionnées sous la rubrique « Quantité » correspondent à la quantité nécessaire pour former des assemblages ou des sous-ensembles.
Toutes les pièces sont illustrées sur des dessins éclatés montrant les pièces individuellement les unes par rapport aux autres. Les numéros de référence correspondent aux numéros des pièces sur les vues éclatées. Ces chiffres se rapportent à ceux de la rubrique « Chiffre de référence » qui sont suivis par le numéro de la pièce et sa description.
Toutes les commandes doivent spécifier exactement le numéro correct de la pièce, sa description, la quantité nécessaire, le type et le NUMERO DU MATERIEL, le mode d'expédition et l'adresse du destinataire.
Pour être sûr que votre commande de pièces correspond à vos besoins, vérifier l'illustration et la description dans le catalogue avec la pièce à commander.

BESTELLUNG VON ERSATZTEILEN

Diese Ersatzteilliste ist so zusammengestellt, dass alle Original—CASE—Ersatzteile leicht identifiziert werden koennen. Vorn ist ein Inhaltsverzeichnis nach Baugruppen und Bauteilen angeordnet, welches das Auffinden der Teile erleichtert. Hinten am Schluss der Liste befindet sich ein fortlaufendes Verzeichnis der Ersatzteilnummern, in dem der betreffenden Ersatzteilnummer jeweils die Seitennummer gegenuebersteht, auf der das Teil verzeichnet ist.
Im Ersatzteilverzeichnis befindet sich vor der Ersatzteilnummer eine laufende Nummer, die auch auf der Abbildung wiederholt wird, daneben die Ersatzteilnummer, die Bezeichnung des Teils und die davon benoetigte Stueckzahl für die betreffende Baugruppe.
Alle Teile sind in Zerlegt-Darstellung so abgebildet, dass sie in ihrem natuerlichen Zusammenhang mit den anderen Teilen erkennbar sind, und werden mit der « laufenden Nummer » des Ersatzteilverzeichnisses bezeichnet, um ihre Auffindung zu erleichtern.
Alle Ersatzteil-Auftraege muessen deutlich die richtige Ersatzteilnummer, die genaue Beschreibung, die benoetigte Anzahl von Teilen, Modell und NUMMER des traktors, die gewuenschte Versandart und die Versandadresse enthalten.
Das benoetigte Teil muss sorgfaeltig mit der Abbildung und der Beschreibung verglichen werden, damit die in Auftrag gegebenen Teile auch richtig bestellt sind.

ORDINI DI PEZZI

Questo libro di pezzi è disposto in modo da permettere facilmente una identificazione di tutti gli Autentici Pezzi CASE Impiegati. Un indice è fornito sulla facciata del catalogo dei pezzi per individuare i principali gruppi o montaggi. Un indice numerico alla fine del catalogo dei pezzi indica la pagina in cui ciascun pezzo numerato è descritto.
I pezzi sono elencati in ordine di numero di riferimento seguito dalnumero del pozzo, descrizione, e quantitativo richiesto. I quantitativi indicati nella colonna « Quantitativo richiesto » rappresentano il numero di pezzi richiesto per comporre uno dei precedenti Montaggi o Sotto- Montaggi.
Tutti i pezzi sono illustrati in « Prospetti Sviluppati » che mostrano i singoli pezzi e la loro relazione normale tra di loro. I numeri di riferimento sono indicati nella illustrazione. Questi numeri corrispondono a quelli nella colonna « Numero di Riferimento » e sono seguiti dal numero del pezzo e la descrizione.
Tutti gli ordini devono specificare chiaramente il preciso numero del pezzo, completa descrizione, quantitativo richiesto, modello e NUMERO DELLA SERIE della trattrice, metodo di spedizione e indirizzo della spedizione.
Controllate l'illustrazione e la descrizione con il pezzo richiesto, per assicurarvi che i pezzi ordinati sono giusti.

BESTÄLLNING AV RESERVDELAR

Denna reservdelkatalog har getts en speciell uppställningsform för att förenkla identifieringen av alla äkta CASE reservdelar. Ett register finns i början av katalogen upptagande de olika större grupperna och enheterna. En reservdelsnummerförteckning i slutel av katalogen anger vilken sida de olika detaljerna förekomma på.
De olika reservdelarna anges i referensnummerordning atföljda av serservdelsnumret, beskrivning och antal. Antalet, som anges i kolumnen « Quantity Required », är det antal som ingär i enheten i fräga.
Alla reservdelaravbildas i sprängbilder i sina inbördes lägen. Referensnumren anges på sprängbilderna. De framgä också av kolumnen « Reference Number » där de åtföljas av beskrivning och reservdelsnummer.
Reservdelbeställningar skall upptaga korrekt reservdelsnummer, beskrivning, beställt antal, modell och **serienummer** på maskinen, transportsätt och mottagarens adress.
Kontrollera noga att bild och beskrivning motsvara den önskade detaljen så att misstag undvikas.

720143

Printed In U.S.A.

Issued January, 1978

http://www.minnparbackhoeparts.com/

580C CONSTRUCTION KING LOADER BACKHOE
SERIAL NUMBER LOCATIONS

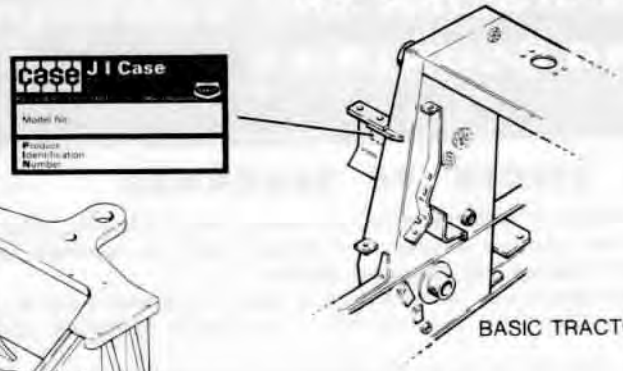

BASIC TRACTOR



CAB OR CANOPY

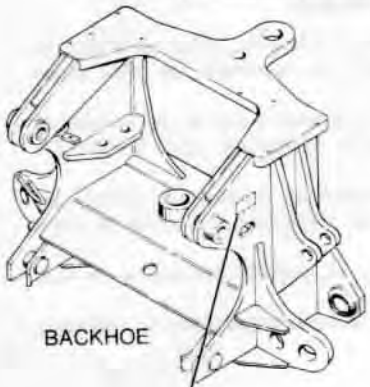

BACKHOE

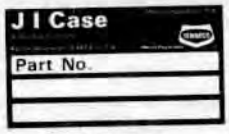

BUCKET

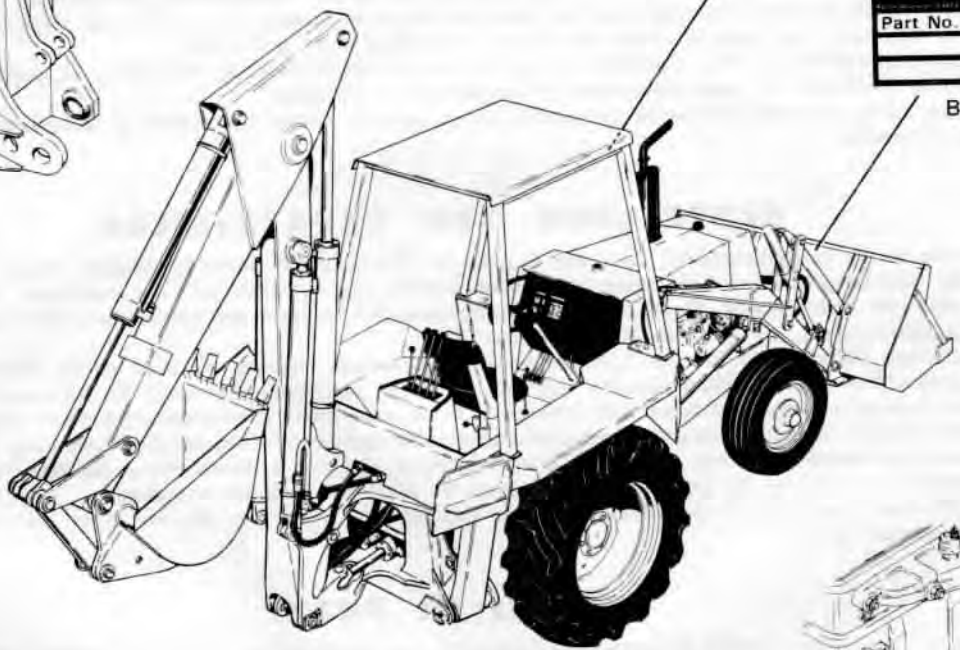

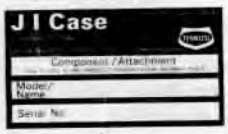

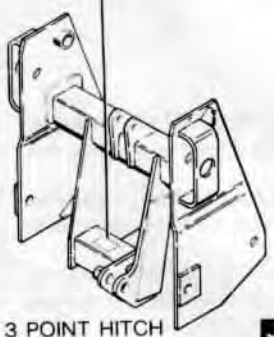

3 POINT HITCH



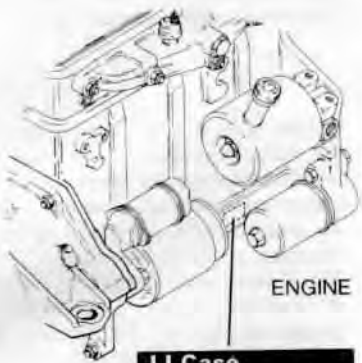

ENGINE

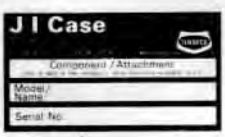

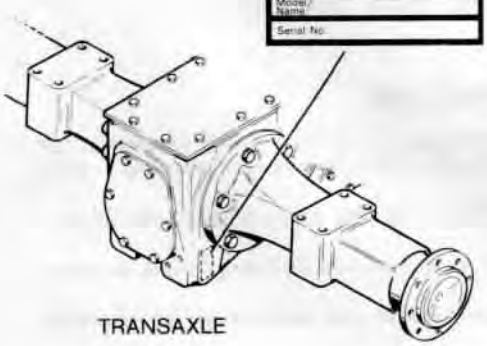

TRANSAXLE

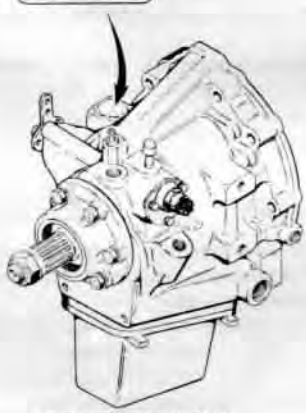

POWER SHUTTLE

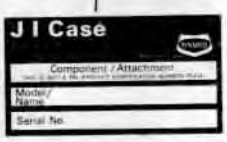

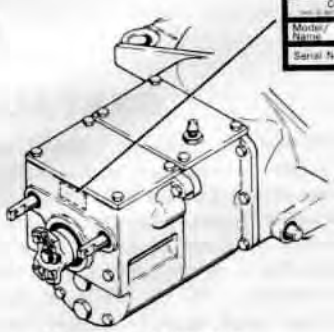

MANUAL SHUTTLE

750626 B

http://www.minnparbackhoeparts.com/

ALPHABETICAL INDEX

A

Air Cleaner 109
Alarm - backup 101
Alternator - electrical 43-45
Anti-Rollback 249, 251
Axle
  Front 173
  Rear 151

B

Backhoe
  Buckets 377-383
  Extendable Dipper 375
  Frame and Mounting Parts 365, 367
  Hydraulic Circuits (See Hydraulic Circuits)
  Stabilizers 365
  Tower, Boom and Dipper 369-373
Backup Alarm 101
Battery 57, 57B
Beacon - rotating 93-97
Bearings
  Main - engine 27
  Rod - engine 29
Belt - alternator and fan drive 51
Belt - seat 407
Blade - loader 357
Block - engine 23
Brake System 153-163
Buckets
  Backhoe 377-383
  Loader 353-355B

C

Cab
  Doors, Windows and Related Parts 423, 423B
  Electrical and Lighting 59, 61, 75
  Frame and Rear Window 421
  Heater and Defroster 81-87
  Glass and Moldings 425
  Mounting Parts 417
  Panels - enclosure, cab to tractor 419
  Windshield Wipers 89

C

Camshaft - engine 25
Canopy - ROPS 427
Chassis - tractor 399
Clutch, Clutch Pedals, and Linkage 125, 127, 165
Clutch Cutout 67
Cold Start System 103
Column - steering 181, 189
Connecting Rods - engine 29
Controls
  Backhoe 223, 385-391
  Brake 157-163
  Clutch 165
  Clutch Cutout 67
  Engine Speed 171
  Hitch - 3 point 283
  Loader 245-251
  Loader Positioning 249, 251
  PTO 231
  Transmission and Shuttle 139, 167, 169
Converter - torque 113
Cooler - power shuttle 195, 195B
Cooler - PTO 229, 229B
Counterweights 361, 363
Coupling - hydraulic pump to engine 51, 197
Coupling - hydraulic line disconnect 299
Cover - cylinder head 19
Cover - timing gear 15
Crankshaft - engine 27
Cylinders - hydraulic
  Boom - backhoe 325, 327
  Brake - master cylinder 161
  Bucket - backhoe 333, 335
  Clam - loader 309, 311
  Dipper - backhoe 329, 331
  Dipper Extension - backhoe 337, 339
  Grapple - loader 313, 315
  Lift - hitch, 3 point 341, 343
  Lift - loader 301, 303
  Pitch - hitch, 3 point 349
  Stabilizer - backhoe 317, 319
  Steering 193
  Swing - backhoe 321, 323
  Tilt - hitch, 3 point 345, 347
  Tilt - loader bucket 305, 307
Cylinder Head - engine 19
Cylinder Sleeve - engine 29

Printed in U.S.A. 770436A Issued January, 1978

http://www.minnparbackhoeparts.com/

ALPHABETICAL INDEX

D

Decals 431, 433
Defroster 81-87
Differential and Differential Lock ..139, 149, 149B
Dipsticks 23, 117, 141, 187
Drawbar - swinging or rigid 397
Drive Shaft 137

E

Electrical System 55-107, 237, 249, 251
Engine 11-49
Engine Mounting 51

F

Fan
- Defroster 85-87
- Heater 85
- Engine Cooling 53

Fenders - rear wheels 401
Filter
- Air 109
- Engine Oil 17
- Fuel 37
- Hydraulic Oil 297

Floor Plates and Firewall 405
Flywheel - engine 27
Fork - loader pallet 357
Frame - tractor 399
Frost Point - backhoe 373
Fuel Injection System 35
Fuel Shutoff Cable 171
Fuel Tank and Lines 111

G

Gasket Kits - engine 31
Gauges
- Hourmeter 71
- Instrument Panel Cluster 69
- PTO Speed 237

Grille 411
Guides - engine valve 19, 21

H

Harness - electrical 55-67, 71-77, 237, 251
- Cab - operator's 75
- Canopy - ROPS 73
- Front - tractor 55-57D
- Hourmeter 71
- Main - tractor 59-65
- PTO Speed Indicator 237
- Rear, without canopy or cab 77
- Return-to-Dig 251

Head - cylinder, engine 19
Heater
- Cab 81-85
- Engine block 23

Hitch - 3 point
- Frame and Mounting Parts 393
- Hydraulic Circuits (See Hydraulic Circuits)
- Lift Arm and Linkage 395

Hood - tractor 411
Horn - electric 99
Hose and Fitting Conversion Part Numbers 434
Hourmeter 71
Hub - front wheel 175
Hydraulic Circuits
- Backhoe Boom 213, 215
- Backhoe Boom Lock 223
- Backhoe Bucket 219, 219B
- Backhoe Dipper 217
- Backhoe Dipper Extension 221
- Backhoe Stabilizer 209
- Backhoe Swing 211
- Equipment Primary 197-201
- Hitch Cylinder - 3 point 227, 227B
- Hitch Valve - 3 point 225
- Loader Clam or Grapple 207
- Loader Lift 203
- Loader Tilt 205
- Power Shuttle Transmission 195, 195B
- PTO 229-235

I

Injection Pump - fuel 39
Injection Pump Drive - fuel 33
Injector Nozzle - ether 103
Injector Nozzle - fuel 35, 41
Instruments - tractor 69, 71, 237

http://www.minnparbackhoeparts.com/

ALPHABETICAL INDEX

L

Levers - control (See Controls)
Lifters - engine valves 21
Lights
  Dipper 105, 107
  Tractor 73-79B
Loader
  Buckets and Attachments 353-359
  Hydraulic Circuits (See Hydraulic Circuits)
  Lift Frame 351

M

Manifolds - engine 11
Motor - hydraulic, PTO 235, 295
Motor - wiper 91
Muffler - engine exhaust 51

N

Noise Reduction Pads 415
Nozzle - ether injection 103
Nozzle - fuel injection 35, 41
Numerical Index 435

O

Oil Eruption Kit - power shuttle 123B
Oil Filter
  Engine 17
  Hydraulic 297
Oil Pan - engine 17
Oil Pump - engine 17

P

Pads - noise reduction 415
Pallet Forks - loader 357
Pan - engine oil 17
Panel - enclosure, cab 419
Panel - engine side 413
Panel - instrument 59, 61, 69
Parking Brake 163
Pistons - engine 29
PTO
  Cooling System - hydraulic 229
  Hydraulic Circuit and Control 231
  Motor and Motor Housing 233, 235, 295
  Shield and Speed Indicator 237
Pulley
  Alternator 43, 45
  Crankshaft 27
  Fan 13
Pump
  Engine Oil 17
  Fuel Injection 39
  Hydraulic Equipment 239, 241
  Steering 187
  Water 13
Push Rod - engine 21

R

Radiator - engine 53
Regulator - alternator 43, 45
Return-To-Dig 249, 251
Rings - piston, engine 29
Rocker Arm - engine 21
Rod - connecting, engine 29
Rod - push, engine 21
Rotating Beacon 93-97

S

Seat - operators 407-409B
Seat - engine valves 21

Printed in U.S.A. 770438A Issued January, 1978

http://www.minnparkbackhoeparts.com/

ALPHABETICAL INDEX

S

Sending Units
- Air Filter Restriction 55, 57B
- Fuel Gauge 57, 57D
- Hourmeter 71
- Oil Filter Restriction 57, 57D
- Oil Pressure 57, 57D
- Oil Temperature - power shuttle 67
- Water Temperature 55, 57B

Shuttle Transmission
- Mechanical Shift 125-135
- Power Shift 115-123

Sleeves - engine 29
Slow Moving Vehicle Emblem 429
Solenoid - starter 47, 49B
Spindle - front axle 173
Starter - engine 47-49B
Steering - power circuit 183, 185
Steering Wheel 181
Switches
- Clutch Cutout 67
- Ignition and Starter 59, 61
- Lights 59-65
- Neutral Start 57, 57D
- Return-To-Dig 249-251

Swivel Fittings 243

T

Tank
- Fuel 111
- Hydraulic 197, 199

Teeth - buckets 353, 355, 377-383
Thermostat - engine 13
Throttle - engine 171
Timing Gear Cover 15
Tool Box 401

T

Torque Converter 113
Tower - backhoe control 385
Transaxle 139-155
Transmission - shuttle
- Mechanical Shift 125-135
- Power Shift 115-123

Turn Signals 73-77

V

Valves
- Backhoe Control 271-277
- Backhoe Stabilizer 269
- Boom Lock 279
- Engine 21
- Hitch Control - 3 point hitch 285-291
- Loader Control 253-267
- PTO Selector 293
- Relief - hydraulic tank 197
- Relief - shuttle 115, 129, 195, 195B
- Relief - tractor without loader 281
- Relief - transaxle 141
- Steering 189, 191

Valve Guides 19, 21

W

Water Pump 13
Wheel - steering 181
Wheels and Tires
- Front 177
- Rear 179

Wiper - cab window 89
Wiper Motors 91

http://www.minnparbackhoeparts.com/

OWNERS NAME	SERIAL NUMBER	YEAR	ATTACHMENTS

http://www.minnparbackhoeparts.com/

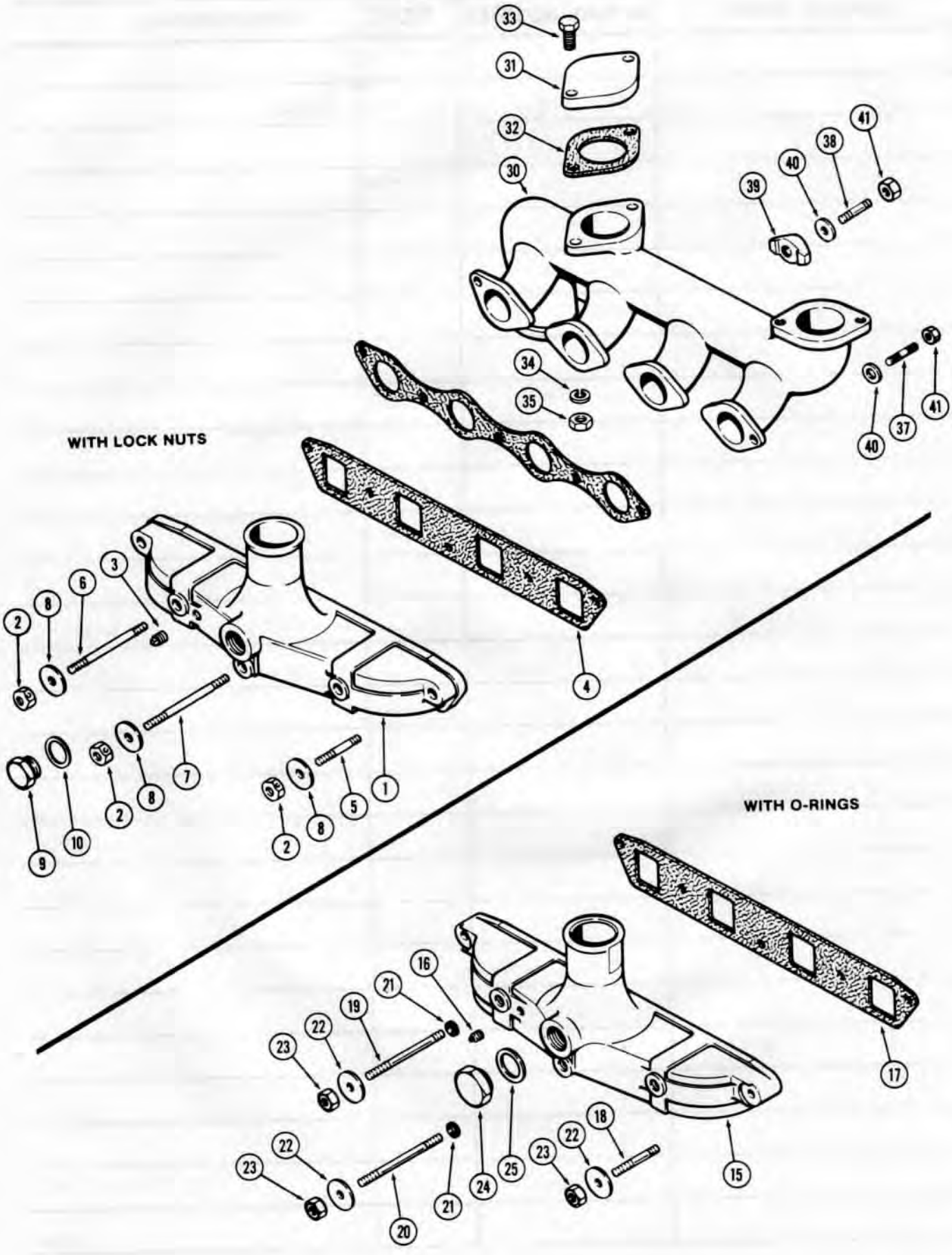

http://www.minnparbackhoeparts.com/

MANIFOLDS
207 DIESEL ENGINE
INTAKE MANIFOLD
WITH LOCKING NUTS
1ST USED ENG. SER. NO. 2880541

REF.	PART NO.	DESCRIPTION	REQ'D
1	A 152536	MANIFOLD ASSY - intake	1
2	131- 206	NUT - lock, (3/8" NC w/nylon insert)	5
3	221- 11	PLUG - 1/8" P.T., sq. hd.	1
4	G 46871	GASKET - manifold to head	1
5	A 140924	STUD - manifold, ends (3/8" NC x 2-7/16")	2
6	A 51499	STUD - manifold, intermediate (3/8" NC x 4-5/16")	2
7	A 51500	STUD - manifold, center (3/8" NC x 5-5/16")	1
8	D 41740	WASHER - studs (3/8 x 1 x 1/8")	5
9	A 20917	PLUG - manifold (heater hole)	1
10	A 20916	GASKET - plug	1

WITH O-RINGS
USED PRIOR TO ENG. SER. NO. 2880541

15	A 51876	MANIFOLD ASSY. - intake	1
16	221- 11	PLUG - 1/8" P.T. sq. hd.	1
17	G 46871	GASKET - manifold to head	1
18	A 140924	STUD - manifold, ends (3/8" NC x 2- 7/16") (Replaces A35175)	2
19	A 51499	STUD - manifold, intermediate (3/8" NC x 4-5/16")	2
20	A 51500	STUD - manifold, center (3/8" NC x 5-5/16")	1
21	A 27891	O-RING - center & intermediate studs (3/8 x 9/16 x 3/32")	3
22	D 41740	WASHER - studs (3/8 x 1 x 1/8")	5
23	25- 106	NUT - 3/8" NC hex	5
24	A 20917	PLUG - manifold (heater hole)	1
25	A 20916	GASKET - plug	1

EXHAUST MANIFOLD

30	A 392331	MANIFOLD ASSY. - exhaust	1
31	A 38188	PLATE - cover	2
32	G 46853	GASKET - cover plate	2
33	13- 620	BOLT - cover plate (3/8 x 1-1/4" NC hex)	4
34	195- 25	WASHER - 3/8" lock	4
35	131- 903	NUT - 3/8" NC Seez-Pruf	4
36	G 46872	GASKET - exhaust manifold	1
37	A 29431	STUD - manifold, ends (3/8" NC x 1-3/4")	2
38	A 39129	STUD - manifold, clamps (3/8" NC x 2-1/16")	3
39	A 35028	CLAMP - manifold	3
40	195- 25	WASHER - 3/8 x 13/16 x 1/16"	5
41	131- 903	NUT - 3/8" NC Seez-Pruf	5

Printed in U.S.A.

Issued January, 1978

http://www.minnparbackhoeparts.com/

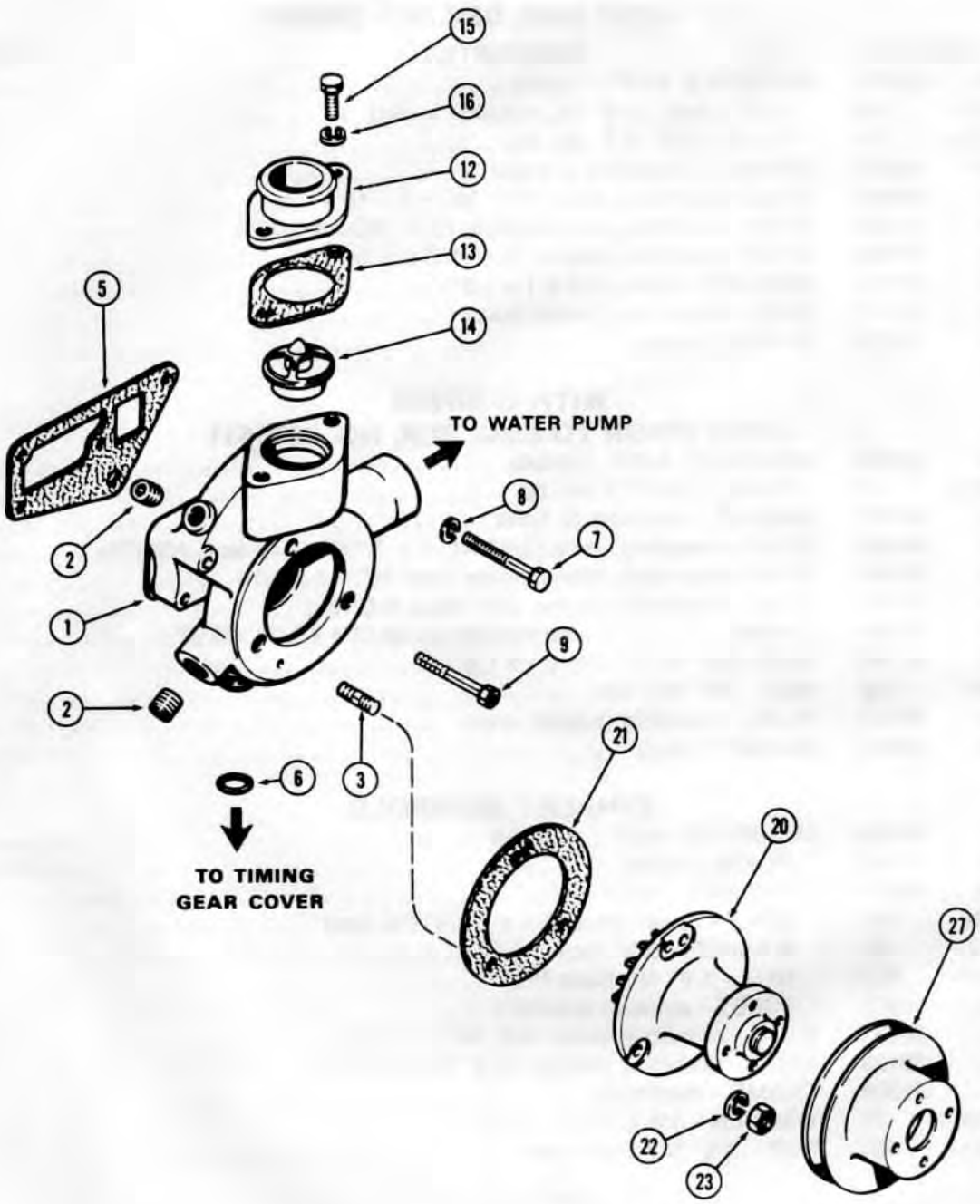

http://www.minnparbackhoeparts.com/

WATER PUMP
207 DIESEL ENGINE

REF.	PART NO.	DESCRIPTION	REQ'D
1	A 152802	BODY ASSY. - water pump (ReplacesA139826)	
2	221- 843	PLUG - body (3/8" P.T., sckt. hd.)	2
3	A 29433	STUD - water pump (3/8" NC x 1")	3
5	A 38084	GASKET - body to cylinder head	1
6	F 62075	O-RING - body to cover (3/4 x 1 x 1/8")	1
7	13- 620	BOLT - body to cylinder head (3/8 x 1-1/4" NC hex)	1
7	13- 648	BOLT - body to cylinder head (3/8 x 3" NC hex)	1
7	13- 656	BODY - body to cylinder head (3/8 x 3-1/2" NC hex)	1
8	92- 6	WASHER - 3/8" lock	3
9	61- 632	BOLT - body to cylinder head (inside body) (3/8 x 2" NC, hex sckt. hd.)	1
12	G 2144	HOUSING - thermostat & water outlet	1
13	G 46907	GASKET - housing to body	1
14	A 57641	THERMOSTAT - (180°)	1
15	13- 616	BOLT - housing (3/8 x 1" NC hex)	2
16	92- 6	WASHER - 3/8" lock	2
20	A 146584	PUMP ASSY. - water (Replaces A39074)	1
21	A 38083	GASKET - pump to body	1
22	92- 6	WASHER - 3/8" lock	2
23	25- 106	NUT - 3/8" NC hex	2
27	G 11339	PULLEY - fan drive	1

http://www.minnparbackhoeparts.com/

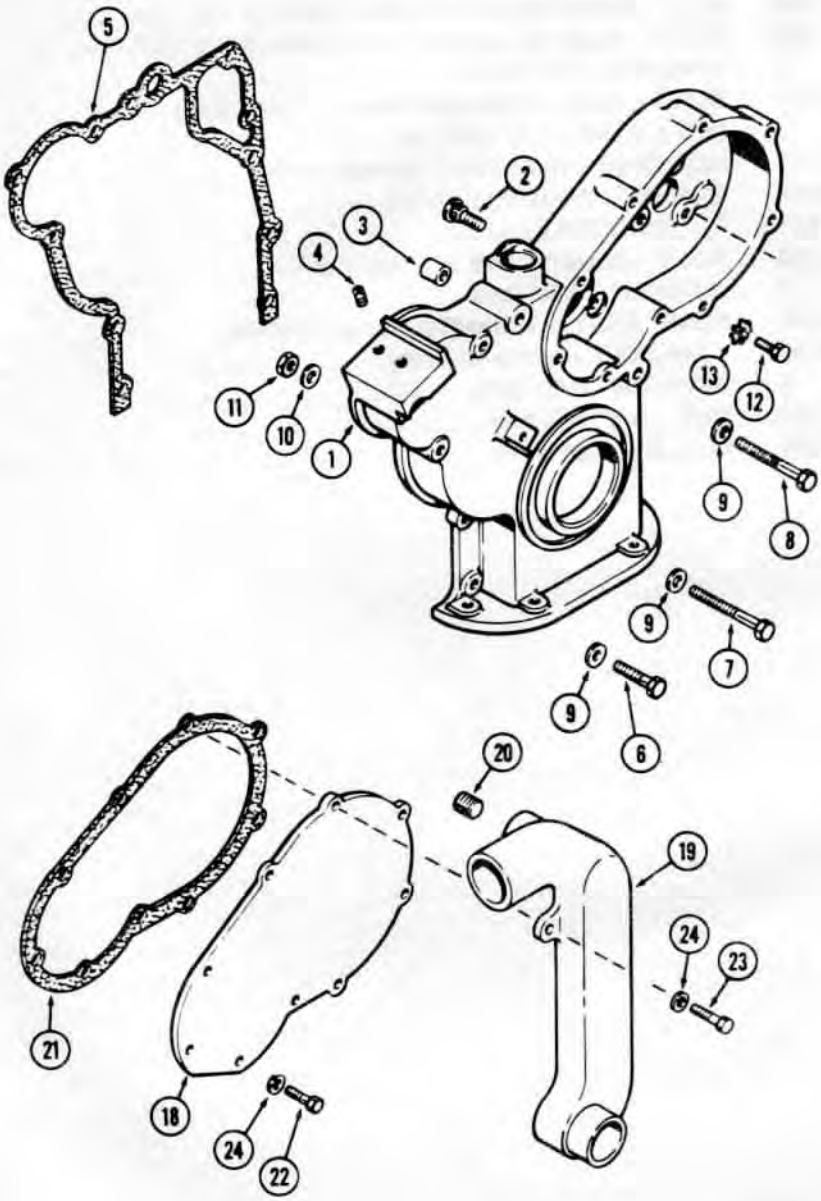

http://www.minnparbackhoeparts.com/

TIMING GEAR COVER
207 DIESEL ENGINE

REF.	PART NO.	DESCRIPTION	REQ'D
1	A 138245	COVER ASSY. - timing gears	1
2	A 51649	STUD - cover	2
3	A 29442	DOWEL - cover locating (9/16 x 3/8 x 5/8")	2
4	178- 821	PLUG - cover (3/8 x 3/8" NC sckt. hd.)	2
5	A 51529	GASKET - cover to block	1
6	13- 620	BOLT - cover (3/8 x 1-1/4" NC hex)	3
6	13- 624	BOLT - cover (3/8 x 1-1/2" NC hex)	1
7	13- 648	BOLT - cover (3/8 x 3" NC hex)	1
7	13- 644	BOLT - cover (3/8 x 2-3/4" NC hex)	1
8	13- 652	BOLT - cover (3/8 x 3-1/4" NC hex)	3
9	A 50820	WASHER - 3/8 x 3/4 x 1/8"	9
9	95- 6	WASHER - 3/8 x 1 x 1/16"	1
10	195- 25	WASHER - 3/8 x 13/16 x 1/16"	3
11	25- 106	NUT - 3/8" NC hex	3
12	13- 614	BOLT - cover (inside) (3/8 x 7/8" NC hex)	2
13	193- 10	WASHER - 3/8" ext. skpf.	2
18	A 51908	PLATE - water tube	1
19	A 51907	TUBE - water	1
20	221- 843	PLUG - water tube (3/8" P.T., sckt. hd.)	1
21	A 39925	GASKET - plate to cover	1
22	13- 616	BOLT - cover plate (3/8 x 1" NC hex)	5
23	13- 624	BOLT - water tube (3/8 x 1-1/2" NC hex)	2
24	A 50820	WASHER - 3/8 x 3/4 x 1/8"	7

Printed in U.S.A.

Issued January, 1978

http://www.minnparbackhoeparts.com/

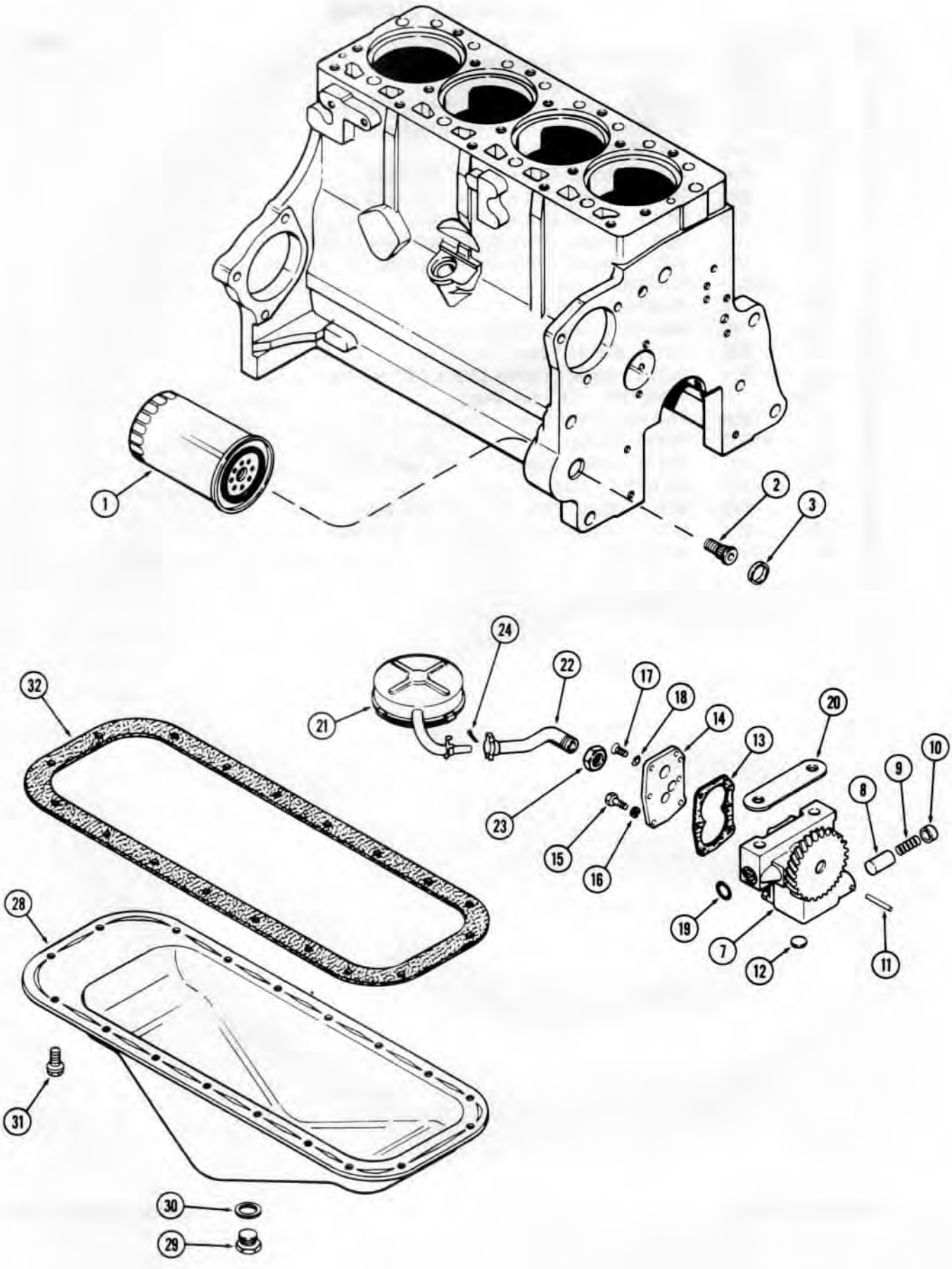

http://www.minnparbackhoeparts.com/

OIL FILTER
207 DIESEL ENGINE

REF.	PART NO.	DESCRIPTION	REQ'D
1	A 146696	FILTER - engine oil (Replaces A37189)	1
2	A 37206	ADAPTER - filter to block	1
3	41- 1016	PLUG - adapter hole (1" cup type)	1

OIL PUMP

7	A 38372	PUMP ASSY. - engine oil	1
8	A 29279	VALVE - relief	1
9	G 48500	SPRING - relief valve	1
10	A 29260	RETAINER - relief valve spring	1
11	138- 62	PIN - roll (1/8 x 1-1/8")	1
12	A 39321	PLUG - body (1/2" cup type)	1
13	G 46852	GASKET - pump cover	1
14	NSS	COVER - pump body	1
15	13- 420	BOLT - 1/4 x 1-1/4" NC hex	1
15	13- 412	BOLT - 1/4 x 3/4" NC hex	3
16	92- 4	WASHER - 1/4" lock	4
17	73- 410	SCREW - 1/4 x 5/8" NC sltd. flat hd.	2
18	193- 52	WASHER - 1/4" ext. skpf.	2
19	A 27365	O-RING - oil port (3/4 x 15/16 x 3/32")	1
20	G 11337	SHIM - pump to bearing cap (.002")	UAR
20	G 11338	SHIM - pump to bearing cap (.005")	UAR
21	A 39037	FLOAT ASSY. - w/screen	1
22	A 39035	PIPE ASSY. - suction	1
23	223- 207	NUT - tube to pump	1
24	132- 50	PIN - cotter (1/8 x 1-1/4")	1

OIL PAN

28	A 36782	PAN ASSY. - oil	1
29	A 140222	PLUG - drain	1
30	A 58608	GASKET - drain plug	1
31	193- 514	BOLT ASSY. - (5/16 x 3/4" NC hex sems)	18
32	NSS	GASKET - oil pan (Order A44758, See Page 31)	1

http://www.minnparbackhoeparts.com/

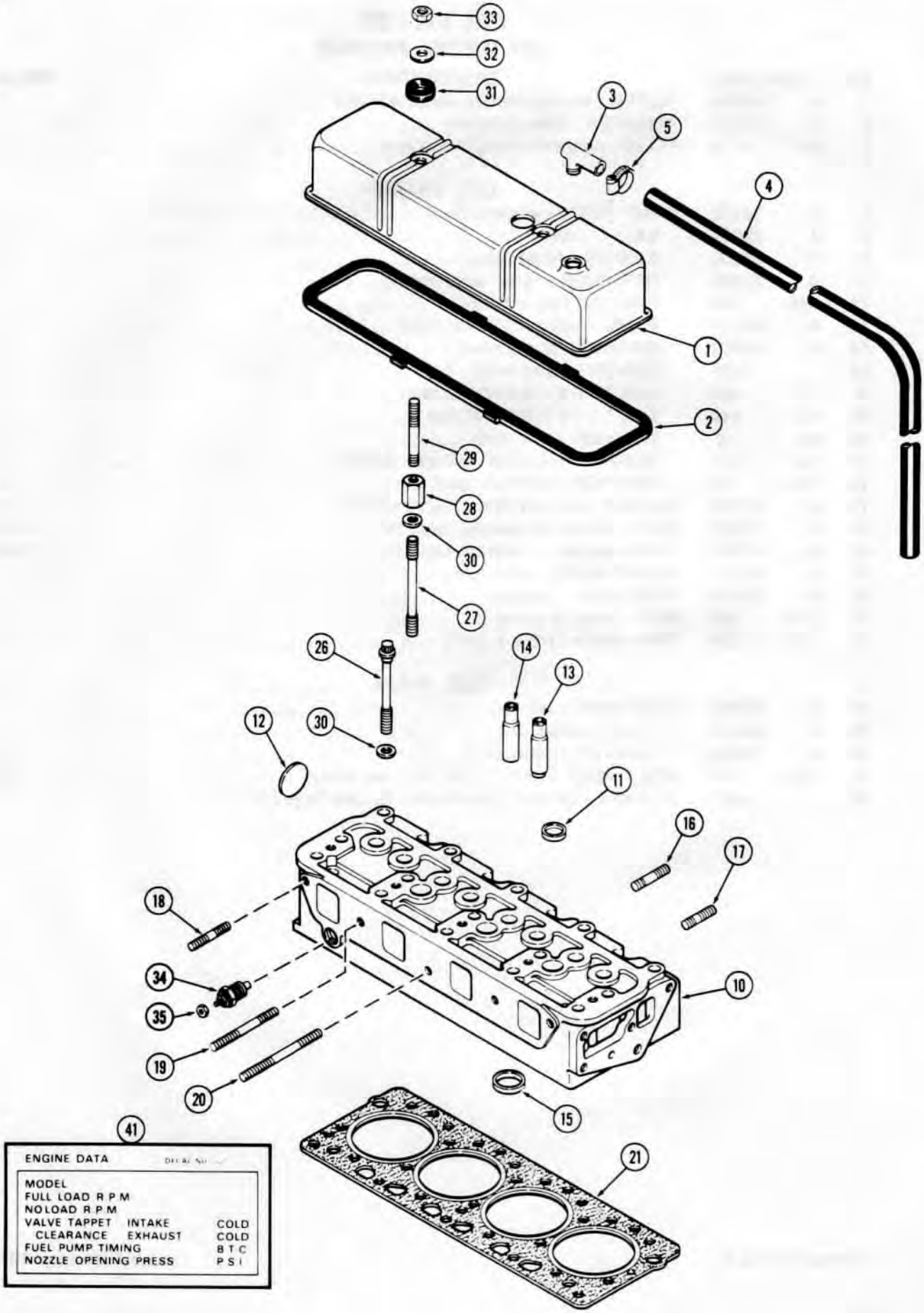

http://www.minnparbackhoeparts.com/

CYLINDER HEAD AND COVER
207 DIESEL ENGINE

REF.	PART NO.	DESCRIPTION	REQ'D
1	A 36815	COVER - cylinder head	1
2	A 43030	GASKET - cover to head	1
3	A 9155	ELBOW - breather tube to cover	1
4	A 39570	HOSE - breather tube (rubber)	1
5	214- 253	CLAMP - hose to elbow (9/16" to 1-1/16")	1
10	A 150385	HEAD ASSY. - cylinder (Casting No.A150384) (Replaces A144776)	1
11	41- 1016	PLUG - top (1" cup type)	3
12	41- 1028	PLUG - rear (1-3/4" cup type)	1
13	G 2069	GUIDE - exhaust valve (3-1/8" long)	4
14	G 2068	GUIDE - intake valve (3-1/4" long)	4
15	A 39268	INSERT - exhaust valve seat	4
16	A 39129	STUD - exhaust manifold, clamps (3/8" NC x 2-1/16")	3
17	A 29431	STUD - exhaust manifold, ends (3/8" NC x 1-3/4")	2
18	A 140924	STUD - intake manifold, ends (3/8" NC x 2-7/16")	2
19	A 51499	STUD - intake manifold, inter. (3/8" NC x 4-5/16")	2
20	A 51500	STUD - intake manifold, center (3/8" NC x 5-5/16")	1
21	A 148745	GASKET - cylinder head to block (Replaces A39279)	1
26	A 39047	BOLT - head to block (1/2 x 3-1/2" NC 12 pt. hd.)	4
26	A 39048	BOLT - head to block (1/2 x 5-1/8" NC 12 pt. hd.)	11
26	A 39049	BOLT - head to block (1/2 x 5-5/8" NC 12 pt. hd.)	2
27	A 36902	STUD - cylinder head (1/2" NC x 5-5/8")	2
28	A 51114	NUT - head studs (1/2" NC & 3/8" NC)	2
29	A 51271	STUD - cylinder head cover (3/8" NC x 3-3/4")	2
30	A 39046	WASHER - 1/2 x 7/8 x 1/8"	19
31	A 142098	GROMMET - cover (rubber)	2
32	G 49400	WASHER - cover nut (3/8 x 1-1/8 x 1/8")	2
33	25- 106	NUT - cover (3/8" NC hex)	2
34	D 65446	UNIT - temperature sending	1
35	193- 1000	NUT - unit terminal (#10 N.F. hex)	1

Printed in U.S.A. Issued January, 1978

http://www.minnparbackhoeparts.com/

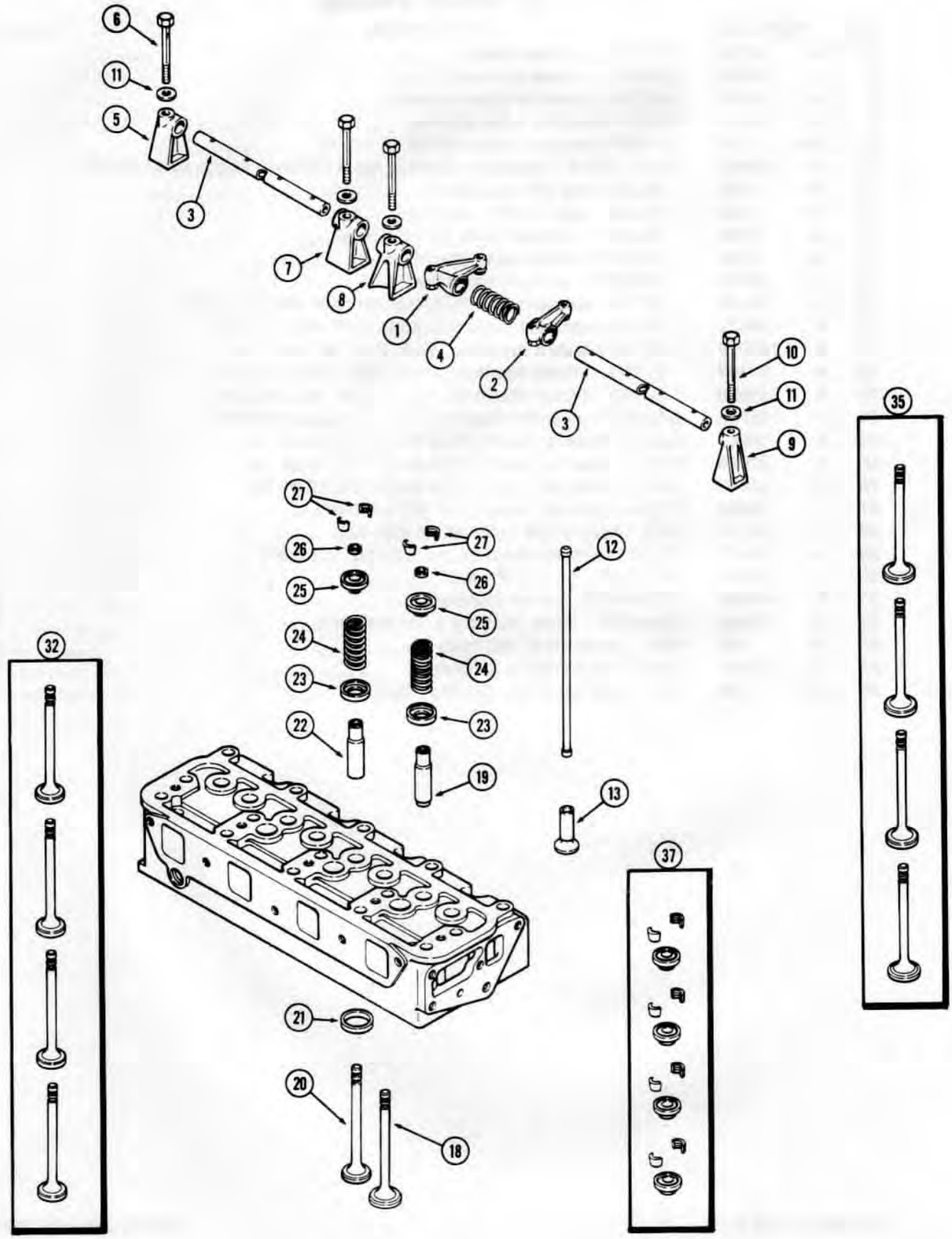

http://www.minnparbackhoeparts.com/

VALVE MECHANISM
207 DIESEL ENGINE

REF.		PART NO.	DESCRIPTION	REQ'D
1	A	51149	ARM ASSY. - rocker, left hand, w/adj. screw	4
2	A	51148	ARM ASSY. - rocker, right hand, w/adj. screw	4
3	A	38181	SHAFT - rocker arm	2
4	G	48501	SPRING - rocker arm shaft	4
5	A	36615	BRACKET - rear, rocker arm shaft	1
6	G	49067	BOLT - rear bracket (drilled)	1
7	G	2101	BRACKET - center	1
8	A	51084	BRACKET - intermediate	2
9	G	2100	BRACKET - front	1
10	13-	656	BOLT - bracket (3/8 x 2-1/2" NC hex)	4
11	A	30058	WASHER - bracket bolt (3/8 x 7/8 x 1/8")	5
12	G	47079	ROD - push	8
13	G	47077	LIFTER - push rod	8
18		NSS	VALVE - intake (Order ref. 35)	4
19	G	2068	GUIDE - intake valve (3-1/4" long)	4
20		NSS	VALVE - exhaust (Order ref. 32)	4
21	A	39268	INSERT - exhaust valve seat	4
22	G	2069	GUIDE - exhaust valve (3-1/8" long)	4
23	G	49065	SEAT - valve spring	8
24	A	30025	SPRING - valve	8
25		NSS	RETAINER - valve spring (Order ref. 37)	8
26	G	46851	SEAL - valve stem (rubber)	8
27	A	30004	LOCK - retainer	16
32	A	41727	VALVE KIT - exhaust (Set of 4)	1
35	A	41726	VALVE KIT - intake (Set of 4)	1
37	G	11927	RETAINER KIT - valve springs (Set of 4 w/locks)	2

http://www.minnparbackhoeparts.com/

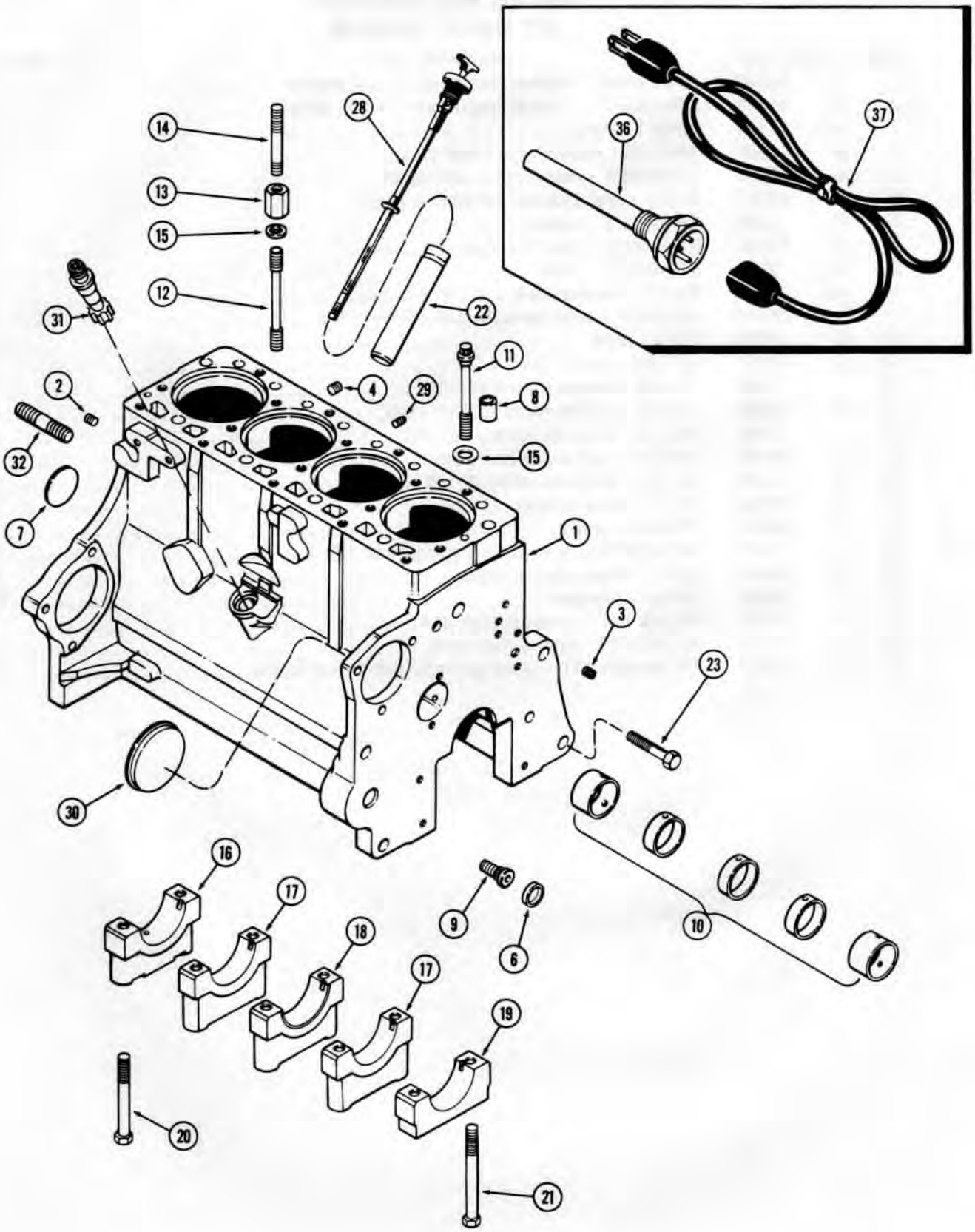

http://www.minnparbackhoeparts.com/

CYLINDER BLOCK
207 DIESEL ENGINE

REF.	PART NO.	DESCRIPTION	REQ'D
	A 46037	BLOCK ASSY. - short (Casting No. A136813) (Replaces A46009) (incl. stripped block, piston assy., conn. rods & brgs., crankshaft & brgs., camshaft, oil pump & timing gears)	1
1	A 44702	BLOCK ASSY. - stripped (Replaces A46010)	1
2	221- 1841	PLUG - oil gallery, rear (1/4" P.T., sckt. hd.)	2
3	G 49070	PLUG - oil gallery, front (1/4" P.T. drilled)	1
4	221- 1032	PLUG - (3/8" P.T., sckt. hd.)	1
	A 38534	PLUG - tach. drive hole (not illust.) (this application used for shipping only)	1
6	41- 1016	PLUG - adapter hole (1" cup type)	1
7	A 39241	PLUG - camshaft hole (2-1/8" expansion)	1
8	G 49608	RING - dowel, head locating	2
9	A 37206	ADAPTER - oil filter	1
10	A 42746	BUSHING SET - camshaft	1
11	A 39047	BOLT - cylinder head (1/2 x 3-1/2" NC, 12 pt. hd.)	4
11	A 39048	BOLT - cylinder head (1/2 x 5-1/8" NC , 12 pt. hd.)	11
11	A 39049	BOLT - cylinder head (1/2 x 5-5/8" NC , 12 pt. hd.)	2
12	A 36902	STUD - cylinder head (1/2" NC x 5-5/8")	2
13	A 51114	NUT - cylinder head studs (1/2" NC & 3/8" NC)	2
14	A 51271	STUD - cylinder head cover (3/8" NC 3-3/4")	2
15	A 39046	WASHER - 1/2 x 7/8 x 1/8"	19
16	A 38385	CAP - main bearing, rear (Replaces A51057)	1
17	G 2128	CAP - main bearing, intermediate (Replaces A51055)	2
18	G 2127	CAP - main bearing, center (Replaces A51056)	1
19	G 2126	CAP - main bearing, front (Replaces A51054)	1
20	26- 872	BOLT - bearing caps (1/2 x 4-1/2" NC hex)	8
21	26- 882	BOLT - front bearing cap (1/2 x 5-1/8" NC hex)	2
22	A 37149	TUBE - oil filler & dipstick	1
23	A 38303	BOLT - front support (5/8 x 3-3/16" NC hex)	1
28	A 39936	DIPSTICK - oil level (Turn-tite type)	1
29	221- 662	PLUG - drain, cylinder block (1/4" P.T., sq. hd.)	1
30	A 29268	COVER - auxiliary drive opening (3-1/2" cup type)	1
31	A 137572	DRIVE ASSY. - tachometer	1
32	A 51793	STUD - (5/8" N.F. x 3-3/16")	2

BLOCK HEATER

36	A 44815	HEATER ASSY. - block	1
37	A 44814	CORD - heater (12" long)	1

http://www.minnparbackhoeparts.com/

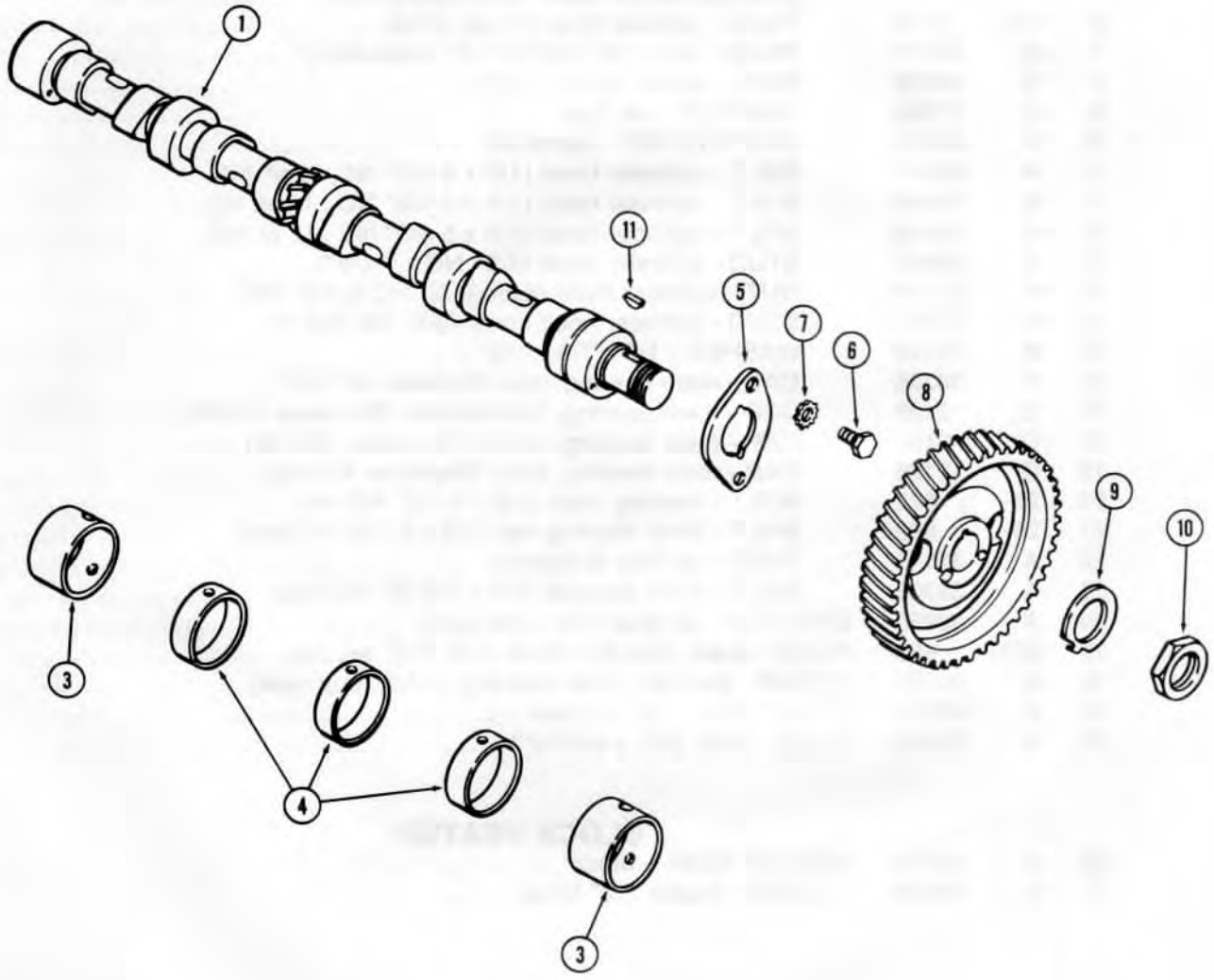

http://www.mimmerbackhoeparts.com/

CAMSHAFT
207 DIESEL ENGINE

REF.	PART NO.	DESCRIPTION	REQ'D
1	A 39013	CAMSHAFT	1
	A 42746	BUSHING SET - camshaft	1
3	NSS	BUSHING - front & rear (1-1/4" wide)	2
4	NSS	BUSHING - intermediate (1/2" wide)	3
5	A 29290	PLATE - thrust, camshaft	1
6	A 30056	SCREW - thrust plate	2
7	193- 9	WASHER - 5/16" ext. skpf.	2
8	A 38931	GEAR - camshaft	1
9	A 29438	WASHER - tab, gear nut lock	1
10	A 30063	NUT - gear to crankshaft	1
11	126- 12	KEY - gear to crankshaft (#6 Woodruff)	1

Printed in U.S.A.

Issued January, 1978

http://www.minnparbackhoeparts.com/

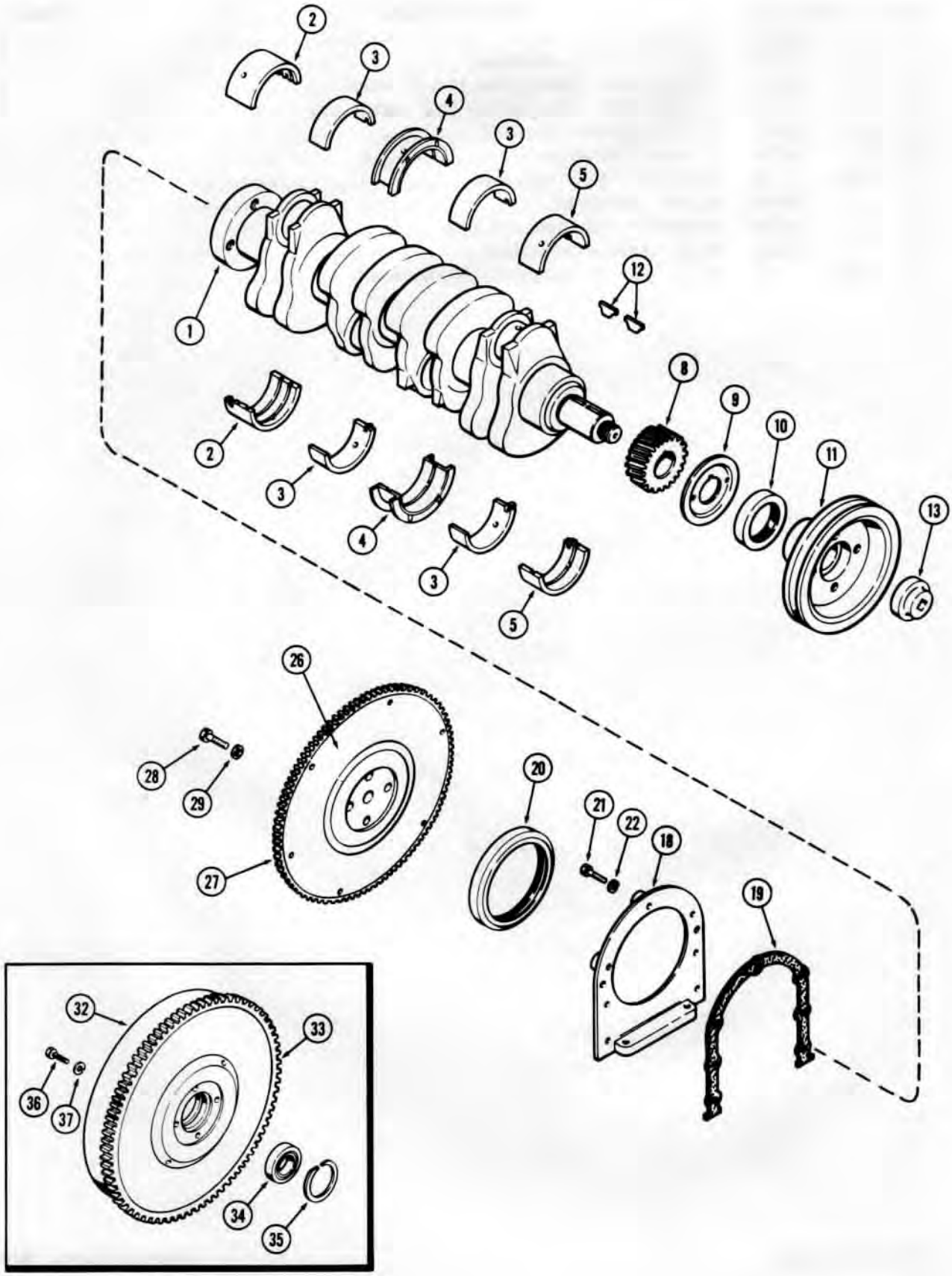

http://www.minnparbackhoeparts.com/

CRANKSHAFT
207 DIESEL ENGINE

REF.	PART NO.	DESCRIPTION	REQ'D
1	A 51917	CRANKSHAFT	1
2	A 36495	LINER KIT - main bearing, rear (Std.) (Set of 2)	1
2	A 36496	LINER KIT - main bearing, rear (-.002") (Set of 2)	1
2	A 36497	LINER KIT - main bearing, rear (-.010") (Set of 2)	1
2	A 36498	LINER KIT - main bearing, rear (-.020") (Set of 2)	1
2	A 36499	LINER KIT - main bearing, rear (-.030") (Set of 2)	1
3	A 36485	LINER KIT - main bearing, intermediate (Std.) (Set of 2)	2
3	A 36486	LINER KIT - main bearing, intermediate (-.002") (Set of 2)	2
3	A 36487	LINER KIT - main bearing, intermediate (-.010") (Set of 2)	2
3	A 36488	LINER KIT - main bearing, intermediate (-.020") (Set of 2)	2
3	A 36489	LINER KIT - main bearing, intermediate (-.030") (Set of 2)	2
4	A 36490	LINER KIT - main bearing, center (Std.) (Set of 2)	1
4	A 36491	LINER KIT - main bearing, center (-.002") (Set of 2)	1
4	A 36492	LINER KIT - main bearing, center (-.010") (Set of 2)	1
4	A 36493	LINER KIT - main bearing, center (-.020") (Set of 2)	1
4	A 36494	LINER KIT - main bearing, center (-.030") (Set of 2)	1
5	A 36480	LINER KIT - main bearing, front (Std.) (Set of 2)	1
5	A 36481	LINER KIT - main bearing, front (-.002") (Set of 2)	1
5	A 36482	LINER KIT - main bearing, front (-.010") (Set of 2)	1
5	A 36483	LINER KIT - main bearing, front (-.020") (Set of 2)	1
5	A 36484	LINER KIT - main bearing, front (-.030") (Set of 2)	1
8	A 39288	GEAR - crankshaft	1
9	A 29259	SLINGER - oil	1
10	A 39110	SEAL - oil, front (2 x 3 x 1/2")	1
11	A 138244	PULLEY - fan drive	1
12	126- 216	KEY - pulley & gear (Hi-Pro)	2
13	A 35673	NUT - pulley retaining	1
18	A 38390	RETAINER - rear oil seal	1
19	A 39188	GASKET - retainer	1
20	A 51339	SEAL - oil, rear (4 x 5 x 1/2")	1
21	26- 412	BOLT - retainer (1/4 x 3/4" NC hex)	4
21	26- 416	BOLT - retainer (1/4 x 1" NC hex)	3
22	92- 4	WASHER - 1/4" lock	7

FLYWHEEL
POWER SHUTTLE

26	A 38915	FLYWHEEL ASSY.	1
27	G 11710	GEAR - ring, starter	1
28	121- 300	BOLT - flywheel to crankshaft (7/16 x 1-1/8" N.F. hex)	4
29	A 30013	WASHER - flywheel bolt (7/16 x 3/4 x 1/16")	4

MECHANICAL SHUTTLE

32	A 135973	FLYWHEEL ASSY.	1
33	G 11710	GEAR - ring, starter	1
34	A 51983	BEARING - main shaft (1-3/16 x 2-3/16 x 1/2")	1
35	49482	RING - snap, bearing retaining	1
36	A 37216	BOLT - flywheel to crankshaft (7/16 x 1-1/2" NF hex)	4
37	A 30013	WASHER - flywheel bolt (7/16 x 3/4 x 1/16")	4

Printed in U.S.A. Issued January, 1978

http://www.minnparbackhoeparts.com/

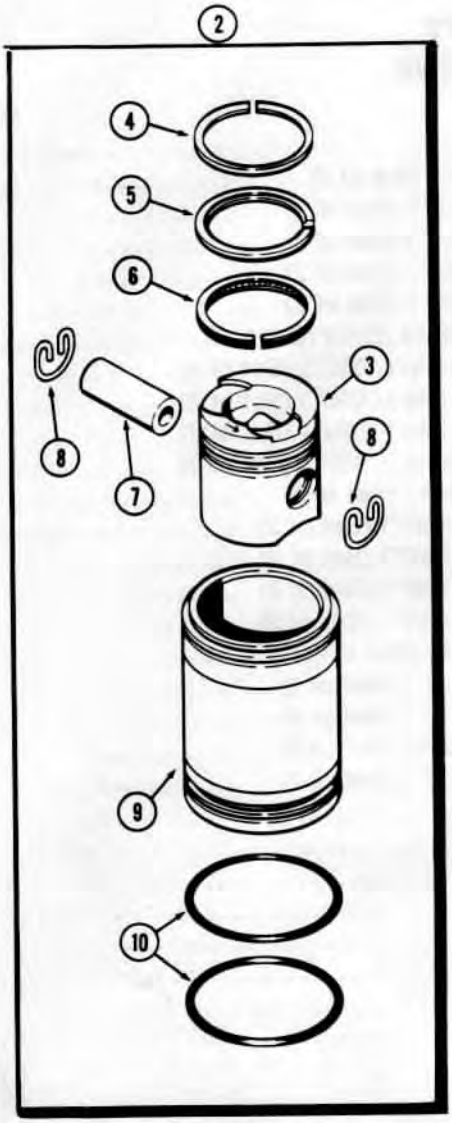

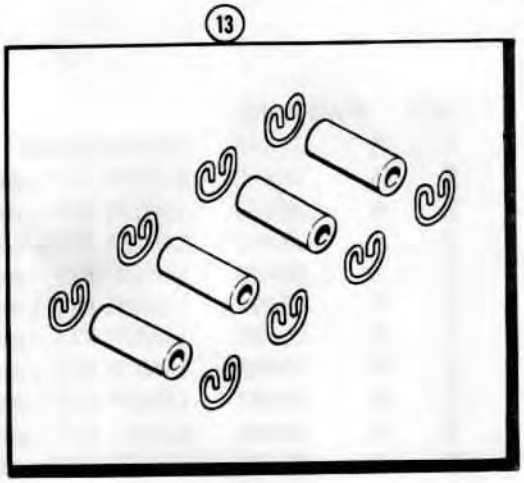

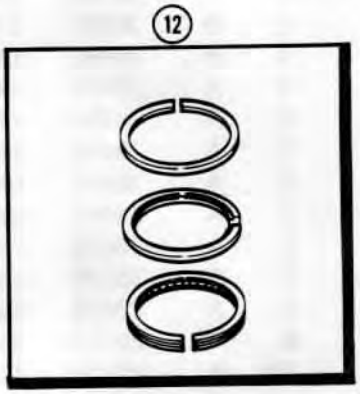

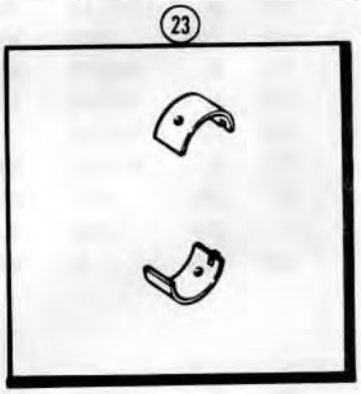

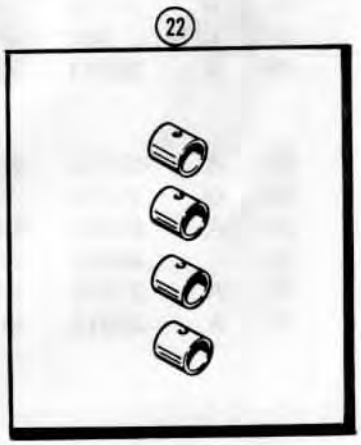

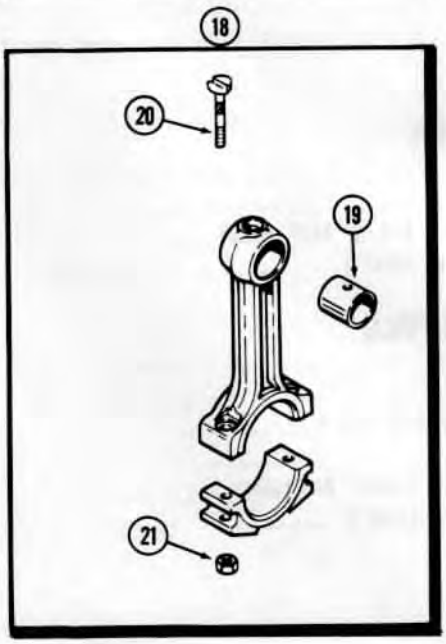

http://www.minnparbackhoeparts.com/

PISTONS
207 DIESEL ENGINE

REF.		PART NO.	DESCRIPTION	REQ'D
	A	46014	PISTON ASSY. - (Set of 4)	1
2	A	46013	PISTON ASSY. - (Set of 1)	4
3	A	51911	PISTON	1
4		NSS	RING - compression, 1st groove (Order ref. 12)	1
5		NSS	RING - compression, 2nd groove (Order ref. 12)	1
6		NSS	RING - oil control, 3rd groove (Order ref. 12)	1
7		NSS	PIN - piston (Order ref. 13)	1
8	G	46702	RING - piston pin retaining	2
9	A	136474	SLEEVE - piston (cylinder liner)	1
10	A	51916	O-RING - sleeve	2
	A	46016	RING SET - piston re-ring (Set of 4)	1
12	A	46015	RING SET - piston re-ring (Set of 1)	4
13	A	35771	PIN SET - piston (Set of 4 pins & 8 rings)	1

CONNECTING RODS

18	A	51913	ROD ASSY. - connecting	4
19		NSS	BUSHING - piston pin (Order ref. 22)	1
20	A	51914	BOLT - connecting rod cap	2
21	A	51904	NUT - connecting rod bolt	2
22	A	44083	BUSHING SET - piston pin (Set of 4)	1
23	A	50975	LINER KIT - conn. rod bearing, (Std.) (Set of 2)	4
23	A	50976	LINER KIT - conn. rod bearing, (-.002") (Set of 2)	4
23	A	50977	LINER KIT - conn. rod bearing, (-.010") (Set of 2)	4
23	A	50978	LINER KIT - conn. rod bearing, (-.020") (Set of 2)	4
23	A	50979	LINER KIT - conn. rod bearing, (-.030") (Set of 2)	4

http://www.minnparbackhoeparts.com/

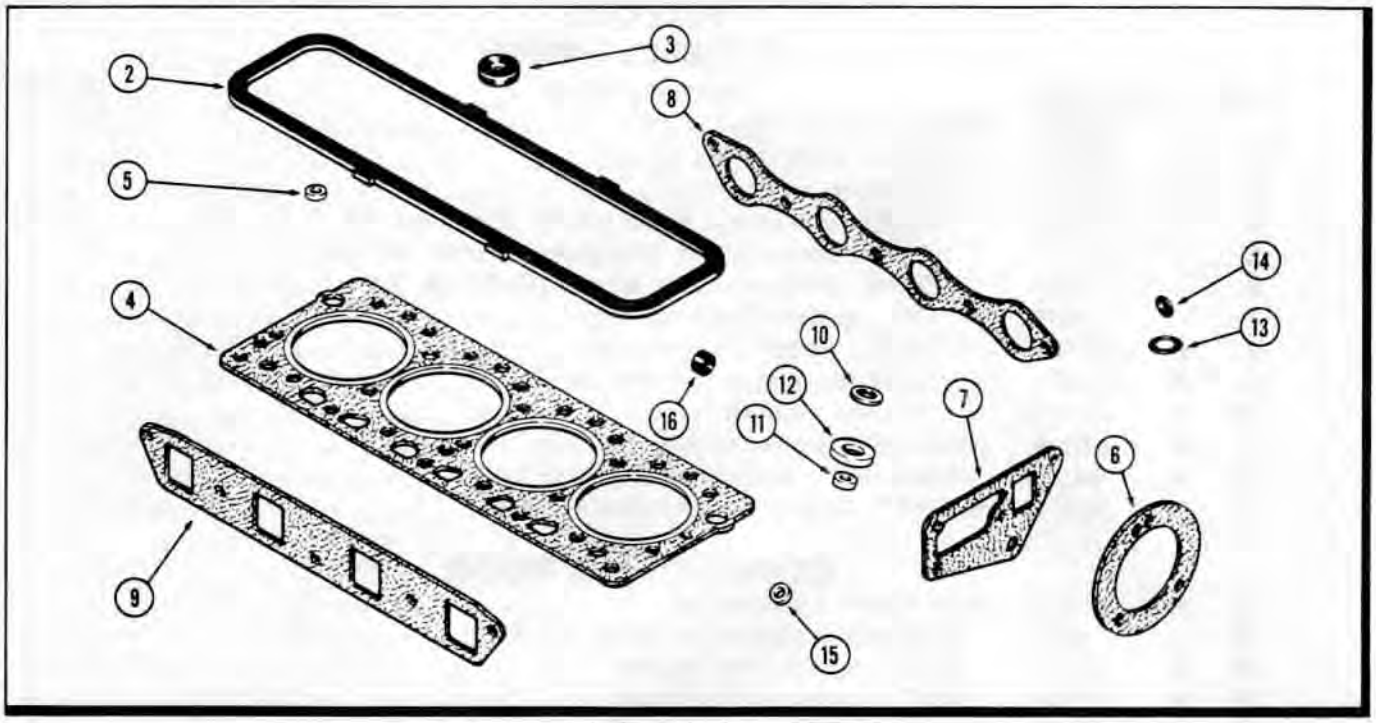

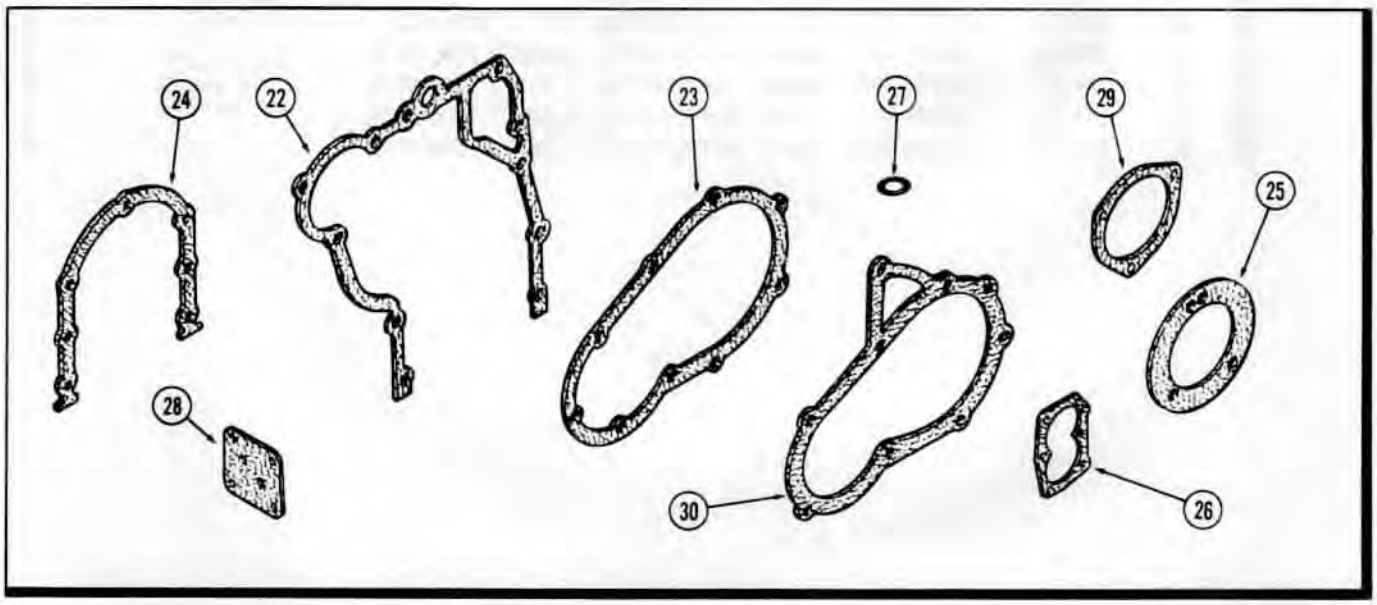

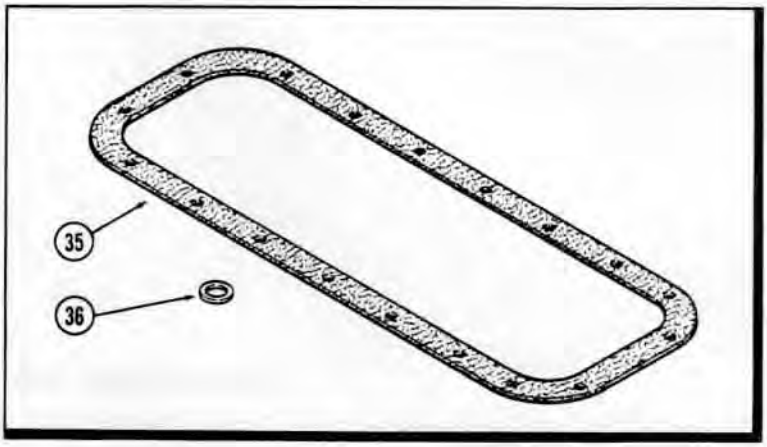

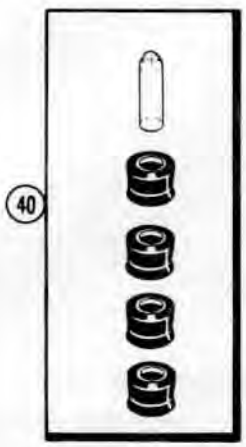

http://www.mymobilebackhoeparts.com/

ENGINE GASKET KITS
207 DIESEL ENGINE
VALVE GRIND KIT

REF.		PART NO.	DESCRIPTION	REQ'D
	A	43193	GASKET KIT - valve grind (See Note)	1
2	A	43030	GASKET - valve cover	1
3	A	142098	GROMMET - valve cover studs (rubber)	2
4	A	148745	GASKET - cylinder head (Replaces A39279)	1
5	G	46851	SEAL - valve stem (rubber) (See ref. 40)	8
6	A	38083	GASKET - water pump to body	1
7	A	38084	GASKET - water pump body to cylinder head	1
8	G	46872	GASKET - exhaust manifold	1
9	G	46871	GASKET - intake manifold	1
10	G	49407	WASHER - fuel injection lines to pump	8
11	A	41402	SEAL - carbon stop, injection nozzles	4
12	A	41403	WASHER - seat, injection nozzles	4
13	F	62075	O-RING - water pump body (3/4 x 1 x 1/8")	1
14	A	27891	O-RING - manifold studs (3/8 x 9/16 x 3/32")	3
15	G	49068	GASKET - injection nozzle seat (not used this application)	4
16	222-	101	SLEEVE - for 3/16" tube (Not used this application)	4
16	222-	103	SLEEVE - for 5/16" tube (not used this application)	4

CYLINDER BLOCK KIT

	A	43198	GASKET KIT - cylinder block (See Note)	1
22	A	51529	GASKET - timing gear cover	1
23	A	39925	GASKET - injection pump drive cover	1
24	A	39188	GASKET - rear oil seal retainer	1
25	A	38083	GASKET - water pump	1
26	G	46852	GASKET - oil pump cover	1
27	F	62075	O-RING - water pump body to cover (3/4 x 1 x 1/8")	1
28	G	46854	GASKET - (not used this applicatios)	1
29	A	30042	GASKET - (not used this application)	1
30	G	46859	GASKET - (not used this application)	1

OIL PAN KIT

	A	44758	GASKET KIT - oil pan (See Note)	1
35		NSS	GASKET - oil pan	1
36	A	58608	GASKET - drain plug (3/4 x 1 x 1/16" nylon)	1
36	A	34827	GASKET - drain plug (7/8 x 1-1/8 x 3/64" copper)	1
40	M	20611	SEAL KIT - valves (incl. 4 seals & installation sleeve)	UAR

NOTE: FOR COMPLETE ENGINE OVERHAUL ORDER 1-A43193, 1-A43198 & 1-A44758

http://www.minnparbackhoeparts.com/

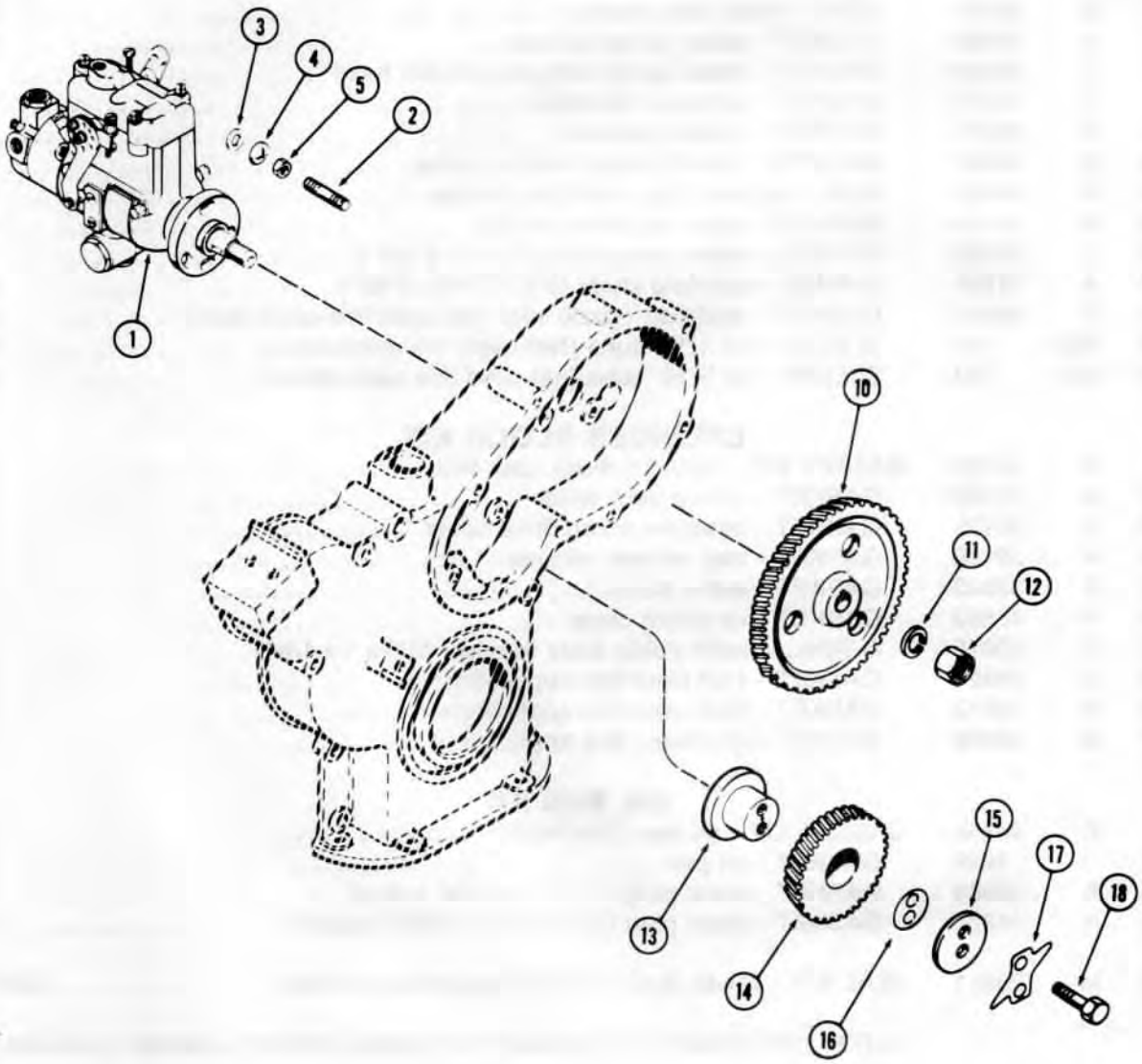

http://www.minnparbackhoeparts.com/

INJECTION PUMP DRIVE
207 DIESEL ENGINE

REF.	PART NO.		DESCRIPTION	REQ'D
1		REF.	PUMP ASSY. - fuel injection (See Page 39)	1
2	G	102128	STUD - pump mounting (3/8" NC x 1-7/16")	3
3	A	30043	WASHER - mtg. studs (3/8 x 7/8 x 1/8")	3
4	92-	6	WASHER - 3/8" lock	3
5	25-	106	NUT - 3/8" NC hex	3
10	G	2076	GEAR - drive, injection pump	1
11	192-	24	WASHER - 9/16" lock	1
12	25-	159	NUT - 9/16" NF hex, jam	1
13	G	11726	HUB - idler gear	1
14	G	11852	GEAR ASSY. - idler, w/bushing	1
15	G	11732	PLATE - thrust, idler gear	1
16	G	11728	SHIM - idler gear (.005")	UAR
16	G	11729	SHIM - idler gear (.006")	UAR
16	G	11730	SHIM - idler gear (.007")	UAR
16	G	11731	SHIM - idler gear (.009")	UAR
17	G	11746	PLATE - lock, idler gear	1
18	13-	632	BOLT - 3/8 x 2" NC hex	2

Printed in U.S.A.

Issued January, 1978

http://www.minnparbackhoeparts.com/

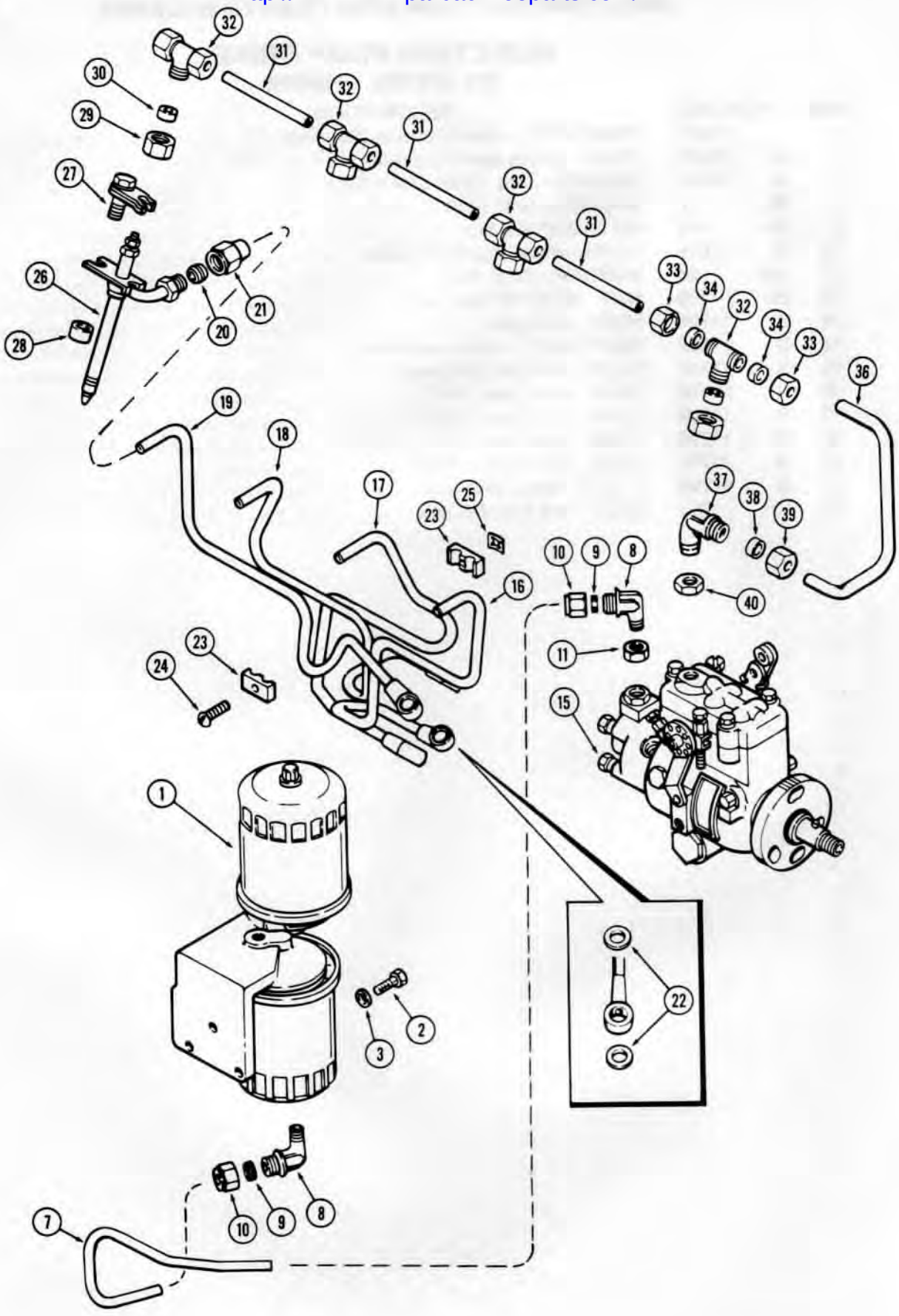

http://www.minnparbackhoeparts.com/

FUEL INJECTION AND FILTER SYSTEM
207 DIESEL ENGINE

REF.	PART NO.		DESCRIPTION	REQ'D
1		REF.	FILTER ASSY. - fuel (Repairs Page 37)	1
2	13-	514	BOLT - filter mounting (5/16 x 7/8" NC hex)	3
3	92-	5	WASHER - 5/16" lock	3
7	A	51784	LINE - filter to pump	1
8	222-	47	ELBOW ASSY.	2
9	222-	104	SLEEVE - (for 3/8" tube)	1
10	222-	114	NUT - (for 3/8" tube)	1
11	A	38161	NUT - sealing (1/4" P.T.) (at injection pump)	1
15		REF.	PUMP ASSY. - injection (Repairs Page 39)	1
16	A	41391	TUBE ASSY. - injection pump to #1 cylinder (Replaces A50980) (Includes items 20, 21 & 22)	1
17	A	41392	TUBE ASSY. - injection pump to #2 cylinder (Replaces A50981) (Includes items 20, 21 & 22)	1
18	A	41393	TUBE ASSY. - injection pump to #3 cylinder (Replaces A50982)(Includes items 20, 21 & 22)	1
19	A	41394	TUBE ASSY. - injection pump to #4 cylinder (Replaces A50983) (Includes items 20, 21 & 22)	1
20	A	37850	SLEEVE - injection tube	1
21	A	37851	NUT - injection tube	1
22	G	49407	WASHER - connector screw	2
23	A	58709	CLAMP - fuel injection lines	4
24	173-	102	SCREW - clamp (#10 x 1" rd. hd.)	2
25	131-	612	NUT - #10 Tinnerman	2
26		REF.	NOZZLE ASSY. - injector (Repairs Page 41)	4
27	A	37837	CLAMP ASSY. - injector nozzle	4
28	A	37839	SPACER - nozzle clamp	4
29	A	58961	NUT - tee to injector nozzle	4
30	A	58962	GROMMET - nut to tee	4
31	A	38644	TUBE - fuel leak-off	3
32	A	58960	TEE - nozzle & leak-off lines junction	4
33	222-	112	NUT - (for 1/4" tube)	8
34	222-	102	SLEEVE - (for 1/4" tube)	8
36	A	142906	TUBE - fuel leak-off (at pump)	1
37	222-	42	ELBOW ASSY. - fuel leak-off line (at pump)	1
38	222-	102	SLEEVE - (for 1/4" tube)	1
39	222-	112	NUT - (for 1/4" tube)	1
40	A	38160	NUT - sealing (1/8" P.T.) (at pump)	1

http://www.minnparbackhoeparts.com/

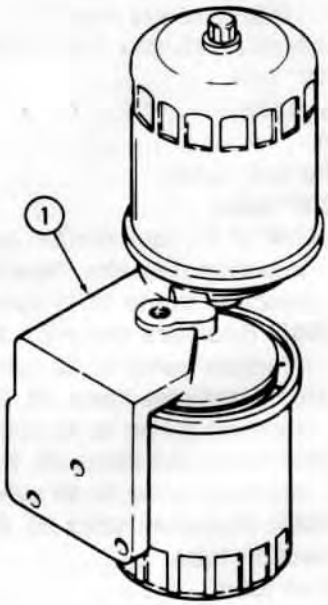

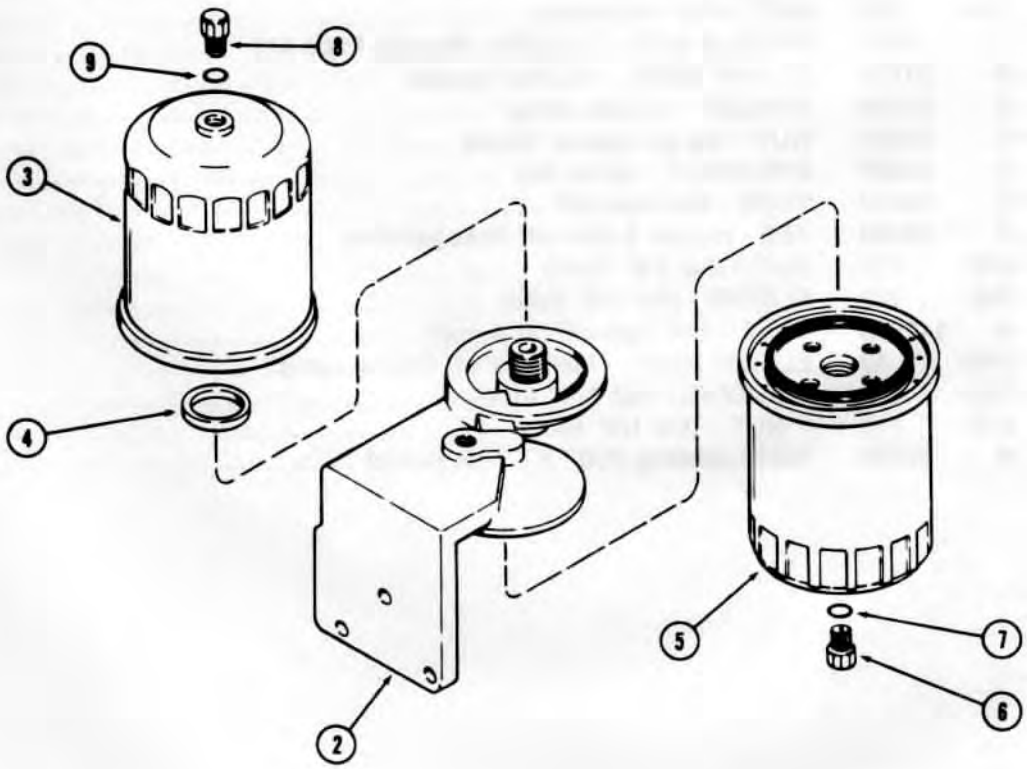

http://www.minnparbackhoeparts.com/

FUEL FILTER

REF.		PART NO.	DESCRIPTION	REQ'D
1	A	51739	FILTER ASSY. - fuel	1
2	A	51738	HEAD - filter base	1
	A	151281	FILTER KIT	1
3	A	39867	FILTER ASSY. - secondary (15/16" threads)	1
4	A	42315	GASKET - filter to head (15/16 x 1-1/4 x 1/4")	1
5	A	39868	FILTER ASSY. primary (13/16" threads)	1
6	G	49080	PLUG - drain, primary filter (3/8" NC , 12 pt. head, nylon)	1
7	218-	5002	O-RING - drain plug (5/16 x 7/16 x 1/16")	1
8	218-	5152	PLUG ASSY. - drain, secondary filter (3/8" NF hex, metal)	1
9	218-	5002	O-RING - drain plug (5/16 x 7/16 1/16")	1

Printed in U.S.A.

Issued January, 1978

http://www.minnparbackhoeparts.com/

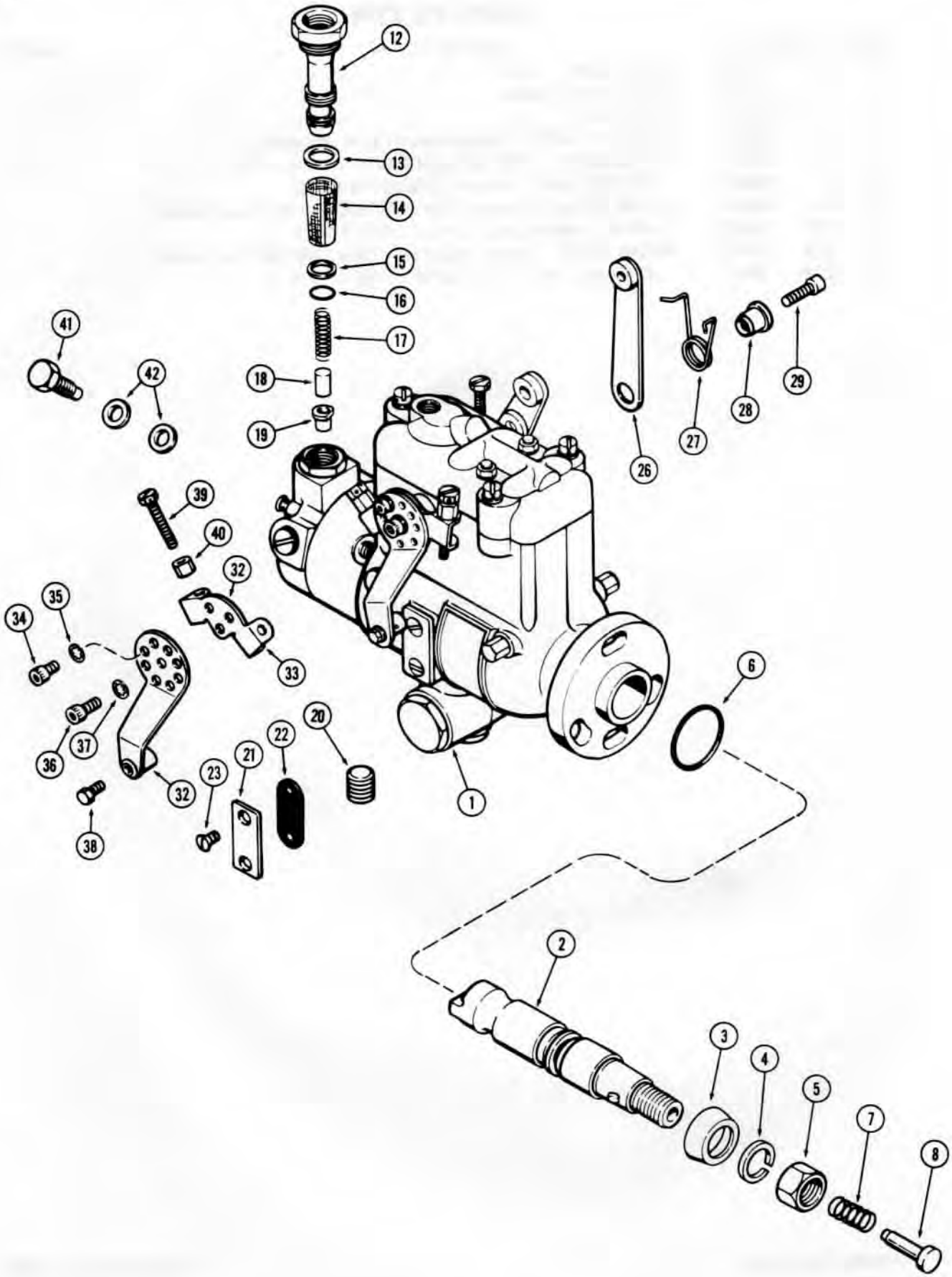

http://www.minnparbackhoeparts.com/

INJECTION PUMPS

REF.	PART NO.	DESCRIPTION	REQ'D
1	A 151669	PUMP ASSY. - fuel injection (Mechanical Shuttle) (H.M.S. No. DBGFCC431-49AJ) (Replaces A138484 & A51631)	1
1	A 15113	PUMP ASSY. - fuel injection (Power Shuttle) (H.M.S. No. DBGFCC431-X58AJ) (Replaces A50991 & A148069)	1
2	A 44710	SHAFT ASSY. - drive, w/pin	1
3	R 14711	SEAL - drive shaft	1
4	192- 24	WASHER - 9/16" lock	1
5	25- 119	NUT - 9/16" NF hex, jam	1
6	74244	SEAL - pilot tubes	1
7	G 48502	SPRING - thrust, pump shaft (1-3/16" free length)	1
8	A 44653	PLUNGER - thrust spring	1
12	A 43869	SLEEVE - end plate	1
13	73666	SEAL - end plate sleeve	1
14	A 43870	FILTER - element	1
15	A 43871	SEAL - element (3/8 x 1/2 x 1/16")	1
16	A 28090	SEAL - sleeve (5/16 x 7/16 x 1/16")	1
17	A 43867	SPRING - regulating (5/8" free length)	1
18	73621	PISTON - regulating	1
19	A 43868	SEAL - regulating piston (rubber)	1
20	221- 1841	PLUG - end plate (1/4" P.T., hex sckt. hd.)	1
21	73452	COVER - timing window	1
22	73453	GASKET - timing window cover	?
23	73514	SCREW - timing window cover	2
26	G 45338	ARM - throttle	1
27	G 48505	SPRING - throttle arm	1
28	G 49621	RETAINER - throttle arm spring	1
29	165- 124	SCREW - throttle arm	1
32	G 45337	ARM - shut-off	1
33	NSS	LEVER - shut-off	1
34	165- 1	SCREW - position, shut-off arm	1
35	193- 91	WASHER - position screw	1
36	165- 30	SCREW - retaining, shut-off arm	1
37	193- 99	WASHER - retaining screw	1
38	163- 7	SCREW - pivot	1
39	G 49088	SCREW - high idle adjusting	2
40	73651	NUT - lock, high idle adj. screw	2
41	73613	SCREW - connector, injection tubes	4
42	G 49407	WASHER - connector screw	8

Printed in U.S.A.

Issued January, 1978

http://www.minnparbackhoeparts.com/

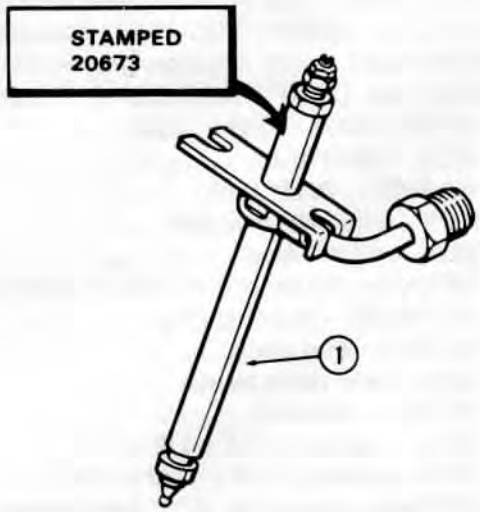

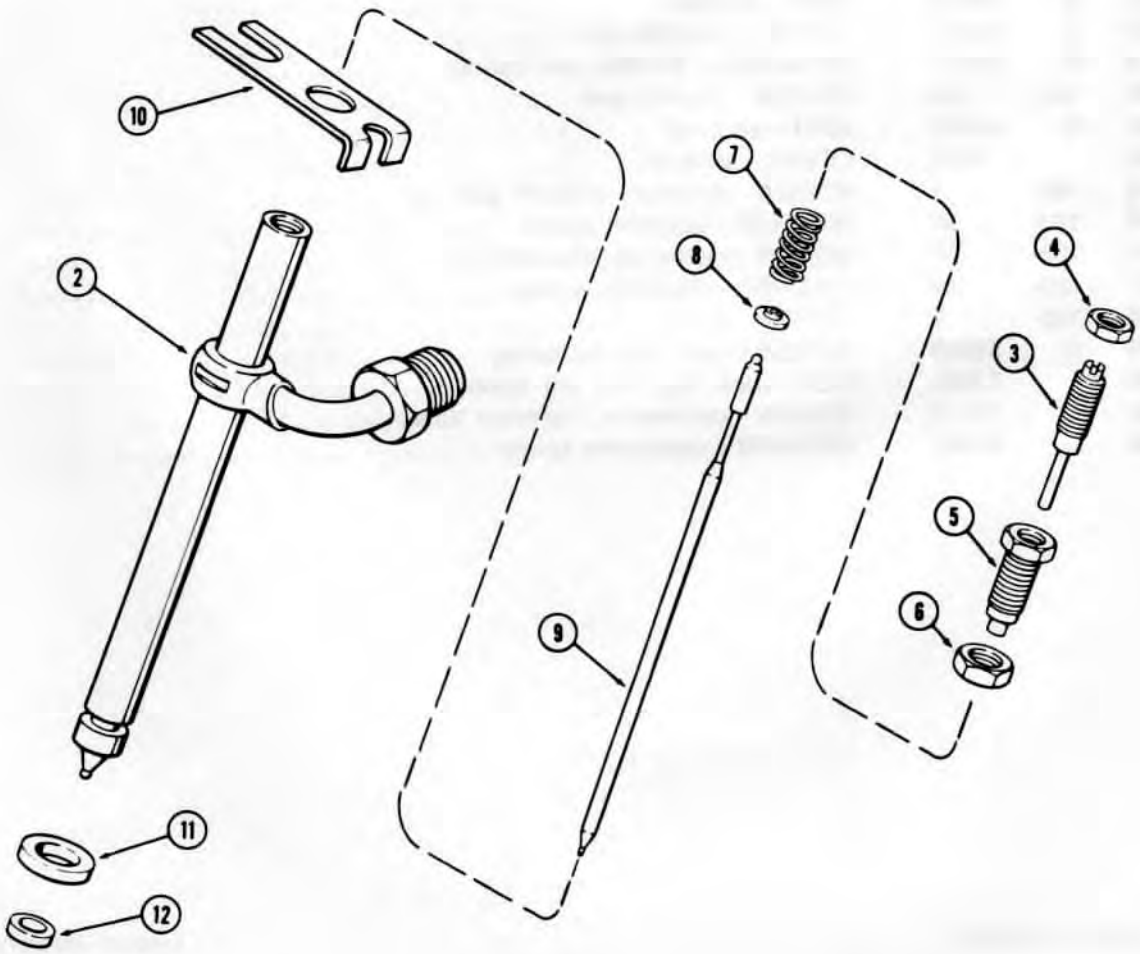

http://www.minnparbackhoeparts.com/

INJECTOR NOZZLES

REF.		PART NO.	DESCRIPTION	REQ'D
1	A	140828	NOZZLE ASSY. - injector (See Note) (Supplier's No. 20673 stamped on body) (Replaces A140827) this application only) (Color code white & yellow band)	4
2		NSS	BODY - nozzle	1
3	A	43599	SCREW - lift adjusting	1
4	A	43602	NUT - lock, lift adjusting screw	1
5	A	43600	SCREW - pressure adjusting	1
6	A	42424	NUT - lock, pressure adjusting screw	1
7	A	43733	SPRING - pressure adjusting (9/16" free length)	1
8	A	44369	SEAT - pressure adjusting spring	1
9		NSS	VALVE - nozzle	1
10	A	43506	PLATE - nozzle holder	1
11	A	41403	WASHER - nozzle body	1
12	A	41402	SEAL - carbon stop	1

NOTE: WHENEVER NOZZLE IS REMOVED FROM HEAD WASHER (A41403) & SEAL (A41402) MUST BE REPLACED BEFORE NOZZLE IS INSTALLED BACK IN HEAD

http://www.minnparbackhoeparts.com/

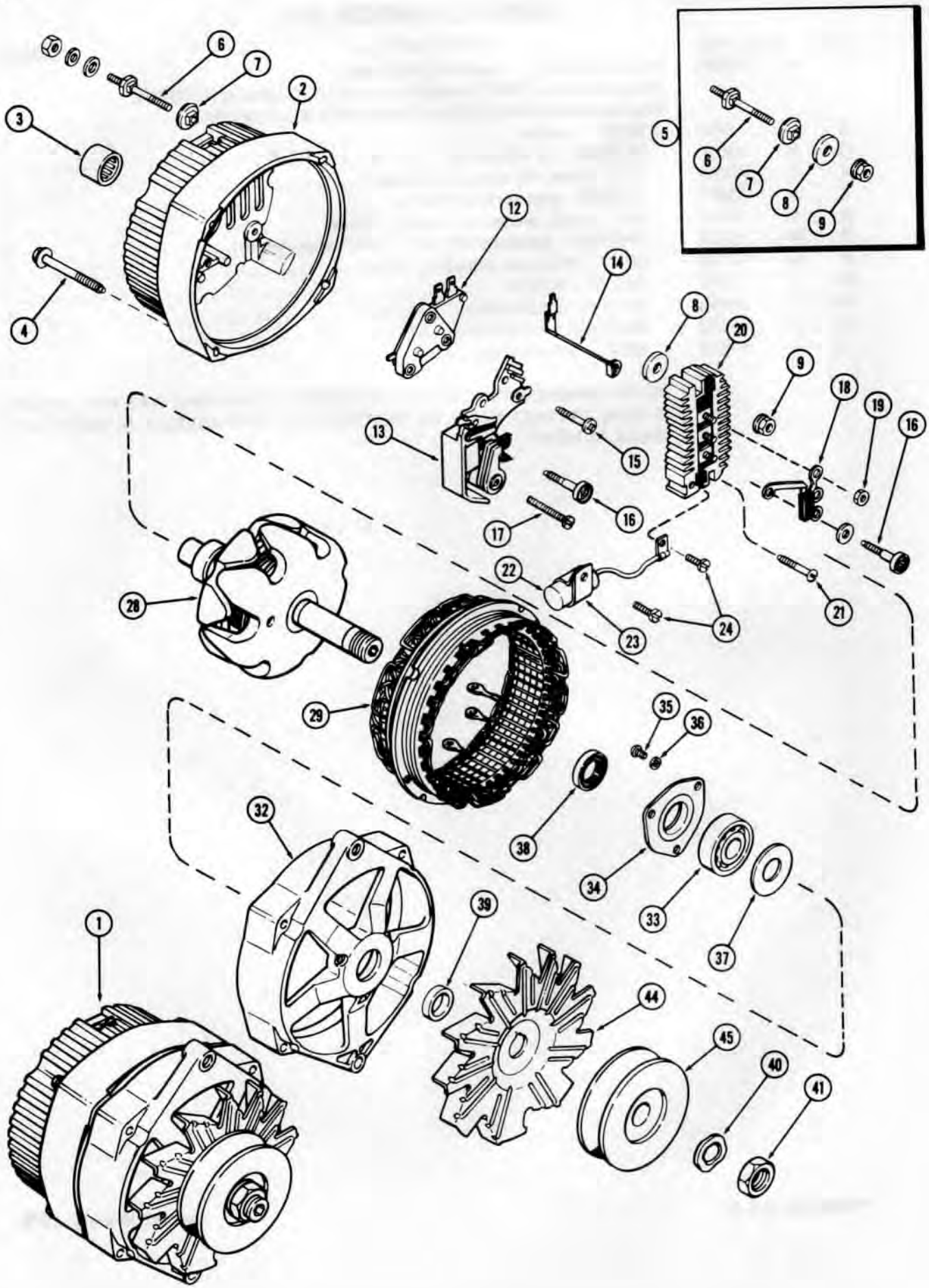

http://www.minnparbackhoeparts.com/

D77810 ALTERNATOR
DELCO-REMY NO. 1102927

REF.	PART NO.	DESCRIPTION	REQ'D
1	D 77810	ALTERNATOR ASSY. - (Delco-Remy #1102927) (Used for production only) (Order 1-D78005 alternator, 1-A43384 fan & 1-A51561 pulley)	1
	D 78005	ALTERNATOR ASSY. - (Delco-Remy #1102920) (Used for repairs only) (Less pulley & fan)	1
2	A 47041	FRAME ASSY. - slip ring end	1
3	A 47046	BEARING - roller	1
4	163- 6	BOLT - thru (#10-24 x 1-3/4" hex hd. w/washer)	4
5	A 45225	TERMINAL KIT - battery	1
6	NSS	STUD - terminal	1
7	NSS	INSULATOR	1
8	NSS	WASHER - insulating	1
9	NSS	NUT ASSY	2
12	A 45213	REGULATOR - voltage	1
13	A 47042	HOLDER ASSY. - brush (Includes brushes)	1
14	A 47045	TERMINAL - relay	1
15	A 47043	SCREW - brush holder, grounded	1
16	A 45223	SCREW - brush holder, insulated	2
17	182- 558	SCREW - brush holder attaching	1
18	A 45219	DIODE - trio	1
19	129- 16	NUT - trio diode to rectifier bridge (#8-32 hex)	3
20	A 45394	RECTIFIER BRIDGE	1
21	A 45221	SCREW - rectifier bridge attaching	1
22	A 45017	CAPACITOR	1
23	A 45227	BRACKET - capacitor mounting	1
24	A 45228	SCREW - capacitor bracket & lead	2
28	A 47047	ROTOR ASSY.	1
29	A 47048	STATOR ASSY	1
32	A 45229	FRAME - drive end	1
33	A 45230	BEARING - ball, drive end	1
34	A 44433	PLATE - bearing retaining	1
35	173- 210	SCREW - bearing plate retaining	3
36	195- 512	WASHER - 7/32 x 7/16 x 1/16"	3
37	A 45232	WASHER - grease slinger, bearing	1
38	A 43693	SEAL - oil	1
39	A 72047	COLLAR - rotor shaft	1
40	R 16171	WASHER - lock, pulley nut	1
41	A 25546	NUT - pulley & fan retaining	1
44	A 43384	FAN - ventilating	1
45	A 51561	PULLEY - drive	1

http://www.minnparbackhoeparts.com/

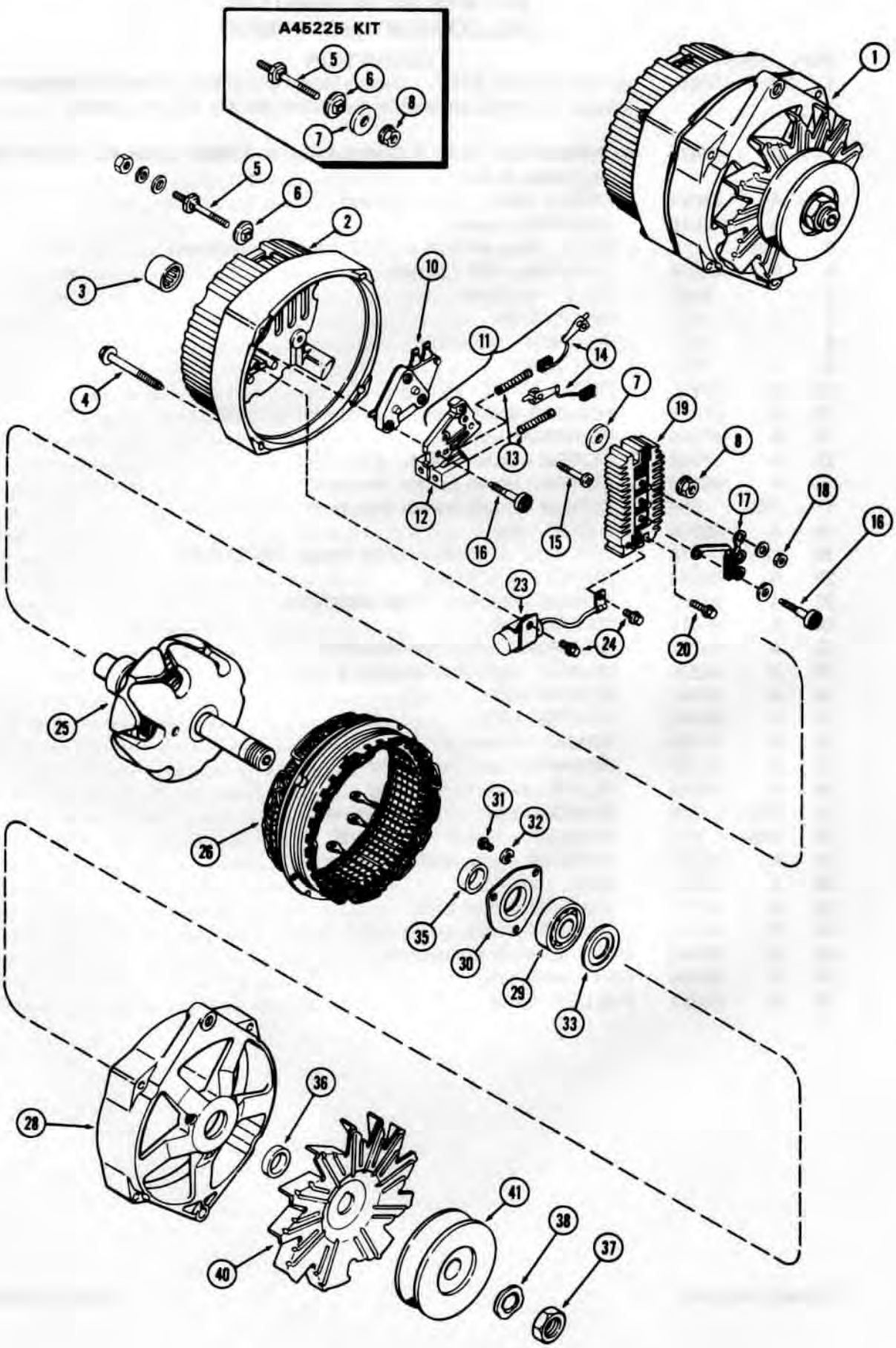

http://www.minnparbackhoeparts.com/

A135714 ALTERNATOR
DELCO-REMY NO. 1102886

REF.	PART NO.	DESCRIPTION	REQ'D
1	A 135714	ALTERNATOR ASSY. - (Delco-Remy #1102886) (37 AMP.) (Used for production only) (Order 1-A45201 alternator, 1-A43384 fan & 1-A51561 pulley)	1
	A 45201	ALTERNATOR ASSY. - (Delco-Remy #1100583) (42 AMP.) (Repairs only) (Less pulley & fan)	1
2	A 45217	FRAME ASSY. - slip ring end	1
3	A 45218	BEARING - roller	1
4	163- 6	BOLT - thru (#10-24 x 1-3/4" hex washer hd.)	4
	A 45225	TERMINAL KIT - battery	1
5	NSS	STUD - terminal	1
6	NSS	INSULATOR	1
7	NSS	WASHER - insulating	1
8	NSS	NUT ASSY.	2
10	A 45213	REGULATOR - voltage	1
11	A 45222	BRUSH HOLDER ASSY. - (Includes brushes)	1
12	NSS	HOLDER - brush	1
13	A 43678	SPRING - brush	2
14	NSS	BRUSH	2
15	A 45224	SCREW - brush holder, grounded	1
16	A 45223	SCREW - brush holder, insulated	2
17	A 45219	DIODE - trio	1
18	129- 16	NUT - #8-32 hex	3
19	A 45394	RECTIFIER BRIDGE	1
20	A 45221	SCREW - rectifier bridge (#8-32 x 1")	1
23	A 45017	CAPACITOR ASSY. - (Includes bracket)	1
24	A 45228	SCREW - capacitor (#8-32 x 3/8")	2
25	A 45391	ROTOR ASSY. - (Includes slip rings)	1
26	A 45223	STATOR ASSY	1
28	A 45229	FRAME - drive end	1
29	A 45230	BEARING - ball, drive end	1
30	A 44433	PLATE ASSY. - bearing retainer	1
31	173- 210	SCREW - bearing plate (#10-24 x 3/8" rd. hd.)	3
32	195- 512	WASHER - 7/32 x 7/16 x 1/16"	4
33	A 45232	WASHER - grease slinger, bearing	1
35	A 44522	COLLAR - inside, rotor shaft (11/16" I.D. x 29/32" O.D. x 3/8")	1
36	A 72047	COLLAR - outer, rotor shaft (11/16" I.D. x 7/8" O.D. x 13/16")	1
37	A 25546	NUT - pulley & fan retaining	1
38	R 16171	WASHER - lock	1
40	A 43384	FAN - alternator	1
41	A 51561	PULLEY - drive	1

http://www.minnparbackhoeparts.com/

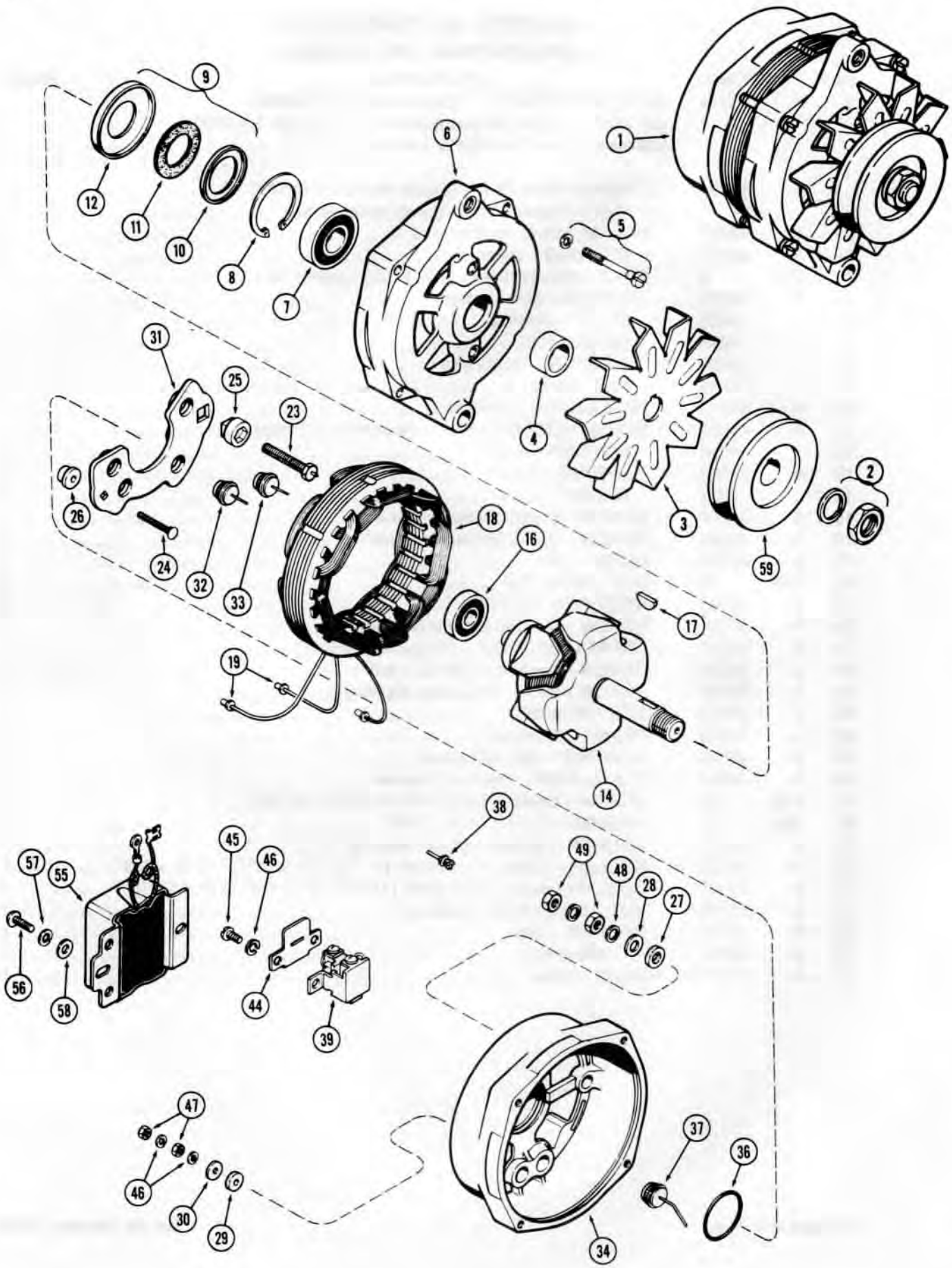

http://www.minnparbackhoeparts.com/

A38815 ALTERNATOR
PRESTOLITE NO. ALK-7314

REF.	PART NO.	DESCRIPTION	REQ'D
1	A 38815	ALTERNATOR ASSY. - (Prestolite #ALK-7314) (production only - includes pulley & regulator) (Order 1-A42776, 1-A42777 & 1-A44543)	1
	A 42776	ALTERNATOR ASSY. - (Prestolite #ALK-6314-S)	1
2	A 40581	PACKAGE - nut & washer, pulley retaining	1
3	A 41066	FAN - ventilating	1
4	A 41078	SPACER - fan	1
5	A 41081	PACKAGE - thru bolt & washer (Set of 4)	1
6	A 42262	HEAD ASSY. - drive end	1
7	A 42263	BEARING - ball (21/32 x 1-9/16 x 15/32")	1
8	NSS	RING - snap, bearing retaining	1
9	A 42268	PACKAGE - seal & retainers	1
10	NSS	RETAINER - felt seal, outer	1
11	NSS	SEAL - felt	1
12	NSS	RETAINER - felt seal, inner	1
14	A 42774	ROTOR ASSY	1
16	A 41077	BEARING ASSY. - (9/16 x 1-3/16 x 11/32")	1
17	126- 112	KEY - pulley & fan (#6 Woodruff)	1
18	A 41079	STATOR ASSY	1
19	A 41065	PACKAGE - wire eyelets (Set of 6)	1
	A 42771	PACKAGE - terminal studs	1
23	NSS	STUD - battery terminal	1
24	NSS	STUD - auxiliary terminal	1
25	NSS	BUSHING - insulation, battery terminal	1
26	NSS	BUSHING - insulating, auxiliary terminal	1
27	NSS	WASHER - insulating, battery terminal	1
28	NSS	WASHER - plain, battery terminal	1
29	NSS	WASHER - insulating, auxiliary terminal	1
30	NSS	WASHER - plain, auxiliary terminal	1
31	A 42773	HEAT SINK - rectifier	1
32	NSS	DIODE - positive (color coded w/red mark)	3
33	A 42261	DIODE - output (Set of 2) (Color coded w/black mark)	1
34	A 42772	HEAD ASSY. - slip ring end	1
36	A 41072	O-RING - sealing (1-3/16 x 1-5/16 x 1/16")	1
37	A 44180	DIODE - negative (color coded w/black mark) (Set of 4)	1
38	A 42266	PACKAGE - plugs (Set of 10)	UAR
39	A 43952	BRUSH & HOLDER ASSY	1
44	A 41073	INSULATION - brush holder cover	1
45	187- 1012	SCREW - brush holder (#10-24 x 3/8" rd. hd.)	2
46	92- 3	WASHER - #10 lock	8
47	129- 665	NUT - #10 NF hex, jam	2
48	92- 4	WASHER - 1/4" lock	2
49	131- 902	NUT - 1/4"-28 hex	2
55	A 44543	REGULATOR ASSY. - voltage	1
56	NSS	SCREW - regulator mounting	2
57	NSS	WASHER - lock	2
58	NSS	WASHER - plain flat	2
59	A 42777	PULLEY - drive	1

http://www.minnparbackhoeparts.com/

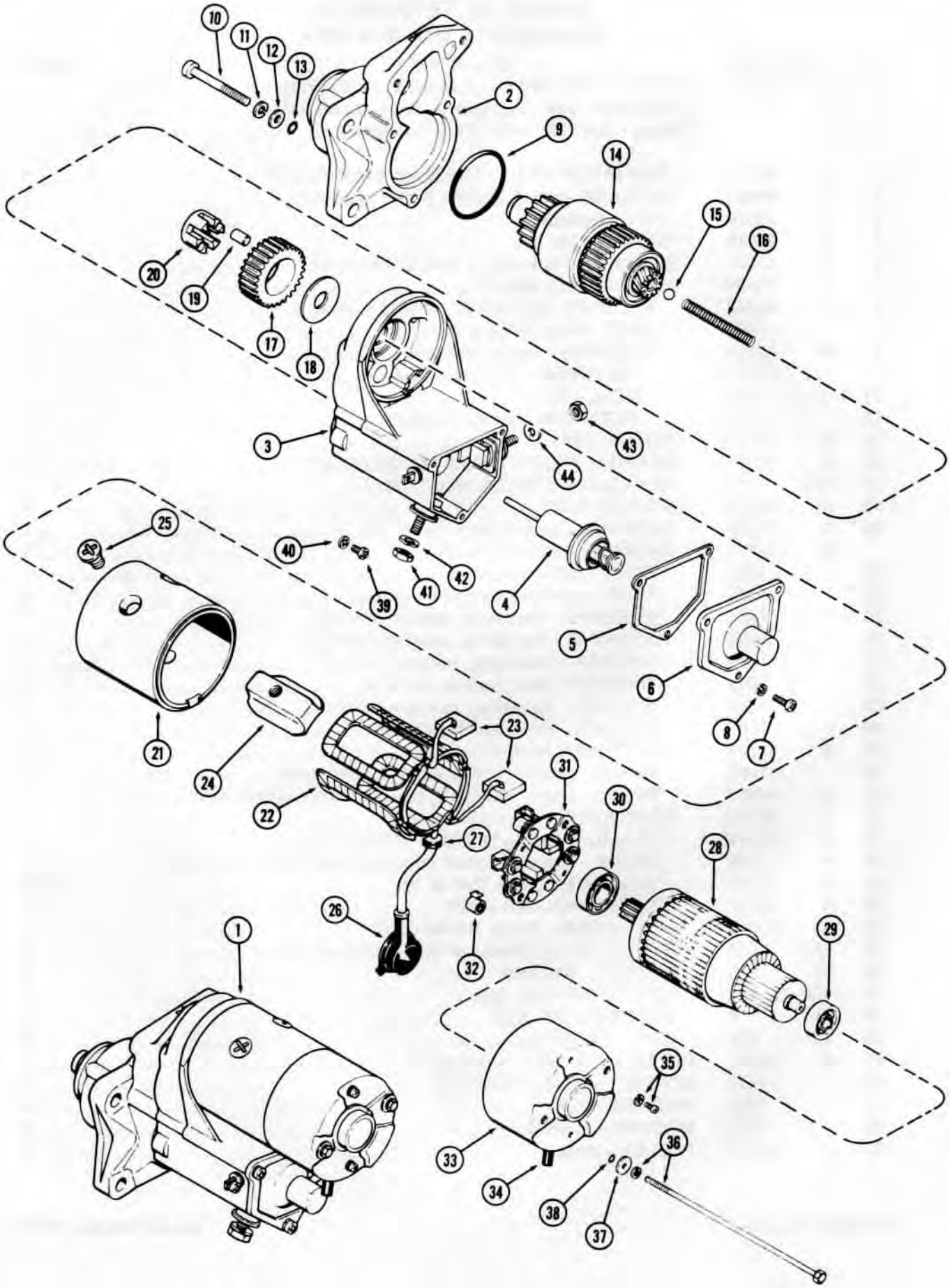

http://www.minnparbackhoeparts.com/

R39341 STARTER
NIPPONDENSO

REF.	PART NO.	DESCRIPTION	REQ'D
1	R 39341	STARTER ASSY. - (Nippondenso #028000-5880)	1
2	A 47227	HOUSING - drive end	1
3	A 47228	SWITCH ASSY. - magnetic	1
4	NSS	SOLENOID	1
5	NSS	GASKET - solenoid cover	1
6	NSS	COVER - solenoid	1
7	NSS	SCREW - cover to switch	3
8	NSS	WASHER - cover screw	3
9	A 47229	O-RING - switch to housing (1-7/8 x 2 x 3/32")	1
	A 47243	BOLT ASSY. - thru	2
10	NSS	BOLT - thru	1
11	592- 24	WASHER - 1/4" lock	1
12	195- 516	WASHER - 1/4 x 9/16 x 1/16"	1
13	A 47127	O-RING - bolt seal (3/16 x 5/16 x 1/16")	1
14	A 47231	CLUTCH ASSY. - drive	1
15	211- 10	BALL - thrust (3/8" dia. steel)	1
16	A 47232	SPRING - clutch drive (2-13/16" free length)	1
17	A 47233	PINION - idler	1
18	A 47234	WASHER - thrust, idler pinion	1
19	A 47235	ROLLER - idler pinion bearing	6
20	A 47236	RETAINER - roller bearings	1
	A 47240	HOUSING ASSY. - w/coil & brushes	1
21	NSS	HOUSING	1
22	NSS	COIL - field	1
23	NSS	BRUSHES	2
24	NSS	SHOE - pole	4
25	NSS	SCREW - pole shoes	4
26	NSS	BOOT - magnetic switch terminal	1
27	A 47241	PLATE - lock	1
28	A 47242	ARMATURE ASSY.	1
29	A 47248	BEARING - commutator end (3/8 x 1-13/16 x 3/8")	1
30	A 47247	BEARING - drive end (11/16 x 1-3/8 x 3/8")	1
31	A 47239	HOLDER ASSY. - brush (includes 2 brushes)	1
32	A 47249	SPRING - brush tension	4
33	A 47237	FRAME - commutator end	1
34	A 47238	COVER - end frame	1
35	A 47244	SCREW ASSY. - brush holder to cover	2
	A 47230	BOLT ASSY. - comm. end cover to drive end hsg.	3
36	NSS	BOLT - w/lock washer	1
37	195- 516	WASHER - 1/4 x 9/16 x 1/16"	1
38	A 47130	O-RING - bolt seal (3/16 x 5/16 x 1/16")	1
39	182- 508	SCREW - #8-32 x 3/8" pan hd.	1
40	193- 25	WASHER - #8 int. skpf.	1
41	129- 143	NUT - battery terminal (3/8" NC hex)	1
42	192- 21	WASHER - 3/8" lock	1
43	527- 7	NUT - field coil terminal	1
44	A 10454	WASHER - field coil terminal	1

http://www.minnparbackhoeparts.com/

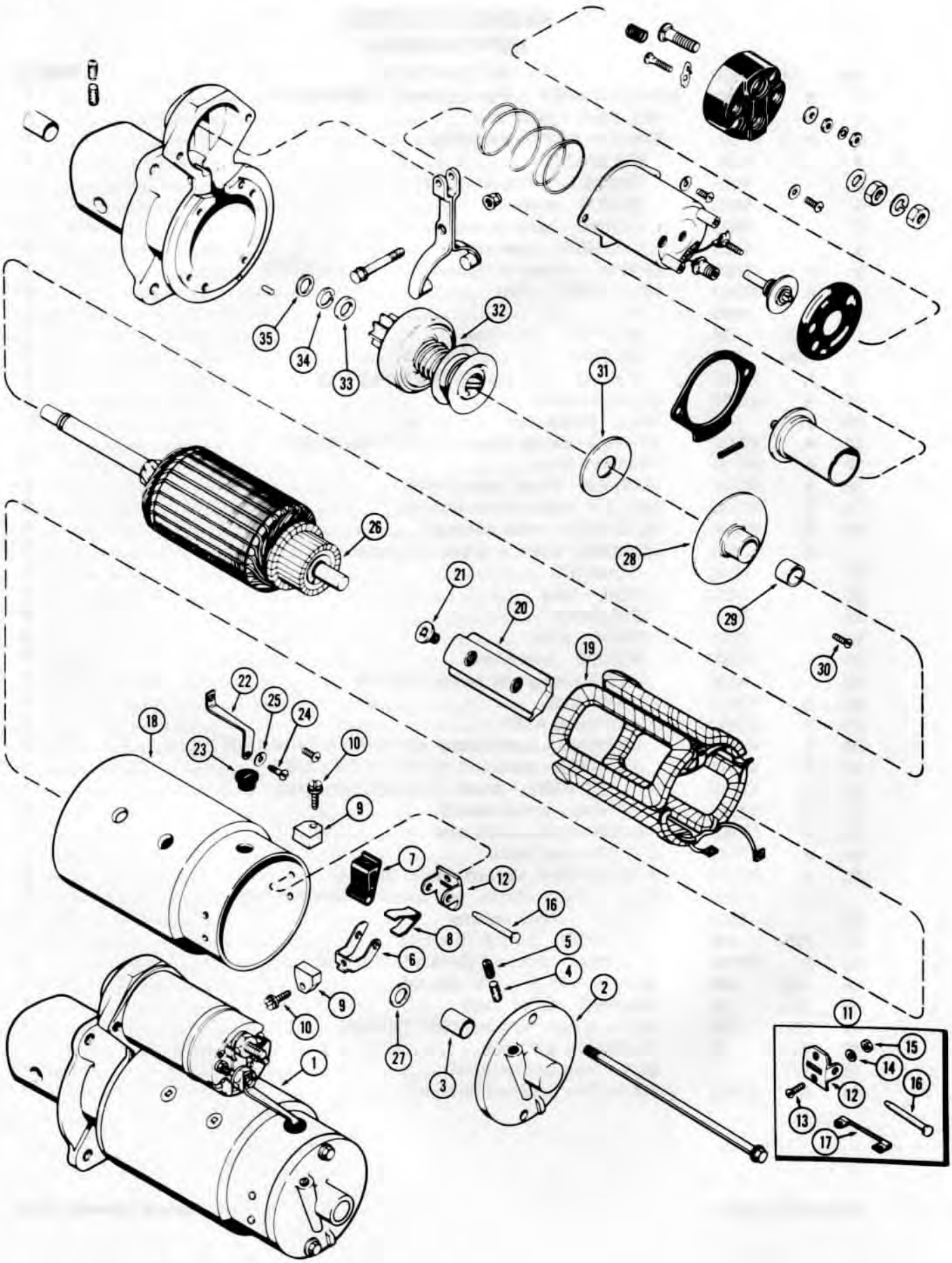

http://www.minnparbackhoeparts.com/

R29870 STARTER
DELCO-REMY

REF.	PART NO.	DESCRIPTION	REQ'D
1	R 29870	STARTER ASSY. - (Delco-Remy #1109149)	1
2	A 25304	FRAME ASSY. commutator end	1
3	A 45152	BUSHING - (9/16 x 11/16 x 3/4")	1
4	A 41979	WICK - oiler	1
5	221- 1041	PLUG - oil wick hole (1/8" P.T., sltd. hd.)	1
6	A 40217	HOLDER - brush (grounded)	2
7	R 15027	HOLDER - brush (insulated)	2
8	A 25359	SPRING - brush pressure	2
9	A 25356	BRUSH	4
10	D 32481	SCREW ASSY. - brush (#8-32 x 13/16" sltd. hd.)	4
11	A 25379	SUPPORT KIT - brush holder	2
12	NSS	SUPPORT	1
13	173- 212	SCREW - supt. to frame (#10-24 x 1/2" rd. hd.)	2
14	192- 18	WASHER - #10 lock	2
15	R 15032	NUT - #10-24 hex	2
16	R 15035	PIN - brush holder	1
17	A 42494	LEAD - brush ground	1
18	NSS	FRAME - starter body	1
19	A 25548	COIL ASSY. - field	1
20	A 25391	SHOE - pole	4
21	74- 612	SCREW - pole shoes (3/8 x 5/8" NF flat hd.)	8
22	A 40225	CONNECTOR - field to solenoid	1
23	A 41980	GROMMET - connector insulating (in frame)	1
24	173- 221	SCREW - connector to coil (#10-32 x 7/16" rd. hd.)	1
25	192- 18	WASHER - #10 lock	1
26	A 25547	ARMATURE	1
27	A 41917	WASHER - thrust (at comm. end)	1
28	A 40215	PLATE ASSY. - center bearing	1
29	R 15038	BUSHING - center bearing (3/4 x 13/16 x 3/4")	1
30	A 41959	SCREW - center bearing to drive hsg.	4
31	R 15043	WASHER - thrust, center bearing	1
32	D 65139	DRIVE ASSY.	1
33	R 15049	COLLAR - drive stop	1
34	R 15048	RING - snap, stop collar retaining	1
35	A 25385	WASHER - thrust (drive end)	1

CONTINUED ON PAGE 49B

http://www.minnparbackhoeparts.com/

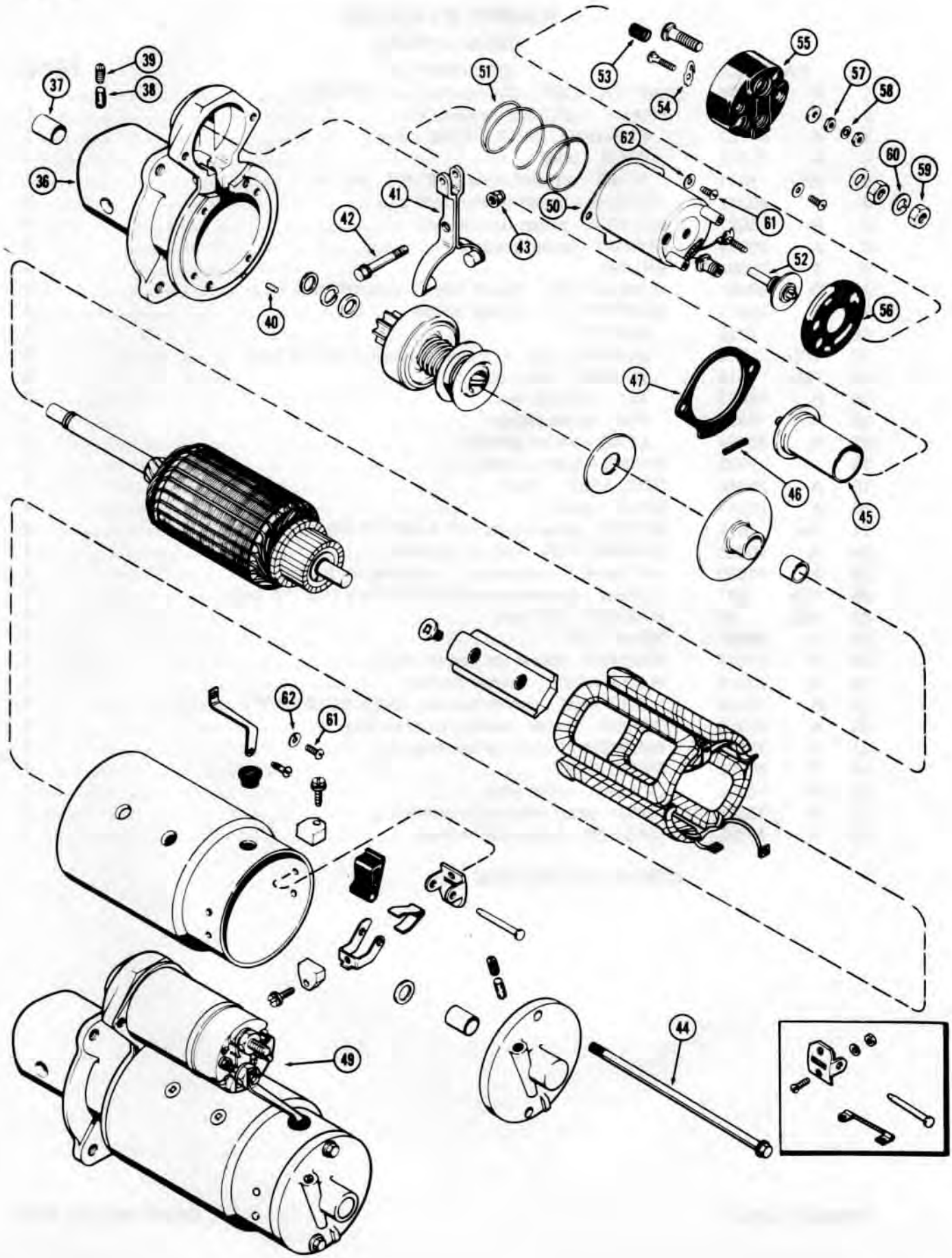

http://www.minnparbackhoeparts.com/

R29870 STARTER
DELCO-REMY

REF.	PART NO.		DESCRIPTION	REQ'D
	R	29870	STARTER ASSY - (Continued from Page 49)	1
36	A	44495	HOUSING ASSY. - drive end	1
37	A	25387	BUSHING - drive hsg. (1/2 x 5/8 x 13/16")	1
38	R	15023	WICK - oiler	1
39	221-	1041	PLUG - oil wick hole (1/8" P.T., sltd. hd.)	1
40	R	15041	PIN - locating, drive hsg. (3/16 x 5/16")	1
41	A	40220	LEVER - drive shift	1
42	A	40520	PIVOT - shift lever	1
43	131-	4	NUT - pivot (5/16" NC hex)	1
44	A	25552	BOLT - thru	2
45	A	40218	PLUNGER - solenoid	1
46	138-	93	PIN - plunger to shift lever (3/16 x 13/16" roll)	1
47	A	40222	BOOT - plunger protection	1
49	G	44891	SOLENOID ASSY. - (See Note)	1
50		NSS	CASE ASSY. -	1
51	A	40221	SPRING - plunger return	1
52	A	42061	CONTACT ASSY.	1
53	A	42059	SPRING - contact return	1
54	A	42060	BLADE - contact	1
55		NSS	COVER - solenoid contact & terminals	1
56		NSS	GASKET - cover to solenoid	1
57	129-	16	NUT - #8-32 hex	2
58	192-	16	WASHER - #8 lock	2
59	129-	143	NUT - 3/8" NC hex	2
60	192-	21	WASHER - 3/8" lock	1
61	A	42023	SCREW - solenoid & connector (1/4 x 1/2" NC rd. hd.)	3
62	192-	19	WASHER - 1/4" lock	3

NOTE: SEE DELCO-REMY DEALER FOR PARTS ILLUSTRATED BUT NOT LISTED

http://www.minnparbackhoeparts.com/

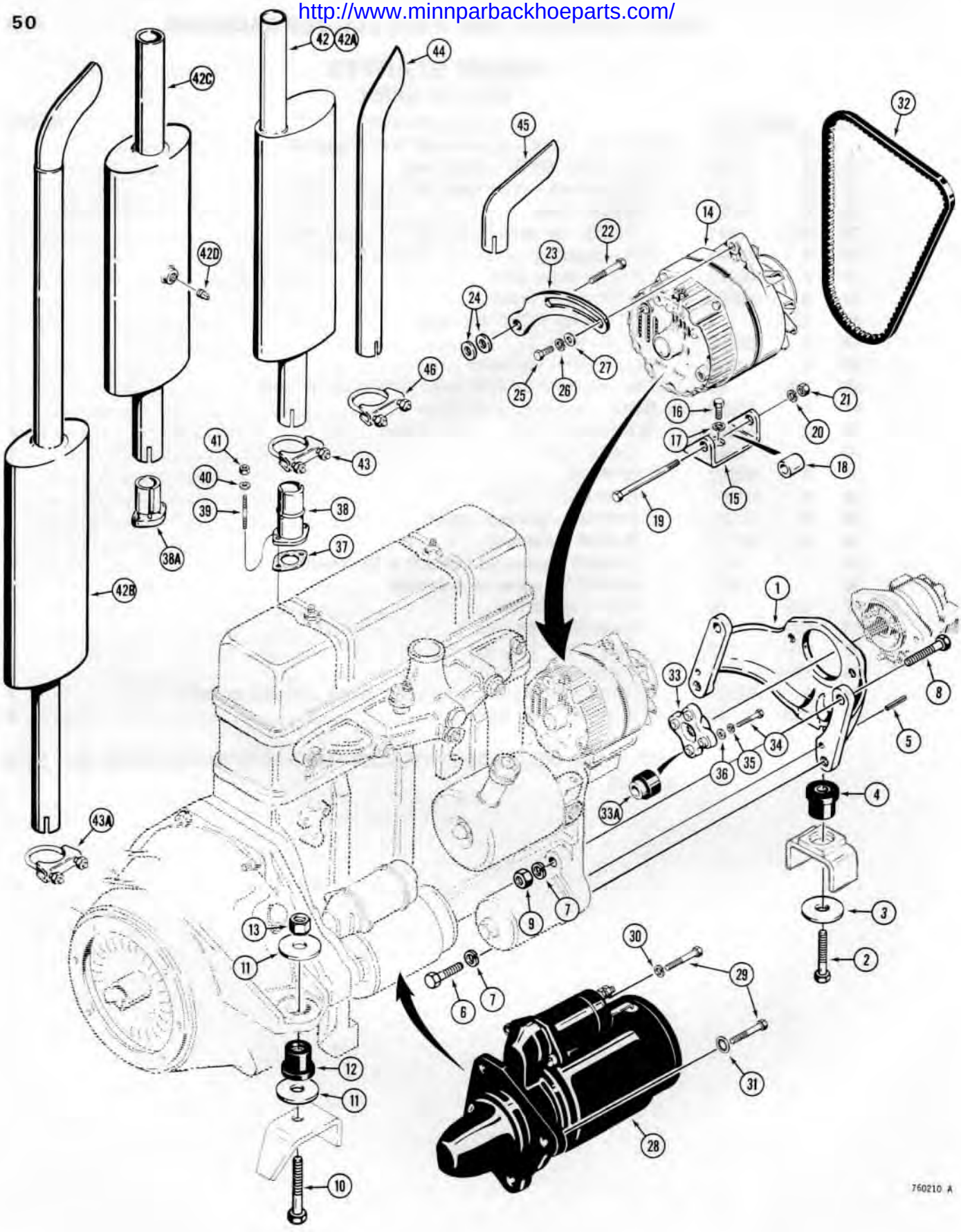

http://www.minnparbackhoeparts.com/

ENGINE, MUFFLER, ALTERNATOR AND STARTER MOUNTING

REF.	PART NO.	DESCRIPTION	REQ'D.
1	D 64222	SUPPORT - engine front	1
2	13- 1044	HHCS - 5/8" - 11 NC x 2-3/4"	1
3	D 35009	WASHER - flat, special	1
4	A 59516	MOUNT - rubber	1
5	139- 64	PIN - dowel, tapered	2
6	13- 1032	HHCS - 5/8" - 11 NC x 2"	2
7	92- 10	WASHER - lock, 5/8"	4
8	13- 1044	HHCS - 5/8" - 11 NC x 2-3/4"	2
9	25- 1010	NUT - hex, 5/8" - 11 NC	2
10	13- 664	HHCS - 3/8" - 16 NC x 4"	1
11	D 35009	WASHER - flat, special	4
12	A 59516	MOUNT - rubber	2
13	25- 1010	NUT - hex, 5/8" - 11 NC	2
14	REF.	ALTERNATOR - electrical, see pages 43 thru 45	1
15	A 138246	BRACKET - alternator mounting	1
16	13- 612	HHCS - 3/8" - 16 NC x 3/4"	2
17	92- 6	WASHER - lock, 3/8"	2
18	A 138247	SPACER - alternator	1
19	13- 664	HHCS - 3/8" - 16 NC x 4"	1
20	92- 6	WASHER - lock, 3/8"	1
21	25- 106	NUT - hex, 3/8" - 16 NC	1
22	13- 636	HHCS - 3/8" - 16 NC x 2-1/4"	1
23	A 139258	STRAP - alternator adjusting	1
24	195- 104	WASHER - alternator strap, 3/8" flat	2
25	113- 102	HHCS - 5/16" - 18 NC x 3/4"	1
26	192- 20	WASHER - lock, 5/16"	1
27	195- 103	WASHER - flat, 5/16"	1
28	REF.	STARTER - engine, see pages 47 and 49	1
29	13- 632	HHCS - 3/8" - 16 NC x 2"	3
30	92- 6	WASHER - lock, 3/8"	2
31	193- 72	WASHER - external-internal tooth lock, 3/8"	1
32	D 73446	BELT - alternator and fan drive	1
33	A 51885	COUPLING - equipment hydraulic pump	1
33A	A 45216	BUSHING - pump coupling	4
34	13- 724	HHCS - 7/16" - 14 NC x 1-1/2"	4
35	92- 7	WASHER - lock, 7/16"	4
36	A 30013	WASHER - flat, special	4
37	G 46853	GASKET - manifold to exhaust pipe	1
38	D 73198	PIPE - exhaust, 2-1/2" dia. (64 mm) if used	1
38A	D 69366	PIPE - exaust, 1-7/8" dia. (48 mm) if used	1
39	A 59077	STUD - 3/8" - 16 NC x 1.81"	2
40	195- 25	WASHER - flat, 3/8"	2
41	131- 652	NUT - hex, lock, 3/8" - 16 NC	2
42	A 39561	MUFFLER - inlet dia. 2-1/2" (64 mm) if used	1
42A	D 55532	MUFFLER - increased noise control, inlet dia. 2-1/2" (64 mm)	1
42B	D 69365	MUFFLER - increased noise control, inlet dia. 1-7/8" (48 mm)	1
42C	D 65392	MUFFLER - exhaust, spark arresting	1
42D	217- 276	PLUG - brass, 1/4" NPT	1
43	A 13240	CLAMP - muffler, used with items 42 and 42A	1
43A	R 11500	CLAMP - muffler, used with item 42B	1
44	D 70514	EXTENSION - muffler exhaust, if used	1
45	D 53101	DEFLECTOR - muffler exhaust, if used	1
46	G 45410	CLAMP - muffler extension or deflector	1

Printed in U.S.A.
Issued January, 1978

http://www.minnparbackhoeparts.com/

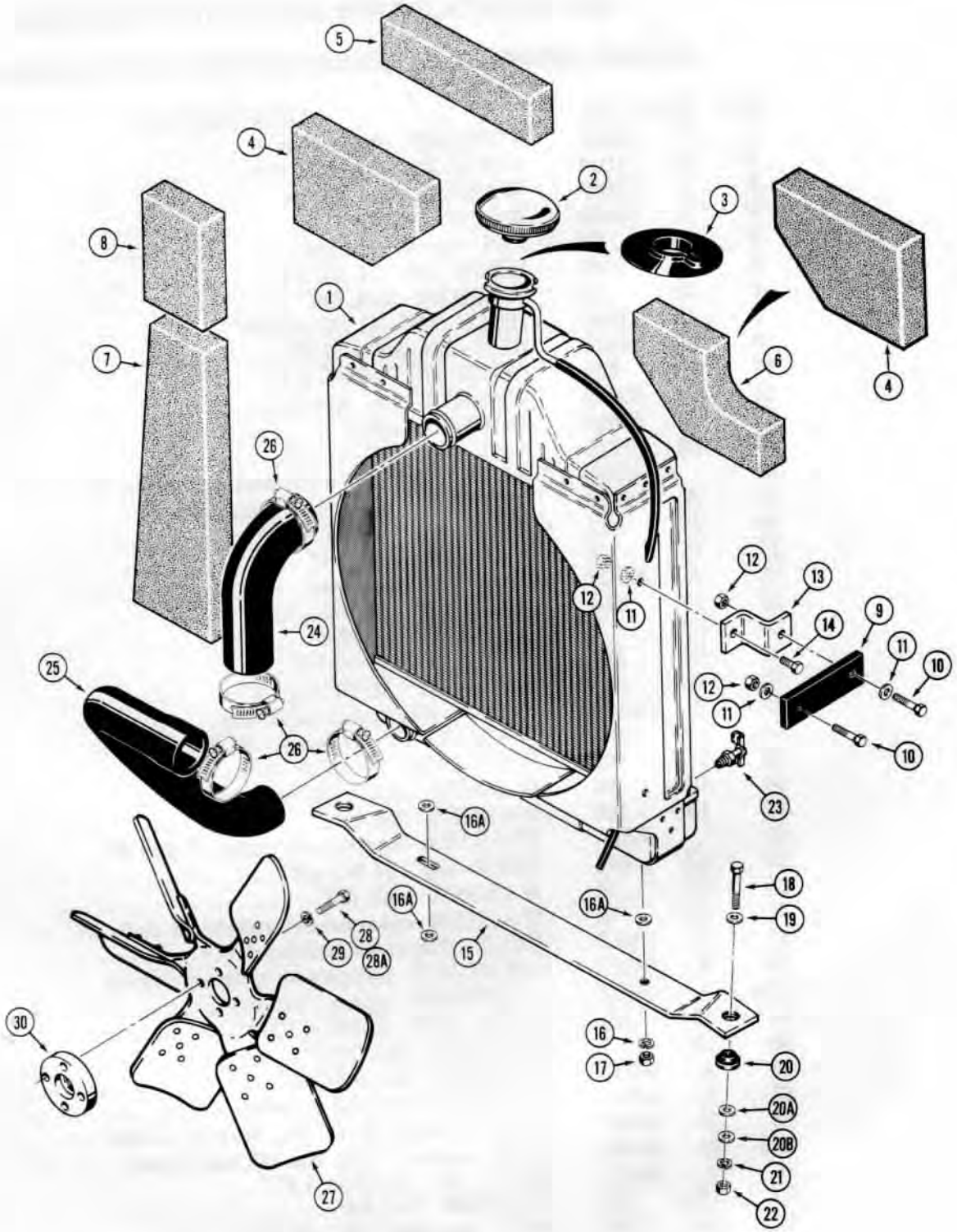

750627 B

http://www.minnparbackhoeparts.com/

RADIATOR, FAN AND MOUNTING PARTS

REF.	PART NO.	DESCRIPTION	REQ'D.
1	D 77843	RADIATOR - engine	1
2	A 39359	CAP - radiator	1
3	D 69037	GROMMET - radiator	1
4	D 69065	BAFFLE - radiator, top	1-2
5	D 69067	BAFFLE - radiator, top center	1
6	D 69064	BAFFLE - radiator, top, R.H., used on models with air cleaner tube extending toward the front	1
7	D 69068	BAFFLE - radiator, side	2
8	D 69066	BAFFLE - radiator, side	2
9	D 73500	STRAP - radiator mounting, side	2
10	13- 620	HHCS - 3/8" - 16 NC x 1-1/4"	4
11	95- 6	WASHER - flat, 3/8"	6
12	131- 652	NUT - hex, lock, 3/8" - 16 NC	6
13	D 68976	BRACKET - radiator mounting	2
14	13- 616	HHCS - 3/8" - 16 NC x 1"	2
15	D 68953	BAR - radiator mounting	1
16	92- 6	WASHER - lock, 3/8", if used	2
16A	95- 6	WASHER - flat, 3/8", if used	3
17	25- 106	NUT - hex, 3/8" - 16 NC, if used	2
17	131- 6	NUT - hex, lock, 3/8" - 16 NC, if used	2
18	13- 636	HHCS - 3/8" - 16 NC x 2-1/4"	2
19	95- 6	WASHER - flat, 3/8"	2
20	D 52276	CUSHION - rubber	2
20A	*195- 2034	WASHER - flat, special	2-4
20B	D 52275	WASHER - flat, special	2
21	92- 6	WASHER - lock, 3/8"	2
22	131- 652	NUT - hex, lock, 3/8" - 16 NC	2
23	217- 103	VALVE - water drain	1
24	D 68799	HOSE - radiator, upper	1
25	D 68800	HOSE - radiator, lower	1
26	214- 260	CLAMP - hose	4
27	D 78235	FAN - suction	1
28	**13- 524	HHCS - 5/16" - 18 NC x 1-1/2", used with original production water pumps only	4
28A	**13- 520	HHCS - 5/16" - 18 NC x 1-1/4", used with service replacement water pumps	4
29	92- 5	WASHER - lock, 5/16"	4
30	D 66937	SPACER - fan	1

*NOTE: Two 195-2034 washers are required under each radiator mount on models with D72300 equipment pump. See page 241.

**NOTE: Original production tractors before tractor serial number 8959748 (Power Shuttle Models) or 8959941 (Mechanical Shuttle Models) require 1-1/2" fan bolts, but after replacing the water pump with a service pump, 1-1/4" fan bolts must be used. All other tractors use only 1-1/4" fan bolts.

http://www.minnparbackhoeparts.com/

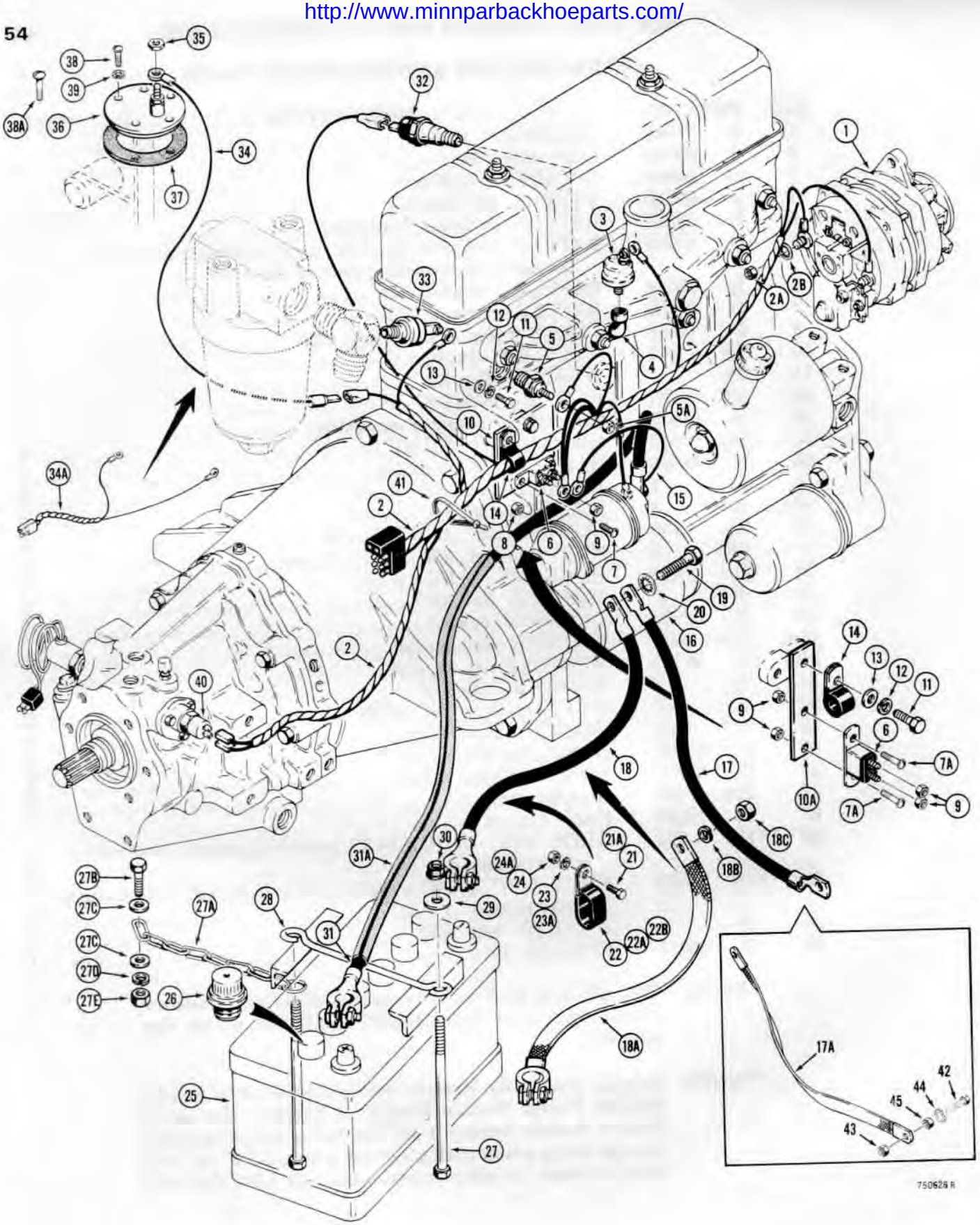

http://www.minnparbackhoeparts.com/

ELECTRICAL SYSTEM

FRONT HARNESS, ALTERNATOR, STARTER AND BATTERY

BEFORE TRACTOR SN. 8965035

REF.	PART NO.	DESCRIPTION	REQ'D.
1	REF.	ALTERNATOR - electrical, see pages 43 thru 45	1
2	D 67879	HARNESS - front, used with Prestolite alternator before tractor sn. 8958213	1
2	D 73456	HARNESS - front, used with Delco Remy alternator before tractor sn. 8958213	1
2	D 75026	HARNESS - front, used with Delco Remy alternator on tractor sn. 8958213 and after, not shown, see item 34A	1
2A	129- 18	NUT - hex, #12 - 24 NC, plated	1
2B	193- 60	WASHER - internal tooth lock, 1/4", plated	1
3	D 67721	SENDING UNIT - air filter restriction	1
4	221- 374	FITTING - 90°	1
5	D 65446	SENDING UNIT - engine water temperature	1
5A	193- 1000	NUT - lock, #10 - 32 NF	1
6	A 22877	CIRCUIT BREAKER - 40 amp.	1
7	182- 86	SCREW - pan head, slotted, #8 - 32 NC x 1/2", if used	2
7A	182- 145	SCREW - pan head, slotted, #10 - 32 NF x 1/2", if used	2
8	193- 1002	NUT - lock, #8 - 32 NC	2
9	193- 1000	NUT - lock, #10 - 32 NF	2-4
10	D 67957	PLATE - breaker mounting, if used	1-2
10A	D 74343	STRAP - breaker mounting, if used	1-2
11	13- 412	HHCS - 1/4" - 20 NC x 3/4"	2
12	92- 4	WASHER - lock, 1/4"	2
13	95- 4	WASHER - flat, 1/4"	1
14	49852	CLAMP - harness mounting	1
15	D 67876	WIRE - jumper	1
16	REF.	STARTER - engine, see pages 47 and 49	1
17	F 10142	CABLE - ground, round	1
17A	D 73383	CABLE - ground, flat	1
18	D 67874	CABLE - battery, negative terminal, round	1
18A	D 73427	CABLE - battery, negative terminal, flat	1
18B	193- 85	WASHER - lock, 5/8", used with D72427 cable	1
18C	129- 147	NUT - hex, jam, 5/8" - 11 NC, used with D72427 cable	1
19	13- 632	HHCS - 3/8" - 16 NC x 2"	1
20	193- 72	WASHER - external - internal tooth, 3/8"	1
21	13- 816	HHCS - 1/2" - 13 NC x 1", if used	2
21A	13- 616	HHCS - 3/8" - 16 NC x 1", if used	2
22	D 34980	CLAMP - battery cable, double round cables, if used	2
22A	49386	CLAMP - battery cable, single round cables, if used	2
22B	R 21385	CLAMP - battery cable, single round cable wrapped in hose, if used	3
23	92- 8	WASHER - lock, 1/2", if used	2
23A	92- 6	WASHER - lock, 3/8", if used	2
24	25- 108	NUT - hex, 1/2" - 13 NC, if used	2
24A	25- 106	NUT - hex, 3/8" - 16NC, if used	2

Continued on next page

http://www.minnparbackhoeparts.com/

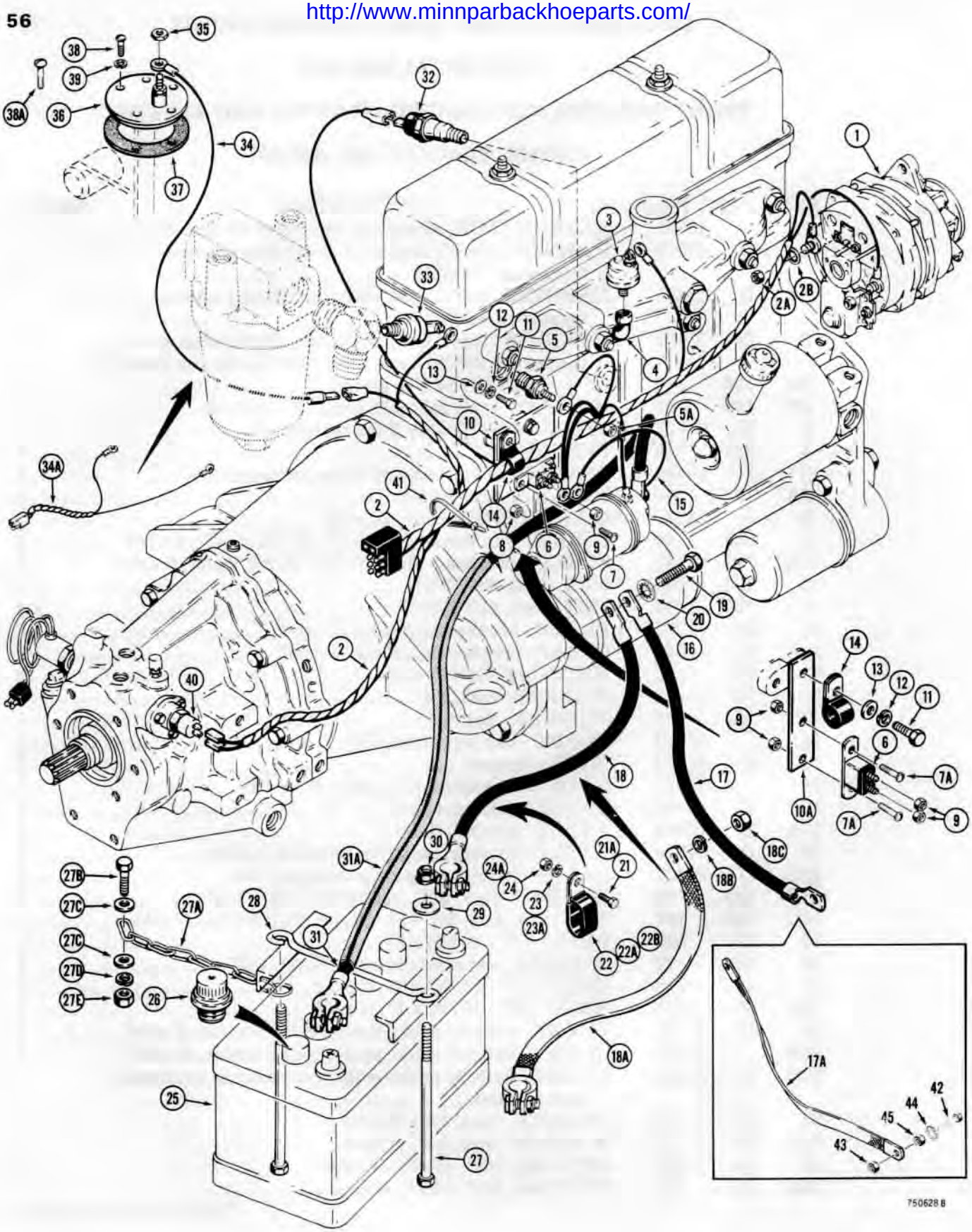

http://www.minnparbackhoeparts.com/

ELECTRICAL SYSTEM

FRONT HARNESS, ALTERNATOR, STARTER AND BATTERY

BEFORE TRACTOR SN. 8965035

REF.	PART NO.	DESCRIPTION	REQ'D.
25	*A 38411	BATTERY - 12 volt, service replacement must be used with A60553 nonspill caps	1
26	A 60553	CAP - battery, nonspill	6
27	115- 215	HHCS - 3/8" - 16 NC x 9-3/4"	2
27A	D 75052	CHAIN - door stop	1
27B	13- 620	HHCS - 3/8" - 16 NC x 1-1/4", chain attaching, drawbar models	1
27C	195- 2034	WASHER - flat, 3/8", if used	2
27D	92- 6	WASHER - lock, 3/8", if used	1
27E	25- 106	NUT - hex, 3/8" - 16 NC, if used	1
28	D 55559	HOLDDOWN - battery	1
29	195- 25	WASHER - flat, 3/8"	2
30	131- 652	NUT - hex, special, 3/8" - 16 NC	2
31	D 74991	CABLE - battery, positive	1
31A	D 75043	HOSE - cable insulating, if used	1
32	D 63294	SENDING UNIT - oil pressure	1
33	D 65458	SENDING UNIT - oil filter restriction	1
34	D 67875	WIRE - fuel sender, used before tractor sn. 8958213	1
34A	D 75028	HARNESS - fuel and filter restriction senders, used on tractor sn. 8958213 and after	1
35	193- 1000	NUT - lock, #10 - 32 NC	1
36	D 63293	SENDING UNIT - fuel	1
37	A 11822	GASKET - fuel sender	1
38	182- 143	SCREW - pan head slotted, #10 - 32 NF x 3/8", use D75465 sealing screw	5
38A	D 75465	SCREW - special sealing	5
39	92- 3	WASHER - lock, 3/16", used with 182-143 screw only	5
40	D 72823	SWITCH - neutral start, power shuttle	1
40	A 139078	SWITCH - neutral start, mechanical shuttle, not shown	1
41	L 18331	STRAP - wire harness	1
42	113- 2619	HHCS - 5/8" - 11 NC x 2", grade 8, plated, used with flat battery cable	1
43	129- 183	NUT - hex, 5/8" - 11 NC, plated, used with flat battery cable	1
44	193- 85	WASHER - lock, 5/8", used with flat battery cable	1
45	129- 147	NUT - hex, jam, 5/8" - 11 NC, used with flat battery cable	1

*NOTE: When replacing battery, conventional caps must be removed from new battery and replaced by (6) A60553 nonspill caps. Nonspill caps can be removed from existing battery and reused or new nonspill caps can be ordered.

http://www.minnparbackhoeparts.com/

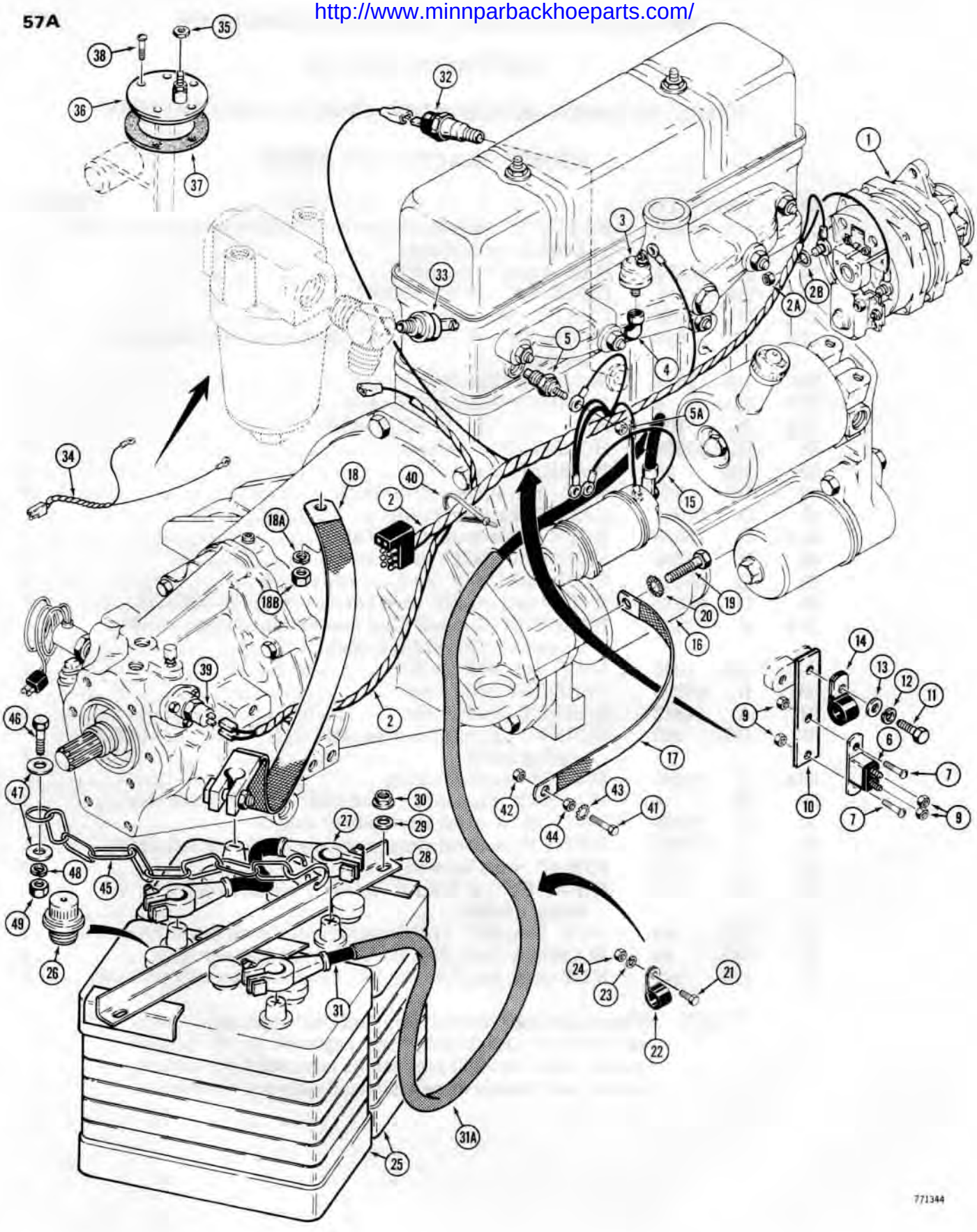

http://www.minnparbackhoeparts.com/

ELECTRICAL SYSTEM

FRONT HARNESS, ALTERNATOR, STARTER AND BATTERY

TRACTOR SN. 8965035 AND AFTER

REF.	PART NO.	DESCRIPTION	REQ'D.
1	REF.	ALTERNATOR - electrical, see pages 43 thru 45	1
2	D 75026	HARNESS - front, used with Delco Remy starter	1
2	D 80884	HARNESS - front, used with Nippondenso starter	1
2A	129- 18	NUT - hex, No. 12 - 24 NC, plated	1
2B	193- 60	WASHER - internal tooth lock, 1/4", plated	1
3	D 67721	SENDING UNIT - air filter restriction	1
4	221- 374	FITTING - 90°	1
5	D 65446	SENDING UNIT - engine water temperature	1
5A	193- 1000	NUT - lock, No. 10 - 32 NF	1
6	A 22877	CIRCUIT BREAKER - 40 amp	1
7	182- 145	SCREW - pan head, slotted, No. 10 - 32 NF x 1/2"	2
8		RESERVED	
9	193- 1000	NUT - lock, No. 10 - 32 NF	4
10	D 74343	STRAP - breaker mounting	1
11	13- 412	HHCS - 1/4" - 20 NC x 3/4"	1
12	92- 4	WASHER - lock, 1/4"	1
13	95- 4	WASHER - flat, 1/4"	1
14	49852	CLAMP - harness mounting	1
15	D 67876	WIRE - jumper, used with Delco Starter	1
15	D 79476	WIRE - jumper, used with Nippondenso Starter	1
16	REF.	STARTER - engine, see pages 47 and 49	1
17	D 73383	CABLE - ground, starter to frame	1
18	D 73427	CABLE - ground, battery to frame	1
18A	193- 85	WASHER - lock, 5/8"	1
18B	129- 147	NUT - hex, jam, 5/8" - 11 NC	1
19	13- 632	HHCS - 3/8" - 16 NC x 2"	1
20	193- 72	WASHER - external-internal tooth, 3/8"	1
21	13- 616	HHCS - 3/8" - 16 NC x 1"	2
22	R 21385	CLAMP - battery cable	2
23	92- 6	WASHER - lock, 3/8"	2
24	25- 106	NUT - hex, 3/8" - 16 NC	2
25	*D 44177	BATTERY - 6 volt, service replacement, must be used with nonspill caps	2
26	A 60553	CAP - battery, nonspill	6

Continued on next page

*NOTE: When replacing battery, conventional caps must be removed from new battery and replaced by (6) A60553 nonspill caps. Nonspill caps can be removed from existing battery and reused or new nonspill caps can be ordered.

http://www.minnparbackhoeparts.com/

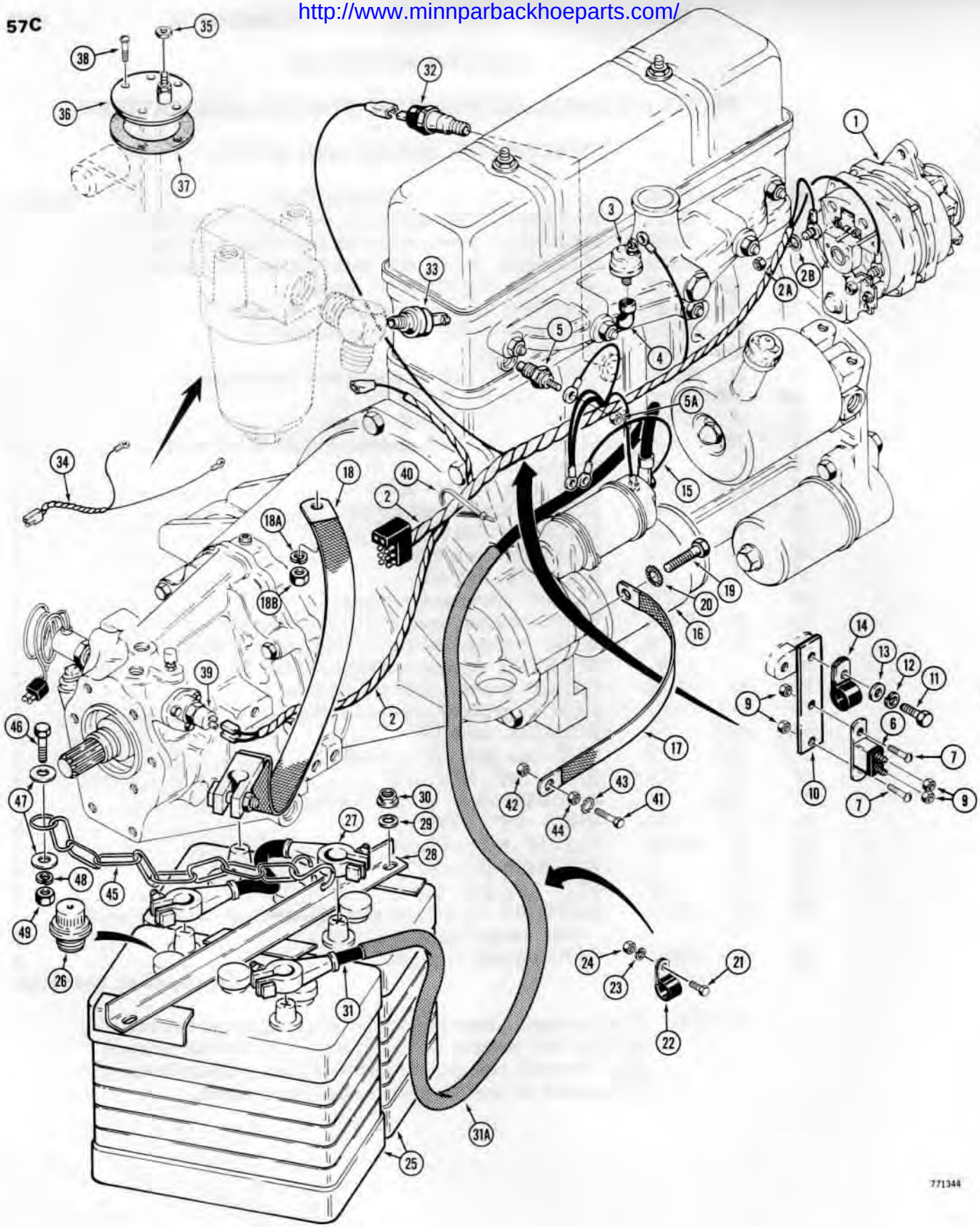

http://www.minnparbackhoeparts.com/

ELECTRICAL SYSTEM

FRONT HARNESS, ALTERNATOR, STARTER AND BATTERY

TRACTOR SN. 8965035 AND AFTER

REF.	PART NO.	DESCRIPTION	REQ'D.
27	R 11115	CABLE - between batteries	1
28	D 80730	HOLDDOWN - battery	1
29	195- 21	WASHER - flat, 5/16"	2
30	131- 4	NUT - hex, lock, 5/16" - 18 NC	2
31	D 74991	CABLE - battery, positive, used with Delco Remy starter	1
31	D 80892	CABLE - battery, positive, used with Nippondenso starter	1
31A	D 75043	HOSE - cable insulating	1
32	D 63294	SENDING UNIT - oil pressure	1
33	D 65458	SENDING UNIT - oil filter restriction	1
34	D 75028	HARNESS - fuel and filter restriction senders	1
35	193- 1000	NUT - lock, No. 10 - 32 NC	1
36	D 63293	SENDING UNIT - fuel	1
37	A 11822	GASKET - fuel sender	1
38	D 75465	SCREW - special sealing	5
39	D 72823	SWITCH - neutral start, power shuttle	1
39	A 139078	SWITCH - neutral start, mechanical shuttle, not shown	1
40	L 18331	STRAP - wire harness	1
41	113- 2619	HHCS - 5/8" - 11 NC x 2", grade 8, plated	1
42	129- 183	NUT - hex, 5/8" - 11 NC, plated	1
43	193- 85	WASHER - lock, 5/8"	1
44	129- 147	NUT - hex, jam, 5/8" - 11 NC	1
45	D 79078	CHAIN - door stop	1
46	13- 620	HHCS - 3/8" - 16 NC x 1-1/4", chain attaching, drawbar models	1
47	195- 2034	WASHER - flat, 3/8", if used	2
48	92- 6	WASHER - lock, 3/8", if used	1
49	25- 106	NUT - hex, 3/8" - 16 NC, if used	1

http://www.minnparbackhoeparts.com/

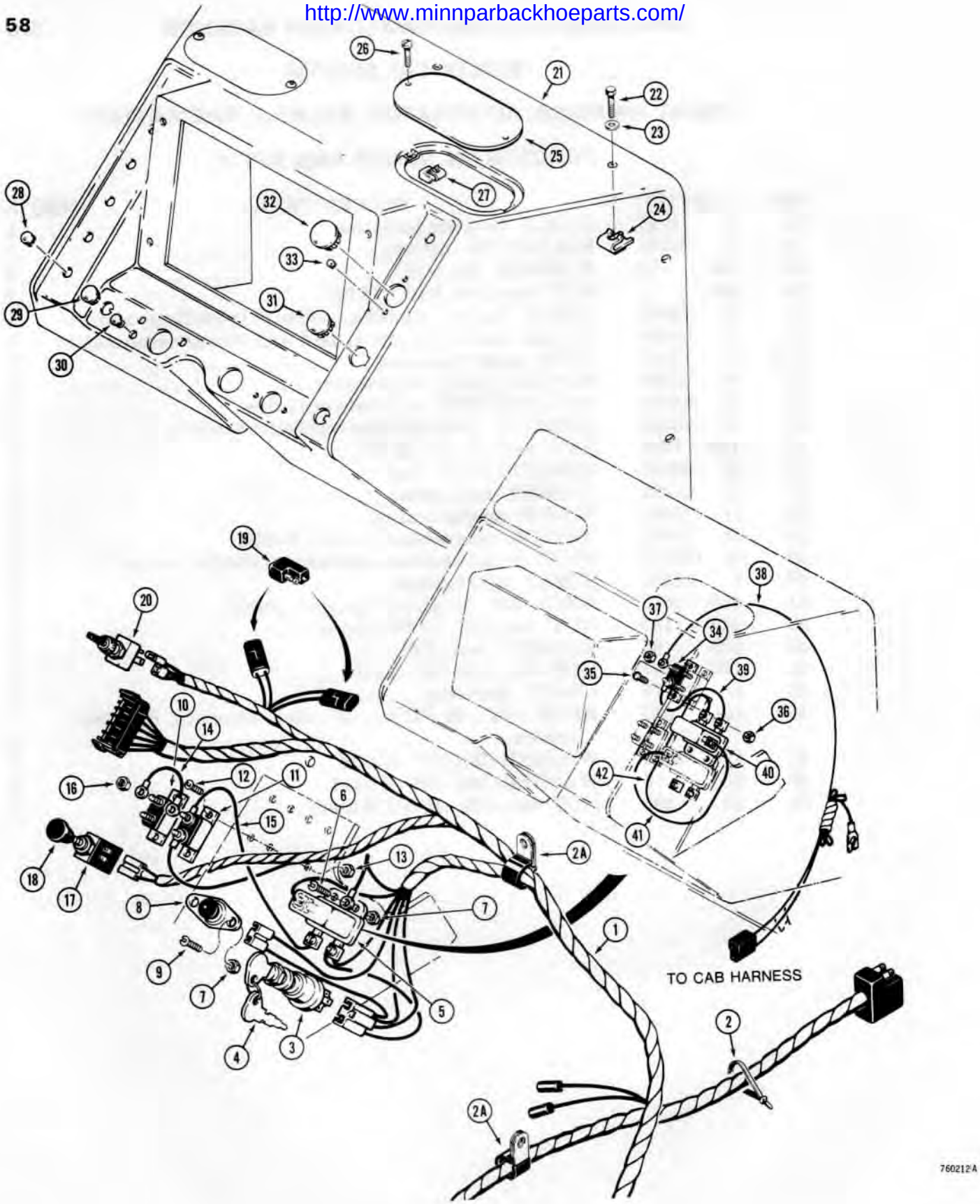

http://www.minnparbackhoeparts.com/

ELECTRICAL SYSTEM

MAIN HARNESS AND INSTRUMENT PANEL
USED WITH SINGLE LIGHT SWITCH CONTROL
*BEFORE TRACTOR SN. 8958213

REF.	PART NO.	DESCRIPTION	REQ'D.
1	D 67956	HARNESS - main	1
2	L 18331	STRAP - harness	1
2A	49838	CLAMP - wire	2
3	D 67148	SWITCH - key	1
4	D 36822	KEY - switch	2
5	L 11508	RELAY - electrical	1
6	182- 147	SCREW - pan head, slotted, #10 - 32 NF x 3/4"	2
7	193- 1000	NUT - hex, lock, #10 - 32 NF	4
8	D 67872	SWITCH - push button starter	1
9	182- 528	SCREW - pan head, slotted, #10 - 32 NF x 1/2"	2
10	D 37252	CIRCUIT BREAKER - 10 amp	1
11	D 37203	CIRCUIT BREAKER - 15 amp	1
12	182- 86	SCREW - pan head, slotted, #8 - 32 NC x 1/2"	4
13	193- 1002	NUT - lock, #8 - 32 NC	4
14	D 67962	WIRE - jumper, breaker	1
15	D 67961	WIRE - jumper, breaker to relay	1
16	193- 1000	NUT - lock, #10 - 32 NF	4
17	D 74330	SWITCH - light	1
18	D 95781	KNOB - light switch	1
19	L 11760	DIODE - switch protecting	2
20	D 67743	SWITCH - test, air cleaner and hydraulic filter	1
21	D 72863	PANEL - instrument, dashboard	1
22	113- 102	HHCS - 5/16" - 18 NC x 3/4"	7
23	195- 521	WASHER - flat, 5/16"	7
24	131- 637	NUT - "J" type, 5/16" - 18 NC	7
25	D 67695	COVER - access hole	2
26	182- 516	SCREW - pan head, slotted, #10 - 24 NC x 1/2"	4
27	131- 619	NUT - "J" type, #10 - 24 NC	4
28	353- 402	PLUG - button, 3/8"	5
29	353- 404	PLUG - button, 1/2"	1
30	353- 401	PLUG - button, 5/16"	3
31	353- 407	PLUG - button, 11/16"	1
32	353- 411	PLUG - button, 1"	1
33	353- 421	PLUG - button, 3/16"	2

USED WITH CAB ONLY

34	D 37203	CIRCUIT BREAKER - 15 amp	1
35	182- 86	SCREW - pan head, slotted, #8 - 32 NC - 1/2"	2
36	193- 1002	NUT - lock, #8 - 32 NF	2
37	193- 1000	NUT - lock, #10 - 32 NF	2
38	D 72915	WIRE - to cab harness	1
39	D 67961	WIRE - jumper, breaker to relay	1
40	L 11508	RELAY - electrical	1
41	D 72922	WIRE - jumper, between relays	1
42	D 72939	WIRE - jumper, between relays	1

*NOTE: For tractor sn. 8958213 and after see page 61.

http://www.minnparbackhoeparts.com/

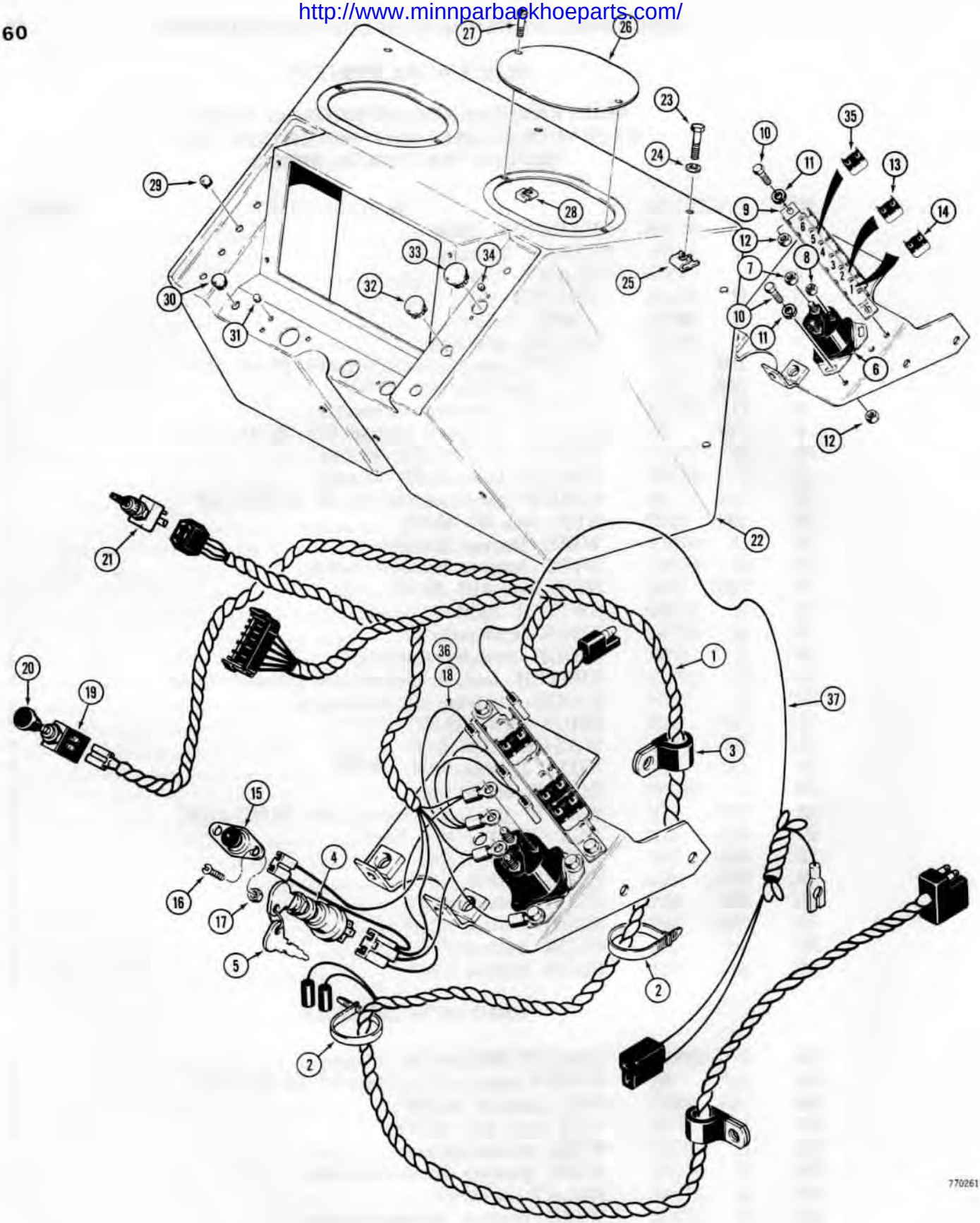

http://www.minnparbackhoeparts.com/

ELECTRICAL SYSTEM

MAIN HARNESS AND INSTRUMENT PANEL
USED WITH SINGLE LIGHT SWITCH CONTROL
*TRACTOR SN. 8958213 AND AFTER

REF.	PART NO.	DESCRIPTION	REQ'D.
1	D 75027	HARNESS - main	1
2	L 18331	STRAP - harness	2
3	49838	CLAMP - wire	2
4	D 67148	SWITCH - key	1
5	D 36822	KEY - switch	2
6	A 77311	SOLENOID - electrical	1
7	193- 1009	NUT - hex, lock, 5/16" - 18 NC	2
8	193- 1000	NUT - hex, lock, #10 - 32 NF	1
9	D 75355	BRACKET - circuit breaker	1
10	13- 412	HHCS - 1/4" - 20 NC x 3/4"	4
11	95- 4	WASHER - lock, 1/4"	4
12	193- 1006	NUT - hex, lock, 1/4" - 20 NC	4
13	D 75356	CIRCUIT BREAKER - 10 amp	1
14	D 75357	CIRCUIT BREAKER - 15 amp	1
15	D 67872	SWITCH - push button starter	1
16	182- 528	SCREW - pan head, slotted, #10 - 32 NF x 1/2"	2
17	193- 1000	NUT - hex, lock, #10 - 32 NF	2
18	D 75225	WIRE ASSEMBLY - solenoid to circuit breakers	1
19	D 74330	SWITCH - light	1
20	D 95781	KNOB - light switch	1
21	D 75360	SWITCH - test, air cleaner and hydraulic filter	1
22	D 72863	PANEL - instrument, dashboard	1
23	113- 102	HHCS - 5/16" - 18 NC x 3/4"	7
24	195- 521	WASHER - flat, 5/16"	7
25	131- 637	NUT - "J" type, 5/16" - 18 NC	7
26	D 67695	COVER - access hole	2
27	182- 516	SCREW - pan head, slotted, #10 - 24 NC x 1/2"	4
28	131- 619	NUT - "J" type, #10 - 24 NC	4
29	353- 402	PLUG - button, 3/8"	5
30	353- 404	PLUG - button, 1/2"	1
31	353- 401	PLUG - button, 5/16"	3
32	353- 407	PLUG - button, 11/16"	1
33	353- 411	PLUG - button, 1"	1
34	353- 421	PLUG - button, 3/16"	2

USED WITH CAB ONLY

35	D 75357	CIRCUIT BREAKER - 15 amp	1
36	D 75225	WIRE - solenoid to circuit breaker	1
37	D 75955	WIRE - to cab harness	1

*NOTE: For models before tractor sn. 8958213 see page 59.

http://www.minnparbackhoeparts.com/

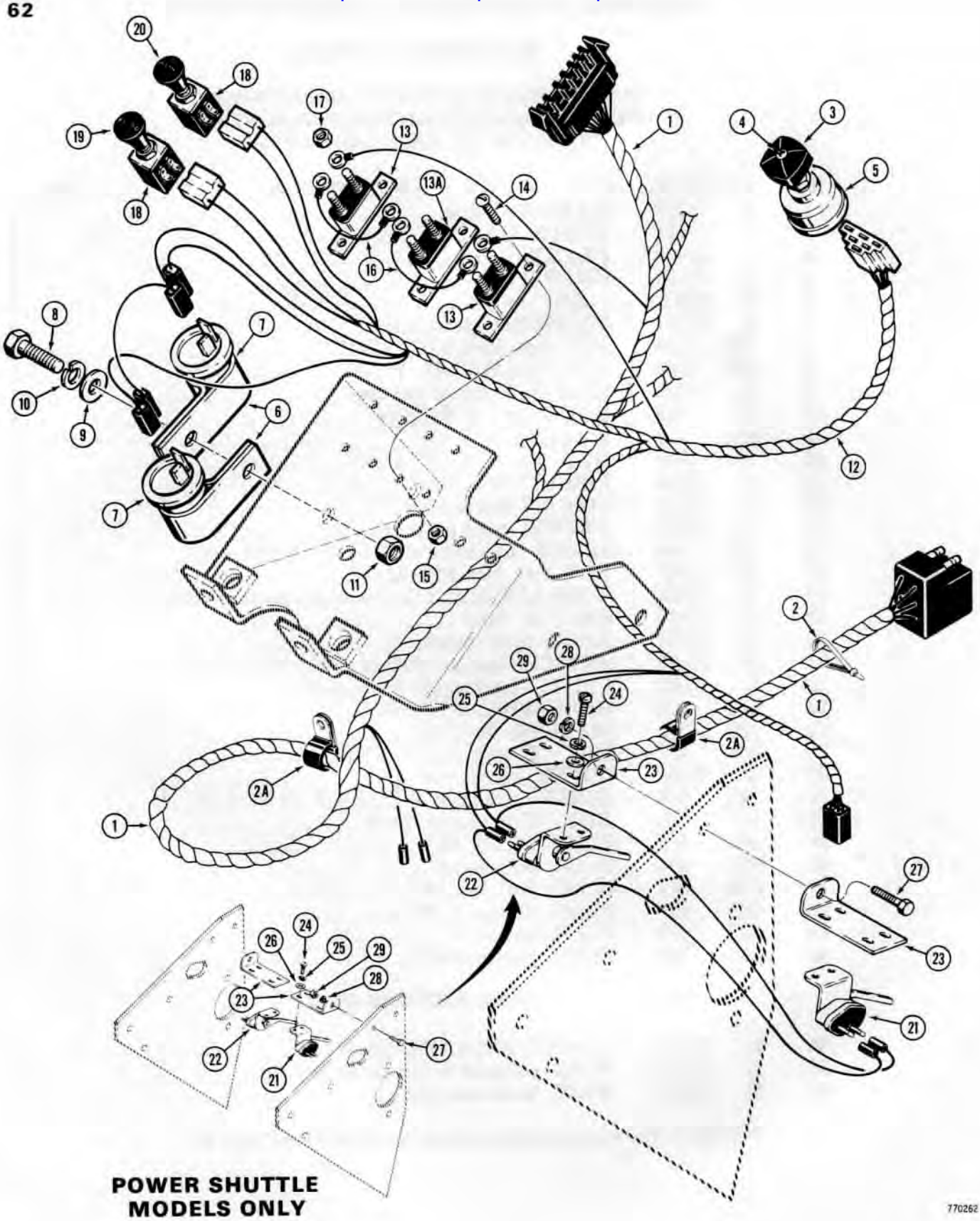

http://www.ninnerbackhoeparts.com/

ELECTRICAL SYSTEM

MAIN HARNESS AND CONNECTIONS USED WITH DUAL LIGHT SWITCH CONTROL *BEFORE TRACTOR SN. 8958213

REF.	PART NO.	DESCRIPTION	REQ'D.
1	D 67956	HARNESS - main	1
2	L 18331	STRAP - main harness	1
2A	49838	CLAMP - wire	2
3	A 20465	KNOB - turn signal switch	1
4	A 20468	SCREW - button retaining	1
5	D 52008	SWITCH - turn signal	1
6	A 34868	CLAMP - flasher mounting	2
7	A 65550	FLASHER - 12 volt	2
8	13- 516	HHCS - 5/16" - 18 NC x 1"	1
9	195- 21	WASHER - flat, 5/16"	1
10	92- 5	WASHER - lock, 5/16"	1
11	25- 105	NUT - hex, 5/16" - 18 NC	1
12	D 72921	HARNESS - lights and flashers	1
13	D 37203	CIRCUIT BREAKER - 15 amp	2
13A	D 37252	CIRCUIT BREAKER - 10 amp	1
14	182- 86	SCREW - pan head, slotted, #8 - 32 NC x 1/2"	6
15	193- 1002	NUT - hex, #8 - 32 NC	6
16	D 67962	WIRE - jumper, circuit breakers	2
17	193- 1000	NUT - hex, #10 - 32 NF	6
18	D 74330	SWITCH - light	2
19	D 95783	KNOB - flood light	1
20	D 95782	KNOB - flasher	1
21	A 33976	SWITCH - stop, R.H.	1
22	A 33977	SWITCH - stop, L.H.	1
23	D 70492	BRACKET - brake switch mounting	2
24	182- 143	SCREW - pan head, slotted, #10 - 32 NF x 7/16", plated	4
25	192- 18	WASHER - lock, #10, plated	4
26	195- 513	WASHER - flat, #10, plated	4
27	13- 416	HHCS - 1/4" - 20 NC x 1"	1-2
28	92- 4	WASHER - lock, 1/4"	1-2
29	25- 104	NUT - hex, 1/4" - 20 NC	1-2

*NOTE: For tractor sn. 8958213 and after see page 65.

http://www.minnparbackhoeparts.com/

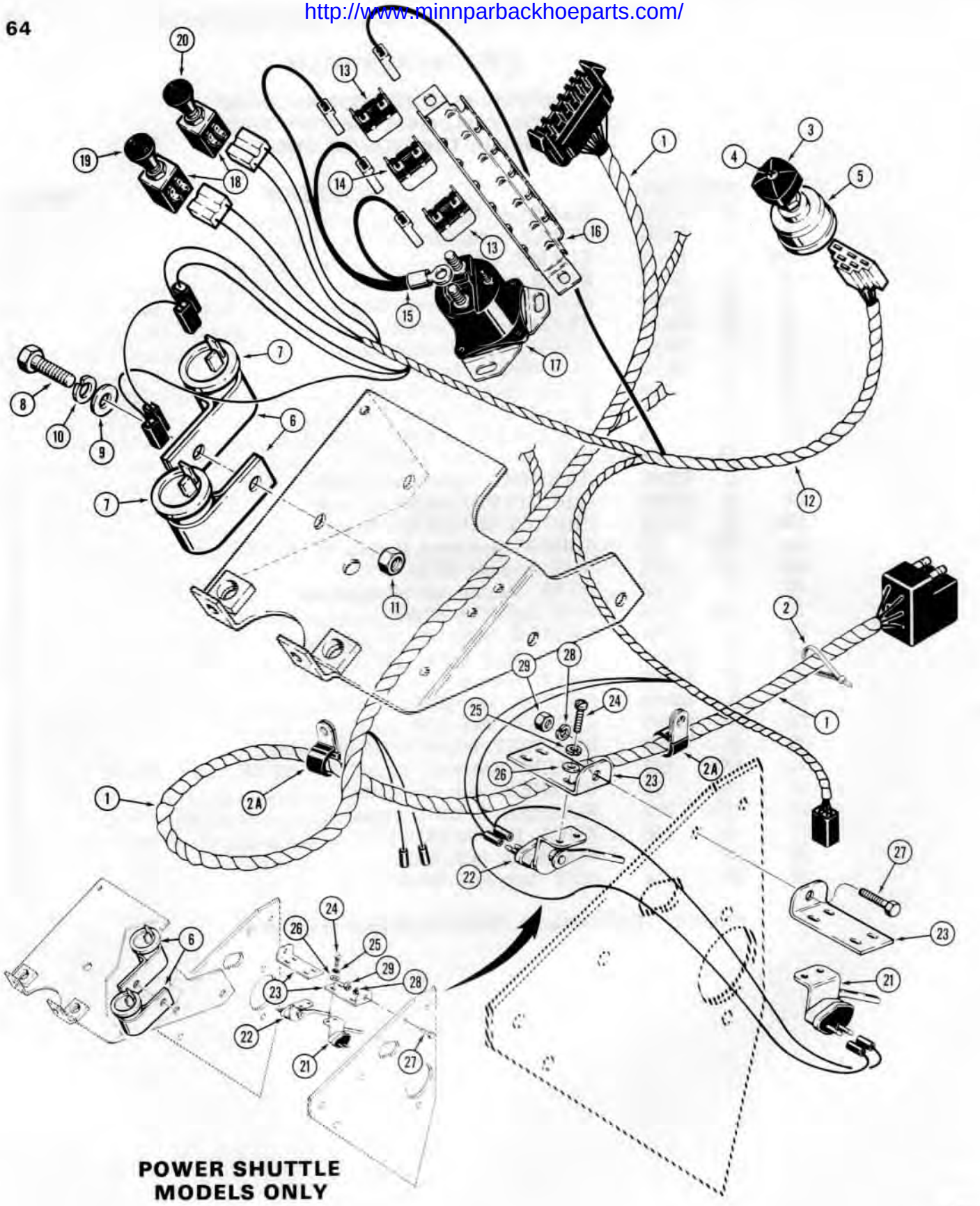

http://www.minnparbackhoeparts.com/

ELECTRICAL SYSTEM

MAIN HARNESS AND CONNECTIONS
USED WITH DUAL LIGHT SWITCH CONTROL
*TRACTOR SN. 8958213 AND AFTER

REF.	PART NO.	DESCRIPTION	REQ'D.
1	D 75027	HARNESS - main	1
2	L 18331	STRAP - main harness	2
2A	49838	CLAMP - wire	2
3	A 20465	KNOB - turn signal switch	1
4	A 20468	SCREW - button retaining	1
5	D 52008	SWITCH - turn signal	1
6	A 34868	CLAMP - flasher mounting	2
7	A 65550	FLASHER - 12 volt	2
8	13- 516	HHCS - 5/16" - 18 NC x 1"	1
9	195- 21	WASHER - flat, 5/16"	1
10	92- 5	WASHER - lock, 5/16"	1
11	25- 105	NUT - hex, 5/16" - 18 NC	1
12	D 75958	HARNESS - lights and flashers	1
13	D 75357	CIRCUIT BREAKER - 15 amp	2
14	D 75356	CIRCUIT BREAKER - 10 amp	1
15	D 75225	WIRE ASSEMBLY - solenoid to breakers	1
16	REF.	BRACKET - circuit breaker, see page 61 for bracket and attaching hardware	1
17	REF.	SOLENOID - electrical, see page 61 for solenoid and attaching hardware	1
18	D 74330	SWITCH - light	2
19	D 95783	KNOB - flood light	1
20	D 95782	KNOB - flasher	1
21	A 33976	SWITCH - stop, R.H.	1
22	A 33977	SWITCH - stop, L.H.	1
23	D 70492	BRACKET - brake switch mounting	2
24	182- 143	SCREW - pan head, slotted, #10 - 32 NF x 7/16", plated	4
25	192- 18	WASHER - lock, #10, plated	4
26	195- 513	WASHER - flat, #10, plated	4
27	13- 416	HHCS - 1/4" - 20 NC x 1"	1-2
28	92- 4	WASHER - lock, 1/4"	1-2
29	25- 104	NUT - hex, 1/4" - 20 NC	1-2

*NOTE: For models before tractor sn. 8958213 see page 63.

http://www.minnparbackhoeparts.com/

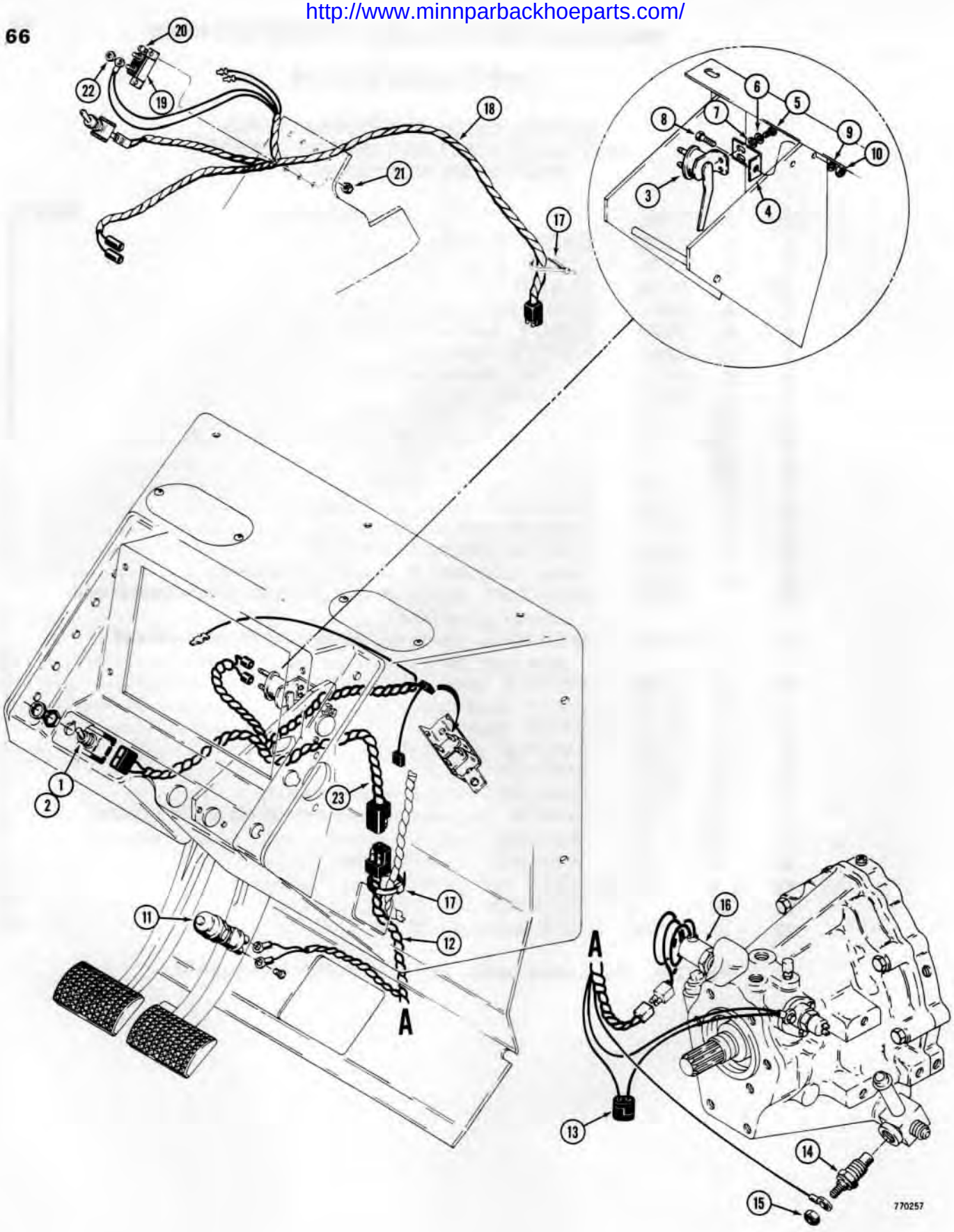

http://www.minnparbackhoeparts.com/

POWER SHUTTLE ELECTRICAL SYSTEM

REF.	PART NO.	DESCRIPTION	REQ'D.
1	D 67251	SWITCH - clutch cutout, dash mounted, includes hardware	1
2	D 73929	PLATE - clutch cutout switch	1
3	A 33977	SWITCH - clutch cutout, brake pedal	1
4	D 73915	BRACKET - brake switch	1
5	182- 143	SCREW - #10 - 32 NF x 3/8"	2
6	192- 18	WASHER - lock, 3/16"	2
7	195- 513	WASHER - flat, #10, plated	2
8	13- 416	HHCS - 1/4" - 20 NC x 1"	1
9	92- 4	WASHER - lock, 1/4"	1
10	25- 104	NUT - hex, 1/4" - 20 NC	1
11	D 71139	SWITCH - clutch cutout, floor, includes terminal screws	1
12	D 73919	HARNESS - clutch cutout, lower	1
13	L 11760	DIODE - switch protecting	1
14	D 65446	SENDING UNIT - transmission temperature	1
15	193- 1000	NUT - hex, lock, #10 - 32 NF	1
16	D 67903	SOLENOID - clutch cutout, at shuttle	1
17	L 18331	STRAP - harness retaining	UAR

USED BEFORE TRACTOR SN. 8958213

18	D 73918	HARNESS - clutch cutout, upper	1
19	D 37252	CIRCUIT BREAKER - 10 amp	1
20	182- 86	SCREW - #8 - 32 NC x 1/2"	2
21	193- 1002	NUT - hex, lock, #8 - 32 NC	2
22	193- 1000	NUT - hex, lock, #10 - 32 NF	2

USED ON TRACTOR SN. 8958213 AND AFTER

23	D 75025	HARNESS - clutch cutout, upper	1

http://www.minnparbackhoeparts.com/

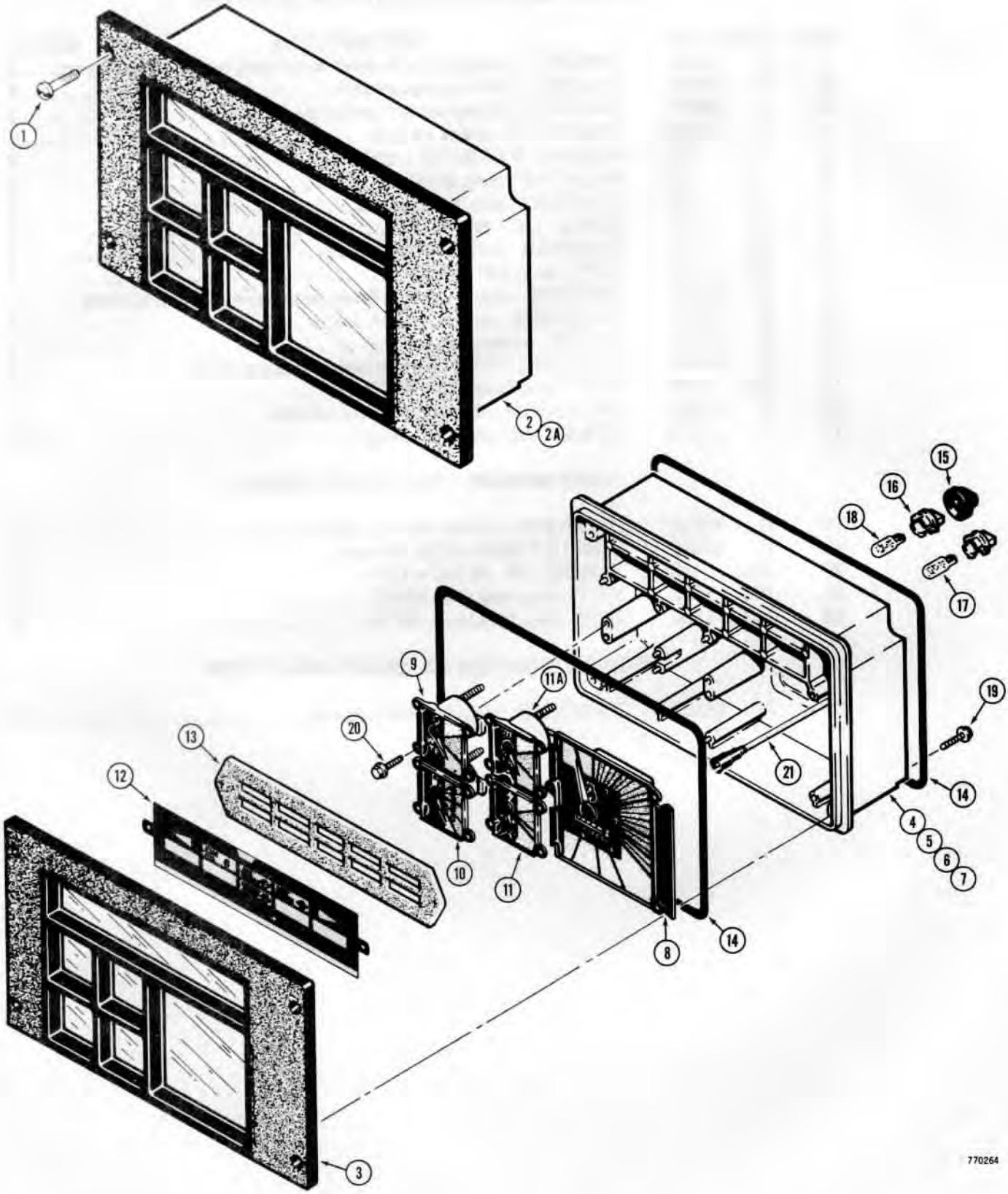

http://www.minnparbackhoeparts.com/

INSTRUMENT CLUSTER

REF.	PART NO.	DESCRIPTION	REQ'D.
1	182- 516	SCREW - pan head, slotted, #10 - 24 NC x 1/2"	4
2	D 67149	CLUSTER - instrument, mechanical shuttle models only	1
2A	D 64276	CLUSTER - instrument, power shuttle models only	1
3	D 71334	COVER - cluster	1
	D 71335	CASE ASSEMBLY - cluster	1
4	NSS	CASE - cluster	1
5	NSS	CIRCUIT BOARD - printed	1
6	NSS	CLIP - gauges	12
7	NSS	GASKET - case	1
8	D 71336	GAUGE - tachometer	1
9	D 71337	GAUGE - water temperature	1
10	D 71338	GAUGE - fuel level	1
11	D 71339	GAUGE - voltmeter	1
11A	D 71340	GAUGE - oil temperature, used on power shuttle models only	1
12	D 71341	STRIP - telltale light indentification	1
13	D 71342	GASKET - lens	1
14	D 71343	GASKET - cluster	2
15	D 71344	COVER - rubber	3
16	L 35949	SOCKET - lamp, green	9-10
17	W 10478	BULB - cluster warning, #194	6-7
18	D 71346	BULB - cluster illumination, #168	3
19	164- 15	SCREW - hex socket head, #6 x 3/4"	4
20	164- 13	SCREW - hex socket head, #6 x 1/2"	8
21	D 68851	CABLE - tachometer drive	1

http://www.minnparbackhoeparts.com/

DRY CLUTCH MODELS

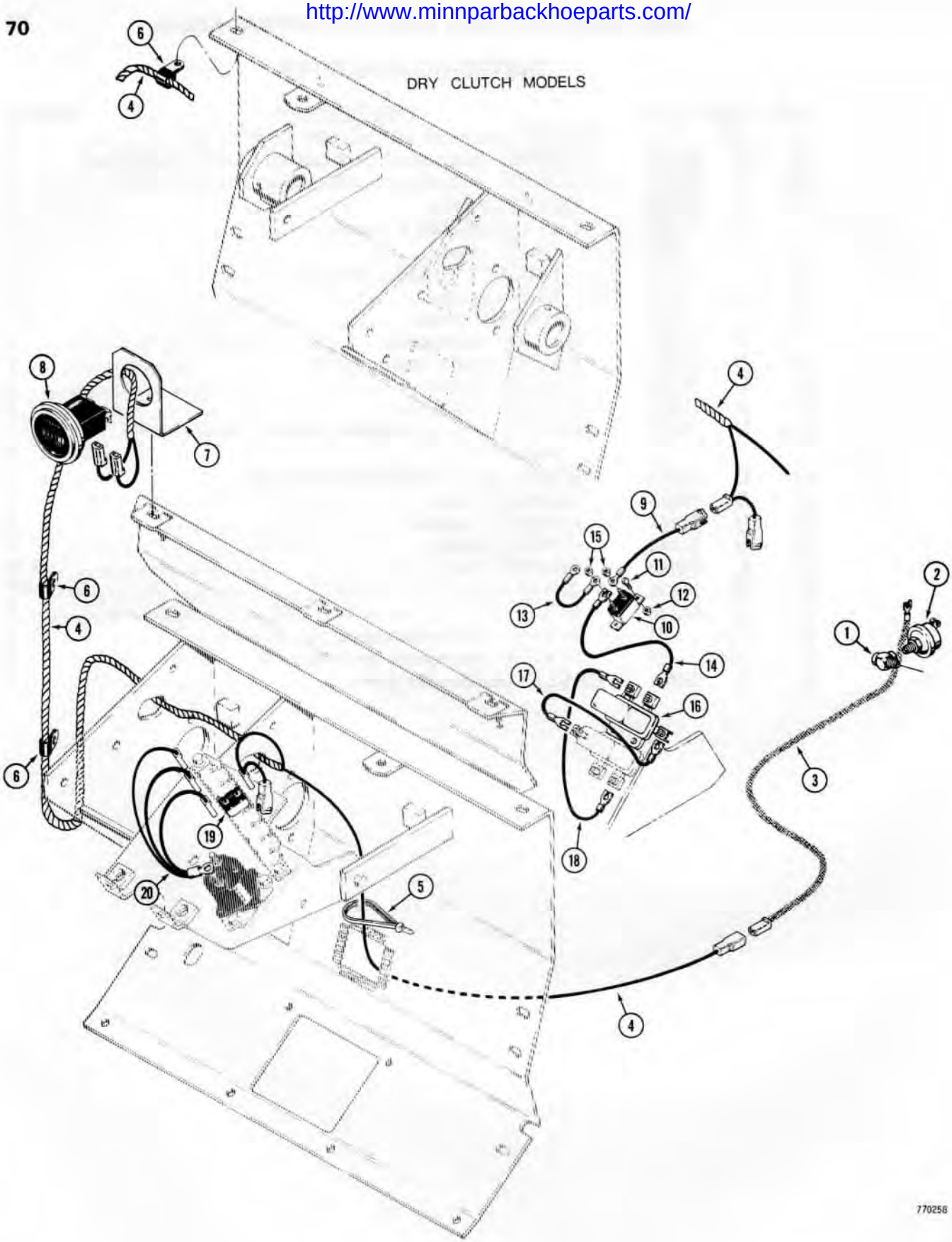

http://www.minnparbackhoeparts.com/

HOURMETER ELECTRICAL SYSTEM

REF.	PART NO.	DESCRIPTION	REQ'D.
1	217- 1061	FITTING - tee, 1/8" NPT, at engine	1
2	D 65458	SENDING UNIT - hourmeter, at engine	1
3	D 75712	WIRE - from sending unit	1
4	D 76118	HARNESS - hourmeter	1
5	L 18331	STRAP - wire retaining	UAR
6	49853	CLAMP - wire retaining	2
7	D 75592	BRACKET - hourmeter	1
8	D 53047	HOURMETER ASSEMBLY	1
		USED BEFORE TRACTOR SN. 8958213	
9	D 76214	WIRE - hourmeter harness to circuit breaker	1
10	D 37203	CIRCUIT BREAKER - 15 amp	1
11	182- 86	SCREW - pan head, slotted, #8 - 32 NC	2
12	193- 1002	NUT - hex, lock, #8 - 32 NC	2
13	D 67962	WIRE - jumper, breaker to breaker	1
14	D 67961	WIRE - breaker to relay	1
15	193- 1000	NUT - hex, lock, #10 - 32 NF	2
16	L 11508	RELAY - electrical	1
17	D 72922	WIRE - #1 relay terminal connecting	1
18	D 72939	WIRE - #2 relay terminal connecting	1
		USED ON TRACTOR SN. 8958213 AND AFTER	
19	D 75357	CIRCUIT BREAKER - 15 amp	1
20	D 75225	WIRE - circuit breaker to solenoid	1

http://www.minnparbackhoeparts.com/

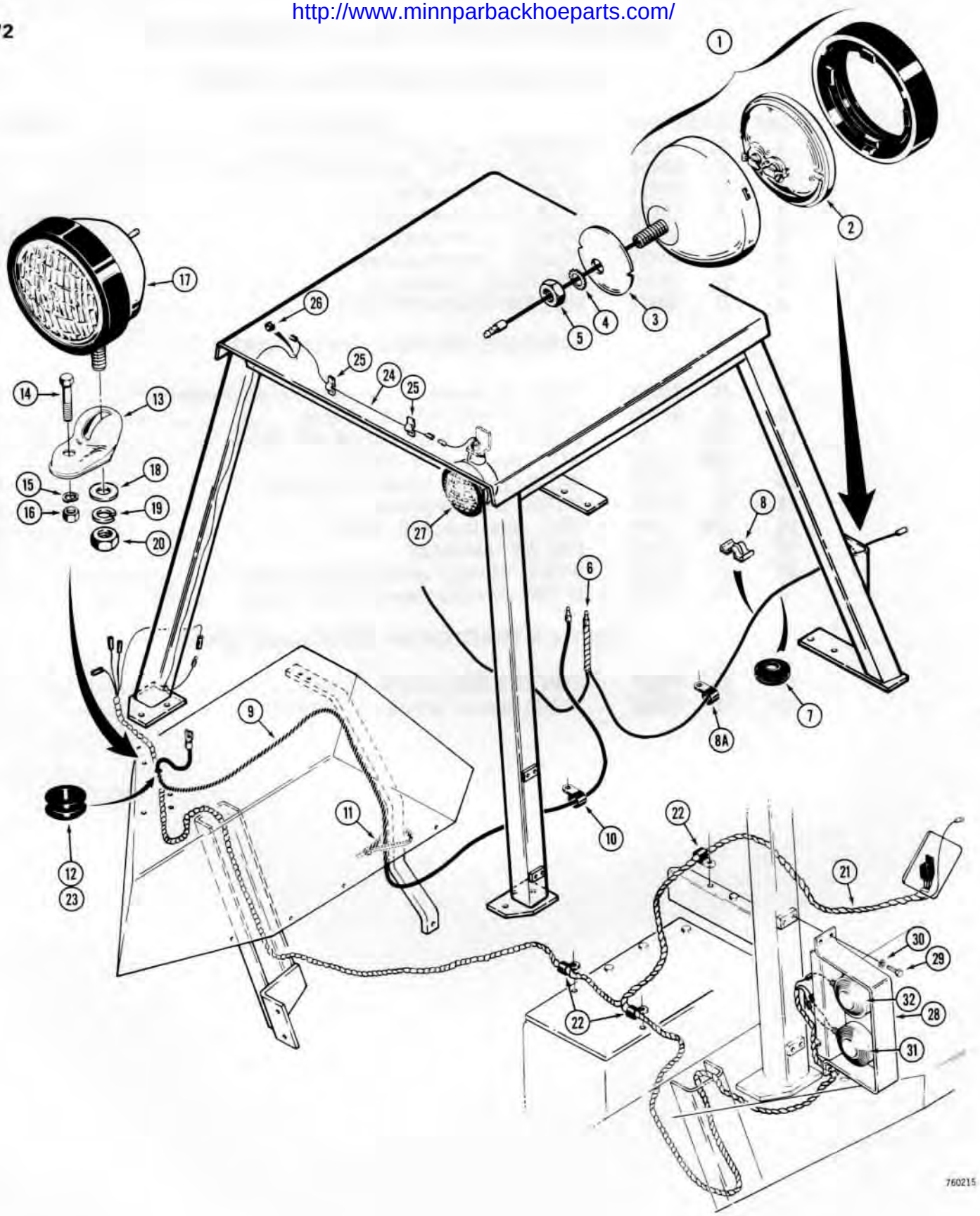

http://www.minnparbackhoeparts.com/

CANOPY ELECTRICAL SYSTEM AND LIGHTS

REF.	PART NO.	DESCRIPTION	REQ'D.
1	A 59701	LIGHT ASSEMBLY - front	2
2	A 24572	LAMP - sealed beam, #4411	1
3	A 59702	WASHER - retainer	2
4	193- 87	WASHER - external-internal tooth lock, 1/2"	2
5	129- 105	NUT - hex, 1/2" - 13 NC, plated	2
6	D 69263	WIRE - front lights	1
7	49561	GROMMET - rubber	1
8	F 93268	CLIP - wire, stick on type	5
8A	49853	CLAMP - wire	3

USED WITH FENDER MOUNTED REAR LIGHT

9	D 70747	WIRE - rear fender light	1
10	49859	CLAMP - wire	1
11	L 18331	STRAP - wire tie	3
12	D 37936	GROMMET - rubber	1
13	A 34046	BRACKET - rear fender light	1
14	113- 209	HHCS - 3/8" - 16 NC x 1-1/2", plated	1
15	192- 21	WASHER - lock, 3/8"	1
16	129- 103	NUT - hex, 3/8" - 16 NC	1
17	D 70115	LIGHT - rear flood and tail, parts list page 79B	1
18	195- 533	WASHER - flat, 1/2", plated	1
19	192- 23	WASHER - lock, 1/2", plated	1
20	129- 105	NUT - hex, 1/2" - 13 NC, plated	1

USED WITH UPPER REAR LIGHTS AND FLASHERS

21	D 72920	HARNESS - rear lights	1
22	49851	CLAMP - harness	3
23	D 37936	GROMMET - rubber	2
24	D 72923	HARNESS - upper, rear lights	1
25	F 93268	CLIP - wire, stick on type	2
26	L 10082	GROMMET - rubber	1
27	D 49976	LIGHT ASSEMBLY - rear flood, parts list page 79B	2
28	D 75557	BRACKET - light mounting, rear	2
29	113- 118	HHCS - 5/16" - 18 NC x 5/8", plated	4-8
30	192- 20	WASHER - lock, 5/16", plated	4-8
31	D 49733	LIGHT - stop and tail, parts list page 79	2
32	D 49734	LIGHT - flasher, parts list page 79	2

http://www.minnparbackhoeparts.com/

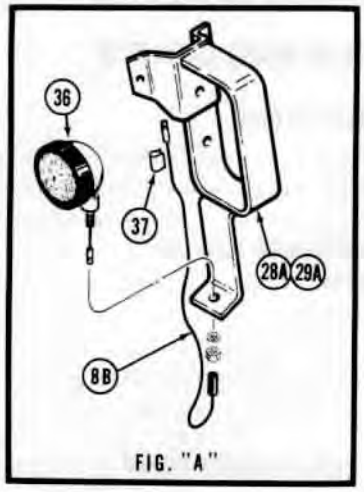

FIG. "A"

http://www.minnparbackhoeparts.com/

CAB ELECTRICAL SYSTEM AND LIGHTS

REF.	PART NO.	DESCRIPTION	REQ'D.
1	A 59723	LIGHT ASSEMBLY - front	2
2	A 25213	RETAINER - light	1
3	A 42294	LAMP - sealed beam, #4406	1
4	A 59702	WASHER - retainer	2
5	193- 87	WASHER - external - internal tooth lock, 1/2"	2
6	129- 105	NUT - hex, 1/2" - 13 NC, plated	2
7	F 53322	GROMMET - rubber	2
8	F 43962	HARNESS - cab, used before cab sn. 7867204, order 8A and 8B	1
8A	F 44608	HARNESS - cab, used on cab sn. 7867204 and after	1
8B	F 44607	WIRE - harness extension, can be used to adapt F43962 harness for use on cab sn. 7867204 and after	2
9	F 44338	CHANNEL - lower front, wire	1
10	F 44337	CHANNEL - upper front, wire	1
11	187- 1046	SCREW - self-tapping, 3/8" - 16 NC x 5/8", plated	4
12	F 44339	CHANNEL - upper, wire	1
13	F 44407	CLIP - wire	10
14	R 37316	WIRE - to L.H. front light	1
15	R 37315	WIRE - to front wiper	1
16	49859	CLAMP - cab harness	1
17	49851	CLAMP - cab harness	1

USED WITH FENDER MOUNTED REAR LIGHT

18	D 70747	WIRE - rear fender light	1
19	49859	CLAMP - wire	1
20	A 34046	BRACKET - rear fender light	1
21	113- 209	HHCS - 3/8" - 16 NC x 1-1/2", plated	1
22	192- 21	WASHER - lock, 3/8"	1
23	129- 103	NUT - hex, 3/8" - 16 NC	1
24	D 70115	LIGHT - rear flood and tail, parts list page 79B	1
25	195- 533	WASHER - flat, 1/2", plated	1
26	192- 33	WASHER - lock, 1/2", plated	1
27	129- 105	NUT - hex, 1/2" - 13 NC, plated	1

USED WITH UPPER REAR LIGHTS AND FLASHERS

28	F 96596	BRACKET - optional rear light mounting, R.H., used before cab sn. 7867204	1
28A	F 96702	BRACKET - optional rear light mounting, R.H., used on cab 7867204 and after	1
29	F 96595	BRACKET - optional rear light mounting, L.H., used before cab sn. 7867204	1
29A	F 96701	BRACKET - optional rear light mounting, L.H., used on cab 7867204 and after	1
30	113- 206	HHCS - 3/8" - 16 NC x 3/4", plated	4
31	192- 21	WASHER - lock, 3/8", plated	4
32	129- 103	NUT - hex, 3/8" - 16 NC, plated	4
33	L 13765	GROMMET - wire	2
34	D 49734	LIGHT - flasher, parts list page 79	2
35	D 49733	LIGHT - stop and tail, parts list page 79	2
36	D 49976	LIGHT ASSEMBLY - rear flood, parts list page 79B	2
37	214- 1105	CLIP - light wire, if used	10

http://www.minnparbackhoeparts.com/

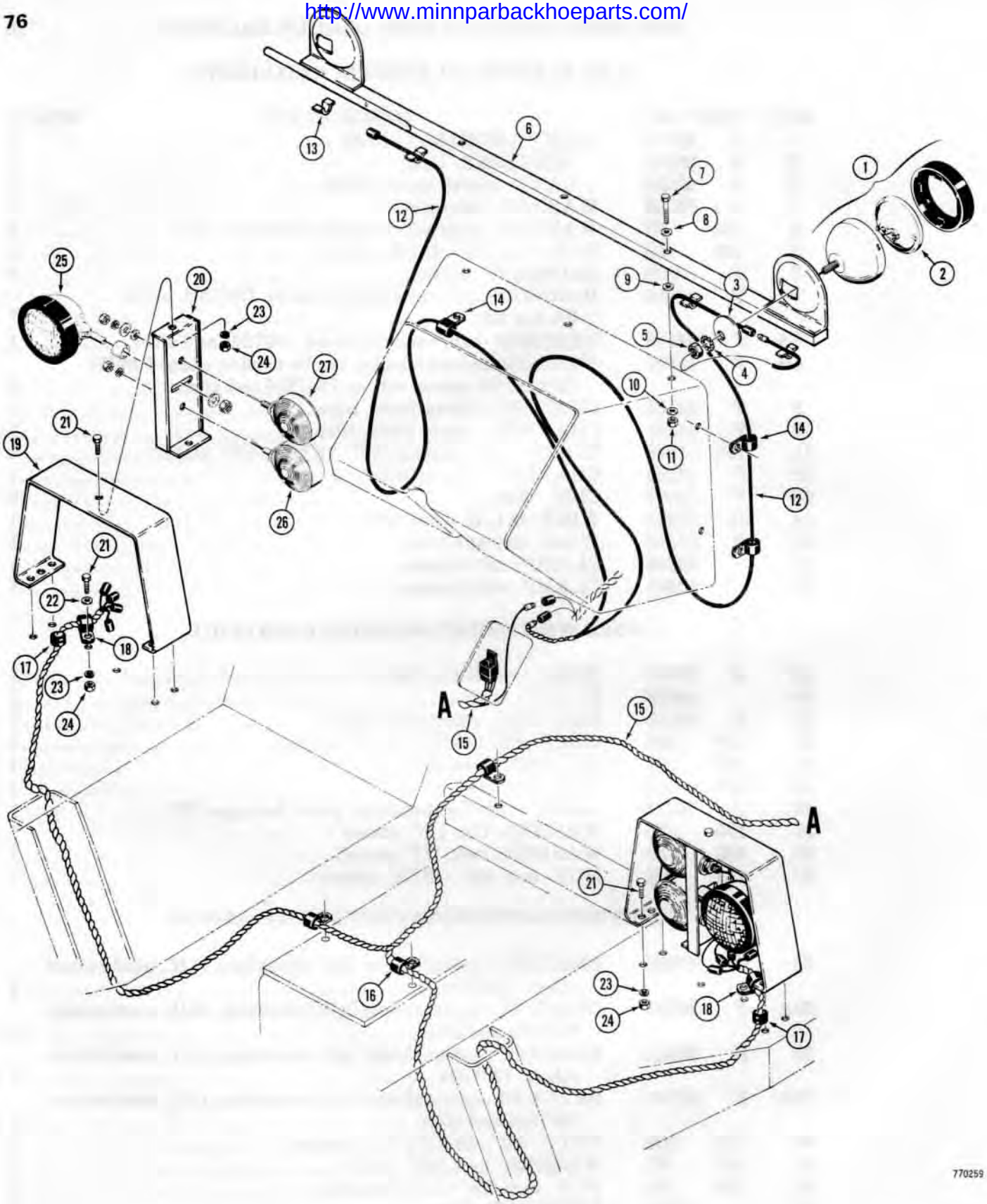

http://www.minnparbackhoeparts.com/

ELECTRICAL SYSTEM AND LIGHTS WITHOUT CANOPY OR CAB

REF.	PART NO.	DESCRIPTION	REQ'D.
1	A 59701	LIGHT ASSEMBLY - front	2
2	A 24572	LAMP - sealed beam, #4411	1
3	A 59702	WASHER - retainer	2
4	193- 87	WASHER - external - internal tooth, lock, 1/2"	2
5	129- 105	NUT - hex, 1/2" - 13 NC, plated	2
6	D 77790	BRACKET - front lights	1
7	113- 120	HHCS - 5/16" - 18 NC x 1-3/4", plated	3
8	195- 521	WASHER - flat, 5/16", plated	3
9	95- 5	WASHER - flat, 5/16", used as spacer on models with hourmeter	2
10	195- 21	WASHER - flat, 5/16"	3
11	131- 4	NUT - hex, lock, 5/16" - 18 NC	3
12	D 69263	WIRE - front lights	1
13	F 93268	CLIP - wire, stick on type	4
14	49853	CLAMP - wire	5
15	D 75239	HARNESS - rear lights	1
16	49851	CLAMP - wire	3
17	D 37936	GROMMET - rubber	2
18	49859	CLAMP - wire	2
19	D 58721	BRACKET - rear light, outer	2
20	D 58713	BRACKET - rear light, center	2
21	13- 612	HHCS - 3/8" - 16 NC x 3/4"	14
22	195- 25	WASHER - plain, 3/8", clamp bolts only	2
23	92- 6	WASHER - lock, 3/8"	14
24	25- 106	NUT - hex, 3/8" - 16 NC	14
25	D 49976	LIGHT ASSEMBLY - rear flood, parts list page 79B	2
26	D 49733	LIGHT ASSEMBLY - stop and tail, parts list page 79	2
27	D 49734	LIGHT ASSEMBLY - signal and flasher, parts list page 79	2

http://www.minnparbackhoeparts.com/

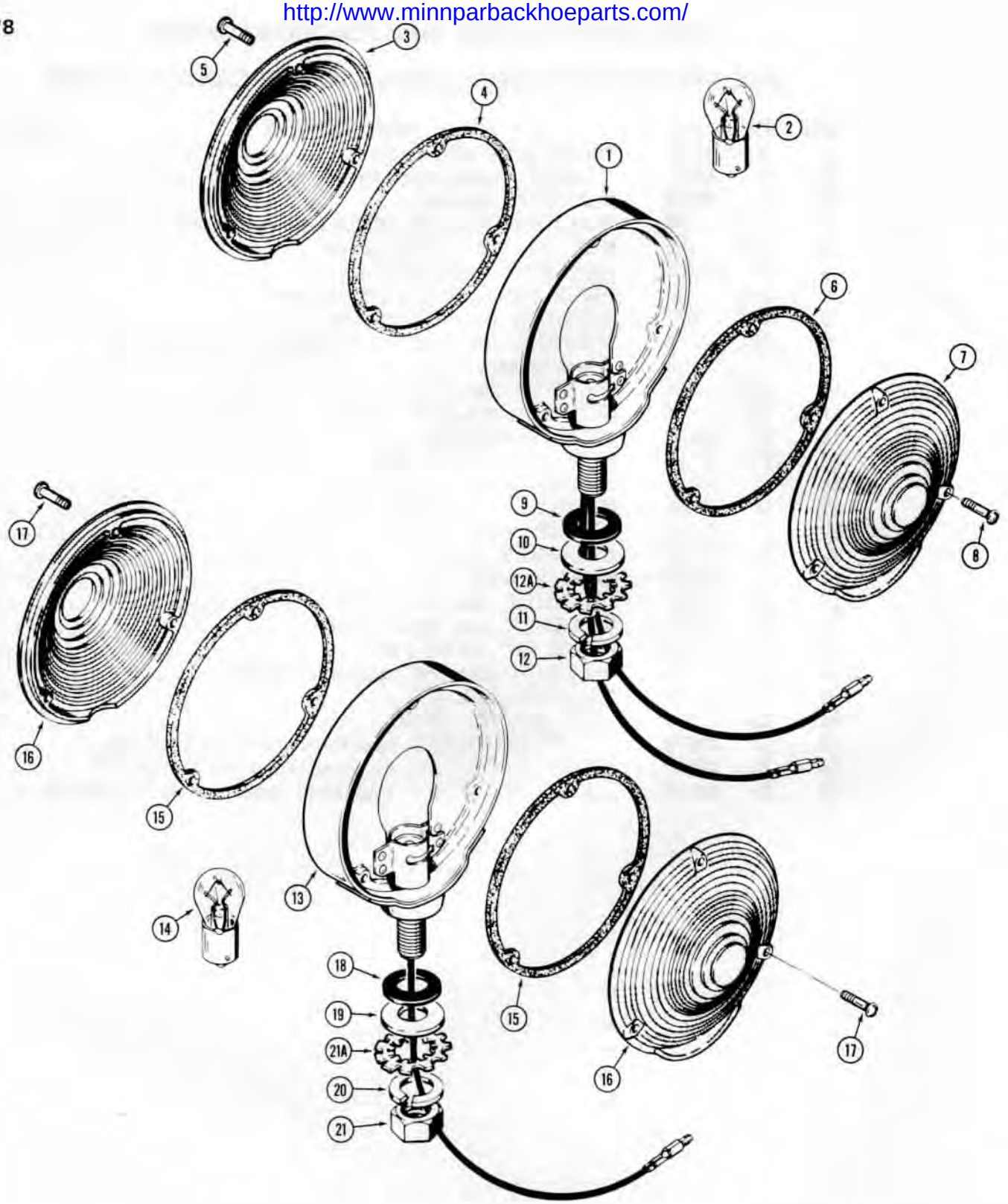

http://www.minnparbackhoeparts.com/

TRACTOR LIGHTS

REF.	PART NO.	DESCRIPTION	REQ'D.
		D49733 STOP AND TAILLIGHT	
	D 49733	LIGHT ASSEMBLY - stop and tail	2
1	NSS	BODY - light, stop and tail	1
2	T 34857	BULB - light, #1157	1
	L 32213	KIT - lens replacement, red	1
3	NSS	LENS - red	1
4	NSS	GASKET - lens	1
5	173- 279	SCREW - round head, #6 - 32 NC x 5/8"	3
	L 32214	KIT - lens replacement, amber	1
6	NSS	GASKET - lens	1
7	NSS	LENS - amber	1
8	173- 279	SCREW - round head, #6 - 32 NC x 5/8"	3
9	L 32256	BUSHING - rubber, if used	1
10	195- 105	WASHER - plain, 1/2", zinc plated, if used	1-2
11	192- 23	WASHER - lock, 1/2", zinc plated	1
12	129- 125	NUT - hex, lock, 1/2" - 20 NF, zinc plated	1
12A	193- 87	WASHER - external-internal tooth lock, 1/2", if used	2
		D49734 SIGNAL AND FLASHER LIGHT	
	D 49734	LIGHT ASSEMBLY - signal and flasher	2
13	NSS	BODY - light, signal and flasher	1
14	A 41264	BULB - light, #1156	1
	L 32214	KIT - lens replacement	2
15	NSS	GASKET - lens	1
16	NSS	LENS - amber	1
17	173- 279	SCREW - round head, #6 - 32 NC x 5/8"	3
18	L 32256	BUSHING - rubber, if used	1
19	195- 105	WASHER - plain, 1/2", zinc plated, if used	1-2
20	192- 23	WASHER - lock, 1/2", zinc plated	1
21	129- 125	NUT - hex, lock, 1/2" - 20 NF, zinc plated	1
21A	193- 87	WASHER - external-internal tooth lock, 1/2", if used	2

NOTE: For front light parts list see pages 73, 75 and 77. For rear flood light parts see page 79B.

http://www.minnparbackhoeparts.com/

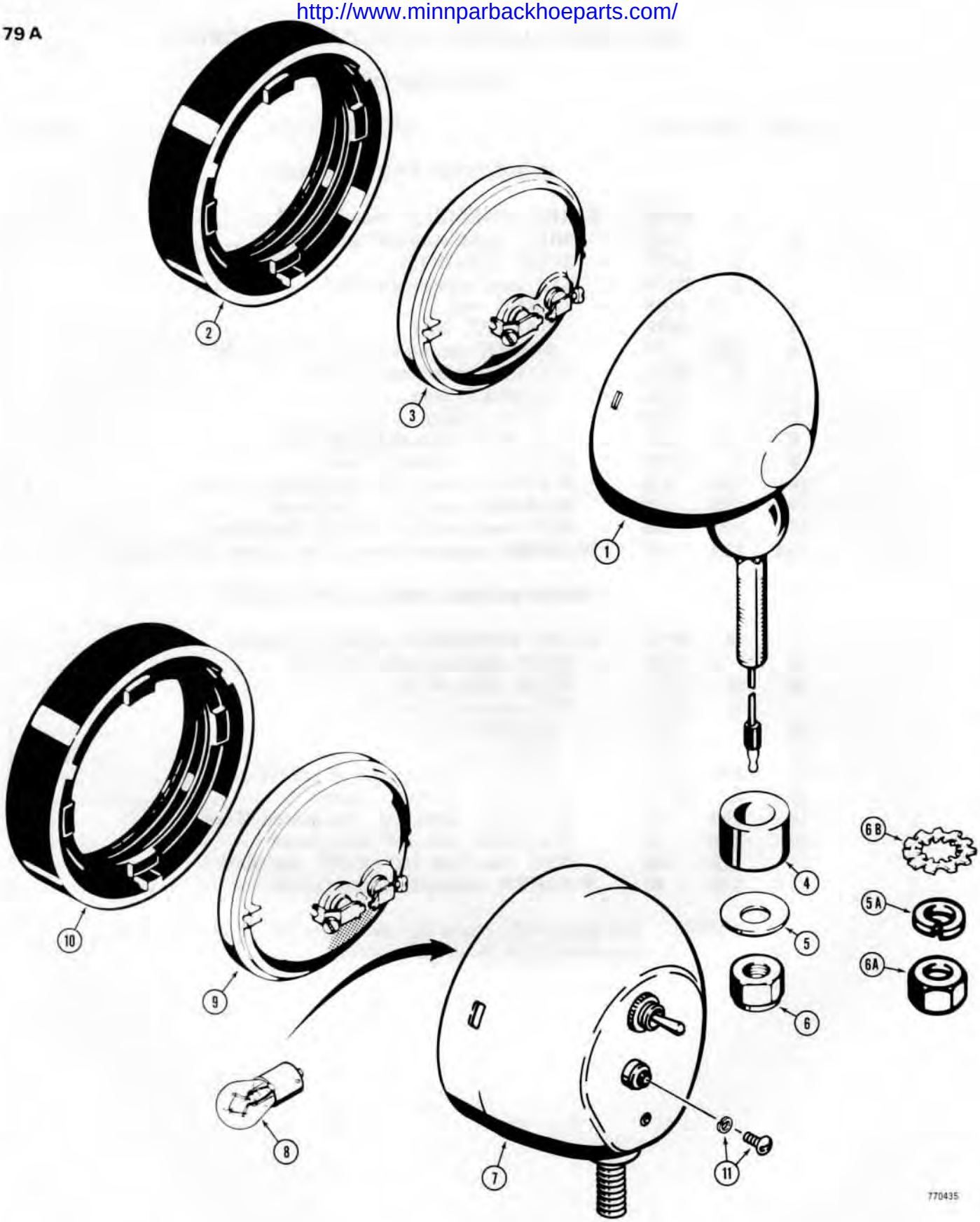

http://www.minnparbackhoeparts.com/

TRACTOR LIGHTS

REF.	PART NO.	DESCRIPTION	REQ'D.
		D49976 REAR FLOOD LIGHT	
	D 49976	LIGHT ASSEMBLY - rear flood	2
1	NSS	BODY - light	1
2	A 25213	RETAINER - light, rubber	1
3	A 24572	LAMP - sealed beam, #4411	1
4	D 37048	BUSHING - pivot	1
5	195- 106	WASHER - flat, 1/2"	1
5A	192- 23	WASHER - lock, 1/2", plated, if used	1
6	131- 9	NUT - hex, lock, 1/2" - 20 NF, if used	1
6A	129- 165	NUT - hex, jam, 1/2" - 20 NF, plated, if used	1
6B	193- 87	WASHER - external-internal tooth lock, 1/2", if used	2
		D70115 FLOOD AND TAILLIGHT	
	D 70115	LIGHT ASSEMBLY - flood and tail	1
7	NSS	SHELL - light	1
8	33686	BULB - tail, #1141	1
9	D 71409	LAMP - sealed beam, #4409X	1
10	A 25213	RETAINER - sealed beam	1
11	193- 543	SCREW AND LOCKWASHER ASSEMBLY - #8 - 32 NC - x 3/8"	1

NOTE: For front light parts list see pages 73, 75 and 77. For stop and flasher lights see page 79.

http://www.minnparbackhoeparts.com/

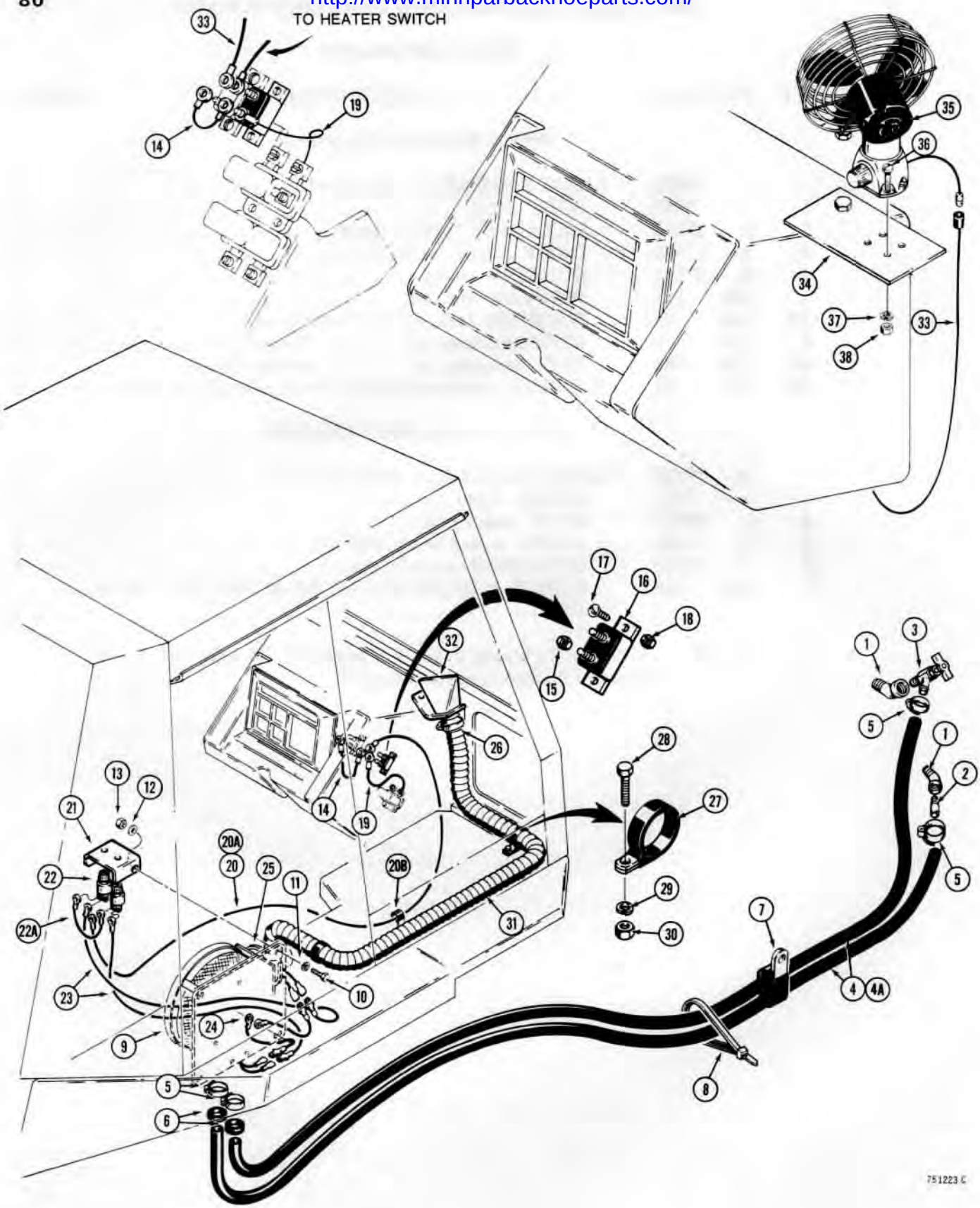

http://www.minnparbackhoeparts.com/

CAB HEATER AND DEFROSTER SYSTEM

*BEFORE TRACTOR SN. 8958213

REF.	PART NO.	DESCRIPTION	REQ'D.
1	D 73369	FITTING - street, 45°, 3/8" NPT	2
2	L 17985	NIPPLE - 3/8" NPT	1
3	A 16764	VALVE - water shutoff	1
4	D 72024	HOSE - heater, models with heater on R.H. side of cab, 102" long (2591 mm)	2
4A	L 52722	HOSE - heater, models with heater on L.H. side of cab, 151" long (3835 mm)	2
5	214- 253	CLAMP - heater hose	4
6	D 73137	GROMMET - heater hose	2
7	L 50799	CLAMP - heater hoses, if used	1
8	L 18331	STRAP - heater hose tie	4
9	F 93834	HEATER - cab, parts list page 85	1
10	113- 103	HHCS - 5/16" - 18 NC x 1", plated	3-4
11	192- 20	WASHER - lock, 5/16", plated	3-4
12	195- 521	WASHER - flat, 5/16", plated	3-4
13	129- 102	NUT - hex, 5/16" - 18 NC, plated	3-4
14	D 67962	WIRE - jumper, breaker to breaker	1
15	193- 1000	NUT - hex, lock, #10 - 32 NF	2
16	D 37203	BREAKER - 15 amp	1
17	182- 86	SCREW - pan head, slotted, #8 - 32 NC	2
18	193- 1002	NUT - hex, lock, #8 - 32 NC	2
19	D 67961	WIRE - relay to circuit breaker	1
20	A 56103	WIRE - to heater switch 80" long (2032 mm) if used	1
20A	D 69903	WIRE - to heater switch, 95" long (2413 mm) if used	1
20B	49853	CLAMP - wire, if used	3
21	D 69895	BRACKET - heater and defroster switch mounting	1
22	D 75650	SWITCH - heater and defroster	1-2
22A	D 69950	WIRE - jumper, switch to switch, if used	1
23	D 69901	WIRE - switch to heater	1-2
24	D 69902	WIRE - heater ground	1

MODELS WITH DEFROSTER BLOWER AND TUBE

25	REF.	DEFROSTER - parts list and related parts page 85	1
26	214- 257	CLAMP - hose, defroster tube	2
27	R 14192	CLAMP - "P" type, defroster tube	2
28	113- 206	HHCS - 3/8" - 16 NC x 3/4"	2
29	192- 21	WASHER - lock, 3/8"	2
30	129- 103	NUT - hex, 3/8" - 16 NC	2
31	D 69884	TUBE - defroster	1
32	D 70801	DEFLECTOR - tube outlet	1

MODELS WITH DEFROSTER WINDOW FAN

33	D 72991	WIRE - breaker to defroster fan	1
34	D 74031	PLATE - fan mounting	1
35	L 13468	FAN - defroster, parts list page 87	1
36	169- 137	SCREW - machine, #10 - 24 NC x 5/8", plated	4
37	192- 18	WASHER - lock, #10, plated	4
38	129- 17	NUT - hex, #10 - 24 NC, plated	4

*NOTE: For tractor sn. 8958213 and after see page 83.

Printed in U.S.A. Issued January, 1978

http://www.minnparbackhoeparts.com/

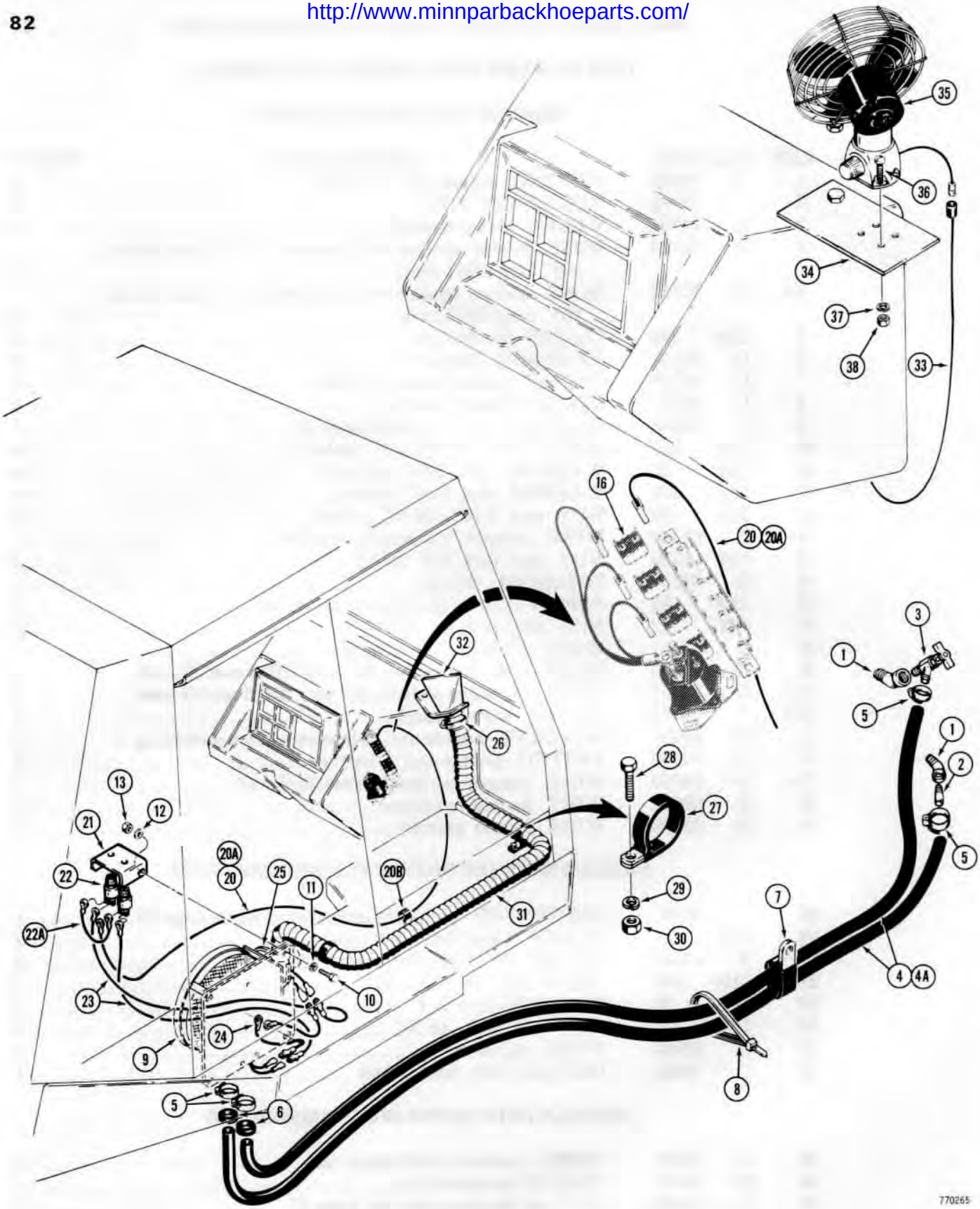

http://www.minnparbackhoeparts.com/

CAB HEATER AND DEFROSTER SYSTEM

*TRACTOR SN. 8958213 AND AFTER

REF.	PART NO.	DESCRIPTION	REQ'D.
1	D 73369	FITTING - street, 45°, 3/8" NPT	2
2	L 17985	NIPPLE - 3/8" NPT	1
3	A 16764	VALVE - water shutoff	1
4	D 72024	HOSE - heater, models with heater on R.H. side of cab, 102" long (2591 mm)	2
4A	L 52722	HOSE - heater, models with heater on L.H. side of cab, 151" long (3835 mm)	2
5	214- 253	CLAMP - heater hose	4
6	D 73137	GROMMET - heater hose	2
7	L 50799	CLAMP - heater hoses, if used	1
8	L 18331	STRAP - heater hose tie	4
9	F 93834	HEATER - cab, parts list page 85	1
10	113- 103	HHCS - 5/16" - 18 NC x 1", plated	3-4
11	192- 20	WASHER - lock, 5/16", plated	3-4
12	195- 103	WASHER - flat, 5/16", plated	3-4
13	129- 102	NUT - hex, 5/16" - 18 NC, plated	3-4
14		RESERVED	
15		RESERVED	
16	D 75357	BREAKER - 15 amp	1
17		RESERVED	
18		RESERVED	
19		RESERVED	
20	D 75588	WIRE - to heater switch, 80" long (203 mm) if used	1
20A	D 75817	WIRE - to heater switch, 95" long (2413 mm) if used	1
20B	49853	CLAMP - wire, if used	3
21	D 69895	BRACKET - heater and defroster switch mounting	1
22	D 75650	SWITCH - heater and defroster	1-2
22A	D 69950	WIRE - jumper, switch to switch, if used	1
23	D 75652	WIRE - switch to heater	1-2
24	D 69902	WIRE - heater ground	1

MODELS WITH DEFROSTER BLOWER AND TUBE

25	REF.	DEFROSTER - parts list and related parts page 85.	1
26	214- 257	CLAMP - hose, defroster tube	2
27	R 14192	CLAMP - "P" type, defroster tube	2
28	113- 206	HHCS - 3/8" - 16 NC x 3/4"	2
29	192- 21	WASHER - lock, 3/8"	2
30	129- 103	NUT - hex, 3/8" - 16 NC	2
31	D 69884	TUBE - defroster	1
32	D 70801	DEFLECTOR - tube outlet	1

MODELS WITH DEFROSTER WINDOW FAN

33	D 75454	WIRE - breaker to defroster fan	1
34	D 74031	PLATE - fan mounting	1
35	L 13468	FAN - defroster, parts list page 87	1
36	169- 137	SCREW - machine, #10 - 24 NC x 5/8", plated	4
37	192- 18	WASHER - lock, #10, plated	4
38	129- 17	NUT - hex, #10 - 24 NC, plated	4

*NOTE: For models before tractor sn. 8958213 see page 81.

Printed in U.S.A. Issued January, 1978

http://www.minnparbackhoeparts.com/

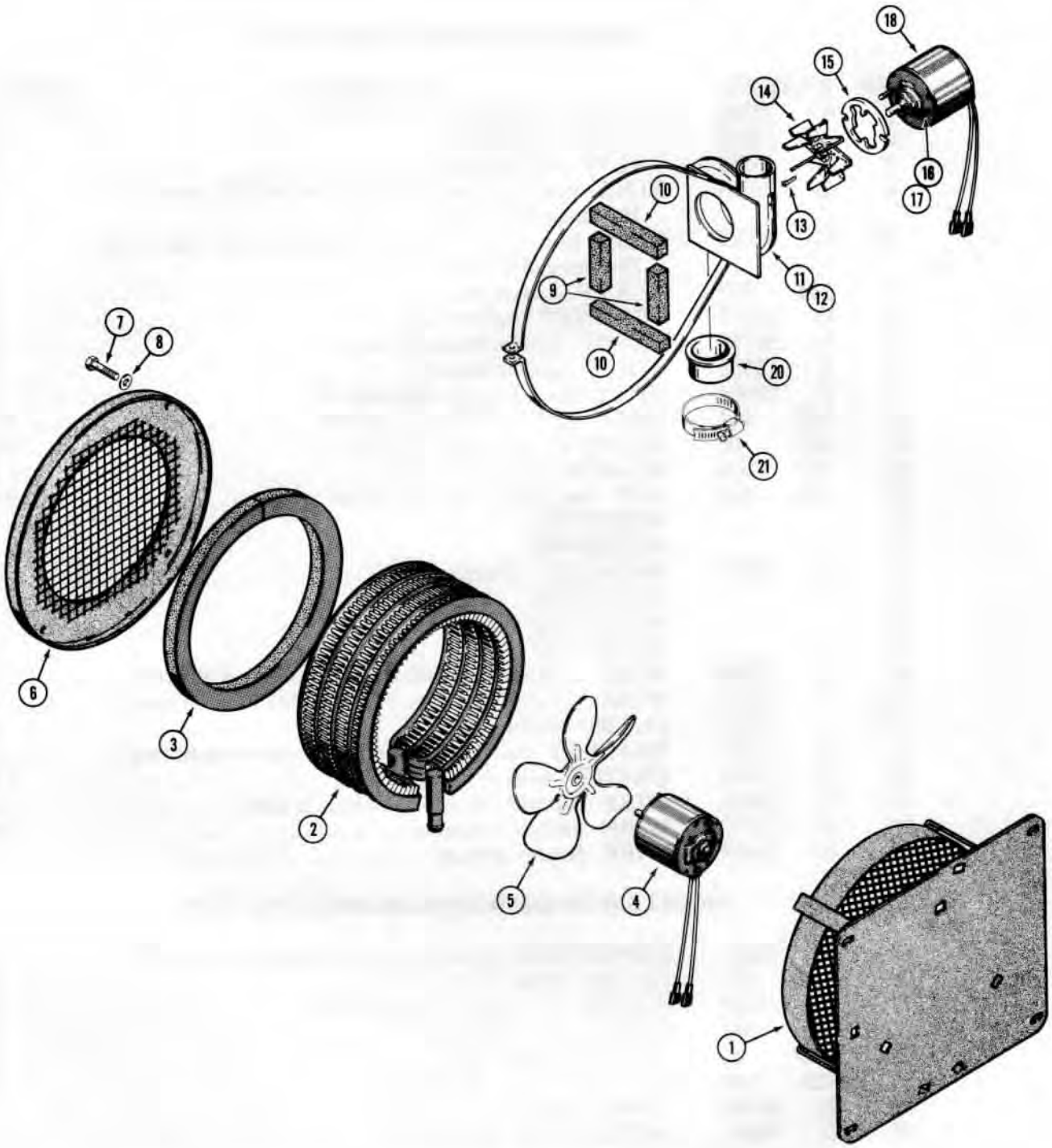

750726 A

http://www.mycarbackhoeparts.com/

CAB HEATER AND DEFROSTER

REF.	PART NO.	DESCRIPTION	REQ'D.
	F 93834	HEATER ASSEMBLY - cab	1
1	F 43809	CASE - heater	1
2	F 43810	CORE - heater	1
3	REF.	STRIP - rubber adhesive, 35" long (889 mm) Cut from D71303 bulk	1
4	F 43811	MOTOR - heater	1
5	F 43812	FAN - heater, 8" dia. (203 mm)	1
6	F 43813	COVER - heater	1
7	187- 996	HHCS - self-tapping, 1/4" - 20 NC x 1"	4
8	195- 102	WASHER - flat, 1/4", plated	4
	D 69710	DEFROSTER - cab	1
9*	REF.	STRIP - rubber, 2.5" long (64 mm) Cut from D71303	2
10*	REF.	STRIP - rubber, 4.4" long (112 mm) Cut from D71303	2
11	NSS	HOUSING - intake side	1
12	NSS	HOUSING - exhaust side	1
13	187- 1040	SCREW - #6 - 32 NC x 3/8"	2
14	D 71305	FAN - defroster	1
15	L 32699	SHIM - motor	1
16	131- 47	NUT - hex, lock, #10 - 32 NF	2
17	193- 6	WASHER - external shakeproof, #10	2
18	F 43811	MOTOR - defroster, 14 Volt	1
19		RESERVED	
20	353- 33	PLUG - defroster suction	1
21	214- 257	CLAMP - plug	1
*	D 71303	SEAL - rubber, bulk roll, not shown, 25 ft. (7620 mm)	UAR

NOTE: For window defroster fan see page 87.

http://www.minnparbackhoeparts.com/

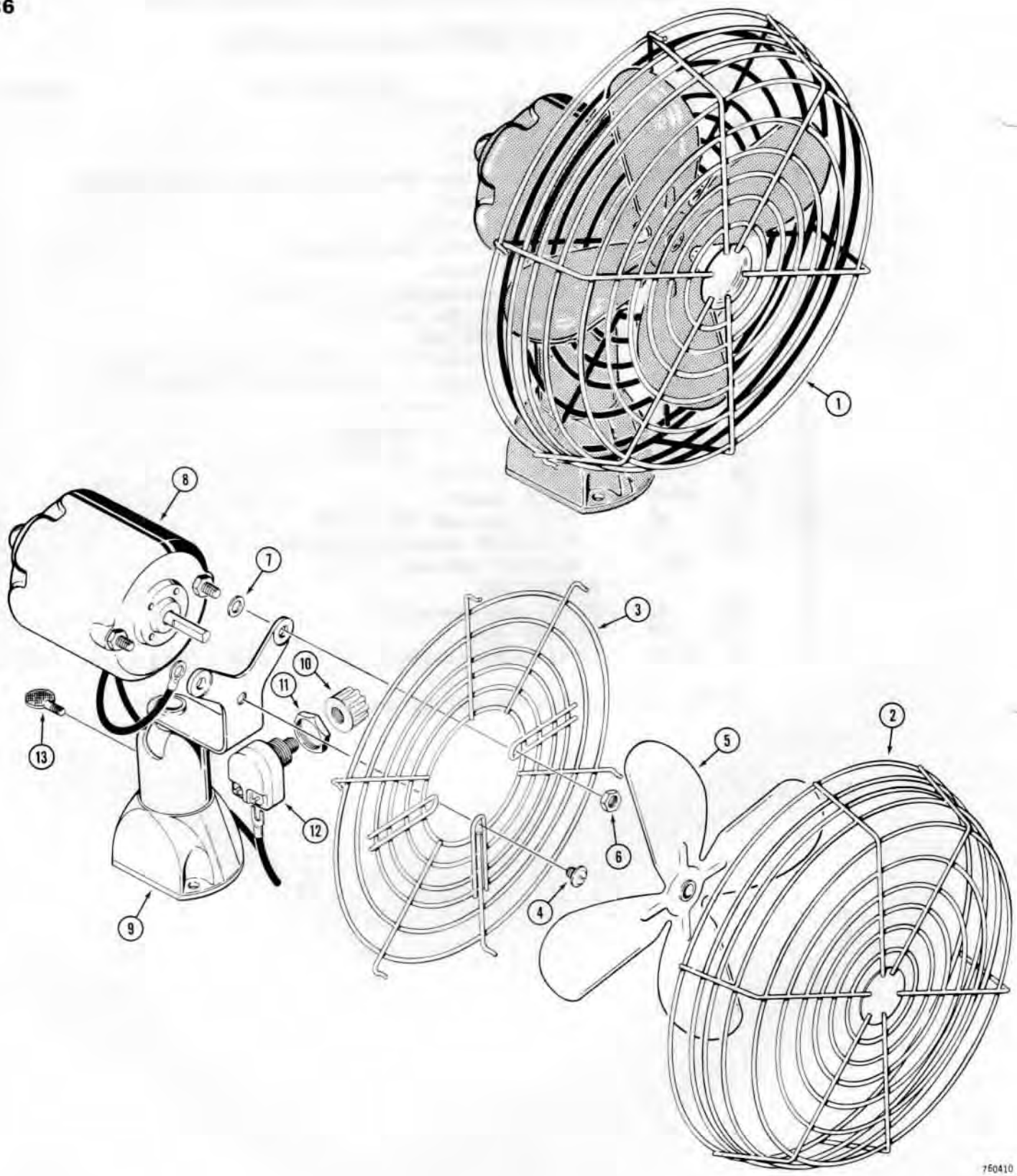

http://www.minnparbackhoeparts.com/

WINDOW DEFROSTER FAN

REF.	PART NO.	DESCRIPTION	REQ'D.
1	L 13468	FAN - defroster, cab rear window	1
2	L 30907	GRILLE - fan, front	1
3	L 30904	GRILLE - fan, back	1
4	L 30906	BOLT - special	1
5	L 30902	BLADE ASSEMBLY - fan	1
6	129- 26	NUT - hex, #8 - 36 NF	2
7	L 35760	WASHER - special	1
8	A 44571	MOTOR - fan	1
9	L 30900	BASE - fan	1
10	L 30909	KNOB - control	1
11	L 30908	NUT - hex, special	1
12	L 30903	SWITCH - control	1
13	L 30910	THUMB SCREW - swivel	1

NOTE: For defroster blower that mounts next to heater, see page 85.

http://www.minnparbackhoeparts.com/

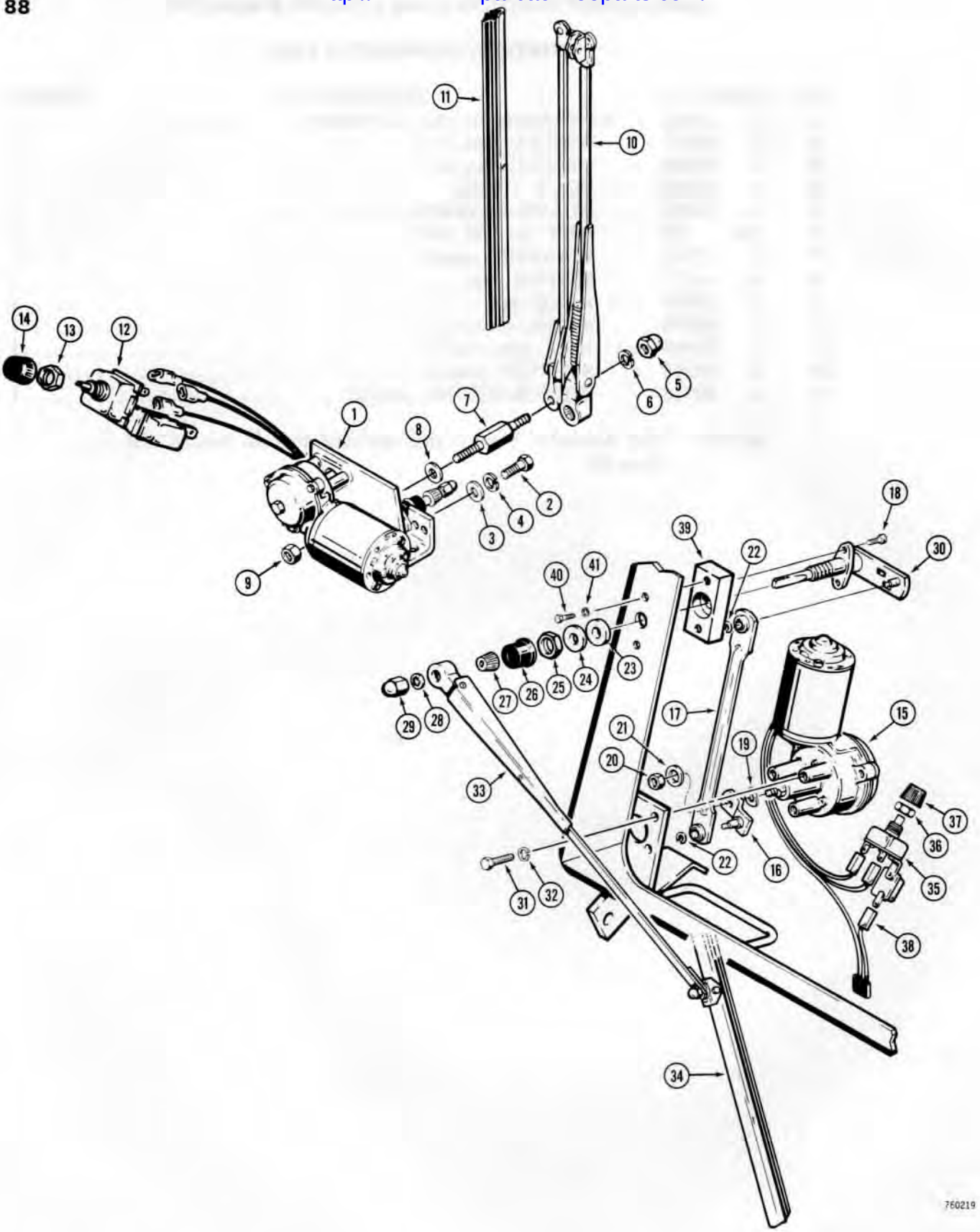

http://www.minnparbackhoeparts.com/

FRONT AND REAR WINDSHIELD WIPERS

REF.	PART NO.	DESCRIPTION	REQ'D.
1	F 93602	MOTOR - windshield wiper, front, parts list page 91	1
2	114- 1	HHCS - 1/4" - 28 NF x 1", plated	2
3	195- 518	WASHER - flat, 1/4", plated	2
4	192- 15	WASHER - lock, 1/4", plated	2
5	129- 642	NUT - hex, cap, #10, plated	1
6	195- 513	WASHER - lock, #10, plated	1
7	F 43960	STUD - panograph	1
8	195- 518	WASHER - flat, 1/4", plated	1
9	129- 161	NUT - jam, 1/4", plated	1
10	L 35260	ARM - wiper, 20"	1
11	F 42706	BLADE - wiper, 19"	1
12	A 42660	SWITCH - wiper, front	1
13	A 42561	NUT - hex, switch	1
14	A 42578	KNOB - switch	1
15	F 96637	MOTOR - wiper, rear, parts list page 91	1
16	A 36091	ARM - drive	1
17	D 71412	LINK - drive	1
18	F 44456	SCREW - wiper	2
19	D 71411	WASHER - wave	1
20	F 44452	NUT - special lock	1
21	A 22431	WASHER - spacer	2
22	D 71414	CLIP - spring	2
	D 71415	SHAFT ASSEMBLY - wiper	1
23	D 71417	WASHER - fiber	1
24	D 71418	WASHER - steel	1
25	D 71419	NUT - shaft	1
26	D 71420	CAP - shaft	1
27	D 71421	DRIVE - knurled	1
28	193- 9	WASHER - lock, 5/16"	1
29	D 71422	NUT - cap	1
30	NSS	SHAFT - wiper	1
31	114- 3	HHCS - 1/4" - 28 NF x 5/8", plated	3
32	192- 19	WASHER - lock, 1/4", plated	3
33	F 43789	ARM - wiper, 18", rear	1
34	F 43938	BLADE - rear wiper	1
35	A 42660	SWITCH - rear wiper	1
36	A 42561	NUT - hex, switch mounting	1
37	A 42578	KNOB - switch	1
38	F 93877	WIRE - wiper, rear	1
39	R 37439	BLOCK - wiper mounting, part of rear window frame, see page 419	1
40	113- 101	HHCS - 5/16" - 18 NC x 1/2", plated	2
41	192- 20	WASHER - lock, 5/16", plated	2

http://www.minnparbackhoeparts.com/

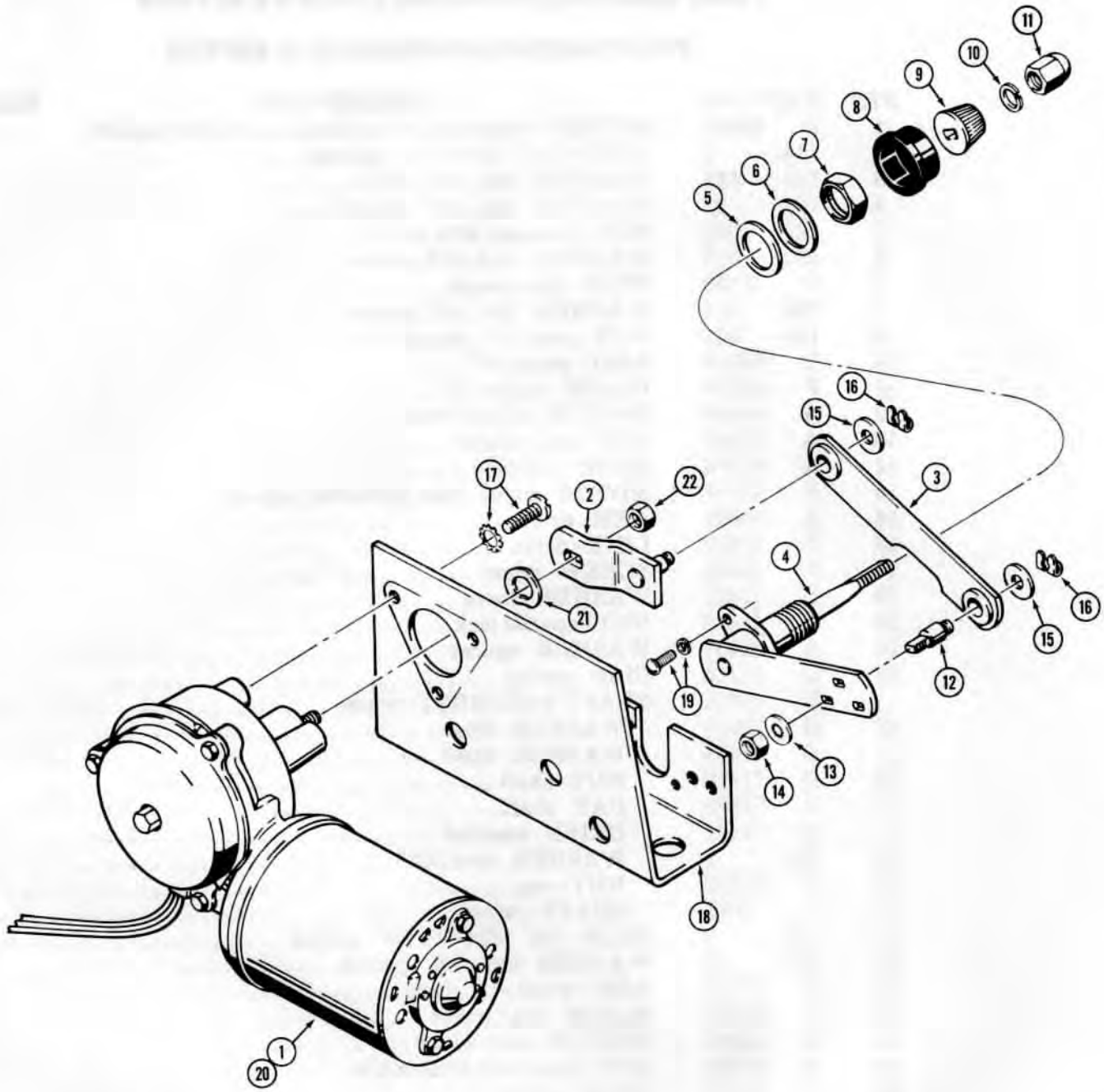

770260

http://www.minnparbackhoeparts.com/

WINDSHIELD WIPER MOTORS

FRONT WIPER MOTOR ONLY

REF.	PART NO.		DESCRIPTION	REQ'D.
	F	93602	MOTOR ASSEMBLY - wiper, with bracket, front windshield	1
1	F	96637	MOTOR ASSEMBLY - wiper, see parts list below, same as for rear wiper	1
2	F	64210	ARM - drive	1
3	D	71427	LINK - arm to shaft	1
	D	72848	SHAFT ASSEMBLY - pivot	1
4		NSS	SHAFT - pivot	1
5	D	71417	WASHER - fiber	1
6	D	71418	WASHER - steel	1
7	D	71419	NUT - shaft	1
8	D	71420	CAP - shaft	1
9	D	71421	DRIVE - knurled	1
10	193-	9	WASHER - lock, 5/16"	1
11	D	71422	NUT - cap	1
12	D	73642	BOLT - special	1
13	193-	60	WASHER - internal tooth lock, 1/4", plated	1
14	129-	161	NUT - hex, jam, 1/4 - 28 NF, plated	1
15	A	22431	WASHER - spacer	2
16	D	71414	CLIP - spring	2
17	D	72849	SCREW AND WASHER - bracket to motor	3
18	D	72850	BRACKET - mounting	1
19	F	44456	SCREW AND WASHER - bracket to arm	2

FRONT AND REAR MOTOR

	F	96637	MOTOR ASSEMBLY - wiper	2
20		NSS	MOTOR - wiper	1
21	D	71411	WASHER - wave	1
22	F	44452	NUT - shaft, 1/4" - 28 NF	1

http://www.minnparbackhoeparts.com/

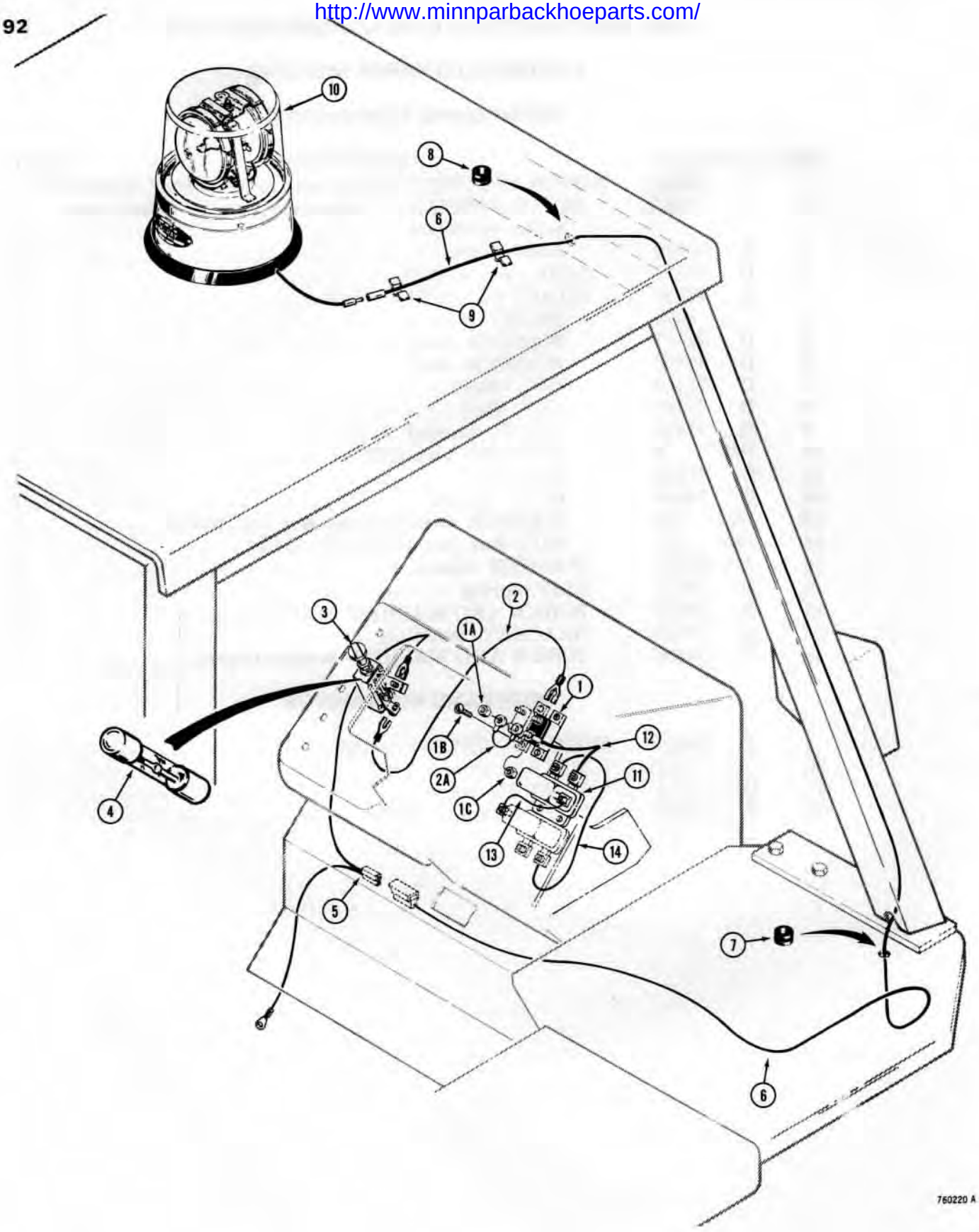

http://www.minnparbackhoeparts.com/

ROTATING BEACON AND RELATED PARTS

***BEFORE TRACTOR SN. 8958213**

REF.	PART NO.	DESCRIPTION	REQ'D.
1	D 37203	CIRCUIT BREAKER - 15 amp	1
1A	193- 1000	NUT - hex, #10 - 32 NF	2
1B	182- 186	SCREW - pan head, slotted, #8 - 32 NC x 1/2"	2
1C	193- 1002	NUT - hex, #8 - 32 NC	2
2	D 76063	WIRE - breaker to beacon switch, may replace a two-piece wire on some units	1
2A	D 67962	WIRE - jumper, circuit breaker	1
3	L 16099	SWITCH ASSEMBLY - beacon, included in F93158 Kit - see page 97	1
4	223- 20	FUSE - SFE 20	1
5	D 72915	WIRE - beacon and wiper	1
6	D 72914	WIRE - beacon switch to beacon wire, canopy only	1
7	D 37936	GROMMET - wire	1
8	L 10082	GROMMET - wire	1
9	F 93268	CLIP - wire	2
10	REF	BEACON - rotating, parts list page 97	1
11	L 11508	RELAY - electrical	1
12	D 67961	WIRE - circuit breaker to relay	1
13	D 72922	WIRE - #1 relay terminal connecting	1
14	D 72939	WIRE - #3 relay terminal connecting	1

*NOTE: For tractor sn. 8958213 and after see page 95.

http://www.minnparbackhoeparts.com/

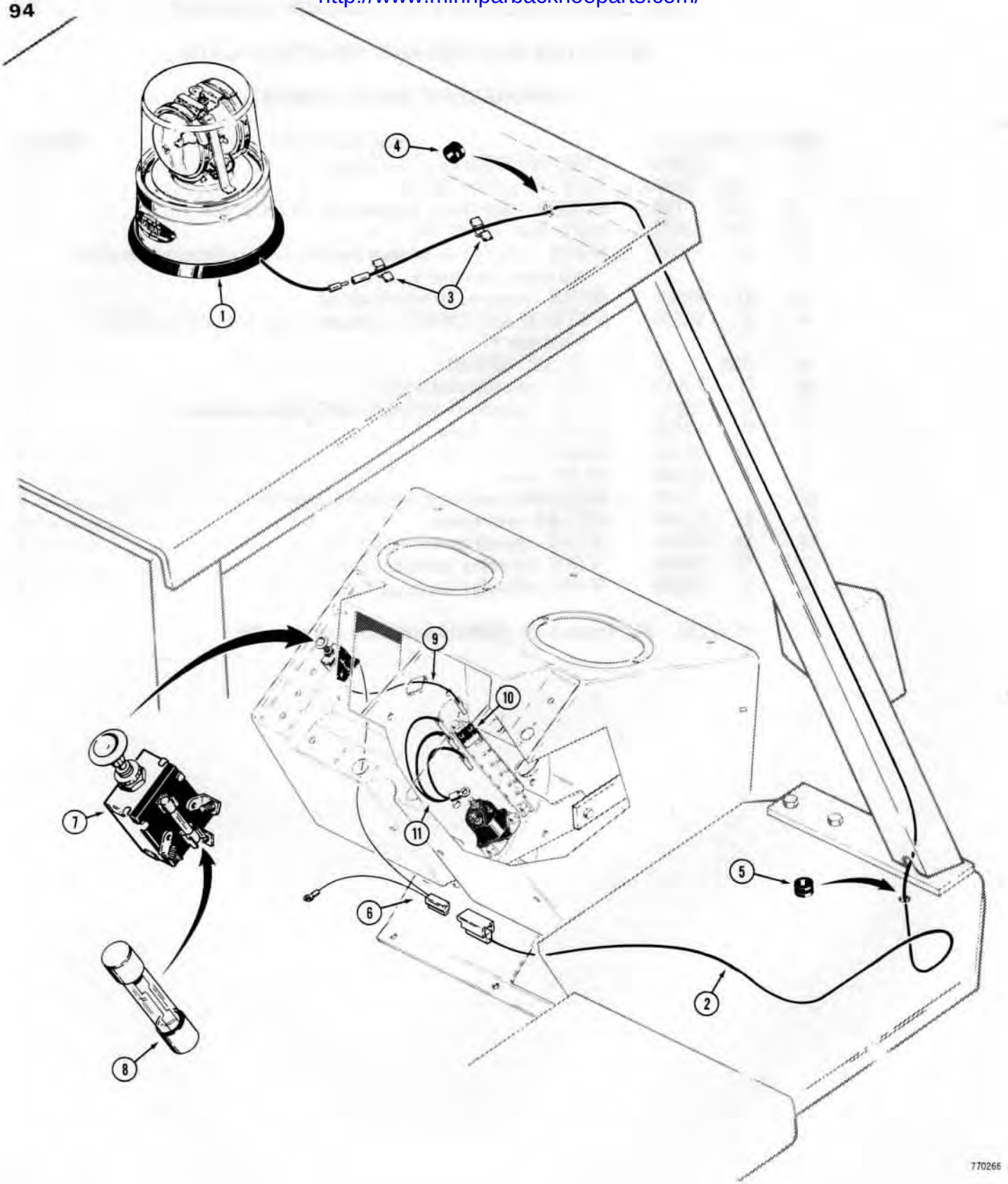

http://www.minnparbackhoeparts.com/

ROTATING BEACON AND RELATED PARTS

*TRACTOR SN. 8958213 AND AFTER

REF.	PART NO.	DESCRIPTION	REQ'D.
1	REF.	BEACON - rotating, parts list page 97	1
2	D 72914	WIRE - beacon, canopy only	1
3	F 93268	CLIP - wire	2
4	L 10082	GROMMET - rubber	1
5	D 37936	GROMMET - rubber	1
6	D 75955	WIRE - switch to beacon wire, canopy only	1
7	L 16099	SWITCH ASSEMBLY - beacon, included in F93158 Kit - see page 97	1
8	223- 20	FUSE - SFE 20	1
9	D 75956	WIRE - switch to circuit breaker	1
10	D 75357	CIRCUIT BREAKER - 15 amp	1
11	D 75225	WIRE - solenoid to circuit breaker	1

*NOTE: For models before tractor sn. 8958213 see page 93.

http://www.minnparbackhoeparts.com/

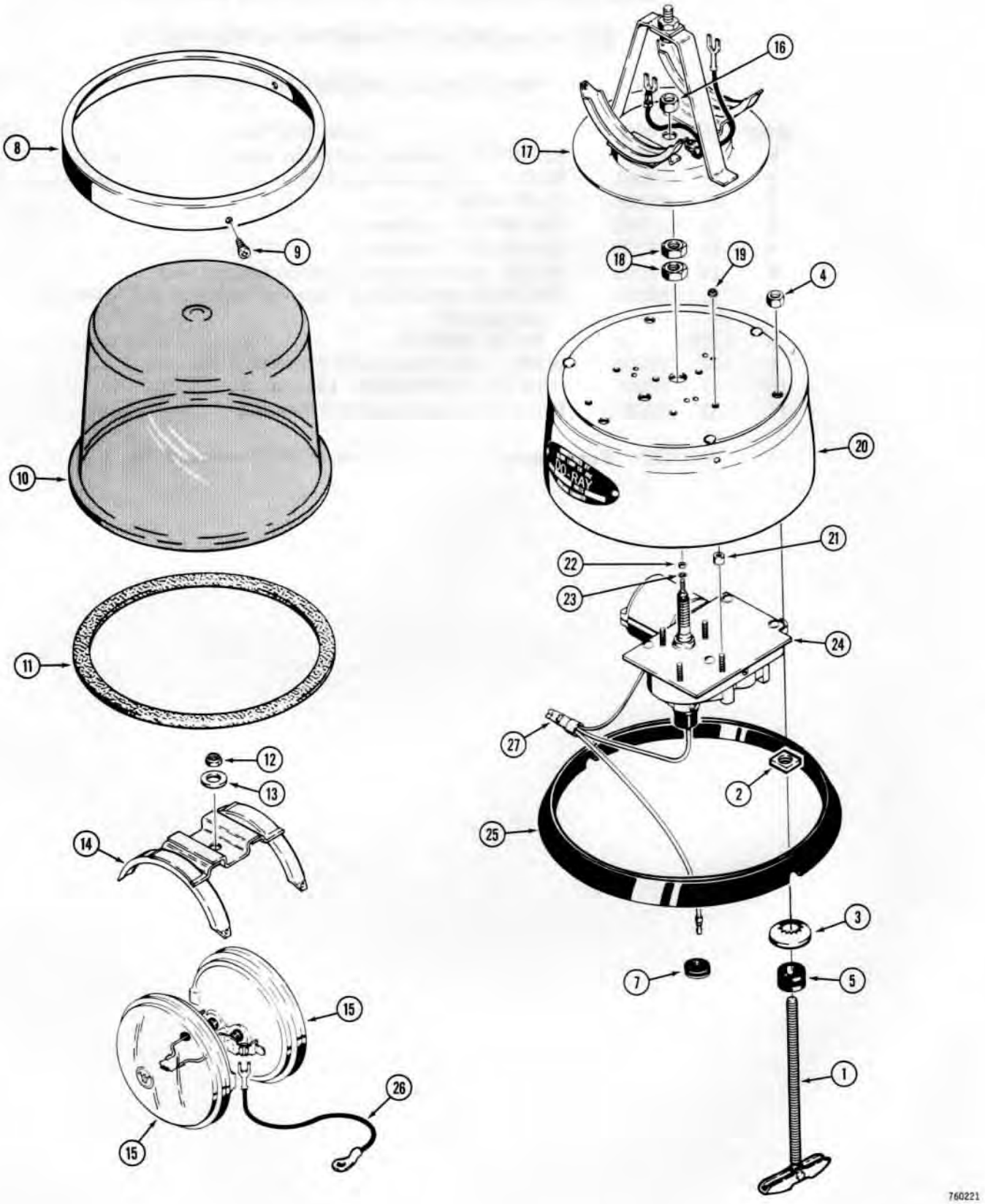

http://www.minnparbackhoeparts.com/

ROTATING BEACON

REF.	PART NO.	DESCRIPTION	REQ'D.
	F 93158	BEACON KIT - rotating, 360° amber	1
	L 35092	KIT - beacon mounting	1
1	L 35148	BOLT - toggle, #10 - 24	3
2	129- 47	NUT - square, #10 - 24	3
3	L 35146	WASHER - lock, #10	3
4	131- 67	NUT - hex, #10 - 24	3
5	F 63115	GROMMET - rubber, beacon mounting	3
6		RESERVED	
7	A 43211	GROMMET - rubber, beacon wire	1
	L 16099	SWITCH ASSEMBLY - beacon, shown on page 93 and 95	1
	223- 20 NSS	FUSE - beacon switch, SFE 20	1
		LAMP ASSEMBLY - rotating beacon, Order F93158	1
8	L 32219	RING - clamp, lens	1
9	168- 70	SCREW - self-tapping, #8 - 32 NC x 3/8"	3
10	L 32221	LENS - amber	1
11	L 32220	GASKET - lens	1
12	131- 46	NUT - lock, 1/4" NC	1
13	95- 4	WASHER - 5/16" x 3/4" x 1/16"	1
14	L 32222	BRACKET - retainer, sealed beam light	1
15	D 66204	LIGHT - sealed beam	2
16	129- 303	NUT - hex, 3/8" - 24 NF, L.H. thread	1
17	L 32224	PLATE - mounting, light	1
18	L 32225	NUT - special brass	2
19	129- 29	NUT - hex, lock, #8 - 32 NC	4
20	L 32226	BASE - motor and lens	1
21	L 32228	SPACER - motor to base	1
22	129- 3	NUT - hex, #4 - 40	2
23	192- 3	WASHER - lock, #4	1
24	D 65187	MOTOR - electric, 12 volt	1
25	L 32227	GASKET - base	1
26	L 35144	WIRE - ground	1
27	T 29401	NUT - twist-on, wire	1

http://www.minnparbackhoeparts.com/

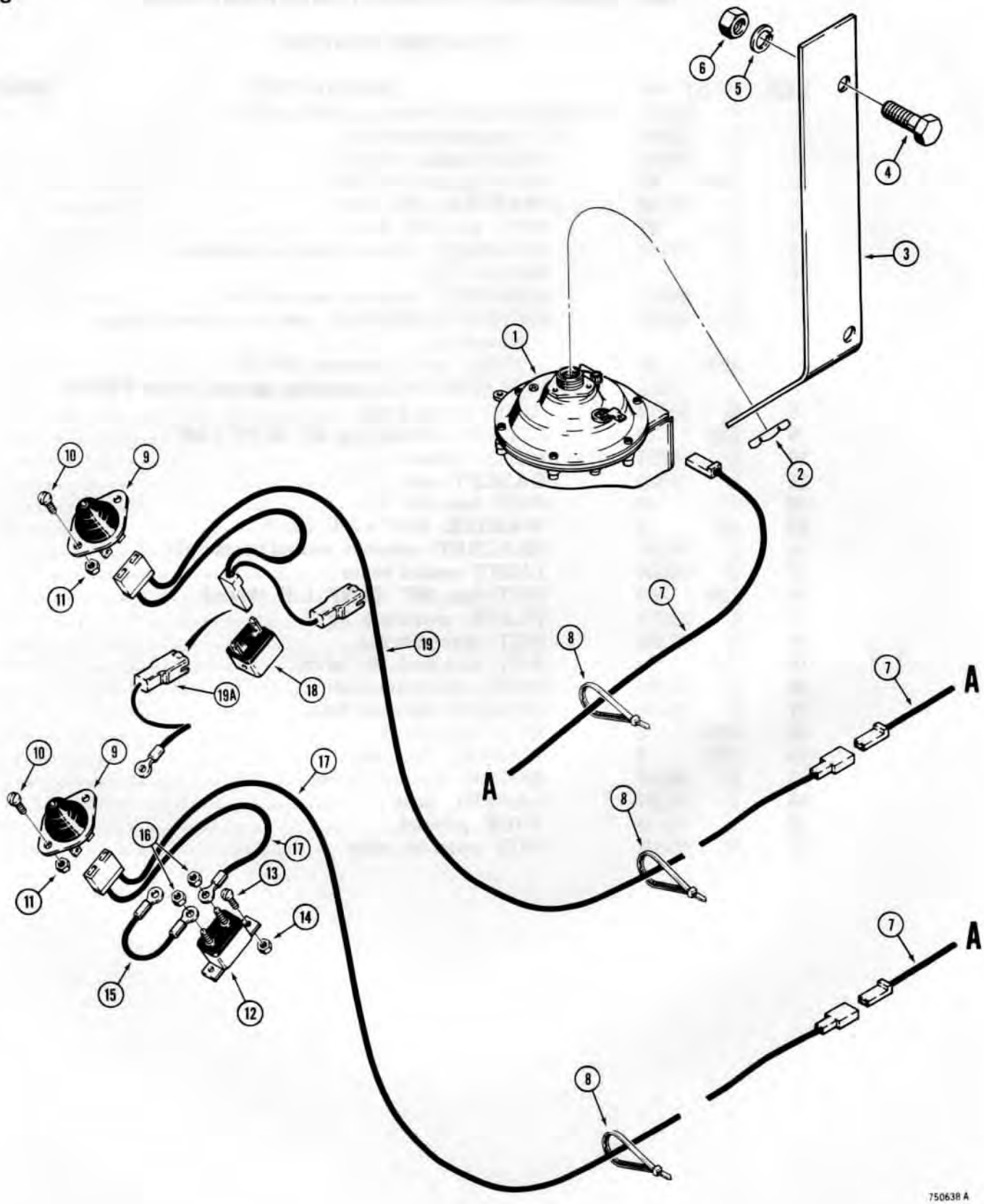

http://www.minnparbackhoeparts.com/

ELECTRIC HORN

REF.	PART NO.	DESCRIPTION	REQ'D.
1	S 203189	HORN - 12 volt	1
2	L 30866	NUT - hex, horn mounting, 7/8" - 20	1
3	D 70025	BRACKET - horn	1
4	113- 208	HHCS - 3/8" - 16 NC x 1-1/4"	2
5	192- 21	WASHER - lock, 3/8" - 16 NC	2
6	129- 103	NUT - hex, 3/8" - 16 NC	2
7	D 70199	WIRE - horn	1
8	L 18331	STRAP - wire	7
9	D 67872	SWITCH - horn	1
10	182- 528	SCREW - pan head, slotted, #10 - 32 NF x 1/2"	2
11	193- 1000	NUT - hex, lock, #10 - 32 NF	2
		USED BEFORE TRACTOR SN. 8958213	
12	D 37252	CIRCUIT BREAKER - 15 amp	1
13	182- 86	SCREW - pan head, slotted, #8 - 32 NC x 1/2"	2
14	193- 1002	NUT - hex, lock, #8 - 32 NC	2
15	D 67962	WIRE - jumper	1
16	193- 1000	NUT - hex, lock, #10 - 32 NF	2
17	D 70200	WIRE - circuit breaker to horn button and horn	1
		USED ON TRACTOR SN. 8958213 AND AFTER	
18	D 75357	CIRCUIT BREAKER	1
19	D 75818	WIRE - circuit breaker to horn button and horn	1
19A	D 76214	WIRE - adapter, will adapt D75818 wire for use on circuit breakers before tractor SN 8958213, if used	1

http://www.minnparbackhoeparts.com/

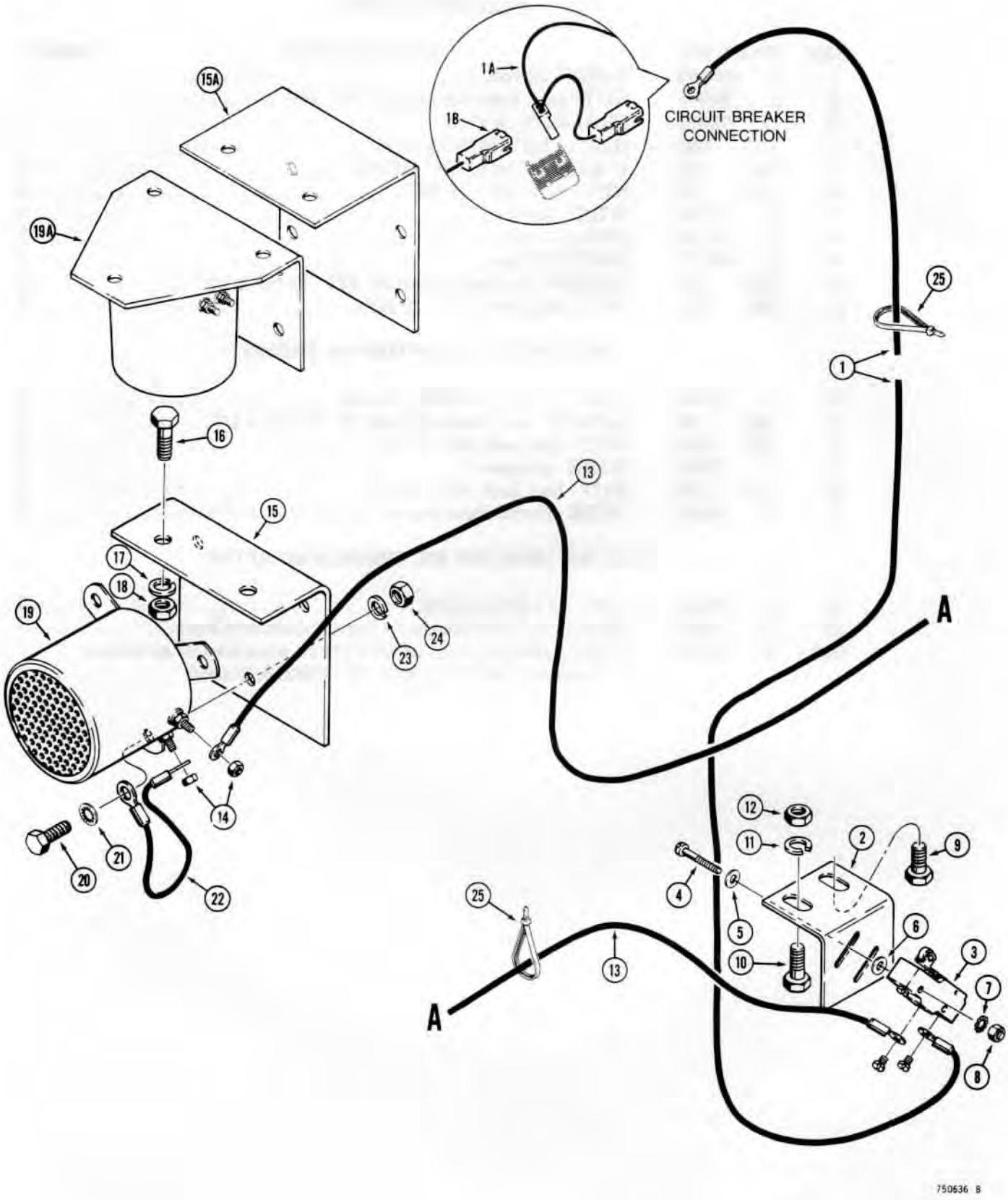

http://www.minnparbackhoeparts.com/

BACKUP ALARM

REF.	PART NO.	DESCRIPTION	REQ'D.
1	D 70127	WIRE - circuit breaker to switch, used before sn. 8958213	1
1A	D 75957	WIRE - circuit breaker to switch, used on sn. 8958213 and after	1
1B	D 76214	WIRE - adapter, will adapt D75957 wire for use on circuit breakers before tractor sn. 8958213, if used	1
2	D 70035	BRACKET - switch mounting	1
3	L 54683	SWITCH - backup alarm	1
4	169- 144	SCREW - fillister head, #6 - 32 NC x 1-1/4"	2
5	195- 507	WASHER - flat, #6	2
6	195- 7	WASHER - flat, #6	2
7	193- 89	WASHER - external-internal tooth, lock #6, plated	2
8	129- 15	NUT - hex, #6 - 32 NC	2
9	13- 612	HHCS - 3/8" - 16 NC x 3/4"	1
10	13- 616	HHCS - 3/8" - 16 NC x 1"	1
11	92- 6	WASHER - lock, 3/8"	2
12	25- 106	NUT - hex, 3/8" - 16 NC	2
13	D 70126	WIRE - switch to alarm	1
14	193- 1002	NUT - hex, #8 - 32 NC	2
15	D 70026	BRACKET - backup alarm, causes alarm to point rearward	1
15A	D 75815	BRACKET - backup alarm, causes alarm to point down	1
16	113- 207	HHCS - 3/8" - 16 NC x 1"	2
17	192- 21	WASHER - lock, 3/8"	2
18	129- 103	NUT - hex, 3/8" - 16 NC	2
19	D 51820	ALARM - backup, points rearward, order D75814	1
19A	D 75814	ALARM - backup, points rearward or downward	1
20	13- 512	HHCS - 5/16" - 18 NC x 3/4"	3-4
21	193- 82	WASHER - internal tooth lock, 5/16", plated	1
22	D 70125	WIRE - alarm ground	1
23	92- 5	WASHER - lock, 5/16"	3-4
24	25- 105	NUT - hex, 5/16" - 18 NC	3-4
25	L 18331	STRAP - wire tie	6

http://www.minnparbackhoeparts.com/

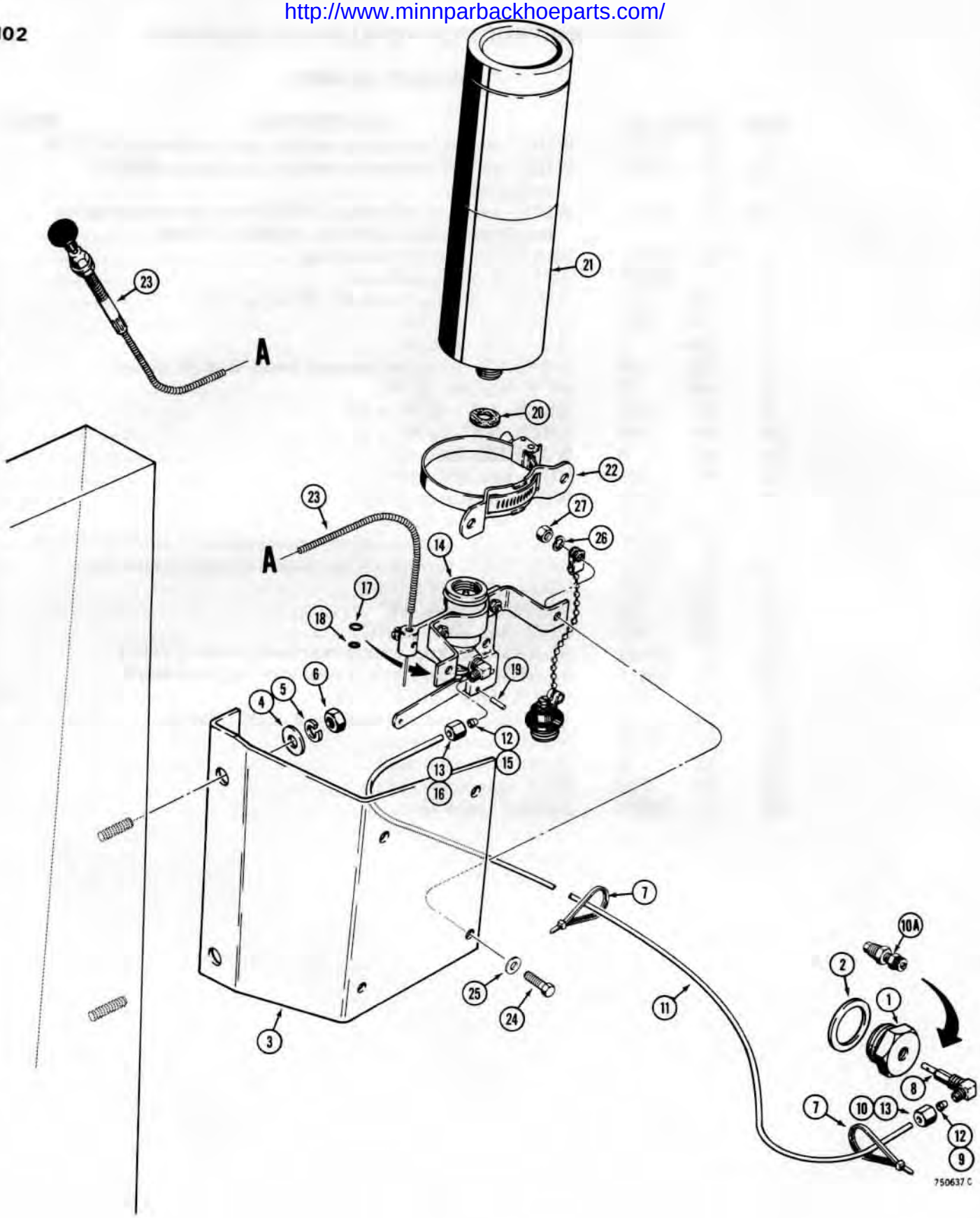

http://www.minnparbackhoeparts.com/

COLD START SYSTEM

REF.	PART NO.	DESCRIPTION	REQ'D.
1	L 10283	PLUG - manifold, used with item 8	1
1	D 79761	PLUG - manifold, used with item 10A	1
2	A 20916	WASHER - special	1
3	D 70731	BRACKET - cold start	1
4	195- 21	WASHER - flat, 5/16"	2
5	92- 5	WASHER - lock, 5/16"	2
6	25- 105	NUT - hex, 5/16" - 18 NC	2
7	L 18331	STRAP - tie, tubing	2
	D 55946	INJECTOR ASSEMBLY - cold start, 90°, used with L10283 manifold plug only	1
8	NSS	INJECTOR - D55946 assembly, 90°	1
9	222- 650	SLEEVE - tube nut	1
10	222- 660	NUT - tube	1
10A	D 81319	INJECTOR ASSEMBLY - cold start, straight, used with D79761 manifold plug only	1
	D 55947	TUBE ASSEMBLY - valve to injector	1
11	NSS	TUBE - valve to injector, 60" long (1524 mm)	1
12	222- 650	SLEEVE - tube nut	2
13	222- 660	NUT - tube	2
	D 55948	VALVE ASSEMBLY - actuator	1
14	NSS	VALVE - actuator	1
15	222- 650	SLEEVE - tube nut	1
16	222- 660	NUT - tube	1
	D 55951	KIT - service, valve seal	1
17	NSS	O-RING - internal plunger, top	1
18	NSS	O-RING - internal plunger, bottom	1
19	NSS	PIN - drive, 3/32"	1
20	D 74422	SEAL - valve to cylinder	1
21	D 55767	CYLINDER - cold start	1
22	D 55949	CLAMP - cylinder	1
23	D 71332	CABLE - cold start control	1
24	113- 3	HHCS - 1/4" - 20 NC x 3/4", plated	4
25	195- 102	WASHER - flat, 1/4", plated	4
26	192- 19	WASHER - lock, 1/4", plated	4
27	129- 101	NUT - hex, 1/4" - 20 NC, plated	4

NOTE: Cold Start Kits can be ordered as machinery items from the Machinery Price List. See the Machinery Price List for the correct Kit. Items 1-7 are not included in Kits.

http://www.minnparbackhoeparts.com/

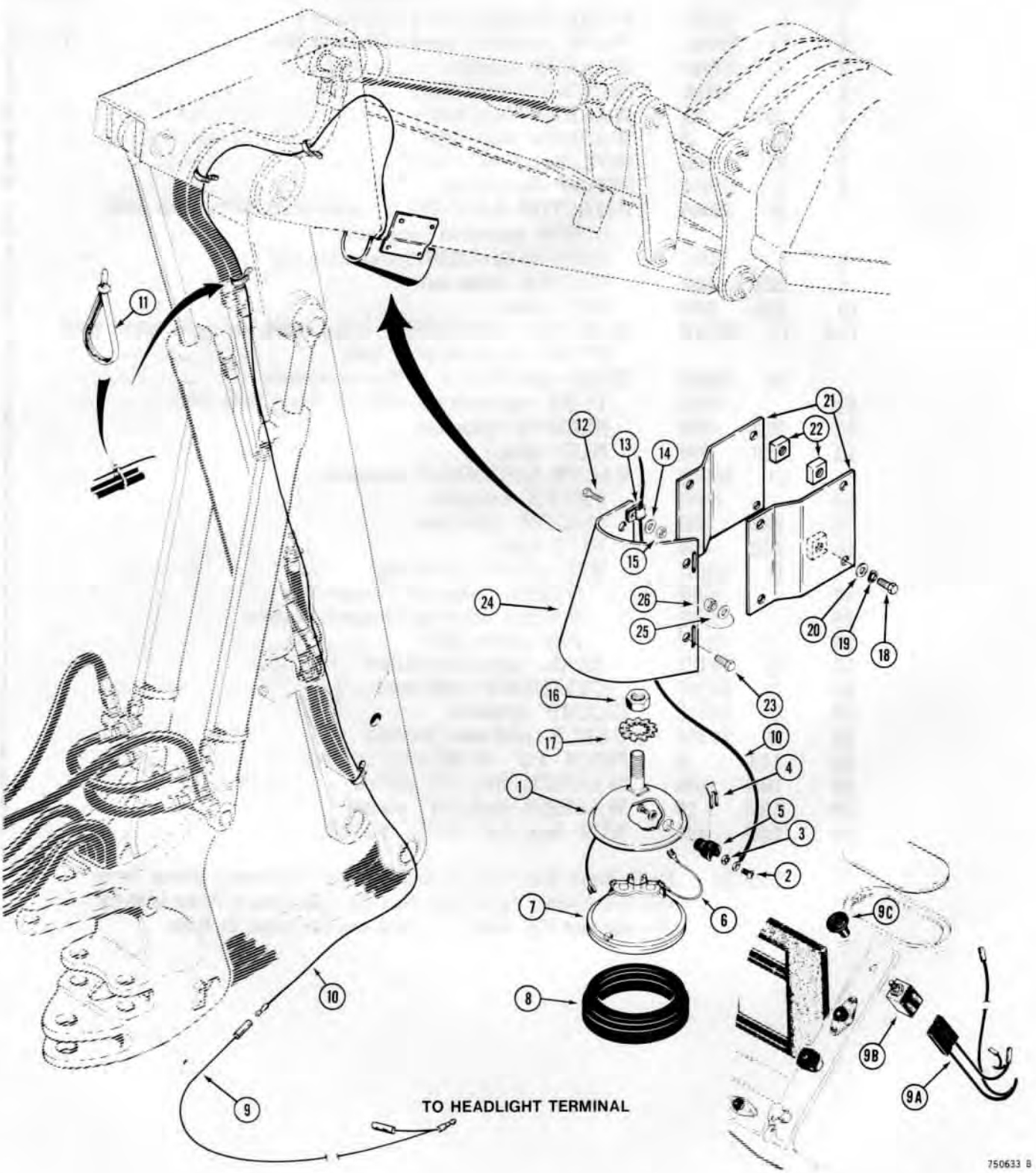

http://www.minnparbackhoeparts.com/

DIPPER LIGHT

USED WITH NON-EXTENDABLE DIPPER

REF.	PART NO.	DESCRIPTION	REQ'D.
	D 37811	LAMP ASSEMBLY - dipper arm	1
1	NSS	BODY - lamp	1
2	173- 73	SCREW - round head machine #8 - 32 NC x 1/4"	2
3	193- 25	WASHER - internal tooth lock, #8	2
4	10927	SPRING - lamp	1
5	B 50293	INSULATOR - lamp	1
6	A 25262	WIRE - lamp	1
7	D 33182	BULB - seal beam	1
8	D 31441	RETAINER - lamp	1
9	D 73170	WIRE - harness to wire, models without separate dipper light switch	1
9A	D 75761	WIRE - to dipper light switch, if used	1
9B	D 74330	SWITCH - dipper light, if used	1
9C	D 95783	KNOB - dipper light switch	1
10	D 50717	WIRE - wire to dipper light	1
11	L 18331	STRAP - wire retaining	UAR
12	13- 612	HHCS - 3/8" - 16 NC x 3/4"	1
13	49853	CLAMP - wire, at dipper	1
14	195- 25	WASHER - flat, 3/8"	1
15	131- 652	NUT - hex, lock, 3/8" - 16 NC	1
16	131- 654	NUT - hex, lock, 1/2" - 13 NC	1
17	193- 87	WASHER - external-internal tooth lock, 1/2"	1
18	13- 612	HHCS - 3/8" - 16 NC x 3/4"	4
19	92- 6	WASHER - lock, 3/8"	4
20	195- 25	WASHER - flat, 3/8"	4
21	D 56849	BRACKET - support, light shield	2
22	D 30458	BLOCK, tapped, welded to dipper	4
23	13- 616	HHCS - 3/8" - 16 NC x 1"	4
24	D 41427	SHIELD - dipper light	1
25	195- 25	WASHER - flat, 3/8"	4
26	131- 652	NUT - hex, lock, 3/8" - 16 NC	4

http://www.minnparbackhoeparts.com/

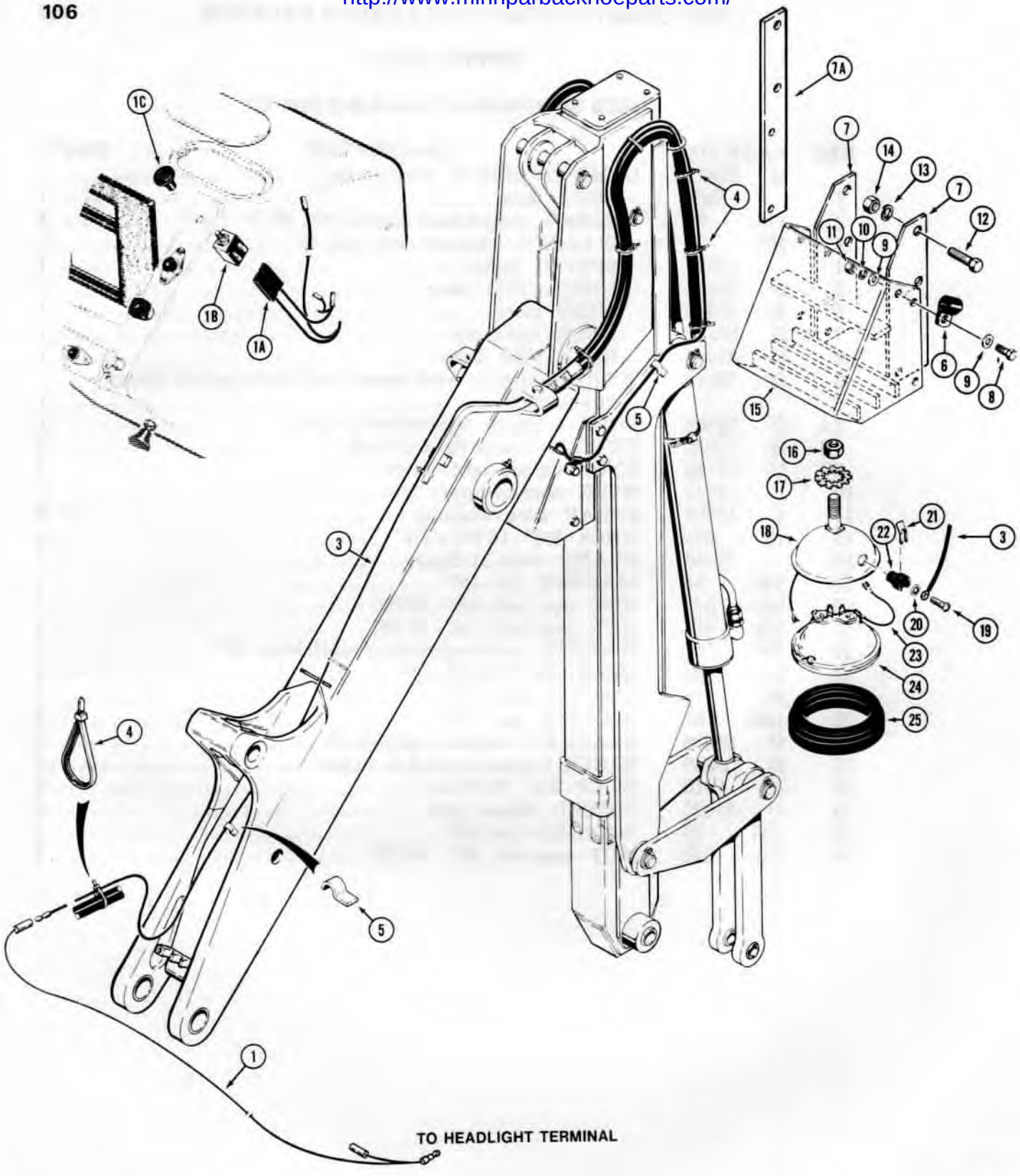

741828 C

http://www.minnparbackhoeparts.com/

DIPPER LIGHT

USED WITH EXTENDABLE DIPPER

REF.	PART NO.	DESCRIPTION	REQ'D.
1	D 73170	WIRE - harness to wire, models without separate dipper light switch	1
1A	D 75761	WIRE - to dipper light switch, if used	1
1B	D 74330	SWITCH - dipper light, if used	1
1C	D 95783	KNOB - dipper light switch	1
2		RESERVED	
3	D 53268	WIRE - rear harness to dipper light	1
4	L 18331	STRAP - wire to hose	8
5	D 48071	CLAMP - wire to boom and dipper	2
6	49859	CLAMP - wire to light housing	1
7	*D 66561	PLATE - light mounting, early production type	2
7A	*D 75730	PLATE - light mounting, late production type	2
8	13- 620	HHCS - 3/8" - 16 NC x 1-1/4"	4
9	195- 33	WASHER - flat, 3/8"	8
10	92- 6	WASHER - lock, 3/8"	4
11	25- 106	NUT - hex, 3/8" - 16 NC	4
12	13- 832	HHCS - 1/2" - 13 NC x 2"	4
13	92- 8	WASHER - lock, 1/2"	4
14	25- 108	NUT - hex, 1/2" - 13 NC	4
15	D 52591	HOUSING - dipper light	1
16	131- 354	NUT - hex, lock, 1/2" - 13 NC	1
17	193- 87	WASHER - external-internal tooth lock, 1/2"	1
	D 37811	LIGHT ASSEMBLY - dipper	1
18	NSS	BODY - light	1
19	173- 73	SCREW - machine, round head, #8 - 32 NC x 1/4"	2
20	193- 25	WASHER - internal tooth lock, #8	2
21	10927	SPRING - light	1
22	B 50293	INSULATOR - light	1
23	A 25262	WIRE - light	1
24	D 33182	BULB - sealed beam	1
25	D 31441	RETAINER - light	1

*NOTE: Late production type light mounting plates may be ordered in pairs to replace early production type, but early production type plates should not be used to replace late production type plates.

http://www.minnparbackhoeparts.com/

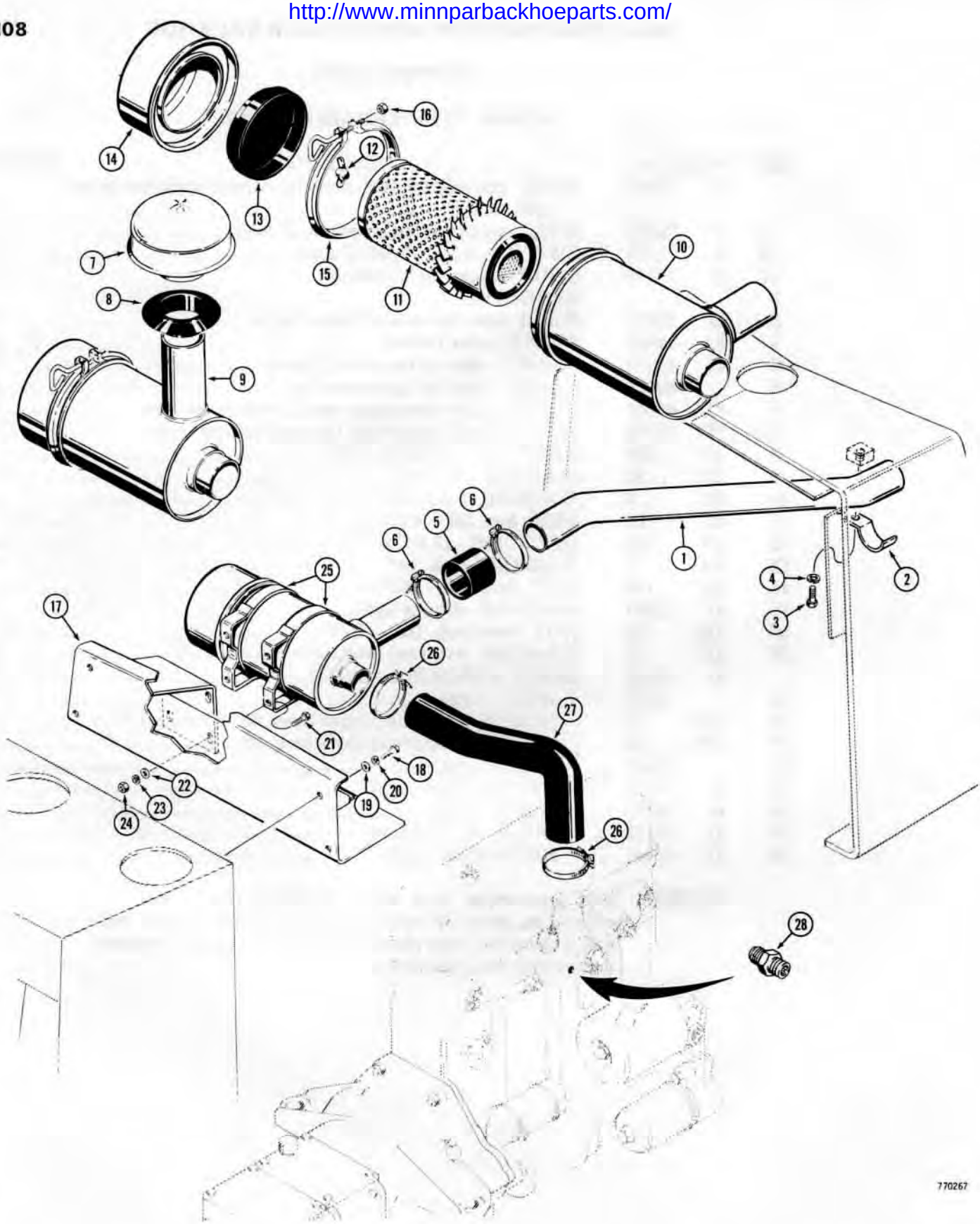

http://www.minnparbackhoeparts.com/

AIR CLEANER AND CONNECTIONS

REF.	PART NO.	DESCRIPTION	REQ'D.
1	D 68239	TUBE - horizontal air cleaner intake, if used - see item 7	1
2	D 66567	CLAMP - tube	1
3	13- 812	HHCS - 1/2" - 13 NC x 3/4"	1
4	92- 8	WASHER - lock, 1/2"	1
5	73149	HOSE - horizontal intake tube to air cleaner, 2-1/2" I.D. x 2-1/2" long (64 mm x 64 mm) if used	1
6	214- 261	CLAMP - hose	2
7	A 61276	CAP - vertical air cleaner intake, if used - see item 1	1
8	D 75362	GROMMET - air cleaner cap, if used	1
9	A 139086	AIR CLEANER ASSEMBLY - engine	1
10	NSS	BODY - air cleaner	1
11	A 42274	ELEMENT - air cleaner	1
12	F 91761	NUT - wing, element	1
13	F 22312	BAFFLE - rubber	1
14	F 91760	CUP - access, air cleaner	1
15	F 84999	CLAMP - cup, includes hardware	1
16	25- 224	NUT - hex, 1/4" - 20 NC	1
17	* REF.	BRACKET - air cleaner mounting	1
18	13- 620	HHCS - 3/8" - 16 NC x 1-1/4"	2
19	195- 25	WASHER - flat, 3/8"	2
20	92- 6	WASHER - lock, 3/8"	2
21	13- 612	HHCS - 3/8" - 16 NC x 3/4"	4
22	195- 25	WASHER - flat, 3/8"	4
23	92- 6	WASHER - lock, 3/8"	4
24	25- 106	NUT - hex, 3/8"	4
25	L 11247	BAND - air cleaner mounting	2
26	214- 261	CLAMP - hose	2
27	D 68299	HOSE - air cleaner to manifold	1
28	D 36264	FILTER - safety, air restriction	1

*NOTE: For correct air cleaner and hood mounting brackets, see page 411.

http://www.minnparbackhoeparts.com/

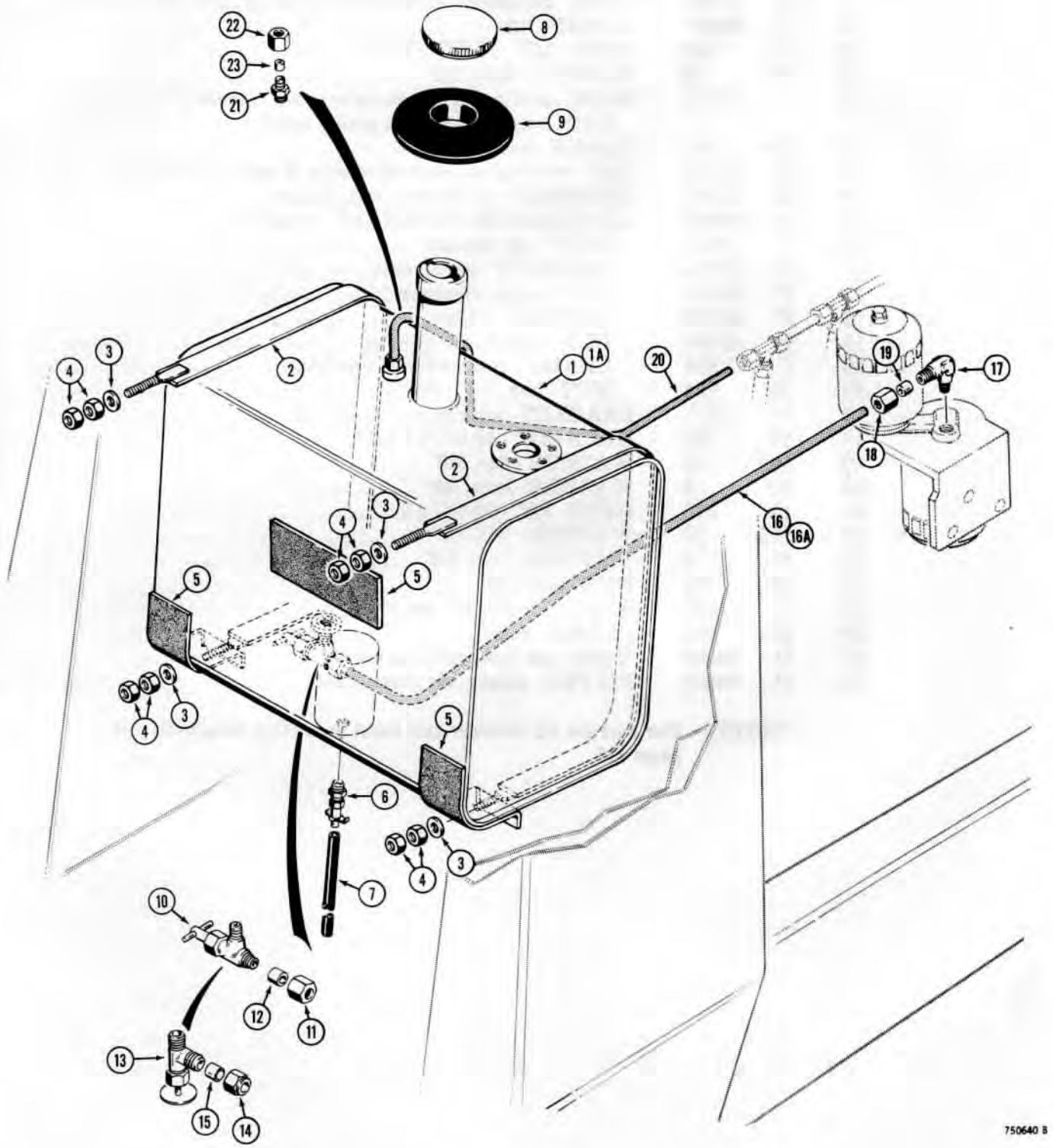

http://www.minnparbackhoeparts.com/

FUEL TANK AND FUEL LINES

REF.	PART NO.	DESCRIPTION	REQ'D.
1	D 64997	TANK - fuel, used before tractor sn. 8953324	1
1A	D 75422	TANK - fuel, used on tractor sn. 8953324 and after	1
2	D 65000	STRAP - fuel tank mounting	2
3	195- 25	WASHER - flat, 3/8"	4
4	25- 106	NUT - hex, 3/8" - 16 NC	8
5	D 64999	CUSHION - rubber mounting	3
6	217- 107	FITTING - drain cock	1
7	D 34989	HOSE - drain, fuel tank, 5/16" x 9" (8 mm x 229 mm)	1
8	A 51390	CAP - fuel tank	1
9	R 14780	GROMMET - fuel tank neck	1
	A 27955	VALVE - outlet, used before tractor sn. 8953324	1
10	NSS	BODY - valve	1
11	222- 114	NUT - flex tube	1
12	222- 104	SLEEVE - flex tube	1
	D 74027	VALVE - outlet, used on tractor sn. 8953324 and after	1
13	NSS	BODY - valve	1
14	222- 664	NUT - compression	1
15	222- 654	SLEEVE - compression	1
16	D 65020	TUBE - outlet, 3/8", used before tractor sn. 8953324	1
16A	D 76776	TUBE - outlet, 3/8", used on tractor sn. 8953324 and after	1
	222- 47	FITTING - 90°, flex tube	1
17	NSS	BODY - fitting	1
18	222- 114	NUT - flex tube	1
19	222- 104	SLEEVE - flex tube	1
20	D 68256	TUBE - return, 1/4"	1
	222- 23	FITTING - straight, flex tube	1
21	NSS	BODY - fitting	1
22	222- 112	NUT - flex tube	1
23	222- 102	SLEEVE - flex tube	1

http://www.minnparbackhoeparts.com/

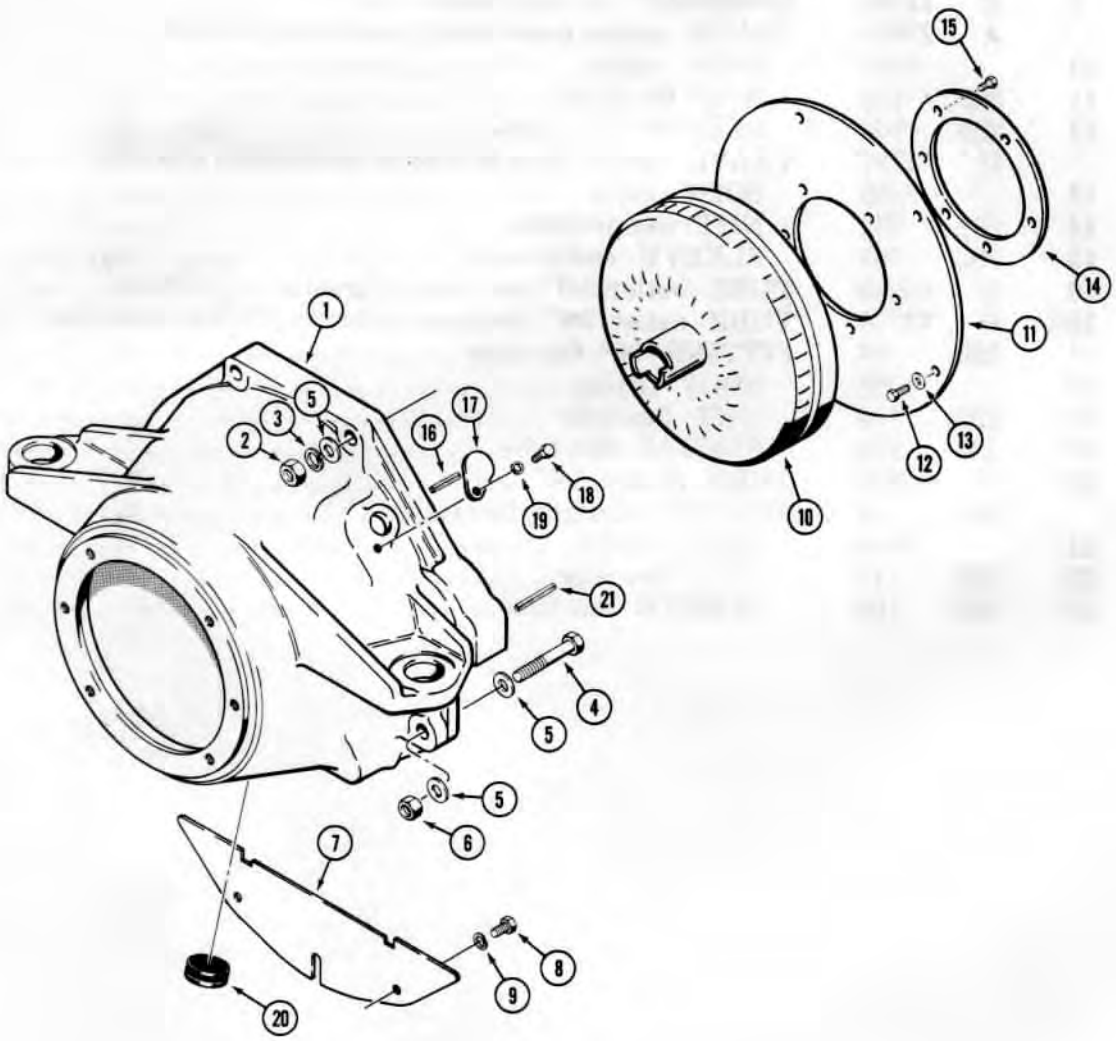

750642 A

http://www.minnpar backhoeparts.com/

TORQUE CONVERTER, HOUSING AND RELATED PARTS

REF.	PART NO.	DESCRIPTION	REQ'D.
1	D 63263	HOUSING - torque converter	1
2	25- 1110	NUT - hex, 5/8" - 18 NF	2
3	92- 10	WASHER - lock, 5/8", no longer used, not required	2
4	D 76605	HHCS - 5/8" - 18 NF x 3-1/2"	2
5	A 35147	WASHER - flat, hardened, 5/8"	6
6	25- 1110	NUT - hex, 5/8" - 18 NF	2
7	D 68670	COVER - flywheel	1
8	13- 68	HHCS - 3/8" - 16 NC x 1/2"	2
9	92- 6	WASHER - lock, 3/8"	2
10	D 71758	TORQUE CONVERTER - transmission	1
11	A 15670	PLATE - torque converter	1
12	121- 103	BOLT - special, converter mounting	6
13	A 15672	WASHER - flat, special	6
14	A 14510	PLATE - converter drive	1
15	121- 203	BOLTS - special, converter drive plate mounting	6
16	138- 65	PIN - roll, 1/8" x 1-1/2", Timing pin	1
17	A 29068	COVER - timing hole	1
18	13- 48	HHCS - 1/4" - 20 NC x 1/2"	1
19	92- 4	WASHER - lock, 1/4"	1
20	D 68661	PLUG - converter drain	1
21	139- 62	PIN - taper dowel	2

http://www.minnparbackhoeparts.com/

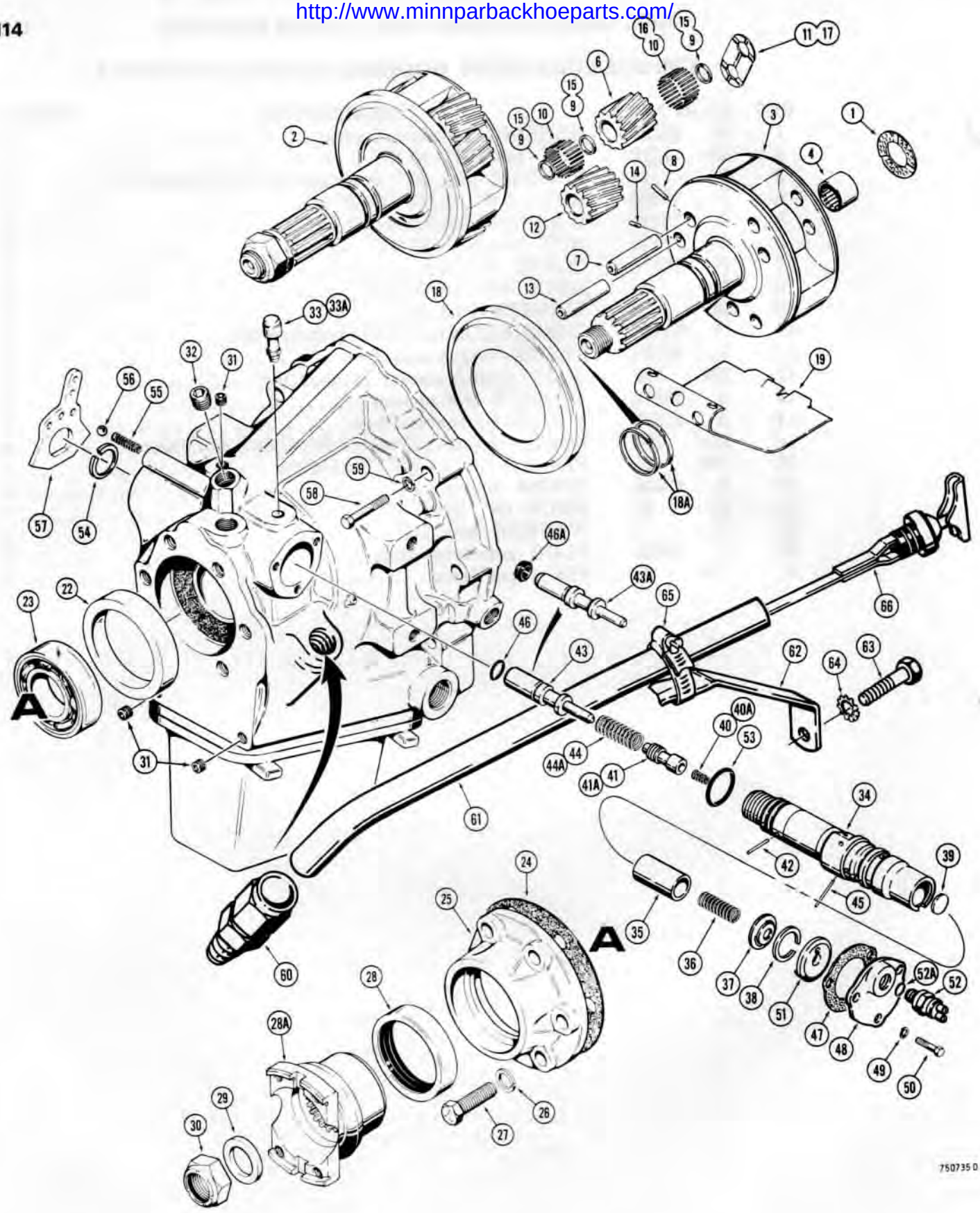

http://www.minnparbackhoeparts.com/

HOUSING, PINION CAGE, AND OUTPUT SHAFT

REF.	PART NO.	DESCRIPTION	REQ'D.
	D 73384	SHUTTLE ASSEMBLY - complete, used before tractor sn. 8955232, see pages 115 thru 123 for components	1
	D 75364	SHUTTLE ASSEMBLY - complete, used on tractor sn. 8955232 and after, see pages 115 thru 123 for components	1
1	D 50055	WASHER - thrust, clutch hub	1
2	D 70665	PINION CAGE AND OUTPUT SHAFT	1
3	NSS	CAGE AND SHAFT - basic	1
4	H 747964	BEARING - needle	1
5		RESERVED	
	D 50030	KIT - inner pinion	3
6	NSS	GEAR - inner pinion	1
7	NSS	SHAFT - pinion	1
8	NSS	PIN - shaft retaining	1
9	NSS	SPACER - pinion bearing	3
10	NSS	ROLLER - pinion	48
11	NSS	PLATE - thrust	2
	D 50031	KIT - outer pinion	3
12	NSS	GEAR - outer pinion	1
13	NSS	SHAFT - pinion	1
14	NSS	PIN - shaft retaining	1
15	NSS	SPACER - pinion bearing	3
16	NSS	ROLLER - pinion	48
17	NSS	PLATE - thrust	2
18	D 50087	RING - collector	1
18A	D 50080	RING - seal	2
19	D 50056	BAFFLE - plate	1
20		RESERVED	
21		RESERVED	
22	D 50057	SLEEVE - rear bearing spacer	1
23	40011	BEARING - output shaft	1
24	D 50058	GASKET - bearing retainer	1
25	D 50059	RETAINER - rear bearing	1
26	92- 7	WASHER - lock, 7/16"	6
27	13- 718	HHCS - 7/16" - 14 NC x 1-1/8"	6
28	D 50060	SEAL - oil, rear	1
28A	D 69669	YOKE - drive shaft mounting, used before tractor sn. 8955232	1
28A	D 73776	FLANGE - drive shaft mounting, used on tractor sn. 8955232 and after	1
29	D 65247	WASHER - output shaft	1
	345- 84	SEAL - 3 oz. (89 ml) of sealer in tube, not shown, can be used between D65247 washer and end of shaft	1
30	131- 37	NUT - hex, lock, 3/4" - 16 NF	1
31	221- 849	PLUG - hex socket head, 1/8" NPT	3
32	221- 843	PLUG - hex socket head, 3/8" NPT	1
33	D 50062	BREATHER - shuttle	1
33A	D 74695	BREATHER - shuttle sn. 151 thru 471 only	1
	D 70652	VALVE ASSEMBLY - used before tractor sn. 8952352, includes items 34 thru 40, 41, 42, 43, 44, 45 and 46, order D75487 for service	1
	D 75487	VALVE ASSEMBLY - used on tractor sn. 8952352 thru 8955262, includes items 34 thru 40, 41, 42, 43A, 44, 45 and 46A, order D77473	1

Continued on next page

http://www.minnparbackhoeparts.com/

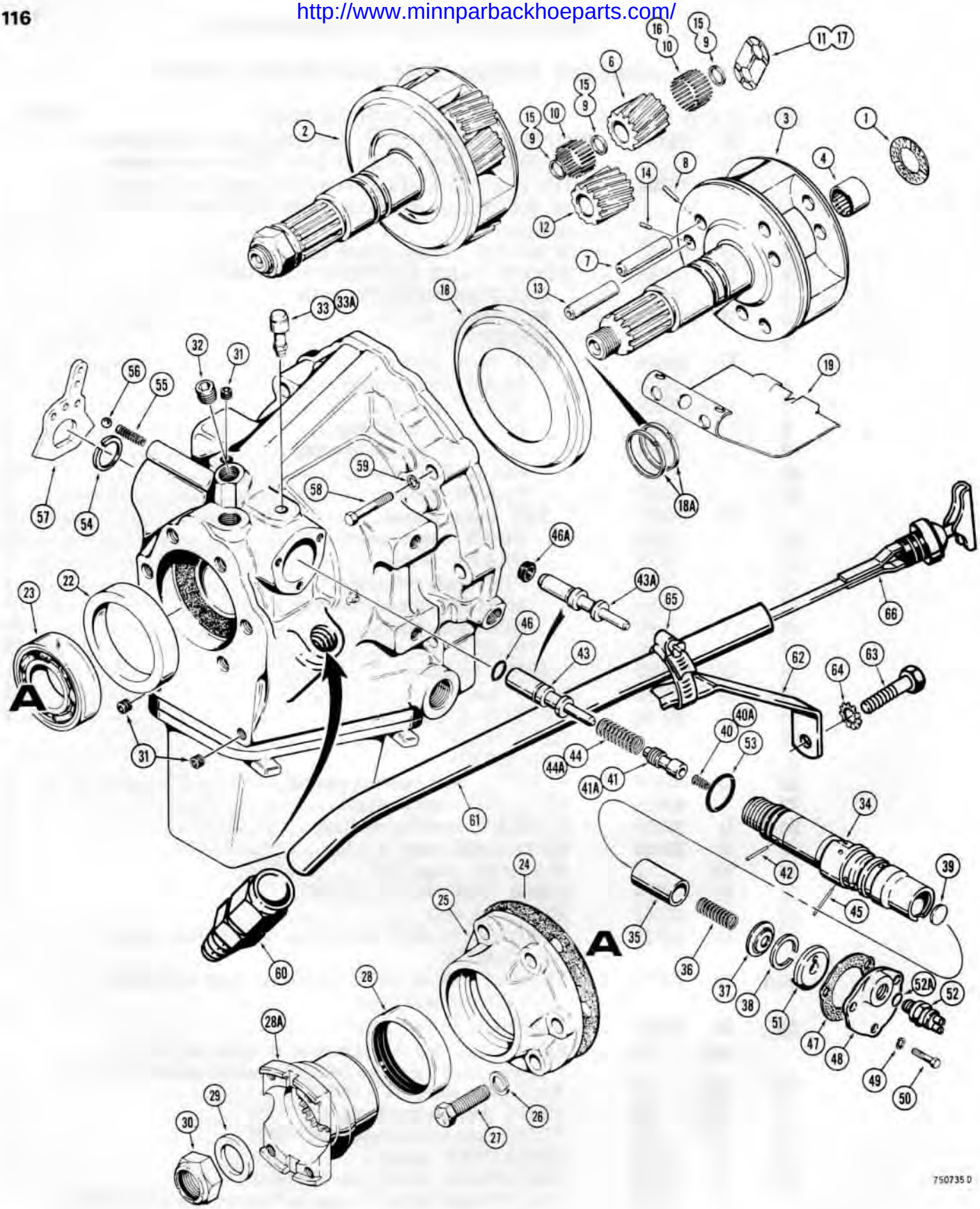

http://www.minnearbackhoeparts.com/

POWER SHUTTLE TRANSMISSION

HOUSING, PINION CAGE, AND OUTPUT SHAFT

REF.	PART NO.	DESCRIPTION	REQ'D.
	D 77473	VALVE ASSEMBLY - used on tractor sn. 8955232 and after, includes items 34 thru 39, 40A, 41A, 42, 43A, 44A, 45 and 46A	1
34	NSS	BODY - valve	1
35	D 50089	VALVE - pressure regulator	1
36	D 50090	SPRING - valve	1
37	D 50091	RETAINER - spring	1
38	D 50092	RING - spring retaining	1
39	41- 12	PLUG - expansion	1
40	D 77476	SPRING - clutch cutout, D70652 and D75487 valves	1
40A	D 77475	SPRING - clutch cutout, D77473 valve	1
41	D 70655	SPOOL - D70652 and D75487 valves	1
41A	D 77474	SPOOL - D77473 valve	1
42	138- 28	PIN - roll, 5/64" x 1", if used, use 135-198 groove pin	1
42	135- 198	PIN - groove, 5/64" x 1", if used	1
43	NSS	PLUNGER - D70652 valve, order D75490 kit	1
43A	*D 75488	PLUNGER - D75487 and D77473 valves	1
44	D 70673	SPRING - plunger, D70652 and D75487 valves	1
44A	D 77475	SPRING - plunger, D77473 valve	1
45	*138- 59	PIN - roll, 1/8" x 7/8", if used	1
45	135- 229	PIN - groove, 1/8" x 7/8", if used, use 138-59 roll pin	1
46	NSS	SEAL - D70652 valve, order D75490 kit	1
46A	*D 77581	SEAL - oil, D75487 and D77473 valves, includes installation tool	1
47	*D 50066	GASKET - valve cover	1
48	D 72822	COVER - valve	1
49	92- 4	WASHER - lock, 1/4"	3
50	13- 414	HHCS - 1/4" - 20 NC x 7/8"	3
51	D 70660	CAM - neutral start switch	1
52	D 72823	SWITCH - neutral start	1
52A	218- 5005	O-RING - neutral start switch, if used	1
53	D 37156	O-RING	1
54	A 75171	RING - retaining	1
55	S 47892	SPRING - poppet	1
56	*211- 9	BALL - steel, 5/16" dia.	1
57	D 77621	LEVER - shift	1
58	13- 752	HHCS - 7/16" - 14 NC x 3-1/4"	6
59	92- 7	WASHER - lock, 7/16"	6
60	222- 3006	CONNECTOR - male, straight	1
61	D 70393	TUBE - filler, power shuttle	1
62	D 70471	PLATE - mounting, used with Delco Remy starter	1
62	D 80894	PLATE - mounting, used with Nippondenso starter	1
63	13- 632	HHCS - 3/8" - 16 NC x 2"	1
64	193- 72	WASHER - external - internal tooth lock, 3/8"	1
65	214- 255	CLAMP - filler tube mounting	1
66	D 75468	DIPSTICK - before tractor sn. 8955232	1
66	D 78855	DIPSTICK - tractor sn. 8955232 and after	1
	*D 75490	KIT - valve plunger and seal replacement, includes items preceeded by an asterisk	1

http://www.minnparbackhoeparts.com/

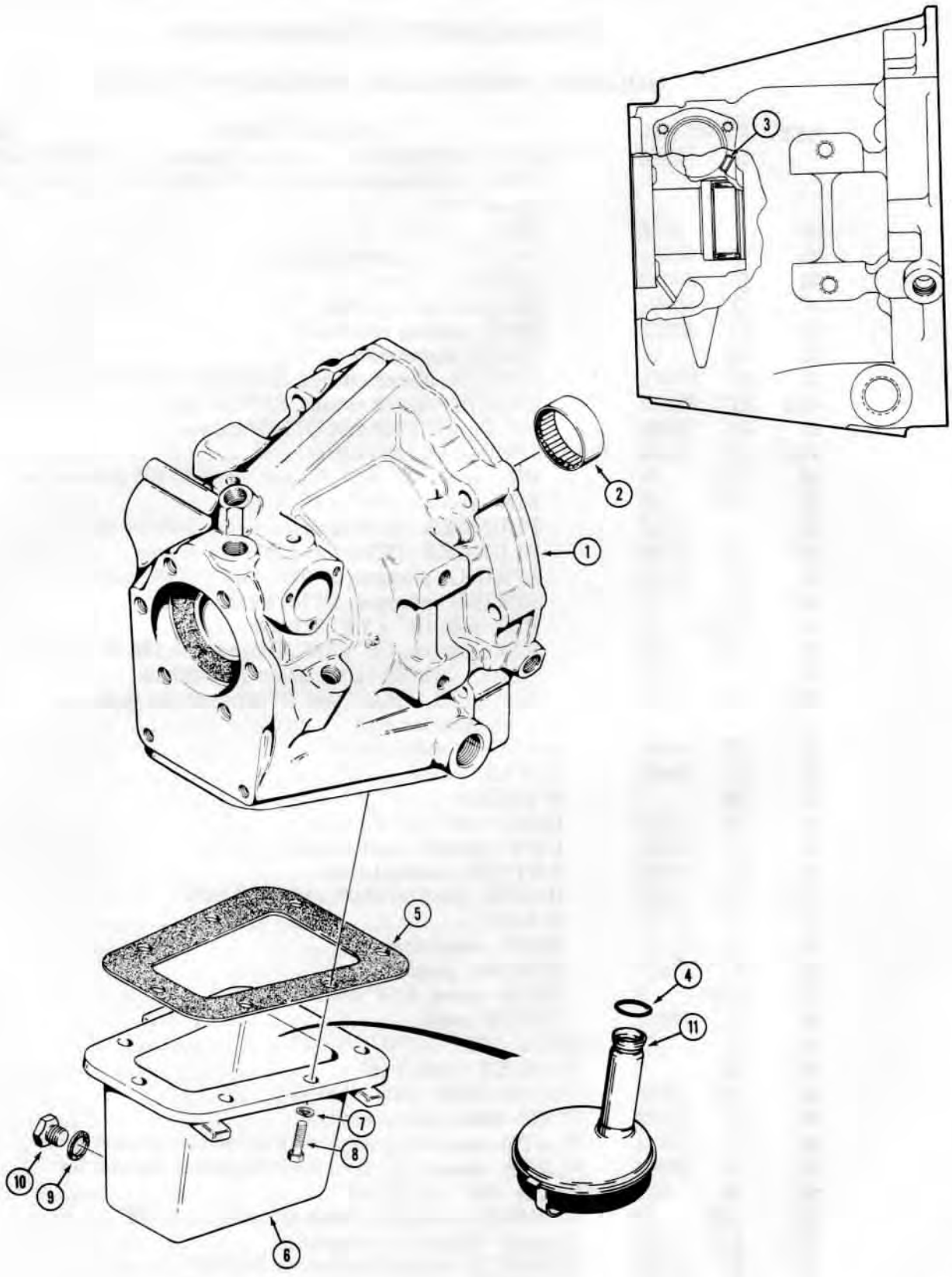

http://www.minnparbackhoeparts.com/

POWER SHUTTLE TRANSMISSION

HOUSING AND OIL PAN

REF.	PART NO. REF.		DESCRIPTION	REQ'D.
			SHUTTLE ASSEMBLY - for complete shuttle see pages 115 thru 123.	1
	*D	70650	HOUSING ASSEMBLY - shuttle.	1
1		NSS	HOUSING - shuttle	1
2	R	21491	BEARING - needle	1
3	41-	1007	PLUG - cup	1
4	R	29797	O-RING	1
5	R	29956	GASKET - oil pan	1
5	345-	84	SEAL - 3 oz. (89 ml) of sealer in a tube, not shown, can be used in place of R29956 gasket	1
6	R	29902	PAN - oil	1
7	92-	6	WASHER - lock, 3/8"	7
8	13-	616	HHCS - 3/8" - 16 NC x 1"	7
	D	73701	PLUG ASSEMBLY - drain	1
9		NSS	GASKET - drain plug	1
10		NSS	PLUG - drain	1
11	D	66455	SCREEN - sump, shuttle	1

*NOTE: When replacement housings are ordered for shuttles with S/N 151 thru 471, a new D50062 Breather should also be ordered as the original equipment breather on these housings will not fit the new housing. See page 115 items 33 and 33A.

http://www.minnparbackhoeparts.com/

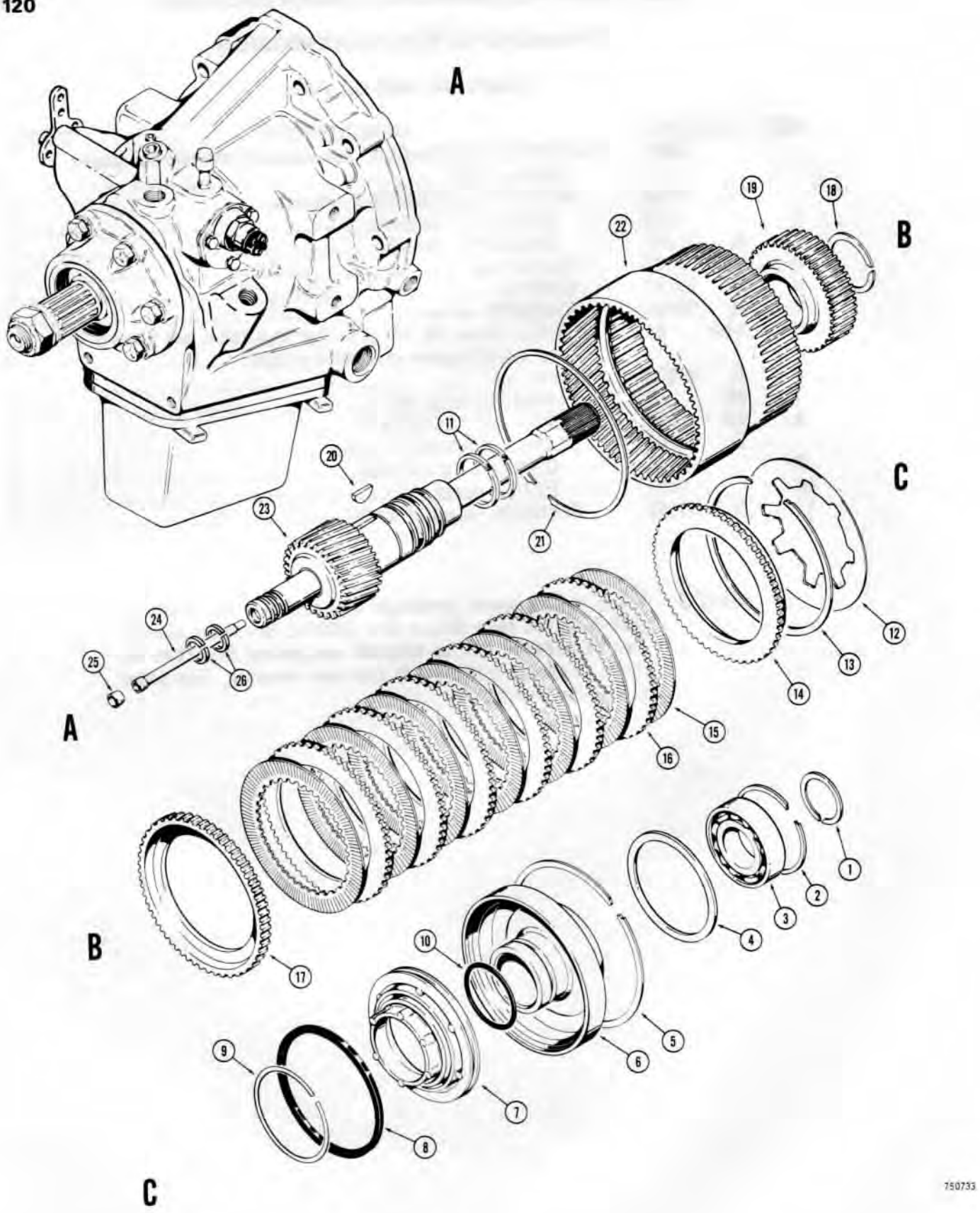

http://www.minnparbackhoeparts.com/

POWER SHUTTLE TRANSMISSION

DRIVE GEAR AND FORWARD CLUTCH

REF.	PART NO. REF.		DESCRIPTION	REQ'D.
			SHUTTLE ASSEMBLY - complete, see pages 115 thru 123	1
1	D	50042	RING - bearing retaining, small	1
2	D	50043	RING - bearing retaining, large	1
3	D	50044	BEARING - clutch cylinder	1
4	D	50045	WASHER - thrust	1
5	D	50046	RING - ring gear retaining	1
6	D	50075	CYLINDER - forward clutch	1
7	D	70670	PISTON - forward clutch	1
8	D	50077	RING - clutch	1
9	D	50078	RING - bearing	1
10	D	50079	SEAL - O-ring	1
11	D	50080	RING - sealing	2
12	D	50047	SPRING - belleville	1
13	D	50048	RING - retaining, clutch spring	1
	D	50024	KIT - forward clutch pack	1
14	D	50081	PRESSURE PLATE - front	1
15	D	70672	PLATE - clutch, internal tooth	7
16	D	50083	PLATE - clutch, external tooth	6
17	D	50084	PRESSURE PLATE - rear	1
18	D	50049	RING - clutch hub retaining	1
19	D	50050	HUB - clutch	1
20	126-	124	KEY - Woodruff	1
21	D	50051	RING - .050" to .054" thick (1.270 mm to 1.372 mm)	UAR
21	D	78397	RING - .062" to .066" thick (1.575 mm to 1.676 mm)	UAR
21	D	50052	RING - .074" to .078" thick (1.880 mm to 1.981 mm)	UAR
21	D	78398	RING - .084" to .088" thick (2.134 mm to 2.235 mm)	UAR
21	D	50053	RING - .096" to .100" thick (2.438 mm to 2.540 mm)	UAR
22	D	50054	RING GEAR	1
	D	70666	DRIVE GEAR AND SHAFT ASSEMBLY	1
23		NSS	GEAR AND SHAFT - drive	1
24	D	70667	TUBE - forward clutch supply	1
25	D	50086	PLUG - shaft end	1
26	D	70668	RING - seal	2

http://www.minnparbackhoeparts.com/

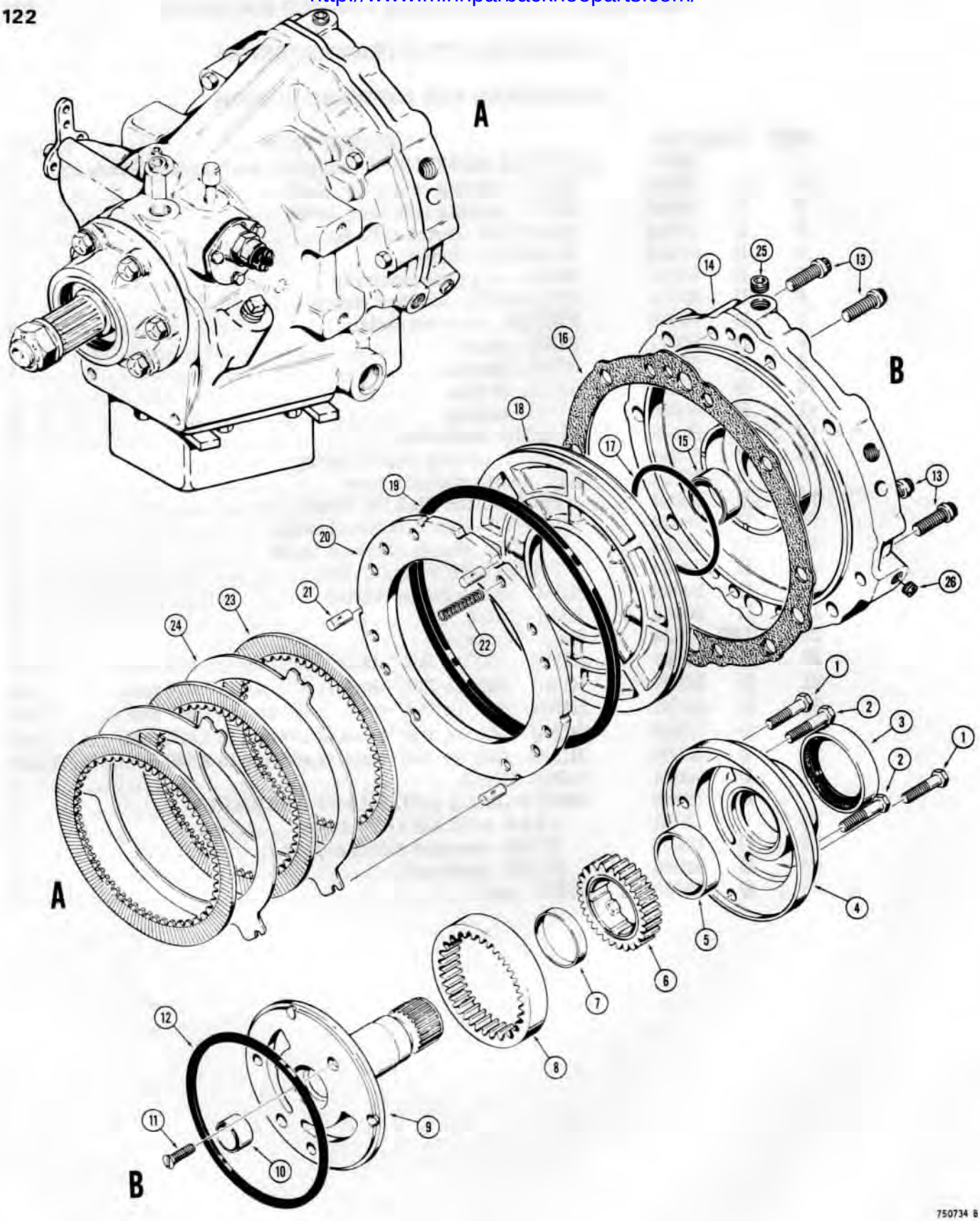

http://www.minnparbackhoeparts.com/

POWER SHUTTLE TRANSMISSION

FRONT PUMP AND REVERSE CLUTCH

REF.	PART NO. REF.	DESCRIPTION	REQ'D.
		SHUTTLE ASSEMBLY - complete, see page 115 thru 123	1
1	13- 528	HHCS - 5/16" - 18 NC x 1-3/4"	2
2	13- 530	HHCS - 5/16" - 18 NC x 1-7/8"	2
	R 29995	PUMP ASSEMBLY - front, shuttle	1
3	L 30489	SEAL - oil, rear	1
4	NSS	BODY - rear pump	1
5	NSS	BUSHING - front pump	1
6	NSS	GEAR - pump drive	1
7	NSS	BUSHING - pump gear drive	1
8	NSS	GEAR - pump driven	1
9	NSS	SUPPORT - converter	1
10	NSS	BUSHING - converter support	1
11	171- 100	FHMS - No. 10 - 24 NC x 3/4"	1
12	L 30487	GASKET - rear pump	1
13	166- 46	SCREW - ferry cap, 3/8" - 16 NC x 1-1/4"	4
	D 50022	ADAPTER ASSEMBLY - forward and reverse	1
14	NSS	ADAPTER - forward and reverse	1
15	D 50074	BUSHING - adapter	1
16	D 50033	GASKET - adapter to case	1
17	D 50034	SEAL - O-ring, small	1
18	D 50035	PISTON - reverse clutch	1
19	D 50036	SEAL - O-ring, large	1
20	D 50037	PLATE - pressure, reverse clutch	1
21	D 50038	DOWEL PIN - pressure plate	3
22	D 50039	SPRING - pressure plate	11
23	D 50040	PLATE - clutch, internal tooth	3
24	D 50041	PLATE - clutch, external flange	2
25	221- 841	PLUG - hex socket head, 1/4" NPT	1
26	221- 849	PLUG - hex socket head, 1/8" NPT	2

http://www.minnparbackhoeparts.com/

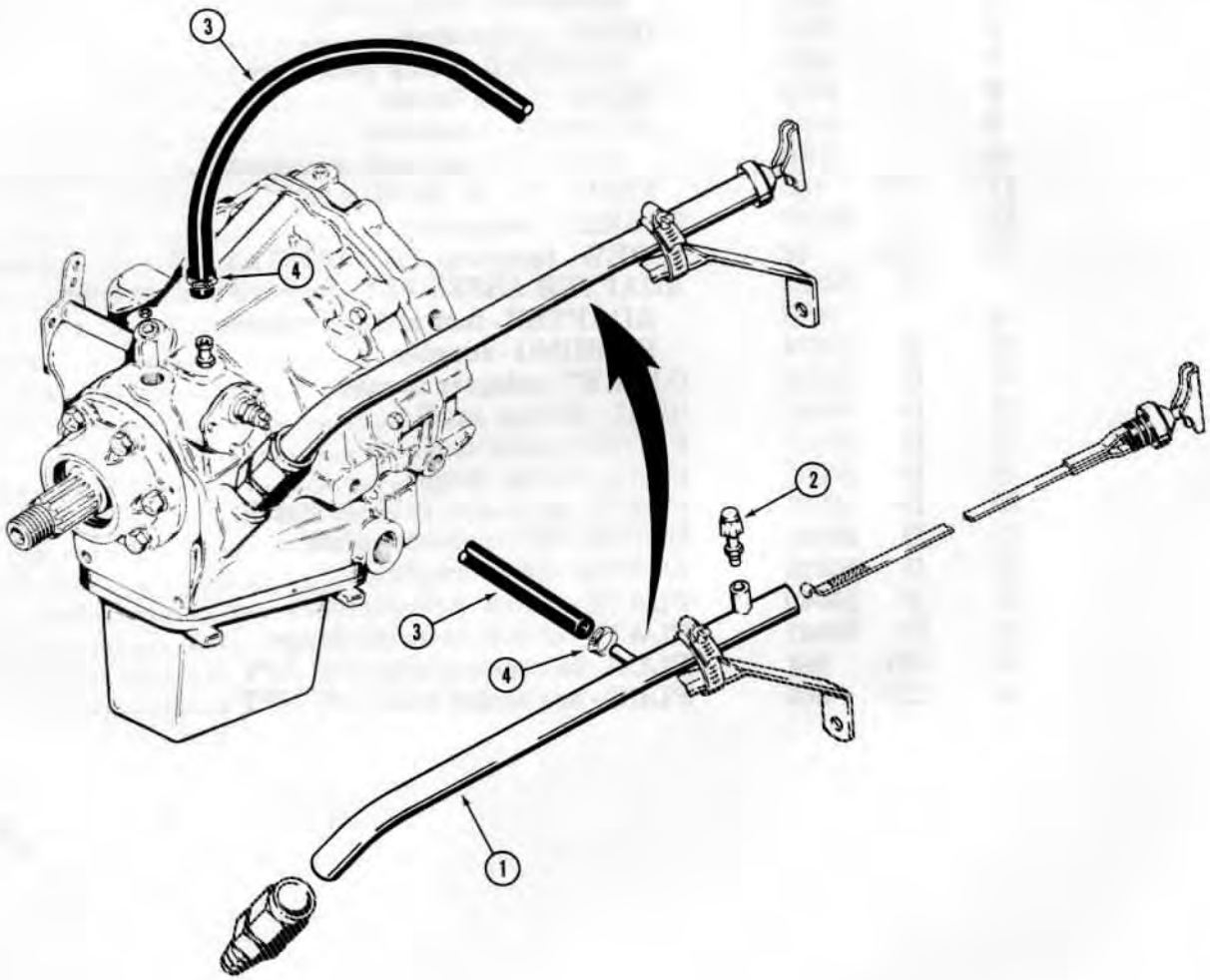

771345

http://www.minnparbackhoeparts.com/

CHASSIS

REF.	PART NO.	DESCRIPTION	REQ'D.
1	D 76243	CHASSIS - tractor	1
2	D 43940	BUSHING - front axle mounting	2
2A	D 37443	BUSHING - loader lift arm pivot	2
2B	D 19134	BRACKET - rear mounting, includes welding instructions, for use before tractor sn. 8958753 only	2
3	221- 27	PLUG - hex, socket, 1-1/4" NPT	1
4	221- 35	PLUG - hex, socket, 3/4" NPT	2
5	D 66068	BRACKET - cross member	1
6	13- 820	HHCS - 1/2" - 13 NC x 1-1/4"	4
7	195- 33	WASHER - plain, 1/2"	4
8	92- 8	WASHER - lock, 1/2"	4
9	25- 108	NUT - hex, 1/2" - 13 NC	4
10	205- 72	PLUG - button, 3" dia.	1
11	D 63875	PLUG - indicator, oil level	1
12	221- 15	PLUG - sq. head, 3/4" NPT, reservoir return ports, used only on drawbar tractors without equipment hydraulics	2
13	353- 23	PLUG - plastic, #15, reservoir outlet tubes, used only on drawbar tractors without equipment hydraulics	2
14	353- 416	PLUG - button, nylon, 1-3/4", used on models without loader	4

http://www.minnparbackhoeparts.com/

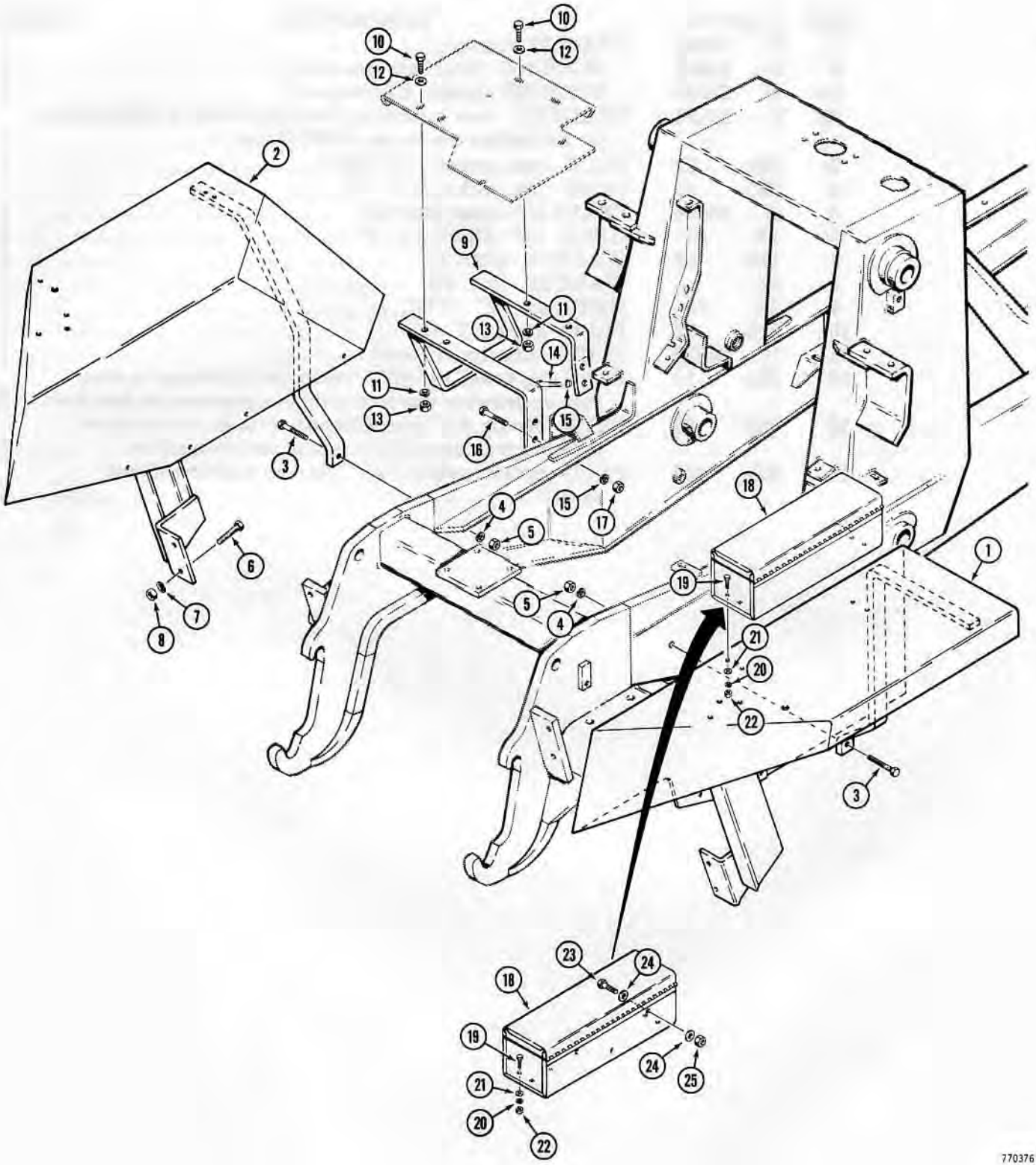

http://www.minnparbackhoeparts.com/

CLUTCH, MECHANICAL SHUTTLE AND RELATED PARTS

REF.	PART NO.	DESCRIPTION	REQ'D.
1	A 143492	TRANSMISSION - shuttle, used before tractor sn. 8955262, includes parts listed on pages 127-135 except for clutch release bearing shown as item 22 on page 127	1
1	A 150522	TRANSMISSION - shuttle, used on tractor sn. 8955262 and after, includes parts listed on pages 127-135 except for clutch release bearing shown as item 22 on page 127	1
2	25- 1110	NUT - hex, 5/8" - 18 NF	2
3	A 35147	WASHER - hardened, 5/8"	2
4	D 76605	HHCS - 5/8" - 18 NF x 3-1/2", special	2
5	A 35147	WASHER - hardened, 5/8"	4
6	25- 1110	NUT - hex, 5/8" - 18 NF	2
7	D 68669	COVER - flywheel	1
8	13- 1016	HHCS - 5/8" 11 NC x 1"	2
9	92- 10	WASHER - lock, 5/8"	2
10	G 11207	BOLT - special, pressure plate mounting	6
11	92- 5	WASHER - lock, 5/16"	6
	A 39213	PRESSURE PLATE - clutch, original equipment type without internal splined hub, order A39212 pressure plate	1
	A 39212	PRESSURE PLATE - clutch, service replacement type with internal splined hub	1
12	A 43607	CLIP - clutch return	3
13	A 43605	LINK - pressure plate	3
14	A 43608	SCREW - lever adjustment	3
15	25- 155	NUT - hex, jam, 5/16" - 24 NF	3
16	G 49048	WASHER - flat, adjuster	3
17	A 43613	RING - pressure plate spring	1
18	A 43609	PLATE - pressure	1
19	A 43612	KIT - pressure spring, set of 6, yellow code	1
20	A 43660	BRACKET ASSEMBLY - pressure plate	1
21	NSS	BRACKET - pressure plate	1
22	NSS	LEVER - pressure spring	3
23	A 43606	PIN - pivot, lever	3
24	A 51840	PLATE - clutch, driven	1
25	138- 65	PIN - roll, 1/8" x 1-1/2", timing pin	1
26	A 29068	COVER - timing hole	1
27	92- 4	WASHER - lock, 1/4"	1
28	13- 48	HHCS - 1/4" - 20 NC x 1/2"	1

http://www.minnparbackhoeparts.com/

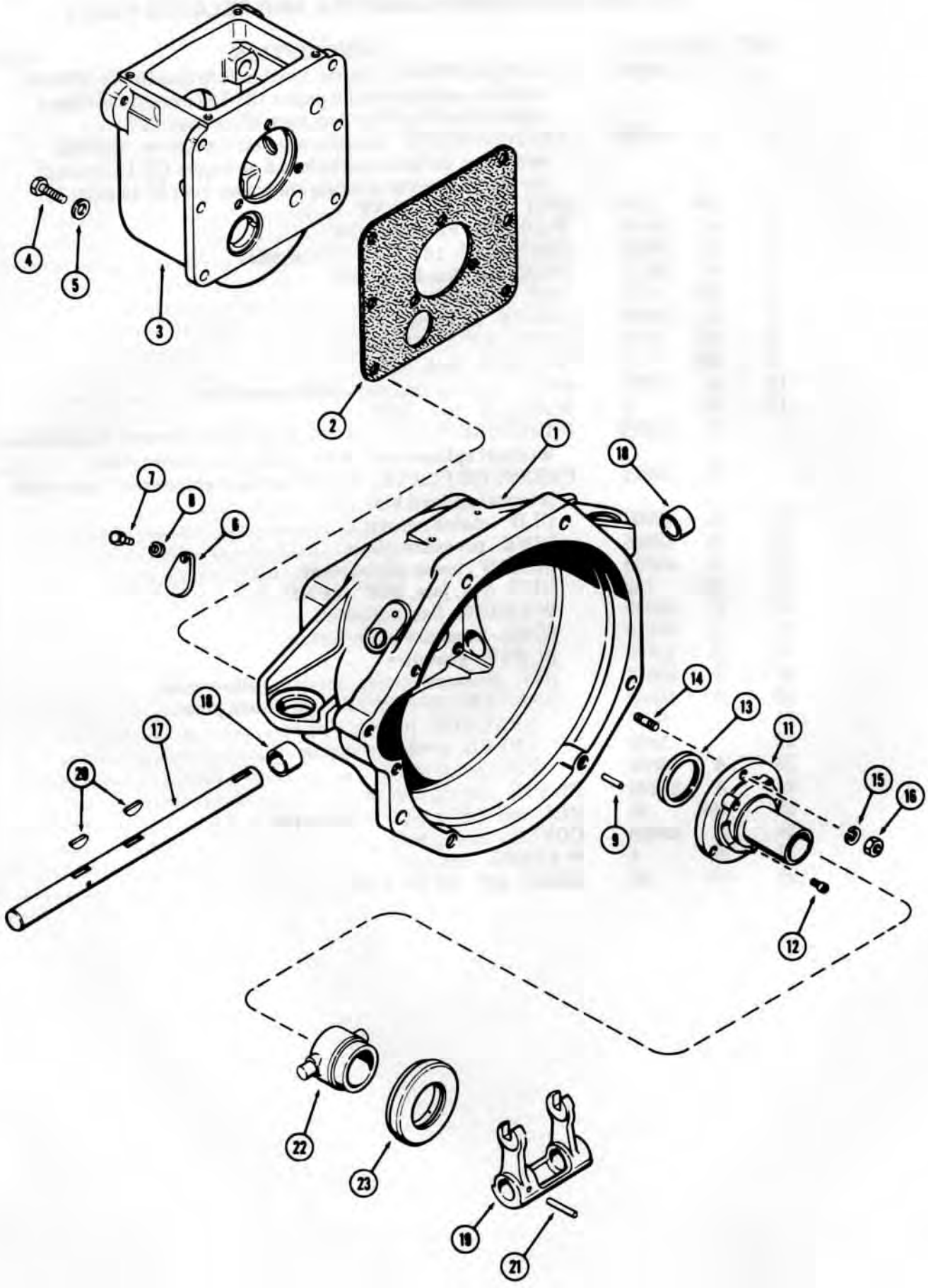

http://www.minnparbackhoeparts.com/

CLUTCH HOUSING
2 SPEED MECHANICAL SHUTTLE

REF.	PART NO.	DESCRIPTION	REQ'D
1	A 138284	HOUSING - clutch	1
2	A 51938	GASKET - clutch hsg. to shuttle hsg.	1
3	A 51935	HOUSING - shuttle	1
4	13- 622	BOLT - clutch hsg. to shuttle hsg. (3/8 x 1-3/8" NC hex)	6
5	92- 6	WASHER - 3/8" lock	6
6	A 29068	COVER - timing hole	1
7	13- 48	BOLT - timing cover (1/4 x 1/2" NC hex)	1
8	92- 4	WASHER - 1/4" lock	1
9	138- 61	PIN - timing (1/8 x 1" roll)	1

CLUTCH THROWOUT

11	A 148283	SPINDLE - clutch throwout (Replaces A51934)	1
12	178- 428	SCREW - spindle (1/4 x 1/2" NC hex, sckt. hd.)	3
13	39736	SEAL - oil, spindle (1-7/16 x 2-1/4 x 1/4")	1
14	A 7597	STUD - spindle (3/8" NC - NF x 1-5/16")	3
15	92- 6	WASHER - 3/8" lock	3
16	25- 116	NUT - 3/8" NF hex	3
17	A 138571	SHAFT - cross, clutch throwout	1
18	G 49666	BUSHING - cross shaft (1 x 1-1/4 x 1")	2
19	A 138570	YOKE - clutch throwout	1
20	126- 24	KEY - yoke to shaft (#15 Woodruff)	2
21	138- 139	PIN - yoke to shaft (1/4 x 1-5/8" roll)	1
22	A 144626	CARRIER ASSY. - throwout bearing	1
23	A 138864	BEARING - clutch throwout	1

http://www.minnparbackhoeparts.com/

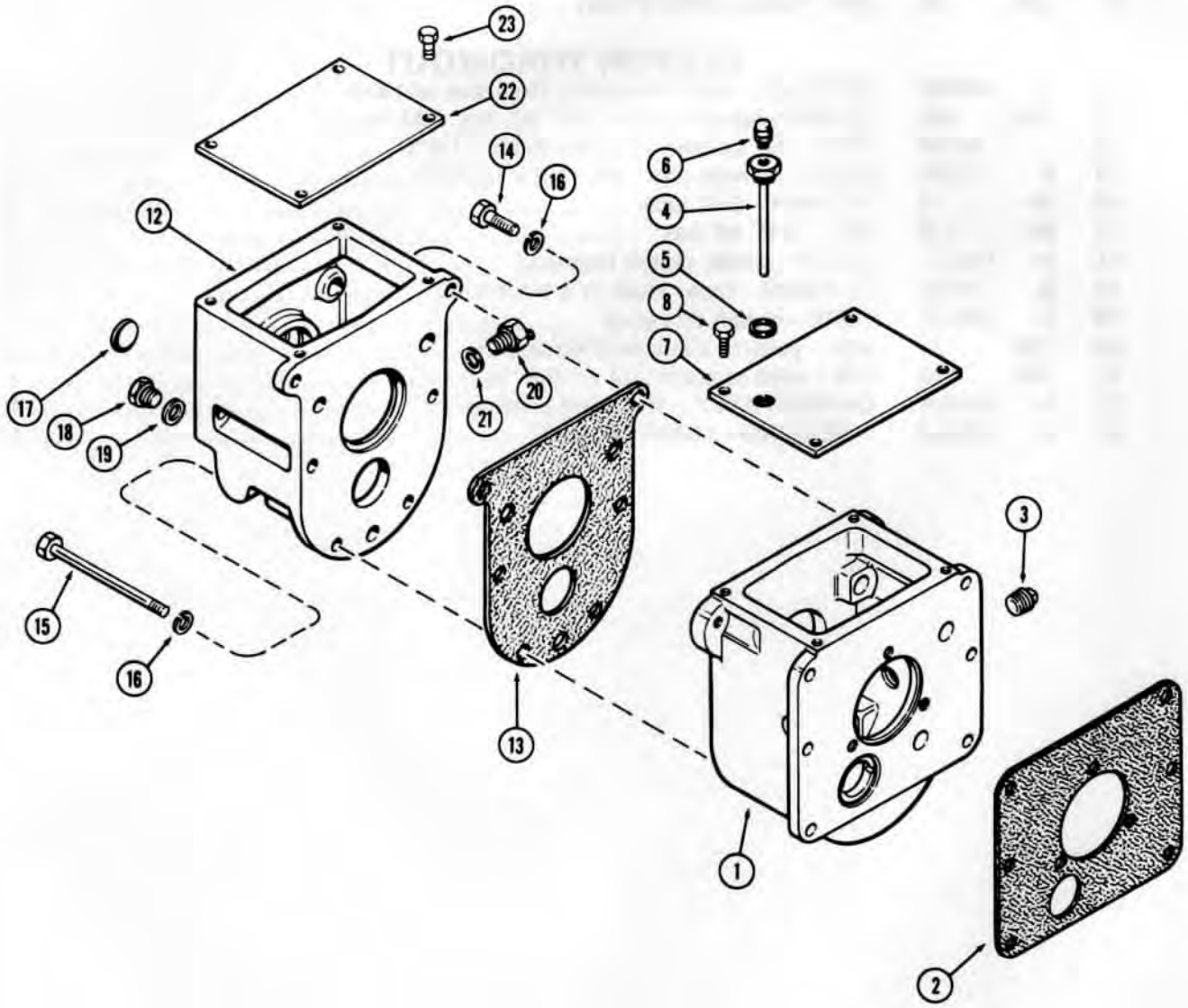

http://www.minnparbackhoeparts.com/

SHUTTLE HOUSING
2 SPEED MECHANICAL SHUTTLE

REF.	PART NO.	DESCRIPTION	REQ'D
1	A 51935	HOUSING - shuttle	1
2	A 51938	GASKET - shuttle to clutch hsg.	1
3	221- 5	PLUG - oil level (3/4" P.T., sq. hd.)	1
4	A 144331	TUBE - breather	1
5	A 58608	GASKET - breather tube to shuttle hsg.	1
6	A 12928	BREATHER - shuttle hsg. vent	1
7	A 51936	COVER - housing, top	1
8	13- 514	BOLT - cover (5/16 x 7/8" NC hex)	4
	M 20704	SEALANT - cover, Form-A-Gasket (3 oz. tube)	UAR

RANGE HOUSING

12	A 51944	HOUSING - range	1
13	A 51946	GASKET - range hsg. to shuttle hsg.	1
14	13- 624	BOLT - range to shuttle hsg., top (3/8 x 1-1/2 NC hex)	2
15	13- 692	BOLT - range to shuttle housing, bottom (3/8 x 5-3/4 NC hex)	2
15	13- 6104	BOLT - range to shuttle housing, center (3/8 x 6-1/2" NC hex)	2
16	92- 6	WASHER - 3/8" lock	6
17	41- 20	PLUG - countershaft hole (1-1/4" expansion)	1
18	A 140222	PLUG - drain	1
19	A 58608	GASKET - drain plug	1
20	A 139078	SWITCH ASSY. - neutral start	1
21	G 49401	SHIM - neutral start switch (.005")	UAR
22	A 51945	COVER - range housing, top	1
23	13- 514	BOLT - cover (5/16 x 7/8" NC hex)	4
	M 20704	SEALANT - cover, Form-A-Gasket (3 oz. tube)	UAR

http://www.minnparbackhoeparts.com/

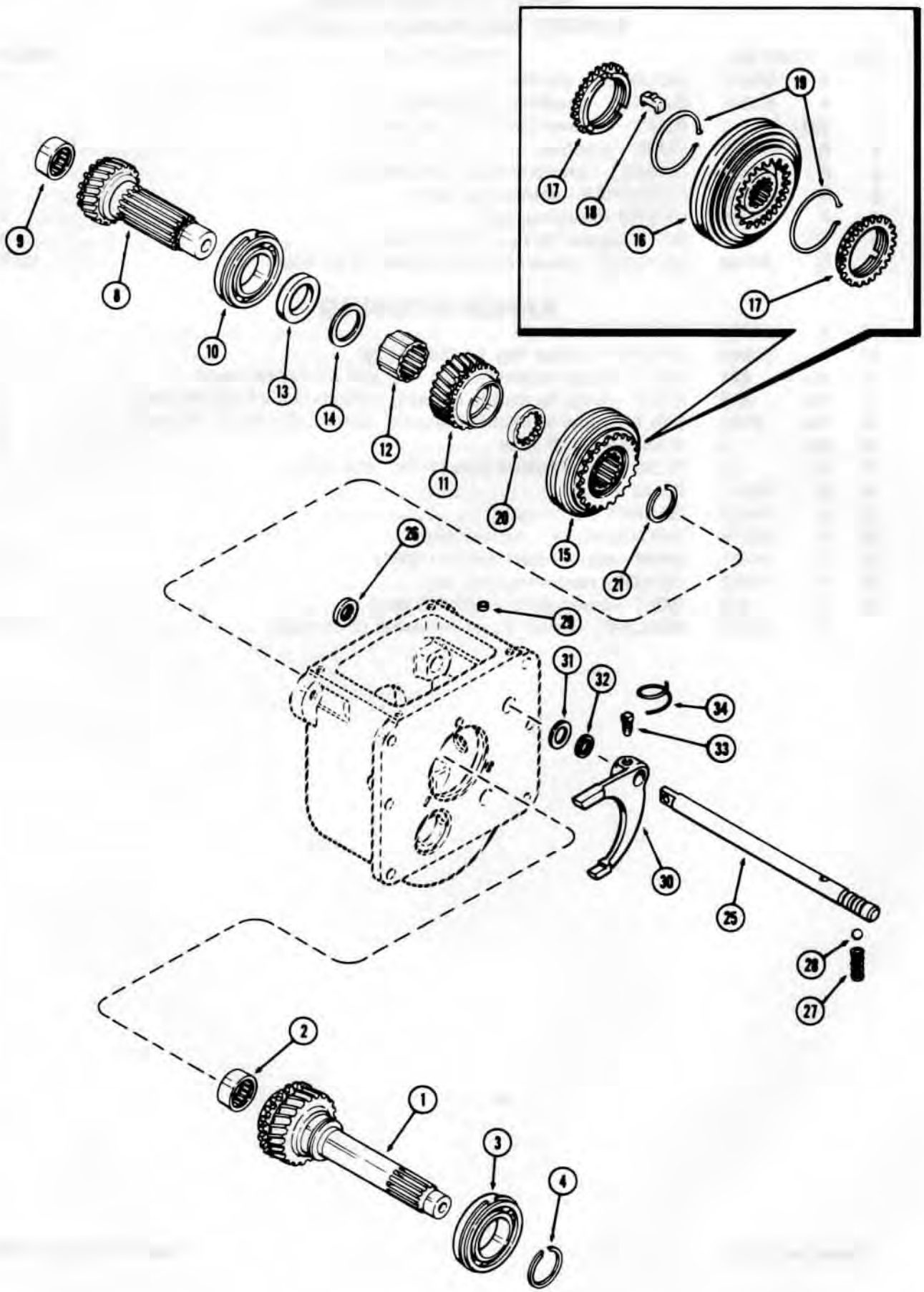

http://www.minnparbackhoeparts.com/

SHUTTLE INPUT GEAR
2 SPEED MECHANICAL SHUTTLE

REF.		PART NO.	DESCRIPTION	REQ'D
1	A	51939	GEAR - input (28 helical teeth)	1
2	A	35767	BEARING - needle (1-3/8 x 1-3/4 x 3/4")	1
3	L	31014	BEARING - ball, w/snap ring (2 x 3-1/2 x 3/4")	1
4	A	27209	RING - snap, bearing retaining	1

SHUTTLE OUTPUT GEAR

8	A	138343	GEAR - output shaft (25 helical teeth)	1
9	G	10419	BEARING - needle (1-3/8 x 1-3/4 x 3/4")	1
10	G	13606	BEARING - ball, w/snap ring (1-9/16 x 3-1/8 x 11/16")	1
11	A	144361	GEAR - output (27 external teeth)	1
12	G	16619	BUSHING - output gear (24 internal teeth)	1
13	A	144672	COLLAR - output gear	1
14	A	144491	WASHER - thrust, output gear	1
15	A	151114	SYNCHRONIZER ASSY. - forward & reverse (Replaces A51874)	1
16		NSS	HUB & SLEEVE ASSY	1
17	G	46077	RING - blocking	2
18	G	46078	PLATE - shifter	3
19	A	40766	SPRING - lock ring	2
20	G	16625	COLLAR - thrust, synchronizer (1-1/2 x 2-1/16 x 9/32")	1
21	A	27568	RING - snap, synchronizer retaining (.093")	UAR
21	G	46097	RING - snap, synchronizer retaining (.088")	UAR
21	A	27567	RING - snap, synchronizer retaining (.084")	UAR
21	A	27566	RING - snap, synchronizer retaining (.080")	UAR
21	A	27565	RING - snap, synchronizer retaining (.076")	UAR

SHUTTLE SHIFT MECHANISM

25	A	138294	RAIL - shuttle shifter	1
26	A	50421	SEAL - oil, shifter rail (in range hsg.) (3/4 x 1-1/2 x 1/4")	1
27	G	47039	SPRING - detent ball	1
28	211-	11	BALL - detent (3/8" dia.)	1
29	A	39321	PLUG - shuttle hsg. shifter rail boss (7/16" cup type)	1
30	A	51943	FORK - shifter	1
31	A	30881	WASHER - shift stop (3/4 x 1-1/4 x 20 ga. steel)	1
32	A	58608	WASHER - shift stop (3/4 x 1 x 1/16" nylon)	UAR
33	A	29964	SCREW - shuttle shift fork	1
34	A	29966	WIRE - lock, shuttle fork screw	1

http://www.minnparbackhoeparts.com/

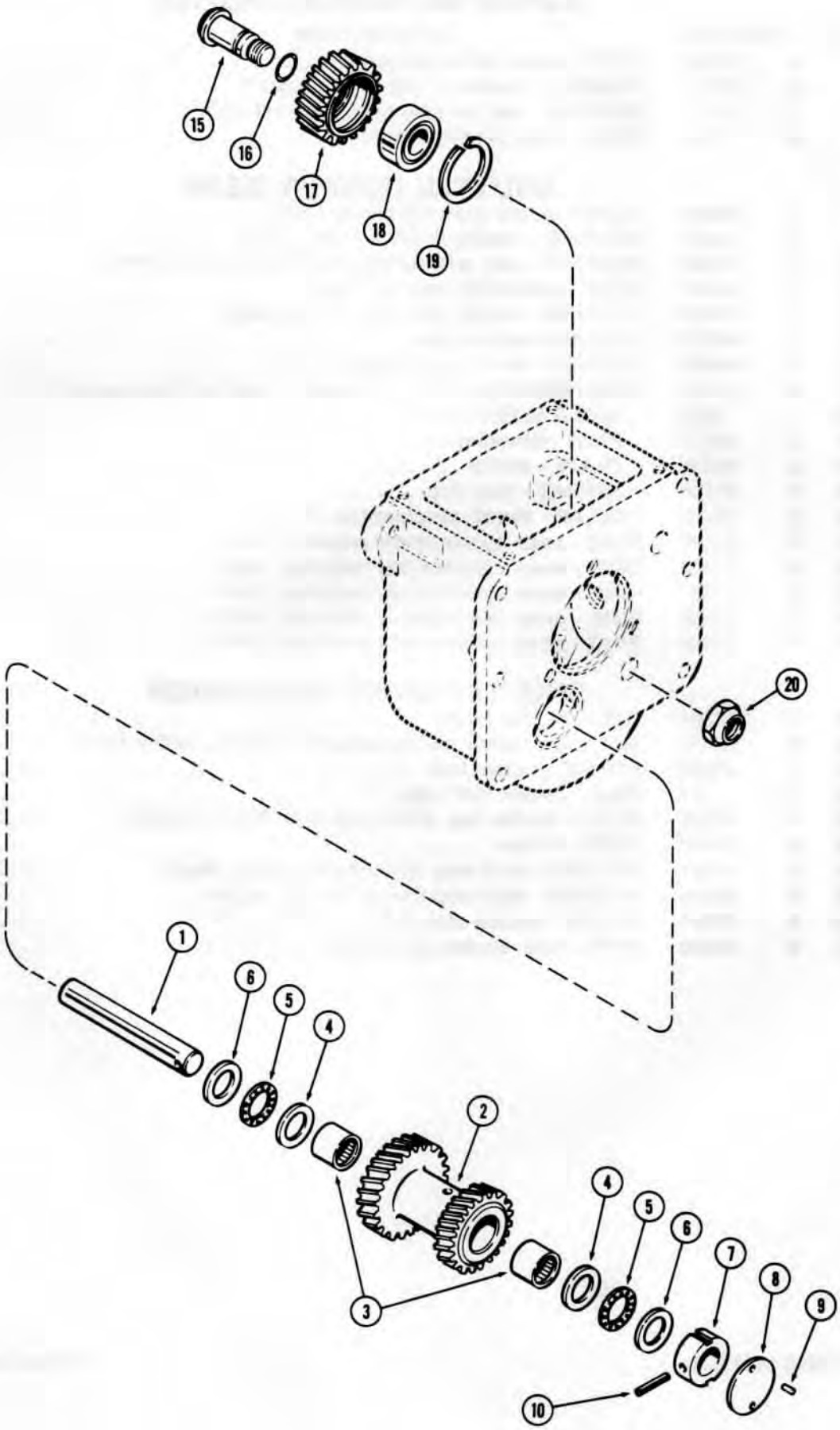

http://www.minnparbackhoeparts.com/

SHUTTLE COUNTERSHAFT
2 SPEED MECHANICAL SHUTTLE

REF.	PART NO.	DESCRIPTION	REQ'D
1	A 51941	COUNTERSHAFT - shuttle (5-3/4" long)	1
2	G 16615	GEAR - countershaft (25 & 30 external teeth)	1
3	G 10420	BEARING - needle (1 x 1-1/4" x 1")	2
4	G 46082	WASHER - thrust, inner (1 x 1-9/16 x 1/8")	2
5	G 13609	BEARING - thrust	2
6	G 46081	WASHER - thrust, outer (1 x 1-9/16 x 1/32")	2
7	A 51942	COLLAR - countershaft (notched)	1
8	G 16608	SHIM - collar (.005")	UAR
9	135- 49	PIN - collar (3/16 x 3/8" roll)	2
10	138- 2055	PIN - collar to shaft (3/16 x 1-1/2")	1

SHUTTLE REVERSE IDLER

15	A	51940	STUD - idler gear shaft	1
16	A	30097	O-RING - idler shaft (9/16 x 3/4 x 3/32")	1
17	G	16612	GEAR - reverse idler (24 external teeth)	1
18	G	13608	BEARING - ball (3/4 x 2 x 7/8")	1
19	A	27150	RING - snap, bearing retaining	1
20	G	16614	NUT - idler stud retaining	1

http://www.minnparbackhoeparts.com/

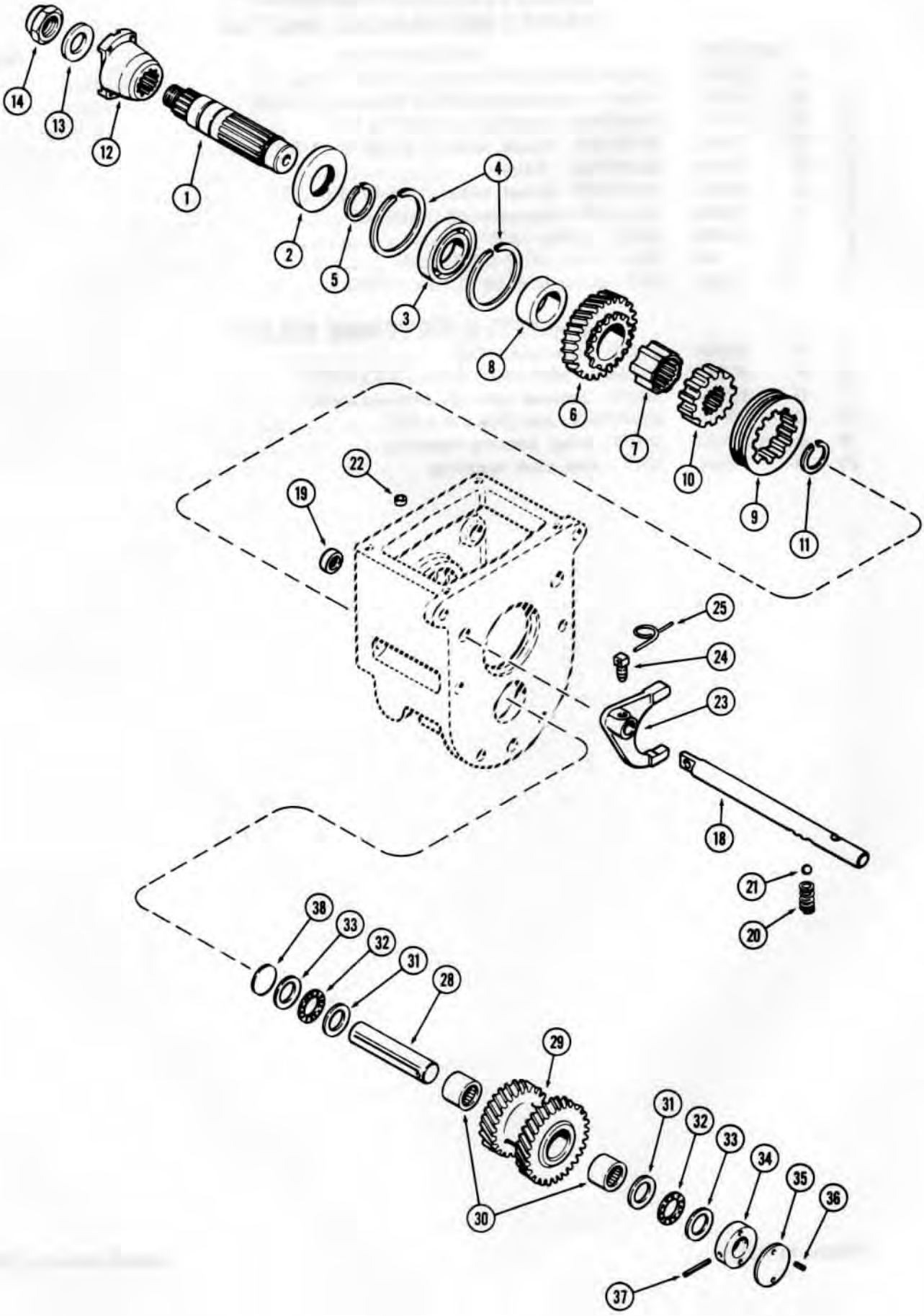

http://www.minnparbackhoeparts.com/

RANGE OUTPUT SHAFT
2 SPEED MECHANICAL SHUTTLE

REF.	PART NO.	DESCRIPTION	REQ'D
1	A 51947	SHAFT - range output	1
2	A 51948	SEAL - oil (1-9/16 x 3-5/32 x 5/16")	1
3	B 18215	BEARING - ball (1-9/16 x 3-1/4 x 11/16")	1
4	A 27579	RING - snap, bearing retaining (3-9/32" O.D.)	2
5	A 26946	RING - snap, bearing retaining (1-7/16" O.D.)	1
6	G 16620	GEAR - range (12 & 32 external teeth)	1
7	G 16619	SLEEVE - range gear (24 internal teeth)	1
8	A 140687	SPACER - thrust, range gear (1-9/16 x 2-1/4 x 13/16")	1
9	A 148437	COLLAR - range shift (12 internal teeth) (Replaces A38153)	1
10	G 16621	CARRIER - range shift collar (12 ext. & 24 int. teeth)	1
11	A 27568	RING - snap, carrier retaining (.093")	UAR
11	G 46097	RING - snap, carrier retaining (.088")	UAR
11	A 27567	RING - snap, carrier retaining (.084")	UAR
11	A 27566	RING - snap, carrier retaining (.080")	UAR
11	A 27565	RING - snap, carrier retaining (.076")	UAR
12	A 51949	YOKE - range output shaft	1
13	G 46082	WASHER - yoke (1 x 1-9/16 x 1/8")	1
14	131- 583	LOCKNUT - yoke retaining	1

RANGE SHIFT MECHANISM

18	A 140744	RAIL - dual range shift	1
19	A 26778	SEAL - oil, shifter rail (5/8 x 1-1/8 x 3/8")	1
20	G 47039	SPRING - detent ball	1
21	211- 11	BALL - detent (3/8" dia.)	1
22	A 39321	PLUG - range hsg. shifter rail boss (7/16" cup type)	1
23	A 51951	FORK - shifter	1
24	A 29964	SCREW - range shift fork	1
25	A 29966	WIRE - lock, range fork screw	1

RANGE COUNTERSHAFT

28	G 16606	COUNTERSHAFT - range (4-9/16" long)	1
29	A 140923	GEAR - countershaft (27 & 34 external teeth)	1
30	F 51079	BEARING - needle, (1 x 1-5/16 x 1")	2
31	G 46082	WASHER - thrust, inner (1 x 1-9/16 x 1/8")	2
32	F 13609	BEARING - thrust	2
33	G 46081	WASHER - thrust, outer (1 x 1-9/16 x 1/32")	2
34	G 16607	COLLAR - countershaft (solid)	1
35	G 16608	SHIM - collar (.005")	UAR
36	138- 88	PIN - collar (3/16 x 1/2" roll)	2
37	138- 104	PIN - collar to shaft (3/16 x 2" roll)	1
38	41- 20	PLUG - countershaft hole (1-1/4" expansion)	1

http://www.minnparbackhoeparts.com/

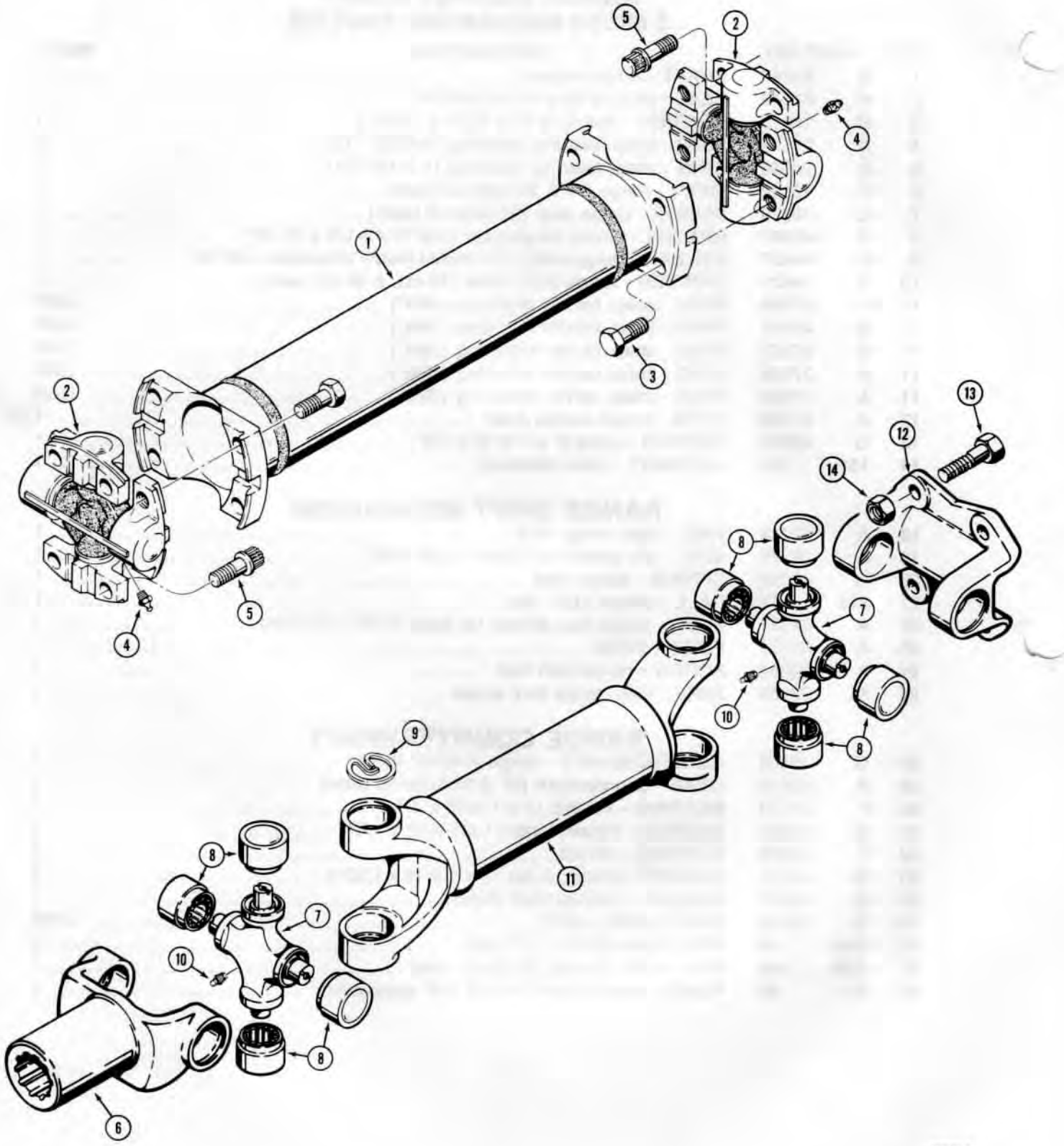

http://www.minnparbackhoeparts.com/

DRIVE SHAFTS

BEFORE TRACTOR SN. 8955262 (DRY CLUTCH) OR 8955232 (POWER SHUTTLE)

	D	64923	SHAFT ASSEMBLY - dry clutch models 1
	D	64924	SHAFT ASSEMBLY - power shuttle models 1
1	D	71308	TUBE - dry clutch models 1
1	D	71307	TUBE - power shuttle models 1
	D	73649	UNIVERSAL JOINT - drive shaft 2
2		NSS	JOINT - universal 1
3	A	14723	SCREW - hex head, 5/16" - 24 NF x 3/4" 4
4	219-	8	FITTING - grease, straight, 1/4" - 28 NF 1
5	L	30495	SCREW - ferry head, 5/16" - 24 NF x 3/4" 4

TRACTOR SN. 8955262 (DRY CLUTCH) OR 8955232 (POWER SHUTTLE) AND AFTER

	D	73781	SHAFT ASSEMBLY - dry clutch models 1
	D	73777	SHAFT ASSEMBLY - power shuttle models 1
6	D	75847	YOKE - end 1
	D	70629	KIT - universal joint 2
7		NSS	JOINT - universal 1
8		NSS	BEARING - universal joint 4
9		11256	RING - retaining 4
10	219-	10	FITTING - grease, straight 1
11		NSS	SHAFT - drive 1
12	W	13668	YOKE - flanged 1
13	114-	263	HHCS - 3/8" - 24 NF x 1-1/8", grade 8, if used 4
13	114-	266	HHCS - 3/8" - 24 NF x 1", grade 8, if used 4
14	131-	181	NUT - hex, lock, 3/8" - 24 NF, used with 1-1/8" bolts 4
14	131-	752	NUT - hex, lock, 3/8" - 24 NF, used with 1" bolts 4

NOTE: It is necessary to use a grease gun needle nozzle adapter (case part number D51765 or Lincoln number 5803) to lubricate drive shafts.

http://www.minnparbackhoeparts.com/

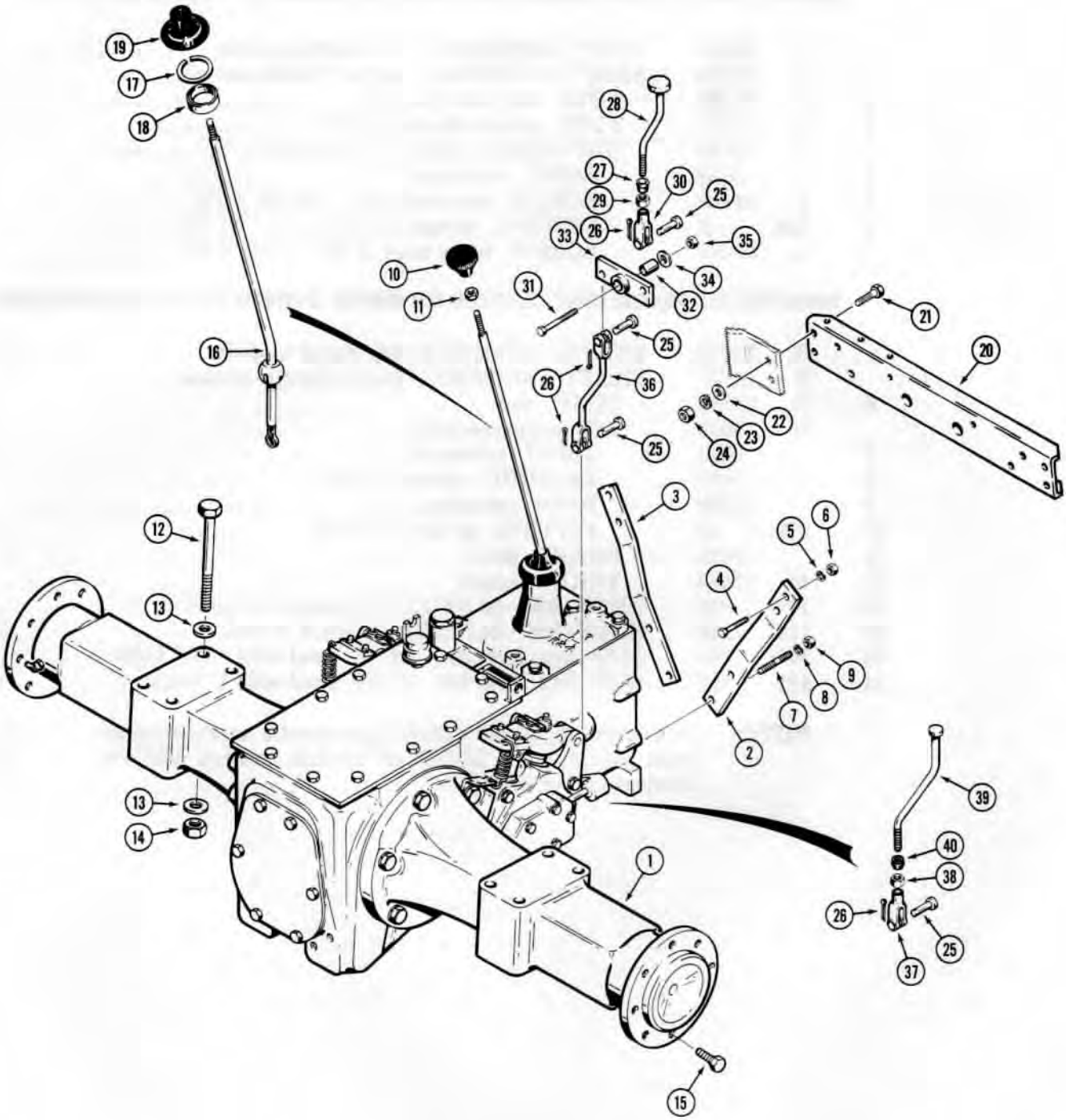

http://www.minnparbackhoeparts.com/

TRANSAXLE AND DIFFERENTIAL LOCK

REF.	PART NO.	DESCRIPTION	REQ'D.
1	A 137164	TRANSAXLE - complete, used before tractor sn. 8955262 (Dry Clutch) or 8955232 (Power Shuttle), parts list pages 141-155	1
1	A 150159	TRANSAXLE - complete, used on tractor sn. 8955262 (Dry Clutch) or 8955232 (Power Shuttle) and after, parts list pages 141-155	1
2	D 69605	SUPPORT - R.H.	1
3	D 69606	SUPPORT - L.H.	1
4	13- 820	HHCS - 1/2" - 13 NC x 1-1/4"	4
5	92- 8	WASHER - lock, 1/2"	4
6	25- 108	NUT - hex, 1/2" - 13 NC	4
7	D 69763	STUD - 1/2" - 20 NF	4
8	92- 8	WASHER - lock, 1/2"	4
9	25- 118	NUT - hex, 1/2" - 20 NF	4
10	D 69105	KNOB - lever	1
11	129- 145	NUT - hex, jam, 1/2" - 13 NC	1
12	13- 12128	HHCS - 3/4" - 11 NC x 8"	8
13	D 34666	WASHER - flat, hardened	16
14	25- 1012	NUT - hex, 3/4" - 11 NC	8
15	A 38208	BOLT - lug, rear	16
16	A 148573	LEVER - shifting	1
17	A 26836	RING - retaining	1
18	A 7923	SEAT - shifting lever	1
19	A 57876	COVER - rubber, gear shift lever	1
20	D 66068	BRACKET - crossmember	1
21	13- 820	HHCS - 1/2" - 13 NC x 1-1/4"	4
22	195- 33	WASHER - flat, 1/2"	4
23	92- 8	WASHER - lock, 1/2"	4
24	25- 108	NUT - hex, 1/2" - 13 NC	4
25	141- 4	PIN - clevis	1-3
26	132- 25	PIN - cotter, 3/32" x 1-1/2"	1-3
		TWO PIECE DIFFERENTIAL LOCK LEVER	
27	353- 459	BUSHING - nylon	1
28	D 65375	ROD - differential lock	1
29	25- 156	NUT - hex, jam, 3/8" - 24 NF	1
30	213- 4	YOKE - adjustable	1
31	13- 628	HHCS - 3/8" - 16 NC x 1-3/4"	1
32	D 95744	SLEEVE - bushing	1
33	D 65371	LEVER - differential lock	1
34	195- 2034	WASHER - flat, special	1
35	25- 106	NUT - hex, 3/8" - 16 NC	1
36	D 65373	ROD - differential lock	1
		ONE PIECE DIFFERENTIAL LOCK LEVER	
37	213- 4	YOKE - clevis	1
38	25- 156	NUT - hex, jam, 3/8" - 24 NF	1
39	D 76355	ROD - differential lock, dry clutch models	1
39	D 74623	ROD - differential lock, power shuttle models	1
40	353- 462	BUSHING - snap	1

http://www.minnparbackhoeparts.com/

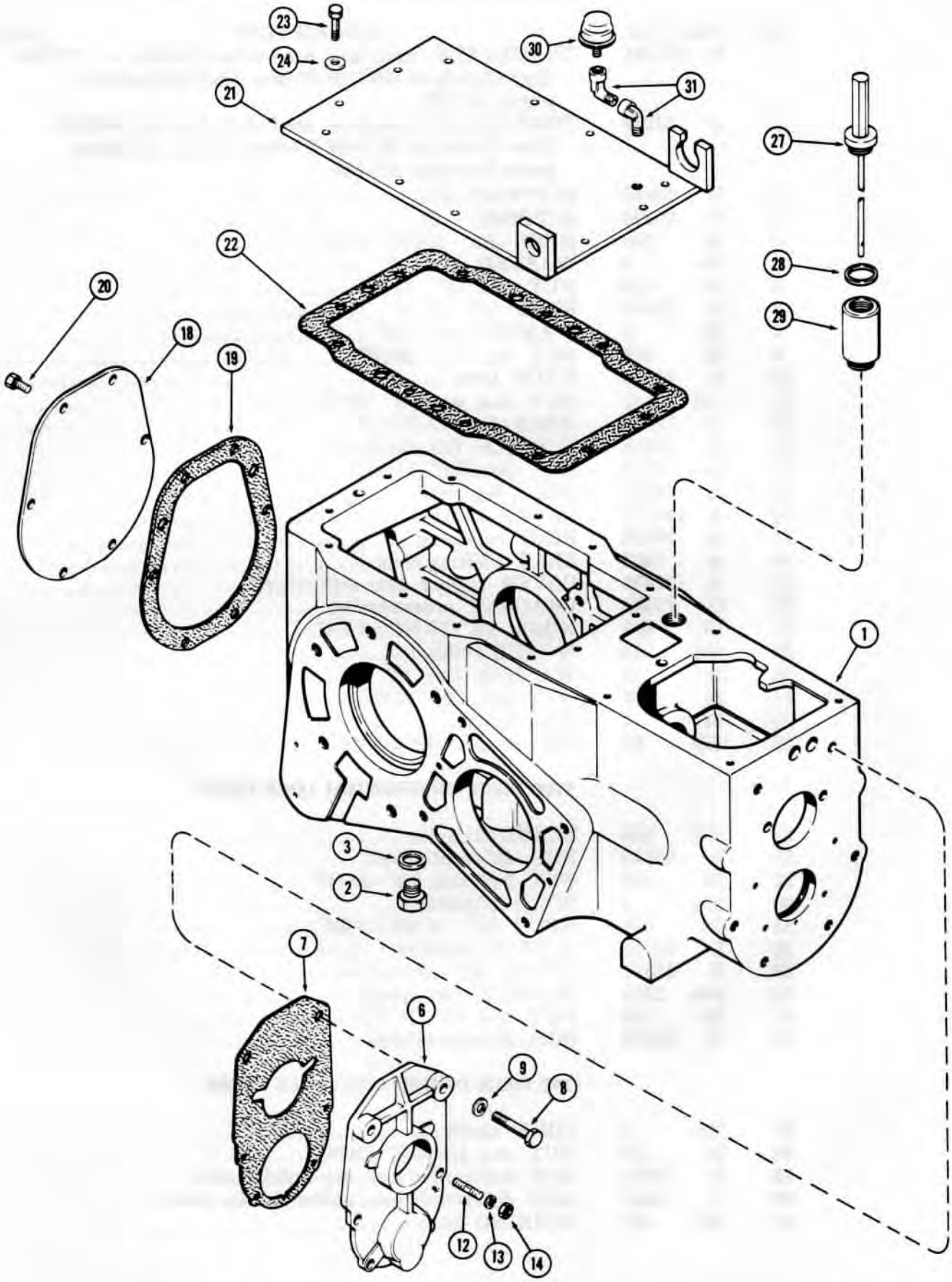

http://www.minnparbackhoeparts.com/

TRANSMISSION HOUSING
TRANSAXLE

REF.	PART NO.	DESCRIPTION	REQ'D
1	A 51952	HOUSING - transmission	1
2	A 140222	PLUG - drain, transmission housing	1
3	A 58608	GASKET - drain plug	1
6	A 51953	COVER - transmission housing, front	1
7	G 46849	GASKET - front cover to trans. housing	1
8	13- 830	BOLT - cover, top (1/2 x 1" NC hex)	2
9	92- 8	WASHER - 1/2" lock	2
12	A 29717	STUD - cover, center (3/8" NC - NF x 1-1/2")	2
12	G 10710	STUD - cover, bottom (3/8" NC - NF x 1-3/4")	2
13	92- 6	WASHER - 3/8" lock	4
14	25- 116	NUT - 3/8" NF hex	4
18	A 39105	COVER - transmission housing, rear	1
19	G 10447	GASKET - rear cover to trans. housing (See Note)	1
20	13- 612	BOLT - cover (3/8 x 3/4" NC hex)	6
21	A 142559	COVER - trans. housing, top, rear	1
22	A 152450	GASKET - top cover to trans. housing (Replaces G10941)	1
23	26- 616	BOLT - cover (3/8 x 1" NC hex) (Gr. 8)	10
24	A 140282	WASHER - cover bolt (3/8 x 3/4 x 1/32")	10
27	A 142303	DIPSTICK - oil gauge	1
28	A 38660	GASKET - dipstick	1
29	A 39322	TUBE - dipstick & oil filler	1
30	A 27173	BREATHER - transmission oil	1
31	221- 402	ELBOW - breather to cover (1/4" P.T., 45°)	2

NOTE: PRODUCTION HOUSING MAY NOT HAVE A COVER GASKET. IF REAR HOUSING COVER IS REMOVED, INSTALL A GASKET PRIOR TO RE-ASSEMBLY.

http://www.minnparbackhoeparts.com/

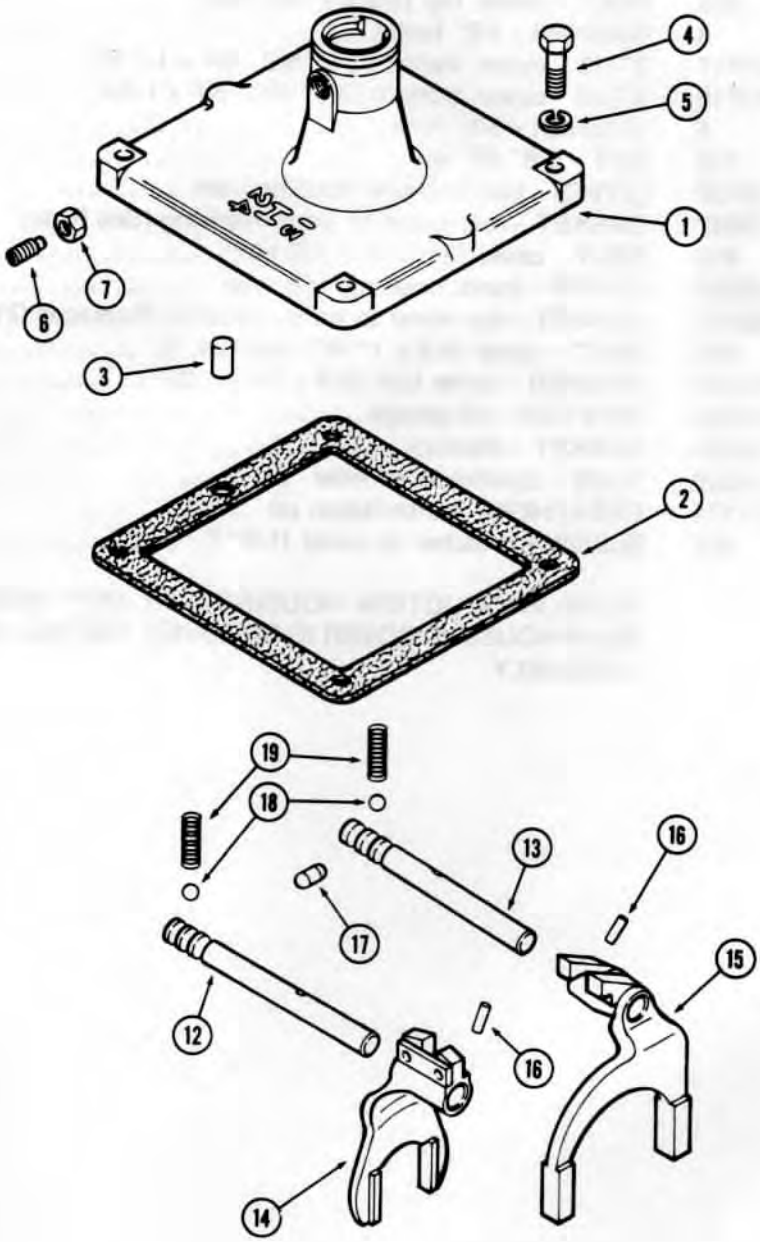

http://www.mymarkbackhoeparts.com/

SHIFTER MECHANISM
TRANSAXLE

REF.	PART NO.	DESCRIPTION	REQ'D
1	A 138312	COVER - shift control	1
2	G 10342	GASKET - cover to trans. housing	1
3	138- 245	PIN - cover locating (1/2 x 7/8" roll)	1
4	13- 624	BOLT - cover to trans. hsg. (3/8 x 1-1/2" NC hex)	4
5	92- 6	WASHER - 3/8" lock	4
6	G 15468	SCREW - shift lever ret. (5/16" NC set.)	1
7	25- 145	NUT - lock, set screw (5/16" NC hex jam)	1
12	A 138313	RAIL - shifter, 1st & 2nd gear	1
13	A 140578	RAIL - shifter, 3rd & 4th gear	1
14	A 51964	FORK ASSY. - shift, 1st & 2nd gear	1
15	A 150726	FORK - shifter, 3rd & 4th gear (Replaces A51963)	1
16	138- 2009	PIN - fork to rail (3/16 x 1" spirol)	2
17	A 29060	PLUG - interlock, shifter rails	1
18	211- 28	BALL - detent, shifter rail (13/32" dia.)	2
19	G 47039	SPRING - tension, detent ball	2

Printed in U.S.A.

Issued January, 1978

http://www.minnparbackhoeparts.com/

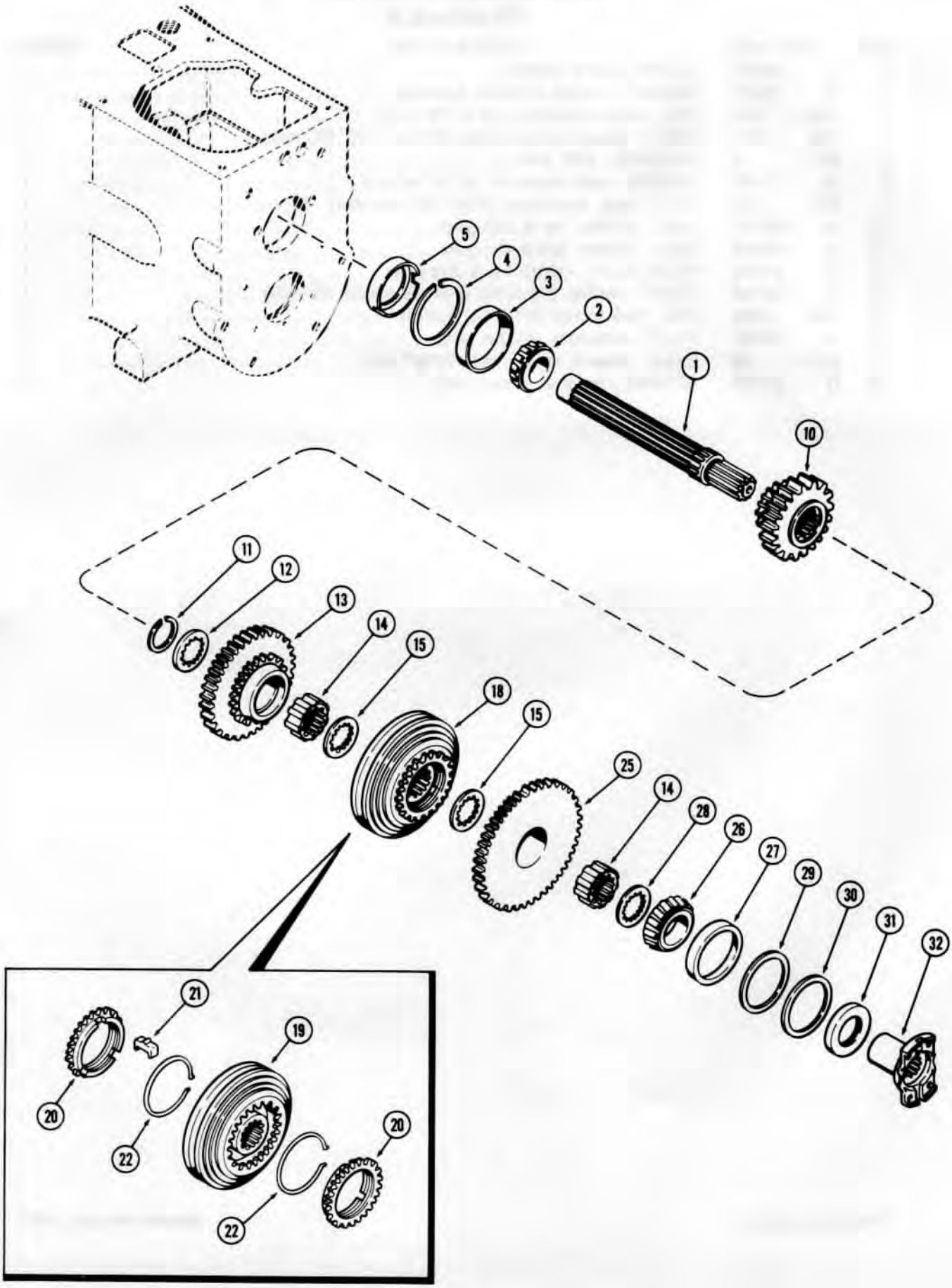

http://www.minnparbackhoeparts.com/

MAINSHAFT
TRANSAXLE

REF.		PART NO.	DESCRIPTION	REQ'D
1	A	148508	MAINSHAFT - (1st used trans. ser. no. 10043978) (1-1/4" rear bearing area dia.) (Used w/T20939 rear bearing cone)	1
1	A	138301	MAINSHAFT - (Used prior to trans. ser. no. 10043978) (1-3/8" rear bearing area dia.) (Used w/A29976 rear bearing cone) (Order 1-A148508 mainshaft & 1-T20939 bearing cone)	1
2	T	20939	CONE - bearing, rear (1-1/4" I.D.) (Used w/ A148508 mainshaft)	1
2	A	29976	CONE - bearing, rear (1-3/8" I.D.) (Used w/A138301 mainshaft)	1
3	A	29977	CUP - bearing, rear (2-3/4" O.D.)	1
4	A	29971	RING - snap, rear bearing retaining	1
5	G	10616	CUP - oiling, mainshaft, rear	1
10	A	51957	GEARS - sliding, 1st & 2nd (16 & 25 ext. & 24 int. teeth)	1
11	A	26946	RING - snap, thrust washers & gears retaining	1
12	A	140239	COLLAR - thrust, 3rd & 4th gears (24 int. teeth)	1
13	A	136597	GEAR - sliding, 3rd (27 & 35 external teeth)	1
14	A	51956	BUSHING - 3rd & 4th gears (24 internal teeth)	2
15	A	138572	WASHER - thrust, 3rd & 4th gears (1/8" thick w/24 internal teeth)	2
18	A	138655	SYNCHRONIZER ASSY	1
19		NSS	HUB & SLEEVE ASSY	1
20	A	45568	RING - blocking	2
21	G	46078	PLATE - shifter	3
22	A	40766	SPRING - lock ring	2
25	A	148194	GEAR - sliding, 4th (27 & 44 external teeth) (Replaces A51955)	1
26	G	10424	CONE - bearing, front (1-9/16" I.D.)	1
27	G	10425	CUP - bearing, front (2-7/8" O.D.)	1
28	A	136386	COLLAR - thrust, front bearing (1-7/16 x 2 x 3/16")	1
29	A	51527	SHIM - front bearing (.035")	UAR
29	G	10341	SHIM - front bearing (.005")	UAR
29	G	10340	SHIM - front bearing (.007")	UAR
30	A	39184	COLLAR - pilot, front cover (2-9/16 x 2-7/8 x 5/16")	1
31	G	10422	SEAL - oil, front (1-9/16 x 2-7/16 x 1/2")	1
32	A	51954	YOKE - power input (Used before trac. ser. nos. mechanical shuttle 8955232 and power shuttle 8955262)	1

http://www.minnparbackhoeparts.com/

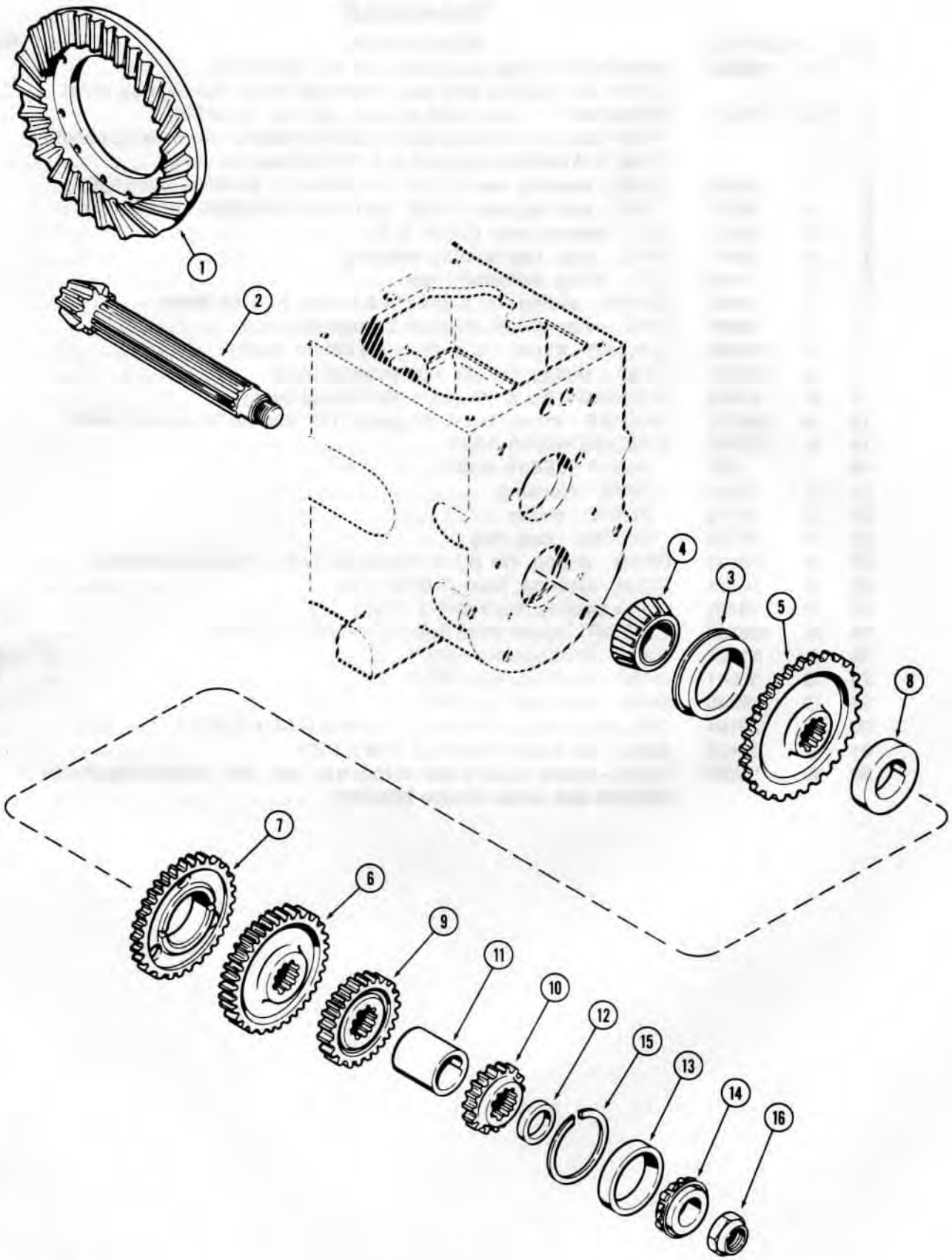

http://www.impactbackhoeparts.com/

G34881 BACKHOE SWING CYLINDER

WITH TWO PIECE PISTON

REF.	PART NO.	DESCRIPTION	REQ'D.
1	G 34881	CYLINDER ASSEMBLY - swing, 4" (102 mm) I.D. x 11-1/4" (286 mm) stroke, see foot note	2
2	G 34877	TUBE ASSEMBLY - cylinder	1
3	G 34875	BUSHING - tube	2
	G 34331	GLAND ASSEMBLY - cylinder	1
4	NSS	GLAND - cylinder	1
5	NSS	RING - retaining	1
6	*D 95144	WIPER - piston rod, outer	1
7	*G 34322	BEARING - center	1
8	*D 36971**	SEAL - piston rod	1
9	*A 27507	O-RING - gland	1
10	*G 32176	RING - backup	1
11	187- 1031	SCREW - self tapping, #8 - 32 NC x 1/4"	1
12	G 34775	ROD ASSEMBLY - piston, 2" (51 mm) dia.	1
13	G 34854	BUSHING - piston rod	2
14	G 33159	PISTON - split, rod end	1
15	D 49161	PISTON - split, bolt end	1
16	*D 47204	PACKING ASSEMBLY - piston, "V" type	2
17	D 47209	RING - center bearing	1
18	D 38679	PIN - cushion relief	1
19	D 38683	SPRING - cushion relief	1
20	211- 14	BALL - cushion relief spring	1
21	D 41359	BOLT - piston and cushion relief	1
22	G 32351	WASHER - hardened	1
23	219- 1	FITTING - grease, straight, 1/8" NPT	1
	*G 34594	KIT - seal, includes all items with an asterisk	1
	**G 100778	SEAL - piston rod, service option - extreme heat or cold	1

NOTE: Look for cylinder assembly part number to be stamped on cylinder gland or tube.

http://www.minnparbackhoeparts.com/

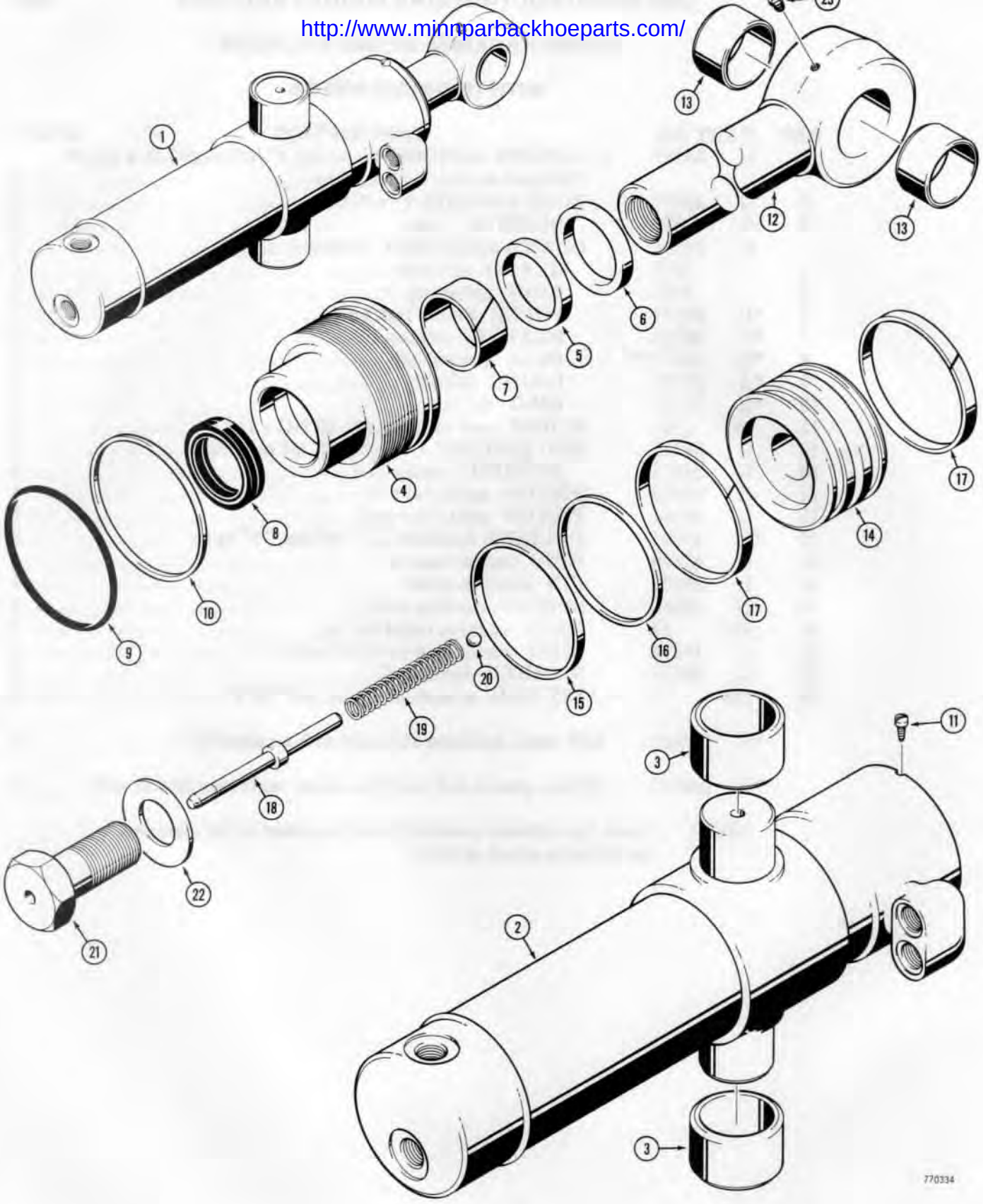

http://www.minnparbackhoeparts.com/

DIFFERENTIAL
TRANSAXLE

REF.	PART NO.	DESCRIPTION	REQ'D
	A 51980	PINION & RING GEAR - (Matched set)	1
1	NSS	GEAR - ring (bolted type)	1
2	NSS	PINION - bevel drive (See Page 147) (12-1/4" long)	1
3	A 140438	WHEEL - center	1
4	A 153272	DOWEL - center wheel (split & tapered) (Replaces A140412)	12
5	28- 614	BOLT - center wheel (3/8 x 7/8" NF hex)	12
6	A 140282	WASHER - wheel bolt (3/8 x 3/4 x 1/32" hardened)	12
7	A 142676	GEAR - pinion	3
8	A 146541	PIN - pinion gear (Replaces A142356)	3
9	A 140705	PIN - (3/16 x 2" groove) (Replaces 135-141)	3
10	138- 94	PIN - (3/16 x 7/8" roll)	3
11	A 39012	WASHER - thrust, center wheel (.089")	UAR
11	A 39007	WASHER - thrust, center wheel (.094")	UAR
11	A 39008	WASHER - thrust, center wheel (.099")	UAR
11	A 39009	WASHER - thrust, center wheel (.104")	UAR
11	A 39010	WASHER - thrust, center wheel (.109")	UAR
11	A 39011	WASHER - thrust, center wheel (.119")	UAR
15	A 144266	SHAFT - cross	1
16	A 50990	GEAR ASSY. - side, left hand w/identification groove on spur gear	1
17	A 29902	PLUG - L.H. side gear (1-5/8" expansion)	1
18	A 50989	GEAR ASSY. - side, right hand, w/identification groove on spur gear	1
19	A 35921	BUSHING - R.H. side gear (1-3/8 x 1-9/16 x 13/16")	1
20	A 146027	SEAL - oil, R.H. side gear (1-3/8 x 1-5/8 x 3/16")	1
24	A 140869	CARRIER ASSY. - side gear bearing	2
25	A 26744	CUP - bearing, side gear (4-11/32" O.D.)	1
26	A 30114	CONE - bearing, side gear (2-1/4" I.D.)	2
27	A 39289	SHIM - bearing carrier (.003")	UAR
27	G 10719	SHIM - bearing carrier (.005")	UAR
27	G 10720	SHIM - bearing carrier (.010")	UAR
28	A 39273	SEAL - oil, carrier (2-1/4 x 3 x 1/2")	UAR
29	G 10347	O-RING - carrier seal (5 x 5-1/4 x 1/8")	2
30	73- 616	SCREW - carrier to trans. hsg. (3/8-16 x 1" flat hd. sltd.)	2

Printed in U.S.A.

Issued January, 1978

http://www.minnparbackhoeparts.com/

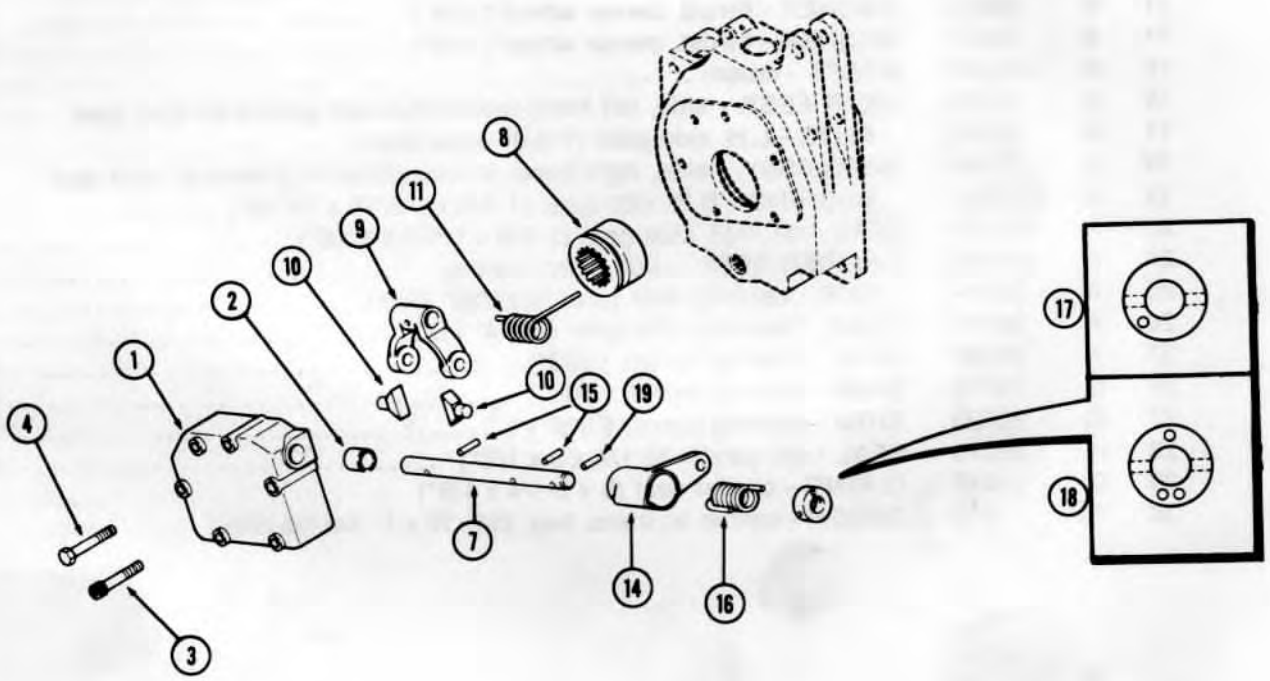

http://www.minnparbackhoeparts.com/

DIFFERENTIAL LOCK
TRANSAXLE

REF.	PART NO.	DESCRIPTION	REQ'D
1	A 35923	COVER ASSY. - lock (on R.H. brake housing)	1
2	A 35925	BUSHING - cover (5/8 x 3/4 x 3/4")	1
3	61- 536	SCREW - cover (5/16 x 2-1/4" NC, hex sckt. hd.)	1
4	13- 540	BOLT - cover (5/16 x 2-1/2" NC hex)	5
7	A 37564	SHAFT - actuating	1
8	A 142029	COLLAR - diff. lock	1
9	A 38749	LEVER - collar throw-out	1
10	A 65101	FINGERS - lever to collar (Replaces A38750)	2
11	A 35933	SPRING - throwout lever	1
14	A 148426	LEVER - actuating (Replaces A51977)	1
15	138- 96	PIN - levers to shaft (3/16 x 1" roll)	2
16	A 36446	SPRING - actuating lever	1
17	A 36447	RETAINER - actuating lever spring (With 1 hole) (Used prior to trans. ser. no. 10046712)	1
18	A 148619	RETAINER - actuating lever spring (With 3 holes) (1st used trans. ser. no. 10046712)	1
19	138- 98	PIN - retainer to shaft (3/16 x 1-1/4" roll)	1

Printed in U.S.A.

Issued January, 1978

http://www.minnparbackhoeparts.com/

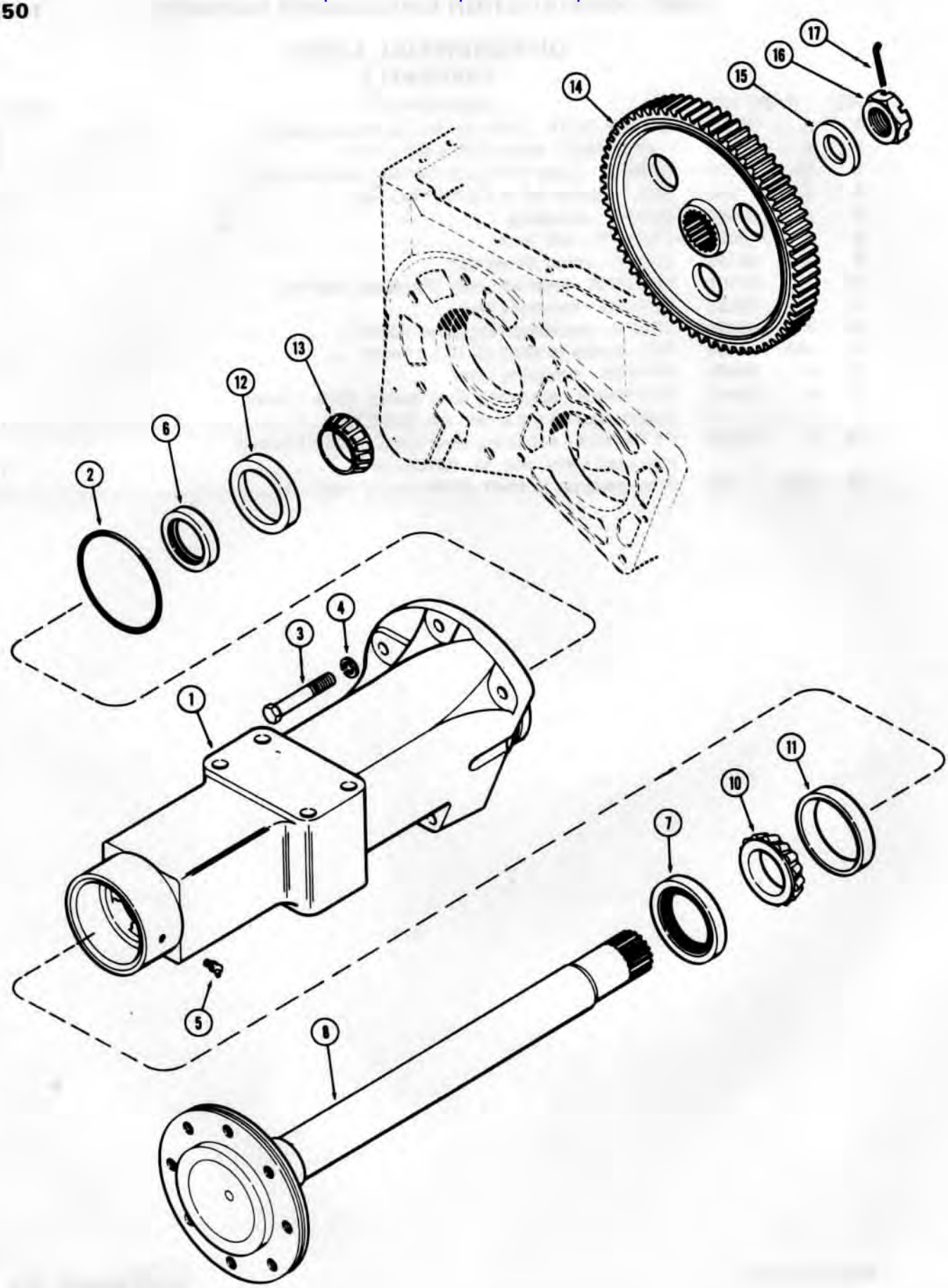

http://www.minnparbackhoeparts.com/

REAR AXLE
TRANSAXLE

REF.	PART NO.	DESCRIPTION	REQ'D
1	A 138286	HOUSING - axle, right hand	1
1	A 138287	HOUSING - axle, left hand	1
2	G 10347	O-RING - axle hsg. to trans. case (5 x 5-1/4 x 1/8")	2
3	26- 1032	BOLT - axle hsg. to trans. case (5/8 x 2" NC hex) (Grade 8)	2
3	26- 1036	BOLT - axle hsg. to trans. case (5/8 x 2-1/4" NC hex) (Grade 8)	6
3	26- 1064	BOLT - axle hsg. to trans. case (5/8 x 4" NC hex) (Grade 8)	2
4	92- 10	WASHER - 5/8" lock	10
5	219- 36	FITTING - grease (1/8" P.T., 45°)	2
6	G 13801	SEAL - oil, inner (2-1/4 x 3-1/8 x 1/2")	2
7	G 13822	SEAL - oil, outer (3 x 4-3/8 x 1/2")	2
8	A 138233	SHAFT - rear axle	2
10	G 15207	CONE - bearing, outer (2-5/8" I.D.)	2
11	G 15208	CUP - bearing, outer (4-11/32" O.D.)	2
12	G 10415	CUP - bearing, inner (3-15/16" O.D.)	2
13	L 33289	CONE - bearing, inner (2-1/4" I.D.)	2
14	A 51901	GEAR - final drive (bull gear) (65 ext. & 17 int. teeth)	2
15	F 62105	WASHER - take-up (1-1/2 x 2-3/4 x 1/4")	2
16	A 30075	NUT - 1/2" NF hex, sltd.	1
17	132- 157	PIN - cotter (1/4 x 2-1/2")	2

Printed in U.S.A.

Issued January, 1978

http://www.minnparbackhoeparts.com/

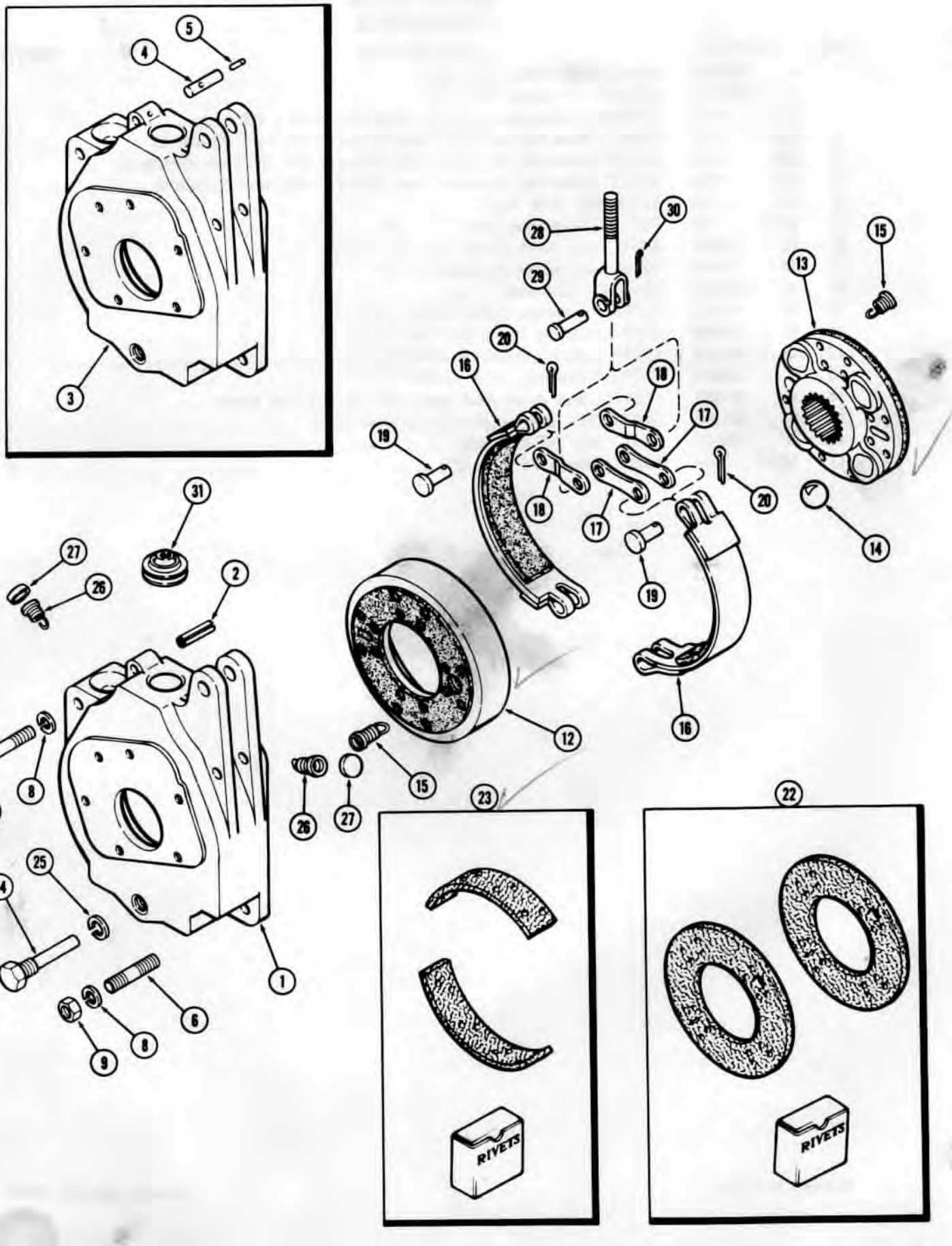

http://www.minnparbackhoeparts.com/

DIFFERENTIAL BRAKE HOUSING AND BRAKE TRANSAXLE

REF.	PART NO.	DESCRIPTION	REQ'D
1	A 152924	HOUSING - brake, right hand (0.360 dia. anchor pin hole) (1st used trans.ser. no. 10074408)	1
1	A 152923	HOUSING - brake, left hand (0.360 dia. anchor pin hole) (1st used trans. ser. no. 10074408)	1
2	138- 2068	PIN - spring anchor (3/8 x 2-1/2" spirol) (Used w/A152924 and A152923 housing)	2
3	A 138719	HOUSING - brake, right hand (0.386 dia. anchor pin hole) (Used prior to trans. ser. no. 10074408)	1
3	A 138736	HOUSING - brake, left hand (0.386 dia. anchor pin hole) (Used prior to trans. ser. no. 10074408)	1
4	A 146505	PIN - spring anchor (3/8 x 2-7/8" solid type) (Used w/A138719 and A138736 housing)	2
5	138- 71	PIN - anchor spring retaining (3/16 x 5/8" roll) (Used w/A146505 pin)	2
6	A 27637	STUD - brake housing (1/2" NC x 2-5/8")	4
7	13- 860	BOLT - brake housing (1/2 x 3-3/4" NC hex)	2
7	13- 864	BOLT - brake housing (1/2 x 4" NC hex)	2
8	92- 8	WASHER - 1/2" lock	8
9	25- 118	NUT - 1/2" NC hex	4
	A 142981	BRAKE ASSY	2
12	A 142979	DRUM ASSY. - w/lining (See Ref. 22)	1
13	A 142980	DISC ASSY- w/lining (See Ref. 22)	1
14	211- 21	BALL - (1" dia.)	4
15	G 48508	SPRING - disc return	2
16	A 44756	BAND ASSY. - inner, w/lining (See Ref. 23)	2
17	G 46345	LINK - actuating, inner band	2
18	G 46344	LINK - actuating, outer band	2
19	G 49082	PIN - clevis, link to band	2
20	132- 26	PIN - cotter (3/32 x 3/4")	2
22	A 44720	LINING KIT - drum & disc, w/rivets(for 1 side only)	2
23	A 44721	LINING KIT - brake bands, w/rivets (for 1 side only)	2
24	G 15801	ANCHOR - brake bands	2
25	92- 10	WASHER - 5/8" lock	2
26	G 48507	SPRING - brake band return	4
27	41- 13	PLUG - return spring hole (13/16" expansion)	4
28	A 51968	ROD - brake actuating	2
29	141- 5	PIN - clevis, rod to brake links	2
30	132- 26	PIN - cotter (3/32 x 3/4")	2
31	A 135946	SEAL - dust, brake housing	2

Printed in U.S.A.

Issued January, 1978

http://www.minnparbackhoeparts.com/

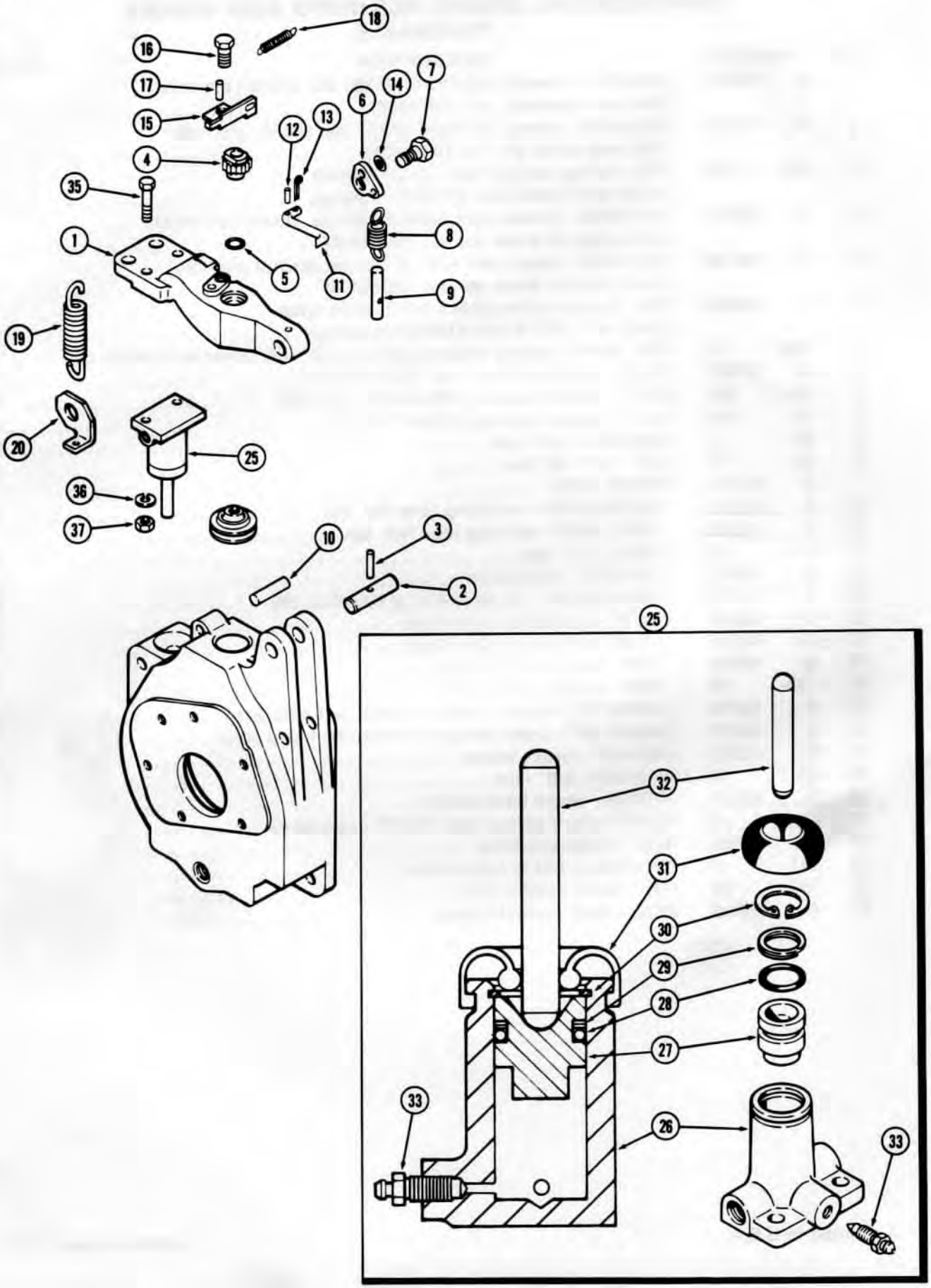

http://www.minnparbackhoeparts.com/

DIFFERENTIAL BRAKE LEVER AND LOCK
TRANSAXLE

REF.	PART NO.	DESCRIPTION	REQ'D
1	A 51969	LEVER - brake	2
2	A 62822	PIN - brake lever pivot	2
3	138- 98	PIN - pivot pin retaining (3/16 x 1-1/4" roll)	2
4	A 148118	NUT - ratchet, brake adjusting	2
5	A 27891	O-RING - adj. nut (3/8 x 9/16 x 3/32")	2
6	A 64490	CAM - self adjusting brake	2
7	A 58471	BOLT - cam pivot	2
8	A 60489	SPRING - self adjusting brake cam	2
9	A 51971	PIN - spring limit (5/16 x 2-1/4")	2
10	REF.	PIN - spring anchor (See Page 153)	2
11	A 51970	ROD - ratchet lock	2
12	138- 20	PIN - rod retaining, inside (1/16 x 1/2" roll)	2
13	132- 5	PIN - rod retaining, outer (1/16 x 1/2" cotter)	2
14	S 67607	RING - grip, brake rod to cam	2
15	A 59609	BRACKET - self adjusting brake	2
16	61- 68	BOLT - bracket (3/8 x 1/2" N.C. hex sckt. hd.)	2
17	138- 92	PIN - bracket anchor (3/16 x 3/4" roll)	2
18	A 60555	SPRING - ratchet rod return	2
19	A 35789	SPRING - brake return (4" free length)	2
20	A 51974	BRACKET - anchor, return spring, right hand	1
21	A 51975	BRACKET - anchor, return spring, left hand	1

DIFFERENTIAL BRAKE CYLINDER

25	A 51976	CYLINDER ASSY. - brake	2
26	NSS	BODY - cylinder	1
	A 45383	PISTON ASSY.	1
27	NSS	PISTON	1
28*	L 32132	O-RING - piston (11/16 x 7/8 x 3/32")	1
29*	A 42252	RING - O-ring backup	1
30*	A 42256	RING - snap, piston retaining	1
31*	A 45382	BOOT - cylinder weatherseal	1
32*	A 42254	ROD - push	1
33	A 41491	SCREW - cylinder bleeder	1
	A 45387	REPAIR KIT - wheel cylinder (Incl. all items w/*)	2
35	13- 420	BOLT - brake cylinder to lever (1/4 x 1-1/4" NC hex)	4
36	92- 4	WASHER - 1/4" lock	4
37	25- 104	NUT - 1/4" NC hex	4

http://www.minnparbackhoeparts.com/

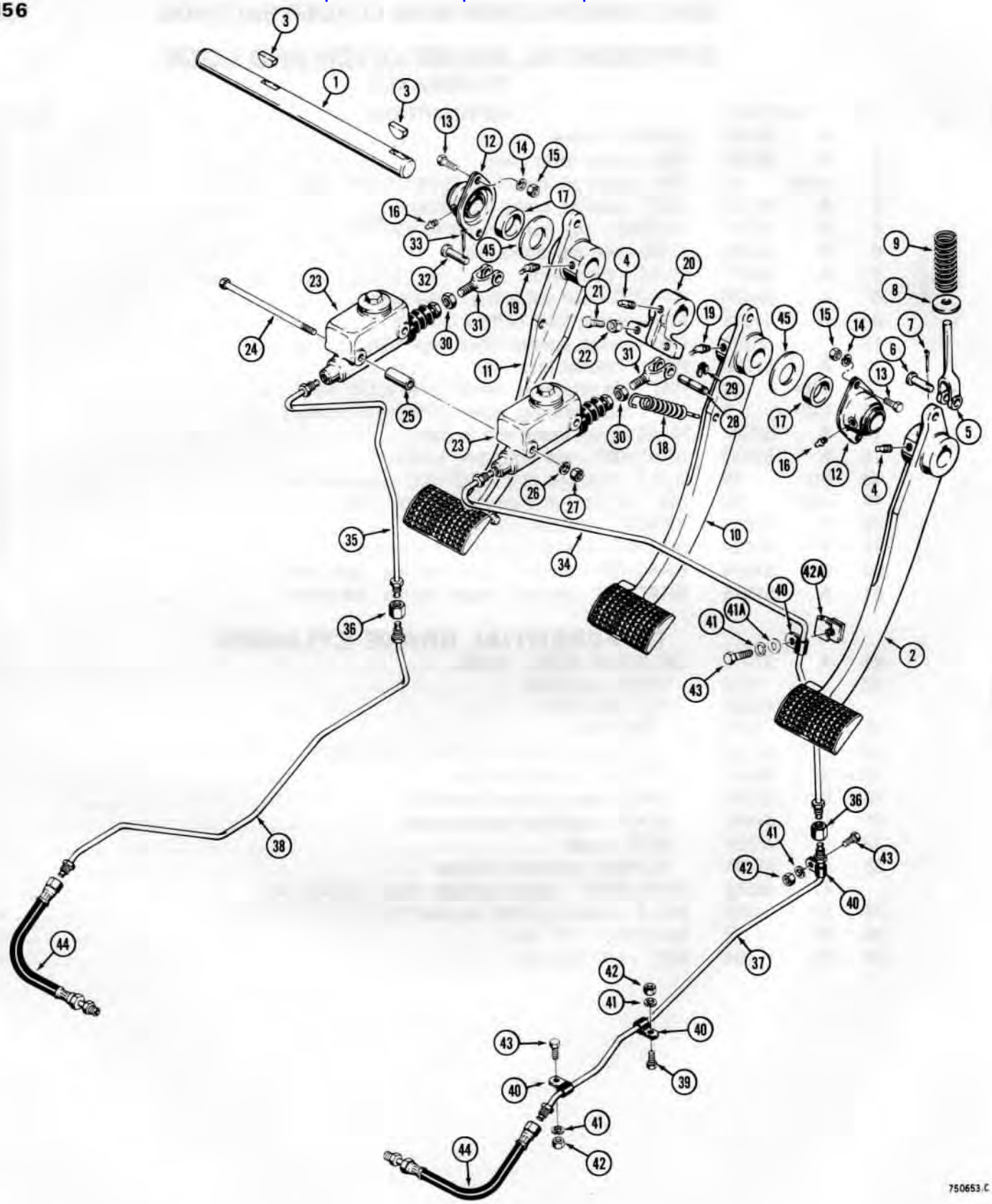

http://www.minnparbackhoeparts.com/

BRAKE PEDALS AND BRAKE SYSTEM

POWER SHUTTLE MODELS ONLY

REF.	PART NO.	DESCRIPTION	REQ'D.
1	D 66125	SHAFT - brake pedals	1
2	D 67987	PEDAL - brake, R.H.	1
3	126- 33	KEY - woodruff, 5/16" x 1-1/4"	2
4	85- 612	SCREW - set, square head, 3/8" - 16 NC x 3/4"	2
5	D 66142	YOKE - brake, R.H. pedal	1
6	141- 5	PIN - clevis, 7/16"	1
7	132- 26	PIN - cotter, 3/32" x 3/4"	1
8	95- 7	WASHER - flat, 7/16"	1
9	D 72404	SPRING - brake pedal, R.H.	1
10	D 67988	PEDAL - brake, center	1
11	D 67993	PEDAL - brake, L.H.	1
12	D 66705	BEARING - flanged, brake pedal mounting	2
13	13- 616	HHCS - 3/8" - 16 NC x 1"	4
14	92- 6	WASHER - lock, 3/8"	4
15	25- 106	NUT - hex, 3/8" - 16 NC	4
16	219- 36	FITTING - grease, 45°, 1/8" NPT	2
17	D 73014	SPACER - brake	2
18	A 33810	SPRING - brake return	2
19	219- 40	FITTING - grease, 65°, 1/8" NPT	2
20	D 68123	DOG - brake	1
21	13- 620	HHCS - 3/8" - 16 NC x 1-1/4"	2
22	25- 106	NUT - hex, 3/8" - 16 NC	2
23	L 25419	CYLINDER - master, brake, parts list page 161	2
24	15- 6120	BOLT - hex head, 3/8" - 16 NC x 7-1/2"	2
25	D 76196	SPACER - master cylinders	2
26	92- 6	WASHER - lock, 3/8"	2
27	25- 106	NUT - hex, 3/8" - 16 NC	2
28	D 68737	PIN - clutch cut-out switch and brake light switch, actuating	1-2
29	G 32429	RING - retaining	2-4
30	25- 157	NUT - hex, jam, 3/16" - 20 NF	2
31	D 38620	YOKE - brake master cylinder	2
32	141- 5	PIN - yoke, 7/16" used on models without brake lights	1
33	132- 26	PIN - cotter, 3/32" x 3/4" if used	1
34	D 68109	TUBE - brake, R.H., upper	1
35	D 68111	TUBE - brake, L.H., upper	1
36	222- 1053	UNION - tube, 7/16" - 24 thread	2
37	D 69282	TUBE - brake, R.H., lower	1
38	D 69280	TUBE - brake, L.H., lower	1
39	13- 612	HHCS - 3/8" - 16 NC x 3/4"	2
40	49851	CLAMP - tube	6
41	92- 6	WASHER - lock, 3/8"	6
41A	195- 25	WASHER - flat, 3/8"	2
42	25- 106	NUT - hex, 3/8" - 16 NC	6
42A	131- 634	NUT - speed, "J" type, 3/8" - 16 NC	2
43	13- 616	HHCS - 3/8" - 16 NC x 1"	4
44	D 66741	HOSE - brake	2
45	195- 2125	WASHER - flat, 2"	UAR

http://www.minnparbackhoeparts.com/

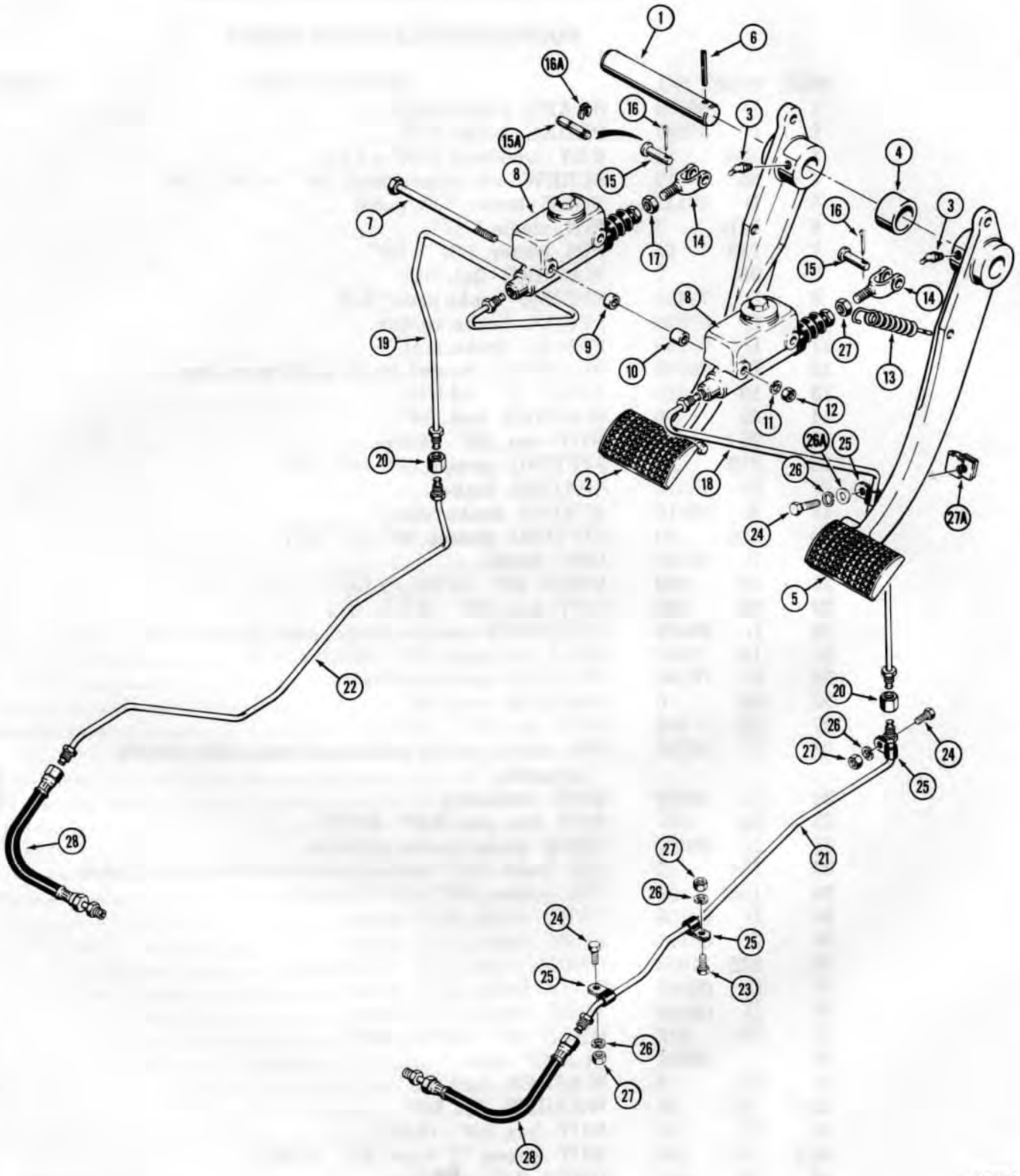

http://www.minnparbackhoeparts.com/

BRAKE PEDALS AND BRAKE SYSTEM

MECHANICAL SHUTTLE MODELS ONLY

REF.	PART NO.	DESCRIPTION	REQ'D.
1	D 67983	SHAFT - brake pedals	1
2	D 67993	PEDAL - brake, L.H.	1
3	219- 40	FITTING - grease, 65°, 1/8" NPT	2
4	D 67038	SPACER - brake	1
5	D 67988	PEDAL - brake, R.H.	1
6	138- 177	PIN - roll, 3/8" x 2"	1
7	15- 6104	HHCS - 5/8" - 16 NC x 6-1/2"	2
8	L 25419	CYLINDER - master, brake, parts list page 161	2
9	D 76211	SPACER - master cylinder, L.H.	2
10	D 76207	SPACER - master cylinder, R.H.	2
11	92- 6	WASHER - lock, 3/8"	2
12	25- 106	NUT - hex, 3/8" - 16 NC	2
13	A 33810	SPRING - brake pedal return	2
14	D 38620	YOKE - master cylinder	2
15	141- 5	PIN - yoke, 7/16", used on units without brake lights	2
15A	D 68737	PIN - brake light switch actuating, if used	2
16	132- 26	PIN - cotter, 3/32" x 3/4" if used	2
16A	G 32429	RING - retaining, if used	4
17	25- 157	NUT - hex, jam, 7/16" - 20 NF	2
18	D 68113	TUBE - brake, R.H., upper	1
19	D 68115	TUBE - brake, L.H., upper	1
20	222- 1053	UNION - tube, 7/16" - 24 thread	2
21	D 69282	TUBE - brake, R.H., lower	1
22	D 69280	TUBE - brake, L.H., lower	1
23	13- 612	HHCS - 3/8" - 16 NC x 3/4"	2
24	13- 616	HHCS - 3/8" - 16 NC x 1"	4
25	49851	CLAMP - "P" type	6
26	92- 6	WASHER - lock, 3/8"	6
26A	195- 25	WASHER - flat, 3/8"	2
27	25- 106	NUT - hex, 3/8" - 16 NC	6
27A	131- 634	NUT - speed, "J" type, 3/8" - 16 NC	2
28	D 66741	HOSE - brake	2
29	D 68737	PIN - brake light switch actuating, if used	2
30	D 95094	RING - retaining, if used	4

http://www.minnparbackhoeparts.com/

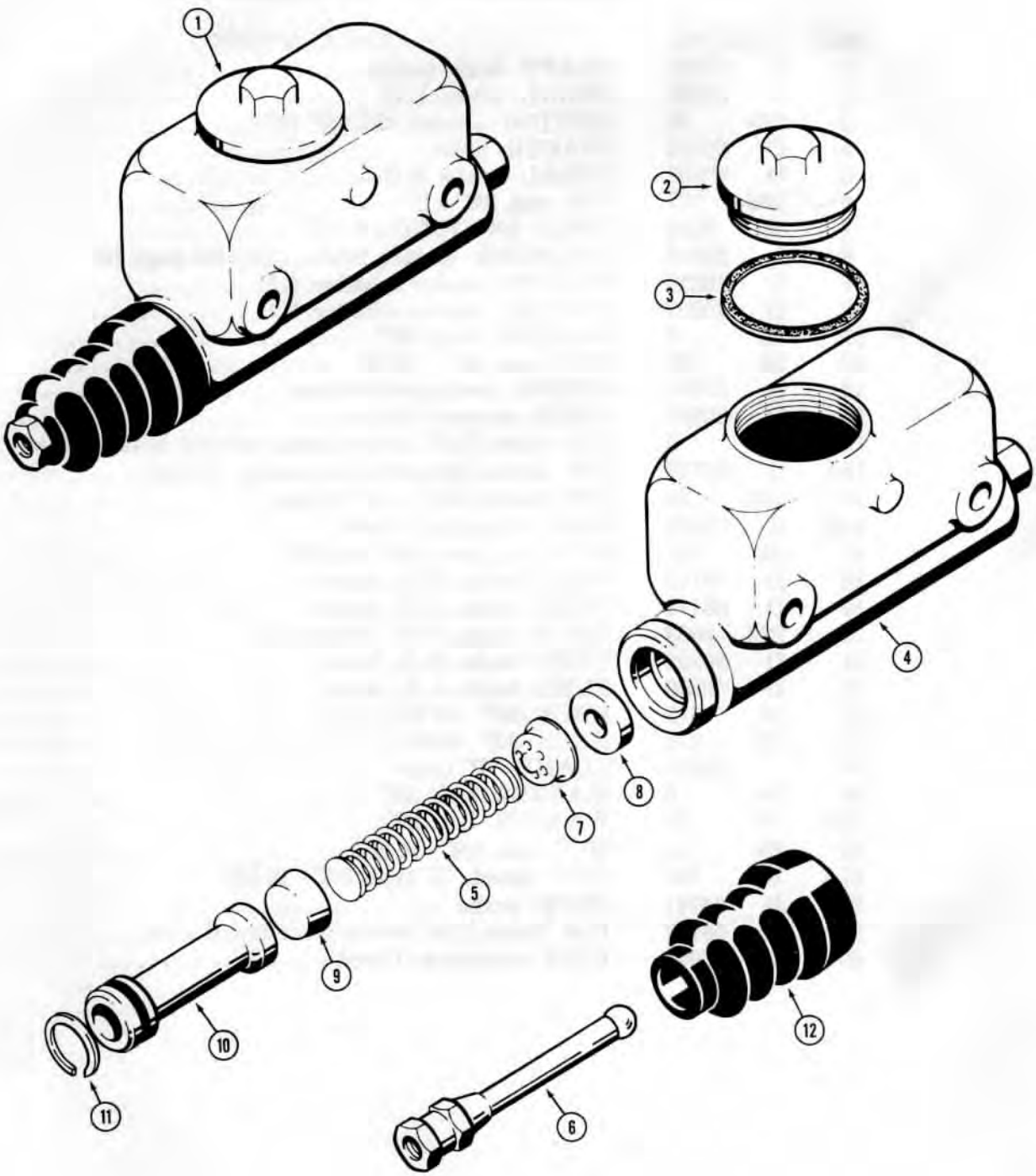

760229

http://www.minnparbackhoeparts.com/

BRAKE MASTER CYLINDER

REF.	PART NO.	DESCRIPTION	REQ'D.
1	L 25419	CYLINDER - master, brake	1
2	L 32127	CAP - filler	1
3	L 32128	GASKET - filler cap	1
4	NSS	BODY - master cylinder	1
5	L 32126	SPRING - piston return	1
6	L 32137	ROD - push	1
	L 32129	KIT - service, master cylinder	1
7	NSS	VALVE - check	1
8	NSS	SEAT - valve	1
9	NSS	CUP - cylinder	1
10	NSS	PISTON - cylinder	1
11	NSS	RING - retainer, piston	1
12	NSS	SEAL - cylinder, boot	1

http://www.minnparbackhoeparts.com/

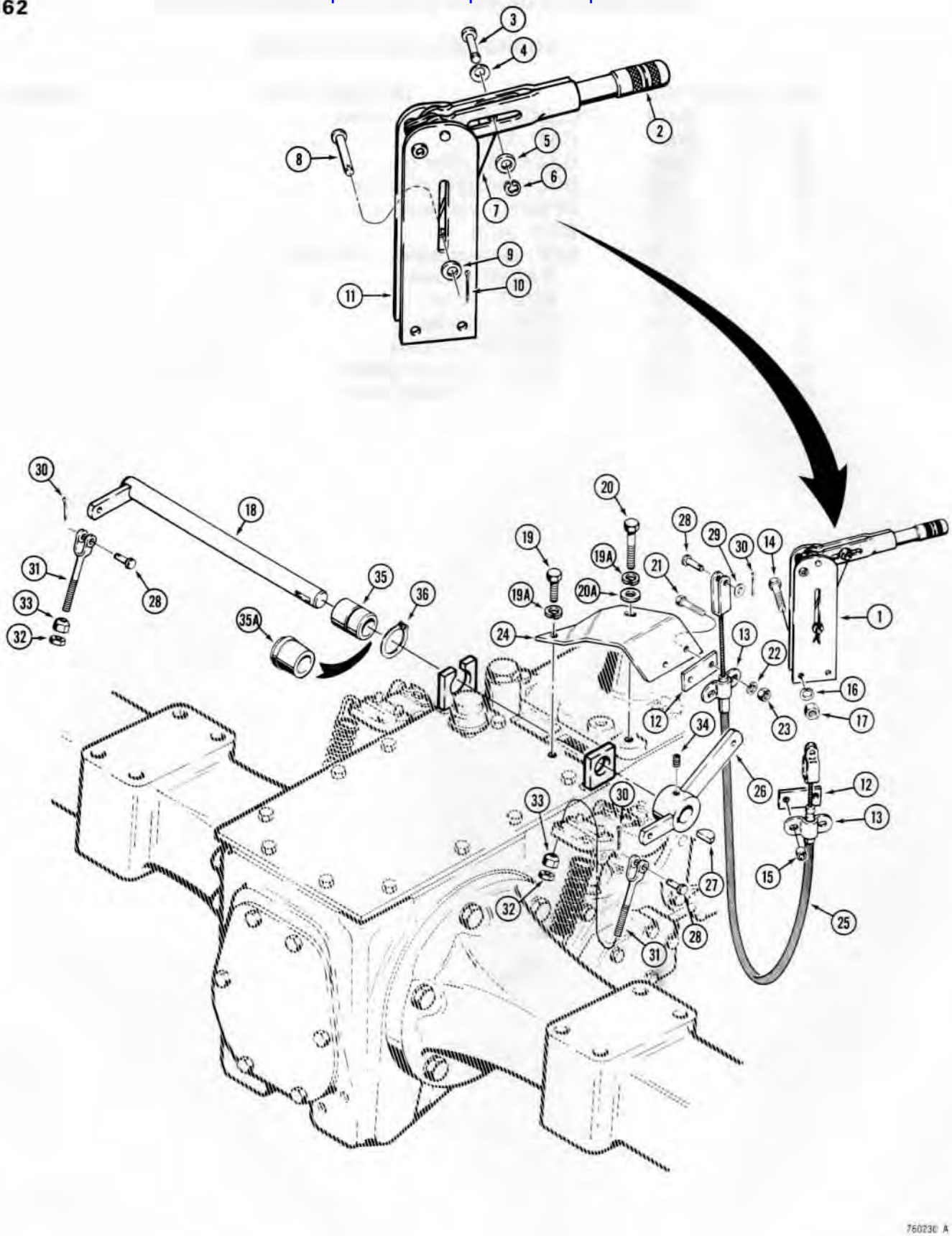

http://www.minnparbackhoeparts.com/

PARKING BRAKE

REF.	PART NO.	DESCRIPTION	REQ'D.
1	D 75370	LEVER ASSEMBLY - hand brake	1
2	NSS	HANDLE - brake lever	1
3	A 42204	PIN - handle to link, if used	1
4	A 55934	WASHER - wave, if used	1
5	95- 5	WASHER - flat, 5/16", if used	1
6	C 14652	RING - retaining, if used	1
7	NSS	LINK - brake lever	1
8	L 30975	PIN - link to bracket	1
9	95- 5	WASHER - flat, 5/16"	1
10	132- 26	PIN - cotter, 3/32" x 3/4"	1
11	NSS	BRACKET - brake lever	1
12	D 69990	PLATE - spacer	2
13	A 55980	CLAMP - cable, 1/2"	2
14	13- 532	HHCS - 5/16" - 18 NC x 2"	2
15	D 69991	SPACER - clamp	2
16	92- 5	WASHER - lock, 5/16"	2
17	25- 105	NUT - hex, 5/16" - 18 NC	2
18	D 69400	SHAFT - hand brake	1
19	13- 624	HHCS - 3/8" - 16 NC x 1-1/2"	1
19A	92- 6	WASHER - lock, 3/8"	2
20	13- 632	HHCS - 3/8" - 16 NC x 2"	1
20A	195- 25	WASHER - flat, 3/8"	1
21	13- 524	HHCS - 5/16" - 18 NC x 1-1/2"	2
22	92- 5	WASHER - lock, 5/16"	2
23	25- 105	NUT - hex, 5/16" - 18 NC	2
24	D 69997	BRACKET - cable mounting	1
25	D 69994	CABLE - hand brake	1
26	D 69995	ARM - hand brake	1
27	126- 24	KEY - woodruff, #15	1
28	141- 3	PIN - clevis, 5/16"	3
29	195- 21	WASHER - flat, 5/16"	1
30	132- 24	PIN - cotter, 3/32" x 1/2"	3
31	D 69411	ROD - hand brake	2
32	25- 105	NUT - hex, 5/16" - 18 NC	2
33	D 69410	NUT - hand brake, 5/16" - 18 NC, special	2
34	85- 610	SCREW - set, 3/8" - 16 NC x 5/8"	1
35	D 69982	BUSHING - spacer, with snap ring groove, if used	1
35A	D 73505	BUSHING - spacer, does not use snap ring, if used	2
36	D 25279	RING - retaining, used with D69982 bushing only	1

http://www.minnparbackhoeparts.com/

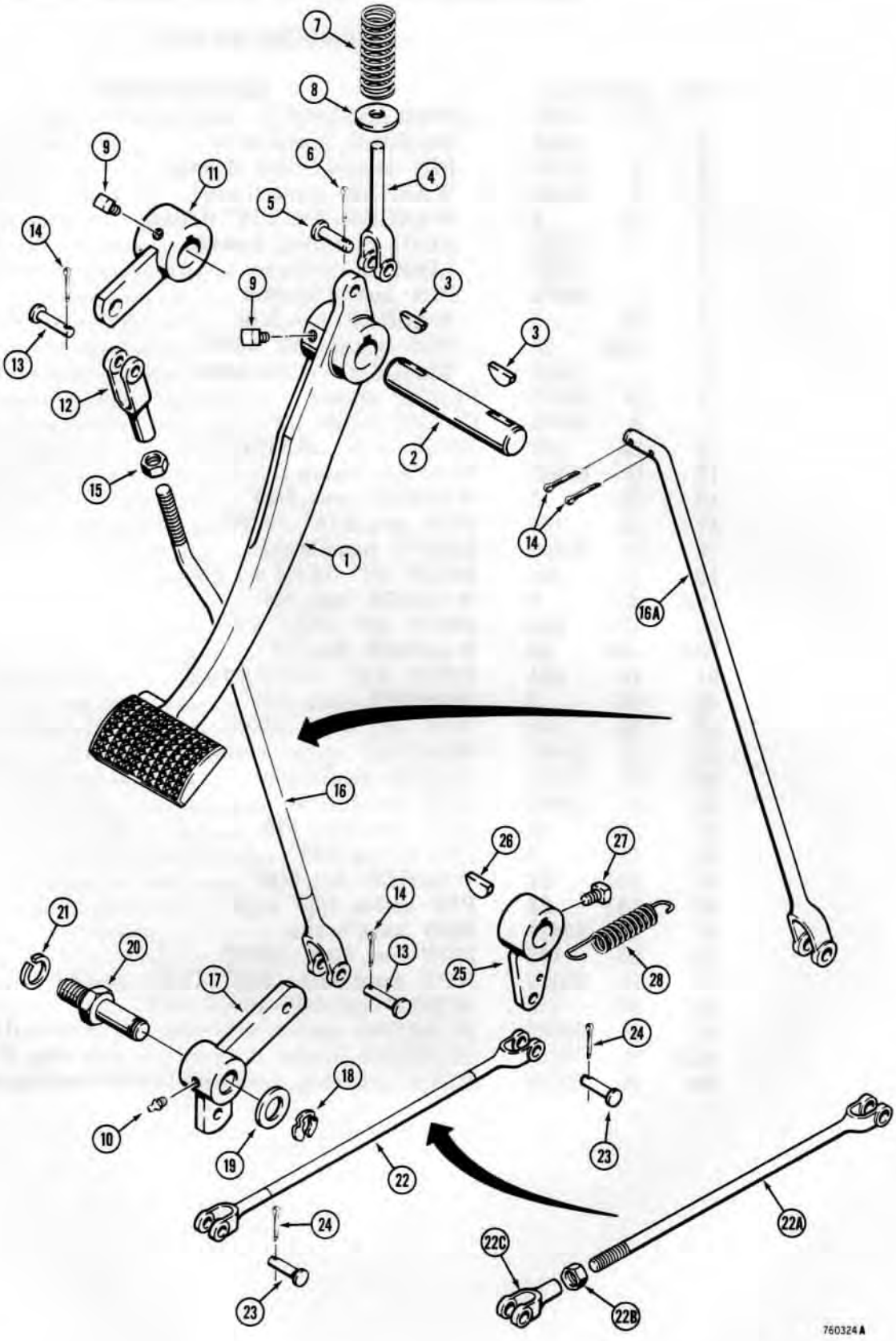

http://www.minnparbackhoeparts.com/

CLUTCH PEDAL AND LINKAGE

REF.	PART NO.	DESCRIPTION	REQ'D.
1	D 67987	PEDAL - clutch	1
2	D 67039	SHAFT - clutch pedal	1
3	126- 33	KEY - woodruff, 5/16" x 1-1/4"	2
4	D 66142	YOKE - clutch pedal	1
5	141- 5	PIN - clevis, 7/16"	1
6	132- 26	PIN - cotter, 3/32" x 3/4"	1
7	D 72404	SPRING - clutch pedal return	1
8	95- 7	WASHER - flat, 7/16"	1
9	85- 612	SCREW - set, square head, 3/8" - 16 NC x 3/4"	2
10	219- 1	FITTING - grease, straight, 1/8" NPT	1
11	D 76166	LEVER - clutch	1
12	213- 6	YOKE - 1/2" dia.	1
13	141- 6	PIN - yoke, 1/2" dia.	2
14	132- 48	PIN - cotter, 1/8" x 1"	2-3
15	25- 118	NUT - hex, 1/2" - 20 NF	1
16	D 70394	ROD - clutch, upper, adjustable, if used	1
16A	D 74215	ROD - clutch, upper, non-adjustable, if used	1
17	D 70468	BELLCRANK - clutch	1
18	D 95097	RING - retaining	1
19	195- 45	WASHER - flat, 25/32"	1
20	D 67041	STUD - special	1
21	92- 12	WASHER - lock, 3/4"	1
22	D 70450	ROD - clutch, lower, non-adjustable, if used.	1
22A	D 74216	ROD - clutch, lower, adjustable, if used	1
22B	25- 116	NUT - hex, 3/8" - 24 NF	1
22C	213- 4	YOKE - 3/8" dia.	1
23	141- 4	PIN - yoke, 3/8"	2
24	132- 26	PIN - cotter, 3/32" x 3/4"	2
25	D 70454	LEVER - clutch	1
26	126- 126	KEY - woodruff, 3/16" x 1-1/8"	1
27	85- 612	SCREW - set, square head, 3/8" - 16 NC x 3/4"	1
28	A 36199	SPRING - clutch return	1

http://www.minnparbackhoeparts.com/

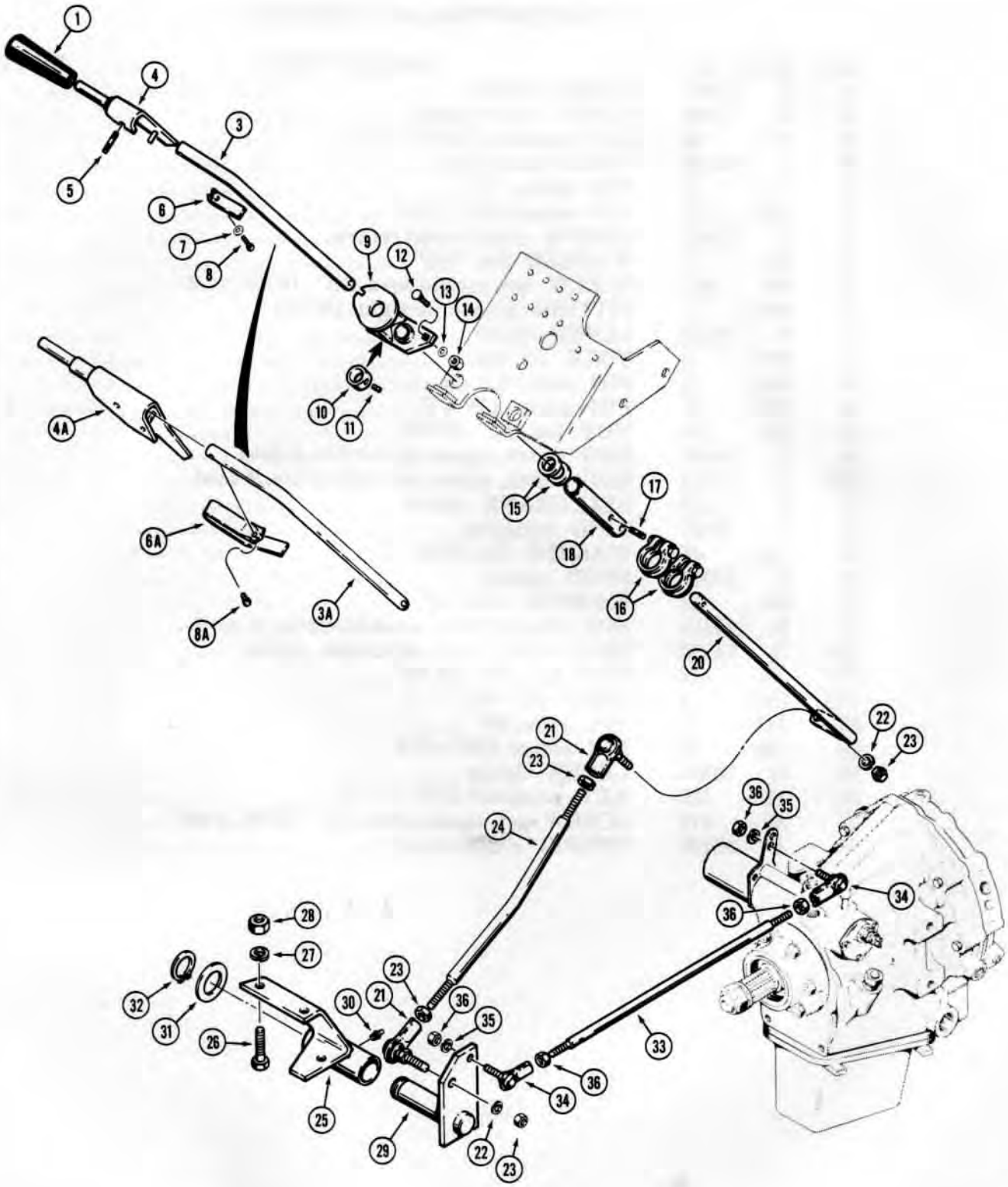

http://www.minnparbackhoeparts.com/

SHUTTLE CONTROL

POWER SHUTTLE MODELS ONLY

REF.	PART NO.	DESCRIPTION	REQ'D.
1	A 37247	KNOB - power shuttle control	1
2		RESERVED	UAR
3	D 71830	LEVER - power shuttle, used before tractor sn. 8959010	1
3A	D 76132	LEVER - power shuttle, used on tractor sn. 8959010 and after	1
4	D 71957	LEVER - with pin, detent, used before tractor sn. 8959010	1
4A	D 76525	LEVER - with pin, detent, used on tractor sn. 8959010 and after	1
5	138- 2053	PIN - roll, 1/4" x 1-1/4"	1
6	A 38296	SPRING - detent, used before tractor sn. 8959010	1
6A	D 76444	SPRING - detent, used on tractor sn. 8959010 and after	1
7	195- 8	WASHER - flat, #8, used with A38296 spring	1
8	182- 82	SCREW - #8 x 1/4", used with A38296 spring	1
8A	163- 28	SCREW - washer head, #8 - 32 NC x 1/4", used with D76444 spring	1
9	D 72891	BRACKET - detent	1
10	D 43620	COLLAR - bearing	1
11	83- 54	SCREW - set, 5/16" - 18 NC x 1/4"	1
12	12- 512	BOLT - carriage, 5/16" - 18 NC x 3/4", plated	3
13	195- 21	WASHER - flat, 5/16"	3
14	131- 651	NUT - hex, lock, 5/16"	3
15	D 70730	WASHER - heat treated	UAR
16	D 71880	CLAMP - shuttle control rod	2
17	138- 150	PIN - roll	2
18	D 71813	SLEEVE - shuttle shift lever	1
19		RESERVED	
20	D 71822	SHAFT - shuttle control	1
21	D 69180	JOINT - ball	2
22	92- 6	WASHER - lock, 3/8"	2
23	25- 116	NUT - hex, 3/8" - 24 NC	4
24	D 67493	ROD - shifting	1
25	D 67497	BRACKET - shuttle shifting	1
26	13- 616	HHCS - 3/8" - 16 NC x 1"	3
27	92- 6	WASHER - lock, 3/8"	3
28	25- 106	NUT - hex, 3/8" - 16 NC	3
29	D 67814	BELLCRANK - shuttle shifting	1
30	219- 1	FITTING - grease, straight, 1/8" NPT	1
31	F 41695	WASHER - plain	1
32	D 95098	SNAP RING - retaining	1
33	D 67811	ROD - shuttle control	1
34	D 63154	JOINT - ball, 1/4"	2
35	92- 4	WASHER - lock, 1/4"	2
36	25- 114	NUT - hex, lock, 1/4" - 28 NF	4

http://www.minnparbackhoeparts.com/

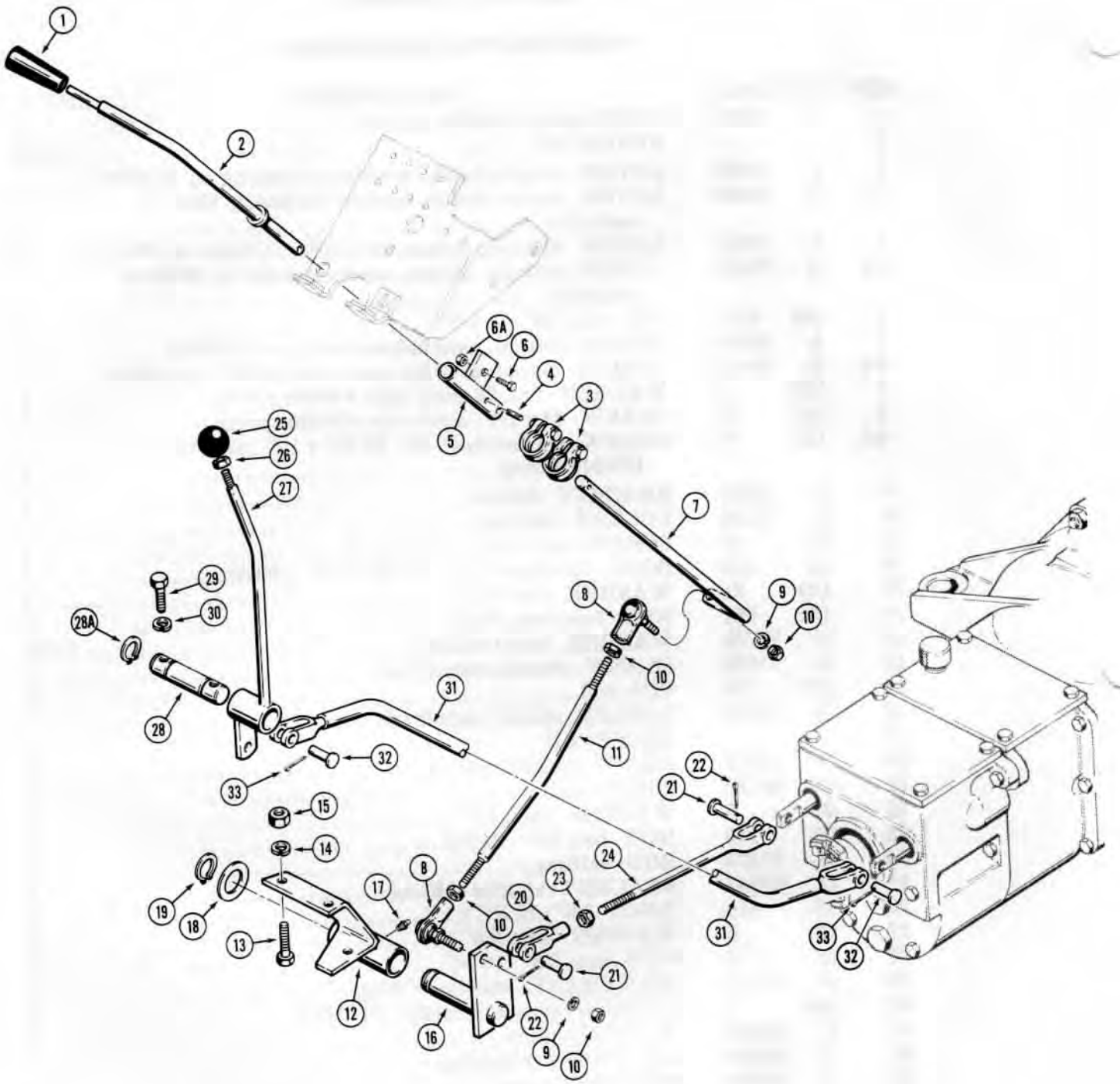

750651 B

http://www.mcpartbackhoeparts.com/

SHUTTLE CONTROL

MECHANICAL SHUTTLE MODELS ONLY

REF.	PART NO.	DESCRIPTION	REQ'D.
1	A 37247	KNOB - shuttle control lever, column	1
2	D 72528	LEVER - shuttle control, column	1
3	D 71880	CLAMP - shuttle rods	2
4	138- 150	PIN - roll, 5/16" x 13/16"	2
5	D 73824	SLEEVE - shuttle shift lever	1
6	13- 514	HHCS - 5/16" - 18 NC x 7/16"	1
6A	25- 105	NUT - hex, 5/16" - 18 NC x 1"	1
7	D 71818	SHAFT - shuttle control, column	1
8	D 69180	JOINT - ball, 3/8"	2
9	92- 6	WASHER - lock, 3/8"	2
10	25- 116	NUT - hex, lock, 3/8" - 24 NC	4
11	D 67493	ROD - shuttle control, column	1
12	D 67497	BRACKET - shuttle control, column	1
13	13- 616	HHCS - 3/8" - 16 NC x 1"	3
14	92- 6	WASHER - lock, 3/8"	3
15	25- 106	NUT - hex, 3/8" - 16 NC	3
16	D 67490	BELLCRANK - shuttle control, column	1
17	219- 1	FITTING - grease, straight, 1/8" NPT	1
18	F 41695	WASHER - plain	1
19	D 95098	RING - retaining	1
20	213- 4	YOKE - rod	1
21	141- 4	PIN - yoke	2
22	132- 24	PIN - cotter, 3/32" x 1/2"	2
23	25- 116	NUT - hex, lock, 3/8" - 24 NF	1
24	D 35814	ROD - shuttle control, column	1
25	D 69106	KNOB - shuttle control, floor	1
26	129- 145	NUT - hex, jam, 1/2" - 13 NC	1
27	D 70718	LEVER - shuttle control, floor	1
28	D 67162	SHAFT - shuttle lever mounting	1
28A	D 95098	RING - retaining	2
29	13- 612	HHCS - 3/8" - 16 NC x 3/4"	2
30	92- 6	WASHER - lock, 3/8"	2
31	D 67529	ROD - shuttle control, floor	1
32	141- 4	PIN - yoke	2
33	132- 24	PIN - cotter, 3/32" x 1/2"	2

Printed in U.S.A.

Issued January, 1978

http://www.minnparbackhoeparts.com/

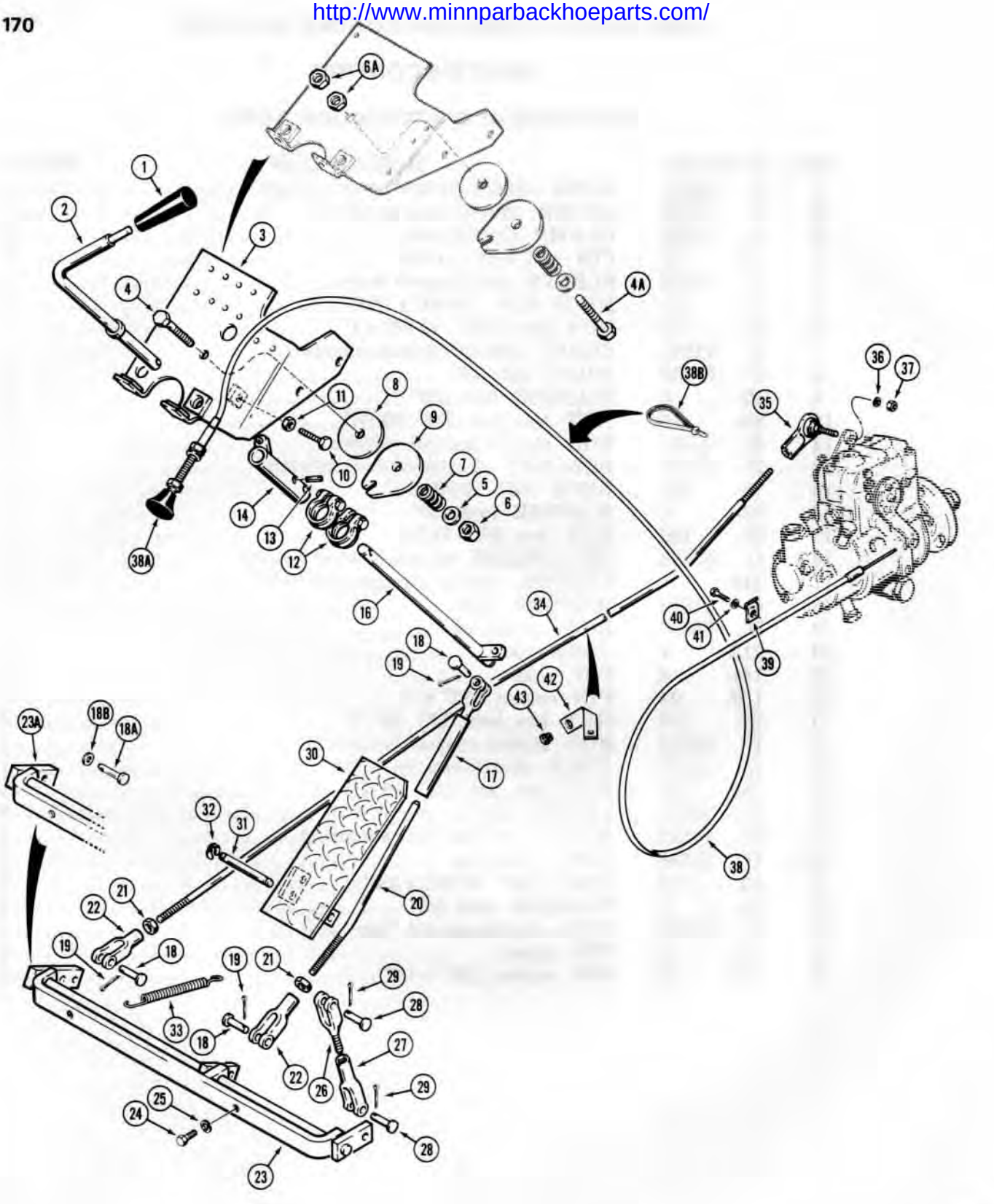

7506498

http://www.minnparbackhoeparts.com/

THROTTLE AND FUEL SHUTOFF CABLE

REF.	PART NO.	DESCRIPTION	REQ'D.
1	A 37247	KNOB - hand throttle	1
2	D 76429	LEVER - hand throttle	1
3	REF.	BRACKET - mounting, see page 181 for correct bracket	1
4	13- 836	HHCS - 1/2" - 13 NC x 2-1/4", if used	1
4A	13- 840	HHCS - 1/2" - 13 NC x 2-1/2", if used	1
5	195- 33	WASHER - flat, 1/2"	1
6	131- 654	NUT - hex, lock, 1/2" - 13 NC, if used	1
6A	25- 108	NUT - hex, 1/2" - 13 NC, if used	2
7	A 34113	SPRING - detent	1
8	R 15071	DISC - friction	1
9	D 66096	PLATE - throttle linkage	1
10	13- 416	HHCS - 1/4" - 20 NC x 1"	1
11	25- 104	NUT - hex, 1/4" - 20 NC	1
12	D 71880	CLAMP - throttle linkage	2
13	138- 150	PIN - roll, 5/16" x 13/16"	2
14	D 71815	CLAMP - throttle linkage	1
15		RESERVED	
16	D 71820	SHAFT - throttle	1
17	D 66655	SLEEVE - throttle	1
18	141- 3	PIN - yoke	2-3
18A	141- 60	PIN - yoke, used on models with spring attaching to clevis pin rather than to lug on shaft	1
18B	195- 21	WASHER - flat, 5/16", used with item 18A	1
19	132- 24	PIN - cotter, 3/32" x 1/2"	3
20	D 68266	ROD - throttle	1
21	25- 115	NUT - hex, 5/16" - 24 NF	2
22	213- 3	YOKE - rod	2
23	NSS	SHAFT - throttle, with extra hole in L.H. lug for spring, order items 23A, 18A, and 18B	1
23A	D 75201	SHAFT - throttle, used on models with spring attaching to clevis pin rather than to lug on shaft	1
24	13- 612	HHCS - 3/8" - 16 NC x 3/4"	2
25	92- 6	WASHER - lock, 3/8"	2
26	D 68186	YOKE - rod	1
27	213- 3	YOKE - rod	1
28	141- 3	PIN - yoke	2
29	132- 24	PIN - cotter, 3/32" x 1/2"	2
30	D 66581	PEDAL - foot throttle	1
31	D 66055	PIN - pivot	1
32	D 95093	RING - retaining	2
33	D 73386	SPRING - throttle return	1
34	D 68268	ROD - throttle control	1
35	D 63154	JOINT - ball, 1/4"	1
36	92- 4	WASHER - lock, 1/4"	1
37	25- 114	NUT - hex, jam, 1/4" - 20 NC	1
38	D 67656	CABLE - fuel shutoff	1
38A	L 33717	KNOB - part of D67656 cable	1
38B	L 18331	STRAP - tie, fuel shutoff cable	1
39	A 26673	CLIP - cable retaining	1
40	113- 2	HHCS - 1/4" - 20 NC x 5/8", plated	1
41	92- 4	WASHER - lock, 1/4"	1
42	D 75410	SUPPORT - throttle rod, if used	1
43	353- 459	BUSHING - snap type, if used	1

http://www.minnparbackhoeparts.com/

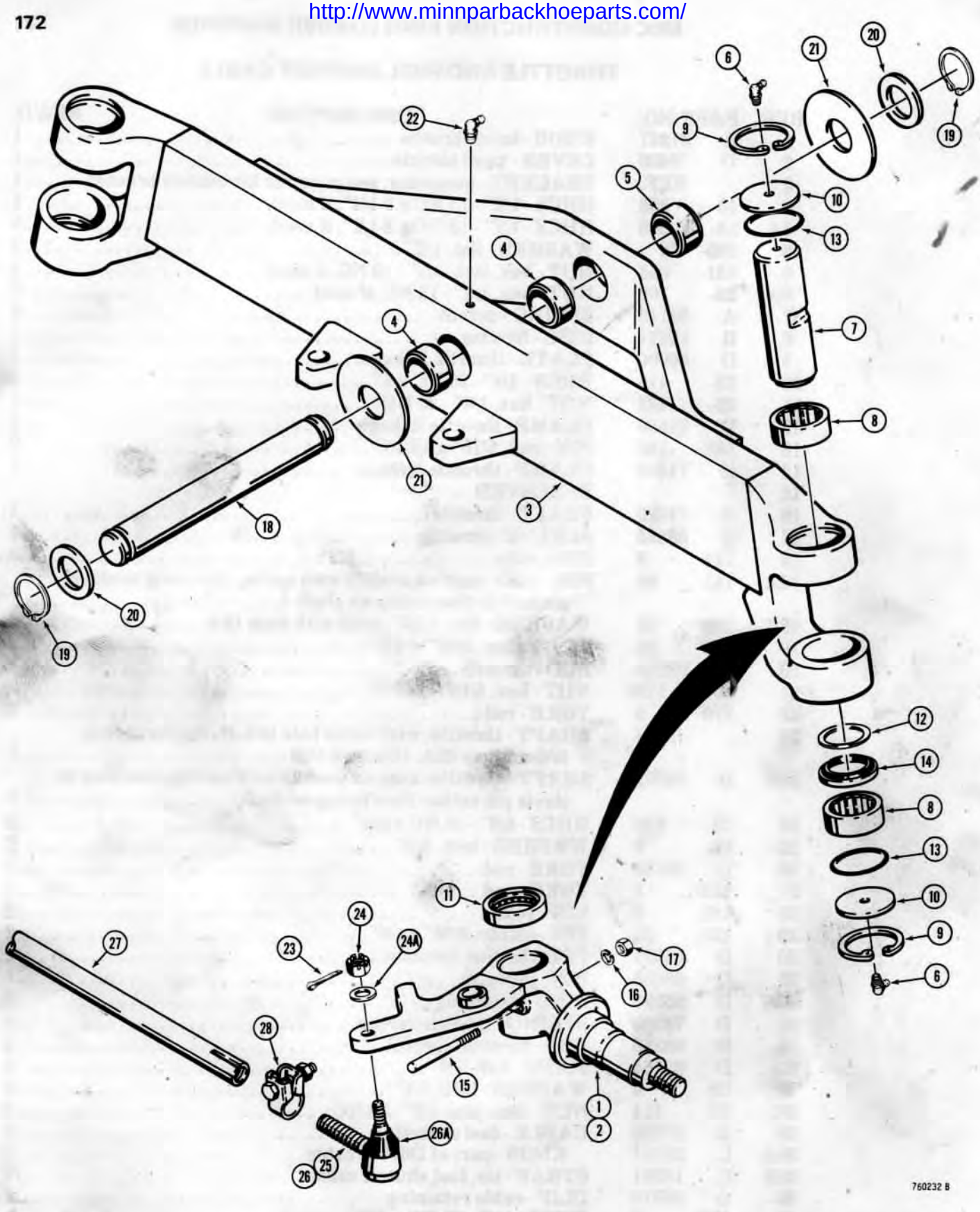

http://www.minnparbackhoeparts.com/

FRONT AXLE AND SPINDLES

REF.	PART NO.	DESCRIPTION	REQ'D.
1	D 71843	SPINDLE - right-hand	1
2	D 71844	SPINDLE - left-hand	1
3	D 67317	AXLE - front	1
4	D 61241	BUSHING - axle	2
5	D 43940	BUSHING - axle	1
6	219- 89	FITTING - grease, 45°, 1/8" NPT	4
7	D 72337	PIN - king	2
8	A 28230	BEARING - king pin	4
9	A 27463	RING - internal lock	4
10	D 72371	SPACER - king pin	4
11	A 27602	BEARING - spacer	2
12	D 72372	RACE - bearing	2
13	A 23904	O-RING	4
14	D 61297	SEAL - oil	2
15	D 57486	PIN - king pin lock	2
16	92- 8	WASHER - lock, 1/2"	2
17	25- 118	NUT - hex, lock, 1/2" - 20 NF	2
18	D 64171	PIN - axle pivot	1
19	D 25280	RING - external lock	2
20	195- 2152	WASHER - spacer	2
21	D 61076	WASHER - spacer	UAR
22	219- 56	FITTING - grease, 90°, 1/8" NPT	1
23	132- 50	PIN - cotter, 1/8" x 1-1/4"	2
24	25- 1310	NUT - hex, slotted, 5/8" - 18 NF	2
24A	95- 10	WASHER - flat, 5/8"	2
25	D 71713	BALL JOINT - tie rod, R.H.	1
26	D 71714	BALL JOINT - tie rod, L.H.	1
26A	D 80438	COVER - dust, D71713 or D71714 ball joint	1
27	D 73397	TUBE - tie rod	1
28	D 73799	CLAMP - tie rod, includes hardware	2

http://www.minnparbackhoeparts.com/

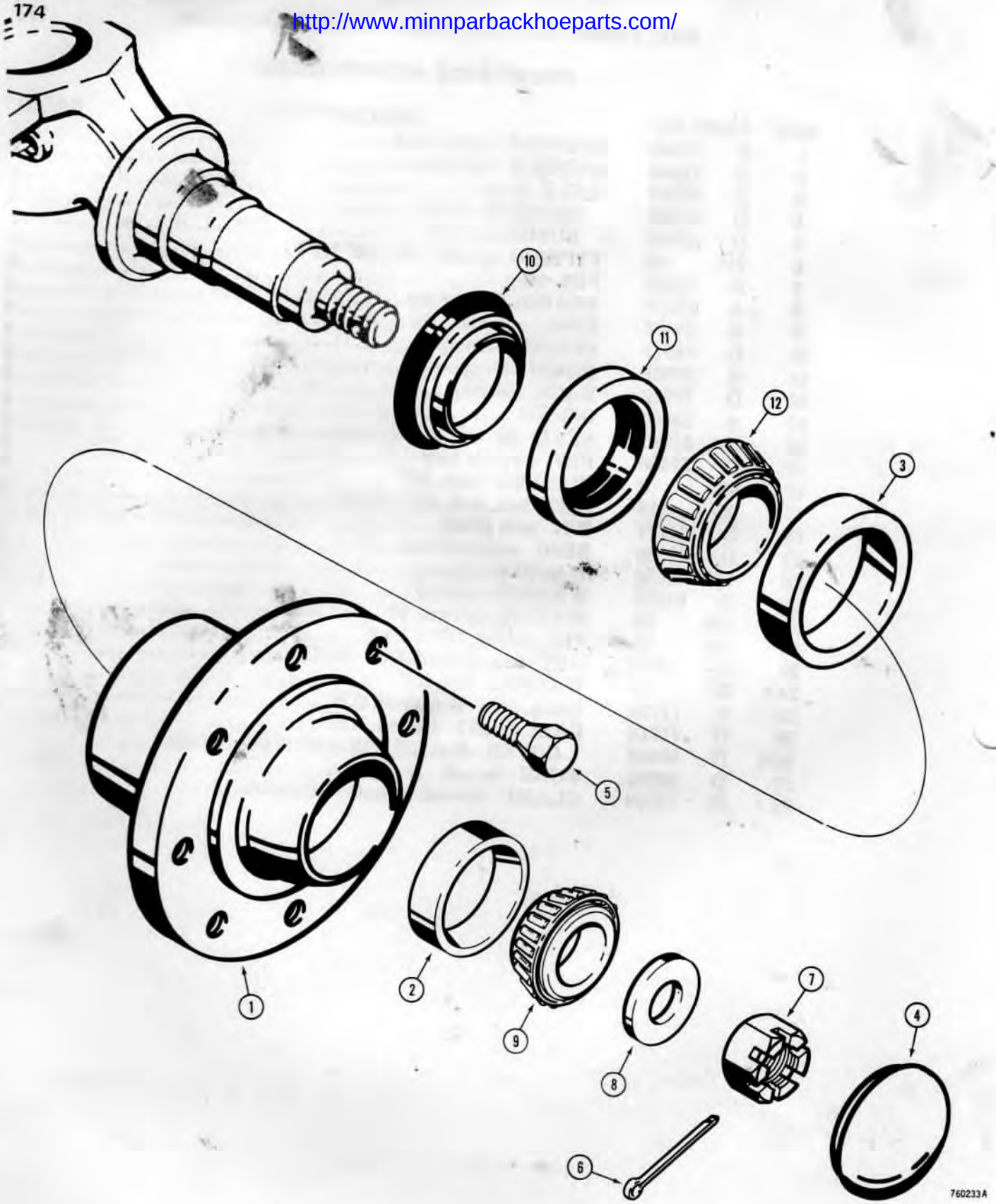

http://www.minnparbackhoeparts.com/

FRONT WHEEL HUB AND BEARINGS

REF.	PART NO.	DESCRIPTION	REQ'D.
	A 66759	HUB ASSEMBLY - front wheel	2
1	NSS	HUB - front wheel	1
2	G 15214	RACE - outer bearing	1
3	A 61446	RACE - inner bearing	1
4	A 61450	CAP - hub	2
5	A 38208	BOLT - wheel retaining	16
6	132- 99	PIN - cotter, 3/16" x 2"	2
7	25- 1918	NUT - hex, slotted, 1-1/8" - 12 NF	2
8	D 74949	WASHER - flat, 1-1/8"	2
9	G 15215	BEARING - tapered roller, outer	2
10	A 61449	SEAL - bearing, spindle	2
11	A 61448	SEAL - bearing, hub	2
12	A 61447	BEARING - tapered roller, inner	2

http://www.minnparbackhoeparts.com/

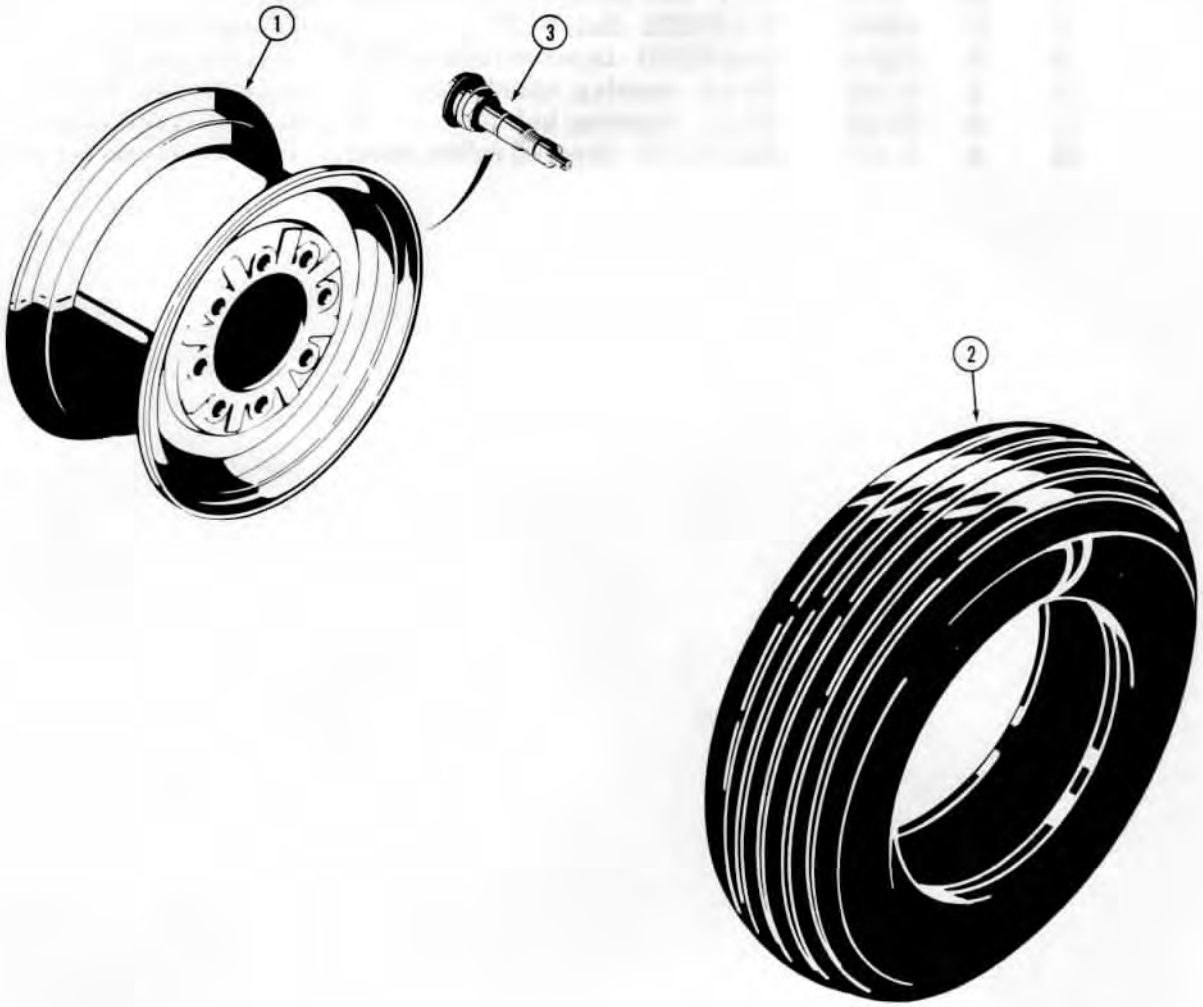

750647

http://www.minnparbackhoeparts.com/

FRONT WHEELS AND TIRES

REF.		PART NO.	DESCRIPTION	REQ'D.
			7.50 x 16 - 10 PLY TIRES	
1	A	139081	WHEEL - rim	2
2		REF.	TIRE - front	2
3	A	38261	VALVE STEM - wheel	2
			11L x 16 - 10 PLY TIRES	
1	A	139082	WHEEL - rim	2
2		REF.	TIRE - front	2
3	A	38261	VALVE STEM - wheel	2

http://www.minnparbackhoeparts.com/



http://www.minnparbackhoeparts.com/

REAR WHEELS AND TIRES

REF.	PART NO.	DESCRIPTION	REQ'D.
		14.9 x 24 - FIXED DISC WHEEL	
1	A 139083	WHEEL - rim	2
2	A 20058	VALVE STEM - rim	2
3	REF.	TIRE - rear	2
		16.9 x 24 AND 17.5L x 24 - FIXED DISC WHEEL	
1	A 139085	WHEEL - rim	2
2	A 20058	VALVE STEM - rim	2
3	REF.	TIRE - rear	2
		14.9 x 24 - OFFSET FIXED DISC WHEEL	
1	A 139084	WHEEL - rim	2
2	A 20058	VALVE STEM - rim	2
3	REF.	TIRE - rear	2
		14.9 x 24 - DEMOUNTABLE RIMS	
4	D 72304	RIM - tire	2
5	D 72323	DISC - wheel, demountable	2
6	G 10701	BOLT - 5/8" - 18 NF x 2-11/16" special	12
7	129- 565	NUT - hex, 5/8" - 18 NF, plated	12
8	A 20058	VALVE STEM - rim	2
9	REF.	TIRE - rear	2
		16.9 x 24 AND 17.5L x 24 - DEMOUNTABLE RIMS	
4	D 72303	RIM - tire	2
5	D 72323	DISC - wheel, demountable	2
6	G 10701	BOLT - 5/8" - 18 NF x 2-11/16", special	12
7	129- 565	NUT - hex, 5/8" - 18 NF, plated	12
8	A 20058	VALVE STEM - rim	2
9	REF.	TIRE - rear	2

http://www.minnparbackhoeparts.com/

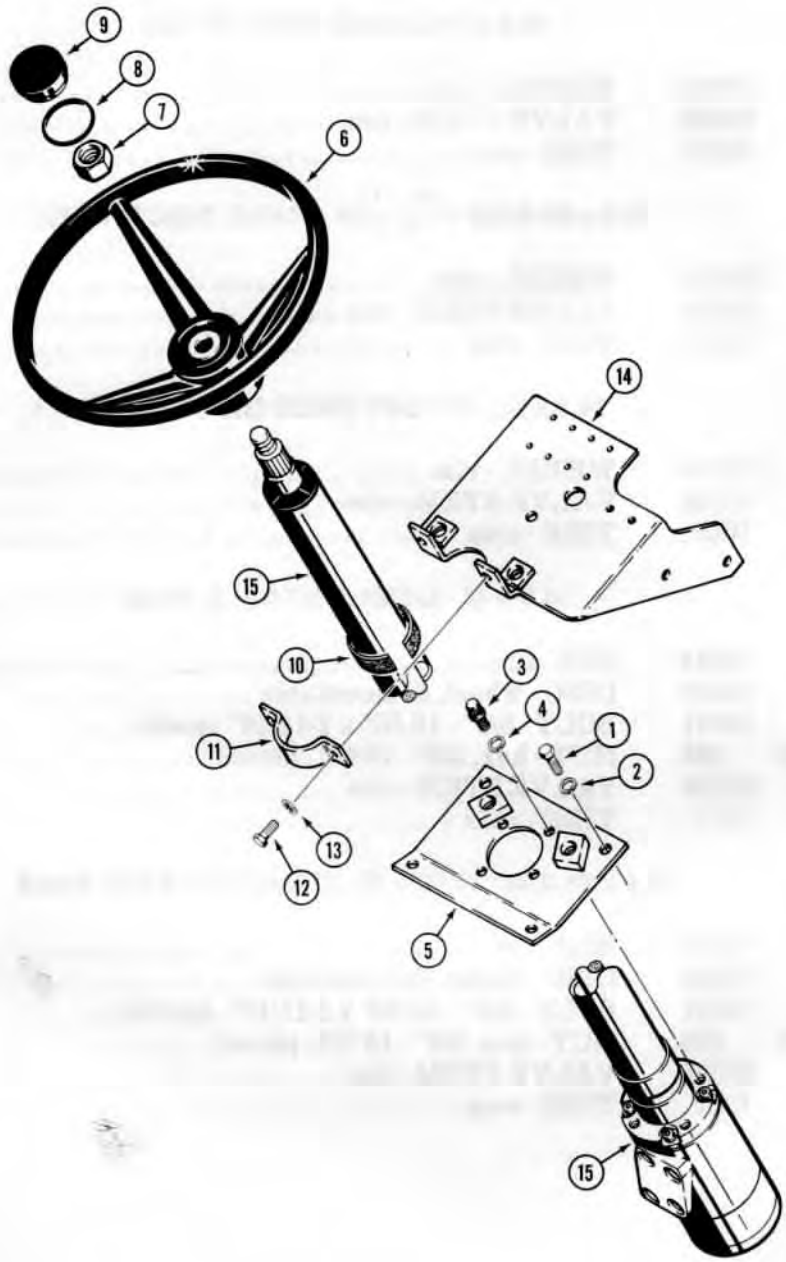

760234

http://www.minnparbackhoeparts.com/

STEERING WHEEL AND COLUMN

REF.	PART NO.	DESCRIPTION	REQ'D.
1	13- 616	HHCS - 3/8" - 16 NC x 1"	2
2	92- 6	WASHER - lock, 3/8"	2
3	163- 23	SCREW - ferry head, 5/16" - 18 NC x 5/8"	4
4	92- 5	WASHER - lock, 5/16"	4
5	D 71584	PLATE - steering valve mounting	1
6	A 65544	WHEEL - steering	1
7	A 14567	NUT - steering wheel retaining	1
8	D 26115	O-RING	1
9	A 62210	MEDALLION - steering wheel nut cover	1
10	D 66844	WRAPPER - steering, column	1
11	D 66049	CLAMP - steering column	1
12	13- 516	HHCS - 5/16" - 18 NC x 1"	2
13	92- 5	WASHER - lock, 5/16"	2
14	D 66041	BRACKET - steering column, mechanical shuttle models only before tractor sn. 8958213	1
14	D 76066	BRACKET - steering column, mechanical shuttle models only tractor sn. 8958213 and after	1
14	D 70721	BRACKET - steering column, power shuttle models only before tractor sn. 8958213	1
14	D 75238	BRACKET - steering column, power shuttle models only tractor sn. 8958213 and after	1
15	D 63250	VALVE - steering, includes column, parts list page 189	1

http://www.minnparbackhoeparts.com/

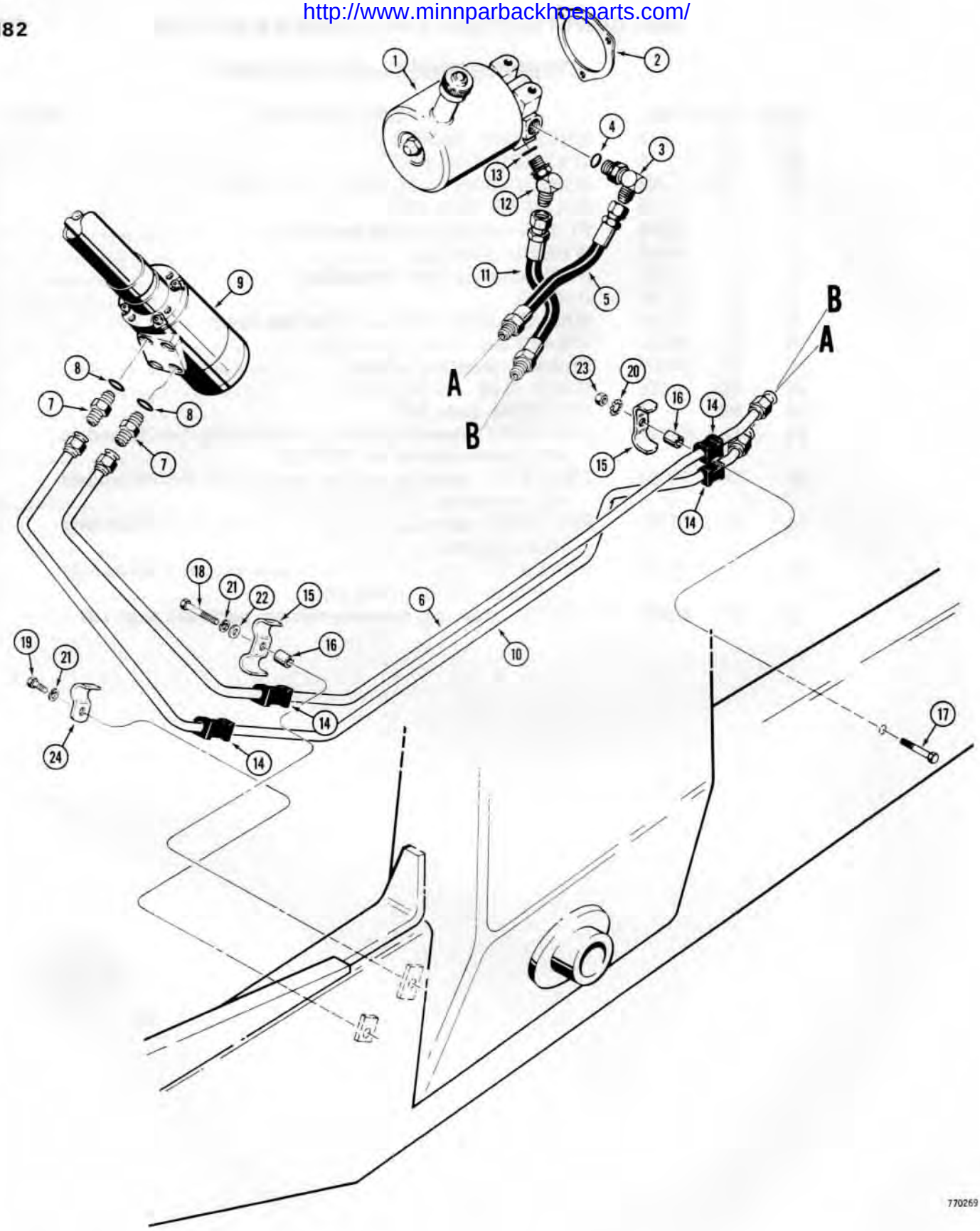

http://www.minnparbackhoeparts.com/

STEERING HYDRAULIC CIRCUIT

PUMP TO VALVE

REF.	PART NO.	DESCRIPTION	REQ'D.
1	D 64601	PUMP - power steering, parts list page 187	1
2	A 30042	GASKET - power steering pump	1
3	218- 5106	FITTING - adjustable, 90°	1
4	218- 5006	O-RING - fitting	1
5	D 63184	HOSE - from pump, 12" long (305 mm)	1
6	D 68794	TUBE - to valve, pressure	1
7	218- 5351	FITTING - straight, male adapter	2
8	218- 5005	O-RING - fitting	1
9	D 63250	VALVE - steering, includes column, parts list page 189	1
10	D 68796	TUBE - from valve, return	1
11	D 63184	HOSE - to pump, 12" long (305 mm)	1
12	218- 5136	FITTING - adjustable, 45°	1
13	218- 5006	O-RING - fitting	1
14	D 67296	BLOCK - isolation	4
15	D 68646	CLAMP - tube	2
16	D 76195	SPACER - tube clamp	2
17	13- 628	HHCS - 3/8" - 16 NC x 1-3/4"	1
18	13- 624	HHCS - 3/8" - 16 NC x 1-1/2"	1
19	13- 68	HHCS - 3/8" - 16 NC x 1/2"	1
20	193- 72	WASHER - internal-external tooth lock, 3/8"	1
21	92- 6	WASHER - lock, 3/8"	2
22	195- 25	WASHER - flat, 3/8", if used	1
23	25- 106	NUT - hex, 3/8" - 16 NC	1
24	D 68638	CLAMP - tube	1

http://www.minnparbackhoeparts.com/

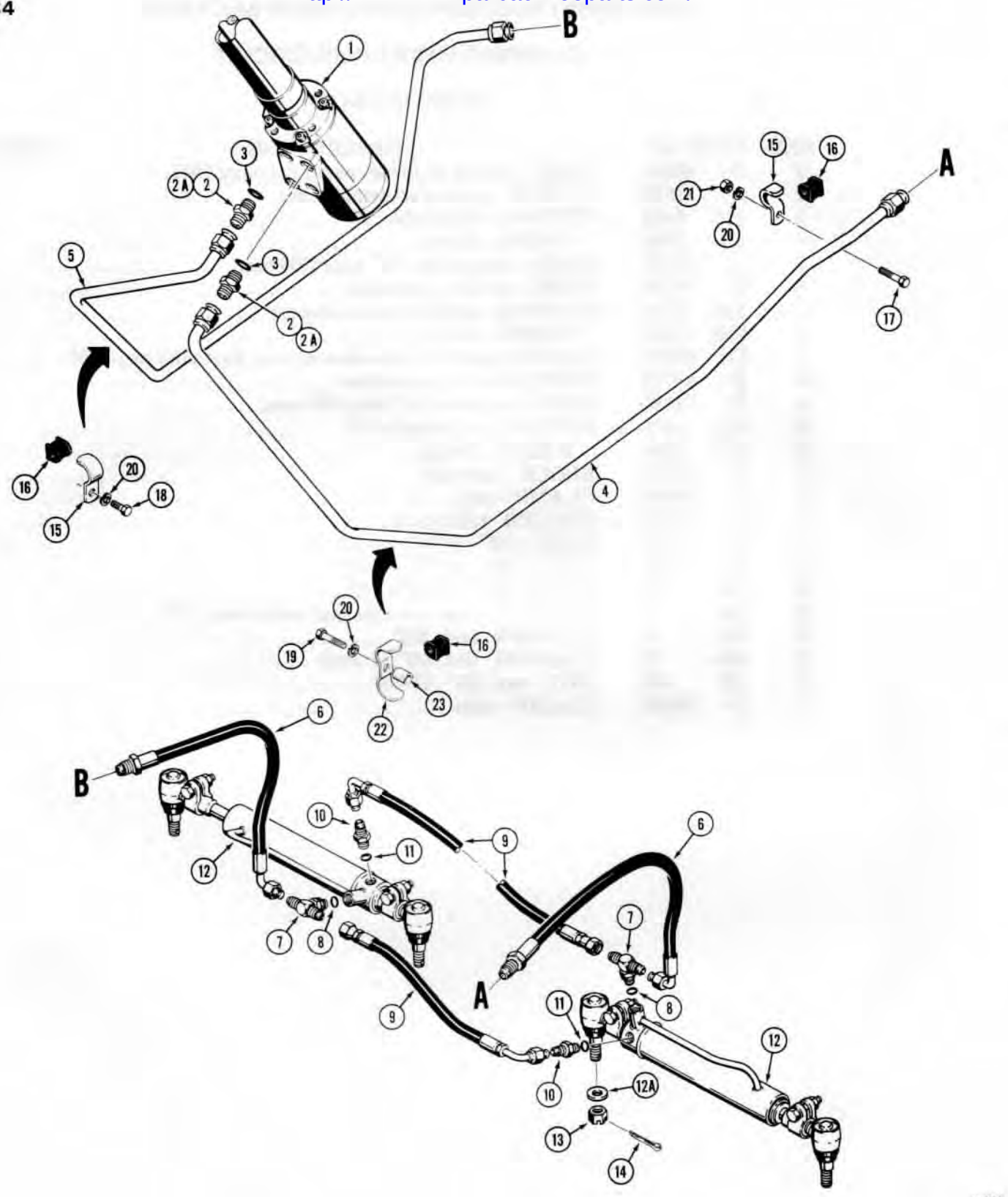

http://www.minnparbackhoeparts.com/

STEERING HYDRAULIC CIRCUIT

VALVE TO CYLINDERS

REF.	PART NO.	DESCRIPTION	REQ'D.
1	D 63250	VALVE - steering, includes column, parts list page 189	1
2	218- 5351	FITTING - straight, male adapter, if used	2
2A	D 76050	FITTING - straight, male adapter, restrictor type, if used	2
3	218- 5005	O-RING - 218-5351 or D76050 fittings	1
4	D 68790	TUBE - to R.H. steering cylinder	1
5	D 68792	TUBE - to L.H. steering cylinder	1
6	D 62390	HOSE - to steering cylinders, 20" long (508 mm)	2
7	218- 5182	FITTING - adjustable tee	2
8	218- 5005	O-RING - fitting	1
9	D 65620	HOSE - between cylinders, 16" long (406 mm)	2
10	218- 5057	FITTING - straight, male adapter	2
11	218- 5005	O-RING - fitting	1
12	REF.	CYLINDER - steering - parts list page 193	2
12A	95- 10	WASHER - flat, 5/8"	UAR
13	25- 1310	NUT - hex, slotted, 5/8" - 18 NF	4
14	132- 50	PIN - cotter, 1/8" - 1-1/4"	4
15	D 68638	CLAMP - tube	3
16	D 67296	BLOCK - tube clamp	4
17	13- 616	HHCS - 3/8" - 16 NC x 1"	2
18	13- 68	HHCS - 3/8" - 16 NC x 1/2"	1
19	13- 624	HHCS - 3/8" - 16 NC x 1-1/2"	1
20	92- 6	WASHER - lock, 3/8"	4
21	25- 106	NUT - hex, 3/8" - 16 NC	2
22	D 68646	CLAMP - tube	1
23	D 76195	SPACER - tube clamp	1

http://www.minnparbackhoeparts.com/

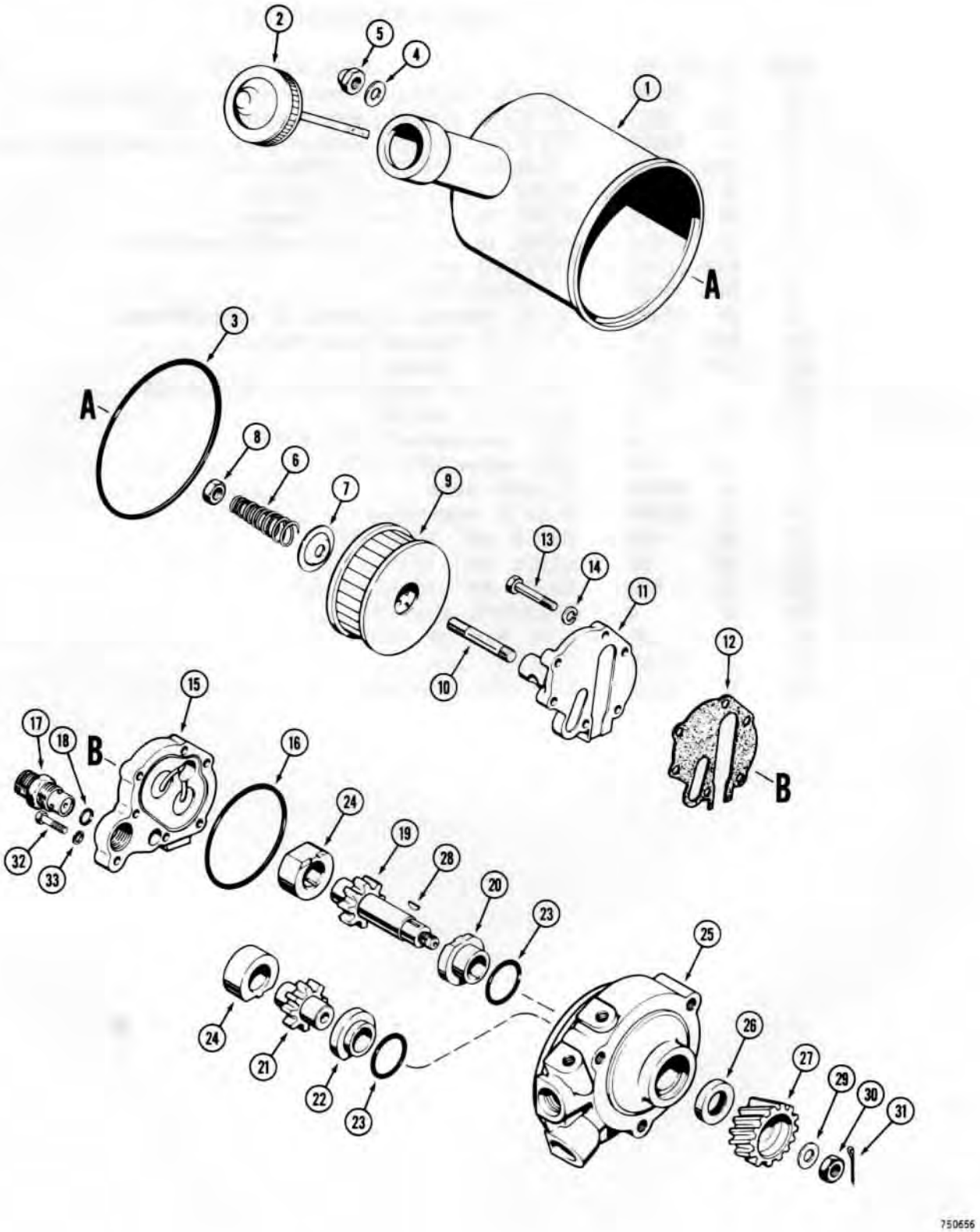

http://www.minnparbackhoeparts.com/

POWER STEERING PUMP

REF.	PART NO.	DESCRIPTION	REQ'D.
	D 64601	PUMP ASSEMBLY - power steering	1
1	A 35951	RESERVOIR - oil	1
2	A 35967	CAP - reservoir, includes dipstick	1
3	A 35965	GASKET - reservoir	1
4	A 42164	WASHER - reservoir nut	1
5	129- 525	NUT - acorn, 3/8" - 16 NC	1
6	A 35963	SPRING - element tension	1
7	A 35962	SEAT - element spring	1
8	25- 156	NUT - hex, jam, 3/8" - 16 NC	1
9	A 42242	ELEMENT - filter	1
10	A 35952	STUD - 3/8" - 16 NC x 2-3/8"	1
11	A 35950	COVER - pump, rear	1
12	A 35966	GASKET - rear cover	1
13	26- 426	BOLT - 1/4" - 20 NC x 1-5/8", grade 8	6
14	92- 4	WASHER - lock, 1/4"	6
15	A 35949	COVER - pump, intermediate	1
16	A 35959	O-RING - cover	1
17	D 71330	VALVE ASSEMBLY - relief	1
18	A 42187	O-RING - relief valve	1
19	A 25593	GEAR - driven	1
20	A 35957	BEARING - gear, front	1
21	A 35954	GEAR - idler	1
22	A 35955	BEARING - idler gear front	1
23	A 35958	O-RING - body	2
24	A 35956	BEARING - rear	2
25	D 71329	BODY - front	1
26	A 50421	SEAL - oil	1
27	A 25594	GEAR - pump drive	1
28	126- 109	KEY - Woodruff, #3	1
29	195- 25	WASHER - flat, 3/8"	1
30	F 18390	NUT - special, 3/8" - 24 NF	1
31	132- 5	PIN - cotter, 1/16" x 1/2"	1
32	26- 414	HHCS - 1/4" - 20 NC x 7/8", grade 8	1
33	92- 4	WASHER - lock, 1/4"	1

http://www.minnparbackhoeparts.com/

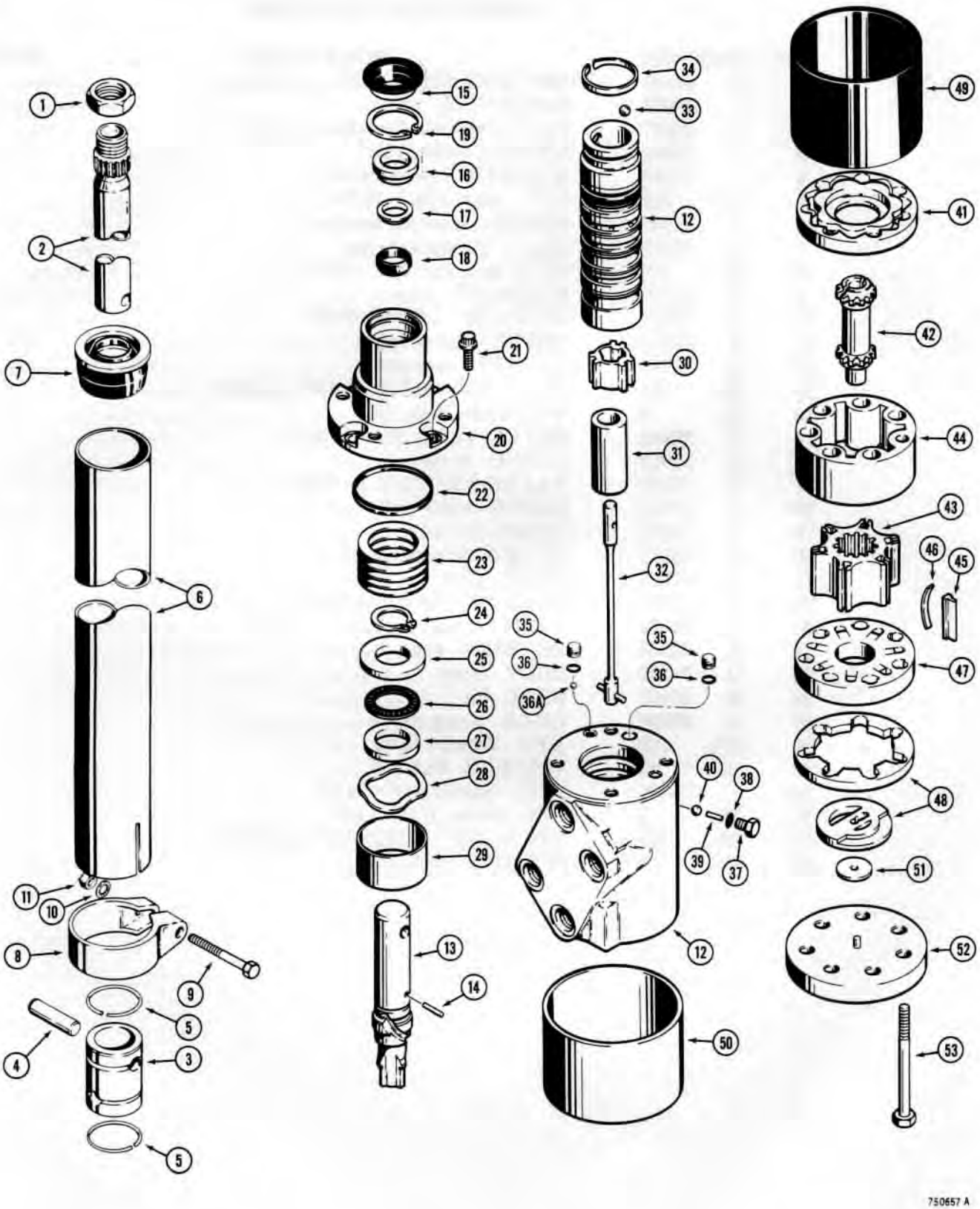

http://www.minnparbackhoeparts.com/

STEERING VALVE AND COLUMN

REF.	PART NO.	DESCRIPTION	REQ'D.
	D 63250	STEERING VALVE AND COLUMN - steering	1
1	A 14567	NUT - steering wheel retaining	1
2	D 71310	SHAFT - steering column	1
	D 72851	KIT - coupling	1
3	NSS	COUPLING - steering column to valve	1
4	L 35654	PIN - coupling	2
5	NSS	RING - pin retaining	2
	D 71312	JACKET ASSEMBLY - steering column	1
6	NSS	JACKET - steering column	1
7	L 35675	SEAL - steering column	1
	L 35657	CLAMP ASSEMBLY - tube	1
8	NSS	CLAMP - tube	1
9	14- 532	HHCS - 5/16" - 24 NF x 2"	1
10	193- 29	WASHER - internal tooth lock, 5/16"	1
11	129- 122	NUT - hex, 5/16" - 24 NF, zinc plated	1
	D 73670	VALVE ASSEMBLY - manual steering	1
12	NSS	HOUSING AND SPOOL ASSEMBLY	1
13	A 43551	SHAFT - input, valve	1
14	D 53297	PIN - torsion bar retaining	1
	D 73671	SEAL KIT - shaft	1
15	D 70586	SEAL - dirt	1
16	NSS	SPACER - seal kit	1
17	NSS	RING - seal, no longer used	1
18	NSS	SEAL - dust	1
19	A 21145	RING - bearing retaining	1
20	D 65139	COVER - upper	1
21	166- 24	SCREW - 5/16" - 18 NC x 3/4"	4
22	A 43566	SEAL - cover	1
23	A 44435	SHIM KIT - cover	1
24	A 43720	RING - retaining, shaft	1
25	A 43558	WASHER - thrust	1
26	F 19633	BEARING - thrust	1
27	F 19634	WASHER - thrust	1
28	A 43721	WASHER - wave	1
29	A 43728	SPACER - bearing	1
30	A 43554	RING - drive	1
31	L 36011	SPACER - drive link	1
32	L 36010	BAR - torsion	1
33	211- 9	BALL - 5/16" dia	1
34	A 43560	SPRING - preload	1

Continued on next page

http://www.minnparbackhoeparts.com/

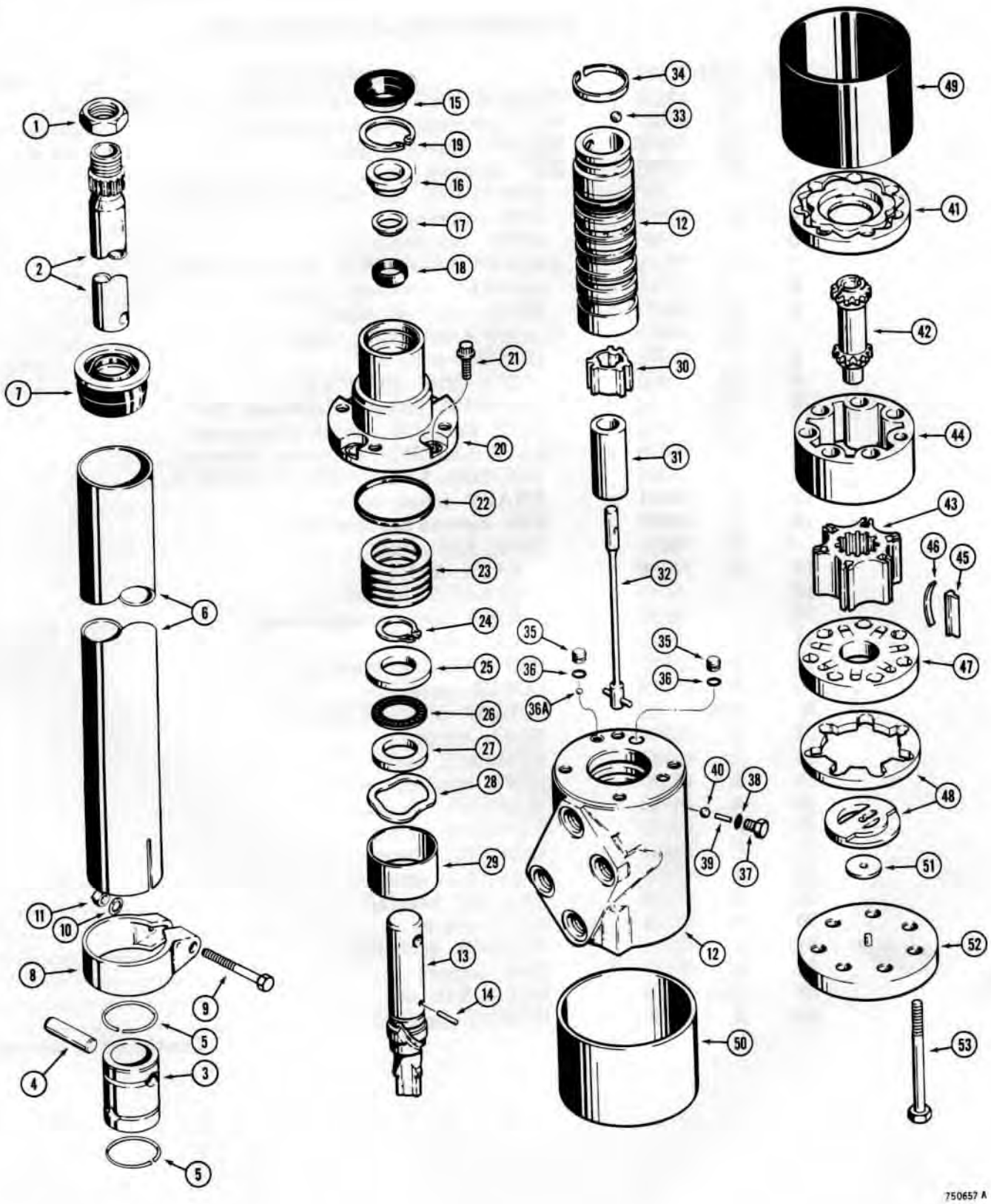

http://www.minnparbackhoeparts.com/

STEERING VALVE AND COLUMN

REF.	PART NO.	DESCRIPTION	REQ'D.
	L 36015	PLUG ASSEMBLY - valve	1-2
35	NSS	PLUG - valve	1
36	A 43729	O-RING - seal	1
	F 82943	CHECK ASSEMBLY - ball type, if used	1
36A	211- 7	BALL - check, if used	1
37	NSS	PLUG - check assembly	1
38	218- 5002	O-RING	1
39	138- 60	PIN - check assembly	1
40	211- 7	BALL - check	1
41	A 43569	SPACER - link	1
42	A 43568	LINK - drive	1
	D 71313	ROTOR SET - steering valve	1
43	NSS	GEAR - star	1
44	NSS	GEAR - ring	1
45	A 42778	VANE - star	6
46	A 42219	SPRING - vane	6
47	A 43573	MANIFOLD - steering valve	1
48	A 43574	COMMUTATOR - steering valve	1
49	D 74440	SEAL - rotor	1
50	D 71315	RETAINER - seal	1
51	A 43579	WASHER - wear, rotor	1
52	A 43580	COVER - end	1
53	D 71316	HHCS - 5/16" - 18 NC x 2-11/16", special	7

http://www.minnparbackhoeparts.com/

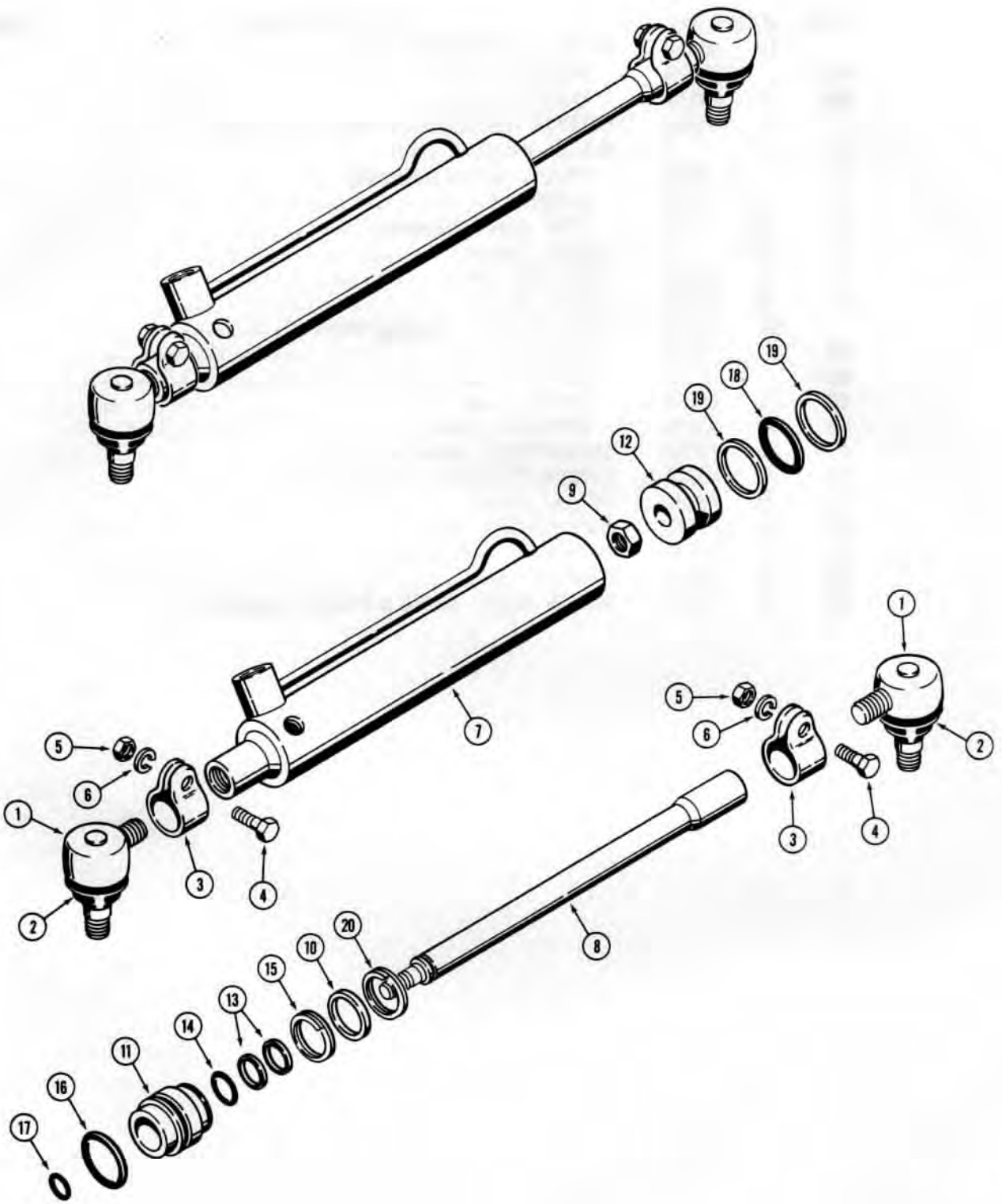

http://www.minnparbackhoeparts.com/

STEERING CYLINDERS

REF.	PART NO.	DESCRIPTION	REQ'D.
	A 137503	CYLINDER - steering	2
1	A 40962	END ASSEMBLY - male thread	2
2	A 41424	BOOT - end	1
3	A 27080	CLAMP ASSEMBLY - end	2
4	14- 624	HHCS - 3/8" - 24 NF x 1-1/2"	1
5	25- 116	NUT - hex, 3/8 - 24 NF	1
6	92- 6	WASHER - lock, 3/8"	1
7	NSS	TUBE - cylinder	1
8	A 44642	ROD - cylinder	1
9	131- 1275	NUT - hex, lock, 9/16" - 18 NF	1
10	A 44641	SPACER - cylinder head	1
11	A 44639	GLAND ASSEMBLY - cylinder, includes bushings	1
12	A 44640	PISTON - cylinder	1
	A 44644	KIT - cylinder repair	1
13	NSS	WIPER - rod	2
14	F 62075	O-RING - inner gland	1
15	NSS	RING - lock, gland	1
16	A 41184	O-RING - outer gland	1
17	A 30097	O-RING - rod to piston	1
18	A 27577	O-RING - piston	1
19	NSS	RING - backup, leather	2
20	A 44654	RING - lock, outer	1

http://www.minnparbackhoeparts.com/

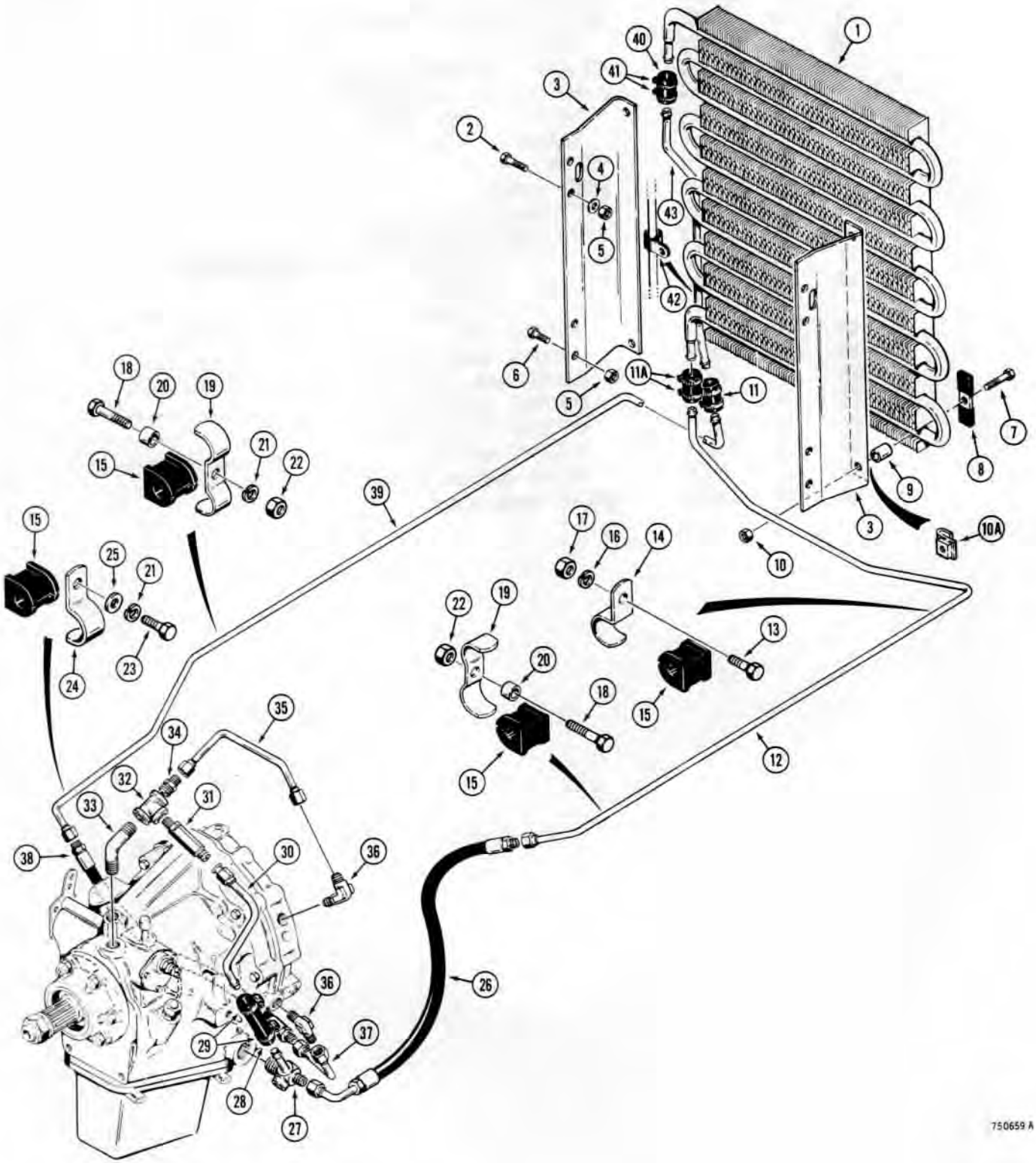

http://www.minnparbackhoeparts.com/

*POWER SHUTTLE TRANSMISSION HYDRAULIC CIRCUIT

BEFORE TRACTOR SN. 8961374

REF.	PART NO.	DESCRIPTION	REQ'D.
1	D 68834	COOLER - transmission oil	1
2	13- 616	HHCS - 3/8" - 16 NC x 1"	2
3	D 75234	BRACKET - cooler, when replacing brackets using loose hex nuts (item 10) or welded on square nuts also order (2) 131-639 (item 10A) "J" type nuts	2
4	95- 6	WASHER - flat, 3/8"	2
5	131- 652	NUT - hex, lock, 3/8" - 16 NC	4
6	13- 612	HHCS - 3/8" - 16 NC x 3/4"	2
7	13- 524	HHCS - 5/16" - 18 NC x 1-1/2"	4
8	D 54416	PLATE - clamp, cooler mounting	4
9	D 76213	SPACER - cooler mounting plate	4
10	131- 651	NUT - hex, lock, 5/16" - 18 NC, if used	4
10A	131- 639	NUT - "J" type, 5/16" - 18 NC, if used	4
11	D 69050	HOSE - cooler to tube, 1/2" I.D. x 3" long (13 x 76 mm)	1
11A	214- 253	CLAMP - hose	2
12	D 69004	TUBE - cooler outlet	1
13	13- 616	HHCS - 3/8" - 16 NC x 1"	1
14	D 68638	CLAMP - tube	1
15	D 67296	BLOCK - isolation	6
16	92- 6	WASHER - lock, 3/8"	1
17	25- 106	NUT - hex, 3/8" - 16 NC	1
18	13- 628	HHCS - 3/8" - 16 NC x 1-3/4"	2
19	D 68646	CLAMP - tube	2
20	D 76195	SPACER - tube	2
21	92- 6	WASHER - lock, 3/8"	2
22	25- 106	NUT - hex, 3/8" - 16 NC	2
23	13- 612	HHCS - 3/8" - 16 NC x 3/4"	1
24	D 68638	CLAMP - tube	1
25	195- 25	WASHER - flat, 3/8"	1
26	D 69051	HOSE - shuttle inlet, 18" long (457 mm)	1
27	D 68972	FITTING - shuttle inlet tee	1
28	D 55583	HOSE - shuttle inlet, 1/2" I.D. x 4" long (13 x 102 mm)	1
29	214- 253	CLAMP - hose	2
30	D 68973	TUBE - shuttle inlet	1
31	D 48540	VALVE - relief	1
32	221- 423	FITTING - tee, 3/8" NPT	1
33	D 48539	FITTING - pipe elbow, 75° special	1
34	218- 444	FITTING - straight, male adapter	1
35	D 48523	TUBE - shuttle inlet	1
36	218- 484	FITTING - 90°	2
37	D 65479	TUBE - shuttle outlet	1
38	D 65481	HOSE - shuttle outlet, 12" long (305 mm)	1
39	D 69006	TUBE - cooler inlet	1
40	D 69050	HOSE - cooler inlet tubes, 1/2" I.D. x 3" long (13 x 76 mm)	1
41	214- 253	CLAMP - hose	2
42	49854	CLAMP - tube	1
43	D 69076	TUBE - cooler inlet	1

*NOTE: For Hydraulic PTO cooling system, see page 229.

http://www.minnparbackhoeparts.com/

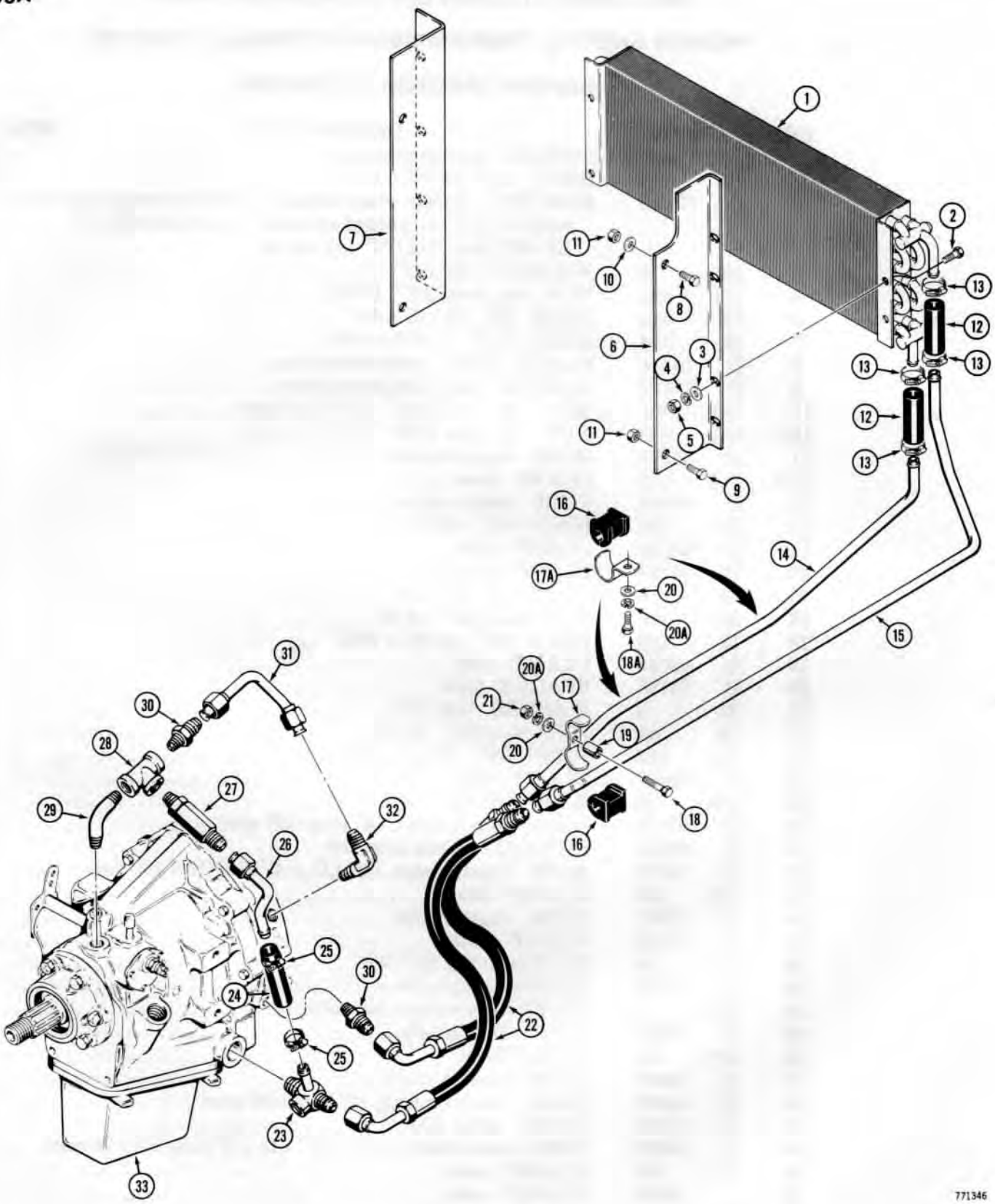

http://www.minnparbackhoeparts.com/

*POWER SHUTTLE TRANSMISSION HYDRAULIC CIRCUIT

TRACTOR SN. 8961374 AND AFTER

REF.	PART NO.	DESCRIPTION	REQ'D.
1	D 76097	COOLER - transmission oil	1
2	13- 512	HHCS - 5/16" - 18 NC x 3/4"	4
3	195- 21	WASHER - flat, 5/16"	4
4	92- 5	WASHER - lock, 5/16"	4
5	25- 105	NUT - hex, 5/16" - 18 NC	4
6	D 76570	BRACKET - cooler, R.H.	1
7	D 76569	BRACKET - cooler, L.H.	1
8	13- 616	HHCS - 3/8" - 16 NC x 1"	2
9	13- 612	HHCS - 3/8" - 16 NC x 3/4"	2
10	95- 6	WASHER - flat, 3/8"	2
11	131- 652	NUT - hex, lock, 3/8" - 16 NC	4
12	D 69050	HOSE - cooler to tubes, 1/2" (13 mm) I.D. x 3" (76 mm) long	2
13	214- 253	CLAMP - hose	4
14	D 79764	TUBE - cooler inlet	1
15	D 76602	TUBE - cooler outlet	1
16	D 67296	BLOCK - tube isolation	4
17	D 68646	CLAMP - tube, double	1
17A	D 68638	CLAMP - tube, single	2
18	13- 628	HHCS - 3/8" - 16 NC x 1-3/4"	1
18A	13- 612	HHCS - 3/8" - 16 NC x 3/4"	2
19	D 76195	SPACER - tube clamp, double clamp	1
20	195- 25	WASHER - flat, 3/8"	3
20A	92- 6	WASHER - lock, 3/8"	3
21	25- 106	NUT - hex, 3/8" - 16 NC, double clamp	1
22	D 69051	HOSE - shuttle to tubes, 18" (457 mm) long	2
23	D 68972	FITTING - 4-way	1
24	D 55583	HOSE - shuttle, inlet, 1/2" (13 mm) I.D. x 4" (102 mm) long	1
25	214- 253	CLAMP - hose	2
26	D 68973	TUBE - shuttle outlet	1
27	D 48540	VALVE - relief	1
28	221- 423	FITTING - 3 way, 3/8" NPT	1
29	D 48539	FITTING - pipe elbow, 75° special	1
30	218- 444	FITTING - straight, male adapter	2
31	D 48523	TUBE - shuttle inlet	1
32	218- 484	FITTING - 90°, male	1
33	REF.	SHUTTLE ASSEMBLY - see page 119	1

*NOTE: For PTO Hydraulic Cooling System, see page 229B.

http://www.minnparbackhoeparts.com/

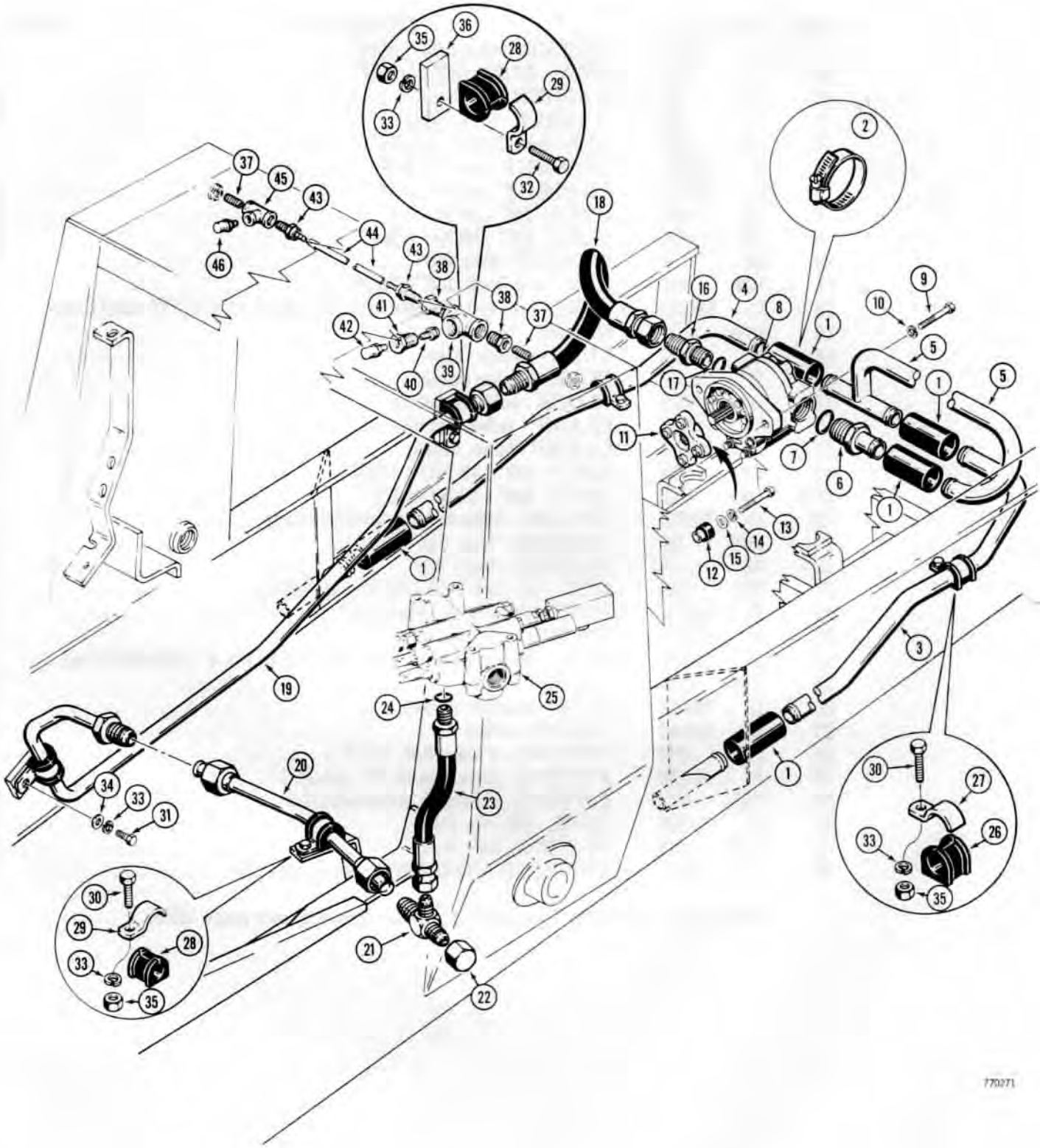

http://www.minnparbackhoeparts.com/

EQUIPMENT HYDRAULIC CIRCUIT

*RESERVOIR TO LOADER VALVE

REF.	PART NO.	DESCRIPTION	REQ'D.
1	R 13911	HOSE - suction tubes, 1-1/4" I.D. x 4" long (32 x 102 mm)	5
2	214- 257	CLAMP - hose	10
3	D 65670	TUBE - suction, R.H.	1
4	D 65659	TUBE - suction, L.H.	1
5	D 65691	TUBE - manifold, suction	1
6	217- 178	FITTING - hose stem, at pump	1
7	218- 5011	O-RING - fitting	1
8	REF.	PUMP - hydraulic equipment, see pages 239 thru 241 for correct pump and parts list	1
9	13- 824	HHCS - 1/2" - 13 NC x 1-1/2"	2
10	92- 6	WASHER - lock, 1/2"	2
11	A 51885	COUPLING - equipment hydraulic pump	1
12	A 45216	BUSHING - pump coupling	4
13	13- 724	HHCS - 7/16" - 14 NC x 1-1/2"	4
14	92- 7	WASHER - lock, 7/16"	4
15	A 30013	WASHER - flat, special	4
16	218- 5069	FITTING - straight, male adapter	1
17	218- 5011	O-RING - fitting	1
18	D 68547	HOSE - pump pressure, 20" long (508 mm)	1
19	D 70534	TUBE - pressure, from pump	1
20	*D 72400	TUBE - pressure, to loader valve	1
21	*218- 589	FITTING - tee	1
22	*218- 335	CAP - tee	1
23	*D 73319	HOSE - to loader valve, 14" long (356 mm)	1
24	218- 5008	O-RING - hose	1
25	*REF.	VALVE - loader control, see pages 245 and 247	1
26	D 67298	CUSHION - suction tubes	2
27	D 68845	CLAMP - suction tubes	2
28	D 67297	CUSHION - pressure tubes	3
29	D 68846	CLAMP - pressure tubes	3
30	13- 616	HHCS - 3/8" - 16 NC x 1"	3
31	13- 612	HHCS - 3/8" - 16 NC x 3/4"	1
32	13- 624	HHCS - 3/8" - 16 NC x 1-1/2"	1
33	92- 6	WASHER - lock, 1/2"	5
34	195- 25	WASHER - flat, 3/8"	1
35	25- 106	NUT - hex, 3/8" - 16 NC	4
36	D 68806	PLATE - spacer	1
37	221- 130	NIPPLE - 1/4" NPT	2
38	221- 55	BUSHING - reducer	2
39	221- 441	FITTING - tee, R.H. side	1
40	D 63543	FILTER - relief valve	1
41	D 63506	ADAPTER - relief valve	1
42	R 15538	VALVE - relief, inlet	1
43	220- 502	FITTING - hose coupling	2
44	D 72098	HOSE - relief valve, 1/4" I.D. x 17" long (6.4 x 432 mm)	1
45	221- 430	TEE - relief valve	1
46	R 15536	VALVE - relief, outlet	1

*NOTE: For equipment relief valve and connecting parts on models without loader, see page 201.

http://www.minnparbackhoeparts.com/

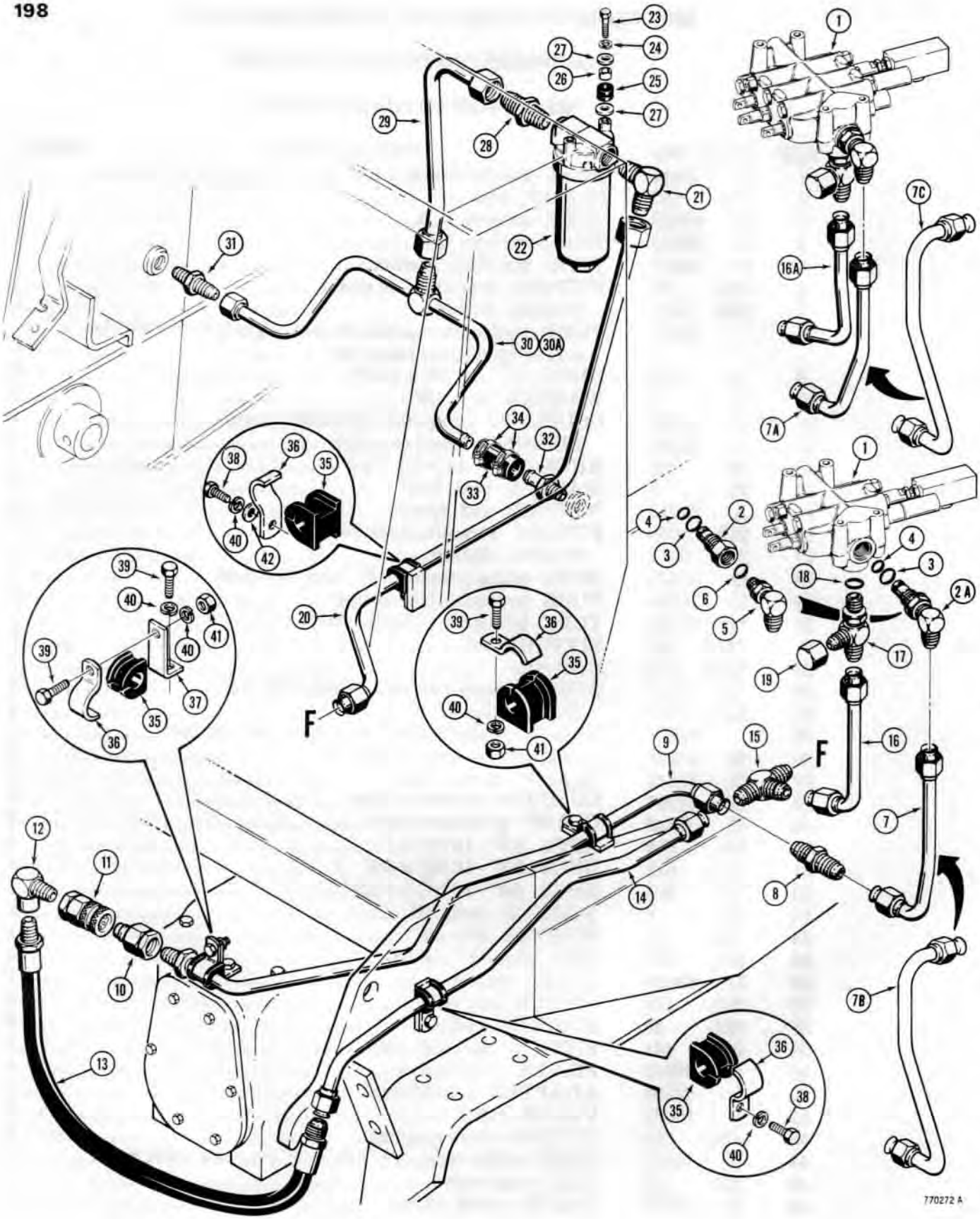

http://www.minnparbackhoeparts.com/

EQUIPMENT HYDRAULIC CIRCUIT

*REAR EQUIPMENT AND RETURN LINES

REF.	PART NO.	DESCRIPTION	REQ'D.
1	*REF.	VALVE - loader control, see pages 245 and 247	1
2	*D 61251	FITTING ASSEMBLY - straight, special sleeve, if used	1
2A	D 75575	FITTING ASSEMBLY - 90°, special sleeve, if used	1
3	218- 5010	O-RING - large, D61251 or D75575 fittings	1
4	L 32680	O-RING - small, D61251 or D75575 fittings	1
5	*218- 5124	FITTING - 90° adjustable	1
6	218- 5008	O-RING - fitting	1
7	*D 67505	TUBE - from two spool valve, used with single 12V battery	1
7A	*D 68629	TUBE - from three spool valve, used with single 12V battery	1
7B	*D 79120	TUBE - from two spool valve, used with two 6V batteries	1
7C	*D 79118	TUBE - from three spool valve, used with two 6V batteries	1
8	218- 739	FITTING - male connector	1
9	D 72095	TUBE - to hydraulic coupling	1
10	D 52694	COUPLING - disconnect, male, parts list page 299	1-2
11	D 52800	COUPLING - disconnect, female, parts list page 299	1-2
12	217- 1020	FITTING - 90° street	1
13	D 49118	HOSE - return, 33" long (838 mm)	1
14	D 70855	TUBE - return, rear equipment	1
15	218- 598	FITTING - tee, return lines	1
16	*D 72402	TUBE - 2 spool loader valve return	1
16A	*D 72398	TUBE - 3 spool loader valve return	1
17	*218- 5583	FITTING - tee, at loader valve	1
18	218- 5010	O-RING - fitting	1
19	218- 335	CAP - tee	1
20	D 67717	TUBE - filter inlet, models without PTO, for models with PTO see page 231	1
21	D 65646	FITTING - 90°, models without PTO, for models with PTO see page 229	1
22	D 73910	FILTER - hydraulic oil, parts list page 297	1
23	13- 824	HHCS - 1/2" - 13 NC x 1-1/2"	2
24	92- 8	WASHER - lock, 1/2"	2
25	D 67915	GROMMET - rubber mounting	2
26	D 65660	SPACER -filter mounting	2
27	195- 36	WASHER - flat, 1/2"	4
28	218- 448	FITTING - filter outlet, male connector	1
29	D 67711	TUBE - return from filter	1
30	D 68536	TUBE - return to tank, models without PTO	1
30A	D 71941	TUBE - return to tank, models with PTO, see page 231	1
31	218- 446	FITTING - male, straight adapter	1
32	217- 155	FITTING - hose stem, R.H. reservoir	1
33	R 20804	HOSE - 3/4" I.D. x 3" long (19 x 76 mm)	1
34	214- 255	CLAMP - hose	2
35	D 67297	CUSHION - hydraulic tubes	4
36	D 68846	CLAMP - tube	4
37	D 65647	BRACKET - tube support	1
38	13- 612	HHCS - 3/8" - 16 NC x 3/4"	2
39	13- 616	HHCS - 3/8" - 16 NC x 1"	3
40	92- 6	WASHER - lock, 3/8"	5
41	25- 106	NUT - hex, 3/8" - 16 NC	2
42	195- 25	WASHER - flat, 3/8"	1

*NOTE: For equipment relief valve and connecting parts on models without loader, see page 201.

http://www.minnparbackhoeparts.com/

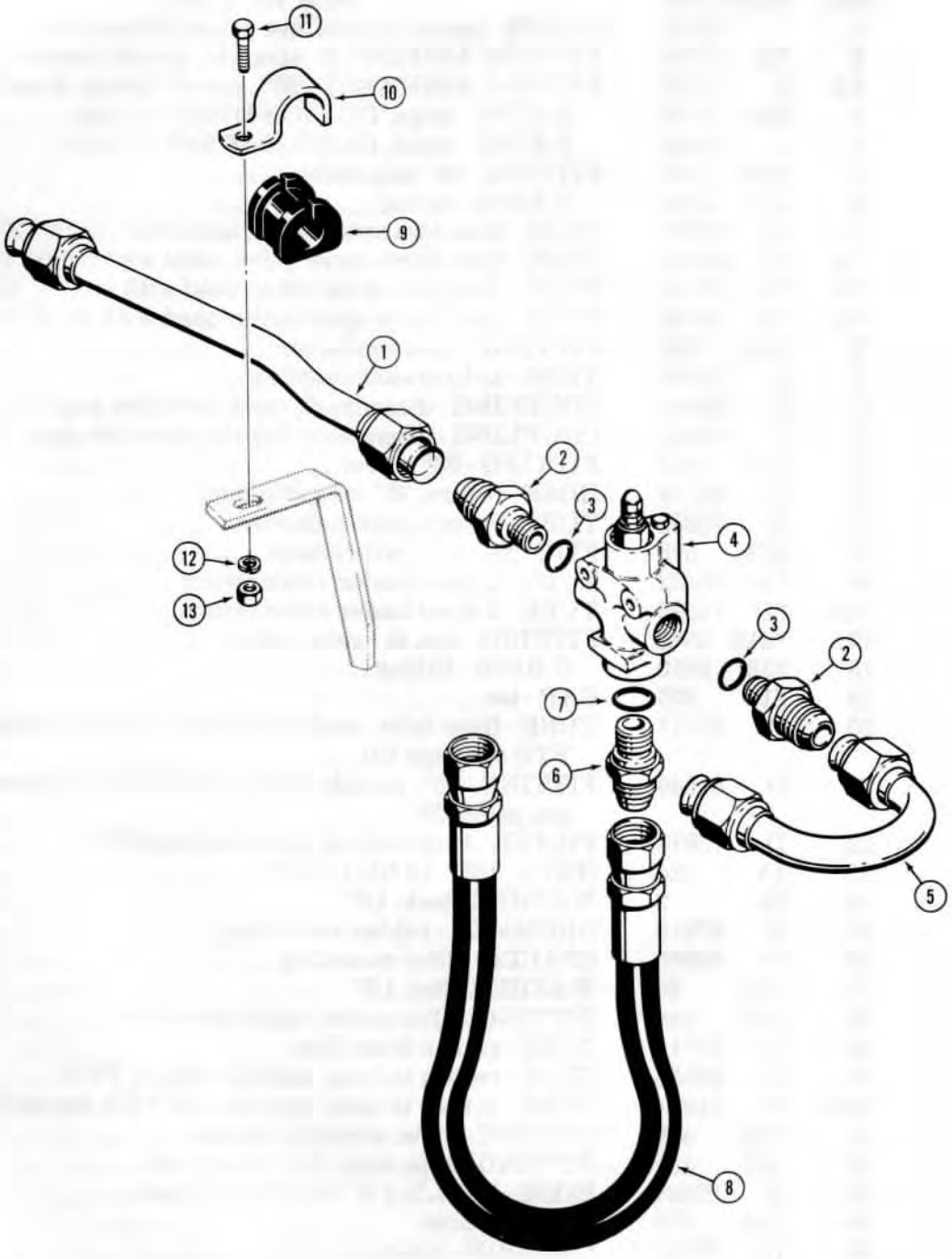

770273

http://www.minnparbackhoeparts.com/

EQUIPMENT HYDRAULIC CIRCUIT

*SPECIAL PARTS USED ON TRACTORS WITHOUT LOADER

REF.	PART NO.	DESCRIPTION	REQ'D.
1	D 72229	TUBE - pressure, to relief valve	1
2	218- 5046	FITTING - straight adapter	2
3	218- 5007	O-RING - fitting	1
4	D 71668	VALVE - equipment relief, parts list page 281	1
5	D 72227	TUBE - pressure, to rear equipment	1
6	218- 5050	FITTING - straight adapter	1
7	218- 5008	O-RING - fitting	1
8	D 49224	HOSE - return, 28" long (711 mm)	1
9	D 67297	CUSHION - tube clamp	1
10	D 68846	CLAMP - tube	1
11	13- 616	HHCS - 3/8" - 16 NC x 1"	1
12	92- 6	WASHER - lock, 3/8"	1
13	25- 106	NUT - hex, lock, 3/8" - 16 NC	1

*NOTE: See pages 197 and 199 for parts required to complete the equipment hydraulic circuit.

http://www.minnparbackhoeparts.com/

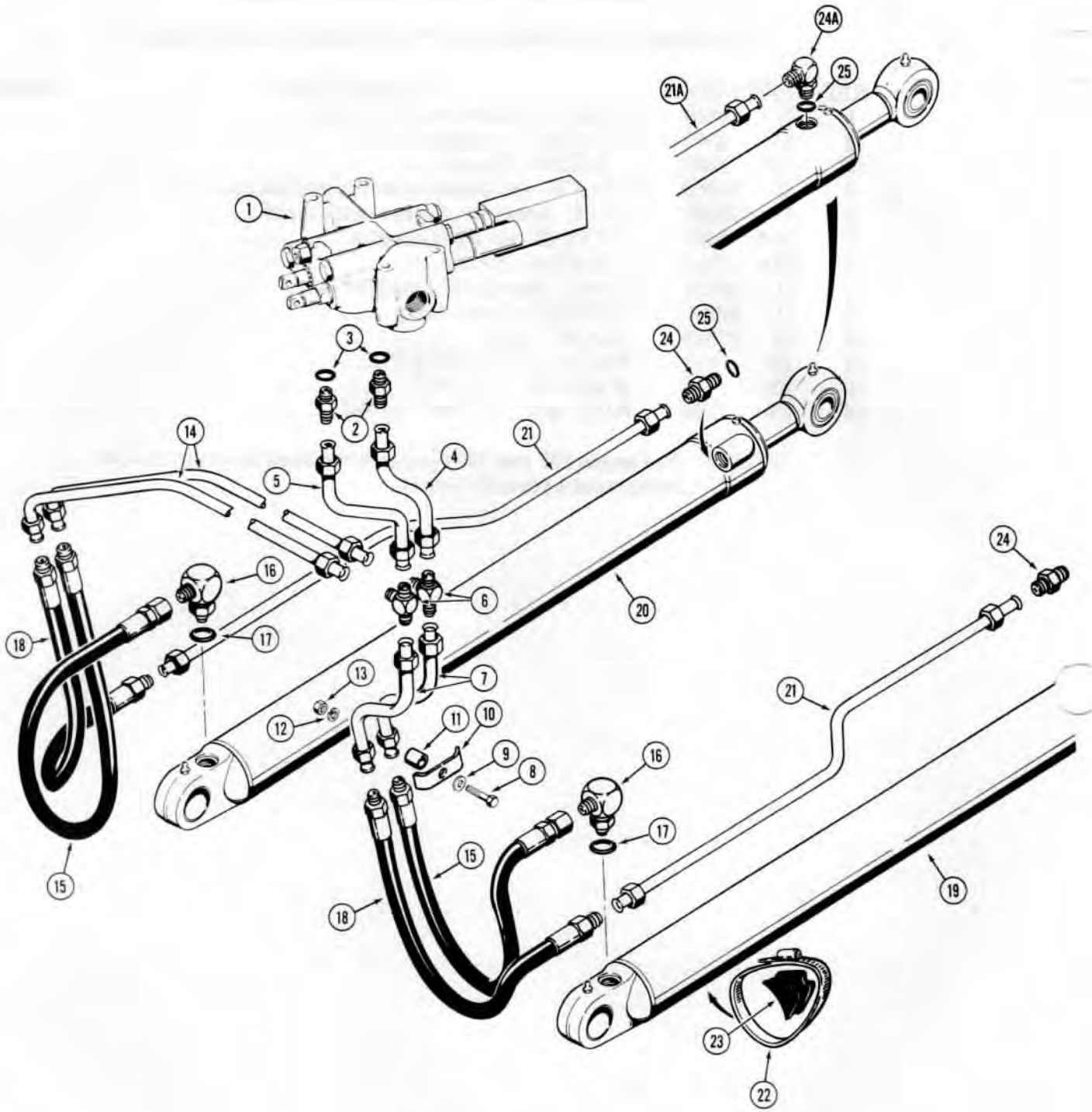

75 1250 B

http://www.minnparbackhoeparts.com/

LOADER LIFT HYDRAULIC CIRCUIT

REF.	PART NO.	DESCRIPTION	REQ'D.
1	REF.	VALVE - loader control, see pages 245 and 247 for proper valve and control levers	1
2	218- 5062	FITTING - male, straight connector	2
3	218- 5007	O-RING - fitting	1
4	D 67507	TUBE - valve to closed end of lift cylinders	1
5	D 67506	TUBE - valve to rod end of lift cylinders	1
6	218- 595	TEE - R.H. to L.H. lift cylinders	2
7	D 67329	TUBE - R.H. lift cylinder	2
8	13- 628	HHCS - 3/8" - 16 NC x 1-3/4"	2
9	195- 25	WASHER - flat, 3/8"	2
10	D 40236	CLAMP - tube	2
11	D 76209	SPACER - tube clamp	2
12	92- 6	WASHER - lock, 3/8"	2
13	25- 106	NUT - hex, 3/8" - 16 NC	2
14	D 67331	TUBE - to L.H. lift cylinder	2
15	38410	HOSE - closed end of lift cylinder, 22-1/2" long (572 mm)	2
16	218- 5107	FITTING - 90°, adjustable	2
17	218- 5007	O-RING - fitting	1
18	D 38485	HOSE - rod end of R.H. lift cylinder, 22-1/2" long (572 mm)	2
19	REF.	CYLINDER - lift, R.H., parts list page 301 or 303	1
20	REF.	CYLINDER - lift, L.H., parts list page 301 or 303	1
21	D 69415	TUBE - rod end of lift cylinder, used with item 24	2
21A	D 76890	TUBE - rod end of lift cylinder, used with item 24A	2
22	214- 264	CLAMP - tube	2
23	D 38648	SPACER - rubber, tube	2
24	218- 5062	FITTING - male, straight connector	1-2
24A	218- 5107	FITTING - male, 90°, if used	1
25	218- 5007	O-RING - 218-5062 and 218-5107 fittings	1

http://www.minnparbackhoeparts.com/

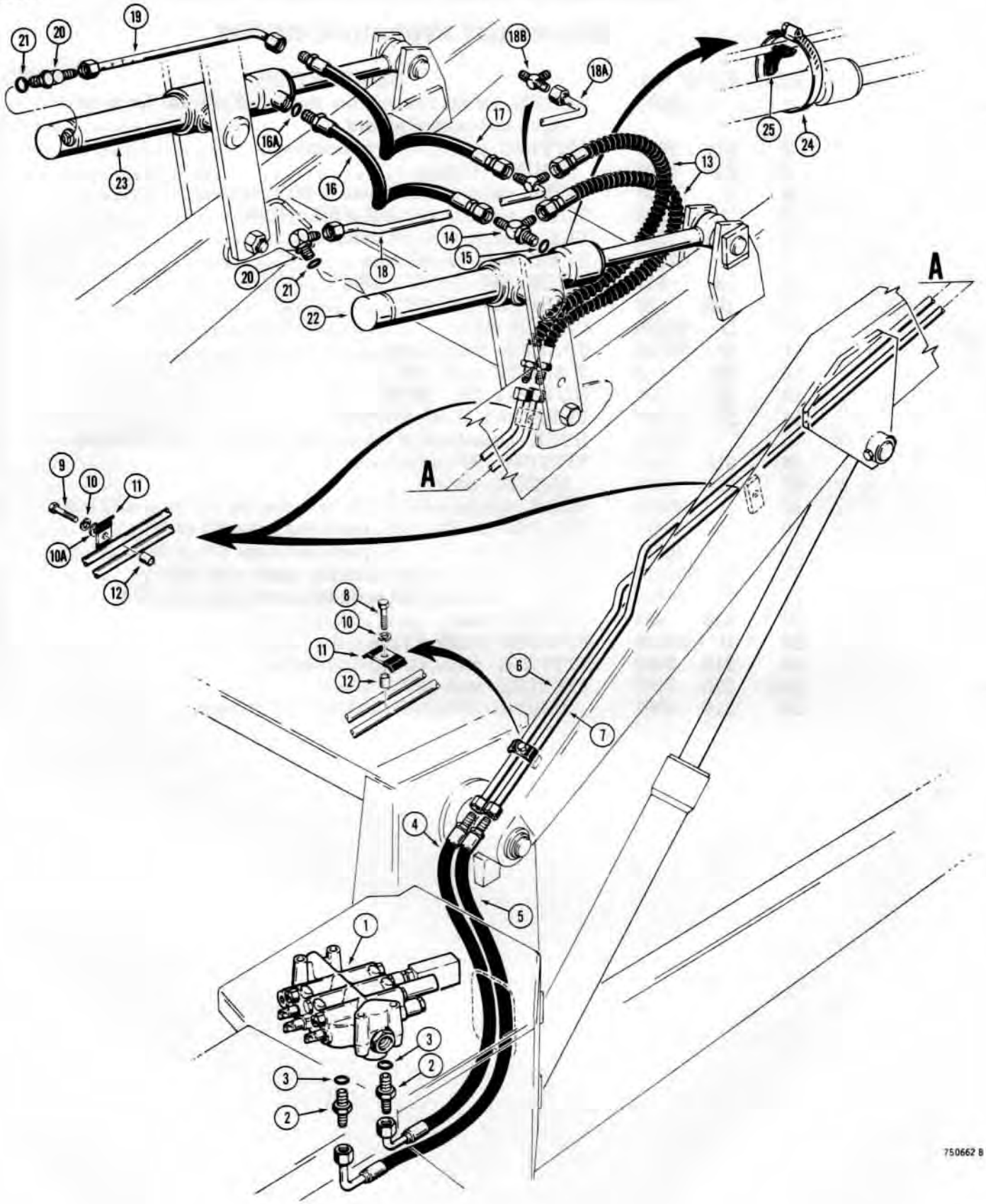

http://www.minnparbackhoeparts.com/

LOADER BUCKET TILT CYLINDER HYDRAULIC CIRCUIT

REF.	PART NO.	DESCRIPTION	REQ'D.
1	REF.	VALVE - loader control, see pages 245 and 247 for proper valve and control levers	1
2	218- 5060	FITTING - male, straight connector	2
3	218- 5007	O-RING - fitting	1
4	D 67896	HOSE - valve to tilt cylinders, 34" long (864 mm)	1
5	D 67897	HOSE - valve to tilt cylinders, 36" long (914 mm)	1
6	D 69462	TUBE - to tilt cylinders	1
7	D 69460	TUBE - to tilt cylinders	1
8	13- 516	HHCS - 5/16" - 18 NC x 1"	1
9	13- 520	HHCS - 5/16" - 18 NC x 1-1/4"	2
10	92- 5	WASHER - lock, 5/16"	3
10A	195- 21	WASHER - flat, 5/16"	2
11	R 17319	CLAMP - tube	3
12	D 76208	SPACER - tube clamp	3
13	D 31370	HOSE - tubes to tilt cylinders, 30-7/16" long (773 mm) with wire guard, if used	2
13	D 73244	HOSE - tubes to tilt cylinders, 30-7/16" long (773 mm) without wire guard, if used	2
14	218- 5241	FITTING - tee, hoses to rod end of tilt cylinders	1
15	218- 5007	O-RING - fitting	1
16	D 67731	HOSE - to rod end of L.H. tilt cylinders, 32" long (813 mm)	1
16A	218- 5007	O-RING - hose	1
17	D 67730	HOSE - to closed end of L.H. tilt cylinders, 32" long (813 mm) used with D61058 tube, see item 18	1
18	D 61058	TUBE - R.H. tilt cylinder, with braized tee fitting, if used	1
18A	D 73800	TUBE - R.H. tilt cylinder, without braized tee fitting, if used	1
18B	218- 586	FITTING - tee, if used	1
19	D 38637	TUBE - L.H. tilt cylinder	1
20	218- 5121	FITTING - 90°, adjustable	2
21	218- 5007	O-RING - fitting	1
22	REF.	CYLINDER - R.H. tilt, parts list page 305 or 307	1
23	REF.	CYLINDER - L.H. tilt, parts list page 305 or 307	1
24	214- 265	CLAMP - tube	2
25	D 38648	SPACER - rubber	2

http://www.minnparbackhoeparts.com/

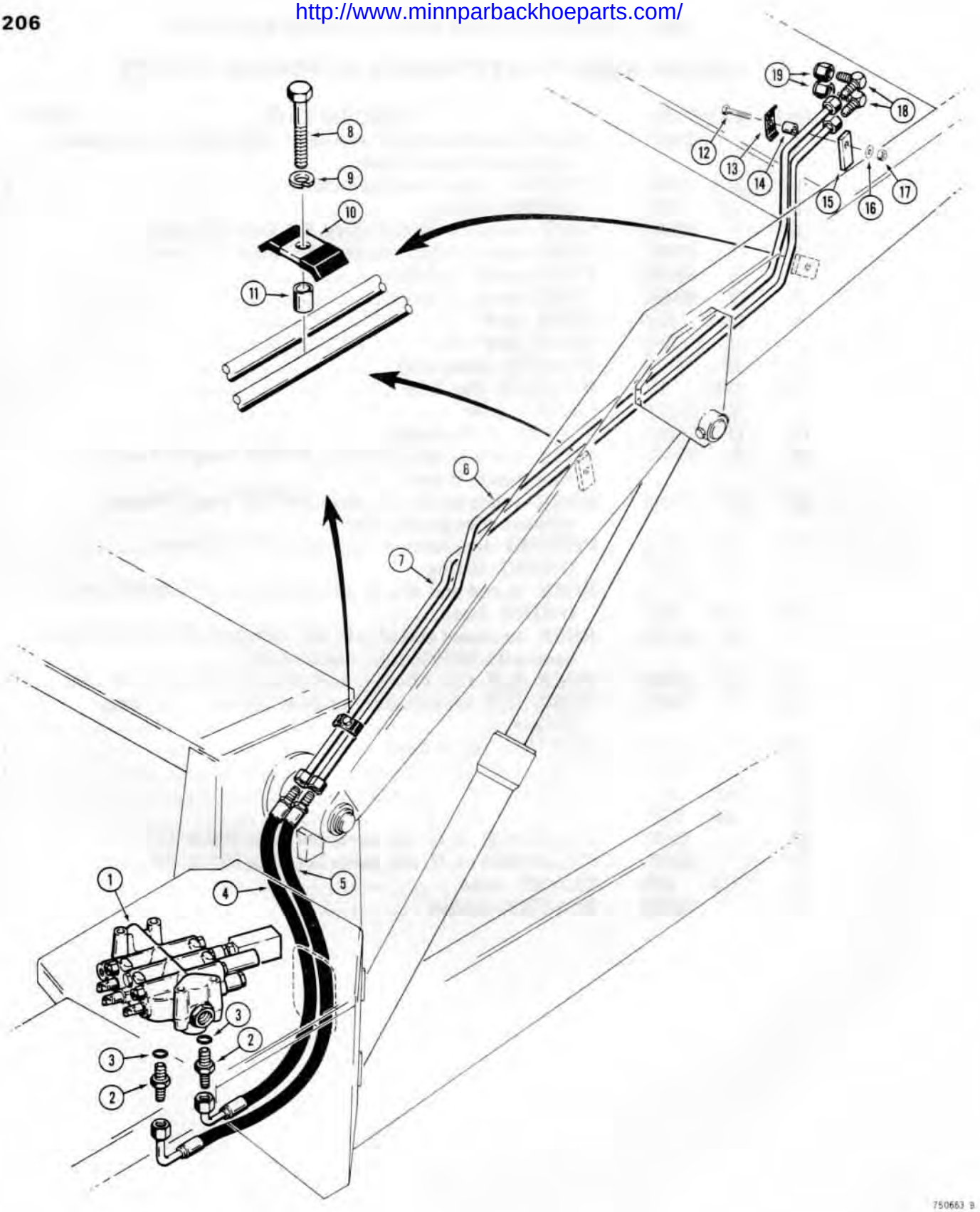

http://www.minnparbackhoeparts.com/

*LOADER CLAM AND GRAPPLE HYDRAULIC CIRCUIT

REF.	PART NO.	DESCRIPTION	REQ'D.
1	REF.	VALVE - loader control, 3 spool, see page 247 for parts	1
2	218- 5060	FITTING - male, straight connector	2
3	218- 5007	SEAL - "o"ring	1
4	D 67897	HOSE - valve to tube, 36" long (914 mm)	1
5	D 67896	HOSE - valve to tube, 34" long (864 mm)	1
6	D 69726	TUBE - hose to attachment	1
7	D 69724	TUBE - hose to attachment	1
8	13- 528	HHCS - 5/16" - 18 NC x 1-3/4"	3
9	92- 5	WASHER - lock, 5/16"	3
10	R 17319	CLAMP - tube	3
11	D 33551	SPACER - tube clamp	3
12	13- 532	HHCS - 5/16" - 18 NC x 2"	1
13	R 17319	CLAMP - tube	1
14	D 33551	SPACER - tube clamp	1
15	NSS	BRACKET - tube mounting	1
16	195- 21	WASHER - flat, 5/16"	1
17	131- 4	NUT - hex, lock, 5/16" - 18 NC	1
18	218- 474	FITTING - 90°	2
19	218- 755	CAP - fitting, used when attachments are removed	2

*NOTE: For hydraulic components attached to the 4-in-1 bucket or grapple attachment see pages 355 or 359.

http://www.minnparbackhoeparts.com/

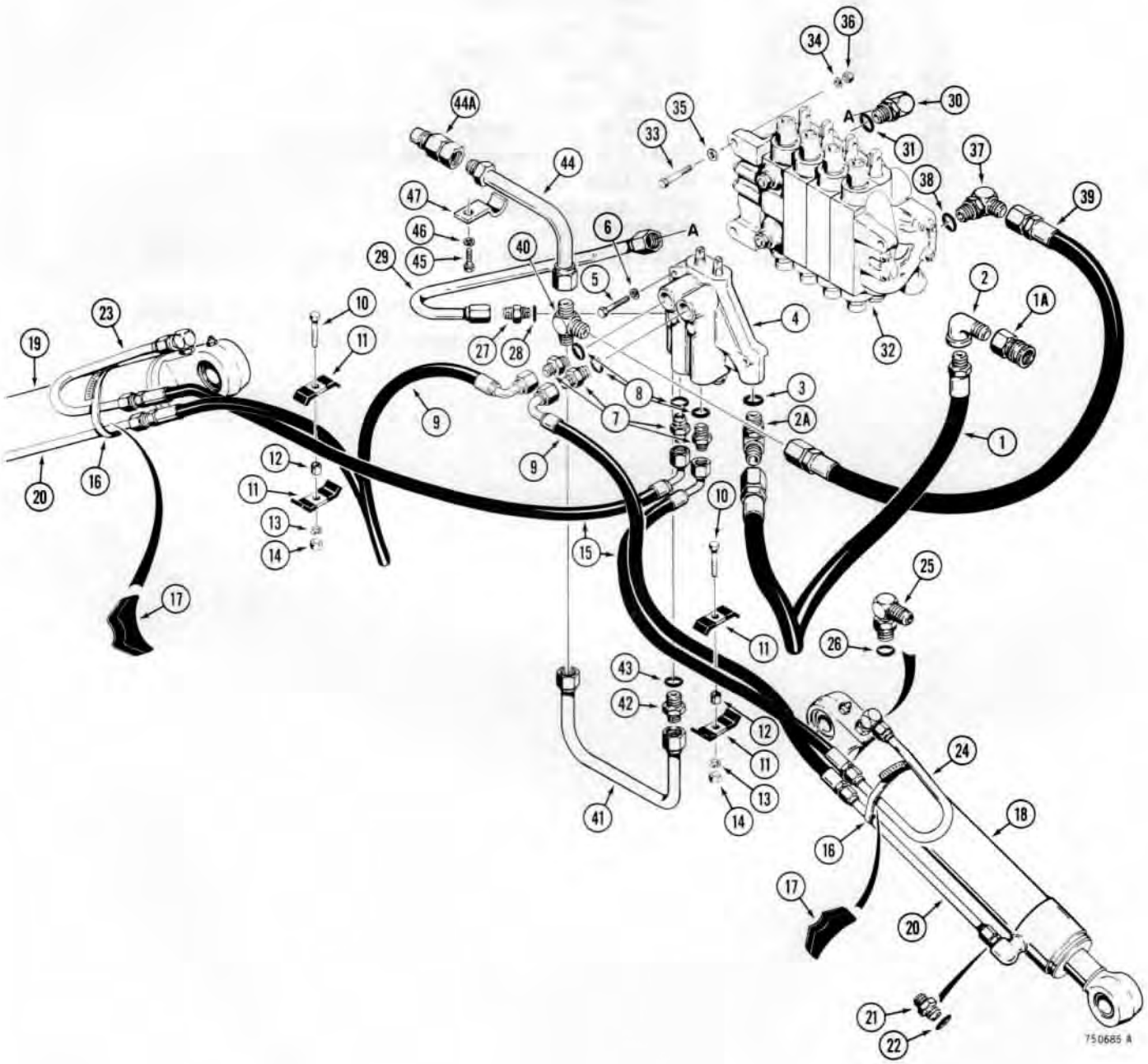

http://www.minnparbackhoeparts.com/

BACKHOE STABILIZER CYLINDER HYDRAULIC CIRCUIT

REF.	PART NO.	DESCRIPTION	REQ'D.
1	D 56094	HOSE - pressure from loader valve to stabilizer valves 39" long (991 mm)	1
1A	D 52800	COUPLING - disconnect, female, parts list page 299	1
2	217- 1020	FITTING - street, 90°	1
2A	218- 5124	FITTING - 90°, adjustable	1
3	218- 5008	O-RING - fitting	1
4	D 62348	VALVE - stabilizer control, parts list page 269	1
5	13- 535	HHCS - 5/16" - 18 NC x 2-1/4"	2
6	92- 5	WASHER - lock, 5/16"	2
7	218- 5354	FITTING - male, straight adapter	4
8	218- 5007	O-RING - fitting	1
9	D 65652	HOSE - to rod end of cylinder, 39" long (991 mm)	2
10	13- 640	HHCS - 3/8" - 16 NC x 2-1/2"	2
11	D 40236	CLAMP - hose	4
12	D 34244	SPACER - clamp	2
13	92- 6	WASHER - lock, 3/8"	2
14	25- 106	NUT - hex, 3/8" - 16 NC	2
15	D 56043	HOSE - to closed end of cylinder, 34" long (864 mm)	2
16	214- 270	CLAMP - tube	2
17	D 38648	SPACER - tube, rubber	2
18	REF.	CYLINDER - stabilizer, R.H., parts list page 317 or 319	1
19	REF.	CYLINDER - stabilizer, L.H., parts list page 317 or 319	1
20	D 55865	TUBE - to rod end of cylinder	2
21	218- 5060	FITTING - male, straight adapter	2
22	218- 5007	O-RING - fitting	1
23	D 55360	TUBE - to closed end of cylinder, L.H.	1
24	D 55357	TUBE - to closed end of cylinder, R.H.	1
25	218- 5121	FITTING - 90°, adjustable	2
26	218- 5007	O-RING - fitting	1
27	218- 5064	FITTING - male, straight adapter	1
28	218- 5008	O-RING - fitting	1
29	D 68573	TUBE - power beyond port of stabilizer valve to backhoe valve	1
30	218- 5118	FITTING - 90°, adjustable	1
31	218- 5010	O-RING - fitting	1
32	REF.	VALVE - backhoe control, parts list page 271	1
33	13- 832	HHCS - 1/2" - 13 NC x 2"	3
34	92- 8	WASHER - lock, 1/2"	3
35	95- 8	WASHER - flat, 1/2"	3
36	25- 108	NUT - hex, 1/2" - 13 NC	3
37	218- 5110	FITTING - 90°, adjustable	1
38	218- 5010	O-RING - fitting	1
39	D 67792	HOSE - backhoe valve return, models without extendahoe, 32" long (813 mm)	1
39	D 73346	HOSE - backhoe valve return, models with extendahoe, 34" long (864 mm)	1
40	218- 590	FITTING - tee, backhoe return	1
41	D 68315	TUBE - return from stabilizer valve	1
42	218- 5065	FITTING - male, straight adapter	1
43	218- 5007	O-RING - fitting	1
44	D 72091	TUBE - return to tank	1
44A	D 52694	COUPLING - disconnect, male, parts list page 299	1
45	13- 616	HHCS - 3/8" - 16 NC x 1"	1
46	92- 6	WASHER - lock, 3/8"	1
47	D 55880	CLAMP - tube	1

Printed in U.S.A. Issued January, 1978

http://www.minnparbackhoeparts.com/

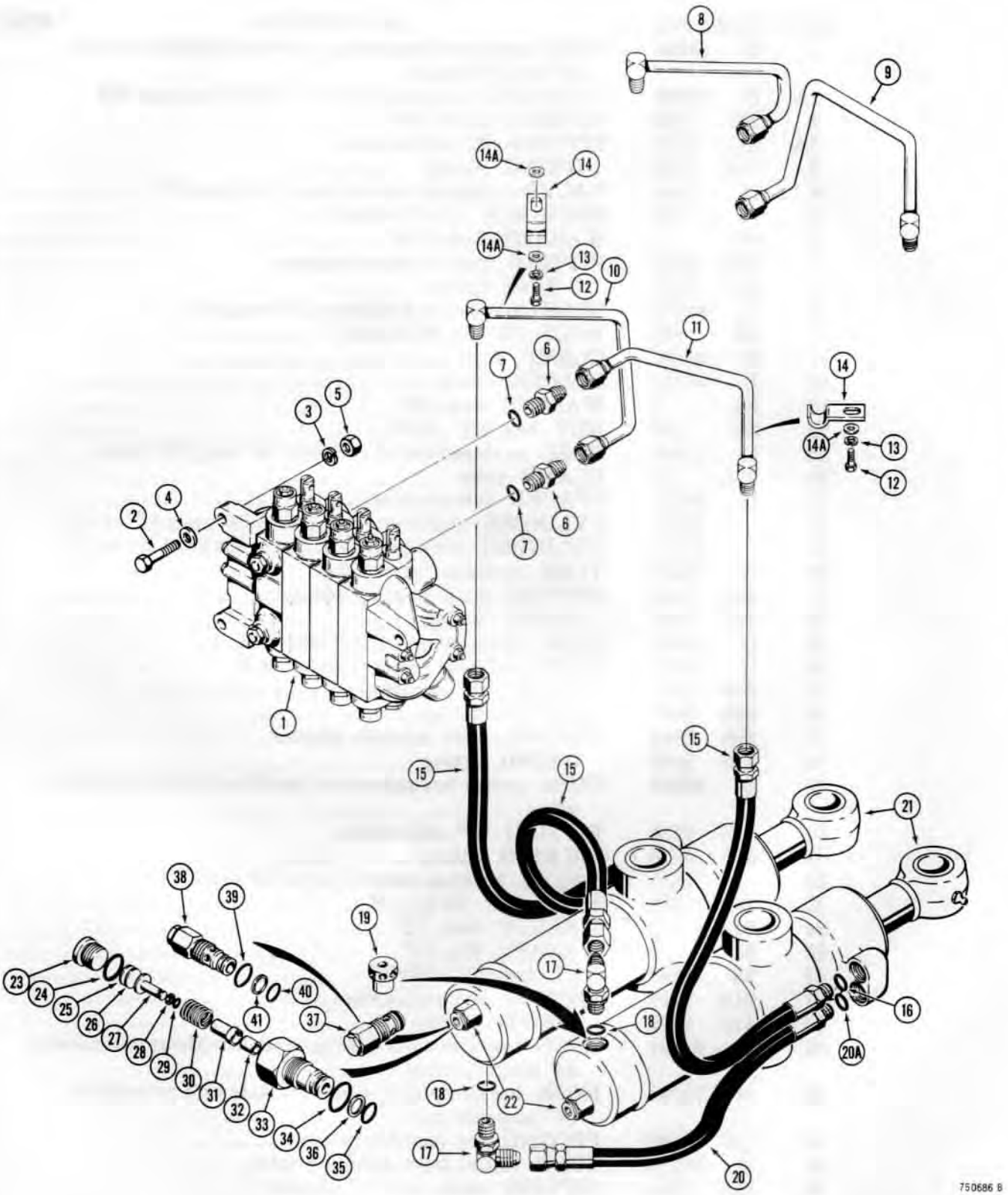

http://www.minnparbackhoeparts.com/

BACKHOE SWING CYLINDER HYDRAULIC CIRCUIT

REF.	PART NO.	DESCRIPTION	REQ'D.
1	REF.	VALVE - backhoe control, parts list page 271	1
2	13- 832	HHCS - 1/2" - 13 NC x 2"	3
3	92- 8	WASHER - lock, 1/2"	3
4	95- 8	WASHER - flat, 1/2"	3
5	25- 108	NUT - hex, 1/2" - 13 NC	3
6	218- 5078	FITTING - male, straight adapter	2
7	218- 5010	O-RING - fitting	1
8	D 68461	TUBE - upper port of swing section to rod end of swing cylinder, used on models with hand swing control	1
9	D 68459	TUBE - lower port of swing section to rod end of swing cylinder, used on models with hand swing control	1
10	D 68313	TUBE - lower port of swing section to rod end of swing cylinder, used on models with foot swing control	1
11	D 68311	TUBE - upper port of swing section to rod end of swing cylinder, used on models with foot swing control	1
12	13- 812	HHCS - 1/2" - 13 NC x 3/4"	2
13	92- 8	WASHER - lock, 1/2"	2
14	D 50551	CLAMP - tube	2
14A	195- 33	WASHER - flat, 1/2"	2
15	D 39140	HOSE - tube to swing cylinders, 23-1/2" long (597 mm)	3
16	218- 5006	O-RING - hose	1
17	218- 5121	FITTING - 90°, adjustable	2
18	218- 5007	O-RING - fitting	1
19	D 76235	RESTRICTOR - flow control, models without extendahoe	2
19	D 45555	RESTRICTOR - flow control, models with extendahoe	2
20	D 55749	HOSE - swing cylinder, 21-3/4" (552 mm)	1
20A	218- 5006	O-RING - hose	1
21	REF.	CYLINDER - swing, parts list page 321 or 323	2
22	D 47557	VALVE - relief, allen head, if used	2
23	D 40354	PLUG - relief valve	1
24	218- 5006	SEAL - "O"ring, plug	1
25	D 40355	SHIM - spring guide, .005" (0.127 mm)	UAR
26	16917	SHIM - spring guide, .010" (0.254 mm)	UAR
27	D 37150	GUIDE - spring	1
28	D 37147	RING - backup, spring guide	1
29	A 51274	O-RING - spring guide	1
30	D 37148	SPRING - plunger	1
31	D 37151	PLUNGER - relief valve	1
32	D 37075	SEAT - plunger	1
33	D 47667	BODY - relief valve	1
34	218- 5007	O-RING - valve body to cylinder	1
35	D 26265	O-RING - valve body	1
36	D 37071	RING - backup, valve body seal	1
37	D 55017	VALVE - relief, hex. head, if used	2
38	NSS	BODY ASSEMBLY - relief valve	1
39	218- 5007	O-RING - outer	1
40	D 26265	O-RING - inner	1
41	D 37071	RING - backup, inner O-ring	1

http://www.minnparbackhoeparts.com/

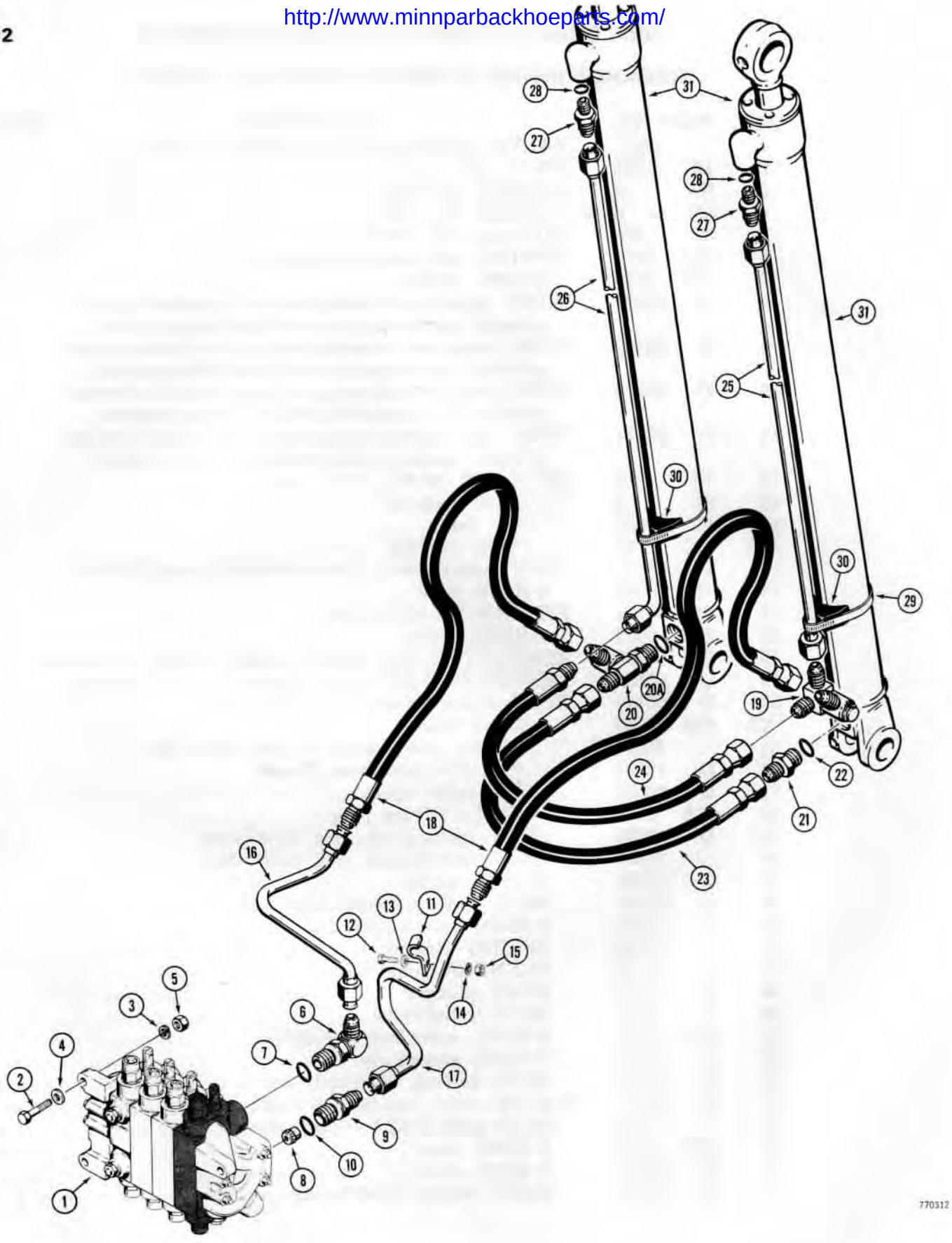

http://www.minnparbackhoeparts.com/

BACKHOE BOOM CYLINDER HYDRAULIC CIRCUIT

BEFORE BACKHOE SN. 5356938

REF.	PART NO.	DESCRIPTION	REQ'D.
1	REF.	VALVE - backhoe control, parts list page 271	1
2	13- 832	HHCS - 1/2" - 13 NC x 2"	3
3	92- 8	WASHER - lock, 1/2"	3
4	95- 8	WASHER - flat, 1/2"	3
5	25- 108	NUT - hex, 1/2" - 13 NC	3
6	218- 5118	FITTING - 90°, adjustable, upper port	1
7	218- 5010	O-RING - fitting	1
8	D 56252	RESTRICTOR - check	1
9	L 55143	FITTING - special adapter, lower port	1
10	218- 5010	O-RING - fitting	1
11	D 41165	CLAMP - tube	2
12	13- 616	HHCS - 3/8" - 16 NC x 1"	2
13	195- 25	WASHER - flat, 3/8"	2
14	92- 6	WASHER - lock, 3/8"	2
15	25- 106	NUT - hex, 3/8" - 16 NC	2
16	D 73053	TUBE - upper valve port	1
17	D 73055	TUBE - lower valve port	1
18	D 55562	HOSE - to cylinders, 38" (965 mm) long	2
19	D 60947	FITTING - swivel, R.H., parts list page 243	1
20	D 60948	FITTING - swivel, L.H., parts list page 243	1
20A	218- 5008	O-RING - fitting	1
21	218- 5064	FITTING - straight, male adapter	1
22	218- 5008	O-RING - fitting	1
23	D 50373	HOSE - crossover, closed end circuit, 23" (584 mm) long	1
24	D 55563	HOSE - crossover, rod end circuit, 21" (533 mm) long	1
25	D 55564	TUBE - to rod end of R.H. cylinder	1
26	D 55566	TUBE - to rod end of L.H. cylinder	1
27	218- 5065	FITTING - straight, male adapter	2
28	218- 5007	O-RING - fitting	1
29	214- 267	CLAMP - cylinder tube	2
30	D 38648	SPACER - clamp	2
31	REF.	CYLINDER - boom, parts list page 325 or 327	2

http://www.minnparbackhoeparts.com/

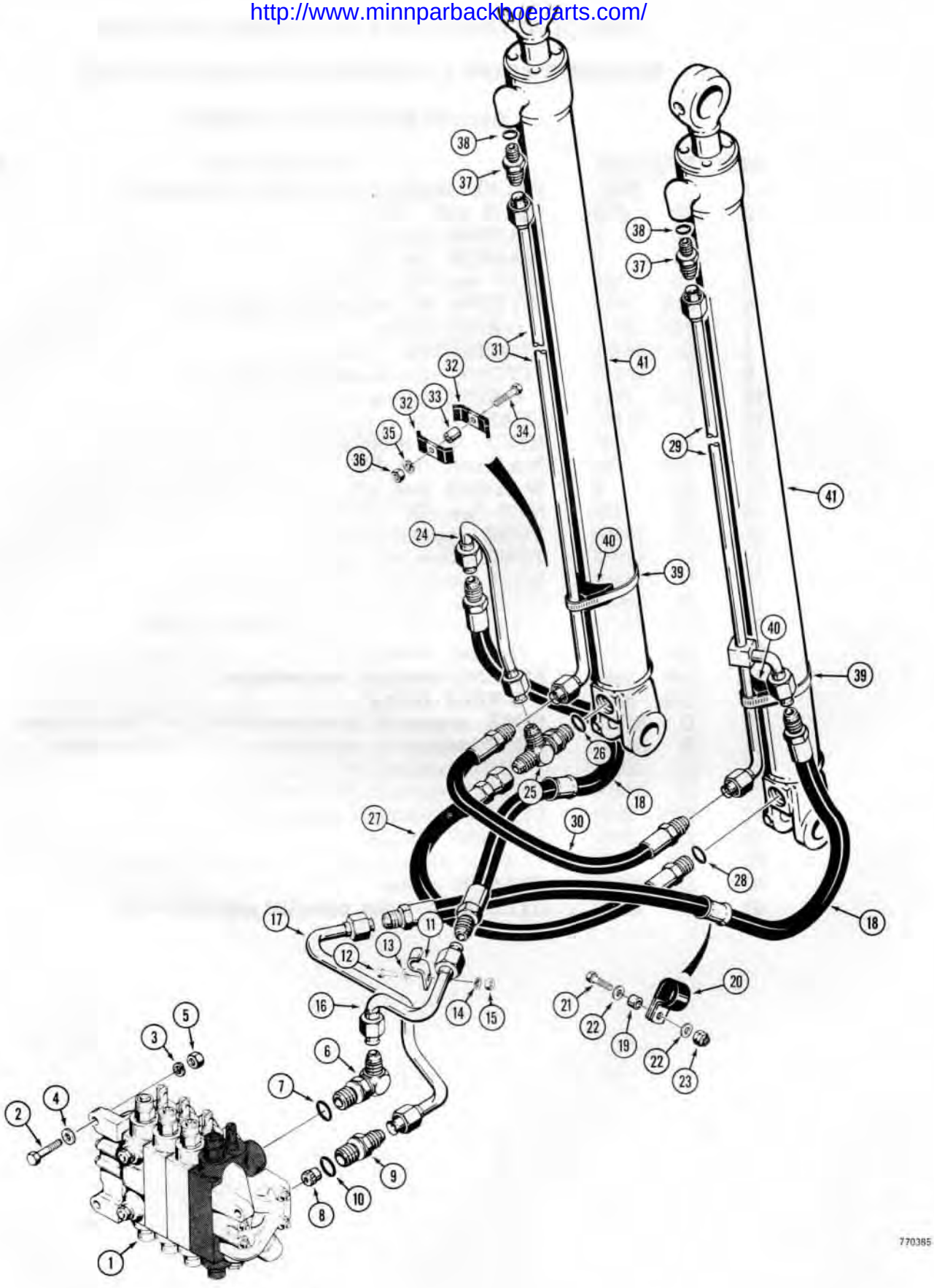

http://www.minnparbackhoeparts.com/

BACKHOE BOOM CYLINDER HYDRAULIC CIRCUIT

BACKHOE SN. 5356938 AND AFTER

REF.	PART NO.	DESCRIPTION	REQ'D.
1	REF.	VALVE - backhoe control, parts list page 271	1
2	13- 832	HHCS - 1/2" - 13 NC x 2"	3
3	92- 8	WASHER - lock, 1/2"	3
4	95- 8	WASHER - flat, 1/2"	3
5	25- 108	NUT - hex, 1/2" - 13 NC	3
6	218- 5118	FITTING - 90°, adjustable, upper port	1
7	218- 5010	O-RING - fitting	1
8	D 56252	RESTRICTOR - check	1
9	L 55143	FITTING - special adapter, lower port	1
10	218- 5010	O-RING - fitting	1
11	D 41165	CLAMP - tube	2
12	13- 616	HHCS - 3/8" - 16 NC x 1"	2
13	195- 25	WASHER - flat, 3/8"	2
14	92- 6	WASHER - lock, 3/8"	2
15	25- 106	NUT - hex, 3/8" - 16 NC	2
16	D 69177	TUBE - upper valve port	1
17	D 69199	TUBE - lower valve port	1
18	E 35287	HOSE - to cylinders, 42" (1067 mm) long	2
19	D 72284	CUSHION - hose clamp	2
20	D 47782	CLAMP - hose	2
21	13- 624	HHCS - 3/8" - 16 NC x 1-1/2"	2
22	195- 25	WASHER - flat, 3/8"	4
23	131- 652	NUT - hex, lock, 3/8" - 16 NC	2
24	D 69421	TUBE - to closed end port	1
25	218- 5239	FITTING - tee, adjustable	1
26	218- 5008	O-RING - fitting	1
27	D 65491	HOSE - crossover, closed end circuit, 22" (559 mm) long	1
28	218- 5008	O-RING - hose end	1
29	D 69237	TUBE - to rod end of R.H. cylinder	1
30	D 65886	HOSE - crossover, rod end circuit, 18" (457 mm) long	1
31	D 69234	TUBE - to rod end of L.H. cylinder	1
32	D 40236	CLAMP - tube	2
33	D 34244	SPACER - tube clamp	1
34	13- 632	HHCS - 3/8" - 16 NC x 2"	1
35	92- 6	WASHER - lock, 3/8"	1
36	25- 106	NUT - hex, 3/8" - 16 NC	1
37	218- 5065	FITTING - straight, male adapter	2
38	218- 5007	O-RING - fitting	1
39	214- 267	CLAMP - cylinder tube	2
40	D 38648	SPACER - clamp	2
41	REF.	CYLINDER - boom, parts list page 325 or 327	2

http://www.minnpanbackhoeparts.com/

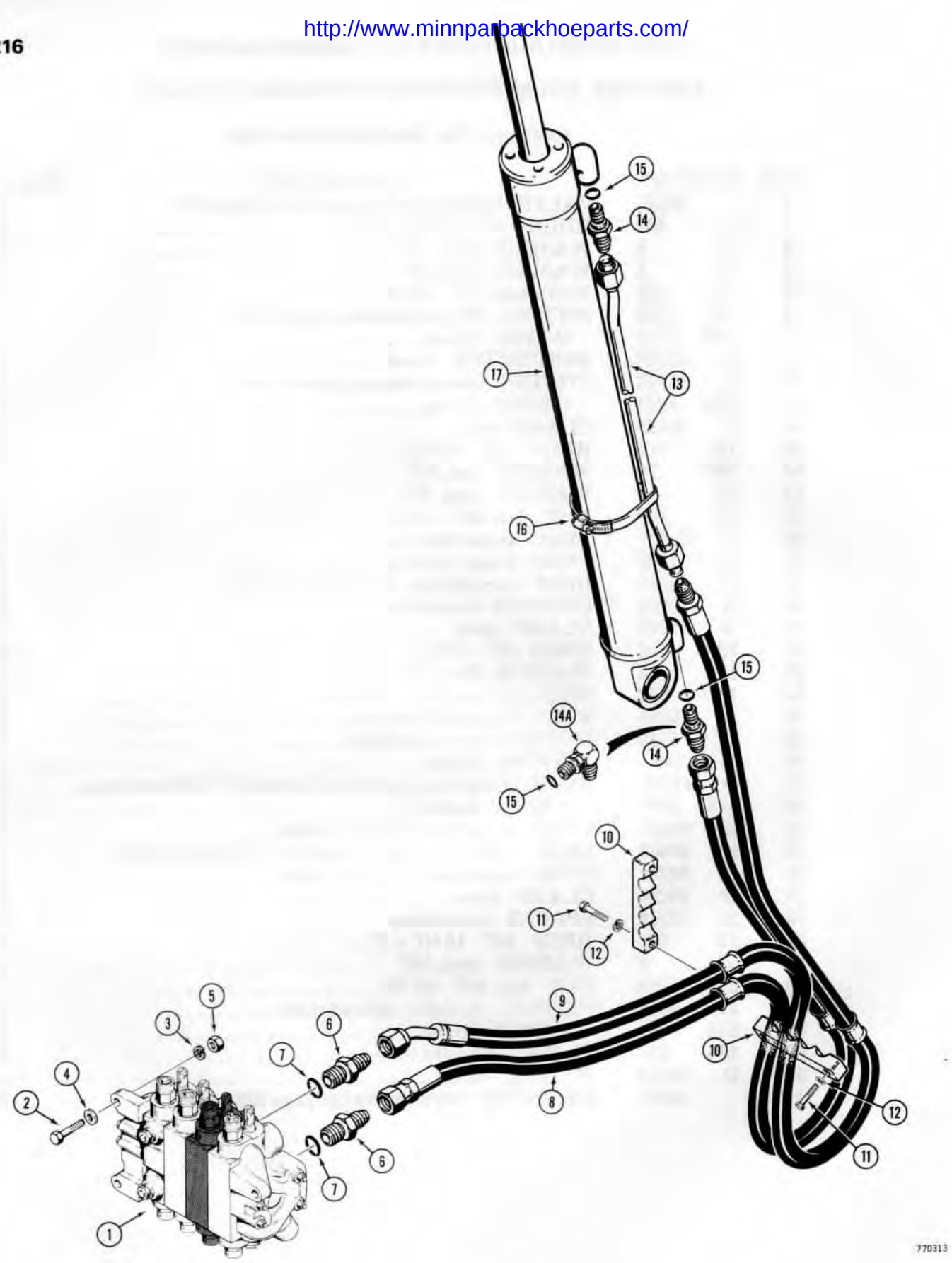

http://www.minnparbackhoeparts.com/

BACKHOE DIPPER CYLINDER HYDRAULIC CIRCUIT

REF.	PART NO.	DESCRIPTION	REQ'D.
1	REF.	VALVE - backhoe control, parts list page 271	1
2	13- 832	HHCS - 1/2" - 13 NC x 2"	3
3	92- 8	WASHER - lock, 1/2"	3
4	95- 8	WASHER - flat, 1/2"	3
5	25- 108	NUT - hex, 1/2" - 13 NC	3
6	218- 5077	FITTING - straight, male adapter	2
7	218- 5010	O-RING - fitting	1
8	D 69168	HOSE - to cylinder closed end, 73" long (1854 mm)	1
9	D 70870	HOSE - to cylinder rod end, 80" long (2032 mm)	1
10	D 50388	CLAMP - hoses	2
11	13- 828	HHCS - 1/2" - 13 NC x 1-3/4"	4
12	92- 8	WASHER - lock, 1/2"	4
13	D 50379	TUBE - to rod end of cylinder	1
14	218- 5065	FITTING - straight, male adapter	1-2
14A	218- 5123	FITTING - 90°, adjustable, if used	1
15	218- 5007	O-RING - 218-5065 and 218-5123 fittings	1
16	214- 269	CLAMP - cylinder tube	1
17	REF.	CYLINDER - dipper, parts list page 329 or 331	1

http://www.minnparbackhoeparts.com/

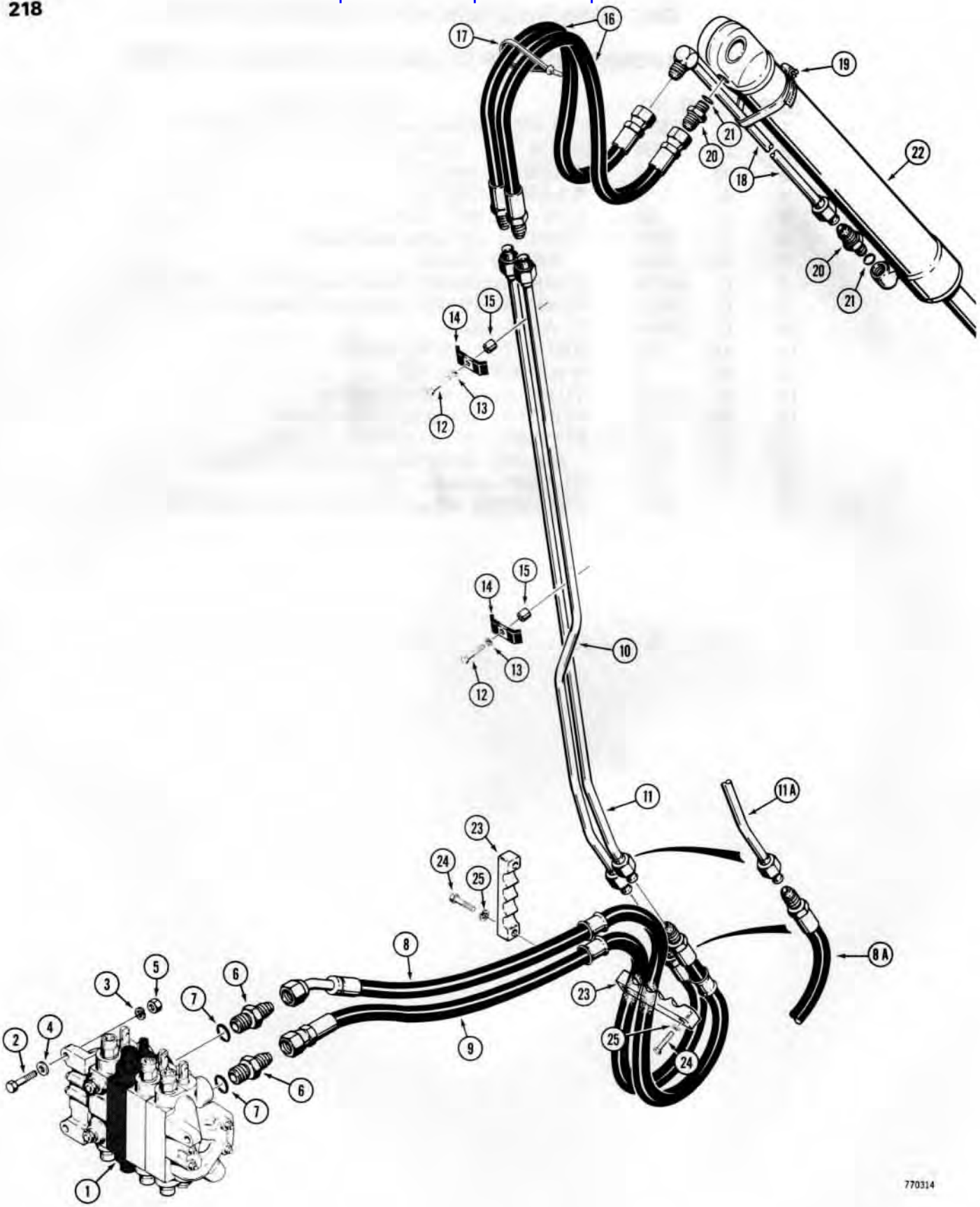

http://www.minnparbackhoeparts.com/

BACKHOE BUCKET CYLINDER HYDRAULIC CIRCUIT

MODELS WITHOUT EXTENDABLE DIPPER

REF.	PART NO.		DESCRIPTION	REQ'D.
1		REF.	VALVE - backhoe control, parts list page 271	1
2	13-	832	HHCS - 1/2" - 13 NC x 2"	3
3	92-	8	WASHER - lock, 1/2"	3
4	95-	8	WASHER - flat, 1/2"	3
5	25-	108	NUT - hex, 1/2" - 13 NC	3
6	218-	5077	FITTING - straight, male adapter	2
7	218-	5010	O-RING - fitting	1
8	D	74339	HOSE - top valve port, 54" (1372 mm) long, used on backhoe sn. 5355844 and after	1
8A	D	70871	HOSE - top valve port, 50" (1270 mm) long, used before backhoe sn. 5355844	1
9	D	69170	HOSE - bottom valve port, 48" (1219 mm) long	1
10	D	73350	TUBE - closed end circuit, R.H.	1
11	D	74338	TUBE - rod end circuit, L.H., used on backhoe sn. 5355844 and after	1
11A	D	73348	TUBE - rod end circuit, L.H., used before backhoe sn. 5355844	1
12	13-	624	HHCS - 3/8" - 16 NC x 1-1/2"	2
13	92-	6	WASHER - lock, 3/8"	2
14	D	40236	CLAMP - tube	2
15	D	95801	SPACER - clamp	2
16	D	50372	HOSE - to cylinder, 34" long (864 mm)	2
17	L	18331	STRAP - bucket cylinder hoses	1
18	D	58609	TUBE - to rod end of cylinder	1
19	214-	269	CLAMP - tube	1
20	218-	5065	FITTING - straight, male adapter	2
21	218-	5007	O-RING - fitting	1
22		REF.	CYLINDER - bucket, parts list page 333 or 335	1
23	D	50388	CLAMP - hoses	2
24	13-	828	HHCS - 1/2" - 13 NC x 1-3/4"	4
25	92-	8	WASHER - lock, 1/2"	4

http://www.minnparbackhoeparts.com/

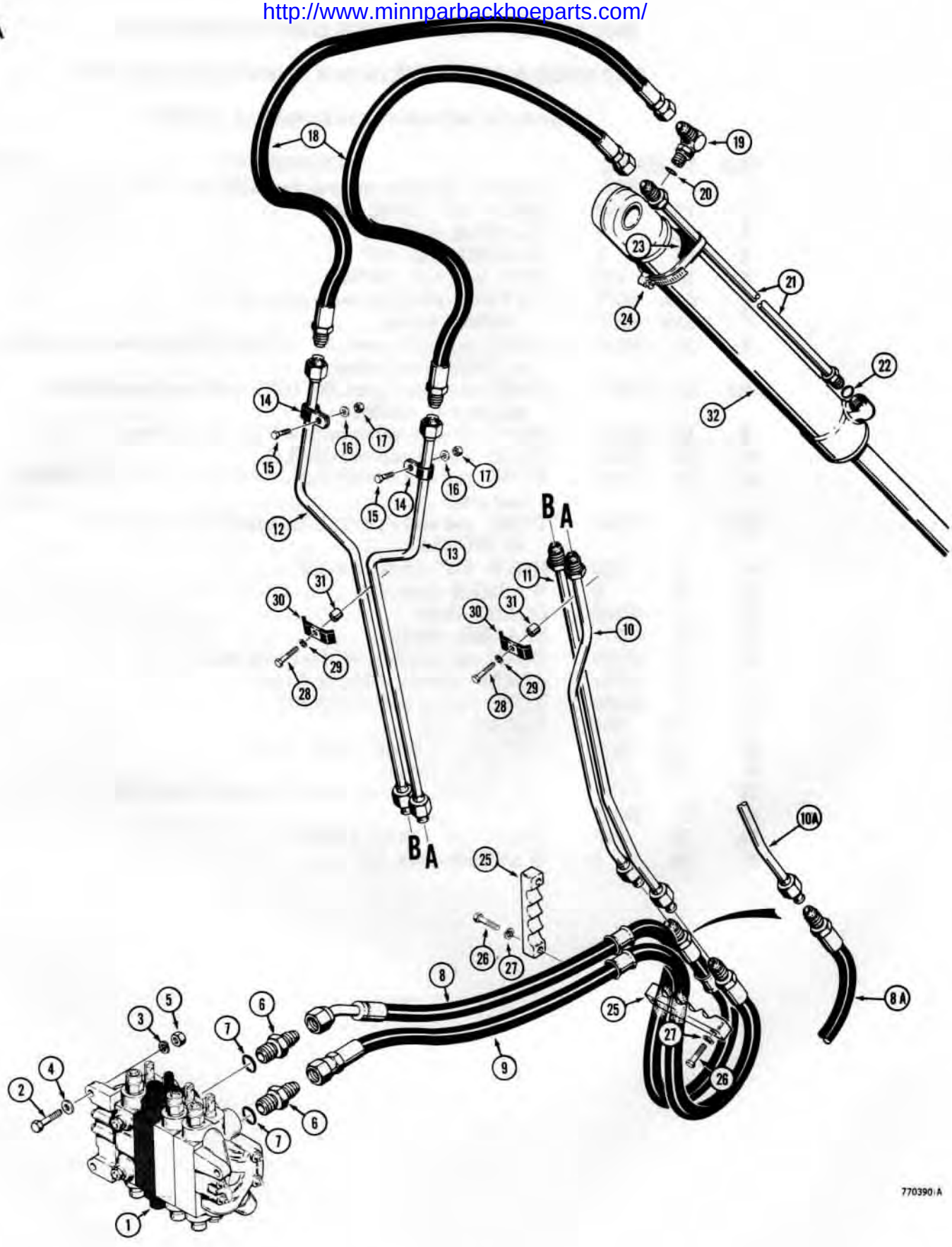

http://www.minnparbackhoeparts.com/

BACKHOE BUCKET CYLINDER HYDRAULIC CIRCUIT

MODELS WITH EXTENDABLE DIPPER

REF.	PART NO.	DESCRIPTION	REQ'D.
1	REF.	VALVE - backhoe control, parts list page 271	1
2	13- 832	HHCS - 1/2" - 13 NC x 2"	3
3	92- 8	WASHER - lock, 1/2"	3
4	95- 8	WASHER - flat, 1/2"	3
5	25- 108	NUT - hex, 1/2" - 13 NC	3
6	218- 5077	FITTING - straight, male adapter	2
7	218- 5010	O-RING - fitting	1
8	D 74339	HOSE - top valve port, 54" (1372 mm) long, used on backhoe sn. 5355844 and after	1
8A	D 70871	HOSE - top valve port, 50" (1270 mm) long, used before backhoe sn. 5355844	1
9	D 69170	HOSE - bottom valve port, 48" (1219 mm) long	1
10	D 76418	TUBE - rod end circuit, R.H. lower, used on backhoe sn. 5355844 and after	1
10A	D 73298	TUBE - rod end circuit, R.H. lower, used before backhoe sn. 5355844	1
11	D 73300	TUBE - closed end circuit, L.H. lower	1
12	D 73302	TUBE - rod end circuit, L.H. upper	1
13	D 73304	TUBE - closed end circuit, R.H. upper	1
14	49858	CLAMP - D73302 and D73304 tubes	2
15	13- 616	HHCS - 3/8" - 16 NC x 1"	2
16	195- 25	WASHER - flat, 3/8"	2
17	131- 652	NUT - hex, lock, 3/8" - 16 NC	2
18	D 52566	HOSE - to bucket cylinder, 70" (1778 mm) long	2
19	218- 5123	FITTING - 90°, male adapter	1
20	218- 5007	O-RING - fitting	1
21	D 55050	TUBE - to rod end of cylinder	1
22	218- 5007	O-RING - tube end	1
23	D 38648	SPACER - tube, rubber	1
24	214- 269	CLAMP - tube	1
25	D 50388	CLAMP - hoses	2
26	13- 828	HHCS - 1/2" - 13 NC x 1-3/4"	4
27	92- 8	WASHER - lock, 1/2"	4
28	13- 624	HHCS - 3/8" - 16 NC x 1-1/2"	2
29	92- 6	WASHER - lock, 3/8"	2
30	D 40236	CLAMP - tube	2
31	D 76212	SPACER - clamp	2
32	REF.	CYLINDER - bucket, parts list page 333 or 335	1

http://www.minnparbackhoeparts.com/

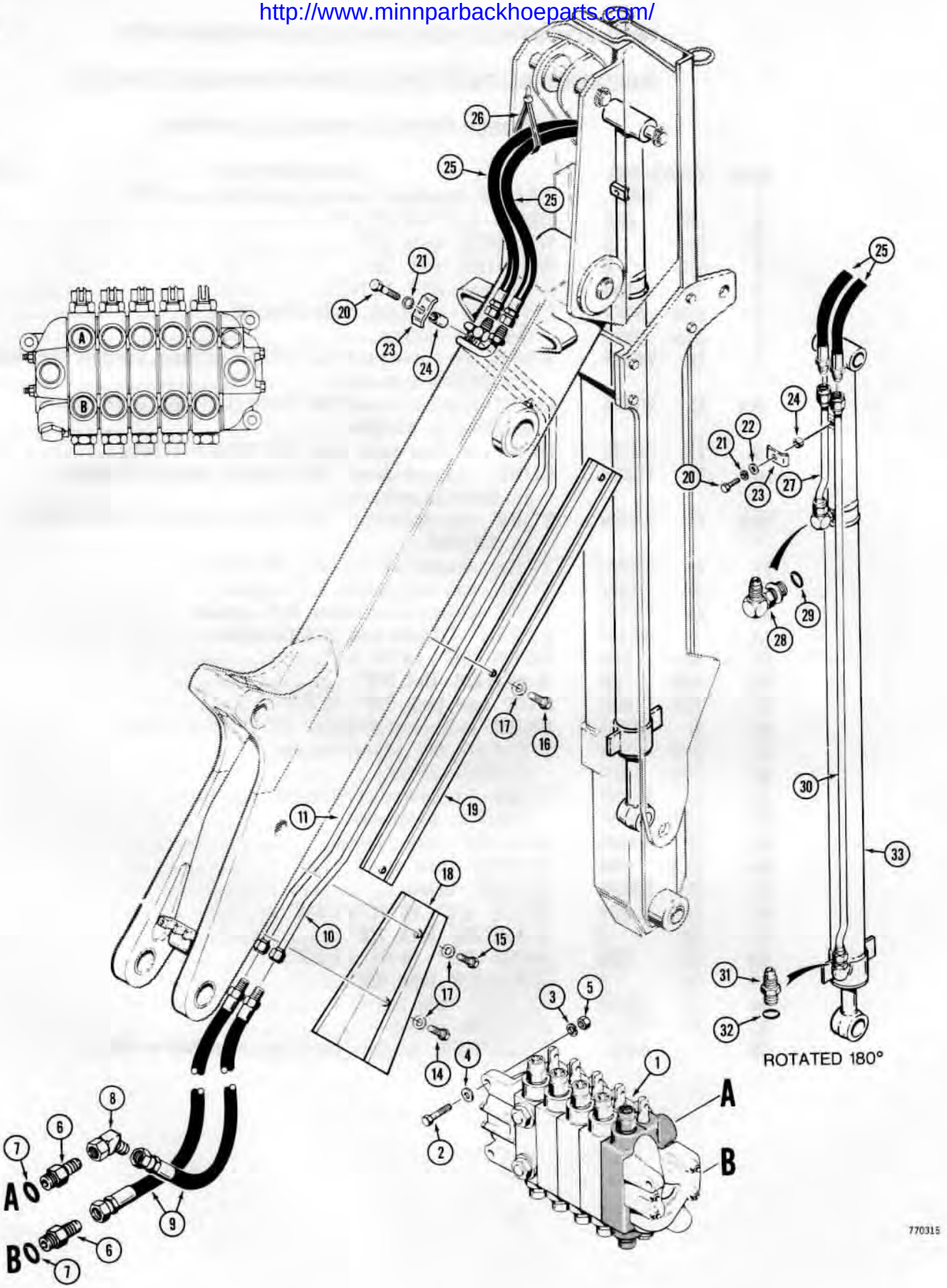

http://www.minnparbackhoeparts.com/

BACKHOE EXTENDABLE DIPPER CYLINDER HYDRAULIC CIRCUIT

REF.	PART NO.	DESCRIPTION	REQ'D.
1	REF.	VALVE - backhoe control, parts list page 271	1
2	13- 832	HHCS - 1/2" - 13 NC x 2"	3
3	92- 8	WASHER - lock, 1/2"	3
4	95- 8	WASHER - flat, 1/2"	3
5	25- 108	NUT - hex, 1/2" - 13 NC	3
6	218- 5077	FITTING - straight, male adapter	2
7	218- 5010	O-RING - fitting	1
8	218- 5175	FITTING - 45°, adjustable, upper port	1
9	D 73377	HOSE - from valve, 52" long (1321 mm)	2
10	D 55464	TUBE - R.H.	1
11	D 55466	TUBE - L.H.	1
12		RESERVED	
13		RESERVED	
14	13- 828	HHCS - 1/2" - 13 NC x 1-3/4"	1
15	13- 824	HHCS - 1/2" - 13 NC x 1-1/2"	1
16	13- 812	HHCS - 1/2" - 13 NC x 3/4"	3
17	95- 8	WASHER - flat, 1/2"	5
18	D 54420	GUARD - tube, lower	1
19	D 54137	GUARD - tube, upper	1
20	13- 624	HHCS - 3/8" - 16 NC x 1-1/2"	2
21	92- 6	WASHER - lock, 3/8"	2
22	195- 25	WASHER - flat, 3/8"	1
23	D 40236	CLAMP - tube	2
24	D 33552	SPACER - tube clamp	2
25	D 32284	HOSE - to cylinder, 40" long (1016 mm)	2
26	L 18331	STRAP - wire harness	1
27	D 52572	TUBE - to cylinder closed end	1
28	218- 5107	FITTING - 90°, adjustable	1
29	218- 5007	O-RING - fitting	1
30	D 52574	TUBE - to cylinder rod end	1
31	218- 5062	FITTING - straight, male adapter	1
32	218- 5007	O-RING - fitting	1
33	REF.	CYLINDER - dipper extension, parts list page 337 or 339	1

http://www.minnparbackhoeparts.com/

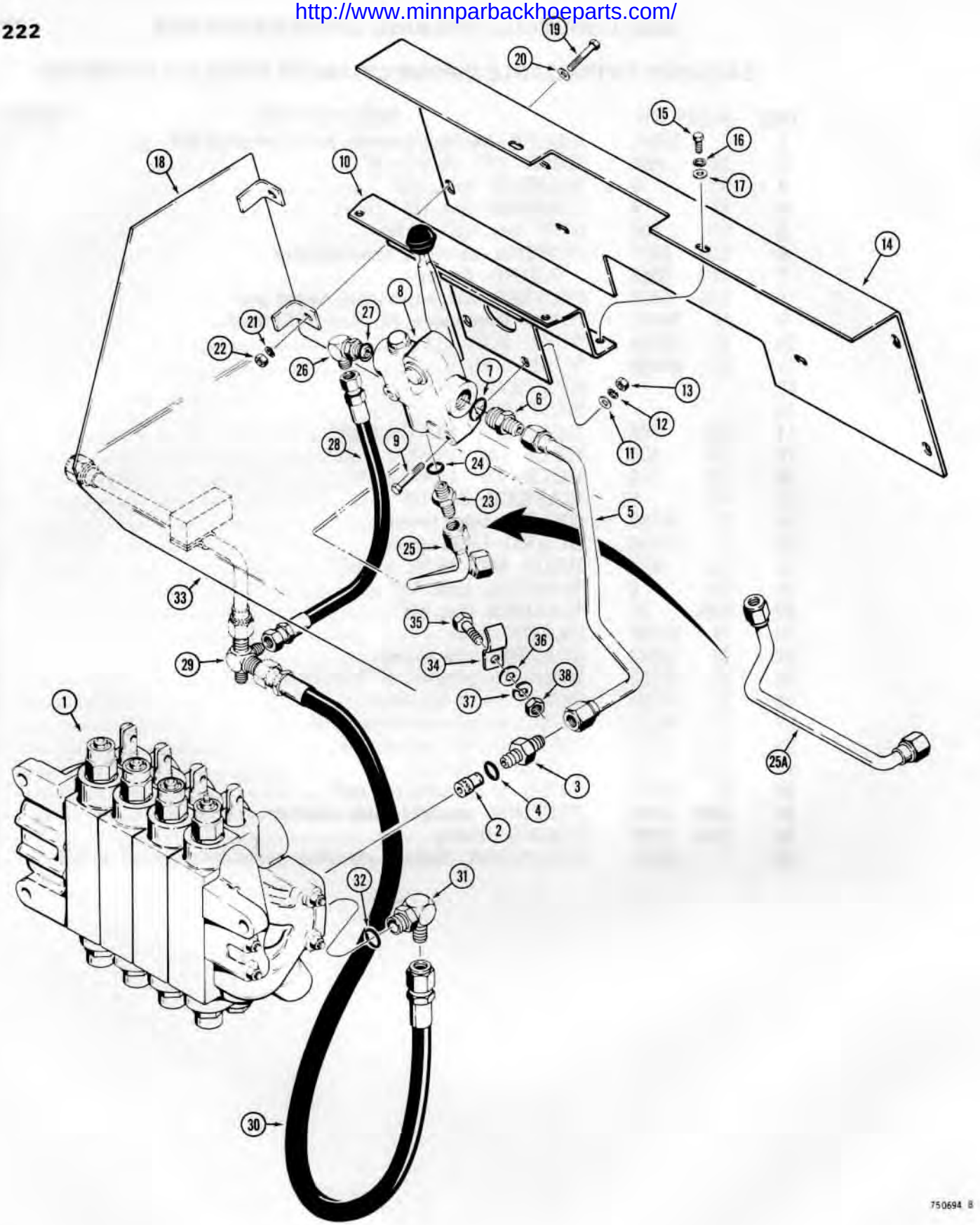

http://www.minnparbackhoeparts.com/

BACKHOE BOOM LOCK HYDRAULIC CIRCUIT

REF.	PART NO.		DESCRIPTION	REQ'D.
1		REF.	VALVE - backhoe control, see page 271	1
2	D	56252	RESTRICTOR - check	1
3	L	55143	FITTING - male, straight adapter	1
4	218-	5010	O-RING - fitting	1
5	D	69518	TUBE - from backhoe valve to boom lock valve	1
6	218-	5064	FITTING - male, straight connector	1
7	218-	5008	O-RING - fitting	1
8	D	56102	VALVE - boom lock, parts list page 279	1
9	13-	648	HHCS - 3/8" - 16 NC x 3"	2
10	D	69516	PANEL - top	1
11	195-	25	WASHER - flat, 3/8"	2
12	92-	6	WASHER - lock, 3/8"	2
13	25-	106	NUT - hex, 3/8" - 16 NC	2
14	D	69517	PANEL - front	1
15	13-	68	HHCS - 3/8" - 16 NC x 1/2"	2
16	92-	6	WASHER - lock, 3/8"	2
17	195-	25	WASHER - flat, 3/8"	2
18	D	67788	PLATE - mounting	1
19	13-	612	HHCS - 3/8" - 16 NC x 3/4"	4
20	195-	25	WASHER - flat, 3/8"	4
21	92-	6	WASHER - lock, 3/8"	4
22	25-	106	NUT - hex, 3/8" - 16 NC	4
23	218-	5064	FITTING - male, straight connector	1
24	218-	5008	O-RING - fitting	1
25	D	75080	TUBE - lock valve to boom cylinder, used before backhoe sn. 5356938	1
25A	D	69520	TUBE - lock valve to boom cylinder, used on backhoe sn. 5356938 and after	1
26	218-	5117	FITTING - 90°, adjustable	1
27	218-	5006	O-RING - fitting	1
28	D	69650	HOSE - lock valve return, 26" long (660 mm)	1
29	D	69651	CROSS - 4-way	1
30	D	66505	HOSE - backhoe valve return, 40" long (1016 mm)	1
31	218-	5118	FITTING - 90°, adjustable	1
32	218-	5010	O-RING - fitting	1
33	D	72091	TUBE - return to hydraulic tank	1
34	D	41165	CLAMP - tube	1
35	13-	616	HHCS - 3/8" - 16 NC x 1"	1
36	195-	25	WASHER - flat, 3/8"	1
37	92-	6	WASHER - lock, 3/8"	1
38	25-	106	NUT - hex, 3/8" - 16 NC	1

http://www.minnparbackhoeparts.com/

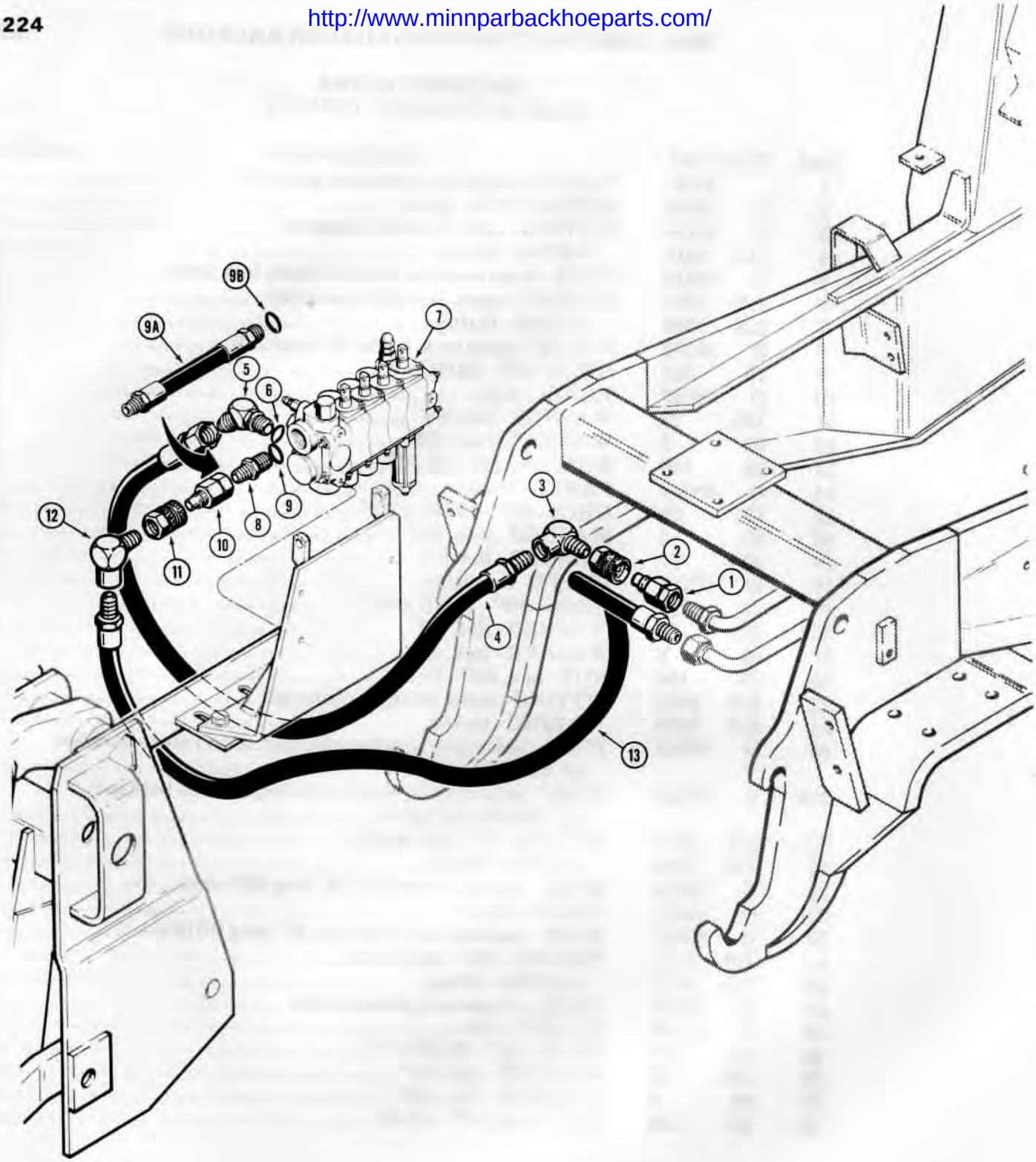

http://www.minnparbackhoeparts.com/

3-POINT HITCH VALVE HYDRAULIC CIRCUIT

REF.	PART NO.	DESCRIPTION	REQ'D.
1	D 52694	COUPLING - hydraulic, male, parts list page 299	1
2	D 52800	COUPLING - hydraulic, female, parts list page 299	1
3	217- 1020	FITTING - 90°, adapter	1
4	D 52667	HOSE - tractor to 3-point hitch valve, 36" long (914 mm)	1
5	218- 5147	FITTING - adjustable, 45°	1
6	218- 5008	O-RING - fitting	1
7	D 52970	VALVE - control, 3-point hitch, parts list page 285, valve mounting and levers on page 283	1
8	218- 5022	FITTING - straight, male adapter	1
9	218- 5008	O-RING - fitting	1
9A	D 72659	HOSE - valve outlet, used in place of item 8 on some models, 12" long (305 mm)	1
9B	218- 5008	O-RING - hose	1
10	D 52694	COUPLING - hydraulic, male, parts list page 299	1
11	D 52800	COUPLING - hydraulic, female, parts list page 299	1
12	217- 1020	FITTING - 90°, adapter	1
13	D 49118	HOSE - 3-point hitch valve to tractor, 33" long (838 mm)	1

NOTE: See page 227 for 3-point hitch cylinder hydraulic circuit and pages 197 thru 201 for tractor equipment hydraulic circuit.

http://www.minnparbackhoeparts.com/

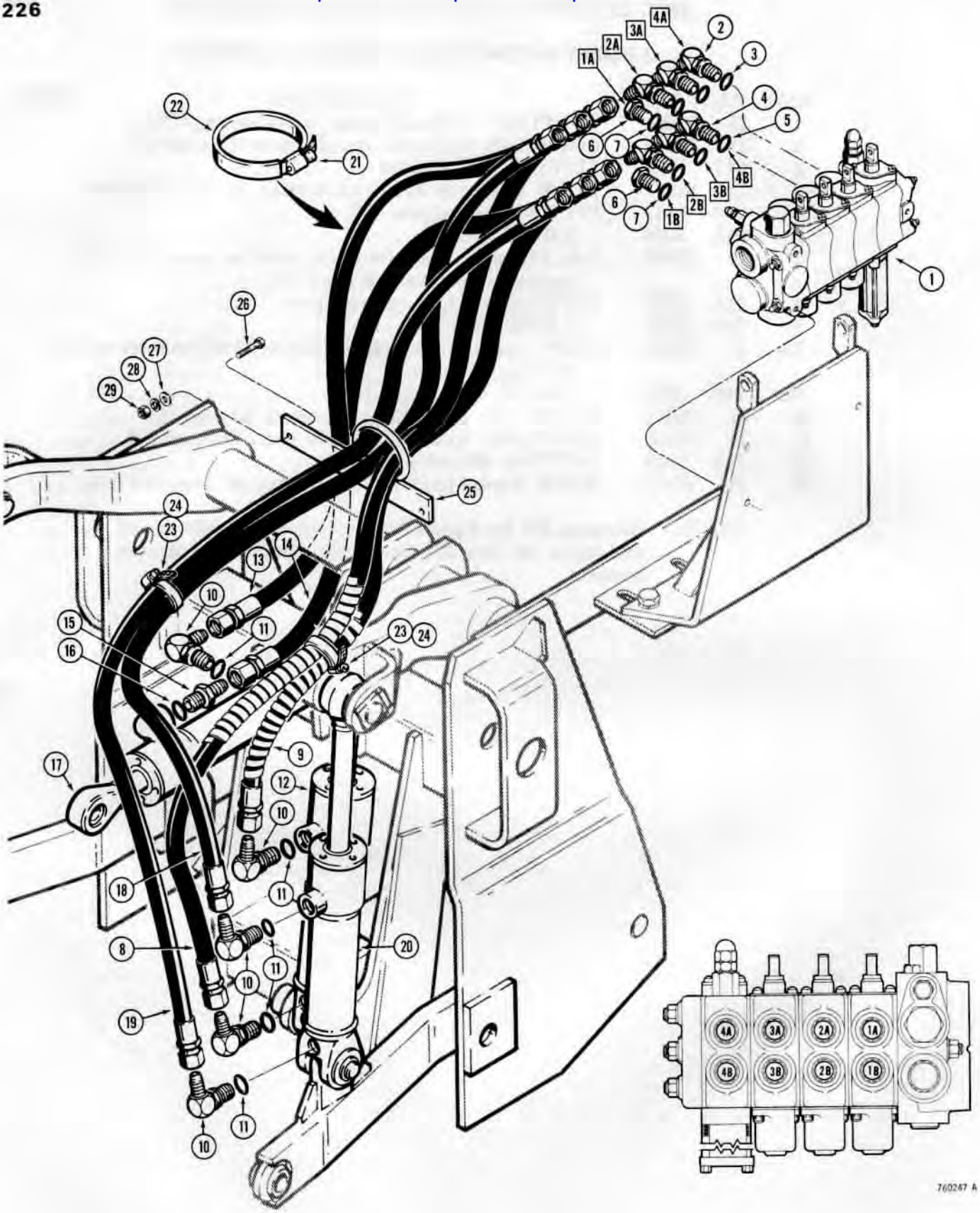

http://www.minnparbackhoeparts.com/

3-POINT HITCH CYLINDER HYDRAULIC CIRCUIT

REF.	PART NO.	DESCRIPTION	REQ'D.
1	D 52970	VALVE - control, 3-point hitch, parts list page 285	1
2	D 52943	FITTING - restrictor, 45°, upper ports	3
3	218- 5006	O-RING - fitting	1
4	218- 5136	FITTING - adjustable, 45°, lower ports	3
5	218- 5006	O-RING - fitting	1
6	218- 5156	PLUG - hex, socket	2
7	218- 5006	O-RING - plug	1
8	D 51683	HOSE - valve to closed end of lift cylinder, 56" long (1422 mm)	1
9	D 52256	HOSE - valve to rod end of lift cylinder, 45" long (1143 mm)	1
10	218- 5121	FITTING - 90°, adjustable	5
11	218- 5007	O-RING - fitting	1
12	REF.	CYLINDER - lift, parts list page 341 or 343	1
13	D 51688	HOSE - valve to closed end of pitch cylinder 42" long (1067 mm)	1
14	D 51684	HOSE - valve to rod end of pitch cylinder 45" long (1143 mm)	1
15	218- 5060	FITTING - connector, straight male	1
16	218- 5007	O-RING - fitting	1
17	REF.	CYLINDER - pitch, parts list page 349	1
18	D 51686	HOSE - valve to rod end of tilt cylinder, 54" long (1372 mm)	1
19	D 51685	HOSE - valve to closed end of tilt cylinder, 66" long (1676 mm)	1
20	REF.	CYLINDER - tilt, parts list page 345 or 347	1
21	214- 261	CLAMP - hose	1
22	D 95252	GUARD - hose	1
23	214- 256	CLAMP - hose	2
24	D 95251	GUARD - hose	2
25	D 72680	BRACKET - hose mounting	1
26	113- 103	HHCS - 5/16" - 18 NC x 1", plated	2
27	195- 521	WASHER - flat, 5/16", plated	2
28	195- 20	WASHER - lock, 5/16", plated	2
29	129- 102	NUT - hex, 5/16" - 18 NC	2

http://www.minnparbackhoeparts.com/

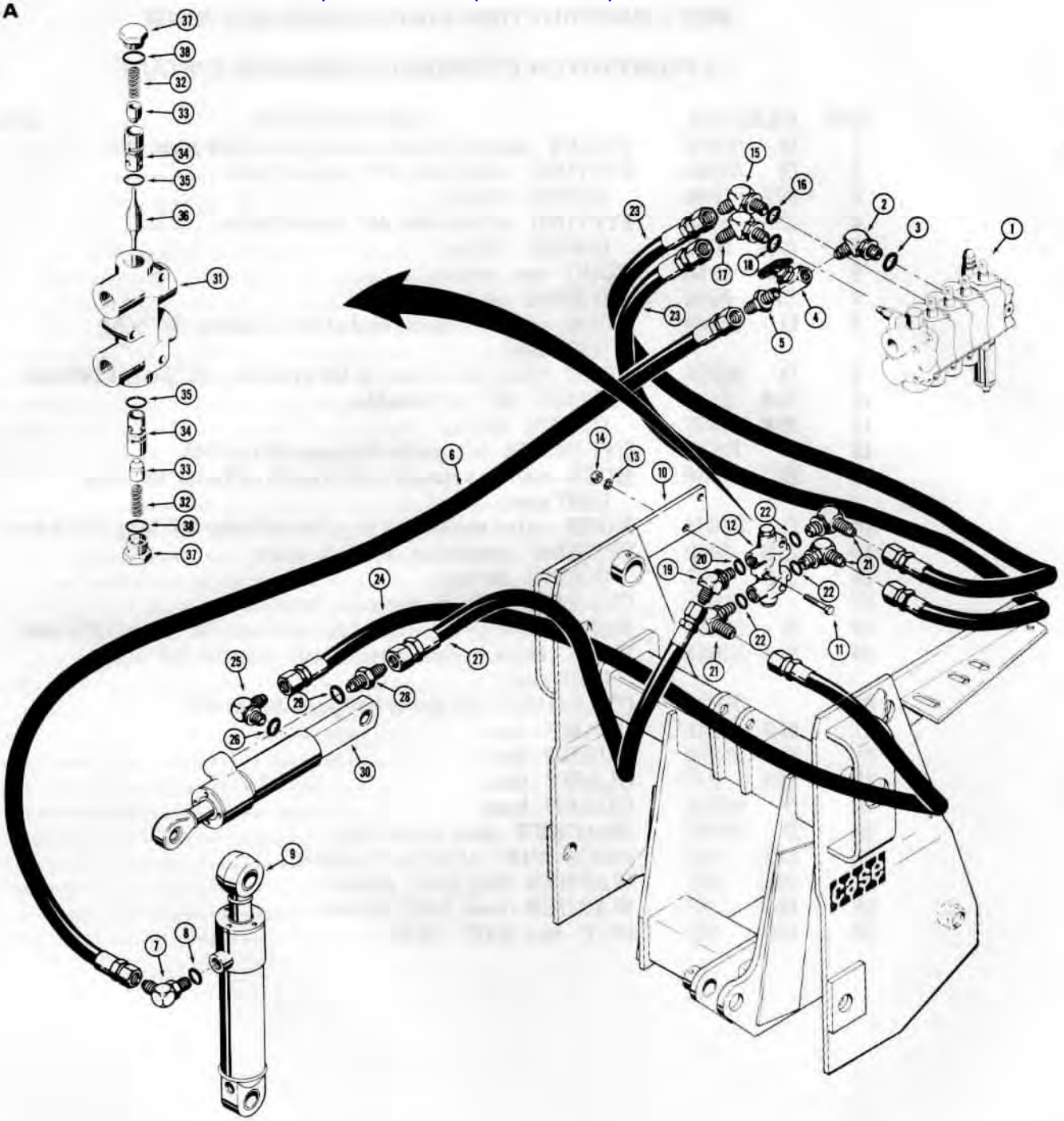

http://www.minnparbackhoeparts.com/

3-POINT HITCH ANTI-LEAKDOWN KIT

REF.	PART NO.	DESCRIPTION	REQ'D.
1	D 52970	VALVE - control, 3 point hitch, parts list page 285	1
2	*D 60015	FITTING - adjustable, 45°	1
3	218- 5006	O-RING - fitting	1
4	*D 60016	VALVE - shut-off	1
5	*218- 444	FITTING - straight, male connector	1
6	D 51686	HOSE - shut-off valve to lift cylinder, rod end, 54" long (1372 mm)	1
7	218- 5121	FITTING - 90°, adjustable	1
8	218- 5007	O-RING - fitting	1
9	REF.	CYLINDER - hydraulic, lift, see pages 329 and 331	1
10	*D 59772	PLATE - valve mounting, welded to hitch frame	1
11	*13- 532	HHCS - 5/16" - 18 NC x 2"	2
12	*D 47256	VALVE - check, pilot operated, parts list below	1
13	*92- 5	WASHER - lock, 5/16"	2
14	*25- 105	NUT - hex, 5/16" - 18 NC	2
15	D 52943	FITTING - 45° restrictor, upper port of pitch section	1
16	218- 5006	O-RING - fitting	1
17	218- 5136	FITTING - 45°, adjustable, lower port of pitch section	1
18	218- 5006	O-RING - fitting	1
19	*D 59773	FITTING - restrictor, 45°, at check valve	1
20	218- 5006	O-RING - fitting	1
21	*218- 5106	FITTING - adjustable, 90°, at check valve	3
22	218- 5006	O-RING - fitting	1
23	*D 59771	HOSE - top and bottom ports of pitch section of control valve to top and bottom ports of check valve, 27" long (686 mm)	2
24	*T 40301	HOSE - rear bottom port of check valve to closed end of pitch cylinder, 17" (432 mm) long	1
25	218- 5121	FITTING - 90°, adjustable	1
26	218- 5007	O-RING - fitting	1
27	*D 56128	HOSE - rear top port of check valve to rod end of pitch cylinder, 25" (635 mm) long	1
28	218- 5060	FITTING - male, straight connector	1
29	218- 5007	O-RING - fitting	1
30	REF.	CYLINDER - hydraulic, pitch, see page 337	1

D47256 CHECK VALVE

REF.	PART NO.	DESCRIPTION	REQ'D.
	D 47256	VALVE - check, Parker VCPDO8B11T	1
31	NSS	BODY - valve	1
32	D 48818	SPRING - poppet	2
	D 48819	POPPET AND SLEEVE ASSEMBLY	2
33	NSS	POPPET	1
34	NSS	SLEEVE	1
35	D 48820	O-RING	1
36	D 48821	SHUTTLE - valve	1
37	D 48822	PLUG - special	2
38	218- 5006	O-RING - plug	2
	*D 17196	KIT - anti-leakdown, includes all items preceded by an asterisk	1

http://www.minnparbackhoeparts.com/

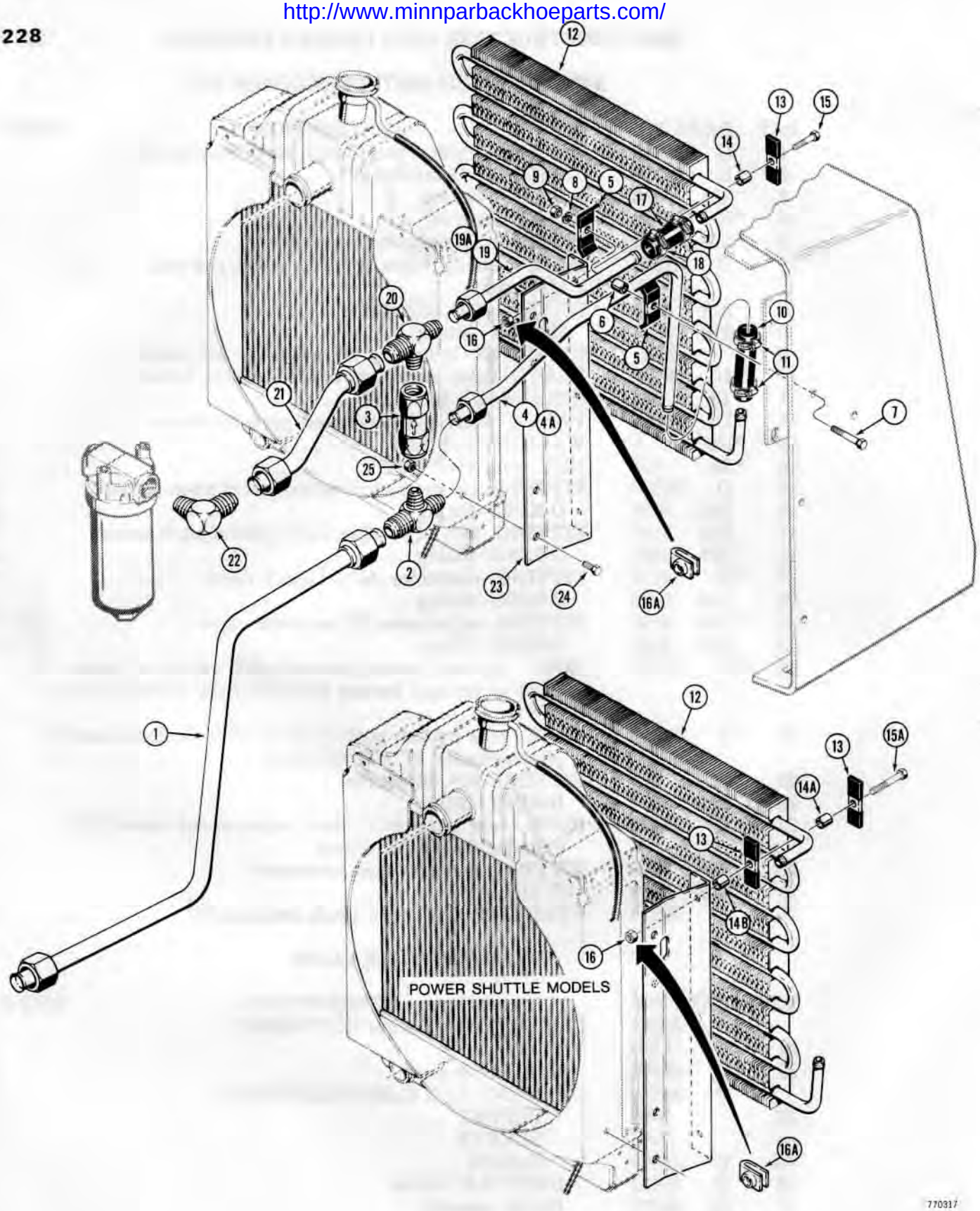

http://www.minnparbackhoeparts.com/

*PTO HYDRAULIC COOLING SYSTEM

BEFORE TRACTOR SN. 8961374

REF.	PART NO.	DESCRIPTION	REQ'D.
1	D 71805	TUBE - return, from rear equipment hydraulics	1
2	218- 1109	FITTING - tee, male	1
3	D 68804	VALVE - check	1
4	D 72066	TUBE - to cooler bottom port, mechanical shuttle models	1
4A	D 72040	TUBE - to cooler bottom port, power shuttle models	1
5	D 40236	CLAMP - tube	2
6	D 95745	SPACER - clamp	1
7	13- 636	HHCS - 3/8" - 16 NC x 2-1/4"	1
8	92- 6	WASHER - lock, 3/8"	1
9	25- 106	NUT - hex, 3/8" - 16 NC	1
10	D 24728	HOSE - cooler tubes, 3/4" I.D. x 4-1/2" long (19 x 114 mm)	1
11	214- 256	CLAMP - hose	2
12	D 72041	COOLER - hydraulic oil	1
13	D 54416	PLATE - mounting	4-8
14	D 75075	SPACER - mounting plate, mechanical shuttle models	4
14A	D 95745	SPACER - mounting, front, power shuttle models	4
14B	D 95743	SPACER - mounting, rear, power shuttle models	4
15	13- 524	HHCS - 5/16" - 18 NC x 1-1/2", mechanical shuttle models	4
15A	13- 556	HHCS - 5/16" - 18 NC x 3-1/2", power shuttle models	4
16	131- 651	NUT - hex, lock, 5/16" - 18 NC, if used	4
16A	131- 639	NUT - "J" type, 5/16" - 18 NC, if used	4
17	R 20804	HOSE - cooler tubes, 3/4" I.D. x 3" long (19 x 76 mm)	1
18	214- 256	CLAMP - hose	2
19	D 72064	TUBE - from cooler top tube, mechanical shuttle models	1
19A	D 72038	TUBE - from cooler top tube, power shuttle models	1
20	218- 1109	FITTING - tee, male	1
21	D 71807	TUBE - to filter	1
22	D 71940	FITTING - at filter, 90° special	1
23	D 75234	BRACKET - cooler, mechanical shuttle models, when replacing brackets using loose hex nuts (item 16) or welded on square nuts also order (2) "J" type nuts (item 16A)	2
24	13- 612	HHCS - 3/8" - 16 NC x 3/4"	2
25	131- 652	NUT - hex, lock, 3/8" - 16 NC	2

*NOTE: For Power Shuttle Cooling System, see page 195.

http://www.minnparbackhoeparts.com/

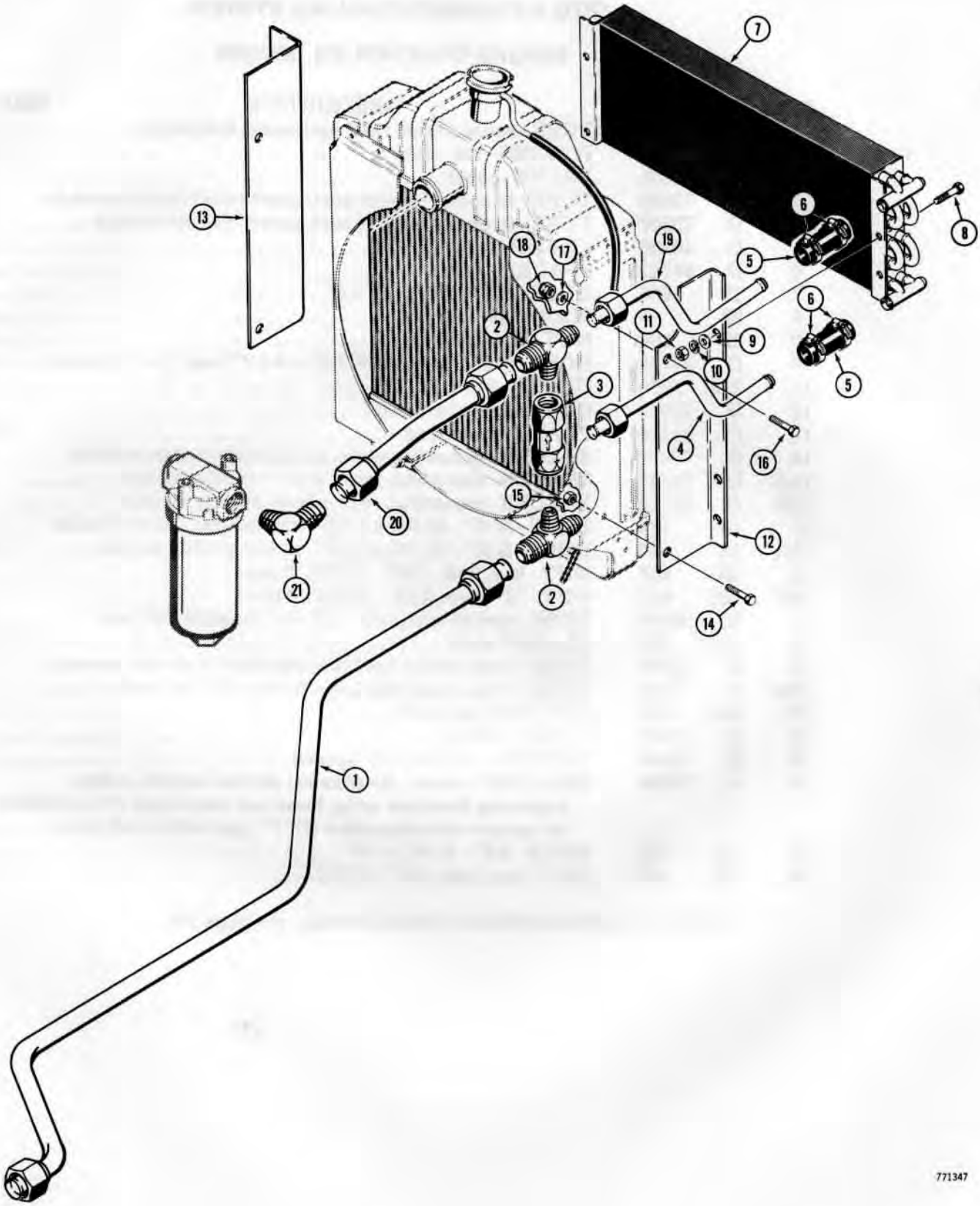

http://www.minnparbackhoeparts.com/

*PTO HYDRAULIC COOLING SYSTEM

TRACTOR SN. 8961374 AND AFTER

REF.	PART NO.	DESCRIPTION	REQ'D.
1	D 71805	TUBE - return, from rear equipment hydraulic circuit	1
2	218- 1109	FITTING - tee, male	2
3	D 68804	VALVE - check	1
4	D 77837	TUBE - to cooler bottom port	1
5	R 14170	HOSE - cooler tubes, 3/4" (19 mm) I.D. x 5" (127 mm) long	2
6	214- 256	CLAMP - hose	4
7	D 76544	COOLER - PTO hydraulic oil	1
8	13- 512	HHCS - 5/16" - 18 NC x 3/4"	4
9	195- 21	WASHER - flat, 5/16"	4
10	92- 5	WASHER - lock, 5/16"	4
11	25- 105	NUT - hex, 5/16" - 18 NC	4
12	D 76570	BRACKET - cooler mounting, R.H.	1
13	D 76569	BRACKET - cooler mounting, L.H.	1
14	13- 612	HHCS - bottom, 3/8" - 16 NC x 3/4"	2
15	131- 652	NUT - hex, lock, 3/8" - 16 NC	2
16	13- 616	HHCS - top, 3/8" - 16 NC x 1"	2
17	95- 6	WASHER - flat, 3/8"	2
18	131- 652	NUT - hex, lock, 3/8" - 16 NC	2
19	D 77835	TUBE - from cooler top tube	1
20	D 77947	TUBE - to filter	1
21	D 71940	FITTING - at filter, 90° special	1

*NOTE: For Power Shuttle Cooling System, see page 195B.

http://www.minnparbackhoeparts.com/

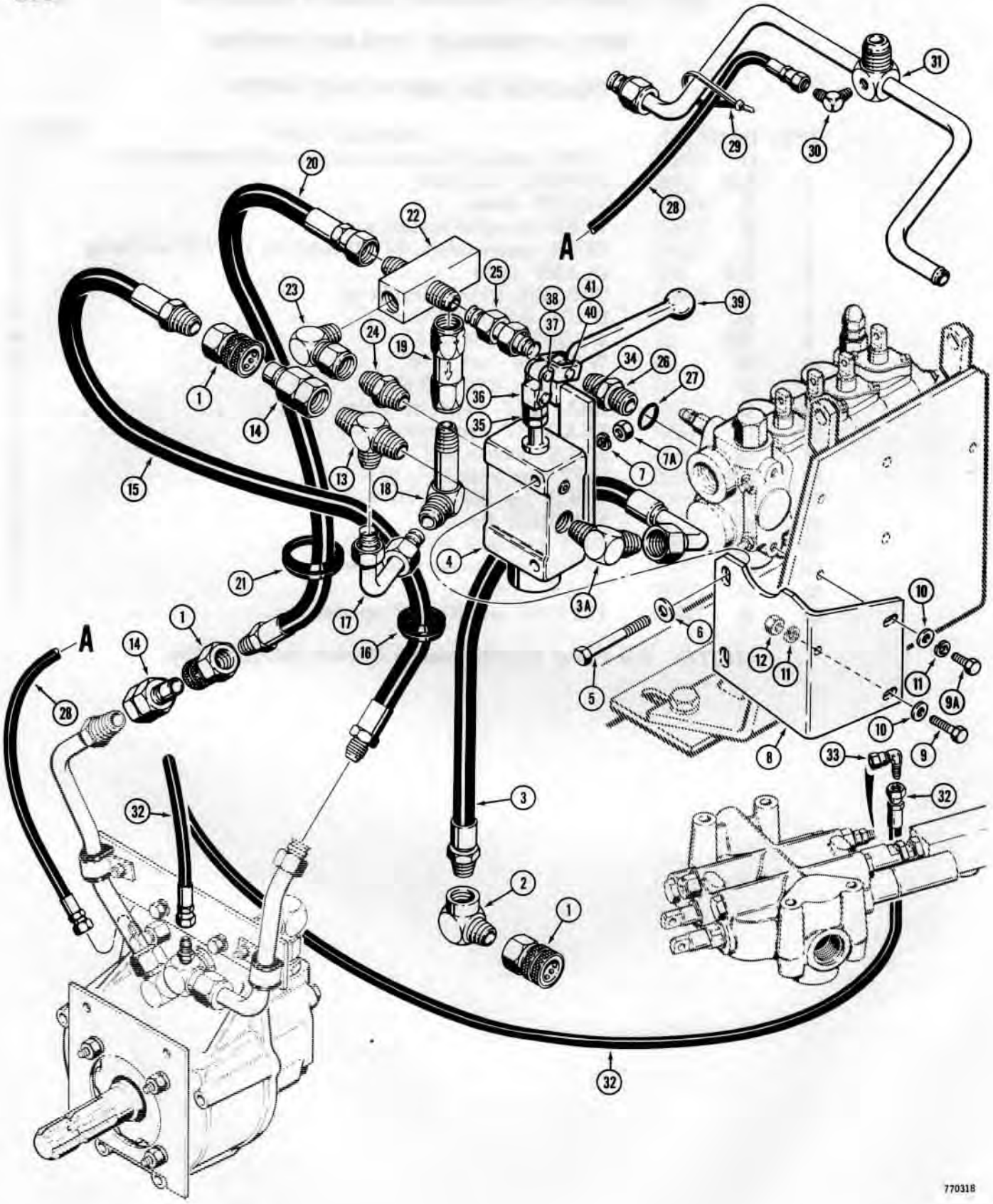

http://www.minnparbackhoeparts.com/

PTO HYDRAULIC CIRCUIT AND CONTROL

REF.	PART NO.	DESCRIPTION	REQ'D.
1	D 52800	COUPLING - disconnect, female, parts list page 299	3
2	217- 1020	FITTING - 90°, 3/4" NPT	1
3	D 73580	HOSE - to selector valve, special	1
3A	218- 486	FITTING - 90° male, at selector valve	1
4	D 65378	VALVE - selector, parts list page 293	1
5	13- 856	HHCS - 1/2" - 13 NC x 3-1/2"	2
6	195- 33	WASHER - flat, 1/2"	2
7	92- 8	WASHER - lock, 1/2"	2
7A	25- 108	NUT - hex, 1/2" - 13 NC	2
8	D 72655	BRACKET - valve	1
9	13- 620	HHCS - 3/8" - 16 NC x 1-1/4"	1
9A	13- 612	HHCS - 3/8" - 16 NC x 3/4"	1
10	195- 25	WASHER - flat, 3/8"	2
11	92- 6	WASHER - lock, 3/8"	2
12	25- 106	NUT - hex, 3/8" - 16 NC	1
13	D 72656	FITTING - tee, male	1
14	D 52694	COUPLING - disconnect, male, parts list page 299	2
15	D 73579	HOSE - pressure, to PTO, 30" long (762 mm)	1
16	49564	GROMMET - floor plate, if used, 1-3/4" (44 mm)	1
17	D 72629	TUBE -check valve	1
18	218- 503	FITTING - 90°, check valve	1
19	D 71716	VALVE - check	1
20	35188	HOSE - PTO return, 25" long (635 mm)	1
21	D 72661	GROMMET - floor plate, 2-1/2" (64 mm)	1
22	D 72423	BLOCK - manifold	1
23	218- 990	FITTING - 90° adjustable	1
24	218- 446	FITTING - male adapter	1
25	D 72631	TUBE - to 3-point hitch valve	1
26	218- 5064	FITTING - male connector	1
27	218- 5008	O-RING - fitting	1
28	D 72020	HOSE - PTO case drain	1
29	L 18331	STRAP - hose tie	2
30	218- 481	FITTING - 90° male	1
31	D 71941	TUBE - to oil reservoir	1
32	D 74342	HOSE - PTO Motor to Loader valve, 70" long (1778 mm) if used	1
33	218- 5228	FITTING - 90°, D74342 hose to loader valve two stage main relief, if used	1
34	D 74934	BRACKET - selector valve	1
35	25- 148	NUT - hex, jam, 1/2" - 13 NC	1
36	D 74931	LINK - spool end	1
37	36640	LINK ASSEMBLY - connecting	1
38	132- 13	PIN - cotter, 1/16" x 1-1/2"	1
39	D 23722	LEVER - selector valve control	1
40	36627	PIN - clevis	1
41	132- 5	PIN - cotter, 1/16" x 1/2"	1

NOTE: Additional PTO hydraulic tubes and fittings at PTO motor are listed on page 233. For 3-point hitch valve connections see page 225.

http://www.minnparbackhoeparts.com/

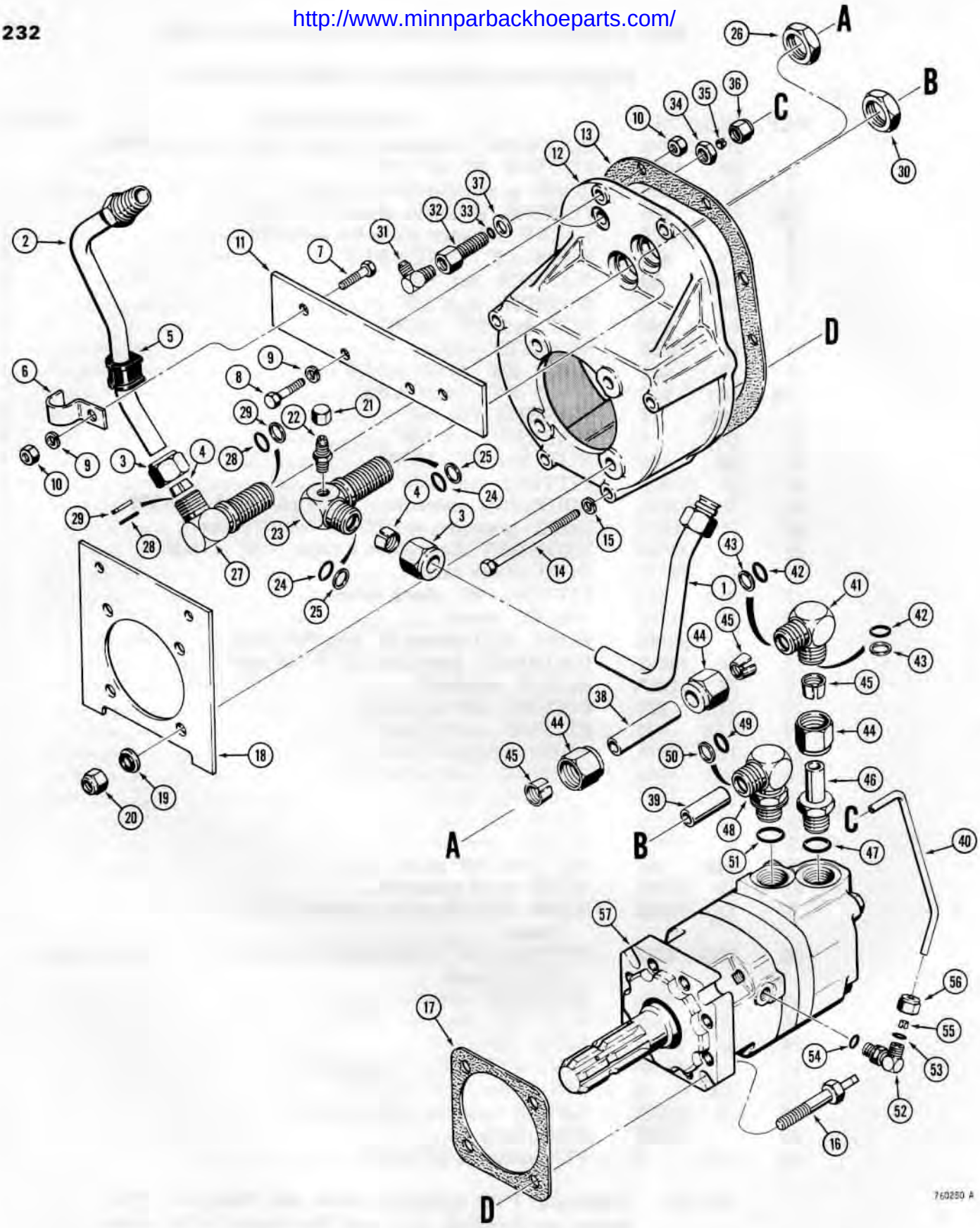

http://www.minnparbackhoeparts.com/

PTO MOTOR AND MOTOR HOUSING

REF.	PART NO.	DESCRIPTION	REQ'D.
1	D 72627	TUBE - pressure, PTO	1
2	D 72625	TUBE - return, PTO	1
3	222- 3112	NUT - tube	2
4	222- 3103	SLEEVE - tube nut	2
5	D 74182	PAD - tube cushion	2
6	D 74192	CLAMP - tube, used with D74182 pad	2
7	13- 620	HHCS - 3/8" - 16 NC x 1-1/4"	2
8	13- 624	HHCS - 3/8" - 16 NC x 1-1/2"	2
9	92- 6	WASHER - lock, 3/8"	4
10	25- 106	NUT - hex, 3/8" - 16 NC	4
11	D 72653	PLATE - clamp mounting	1
12	D 72023	HOUSING - PTO	1
13	G 10447	GASKET - PTO housing	1
14	13- 672	HHCS - 3/8" - 16 NC x 4-1/2"	4
15	92- 6	WASHER - lock, 3/8"	4
16	D 71968	BOLT - special	4
17	D 72019	GASKET - PTO motor to housing	1
18	D 72274	PLATE - shield mounting, see page 237 for shield	1
19	T 42588	WASHER - special sealing	4
20	131- 10	NUT - hex, lock, 1/2" - 13 NC	4
21	218- 752	CAP - fitting	1
22	218- 441	FITTING - male adapter	1
	D 72652	FITTING ASSEMBLY - bulkhead, 90°	1
23	NSS	BODY - fitting	1
24	A 27365	O-RING - internal	2
25	D 75828	RING - backup, internal	2
26	222- 3166	NUT - bulkhead	1
	222- 3097	FITTING ASSEMBLY - bulkhead, 90°	1
27	NSS	BODY - fitting	1
28	A 27365	O-RING - internal	2
29	D 75828	RING - backup, internal	2
30	222- 3166	NUT - bulkhead	1
31	218- 481	FITTING - 90°, motor drain circuit	1
	222- 3150	FITTING ASSEMBLY - bulkhead, straight	1
32	NSS	BODY - fitting	1
33	A 27358	O-RING - internal	1
34	222- 3165	NUT - bulkhead	1
35	222- 3106	SLEEVE - tube nut	1
36	222- 3113	NUT - tube	1
37	D 35288	WASHER - copper	1
38	D 71965	TUBE - pressure, to PTO motor, 2.7" long (68.58 mm)	1
39	D 71966	TUBE - return, from PTO motor, 1.55" long (39.37 mm)	1
40	D 72434	TUBE - PTO motor drain	1

Continued on next page

http://www.minnparbackhoeparts.com/

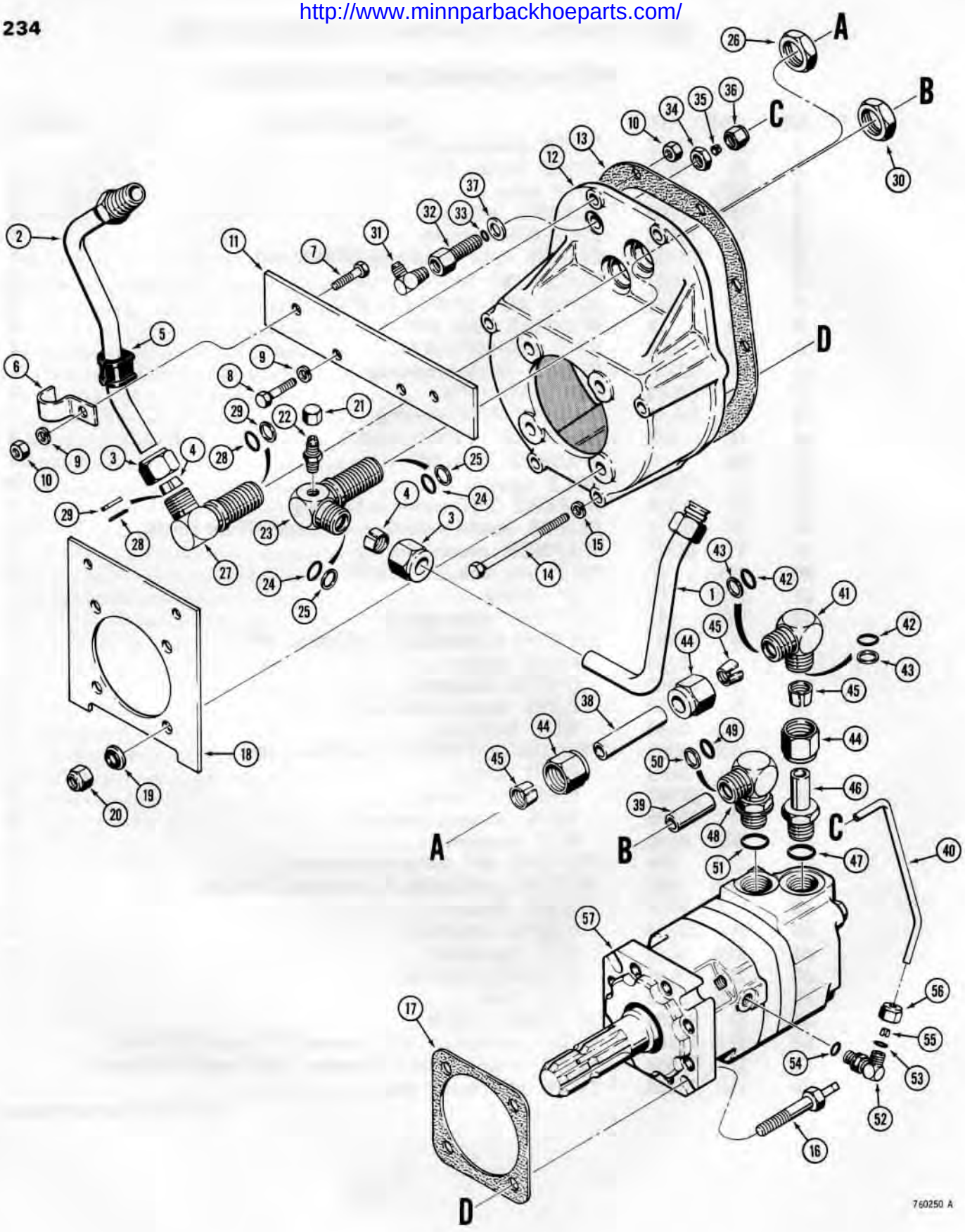

http://www.minnparbackhoeparts.com/

PTO MOTOR AND MOTOR HOUSING

REF.	PART NO.	DESCRIPTION	REQ'D.
	222- 3141	FITTING ASSEMBLY - special, 90°	
41	NSS	BODY - fitting	1
42	A 27365	O-RING - internal	1
43	D 75828	RING - backup	2
44	222- 3112	NUT - tube	2
45	222- 3103	SLEEVE - tube nut	3
46	222- 3071	FITTING - special nipple	3
47	218- 5008	O-RING - fitting	1
	222- 3145	FITTING - adjustable, 90°	1
48	NSS	BODY - fitting	1
49	A 27365	O-RING - internal	1
50	D 75828	RING - backup, internal	1
51	218- 5008	O-RING - external	1
	222- 3146	FITTING - adjustable, 90°	1
52	NSS	BODY - fitting	1
53	A 27358	O-RING - internal	1
54	218- 5003	O-RING - external	1
55	222- 3106	SLEEVE - tube nut	1
56	222- 3113	NUT - tube	1
57	D 71868	MOTOR - hydraulic, PTO, parts list page 295	1

http://www.minnparbackhoeparts.com/

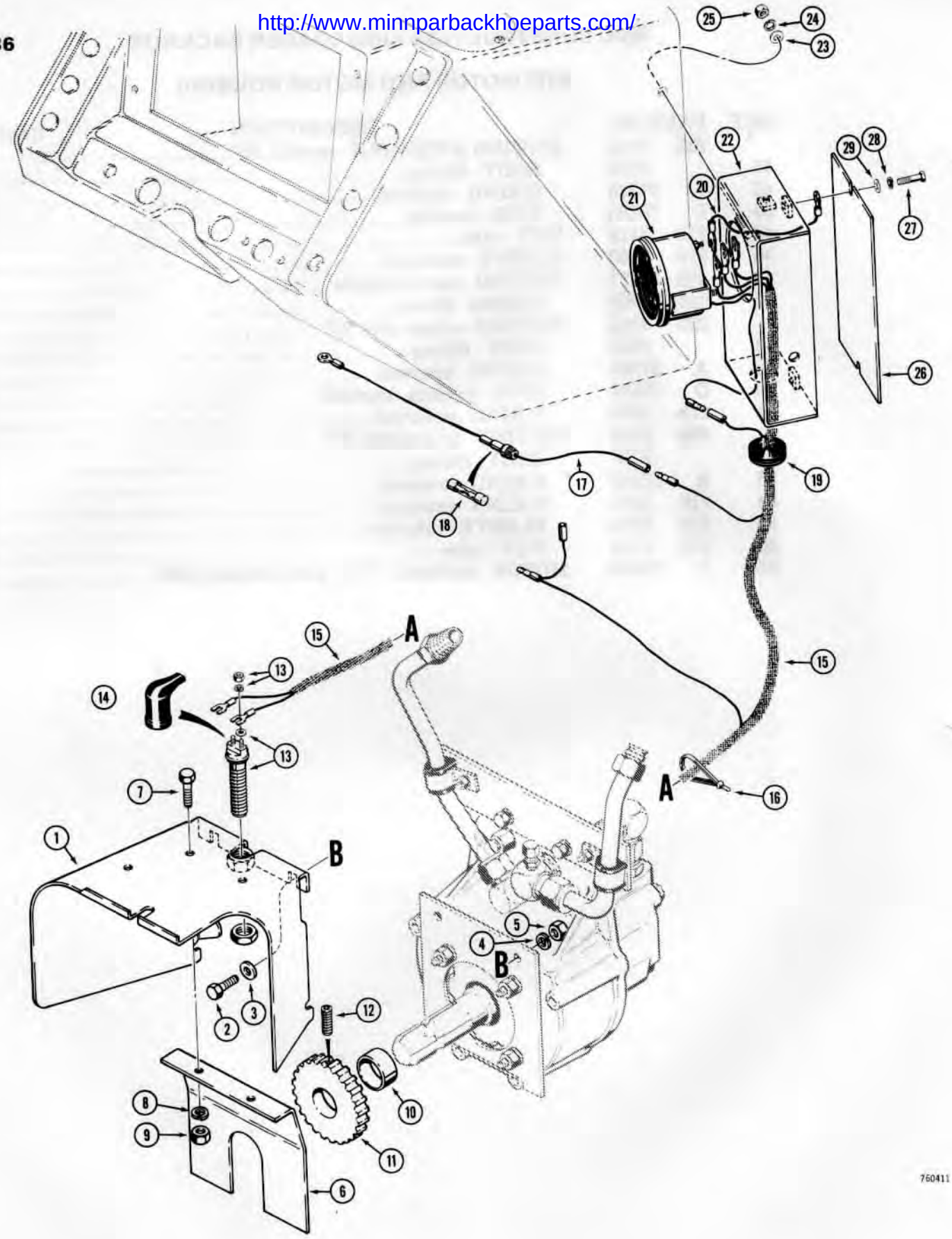

http://www.minnparbackhoeparts.com/

PTO SHIELD AND SPEED INDICATOR

REF.	PART NO.	DESCRIPTION	REQ'D.
1	D 75219	SHIELD - PTO shaft	1
2	13- 616	HHCS - 3/8" - 16 NC x 1"	2
3	195- 2028	WASHER - flat, 3/8"	2
4	92- 6	WASHER - lock, 3/8"	2
5	25- 106	NUT - 3/8" - 16 NC	2
6	D 74799	SHIELD - sensor	1
7	13- 512	HHCS - 5/16" - 18 NC x 1-1/4"	2
8	92- 5	WASHER - lock, 5/16"	2
9	25- 105	NUT - hex, 5/16" - 18 NC	2
10	D 74632	SPACER - disc	1
11	D 74741	DISC - pickup	1
12	83- 414	SCREW - set, 1/4" - 20 NC x 7/8"	1
13	D 75217	SENSOR - speed indicator, includes hardware	1
14	R 29627	GUARD - rubber	1
15	D 74873	HARNESS - wire	1
16	L 18331	STRAP - harness	3
17	D 74876	WIRE - fuseholder	1
18	223- 10	FUSE - 10 amp (3AG 10)	1
19	49567	GROMMET - harness	1
20	D 74877	WIRE - ground	1
21	D 74872	GAUGE - PTO speed indicator	1
22	D 74814	BRACKET - gauge	1
23	195- 21	WASHER - flat, 5/16"	1
24	92- 5	WASHER - lock, 5/16"	1
25	25- 105	NUT - hex, 5/16" - 18 NC	1
26	D 74801	COVER - bracket	1
27	13- 512	HHCS - 5/16" - 18 NC x 1-1/4"	2
28	92- 6	WASHER - lock, 5/16"	2
29	195- 21	WASHER - flat, 5/16"	2

Printed In U.S.A.

Issued January, 1978

http://www.minnparbackhoeparts.com/

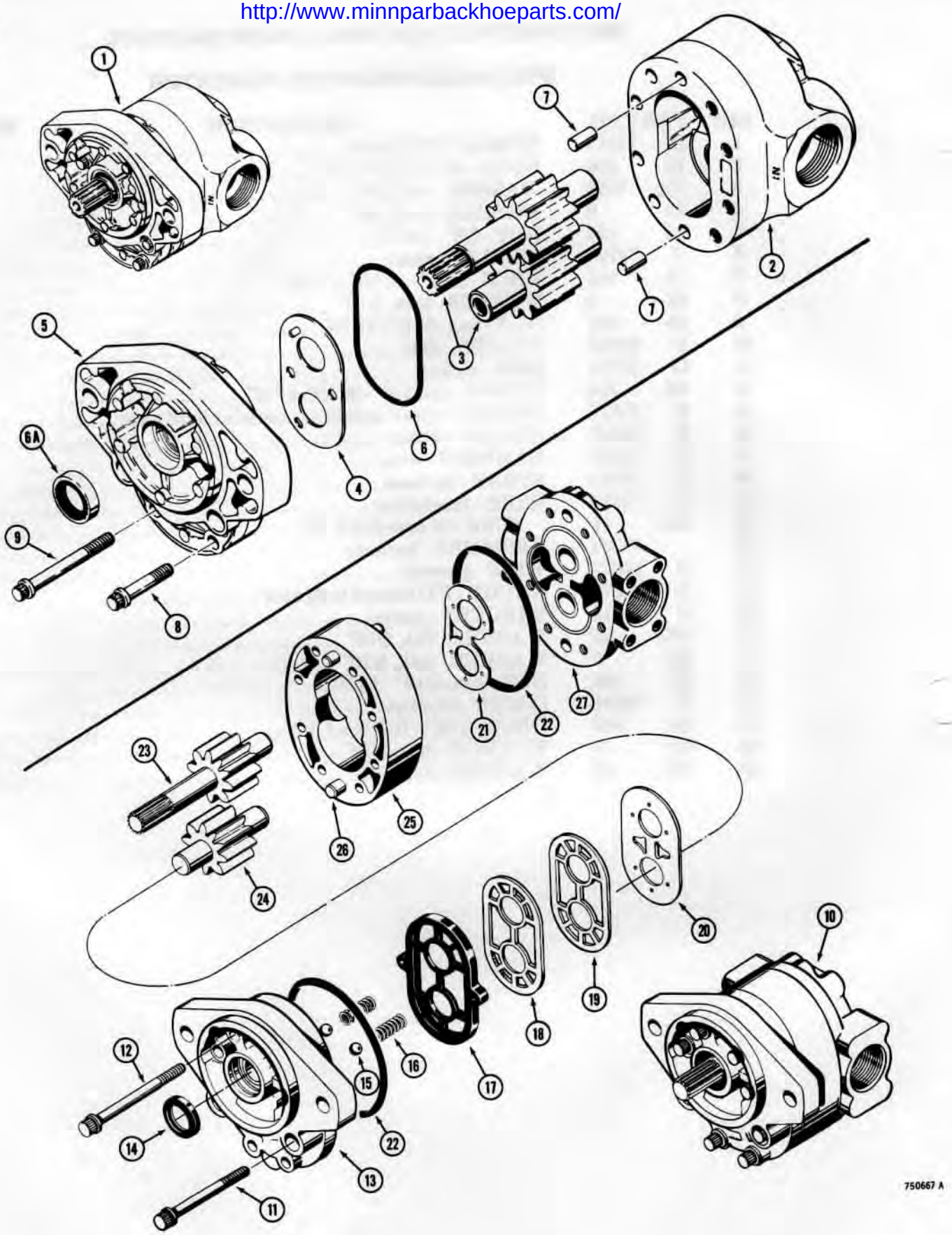

http://www.minnparbackhoeparts.com/

D49241 HYDRAULIC PUMP

REF.	PART NO.	DESCRIPTION	REQ'D.
1	*D 49241	PUMP ASSEMBLY - hydraulic, complete, TRW #19-920178-00	1
2	NSS	BODY ASSEMBLY - pump, includes bushings	1
3	D 50103	GEAR SET - drive and driven	1
4	D 50104	PLATE - pressure	1
	D 50105	COVER ASSEMBLY - shaft end	1
5	NSS	COVER - shaft end, includes bushings and seals	1
6	F 30271	O-RING - pressure plate	1
6A	D 52477	SEAL - shaft	1
7	D 50106	DOWEL - cover	1
8	166- 48	SCREW - 12 point flanged, 3/8" - 16 NC x 1-3/4"	4
9	166- 54	SCREW - 12 point flanged, 3/8" - 16 NC x 3-1/4"	4

D48950 HYDRAULIC PUMP

10	*D 48950	PUMP ASSEMBLY - hydraulic, complete, Cessna #24505-LAD	1
11	166- 59	SCREW - 12 point flanged, 3/8" - 16 NC x 3-3/4"	4
12	166- 55	SCREW - 12 point flanged, 3/8" - 16 NC x 3-1/2"	4
13	D 48879	COVER - drive shaft end	1
	D 59656	KIT - pump repair	1
14	A 25139	SEAL - drive shaft	1
15	211- 312	BALL - steel	2
16	D 31403	SPRING - ball retaining	2
17	D 48888	SEAL - diaphragm	1
18	H 260927	GASKET - backup	1
19	H 260935	GASKET - protector	1
20	D 31400	DIAPHRAGM - pump	1
21	D 41322	PLATE - thrust	1
22	H 756221	O-RING - cover	2
	D 48881	GEAR SET - drive and driven	1
23	NSS	GEAR - drive, includes shaft	1
24	NSS	GEAR - driven, includes shaft	1
25	D 56471	HOUSING - gear	1
26	D 48882	PIN - dowel	2
27	D 48883	COVER - port end	1

*NOTE: For identification see name plate on pump. Check make of pump before ordering parts. See other pump options on page 241.

http://www.minnparbackhoeparts.com/

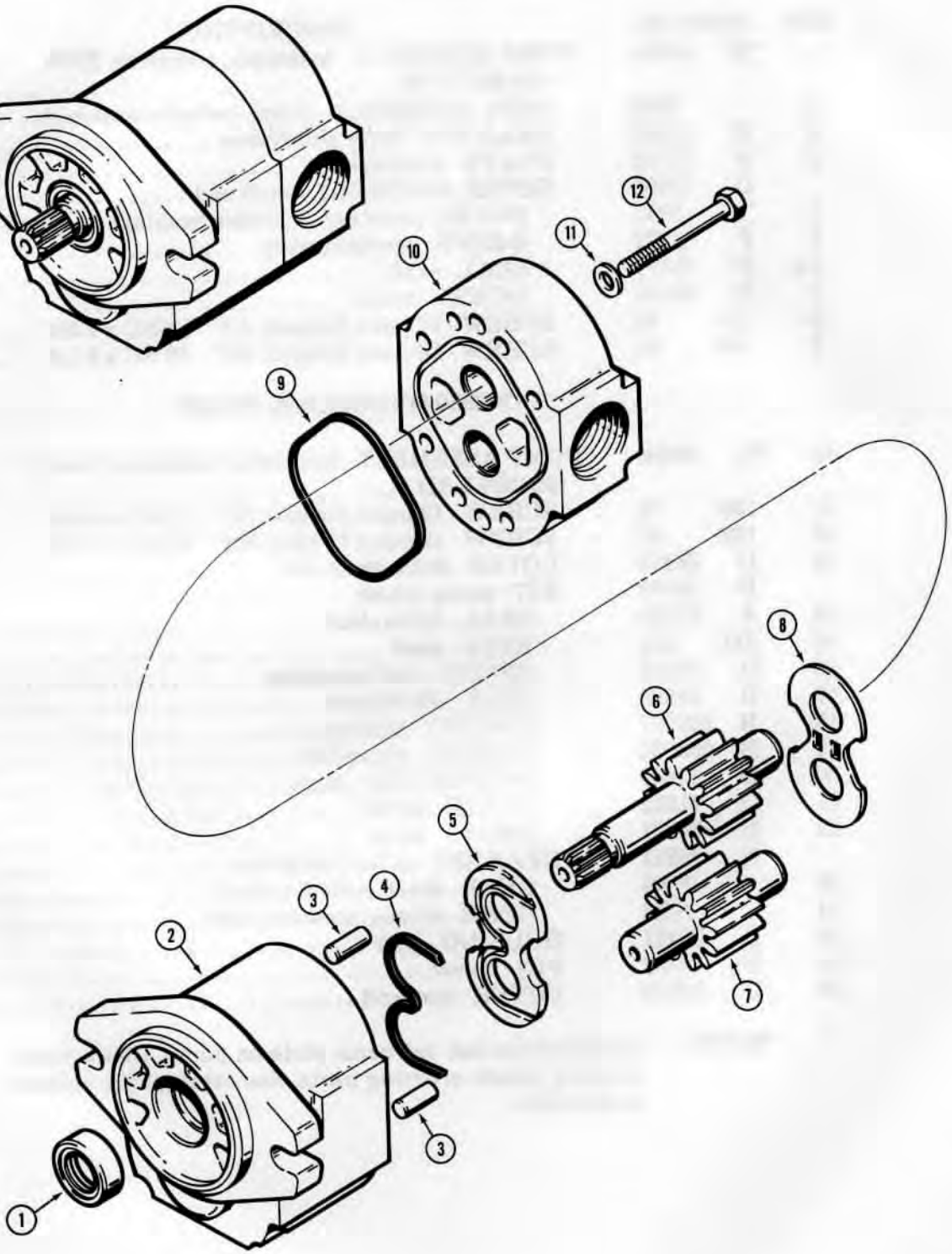

760251

http://www.minnparbackhoeparts.com/

D72300 AND D72196 HYDRAULIC PUMPS

REF.	PART NO.	DESCRIPTION	REQ'D.
	*D 72300	PUMP - hydraulic, Warner Motive S30S-27E-J5-2-L	1
	*D 72196	PUMP - hydraulic, Warner Motive S30S-29E-J5-2-L	1
1	D 73624	SEAL - shaft	1
2	D 74418	BODY ASSEMBLY - shaft end, D72300 pump only	1
2	D 73616	BODY ASSEMBLY - shaft end, D72196 pump only	1
3	D 73621	PIN - dowel	2
4	D 73620	SEAL - load	1
5	D 73619	PLATE - wear	1
6	D 74419	GEAR - drive, D72300 pump only	1
6	D 73617	GEAR - drive, D72196 pump only	1
7	D 74420	GEAR - driven, D72300 pump only	1
7	D 73618	GEAR - driven, D72196 pump only	1
8	D 73623	PLATE - thrust	1
9	D 73622	SEAL - square section	1
10	D 73615	COVER ASSEMBLY - port end	1
11	D 74441	WASHER - special	8
12	13- 652	HHCS - 3/8" - 16 NC x 3-1/4"	8

*NOTE: For identification see name plate on pump. Check make and model number of pump before ordering parts. See other pump options on page 239.

http://www.minnparbackhoeparts.com/

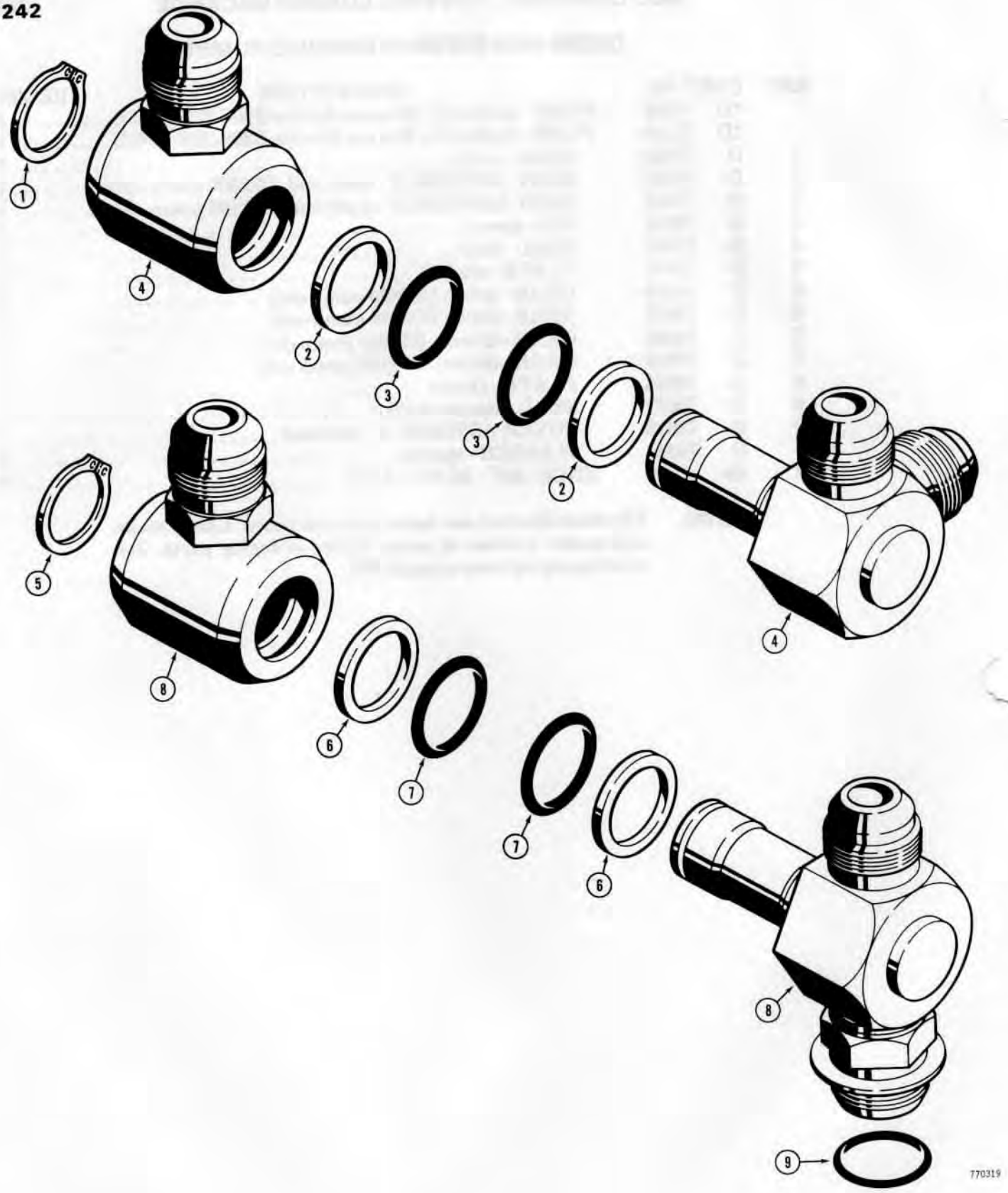

http://www.minnparbackhoeparts.com/

SWIVEL FITTINGS

REF.	PART NO.	DESCRIPTION	REQ'D.
	D 60947	FITTING ASSEMBLY - swivel, backhoe boom circuit, if used	1
1	S 70827	RING - retaining	1
2	D 61902	RING - backup	2
3	16202	O-RING - internal	2
4	NSS	BODY - swivel fitting	1
	D 60948	FITTING ASSEMBLY - swivel, backhoe boom circuit, if used	1
5	S 70827	RING - retaining	1
6	D 61902	RING - backup	2
7	16202	O-RING - internal	2
8	NSS	BODY - swivel fitting	1
9	218- 5008	O-RING - external	1

http://www.minnparbackhoeparts.com/

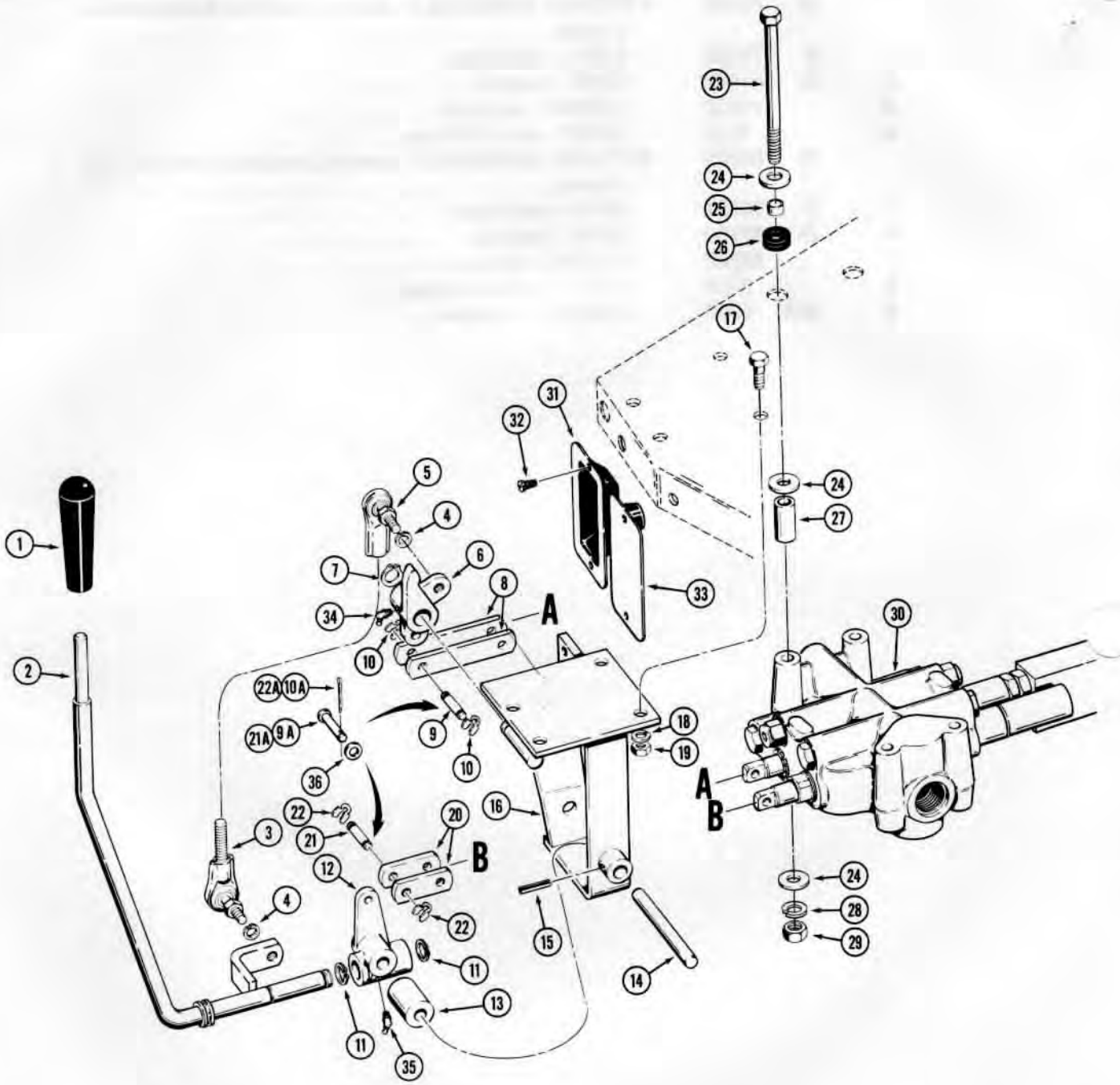

75066B B

http://www.minnparbackhoeparts.com/

LOADER CONTROL VALVE AND LEVER (2 SPOOL)

REF.	PART NO.	DESCRIPTION	REQ'D.
1	A 37247	KNOB - lever	1
2	D 76194	LEVER - loader control, lift and tilt	1
3	D 64789	JOINT - ball type, tilt spool	1
4	92- 6	WASHER - lock, 3/8"	2
5	D 69180	JOINT - ball type, tilt spool	1
6	D 72232	BELLCRANK - lever	1
7	D 95096	RING - retaining	1
8	D 64746	LINK - connecting	2
9	D 95632	PIN - connecting, if used	2
9A	141- 3	PIN - connecting, if used	2
10	D 95092	RING - retaining, if used	4
10A	132- 24	PIN - cotter, 3/32" x 1/2", if used	2
11	D 95096	RING - retaining	2
12	D 64777	BLOCK - pivot	1
13	D 69955	SPACER - controls	1
14	D 64790	SHAFT - retaining	1
15	138- 61	PIN - roll, 1/8" x 1"	1
16	D 67594	BRACKET - lever	1
17	13- 616	HHCS - 3/8" - 16 NC x 1"	4
18	92- 6	WASHER - lock, 3/8"	4
19	25- 106	NUT - hex, 3/8" - 16 NC	4
20	D 69601	LINK - connecting	2
21	D 95632	PIN - connecting, if used	2
21A	141- 3	PIN - connecting, if used	2
22	D 95092	RING - retaining, if used	4
22A	132- 24	PIN - cotter, 3/32" x 1/2", if used	2
23	13- 696	HHCS - 3/8" - 16 NC x 6"	4
24	95- 6	WASHER - flat, 3/8"	12
25	D 66017	SLEEVE - valve mounting	4
26	D 64797	GROMMET - valve mounting	4
27	D 64745	SPACER - valve	4
28	92- 6	WASHER - lock, 3/8"	4
29	25- 106	NUT - hex, 3/8" - 16 NC	4
30	REF.	VALVE - loader control, 2 spool, see page 253	1
31	D 72302	SEAL - controls	1
32	187- 329	SCREW - #10 x 1/2", self-tapping	2
33	D 72241	PLATE - controls	1
34	219- 57	FITTING - grease, 90°	1
35	219- 36	FITTING - grease, 45°	1
36	195- 21	WASHER - flat, 5/16", plated	4

http://www.minnparbackhoeparts.com/

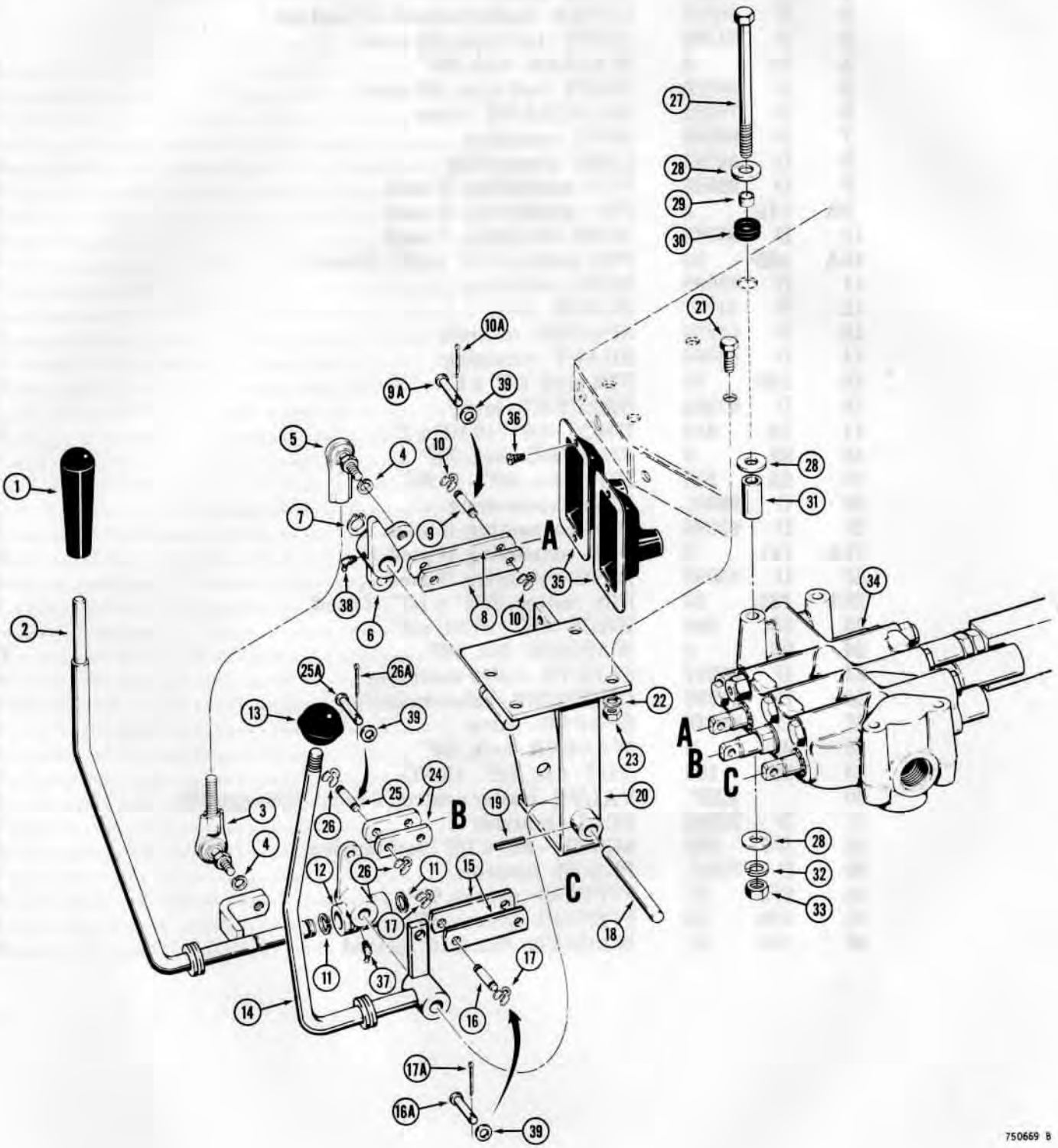

http://www.minnparbackhoeparts.com/

LOADER CONTROL VALVE AND LEVERS (3 SPOOL)

REF.	PART NO.	DESCRIPTION	REQ'D.
1	A 37247	KNOB - lever, lift and tilt	1
2	D 72231	LEVER - loader control, lift and tilt	1
3	D 64789	JOINT - ball type, tilt spool	1
4	92- 6	WASHER - lock, 3/8"	2
5	D 69180	JOINT - ball type, tilt spool	1
6	D 72232	BELLCRANK - lever	1
7	D 95096	RING - retaining	1
8	D 64746	LINK - connecting	2
9	D 95632	PIN - connecting, if used	2
9A	141- 3	PIN - connecting, if used	2
10	D 95092	RING - retaining, if used	4
10A	132- 24	PIN - cotter, 3/32" x 1/2", if used	2
11	D 95096	RING - retaining	2
12	D 64777	BLOCK - pivot	1
13	D 59912	KNOB - lever, auxiliary spool	1
14	D 76517	LEVER - auxiliary control	1
15	D 64747	LINK - auxiliary control	2
16	D 95632	PIN - link, if used	2
16A	141- 3	PIN - link, if used	2
17	D 95092	RING - retaining, if used	4
17A	132- 24	PIN - cotter, 3/32" x 1/2", if used	2
18	D 64790	SHAFT - retaining	1
19	138- 61	PIN - roll, 1/8" - 1"	1
20	D 67594	BRACKET - levers	1
21	13- 616	HHCS - 3/8" - 16 NC x 1"	4
22	92- 6	WASHER - lock, 3/8"	4
23	25- 106	NUT - hex, 3/8" - 16 NC	4
24	D 69601	LINK - connecting	2
25	D 95632	PIN - connecting, if used	2
25A	141- 3	PIN - connecting, if used	2
26	D 95092	RING - retaining, if used	4
26A	132- 24	PIN - cotter, 3/32" x 1/2", if used	2
27	13- 696	HHCS - 3/8" - 16 NC x 6"	4
28	95- 6	WASHER - flat, 3/8"	12
29	D 66017	SLEEVE - valve mounting	4
30	D 64797	GROMMET - valve mounting	4
31	D 64745	SPACER - valve	4
32	92- 6	WASHER - lock, 3/8"	4
33	25- 106	NUT - hex, 3/8" - 16 NC	4
34	REF.	VALVE - loader control, 3 spool, see page 255	1
35	D 72302	SEAL - controls	2
36	187- 329	SCREW - #10 x 1/2", self-tapping	4
37	219- 36	FITTING - grease, 45°	1
38	219- 57	FITTING - grease, 90°	1
39	195- 21	WASHER - flat, 5/16", plated, if used	6

http://www.minnparbackhoeparts.com/

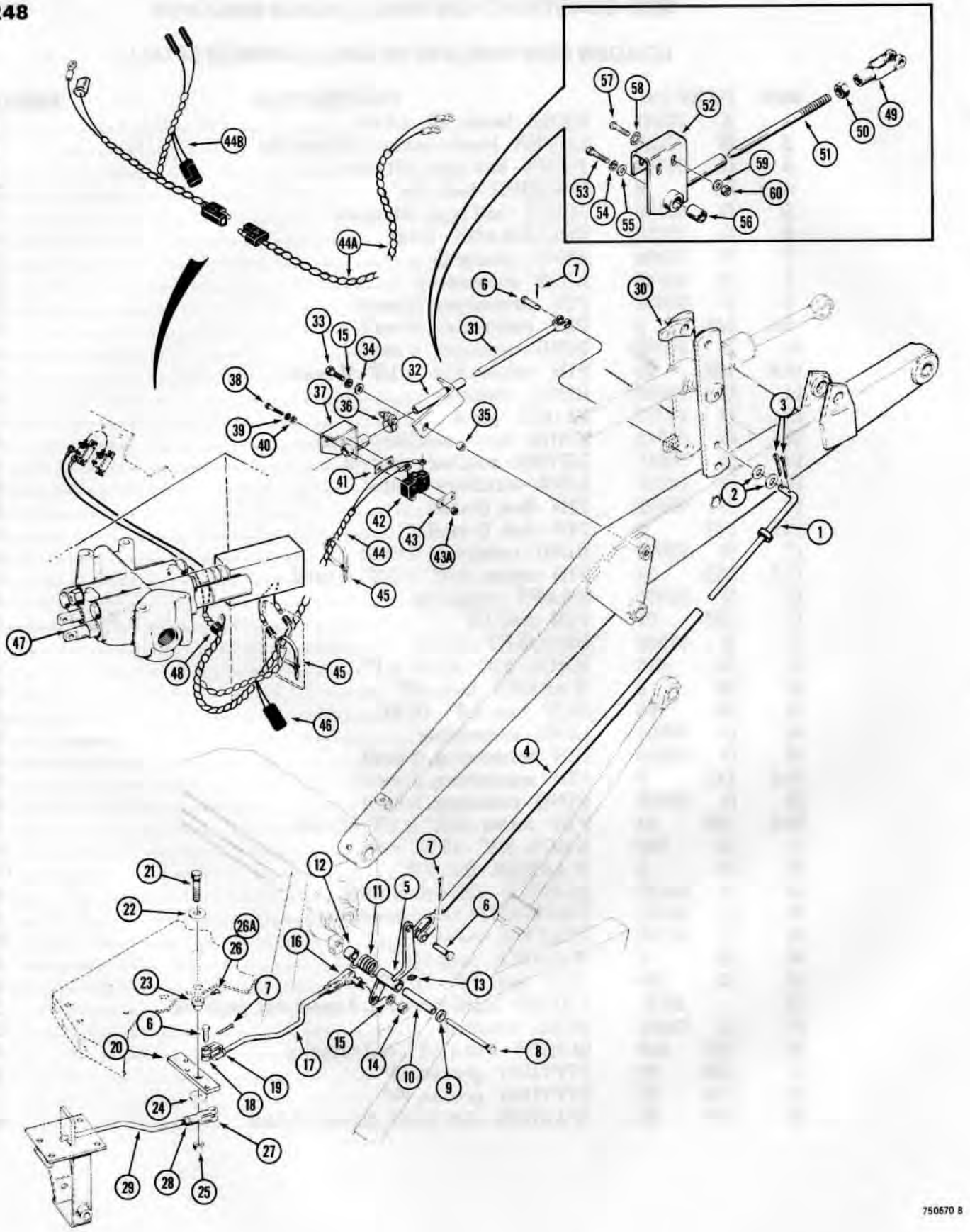

http://www.minnparbackhoeparts.com/

LOADER POSITIONING CONTROLS

REF.	PART NO.	DESCRIPTION	REQ'D.
1	D 73911	ROD - connecting, lever to dump link	1
2	195- 33	WASHER - flat, 1/2"	2
3	132- 48	PIN - cotter, 1/8" x 1"	2
4	D 37567	GUIDE - rod	1
5	D 73913	LEVER - loader positioning	1
6	141- 4	PIN - clevis, 3/8"	4
7	132- 25	PIN - cotter, 3/32" x 5/8"	4
8	13- 1096	HHCS - 5/8" - 11 NC x 6"	1
9	D 43266	WASHER - heat treated	1
10	D 69565	SLEEVE - bearing	1
11	D 72099	SPRING - return	1
12	D 69566	SLEEVE - spacer	1
13	219- 20	FITTING - grease, straight, 1/4" - 28 NF	1
14	25- 116	NUT - hex, 3/8" - 24 NF	1
15	92- 6	WASHER - lock, 3/8"	2
16	D 64925	JOINT - ball type	1
17	D 69604	ROD - input	1
18	L 11182	YOKE - offset	1
19	25- 116	NUT - hex, 3/8" - 24 NF	1
20	D 69578	LINK - connecting	1
21	13- 836	HHCS - 1/2" - 13 NC x 2-1/4"	1
22	95- 8	WASHER - flat, 1/2"	1
23	D 69568	SPACER - pivot, accepts item 26, order D75756 and item 26A	1
23	D 75756	SPACER - pivot, accepts item 26A	1
24	D 64050	WASHER - hardened	1
25	131- 654	NUT - hex, lock, 1/2 - 13 NC	1
26	219- 400	FITTING - grease, 45°, 1/4" - 28 NF	1
26A	219- 55	FITTING - grease, 90°, 1/8" NPT	1
27	213- 4	YOKE - adjustable, 3/8"	1
28	25- 116	NUT - hex, 3/8" - 24 NF	1
29	D 69960	ROD - loader positioning	1
30	D 72287	LINK - bucket cylinder, R.H. inner	1
31	D 72147	ROD - return-to-dig	1
32	D 72144	GUIDE - rod	1
33	13- 612	HHCS - 3/8" - 16 NC x 3/4"	1
34	195- 25	WASHER - flat, 3/8"	1
35	D 95748	SPACER - guide	1
36	D 71880	CLAMP - return-to-dig guide	1
37	D 72141	BRACKET - return-to-dig switch mounting	1
38	169- 143	SCREW - #6 - 32 NC x 1-1/2", plated	2
39	193- 89	WASHER - lock, external-internal tooth lock, #6, plated	2
40	195- 507	WASHER - flat, #6, plated	2

Continued on next page

http://www.minnparbackhoeparts.com/

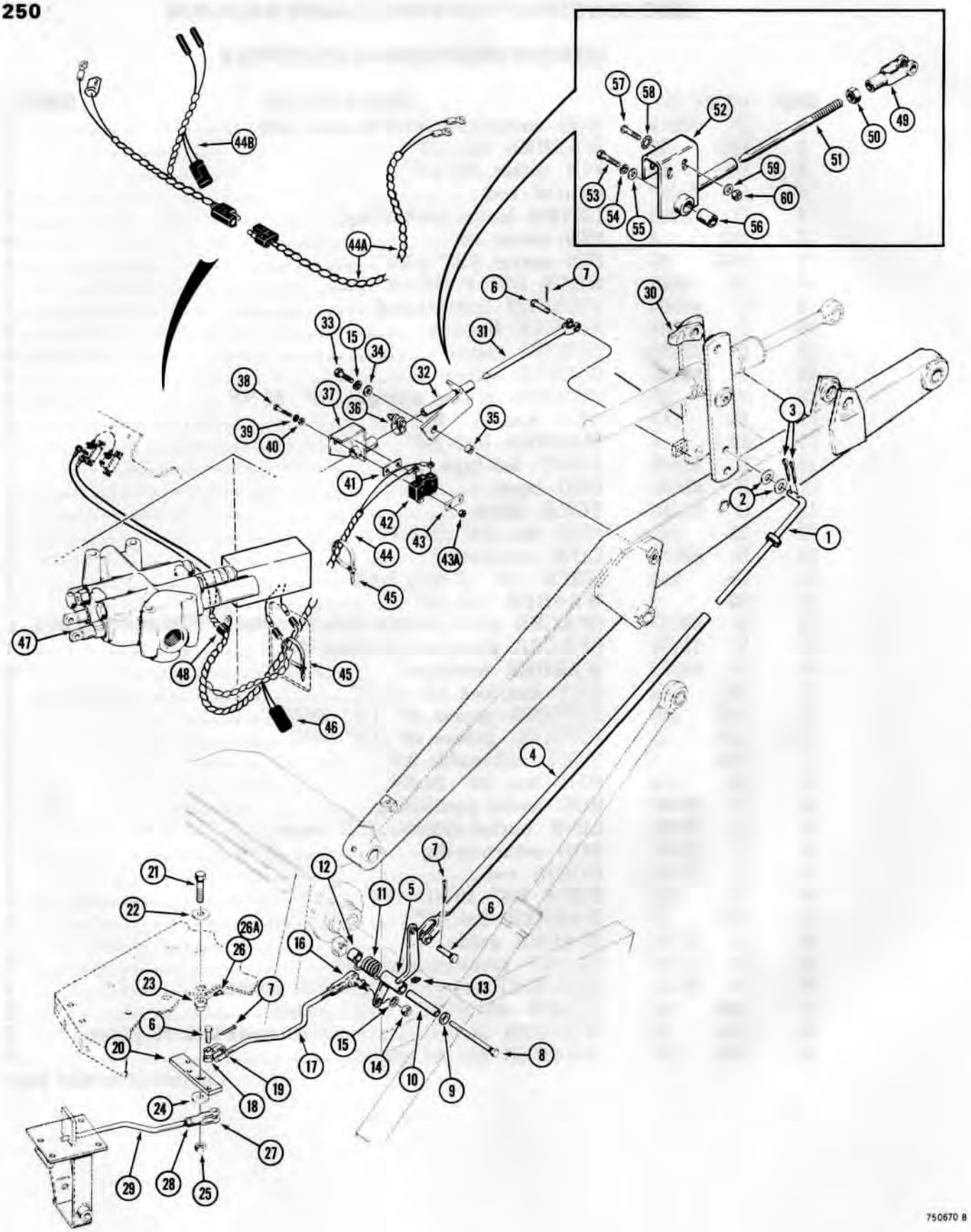

750670 B

http://www.minnparbackhoeparts.com/

LOADER POSITIONING CONTROLS

REF.	PART NO.	DESCRIPTION	REQ'D.
41	D 40924	SPACER - switch mounting	1
42	L 54683	SWITCH - return-to-dig	1
43	L 52496	PLATE - switch mounting, if used	1
43A	129- 15	NUT - hex, #6 - 32 NC, if used	2
44	D 72270	HARNESS - return-to-dig, used before tractor sn. 8958213	1
44A	D 74848	HARNESS - front, return-to-dig, used on tractor sn. 8958213 and after	1
44B	D 74849	HARNESS - rear, return-to-dig, used on tractor sn. 8958213 and after	1
45	L 18331	STRAP - tie	UAR
46	L 11760	DIODE - valve protecting	1
47	REF.	VALVE - loader control, see pages 253 and 255	1
48	49838	CLAMP - harness, if used	1

USED ON TRACTOR SN. 8959067 AND AFTER

49	213- 4	YOKE - return-to-dig rod	1
50	25- 156	NUT - hex, jam, 3/8" - 16 NC	1
51	D 75722	ROD - return-to-dig	1
52	D 75724	BRACKET - return-to-dig switch mounting	1
53	13- 620	HHCS - 3/8" - 16 NC x 1-1/4"	1
54	92- 6	WASHER - lock, 3/8"	1
55	195- 25	WASHER - flat, 3/8"	1
56	D 76175	SPACER - guide	1
57	169- 144	SCREW - #6 - 32 NC x 1-1/4", plated	2
58	193- 89	WASHER - external-internal tooth lock, #6, plated	2
59	195- 507	WASHER - flat, #6, plated	2
60	129- 15	NUT - hex, #6 - 32 NC, plated	2

http://www.minnparbackhoeparts.com/

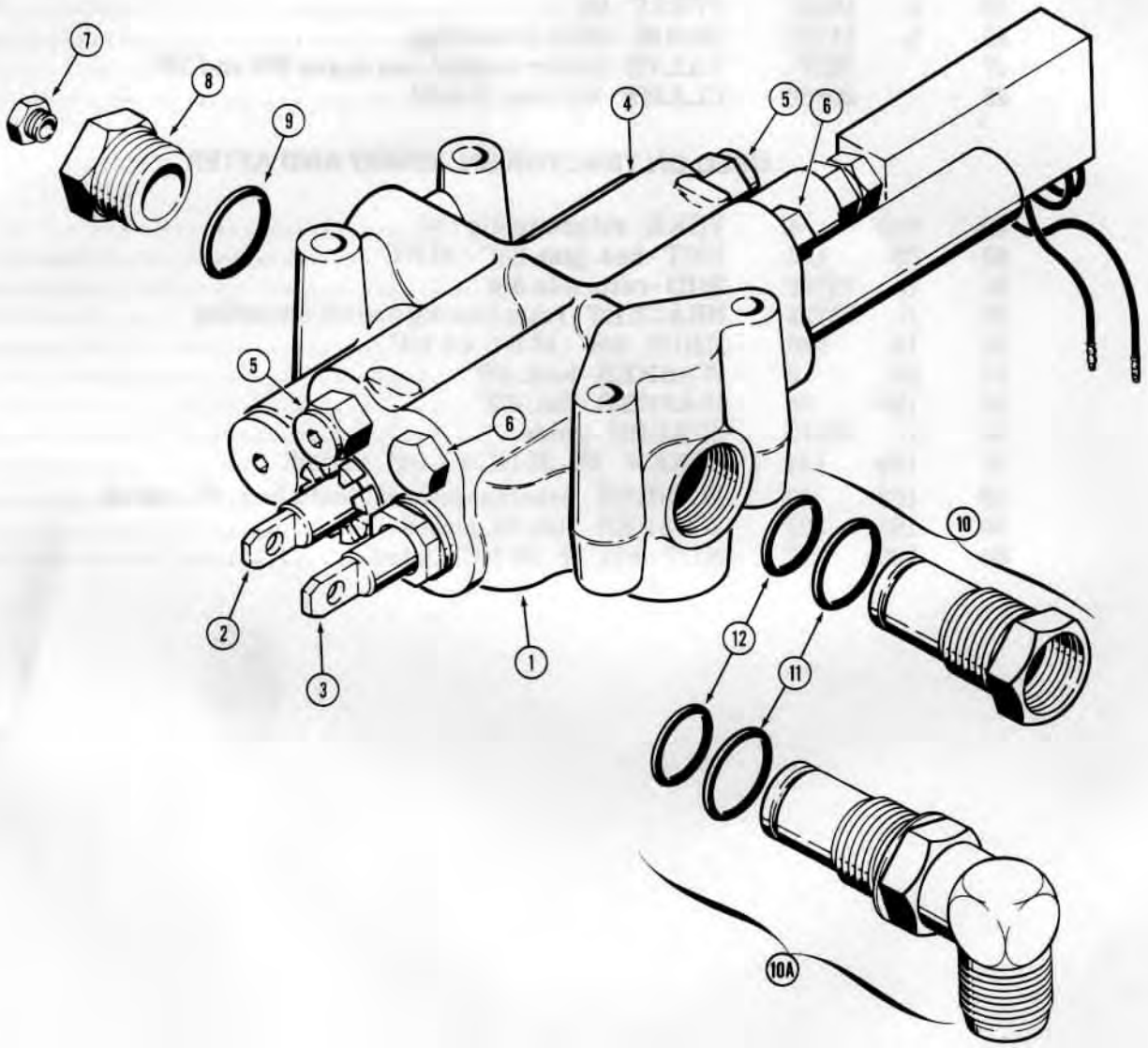

750671A

http://www.minnparbackhoeparts.com/

LOADER CONTROL VALVE-2 SPOOL

REF.	PART NO.	DESCRIPTION	REQ'D.
1	D 73511	VALVE - loader control, 2 spool, Parker series VDSP-22, used on models without PTO	1
1	D 72566	VALVE - loader control, 2 spool, Parker series VDSP-22, used on models with PTO	1
2	L 35090	SPOOL - loader tilt, parts list page 259	1
3	D 46024	SPOOL - loader lift, parts list page 261	1
3	D 46025	SPOOL - loader lift, parts list page 261	1
3	D 46026	SPOOL - loader lift, parts list page 261	1
3	D 46027	SPOOL - loader lift, parts list page 261	1
4	NSS	VALVE - main relief, used in D73511 valves only, parts list page 265	1
4	NSS	VALVE - two stage main relief, used in D72566 valves only, parts list page 265	1
5	NSS	VALVE - secondary relief, parts list page 263	2
6	NSS	VALVE - check, parts list page 267	2
7	221- 662	PLUG - pipe, hex head, 1/4" NPT	1
8	D 38825	FITTING - valve port	1
9	218- 5008	O-RING - fitting	1
10	D 61251	FITTING - special sleeve, straight, if used	1
10A	D 75575	FITTING - special sleeve, 90°, if used	1
11	218- 5010	O-RING - large	1
12	L 32680	O-RING - small	1

http://www.minnparbackhoeparts.com/

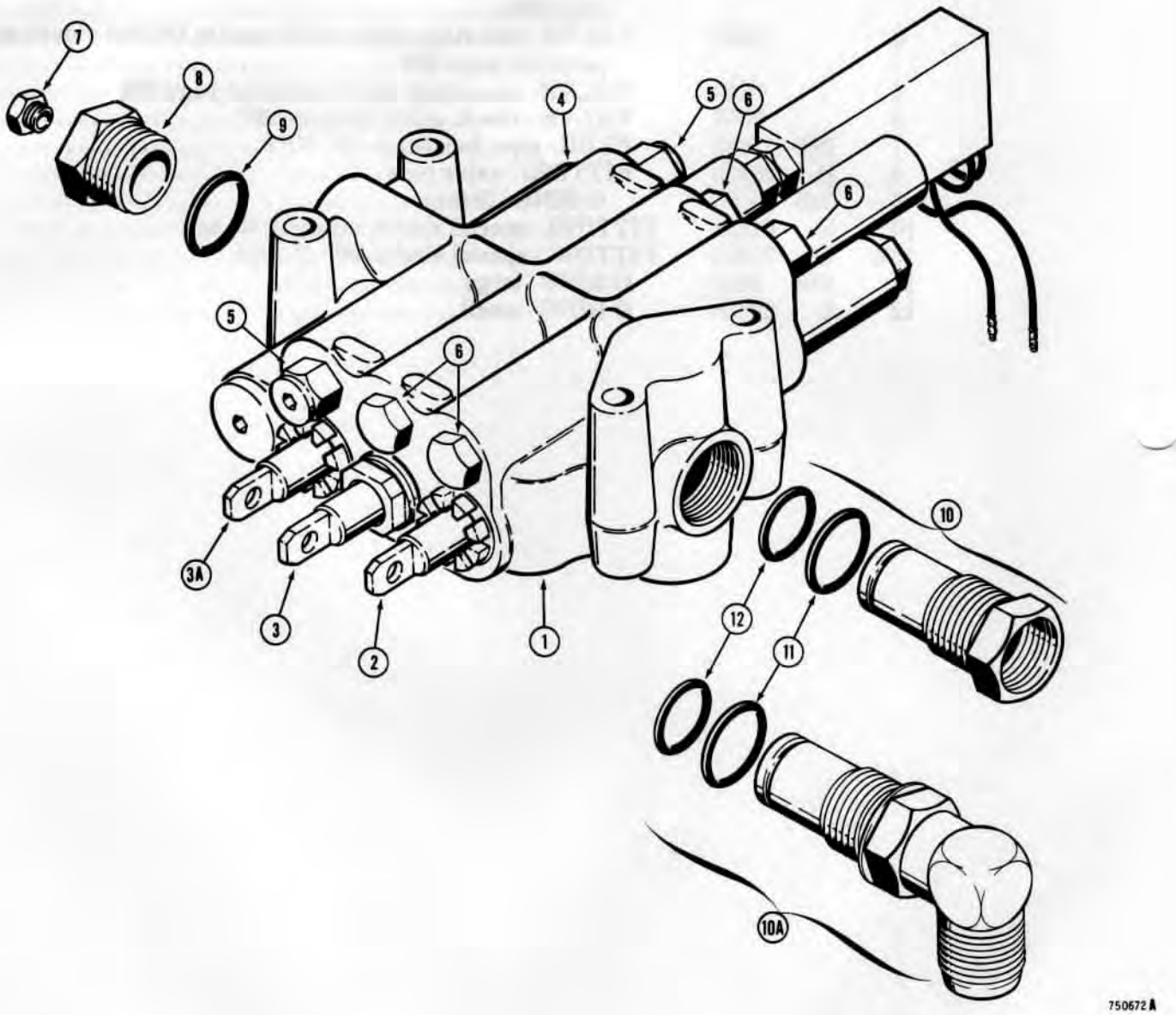

http://www.minnparbackhoeparts.com/

LOADER CONTROL VALVE-3 SPOOL

REF.	PART NO.	DESCRIPTION	REQ'D.
1	D 73512	VALVE - loader control, 3 spool, Parker series VDSP-22, used on models without PTO	1
1	D 72566	VALVE - loader control, 2 spool, Parker series VDSP-22, used on models with PTO	1
2	D 37050	SPOOL - loader clam, parts list page 257	1
2	D 37051	SPOOL - loader clam, parts list page 257	1
2	D 37052	SPOOL - loader clam, parts list page 257	1
2	D 37053	SPOOL - loader clam, parts list page 257	1
3	D 46024	SPOOL - loader lift, parts list page 261	1
3	D 46025	SPOOL - loader lift, parts list page 261	1
3	D 46027	SPOOL - loader lift, parts list page 261	1
3	D 46026	SPOOL - loader lift, parts list page 261	1
3A	L 35090	SPOOL - loader tilt, parts list page 259	1
4	NSS	VALVE - main relief, used in D73512 valves only, parts list page 265	1
4	NSS	VALVE - two stage main relief, used in D72566 valves only, parts list page 265	1
5	NSS	VALVE - secondary relief, parts list page 263	2
6	NSS	VALVE - check, parts list page 267	4
7	221- 662	PLUG - pipe, hex head, 1/4" NPT	1
8	D 38825	FITTING - valve port	1
9	218- 5008	O-RING - fitting	1
10	D 61251	FITTING - special sleeve, if used	1
10A	D 75575	FITTING - special sleeve, 90°, if used	1
11	218- 5010	O-RING - large	1
12	L 32680	O-RING - small	1

http://www.minnparbackhoeparts.com/

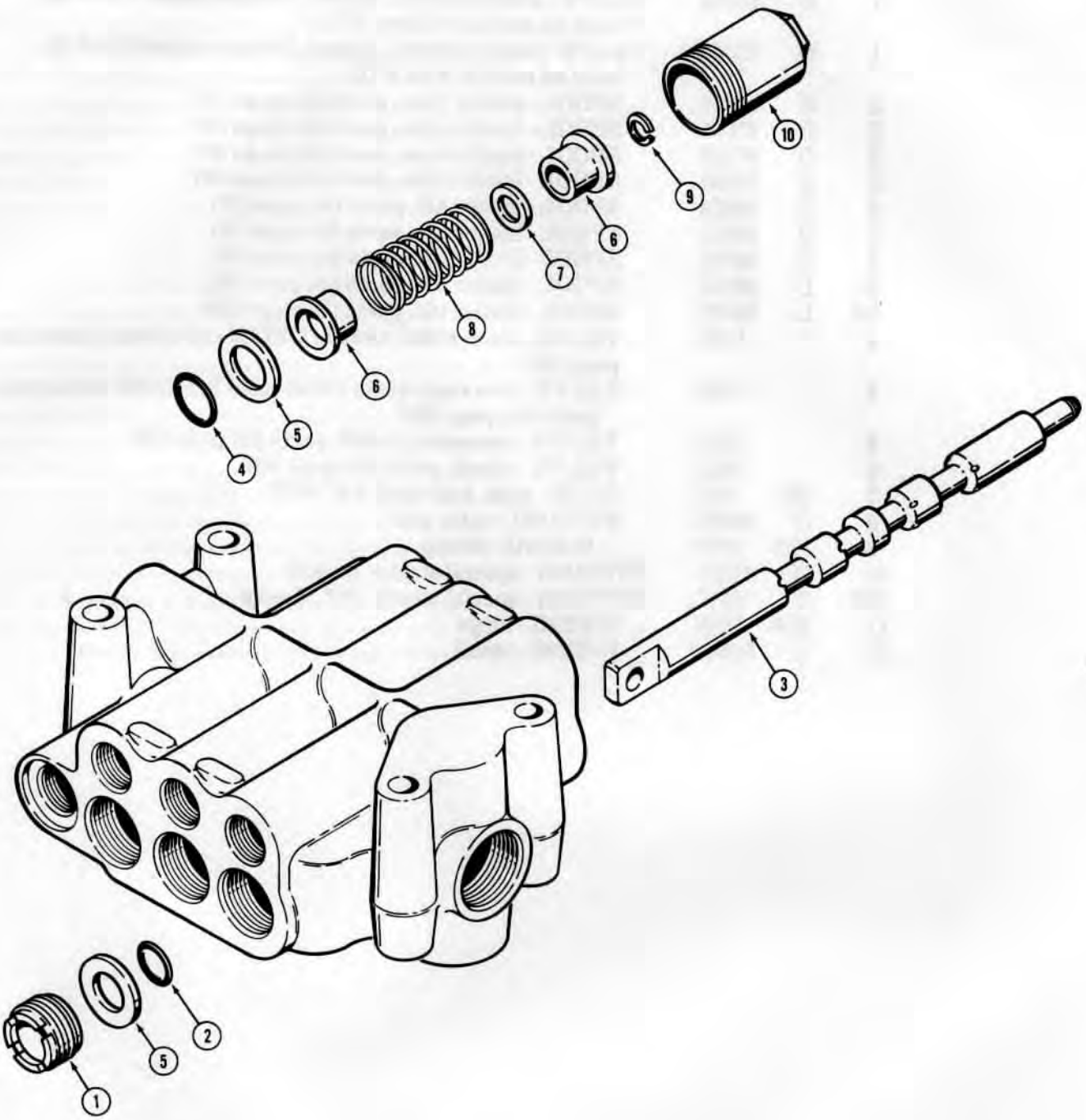

750673 A

http://www.minnparbackhoeparts.com/

LOADER CONTROL VALVE

LOADER CLAM SPOOL

REF.	PART NO.		DESCRIPTION	REQ'D.
	D	37050	SPOOL ASSEMBLY - loader clam, color code - black or letter code - W, .73700" to .73709" (18.7198-18.7220 mm)	1
	D	37051	SPOOL ASSEMBLY - loader clam, color code - blue or letter code - X, .73710" to .73719" (18.7223-18.7246 mm)	1
	D	37052	SPOOL ASSEMBLY - loader clam, color code - yellow or letter code - Y, .73720" to .73729" (18.7249-18.7272 mm)	1
	D	37053	SPOOL ASSEMBLY - loader clam, color code - green or letter code - Z, .73730" to .73740" (18.7274-18.7299 mm)	1
1	L	30744	GLAND AND WIPER - spool	1
2	A	27365	O-RING - gland	1
3		NSS	SPOOL	1
4	A	27365	O-RING	1
5	A	14535	RETAINER - seal	2
6	A	14533	RETAINER - spring	2
7	A	25286	WASHER - special	1
8	A	14534	SPRING - spool return	1
9	A	27020	RING - retaining	1
10	A	14529	CAP - spool	1

http://www.minnparbackhoeparts.com/

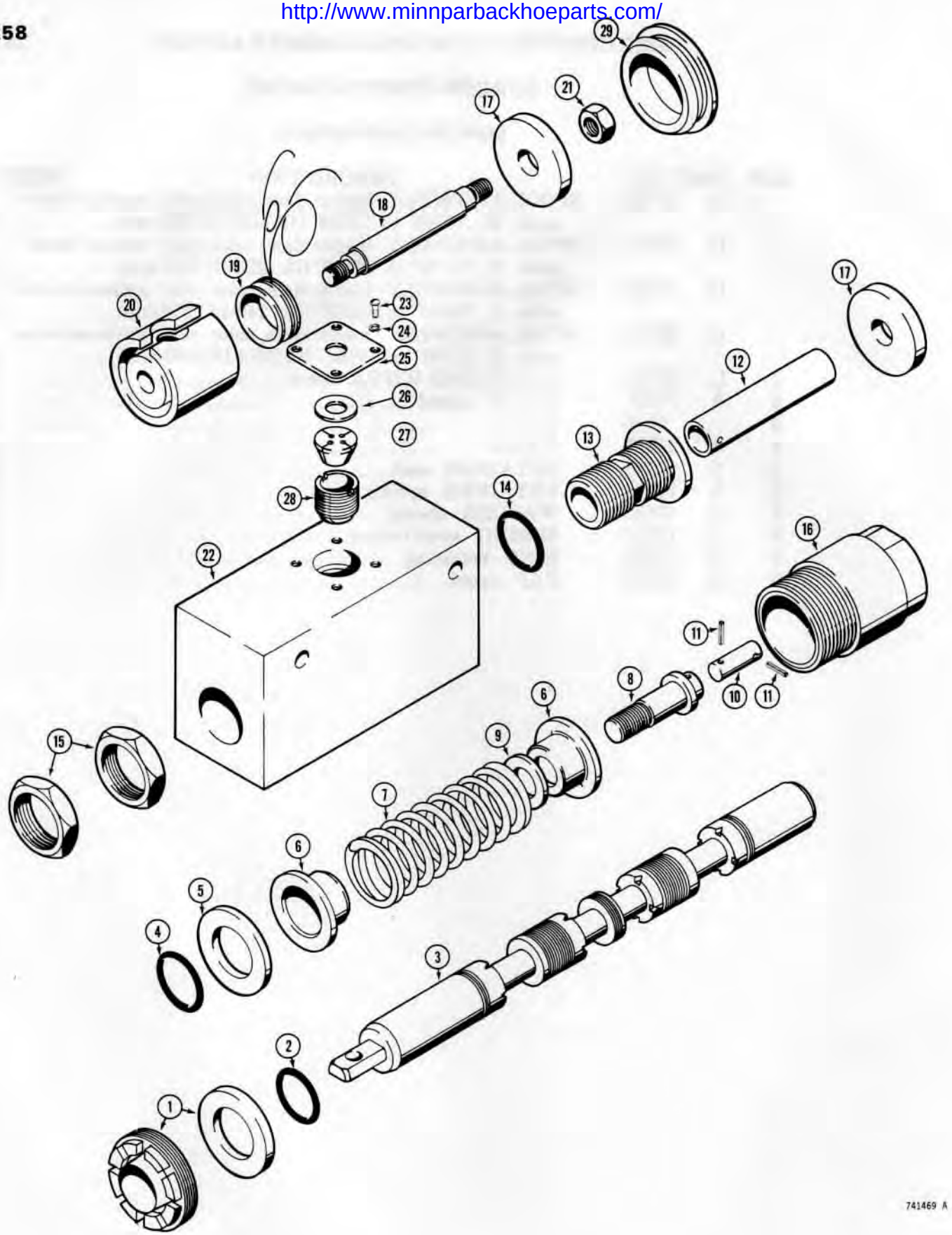

http://www.minnparbackhoeparts.com/

LOADER CONTROL VALVE

LOADER TILT SPOOL

REF.	PART NO.	DESCRIPTION	REQ'D.
	L 35090	SPOOL ASSEMBLY - loader tilt	1
1	L 30744	GLAND AND WIPER - spool	1
2	A 27365	O-RING	1
3	L 36051	SPOOL - tilt control	1
4	A 27365	O-RING	1
5	A 14535	RETAINER - seal	2
6	A 14533	RETAINER - spring	2
7	A 25285	SPRING - spool	1
8	L 36048	PLUG - spool	1
9	A 25286	WASHER - spacer	1
10	D 33858	LINK - spool detent	1
11	138- 2012	PIN - spirol, 1/8" x 1/2"	2
12	L 36049	SPACER - detent link	1
13	L 36046	CONNECTOR - spool end and detent	1
14	F 62114	O-RING	1
15	L 36045	NUT - hex, jam	2
16	L 36047	CAP - spool	1
17	L 36038	CLAPPER - magnetic detent	2
18	L 36050	SPACER - clapper	1
19	L 36147	COIL - magnetic detent	1
20	L 36041	SLEEVE - coil	1
21	25- 114	NUT - hex, 1/4" - 28 NF	1
22	L 36040	HOUSING - magnetic detent	1
23	173- 26	SCREW - round head machine, #4 - 40 NC x 5/16"	4
24	192- 53	WASHER - heavy lock, #4, plated	4
25	L 36145	PLATE - cover	1
26	L 36146	WASHER - spacer	1
27	L 33782	SEAL - moisture	1
28	L 36042	LOCK - coil	1
29	L 36039	CAP - magnetic detent spool	1

http://www.minnparbackhoeparts.com/

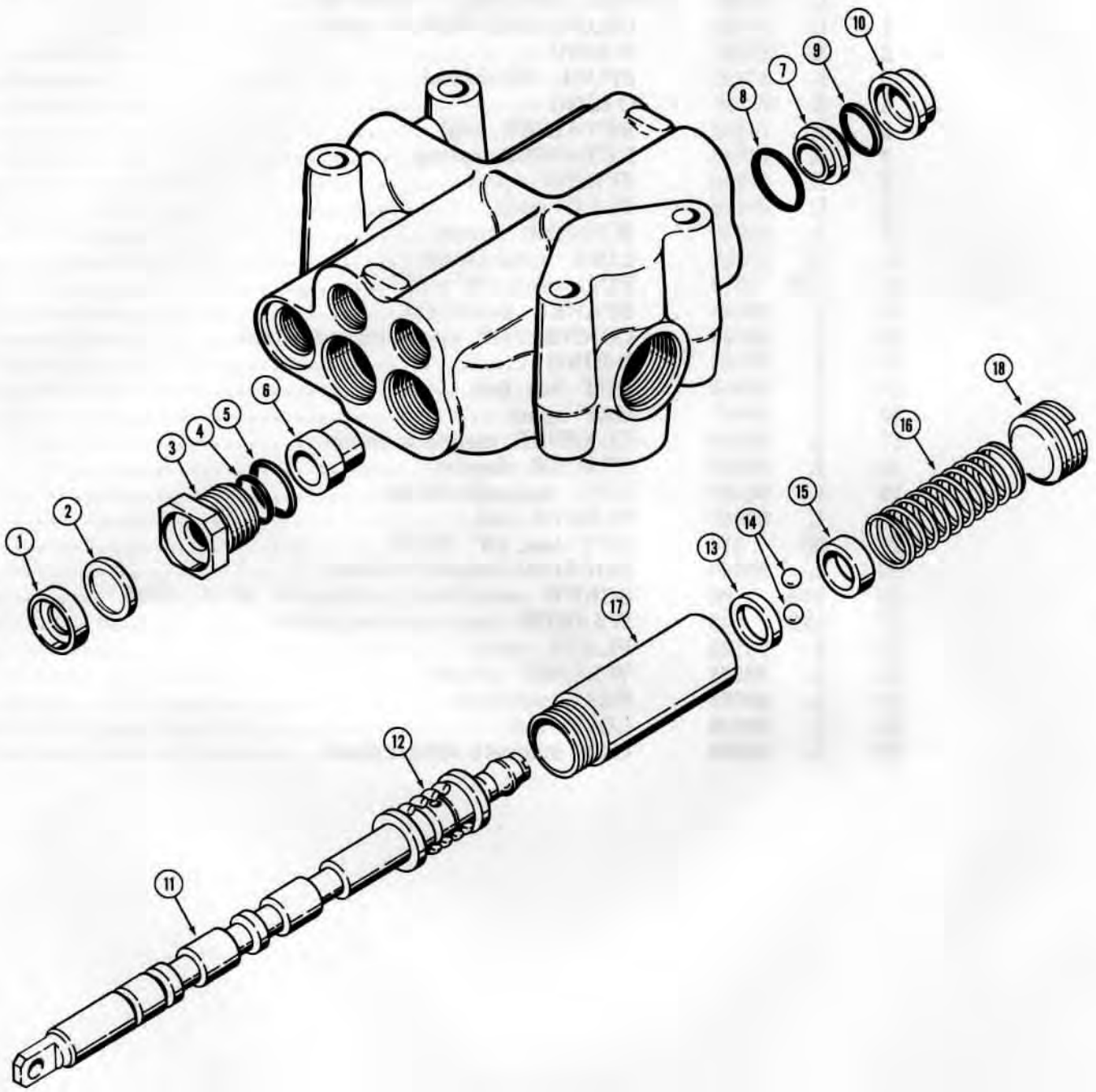

http://www.minnparbackhoeparts.com/

LOADER CONTROL VALVE

LOADER LIFT SPOOL

REF.	PART NO.	DESCRIPTION	REQ'D.
	D 46024	SPOOL ASSEMBLY - loader lift, color code - black or letter code - W, .73700" to .73709" (18.7198-18.7220 mm)	1
	D 46025	SPOOL ASSEMBLY - loader lift, color code - blue or letter code - X, .73710" to .73719" (18.7223-18.7246 mm)	1
	D 46026	SPOOL ASSEMBLY - loader lift, color code - yellow or letter code - Y, .73720" to .73729" (18.7249-18.7272 mm)	1
	D 46027	SPOOL ASSEMBLY - loader lift, color code - green or letter code - Z, .73730" to .73740" (18.7274-18.7299 mm)	1
1	D 37153	RETAINER - wiper ring	1
2	A 14527	RING - wiper	1
3	D 37152	GLAND - spool	1
4	A 27365	O-RING - gland, small	1
5	D 37156	O-RING - gland, large	1
6	D 37076	SLEEVE - spool, lug end	1
7	D 33857	RETAINER - O-ring	1
8	A 7623	O-RING - housing, large	1
9	A 27365	O-RING - gland, small	1
10	D 33856	RETAINER - O-ring	1
	D 46034	SPOOL KIT - D46024 spool assembly only	1
	D 46035	SPOOL KIT - D46025 spool assembly only	1
	D 46036	SPOOL KIT - D46026 spool assembly only	1
	D 46037	SPOOL KIT - D46027 spool assembly only	1
11	NSS	SPOOL ASSEMBLY - four position	1
12	A 16882	SPRING - centering	1
13	L 30455	WASHER - detent	1
14	211- 8	BALL - detent, 9/32" dia.	8
15	L 30456	CAM - detent	1
16	L 30626	SPRING - detent	1
17	L 30454	CAP - valve, detent	1
18	L 30458	PLUG - detent adjustment	1

http://www.minnparbackhoeparts.com/

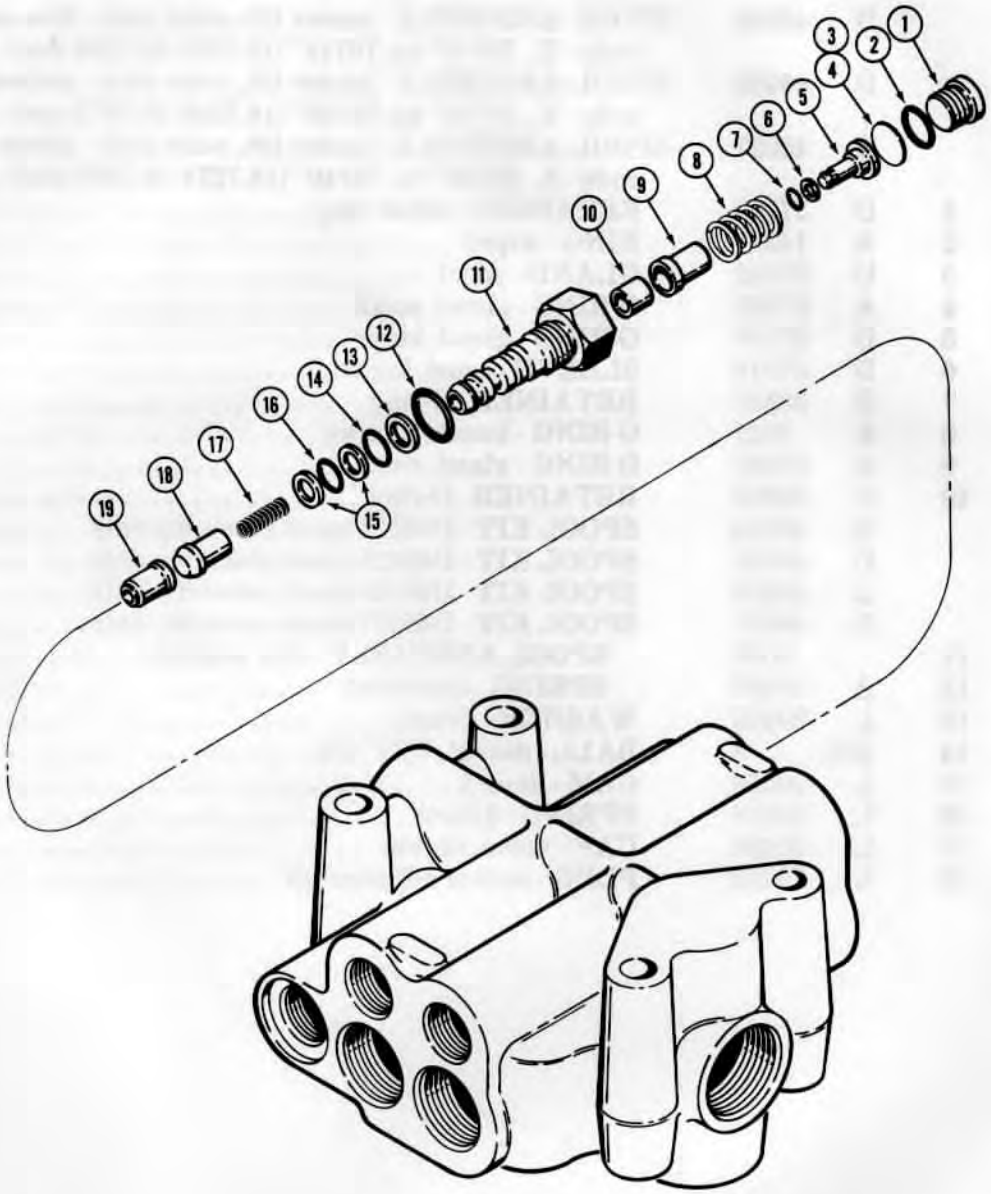

750675

http://www.minnparbackhoeparts.com/

LOADER CONTROL VALVE

SECONDARY RELIEF VALVE

REF.	PART NO.	DESCRIPTION	REQ'D.
1	218- 5210	PLUG - secondary relief	1
2	218- 5006	O-RING - plug	1
3	D 40355	SHIM - spring guide, .0050" (0.127 mm)	UAR
4	16917	SHIM - spring guide, .0105" (0.267 mm)	UAR
5	D 37073	GUIDE - spring	1
6	D 40357	RING - backup, spring guide	1
7	D 40356	O-RING - spring guide	1
8	D 37148	SPRING - plunger	1
9	D 37074	PLUNGER - relief valve	1
10	D 37075	SEAT - plunger	1
11	D 37072	BODY - secondary relief valve	1
12	218- 5007	O-RING - valve body, large	1
13	D 37071	RING - backup, center O-ring	1
14	D 26265	O-RING - relief body, center	1
15	D 37070	RING - backup, small O-ring	2
16	D 26872	O-RING - relief body, small	1
17	D 37067	SPRING - poppet	1
18	D 37068	POPPET - check valve	1
19	D 40358	SEAT - poppet	1

http://www.minnparbackhoeparts.com/

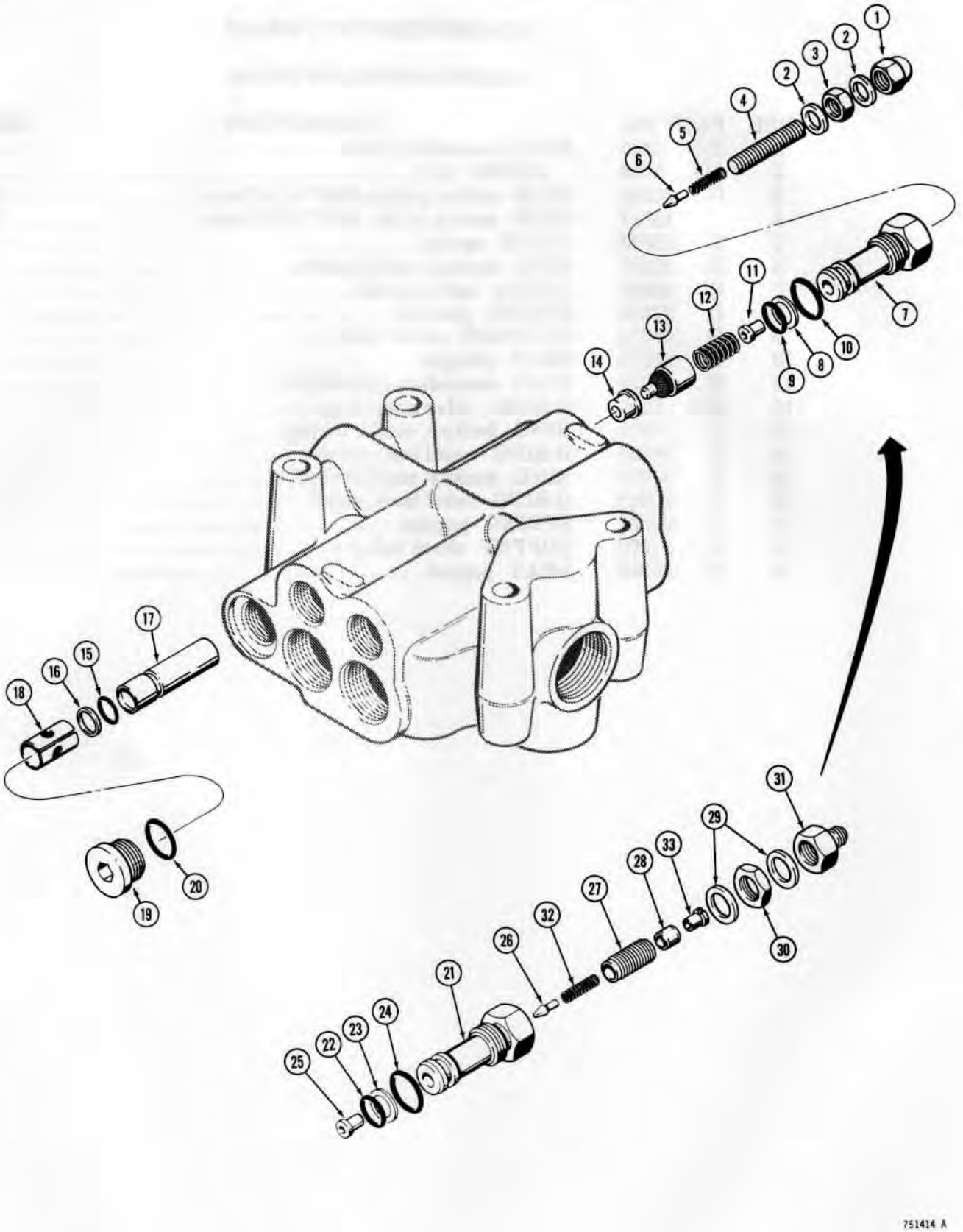

http://www.minnperbackhoeparts.com/

LOADER CONTROL VALVE

MAIN RELIEF VALVE

REF.	PART NO.	DESCRIPTION	REQ'D.
1	129- 514	NUT - acorn, main relief valve	1
2	D 26270	WASHER - special	2
3	25- 155	NUT - hex, jam, 5/16" - 24 NF	1
4	176- 296	SCREW - adjusting, main relief valve, 5/16" - 24 NF x 1-3/4"	1
5	D 26268	SPRING - pilot	1
6	D 26267	PLUNGER - relief valve	1
7	A 25291	BODY - valve	1
8	L 30443	RING - backup, L30444 seal	1
9	L 30444	O-RING - relief valve cap, small	1
10	218- 5006	O-RING - relief valve cap, large	1
11	D 26266	SEAT - plunger	1
12	D 52319	SPRING - relief valve	1
13	D 37062	POPPET ASSEMBLY - main relief valve	1
14	D 37063	SEAT - poppet	1
15	L 30444	O-RING - sleeve	1
16	L 30443	RING - backup, L30444 seal	1
17	D 37064	SLEEVE - poppet seat	1
18	D 37065	SLEEVE - drain	1
19	218- 5210	PLUG - main relief valve	1
20	218- 5006	O-RING - plug	1

USED ON PTO MODELS ONLY

	D 71665	VALVE ASSEMBLY - dual main relief	1
21	D 37045	BODY - valve	1
22	L 30444	O-RING - small	1
23	L 30443	RING - backup, L30444 seal	1
24	218- 5006	O-RING - large	1
25	D 26266	SEAT - pilot	1
26	D 26267	PLUNGER - pilot	1
27	D 27258	SCREW - adjusting	1
28	D 27261	PISTON - relief valve	1
29	D 27259	SEAL - special	2
30	25- 1510	NUT - hex, jam, 5/8" - 18 NF	1
31	D 27260	FITTING - pilot	1
32	D 26268	SPRING - pilot	1
33	R 29766	RETAINER - piston	1

http://www.minnparbackhoeparts.com/

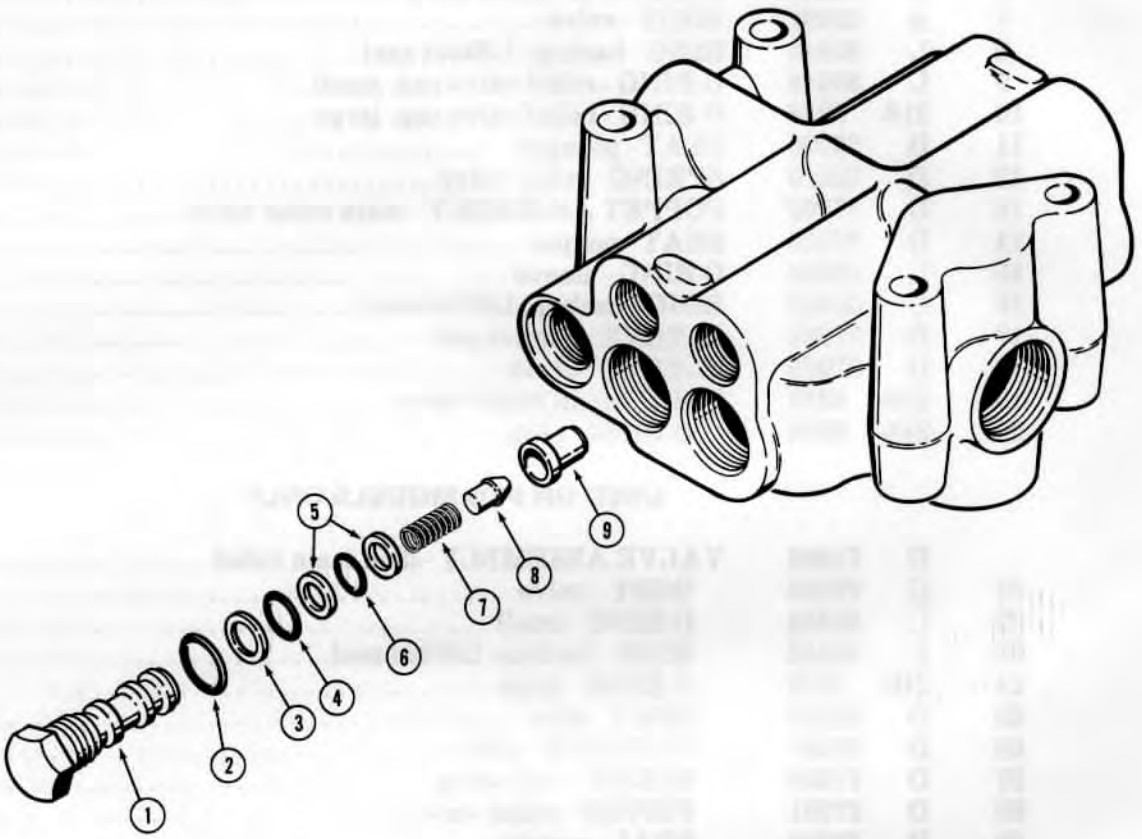

750677

http://www.minnparbackhoeparts.com/

LOADER CONTROL VALVE

CHECK VALVE

REF.	PART NO.	DESCRIPTION	REQ'D.
1	D 37066	CAP - check valve	1
2	218- 5007	O-RING - check valve cap, large	1
3	D 37071	RING - backup, center O-ring	1
4	D 26265	O-RING - check valve cap, center	1
5	D 37070	RING - backup, small O-ring	2
6	D 26872	O-RING - check valve cap, small	1
7	D 37067	SPRING - check valve	1
8	D 37068	POPPET - check valve	1
9	D 40358	SEAT - poppet	1

Printed In U.S.A. Issued January, 1978

http://www.minnparbackhoeparts.com/

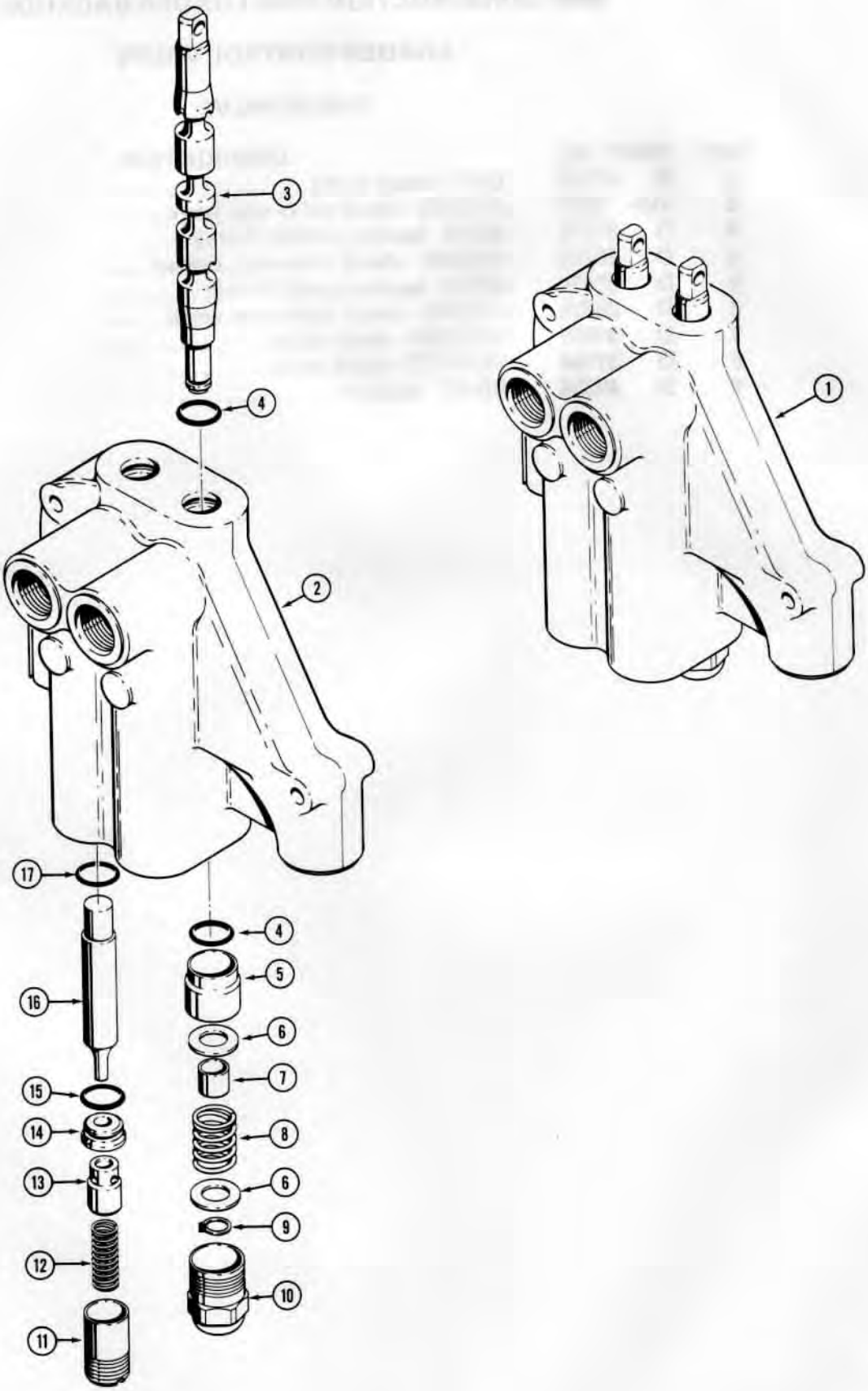

http://www.minnparbackhoeparts.com/

STABILIZER CONTROL VALVE

REF.	PART NO.		DESCRIPTION	REQ'D.
1	D	62348	VALVE ASSEMBLY - stabilizer control, Cessna No. 39042-AAE	1
2		NSS	BODY - valve	1
3		NSS	SPOOL - control valve	1
4	D	56443	O-RING - valve spool	4
5	D	56439	BUSHING - valve spool	2
6	F	8235	WASHER - spring retainer	4
7	D	56909	SPACER - spring	2
8	D	56445	SPRING - spool return	2
9	A	27020	RING - retaining, washer	2
10	F	35196	CAP - spool end	2
11	D	59653	PLUG - spring retainer	2
12	D	56444	SPRING - poppet	2
13	D	59654	POPPET - valve	2
14	D	56455	SEAT - plunger	2
15	D	48359	O-RING - seat	2
16	D	59655	PLUNGER - valve	2
17	D	31410	O-RING - plunger	2

http://www.minnparbackhoeparts.com/

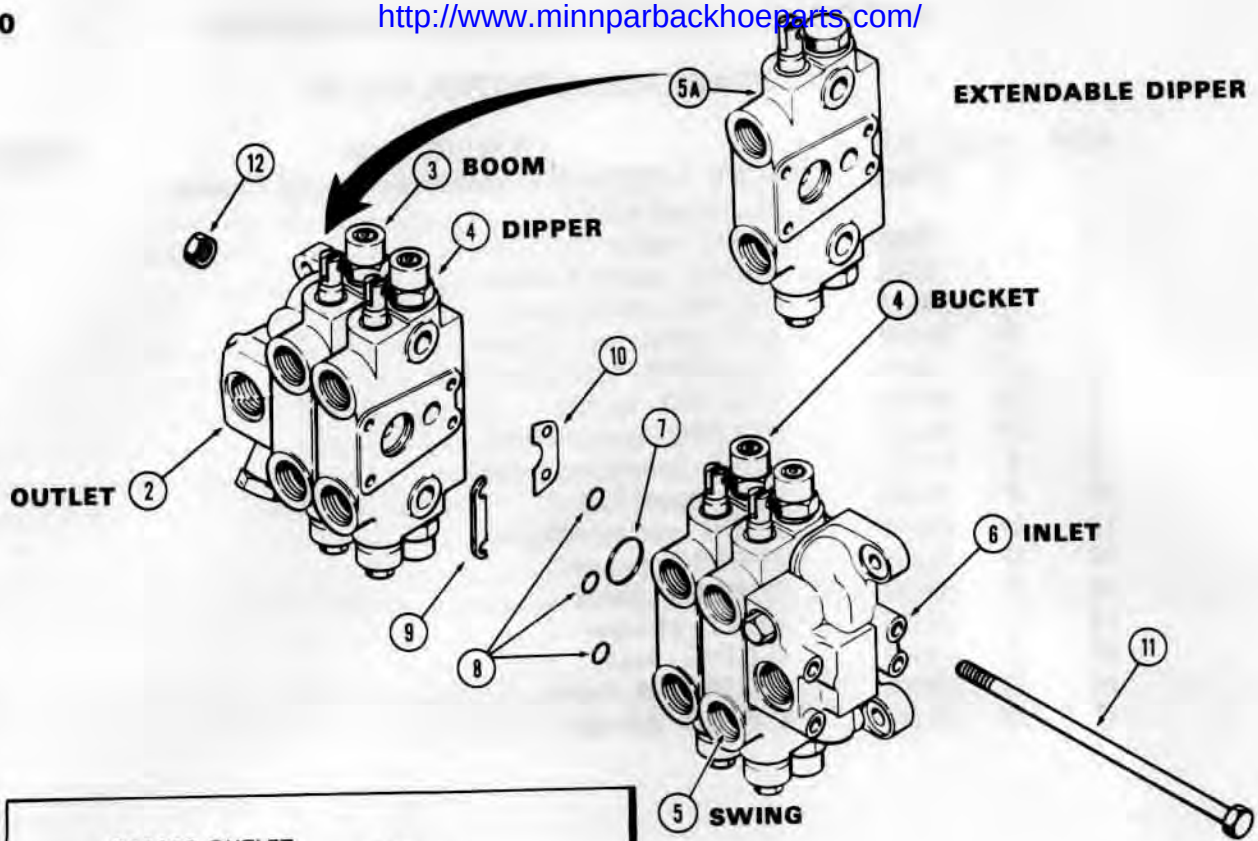

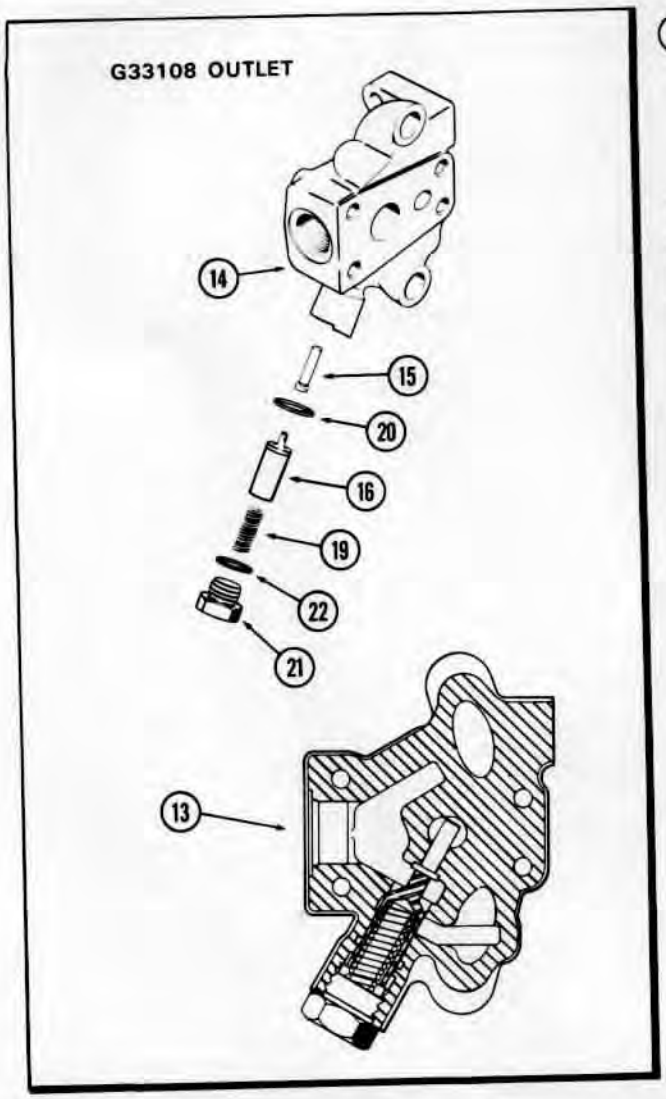

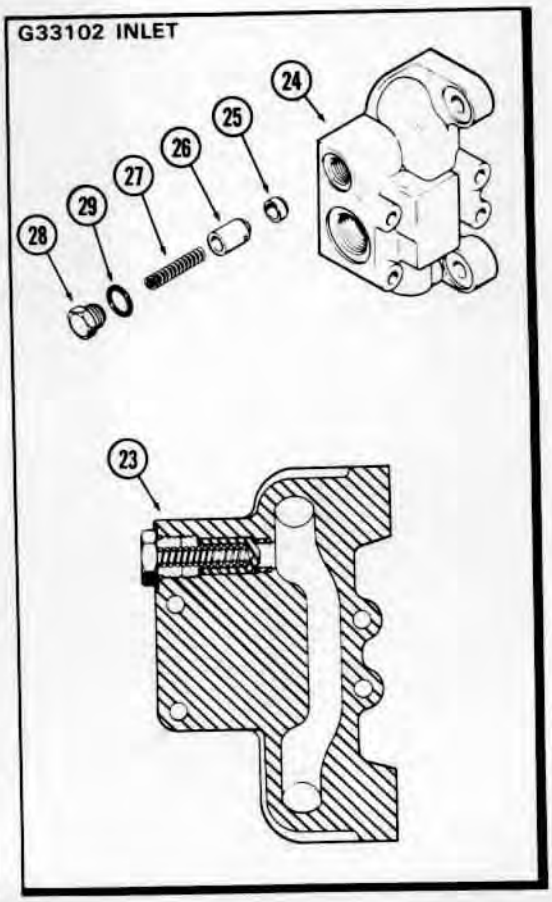

750696

http://www.minnparbackhoeparts.com/

BACKHOE CONTROL VALVES

REF.	PART NO.		DESCRIPTION	REQ'D.
1	G	34897	VALVE ASSEMBLY - control, models without extendable dipper, before backhoe sn. 5355084, not shown assembled	1
1	G	100244	VALVE ASSEMBLY - control, models without extendable dipper, backhoe sn. 5355084 and after, not shown assembled	1
1	G	35360	VALVE ASSEMBLY - control, models with extendable dipper, before backhoe sn. 5355084, not shown assembled	1
1	G	100196	VALVE ASSEMBLY - control, models with extendable dipper, backhoe sn. 5355084 and after, not shown assembled	1
2		REF.	VALVE SECTION - outlet, see below	1
3		REF.	VALVE SECTION - boom, see page 277	1
4		REF.	VALVE SECTION - bucket and dipper, see page 273	2
5		REF.	VALVE SECTION - swing, see page 275	1
5A		REF.	VALVE SECTION - dipper extension, used in G35360 or G100196 valves only, see page 273B	1
6		REF.	VALVE SECTION - inlet, see below	1
7	G	34001	O-RING - section ports, large	5-6
8	G	34000	O-RING - section ports, small	15-18
9	G	33964	SHIM - section, port side of valve	5-6
10	G	33965	SHIM - section, non-port side of valve	5-6
11	G	33114	BOLT - tie, valve sections, 3/8" - 16 NC x 13-3/8", models without extendable dipper	4
11	G	34675	BOLT - tie, valve sections, 3/8" - 16 NC x 15-3/4", models with extendable dipper	4
12	25-	106	NUT - hex, 3/8" - 16 NC	4

OUTLET SECTION

13	G	33108	VALVE SECTION ASSEMBLY - outlet	1
14		NSS	BODY - outlet section	1
15	G	33110	PISTON - regeneration sensing	1
16	G	34586	SPOOL - regeneration	1
17			RESERVED	
18			RESERVED	
19	G	33112	SPRING - spool	1
20	A	35104	O-RING - internal	1
21	G	33113	PLUG - spool retaining	1
22	218-	5009	O-RING - plug	1

INLET SECTION

23	G	33102	VALVE SECTION ASSEMBLY - inlet	1
24		NSS	BODY - inlet section	1
25	G	33104	SEAT - check valve poppet	1
26	G	33105	POPPET - check valve	1
27	G	33106	SPRING - check valve	1
28	A	39586	PLUG - check valve	1
29	218-	5007	O-RING - plug	1

Printed in U.S.A.

Issued January, 1978

http://www.minnparbackhoeparts.com/

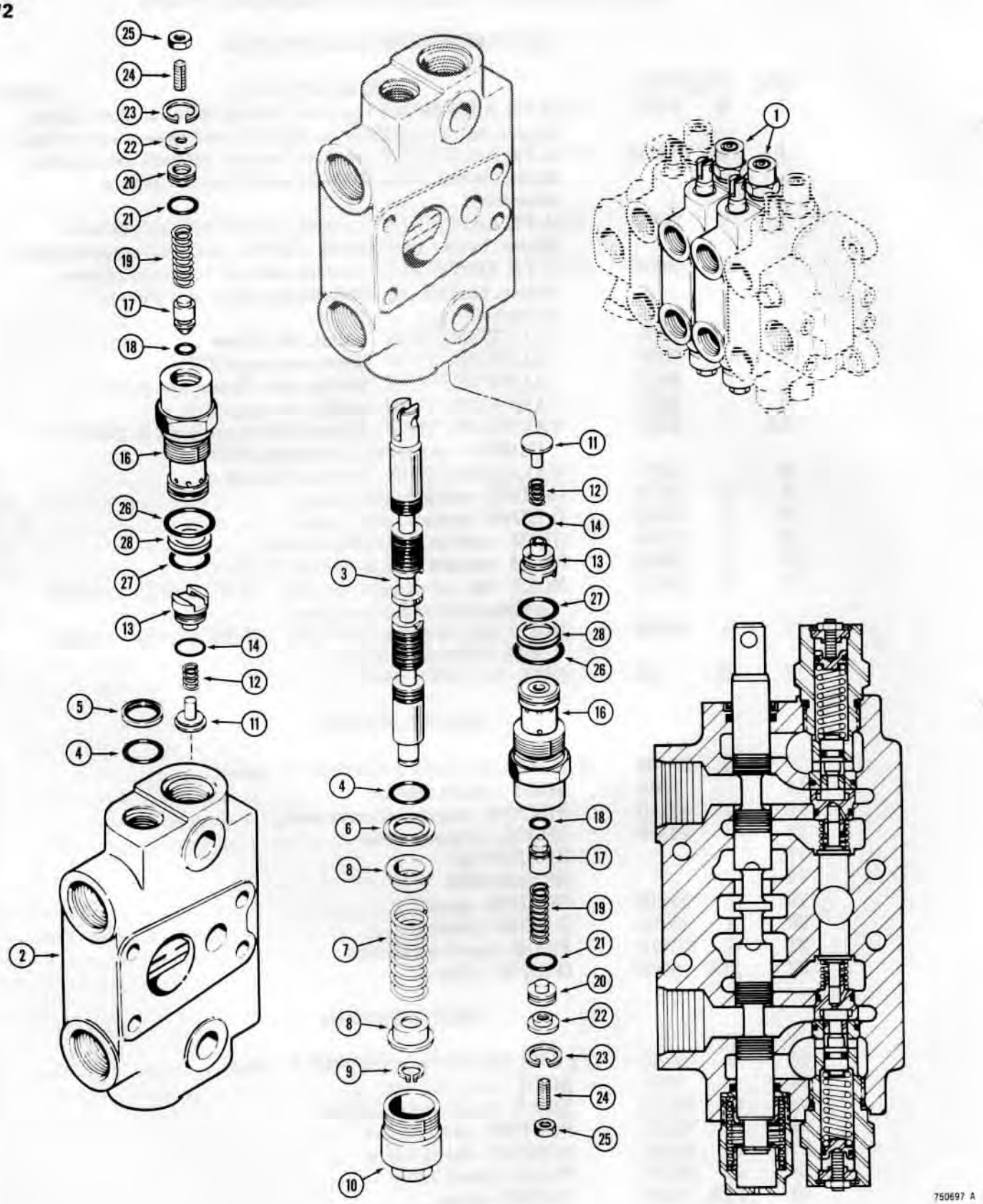

http://www.minnparbackhoeparts.com/

BACKHOE CONTROL VALVE

DIPPER AND BUCKET SECTION

REF.	PART NO.	DESCRIPTION	REQ'D.
1	G 33097	VALVE SECTION ASSEMBLY - dipper and bucket, used before backhoe sn. 5355084, order G35444	1
1	G 35444	VALVE SECTION ASSEMBLY - dipper and bucket, used on backhoe sn. 5355084 and after	1
2	NSS	BODY - section	1
3	NSS	SPOOL - valve	1
4	A 27365	O-RING	2
5	A 32309	SEAL - valve spool	1
6	G 33803	RETAINER - O-ring	1
7	G 34463	SPRING - spool centering	1
8	G 33075	RETAINER - centering spring	2
9	G 33077	RING - retaining	1
10	G 33080	CAP - centering spring	1
11	G 33081	POPPET - load check	2
12	G 33573	SPRING - load check	2
13	G 33084	PLUG - load check	2
14	G 33686	O-RING	2
15		RESERVED	
	*G 34043	VALVE ASSEMBLY - relief	2
16	NSS	BODY - relief valve	1
17	G NSS	POPPET - relief valve	1
18	A 28090	O-RING	1
19	G 33090	SPRING - relief valve	1
20	G 33091	PISTON - relief valve	1
21	D 31409	O-RING	1
22	G 33092	RETAINER - relief valve	1
23	G 46150	RING - retaining	1
24	178- 630	SCREW - set, hex socket, 1/4" - 20 NC x 3/4"	1
25	25- 144	NUT - hex, lock, 1/4" - 20 NC	1
26	218- 5008	O-RING - large	1
27	G 100959	O-RING - small	1
28	G 35540	RING - backup, if used	1
	*G 34862	KIT - service for G34043, includes items 16 thru 28	1

http://www.minnparbackhoeparts.com/

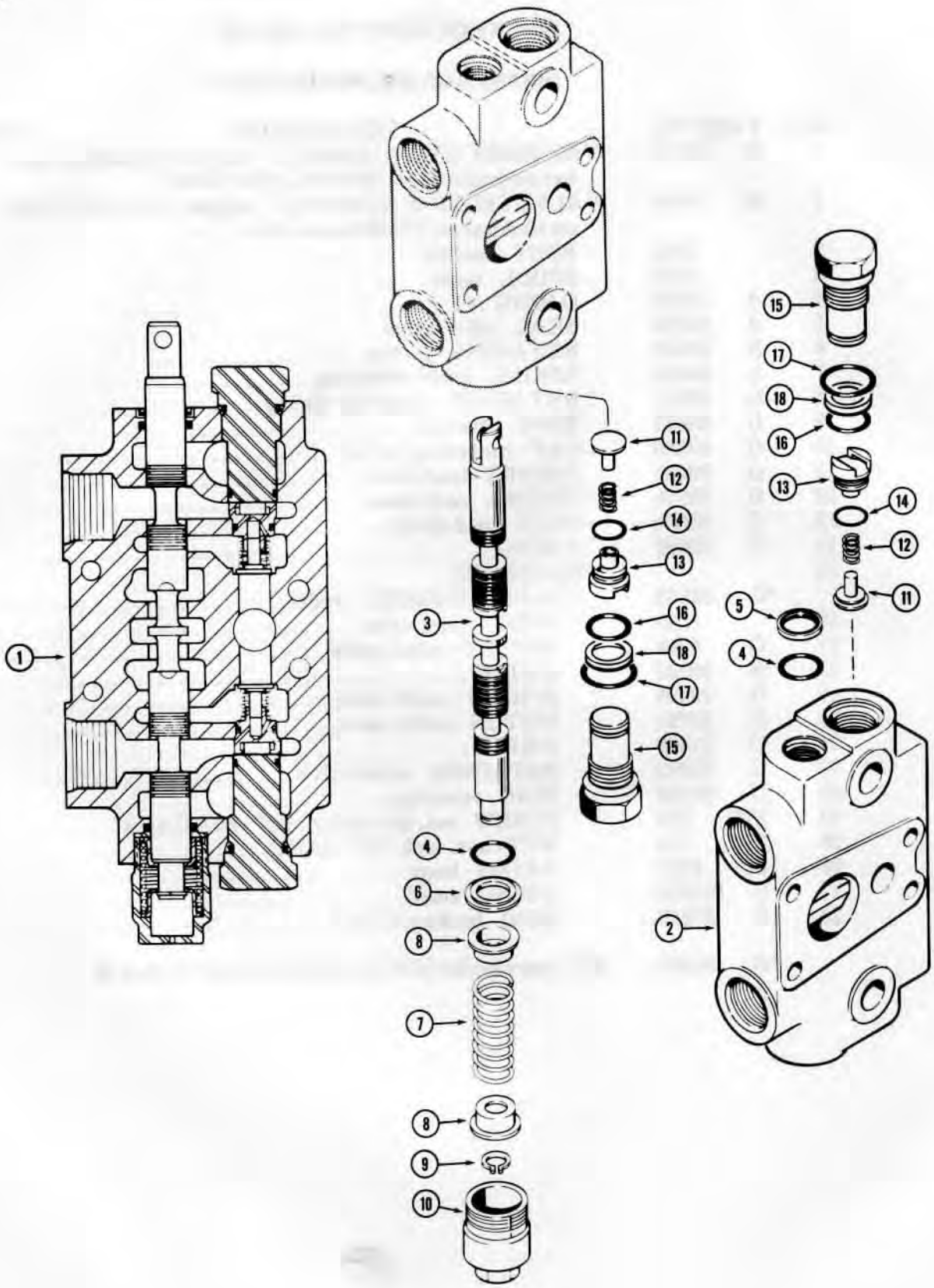

http://www.minnparbackhoeparts.com/

BACKHOE CONTROL VALVE

DIPPER EXTENSION SECTION

REF.	PART NO.	DESCRIPTION	REQ'D.
1	G 33121	VALVE SECTION ASSEMBLY - dipper extension, used before backhoe sn. 5355084, order G100193	1
1	G 100193	VALVE SECTION ASSEMBLY - dipper extension, used on backhoe sn. 5355084 and after	1
2	NSS	BODY - section	1
3	NSS	SPOOL - valve	1
4	A 27365	O-RING - body	2
5	A 32309	SEAL - valve spool	1
6	G 33803	RETAINER - O-ring	1
7	G 34463	SPRING - spool centering	1
8	G 33075	RETAINER - centering spring	2
9	G 33077	RING - retaining	1
10	G 33080	CAP - centering spring	1
11	G 33081	POPPET - load check	2
12	G 33573	SPRING - load check	1
13	G 33084	PLUG - load check	2
14	G 33686	O-RING - plug	2
15	G 33122	PLUG ASSEMBLY - relief port	2
16	G 100959	O-RING - plug	1
17	218- 5008	O-RING - plug	1
18	G 35540	RING - backup, if used	1

http://www.minnparbackhoeparts.com/

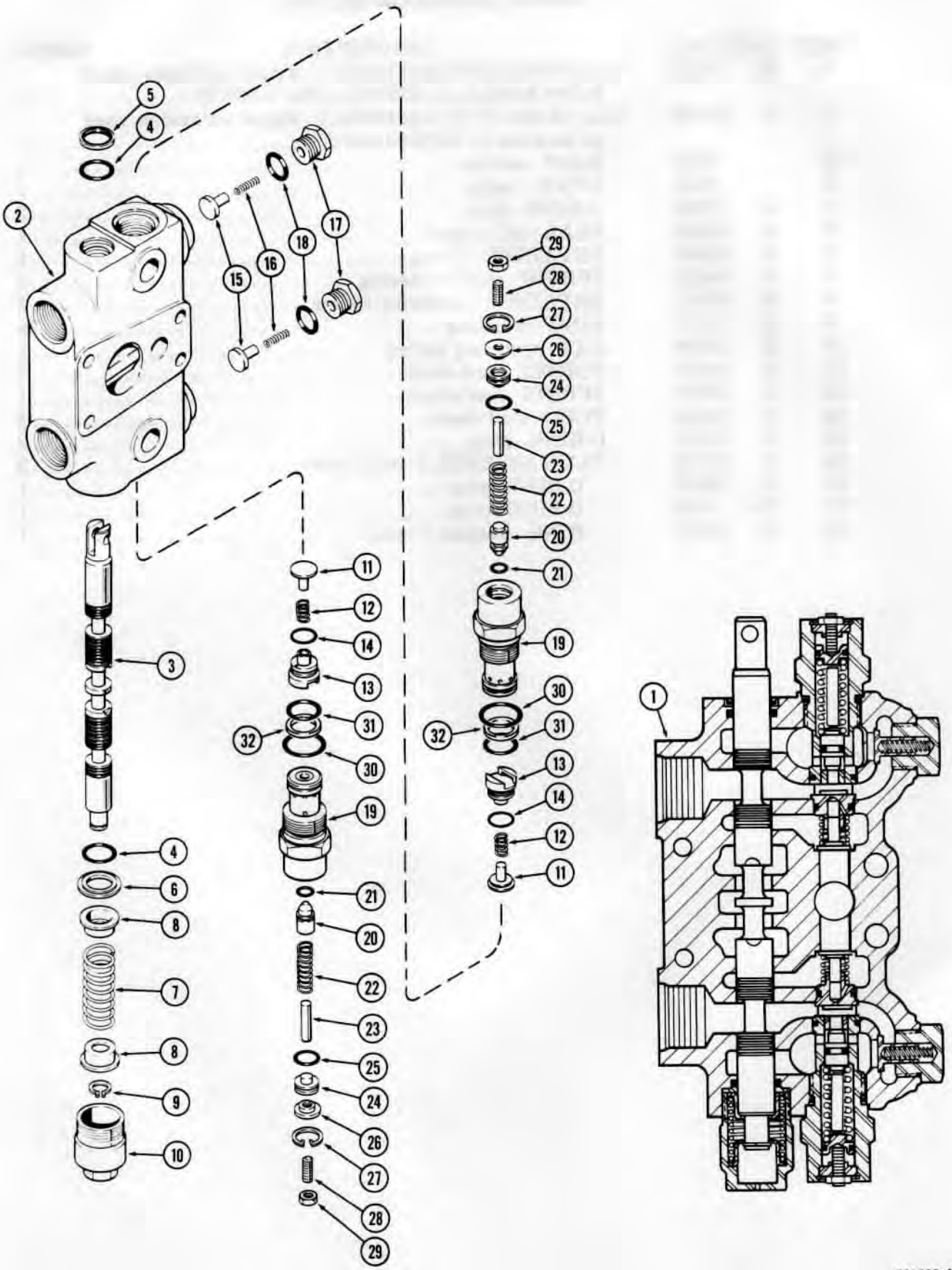

http://www.minnparbackhoeparts.com/

BACKHOE CONTROL VALVE

SWING SECTION

REF.	PART NO.	DESCRIPTION	REQ'D.
1	G 34941	VALVE SECTION ASSEMBLY - swing, used before backhoe sn. 5355084, order G100192	1
1	G 100192	VALVE SECTION ASSEMBLY - swing, used on backhoe sn. 5355084 and after	1
2	NSS	BODY - swing valve	1
3	NSS	SPOOL - swing valve	1
4	A 27365	O-RING - body	2
5	A 32309	SEAL - valve spool	1
6	G 33803	RETAINER - O-ring	1
7	G 34463	SPRING - spool centering	1
8	G 33075	RETAINER - centering spring	2
9	G 33077	RING - retaining	1
10	G 33080	CAP - centering spring	1
11	G 33081	POPPET - load check valve	2
12	G 33573	SPRING - load check valve	2
13	G 33084	PLUG - load check valve	2
14	G 33686	O-RING - plug	2
15	G 34938	POPPET - anti-cavity valve	2
16	G 34458	SPRING - anti-cavity valve	2
17	G 34937	PLUG - anti-cavity valve	2
18	218- 5007	O-RING - plug	2
	*G 34657	VALVE ASSEMBLY - relief	2
19	NSS	BODY - relief valve	1
20	G 33089	POPPET - relief valve	1
21	A 28090	O-RING - poppet	1
22	G 33090	SPRING - relief valve	1
23	G 34455	PIN - stop, relief valve spring	1
24	G 33091	PISTON - relief valve	1
25	D 31409	O-RING - piston	1
26	G 33092	RETAINER - relief valve	1
27	G 46150	RING - retaining	1
28	178- 630	SCREW - set, piston adjusting, 1/4" - 20 NC x 3/4"	1
29	25- 144	NUT - hex, lock, 1/4" - 20 NC	1
30	218- 5008	O-RING - large	1
31	G 100959	O-RING - small	1
32	G 35540	RING - backup, if used	1
	*G 34862	KIT - service for G34657, includes items 19 thru 32	1

http://www.minnparbackhoeparts.com/

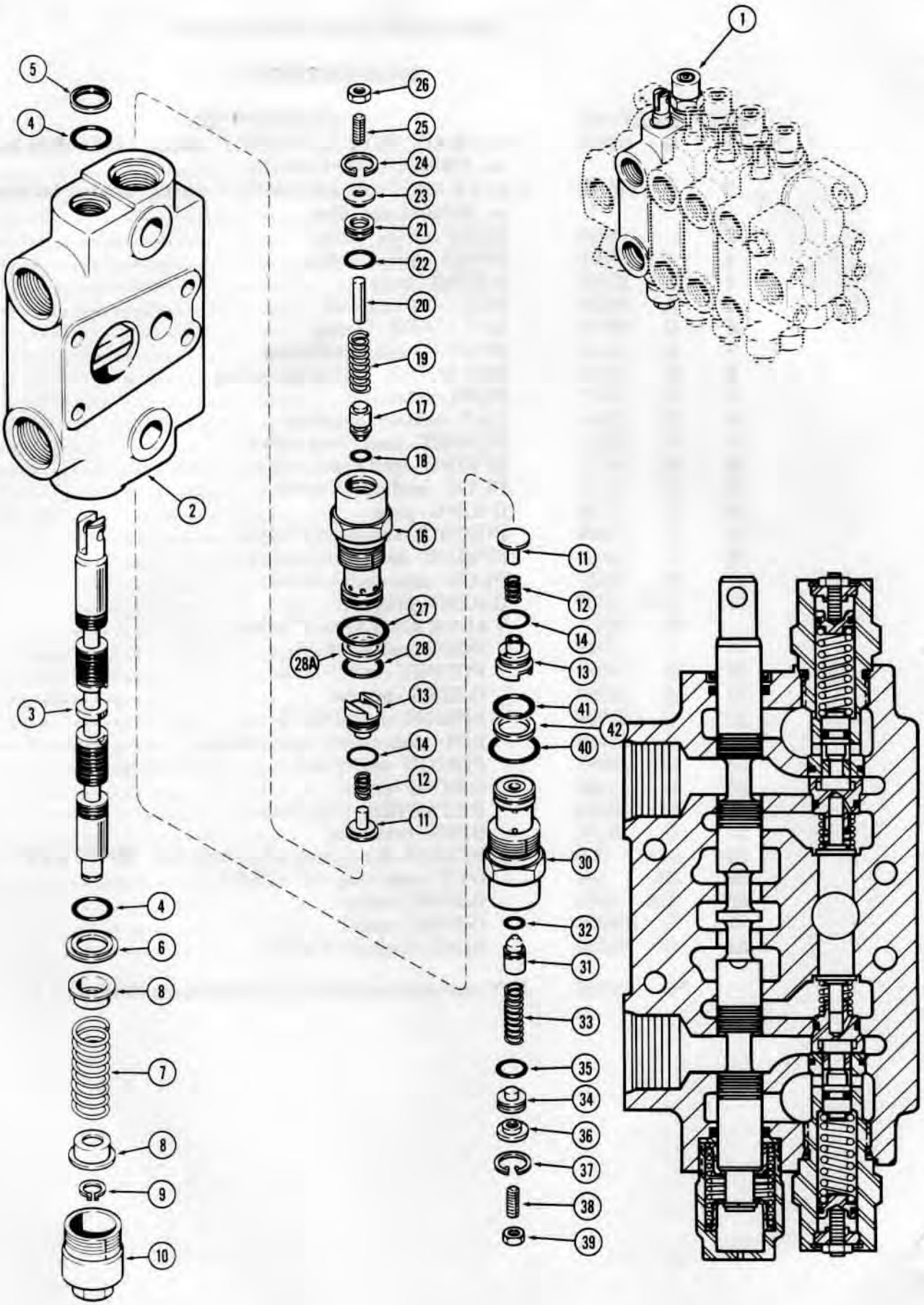

http://www.minnparbackhoeparts.com/

BACKHOE CONTROL VALVE

BOOM SECTION

REF.	PART NO.		DESCRIPTION	REQ'D.
1	G	33099	VALVE SECTION ASSEMBLY - boom, used before backhoe sn. 5355084, order G35445	1
1	G	35445	VALVE SECTION ASSEMBLY - boom, used on backhoe sn. 5355084 and after	1
2		NSS	BODY - valve section	1
3		NSS	SPOOL - boom valve	1
4	A	27365	O-RING - body	2
5	A	32309	SEAL - valve spool	1
6	G	33803	RETAINER - O-ring	1
7	G	34463	SPRING - spool centering	1
8	G	33075	RETAINER - centering spring	2
9	G	33077	RING - retaining	1
10	G	33080	CAP - centering spring	1
11	G	33081	POPPET - load check	2
12	G	33573	SPRING - load check	2
13	G	33084	PLUG - load check	2
14	G	33686	O-RING - plug	2
15	*G	33100	VALVE ASSEMBLY - relief, upper, not shown assembled	1
16		NSS	BODY - relief valve	1
17	G	33089	POPPET - relief valve	1
18	A	28090	O-RING - poppet	1
19	G	33090	SPRING - relief valve	1
20	G	33241	PIN - stop, relief valve	1
21	G	33091	PISTON - relief valve	1
22	D	31409	O-RING - piston	1
23	G	33092	RETAINER - relief valve	1
24	G	46150	RING - retaining	1
25	178-	630	SCREW - set, piston, 1/4" - 20 NC x 3/4"	1
26	25-	144	NUT - hex, lock, 1/4" - 20 NC	1
27	218-	5008	O-RING - large	1
28	G	33093	O-RING - small	1
28A	G	35540	RING - backup, if used	1
29	*G	34043	VALVE ASSEMBLY - relief, lower, not shown assembled	1
30		NSS	BODY - relief valve	1
31		NSS	POPPET - relief valve	1
32	A	28090	O-RING - poppet	1
33	G	33090	SPRING - relief valve	1
34	G	33091	PISTON - relief valve	1
35	D	31409	O-RING - piston	1
36	G	33092	RETAINER - relief valve	1
37	G	46150	RING - retaining	1
38	178-	630	SCREW - set, piston, 1/4" - 20 NC x 3/4"	1
39	25-	144	NUT - hex, lock, 1/4" - 20 NC	1
40	218-	5008	O-RING - large	1
41	G	100959	O-RING - small	1
42	G	35540	RING - backup, if used	1
	*G	34862	KIT - service for G33100 or G34043, includes items 16 thru 28A or 30 thru 42	1

http://www.minnparbackhoeparts.com/

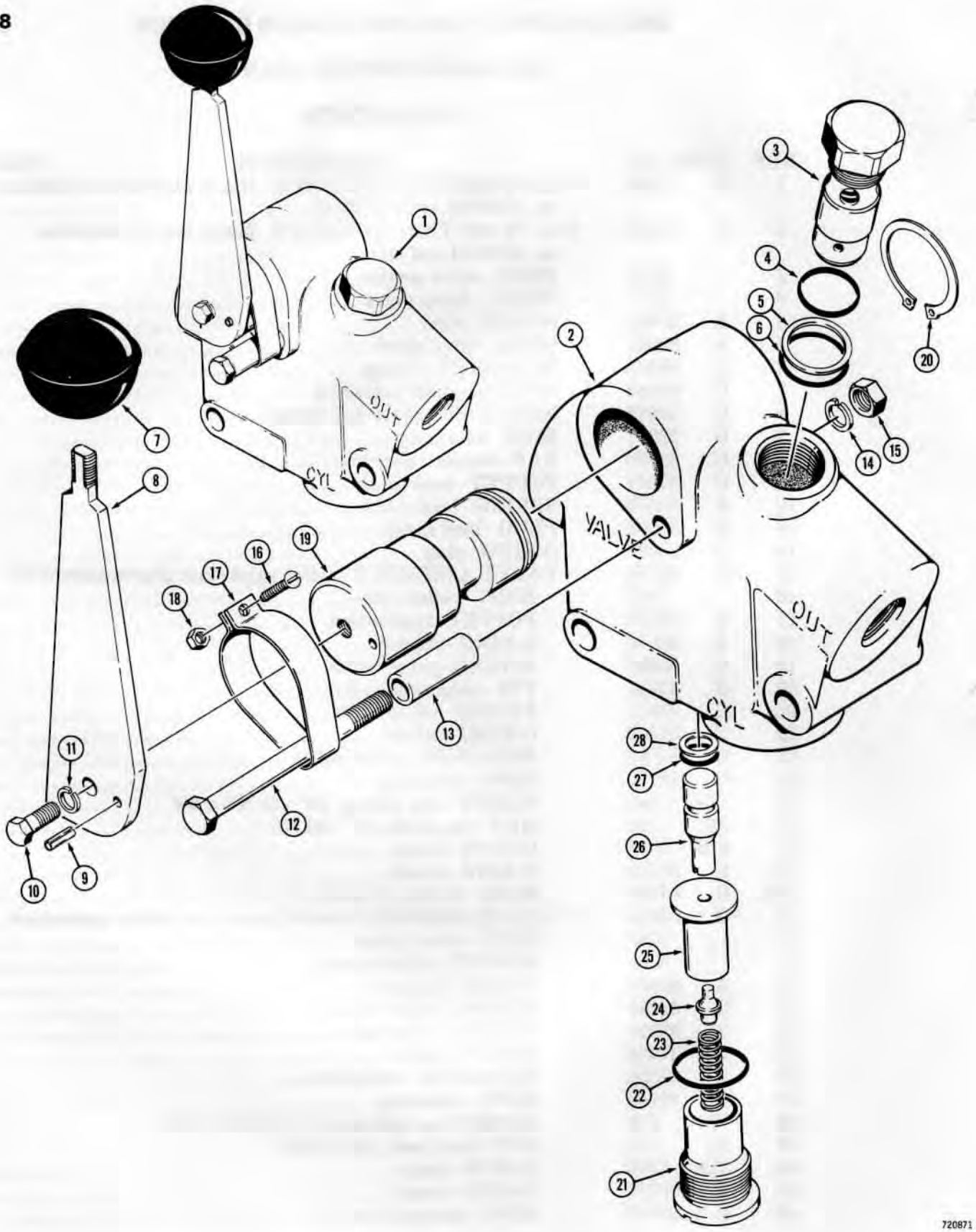

http://www.minnparbackhoeparts.com/

BOOM LOCK VALVE

REF.	PART NO.		DESCRIPTION	REQ'D.
1	D	56102	VALVE - boom lock (Cessna No. 39013-CAA)	1
2		NSS	BODY - valve	1
3	D	56470	VALVE ASSEMBLY - relief	1
4	F	9857	O-RING	1
5	D	56469	RING - backup	1
6	A	7464	O-RING - valve, outer	1
7	D	56472	KNOB - control, handle	1
8	D	56458	HANDLE - control	1
9	D	56881	PIN - dowel, handle	1
10	13-	510	HHCS - 5/16" - 18 NC x 5/8"	1
11	92-	5	WASHER - 5/16"	1
12	13-	558	HHCS - 5/16" - 18 NC x 3-5/8"	1
13	D	56460	BUSHING - spacer	1
14	92-	5	WASHER - lock, 5/16"	1
15	25-	145	NUT - hex, jam, 5/16" - 18 NC	1
16	182-	48	RHMS - #6 - 32 NC x 3/4"	1
17	D	56467	CLAMP - shaft retaining	1
18	131-	150	NUT - hex, lock, #6 - 32 NC	1
19	D	56465	SHAFT - lock control	1
20	F	62020	RING - retaining, shaft	1
21	D	56461	PLUG - plunger retainer	1
22	A	35104	O-RING	1
23	D	56462	SPRING - poppet	1
24	D	56464	POPPET - valve	1
25	D	56463	SEAT - poppet	1
26	D	56466	PLUNGER - valve	1
27	A	30825	O-RING	1
28	L	31330	RING - backup, seal	1

http://www.minnparbackhoeparts.com/

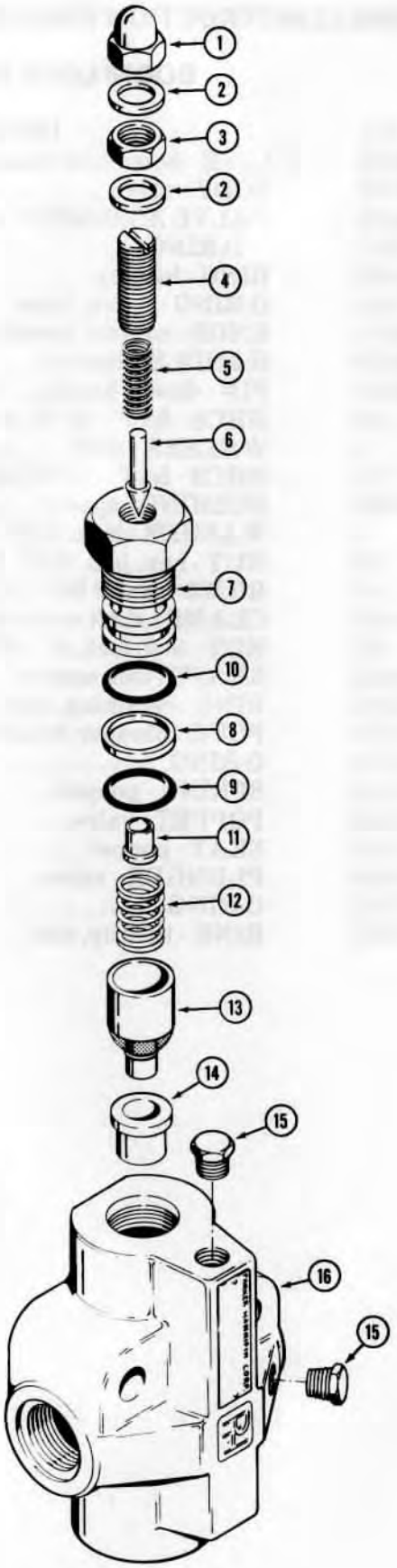

http://www.minnparbackhoeparts.com/

RELIEF VALVE

MODELS WITHOUT LOADER

REF.	PART NO.	DESCRIPTION	REQ'D.
	D 71668	VALVE - relief, used on units without loader only	1
1	129- 514	NUT - acorn, relief valve, 5/16" - 24 NF	1
2	D 26270	WASHER - special	2
3	25- 155	NUT - hex, jam, 5/16" - 24 NF	1
4	176- 299	SCREW - adjusting, 5/16" - 24 NF x 7/8"	1
5	D 26268	SPRING - pilot	1
6	D 26267	PLUNGER - relief valve	1
7	D 26262	CAP - relief valve	1
8	L 30443	RING - backup, L30444 O-ring	1
9	L 30444	O-RING - relief valve cap, inner	1
10	218- 5006	O-RING - relief valve cap, outer	1
11	D 26266	SEAT - plunger	1
12	D 52319	SPRING - relief valve	1
13	D 37062	POPPET ASSEMBLY - relief valve	1
14	D 37063	SEAT - poppet	1
15	D 52471	PLUG - special, 1/8" NPT	2
16	NSS	BODY - relief valve	1

http://www.minnparbackhoeparts.com/

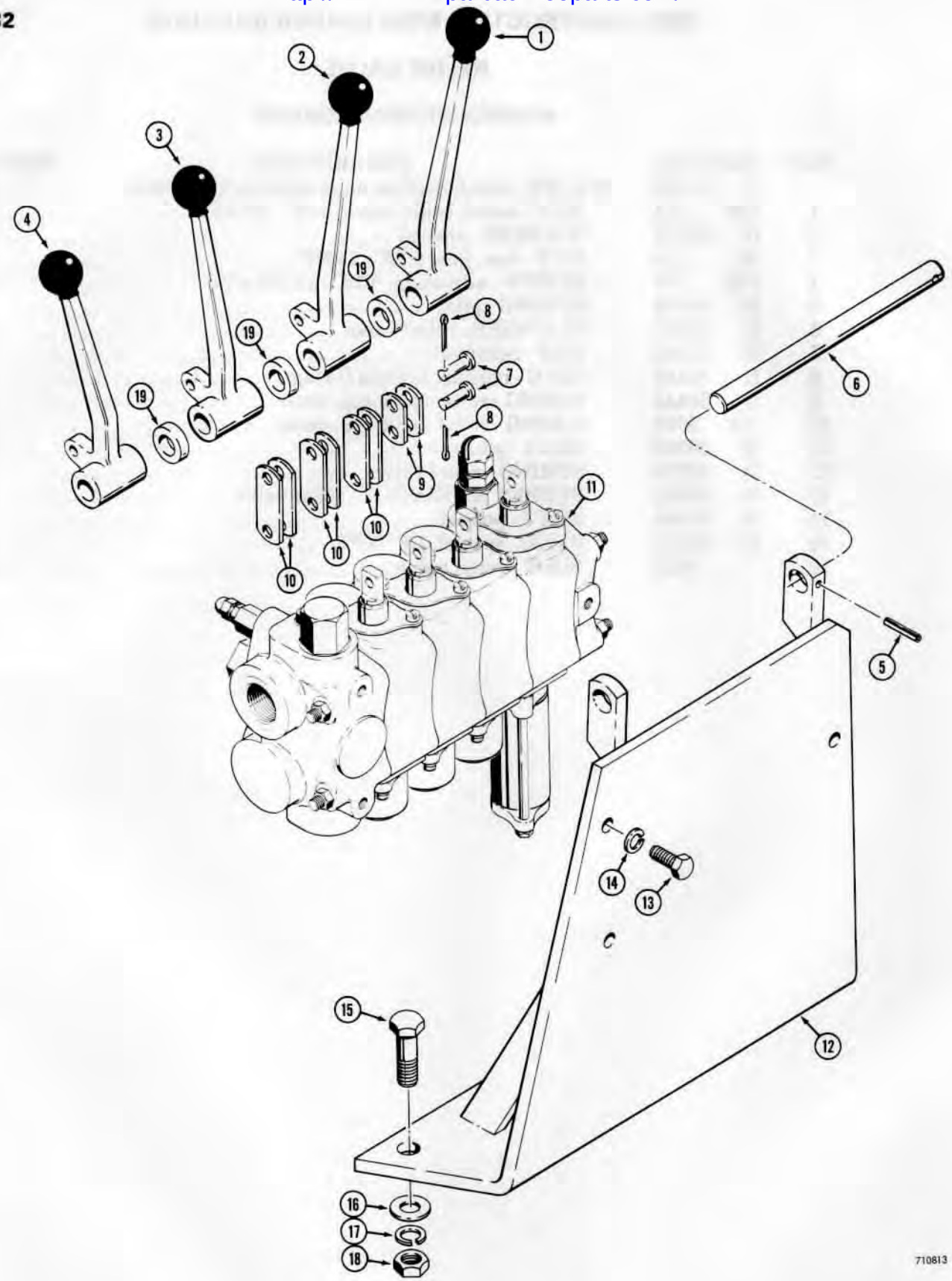

http://www.minnparbackhoeparts.com/

3-POINT HITCH CONTROL LEVERS AND VALVE

REF.	PART NO.	DESCRIPTION	REQ'D.
1	D 33255	LEVER - 3 point hitch control, lift	1
2	D 51689	LEVER - 3 point hitch control, pitch	1
3	D 51690	LEVER - 3 point hitch control, tilt	1
4	D 33256	LEVER - 3 point hitch control, implement	1
5	138- 98	PIN - roll type, 1/4" dia. x 1"	1
6	D 52945	SHAFT - control lever pivot	1
7	141- 3	PIN - link mounting	8
8	132- 25	PIN - cotter, 3/32" dia. x 5/8"	8
9	D 52980	LINK - lever to spool, lift spool only	2
10	D 38089	LINK - lever to spool, all except lift spool	6
11	D 52970	VALVE - control, 3 point hitch, parts list page 285	1
12	D 52950	PLATE - valve mounting	1
13	13- 612	HHCS - 3/8" - 16 NC x 3/4"	3
14	92- 6	WASHER - lock, 3/8"	3
15	13- 824	HHCS - 1/2" - 13 NC x 1-1/2"	3
16	95- 8	WASHER - flat, 1/2"	3
17	92- 8	WASHER - lock, 1/2"	3
18	25- 108	NUT - hex, 1/2" - 13 NC	3
19	D 52944	SPACER - .22" thick (5.59 mm)	3

http://www.minnparbackhoeparts.com/

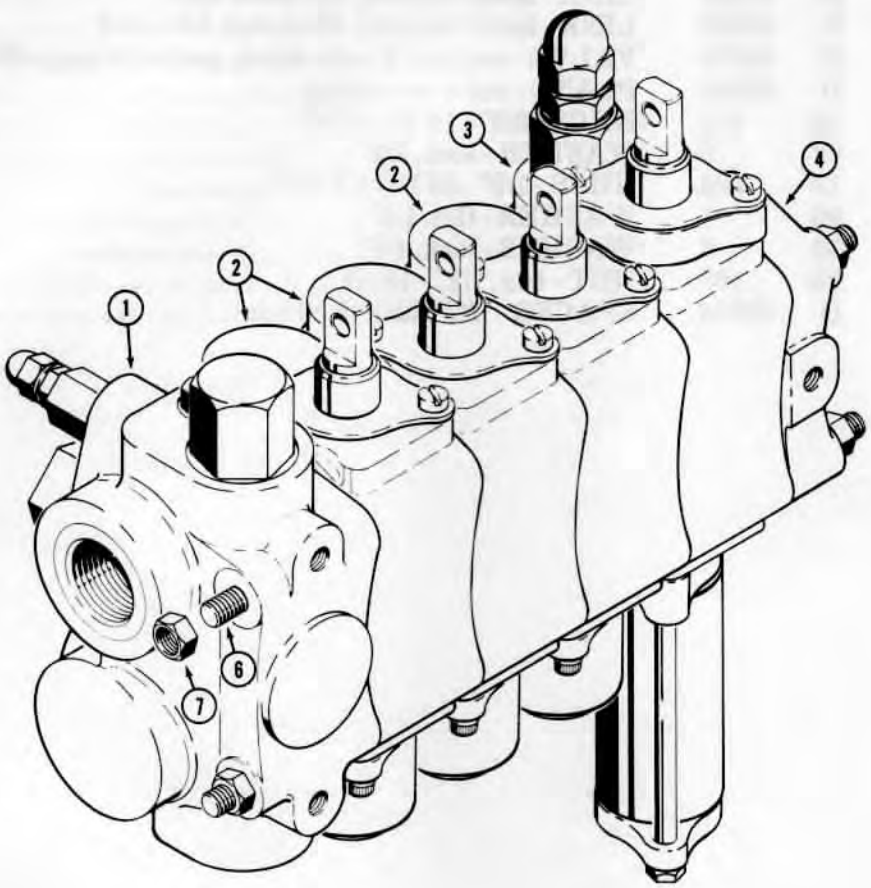

750710

http://www.minnparbackhoeparts.com/

3-POINT HITCH CONTROL VALVE

REF.	PART NO.	DESCRIPTION	REQ'D.
	D 52970	VALVE - 3 point hitch control, 4 spool	1
1	D 53593	SECTION - inlet, parts list page 287	1
2	D 53594	SECTION - pitch, tilt and implement, parts list page 291	3
3	D 53595	SECTION - lift, parts list page 289	1
4	D 53600	SECTION - end	1
5	D 53598	PLATE - orifice, see page 287, REF. No. 24 for location in inlet section, not illustrated	1
6	D 53599	ROD - tie, valve sections	3
7	129- 524	NUT - hex, 3/8" - 24 NF, grade 8	6

http://www.minnparbackhoeparts.com/

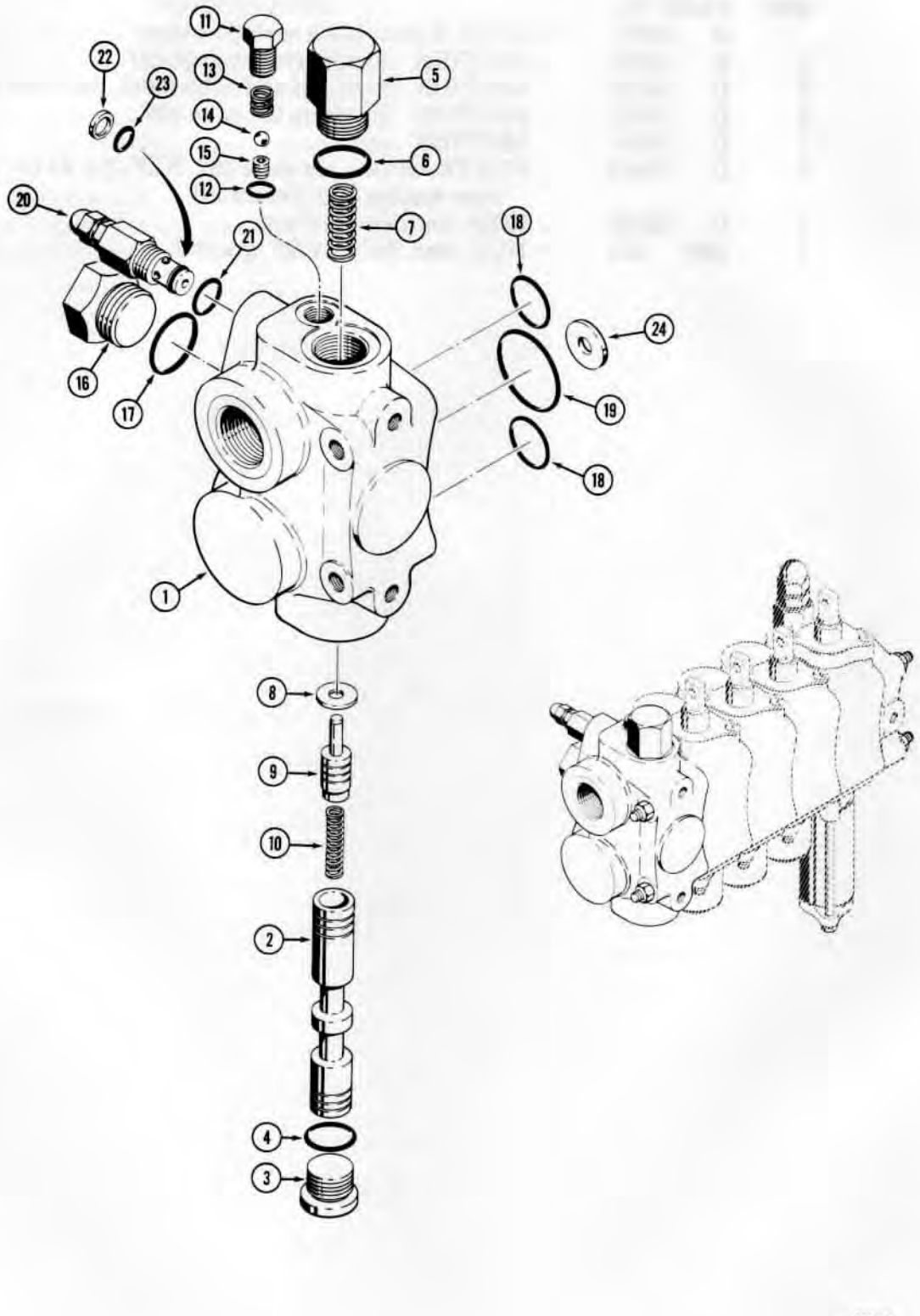

http://www.minnparbackhoeparts.com/

3-POINT HITCH CONTROL VALVE

INLET SECTION

REF.	PART NO.	DESCRIPTION	REQ'D.
	D 53593	SECTION - inlet, control valve	1
1	NSS	HOUSING - inlet section	1
2	NSS	SPOOL - inlet section	1
3	218- 5211	PLUG - spool end, hex socket head	1
4	218- 5007	O-RING	1
5	D 53660	PLUG - special, plunger end	1
6	218- 5007	O-RING	1
7	D 53605	SPRING - plunger, external	1
8	D 53609	WASHER - spring retaining	1
9	NSS	PLUNGER - spool	1
10	D 53607	SPRING - plunger, internal	1
11	218- 5153	PLUG - spring retaining, hex head	1
12	218- 5003	O-RING	1
13	D 53604	SPRING - ball retaining	1
14	211- 101	BALL - orifice, 1/4" dia.	1
15	D 53611	SCREW - orifice	1
16	218- 5158	PLUG - housing, hex head	1
17	218- 5008	O-RING	1
18	R 15366	O-RING - small	2
19	T 39567	O-RING - large	1
20	D 53596	VALVE ASSEMBLY - main relief	1
21	218- 5005	O-RING	1
22	W 12244	RING - backup	1
23	A 28090	O-RING	1
24	D 53598	PLATE - orifice, included with D52970 control valve	1

http://www.minnparbackhoeparts.com/

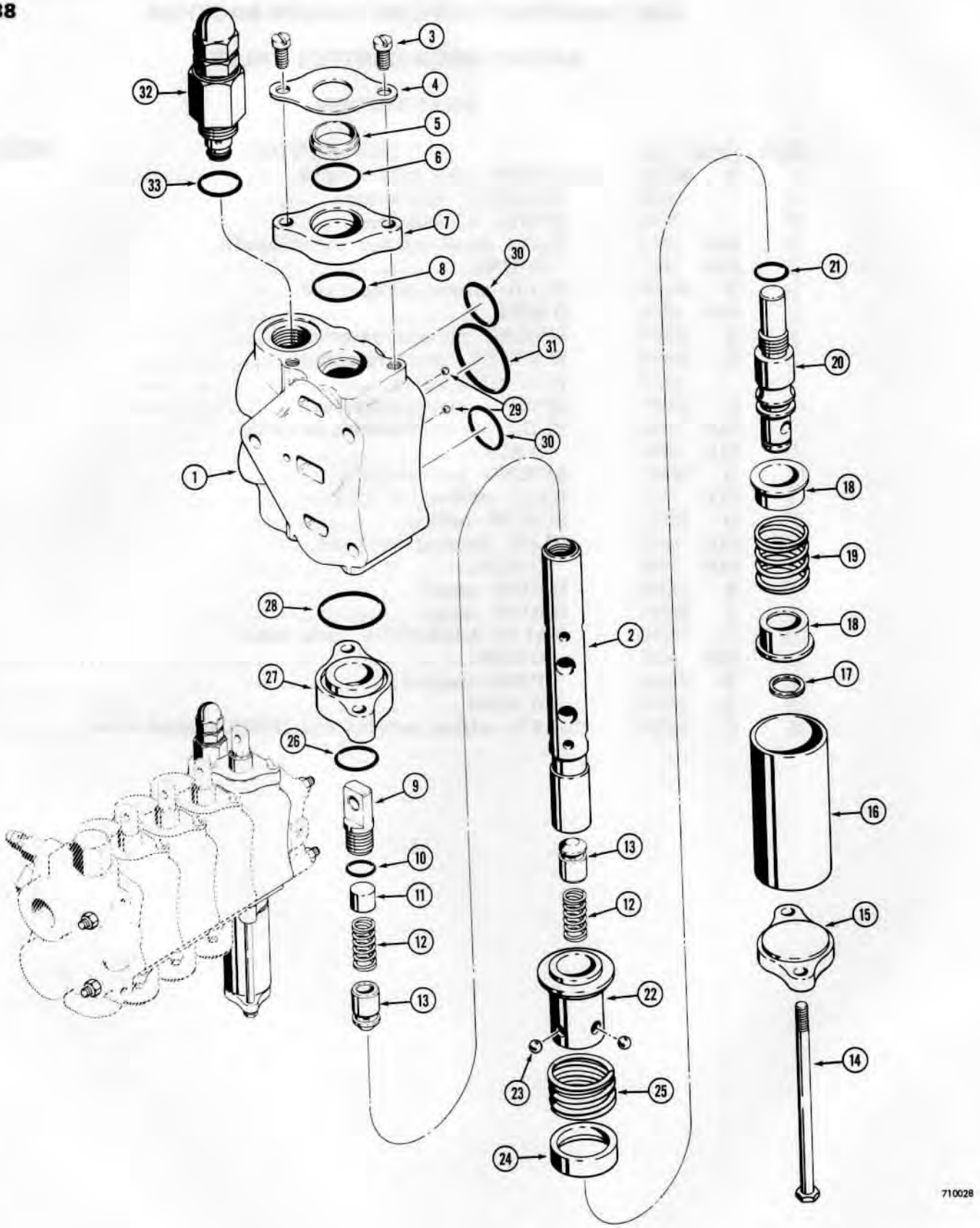

http://www.minnparbackhoeparts.com/

3-POINT HITCH CONTROL VALVE

LIFT SECTION

REF.	PART NO.	DESCRIPTION	REQ'D.
	D 53595	SECTION - lift spool, control valve	1
1	NSS	HOUSING - lift section	1
2	NSS	SPOOL - lift section	1
3	71- 416	SCREW - machine, fillister head, 1/4" - 20 NC x 1"	2
4	D 53612	PLATE - seal retainer	1
5	*D 53610	WIPER - lift spool	1
6	*F 62075	O-RING - spool	1
7	D 53651	RETAINER - spool seal	1
8	*A 13184	O-RING - seal retainer to housing	1
9	D 53616	EYE - spool end	1
10	*218- 5005	O-RING - eye to spool	1
11	D 53652	SPACER - poppet spring	1
12	*D 53601	SPRING - poppet	2
13	D 53615	POPPET - relief, spool	2
14	13- 472	HHCS - 1/4" - 20 NC x 4-1/2"	2
15	D 53659	CAP - detent housing	1
16	D 53658	HOUSING - detent	1
17	*D 53608	RING - spring retaining	1
18	D 53656	RETAINER - spool spring	2
19	*D 53603	SPRING - spool centering	1
20	D 53657	STUD - detent	1
21	*218- 5005	O-RING - detent stud	1
22	D 53655	SLEEVE - detent	1
23	*211- 7	BALL - steel, 1/4" dia.	4
24	D 53654	RETAINER - ball	1
25	*D 53602	SPRING - detent	1
26	*F 62075	O-RING - spool	1
27	D 53653	RETAINER - spool seal	1
28	*A 13184	O-RING - retainer to housing	1
29	*211- 105	BALL - steel, 5/32" dia.	2
30	*R 15366	O-RING - small	2
31	*T 39567	O-RING - large	1
32	D 53597	VALVE ASSEMBLY - secondary relief	1
33	218- 5006	O-RING	1
	*D 59667	KIT - spool repair, includes items marked with an asterisk	1

http://www.minnparbackhoeparts.com/

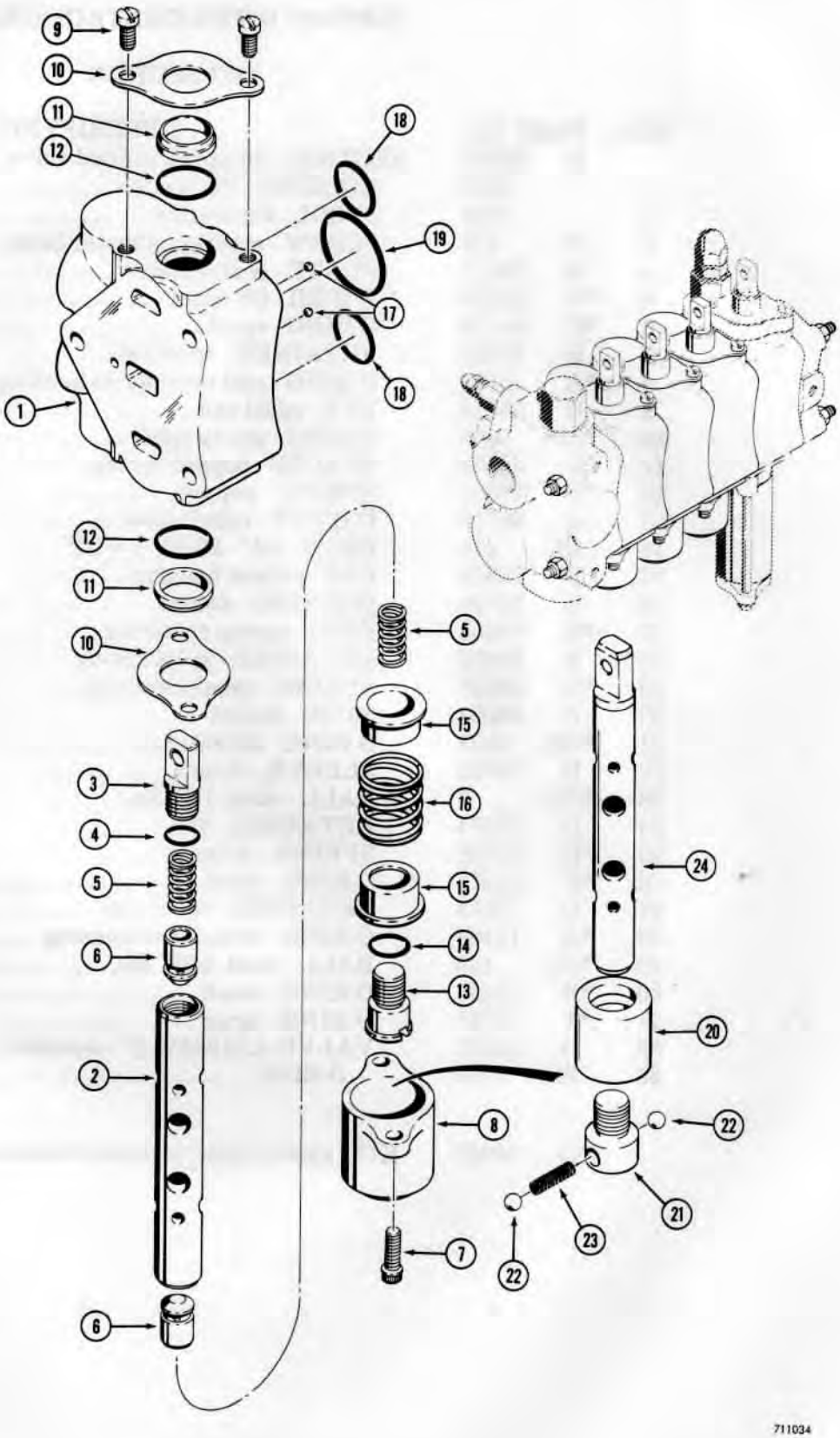

http://www.minnparbackhoeparts.com/

3-POINT HITCH CONTROL VALVE

PITCH, TILT AND IMPLEMENT SECTIONS

REF.	PART NO.	DESCRIPTION	REQ'D.
	D 53594	SECTION - valve, pitch, tilt and implement spools	3
1	NSS	HOUSING - valve section	1
2	NSS	SPOOL - valve section	1
3	D 53616	EYE - spool	1
4	*218- 5005	O-RING - eye to spool	1
5	D 53601	SPRING - poppet	2
6	D 53615	POPPET - relief	2
7	166- 4	SCREW - socket head, 12 point, 1/4" - 20 NC x 3/4"	2
8	D 53613	CAP - spool spring	1
9	71- 48	SCREW - machine, fillister head, 1/4" - 20 NC x 1/2"	2
10	D 53612	RETAINER - seal	2
11	*D 53610	WIPER - spool	2
12	*F 62075	O-RING - spool	2
13	D 53614	BOLT - spring retainer	1
14	*218- 5005	O-RING - retainer bolt	1
15	D 53656	RETAINER - centering spring	2
16	D 53606	SPRING - centering	1
17	*211- 105	BALL - steel, 5/32" dia.	2
18	*R 15366	O-RING - small	2
19	*T 39567	O-RING - large	1
	D 53549	KIT - motor spool, service option for implement spool	1
20	D 54865	SLEEVE - detent	1
21	D 54864	RETAINER - ball	1
22	211- 7	BALL - steel, 1/4" dia.	2
23	D 54863	SPRING - detent	1
24	NSS	SPOOL - motor	1
	*D 59668	KIT - seal repair, includes items marked with an asterisk	1

http://www.minnparbackhoeparts.com/

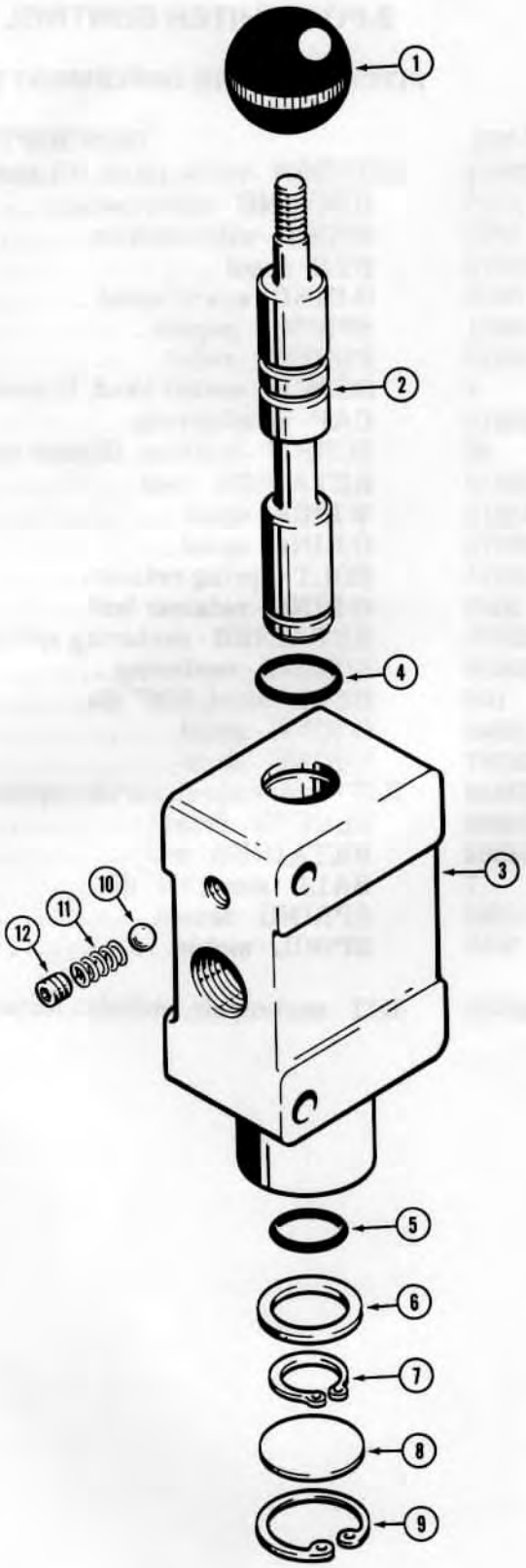

http://www.minnparbackhoeparts.com/

PTO SELECTOR VALVE

REF.	PART NO.	DESCRIPTION	REQ'D.
	D 65378	VALVE - selector	1
1	D 66441	BALL - handle, not used, see page 231	1
2	NSS	SPOOL - valve	1
3	NSS	BODY - valve	1
4	A 7623	O-RING - upper	1
5	A 7623	O-RING - lower	1
6	D 66438	WASHER - backup	1
7	D 66439	RING - retaining, small	1
8	D 66440	PLUG - welch	1
9	T 28550	RING - retaining, large	1
10	211- 9	BALL - steel, 5/16"	1
11	23137	SPRING	1
12	221- 1849	PLUG - hex socket head, 1/8" NPT	1

http://www.minnparbackhoeparts.com/

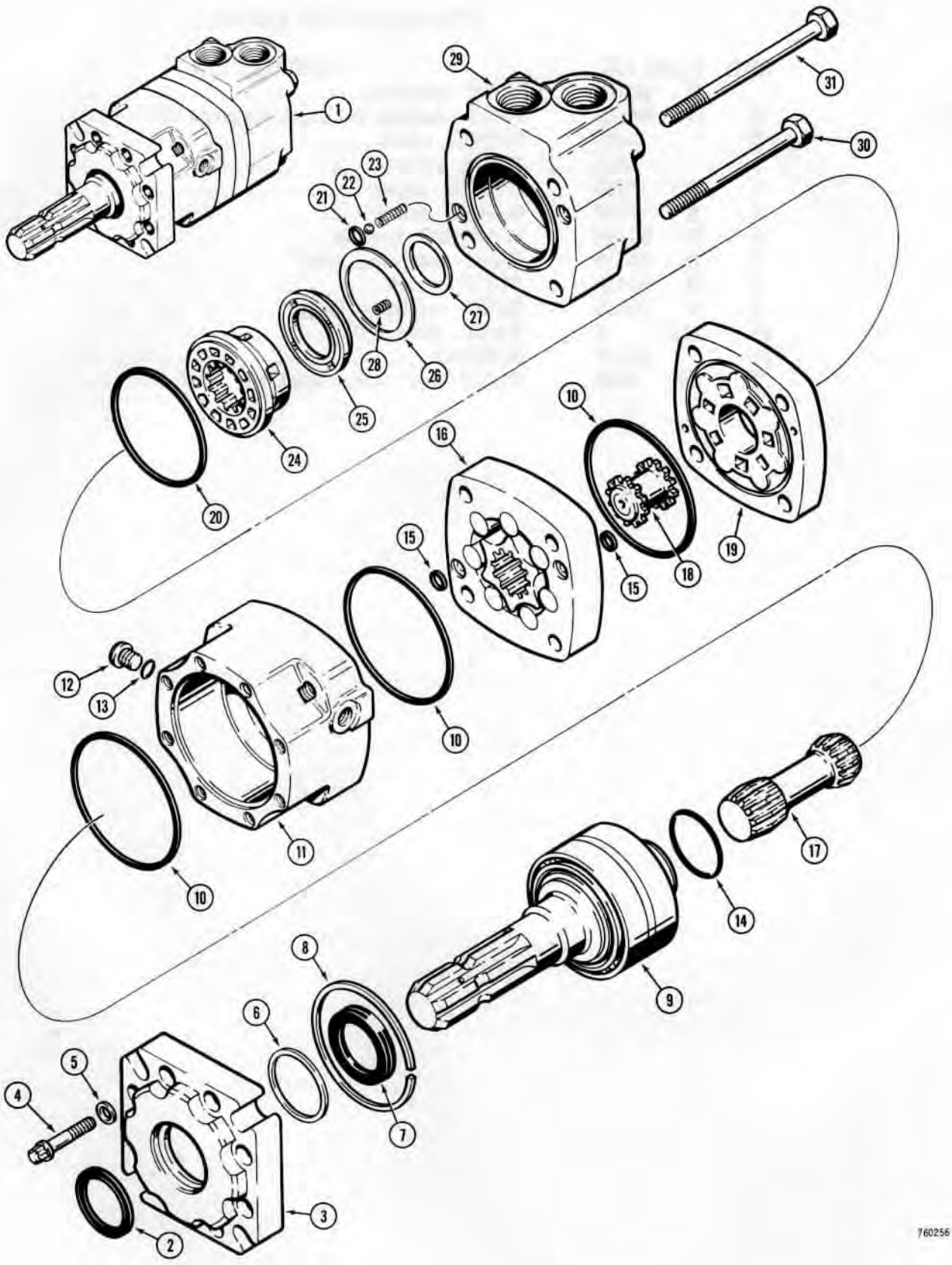

http://www.minnparbackhoeparts.com/

PTO HYDRAULIC MOTOR

REF.	PART NO.	DESCRIPTION	REQ'D.
1	D 71868	MOTOR - hydraulic, PTO	1
2	D 74402	SEAL - dust	1
3	D 74382	HOUSING - shaft end	1
4	166- 526	SCREW - 12 point flange, 5/16" - 24 NF x 1-1/4"	8
5	C 14301	WASHER - special	8
6	D 74401	RING - backup	1
7	D 74400	SEAL - shaft	1
8	D 74380	SPACER - bearing	1
9	D 74379	SHAFT AND BEARING ASSEMBLY	1
10	D 74397	SEAL - between housings	3
11	D 74381	HOUSING - bearing	1
12	S 108180	PLUG - bearing housing	1
13	218- 5003	O-RING - S108180 plug	1
14	D 74399	O-RING - bearing housing, inner	1
15	D 74398	SEAL - gerotor	4
16	D 74385	GEROTOR ASSEMBLY	1
17	D 74383	DRIVE - main	1
18	D 74388	DRIVE - valve	1
19	D 74387	PLATE - valve	1
20	D 74396	SEAL - plate to housing	1
21	D 74395	SEAL - check ball	2
22	211- 101	BALL - check, 1/4" special	2
23	D 74394	SPRING - check ball	2
24	D 74389	VALVE - hydraulic	1
25	D 74392	PLATE ASSEMBLY - balancing	1
26	D 74390	SEAL - outer	1
27	D 74391	SEAL - inner	1
28	S 94568	SPRING - balancing plate	1
29	D 74393	HOUSING - closed end	1
30	14- 768	HHCS - 7/16" - 20 NF x 4-1/2"	3
31	14- 784	HHCS - 7/16" - 20 NF x 5-1/2"	1

http://www.minnparbackhoeparts.com/

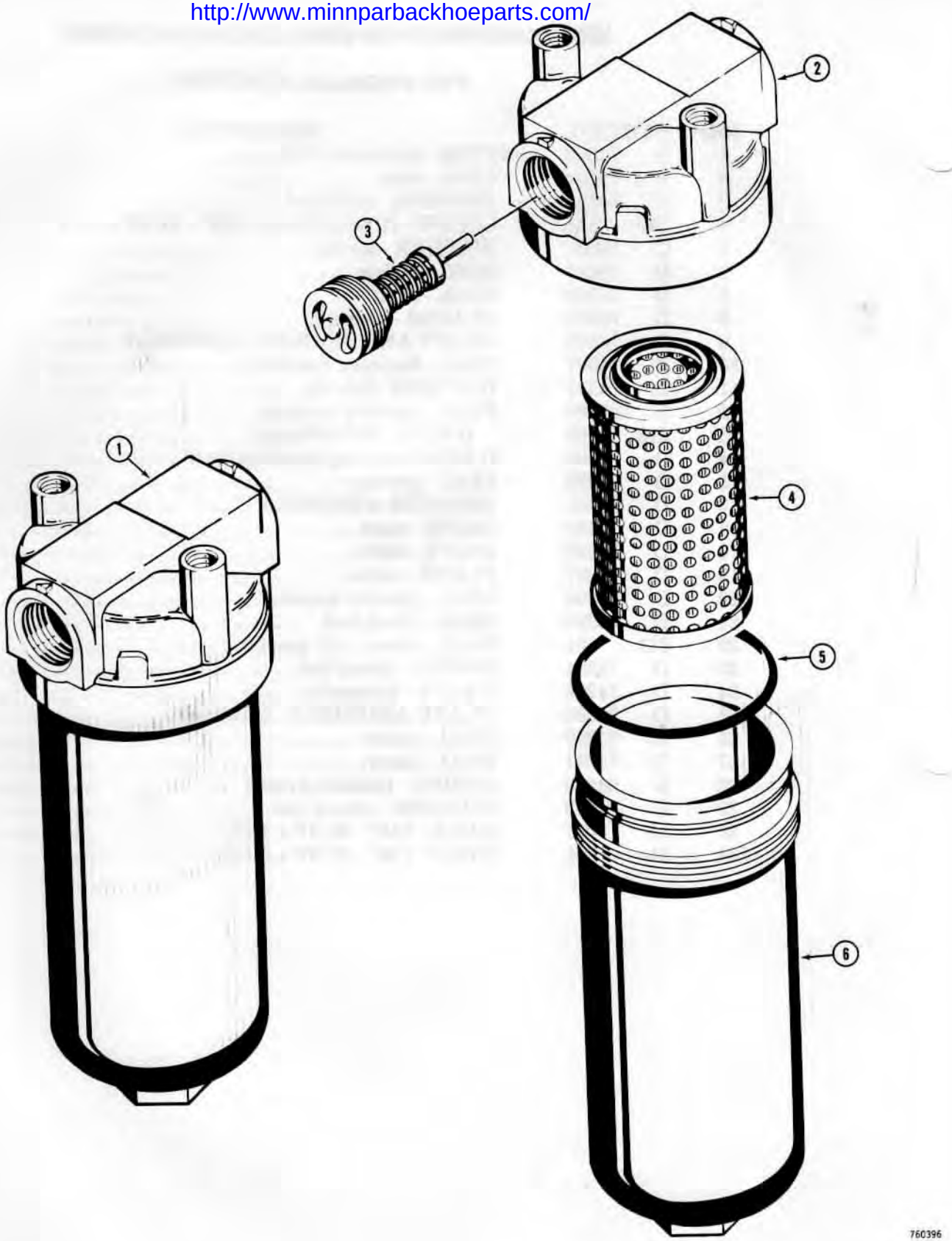

http://www.minnparbackhoeparts.com/

D73910 HYDRAULIC OIL FILTER

REF.	PART NO.	DESCRIPTION	REQ'D.
1	D 73910	FILTER - hydraulic oil	1
	D 61903	HEAD ASSEMBLY - filter	1
2	NSS	HEAD - filter	1
3	D 58199	VALVE - oil, by-pass	1
	D 75831	KIT - filter element	1
4	NSS	ELEMENT - filter	1
5	A 27994	O-RING	1
6	D 42439	HOUSING - filter	1

http://www.minnparbackhoeparts.com/

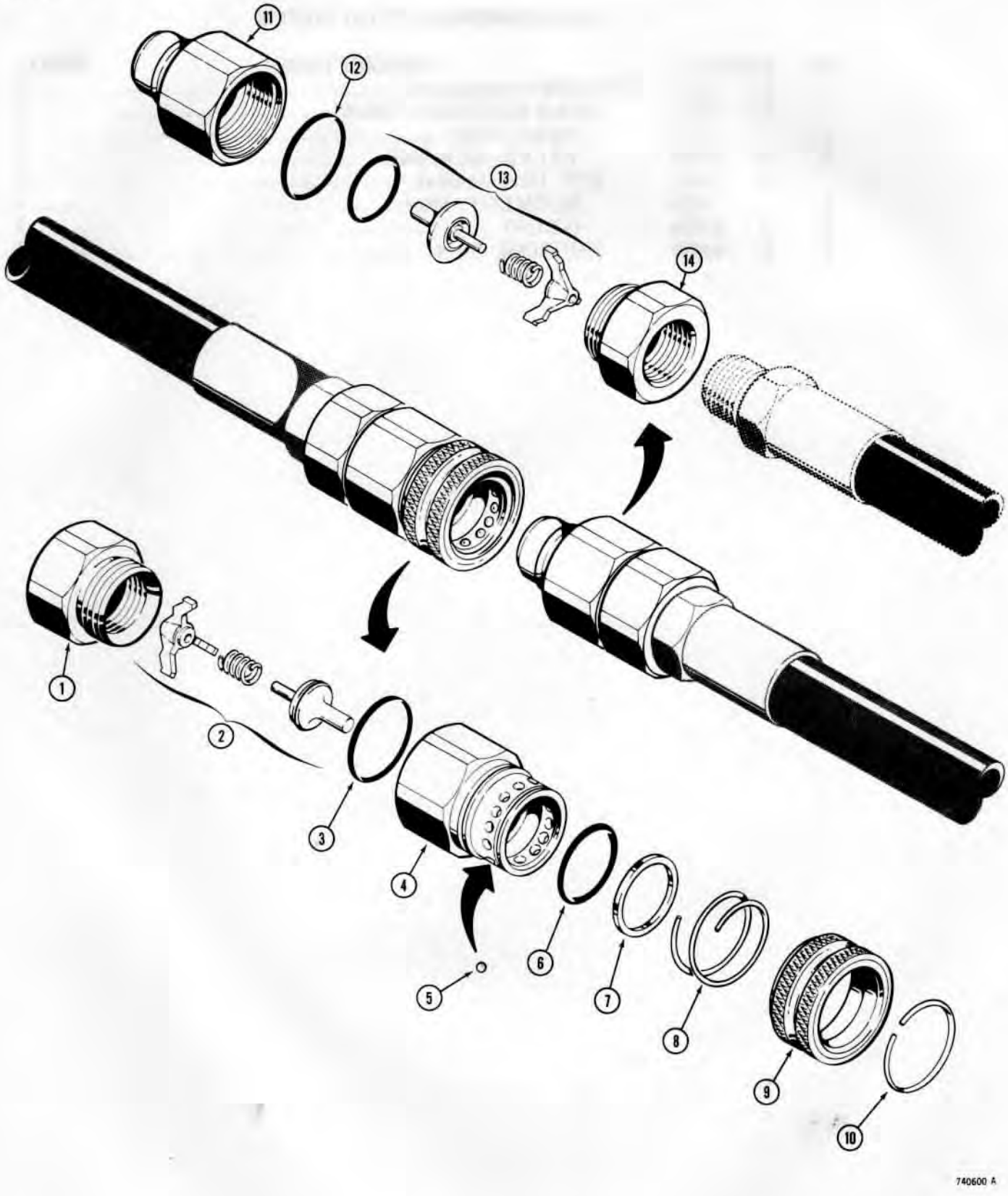

http://www.minnparbackhoeparts.com/

D52800 HYDRAULIC COUPLING (FEMALE)

REF.	PART NO.	DESCRIPTION	REQ'D.
	D 52800	COUPLING - hydraulic, female	1
1	D 31975	FITTING - end, coupling	1
2	D 53915	VALVE ASSEMBLY - coupling	1
3	A 13184	SEAL - coupling body	1
4	D 53916	BODY - coupling, straight end	1
5	211- 6	BALL - steel, 7/32" dia.	10
6	D 53895	SEAL - coupling body, internal	1
7	D 54276	RING - backup	1
8	D 31979	SPRING - sleeve	1
9	D 31980	SLEEVE - ball retaining	1
10	D 31981	RING - retaining	1

D52694 HYDRAULIC COUPLING (STRAIGHT MALE)

	D 52694	COUPLING - hydraulic, straight male	1
11	D 31971	BODY - coupling, straight male	1
12	A 13184	SEAL - coupling body	1
13	D 53915	VALVE ASSEMBLY - coupling	1
14	D 31975	FITTING - end, coupling	1

http://www.minnparbackhoeparts.com/

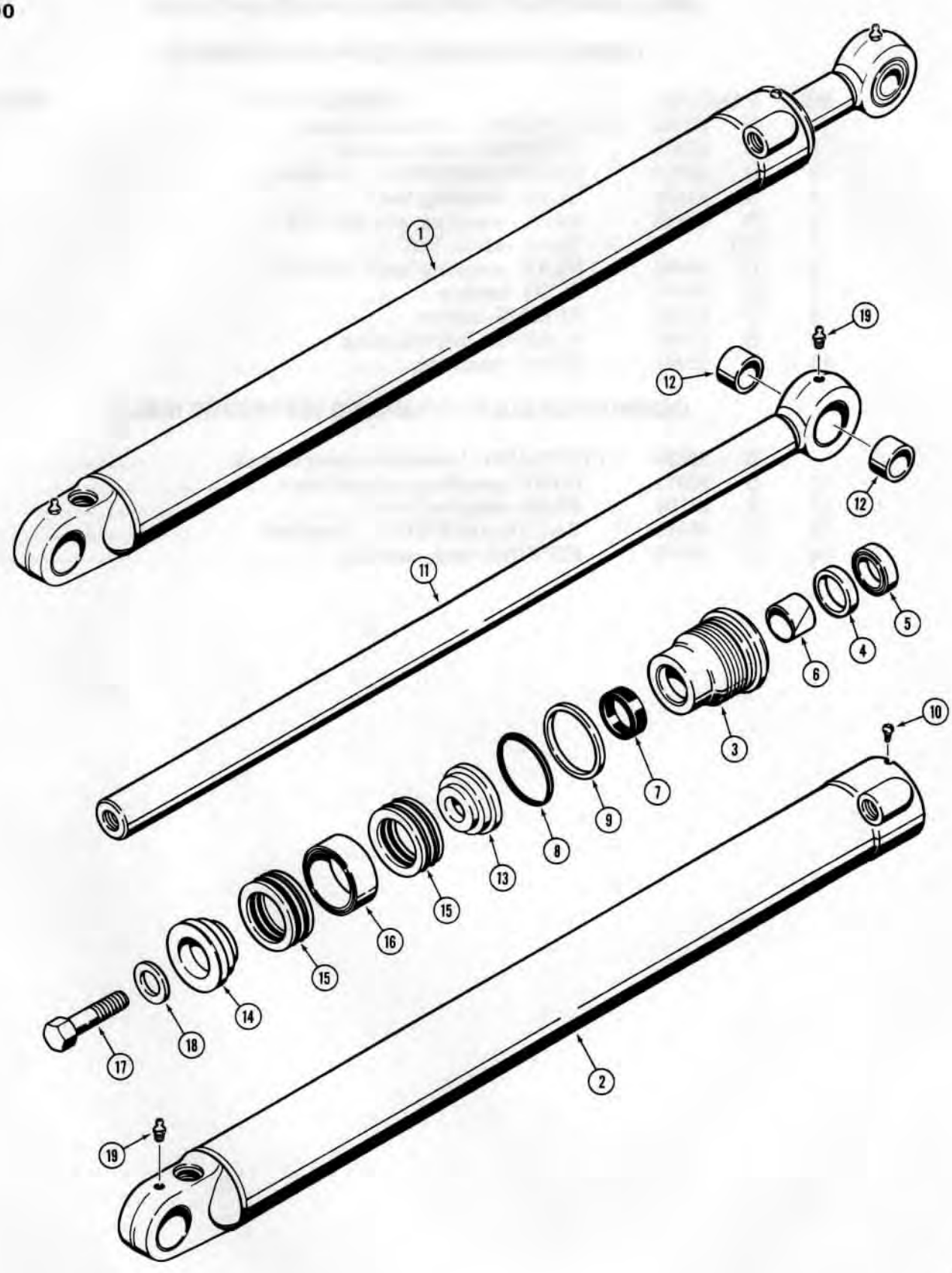

http://www.minnparbackhoeparts.com/

G100414 AND G100415 LOADER LIFT CYLINDERS

WITH TWO PIECE PISTON

REF.	PART NO.	DESCRIPTION	REQ'D.
1	G 100415	CYLINDER ASSEMBLY - lift, R.H., 3" (76 mm) I.D. x 31-1/2" (800 mm) stroke, see foot note	1
1	G 100414	CYLINDER ASSEMBLY - lift, L.H., 3" (76 mm) I.D. x 31-1/2" (800 mm) stroke, see foot note	1
2	G 100413	TUBE - R.H. cylinder	1
2	G 100412	TUBE - L.H. cylinder	1
	G 34633	GLAND ASSEMBLY - cylinder	1
3	NSS	GLAND - cylinder	1
4	NSS	RING - retaining	1
5	*D 95143	WIPER - piston rod, outer	1
6	*G 34621	BEARING - center	1
7	*D 36970**	SEAL - piston rod	1
8	*A 30095	O-RING - gland	1
9	*G 32122	RING - backup	1
10	187- 1031	SCREW - self tapping, #8 - 32 NC x 1/4"	1
11	G 35332	ROD ASSEMBLY - piston, 1-3/4" (44 mm) dia.	1
12	D 30930	BUSHING - rod	2
13	G 33331	PISTON - split, rod end	1
14	D 28896	PISTON - split, bolt end	1
	*G 33151	PACKING ASSEMBLY - piston	1
15	NSS	PACKING - "V" type	2
16	NSS	RING - center bearing	1
17	28- 1640	HHCS - 1" - 14 NF x 2-1/2", grade 8	1
18	G 32303	WASHER - hardened	1
19	219- 1	FITTING - grease, straight, 1/8" NPT	2
	*G 34642	KIT - seal, includes all items with an asterisk	1
	**G 100777	SEAL - piston rod, service option-extreme heat or cold	1

NOTE: Look for cylinder assembly part number to be stamped on cylinder gland or tube.

http://www.minnparbackhoeparts.com/

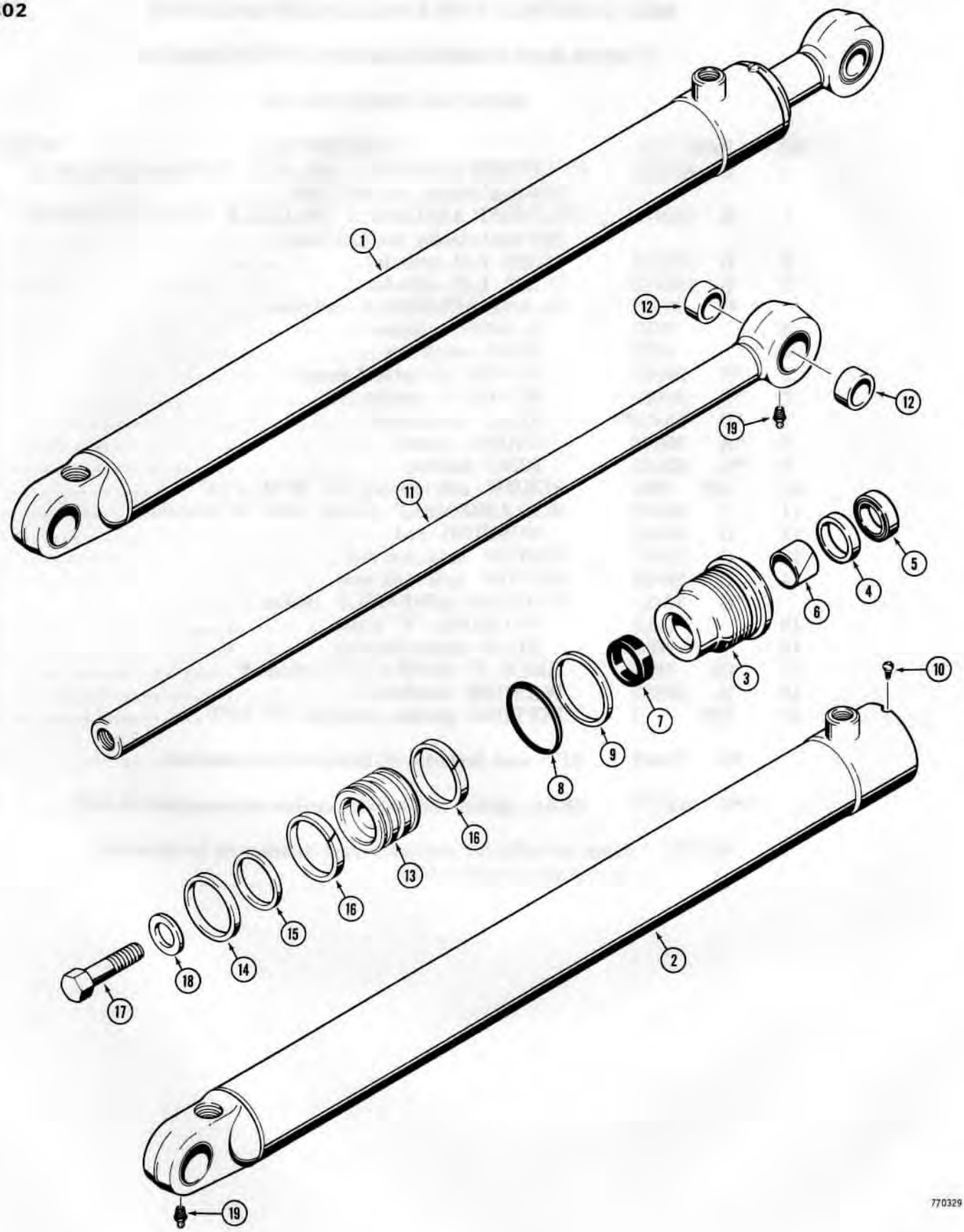

http://www.minnparbackhoeparts.com/

G101184 LOADER LIFT CYLINDER

WITH ONE PIECE PISTON

REF.	PART NO.	DESCRIPTION	REQ'D.
1	G 101184	CYLINDER ASSEMBLY - lift, R.H. and L.H., 3" (76 mm) I.D. x 31-1/2" (800 mm) stroke, see foot note	2
2	G 101514	TUBE - cylinder	1
	G 34633	GLAND ASSEMBLY - cylinder	1
3	NSS	GLAND - cylinder	1
4	NSS	RING - retaining	1
5	*D 95143	WIPER - piston rod, outer	1
6	*G 34621	BEARING - center	1
7	*D 36970**	SEAL - piston rod	1
8	*A 30095	O-RING - gland	1
9	*G 32122	RING - backup	1
10	187- 1031	SCREW - self tapping, #8 - 32 NC x 1/4"	1
11	G 35332	ROD ASSEMBLY - piston, 1-3/4" (44 mm) dia.	1
12	D 30930	BUSHING - rod	2
13	G 100704	PISTON - cylinder	1
14	*G 100443	SEAL - piston	1
15	*G 100444	RING - backup	1
16	*G 100449	RING - wear	2
17	28- 1640	HHCS - 1" - 14 NF x 2-1/2", grade 8	1
18	G 32303	WASHER - hardened	1
19	219- 1	FITTING - grease, straight, 1/8" NPT	2
	*G 101291	KIT - seal, includes all items with an asterisk	1
	**G 100777	SEAL - piston rod, service option - extreme heat or cold	1

NOTE: Look for cylinder assembly part number to be stamped on cylinder gland or tube.

http://www.minnparbackhoeparts.com/

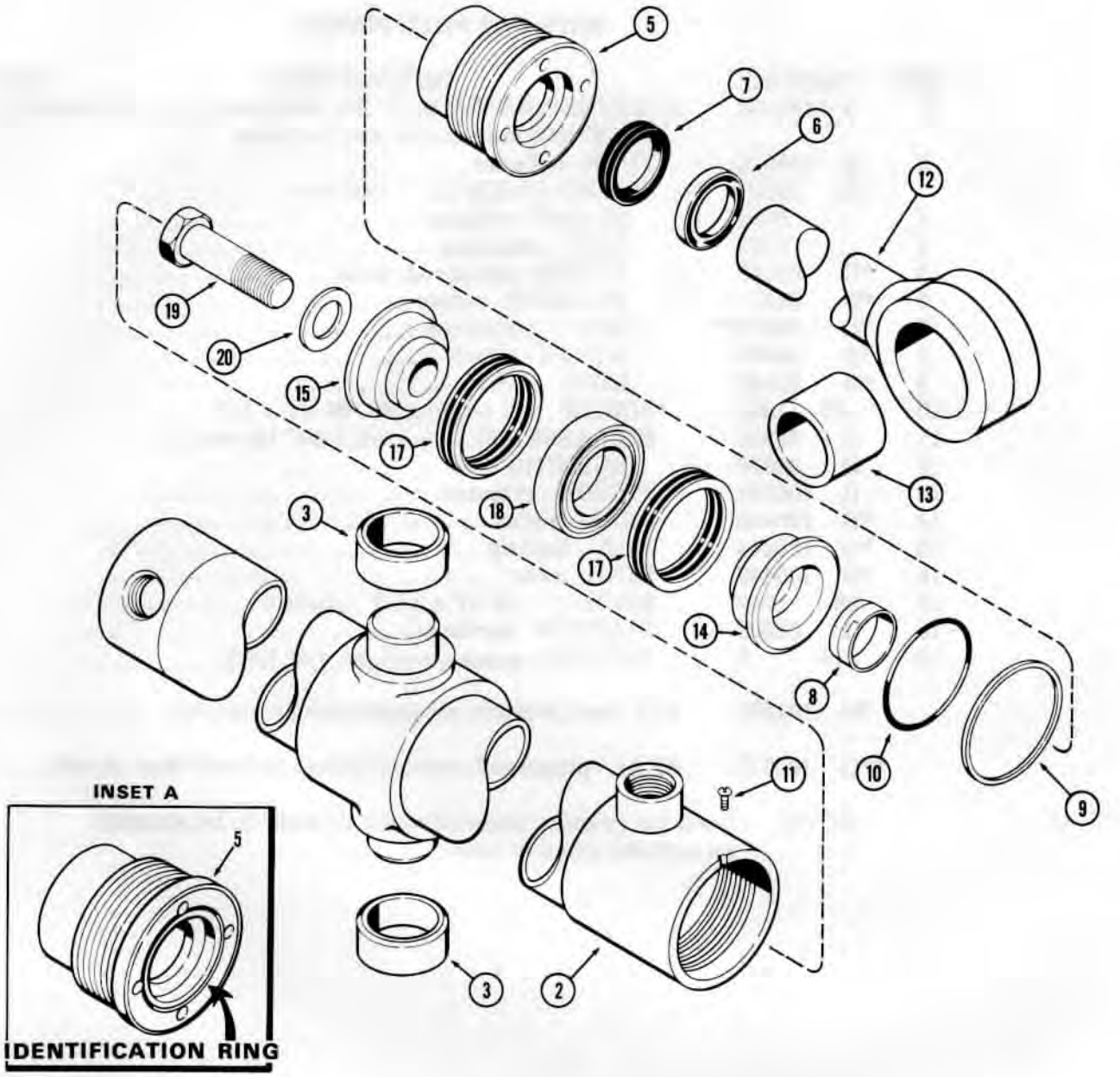

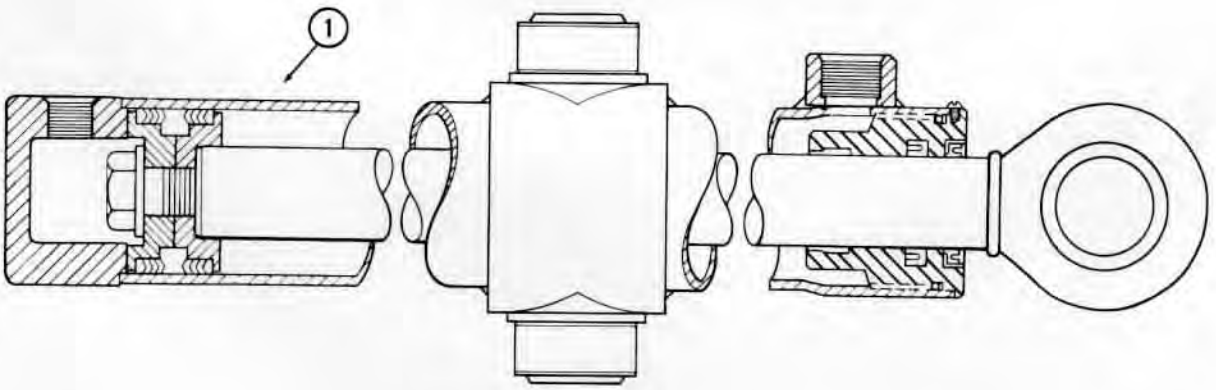

750665

http://www.minnparbackhoeparts.com/

G33420 AND G33421 LOADER BUCKET TILT CYLINDERS

WITH TWO PIECE PISTON

REF.	PART NO.	DESCRIPTION	REQ'D.
1	G 33420	CYLINDER ASSEMBLY - tilt, R.H., 2-1/2" (64 mm) I.D. x 20" (508 mm) stroke	1
1	G 33421	CYLINDER ASSEMBLY - tilt, L.H., 2-1/2" (64 mm) I.D. x 20" (508 mm) stroke	1
2	D 31098	TUBE ASSEMBLY - R.H. cylinder	1
2	D 31099	TUBE ASSEMBLY - L.H. cylinder	1
3	D 31511	BUSHING - tube trunnion	2
4		RESERVED	
	G 33487	GLAND ASSEMBLY - cylinder	1
5	NSS	GLAND - cylinder, see inset A	1
6	*D 95142	WIPER - piston rod, outer	1
7	*D 36969**	SEAL - piston rod	1
8	*D 27706	WIPER - piston rod, inner, if used	1
9	*G 32129	RING - backup	1
10	*A 28318	O-RING - gland	1
11	187- 1031	SCREW - self tapping, #8 - 32 NC x 1/4"	1
12	G 33422	ROD ASSEMBLY - piston, 1-1/2" (38 mm) dia.	1
13	D 30929	BUSHING - rod	1
14	G 33419	PISTON - split, rod end	1
15	D 28364	PISTON - split, bolt end	1
16		RESERVED	
	*G 33193	PACKING ASSEMBLY - piston	1
17	NSS	PACKING - "V" type	2
18	NSS	RING - center bearing	1
19	28- 1240	HHCS - 3/4" - 16 NF x 2-1/2", grade 8	1
20	G 32317	WASHER - hardened	1
	*G 32294	KIT - seal, includes all items with an asterisk	1
	**G 100776	SEAL - piston rod, service option - extreme heat or cold	1

http://www.minnparbackhoeparts.com/

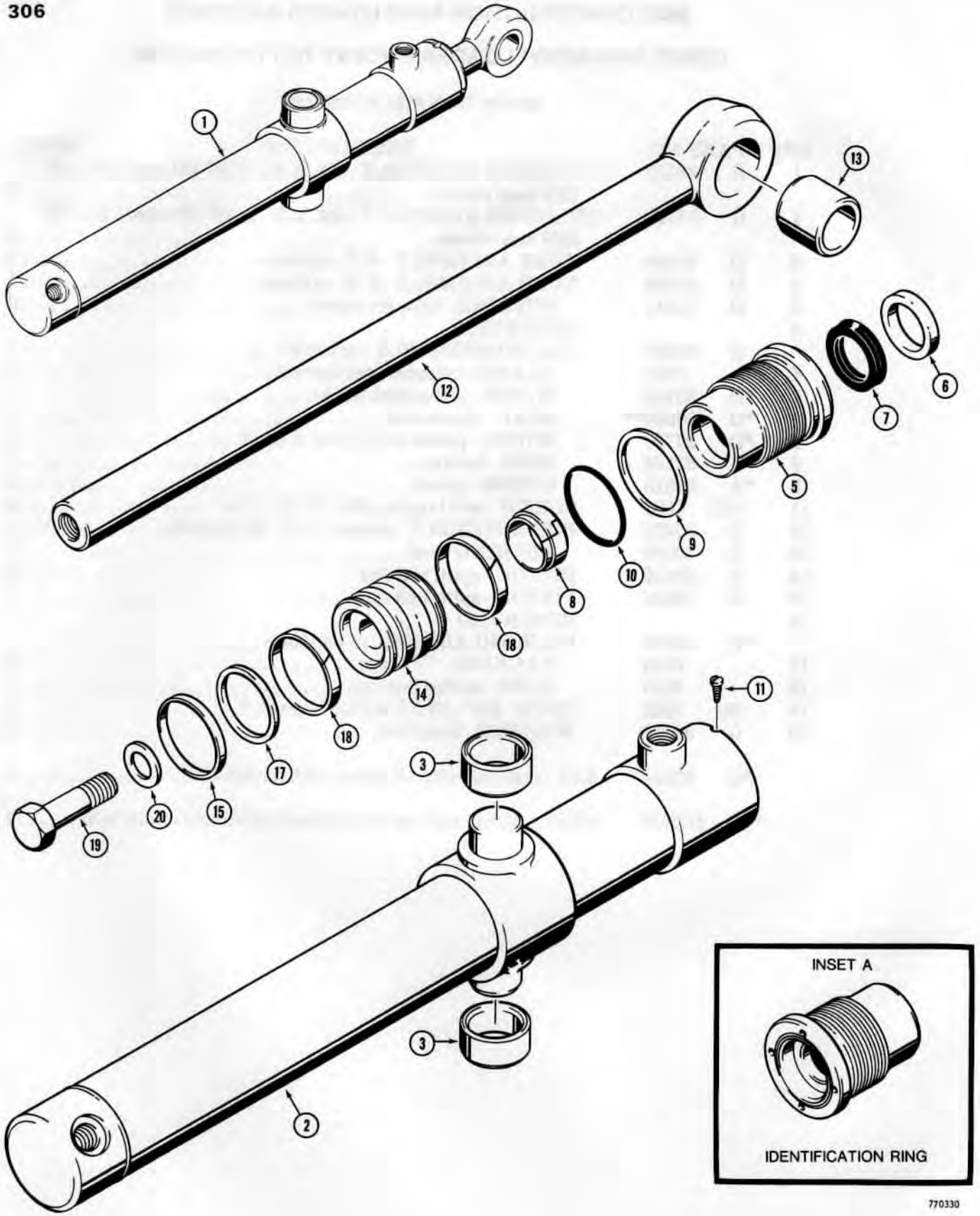

http://www.minnparbackhoeparts.com/

G101186 AND G101187 LOADER BUCKET TILT CYLINDERS

WITH ONE PIECE PISTON

REF.	PART NO.	DESCRIPTION	REQ'D.
1	G 101186	CYLINDER ASSEMBLY - tilt, R.H., 2-1/2" (64 mm) I.D. x 20" (508 mm) stroke	1
1	G 101187	CYLINDER ASSEMBLY - tilt, L.H., 2-1/2" (64 mm) I.D. x 20" (508 mm) stroke	1
2	D 31098	TUBE ASSEMBLY - R.H. cylinder	1
2	D 31099	TUBE ASSEMBLY - L.H. cylinder	1
3	D 31511	BUSHING - tube trunnion	2
4		RESERVED	
	G 33487	GLAND ASSEMBLY - cylinder	1
5	NSS	GLAND - cylinder, see inset A	1
6	*D 95142	WIPER - piston rod, outer	1
7	*D 36969**	SEAL - piston rod	1
8	*D 27706	WIPER - piston rod, inner, if used	1
9	*G 32129	RING - backup	1
10	*A 28318	O-RING - gland	1
11	187- 1031	SCREW - self tapping, #8 - 32 NC x 1/4"	1
12	G 33422	ROD ASSEMBLY - piston, 1-1/2" (38 mm) dia.	1
13	D 30929	BUSHING - rod	1
14	G 100706	PISTON - cylinder	1
15	*G 100712	SEAL - piston	1
16		RESERVED	
17	*G 100713	RING - backup	1
18	*G 100714	RING - wear	2
19	28- 1240	HHCS - 3/4" - 16 NF x 2-1/2", grade 8	1
20	G 32317	WASHER - hardened	1
	*G 101292	KIT - seal, includes all items with an asterisk	1
	**G 100776	SEAL - piston rod, service option - extreme heat or cold	1

http://www.minnparbackhoeparts.com/

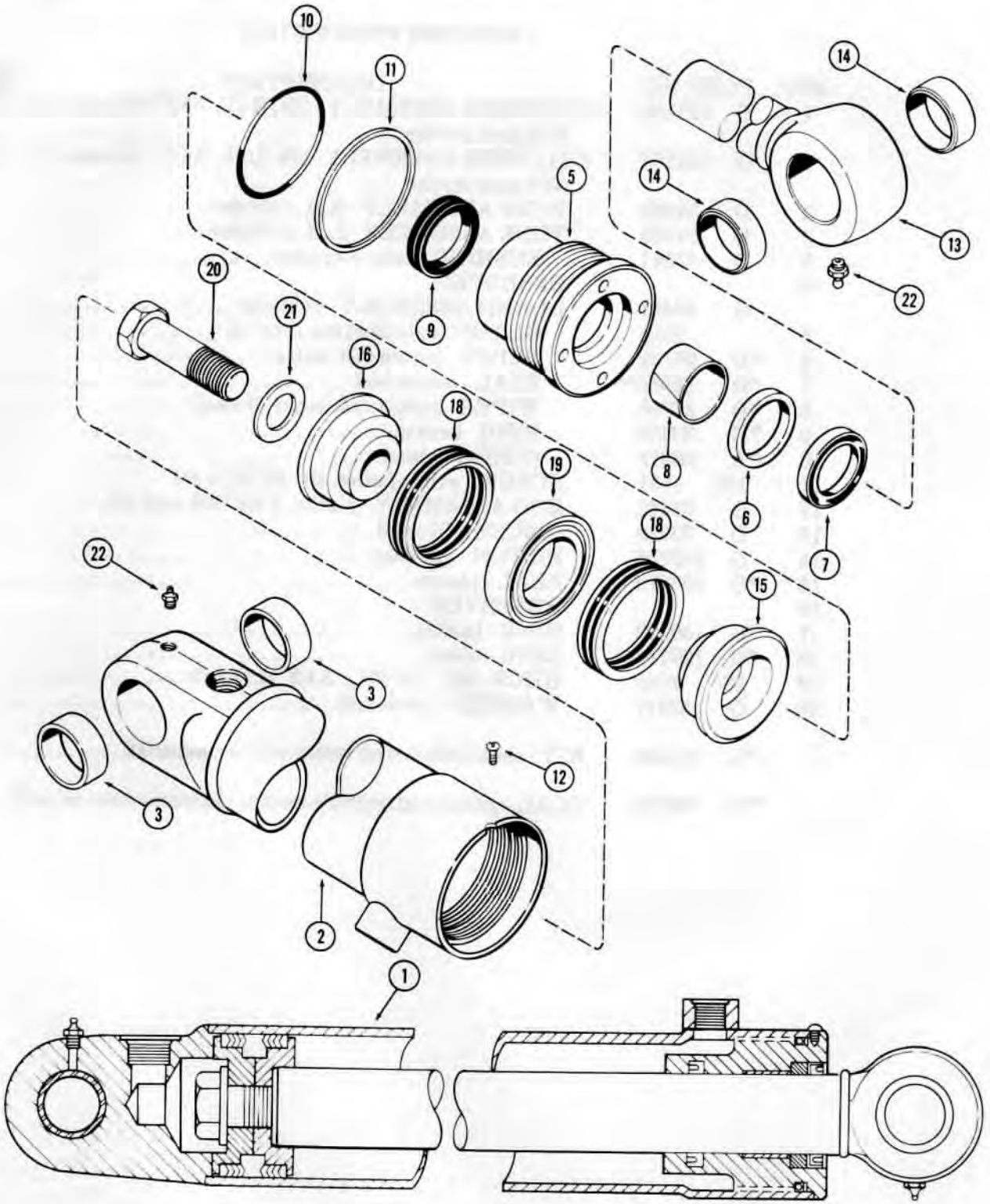

741013 A

http://www.minnparbackhoeparts.com/

G33798 AND G33799 LOADER CLAM CYLINDERS

WITH TWO PIECE PISTON

REF.	PART NO.	DESCRIPTION	REQ'D.
1	G 33798	CYLINDER ASSEMBLY - clam, R.H., 3" (76 mm) I.D. x 9" (229 mm) stroke, see foot note	1
1	G 33799	CYLINDER ASSEMBLY - clam, L.H., 3" (76 mm) I.D. x 9" (229 mm) stroke, see foot note	1
2	G 32305	TUBE ASSEMBLY - R.H. cylinder	1
2	G 32304	TUBE ASSEMBLY - L.H. cylinder	1
3	30634	BUSHING - tube	2
4		RESERVED	
	G 34633	GLAND ASSEMBLY - cylinder	1
5	NSS	GLAND - cylinder	1
6	NSS	RING - retaining	1
7	*D 95143	WIPER - piston rod, outer	1
8	*G 34621	BEARING - center	1
9	*D 36970**	SEAL - piston rod	1
10	*A 30095	O-RING - gland	1
11	*G 32122	RING - backup	1
12	187- 1031	SCREW - self tapping, #8 - 32 NC x 1/4"	1
13	G 33800	ROD ASSEMBLY - piston, 1-3/4" (44 mm) dia.	1
14	30634	BUSHING - piston rod	2
15	G 33331	PISTON - split, rod end	1
16	D 28896	PISTON - split, bolt end	1
17	*G 33151	PACKING ASSEMBLY - piston, not shown assembled	1
18	NSS	PACKING - "V" type	2
19	NSS	RING - center bearing	1
20	28- 1640	HHCS - 1" - 14 NF x 2-1/2", grade 8	1
21	G 32303	WASHER - hardened	1
22	219- 1	FITTING - grease, straight, 1/8" NPT	2
	*G 34642	KIT - seal, includes all items with an asterisk	1
	**G 100777	SEAL - piston rod, service option - extreme heat or cold	1

NOTE: Look for cylinder assembly part number to be stamped on cylinder gland or tube.

http://www.minnparbackhoeparts.com/

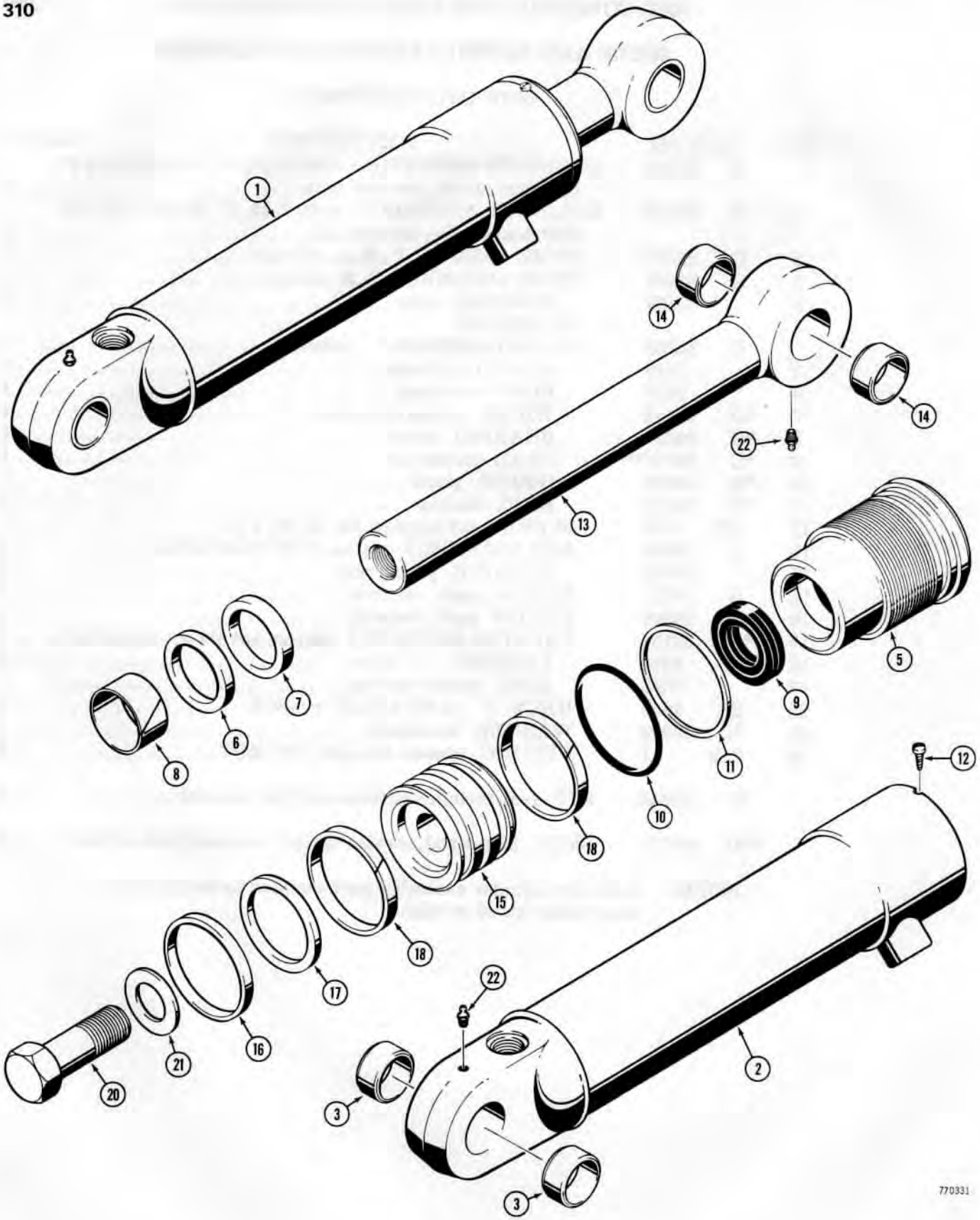

http://www.minnparbackhoeparts.com/

G101190 AND G101191 LOADER CLAM CYLINDERS

WITH ONE PIECE PISTON

REF.	PART NO.	DESCRIPTION	REQ'D.
1	G 101190	CYLINDER ASSEMBLY - clam, R.H., 3" (76 mm) I.D. x 9" (229 mm) stroke, see foot note	1
1	G 101191	CYLINDER ASSEMBLY - clam, L.H., 3" (76 mm) I.D. x 9" (229 mm) stroke, see foot note	1
2	G 32305	TUBE ASSEMBLY - R.H. cylinder	1
2	G 32304	TUBE ASSEMBLY - L.H. cylinder	1
3	30634	BUSHING - tube	2
4		RESERVED	
	G 34633	GLAND ASSEMBLY - cylinder	1
5	NSS	GLAND - cylinder	1
6	NSS	RING - retaining	1
7	*D 95143	WIPER - piston rod, outer	1
8	*G 34621	BEARING - center	1
9	*D 36970**	SEAL - piston rod	1
10	*A 30095	O-RING - gland	1
11	*G 32122	RING - backup	1
12	187- 1031	SCREW - self tapping, #8 - 32 NC x 1/4"	1
13	G 33800	ROD ASSEMBLY - piston, 1-3/4" (44 mm) dia.	1
14	30634	BUSHING - piston rod	2
15	G 100704	PISTON - cylinder	1
16	*G 100443	SEAL - piston	1
17	*G 100444	RING - backup	1
18	*G 100449	RING - wear	2
19		RESERVED	
20	28- 1640	HHCS - 1" - 14 NF x 2-1/2", grade 8	1
21	G 32303	WASHER - hardened	1
22	219- 1	FITTING - grease, straight, 1/8" NPT	2
	*G 101291	KIT - seal, includes all items with an asterisk	1
	**G 100777	SEAL - piston rod, service option - extreme heat or cold	1

NOTE: Look for cylinder assembly part number to be stamped on cylinder gland or tube.

http://www.minnparbackhoeparts.com/

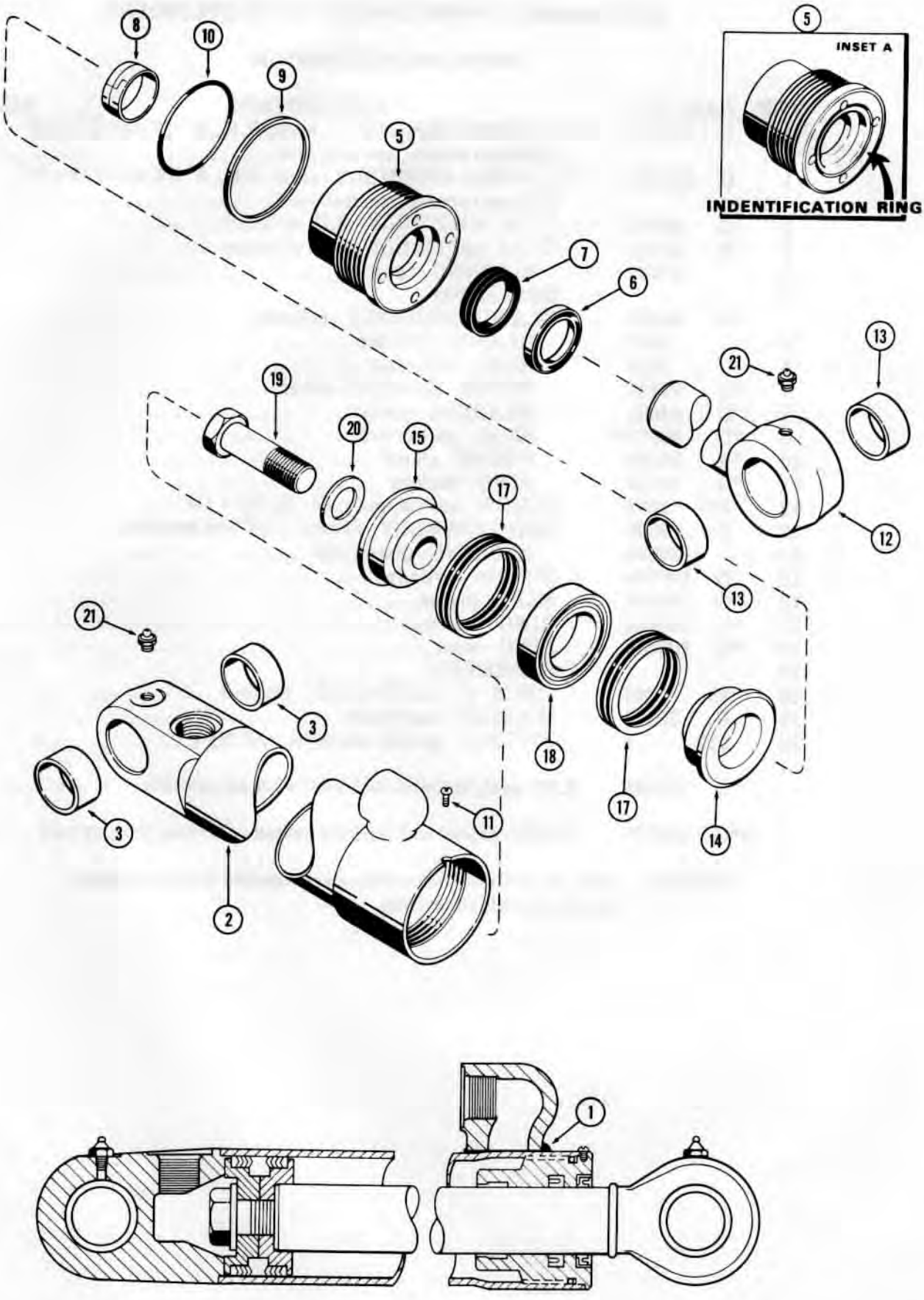

751356

http://www.minnparbackhoeparts.com/

G34293 LOADER GRAPPLE CYLINDER

WITH TWO PIECE PISTON

REF.	PART NO.	DESCRIPTION	REQ'D.
1	G 34293	CYLINDER ASSEMBLY - grapple, 2-1/2" (64 mm) I.D. x 9" (229 mm) stroke	1
2	D 46135	TUBE ASSEMBLY - cylinder	1
3	30634	BUSHING - tube	2
4		RESERVED	
	G 33487	GLAND ASSEMBLY	1
5	NSS	GLAND - cylinder, see inset A	1
6	*D 95142	WIPER - piston rod, outer	1
7	*D 36969**	SEAL - piston rod	1
8	D 27706	WIPER - piston rod, inner, if used	1
9	*G 32129	RING - backup	1
10	*A 28318	O-RING - gland	1
11	187- 1031	SCREW - self tapping, #8 - 32 NC x 1/4"	1
12	G 34294	ROD ASSEMBLY - piston, 1-1/2" (38 mm) dia.	1
13	30634	BUSHING - piston rod	2
14	G 33419	PISTON - split, rod end	1
15	D 28364	PISTON - split, bolt end	1
16		RESERVED	
	*G 33193	PACKING ASSEMBLY - piston rod	1
17	NSS	PACKING - "V" type	2
18	NSS	RING - center bearing	1
19	25- 1240	HHCS - 3/4" - 16 NF x 2-1/2", grade 8	1
20	G 32317	WASHER - hardened	1
21	219- 1	FITTING - grease, straight, 1/8" NPT	2
	*G 32294	KIT - seal, includes all items with an asterisk	1
	**G 100776	SEAL - piston rod, service option - extreme heat or cold	1

http://www.minnparbackhoeparts.com/

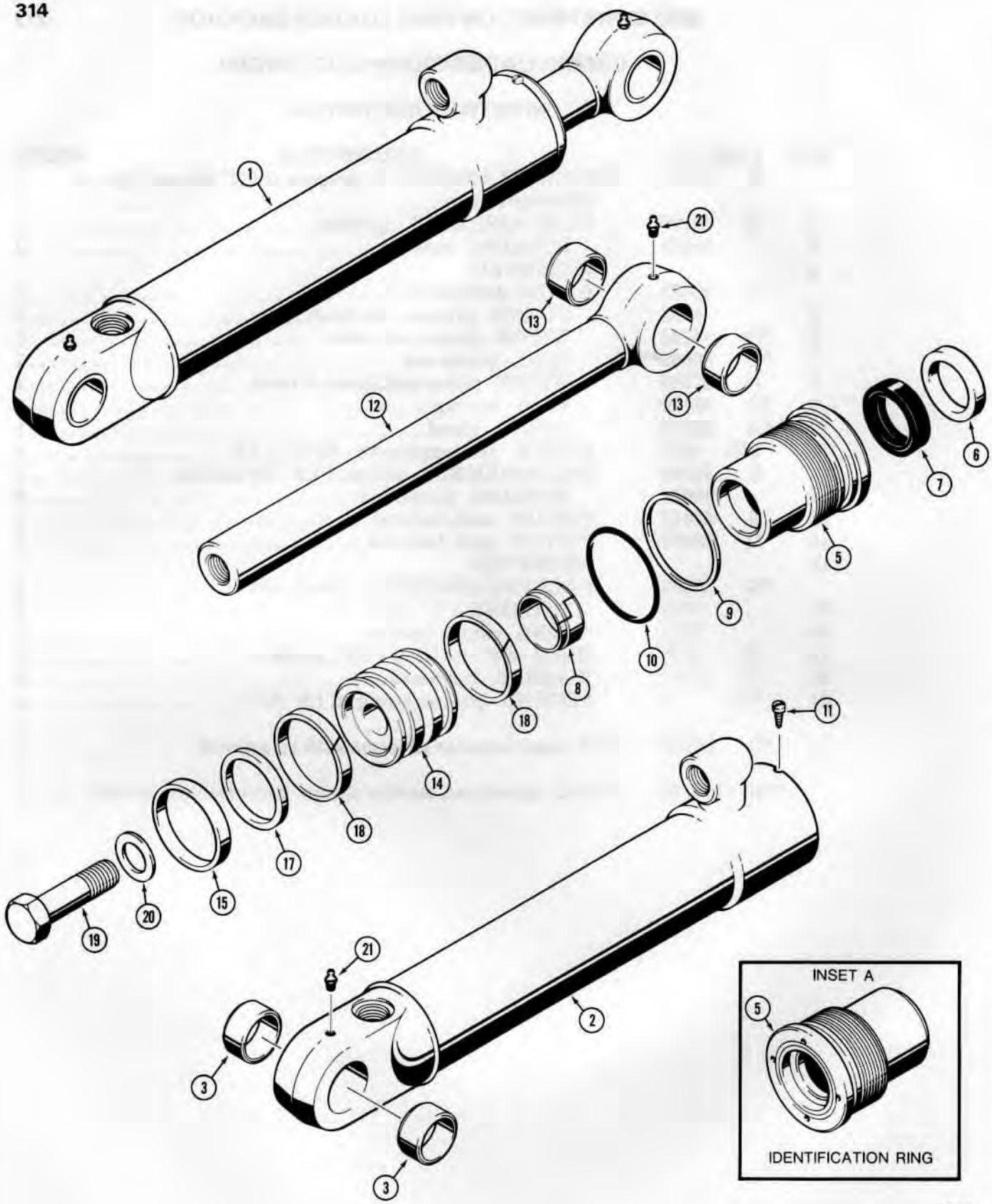

http://www.minnparbackhoeparts.com/

G101251 LOADER GRAPPLE CYLINDER

WITH ONE PIECE PISTON

REF.	PART NO.	DESCRIPTION	REQ'D.
1	G 101251	CYLINDER ASSEMBLY - grapple, 2-1/2" (64 mm) I.D. x 9" (229 mm) stroke	1
2	D 46135	TUBE ASSEMBLY - cylinder	1
3	30634	BUSHING - tube	2
4		RESERVED	
	G 33487	GLAND ASSEMBLY - cylinder	1
5	NSS	GLAND - cylinder, see inset A	1
6	*D 95142	WIPER - piston rod, outer	1
7	*D 36969**	SEAL - piston rod	1
8	D 27706	WIPER - piston rod, inner, if used	1
9	*G 32129	RING - backup	1
10	*A 28318	O-RING - gland	1
11	187- 1031	SCREW - self tapping, #8 - 32 NC x 1/4"	1
12	G 34294	ROD ASSEMBLY - piston, 1-1/2" (38 mm) dia.	1
13	30634	BUSHING - piston rod	2
14	G 100706	PISTON - cylinder	1
15	*G 100712	SEAL - piston	1
16		RESERVED	
17	*G 100713	RING - backup	1
18	*G 100714	RING - wear	2
19	28- 1240	HHCS - 3/4" - 16 NF x 2-1/2", grade 8	1
20	G 32317	WASHER - hardened	1
21	219- 1	FITTING - grease, straight, 1/8" NPT	2
	*G 101292	KIT - seal, includes all items with an asterisk	1
	**G 100776	SEAL - piston rod, service option - extreme heat or cold	1

http://www.minnparbackhoeparts.com/

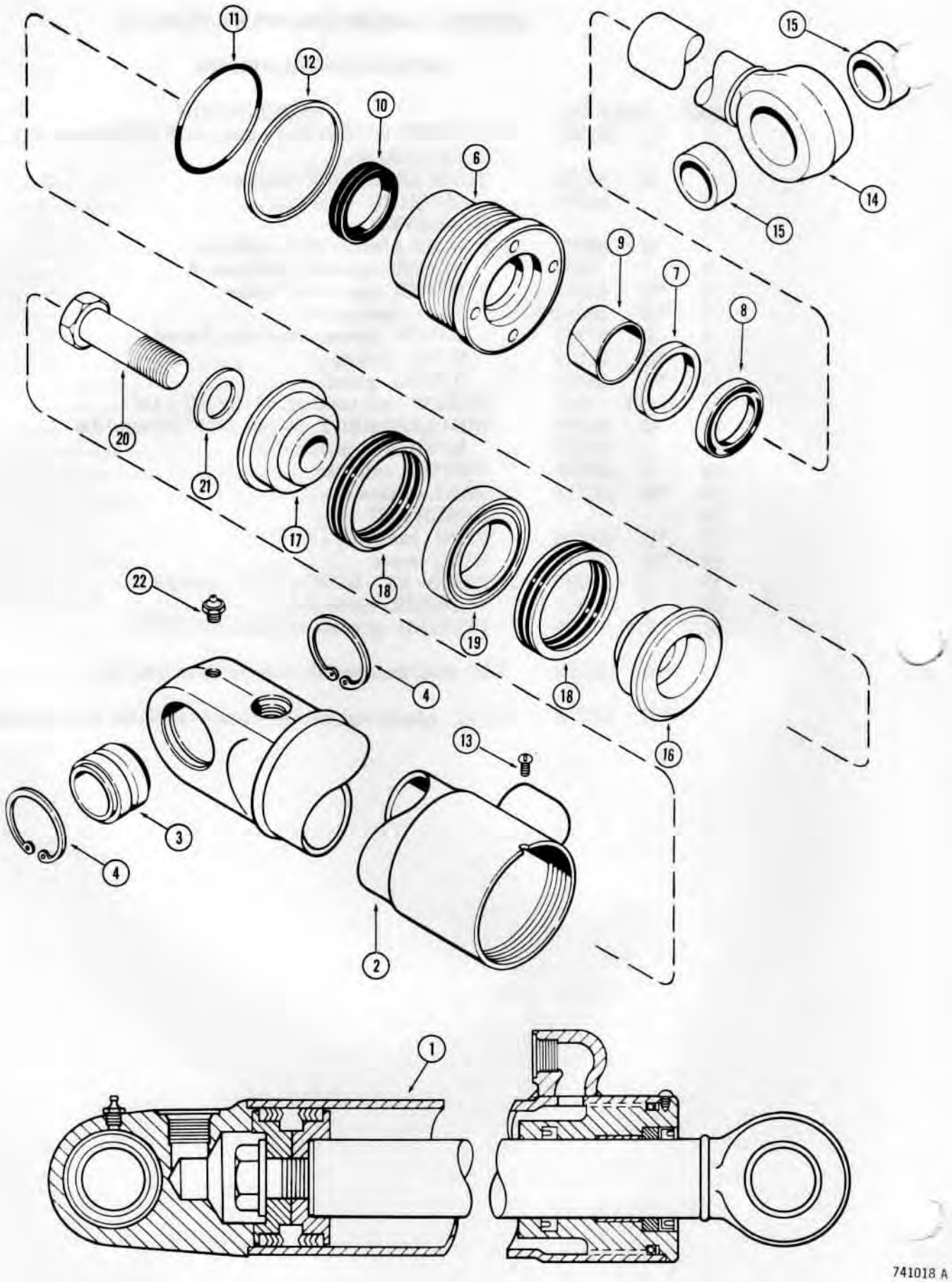

741018 A

http://www.minnparbackhoeparts.com/

G34470 AND G34471 BACKHOE STABILIZER CYLINDERS

WITH TWO PIECE PISTON

REF.	PART NO.	DESCRIPTION	REQ'D.
1	G 34470	CYLINDER ASSEMBLY - stabilizer, R.H., 4" (102 mm) I.D. x 19-3/8" (492 mm) stroke, see foot note	1
1	G 34471	CYLINDER ASSEMBLY - stabilizer, L.H., 4" (102 mm) I.D. x 19-3/8" (492 mm) stroke, see foot note	1
2	G 34468	TUBE ASSEMBLY - cylinder, R.H.	1
2	G 34469	TUBE ASSEMBLY - cylinder, L.H.	1
3	D 36203	BUSHING - tube, self aligning	1
4	A 10506	RING - retaining	2
5		RESERVED	
	G 34331	GLAND ASSEMBLY - cylinder	1
6	NSS	GLAND - cylinder	1
7	NSS	RING - retaining	1
8	*D 95144	WIPER - piston rod, outer	1
9	*G 34322	BEARING - center	1
10	*D 36971**	SEAL - piston rod	1
11	*A 27507	O-RING - gland	1
12	*G 32176	RING - backup	1
13	187- 1031	SCREW - self tapping, #8 - 32 NC x 1/4"	1
14	G 34475	ROD ASSEMBLY - piston, 2" (51 mm) dia.	1
15	D 32865	BUSHING - piston rod	2
16	G 33159	PISTON - split, rod end	1
17	D 46930	PISTON - split, bolt end	1
18	*D 47204	PACKING ASSEMBLY - piston, "V" type	2
19	D 47209	RING - center bearing	1
20	28- 2040	HHCS - 1-1/4" - 12 NF x 2-1/2", grade 8	1
21	G 32351	WASHER - hardened	1
22	219- 1	FITTING - grease, straight, 1/8" NPT	1
	*G 34594	KIT - seal, includes all items with an asterisk	1
	**G 100778	SEAL - piston rod, service option - extreme heat or cold	1

NOTE: Look for cylinder assembly part number to be stamped on cylinder gland or tube.

http://www.minnparbackhoeparts.com/

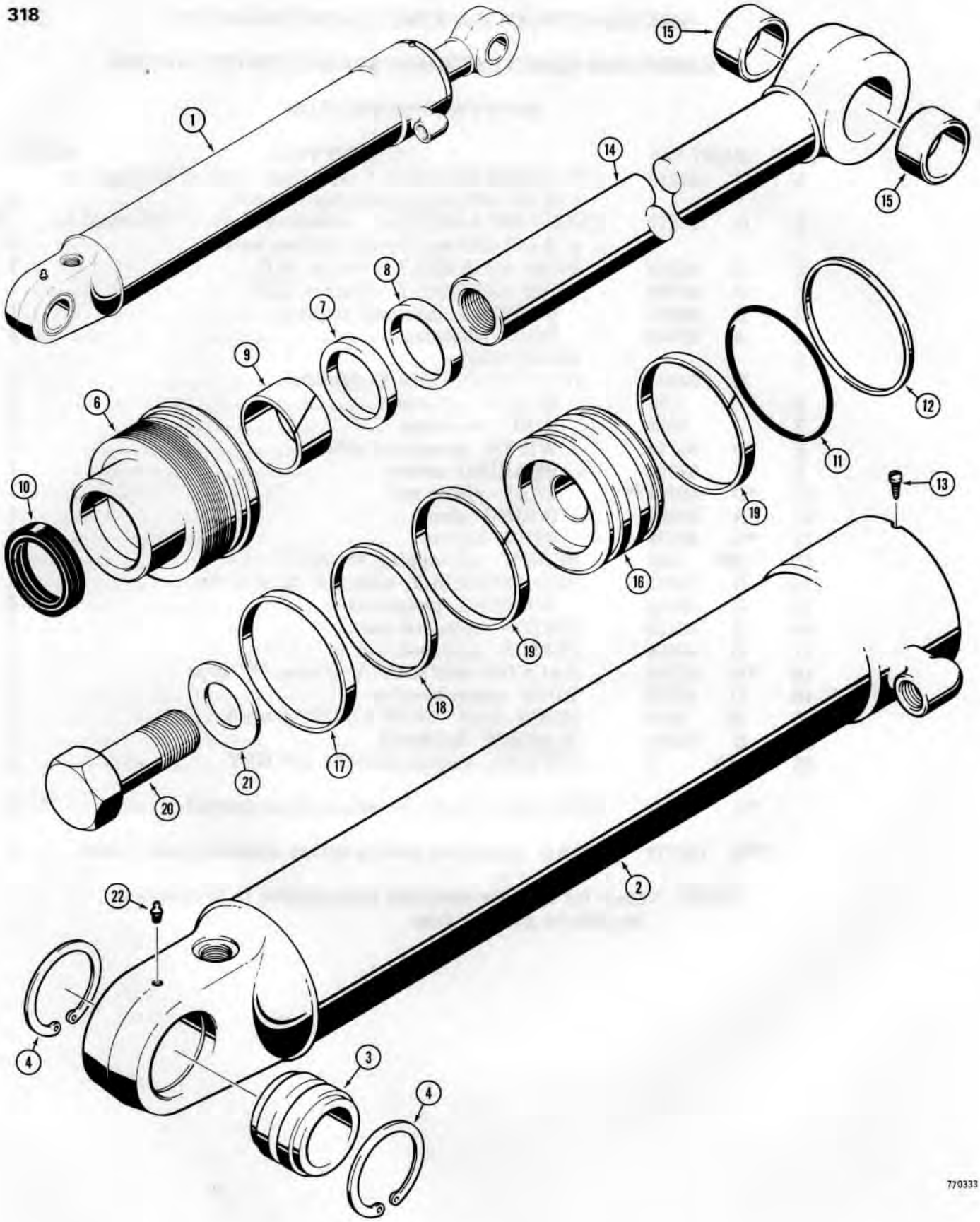

http://www.minnparbackhoeparts.com/

G101180 AND G101181 BACKHOE STABILIZER CYLINDERS

WITH ONE PIECE PISTON

REF.	PART NO.	DESCRIPTION	REQ'D.
1	G 101180	CYLINDER ASSEMBLY - stabilizer, R.H., 4" (102 mm) I.D. x 19-3/8" (492 mm) stroke, see foot note	1
1	G 101181	CYLINDER ASSEMBLY - stabilizer, L.H., 4" (102 mm) I.D. x 19-3/8" (492 mm) stroke, see foot note	1
2	G 34468	TUBE ASSEMBLY - cylinder, R.H.	1
2	G 34469	TUBE ASSEMBLY - cylinder, L.H.	1
3	D 36203	BUSHING - tube, self aligning	1
4	A 10506	RING - retaining	2
5		RESERVED	
	G 34331	GLAND ASSEMBLY - cylinder	1
6	NSS	GLAND - cylinder	1
7	NSS	RING - retaining	1
8	*D 95144	WIPER - piston rod, outer	1
9	*G 34322	BEARING - center	1
10	*D 36971**	SEAL - piston rod	1
11	*A 27507	O-RING - gland	1
12	*G 32176	RING - backup	1
13	187- 1031	SCREW - self tapping, #8 - 32 NC x 1/4"	1
14	G 34475	ROD ASSEMBLY - piston, 2" (51 mm) dia.	1
15	D 32865	BUSHING - piston rod	2
16	G 100438	PISTON - cylinder	1
17	*G 100439	SEAL - piston	1
18	*G 100440	RING - backup	1
19	*G 100448	RING - wear	2
20	28- 2040	HHCS - 1-1/4" - 12 NF x 2-1/2", grade 8	1
21	G 32351	WASHER - hardened	1
22	219- 1	FITTING - grease, straight, 1/8" NPT	1
	*G 101287	KIT - seal, includes all items with an asterisk	1
	**G 100778	SEAL - piston rod, service option - extreme heat or cold	1

NOTE: Look for cylinder assembly part number to be stamped on cylinder gland or tube.

http://www.minnparbackhoeparts.com/

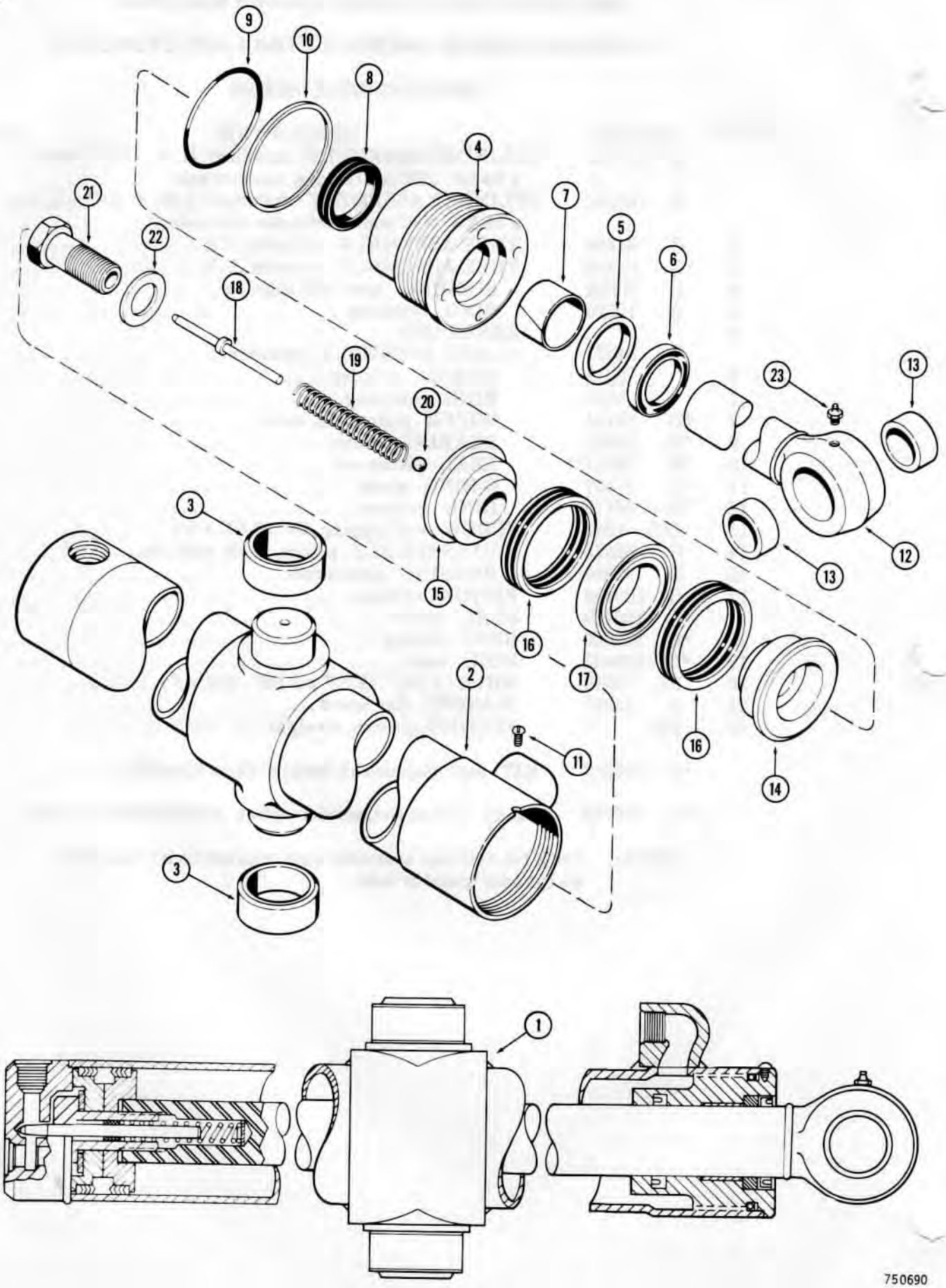

http://www.minnparbackhoeparts.com/

G34881 BACKHOE SWING CYLINDER

WITH TWO PIECE PISTON

REF.	PART NO.	DESCRIPTION	REQ'D.
1	G 34881	CYLINDER ASSEMBLY - swing, 4" (102 mm) I.D. x 11-1/4" (286 mm) stroke, see foot note	2
2	G 34877	TUBE ASSEMBLY - cylinder	1
3	G 34875	BUSHING - tube	2
	G 34331	GLAND ASSEMBLY - cylinder	1
4	NSS	GLAND - cylinder	1
5	NSS	RING - retaining	1
6	*D 95144	WIPER - piston rod, outer	1
7	*G 34322	BEARING - center	1
8	*D 36971**	SEAL - piston rod	1
9	*A 27507	O-RING - gland	1
10	*G 32176	RING - backup	1
11	187- 1031	SCREW - self tapping, #8 - 32 NC x 1/4"	1
12	G 34775	ROD ASSEMBLY - piston, 2" (51 mm) dia.	1
13	G 34854	BUSHING - piston rod	2
14	G 33159	PISTON - split, rod end	1
15	D 49161	PISTON - split, bolt end	1
16	*D 47204	PACKING ASSEMBLY - piston, "V" type	2
17	D 47209	RING - center bearing	1
18	D 38679	PIN - cushion relief	1
19	D 38683	SPRING - cushion relief	1
20	211- 14	BALL - cushion relief spring	1
21	D 41359	BOLT - piston and cushion relief	1
22	G 32351	WASHER - hardened	1
23	219- 1	FITTING - grease, straight, 1/8" NPT	1
	*G 34594	KIT - seal, includes all items with an asterisk	1
	**G 100778	SEAL - piston rod, service option - extreme heat or cold	1

NOTE: Look for cylinder assembly part number to be stamped on cylinder gland or tube.

http://www.minnparbackhoeparts.com/

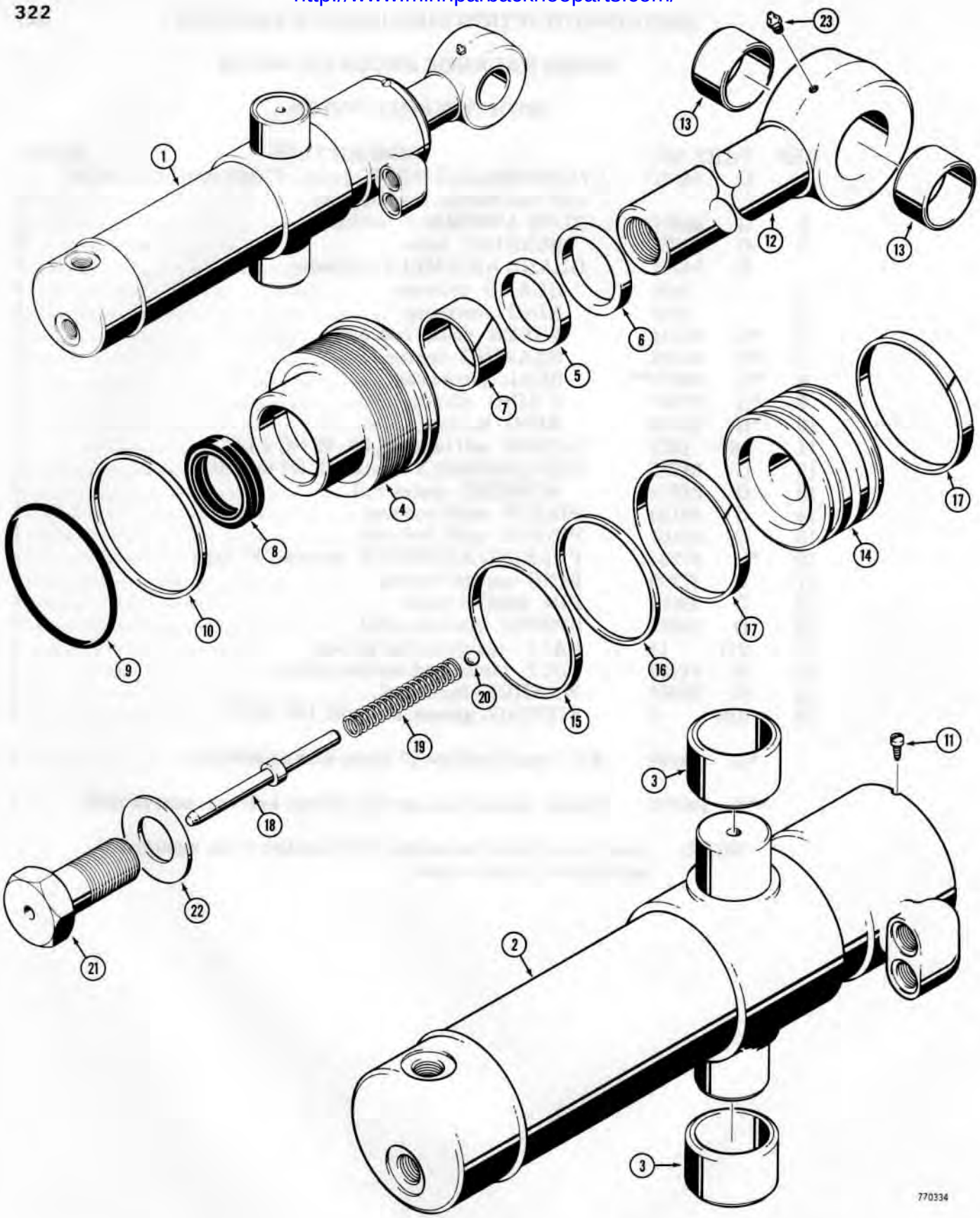

http://www.minnparbackhoeparts.com/

G101182 BACKHOE SWING CYLINDER

WITH ONE PIECE PISTON

REF.	PART NO.	DESCRIPTION	REQ'D.
1	G 101182	CYLINDER ASSEMBLY - swing, 4" (102 mm) I.D. x 11-1/4" (286 mm) stroke, see foot note	2
2	G 34877	TUBE ASSEMBLY - cylinder	1
3	G 34875	BUSHING - tube	2
	G 34331	GLAND ASSEMBLY - cylinder	1
4	NSS	GLAND - cylinder	1
5	NSS	RING - retaining	1
6	*D 95144	WIPER - piston rod, outer	1
7	*G 34322	BEARING - center	1
8	*D 36971**	SEAL - piston rod	1
9	*A 27507	O-RING - gland	1
10	*G 32176	RING - backup	1
11	187- 1031	SCREW - self tapping, #8 - 32 NC x 1/4"	1
12	G 34775	ROD ASSEMBLY - piston, 2" (51 mm) dia.	1
13	G 34854	BUSHING - piston rod	2
14	G 101309	PISTON - cylinder	1
15	*G 100439	SEAL - piston	1
16	*G 100440	RING - backup	1
17	*G 100448	RING - wear	2
18	D 38679	PIN - cushion relief	1
19	D 38683	SPRING - cushion relief	1
20	211- 14	BALL - cushion relief spring	1
21	D 41359	BOLT - piston and cushion relief	1
22	G 32351	WASHER - hardened	1
23	219- 1	FITTING - grease, straight, 1/8" NPT	1
	*G 101287	KIT - seal, includes all items with an asterisk	1
	**G 100778	SEAL - piston rod, service option - extreme heat or cold	1

NOTE: Look for cylinder assembly part number to be stamped on cylinder gland or tube.

http://www.minnparbackhoeparts.com/

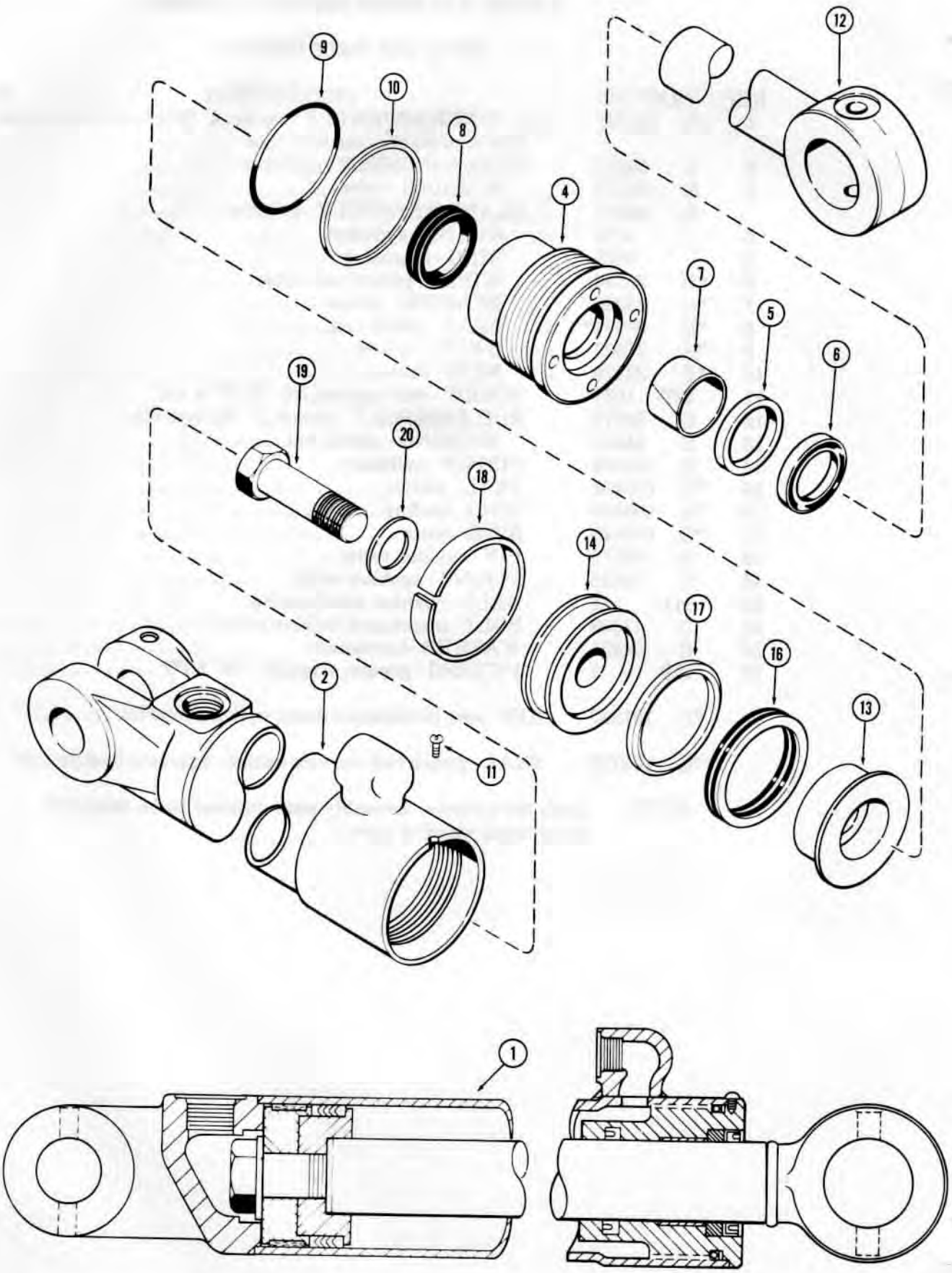

741026 A

http://www.minnparbackhoeparts.com/

G33881 BACKHOE BOOM CYLINDER

WITH TWO PIECE PISTON

REF.	PART NO.	DESCRIPTION	REQ'D.
1	G 33881	CYLINDER ASSEMBLY - boom, 3-1/4" (83 mm) I.D. x 42.1" (1069 mm) stroke, see foot note	2
2	G 33882	TUBE - cylinder	1
3		RESERVED	
	G 34649	GLAND ASSEMBLY - cylinder	1
4	NSS	GLAND - cylinder	1
5	NSS	RING - retaining	1
6	*D 95143	WIPER - piston rod, outer	1
7	*G 34621	BEARING - center	1
8	*D 36970**	SEAL - piston rod	1
9	*A 27994	O-RING - gland	1
10	*D 38858	RING - backup	1
11	187- 1031	SCREW - self tapping, #8 - 32 NC x 1/4"	1
12	G 33885	ROD - piston	1
13	G 33180	PISTON - split, rod end	1
14	G 33182	PISTON - split, bolt end	1
15		RESERVED	
	*G 33186	PACKING ASSEMBLY - piston	1
16	NSS	PACKING - "V" type	2
17	NSS	ADAPTER - packing	1
18	G 33181	RING - wear, piston	1
19	28- 1648	HHCS - 1" - 14 NF x 3", grade 8	1
20	G 32303	WASHER - hardened	1
	*G 34653	KIT - seal, includes all items with an asterisk	1
	**G 100777	SEAL - piston rod, service option - extreme heat or cold	1

NOTE: Look for cylinder assembly part number to be stamped on cylinder gland or tube.

http://www.minnparbackhoeparts.com/

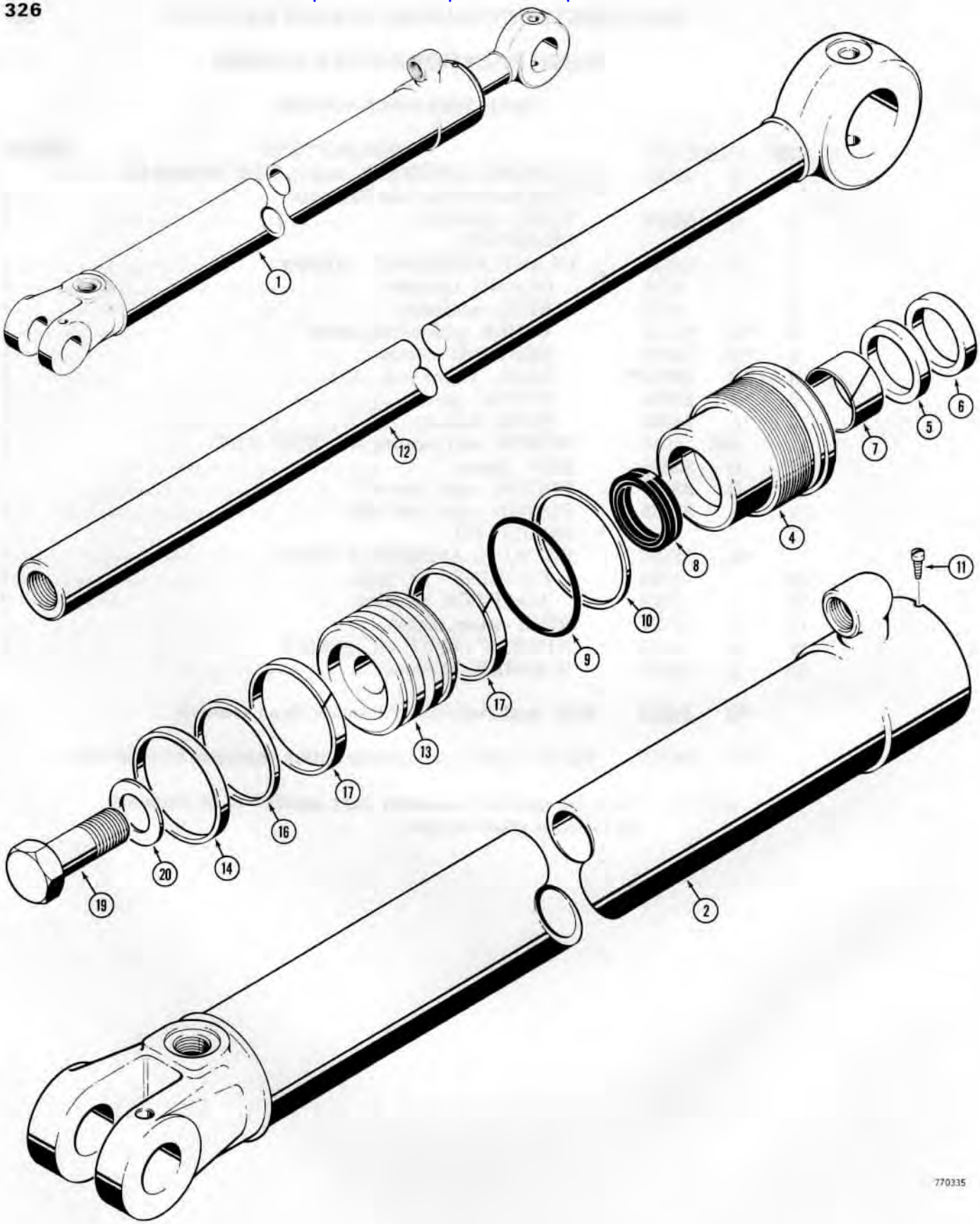

http://www.minnparbackhoeparts.com/

G101177 BACKHOE BOOM CYLINDER

WITH ONE PIECE PISTON

REF.	PART NO.	DESCRIPTION	REQ'D.
1	G 101177	CYLINDER ASSEMBLY - boom, 3-1/4" (83 mm) I.D. x 42.1 (1069 mm) stroke, see foot note	2
2	G 33882	TUBE - cylinder	1
3		RESERVED	
	G 34649	GLAND ASSEMBLY - cylinder	1
4	NSS	GLAND - cylinder	1
5	NSS	RING - retaining	1
6	*D 95143	WIPER - piston rod, outer	1
7	*G 34621	BEARING - center	1
8	*D 36970**	SEAL - piston rod	1
9	*A 27994	O-RING - gland	1
10	*D 38858	RING - backup	1
11	187- 1031	SCREW - self tapping, #8 - 32 NC x 1/4"	1
12	G 33885	ROD - piston	1
13	G 100642	PISTON - cylinder	1
14	*S 109443	SEAL - piston	1
15		RESERVED	
16	*S 109444	RING - backup	1
17	*S 109445	RING - wear	2
18		RESERVED	
19	28- 1640	HHCS - 1" - 14 NF x 2-1/2", grade 8	1
20	G 32303	WASHER - hardened	1
	*G 101289	KIT - seal, includes all items with an asterisk	1
	**G 100777	SEAL - piston rod, service option - extreme heat or cold	1

NOTE: Look for cylinder assembly part number to be stamped on cylinder gland or tube.

http://www.minnparbackhoeparts.com/

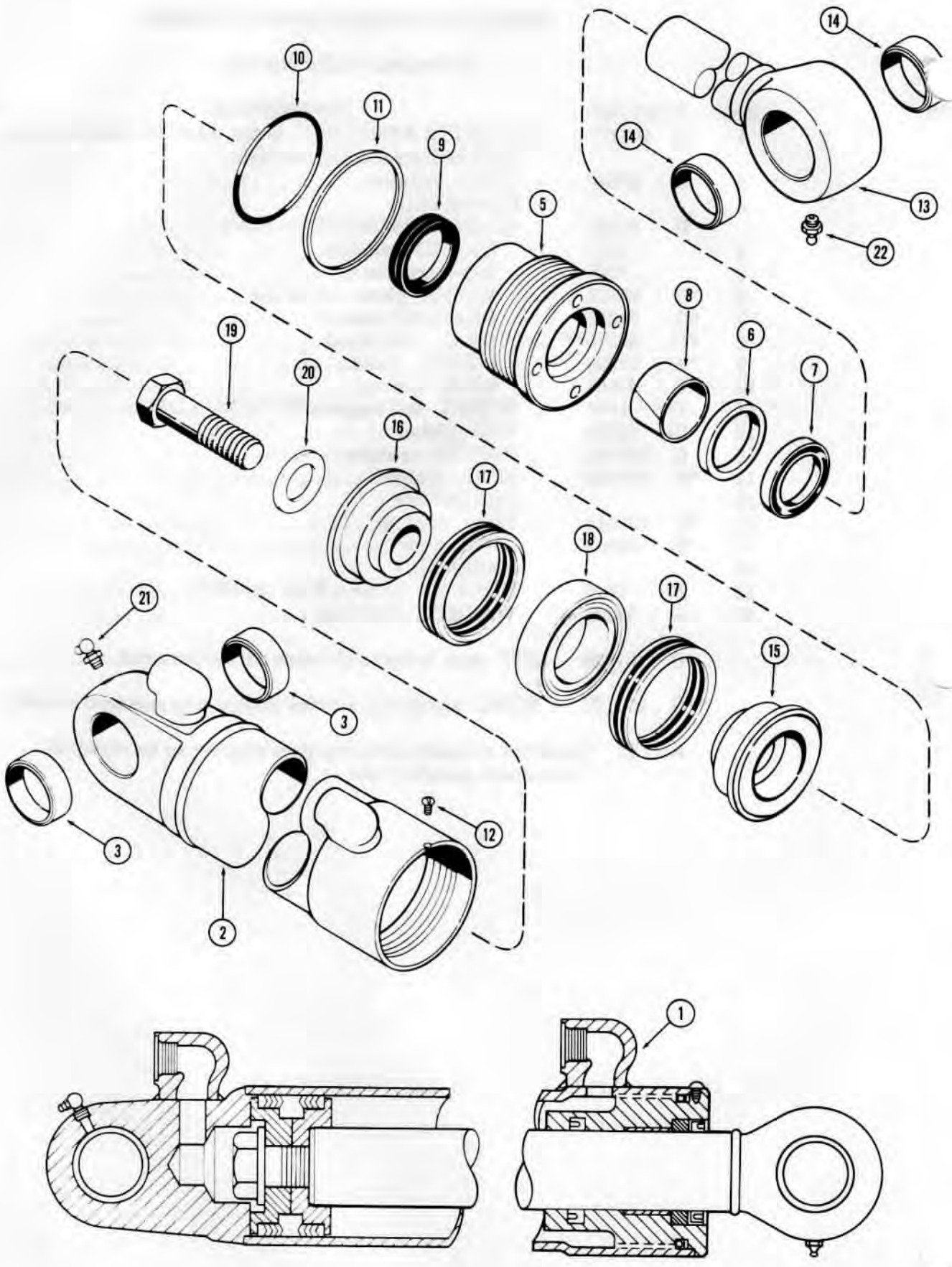

741028 A

http://www.minnparbackhoeparts.com/

G32079 BACKHOE DIPPER CYLINDER

WITH TWO PIECE PISTON

REF.	PART NO.	DESCRIPTION	REQ'D.
1	G 32079	CYLINDER ASSEMBLY - dipper, 4" (102 mm) I.D. x 35-1/8" (892 mm) stroke, see foot note	1
2	G 32831	TUBE ASSEMBLY - cylinder	1
3	D 33047	BUSHING - tube	2
4		RESERVED	
	G 34331	GLAND ASSEMBLY - cylinder	1
5	NSS	GLAND - cylinder	1
6	NSS	RING - retaining	1
7	*D 95144	WIPER - piston rod, outer	1
8	*G 34322	BEARING - center	1
9	*D 36971**	SEAL - piston rod	1
10	*A 27507	O-RING - gland	1
11	*G 32176	RING - backup	1
12	187- 1031	SCREW - self tapping, #8 - 32 NC x 1/4"	1
13	G 33154	ROD ASSEMBLY - piston, 2" (51 mm) dia.	1
14	D 33047	BUSHING - piston rod	2
15	G 33159	PISTON - split, rod end	1
16	D 46930	PISTON - split, bolt end	1
17	*D 47204	PACKING ASSEMBLY - piston, "V" type	2
18	D 47209	RING - center bearing	1
19	28- 2040	HHCS - 1-1/4" - 12 NF x 2-1/2", grade 8	1
20	G 32351	WASHER - hardened	1
21	219- 55	FITTING - grease, 90°, 1/8" NPT	1
22	219- 1	FITTING - grease, straight, 1/8" NPT	1
	*G 34594	KIT - seal, includes all items with an asterisk	1
	**G 100778	SEAL - piston rod, service option - extreme heat or cold	1

NOTE: Look for cylinder assembly part number to be stamped on cylinder gland or tube.

http://www.minnparbackhoeparts.com/

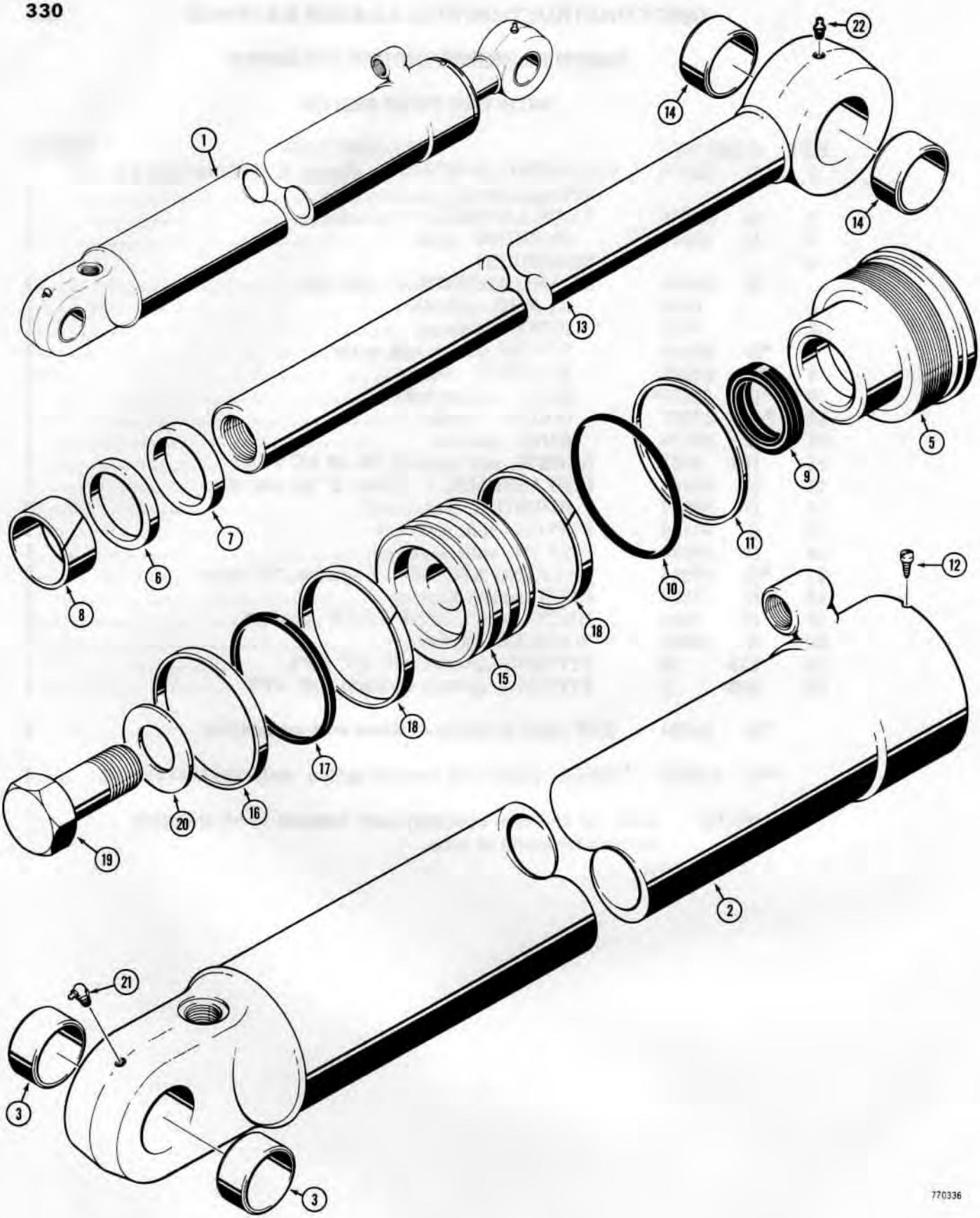

http://www.minnparbackhoeparts.com/

G101175 BACKHOE DIPPER CYLINDER

WITH ONE PIECE PISTON

REF.	PART NO.	DESCRIPTION	REQ'D.
1	G 101175	CYLINDER ASSEMBLY - dipper, 4" (102 mm) I.D. x 35-1/8" (892 mm) stroke, see foot note	1
2	G 101516	TUBE ASSEMBLY - cylinder	1
3	D 33047	BUSHING - tube	2
4		RESERVED	
	G 34331	GLAND ASSEMBLY - cylinder	1
5	NSS	GLAND - cylinder	1
6	NSS	RING - retaining	1
7	*D 95144	WIPER - piston rod, outer	1
8	*G 34322	BEARING - center	1
9	*D 36971**	SEAL - piston rod	1
10	*A 27507	O-RING - gland	1
11	*G 32176	RING - backup	1
12	187- 1031	SCREW - self tapping, #8 - 32 NC x 1/4"	1
13	G 33154	ROD ASSEMBLY - piston, 2" (51 mm) dia.	1
14	D 33047	BUSHING - piston rod	2
15	G 100438	PISTON - cylinder	1
16	*G 100439	SEAL - piston	1
17	*G 100440	RING - backup	1
18	*G 100448	RING - wear	2
19	28- 2040	HHCS - 1-1/4" - 12 NF x 2-1/2", grade 8	1
20	G 32351	WASHER - hardened	1
21	219- 55	FITTING - grease, 90°, 1/8" NPT	1
22	219- 1	FITTING - grease, straight, 1/8' NPT	1
	*G 101287	KIT - seal, includes all items with an asterisk	1
	**G 100778	SEAL - piston rod, service option - extreme heat or cold	1

NOTE: Look for cylinder assembly part number to be stamped on cylinder gland or tube.

http://www.minnparbackhoeparts.com/

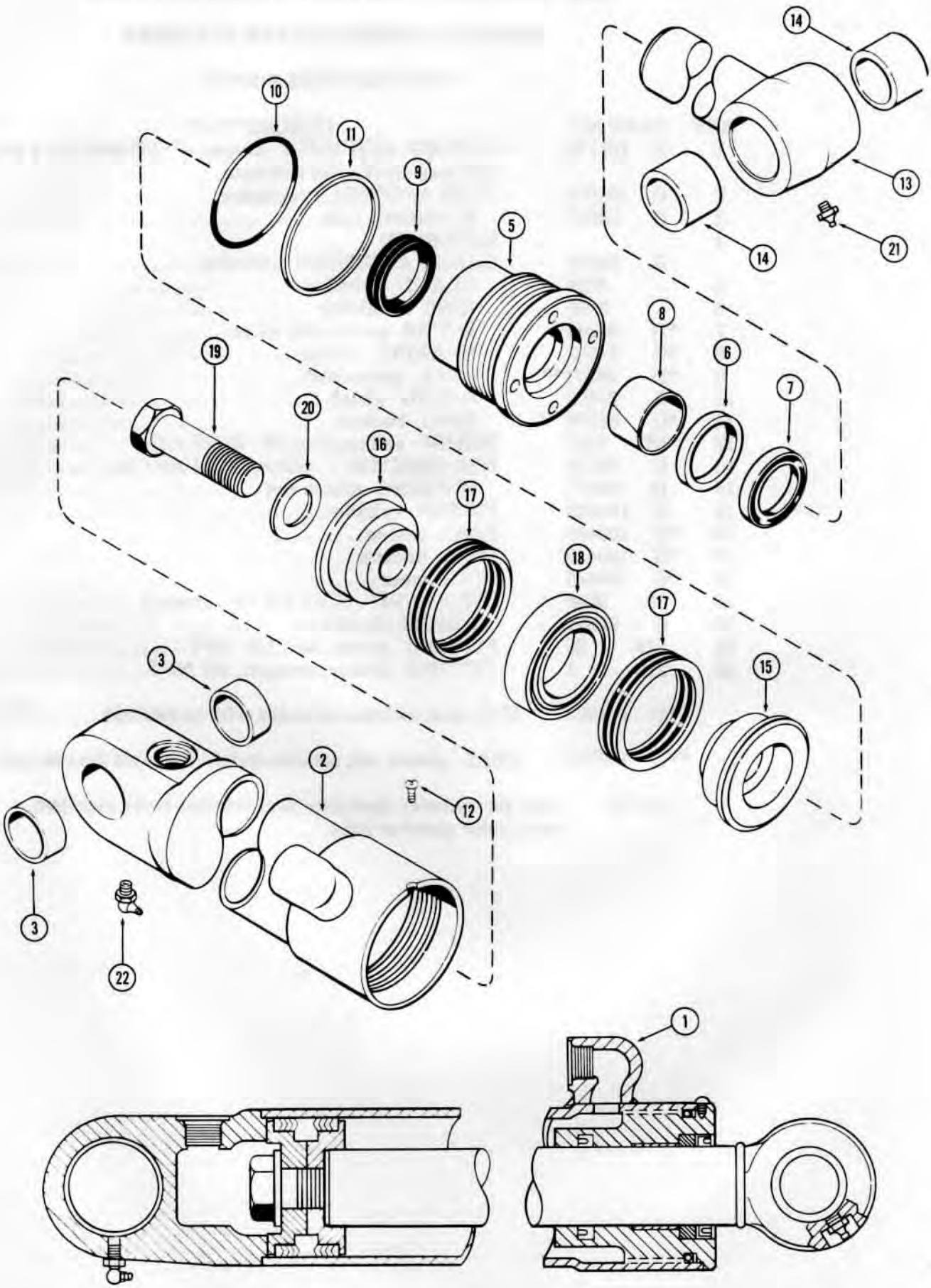

741030 A

http://www.minnparbackhoeparts.com/

G33196 BACKHOE BUCKET CYLINDER

WITH TWO PIECE PISTON

REF.	PART NO.	DESCRIPTION	REQ'D.
1	G 33196	CYLINDER ASSEMBLY - bucket, 3-1/2" (89 mm) I.D. x 30-1/2" (775 mm) stroke, see foot note	1
2	G 32399	TUBE ASSEMBLY - cylinder	1
3	D 33047	BUSHING - tube	2
4		RESERVED	
	G 34629	GLAND ASSEMBLY - cylinder	1
5	NSS	GLAND - cylinder	1
6	NSS	RING - retaining	1
7	*D 95144	WIPER - piston rod	1
8	*G 34322	BEARING - center	1
9	*D 36971**	SEAL - piston rod	1
10	*G 15457	O-RING - gland	1
11	*G 32126	RING - backup	1
12	187- 1031	SCREW - self tapping, #8 - 32 NC x 1/4"	1
13	G 33162	ROD ASSEMBLY - piston, 2" (51 mm) dia.	1
14	D 34340	BUSHING - piston rod	2
15	G 33167	PISTON - split, rod end	1
16	D 28367	PISTON - split, bolt end	1
17	*D 47203	PACKING ASSEMBLY - piston, "V" type	2
18	D 47208	RING - center bearing	1
19	28- 1640	HHCS - 1" - 14 NF x 2-1/2", grade 8	1
20	G 32303	WASHER - hardened	1
21	219- 1	FITTING - grease, straight, 1/8" NPT	1
22	219- 55	FITTING - grease, 90°, 1/8" NPT	1
	*G 34651	KIT - seal, includes all items with an asterisk	1
	**G 100778	SEAL - piston rod, service option - extreme heat or cold	1

NOTE: Look for cylinder assembly part number to be stamped on cylinder gland or tube.

http://www.minnparbackhoeparts.com/

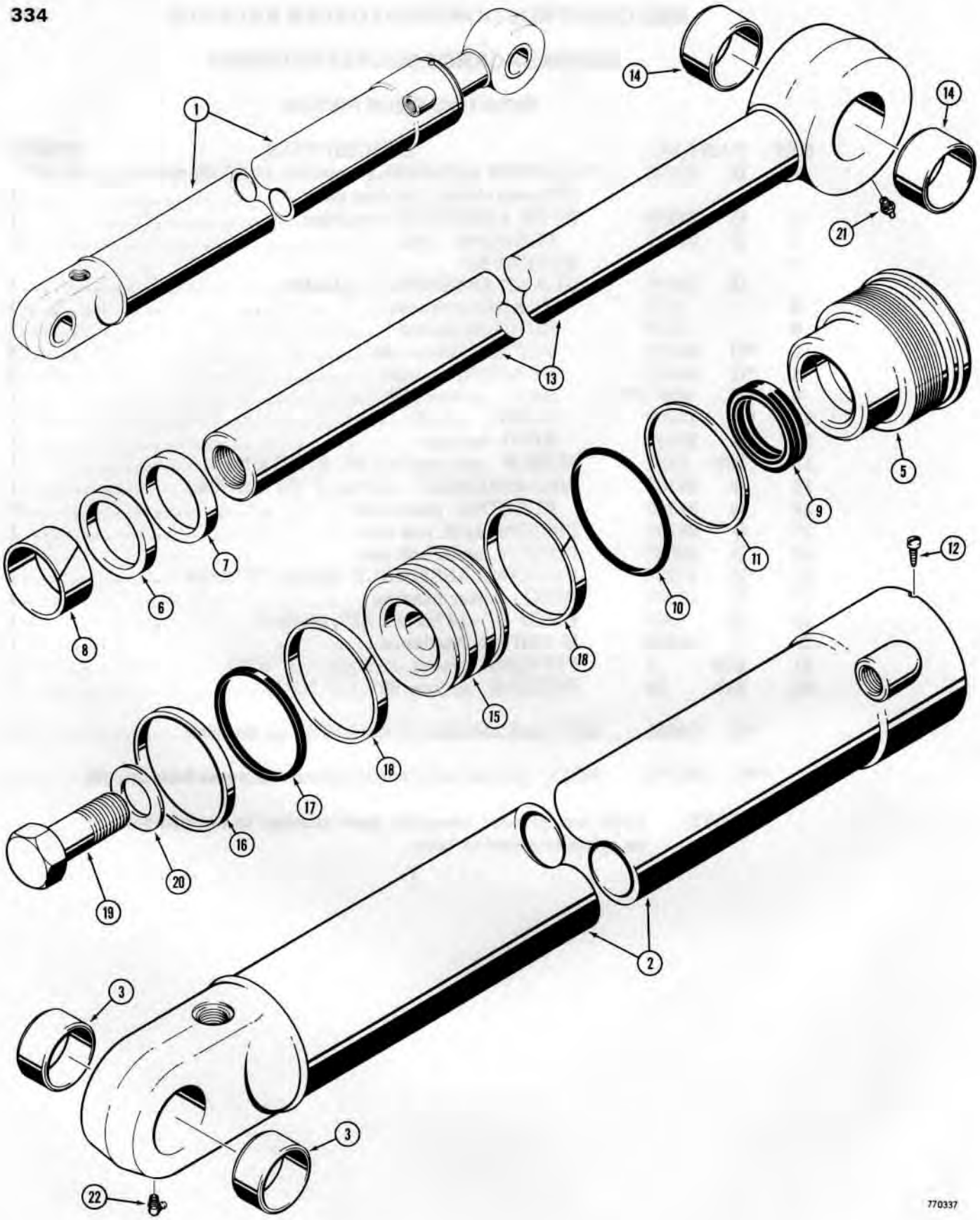

http://www.minnparbackhoeparts.com/

G101176 BACKHOE BUCKET CYLINDER

WITH ONE PIECE PISTON

REF.	PART NO.	DESCRIPTION	REQ'D.
1	G 101176	CYLINDER ASSEMBLY - bucket, 3-1/2" (89 mm) I.D. x 30-1/2" (775 mm) stroke, see foot note	1
2	G 32399	TUBE ASSEMBLY - cylinder	1
3	D 33047	BUSHING - tube	2
4		RESERVED	
	G 34629	GLAND ASSEMBLY - cylinder	1
5	NSS	GLAND - cylinder	1
6	NSS	RING - retaining	1
7	*D 95144	WIPER - piston rod	1
8	*G 34322	BEARING - center	1
9	*D 36971**	SEAL - piston rod	1
10	*G 15457	O-RING - gland	1
11	*G 32126	RING - backup	1
12	187- 1031	SCREW - self tapping, #8 - 32 NC x 1/4"	1
13	G 33162	ROD ASSEMBLY - piston, 2" (51 mm) dia.	1
14	D 34340	BUSHING - piston rod	2
15	G 100694	PISTON - cylinder	1
16	*G 100709	SEAL - piston	1
17	*G 100710	RING - backup	1
18	*G 100711	RING - wear	2
19	28- 1640	HHCS - 1" - 14 NF x 2-1/2", grade 8	1
20	G 32303	WASHER - hardened	1
21	219- 1	FITTING - grease, straight, 1/8" NPT	1
22	219- 55	FITTING - grease, 90°, 1/8" NPT	1
	*G 101288	KIT - seal, includes all items with an asterisk	1
	**G 100778	SEAL - piston rod, service option - extreme heat or cold	1

NOTE: Look for cylinder assembly part number to be stamped on cylinder gland or tube.

http://www.minnparbackhoeparts.com/

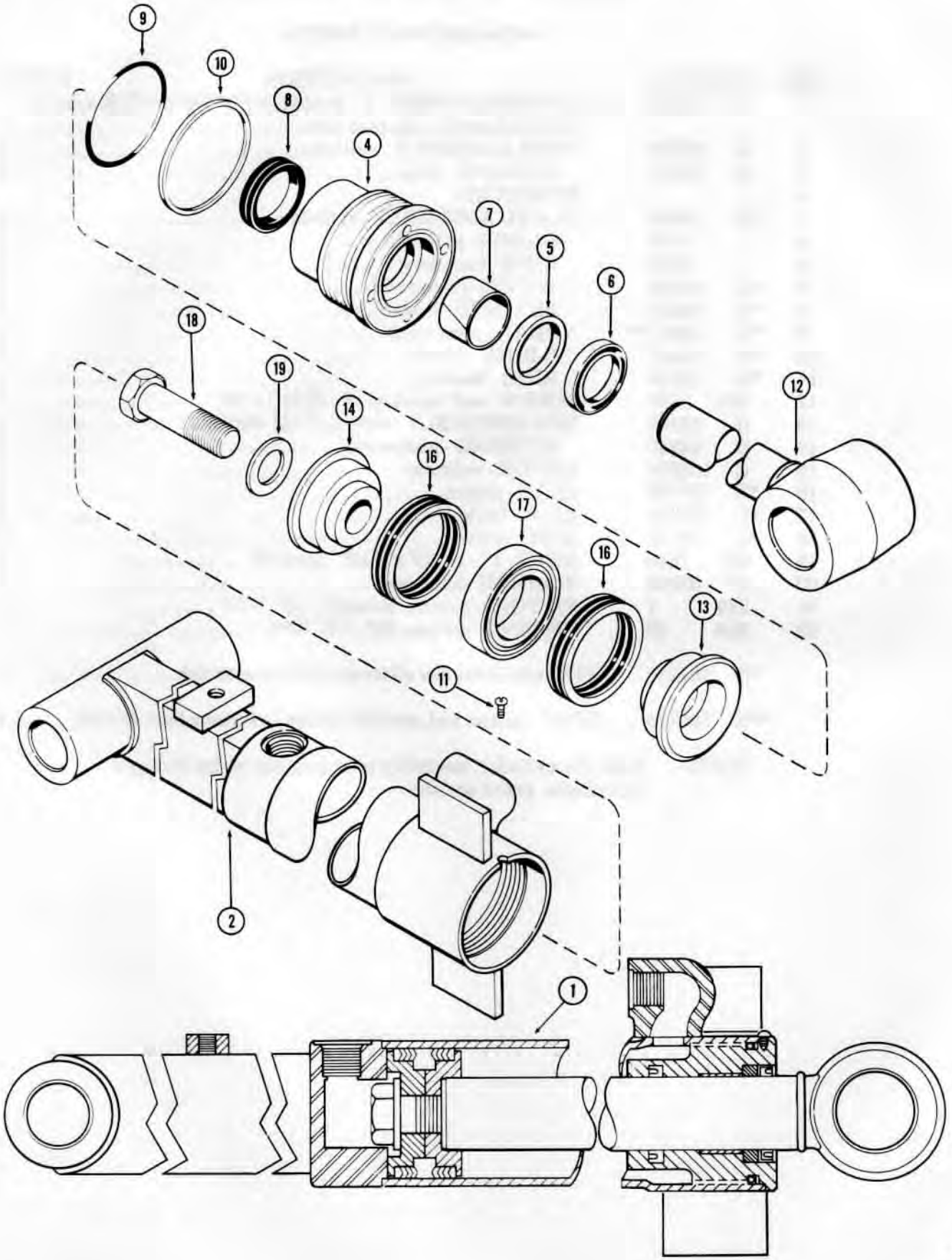

http://www.minnparbackhoeparts.com/

G33142 BACKHOE DIPPER EXTENSION CYLINDER

WITH TWO PIECE PISTON

REF.	PART NO.	DESCRIPTION	REQ'D.
1	G 33142	CYLINDER ASSEMBLY - dipper extension, 3" (76 mm) I.D. x 48" (1219 mm) stroke, see foot note	1
2	G 32699	TUBE - cylinder	1
3		RESERVED	
	G 34328	GLAND ASSEMBLY - cylinder	1
4	NSS	GLAND - cylinder	1
5	NSS	RING - retaining	1
6	*D 95142	WIPER - piston rod	1
7	*G 34302	BEARING - center	1
8	*D 36969**	SEAL - piston rod	1
9	*A 30095	O-RING - gland	1
10	*G 32122	RING - backup	1
11	187- 1031	SCREW - self tapping, #8 - 32 NC x 1/4"	1
12	G 33143	ROD - piston, 1-1/2" (38 mm) dia.	1
13	G 33150	PISTON - split, rod end	1
14	D 28366	PISTON - split, bolt end	1
15		RESERVED	
	*G 33151	PACKING ASSEMBLY - piston	1
16	NSS	PACKING - "V" type	2
17	NSS	RING - center bearing	1
18	28- 1240	HHCS - 3/4" - 16 NF x 2-1/2", grade 8	1
19	G 32317	WASHER - hardened	1
	*G 34332	KIT - seal, includes all items with an asterisk	1
	**G 100776	SEAL - piston rod, service option - extreme heat or cold	1

NOTE: Look for cylinder assembly part number to be stamped on cylinder gland or tube.

http://www.minnparbackhoeparts.com/

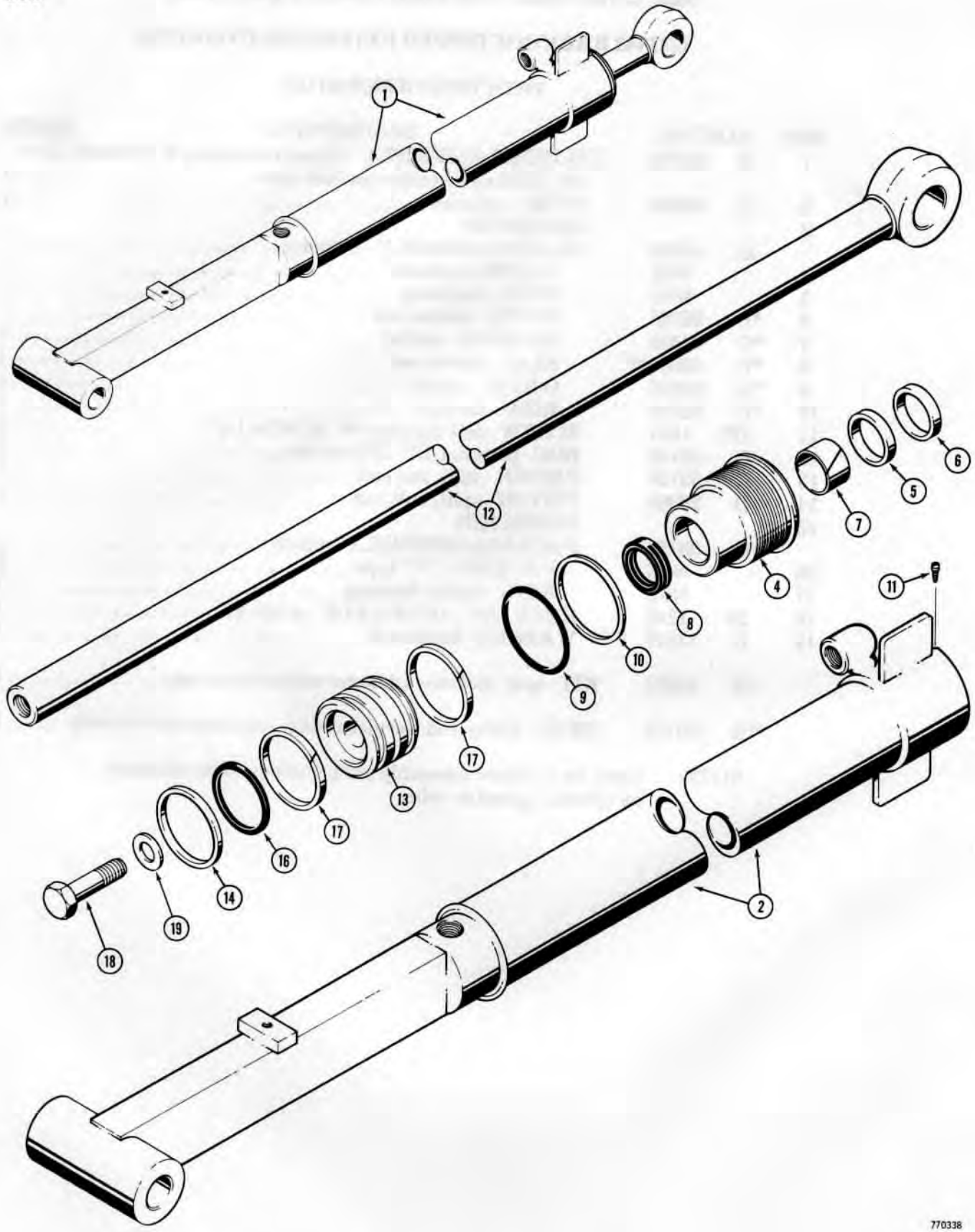

http://www.minnparbackhoeparts.com/

G101183 BACKHOE DIPPER EXTENSION CYLINDER

WITH ONE PIECE PISTON

REF.	PART NO.	DESCRIPTION	REQ'D.
1	G 101183	CYLINDER ASSEMBLY - dipper extension, 3" (76 mm) I.D. x 48" (1219 mm) stroke, see foot note	1
2	G 32699	TUBE - cylinder	1
3		RESERVED	
	G 34328	GLAND ASSEMBLY - cylinder	1
4	NSS	GLAND - cylinder	1
5	NSS	RING - retaining	1
6	*D 95142	WIPER - piston rod	1
7	*G 34302	BEARING - center	1
8	*D 36969**	SEAL - piston rod	1
9	*A 30095	O-RING - gland	1
10	*G 32122	RING - backup	1
11	187- 1031	SCREW - self tapping, #8 - 32 NC x 1/4"	1
12	G 33143	ROD - piston, 1-1/2" (38 mm) dia.	1
13	G 100442	PISTON - cylinder	1
14	*G 100443	SEAL - piston	1
15		RESERVED	
16	*G 100444	RING - backup	1
17	*G 100449	RING - wear	2
18	28- 1240	HHCS - 3/4" - 16 NF x 2-1/2", grade 8	1
19	G 32317	WASHER - hardened	1
	*G 101290	KIT - seal, includes all items with an asterisk	1
	**G 100776	SEAL - piston rod, service option - extreme heat or cold	1

NOTE: Look for cylinder assembly part number to be stamped on cylinder gland or tube.

http://www.minnparbackhoeparts.com/

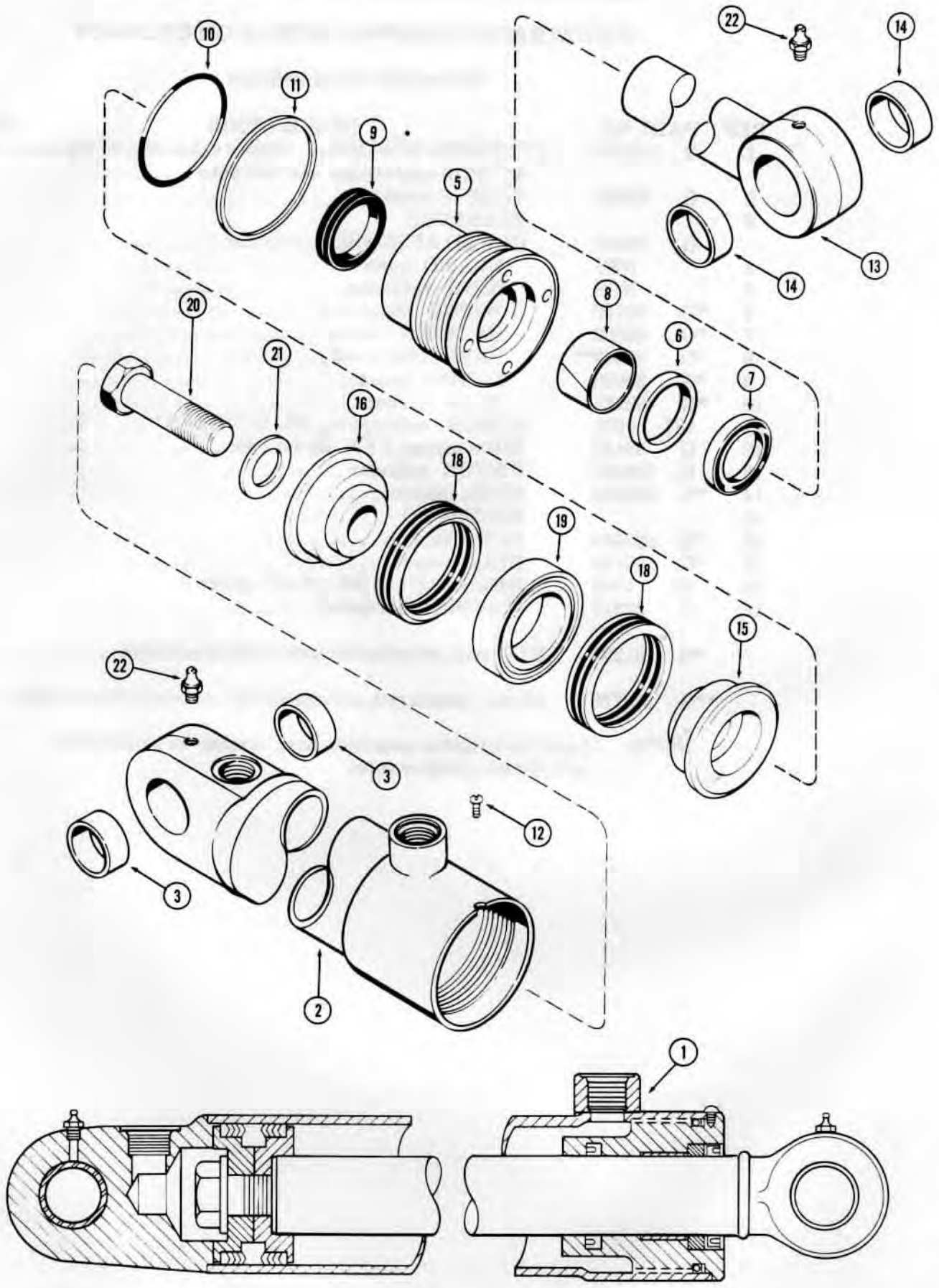

741034 A

http://www.minnparbackhoeparts.com/

G33456 3-POINT HITCH LIFT CYLINDER

WITH TWO PIECE PISTON

REF.	PART NO.	DESCRIPTION	REQ'D.
1	G 33456	CYLINDER ASSEMBLY - lift, 3" (76 mm) I.D. x 8-3/8" (213 mm) stroke, see foot note	1
2	G 32330	TUBE ASSEMBLY - cylinder	1
3	30634	BUSHING - tube	2
4		RESERVED	
	G 34328	GLAND ASSEMBLY - cylinder	1
5	NSS	GLAND - cylinder	1
6	NSS	RING - retaining	1
7	*D 95142	WIPER - piston rod	1
8	*G 34302	BEARING - center	1
9	*D 36969**	SEAL - piston rod	1
10	*A 30095	O-RING - gland	1
11	*G 32122	RING - backup	1
12	187- 1031	SCREW - self tapping, #8 - 32 NC x 1/4"	1
13	G 33457	ROD ASSEMBLY - piston, 1-1/2" (38 mm) dia.	1
14	30634	BUSHING - piston rod	2
15	G 33150	PISTON - split, rod end	1
16	D 28366	PISTON - split, bolt end	1
17		RESERVED	
	*G 33151	PACKING ASSEMBLY - piston	1
18	NSS	PACKING - "V" type	2
19	NSS	RING - center bearing	1
20	28- 1240	HHCS - 3/4" - 16 NF x 2-1/2", grade 8	1
21	G 32317	WASHER - hardened	1
22	219- 1	FITTING - grease, straight, 1/8" NPT	2
	*G 34332	KIT - seal, includes all items with an asterisk	1
	**G 100776	SEAL - piston rod, service option - extreme heat or cold	1

NOTE: Look for cylinder assembly part number to be stamped on cylinder gland or tube.

http://www.minnparbackhoeparts.com/

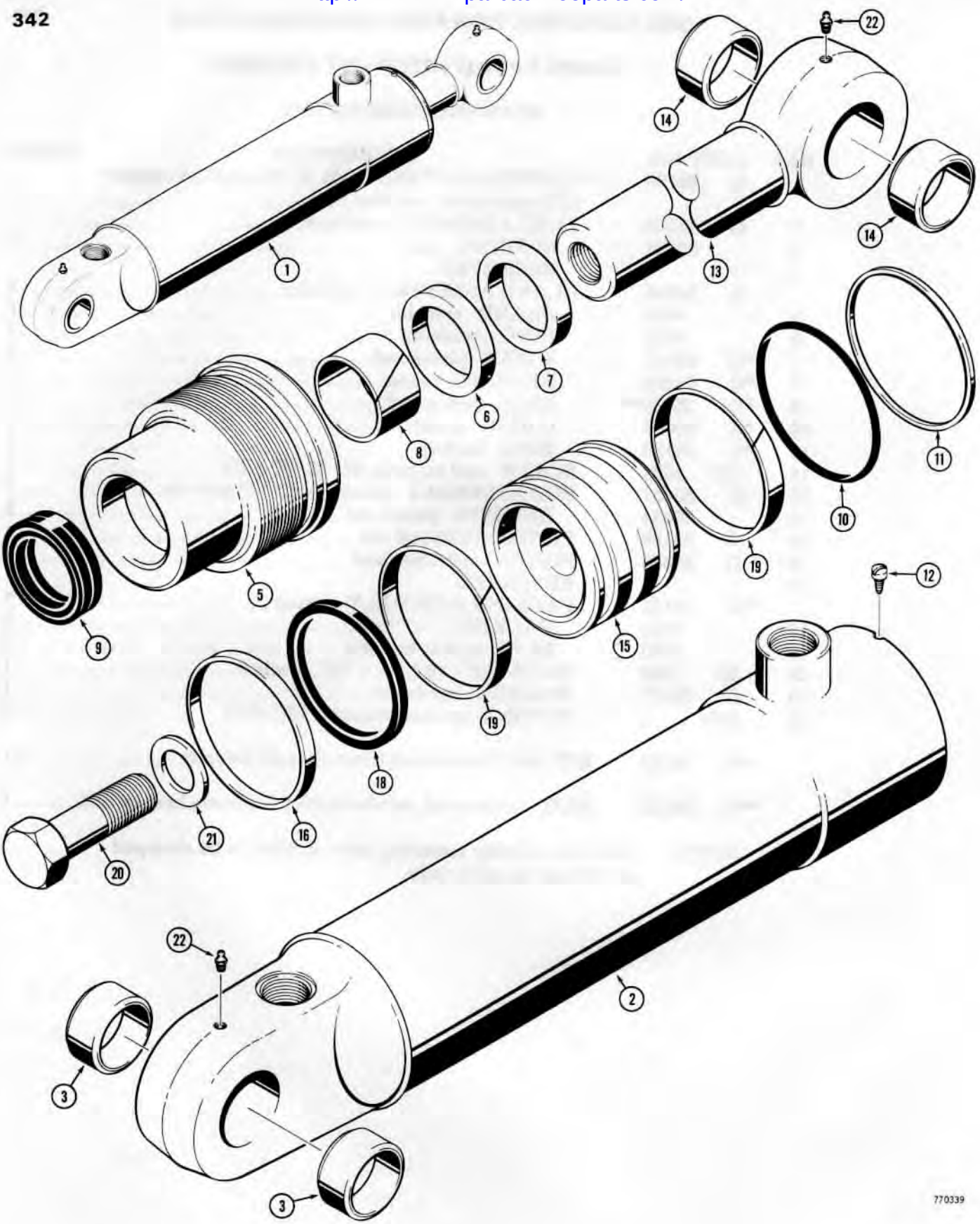

http://www.minnparbackhoeparts.com/

G101189 3-POINT HITCH LIFT CYLINDER

WITH ONE PIECE PISTON

REF.	PART NO.	DESCRIPTION	REQ'D.
1	G 101189	CYLINDER ASSEMBLY - lift, 3" (76 mm) I.D. x 8-3/8" (213 mm) stroke, see foot note	1
2	G 32330	TUBE ASSEMBLY - cylinder	1
3	30634	BUSHING - tube	2
4		RESERVED	
	G 34328	GLAND ASSEMBLY - cylinder	1
5	NSS	GLAND - cylinder	1
6	NSS	RING - retaining	1
7	*D 95142	WIPER - piston rod	1
8	*G 34302	BEARING - center	1
9	*D 36969**	SEAL - piston rod	1
10	*A 30095	O-RING - gland	1
11	*G 32122	RING - backup	1
12	187- 1031	SCREW - self tapping, #8 - 32 NC x 1/4"	1
13	G 33457	ROD ASSEMBLY - piston, 1-1/2" (38 mm) dia.	1
14	30634	BUSHING - piston rod	2
15	G 100442	PISTON - cylinder	1
16	*G 100443	SEAL - piston	1
17		RESERVED	
18	*G 100444	RING - backup	1
19	*G 100449	RING - wear	2
20	28- 1240	HHCS - 3/4" - 16 NF x 2-1/2", grade 8	1
21	G 32317	WASHER - hardened	1
22	219- 1	FITTING - grease, straight, 1/8" NPT	2
	*G 101290	KIT - seal, includes all items with an asterisk	1
	**G 100776	SEAL - piston rod, service option - extreme heat or cold	1

NOTE: Look for cylinder assembly part number to be stamped on cylinder gland or tube.

http://www.minnparbackhoeparts.com/

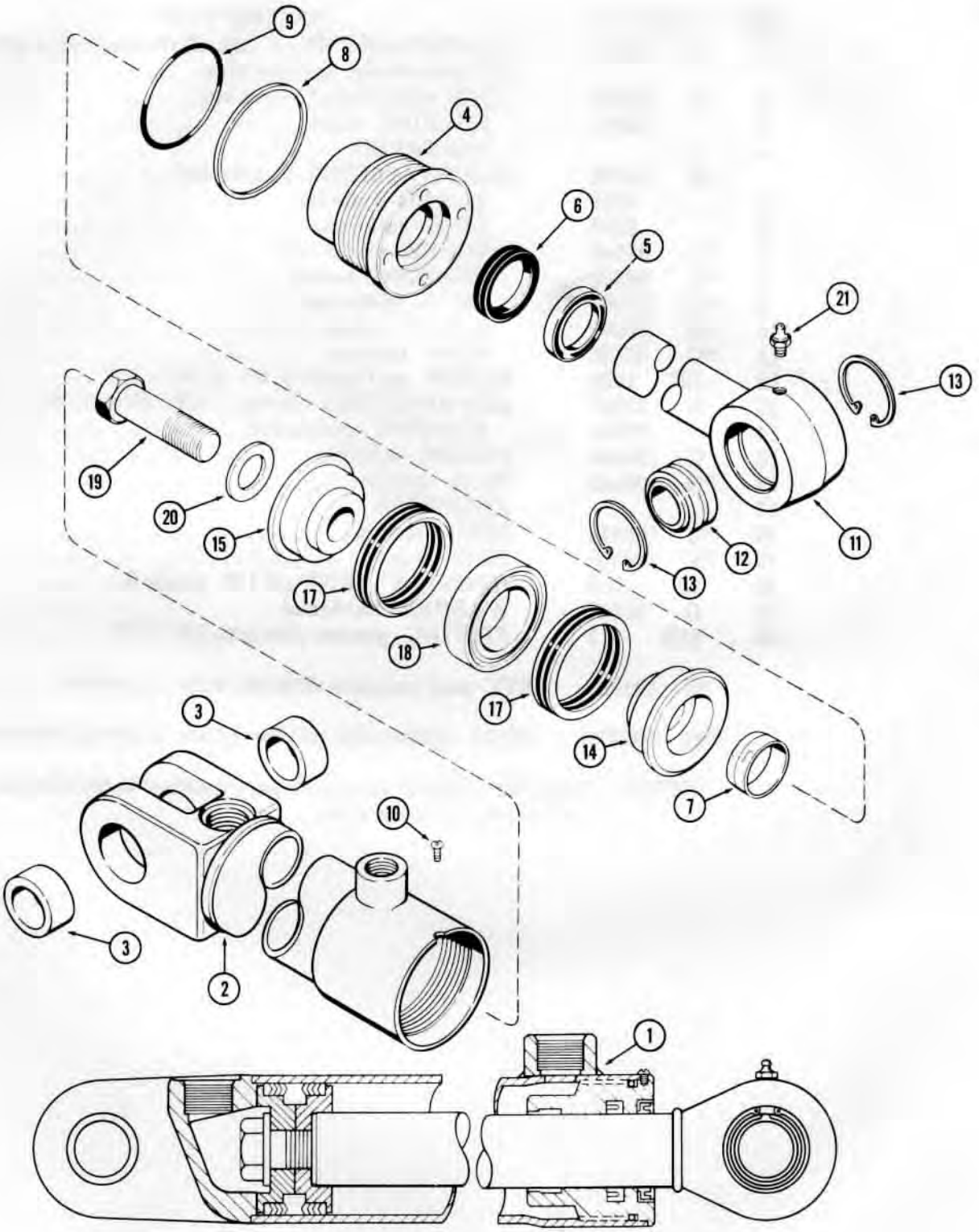

750721 A

http://www.minnparbackhoeparts.com/

G33351 3-POINT HITCH TILT CYLINDER

WITH TWO PIECE PISTON

REF.	PART NO.	DESCRIPTION	REQ'D.
1	G 33351	CYLINDER ASSEMBLY - tilt, 2-1/2" (64 mm) I.D. x 6-5/16" (160 mm) stroke	1
2	G 32313	TUBE ASSEMBLY - cylinder	1
3	D 34818	BUSHING - tube	2
	G 33578	GLAND ASSEMBLY - cylinder	1
4	NSS	GLAND - cylinder	1
5	*D 95141	WIPER - piston rod	1
6	*D 36968**	SEAL - piston rod	1
7	*D 27705	WIPER - piston rod, inner, if used	1
8	*G 32129	RING - backup	1
9	*A 28318	O-RING - gland	1
10	187- 1031	SCREW - self tapping, #8 - 32 NC x 1/4"	1
11	G 33352	ROD ASSEMBLY - piston, 1-1/4" (32 mm) dia.	1
12	D 22200	BUSHING - piston rod, self-aligning	1
13	D 27833	RING - retaining	2
14	G 33347	PISTON - split, rod end	1
15	D 28364	PISTON - split, bolt end	1
16		RESERVED	
	*G 33193	PACKING ASSEMBLY - piston	1
17	NSS	PACKING - "V" type	2
18	NSS	RING - center bearing	1
19	28- 1240	HHCS - 3/4" - 16 NF x 2-1/2", grade 8	1
20	G 32317	WASHER - hardened	1
21	219- 1	FITTING - grease, straight, 1/8" NPT	1
	*G 32295	KIT - seal, includes all items with an asterisk	1
	**G 100775	SEAL - piston rod, service option - extreme heat or cold	1

http://www.minnparbackhoeparts.com/

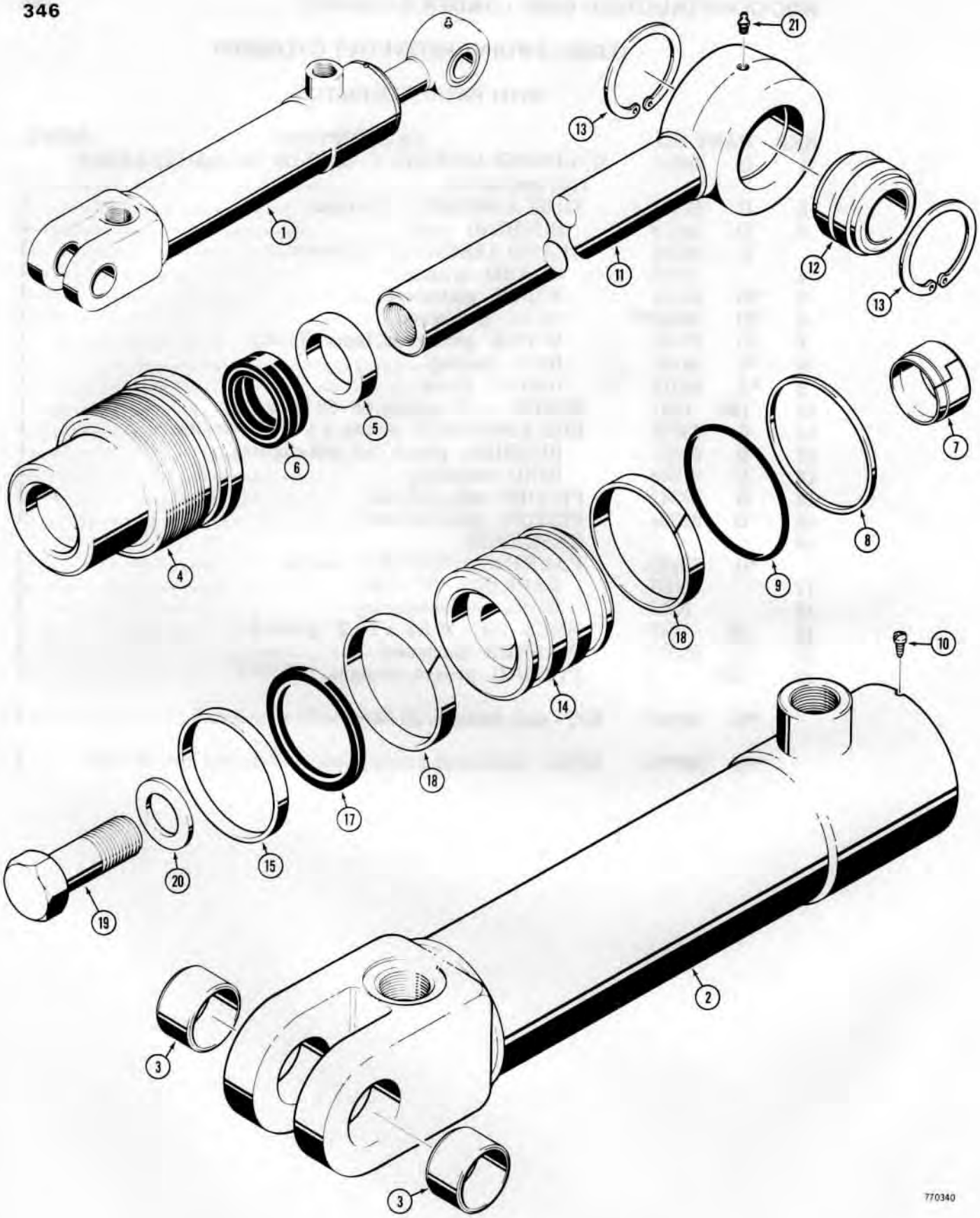

http://www.minnparbackhoeparts.com/

G101188 3-POINT HITCH TILT CYLINDER

WITH ONE PIECE PISTON

REF.	PART NO.	DESCRIPTION	REQ'D.
1	G 101188	CYLINDER ASSEMBLY - tilt, 2-1/2" (64 mm) I.D. x 6-5/16" (160 mm) stroke	1
2	G 32313	TUBE ASSEMBLY - cylinder	1
3	D 34818	BUSHING - tube	2
	G 33578	GLAND ASSEMBLY - cylinder	1
4	NSS	GLAND - cylinder	1
5	*D 95141	WIPER - piston rod	1
6	*D 36968**	SEAL - piston rod	1
7	*D 27705	WIPER - piston rod, inner, if used	1
8	*G 32129	RING - backup	1
9	*A 28318	O-RING - gland	1
10	187- 1031	SCREW - self tapping, #8 - 32 NC x 1/4"	1
11	G 33352	ROD ASSEMBLY - piston, 1-1/4" (32 mm) dia.	1
12	D 22200	BUSHING - piston rod, self-aligning	1
13	D 27833	RING - retaining	2
14	G 100708	PISTON - cylinder	1
15	*G 100712	SEAL - piston	1
16		RESERVED	
17	*G 100713	RING - backup	1
18	*G 100714	RING - wear	2
19	28- 1240	HHCS - 3/4" - 16 NF x 2-1/2", grade 8	1
20	G 32317	WASHER - hardened	1
21	219- 1	FITTING - grease, straight, 1/8" NPT	1
	*G 101293	KIT - seal, includes all items with an asterisk	1
	**G 100775	SEAL - piston rod, service option - extreme heat or cold	1

http://www.minnparbackhoeparts.com/

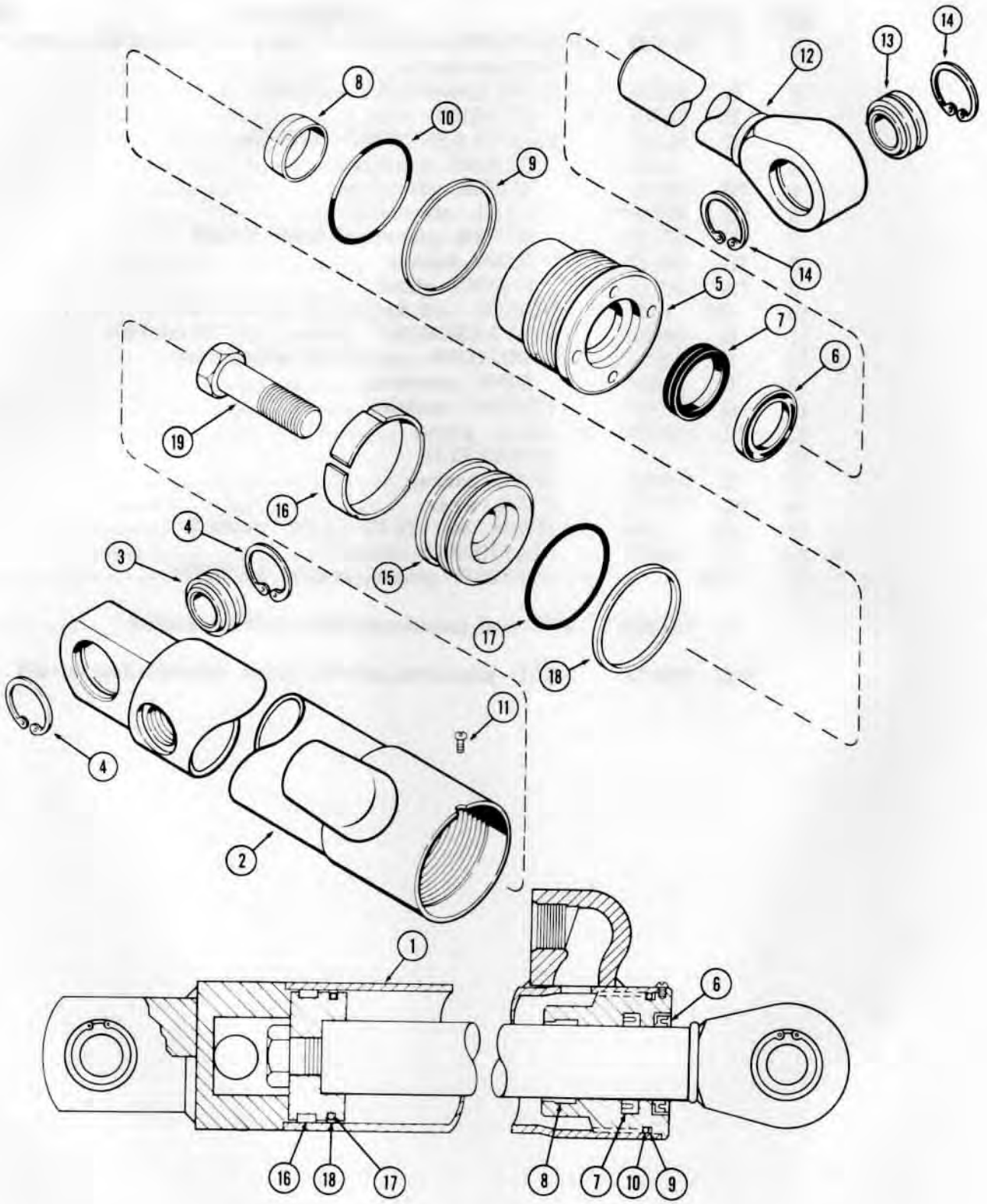

741298

http://www.minnparbackhoeparts.com/

G33128 3-POINT HITCH PITCH CYLINDER

REF.	PART NO.		DESCRIPTION	REQ'D.
1	G	33128	CYLINDER ASSEMBLY - pitch, 2-1/2" (64 mm) I.D. x 7" (178 mm) stroke	1
2	G	33129	TUBE ASSEMBLY - cylinder	1
3	G	32321	BUSHING - tube, self-aligning	1
4	A	21145	RING - retaining	2
	G	33578	GLAND ASSEMBLY - cylinder	1
5		NSS	GLAND - cylinder	1
6	*D	95141	WIPER - piston rod, outer	1
7	*D	36968**	SEAL - piston rod	1
8	*D	27705	WIPER - piston rod, inner, if used	1
9	*G	32129	RING - backup	1
10	*A	28318	O-RING - gland	1
11	187-	1031	SCREW - self-tapping, #8 - 32 NC x 1/4"	1
12	G	33134	ROD ASSEMBLY - piston, 1-1/4" (32 mm) dia.	1
13	G	32321	BUSHING - piston rod, self-aligning	1
14	A	21145	RING - retaining	2
15	G	33138	PISTON - cylinder	1
16	*G	33139	RING - wear, piston	1
17	*F	62076	O-RING - piston	1
18	*G	33140	RING - seal, piston	1
19	28-	1232	HHCS - 3/4" - 16 NF x 2", grade 8	1
	*G	33141	KIT - seal, includes all items with an asterisk	1
	**G	100775	SEAL - piston rod, service option - extreme heat or cold	1

http://www.minnparbackhoeparts.com/

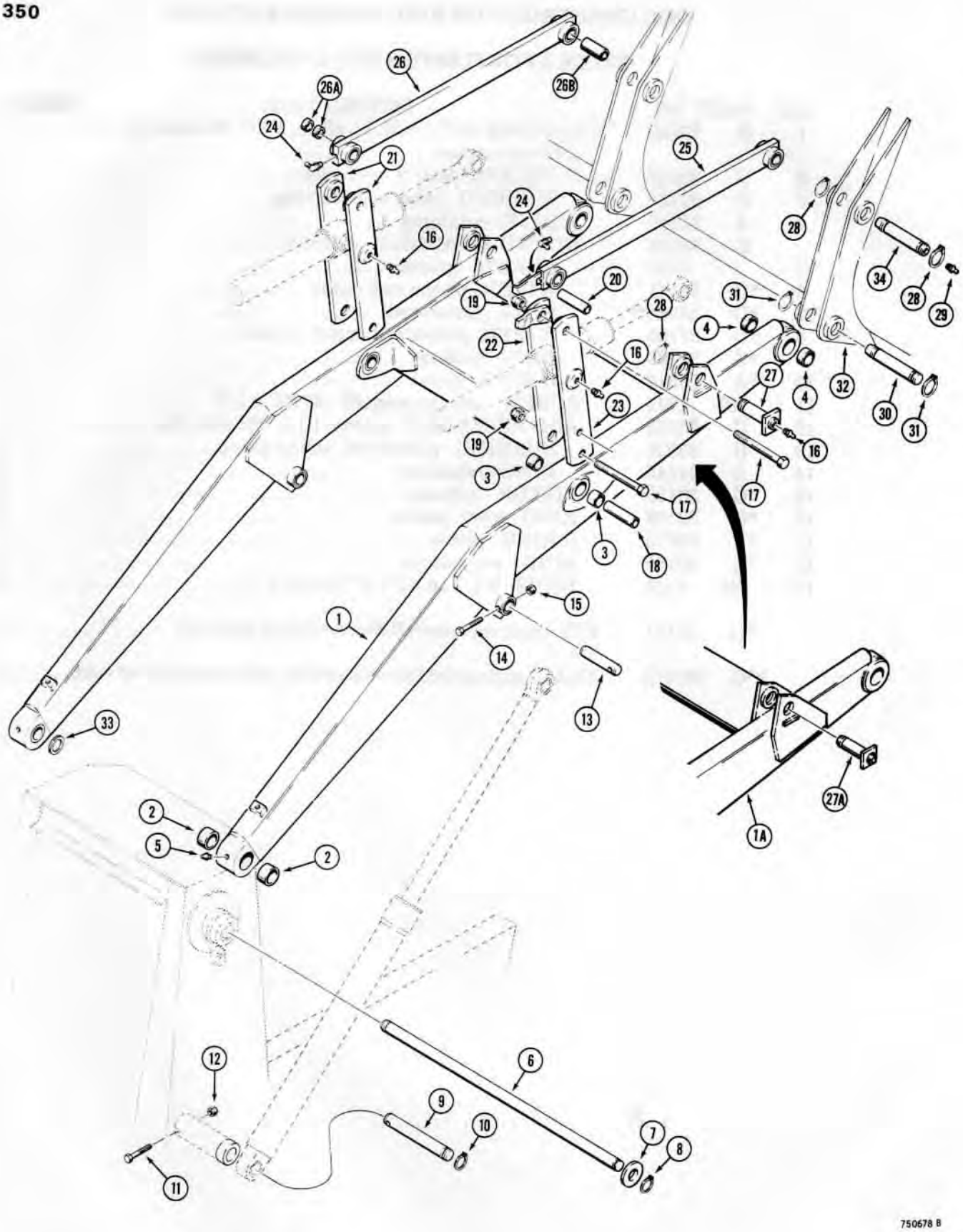

http://www.minnparbackhoeparts.com/

LOADER LIFT ARM FRAME AND RELATED PARTS

REF.	PART NO.	DESCRIPTION	REQ'D.
1	D 75274	FRAME - loader lift, with rectangular crossmember	1
1A	D 76533	FRAME - loader lift, with oval crossmember	
2	D 37392	BUSHING - frame pivot, part of item 1 or 1A	4
3	D 37763	BUSHING - bucket link pivot, part of item 1 or 1A	4
4	D 30931	BUSHING - bucket mounting, part of item 1 or 1A	4
5	219- 1	FITTING - grease, straight, 1/8" NPT	2
6	D 62192	PIN - lift frame pivot	1
7	D 62194	WASHER - flat	2
8	D 25280	RING - retaining	2
9	D 62193	PIN - lift cylinder pivot	2
10	D 25280	RING - retaining	2
11	13- 652	HHCS - 3/8" - 16 NC x 3-1/4"	2
12	131- 652	NUT - hex, lock, 3/8" - 16 NC	2
13	D 67357	PIN - lift cylinder to lift frame	2
14	13- 644	HHCS - 3/8" - 16 NC x 2-3/4"	2
15	131- 652	NUT - hex, lock, 3/8" - 16 NC	2
16	219- 1	FITTING - grease, straight, 1/8" NPT	6
17	13- 16104	HHCS - 1" - 8 NC x 6-1/2"	4
18	D 31219	SPACER - bushing	2
19	131- 659	NUT - hex, lock, 1" - 8 NC	4
20	D 45904	SPACER - bushing	2
21	D 44997	LINK - bucket cylinder, inner and outer, L.H.	2
22	D 72287	LINK - bucket cylinder, inner, R.H.	1
23	D 44996	LINK - bucket cylinder, outer, R.H.	1
24	219- 55	FITTING - grease, 90°, 1/8" NPT	2
25	D 30945	LINK - bucket, R.H.	1
26	D 30947	LINK - bucket, L.H.	1
26A	D 30933	BUSHING - at bucket, D30945 and D30947 links	2
26B	D 30931	BUSHING - at link, D30945 and D30947 links	1
27	D 45001	PIN - bucket cylinder mounting, used with item 1 above	2
27A	D 77326	PIN - bucket cylinder mounting, used with item 1A above	
28	D 25279	RING - retaining	6
29	219- 1	FITTING - grease, straight, 1/8" NPT	2
30	D 37286	PIN - bucket mounting	2
31	D 25279	RING - retaining	4
32	REF.	BUCKET - loader, see page 353 for bucket	1
33	D 62194	WASHER - spacer	UAR
34	D 37287	PIN - bucket mounting, upper	2

http://www.minnparbackhoeparts.com/

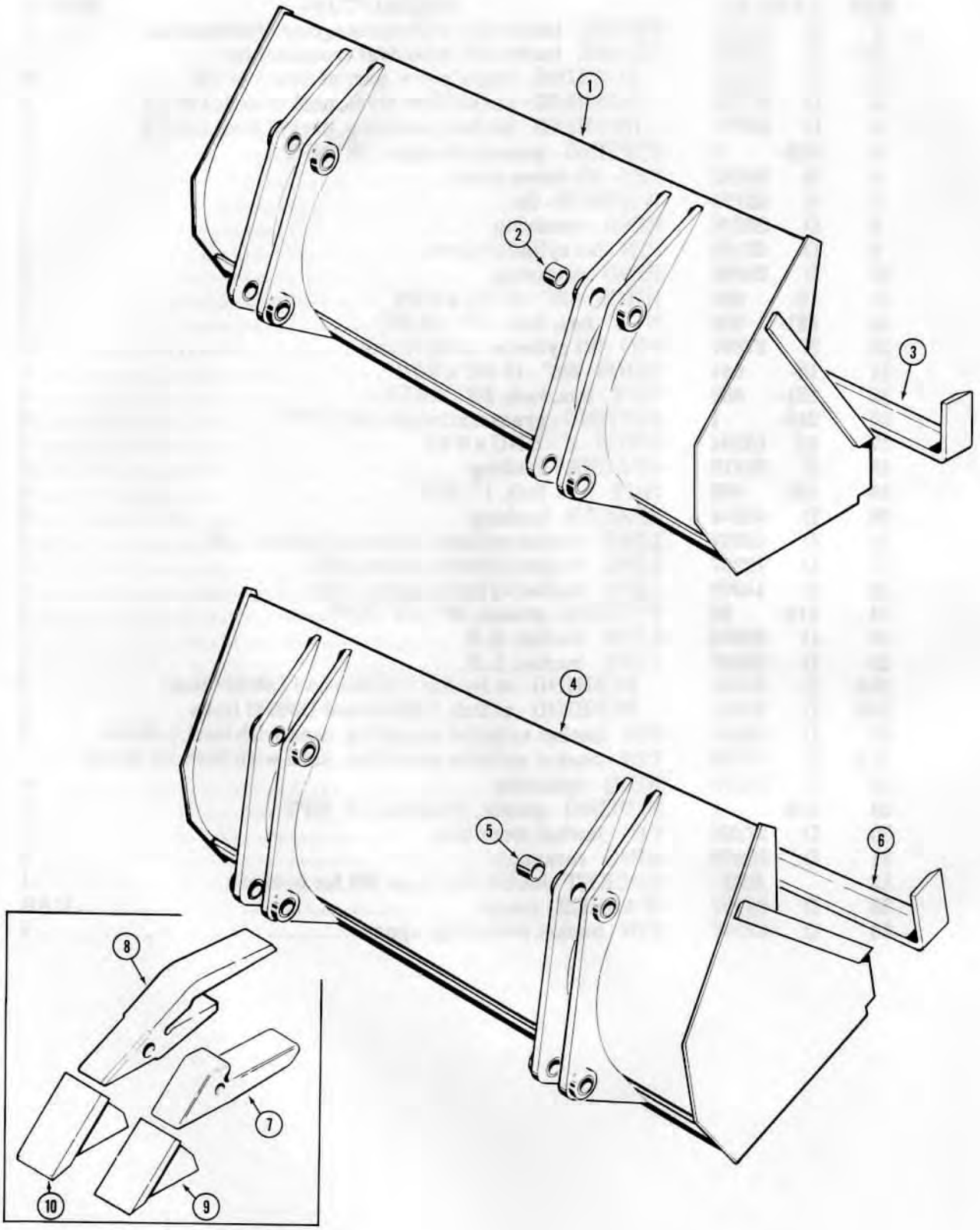

750679 A

http://www.minnparbackhoeparts.com/

LOADER BUCKETS

REF.	PART NO.		DESCRIPTION	REQ'D.
			SHORT LIP BUCKETS	
	*D	64731	BUCKET ASSEMBLY - loader, 74" (1880 mm) wide, see foot note	1
1		NSS	BUCKET - loader	1
2	D	30932	BUSHING - bucket ear	8
3	D	95072	EDGE - cutting	1
	*D	64733	BUCKET ASSEMBLY - loader, 80" (2032 mm) wide, see footnote	1
1		NSS	BUCKET - loader	1
2	D	30932	BUSHING - bucket ear	8
3	D	95073	EDGE - cutting	1
			LONG LIP BUCKETS	
	*D	64732	BUCKET ASSEMBLY - loader, 74" (1880 mm) wide, see foot note	1
4		NSS	BUCKET - loader	1
5	D	30932	BUSHING - bucket ear	8
6	D	95072	EDGE - cutting	1
	*D	64734	BUCKET ASSEMBLY - loader, 80" (2032 mm) wide, see foot note	1
4		NSS	BUCKET - loader	1
5	D	30932	BUSHING - bucket ear	8
6	D	95073	EDGE - cutting	1
	*D	76259	BUCKET ASSEMBLY - loader, 82" (2083 mm) wide, see foot note	1
4		NSS	BUCKET - loader	1
5	D	30932	BUSHING - bucket ear	8
6	D	76258	EDGE - cutting	1
			BUCKET TEETH	
7	D	26368	SHANK - tooth, original equipment	UAR
8	D	58499	SHANK - tooth, service option	UAR
9	D	58576	POINT - tooth, H and L manufactured, 4-7/8" long (124 mm)	UAR
9	D	58577	POINT - tooth, Fabco manufactured, 4-3/4" long (121 mm)	UAR
10	D	58592	POINT - tooth, H and L manufactured, Heavy duty service option, 4-7/8" long (124 mm)	UAR
10	D	58593	POINT - tooth, Fabco manufactured, Heavy duty service option, 4-7/8" long (124 mm)	UAR

*NOTE: All bucket assemblies are machinery items. See page 2 for ordering.

http://www.minnparbackhoeparts.com/

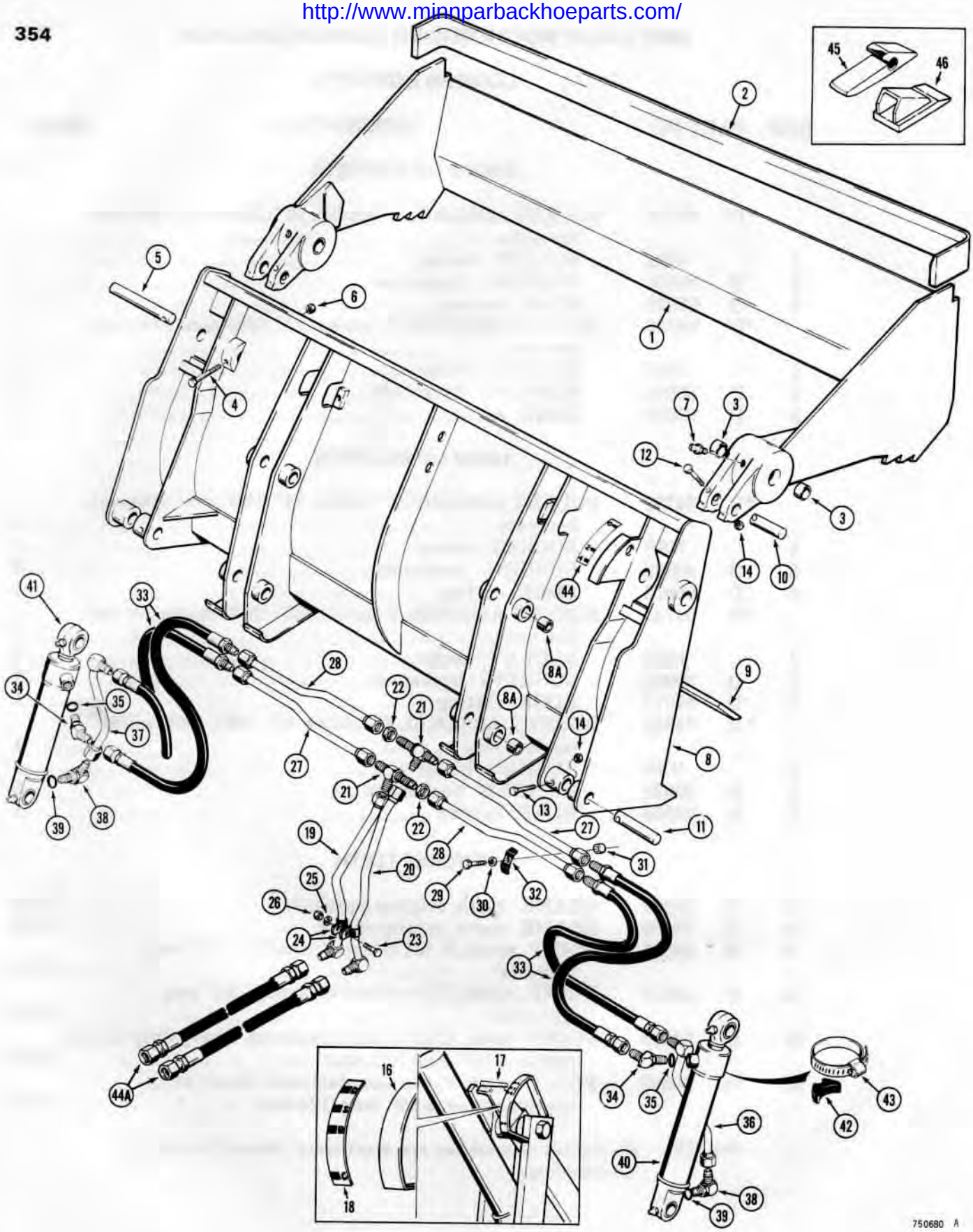

http://www.minnparbackhoeparts.com/

4-IN-1 LOADER BUCKET

REF.	PART NO.	DESCRIPTION	REQ'D.
	D 67086	BUCKET ASSEMBLY - 4-in-1, 74" (1880 mm) wide, machinery item, see page 2 for ordering	1
	D 75644	BUCKET ASSEMBLY - 4-in-1, 82" (2083 mm) wide, machinery item, see page 2 for ordering	1
	D 51384	CLAM ASSEMBLY - D67086 bucket	1
	D 75633	CLAM ASSEMBLY - D75644 bucket	1
1	NSS	CLAM - bucket	1
2	D 95072	EDGE - clam cutting, D67086 bucket	1
2	D 75632	EDGE - clam cutting, D75644 bucket	1
3	D 31140	BUSHING - clam pivot	4
4	13- 664	HHCS - 3/8" - 16 NC x 4"	2
5	D 51391	PIN - pivot, clam to blade	2
6	131- 652	NUT - hex, lock, 3/8" - 16 NC	2
7	219- 1	FITTING - grease, straight, 1/8" NPT	2
	D 67084	BLADE ASSEMBLY - D67086 bucket	1
	D 79843	BLADE ASSEMBLY - D75644 bucket	1
8	NSS	BLADE - bucket	1
8A	D 30932	BUSHING - bucket ear	8
9	D 51388	EDGE - blade cutting, D67086 bucket	1
9	D 75636	EDGE - blade cutting, D75644 bucket	1
10	D 51392	PIN - cylinder mounting, upper	2
11	D 51393	PIN - cylinder mounting, lower	2
12	13- 656	HHCS - 3/8" - 16 NC x 3-1/2", upper mounting pin	2
13	13- 644	HHCS - 3/8" - 16 NC x 2-3/4", lower mounting pin	2
14	131- 652	NUT - hex, lock, 3/8" - 16 NC	4
15		RESERVED	
16	D 51816	GAUGE - bucket position	1
17	D 51726	POINTER - bucket position	1
18	321- 1707	DECAL - bucket position, see page 433 for decal kit	1
19	D 51615	TUBE - clam cylinder, closed end	1
20	D 51617	TUBE - clam cylinder, rod end	1
21	218- 1237	FITTING - bulkhead type tee	2
22	218- 1251	NUT - lock, bulkhead	2
23	13- 516	HHCS - 5/16" - 18 NC x 1"	1
24	38188	CLAMP - tube	2
25	92- 5	WASHER - lock, 5/16"	1
26	25- 105	NUT - hex, 5/16" - 18 NC	1
27	D 67081	TUBE - clam cylinder, horizontal short	2
28	D 67083	TUBE - clam cylinder, horizontal long	2
29	13- 624	HHCS - 3/8" - 16 NC x 1-1/2"	2
30	92- 6	WASHER - lock, 3/8"	2
31	D 33552	SPACER - tube clamp	2
32	D 40236	CLAMP - tube	2
33	38410	HOSE - clam cylinder, 22-1/2" (572 mm) long, used on D67086 bucket	4
33	D 27984	HOSE - clam cylinder, 26" (660 mm) long, used on D75644 bucket	4
34	218- 5137	FITTING - male, 45°	2
35	218- 5007	O-RING - fitting	1

Continued on next page

http://www.minnparbackhoeparts.com/

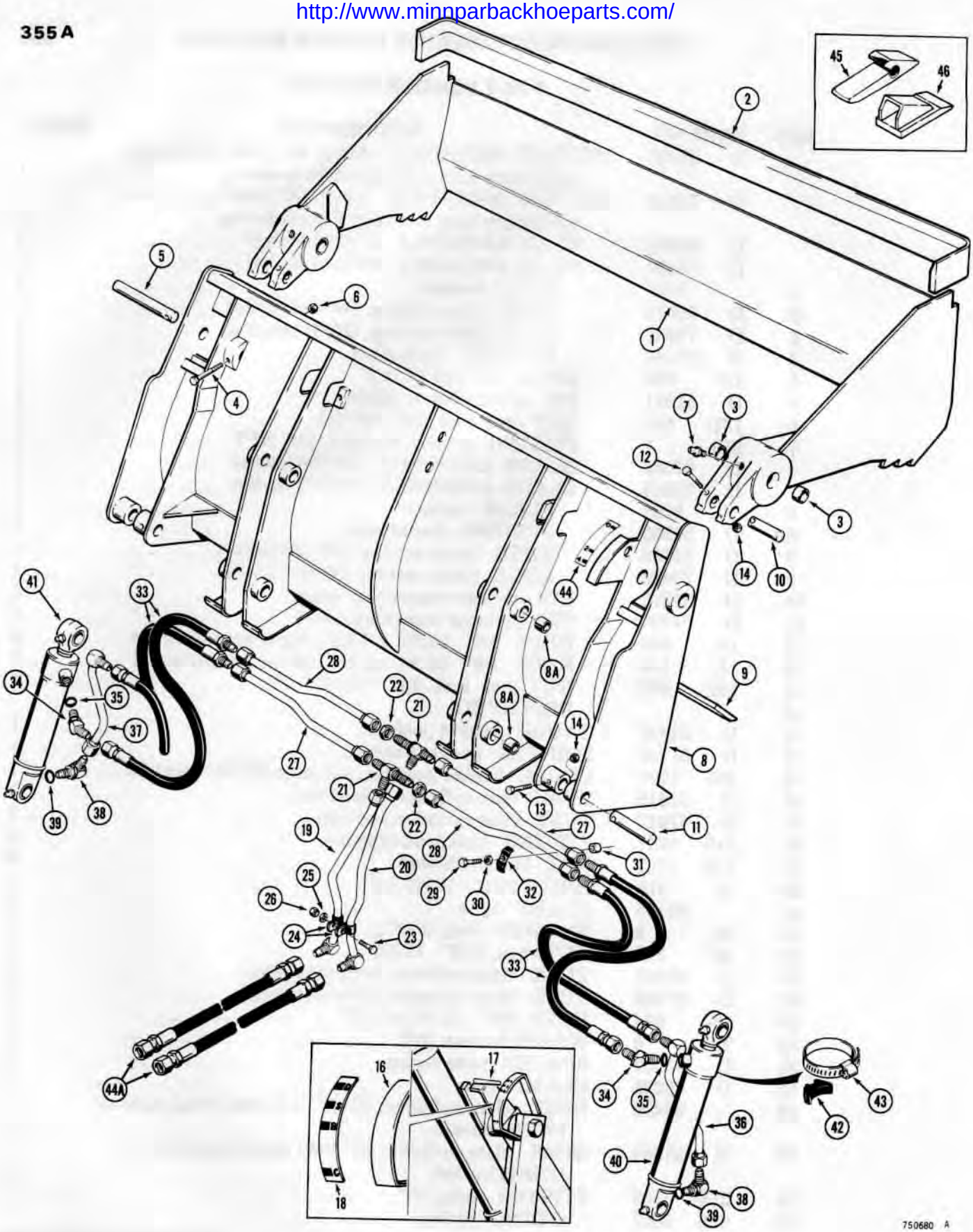

http://www.minnparbackhoeparts.com/

4-IN-1 BUCKET

REF.	PART NO.	DESCRIPTION	REQ'D.
36	D 51621	TUBE - hose to R.H. clam cylinder	1
37	D 51619	TUBE - hose to L.H. clam cylinder	1
38	218- 5107	FITTING - male, 90°	2
39	218- 5007	O-RING - fitting	1
40	REF.	CYLINDER - R.H. clam, see page 309 or 311 for proper cylinder	1
41	REF.	CYLINDER - L.H. clam, see page 309 or 311 for proper cylinder	1
42	D 38648	SPACER - tube, rubber	2
43	214- 267	CLAMP - cylinder to tube	2
44	321- 1708	DECAL - clam opening, see page 433 for decal kit	1
44A	D 51691	HOSE - hydraulic, 40" (1016 mm) long	2
45	D 58499	SHANK - bucket tooth, if used	9
46	D 58576	POINT - tooth (H and L manufactured) 4-7/8" (124 mm) long	9
46	D 58577	POINT - tooth, (Fabco manufactured) 4-3/4" (121 mm) long	9

http://www.minnparbackhoeparts.com/

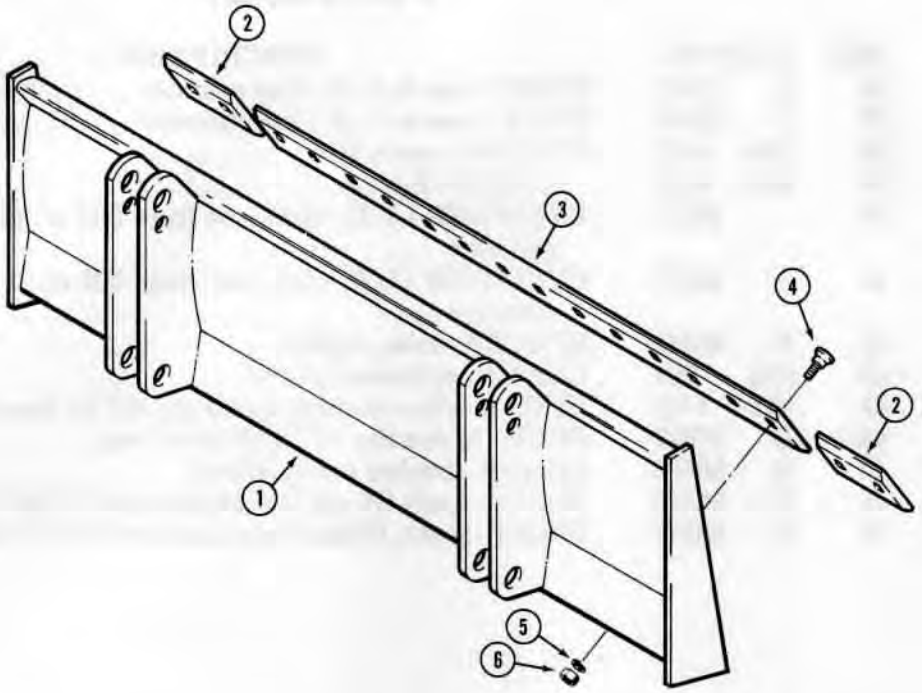

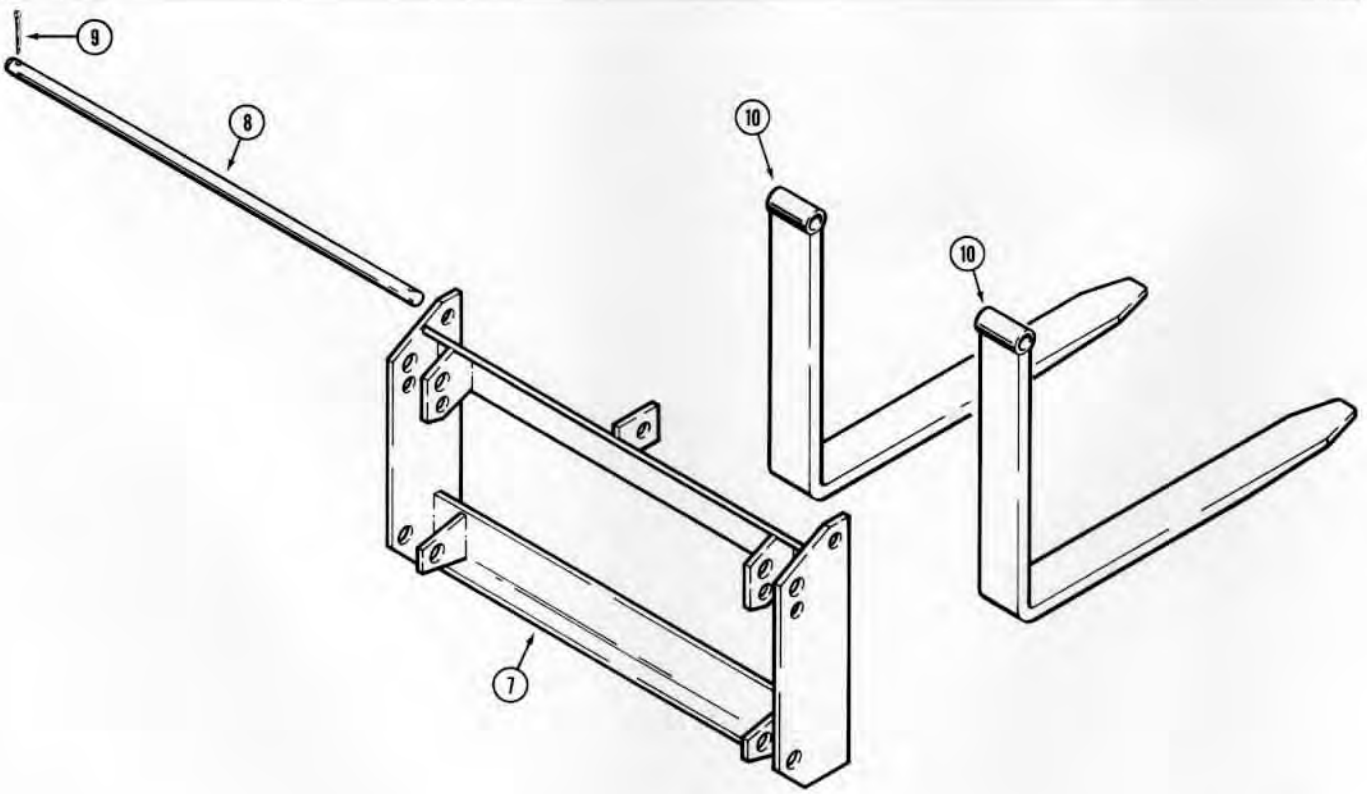

760259

http://www.minnparbackhoeparts.com/

LOADER BLADE

REF.	PART NO.	DESCRIPTION	REQ'D.
	D 67599	BLADE - loader, machinery item, see page 2 for ordering	1
1	NSS	MOLDBOARD - loader blade	1
2	38150	CUTTING EDGE - moldboard, end	2
3	16040	CUTTING EDGE - moldboard, center	1
4	19- 828	BOLT - plow, 1/2" - 13 NC x 1-3/4"	18
5	92- 8	WASHER - lock, 1/2"	18
6	25- 108	NUT - hex, 1/2" - 13 NC	18

PALLET FORKS

REF.	PART NO.	DESCRIPTION	REQ'D.
7	D 69200	FRAME - pallet fork	1
8	D 69201	SHAFT - fork mounting	1
9	132- 152	PIN - cotter, 1/4" dia. x 1-3/4"	2
10	D 47999	FORK - pallet	2

http://www.minnparbackhoeparts.com/

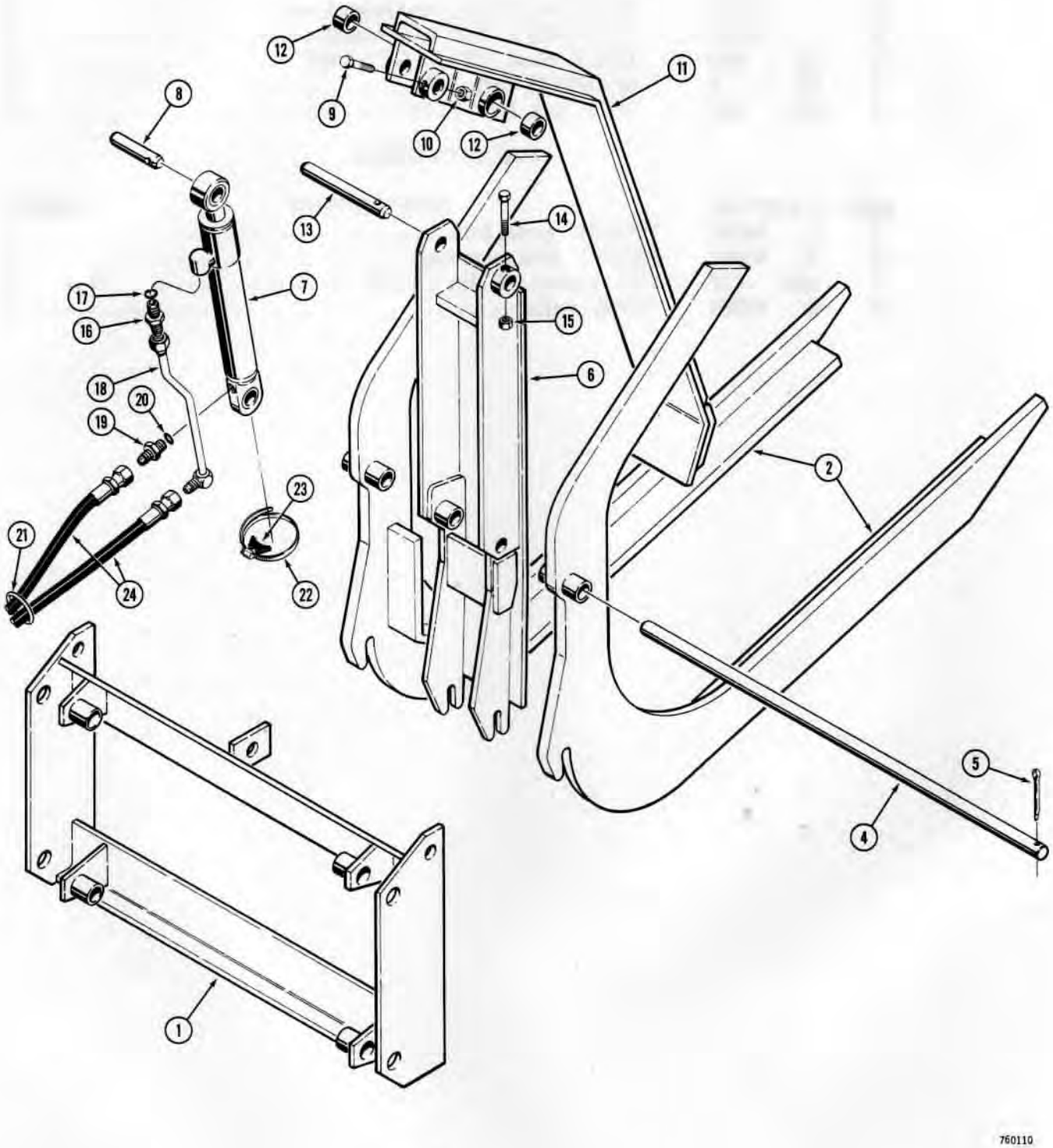

http://www.minnparbackhoeparts.com/

GRAPPLE ATTACHMENT

USED WITH LOGGING OR PALLET FORKS

REF.	PART NO.	DESCRIPTION	REQ'D.
1	D 69200	FRAME - pallet and logging fork	1
2	D 43124	FORK - logging	2
3	D 47999	FORK - pallet, not illustrated	2
4	D 69201	SHAFT - fork and grapple mounting	1
5	132- 152	PIN - cotter, 1/4" dia. x 1-3/4"	2
6	D 46133	FRAME - grapple	1
7	REF.	CYLINDER - hydraulic, grapple, see page 313 or 315 for proper cylinder	1
8	D 46141	PIN - cylinder mounting, upper	1
9	13- 644	HHCS - 3/8" - 16 NC x 2-3/4"	1
10	131- 352	NUT - hex, 3/8" - 16 NC	1
11	D 46114	ARM - grapple	1
12	D 32890	BUSHING - arm	2
13	D 46142	PIN - mounting, arm to frame	1
14	13- 644	HHCS - 3/8" - 16 NC x 2-3/4"	1
15	131- 352	NUT - hex, lock, 3/8" - 16 NC	1
16	218- 5060	FITTING - male, straight connector	1
17	218- 5007	O-RING - fitting	1
18	D 48028	TUBE - hose to cylinder, rod end	1
19	D 48030	FITTING - special, restrictor	1
20	218- 5006	O-RING - fitting	1
21	D 48031	RING - hose	1
22	214- 624	CLAMP - tube to cylinder	1
23	D 38648	SPACER - tube	1
24	D 34401	HOSE - hydraulic, 60" (1524 mm) long	2

NOTE: See page 207 for optional loader hydraulics to use with grapple attachment.

http://www.minnparbackhoeparts.com/

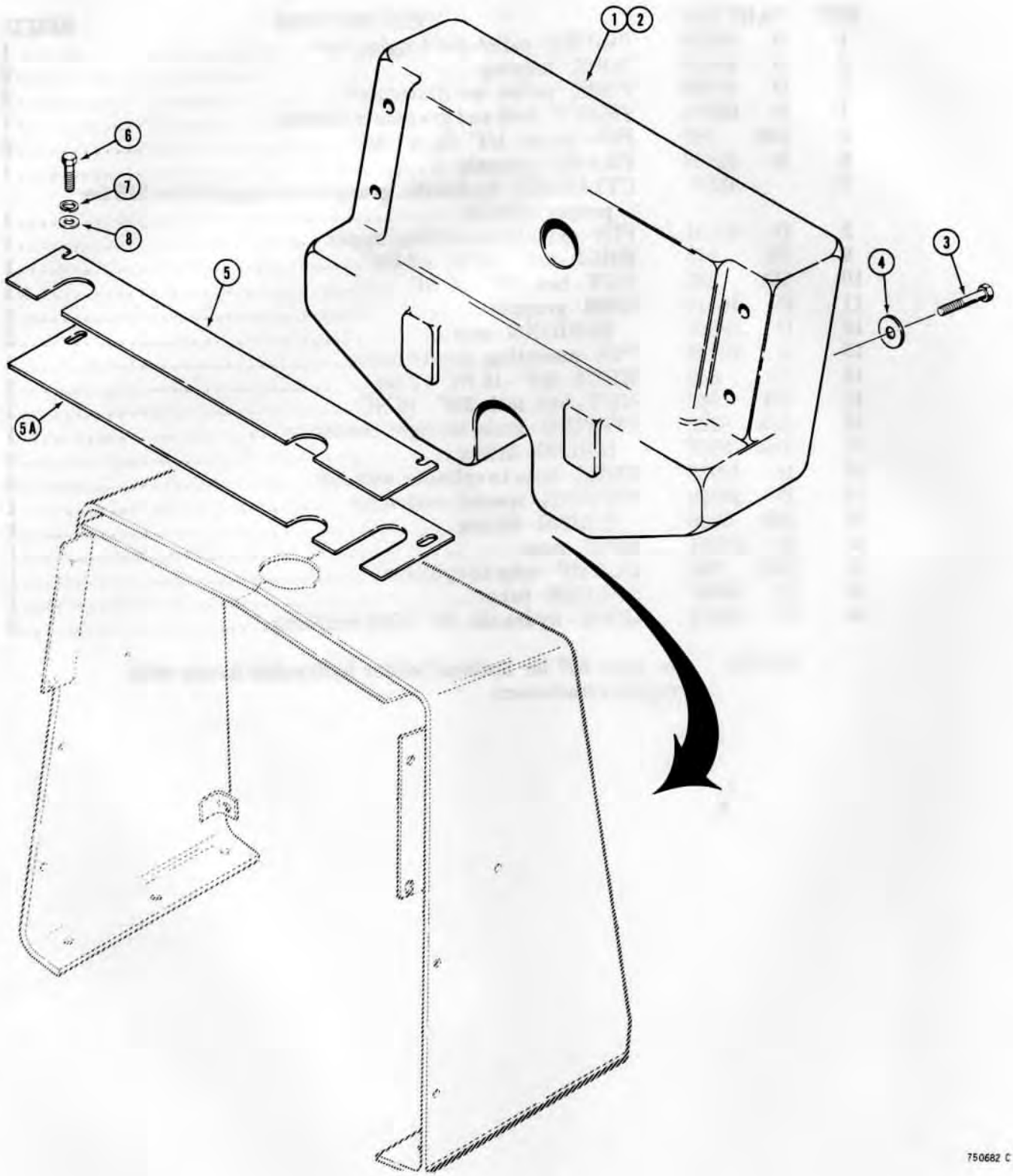

http://www.minnparbackhoeparts.com/

FRONT COUNTERWEIGHT

REF.	PART NO.	DESCRIPTION	REQ'D.
1	D 69117	COUNTERWEIGHT - front, 500 lbs.	1
2	D 69118	COUNTERWEIGHT - front, 700 lbs.	1
3	13- 1252	HHCS - 3/4" - 10 NC x 3-1/4"	4
4	D 34666	WASHER - special, heat treated	4
5	D 69352	PLATE - mounting, used before tractor sn. 8961374	1
5A	D 76754	PLATE - mounting, used on tractor sn. 8961374 and after	1
6	13- 824	HHCS - 1/2" - 13 NC x 1-1/2"	2
7	92- 8	WASHER - lock, 1/2"	2
8	195- 33	WASHER - flat, 1/2"	2

Printed in U.S.A.

Issued January, 1978

http://www.minnparbackhoeparts.com/

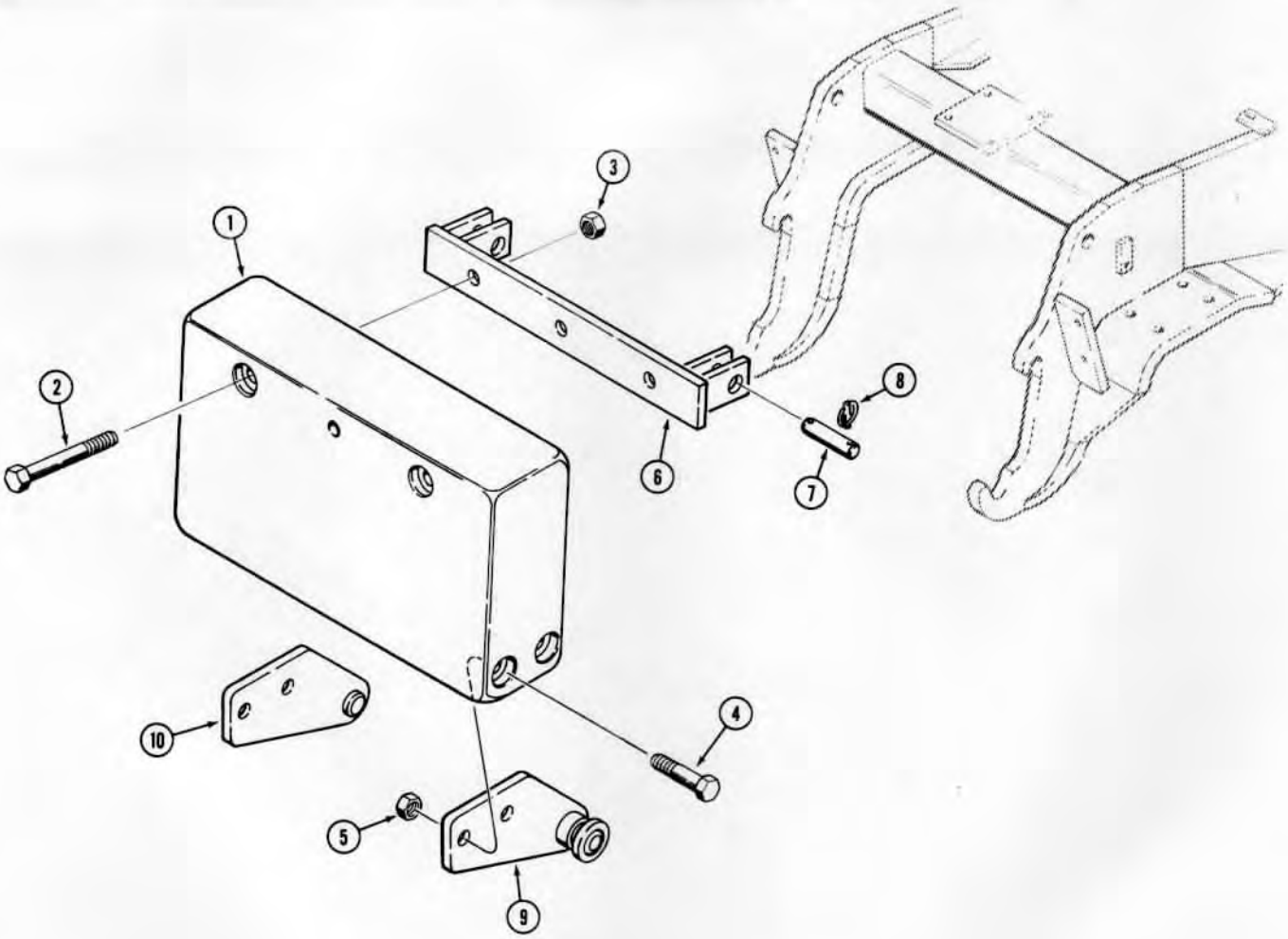

750684

http://www.minnparbackhoeparts.com/

REAR COUNTERWEIGHT

REF.	PART NO.	DESCRIPTION	REQ'D.
1	D 31204	COUNTERWEIGHT - rear, 1400 lbs.	1
2	15- 16168	HHCS - 1" - 8 NC x 10-1/2"	2
3	131- 659	NUT - hex, lock, 1" - 8 NC	2
4	13- 16104	HHCS - 1" - 8 NC x 6-1/2"	4
5	131- 659	NUT - hex, lock, 1" - 8 NC	4
6	D 50818	BRACKET - counterweight mounting	1
7	D 49812	PIN - bracket to upper support	2
8	D 33805	PIN - retaining	4
9	D 37134	SUPPORT - lower, R.H.	1
10	D 37135	SUPPORT - lower, L.H.	1

http://www.minnparbackhoeparts.com/

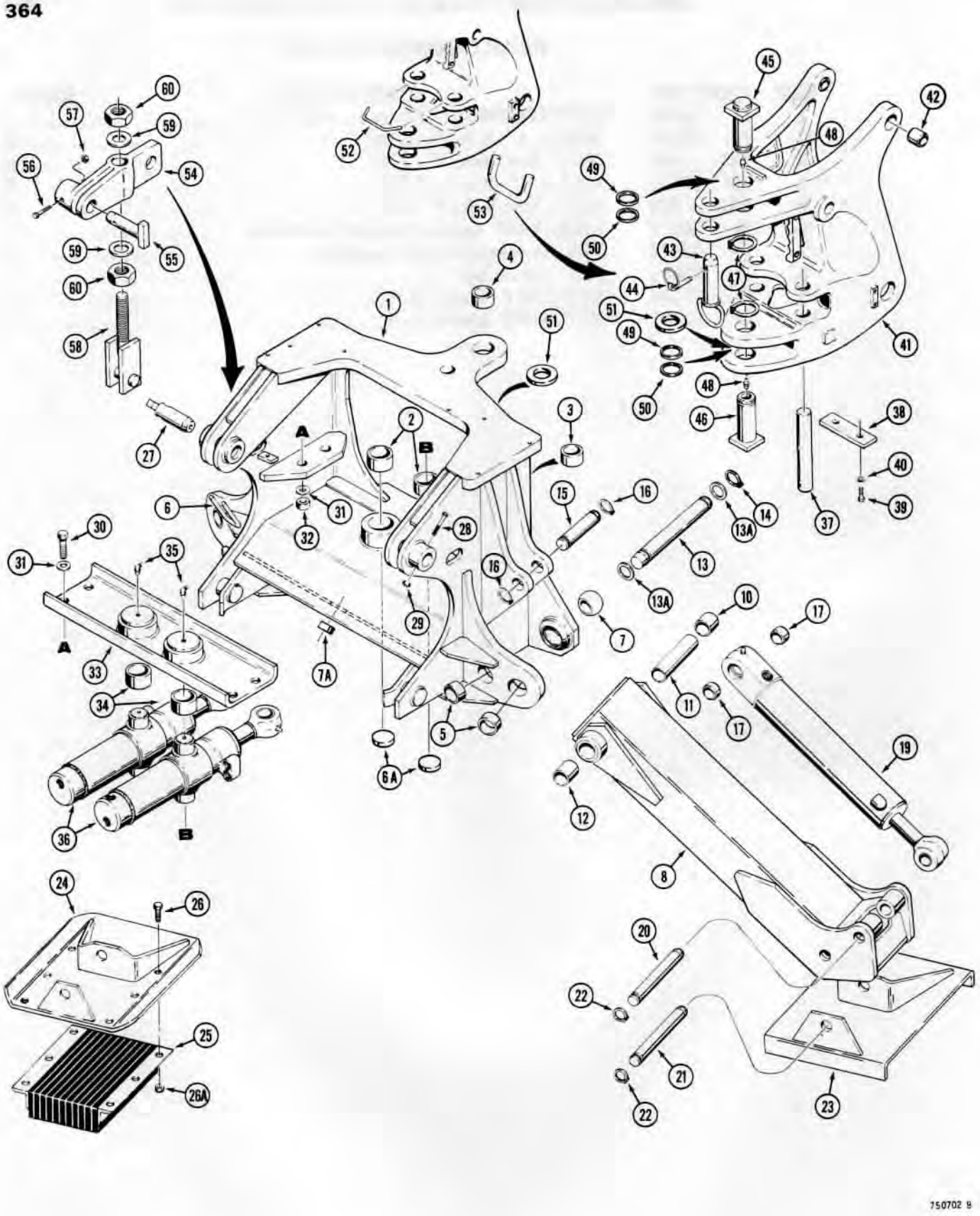

http://www.minnparbackhoeparts.com/

MOUNTING FRAME AND STABILIZERS

REF.	PART NO.	DESCRIPTION	REQ'D.
1	D 67790	FRAME - backhoe mounting, order (2) D60803 inner races, REF. No. 7 also (1) 41-1032 plug, Ref. No. 7A	1
2	D 60159	BUSHING - swing cylinder pivot, lower	2
3	D 31142	BUSHING - frame, at swing tower, lower	1
4	D 30756	BUSHING - frame, at swing tower, upper	1
5	D 43940	BUSHING - stabilizer anchor	4
6	D 61298	GUIDE - hose	1
6A	41- 1044	PLUG - cup, 2-3/4"	2
7	D 60803	RACE - inner, stabilizer anchor	2
7A	41- 1032	PLUG - core hole, 2"	1
8	D 50292	LEG ASSEMBLY - stabilizer, R.H.	1
9	D 50293	LEG ASSEMBLY - stabilizer, L.H., not shown.	1
10	D 37495	BUSHING - leg to frame, 1-1/4" (32 mm) long	1
11	D 54013	SPACER - bushing	1
12	D 37443	BUSHING - leg to frame, 2" (51 mm) long.	1
13	D 67308	PIN - stabilizer leg to frame	2
13A	195- 2152	WASHER - flat, 1-3/4"	4
14	D 25280	RING - pin retaining	4
15	D 29483	PIN - stabilizer cylinder to frame	2
16	D 25279	RING - pin retaining	4
17	D 50337	SPACER - cylinder to frame	4
18	REF.	CYLINDER - hydraulic, L.H. stabilizer, not shown, see page 317 or 319 for proper cylinder	1
19	REF.	CYLINDER - hydraulic, R.H. stabilizer, see page 317 or 319 for proper cylinder	1
20	D 50695	PIN - stabilizer cylinder to leg	2
21	D 50696	PIN - stabilizer foot to leg	2
22	D 25279	RING - pin retaining	8
23	D 64621	FOOT - stabilizer, cleated, if used	2
24	D 61376	FOOT - stabilizer, street or cemetery pad, if used, uses D61368 pad	2
25	D 61368	PAD - rubber, D61376 stabilizer foot, if used.	2
26	113- 713	HHCS - 3/4" - 10 NC x 1-3/4", plated	12
26A	129- 108	NUT - hex, 3/4" - 10 NC, plated	12
27	D 56335	PIN - tractor to backhoe mounting frame.	2
28	13- 856	HHCS - 1/2" - 13 NC x 3-1/2".	2
29	131- 654	NUT - hex, lock, 1/2" - 13 NC	2
30	13- 1640	HHCS - 1" - 8 NC x 2-1/2"	4
31	D 36505	WASHER - special, hardened	8
32	25- 1016	NUT - hex, 1" - 8 NC	4
33	D 60169	PLATE - retainer, swing cylinder, upper.	1
34	D 60159	BUSHING - swing cylinder pivot, upper	2
35	219- 55	FITTING - grease, 90°, 1/8" NPT.	2
36	REF.	CYLINDER - hydraulic, swing, see page 321 or 323 for proper cylinder	2
37	D 49863	PIN - swing cylinder to tower	2
38	D 49864	PLATE - pin retaining	1
39	13- 820	HHCS - 1/2" - 13 NC x 1-1/4".	2

Continued on next page

http://www.minnparbackhoeparts.com/

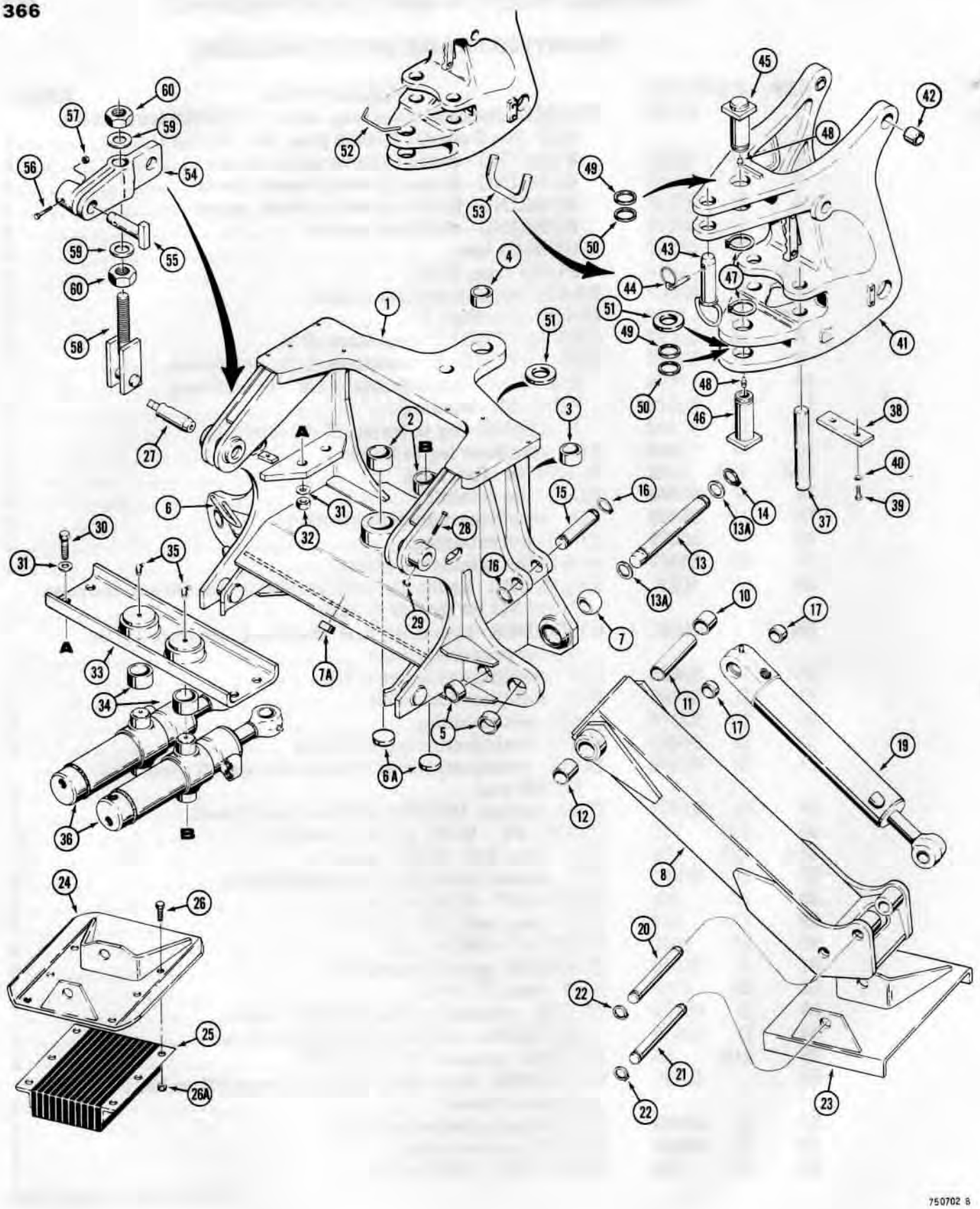

http://www.minnparbackhoeparts.com/

MOUNTING FRAME AND STABILIZERS

REF.	PART NO.	DESCRIPTION	REQ'D.
40	92- 8	WASHER - lock, 1/2"	2
41	D 67791	TOWER - swing, see page 369 for boom attaching parts.	1
42	D 49429	BUSHING - at boom cylinder, closed end.	2
43	D 49879	PIN - swing locking	1
44	D 33805	PIN - retaining	1
45	D 50170	PIN - tower to frame, upper	1
46	D 50170	PIN - tower to frame, lower	1
47	D 26919	RING - pin retaining	2
48	219- 1	FITTING - grease, straight, 1/8" NPT	2
49	195- 2155	WASHER - flat, spacer, .015" (0.38 mm) thick	UAR
50	R 10830	WASHER - flat, spacer, .0625" (1.59 mm) thick	UAR
51	D 50132	WASHER - spacer, welded to swing tower and mounting frame	2
52	D 54702	GUARD - hose retaining, if used	1
53	D 56194	GUARD - hose retaining, if used	1
54	D 74007	LINK - upper, backhoe attaching	2
55	D 71870	PIN - link to tractor	2
56	13- 860	HHCS - 1/2" - 13 NC x 3-3/4", if used.	2
56	13- 856	HHCS - 1/2" - 13 NC x 3-1/2", if used.	2
57	131- 654	NUT - hex, lock, 1/2" - 13 NC	2
58	D 61065	ROD - tension	2
59	D 64968	WASHER - special, hardened	4
60	25- 1020	NUT - hex, 1-1/4" - 7 NC	4

http://www.minnparbackhoeparts.com/

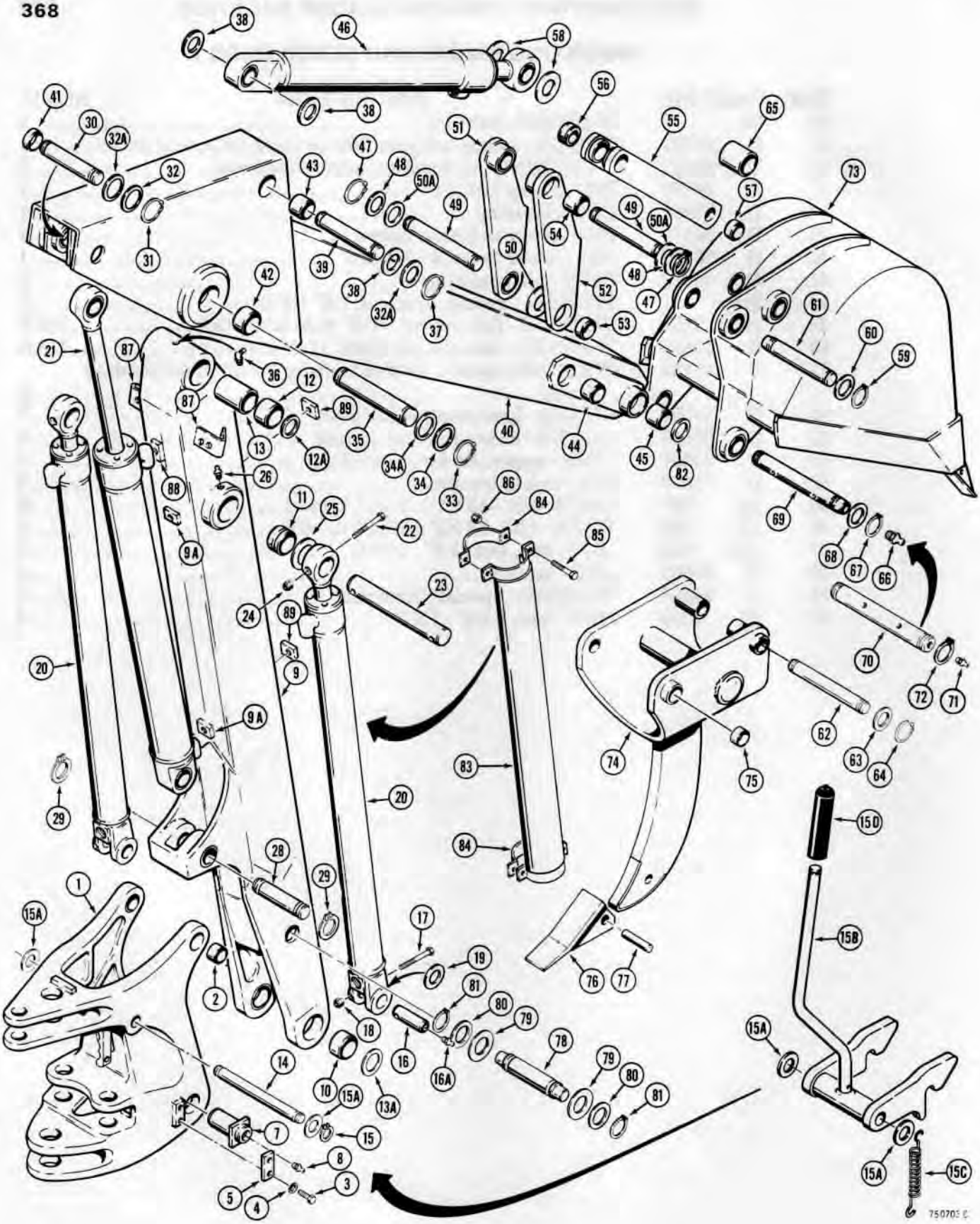

http://www.minnparbackhoeparts.com/

TOWER, BOOM, DIPPER ARM AND BUCKET

REF.	PART NO.	DESCRIPTION	REQ'D.
1	D 67791	TOWER - swing, see page 365 and 367 for swing cylinder and frame attaching parts and hose guards	1
2	D 49429	BUSHING - at boom cylinder, closed end	2
3	13- 812	HHCS - 1/2" - 13 NC x 3/4"	4
4	92- 8	WASHER - lock, 1/2"	4
5	D 50149	BLOCK - pin locking	2
6		RESERVED	
7	D 50700	PIN - boom to swing tower	2
8	219- 1	FITTING - grease, straight, 1/8" NPT	2
9	D 69988	BOOM - backhoe	1
9A	D 50004	BLOCK - tapped, welded to boom	2
10	D 50698	BUSHING - boom pivot	2
11	D 95362	BUSHING - boom cylinder anchor	2
12	D 31142	BUSHING - dipper pivot	2
12A	72990	WASHER - flat, .06" (1.52 mm) thick	UAR
13	D 37416	SPACER - bushing	1
13A	D 44813	SHIM - spacer, between swing tower and boom	UAR
14	D 55996	SHAFT - pivot, boom lock	1
15	D 56051	RING - retaining, pin	2
15A	195- 2140	WASHER - flat	UAR
15B	D 75674	LEVER AND LATCH - transport lock	1
15C	D 63988	SPRING - transport latch	1
15D	D 75300	GRIP - handle, plastic, if used	1
16	D 49866	PIN - boom cylinder to tower	2
16A	219- 1	FITTING - grease, straight, 1/8" NPT	2
17	13- 656	HHCS - 3/8" - 16 NC x 3-1/2"	2
18	131- 352	NUT - hex, lock, 3/8" - 16 NC	2
19	D 28610	WASHER - special, if used	UAR
20	REF.	CYLINDER - hydraulic, boom, see page 325 or 327	2
21	REF.	CYLINDER - hydraulic, dipper see page 329 or 331	1
22	13- 864	HHCS - 1/2" - 13 NC x 4"	2
23	D 49865	PIN - boom cylinder to boom	1
24	131- 354	NUT - hex, lock, 1/2" - 13 NC	2
25	195- 2155	WASHER - flat	2
26	219- 1	FITTING - grease, straight, 1/8" NPT	2
27		RESERVED	
28	D 72359	PIN - dipper cylinder to boom	1
29	D 25280	RING - retaining, pin	2
30	D 52522	PIN - dipper cylinder to dipper	1
31	D 25280	RING - retaining, pin	2
32	195- 2152	WASHER - flat, .105" (2.67 mm) thick	4
32A	30575	WASHER - flat, .0625" (1.59 mm) thick	UAR
33	D 26919	RING - retaining, pin	2
34	195- 2155	WASHER - flat, .105" (2.67 mm) thick	4
34A	D 44813	SHIM - pin, .035" (0.89 mm) thick	UAR
35	D 45523	PIN - boom to dipper	1
36	219- 55	FITTING - grease, 90°, 1/8" NPT	1
37	D 25280	RING - retaining, pin	2
38	195- 2152	WASHER - flat	4
39	D 52522	PIN - dipper to bucket cylinder	1
40	D 63796	DIPPER ARM - backhoe, includes items 41-45	1
41	D 52434	BUSHING - dipper, at dipper cylinder	2
42	D 31142	BUSHING - dipper, at boom	2

Continued on next page

http://www.minnparbackhoeparts.com/

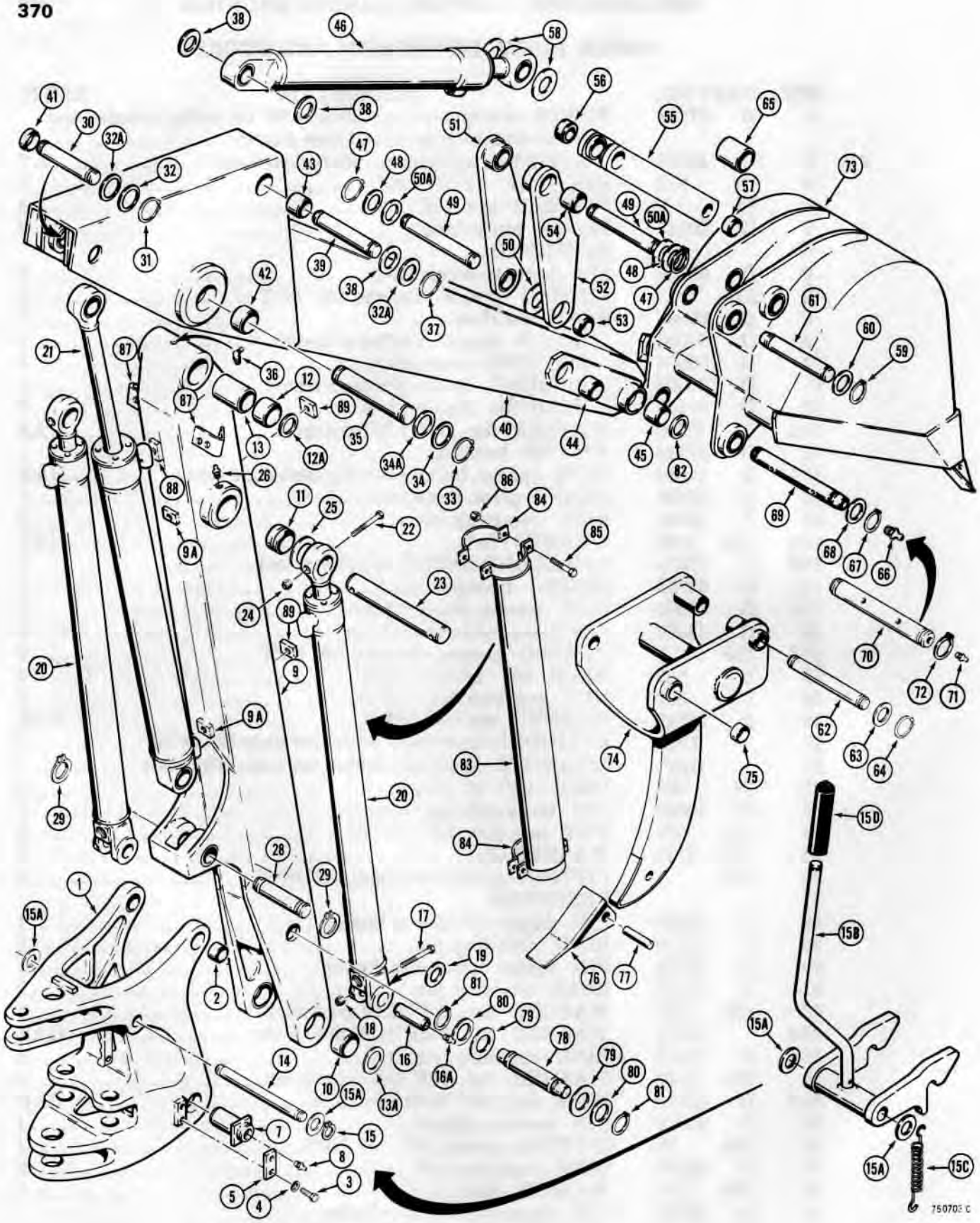

http://www.minnparbackhoeparts.com/

TOWER, BOOM, DIPPER ARM AND BUCKET

REF.	PART NO.	DESCRIPTION	REQ'D.
43	D 34340	BUSHING - dipper, at bucket cylinder	2
44	D 50146	BUSHING - dipper, at bucket links	2
45	D 55626	BUSHING - dipper, at bucket	2
46	REF.	CYLINDER - hydraulic, bucket, see page 333 or 335 for proper cylinder	1
47	D 25280	RING - retaining, pin	4
48	195- 2152	WASHER - flat, .105" (2.67 mm) thick	4
49	D 53818	PIN - bucket linkage to dipper arm	2
50	D 77725	WASHER - special, .375 (9.53 mm) thick	2
50A	30575	WASHER - flat, .0625" (1.59 mm) thick	UAR
51	D 61088	LINK - bucket cylinder to dipper arm, L.H.	1
52	D 61087	LINK - bucket cylinder to dipper arm, R.H.	1
53	D 46405	BUSHING - link, at dipper arm	1
54	D 42788	BUSHING - link, at bucket cylinder	1
55	D 61244	LINK - bucket cylinder to bucket	2
56	D 37495	BUSHING - link, at bucket cylinder	1
57	D 30933	BUSHING - link, at bucket	1
58	195- 2152	WASHER - flat	2
59	D 25279	RING - retaining	2
60	D 28610	WASHER - special	UAR
61	D 30899	PIN - link to bucket, used on shovel and ditching buckets only	1
61	D 37614	PIN - link to bucket, used on all buckets except shovel and ditching buckets	1
62	D 54218	PIN - link to frost point	1
63	195- 63	WASHER - plain	2
64	D 25279	RING - retaining	2
65	D 37450	SPACER - link	1
66	219- 1	FITTING - grease, straight, 1/8" NPT	2
67	D 25280	RING - retaining	2
68	195- 2152	WASHER - flat	2
69	D 64799	PIN - dipper arm to bucket, all buckets except 12" (305 mm) buckets	1
70	D 55584	PIN - dipper arm to bucket, lubricated, 12" (305 mm) buckets only	1
71	219- 1	FITTING - grease, straight, 1/8" NPT	2
72	D 25280	RING - pin retaining	2

Continued on next page

http://www.minnparbackhoeparts.com/

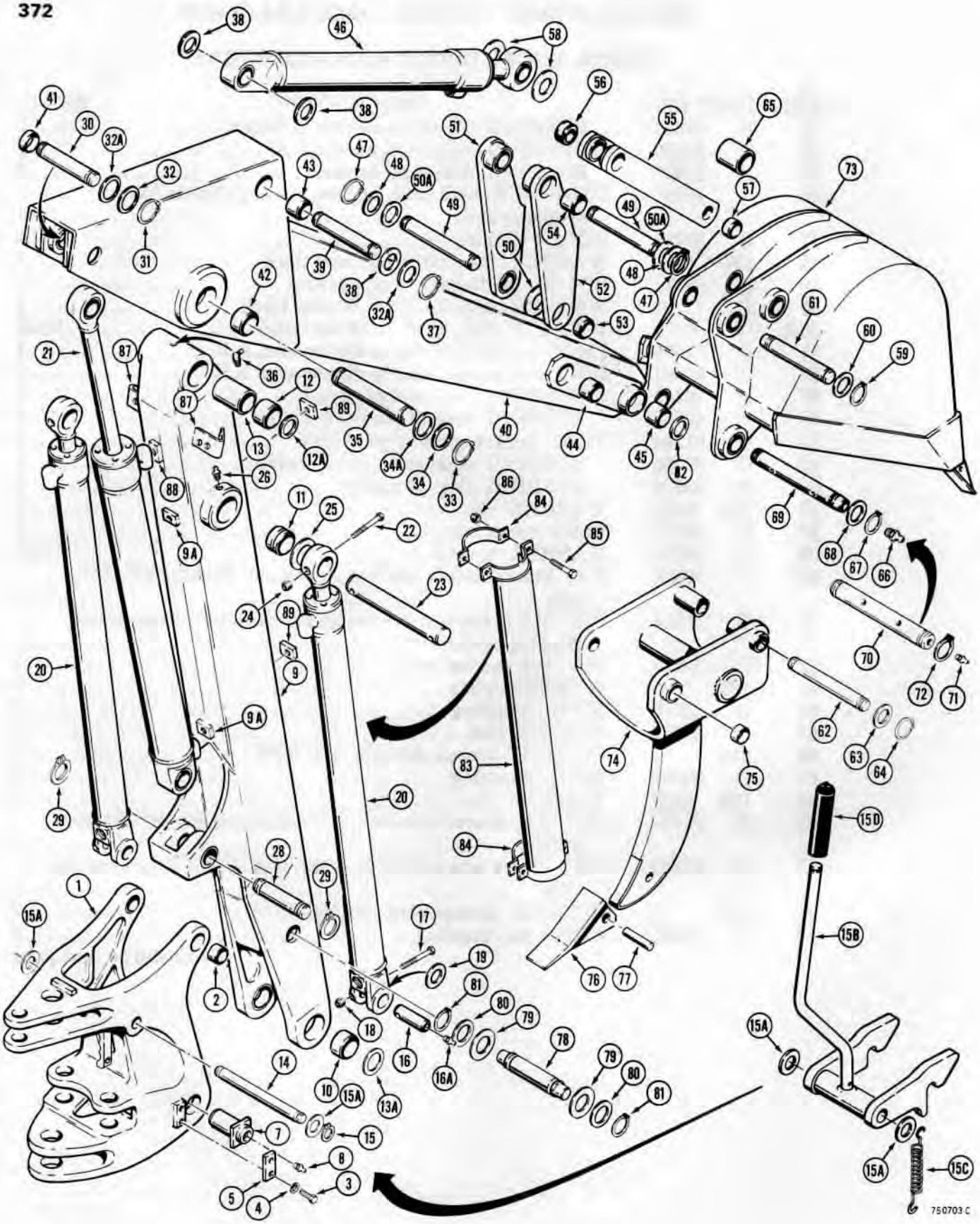

http://www.minnparbackhoeparts.com/

TOWER, BOOM, DIPPER ARM AND BUCKET

REF.	PART NO.	DESCRIPTION	REQ'D.
73	REF.	BUCKET - backhoe, see pages 377 thru 383 for options	1
74	D 54136	BODY - frost point	1
75	D 37495	BUSHING - frost point pivot	2
76	D 43416	POINT - tooth	1
77	D 43417	PIN - point	1
78	D 55082	PIN - lock, boom transport	1
79	D 28610	WASHER - flat, .105" (2.67 mm) thick	UAR
80	D 31312	WASHER - flat, .062" (1.57 mm) thick	UAR
81	D 25279	RING - retaining, pin	2
82	195- 2152	WASHER - flat, 1-3/4"	2
83	D 62468	GUARD - boom cylinder, if used	2
84	D 62467	BRACKET - guard mounting, if used	4
85	13- 548	HHCS - 5/16" - 18 NC x 3"	8
86	131- 4	NUT - hex, lock, 5/16" - 18 NC	8
		USED WITH EXTENDABLE DIPPER	
87	D 45559	BRACKET - tube clamp, welded to boom	2
88	D 52569	BLOCK - tapped, welded to boom	1
89	D 52843	BLOCK - tapped, welded to boom	5

http://www.minnparbackhoeparts.com/

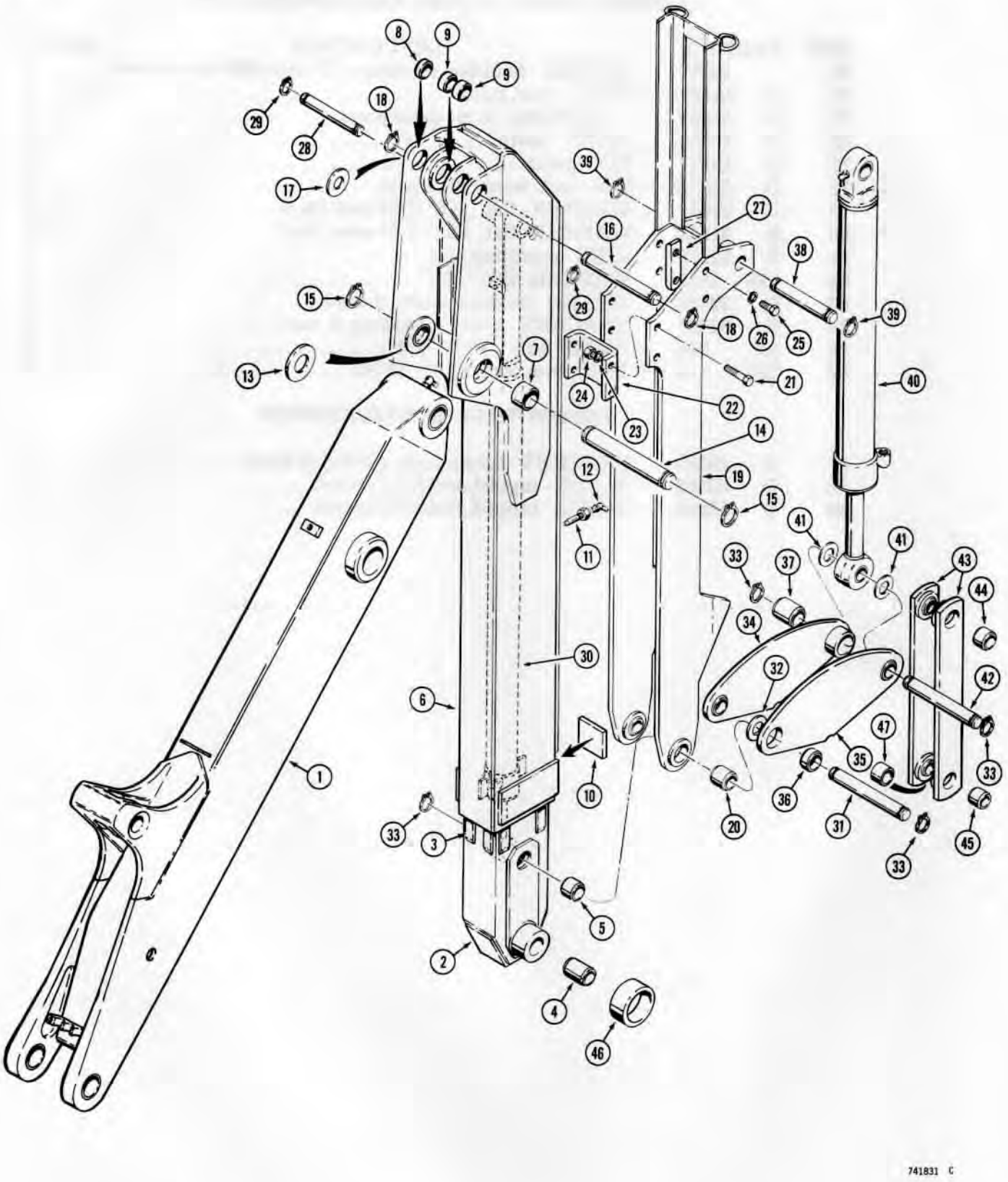

http://www.minnparbackhoeparts.com/

HYDRAULIC EXTENDABLE DIPPER

MECHANICAL PARTS

REF.	PART NO.	DESCRIPTION	REQ'D.
1	REF.	BOOM - backhoe, see pages 369 thru 373	1
2	D 55727	DIPPER ARM ASSEMBLY - extension	1
	D 16615	KIT - wear strip, extendable dipper	2
3	D 55688	WEAR STRIP - dipper slide, steel	4
4	D 50146	BUSHING - dipper arm, at bucket	2
5	D 37443	BUSHING - dipper arm, at bucket link	2
	D 73826	KIT - dipper housing	1
6	NSS	HOUSING - dipper	1
7	D 30756	BUSHING - at boom	2
8	D 34340	BUSHING - at dipper cylinder, L.H. side plate	1
9	D 46405	BUSHING - dipper cylinder, inner plate	2
10	D 61708	BLOCK - stop	1
11	219- 107	NOZZLE - extension, grease fitting	1
12	219- 55	FITTING - grease, 90°, 1/8" NPT	1
13	D 53561	SPACER - dipper housing to boom	2
14	D 45034	PIN - dipper housing to boom	1
15	D 26919	RING - pin retaining	2
16	D 37611	PIN - dipper cylinder to dipper housing	1
17	195- 2152	WASHER - flat	4
18	D 25280	RING - pin retaining	2
19	D 61744	EXTENSION ASSEMBLY - dipper	1
20	D 52521	BUSHING - bucket link pin	2
21	13- 828	HHCS - 1/2" - 13 NC x 1-3/4"	4
22	D 61701	PLATE - guide	1
23	92- 8	WASHER - lock, 1/2"	4
24	25- 108	NUT - hex, 1/2" - 13 NC	4
25	13- 820	HHCS - 1/2" - 13 NC x 1-1/4"	4
26	92- 8	WASHER - lock, 1/2"	4
27	D 54095	BLOCK - guide	2
28	D 44882	PIN - extension cylinder to housing	1
29	D 25279	RING - pin retaining	2
30	REF.	CYLINDER - hydraulic, dipper extension, see pages 337 or 339 for proper cylinder	1
31	D 53818	PIN - dipper and dipper extension to bucket links	1
32	195- 2152	WASHER - plain, bucket link to extension	UAR
33	D 25280	RING - pin retaining	4
34	D 61088	LINK - dipper and extension to dump links, L.H.	1
35	D 61087	LINK - dipper and extension to dump links, R.H.	1
36	D 46405	BUSHING - link, at dipper arm	1
37	D 42788	BUSHING - link, at bucket cylinder	1
38	D 37602	PIN - bucket cylinder to dipper extension	1
39	D 25280	RING - pin retaining	2
40	REF.	CYLINDER - hydraulic, bucket, see pages 333 or 335 for proper cylinder	1
41	195- 2152	WASHER - plain, bucket cylinder to links	UAR
42	D 53818	PIN - bucket cylinder to links	1
43	D 61244	LINK - bucket dump	2
44	D 37495	BUSHING - link, at cylinder	1
45	D 30933	BUSHING - link, at bucket	1
46	D 52578	SPACER - dipper arm to bucket, if used	2
47	D 37450	SPACER - bucket link	1

http://www.minnparbackhoeparts.com/

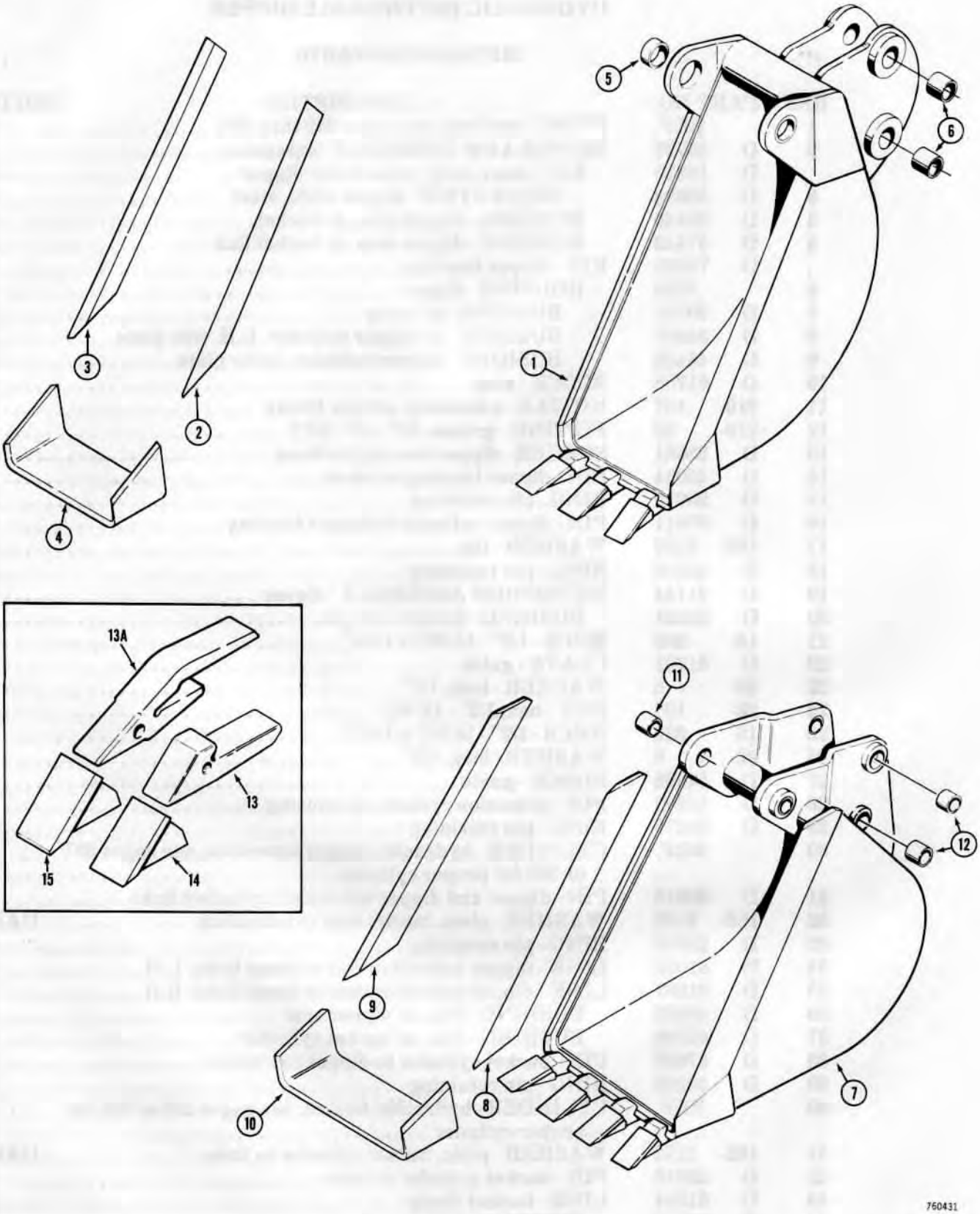

http://www.minnparbackhoeparts.com/

BACKHOE BUCKETS

REF.	PART NO.		DESCRIPTION	REQ'D.
			TRENCHING BUCKETS	
1	D	52642	BUCKET - 12 inch (305 mm) Machinery item - see page 2 for ordering	1
2	D	29424	BLADE - cutting, R.H. side	1
3	D	29423	BLADE - cutting, L.H. side	1
4	D	37464	BLADE - cutting, center	1
5	D	40243	BUSHING - bucket, at dipper arm	2
6	D	30933	BUSHING - bucket, bucket link pin hole	4
7	D	37473	BUCKET - 18 inch (457 mm) Machinery item - see page 2 for ordering	1
8	D	21606	BLADE - cutting, R.H. side	1
9	D	21605	BLADE - cutting, L.H. side	1
10	D	37642	BLADE - cutting, center	1
11	D	37495	BUSHING - bucket, at dipper arm	2
12	D	30933	BUSHING - bucket, upper and lower bucket link pin hole	4
7	D	37474	BUCKET - 24 inch (610 mm) Machinery item - see page 2 for ordering	1
8	D	21606	BLADE - cutting, R.H. side	1
9	D	21605	BLADE - cutting, L.H. side	1
10	D	37507	BLADE - cutting, center	1
11	D	37495	BUSHING - bucket, at dipper arm	2
12	D	30933	BUSHING - bucket, upper and lower bucket link pin hole	4
7	D	37475	BUCKET - 30 inch (762 mm) Machinery item - see page 2 for ordering	1
8	D	21606	BLADE - cutting, R.H. side	1
9	D	21605	BLADE - cutting, L.H. side	1
10	D	37505	BLADE - cutting, center	1
11	D	37495	BUSHING - bucket, at dipper arm	2
12	D	30933	BUSHING - bucket, upper and lower bucket link pin hole	4
7	D	37476	BUCKET - 36 inch (914 mm) Machinery item - see page 2 for ordering	1
8	D	21606	BLADE - cutting, R.H. side	1
9	D	21605	BLADE - cutting, L.H. side	1
10	D	37471	BLADE - cutting, center	1
11	D	37495	BUSHING - bucket, at dipper arm	2
12	D	30933	BUSHING - bucket, upper and lower bucket link pin hole	4
			BUCKET TEETH	
13	D	26368	SHANK - tooth, original equipment	UAR
13A	D	58499	SHANK - tooth, service option	UAR
14	D	58576	POINT - tooth, H and L manufactured, 4-7/8" long (124 mm)	UAR
14	D	58577	POINT - tooth, Fabco manufactured, 4-3/4" long (121 mm)	UAR
15	D	58592	POINT - tooth, H and L manufactured, Heavy duty service option, 4-7/8" long (124 mm)	UAR
15	D	58593	POINT - tooth, Fabco manufactured, heavy duty service option, 4-7/8" long (124 mm)	UAR

NOTE: Additional buckets are listed on pages 379 thru 383.

http://www.minnparbackhoeparts.com/

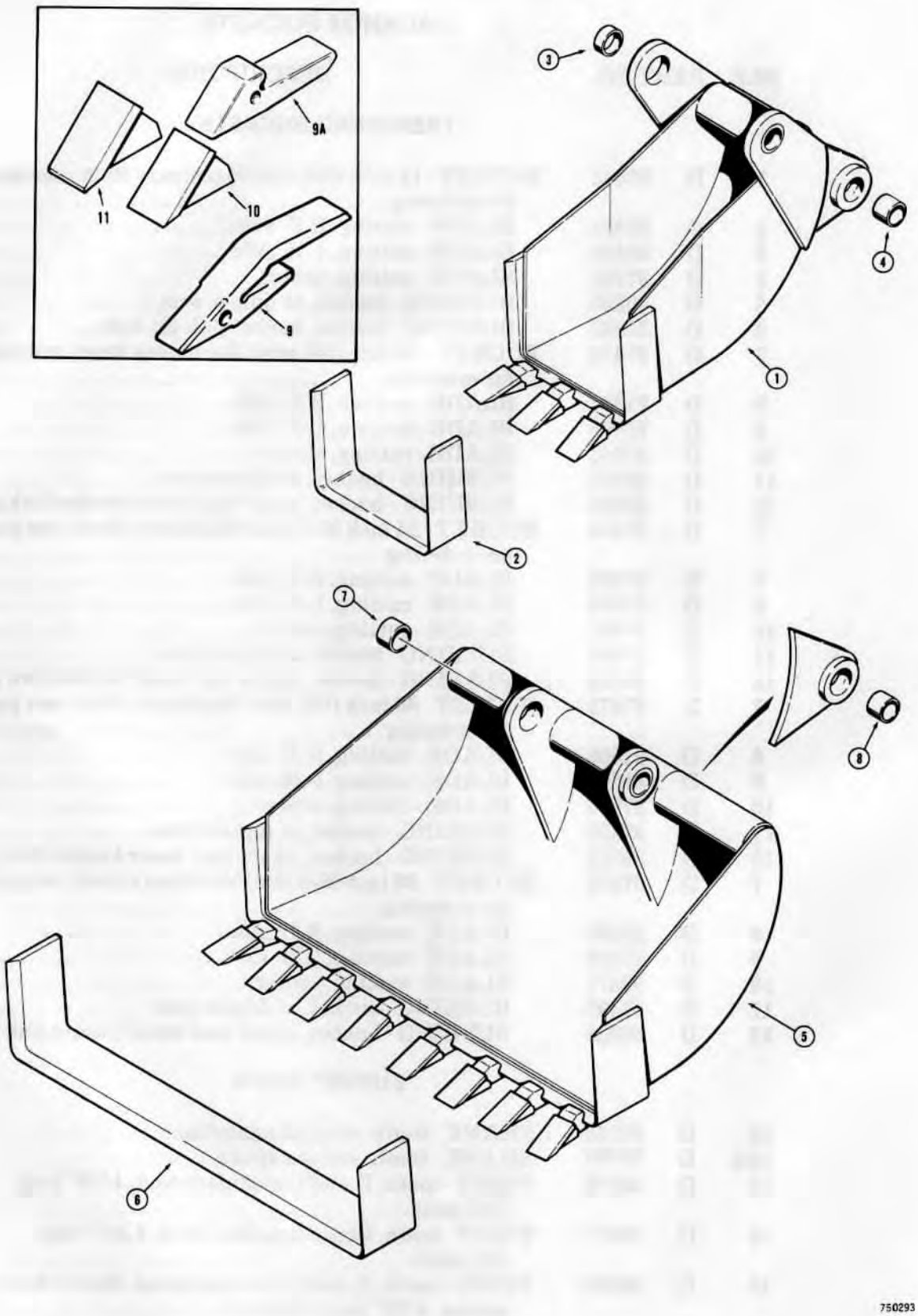

http://www.minnparbackhoeparts.com/

BACKHOE BUCKETS

REF.	PART NO.		DESCRIPTION	REQ'D.
			BELLHOLE BUCKETS	
1	D	41547	BUCKET - 12 inch (305 mm) Machinery item - see page 2 for ordering	1
2	D	37490	BLADE - cutting	1
3	D	40243	BUSHING - bucket, at dipper arm	2
4	D	30933	BUSHING - bucket, bucket link pin hole	2
1	D	41548	BUCKET - 16 inch (406 mm) Machinery item - see page 2 for ordering	1
2	D	37518	BLADE - cutting	1
3	D	37495	BUSHING - bucket, at dipper arm	2
4	D	30933	BUSHING - bucket, bucket link pin hole	2
1	D	41549	BUCKET - 30 inch (762 mm) Machinery item - see page 2 for ordering	1
2	D	37515	BLADE - cutting	1
3	D	37495	BUSHING - bucket, at dipper arm	2
4	D	30933	BUSHING - bucket, bucket link pin hole	2
			COMBINATION BELLHOLE AND GRAVEYARD BUCKET	
5	D	41550	BUCKET - 36 inch (914 mm) Machinery item - see page 2 for ordering	1
6	D	37516	BLADE - cutting	1
7	D	37495	BUSHING - bucket, at dipper arm	2
8	D	30933	BUSHING - bucket, bucket link pin hole	2
			BUCKET TEETH	
9	D	58499	SHANK - tooth, service option	UAR
9A	D	26368	SHANK - tooth, original equipment	UAR
10	D	58576	POINT - tooth, H and L manufacturered, 4-7/8" long (124 mm)	UAR
10	D	58577	POINT - tooth, Fabco manufactured, 4-3/4" long (121 mm)	UAR
11	D	58592	POINT - tooth, H and L manufactured, heavy duty service option	UAR
11	D	58593	POINT - tooth, Fabco manufactured, heavy duty service option	UAR

NOTE: Additional buckets are listed on pages 377, 381, and 383.

http://www.minnparbackhoeparts.com/

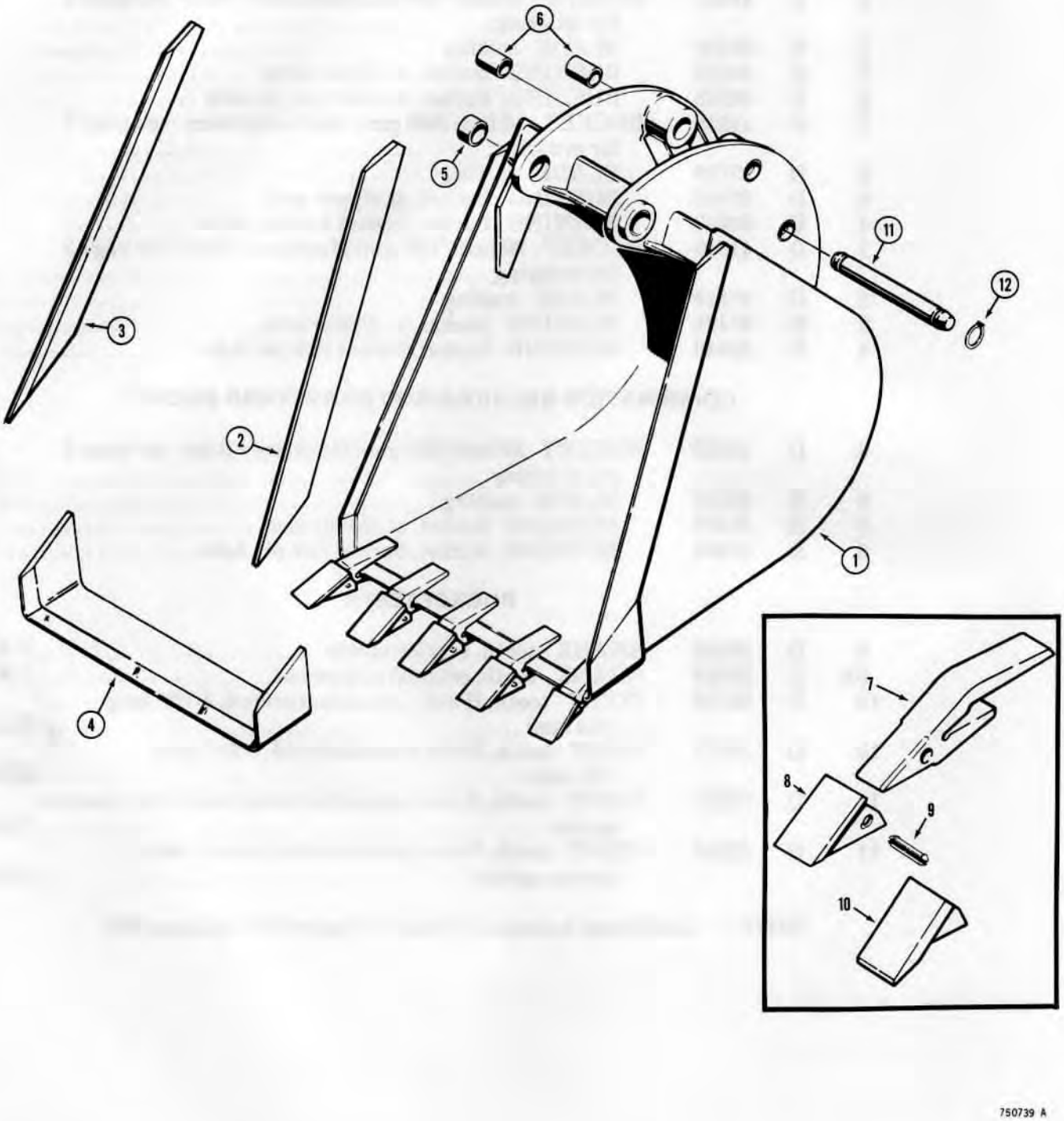

750739 A

http://www.minnparbackhoeparts.com/

BACKHOE BUCKETS

REF.	PART NO.		DESCRIPTION	REQ'D.
			TRENCHING BUCKETS - HEAVY DUTY	
1	D	57546	BUCKET - 18" (457 mm) Machinery item - see page 2 for ordering	1
2	D	57550	BLADE - cutting, R.H. side	1
3	D	57551	BLADE - cutting, L.H. side	1
4	D	57594	BLADE - cutting, center	1
5	D	37495	BUSHING - bucket, at dipper arm	2
6	D	30933	BUSHING - bucket, at bucket link	4
1	D	57544	BUCKET - 24" (610 mm) Machinery item - see page 2 for ordering	1
2	D	57550	BLADE - cutting, R.H. side	1
3	D	57551	BLADE - cutting, L.H. side	1
4	D	57591	BLADE - cutting, center	1
5	D	37495	BUSHING - bucket, at dipper arm	2
6	D	30933	BUSHING - bucket, at bucket link	4
1	D	57543	BUCKET - 30" (762 mm) Machinery item - see page 2 for ordering	1
2	D	57550	BLADE - cutting, R.H. side	1
3	D	57551	BLADE - cutting, L.H. side	1
4	D	57559	BLADE - cutting, center	1
5	D	37495	BUSHING - bucket, at dipper arm	2
6	D	30933	BUSHING - bucket, at bucket link	4
1	D	57545	BUCKET - 36" (914 mm) Machinery item - see page 2 for ordering	1
2	D	57550	BLADE - cutting, R.H. side	1
3	D	57551	BLADE - cutting, L.H. side	1
4	D	57595	BLADE - cutting, center	1
5	D	37495	BUSHING - bucket, at dipper arm	2
6	D	30933	BUSHING - bucket, at bucket link	4
			TOOTH ASSEMBLY	
	D	48035	TOOTH ASSEMBLY - heavy duty bucket only	UAR
7		NSS	SHANK - tooth	1
8	D	39093	POINT - tooth	1
9	D	39094	FLEX PIN - point	1
10	D	44193	POINT - tooth, heavy duty	UAR
			D41679 PIN KIT	
	D	41679	KIT - pin, bucket	1
11	D	30899	PIN - bucket to bucket link	1
12	D	25279	RING - snap	2

NOTE: Additional buckets are listed on pages 377, 379, and 383.

http://www.minnparbackhoeparts.com/

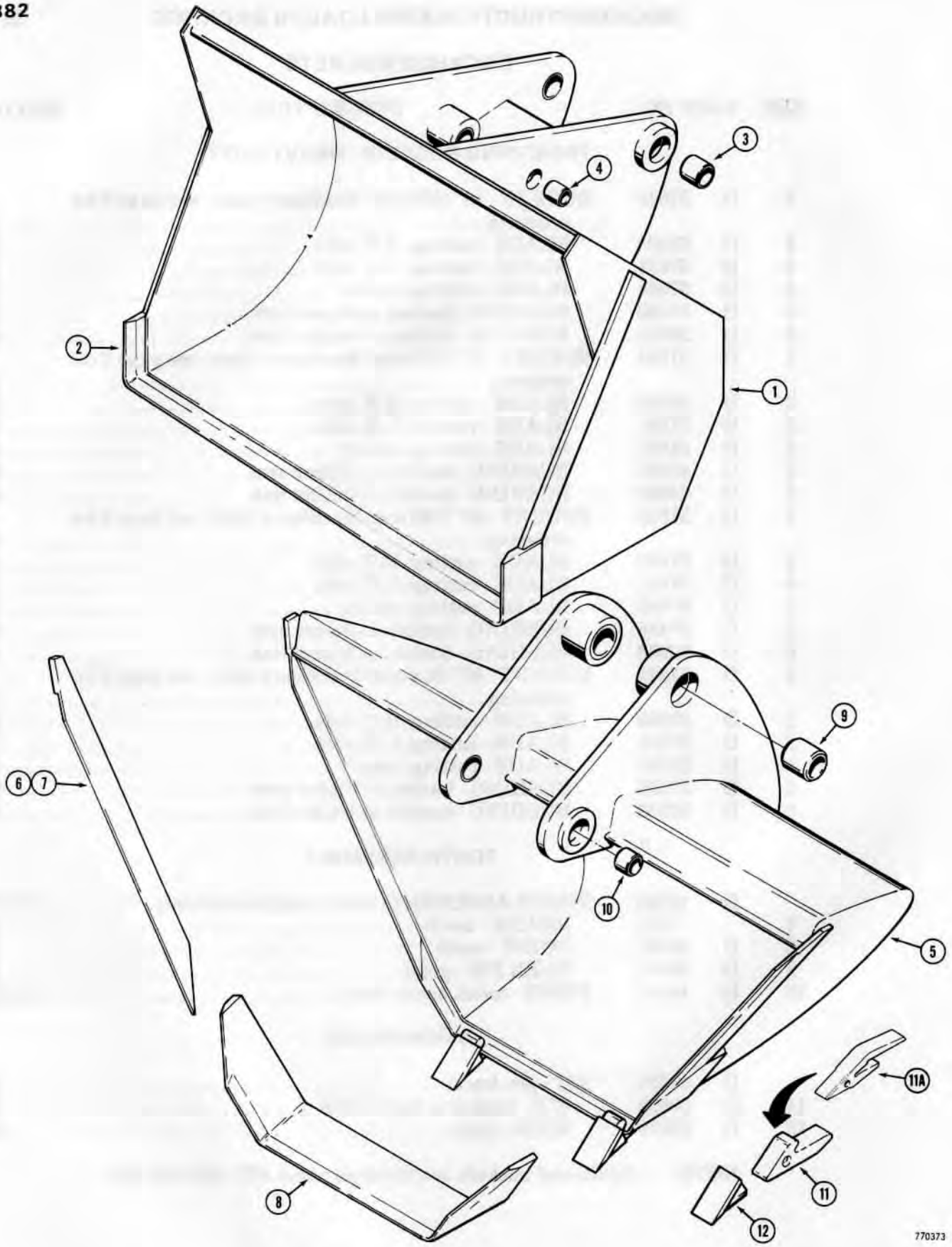

http://www.minnparbackhoeparts.com/

BACKHOE BUCKETS

REF.	PART NO.		DESCRIPTION	REQ'D.
			SHOVEL BUCKET	
1	D	50682	BUCKET - backhoe, shovel, machinery item, see page 2 for ordering	1
2	D	95074	BLADE - cutting center	1
3	D	30929	BUSHING - bucket, at bucket link	2
4	D	37495	BUSHING - bucket, at dipper arm	2
			DITCHING BUCKET	
5	E	15133	BUCKET - backhoe, ditching, machinery item, see page 2 for ordering	1
6	D	43331	BLADE - cutting, L.H.	1
7	D	43332	BLADE - cutting, R.H.	1
8	D	43341	BLADE - cutting, center	1
9	D	30929	BUSHING - bucket, at bucket link	2
10	D	37495	BUSHING - bucket, at dipper arm	2
11	D	26368	SHANK - tooth, original equipment	2
11A	D	58499	SHANK - tooth, service option	2
12	D	58576	POINT - tooth, H and L manufactured, 4-7/8" (124 mm) long	UAR
12	D	58577	POINT - tooth, Fabco manufactured, 4-3/4" (121 mm) long	UAR

NOTE: Additional buckets are listed on pages 377 thru 381.

http://www.minnparbackhoeparts.com/

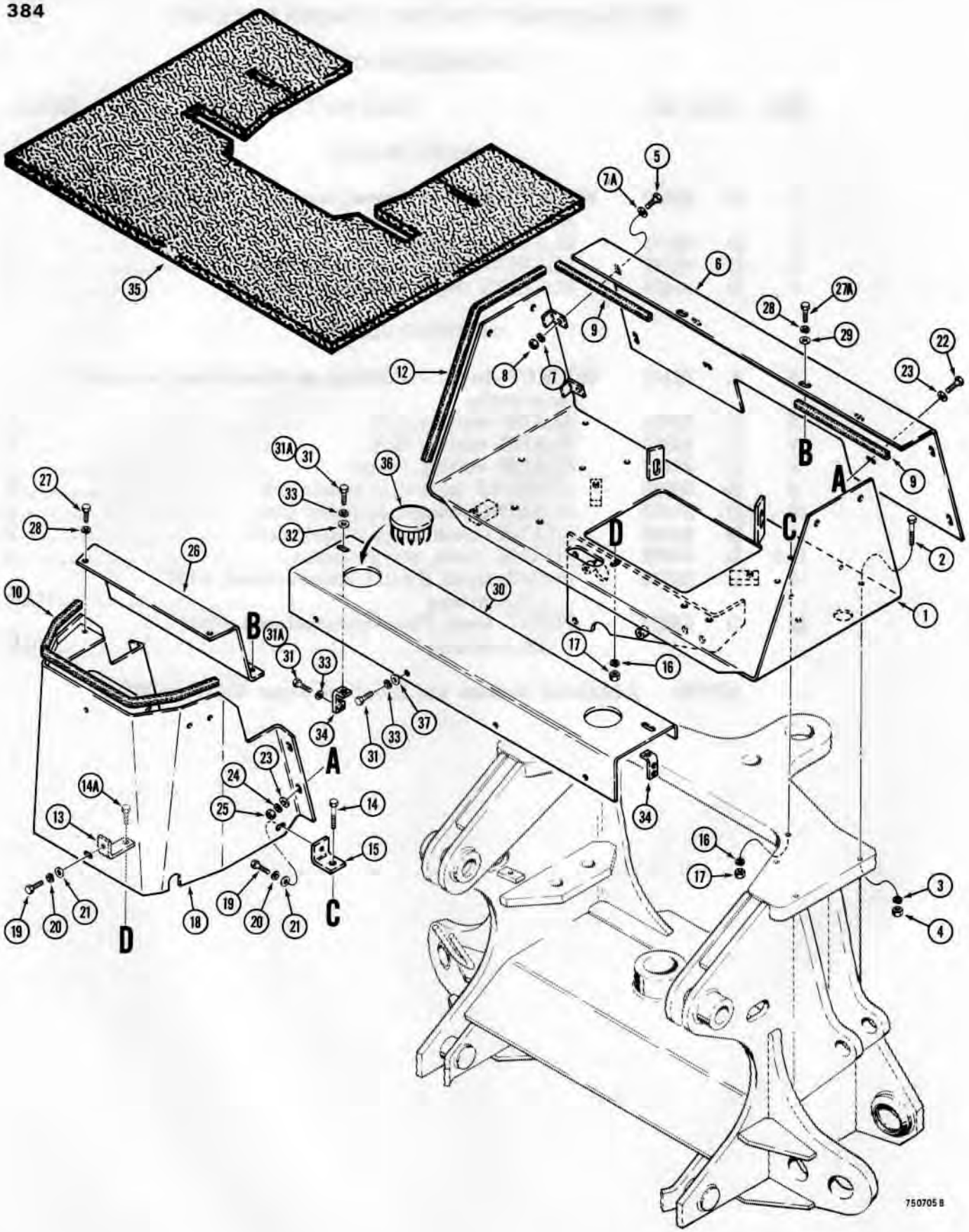

http://www.minnparbackhoeparts.com/

BACKHOE CONTROL TOWER

REF.	PART NO.	DESCRIPTION	REQ'D.
1	*D 67788	PLATE AND FOOT SHIELDS - mounting frame, top	1
2	13- 632	HHCS - 3/8" - 16 NC x 2"	4
3	92- 6	WASHER - lock, 3/8"	4
4	25- 106	NUT - hex, 3/8" - 16 NC	4
5	13- 612	HHCS - 3/8" - 16 NC x 3/4"	4
6	D 67779	PANEL - front, console and foot shields	1
7	92- 6	WASHER - lock, 3/8"	4
7A	195- 25	WASHER - flat, 3/8"	4
8	25- 106	NUT - hex, 3/8" - 16 NC	4
9	D 49094	GUARD - edge, 10-1/2" (268 mm) long	2
10	D 73120	GUARD - edge, 29" (737 mm) long	1
11		RESERVED	
12	D 35424	GUARD - edge, 16" (406 mm) long	2
13	D 52697	BRACKET - center panel anchor	1
14	13- 636	HHCS - 3/8" - 16 NC x 2-1/4"	2
14A	13- 616	HHCS - 3/8" - 16 NC x 1"	1
15	D 50287	BRACKET - mounting, center panel	2
16	92- 6	WASHER - lock, 3/8"	3
17	25- 106	NUT - hex, 3/8" - 16 NC	3
18	D 67778	PANEL - console, center	1
19	13- 612	HHCS - 3/8" - 16 NC x 3/4"	3
20	92- 6	WASHER - lock, 3/8"	3
21	195- 25	WASHER - plain, 3/8"	3
22	13- 616	HHCS - 3/8" - 16 NC x 1"	4
23	195- 25	WASHER - flat, 3/8"	8
24	92- 6	WASHER - lock, 3/8"	4
25	25- 106	NUT - hex, 3/8" - 16 NC	4
26	D 67782	PANEL - console, top	1
27	13- 612	HHCS - 3/8" - 16 NC x 3/4"	2
27A	13- 68	HHCS - 3/8" - 16 NC x 1/2"	2
28	92- 6	WASHER - lock, 3/8"	4
29	195- 25	WASHER - flat, 3/8"	2
30	D 73847	PANEL - closure, floor	1
31	13- 516	HHCS - 5/16" - 18 NC x 1"	4-8
31A	13- 512	HHCS - 5/16" - 18 NC x 3/4", if used	4
32	95- 5	WASHER - flat, 5/16"	2
33	92- 5	WASHER - lock, 5/16"	8
34	D 77105	BRACKET - panel	2
35	D 69728	FLOORMAT - backhoe floor, if used	1
36	205- 72	PLUG - button	2
37	195- 21	WASHER - flat, 5/16"	4

*NOTE: For extra sealing strips to provide a seal between foot shield and cab, see page 419.

http://www.minnparbackhoeparts.com/

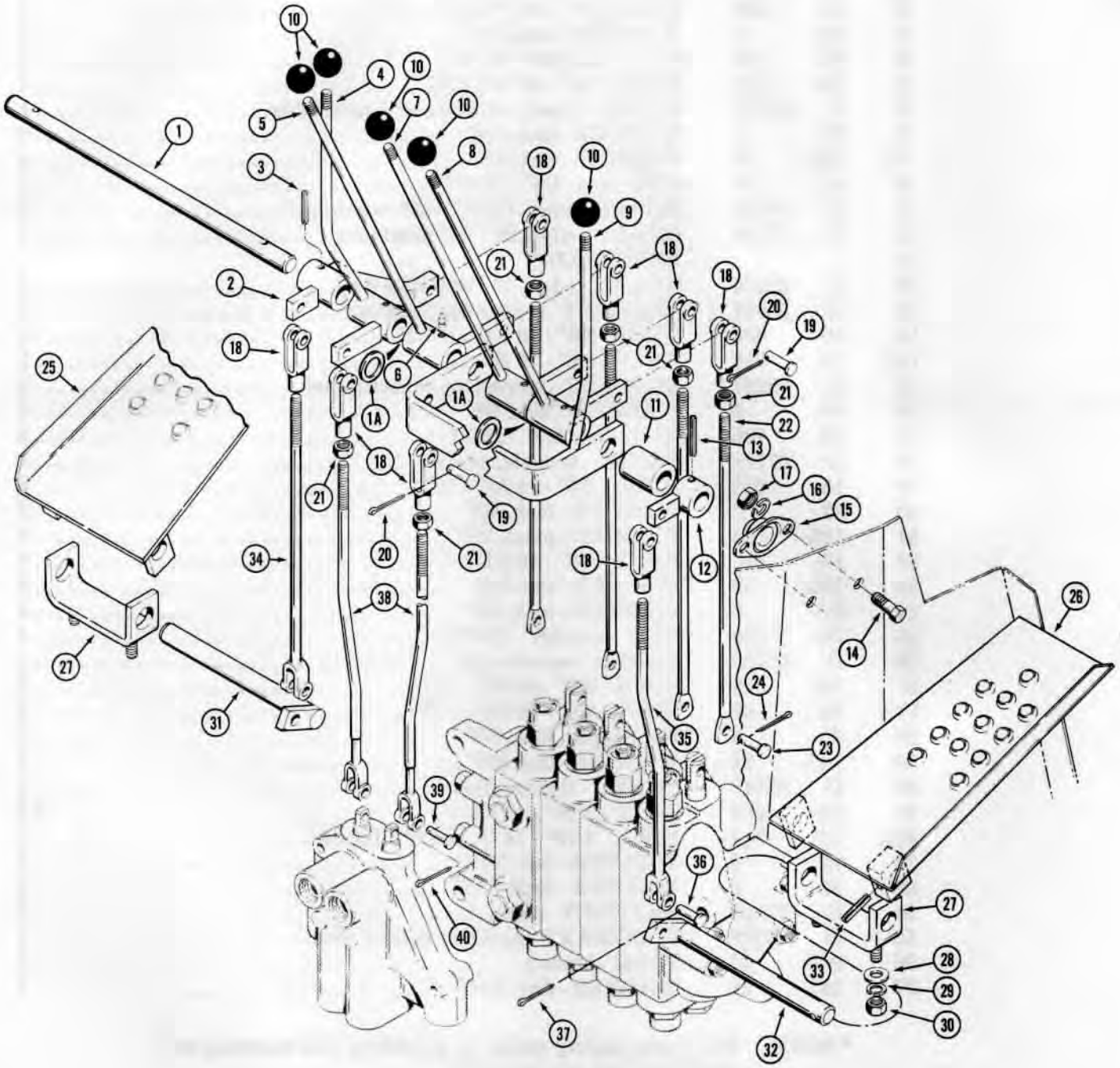

http://www.minnparbackhoeparts.com/

BACKHOE CONTROLS WITH FOOT SWING

REF.	PART NO.	DESCRIPTION	REQ'D.
1	D 67759	SHAFT - control levers	1
1A	195- 45	WASHER - flat, used as shim	UAR
2	D 67761	BELLCRANK - L.H. swing	1
3	138- 136	PIN - roll, 1/4" x 1-1/4"	1
4	D 67771	HANDLE - L.H. stabilizer	1
5	D 67765	HANDLE - bucket	1
6	219- 4	FITTING - grease, straight, 1/8" NPT	4
7	D 67766	HANDLE - dipper	1
8	D 67767	HANDLE - boom	1
9	D 67774	HANDLE - R.H. stabilizer	1
10	D 59912	KNOB - handle	5
11	D 95538	SPACER - shaft	1
12	D 67762	BELLCRANK - R.H. swing	1
13	138- 136	PIN - roll, 1/4" x 1-1/4"	1
14	13- 612	HHCS - 3/8" - 16 NC x 3/4"	4
15	L 48412	BEARING - shaft	2
16	92- 6	WASHER - lock, 3/8"	4
17	25- 106	NUT - hex, 3/8" - 16 NC	4
18	213- 4	YOKE - rod	8
19	141- 4	PIN - yoke, 3/8"	8
20	132- 25	PIN - cotter, 3/32" x 5/8"	8
21	25- 116	NUT - hex, jam, 3/8" - 24 NF	6
22	D 67783	ROD - link	4
23	141- 3	PIN - yoke, 5/16"	4
24	132- 25	PIN - cotter, 3/32" x 5/8"	4
25	D 58221	PEDAL - L.H. swing	1
26	D 58220	PEDAL - R.H. swing	1
27	D 56287	BRACKET - swing pedal mounting	2
28	95- 6	WASHER - flat, 3/8"	4
29	92- 6	WASHER - lock, 3/8"	4
30	25- 106	NUT - hex, 3/8" - 16 NC	4
31	D 50407	SHAFT - L.H. swing pedal	1
32	D 69130	SHAFT - R.H. swing pedal	1
33	138- 136	PIN - roll, 1/4" x 1-1/4"	2
34	D 67763	ROD - swing pedal, L.H.	1
35	D 69131	ROD - swing pedal, R.H.	1
36	141- 4	PIN - yoke, 3/8"	2
37	132- 25	PIN - cotter, 3/32" x 5/8"	2
38	D 67775	ROD - stabilizer control	2
39	141- 3	PIN - yoke, 5/16"	2
40	132- 25	PIN - cotter, 3/32" x 5/8"	2

http://www.minnparbackhoeparts.com/

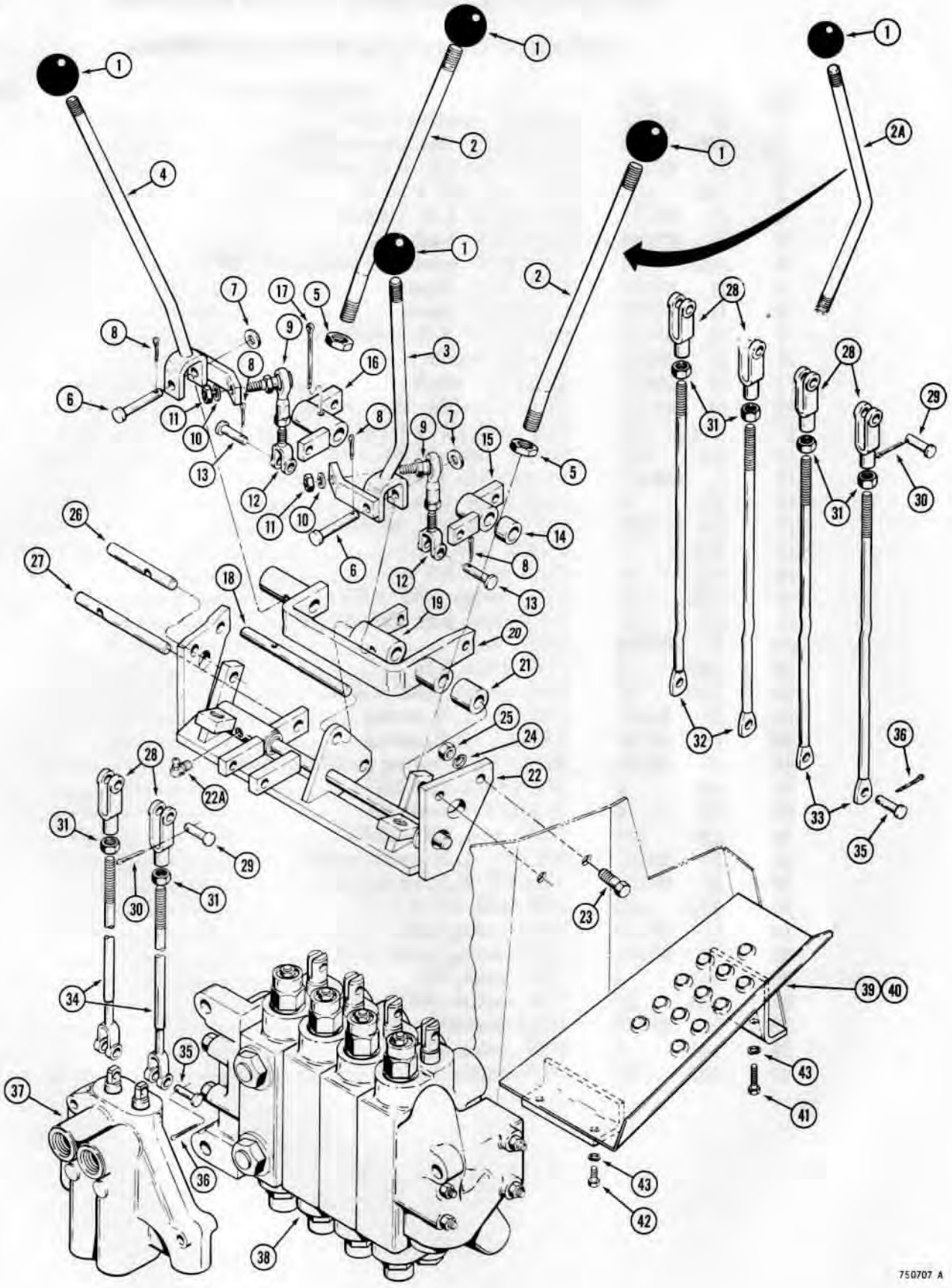

http://www.minnparbackhoeparts.com/

BACKHOE CONTROLS WITH HAND SWING

REF.	PART NO.	DESCRIPTION	REQ'D.
1	D 59912	KNOB - levers	4
2	D 73009	LEVER - stabilizer, early production, 34° bend, order D75434	2
2A	D 75434	LEVER - stabilizer, late production, 45° bend	2
3	D 69913	LEVER - handle, R.H.	1
4	D 69915	LEVER - handle, L.H.	1
5	25- 158	NUT - hex, jam, 1/2" - 20 NF	2
6	141- 5	PIN - clevis, 1/4"	2
7	195- 18	WASHER - flat, 1/4"	2
8	132- 5	PIN - cotter, 1/16" x 1/2"	4
9	D 52241	BALLJOINT - lever	2
10	92- 4	WASHER - lock, 1/4"	2
11	25- 114	NUT - hex, jam, 1/4" - 28 NF	2
12	D 52778	YOKE - levers, 1/4"	2
13	141- 2	PIN - yoke, 1/4"	2
14	D 58552	SPACER - bellcrank	1
15	D 69925	BELLCRANK - bucket	1
16	D 69924	BELLCRANK - swing	1
17	132- 95	PIN - cotter, 3/16" x 1-1/2"	1
18	D 69920	SHAFT - upper, R.H.	1
19	D 69917	ARM - dipper	1
20	D 69908	ARM - boom	1
21	D 69910	SPACER - boom arm	1
22	D 69933	BRACKET - control mounting	1
22A	219- 55	FITTING - grease, 90°, 1/8" NPT	1
23	13- 612	HHCS - 3/8" - 16 NC x 3/4"	4
24	92- 6	WASHER - lock, 3/8"	4
25	25- 106	NUT - hex, 3/8" - 16 NC	4
26	D 69918	SHAFT - upper, L.H.	1
27	D 69921	SHAFT - lower	1
28	213- 4	YOKE - 3/8"	6
29	141- 4	PIN - yoke, 3/8"	6
30	132- 25	PIN - cotter, 3/32" x 5/8"	6
31	25- 116	NUT - hex, jam, 3/8" - 24 NF	6
32	D 69932	ROD - control	2
33	D 67783	ROD - control	2
34	D 56050	ROD - control	2
35	141- 3	PIN - yoke, 5/16"	6
36	138- 25	PIN - cotter, 3/32" x 5/8"	6
37	REF.	VALVE - stabilizer control, see page 269	1
38	REF.	VALVE - backhoe control, see page 271	1
39	D 52196	FOOT REST - R.H.	1
40	D 52197	FOOT REST - L.H.	1
41	13- 632	HHCS - 3/8" - 16 NC x 2"	2
42	13- 616	HHCS - 3/8" - 16 NC x 1"	4
43	92- 6	WASHER - lock, 3/8"	6

http://www.minnparbackhoeparts.com/

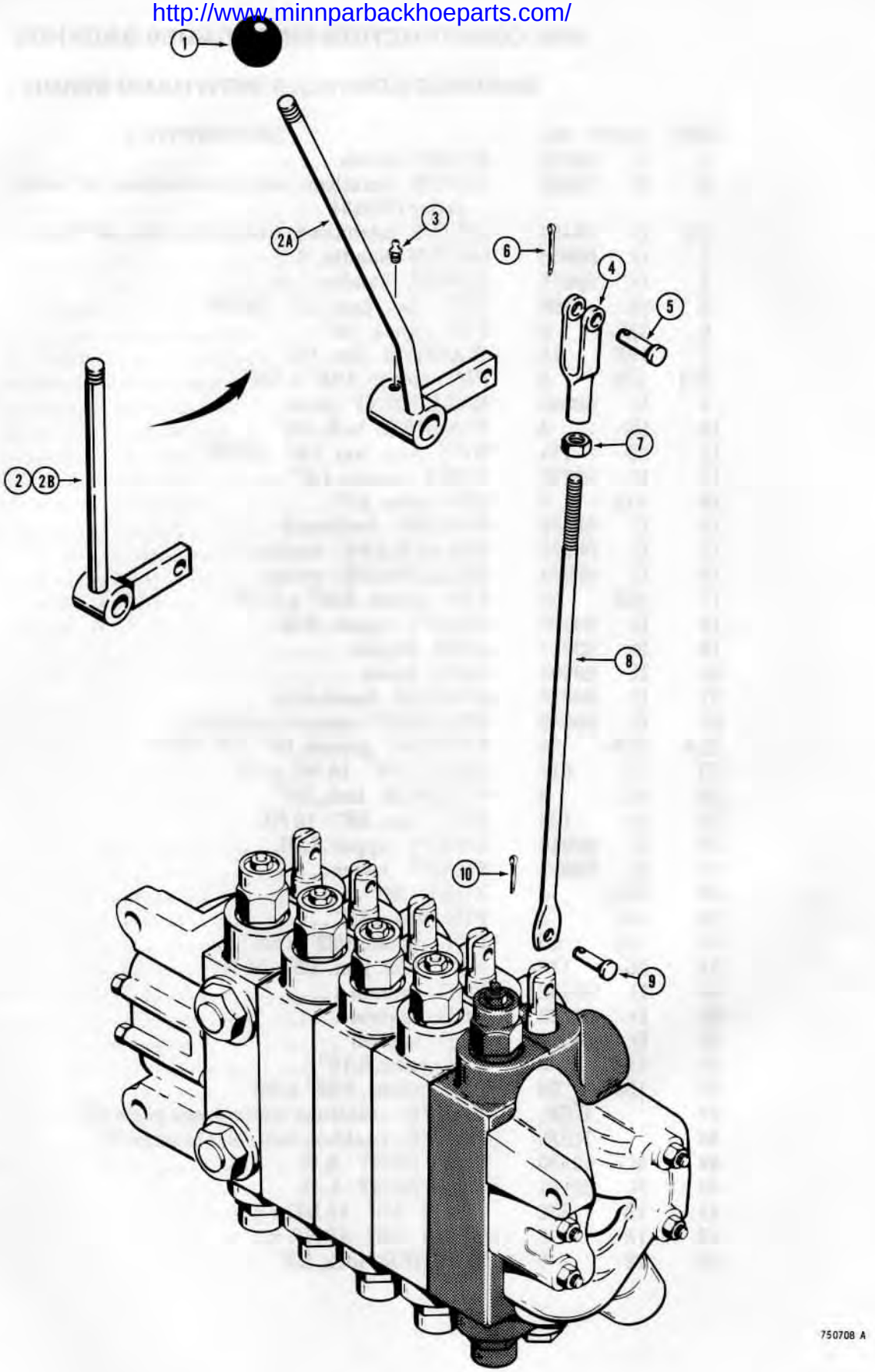

http://www.minnparbackhoeparts.com/

EXTENDABLE DIPPER CONTROL

REF.	PART NO.	DESCRIPTION	REQ'D.
1	D 59912	KNOB - lever	1
2	D 67768	HANDLE - extendable dipper, individual lever controls	1
2A	D 69934	HANDLE - extendable dipper, twin lever controls, bent, if used	1
2B	D 75381	HANDLE - extendable dipper, twin lever control, straight, if used	1
3	219- 4	FITTING - grease, straight, 1/8" NPT	1
4	213- 4	YOKE - rod, 3/8"	1
5	141- 4	PIN - yoke, 3/8"	1
6	132- 25	PIN - cotter, 3/32" x 5/8"	1
7	25- 116	NUT - hex, 3/8" - 24 NF	1
8	D 67783	ROD - extendable dipper	1
9	141- 3	PIN - yoke, 5/16"	1
10	132- 24	PIN - cotter, 3/32" x 1/2"	1

http://www.minnparbackhoeparts.com/

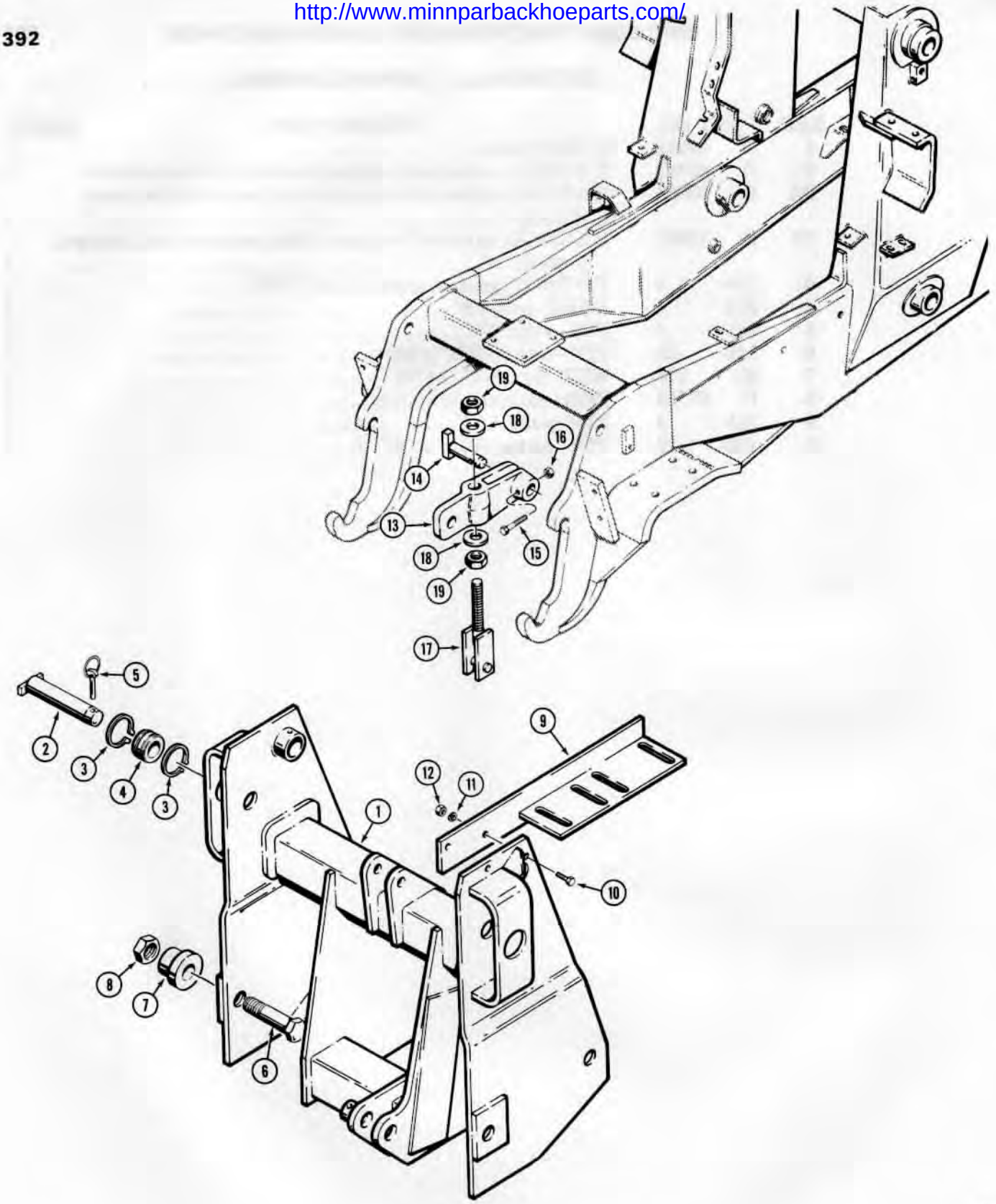

770378

http://www.minnparbackhoeparts.com/

3-POINT HITCH FRAME AND ATTACHING PARTS

REF.	PART NO.	DESCRIPTION	REQ'D.
1	D 67337	FRAME - mounting, 3-point hitch	1
2	D 54957	PIN - mounting, frame to upper support	2
3	F 40807	RING - retaining, spacer	4
4	D 51895	SPACER - mounting pin	2
5	D 33805	PIN - retaining	2
6	13- 2068	HHCS - 1-1/4" - 7 NC x 4-1/4"	2
7	D 51573	PIN - frame mounting, lower	2
8	25- 1020	NUT - hex, 1-1/4" - 7 NC	2
9	D 69194	BRACKET - valve mounting	1
10	13- 824	HHCS - 1/2" - 13 NC x 1-1/2"	2
11	92- 8	WASHER - lock, 1/2"	2
12	25- 108	NUT - hex, 1/2" - 13 NC	2
13	D 74007	LINK - upper, backhoe attaching	2
14	D 71870	PIN - link to tractor	2
15	13- 860	HHCS - 1/2" - 13 NC x 3-3/4", if used	2
15	13- 856	HHCS - 1/2" - 13 NC x 3-1/2", if used	2
16	131- 654	NUT - hex, lock, 1/2" - 13 NC	2
17	D 61065	ROD - tension	2
18	D 64968	WASHER - special, hardened	4
19	25- 1020	NUT - hex, 1-1/4" - 7 NC	4

Printed In U.S.A. Issued January, 1978

http://www.minnparbackhoeparts.com/

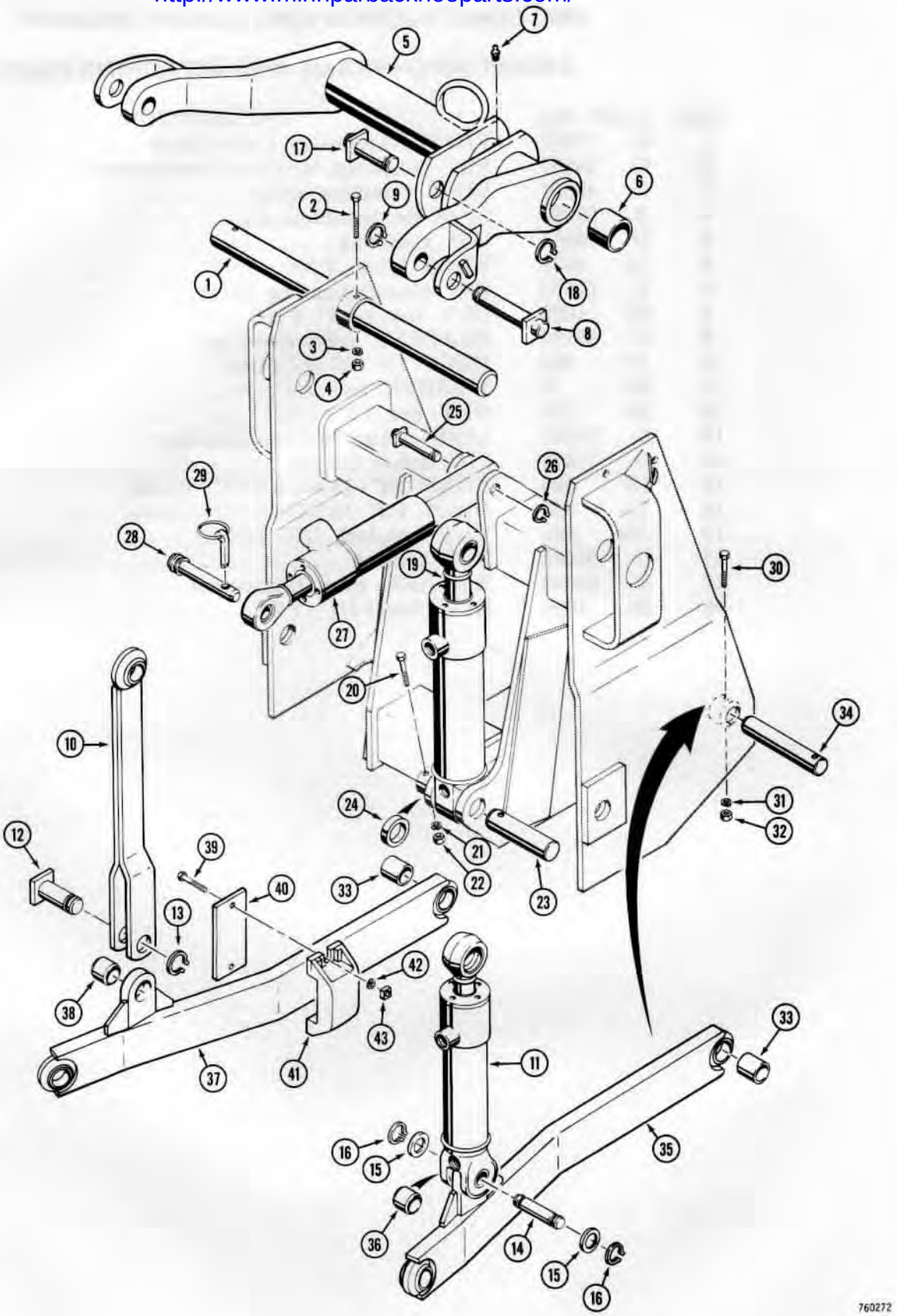

http://www.minnparbackhoeparts.com/

3-POINT HITCH LIFT ARM, LINKAGE AND CYLINDERS

REF.	PART NO.	DESCRIPTION	REQ'D.
1	D 51569	SHAFT - rocker	1
2	13- 648	HHCS - 3/8" - 16 NC x 3"	1
3	92- 6	WASHER - lock, 3/8"	1
4	25- 106	NUT - hex, 3/8" - 16 NC	1
5	D 72875	TUBE - rocker shaft	1
6	D 50146	BUSHING - tube	2
7	219- 4	FITTING - grease, straight, 1/8" NPT	1
8	D 51299	PIN - mounting, tilt cylinder and strut, upper	2
9	D 25277	RING - retaining	2
10	D 51276	STRUT - stationary, tilt cylinder opposing	1
11	G 33351	CYLINDER - tilt, parts list page 345 or 347	1
12	D 51297	PIN - mounting, strut, lower	1
13	D 25277	RING - retaining, lower strut mounting pin	1
14	D 30609	PIN - mounting, tilt cylinder, lower	1
15	195- 53	WASHER - plain, cylinder alignment	UAR
16	D 25277	RING - retaining, lower tilt cylinder mounting pin	2
17	D 51302	PIN - mounting, lift cylinder, upper	1
18	D 26918	RING - retaining, upper lift cylinder mounting pin	1
19	G 33456	CYLINDER - lift, parts list page 341 or 343	1
20	13- 640	HHCS - 3/8" - 16 NC x 2-1/2"	1
21	92- 6	WASHER - lock, 3/8"	1
22	25- 106	NUT - hex, 3/8" - 16 NC	1
23	D 51695	PIN - mounting, lift cylinder, lower	1
24	D 51692	SPACER - lift cylinder mounting pin, lower	1
25	D 51294	PIN - mounting, pitch cylinder at mounting frame	1
26	T 25683	RING - retaining, pitch cylinder mounting pin	1
27	G 33128	CYLINDER - hydraulic, pitch, parts list page 349	1
28	G 16735	PIN - mounting, pitch cylinder to equipment	1
29	A 30338	PIN - retaining	1
30	13- 640	HHCS - 3/8" - 16 NC x 2-1/2"	2
31	92- 6	WASHER - lock, 3/8"	2
32	25- 106	NUT - hex, 3/8" - 16 NC	2
33	D 51588	TUBE - pivot, draft arm mounting pin	2
34	D 50724	PIN - mounting, draft arm to mounting frame	2
35	D 51339	ARM - draft, R.H.	1
36	D 51608	BUSHING - arm	1
37	D 51340	ARM - draft, L.H.	1
38	D 51608	BUSHING - arm	1
39	13- 632	HHCS - 3/8" - 16 NC x 2"	1
40	D 56245	PLATE - sway retaining	4
41	D 51722	ANCHOR - sway retaining	2
42	92- 6	WASHER - lock, 3/8"	2
43	25- 226	NUT - square, heavy, 3/8" - 16 NC	4

http://www.minnparbackhoeparts.com/

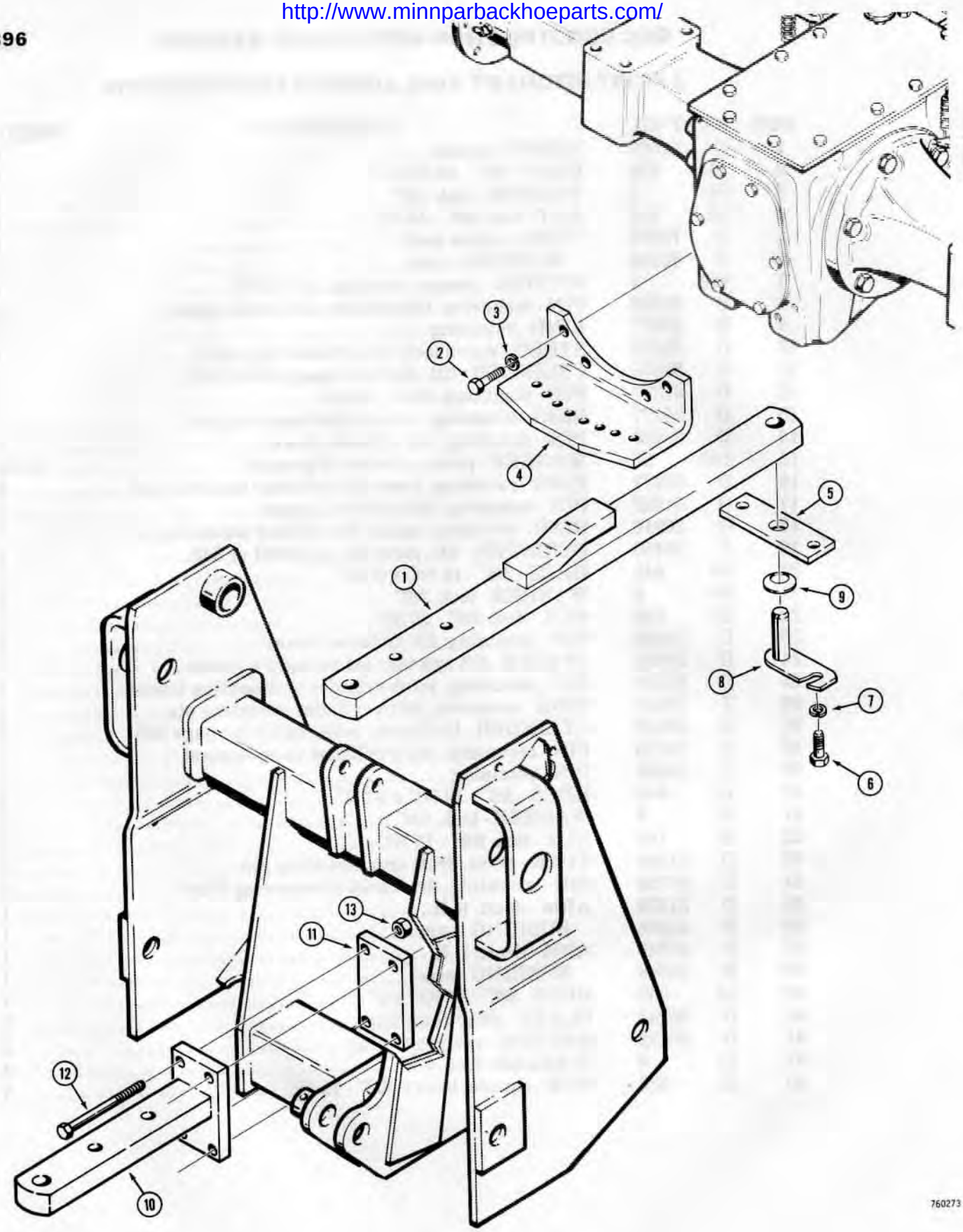

http://www.minnparbackhoeparts.com/

SWINGING DRAWBAR

REF.	PART NO.	DESCRIPTION	REQ'D.
1	A 37809	DRAWBAR - swinging, tractor	1
2	13- 1024	HHCS - 5/8" - 11 NC x 1-1/2"	4
3	92- 10	WASHER - lock, 5/8"	4
4	G 30266	GUIDE - rear, drawbar	1
5	G 10617	PLATE - front, drawbar retaining	1
6	13- 1224	HHCS - 3/4" - 10 NC x 1-1/2"	2
7	92- 12	WASHER - lock, 3/4"	2
8	G 14403	PIN - drawbar mounting	1
9	A 35270	WASHER - spring type	1

RIGID DRAWBAR

USED WITH 3-POINT HITCH

10	D 73232	DRAWBAR - rigid, tractor	1
11	D 73231	PLATE - mounting	1
12	13- 10104	HHCS - 5/8" - 11 NC x 6-1/2"	4
13	25- 1010	NUT - hex, 5/8" - 11 NC	4

http://www.minnparbackhoeparts.com/

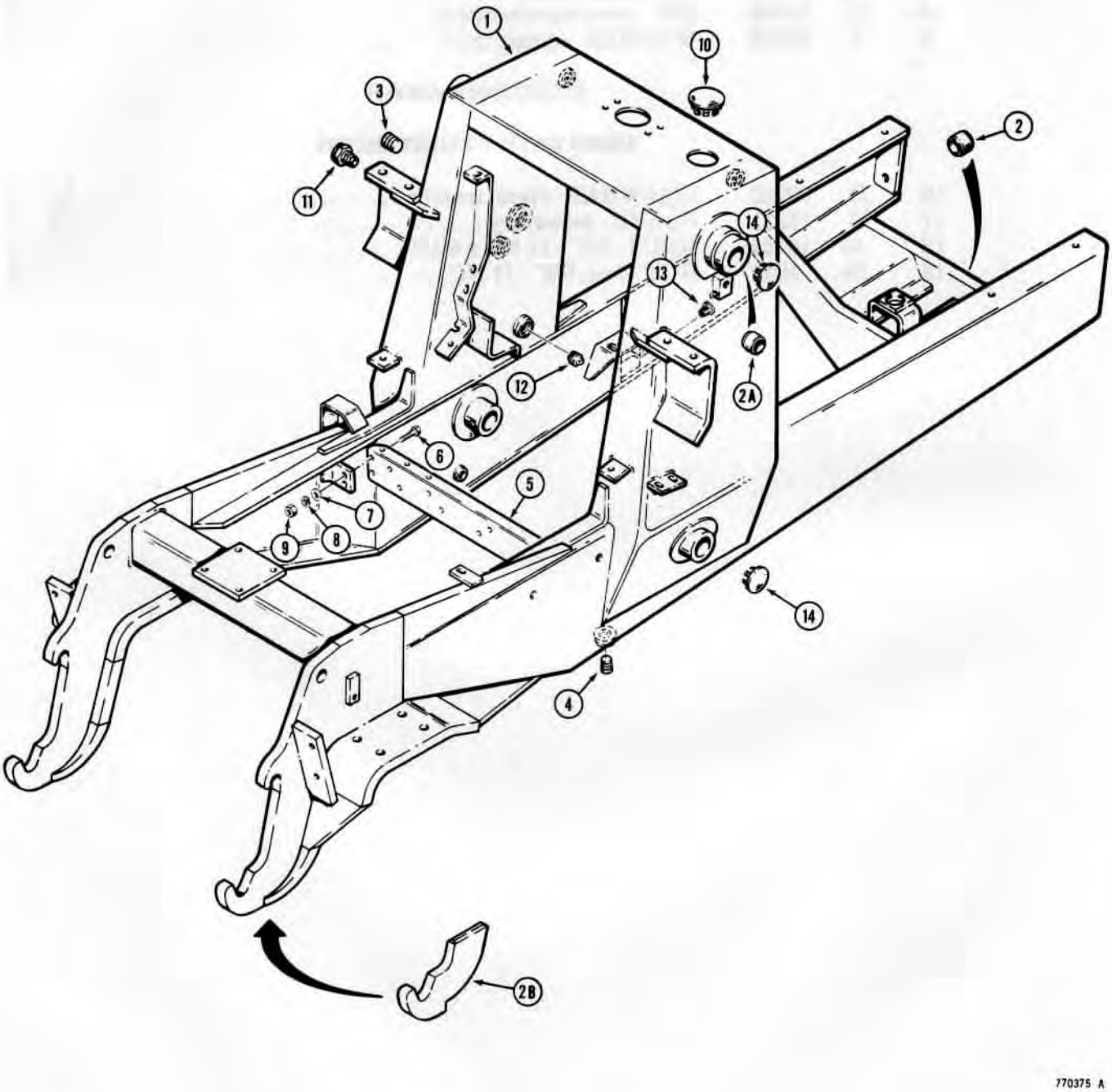

http://www.minnparbackhoeparts.com/

CHASSIS

REF.	PART NO.	DESCRIPTION	REQ'D.
1	D 76243	CHASSIS - tractor	1
2	D 43940	BUSHING - front axle mounting	2
2A	D 37443	BUSHING - loader lift arm pivot	2
2B	D 19134	BRACKET - rear mounting, includes welding instructions, for use before tractor sn. 8958753 only	2
3	221- 27	PLUG - hex, socket, 1-1/4" NPT	1
4	221- 35	PLUG - hex, socket, 3/4" NPT	2
5	D 66068	BRACKET - cross member	1
6	13- 820	HHCS - 1/2" - 13 NC x 1-1/4"	4
7	195- 33	WASHER - plain, 1/2"	4
8	92- 8	WASHER - lock, 1/2"	4
9	25- 108	NUT - hex, 1/2" - 13 NC	4
10	205- 72	PLUG - button, 3" dia.	1
11	D 63875	PLUG - indicator, oil level	1
12	221- 15	PLUG - sq. head, 3/4" NPT, reservoir return ports, used only on drawbar tractors without equipment hydraulics	2
13	353- 23	PLUG - plastic, #15, reservoir outlet tubes, used only on drawbar tractors without equipment hydraulics	2
14	353- 416	PLUG - button, nylon, 1-3/4", used on models without loader	4

http://www.minnparbackhoeparts.com/

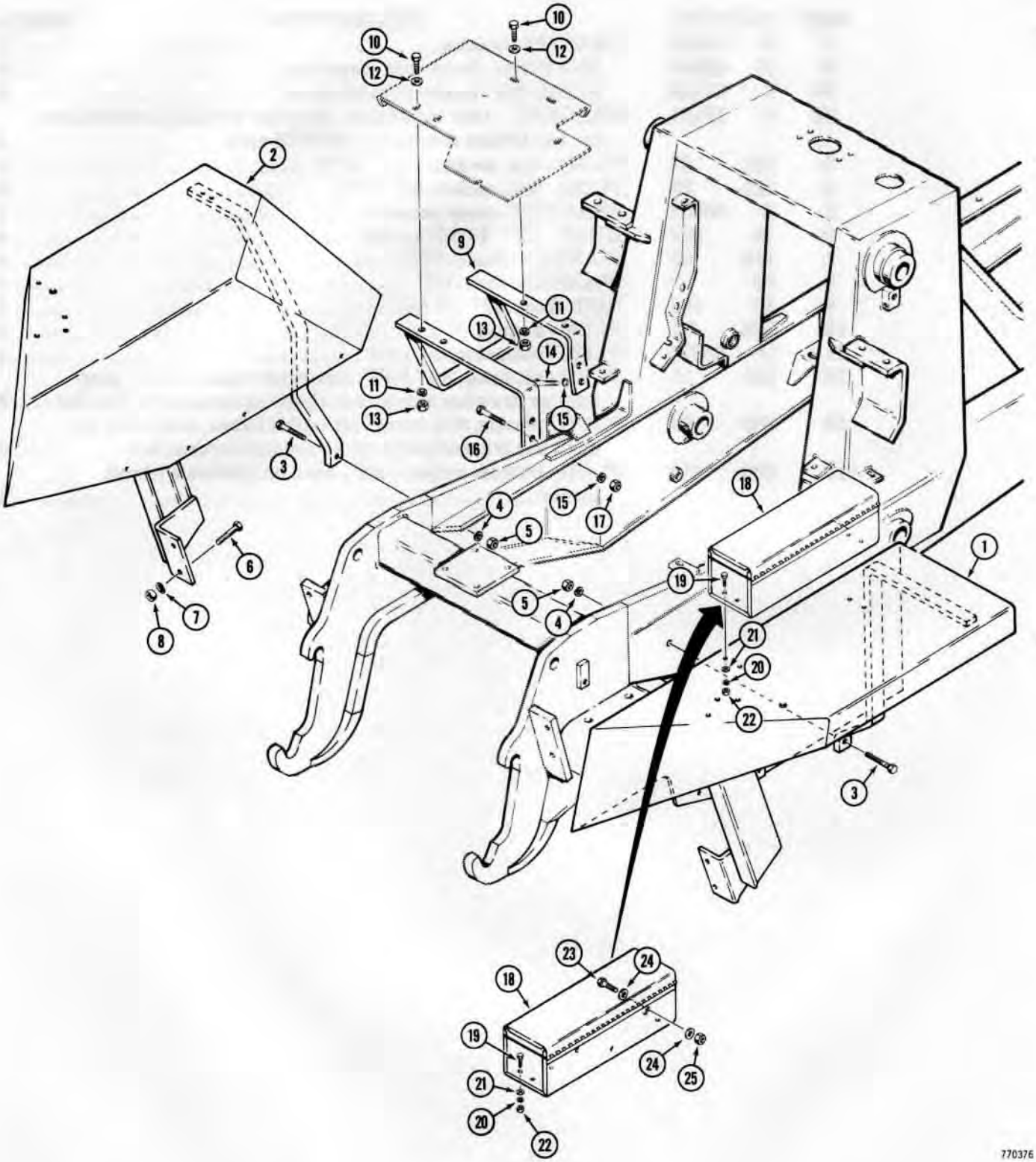

http://www.minnparbackhoeparts.com/

FENDERS, STEP AND TOOL BOX

REF.	PART NO.	DESCRIPTION	REQ'D.
1	D 75597	FENDER - rear, R.H.	1
2	D 75598	FENDER - rear, L.H.	1
3	13- 836	HHCS - 1/2" - 13 NC x 2-1/4"	2
4	92- 8	WASHER - lock, 1/2"	2
5	25- 108	NUT - hex, 1/2" - 13 NC	2
6	26- 1036	HHCS - 5/8" - 11 NC x 2-1/4", grade 8	4
7	92- 10	WASHER - lock, 5/8"	4
8	129- 563	NUT - hex, 5/8" - 11 NC	4
9	D 68738	STEP - operators compartment	1
10	13- 620	HHCS - 3/8" - 16 NC x 1-1/4"	4
11	92- 6	WASHER - lock, 3/8"	4
12	95- 6	WASHER - flat, 3/8"	4
13	25- 106	NUT - hex, 3/8" - 16 NC	4
14	13- 820	HHCS - 1/2" - 13 NC x 1-1/4", if used	2
15	92- 8	WASHER - lock, 1/2"	2-4
16	13- 824	HHCS - 1/2" - 13 NC x 1-1/2"	2
17	25- 108	NUT - hex, 1/2" - 13 NC	2
18	D 55624	TOOL BOX - tractor	1
19	*113- 3	HHCS - 1/4" - 20 NC x 3/4", plated	4
20	*192- 19	WASHER - lock, 1/4", plated	4
21	*195- 102	WASHER - flat, 1/4", plated, if used	4
22	*129- 101	NUT - hex, 1/4" - 20 NC, plated	4
23	**114- 200	HHCS - 3/8" - 24 NF x 1"	3
23	**113- 206	HHCS - 3/8" - 16 NC x 3/4", if used	3
24	**195- 525	WASHER - flat, 3/8"	6
24A	**192- 21	WASHER - lock, 3/8", if used, not shown	3-6
25	**129- 123	NUT - hex, lock, 3/8" - 24 NF	3
25	**129- 103	NUT - hex, 3/8" - 16 NC, if used	3-6

*NOTE: Used when the tool box is mounted on top of the fender.

**NOTE: Used when the tool box is mounted on the side of the fender.

http://www.minnparbackhoeparts.com/

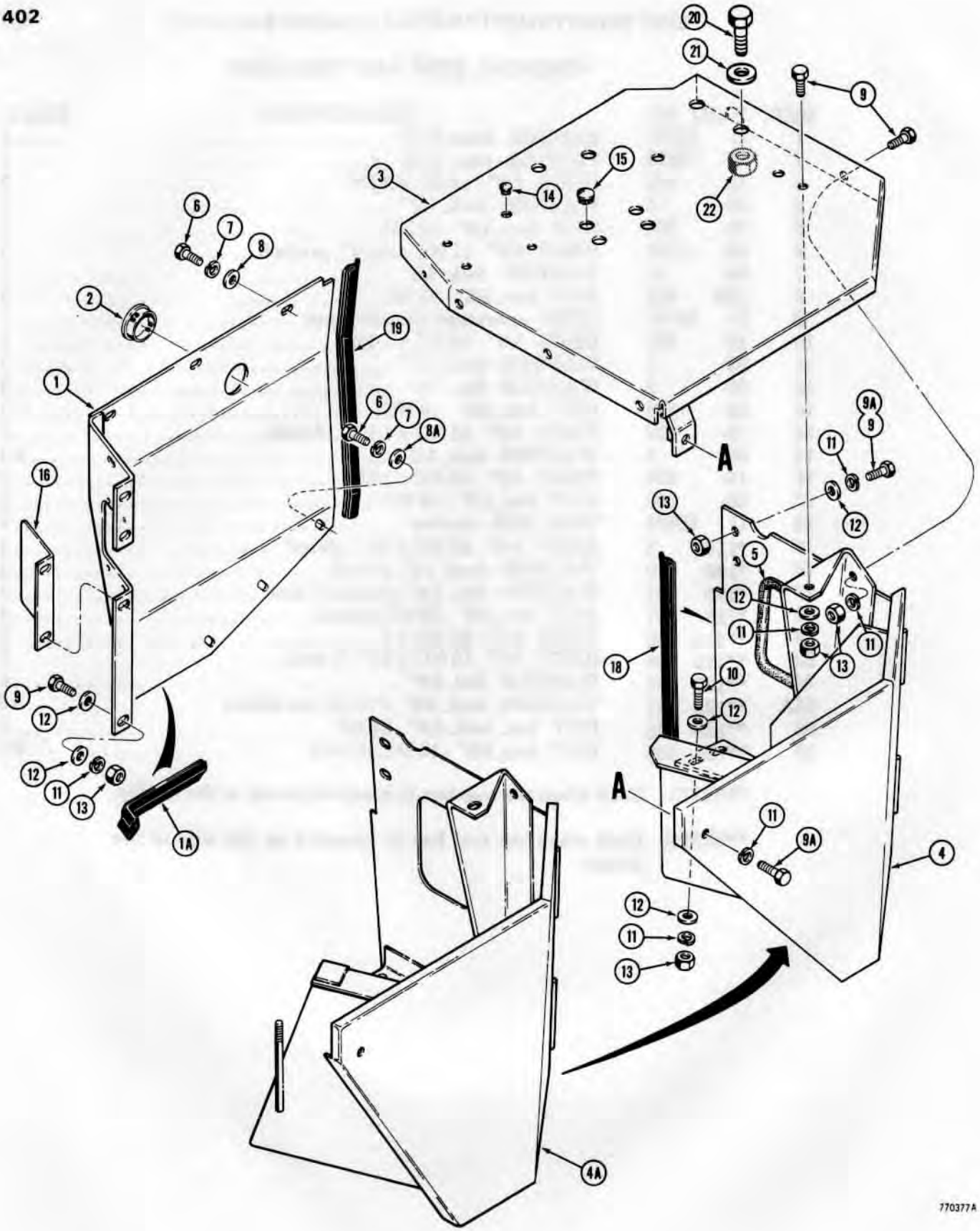

http://www.minnparbackhoeparts.com/

BATTERY COMPARTMENT AND VALVE MOUNTING PLATE

REF.	PART NO.	DESCRIPTION	REQ'D.
1	D 68238	PLATE - shield, battery and valve compartment	1
1A	D 72862	GUARD - edge, shield	1
2	353- 417	PLUG - button, 2"	2
3	D 68091	PLATE - valve mounting	1
4	D 68445	BOX - battery, used with one 12 volt battery	1
4A	D 78930	BOX - battery, used with two 6 volt batteries	1
5	D 59554	GUARD - edge, hose opening	1
6	13- 512	HHCS - 5/16" - 18 NC x 3/4"	7
7	92- 5	WASHER - lock, 5/16"	7
8	195- 21	WASHER - flat, 5/16"	4
8A	195- 24	WASHER - flat, 5/16", special	3
9	13- 612	HHCS - 3/8" - 16 NC x 3/4"	2-4
9A	13- 620	HHCS - 3/8" - 16 NC x 1-1/4"	1-3
10	13- 616	HHCS - 3/8" - 16 NC x 1"	6
11	92- 6	WASHER - lock, 3/8"	11
12	195- 25	WASHER - flat, 3/8"	14
13	25- 106	NUT - hex, 3/8" - 16 NC	9-10
14	205- 75	PLUG - button, 13/32", used on models without loader	4
15	205- 33	PLUG - button, 25/32", used on models without loader	3
16	D 69116	PLATE - cover, valve lever slots, used on models without loader	1
17	187- 329	SCREW - tapping, #10, cover plate, if used, not shown	2
18	D 95811	GUARD - edge, battery box	1
19	D 95813	GUARD - edge, compartment plate	1
20	113- 606	HHCS - 5/8" - 11 NC x 1-1/4", if used	2
21	195- 541	WASHER - flat, 5/8", if used	2
22	129- 183	NUT - hex, 5/8" - 11 NC, if used	2

http://www.minnparbackhoeparts.com/

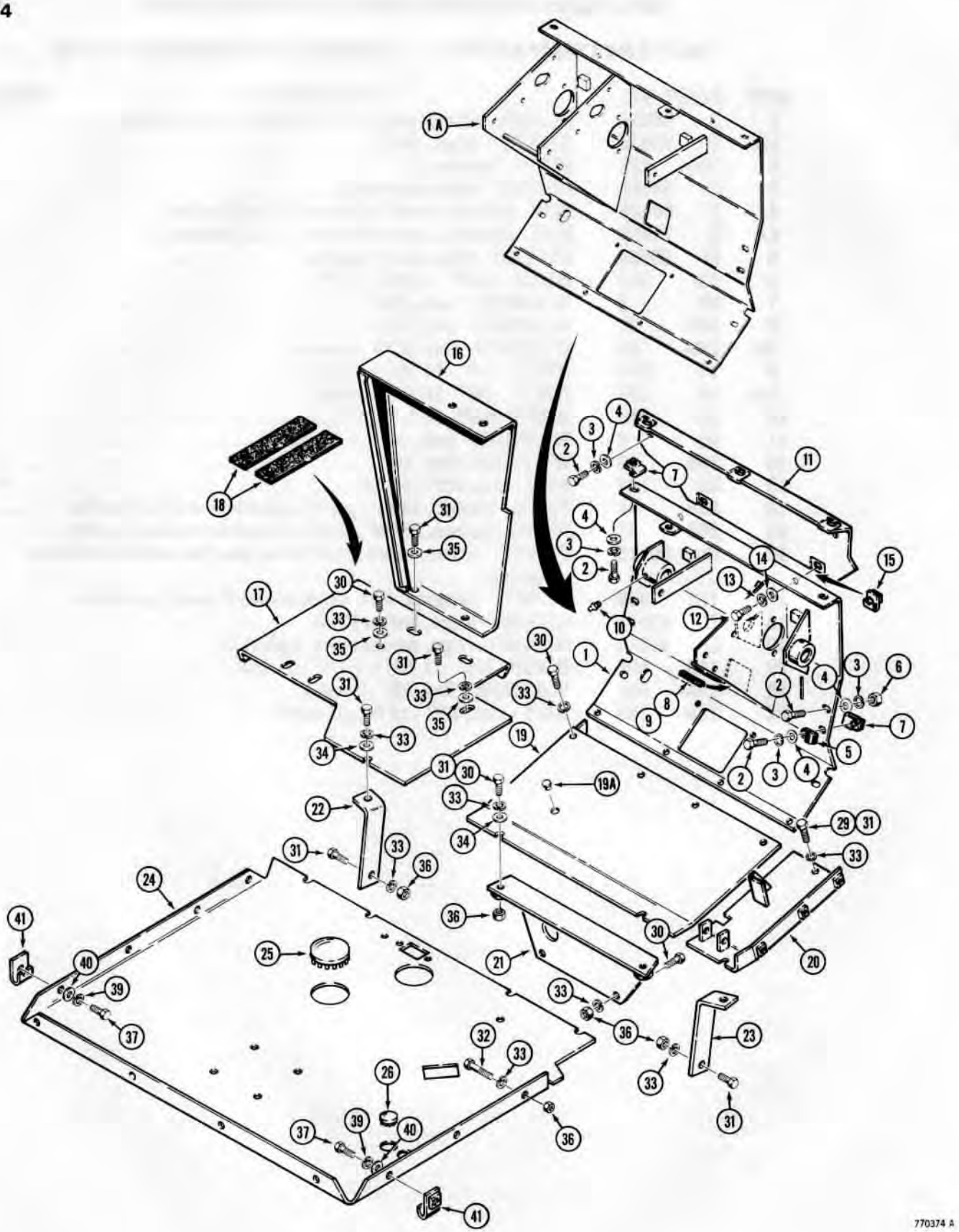

http://www.minnparbackhoeparts.com/

FLOOR PLATES AND FIREWALL

REF.	PART NO.	DESCRIPTION	REQ'D.
1	D 67017	FIREWALL - pedal mounting, mechanical shuttle models	1
1A	D 66528	FIREWALL - pedal mounting, power shuttle models	1
2	13- 616	HHCS - 3/8" - 16 NC x 1"	11
3	92- 6	WASHER - lock, 3/8"	11
4	195- 25	WASHER - flat, 3/8"	11
5	49851	CLAMP - brake lines	2
6	25- 106	NUT - hex, 3/8" - 16 NC	1
7	131- 634	NUT - "J" type, 3/8" - 16 NC	8
8	D 38500	GUARD - edge, firewall opening, horizontal, cut to fit	2
9	D 72356	GUARD - edge, firewall opening, vertical	2
10	219- 1	FITTING - grease, straight, 1/8" NPT, if used	1
11	D 67256	PLATE - upper	1
12	13- 516	HHCS - 5/16" - 18 NC x 1"	2
13	92- 5	WASHER - lock, 5/16"	2
14	195- 21	WASHER - flat, 5/16"	2
15	131- 636	NUT - "J" type, 5/16" - 18 NC	2
16	D 68362	PANEL - L.H. front	1
17	D 68667	PLATE - floor, entrance	1
18	D 55216	STRIP - non-skid	2
19	D 68666	PLATE - floor, front, mechanical shuttle models	1
19	D 70508	PLATE - floor, front, power shuttle models	1
19A	353- 407	PLUG - button, 11/16", if used	1
20	D 66769	PLATE - floor, R.H. front	1
21	D 66063	BRACKET - crossmember	1
22	D 70498	BRACKET - L.H.	1
23	D 70499	BRACKET - R.H.	1
24	D 68659	PLATE - floor, rear, mechanical shuttle models before tractor sn. 8955262, order D75145 and 353-462 bushing, see page 139, item 40	1
24	*D 75145	PLATE - floor, rear, mechanical shuttle models on tractor sn. 8955262 and after	1
24	D 70506	PLATE - floor, rear, power shuttle models before tractor sn. 8955232	1
24	*D 75146	PLATE - floor, rear, power shuttle models on tractor sn. 8955232 and after	1
25	205- 72	PLUG - button, 3" dia.	2
26	205- 61	PLUG - button, 1-1/2" dia.	1
27		RESERVED	
28		RESERVED	
29	13- 612	HHCS - 3/8" - 16 NC x 3/4", if used	1
30	13- 616	HHCS - 3/8" - 16 NC x 1"	7-9
31	13- 620	HHCS - 3/8" - 16 NC x 1-1/4"	8-11
32	13- 624	HHCS - 3/8" - 16 NC x 1-1/2"	1-2
33	92- 6	WASHER - lock, 3/8"	20
34	95- 6	WASHER - flat, 3/8"	4
35	195- 25	WASHER - flat, 3/8"	7
36	25- 106	NUT - hex, 3/8" - 16 NC	6-9
37	13- 512	HHCS - 5/16" - 18 NC x 3/4"	6
38		RESERVED	
39	92- 5	WASHER - lock, 5/16"	6
40	195- 21	WASHER - flat, 5/16"	6
41	131- 636	NUT - cage, 5/16" - 18 NC	5-6

*NOTE: See page 139 for differential lock lever bushing.

http://www.minnparbackhoeparts.com/

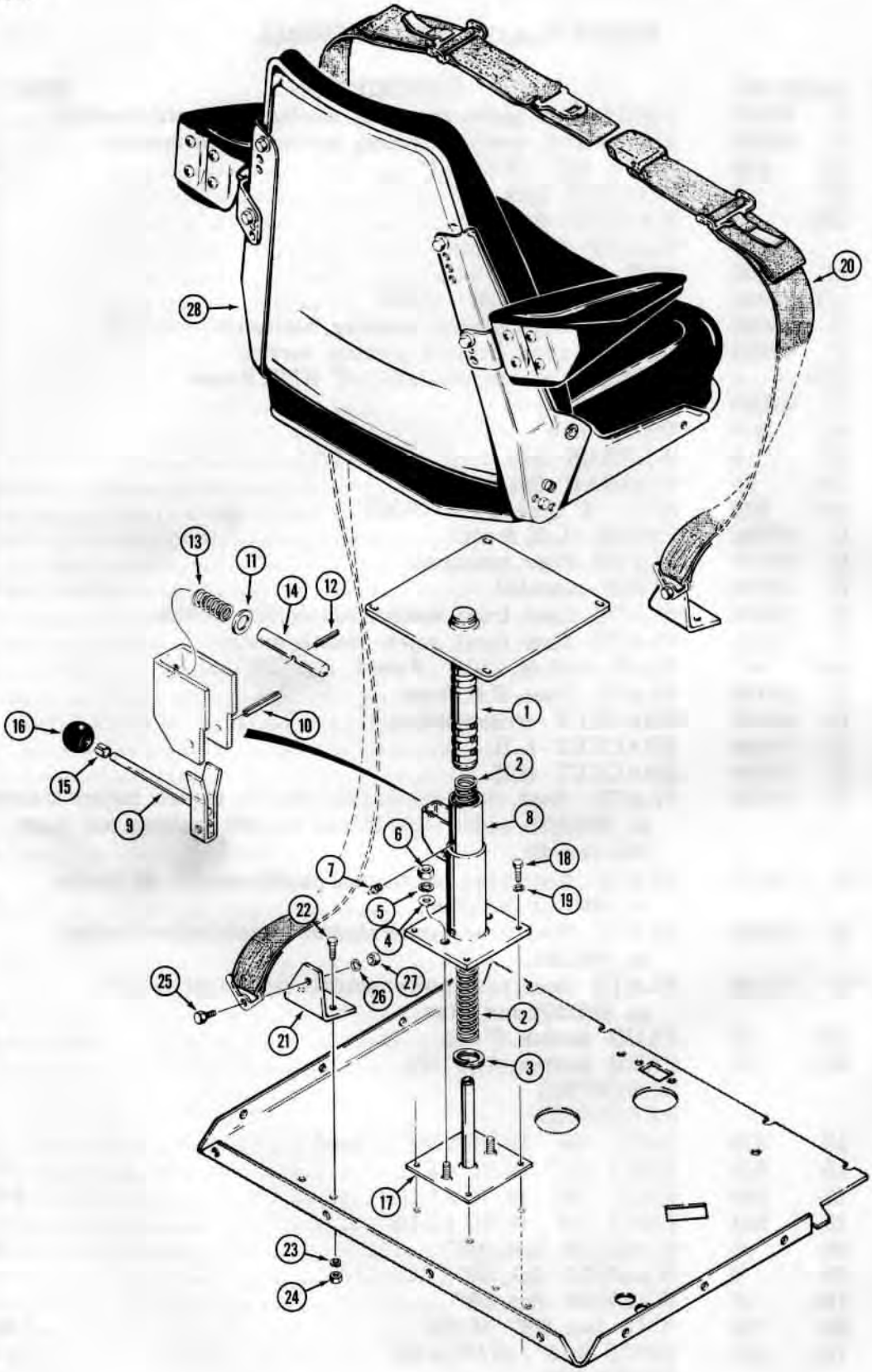

http://www.minnparbackhoeparts.com/

SEAT MOUNTING PARTS AND SEAT BELTS

REF.	PART NO.	DESCRIPTION	REQ'D.
1	D 73865	POST - seat mounting	1
2	D 64767	SPRING - seat	1
3	D 49776	RING - retaining	1
4	195- 25	WASHER - flat, 3/8"	2
5	92- 6	WASHER - lock, 3/8"	2
6	25- 106	NUT - hex, 3/8" - 16 NC	2
7	219- 1	FITTING - grease, straight, 1/8" NPT	1
8	D 64776	POST - seat base	1
9	D 38258	LOCK - seat height adjustment	1
10	138- 137	PIN - roll, 1/4" x 1-3/8"	1
11	D 49941	WASHER - flat	1
12	138- 94	PIN - roll, 3/16" x 7/8"	1
13	D 49774	SPRING - lock	1
14	D 38261	PIN - post latch	1
15	D 38673	RING - knob retaining	1
16	D 38643	KNOB - height adjustment lever	1
17	D 62012	SPACER - base	1
18	13- 620	HHCS - 3/8" - 16 NC x 1-1/4"	4
19	92- 6	WASHER - lock, 3/8"	4
20	D 60615	BELT - seat, 3" (76 mm) wide, if used	1
20	D 75428	BELT - seat, 2" (51 mm) wide, if used	1
21	D 75008	BRACKET - seat belt mounting	2
22	113- 207	HHCS - 3/8" - 16 NC x 1", plated	4
23	192- 21	WASHER - lock, 3/8", plated	4
24	129- 103	NUT - hex, 3/8" - 16 NC, plated	4
25	F 42236	BOLT - shoulder, 7/16" - 20 NF x 1-1/4"	2
26	192- 22	WASHER - 7/16", plated	2
27	129- 124	NUT - hex, 7/16" - 20 NF, plated	2
28	REF.	SEAT ASSEMBLY - operators, parts list page 409 or 409B	1

http://www.minnparbackhoeparts.com/

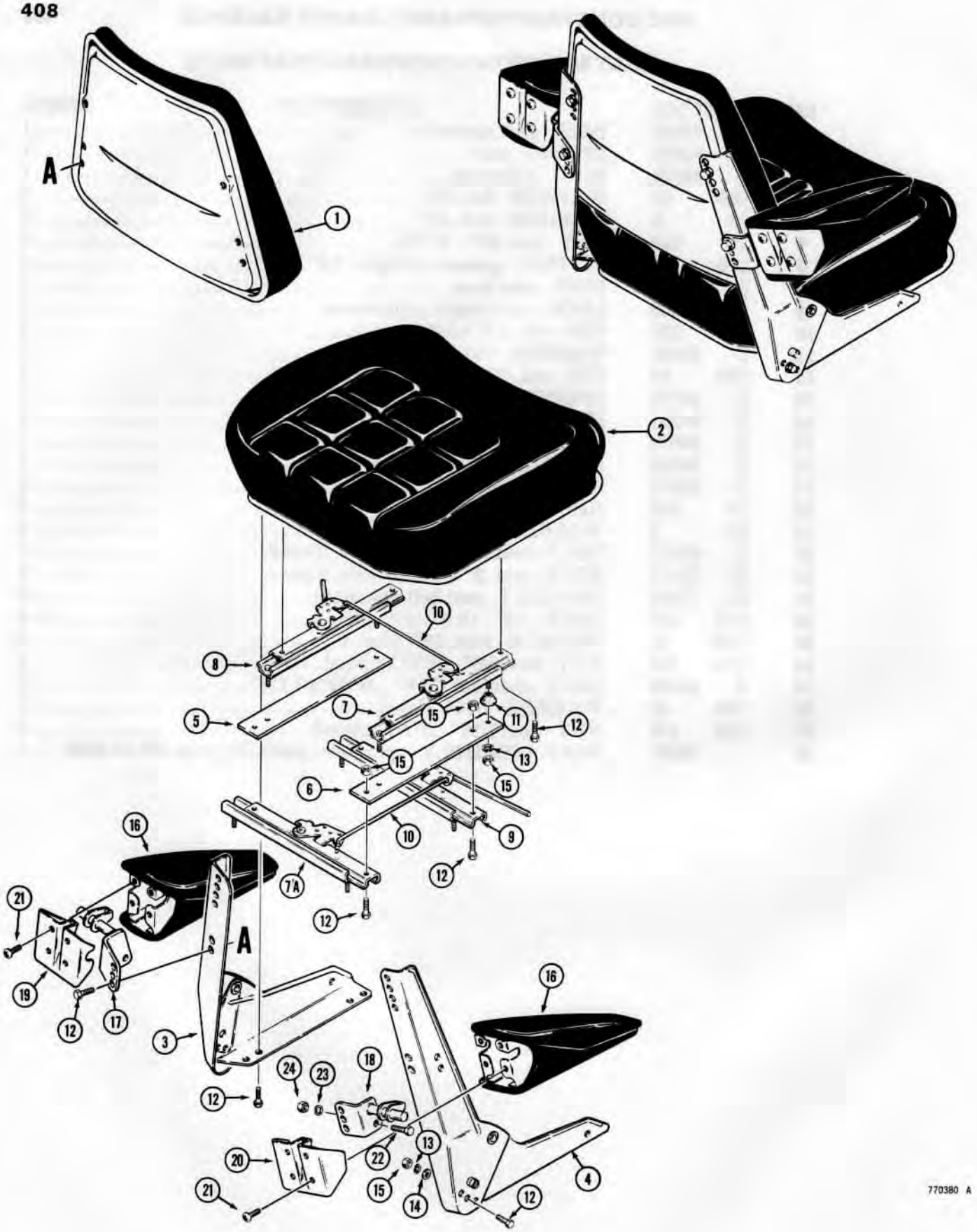

http://www.minnparbackhoeparts.com/

SEAT AND ARM RESTS

REF.	PART NO.		DESCRIPTION	REQ'D.
	L	57148	SEAT ASSEMBLY - operator, used before tractor sn. 8951178	1
	D	73821	SEAT ASSEMBLY - operator, used on tractor sn. 8951178 and after	1
1	D	56884	BACKREST - seat	1
2	D	56883	CUSHION - seat	1
3	D	56885	FRAME - seat, L.H.	1
4	D	56886	FRAME - seat, R.H.	1
5	D	59687	BRACKET - mounting, L.H.	1
6	D	59686	BRACKET - mounting, R.H.	1
7	A	64818	ADJUSTER - R.H., D57148 seat only	1
7	L	35491	ADJUSTER - R.H., D73821 seat only	1
7A	A	64818	ADJUSTER - rear, D57148 and D73821 seats	1
8	L	35629	ADJUSTER - L.H., D57148 seat only	1
8	D	56888	ADJUSTER - L.H., D73821 seat only	1
9	D	59695	ADJUSTER - front, D57148 seat only	1
9	D	73726	ADJUSTER - front, D73821 seat only	1
10	L	35492	ROD - connecting, seat adjusters	2
11	D	59689	SPACER - seat frame	4
12	113-	118	HHCS - 5/16" - 18 NC x 5/8", plated	18
13	192-	20	WASHER - lock, 5/16", plated	10
14	195-	521	WASHER - flat, 5/16", plated	18
15	129-	102	NUT - hex, 5/16" - 18 NC, plated	10
	D	56424	KIT - arm rest	1
16	D	56898	ARM REST - operator	2
17	D	56899	BRACKET - mounting, L.H.	1
18	D	56900	BRACKET - mounting, R.H.	1
19	D	56901	PLATE - mounting, L.H.	1
20	D	56902	PLATE - mounting, R.H.	1
21	187-	1004	SCREW - self-tapping, #8 - 32 NC x 3/8"	8
22	113-	143	HHCS - 5/16" - 18 NC x 5/8"	2
23	192-	20	WASHER - lock, 5/16"	2
24	129-	102	NUT - hex, 5/16" - 18 NC	2

http://www.minnparbackhoeparts.com/

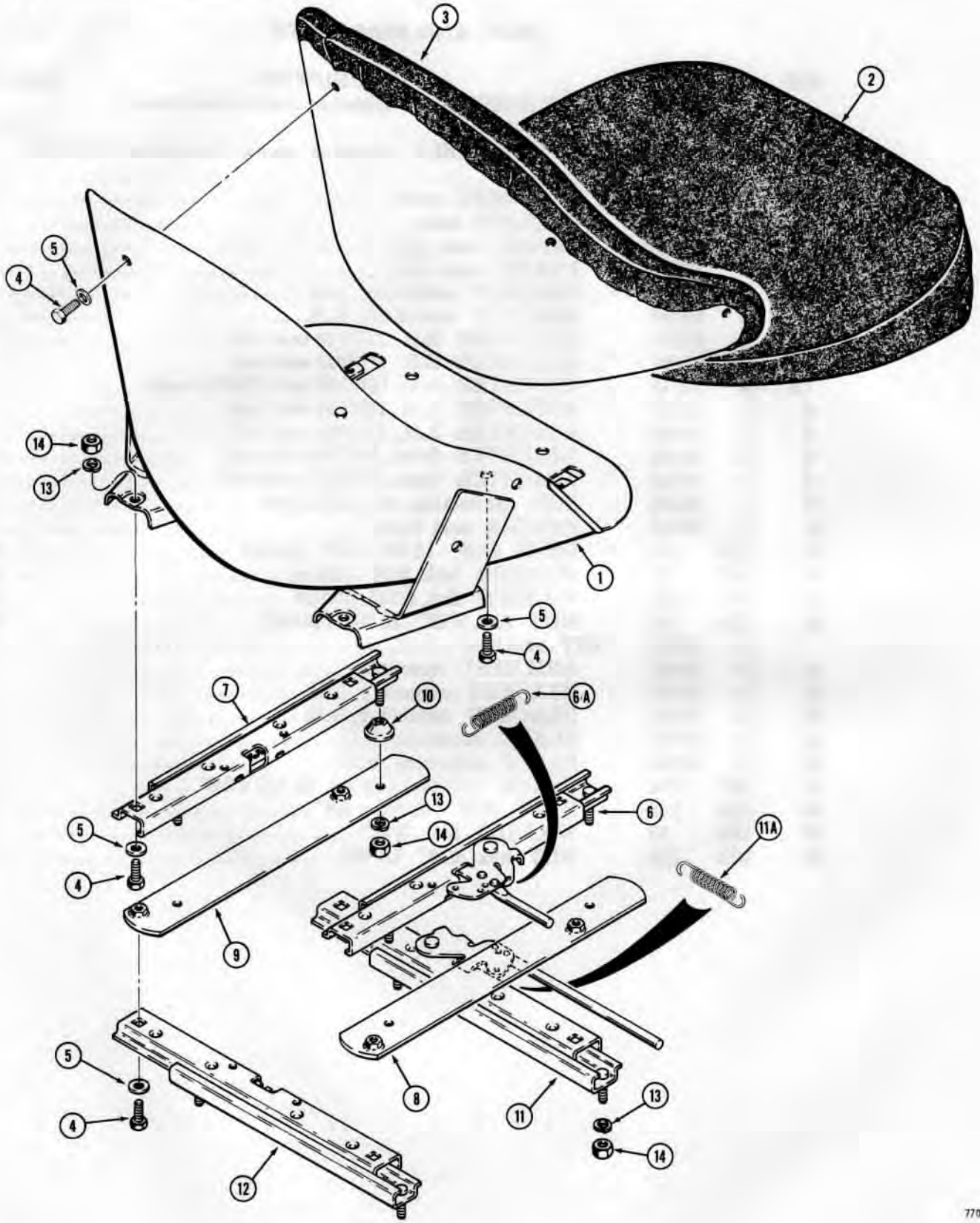

http://www.minnparbackhoeparts.com/

D58296 SEAT

REF.	PART NO.	DESCRIPTION	REQ'D.
	*D 58296	SEAT ASSEMBLY - operator's	1
1	NSS	SHELL - seat	1
2	D 59685	CUSHION - seat	1
3	L 30536	CUSHION - backrest	1
4	113- 118	HHCS - 5/16" - 18 NC x 5/8", plated	15
5	195- 103	WASHER - flat, 5/16"	15
6	L 35490	ADJUSTER - rail, R.H.	1
6A	L 35503	SPRING - adjuster rail	1
7	D 56887	ADJUSTER - rail, L.H.	1
8	D 59686	BRACKET - R.H.	1
9	D 59687	BRACKET - L.H.	1
10	D 59689	SPACER - 3/8" I.D. x 3/8" thick	4
11	D 59688	ADJUSTER - rail, front	1
11A	L 35503	SPRING - adjuster rail	1
12	L 35272	ADJUSTER - rail, rear	1
13	192- 20	WASHER - lock, 5/16", plated	10
14	129- 102	NUT - hex, 5/16" - 18 NC, plated	10

*NOTE: Optional style seat shown on page 409.

http://www.minnparbackhoeparts.com/

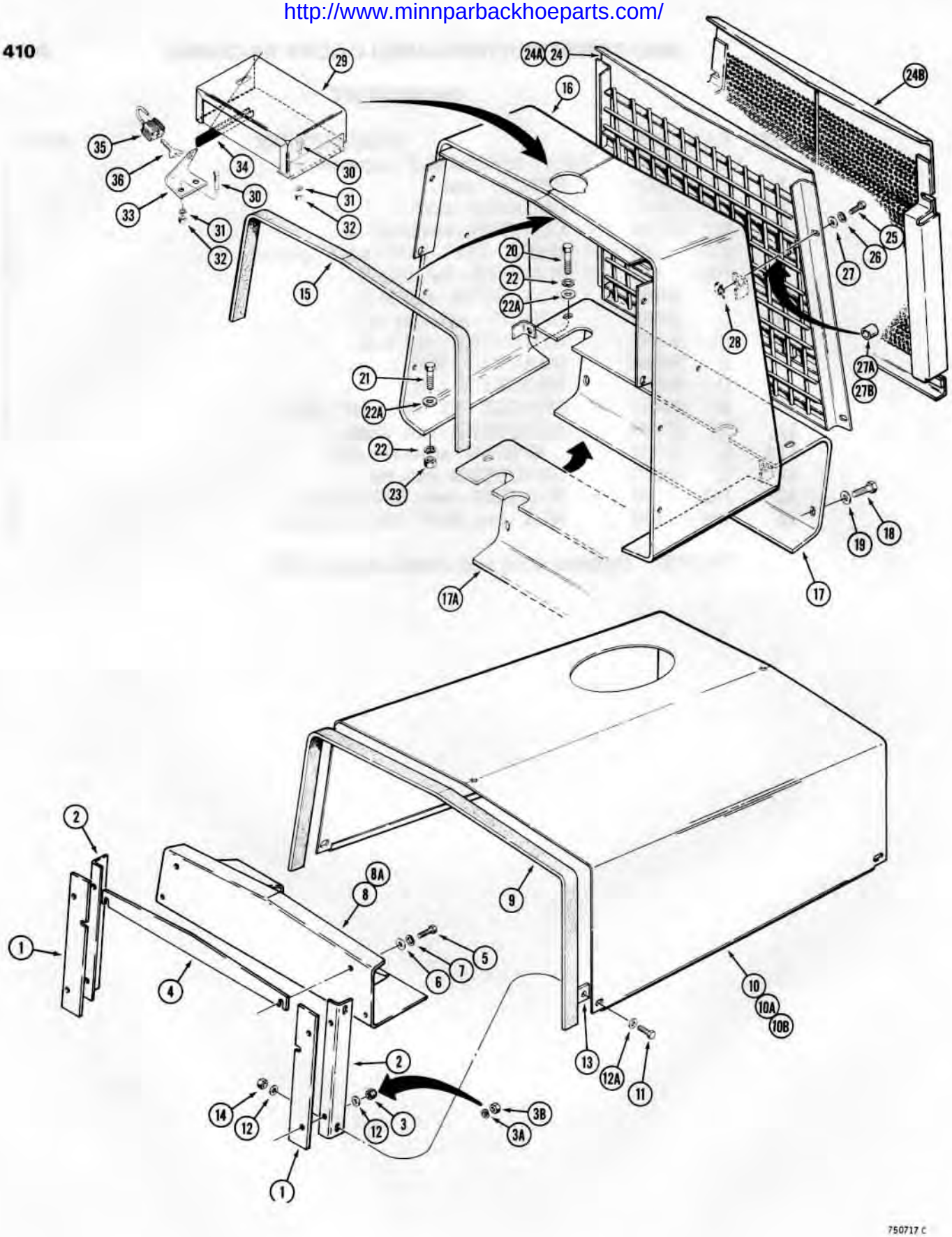

750717 C

http://www.minnparbackhoeparts.com/

HOOD AND RADIATOR SHROUD

REF.	PART NO.	DESCRIPTION	REQ'D.
1	D 70484	SPACER - support, hood mounting, if used	2
2	D 74220	SUPPORT - hood mounting, used before tractor sn. 8954614	2
2	D 75571	SUPPORT - hood mounting, used on tractor sn. 8954614 and after	2
3	131- 665	NUT - hex, lock, 5/16" - 18 NC, if used	6
3A	92- 5	WASHER - lock, 5/16", if used	6
3B	25- 105	NUT - hex, 5/16" - 18 NC, if used	6
4	D 70485	SPACER - hood mounting, if used	1
5	13- 620	HHCS - 3/8" - 16 NC x 1-1/4"	2
6	195- 25	WASHER - flat, 3/8"	2
7	92- 6	WASHER - lock, 3/8"	2
8	D 75519	BRACKET - hood and air cleaner mounting, used before tractor sn. 8954614, order D75417	1
8A	D 75417	BRACKET - hood and air cleaner mounting, used on tractor sn. 8954614 and after, eliminates the need for items 1 and 4	1
9	D 95582	STRIP - rubber, rear	1
10	D 73313	HOOD - engine, models with vertical air cleaner intake, muffler opening is 5.6" x 9.4" (142 mm x 239 mm)	1
10A	D 67749	HOOD - engine, models with horizontal air cleaner intake tube, muffler opening is 5.6" x 9.4" (142 mm x 239 mm)	1
10B	D 73208	HOOD - engine, models with horizontal air cleaner intake tube, muffler opening is 6.9" x 10.4" (175 mm x 264 mm)	1
11	13- 516	HHCS - 5/16" - 18 NC x 1"	4
12	195- 21	WASHER - flat, 5/16"	4-8
12A	195- 103	WASHER - flat, plated	4
13	D 61266	SPACER - hood	4
14	131- 651	NUT - hex, lock, 5/16" - 18 NC	4
15	D 95581	STRIP - rubber, front	1
16	D 74242	SHROUD - radiator	1
17	D 73429	GUARD - pump, used before tractor sn. 8961374	1
17A	D 76755	GUARD - pump, used on tractor sn. 8961374 and after	1
18	13- 1216	HHCS - 3/4" - 10 NC x 1"	2
19	195- 45	WASHER - flat, 3/4"	2
20	13- 832	HHCS - 1/2" - 13 NC x 2"	2
21	13- 824	HHCS - 1/2" - 13 NC x 1-1/2"	2
22	92- 8	WASHER - lock, 1/2"	4
22A	95- 8	WASHER - flat, 1/2"	4
23	25- 108	NUT - hex, 1/2" - 13 NC	2

Continued on next page

http://www.minnparbackhoeparts.com/

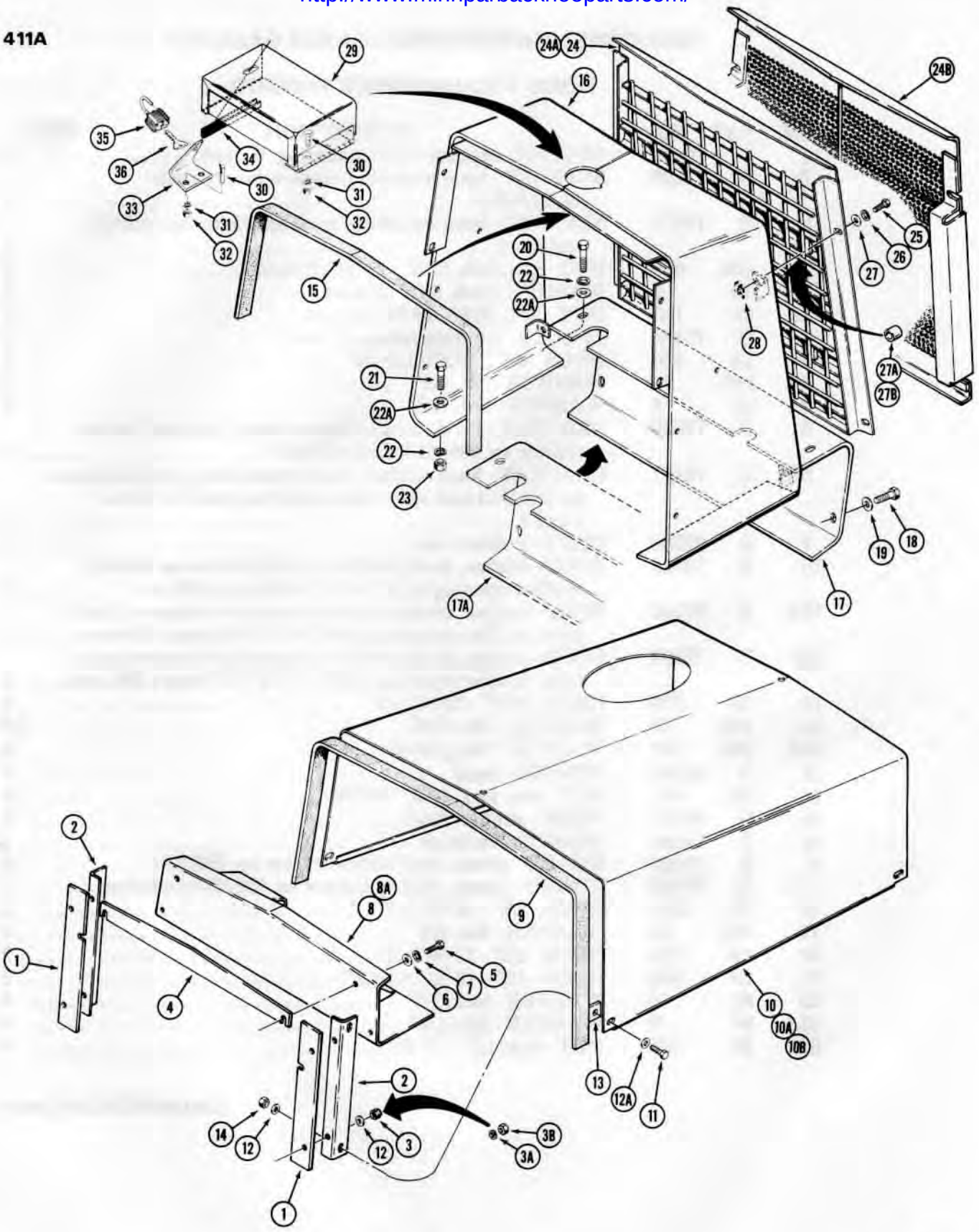

750717 C

http://www.minnparbackhoeparts.com/

HOOD AND RADIATOR SHROUD

REF.	PART NO.	DESCRIPTION	REQ'D.
24	D 67580	GRILLE - radiator, used before tractor sn. 8961374	1
24A	D 72043	GRILLE - radiator, power shuttle models with PTO only before tractor sn. 8961374	1
24B	D 77114	GRILLE - radiator, all models, tractor sn. 8961374 and after	1
25	13- 612	HHCS - 3/8" - 16 NC x 3/4", used with item 24	4
25	13- 632	HHCS - 3/8" - 16 NC x 2", used with items 24 and 27A	4
25	13- 616	HHCS - 3/8" - 16 NC x 1", used with item 24B	4
25	13- 628	HHCS - 3/8" - 16 NC x 1-3/4", used with items 24B and 27B	4
26	92- 6	WASHER - lock, 3/8"	4
27	195- 25	WASHER - flat, 3/8"	4
27A	D 95745	SPACER - grille to shroud, power shuttle models with PTO before tractor sn. 8961374	4
27B	D 95746	SPACER - grille to shroud, power shuttle models with PTO tractor sn. 8961374 and after	4
28	131- 634	NUT - "J" type, 3/8" - 16 NC	4
29	D 70139	COVER - radiator and fuel cap, models with lockup parts	2
30	13- 516	HHCS - 5/16" - 18 NC x 1"	8
31	92- 5	WASHER - lock, 5/16"	8
32	25- 105	NUT - hex, 5/16" - 18 NC	8
33	D 70140	BRACKET - lock	2
34	D 95461	TRIM - "Quickedge"	2
35	R 29556	LOCK ASSEMBLY - cover, includes keys	1
36	R 29555	KEY - padlock	2

http://www.minnparbackhoeparts.com/

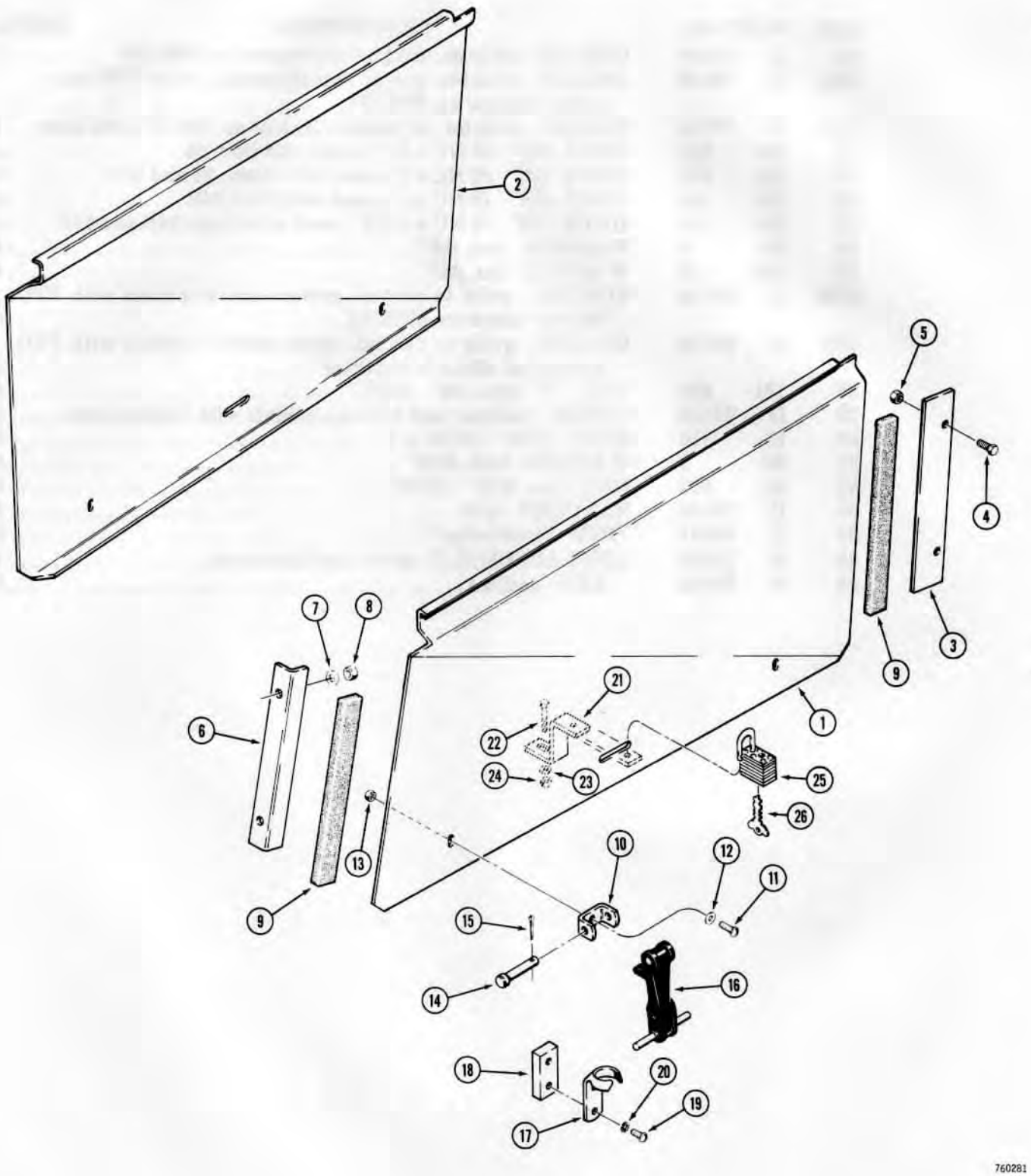

http://www.minnparbackhoeparts.com/

ENGINE SIDE PANELS

REF.	PART NO.	DESCRIPTION	REQ'D.
1	D 74230	PANEL - side, engine, R.H.	1
2	D 74231	PANEL - side, engine, L.H.	1
3	D 69160	STRAP - side panel stop, front	2
4	13- 516	HHCS - 5/16" - 18 NC x 1"	4
5	131- 651	NUT - hex, lock, 5/16" - 18 NC	4
6	D 68862	BRACKET - side panel stop, rear	2
7	195- 21	WASHER - flat, 5/16"	4
8	131- 651	NUT - hex, lock, 5/16" - 18 NC	4
9	D 95585	CUSHION - rubber	4
10	L 47159	BRACKET - anchor, hook	4
11	113- 118	HHCS - 5/16" - 18 NC x 5/8"	4
12	195- 21	WASHER - plain, 5/16"	4
13	131- 651	NUT - hex, lock, 5/16" - 18 NC	4
14	T 11232	PIN - hook mounting	4
15	132- 44	PIN - 1/8" x 1/2"	4
16	L 47157	HOOK - side panel holddown	4
17	L 47158	BRACKET - hook	4
18	L 48956	BLOCK - side panel latch, if used	4
19	182- 516	SCREW - round head, #10 - 24 NC x 1/2", if used	8
20	92- 3	WASHER - lock, #10, if used	8
21	D 73867	BRACKET - for padlock, if used	2
22	13- 520	HHCS - 5/16" - 18 NC x 1-1/4"	2
23	195- 21	WASHER - flat, 5/16"	2
24	131- 651	NUT - hex, lock, 5/16" - 18 NC	2
25	R 29556	LOCK ASSEMBLY - side panel, if used	2
26	R 29555	KEY - lock	2

http://www.minnparbackhoeparts.com/

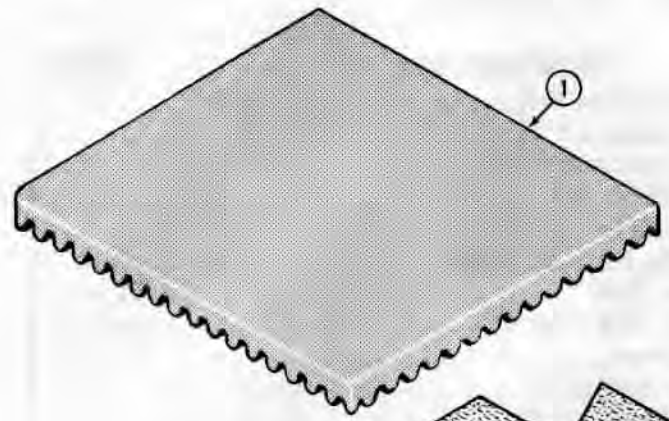

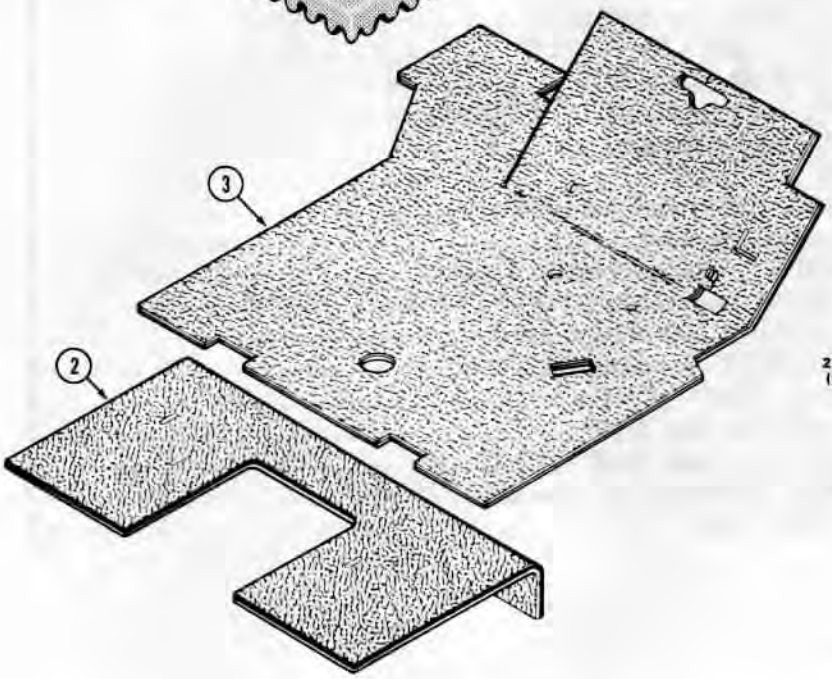

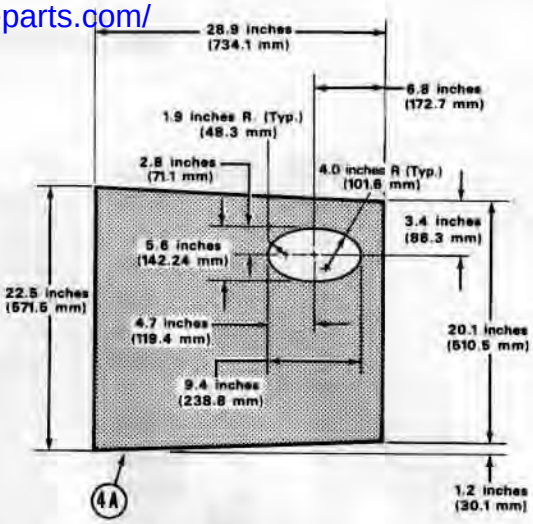

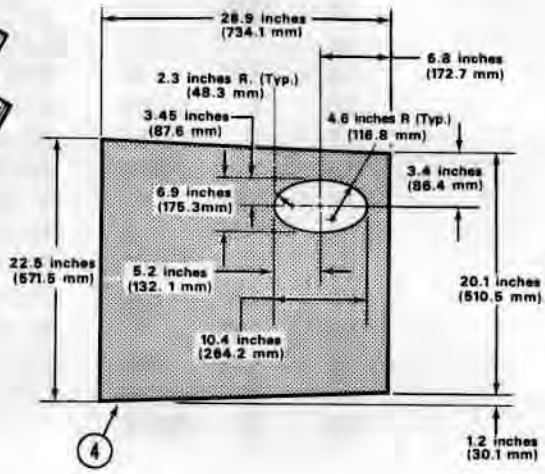

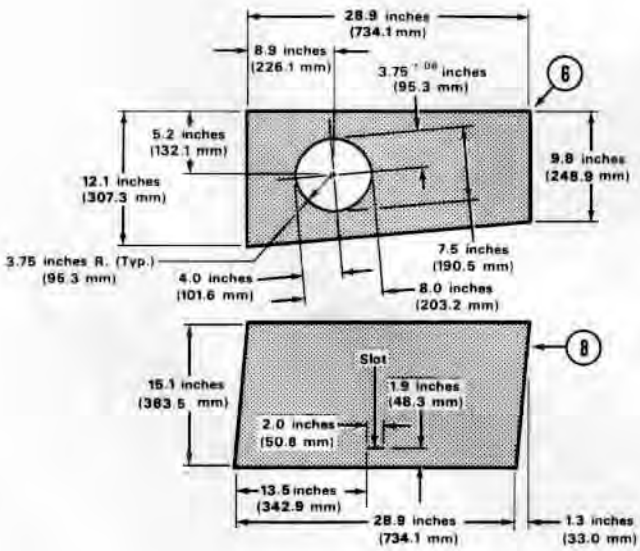

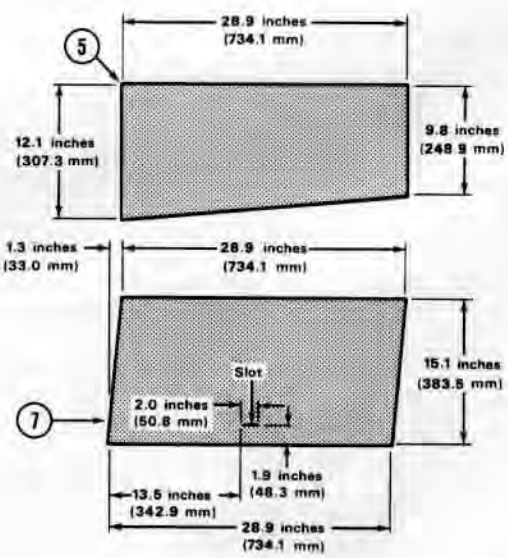

77038

http://www.minnparbackhoeparts.com/

NOISE REDUCTION PADS

REF.	PART NO.	DESCRIPTION	REQ'D.
1	D 69083	PAD - ceiling, for canopy, see page 421 for cab pads	1
2	D 69728	PAD - floor, rear, used on models with backhoe only	1
3	D 69730	PAD - floor, operator's compartment	1
4	* REF.	PAD - hood, top, for hood with muffler opening 6.9" x 10.4" (175 mm x 264 mm)	1
4A	* REF.	PAD - hood, top, for hood with muffler opening 5.6" x 9.4" (142 mm x 239 mm)	1
5	* REF.	PAD - hood side, R.H.	1
6	* REF.	PAD - hood side, L.H.	1
7	* REF.	PAD - engine side panel, R.H.	1
8	* REF.	PAD - engine side panel, L.H.	1
	*D 61247	PAD - service for items 2 thru 8 above, cut to dimensions shown, 54" x 36" x 2" sheet (1372 mm x 914 mm x 51 mm)	UAR

http://www.minnparbackhoeparts.com/

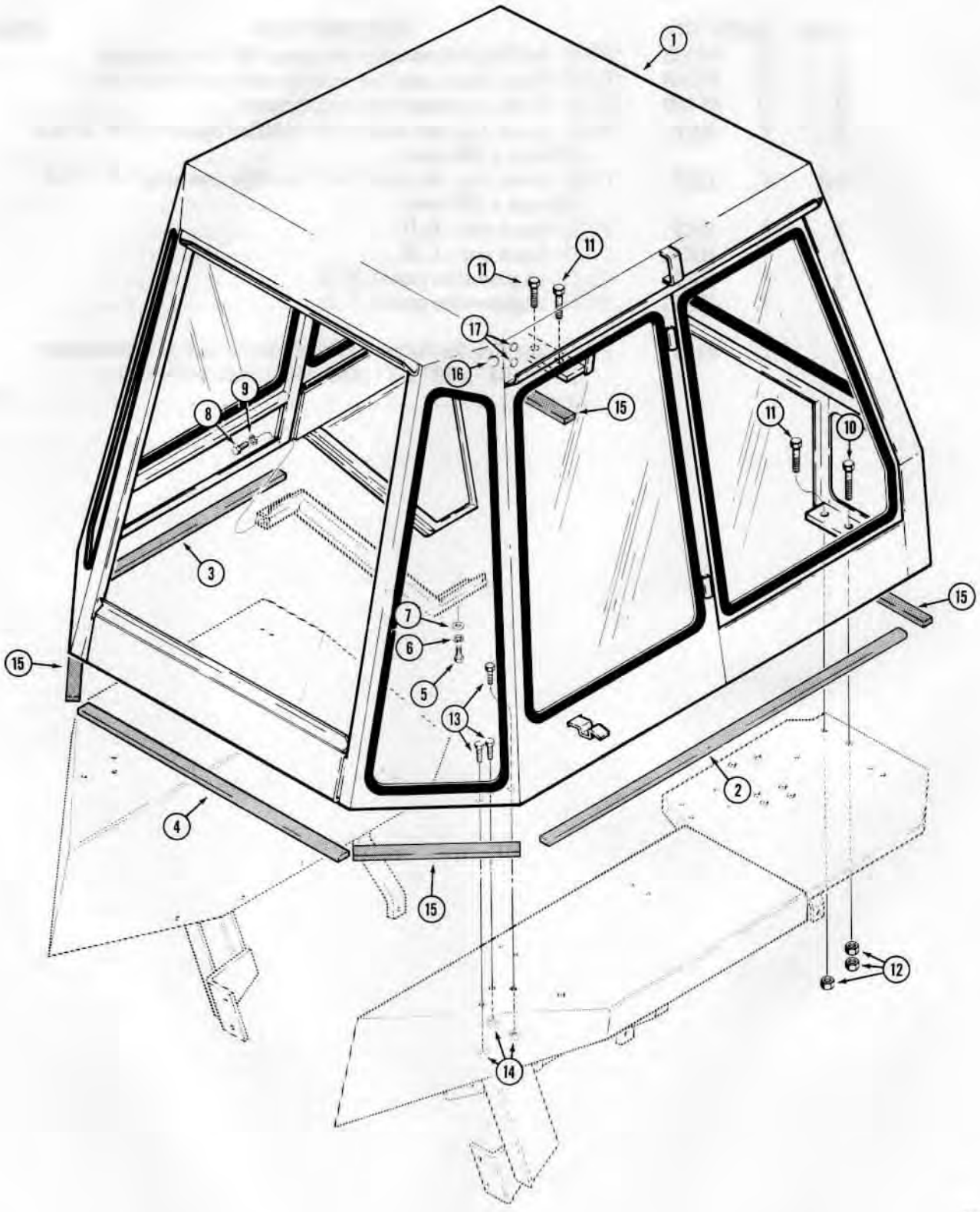

http://www.minnparbackhoeparts.com/

CAB AND MOUNTING PARTS

REF.	PART NO.	DESCRIPTION	REQ'D.
1	Mach. Item	CAB - operator's, parts list pages 421-425, see page 2 for ordering	1
2	** REF.	SEAL - fender, R.H., 52.6" long (1336 mm)	1
3	** REF.	SEAL - fender, L.H., 24.7" long (627 mm)	1
4	F 43996	SEAL - rear panel	1
5	113- 207	HHCS - 3/8" - 16 NC x 1", plated	1
6	192- 21	WASHER - lock, 3/8", plated	1
7	195- 525	WASHER - flat, 3/8", plated	1
8	113- 206	HHCS - 3/8" - 16 NC x 3/4", plated	1
9	192- 21	WASHER - lock, 3/8", plated	1
10	113- 684	HHCS - 5/8" - 11 NC x 2-1/2", grade 8, plated	1
11	113- 2619	HHCS - 5/8" - 11 NC x 2", grade 8, plated	3
12	129- 183	NUT - hex, 5/8" - 11 NC, plated	5
13	113- 2418	HHCS - 1/2" - 13 NC x 1-3/4", grade 8, plated	6
14	129- 184	NUT - hex, 1/2" - 13 NC, plated	6
15	* NSS	SEAL - front and rear corners, cut from A42676 bulk strip	UAR
16	353- 403	PLUG - nylon, upper, if used	4
17	353- 405	PLUG - nylon, lower, if used	2
	*A 42676	SEAL - strip, bulk roll, 25 ft. (762 cm)	1
	**F 44595	SEAL - strip, bulk roll, 50 ft. (1524 cm)	1

http://www.minnparbackhoeparts.com/

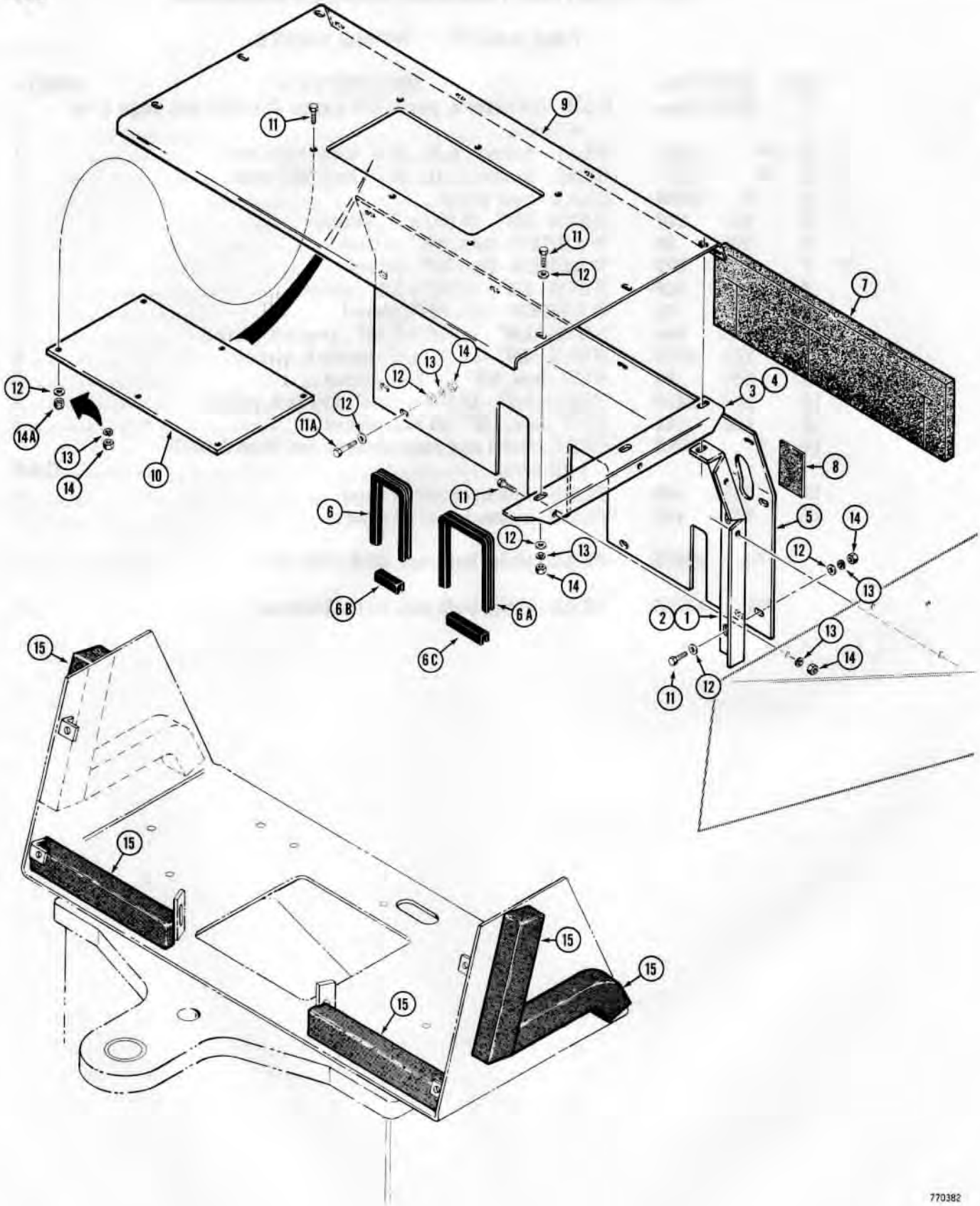

http://www.minnparbackhoeparts.com/

CAB TO TRACTOR ENCLOSURE PANELS

REF.	PART NO.	DESCRIPTION	REQ'D.
1	D 71028	BRACKET - R.H. side	1
2	D 71029	BRACKET - L.H. side	1
3	D 71026	BRACKET - R.H. top	1
4	D 71027	BRACKET - L.H. top	1
5	*D 73223	PANEL - enclosure, vertical	1
6	*D 33534	GUARD - edge trim, 12.5" (318 mm) long	2
6A	*D 60180	GUARD - edge trim, 14.5" (368 mm) long	1
6B	*D 55218	GUARD - edge trim, 3" (76 mm) long	1
6C	*D 43403	GUARD - edge trim, 5" (127 mm) long	1
7	*D 74213	PAD - foam	1
8	*D 75251	PAD - foam	1
9	*D 74846	PANEL - enclosure, horizontal	1
10	*D 74847	COVER - D74846 panel, see thru window	1
11	113- 102	HHCS - 5/16" - 18 NC x 3/4", plated	28
11A	113- 103	HHCS - 5/16" - 18 NC x 1", plated	3
12	195- 521	WASHER - flat, 5/16", plated	40
13	192- 20	WASHER - lock, 5/16", plated	25
14	129- 102	NUT - hex, 5/16" - 18 NC, plated	25
14A	131- 69	NUT - hex, lock, 5/16" - 18 NC	6
15	** NSS	STRIP - foam, used on backhoe models	6

*NOTE: Some early production tractors had solid panels without see thru window (item 10) and sealing foam pads or rubber edge trim around openings. When replacing item 5 on these models, also order items 6 thru 8 to complete the installation. When replacing item 9 on these models, also order the window panel (item 10) and attaching hardware for item 10.

**D 59896 PAD - foam, 54" x 36" x 2" (1372 mm x 914 mm x 51 mm) sheet, cut foam strips - item 15 - from this sheet as required 1

http://www.minnparbackhoeparts.com/

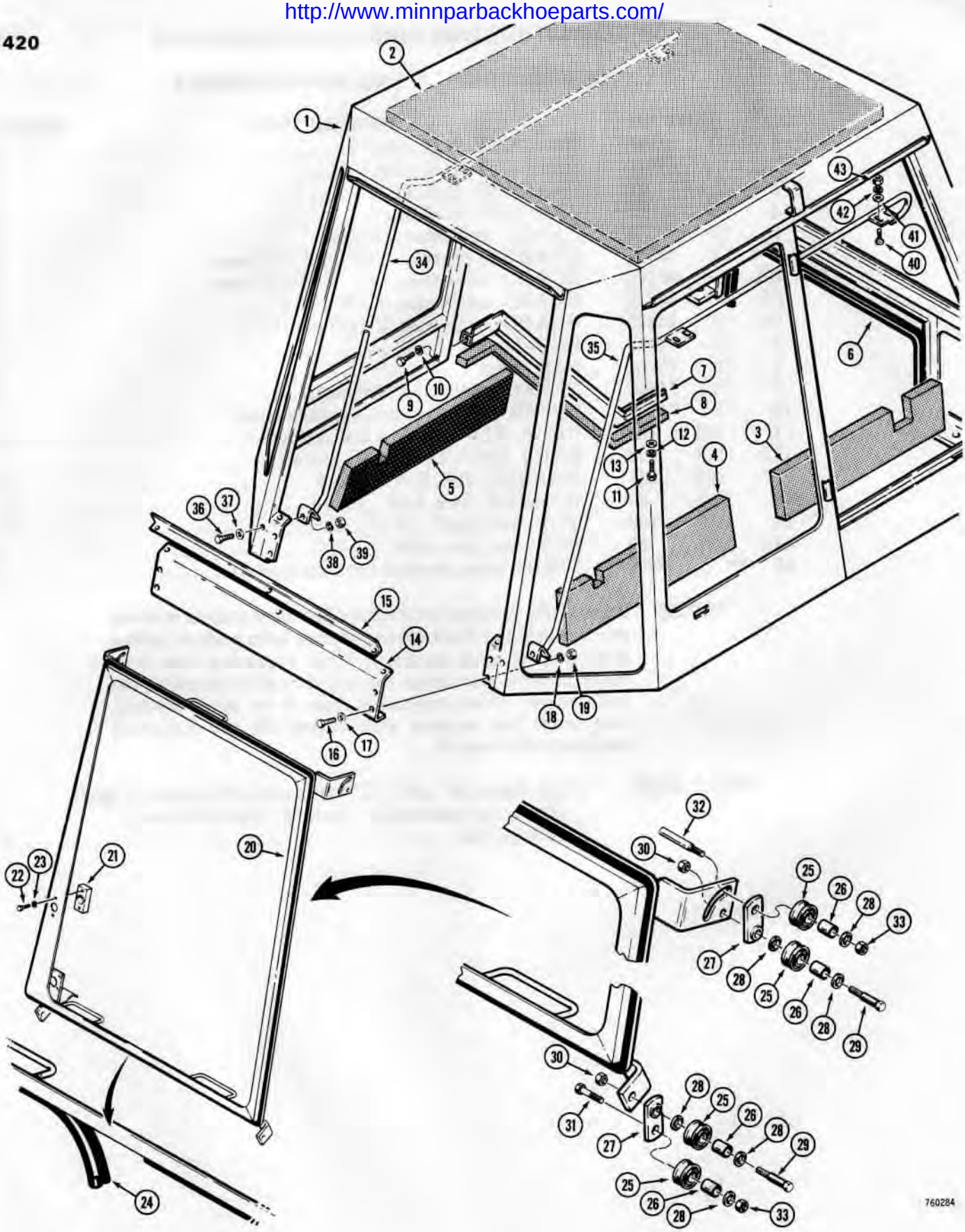

http://www.minnparbackhoeparts.com/

CAB FRAME AND REAR WINDOW

REF.	PART NO.	DESCRIPTION	REQ'D.
1	NSS	FRAME - cab, for door and window latches and seals, see page 423	
2	F 44617	PAD - headliner, cab top	1
3	F 43953	PAD - foam, R.H. front panel	1
4	F 43951	PAD - foam, R.H. rear panel	1
5	F 43952	PAD - foam, L.H. rear panel	1
6	* REF.	SEAL - cowl, 539" (1369 mm) long, cut from F43086 bulk	1
7	F 93886	FRAME - door	1
8	*** REF.	SEAL - door frame to fender	1
9	113- 206	HHCS - 3/8" - 16 NC x 3/4", plated	1
10	192- 21	WASHER - lock, 3/8", plated	1
11	113- 207	HHCS - 3/8" - 16 NC x 1", plated	1
12	192- 21	WASHER - lock, 3/8", plated	1
13	195- 525	WASHER - flat, 3/8", plated	1
14	F 43958	PANEL - lower, rear	1
15	F 43959	ANGLE - seal, lower panel	1
16	113- 102	HHCS - 5/16" - 18 NC x 3/4", plated	7
17	195- 521	WASHER - flat, 5/16", plated	7
18	192- 20	WASHER - lock, 5/16", plated	7
19	129- 102	NUT - hex, 5/16" - 18 NC, plated	7
20	R 37442	FRAME - rear window	1
21	R 37439	BLOCK - wiper mounting	1
22	113- 101	HHCS - 5/16" - 18 NC x 1/2", plated	2
23	192- 20	WASHER - lock, 5/16", plated	2
24	** REF.	SEAL - rear window, 144" (3658 mm) long, cut from F43087 bulk	1
25	F 43589	ROLLER - rear window	8
26	F 43832	SPACER - roller	8
27	F 93875	ARM - roller	4
28	195- 525	WASHER - flat, 3/8", plated	12
29	F 43937	PIN - roller	4
30	131- 1117	NUT - hex, lock, 5/16" - 18 NC, plated	4
31	113- 208	HHCS - 3/8" - 16 NC x 1-1/4", plated	2
32	F 43961	PIN - roller	2
33	131- 203	NUT - hex, lock, 3/8" - 16 NC, plated	4
34	F 93879	TRACK - L.H. rear window	1
35	F 93878	TRACK - R.H. rear window	1
36	113- 207	HHCS - 3/8" - 16 NC x 1", plated	2
37	195- 525	WASHER - flat, 3/8", plated	2
38	192- 21	WASHER - lock, 3/8", plated	2
39	129- 103	NUT - hex, 3/8" - 16 NC, plated	2
40	111- 203	BOLT - round head, 5/16" - 18 NC x 1", plated	8
41	195- 521	WASHER - flat, 5/16", plated	8
42	192- 20	WASHER - lock, 5/16", plated	8
43	129- 102	NUT - hex, 5/16", plated	8
*F	43086	SEAL - bulk roll, 100 ft. (3048 cm)	1
**F	43087	SEAL - bulk roll, 97.4 in. (2474 mm)	1
***F	44595	SEAL - bulk roll, 50 ft. (1524 cm)	1

http://www.minnparbackhoeparts.com/

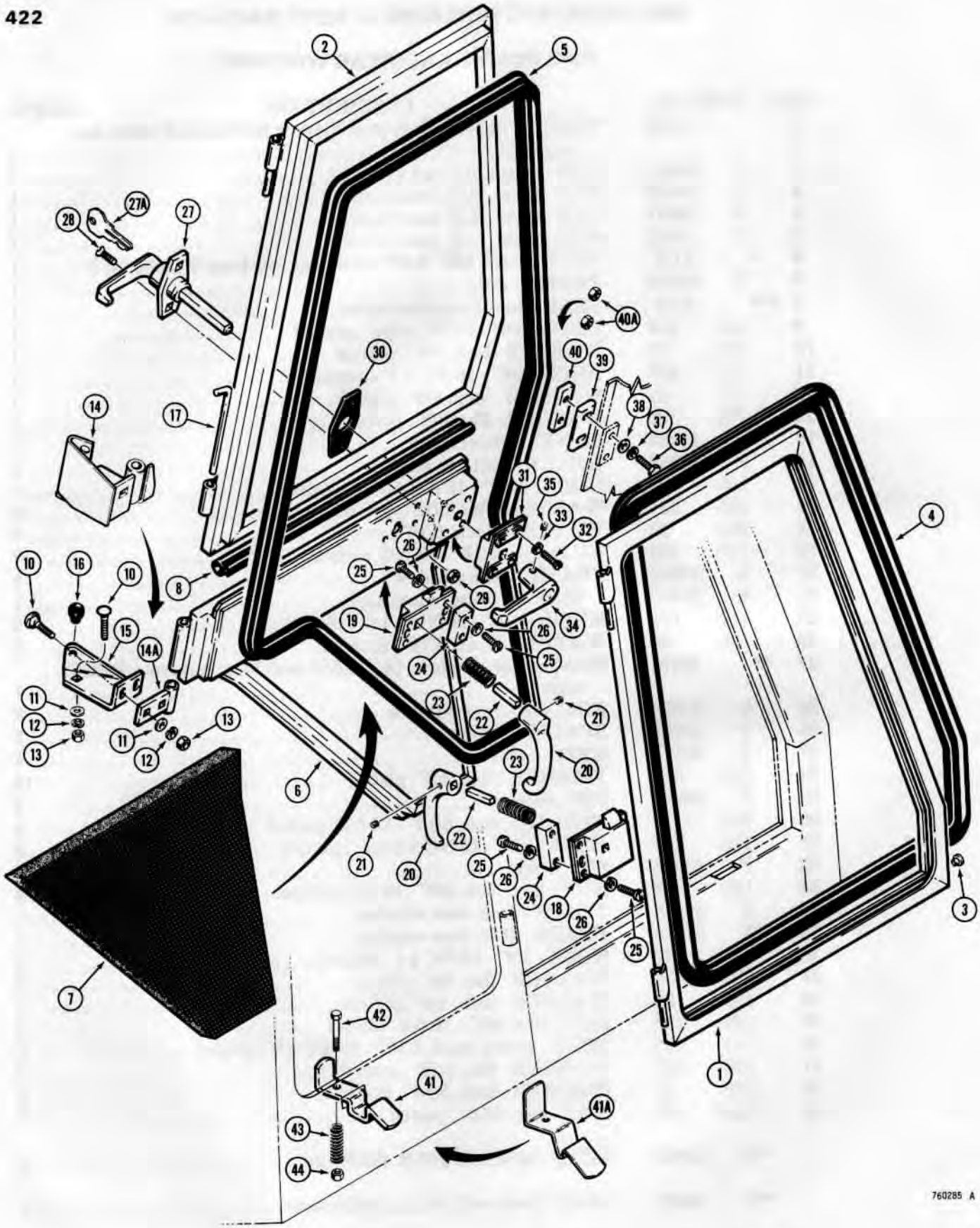

http://www.minnparbackhoeparts.com/

CAB DOORS, WINDOWS AND RELATED PARTS

REF.	PART NO.	DESCRIPTION	REQ'D.
1	F 93871	FRAME - R.H. front window, used before cab sn. 7867825	1
1	F 96694	FRAME - R.H. front window, used on cab sn. 7867825 and after	1
2	F 93872	FRAME - L.H. front window, used before cab sn. 7867825	1
2	F 96695	FRAME - L.H. front window, used on cab sn. 7867825 and after	1
3	353- 62	PLUG - plastic, window frame sides and top	16
4	* REF.	SEAL - R.H. window, 113" (2870 mm) long, cut from F43086 bulk	1
5	* REF.	SEAL - L.H. window and door, 182" (4623 mm) long, cut from F43086 bulk	1
6	F 93883	DOOR - cab, does not include latches	1
7	F 43981	PAD - foam, door panel	1
8	R 37351	SEAL - upper, door, 33" long (838 mm)	1
9		RESERVED	
10	111- 317	BOLT - round head, 3/8" - 16 NC x 1", plated	3
11	195- 525	WASHER - flat, 3/8"	3
12	192- 21	WASHER - lock, 3/8", plated	3
13	129- 103	NUT - hex, 3/8" - 16 NC	3
14	F 93889	HINGE AND STOP - single piece style, if used	1
14A	R 37336	HINGE - door pin, 2 piece style hinge and stop	1
15	R 37339	BRACKET - door stop, 2 piece style hinge and stop	1
16	L 60224	CUSHION - rubber, door stop	1
17	F 42100	PIN - door	1
18	F 93884	LOCK - window, R.H.	1
19	F 93892	LOCK - window, L.H.	1
20	F 43966	HANDLE - window	2
21	178- 819	SCREW - set, #10 - 32 NF x 3/16"	1
22	F 93880	SHAFT - window latch	2
23	F 43968	SPRING - window latch	2
24	F 43980	BLOCK - tapped, window latch	4
25	182- 540	SCREW - pan head slotted, 1/4" - 20 NC x 3/8", plated	16
26	192- 19	WASHER - lock, 1/4"	16
27	F 93842	HANDLE - door, outside, includes keys	1
27A	A 42653	KEY - handle	2

Continued on next page

*F	43086	SEAL - bulk roll, 100 ft. (3048 cm) 1

http://www.minnparbackhoeparts.com/

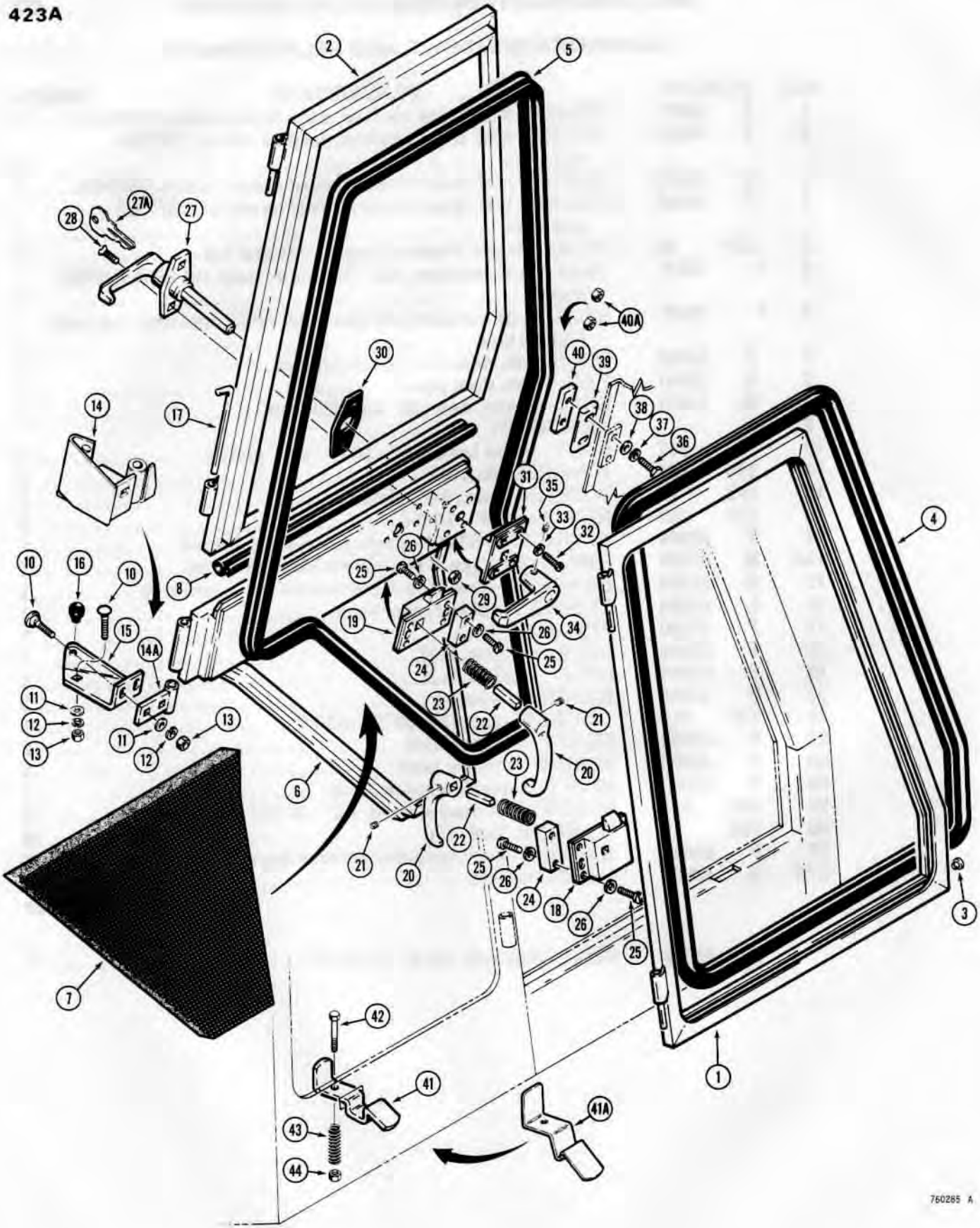

http://www.minnparbackhoeparts.com/

CAB DOORS, WINDOWS AND RELATED PARTS

REF.	PART NO.	DESCRIPTION	REQ'D.
28	179- 154	SCREW - machine, oval head, #10 - 24 NC x 5/8", plated	2
29	131- 50	NUT - hex, lock, #10 - 24 NC, plated	2
30	F 63860	GASKET - door	1
31	F 98123	LOCK - door	1
32	182- 528	SCREW - pan head slotted, #10 - 32 NC x 1/2", plated	4
33	192- 18	WASHER - lock, 3/16", plated	4
34	F 63925	HANDLE - door, inside	1
35	83- 54	SCREW - set, 5/16" - 18 NC x 1/4"	1
36	113- 3	HHCS - 1/4" - 20 NC x 3/4", plated	2
37	192- 19	WASHER - lock, 1/4", plated	2
38	195- 518	WASHER - flat, 1/4", plated	2
39	F 63783	STRIKER - latch	1
40	F 43967	BLOCK - tapped, if used	1
40A	129- 101	NUT - hex, 1/4" - 20 NC, if used	2
41	F 44038	LATCH - window, rear swing back, used before cab. sn. 7867825	2
41A	F 44590	LATCH - window, rear swing back, used on cab sn. 7867825 and after	2
42	113- 17	HHCS - 1/4" - 20 NC x 1-1/4", plated	2
43	D 36669	SPRING - window latch	2
44	131- 1180	NUT - hex, lock, 1/4" - 20 NC	2

http://www.minnparbackhoeparts.com/

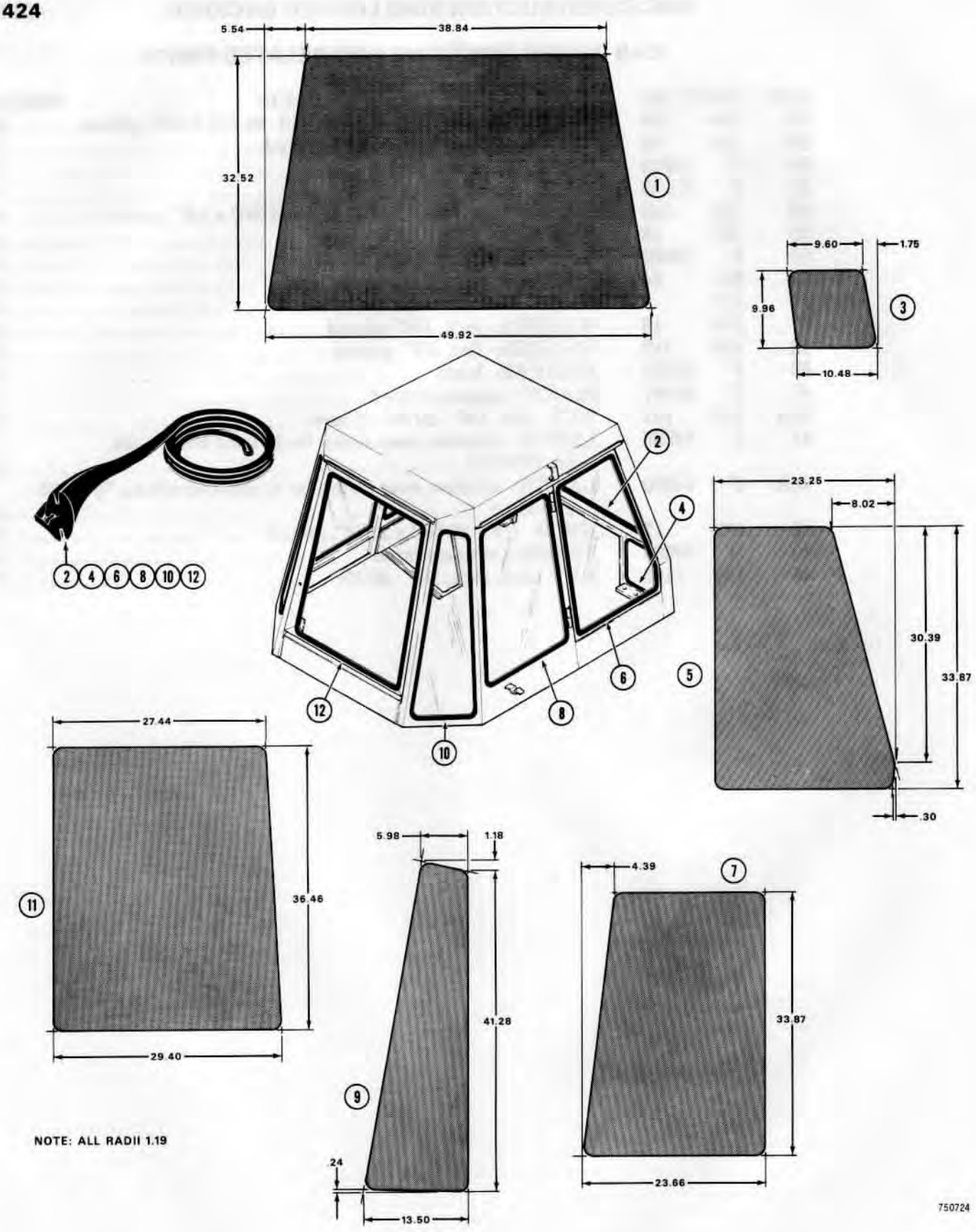

http://www.minnparbackhoeparts.com/

CAB GLASS AND MOLDING

REF.	PART NO.	DESCRIPTION	REQ'D.
1	REF.	GLASS - windshield	1
2	REF.	MOLDING - glass, 129.4" long (3287 mm) Cut from A42677 bulk	1
3	REF.	GLASS - lower front	1
4	REF.	MOLDING - glass, 41" long (1041 mm) Cut from A42677 bulk	1
5	REF.	GLASS - side, front	2
6	REF.	MOLDING - glass, 107" long (2718 mm) Cut from A42677 bulk	2
7	REF.	GLASS - side, rear	2
8	REF.	MOLDING - glass, 111" long (2819 mm) Cut from A42677 bulk	2
9	REF.	GLASS - rear quarter	2
10	REF.	MOLDING - glass, 104" long (2643 mm) Cut from A42677 bulk	2
11	REF.	GLASS - rear window	1
12	REF.	MOLDING - glass, 129.4" long (3287 mm) Cut from A42677 bulk	1
	A 42677	MOLDING - bulk roll, 50 ft. (1524 cm)	UAR

NOTE: All cab glass must be obtained from local sources. Order laminated safety glass to dimensions on opposite page.

http://www.minnparbackhoeparts.com/

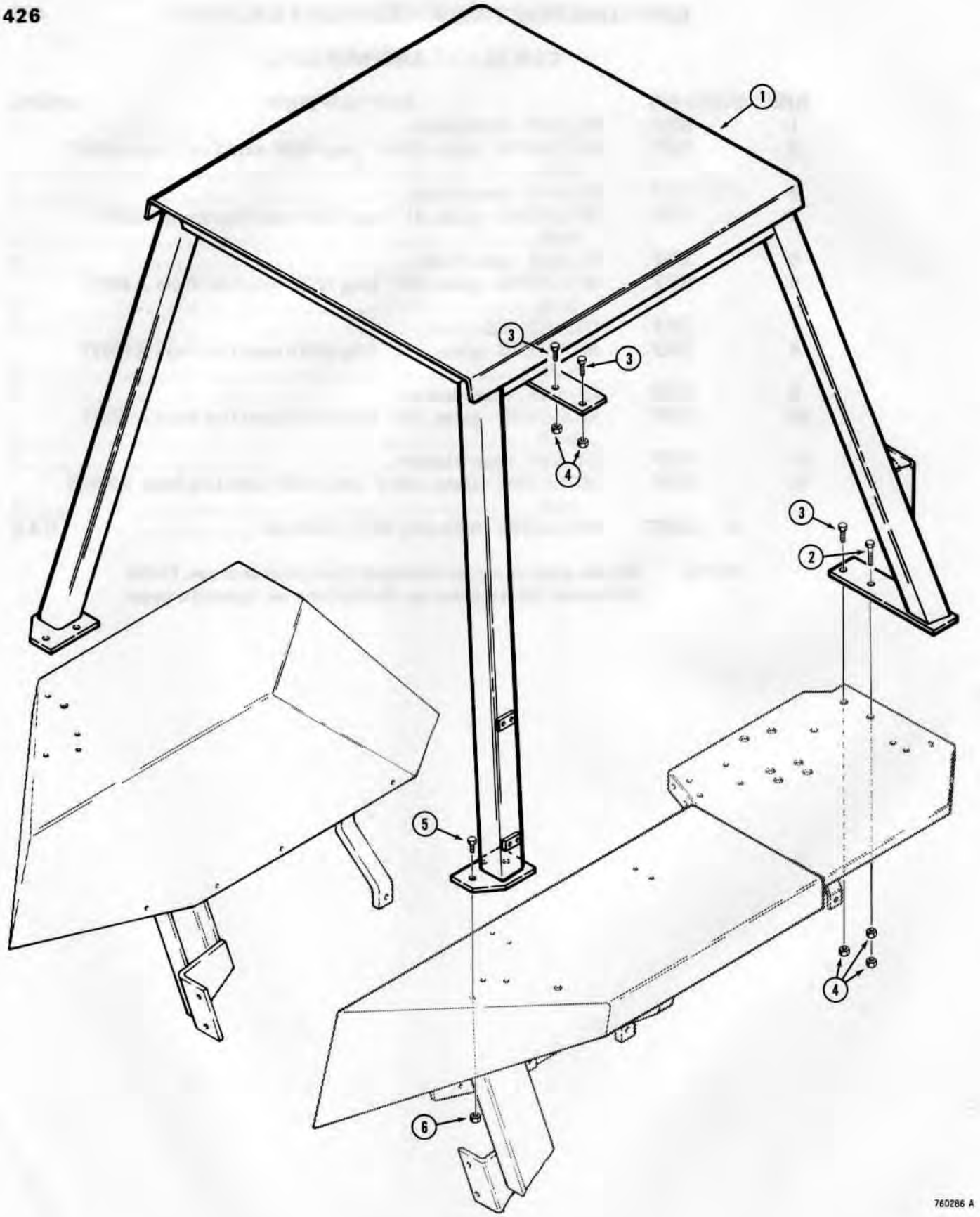

http://www.minnparbackhoeparts.com/

ROPS CANOPY

REF.	PART NO.	DESCRIPTION	REQ'D.
1	Mach. Item	CANOPY - ROPS, see page 2 for ordering	1
2	113- 684	HHCS - 5/8" - 11 NC x 2-1/2", grade 8, plated	1
3	113- 2619	HHCS - 5/8" - 11 NC x 2", grade 8, plated	3
4	129- 183	NUT - hex, 5/8" - 11 NC, plated	5
5	113- 2418	HHCS - 1/2" - 13 NC x 1-3/4", grade 8, plated	6
6	129- 184	NUT - hex, 1/2" - 13 NC, plated	6

Printed In U.S.A. Issued January, 1978

http://www.minnparbackhoeparts.com/

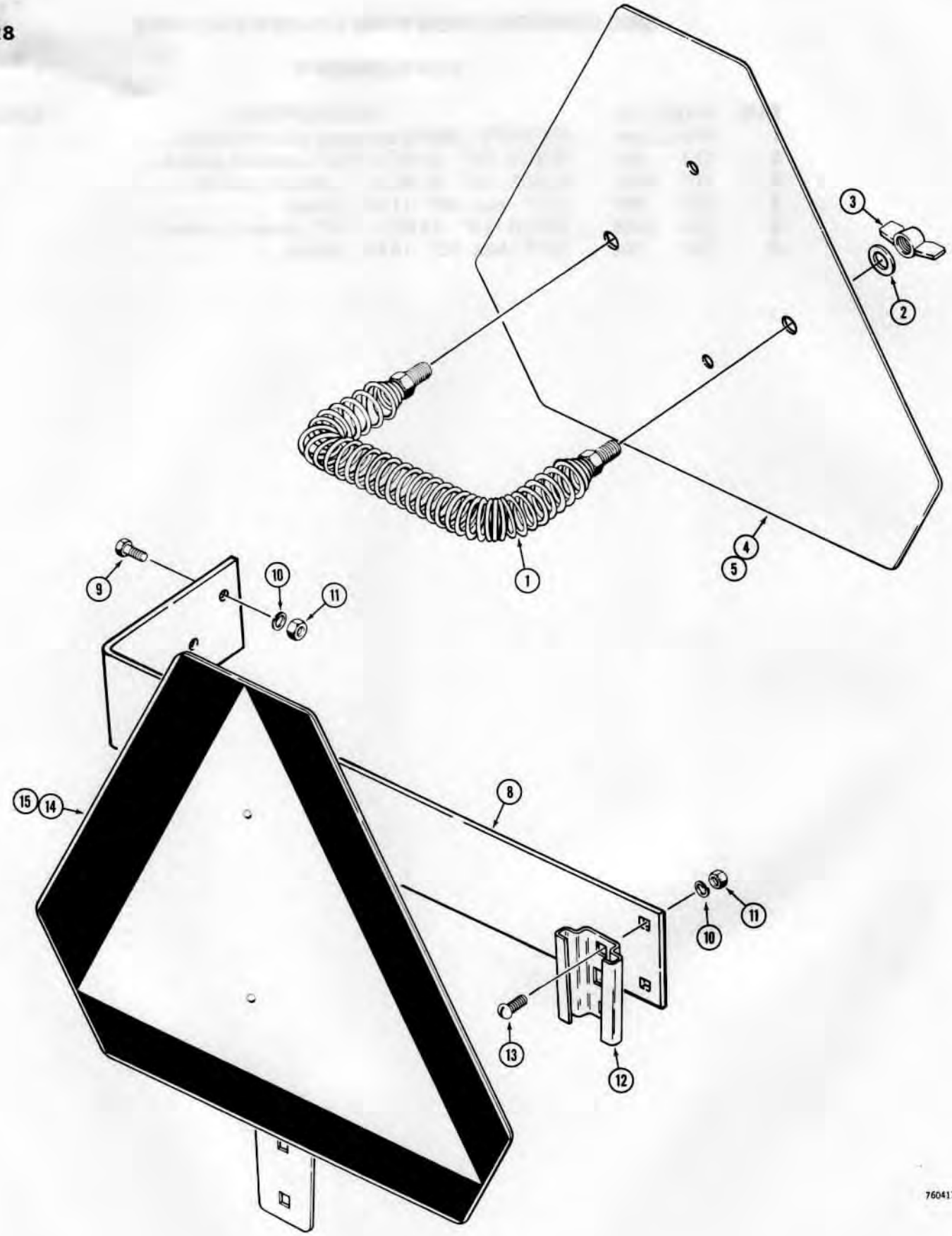

http://www.minnparbackhoeparts.com/

SLOW MOVING VEHICLE EMBLEM

REF.	PART NO.	DESCRIPTION	REQ'D.
		USED ON BACKHOE MODELS ONLY	
1	D 52564	SPRING - emblem retaining	1
2	195- 518	WASHER - flat, 1/4", plated	2
3	129- 409	NUT - winged, 1/4" - 20 NC	2
4	D 52581	EMBLEM - plate and decal	1
5	321- 1751	DECAL - emblem	1
6	113- 3	HHCS - 1/4" - 20 NC x 3/4", plated, used when storing emblem only, not shown	2
7	129- 101	NUT - hex, 1/4" - 20 NC, plated, used when storing emblem only, not shown	2
		USED ON LOADER OR DRAWBAR MODELS	
8	D 69980	BRACKET - SMV mounting	1
9	113- 102	HHCS - 5/16" - 18 NC x 3/4", plated	2
10	192- 20	WASHER - lock, 5/16", plated	4
11	129- 102	NUT - hex, 5/16" - 18 NC, plated	4
12	A 59457	SOCKET - emblem mounting	1
13	111- 215	BOLT - round head, 5/16" - 18 NC x 3/4", plated	2
14	A 59450	EMBLEM - plate and decal	1
15	321- 1751	DECAL - emblem	1

http://www.minnparbackhoeparts.com/

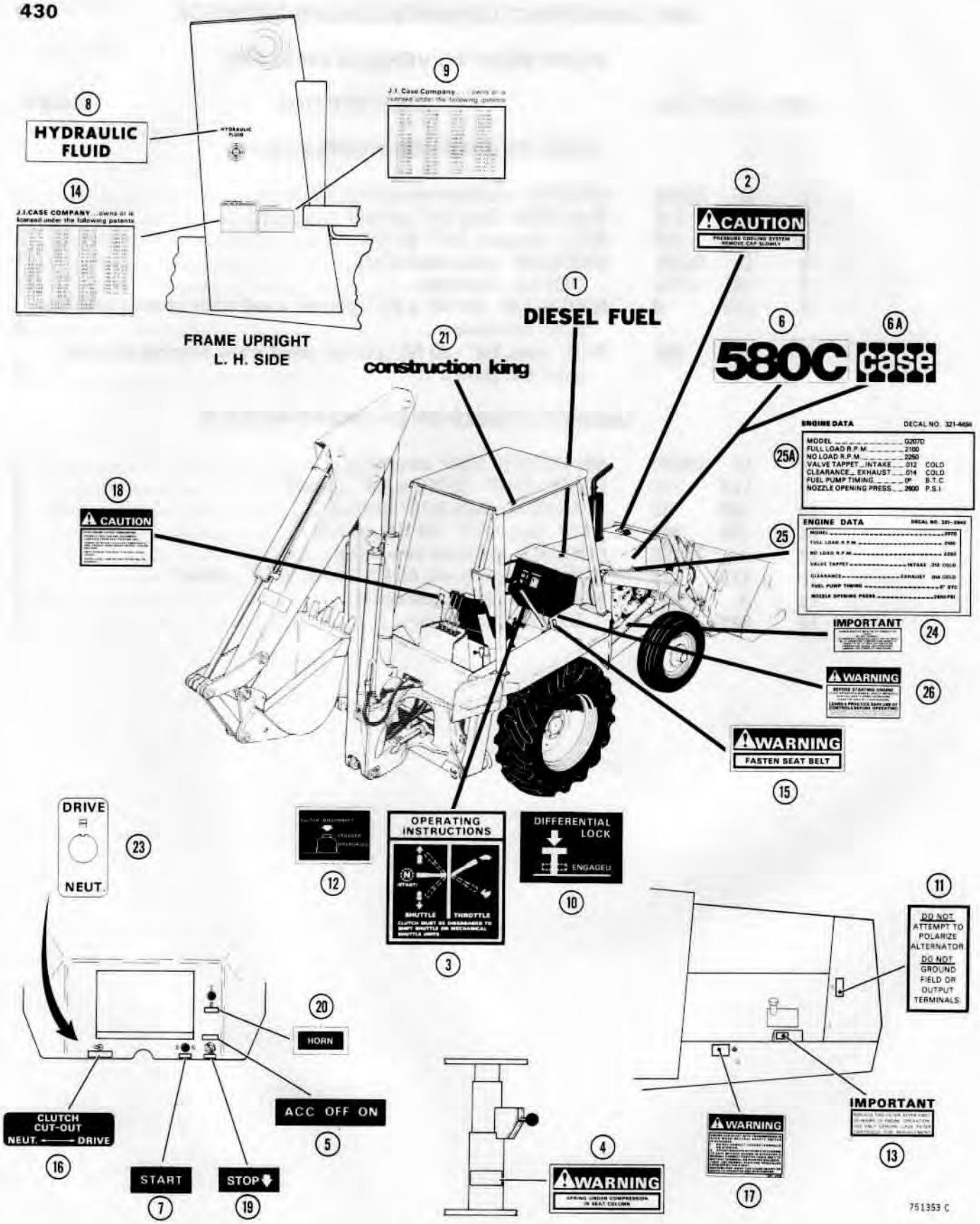

http://www.minnparbackhoeparts.com/

DECALS

BASIC TRACTOR

REF.	PART NO.	DESCRIPTION	REQ'D.
	D 71408	DECAL KIT - 580C, also includes items on page 433	1
1	321- 230	DECAL - diesel fuel	1
2	321- 3061	DECAL - Caution, radiator pressure	1
3	321- 3025	DECAL - instructions, throttle and shifting	1
4	321- 3055	DECAL - warning, seat spring	1
5	321- 3402	DECAL - ignition switch	1
6	321- 3264	DECAL - "580C"	2
6A	321- 1573	DECAL - "Case", used on models without loader only	2
7	321- 3401	DECAL - start, push button	1
8	321- 229	DECAL - hydraulic fluid	1
9	321- 663	DECAL - equipment patent	1
10	321- 1646	DECAL - differential lock	1
11	321- 1061	DECAL - alternator instructions	1
12	321- 3307	DECAL - clutch disconnect, power shuttle models	1
13	321- 2101	DECAL - oil filter	1
14	321- 246	DECAL - tractor patent	1
15	321- 3060	DECAL - seat belt	1
16	NSS	DECAL - clutch cutout, Order D73929 plate for service	1
17	321- 4126	DECAL - starter, neg. ground	1
18	321- 3022	DECAL - caution	1
19	321- 3579	DECAL - stop, fuel shutoff	1
20	321- 3294	DECAL - electric horn	1
21	321- 3231	DECAL - Construction King, ROPS Canopy and Cab	2
22		RESERVED	
23	D 73929	PLATE - clutch cutout (Power shuttle models)	1
24	321- 3882	DECAL - oil check	1
25	321- 2940	DECAL - engine data, valve cover, before engine sn. 2831781	1
25A	321- 4494	DECAL - engine data, valve cover, engine sn. 2831781 and after	1
26	321- 3705	DECAL - safety warning	1

http://www.minnparbackhoeparts.com/

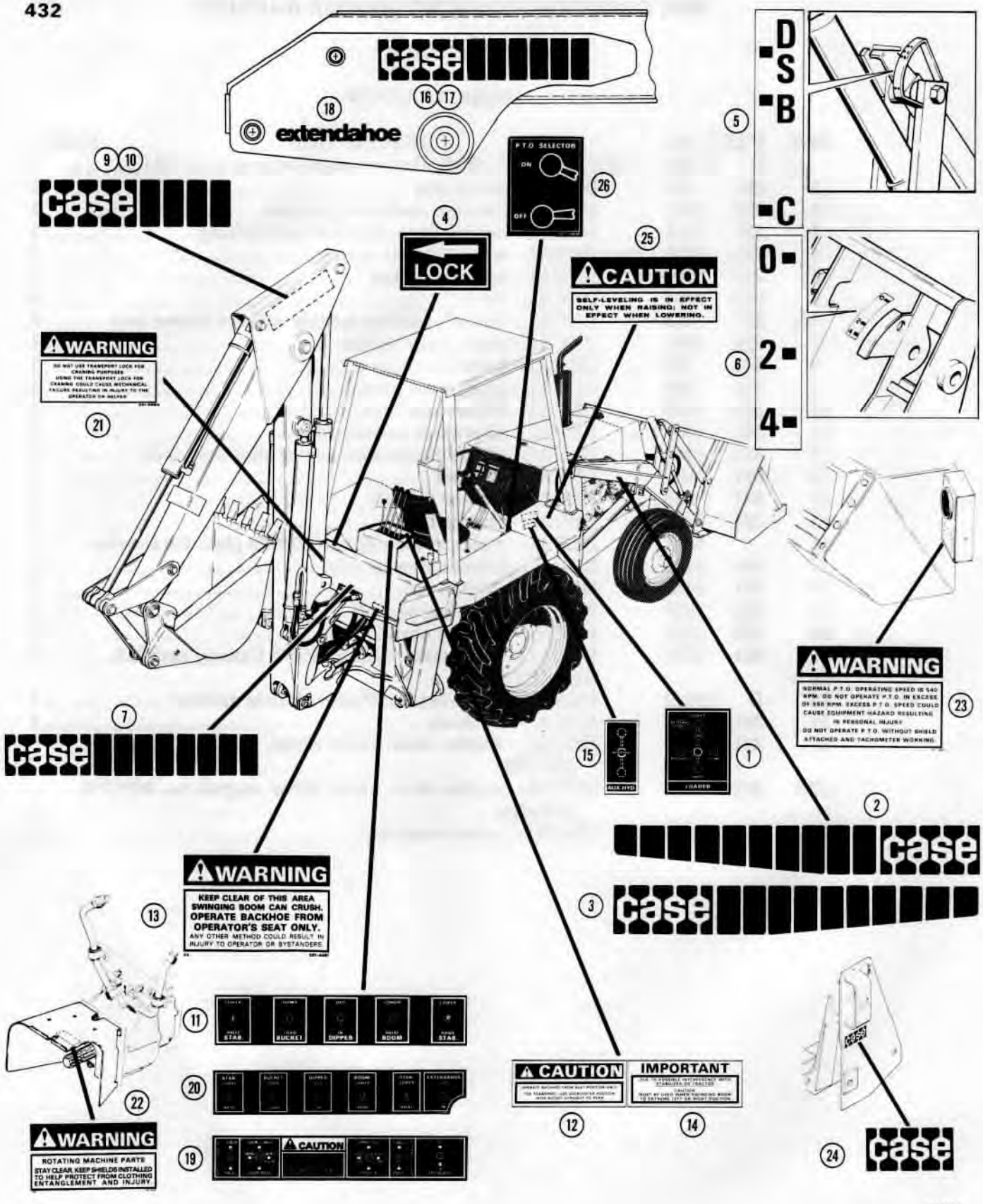

751352 B

http://www.minnparbackhoeparts.com/

DECALS

EQUIPMENT

REF.	PART NO.	DESCRIPTION	REQ'D.
	D 71408	DECAL KIT - 580C, also includes items on page 431	1
1	321- 3718	DECAL - loader control	1
2	321- 3274	DECAL - "Case", with tread, R.H.	1
3	321- 3275	DECAL - "Case", with tread, L.H.	1
4	321- 3348	DECAL - boom lock	1
5	321- 1707	DECAL - bucket position, 4-in-1	1
6	321- 1708	DECAL - clam opening, 4-in-1	1
7	321- 3109	DECAL - "Case", with tread, used on backhoe models	1
8		RESERVED	
9	321- 3182	DECAL - "Case", with tread, R.H., standard backhoe dipper	1
10	321- 3183	DECAL - "Case", with tread, L.H., standard backhoe dipper	1
11	321- 2192	DECAL - operator's instructions, individual lever	1
12	321- 3056	DECAL - caution, transport	1
13	321- 4481	DECAL - warning, swing	2
14	321- 3058	DECAL - important, swing	1
15	321- 3581	DECAL - auxiliary loader control	1
16	321- 3135	DECAL - "Case", with tread, L.H., extendable dipper	1
17	321- 3134	DECAL - "Case", with tread, R.H., extendable dipper	1
18	321- 3139	DECAL - "Extendahoe"	2
19	321- 3434	DECAL - operators instructions, Extendahoe, dual lever	1
20	321- 4607	DECAL - operators instructions, Extendahoe, individual lever	1
21	321- 3885	DECAL - warning, craning	1
22	321- 3710	DECAL - caution, PTO	1
23	321- 3888	DECAL - PTO speed	1
24	321- 2425	DECAL - "Case", 3-Point hitch frame	2
25	321- 3775	DECAL - pallet fork does not self level when lowered	1
26	321- 3934	DECAL - PTO circuit control	1

http://www.minnparbackhoeparts.com/

HOSE AND FITTING ASSEMBLY CONVERSION PART NUMBERS

To make up a replacement hose line, find the CASE original equipment part number in the left hand column. To the right of this number are the component part numbers needed to assemble the replacement hose line.

ORIGINAL EQUIPMENT ASS'Y NO.	BULK HOSE NO.	CUT HOSE LENGTH	USE FITTING NO.	USE FITTING NO.	ADDITIONAL PARTS REQUIRED
38410	A21572	19-1/4"	220-204	220-251	
D27984	A21572	22-3/4"	220-204	220-251	
D31370	A21572	26-7/8"	220-243	220-204	
D32284	A21572	36-3/4"	220-204	220-251	
D34401	A21572	56-3/4"	220-203	220-203	
D38485	A21572	19-1/2"	220-251	220-251	
D39140	A21572	20-5/8"	220-203	220-263	(1) 218-5006 "O"ring
D49118	A21574	29"	220-226	220-246	
D49224	A21574	23-1/4"	220-211	220-211	
D50372	A21572	30-3/4"	220-252	220-198	
D50373	A21572	19-1/4"	220-198	220-198	
D51683	A21566	52-3/4"	220-104	220-104	D52920 - 11" Guard
D51684	A21566	41-3/4"	220-104	220-104	
D51685	A21566	62-3/4"	220-104	220-104	
D51686	A21566	50-3/4"	220-104	220-104	
D51688	A21566	38-3/4"	220-104	220-104	
D51691	A21572	36-1/2"	220-203	220-204	
D52256	A21566	42"	220-104	220-104	D52920 - 11" Guard
D52566	A21574	66-1/4"	220-245	220-206	
D52667	A21574	32"	220-226	220-211	
D53579	Use Original Equipment Hose				
D53580	Use Original Equipment Hose				
D55562	A21573	34-1/2"	220-238	220-199	
D55563	A21572	17-3/4"	220-252	220-198	
D55749	A21572	19"	220-263	220-203	(1) 218-5006 "O"ring
D56043	A21571	31-3/8"	220-289	220-239	
D56094	A21574	35"	220-226	220-211	
D62390	A21571	17-3/8"	220-239	220-289	
D63184	A21571	13-1/4"	220-202	220-289	
D65481	A21566	9"	220-104	220-144	
D65620	A21566	9-1/4"	220-144	220-144	
D65652	A21571	26-3/8"	220-239	220-289	
D66505	A21574	35-7/8"	220-246	220-211	
D66741	Use Original Equipment Hose				
D67730	A21572	28-3/4"	220-204	220-243	
D67731	A21572	29"	220-204	220-261	(1) 218-5007 "O"ring
D67792	A21569	28-1/4"	220-107	220-107	
D67896	A21572	31"	220-243	220-291	
D67897	A21572	33"	220-243	220-412	
D68547	A21574	15-7/8"	220-246	220-211	
D69051	Use Original Equipment Hose				
D69168	A21573	69-1/8"	220-199	220-199	Use old sleeves
D69170	A21573	46-1/4"	220-238	220-199	Use old sleeves
D69522	A21572	52-1/2"	220-251	220-198	
D69523	A21572	54-1/2"	220-251	220-198	
D69650	A21567	22-3/8"	220-105	220-105	
D70870	Use Original Equipment Hose				
D70871	Use Original Equipment Hose				
D72659	A21574	8-3/4"	220-264	220-226	
D73319	A21574	10-1/2"	220-264	220-206	
D73346	A21574	29-3/4"	220-211	220-211	
D73377	A21572	48-1/2"	220-251	220-198	
L54660	A21574	34-1/4"	220-246	220-211	

770465A

http://www.minnparbackhoeparts.com/

NUMERICAL INDEX

PART NO.	PAGE NO.	REF. NO.
10927	105	4
10927	107	21
11256	137	9
16040	357	3
16202	243	3
16202	243	7
16917	211	26
16917	263	4
23137	293	11
30575	369	32A
30575	371	50A
30634	309	3
30634	309	14
30634	311	3
30634	311	14
30634	313	3
30634	313	13
30634	315	3
30634	315	13
30634	341	3
30634	341	14
30634	343	3
30634	343	14
33686	79B	8
35188	231	20
36627	231	40
36640	231	37
38150	357	2
38188	355	24
38410	203	15
38410	355	33
39736	127	13
40011	115	23
49386	55	22A
49482	27	35
49561	73	7
49564	231	16
49567	237	19
49838	59	2A
49838	61	3
49838	63	2A
49838	65	2A
49838	251	48
49851	73	22
49851	75	17
49851	77	16
49851	157	40
49851	159	25
49851	405	5
49852	55	14
49852	57B	14
49853	71	6
49853	73	8A
49853	77	14
49853	81	20B
49853	83	20B
49853	105	13
49854	195	42
49858	219B	14
49859	73	10
49859	75	16
49859	75	19
49859	77	18
49859	107	6
A 72990	369	12A
A 73149	109	5
A 73452	39	21
A 73453	39	22
A 73514	39	23
A 73613	39	41
A 73621	39	18
A 73651	39	40
A 73666	39	13
A 74244	39	6
A 7464	279	6
A 7597	127	14
A 7623	261	8
A 7623	293	4
A 7623	293	5
A 7923	139	18
A 9155	19	3
A 10454	47	44
A 10506	317	4
A 10506	319	4
A 11822	57	37
A 11822	57D	37
A 12928	129	6
A 13184	289	8
A 13184	289	28
A 13184	299	3
A 13184	299	12
A 13240	51	43
A 14510	113	14
A 14527	261	2
A 14529	257	10
A 14533	257	6
A 14533	259	6
A 14534	257	8
A 14535	257	5
A 14535	259	5
A 14567	181	7
A 14567	189	1
A 14723	137	3
A 15113	39	1
A 15670	113	11
A 15672	113	13
A 16764	81	3
A 16764	83	3
A 16882	261	12
A 20058	179	2
A 20058	179	2
A 20058	179	2
A 20058	179	8
A 20058	179	8
A 20465	63	3
A 20465	65	3
A 20468	63	4
A 20468	65	4
A 20916	11	10
A 20916	11	25
A 20916	103	2
A 20917	11	9
A 20917	11	24
A 21145	189	19
A 21145	349	4
A 21145	349	14
A 22431	89	21
A 22431	91	15
A 22877	55	6
A 22877	57B	6
A 23904	173	13
A 24572	73	2
A 24572	77	2
A 24572	79B	3
A 25139	239	14
A 25213	75	2
A 25213	79B	2
A 25213	79B	10
A 25262	105	6
A 25262	107	23
A 25285	259	7
A 25286	257	7
A 25286	259	9
A 25291	265	7
A 25304	49	2
A 25356	49	9
A 25359	49	8
A 25379	49	11
A 25385	49	35
A 25387	49B	37
A 25391	49	20
A 25546	43B	37
A 25546	43	41
A 25547	49	26
A 25548	49	19
A 25552	49B	44
A 25593	187	19
A 25594	187	27
A 26673	171	39
A 26744	149	25
A 26778	135	19
A 26836	139	17
A 26946	135	5
A 26946	145	11
A 27020	257	9
A 27020	269	9
A 27080	193	3
A 27150	133	19
A 27173	141	30
A 27209	131	4
A 27358	233	33
A 27358	235	53
A 27365	17	19
A 27365	233	24
A 27365	233	28
A 27365	235	42
A 27365	235	49
A 27365	257	2
A 27365	257	4
A 27365	259	2
A 27365	259	4
A 27365	261	4
A 27365	261	9
A 27365	273B	4
A 27365	273	4
A 27365	275	4
A 27365	277	4
A 27463	173	9
A 27507	317	11
A 27507	319	11
A 27507	321	9
A 27507	323	9

http://www.minnparbackhoeparts.com/

NUMERICAL INDEX

PART NO.	PAGE NO.	REF. NO.
A 27507	329	10
A 27507	331	10
A 27565	131	21
A 27565	135	11
A 27566	131	21
A 27566	135	11
A 27567	131	21
A 27567	135	11
A 27568	131	21
A 27568	135	11
A 27577	193	18
A 27579	135	4
A 27602	173	11
A 27637	153	6
A 27891	11	21
A 27891	31	14
A 27891	155	5
A 27955	111	
A 27994	297	5
A 27994	325	9
A 27994	327	9
A 28090	39	16
A 28090	273	18
A 28090	275	21
A 28090	277	18
A 28090	277	32
A 28090	287	23
A 28230	173	8
A 28318	305	10
A 28318	307	10
A 28318	313	10
A 28318	315	10
A 28318	345	9
A 28318	347	9
A 28318	349	10
A 29060	143	17
A 29068	113	17
A 29068	125	26
A 29068	127	6
A 29259	27	9
A 29260	17	10
A 29268	23	30
A 29279	17	8
A 29290	25	5
A 29431	11	37
A 29431	19	17
A 29433	13	3
A 29438	25	9
A 29442	15	3
A 29717	141	12
A 29902	149	17
A 29964	131	33
A 29964	135	24
A 29966	131	34
A 29966	135	25
A 29971	145	4
A 29971	147	15
A 29976	145	2
A 29977	145	3
A 29977	147	13
A 30004	21	21
A 30013	27	29
A 30013	27	37
A 30013	51	36
A 30013	197	15
A 30025	21	24
A 30042	31	29
A 30042	183	2
A 30043	33	3
A 30056	25	6
A 30058	21	11
A 30063	25	10
A 30072	147	14
A 30075	151	16
A 30095	301	8
A 30095	303	8
A 30095	309	10
A 30095	311	10
A 30095	337	9
A 30095	339	9
A 30095	341	10
A 30095	343	10
A 30097	133	16
A 30097	193	17
A 30114	149	26
A 30115	147	3
A 30116	147	4
A 30338	395	29
A 30825	279	27
A 30881	131	31
A 32132	155	28
A 32309	273	5
A 32309	273B	5
A 32309	275	5
A 32309	277	5
A 33810	157	18
A 33810	159	13
A 33976	63	21
A 33976	65	21
A 33977	63	22
A 33977	65	22
A 33977	67	3
A 34046	73	13
A 34046	75	20
A 34113	171	7
A 34827	31	36
A 34868	63	6
A 34868	65	6
A 35028	11	39
A 35104	271	20
A 35104	279	22
A 35147	113	5
A 35147	125	3
A 35147	125	5
A 35270	397	9
A 35673	27	13
A 35767	131	2
A 35771	29	13
A 35789	155	19
A 35921	149	19
A 35923	149B	1
A 35925	149B	2
A 35933	149B	11
A 35949	187	15
A 35950	187	11
A 35951	187	1
A 35952	187	10
A 35954	187	21
A 35955	187	22
A 35956	187	24
A 35957	187	20
A 35958	187	23
A 35959	187	16
A 35962	187	7
A 35963	187	6
A 35965	187	3
A 35966	187	12
A 35967	187	2
A 36091	89	16
A 36199	165	28
A 36446	149B	16
A 36447	149B	17
A 36480	27	5
A 36481	27	5
A 36482	27	5
A 36483	27	5
A 36484	27	5
A 36485	27	3
A 36486	27	3
A 36487	27	3
A 36488	27	3
A 36489	27	3
A 36490	27	4
A 36491	27	4
A 36492	27	4
A 36493	27	4
A 36494	27	4
A 36495	27	2
A 36496	27	2
A 36497	27	2
A 36498	27	2
A 36499	27	2
A 36615	21	5
A 36782	17	28
A 36815	19	1
A 36902	19	27
A 36902	23	12
A 37149	23	22
A 37206	17	2
A 37206	23	9
A 37216	27	36
A 37247	167	1
A 37247	169	1
A 37247	171	1
A 37247	245	1
A 37247	247	1
A 37564	149B	7
A 37809	397	1
A 37837	35	27
A 37839	35	28
A 37850	35	20
A 37851	35	21
A 38083	13	21
A 38083	31	6
A 38083	31	25
A 38084	13	5
A 38084	31	7
A 38157	147	5
A 38160	35	40
A 38161	35	11
A 38181	21	3
A 38188	11	31

http://www.minnparbackhoeparts.com/

NUMERICAL INDEX

PART NO.	PAGE NO.	REF. NO.
A 38208	139	15
A 38208	175	5
A 38261	177	3
A 38261	177	3
A 38296	167	6
A 38303	23	23
A 38372	17	7
A 38385	23	16
A 38390	27	18
A 38411	57	25
A 38534	23	
A 38644	35	31
A 38660	141	28
A 38749	1498	9
A 38751	147	12
A 38752	147	12
A 38753	147	12
A 38754	147	12
A 38755	147	12
A 38756	147	12
A 38757	147	12
A 38758	147	12
A 38759	147	12
A 38760	147	12
A 38761	147	12
A 38762	147	12
A 38763	147	12
A 38764	147	12
A 38765	147	12
A 38766	147	12
A 38767	147	12
A 38768	147	12
A 38769	147	12
A 38815	45	1
A 38915	27	26
A 38931	25	8
A 39007	149	11
A 39008	149	11
A 39009	149	11
A 39010	149	11
A 39011	149	11
A 39012	149	11
A 39013	25	1
A 39035	17	22
A 39037	17	21
A 39046	19	30
A 39046	23	15
A 39047	19	26
A 39047	23	11
A 39048	19	26
A 39048	23	11
A 39049	19	26
A 39049	23	11
A 39105	141	18
A 39110	27	10
A 39129	11	38
A 39129	19	16
A 39184	145	30
A 39188	27	19
A 39188	31	24
A 39212	125	
A 39213	125	
A 39233	11	30
A 39241	23	7
A 39268	19	15
A 39268	21	21
A 39273	149	28
A 39288	27	8
A 39289	149	27
A 39321	17	12
A 39321	131	29
A 39321	135	22
A 39322	141	29
A 39341	47	1
A 39359	53	2
A 39561	51	42
A 39570	19	4
A 39586	271	28
A 39867	37	3
A 39868	37	5
A 39925	15	21
A 39925	31	23
A 39936	23	28
A 40215	49	28
A 40217	49	6
A 40218	498	45
A 40220	498	41
A 40221	498	51
A 40222	498	47
A 40225	49	22
A 40520	498	42
A 40581	45	2
A 40766	131	19
A 40766	145	22
A 40962	193	1
A 41065	45	19
A 41066	45	3
A 41072	45	36
A 41073	45	44
A 41077	45	16
A 41078	45	4
A 41079	45	18
A 41081	45	5
A 41184	193	16
A 41264	79	14
A 41391	35	16
A 41392	35	17
A 41393	35	18
A 41394	35	19
A 41402	31	11
A 41402	41	12
A 41403	31	12
A 41403	41	11
A 41424	193	2
A 41491	155	33
A 41726	21	35
A 41727	21	32
A 41917	49	27
A 41959	49	30
A 41979	49	4
A 41980	49	23
A 42023	498	61
A 42059	498	53
A 42060	498	54
A 42061	498	52
A 42164	187	4
A 42187	187	18
A 42204	163	3
A 42219	191	46
A 42242	187	9
A 42252	155	29
A 42254	155	32
A 42256	155	30
A 42261	45	33
A 42262	45	6
A 42263	45	7
A 42266	45	38
A 42268	45	9
A 42274	109	11
A 42294	75	3
A 42315	37	4
A 42424	41	6
A 42494	49	17
A 42561	89	13
A 42561	89	36
A 42578	89	14
A 42578	89	37
A 42653	423	27A
A 42660	89	12
A 42660	89	35
A 42676	417	
A 42677	425	
A 42746	23	10
A 42746	25	
A 42771	45	
A 42772	45	34
A 42773	45	31
A 42774	45	14
A 42776	45	
A 42777	45	59
A 42778	191	45
A 43030	19	2
A 43030	31	2
A 43193	31	
A 43198	31	
A 43211	97	7
A 43384	438	40
A 43384	43	44
A 43506	41	10
A 43551	189	13
A 43554	189	30
A 43558	189	25
A 43560	189	34
A 43566	189	22
A 43568	191	42
A 43569	191	41
A 43573	191	47
A 43574	191	48
A 43579	191	51
A 43580	191	52
A 43599	41	3
A 43600	41	5
A 43602	41	4
A 43605	125	13
A 43606	125	23
A 43607	125	12
A 43608	125	14
A 43609	125	18
A 43612	125	19
A 43613	125	17
A 43660	125	20
A 43678	438	13

http://www.minnparbackhoeparts.com/

NUMERICAL INDEX

PART NO.	PAGE NO.	REF. NO.
A 43693	43	38
A 43720	189	24
A 43721	189	28
A 43728	189	29
A 43729	191	36
A 43733	41	7
A 43867	39	17
A 43868	39	19
A 43869	39	12
A 43870	39	14
A 43871	39	15
A 43952	45	39
A 44083	29	22
A 44180	45	37
A 44369	41	8
A 44433	43B	30
A 44433	43	34
A 44435	189	23
A 44495	49B	36
A 44522	43B	35
A 44543	45	55
A 44571	87	8
A 44639	193	11
A 44640	193	12
A 44641	193	10
A 44642	193	8
A 44644	193	
A 44653	39	8
A 44654	193	20
A 44702	23	1
A 44710	39	2
A 44720	153	22
A 44721	153	23
A 44756	153	16
A 44758	31	
A 44814	23	37
A 44815	23	36
A 45017	43	22
A 45017	43B	23
A 45152	49	3
A 45201	43B	
A 45213	43B	10
A 45213	43	12
A 45216	51	33A
A 45216	197	12
A 45217	43B	2
A 45218	43B	3
A 45219	43B	17
A 45219	43	18
A 45221	43B	20
A 45221	43	21
A 45222	43B	11
A 45223	43B	16
A 45223	43	16
A 45223	43B	26
A 45224	43B	15
A 45225	43B	
A 45225	43	5
A 45227	43	23
A 45228	43	24
A 45228	43B	24
A 45229	43B	28
A 45229	43	32
A 45230	43B	29
A 45230	43	33
A 45232	43B	33
A 45232	43	37
A 45382	155	31
A 45383	155	
A 45387	155	
A 45391	43B	25
A 45394	43B	19
A 45394	43	20
A 46013	29	2
A 46014	29	
A 46015	29	12
A 46016	29	
A 46037	23	
A 47041	43	2
A 47042	43	13
A 47043	43	15
A 47045	43	14
A 47046	43	3
A 47047	43	28
A 47048	43	29
A 47127	47	13
A 47130	47	38
A 47227	47	2
A 47228	47	3
A 47229	47	9
A 47230	47	
A 47231	47	14
A 47232	47	16
A 47233	47	17
A 47234	47	18
A 47235	47	19
A 47236	47	20
A 47237	47	33
A 47238	47	34
A 47239	47	31
A 47240	47	
A 47241	47	27
A 47242	47	28
A 47243	47	
A 47244	47	35
A 47247	47	30
A 47248	47	29
A 47249	47	32
A 50421	131	26
A 50421	187	26
A 50820	15	9
A 50820	15	24
A 50975	29	23
A 50976	29	23
A 50977	29	23
A 50978	29	23
A 50979	29	23
A 50989	149	18
A 50990	149	16
A 51084	21	8
A 51114	19	28
A 51114	23	13
A 51148	21	2
A 51149	21	1
A 51271	19	29
A 51271	23	14
A 51274	211	29
A 51339	27	20
A 51390	111	8
A 51499	11	6
A 51499	11	19
A 51499	19	19
A 51500	11	7
A 51500	11	20
A 51500	19	20
A 51527	145	29
A 51529	15	5
A 51529	31	22
A 51561	43B	41
A 51561	43	45
A 51649	15	2
A 51738	37	2
A 51739	37	1
A 51784	35	7
A 51793	23	32
A 51840	125	24
A 51874	131	15
A 51876	11	15
A 51885	51	33
A 51885	197	11
A 51901	151	14
A 51904	29	21
A 51907	15	19
A 51908	15	18
A 51911	29	3
A 51913	29	18
A 51914	29	20
A 51916	29	10
A 51917	27	1
A 51935	127	3
A 51935	129	1
A 51936	129	7
A 51938	127	2
A 51938	129	2
A 51939	131	1
A 51940	133	15
A 51941	133	1
A 51942	133	7
A 51943	131	30
A 51944	129	12
A 51945	129	22
A 51946	129	13
A 51947	135	1
A 51948	135	2
A 51949	135	12
A 51951	135	23
A 51952	141	1
A 51953	141	6
A 51954	145	32
A 51956	145	14
A 51957	145	10
A 51959	147	11
A 51960	147	9
A 51961	147	6
A 51962	147	7
A 51964	143	14
A 51968	153	28
A 51969	155	1
A 51970	155	11
A 51971	155	9
A 51974	155	20
A 51975	155	21

http://www.minnparbackhoeparts.com/

NUMERICAL INDEX

PART NO.	PAGE NO.	REF. NO.
A 51976	155	25
A 51977	1498	14
A 51980	147	
A 51980	149	
A 51983	27	34
A 55934	163	4
A 55980	163	13
A 56103	81	20
A 57641	13	14
A 57876	139	19
A 58471	155	7
A 58608	17	30
A 58608	31	36
A 58608	129	5
A 58608	129	19
A 58608	131	32
A 58608	141	3
A 58709	35	23
A 58960	35	32
A 58961	35	29
A 58962	35	30
A 59077	51	39
A 59450	429	14
A 59457	429	12
A 59516	51	4
A 59516	51	12
A 59609	155	15
A 59701	73	1
A 59701	77	1
A 59702	73	3
A 59702	75	4
A 59702	77	3
A 59723	75	1
A 60489	155	8
A 60553	57B	26
A 60553	57	26
A 60555	155	18
A 61276	109	7
A 61446	175	3
A 61447	175	12
A 61448	175	11
A 61449	175	10
A 61450	175	4
A 62210	181	9
A 62822	155	2
A 64490	155	6
A 64818	409	7A
A 64818	409	7
A 65101	1498	10
A 65544	181	6
A 65550	63	7
A 65550	65	7
A 66759	175	
A 72047	438	36
A 72047	43	39
A 75171	117	54
A 77311	61	6
A 135714	438	1
A 135946	153	31
A 135973	27	32
A 136386	145	28
A 136474	29	9
A 136597	145	13
A 137164	139	1
A 137503	193	
A 137572	23	31
A 138233	151	8
A 138244	27	11
A 138245	15	1
A 138246	51	15
A 138247	51	18
A 138284	127	1
A 138286	151	1
A 138287	151	1
A 138294	131	25
A 138301	145	1
A 138312	143	1
A 138313	143	12
A 138343	131	8
A 138570	127	19
A 138571	127	17
A 138572	145	15
A 138655	145	18
A 138719	153	3
A 138736	153	3
A 138847	147	8
A 138864	127	23
A 139078	57D	39
A 139078	57	40
A 139078	129	20
A 139081	177	1
A 139082	177	1
A 139083	179	1
A 139084	179	1
A 139085	179	1
A 139086	109	9
A 139258	51	23
A 140222	17	29
A 140222	129	18
A 140222	141	2
A 140239	145	12
A 140282	149	6
A 140438	149	3
A 140578	143	13
A 140687	135	8
A 140705	149	9
A 140744	135	18
A 140828	41	1
A 140869	149	24
A 140923	135	29
A 140924	11	5
A 140924	11	18
A 140924	19	18
A 142029	149B	8
A 142098	19	31
A 142098	31	3
A 142303	141	27
A 142559	141	21
A 142676	149	7
A 142906	35	36
A 142979	153	12
A 142980	153	13
A 142981	153	
A 143492	125	1
A 144266	149	15
A 144331	129	4
A 144361	131	11
A 144491	131	14
A 144626	127	22
A 144672	131	13
A 144776	19	10
A 145568	145	20
A 146027	149	20
A 146505	153	4
A 146541	149	8
A 146584	13	20
A 146696	17	1
A 148118	155	4
A 148194	145	25
A 148283	127	11
A 148437	135	9
A 148508	145	1
A 148573	139	16
A 148619	1498	18
A 148745	19	21
A 148745	31	4
A 150159	139	1
A 150248	147	10
A 150522	125	1
A 150726	143	15
A 151281	37	
A 151669	39	1
A 152450	141	22
A 152536	11	1
A 152802	13	1
A 152923	153	1
A 152924	153	1
A 153272	149	4
B 18215	135	3
B 50293	105	5
B 50293	107	22
C 14301	295	5
C 14652	163	6
D 16615	375	
D 17196	2278	
D 19134	399	28
D 19142	1238	
D 21605	377	9
D 21605	377	9
D 21605	377	9
D 21605	377	9
D 21606	377	8
D 21606	377	8
D 21606	377	8
D 21606	377	8
D 22200	345	12
D 22200	347	12
D 23722	231	39
D 24728	229	10
D 25277	395	9
D 25277	395	13
D 25277	395	16
D 25279	163	36
D 25279	351	28
D 25279	351	31
D 25279	365	16
D 25279	365	22
D 25279	371	59
D 25279	371	64
D 25279	373	81
D 25279	375	29
D 25279	381	12

http://www.minnparbackhoeparts.com/

NUMERICAL INDEX

PART NO.	PAGE NO.	REF. NO.
D 25280	173	19
D 25280	351	8
D 25280	351	10
D 25280	365	14
D 25280	369	29
D 25280	369	31
D 25280	369	37
D 25280	371	47
D 25280	371	67
D 25280	371	72
D 25280	375	18
D 25280	375	33
D 25280	375	39
D 26115	181	8
D 26262	281	7
D 26265	211	35
D 26265	211	40
D 26265	263	14
D 26265	267	4
D 26266	265	11
D 26266	265	25
D 26266	281	11
D 26267	265	6
D 26267	265	26
D 26267	281	6
D 26268	265	5
D 26268	265	32
D 26268	281	5
D 26270	265	2
D 26270	281	2
D 26368	353	7
D 26368	377	13
D 26368	379	9A
D 26368	383	11
D 26872	263	16
D 26872	267	6
D 26918	395	18
D 26919	367	47
D 26919	369	33
D 26919	375	15
D 27258	265	27
D 27259	265	29
D 27260	265	31
D 27261	265	28
D 27705	345	7
D 27705	347	7
D 27705	349	8
D 27706	305	8
D 27706	307	8
D 27706	313	8
D 27706	315	8
D 27833	345	13
D 27833	347	13
D 28364	305	15
D 28364	313	15
D 28364	345	15
D 28366	337	14
D 28366	341	16
D 28367	333	16
D 28610	369	19
D 28610	371	60
D 28610	373	79
D 28896	301	14
D 28896	309	16
D 29423	377	3
D 29424	377	2
D 29483	365	15
D 30458	105	22
D 30609	395	14
D 30756	365	4
D 30756	375	7
D 30899	371	61
D 30899	381	11
D 30929	305	13
D 30929	307	13
D 30929	383	3
D 30929	383	9
D 30930	301	12
D 30930	303	12
D 30931	351	4
D 30931	351	26B
D 30932	353	2
D 30932	353	2
D 30932	353	5
D 30932	353	5
D 30932	353	5
D 30932	355	8A
D 30933	351	26A
D 30933	371	57
D 30933	375	45
D 30933	377	6
D 30933	377	12
D 30933	377	12
D 30933	377	12
D 30933	377	12
D 30933	379	4
D 30933	379	4
D 30933	379	4
D 30933	379	8
D 30933	381	6
D 30933	381	6
D 30933	381	6
D 30933	381	6
D 30945	351	25
D 30947	351	26
D 31098	305	2
D 31098	307	2
D 31099	305	2
D 31099	307	2
D 31140	355	3
D 31142	365	3
D 31142	369	12
D 31142	369	42
D 31204	363	1
D 31219	351	18
D 31312	373	80
D 31370	205	13
D 31400	239	20
D 31403	239	16
D 31409	273	21
D 31409	275	25
D 31409	277	22
D 31409	277	35
D 31410	269	17
D 31441	105	8
D 31441	107	25
D 31511	305	3
D 31511	307	3
D 31971	299	11
D 31975	299	1
D 31975	299	14
D 31979	299	8
D 31980	299	9
D 31981	299	10
D 32284	221	25
D 32481	49	10
D 32865	317	15
D 32865	319	15
D 32890	359	12
D 33047	329	3
D 33047	329	14
D 33047	331	3
D 33047	331	14
D 33047	333	3
D 33047	335	3
D 33182	105	7
D 33182	107	24
D 33255	283	1
D 33256	283	4
D 33534	419	6
D 33551	207	11
D 33551	207	14
D 33552	221	24
D 33552	355	31
D 33805	363	8
D 33805	367	44
D 33805	393	5
D 33856	261	10
D 33857	261	7
D 33858	259	10
D 34244	209	12
D 34244	215	33
D 34340	333	14
D 34340	335	14
D 34340	371	43
D 34340	375	8
D 34401	359	24
D 34666	139	13
D 34666	361	4
D 34818	345	3
D 34818	347	3
D 34980	55	22
D 34989	111	7
D 35009	51	3
D 35009	51	11
D 35288	233	37
D 35424	385	12
D 35814	169	24
D 36203	317	3
D 36203	319	3
D 36264	109	28
D 36505	365	31
D 36669	4238	43
D 36822	59	4
D 36822	61	5
D 36968	345	6
D 36968	347	6
D 36968	349	7
D 36969	305	7
D 36969	307	7
D 36969	313	7
D 36969	315	7

http://www.minnparbackhoeparts.com/

NUMERICAL INDEX

PART NO.	PAGE NO.	REF. NO.
D 36969	337	8
D 36969	339	8
D 36969	341	9
D 36969	343	9
D 36970	301	7
D 36970	303	7
D 36970	309	9
D 36970	311	9
D 36970	325	8
D 36970	327	8
D 36971	317	10
D 36971	319	10
D 36971	321	8
D 36971	323	8
D 36971	329	9
D 36971	331	9
D 36971	333	9
D 36971	335	9
D 37045	265	21
D 37048	798	4
D 37050	255	2
D 37050	257	
D 37051	255	2
D 37051	257	
D 37052	255	2
D 37052	257	
D 37053	255	2
D 37053	257	
D 37062	265	13
D 37062	281	13
D 37063	265	14
D 37063	281	14
D 37064	265	17
D 37065	265	18
D 37066	267	1
D 37067	263	17
D 37067	267	7
D 37068	263	18
D 37068	267	8
D 37070	263	15
D 37070	267	5
D 37071	211	36
D 37071	211	41
D 37071	263	13
D 37071	267	3
D 37072	263	11
D 37073	263	5
D 37074	263	9
D 37075	211	32
D 37075	263	10
D 37076	261	6
D 37134	363	9
D 37135	363	10
D 37147	211	28
D 37148	211	30
D 37148	263	8
D 37150	211	27
D 37151	211	31
D 37152	261	3
D 37153	261	1
D 37156	117	53
D 37156	261	5
D 37203	59	11
D 37203	59	34
D 37203	63	13
D 37203	71	10
D 37203	81	16
D 37203	93	1
D 37252	59	10
D 37252	63	13A
D 37252	67	19
D 37252	99	12
D 37286	351	30
D 37287	351	34
D 37392	351	2
D 37416	369	13
D 37443	365	12
D 37443	375	5
D 37443	399	2A
D 37450	371	65
D 37450	375	47
D 37464	377	4
D 37471	377	10
D 37473	377	7
D 37474	377	7
D 37475	377	7
D 37476	377	7
D 37490	379	2
D 37495	365	10
D 37495	371	56
D 37495	373	75
D 37495	375	44
D 37495	377	11
D 37495	377	11
D 37495	377	11
D 37495	377	11
D 37495	379	3
D 37495	379	3
D 37495	379	7
D 37495	381	5
D 37495	381	5
D 37495	381	5
D 37495	381	5
D 37495	383	4
D 37495	383	10
D 37505	377	10
D 37507	377	10
D 37515	379	2
D 37516	379	6
D 37518	379	2
D 37567	249	4
D 37602	375	38
D 37611	375	16
D 37614	371	61
D 37642	377	10
D 37763	351	3
D 37811	105	
D 37811	107	
D 37936	73	12
D 37936	73	23
D 37936	77	17
D 37936	93	7
D 37936	95	5
D 38089	283	10
D 38258	407	9
D 38261	407	14
D 38485	203	18
D 38500	405	8
D 38620	157	31
D 38620	159	14
D 38637	205	19
D 38643	407	16
D 38648	203	23
D 38648	205	25
D 38648	209	17
D 38648	213	30
D 38648	215	40
D 38648	2198	23
D 38648	3558	42
D 38648	359	23
D 38673	407	15
D 38679	321	18
D 38679	323	18
D 38683	321	19
D 38683	323	19
D 38825	253	8
D 38825	255	8
D 38858	325	10
D 38858	327	10
D 39093	381	8
D 39094	381	9
D 39140	211	15
D 40236	203	10
D 40236	209	11
D 40236	215	32
D 40236	219	14
D 40236	2198	30
D 40236	221	23
D 40236	229	5
D 40236	355	32
D 40243	377	5
D 40243	379	3
D 40354	211	23
D 40355	211	25
D 40355	263	3
D 40356	263	7
D 40357	263	6
D 40358	263	19
D 40358	267	9
D 40924	251	41
D 41165	213	11
D 41165	215	11
D 41165	223	34
D 41165	233	
D 41322	239	21
D 41359	321	21
D 41359	323	21
D 41427	105	24
D 41547	379	1
D 41548	379	1
D 41549	379	1
D 41550	379	5
D 41679	381	
D 41740	11	8
D 42439	297	6
D 42788	371	54
D 42788	375	37
D 43124	359	2
D 43266	249	9
D 43331	383	6
D 43332	383	7
D 43341	383	8

http://www.minnparbackhoeparts.com/

NUMERICAL INDEX

PART NO.	PAGE NO.	REF. NO.
D 43403	419	6C
D 43416	373	76
D 43417	373	77
D 43620	167	10
D 43940	173	5
D 43940	365	5
D 43940	399	2
D 44177	578	25
D 44193	381	10
D 44813	369	13A
D 44813	369	34A
D 44882	375	28
D 44996	351	23
D 44997	351	21
D 45001	351	27
D 45034	375	14
D 45523	369	35
D 45555	211	19
D 45559	373	87
D 45904	351	20
D 46024	253	3
D 46024	255	3
D 46024	261	
D 46025	253	3
D 46025	255	3
D 46025	261	
D 46026	253	3
D 46026	255	3
D 46026	261	
D 46027	253	3
D 46027	255	3
D 46027	261	
D 46034	261	
D 46035	261	
D 46036	261	
D 46037	261	
D 46114	359	11
D 46133	359	6
D 46135	313	2
D 46135	315	2
D 46141	359	8
D 46142	359	13
D 46405	371	53
D 46405	375	9
D 46405	375	36
D 46930	317	17
D 46930	329	16
D 47203	333	17
D 47204	317	18
D 47204	321	16
D 47204	329	17
D 47208	333	18
D 47209	317	19
D 47209	321	17
D 47209	329	18
D 47256	2278	
D 47256	2278	12
D 47557	211	22
D 47667	211	33
D 47782	215	20
D 47999	357	10
D 47999	359	3
D 48028	359	18
D 48030	359	19
D 48031	359	21
D 48035	381	
D 48071	107	5
D 48359	269	15
D 48523	1958	31
D 48523	195	35
D 48539	1958	29
D 48539	195	33
D 48540	1958	27
D 48540	195	31
D 48818	2278	32
D 48819	2278	
D 48820	2278	35
D 48821	2278	36
D 48822	2278	37
D 48879	239	13
D 48881	239	
D 48882	239	26
D 48883	239	27
D 48888	239	17
D 48950	239	10
D 49094	385	9
D 49118	199	13
D 49118	225	13
D 49161	321	15
D 49224	201	8
D 49241	239	1
D 49429	367	42
D 49429	369	2
D 49733	73	31
D 49733	75	35
D 49733	77	26
D 49733	79	
D 49734	73	32
D 49734	75	34
D 49734	77	27
D 49734	79	
D 49774	407	13
D 49776	407	3
D 49812	363	7
D 49863	365	37
D 49864	365	38
D 49865	369	23
D 49866	369	16
D 49879	367	43
D 49941	407	11
D 49976	73	27
D 49976	75	36
D 49976	77	25
D 49976	798	
D 50004	369	9A
D 50022	123	
D 50024	121	
D 50030	115	
D 50031	115	
D 50033	123	16
D 50034	123	17
D 50035	123	18
D 50036	123	19
D 50037	123	20
D 50038	123	21
D 50039	123	22
D 50040	123	23
D 50041	123	24
D 50042	121	1
D 50043	121	2
D 50044	121	3
D 50045	121	4
D 50046	121	5
D 50047	121	12
D 50048	121	13
D 50049	121	18
D 50050	121	19
D 50051	121	21
D 50052	121	21
D 50053	121	21
D 50054	121	22
D 50055	115	1
D 50056	115	19
D 50057	115	22
D 50058	115	24
D 50059	115	25
D 50060	115	28
D 50062	115	33
D 50062	1238	2
D 50066	117	47
D 50074	123	15
D 50075	121	6
D 50077	121	8
D 50078	121	9
D 50079	121	10
D 50080	115	18A
D 50080	121	11
D 50081	121	14
D 50083	121	16
D 50084	121	17
D 50086	121	25
D 50087	115	18
D 50089	117	35
D 50090	117	36
D 50091	117	37
D 50092	117	38
D 50103	239	3
D 50104	239	4
D 50105	239	
D 50106	239	7
D 50132	367	51
D 50146	371	44
D 50146	375	4
D 50146	395	6
D 50149	369	5
D 50170	367	45
D 50170	367	46
D 50287	385	15
D 50292	365	8
D 50293	365	9
D 50337	365	17
D 50372	219	16
D 50373	213	23
D 50379	217	13
D 50388	217	10
D 50388	219	23
D 50388	2198	25
D 50407	387	31
D 50551	211	14
D 50682	383	1
D 50695	365	20
D 50696	365	21

http://www.minnparbackhoeparts.com/

NUMERICAL INDEX

PART NO.	PAGE NO.	REF. NO.
D 50698	369	10
D 50700	369	7
D 50717	105	10
D 50724	395	34
D 50818	363	6
D 51276	395	10
D 51294	395	25
D 51297	395	12
D 51299	395	8
D 51302	395	17
D 51339	395	35
D 51340	395	37
D 51384	355	
D 51388	355	9
D 51391	355	5
D 51392	355	10
D 51393	355	11
D 51569	395	1
D 51573	393	7
D 51588	395	33
D 51608	395	36
D 51608	395	38
D 51615	355	19
D 51617	355	20
D 51619	355B	37
D 51621	355B	36
D 51683	227	8
D 51684	227	14
D 51685	227	19
D 51686	227B	6
D 51686	227	18
D 51688	227	13
D 51689	283	2
D 51690	283	3
D 51691	355B	44A
D 51692	395	24
D 51695	395	23
D 51722	395	41
D 51726	355	17
D 51816	355	16
D 51820	101	19
D 51895	393	4
D 52008	63	5
D 52008	65	5
D 52196	389	39
D 52197	389	40
D 52241	389	9
D 52256	227	9
D 52275	53	20B
D 52276	53	20
D 52319	265	12
D 52319	281	12
D 52434	369	41
D 52471	281	15
D 52477	239	6A
D 52521	375	20
D 52522	369	30
D 52522	369	39
D 52564	429	1
D 52566	219B	18
D 52569	373	88
D 52572	221	27
D 52574	221	30
D 52578	375	46
D 52581	429	4
D 52591	107	15
D 52642	377	1
D 52667	225	4
D 52694	199	10
D 52694	209	44A
D 52694	225	1
D 52694	225	10
D 52694	231	14
D 52694	299	
D 52697	385	13
D 52778	389	12
D 52800	199	11
D 52800	209	1A
D 52800	225	2
D 52800	225	11
D 52800	231	1
D 52800	299	
D 52843	373	89
D 52943	227	2
D 52943	227B	15
D 52944	283	19
D 52945	283	6
D 52950	283	12
D 52970	225	7
D 52970	227	1
D 52970	227B	1
D 52970	283	11
D 52970	285	
D 52980	283	9
D 53047	71	8
D 53101	51	45
D 53268	107	3
D 53297	189	14
D 53549	291	
D 53561	375	13
D 53593	285	1
D 53593	287	
D 53594	285	2
D 53594	291	
D 53595	285	3
D 53595	289	
D 53596	287	20
D 53597	289	32
D 53598	285	5
D 53598	287	24
D 53599	285	6
D 53600	285	4
D 53601	289	12
D 53601	291	5
D 53602	289	25
D 53603	289	19
D 53604	287	13
D 53605	287	7
D 53606	291	16
D 53607	287	10
D 53608	289	17
D 53609	287	8
D 53610	289	5
D 53610	291	11
D 53611	287	15
D 53612	289	4
D 53612	291	10
D 53613	291	8
D 53614	291	13
D 53615	289	13
D 53615	291	6
D 53616	289	9
D 53616	291	3
D 53651	289	7
D 53652	289	11
D 53653	289	27
D 53654	289	24
D 53655	289	22
D 53656	289	18
D 53656	291	15
D 53657	289	20
D 53658	289	16
D 53659	289	15
D 53660	287	5
D 53818	371	49
D 53818	375	31
D 53818	375	42
D 53895	299	6
D 53915	299	2
D 53915	299	13
D 53916	299	4
D 54013	365	11
D 54095	375	27
D 54136	373	74
D 54137	221	19
D 54218	371	62
D 54276	299	7
D 54416	195	8
D 54416	229	13
D 54420	221	18
D 54702	367	52
D 54863	291	23
D 54864	291	21
D 54865	291	20
D 54957	393	2
D 55017	211	37
D 55050	219B	21
D 55082	373	78
D 55216	405	18
D 55218	419	6B
D 55357	209	24
D 55360	209	23
D 55464	221	10
D 55466	221	11
D 55532	51	42A
D 55559	57	28
D 55562	213	18
D 55563	213	24
D 55564	213	25
D 55566	213	26
D 55583	195B	24
D 55583	195	28
D 55584	371	70
D 55624	401	18
D 55626	371	45
D 55688	375	3
D 55727	375	2
D 55749	211	20
D 55767	103	21
D 55865	209	20
D 55880	209	47
D 55946	103	

http://www.minnparbackhoeparts.com/

NUMERICAL INDEX

PART NO.	PAGE NO.	REF. NO.
D 55947	103	
D 55948	103	
D 55949	103	22
D 55951	103	
D 55996	369	14
D 56043	209	15
D 56050	389	34
D 56051	369	15
D 56094	209	1
D 56102	223	8
D 56102	279	1
D 56128	227B	27
D 56194	367	53
D 56245	395	40
D 56252	213	8
D 56252	215	8
D 56252	223	2
D 56287	387	27
D 56335	365	27
D 56409	409	
D 56424	409	
D 56439	269	5
D 56443	269	4
D 56444	269	12
D 56445	269	8
D 56455	269	14
D 56458	279	8
D 56460	279	13
D 56461	279	21
D 56462	279	23
D 56463	279	25
D 56464	279	24
D 56465	279	19
D 56466	279	26
D 56467	279	17
D 56469	279	5
D 56470	279	3
D 56471	239	25
D 56472	279	7
D 56849	105	21
D 56881	279	9
D 56883	409	2
D 56884	409	1
D 56885	409	3
D 56886	409	4
D 56887	409B	7
D 56888	409	8
D 56898	409	16
D 56899	409	17
D 56900	409	18
D 56901	409	19
D 56902	409	20
D 56909	269	7
D 57486	173	15
D 57543	381	1
D 57544	381	1
D 57545	381	1
D 57546	381	1
D 57550	381	2
D 57550	381	2
D 57550	381	2
D 57550	381	2
D 57551	381	3
D 57551	381	3
D 57551	381	3
D 57559	381	4
D 57591	381	4
D 57594	381	4
D 57595	381	4
D 58199	297	3
D 58220	387	26
D 58221	387	25
D 58296	409B	
D 58499	353	8
D 58499	355B	45
D 58499	377	13A
D 58499	379	9
D 58499	383	11A
D 58552	389	14
D 58576	353	9
D 58576	355B	46
D 58576	377	14
D 58576	379	10
D 58576	383	12
D 58577	353	9
D 58577	355B	46
D 58577	377	14
D 58577	379	10
D 58577	383	12
D 58592	353	10
D 58592	377	15
D 58592	379	11
D 58593	353	10
D 58593	377	15
D 58593	379	11
D 58609	219	18
D 58713	77	20
D 58721	77	19
D 59554	403	5
D 59653	269	11
D 59654	269	13
D 59655	269	16
D 59656	239	
D 59667	289	
D 59668	291	
D 59685	409B	2
D 59686	409	6
D 59686	409B	8
D 59687	409	5
D 59687	409B	9
D 59688	409B	11
D 59689	409B	10
D 59689	409	11
D 59695	409	9
D 59771	227B	23
D 59772	227B	10
D 59773	227B	19
D 59896	419	
D 59912	247	13
D 59912	387	10
D 59912	389	1
D 59912	391	1
D 60015	227B	2
D 60016	227B	4
D 60159	365	2
D 60159	365	34
D 60169	365	33
D 60180	419	6A
D 60615	407	20
D 60803	365	7
D 60947	213	19
D 60947	243	
D 60948	213	20
D 60948	243	
D 61058	205	18
D 61065	367	58
D 61065	393	17
D 61076	173	21
D 61087	371	52
D 61087	375	35
D 61088	371	51
D 61088	375	34
D 61241	173	4
D 61244	371	55
D 61244	375	43
D 61247	415	
D 61251	199	2
D 61251	253	10
D 61251	255	10
D 61266	411	13
D 61297	173	14
D 61298	365	6
D 61368	365	25
D 61376	365	24
D 61701	375	22
D 61708	375	10
D 61744	375	19
D 61902	243	2
D 61902	243	6
D 61903	297	
D 62012	407	17
D 62192	351	6
D 62193	351	9
D 62194	351	7
D 62194	351	33
D 62348	209	4
D 62348	269	1
D 62390	185	6
D 62467	373	84
D 62468	373	83
D 63154	167	34
D 63154	171	35
D 63184	183	5
D 63184	183	11
D 63250	181	15
D 63250	183	9
D 63250	185	1
D 63250	189	
D 63263	113	1
D 63293	57	36
D 63293	57D	36
D 63294	57D	32
D 63294	57	32
D 63506	197	41
D 63543	197	40
D 63796	369	40
D 63875	399	11
D 63988	369	15C
D 64050	249	24
D 64171	173	18
D 64222	51	1

http://www.minnparbackhoeparts.com/

NUMERICAL INDEX

PART NO.	PAGE NO.	REF. NO.
D 64276	69	2A
D 64601	183	1
D 64601	187	
D 64621	365	23
D 64731	353	
D 64732	353	
D 64733	353	
D 64734	353	
D 64745	245	27
D 64745	247	31
D 64746	245	8
D 64746	247	8
D 64747	247	15
D 64767	407	2
D 64776	407	8
D 64777	245	12
D 64777	247	12
D 64789	245	3
D 64789	247	3
D 64790	245	14
D 64790	247	18
D 64797	245	26
D 64797	247	30
D 64799	371	69
D 64923	137	
D 64924	137	
D 64925	249	16
D 64968	367	59
D 64968	393	18
D 64997	111	1
D 64999	111	5
D 65000	111	2
D 65020	111	16
D 65139	49	32
D 65139	189	20
D 65187	97	24
D 65247	115	29
D 65371	139	33
D 65373	139	36
D 65375	139	28
D 65378	231	4
D 65378	293	
D 65392	51	42C
D 65446	55	5
D 65446	57B	5
D 65446	67	14
D 65458	57	33
D 65458	57D	33
D 65458	71	2
D 65479	195	37
D 65481	195	38
D 65491	215	27
D 65620	185	9
D 65646	199	21
D 65647	199	37
D 65652	209	9
D 65659	197	4
D 65660	199	26
D 65670	197	3
D 65691	197	5
D 65886	215	30
D 66017	245	25
D 66017	247	29
D 66041	181	14
D 66049	181	11
D 66055	171	31
D 66063	405	21
D 66068	139	20
D 66068	399	5
D 66096	171	9
D 66125	157	1
D 66142	157	5
D 66142	165	4
D 66204	97	15
D 66438	293	6
D 66439	293	7
D 66440	293	8
D 66441	293	1
D 66455	119	11
D 66505	223	30
D 66528	405	1A
D 66561	107	7
D 66567	109	2
D 66581	171	30
D 66655	171	17
D 66705	157	12
D 66741	157	44
D 66741	159	28
D 66769	405	20
D 66844	181	10
D 66937	53	30
D 67017	405	1
D 67038	159	4
D 67039	165	2
D 67041	165	20
D 67081	355	27
D 67083	355	28
D 67084	355	
D 67086	355	
D 67148	59	3
D 67148	61	4
D 67149	69	2
D 67162	169	28
D 67251	67	1
D 67256	405	11
D 67296	183	14
D 67296	185	16
D 67296	195	15
D 67296	195B	16
D 67297	197	28
D 67297	199	35
D 67297	201	9
D 67298	197	26
D 67308	365	13
D 67317	173	3
D 67329	203	7
D 67331	203	14
D 67337	393	1
D 67357	351	13
D 67490	169	16
D 67493	167	24
D 67493	169	11
D 67497	167	25
D 67497	169	12
D 67505	199	7
D 67506	203	5
D 67507	203	4
D 67529	169	31
D 67580	411B	24
D 67594	245	16
D 67594	247	20
D 67599	357	
D 67656	171	38
D 67695	59	25
D 67695	61	26
D 67711	199	29
D 67717	199	20
D 67721	55	3
D 67721	57B	3
D 67730	205	17
D 67731	205	16
D 67743	59	20
D 67749	411	10A
D 67759	387	1
D 67761	387	2
D 67762	387	12
D 67763	387	34
D 67765	387	5
D 67766	387	7
D 67767	387	8
D 67768	391	2
D 67771	387	4
D 67774	387	9
D 67775	387	38
D 67778	385	18
D 67779	385	6
D 67782	385	26
D 67783	387	22
D 67783	389	33
D 67783	391	8
D 67788	223	18
D 67788	385	1
D 67790	365	1
D 67791	367	41
D 67791	369	1
D 67792	209	39
D 67811	167	33
D 67814	167	29
D 67872	59	8
D 67872	61	15
D 67872	99	9
D 67874	55	18
D 67875	57	34
D 67876	55	15
D 67876	57B	15
D 67879	55	2
D 67896	205	4
D 67896	207	5
D 67897	205	5
D 67897	207	4
D 67903	67	16
D 67915	199	25
D 67956	59	1
D 67956	63	1
D 67957	55	10
D 67961	59	15
D 67961	59	39
D 67961	71	14
D 67961	81	19
D 67961	93	12
D 67962	59	14
D 67962	63	16

http://www.minnparbackhoeparts.com/

NUMERICAL INDEX

PART NO.	PAGE NO.	REF. NO.
D 67962	71	13
D 67962	81	14
D 67962	93	2A
D 67962	99	15
D 67983	159	1
D 67987	157	2
D 67987	165	1
D 67988	157	10
D 67988	159	5
D 67993	157	11
D 67993	159	2
D 68091	403	3
D 68109	157	34
D 68111	157	35
D 68113	159	18
D 68115	159	19
D 68123	157	20
D 68186	171	26
D 68238	403	1
D 68239	109	1
D 68256	111	20
D 68266	171	20
D 68268	171	34
D 68299	109	27
D 68311	211	11
D 68313	211	10
D 68315	209	41
D 68362	405	16
D 68445	403	4
D 68459	211	9
D 68461	211	8
D 68536	199	30
D 68547	197	18
D 68573	209	29
D 68629	199	7A
D 68638	183	24
D 68638	185	15
D 68638	195	14
D 68638	1958	17A
D 68638	195	24
D 68646	183	15
D 68646	185	22
D 68646	1958	17
D 68646	195	19
D 68659	405	24
D 68661	113	20
D 68666	405	19
D 68667	405	17
D 68669	125	7
D 68670	113	7
D 68737	157	28
D 68737	159	15A
D 68738	401	9
D 68790	185	4
D 68792	185	5
D 68794	183	6
D 68796	183	10
D 68799	53	24
D 68800	53	25
D 68804	229	3
D 68804	229B	3
D 68806	197	36
D 68834	195	1
D 68845	197	27
D 68846	197	29
D 68846	199	36
D 68846	201	10
D 68851	69	21
D 68862	413	6
D 68953	53	15
D 68972	1958	23
D 68972	195	27
D 68973	1958	26
D 68973	195	30
D 68976	53	13
D 69004	195	12
D 69006	195	39
D 69037	53	3
D 69050	195	11
D 69050	1958	12
D 69050	195	40
D 69051	1958	22
D 69051	195	26
D 69061	385	34
D 69064	53	6
D 69065	53	4
D 69066	53	8
D 69067	53	5
D 69068	53	7
D 69076	195	43
D 69083	415	1
D 69105	139	10
D 69106	169	25
D 69116	403	16
D 69117	361	1
D 69118	361	2
D 69130	387	32
D 69131	387	35
D 69160	413	3
D 69168	217	8
D 69170	219	9
D 69170	219B	9
D 69177	215	16
D 69180	167	21
D 69180	169	8
D 69180	245	5
D 69180	247	5
D 69194	393	9
D 69199	215	17
D 69200	357	7
D 69200	359	1
D 69201	357	8
D 69201	359	4
D 69234	215	31
D 69237	215	29
D 69263	73	6
D 69263	77	12
D 69280	157	38
D 69280	159	22
D 69282	157	37
D 69282	159	21
D 69352	361	5
D 69365	51	42B
D 69366	51	38A
D 69400	163	18
D 69410	163	33
D 69411	163	31
D 69415	203	21
D 69421	215	24
D 69460	205	7
D 69462	205	6
D 69516	223	10
D 69517	223	14
D 69518	223	5
D 69520	223	25A
D 69565	249	10
D 69566	249	12
D 69568	249	23
D 69578	249	20
D 69601	245	20
D 69601	247	24
D 69604	249	17
D 69605	139	2
D 69606	139	3
D 69650	223	28
D 69651	223	29
D 69669	115	28A
D 69710	85	
D 69724	207	7
D 69726	207	6
D 69728	385	35
D 69728	415	2
D 69730	415	3
D 69763	139	7
D 69884	81	31
D 69884	83	31
D 69895	81	21
D 69895	83	21
D 69901	81	23
D 69902	81	24
D 69902	83	24
D 69903	81	20A
D 69908	389	20
D 69910	389	21
D 69913	389	3
D 69915	389	4
D 69917	389	19
D 69918	389	26
D 69920	389	18
D 69921	389	27
D 69924	389	16
D 69925	389	15
D 69932	389	32
D 69933	389	22
D 69934	391	2A
D 69950	81	22A
D 69950	83	22A
D 69955	245	13
D 69960	249	29
D 69980	429	8
D 69982	163	35
D 69988	369	9
D 69990	163	12
D 69991	163	15
D 69994	163	25
D 69995	163	26
D 69997	163	24
D 70025	99	3
D 70026	101	15
D 70035	101	2
D 70115	73	17
D 70115	75	24

http://www.minnparbackhoeparts.com/

NUMERICAL INDEX

PART NO.	PAGE NO.	REF. NO.
D 70115	798	
D 70125	101	22
D 70126	101	13
D 70127	101	1
D 70139	4118	29
D 70140	4118	33
D 70199	99	7
D 70200	99	17
D 70393	117	61
D 70394	165	16
D 70450	165	22
D 70454	165	25
D 70468	165	17
D 70471	117	62
D 70484	411	1
D 70485	411	4
D 70492	63	23
D 70492	65	23
D 70498	405	22
D 70499	405	23
D 70506	405	24
D 70508	405	19
D 70514	51	44
D 70534	197	19
D 70586	189	15
D 70629	137	
D 70650	119	
D 70652	115	
D 70655	117	41
D 70660	117	51
D 70665	115	2
D 70666	121	
D 70667	121	24
D 70668	121	26
D 70670	121	7
D 70671	117	40
D 70672	121	15
D 70673	117	44
D 70718	169	27
D 70721	181	14
D 70730	167	15
D 70731	103	3
D 70747	73	9
D 70747	75	18
D 70801	81	32
D 70801	83	32
D 70855	199	14
D 70870	217	9
D 70871	2198	8A
D 70871	219	8A
D 71026	419	3
D 71027	419	4
D 71028	419	1
D 71029	419	2
D 71139	67	11
D 71303	85	
D 71305	85	14
D 71307	137	1
D 71308	137	1
D 71310	189	2
D 71311	189	3
D 71312	189	
D 71313	191	
D 71315	191	50
D 71316	191	53
D 71329	187	25
D 71330	187	17
D 71332	103	23
D 71334	69	3
D 71335	69	
D 71336	69	8
D 71337	69	9
D 71338	69	10
D 71339	69	11
D 71340	69	11A
D 71341	69	12
D 71342	69	13
D 71343	69	14
D 71344	69	15
D 71346	69	18
D 71408	431	
D 71408	433	
D 71409	798	9
D 71411	89	19
D 71411	91	21
D 71412	89	17
D 71414	89	22
D 71414	91	16
D 71415	89	
D 71417	89	23
D 71417	91	5
D 71418	89	24
D 71418	91	6
D 71419	89	25
D 71419	91	7
D 71420	89	26
D 71420	91	8
D 71421	89	27
D 71421	91	9
D 71422	89	29
D 71422	91	11
D 71427	91	3
D 71584	181	5
D 71665	265	
D 71668	201	4
D 71668	281	
D 71713	173	25
D 71714	173	26
D 71716	231	19
D 71758	113	10
D 71805	229	1
D 71805	2298	1
D 71807	229	21
D 71813	167	18
D 71815	171	14
D 71818	169	7
D 71820	171	16
D 71822	167	20
D 71830	167	3
D 71843	173	1
D 71844	173	2
D 71868	235	57
D 71868	295	1
D 71870	367	55
D 71870	393	14
D 71880	167	16
D 71880	169	3
D 71880	171	12
D 71880	249	36
D 71940	2298	21
D 71940	229	22
D 71941	199	30A
D 71941	231	31
D 71957	167	4
D 71965	233	38
D 71966	233	39
D 71968	233	16
D 72019	233	17
D 72020	231	28
D 72023	233	12
D 72024	81	4
D 72024	83	4
D 72038	229	19A
D 72040	229	4A
D 72041	229	12
D 72043	4118	24A
D 72064	229	19
D 72066	229	4
D 72091	209	44
D 72091	223	33
D 72095	199	9
D 72098	197	44
D 72099	249	11
D 72141	249	37
D 72144	249	32
D 72147	249	31
D 72196	241	
D 72227	201	5
D 72229	201	1
D 72231	247	2
D 72232	245	6
D 72232	247	6
D 72241	245	33
D 72270	251	44
D 72274	233	18
D 72284	215	19
D 72287	249	30
D 72287	351	22
D 72300	241	
D 72302	245	31
D 72302	247	35
D 72303	179	4
D 72304	179	4
D 72323	179	5
D 72323	179	5
D 72337	173	7
D 72356	405	9
D 72359	369	28
D 72371	173	10
D 72372	173	12
D 72398	199	16A
D 72400	197	20
D 72402	199	16
D 72404	157	9
D 72404	165	7
D 72423	231	22
D 72434	233	40
D 72528	169	2
D 72566	253	1
D 72566	255	1
D 72625	233	2
D 72627	233	1

http://www.minnparbackhoeparts.com/

NUMERICAL INDEX

PART NO.	PAGE NO.	REF. NO.
D 72629	231	17
D 72631	231	25
D 72652	233	
D 72653	233	11
D 72655	231	8
D 72656	231	13
D 72659	225	9A
D 72661	231	21
D 72680	227	25
D 72822	117	48
D 72823	57D	39
D 72823	57	40
D 72823	117	52
D 72848	91	
D 72849	91	17
D 72850	91	18
D 72851	189	
D 72862	403	1A
D 72863	59	21
D 72863	61	22
D 72875	395	5
D 72891	167	9
D 72914	93	6
D 72914	95	2
D 72915	59	38
D 72915	93	5
D 72920	73	21
D 72921	63	12
D 72922	59	41
D 72922	71	17
D 72922	93	13
D 72923	73	24
D 72939	59	42
D 72939	71	18
D 72939	93	14
D 72991	81	33
D 73009	389	2
D 73014	157	17
D 73053	213	16
D 73055	213	17
D 73120	385	10
D 73137	81	6
D 73137	83	6
D 73170	105	9
D 73170	107	1
D 73198	51	38
D 73208	411	10B
D 73223	419	5
D 73231	397	11
D 73232	397	10
D 73244	205	13
D 73298	219B	10A
D 73300	219B	11
D 73302	219B	12
D 73304	219B	13
D 73313	411	10
D 73319	197	23
D 73346	209	39
D 73348	219	11A
D 73350	219	10
D 73369	81	1
D 73369	83	1
D 73377	221	9
D 73383	55	17A
D 73383	57B	17
D 73384	115	
D 73386	171	33
D 73397	173	27
D 73427	55	18A
D 73427	57B	18
D 73429	411	17
D 73446	51	32
D 73456	55	2
D 73500	53	9
D 73505	163	35A
D 73511	253	1
D 73512	255	1
D 73579	231	15
D 73580	231	3
D 73615	241	10
D 73616	241	2
D 73617	241	6
D 73618	241	7
D 73619	241	5
D 73620	241	4
D 73621	241	3
D 73622	241	9
D 73623	241	8
D 73624	241	1
D 73642	91	12
D 73649	137	
D 73670	189	
D 73671	189	
D 73701	119	
D 73726	409	9
D 73776	115	28A
D 73777	137	
D 73781	137	
D 73799	173	28
D 73800	205	18A
D 73821	409	
D 73824	169	5
D 73826	375	
D 73847	385	30
D 73865	407	1
D 73867	413	21
D 73910	199	22
D 73910	297	1
D 73911	249	1
D 73913	249	5
D 73915	67	4
D 73918	67	18
D 73919	67	12
D 73929	67	2
D 73929	431	23
D 74007	367	54
D 74007	393	13
D 74027	111	
D 74031	81	34
D 74031	83	34
D 74182	233	5
D 74192	233	6
D 74213	419	7
D 74215	165	16A
D 74216	165	22A
D 74220	411	2
D 74230	413	1
D 74231	413	2
D 74242	411	16
D 74330	59	17
D 74330	61	19
D 74330	63	18
D 74330	65	18
D 74330	105	9B
D 74330	107	18
D 74335	233	
D 74338	219	11
D 74339	219B	8
D 74339	219	8
D 74342	231	32
D 74343	55	10A
D 74343	57B	10
D 74379	295	9
D 74380	295	8
D 74381	295	11
D 74382	295	3
D 74383	295	17
D 74385	295	16
D 74387	295	19
D 74388	295	18
D 74389	295	24
D 74390	295	26
D 74391	295	27
D 74392	295	25
D 74393	295	29
D 74394	295	23
D 74395	295	21
D 74396	295	20
D 74397	295	10
D 74398	295	15
D 74399	295	14
D 74400	295	7
D 74401	295	6
D 74402	295	2
D 74418	241	2
D 74419	241	6
D 74420	241	7
D 74422	103	20
D 74440	191	49
D 74441	241	11
D 74623	139	39
D 74632	237	10
D 74695	115	33A
D 74741	237	11
D 74799	237	6
D 74801	237	26
D 74814	237	22
D 74846	419	9
D 74847	419	10
D 74848	251	44A
D 74849	251	44B
D 74872	237	21
D 74873	237	15
D 74876	237	17
D 74877	237	20
D 74931	231	36
D 74934	231	34
D 74949	175	8
D 74991	57	31
D 74991	57D	31
D 75008	407	21
D 75025	67	23

http://www.minnparbackhoeparts.com/

NUMERICAL INDEX

PART NO.	PAGE NO.	REF. NO.
D 75026	55	2
D 75026	57B	2
D 75027	61	1
D 75027	65	1
D 75028	57	34A
D 75028	57D	34
D 75043	57D	31A
D 75043	57	31A
D 75052	57	27A
D 75075	229	14
D 75080	223	25
D 75145	405	24
D 75146	405	24
D 75201	171	23A
D 75217	237	13
D 75219	237	1
D 75225	61	18
D 75225	61	36
D 75225	65	15
D 75225	71	20
D 75225	95	11
D 75234	195	3
D 75234	229	23
D 75238	181	14
D 75239	77	15
D 75251	419	8
D 75274	351	1
D 75300	369	15D
D 75355	61	9
D 75356	61	13
D 75356	65	14
D 75357	61	14
D 75357	61	35
D 75357	65	13
D 75357	71	19
D 75357	83	16
D 75357	95	10
D 75357	99	18
D 75360	61	21
D 75362	109	8
D 75364	115	
D 75370	163	1
D 75381	391	28
D 75410	171	42
D 75417	411	8A
D 75422	111	1A
D 75428	407	20
D 75434	389	2A
D 75454	83	33
D 75465	57	38A
D 75465	57D	38
D 75468	117	66
D 75487	115	
D 75488	117	43A
D 75490	117	
D 75519	411	8
D 75557	73	28
D 75571	411	2
D 75575	199	2A
D 75575	253	10A
D 75575	255	10A
D 75588	83	20
D 75592	71	7
D 75597	401	1
D 75598	401	2
D 75632	355	2
D 75633	355	
D 75636	355	9
D 75644	355	
D 75650	81	22
D 75650	83	22
D 75652	83	23
D 75674	369	15B
D 75712	71	3
D 75722	251	51
D 75724	251	52
D 75730	107	7A
D 75756	249	23
D 75761	105	9A
D 75761	107	1A
D 75814	101	19A
D 75815	101	15A
D 75817	83	20A
D 75818	99	19
D 75828	233	25
D 75828	233	29
D 75828	235	43
D 75828	235	50
D 75831	297	
D 75847	137	6
D 75955	61	37
D 75955	95	6
D 75956	95	9
D 75957	101	1A
D 75958	65	12
D 76050	185	2A
D 76063	93	2
D 76066	181	14
D 76097	1958	1
D 76118	71	4
D 76166	165	11
D 76175	251	56
D 76194	245	2
D 76195	183	16
D 76195	185	23
D 76195	1958	19
D 76195	195	20
D 76196	157	25
D 76207	159	10
D 76208	205	12
D 76209	203	11
D 76211	159	9
D 76212	2198	31
D 76213	195	9
D 76214	71	9
D 76214	99	19A
D 76214	101	18
D 76235	211	19
D 76243	399	1
D 76258	353	6
D 76259	353	
D 76355	139	39
D 76418	2198	10
D 76429	171	2
D 76517	247	14
D 76533	351	1A
D 76544	2298	7
D 76569	1958	7
D 76569	2298	13
D 76570	1958	6
D 76570	2298	12
D 76602	1958	15
D 76605	113	4
D 76605	125	4
D 76754	361	5A
D 76755	411	17A
D 76776	111	16A
D 76890	203	21A
D 77105	385	34
D 77114	411B	24B
D 77326	351	27A
D 77473	117	
D 77474	117	41A
D 77475	117	44A
D 77476	117	40A
D 77581	117	46A
D 77621	117	57
D 77725	371	50
D 77790	77	6
D 77810	43	1
D 77835	2298	19
D 77837	2298	4
D 77843	53	1
D 77947	2298	20
D 78005	43	
D 78235	53	27
D 78397	121	21
D 78398	121	21
D 78855	117	66
D 78930	403	4A
D 79078	57D	45
D 79118	199	7C
D 79120	199	7B
D 79476	57B	15
D 79761	103	1
D 79764	1958	14
D 79843	355	
D 79952	1238	1
D 80135	1238	3
D 80438	173	26A
D 80730	57D	28
D 80884	57B	2
D 80892	57D	31
D 80894	117	62
D 81319	103	10A
D 95072	353	3
D 95072	353	6
D 95072	355	2
D 95073	353	3
D 95073	353	6
D 95074	383	2
D 95092	245	10
D 95092	245	22
D 95092	247	10
D 95092	247	17
D 95092	247	26
D 95093	171	32
D 95096	245	7
D 95096	245	11
D 95096	247	7
D 95096	247	11
D 95097	165	18

http://www.minnparbackhoeparts.com/

NUMERICAL INDEX

PART NO.	PAGE NO.	REF. NO.
D 95098	167	32
D 95098	169	19
D 95098	169	28A
D 95141	345	5
D 95141	347	5
D 95141	349	6
D 95142	305	6
D 95142	307	6
D 95142	313	6
D 95142	315	6
D 95142	337	6
D 95142	339	6
D 95142	341	7
D 95142	343	7
D 95143	301	5
D 95143	303	5
D 95143	309	7
D 95143	311	7
D 95143	325	6
D 95143	327	6
D 95144	317	8
D 95144	319	8
D 95144	321	6
D 95144	323	6
D 95144	329	7
D 95144	331	7
D 95144	333	7
D 95144	335	7
D 95251	227	24
D 95252	227	22
D 95362	369	11
D 95461	4118	34
D 95538	387	11
D 95581	411	15
D 95582	411	9
D 95585	413	9
D 95632	245	9
D 95632	245	21
D 95632	247	9
D 95632	247	16
D 95632	247	25
D 95743	229	14B
D 95744	139	32
D 95745	229	6
D 95745	229	14A
D 95745	4118	27A
D 95746	4118	27B
D 95748	249	35
D 95781	59	18
D 95781	61	20
D 95782	63	20
D 95782	65	20
D 95783	63	19
D 95783	65	19
D 95783	105	9C
D 95783	107	1C
D 95801	219	15
D 95811	403	18
D 95813	403	19
E 15133	383	5
E 35287	215	18
F 8235	269	6
F 9857	279	4
F 10142	55	17
F 18390	187	30
F 19633	189	26
F 19634	189	27
F 22312	109	13
F 30271	239	6
F 35196	269	10
F 40807	393	3
F 41695	167	31
F 41695	169	18
F 42100	423	17
F 42236	407	25
F 42706	89	11
F 43086	421	
F 43086	423	
F 43087	421	
F 43589	421	25
F 43789	89	33
F 43809	85	1
F 43810	85	2
F 43811	85	4
F 43811	85	18
F 43812	85	5
F 43813	85	6
F 43832	421	26
F 43937	421	29
F 43938	89	34
F 43951	421	4
F 43952	421	5
F 43953	421	3
F 43958	421	14
F 43959	421	15
F 43960	89	7
F 43961	421	32
F 43962	75	8
F 43966	423	20
F 43967	4238	40
F 43968	423	23
F 43980	423	24
F 43981	423	7
F 43996	417	4
F 44038	4238	41
F 44337	75	10
F 44338	75	9
F 44339	75	12
F 44407	75	13
F 44452	89	20
F 44452	91	22
F 44456	89	18
F 44456	91	19
F 44590	4238	41A
F 44595	417	
F 44595	421	
F 44607	75	8B
F 44608	75	8A
F 44617	421	2
F 51079	135	30
F 53322	75	7
F 62020	279	20
F 62075	13	6
F 62075	31	13
F 62075	31	27
F 62075	193	14
F 62075	289	6
F 62075	289	26
F 62075	291	12
F 62076	349	17
F 62105	151	15
F 62114	259	14
F 63115	97	5
F 63783	4238	39
F 63860	4238	30
F 63925	4238	34
F 64210	91	2
F 82943	191	
F 84999	109	15
F 91760	109	14
F 91761	109	12
F 93158	97	
F 93268	73	8
F 93268	73	25
F 93268	77	13
F 93268	93	9
F 93268	95	3
F 93602	89	1
F 93602	91	
F 93834	81	9
F 93834	83	9
F 93834	85	
F 93842	423	27
F 93871	423	1
F 93872	423	2
F 93875	421	27
F 93877	89	38
F 93878	421	35
F 93879	421	34
F 93880	423	22
F 93883	423	6
F 93884	423	18
F 93886	421	7
F 93889	423	14
F 93892	423	19
F 96595	75	29
F 96596	75	28
F 96637	89	15
F 96637	91	
F 96637	91	1
F 96694	423	1
F 96695	423	2
F 96701	75	29A
F 96702	75	28A
F 98123	4238	31
G 2068	19	14
G 2068	21	19
G 2069	19	13
G 2069	21	22
G 2076	33	10
G 2100	21	9
G 2101	21	7
G 2126	23	19
G 2127	23	18
G 2128	23	17
G 2144	13	12
G 10340	145	29
G 10341	145	29
G 10342	143	2
G 10347	149	29
G 10347	151	2
G 10415	151	12

http://www.minnparbackhoeparts.com/

NUMERICAL INDEX

PART NO.	PAGE NO.	REF. NO.
G 10419	131	9
G 10420	133	3
G 10422	145	31
G 10424	145	26
G 10425	145	27
G 10447	141	19
G 10447	233	13
G 10616	145	5
G 10617	397	5
G 10701	179	6
G 10701	179	6
G 10710	141	12
G 10719	149	27
G 10720	149	27
G 11204	33	2
G 11207	125	10
G 11337	17	20
G 11338	17	20
G 11339	13	27
G 11710	27	27
G 11710	27	33
G 11726	33	13
G 11728	33	16
G 11729	33	16
G 11730	33	16
G 11731	33	16
G 11732	33	15
G 11746	33	17
G 11852	33	14
G 11927	21	37
G 13606	131	10
G 13607	131	3
G 13608	133	18
G 13609	133	5
G 13609	135	32
G 13801	151	6
G 13822	151	7
G 14403	397	8
G 15207	151	10
G 15208	151	11
G 15214	175	2
G 15215	175	9
G 15457	333	10
G 15457	335	10
G 15468	143	6
G 15801	153	24
G 16606	135	28
G 16607	135	34
G 16608	133	8
G 16608	135	35
G 16612	133	17
G 16614	133	20
G 16615	133	2
G 16619	131	12
G 16619	135	7
G 16620	135	6
G 16621	135	10
G 16625	131	20
G 16735	395	28
G 30266	397	4
G 32079	329	1
G 32122	301	9
G 32122	303	9
G 32122	309	11
G 32122	311	11
G 32122	337	10
G 32122	339	10
G 32122	341	11
G 32122	343	11
G 32126	333	11
G 32126	335	11
G 32129	305	9
G 32129	307	9
G 32129	313	9
G 32129	315	9
G 32129	345	8
G 32129	347	8
G 32129	349	9
G 32176	317	12
G 32176	319	12
G 32176	321	10
G 32176	323	10
G 32176	329	11
G 32176	331	11
G 32294	305	
G 32294	313	
G 32295	345	
G 32303	301	18
G 32303	303	18
G 32303	309	21
G 32303	311	21
G 32303	325	20
G 32303	327	20
G 32303	333	20
G 32303	335	20
G 32304	309	2
G 32304	311	2
G 32305	309	2
G 32305	311	2
G 32313	345	2
G 32313	347	2
G 32317	305	20
G 32317	307	20
G 32317	313	20
G 32317	315	20
G 32317	337	19
G 32317	339	19
G 32317	341	21
G 32317	343	21
G 32317	345	20
G 32317	347	20
G 32321	349	3
G 32321	349	13
G 32330	341	2
G 32330	343	2
G 32351	317	21
G 32351	319	21
G 32351	321	22
G 32351	323	22
G 32351	329	20
G 32351	331	20
G 32399	333	2
G 32399	335	2
G 32429	157	29
G 32429	159	16A
G 32699	337	2
G 32699	339	2
G 32831	329	2
G 33075	273	8
G 33075	2738	8
G 33075	275	8
G 33075	277	8
G 33077	2738	9
G 33077	273	9
G 33077	275	9
G 33077	277	9
G 33080	2738	10
G 33080	273	10
G 33080	275	10
G 33080	277	10
G 33081	2738	11
G 33081	273	11
G 33081	275	11
G 33081	277	11
G 33084	2738	13
G 33084	273	13
G 33084	275	13
G 33084	277	13
G 33089	277	17
G 33090	273	19
G 33090	275	22
G 33090	277	19
G 33090	277	33
G 33091	273	20
G 33091	275	24
G 33091	277	21
G 33091	277	34
G 33092	273	22
G 33092	275	26
G 33092	277	23
G 33092	277	36
G 33093	277	28
G 33097	273	1
G 33099	277	1
G 33100	277	15
G 33102	271	23
G 33104	271	25
G 33105	271	26
G 33106	271	27
G 33108	271	13
G 33110	271	15
G 33112	271	19
G 33113	271	21
G 33114	271	11
G 33121	2738	1
G 33122	2738	15
G 33128	349	1
G 33128	395	27
G 33129	349	2
G 33134	349	12
G 33138	349	15
G 33139	349	16
G 33140	349	18
G 33141	349	
G 33142	337	1
G 33143	337	12
G 33143	339	12
G 33150	337	13
G 33150	341	15
G 33151	301	
G 33151	309	17
G 33151	337	

http://www.minnparbackhoeparts.com/

NUMERICAL INDEX

PART NO.	PAGE NO.	REF. NO.
G 33151	341	
G 33154	329	13
G 33154	331	13
G 33159	317	16
G 33159	321	14
G 33159	329	15
G 33162	333	13
G 33162	335	13
G 33167	333	15
G 33180	325	13
G 33181	325	18
G 33182	325	14
G 33186	325	
G 33193	305	
G 33193	313	
G 33193	345	
G 33196	333	1
G 33241	277	20
G 33331	301	13
G 33331	309	15
G 33347	345	14
G 33351	345	1
G 33351	395	11
G 33352	345	11
G 33352	347	11
G 33419	305	14
G 33419	313	14
G 33420	305	1
G 33421	305	1
G 33422	305	12
G 33422	307	12
G 33456	341	1
G 33456	395	19
G 33457	341	13
G 33457	343	13
G 33487	305	
G 33487	307	
G 33487	313	
G 33487	315	
G 33573	273	12
G 33573	2738	12
G 33573	275	12
G 33573	277	12
G 33578	345	
G 33578	347	
G 33578	349	
G 33686	2738	14
G 33686	273	14
G 33686	275	14
G 33686	277	14
G 33798	309	1
G 33799	309	1
G 33800	309	13
G 33800	311	13
G 33803	2738	6
G 33803	273	6
G 33803	275	6
G 33803	277	6
G 33881	325	1
G 33882	325	2
G 33882	327	2
G 33885	325	12
G 33885	327	12
G 33964	271	9
G 33965	271	10
G 34000	271	8
G 34001	271	7
G 34043	273	
G 34043	277	29
G 34293	313	
G 34294	313	12
G 34294	315	12
G 34302	337	7
G 34302	339	7
G 34302	341	8
G 34302	343	8
G 34322	317	9
G 34322	319	9
G 34322	321	7
G 34322	323	7
G 34322	329	8
G 34322	331	8
G 34322	333	8
G 34322	335	8
G 34328	337	
G 34328	339	
G 34328	341	
G 34328	343	
G 34331	317	
G 34331	319	
G 34331	321	
G 34331	323	
G 34331	329	
G 34331	331	
G 34332	337	
G 34332	341	
G 34455	275	23
G 34458	275	16
G 34463	273	7
G 34463	2738	7
G 34463	275	7
G 34463	277	7
G 34468	317	2
G 34468	319	2
G 34469	317	2
G 34469	319	2
G 34470	317	1
G 34471	317	1
G 34475	317	14
G 34475	319	14
G 34586	271	16
G 34594	317	
G 34594	321	
G 34594	329	
G 34621	301	6
G 34621	303	6
G 34621	309	8
G 34621	311	8
G 34621	325	7
G 34621	327	7
G 34629	333	
G 34629	335	
G 34633	301	
G 34633	303	
G 34633	309	
G 34633	311	
G 34642	301	
G 34642	309	
G 34649	325	
G 34649	327	
G 34651	333	
G 34653	325	
G 34657	275	
G 34675	271	11
G 34775	321	12
G 34775	323	12
G 34854	321	13
G 34854	323	13
G 34862	273	
G 34862	275	
G 34862	277	
G 34875	321	3
G 34875	323	3
G 34877	321	2
G 34877	323	2
G 34881	321	1
G 34897	271	1
G 34937	275	17
G 34938	275	15
G 34941	275	1
G 35332	301	11
G 35332	303	11
G 35360	271	1
G 35444	273	1
G 35445	277	1
G 35540	2738	18
G 35540	273	28
G 35540	275	32
G 35540	277	28A
G 35540	277	42
G 44891	498	49
G 45337	39	32
G 45338	39	26
G 45410	51	46
G 46077	131	17
G 46078	131	18
G 46078	145	21
G 46081	133	6
G 46081	135	33
G 46082	133	4
G 46082	135	13
G 46082	135	31
G 46097	131	21
G 46097	135	11
G 46150	273	23
G 46150	275	27
G 46150	277	24
G 46150	277	37
G 46344	153	18
G 46345	153	17
G 46702	29	8
G 46849	141	7
G 46851	21	26
G 46851	31	5
G 46852	17	13
G 46852	31	26
G 46853	11	32
G 46853	51	37
G 46854	31	28
G 46859	31	30
G 46871	11	4
G 46871	11	17

http://www.minnparbackhoeparts.com/

NUMERICAL INDEX

PART NO.	PAGE NO.	REF. NO.
G 46871	31	9
G 46872	11	36
G 46872	31	8
G 46907	13	13
G 47039	131	27
G 47039	135	20
G 47039	143	19
G 47077	21	13
G 47079	21	12
G 48500	17	9
G 48501	21	4
G 48502	39	7
G 48505	39	27
G 48507	153	26
G 48508	153	15
G 49010	147	16
G 49048	125	16
G 49065	21	23
G 49067	21	6
G 49068	31	15
G 49070	23	3
G 49080	37	6
G 49082	153	19
G 49088	39	39
G 49400	19	32
G 49401	129	21
G 49407	31	10
G 49407	35	22
G 49407	39	42
G 49608	23	8
G 49621	39	28
G 49666	127	18
G 100192	275	1
G 100193	2738	1
G 100196	271	1
G 100244	271	1
G 100412	301	2
G 100413	301	2
G 100414	301	1
G 100415	301	1
G 100438	319	16
G 100438	331	15
G 100439	319	17
G 100439	323	15
G 100439	331	16
G 100440	319	18
G 100440	323	16
G 100440	331	17
G 100442	339	13
G 100442	343	15
G 100443	303	14
G 100443	311	16
G 100443	339	14
G 100443	343	16
G 100444	303	15
G 100444	311	17
G 100444	339	16
G 100444	343	18
G 100448	319	19
G 100448	323	17
G 100448	331	18
G 100449	303	16
G 100449	311	18
G 100449	339	17
G 100449	343	19
G 100642	327	13
G 100694	335	15
G 100704	303	13
G 100704	311	15
G 100706	307	14
G 100706	315	14
G 100708	347	14
G 100709	335	16
G 100710	335	17
G 100711	335	18
G 100712	307	15
G 100712	315	15
G 100712	347	15
G 100713	307	17
G 100713	315	17
G 100713	347	17
G 100714	307	18
G 100714	315	18
G 100714	347	18
G 100775	345	
G 100775	347	
G 100775	349	
G 100776	305	
G 100776	307	
G 100776	313	
G 100776	315	
G 100776	337	
G 100776	339	
G 100776	341	
G 100776	343	
G 100777	301	
G 100777	303	
G 100777	309	
G 100777	311	
G 100777	325	
G 100777	327	
G 100778	317	
G 100778	319	
G 100778	321	
G 100778	323	
G 100778	329	
G 100778	331	
G 100778	333	
G 100778	335	
G 100959	2738	16
G 100959	273	27
G 100959	275	31
G 100959	277	41
G 101175	331	1
G 101176	335	1
G 101177	327	1
G 101180	319	1
G 101181	319	1
G 101182	323	1
G 101183	339	1
G 101184	303	1
G 101186	307	1
G 101187	307	1
G 101188	347	1
G 101189	343	1
G 101190	311	1
G 101191	311	1
G 101251	315	1
G 101287	319	
G 101287	323	
G 101287	331	
G 101288	335	
G 101289	327	
G 101290	339	
G 101290	343	
G 101291	303	
G 101291	311	
G 101292	307	
G 101292	315	
G 101293	347	
G 101309	323	14
G 101514	303	2
G 101516	331	2
H 260927	239	18
H 260935	239	19
H 747964	115	4
H 756221	239	22
L 10082	73	26
L 10082	93	8
L 10082	95	4
L 10283	103	1
L 11182	249	18
L 11247	109	25
L 11508	59	5
L 11508	59	40
L 11508	71	16
L 11508	93	11
L 11760	59	19
L 11760	67	13
L 11760	251	46
L 13468	81	35
L 13468	83	35
L 13468	87	1
L 13765	75	33
L 16099	93	3
L 16099	95	7
L 16099	97	
L 17985	81	2
L 17985	83	2
L 18331	57D	40
L 18331	57	41
L 18331	59	2
L 18331	61	2
L 18331	63	2
L 18331	65	2
L 18331	67	17
L 18331	71	5
L 18331	73	11
L 18331	81	8
L 18331	83	8
L 18331	99	8
L 18331	101	25
L 18331	103	7
L 18331	105	11
L 18331	107	4
L 18331	171	388
L 18331	219	17
L 18331	221	26
L 18331	231	29
L 18331	237	16
L 18331	251	45
L 25419	157	23

http://www.minnparbackhoeparts.com/

580C CONSTRUCTION KING LOADER BACKHOE

NUMERICAL INDEX

PART NO.	PAGE NO.	REF. NO.
L 25419	159	8
L 25419	161	1
L 30443	265	8
L 30443	265	16
L 30443	265	23
L 30443	281	8
L 30444	265	9
L 30444	265	15
L 30444	265	22
L 30444	281	9
L 30454	261	17
L 30455	261	13
L 30456	261	15
L 30458	261	18
L 30487	123	12
L 30489	123	3
L 30495	137	5
L 30536	409B	3
L 30626	261	16
L 30744	257	1
L 30744	259	1
L 30866	99	2
L 30900	87	9
L 30902	87	5
L 30903	87	12
L 30904	87	3
L 30906	87	4
L 30907	87	2
L 30908	87	11
L 30909	87	10
L 30910	87	13
L 30975	163	8
L 31330	279	28
L 32126	161	5
L 32127	161	2
L 32128	161	3
L 32129	161	
L 32137	161	6
L 32213	79	
L 32214	79	
L 32214	79	
L 32219	97	8
L 32220	97	11
L 32221	97	10
L 32222	97	14
L 32224	97	17
L 32225	97	18
L 32226	97	20
L 32227	97	25
L 32228	97	21
L 32256	79	9
L 32256	79	18
L 32680	199	4
L 32680	253	12
L 32680	255	12
L 32699	85	15
L 33289	151	13
L 33717	171	38A
L 33782	259	27
L 35090	253	2
L 35090	255	3A
L 35090	259	
L 35092	97	
L 35144	97	26
L 35146	97	3
L 35148	97	1
L 35260	89	10
L 35272	409B	12
L 35490	409B	6
L 35491	409	7
L 35492	409	10
L 35503	409B	6A
L 35503	409B	11A
L 35629	409	8
L 35654	189	4
L 35657	189	
L 35675	189	7
L 35760	87	7
L 35949	69	16
L 36010	189	32
L 36011	189	31
L 36015	191	
L 36038	259	17
L 36039	259	29
L 36040	259	22
L 36041	259	20
L 36042	259	28
L 36045	259	15
L 36046	259	13
L 36047	259	16
L 36048	259	8
L 36049	259	12
L 36050	259	18
L 36051	259	3
L 36145	259	25
L 36146	259	26
L 36147	259	19
L 47157	413	16
L 47158	413	17
L 47159	413	10
L 48412	387	15
L 48956	413	18
L 50799	81	7
L 50799	83	7
L 52496	251	43
L 52722	81	4A
L 52722	83	4A
L 54683	101	3
L 54683	251	42
L 55143	213	9
L 55143	215	9
L 55143	223	3
L 57148	409	
L 60224	423	16
M 20611	31	40
M 20704	129	
M 20704	129	
M 20705	129	
M 20705	129	
R 10830	367	50
R 11115	57D	27
R 11500	51	43A
R 13911	197	1
R 14170	229B	5
R 14192	81	27
R 14192	83	27
R 14711	39	3
R 14780	111	9
R 15023	498	38
R 15027	49	7
R 15032	49	15
R 15035	49	16
R 15038	49	29
R 15041	498	40
R 15043	49	31
R 15048	49	34
R 15049	49	33
R 15071	171	8
R 15366	287	18
R 15366	289	30
R 15366	291	18
R 15536	197	46
R 15538	197	42
R 16171	43B	38
R 16171	43	40
R 17319	205	11
R 17319	207	10
R 17319	207	13
R 20804	199	33
R 20804	229	17
R 21385	55	22B
R 21385	57B	22
R 21491	119	2
R 29555	411B	36
R 29555	413	26
R 29556	411B	35
R 29556	413	25
R 29627	237	14
R 29766	265	33
R 29797	119	4
R 29870	498	
R 29870	49	1
R 29902	119	6
R 29956	119	5
R 29995	123	
R 37315	75	15
R 37316	75	14
R 37336	423	14A
R 37339	423	15
R 37351	423	8
R 37439	89	39
R 37439	421	21
R 37442	421	20
S 47892	117	55
S 67607	155	14
S 70827	243	1
S 70827	243	5
S 94568	295	28
S 108180	295	12
S 109443	327	14
S 109444	327	16
S 109445	327	17
S 203189	99	1
T 11232	413	14
T 20939	145	2
T 25683	395	26
T 28550	293	9
T 29401	97	27
T 34857	79	2
T 39567	287	19
T 39567	289	31
T 39567	291	19

http://www.minnparbackhoeparts.com/

NUMERICAL INDEX

PART NO.	PAGE NO.	REF. NO.
T 40301	227B	24
T 42588	233	19
W 10478	69	17
W 12244	287	22
W 13668	137	12

HARDWARE PART NUMBERS

PART NO.	PAGE NO.	REF. NO.
12- 512	167	12
13- 48	113	18
13- 48	125	28
13- 48	127	7
13- 68	113	8
13- 68	183	19
13- 68	185	18
13- 68	223	15
13- 68	385	27A
13- 412	17	15
13- 412	55	11
13- 412	57B	11
13- 412	61	10
13- 414	117	50
13- 416	63	27
13- 416	65	27
13- 416	67	8
13- 416	171	10
13- 420	17	15
13- 420	155	35
13- 472	289	14
13- 510	279	10
13- 512	101	20
13- 512	1958	2
13- 512	2298	8
13- 512	237	7
13- 512	237	27
13- 512	385	31A
13- 512	403	6
13- 512	405	37
13- 514	35	2
13- 514	129	8
13- 514	129	23
13- 514	169	6
13- 516	63	8
13- 516	65	8
13- 516	181	12
13- 516	205	8
13- 516	355	23
13- 516	385	31
13- 516	405	12
13- 516	411	11
13- 516	4118	30
13- 516	413	4
13- 520	53	28A
13- 520	205	9
13- 520	413	22
13- 524	53	28
13- 524	163	21
13- 524	195	7
13- 524	229	15
13- 528	123	1
13- 528	207	8
13- 530	123	2
13- 532	163	14
13- 532	207	12
13- 532	2278	11
13- 535	209	5
13- 540	1498	4
13- 548	373	85
13- 556	229	15A
13- 558	279	12
13- 612	51	16
13- 612	77	21
13- 612	101	9
13- 612	105	12
13- 612	105	18
13- 612	109	21
13- 612	141	20
13- 612	157	39
13- 612	159	23
13- 612	169	29
13- 612	171	24
13- 612	195	6
13- 612	1958	9
13- 612	1958	18A
13- 612	195	23
13- 612	197	31
13- 612	199	38
13- 612	223	19
13- 612	229B	14
13- 612	229	24
13- 612	231	9A
13- 612	249	33
13- 612	283	13
13- 612	385	5
13- 612	385	19
13- 612	385	27
13- 612	387	14
13- 612	389	23
13- 612	403	9
13- 612	405	29
13- 612	4118	25
13- 614	15	12
13- 616	13	15
13- 616	15	22
13- 616	53	14
13- 616	55	21A
13- 616	57B	21
13- 616	101	10
13- 616	105	23
13- 616	119	8
13- 616	157	13
13- 616	157	43
13- 616	159	24
13- 616	167	26
13- 616	169	13
13- 616	181	1
13- 616	185	17
13- 616	195	2
13- 616	1958	8
13- 616	195	13
13- 616	197	30
13- 616	199	39
13- 616	201	11
13- 616	209	45
13- 616	213	12
13- 616	215	12
13- 616	2198	15
13- 616	223	35
13- 616	2298	16
13- 616	237	2
13- 616	245	17
13- 616	247	21
13- 616	385	14A
13- 616	385	22
13- 616	389	42
13- 616	403	10
13- 616	405	2
13- 616	405	30
13- 616	4118	25
13- 620	11	33
13- 620	13	7
13- 620	15	6
13- 620	53	10
13- 620	57	27B
13- 620	57D	46
13- 620	107	8
13- 620	109	18
13- 620	157	21
13- 620	231	9
13- 620	233	7
13- 620	251	53
13- 620	401	10
13- 620	403	9A
13- 620	405	31
13- 620	407	18
13- 620	411	5
13- 622	127	4
13- 624	15	6
13- 624	15	23
13- 624	129	14
13- 624	143	4
13- 624	163	19
13- 624	183	18
13- 624	185	19
13- 624	197	32
13- 624	215	21
13- 624	219	12
13- 624	2198	28
13- 624	221	20
13- 624	233	8
13- 624	355	29
13- 624	405	32
13- 628	139	31
13- 628	183	17
13- 628	195	18
13- 628	1958	18
13- 628	203	8
13- 628	4118	25
13- 632	33	18
13- 632	51	29
13- 632	55	19
13- 632	57B	19
13- 632	117	63
13- 632	163	20
13- 632	215	34
13- 632	385	2
13- 632	389	41
13- 632	395	39
13- 632	4118	25

http://www.minnparbackhoeparts.com/

NUMERICAL INDEX

PART NO.	PAGE NO.	REF. NO.
13- 636	51	22
13- 636	53	18
13- 636	229	7
13- 636	385	14
13- 640	209	10
13- 640	395	20
13- 640	395	30
13- 644	15	7
13- 644	351	14
13- 644	355	13
13- 644	359	9
13- 644	359	14
13- 648	13	7
13- 648	15	7
13- 648	223	9
13- 648	395	2
13- 652	15	8
13- 652	241	12
13- 652	351	11
13- 656	13	7
13- 656	21	10
13- 656	355	12
13- 656	369	17
13- 664	51	19
13- 664	355	4
13- 672	233	14
13- 692	129	15
13- 696	245	23
13- 696	247	27
13- 718	115	27
13- 724	51	34
13- 724	197	13
13- 752	117	58
13- 812	109	3
13- 812	211	12
13- 812	221	16
13- 812	369	3
13- 816	55	21
13- 820	139	4
13- 820	139	21
13- 820	365	39
13- 820	375	25
13- 820	399	6
13- 820	401	14
13- 824	197	9
13- 824	199	23
13- 824	221	15
13- 824	283	15
13- 824	361	6
13- 824	393	10
13- 824	401	16
13- 824	411	21
13- 828	217	11
13- 828	219	24
13- 828	2198	26
13- 828	221	14
13- 828	375	21
13- 830	141	8
13- 832	107	12
13- 832	209	33
13- 832	211	2
13- 832	213	2
13- 832	215	2
13- 832	217	2
13- 832	2198	2
13- 832	219	2
13- 832	221	2
13- 832	411	20
13- 836	171	4
13- 836	249	21
13- 836	401	3
13- 840	171	4A
13- 856	231	5
13- 856	365	28
13- 856	367	56
13- 856	393	15
13- 860	153	7
13- 860	367	56
13- 860	393	15
13- 864	153	7
13- 864	369	22
13- 1016	125	8
13- 1024	397	2
13- 1032	51	6
13- 1044	51	2
13- 1044	51	8
13- 1052	51	10
13- 1096	249	8
13- 1216	411	18
13- 1224	397	6
13- 1252	361	3
13- 1640	365	30
13- 2068	393	6
13- 6104	129	15
13-10104	397	12
13-12128	139	12
13-16104	351	17
13-16104	363	4
14- 532	189	9
14- 624	193	4
14- 768	295	30
14- 784	295	31
15- 6104	159	7
15- 6120	157	24
15-16168	363	2
19- 828	357	4
25- 104	63	29
25- 104	65	29
25- 104	67	10
25- 104	155	37
25- 104	171	11
25- 105	63	11
25- 105	65	11
25- 105	101	24
25- 105	103	6
25- 105	163	17
25- 105	163	23
25- 105	163	32
25- 105	169	6A
25- 105	1958	5
25- 105	2278	14
25- 105	2298	11
25- 105	237	9
25- 105	237	25
25- 105	355	26
25- 105	411	3B
25- 105	4118	32
25- 106	11	23
25- 106	13	23
25- 106	15	11
25- 106	19	33
25- 106	33	5
25- 106	51	21
25- 106	53	17
25- 106	55	24A
25- 106	57B	24
25- 106	57	27E
25- 106	57D	49
25- 106	77	24
25- 106	101	12
25- 106	107	11
25- 106	109	24
25- 106	111	4
25- 106	139	35
25- 106	157	15
25- 106	157	22
25- 106	157	27
25- 106	157	42
25- 106	159	12
25- 106	159	27
25- 106	167	28
25- 106	169	15
25- 106	183	23
25- 106	185	21
25- 106	195	17
25- 106	195B	21
25- 106	195	22
25- 106	197	35
25- 106	199	41
25- 106	201	13
25- 106	203	13
25- 106	209	14
25- 106	213	15
25- 106	215	15
25- 106	215	36
25- 106	223	13
25- 106	223	22
25- 106	223	38
25- 106	229	9
25- 106	231	12
25- 106	233	10
25- 106	237	5
25- 106	245	19
25- 106	245	29
25- 106	247	23
25- 106	247	33
25- 106	271	12
25- 106	385	4
25- 106	385	8
25- 106	385	17
25- 106	385	25
25- 106	387	17
25- 106	387	30
25- 106	389	25
25- 106	395	4
25- 106	395	22
25- 106	395	32
25- 106	401	13
25- 106	403	13
25- 106	405	6
25- 106	405	36
25- 106	407	6

http://www.minnparbackhoeparts.com/

NUMERICAL INDEX

PART NO.	PAGE NO.	REF. NO.
25- 108	55	24
25- 108	107	14
25- 108	139	6
25- 108	139	24
25- 108	171	6A
25- 108	209	36
25- 108	211	5
25- 108	213	5
25- 108	215	5
25- 108	217	5
25- 108	219B	5
25- 108	219	5
25- 108	221	5
25- 108	231	7A
25- 108	283	18
25- 108	357	6
25- 108	375	24
25- 108	393	12
25- 108	399	9
25- 108	401	5
25- 108	401	17
25- 108	411	23
25- 114	167	36
25- 114	171	37
25- 114	259	21
25- 114	389	11
25- 115	171	21
25- 116	127	16
25- 116	141	14
25- 116	165	22B
25- 116	167	23
25- 116	169	10
25- 116	169	23
25- 116	193	5
25- 116	249	14
25- 116	249	19
25- 116	249	28
25- 116	387	21
25- 116	389	31
25- 116	391	7
25- 118	139	9
25- 118	153	9
25- 118	165	15
25- 118	173	17
25- 119	39	5
25- 144	273	25
25- 144	275	29
25- 144	277	26
25- 144	277	39
25- 145	143	7
25- 145	279	15
25- 148	231	35
25- 155	125	15
25- 155	265	3
25- 155	281	3
25- 156	139	29
25- 156	139	38
25- 156	187	8
25- 156	251	50
25- 157	157	30
25- 157	159	17
25- 158	389	5
25- 159	33	12
25- 224	109	16
25- 226	395	43
25- 1010	51	9
25- 1010	51	13
25- 1010	397	13
25- 1012	139	14
25- 1016	365	32
25- 1020	367	60
25- 1020	393	8
25- 1020	393	19
25- 1110	113	2
25- 1110	113	6
25- 1110	125	2
25- 1110	125	6
25- 1240	313	19
25- 1310	173	24
25- 1310	185	13
25- 1510	265	30
25- 1918	175	7
26- 412	27	21
26- 414	187	32
26- 416	27	21
26- 426	187	13
26- 616	141	23
26- 872	23	20
26- 882	23	21
26- 1032	151	3
26- 1036	151	3
26- 1036	401	6
26- 1064	151	3
28- 614	149	5
28- 1232	349	19
28- 1240	305	19
28- 1240	307	19
28- 1240	315	19
28- 1240	337	18
28- 1240	339	18
28- 1240	341	20
28- 1240	343	20
28- 1240	345	19
28- 1240	347	19
28- 1640	301	17
28- 1640	303	17
28- 1640	309	20
28- 1640	311	20
28- 1640	327	19
28- 1640	333	19
28- 1640	335	19
28- 1648	325	19
28- 2040	317	20
28- 2040	319	20
28- 2040	329	19
28- 2040	331	19
41- 12	117	39
41- 13	153	27
41- 20	129	17
41- 20	135	38
41- 1007	119	3
41- 1016	17	3
41- 1016	19	11
41- 1016	23	6
41- 1028	19	12
41- 1032	365	7A
41- 1044	365	6A
61- 68	155	16
61- 536	149B	3
61- 632	13	9
71- 48	291	9
71- 416	289	3
73- 410	17	17
73- 616	149	30
74- 612	49	21
83- 54	167	11
83- 54	423B	35
83- 414	237	12
85- 610	163	34
85- 612	157	4
85- 612	165	9
85- 612	165	27
92- 3	45	46
92- 3	57	39
92- 3	413	20
92- 4	17	16
92- 4	27	22
92- 4	45	48
92- 4	55	12
92- 4	57B	12
92- 4	63	28
92- 4	65	28
92- 4	67	9
92- 4	113	19
92- 4	117	49
92- 4	125	27
92- 4	127	8
92- 4	155	36
92- 4	167	35
92- 4	171	36
92- 4	171	41
92- 4	187	14
92- 4	187	33
92- 4	389	10
92- 5	35	3
92- 5	53	29
92- 5	63	10
92- 5	65	10
92- 5	101	23
92- 5	103	5
92- 5	125	11
92- 5	163	16
92- 5	163	22
92- 5	181	4
92- 5	181	13
92- 5	195B	4
92- 5	205	10
92- 5	207	9
92- 5	209	6
92- 5	227B	13
92- 5	229B	10
92- 5	237	8
92- 5	237	24
92- 5	279	11
92- 5	279	14
92- 5	355	25
92- 5	385	33
92- 5	403	7
92- 5	405	13
92- 5	405	39
92- 5	411	3A
92- 5	411B	31

http://www.minnparbackhoeparts.com/

NUMERICAL INDEX

PART NO.	PAGE NO.	REF. NO.
92- 6	13	8
92- 6	13	16
92- 6	13	22
92- 6	33	4
92- 6	51	17
92- 6	51	20
92- 6	51	30
92- 6	53	16
92- 6	53	21
92- 6	55	23A
92- 6	57B	23
92- 6	57	27D
92- 6	57D	48
92- 6	77	23
92- 6	101	11
92- 6	105	19
92- 6	107	10
92- 6	109	20
92- 6	109	23
92- 6	113	9
92- 6	119	7
92- 6	127	5
92- 6	127	15
92- 6	129	16
92- 6	141	13
92- 6	143	5
92- 6	157	14
92- 6	157	26
92- 6	157	41
92- 6	159	11
92- 6	159	26
92- 6	163	19A
92- 6	167	22
92- 6	167	27
92- 6	169	9
92- 6	169	14
92- 6	169	30
92- 6	171	25
92- 6	181	2
92- 6	183	21
92- 6	185	20
92- 6	193	6
92- 6	195	16
92- 6	195B	20A
92- 6	195	21
92- 6	197	10
92- 6	197	33
92- 6	199	40
92- 6	201	12
92- 6	203	12
92- 6	209	13
92- 6	209	46
92- 6	213	14
92- 6	215	14
92- 6	215	35
92- 6	219	13
92- 6	219B	29
92- 6	221	21
92- 6	223	12
92- 6	223	16
92- 6	223	21
92- 6	223	37
92- 6	229	8
92- 6	231	11
92- 6	233	9
92- 6	233	15
92- 6	237	4
92- 6	237	28
92- 6	245	4
92- 6	245	18
92- 6	245	28
92- 6	247	4
92- 6	247	22
92- 6	247	32
92- 6	249	15
92- 6	251	54
92- 6	283	14
92- 6	355	30
92- 6	385	3
92- 6	385	7
92- 6	385	16
92- 6	385	20
92- 6	385	24
92- 6	385	28
92- 6	387	16
92- 6	387	29
92- 6	389	24
92- 6	389	43
92- 6	395	3
92- 6	395	21
92- 6	395	31
92- 6	395	42
92- 6	401	11
92- 6	403	11
92- 6	405	3
92- 6	405	33
92- 6	407	5
92- 6	407	19
92- 6	411	7
92- 6	411B	26
92- 7	51	35
92- 7	115	26
92- 7	117	59
92- 7	197	14
92- 8	55	23
92- 8	107	13
92- 8	109	4
92- 8	139	5
92- 8	139	8
92- 8	139	23
92- 8	141	9
92- 8	153	8
92- 8	173	16
92- 8	199	24
92- 8	209	34
92- 8	211	3
92- 8	211	13
92- 8	213	3
92- 8	215	3
92- 8	217	3
92- 8	217	12
92- 8	219B	3
92- 8	219	3
92- 8	219	25
92- 8	219B	27
92- 8	221	3
92- 8	231	7
92- 8	283	17
92- 8	357	5
92- 8	361	7
92- 8	367	40
92- 8	369	4
92- 8	375	23
92- 8	375	26
92- 8	393	11
92- 8	399	8
92- 8	401	4
92- 8	401	15
92- 8	411	22
92- 10	51	7
92- 10	113	3
92- 10	125	9
92- 10	151	4
92- 10	153	25
92- 10	397	3
92- 10	401	7
92- 12	165	21
92- 12	397	7
95- 4	55	13
95- 4	57B	13
95- 4	61	11
95- 4	97	13
95- 5	77	9
95- 5	163	5
95- 5	163	9
95- 5	385	32
95- 6	15	9
95- 6	53	11
95- 6	53	16A
95- 6	53	19
95- 6	195	4
95- 6	195B	10
95- 6	229B	17
95- 6	245	24
95- 6	247	28
95- 6	387	28
95- 6	401	12
95- 6	405	34
95- 7	157	8
95- 7	165	8
95- 8	209	35
95- 8	211	4
95- 8	213	4
95- 8	215	4
95- 8	217	4
95- 8	219	4
95- 8	219B	4
95- 8	221	4
95- 8	221	17
95- 8	249	22
95- 8	283	16
95- 8	411	22A
95- 10	173	24A
95- 10	185	12A
111- 203	421	40
111- 215	429	13
111- 317	423	10
113- 2	171	40
113- 3	103	24
113- 3	401	19
113- 3	423B	36
113- 3	429	6

http://www.minnparbackhoeparts.com/

NUMERICAL INDEX

PART NO.	PAGE NO.	REF. NO.
113- 17	423B	42
113- 101	89	40
113- 101	421	22
113- 102	51	25
113- 102	59	22
113- 102	61	23
113- 102	419	11
113- 102	421	16
113- 102	429	9
113- 103	81	10
113- 103	83	10
113- 103	227	26
113- 103	419	11A
113- 118	73	29
113- 118	409B	4
113- 118	409	12
113- 118	413	11
113- 120	77	7
113- 143	409	22
113- 206	75	30
113- 206	81	28
113- 206	83	28
113- 206	401	23
113- 206	417	8
113- 206	421	9
113- 207	101	16
113- 207	407	22
113- 207	417	5
113- 207	421	11
113- 207	421	36
113- 208	99	4
113- 208	421	31
113- 209	73	14
113- 209	75	21
113- 606	403	20
113- 684	417	10
113- 684	427	2
113- 713	365	26
113- 2418	417	13
113- 2418	427	5
113- 2619	57D	41
113- 2619	57	42
113- 2619	417	11
113- 2619	427	3
114- 1	89	2
114- 3	89	31
114- 200	401	23
114- 263	137	13
114- 266	137	13
115- 215	57	27
121- 103	113	12
121- 203	113	15
121- 300	27	28
126- 12	25	11
126- 24	127	20
126- 24	163	27
126- 33	157	3
126- 33	165	3
126- 109	187	28
126- 112	45	17
126- 124	121	20
126- 126	165	26
126- 216	27	12
129- 3	97	22
129- 15	101	8
129- 15	251	43A
129- 15	251	60
129- 16	43B	18
129- 16	43	19
129- 16	49B	57
129- 17	81	38
129- 17	83	38
129- 18	55	2A
129- 18	57B	2A
129- 26	87	6
129- 29	97	19
129- 47	97	2
129- 101	103	27
129- 101	401	22
129- 101	423B	40A
129- 101	429	7
129- 102	81	13
129- 102	83	13
129- 102	227	29
129- 102	409B	14
129- 102	409	15
129- 102	409	24
129- 102	419	14
129- 102	421	19
129- 102	421	43
129- 102	429	11
129- 103	73	16
129- 103	75	23
129- 103	75	32
129- 103	81	30
129- 103	83	30
129- 103	99	6
129- 103	101	18
129- 103	401	25
129- 103	407	24
129- 103	421	39
129- 103	423	13
129- 105	73	5
129- 105	73	20
129- 105	75	6
129- 105	75	27
129- 105	77	5
129- 108	365	26A
129- 122	189	11
129- 123	401	25
129- 124	407	27
129- 125	79	12
129- 125	79	21
129- 143	47	41
129- 143	49B	59
129- 145	139	11
129- 145	169	26
129- 147	55	18C
129- 147	57B	18B
129- 147	57D	44
129- 147	57	45
129- 161	89	9
129- 161	91	14
129- 165	79B	6A
129- 183	57D	42
129- 183	57	43
129- 183	403	22
129- 183	417	12
129- 183	427	4
129- 184	417	14
129- 184	427	6
129- 303	97	16
129- 409	429	3
129- 514	265	1
129- 514	281	1
129- 524	285	7
129- 525	187	5
129- 563	401	8
129- 565	179	7
129- 565	179	7
129- 642	89	5
129- 665	45	47
131- 4	49B	43
131- 4	57D	30
131- 4	77	11
131- 4	207	17
131- 4	373	86
131- 6	53	17
131- 9	79B	6
131- 10	233	20
131- 37	115	30
131- 46	97	12
131- 47	85	16
131- 50	423B	29
131- 67	97	4
131- 69	419	14A
131- 150	279	18
131- 181	137	14
131- 203	421	33
131- 206	11	2
131- 352	359	10
131- 352	359	15
131- 352	369	18
131- 354	107	16
131- 354	369	24
131- 583	135	14
131- 612	35	25
131- 619	59	27
131- 619	61	28
131- 634	157	42A
131- 634	159	27A
131- 634	405	7
131- 634	411B	28
131- 636	405	15
131- 636	405	41
131- 637	59	24
131- 637	61	25
131- 639	195	10A
131- 639	229	16A
131- 651	167	14
131- 651	195	10
131- 651	229	16
131- 651	411	14
131- 651	413	5
131- 651	413	8
131- 651	413	13
131- 651	413	24
131- 652	51	41
131- 652	53	12
131- 652	53	22
131- 652	57	30
131- 652	105	15

http://www.minnparbackhoeparts.com/

NUMERICAL INDEX

PART NO.	PAGE NO.	REF. NO.
131- 652	105	26
131- 652	195	5
131- 652	1958	11
131- 652	215	23
131- 652	2198	17
131- 652	2298	15
131- 652	2298	18
131- 652	229	25
131- 652	351	12
131- 652	351	15
131- 652	355	6
131- 652	355	14
131- 654	105	16
131- 654	171	6
131- 654	249	25
131- 654	365	29
131- 654	367	57
131- 654	393	16
131- 659	351	19
131- 659	363	3
131- 659	363	5
131- 665	411	3
131- 752	137	14
131- 902	45	49
131- 903	11	35
131- 903	11	41
131- 1117	421	30
131- 1180	423B	44
131- 1275	193	9
132- 5	155	13
132- 5	187	31
132- 5	231	41
132- 5	389	8
132- 13	231	38
132- 24	163	30
132- 24	169	22
132- 24	169	33
132- 24	171	19
132- 24	171	29
132- 24	245	10A
132- 24	245	22A
132- 24	247	10A
132- 24	247	17A
132- 24	247	26A
132- 24	391	10
132- 25	139	26
132- 25	249	7
132- 25	283	8
132- 25	387	20
132- 25	387	24
132- 25	387	37
132- 25	387	40
132- 25	389	30
132- 25	391	6
132- 26	153	20
132- 26	153	30
132- 26	157	7
132- 26	157	33
132- 26	159	16
132- 26	163	10
132- 26	165	6
132- 26	165	24
132- 44	413	15
132- 48	165	14
132- 48	249	3
132- 50	17	24
132- 50	173	23
132- 50	185	14
132- 95	389	17
132- 99	175	6
132- 152	357	9
132- 152	359	5
132- 157	151	17
135- 49	133	9
138- 20	155	12
138- 25	389	36
138- 28	117	42
138- 59	117	45
138- 60	191	39
138- 61	127	9
138- 61	245	15
138- 61	247	19
138- 62	17	11
138- 65	113	16
138- 65	125	25
138- 71	153	5
138- 88	135	36
138- 92	155	17
138- 93	49B	46
138- 94	149	10
138- 94	407	12
138- 96	149B	15
138- 98	149B	19
138- 98	155	3
138- 98	283	5
138- 104	135	37
138- 136	387	3
138- 136	387	13
138- 136	387	33
138- 137	407	10
138- 139	127	21
138- 150	167	17
138- 150	169	4
138- 150	171	13
138- 177	159	6
138- 245	143	3
138- 2009	143	16
138- 2012	259	11
138- 2053	167	5
138- 2055	133	10
138- 2068	153	2
139- 62	113	21
139- 64	51	5
141- 2	389	13
141- 3	163	28
141- 3	171	18
141- 3	171	28
141- 3	245	9A
141- 3	245	21A
141- 3	247	9A
141- 3	247	16A
141- 3	247	25A
141- 3	283	7
141- 3	387	23
141- 3	387	39
141- 3	389	35
141- 3	391	9
141- 4	139	25
141- 4	165	23
141- 4	169	21
141- 4	169	32
141- 4	249	6
141- 4	387	19
141- 4	387	36
141- 4	389	29
141- 4	391	5
141- 5	153	29
141- 5	157	6
141- 5	157	32
141- 5	159	15
141- 5	165	5
141- 5	389	6
141- 6	165	13
141- 60	171	18A
163- 6	438	4
163- 6	43	4
163- 7	39	38
163- 23	181	3
164- 13	69	20
164- 15	69	19
165- 1	39	34
165- 30	39	36
165- 124	39	29
166- 4	291	7
166- 24	189	21
166- 46	123	13
166- 48	239	8
166- 54	239	9
166- 55	239	12
166- 59	239	11
166- 526	295	4
168- 70	97	9
169- 137	81	36
169- 137	83	36
169- 143	249	38
169- 144	101	4
169- 144	251	57
171- 100	123	11
173- 26	259	23
173- 73	105	2
173- 73	107	19
173- 102	35	24
173- 210	438	31
173- 210	43	35
173- 212	49	13
173- 221	49	24
173- 279	79	5
173- 279	79	8
173- 279	79	17
176- 296	265	4
176- 299	281	4
178- 428	127	12
178- 630	273	24
178- 630	275	28
178- 630	277	25
178- 630	277	38
178- 819	423	21
178- 821	15	4
179- 154	423B	28
182- 48	279	16
182- 82	167	8
182- 86	55	7

NUMERICAL INDEX

http://www.minnparbackhoeparts.com/

PART NO.	PAGE NO.	REF. NO.
214- 255	117	65
214- 255	199	34
214- 256	227	23
214- 256	229B	6
214- 256	229	11
214- 256	229	18
214- 257	81	26
214- 257	83	26
214- 257	85	21
214- 257	197	2
214- 260	53	26
214- 261	109	6
214- 261	109	26
214- 261	227	21
214- 264	203	22
214- 265	205	24
214- 267	213	29
214- 267	215	39
214- 267	355B	43
214- 269	217	16
214- 269	219	19
214- 269	219B	24
214- 270	209	16
214- 624	359	22
214- 1105	75	37
217- 103	53	23
217- 107	111	6
217- 155	199	32
217- 178	197	6
217- 276	51	42D
217- 1020	199	12
217- 1020	209	2
217- 1020	225	3
217- 1020	225	12
217- 1020	231	2
217- 1061	71	1
218- 335	197	22
218- 335	199	19
218- 441	233	22
218- 444	195B	30
218- 444	195	34
218- 444	227B	5
218- 446	199	31
218- 446	231	24
218- 448	199	28
218- 474	207	18
218- 481	231	30
218- 481	233	31
218- 484	195B	32
218- 484	195	36
218- 486	231	3A
218- 503	231	18
218- 586	205	18B
218- 589	197	21
218- 590	209	40
218- 595	203	6
218- 598	199	15
218- 739	199	8
218- 752	233	21
218- 755	207	19
218- 990	231	23
218- 1109	229	2
218- 1109	229B	2
218- 1109	229	20
218- 1237	355	21
218- 1251	355	22
218- 5002	37	7
218- 5002	37	9
218- 5002	191	38
218- 5003	235	54
218- 5003	287	12
218- 5003	295	13
218- 5005	117	52A
218- 5005	183	8
218- 5005	185	3
218- 5005	185	8
218- 5005	185	11
218- 5005	287	21
218- 5005	289	10
218- 5005	289	21
218- 5005	291	4
218- 5005	291	14
218- 5006	183	4
218- 5006	183	13
218- 5006	211	16
218- 5006	211	20A
218- 5006	211	24
218- 5006	223	27
218- 5006	227	3
218- 5006	227B	3
218- 5006	227	5
218- 5006	227	7
218- 5006	227B	16
218- 5006	227B	18
218- 5006	227B	20
218- 5006	227B	22
218- 5006	227B	38
218- 5006	263	2
218- 5006	265	10
218- 5006	265	20
218- 5006	265	24
218- 5006	281	10
218- 5006	289	33
218- 5006	359	20
218- 5007	201	3
218- 5007	203	3
218- 5007	203	17
218- 5007	203	25
218- 5007	205	3
218- 5007	205	15
218- 5007	205	16A
218- 5007	205	21
218- 5007	207	3
218- 5007	209	8
218- 5007	209	22
218- 5007	209	26
218- 5007	209	43
218- 5007	211	18
218- 5007	211	34
218- 5007	211	39
218- 5007	213	28
218- 5007	215	38
218- 5007	217	15
218- 5007	219B	20
218- 5007	219	21
218- 5007	219B	22
218- 5007	221	29
218- 5007	221	32
218- 5007	227B	8
218- 5007	227	11
218- 5007	227	16
218- 5007	227B	26
218- 5007	227B	29
218- 5007	263	12
218- 5007	267	2
218- 5007	271	29
218- 5007	275	18
218- 5007	287	4
218- 5007	287	6
218- 5007	355	39
218- 5007	355B	39
218- 5007	359	17
218- 5008	197	24
218- 5008	199	6
218- 5008	201	7
218- 5008	209	3
218- 5008	209	28
218- 5008	213	20A
218- 5008	213	22
218- 5008	215	26
218- 5008	215	28
218- 5008	223	7
218- 5008	223	24
218- 5008	225	6
218- 5008	225	9
218- 5008	225	9B
218- 5008	231	27
218- 5008	235	47
218- 5008	235	51
218- 5008	243	9
218- 5008	253	9
218- 5008	255	9
218- 5008	273B	17
218- 5008	273	26
218- 5008	275	30
218- 5008	277	27
218- 5008	277	40
218- 5008	287	17
218- 5009	271	22
218- 5010	199	3
218- 5010	199	18
218- 5010	209	31
218- 5010	209	38
218- 5010	211	7
218- 5010	213	7
218- 5010	213	10
218- 5010	215	7
218- 5010	215	10
218- 5010	217	7
218- 5010	219	7
218- 5010	219B	7
218- 5010	221	7
218- 5010	223	4
218- 5010	223	32
218- 5010	253	11
218- 5010	255	11
218- 5011	197	7
218- 5011	197	17
218- 5022	225	8
218- 5046	201	2
218- 5050	201	6
218- 5057	185	10

NUMERICAL INDEX

http://www.minnparbackhoeparts.com/

PART NO.	PAGE NO.	REF. NO.
218- 5060	205	2
218- 5060	207	2
218- 5060	209	21
218- 5060	227	15
218- 5060	227B	28
218- 5060	359	16
[illegible] - 5062	203	2
218- 5062	203	24
218- 5062	221	31
218- 5064	209	27
218- 5064	213	21
218- 5064	223	6
218- 5064	223	23
218- 5064	231	26
218- 5065	209	42
218- 5065	213	27
218- 5065	215	37
218- 5065	217	14
218- 5065	219	20
218- 5069	197	16
218- 5077	217	6
218- 5077	219B	6
218- 5077	219	6
218- 5077	221	6
218- 5078	211	6
218- 5106	183	3
218- 5106	227B	21
218- 5107	203	16
218- 5107	203	24A
218- 5107	221	28
218- 5107	355B	38
218- 5110	209	37
218- 5117	223	26
218- 5118	209	30
218- 5118	213	6
218- 5118	215	6
218- 5118	223	31
218- 5121	205	20
218- 5121	209	25
218- 5121	211	17
218- 5121	227B	7
218- 5121	227	10
218- 5121	227B	25
218- 5123	217	14A
218- 5123	219B	19
218- 5124	199	5
218- 5124	209	2A
218- 5136	183	12
218- 5136	227	4
218- 5136	227B	17
218- 5137	355	34
218- 5147	225	5
218- 5152	37	8
218- 5153	287	11
218- 5156	227	6
218- 5158	287	16
218- 5175	221	8
218- 5182	185	7
218- 5210	263	1
218- 5210	265	19
218- 5211	287	3
218- 5228	231	33
218- 5239	215	25
218- 5241	205	14
218- 5351	183	7
218- 5351	185	2
218- 5354	209	7
218- 5583	199	17
219- 1	165	10
219- 1	167	30
219- 1	169	17
219- 1	301	19
219- 1	303	19
219- 1	309	22
219- 1	311	22
219- 1	313	21
219- 1	315	21
219- 1	317	22
219- 1	319	22
219- 1	321	23
219- 1	323	23
219- 1	329	22
219- 1	331	22
219- 1	333	21
219- 1	335	21
219- 1	341	22
219- 1	343	22
219- 1	345	21
219- 1	347	21
219- 1	351	5
219- 1	351	16
219- 1	351	29
219- 1	355	7
219- 1	367	48
219- 1	369	8
219- 1	369	16A
219- 1	369	26
219- 1	371	66
219- 1	371	71
219- 1	405	10
219- 1	407	7
219- 4	387	6
219- 4	391	3
219- 4	395	7
219- 8	137	4
219- 10	137	10
219- 20	249	13
219- 36	151	5
219- 36	157	16
219- 36	245	35
219- 36	247	37
219- 40	157	19
219- 40	159	3
219- 55	249	26A
219- 55	329	21
219- 55	331	21
219- 55	333	22
219- 55	335	22
219- 55	351	24
219- 55	365	35
219- 55	369	36
219- 55	375	12
219- 55	389	22A
219- 56	173	22
219- 57	245	34
219- 57	247	38
219- 89	173	6
219- 107	375	11
219- 400	249	26
220- 502	197	43
221- 5	129	3
221- 11	11	3
221- 11	11	16
221- 15	399	12
221- 27	399	3
221- 35	399	4
221- 55	197	38
221- 130	197	37
221- 374	55	4
221- 374	57B	4
221- 402	141	31
221- 423	195B	28
221- 423	195	32
221- 430	197	45
221- 441	197	39
221- 662	23	29
221- 662	253	7
221- 662	255	7
221- 841	123	25
221- 843	13	2
221- 843	15	20
221- 843	115	32
221- 849	115	31
221- 849	123	26
221- 1032	23	4
221- 1041	49	5
221- 1041	49B	39
221- 1841	23	2
221- 1841	39	20
221- 1849	293	12
222- 23	111	
222- 42	35	37
222- 47	35	8
222- 47	111	
222- 101	31	16
222- 102	35	34
222- 102	35	38
222- 102	111	23
222- 103	31	16
222- 104	35	9
222- 104	111	12
222- 104	111	19
222- 112	35	33
222- 112	35	39
222- 112	111	22
222- 114	35	10
222- 114	111	11
222- 114	111	18
222- 650	103	9
222- 650	103	12
222- 650	103	15
222- 654	111	15
222- 660	103	10
222- 660	103	13
222- 660	103	16
222- 664	111	14
222- 1053	157	36
222- 1053	159	20
222- 3006	117	60
222- 3071	235	46
222- 3097	233	
222- 3103	233	4