Número de serie: 580H 1979

Ruta de acceso: Case CE LAR > LIGHT EQUIPMENT >LOADER BACKHOES >H >580H - CASE LOADER BACKHOE >06 - POWER TRAIN >6-002 - TRANSMISSION ASSEMBLY - TRANSAXLE SYSTEM >

RUTHZIL TRATOR COMERCIAL DE PEÇAS LTDA 11 97083-6812 ROLANDO CITRANGULO

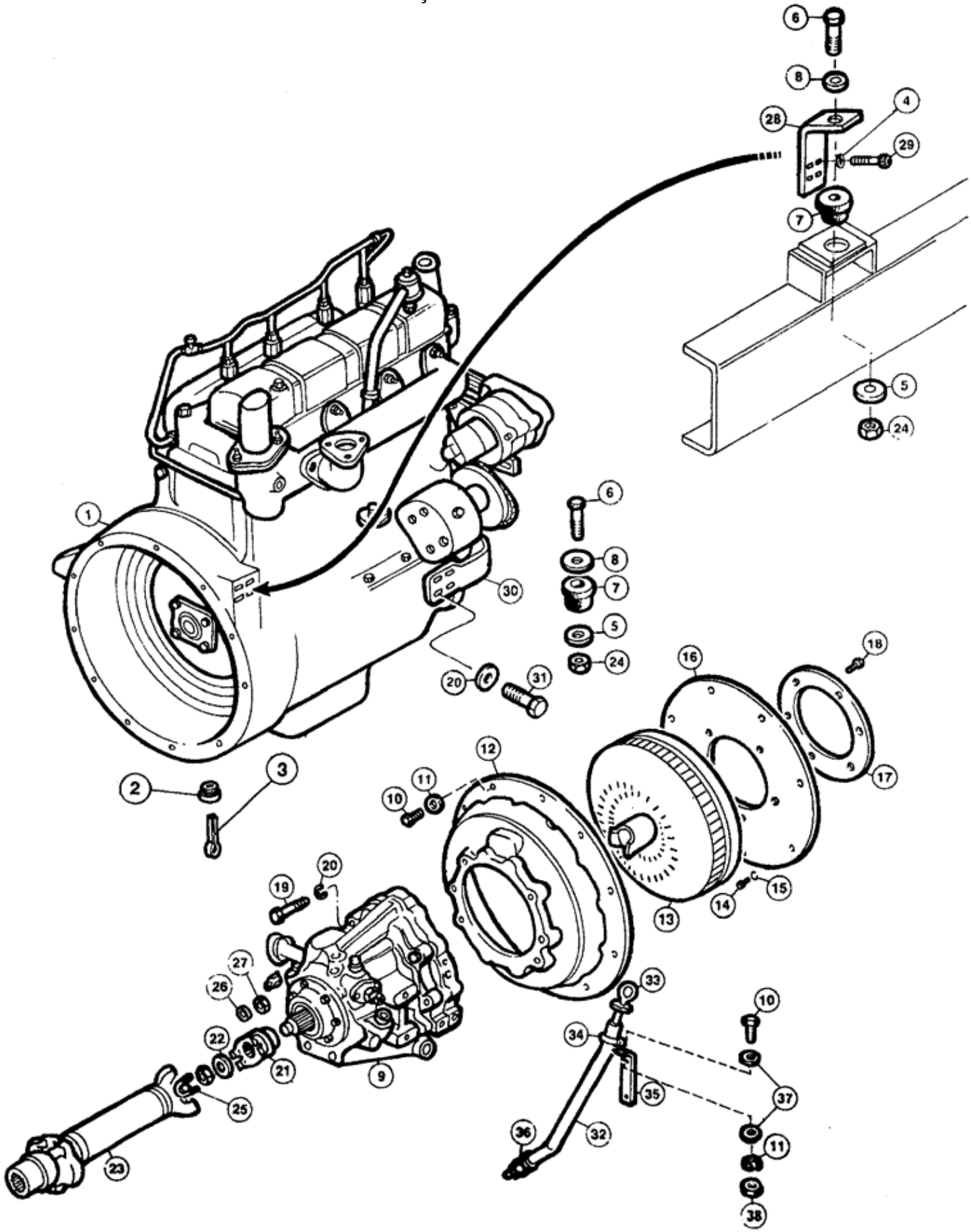

Número de serie:

Ruta de acceso: Case CE LAR > LIGHT EQUIPMENT >LOADER BACKHOES >H >580H - CASE LOADER BACKHOE >06 - POWER TRAIN >6-002 - TRANSMISSION ASSEMBLY - TRANSAXLE SYSTEM >

Ref	Qty	Part #	Part Description	Usage
1	1	REF	INSTRUCTION	ENGINE ASSY.
2	1	E95060	PLUG	PLUG
3	1	132-48	COTTER PIN	
4	8	92-8	LOCK WASHER	
5	3	A17516	WASHER	
6	3	13-1056	BOLT	
7	3	E60120	STRUT	CUSHION
8	3	95-10	WASHER	
9	1	REF	INSTRUCTION	SHUTTLE power, figure 6-012
10	13	13-616	BOLT	
11	13	92-6	LOCK WASHER	
12	1	D48445	HOUSING	
13	1	D81693	CONVERTER	COVER
14	6	121-103	BOLT	
15	6	A15672	WASHER	
16	1	A15670	PLATE	
17	1	D81592	PLATE	
18	6	121-203	BOLT	
19	6	13-752	BOLT	
20	14	82-7		WASHER
21	1	E62872	SPARE PART	YOKE
22	1	D73180	WASHER	
23	1	REF	INSTRUCTION	SHAFT drive, figure 6-044
24	3	131-14	LOCK NUT	
25	4	E62873	STAPLE	
26	8	E62877	WASHER	WASHER
27	8	E62875	NUT	
28	2	E62468		BRACKET
29	8	13-824	BOLT	
30	1	E62548	SUPPORT	BRACKET
30	1	E67752	SUPPORT	BRACKET
31	8	14-720	BOLT	
32	1	E64186	TUBE	
33	1	D75468	DIPSTICK	
34	1	R14668	CLAMP	
35	1	E64094	SUPPORT	BRACKET
36	1	E64204	SUN VISOR	
37	2	95-6	WASHER	
38	1	25-106	NUT	

Número de serie:

Ruta de acceso: Case CE LAR > LIGHT EQUIPMENT >LOADER BACKHOES >H >580H - CASE LOADER BACKHOE >06 - POWER TRAIN >6-006 - CONTROLS - POWER SHUTTLE >

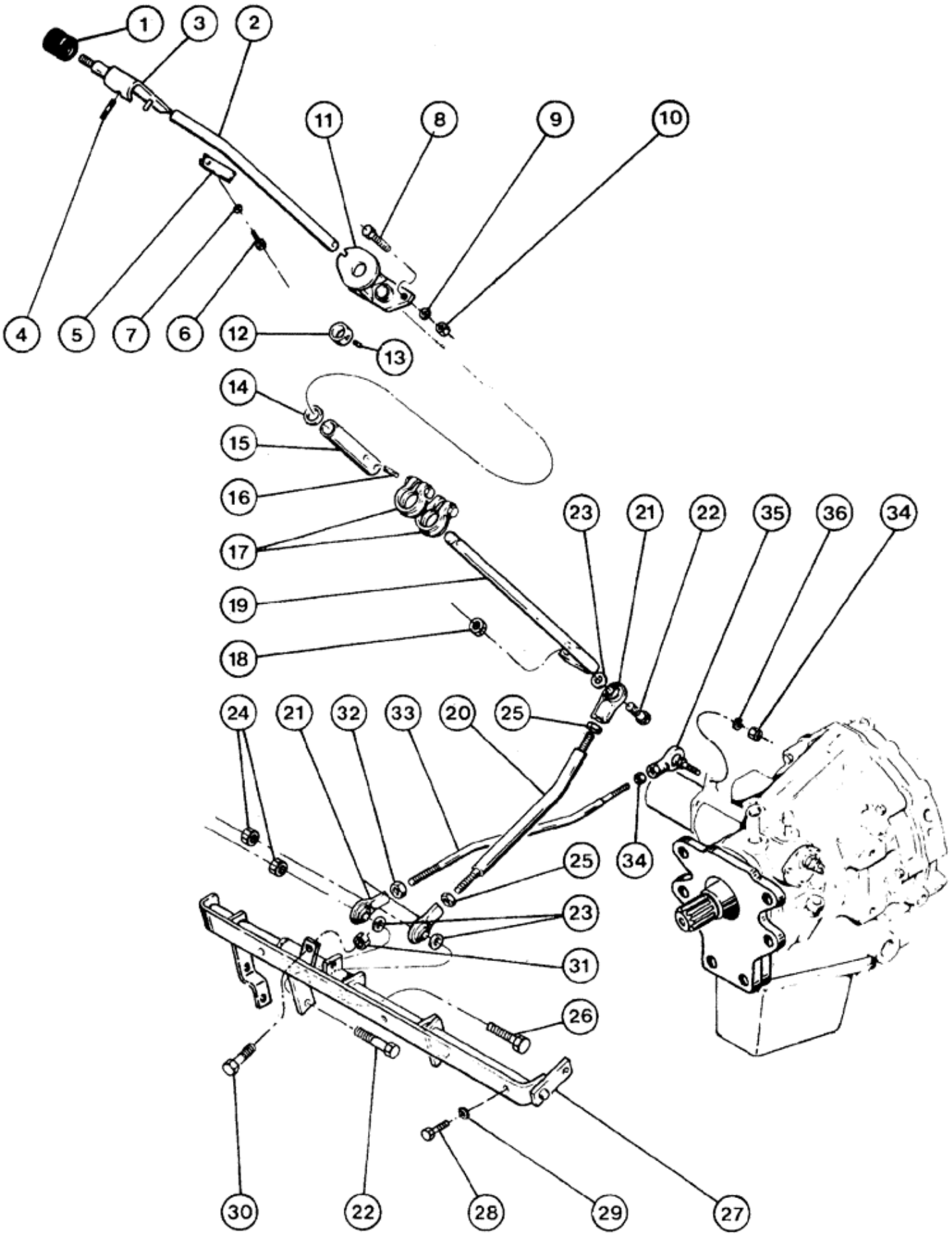

Número de serie:

Ruta de acceso: Case CE LAR > LIGHT EQUIPMENT >LOADER BACKHOES >H >580H - CASE LOADER BACKHOE >06 - POWER TRAIN >6-006 - CONTROLS - POWER SHUTTLE >

Ref	Qty	Part #	Part Description	Usage
1	1	A23885	KNOB	
2	1	D72078	LEVER	
3	1	D72994	LOCK	
4	1	138-2053	PIN	
5	1	A38296	SPRING	
6	1	182-82	SCREW	
7	1	495-31019	WASHER	
8	3	11-512	SCREW	
9	3	495-11034	WASHER	
10	3	131-665	LOCK NUT	
11	1	D72971	SUPPORT	BRACKET
12	1	D71883	COLLAR	COLLAR
13	1	83-54	SET SCREW	
14	1	D70730	WASHER	
15	1	E68659	SLEEVE	SLEEVE
16	2	E68657	PIN	PIN roll
17	2	D71880	CLAMP	
18	1	E64794	NUT	NUT
19	1	D72076	SHAFT	
20	1	E95768	ROD	ROD
21	3	D59922	BALL JOINT	TERMINAL
22	2	413-624	BOLT	
23	3	G49409		WASHER
24	2	E64794	NUT	NUT
25	2	425-116	NUT	
26	1	413-628	BOLT	
27	1	E96142	ARTICULATION	LINK
28	3	413-516	BOLT	
29	3	492-11031	LOCK WASHER	
30	1	13-416	BOLT	
31	1	425-104	NUT	
32	1	425-116	NUT	
33	1	E95773	ROD	ROD
34	2	425-114	NUT	
35	1	E64262	BALL JOINT	
36	1	492-11025	LOCK WASHER	

Número de serie:

Ruta de acceso: Case CE LAR > LIGHT EQUIPMENT >LOADER BACKHOES >H >580H - CASE LOADER BACKHOE >06 - POWER TRAIN >6-010 - POWER SHUTTLE COOLING SYSTEM >

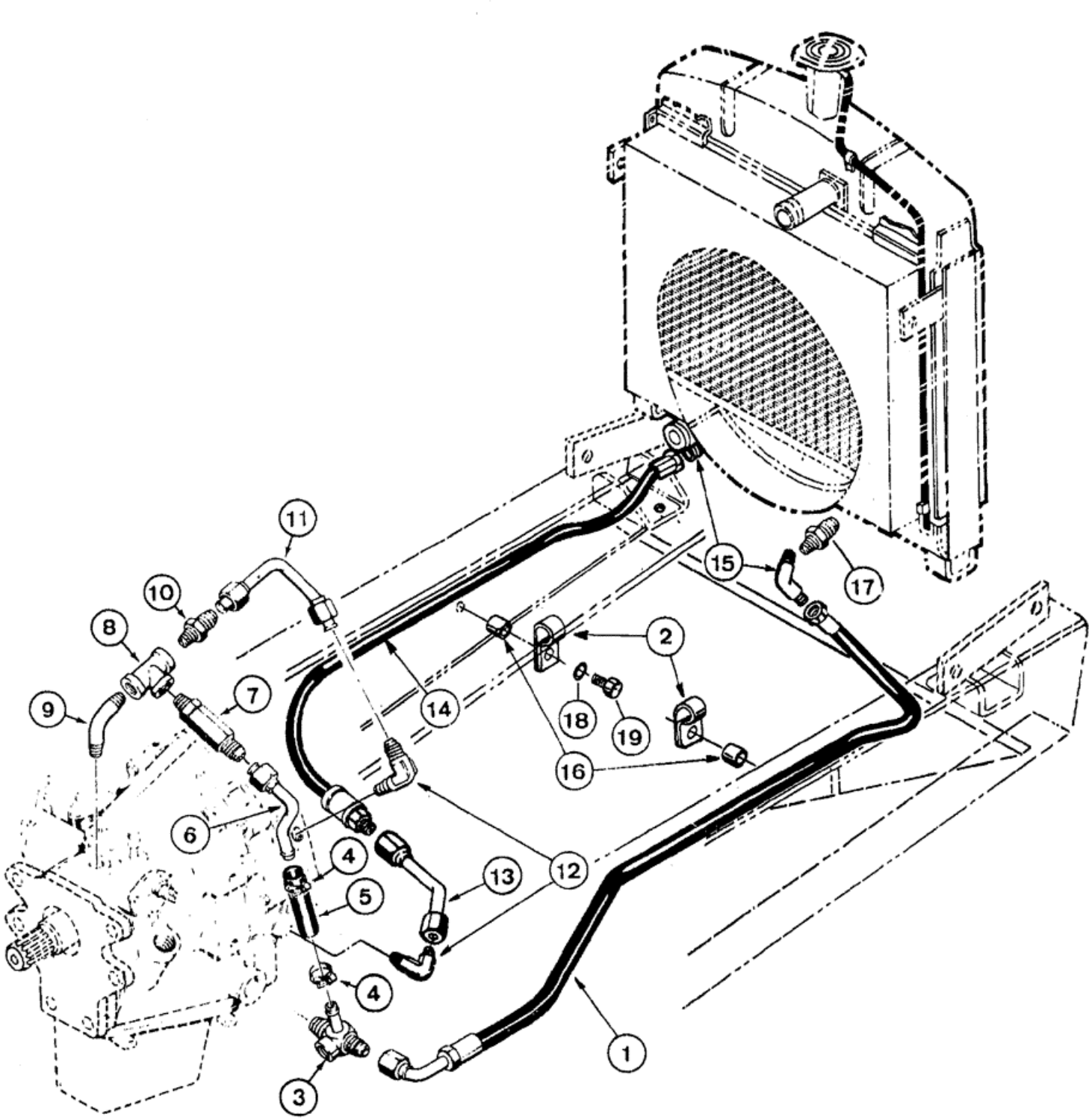

Número de serie:

Ruta de acceso: Case CE LAR > LIGHT EQUIPMENT >LOADER BACKHOES >H >580H - CASE LOADER BACKHOE >06 - POWER TRAIN >6-010 - POWER SHUTTLE COOLING SYSTEM >

Ref	Qty	Part #	Part Description	Usage
1	1	E96937	HOSE	
2	2	R14668	CLAMP	
3	1	D68972	CONNECTOR, ELEC	CONNECTOR T
4	2	214-253	HOSE CLAMP	
5	1	D55583	HOSE	
6	1	E64096	TUBE	TUBE
7	1	D48540	VALVE POPPET	relief
8	1	221-423	TEE	
9	1	D48539	FITTING	ELBOW
10	1	218-444	HYD CONNECTOR	
11	1	E64106	TUBE	TUBE
12	2	218-484	ELBOW	ELBOW
13	1	E64104	TUBE	TUBE
14	1	E62593	HOSE	model 580H
14	1	E96936	HOSE	
15	2	218-1098	ELBOW	ELBOW
15	2	221-1368	ELBOW	model 580H
16	2	D73071	SPACER	SPACER
17	1	221-1186	SUN VISOR	CONNECTOR model 580H, if used
18	3	92-6	LOCK WASHER	model 580H, if used
19	3	13-610	BOLT	Model 580H, if used

Número de serie:

Ruta de acceso: Case CE LAR > LIGHT EQUIPMENT >LOADER BACKHOES >H >580H - CASE LOADER BACKHOE >06 - POWER TRAIN >6-012 - POWER SHUTTLE - HOUSING AND SUMP >

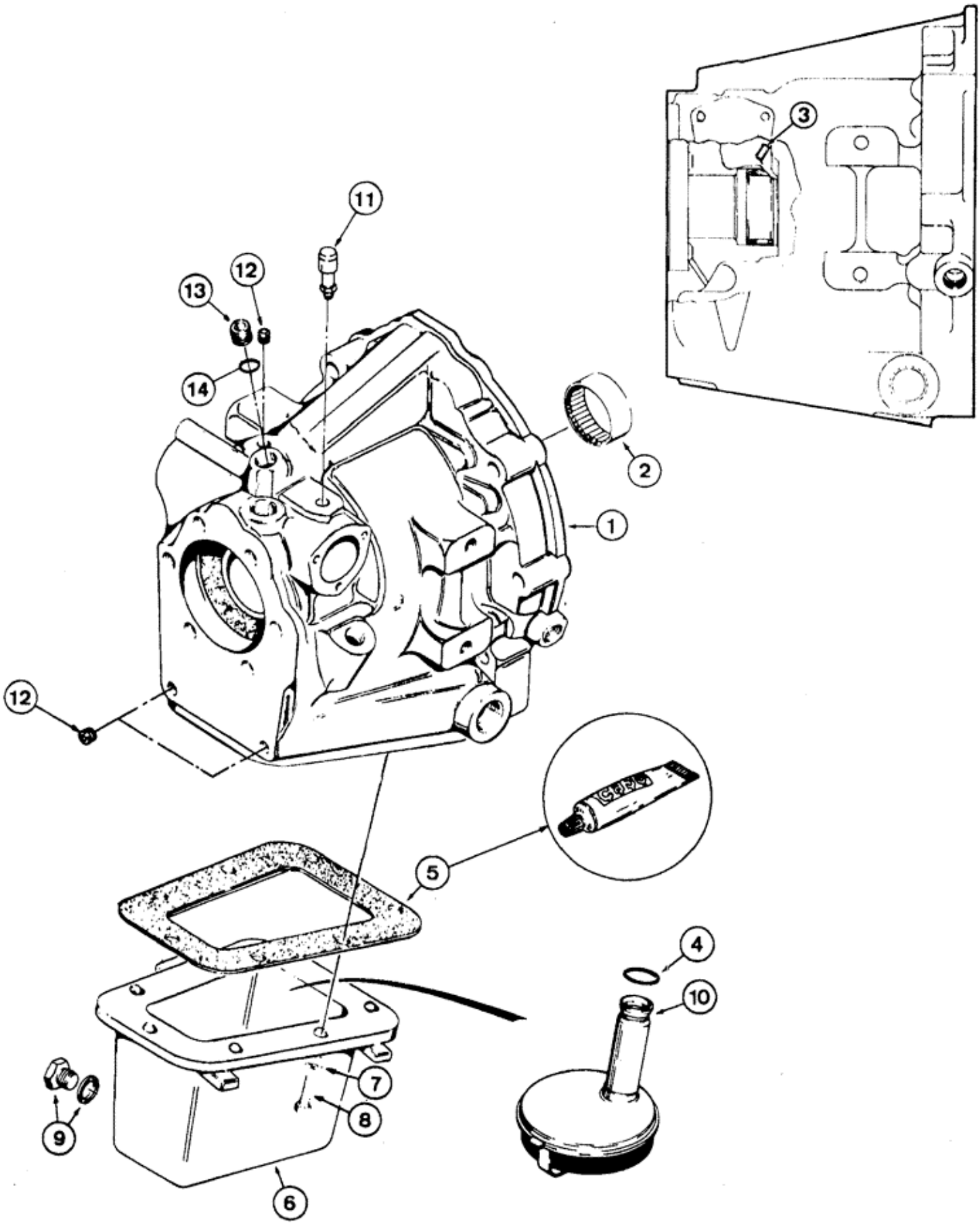

Número de serie:

Ruta de acceso: Case CE LAR > LIGHT EQUIPMENT >LOADER BACKHOES >H >580H - CASE LOADER BACKHOE >06 - POWER TRAIN >6-012 - POWER SHUTTLE - HOUSING AND SUMP >

Ref	Qty	Part #	Part Description	Usage
	1	E41563	GEARBOX ASSY	SHUTTLE ASSY. power, model 580H, -->6983980, Includes: Ref. 1 - 5
	1	E97021	REVERSER	SHUTTLE ASSY. power, model 580Hx, 6983981-->, Includes: Ref. 1 - 5
1	1	D70650	HOUSING	ASSY.
2	1	R21491	NEEDLE BEARING	
3	1	41-1007	PLUG	
4	1	R29797	O-RING	
5	1	R29956	GASKET	
5	UQN	M20704	ADHESIVE	SEALING, Includes: Ref. 6 - 13
6	1	N13577	PAN	SUMP
7	7	492-11038	LOCK WASHER	
8	7	113-221	BOLT	
9	1	R29957	GASKET	PLUG, -->6983980
9	1	D73701	PLUG	1/2 UNF
9	1	221-841	PLUG	1/4 UNF
10	1	D143133	FILTER SCREEN	
11	1	D50062	BREATHER	
12	3	S117865	PLUG	
13	1	221-1843	PLUG	3/8 UNF
13	1	76349	PLUG	
14	1	218-5005	O-RING	

Número de serie:

Ruta de acceso: Case CE LAR > LIGHT EQUIPMENT >LOADER BACKHOES >H >580H - CASE LOADER BACKHOE >06 - POWER TRAIN >6-014 - POWER SHUTTLE - CONTROL VALVE >

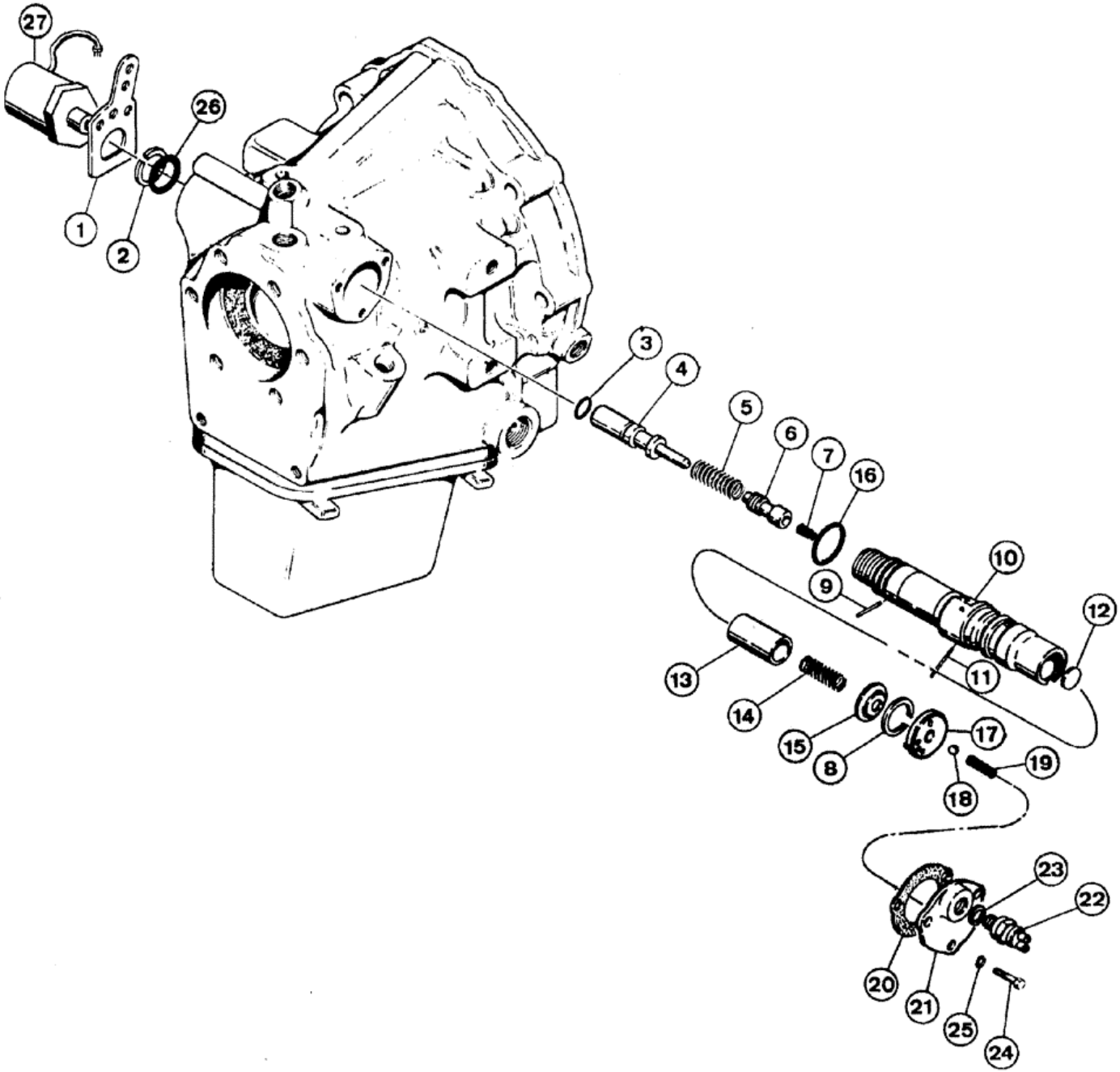

Número de serie:

Ruta de acceso: Case CE LAR > LIGHT EQUIPMENT >LOADER BACKHOES >H >580H - CASE LOADER BACKHOE >06 - POWER TRAIN >6-014 - POWER SHUTTLE - CONTROL VALVE >

Ref	Qty	Part #	Part Description	Usage
	1	E41563	GEARBOX ASSY	SHUTTLE ASSY. power, model 580H, -->6983980, , Includes: Ref. 1 - 27
	1	E97021	REVERSER	SHUTTLE ASSY. power, model 580Hx, 6983981-->, , Includes: Ref. 1 - 27
1	1	D77621	LEVER	
2	1	A75171	SNAP RING	
	1	D77473	VALVE	ASSY., Includes: Ref. 3 - 15
3	1	D75489	SEAL	
4	1	D75488	PLUNGER	PISTON
5	1	D77475	SPRING	
6	1	D77474	SPOOL	
7	1	D77476	SPRING	
8	1	D50092	RING	snap
9	1	138-59	LOCK PIN	
10	1	NSS	NOT SERVICED SEPARATELY	BODY
11	1	135-198	GROOVED PIN	
12	1	41-12	PLUG	
13	1	D50089	VALVE	
14	1	D50090	SPRING	
15	1	D50091	RETAINER	
16	1	D142214	O-RING	
17	1	D86489	CAM	BOSS
18	1	211-9	BALL	
19	1	S47892	SPRING	
20	1	D50066	GASKET	
21	1	D72822	COVER	model 580H, -->6983980
21	1	D86488	COVER	6983981-->
22	1	S113435	SWITCH	Includes: Ref. 23
23	1	218-5005	O-RING	
24	3	413-414	BOLT	
25	3	492-11025	LOCK WASHER	
26	1	D142214	O-RING	

Ref	Qty	Part #	Part Description	Usage
27	1	E65307	SOLENOID	

Número de serie:

Ruta de acceso: Case CE LAR > LIGHT EQUIPMENT >LOADER BACKHOES >H >580H - CASE LOADER BACKHOE >06 - POWER TRAIN >6-016 - POWER SHUTTLE - INPUT SHAFT AND FOWARD CLUTCH >

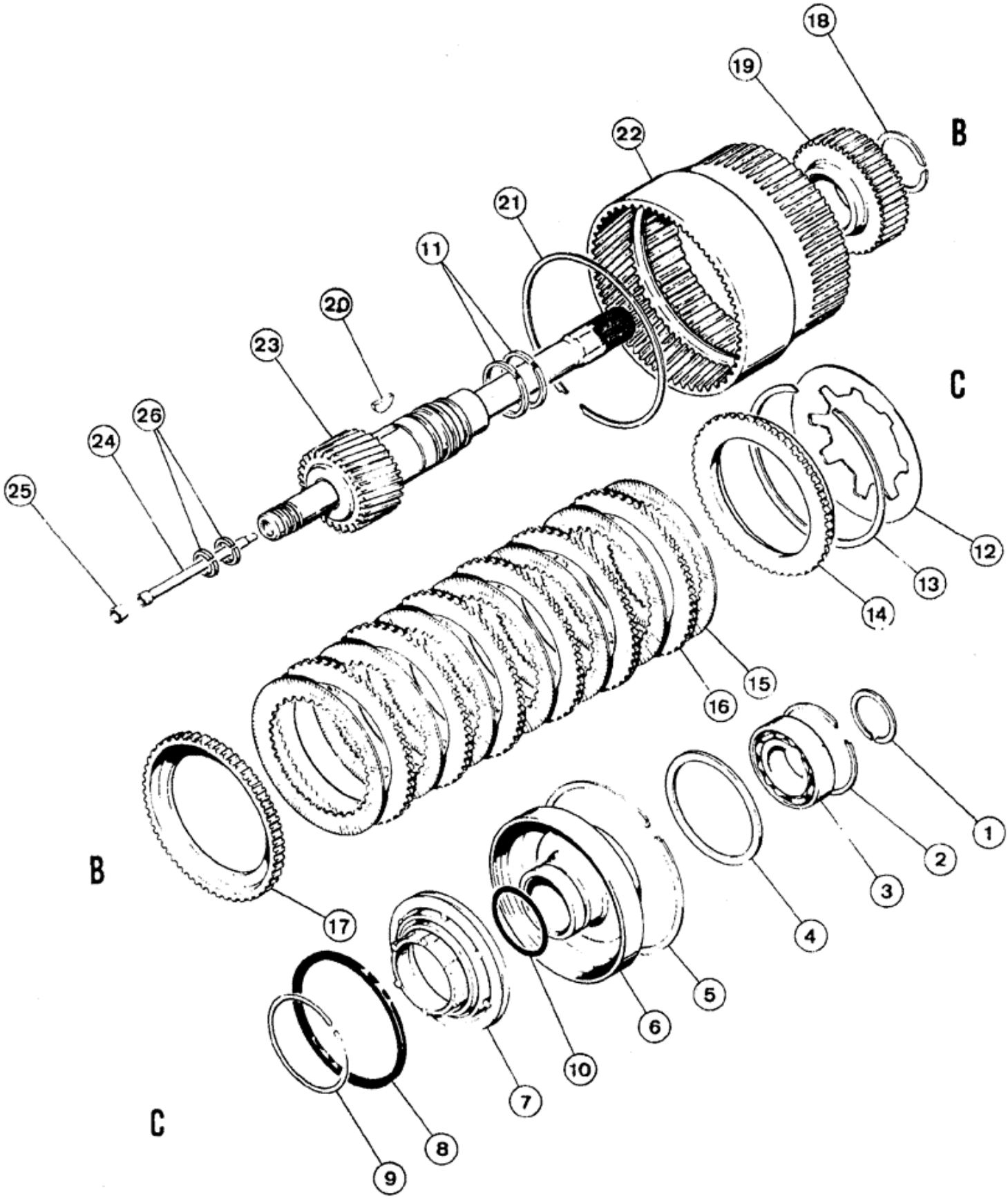

Número de serie:

Ruta de acceso: Case CE LAR > LIGHT EQUIPMENT >LOADER BACKHOES >H >580H - CASE LOADER BACKHOE >06 - POWER TRAIN >6-016 - POWER SHUTTLE - INPUT SHAFT AND FOWARD CLUTCH >

Ref	Qty	Part #	Part Description	Usage
	1	E41563	GEARBOX ASSY	SHUTTLE ASSY. power, model 580H, -->6983980, Includes: Ref. 1 - 26
	1	E97021	REVERSER	SHUTTLE ASSY. power, model 580Hx, 6983981-->, Includes: Ref. 1 - 26
1	1	D50042	RING	snap
2	1	D50043	RING	snap
3	1	D50044	BALL BEARING	
4	1	D50045	WASHER	
5	1	D50046	RING	snap
6	1	D50075	CYLINDER	
7	1	D70670	PISTON	
8	1	D50077	RING	
9	1	D50078	RING	snap
10	1	D50079	O-RING	
11	2	D50080	RING	seal
12	1	D50047	BELLEVILLE WASHER	
13	1	D50048	CIRCLIP	snap
14	1	D50081	PLATE	pressure
15	7	D70672	PLATE	clutch
16	6	D50083	PLATE	clutch
17	1	D50084	PLATE	pressure
18	1	D50049	RING	snap
19	1	D75853	HUB	
20	1	126-124	WOODRUFF KEY	
21	1	CASD50051	RING	RING, snap 1.27 - 1.37 mm
21	1	D78397	RING	snap 1.57 - 1.67 mm
21	1	D50052	RING	snap 1.87 - 1.98 mm
21	1	D78398	RING	snap 2.13 - 2.33 mm
21	1	D50053	RING	snap 2.43 - 2.54 mm
22	1	D50054	GEAR	ring
23	1	D70666	GEAR	SHAFT ASSY., Includes: Ref. 24 and 25
24	1	N7043	TUBE	
25	1	D50086	PLUG	
26	2	D70668	RING	seal

Número de serie:

Ruta de acceso: Case CE LAR > LIGHT EQUIPMENT >LOADER BACKHOES >H >580H - CASE LOADER BACKHOE >06 - POWER TRAIN >6-018 - POWER SHUTTLE - PUMP AND REVERSE CLUTCH >

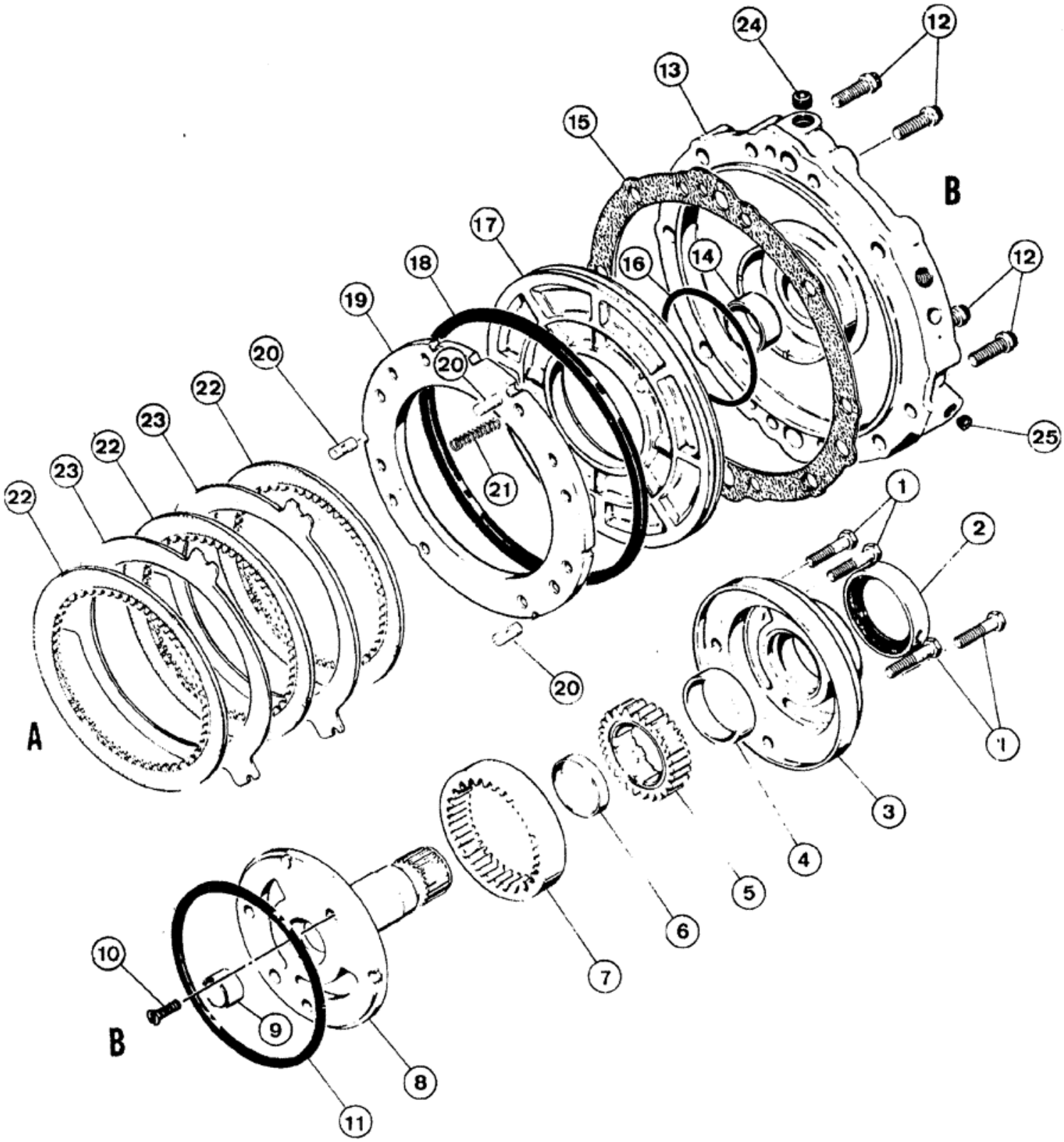

Número de serie:

Ruta de acceso: Case CE LAR > LIGHT EQUIPMENT >LOADER BACKHOES >H >580H - CASE LOADER BACKHOE >06 - POWER TRAIN >6-018 - POWER SHUTTLE - PUMP AND REVERSE CLUTCH >

Ref	Qty	Part #	Part Description	Usage
	1	E41563	GEARBOX ASSY	SHUTTLE ASSY. power, model 580H, -->6983980, Includes: Ref. 1 - 25
	1	E97021	REVERSER	SHUTTLE ASSY. power, model 580Hx, 6983981-->, Includes: Ref. 1 - 25
1	4	413-528	BOLT	
	1	E97806	PUMP	PUMP ASSY., Includes: Ref. 2 - 10
	1	R29995	PUMP	ASSY., Includes: Ref. 2 - 10
2	1	L30489	OIL SEAL	-->6983980
				Used in the pump R29995
2	1	N8071	OIL SEAL	used in pump R29995, 6983981-->
2		E97808	RUBBER SEAL	SEAL
				Used in the pump E97806
3	1	NSS	NOT SERVICED SEPARATELY	BODY
4	1	NSS	NOT SERVICED SEPARATELY	BUSHING
5	1	NSS	NOT SERVICED SEPARATELY	GEAR
6	1	NSS	NOT SERVICED SEPARATELY	BUSHING
7	1	NSS	NOT SERVICED SEPARATELY	GEAR
8	1	NSS	NOT SERVICED SEPARATELY	BRACKET
9	1	NSS	NOT SERVICED SEPARATELY	BUSHING
10	1	171-100	SCREW	
11	1	L30487	GASKET	
12	4	166-46	12 PT SCREW	
	1	D50022	ADAPTER	ASSY., Includes: Ref. 13 - 15
13	1	NSS	NOT SERVICED SEPARATELY	ADAPTER
14	1	D50074	BUSHING	
15	1	D50033	GASKET	
16	1	D50034	O-RING	
17	1	D50035	PISTON	
18	1	D50036	SEALING RING	
19	1	D50037	PLATE	
20	3	D50038	PIN	dowel
21	11	D50039	SPRING	
22	3	D50040	PLATE	clutch
23	2	D50041	CLUTCH PLATE	clutch
24	1	221-841	PLUG	
25	2	221-849	PLUG	

Número de serie:

Ruta de acceso: Case CE LAR > LIGHT EQUIPMENT >LOADER BACKHOES >H >580H - CASE LOADER BACKHOE >06 - POWER TRAIN >6-020 - POWER SHUTTLE - OUTPUT SHAFT >

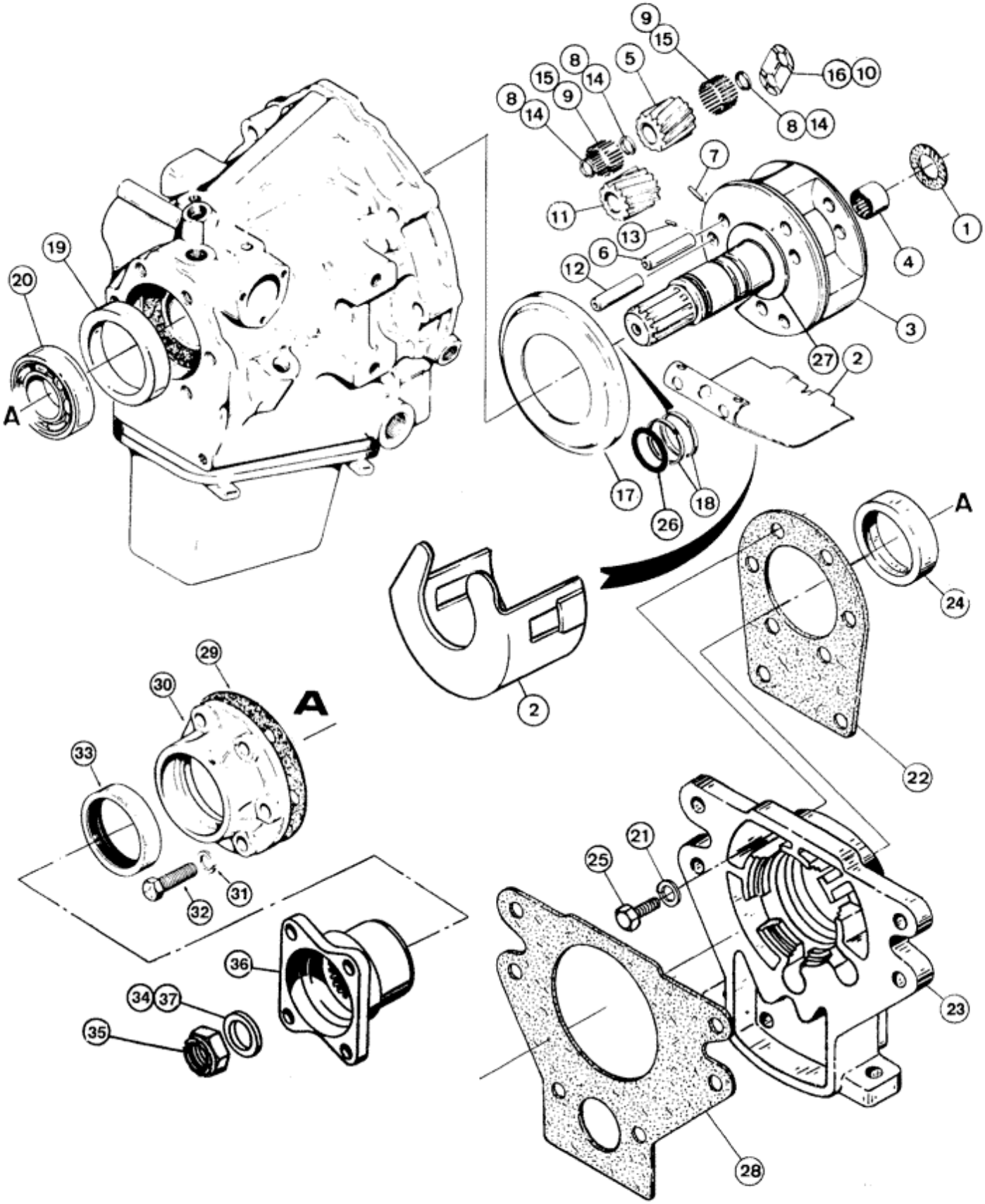

Número de serie:

Ruta de acceso: Case CE LAR > LIGHT EQUIPMENT >LOADER BACKHOES >H >580H - CASE LOADER BACKHOE >06 - POWER TRAIN >6-020 - POWER SHUTTLE - OUTPUT SHAFT >

Ref	Qty	Part #	Part Description	Usage
	1	E41563	GEARBOX ASSY	SHUTTLE ASSY. power, model 580H, -->6983980, Includes: Ref. 1 - 27
	1	E97021	REVERSER	SHUTTLE ASSY. power, model 580Hx, 6983981-->, Includes: Ref. 1 - 27
1	1	D50055	WASHER, THRUST	
2	1	D50056	GUARD	PLATE, baffle
	1	D70665	GEAR	PINION ASSY. housing, model 580H, -->6983980, Includes: Ref. 3 - 18
	1	S235744	CAGE	PINION ASSY. housing, model 580Hx, 6983981-->, Includes: Ref. 3 - 18
3	1	NSS	NOT SERVICED SEPARATELY	HOUSING
4	1	R21491	NEEDLE BEARING	model 580H, -->6983980
4	1	H747964	NEEDLE BEARING	model 580Hx, 6983981-->
	3	D50030	GEAR	PINION ASSY., Includes: Ref. 5 - 10
5	1	NSS	NOT SERVICED SEPARATELY	GEAR pinion
6	1	NSS	NOT SERVICED SEPARATELY	SHAFT
7	1	NSS	NOT SERVICED SEPARATELY	PIN
8	3	NSS	NOT SERVICED SEPARATELY	SPACER
9	48	NSS	NOT SERVICED SEPARATELY	ROLLER
10	2	NSS	NOT SERVICED SEPARATELY	PLATE
	3	D50031	KIT	PINION ASSY., Includes: Ref. 11 - 16
11	1	NSS	NOT SERVICED SEPARATELY	GEAR pinion
12	1	NSS	NOT SERVICED SEPARATELY	SHAFT
13	1	NSS	NOT SERVICED SEPARATELY	PIN
14	3	NSS	NOT SERVICED SEPARATELY	SPACER
15	48	NSS	NOT SERVICED SEPARATELY	ROLLER
16	2	NSS	NOT SERVICED SEPARATELY	PLATE
17	1	S105555	OIL SEAL	COVER
18	2	D50080	RING	SEAL
19	1	D50057	SLEEVE	
20	1	ST291	BEARING, BALL	model 580H, -->6983980
20	1	S84339	TAPERED ROLLER BEARING	model 580Hx, 6983981-->
21	8	492-11044	LOCK WASHER	Model 580Hx, 6983981-->
22	1	S18662	GASKET	model 580Hx, 6983981-->
23	1	S73488	HOUSING	model 580Hx, 6983981-->
24	1	S16766	SEAL	model 580Hx, 6983981-->
25	8	413-718	BOLT	model 580Hx, 6983981-->
26	1	S73477	O-RING	model 580Hx, 6983981-->
27	1	S73478	WASHER	back-up, model 580Hx, 6983981-->
28	1	D71460	GASKET	
29	1	D50058	GASKET	model 580H, -->6983980
30	1	D50059	BEARING HOUSING	COVER model 580H, -->6983980
31	1	92-7	LOCK WASHER	Model 580H, -->6983980
32	6	413-718	BOLT	model 580H, -->6983980
33	6	D50060	SEAL	model 580H, -->6983980
34	1	D65247	WASHER	model 580H, -->6983980

Ref	Qty	Part #	Part Description	Usage
35	1	131-37	LOCK NUT	Model 580H, -->6983980
36	1	D73776	FLANGE	model 580H, -->6983980
37	UQN	345-84	ADHESIVE	SEALING model 580H, -->6983980

Número de serie:

Ruta de acceso: Case CE LAR > LIGHT EQUIPMENT >LOADER BACKHOES >H >580H - CASE LOADER BACKHOE >06 - POWER TRAIN >6-022 - REAR AXLE - HOUSING - TRANSAXLE SYSTEM >

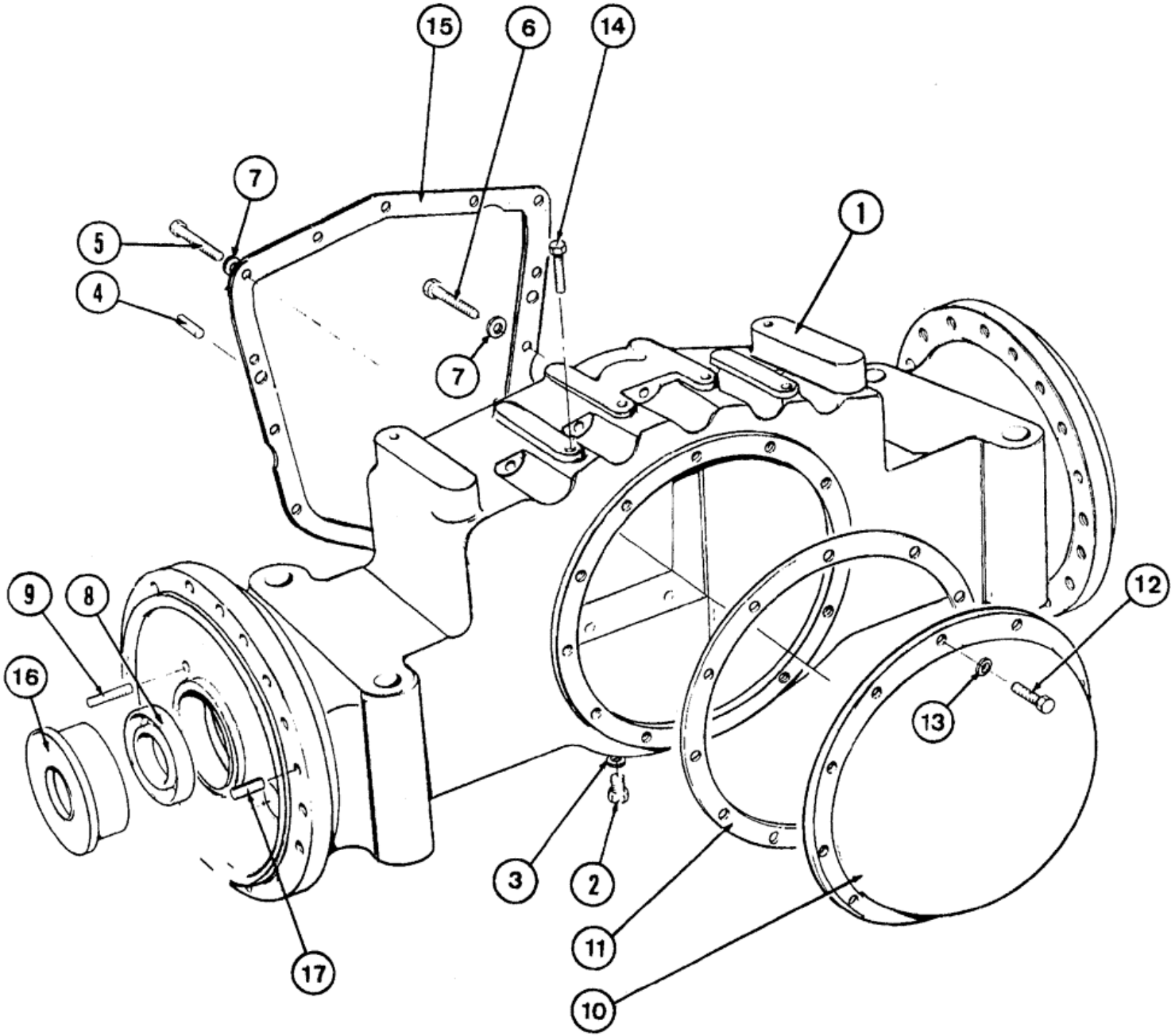

Número de serie:

Ruta de acceso: Case CE LAR > LIGHT EQUIPMENT >LOADER BACKHOES >H >580H - CASE LOADER BACKHOE >06 - POWER TRAIN >6-022 - REAR AXLE - HOUSING - TRANSAXLE SYSTEM >

Ref	Qty	Part #	Part Description	Usage
	1	E66997		AXLE ASSY., -->6980449, Includes: Ref. 1 - 17
	1	E68302	SHAFT	AXLE ASSY., 6980450-->, Includes: Ref. 1 - 17
1	1	K955077	SHAFT	HOUSING
2	1	K623826	PLUG	
3	1	K626315	WASHER	
4	2	K621826	PIN	dowel
5	5	13-772	BOLT	
6	9	13-764	BOLT	
7	14	92-7	LOCK WASHER	
8	4	K13353	SEAL	RETAINER
9	2	K947891	BREATHER	
10	1	K15222	COVER	SPARE PART
11	1	K15228	GASKET	
12	12	13-712	SCREW	
13	12	92-7	LOCK WASHER	
14	1	K603148	SCREW	BREATHER
15	1	K948762	GASKET	
16	2	K200090	SEAL	housing, oil
17	4	K900105	PIN	dowel

Número de serie:

Ruta de acceso: Case CE LAR > LIGHT EQUIPMENT >LOADER BACKHOES >H >580H - CASE LOADER BACKHOE >06 - POWER TRAIN >6-024 - GEAR BOX - HOUSING - TRANSAXLE SYSTEM >

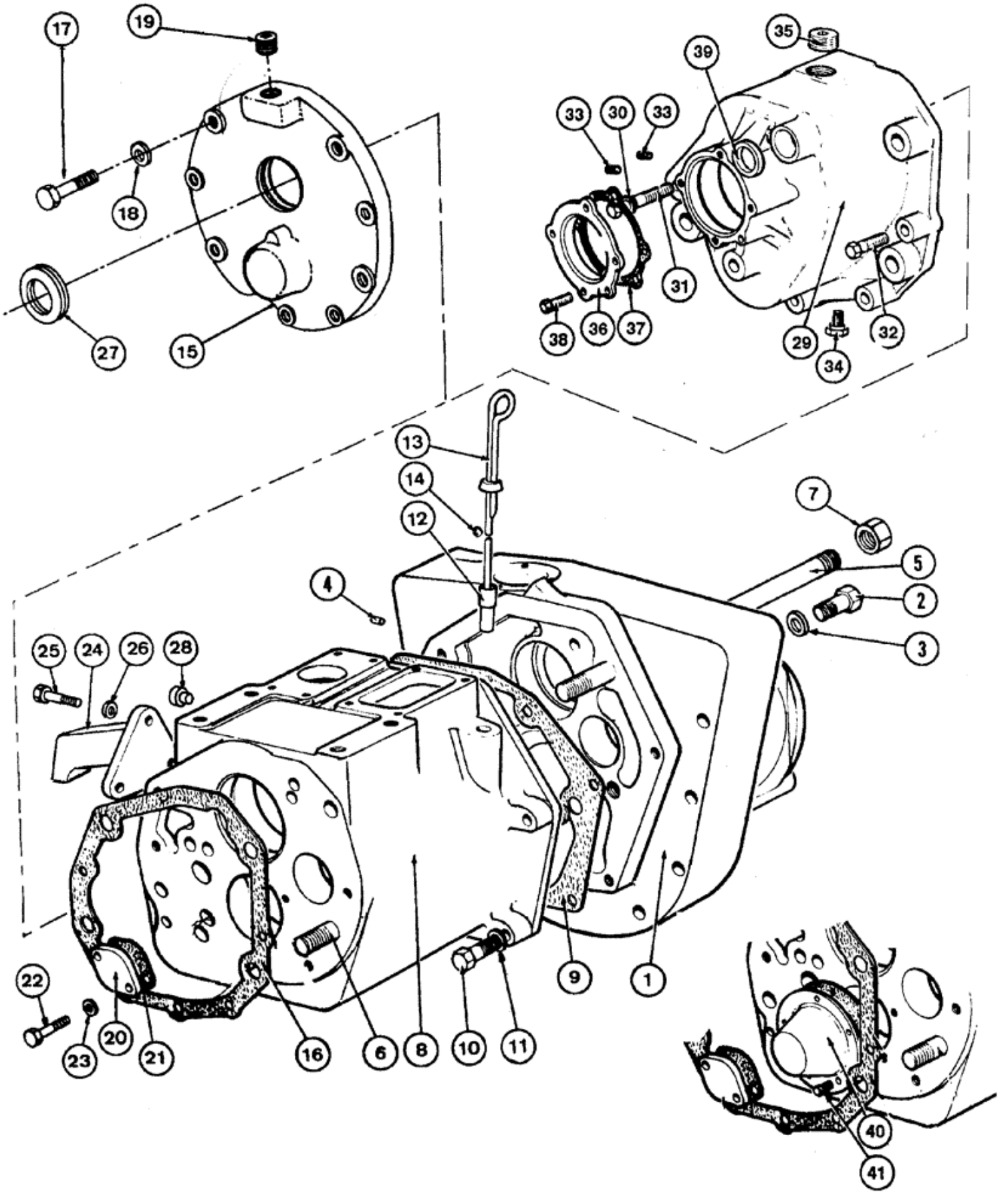

Número de serie:

Ruta de acceso: Case CE LAR > LIGHT EQUIPMENT >LOADER BACKHOES >H >580H - CASE LOADER BACKHOE >06 - POWER TRAIN >6-024 - GEAR BOX - HOUSING - TRANSAXLE SYSTEM >

Ref	Qty	Part #	Part Description	Usage
1	1	K955018	PLATE	COVER
2	4	26-1060	BOLT	
3	4	K626389	BEARING WASHER	WASHER
4	1	K948791	PLUG	
5	2	K200739	STUD	
6	2	K940991	STUD	
7	4	K607331	NUT	
8	1	K948624	HOUSING	HOUSING
9	1	K948763	GASKET	
10	5	13-740	BOLT	
11	5	92-7	LOCK WASHER	
12	1	K83884	SLEEVE	
13	1	K952253	DIPSTICK	
14	2	178-467	SET SCREW	
15	1	K948668	COVER	COVER
16	1	K948765	GASKET	
17	4	13-728	BOLT	
18	4	92-7	LOCK WASHER	
19	1	K12362	PLUG	
20	1	K948787	COVER	COVER
21	1	K948788	GASKET	
22	2	13-616	BOLT	
23	2	192-21	LOCK WASHER	
24	1	K953347	BRACKET	
25	3	13-724	BOLT	
26	3	92-7	LOCK WASHER	
27	1	K623448	SEAL	RESTRICTOR
28	3	353-8	PLUG	
29	1	K948678	COVER	COVER
30	1	K948786	WASHER	
31	4	K600665	BOLT	
32	3	13-740	BOLT	
33	2	K616001	SCREW	
34	1	K19581	PLUG	
35	1	K12362	PLUG	
36	1	K948674	HOUSING	FLANGE
37	1	K948679	GASKET	
38	4	13-514	BOLT	
39	1	K623443	OIL SEAL	oil
40	1	K946426	COVER	
41	5	13-48	BOLT	

Número de serie:

Ruta de acceso: Case CE LAR > LIGHT EQUIPMENT >LOADER BACKHOES >H >580H - CASE LOADER BACKHOE >06 - POWER TRAIN >6-026 - DRIVESHAFT AND LAYSHAFT-TRANSAXLE SYSTEM >

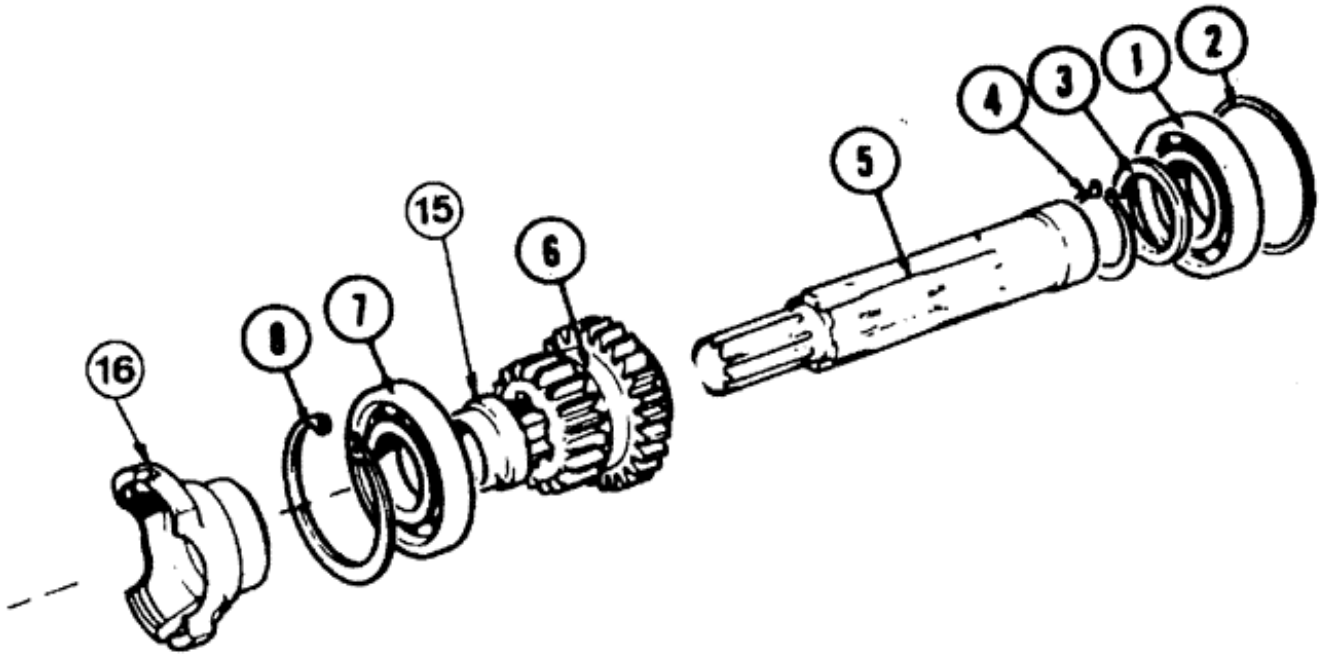

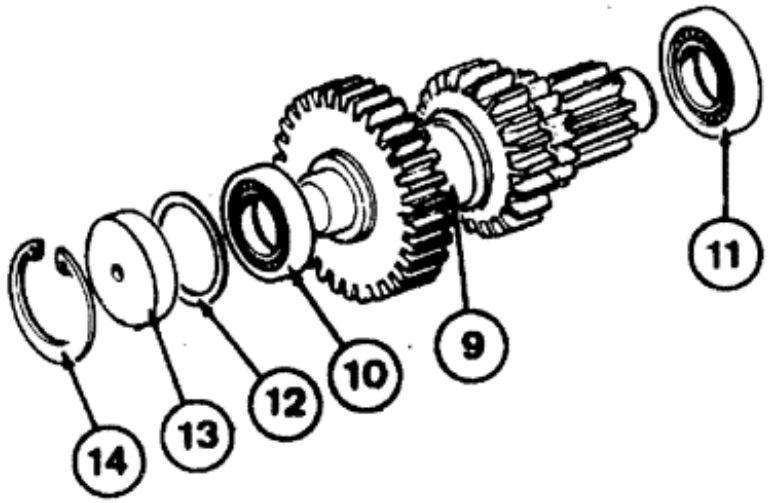

Número de serie:

Ruta de acceso: Case CE LAR > LIGHT EQUIPMENT >LOADER BACKHOES >H >580H - CASE LOADER BACKHOE >06 - POWER TRAIN >6-026 - DRIVESHAFT AND LAYSHAFT-TRANSAXLE SYSTEM >

Ref	Qty	Part #	Part Description	Usage
1	1	K19047	BALL BEARING	BEARING
2	UQN	K908372	SHIM	(.076 mm)
2	UQN	K908373	SHIM	(.127mm)
2	UQN	K908374	SHIM	(.508 mm)
3	1	K940671	WASHER	SPACER
4	1	K12922	RING, SNAP	RING SNAP
5	1	K950644	SHAFT	
6	1	K948769	GEAR	PINION
7	1	K19081	BALL BEARING	
8	1	K16296	RING	snap
9	1	K948575	SHAFT	lay
10	1	K620076	BEARING, ROLLER	
11	1	K620063	ROLLER	BEARING
12	UQN	K914702	SHIM	(.051 mm)
12	UQN	K914703	SHIM	(.076 mm)
12	UQN	K914704	SHIM	(.178 mm)
12	UQN	K914705	SHIM	(.254 mm)
13	1	K948802	BUSHING	SPACER
14	1	K621483	RING, SNAP	RING SNAP
15	1	K948657	BUSHING	
16	1	E64419	SPARE PART	YOKE ASSY.

Número de serie:

Ruta de acceso: Case CE LAR > LIGHT EQUIPMENT >LOADER BACKHOES >H >580H - CASE LOADER BACKHOE >06 - POWER TRAIN >6-028 - GEAR SELECTOR MECHANISM - TRANSAXLE SYSTEM >

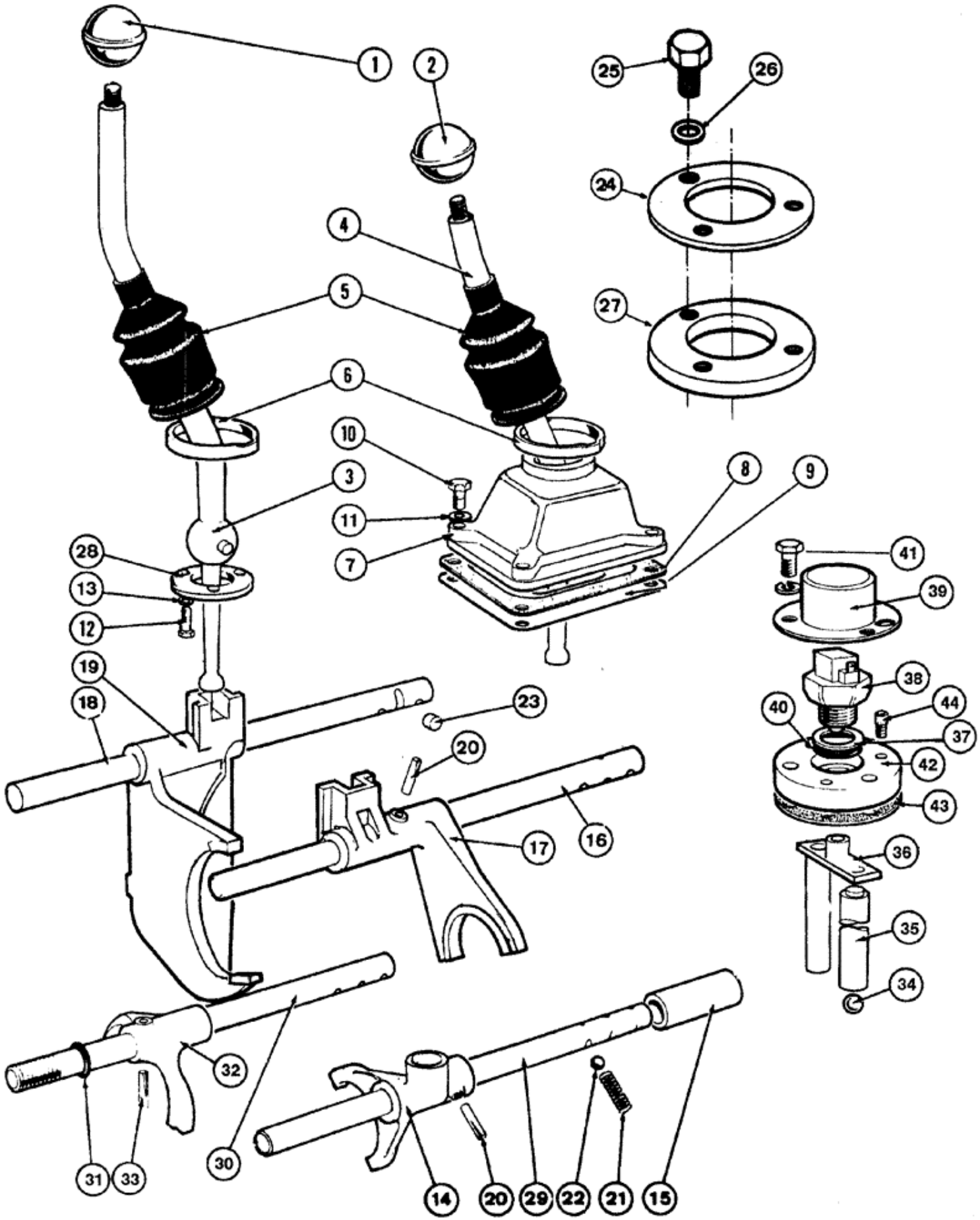

Número de serie:

Ruta de acceso: Case CE LAR > LIGHT EQUIPMENT >LOADER BACKHOES >H >580H - CASE LOADER BACKHOE >06 - POWER TRAIN >6-028 - GEAR SELECTOR MECHANISM - TRANSAXLE SYSTEM >

Ref	Qty	Part #	Part Description	Usage
1	1	K951313	KNOB	
2	1	K951321	KNOB	SPARE PART
3	1	K951314	SELECTOR	LEVER
4	1	K954190	SELECTOR	LEVER
5	2	K929631	BOOT	GROMMET
6	2	214-259	HOSE CLAMP	
7	2	K929629	BALL	HOUSING
8	4	K950543	GASKET	
9	2	K952626	BAFFLE	
10	8	13-418	BOLT	
11	8	92-4	LOCK WASHER	
12	6	K603630	SCREW	
13	2	K904386	WASHER	
14	1	K929628	SELECTOR	FORK
15	1	K948965	SLEEVE	SLEEVE
16	1	K948962	LARGE PIN	PIN, LARGE SELECTOR rod
17	1	K948920	SELECTOR	FORK
18	1	K948963	ROD	rod
19	1	K948964	SELECTOR	FORK
20	3	K623748	PIN	
21	3	K13507	SPRING	
22	3	211-210	BALL	
23	1	K30430	LOCKING DEVICE	gear
24	1	K951059	COVER	
25	3	88542	BOLT	
25	3	113-1	BOLT	
26	3	192-19	LOCK WASHER	
27	1	K948790	GASKET	
28	2	K903074	SUPPORT	PLATE
29	1	K948961	SELECTOR	rod
30	1	K948960	ROD	rod
31	2	K623407	OIL SEAL	
32	2	K946946	PIN	FORK
33	4	K623748	PIN	
34	2	211-210	BALL	
35	1	K945208	PLUNGER	PISTON
36	1	K945204	PLUNGER	ASSY.
37	1	K626895	SHIM	(.0076 mm - .0003)
37	1	K626858	SHIM	(.0127 mm)
37	1	K626894	SHIM	(.0330 mm - .0013)
38	1	K940288	SWITCH	starter
39	1	K940284	COVER	
40	1	K15535	O-RING	O
41	3	133-1		
42	1	K948789	BLOCK	block
43	1	K948790	GASKET	

Ref	Qty	Part #	Part Description	Usage
44	3	K606804	SCREW	

Número de serie:

Ruta de acceso: Case CE LAR > LIGHT EQUIPMENT >LOADER BACKHOES >H >580H - CASE LOADER BACKHOE >06 - POWER TRAIN >6-030 - BEVEL PINION SHAFT - TRANSAXLE SYSTEM >

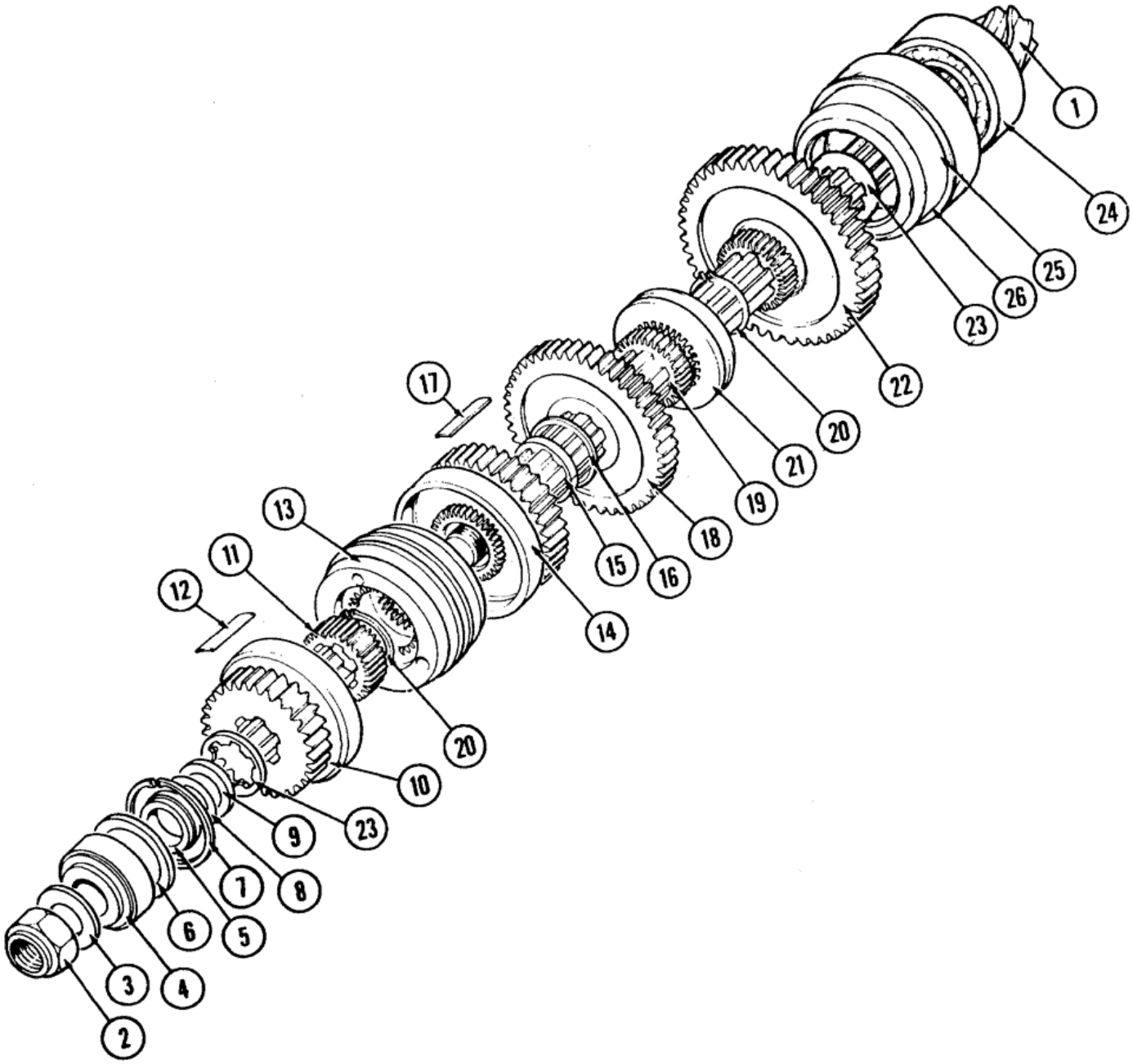

Número de serie:

Ruta de acceso: Case CE LAR > LIGHT EQUIPMENT >LOADER BACKHOES >H >580H - CASE LOADER BACKHOE >06 - POWER TRAIN >6-030 - BEVEL PINION SHAFT - TRANSAXLE SYSTEM >

Ref	Qty	Part #	Part Description	Usage
1	1	K964846	GEAR-SET	PINION ASSY.
2	1	K622803	NUT	
3	1	K14687	WASHER	
4	1	K620061	BEARING, ROLLER	
5	1	K917844	BUSHING	SPACER
6	1	K627253	BUSHING	SPACER
7	1	K17023	CIRCLIP	RING snap
8	UQN	5917845		SHIM (.0508 mm - .002)
8	UQN	K917846	SHIM	(.1270 mm - .005)
8	UQN	K917847	SHIM	(.2540 mm - .010)
8	UQN	K917848	SHIM	(.7620 mm - .030)
9	1	K940969	BUSHING	SPACER
10	1	K948589	GEAR	
11	2	K943435	GEAR	
12	12	K940989	PLATE	PAD bearing
13	1	K928223	GEAR	
14	1	K942817	GEAR	
15	2	K948598	RING	snap
16	1	K943615	SPACER	RING snap
17	12	K948591	PAD	bearing
18	1	K948579	GEAR	
19	2	K948590	GEAR	
20	2	K621865	RING, SNAP	RING SNAP
21	1	K946652	CLUTCH	GEAR
22	1	K948578	GEAR	
23	2	K940975	DISC	WASHER
24	1	K620062	BEARING, ROLLER	
25	1	K943536	HOUSING	
26	UQN	K943665	SHIM	(.7620 mm - .030)
26	UQN	K943666	SHIM	(.3710 mm - .015)
26	UQN	K943667	SHIM	(.1270 mm - .005)
26	UQN	K943668	SHIM	(.0508 mm - .002)

Ref	Qty	Part #	Part Description	Usage
	6	K926266	SPRING	

Número de serie:

Ruta de acceso: Case CE LAR > LIGHT EQUIPMENT >LOADER BACKHOES >H >580H - CASE LOADER BACKHOE >06 - POWER TRAIN >6-032 - DIFERENTIAL - TRANSAXLE SYSTEM >

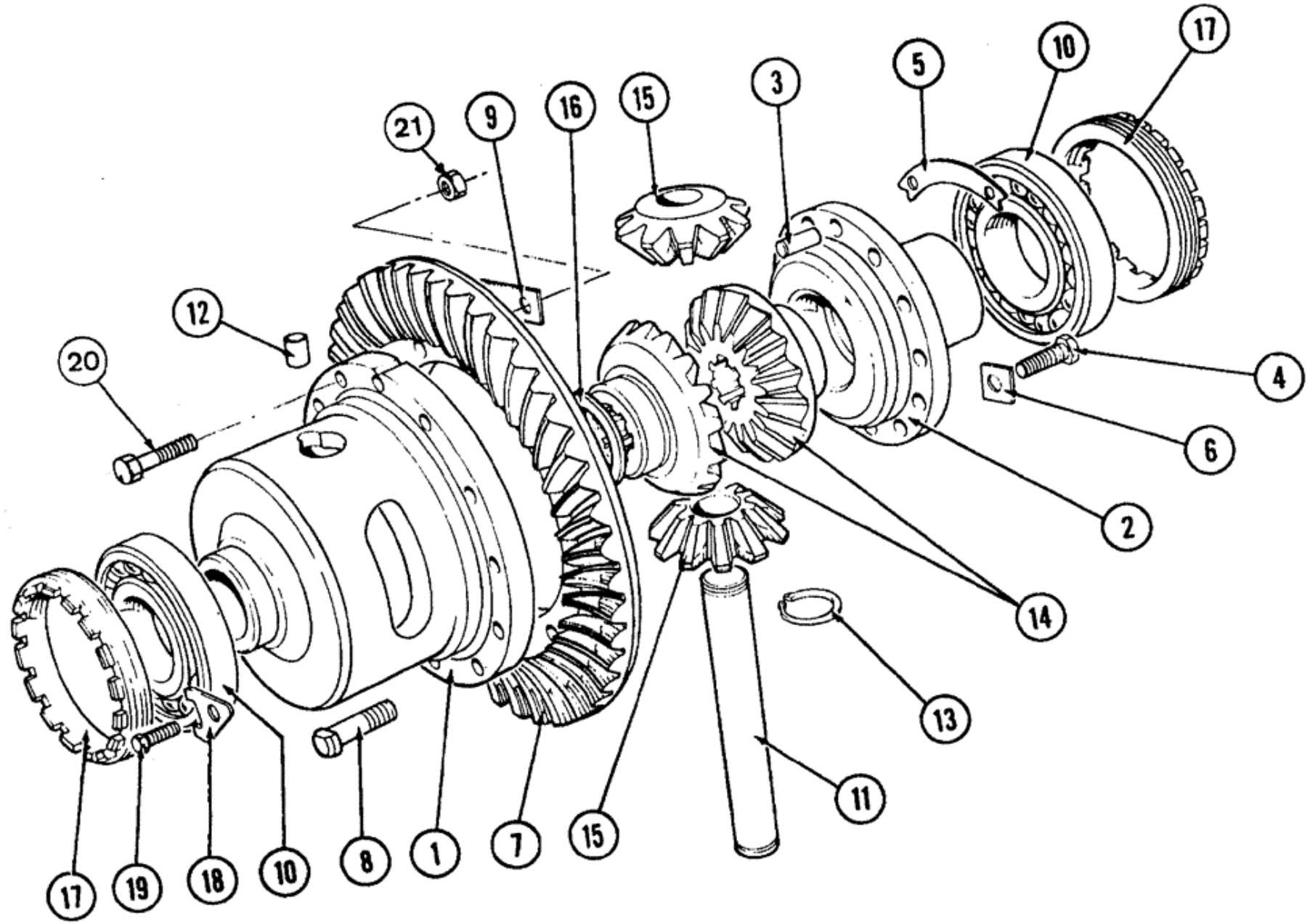

Número de serie:

Ruta de acceso: Case CE LAR > LIGHT EQUIPMENT >LOADER BACKHOES >H >580H - CASE LOADER BACKHOE >06 - POWER TRAIN >6-032 - DIFERENTIAL - TRANSAXLE SYSTEM >

Ref	Qty	Part #	Part Description	Usage
1	1	K951954	HOUSING	
1	1	K262540	HOUSING	
2	1	K903184	FLANGE	COVER
3	3	K621801	PIN	dowel
4	9	13-616	BOLT	
5	3	K903185	WASHER	
6	3	K626372	WASHER	
7	1	K964846	GEAR-SET	PINION ASSY.
8	1	K951067	BOLT	
9	6	K30236	WASHER	
10	2	K19010	BALL BEARING	
11	1	K951955	PIN	
11	1	K206650	PIN	
				Used in housing part n° K262540 with 31,30±0,01 diameter for planetary pin fixing
12	1	K621858	PIN	dowel
13	2	K12207	RING, SNAP	RING SNAP
13	2	K11129	RING, SNAP	RING SNAP
				Used in housing part n° K262540 with 31,30±0,01 diameter for planetary pin fixing
14	2	K30234	CONE PINION	GEAR, side
15	2	K942317	DIFFERENTIAL	GEAR, pinion
15	2	K206651	GEAR	pinion
				Used in housing part n° K262540 with 31,30±0,01 diameter for planetary pin fixing
16	1	K940805	WASHER, THRUST	
17	2	K15007	RING, LOCKING	RING, LOCK NUT
18	2	K626420	WASHER	LOCK
19	2	13-58	BOLT	
20	11	K905664	WHEEL BOLT	
21	12	25-107	NUT	

Número de serie:

Ruta de acceso: Case CE LAR > LIGHT EQUIPMENT >LOADER BACKHOES >H >580H - CASE LOADER BACKHOE >06 - POWER TRAIN >6-034 - GEAR BOX - PUMP AND FILTER - TRANSAXLE SYSTEM >

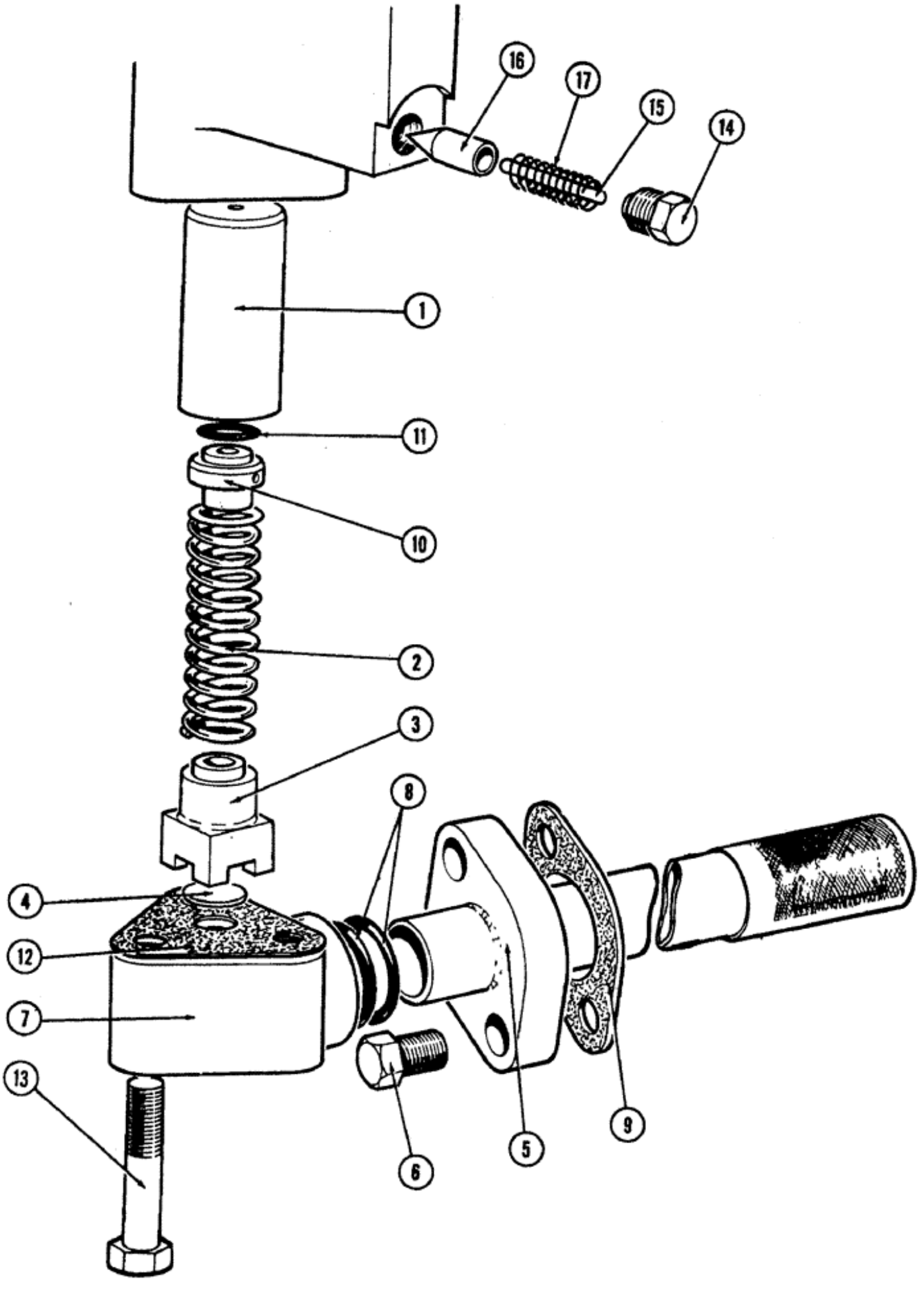

Número de serie:

Ruta de acceso: Case CE LAR > LIGHT EQUIPMENT >LOADER BACKHOES >H >580H - CASE LOADER BACKHOE >06 - POWER TRAIN >6-034 - GEAR BOX - PUMP AND FILTER - TRANSAXLE SYSTEM >

Ref	Qty	Part #	Part Description	Usage
1	1	K926889	PLUNGER	
2	1	K625214	SPRING	
3	1	K921152	VALVE	housing
4	1	K623815	PLUG	
5	1	K948830	TUBE	suction
6	2	13-616	BOLT	
	2	192-21	LOCK WASHER	
7	1	K948827	ADAPTER	
8	2	K15028	O-RING	
9	1	K948788	GASKET	
10	1	K926864	VALVE	ASSY.
11	1	K24701	O-RING	O
12	1	K926867	GASKET	
13	3	13-532	BOLT	
	3	192-20	LOCK WASHER	
14	1	K945045	VALVE	RESTRICTOR
15	1	K620027	NEEDLE	ROLLER
16	1	K921370	SYMBOLS	SYMBOL VALVE
17	1	K625216	SPRING	

Número de serie:

Ruta de acceso: Case CE LAR > LIGHT EQUIPMENT >LOADER BACKHOES >H >580H - CASE LOADER BACKHOE >06 - POWER TRAIN >6-036 - FIANL DRIVE AND REDUCTION GEARS - TRANSAXLE SYSTEM >

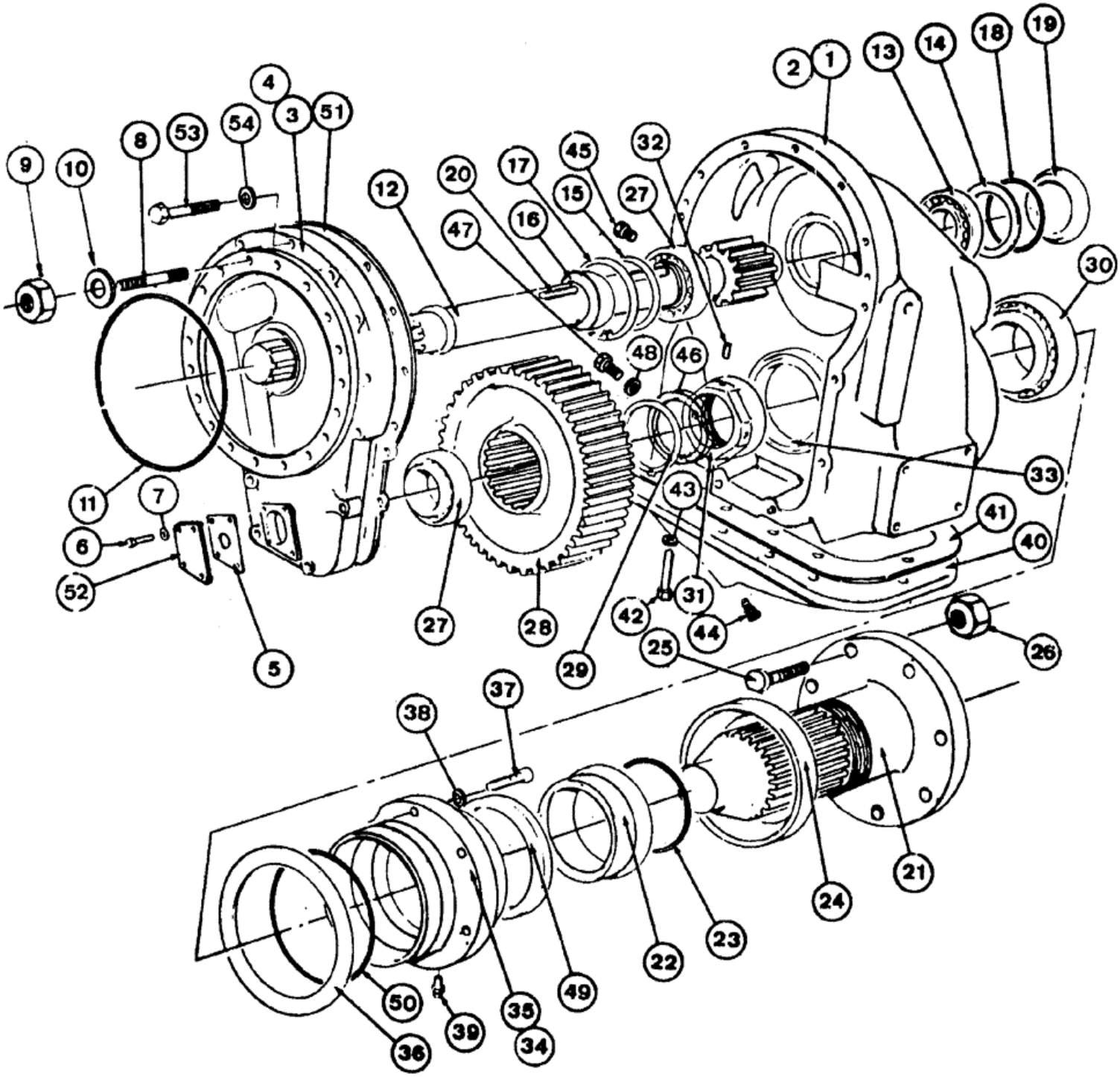

Número de serie:

Ruta de acceso: Case CE LAR > LIGHT EQUIPMENT >LOADER BACKHOES >H >580H - CASE LOADER BACKHOE >06 - POWER TRAIN >6-036 - FIANL DRIVE AND REDUCTION GEARS - TRANSAXLE SYSTEM >

Ref	Qty	Part #	Part Description	Usage
1	1	K954214	HOUSING	R.H.
2	1	K954213	HOUSING	SPARE PART L.H.
3	1	K953976	HOUSING	L.H.
4	1	K953977	HOUSING	HOUSING R.H.
5	2	K940852	GASKET	
6	8	13-410	BOLT	
7	8	92-4	LOCK WASHER	
8	36	K608509	STUD	
	4	K30134	PIN	dowel
9	36	K607239	NUT	
10	36	192-23	LOCK WASHER	
11	2	K628855	O-RING	
12	2	K950244	GEAR-SET	SPARE PART SHAFT 12 teeth
12	2	K950253	ELECTRICAL WIRE	WIRE SHAFT 10 teeth
13	4	K19186	BEARING, ROLLER	
14	UQN	K907514	SHIM	(0.076 mm)
14	UQN	K907515	SHIM	(.254 mm)
15	2	K904256	SPACER	SPACER
16	2	K627237	BUSHING	SPACER
17	4	K13042	RING, SNAP	RING SNAP
18	2	K623545	O-RING	
19	2	K929045	COVER	
20	4	K622324	KEY	
21	2	K965006	SHAFT ASSY.	items 21, 31, 32, 46
22	2	K924148	COLLAR	
23	2	K623698	O-RING	
24	2	K924150	SHIELD	COVER
25	16	K611464	BOLT	
26	16	K617176	NUT	
27	2	K19186	BEARING, ROLLER	
28	2	K950245	WHEEL	GEAR 48 teeth
28	2	K950382	COVER	GEAR 49 teeth
29	2	K621565	RING, SNAP	RING SNAP
30	2	K620121	BEARING	
31	2	K945534	LOCK NUT	
32	2	K606408	SCREW	
33	2	K623457	OIL SEAL	
34	1	K945535	HOUSING	R.H.
35	1	K945536	HOUSING	L.H.
36	UQN	K940849	SHIM	(.076 mm - .003)
36	UQN	K940848	SHIM	(.0127 mm - .005)
36	UQN	K940847	SHIM	(.381 mm - .015)
36	UQN	K940846	SHIM	(.762 mm - .030)
37	12	13-724	BOLT	
38	12	92-7	LOCK WASHER	
39	2	219-8	LUBE NIPPLE	

Ref	Qty	Part #	Part Description	Usage
40	2	K940850	COVER	
41	2	K923221	GASKET	
42	20	13-616	BOLT	
43	20	192-21	LOCK WASHER	
44	4	K12362	PLUG	
45	2	K623758	PLUG	
46	2	K955057	WASHER	(5.84 mm - .230)
46	2	K955058	WASHER	(5.23 mm - .206)
47	2	K623825	PLUG	
48	2	K626793	WASHER	
49	2	K623432	SEAL	
50	2	K623539	O-RING	
51	2	K940834	GASKET	
52	2	K940581	LEVER	COVER
53	26	13-840	BOLT	
54	26	92-8	LOCK WASHER	
55	4	K11482	PIN	dowel

Número de serie:

Ruta de acceso: Case CE LAR > LIGHT EQUIPMENT >LOADER BACKHOES >H >580H - CASE LOADER BACKHOE >06 - POWER TRAIN >6-040 - TRANSAXLE ASSEMBLY >

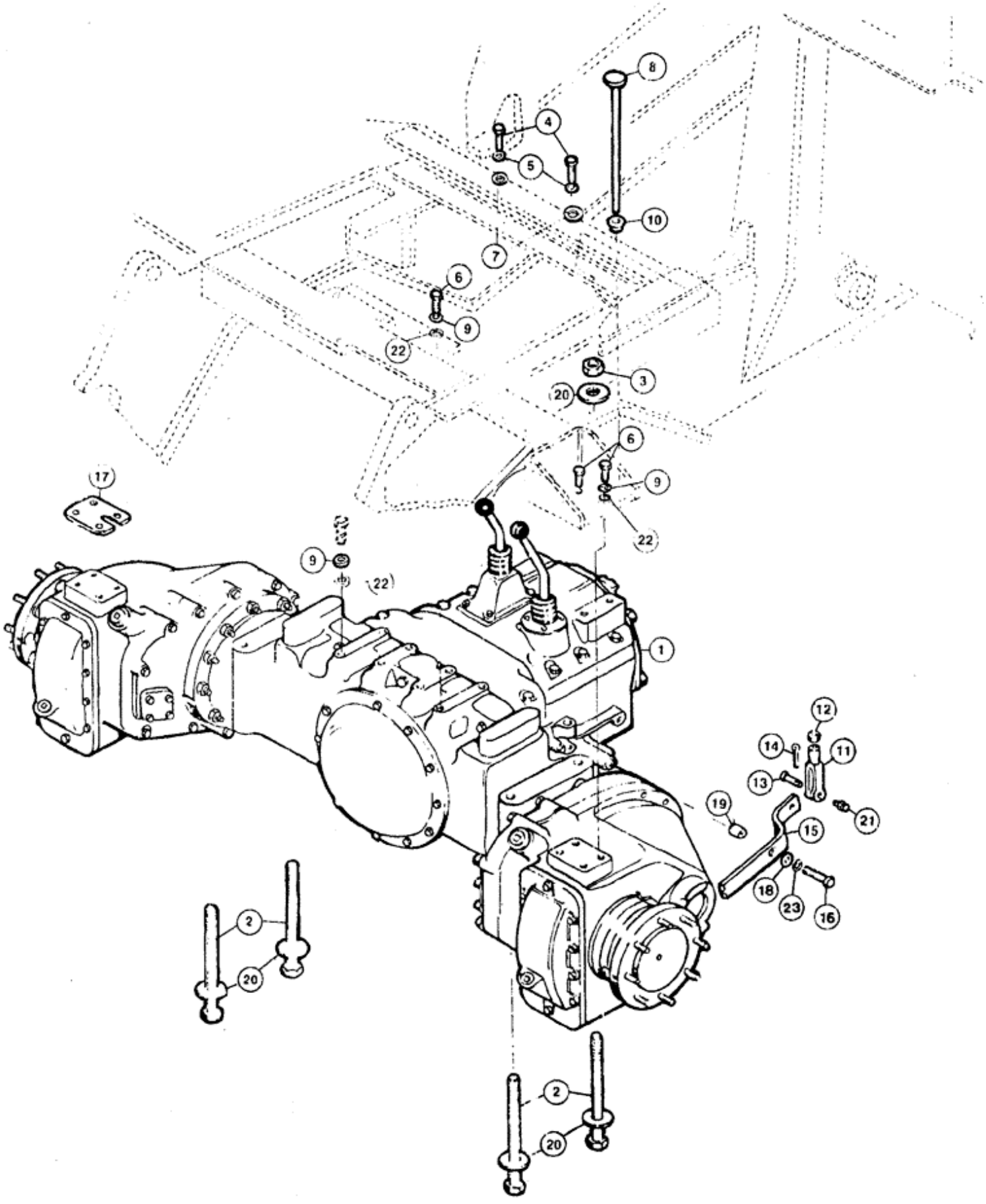

Número de serie:

Ruta de acceso: Case CE LAR > LIGHT EQUIPMENT >LOADER BACKHOES >H >580H - CASE LOADER BACKHOE >06 - POWER TRAIN >6-040 - TRANSAXLE ASSEMBLY >

Ref	Qty	Part #	Part Description	Usage
1	1	REF	INSTRUCTION	AXLE ASSY figure 6-022
2	4	26-16168	BOLT	
3	4	26-1016	BOLT	NUT
4	2	13-1024	BOLT	
5	2	92-10	LOCK WASHER	
6	11	13-820	BOLT	
7	2	E65264	WASHER	WASHER
8	1	D67689	PEDAL	
9	12	92-8	LOCK WASHER	
10	1	E61440	BUSHING	BUSHING
11	1	213-4	ADJUSTABLE CLEVIS	YOKE
12	1	25-116	NUT	
13	1	141-4	CLEVIS PIN	
14	1	132-26	COTTER PIN	3/32" x 3/4"
15	1	D73568		LEVER
16	1	13-840	BOLT	
17	6	D70282	SHIM	
18	1	195-33	WASHER	
19	1	E69244	BUSHING	SPACER
20	8	D36605	WASHER	WASHER
21	1	219-1	LUBE NIPPLE	
22	12	95-8	WASHER	
23	1	92-8	LOCK WASHER	

Número de serie:

Ruta de acceso: Case CE LAR > LIGHT EQUIPMENT >LOADER BACKHOES >H >580H - CASE LOADER BACKHOE >06 - POWER TRAIN >6-042 - DIFERENTIAL LOCK - TRANSAXLE SYSTEM >

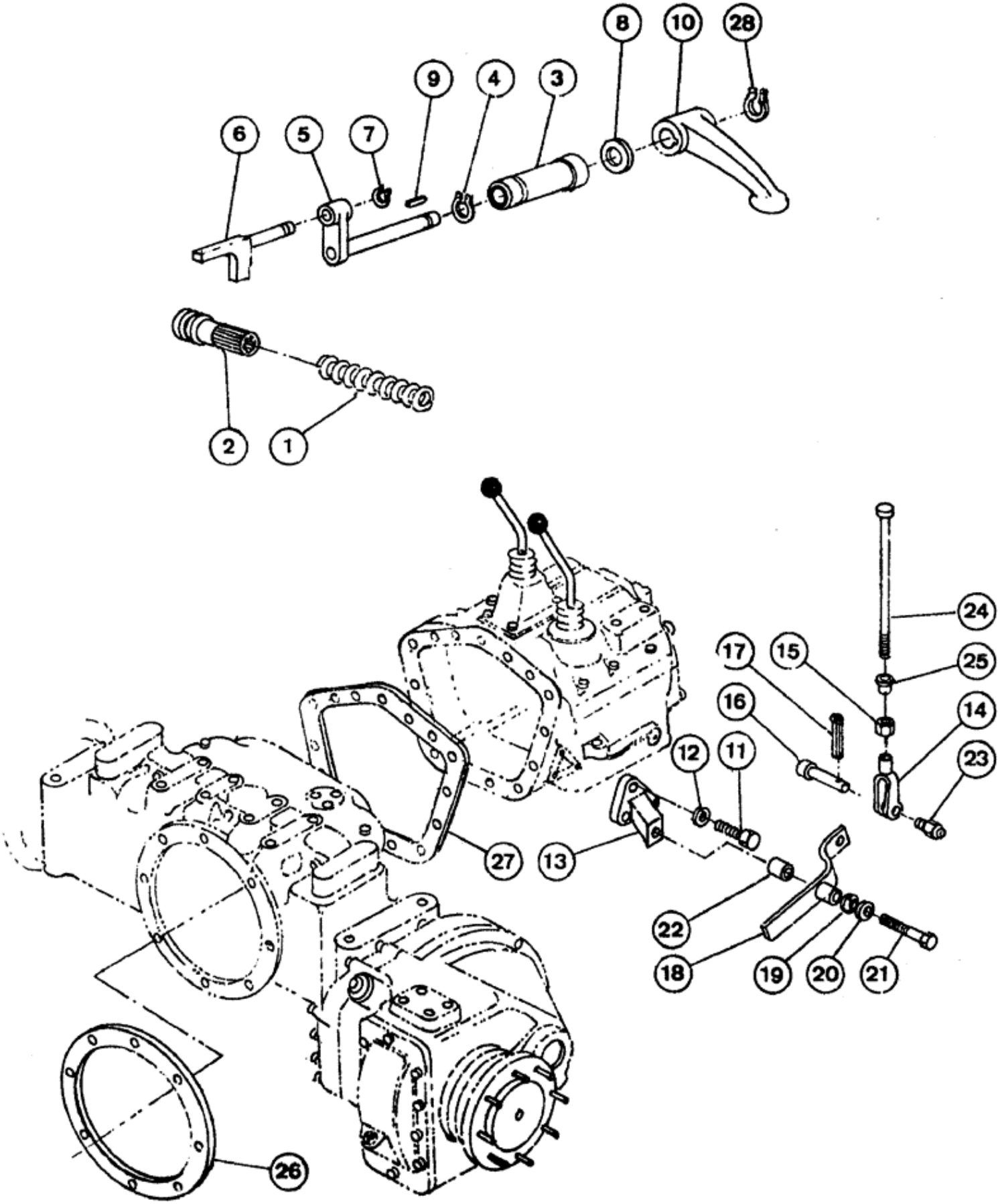

Número de serie:

Ruta de acceso: Case CE LAR > LIGHT EQUIPMENT >LOADER BACKHOES >H >580H - CASE LOADER BACKHOE >06 - POWER TRAIN >6-042 - DIFERENTIAL LOCK - TRANSAXLE SYSTEM >

Ref	Qty	Part #	Part Description	Usage
1	1	K625119	SPRING	
2	1	K903191	SLEEVE	
3	1	K903494	BUSHING	
4	1	K34454	RING, SNAP	RING SNAP
5	1	K903197	SHAFT	ARM
6	1	K903226	SELECTOR	YOKE
	1	K626674	WASHER	
7	1	K11302	RING, SNAP	RING SNAP
8	1	K24676	O-RING	O
9	1	K622309	KEY	
10	1	K903228	LEVER	
11	3	13-724	BOLT	
12	3	92-7	LOCK WASHER	
13	1	K953347	BRACKET	
14	1	213-4	ADJUSTABLE CLEVIS	YOKE
15	1	25-116	NUT	
16	1	141-4	CLEVIS PIN	
17	1	132-26	COTTER PIN	3/32" x 3/4"
18	1	D73568		LEVER
19	1	195-33	WASHER	
20	1	92-8	LOCK WASHER	
21	1	13-840	BOLT	
22	1	E69244	BUSHING	SPACER
23	1	219-1	LUBE NIPPLE	
24	1	D67689	PEDAL	
25	1	E61440	BUSHING	BUSHING
26	1	K15228	GASKET	
27	1	K948762	GASKET	
28	1	K11797	RING, SNAP	RING SNAP
	1	E69291		KIT, field, items 1, 2, 3, 4, 5, 6, 7, 8, 9, 10, 28

Número de serie:

Ruta de acceso: Case CE LAR > LIGHT EQUIPMENT >LOADER BACKHOES >H >580H - CASE LOADER BACKHOE >06 - POWER TRAIN >6-044 - DRIVESHAFT - TRANSAXLE SYSTEM >

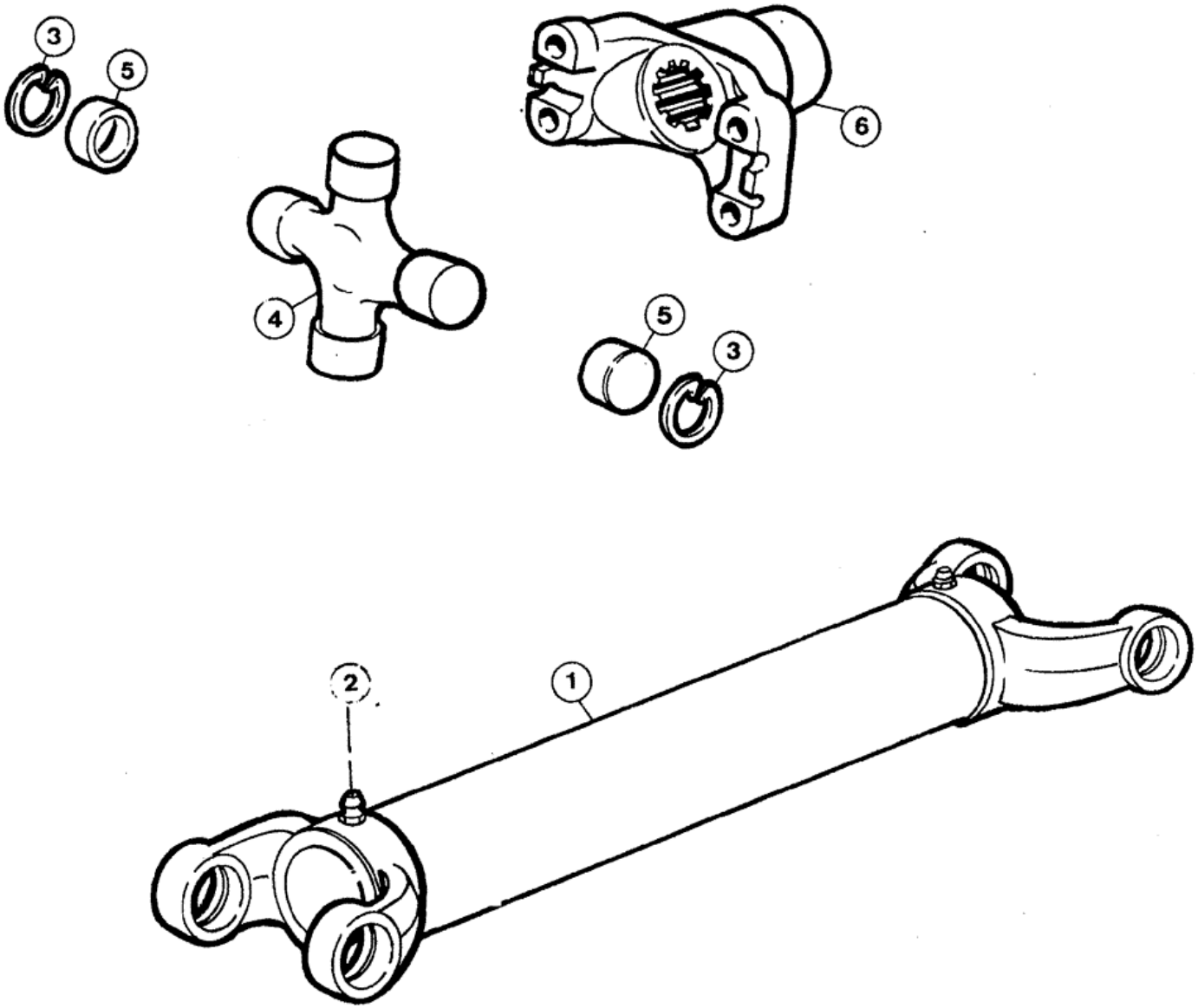

Número de serie:

Ruta de acceso: Case CE LAR > LIGHT EQUIPMENT >LOADER BACKHOES >H >580H - CASE LOADER BACKHOE >06 - POWER TRAIN >6-044 - DRIVESHAFT - TRANSAXLE SYSTEM >

Ref	Qty	Part #	Part Description	Usage
	1	E62871	NUT	SHAFT ASSY. drive, 690001-->6962347
	1	E67660	SHAFT	ASSY. drive, 6962348-->
1	1	E64424	TUBE	SHAFT ASSY. drive
	2	D70629	U-JOINT SPIDER	ASSY., Includes: Ref. 2 - 6
2	1	219-10	LUBE NIPPLE	
3	1	11256	SNAP RING	snap
4	1	NSS	NOT SERVICED SEPARATELY	SPIDER
5	4	NSS	NOT SERVICED SEPARATELY	BEARING
6	1	E64419	SPARE PART	COUPLING, 6960001-->6962347