FEVEREIRO 1989

case

580K
Construction King
Loader Backhoe

Parts Catalog

RUTHZIL TRATOR COMERCIAL DE PEÇAS LTDA 11 97083-6812 ROLANDO CITRANGULO

01-001 580K CONSTRUCTION KING LOADER BACKHOE PARTS CATALOG

Ref	Part Number	Qty	Description

LOCATION OF SERIAL AND PRODUCT IDENTIFICATION NUMBERS

Please use the horizontal lines provided to record these important serial numbers, product identification number, and part numbers.

PRODUCT IDENTIFICATION NUMBER
(Below left-hand door on chassis)

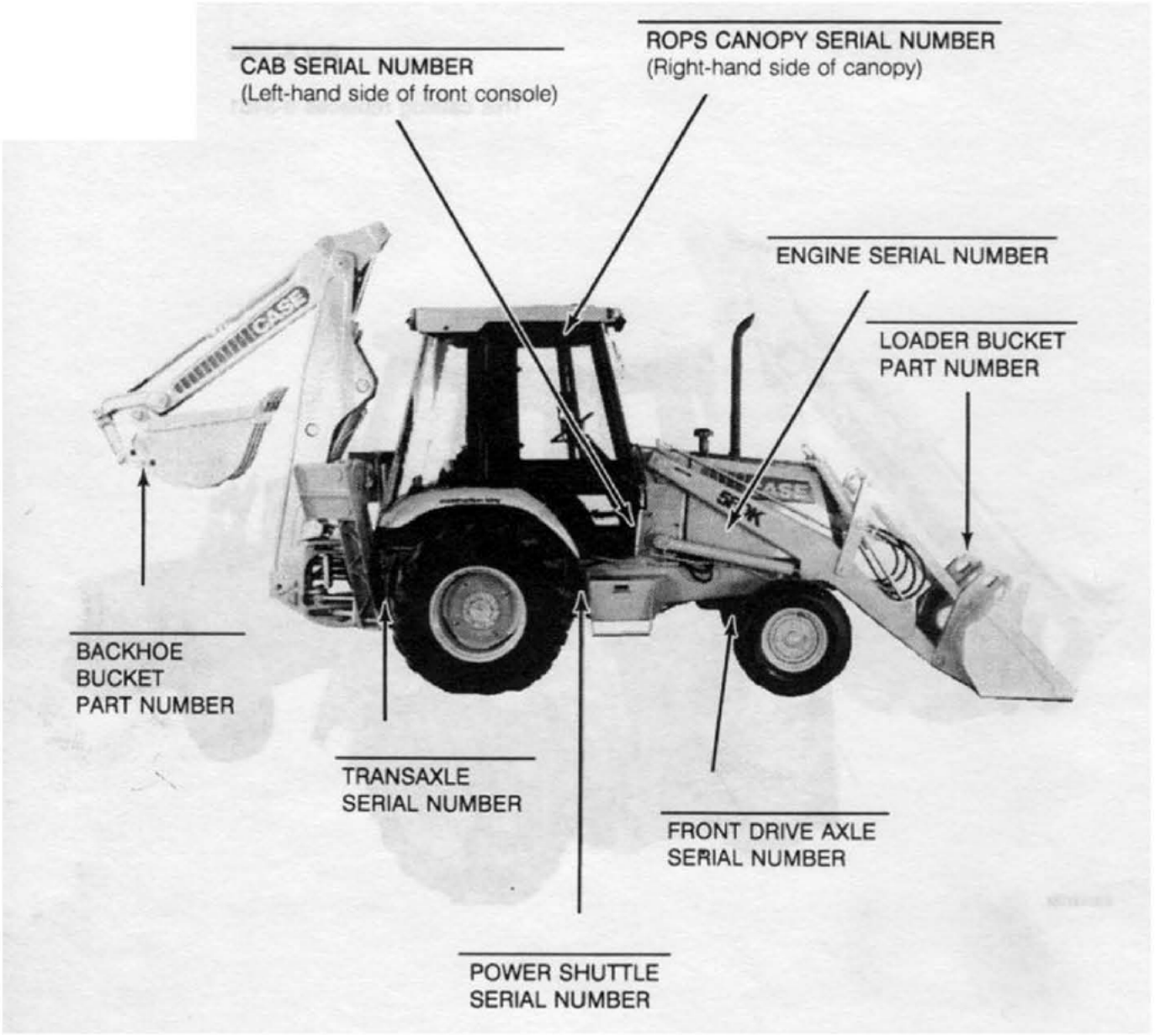

THREE-POINT HITCH
SERIAL NUMBER

01-002 LOCATION OF SERIAL AND PRODUCT IDENTIFICATION NUMBERS

Ref	Part Number	Qty	Description

PICTORIAL SECTION INDEX

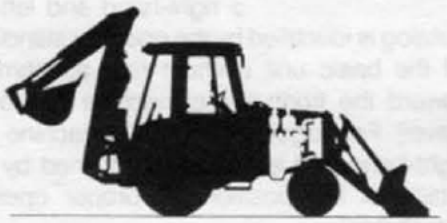

GENERAL 1



ENGINE 2



FUEL 3



ELECTRICAL 4



STEERING/
TRACK 5



POWER TRAIN 6



BRAKES 7

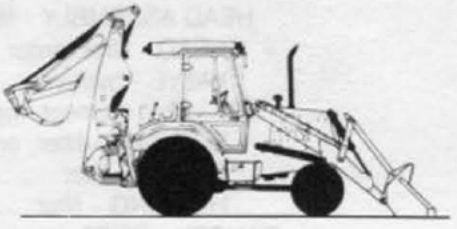

HYDRAULICS 8

CHASSIS/
MOUNTED
EQUIPMENT 9

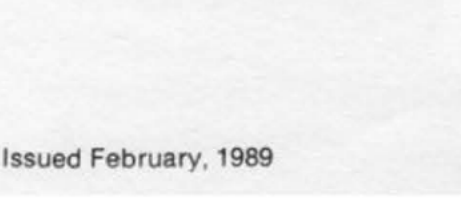

B890757

GENERAL INFORMATION

Indexes

Section 1 of this catalog contains a SN and P.I.N. location guide, alphabetical index, pictorial index of the sections included, and pictorial index(es) for quick location of hoses and tubes (and other system components in some catalogs). An alphabetical index also appears at the beginning of each section. Section 10 is the Numerical Index which lists all part numbers in alpha/numeric order with their page location and reference number.

Illustration and Text

The arrangement of this parts catalog is for easy identification of parts. All parts are illustrated in "exploded views" in proper relation to each other. Reference numbers used in the illustrations refer to those on the text pages. The text pages list reference number, part number, part description and the quantity required.

Abbreviations

P.I.N. "Product Identification Number"
SN "Serial Number"
NSS "Not Serviced Separately" in the part number column indicates this part is not available for service.
REF "Reference" in the part number column indicates this part has special service information. The page where this information can be found is given in the part description column.
UAR "Use As Required" in the quantity required column indicates the number of parts used is determined by service needs.

Right-Hand and Left-Hand Identification

The reference to right-hand and left-hand in this catalog is identified by the operator standing at the rear of the basic unit (without rear attachment), looking toward the front of the machine (in normal forward travel). For pages covering any machine attachments, right-hand and left-hand are defined by the operator sitting in the position for proper operation of the attachment.

Catalog Revisions and Supplements

Changes to the product may make it necessary to revise or add pages to this catalog. A cover sheet will list all pages released in a revision or supplement. Each new or revised page will have a new issue date. All revised and new pages must be put into the parts catalog as soon as they are received.

Parts Orders

Orders must specify product model, all necessary serial numbers, correct part number, complete description, quantity required, method of shipment, and shipping address.

Text Format Explanation

An assembly may contain many service items. The component parts of an assembly or subassembly are indented. The quantity required column lists the number of assemblies required for a complete machine, and the number of components required in a complete assembly or subassembly.

The example below illustrates the use of indents and other text page elements explained on this page.

REF.	PART NO.	DESCRIPTION	REQ'D.
1	D43567	FILTER ASSEMBLY - hydraulic oil, PIN 7534840 and after	1
	D61903	HEAD ASSEMBLY - filter	1
2	NSS	HEAD - filter, order D61903 head assembly	1
3	D58199	VALVE - bypass	1
	D43800	KIT - filter element, replaces D35700 kit	1
4	NSS	ELEMENT - filter, order D43800 element kit	1
5	A27994	O-RING - filter	1
6	D61948	HOUSING - filter	1
7	REF	CANOPY - ROPS, machinery item, order from Machinery Price List	1
8	843065C1	HOSE - 132 inch (3353 mm) long, reservoir to pump	1
9	113-323	BOLT - hex head, 7/16 - 14 NC x 1-3/4 inch, plated	2
10	814-8030	BOLT - hex head, 8 mm - 1.25 x 30 mm (8.8), plated	4

01-004 580K CONSTRUCTION KING LOADER BACKHOE GENERAL INFORMATION

Ref	Part Number	Qty	Description

PICTORIAL SECTION INDEX



ENGINE 2

B890757

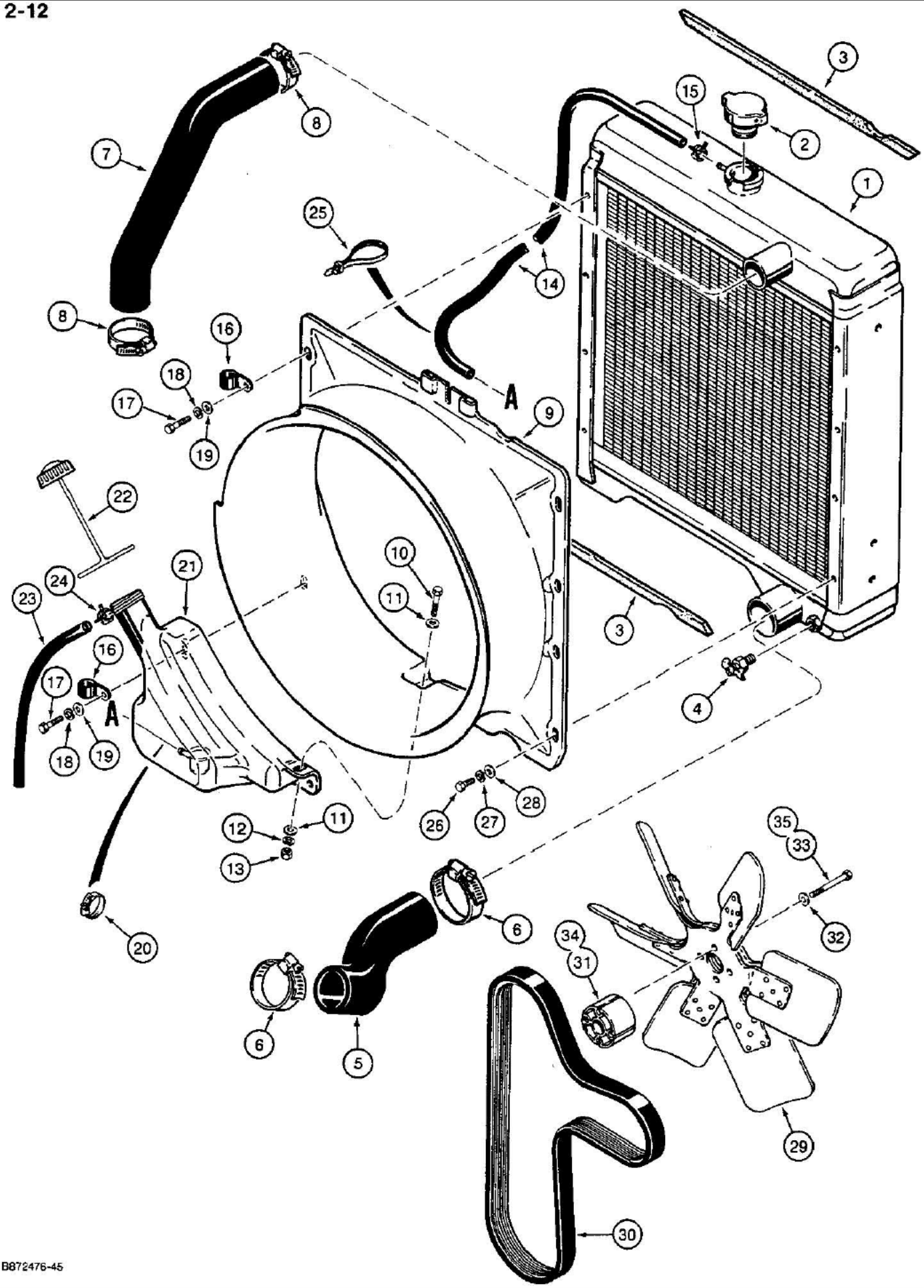
1
2
3
4
5
6
7
8
9
10
11
12
13
14
15
16
17
18
19
20
21
22
23
24
25
26
27
28
29
30
31
32
33
34
35
A
A
B872476-45

580K LOADER BACKHOE (NORTH AMERICA) - Engine

02-012 RADIATOR, FAN, AND MOUNTING PARTS

Ref	Part Number	Qty	Description
1	A172038	1	RADIATOR engine cooling
2	A170241	1	CAP filler, radiator, 15 psi
3	A173165	2	SEAL radiator, upper and lower
4	217-92	1	VALVE drain
5	D127775	1	HOSE radiator, lower
6	214-262	2	CLAMP hose, lower radiator
7	D127774	1	HOSE radiator, upper
8	214-259	2	CLAMP hose, upper radiator
9	A173459	1	SHROUD radiator fan
10	814-8030	1	BOLT hex head, plated, 8 mm -1.25 x 30 mm, 8.8
11	195-103	2	WASHER flat, plated, 5/16"
12	192-20	1	WASHER, LOCK, 5/16"
13	825-1108	1	NUT hex, plated, 8 mm-1.25
14	A171019	1	HOSE radiator to reservoir, 5/16" (8 mm) ID x 35-7/16" (900 mm) long
15	A171099	1	CLAMP hose, at upper radiator
16	49768	2	CLAMP, P-type, attaches to radiator fan shroud
17	814-8030	2	BOLT hex head, plated, 8 mm-1.25 x 30 mm, 8.8
18	192-20	2	WASHER, LOCK, 5/16"
19	195-103	2	WASHER flat, plated, 5/16"
20	214-335	1	CLAMP hose, lower, at reservoir
21	A171805	1	RESERVOIR coolant recovery bottle
22	A184079	1	CAP screw-on, tethered, coolant recovery bottle
23	A172262	1	HOSE coolant overflow, 5/16" (8 mm) ID x 12-7/32" (310 mm) long, cut from P/N A172261 bulk hose, see below
24	A171099	1	CLAMP coolant overflow hose at reservoir
25	L18337	1	STRAP tie, nylon, hose, 15"
26	814-8016	6	BOLT hex head, plated, 8 mm-1.25 x 16 mm, 8.8
27	192-20	6	WASHER, LOCK, 5/16"
28	195-103	6	WASHER flat, plated, 5/16"
29	A173545	1	FAN suction, six blade
30	J911559	1	BELT fan, V-ribbed
31	A173332	1	SPACER fan, used with P/N 827-10100 bolt, Ref. 33, if used
32	196-1	4	WASHER flat, hardened, plated, 3/8"
33	827-10100	4	BOLT, Hex, plated, 10 mm-1.5 x 100 mm, 10.9, Used with P/N A173332 spacer, Ref. 31, if used
34	A184545	1	SPACER fan, used with P/N 814-10070 bolt, Ref. 35, if used
35	814-10070	4	BOLT hex head, plated, 10 mm-1.5 x 70 mm, 8.8, used with P/N A184545 spacer, Ref. 34, if used
	A172261	UAR	HOSE bulk, 5/16" (8 mm) ID x 6 ft (1829 mm) long

02-014 AIR CLEANER AND AIR INTAKE PARTS, MODELS WITHOUT TURBOCHARGED ENGINES

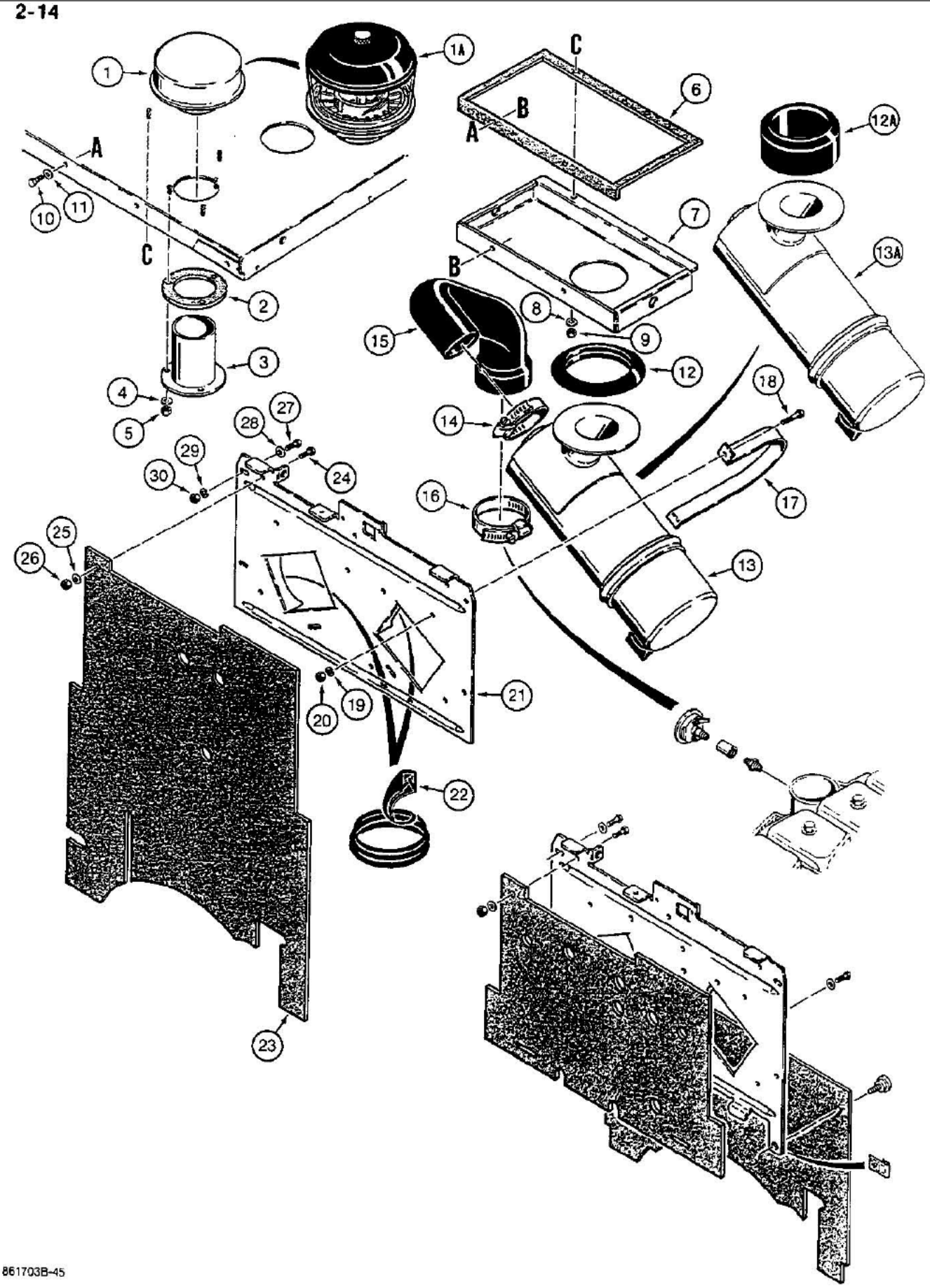

861703B-45

02-014 AIR CLEANER AND AIR INTAKE PARTS, MODELS WITHOUT TURBOCHARGED ENGINES

Ref	Part Number	Qty	Description
1	A61277	1	CAP air cleaner, standard, if used
1A	A24391	1	PRECLEANER ASSEMBLY air, if used, see Figure 02-022
2	D136053	1	GASKET adapter tube, if used
3	D136039	1	ADAPTER tube, cap or precleaner to air cleaner, if used
4	195-518	3	WASHER flat, plated, 1/4", if used
5	86625061	3	NUT hex, self-locking, plated, 1/4"-20 NC, attaches to weld studs under hood, if used
6	D136052	1	SEAL air duct to hood, if used
7	D137022	1	DUCT air, attaches to weld studs under hood, if used
8	195-518	2	WASHER flat, plated, 1/4", if used
9	86625061	2	NUT hex, self-locking, plated, 1/4"-20 NC, if used
10	113-3	2	BOLT, Hex, 1/4"-20 x 3/4", G5, Full Thd, If used
11	195-518	2	WASHER flat, plated, 1/4", if used
12	A184698	1	SEAL, P/N A184107 air cleaner
12A	D143756	1	SEAL, P/N D143874 air cleaner
13	A184107	1	AIR CLEANER engine, used on models with air cleaner air duct box, if used, see Figure 02-020
13A	D143874	1	AIR CLEANER engine, used on models without air cleaner air duct box, if used, see Figure 02-020
14	214-262	1	CLAMP hose to air cleaner
15	D135793	1	HOSE air cleaner
16	214-264	1	CLAMP hose to engine
17	D129158	1	STRAP air cleaner
18	113-209	1	BOLT, Hex, 3/8"-16 x 1 1/2", G5
19	192-21	1	
20	131-217	1	NUT light hex, self-locking, plated, 3/8"-16 NC
21	D136663	1	BRACKET air cleaner mounting, attaches to pad and chassis uprights, if used
22	D43403	2	SEAL, 5" (127 mm) long, cut from bulk seal, see Parts Substitution List for bulk seal options
23	D140056	1	PAD one-piece, heat and noise protection, attaches to air cleaner mounting bracket at chassis upright, if used
24	113-103	3	BOLT, Hex, 5/16"-18 x 1", G5, Full Thd, Attaches air cleaner mounting bracket to pad
25	195-521	3	WASHER flat, plated, 5/16"
26	131-4	3	NUT hex, self-locking, 5/16"-18 NC
27	113-207	4	BOLT, Hex, 3/8"-16 x 1", G5, Full Thd, Attaches pad and mounting bracket to chassis uprights, if used
28	195-525	4	WASHER flat, plated, 3/8", if used
29	192-21	4	WASHER, LOCK, 3/8", If used
30	129-103	4	NUT, 3/8"-16, G5, If used

02-016 AIR CLEANER AND AIR INTAKE PARTS, MODELS WITHOUT TURBOCHARGED ENGINES

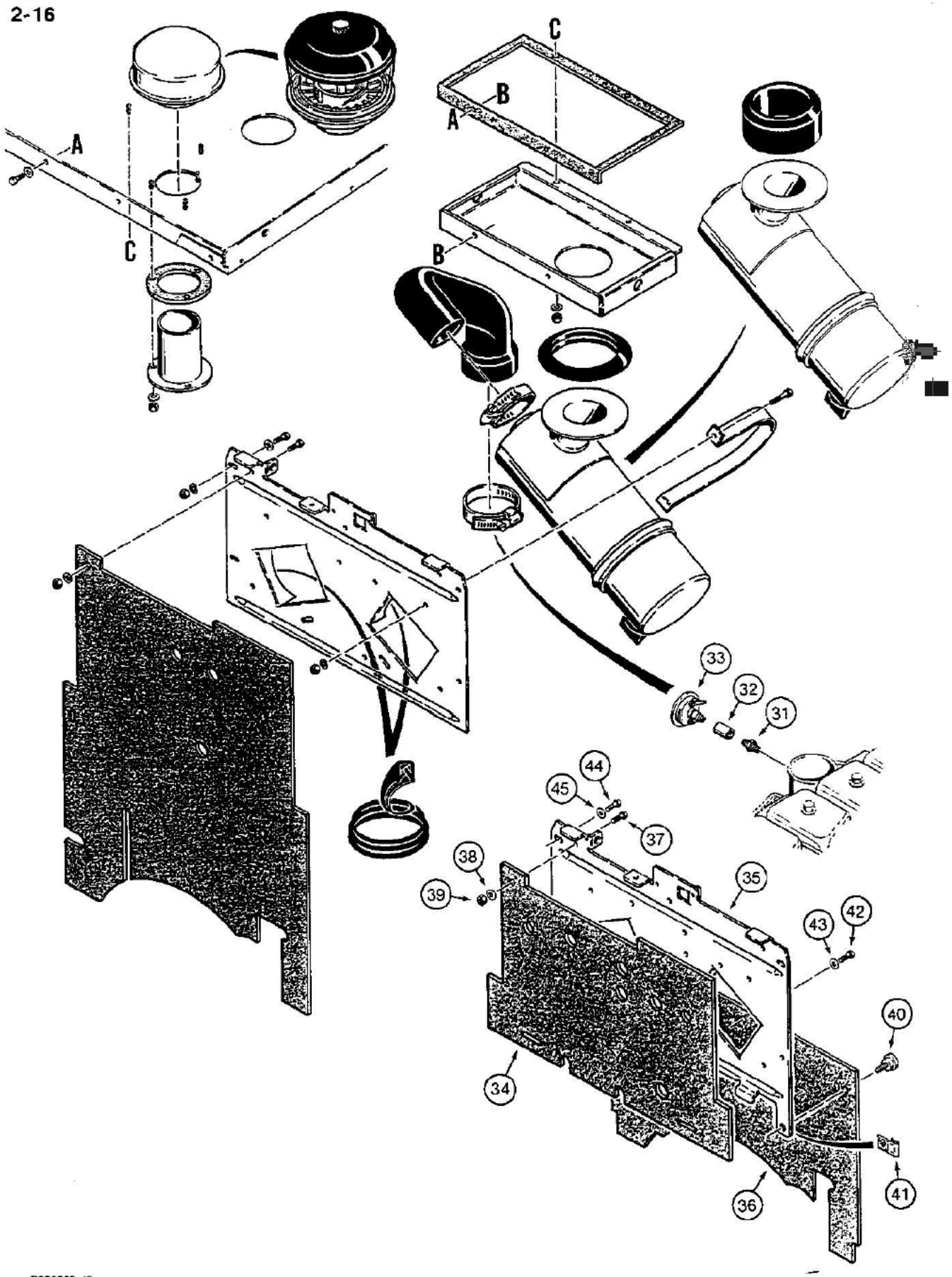

02-016 AIR CLEANER AND AIR INTAKE PARTS, MODELS WITHOUT TURBOCHARGED ENGINES

Ref	Part Number	Qty	Description
31	D36264	1	FITTING AND FILTER ASSEMBLY air restriction indicator
32	221-1335	1	COUPLING, 1/8" NPT
33	L103131	1	SENDER air filter restriction indicator
34	D140710	1	PAD upper, heat and noise protection, used with Ref.35 and 36, if used
35	D140712	1	BRACKET air cleaner mounting, used with Ref. 34 and 36 pads, if used
36	D140711	1	PAD lower, heat and noise protection, used with Ref. 34 and 35, if used
37	113-103	3	BOLT, Hex, 5/16"-18 x 1", G5, Full Thd
38	195-521	3	WASHER flat, plated, 5/16"
39	131-4	3	NUT hex, self-locking, 5/16"-18 NC
40	D138881	2	KNOB clamping, lower pad, if used
41	D122908	4	NUT, J-type, 3/8"-16 NC, if used
42	113-207	2	BOLT, Hex, 3/8"-16 x 1", G5, Full Thd
43	195-525	2	WASHER flat, plated, 3/8"
44	187-1926	4	SCREW indented hex washer head, self-tapping, 3/8"-16 NC x 3/4", if used
45	495-11041	4	WASHER flat, zinc plated, 3/8", if used

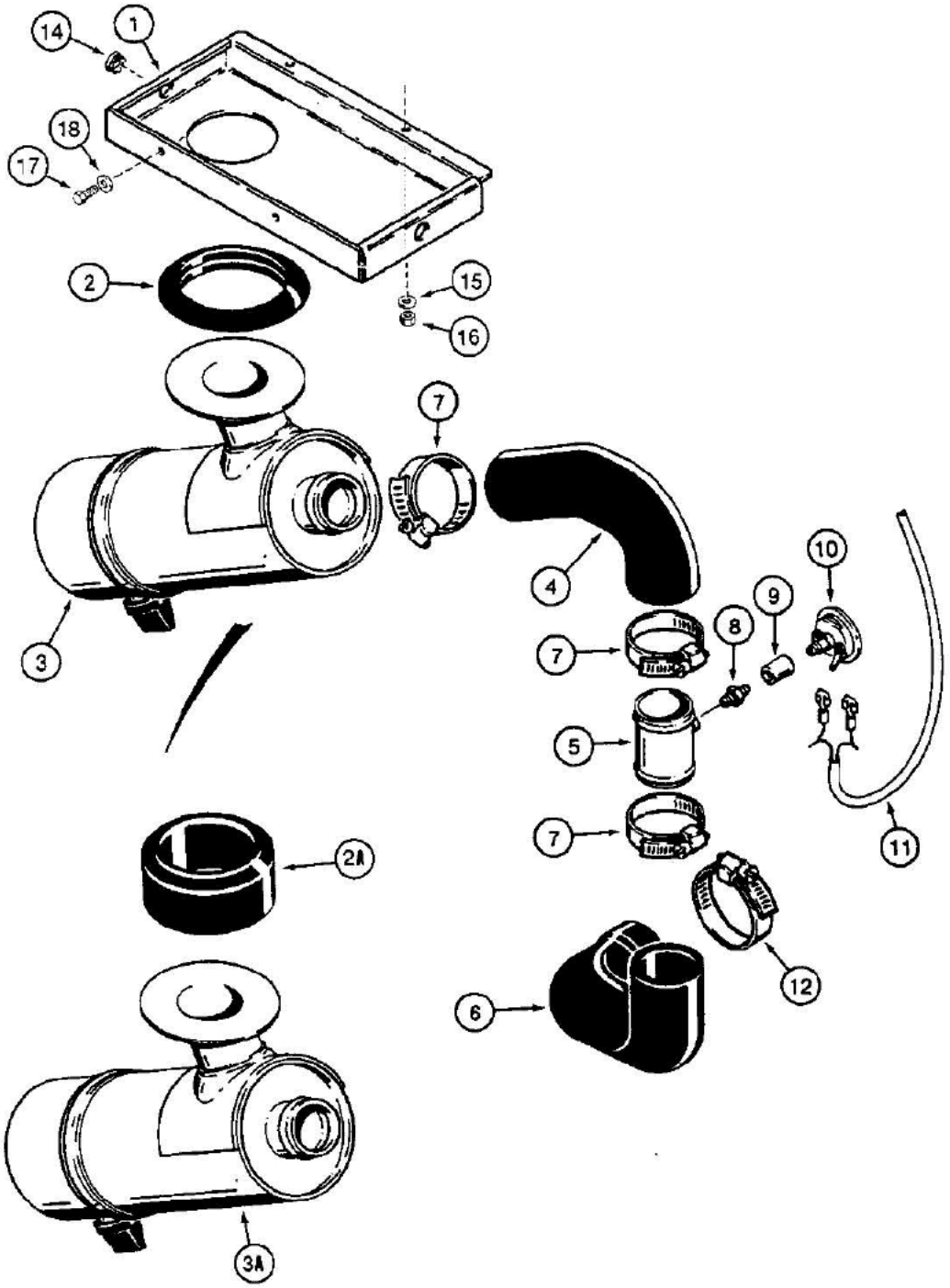

See Figure 02-014 for common air cleaner attaching parts, like air cleaner mounting bracket, cap, gasket, and duct seal.

02-018 AIR CLEANER AND AIR INTAKE PARTS, MODELS WITH TURBOCHARGED ENGINES

Ref	Part Number	Qty	Description
1	D137024	1	DUCT air, attaches to weld studs under hood, if used
2	A184698	1	SEAL, P/N A184107 air cleaner
2A	D143756	1	SEAL, P/N D143874 air cleaner
3	A184107	1	AIR CLEANER engine, used on models with air cleaner air duct box, if used, see Figure 02-020
3A	D143874	1	AIR CLEANER engine, used on models without air cleaner air duct box, if used, see Figure 02-020
4	D139340	1	HOSE air cleaner, upper
5	D139343	1	ADAPTER coupling, air restriction
6	D139342	1	HOSE air cleaner, lower, at engine, for service order P/N D139394 hose, see Ref. 13
7	214-262	3	CLAMP hose, includes hardware
8	D36264	1	FITTING AND FILTER ASSEMBLY air restriction indicator
9	221-1335	1	COUPLING, 1/8" NPT
10	L103131	1	SENDER air filter restriction indicator
11	D140449	1	WIRE jumper, restriction indicator, attaches to front console wiring harness
12	214-264	1	CLAMP hose to engine
13	D139394	1	HOSE air cleaner, lower, at engine, not shown
14	205-36	2	PLUG button, 7/8", if used
15	495-11028	2	WASHER, 1/4", SAE, If used
16	86625061	2	NUT hex, self-locking, plated, 1/4"-20 NC, if used
17	413-412	2	BOLT, Hex, 1/4"-20 x 3/4", G5, Full Thd, If used
18	495-11028	2	WASHER, 1/4", SAE, If used

See Figure 02-014 for common air cleaner attaching parts, like air cleaner mounting bracket, cap, gasket, and duct seal.

02-020 A184107 AIR CLEANER, MODELS WITH OR WITHOUT TURBOCHARGED ENGINES

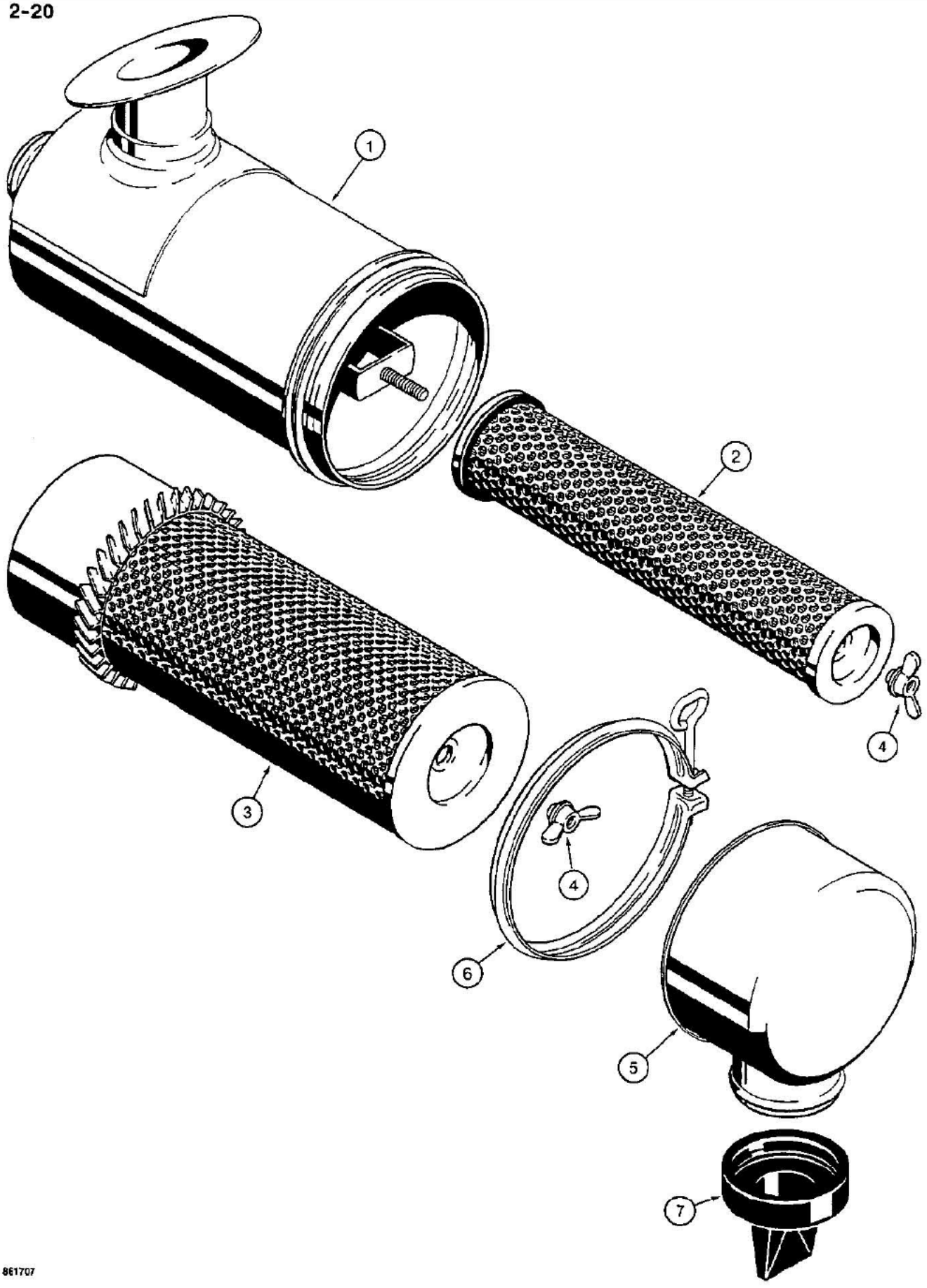

861707

02-020 A184107 AIR CLEANER, MODELS WITH OR WITHOUT TURBOCHARGED ENGINES

Ref	Part Number	Qty	Description
	A184107	1	AIR CLEANER ASSEMBLY engine, used on models with air cleaner air duct box, if used, Includes: Ref. 1 thru 7
	D143874	1	AIR CLEANER ASSEMBLY engine, used on models without air cleaner air duct box, if used, Includes: Ref. 1 thru 7
1	NSS	1	HOUSING air cleaner
2	A173291	1	ELEMENT secondary
3	A173290	1	ELEMENT primary
4	D78354	2	WING NUT element
5	A184598	1	COVER end
6	F84999	1	CLAMP, P/N A184107 air cleaner, housing to end cover
6	378621R1	1	CLAMP, P/N D143874 air cleaner, housing to end cover
7	A184597	1	VALVE dust, rubber

2-22

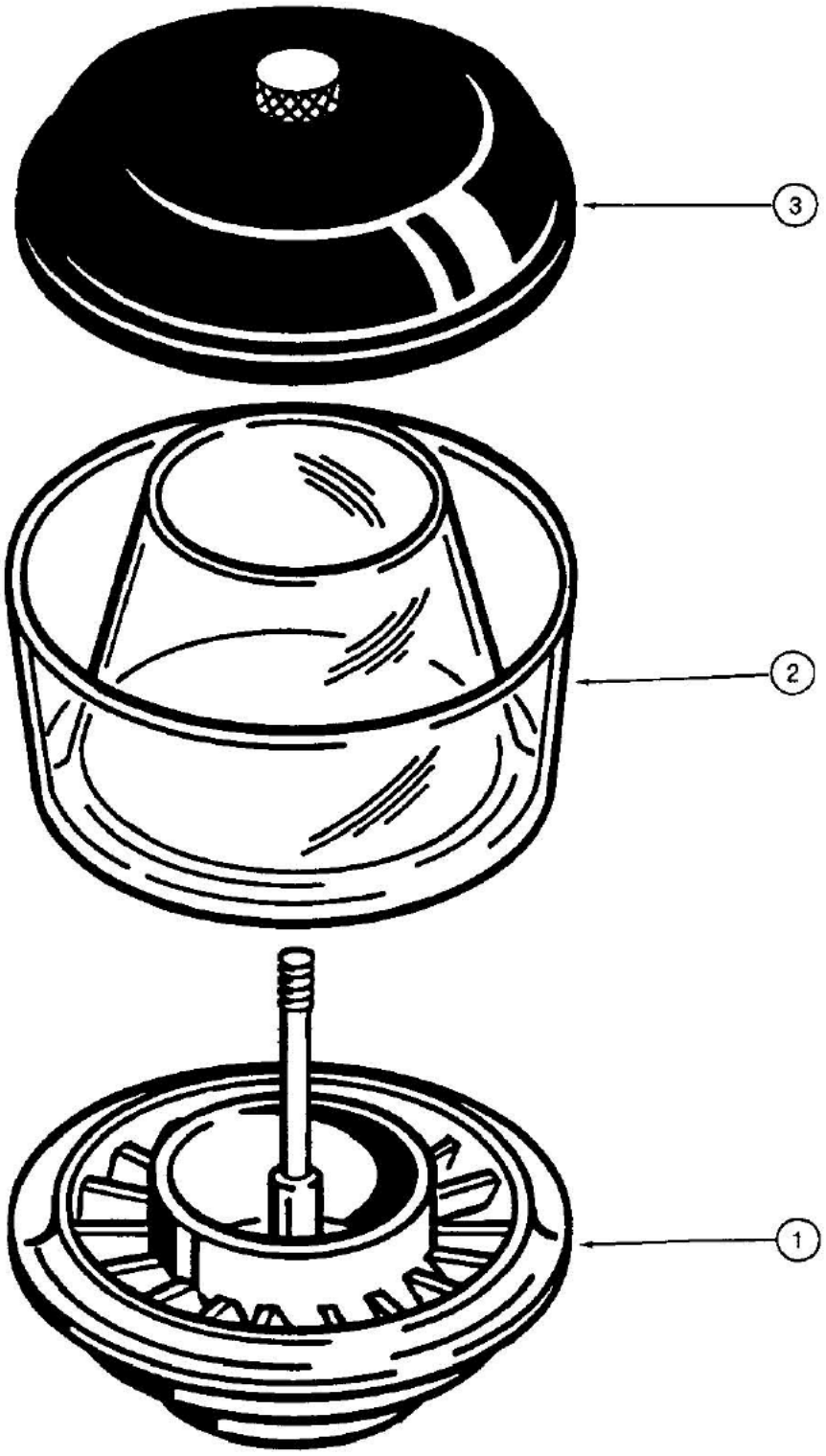

861709

02-022 PRECLEANER

Ref	Part Number	Qty	Description
	A24391	1	PRECLEANER ASSEMBLY air, if used, Includes: Ref. 1 thru 3
1	NSS	1	BODY precleaner
2	73186	1	BOWL precleaner
3	73187	1	COVER precleaner

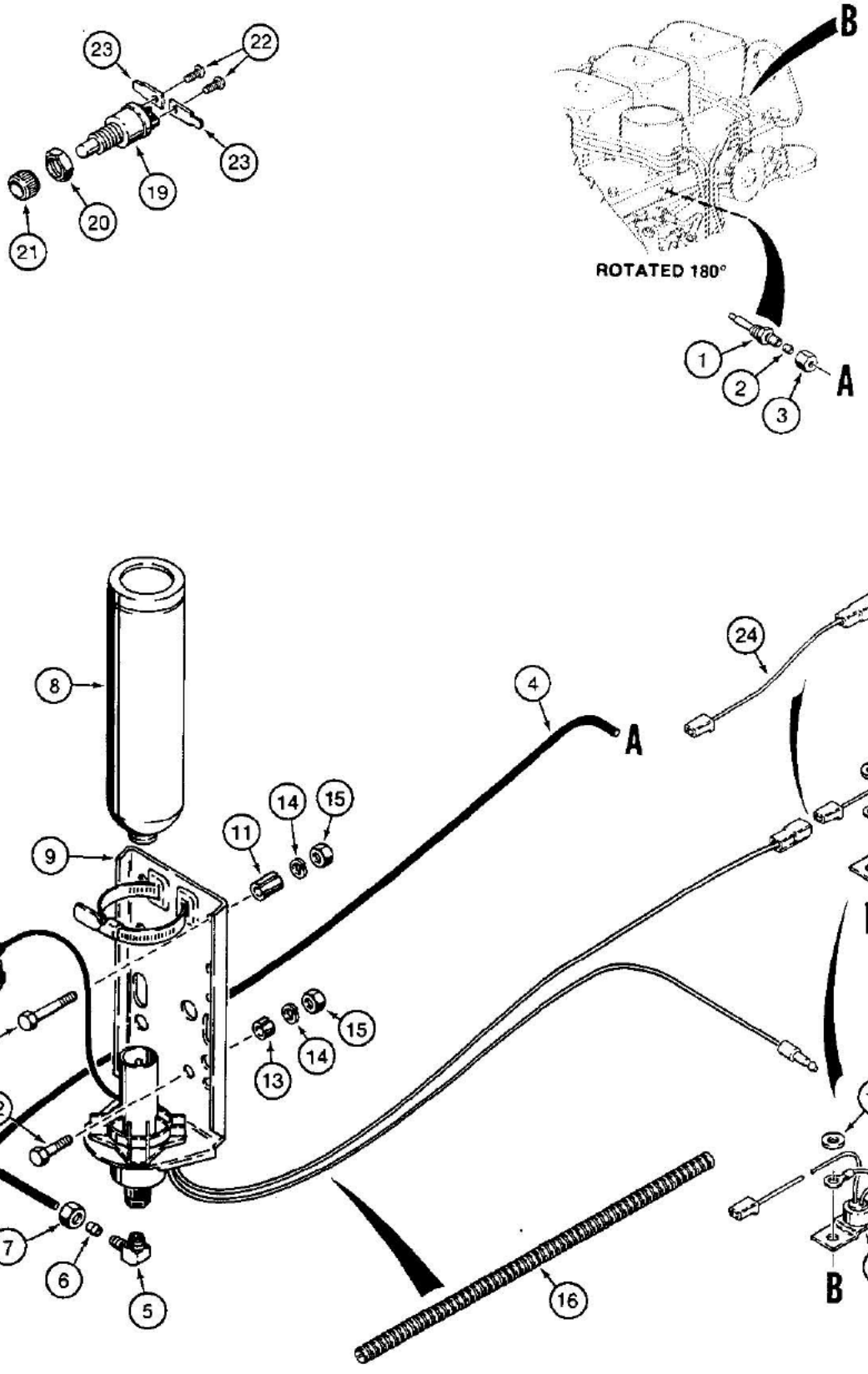
23
22
23
19
20
21
B
ROTATED 180°
1
2
3
A
8
4
A
24
18
14
15
11
9
17
B
10
15
14
13
12
18
7
6
5
4
16
25
B

B872479A-45

02-024 COLD START SYSTEM

Ref	Part Number	Qty	Description
	A172352	1	NOZZLE ASSEMBLY cold start injector, .008 dual orifice nozzle, used with P/N A172116 valve, no longer available, order P/N A172900 nozzle, Includes: Ref. 1 thru 3
1	NSS	1	BODY nozzle
2	222-650	1	SLEEVE, 1/8" Tube, Comp, Brass
3	222-660	1	NUT compression, fitting, brass, 1/8"
	A172900	1	NOZZLE ASSEMBLY cold start injector, .011 dual orifice nozzle, component parts not serviced separately, used with P/N A172116 valve, not shown
4	D145367	1	TUBE, valve to injector nozzle, 30" (762 mm) long
	222-615	1	ELBOW, 90e, 5/16"-24 x 1/8" NPT, Comp, Incl. Ref. 5 thru 7
5	NSS	1	BODY elbow
6	222-650	1	SLEEVE, 1/8" Tube, Comp, Brass
7	222-660	1	NUT compression, fitting, brass, 1/8"
8	A171940	1	CYLINDER starting fluid
9	A172116	1	VALVE ASSEMBLY, 3 cc starting fluid injection, component parts not serviced separately, used with P/N A172352 or P/N A172900 nozzle
10	113-122	2	BOLT, Hex, 5/16"-18 x 1 1/2", G5
11	D76210	2	SPACER valve mounting, upper
12	113-103	1	BOLT, Hex, 5/16"-18 x 1", G5, Full Thd
13	R46103	1	SPACER valve mounting, lower
14	192-20	3	WASHER, LOCK, 5/16"
15	9635082	3	NUT, 5/16"-18, G5
16	D128402	1	SLEEVE wire guard, 15" (380 mm) long
17	A171943	1	SWITCH temperature, 4" long wire, circuit breaking, uses existing intake manifold mounting hardware, used with Ref. 24 jumper wire on some models, no longer used, order P/N A189369 switch, Ref. 25, This switch has two 4" leads.
18	195-521	1	WASHER flat, plated, 5/16"
	L72776	1	SWITCH ASSEMBLY cold start, must also order (2) P/N L59682, blade terminals, Ref. 23, Includes: Ref. 19 thru 22
19	NSS	1	SWITCH cold start
20	H275784	1	NUT hex, jam, special
21	D73741	1	NUT hex, special
22	174-93	2	SCREW machine, round head slotted, No. 10-32 NF x 1/4"
23	L59682	2	TERMINAL blade, used with P/N L72776 switch
24	NSS	1	WIRE jumper, valve to Ref. 17 switch, not available for service, order P/N A189369 switch, Ref. 25
25	A189369	1	SWITCH temperature, 11" long wire, circuit breaking, uses existing intake manifold mounting hardware replaces Ref. 17 switch and Ref. 24 jumper wire on some models, Replaced by P/N A187923. This switch has two 4" leads and one 11" wire.

2-26

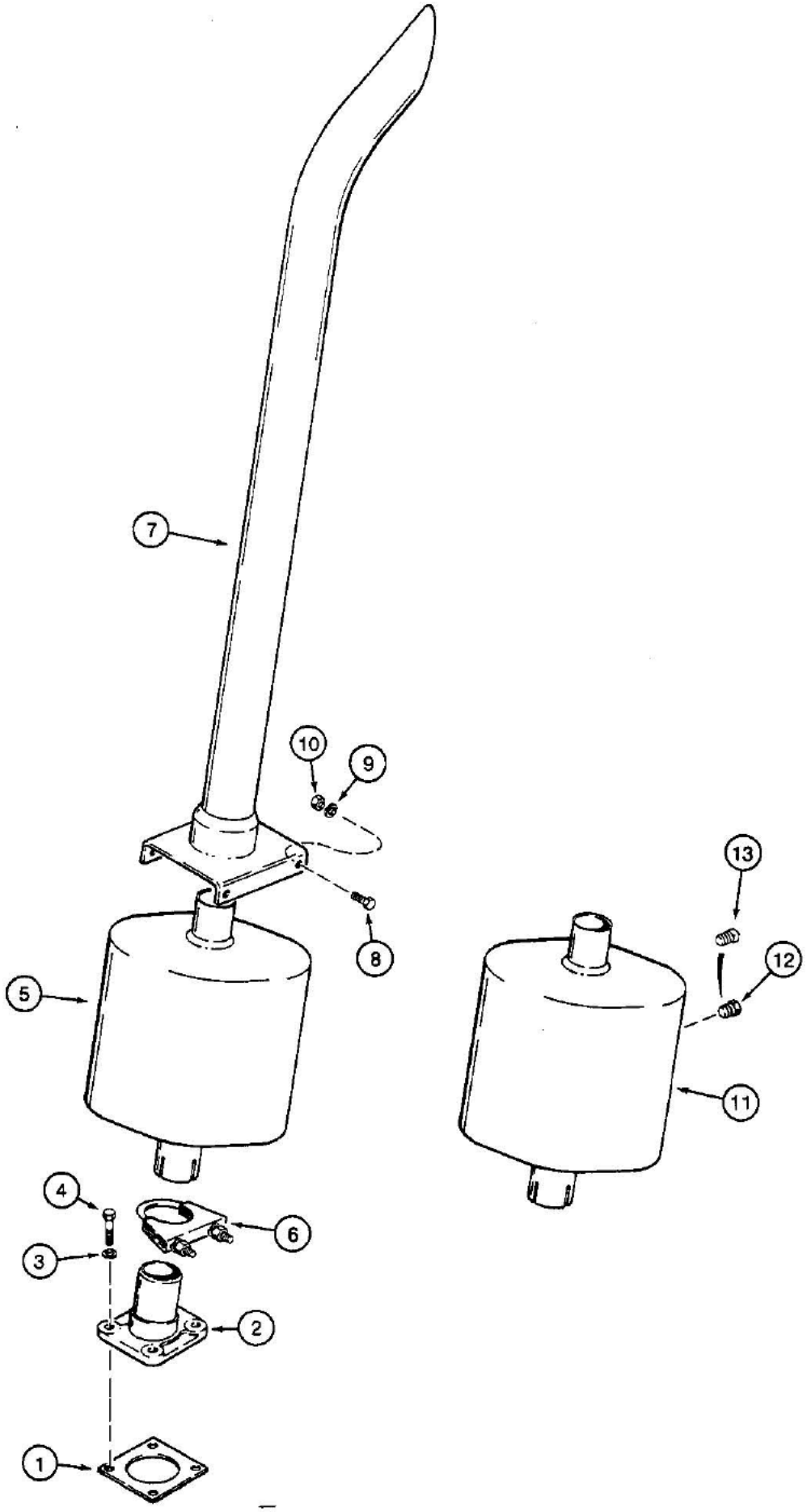

861695A-45

580K LOADER BACKHOE (NORTH AMERICA) - Engine

02-026 MUFFLER AND EXHAUST SYSTEM, MODELS WITHOUT TURBOCHARGED ENGINES, SPARK ARRESTER MUFFLER

Ref	Part Number	Qty	Description
1	A170151	1	GASKET muffler adapter
2	A173610	1	ADAPTER muffler
3	892-1110	4	WASHER lock, plated, 10 mm
4	814-10025	4	BOLT hex head, plated, 10 mm-1.5 x 25 mm, 8.8
5	A184237	1	MUFFLER engine exhaust, under hood, standard, if used
6	A62874	1	CLAMP muffler, includes hardware
7	D136087	1	PIPE exhaust, muffler extension, attaches to hood
8	113-102	4	BOLT, Hex, 5/16"-18 x 3/4", G5, Full Thd
9	192-20	4	WASHER, LOCK, 5/16"
10	9635082	4	NUT, 5/16"-18, G5
11	A184241	1	MUFFLER spark arrester, under hood, if used, Includes: Ref. 12 and 13
12	217-87	1	PLUG hex head, brass, 3/8" NPT, if used, spark arrester muffler
13	221-1015	1	PLUG square head, steel, 3/4" NPT, if used, spark arrester muffler

2-28

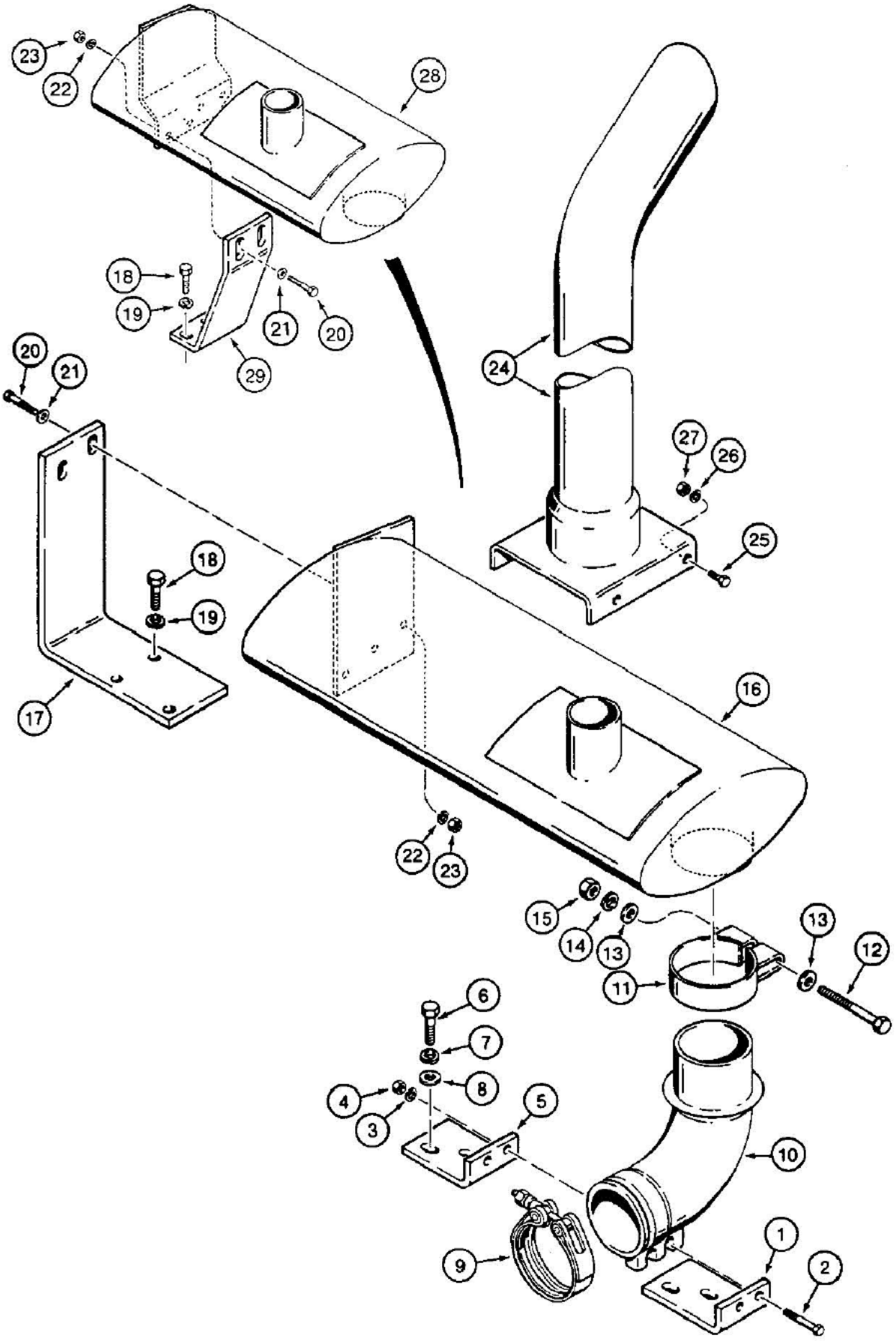

870207A-45

02-028 MUFFLER AND EXHAUST SYSTEM, MODELS WITH TURBOCHARGED ENGINES

Ref	Part Number	Qty	Description
1	A184021	1	BRACKET lower
2	814-8035	2	BOLT, Hex, M8 x 35, 8.8
3	892-1108	2	WASHER lock, plated, 8 mm
4	825-1108	2	NUT hex, plated, 8 mm-1.25
5	A184033	1	BRACKET upper
6	814-10035	2	BOLT hex head, plated, 10 mm-1.5 x 35 mm, 8.8
7	892-1110	2	WASHER lock, plated, 10 mm
8	895-11010	2	WASHER, M10 x 20 x 2
9	A170467	1	CLAMP, T-bolt type, includes hardware, at engine
10	A173607	1	ELBOW engine exhaust
11	R27691	1	CLAMP at muffler
12	113-2272	1	BOLT, Hex, 3/8"-16 x 3 1/4", G5
13	195-129	2	WASHER flat, plated, 3/8"
14	192-46	1	WASHER, LOCK, 3/8"
15	129-770	1	NUT hex, black plated, 3/8"-16 NC
16	A173453	1	MUFFLER engine exhaust, used with P/N A173682 bracket, no longer available, order P/N A184890 muffler and P/N D141541 bracket
17	A173682	1	BRACKET muffler support, if used
18	814-10025	2-3	BOLT hex head, plated, 10 mm-1.5 x 25 mm, 8.8, see Figure 04-098 for bolt used on models with air conditioning
19	892-1110	2-3	WASHER lock, plated, 10 mm
20	814-8030	2	BOLT hex head, plated, 8 mm-1.25 x 30 mm, 8.8
21	895-11008	2	WASHER, M8 x 16 x 1.6
22	892-11008	2	WASHER, LOCK, M8
23	825-1108	2	NUT hex, plated, 8 mm-1.25
24	D136087	1	PIPE exhaust, muffler extension
25	113-103	4	BOLT hex head, plated, 5/16"-18 NC x 3/4"
26	192-20	4	WASHER, LOCK, 5/16"
27	9635082	4	NUT, 5/16"-18, G5
28	A184890	1	MUFFLER engine exhaust, used with P/N D141541 bracket
29	D141541	1	BRACKET muffler support

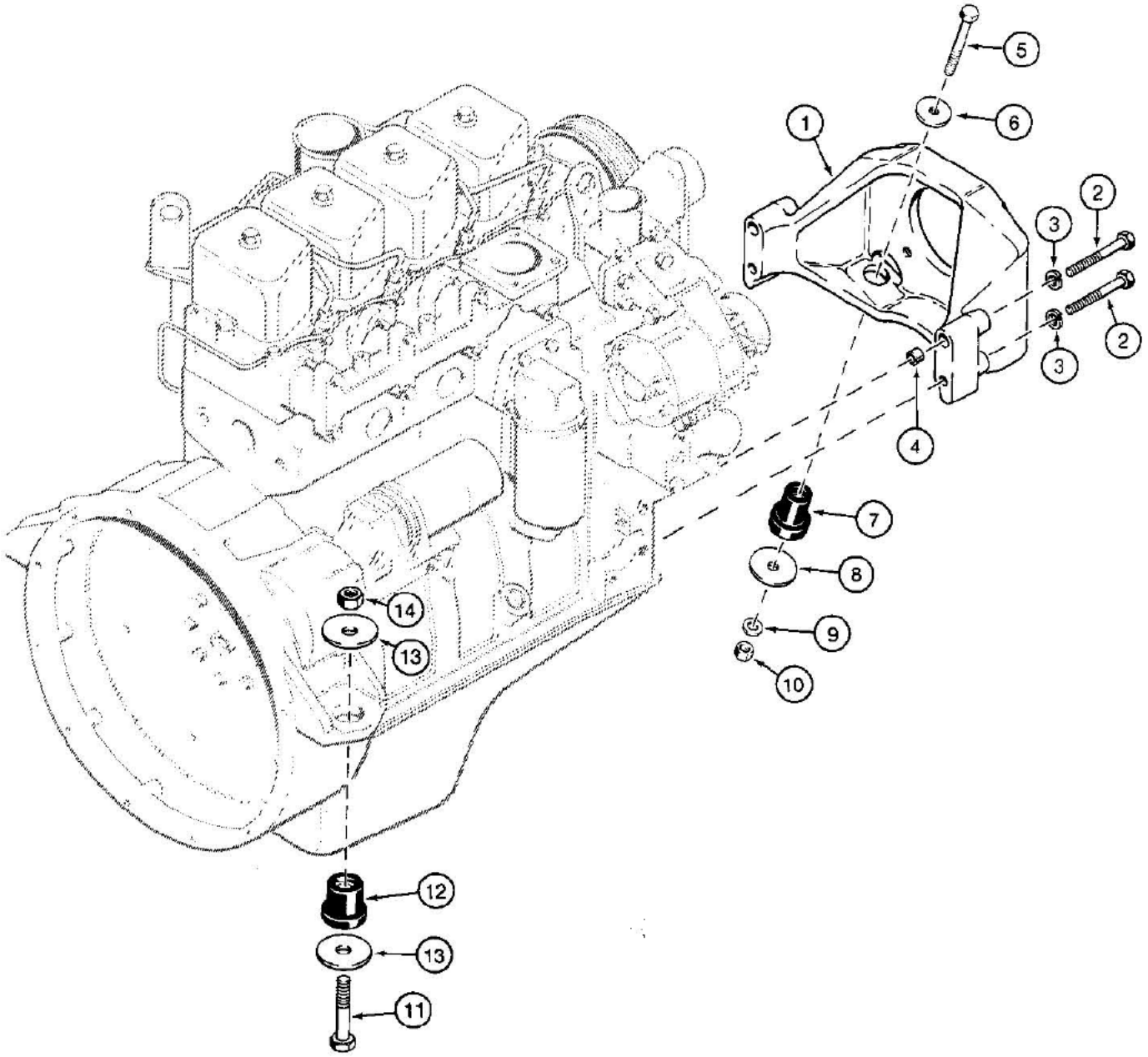

861715-45

580K LOADER BACKHOE (NORTH AMERICA) - Engine

02-030 ENGINE MOUNTING

Ref	Part Number	Qty	Description
1	D123725	1	SUPPORT engine front
2	814-12090	4	BOLT hex head, plated, 12 mm-1.75 x 90 mm, 8.8, Refer to Service Bulletin NLB SB 015 88
3	892-1112	4	WASHER lock, plated, 12 mm
4	A170309	2	BUSHING engine support, upper bolt holes
5	113-426	2	BOLT, Hex, 1/2"-13 x 2 3/4", G5
6	D126338	2	WASHER flat, special, 1/2" (13 mm) ID x 1-25/32" (45 mm) OD x 3/16" (5 mm) thick
7	D60627	2	INSULATOR engine mount, rubber, front
8	195-2055	2	WASHER flat, 1/2" bolt size, 17/32" ID x 2-1/4" OD x 3/16" thick
9	195-533	2	WASHER flat, plated, 1/2"
10	131-70	2	NUT hex, self-locking, plated, 1/2"-13 NC
11	113-628	2	BOLT, Hex, 5/8"-11 x 3 1/2", G5
12	D133316	2	INSULATOR engine mount, rubber, rear
13	D35009	4	WASHER flat, special, hardened
14	129-107	2	NUT, 5/8"-11, G5

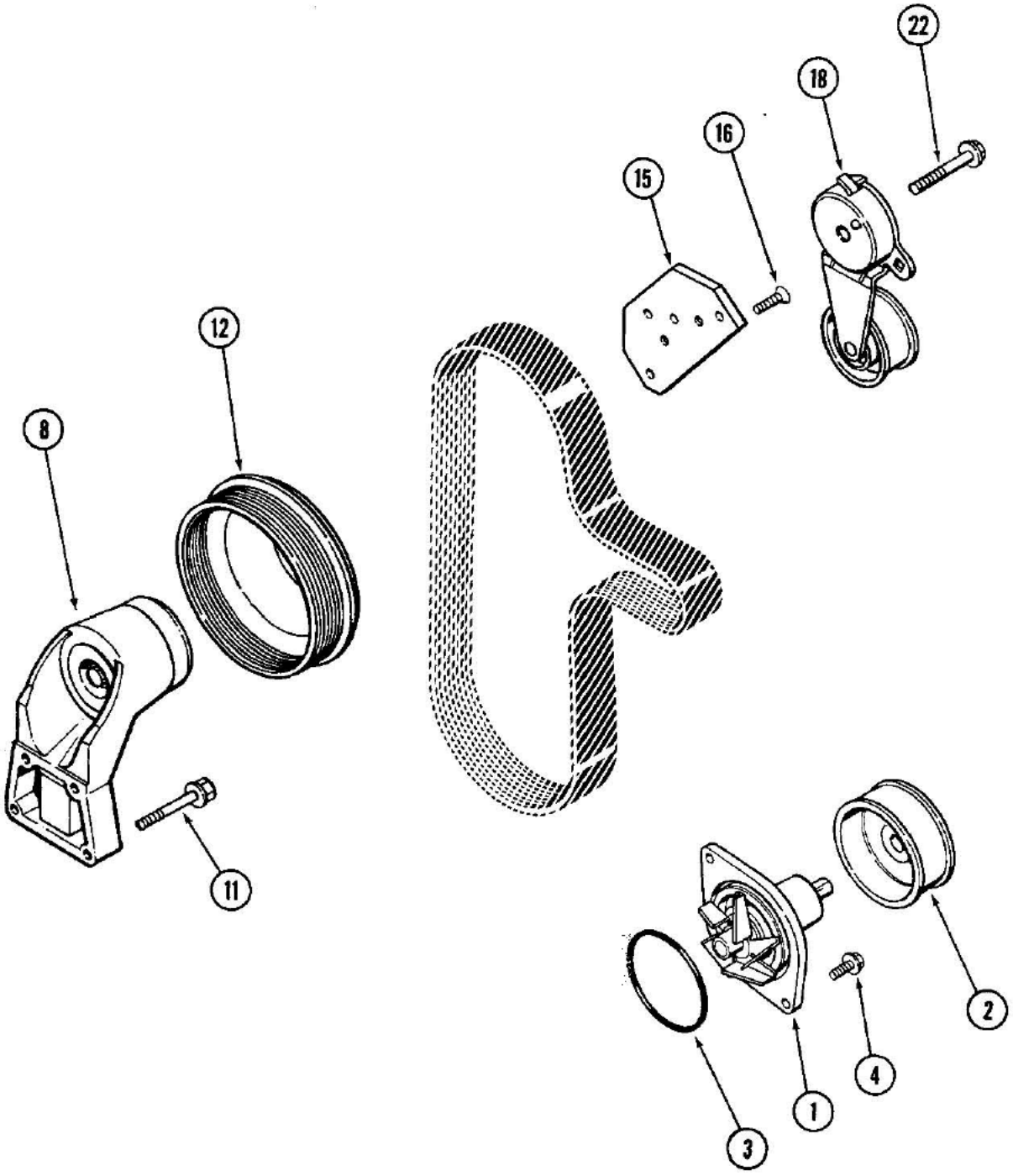
22
18
16
15
12
8
11
2
4
1
3

580K LOADER BACKHOE (NORTH AMERICA) - Engine

02-032 WATER PUMP SYSTEM, 4-390 ENGINE, 4T-390 ENGINE

Ref	Part Number	Qty	Description
	AR77471	1	PUMP water, remanufactured, North America only
	AC77471	1	RETURN NUMBER use this part number to return pump core for credit
	A77471	1	KIT water pump, Includes: Ref. 1 thru 3
1	NSS	1	PUMP ASSEMBLY water, order P/N A77471
2	NSS	1	PULLEY water pump, order P/N A77471
3	22290R1	1	O-RING sealing
4	J900227	2	BOLT, Hex, M8 x 1.25 x 22
8	J911922	1	BRACKET ASSEMBLY fan pulley
11	J900678	4	BOLT hex flange, 8 mm-1.25 x 40 mm
12	J914462	1	PULLEY fan, Replaces: P/N J908447
15	J904548	1	BRACKET belt tension
16	J925186	2	SCREW - flat head slotted, 8 x 25 mm
18	J914086	1	TENSIONER ASSEMBLY belt, Replaces: P/N J912246
22	J904446	1	BOLT hex flange, 10 mm-1.50 x 70 mm, use with P/N J914086 only
22	J905426	1	BOLT hex flange, 10 mm-1.50 x 70 mm, use with P/N J912246 only

2-34

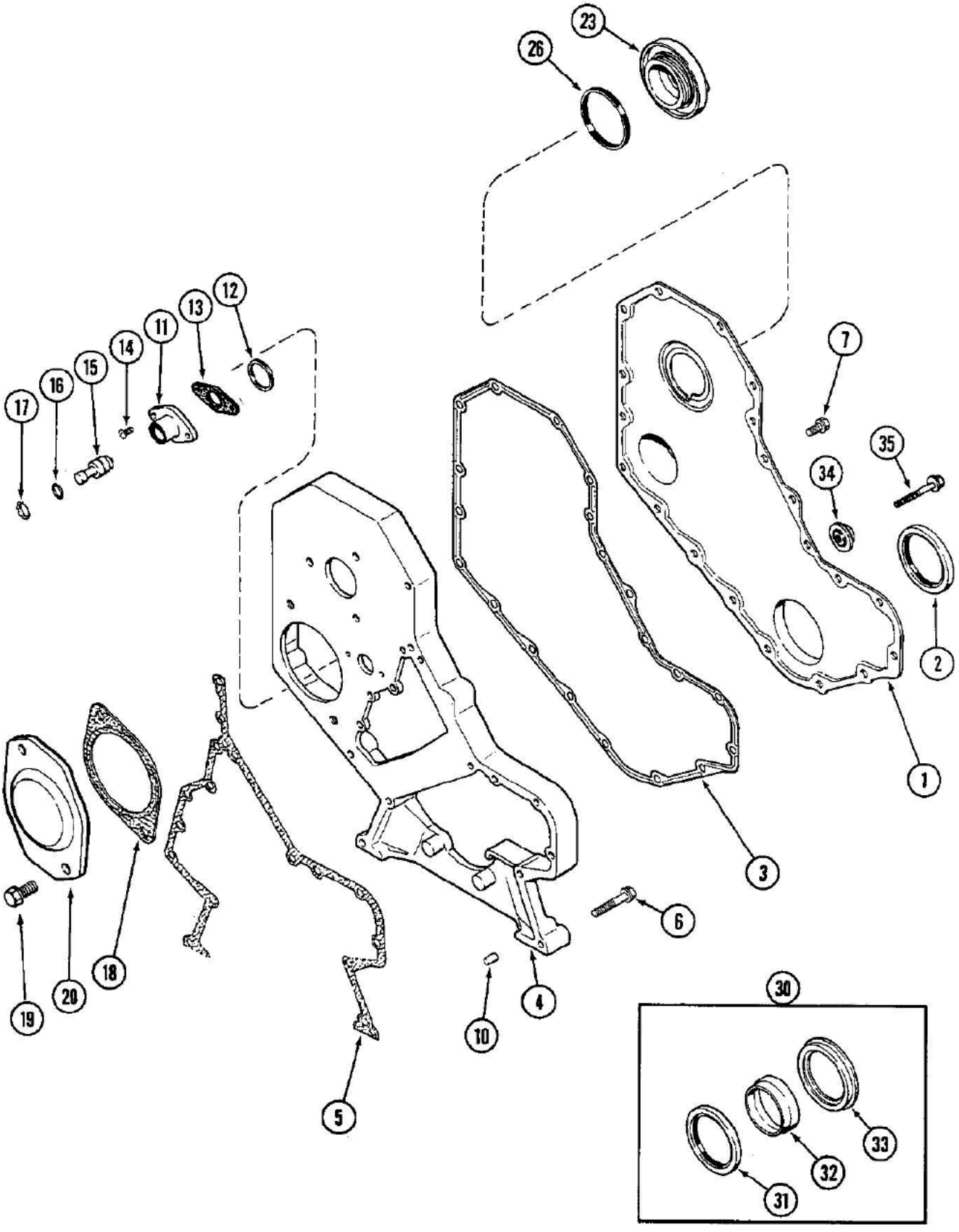

L872296-67

580K LOADER BACKHOE (NORTH AMERICA) - Engine

02-034 FRONT GEAR COVER, 4-390 ENGINE, 4T-390 ENGINE

Ref	Part Number	Qty	Description
1	J903794	1	COVER gear, front
2	NSS	1	SEAL oil, crankshaft front, order P/N J904353, see Ref. 30
3	J914385	1	GASKET front cover, Replaces: P/N J910500
4	J910411	1	HOUSING timing gear
5	J914384	1	GASKET gear housing, Replaces: P/N J907836
6	J900633	11	BOLT hex, 8 mm-1.25 x 50 mm
7	J900629	16	BOLT hex, 8 mm-1.25 x 16 mm
10	J900257	2	PIN dowel, location, 16 mm
11	J905933	1	HOUSING timing pin, Replaces: P/N J903923
12	J914092	1	O-RING pin housing, Replaces: P/N J906693
13	J905595	1	GASKET pin housing, used with P/N J903923 housing
14	J907998	2	SCREW, LOCK, Spc Rd Torx Hd, M5 x 17
15	J903924	1	PIN timing
16	J913994	1	O-RING sealing, Replaces: P/N J903927
17	J904849	1	Ring, Snap, 0.875", Int, #87, timing pin
18	J913192	1	GASKET cover plate, Replaces: P/N A77441
19	J901249	2	BOLT hex flange, 12 mm-1.75 x 25 mm
20	J909918	1	PLATE cover, access
23	J903463	1	COVER tachometer drive hole
26	J903475	1	SEAL cover
30	J904353	1	KIT seal, oil, crankshaft front, Includes: Ref. 31 thru 33
31	NSS	1	SEAL oil, crankshaft front
32	NSS	1	TOOL seal installation
33	NSS	1	TOOL seal installation
34	J912772	1	RETAINER bolt
35	J901446	1	BOLT hex flange, 8 mm-1.25 x 60 mm

2-36

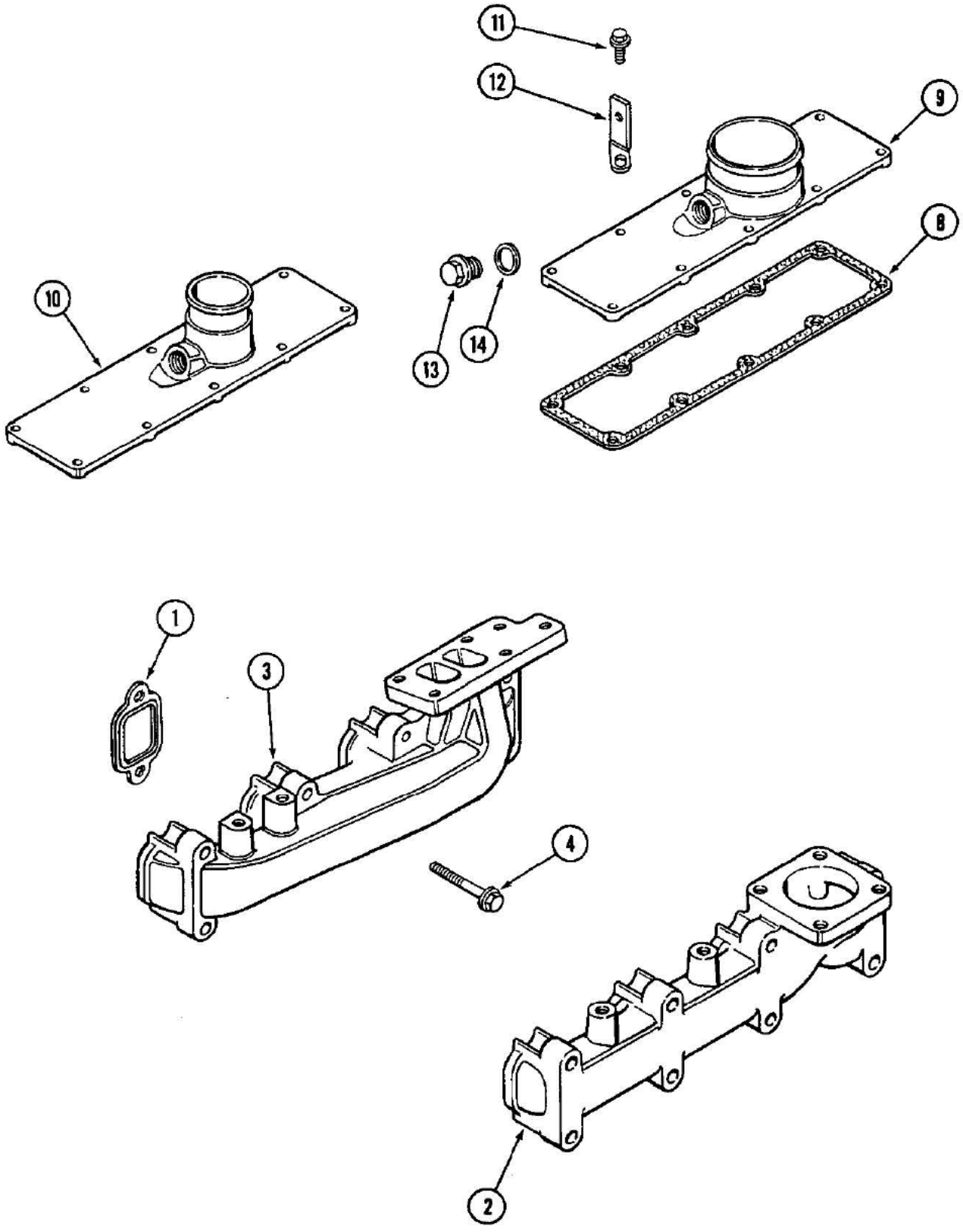

_B72320-65

02-036 MANIFOLDS, EXHAUST, 4-390 ENGINE, 4T-390 ENGINE

Ref	Part Number	Qty	Description
1	J905443	4	GASKET exhaust manifold
2	J901223	1	MANIFOLD exhaust, natural aspirated
3	J901919	1	MANIFOLD exhaust, turbocharged
4	J904446	8	BOLT hex flange, 10 mm-1.50 x 70 mm, exhaust
8	J914028	1	GASKET intake manifold, Replaces: P/N J901999
9	NSS	1	MANIFOLD intake, natural aspirated, order P/N A77415 kit
10	NSS	1	MANIFOLD intake, turbocharged, order P/N A77416 kit
11	J904341	10	BOLT intake manifold
12	NSS	1	BRACE fuel tube, see Figure 03-078, intake
13	J907185	1	PLUG ASSEMBLY manifold, intake
14	J906773	1	WASHER plug sealing, intake
	A77415	1	KIT intake manifold, natural aspirated, Includes: Ref. 9, 13 and 14
	A77416	1	KIT intake manifold, turbocharged, Includes: Ref. 10, 13 and 14

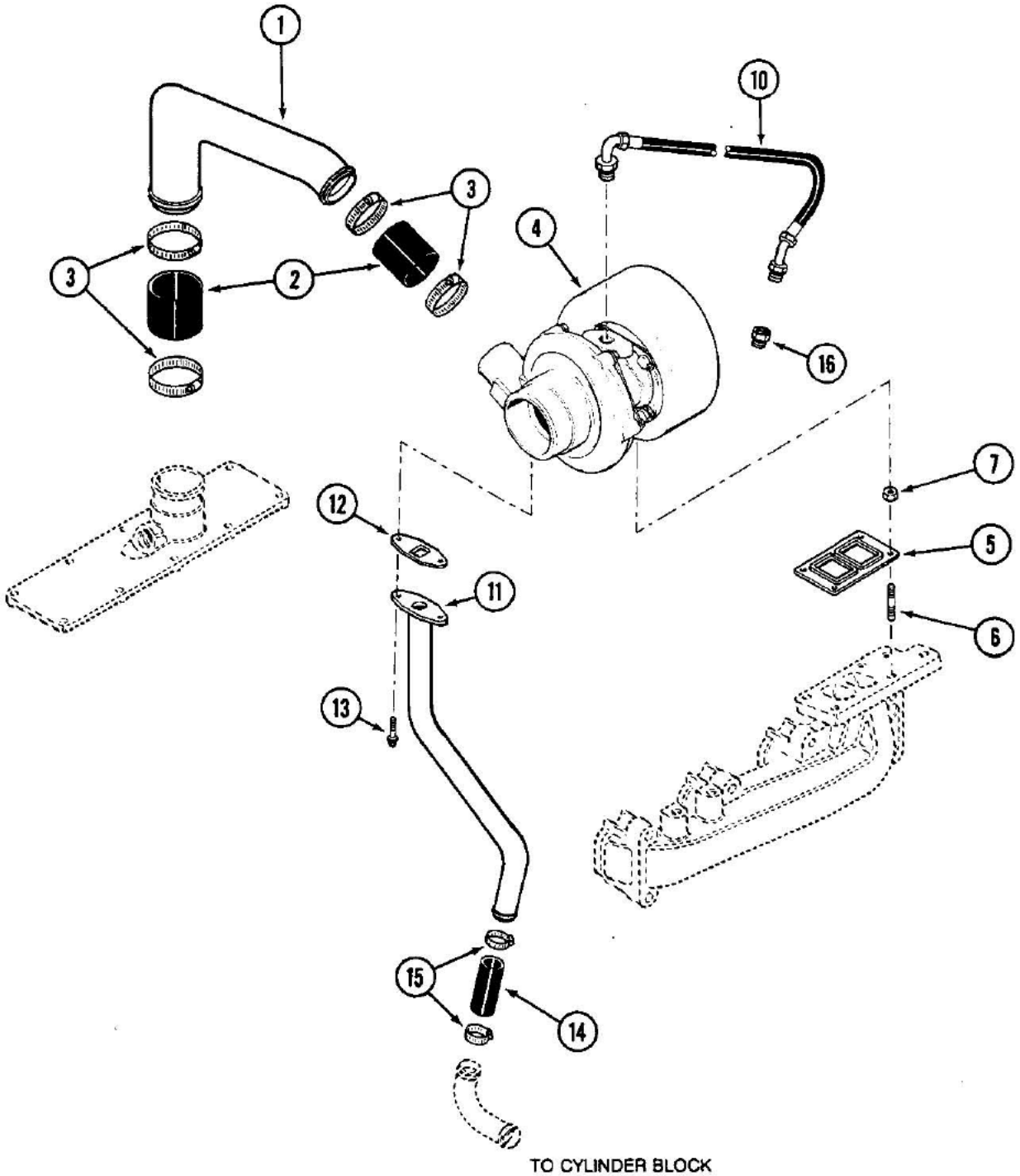
1
10
3
4
3
2
16
7
12
5
11
6
13
15
14
TO CYLINDER BLOCK

580K LOADER BACKHOE (NORTH AMERICA) - Engine

02-038 TURBOCHARGER SYSTEM, 4T-390 ENGINE

Ref	Part Number	Qty	Description
1	J912240	1	TUBE air intake
2	J901804	2	HOSE crossover
3	214-258	4	CLAMP hose, 1-5/16" to 2-1/4"
4	REF	1	TURBOCHARGER ASSEMBLY engine, see Figure 02-040
5	J901356	1	GASKET turbocharger to manifold
6	J905417	1	STUD turbocharger mounting
7	J901961	4	NUT hex, stud
10	J913759	1	HOSE ASSEMBLY turbocharger oil supply, Replaces: P/N J909546
11	J903740	1	TUBE turbocharger oil drain
12	J914388	1	GASKET drain tube, Replaces: P/N J901805
13	J900630	2	BOLT hex flange, 8 mm-1.25 x 20 mm
14	J903745	1	HOSE turbocharger oil drain
15	214-555	2	CLAMP hose, 13/16" to 1-1/2"
16	A77457	1	CONNECTOR supply hose

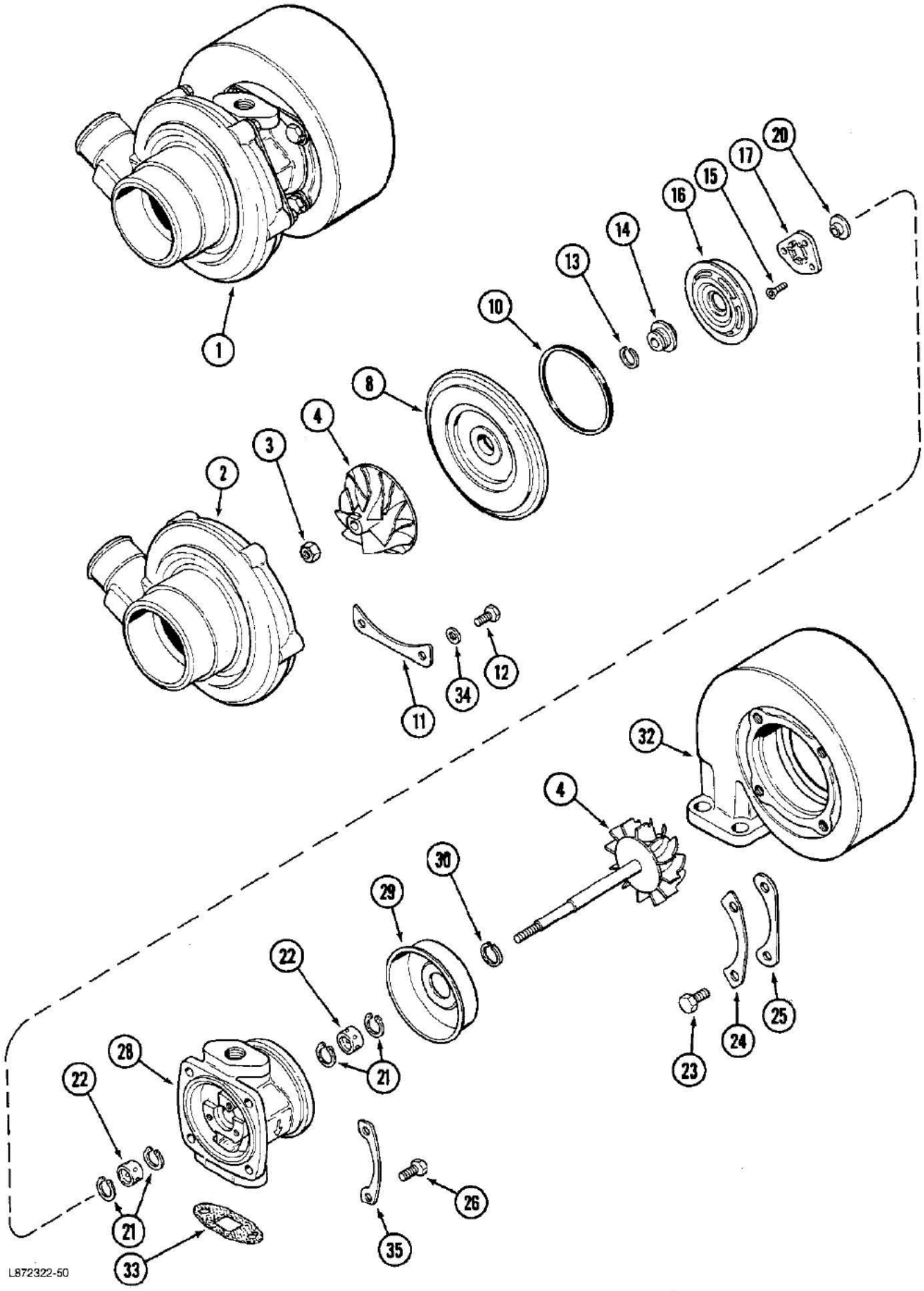
1
2
3
4
8
10
13
14
16
15
17
20
11
34
12
32
4
30
29
22
21
28
22
21
33
23
24
25
26
35
L872322-50

580K LOADER BACKHOE (NORTH AMERICA) - Engine

02-040 TURBOCHARGER ASSEMBLY, 4T-390 ENGINE

Ref	Part Number	Qty	Description
	JR908293	1	TURBOCHARGER ASSEMBLY remanufactured, North America only
	JC908293	1	RETURN NUMBER use this part number to return turbocharger core for credit
1	J908293	1	TURBOCHARGER ASSEMBLY new, Includes: Ref. 2 thru 35
2	NSS	1	HOUSING compressor
3	NSS	1	NUT hex lock, Part of Turbocharger Overhaul Kit P/N J904772
4	NSS	1	ROTOR ASSEMBLY turbocharger
8	NSS	1	DIFFUSER compressor
10	NSS	1	SEAL diffuser, Part of Turbocharger Overhaul Kit P/N J904772
11	NSS	3	PLATE diffuser
12	NSS	6	BOLT AND WASHER ASSEMBLY hex lock, Part of Turbocharger Overhaul Kit P/N J904772
13	NSS	1	SEAL split ring, compressor, Part of Turbocharger Overhaul Kit P/N J904772
14	NSS	1	SLINGER oil
15	NSS	3	SCREW flat head torx, Part of Turbocharger Overhaul Kit P/N J904772
16	NSS	1	BAFFLE oil
17	NSS	1	BEARING thrust, Part of Turbocharger Overhaul Kit P/N J904772
20	NSS	1	COLLAR thrust
21	NSS	4	RING snap, Part of Turbocharger Overhaul Kit P/N J904772
22	NSS	2	BEARING impeller shaft, Part of Turbocharger Overhaul Kit P/N J904772
23	NSS	4	BOLT cap, Part of Turbocharger Overhaul Kit P/N J904772
24	NSS	2	PLATE lock, turbine housing, Part of Turbocharger Overhaul Kit P/N J904772
25	NSS	2	PLATE clamping, turbine housing
26	NSS	4	BOLT AND WASHER ASSEMLBY hex lock, Part of Turbocharger Overhaul Kit P/N J904772
28	NSS	1	HOUSING bearing, turbine
29	NSS	1	SHIELD heat, turbine
30	NSS	1	SEAL piston, turbine, Part of Turbocharger Overhaul Kit P/N J904772
32	NSS	1	HOUSING turbine
33	NSS	1	GASKET oil drain
34	NSS	6	WASHER lock, Part of Turbocharger Overhaul Kit P/N J904772
35	NSS	2	PLATE lock, turbine, Part of Turbocharger Overhaul Kit P/N J904772
	J904772	1	KIT overhaul, turbocharger, Includes: Ref. 3, 10, 12, 13, 15, 17, 21, 22, 23, 24, 26, 30, 34 and 35

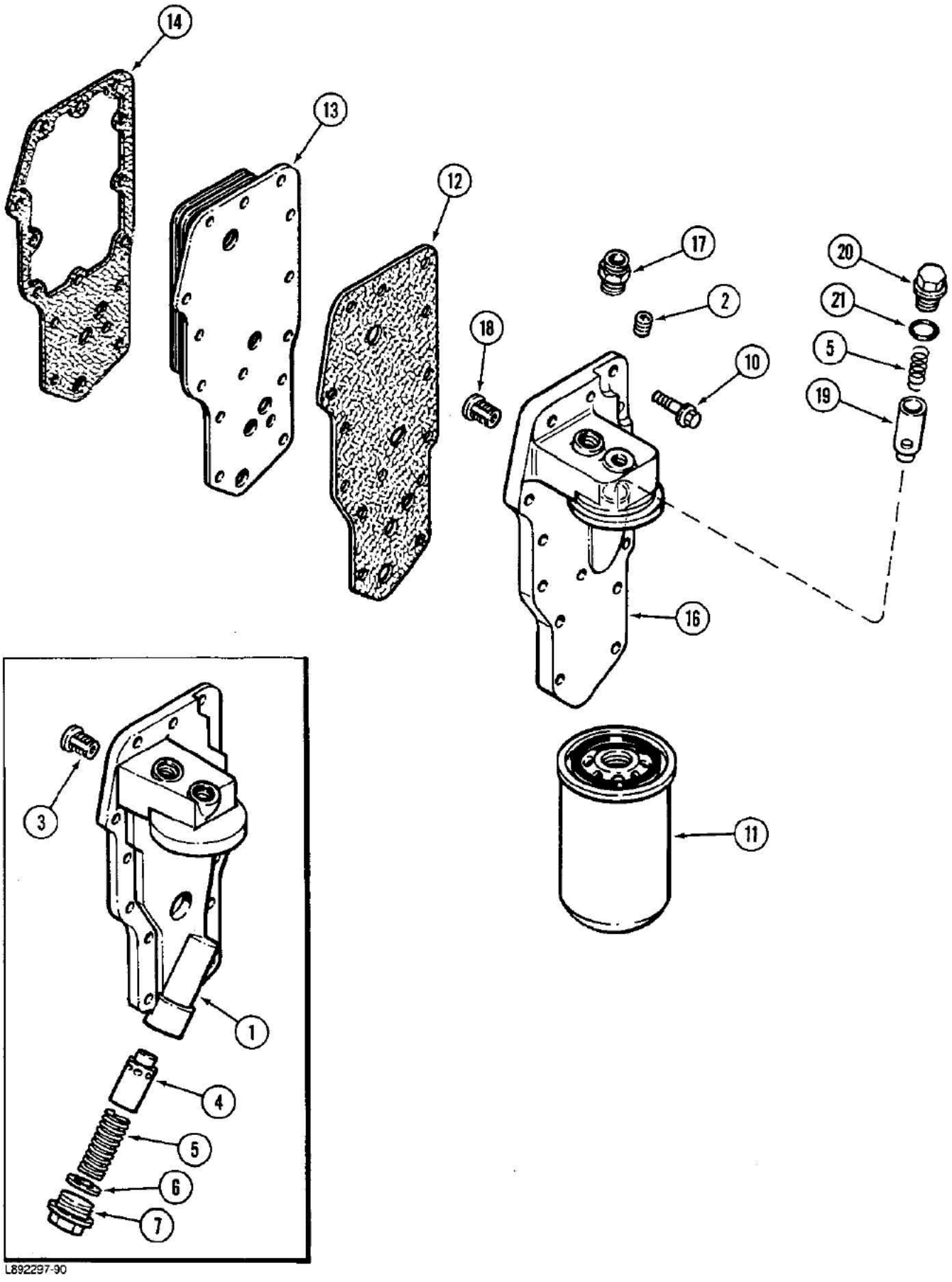
14
13
12
17
2
18
10
20
21
5
19
16
11
3
1
4
5
6
7
L892297-90

580K LOADER BACKHOE (NORTH AMERICA) - Engine

02-042 OIL FILTER AND COOLER, 4-390 ENGINE, 4T-390 ENGINE

Ref	Part Number	Qty	Description
1	J902295	1	HEAD filter, lube oil , Used prior to engine S/N 44257900. For repairs.
2	J906619	1	PLUG hex socket pipe, 1/8"-27 PT
3	J902338	1	VALVE relief, pressure
4	J909376	1	PLUNGER regulator, pressure
5	J903261	1	SPRING compression
6	J902425	1	WASHER seal, plug
7	J904386	1	PLUG pipe
10	J900632	14	BOLT hex flange head, 8 mm-1.25 x 35 mm
11	J908616	1	FILTER lube oil, cartridge
12	J912532	1	GASKET filter head, Replaces: P/N J912638
13	J904320	1	COOLER oil
14	J914387	1	GASKET cooler core, Replaces: P/N J904427
	J915766	1	KIT oil cover, Includes: Ref. 16 thru 21, ASN 44257900
16	J909352	1	HEAD ASSEMBLY filter and cooler, order P/N J915243
17	J909355	1	ADAPTER filter head
18	J902338	1	VALVE relief, pressure
19	J914084	1	PLUNGER regulator, pressure
20	J912618	1	PLUG pipe
21	J912818	1	WASHER seal, plug

2-44

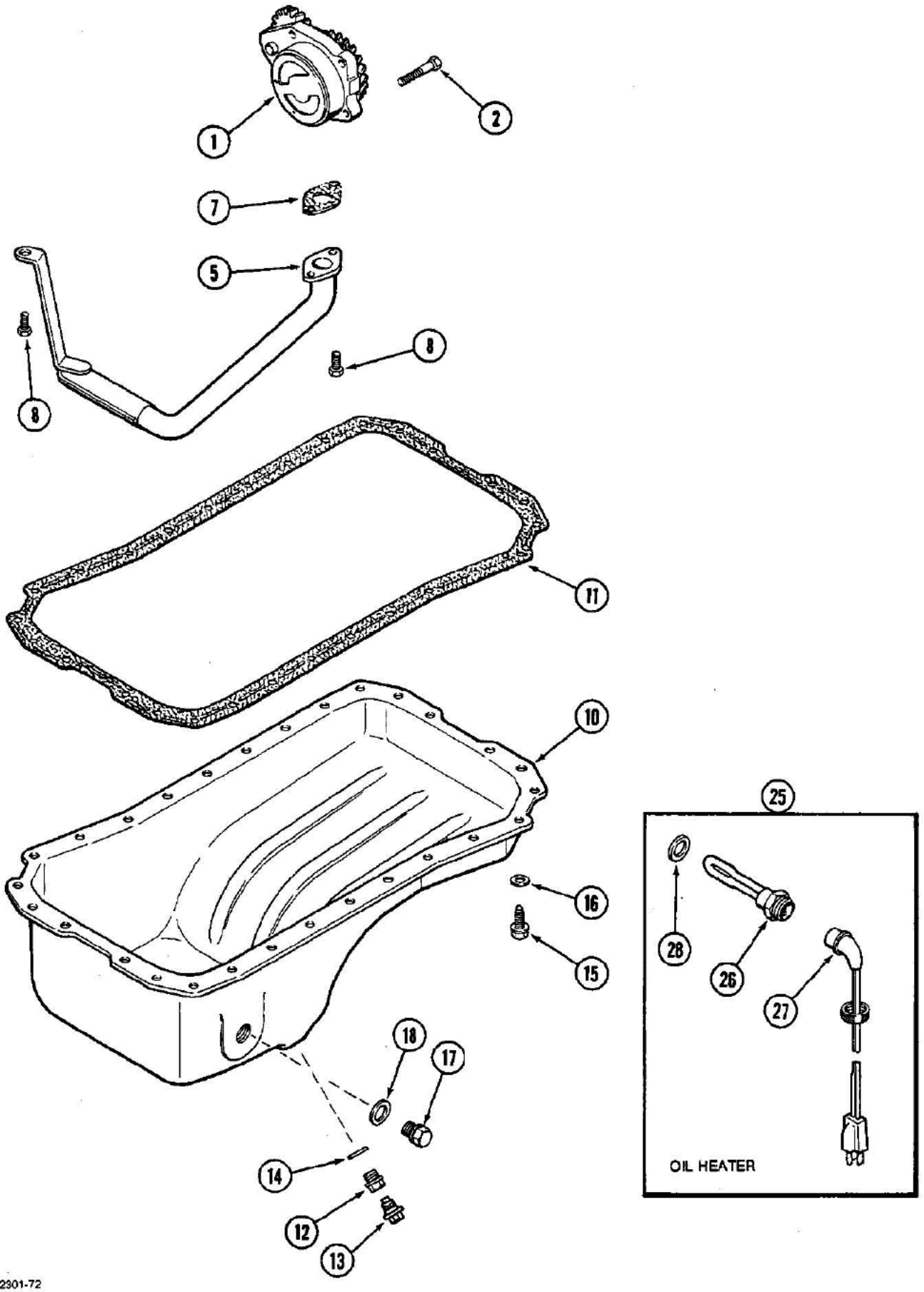

872301-72

02-044 OIL PUMP AND OIL PAN, 4-390 ENGINE, 4T-390 ENGINE

Ref	Part Number	Qty	Description
	JR914005	1	PUMP oil, remanufactured, North America only
	JC914005	1	RETURN NUMBER use this part number to return pump core for credit
1	J914005	1	PUMP ASSEMBLY oil, engine, Replaces: P/N J906412
2	814-8030	4	BOLT hex, 8 mm-1.25 x 30 mm
5	J905206	1	TUBE suction, oil
7	J914383	1	GASKET mounting, tube, Replaces: P/N J905468, Part of Gasket Kit P/N A77482
8	J900629	3	BOLT hex, 8 mm-1.25 x 16 mm
10	J901049	1	PAN oil, engine
11	NSS	1	GASKET oil pan, order P/N A77482, Part of Gasket Kit P/N A77482
12	J900215	1	PLUG drain, oil, alternate with P/N J911638 plug
13	J911638	1	PLUG drain, oil magnetic, alternate with P/N J900215 plug
14	J900216	1	WASHER seal, drain plug, Part of Gasket Kit P/N A77482
15	J907860	28	SCREW - hex flange special, 8 mm - 1.25 x 25 mm
16	J907537	28	WASHER spring, pan bolt
17	J904386	1	PLUG pipe
18	J902425	1	WASHER seal, plug
	A77482	1	KIT gasket, oil pan, Includes: Ref. 7, 11 and 14
25	A77490	1	KIT heater, engine oil, Includes: Ref. 26 and 27, When kit is ordered, Washer P/N J902425 must also be ordered. See Ref. 28.
26	NSS	1	ELEMENT heater, 12 volt, order P/N A77490, engine oil
27	J905113	1	CABLE electric, heater, engine oil
28	J902425	1	WASHER seal, engine oil heater

2-46

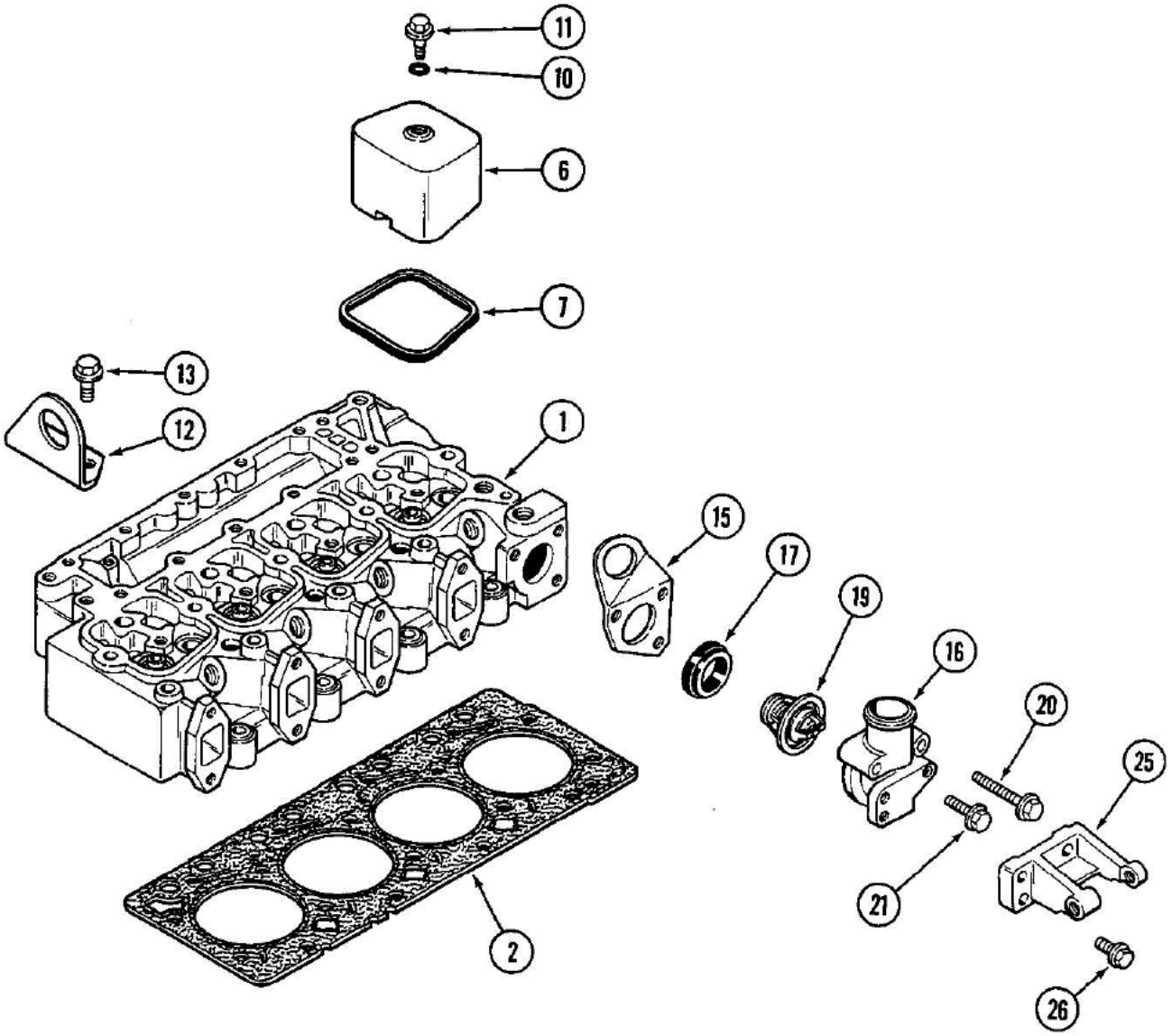

02-046 CYLINDER HEAD AND COVERS, 4-390 ENGINE, 4T-390 ENGINE

Ref	Part Number	Qty	Description
1	REF	1	HEAD cylinder, engine, see Figure 02-048, cylinder head and covers
2	J915726	1	GASKET cylinder head, standard, 1 notch, Replaces: P/N J907054, cylinder head and covers, P/N J915726 subs to P/N J282999
2	J915727	1	GASKET cylinder head, 0.23 mm thicker, 2 notches, Replaces: P/N J907054, cylinder head and covers, P/N J915727 subs to P/N J921395
2	J915728	1	GASKET cylinder head, 0.51mm thicker, 3 notches, Replaces: P/N J907056, cylinder head and covers, P/N J915728 subs to P/N J921397
6	J902604	4	COVER rocker, cylinder head and covers
7	J902666	4	SEAL rocker cover, cylinder head and covers
10	J910824	4	O-RING cover bolt, Replaces: P/N J901837, cylinder head and covers
11	J907049	4	BOLT special, 8 mm-1.25 x 21.25 mm, cylinder head and covers
11	J902375	4	BOLT hex flange head, 8 mm-1.25 x 13.5 mm, if equipped, cylinder head and covers
12	J908118	1	BRACKET lifting, rear, cylinder head and covers
13	814-12025	2	BOLT hex flange head, 12 mm-1.74 x 25 mm, cylinder head and covers
15	J903757	1	BRACKET lifting, front, thermostat and housing
16	J914409	1	HOUSING thermostat, Replaces: P/N J903756
17	J903301	1	GASKET housing, thermostat
19	J912587	1	THERMOSTAT water, 95° C, housing
20	J903096	2	BOLT hex flange head, 8 mm-1.25 x 70 mm, thermostat and housing
21	J900632	1	BOLT hex flange head, 8 mm-1.25 x 35 mm, thermostat and housing
25	J910713	1	SUPPORT alternator mounting, thermostat and housing
26	814-8025	3	BOLT hex flange head, 8 mm-1.25 x 25 mm, thermostat and housing

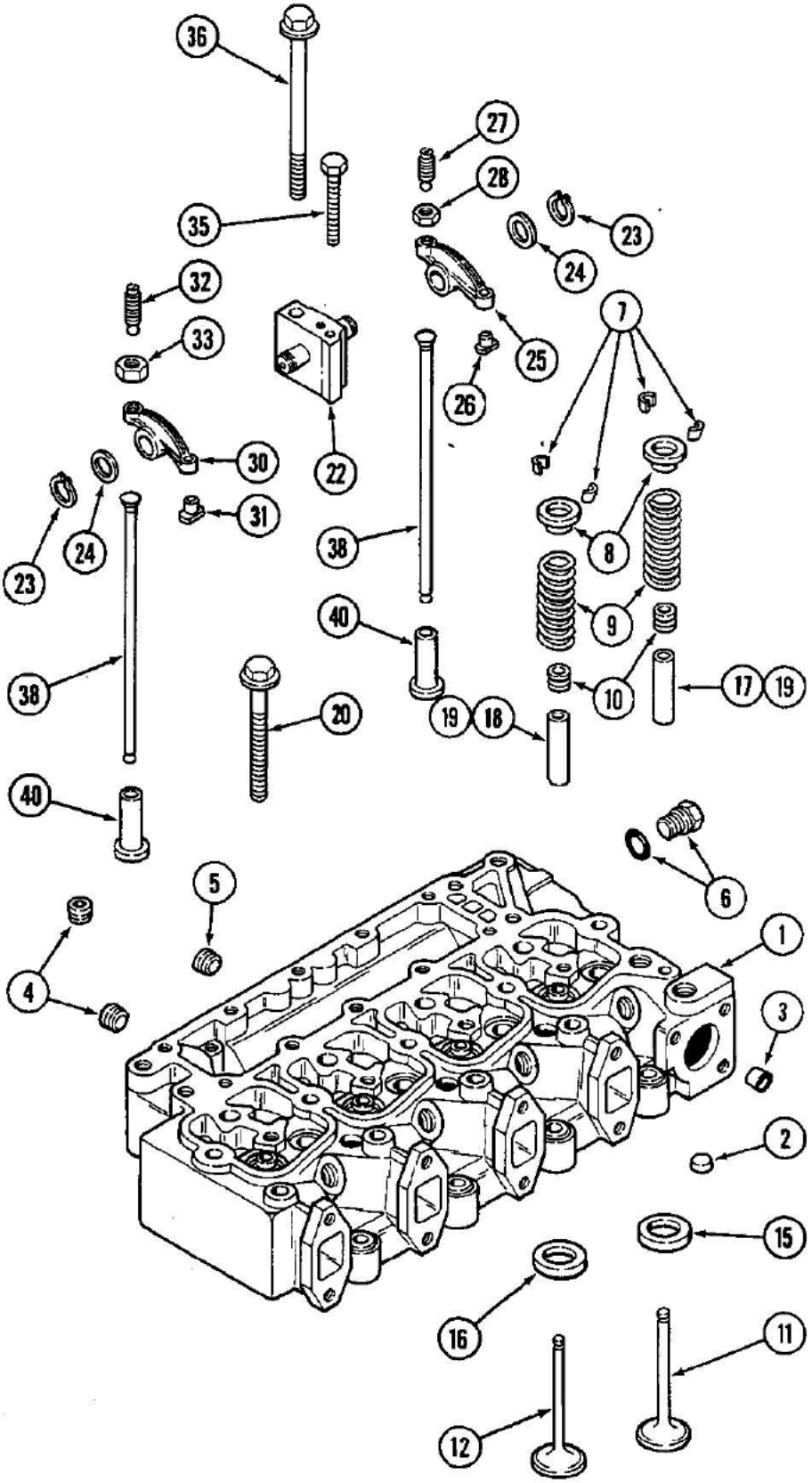
36
35
27
28
23
24
32
33
25
7
26
22
30
31
38
8
23
24
9
40
38
10
17
19
20
19
18
40
6
5
1
4
3
2
15
16
11
12

L872310-70

580K LOADER BACKHOE (NORTH AMERICA) - Engine

02-048 VALVE MECHANISM, 4-390 ENGINE, 4T-390 ENGINE

Ref	Part Number	Qty	Description
	JR910275	1	HEAD cylinder, remanufactured, North America only
	JC905864	1	RETURN NUMBER use this part number to return core for credit
	JC910275	1	RETURN NUMBER use this part number to return head core for credit
1	J910275	1	HEAD ASSEMBLY cylinder, new, with valves, Includes: Ref. 1 P/N J913389 thru Ref. 12
1	J913389	1	HEAD ASSEMBLY cylinder, without valves, Replaces: P/N J909947, Includes: Ref. 2 and 3
2	J902606	3	PLUG expansion, 21 mm OD
3	J909403	1	SLEEVE cylinder head
4	A77429	5	PLUG hex socket pipe, 1/4"-18 PT
5	J906619	2	PLUG hex socket pipe, 1/8"-27 PT
7	J900250	16	KEEPER valve
8	J900299	8	RETAINER valve spring
9	J900276	8	SPRING valve
10	J901097	8	SEAL valve
11	J901117	4	VALVE intake
12	J901607	4	VALVE exhaust
15	J906854	4	SEAT insert, intake valve, service repair only
16	J904105	4	SEAT insert, exhaust valve, service repair only
17	J904408	4	GUIDE valve, intake, service repair only
18	J904409	4	GUIDE valve, exhaust, service repair only
19	J906206	12	GUIDE valve, intake and exhaust, 11 mm OD, service repair only
20	J903938	4	BOLT hex flange head, 12 mm-1.75 x 70 mm
20	J903939	10	BOLT hex flange head, 12 mm-1.75 x 120 mm
21	J910814	4	SUPPORT AND SHAFT ASSEMBLY rocker arm, Includes: Ref. 22
22	J907555	1	PLUG rocker arm shaft, 1/4"-18 PT
23	J900242	8	RING retaining, rocker arm
24	J900245	8	WASHER thrust, rocker arm
25	J910811	4	ARM ASSEMBLY rocker, intake, Includes: Ref. 26 thru 28
26	NSS	1	INSERT rocker arm
27	J937438	1	SCREW slotted set adjusting, 3/8" NF x 40 mm
28	A77558	1	NUT hex jam, 3/8" NF
30	J910810	4	ARM ASSEMBLY rocker, exhaust, Includes: Ref. 31 thru 33
31	NSS	1	INSERT rocker arm
32	J937438	1	SCREW slotted set adjusting, 3/8" NF x 40 mm
33	A77558	1	NUT hex jam, 3/8" NF
35	813-8075	4	BOLT hex, 8 mm-1.25 x 75 mm
36	J903940	4	BOLT hex flange head, 12 mm-1.75 x 180 mm
38	J904679	8	ROD push, rocker arm
40	J907240	8	TAPPET valve, push rod

2-50

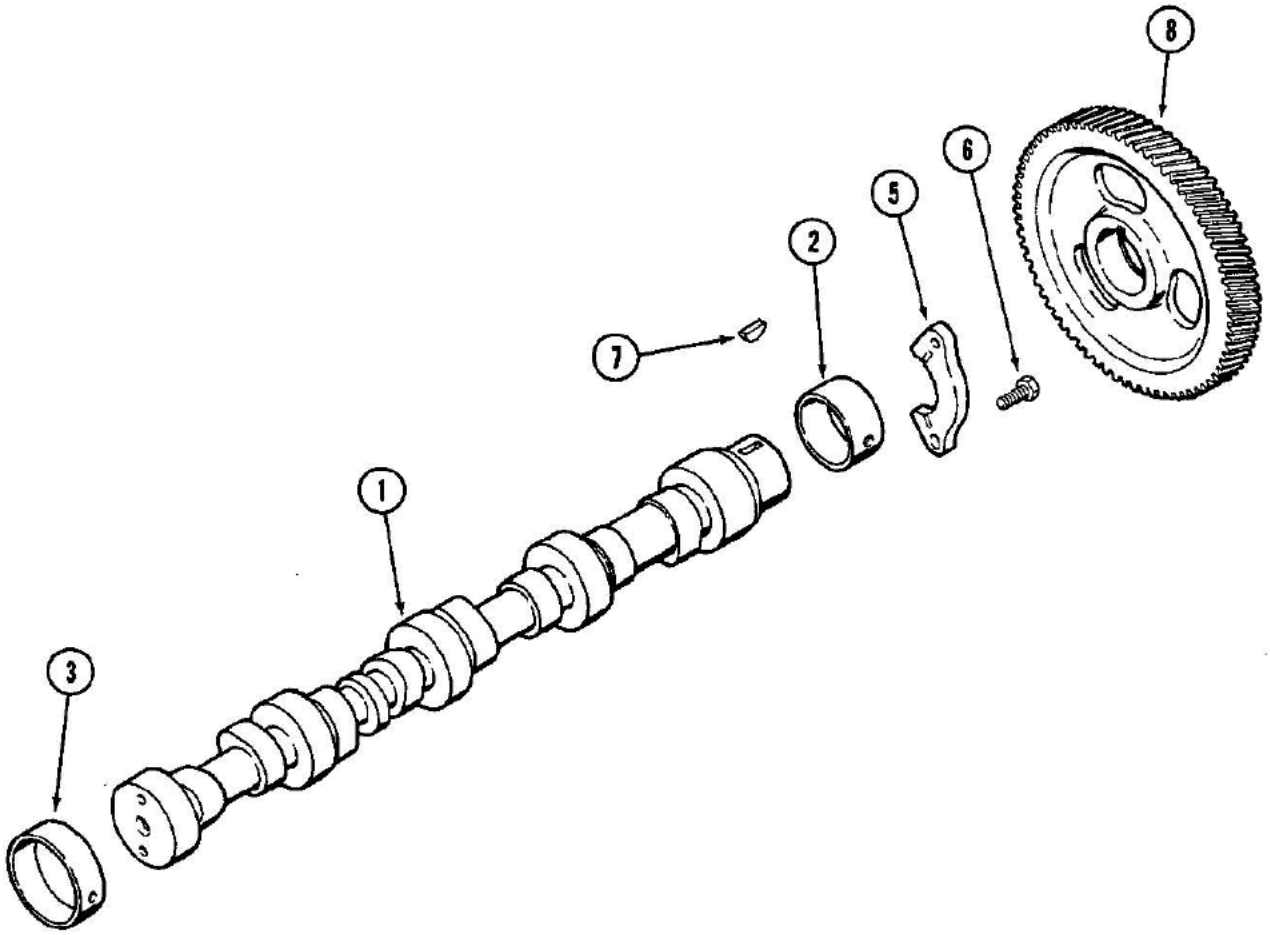

L872299-90

When the intermediate and rear cylinder block camshaft bores are reamed in engine repair, use 903242 bearings.

580K LOADER BACKHOE (NORTH AMERICA) - Engine

02-050 CAMSHAFT, 4-390 ENGINE, 4T-390 ENGINE

Ref	Part Number	Qty	Description
1	J907823	1	CAMSHAFT engine, order P/N J914638 and J914641
1	J914638	1	CAMSHAFT engine, Replaces: P/N J907823
2	J901306	1	BUSHING camshaft, front standard
2	J904369	1	BUSHING camshaft, front oversize, 58 mm OD
3	J903242	4	BUSHING camshaft, intermediate and rear
5	J914641	1	SUPPORT thrust, camshaft, Replaces: P/N J910761
6	J900227	2	BOLT, Hex, M8 x 1.25 x 22
7	J902332	1	KEY camshaft gear
8	J907431	1	GEAR camshaft

When the intermediate and rear cylinder block camshaft bores are reamed in engine repair, use 903242 bearings.

2-52

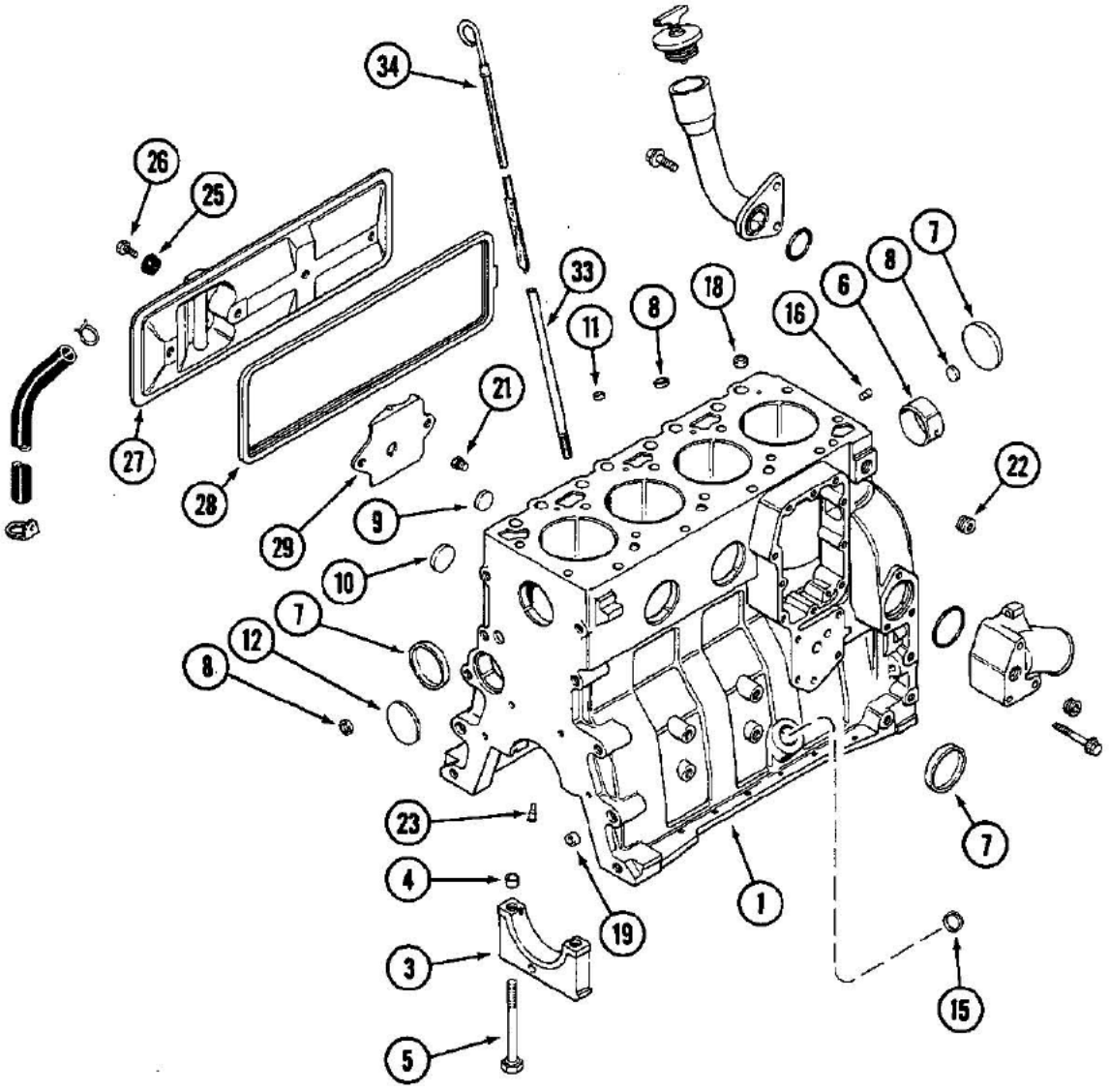

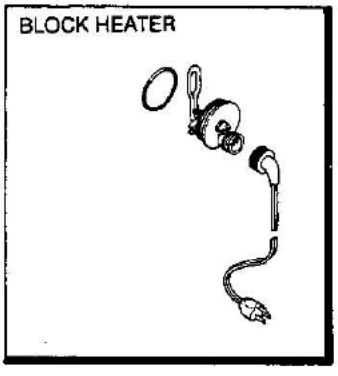

L872314-45

02-052 CYLINDER BLOCK, 4-390 ENGINE

Ref	Part Number	Qty	Description
	A174233	1	ENGINE ASSEMBLY, 4-390 standard, complete, new, includes all parts except starter, alternator, fan, fan belt, air cleaner, muffler and exhaust pipe
	A174236	1	ENGINE ASSEMBLY, 4-390 optional, complete, new, with security module, includes all parts except starter, alternator, fan, fan belt, air cleaner, muffler and exhaust pipe
	JR905377	1	BLOCK ASSEMBLY short, engine, remanufactured, North America only
	JC905377	1	RETURN NUMBER use this part number to return short block core for credit
	J905377	1	BLOCK ASSEMBLY short, engine, new, includes stripped block, piston, connecting rods and bearings, crankshaft and bearings, order short block and P/N J905813 kit
1	J905376	1	BLOCK ASSEMBLY stripped, engine, order block and P/N J905812 kit, Includes: Ref. 3 thru 9
3	J900967	5	CAP main bearing
4	J900068	10	RING dowel, 18 mm OD
5	J904217	10	BOLT bearing cap, special
6	REF	1	BUSHING camshaft front, see Figure 02-050
7	J900965	4	PLUG expansion, 58 mm OD
8	J900956	3	PLUG expansion, 18 mm OD
9	A77539	2	PLUG expansion, 26 mm
	J905813	1	KIT block hardware, Includes: Ref. 10 thru 23
10	J900958	2	PLUG expansion, 32 mm OD
11	J900955	1	PLUG expansion, 10 mm OD
12	J900687	1	PLUG expansion, welch, 60 mm OD
15	A77439	1	PLUG expansion, 0.886 mm OD
16	J900257	2	PIN dowel, 16 mm long
18	J902343	2	RING dowel, 16 mm OD
19	J900068	2	RING dowel, 18 mm OD
21	J906619	2	PLUG hex socket pipe, 1/8"-27 PT
22	A77429	1	PLUG hex socket pipe, 1/4"-18 PT
23	J901020	4	NOZZLE piston cooling
25	J900267	4	SEAL ASSEMBLY cover bolt
26	J900629	2	BOLT hex, 8 mm-1.25 x 16 mm
27	J905023	1	COVER tappet
28	J904056	1	GASKET tappet cover
29	J907586	1	BAFFLE tappet cover
33	J905779	1	TUBE dipstick
34	J905781	1	DIPSTICK oil level gauge

2-54

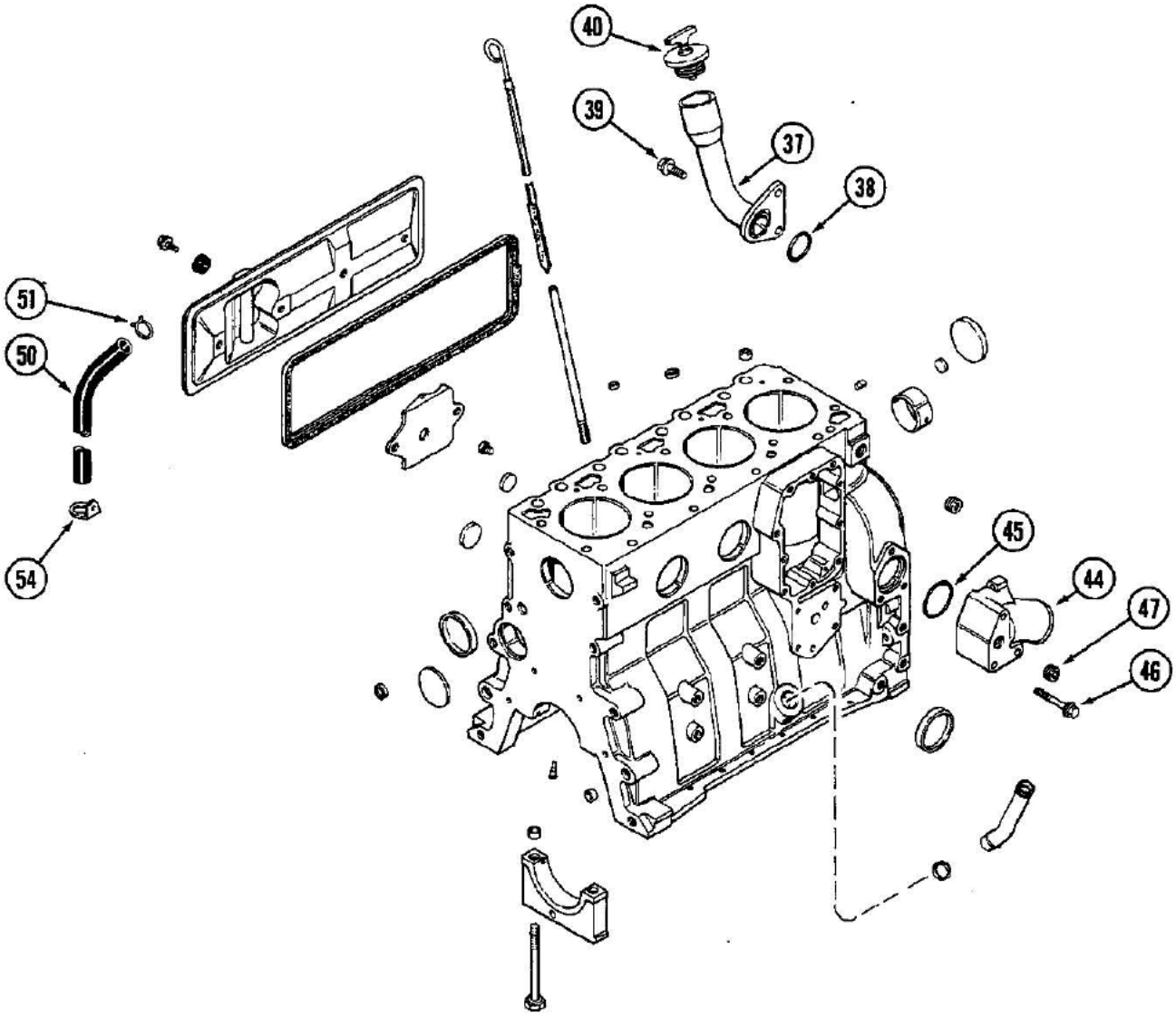

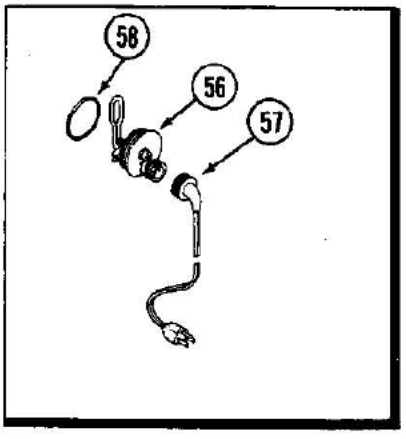

L872314-45

02-054 CYLINDER BLOCK, 4-390 ENGINE AND ENGINE BLOCK HEATER

Ref	Part Number	Qty	Description
37	J905440	1	TUBE oil fill
38	J906696	1	O-RING sealing, 38 mm ID
39	J901249	2	BOLT hex flange, 12 mm-1.75 x 25 mm
40	A77424	1	CAP ASSEMBLY fill, oil
44	J903102	1	CONNECTION water inlet
45	J906697	1	O-RING sealing, 50 mm ID
46	J901757	3	BOLT hex flange head, 10 mm-1.50 x 75 mm
47	A77429	2	PLUG hex socket pipe, 1/2" PT
50	J906593	1	HOSE breather
51	J904230	1	CLAMP spring, hose
54	J909670	1	CLIP retaining
	A77634	1	KIT heater, engine block, Includes: Ref. 56 and 57
56	NSS	1	ELEMENT engine block heater, 12 volt
57	J905113	1	CABLE engine block heater
58	J910517	1	O-RING heater sealing, engine block

2-56

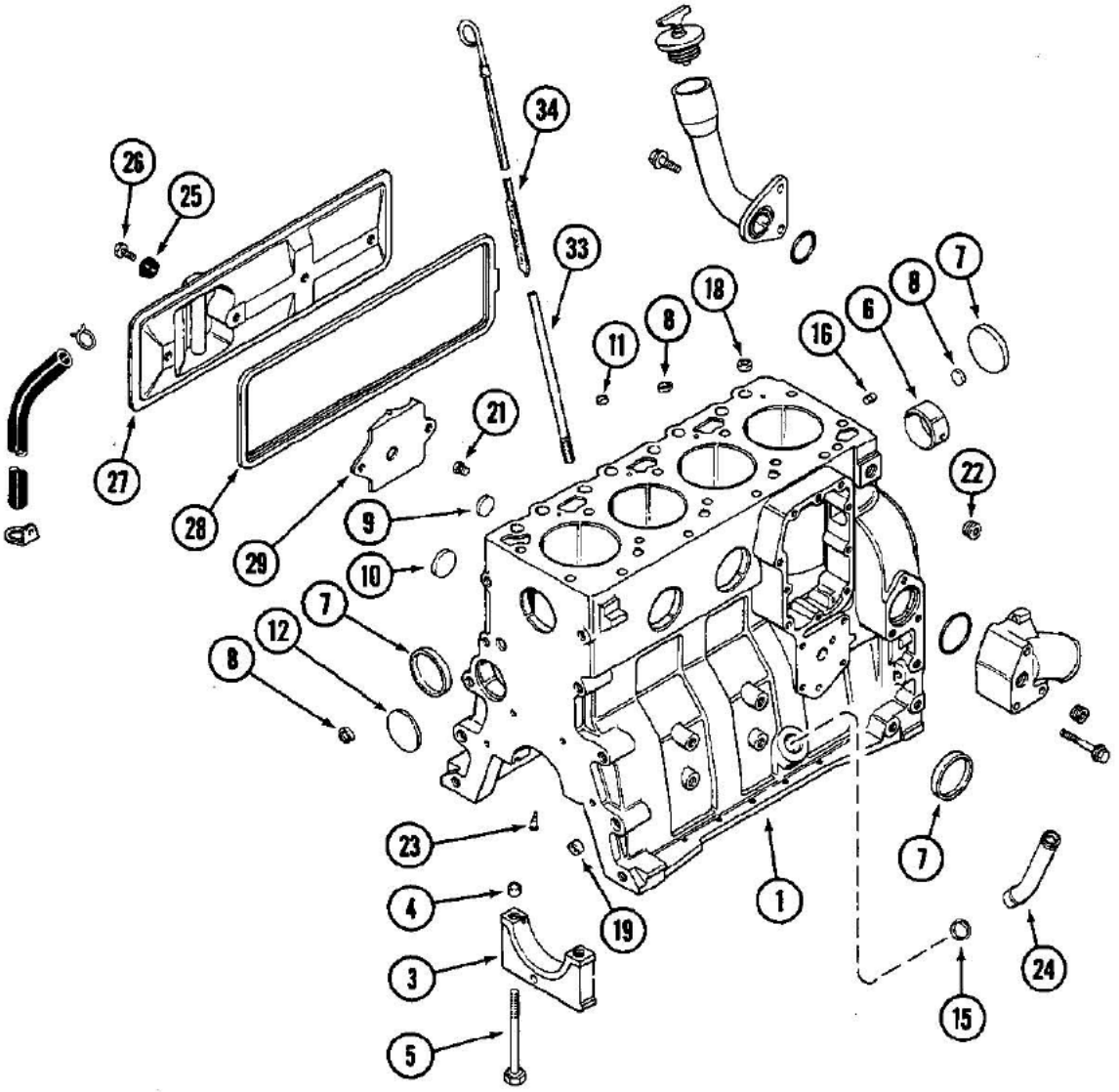

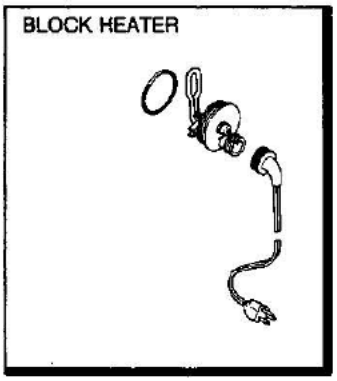

L672314-45

02-056 CYLINDER BLOCK, 4T-390 ENGINE

Ref	Part Number	Qty	Description
	A174234	1	ENGINE ASSEMBLY, 4T-390 standard, complete, new, includes all parts except starter, alternator, fan, fan belt, air cleaner, muffler and exhaust pipe
	A174237	1	ENGINE ASSEMBLY, 4T-390 optional, complete, new, with security module, includes all parts except starter, alternator, fan, fan belt, air cleaner, muffler and exhaust pipe
	JR905378	1	BLOCK ASSEMBLY short, engine, remanufactured, North American only
	JC905378	1	RETURN NUMBER use this part number to return short block core for credit
	J905378	1	BLOCK ASSEMBLY short, engine, new, includes stripped block, pistons, connecting rods and bearings, crankshaft and bearings, order short block and P/N J905813 kit
1	J905376	1	BLOCK ASSEMBLY stripped, engine, order block and P/N J905813 kit, Includes: Ref. 3 thru 9
3	J900967	5	CAP main bearing
4	J900068	10	RING dowel, 18 mm OD
5	J904217	10	BOLT bearing cap, special
6	REF	1	BUSHING camshaft front, see Figure 02-050
7	J900965	4	PLUG expansion, 58 mm OD
8	J900956	3	PLUG expansion, 18 mm OD
9	A77539	2	PLUG expansion, 26 mm
	J905813	1	KIT block hardware, Includes: Ref. 10 thru 23
10	J900958	2	PLUG expansion, 32 mm OD
11	J900955	1	PLUG expansion, 10 mm OD
12	J900687	1	PLUG expansion, welch, 60 mm OD
15	A77439	1	PLUG expansion, 0.886 mm OD
16	J900257	2	PIN dowel, 16 mm long
18	J900068	2	RING dowel, 16 mm OD
19	J900068	2	RING dowel, 18 mm OD
21	J906619	2	PLUG hex socket pipe, 1/8"-27 PT
22	J901020	4	NOZZLE piston cooling
23	A77429	1	PLUG hex socket pipe, 1/4"-18 PT
24	J903744	1	TUBE drain, oil
25	J900267	4	SEAL ASSEMBLY cover bolt
26	J900629	2	BOLT hex, 8 mm-1.25 x 16 mm
27	J905023	1	COVER tappet
28	J904056	1	GASKET tappet cover
29	J907586	1	BAFFLE tappet cover
33	J905779	1	TUBE dipstick
34	J905781	1	DIPSTICK oil level gauge

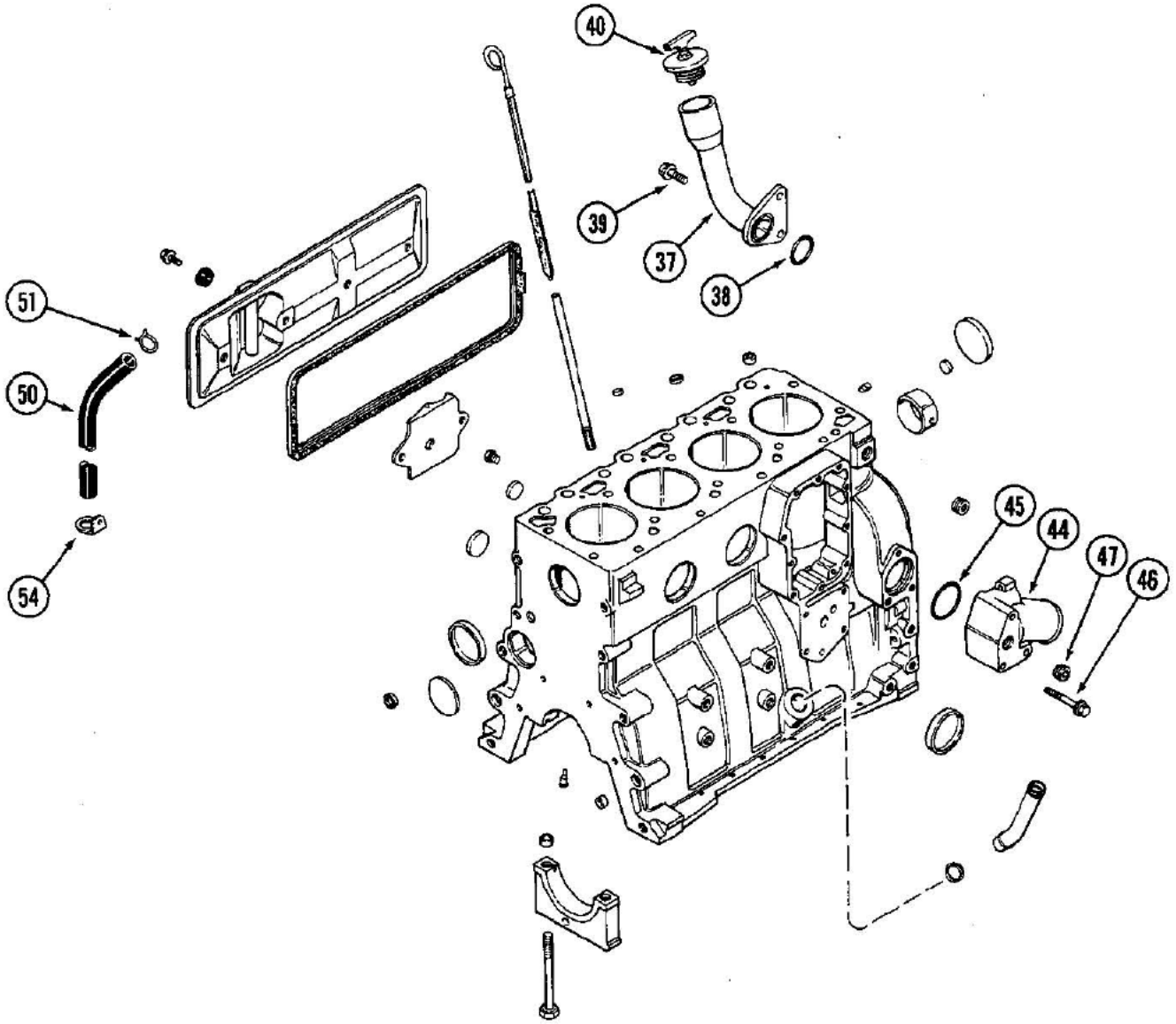

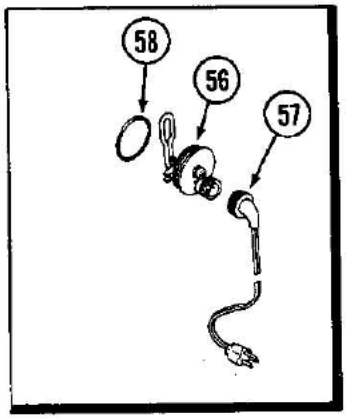

L672314-45

02-058 CYLINDER BLOCK, 4T-390 ENGINE

Ref	Part Number	Qty	Description
37	J905440	1	TUBE oil fill
38	J9006696	1	O-RING sealing, 38 mm ID
39	J901249	2	BOLT hex flange, 12 mm-1.74 x 25 mm
40	A77424	1	CAP ASSEMBLY fill, oil
44	J903102	1	CONNECTION water inlet
45	J906697	1	O-RING sealing, 50 mm ID
46	J901757	3	BOLT hex flange head, 10 mm-1.50 x 75 mm
47	A77429	2	PLUG hex socket pipe, 1/2" PT
50	J906593	1	HOSE breather
51	J904230	1	CLAMP spring, hose
54	J909670	1	CLIP retaining
	A77634	1	KIT heater, engine block, Includes: Ref. 56 and 57
56	NSS	1	ELEMENT engine block heater, 12 volt
57	J905113	1	CABLE engine block heater
58	J910517	1	O-RING heater sealing, engine block

2-60

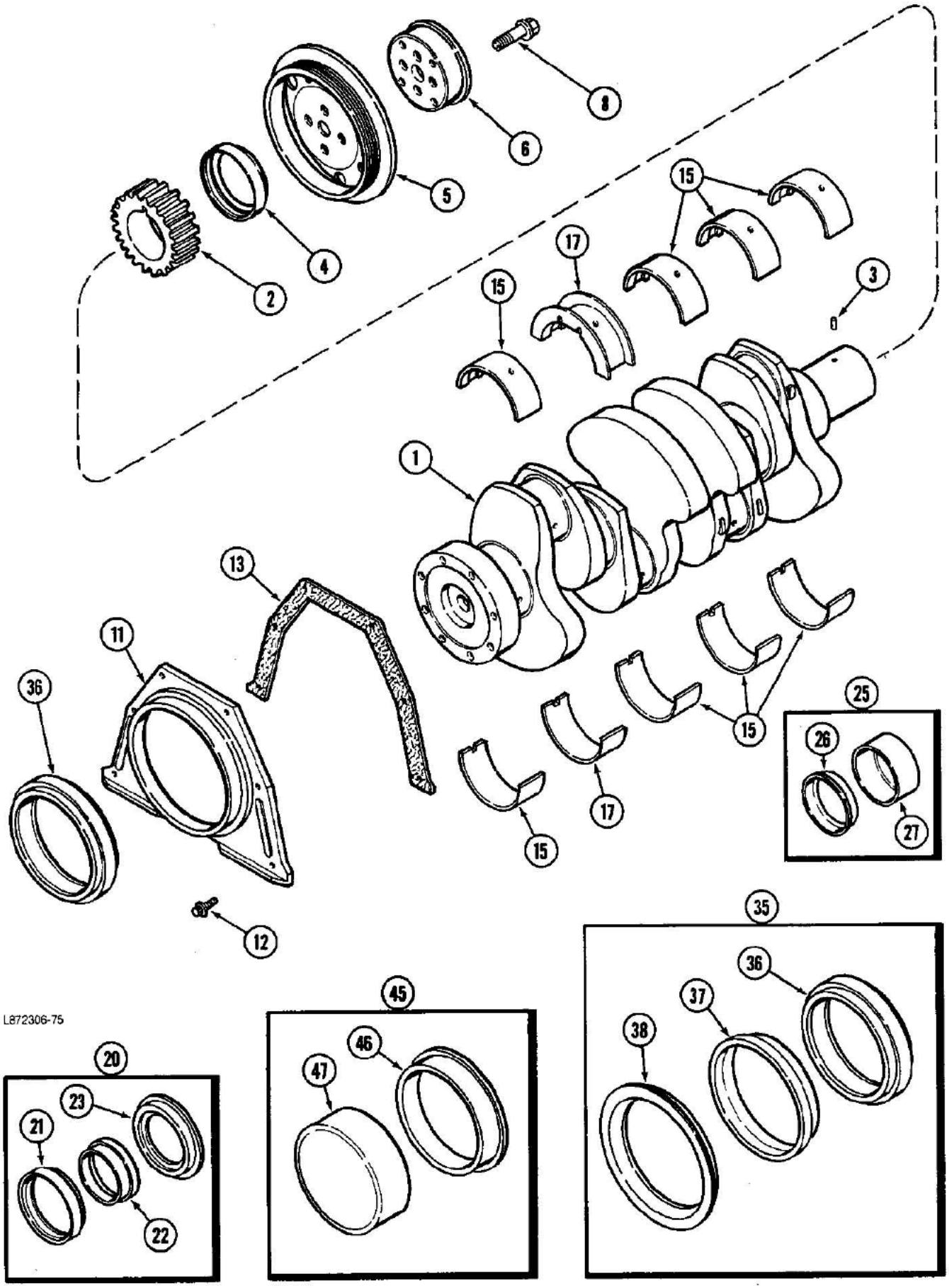
8
6
5
4
2
15
17
15
3
1
13
11
36
15
25
26
27
17
15
12
35
36
37
38
45
46
47
20
23
21
22
L872306-75

580K LOADER BACKHOE (NORTH AMERICA) - Engine

02-060 CRANKSHAFT, 4-390 ENGINE, 4T-390 ENGINE

Ref	Part Number	Qty	Description
	JR916190	1	CRANKSHAFT ASSEMBLY remanufactured, North America only
	JC908031	1	RETURN NUMBER use this part number to return crankshaft for credit
1	J916190	1	CRANKSHAFT ASSEMBLY engine, new, Replaces: P/N J908031, Includes: Ref. 2 and 3
2	J901258	1	GEAR crankshaft
3	J904483	1	PIN dowel
4	NSS	1	SEAL oil, crankshaft front, order P/N J904353 Ref. 20
5	J914494	1	PULLEY crankshaft dampener, Replaces: P/N J903858
6	J905820	1	FLANGE adapter, pulley
8	J903857	4	BOLT hex flange head, 12 mm-1.75 x 36 mm
11	J913447	1	RETAINER rear seal, Replaces: P/N J906526
12	J913638	6	BOLT hex flange head, 6 mm-1.00 x 15 mm
13	J914386	1	GASKET seal retainer, Replaces: P/N J901019
15	A77405	4	KIT bearing, main, set, upper and lower, standard
15	A77472	4	KIT bearing, main, set, upper and lower, 0.25 mm undersize
15	A77474	4	KIT bearing, main, set, upper and lower, 0.5 mm undersize
15	A77476	4	KIT bearing, main, set, upper and lower, 0.75 mm undersize
15	A77478	4	KIT bearing, main, set, upper and lower, 1.0 mm undersize
17	A77406	1	KIT bearing, thrust, main, set, upper and lower, standard
17	A77473	1	KIT bearing, thrust, main, set, upper and lower, 0.25 mm undersize
17	A77475	1	KIT bearing, thrust, main, set, upper and lower 0.5 mm undersize
17	A77477	1	KIT bearing, thrust, main, set, upper and lower, 0.75 mm undersize
17	A77479	1	KIT bearing, thrust, main, set, upper and lower, 1.0 mm undersize
20	J904353	1	KIT oil seal, crankshaft front, Includes: Ref. 21 thru 23
21	NSS	1	SEAL oil, front
22	NSS	1	TOOL installation
23	NSS	1	TOOL installation
25	J906080	1	KIT wear sleeve, crankshaft front, Includes: Ref. 26 and 27
26	NSS	1	SLEEVE wear
27	NSS	1	TOOL installation
35	J909410	1	KIT oil seal, crankshaft rear, Includes: Ref. 36 thru 38
36	NSS	1	SEAL oil, rear
37	NSS	1	TOOL installation
38	NSS	1	TOOL installation
45	J906081	1	KIT wear sleeve, crankshaft rear, Includes: Ref. 46 and 47
46	NSS	1	SLEEVE wear
47	NSS	1	TOOL installation

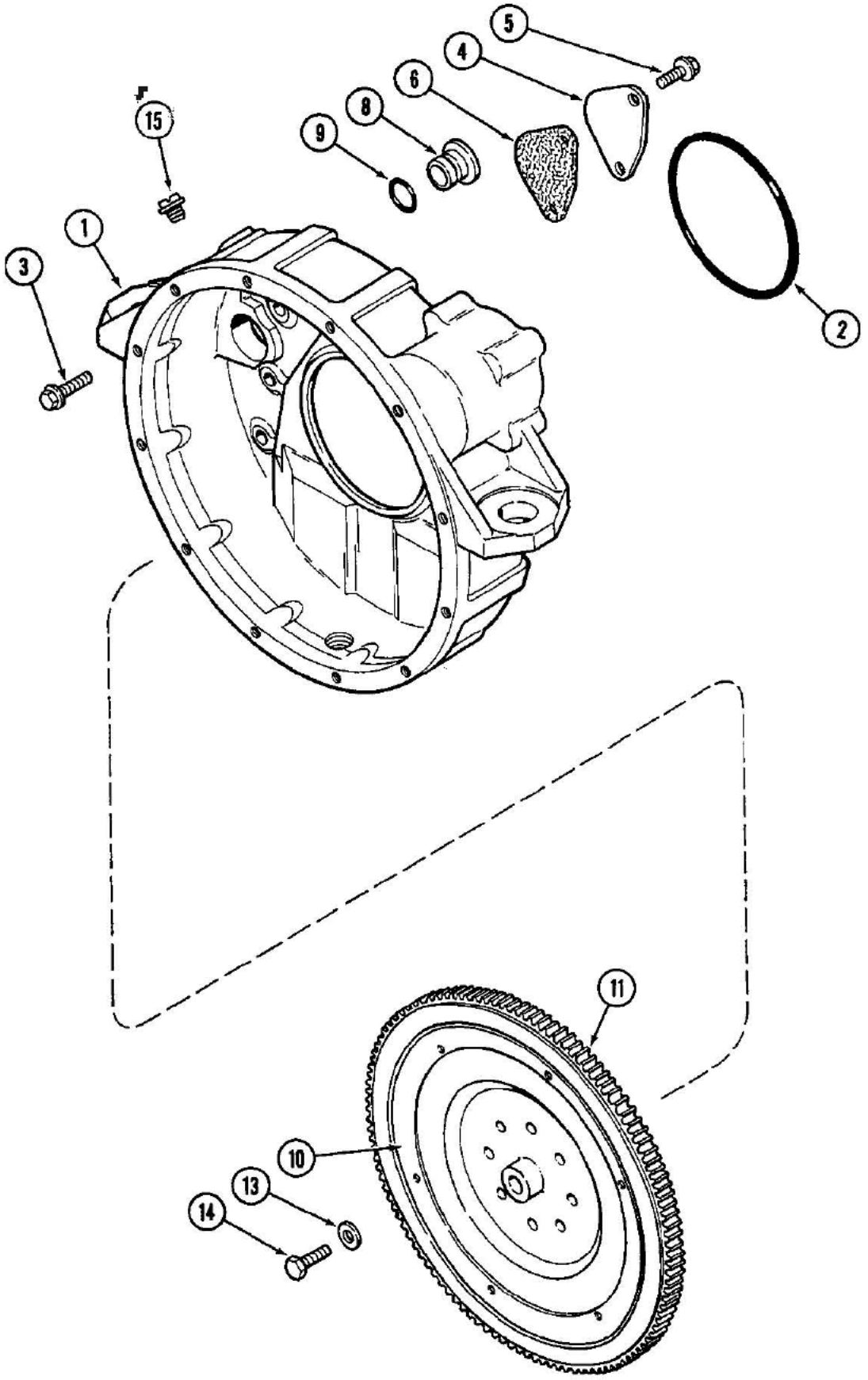

892313-70
892435-70

580K LOADER BACKHOE (NORTH AMERICA) - Engine

02-062 FLYWHEEL AND HOUSING, 4-390 ENGINE, 4T-390 ENGINE

Ref	Part Number	Qty	Description
1	J903287	1	HOUSING flywheel, Hole showing in drawing at bottom of this flywheel housing accepts a 3/4" plug P/N 221-845
2	J912473	1	O-RING housing to block, Replaces: P/N A157927
3	J910540	8	BOLT hex flange, 12 mm-1.75 x 40 mm, Replaces: P/N J901408
4	J908095	1	PLATE cover
5	J902735	2	BOLT hex, flange, 12 mm-1.75 x 40 mm, Replaces: P/N J901408
6	J908096	1	GASKET cover plate
8	J910248	1	PLUG housing, Replaces: P/N J908001
9	253070R1	1	O-RING plug, flywheel housing, Replaces: P/N J904469
10	J910684	1	FLYWHEEL ASSEMBLY crankshaft, Includes: Ref. 11
11	J901774	1	GEAR flywheel
13	J900269	8	WASHER flat, flywheel bolt
14	J901395	8	BOLT hex head, 12 mm-1.25 x 32 mm
15	353-225	1	PLUG hex head, 3/4" NF

2-64

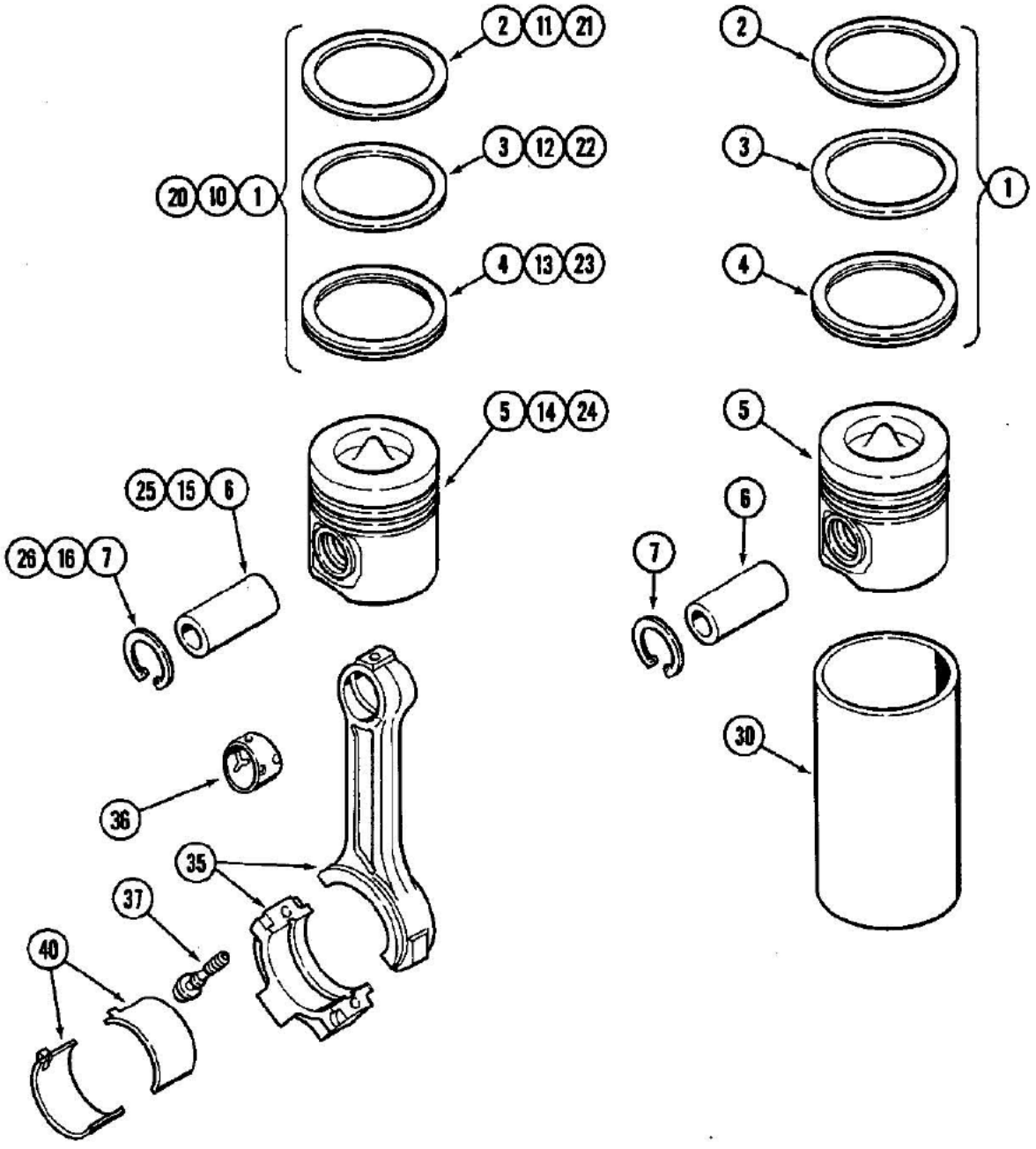

L872299-80

02-064 PISTONS, 4-390 ENGINE

Ref	Part Number	Qty	Description
	A77410	4	KIT piston, engine, standard, Includes: Ref. 1 thru 5, P/N A77410, A77411 and A77412 are short pin piston kits, stamped 6223, 6209, and 6208 on piston. P/N A77818, A77819 and A77820 are long pin piston kits, stamped 1880, 1882, 1881 on piston. Do not mix.
1	A77401	1	KIT ring, piston, standard, Includes: Ref. 2 thru 4
2	NSS	1	RING compression, top, pistons
3	NSS	1	RING compression, middle, pistons
4	NSS	1	RING oil, bottom, pistons
5	NSS	1	PISTON engine, standard, stamped 6223
6	J901793	1	PIN piston
7	J901706	2	RING retainer, pin, pistons
	A77411	4	KIT piston, engine, 0.5 mm oversize, Includes: Ref. 10 thru 13, P/N A77410, A77411 and A77412 are short pin piston kits, stamped 6223, 6209, and 6208 on piston. P/N A77818, A77819 and A77820 are long pin piston kits, stamped 1880, 1882, 1881 on piston. Do not mix.
10	A77463	1	KIT ring, engine, 0.5 mm oversize, pistons
11	NSS	1	RING compression, top, pistons
12	NSS	1	RING compression, middle, pistons
13	NSS	1	RING oil, bottom, pistons
14	NSS	1	PISTON engine, 0.5 mm oversize, stamped 6209
15	J901793	1	PIN piston
16	J901706	2	RING retainer, pin, pistons
	A77412	4	KIT piston, engine, 1.0 mm oversize, Includes: Ref. 20 thru 26, P/N A77410, A77411 and A77412 are short pin piston kits, stamped 6223, 6209, and 6208 on piston. P/N A77818, A77819 and A77820 are long pin piston kits, stamped 1880, 1882, 1881 on piston. Do not mix.
20	A77464	1	KIT ring, engine, 1.0 mm oversize, Includes: Ref. 21 thru 23, pistons
21	NSS	1	RING compression, top, pistons
22	NSS	1	RING compression, middle, pistons
23	NSS	1	RING oil, bottom, pistons
24	NSS	1	PISTON engine, 1.0 mm oversize, stamped 6208
25	J901793	1	PIN piston
26	J901706	2	RING retainer, pin, pistons
30	J904166	UAR	LINER piston, used only in engine block repair, when liner is installed, use only P/N A77410 piston kit
	JR901569	UAR	ROD ASSEMBLY connecting, remanufactured, North America only
	JC901569	UAR	RETURN NUMBER use this part number to return connecting rod for credit
35	J901569	4	ROD ASSEMBLY connecting, new, Includes: Ref. 36 and 37
36	NSS	1	BUSHING rod to piston pin, order J901569, connecting rods
37	J900919	2	BOLT hex special, MJ11-1.25 x 59 mm, connectiong rods
40	A77465	4	KIT bearing, connecting rod, set, upper and lower, standard
40	A77467	4	KIT bearing, connecting rod, set, upper and lower, 0.25 mm undersize
40	A77467	4	KIT bearing, connecting rod, set, upper and lower, 0.5 mm undersize
40	A77468	4	KIT bearing, connecting rod, set, upper and lower, 0.76 mm undersize
40	A77469	4	KIT bearing, connecting rod, set, upper and lower, 1.0 mm undersize

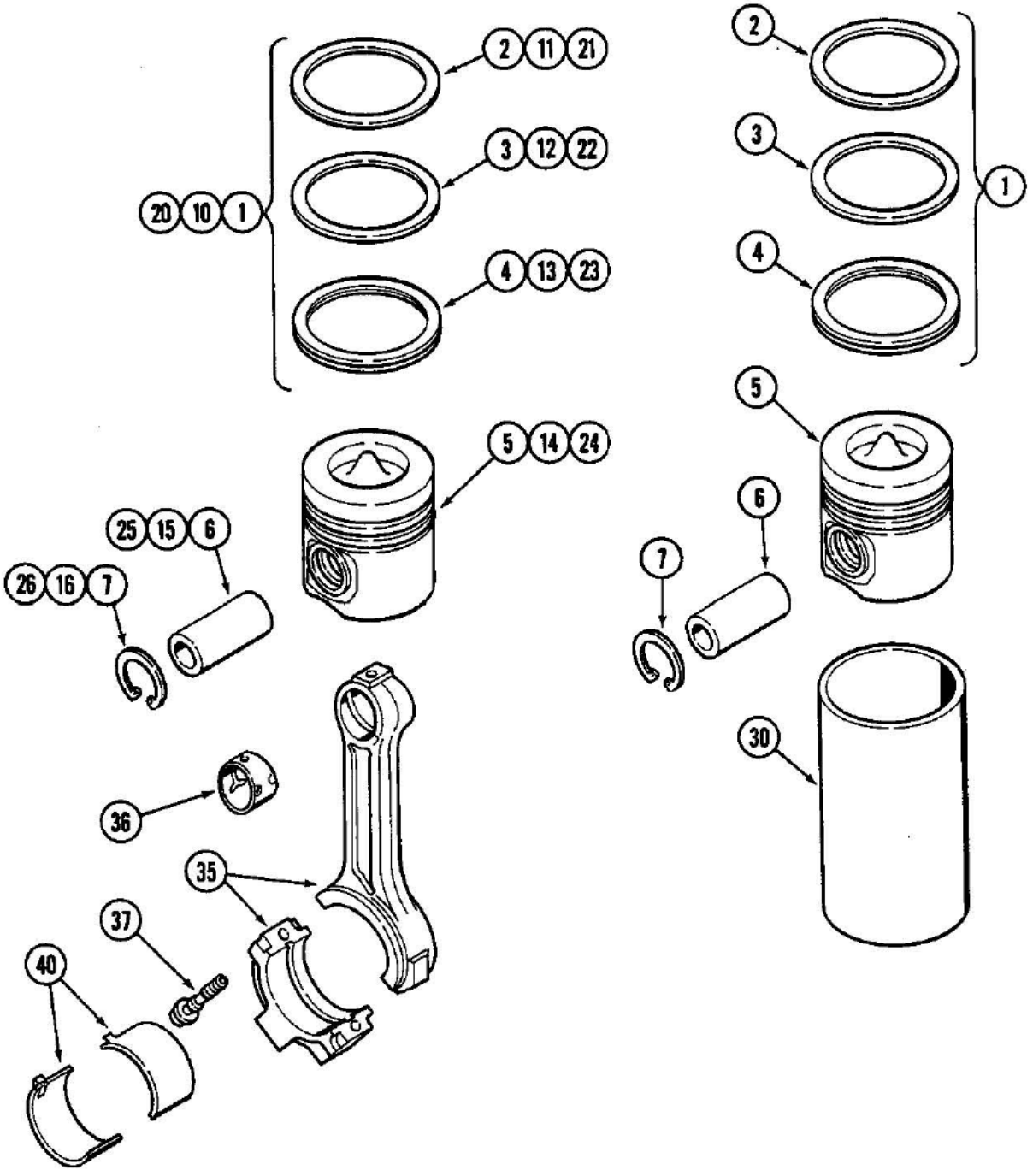
2
11
21
3
12
22
20
10
1
4
13
23
5
14
24
25
15
6
26
16
7
36
35
37
40
2
3
1
4
5
6
7
30

580K LOADER BACKHOE (NORTH AMERICA) - Engine

02-066 PISTONS, 4T-390 ENGINE

Ref	Part Number	Qty	Description
	A77419	4	KIT piston, engine, standard, Includes: Ref. 1 thru 7
1	A77500	1	KIT ring, piston, standard, Includes: Ref. 2 thru 4
2	NSS	1	RING compression, top, pistons
3	NSS	1	RING compression, middle, pistons
4	NSS	1	RING oil, bottom, pistons
5	NSS	1	PISTON engine, standard, stamped 7163
6	J901793	1	PIN piston
7	J901706	2	RING retainer, pin, pistons
	A77638	4	KIT piston, engine, 0.5 mm oversize, Includes: Ref. 10 thru 16
10	A77501	1	KIT ring, engine, 0.5 mm oversize, Includes: Ref. 11 thru 13, pistons
11	A77501	1	RING compression, top, pistons
12	NSS	1	RING compression, middle, pistons
13	NSS	1	RING oil, bottom, pistons
14	NSS	1	PISTON engine, 0.5 mm oversize, stamped 8815
15	J901793	1	PIN piston
16	J901706	2	RING retainer, pin, pistons
	A77637	4	KIT piston, engine, 1.0 mm oversize, Includes: Ref. 20 thru 26
20	A77502	1	KIT ring, engine, 1.0 mm oversize, Includes: Ref. 21 thru 23, pistons
21	NSS	1	RING compression, top, pistons
22	NSS	1	RING compression, middle, pistons
23	NSS	1	RING oil, bottom, pistons
24	NSS	1	PISTON engine, 1.0 mm oversize, stamped 8816
25	J901793	1	PIN piston
26	J901706	2	RING retainer, pin, pistons
30	J904166	UAR	LINER piston, used only in engine block repair, when liner is installed, use only P/N A77419 piston kit
	JR901569	UAR	ROD ASSEMBLY connecting, remanufactured, North America only
	JC901569	UAR	RETURN NUMBER use this part number to return connecting rod for credit
35	J901569	4	ROD ASSEMBLY connecting, new, Includes: Ref.36 and 37
36	NSS	1	BUSHING connecting rod to piston pin, order P/N J901569
37	J900919	2	BOLT hex special, MJ11-1.25 x 59 mm, connecting rods
40	A77465	4	KIT bearing, connecting rod, set, upper and lower, standard
40	A77466	4	KIT bearing, connecting rod, set, upper and lower, 0.25 mm undersize
40	A77467	4	KIT bearing, connecting rod, set, upper and lower, 0.5 mm undersize
40	A77468	4	KIT bearing, connecting rod, set, upper and lower, 0.76 mm undersize
40	A77469	4	KIT bearing, connecting rod, set, upper and lower, 1.0 mm undersize

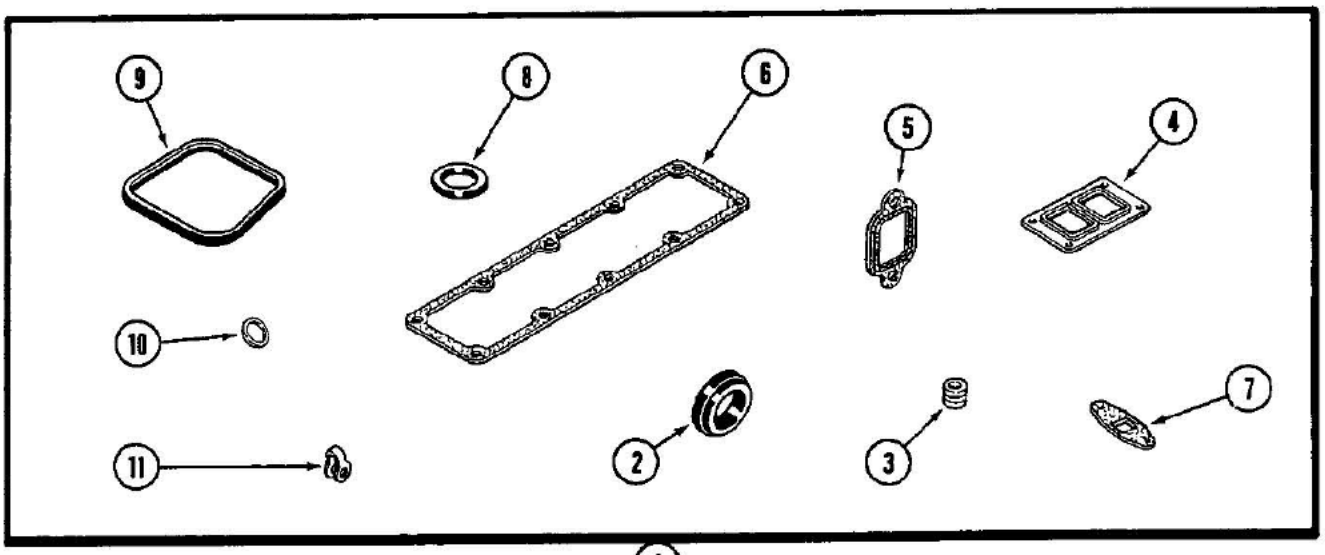
9
8
6
5
4
10
2
3
7
11
1

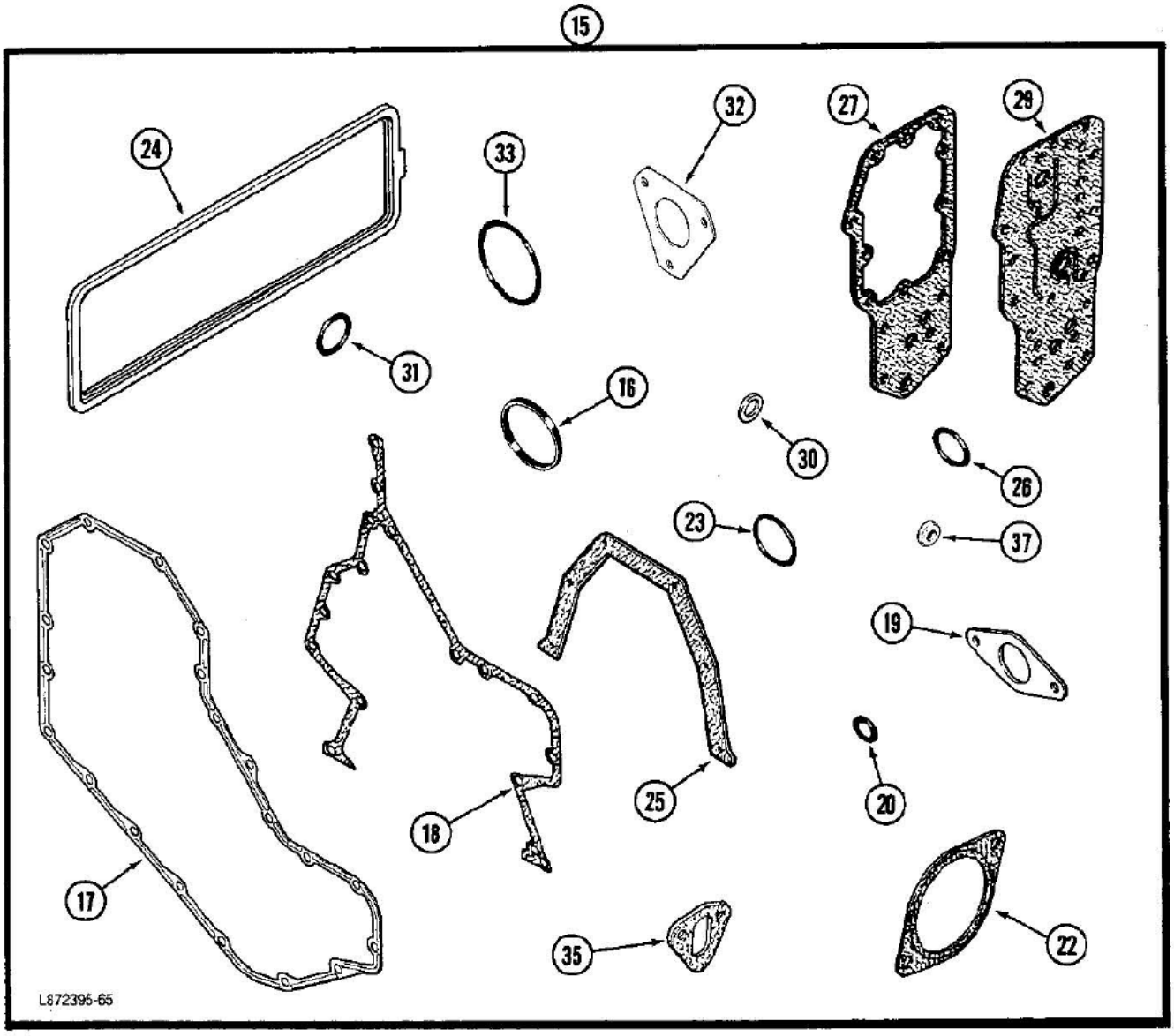
15
24
33
32
27
29
31
16
30
26
23
37
19
18
25
20
17
35
22
L872395-65

02-068 ENGINE GASKET KITS, 4-390 ENGINE, 4T-390 ENGINE, VALVE GRIND AND CYLINDER BLOCK

Ref	Part Number	Qty	Description
1	A77481	1	KIT gasket, valve grind, engine, Includes: Ref. 2 thru 11, When just the valve grind gasket kit is used, also order the required cylinder head gasket, see Figure 02-046.
2	J903301	1	GASKET thermostat
3	J901097	8	SEAL valve
4	J901356	1	GASKET turbocharger to manifold
5	J905443	4	GASKET exhaust manifold
6	J914028	1	GASKET intake manifold, Replaces: P/N J901999
7	J914385	1	GASKET oil drain tube, Replaces: P/N J901805
8	J902363	1	SEAL oil fill cap
9	J902666	4	SEAL rocker cover
10	J900808	4	SEAL injector
11	J903380	4	SEAL connector
15	A77640	1	KIT gasket, engine cylinder block, Replaces: P/N A77480, Includes: Ref. 16 thru 37, For complete engine overhaul, order (1) cylinder block kit, (1) valve grind kit, (1) oil pan kit shown in Figure 02-044, front and rear crankshaft seal kit shown in Figure 02-060, and required cylinder head gasket shown in Figure 02-046.
16	J903475	1	SEAL cover
17	J914385	1	GASKET cover to housing, Replaces: P/N J910500
18	J914384	1	GASKET housing to cylinder block, Replaces: P/N J907836
19	J905595	1	GASKET pin housing
20	J913994	1	O-RING sealing, Replaces: P/N J903927
22	J913192	1	GASKET cover plate, Replaces: P/N A77441
23	22290R1	1	O-RING sealing
24	J904056	1	GASKET tappet cover
25	J914386	1	GASKET seal retainer, Replaces: P/N J901019
26	J906697	1	O-RING sealing, 50 mm ID
27	J914387	1	GASKET cooler core, Replaces: P/N J904427
29	J912532	1	GASKET filter head, Replaces: P/N J912638
30	J902425	1	WASHER seal, plug
31	J906696	1	O-RING sealing
32	J914389	1	GASKET fuel pump, Replaces: P/N J905685
33	A157927	1	O-RING flywheel housing
35	J914304	1	GASKET fuel lift pump, Replaces: P/N J904044
37	J900267	4	SEAL ASSEMBLY cover bolt

PICTORIAL SECTION INDEX



FUEL 3

B890757

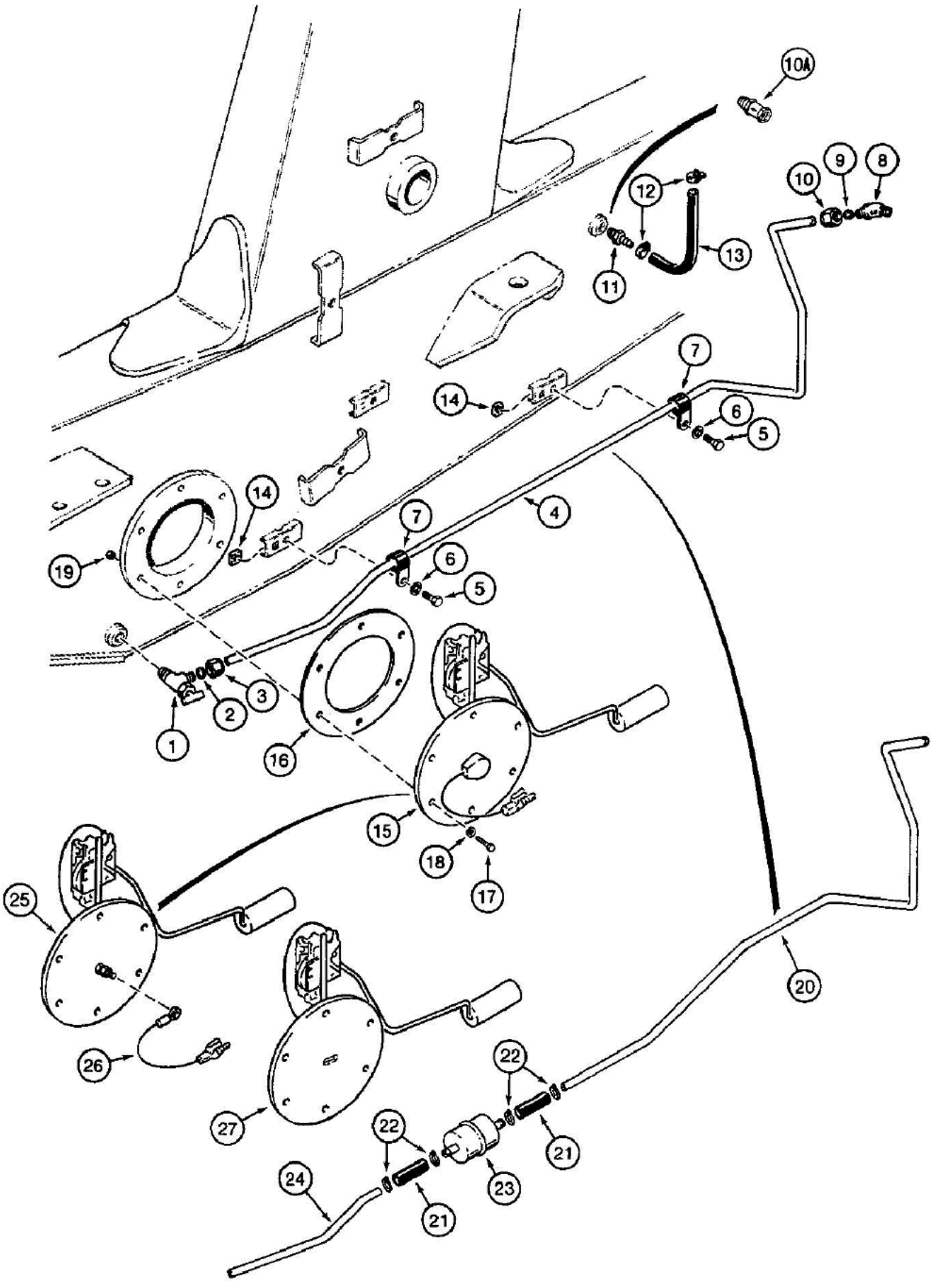

861831B-45

03-072 FUEL RESERVOIR LINES AND FUEL LEVEL SENDER

Ref	Part Number	Qty	Description
	D74027	1	VALVE ASSEMBLY shutoff, fuel tank outlet, Includes: Ref. 1 thru 3
1	NSS	1	BODY shutoff valve
2	222-654	1	SLEEVE compression fitting
3	222-664	1	NUTcompression fitting
4	D137295	1	TUBE engine supply, 3/8" OD, no longer used, for service order P/N D139623 tube, (4) P/N 214-335 clamps, (2) P/N D139224 hose, P/N D139243 tube, and P/N D139225 filter, see Ref. 20 - 24
5	113-205	2	BOLT, Hex, 3/8"-16 x 5/8", G5, Full Thd
6	192-21	2	WASHER, LOCK, 3/8"
7	49845	2	CLAMP engine supply tube
	222-95	1	ELBOW ASSEMBLY, 45 degree, compression fitting, to engine fuel pump, Includes: Ref. 8 thru 10
8	NSS	1	BODY elbow
9	222-104	1	SLEEVE compression fitting, for 3/8" OD tube
10	222-114	1	NUT compression fitting, for 3/8" OD tube
10A	A177556	1	VALVE check, anti-drain
11	217-119	1	FITTING barb, straight
12	214-335	2	CLAMP engine injector return hose
13	D141617	1	HOSE, 1/4" (6 mm) ID x 9-1/2" (241 mm) long, replaces 12-1/2" (318 mm) long hose used on some models, cut from P/N A21561 hose, engine injector return line, see below
14	25-226	1-2	NUT square, 3/8"-16 NC
15	D137316	1	SENDER fuel level, with wire lead, sender wire attaches to engine main harness and mounts on left-hand inner chassis channel, no longer used, for service order P/N D141357 sender and P/N D141358 wire, Ref. 25 and 26
16	D129228	1	GASKET fuel level sender
17	113-3	6	BOLT, Hex, 1/4"-20 x 3/4", G5, Full Thd
18	192-19	6	WASHER, LOCK, 1/4"
19	7770	6	NUT, 1/4"-20, G5
20	D139623	1	TUBE engine supply
21	D139224	2	HOSE fuel line
22	214-335	4	CLAMP fuel line hose
23	D139225	1	FILTER fuel, in-line
24	D139243	1	TUBE fuel line
25	D141357	1	SENDER fuel level, without wire lead, no longer available, order P/N D141953 sender, Ref. 27
26	D141358	1	WIRE fuel level sender, used with P/N D141357 sender on models with engine fuse block on harness, if used
27	D141953	1	SENDER fuel level, without lead wire
	A21561	UAR	HOSE bulk, 1/4" (6 mm) ID x 25 ft (7.62 cm) long, see Ref. 13

3-74

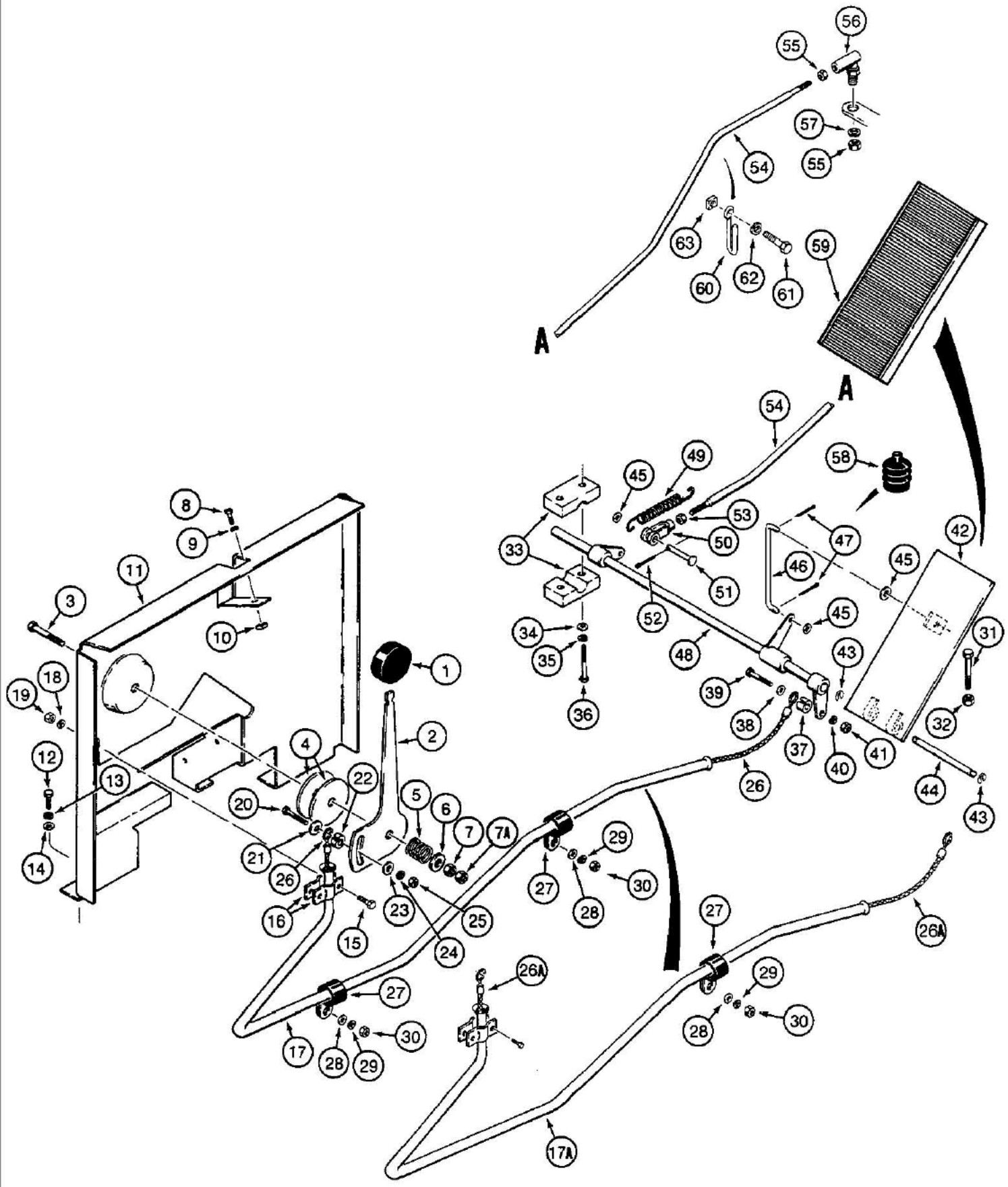

861719B-45

580K LOADER BACKHOE (NORTH AMERICA) - Fuel System

03-074 THROTTLE CONTROL LINKAGE

Ref	Part Number	Qty	Description
1	A177435	1	KNOB hand throttle
2	D135409	1	LEVER hand throttle
3	413-844	1	BOLT hex head, 1/2"-13 NC x 2-3/4", plated
4	D139323	2	DISC friction, throttle bracket
5	A34113	1	SPRING throttle control lever
6	195-533	1	WASHER flat, 1/2", plated
7	129-105	1	NUT, 1/2"-13, G5
7A	131-70	1	NUT hex, self-locking, 1/2"-13 NC, plated
8	113-102	1	BOLT, Hex, 5/16"-18 x 3/4", G5, Full Thd
9	192-20	1	WASHER, LOCK, 5/16"
10	25-225	1	NUT square, 5/16"-18 NC
11	D138131	1	BRACKET throttle control
12	113-104	5	BOLT, Hex, 5/16"-18 x 1 1/4", G5
13	192-20	5	WASHER, LOCK, 5/16"
14	195-521	5	WASHER flat, 5/16", plated
15	113-4	2	BOLT, Hex, 1/4"-20 x 1", G5
16	D127819	2	CLAMP cable guide tube
17	D131694	1	TUBE cable guide, uses two P-clamps, Ref. 27, used with P/N D124958 cable, Ref. 26, if used
17A	D142057	1	TUBE cable guide, uses one P-clamp, Ref. 27, used with P/N D142938 cable, Ref. 26A, if used
18	192-19	2	WASHER, LOCK, 1/4"
19	7770	2	NUT, 1/4"-20, G5
20	113-104	1	BOLT, Hex, 5/16"-18 x 1 1/4", G5
21	195-103	1	WASHER flat, 5/16", plated
22	D124865	1	SPACER cable to throttle control lever
23	195-521	1	WASHER flat, 5/16", plated
24	192-20	1	WASHER, LOCK, 5/16"
25	9635082	1	NUT, 5/16"-18, G5
26	D124958	1	CABLE, 60-5/8" (1540 mm) long, hand throttle, used with P/N D131694 tube, Ref. 17, if used
26A	D142938	1	CABLE, 62-7/32" (1580 mm) long, hand throttle, used with P/N D142057 tube, Ref. 17A, if used
27	49771	1-2	CLAMP, P-type, cable guide tube to floor plate
28	195-2042	1-2	WASHER flat, 15/32" ID x 1-1/2" OD x 1/8" thick
29	192-20	1-2	WASHER, LOCK, 5/16"
30	9635082	1-2	NUT, 5/16"-18, G5
31	413-656	1	BOLT hex head, 3/8"-16 NC x 3-1/2", plated, floor plate
32	129-103	1	NUT, 3/8"-16, G5
33	D124857	4	BLOCK cross shaft
34	195-521	4	WASHER flat, 5/16", plated
35	192-20	4	WASHER, LOCK, 5/16"
36	113-121	4	BOLT, Hex, 5/16"-18 x 2", G5
37	D124865	1	SPACER cable to cross shaft
38	195-103	1	WASHER flat, 5/16", plated

03-074 THROTTLE CONTROL LINKAGE

Ref	Part Number	Qty	Description
39	113-104	1	BOLT, Hex, 5/16"-18 x 1 1/4", G5
40	192-20	1	WASHER, LOCK, 5/16"
41	9635082	1	NUT, 5/16"-18, G5
42	D124863	1	PEDAL accelerator
43	D143414	2	RING retaining
44	D143413	1	PIN pedal base
45	195-521	3	WASHER flat, 5/16", plated
46	D143428	1	ROD bent, accelerator pedal
47	132-320	2	PIN, SPLIT (COTTER), 3/32" x 3/4"
48	D124859	1	SHAFT throttle
49	D93823	1	SPRING throttle return
50	213-3	1	CLEVIS adjustable, 5/16"-24 NF
51	141-65	1	PIN clevis, 5/16", plated, special length
52	132-320	1	PIN, SPLIT (COTTER), 3/32" x 3/4"
53	25-115	1	NUT hex, 5/16"-24 NF
54	D140041	1	ROD throttle, to injection pump
55	25-114	2	NUT hex, 1/4"-28 NF
56	A10329	1	JOINT ball, at injection pump
57	192-19	1	WASHER, LOCK, 1/4"
58	D85869	1	BOOT accelerator pedal rod, at floor plate
59	D137499	1	PAD cover, accelerator pedal, optional deluxe interior
60	D141387	1	SUPPORT throttle rod, if used
61	113-206	1	BOLT, Hex, 3/8"-16 x 3/4", G5, Full Thd, If used
62	192-21	1	WASHER, LOCK, 3/8", If used
63	25-226	1	NUT square, 3/8" NC, if used

3-78

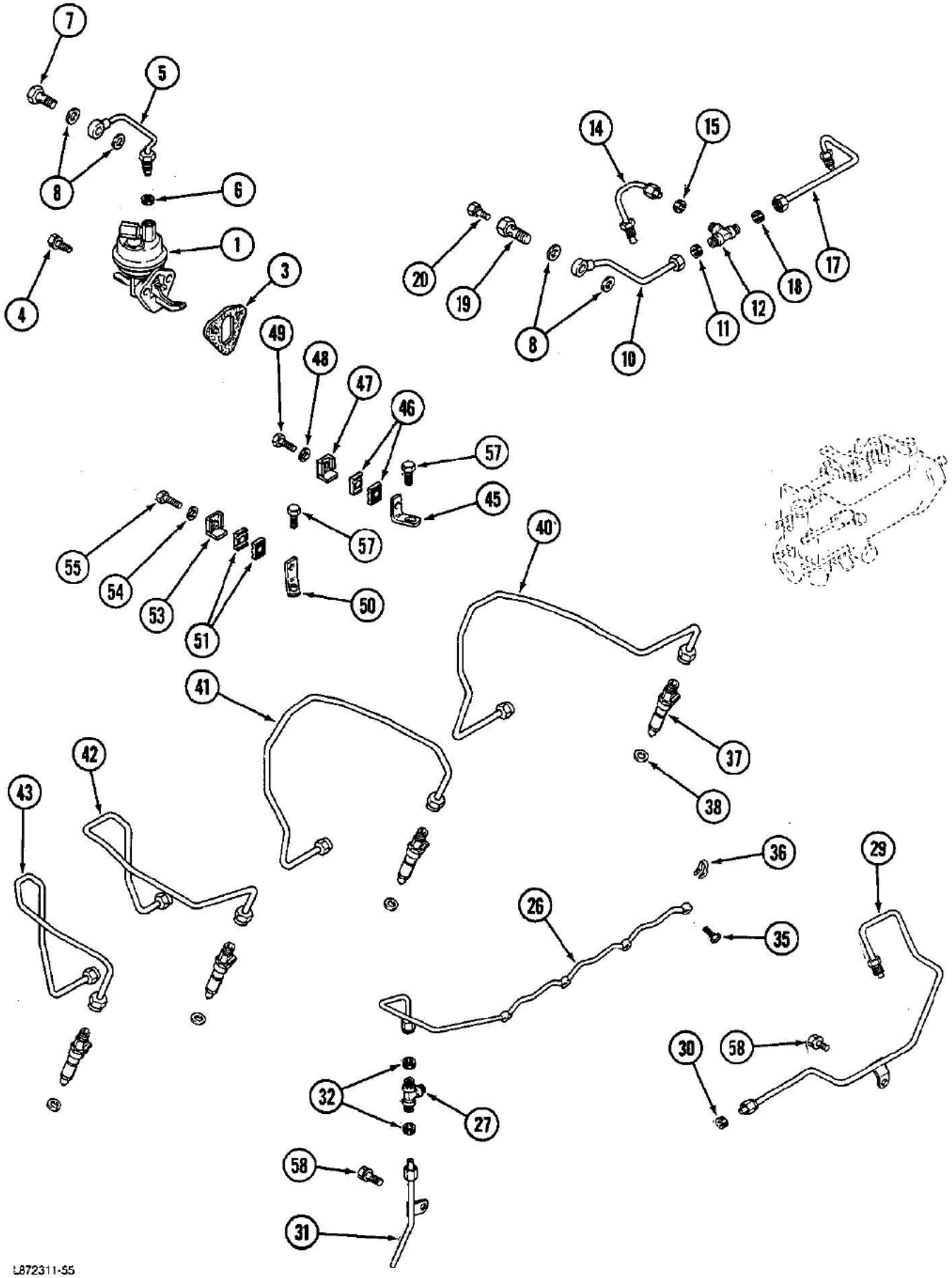
7
5
8
6
1
4
3
20
19
14
15
8
10
11
12
18
17
49
48
47
46
57
45
55
54
53
51
57
50
40
41
42
43
37
38
36
29
26
35
30
58
32
27
58
31
L872311-55

580K LOADER BACKHOE (NORTH AMERICA) - Fuel System

03-078 FUEL INJECTION SYSTEM, 4-390 ENGINE, 4T-390 ENGINE

Ref	Part Number	Qty	Description
1	J904374	1	PUMP ASSEMBLY lift, fuel
3	J914304	1	GASKET fuel lift pump, Replaces: P/N J904044
4	J900630	2	BOLT hex flange head, 8 mm-1.25 x 20 mm
5	J905649	1	TUBE ASSEMBLY fuel, lift pump to filter, Includes: Ref. 6
6	NSS	1	SEAL tube
7	J903035	1	BOLT banjo hex, 12 mm-1.5 x 24 mm
8	J903037	4	WASHER sealing, 12 mm-1.5 x 24 mm
10	J905364	1	TUBE ASSEMBLY fuel supply, filler to tee, Includes: Ref. 11
11	222-103	1	SLEEVE tube, 5/16"
12	J905353	1	TEE union, 9/16"-24 NF thread, Includes: P/N 222-663
	222-663	3	NUT hex, 1/2"-24 thread, discard before assembly
14	J905375	1	TUBE ASSEMBLY fuel supply, tee to rear of injection pump, Includes: Ref. 15
15	222-103	1	SLEEVE tube, 5/16"
17	J905363	1	TUBE ASSEMBLY fuel supply, tee to front of injection pump, Includes: Ref. 18
18	222-103	1	SLEEVE tube, 5/16"
	J905860	1	BOLT banjo hex, special, Includes: Ref. 19 and 20
19	NSS	1	BOLT connector, banjo hex, special, order P/N J905860
20	NSS	1	SCREW hex special, vent, order P/N J905860
26	J909695	1	MANIFOLD ASSEMBLY fuel return
27	222-121	1	TEE union, 3/16" tube, Includes: P/N 222-661
	222-661	3	NUT hex, 3/8"-24 thread, discard before assembly
29	J905703	1	TUBE ASSEMBLY fuel return, tee to pump, Includes: Ref. 30
30	222-103	1	SLEEVE tube, 5/16"
31	J905692	1	TUBE ASSEMBLY fuel return, tee to tank, Includes: Ref. 32
32	222-101	1	SLEEVE for 3/16" tube
35	J905307	4	BOLT banjo drain, special
36	J903380	4	SEAL connector
37	REF	4	INJECTOR ASSEMBLY fuel, see Figure 03-084
38	J900808	4	SEAL injector
40	J903522	1	TUBE ASSEMBLY fuel injector, No. 1 cylinder
41	J903523	1	TUBE ASSEMBLY fuel injector, No. 2 cylinder
42	J903524	1	TUBE ASSEMBLY fuel injector, No. 3 cylinder
43	J903525	1	TUBE ASSEMBLY fuel injector, No. 4 cylinder
	A77484	1	BRACKET ASSEMBLY injection supply tube, No. 1 and 2, Includes: Ref. 45 thru 49
45	NSS	1	BRACKET fuel tube
46	NSS	2	ISOLATOR fuel tube
47	NSS	1	PLATE clamp, fuel tube
48	NSS	1	WASHER lock, M5
49	NSS	1	BOLT hex head
	A77485	1	BRACKET ASSEMBLY injection supply tube No. 3 and 4, Includes: Ref. 50 thru 55
50	NSS	1	BRACKET fuel tube

03-078 FUEL INJECTION SYSTEM, 4-390 ENGINE, 4T-390 ENGINE

Ref	Part Number	Qty	Description
51	NSS	2	ISOLATOR fuel tube
53	NSS	1	PLATE clamp, fuel tube
54	NSS	1	WASHER lock, M5
55	NSS	1	BOLT hex head
57	J904341	2	BOLT hex, special
58	J900629	2	BOLT hex, 8 mm-1.25 x 16 mm

3-80

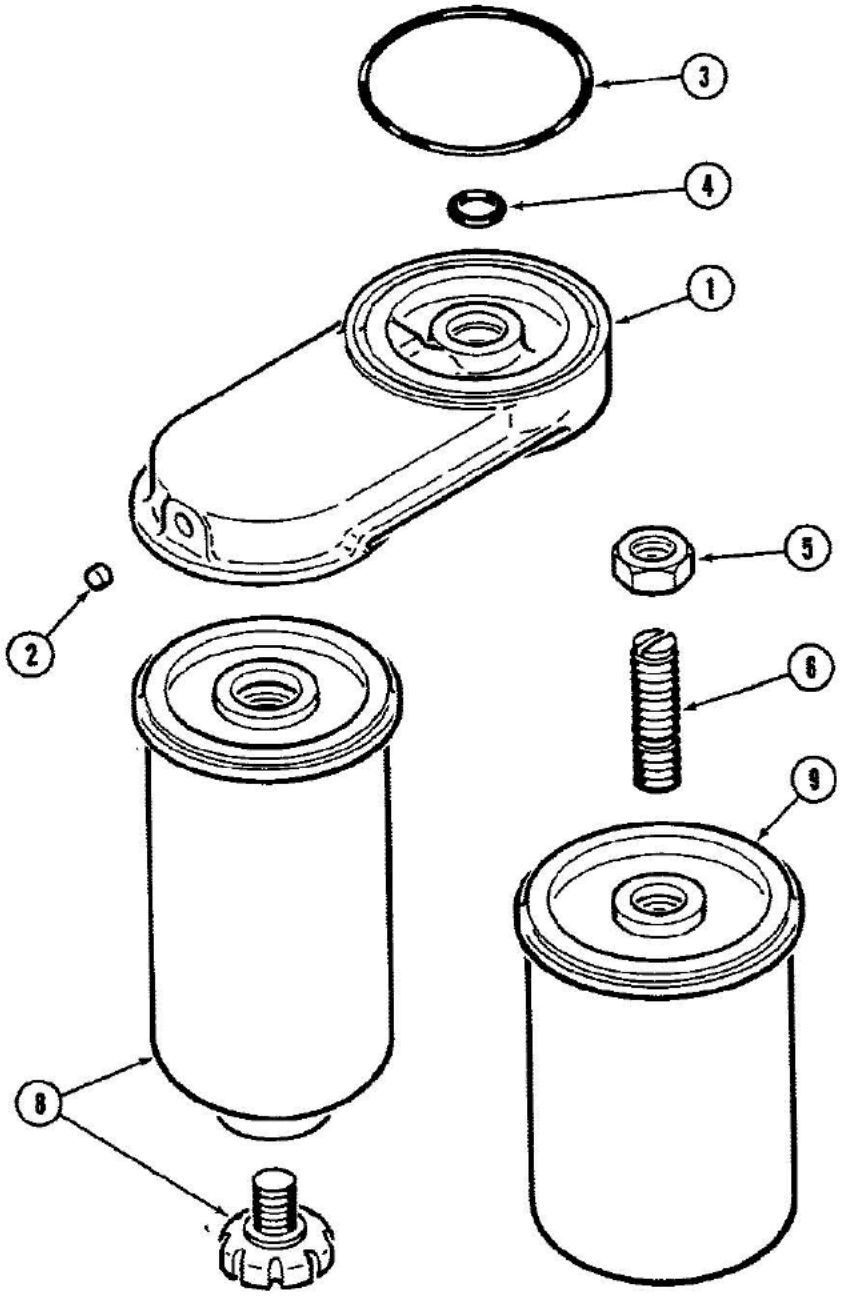

872321-90

580K LOADER BACKHOE (NORTH AMERICA) - Fuel System

03-080 FUEL FILTER, 4-390 ENGINE, 4T-390 ENGINE

Ref	Part Number	Qty	Description
1	J904362	1	HEAD ASSEMBLY fuel filter, Includes: Ref. 2
2	A77432	1	PLUG expansion, 0.26 mm OD
3	J906694	1	O-RING sealing, 17 mm ID
4	J906695	1	O-RING sealing, 14 mm ID
5	J903293	1	NUT hex, 16 mm-2.0
6	J903845	1	ADAPTER fuel
	A77470	1	KIT fuel filter, Includes: Ref. 8 and 9
8	NSS	1	FILTER fuel, primary
9	NSS	1	FILTER fuel, secondary

3-82

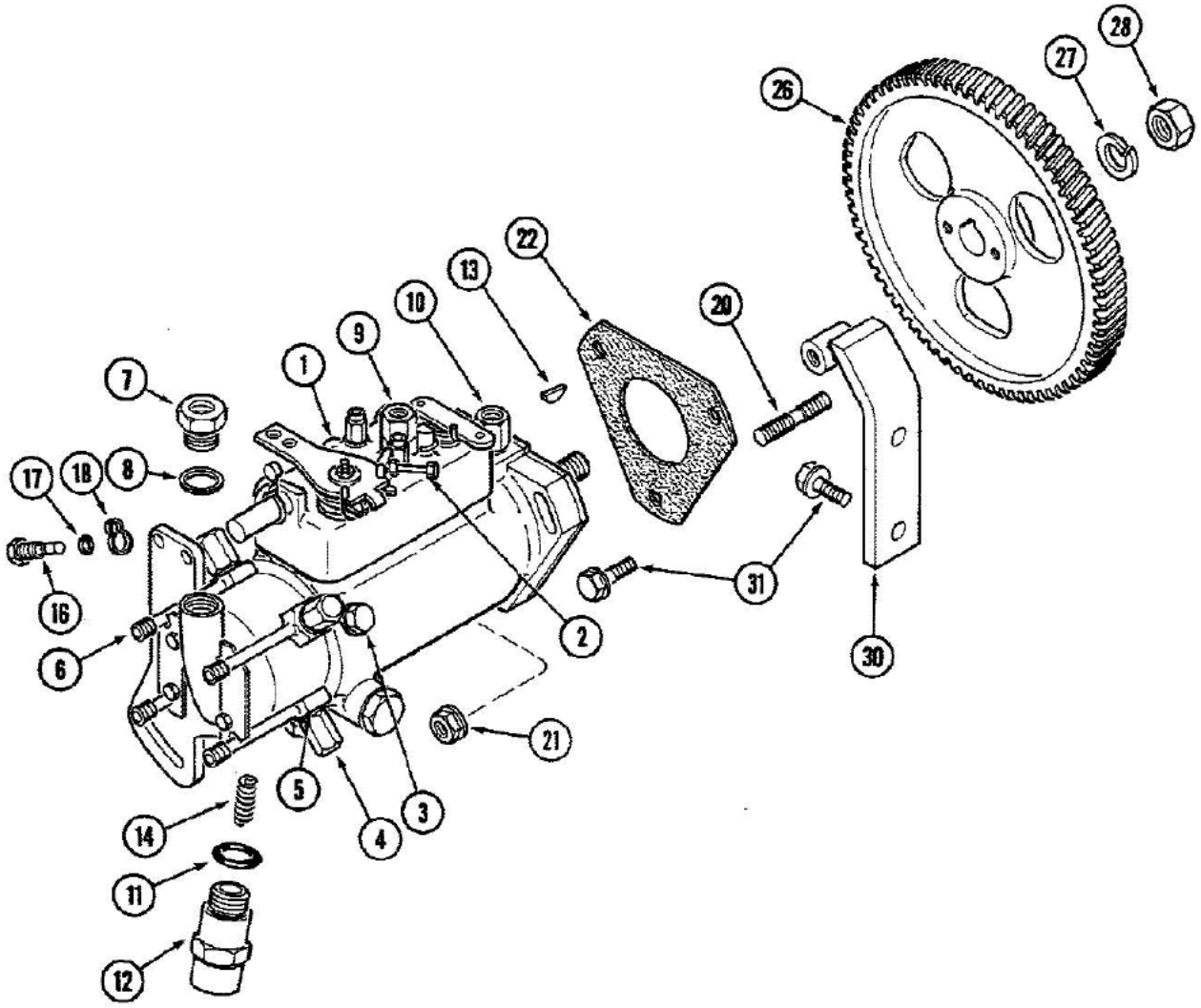

L872321-58

Loader backhoe equipped with security module see Figure 04-114.

03-082 FUEL INJECTION PUMP AND DRIVE, 4-390 ENGINE, 4T-390 ENGINE

Ref	Part Number	Qty	Description
	JR908645	1	PUMP ASSEMBLY fuel injection, remanufactured, North America only
	JC908645	1	RETURN NUMBER use this part number to return pump core for credit
1	J908645	1	PUMP ASSEMBLY fuel injection, new, 2200 RPM, Includes: Ref. 2 thru 18, BSN 44280065
1	J916402	1	PUMP ASSEMBLY fuel injection, new, 2300 RPM, Includes: Ref. 2 thru 18, ASN 44280065
2	J904637	1	SCREW adjusting, low idle
3	K963867	1	SCREW ASSEMBLY bleed, pump head
4	J904646	4	BOLT banjo
5	J904644	9	WASHER sealing
6	K962755	4	FITTING banjo
7	J904641	1	FITTING inlet
8	K962748	1	WASHER inlet fitting, copper
9	J904640	1	ORIFICE bleed
10	J904643	1	FITTING return
11	J904635	1	O-RING solenoid
12	J904630	1	SOLENOID ASSEMBLY shut down, 12 volt
13	J902332	1	KEY retainer, pump gear
14	J904777	1	SPRING plunger
16	J904778	1	BOLT hex, locking device
17	J904780	1	SEAL locking bolt
18	J904779	1	WASHER locking
20	J902501	3	STUD pump mounting, 8 mm-1.25 x 48 mm
21	J900589	3	NUT hex flange, 8 mm
22	J914389	1	GASKET pump mounting, Replaces: P/N J905685
26	J914912	1	GEAR pump drive, Replaces: P/N J911331
27	192-24	1	WASHER, LOCK, 9/16"
28	J903738	1	NUT hex, 14 mm
30	J916024	1	BRACE fuel pump, Replaces: P/N J905387
31	J900630	3	BOLT hex, 8 mm-1.25 x 20 mm

Loader backhoe equipped with security module see Figure 04-114.

3-84

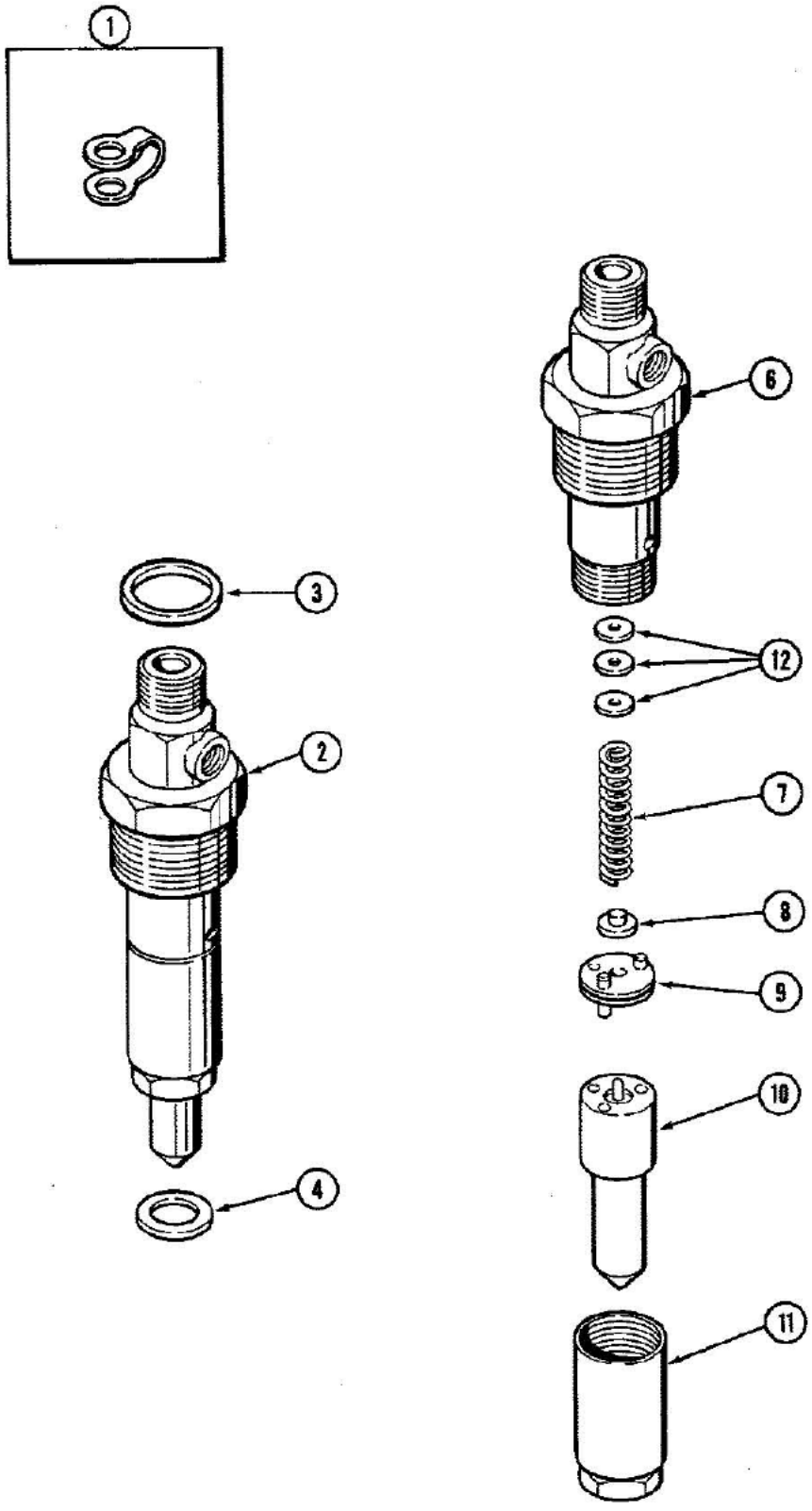

LB72306-80

03-084 FUEL INJECTION NOZZLE, 4-390 ENGINE, 4T-390 ENGINE

Ref	Part Number	Qty	Description
	JR914472	1	NOZZLE ASSEMBLY injection, remanufactured, North America only
	JC914472	1	RETURN NUMBER injector, use this number to return injector core for credit
	AR77553	4	KIT injection nozzle, remanufactured, North America only
	A77553	4	KIT injection nozzle, new, Includes: Ref. 1 thru 12
1	J903380	4	SEAL connector
2	J914472	4	NOZZLE ASSEMBLY fuel injection, new, order P/N A77553 kit, Includes: Ref. 3 thru 12
3	J903927	4	O-RING sealing
4	J900808	4	SEAL injector , Whenever a nozzle is removed from the cylinder head, P/N J900808 gasket must be replaced before nozzle is installed in cylinder head.
6	NSS	1	BODY ASSEMBLY injector, order P/N A77553 kit
7	J905152	1	SPRING nozzle pressure
8	J905154	1	SEAT nozzle pressure spring
9	J905154	1	STOP ASSEMBLY nozzle valve
10	NSS	1	TIP ASSEMBLY nozzle injector, order P/N A77553 kit
11	A48201	1	NUT cap, nozzle tip
	A48186	1	KIT shim, nozzle opening, pressure, Includes : Ref.12
12	1806233C1		UAR SHIM, 1.00mm Thk, Nozzle (5 in kit)
12	1806234C1		UAR SHIM, 1.04mm Thk, Nozzle (5 in kit)
12	1806235C1		UAR SHIM, 1.08mm Thk, Nozzle (5 in kit)
12	1806236C1		UAR SHIM, 1.10mm Thk, Nozzle (5 in kit)
12	1806237C1		UAR SHIM, 1.14mm Thk, Nozzle (5 in kit)
12	1806238C1		UAR SHIM, 1.18mm Thk, Nozzle (5 in kit)
12	1806239C1		UAR SHIM, 1.20mm Thk, Nozzle (5 in kit)
12	1806240C1		UAR SHIM, 1.24mm Thk, Nozzle (5 in kit)
12	1806241C1		UAR SHIM, 1.28mm Thk, Nozzle (5 in kit)
12	1806242C1		UAR SHIM, 1.30mm Thk, Nozzle (5 in kit)
12	1806243C1		UAR SHIM, 1.34mm Thk, Nozzle (5 in kit)
12	1806244C1		UAR SHIM, 1.38mm Thk, Nozzle (5 in kit)
12	1806245C1		UAR SHIM, 1.40mm Thk, Nozzle (5 in kit)
12	1806246C1		UAR SHIM, 1.44mm Thk, Nozzle (5 in kit)
12	1806247C1		UAR SHIM, 1.48mm Thk, Nozzle (5 in kit)
12	1806248C1		UAR SHIM, 1.50mm Thk, Nozzle (5 in kit)
12	1806249C1		UAR SHIM, 1.54mm Thk, Nozzle (5 in kit)
12	1806250C1		UAR SHIM, 1.58mm Thk, Nozzle (5 in kit)
12	1806251C1		UAR SHIM, 1.60mm Thk, Nozzle (5 in kit)
12	1806252C1		UAR SHIM, 1.64mm Thk, Nozzle (5 in kit)
12	1806253C1		UAR SHIM, 1.68mm Thk, Nozzle (5 in kit)
12	1806254C1		UAR SHIM, 1.70mm Thk, Nozzle (5 in kit)
12	1806255C1		UAR SHIM, 1.74mm Thk, Nozzle (5 in kit)
12	1806256C1		UAR SHIM, 1.78mm Thk, Nozzle (5 in kit)
12	1806257C1		UAR SHIM, 1.80mm Thk, Nozzle (5 in kit)

03-084 FUEL INJECTION NOZZLE, 4-390 ENGINE, 4T-390 ENGINE

Ref	Part Number	Qty	Description
12	1806258C1		UAR SHIM, 1.84mm Thk, Nozzle (5 in kit)
12	1806259C1		UAR SHIM, 1.88mm Thk, Nozzle (5 in kit)
12	1806260C1		UAR SHIM, 1.90mm Thk, Nozzle (5 in kit)
12	1806261C1		UAR SHIM, 1.94mm Thk, Nozzle (5 in kit)
12	1806262C1		UAR SHIM, 1.98mm Thk, Nozzle (5 in kit)

PICTORIAL SECTION INDEX



ELECTRICAL 4

B890757

Bur 8-3462 Issued February, 1989 Printed in U.S.A.

4-88

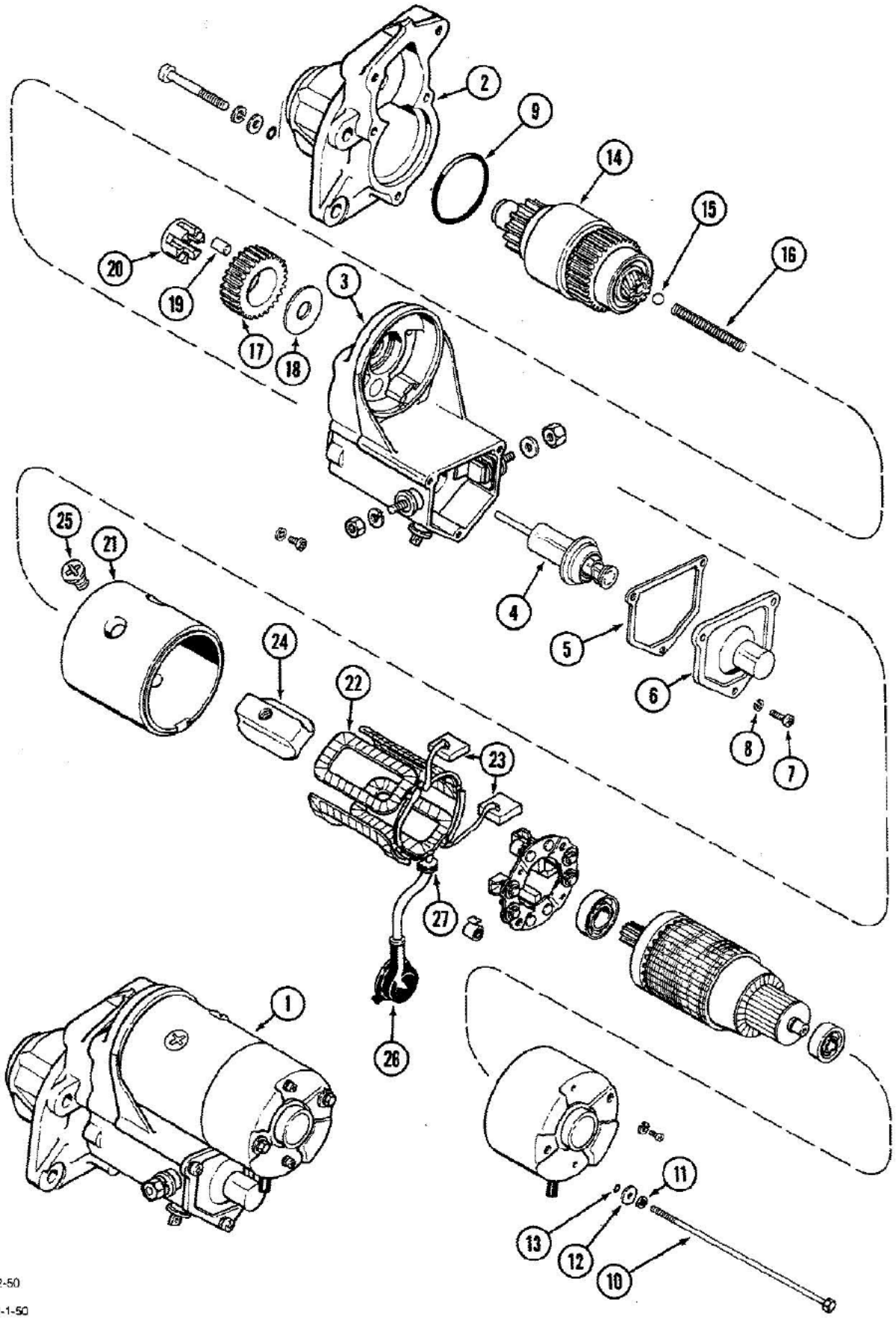

L87192-50

L87192-1-50

04-088 STARTER

Ref	Part Number	Qty	Description
1	AR170746	1	STARTER ASSEMBLY engine, remanufactured, North America only
1	AC170746	1	RETURN NUMBER use this number when returning starter for credit
1	A170746	1	STARTER ASSEMBLY new, Nippondenso No. 5-128000-395, Includes: Ref. 2 thru 27 in this figure and all the parts shown in Figure 04-090
2	A46948	1	HOUSING drive end
3	A46949	1	SWITCH ASSEMBLY magnetic, Includes: Ref. 4 thru 8
4	NSS	1	SOLENOID
5	NSS	1	GASKET solenoid cover
6	NSS	1	COVER solenoid
7	NSS	3	SCREW cover to switch
8	NSS	3	WASHER cover screw
9	NSS	1	O-RING switch to housing
	A47243	2	BOLT ASSEMBLY through, Includes: Ref. 10 thru 13
10	NSS	1	BOLT through
11	892-1106	1	WASHER lock, 1/4"
12	195-516	1	WASHER flat, 1/4" x 9/16" x 1/16"
13	A47127	1	O-RING bolt seal
14	A47231	1	CLUTCH ASSEMBLY drive
15	211-209	1	BALL thrust, steel, 3/8" diameter
16	A47232	1	SPRING clutch drive, 2-13/16", free length
17	A47233	1	PINION idler
18	A47234	1	WASHER thrust, idler pinion
19	A47235	6	ROLLER idler pinion bearing
20	A47236	1	RETAINER roller bearing
	A47240	1	HOUSING ASSEMBLY with coil and brushes, Includes: Ref. 21 thru 26
21	NSS	1	HOUSING starter
22	NSS	1	COIL field
23	NSS	2	BRUSHES starter
24	NSS	4	SHOE pole
25	NSS	4	SCREW pole shoes
26	NSS	1	BOOT magnetic switch terminal
27	A47241	1	PLATE lock

4-90

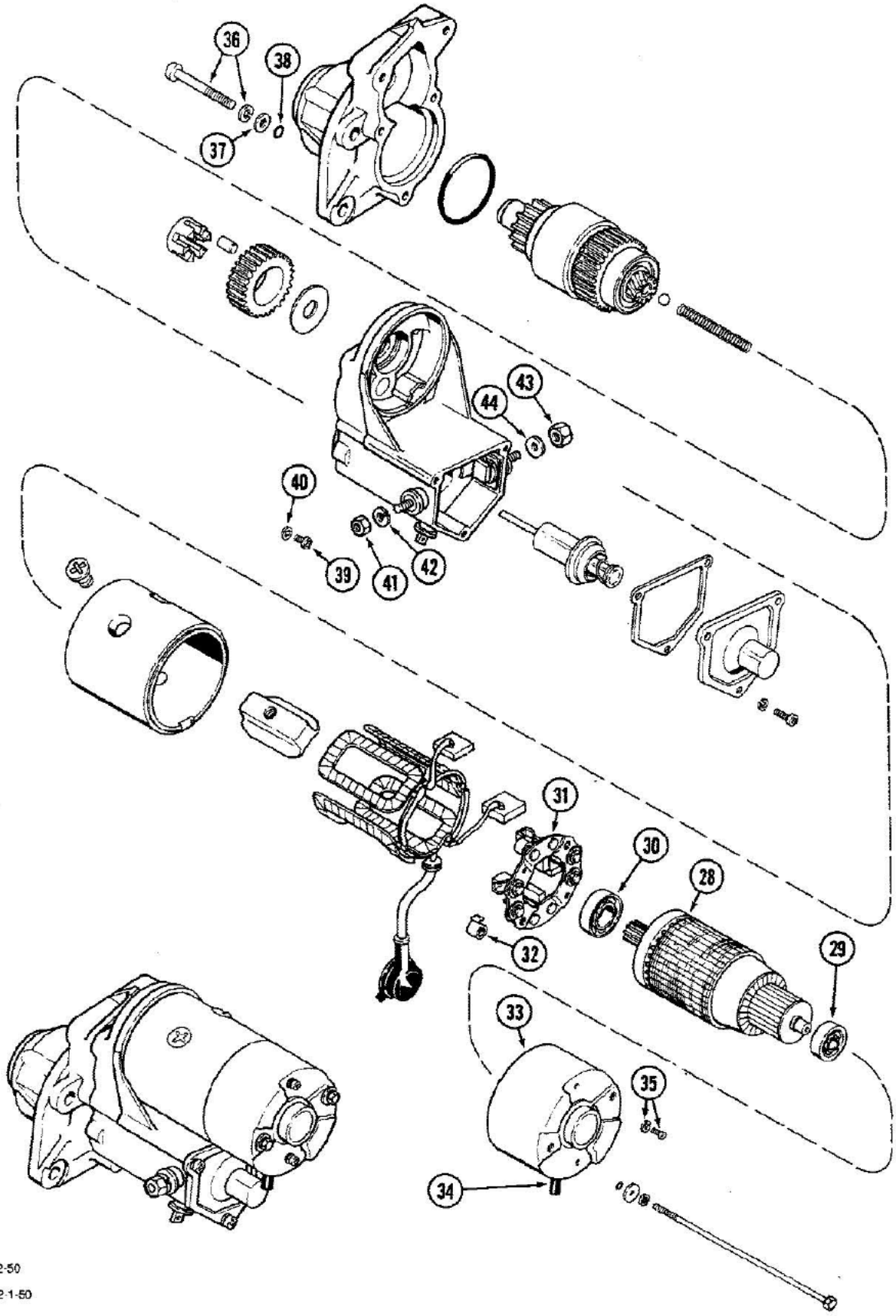

B7192-50

B7192-1-50

04-090 STARTER

Ref	Part Number	Qty	Description
	A170746	1	STARTER ASSEMBLY engine, Includes: Ref. 28 thru 44 and P/N 73-48 in this figure and parts shown in Figure 04-088
28	A47242	1	ARMATURE ASSEMBLY, Includes: Ref. 29 and 30
29	S85601	1	BEARING commutator end
30	A47247	1	BEARING drive end
31	A47239	1	HOLDER ASSEMBLY brush, includes (2) brushes, Includes: Ref. 32
32	A47249	4	SPRING brush tension
33	A47237	1	FRAME commutator end
34	A47238	1	COVER end frame
35	A47244	2	SCREW ASSEMBLY brush holder to cover
	A47230	3	BOLT ASSEMBLY commutator end cover to drive end housing, Includes: Ref. 36 thru 38
36	NSS	1	BOLT with lockwasher
37	192-516	1	WASHER flat, 1/4" x 9/16" x 1/16"
38	A47130	1	O-RING bolt seal
39	182-508	1	SCREW pan head, No. 8-32 x 3/8"
40	193-91	1	WASHER, LOCK, Int Tooth, #8
41	87016560	1	NUT, Jam, 3/8"-16, G5, Battery terminal
42	192-21	1	WASHER, LOCK, 3/8"
43	825-1110	1	NUT field coil terminal
44	A10454	1	WASHER field coil terminal
	73-48	1	SCREW flat head slotted, 1/4" NC x 1/2"

4-92

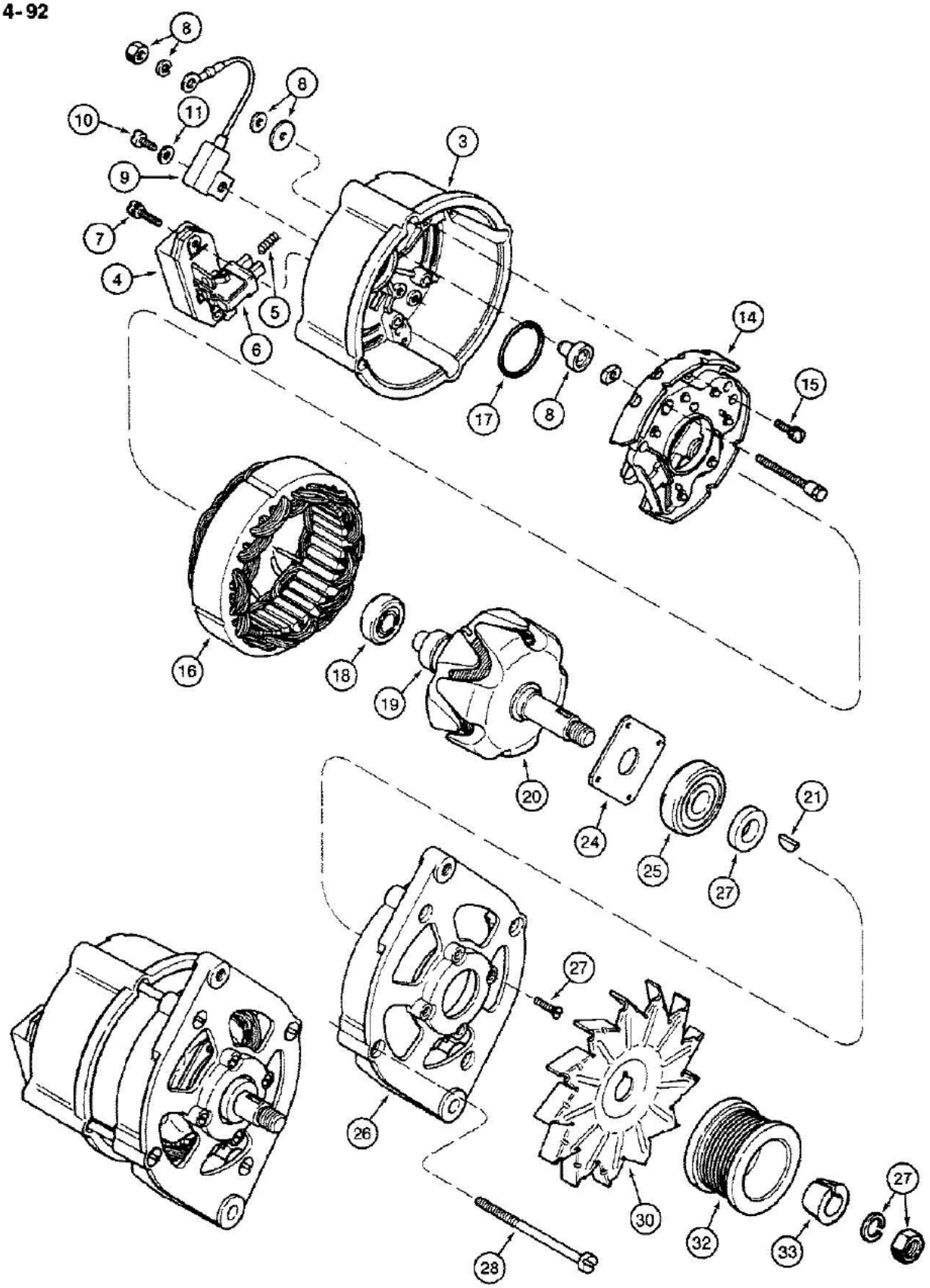

04-092 ALTERNATOR

Ref	Part Number	Qty	Description
	A186125	1	ALTERNATOR ASSEMBLY, 65 ampere, Includes: Ref. 3 thru 28, This is a 65 amperes K1 Bosch alternator, Bosch nbr. 0120489475
3	A186187	1	HOUSING collector ring end
4	A186189	1	REGULATOR voltage, Includes: Ref. 5 and 6
5	NSS	2	SPRING compression
6	NSS	1	BRUSH ASSEMBLY alternator
7	A186194	2	BOLT ASSEMBLY regulator retaining, with washer
8	3079135R1	1	KIT terminal
9	A186195	1	CAPACITOR alternator
10	625589C1	1	BOLT capacitor retaining
11	A186196	1	WASHER retaining bolt
14	A186197	1	BRIDGE rectifier, alternator
15	A186188	3	BOLT ASSEMBLY rectifier bridge retaining, with washer
16	A186192	1	STATOR ASSEMBLY alternator
17	3079386R1	1	O-RING bearing
18	A186186	1	BEARING ball
19	A186185	1	RING collector
20	A186184	1	ROTOR ASSEMBLY alternator
21	NSS	1	KEY rotor, order P/N 3078897R1 kit
24	3078379R1	1	PLATE bearing retaining
25	A186183	1	BEARING ball, drive end
26	A186182	1	HOUSING drive end
27	3078897R1	1	KIT rotor retaining
28	A186193	4	BOLT alternator retaining
30	221425R1	1	FAN alternator
32	J908560	1	PULLEY drive
33	J908563	1	RETAINER pulley

4-94

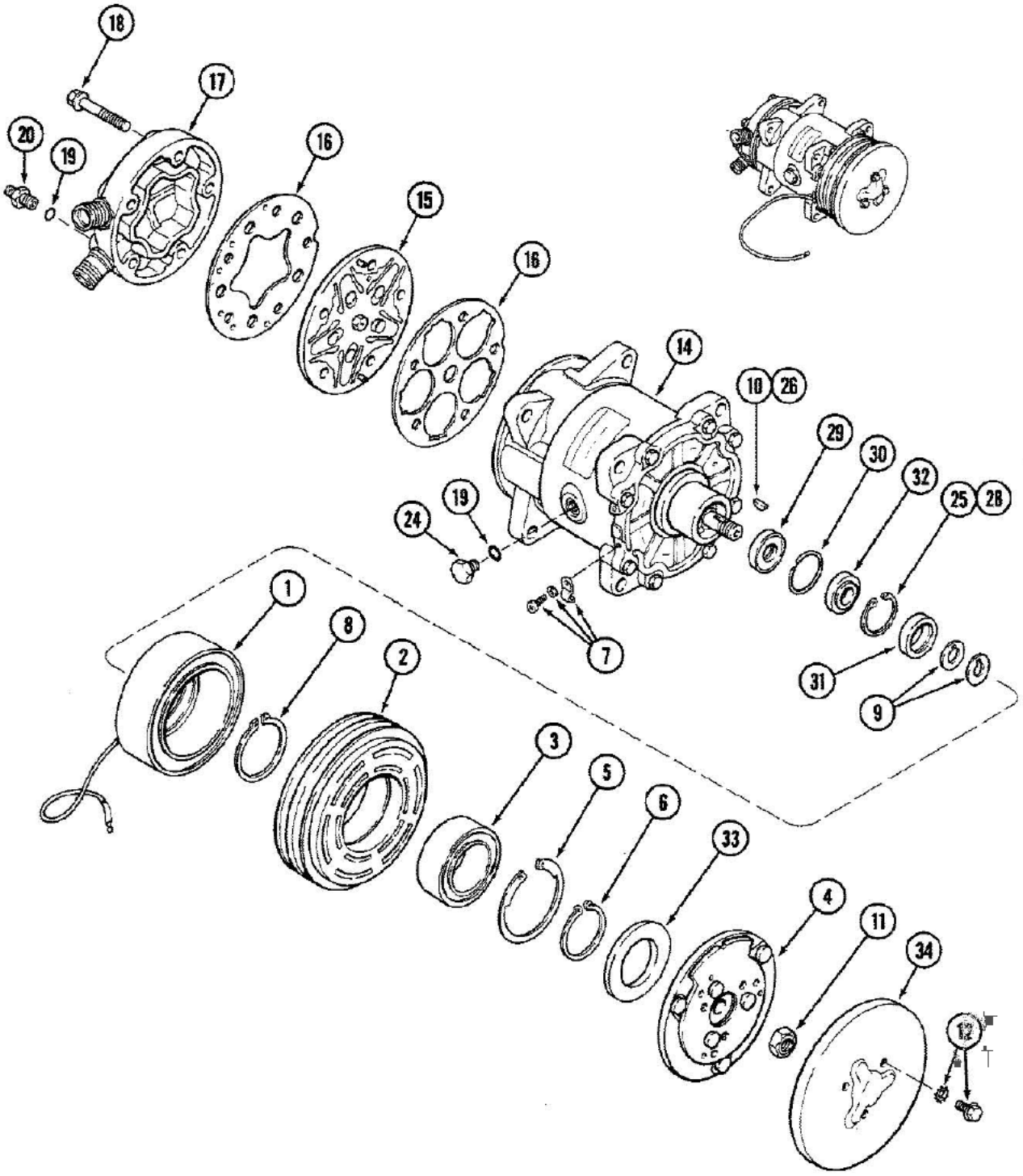

U871221-46

04-094 COMPRESSOR ASSEMBLY

Ref	Part Number	Qty	Description
	A177068	1	COMPRESSOR ASSEMBLY air conditioning, complete, Sankyo-Sanden, Includes: P/N A49676 and Ref. 1 thru 12
	A49676	1	CLUTCH ASSEMBLY compressor, Includes: Ref. 1 thru 12
1	A49659	1	COIL ASSEMBLY field, 12 volt
2	A49660	1	PULLEY ASSEMBLY drive, two groove, Includes: Ref. 3 thru 5
3	A49663	1	BEARING pulley
4	A49677	1	PLATE front
5	NSS	1	RING snap
	A49673	1	KIT accessory, clutch, Includes: Ref. 6 thru 12
6	NSS	1	RING snap, pulley
7	NSS	1	CLAMP ASSEMBLY lead wire
8	NSS	1	RING snap clutch
9	NSS	UAR	SHIM clutch
10	NSS	1	KEY clutch drive
11	NSS	1	NUT retainer
12	NSS	UAR	SCREW retainer
	A49672	1	COMPRESSOR ASSEMBLY field, Includes: Ref. 14 thru 32
14	NSS	1	BLOCK ASSEMBLY compressor
15	A49662	1	PLATE ASSEMBLY valve, Includes: Ref. 16
16	A49668	1	KIT gasket, valve plate
17	A49661	1	HEAD cylinder, Includes: Ref. 16, This does not come with gasket kit P/N A49668 as indicated in the model 580K, 8-3462 catalog. Dealer must order separately.
18	A49669	5	BOLT hex flanged, head
19	A49666	3	O-RING rubber
20	A49670	2	PORT service
24	A49667	1	PLUG oil filler
25	A49664	1	RING snap, seal seat
26	A49671	1	KEY shaft, compressor
	A49665	1	KIT seal, compressor, Includes: Ref. 28 thru 31
28	A49664	1	RING snap
29	NSS	1	SEAL shaft
30	NSS	1	O-RING housing
31	NSS	1	RING felt
32	NSS	1	SEAT seal, shaft
33	A49674	1	COVER dust, bearing
34	A49675	1	COVER dust, clutch

4-96

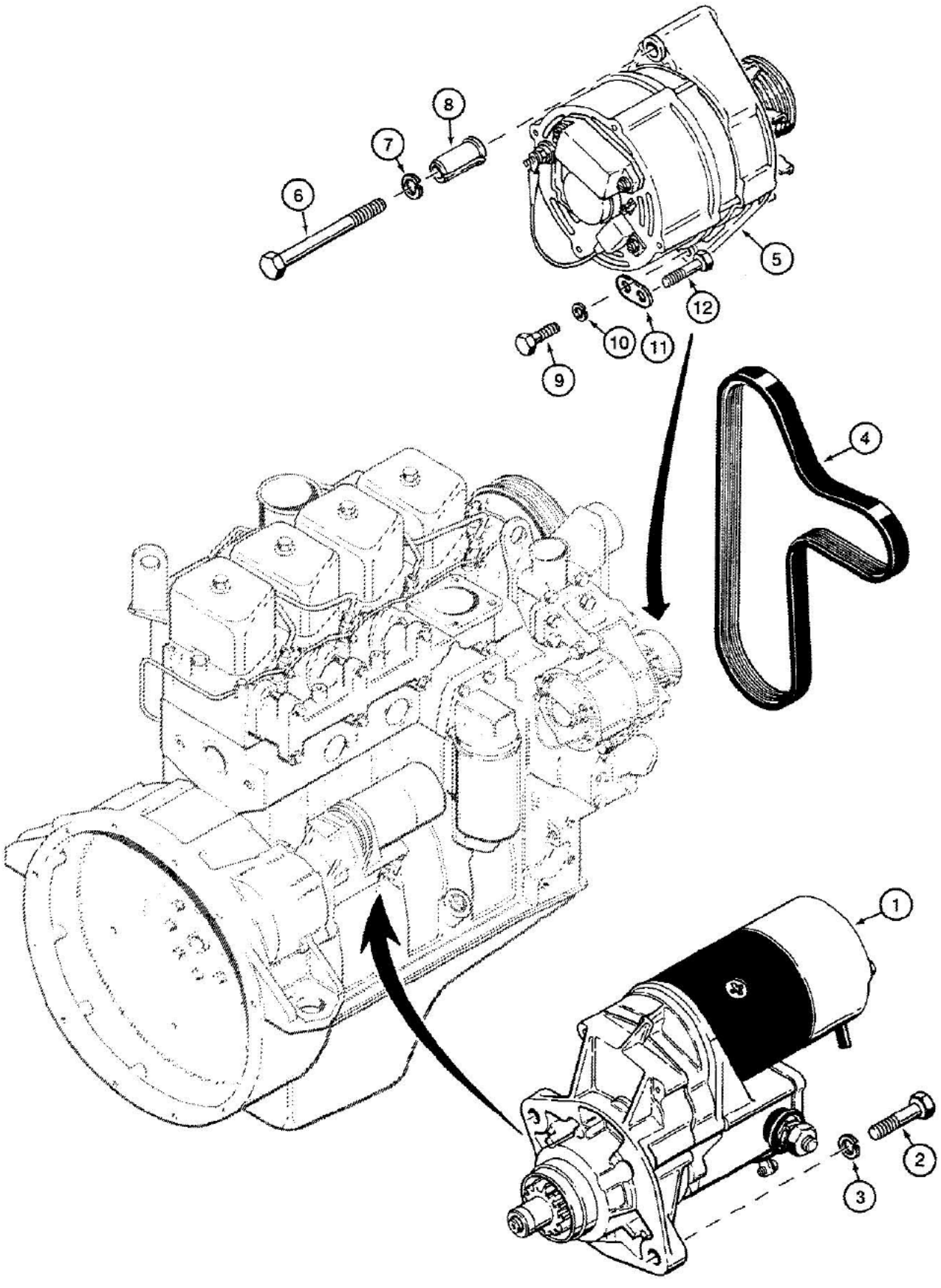

361716A-45

04-096 STARTER AND ALTERNATOR MOUNTING

Ref	Part Number	Qty	Description
1	REF	1	STARTER engine, see Figures 04-088 and 04-090
2	814-10040	2	BOLT hex head, 10 mm-1.5 x 40 mm, 8.8, plated
3	892-1110	2	WASHER lock, 10 mm, plated
4	J911559	1	BELT fan, V-ribbed, alternator and fan
5	REF	1	ALTERNATOR electrical, see Figure 04-092
6	813-10100	1	BOLT hex head, 10 mm-1.5 x 100 mm, 8.8
7	892-1110	1	WASHER lock, 10 mm, plated
8	J902469	1	SPACER alternator
9	814-8025	1	BOLT hex head, 8 mm-1.25 x 25 mm, 8.8, plated
10	192-20	1	WASHER, LOCK, 5/16"
11	J903089	1	BRACE alternator mounting, used on models with turbocharged engine
12	814-8020	1	BOLT, Hex, M8 x 20, 8.8, used on models with turbocharged engine

1-98

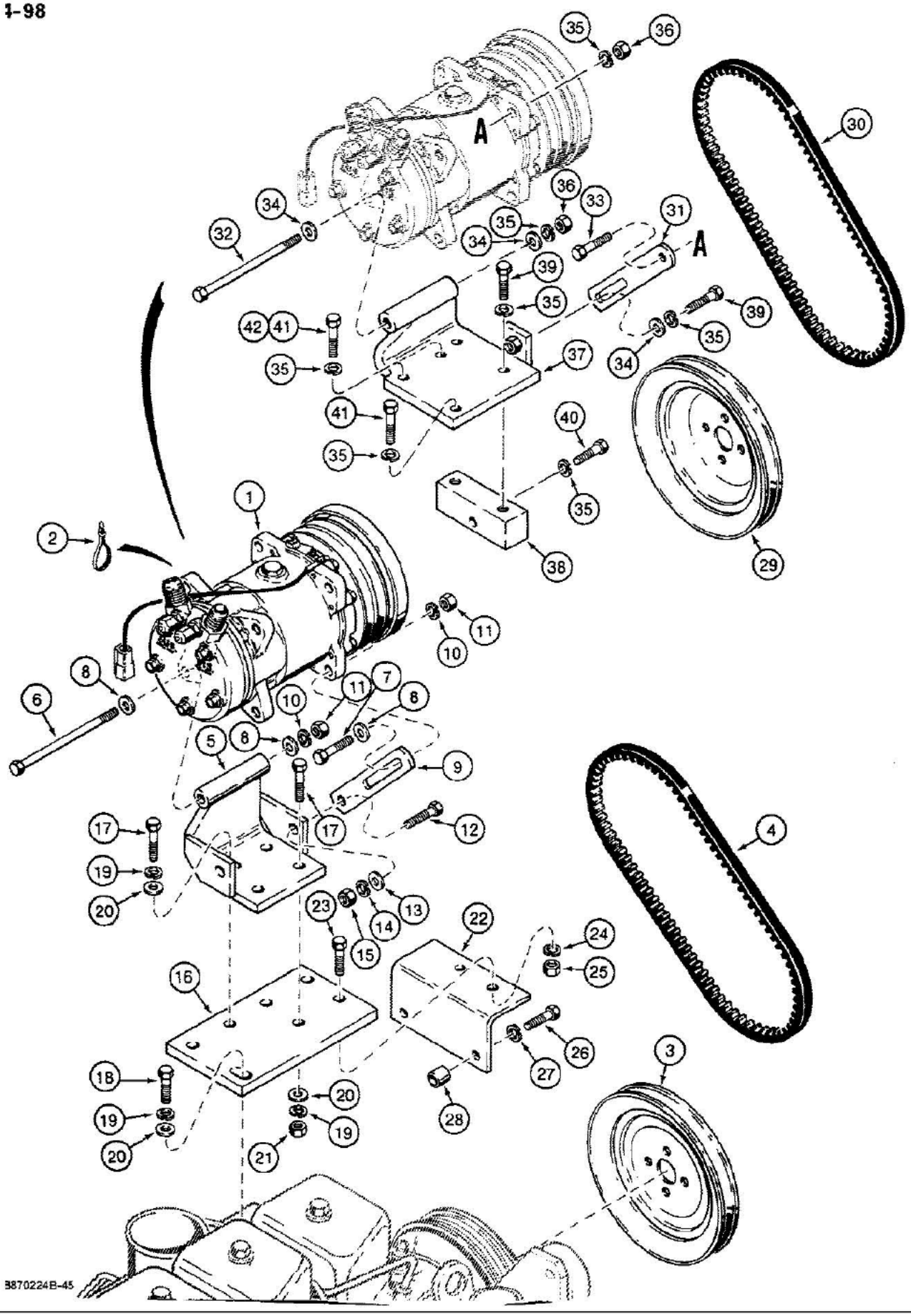

04-098 AIR CONDITIONING COMPRESSOR MOUNTING

Ref	Part Number	Qty	Description
1	A177068	1	COMPRESSOR ASSEMBLY air conditioning, see Figure 04-094, three piece bracket mounting
2	L18337	1	STRAP tie, nylon, compressor wire, 15", three piece bracket mounting
3	L118171	1	PULLEY air conditioner compressor drive, three piece bracket mounting
4	A169970	1	BELT drive, compressor, three piece bracket mounting
5	A177341	1	BRACKET compressor mounting, three piece bracket mounting
6	814-10130	1	BOLT hex head, 10 mm-1.5 x 130 mm, 8.8, plated, three piece bracket mounting
7	814-10035	1	BOLT hex head, 10 mm-1.5 x 35 mm, 8.8, plated, three piece bracket mounting
8	895-15010	3	WASHER, M11 x 24 x 2, Three piece bracket mounting
9	K207316	1	STRAP compressor adjusting, three piece bracket mounting
10	892-1110	2	WASHER lock, 10 mm, plated, three piece bracket mounting
11	825-1110	2	NUT hex, 10 mm-1.5, plated, three piece bracket mounting
12	814-10030	1	BOLT, Hex, M10 x 30, 8.8, 3-piece bracket mounting
13	895-15010	1	WASHER, M11 x 24 x 2, Three piece bracket mounting
14	892-1110	1	WASHER lock, 10 mm, plated, three piece bracket mounting
15	825-1110	1	NUT hex, 10 mm-1.5, plated, three piece bracket mounting
16	A177345	1	PLATE base, three piece bracket mounting
17	814-10035	3	BOLT hex head, 10 mm-1.5 x 35 mm, 8.8, plated, three piece bracket mounting
18	814-10030	1	BOLT, Hex, M10 x 30, 8.8, 3-piece bracket mounting
19	892-1110	4	WASHER lock, 10 mm, plated, three piece bracket mounting
20	895-15010	4	WASHER, M11 x 24 x 2, Three piece bracket mounting
21	825-1110	2	NUT hex, 10 mm-1.5, plated, three piece bracket mounting
22	NSS	1	BRACKET angle, mounts to engine, three piece bracket mounting
23	113-208	2	BOLT, Hex, 3/8"-16 x 1 1/4", G5, Full Thd, Angle bracket to base plate, 3 piece bracket mounting
24	192-21	2	WASHER, LOCK, 3/8", 3 piece bracket mounting
25	129-103	2	NUT, 3/8"-16, G5, 3 piece bracket mounting
26	814-8035	2	BOLT, Hex, M8 x 35, 8.8, Angle bracket to engine, Three piece bracket mounting
27	192-20	2	WASHER, LOCK, 5/16", 3 piece bracket mounting
28	NSS	2	SPACER bracket, three piece bracket mounting
29	J908819	1	PULLEY air conditioner compressor drive, one piece bracket mounting, Sub to P/N J919624.
30	S80928	1	BELT drive, compressor, one piece bracket mounting
31	A184932	1	STRAP compressor adjusting, one piece bracket mounting
32	814-10130	1	BOLT hex head, 10 mm-1.5 x 130 mm, 8.8, plated, one piece bracket mounting
33	814-10035	1	BOLT hex head, 10 mm-1.5 x 35 mm, 8.8, plated, one piece bracket mounting
34	895-15010	3	WASHER, M11 x 24 x 2, One piece bracket mounting
35	892-1110	9	WASHER lock, 10 mm, plated, one piece bracket mounting
36	825-1110	2	NUT hex, 10 mm-1.5, plated, one piece bracket mounting
37	A184882	1	BRACKET compressor mounting, one piece bracket mounting
38	A184614	1	BLOCK bracket support, one piece bracket mounting
39	814-10030	3	BOLT, Hex, M10 x 30, 8.8, 1-piece bracket mounting
40	814-10040	1	BOLT hex head, 10 mm-1.5 x 40 mm, plated, one piece bracket mounting
41	814-10030	1-3	BOLT, Hex, M10 x 30, 8.8, Naturally Aspirated Engines, 1-piece bracket mounting

04-098 AIR CONDITIONING COMPRESSOR MOUNTING

Ref	Part Number	Qty	Description
42	814-10035	2	BOLT hex head, 10 mm-1.5 x 35 mm, plated, turbocharged engines, one piece bracket mounting

04-100 ENGINE ELECTRICAL CIRCUIT, MODELS WITH FUSE BLOCK IN HARNESS

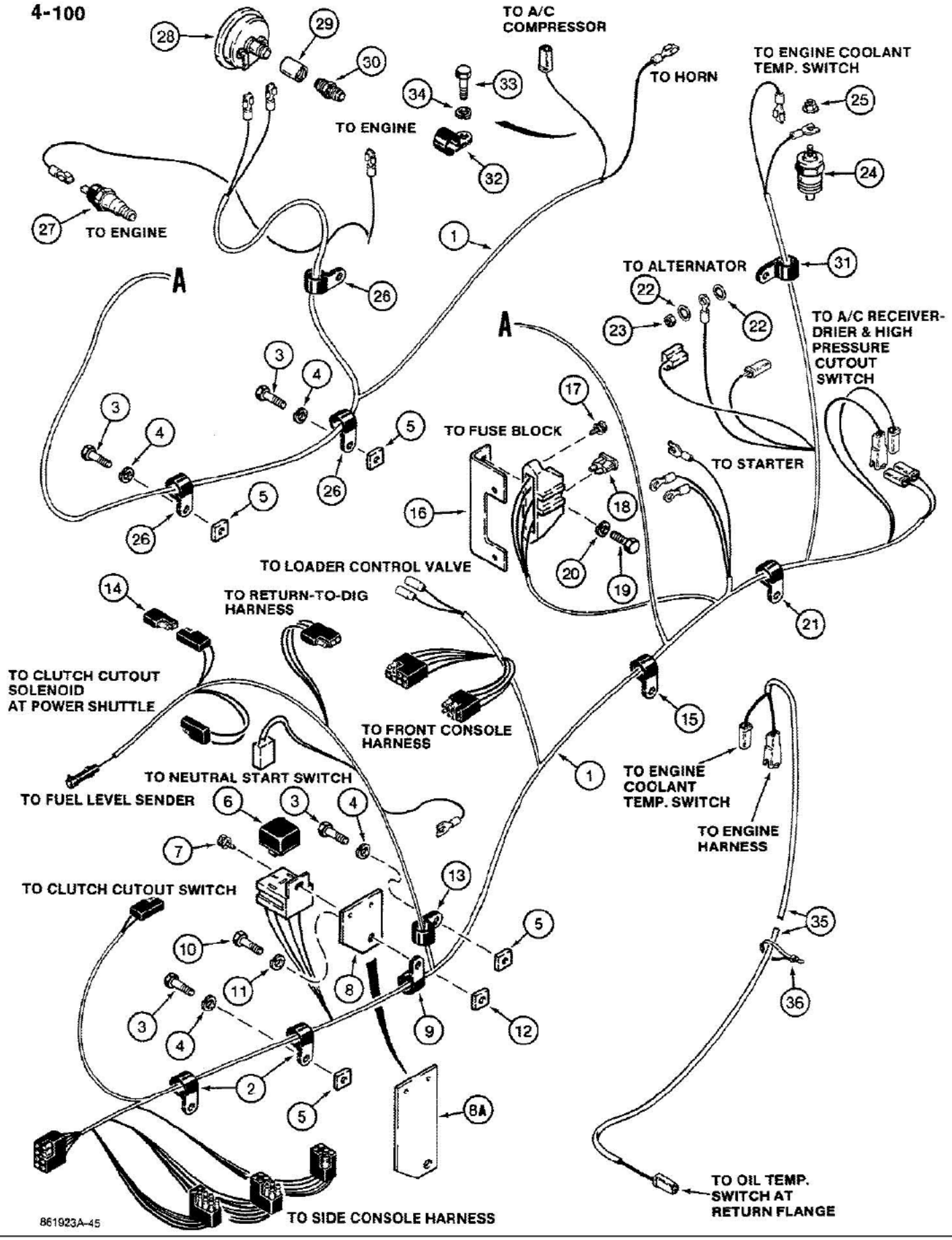

See Figure 04-140 for coolant temperature switch and bushing used on models with audible warning alarm for water temperature, engine oil pressure, and parking brake. The fuse box located between Ref. 16 and 18, on the illustration, is P/N 245435C1.

04-100 ENGINE ELECTRICAL CIRCUIT, MODELS WITH FUSE BLOCK IN HARNESS

Ref	Part Number	Qty	Description
1	D138666	1	HARNESS engine, main, with fuse block in harness on right hand side of engine and starter relay near battery, used on models without electronic instrument control center, See Figure 04-114 for special parts used on models with electronic instrument control center., Plastic fuse block for this harness is P/N 245435C1
2	D88052	2	CLAMP, P-type, harness, rear clamp uses existing hardware
3	113-205	4	BOLT, Hex, 3/8"-16 x 5/8", G5, Full Thd
4	192-21	4	WASHER, LOCK, 3/8"
5	25-226	4	NUT square, 3/8"-16 NC
6	D128310	1	RELAY starter, 30 amperes, 40 amperes is marked on the relay. This is the resistance rating. The inductive rating is 30 amperes. We use this inductive rating in our literature.
7	187-576	1	SCREW self tapping, No. 10-24 x 3/8"
8	D138306	1	PLATE relay mounting, no longer used, order P/N D140282 plate
8A	D140282	1	PLATE relay mounting
9	49858	1	CLAMP, P-type, harness
10	113-206	1	BOLT, Hex, 3/8"-16 x 3/4", G5, Full Thd
11	192-21	1	WASHER, LOCK, 3/8"
12	25-226	1	NUT square, 3/8"-16 NC
13	49858	1	CLAMP, P-type, harness
14	L71879	1	DIODE harness, at power shuttle
15	49858	1	CLAMP, P-type, harness, uses existing steering hydraulic tube hardware
16	D138333	1	BRACKET fuse block mounting
17	187-580	2	SCREW hex slotted washer head, self tapping, No. 10-32 x 3/4", plated
18	A149804	3	FUSE, 30 amperes
19	814-12016	1	BOLT hex head, 12 mm-1.75 x 16 mm, 8.8, plated
20	892-1112	1	WASHER lock, 12 mm, plated
21	49838	1	CLAMP, P-type, harness, uses existing hardware
22	193-60	2	WASHER, LOCK, Int Tooth, 1/4"
23	825-1106	1	NUT hex, 6 mm-1, plated
24	A166057	1	SENDER engine water coolant temperature
25	193-1000	1	NUT AND LOCK WASHER, No. 10-32 NF, plated
26	49838	3	CLAMP, P-type, harness, left hand side of engine, front clamps use existing hardware
27	A162297	1	Oil Pressure Sender, Used on Models Without Electronic Instrument Control Center, See Figure 4-114 for Special Parts Used on Models With Electronic Instrument Control Center
28	L103131	1	SENDER air filter restriction indicator
29	221-1335	1	COUPLING, 1/8" NPT
30	D36264	1	ADAPTER special, includes safety filter
31	49859	1	CLAMP, P-type, harness, uses existing hardware
32	D43839	1	CLAMP, P-type, at air conditioner compressor wire
33	814-10030	1	BOLT, Hex, M10 x 30, 8.8
34	892-1110	1	WASHER lock, 10 mm, plated

See Figure 04-140 for coolant temperature switch and bushing used on models with audible warning alarm for water temperature, engine oil pressure, and parking brake.The fuse box located between Ref. 16 and 18, on the illustration, is P/N 245435C1.

04-100 ENGINE ELECTRICAL CIRCUIT, MODELS WITH FUSE BLOCK IN HARNESS

Ref	Part Number	Qty	Description
35	D140301	1	WIRE used in addition to main engine harness on models with engine fuse block, attaches to engine coolant temperature switch and engine harness to oil temperature switch at return flange, see Figure 08-294 for flange and connecting parts, Special parts used on models with auxiliary hydraulics for optional rear hydraulic attachments
36	L18337	5	STRAP tie, attaches harness to hydraulic plumbing on right hand side of chassis, Special parts used on models with auxiliary hydraulics for optional rear hydraulic attachments

See Figure 04-140 for coolant temperature switch and bushing used on models with audible warning alarm for water temperature, engine oil pressure, and parking brake.□□□□The fuse box located between Ref. 16 and 18, on the illustration, is P/N 245435C1.

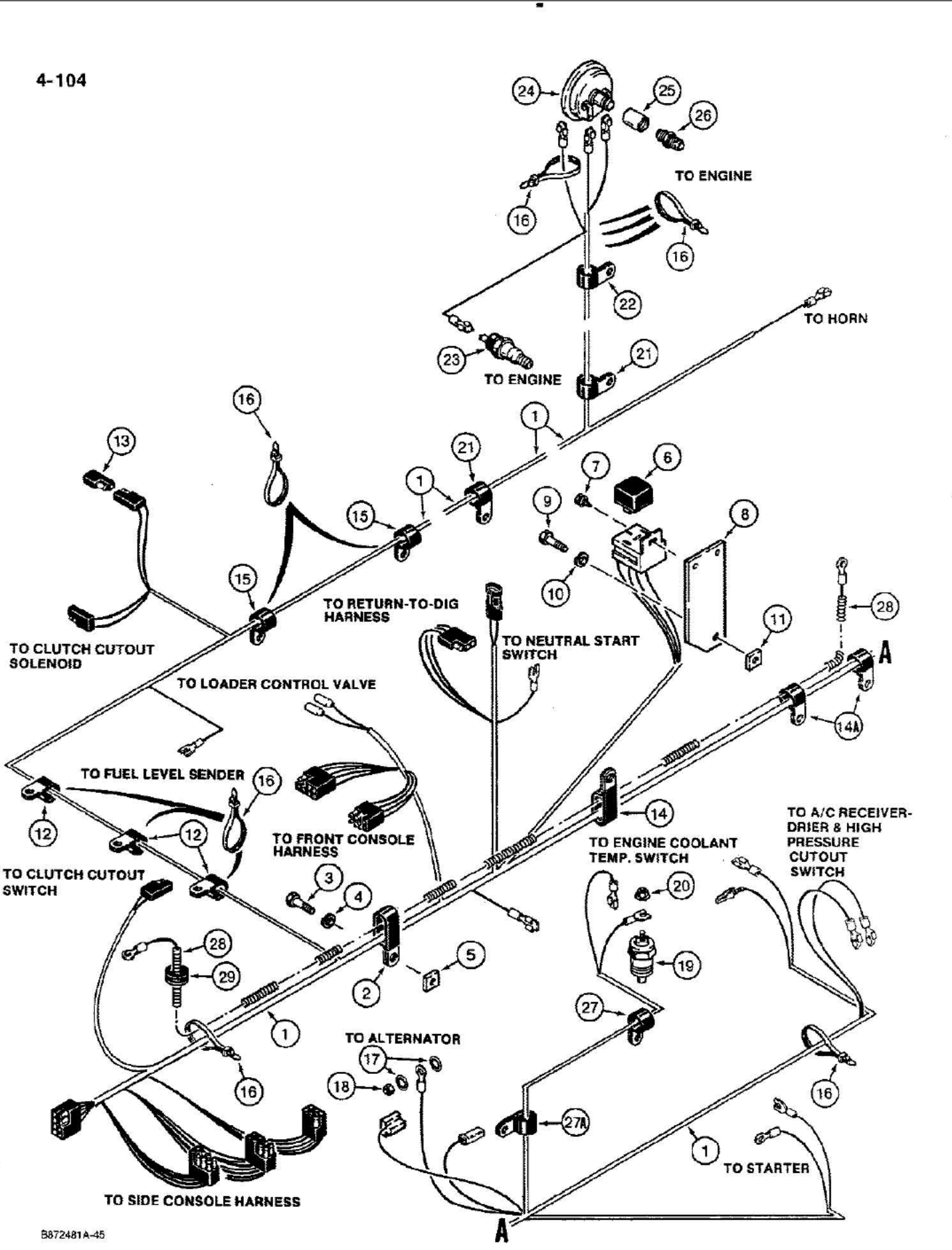

See Figure 04-140 for coolant temperature switch and bushing used on models with audible warning alarm for water temperature, engine oil pressure and parking brake.

04-104 ENGINE ELECTRICAL CIRCUIT, MODELS WITHOUT FUSE BLOCK IN HARNESS

Ref	Part Number	Qty	Description
1	D141275	1	HARNESS engine, main, without fuse block in harness on right hand side of engine, starter relay mounts on chassis upright, used on models without electronic instrument control center, See Figure 04-114 for special parts used on models with electronic instrument control center.
2	D39696	1	CLAMP double, harness
3	113-205	2	BOLT, Hex, 3/8"-16 x 5/8", G5, Full Thd
4	192-21	2	WASHER, LOCK, 3/8"
5	25-226	2	NUT square, 3/8"-16 NC
6	D128310	1	RELAY starter, 30 amperes, 40 amperes is marked on the relay. This is the resistance rating. The inductive rating is 30 amperes. We use this inductive rating in our literature.
7	187-576	1	SCREW self tapping, No. 10-24 x 3/8"
8	D140282	1	PLATE relay mounting
9	113-206	1	BOLT, Hex, 3/8"-16 x 3/4", G5, Full Thd
10	192-21	1	WASHER, LOCK, 3/8"
11	25-226	1	NUT square, 3/8"-16 NC
12	D88052	3	CLAMP, P-type, harness, uses existing loader hydraulic line hardware, if used, may be replaced by tie straps
13	L71879	1	DIODE harness, at power shuttle
14	D47783	1	CLAMP double, harness and power wire, uses existing steering hydraulic tube hardware
14A	A141013	2	CLAMP, P-type
15	49838	1-3	CLAMP, P-type, harness, uses existing hardware, may be replaced by tie straps
16	L18337	5-8	STRAP tie, nylon, harness, 15"
17	193-60	2	WASHER, LOCK, Int Tooth, 1/4"
18	825-1106	1	NUT hex, 6 mm-1, plated
19	A166057	1	SENDER engine water coolant temperature
20	193-1000	1	NUT AND LOCK WASHER, No. 10-32 NF, plated
21	49838	2	CLAMP, P-type, harness, left hand side of engine, front clamps use existing hardware
22	49859	1	CLAMP, P-type, harness, uses existing engine hardware
23	A162297	1	Oil Pressure Sender, Used on Models Without Electronic Instrument Control Center; See Figure 4-114 for Special Parts Used on Models With Electronic Instrument Control Center
24	L103131	1	SENDER air filter restriction indicator
25	221-1335	1	COUPLING, 1/8" NPT
26	D36264	1	ADAPTER special, includes safety filter
27	49858	1	CLAMP, P-type, harness, uses existing hardware
27A	49768	1	CLAMP, P-type
28	D141119	1	WIRE power, starter to side console harness fuse block in floor, used with Ref. 1 harness
29	D141118	1	GROMMET power wire

See Figure 04-140 for coolant temperature switch and bushing used on models with audible warning alarm for water temperature, engine oil pressure and parking brake.

4-106

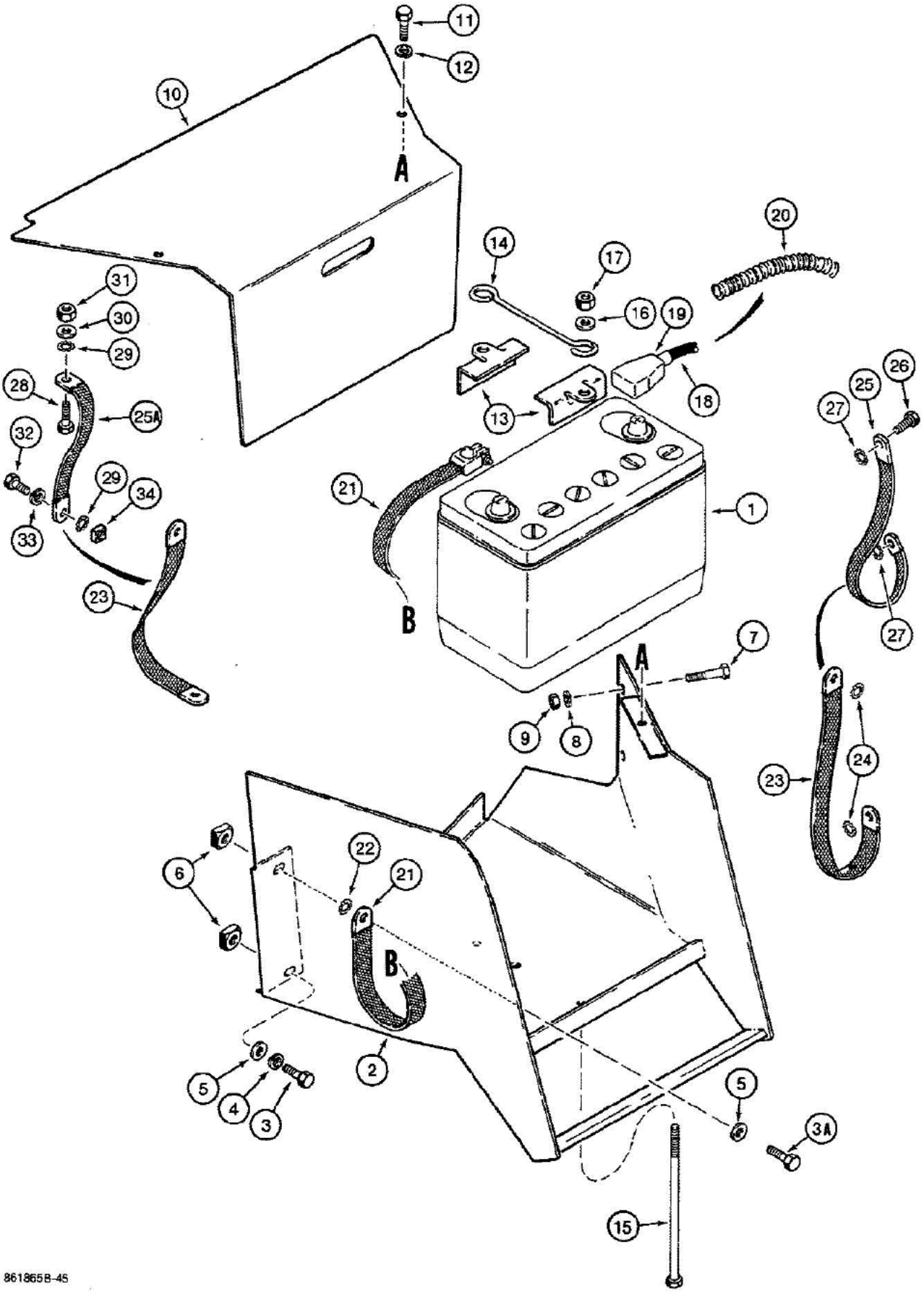

8618658-4S

04-106 BATTERY, BOX, AND MOUNTING PARTS

Ref	Part Number	Qty	Description
1	A180406	1	BATTERY, 12 volt, dry, service replacement, order P/N BMF31E, For use on models without a dual battery cold start system. For models with a dual battery cold start system, see Figure 04-108.
2	D131882	1	BOX battery
3	113-221	1	BOLT, Hex, 3/8"-16 x 7/8", G5, Full Thd
3A	113-207	1	BOLT, Hex, 3/8"-16 x 1", G5, Full Thd, For use on models without a dual battery cold start system. For models with a dual battery cold start system, see Figure 04-108.
4	192-21	1	WASHER, LOCK, 3/8"
5	195-525	2	WASHER flat, 3/8", plated
6	84899	2	NUT square, 3/8"-16 NC, plated
7	113-208	2	BOLT, Hex, 3/8"-16 x 1 1/4", G5, Full Thd
8	192-21	2	WASHER, LOCK, 3/8"
9	129-103	2	NUT, 3/8"-16, G5
10	D131887	1	COVER battery box
11	113-221	2	BOLT, Hex, 3/8"-16 x 7/8", G5, Full Thd
12	192-21	2	WASHER, LOCK, 3/8"
13	D125079	2	BRACKET battery hold down, For use on models without a dual battery cold start system. For models with a dual battery cold start system, see Figure 04-108.
14	D55561	1	RETAINER battery, hold down, For use on models without a dual battery cold start system. For models with a dual battery cold start system, see Figure 04-108.
15	115-218	2	BOLT, Hex, 3/8"-16 x 10", G2, For use on models without a dual battery cold start system. For models with a dual battery cold start system, see Figure 04-108.
16	195-525	2	WASHER flat, 3/8", plated
17	131-52	2	NUT hex, self locking, 3/8"-16 NC, plated
18	D139095	1	CABLE positive, battery, Includes: Ref. 19, For use on models without a dual battery cold start system. For models with a dual battery cold start system, see Figure 04-108.
19	A27072	1	COVER cable, battery end
20	D139094	1	SLEEVE positive cable, guard, 37-13/32" (950 mm) long, cut from P/N D99461 bulk sleeve, see below
21	D83485	1	STRAP negative, at battery, For use on models without a dual battery cold start system. For models with a dual battery cold start system, see Figure 04-108.
22	193-72	1	WASHER lock, internal/external tooth, 3/8", plated
23	D127018	2	STRAP ground, used on models with engine fuse block in harness
24	193-72	2	WASHER lock, internal/external tooth, 3/8", plated, ground strap near starter, chassis ground strap uses existing hardware
25	D127018	1	STRAP ground, used on models without engine fuse block in harness
25A	D140369	1	STRAP ground, pod and chassis, used on models without engine fuse block in harness
26	187-573	1	SCREW hex head, self-tapping, 3/8"-16 NC x 1", plated, if used
27	193-72	2	WASHER lock, internal/external tooth, 3/8", plated
28	113-207	1	BOLT, Hex, 3/8"-16 x 1", G5, Full Thd
29	193-72	2	WASHER lock, internal/external tooth, 3/8", plated
30	195-525	1	WASHER flat, 3/8", plated
31	129-103	1	NUT, 3/8"-16, G5

04-106 BATTERY, BOX, AND MOUNTING PARTS

Ref	Part Number	Qty	Description
32	113-205	1	BOLT, Hex, 3/8"-16 x 5/8", G5, Full Thd
33	192-21	1	WASHER, LOCK, 3/8"
34	25-226	1	NUT square, 3/8"-16 NC
	D99461	UAR	SLEEVE bulk, 80" (2032 mm) long

4-108

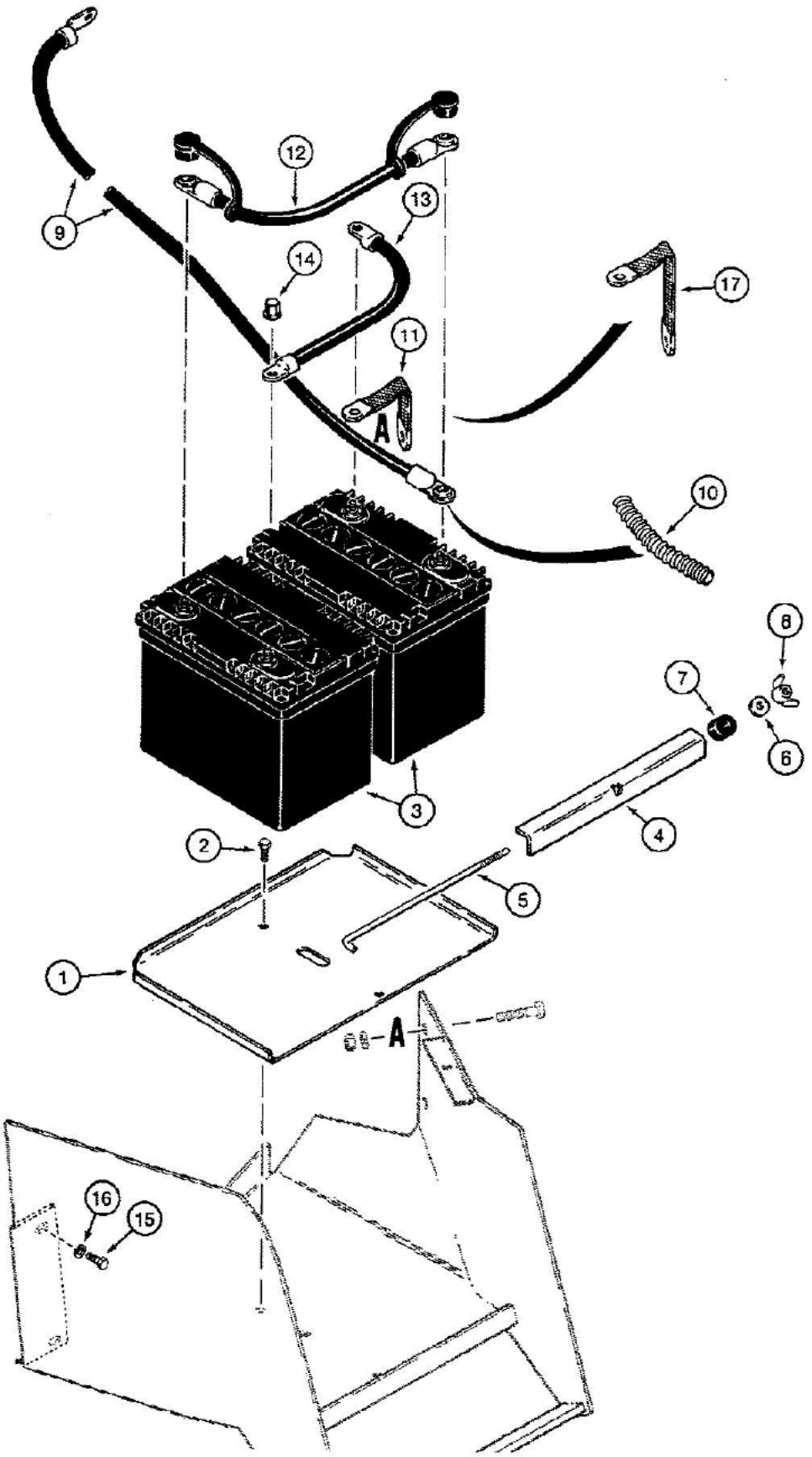

361906B-45

04-108 BATTERIES AND CABLES, COLD START SYSTEM

Ref	Part Number	Qty	Description
1	D135495	1	PLATE battery tray
2	113-206	2	BOLT, Hex, 3/8"-16 x 3/4", G5, Full Thd
3	D127414	2	BATTERY, 12 volt, service replacement, order P/N BMF28S
4	D135493	1	BRACKET battery hold down
5	D135494	1	BOLT, J-type, 3/8"-16 NC x 11-7/32"
6	G49400	1	WASHER flat, 3/8", special
7	G46867	1	GROMMET bolt
8	129-410	1	NUT wing, 3/8"-16 NC, plated
9	D139947	1	CABLE positive
10	D139094	1	SLEEVE positive cable, guard, 37-13/32" (950 mm) long, cut from P/N D99461 bulk sleeve, see below
11	D120366	1	STRAP, 6" (152 mm) long, negative ground to battery box, no longer used, order P/N D140369 strap
12	D126410	1	CABLE positive jumper
13	D126412	1	CABLE negative jumper
14	D126409	4	NUT hex, special, battery terminal, 3/8"-16 NC
15	113-221	1	BOLT, Hex, 3/8"-16 x 7/8", G5, Full Thd
16	192-21	1	WASHER, LOCK, 3/8"
17	D140369	1	STRAP, 10-1/4" (260 mm) long, negative ground to battery box
	D99461	UAR	SLEEVE bulk, 80" (2032 mm) long

04-110 FRONT CONSOLE WIRING HARNESS AND CONNECTIONS

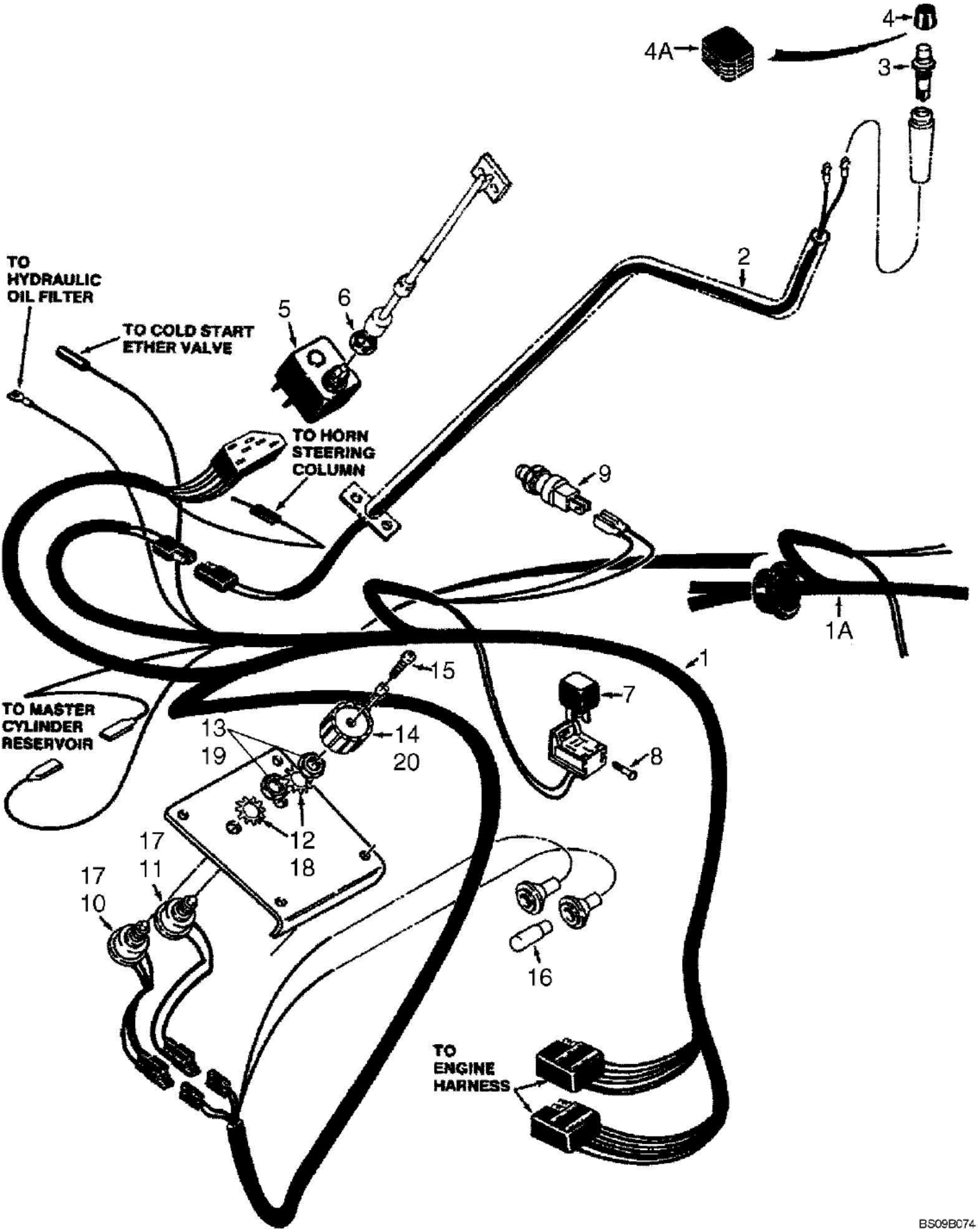

04-110 FRONT CONSOLE WIRING HARNESS AND CONNECTIONS

Ref	Part Number	Qty	Description
1	D138664	1	HARNESS front console, without molded grommet, used on models with fuse block in engine harness and without electronic instrument control center, if used, See Figure 04-114 for special parts used on models with electronic instrument control center.
1A	D141273	1	HARNESS front console, with molded grommet, used on models without fuse block in engine harness and without electronic instrument control center, if used, See Figure 04-114 for special parts used on models with electronic instrument control center.
2	D140063	1	HARNESS loader control lever, to fast cycle switch
3	D141486	1	SWITCH fast cycle, loader control lever
4	D138252	1	COVER switch, if used
4A	D140149	1	COVER switch, if used
5	A77184	1	SWITCH turn signal, Hobbs, replaces switch labeled as Lucas on some models, This switch includes flasher. Refer to service bulletin NLB SB 022 91 for longer life replacement flasher.
6	D91352	1	NUT hex, 3/4"-20 National Extra Fine, special
7	D128310	1	RELAY, 30 amperes, used on models with horn, 40 amperes is marked on the relay. This is the resistance rating. The inductive rating is 30 amperes. We use this inductive rating in our literature.
8	187-576	1	SCREW hex washer head, slotted, self-tapping, No. 10-24 x 3/8", plated, harness relay socket mounting
9	D128886	1	SWITCH brake lamps, includes nut
10	D138376	1	SWITCH ASSEMBLY front driving and rear flood lamps, three position with octagonal shaft, Includes 11 - 13; No Longer Available, For Service Order 133820A1 Switch and D149932 Knob
	D138377	1	SWITCH ASSEMBLY flasher lamps, two position with octagonal shaft, Includes: Ref. 11 - 13; No longer available, order 133818A1 switchand D149932 knob
11	NSS	1	SWITCH, P/N D138376 or D138377
12	193-58	1	WASHER lock, external tooth, 1/2", plated, P/N D138376 or D138377 switch
13	129-125	1	NUT, 1/2"-20, G5, P/N D138376 or D138377 switch
14	A141735	2	KNOB - D138376 work lamp and D138377 flasher switches with octagonal shaft, see Figure 09-638 for lamp and flasher symbol decals
15	182-510	2	SCREW machine, pan head slotted, No. 8-32 NC x 1/2", plated
16	D71346	2	BULB warning, No. 168, indicator lamp
	133820A1	1	SWITCH ASSEMBLY, front driving and rear flood lamps, three position with square shaft, includes Ref. 17 - 19, Replaces D138376 Switch
	133818A1	1	SWITCH ASSEMBLY, flasher lamps, two position with square shaft, includes Ref 17 - 19, Replaces D138377 Switch
17	NSS	1	SWITCH, 133820A1 or 133818A1 switch
18	493-11052	1	WASHER - internal-external tooth lock, 1/2 inch
19	425-148	1	NUT - hex, jam, 1/2 inch NC
20	D149932	2	KNOB - 133820A1 and 133818A1 switch with square shaft

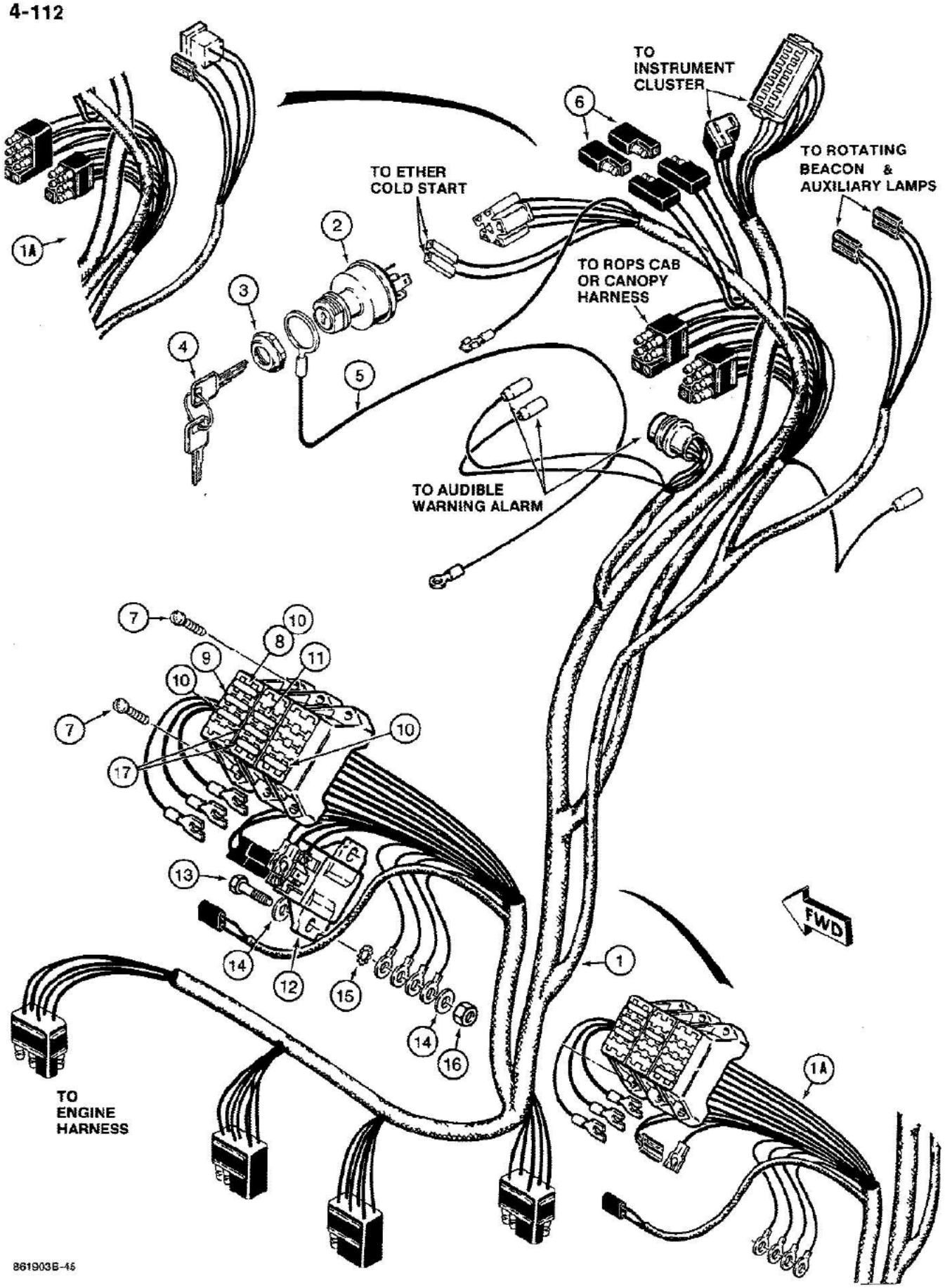

See Figure 09-590 for harness fuse box cover. See Figure 04-140 for special parts used on models with audible warning alarm for water temperature, engine oil pressure, and parking brake.

04-112 SIDE CONSOLE WIRING HARNESS AND CONNECTIONS

Ref	Part Number	Qty	Description
1	D138665	1	HARNESS side console, used on models with a two-position lamp switch for single control of front and rear lamps, used on models without electronic instrument control center, if used, See Figure 04-114 for special parts used on models with electronic instrument control center., Harness for a 4 position lamp switch
1A	D141274	1	HARNESS side console, used on models with a four-position lamp switch for separate switching of front and rear lamps, used on models without electronic instrument control center, if used, See Figure 04-114 for special parts used on models with electronic instrument control center., Harness for a 2 positon lamp switch (P.A.)
	D134737	1	SWITCH ASSEMBLY key, includes keys, Includes: Ref. 2, 3 and 4
2	NSS	1	SWITCH key, without keys, The connector body which Ref. 2 plugs into, shown in illustration, is P/N L79667, plug only.
3	A77314	1	NUT key switch mounting
4	A77313	1	Metal Without Padding
5	D135851	1	WIRE ground, key switch, uses existing hardware
6	L71879	2	DIODE harness
7	187-580	6	SCREW hex slotted washer head, self-tapping, No. 10- 32 x 3/4", plated
8	A149798	1	FUSE, 5 amperes, used with P/N D138665 harness, The fuse block for Ref. 8, 9, 10 and 11 is P/N 245435C1, qty of 3 req'd. The terminal strips that go inside this fuse block are : 14-16 gauge P/N 506504C1 and 10-12 gauge P/N 506498C1. See service bulletin NHE SB 081 89 for illustration.
9	A149803	1	FUSE, 25 amperes, The fuse block for Ref. 8, 9, 10 and 11 is P/N 245435C1, qty of 3 req'd. The terminal strips that go inside this fuse block are : 14-16 gauge P/N 506504C1 and 10-12 gauge P/N 506498C1. See service bulletin NHE SB 081 89 for illustration.
10	A149800	2-3	FUSE, 10 amperes, two used with P/N D138665 harness, three used with P/N D141274 harness, The fuse block for Ref. 8, 9, 10 and 11 is P/N 245435C1, qty of 3 req'd. The terminal strips that go inside this fuse block are : 14-16 gauge P/N 506504C1 and 10-12 gauge P/N 506498C1. See service bulletin NHE SB 081 89 for illustration.
11	A149801	1	FUSE, 15 amperes, The fuse block for Ref. 8, 9, 10 and 11 is P/N 245435C1, qty of 3 req'd. The terminal strips that go inside this fuse block are : 14-16 gauge P/N 506504C1 and 10-12 gauge P/N 506498C1. See service bulletin NHE SB 081 89 for illustration.
12	D144471	1	RELAY power
13	113-4	2	BOLT, Hex, 1/4"-20 x 1", G5
15	193-73	1	WASHER lock, internal/external tooth, 1/4", plated, lower mounting hole only
16	193-1006	2	NUT AND LOCK WASHER, 1/4"- 20 NC, plated
17	A149801	2	FUSE, 15 ampere

See Figure 09-590 for harness fuse box cover. ▯▯▯See Figure 04-140 for special parts used on models with audible warning alarm for water temperature, engine oil pressure, and parking brake.

4-114

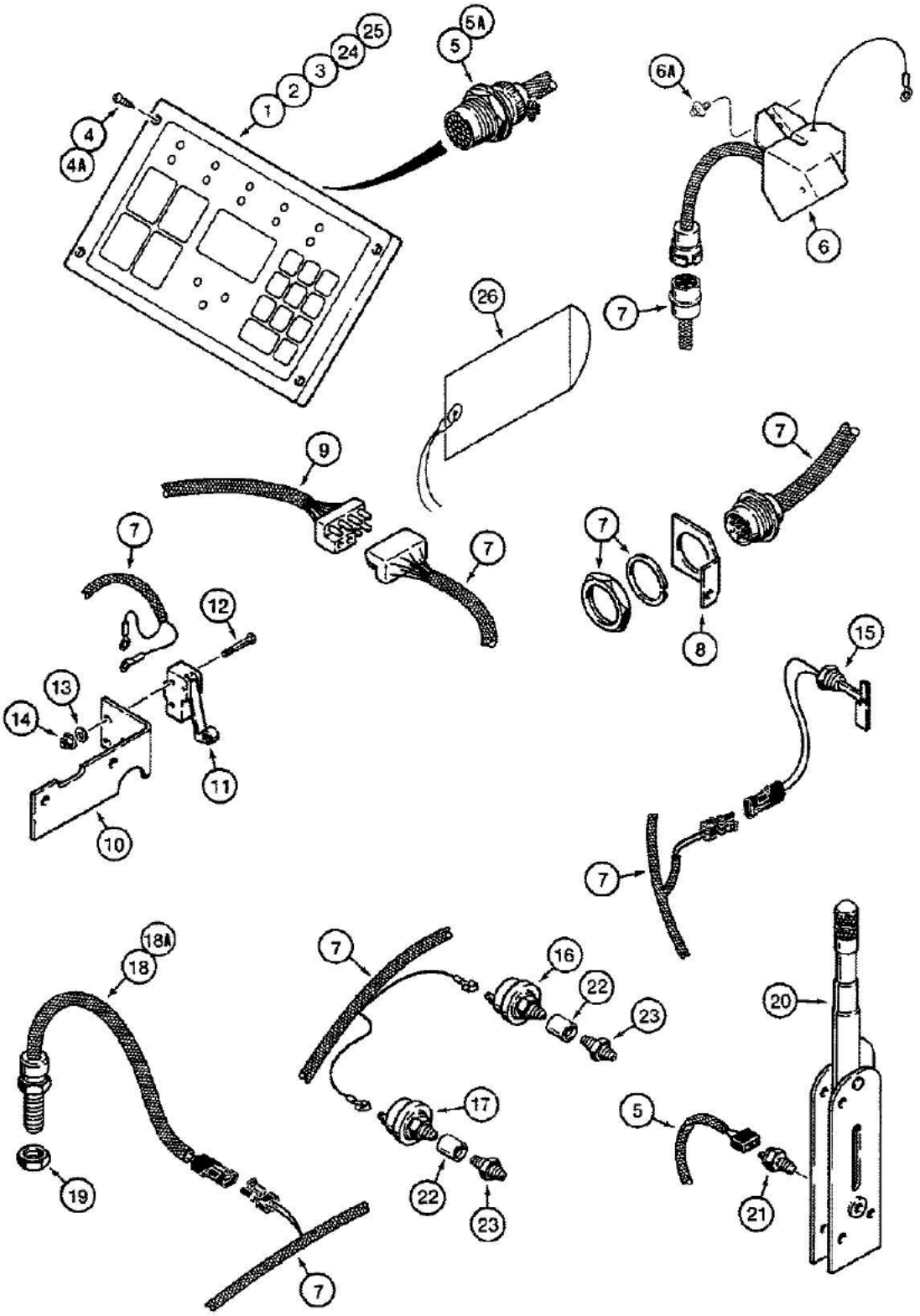

B88124A-45

The parts in this figure are not used on models with audible warning alarm.

04-114 SPECIAL PARTS USED ON MODELS WITH ELECTRONIC INSTRUMENT CONTROL CENTER

Ref	Part Number	Qty	Description
	D125952	1	CLUSTER electronic instrument control center, no longer available, order P/N A187897 cluster, Ref. 24, Includes: Ref. 1 thru 4
1	NSS	1	CLUSTER electronic
2	28628R1	6	BULB, GE trade No. 73
3	N14236	6	SOCKET lamp
4	N14237	4	SCREW special, replace with P/N 182-559 screw, Ref. 4A
4A	182-559	4	SCREW machine, pan Phillips head, No. 10 NC x 3/4"
5	D140702	1	HARNESS side console, used on models with a two-position lamp switch for single control of front and rear lamps
5A	D141654	1	HARNESS side console, used on models with a four-position lamp switch for separate switching of front and rear lamps
	A187819	1	KIT security module, includes instructions, Includes: Ref. 6 and 6A
6	A187664	1	MODULE security, mounts on engine fuel injection pump
6A	A187821	2	BOLT security, special
7	D140703	1	HARNESS main, engine, no longer includes nut and washer, not required
8	D141158	1	BRACKET connector, mounts by side console, if used
9	D140701	1	HARNESS front console
10	D138811	1	BRACKET switch mounting
11	D137363	1	SWITCH four-wheel drive, mounts on four-wheel drive control linkage
12	182-530	2	SCREW machine, pan head slotted, No. 6-32 NC x 1-1/4", plated
13	195-507	2	WASHER flat, No. 6, plated
14	193-1003	2	NUT AND LOCK WASHER, No. 6-32 NC, plated
15	A187668	1	SWITCH oil level, mounts to right-hand chassis upright
16	92243C1	1	SWITCH oil pressure, 15 psi, replaces standard oil pressure switch on engine block
17	92325C1	1	SWITCH oil pressure, 40 psi, replaces existing plug in engine block, rear switch on left-hand side of engine
18	D141264	2	SWITCH magnetic pickup, 11-13/16" (300 mm) long, replaces existing plug in upper left-hand flywheel housing on left-hand side of engine and top rear cover plate on transaxle housing, no longer used, order P/N A187584, switch
18A	A187584	2	SWITCH magnetic pickup, 8-9/16" (217 mm) long, replaces existing plug in upper left-hand flywheel housing on left-hand side of engine and top rear cover plate on transaxle housing
19	129-168	2	NUT hex, jam, 3/4"-16 NF, plated, magnetic pickup
20	D139909	1	LEVER hand brake, see Figure 07-268, for component parts
21	D136514	1	SWITCH parking brake
22	221-335	2	COUPLING, 1/8" NP
23	217-1079	2	CONNECTOR straight, male
	A187820	1	KIT cluster, electronic instrument control center, includes instructions, Includes: Ref. 24 and 25
24	A187897	1	CLUSTER electronic instrument control center, Includes: Ref. 25
25	28628R1	6	BULB, GE trade No. 73
26	D143897	1	ENVELOPE security module ID, see your J I Case Dealer for module ID number

The parts in this figure are not used on models with audible warning alarm.

4-116

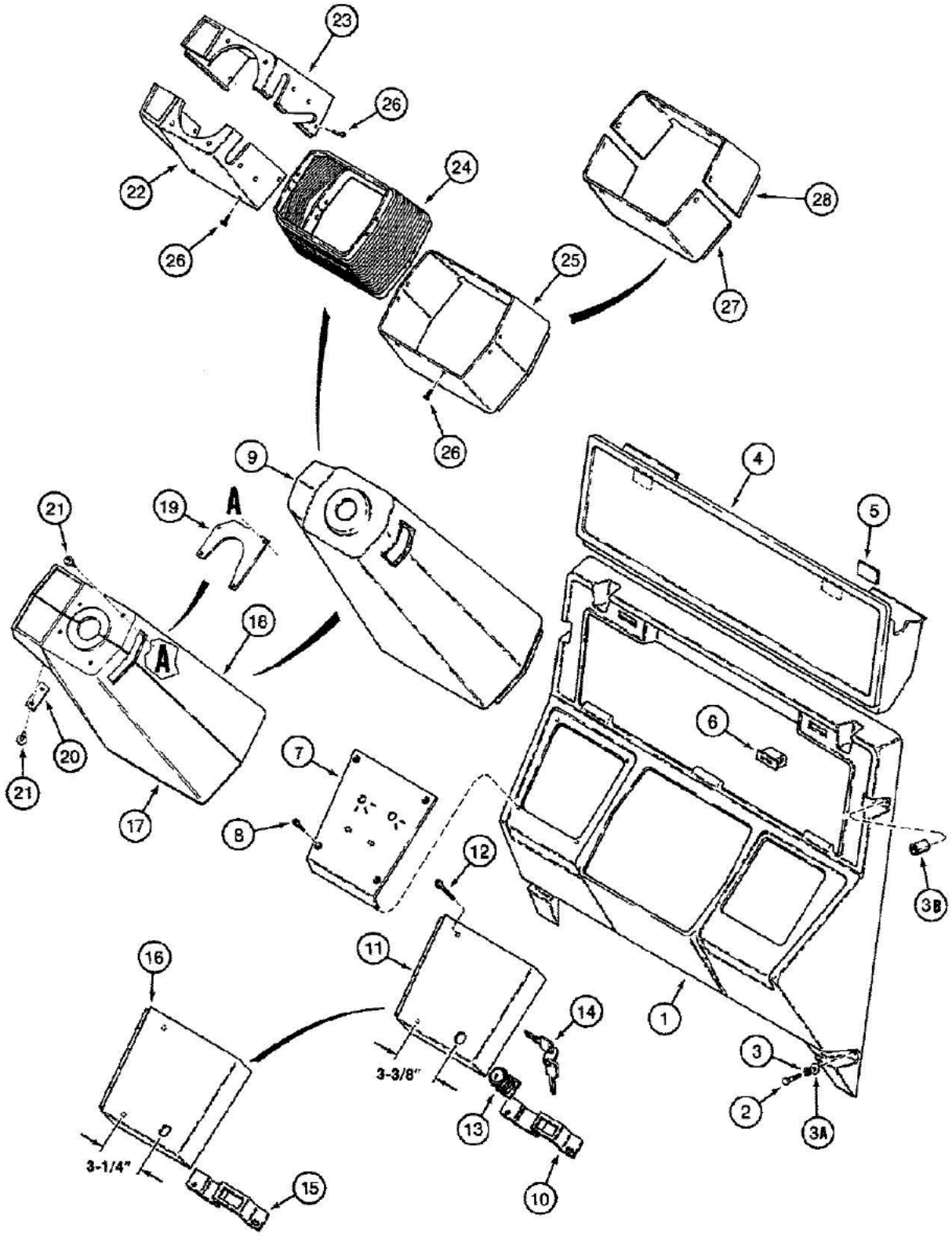

861887B-45

04-116 FRONT INSTRUMENT PANEL

Ref	Part Number	Qty	Description
1	D134389	1	PANEL instrument, front
2	113-103	6	BOLT, Hex, 5/16"-18 x 1", G5, Full Thd
3	192-20	6	WASHER, LOCK, 5/16"
3A	195-521	6	WASHER flat, 5/16", plated
3B	D35217	2	SPACER bolt, upper panel
4	D134256	1	COMPARTMENT storage, operators manual, see Figure 09-638 for decal
5	D135903	2	PLATE steel, striker
6	D127335	2	RETAINER magnetic catch, storage compartment
7	D134306	1	PLATE switch mounting
8	182-550	4	SCREW machine, pan Phillips head, slotted, No. 10-24 NC x 1/2", plated
9	D136376	1	COVER one piece, steering column, see Figure 09-638 for arrow decal, no longer available, order P/N D143963 cover, Ref. 17 thru 21
10	D138160	1	BRACKET lower, switch plate, anti-vandalism, no longer used, order P/N D140938 bracket
11	D136737	1	COVER front instrument panel, 3-3/8" (86 mm) between holes, anti-vandalism, no longer used, order P/N D140938 bracket and P/N D140937 cover
12	182-597	3	SCREW machine, pan head slotted, No. 10-24 NC x 7/8"
13	D136738	1	LOCK ASSEMBLY, includes two keys, anti-vandalism cover, if used, Includes: Ref. 14's, Does not include keys per print
14	N14441	2	KEY cover lock, used on tractor PIN 17417801 thru 17417850 only
14	N14440	2	KEY cover lock
15	D140938	1	BRACKET lower, switch plate, anti-vandalism, if used
16	D140937	1	COVER front instrument panel, 3-1/4" (83 mm) between holes, anti-vandalism, if used
	D143963	1	COVER ASSEMBLY two piece, steering column, see Figure 09-638 for arrow decal, Includes: Ref. 17 thru 21
17	NSS	1	COVER steering column, rear
18	NSS	1	COVER steering column, front
19	D143710	1	PLATE retaining, upper
20	D143711	1	PLATE retaining, side
21	F64519	6	SCREW self-tapping, special
22	D138633	1	COVER plastic, upper, rear, special parts used on models with tilt/telescoping steering column
23	D138632	1	COVER plastic, upper, front, special parts used on models with tilt/telescoping steering column
24	D139219	1	BOOT tilt/telescoping steering column, special parts used on models with tilt/telescoping steering column
25	D139324	1	COVER plastic, lower, one piece, no longer available, order P/N D138634 cover and P/N D138635 cover, Ref. 27 and 28, special parts used on models with tilt/telescoping steering column
26	182-550	22	SCREW machine, pan Phillips head, slotted, No. 10-24 NC x 1/2", plated, special parts used on models with tilt/telescoping steering column
27	D138634	1	COVER plastic, lower, rear, special parts used on models with tilt/telescoping steering column
28	D138635	1	COVER plastic, lower, front, special parts used on models with tilt/telescoping steering column

4-118

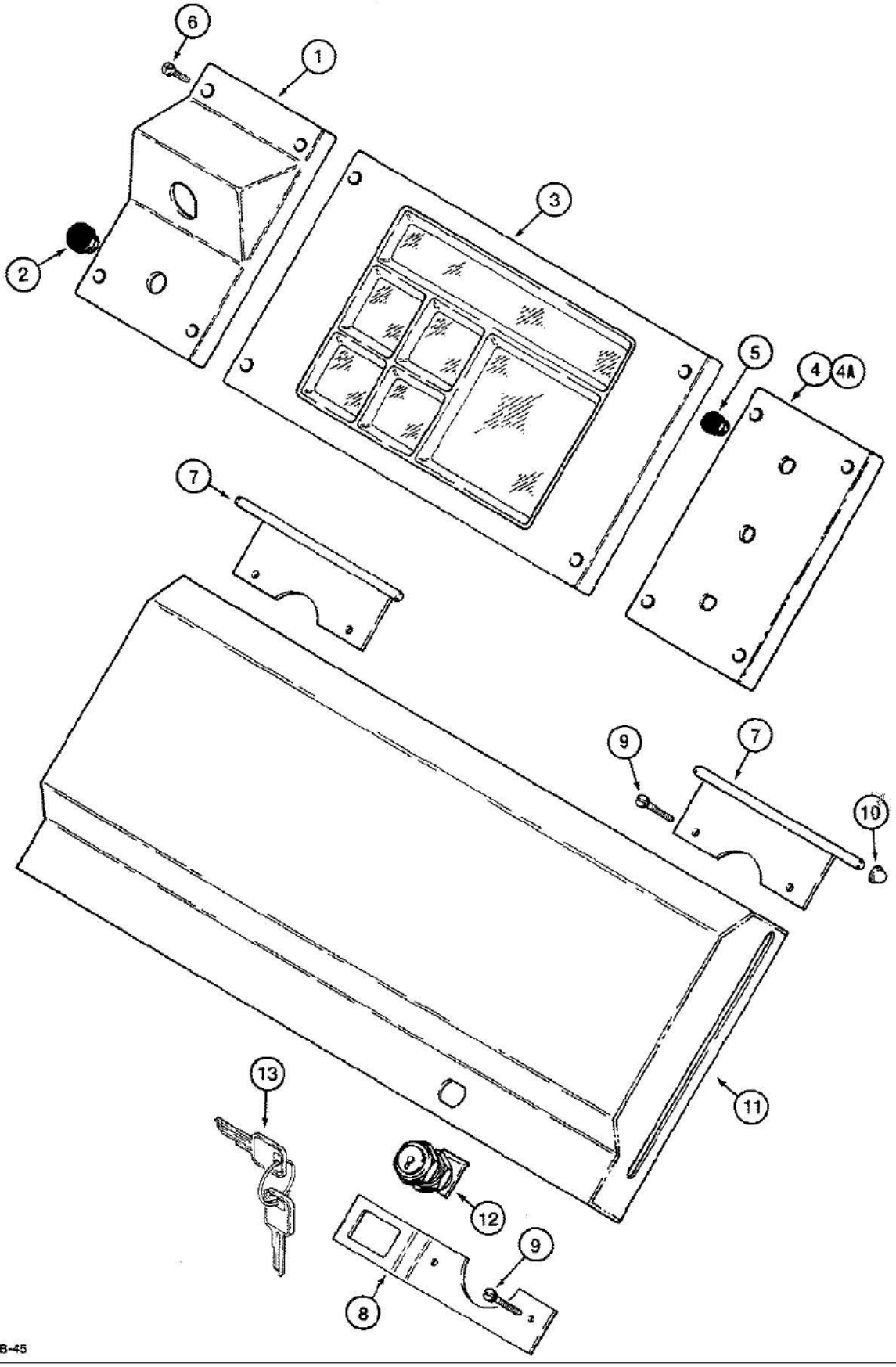

See Figure 09-590 for left-hand and right-hand instrument consoles for cab or canopy models.

04-118 SIDE INSTRUMENT PANEL

Ref	Part Number	Qty	Description
1	D135675	1	PLATE front, key switch
2	353-406	1	PLUG nylon, 5/8", not required on models with cold start
3	REF	1	CLUSTER ASSEMBLY instrument, see Figure 04-120, See Figure 04-114 for electronic instrument control center.
4	D135676	1	PLATE rear, accessory switches, used on models with a two position lamp switch for single control of front and rear lamps, if used, see Figure 09-638 for decals
4A	D141501	1	PLATE rear, accessory switches, used on models with a four position lamp switch for separate switching of front and rear lamps, if used, see Figure 09-638 for decals
5	353-404	3	PLUG, Dome, .500" hole, Nylon, If used
6	182-550	6-12	SCREW machine, pan Phillips head, slotted, No. 10-24 NC x 1/2", plated
7	D136695	2	BRACKET upper, front and rear switch plates, anti-vandalism, if used
8	D136692	1	BRACKET lower, front switch plate, anti-vandalism, if used
9	182-597	6	SCREW machine, pan head slotted, No. 10-24 NC x 7/8", black
10	131-868	2	NUT push-on type with cap, 5/16"
11	D136696	1	COVER side instrument panel, anti-vandalism, if used
12	D136738	1	LOCK ASSEMBLY, includes two keys, anti-vandalism cover, if used, Includes: Ref. 13's, Does not include keys per print
13	N14441	2	KEY cover lock, used on tractor P.I.N. 17417801 thru 17417850 only
13	N14440	2	KEY cover lock

See Figure 09-590 for left-hand and right-hand instrument consoles for cab or canopy models.

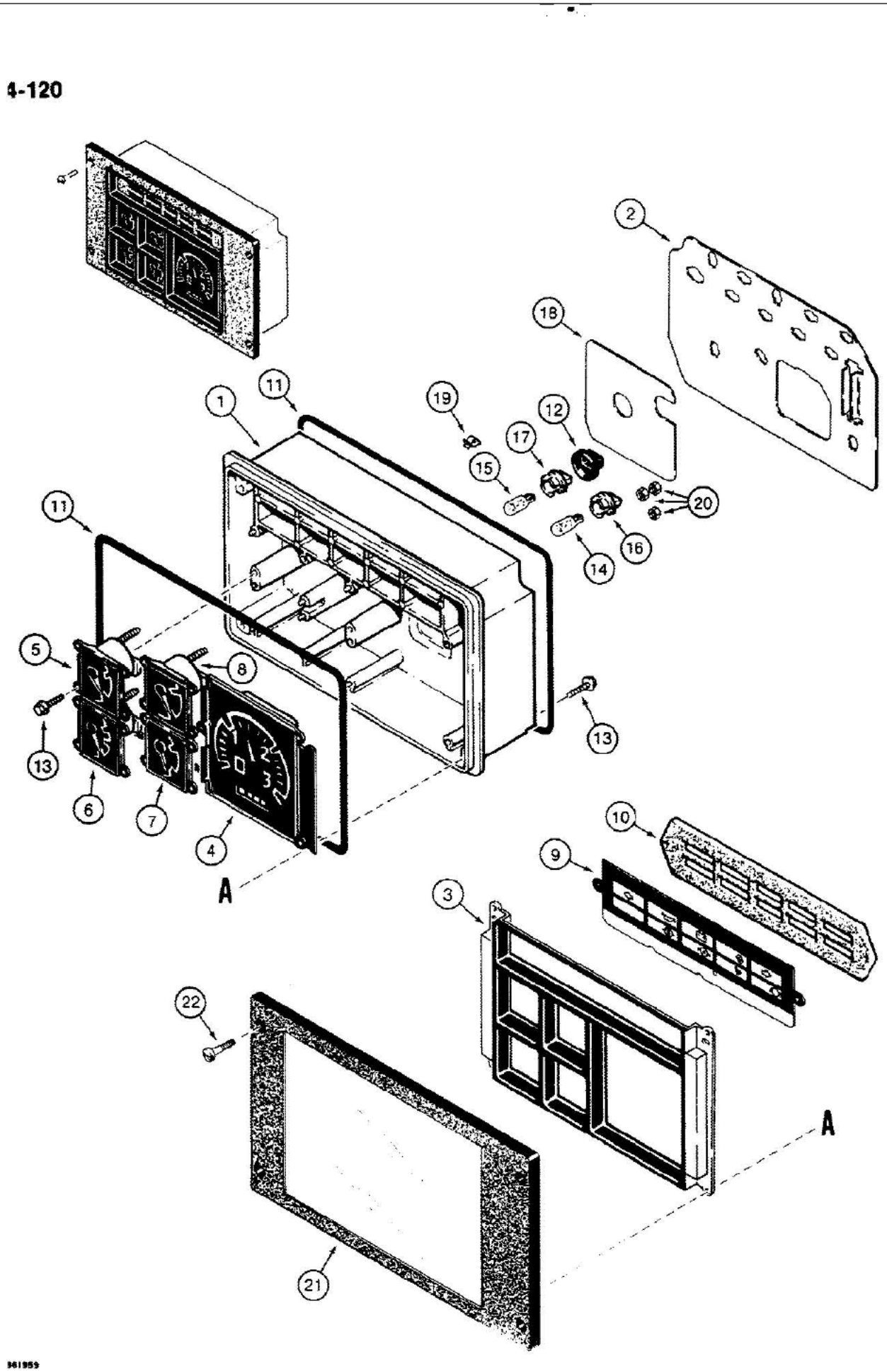

See Figure 04-114 for electronic instrument control center.

04-120 INSTRUMENT CLUSTER

Ref	Part Number	Qty	Description
	D136323	1	CLUSTER ASSEMBLY instrument, tractor, Includes: Ref. 1 thru 21, P/N D136323 subs to P/N A187965.
1	N13545	1	HOUSING instrument cluster
2	H422774	1	CIRCUIT printer, instrument cluster
3	N14227	1	COVER instrument cluster
4	N13543	1	GAUGE tachometer, includes hourmeter
5	N13542	1	GAUGE water temperature
6	A47688	1	GAUGE fuel level
7	N6807	1	GAUGE voltmeter
8	N14226	1	GAUGE oil temperature
9	N13538	1	LENS identification, warning lamps
10	D71342	1	GASKET lens
11	D71343	2	GASKET instrument cluster
12	D71344	3	BOOT rubber
13	A45093	12	SCREW special
14	D71346	6	BULB warning, No. 168
15	W10478	3	BULB illumination, No. 194
16	A47123	6	SOCKET lamp
17	A47125	3	SOCKET lamp, green
18	H422758	1	GASKET housing
19	H422766	11	CLIP gauges
20	129-15	3	NUT, #6-32
21	N14225	1	SHIELD instrument cluster
22	182-550	4	SCREW machine, pan head slotted, No. 10-24 NC x 1/2", plated

See Figure 04-114 for electronic instrument control center.

4-122

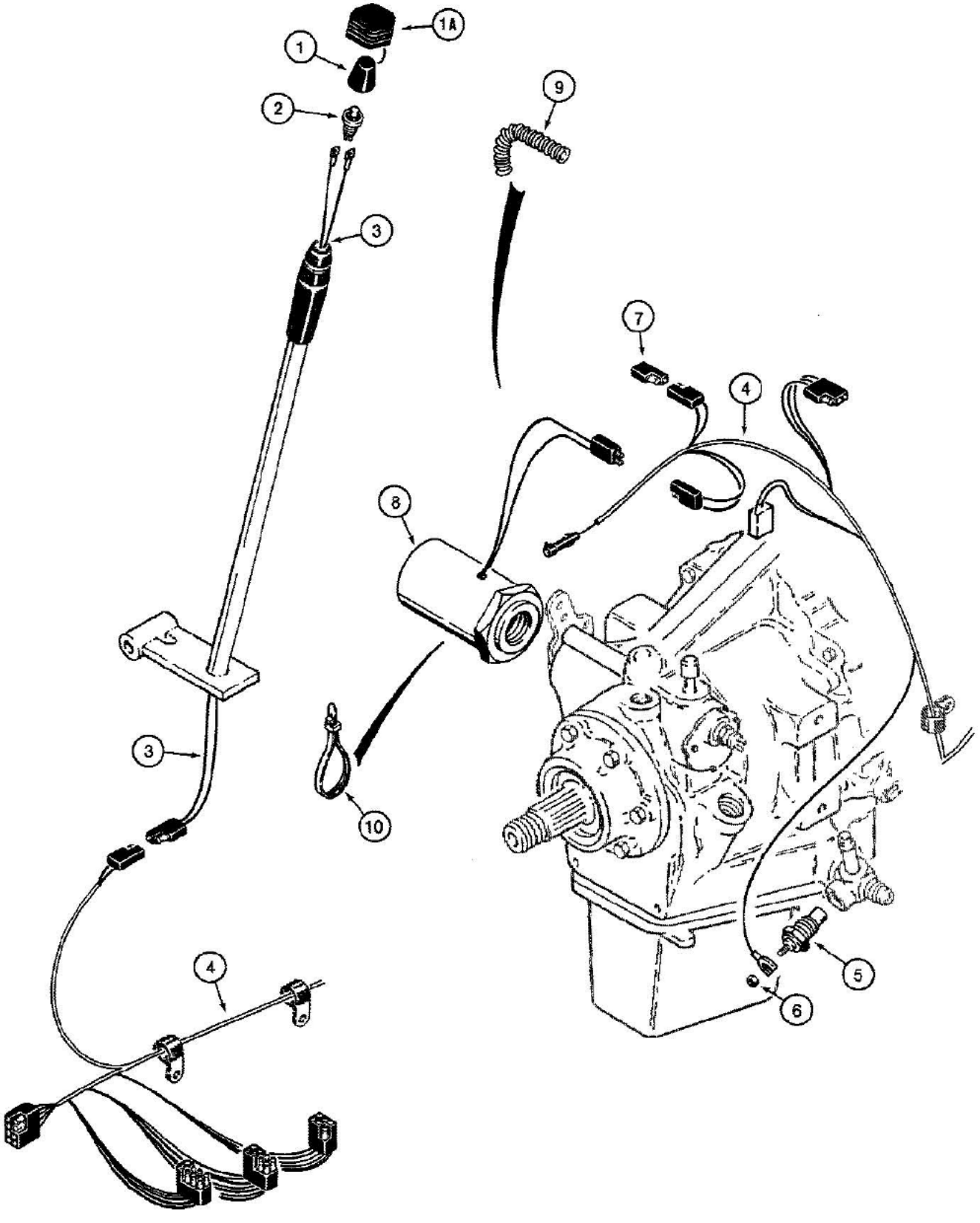

361866A-45

04-122 POWER SHUTTLE ELECTRICAL CIRCUIT

Ref	Part Number	Qty	Description
1	D138252	1	COVER switch, if used
1A	D140149	1	COVER switch, if used
2	D141486	1	SWITCH clutch cutout, shift lever handle
3	D140063	1	HARNESS shift lever switch
4	REF	1	HARNESS main, engine, see Figures 04-100 and 04-104 for engine harness options
5	A166057	1	SENDER shuttle oil temperature
6	193-1000	1	NUT AND LOCK WASHER, No. 10-32 NF, plated
7	L71879	1	DIODE switch protecting
8	D134742	1	SOLENOID clutch cutout, used with P/N D136020 or P/N D135731 power shuttle, See Figure 06-190 for solenoid used with P/N D140175, D140405, or D140492 power shuttle.
9	D88053	1	SLEEVE solenoid wire, protective guard, if used
10	L18337	1	STRAP tie, solenoid wire, if used

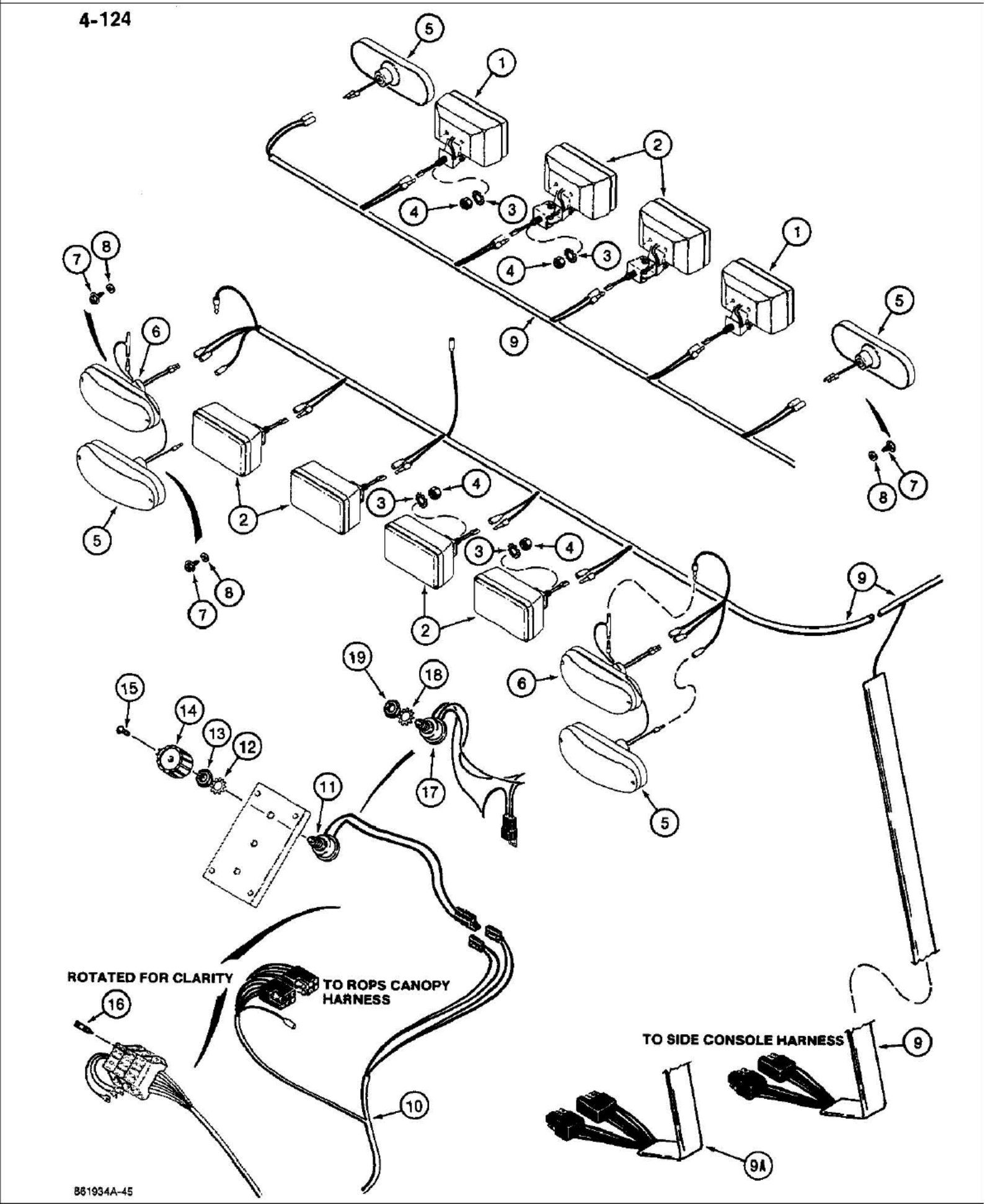

See front console harness and connections on Figure 04-110, for front and rear lamp and turn signal and flasher switches.

04-124 TRACTOR LAMP ELECTRICAL CIRCUIT, WITH CANOPY

Ref	Part Number	Qty	Description
1	D132681	2	LAMP ASSEMBLY front driving, outer, see Figure 04-128
2	D132682	2-6	LAMP ASSEMBLY rear flood, outer, and optional front and rear work lamps, center, see Figure 04-128
3	193-87	4-8	WASHER, LOCK, Ext-Int Tooth, 1/2"
4	129-145	4-8	NUT, Jam, 1/2"-13, G5
5	D135384	4	LAMP ASSEMBLY turn signal and flasher, front and rear, amber, see Figure 04-132
6	D121152	2	LAMP ASSEMBLY stop and tail, rear, red, see Figure 04-132
7	187-576	12	SCREW hex washer head, slotted, self-tapping, No. 10-24 x 3/8", plated, lamp base to ROPS canopy frame
8	195-513	12	WASHER flat, No. 10, plated
9	D132221	1	HARNESS, ROPS canopy, lamps, used on models with a two-position lamp switch for single control of front and rear lamps, if used, attaches to side console instrument harness, see Figure 09-626, for harness cover that mounts to the ROPS canopy
9A	D141380	1	HARNESS, ROPS canopy, lamps, used on models with a four-position lamp switch for separate switching of front and rear lamps, if used, attaches to side console instrument harness, see Figure 09-626 for harness cover that mounts to the ROPS canopy
10	REF	1	HARNESS instrument, side console, see Figure 04-112 for harness options
	D138377	1	SWITCH ASSEMBLY two-position, single control of optional front and rear work lamps, used with P/N D132221 harness, Ref. 9, Includes: Ref. 11 thru 13
11	NSS	1	SWITCH optional front and rear work lamps
12	193-58	1	WASHER lock, external tooth, 1/2", plated
13	129-125	1	NUT, 1/2"-20, G5
14	A141735	1	KNOB optional work lamp switch, see Figure 09-638 for work lamp symbol decal
15	182-510	1	SCREW machine, pan head slotted, No. 8-32 NC x 1/2", plated
16	A149802	1	FUSE, 20 amperes, mounts in fuse holder in side console harness
	D141394	1	SWITCH ASSEMBLY four-position, separate switching of optional front and rear work lamps, used with P/N D141380 harness, Ref. 9A, Includes: Ref. 17 thru 19
17	NSS	1	SWITCH optional front and rear work lamps
18	193-58	1	WASHER lock, external tooth, 1/2", plated
19	129-125	1	NUT, 1/2"-20, G5

See front console harness and connections on Figure 04-110, for front and rear lamp and turn signal and flasher switches.

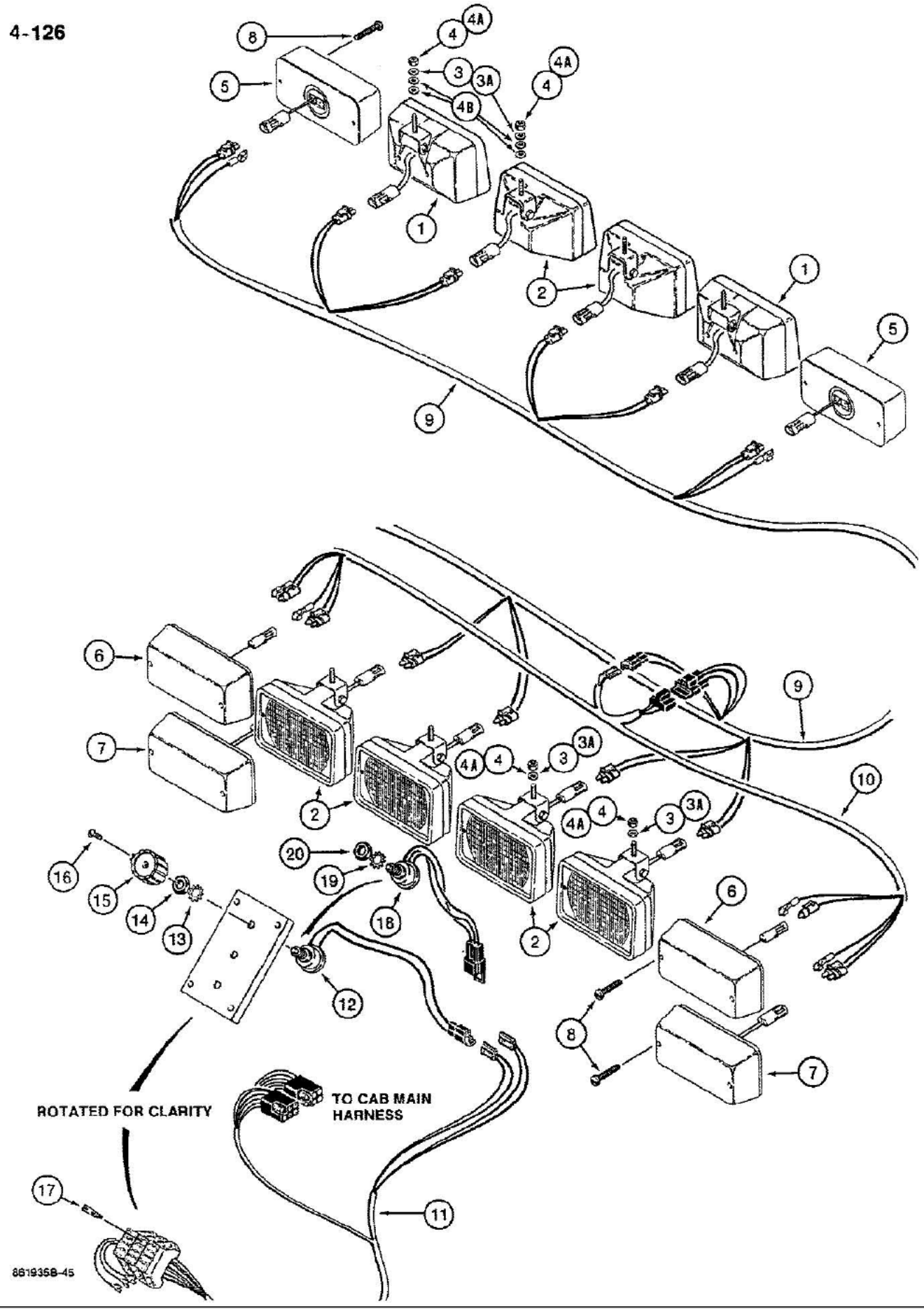

See front console harness and connections on Figure 04-110, for front and rear lamp and turn signal and flasher switches.

04-126 TRACTOR LAMP ELECTRICAL CIRCUIT, WITH CAB

Ref	Part Number	Qty	Description
1	R54411	2	LAMP ASSEMBLY front driving, see Figure 04-130
2	R54412	2-6	LAMP ASSEMBLY rear flood, outer, and optional front and rear work lamps, center, see Figure 04-130
3	195-525	4-8	WASHER flat, 3/8", plated, used with Hobbs (SW) lamps
3A	895-11010	4-8	WASHER, M10 x 20 x 2, Used with ABL lamps
4	131-203	4-8	NUT hex, self-locking, 3/8"-16 NC, plated, used with Hobbs (SW) lamps
4A	831-1110	4-8	NUT hex, self-locking, 10 mm-1.5, used with ABL lamps
4B	131-415	4-16	NUT push, hex, special locking, 3/8" NC, used in addition to flat washer and nut on some models
5	92259C1	2	LAMP ASSEMBLY flasher and turn signal, front of cab only, see Figure 04-134
6	92258C1	2	LAMP ASSEMBLY flasher and turn signal, rear of cab only, see Figure 04-134
7	92260C1	2	LAMP ASSEMBLY stop and tail, see Figure 04-134
8	132080	12	SCREW machine, fillister head, No. 10-24 NC x 2", plated
9	R54147	1	HARNESS cab, main, used on models with two-position lamp switch for single control of front and rear lamps, if used, attaches to side console instrument harness
9A	A187759	1	HARNESS cab, main, used on models with four-position lamp switch for separate switching of front and rear lamps, if used, not shown, attaches to side console instrument harness
10	R53636	1	HARNESS rear lamp, attaches to main cab harness
11	REF	1	HARNESS instrument, side console, see Figure 04-112 for harness options
	D138377	1	SWITCH ASSEMBLY two position, single control of optional front and rear work lamps, used with P/N R54147 harness, Ref. 9, Includes: Ref. 12 thru 14
12	NSS	1	SWITCH optional front and rear work lamps
13	193-58	1	WASHER lock, external tooth, 1/2", plated
14	129-125	1	NUT, 1/2"-20, G5
15	A141735	1	KNOB optional work lamp switch, see Figure 09-638 for work lamp symbol decal
16	182-510	1	SCREW machine, pan head slotted, No. 8-32 NC x 1/2", plated
17	A149802	1	FUSE, 20 amperes, mounts in fuse holder in side console harness
	D141394	1	SWITCH ASSEMBLY four-position, separate switching of optional front and rear work lamps, used with P/N A187759 harness, Ref. 9A, Includes: Ref. 18 thru 20
18	NSS	1	SWITCH optional front and rear work lamps
19	193-58	1	WASHER lock, external tooth, 1/2", plated
20	129-125	1	NUT, 1/2"-20, G5

See front console harness and connections on Figure 04-110, for front and rear lamp and turn signal and flasher switches.

4-128

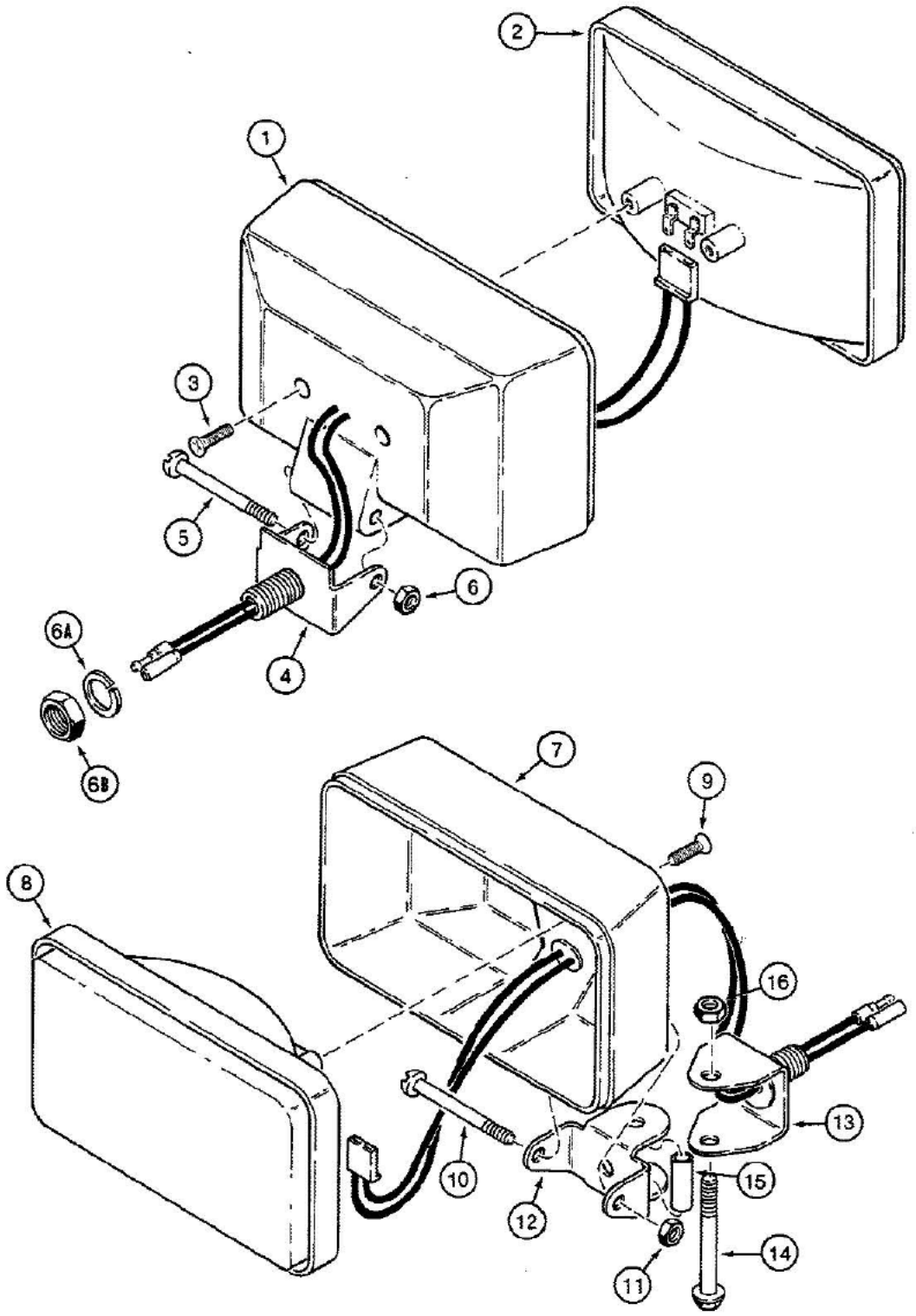

B890640-45

04-128 CANOPY TRACTOR LAMPS, FRONT DRIVING, REAR FLOOD, AND OPTIONAL FRONT AND REAR WORK LAMPS

Ref	Part Number	Qty	Description
	D132681	2	LAMP ASSEMBLY front driving, Includes: Ref. 1 thru 6B
1	NSS	1	HOUSING lamp
2	91946C1	1	BULB sealed beam
3	187-130	2	SCREW self-tapping, pan head Phillips, No. 10-16 x 5/8"
4	N14285	1	BRACKET lamp
5	182-211	1	SCREW machine, pan head slotted, 1/4"-20 NC x 2", housing to bracket
6	86625061	1	NUT hex, self-locking, 1/4"-20 NC, plated
6A	192-23	1	WASHER, LOCK, 1/2"
6B	129-105	1	NUT, 1/2"-13, G5
6B	129-105	1	NUT, 1/2"-13, G5
	D132682	2-6	LAMP ASSEMBLY rear flood and optional front and rear work lamps, Includes: Ref. 7 thru 16
7	NSS	1	HOUSING lamp
8	91947C1	1	BULB sealed beam
9	187-130	2	SCREW self-tapping, pan head Phillips, No. 10-16 x 5/8"
10	182-211	1	SCREW machine, pan head slotted, 1/4"-20 NC x 2", housing to bracket
11	86625061	1	NUT hex, self-locking, 1/4"-20 NC, plated
12	NSS	1	BRACKET housing to lower bracket
13	N14284	1	BRACKET base, lamp mounting
14	121-119	1	BOLT, Hex Flg, 5/16"-18 x 2 1/4", Serr
15	A52219	1	SPACER bracket
16	231-1445	1	NUT hex, self-locking, 5/16"-18 NC, plated

4-130

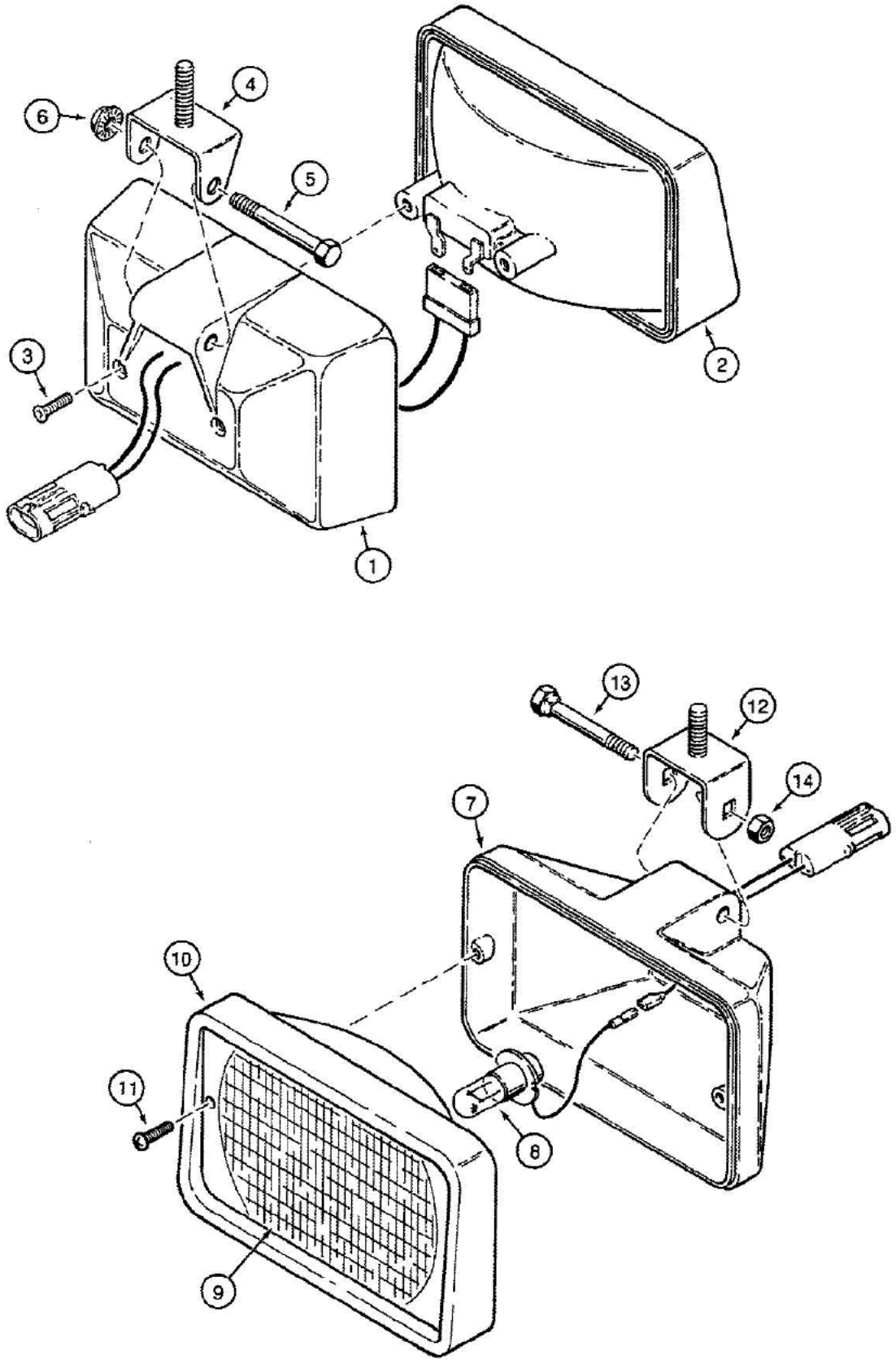

B890641-45

04-130 CAB TRACTOR LAMPS, FRONT DRIVING, REAR FLOOD AND OPTIONAL FRONT AND REAR WORK LAMPS

Ref	Part Number	Qty	Description
	R54411	2	LAMP ASSEMBLY front driving, may receive either Hobbs or ABL complete lamp assembly, see below for service, Includes: P/N A187666 and Ref. 1 thru 14
	A187666	2	LAMP ASSEMBLY, Hobbs, with glare guard, with 3/8" mounting stud, Includes: Ref. 1 thru 6, Order Lamp Assembly P/N R54411
1	NSS	1	HOUSING lamp
2	A187912	1	LAMP sealed beam, Hobbs, designated on lens as SW
3	187-625	2	SCREW flat, self-tapping, No. 8 x 1/2", sealed beam to housing
4	A187914	1	BRACKET mounting, lamp
5	113-14	1	BOLT, Hex, 1/4"- 20 x 2", G5, Housing to bracket
6	131-934	1	NUT hex, serrated flange, self-locking, 1/4" NC
	92264C1	2	LAMP ASSEMBLY, ABL, without glare guard, with 10 mm mounting stud, Includes: Ref. 7 thru 14
7	NSS	1	HOUSING lamp
8	1312210C1	1	BULB lamp
9	1983290C1	1	LENS lamp
10	1964806C1	1	RETAINER lens
11	187-1916	2	SCREW pan, self-tapping, No. 8-16 x 3/4", lens to housing
12	A187915	1	BRACKET mounting, lamp
13	931418R1	1	BOLT shoulder, hex, 8 mm x 45 mm, housing to bracket
14	30382R1	1	NUT hex, self-locking, 8 mm, class 10.9
	R54412	2-6	LAMP ASSEMBLY rear flood and optional front and rear work lamps, may receive either Hobbs or ABL complete lamp assembly, see below for service, Includes: P/N A187665 and Ref. 1 thru 14
	A187665	2-6	LAMP ASSEMBLY, Hobbs, with glare guard, with 3/8" mounting stud, Includes: Ref. 1 thru 6, Order Lamp Assembly P/N R54412
1	NSS	1	HOUSING lamp
2	A187911	1	LAMP sealed beam, Hobbs, designated on lens as SW
3	187-625	2	SCREW flat, self-tapping, No. 8 x 1/2", sealed beam to housing
4	A187914	1	BRACKET mounting, lamp
5	113-14	1	BOLT, Hex, 1/4"- 20 x 2", G5, Housing to bracket
6	131-934	1	NUT hex, serrated flange, self-locking, 1/4" NC
	92263C1	2-6	LAMP ASSEMBLY, ABL, without glare guard, with 10 mm mounting stud, Includes: Ref. 7 thru 14
7	NSS	1	HOUSING lamp
8	1312210C1	1	BULB lamp
9	1964807C1	1	LENS lamp
10	1964806C1	1	RETAINER lens
11	187-1916	2	SCREW pan, self-tapping, No. 8-16 x 3/4", lens to housing
12	A187915	1	BRACKET mounting, lamp
13	931418R1	1	BOLT shoulder, hex, 8 mm x 45 mm, housing to bracket
14	30382R1	1	NUT hex, self-locking, 8 mm, class 10.9

4-132

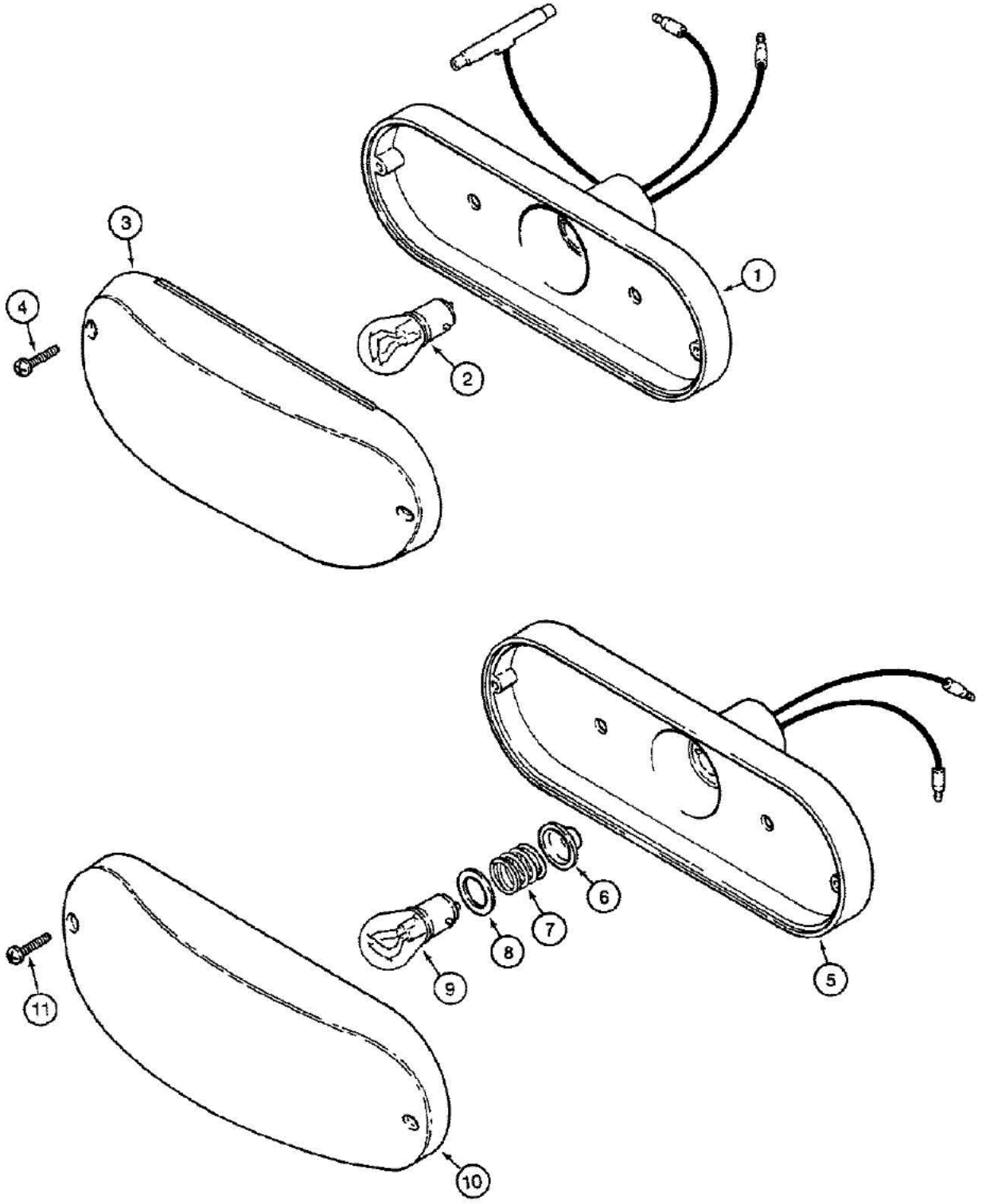

870040

04-132 CANOPY TRACTOR LAMPS, STOP AND TAIL LAMPS AND TURN SIGNAL AND FLASHER LAMPS

Ref	Part Number	Qty	Description
	D121152	2	LAMP ASSEMBLY stop and tail, with red lens, Includes: Ref. 1 thru 4
1	NSS	1	BODY lamp, complete
2	T34857	1	BULB, No. 1157, stop and tail
3	N6836	1	LENS red, lamp
4	187-1005	2	SCREW round head, self-tapping, No. 6-32 NC x 5/8", plated
	D135384	4	LAMP ASSEMBLY turn signal and flasher, with amber lens, Includes: Ref. 5 thru 11
5	NSS	1	BODY AND SOCKET lamp
6	NSS	1	SEAL rubber, spring retaining
7	NSS	1	SPRING lamp
8	NSS	1	INSULATOR lamp
9	A41264	1	BULB, #1156, 12V, Turn signal and flasher
10	N14283	1	LENS amber, lamp
11	187-1005	2	SCREW round head, self-tapping, No. 6-32 NC x 5/8", plated

4-134

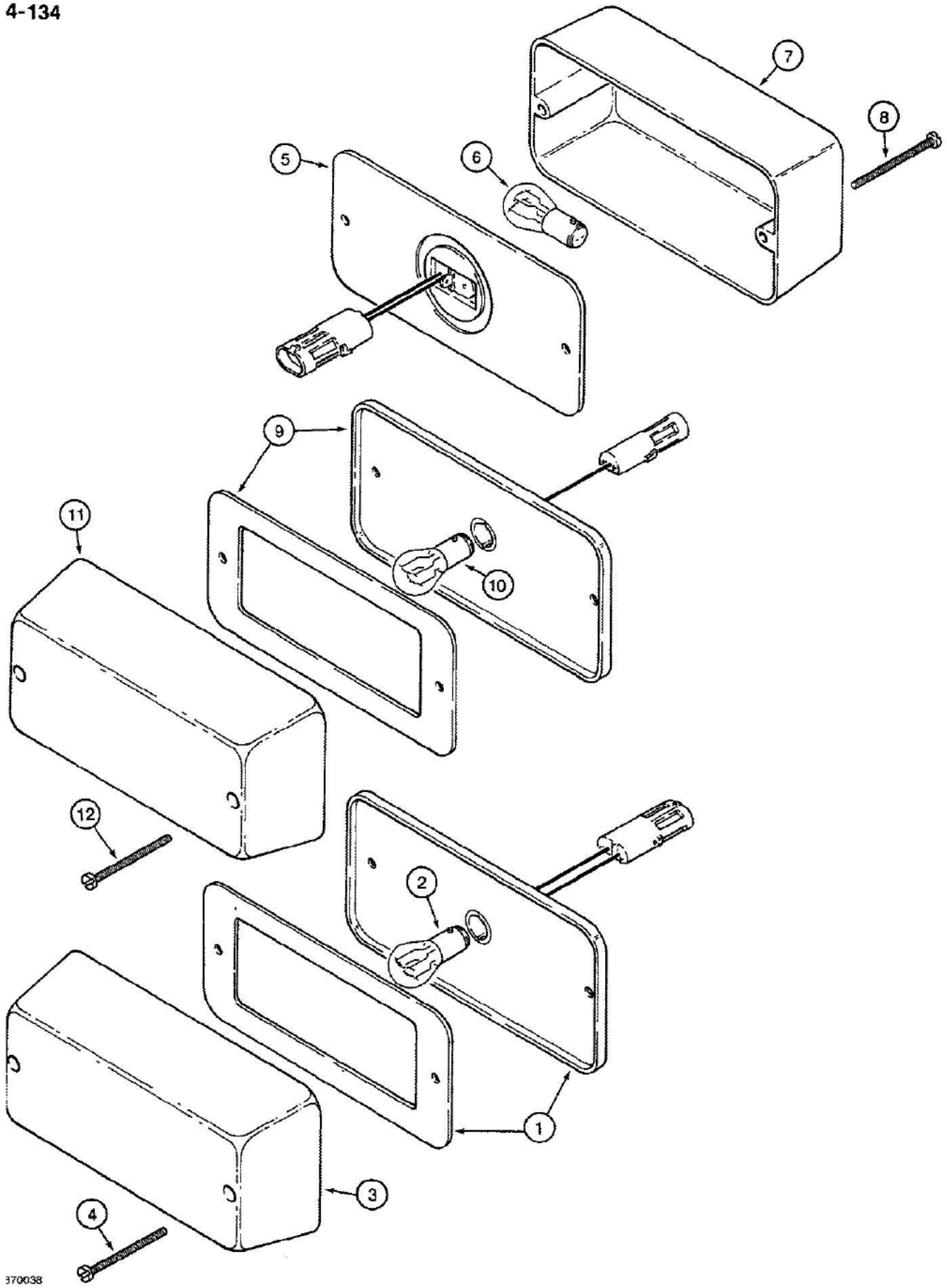

04-134 CAB TRACTOR LAMPS, STOP AND TAIL LAMPS AND TURN SIGNAL AND FLASHER LAMPS

Ref	Part Number	Qty	Description
	92260C1	2	LAMP ASSEMBLY stop and tail, with red lens, Includes: Ref. 1 thru 4
1	NSS	1	BODY lamp, complete
2	9417867	1	BULB, No. 1157, stop and tail
3	216045C1	1	LENS red, lamp
4	132080	2	SCREW machine, fillister head, No. 10-24 NC x 2", plated, lens retaining
	92259C1	2	LAMP ASSEMBLY turn signal and flasher, front, with amber lens, Includes: Ref. 5 thru 8
5	NSS	1	BODY AND SOCKET lamp, complete
6	9417867	1	BULB, No. 1157, turn signal and flasher, front
7	130883C1	1	LENS amber, lamp
8	132080	2	SCREW machine, fillister head, No. 10-24 NC x 2", plated, lens retaining
	92258C1	2	LAMP ASSEMBLY turn signal and flasher, rear, with amber lens, Includes: Ref. 9 thru 12
9	NSS	1	BODY AND SOCKET lamp, complete
10	9417866	1	BULB, No. 1156, turn signal and flasher, rear
11	130883C1	1	LENS amber, lamp
12	132080	2	SCREW machine, fillister head, No. 10-24 NC x 2", plated, lens retaining

4-136

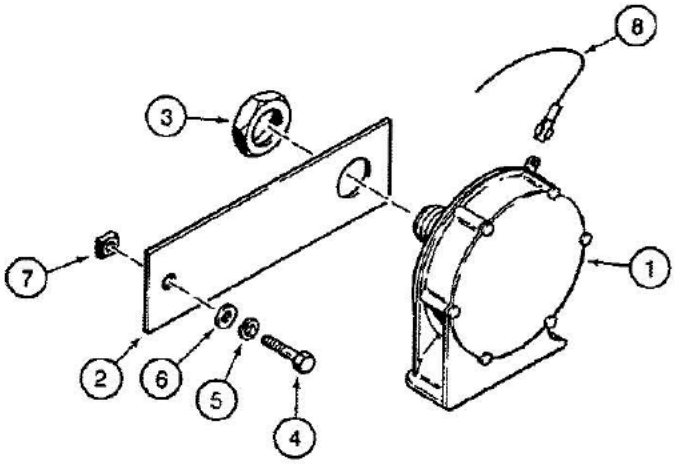

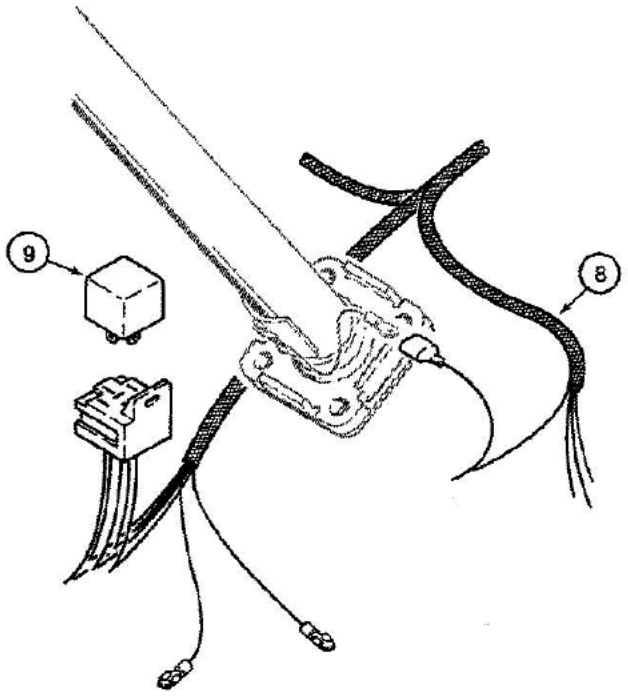

861933-45

See Figure 05-152 for steering wheel and column used on models with a horn.

04-136 HORN, MODELS WITH OR WITHOUT TILT/TELESCOPING STEERING COLUMN

Ref	Part Number	Qty	Description
1	D123205	1	HORN, 12 volt
2	D137007	1	BRACKET horn mounting
3	L30866	1	NUT special, horn mounting
4	113-102	1	BOLT, Hex, 5/16"-18 x 3/4", G5, Full Thd
5	192-20	1	WASHER, LOCK, 5/16"
6	195-103	1	WASHER flat, 5/16", plated
7	25-225	1	NUT square, 5/16"-18 NC
8	REF	1	HARNESS instrument, front console, see Figure 04-110 for front console instrument harness options
9	D128310	1	RELAY horn, attaches to front console instrument harness, 40 amperes is marked on the relay. This is the resistance rating. The inductive rating is 30 amperes. We use this inductive rating in our literature.

See Figure 05-152 for steering wheel and column used on models with a horn.

4-138

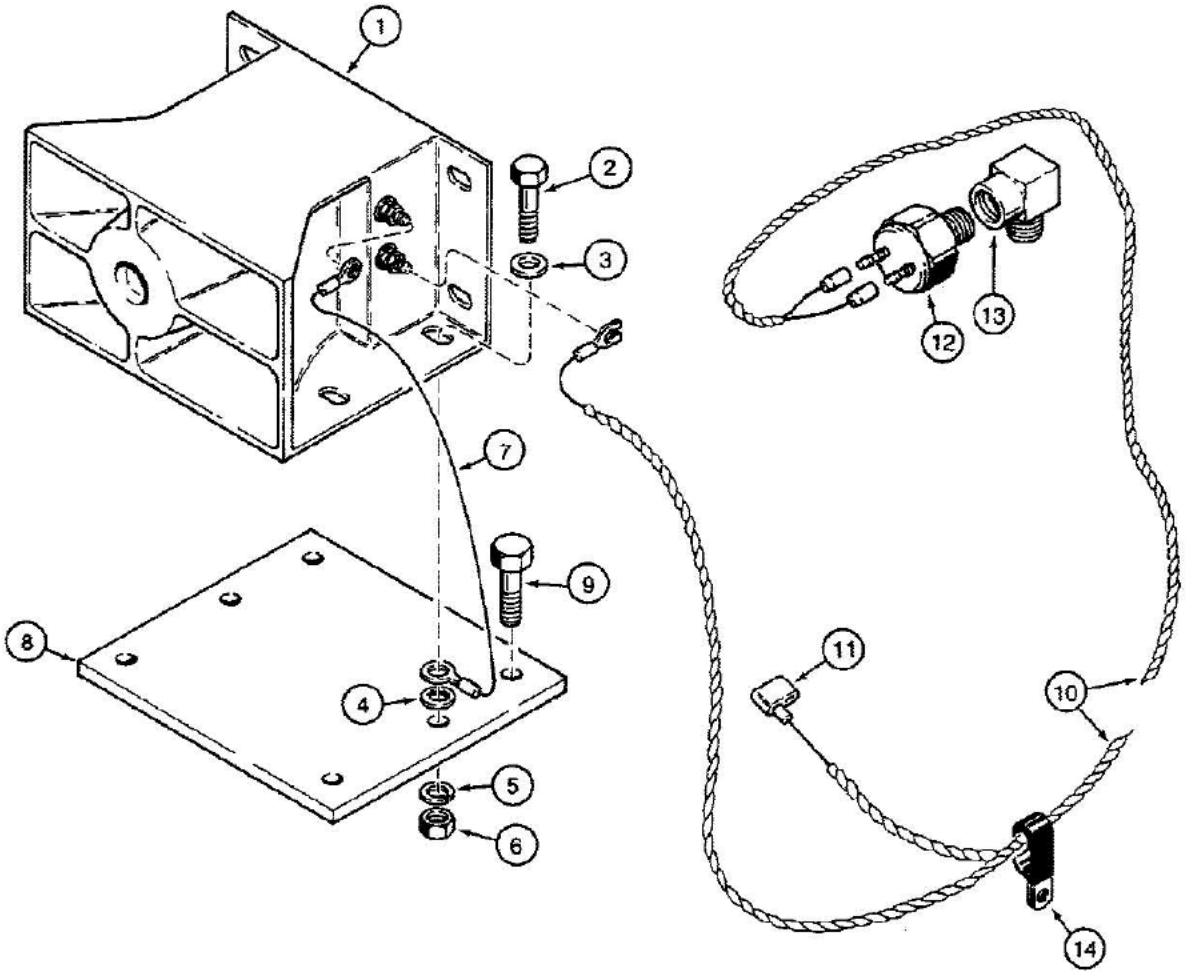

861815B-45

04-138 BACKUP ALARM

Ref	Part Number	Qty	Description
1	D121972	1	ALARM backup, electric
2	113-103	4	BOLT, Hex, 5/16"-18 x 1", G5, Full Thd
3	195-521	4	WASHER flat, 5/16", plated
4	193-82	1	WASHER, LOCK, Int Tooth, 5/16"
5	192-20	4	WASHER, LOCK, 5/16"
6	9635082	4	NUT, 5/16"-18, G5
7	D70125	1	WIRE ground
8	D133397	1	PLATE backup alarm mounting
9	26-616	2	BOLT hex head, 3/8"-16 NC x 1", grade 8
10	D133370	1	HARNESS backup alarm
11	A149798	1	FUSE, 5 amperes
12	D139904	1	SWITCH pressure, backup alarm
13	217-1014	1	ELBOW, 90ε, 1/8"-27 Female x 1/8"-27 Male, at power shuttle
14	D39696	1	CLAMP double, mounts to chassis

4-140

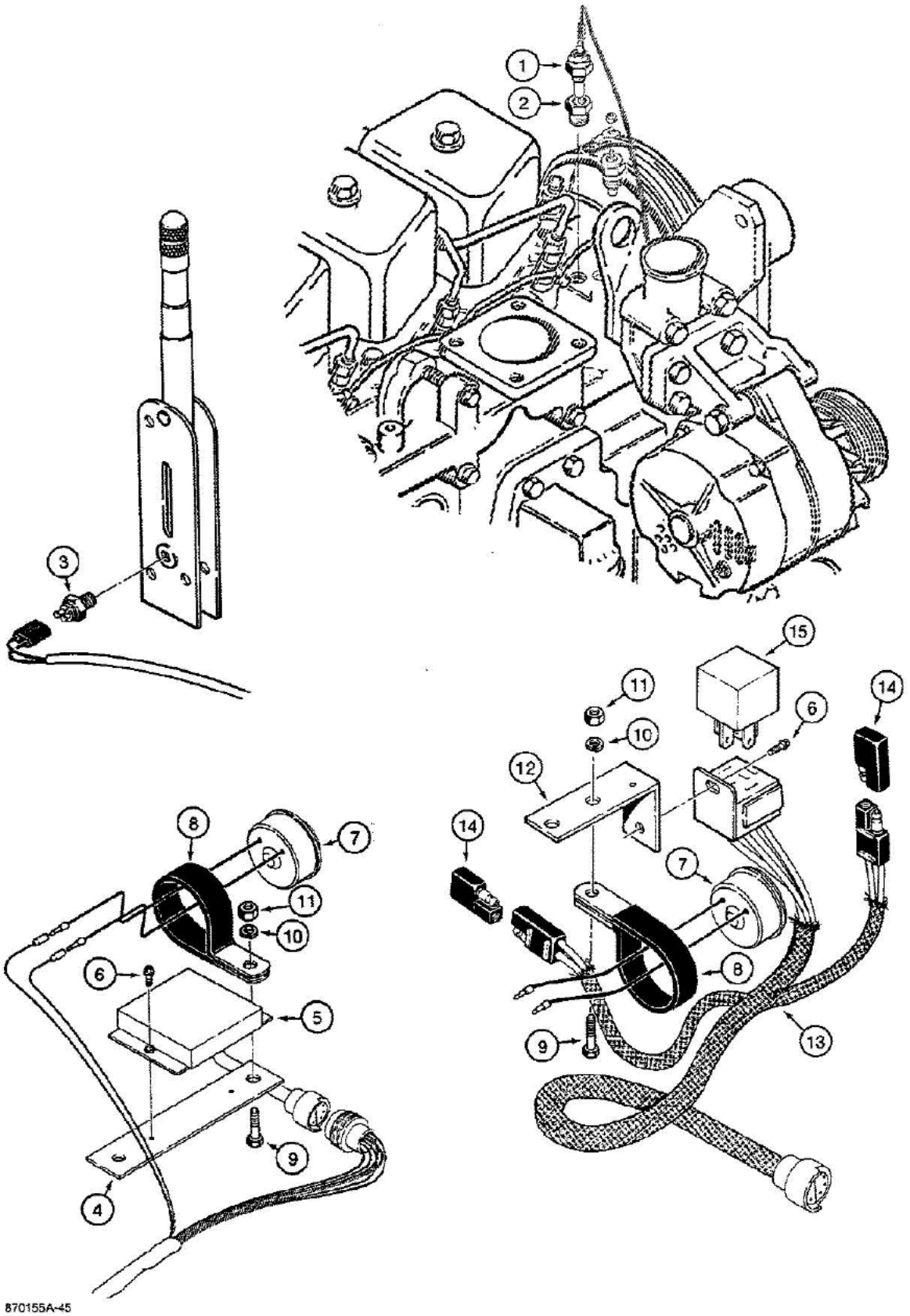

See Figure 04-112 for side instrument console harness options.

04-140 SPECIAL PARTS USED ON MODELS W/AUDIBLE WARNING ALARM FOR WATER TEMP, ENGINE OIL PRESS. & PARK. B

Ref	Part Number	Qty	Description
1	D70163	1	SWITCH engine coolant temperature, replaces existing engine block plug
2	221-1088	1	REDUCER, 1/2" x 1/4" NPT
3	D136514	1	SWITCH parking brake, mounts in parking brake lever on Figure 07-268, and attaches to side instrument panel harness
4	D136682	1	BRACKET alarm mounting, uses existing mounting bolt, mounts under side console, if used
5	D139000	1	RELAY alarm module, attaches to side instrument console harness, no longer available, order P/N D103387 kit
6	187-1090	1-2	SCREW hex washer head, self-tapping, No. 10-24 NC x 5/8", blunt point, plated, relay mounting
7	D137468	1	ALARM warning, for engine water temperature, engine oil pressure, and parking brake
8	D120561	1	CLAMP warning alarm mounting to bracket
9	113-206	1	BOLT, Hex, 3/8"-16 x 3/4", G5, Full Thd, Alarm clamp to bracket
10	192-21	1	WASHER, LOCK, 3/8"
11	129-103	1	NUT, 3/8"-16, G5
	D103387	1	KIT service, audible warning alarm, includes instructions, Includes: Ref. 12 thru 15
12	D143873	1	BRACKET alarm mounting, uses existing mounting bolt, mounts under side console
13	D143962	1	WIRE alarm, attaches to side instrument console harness
14	L71879	2	DIODE isolation
15	D128310	1	RELAY alarm, 40 amperes is marked on the relay. This is the resistance rating. The inductive rating is 30 amperes. We use this inductive rating in our literature.

See Figure 04-112 for side instrument console harness options

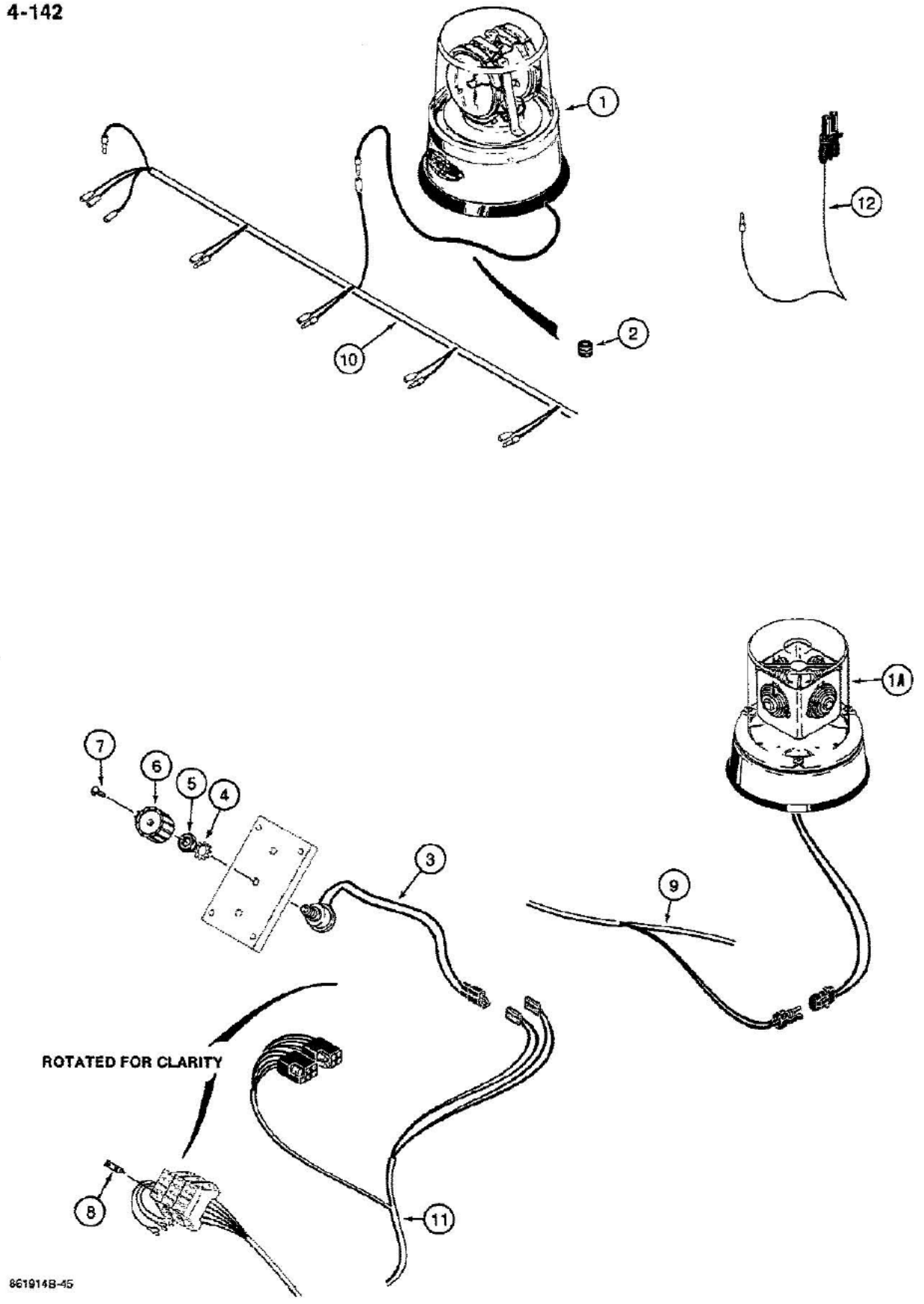

See Figure 09-588 for rotating beacon mounting plate and related hardware, used on cab models.

04-142 ROTATING BEACON AND CIRCUIT

Ref	Part Number	Qty	Description
1	F93158	1	BEACON ASSEMBLY rotating, used on canopy models, see Figure 04-144, no longer available, for service order P/N D137275 beacon and P/N D140477 adapting wire , Ref. 1A and 12
1A	D137275	1	BEACON ASSEMBLY rotating, used on cab or canopy models, see Figure 04-146
2	A23870	1	GROMMET wire, canopy only, use in place of Ref. 7 on Figure 04-144
	D138377	1	SWITCH ASSEMBLY rotating beacon, Includes: Ref. 3 thru 5
3	NSS	1	SWITCH rotating beacon
4	193-58	1	WASHER lock, external tooth, 1/2", plated
5	129-125	1	NUT, 1/2"-20, G5
6	A141735	1	KNOB rotating beacon switch, see Figure 09-638 for rotating beacon symbol decal
7	182-510	1	SCREW machine, pan head slotted, No. 8-32 NC x 1/2", plated
8	A149801	1	FUSE, 15 amperes, mounts in fuse holder in side instrument console harness
9	REF	1	HARNESS cab models, see Figure 04-126 for cab harness options
10	REF	1	HARNESS, ROPS canopy models, see Figure 04-124 for canopy harness options
11	REF	1	HARNESS side console, right-hand, see Figure 04-112 for side console harness options
12	D140447	1	WIRE adapting, used on canopy models

See Figure 09-588 for rotating beacon mounting plate and related hardware, used on cab models.

4-144

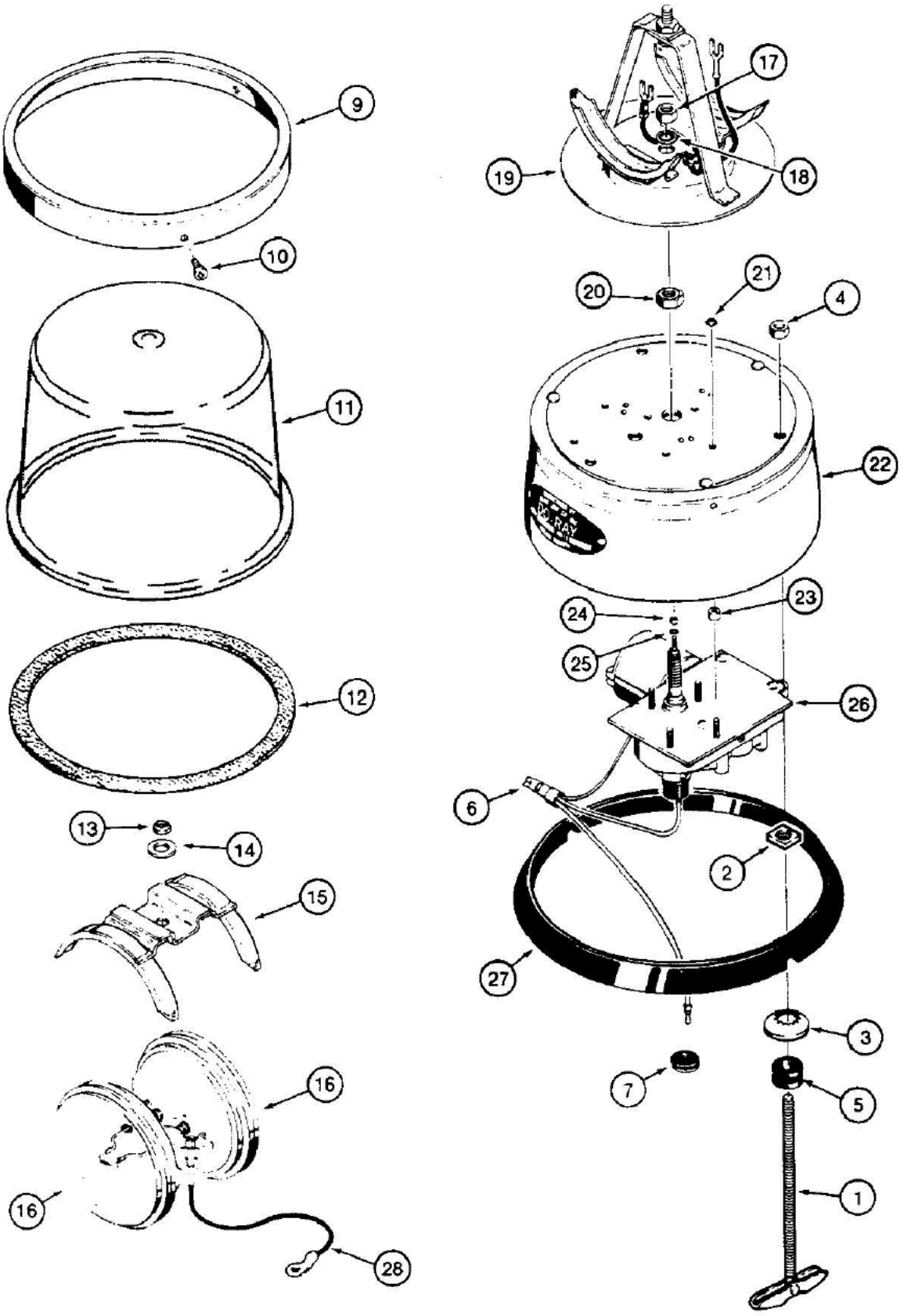

830565-45

04-144 ROTATING BEACON, USED ON CANOPY MODELS

Ref	Part Number	Qty	Description
	F93158	1	BEACON ASSEMBLY rotating, 360°, amber, includes a switch and wire not used on model 580K, no longer available, for service order P/N D140447 adapting wire in Figure 04-142 and P/N D137275 beacon in Figure 04-146, Includes: P/N L35092 and Ref. 1 thru 28, Title indicates for use on canopy models - should indicate for use on cab models only
	L35092	1	KIT mounting, includes an instruction sheet, Includes: Ref. 1 thru 8
1	L35148	3	BOLT toggle, No. 10-24 NC x 4"
2	129-47	3	NUT square, No. 10-24 NC
3	L35146	3	WASHER lock, No. 10
4	86625057	3	NUT, LOCK, #10-24, GB
5	F13115	3	GROMMET rubber, mounting
6	T29401	1	NUT twist-on, wire
7	A43211	1	GROMMET rubber, wire, Replace: with P/N A23870 grommet in Figure 04-142
8	L35145	1	WIRE, 8 foot block, not shown
9	L32219	1	RING clamp, lens
10	168-70	3	SCREW drive, No. 8 x 3/8", plated
11	L32221	1	LENS amber
12	L32220	1	GASKET lens
13	131-204	1	NUT hex, self-locking, 1/4"-20 NC, plated
14	195-102	1	WASHER flat, 1/4", plated
15	L32222	1	BRACKET retainer, sealed beam lamp
16	D66204	2	LAMP sealed beam, No. 4416
17	129-175	1	NUT hex, 3/8"-16 NC, plated, left-hand thread
18	193-94	1	WASHER lock, internal tooth, 3/8", left-hand twist
19	L32224	1	PLATE mounting, lamp
20	L32225	1	NUT special, brass
21	131-29	4	NUT hex, self-locking, No. 8-32 NC, plated
22	L32226	1	BASE motor and lens
23	L32228	4	SPACER motor to base
24	129-13	1	NUT, #4-40
25	192-13	1	Washer, Lock, #4
26	D65187	1	MOTOR electric, 12 volt
27	L32227	1	GASKET base
28	L35144	1	WIRE ground

4-146

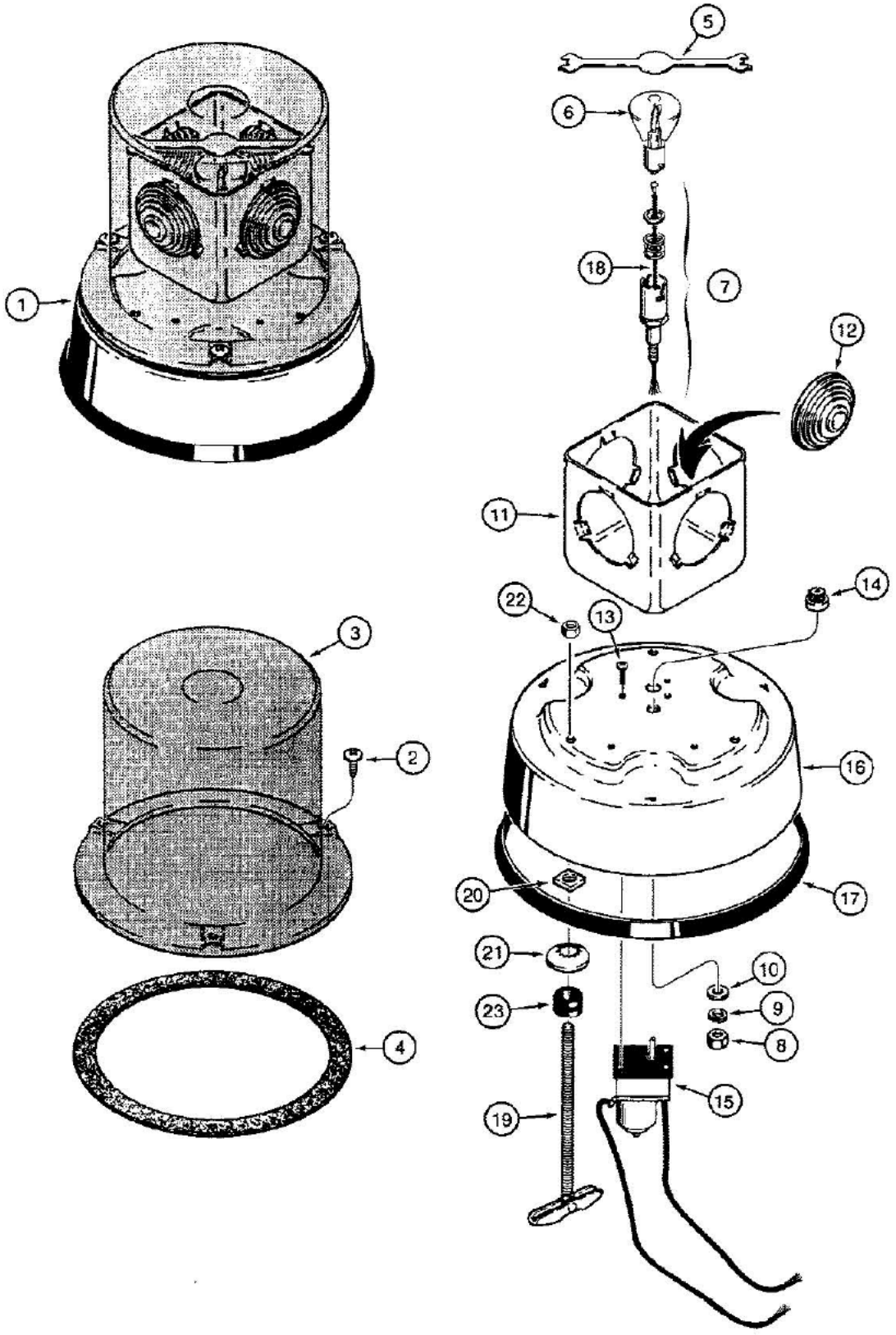

870181A-45

580K LOADER BACKHOE (NORTH AMERICA) - Electrical System

04-146 ROTATING BEACON, USED ON CAB OR CANOPY MODELS

Ref	Part Number	Qty	Description
1	D137275	1	BEACON ASSEMBLY rotating, cab or canopy models, 360 degree, 12 volt, amber lens, Signal Stat No. 378Y109, Includes: Ref. 2 thru 26, Title indicates for use on cab or canopy models - should indicate for use on canopy models only
2	187-39	3	SCREW round head, self-tapping, No. 12 x 5/8"
3	N8426	1	DOME rotating beacon
4	NSS	1	GASKET dome
5	NSS	1	STRAP basket
6	193096	1	BULB, 12 volt, No. 1195
7	N8430	1	SOCKET ASSEMBLY beacon
8	9635082	1	NUT, 5/16"-18, G5
9	192-20	1	WASHER, LOCK, 5/16"
10	195-103	1	WASHER flat, 5/16", plated
11	NSS	1	BASKET less lenses
12	N8423	4	LENS beacon
13	182-47	3	SCREW machine, pan head slotted, No. 6-32 NC x 5/8"
14	NSS	1	GEAR beacon
15	N14442	1	MOTOR beacon, 12 volt, includes connector which is not serviced separately
16	NSS	1	BASE beacon
17	N8422	1	GASKET base
18	N14209	1	WIRE jumper, bulb to motor
	L35092	1	KIT mounting, includes instruction sheet, Includes: Ref. 19 thru 26
19	L35148	3	BOLT toggle, No. 10-24 NC x 4"
20	129-47	3	NUT square, No. 10-24 NC, if used
21	L35146	3	WASHER lock, No. 10
22	86625057	3	NUT, LOCK, #10-24, GB
23	F13115	3	GROMMET rubber, mounting
24	T29401	1	NUT twist-on, wire, not shown, not required
25	A43211	1	GROMMET rubber, wire, if used, not shown
26	L35145	1	WIRE, 8 foot block, not shown

PICTORIAL SECTION INDEX



STEERING/
TRACK 5

B890757

Bur 8-3462 Issued February, 1989 Printed in U.S.A.

5-150

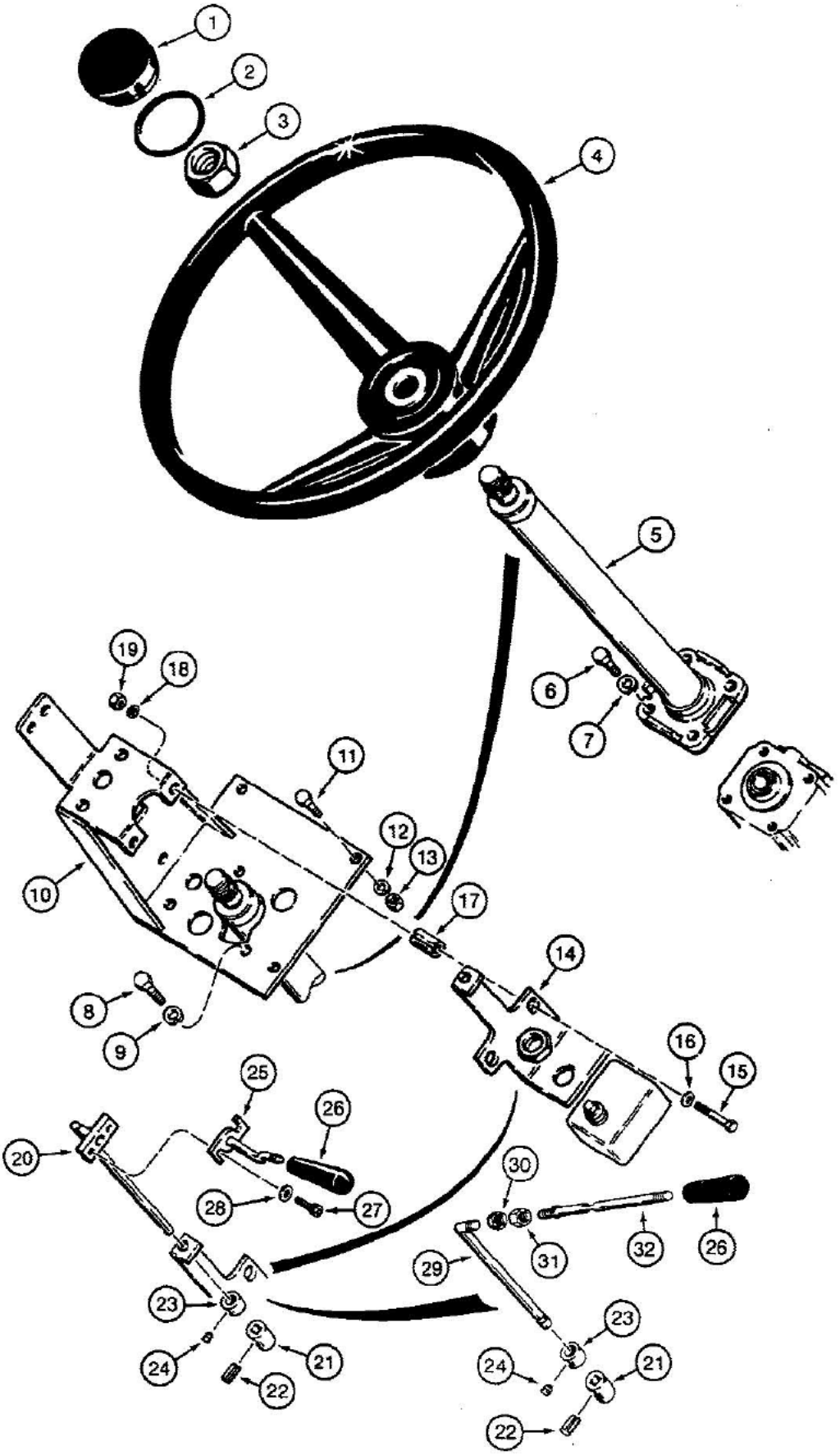
1
2
3
4
5
6
7
8
9
10
11
12
13
14
15
16
17
18
19
20
21
22
23
24
25
26
27
28
29
30
31
32
26
23
24
21
22
361932A-45

05-150 STEERING WHEEL, COLUMN, AND TURN SIGNAL, USED ON MODELS WITHOUT TILT/TELESCOPING STEERING COLU

Ref	Part Number	Qty	Description
1	A62210	1	CAP steering wheel, For use on models without a horn. For models with a horn, see Figure 05-152 for steering wheel, column, and horn button. Other parts listed in this figure are common to models with or without a horn.
2	D26115	1	O-RING cap, For use on models without a horn. For models with a horn, see Figure 05-152 for steering wheel, column, and horn button. Other parts listed in this figure are common to models with or without a horn.
3	F19646	1	NUT special, steering wheel retaining
4	A65544	1	WHEEL steering, tractor, For use on models without a horn. For models with a horn, see Figure 05-152 for steering wheel, column, and horn button. Other parts listed in this figure are common to models with or without a horn.
5	REF	1	COLUMN ASSEMBLY steering, without horn wire, see Figure 05-160, For use on models without a horn. For models with a horn, see Figure 05-152 for steering wheel, column, and horn button. Other parts listed in this figure are common to models with or without a horn.
6	113-206	2	BOLT, Hex, 3/8"-16 x 3/4", G5, Full Thd
7	192-21	2	WASHER, LOCK, 3/8"
8	113-208	2	BOLT, Hex, 3/8"-16 x 1 1/4", G5, Full Thd
9	192-21	2	WASHER, LOCK, 3/8"
10	D134527	1	BRACKET steering column
11	113-102	4	BOLT, Hex, 5/16"-18 x 3/4", G5, Full Thd
12	192-20	4	WASHER, LOCK, 5/16"
13	9635082	4	NUT, 5/16"-18, G5
14	D133224	1	BRACKET turn signal, Electrial switch for turn signal lever bracket is P/N A77184
15	113-110	2	BOLT, Hex, 5/16"-18 x 2 1/4", G5
16	195-521	2	WASHER flat, 5/16", plated
17	D121476	2	SPACER bracket
18	192-20	2	WASHER, LOCK, 5/16"
19	9635082	2	NUT, 5/16"-18, G5
20	D137790	1	ROD turn signal, if used, Make up older style turn signal rod and lever.
21	D126446	1	COUPLER rod to turn signal switch
22	138-56	1	PIN, 1/8" x 11/16", Slotted
23	D126453	1	COLLAR turn signal rod, Includes: Ref. 24
24	83-43	1	SCREW set, hex socket headless, 1/4"-20 NC x 3/16", cup point, use P/N 83-3254 if required
25	D137830	1	LEVER turn signal, if used, Make up older style turn signal rod and lever.
26	D136995	1	KNOB turn signal lever
27	28053R1	2	BOLT hex socket head, No. 6-32 NC x 3/4", if used, Make up older style turn signal rod and lever.
28	195-507	2	WASHER flat, No. 6, plated, if used, Make up older style turn signal rod and lever.
29	D140239	1	ROD turn signal, if used, Make up later style turn signal rod and lever.
30	9635082	1	NUT, 5/16"-18, G5, If used, Make up later style turn signal rod and lever.
31	D140966	1	NUT special, if used, Make up later style turn signal rod and lever.
32	D140513	1	LEVER turn signal, if used, Make up later style turn signal rod and lever.

5-152

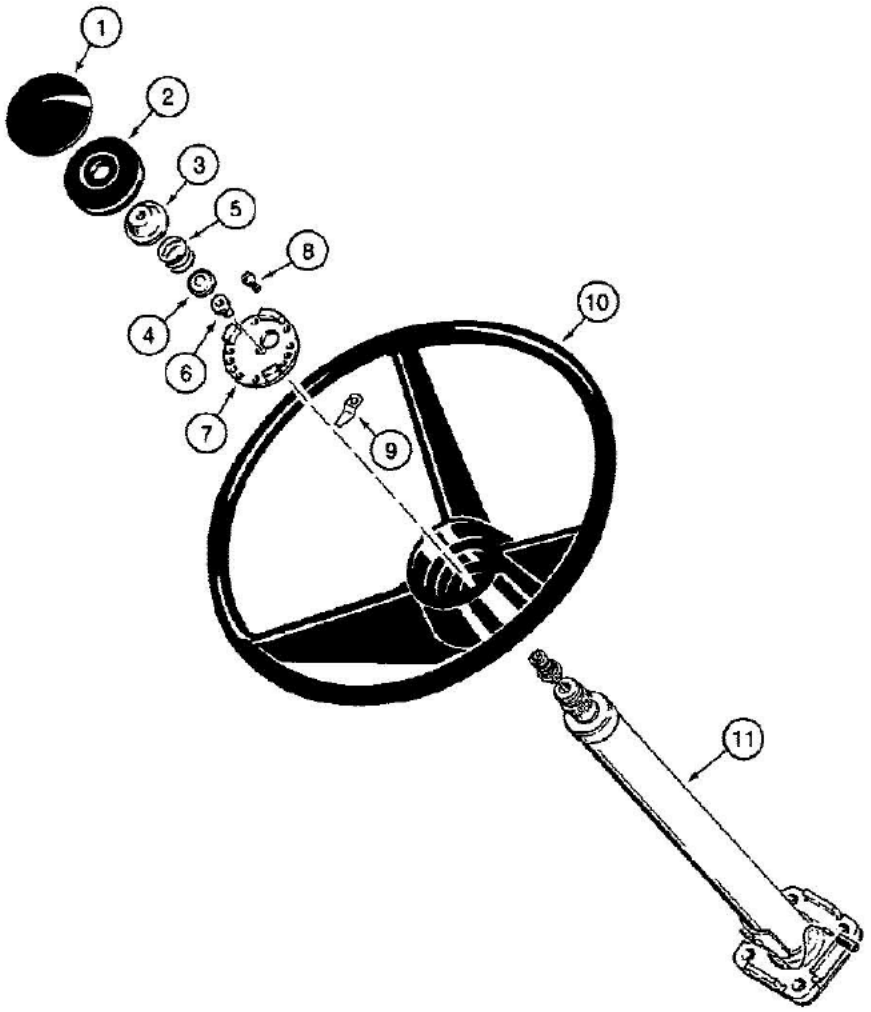

870000

The items in this figure are special parts used on models with a horn. See Figure 05-150 for common parts used on models with or without a horn.

05-152 STEERING WHEEL & COLUMN, SPECIAL PARTS USED ON MODELS W/HORN W/O TILT/TELESCOPING STEERING COL

Ref	Part Number	Qty	Description
	D131790	1	BUTTON ASSEMBLY horn, Includes: Ref. 1 thru 9
1	N14234	1	COVER button
2	A13089	1	BUTTON horn actuating
3	A13092	1	CUP contact
4	A13090	1	CAP contact
5	A13091	1	SPRING return, horn button
6	A13058	1	CONTACT horn, insulator, included in button assembly, not required
7	N9013	1	PLATE base
8	168-25	3	SCREW drive, round head, No. 10 x 5/8", base plate retaining
9	NSS	1	SPRING ground
10	D128532	1	WHEEL steering, tractor
11	REF	1	COLUMN ASSEMBLY steering, with horn wire, see Figure 05-162

The items in this figure are special parts used on models with a horn. See Figure 05-150 for common parts used on models with or without a horn.

05-154 STEERING WHEEL AND COLUMN, SPECIAL PARTS USED ON MODELS WITH TILT/TELESCOPING STEERING COLUMN

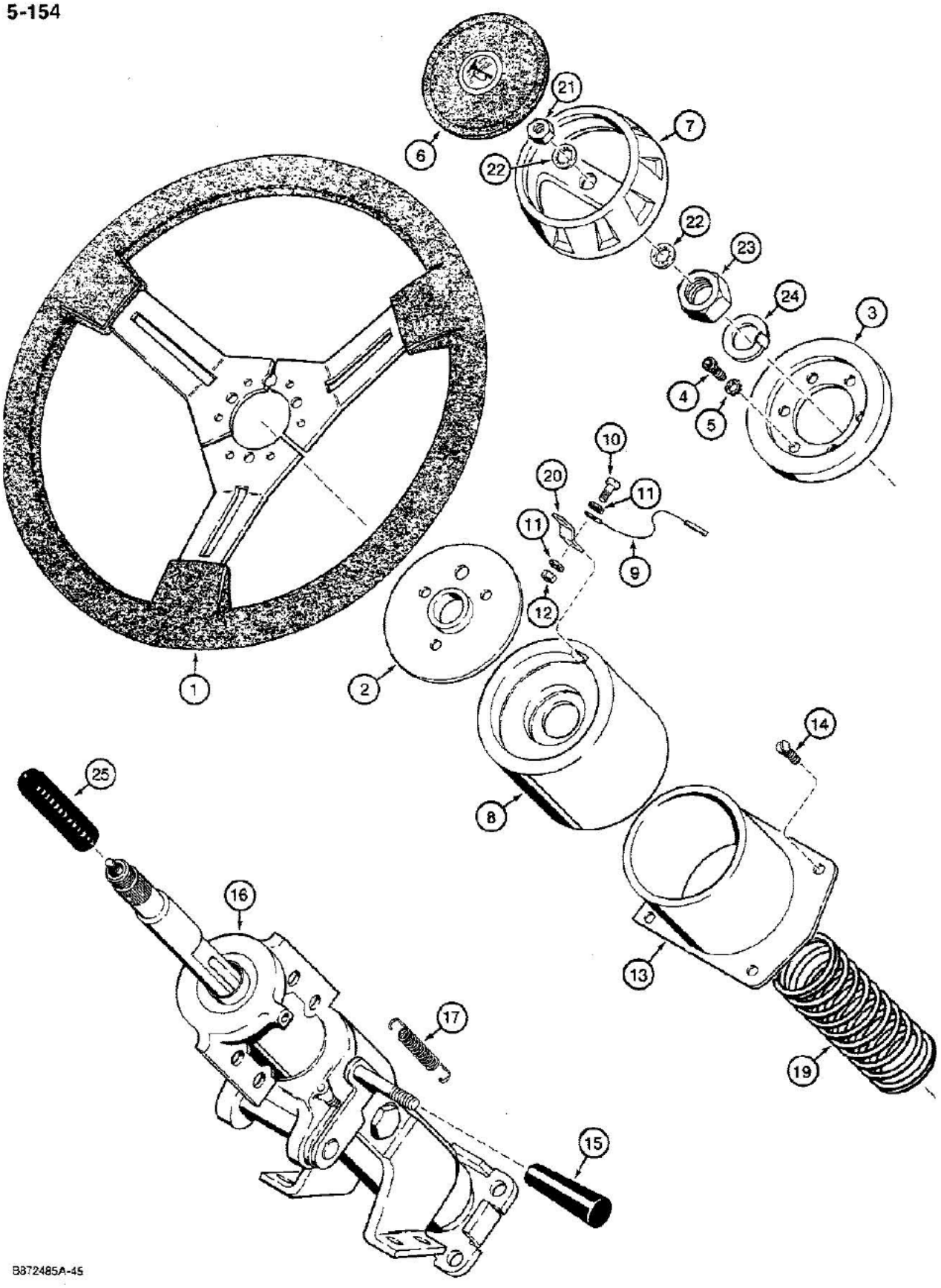

05-154 STEERING WHEEL AND COLUMN, SPECIAL PARTS USED ON MODELS WITH TILT/TELESCOPING STEERING COLUMN

Ref	Part Number	Qty	Description
	D139645	1	WHEEL ASSEMBLY steering, Includes: Ref. 1 thru 5
1	D147465	1	WHEEL steering, P/N D147465 subs to P/N D148204
2	D147466	1	HUB lower
3	D147464	1	SPACER ring, upper
4	864-8020	3	SCREW, hex socket, 8-1.25 x 20 mm, 8.8, plated
5	193-67	3	WASHER, LOCK, Int Tooth, 5/16"
6	D141979	1	BUTTON horn actuating
7	D141980	1	RING lock
8	D139780	1	COVER column, outer
9	D141182	1	WIRE ground, horn, attaches to horn button
10	182-5	1	SCREW machine, pan head, slotted, No. 4-20 NC x 3/8"
11	193-22	2	WASHER, LOCK, Int Tooth, #4
12	129-13	1	NUT, #4-40
13	D139781	1	COVER column, inner
14	182-550	4	SCREW machine, pan Phillips head, slotted, No. 10-24 NC x 1/2", plated
15	D136995	1	KNOB tilt/telescoping control lever
	D138501	1	COLUMN ASSEMBLY tilt/telescoping, steering, internal component parts not serviced separately, Includes: Ref. 16 thru 24
16	NSS	1	COLUMN tilt/telescoping, steering, Brush assy. for horn, P/N D147341 and plate assy., P/N D147554, fit here.
17	D147552	3	SPRING small, lower column
18	D147553	2	SPRING small, side, not shown
19	D147550	1	SPRING large, upper column
20	D141183	1	SPRING wire ground
21	131-497	1	NUT hex, self-locking, 3/8"-16 NC, plated
22	193-68	2	WASHER, LOCK, Int Tooth, 3/8"
23	N14864	1	NUT hex, special
24	D147549	1	RETAINER lock
25	D143637	1	GUARD steering column

5-156

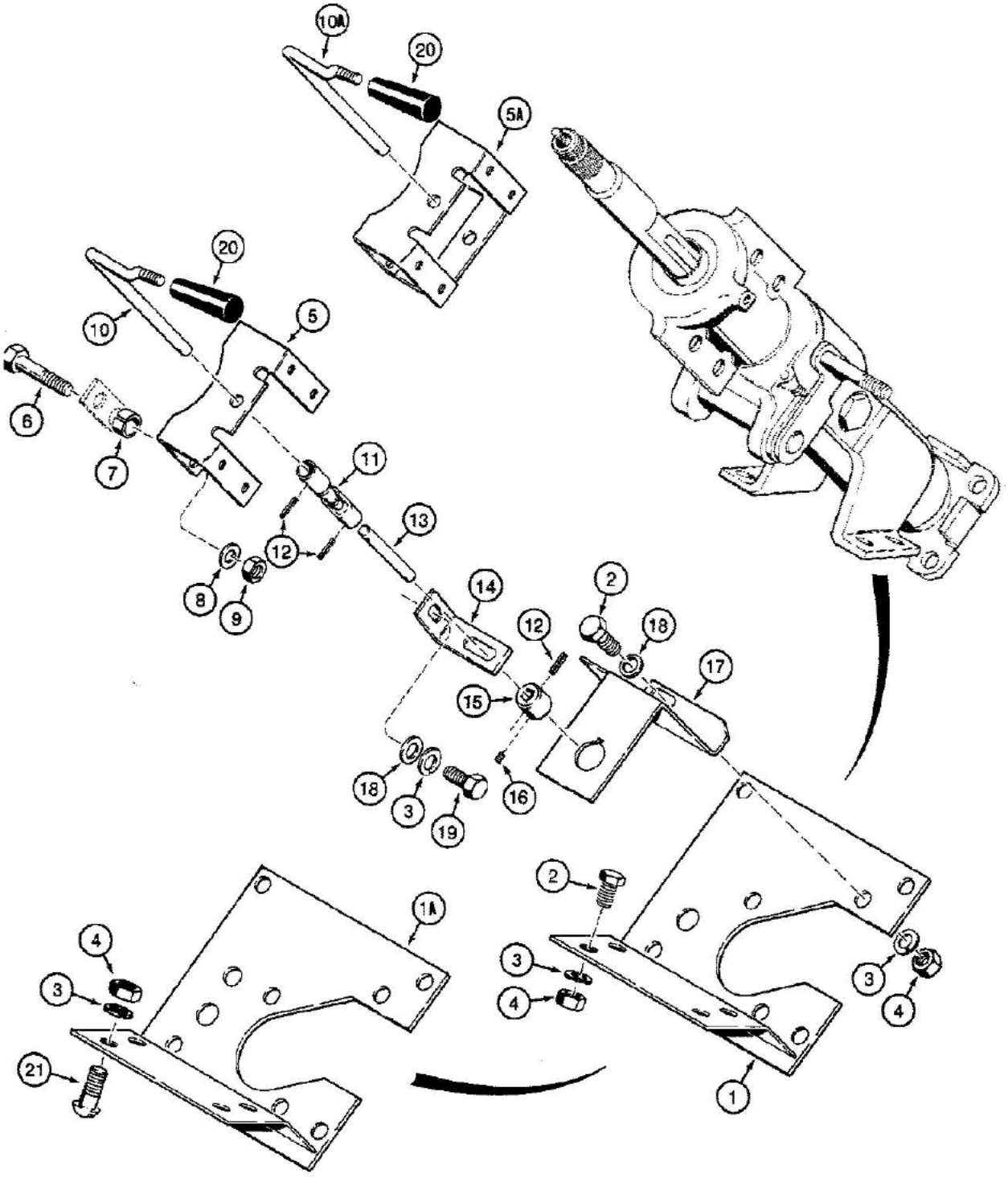

B8853A-45

05-156 STEERING COLUMN AND TURN SIGNAL, SPECIAL PARTS USED ON MODELS WITH TILT/TELESCOPING STEERING CO

Ref	Part Number	Qty	Description
1	D138430	1	BRACKET steering column, if used
1A	D143769	1	BRACKET steering column, if used
2	113-206	1-5	BOLT, Hex, 3/8"-16 x 3/4", G5, Full Thd
3	192-21	6	WASHER, LOCK, 3/8"
4	129-103	5	NUT, 3/8"-16, G5
5	D138518	1	BRACKET upper, turn signal, if used
5A	D143762	1	BRACKET upper, turn signal, if used
6	113-233	4	BOLT, Hex, 3/8"-16 x 1 3/4", G5
7	D76208	4	SPACER upper bracket to steering column
8	192-21	4	WASHER, LOCK, 3/8"
9	129-103	4	NUT, 3/8"-16, G5
10	D139493	1	LEVER turn signal, used with Ref. 5 bracket
10A	D144544	1	LEVER turn signal, used with Ref. 5A bracket
11	D144516	1	U-JOINT turn signal
12	138-56	3	PIN, 1/8" x 11/16", Slotted
13	D138515	1	ROD turn signal
14	D140501	1	SUPPORT turn signal bracket
15	D138517	1	COLLAR turn signal rod
16	178-830	1	SCREW set, hex headless, No. 10-24 NC x 3/8", cup point, special
17	D138578	1	BRACKET lower, turn signal
18	195-525	2	WASHER flat, 3/8", plated
19	14-616	1	BOLT hex, 3/8 NF x 1"
20	D136995	1	KNOB turn signal lever
21	173-247	4	SCREW machine, round head, 3/8" NC x 3/4"

05-158 STEERING HYDRAULIC CIRCUIT

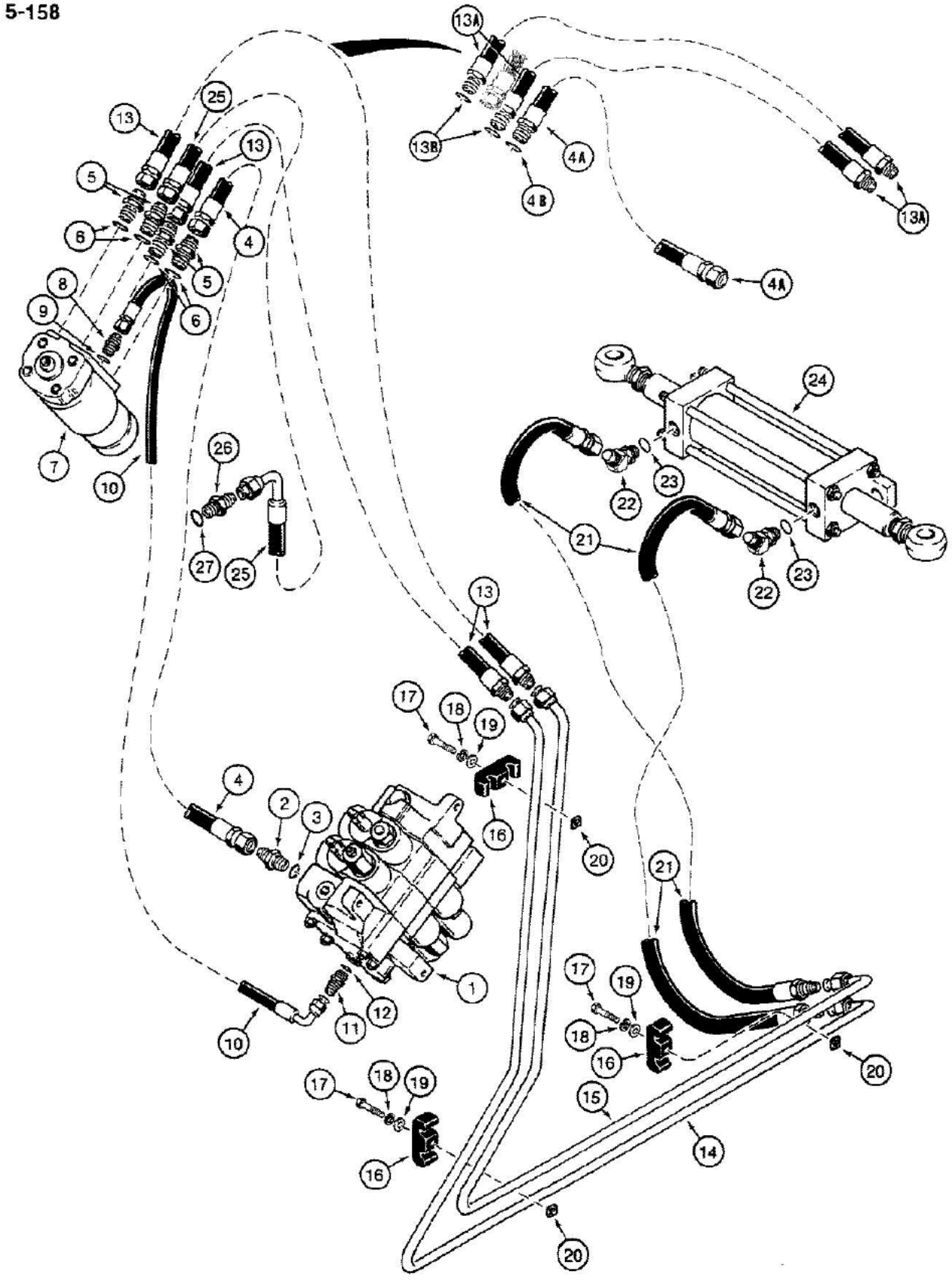

05-158 STEERING HYDRAULIC CIRCUIT

Ref	Part Number	Qty	Description
1	REF	1	VALVE ASSEMBLY control, loader, for correct assembly and components, see Figure 08-354 or 08-356
2	218-5059	1	CONNECTOR straight, male, Includes: Ref. 3
3	237-6008	1	O-RING, 8-1, 90 Duro, .644" ID x .087" Thk, Connector
4	D140106	1	HOSE, 23-5/8" (600 mm) long, steering pressure, loader control valve to steering control valve lower right-hand port, replaces 19-11/16" hose used on some models, used with Ref. 5 connector, if used, may be replaced by Ref. 4A hose on some models
4A	D143189	1	HOSE, 24-5/8" (625 mm) long, steering pressure, loader control valve to steering control valve lower right-hand port, does not require Ref. 5 connector at steering valve, Includes: Ref. 4B
4B	237-6008	1	O-RING, 8-1, 90 Duro, .644" ID x .087" Thk, Hose
5	218-5059	1-4	CONNECTOR straight, male, Includes: Ref. 6
6	237-6008	1	O-RING, 8-1, 90 Duro, .644" ID x .087" Thk, Connector
7	REF	1	VALVE ASSEMBLY control, steering, see Figure 05-164
8	218-5053	1	ADAPTER straight, male, Incl. Ref. 9
9	237-6004	1	O-RING, 4-1, 90 Duro, .351" ID x .072" Thk, Adapter
10	D135246	1	HOSE, 25-5/8" (650 mm) long, steering pilot, steering control valve small center port to loader control valve
11	218-5057	1	CONNECTOR straight, male, Incl. Ref. 12
12	237-6006	1	O-Ring, 6-1, 90 Duro, .468" ID x .078" Thk, Connector
13	R34076	2	HOSE, 21-1/2" (546 mm) long, steering control valve upper and lower left-hand ports to tubes, used with Ref. 5 connector, if used, may be replaced by Ref. 13A hose on some models
13A	D143188	2	HOSE, 22-7/16" (570 mm) long, steering control valve upper and lower left-hand ports to tubes, does not require Ref. 5 connector at steering valve, Includes: Ref. 13B
13B	237-6008	1	O-RING, 8-1, 90 Duro, .644" ID x .087" Thk, Hose
14	D143207	1	TUBE lower, to steering cylinder right-hand port hose, Tube lines are a different configuration than those shown in parts book 8-6952. There are no serial breaks, so be sure the parts being ordered, are similar looking to the ones required.
15	D143205	1	TUBE upper, to steering cylinder left-hand port hose, Tube lines are a different configuration than those shown in parts book 8-6952. There are no serial breaks, so be sure the parts being ordered, are similar looking to the ones required.
16	D120679	3	CLAMP tube
17	113-209	3	BOLT, Hex, 3/8"-16 x 1 1/2", G5
18	192-21	3	WASHER, LOCK, 3/8"
19	195-525	3	WASHER flat, 3/8", plated
20	25-226	3	NUT square, 3/8"-16 NC
21	D124648	2	HOSE, 19-11/16" (500 mm) long, at steering cylinder
22	218-5136	2	ELBOW, 45 degree, adjustable, Incl. Ref 23
23	237-6008	1	O-RING, 8-1, 90 Duro, .644" ID x .087" Thk, Elbow
24	REF	1	CYLINDER ASSEMBLY steering, see Figure 05-168
25	D133857	1	HOSE, 24-5/8" (625 mm) long, steering return, steering control valve upper right-hand port to hydraulic oil filter
26	218-5057	1	CONNECTOR straight, male, Incl. Ref. 27

05-158 STEERING HYDRAULIC CIRCUIT

Ref	Part Number	Qty	Description
27	237-6006	1	O-Ring, 6-1, 90 Duro, .468" ID x .078" Thk, Connector

5-160

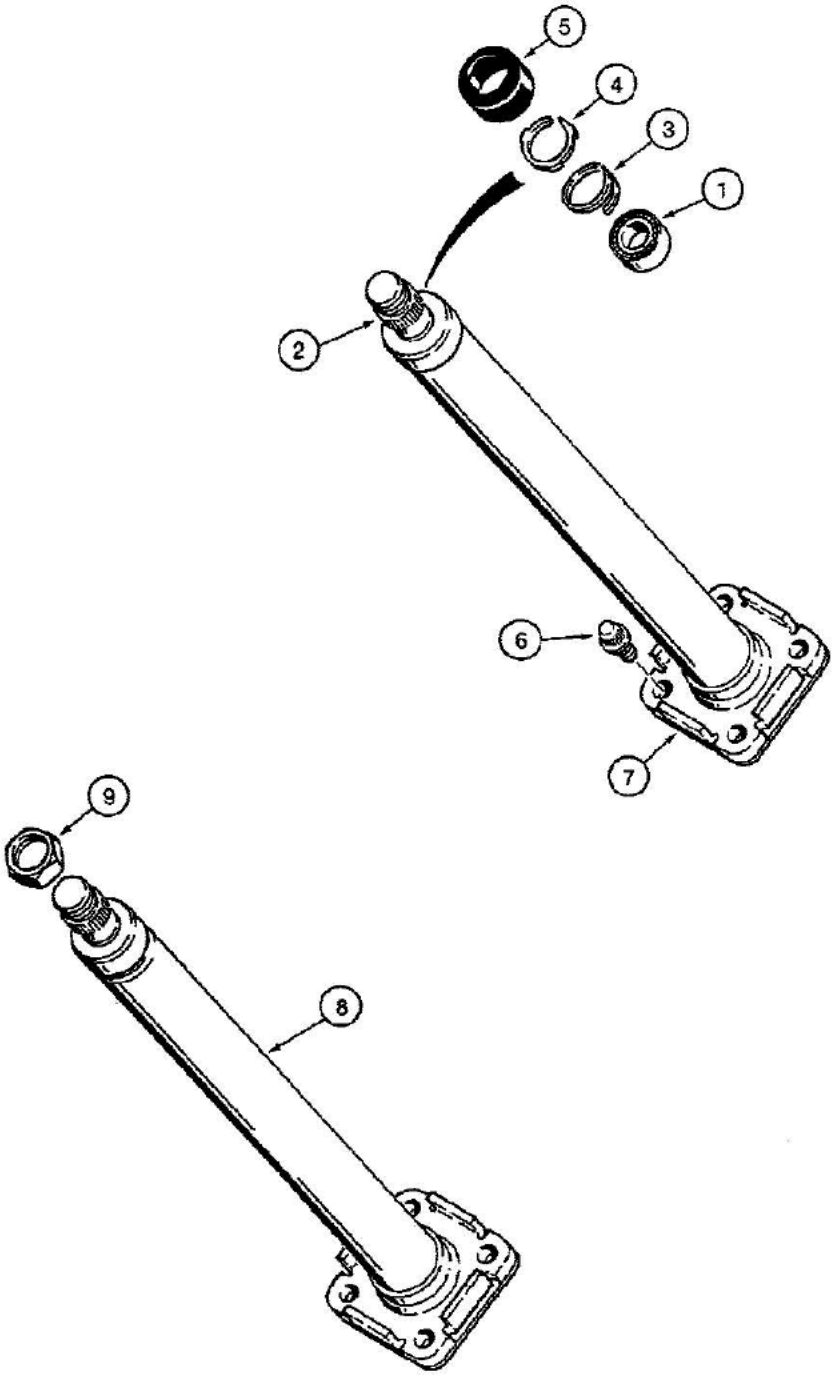

861945-45

05-160 STEERING COLUMNS, MODELS WITHOUT HORN

Ref	Part Number	Qty	Description
	D135411	1	COLUMN ASSEMBLY steering, may receive either Eaton or Danfoss complete steering column assembly, see below for service of internal parts, Includes: steering column assembly and Ref. 1 thru 9
	NSS	1	COLUMN ASSEMBLY steering, Eaton No. 204-1031-005, 18-3/32" (460 mm) long, if used, Includes: Ref. 1 thru 7
1	L30881	1	BEARING roller, steering shaft
2	NSS	1	COLUMN steering shaft
3	F53335	1	RING retaining, bearing
4	NSS	1	RETAINER bearing
5	S115351	1	CAP shaft
6	166-43	2	BOLT, Ferry head, 3/8"-16 NC x 3/4", grade 8, not required, see Figure 05-150
7	NSS	1	FLANGE tube
	NSS	1	COLUMN ASSEMBLY steering, Danfoss Type No. OTPB400, Code No. 150X0058, 17-7/8" (454 mm) long, if used, Includes: Ref. 8 and 9
8	NSS	1	COLUMN steering shaft
9	N14118	1	NUT special, used on Danfoss steering columns

5-162

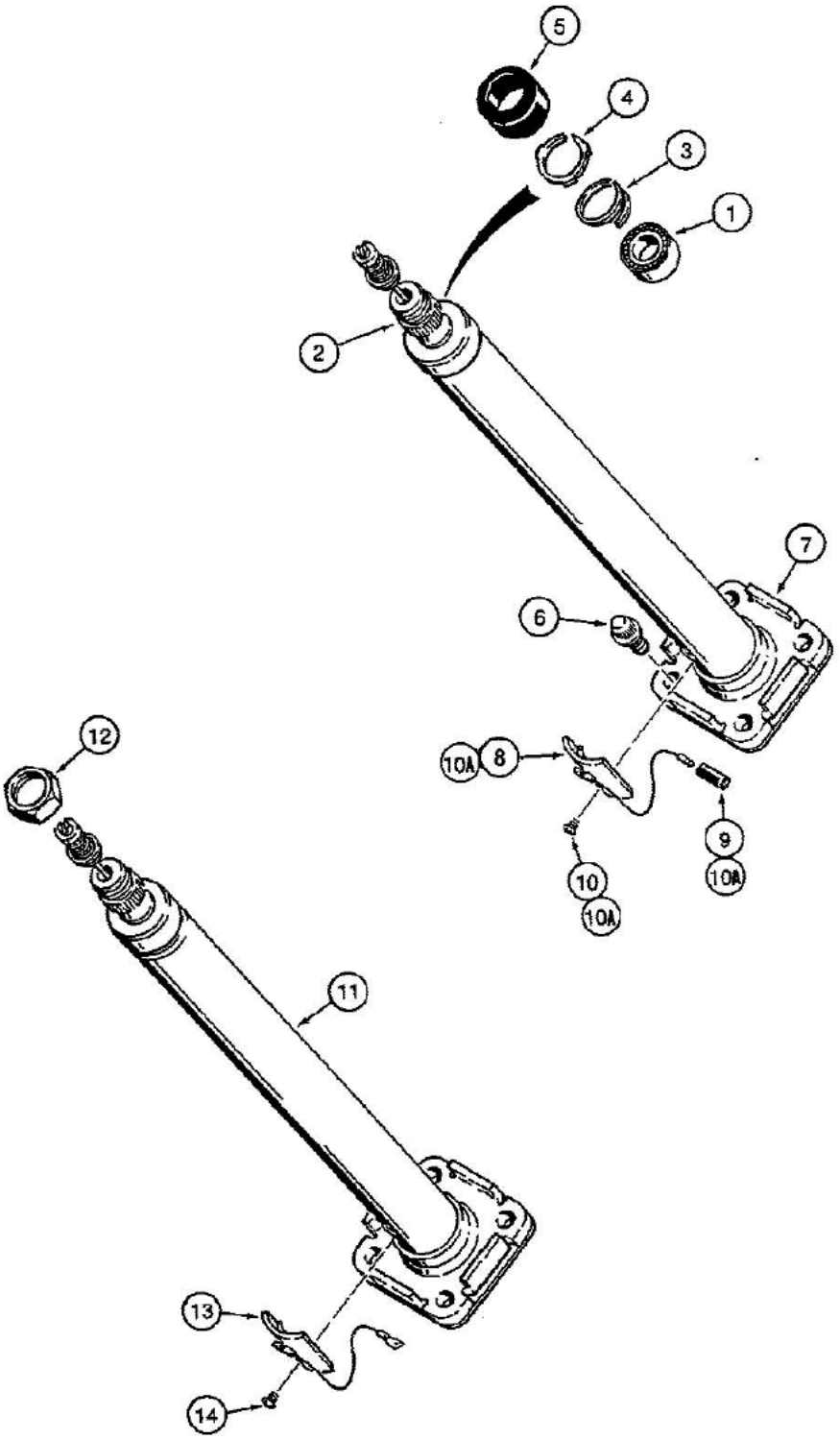

BS90642-45

05-162 STEERING COLUMNS, MODELS WITH HORN

Ref	Part Number	Qty	Description
	D133510	1	COLUMN ASSEMBLY steering, may receive either Eaton or Danfoss complete steering column assembly, see below for service of internal parts, Includes: steering column assembly and Ref. 1 thru 14
	NSS	1	COLUMN ASSEMBLY steering, Eaton No. 204-1067-007, 18-1/8" (460 mm) long, Replaces: Eaton No. 204-1067-005, if used, Includes: Ref. 1 thru 10A
1	NSS	1	BEARING roller, steering shaft
2	NSS	1	COLUMN with wire, steering shaft
3	NSS	1	RING retaining, bearing
4	NSS	1	RETAINER bearing
5	S115351	1	CAP shaft
7	NSS	1	FLANGE tube
	S109356	1	BRUSH ASSEMBLY horn, Eaton No. 204-1067-005 column, Includes: Ref. 8 and 9
8	NSS	1	BRUSH horn
9	S63473	1	CONNECTOR horn, attaches to front console harness
10	187-1116	2	SCREW pan, Phillips head, self-tapping, No. 10-24 NC x 1/4", plated, brush retaining, Eaton No. 204-1067-005 column
10A	D145713	1	KIT brush, includes (2) screws and (1) brush which are not serviced separately, Eaton 204-1067-007 column
	NSS	1	COLUMN ASSEMBLY steering, Danfoss Type No. OTPB400, Code No. 150 x 1315, 17-15/16" (456 mm) long, if used, Includes: Ref. 11 thru 14
11	NSS	1	COLUMN with wire, steering shaft
12	N14118	1	NUT special
	N14216	1	BRUSH ASSEMBLY horn, Includes: Ref. 13 and 14
13	NSS	1	BRUSH horn
14	983-4005	2	SCREW slotted pan head, 4 mm x 5 mm, plated

5-164

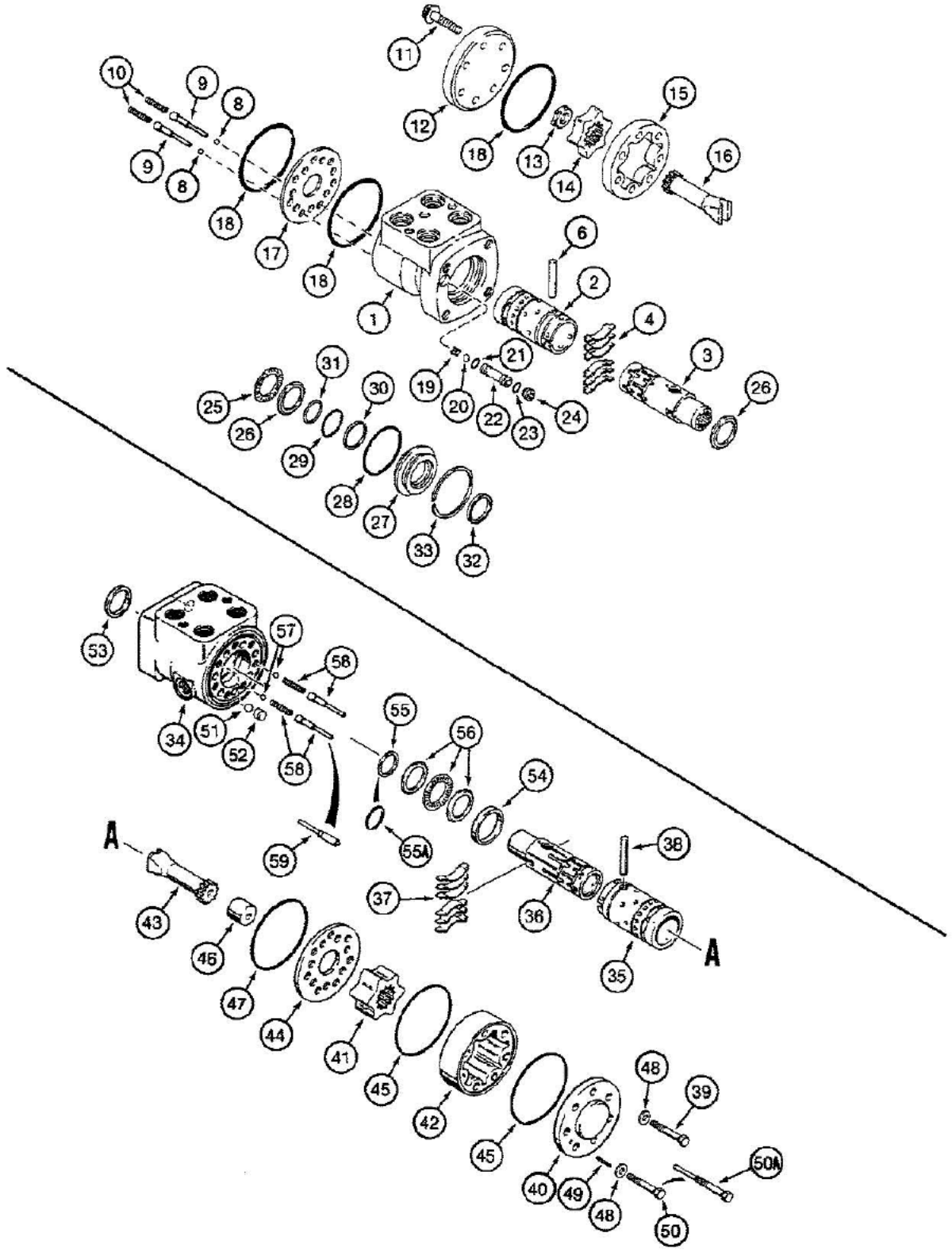

870186B-45

05-164 STEERING CONTROL VALVE

Ref	Part Number	Qty	Description
	D135338	1	VALVE ASSEMBLY control, may receive either Eaton or Danfoss complete control valve assembly, see below for service of internal parts, Includes: Eaton control valve assembly and Ref. 1 thru 33 or Danfoss control valve assembly and Ref. 34 thru 59
	NSS	1	VALVE ASSEMBLY control, steering, Eaton No. 263-1061-004, if used, Replaces: Eaton No. 263-1061-001 valve, Includes: Ref. 1 thru 33
1	NSS	1	HOUSING control valve
2	NSS	1	SLEEVE control valve
3	NSS	1	SPOOL control valve
	N14250	1	KIT centering spring, Includes: Ref. 4 and 5
4	NSS	6	SPRING centering
5	NSS	2	SPACER spring, if used, not shown
6	L30888	1	PIN centering
7	NSS	1	VALVE check, control valve, not shown
8	211-204	2	BALL, 3/16", anticavitation
9	N14764	2	RETAINER spring, anticavitation
10	N14763	2	SPRING anticavitation
11	H189555	7	BOLT, Ferry head, 5/16"-24 NF x 1-5/8"
12	D82809	1	COVER end
13	K964246	1	SPACER drive shaft
	N14154	1	SET gerotor, control valve, Includes: Ref. 14 and 15
14	NSS	1	ROTOR control valve
15	NSS	1	STATOR control valve
16	L30878	1	SHAFT drive, steering control valve
17	S113037	1	PLATE spacer
18	N6392	3	O-RING cover and housing
19	L35368	1	RETAINER ball
20	211-208	1	BALL check, steel
21	L30893	1	O-RING seat, inner
22	D82806	1	SEAT check ball
23	N8539	1	O-RING seat, outer
24	D82805	1	PLUG special, hex socket head
25	G13609	1	BEARING needle, spool
26	D82804	2	WASHER thrust, bearing
27	N13312	1	RETAINER spool seal
28	A14515	1	O-RING seal retainer
29	N13313	1	SEAL spool, inner
30	N13314	1	RING backup, seal
31	L15402	1	O-RING spool, inner
32	A28211	1	SEAL spool, outer
33	S110169	1	RING retaining, seal retainer

05-164 STEERING CONTROL VALVE

Ref	Part Number	Qty	Description
	NSS	1	VALVE ASSEMBLY control, steering, Danfoss Type No. OSPC125LS, Code No. 150-0122, if used, Includes: Ref. 34 thru 59
34	NSS	1	HOUSING control valve
35	NSS	1	SLEEVE control valve
36	NSS	1	SPOOL control valve
37	N14219	1	SPRING centering, set of six
38	3112269R1	1	PIN centering
39	814-8040	6	Hex, M8 x 40, 8.8
40	3112273R1	1	COVER end
	N14221	1	SET gerotor, control valve, Includes: Ref. 41 and 42
41	NSS	1	ROTOR control valve
42	NSS	1	STATOR control valve
43	538915R1	1	SHAFT drive, steering control valve
44	3112276R1	1	PLATE spacer
45	V35605	2	O-RING cover and housing
46	N14220	1	SPACER shaft
47	V35603	1	O-RING plate
48	538920R1	7	WASHER end cover
49	3112271R1	1	PIN roll, locating, used with Ref. 50 bolt
50	K964166	1	BOLT special, no longer available, order P/N D145254 bolt with pin
50A	D145254	1	BOLT special, with pin
51	3112270R1	1	BALL plate
52	3112272R1	1	BUSHING plate
53	V35600	1	SEAL spool, outer
54	3112264R1	1	RING retaining
55	N14217	1	SEAL spool, inner, no longer available, order P/N D145253 O-ring
55A	D145253	1	O-RING special
56	N14218	1	BEARING spool, includes roller bearing and two thrust washers
57	N14222	2	BALL housing
58	N14223	2	PIN with bushing and spring, housing, no longer available, order P/N D145278 pin with bushing
59	D145278	2	PIN with bushing

5-168

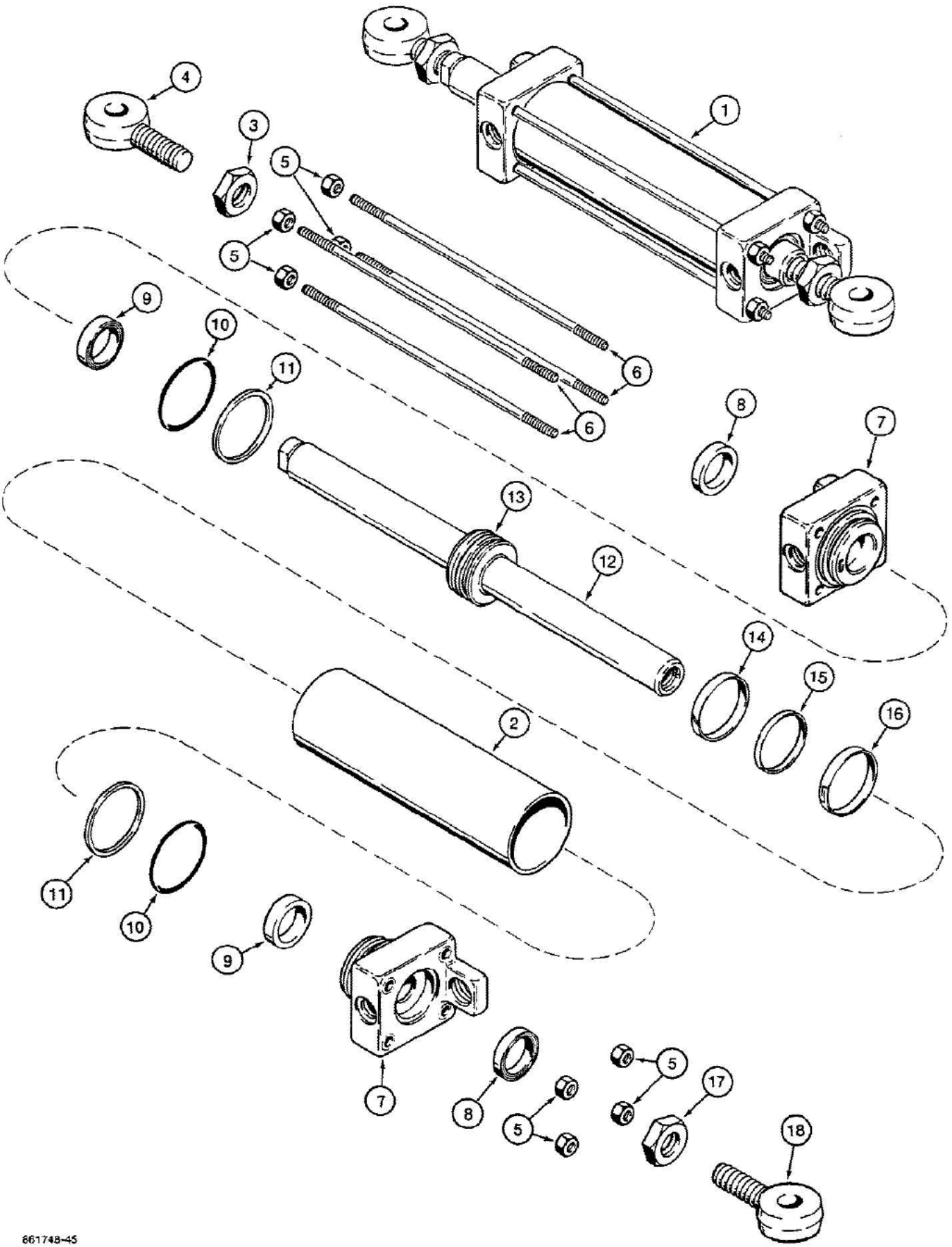

See Fig. 06-220 for the four-wheel drive front axle steering cylinder. Whenever This Cylinder Is Serviced Or Replaced, Always Replace Mounting Hardware With The Following: 446106A1 Bolt, Qty 2, D36505 Washer, Qty 2. Refer to Installation Intructions 6-47080 Available Through DMC.

580K LOADER BACKHOE (NORTH AMERICA) - Steering

05-168 STEERING CYLINDER, TWO WHEEL DRIVE FRONT AXLE

Ref	Part Number	Qty	Description
1	G107720	1	CYLINDER ASSEMBLY steering, two wheel drive front axle, 2-3/4" (70 mm) ID x 6-45/64" (170 mm) stroke, Includes: Ref. 2 thru 18, The cylinder assembly part number is stamped on some cylinder glands or tubes
2	G106808	1	TUBE cylinder
3	129-369	1	NUT, Jam, 7/8"-14, G5, LH thread
4	G106832	1	EYE rod, left-hand thread
5	129-103	8	NUT, 3/8"-16, G5
6	G106817	4	ROD tie, cylinder, 13-5/16" (338 mm) long
	G109996	2	GLAND ASSEMBLY cylinder, Includes: Ref. 7 thru 11
7	NSS	1	GLAND cylinder
8	D95142	1	WIPER piston rod, outer, Part of Seal Kit P/N G110045
9	G107921	1	SEAL, U-cup, with O-ring, piston rod, wide, Part of Seal Kit P/N G110045
10	A28318	1	O-RING gland, Part of Seal Kit P/N G110045
11	G32129	1	RING backup, gland O-ring, Part of Seal Kit P/N G110045
	G107721	1	ROD ASSEMBLY piston, 1-1/2" (38 mm) diameter, Includes: Ref. 12 and 13
12	NSS	1	ROD piston
13	NSS	1	PISTON cylinder
14	G105187	1	RING wear, piston, Part of Seal Kit P/N G110045
15	G104439	1	RING seal, inner, Part of Seal Kit P/N G110045
16	G104454	1	SEAL expandable, outer, piston, Part of Seal Kit P/N G110045
17	129-169	1	NUT, Jam, 7/8"-14, G5, RH thread
18	G106813	1	EYE rod, right-hand thread
	G110045	1	KIT seal, Includes: Ref. 8, 9, 10, 11, 14, 15 and 16

See Fig. 06-220 for the four-wheel drive front axle steering cylinder.□□□□Whenever This Cylinder Is Serviced Or Replaced, Always Replace Mounting Hardware With The Following: 446106A1 Bolt, Qty 2, D36505 Washer, Qty 2. Refer to Installation Intructions 6-47080 Available Through DMC.□□

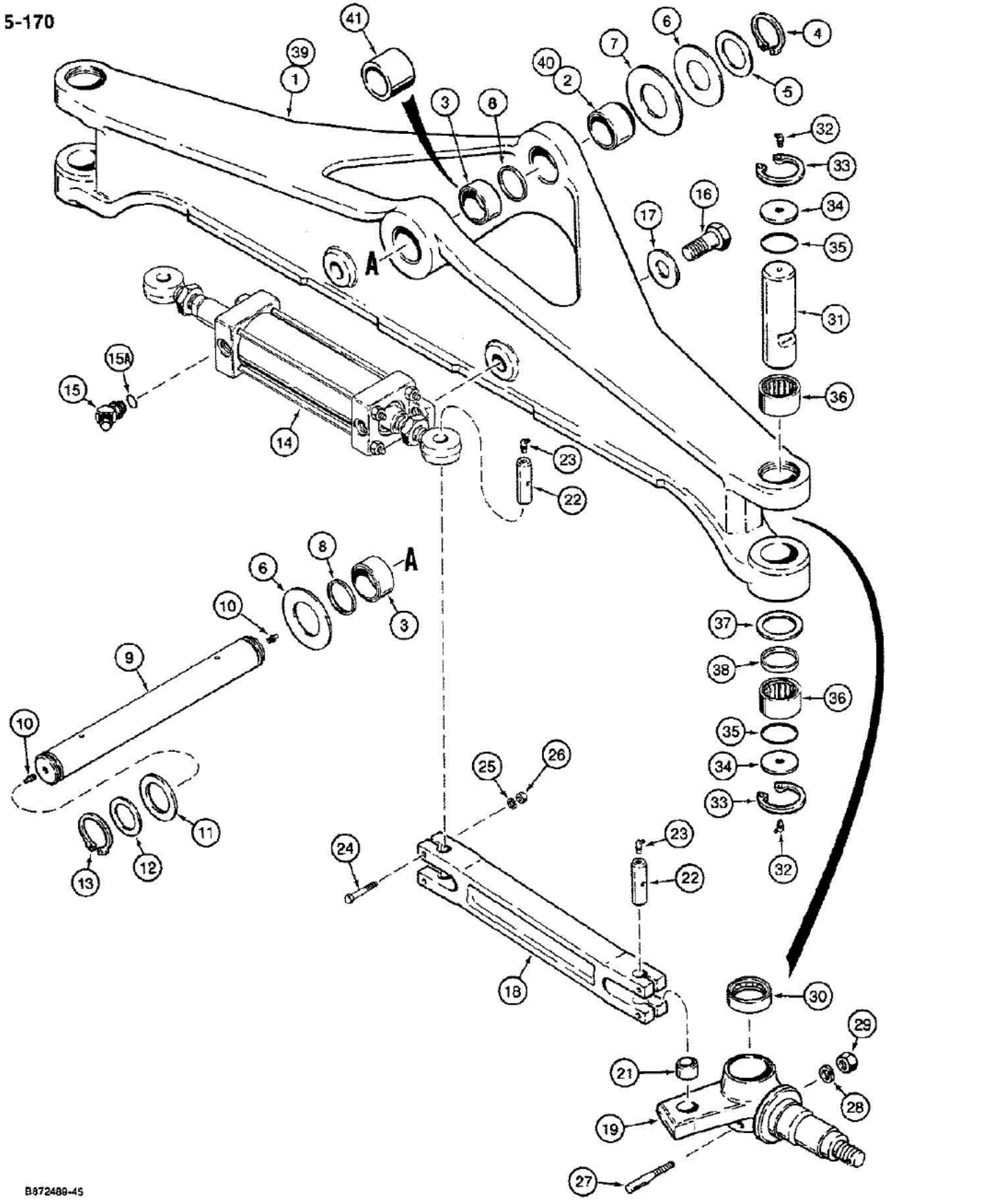
5-170
B872489-4S

05-170 FRONT AXLE AND SPINDLES

Ref	Part Number	Qty	Description
1	D127464	1	AXLE ASSEMBLY front, with double rear bushing, no longer used, for service order P/N D138954 axle, Ref. 39, Includes: Ref. 2 and 3
2	D135074	1	BUSHING axle, front
3	D135075	2	BUSHING axle, rear
4	800-50050	1	RING snap, axle pivot pin retaining, front
5	195-2155	UAR	WASHER flat, 2" bolt size, 2-1/16" ID x 3" OD x 1/8" thick
6	D37449	UAR	SHIM, .0747" Thk, Washer, flat (2-1/32" ID x 4" OD), Spacer
7	D123684	1	WASHER thrust, 2-1/16" ID x 4-1/2" OD x 3/16" thick, front
8	D123655	2	SEAL grease
9	D127445	1	PIN axle pivot
10	219-1	2	FITTING grease, straight, 1/8" NPT
11	S49415	1	WASHER special
12	195-2152	1	WASHER flat, 1-3/4" bolt size, 1-13/16" ID x 2-1/2" OD x 1/8" thick
13	D25280	1	Ring, Snap, #175, Ext, axle pivot pin, rear
14	G107720	1	CYLINDER steering, two wheel drive front axle, see Figure 05-168
15	218-5136	2	ELBOW, 45 degree, adjustable, Incl. Ref 15A
15A	237-6008	1	O-RING, 8-1, 90 Duro, .644" ID x .087" Thk, Elbow
16	113-923	2	BOLT, Hex, 1"-8 x 2 1/4", G5, Full Thd
17	D36505	2	WASHER flat, 1" hardened
18	D123806	2	LINK steering
19	D125340	1	SPINDLE ASSEMBLY right-hand
20	D125341	1	SPINDLE ASSEMBLY left-hand, not shown, Includes: Ref. 21
21	D127507	1	BUSHING, P/N D125340 or P/N D125341 spindle
22	D123682	4	PIN steering link
23	219-89	4	FITTING grease, 45 degree, 1/8" pipe, self-tapping
24	113-219	8	BOLT, Hex, 3/8"-16 x 2", G5
25	192-21	8	WASHER, LOCK, 3/8"
26	129-103	8	NUT, 3/8"-16, G5
27	D57486	2	PIN king pin lock, Part of King Pin Kit P/N D103626
28	192-23	2	WASHER, LOCK, 1/2"
29	129-125	2	NUT, 1/2"-20, G5
30	A27602	2	BEARING roller, spindle, Part of King Pin Kit P/N D103626
31	D123865	2	PIN king, front axle, Part of King Pin Kit P/N D103626
32	219-89	4	FITTING grease, 45 degree, 1/8" pipe, self-tapping, Part of King Pin Kit P/N D103626
33	A27463	4	Ring, Snap, 2.375", Int, #237, brg, Part of King Pin Kit P/N D103626
34	D72371	4	SPACER king pin, Part of King Pin Kit P/N D103626
35	A23904	4	O-RING king pin seal, Part of King Pin Kit P/N D103626
36	A28230	4	BEARING needle, king pin, Part of King Pin Kit P/N D103626
37	D72372	2	WASHER thrust, bearing, Part of King Pin Kit P/N D103626
38	D61297	2	SEAL oil, Part of King Pin Kit P/N D103626
39	D138954	1	AXLE ASSEMBLY front, with single rear bushing, Includes: Ref. 40 and 41

05-170 FRONT AXLE AND SPINDLES

Ref	Part Number	Qty	Description
40	D137345	1	BUSHING axle, front
41	D138047	1	BUSHING axle, rear
	D103626	1	KIT king pin, Includes: Ref. 27 and 30 thru 38, quantity in kit services one side of axle

5-172

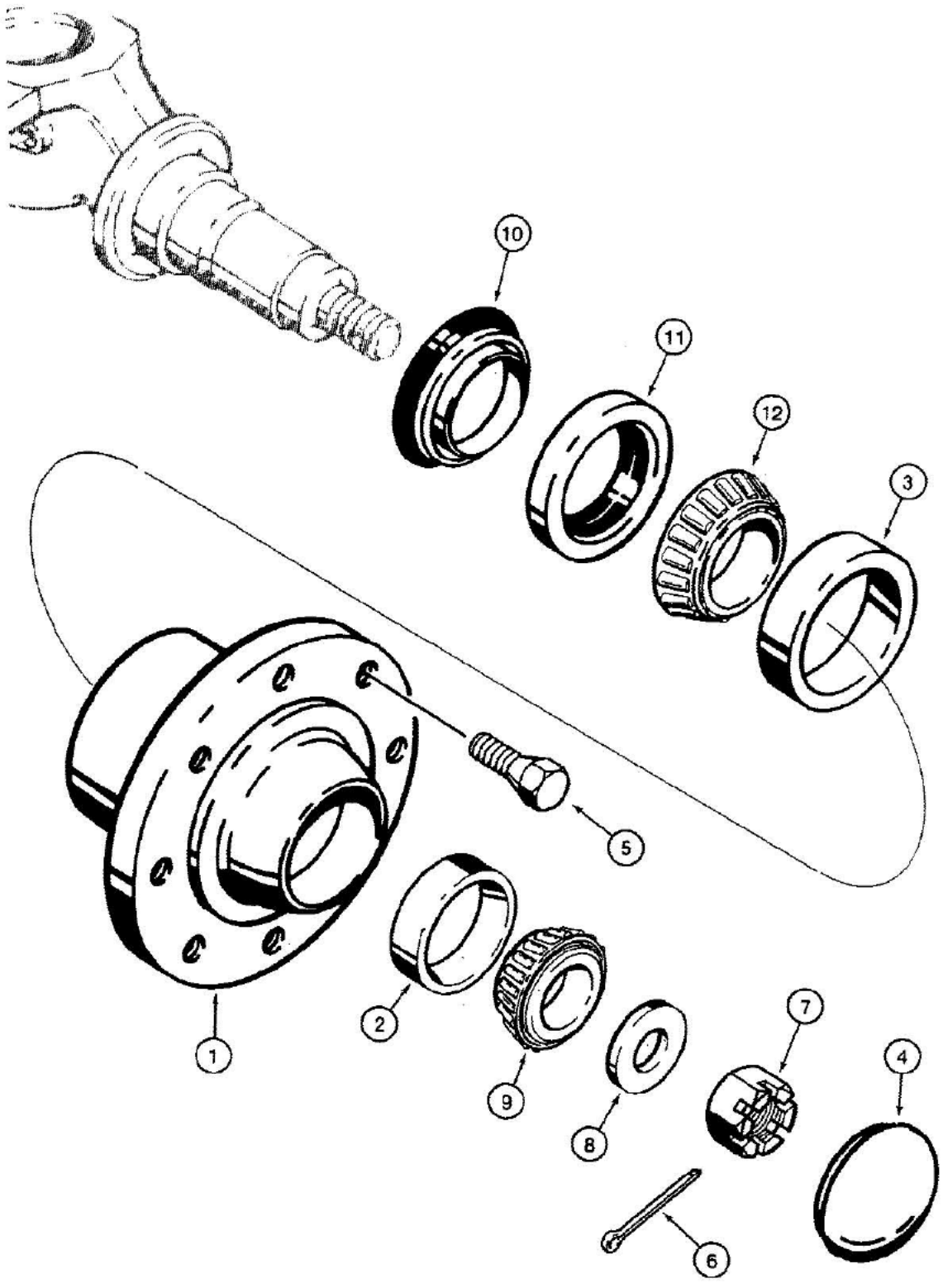

If looking to replace the stud, see Figure 06-224, Ref. 19, 20 and 21. If only doing one side cut in half.

580K LOADER BACKHOE (NORTH AMERICA) - Steering

05-172 FRONT WHEEL HUB AND BEARINGS

Ref	Part Number	Qty	Description
	A66759	2	HUB ASSEMBLY front wheel, Includes: Ref. 1 thru 3
1	NSS	1	HUB front wheel
2	619387R1	1	CUP outer, tapered roller bearing, Part of Wheel Bearing Kit P/N D103157
3	625743C1	1	CUP inner, tapered roller bearing, Part of Wheel Bearing Kit P/N D103157
4	A61450	2	CAP hub
5	A38208	16	BOLT wheel retaining, see Figure 05-174 for bolt or nut options
6	132-317	2	PIN, SPLIT (COTTER), 3/16" x 2"
7	25-1918	2	NUT hex, slotted, thick, 1-1/8"-12 NF
8	D74949	2	WASHER flat, 1-1/8"
9	G15215	2	BEARING tapered roller, outer, Part of Wheel Bearing Kit P/N D103157
10	A61449	2	SEAL spindle, Part of Wheel Bearing Kit P/N D103157
11	A61448	2	SEAL hub, Part of Wheel Bearing Kit P/N D103157
12	A61447	2	BEARING tapered roller, inner, Part of Wheel Bearing Kit P/N D103157
	D103157	1	KIT wheel bearing, Includes: Ref. 2, 3, 9, 10, 11 and 12, two kits required per tractor

If looking to replace the stud, see Figure 06-224, Ref. 19, 20 and 21. If only doing one side cut in half.

5-174



If DLR has a 2 wheel drive unit and the front wheel is a 14.5/.75 x 16.1 , see wheel P/N 247104A1 in the model 590SL 1 and 2 books as well as the model 590SM book.

580K LOADER BACKHOE (NORTH AMERICA) - Steering

05-174 FRONT WHEELS AND TIRES

Ref	Part Number	Qty	Description
1	D125223	2	WHEEL rim, for 11L x 16 tires, two wheel drive models
2	REF	2	TIRE front, purchase locally, for 11L x 16 tires, two wheel drive models, Consult your parts buyer's guide for applicable tire programs currently being offered
3	A38261	2	STEM valve, wheel, for 11L x 16 tires, two wheel drive models
4	D126930	2	WHEEL rim, 8-hole pattern, for 12 x 16.5 tires, four wheel drive models
5	REF	2	TIRE front, purchase locally, for 12 x 16.5 tires, four wheel drive models, Consult your parts buyer's guide for applicable tire programs currently being offered
6	A38261	2	STEM valve, wheel, for 12 x 16.5 tires, four wheel drive models
7	A38208	16	BOLT wheel retaining, two wheel drive models
8	K395089	16	NUT wheel retaining, four wheel drive models
9	D34666	16	WASHER flat, hardened, wheel nuts, four wheel drive models

If DLR has a 2 wheel drive unit and the front wheel is a 14.5/.75 x 16.1 , see wheel P/N 247104A1 in the model 590SL 1 and 2 books as well as the model 590SM book.

PICTORIAL SECTION INDEX



POWER TRAIN 6

B890757

Bur 8-3462 Issued February, 1989 Printed in U.S.A.

6-178

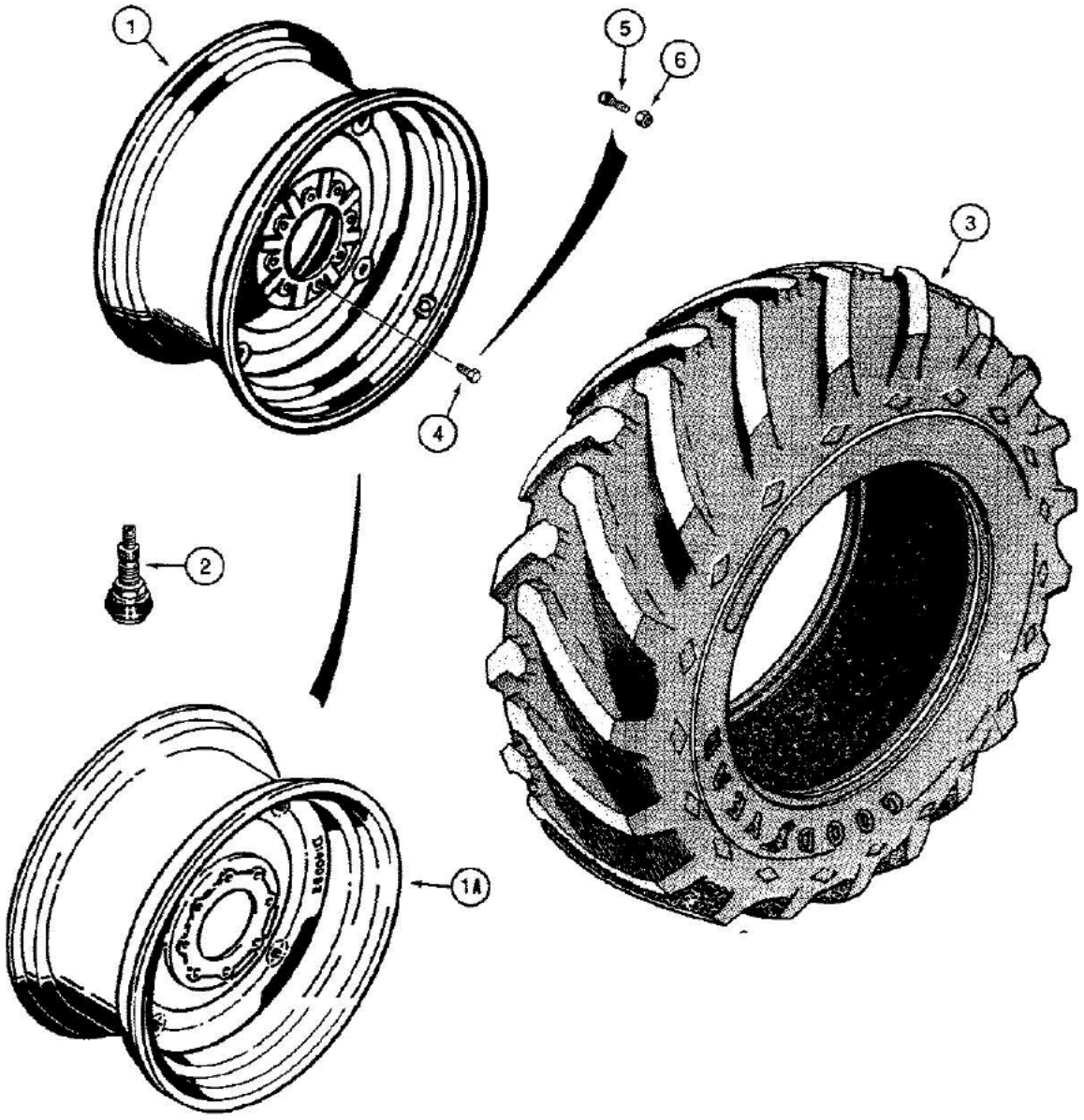

B870163A-45

The kit to rebuild wheels (centers) is L42830 which consists of 16 pcs. P/N F42206 nut, 2 pcs. P/N L42829 ring, 16 pcs. P/N L42896 bolt and 1 pc..P/N 9-99961 instruction sheet. The instruction sheet will show a 680CK model.

580K LOADER BACKHOE (NORTH AMERICA) - Power Train

06-178 REAR WHEELS AND TIRES

Ref	Part Number	Qty	Description
1	A139085	2	WHEEL rim, no longer used, order P/N D140062 wheel, for 16.9 x 24 and 17.5L x 24, fixed disc wheel
1A	D140062	2	WHEEL rim, for 16.9 x 24 and 17.5L x 24, fixed disc wheel
2	A20058	2	STEM valve, wheel, for 16.9 x 24 and 17.5L x 24, fixed disc wheel
3	REF	2	TIRE rear, purchase locally, for 16.9 x 24 and 17.5L x 24, fixed disc wheel
1A	D140062	2	WHEEL rim, for 16.9 x 24 tires, two wheel drive models
2	A20058	2	STEM valve, wheel, for 16.9 x 24 tires, two wheel drive models
3	REF	2	TIRE rear, purchase locally, for 16.9 x 24 tires, two wheel drive models
1A	D140062	2	WHEEL rim, for 17.5L or 17.5LR x 24 tires, two wheel or four wheel drive models
2	A20058	2	STEM valve, wheel, for 17.5L or 17.5LR x 24 tires, two wheel or four wheel drive models
3	REF	2	TIRE rear, purchase locally, for 17.5L or 17.5LR x 24 tires, two wheel or four wheel drive models
4	A38208	16	BOLT grade 5, wheel retaining, used with P/N A139085 wheel, if used, wheel bolts
4	D140705	16	BOLT grade 8, wheel retaining, used with P/N D140062 wheel, if used, wheel bolts
5	404341R3	16	BOLT special, if used, wheel bolt and nut
6	F62206	16	NUT hex, tapered, used only with Ref. 5 bolt, wheel bolt and nut
	115488A1	UAR	WHEEL, W15L x 24, also available
	115489A1	UAR	WHEEL, W16L x 24, also available
	115490A1	UAR	WHEEL, W16L x 24, offset, also available

The kit to rebuild wheels (centers) is L42830 which consists of 16 pcs. P/N F42206 nut, 2 pcs. P/N L42829 ring, 16 pcs. P/N L42896 bolt and 1 pc. P/N 9-99961 instruction sheet. The instruction sheet will show a 680CK model.

6-180

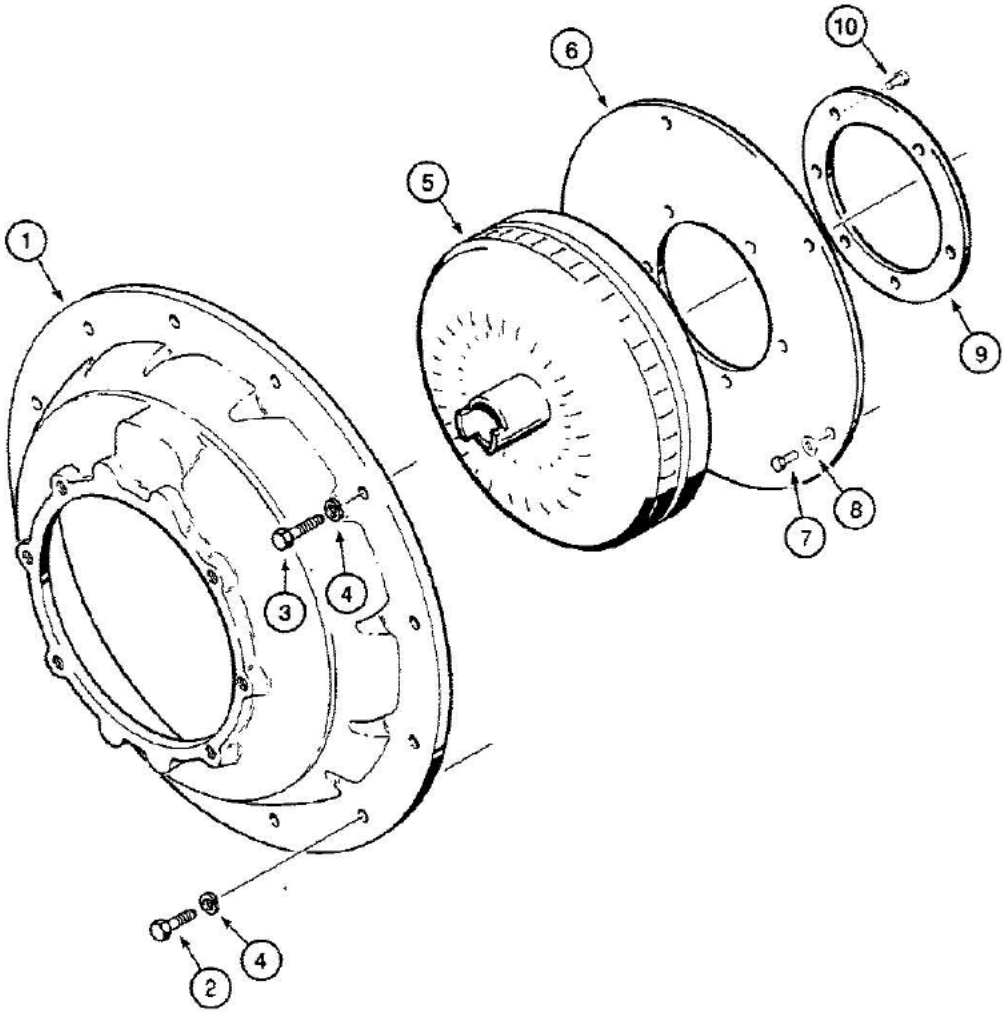

661840-45

06-180 TORQUE CONVERTER AND HOUSING

Ref	Part Number	Qty	Description
1	D48445	1	HOUSING torque converter
2	814-10030	11	BOLT, Hex, M10 x 30, 8.8
3	814-10035	1	BOLT hex head, 10 mm-1.5 x 35 mm, 8.8, plated
4	892-1110	12	WASHER lock, 10 mm, plated
5	D81693	1	CONVERTER torque, transmission
6	D131147	1	PLATE torque converter, hardened
7	121-103	6	BOLT special, 5/16"-18 NC x 5/8", grade 8
8	A15672	6	WASHER flat, special
9	D81592	1	PLATE torque converter drive
10	121-203	6	BOLT special, 3/8"-24 NF x 1/2", grade 8, drive plate mounting

6-182

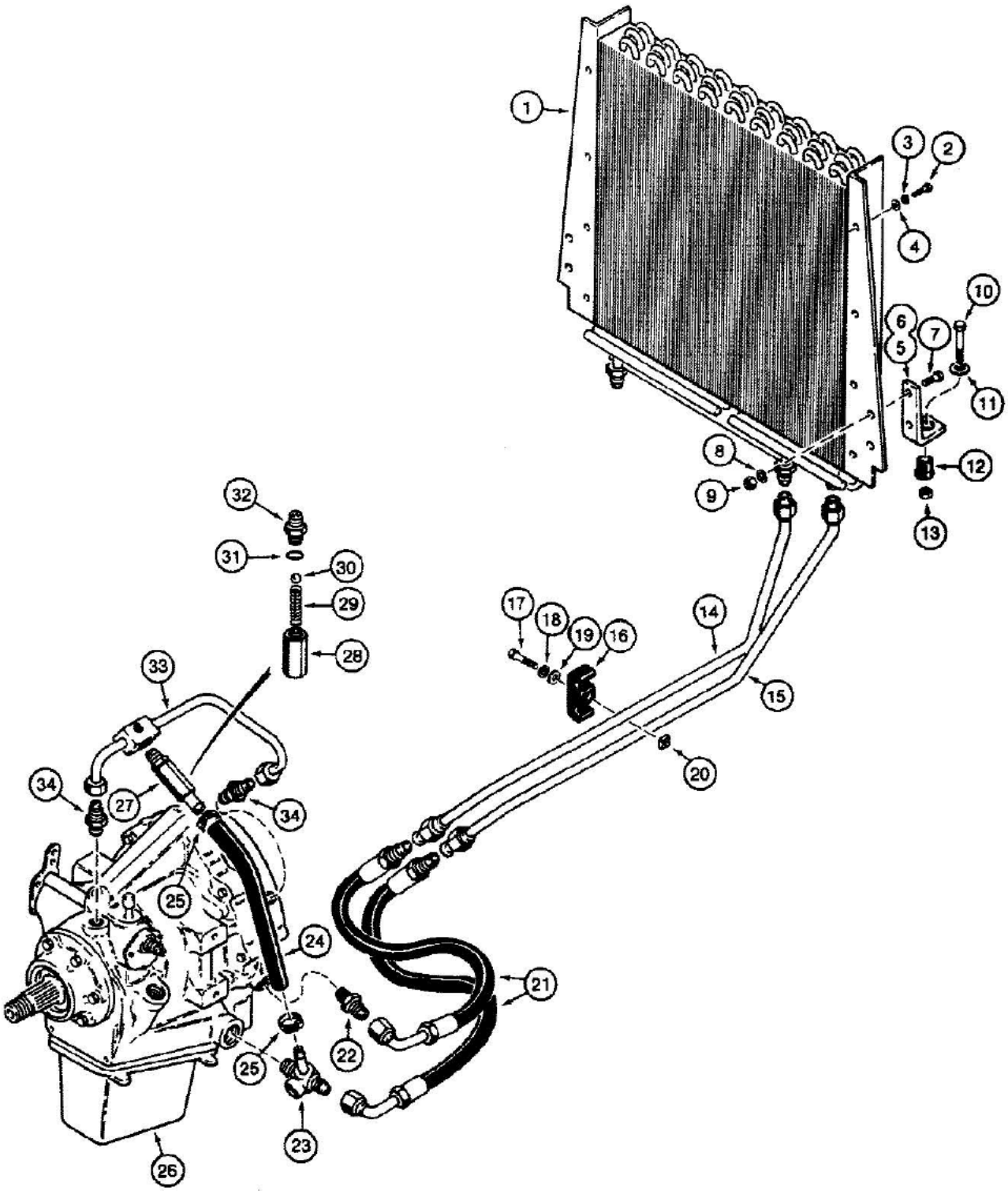

861944-45

06-182 POWER SHUTTLE COOLING SYSTEM

Ref	Part Number	Qty	Description
1	A184542	1	COOLER oil, power shuttle and equipment hydraulic oil, for equipment hydraulic oil cooler lines, see Figures 08-292 and 08-294
2	814-8016	8	BOLT hex head, 8 mm-1.25 x 16 mm, 8.8, plated, mounts oil cooler to radiator
3	192-20	8	WASHER, LOCK, 5/16"
4	195-521	8	WASHER flat, 5/16", plated
5	D131921	1	BRACKET mounting, oil cooler to radiator shroud, left-hand
6	D131920	1	BRACKET mounting, oil cooler to radiator shroud, right-hand
7	113-207	4	BOLT, Hex, 3/8"-16 x 1", G5, Full Thd, Bracket to oil cooler
8	192-21	4	WASHER, LOCK, 3/8"
9	129-103	4	NUT, 3/8"-16, G5
10	113-233	2	BOLT, Hex, 3/8"-16 x 1 3/4", G5, Bracket to radiator shroud
11	D52275	2	WASHER flat, 3/8", hardened
12	D52276	2	INSULATOR vibration, rubber mount
13	131-52	2	NUT hex, self-locking, 3/8"-16 NC, plated
14	D137205	1	TUBE power shuttle to cooler
15	D137207	1	TUBE cooler to power shuttle
16	D120679	1	CLAMP double tube
17	113-209	1	BOLT, Hex, 3/8"-16 x 1 1/2", G5
18	192-21	1	WASHER, LOCK, 3/8"
19	195-525	1	WASHER flat, 3/8", plated
20	25-226	1	NUT square, 3/8"-16 NC
21	D133867	2	HOSE, 21-21/32" (550 mm) long, at power shuttle
22	218-444	1	ADAPTER straight, male
23	D68972	1	FITTING, 4-way, special
24	D136710	1	HOSE, 1/2" (13 mm) ID x 15/16" (24 mm) OD x 9-27/32" (250 mm) long, cut to required length from P/N S118388 bulk hose, see below
25	214-253	2	CLAMP hose
26	REF	1	SHUTTLE ASSEMBLY power, see Figures 06-188 thru 06-196 for parts list
	S118388	UAR	HOSE bulk, 1/2" (13 mm) ID x 168" (4267 mm) long
27	D133321	1	VALVE ASSEMBLY relief, with stem fitting at one end, power shuttle, Includes: Ref. 28 thru 32, Ref. 27 thru 34 are included in P/N D135731, D140175, and D140492 power shuttle assemblies.
28	NSS	1	BODY relief valve
29	S73472	1	SPRING relief valve
30	211-212	1	BALL, 7/16", grade 25, chrome alloy steel
31	D26265	1	O-RING seat
32	S73469	1	SEAT spring
	D135703	1	TUBE power shuttle, Includes: Ref. 33 and 34, Ref. 27 thru 34 are included in P/N D135731, D140175, and D140492 power shuttle assemblies.
33	NSS	1	TUBE power shuttle
34	NSS	2	CONNECTOR with sleeve and nut

6-186

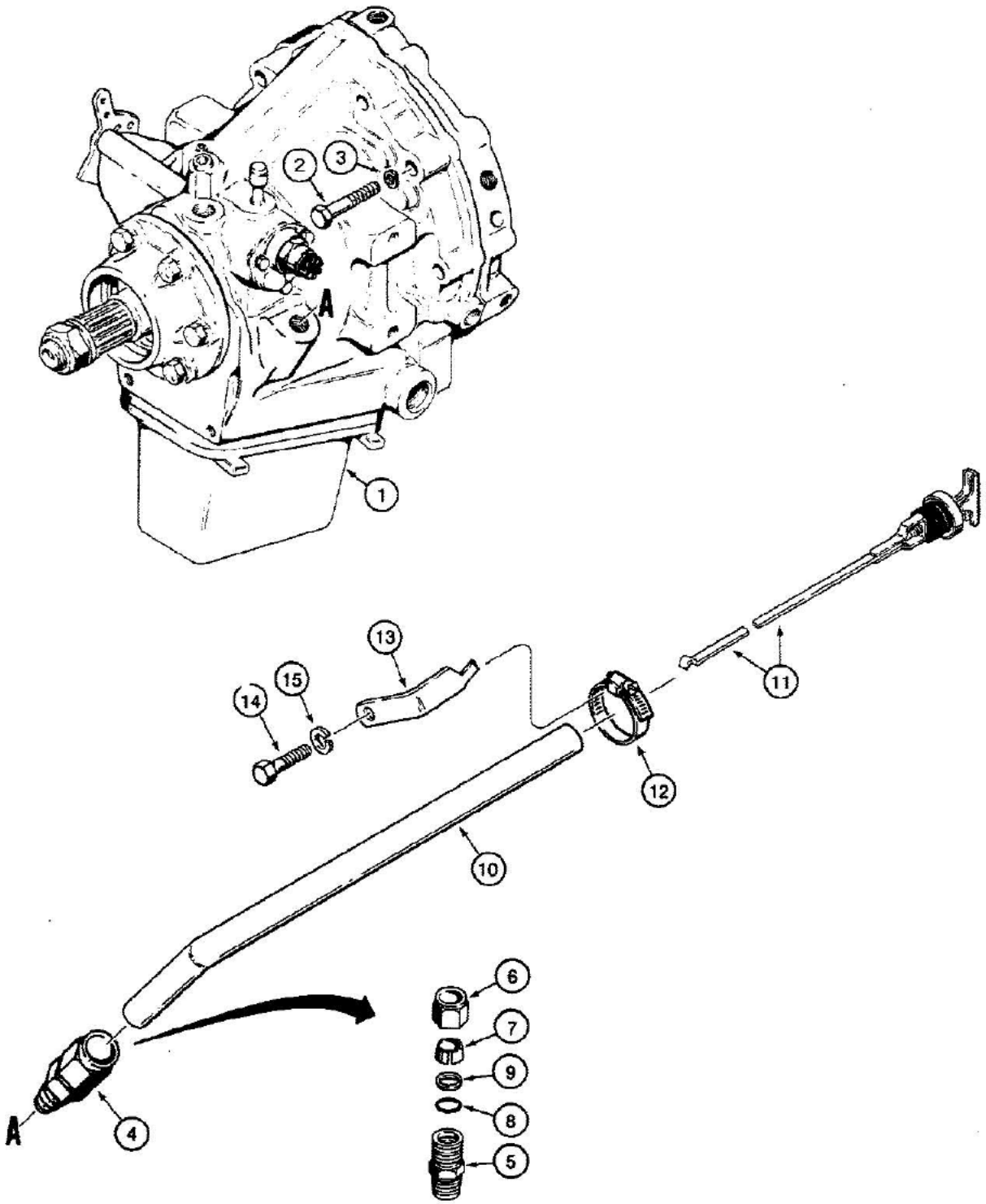

830572-4S

06-186 POWER SHUTTLE MOUNTING AND DIPSTICK

Ref	Part Number	Qty	Description
1	REF	1	SHUTTLE ASSEMBLY power, see Figures 06-188 thru 06-196 for parts list
2	113-329	6	BOLT hex head, 7/16"-14 NC x 3-1/4", plated
3	192-22	6	WASHER, LOCK, 7/16"
4	222-3006	1	CONNECTOR ASSEMBLY straight, power shuttle to dipstick tube, Includes: Ref. 5 thru 9
5	NSS	1	BODY connector
6	222-3111	1	NUT connector
7	222-3105	1	SLEEVE connector
8	A7623	1	O-RING connector
9	D54295	1	RING backup, connector O-ring
10	D125818	1	TUBE filler, power shuttle
11	D125819	1	DIPSTICK power shuttle
12	214-254	1	CLAMP tube
13	D121358	1	SUPPORT filler tube
14	814-10035	1	BOLT hex head, 10 mm-1.5 x 35 mm, 8.8, plated
15	892-1110	1	WASHER lock, 10 mm, plated

6-188

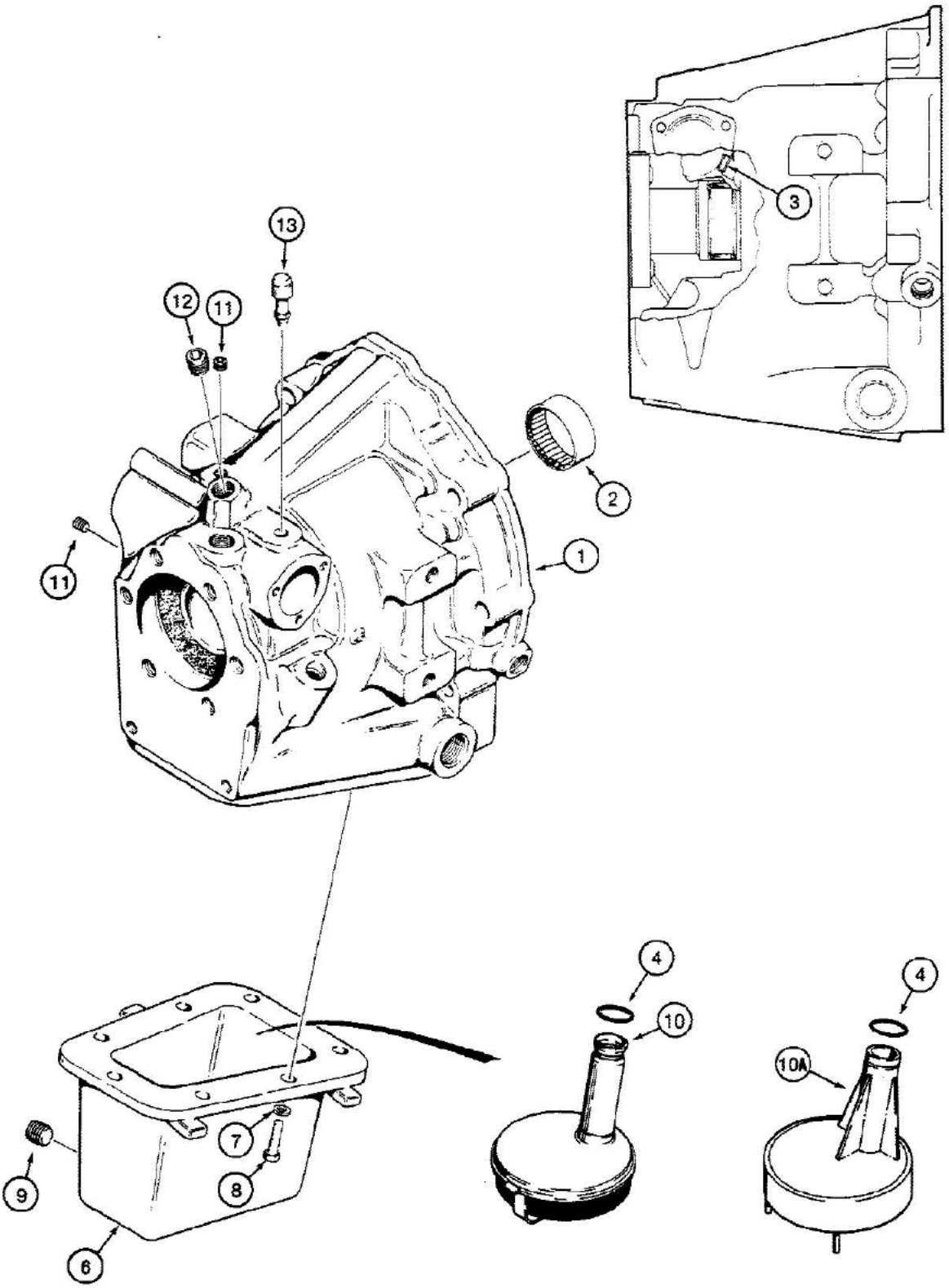

B890643-45

06-188 POWER SHUTTLE, HOUSING AND OIL PAN

Ref	Part Number	Qty	Description
	D136020	1	SHUTTLE ASSEMBLY power, without tube and relief valve (Ref. 27-34 in Figure 06-182) (Warner Gear No. 10-16-000-026) w/o clutch dump solenoid, Includes: P/N D70650 and Ref. 1-13 in this figure & parts in Figures 06-190 thru 06-196 plus an instruction sheet, Service replacement for P/N D135731 (Warner Gear No. 10-16-000-033) power shuttle used in production on some models. P/N D135731 power shuttle also Includes: Ref. 27-34 in Figure 06-182, no longer used, for service order P/N D102905 power shuttle kit.
	329669A1	AR	POWER SHUTTLE - 329669A1 includes a reman power shuttle (DR140175) with a reman converter (103293A1R)
	329669A1C	AR	POWER SHUTTLE - 329669A1 includes a reman power shuttle (DR140175) with a reman converter (103293A1R)
	D140405	1	SHUTTLE ASSEMBLY power, without tube and relief valve (Ref. 27-34 in Figure 06-182) (Warner Gear No. 10-16-000-048) with clutch dump solenoid, Includes: P/N D70650 and Ref. 1-13 in this figure and parts in Figures 06-190 thru 06-196, Service replacement for P/N D140175 (Warner Gear No. D10-16-000-047) power shuttle used in production on some models. D140175 power shuttle also Includes: Ref. 27-34 in Figure 06-182, for service order P/N D102905 power shuttle kit
	329669A1	AR	POWER SHUTTLE - 329669A1 includes a reman power shuttle (DR140175) with a reman converter (103293A1R)
	329669A1C	AR	POWER SHUTTLE - 329669A1 includes a reman power shuttle (DR140175) with a reman converter (103293A1R)
	D140492	1	SHUTTLE ASSEMBLY power, includes tube and relief valve (Ref. 27-34 in Figure 06-182) (Warner Gear No. 10-16-000-047) with clutch dump solenoid and neutral start switch (Ref. 48A and 55 in Figure 06-190), If replacing P/N D140492 power shuttle and your neutral start switch is bad, you will need to order P/N D141061 switch in Figure 06-190 in addition to the kit., Includes: P/N D70650 and Ref. 1-13 in this figure and parts in Figures 06-190 thru 06-196, for service order P/N D102905 power shuttle kit
	D70650	1	HOUSING ASSEMBLY power shuttle, Includes: Ref. 1 thru 3
1	NSS	1	HOUSING power shuttle
2	R21491	1	BEARING needle, housing, included in P/N D103218 bearing kit
3	41-1007	1	PLUG cup, 7/16"
4	R29797	1	O-RING screen tube, included in P/N D103223 seal kit
5	345-84	1	SEALANT, 3 oz. (89 ml) of sealant in a tube, oil pan to housing, not shown
6	N13577	1	PAN oil, power shuttle
7	192-21	7	WASHER, LOCK, 3/8"
8	113-221	7	BOLT, Hex, 3/8"-16 x 7/8", G5, Full Thd
9	221-841	1	PLUG hex socket head, 1/4" NPT
10	D66455	1	SCREEN sump, power shuttle, with leaf spring retainer, no longer available, order P/N D143133 screen
10A	D143133	1	SCREEN sump, power shuttle, with four-peg retainer
11	221-849	2	PLUG hex socket head, 1/8" NPT, The thread on the side of housing may have 3/8"-24 threaded hole. Then the dealer has to purchase plug locally. This is a test port.
12	221-843	1	PLUG hex socket head, 3/8" NPT, Use either this hex socket head 3/8" NPT P/N 221-843 plug, used on early units or P/N 218-5155 hex head plug 9/16"-18 NPT with O-ring, refer T/S # 29-90.

06-188 POWER SHUTTLE, HOUSING AND OIL PAN

Ref	Part Number	Qty	Description
13	D50062	1	BREATHER power shuttle
	D102905	1	KIT power shuttle, service replacement, Includes: P/N D140405 power shuttle and installation instructions
	329669A1	AR	POWER SHUTTLE - 329669A1 includes a reman power shuttle (DR140175) with a reman converter (103293A1R)
	329669A1C	AR	POWER SHUTTLE - 329669A1 includes a reman power shuttle (DR140175) with a reman converter (103293A1R)
	D103218	1	KIT bearing, Includes: (one each) P/N D50044 ball bearing in Figure 06-194, P/N H747964 needle bearing in Figure 06-190, P/N R21491 needle bearing Ref. 2 above, and P/N 40011 ball bearing in Figure 06-190
	D103220	1	KIT seal, gasket, includes seals and gaskets in Figures 06-190 thru 06-196, plus P/N R29956 oil pan gasket not used on the model 580K

6-190

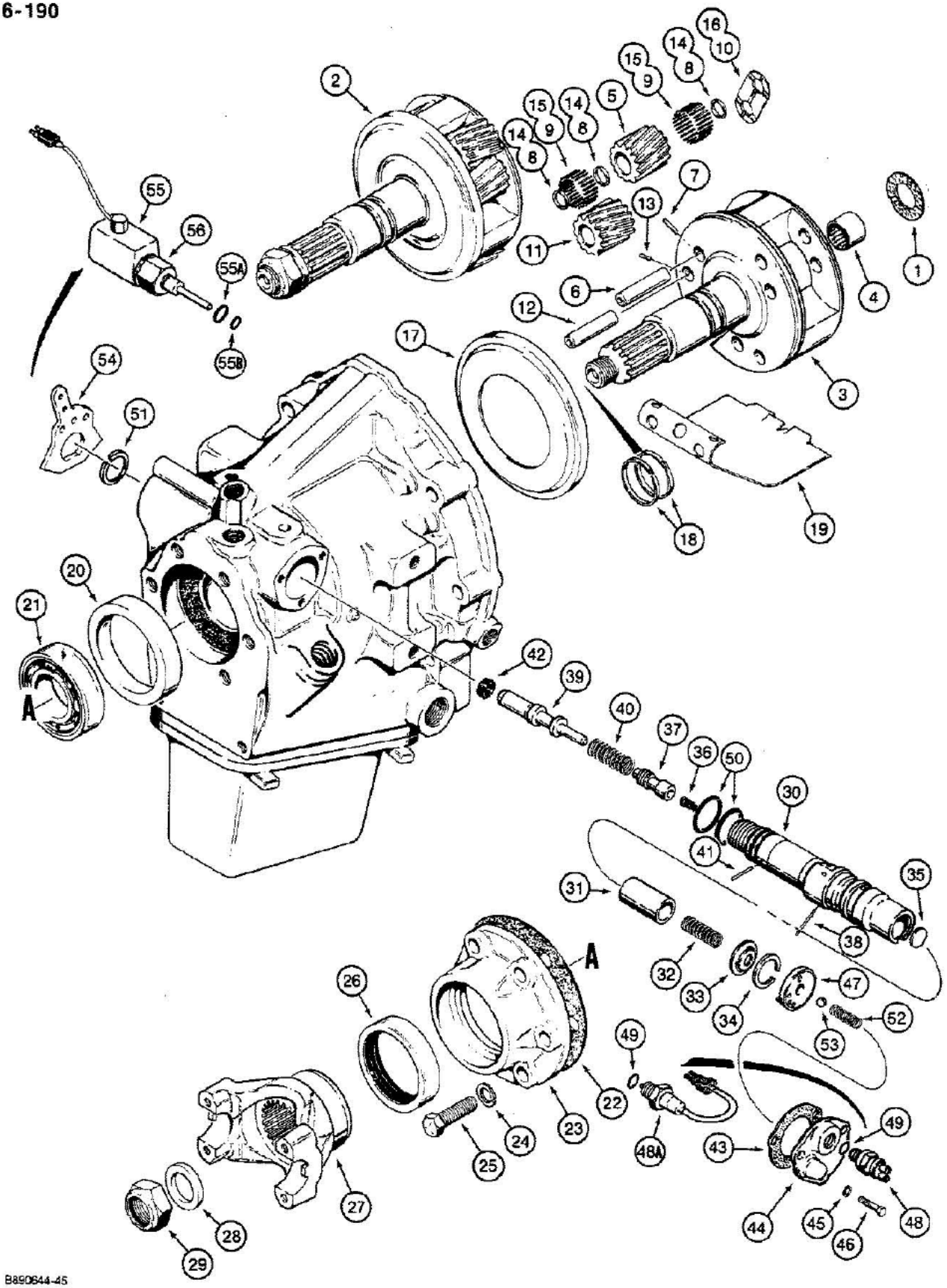

06-190 POWER SHUTTLE, PINION CAGE, OUTPUT SHAFT AND CONTROL VALVE

Ref	Part Number	Qty	Description
	REF	1	SHUTTLE ASSEMBLY power, see Figure 06-188 for service information, see Figures 06-188 thru 06-196 for parts list, Includes: Ref. 1 thru 56 in this figure
1	D50055	1	WASHER thrust, clutch hub, Part of Seal Kit P/N D103220
2	D70665	1	PINION CAGE AND OUTPUT SHAFT power shuttle, Includes: Ref. 3 thru 17
3	NSS	1	CAGE AND SHAFT basic
4	H747964	1	BEARING needle, output shaft, Part of Bearing Kit P/N D103218
	D50030	3	KIT inner pinion gear and shaft, Includes: Ref. 5 thru 10
5	NSS	1	GEAR pinion, inner
6	NSS	1	SHAFT pinion, inner
7	NSS	1	PIN retaining
8	NSS	3	SPACER pinion bearing
9	NSS	48	NEEDLE pinion bearing
10	NSS	2	PLATE thrust
	D50031	3	KIT outer pinion gear and shaft, Includes: Ref. 11 thru 16
11	NSS	1	GEAR pinion, outer
12	NSS	1	SHAFT pinion, outer
13	NSS	1	PIN retaining
14	NSS	3	SPACER pinion bearing
15	NSS	48	NEEDLE pinion bearing
16	NSS	2	PLATE thrust
	D50087	1	KIT oil collector ring, Includes: Ref. 17, Part of Seal Kit P/N D103220
17	S105555	1	RING collector
18	D50080	2	RING sealing, Part of Seal Kit P/N D103220
19	D50056	1	BAFFLE plate
20	D50057	1	SPACER ball bearing
21	40011	1	BEARING ball, output shaft, Part of Bearing Kit P/N D103218
22	D50058	1	GASKET ball bearing retainer, Part of Seal Kit P/N D103220
23	D50059	1	RETAINER rear ball bearing
24	192-22	6	WASHER, LOCK, 7/16"
25	113-363	6	BOLT hex head, 7/16"-14 NC x 1-1/8", plated
26	D50060	1	SEAL oil, rear, Part of Seal Kit P/N D103220, This is a Chicago Rawhide seal approx. 1/2" wide. There have been a couple calls in reference to a "NOK" seal in this application with a vendor P/N UH0331E, approx. 3/8" width. The vendor who built the shuttle says they did switch over to the NOK seal. The wider Chicago Rawhide seal should be no problem to use for service on units with the narrower production seal.
27	D124144	1	YOKE output shaft mounting
28	D65247	1	WASHER output shaft, Part of Seal Kit P/N D103220
	345-84	1	SEALANT, 3 oz. (89 ml) of sealer in a tube, not shown, can be used between P/N D65247 washer and end of shaft
29	131-91	1	NUT hex, self-locking, 3/4"-16 NF, special

06-190 POWER SHUTTLE, PINION CAGE, OUTPUT SHAFT AND CONTROL VALVE

Ref	Part Number	Qty	Description
	N13639	1	VALVE ASSEMBLY, P/N D136020 or D135731 power shuttle, double groove for two P/N D37156 O-rings, Ref. 50, Includes: Ref. 30-42
	N14765	1	VALVE ASSEMBLY, P/N D140175, D140405 or D140492 power shuttle, Includes: Ref. 30-38
30	NSS	1	BODY valve
31	D50089	1	VALVE pressure regulator
32	D50090	1	SPRING valve
33	D50091	1	RETAINER spring
34	D50092	1	RING spring retaining
35	41-12	1	PLUG expansion, 3/4"
36	D77476	1	SPRING clutch cutout
37	D77474	1	SPOOL valve
38	135-198	1	PIN, GROOVED, 5/64" x 1", Type B, Half length taper
39	D75488	1	PLUNGER, P/N N13639 valve only
40	D77475	1	SPRING plunger, P/N N13639 valve only
41	138-59	1	PIN, 1/8" x 7/8", Slotted, P/N N13639 valve only
42	D75489	1	SEAL oil, P/N N13639 valve only, see Ref. 42A, Part of Seal Kit P/N D103220
42A	D75492	1	TOOL installation, used to install P/N D75489 seal, Ref. 42, not shown
43	D50066	1	GASKET valve cover, Part of Seal Kit P/N D103220
44	D86488	1	COVER valve
45	192-19	3	WASHER, LOCK, 1/4"
46	113-9	3	BOLT hex head, 1/4"-20 NC x 7/8", plated
47	D86489	1	CAM neutral start switch
48	S113435	1	SWITCH neutral start, with snap-on connector, used with P/N D135731, D136020, D140175, or D140405 power shuttle assembly
48A	D141061	1	SWITCH neutral start, with plastic wire connector, used with P/N D140492 power shuttle assembly, Includes: Ref. 49
50	D142214	2	O-RING valve, Part of Seal Kit P/N D103220
51	A75171	1	RING retaining
52	S47892	1	SPRING poppet
53	211-9	1	BALL, 5/16", grade 200, chrome alloy steel
54	D77621	1	LEVER shift, The Belleville spring, used on later models, which fits adjacent to shift lever, Ref. 54, is P/N D147178, not shown.
55	N14766	1	SOLENOID, P/N D140175, D140405 or D140492, power shuttle, Includes: Ref. 55A and 55B
55A	G107675	1	O-RING internal, valve body, large
55B	S6476	1	O-RING internal, valve body, small
56	131-424	1	NUT hex, self-locking, 1-1/8"-7 NC, P/N D140175, D140405, or D140492 power shuttle
	D103220	1	KIT seal, gasket, Includes: P/N D50087, Ref. 1, 18, 22, 26, 28, 42, 43, 49 and 50 in this figure and P/N R29797 O-ring in Figure 06-188, plus noted items in Figures 06-194 and 06-196, and P/N R29956 oil pan gasket not used on the model 580K
	D103218	1	KIT bearing, Includes: Ref. 4 and 21 in this figure, plus (1 each) P/N D50044 ball bearing in Figure 06-194 and P/N R21491 needle bearing in Figure 06-188

06-190 POWER SHUTTLE, PINION CAGE, OUTPUT SHAFT AND CONTROL VALVE

Ref	Part Number	Qty	Description
49	237-6006	1	O-Ring, 6-1, 90 Duro, .468" ID x .078" Thk, P/N S113435 or D141061 switch, Part of Seal Kit P/N D103220

6-194

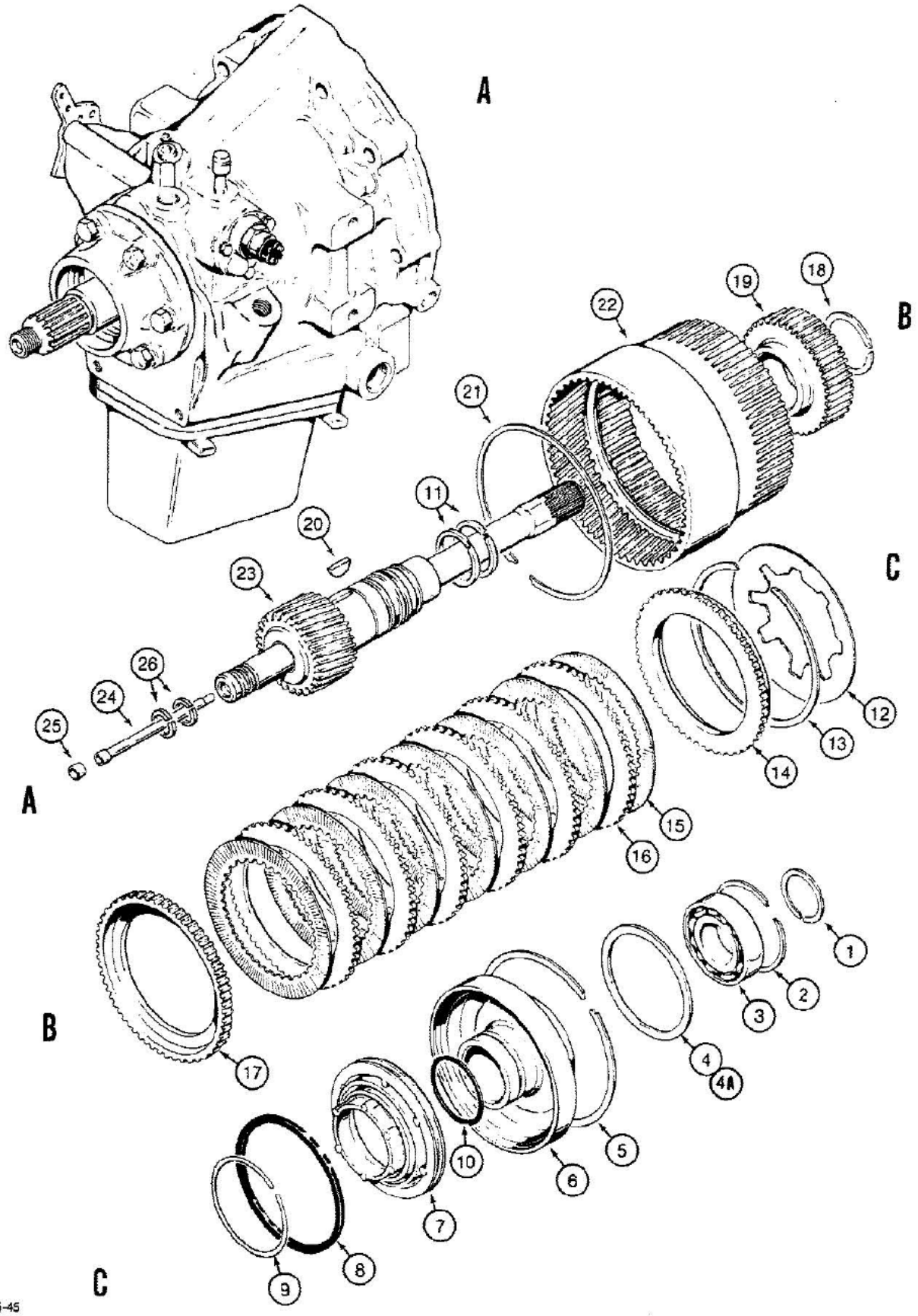

Ref. service kit No. N14254 (vendor No. is MIN46). For this to work the bore must be 7/8". If the bore is 1" the vender No. is MIM47 and uses mineral oil and we do not have a Case cross reference part No.

580K LOADER BACKHOE (NORTH AMERICA) - Power Train

06-194 POWER SHUTTLE, INPUT SHAFT AND FORWARD CLUTCH

Ref	Part Number	Qty	Description
	REF	1	SHUTTLE ASSEMBLY power, see Figure 06-188 for service information, see Figures 06-188 thru 06-196 for parts list, Includes: Ref. 1 thru 26
1	D50042	1	RING snap, bearing retaining, small, Part of Gasket Seal Kit P/N D103220
2	D50043	1	RING snap, bearing retaining, large, Part of Gasket Seal Kit P/N D103220
3	D50044	1	BEARING ball, clutch cylinder, included in P/N D103218, bearing kit
4	D50045	1	WASHER thrust, forward clutch, thin, if used, Part of Gasket Seal Kit P/N D103220
4A	D143871	1	WASHER thrust, forward clutch, thick, if used, Part of Gasket Seal Kit P/N D103220
5	D50046	1	RING ring gear retaining, Part of Gasket Seal Kit P/N D103220
6	D50075	1	CYLINDER forward clutch
7	D70670	1	PISTON forward clutch
8	D50077	1	RING seal, piston, Part of Gasket Seal Kit P/N D103220
9	D50078	1	RING retaining, piston, Part of Gasket Seal Kit P/N D103220
10	D50079	1	O-RING cylinder, Part of Gasket Seal Kit P/N D103220
11	D50080	2	RING sealing, Part of Gasket Seal Kit P/N D103220
12	D50047	1	SPRING, Belleville, Part of Gasket Seal Kit P/N D103220
13	D50048	1	RING retaining, pressure plate, Part of Gasket Seal Kit P/N D103220
14	D50081	1	PLATE pressure, front, Part of Clutch Overhaul Kit P/N D103219
15	D70672	7	DISC friction, internal tooth, Part of Clutch Overhaul Kit P/N D103219
16	D50083	6	DISC friction, external tooth, Part of Clutch Overhaul Kit P/N D103219
17	D50084	1	PLATE pressure, rear, Part of Clutch Overhaul Kit P/N D103219
18	D50049	1	RING clutch hub retaining, Part of Gasket Seal Kit P/N D103220
19	D75853	1	HUB clutch
20	126-124	1	Woodruff Key, #15, 1/4" x 1", HT, Input shaft, Part of Gasket Seal Kit P/N D103220
21	D50051	UAR	RING, .050" (1.270 mm) to .054" (1.372 mm) thick, Part of Gasket Seal Kit P/N D103220
21	D78397	UAR	RING, .062" (1.575 mm) to .066" (1.676 mm) thick, Part of Gasket Seal Kit P/N D103220
21	D50052	UAR	RING, .074" (1.880 mm) to .078" (1.981 mm) thick, Part of Gasket Seal Kit P/N D103220
21	D78398	UAR	RING, .084" (2.134 mm) to .088" (2.235 mm) thick, Part of Gasket Seal Kit P/N D103220
21	D50053	UAR	RING, .096" (2.438 mm) to .100" (2.540 mm) thick, Part of Gasket Seal Kit P/N D103220
22	D50054	1	GEAR ring, power shuttle
	D70666	1	SHAFT ASSEMBLY input, power shuttle, Includes: Ref. 23 thru 25
23	NSS	1	SHAFT input, drive
24	N7043	1	TUBE forward clutch supply
25	D50086	1	PLUG shaft end
26	D70668	2	RING sealing, Part of Gasket Seal Kit P/N D103220
	D103218	1	KIT bearing, Includes: (one each) P/N H747964 and 40011 needle and ball bearings in Figure 06-190, P/N R21491 needle bearing in Figure 06-188, and P/N D50044 ball bearing above
	D103220	1	KIT seal, gasket, Includes: Ref. 1, 2, 4, 4A, 5, 8 thru 13, 18, 20, all Ref. 21's and Ref. 26, plus noted items in Figures 06-188, 06-190 and 06-196, and P/N R29956, oil pan gasket not used on the model 580K.
	D103219	1	KIT overhaul, clutch, Includes: Ref. 14 thru 17, plus P/N D50037, D50040 and D50041 plate and discs in Figure 06-196

Ref. service kit No. N14254 (vendor No. is MIN46). For this to work the bore must be 7/8". If the bore is 1" the vender No. is MIM47 and uses mineral oil and we do not have a Case cross reference part No.

6-196

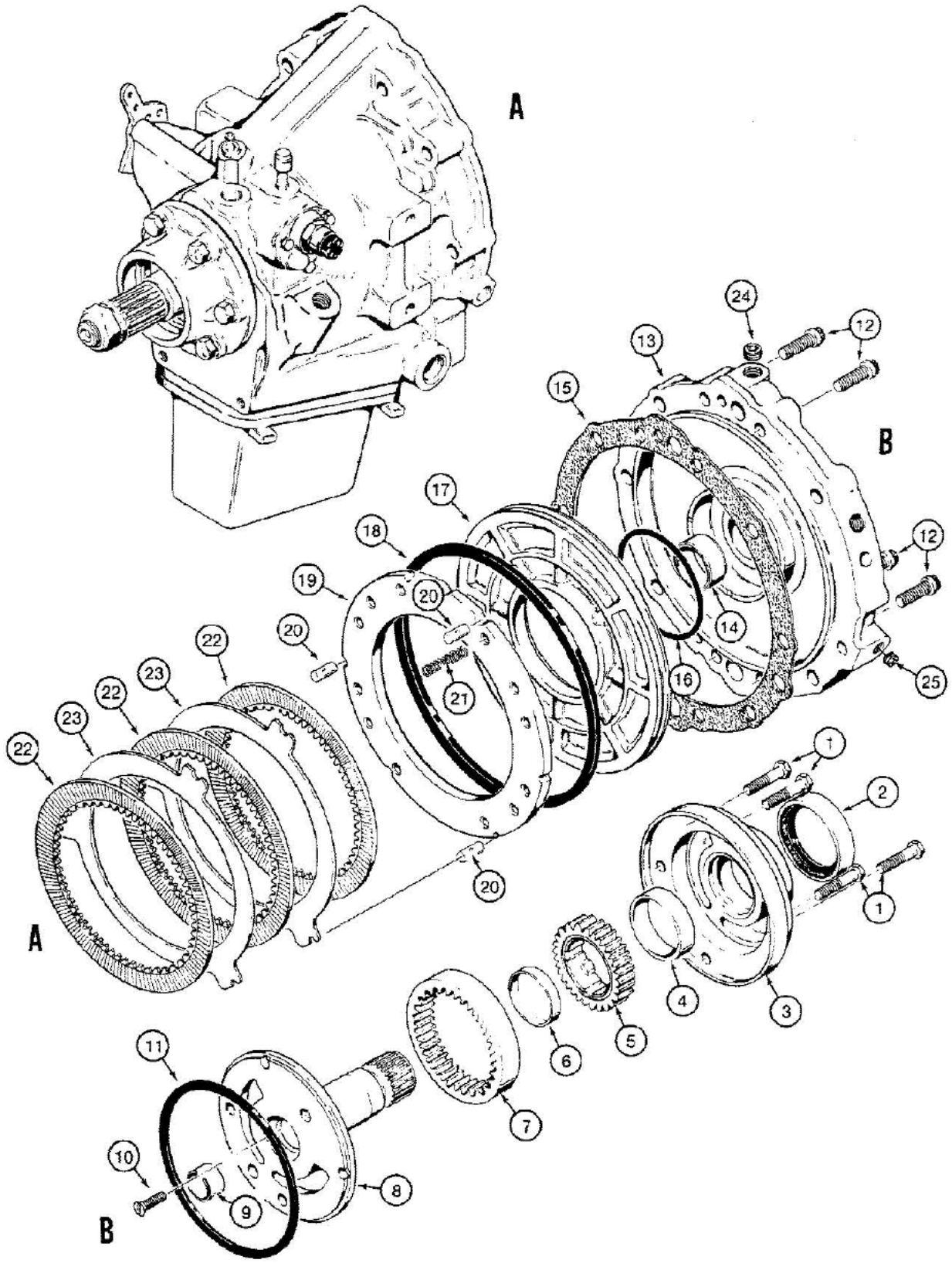

930681-45

The steel disks reverse clutch pack have discrepancies in the number of steels to use. If a shuttle has three steels when disassembled, rebuild using the same number.

06-196 POWER SHUTTLE, CHARGING PUMP AND REVERSE CLUTCH

Ref	Part Number	Qty	Description
	REF	1	SHUTTLE ASSEMBLY power, see Figure 06-188 for service information, see Figures 06-188 thru 06-196 for parts list, Includes: Ref. 1 thru 25 in this figure
1	113-120	4	BOLT, Hex, 5/16"-18 x 1 3/4", G5
	R29995	1	PUMP ASSEMBLY charging, power shuttle, no longer used, order P/N L30488 pump assembly
	L30488	1	PUMP ASSEMBLY charging, power shuttle, service replacement, Includes: Ref. 2 thru 10
2	N8071	1	SEAL oil, P/N R29995 pump, Part of Gasket Seal Kit P/N D103220
2	L30489	1	SEAL oil, P/N L30488 pump
3	NSS	1	BODY charging pump, Includes: Ref. 4
4	D50071	1	BUSHING charging pump
5	NSS	1	GEAR drive, charging pump, Includes: Ref. 6
6	NSS	1	BUSHING charging pump gear drive
7	NSS	1	GEAR driven, charging pump
8	NSS	1	SUPPORT torque converter, Includes: Ref. 9
9	NSS	1	BUSHING torque converter support
10	171-100	1	SCREW machine, flat head slotted, No. 10-24 NC x 3/4", special
11	L30487	1	GASKET charging pump, Part of Gasket Seal Kit P/N D103220
12	166-46	4	BOLT, Ferry head, 3/8"-16 NC x 1-1/4", grade 8
	D50022	1	COVER ASSEMBLY power shuttle, Includes: Ref. 13 and 14
13	NSS	1	COVER power shuttle
14	D50074	1	BUSHING cover, Part of Gasket Seal Kit P/N D103220
15	D50033	1	GASKET cover to housing, Part of Gasket Seal Kit P/N D103220
16	D50034	1	O-RING small, Part of Gasket Seal Kit P/N D103220
17	D50035	1	PISTON reverse clutch
18	D50036	1	RING piston seal, square section, Part of Gasket Seal Kit P/N D103220
19	D50037	1	PLATE pressure, reverse clutch, Per ECN D943038, P/N D50037 reverse clutch pressure plate was removed from the kit as it is not always required. P/N D50037 must be ordered separately. reference E.A.R. #P&C-NA-94-159
20	D50038	3	PIN dowel, pressure plate, Part of Gasket Seal Kit P/N D103220
21	D50039	11	SPRING pressure plate, Part of Gasket Seal Kit P/N D103220
22	D50040	3	DISC friction, internal tooth, Part of Clutch Overhaul Kit P/N D103219
23	D50041	2	DISC metal, external flange, Part of Clutch Overhaul Kit P/N D103219
24	221-841	1	PLUG hex socket head, 1/4" NPT
25	221-849	2	PLUG hex socket head, 1/8" NPT
	D103220	1	KIT seal, gasket, Includes: Ref. 2 P/N N8071, 11, 14, 15, 16, 18, 20 and 21, plus noted items in Figures 06-188 thru 06-194, and P/N R29956 oil pan gasket not used on the model 580K.
	D103219	1	KIT overhaul, clutch, Includes: Ref. 19, 22 and 23, plus P/N D50081, D50083, D50084 and D70672 plates in Figure 06-194

The steel disks reverse clutch pack have discrepancies in the number of steels to use. If a shuttle has three steels when disassembled, rebuild using the same number.

6-198

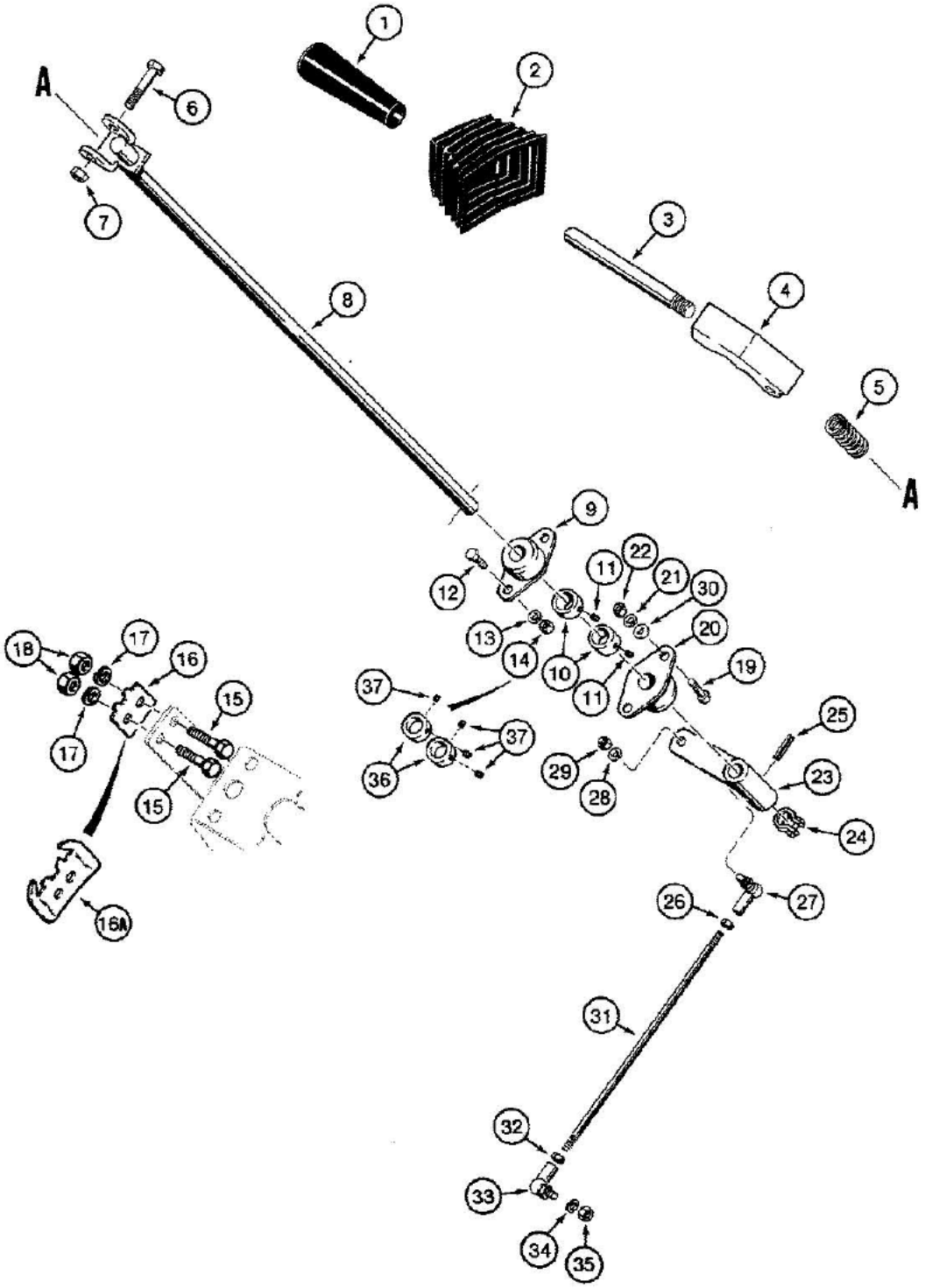

870183A-45

580K LOADER BACKHOE (NORTH AMERICA) - Power Train

06-198 SHUTTLE CONTROL AND LINKAGE, USED ON MODELS WITHOUT TILT/TELESCOPING STEERING COLUMN

Ref	Part Number	Qty	Description
1	D86694	1	KNOB shuttle control lever
2	D138175	1	BOOT shuttle control rod
3	D131414	1	ROD shuttle control lever
4	D134343	1	LEVER control, shuttle, upper
5	D124906	1	SPRING detent
6	413-632	1	BOLT, Hex, 3/8"-16 x 2", G5
7	131-217	1	NUT light hex, self-locking, 3/8" NC
8	D136701	1	ROD control lever
9	L15401	1	BEARING steering valve bracket
10	D81756	2	COLLAR ASSEMBLY locking, with 1/4" set screw, no longer used, order P/N D142939 collar, Ref. 36, Includes: Ref. 11
11	178-888	1	SCREW set, hex headless, 1/4"-20 NC x 1/4", cup point, plated
12	113-102	2	BOLT, Hex, 5/16"-18 x 3/4", G5, Full Thd
13	192-20	2	WASHER, LOCK, 5/16"
14	9635082	2	NUT, 5/16"-18, G5
15	113-206	2	BOLT, Hex, 3/8"-16 x 3/4", G5, Full Thd
16	D138714	1	PLATE detent, no longer used, for service order P/N D140692 plate
16A	D140692	1	PLATE detent
17	192-21	2	WASHER, LOCK, 3/8"
18	129-103	2	NUT, 3/8"-16, G5
19	113-102	2	BOLT, Hex, 5/16"-18 x 3/4", G5, Full Thd
20	L15401	1	BEARING steering valve bracket
21	192-20	2	WASHER, LOCK, 5/16"
22	9635082	2	NUT, 5/16"-18, G5
23	D138713	1	LEVER shuttle, lower
24	D71880	1	CLAMP adjustable, includes hardware
25	138-150	1	PIN, 5/16" x 13/16", Slotted
26	129-121	1	NUT, 1/4"-28, G5
27	D63154	1	JOINT ball, 1/4"
28	192-19	1	WASHER, LOCK, 1/4"
29	129-121	1	NUT, 1/4"-28, G5
30	195-103	2	WASHER flat, 5/16", plated
31	D143423	1	ROD lever to power shuttle
32	129-121	1	NUT, 1/4"-28, G5
33	D63154	1	JOINT ball, 1/4"
34	192-19	1	WASHER, LOCK, 1/4"
35	129-121	1	NUT, 1/4"-28, G5
36	D142939	2	COLLAR ASSEMBLY locking, with 5/16" set screw, Includes: Ref. 37
37	D143603	2	SCREW set, torx socket headless, 5/16"-18 NC x 5/16", cup point, special

6-200

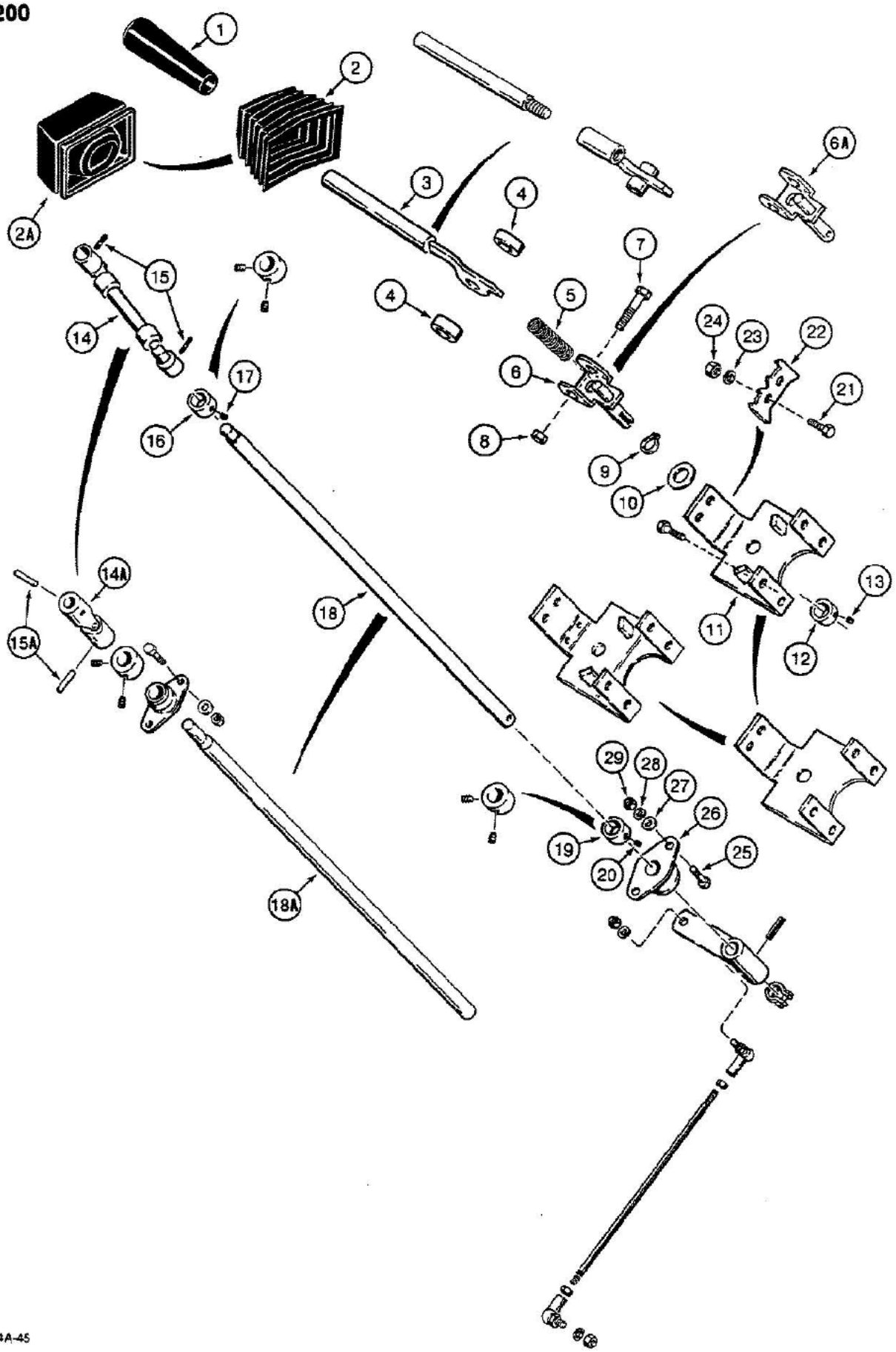

B8854A-45

06-200 SHUTTLE CONTROL AND LINKAGE, USED ON MODELS WITH TILT/TELESCOPING STEERING COLUMN

Ref	Part Number	Qty	Description
1	D86694	1	KNOB shuttle control lever
2	D138175	1	BOOT shuttle control rod, no longer available, order P/N D141958 boot
2A	D141958	1	BOOT shuttle control rod
3	D138567	1	ROD pivot, shuttle control lever, no longer available, order P/N D143607 bracket and P/N D143608 rod Ref. 38 and 39 in Figure 06-202
4	D139015	2	SPACER, P/N D138567 pivot rod
5	D124906	1	SPRING detent
6	D138338	1	CLEVIS rod, upper, with slot for key, Ref. 15, if used
6A	D143768	1	CLEVIS rod, upper, with hole for groove pin, Ref. 15A, if used
7	413-632	1	BOLT, Hex, 3/8"-16 x 2", G5
8	131-217	1	NUT light hex, self-locking, 3/8"-16 NC
9	D95095	1	RETAINER clevis
10	195-533	2	WASHER flat, 1/2", plated
11	D138382	1	BRACKET mounts to tilt/telescoping steering column, with stop blocks, no longer available, order P/N D144550 bracket , Ref. 40 in Figure 06-202
12	D138366	1	COLLAR ASSEMBLY locking, used with Ref. 6 clevis, if used, Includes: Ref. 13
13	178-882	1	SCREW set, hex socket, self-locking, 1/4"-20 NC x 3/8", cup point
14	D144553	1	JOINT, U, double, used with Ref. 18 rod, if used
14A	D143767	1	JOINT, U, shuttle rod, used with Ref. 18A rod, if used
15	D138592	2	KEY square lock, 1/8", used with Ref. 6 clevis, if used
15A	135-341	2	Pin, Grooved, 3/16" x 1", Type F, Used with Ref. 6A clevis, if used
16	D81756	1	COLLAR ASSEMBLY locking, with 1/4" set screw, no longer used, order P/N D142939 collar, Ref. 41 in Figure 06-202, Includes: Ref. 17
17	178-888	1	SCREW set, hex headless, 1/4"-20 NC x 1/4", cup point, plated
18	D138460	1	ROD lower, shuttle control, used with Ref. 14 U-joint, if used
18A	D143766	1	ROD lower, shuttle control, used with Ref. 14A U-joint, if used
19	D81756	1	COLLAR ASSEMBLY locking, with 1/4" set screw, no longer used, order P/N D142939 collar, Ref. 41 in Figure 06-202, Includes: Ref. 20
20	178-888	1	SCREW set, hex headless, 1/4"-20 NC x 1/4", cup point, plated
21	113-206	2	BOLT, Hex, 3/8"-16 x 3/4", G5, Full Thd
22	D140692	1	PLATE detent
23	192-21	2	WASHER, LOCK, 3/8"
24	129-103	2	NUT, 3/8"-16, G5
25	113-102	2	BOLT, Hex, 5/16"-18 x 3/4", G5, Full Thd
26	L15401	1	BEARING steering valve bracket
27	195-103	2	WASHER flat, 5/16", plated
28	192-20	2	WASHER, LOCK, 5/16"
29	9635082	2	NUT, 5/16"-18, G5

6-202

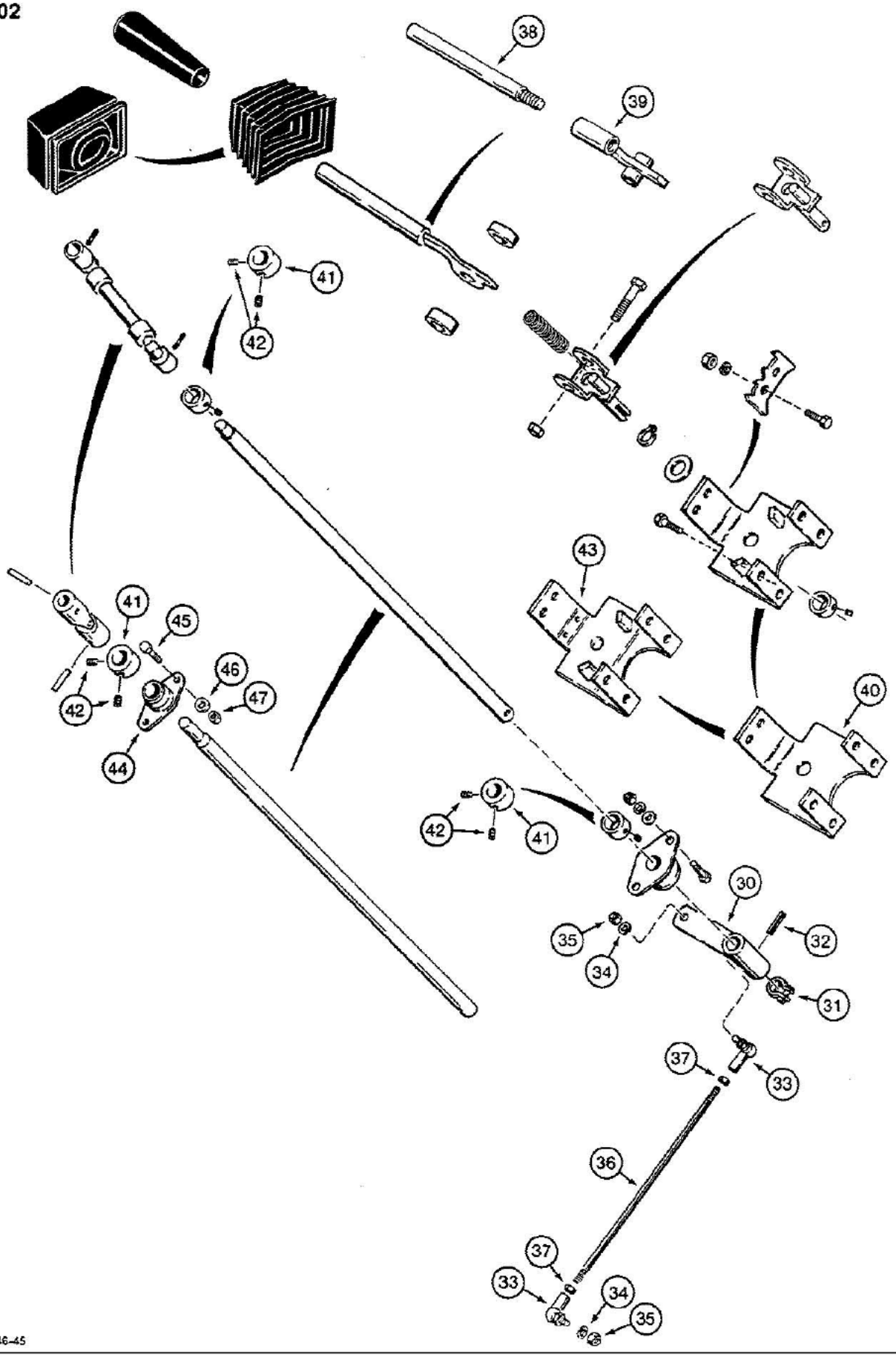

B890646-45

06-202 SHUTTLE CONTROL AND LINKAGE, USED ON MODELS WITH TILT/TELESCOPING STEERING COLUMN

Ref	Part Number	Qty	Description
30	D138713	1	LEVER shuttle, lower
31	D71880	1	CLAMP adjustable, includes hardware
32	138-150	1	PIN, 5/16" x 13/16", Slotted
33	D63154	2	JOINT ball, 1/4"
34	192-19	2	WASHER, LOCK, 1/4"
35	129-121	2	NUT, 1/4"-28, G5
36	D143423	1	ROD lever to power shuttle
37	129-121	2	NUT, 1/4"-28, G5
38	D143608	1	ROD pivot, shuttle control lever
39	D143607	1	BRACKET pivot
40	D144550	1	BRACKET mounts to tilt/telescoping steering column, without stop blocks, if used
41	D142939	2	COLLAR ASSEMBLY locking, with 5/16" set screw, Includes: Ref. 42
42	D143603	2	SCREW set, torx socket headless, 5/16"-18 NC x 5/16", cup point, special
43	D143765	1	BRACKET mounts to tilt/telescoping steering column, with stop blocks, if used
44	L15401	1	BEARING, Ref. 18A shuttle rod, in Figure 06-200
45	413-512	2	BOLT - hex, 5/16 NC x 3/4 inch
46	492-11031	2	WASHER, LOCK, 5/16"
47	425-105	2	NUT - hex, 5/16 inch NC

6- 204

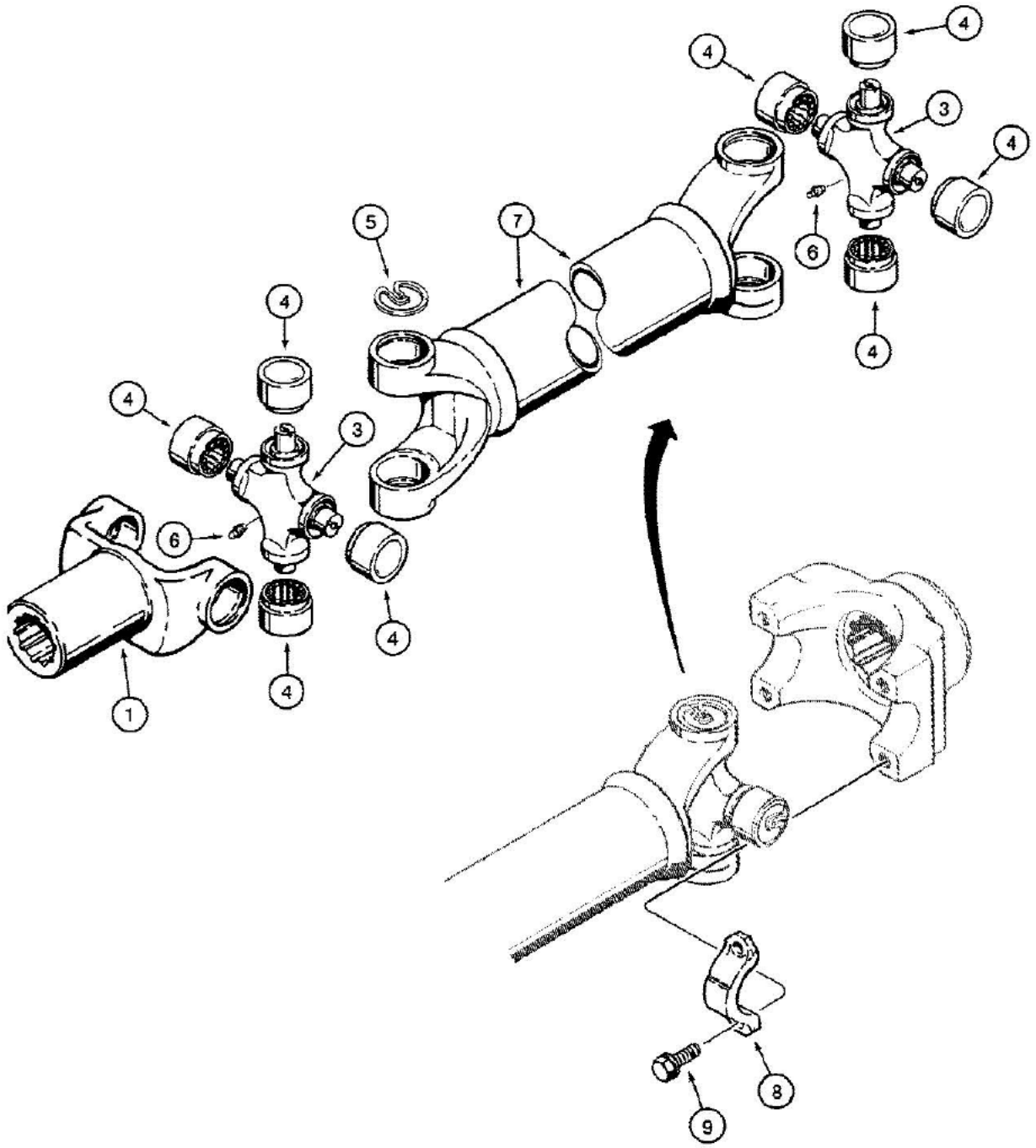

851964-45

It is necessary to use a grease gun needle nozzle adapter (Case P/N D51765 or Lincoln number 5803) to lubricate drive shafts.

580K LOADER BACKHOE (NORTH AMERICA) - Power Train

06-204 DRIVE SHAFT, POWER SHUTTLE TO TRANSAXLE

Ref	Part Number	Qty	Description
	D133167	1	SHAFT ASSEMBLY drive, to transaxle, Includes: Ref. 1 thru 7, If placing an order for P/N D133167 for a four wheel drive unit, P/N N6834 must also be ordered.
1	N9815	1	YOKE end, to transaxle, Includes: Ref. 2, P/N N9815 yoke is for 2 wheel drive tractors, P/N N6834 is for 4 wheel drive., The only difference between P/N N9815 and P/N N6834 is the length. P/N N9815 is 4.13" from center of cross holes to end of splined section of yoke. P/N N6834 is 3.3".
2	N13653	1	PLUG grease, not shown
	N14230	2	KIT universal joint, Includes: Ref. 3 thru 6
3	NSS	1	JOINT universal, drive shaft
4	NSS	4	BEARING universal joint
5	11256	4	RING retaining
6	219-10	1	FITTING grease, straight, 1/4"-28 NF taper
7	NSS	1	SHAFT drive, power shuttle
8	D124146	2	STRAP bearing
9	D124151	4	BOLT special

It is necessary to use a grease gun needle nozzle adapter (Case P/N D51765 or Lincoln number 5803) to lubricate drive shafts.

6- 206

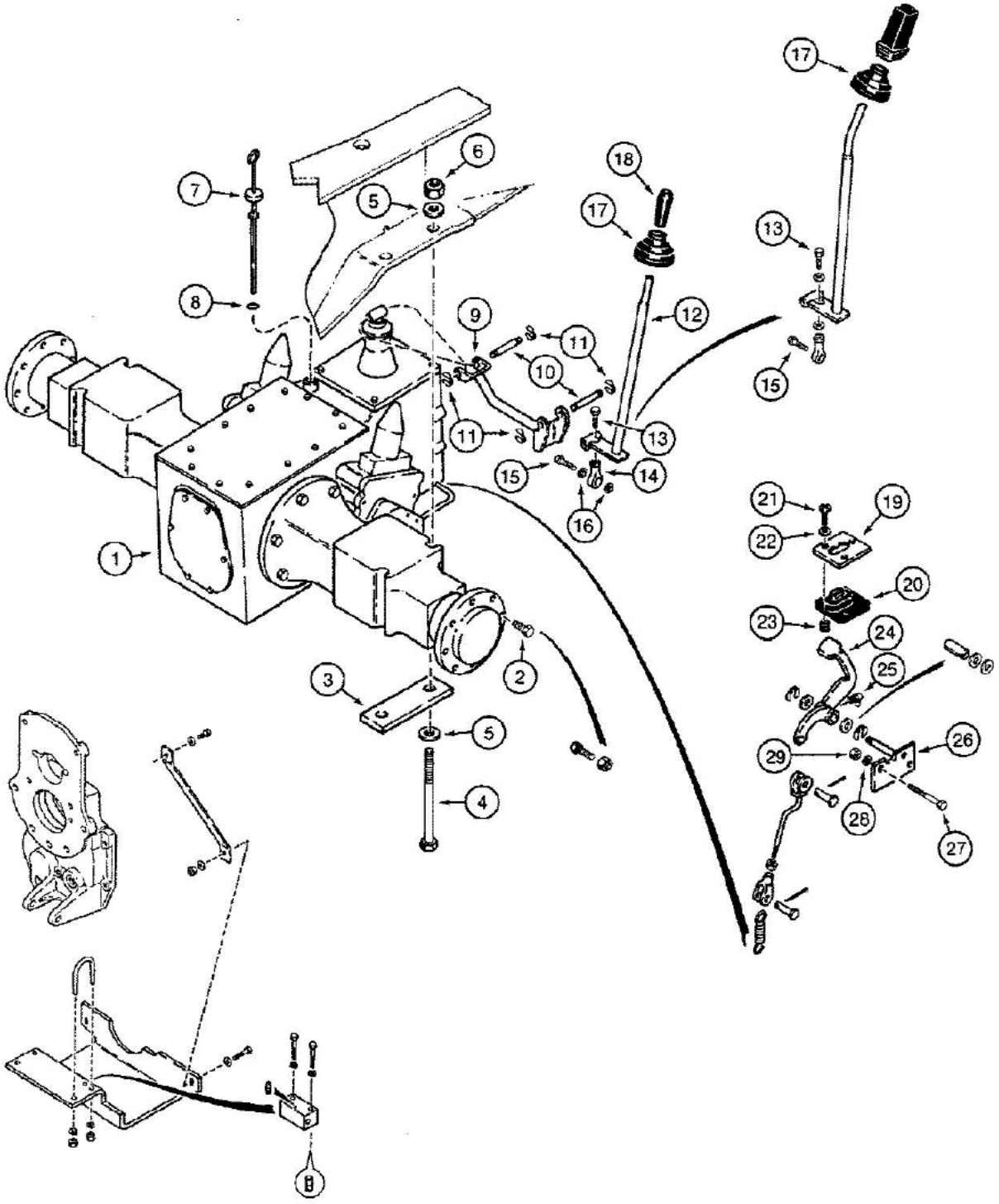

8619498-45

The unnumbered items shown at the bottom left corner of the illustration are the guard kit P/N D102985, see Figure 06-208.

06-206 TRANSAXLE AND DIFFERENTIAL LOCK

Ref	Part Number	Qty	Description
1	A179999	1	TRANSAXLE ASSEMBLY two wheel drive, parts list pages 6-231 thru 7-259, 4 wheel drive is P/N AR180000 - not shown or listed
2	A38208	16	BOLT grade 5, wheel retaining, rear, used with P/N A139085 rear wheels, if used, also see Ref. 38 and 39 in Figure 06-208
2	D140705	16	BOLT grade 8, wheel retaining, rear, used with P/N D140062 rear wheels, if used
3	D127596	2	PLATE spacer
4	26-16176	4	BOLT hex head, 1"-8 NC x 11", grade 8
5	D36505	8	WASHER flat, 1", hardened, special
6	129-185	4	NUT hex, 1"-8 NC, grade 8
7	D138048	1	DIPSTICK transaxle, Includes: Ref. 8
8	F62075	1	O-RING dipstick
9	D133966	1	ROD shift bracket
10	D133974	2	PIN rod attaching
11	D143415	4	RETAINER pin
12	D136575	1	LEVER control, shift, transaxle, no longer available, order P/N D140218 lever and P/N 496-31053 washer, Ref. 56 and 59 in Figure 06-208
13	14-824	1	BOLT hex head, 1/2"-20 NF x 1-1/2"
14	L115782	1	JOINT ball, female
15	113-410	1	BOLT, Hex, 1/2"-13 x 1 1/2", G5, Full Thd, Attaches to chassis
16	192-23	2	WASHER, LOCK, 1/2", If used
17	D123562	1	BOOT shift lever
18	D91439	1	KNOB shift lever, if used
19	D129575	1	PLATE differential lock boot
20	D129670	1	BOOT differential lock
21	182-553	3	SCREW machine, pan Phillips head, No. 10-32 NF x 5/8", plated
22	195-513	3	WASHER flat, No. 10, plated
23	D123827	3	RETAINER threaded insert
24	D141474	1	PEDAL differential lock
25	219-57	1	FITTING grease, 90 degree, 1/4"-28 NF taper
26	D134165	1	BRACKET pivot shaft, pedal, may appear with or without center groove on shaft, for sertvice order P/N D103222 kit
27	113-267	2	BOLT, Hex, 3/8"-16 x 4", G5
28	192-21	2	WASHER, LOCK, 3/8"
29	129-103	2	NUT, 3/8"-16, G5
	D103222	1	KIT service, differential lock pivot shaft, Includes: P/N D134165 bracket, Ref. 26 above and P/N D139528 spacer and (2) P/N A30881 washers, Ref. 30 and 30A in Figure 06-208

The unnumbered items shown at the bottom left corner of the illustration are the guard kit P/N D102985, see Figure 06-208.

6- 208

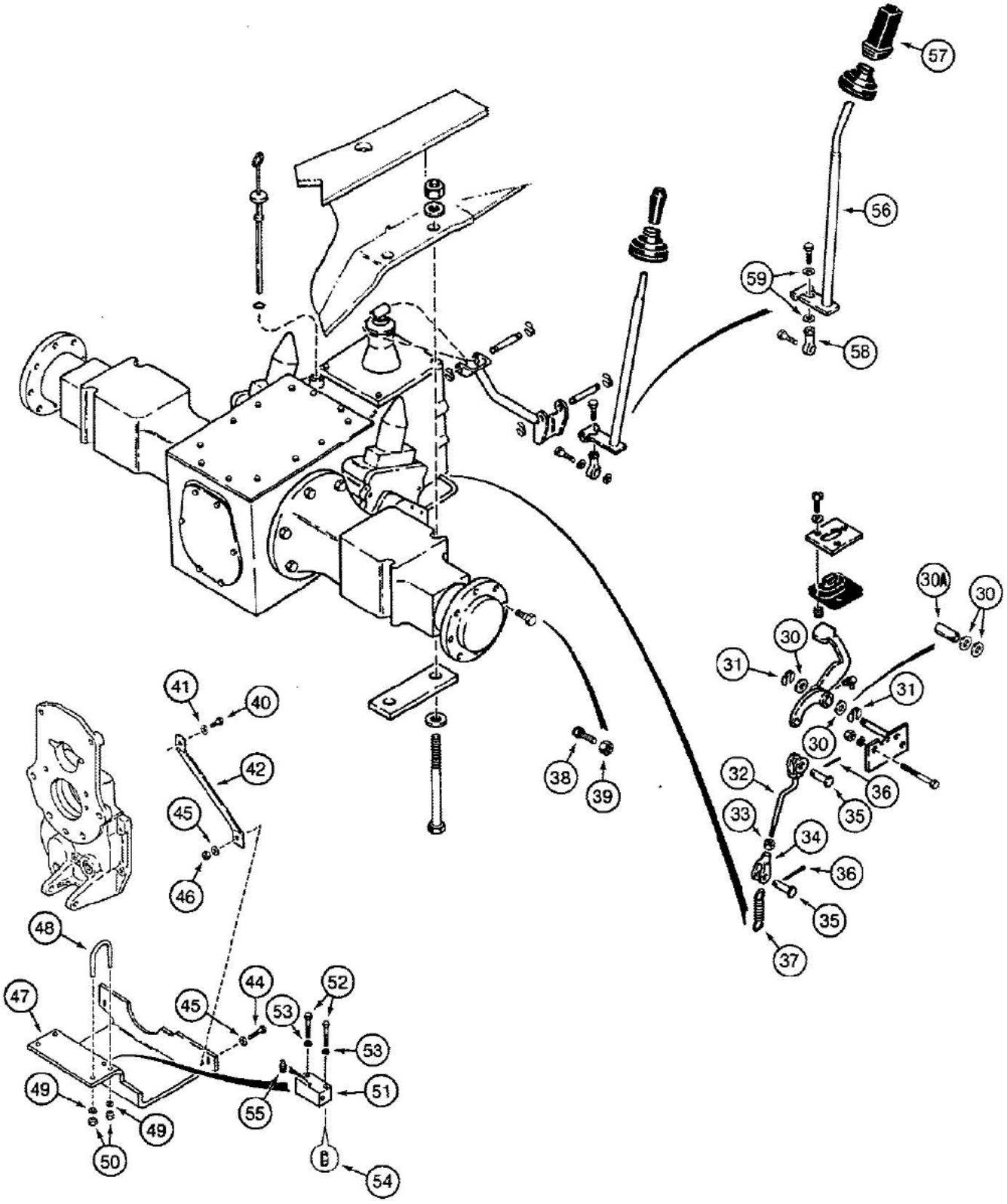

B890744-45

06-208 TRANSAXLE AND DIFFERENTIAL LOCK

Ref	Part Number	Qty	Description
30	A30881	2-4	WASHER flat, spacer
30A	D139528	1	SPACER pivot shaft, not used on four wheel drive models
31	D143416	2	RETAINER pedal to pivot shaft bracket
32	D134151	1	ROD differential lock
33	129-123	1	NUT, 3/8"-24, G5
34	213-41	1	CLEVIS, 3/8", plated
35	141-54	2	PIN clevis, 3/8", plated, special length
36	132-320	2	PIN, SPLIT (COTTER), 3/32" x 3/4"
37	A59470	1	SPRING return, differential lock pedal
38	404341R3	16	BOLT special, if used
39	F62206	16	NUT hex, tapered, used only with Ref. 38 bolt
40	113-606	2	BOLT, Hex, 5/8"-11 x 1 1/4", G5, Full Thd
41	95-10	2	WASHER flat, 5/8"
	D102985	1	KIT guard, four wheel drive transfer gearbox control linkage, includes installation instructions, Includes: Ref. 42 thru 55
42	D139940	2	SUPPORT guard
43	A168517	2	STUD, 5/8"-11 NC x 2-7/8", not shown, not required on 580K models
44	113-600	2	BOLT, Hex, 5/8"-11 x 1 3/4", G5
45	95-10	4	WASHER flat, 5/8"
46	129-107	2	NUT, 5/8"-11, G5
47	D139942	1	GUARD transfer gearbox
48	S63417	2	U-BOLT, 1/2"
49	192-23	4	WASHER, LOCK, 1/2"
50	129-105	4	NUT, 1/2"-13, G5
51	D139941	1	BLOCK pivot, Required only if gearbox cover linkage is damaged, see installation instructions.
52	113-257	2	BOLT, Hex, 3/8"-16 x 2 1/2", G5, Required only if gearbox cover linkage is damaged, see installation instructions.
53	192-21	2	WASHER, LOCK, 3/8", Required only if gearbox cover linkage is damaged, see installation instructions.
54	S118998	2	NUT special, 3/8"-16 NC, Required only if gearbox cover linkage is damaged, see installation instructions.
55	219-1	1	FITTING grease, straight, 1/8" NPT, Required only if gearbox cover linkage is damaged, see installation instructions.
56	D140218	1	LEVER control, shift, transaxle
57	D140148	1	HANDLE control lever
58	D137676	1	JOINT ball, female
59	196-16	2	WASHER flat, 1/2", hardened

6-210

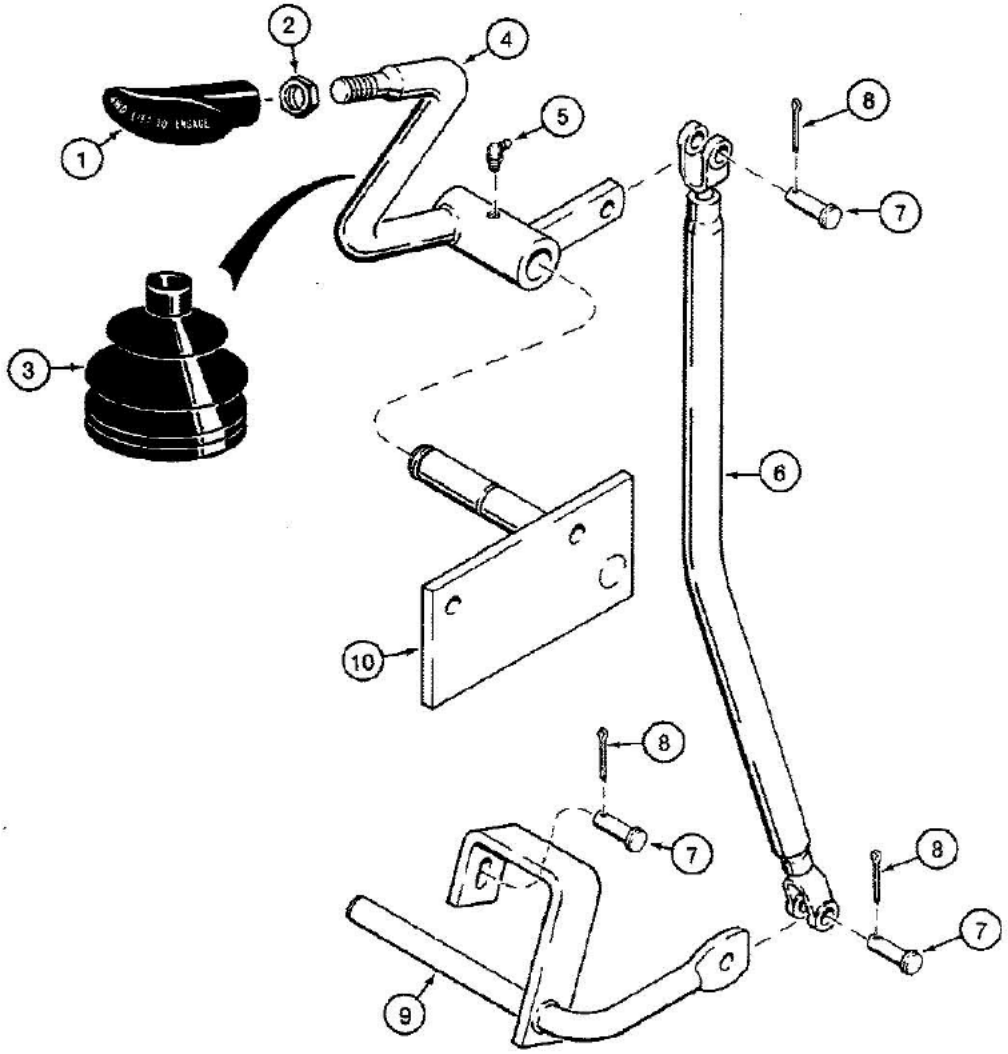

861837-45

06-210 FRONT DRIVE AXLE CONTROL

Ref	Part Number	Qty	Description
1	D120758	1	HANDLE, T-grip
2	129-145	1	NUT, Jam, 1/2"-13, G5
3	D86664	1	BOOT lever
4	D134166	1	LEVER control, shift
5	219-57	1	FITTING grease, 90 degree, 1/4"-28 NF taper
6	D134163	1	ROD shift
7	141-54	3	PIN clevis, 3/8", plated
8	132-320	3	PIN, SPLIT (COTTER), 3/32" x 3/4"
9	D133527	1	LEVER pivot shift
10	REF	1	BRACKET pivot shaft, see Ref. 26 in Figure 06-206

3-212

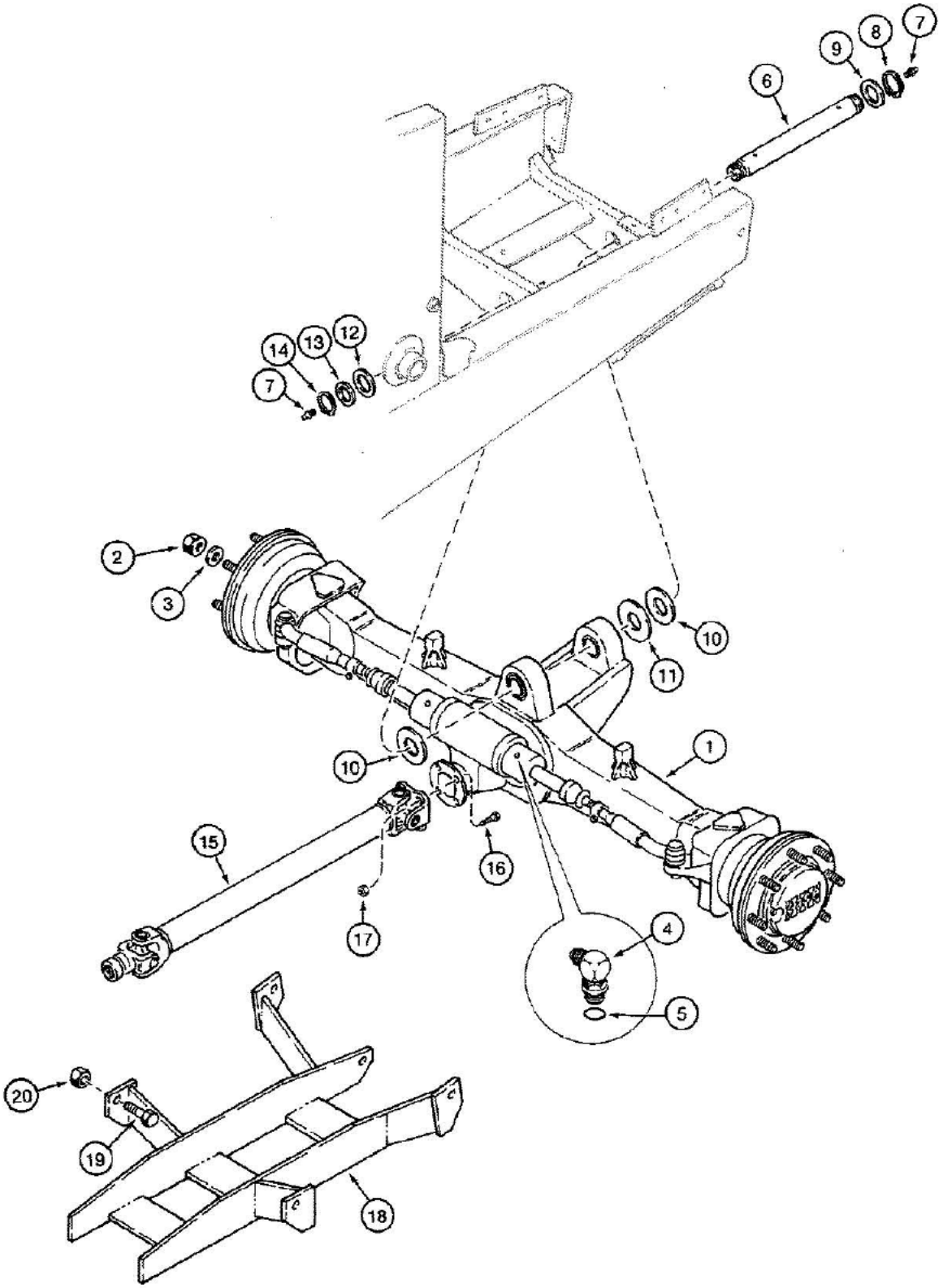

361954-45

06-212 FRONT DRIVE AXLE MOUNTING AND DRIVE SHAFT

Ref	Part Number	Qty	Description
1	REF	1	AXLE ASSEMBLY front drive, see Figures 06-216 thru 06-228 for parts list
2	K395089	16	NUT hex, special, wheel retaining, front
3	D34666	16	WASHER flat, 3/4", hardened
4	218-5106	2	ELBOW, 90 degree, adjustable, Includes: Ref. 5
5	237-6008	1	O-RING, 8-1, 90 Duro, .644" ID x .087" Thk, Elbow
6	D127445	1	SHAFT axle pivot
7	219-1	2	FITTING grease, straight, 1/8" NPT
8	800-50050	1	RING snap, shaft retaining, front
9	195-2155	UAR	WASHER flat, 2" bolt size, 2-1/16" ID x 3" OD x 1/8" thick
10	D37449	UAR	SHIM, .0747" Thk, Washer, flat (2-1/32" ID x 4" OD), Special
11	D123684	1	WASHER thrust, 2-1/16" (52.3 mm) ID x 4-1/2" (114 mm) OD x 3/16" (4.78 mm) thick
12	S49415	1	WASHER special
13	195-2152	1	WASHER flat, 1-3/4" bolt size, 1-13/16" ID x 2-1/2" OD x 1/8" thick
14	D25280	1	Ring, Snap, #175, Ext, pivot shaft, rear
15	D128561	1	SHAFT ASSEMBLY drive, front drive axle, see Figure 06-214
16	28-724	4	BOLT hex head, 7/16"-20 NF x 1-1/2", grade 8
17	232-4617	4	NUT hex, self-locking, 7/16"-20 NF
18	D137890	1	GUARD drive shaft
19	113-924	4	BOLT, Hex, 1"-8 x 2 1/2", G5, Full Thd
20	131-20	4	NUT hex, self-locking, 1"-8 NC

6-214

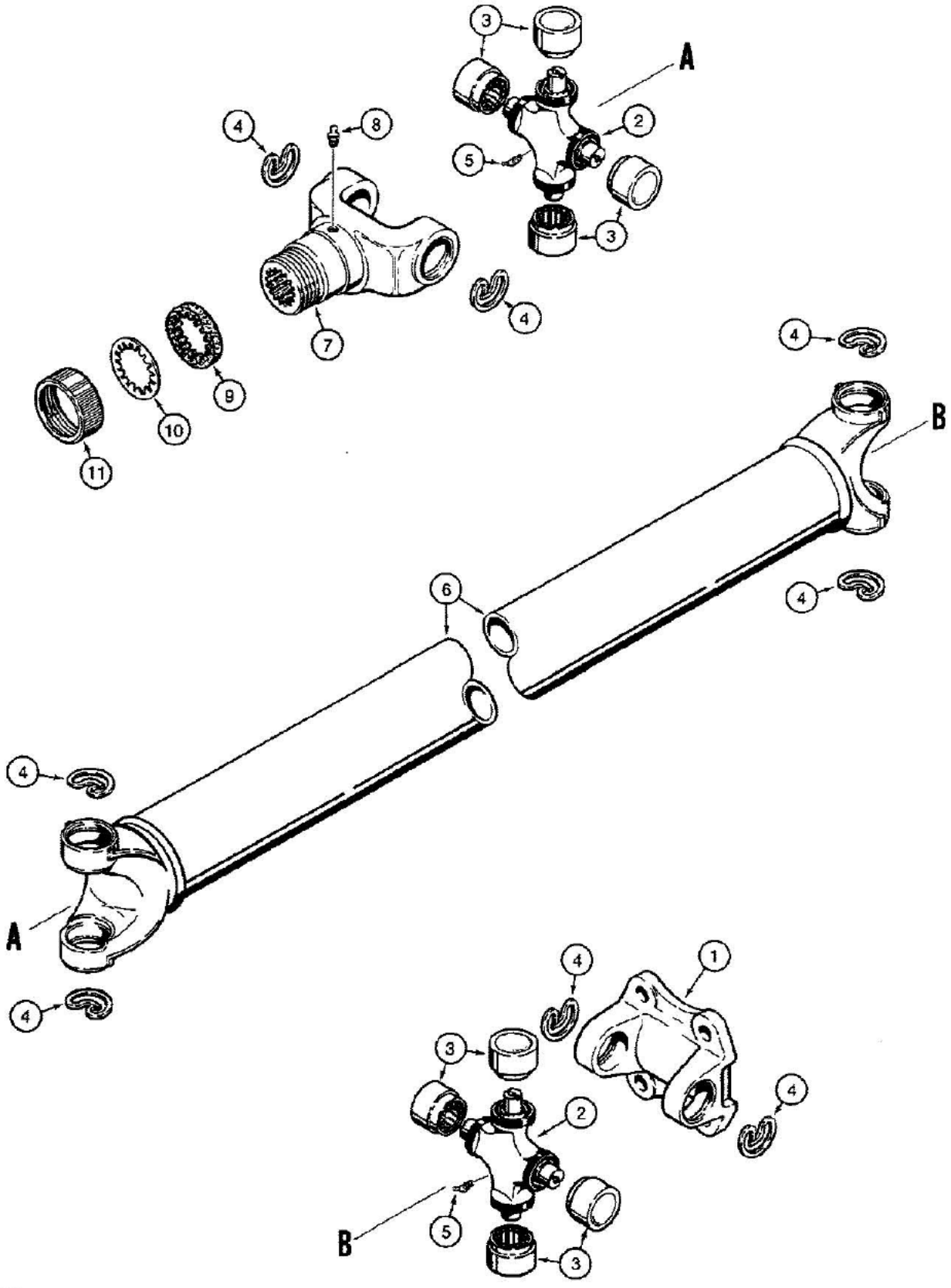

It is necessary to use a grease gun needle nozzle adapter (Case P/N D51765 or Lincoln number 5803) to lubricate drive shafts.

580K LOADER BACKHOE (NORTH AMERICA) - Power Train

06-214 DRIVE SHAFT FOR FRONT DRIVE AXLE

Ref	Part Number	Qty	Description
	D128561	1	SHAFT ASSEMBLY drive, front drive axle, Includes: Ref. 1 thru 11
1	S80726	1	BRACKET flange
	R2713	2	KIT universal joint, Includes: Ref. 2 thru 5
2	NSS	1	JOINT universal, drive shaft
3	NSS	4	BEARING universal joint
4	NSS	4	RING retaining
5	219-37	1	FITTING - grease, 45 degree, 1/4"-28 NF taper
6	NSS	1	SHAFT drive, front drive axle
7	N9926	1	YOKE drive shaft
8	219-10	1	FITTING grease, straight, 1/4"-28 NF taper
	N7513	1	KIT dust seal and cap, Includes: Ref. 9 thru 11
9	NSS	1	WASHER cork
10	NSS	1	WASHER seal, steel
11	NSS	1	CAP dust seal retaining

It is necessary to use a grease gun needle nozzle adapter (Case P/N D51765 or Lincoln number 5803) to lubricate drive shafts.

6-216

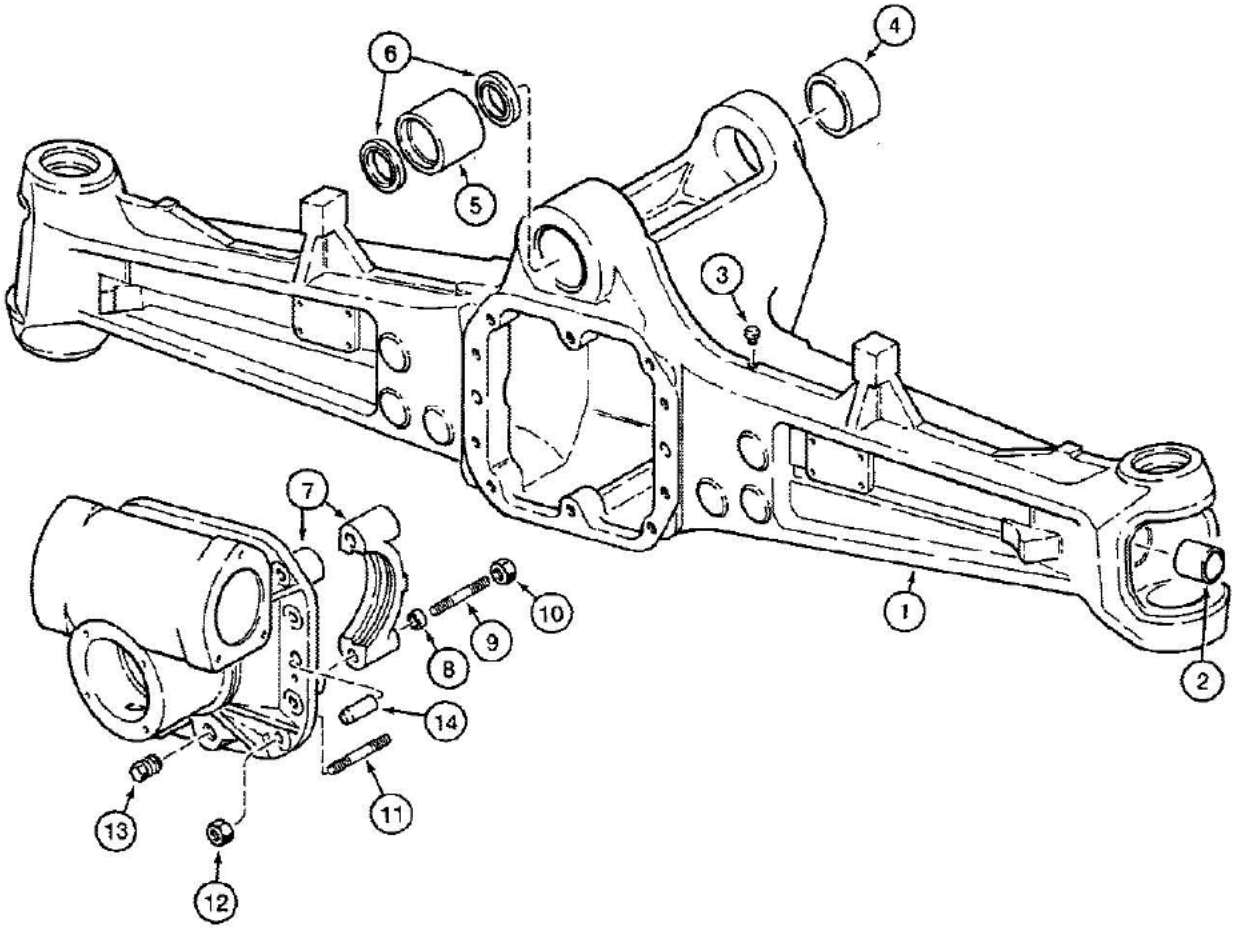

370172

For axle mounting, see Figure 06-212.

06-216 FRONT DRIVE AXLE, AXLE HOUSING

Ref	Part Number	Qty	Description
	D133190	1	AXLE ASSEMBLY, Carraro 710-19 front drive, Carraro No. 120725, if used, see Figures 06-216 thru 06-228 for parts list, Includes: Ref. 1 thru 14
	D139509	1	AXLE ASSEMBLY, Carraro 710-19P front drive, Carraro No. 123800, if used, see Figures 06-216 thru 06-228 for parts list, Includes: Ref. 1 thru 14
1	N14370	1	HOUSING front axle
2	K395019	2	BUSHING housing, The seal that is used in conjuction, shown in 860 turbo trencher axle, is seal P/N K395103 subs to P/N 1966164C1 cam.
3	K965231	1	BREATHER axle housing
4	N14369	1	BUSHING front pivot
5	N14368	1	BUSHING rear pivot
6	N14367	2	SEAL rear bushing
	N14414	1	CARRIER ASSEMBLY differential, for 3-9/16" (90 mm) OD steering cylinder, used in P/N D133190 axle assembly, no longer available, order P/N N14371 carrier assembly, Includes: Ref. 7 thru 10, When replacing P/N N14414 carrier assembly in P/N D133190 axle assembly, you must order all of the following: P/N N14371 carrier assembly in this figure, P/N N14386 steering cylinder, P/N N14385 cylinder flange, (2) P/N G104780 flange O-rings and (2) P/N N14403 backup rings in Figure 06-220.
	N14371	1	CARRIER ASSEMBLY differential, for 3-1/32" (77 mm) OD steering cylinder, used in P/N D139509 axle assembly, Includes: Ref. 7 thru 10
7	NSS	1	CARRIER differential
8	K965259	4	BUSHING centering, carrier
9	K261836	4	STUD carrier
10	K965250	4	NUT hex, self-locking, 14 mm-1.5, special
11	K261839	10	STUD carrier to housing
12	905834R1	10	NUT hex, self-locking, 12 mm-1.25, special
13	A156873	2	PLUG drain
14	K965252	2	PIN dowell, housing to carrier
	M20704	UAR	SEALANT, 3 oz. (89 ml) of sealant in a tube, differential carrier to axle housing, not shown

For axle mounting, see Figure 06-212.

3-218

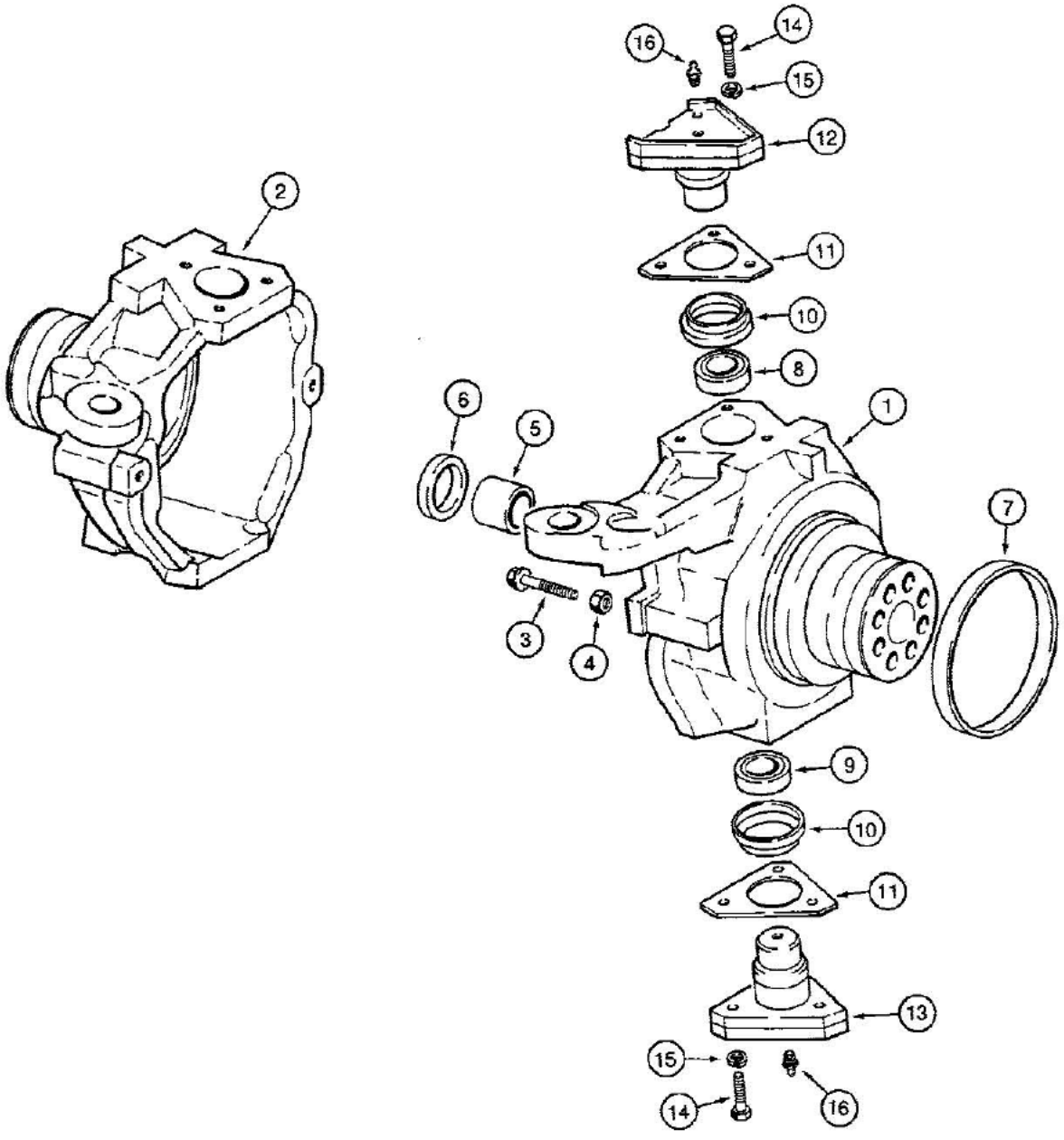

870178

06-218 FRONT DRIVE AXLE, SWIVEL HOUSING

Ref	Part Number	Qty	Description
	D133190	1	AXLE ASSEMBLY, Carraro 710-19 front drive, Carraro No. 120725, if used, see Figures 06-216 thru 06-228 for parts list, Includes: Ref. 1 thru 16
	D139509	1	AXLE ASSEMBLY, Carraro 710-19P front drive, Carraro No. 123800, if used, see Figures 06-216 thru 06-228 for parts list, Includes: Ref. 1 thru 16
1	N14375	1	HOUSING swivel, right-hand
2	N14374	1	HOUSING swivel, left-hand
3	K395032	4	BOLT steering stop, special, Ref. 3 and 4, P/N K395032 bolt and P/N K965369 nut: This was a 12 mm bolt, now changed to P/N D142907 14 mm bolt and P/N D142908 nut. Also requires 14.5 mm bushing P/N D149805.
4	K965369	4	NUT hex, 12 mm, special, Ref. 3 and 4, P/N K395032 bolt and P/N K965369 nut: This was a 12 mm bolt, now changed to P/N D142907 14 mm bolt and P/N D142908 nut. Also requires 14.5 mm bushing P/N D149805.
5	K395033	2	BUSHING swivel housing
6	K262143	2	SEAL oil, swivel housing
7	K395138	2	RING sealing, wear, swivel housing
8	N14372	2	BEARING swivel cap, upper, If swivel housing has a two piece upper bearing, you must order both P/N N14372 upper bearing and P/N N14376 upper king pin.
9	N14373	2	BEARING swivel cap, lower, two piece bearing
10	K395039	4	SEAL bearing
11	K395036	UAR	SHIM, 0.10mm Thk, Swivel cap
11	K395037	UAR	SHIM, 0.19mm Thk, Swivel cap
11	K395038	UAR	SHIM, 0.35mm Thk, Swivel cap
12	N14376	2	PIN king, swivel housing cap, upper, If swivel housing has a two piece upper bearing, you must order both P/N N14372 upper bearing and P/N N14376 upper king pin.
13	N13504	2	PIN king, swivel housing cap, lower
14	K965247	12	BOLT hex head, 14 mm-2 x 35 mm, special
15	K965248	12	WASHER lock, 14 mm, special
16	5194260	4	FITTING grease, straight, swivel cap
	M20704	UAR	SEALANT, 3 oz. (89 ml) of sealant in a tube, wear ring to swivel housing, not shown

6-220

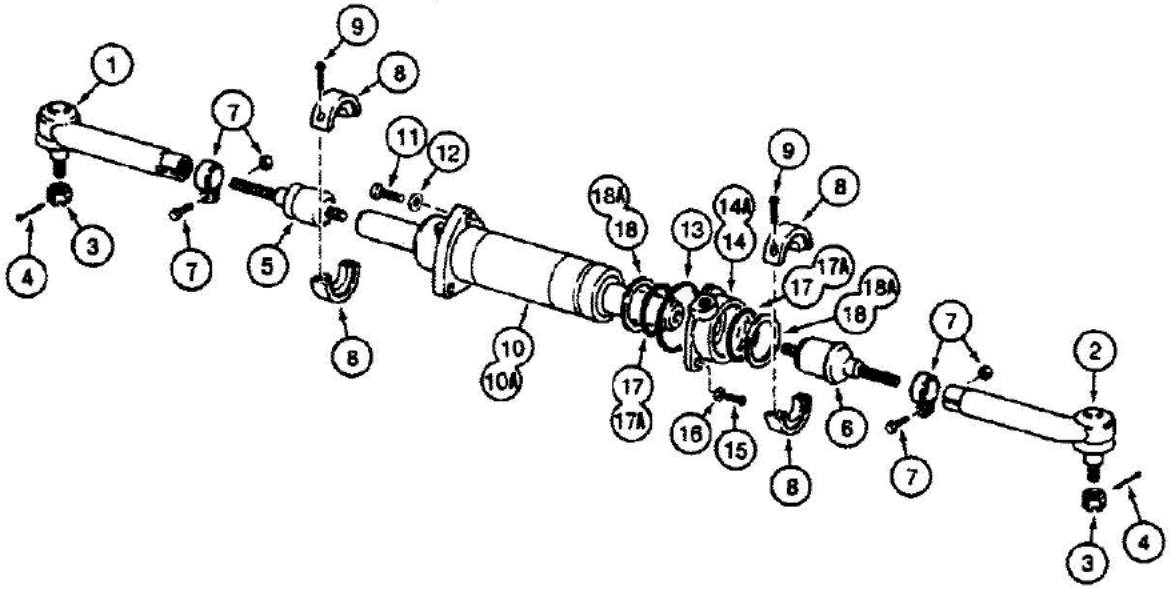

870177-45

06-220 FRONT DRIVE AXLE, STEERING CYLINDER

Ref	Part Number	Qty	Description
	D133190	1	AXLE ASSEMBLY, Carraro 710-19 front drive, Carraro No. 120725, if used, see Figures 06-216 thru 06-228 for parts list, Includes: P/N N14402 and N14379 and Ref. 1 thru 18A
	D139509	1	AXLE ASSEMBLY, Carraro 710-19P front drive, Carraro No. 123800, if used, see Figures 06-216 thru 06-228 for parts list, Includes: P/N N14402 and N14379 and Ref. 1 thru 18A
	N14402	1	JOINT ASSEMBLY ball, left-hand, Includes: Ref. 1, 3 and 4
	N14379	1	JOINT ASSEMBLY ball, right-hand, Includes: Ref. 2 thru 4
1	NSS	1	JOINT ball, left-hand
2	NSS	1	JOINT ball, right-hand
3	N14380	1	NUT hex, slotted, ball joint
4	632-656	1	PIN cotter, 5/32" x 1-27/64", plated
5	N14388	1	ROD tie, steering, adjuster, left-hand
6	N14377	1	ROD tie, steering, adjuster, right-hand
7	N14378	2	CLAMP ball joint to tie rod, includes hardware
8	NSS	2	CLAMP steering stop, two piece, P/N D133190 axle only, no longer used, not required
9	NSS	4	SCREW steering stop clamp, P/N D133190 axle only, no longer used, not required
10	N14416	1	CYLINDER steering, 3-9/16" (90 mm) OD, used in P/N D133190 axle only, no longer available, order P/N N14386 steering cylinder, When replacing P/N N14416 steering cylinder or P/N N14415 cylinder flange in P/N D133190 axle assembly, you must order all of the following: P/N N14371 carrier assembly in Figure 06-216, P/N N14386 steering cylinder, P/N N14385 cylinder flange, (2) P/N G104780 flange O-rings, and (2) P/N N14403 backup rings, in this figure.
10A	N14386	1	CYLINDER steering, 3-1/32" (77 mm) OD, component parts not serviced separately, order P/N N14622 kit to service seals, see below, used in P/N D139509 axle only, The rod for this cylinder is P/N D146308
11	N14387	3	BOLT special, steering cylinder
12	K260268	3	WASHER special, steering cylinder
13	A32190	1	O-RING flange, if used, P/N D133190 axle only
14	N14415	1	FLANGE for 3-9/16" (90 mm) OD steering cylinder, P/N D133190 axle only, no longer available, order P/N N14385 cylinder flange, When replacing P/N N14416 steering cylinder or P/N N14415 cylinder flange in P/N D133190 axle assembly, you must order all of the following: P/N N14371 carrier assembly in Figure 06-216, P/N N14386 steering cylinder, P/N N14385 cylinder flange, (2) P/N G104780 flange O-rings, and (2) P/N N14403 backup rings, in this figure.
14A	N14385	1	FLANGE for 3-1/32" (77 mm) OD steering cylinder, P/N D139509 axle only
15	N14384	3	BOLT special, flange
16	K965360	3	WASHER special, flange
17	G104038	2	O-RING flange, P/N D133190 axle only
17A	G104780	2	O-RING flange, P/N D139509 axle only
18	N14383	2	RING backup, flange O-ring, P/N D133190 axle only
18A	N14403	2	RING backup, flange O-ring, P/N D139509 axle only
	M20704	UAR	SEALANT, 3 oz. (89 ml) of sealant in a tube, cylinder flange to cylinder, not shown
	N14622	1	KIT seal, steering cylinder, for rod, gland, and piston, includes (4) rings, (3) seals, (2) wipers, and (2) gland packing, which are not serviced separately

6-222

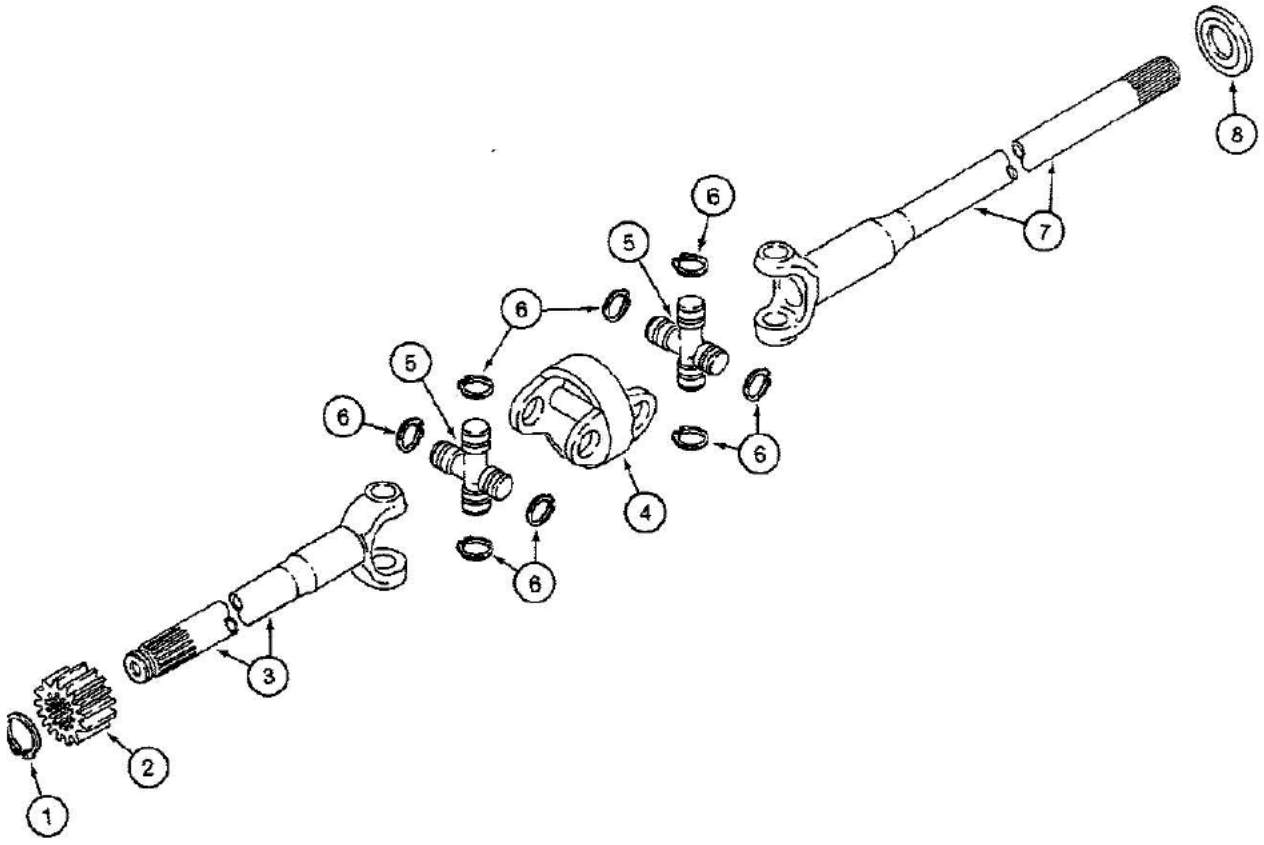

870175

06-222 FRONT DRIVE AXLE, AXLE SHAFTS

Ref	Part Number	Qty	Description
	D133190	1	AXLE ASSEMBLY, Carraro 710-19 front drive, Carraro No. 120725, if used, see Figures 06-216 thru 06-228 for parts list, Includes: Ref. 1 thru 8
	D139509	1	AXLE ASSEMBLY, Carraro 710-19P front drive, Carraro No. 123800, if used, see Figures 06-216 thru 06-228 for parts list, Includes: Ref. 1 thru 8
1	K261897	2	RING snap, axle shaft
2	K395114	2	GEAR pinion, axle shaft
3	N14409	2	SHAFT axle, wheel side, short
4	N14412	2	BODY connecting
5	N14411	4	JOINT universal, axle shaft, cross
6	N14410	16	RING snap, universal joint
7	N14413	2	SHAFT axle, differential side, long
8	K395103	2	SEAL oil, axle shaft

6-224

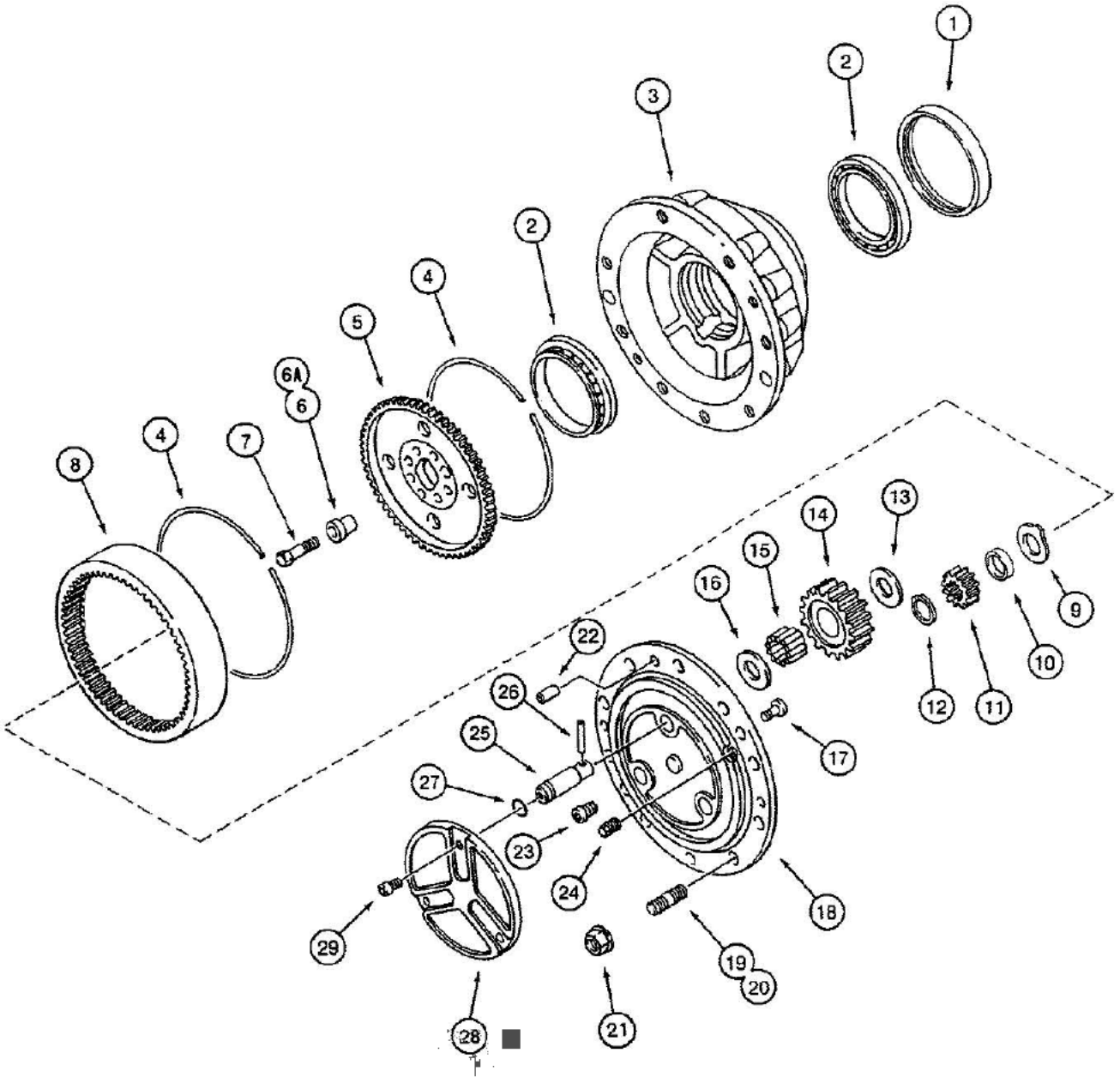
1
2
3
2
4
5
6A
6
4
7
8
9
10
11
12
13
14
15
16
17
18
19
20
21
22
23
24
25
26
27
28
29

870176

06-224 FRONT DRIVE AXLE, PLANETARY

Ref	Part Number	Qty	Description
	D133190	1	AXLE ASSEMBLY, Carraro 710-19 front drive, Carraro No. 120725, if used, see Figures 06-216 thru 06-228 for parts list, Includes: Ref. 1 thru 29
	D139509	1	AXLE ASSEMBLY, Carraro 710-19P front drive, Carraro No. 123800, if used, see Figures 06-216 thru 06-228 for parts list, Includes: Ref. 1 thru 29
1	K395102	2	SEAL oil, hub
2	K395101	4	BEARING ball, hub
3	K395123	2	HUB wheel attaching
4	K395095	4	RING lock
5	K395126	2	HUB ring gear
6	K395105	14	BUSHING, 20 mm OD, centering
6A	K395104	2	BUSHING, 24 mm OD, centering
7	K395131	16	BOLT hex head, special
8	K395113	2	GEAR ring, planetary
9	K395115	2	WASHER tab lock, special, Ref. 9 and 10, P/N K395115 washer and P/N K395121 spacer, are now replaced by a one-piece washer, P/N 107073A1.
10	K395121	2	SPACER pinion gear, Ref. 9 and 10, P/N K395115 washer and P/N K395121 spacer, are now replaced by a one-piece washer, P/N 107073A1.
11	K395114	2	GEAR pinion, axle shaft
12	K261897	2	RING snap, pinion gear retaining
13	N13512	6	WASHER thrust, pinion gear, inner
14	N13513	6	GEAR pinion, planetary
15	N13514	180	BEARING needle, planetary gear
16	K395091	6	WASHER thrust, pinion gear, outer
17	K395093	2	PIN lock, planetary cover
18	N13516	2	COVER planetary, Ref. 18, subs to P/N 309421A1. For information on assembly of thrust washers for pinion gears, see model 590SL series 2 parts catalog., If need without plate, Ref. 28, try P/N 230510A
19	K260218	12	STUD special, without collar
20	N13515	4	STUD special, with collar, for recessed bolt holes
21	K395089	16	NUT hex, special
22	K395094	4	PIN dowel, planetary cover
23	K395029	4	SCREW special, planetary cover
24	A156873	2	PLUG drain
25	N13517	6	SHAFT pinion gear
26	K965305	6	PIN pinion gear shaft
27	A27342	6	O-RING pinion gear shaft
28	K395135	2	PLATE planetary cover, See ECN H93SR54. Effective with axle S/N WA1368 and WP1368, Carraro removed cover and screws from planetary's and replaced the screws with plugs. The new plugs can be used prior to these axle S/N breaks. Plug is P/N 138866A1, 6 per. Also eff. with axle S/N WA1219 and WP1218, the combination of (2) P/N 892-11006 6 mm lockwashers and (2) P/N 614-6012 bolts, not shown, were replaced by 2 pcs. of P/N 112486A1 self-locking bolt. All old parts are retained for service for machines with axles built prior to the aforementioned S/N breaks.

06-224 FRONT DRIVE AXLE, PLANETARY

Ref	Part Number	Qty	Description
29	K395082	6	SCREW special, planetary cover plate, See ECN H93SR54. Effective with axle S/N WA1368 and WP1368, Carraro removed cover and screws from planetary's and replaced the screws with plugs. The new plugs can be used prior to these axle S/N breaks. Plug is P/N 138866A1, 6 per. Also eff. with axle S/N WA1219 and WP1218, the combination of (2) P/N 892-11006 6 mm lockwashers and (2) P/N 614-6012 bolts, not shown, were replaced by 2 pcs. of P/N 112486A1 self-locking bolt. All old parts are retained for service for machines with axles built prior to the aforementioned S/N breaks.
	M20704	UAR	SEALANT, 3 oz. (89 ml) of sealant in a tube, planetary cover to hub, not shown

6-226

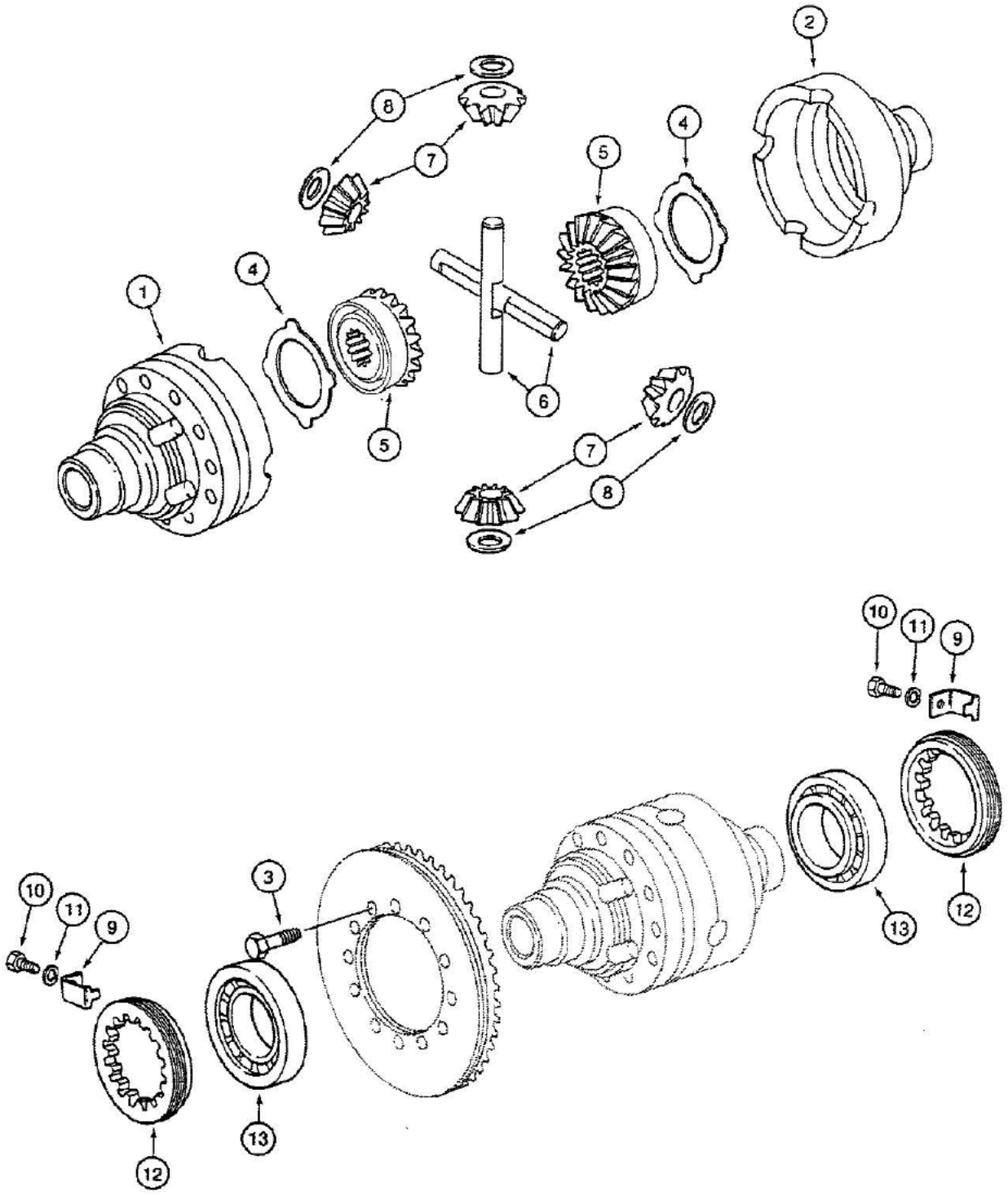

370174

06-226 FRONT DRIVE AXLE, DIFFERENTIAL

Ref	Part Number	Qty	Description
	D133190	1	AXLE ASSEMBLY, Carraro 710-19 front drive, Carraro No. 120725, if used, see Figures 06-216 thru 06-228 for parts list, Includes: P/N N13508 and Ref. 1 thru 13
	D139509	1	AXLE ASSEMBLY, Carraro 710-19P front drive, Carraro No. 123800, if used, see Figures 06-216 thru 06-228, Includes: P/N N13508 and Ref. 1 thru 13
	N13508	1	CASE ASSEMBLY differential, Includes: Ref. 1 thru 3
1	NSS	1	CASE differential, flange half
2	NSS	1	CASE differential, plain half
3	827-10080	12	BOLT - hex, 10 - 1.5 x 80 mm, class 10.9, plated
4	N13618	2	WASHER thrust
5	N14407	2	GEAR side, differential
6	N13507	2	SHAFT pinion gear
7	N14408	4	GEAR pinion, differential
8	K395075	4	WASHER thrust, pinion gear
9	K261869	2	BRACKET lock
10	K261871	2	BOLT hex head, 6 mm-1 x 12 mm, special
11	K261870	2	WASHER lock, 6 mm, special
12	K261868	2	RING lock, threaded
13	K395027	2	BEARING roller, differential
	M20704	UAR	SEALANT, 3 oz. (89 ml) of sealant in a tube, bolt to differential housing, not shown

6-228

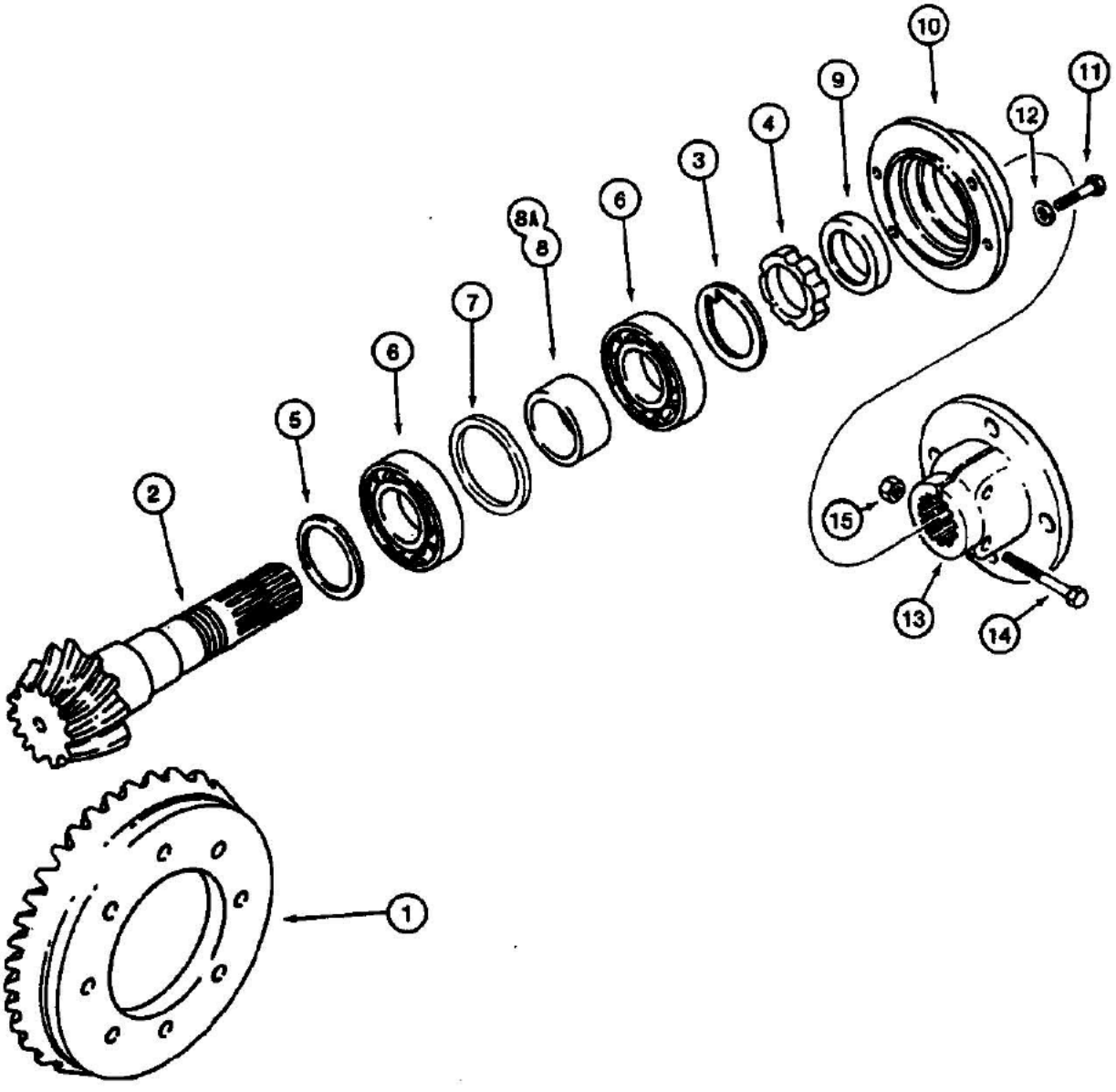

870173-45

06-228 FRONT DRIVE AXLE, RING AND PINION GEAR SET

Ref	Part Number	Qty	Description
	D133190	1	AXLE ASSEMBLY, Carraro 710-19 front drive, Carraro No. 120725, if used, see Figures 06-216 thru 06-228 for parts list, Includes: P/N N13506 and Ref. 1 thru 15
	D139509	1	AXLE ASSEMBLY, Carraro 710-19P front drive, Carraro No. 123800, if used, see Figures 06-216 thru 06-228 for parts list, Includes: P/N N13506 and Ref. 1 thru 15
	N13506	1	SET gear, ring and pinion, Includes: Ref. 1 thru 4
1	NSS	1	GEAR ring, differential
2	NSS	1	GEAR pinion, differential
3	K261065	1	WASHER special
4	K261852	1	RING nut, pinion gear
5	K965280	UAR	SHIM, 2.50mm Thk
5	K965282	UAR	SHIM, 2.60mm Thk
5	K965284	UAR	SHIM, 2.70mm Thk
5	K965286	UAR	SHIM, 2.80mm Thk
5	K965288	UAR	SHIM, 2.90mm Thk
5	K965290	UAR	SHIM, 3.00 mm thick
5	K965292	UAR	SHIM, 3.10mm Thk
5	K965294	UAR	SHIM, 3.20mm Thk
5	K965296	UAR	SHIM, 3.30mm Thk
5	K965298	UAR	SHIM, 3.40mm Thk
6	K395090	2	BEARING roller, pinion gear
7	N14405	1	SPACER bearing, narrow
8	K965412	1	SPACER bearing, wide, used in P/N D133190 axle
8A	N14406	1	SPACER bearing, wide, used in P/N D139509 axle
9	K262143	1	SEAL oil, If Ref. 9, P/N K262143, is too small, use retainer P/N 128570A1 and O-ring P/N 238-5152. See Super K parts manual for reference.
10	N14404	1	COVER differential
11	K395026	4	BOLT special, cover mounting
12	K261870	4	WASHER special
13	N13619	1	COVER flange, drive shaft end
14	K965415	2	BOLT hex head, 10 mm-1.25 x 60 mm, special
15	K965414	2	NUT hex, self-locking, 10 mm-1.25, special
	M20704	UAR	SEALANT, 3 oz. (89 ml) of sealant in a tube, differential cover to differential carrier, not shown

6-230

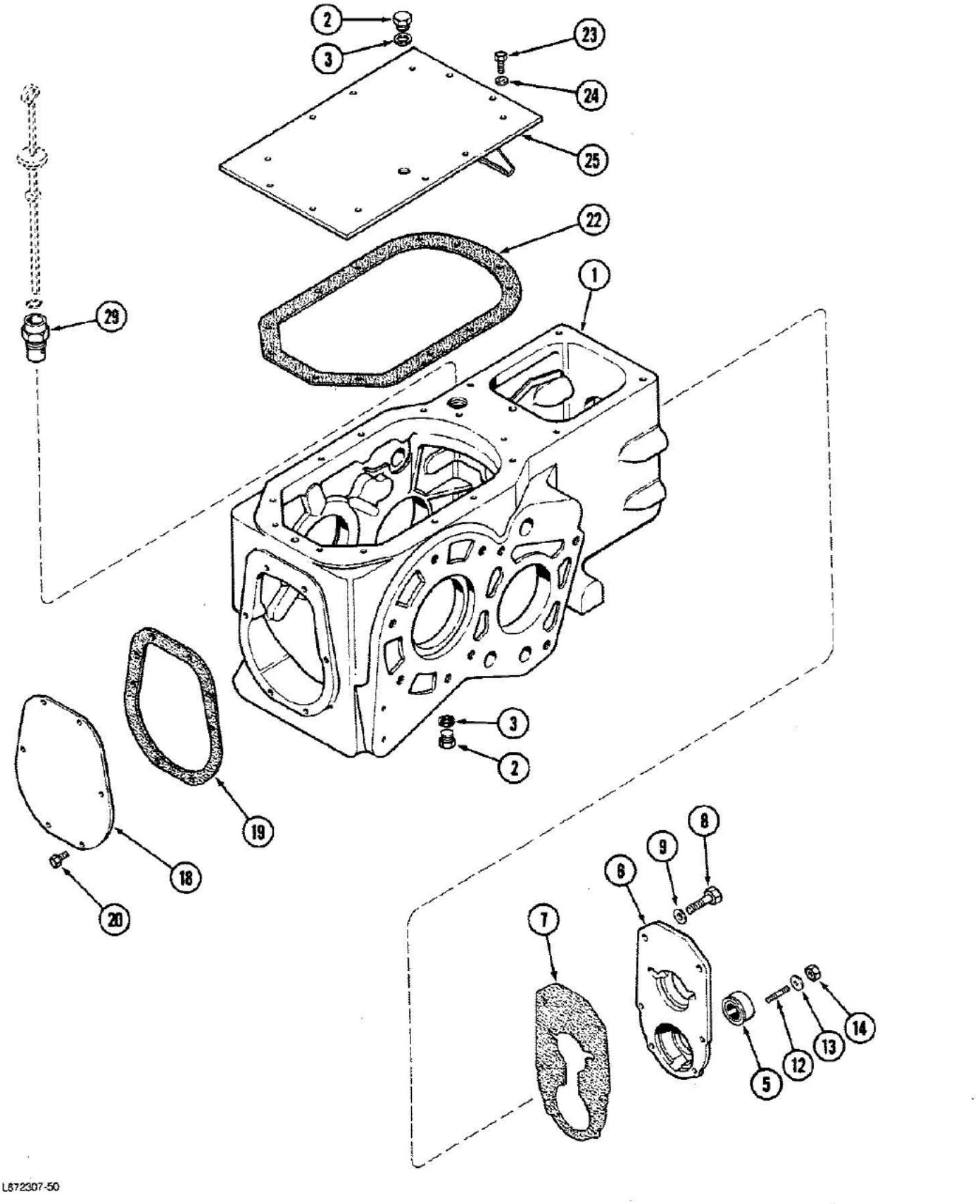

J I Case installed housing may not have a cover gasket. If rear housing cover is removed, install a gasket prior to reassembly.

580K LOADER BACKHOE (NORTH AMERICA) - Power Train

06-230 TRANSAXLE TRANSMISSION HOUSING, 2 WHEEL DRIVE

Ref	Part Number	Qty	Description
1	A182750	1	HOUSING transmission
2	A140222	2	PLUG drain, transmission housing
3	A58608	2	GASKET drain plug
5	A179056	1	SEAL oil
6	A168851	1	COVER transmission housing, front
7	A182721	1	GASKET front cover to transmission housing
8	13-830	2	BOLT hex, 1/2" NC x 1"
9	195-533	2	WASHER flat, 17/32" x 1-1/6" x 7/64"
12	A29717	2	STUD cover, center, 1-1/2"
12	G10710	2	STUD cover, bottom, 1-3/4"
13	195-525	4	WASHER flat, 13/32" x 13/16" x 1/16 "
14	129-123	4	NUT, 3/8"-24, G5
18	A39105	1	COVER transmission housing, rear
19	G10447	1	GASKET rear cover to transmission housing , J I Case installed housing may not have a cover gasket. If rear housing cover is removed, install a gasket prior to reassembly.
20	13-612	6	BOLT, Hex, 3/8"-16 x 3/4", G5, Full Thd
22	A153777	1	GASKET top cover to transmission housing
23	26-616	12	BOLT hex, 3/8" NC x 1", grade 8
24	A140282	12	WASHER cover bolt, hardened
25	A182616	1	COVER housing, top rear
29	A154850	1	TUBE dipstick and oil filler

J I Case installed housing may not have a cover gasket. If rear housing cover is removed, install a gasket prior to reassembly.

6-232

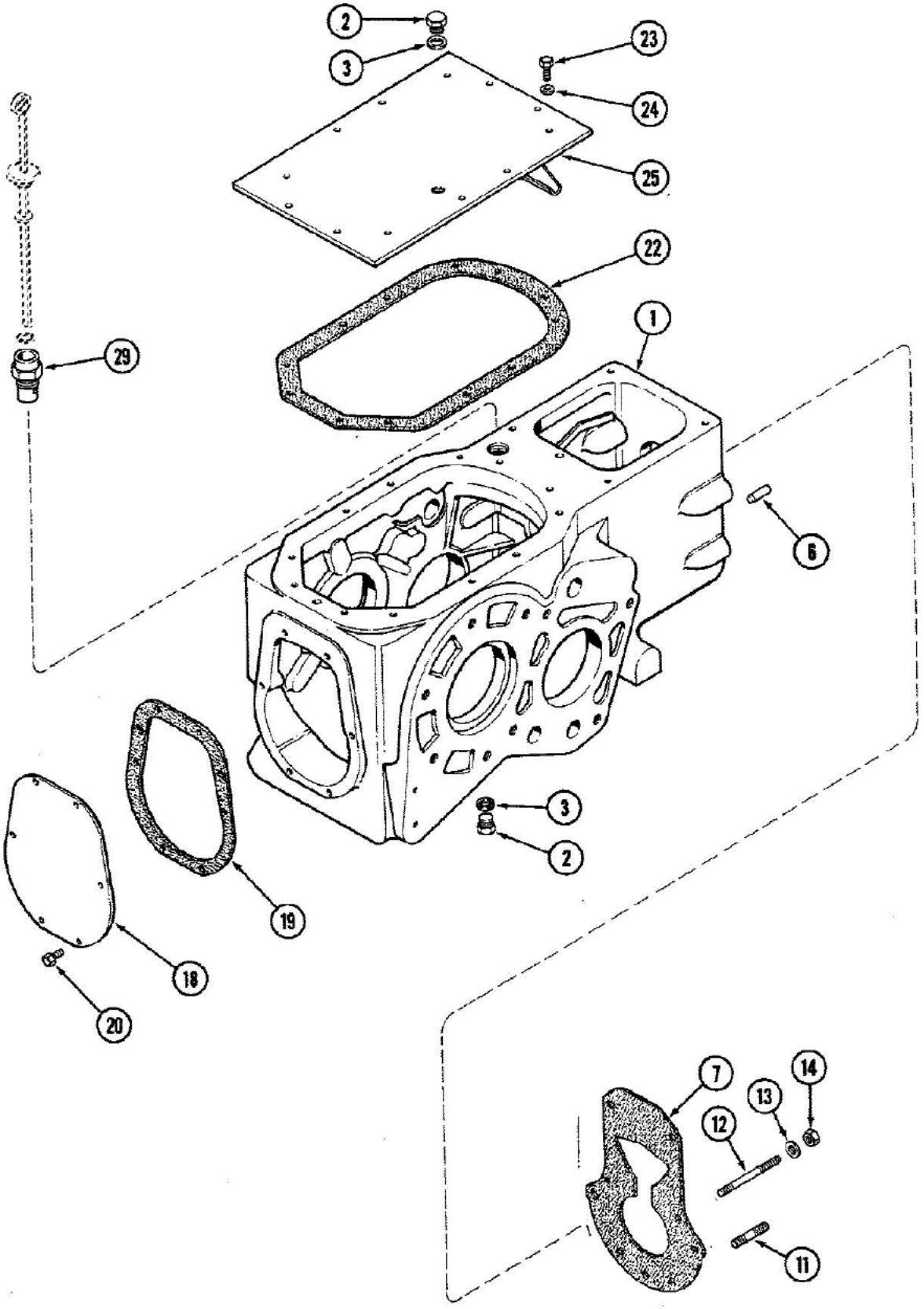

L672307-5C

06-232 TRANSAXLE TRANSMISSION HOUSING, 4 WHEEL DRIVE

Ref	Part Number	Qty	Description
1	A182750	1	HOUSING transmission
2	A140222	2	PLUG drain, transmission housing, If P/N A187584 magnetic speed sensor is used, it goes in place of Ref. 2 and 3
3	A58608	2	GASKET drain plug, If P/N A187584 magnetic speed sensor is used, it goes in place of Ref. 2 and 3
6	A29540	1	PIN dowel, locating
7	A182720	1	GASKET front cover to transmission housing
11	A182720	2	STUD front mounting, 2-1/2"
12	A153248	2	STUD cover, center, 4-13/16"
13	92-6	2	3/8"
14	25-106	2	NUT hex, 3/8" NC
18	A39105	1	COVER transmission housing, rear
19	G10447	1	GASKET rear cover to transmission housing , J I Case installed housing may not have a cover gasket. If rear housing cover is removed, install a gasket prior to reassembly.
20	13-612	6	BOLT, Hex, 3/8"-16 x 3/4", G5, Full Thd
22	A153777	1	GASKET top cover to transmission housing
23	26-616	12	BOLT hex, 3/8" NC x 1", grade 8
24	A140282	12	WASHER cover bolt, hardened
25	A182616	1	COVER housing, top rear
29	A154850	1	TUBE dipstick and oil filler

6-234

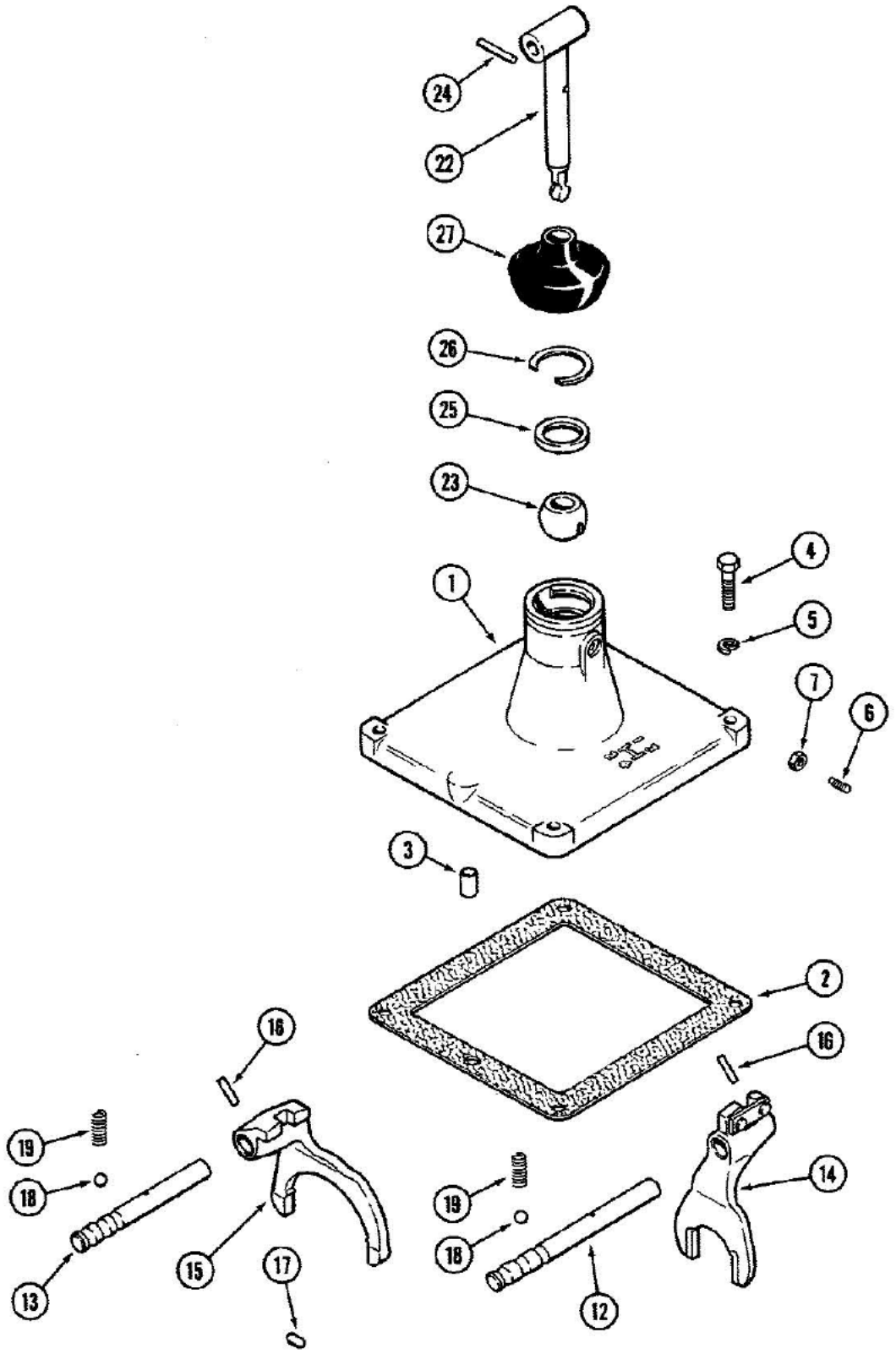

L872315-85

06-234 TRANSAXLE SHIFTER MECHANISM

Ref	Part Number	Qty	Description
1	A138312	1	COVER shift control
2	G10342	1	GASKET cover to transmission housing
3	138-245	1	Pin, 1/2" x 7/8", Slotted
4	13-624	4	BOLT hex, 3/8" NC x 1-1/2"
5	92-6	4	3/8"
6	G15468	1	SCREW set, shift lever retaining, 5/16" NC
7	25-145	1	NUT hex jam lock, 5/16" NC
12	A138313	1	RAIL shifter, first and second gear, Ref. 12 and 13 shift rails originally had three grooves around the rail circumference. Service bulletin NLB SB 006 90 explains that the only groove that now runs the circumference is the neutral groove. The two in gear positions have flats for the detents. This improves the shift action.
13	A140578	1	RAIL shifter, third and fourth gear, Ref. 12 and 13 shift rails originally had three grooves around the rail circumference. Service bulletin NLB SB 006 90 explains that the only groove that now runs the circumference is the neutral groove. The two in gear positions have flats for the detents. This improves the shift action.
14	A51964	1	FORK ASSEMBLY shift, first and second gear
15	A150726	1	FORK shifter, third and fourth gear
16	138-2009	2	PIN, 3/16" x 1", Coiled
17	A29060	1	PLUG interlock, shifter rails
18	211-211	2	BALL detent, 13/32" diameter
19	G47039	2	SPRING tension, detent ball
22	A182622	1	LEVER ASSEMBLY shift, transmission
23	A144397	1	BALL lever
24	A156515	1	PIN groove, lever ball
25	A7923	1	SEAT lever, shift
26	A26836	1	RING snap
27	A26956	1	COVER dust

6-236

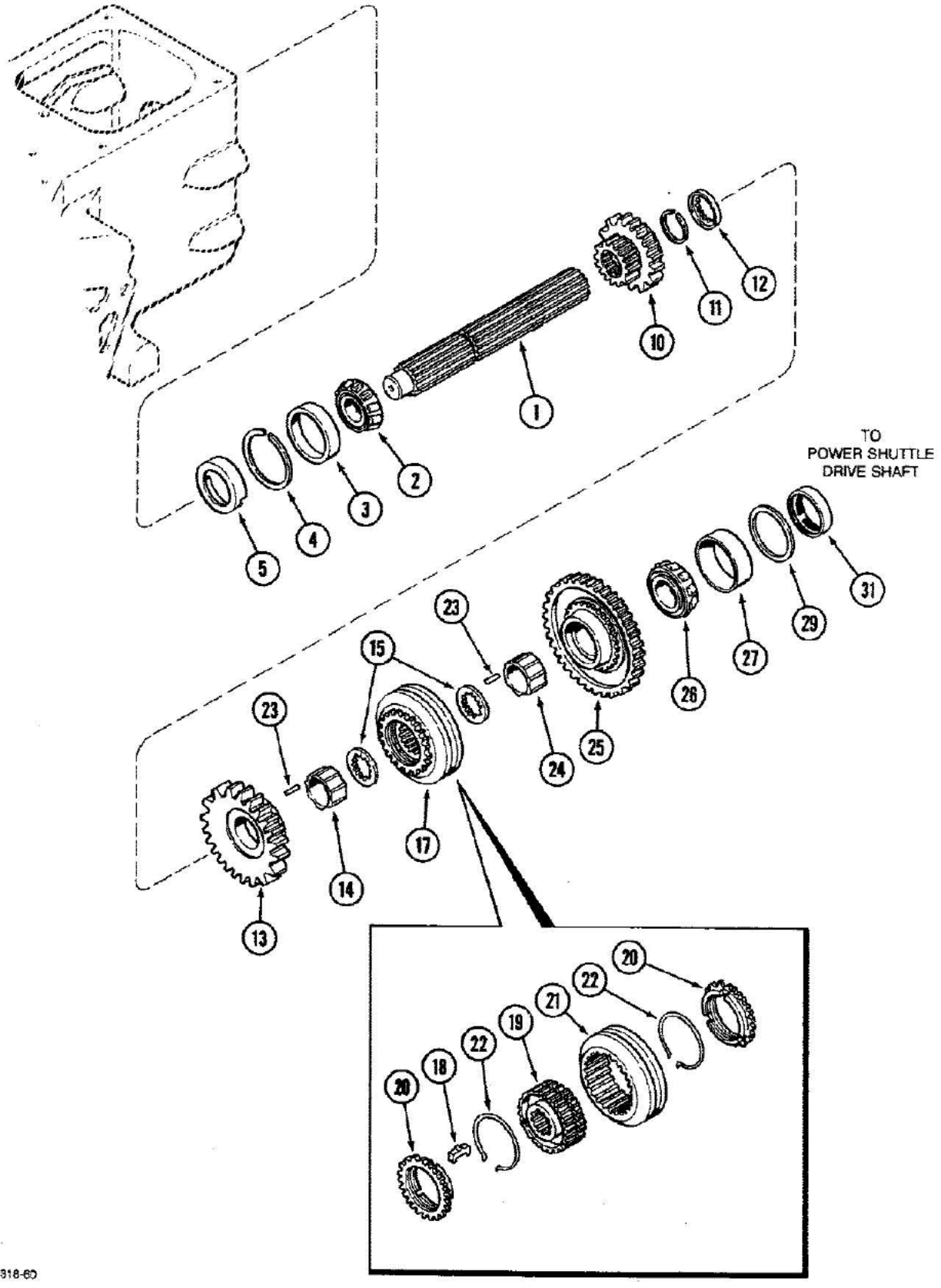
TO
POWER SHUTTLE
DRIVE SHAFT
1
2
3
4
5
10
11
12
13
14
15
17
18
19
20
21
22
23
24
25
26
27
29
31
LB72318-60

06-236 TRANSAXLE MAINSHAFT

Ref	Part Number	Qty	Description
1	A168330	1	MAINSHAFT transaxle
2	T20939	1	CONE bearing, rear, 1-1/4" ID
3	A29977	1	CUP bearing, rear, 2-3/4" OD
4	A29971	1	RING snap, rear bearing retaining
5	G10616	1	CUP oiling, mainshaft, rear
10	A168172	1	GEAR sliding, first and second, 16 and 25 external and 24 internal teeth
11	A26946	1	RING snap, gear retaining
12	A140239	1	COLLAR thrust, third and fourth gears, 24 internal teeth
13	A179853	1	GEAR sliding, third, 27 and 35 external teeth
14	A150317	1	BUSHING third gear
15	A157470	2	WASHER thrust, third and fourth gears, 1/8" thick with 24 internal teeth
17	A182240	1	SYNCHRONIZER ASSEMBLY mainshift, Includes: Ref. 18 thru 22
18	G46078	3	PLATE synchronizer
19	NSS	1	HUB synchronizer
20	A45568	2	RING blocking
21	NSS	1	COLLAR synchronizer
22	L33396	2	SPRING lock ring
23	A168375	2	PIN bushing
24	A150318	1	BUSHING fourth gear
25	A179854	1	GEAR sliding, fourth
26	H753566	1	CONE bearing, front, 1-9/16" ID
27	H753574	1	CUP bearing, front, 2-7/8" OD
29	A51527	UAR	SHIM, .035" Thk, Front bearing
29	G10341	UAR	SHIM, .005" Thk, Front bearing
29	G10340	UAR	SHIM, .007" Thk, Front bearing
31	A154253	1	SEAL oil, front, 2 wheel drive only

6-238

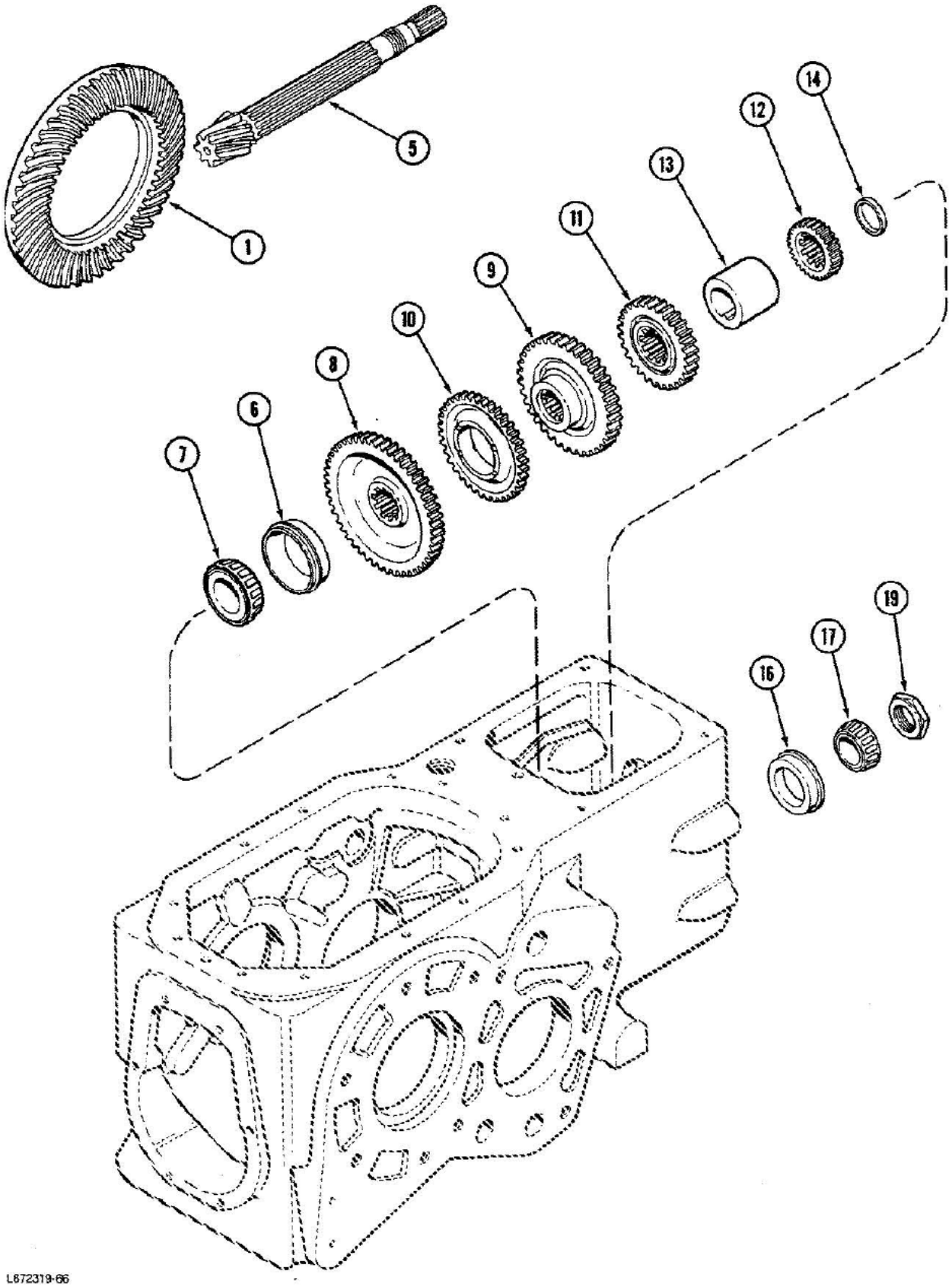

L872319-66

580K LOADER BACKHOE (NORTH AMERICA) - Power Train

06-238 TRANSAXLE COUNTERSHAFT, 2 AND 4 WHEEL DRIVE

Ref	Part Number	Qty	Description
	A168883	1	GEAR and PINION ring, transaxle, matched set, Includes: Ref. 1 and 5
1	NSS	1	GEAR ring
5	NSS	1	PINION bevel
6	A153753	1	CUP bearing, rear, with snap ring, 3-1/2" OD
7	R10276	1	CONE bearing, rear, 1-5/8" ID
8	A153751	1	GEAR first, 47 external and 10 internal teeth
9	A51961	1	GEAR second, 38 external and 10 internal teeth
10	A157304	1	GEAR oil slinger, 38 external teeth
11	A51960	1	GEAR third, 28 external and 10 internal teeth
12	A154649	1	GEAR fourth, 29 external and 10 internal teeth
13	A51959	1	SPACER third and fourth gears, 1-5/8" x 2-5/16" x 2-3/16"
14	A179800	UAR	SPACER thrust, 0.248-0.25"
14	A179799	UAR	SPACER thrust, 0.245-0.243"
14	A179798	UAR	SPACER thrust, 0.240-0.238"
14	A179797	UAR	SPACER thrust, 0.235-0.233"
14	A179796	UAR	SPACER thrust, 0.230-0.228"
14	A179795	UAR	SPACER thrust, 0.225-0.223"
14	A179794	UAR	SPACER thrust, 0.220-0.218"
14	A179793	UAR	SPACER thrust, 0.215-0.213"
14	A179792	UAR	SPACER thrust, 0.210-0.208"
14	A179791	UAR	SPACER thrust, 0.205-0.203"
14	A179790	UAR	SPACER thrust, 0.200-0.198"
14	A179789	UAR	SPACER thrust, 0.195-0.193"
14	A179788	UAR	SPACER thrust, 0.190-0.188"
14	A179787	UAR	SPACER thrust, 0.185-0.183"
14	A179786	UAR	SPACER thrust, 0.182-0.178"
14	A179785	UAR	SPACER thrust, 0.175-0.173"
14	A179784	UAR	SPACER thrust, 0.170-0.168"
14	A179783	UAR	SPACER thrust, 0.165-0.163"
16	A179719	1	CUP bearing
17	A153749	1	CONE bearing, rear, 1-5/16" ID
19	A156260	1	NUT adjusting, countershaft

6-240

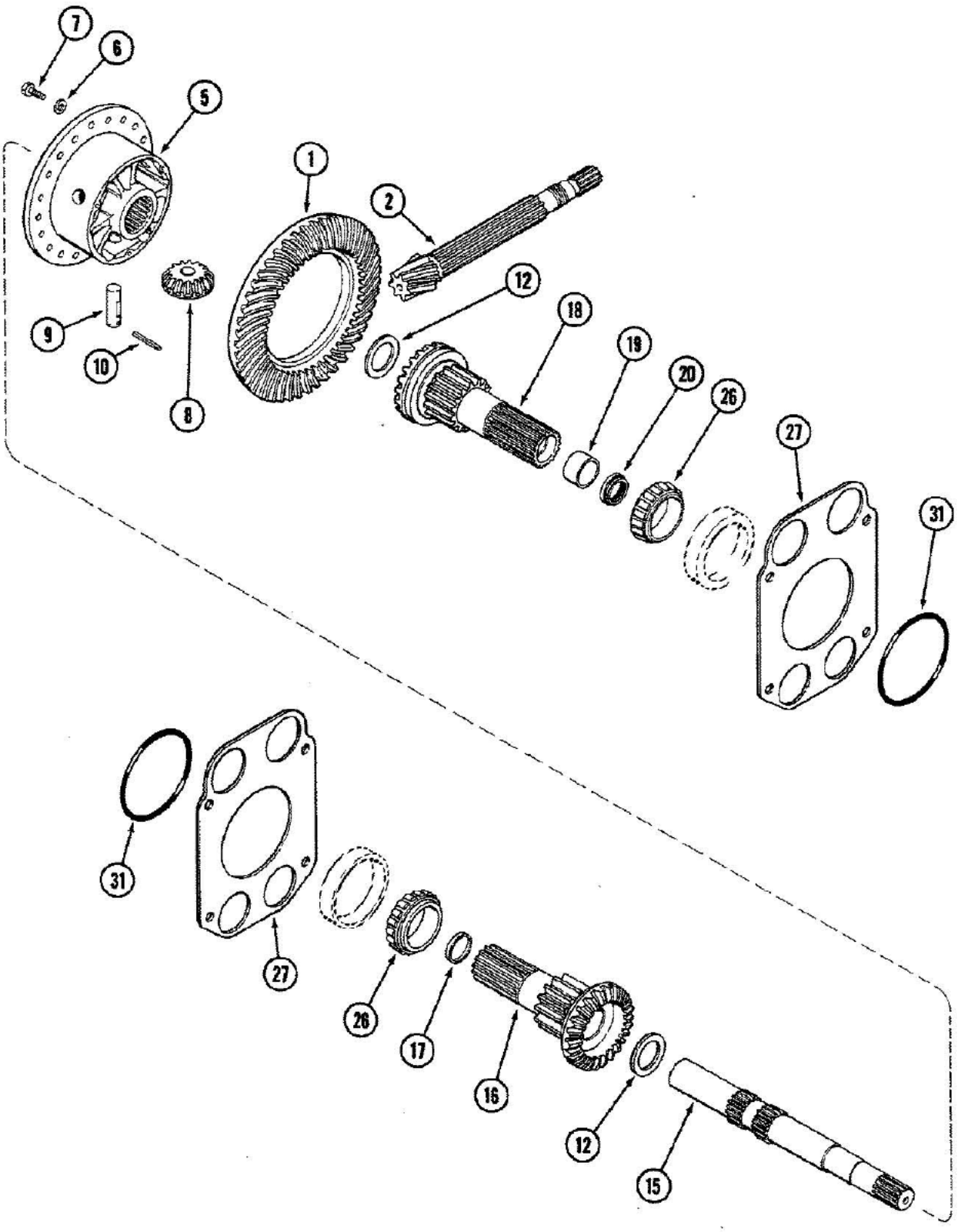

L872320-55

06-240 TRANSAXLE DIFFERENTIAL

Ref	Part Number	Qty	Description
	A168883	1	GEAR and PINION ring, differential, matched set, Includes: Ref. 1 and 2
1	NSS	1	GEAR ring
2	NSS	1	PINION bevel
5	A179986	1	WHEEL center
6	A155847	20	WASHER wheel bolt
7	28-614	20	BOLT hex, 3/8" NF x 7/8"
8	A179762	3	GEAR pinion
9	A153711	3	PIN pinion gear
10	A140705	3	PIN groove, 3/16" x 2"
12	A154141	UAR	WASHER thrust, center wheel, 0.079"
12	A153717	UAR	WASHER thrust, center wheel, 0.084"
12	A153712	UAR	WASHER thrust, center wheel, 0.089"
12	A153713	UAR	WASHER thrust, center wheel, 0.094"
12	A153714	UAR	WASHER thrust, center wheel, 0.099"
12	A153715	UAR	WASHER thrust, center wheel, 0.104"
12	A153716	UAR	WASHER thrust, center wheel, 0.109"
15	A156376	1	SHAFT cross
16	A182286	1	GEAR side, left, Includes: Ref. 17, P/N A182286 subs to P/N 1342925C1
17	41-1028	1	PLUG expansion, 1-3/4", Is not needed with wet brakes, see quality comment on P/N A182286
18	A182283	1	GEAR ASSEMBLY side, right, Includes: Ref. 19, P/N A182283 subs to P/N 1342927C1
19	A153719	1	BUSHING gear
20	A179053	2	SEAL oil, right hand side gear, Is not needed with wet brakes, see quality comment on P/N A182286
26	A7891	2	CONE bearing, 2-1/2" ID
27	A179076	UAR	SHIM, .007" Thk, Bearing carrier, The phantomed part shown between Ref. 26 and Ref. 27 is the bearing cup shown in Figure 07-254, Ref. 2, P/N A7890.
27	A179075	UAR	SHIM, .005" Thk, Bearing carrier
27	A179077	UAR	SHIM bearing carrier, 0.010"
31	G10347	2	O-RING housing

6-242

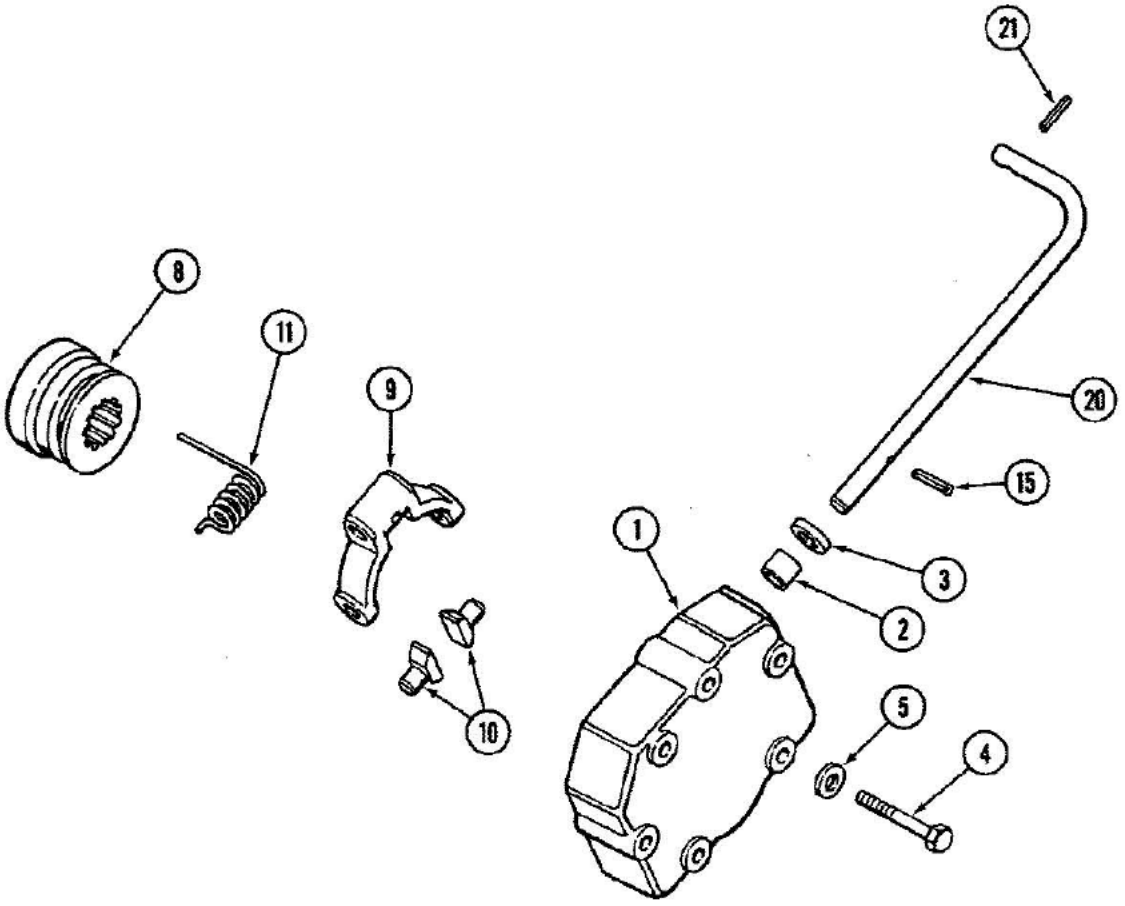

_872400-90

580K LOADER BACKHOE (NORTH AMERICA) - Power Train

06-242 TRANSAXLE DIFFERENTIAL LOCK

Ref	Part Number	Qty	Description
1	A168525	1	COVER ASSEMBLY lock, on right brake housing, Includes: Ref. 2 and 3
2	B15768	1	BUSHING cover
3	A63399	1	SEAL oil
4	113-111	6	BOLT, Hex, 5/16"-18 x 2 1/2", G5
5	195-103	6	WASHER flat, 3/8" x 7/8" x 5/64"
8	A156373	1	COLLAR differential lock
9	A168524	1	LEVER collar throw-out
10	A38750	2	FINGERS lever to collar
11	A156559	1	SPRING throw-out lever
15	138-96	2	PIN, 3/16" x 1", Slotted
20	A157734	1	SHAFT actuating
21	138-319	1	PIN, 3/16" x 1 1/4", Slotted

6-244

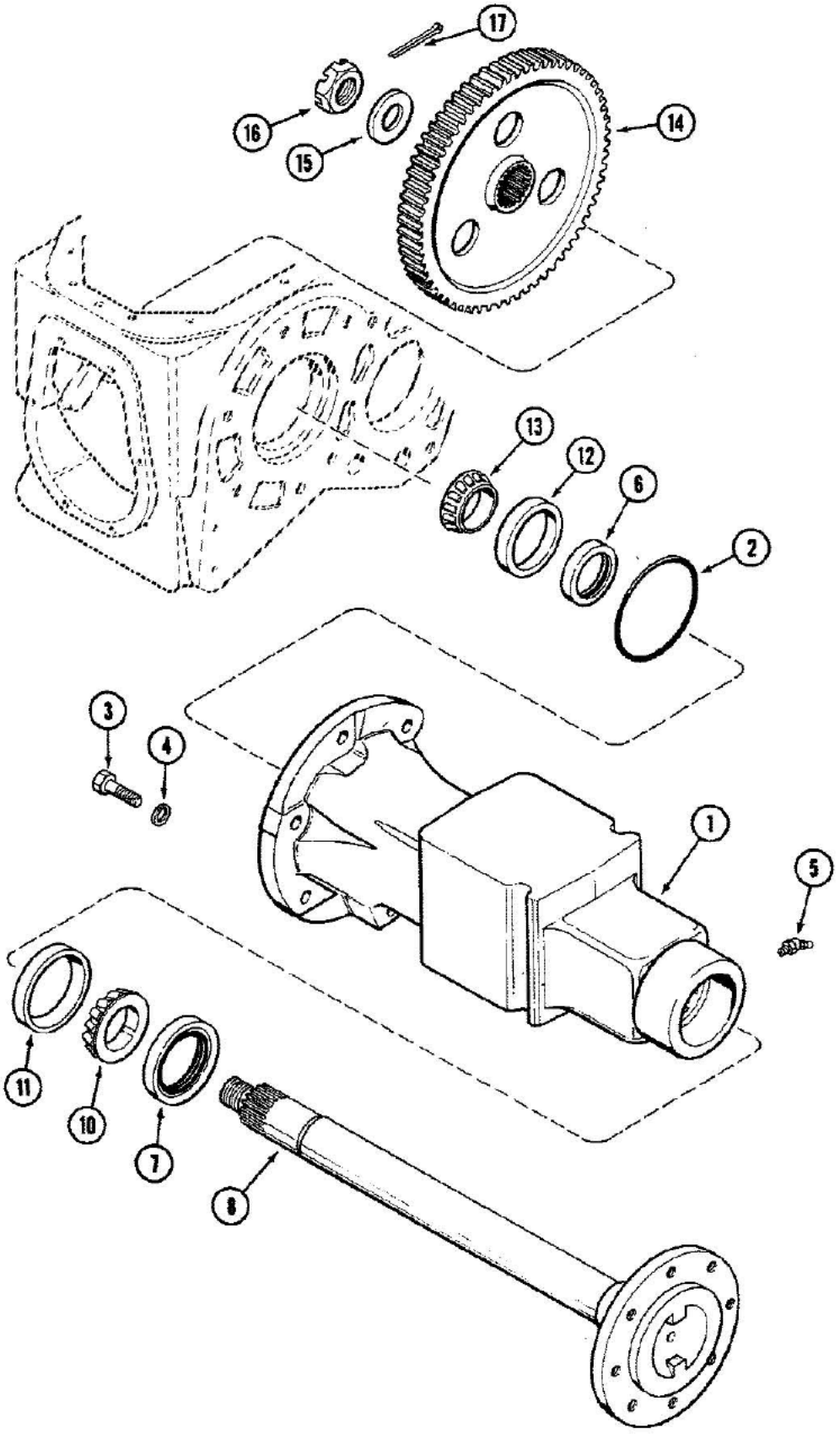

Bolts, P/N 413-16144, hold the axle in place where the slots are.

580K LOADER BACKHOE (NORTH AMERICA) - Power Train

06-244 TRANSAXLE REAR AXLE

Ref	Part Number	Qty	Description
1	A182751	1	HOUSING axle, right
1	A182752	1	HOUSING axle, left. right shown
2	G10347	2	O-RING axle housing transmission case
3	166-137	2	BOLT hex flange, 3/4" NC x 2-3/4"
3	26-1240	2	BOLT hex, 3/4" NC x 2-1/2", grade 8, P/N 26-1240 subs to P/N 426-1240
3	26-1244	4	BOLT hex, 3/4" NC x 2-3/4", grade 8, P/N 26-1244 subs to P/N 326-1244
3	26-1272	2	BOLT hex, 3/4" NC x 4-1/2", grade 8, P/N 26-1272 subs to P/N 326-1272
4	92-12	10	WASHER, LOCK, 3/4" , P/N 92-12 subs to P/N 492-11075
5	219-36	2	FITTING grease, 45 degrees, 1/8" PT
6	G13801	2	SEAL oil, inner, 2-1/4" ID
7	G13822	2	SEAL oil, outer , 3" ID
8	A154936	2	SHAFT rear axle
10	G15207	2	CONE bearing, outer, 2-5/8" ID
11	G15208	2	CUP bearing, outer, 4-11/32" OD
12	G10415	2	CUP bearing, inner, 3-15/16" OD
13	L33289	2	CONE bearing, inner, 2-1/4" ID
14	A154940	2	GEAR final drive, bull gear, 64 external and 35 internal teeth
15	F62105	2	WASHER take-up
16	A30075	1	NUT hex slotted, 1/2" NF
17	132-352	2	Pin, Split (Cotter), 1/4" x 2 1/2"

Bolts, P/N 413-16144, hold the axle in place where the slots are.

6-246

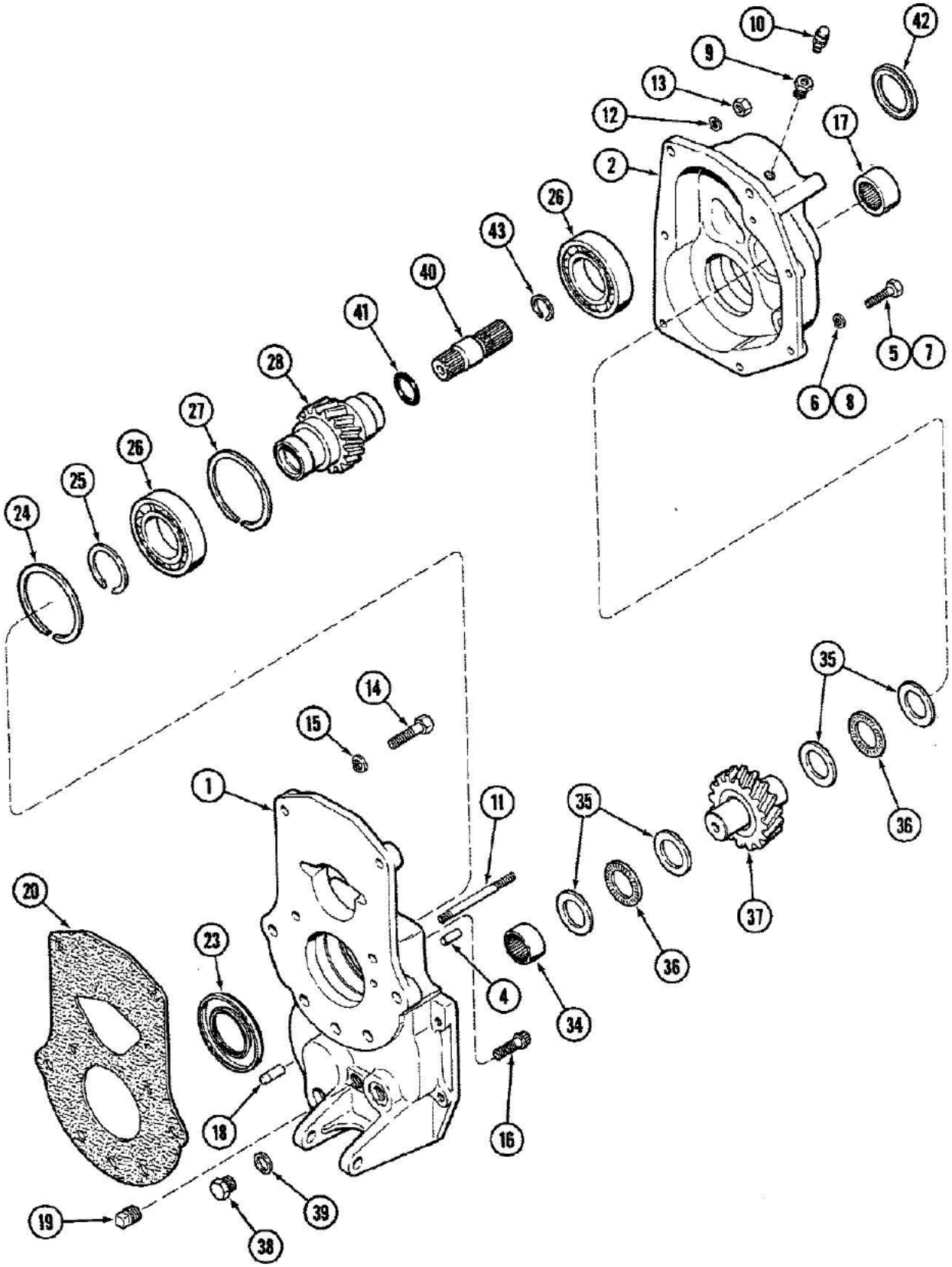
1
2
4
5
6
7
8
9
10
11
12
13
14
15
16
17
18
19
20
23
24
25
26
27
28
34
35
36
37
38
39
40
41
42
43
L672364-63

580K LOADER BACKHOE (NORTH AMERICA) - Power Train

06-246 TRANSAXLE TRANSFER GEAR BOX, 4 WHEEL DRIVE

Ref	Part Number	Qty	Description
	A168942	1	HOUSING ASSEMBLY transfer gearbox, matched set, Includes: Ref. 1 thru 6
1	NSS	1	HOUSING transfer gearbox, order P/N A168942
2	NSS	1	COVER transfer gearbox, order P/N A168942
4	A55459	2	PIN dowel, cover to housing
5	26-624	3	BOLT hex, 3/8" NC x 1-1/2", grade 8
6	92-6	3	3/8"
7	26-624	2	BOLT hex, 3/8" NC x 1-1/2", grade 8
8	92-6	2	3/8"
9	221-85	1	BUSHING breather
10	A12928	1	BREATHER transfer gearbox
11	A153248	2	STUD transfer gearbox mounting, 4-13/16"
12	92-6	2	3/8"
13	129-103	2	NUT, 3/8"-16, G5
14	13-830	4	BOLT, Hex, 1/2"-13 x 1 7/8", G5
15	92-8	4	1/2"
16	166-87	2	BOLT, 12 point head, 1/2" NC x 1-1/2"
17	A156286	1	BEARING idler gear, front
18	A29540	1	PIN dowl, transmission housing
19	221-4	1	PLUG square head, 1/2" PT
20	A182720	1	GASKET transmission housing to transfer gearbox
23	A157228	1	SEAL input gear oil
24	A31234	1	RING bearing to gearbox retaining
25	A27117	UAR	RING retaining, 0.096"
25	A27118	UAR	RING retaining, 0.0975"
25	A27119	UAR	RING retaining, 0.099"
25	A27116	UAR	RING retaining, 0.109"
26	A21266	2	BEARING input gear
27	A31234	1	RING bearing to gearbox retaining
28	A179007	1	GEAR input, 14 teeth
34	F7356	1	BEARING idler gear rear
35	A54031	4	WASHER idler gear thrust
36	T41022	2	BEARING idler gear thrust
37	A156256	1	GEAR idler, 17 teeth
38	A140222	1	PLUG transfer gearbox, drain
39	A58608	1	GASKET drain plug
40	A179006	1	SPLINE stub
41	A179155	1	O-RING sealing
42	A179071	1	SEAL oil
43	A140169	1	RING snap

6-248

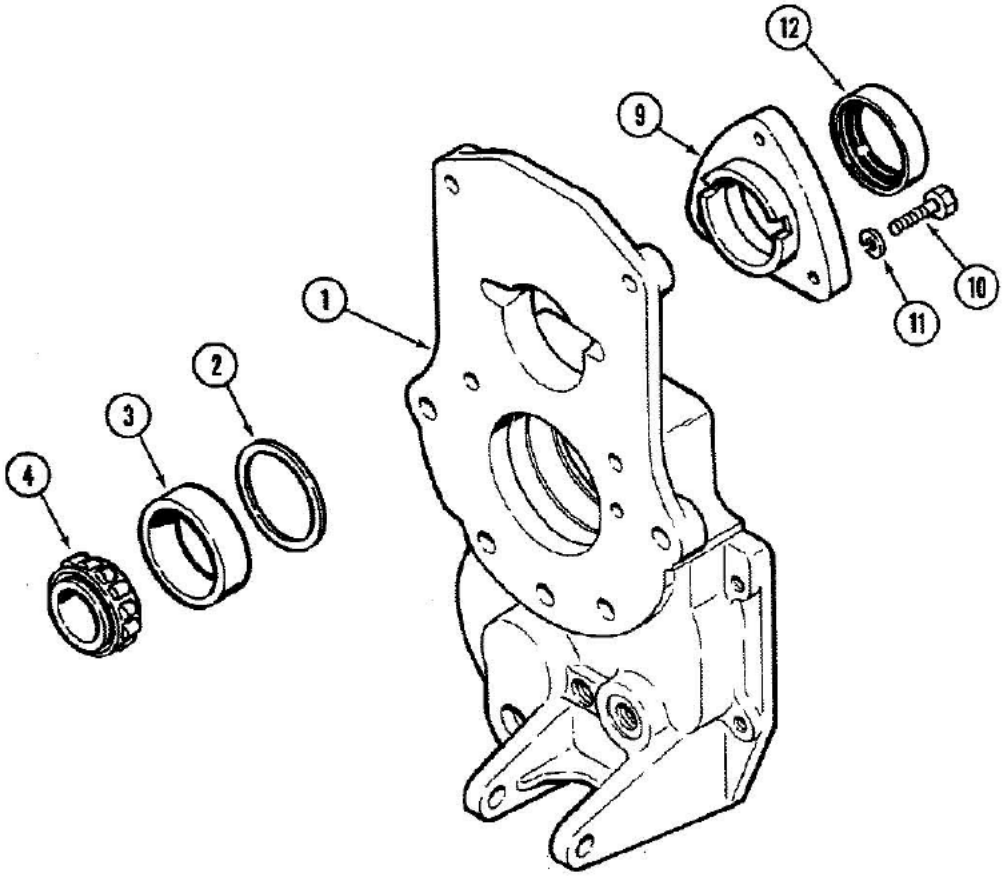

L872397-90

06-248 TRANSAXLE MAINSHAFT ADJUSTING COVER, 4 WHEEL DRIVE

Ref	Part Number	Qty	Description
1	REF	1	HOUSING transfer gearbox, see Figure 06-246
2	G10341	UAR	SHIM, .005" Thk, Main shaft front bearing
2	G10340	UAR	SHIM, .007" Thk, Mainshaft front bearing
2	A51527	UAR	SHIM, .035" Thk, Main shaft front bearing
3	H753574	1	CUP mainshaft bearing, front
4	H753566	1	CONE mainshaft bearing, front
9	A156606	1	COVER mainshaft bearing adjusting
10	113-209	3	BOLT, Hex, 3/8"-16 x 1 1/2", G5
11	92-6	3	3/8"
12	A154253	1	SEAL mainshaft

6-250

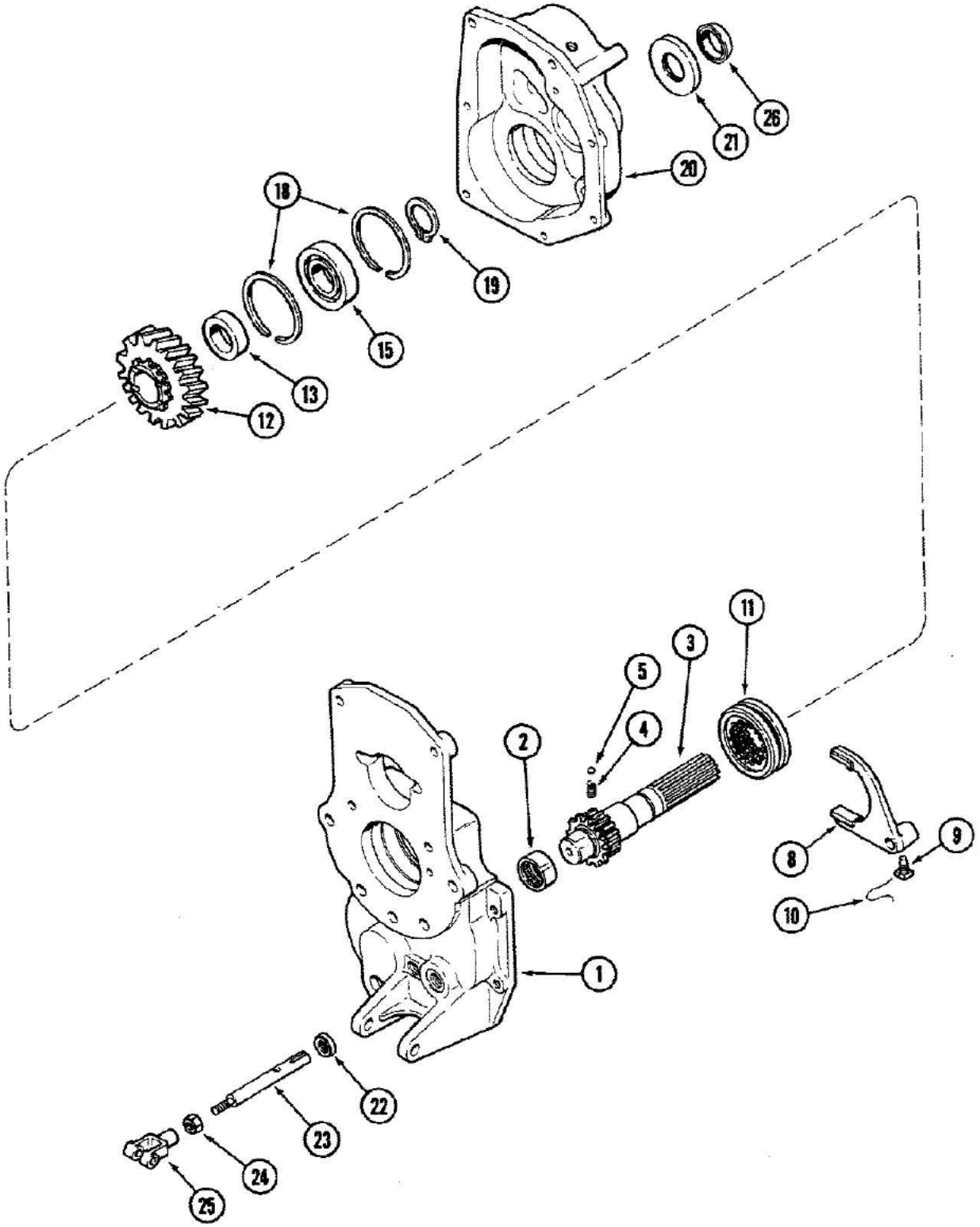

L872398-60

06-250 TRANSAXLE SHIFT MECHANISM AND OUTPUT SHAFT, 4 WHEEL DRIVE

Ref	Part Number	Qty	Description
1	REF	1	HOUSING transfer gearbox, see Figure 06-246
2	A35767	1	BEARING output shaft, rear
3	A156220	1	SHAFT ouput
4	A156269	3	SPRING detent
5	211-7	3	BALL detent, 1/4" diameter
8	A51951	1	FORK shifter
9	A29966	1	SCREW shifter for locking
10	A29966	1	WIRE screw to shift for locking
11	A182777	1	COLLAR ouput shaft
12	A182778	1	GEAR output, 19 teeth
13	A156278	UAR	SPACER gear, 0.611"
13	A156277	UAR	SPACER gear, 0.616"
13	A156276	UAR	SPACER gear, 0.621"
13	A156250	UAR	SPACER gear, 0.626"
15	B18215	1	BEARING output shaft, front
18	A27579	2	RING bearing to cover retaining
19	A144595	1	Ring, Snap, #156, Ext, output shaft
20	REF	1	COVER transfer gearbox, see Figure 06-246
21	A51948	1	SEAL output shaft
22	A63399	1	SEAL shift fork oil
23	A156259	1	RAIL shift fork
24	129-123	1	NUT, 3/8"-24, G5
25	T40057	1	YOKE shifter rail
26	A182638	1	SEAL oil, output shaft

PICTORIAL SECTION INDEX



BRAKES 7

B890757

Bur 8-3462 Issued February, 1989 Printed in U.S.A.

7-254

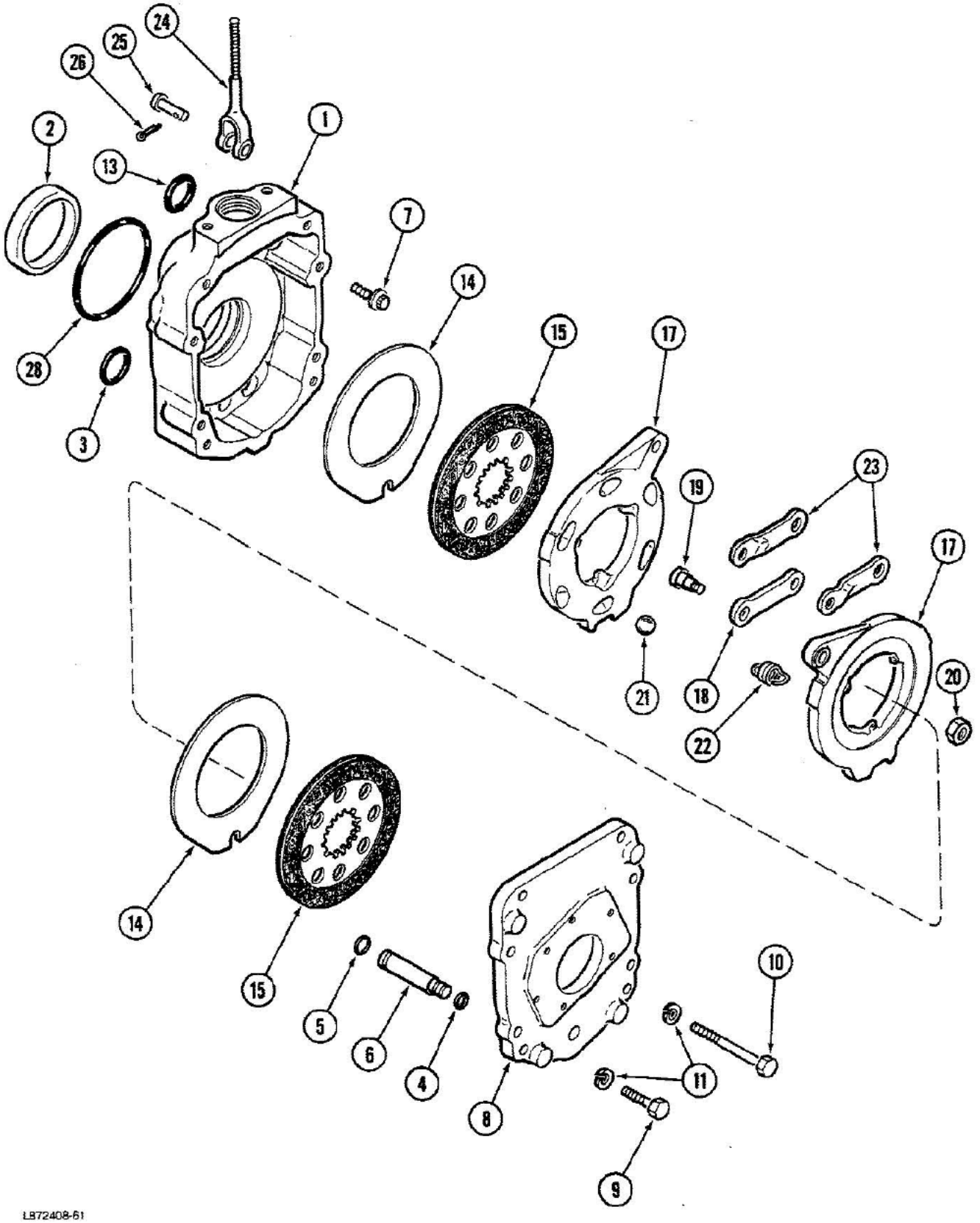

P/N B91443 additive for brake disc chatter is for S/N JJG0020000 and up only, refer to service bulletin NLB SB 012 90.

580K LOADER BACKHOE (NORTH AMERICA) - Brakes

07-254 TRANSAXLE DIFFERENTIAL BRAKE HOUSING AND BRAKE

Ref	Part Number	Qty	Description
1	A179911	2	HOUSING brake
2	A7890	1	CUP bearing, 4-7/16" OD
3	A179567	4	SEAL oil, lower
4	A182413	2	O-RING anchor pin, 5/8" ID
5	A64436	2	O-RING anchor pin, 3/4" ID
6	A182414	2	PIN spring anchor
7	A156878	4	BOLT, 12 point head, housing
8	A179912	1	COVER brake housing, right
8	A179944	1	COVER brake housing, left, right shown
9	113-421	12	BOLT, Hex, 1/2"-13 x 2", G5
10	113-429	4	BOLT, Hex, 1/2"-13 x 5", G5
11	92-8	16	1/2"
13	A179568	4	SEAL oil, upper
	A179938	2	BRAKE ASSEMBLY disc, Includes: Ref. 14 thru 23, P/N A179938 subs to P/N 1342286C1
14	A52252	4	DISC brake, stationary
15	A52253	5	DISC ASSEMBLY brake, rotating, P/N A52253 subs to P/N 1342285C1
	A52251	2	DISC ASSEMBLY brake, actuating, Includes: Ref. 17 thru 23
17	A52278	2	DISC brake, actuating
18	A41861	2	LINK actuating, plain
19	A52254	2	BOLT actuating, disc
20	129-165	2	NUT, Jam, 1/2"-20, G5
21	211-19	6	BALL actuating, 7/8" diameter
22	A30897	3	SPRING disc tension
23	A48952	2	LINK actuating, offset
24	A168817	2	ROD pull, brake actuating
25	L13129	2	PIN clevis rod to brake links
26	132-310	2	PIN, SPLIT (COTTER), 1/8" x 1"
28	G10347	2	O-RING housing

P/N B91443 additive for brake disc chatter is for S/N JJG0020000 and up only, refer to service bulletin NLB SB 012 90.

7-256

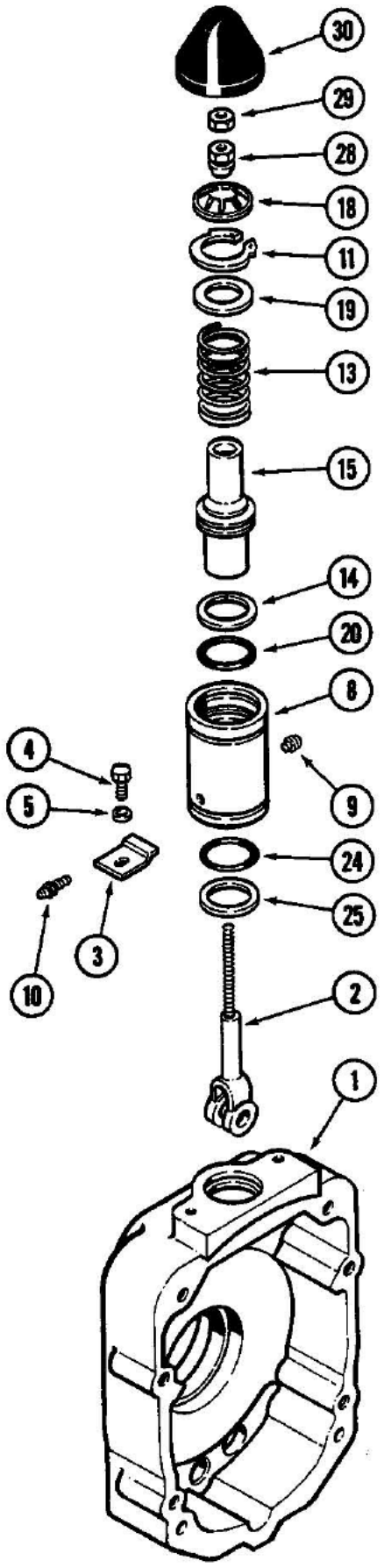

LB71266-70

07-256 TRANSAXLE DIFFERENTIAL BRAKE ACTUATOR

Ref	Part Number	Qty	Description
1	REF	2	HOUSING brake, see Figure 07-254
2	A168817	2	ROD pull, brake actuating
3	A168909	4	PLATE clamp, actuator
4	13-612	4	BOLT, Hex, 3/8"-16 x 3/4", G5, Full Thd, Right side has one breather bolt and one hex bolt. Left side has two breather bolts.
5	195-25	4	WASHER flat, 13/32" x 13/16" x 1/16"
	A168974	2	ACTUATOR ASSEMBLY brake, Includes: Ref. 8 thru 25
8	A52266	1	HOUSING piston
9	S114301	1	INSERT seat
10	S114300	1	SCREW bleed
11	A52276	1	RING retainer
13	A52272	1	SPRING piston
14	A52271	1	RING backup, piston, Part of Repair Kit P/N A52277
15	A52267	1	PISTON actuator
	A52277	1	KIT repair, piston, Includes: Ref. 19 thru 25
18	NSS	1	WASHER spring, This item is not used in the assembly and is not included in repair kit P/N A52277.
19	NSS	1	WASHER flat, 2" OD
20	NSS	1	O-RING piston, 1-1/2" ID
24	NSS	1	O-RING housing, 1-5/8 " OD
25	NSS	1	RING back up
28	A157951	2	NUT hex, pull rod
29	25-157	2	NUT hex jam, 7/16" NF
30	A179594	2	SEAL dust

7-258

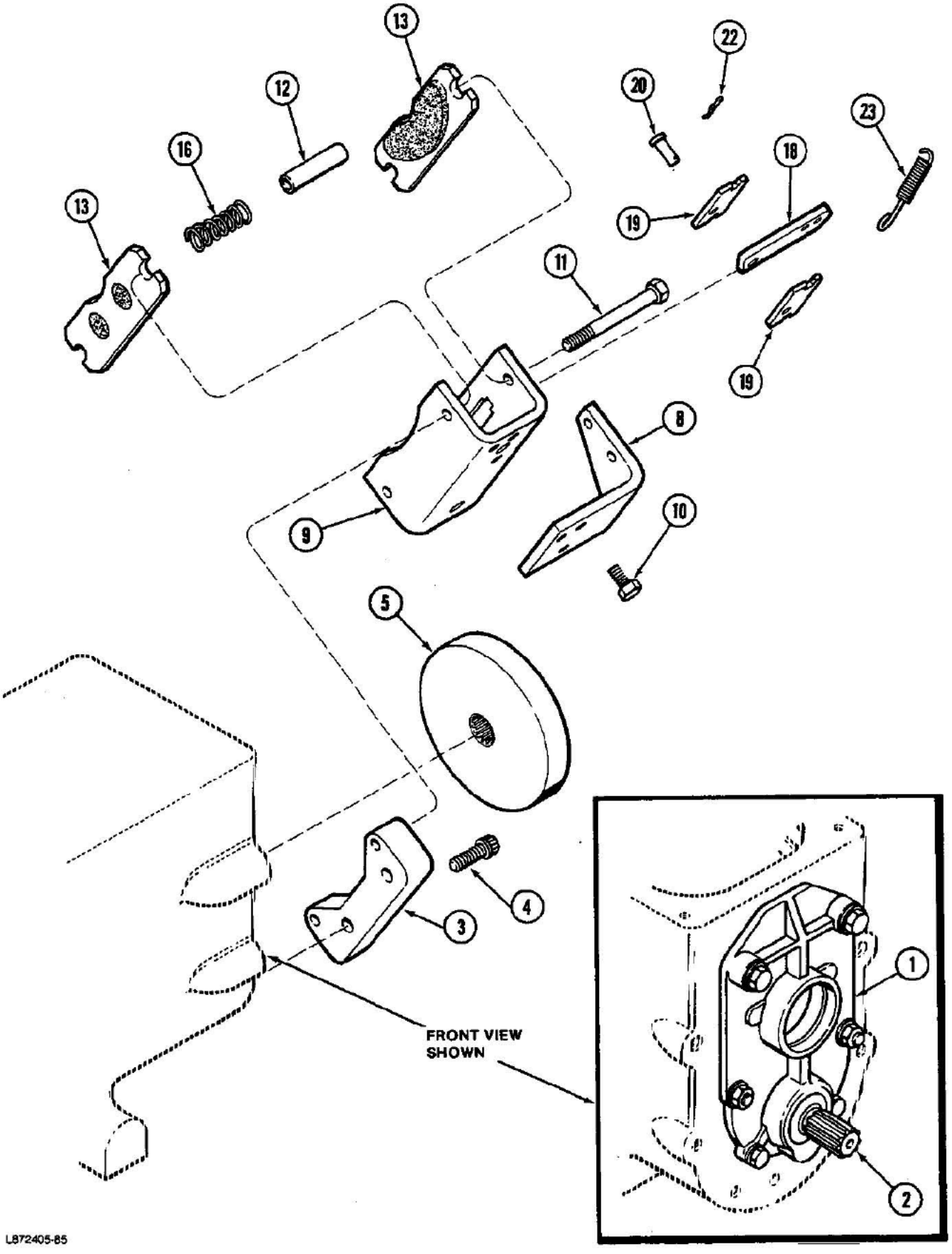
13
12
16
13
22
20
23
18
19
11
19
8
9
10
5
4
3
FRONT VIEW
SHOWN
1
2
L872405-85

07-258 TRANSAXLE PARK BRAKE, TWO WHEEL DRIVE

Ref	Part Number	Qty	Description
1	REF	1	COVER front, transmission, see Figure 06-230
2	REF	1	SHAFT counter, see Figure 06-238
3	A179065	1	PLATE mounting, brake
4	A166-87	2	BOLT, 12 point flanged head, 1/2" NC x 1-1/2"
5	A168790	1	DISC brake, caliper
	A182779	1	BRAKE ASSEMBLY park, Includes: Ref. 8 thru 23
8	A52380	1	BRACKET mounting, cable
9	A52256	1	HOUSING brake
10	113-335	3	BOLT, Hex, 7/16"-14 x 3/4", G5, Full Thd
11	A52263	2	BOLT retaining, brake
12	A52261	2	SPACER stator
13	A182740	2	PAD brake
16	A52262	2	SPRING compression
18	A52379	1	LEVER actuating
19	A52257	1	PLATE pivot
20	A52259	1	PIN clevis, pivot
22	A52260	1	PIN retainer, pivot pin
23	A52264	1	SPRING extension

7-260

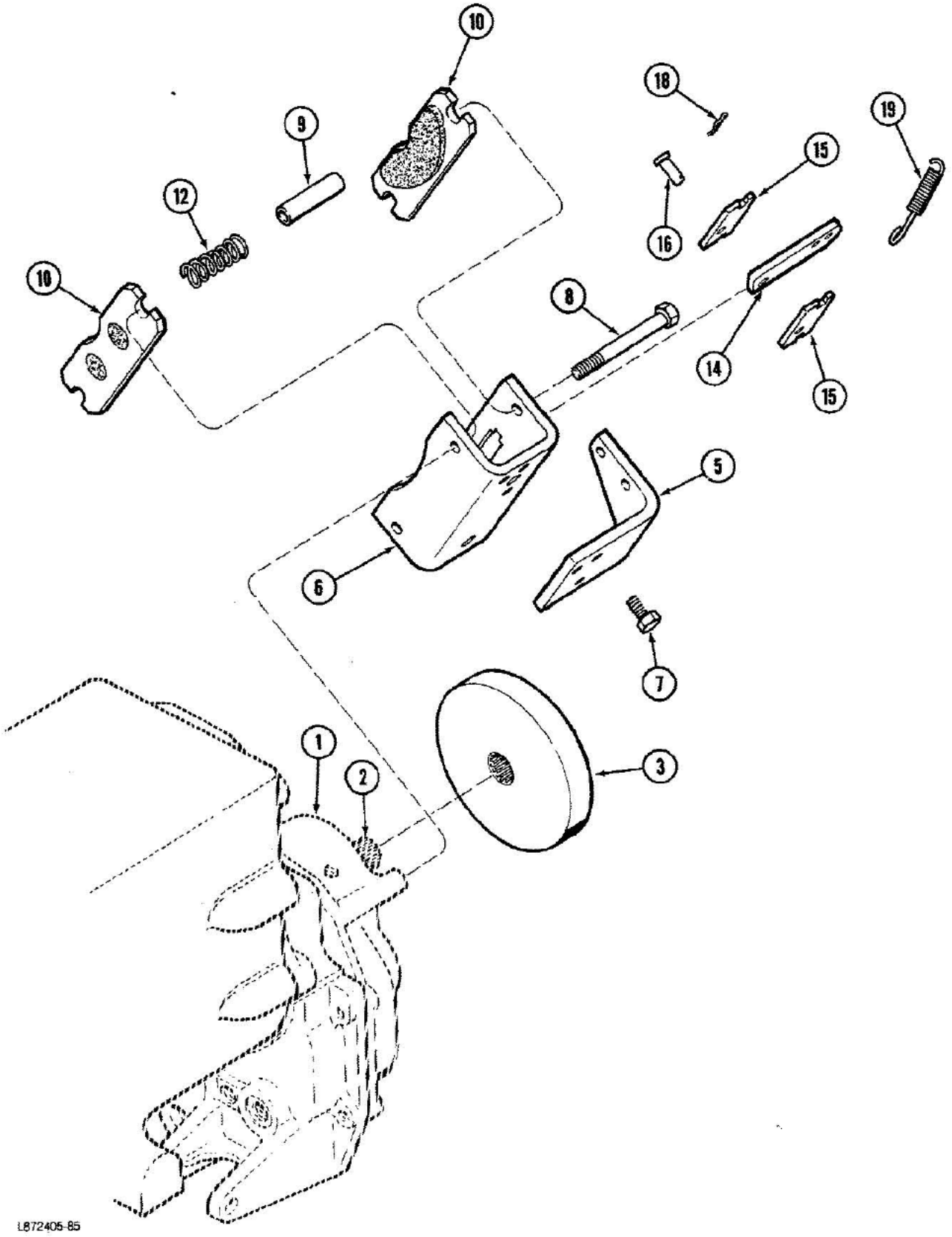

07-260 TRANSAXLE PARK BRAKE, FOUR WHEEL DRIVE

Ref	Part Number	Qty	Description
1	REF	1	COVER transfer gear box, see Figure 06-246
2	REF	1	SPLINE stub, see Figure 06-246
3	A168790	1	DISC brake, caliper
	A182779	1	BRAKE ASSEMBLY park, Includes: Ref. 5 thru 19
5	A52380	1	BRACKET mounting, cable
6	A52256	1	HOUSING brake
7	113-335	3	BOLT, Hex, 7/16"-14 x 3/4", G5, Full Thd
8	A52263	2	BOLT retaining, brake
9	A52261	2	SPACER stator
10	A182740	2	PAD brake
12	A52262	2	SPRING compression
14	A52379	1	LEVER actuating
15	A52257	2	PLATE pivot
16	A52259	1	PIN clevis, pivot
18	A52260	1	PIN retainer, pivot pin
19	A52264	1	SPRING extension

7-262

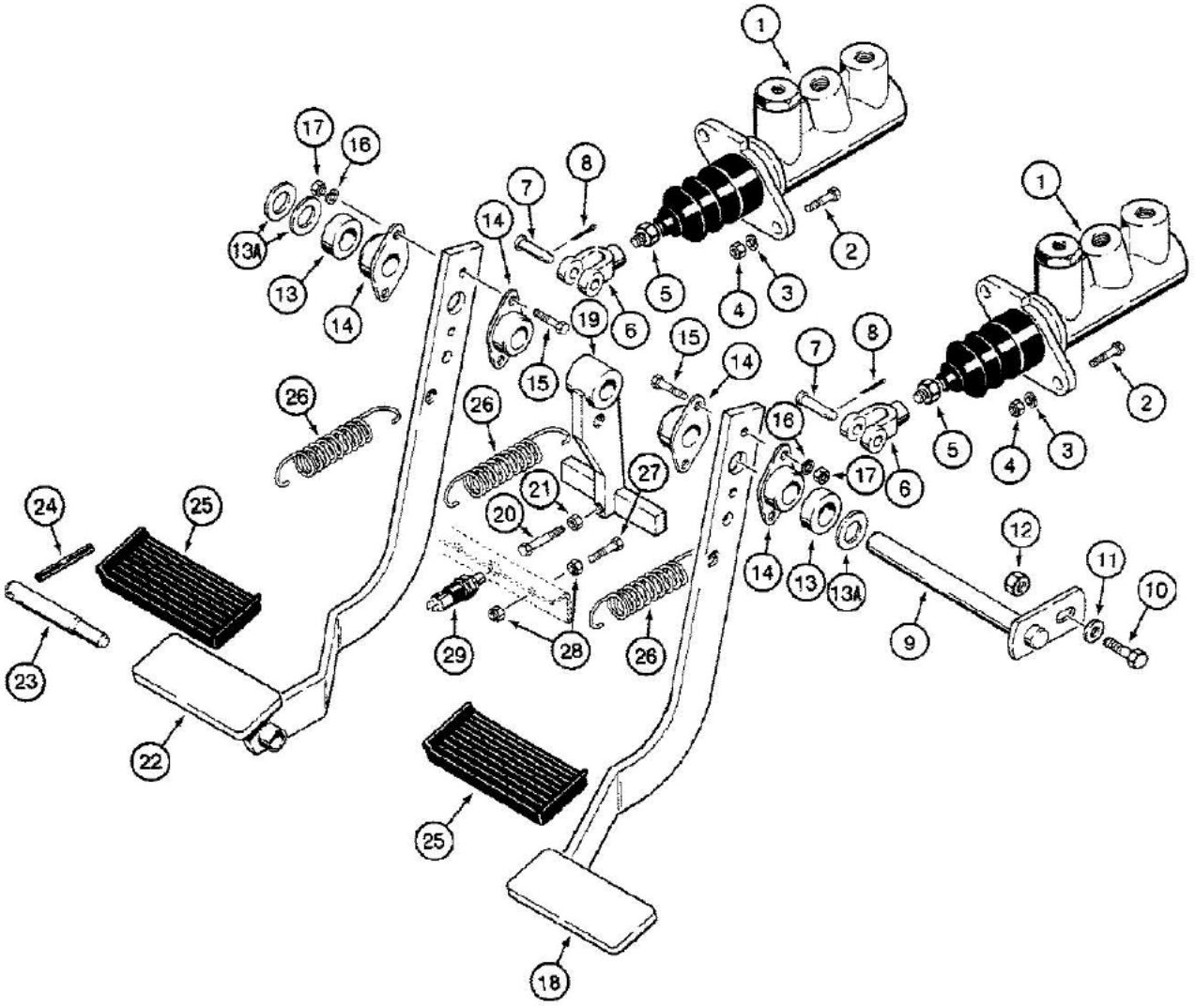

8890647-46

07-262 BRAKE PEDALS AND BRAKE MASTER CYLINDER MOUNTING

Ref	Part Number	Qty	Description
1	REF	2	CYLINDER ASSEMBLY master, brake, see Figure 07-266
2	113-103	4	BOLT, Hex, 5/16"-18 x 1", G5, Full Thd
3	192-20	4	WASHER, LOCK, 5/16"
4	9635082	4	NUT, 5/16"-18, G5
5	86585245	2	NUT hex, jam, 3/8"-24 NF, plated
6	D137077	2	CLEVIS female, master cylinder
7	L26209	2	PIN clevis, 3/8"
8	132-320	2	PIN, SPLIT (COTTER), 3/32" x 3/4"
9	D140035	1	SHAFT brake pedal
10	113-207	1	BOLT, Hex, 3/8"-16 x 1", G5, Full Thd
11	195-525	1	WASHER flat, 3/8", plated
12	131-217	1	NUT light hex, self-locking, 3/8"-16 NC, plated
13	D124529	2	SPACER pedal
13A	195-2191	UAR	WASHER flat, 3/4" bolt size, 13/16" ID x 1-1/2" OD x 1/16" thick, plated, used as a shim
14	A77310	4	BEARING brake pedal
15	113-122	4	BOLT, Hex, 5/16"-18 x 1 1/2", G5
16	192-20	4	WASHER, LOCK, 5/16"
17	9635082	4	NUT, 5/16"-18, G5
18	D124521	1	PEDAL brake, right-hand
19	D124528	1	LEVER brake lamp
20	113-121	1	BOLT, Hex, 5/16"-18 x 2", G5, Brake switch actuator
21	9635082	1	NUT, 5/16"-18, G5
22	D124522	1	PEDAL brake, left-hand
23	D124530	1	PIN pedal lock
24	138-328	1	PIN, 5/16" x 2 1/2", Slotted
25	F9197	2	COVER pedal, rubber
26	D120911	3	SPRING pedal and lever return, attaches to brake pedal spring rod in firewall frame
27	113-104	2	BOLT, Hex, 5/16"-18 x 1 1/4", G5, Attaches to brake pedal stop bar in firewall frame
28	425-145	4	NUT, Jam, 5/16"-18, G5
29	D128886	1	SWITCH brake lamp, attaches to front console wiring harness, mounts in brake pedal stop bar in firewall frome

7-264

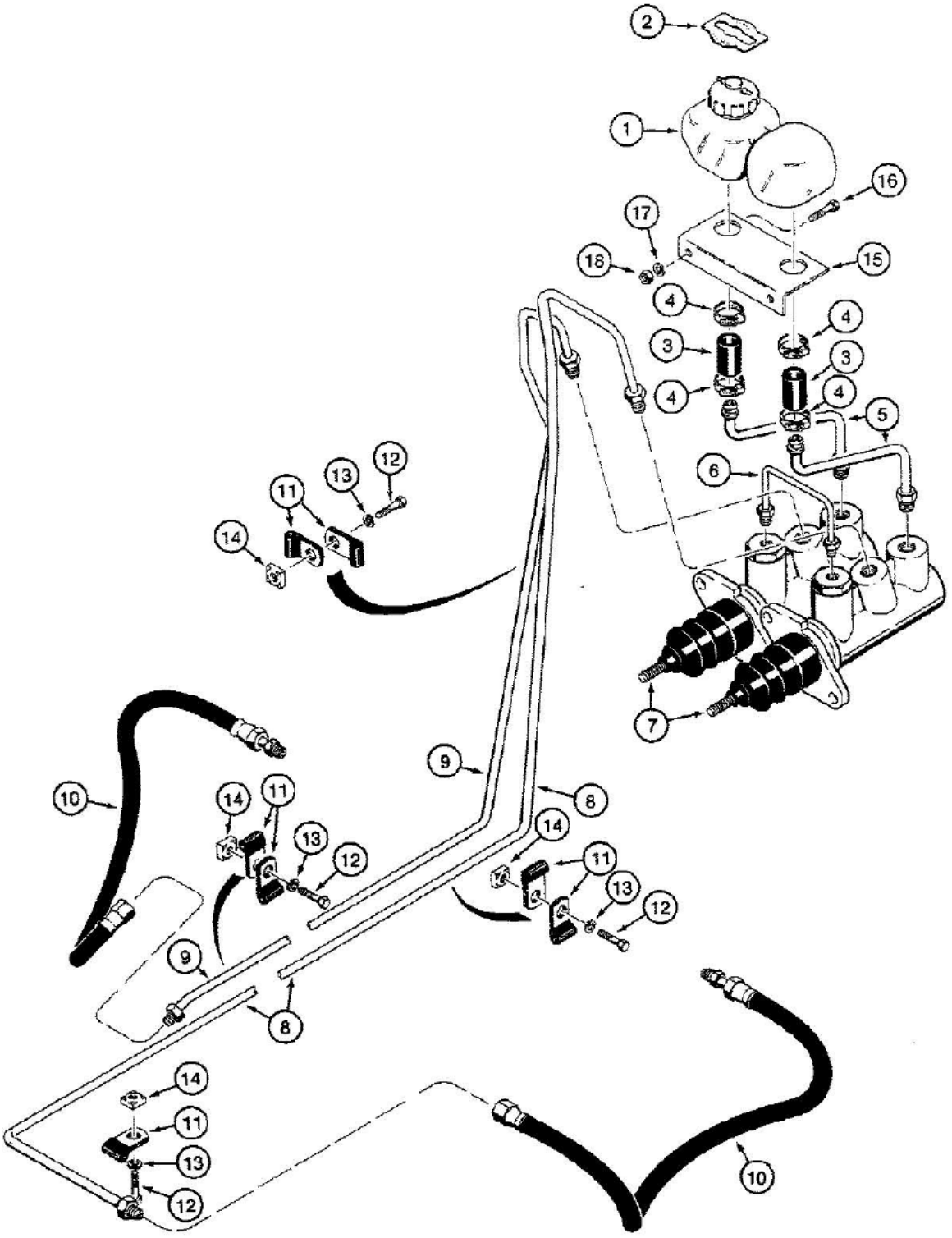

870349

07-264 BRAKE MASTER CYLINDER HYDRAULIC CIRCUIT

Ref	Part Number	Qty	Description
	E46719	1	RESERVOIR ASSEMBLY brake master cylinder, Includes: Ref. 1 and 2
1	E44082	1	RESERVOIR brake master cylinder, includes cap
2	E44062	1	TAG reservoir fluid identification
3	E44083	2	HOSE, 1/2" (13 mm) ID x 1-3/16" (30 mm) long, reservoir to tube
4	D140877	4	CLAMP worm screw, includes hardware, reservoir hose
5	D136854	2	TUBE reservoir to master cylinder
6	D136430	1	TUBE crossover
7	REF	2	CYLINDER ASSEMBLY master, brake, see Figure 07-266
8	D139608	1	TUBE brake, right-hand
9	D139606	1	TUBE brake, left-hand
10	D136476	2	HOSE, 17-3/4" (450 mm) long, brake tube to transaxle brake actuator
11	49859	7	CLAMP, P-type
12	113-102	4	BOLT, Hex, 5/16"-18 x 3/4", G5, Full Thd
13	192-20	4	WASHER, LOCK, 5/16"
14	25-225	4	NUT square, 5/16"-18 NC
15	D135229	1	BRACKET brake reservoir support, attaches to firewall
16	113-102	2	BOLT, Hex, 5/16"-18 x 3/4", G5, Full Thd
17	192-20	2	WASHER, LOCK, 5/16"
18	9635082	2	NUT, 5/16"-18, G5

7- 266

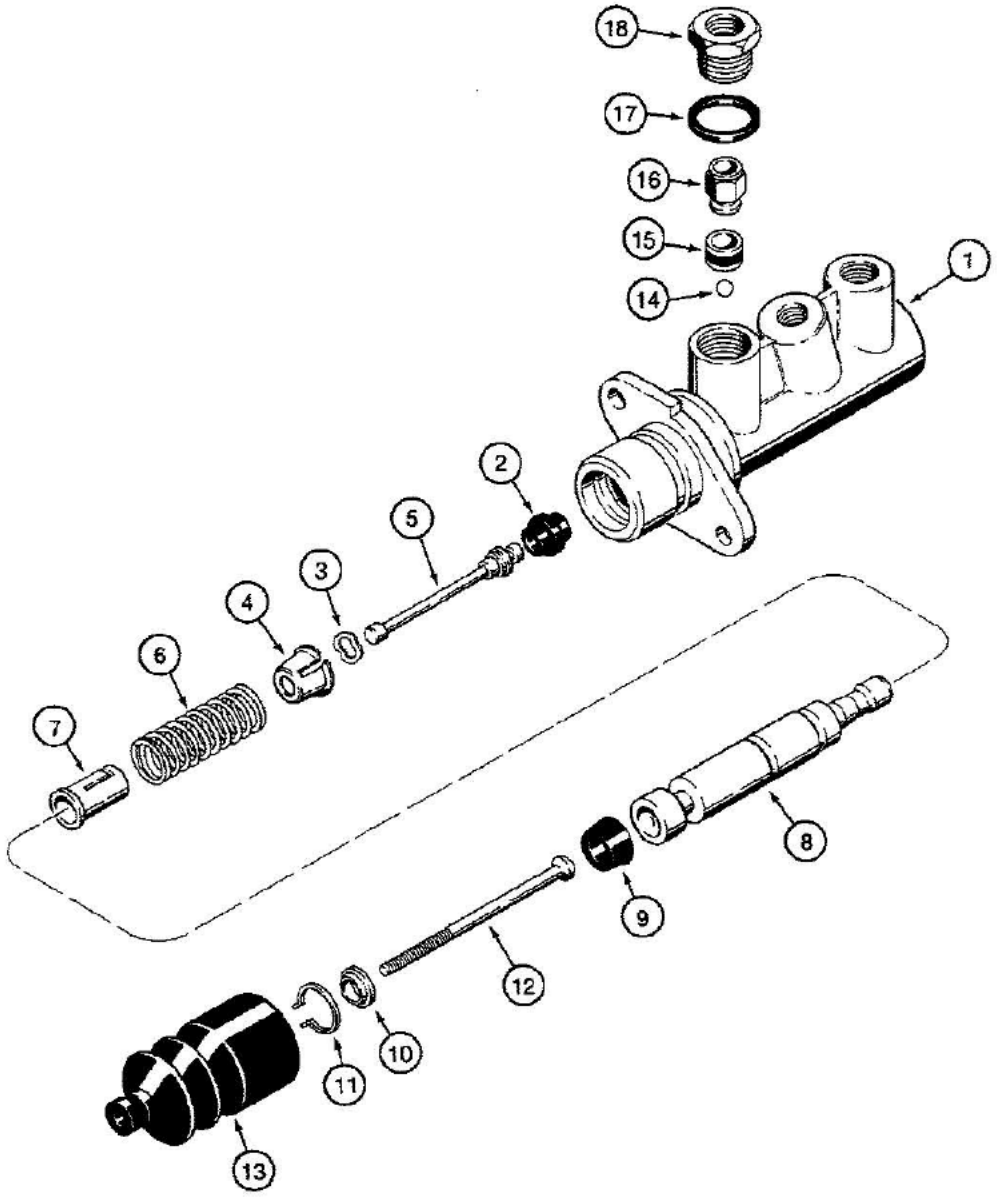

870052

580K LOADER BACKHOE (NORTH AMERICA) - Brakes

07-266 BRAKE MASTER CYLINDER

Ref	Part Number	Qty	Description
	D136837	2	CYLINDER ASSEMBLY master, brake, no longer available, order P/N D141779 cylinder
	D141779	2	CYLINDER ASSEMBLY master, brake, Includes: Ref. 1 thru 18
1	NSS	1	BODY master cylinder
2	NSS	1	SEAL plunger, Part of Seal Service Kit P/N N14254
3	NSS	1	WASHER special, Part of Seal Service Kit P/N N14254
4	NSS	1	SEAT spring, short
5	NSS	1	PLUNGER piston
6	NSS	1	SPRING return
7	NSS	1	SEAT spring, long
8	NSS	1	PISTON master cylinder
9	NSS	1	SEAL piston, Part of Seal Service Kit P/N N14254
10	NSS	1	WASHER seal, special
11	NSS	1	RING retaining, washer, Part of Seal Service Kit P/N N14254
12	NSS	1	ROD push
13	NSS	1	BOOT push rod, Part of Seal Service Kit P/N N14254
14	NSS	1	BALL flow valve, Part of Seal Service Kit P/N N14254
15	NSS	1	SEAL flow valve, Part of Seal Service Kit P/N N14254
16	NSS	1	VALVE flow
17	NSS	1	GASKET flow valve, Part of Seal Service Kit P/N N14254
18	NSS	1	ADAPTER flow valve
	N14254	1	KIT service, seal, Includes: Ref. 2, 3, 9, 11, 13, 14, 15 and 17, Seal service Kit P/N N14254's vendor No. is MIN46. For this to work the bore must be 7/8". If the bore is 1" the vendor No. is MIM47 and uses mineral oil and we do not have a Case cross reference part number.

7-268

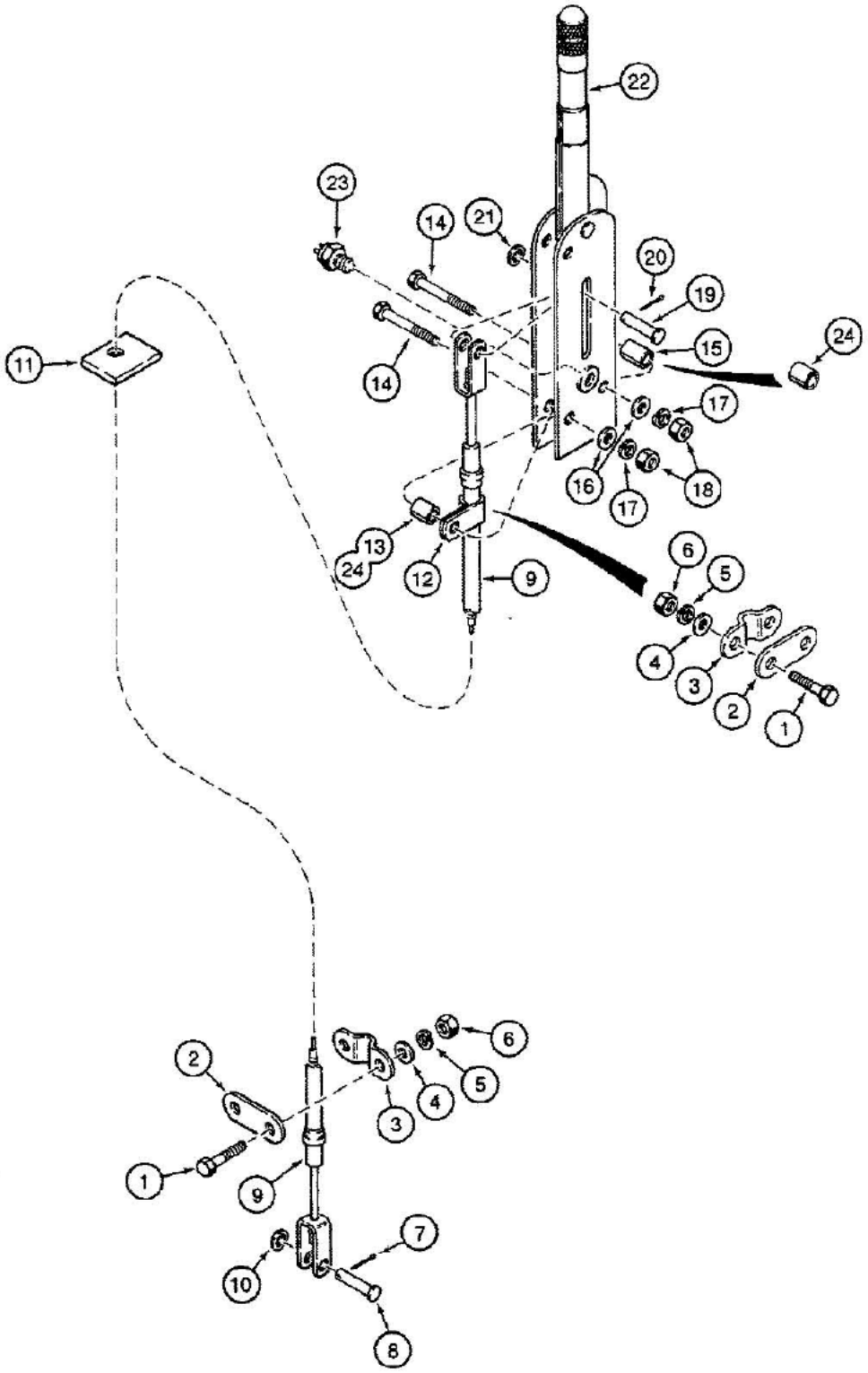

861939A-45

See model 580 Super K catalog 8-6950 or 8-6952, Figure 7-12, for rubber boots for lever assemblies, dual lever boot P/N D137465, single lever boot P/N D137466.

580K LOADER BACKHOE (NORTH AMERICA) - Brakes

07-268 PARKING BRAKE LEVER AND LINKAGE

Ref	Part Number	Qty	Description
1	113-122	2	BOLT, Hex, 5/16"-18 x 1 1/2", G5
2	D129747	1-2	PLATE oval spacer, plated
3	D121608	1-2	CLAMP cable to transaxle brake assembly bracket
4	195-521	2	WASHER flat, 5/16", plated
5	192-20	2	WASHER, LOCK, 5/16"
6	9635082	2	NUT, 5/16"-18, G5
7	132-330	1	PIN, SPLIT (COTTER), 3/32" x 1/2"
8	141-53	1	PIN clevis, 5/16", plated, special length
9	D136510	1	CABLE parking brake
10	195-521	1	WASHER flat, 5/16", plated
11	D138158	1	PAD foam, floor plate
12	D40684	1	CLAMP parking brake cable, no longer used, order Ref. 2 and 3
13	D76209	1	SPACER parking brake lever, rear, used with Ref. 15 spacer, no longer used, order (2) P/N D122882 spacers, Ref. 24
14	113-110	2	BOLT, Hex, 5/16"-18 x 2 1/4", G5
15	R46493	1	SPACER parking brake lever, front, used with Ref. 13 spacer, no longer used, order (2) P/N D122882 spacers, Ref. 24
16	195-521	2	WASHER flat, 5/16", plated
17	192-20	2	WASHER, LOCK, 5/16"
18	9635082	2	NUT, 5/16"-18, G5
	D121555	1	LEVER ASSEMBLY parking brake, without bossed hole, for audible warning alarm parking brake switch, for service order P/N D139909 lever
	D139909	1	LEVER ASSEMBLY parking brake, with bossed hole for brake switch, Replaces: P/N D121555 lever for service, Includes: Ref. 19 thru 22
19	D42458	1	PIN clevis, lever to brake cable
20	132-320	1	PIN, SPLIT (COTTER), 3/32" x 3/4"
21	195-103	1	WASHER flat, 5/16", plated
22	NSS	1	LEVER parking brake
23	D136514	1	SWITCH parking brake, used on models with audible warning alarm, See Figure 04-140 for other special parts used on models with audible warning alarm for water temperature, engine oil pressure, and parking brake.
24	D122882	2	SPACER parking brake lever, front and rear, Replaces: Ref. 13 and 15

See model 580 Super K catalog 8-6950 or 8-6952, Figure 7-12, for rubber boots for lever assemblies, dual lever boot P/N D137465, single lever boot P/N D137466.



HYDRAULICS 8

08-272 EQUIPMENT HYD. SYSTEM RESERVOIR TO LOADER CONTROL VALVE & LOADER VALVE TO FILTER & BACKHOE LINE

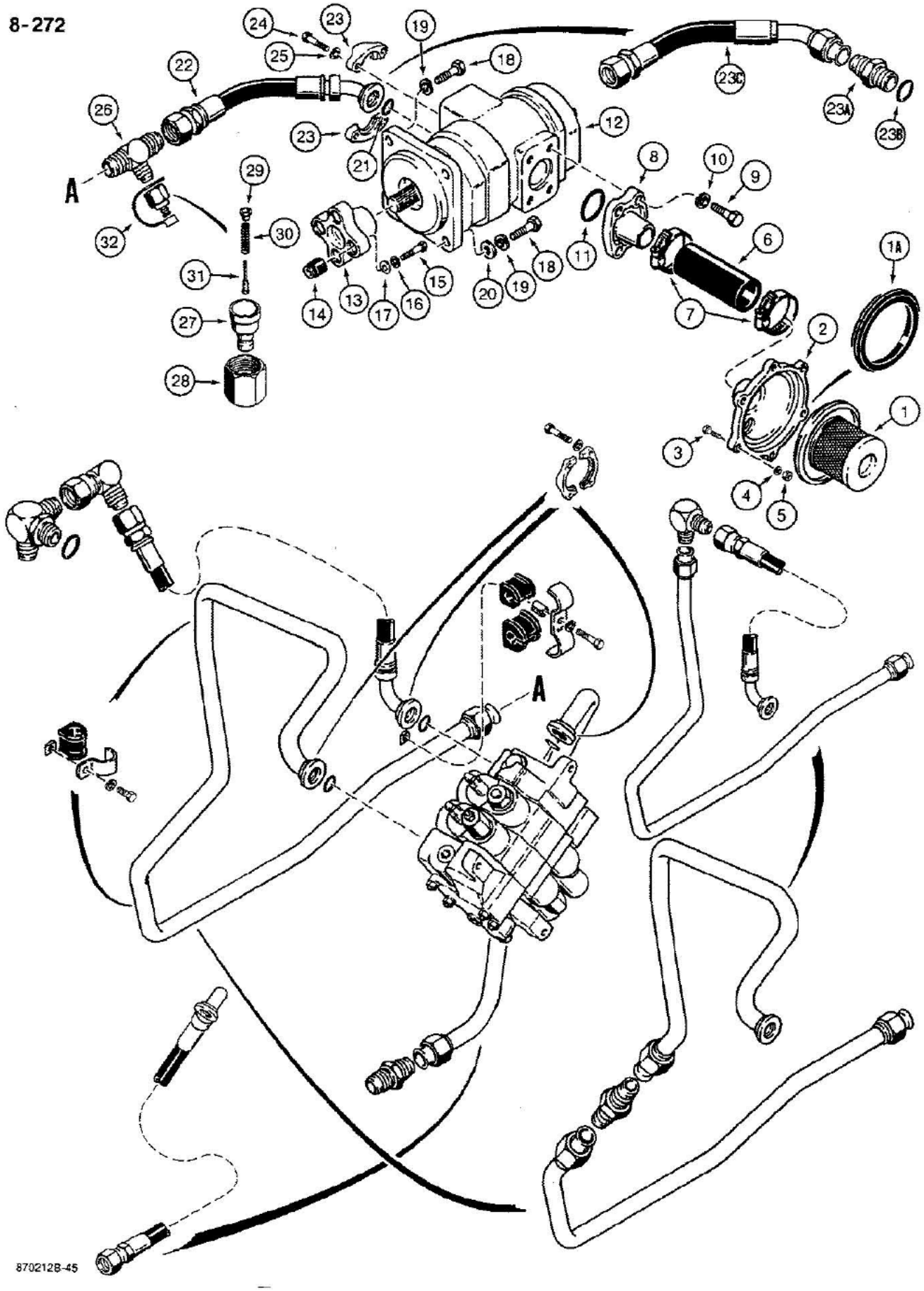

Use Molykote type G on pump splines.

08-272 EQUIPMENT HYD. SYSTEM RESERVOIR TO LOADER CONTROL VALVE & LOADER VALVE TO FILTER & BACKHOE LINE

Ref	Part Number	Qty	Description
1	D127987	1	SCREEN suction, Includes: Ref. 1A
1A	D145356	1	SEAL suction screen
2	D129581	1	FLANGE reservoir, suction
3	113-4	6	BOLT, Hex, 1/4"-20 x 1", G5
4	192-19	6	WASHER, LOCK, 1/4"
5	7770	6	NUT, 1/4"-20, G5
6	D129580	1	HOSE, 1-1/2" (38 mm) ID x 2-1/8" (54 mm) OD x 5-1/8" (130 mm) long, equipment pump inlet
7	214-258	2	CLAMP hose
8	D137343	1	FLANGE pump inlet, replaces adapter and split flange clamp on some models
9	113-410	4	BOLT, Hex, 1/2"-13 x 1 1/2", G5, Full Thd
10	192-23	4	WASHER, LOCK, 1/2"
11	A14515	1	O-RING, 1-7/8", pump inlet flange
12	REF	1	PUMP ASSEMBLY hydraulic, equipment, for correct assembly and components see Figure 08-350
	D136083	1	COUPLING flex, hydraulic pump, Includes: Ref. 13 and 14
13	NSS	1	COUPLING pump
14	N14330	4	BUSHING coupling
15	113-323	4	BOLT, Hex, 7/16"-14 x 1 3/4", G5
16	192-22	4	WASHER, LOCK, 7/16"
17	A30013	4	WASHER flat, plated, special
18	113-410	4	BOLT, Hex, 1/2"-13 x 1 1/2", G5, Full Thd
19	192-23	4	WASHER, LOCK, 1/2"
20	D78732	2	WASHER flat, 1/2", hardened, lower mounting bolts only
21	D31968	1	O-RING, 1", large pump section outlet port, used with P/N D135047 hose
22	D135047	1	HOSE, 17-23/32" (450 mm) long, large pump section outlet port to tee, used with Ref. 23 split flange clamps, if used
23	A12306	2	CLAMP split flange, if used
23A	218-5069	1	ADAPTER straight, large pump section outlet port, if used, Includes: Ref. 23B
23B	237-6016	1	O-RING adapter
23C	D140803	1	HOSE, 17-17/32" (445 mm) long, used with Ref. 23A adapter, if used
24	113-209	4	BOLT, Hex, 3/8"-16 x 1 1/2", G5, If used
25	192-21	4	WASHER, LOCK, 3/8", If used
26	218-587	1	TEE male, pump outlet hose to loader valve inlet tube
	D137625	1	DISCONNECT ASSEMBLY quick, coupling, Includes: Ref. 27 thru 31, The mating female coupling for running check must be ordered from Service Tools, P/N 213165.
27	NSS	1	BODY coupling
28	129-132	1	NUT, 1 1/4"-12, G5
29	NSS	1	SEAT spring
30	NSS	1	SPRING coupling
31	NSS	1	POPPET coupling
32	H434163	1	CAP dust, coupling

Use Molykote type G on pump splines.

08-274 EQUIPMENT HYD. SYSTEM RESERVOIR TO LOADER CONTROL VALVE & LOADER VALVE TO FILTER & BACKHOE LINE

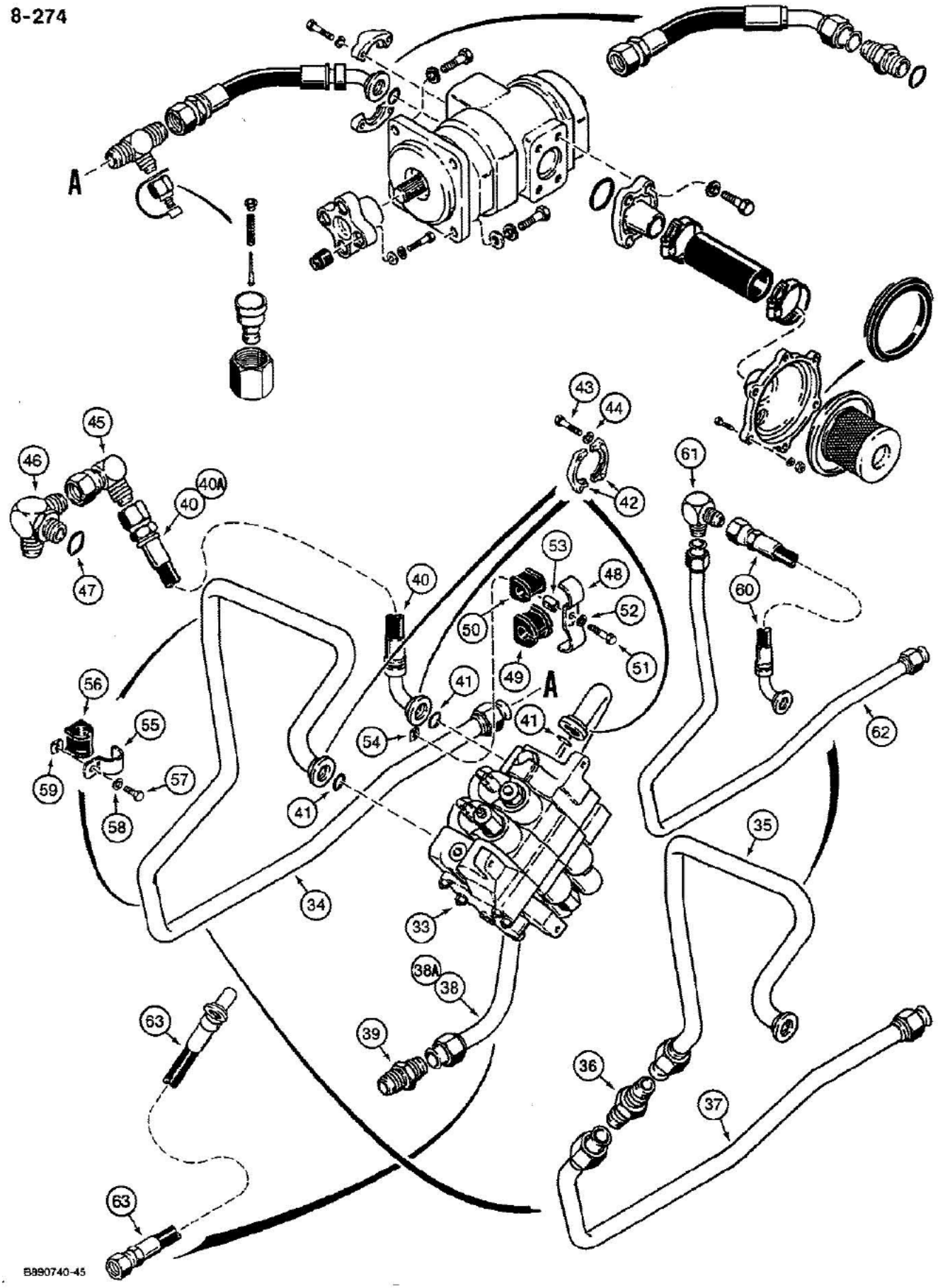

08-274 EQUIPMENT HYD. SYSTEM RESERVOIR TO LOADER CONTROL VALVE & LOADER VALVE TO FILTER & BACKHOE LINE

Ref	Part Number	Qty	Description
33	REF	1	VALVE ASSEMBLY control, loader, for correct assembly and components see Figure 08-354 or 08-356
34	D138904	1	TUBE loader valve inlet, one piece tube no longer used, replace with two piece tube design Ref. 35-37 or hose and tube design Ref. 60-62
35	D135439	1	TUBE loader valve inlet, used with Ref. 36 and 37, replaces one piece tube on some models, if used
36	218-739	1	CONNECTOR straight, if used
37	D135435	1	TUBE pump outlet hose to loader valve inlet tube, if used
38	D139074	1	TUBE power beyond, loader valve outlet section to backhoe valve inlet tube, not used on models with clam bucket, see Ref. 38A for tube used on models with clam bucket, if used, also see Ref. 63 hose
38A	D139072	1	TUBE power beyond, loader valve outlet to backhoe inlet tube, used on models with three spool loader valve, if used, also see Ref. 63 hose
39	218-739	1	CONNECTOR straight
40	D135245	1	HOSE, 21-21/32" (550 mm) long, loader return, loader valve outlet to filter, no longer used, order P/N D140935 hose, Ref. 40A
40A	D140935	1	HOSE, 17-3/8" (440 mm) long, loader return, loader valve outlet to filter
41	D31968	3	O-RING, 1", loader valve tubes and hose
42	A12306	6	CLAMP split flange
43	113-209	12	BOLT, Hex, 3/8"-16 x 1 1/2", G5
44	192-21	12	WASHER, LOCK, 3/8"
45	218-5234	1	ELBOW street, 90 degree, swivel, at hydraulic oil filter fitting
46	D129566	1	FITTING elbow, special, three-way, at hydraulic oil filter, Includes: Ref. 47
47	237-6016	1	O-RING fitting
48	D133675	1	CLAMP double tube, loader valve inlet tube to small pump section backhoe tube
49	D67297	1	INSULATOR, 1", loader valve inlet tube
50	D74182	1	INSULATOR, 3/4", small pump section backhoe tube
51	113-233	1	BOLT, Hex, 3/8"-16 x 1 3/4", G5
52	192-21	1	WASHER, LOCK, 3/8"
53	R46493	1	SPACER tube clamp
54	D122307	1	NUT, U-type, 3/8"-16 NC
55	D143410	2	CLAMP, 1", loader valve inlet tube
56	D67297	2	INSULATOR tube
57	113-207	2	BOLT, Hex, 3/8"-16 x 1", G5, Full Thd
58	192-21	2	WASHER, LOCK, 3/8"
59	D122307	2	NUT, U-type, 3/8"-16 NC
60	D140935	1	HOSE, 17-3/8" (440 mm) long, loader valve inlet, replaces one piece tube or two piece tube design on some models, if used
61	218-478	1	ELBOW, 90 degree, if used
62	D141420	1	TUBE pump outlet hose to loader valve inlet hose, if used
63	D140935	1	HOSE, 17-3/8" (440 mm) long, power beyond, loader valve outlet section to backhoe valve inlet tube, used with or without clam bucket, Replaces: Ref. 38 or 38A tube on some models

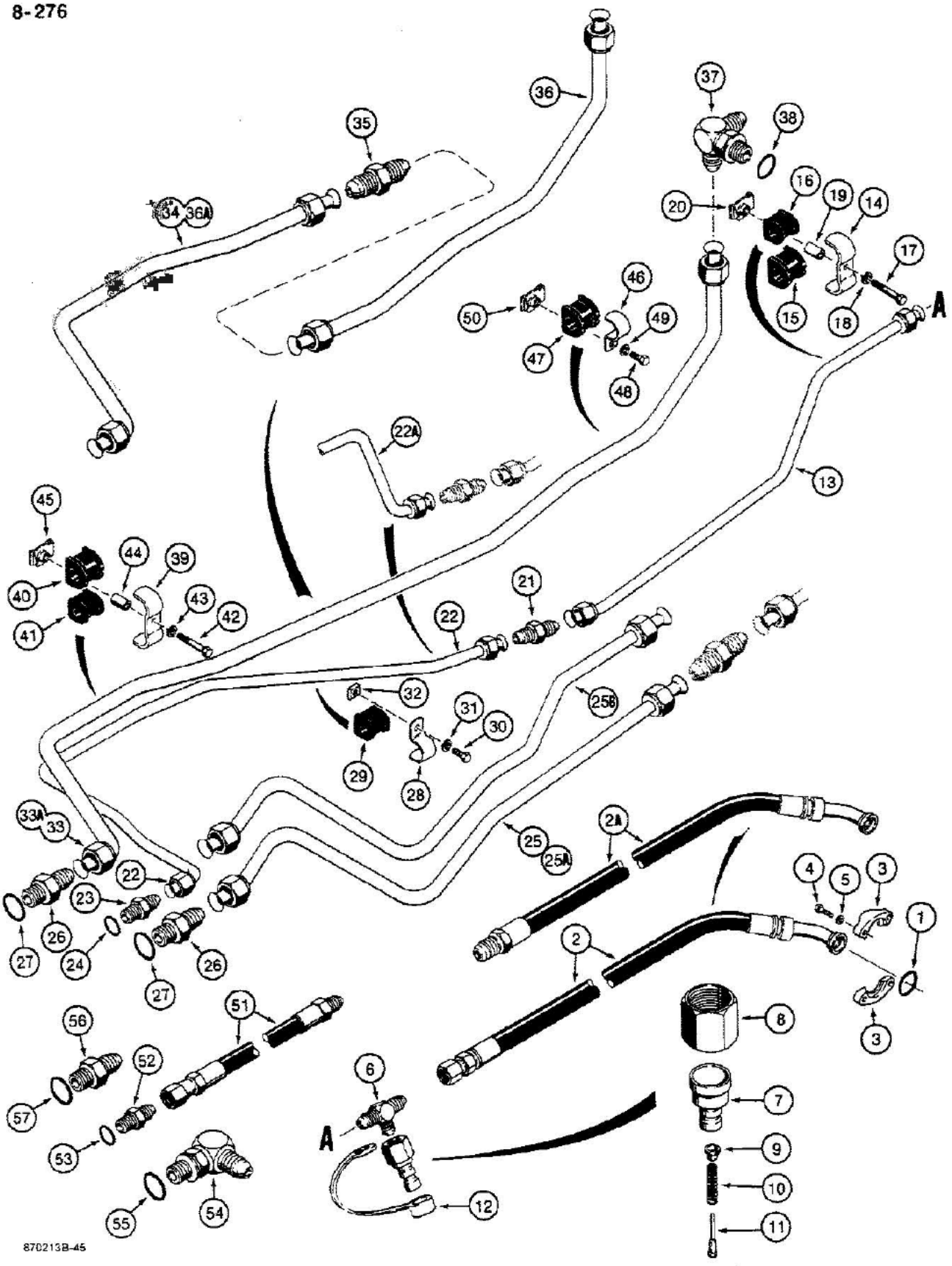

(REF. 3) AT EQUIPMENT PUMP SMALL SECTION OUTLET PORT

08-276 EQUIPMENT HYD. SYSTEM, EQUIP. PUMP TO REAR EQUIP. LINES - W/BACKHOE MODELS W/SPLIT FLANGE CLAMPS

Ref	Part Number	Qty	Description
1	A47226	1	O-RING, 3/4", small pump section outlet port
2	D133649	1	HOSE, 17-23/32" (450 mm) long, small pump section outlet port, used with quick disconnect Ref. 6-12, no longer used, order P/N D140058 hose, Ref. 2A
2A	D140058	1	HOSE, 20-1/2" (520 mm) long, small pump section outlet port, used without quick disconnect coupling
3	A16961	2	CLAMP split flange, at equipment pump small section outlet port
4	113-209	4	BOLT, Hex, 3/8"-16 x 1 1/2", G5
5	192-21	4	WASHER, LOCK, 3/8"
6	218-596	1	TEE male, pump outlet hose to tube, if used
	D137625	1	DISCONNECT ASSEMBLY quick, coupling, used with P/N D133649 hose, Ref. 2, if used, Includes: Ref. 7 thru 11, The mating female coupling for running check must be ordered from Service Tools, P/N 213165.
7	NSS	1	BODY coupling
8	129-132	1	NUT, 1 1/4"-12, G5
9	NSS	1	SEAT spring
10	NSS	1	SPRING coupling
11	NSS	1	POPPET coupling
12	H434163	1	CAP dust, coupling, if used
13	D135437	1	TUBE small pump section hose to backhoe swing section inlet tube
14	D133675	1	CLAMP double tube, small pump section tube to loader valve inlet tube
15	D67297	1	INSULATOR, 1", for loader valve inlet tube
16	D74182	1	INSULATOR, 3/4", small pump section backhoe tube
17	113-233	1	BOLT, Hex, 3/8"-16 x 1 3/4", G5
18	192-21	1	WASHER, LOCK, 3/8"
19	R46493	1	SPACER tube clamp
20	D122307	1	NUT, U-type, 3/8"-16 NC
21	218-737	1	CONNECTOR straight
22	D135458	1	TUBE to backhoe control valve swing section inlet, no longer used, order P/N D135606 tube, Ref. 22A, See Figure 08-284 or 08-288 for rear hydraulic tubes and hoses used on models without backhoe.
22A	D135606	1	TUBE to backhoe control valve swing section inlet, See Figure 08-284 or 08-288 for rear hydraulic tubes and hoses used on models without backhoe.
23	218-5065	1	ADAPTER straight, Includes: Ref. 24, See Figure 08-284 or 08-288 for rear hydraulic tubes and hoses used on models without backhoe.
24	237-6010	1	O-RING adapter
25	D139070	1	TUBE to backhoe inlet section from loader valve power beyond tube Ref. 38 in Figure 08-274, if used., See Figure 08-284 or 08-288 for rear hydraulic tubes and hoses used on models without backhoe.
25A	D141406	1	TUBE to backhoe inlet section from loader valve power beyond hose Ref. 63 in Figure 08-274, no longer available, order P/N D142285 tube, See Figure 08-284 or 08-288 for rear hydraulic tubes and hoses used on models without backhoe.
25B	D142285	1	TUBE to backhoe inlet section from loader valve power beyond hose Ref. 63 in Figure 08-274, if used, See Figure 08-284 or 08-288 for rear hydraulic tubes and hoses used on models without backhoe.

(REF. 3) AT EQUIPMENT PUMP SMALL SECTION OUTLET PORT

08-276 EQUIPMENT HYD. SYSTEM, EQUIP. PUMP TO REAR EQUIP. LINES - W/BACKHOE MODELS W/SPLIT FLANGE CLAMPS

Ref	Part Number	Qty	Description
26	218-5069	2	ADAPTER straight, Includes: Ref. 27, See Figure 08-284 or 08-288 for rear hydraulic tubes and hoses used on models without backhoe.
27	237-6016	1	O-RING adapter
28	D74192	1	CLAMP backhoe swing section inlet tube
29	D74182	1	INSULATOR, 3/4", tube
30	113-207	1	BOLT, Hex, 3/8"-16 x 1", G5, Full Thd
31	192-21	1	WASHER, LOCK, 3/8"
32	25-226	1	NUT square, 3/8"-16 NC
33	D138908	1	TUBE backhoe return to filter, used on models with six spool backhoe valve, one piece tube no longer used, replace with two piece tube design , Ref. 34-36, See Figure 08-284 for rear hydraulic tubes and hoses used on models without backhoe
33A	D138914	1	TUBE backhoe return to filter, used on models with seven spool backhoe valve and models with auxiliary hydraulics for optional rear hydraulic attachments, w/o demountable backhoe, one pc tube no longer used, replace w/two pc tube design, Ref. 35 thru 36A, See Figure 08-284 for rear hydraulic tubes and hoses used on models without backhoe
34	D135540	1	TUBE from backhoe valve outlet section to return to filter tube, used with Ref. 35 and 36, replaces one piece tube on some six spool backhoe valve models, See Figure 08-284 for rear hydraulic tubes and hoses used on models without backhoe
35	218-739	1	CONNECTOR straight, See Figure 08-284 for rear hydraulic tubes and hoses used on models without backhoe
36	D135443	1	TUBE backhoe return to filter, See Figure 08-284 for rear hydraulic tubes and hoses used on models without backhoe
36A	D135416	1	TUBE from backhoe valve outlet section to return to filter tube, used with Ref. 35 and 36, replaces one piece tube on some seven spool backhoe valve models, without demountable backhoe, See Figure 08-284 for rear hydraulic tubes and hoses used on models without backhoe
37	D129566	1	FITTING elbow, special, three-way, at hydraulic oil filter, Includes: Ref. 38
38	237-6016	1	O-RING fitting
39	D133675	1	CLAMP double tube
40	D67297	1	INSULATOR, 1", backhoe return tube
41	D74182	1	INSULATOR, 3/4", backhoe swing section inlet tube
42	113-233	1	BOLT, Hex, 3/8"-16 x 1 3/4", G5
43	192-21	1	WASHER, LOCK, 3/8"
44	R46493	1	SPACER clamp
45	D122307	1	NUT, U-type, 3/8"-16 NC
46	D143410	1	CLAMP, 1", return to filter tube
47	D67297	1	INSULATOR tube
48	113-207	1	BOLT, Hex, 3/8"-16 x 1", G5, Full Thd
49	192-21	1	WASHER, LOCK, 3/8"
50	D122307	1	NUT, U-type, 3/8"-16 NC

(REF. 3) AT EQUIPMENT PUMP SMALL SECTION OUTLET PORT

08-276 EQUIPMENT HYD. SYSTEM, EQUIP. PUMP TO REAR EQUIP. LINES - W/BACKHOE MODELS W/SPLIT FLANGE CLAMPS

Ref	Part Number	Qty	Description
51	D136967	1	HOSE, 36-7/16" (925 mm) long, small pump pressure section tube to backhoe valve swing section, attaches to P/N D136963 tube, Ref. 22 in Figure 08-284, Demountable backhoe special parts attach to loader only hydraulic tubes and hoses. See Figures 08-284 and 08-286 for a continuation of the hydraulic lines, used on models with demountable backhoe, Special parts used on standard or extendable dipper models with demountable backhoe
52	218-5065	1	ADAPTER straight, swing section, Includes: Ref. 53, Special parts used on standard or extendable dipper models with demountable backhoe, Demountable backhoe special parts attach to loader only hydraulic tubes and hoses. See Figures 08-284 and 08-286 for a continuation of the hydraulic lines, used on models with demountable backhoe
53	237-6010	1	O-RING adapter, Demountable backhoe special parts attach to loader only hydraulic tubes and hoses. See Figures 08-284 and 08-286 for a continuation of the hydraulic lines, used on models with demountable backhoe, Special parts used on standard or extendable dipper models with demountable backhoe
54	218-5110	1	ELBOW, 90 degree, adjustable, at backhoe valve inlet, attaches to P/N D136966 hose, Ref. 31 in Figure 08-286, Includes: Ref. 55 in this figure, Special parts used on standard or extendable dipper models with demountable backhoe, Demountable backhoe special parts attach to loader only hydraulic tubes and hoses. See Figures 08-284 and 08-286 for a continuation of the hydraulic lines, used on models with demountable backhoe
55	237-6016	1	O-RING elbow, Demountable backhoe special parts attach to loader only hydraulic tubes and hoses. See Figures 08-284 and 08-286 for a continuation of the hydraulic lines, used on models with demountable backhoe, Special parts used on standard or extendable dipper models with demountable backhoe
56	218-5069	1	ADAPTER straight, at backhoe valve outlet, attaches to P/N D136968 hose, Ref. 37 in Figure 08-286, Includes: Ref. 57 in this figure, Special parts used on standard or extendable dipper models with demountable backhoe, Demountable backhoe special parts attach to loader only hydraulic tubes and hoses. See Figures 08-284 and 08-286 for a continuation of the hydraulic lines, used on models with demountable backhoe
57	237-6016	1	O-RING adapter, Demountable backhoe special parts attach to loader only hydraulic tubes and hoses. See Figures 08-284 and 08-286 for a continuation of the hydraulic lines, used on models with demountable backhoe, Special parts used on standard or extendable dipper models with demountable backhoe

(REF. 3) AT EQUIPMENT PUMP SMALL SECTION OUTLET PORT

8-280

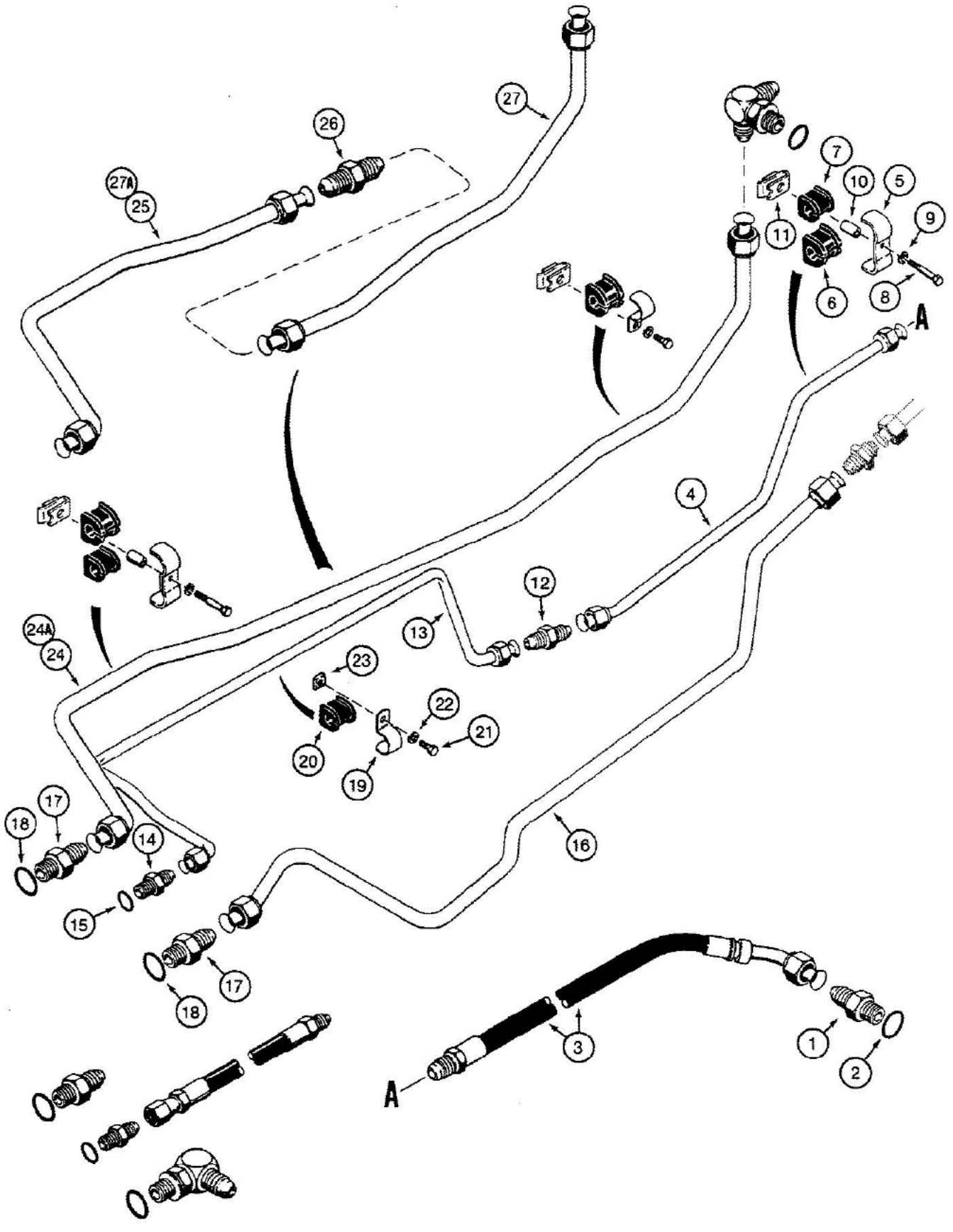

AT EQUIPMENT PUMP SMALL SECTION OUTLET PORT

08-280 EQUIPMENT HYDRAULIC SYSTEM, EQUIP. PUMP TO REAR EQUIP. LINES - W/BACKHOE MODELS W/ADAPTER, REF. 1

Ref	Part Number	Qty	Description
1	218-5063	1	ADAPTER straight, small pump section outlet port, Includes: Ref. 2
2	237-6012	1	O-RING, 12-1, 90 Duro, .924 ID x .116" Thk, Adapter
3	D140802	1	HOSE, 20-7/32" (513 mm) long, small pump section outlet port, used with Ref. 1 adapter
4	D140787	1	TUBE small pump section hose to backhoe swing section inlet tube
5	D143422	1	CLAMP double tube, small pump section tube to loader valve inlet tube
6	D67297	1	INSULATOR, 1", for loader valve inlet tube
7	D143797	1	INSULATOR, 5/8", small pump section backhoe tube
8	113-233	1	BOLT, Hex, 3/8"-16 x 1 3/4", G5
9	192-21	1	WASHER, LOCK, 3/8"
10	R46493	1	SPACER tube clamp
11	D122307	1	NUT, U-type, 3/8"-16 NC
12	218-736	1	CONNECTOR straight
13	D140789	1	TUBE to backhoe control valve swing section inlet, See Figure 08-284 or 08-288 for rear hydraulic tubes and hoses used on models without backhoe.
14	218-5062	1	ADAPTER straight, Includes: Ref. 15, See Figure 08-284 or 08-288 for rear hydraulic tubes and hoses used on models without backhoe.
15	237-6010	1	O-RING adapter
16	D142285	1	TUBE to backhoe inlet section from loader valve power beyond hose Ref. 63 in Figure 08-274, See Figure 08-284 or 08-288 for rear hydraulic tubes and hoses used on models without backhoe.
17	218-5069	2	ADAPTER straight, Includes: Ref. 18, See Figure 08-284 or 08-288 for rear hydraulic tubes and hoses used on models without backhoe.
18	237-6016	1	O-RING adapter
19	D143411	1	CLAMP backhoe swing section inlet tube
20	D143797	1	INSULATOR, 5/8", tube
21	113-207	1	BOLT, Hex, 3/8"-16 x 1", G5, Full Thd
22	192-21	1	WASHER, LOCK, 3/8"
23	25-226	1	NUT square, 3/8"-16 NC
24	D138908	1	TUBE backhoe return to filter, used on models with six spool backhoe valve, one piece tube no longer used, replace with two piece tube tube design, Ref. 25-27, See Figure 08-284 or 08-288 for rear hydraulic tubes and hoses used on models without backhoe.
24A	D138914	1	TUBE backhoe return to filter, used on models w/seven spool backhoe valve and models w/auxiliary hydraulics for optional rear hydraulic attachments, w/o demountable backhoe, one piece tube no longer used, replace w/two piece tube design Ref.26 thru 27A, See Figure 08-284 or 08-288 for rear hydraulic tubes and hoses used on models without backhoe.
25	D135540	1	TUBE from backhoe valve outlet section to return to filter tube, used with Ref. 26 and 27, replaces one piece tube on some six spool backhoe valve models, See Figure 08-284 or 08-288 for rear hydraulic tubes and hoses used on models without backhoe.
26	218-739	1	CONNECTOR straight, See Figure 08-284 or 08-288 for rear hydraulic tubes and hoses used on models without backhoe.
27	D135443	1	TUBE backhoe return to filter, See Figure 08-284 or 08-288 for rear hydraulic tubes and hoses used on models without backhoe.

AT EQUIPMENT PUMP SMALL SECTION OUTLET PORT

08-280 EQUIPMENT HYDRAULIC SYSTEM, EQUIP. PUMP TO REAR EQUIP. LINES - W/BACKHOE MODELS W/ADAPTER, REF. 1

Ref	Part Number	Qty	Description
27A	D135416	1	TUBE from backhoe valve outlet section to return to filter tube, used with Ref. 26 and 27, replaces one piece tube on some seven spool backhoe valve models, without demountable backhoe, See Figure 08-284 or 08-288 for rear hydraulic tubes and hoses used on models without backhoe.

AT EQUIPMENT PUMP SMALL SECTION OUTLET PORT

8-282

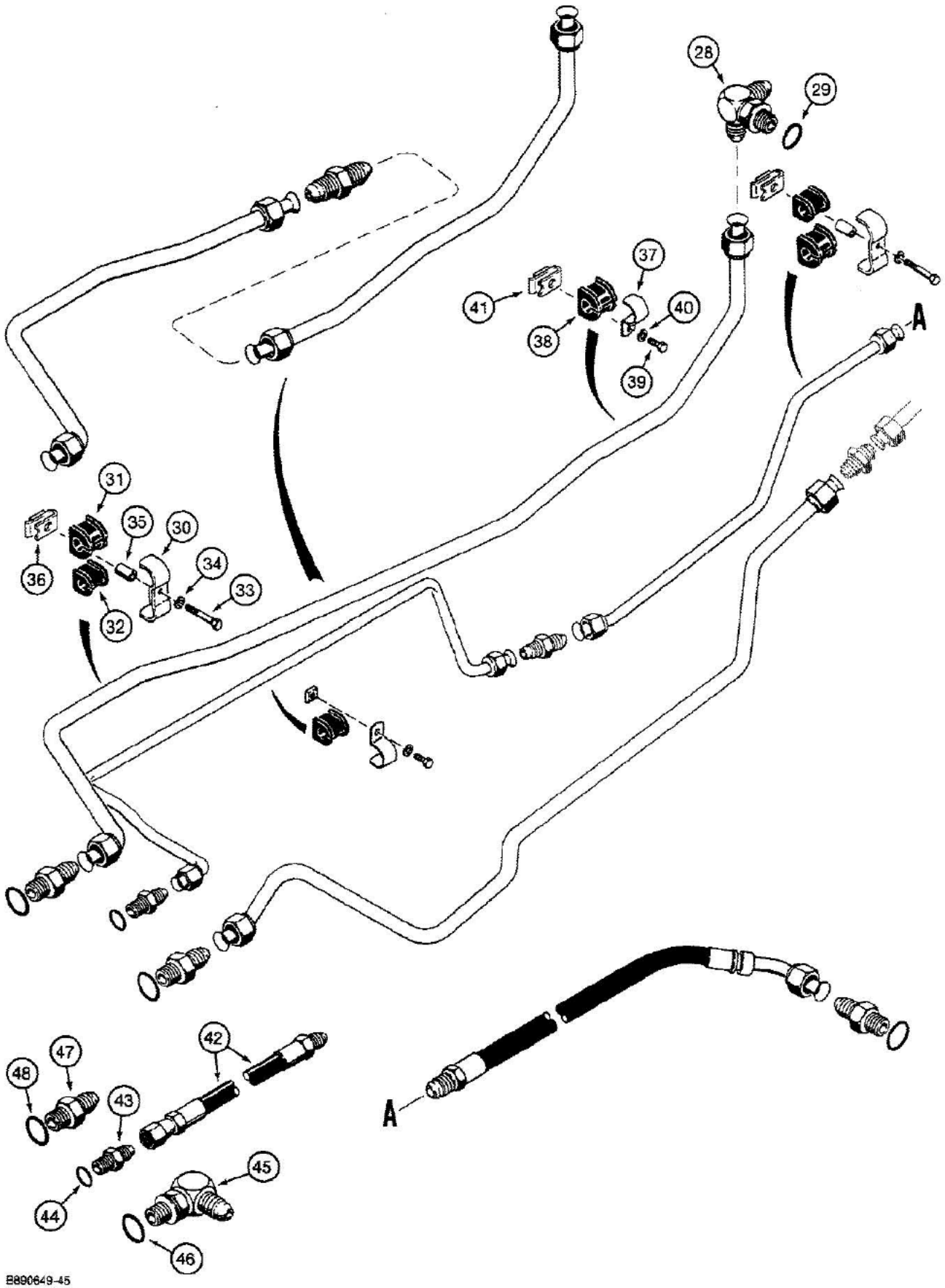

AT EQUIPMENT PUMP SMALL SECTION OUTLET PORT

08-282 EQUIPMENT HYDRAULIC SYSTEM, EQUIP. PUMP TO REAR EQUIP. LINES - W/BACKHOE MODELS W/ADAPTER, REF. 1

Ref	Part Number	Qty	Description
28	D129566	1	FITTING elbow, special, three-way, at hydraulic oil filter, Includes: Ref. 29
29	237-6016	1	O-RING fitting
30	D143422	1	CLAMP double tube
31	D67297	1	INSULATOR, 1", backhoe return tube
32	D143797	1	INSULATOR, 5/8", backhoe swing section inlet tube
33	113-233	1	BOLT, Hex, 3/8"-16 x 1 3/4", G5
34	192-21	1	WASHER, LOCK, 3/8"
35	R46493	1	SPACER clamp
36	D122307	1	NUT, U-type, 3/8"-16 NC
37	D143410	1	CLAMP, 1", return to filter tube
38	D67297	1	INSULATOR tube
39	113-207	1	BOLT, Hex, 3/8"-16 x 1", G5, Full Thd
40	192-21	1	WASHER, LOCK, 3/8"
41	D122307	1	NUT, U-type, 3/8"-16 NC
42	D136967	1	HOSE, 36-7/16" (925 mm) long, small pump pressure section tube to backhoe valve swing section, attaches to P/N D142312 tube Ref. 13 in Figure 08-288, special parts used on standard or extendable dipper models with demountable backhoe, Demountable backhoe special parts attach to loader only hydraulic tubes and hoses. See Figures 08-288 and 08-290 for a continuation of the hydraulic lines, used on models with demountable backhoe, BSN 00000000000000000000
43	218-5065	1	ADAPTER straight, swing section, special parts used on standard or extendable dipper models with demountable backhoe, Includes: Ref. 44, Demountable backhoe special parts attach to loader only hydraulic tubes and hoses. See Figures 08-288 and 08-290 for a continuation of the hydraulic lines, used on models with demountable backhoe
44	237-6010	1	O-RING adapter, special parts used on standard or extendable dipper models with demountable backhoe, Demountable backhoe special parts attach to loader only hydraulic tubes and hoses. See Figures 08-288 and 08-290 for a continuation of the hydraulic lines, used on models with demountable backhoe
45	218-5110	1	ELBOW, 90 degree, adjustable, at backhoe valve inlet, attaches to P/N D136966 hose Ref. 22 in Figure 08-288, special parts used on standard or extendable dipper models with demountable backhoe, Includes: Ref. 46 in this figure, Demountable backhoe special parts attach to loader only hydraulic tubes and hoses. See Figures 08-288 and 08-290 for a continuation of the hydraulic lines, used on models with demountable backhoe
46	237-6016	1	O-RING elbow, special parts used on standard or extendable dipper models with demountable backhoe, Demountable backhoe special parts attach to loader only hydraulic tubes and hoses. See Figures 08-288 and 08-290 for a continuation of the hydraulic lines, used on models with demountable backhoe
47	218-5069	1	ADAPTER straight, at backhoe valve outlet, attaches to P/N D136968 hose Ref. 28 in Figure 08-290, special parts used on standard or extendable dipper models with demountable backhoe, Includes: Ref. 48, Demountable backhoe special parts attach to loader only hydraulic tubes and hoses. See Figures 08-288 and 08-290 for a continuation of the hydraulic lines, used on models with demountable backhoe

AT EQUIPMENT PUMP SMALL SECTION OUTLET PORT

08-282 EQUIPMENT HYDRAULIC SYSTEM, EQUIP. PUMP TO REAR EQUIP. LINES - W/BACKHOE MODELS W/ADAPTER, REF. 1

Ref	Part Number	Qty	Description
48	237-6016	1	O-RING adapter, special parts used on standard or extendable dipper models with demountable backhoe, Demountable backhoe special parts attach to loader only hydraulic tubes and hoses. See Figures 08-288 and 08-290 for a continuation of the hydraulic lines, used on models with demountable backhoe

AT EQUIPMENT PUMP SMALL SECTION OUTLET PORT

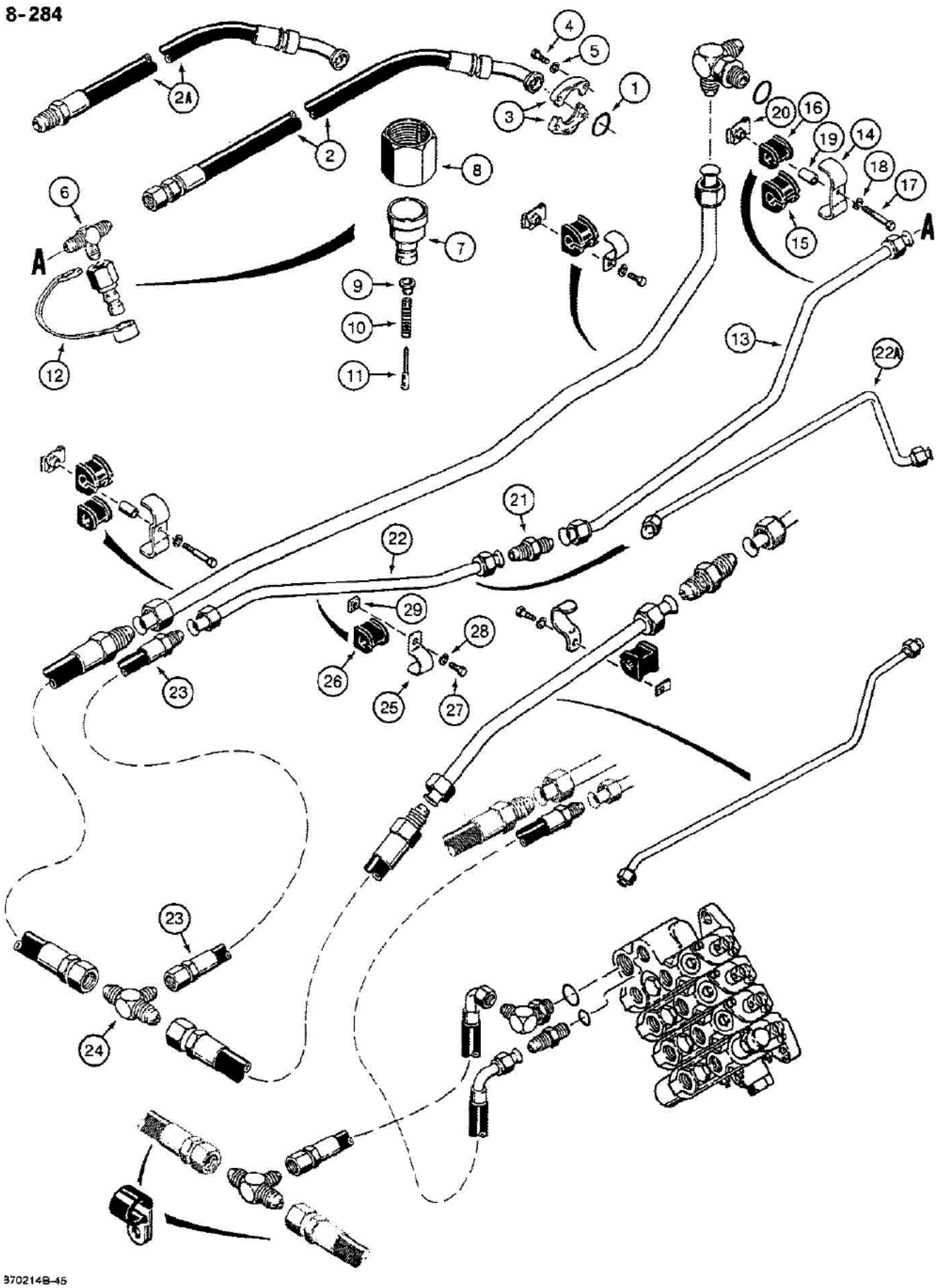

MODELS WITH SPLIT FLANGE CLAMPS, REF. 3, AT EQUIPMENT PUMP SMALL SECTION OUTLET PORT□□□Female coupling for running check, order from Service Tool P/N 213165. Mates to the quick disconnect coupling Ref. 21.

580K LOADER BACKHOE (NORTH AMERICA) - Hydraulics

08-284 EQUIPMENT HYDRAULIC SYSTEM, EQUIPMENT PUMP TO REAR EQUIPMENT LINES W/O BACKHOE - LOADER ONLY

Ref	Part Number	Qty	Description
1	A47226	1	O-RING, 3/4", small pump section outlet port
2	D133649	1	HOSE, 17-23/32" (450 mm) long, small pump section outlet port, used with quick disconnect Ref. 6-12, no longer used, order P/N D140058 hose, Ref. 2A
2A	D140058	1	HOSE, 20-1/2" (520 mm) long, small pump section outlet port, used without quick disconnect coupling, Replaces: Ref. 2 and 6-12
3	A16961	2	CLAMP split flange, at equipment pump small section outlet port
4	113-209	4	BOLT, Hex, 3/8"-16 x 1 1/2", G5
5	192-21	4	WASHER, LOCK, 3/8"
6	218-596	1	TEE male, pump outlet hose to tube, if used
	D137625	1	DISCONNECT ASSEMBLY quick, coupling, used with P/N D133649 hose, Ref. 2, if used, Includes: Ref. 7 thru 11
7	NSS	1	BODY coupling
8	129-132	1	NUT, 1 1/4"-12, G5
9	NSS	1	SEAT spring
10	NSS	1	SPRING coupling
11	NSS	1	POPPET coupling
12	H434163	1	CAP dust, coupling, if used
13	D135437	1	TUBE small pump section hose to small pressure hose, lower left-hand side of chassis
14	D133675	1	CLAMP double tube, small pump section tube to loader valve inlet tube
15	D67297	1	INSULATOR, 1", for loader valve inlet tube
16	D74182	1	INSULATOR, 3/4", small pump section backhoe tube
17	113-233	1	BOLT, Hex, 3/8"-16 x 1 3/4", G5
18	192-21	1	WASHER, LOCK, 3/8"
19	R46493	1	SPACER tube clamp
20	D122307	1	NUT, U-type, 3/8"-16 NC
21	218-737	1	CONNECTOR straight
22	D136963	1	TUBE small pump pressure section tube to hose, lower left-hand side of chassis, no longer used, order P/N D136988 tube, See Figure 08-276 for rear hydraulic tubes used on models with or without demountable backhoe
22A	D142312	1	TUBE small pump pressure section tube to hose, lower left-hand side of chassis
23	D137628	1	HOSE, 26-19/32" (675 mm) long, small pump pressure section tube to return tee, used on models with rear counterweight, not used on models with three-point hitch, for models with three point hitch, see Ref. 54 and 55 in Figure 08-286, See Figure 08-276 for rear hydraulic tubes used on models with or without demountable backhoe
24	218-587	1	TEE male, See Figure 08-276 for rear hydraulic tubes used on models with or without demountable backhoe
25	D74192	1	CLAMP small pump pressure section tube
26	D74182	1	INSULATOR, 3/4", tube
27	113-207	1	BOLT, Hex, 3/8"-16 x 1", G5, Full Thd
28	192-21	1	WASHER, LOCK, 3/8"
29	25-226	1	NUT square, 3/8"-16 NC

MODELS WITH SPLIT FLANGE CLAMPS, REF. 3, AT EQUIPMENT PUMP SMALL SECTION OUTLET PORT□□□□Female coupling for running check, order from Service Tool P/N 213165. Mates to the quick disconnect coupling Ref. 21.

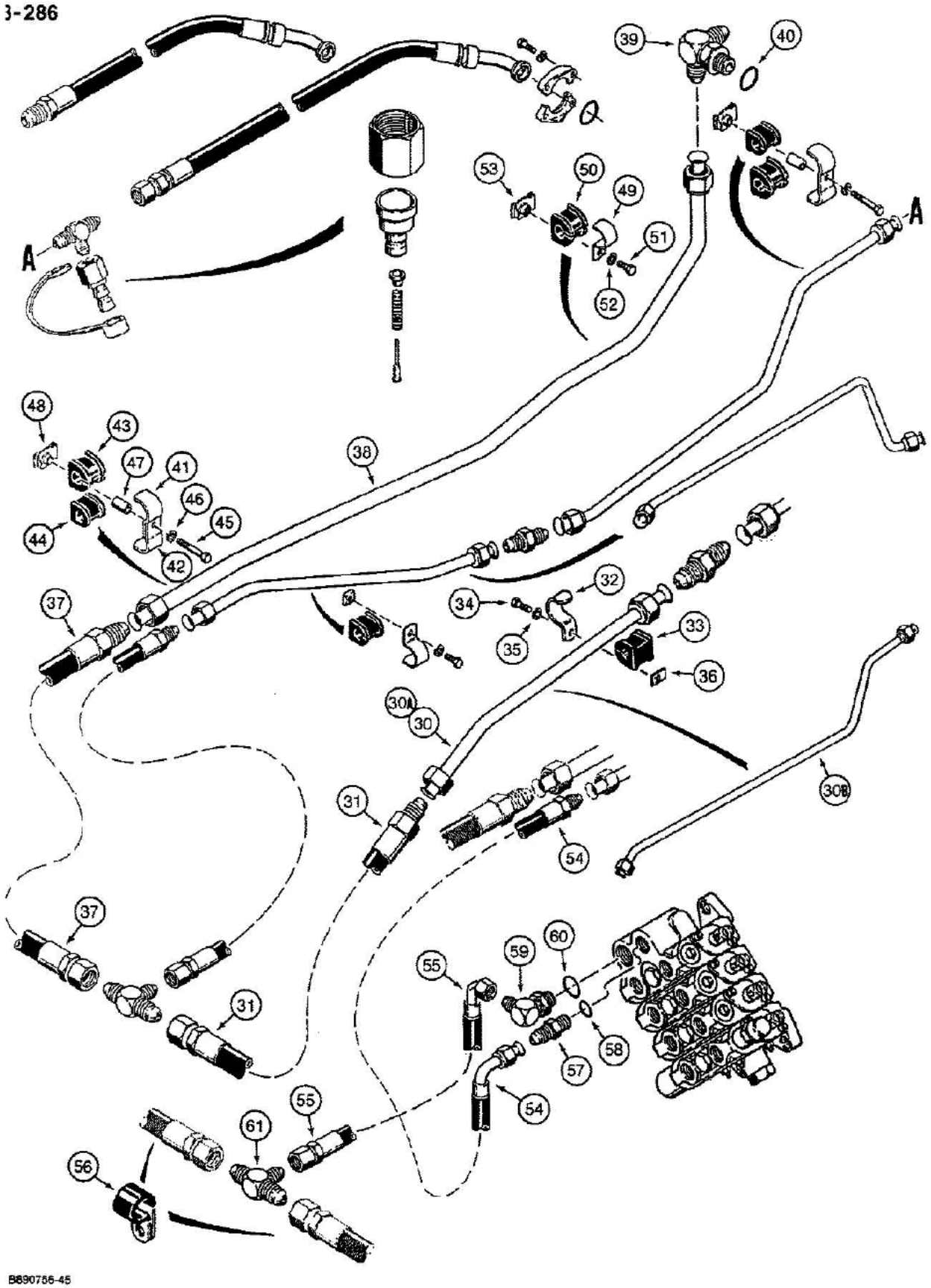

MODELS WITH SPLIT FLANGE CLAMPS, REF. 3, AT EQUIPMENT PUMP SMALL SECTION OUTLET PORT

08-286 EQUIPMENT HYDRAULIC SYSTEM, EQUIPMENT PUMP TO REAR EQUIPMENT LINES WITHOUT BACKHOE - LOADER O

Ref	Part Number	Qty	Description
30	D139135	1	TUBE used with loader valve power beyond tube Ref. 38 in Figure 08-274, right-hand side of chassis, if used, See Figure 08-276 for rear hydraulic tubes used on models with or without demountable backhoe
30A	D141477	1	TUBE used with loader valve power beyond hose Ref. 63 in Figure 08-274, right-hand side of chassis, no longer available, order P/N D142518 tube
30B	D142518	1	TUBE used with loader valve power beyond hose Ref. 63 in Figure 08-274, right-hand side of chassis, if used
31	D136966	1	HOSE, 31-1/2" (800 mm) long, to tee, right hand side of chassis, See Figure 08-276 for rear hydraulic tubes used on models with or without demountable backhoe
32	D143410	1	CLAMP tube
33	D67297	1	INSULATOR, 1", tube
34	113-207	1	BOLT, Hex, 3/8"-16 x 1", G5, Full Thd
35	192-21	1	WASHER, LOCK, 3/8"
36	D122307	1	NUT, U-type, 3/8"-16 NC
37	D136968	1	HOSE, 24-5/8" (625 mm) long, tee to return to filter tube, See Figure 08-276 for rear hydraulic tubes used on models with or without demountable backhoe
38	D139137	1	TUBE return to filter, See Figure 08-276 for rear hydraulic tubes used on models with or without demountable backhoe
39	D129566	1	FITTING elbow, special, three way, at hydraulic oil filter, Includes: Ref. 40
40	237-6016	1	O-RING fitting
41	D143410	1	CLAMP, 1", return tube
42	D74192	1	CLAMP, 3/4", tube
43	D67297	1	INSULATOR, 1", return to filter tube
44	D74182	1	INSULATOR, 3/4", lower pressure tube
45	113-233	1	BOLT, Hex, 3/8"-16 x 1 3/4", G5
46	192-21	1	WASHER, LOCK, 3/8"
47	R46493	1	SPACER tube clamp
48	D122307	1	NUT, U-type, 3/8"-16 NC
49	D143410	1	CLAMP, 1", return to filter tube
50	D67297	1	INSULATOR, 1", return to filter tube
51	113-207	1	BOLT, Hex, 3/8"-16 x 1", G5, Full Thd
52	192-21	1	WASHER, LOCK, 3/8"
53	D122307	1	NUT, U-type, 3/8"-16 NC
54	D141266	1	HOSE, 37-7/16" (950 mm) long, pressure, to hitch valve inlet, upper port, special parts to adapt three-point hitch to loader models
55	D141265	1	HOSE, 33-1/2" (850 mm) long, return from hitch valve outlet, lower port, special parts to adapt three-point hitch to loader models
56	D40471	2	CLAMP uses existing rear transmission housing cover hardware, special parts to adapt three-point hitch to loader models
57	218-5066	1	ADAPTER straight, at hitch valve inlet port, upper, special parts to adapt three-point hitch to loader models, Includes: Ref. 58

MODELS WITH SPLIT FLANGE CLAMPS, REF. 3, AT EQUIPMENT PUMP SMALL SECTION OUTLET PORT

08-286 EQUIPMENT HYDRAULIC SYSTEM, EQUIPMENT PUMP TO REAR EQUIPMENT LINES WITHOUT BACKHOE - LOADER OI

Ref	Part Number	Qty	Description
58	237-6008	1	O-RING, 8-1, 90 Duro, .644" ID x .087" Thk, Adapter, Special parts to adapt three-point hitch to loader models
59	218-5108	1	ELBOW, 90 degree, adjustable, at hitch valve return port, lower, special parts to adapt three-point hitch to loader models, Includes: Ref. 60
60	237-6012	1	O-RING, 12-1, 90 Duro, .924 ID x .116" Thk, Elbow, special parts to adapt three-point hitch to loader models
61	218-587	1	TEE male, hose, special parts to adapt three-point hitch to loader models

MODELS WITH SPLIT FLANGE CLAMPS, REF. 3, AT EQUIPMENT PUMP SMALL SECTION OUTLET PORT

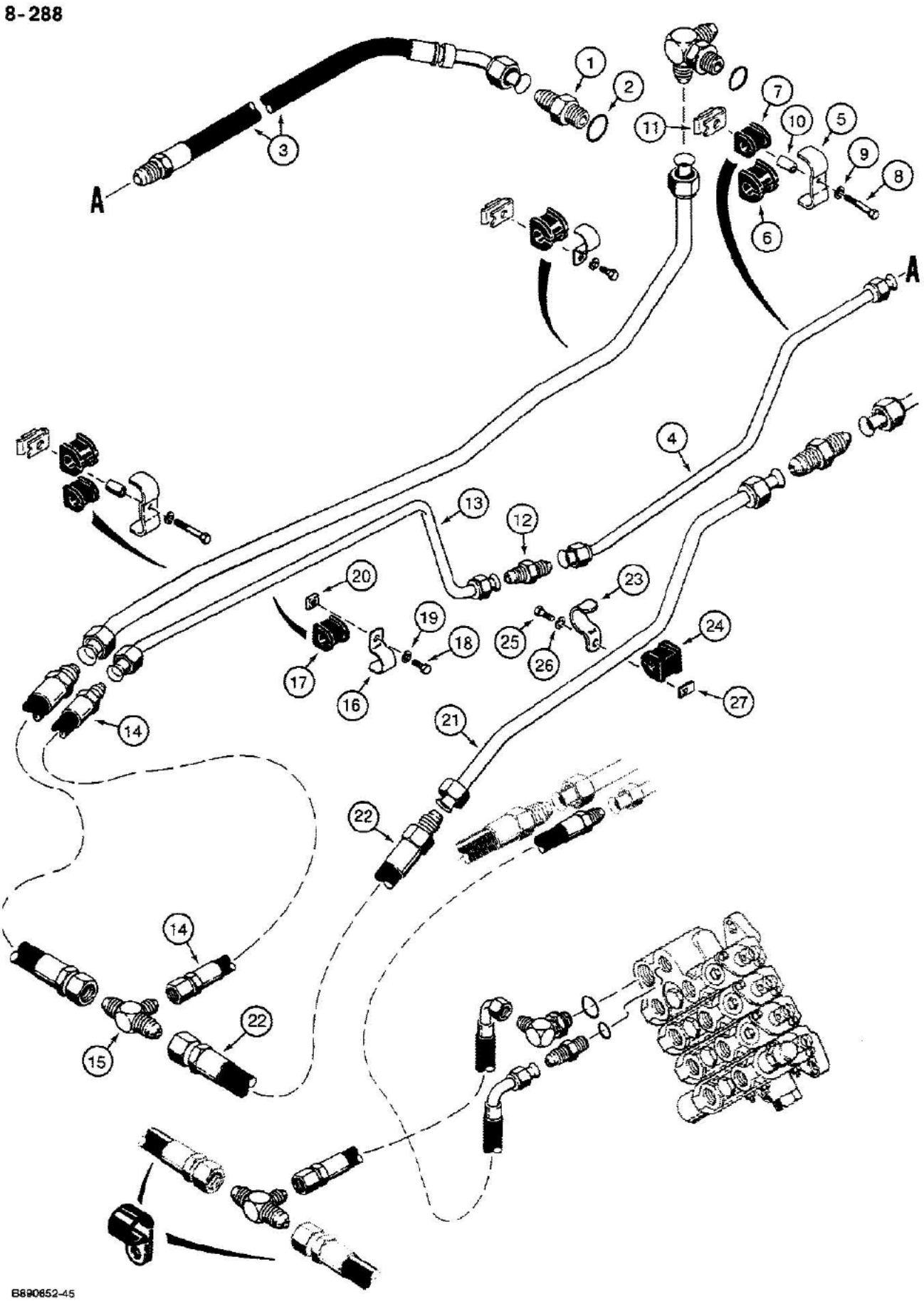

MODELS WITH ADAPTER, REF. 1, AT EQUIPMENT PUMP SMALL SECTION OUTLET PORT

08-288 EQUIPMENT HYDRAULIC SYSTEM, EQUIPMENT PUMP TO REAR EQUIPMENT LINES WITHOUT BACKHOE - LOADER O

Ref	Part Number	Qty	Description
1	218-5063	1	ADAPTER straight, small pump section outlet port, Includes: Ref. 2
2	237-6012	1	O-RING, 12-1, 90 Duro, .924 ID x .116" Thk, Adapter
3	D140802	1	HOSE, 20-7/32" (513 mm) long, small pump section outlet port, used with Ref. 1 adapter
4	D140787	1	TUBE small pump section hose to small pressure hose, lower left-hand side of chassis
5	D143422	1	CLAMP double tube, small pump section tube to loader valve inlet tube
6	D67297	1	INSULATOR, 1", for loader valve inlet tube
7	D143797	1	INSULATOR, 5/8", small pump section backhoe tube
8	113-233	1	BOLT, Hex, 3/8"-16 x 1 3/4", G5
9	192-21	1	WASHER, LOCK, 3/8"
10	R46493	1	SPACER tube clamp
11	D122307	1	NUT, U-type, 3/8"-16 NC
12	218-744	1	ADAPTER straight
13	D142312	1	TUBE small pump pressure section tube to hose, lower left hand side of chassis
14	D137628	1	HOSE, 26-19/32" (675 mm) long, small pump pressure section tube to return tee, used on models with rear counterweight, not used on models with three-point hitch, for models with three-point hitch see Ref. 44 and 45 in Figure 08-290, See Figure 08-280 for rear hydraulic tubes used on models with or without demountable backhoe
15	218-587	1	TEE male, See Figure 08-280 for rear hydraulic tubes used on models with or without demountable backhoe
16	D74192	1	CLAMP small pump pressure section tube, if used
17	D74182	1	INSULATOR, 3/4", tube, if used
18	113-207	1	BOLT, Hex, 3/8"-16 x 1", G5, Full Thd, If used
19	192-21	1	WASHER, LOCK, 3/8", If used
20	25-226	1	NUT square, 3/8"-16 NC, if used
21	D142518	1	TUBE used with loader valve power beyond hose Ref. 63 in Figure 08-274, right hand side of chassis, See Figure 08-280 for rear hydraulic tubes used on models with or without demountable backhoe
22	D136966	1	HOSE, 31-1/2" (800 mm) long, to tee, right hand side of chassis, See Figure 08-280 for rear hydraulic tubes used on models with or without demountable backhoe
23	D143410	1	CLAMP tube
24	D67297	1	INSULATOR, 1", tube
25	113-207	1	BOLT, Hex, 3/8"-16 x 1", G5, Full Thd
26	192-21	1	WASHER, LOCK, 3/8"
27	D122307	1	NUT, U-type, 3/8"-16 NC

MODELS WITH ADAPTER, REF. 1, AT EQUIPMENT PUMP SMALL SECTION OUTLET PORT

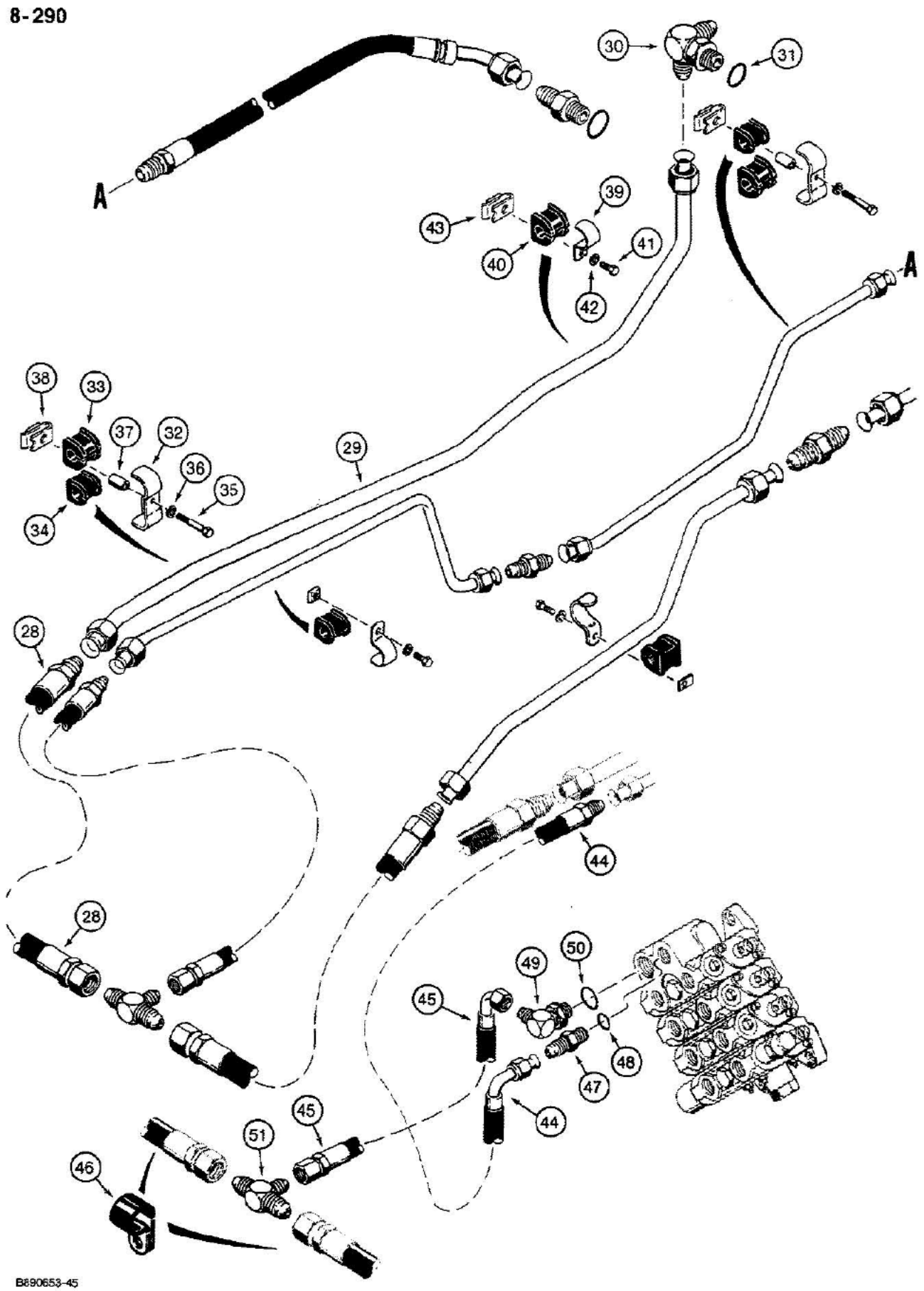

MODELS WITH ADAPTER, REF. 1, AT EQUIPMENT PUMP SMALL SECTION OUTLET PORT

08-290 EQUIPMENT HYDRAULIC SYSTEM, EQUIPMENT PUMP TO REAR EQUIPMENT LINES WITHOUT BACKHOE - LOADER OI

Ref	Part Number	Qty	Description
28	D136968	1	HOSE, 24-5/8" (625 mm) long, tee to return to filter tube, See Figure 08-280 for rear hydraulic tubes used on models with or without demountable backhoe
29	D139137	1	TUBE return to filter, See Figure 08-280 for rear hydraulic tubes used on models with or without demountable backhoe
30	D129566	1	FITTING elbow, special, three way, at hydraulic oil filter, Includes: Ref. 31
31	237-6016	1	O-RING fitting
32	D143422	1	CLAMP double tube, return tube
33	D67297	1	INSULATOR, 1", return to filter tube
34	D143797	1	INSULATOR, 5/8", lower pressure tube
35	113-233	1	BOLT, Hex, 3/8"-16 x 1 3/4", G5
36	192-21	1	WASHER, LOCK, 3/8"
37	R46493	1	SPACER tube clamp
38	D122307	1	NUT, U-type, 3/8"-16 NC
39	D143410	1	CLAMP, 1", return to filter tube
40	D67297	1	INSULATOR, 1", return to filter tube
41	113-207	1	BOLT, Hex, 3/8"-16 x 1", G5, Full Thd
42	192-21	1	WASHER, LOCK, 3/8"
43	D122307	1	NUT, U-type, 3/8"-16 NC
44	D141266	1	HOSE, 37-7/16" (950 mm) long, pressure, to hitch valve inlet, upper port, special parts to adapt three-point hitch to loader models
45	D141265	1	HOSE, 33-1/2" (850 mm) long, return from hitch valve outlet, lower port, special parts to adapt three-point hitch to loader models
46	D40471	2	CLAMP uses existing rear transmission housing cover hardware, special parts to adapt three-point hitch to loader models
47	218-5066	1	ADAPTER straight, at hitch valve inlet port, upper, Includes: Ref. 48, special parts to adapt three-point hitch to loader models
48	237-6008	1	O-RING, 8-1, 90 Duro, .644" ID x .087" Thk, Adapter, Special parts to adapt three-point hitch to loader models
49	218-5108	1	ELBOW, 90 degree, adjustable, at hitch valve return port, lower, special parts to adapt three-point hitch to loader models, Includes: Ref. 50
50	237-6012	1	O-RING, 12-1, 90 Duro, .924 ID x .116" Thk, Elbow, special parts to adapt three-point hitch to loader models
51	218-587	1	TEE male, hose, special parts to adapt three-point hitch to loader models

MODELS WITH ADAPTER, REF. 1, AT EQUIPMENT PUMP SMALL SECTION OUTLET PORT

8-292

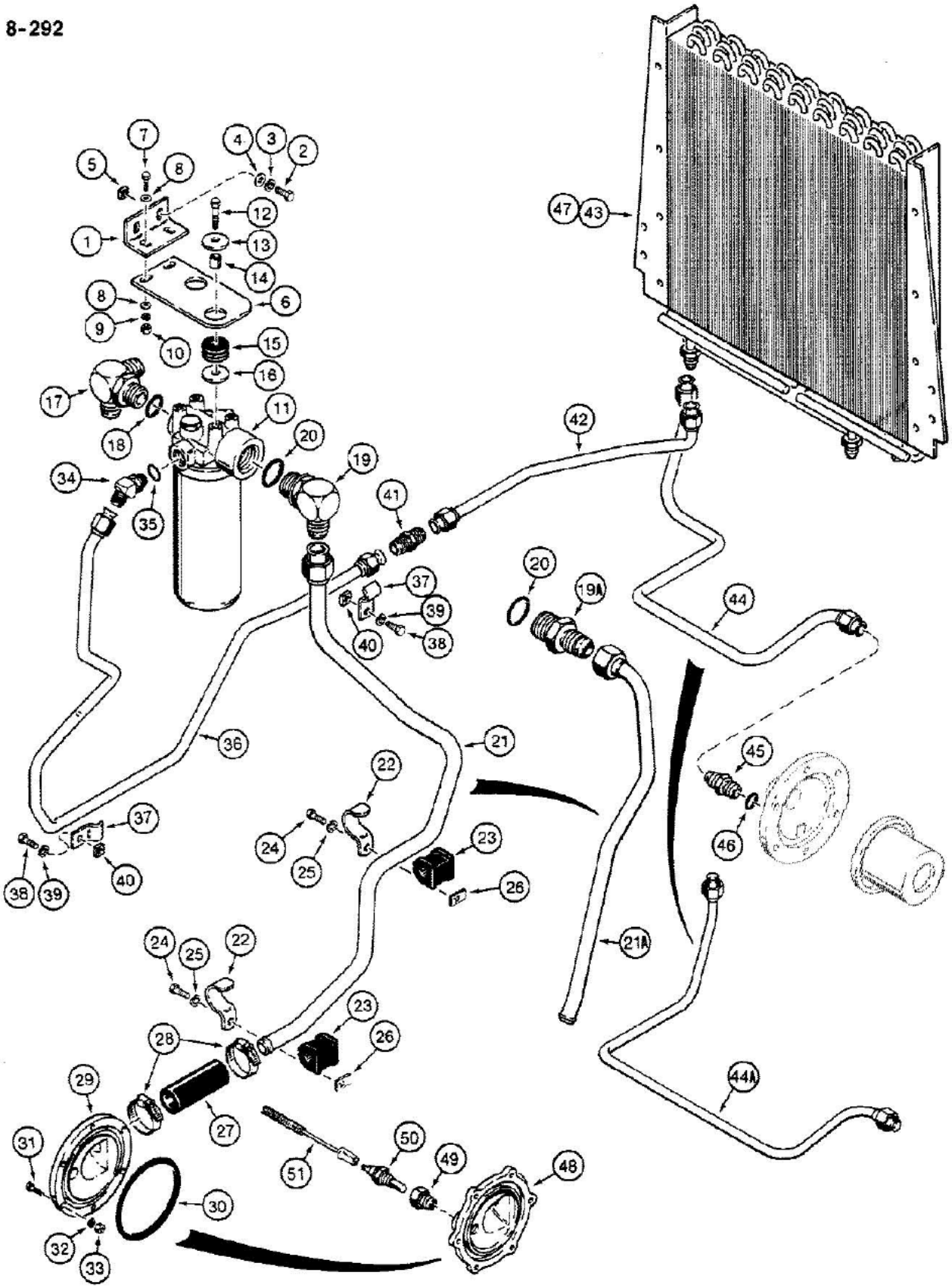

B870215B-45

580K LOADER BACKHOE (NORTH AMERICA) - Hydraulics

08-292 EQUIPMENT HYDRAULIC SYSTEM, OIL COOLER LINES, RETURN LINES, AND FILTER

Ref	Part Number	Qty	Description
1	D129562	1	BRACKET hydraulic oil filter mounting to chassis
2	113-206	2	BOLT, Hex, 3/8"-16 x 3/4", G5, Full Thd
3	192-21	2	WASHER, LOCK, 3/8"
4	195-525	2	WASHER flat, 3/8", plated
5	25-226	2	NUT square, 3/8"-16 NC
6	D135057	1	PLATE hydraulic oil filter mounting
7	113-103	2	BOLT, Hex, 5/16"-18 x 1", G5, Full Thd
8	195-103	4	WASHER flat, 5/16", plated
9	192-20	2	WASHER, LOCK, 5/16"
10	9635082	2	NUT, 5/16"-18, G5
11	D132933	1	FILTER ASSEMBLY hydraulic oil, see Figure 08-406
12	113-209	2	BOLT, Hex, 3/8"-16 x 1 1/2", G5
13	195-2042	2	WASHER flat, 7/16" bolt size, 15/32" ID x 1-1/2" OD x 1/8" thick
14	D76209	2	SPACER filter mounting
15	D132895	2	GROMMET filter mounting plate
16	195-2042	2	WASHER flat, 7/16" bolt size, 15/32" ID x 1-1/2" OD x 1/8" thick
17	D129566	1	FITTING elbow, special, three-way, backhoe return to filter and loader valve return, Incudes: Ref. 18
18	237-6016	1	O-RING fitting
19	218-5275	1	ELBOW, 90 degree, adjustable, return to tank, if used
19A	218-5086	1	ADAPTER straight, return to tank, if used, Includes: Ref. 20
20	237-6020	1	O-RING, 20-1, 90 Duro, 1.475" ID x .118" Thk, P/N 218-5275 elbow, or P/N 218-5086 adapter
21	D135445	1	TUBE return to tank, used with Ref. 19, elbow, if used
21A	D141404	1	TUBE return to tank, used with Ref. 19A, adapter, if used
22	D143410	2	CLAMP return to tank tube
23	D67297	2	INSULATOR tube
24	113-207	2	BOLT, Hex, 3/8"-16 x 1", G5, Full Thd
25	192-21	2	WASHER, LOCK, 3/8"
26	D122307	2	NUT, U-type, 3/8"-16 NC
27	R12351	1	HOSE, 1" (25 mm) ID x 1-1/2" (38 mm) OD x 4" (102 mm) long, return, at tank inlet
28	214-256	2	CLAMP hose
29	D125694	1	FLANGE reservoir, return
30	T53326	1	O-RING reservoir return flange
31	113-4	6	BOLT, Hex, 1/4"-20 x 1", G5
32	192-19	6	WASHER, LOCK, 1/4"
33	7770	6	NUT, 1/4"-20, G5
34	218-5137	1	ELBOW, 45 degree, adjustable, to oil cooler inlet tube, Incl. Ref 35
35	237-6010	1	O-RING elbow
36	D135275	1	TUBE oil filter to cooler inlet
37	D143430	2	CLAMP tube
38	113-206	2	BOLT, Hex, 3/8"-16 x 3/4", G5, Full Thd
39	192-21	2	WASHER, LOCK, 3/8"

08-292 EQUIPMENT HYDRAULIC SYSTEM, OIL COOLER LINES, RETURN LINES, AND FILTER

Ref	Part Number	Qty	Description
40	25-226	2	NUT square, 3/8"-16 NC
41	218-736	1	CONNECTOR straight
42	D135281	1	TUBE cooler inlet
43	A184542	1	COOLER oil, power shuttle and equipment hydraulic oil, see Figure 06-182 for oil cooler mounting hardware
44	D137348	1	TUBE cooler return to reservoir, if used
44A	D140805	1	TUBE cooler return to reservoir, if used
45	218-5062	1	CONNECTOR straight, at reservoir inlet flange, Includes: Ref. 46
46	237-6010	1	O-RING connector
47	A184190	1	COOLER oil, heavy duty, power shuttle and equipment hydraulic oil, see Figure 06-182 for oil cooler mounting hardware, Replaces: Ref. 43 cooler, special parts used on models with auxiliary hydraulics for optional rear hydraulic attachments
48	D139268	1	FLANGE return, Replaces: Ref. 29 flange, special parts used on models with auxiliary hydraulics for optional rear hydraulic attachments
49	221-1088	1	REDUCER, 1/2" x 1/4" NPT, special parts used on models with auxiliary hydraulics for optional rear hydraulic attachments
50	D70163	1	SWITCH oil temperature, special parts used on models with auxiliary hydraulics for optional rear hydraulic attachments
51	D140301	1	HARNESS temperature switch to engine harness, used on models with engine fuse block in main engine harness, if used, special parts used on models with auxiliary hydraulics for optional rear hydraulic attachments

8-296

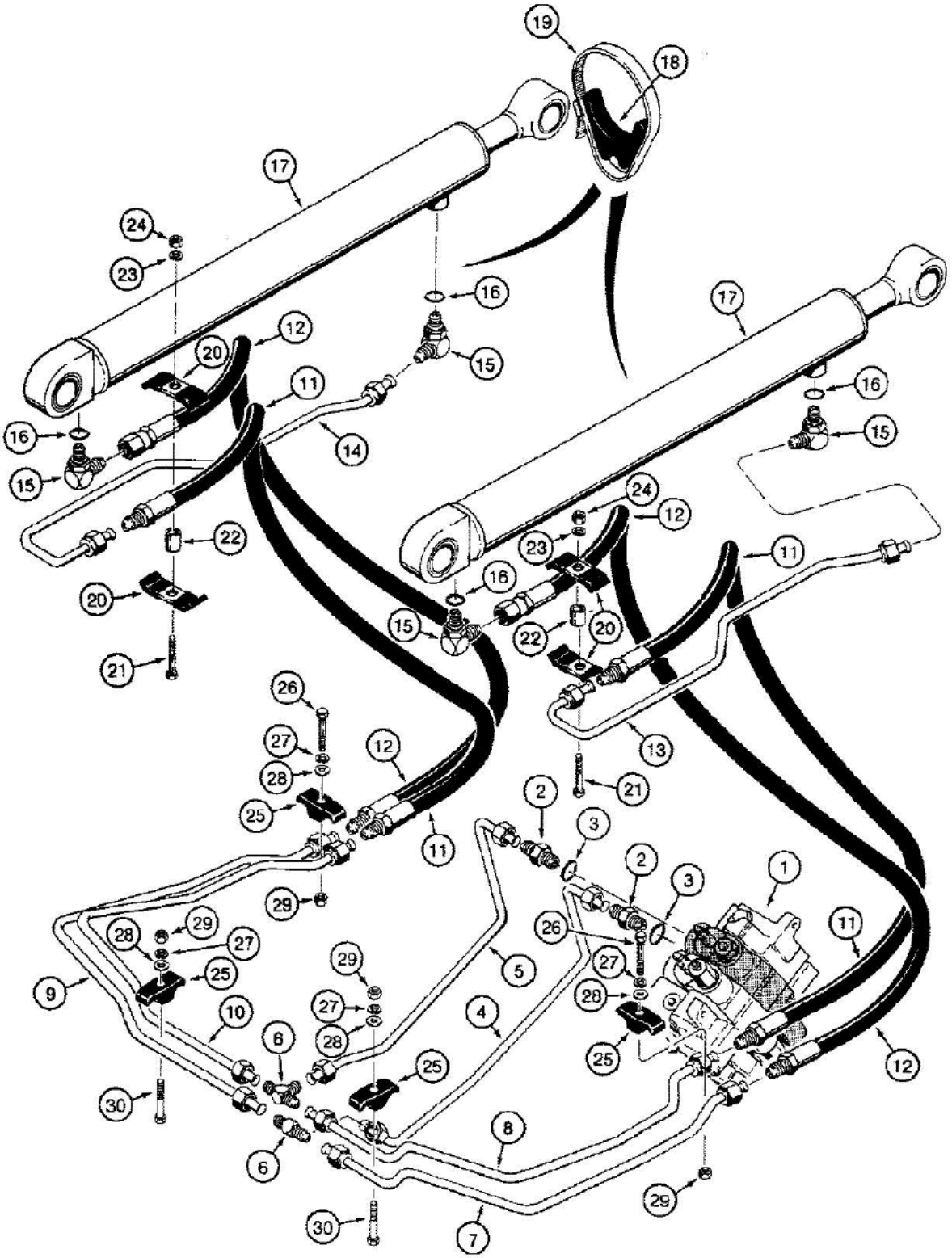

861794A-45

08-296 LOADER LIFT CYLINDER HYDRAULIC CIRCUIT

Ref	Part Number	Qty	Description
1	REF	1	VALVE ASSEMBLY control, loader, for correct assembly and components see Figure 08-354 or 08-356
2	218-5062	2	CONNECTOR straight, male, Includes: Ref. 3
3	237-6010	1	O-RING connector
4	D135063	1	TUBE to lower lift port of control valve
5	D135061	1	TUBE to upper lift port of control valve
6	218-595	2	TEE male, right-hand to left-hand cylinders
7	D131489	1	TUBE at tee, to hose at closed end of right-hand lift cylinder
8	D131491	1	TUBE at tee, to hose at rod end of right-hand lift cylinder
9	D131493	1	TUBE at tee, to hose at closed end of left-hand lift cylinder
10	D131495	1	TUBE at tee, to hose at rod end of left-hand lift cylinder
11	D131496	2	HOSE, 27-3/16" (690 mm) long, to rod end of lift cylinders
12	D131497	2	HOSE, 28-9/16" (725 mm) long, to closed end of lift cylinders
13	D132834	1	TUBE rod end of right-hand lift cylinder
14	D132836	1	TUBE rod end of left-hand lift cylinder
15	218-5107	4	ELBOW, 90 degree, adjustable, Includes: Ref. 16
16	237-6010	1	O-RING elbow
17	REF	2	CYLINDER ASSEMBLY lift, right-hand and left-hand, for correct assembly and components see Figure 08-408
18	D38648	2	SPACER rubber, single tube
19	214-267	2	CLAMP hose to cylinder
20	D143846	4	CLAMP metal, hose
21	113-219	2	BOLT, Hex, 3/8"-16 x 2", G5
22	D143412	2	SPACER hose clamp, plated
23	192-21	2	WASHER, LOCK, 3/8"
24	129-103	2	NUT, 3/8"-16, G5
25	D120613	4	CLAMP plastic, tube
26	113-219	2	BOLT, Hex, 3/8"-16 x 2", G5
27	192-21	4	WASHER, LOCK, 3/8"
28	95-6	4	WASHER flat, 3/8"
29	129-103	4	NUT, 3/8"-16, G5
30	113-233	2	BOLT, Hex, 3/8"-16 x 1 3/4", G5

08-298 LOADER BUCKET CYLINDER HYDRAULIC CIRCUIT WITH BENT UPPER LIFT FRAME CROSSOVER TUBES,

8-298

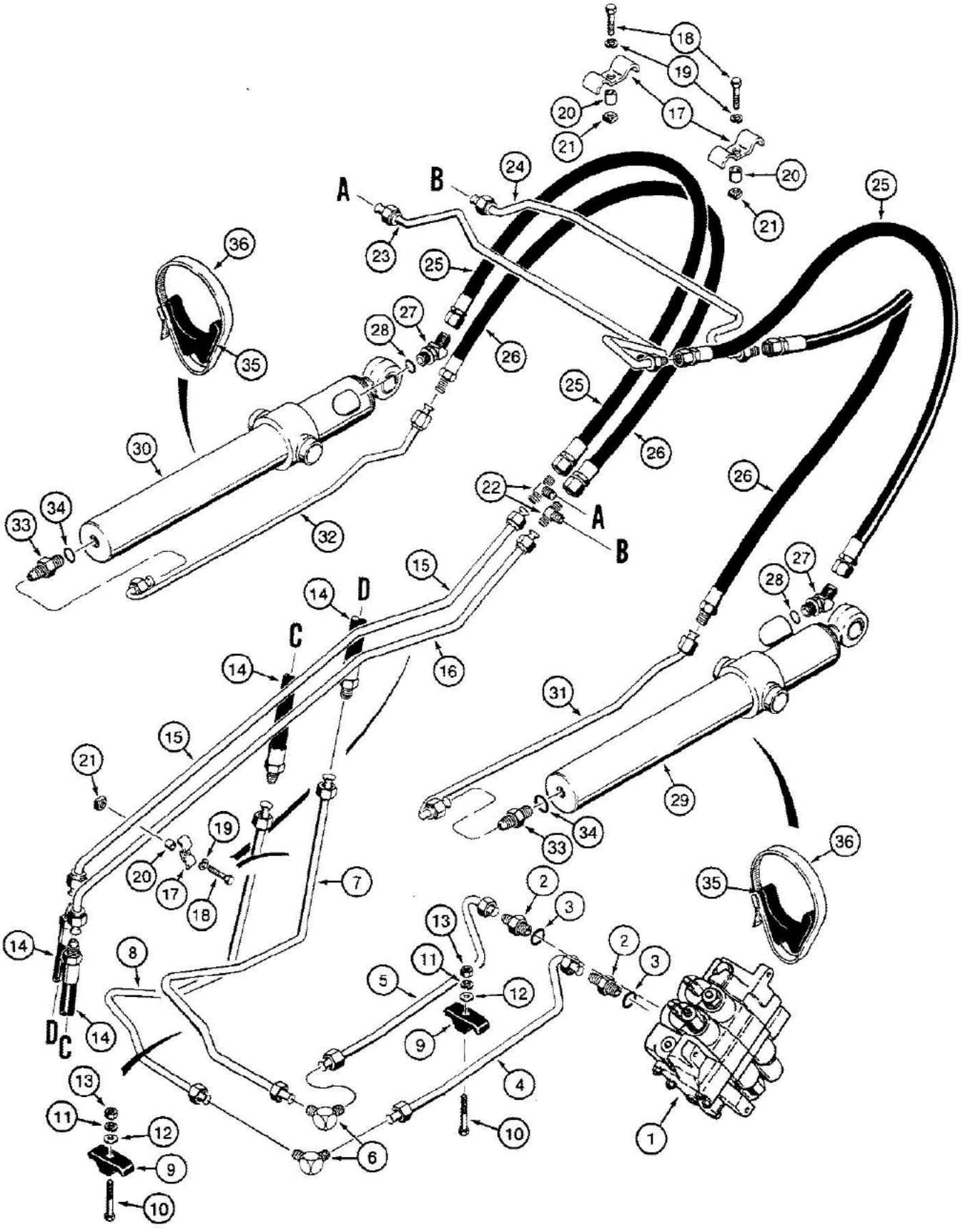

B6863-45

REF. 23 AND 24 WITH FEMALE/MALE ENDS

08-298 LOADER BUCKET CYLINDER HYDRAULIC CIRCUIT WITH BENT UPPER LIFT FRAME CROSSOVER TUBES,

Ref	Part Number	Qty	Description
1	REF	1	VALVE ASSEMBLY control, loader, for correct assembly and components see Figure 08-354 or 08-356
2	218-5062	2	CONNECTOR straight, male, Includes: Ref. 3
3	237-6010	1	O-RING connector
4	D135067	1	TUBE to lower bucket port of control valve, replaces one piece tube used in production on some models, See Figure 08-304 for tubes and fittings used on models with auxiliary remote hydraulics for hand held attachments
5	D135065	1	TUBE to upper bucket port of control valve, replaces one piece tube used in production on some models, See Figure 08-304 for tubes and fittings used on models with auxiliary remote hydraulics for hand held attachments
6	218-475	2	ELBOW, 90 degree, male, See Figure 08-304 for tubes and fittings used on models with auxiliary remote hydraulics for hand held attachments
7	D129522	1	TUBE at elbow, attaches to tube at upper port of control valve, bucket dump, replaces one piece tube used in production on some models, See Figure 08-304 for tubes and fittings used on models with auxiliary remote hydraulics for hand held attachments
8	D129526	1	TUBE at elbow, attaches to tube at lower port of control valve, bucket, rollback, replaces one piece tube used in production on some models, See Figure 08-304 for tubes and fittings used on models with auxiliary remote hydraulics for hand held attachments
9	D120613	2	CLAMP plastic, tube
10	113-233	2	BOLT, Hex, 3/8"-16 x 1 3/4", G5
11	192-21	2	WASHER, LOCK, 3/8"
12	195-104	2	WASHER flat, 3/8", plated
13	129-103	2	NUT, 3/8"-16, G5
14	D125995	2	HOSE, 29-9/16" (750 mm) long, at loader lift frame pivot
15	D134252	1	TUBE upper, on left-hand lift arm, Ref. 15, 16, 23 and 24 must be used together. See Figure 08-300 for tubes used together in "straight upper lift frame crossover tube" configuration.
16	D132824	1	TUBE lower, on left-hand lift arm, Ref. 15, 16, 23 and 24 must be used together. See Figure 08-300 for tubes used together in "straight upper lift frame crossover tube" configuration.
17	D137379	5	CLAMP tube
18	113-207	5	BOLT, Hex, 3/8"-16 x 1", G5, Full Thd
19	192-21	5	WASHER, LOCK, 3/8"
20	D123539	5	SPACER, 13/32" (10 mm) ID x 5/8" (16 mm) OD x 1/4" (6 mm) long
21	25-226	5	NUT square, 3/8"-16 NC
22	218-595	2	TEE male, at upper lift frame crossover tubes
23	D132826	1	TUBE upper, with female/male ends, crossover, at upper lift frame, to rod end of bucket cylinders, Ref. 15, 16, 23 and 24 must be used together. See Figure 08-300 for tubes used together in "straight upper lift frame crossover tube" configuration.
24	D132828	1	TUBE lower, with female/male ends, crossover, at upper lift frame, to closed end of bucket cylinders, Ref. 15, 16, 23 and 24 must be used together. See Figure 08-300 for tubes used together in "straight upper lift frame crossover tube" configuration.
25	D135908	2	HOSE, 28-9/16" (725 mm) long, to rod end of bucket cylinders
26	D135907	2	HOSE, 34-9/32" (870 mm) long, to closed end of bucket cylinders

REF. 23 AND 24 WITH FEMALE/MALE ENDS

08-298 LOADER BUCKET CYLINDER HYDRAULIC CIRCUIT WITH BENT UPPER LIFT FRAME CROSSOVER TUBES,

Ref	Part Number	Qty	Description
27	218-5137	2	ELBOW, 45 degree, adjustable, Incl. Ref 28
28	237-6010	1	O-RING elbow
29	G108486	1	CYLINDER ASSEMBLY bucket, right-hand, see Figure 08-410
30	G108487	1	CYLINDER ASSEMBLY bucket, left-hand, see Figure 08-410
31	D127940	1	TUBE to closed end of right-hand bucket cylinder
32	D127942	1	TUBE to closed end of left-hand bucket cylinder
33	218-5062	2	CONNECTOR straight, male, Includes: Ref. 34
34	237-6010	1	O-RING connector
35	D38648	2	SPACER rubber, single tube
36	214-267	2	CLAMP tube to cylinder

REF. 23 AND 24 WITH FEMALE/MALE ENDS

08-300 LOADER BUCKET CYLINDER HYDRAULIC CIRCUIT WITH STRAIGHT UPPER LIFT FRAME CROSSOVER TUBES,

8-300

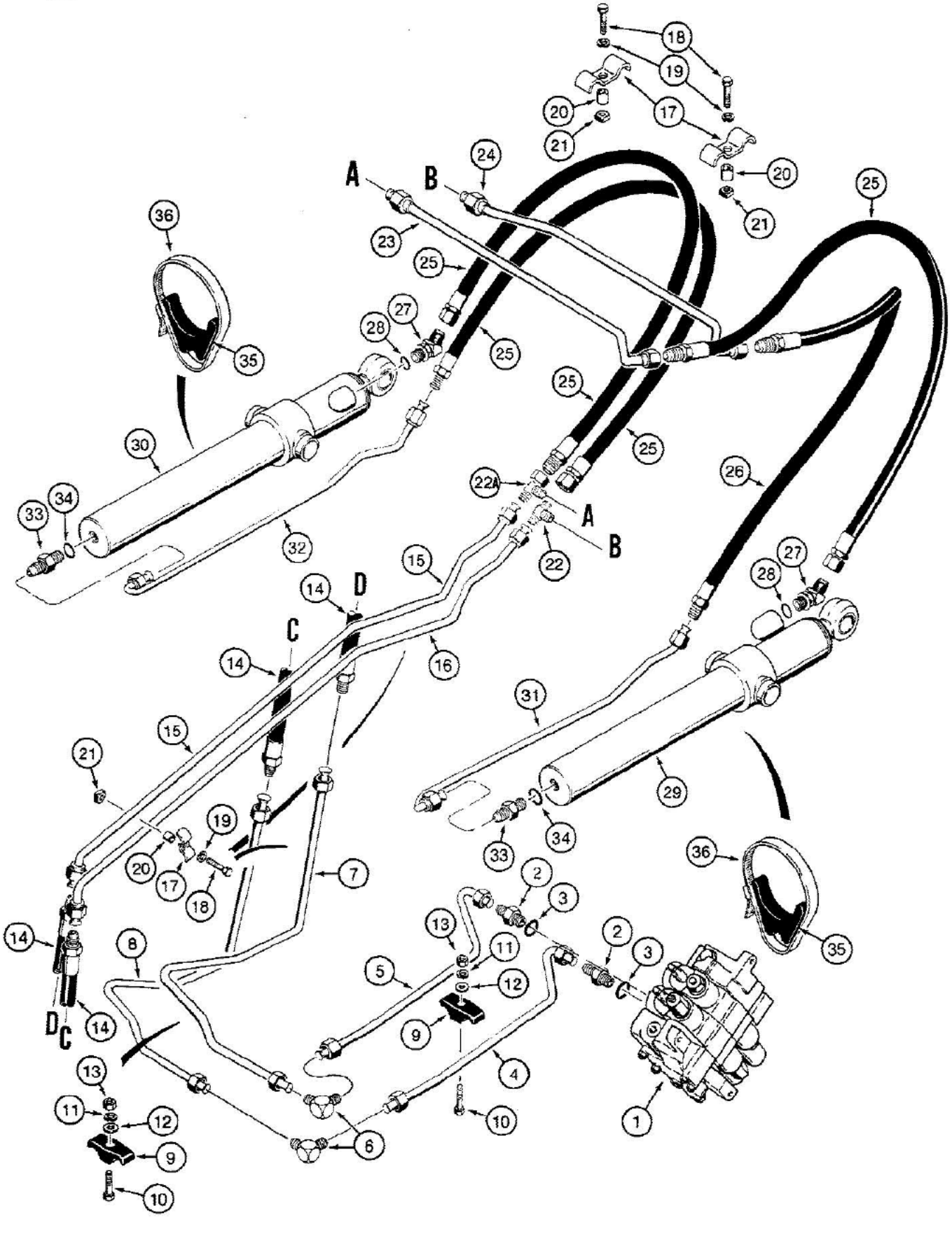

REF. 23 AND 24 WITH FEMALE ENDS

08-300 LOADER BUCKET CYLINDER HYDRAULIC CIRCUIT WITH STRAIGHT UPPER LIFT FRAME CROSSOVER TUBES,

Ref	Part Number	Qty	Description
1	REF	1	VALVE ASSEMBLY control, loader, for correct assembly and components see Figure 08-354 or 08-356
2	218-5062	2	CONNECTOR straight, male, Includes: Ref. 3
3	237-6010	1	O-RING connector
4	D135067	1	TUBE to lower bucket port of control valve, replaces one piece tube used in production on some models, See Figure 08-304 for tubes and fittings used on models with auxiliary remote hydraulics for hand held attachments
5	D135065	1	TUBE to upper bucket port of control valve, replaces one piece tube used in production on some models, See Figure 08-304 for tubes and fittings used on models with auxiliary remote hydraulics for hand held attachments
6	218-475	2	ELBOW, 90 degree, male, See Figure 08-304 for tubes and fittings used on models with auxiliary remote hydraulics for hand held attachments
7	D129522	1	TUBE at elbow, attaches to tube at upper port of control valve, bucket dump, replaces one piece tube used in production on some models, See Figure 08-304 for tubes and fittings used on models with auxiliary remote hydraulics for hand held attachments
8	D129526	1	TUBE at elbow, attaches to tube at lower port of control valve, bucket rollback, replaces one piece tube used in production on some models, See Figure 08-304 for tubes and fittings used on models with auxiliary remote hydraulics for hand held attachments
9	D120613	2	CLAMP plastic, tube
10	113-233	2	BOLT, Hex, 3/8"-16 x 1 3/4", G5
11	192-21	2	WASHER, LOCK, 3/8"
12	195-104	2	WASHER flat, 3/8", plated
13	129-103	2	NUT, 3/8"-16, G5
14	D125995	2	HOSE, 29-9/16" (750 mm) long, at loader lift frame pivot
15	D141672	1	TUBE upper, on left-hand lift arm, Ref. 15, 16, 23 and 24 must be used together. See Figure 08-298 for tubes used together in "bent upper lift frame crossover tube" configuration.
16	D141674	1	TUBE lower, on left-hand lift arm, Ref. 15, 16, 23 and 24 must be used together. See Figure 08-298 for tubes used together in "bent upper lift frame crossover tube" configuration.
17	D143427	5	CLAMP tube
18	113-207	5	BOLT, Hex, 3/8"-16 x 1", G5, Full Thd
19	192-21	5	WASHER, LOCK, 3/8"
20	D143417	5	SPACER, 13/32" (10 mm) ID x 5/8" (16 mm) OD x 1/4" (6 mm) long, plated
21	25-226	5	NUT square, 3/8"-16 NC
22	218-595	1	TEE male, at upper lift frame crossover tube
22A	218-5220	1	TEE swivel, at upper lift frame crossover tube
23	D141678	1	TUBE upper, with female ends, crossover, at upper lift frame, to rod end of bucket cylinder, Ref. 15, 16, 23 and 24 must be used together. See Figure 08-298 for tubes used together in "bent upper lift frame crossover tube" configuration.
24	D141676	1	TUBE lower, with female ends, crossover, at upper lift frame, to closed end of bucket cylinder, Ref. 15, 16, 23 and 24 must be used together. See Figure 08-298 for tubes used together in "bent upper lift frame crossover tube" configuration.

REF. 23 AND 24 WITH FEMALE ENDS

08-300 LOADER BUCKET CYLINDER HYDRAULIC CIRCUIT WITH STRAIGHT UPPER LIFT FRAME CROSSOVER TUBES,

Ref	Part Number	Qty	Description
25	D131497	3	HOSE, 28-9/16" (725 mm) long, to rod end of left-hand and right-hand bucket cylinders and to closed end of left-hand bucket cylinder
26	D125995	1	HOSE, 29-1/2" (750 mm) long, to closed end of right-hand bucket cylinder
27	218-5137	2	ELBOW, 45 degree, adjustable, Incl. Ref 28
28	237-6010	1	O-RING elbow
29	G108486	1	CYLINDER ASSEMBLY bucket, right-hand, see Figure 08-410
30	G108487	1	CYLINDER ASSEMBLY bucket, left-hand, see Figure 08-410
31	D127940	1	TUBE to closed end of right-hand bucket cylinder
32	D127942	1	TUBE to closed end of left-hand bucket cylinder
33	218-5062	2	CONNECTOR straight, male, Includes: Ref. 34
34	237-6010	1	O-RING connector
35	D38648	2	SPACER rubber, single tube
36	214-267	2	CLAMP tube to cylinder

REF. 23 AND 24 WITH FEMALE ENDS

8-304

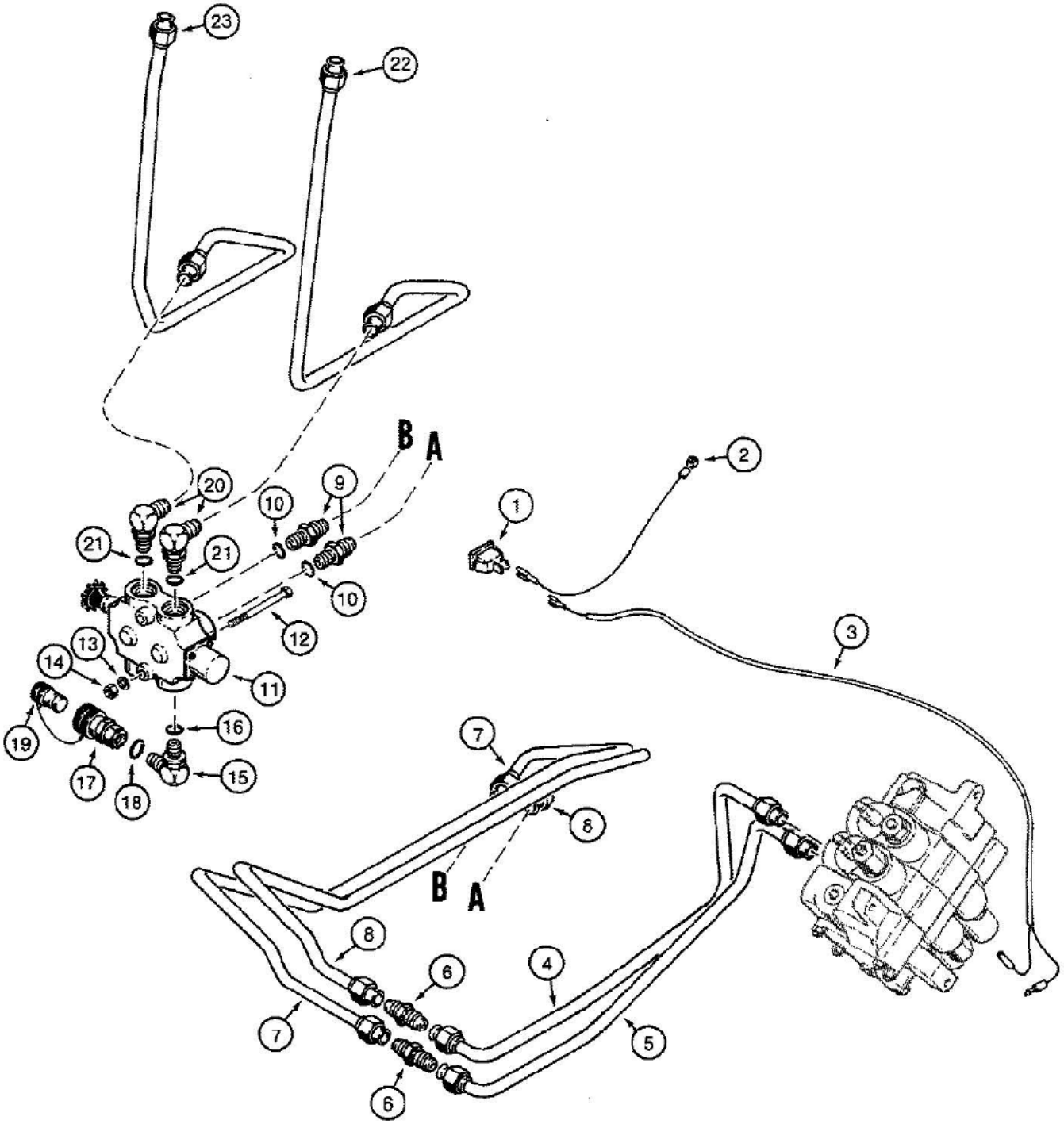

B890656-45

08-304 AUXILIARY REMOTE HYDRAULICS, FOR OPTIONAL HAND HELD ATTACHMENTS

Ref	Part Number	Qty	Description
1	D143751	1	SWITCH rocker, on/off, at front instrument panel
2	D143452	1	WIRE ground, attaches to brake reservoir mounting plate with existing hardware
3	D143451	1	WIRE switch to loader control valve and main engine harness
4	D143268	1	TUBE at loader control valve upper bucket port
5	D143266	1	TUBE at loader control valve lower bucket port
6	218-736	2	CONNECTOR straight
7	D143390	1	TUBE selector valve to loader control valve, lower bucket port tube
8	D143392	1	TUBE loader control valve upper bucket port tube to selector valve
9	218-5066	2	ADAPTER straight, 7/8" NF flare x 3/4" NF, Includes: Ref. 10
10	237-6008	1	O-RING, 8-1, 90 Duro, .644" ID x .087" Thk
11	D142933	1	VALVE ASSEMBLY selector, see Figure 08-352
12	113-203	2	BOLT, Hex, 3/8"-16 x 3 1/2", G5
13	192-21	2	WASHER, LOCK, 3/8"
14	129-103	2	NUT, 3/8"-16, G5
15	218-5313	2	ELBOW, 90 degree, adjustable, Includes: Ref. 16
16	237-6008	1	O-RING, 8-1, 90 Duro, .644" ID x .087" Thk
17	T40265	2	COUPLER quick disconnect, female, Includes: Ref. 18
18	350684R1	1	O-RING coupler
19	T40274	2	PLUG dust, coupler
20	218-5117	2	ELBOW, 90 degree, adjustable, 7/8" NF flare x 3/4" NF, Includes: Ref. 21
21	237-6008	1	O-RING, 8-1, 90 Duro, .644" ID x .087" Thk
22	D143264	1	TUBE selector valve to optional hand held attachment hydraulic hose, Connecting hoses at these tubes shall be supplied by the customer for use with their particular optional hand held attachment.
23	D143262	1	TUBE selector valve to optional hand held attachment hydraulic hose, Connecting hoses at these tubes shall be supplied by the customer for use with their particular optional hand held attachment.

3-306

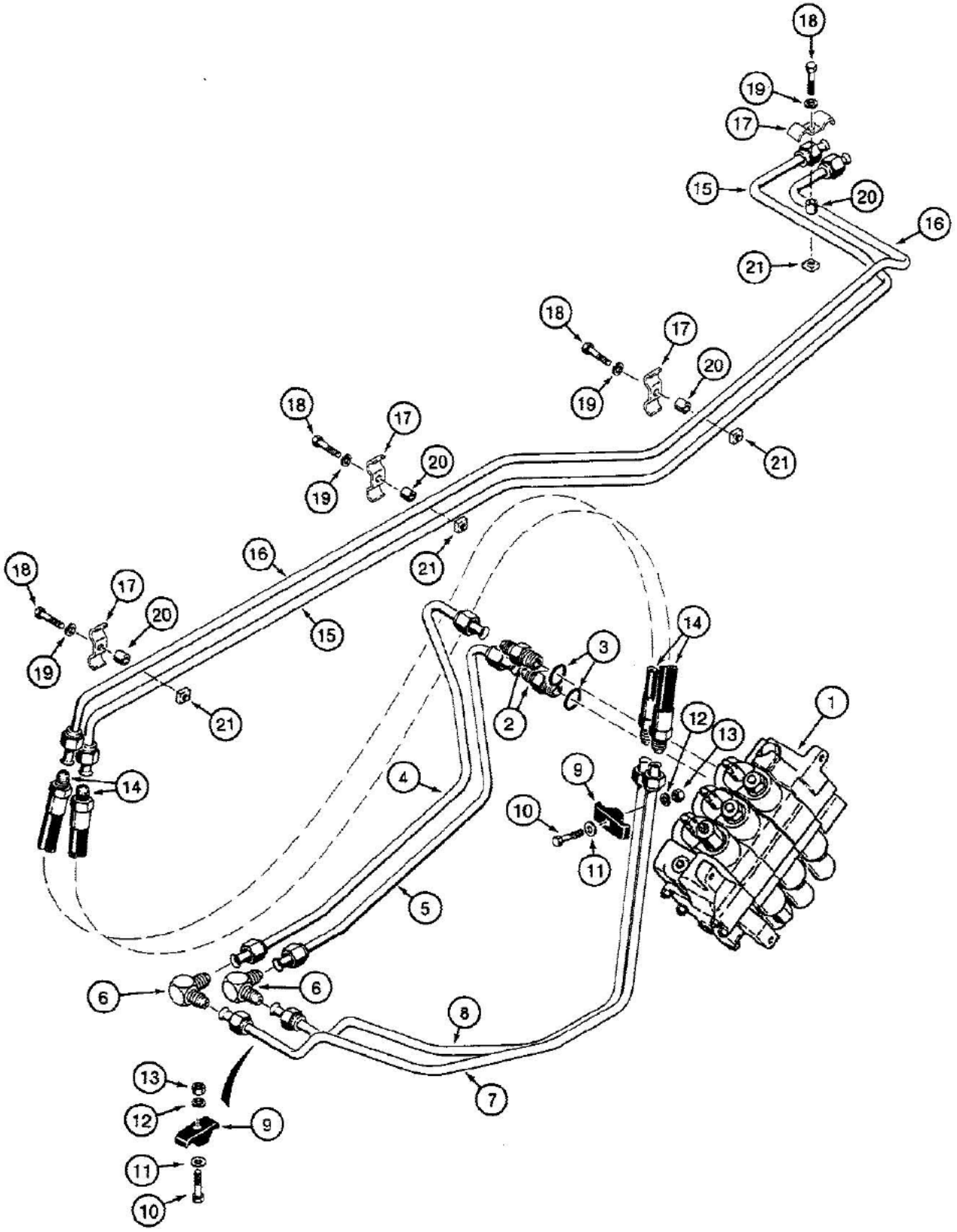

To complete the clam cylinder hydraulic circuit see Figure 08-308.

08-306 LOADER CLAM CYLINDER HYDRAULIC CIRCUIT

Ref	Part Number	Qty	Description
1	G109582	1	VALVE ASSEMBLY control, loader, three-spool, see Figure 08-356
2	218-5062	2	CONNECTOR straight, Includes: Ref. 3
3	237-6010	1	O-RING connector
4	D135316	1	TUBE from upper port auxiliary section of loader control valve, used with Ref. 7, replaces one piece tube used in production
5	D135318	1	TUBE from lower port auxiliary section of loader control valve, used with Ref. 8, replaces one piece tube used in production
6	218-475	2	ELBOW, 90 degree
7	D129710	1	TUBE outer, upper port loader valve tube to lift arm tube
8	D129712	1	TUBE inner, lower port loader valve tube to lift arm tube
9	D120613	2	CLAMP plastic, tube
10	113-233	2	BOLT, Hex, 3/8"-16 x 1 3/4", G5
11	95-6	2	WASHER flat, 3/8"
12	192-21	2	WASHER, LOCK, 3/8"
13	129-103	2	NUT, 3/8"-16, G5
14	D125995	2	HOSE, 29-9/16" (750 mm) long, at loader arm pivot
15	D137482	1	TUBE lower, on loader lift arm
16	D137480	1	TUBE upper, on loader lift arm
17	D143427	4	CLAMP tube, on loader lift arm tubes
18	113-207	4	BOLT, Hex, 3/8"-16 x 1", G5, Full Thd
19	192-21	4	WASHER, LOCK, 3/8"
20	D143417	4	SPACER, 13/32" (10 mm) ID x 5/8" (16 mm) OD x 1/4" (6 mm) long, plated
21	25-226	4	NUT square, 3/8"-16 NC

To complete the clam cylinder hydraulic circuit see Figure 08-308.

3-308

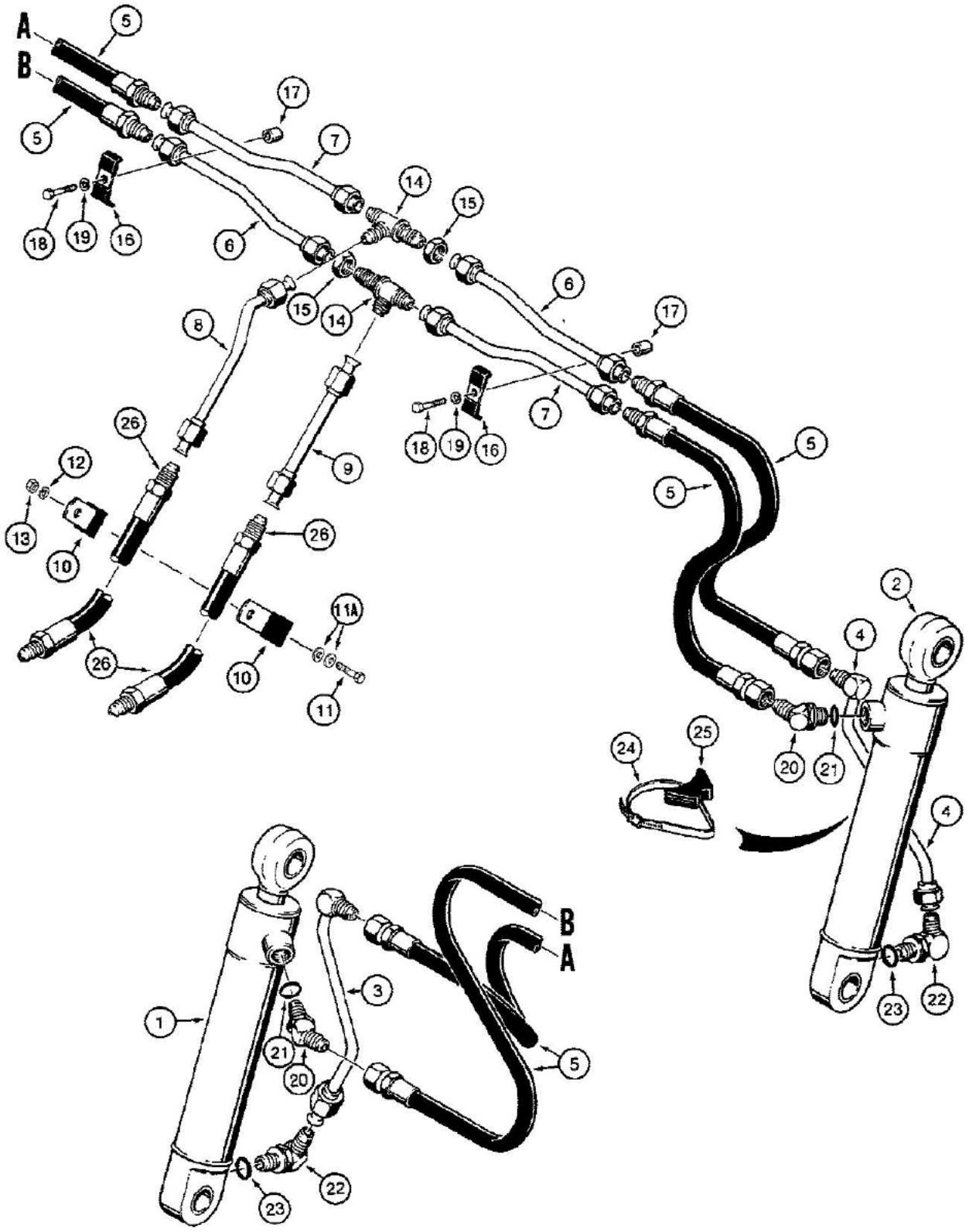

38864-45

To complete the clam cylinder hydraulic circuit see Figure 08-306.

08-308 LOADER CLAM CYLINDER HYDRAULIC CIRCUIT, AT LOADER BUCKET

Ref	Part Number	Qty	Description
1	G101191	1	CYLINDER clam, left-hand, see Figure 08-412
2	G101190	1	CYLINDER clam, right-hand, see Figure 08-412
3	D51619	1	TUBE left-hand cylinder
4	D51621	1	TUBE right-hand cylinder
5	D27984	4	HOSE, 26" (660 mm) long, right-hand and left-hand cylinders
6	D134461	2	TUBE horizontal, right-hand upper and left-hand lower
7	D134459	2	TUBE horizontal, right-hand lower and left-hand upper
8	D138005	1	TUBE vertical, left-hand
9	D138007	1	TUBE vertical, right-hand
10	S88820	2	CLAMP vertical hoses
11	113-104	1	BOLT, Hex, 5/16"-18 x 1 1/4", G5
11A	195-103	2	WASHER flat, 5/16", plated
12	192-20	1	WASHER, LOCK, 5/16"
13	9635082	1	NUT, 5/16"-18, G5
14	218-1237	2	TEE bulkhead, connecting horizontal and vertical tubing
15	218-1251	2	NUT, LOCK, Blkhd, 7/8"-14
16	D40236	2	CLAMP horizontal tubing
17	D33552	2	SPACER tube clamps
18	113-209	2	BOLT, Hex, 3/8"-16 x 1 1/2", G5
19	192-21	2	WASHER, LOCK, 3/8"
20	218-5137	2	ELBOW, 45 degree, adjustable, clam cylinders, rod end, Incl. Ref 21
21	237-6010	1	O-RING elbow
22	218-5107	2	ELBOW, 90 degree, adjustable, clam cylinders, closed end, Includes: 23
23	237-6010	1	O-RING elbow
24	214-267	2	CLAMP clam cylinder tubing, adjustable
25	D38648	2	INSULATOR rubber, clamp
26	D125995	2	HOSE, 29-17/32" (750 mm) long, from loader lift frame

To complete the clam cylinder hydraulic circuit see Figure 08-306.

08-310 BACKHOE STABILIZER CYLINDER HYDRAULIC CIRCUIT WITH TUBES AT STABILIZER CYLINDERS

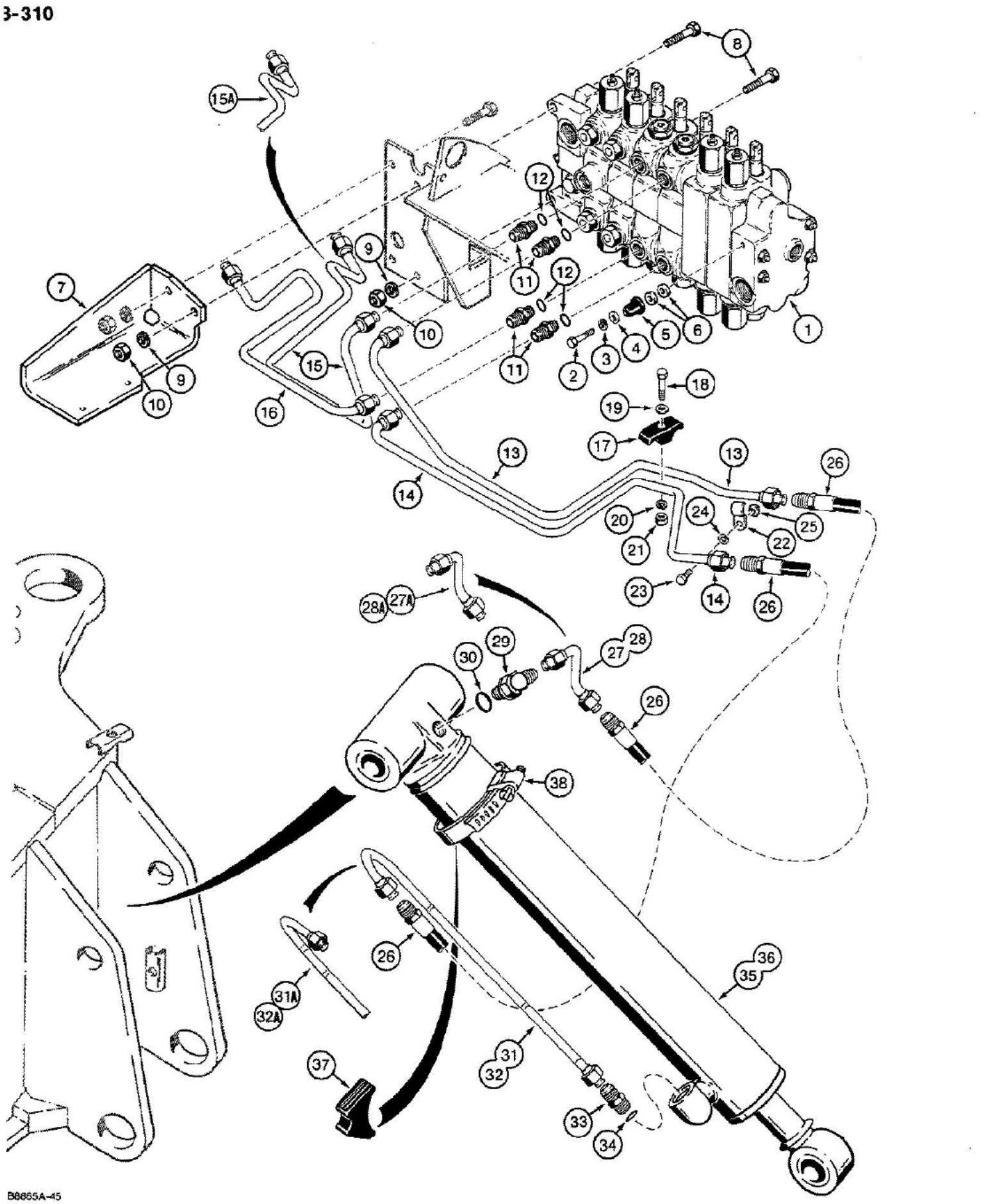

REF. 26 through 34, this configuration is used together when hoses are hooked to stabilizer cylinders via tubes. See Figure 08-314 for alternate configuration with hoses hooked directly to stabilizer cylinders.

580K LOADER BACKHOE (NORTH AMERICA) - Hydraulics

08-310 BACKHOE STABILIZER CYLINDER HYDRAULIC CIRCUIT WITH TUBES AT STABILIZER CYLINDERS

Ref	Part Number	Qty	Description
1	REF	1	VALVE ASSEMBLY control, backhoe, see Figure 08-370 or 08-372
2	113-209	1	BOLT, Hex, 3/8"-16 x 1 1/2", G5
3	192-21	1	WASHER, LOCK, 3/8"
4	D52275	1	WASHER flat, 3/8", hardened
5	D52276	1	INSULATOR vibration
6	195-2030	2	WASHER flat, 3/8" bolt size, 13/32" ID x 7/8" OD x 1/16" thick
7	D135614	1	BRACKET backhoe control valve and swing sequence valve mounting
8	113-441	2	BOLT, Hex, 1/2"-13 x 2 1/4", G5
9	192-23	2	WASHER, LOCK, 1/2"
10	129-105	2	NUT, 1/2"-13, G5
11	218-5059	4	CONNECTOR straight, male, stabilizer sections upper and lower ports, Includes: Ref. 12
12	237-6008	1	O-RING, 8-1, 90 Duro, .644" ID x .087" Thk, Connector
13	D134196	1	TUBE right-hand stabilizer section upper port to hose
14	D134194	1	TUBE right-hand stabilizer section lower port to hose
15	D134191	1	TUBE left-hand stabilizer section upper port to hose, no longer used, order P/N D141169 tube
15A	D141169	1	TUBE left-hand stabilizer section upper port to hose
16	D134189	1	TUBE left-hand stabilizer section lower port to hose
17	D120679	2	CLAMP plastic, 1/2" tube
18	113-233	2	BOLT, Hex, 3/8"-16 x 1 3/4", G5
19	195-104	2	WASHER flat, 3/8", plated
20	192-21	2	WASHER, LOCK, 3/8"
21	129-103	2	NUT, 3/8"-16, G5
22	D140709	4	CLAMP tube
23	113-204	4	BOLT, Hex, 3/8"-16 x 1/2", G5, Full Thd
24	192-21	4	WASHER, LOCK, 3/8"
25	25-226	4	NUT square, 3/8"-16 NC
26	D126490	4	HOSE, 27-9/16" (700 mm) long, to stabilizer cylinders
27	D129193	1	TUBE right-hand stabilizer cylinder closed end, no longer used, order P/N D141044 tube
27A	D141044	1	TUBE right-hand stabilizer cylinder closed end
28	D129191	1	TUBE left-hand stabilizer cylinder closed end, no longer used, order P/N D141046 tube
28A	D141046	1	TUBE left-hand stabilizer cylinder closed end
29	218-5106	2	ELBOW, 90 degree, adjustable, stabilizer cylinder closed ends, Includes: Ref. 30
30	237-6008	1	O-RING, 8-1, 90 Duro, .644" ID x .087" Thk, Elbow
31	D126260	1	TUBE right-hand stabilizer cylinder rod end, no longer used, order P/N D141117 tube
31A	D141117	1	TUBE right-hand stabilizer cylinder rod end
32	D126256	1	TUBE left-hand stabilizer cylinder rod end, no longer used, order P/N D141115 tube
32A	D141115	1	TUBE left-hand stabilizer cylinder rod end
33	218-5059	2	CONNECTOR straight, male, stabilizer cylinder rod ends, Includes: Ref. 34
34	237-6008	1	O-RING, 8-1, 90 Duro, .644" ID x .087" Thk, Connector
36	REF	1	CYLINDER left-hand stabilizer, for correct assembly and components see Figure 08-414
37	D38648	4	INSULATOR rubber

REF. 26 through 34, this configuration is used together when hoses are hooked to stabilizer cylinders via tubes. See Figure 08-314 for alternate configuration with hoses hooked directly to stabilizer cylinders.

08-310 BACKHOE STABILIZER CYLINDER HYDRAULIC CIRCUIT WITH TUBES AT STABILIZER CYLINDERS

Ref	Part Number	Qty	Description
38	214-272	2	CLAMP tube

REF. 26 through 34, this configuration is used together when hoses are hooked to stabilizer cylinders via tubes. See Figure 08-314 for alternate configuration with hoses hooked directly to stabilizer cylinders.

8-314

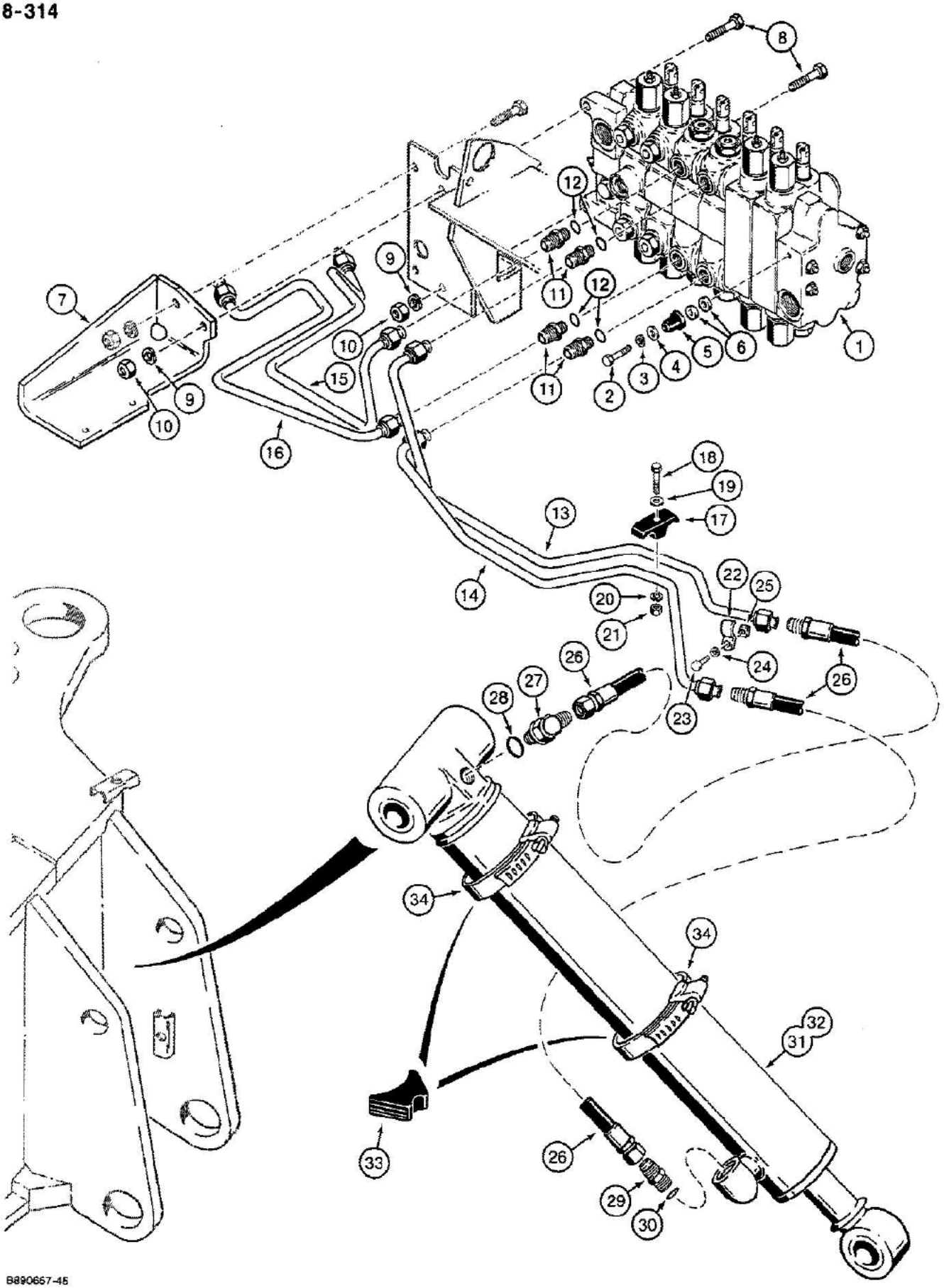

Ref. 26 through 30, this configuration is used together when hoses are hooked directly to stabilizer cylinders. See Figure 08-310 for alternate configuration where hoses are hooked to stabilizer cylinders via tubes.

08-314 BACKHOE STABILIZER CYLINDER HYDRAULIC CIRCUIT WITH HOSES AT STABILIZER CYLINDERS

Ref	Part Number	Qty	Description
1	REF	1	VALVE ASSEMBLY control, backhoe, see Figure 08-370 or 08-372
2	113-209	1	BOLT, Hex, 3/8"-16 x 1 1/2", G5
3	192-21	1	WASHER, LOCK, 3/8"
4	D52275	1	WASHER flat, 3/8", hardened
5	D52276	1	INSULATOR vibration
6	195-2030	2	WASHER flat, 3/8" bolt size, 13/32" ID x 7/8" OD x 1/16" thick
7	D135614	1	BRACKET backhoe control valve and swing sequence valve mounting
8	113-441	2	BOLT, Hex, 1/2"-13 x 2 1/4", G5
9	192-23	2	WASHER, LOCK, 1/2"
10	129-105	2	NUT, 1/2"-13, G5
11	218-5059	4	CONNECTOR straight, male, stabilizer sections upper and lower ports, Includes: Ref. 12
12	237-6008	1	O-RING, 8-1, 90 Duro, .644" ID x .087" Thk, Connector
13	D141746	1	TUBE right-hand stabilizer section upper port to hose
14	D141130	1	TUBE right-hand stabilizer section lower port to hose
15	D141748	1	TUBE left-hand stabilizer section upper port to hose
16	D141160	1	TUBE left-hand stabilizer section lower port to hose
17	D120679	2	CLAMP plastic, 1/2" tube
18	113-233	2	BOLT, Hex, 3/8"-16 x 1 3/4", G5
19	195-104	2	WASHER flat, 3/8", plated
20	192-21	2	WASHER, LOCK, 3/8"
21	129-103	2	NUT, 3/8"-16, G5
22	D140709	4	CLAMP tube
23	113-204	4	BOLT, Hex, 3/8"-16 x 1/2", G5, Full Thd
24	192-21	4	WASHER, LOCK, 3/8"
25	25-226	4	NUT square, 3/8"-16 NC
26	D141166	4	HOSE, 34" (863 mm) long, to stabilizer cylinders
27	218-5106	2	ELBOW, 90 degree, adjustable, stabilizer cylinder closed ends, Includes: Ref. 28
28	237-6008	1	O-RING, 8-1, 90 Duro, .644" ID x .087" Thk, Elbow
29	218-5059	2	CONNECTOR straight, male, stabilizer cylinder rod ends, Includes: Ref. 30
30	237-6008	1	O-RING, 8-1, 90 Duro, .644" ID x .087" Thk, Connector
31	G110672	1	CYLINDER ASSEMBLY right-hand stabilizer, see Figure 08-414
32	G110673	1	CYLINDER ASSEMBLY left-hand stabilizer, see Figure 08-414
33	D142787	4	INSULATOR rubber
34	214-182	4	CLAMP hose

Ref. 26 through 30, this configuration is used together when hoses are hooked directly to stabilizer cylinders. See Figure 08-310 for alternate configuration where hoses are hooked to stabilizer cylinders via tubes.

8-316

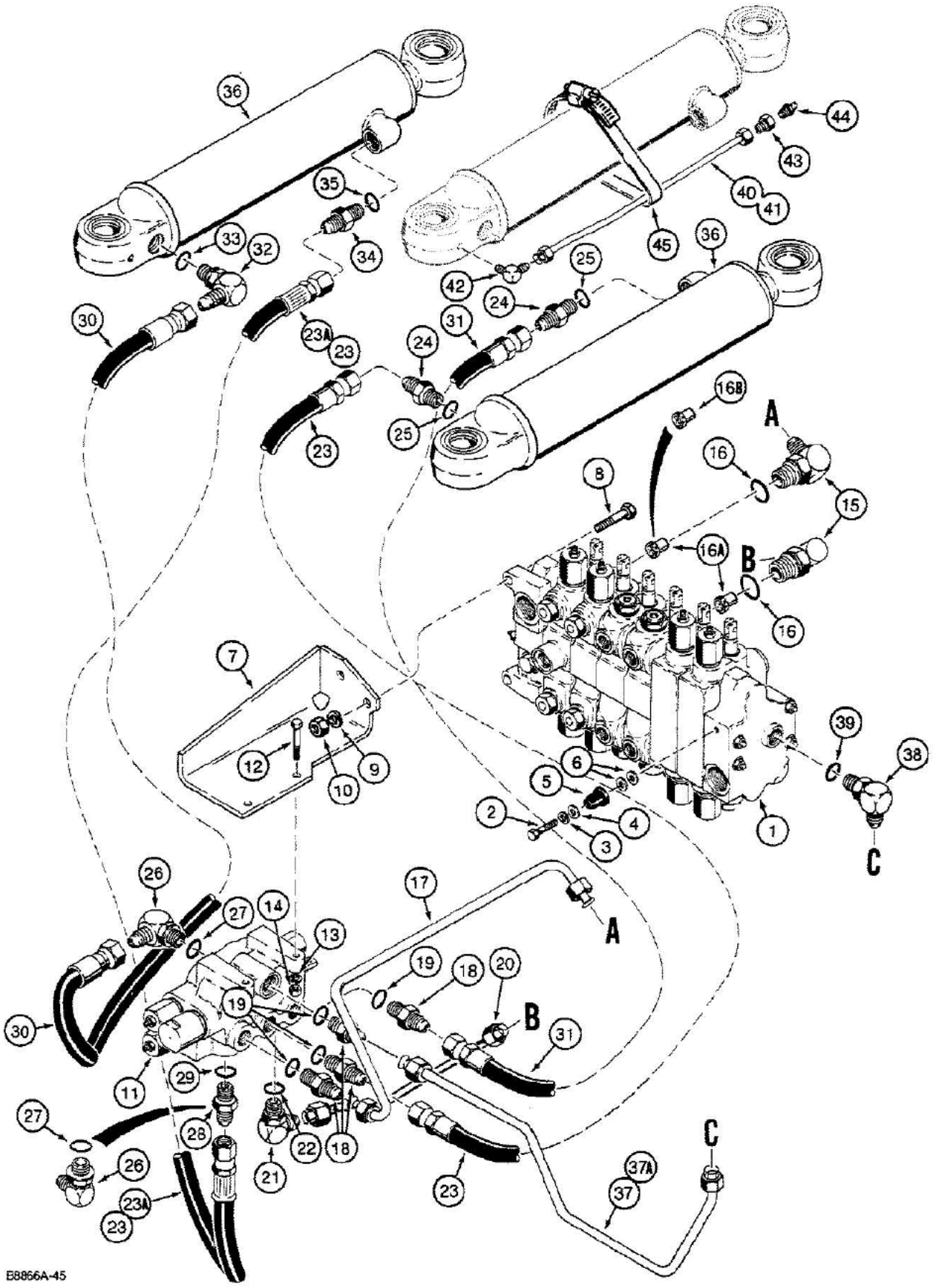
36
44
43
40
41
35
34
33
32
45
36
42
25
24
30
23A
23
24
31
16B
25
23
A
16
8
15
16A
B
16
7
12
10
9
39
38
6
5
2
4
3
1
C
26
27
14
13
17
A
19
18
20
B
31
30
19
11
29
27
28
22
18
21
23
C
37A
37
26
23A
23
B8866A-45

08-316 BACKHOE SWING CYLINDER AND SWING SEQUENCE VALVE HYDRAULIC CIRCUIT

Ref	Part Number	Qty	Description
1	REF	1	VALVE ASSEMBLY control, backhoe, for correct assembly and components see Figure 08-370 or 08-372
2	113-209	1	BOLT, Hex, 3/8"-16 x 1 1/2", G5
3	192-21	1	WASHER, LOCK, 3/8"
4	D52275	1	WASHER flat, 3/8", hardened
5	D52276	1	INSULATOR vibration
6	195-2030	2	WASHER flat, 3/8" bolt size, 13/32" ID x 7/8" OD x 1/16" thick
7	D135614	1	BRACKET backhoe control valve and swing sequence valve mounting
8	113-441	2	BOLT, Hex, 1/2"-13 x 2 1/4", G5
9	192-23	2	WASHER, LOCK, 1/2"
10	129-105	2	NUT, 1/2"-13, G5
11	REF	1	VALVE ASSEMBLY swing sequence, see Figure 08-390
12	113-219	2	BOLT, Hex, 3/8"-16 x 2", G5
13	192-21	2	WASHER, LOCK, 3/8"
14	129-103	2	NUT, 3/8"-16, G5
15	218-5119	2	ELBOW, 90 degree, adjustable, swing section upper and lower ports, Includes: Ref. 16
16	237-6012	1	O-RING, 12-1, 90 Duro, .924 ID x .116" Thk, Elbow
16A	D141726	2	RESTRICTOR swing check, 1/8" (3.2 mm) orifice, used on models with P/N G108608, 3-1/4" diameter swing cylinder in Figure 08-416, if used
16B	D142394	2	RESTRICTOR swing check, 9/64" (3.5 mm) orifice, used on models with P/N 1971702C2, 3-1/2" diameter swing cylinder in Figure 08-418, if used
17	D135616	1	TUBE swing section upper port to sequence valve
18	218-5062	4	CONNECTOR straight, at swing sequence valve, Includes: Ref. 19
19	237-6010	1	O-RING connector
20	D135618	1	TUBE swing section lower port to swing sequence valve lower port
21	218-5107	1	ELBOW, 90 degree, adjustable, swing sequence valve lower port, Includes: Ref. 22
22	237-6010	1	O-RING elbow
23	D27978	1-2	HOSE, 30-3/4" (781 mm) long, swing sequence valve to right-hand swing cylinder closed end, and left-hand swing cylinder rod end
23A	L50840	1	HOSE, 24" (610 mm) long, left-hand swing cylinder rod end, no longer used, order P/N D27978 hose for service, Ref. 23
24	218-5062	2	CONNECTOR straight, right-hand swing cylinder ports, Includes: Ref. 25
25	237-6010	1	O-RING connector
26	218-5107	1-2	ELBOW, 90 degree, adjustable, Includes: Ref. 27
27	237-6010	1	O-RING elbow
28	218-5062	1	CONNECTOR straight, male, no longer used, order P/N 218-5107 elbow, Ref. 26, Includes: Ref. 29
29	237-6010	1	O-RING connector
30	D140192	1	HOSE, 25-19/32" (650 mm) long, swing sequence valve to left-hand swing cylinder closed end
31	D135908	1	HOSE, 28-9/16" (725 mm) long, swing sequence valve to right-hand swing cylinder rod end
32	218-5107	1	ELBOW, 90 degree, adjustable, left-hand swing cylinder closed end, Includes: Ref. 33
33	237-6010	1	O-RING elbow

08-316 BACKHOE SWING CYLINDER AND SWING SEQUENCE VALVE HYDRAULIC CIRCUIT

Ref	Part Number	Qty	Description
34	218-5062	1	CONNECTOR straight, left-hand swing cylinder rod end, Includes: Ref. 35
35	237-6010	1	O-RING connector
36	REF	2	CYLINDER swing, right-hand and left-hand, for correct assembly and components, see Figure 08-416 or 08-418
37	D145226	1	TUBE swing sequence valve drain, used on models with six spool backhoe valve, with or without demountable backhoe
37A	D145228	1	TUBE swing sequence valve drain, used on models with seven spool backhoe valve, with or without demountable backhoe, also used on models with optional rear hydraulic attachments
38	218-5107	1	ELBOW, 90 degree, adjustable, Includes: Ref. 39
39	237-6010	1	O-RING elbow
40	D134966	1	TUBE grease, right-hand swing cylinder
41	D134964	1	TUBE grease, left-hand swing cylinder
42	218-481	2	ELBOW, 90 degree, grease tube to cylinder
43	218-461	2	ADAPTER straight, grease tube coupler
44	219-1	2	FITTING grease, straight, 1/8" NPT
45	214-267	2	CLAMP grease tube to cylinder

B-320

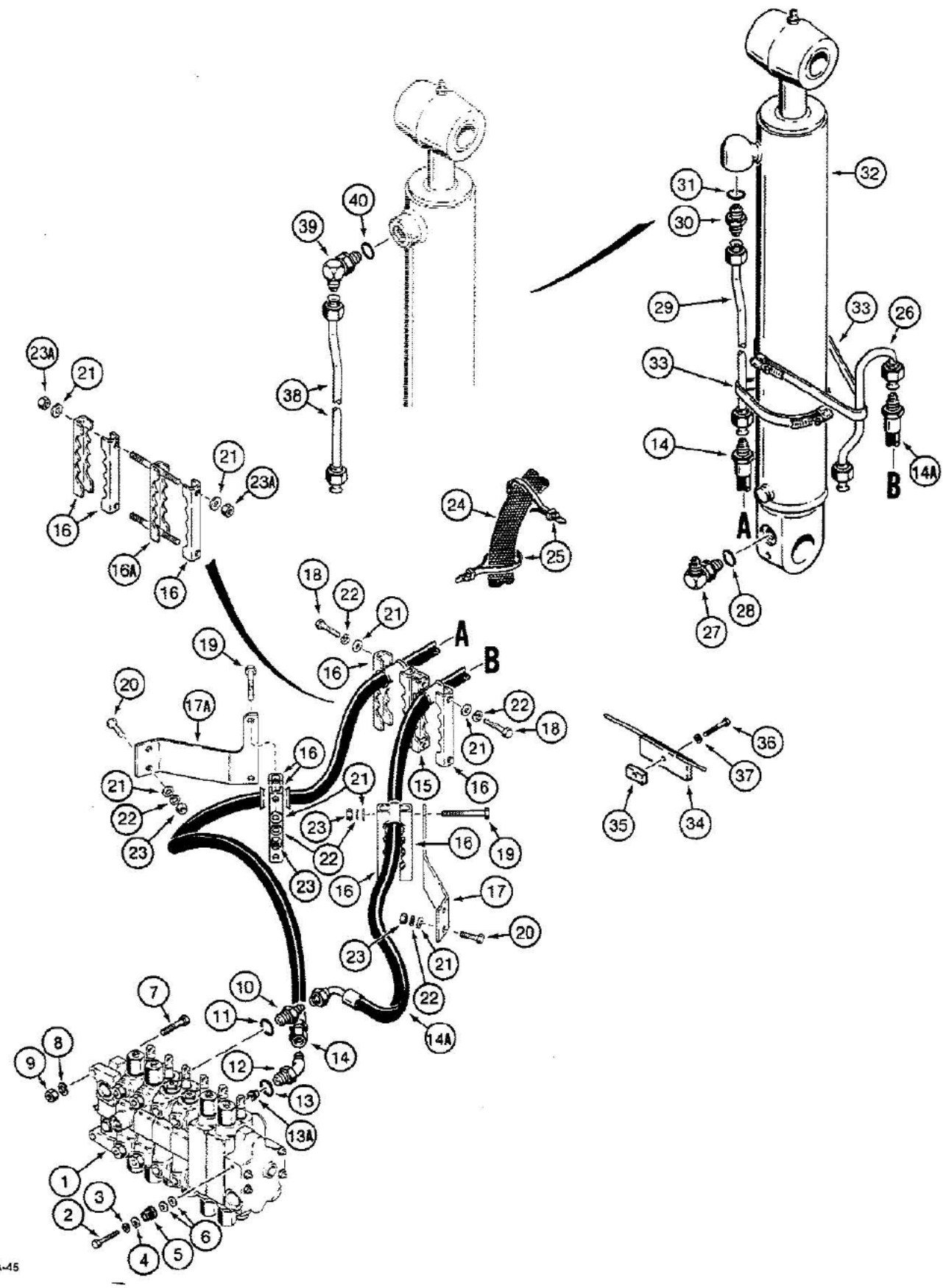

08-320 BACKHOE BOOM CYLINDER HYDRAULIC CIRCUIT

Ref	Part Number	Qty	Description
1	REF	1	VALVE ASSEMBLY control, backhoe, see Figure 08-370 or 08-372 for parts list, for mounting bracket see Figure 08-310 or 08-316
2	113-209	1	BOLT, Hex, 3/8"-16 x 1 1/2", G5
3	192-21	1	WASHER, LOCK, 3/8"
4	D52275	1	WASHER flat, 3/8", hardened
5	D52276	1	INSULATOR vibration
6	195-2030	2	WASHER flat, 3/8" bolt size, 13/32" ID x 7/8" OD x 1/16" thick
7	113-441	2	BOLT, Hex, 1/2"-13 x 2 1/4", G5
8	192-23	2	WASHER, LOCK, 1/2"
9	129-105	2	NUT, 1/2"-13, G5
10	218-5063	1	ADAPTER straight, boom section upper port, Includes: Ref. 11
11	237-6012	1	O-RING, 12-1, 90 Duro, .924 ID x .116" Thk, Adapter
12	218-5149	1	ELBOW, 45 degree, adjustable, boom section lower port, not used on models with boom lock, see Figure 08-346, Includes: Ref. 13
13	237-6012	1	O-RING, 12-1, 90 Duro, .924 ID x .116" Thk, Elbow
13A	D77182	1	RESTRICTOR boom section lower port
14	D140121	1	HOSE, 50-7/32" (1275 mm) long, boom cylinder rod end to boom section lower port, not used on models with boom lock, see Figure 08-346
14A	D140119	1	HOSE, 58-3/32" (1475 mm) long, boom cylinder closed end to boom section upper port
15	D140127	1	CLAMP hose, center, two-piece welded, no longer used, order P/N D92721 clamp and P/N D140552 clamp
16	D92721	6-7	CLAMP hose
16A	D140552	1	CLAMP with studs, used with (1) P/N D92721 clamp to replace two-piece welded clamp, Ref. 15, on some models
17	D140030	1	BRACKET right-hand side, support, rear hose clamps
17A	D140031	1	BRACKET left-hand side, support, rear hose clamps
18	113-421	4	BOLT, Hex, 1/2"-13 x 2", G5, If used
19	113-447	4	BOLT, Hex, 1/2"-13 x 3 1/2", G5
20	113-410	4	BOLT, Hex, 1/2"-13 x 1 1/2", G5, Full Thd
21	195-533	12	WASHER flat, 1/2", plated
22	192-23	8-12	WASHER, LOCK, 1/2"
23	129-105	8	NUT, 1/2"-13, G5
23A	131-70	4	NUT hex, self-locking, 1/2"-13 NC
24	D134728	2	SLEEVE hose guard
25	L18337	4	STRAP tie, hose, 15", nylon
26	D139401	1	TUBE boom cylinder closed end
27	218-5108	1	ELBOW, 90 degree, adjustable, at boom cylinder closed end, Includes: Ref. 28
28	237-6012	1	O-RING, 12-1, 90 Duro, .924 ID x .116" Thk, Elbow
29	D140336	1	TUBE at boom cylinder rod end, used with Ref. 30 connector, if used
30	218-5064	1	CONNECTOR straight, male, boom cylinder rod end, if used, Includes: Ref. 31
31	237-6012	1	O-RING, 12-1, 90 Duro, .924 ID x .116" Thk, Connector

08-320 BACKHOE BOOM CYLINDER HYDRAULIC CIRCUIT

Ref	Part Number	Qty	Description
32	REF	1	CYLINDER boom, for correct assembly and components, see Figures 08-420 thru 08-424
33	214-277	2	CLAMP tube to cylinder
34	D140105	1	BRACKET hose guide
35	D135667	1	PLATE bracket retainer
36	113-219	1	BOLT, Hex, 3/8"-16 x 2", G5
37	192-21	1	WASHER, LOCK, 3/8"
38	D141614	1	TUBE at boom cylinder rod end, used with Ref. 39 elbow, if used
39	218-5108	1	ELBOW, 90 degree, adjustable, at boom cylinder rod end, if used, Includes: Ref. 40
40	237-6012	1	O-RING, 12-1, 90 Duro, .924 ID x .116" Thk, Elbow

3-324

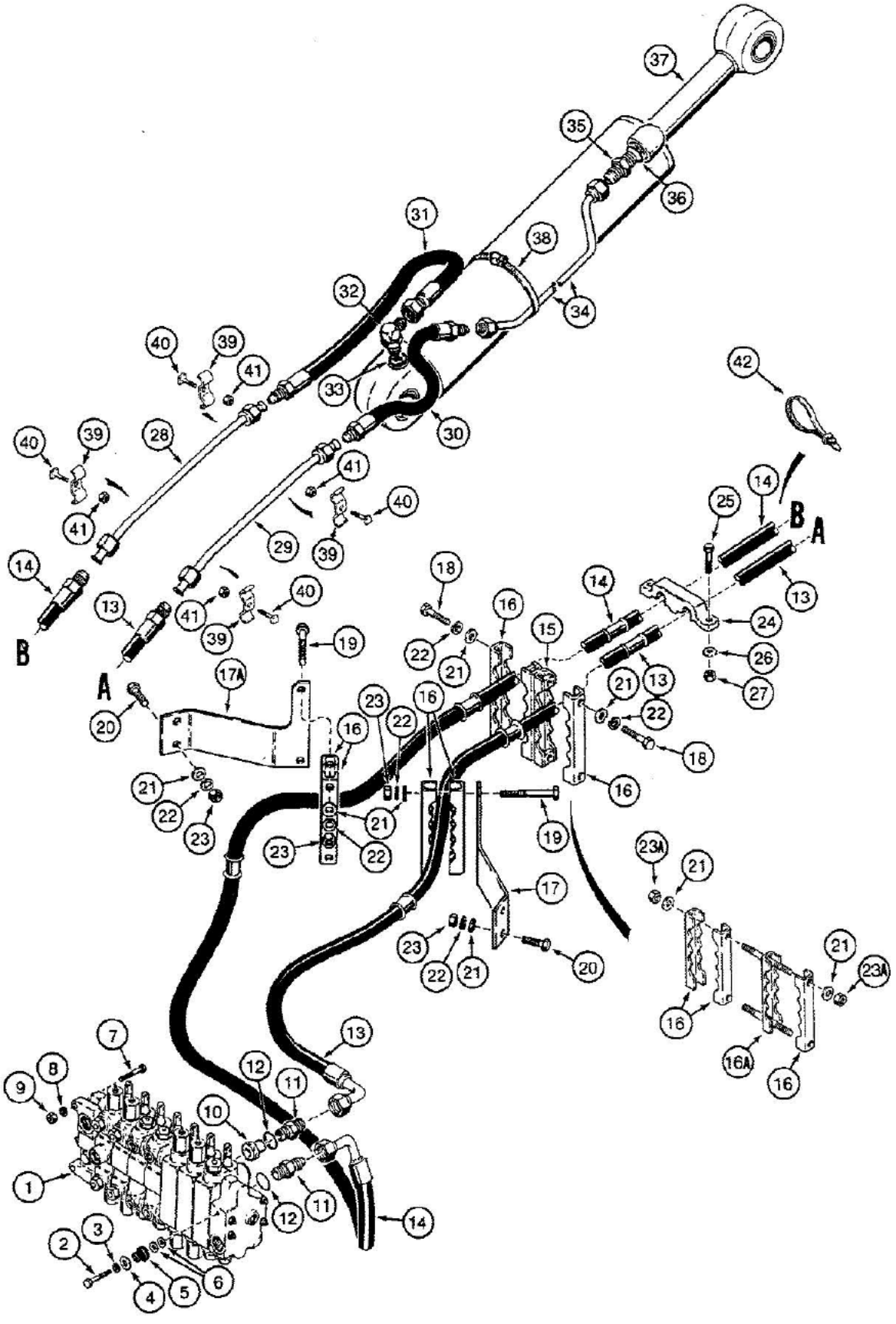

08-324 BACKHOE DIPPER CYLINDER HYDRAULIC CIRCUIT

Ref	Part Number	Qty	Description
1	REF	1	VALVE ASSEMBLY control, backhoe, see Figure 08-370 or 08-372 for parts list, for mounting bracket see Figure 08-310 or 08-316
2	113-209	1	BOLT, Hex, 3/8"-16 x 1 1/2", G5
3	192-21	1	WASHER, LOCK, 3/8"
4	D52275	1	WASHER flat, 3/8", hardened
5	D52276	1	INSULATOR vibration
6	195-2030	2	WASHER flat, 3/8" bolt size, 13/32" ID x 7/8" OD x 1/16" thick
7	113-441	2	BOLT, Hex, 1/2"-13 x 2 1/4", G5
8	192-23	2	WASHER, LOCK, 1/2"
9	129-105	2	NUT, 1/2"-13, G5
10	D140183	1	RESTRICTOR dipper section upper port
11	218-5063	2	ADAPTER straight, dipper section upper and lower ports, Includes: Ref. 12
12	237-6012	1	O-RING, 12-1, 90 Duro, .924 ID x .116" Thk, Adapter
13	D140120	1	HOSE, 55-1/8" (1400 mm) long, dipper section upper port
14	D140118	1	HOSE, 57-3/32" (1450 mm) long, dipper section lower port
15	D140127	1	CLAMP hose, center, two-piece welded, no longer used, order P/N D92721 clamp and P/N D140552 clamp
16	D92721	6-7	CLAMP hose
16A	D140552	1	CLAMP with studs, used with (1) P/N D92721 clamp to replace two-piece welded clamp, Ref. 15, on some models
17	D140030	1	BRACKET right-hand side, support, rear hose clamps
17A	D140031	1	BRACKET left-hand side, support, rear hose clamps
18	113-421	4	BOLT, Hex, 1/2"-13 x 2", G5, If used
19	113-447	4	BOLT, Hex, 1/2"-13 x 3 1/2", G5
20	113-410	4	BOLT, Hex, 1/2"-13 x 1 1/2", G5, Full Thd
21	195-533	12	WASHER flat, 1/2", plated
22	192-23	8-12	WASHER, LOCK, 1/2"
23	129-105	8	NUT, 1/2"-13, G5
23A	131-70	4	NUT hex, self-locking, 1/2"-13 NC
24	D127250	1	CLAMP hose, mounts to swing tower
25	113-425	2	BOLT, Hex, 1/2"-13 x 3", G5
26	195-533	2	WASHER flat, 1/2", plated
27	131-70	2	NUT hex, self-locking, 1/2"-13 NC, plated
28	D139901	1	TUBE left-hand side of boom, from dipper section lower port hose
29	D139903	1	TUBE right-hand side of boom, from dipper section upper port hose
30	D127687	1	HOSE, 15-3/4" (400 mm) long, at dipper cylinder rod end tube, The illustration shows this hose, P/N D127687, bent, but it should be straight
31	D140157	1	HOSE, 29-17/32" (750 mm) long, dipper cylinder closed end
32	218-5108	1	ELBOW, 90 degree, adjustable, dipper cylinder closed end, Includes: Ref. 33
33	237-6012	1	O-RING, 12-1, 90 Duro, .924 ID x .116" Thk, Elbow
34	D139898	1	TUBE dipper cylinder rod end

08-324 BACKHOE DIPPER CYLINDER HYDRAULIC CIRCUIT

Ref	Part Number	Qty	Description
35	218-5064	1	CONNECTOR straight, male, dipper cylinder rod end, Includes: Ref. 36
36	237-6012	1	O-RING, 12-1, 90 Duro, .924 ID x .116" Thk, Connector
37	REF	1	CYLINDER dipper, for correct assembly and components see Figure 08-426 or 08-428
38	214-273	1	CLAMP tube to cylinder
39	D127681	4	CLAMP tube to boom
40	17-616	4	BOLT square head, 3/8"-16 NC x 1", grade 2
41	131-666	4	NUT hex, self-locking, 3/8"-16 NC, plated
42	L18337	1	STRAP tie, 15", nylon

8-328

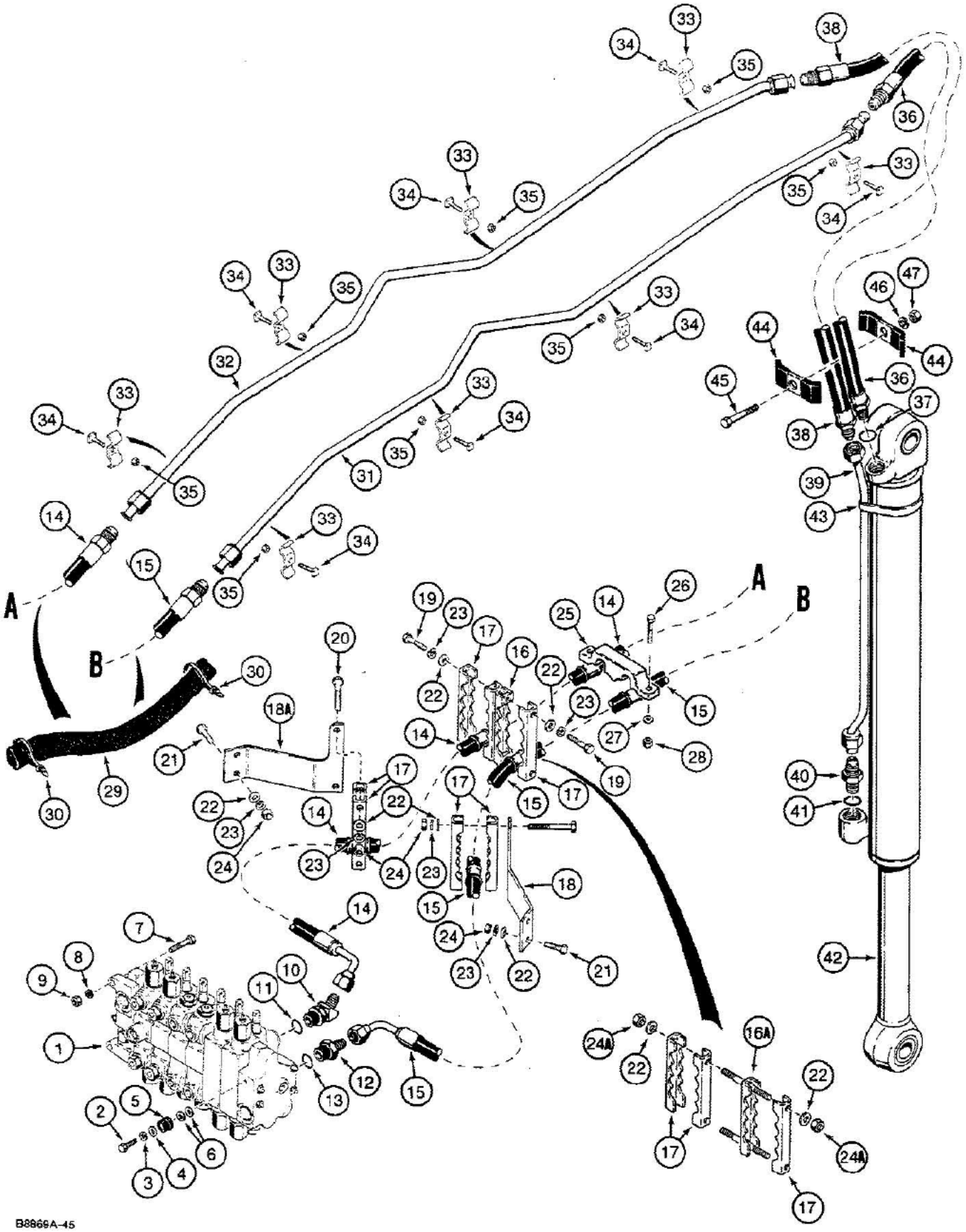

08-328 BACKHOE BUCKET CYLINDER HYDRAULIC CIRCUIT, MODELS WITHOUT EXTENDABLE DIPPER

Ref	Part Number	Qty	Description
1	REF	1	VALVE ASSEMBLY control, backhoe, see Figure 08-370 for parts list, for mounting bracket see Figure 08-310 or 08-316
2	113-209	1	BOLT, Hex, 3/8"-16 x 1 1/2", G5
3	192-21	1	WASHER, LOCK, 3/8"
4	D52275	1	WASHER flat, 3/8", hardened
5	D52276	1	INSULATOR vibration
6	195-2030	2	WASHER flat, 3/8" bolt size, 13/32" ID x 7/8" OD x 1/16" thick
7	113-441	2	BOLT, Hex, 1/2"-13 x 2 1/4", G5
8	192-23	2	WASHER, LOCK, 1/2"
9	129-105	2	NUT, 1/2"-13, G5
10	218-5149	1	ELBOW, 45 degree, adjustable, bucket section upper port, Includes: Ref. 11
11	237-6012	1	O-RING, 12-1, 90 Duro, .924 ID x .116" Thk, Elbow
12	218-5063	1	ADAPTER straight, bucket section lower port, Includes: Ref. 13
13	237-6012	1	O-RING, 12-1, 90 Duro, .924 ID x .116" Thk, Adapter
14	D140117	1	HOSE, 74-13/16" (1900 mm) long, bucket section upper port
15	D140152	1	HOSE, 60-1/16" (1525 mm) long, bucket section lower port, P/N D140152 is the replacement for P/N D127688 and P/N D127689 in the model 580K, 8-3461 catalog.
16	D140127	1	CLAMP hose, center, two piece welded, no longer used, order P/N D92721 clamp and P/N D140552 clamp
16A	D140552	1	CLAMP with studs, used with (1) P/N D92721 clamp to replace two piece welded clamp, Ref. 16, on some models
17	D92721	6-7	CLAMP hose
18	D140030	1	BRACKET right-hand side, support, rear hose clamps
18A	D140031	1	BRACKET left-hand side, support, rear hose clamps
19	113-421	4	BOLT, Hex, 1/2"-13 x 2", G5, If used
20	113-447	4	BOLT, Hex, 1/2"-13 x 3 1/2", G5
21	113-410	4	BOLT, Hex, 1/2"-13 x 1 1/2", G5, Full Thd
22	195-533	12	WASHER flat, 1/2", plated
23	192-23	8-12	WASHER, LOCK, 1/2"
24	129-105	8	NUT, 1/2"-13, G5
24A	131-70	1	NUT hex, self-locking, 1/2"-13 NC
25	D127250	1	CLAMP hose, mounts to swing tower
26	113-425	2	BOLT, Hex, 1/2"-13 x 3", G5
27	195-533	2	WASHER flat, 1/2", plated
28	131-70	2	NUT hex, self-locking, 1/2"-13 NC, plated
29	D132054	2	SLEEVE hose guard
30	L18337	4	STRAP tie, hose, 15", nylon
31	D140156	1	TUBE right-hand side of boom, to bucket cylinder closed end hose
32	D140154	1	TUBE left-hand side of boom, to bucket cylinder rod end hose
33	D127681	8	CLAMP tube to boom
34	17-616	8	BOLT square head, 3/8"-16 NC x 1", grade 2

08-328 BACKHOE BUCKET CYLINDER HYDRAULIC CIRCUIT, MODELS WITHOUT EXTENDABLE DIPPER

Ref	Part Number	Qty	Description
35	131-666	8	NUT hex, self-locking, 3/8"-16 NC, plated
36	D136489	1	HOSE, 25-7/32" (640 mm) long, to closed end of bucket cylinder, Includes: Ref. 37, For hoses used on models with auxiliary hydraulics for optional rear hydraulic attachments, see Figure 08-338
37	237-6012	1	O-RING, 12-1, 90 Duro, .924 ID x .116" Thk, Hose
38	D136488	1	HOSE, 25-7/32" (640 mm) long, to bucket cylinder rod end tube, For hoses used on models with auxiliary hydraulics for optional rear hydraulic attachments, see Figure 08-338
39	D141248	1	TUBE to rod end of bucket cylinder
40	218-5064	1	CONNECTOR straight, male, at rod end of bucket cylinder, Includes: Ref. 41
41	237-6012	1	O-RING, 12-1, 90 Duro, .924 ID x .116" Thk, Connector
42	G110597	1	CYLINDER bucket, see Figure 08-430
43	214-269	1	CLAMP tube to cylinder
44	D40236	2	CLAMP hose
45	113-213	1	BOLT, Hex, 3/8"-16 x 2 1/4", G5
46	192-21	1	WASHER, LOCK, 3/8"
47	129-103	1	NUT, 3/8"-16, G5

08-332 BACKHOE BUCKET CYLINDER HYDRAULIC CIRCUIT, MODELS WITH EXTENDABLE DIPPER

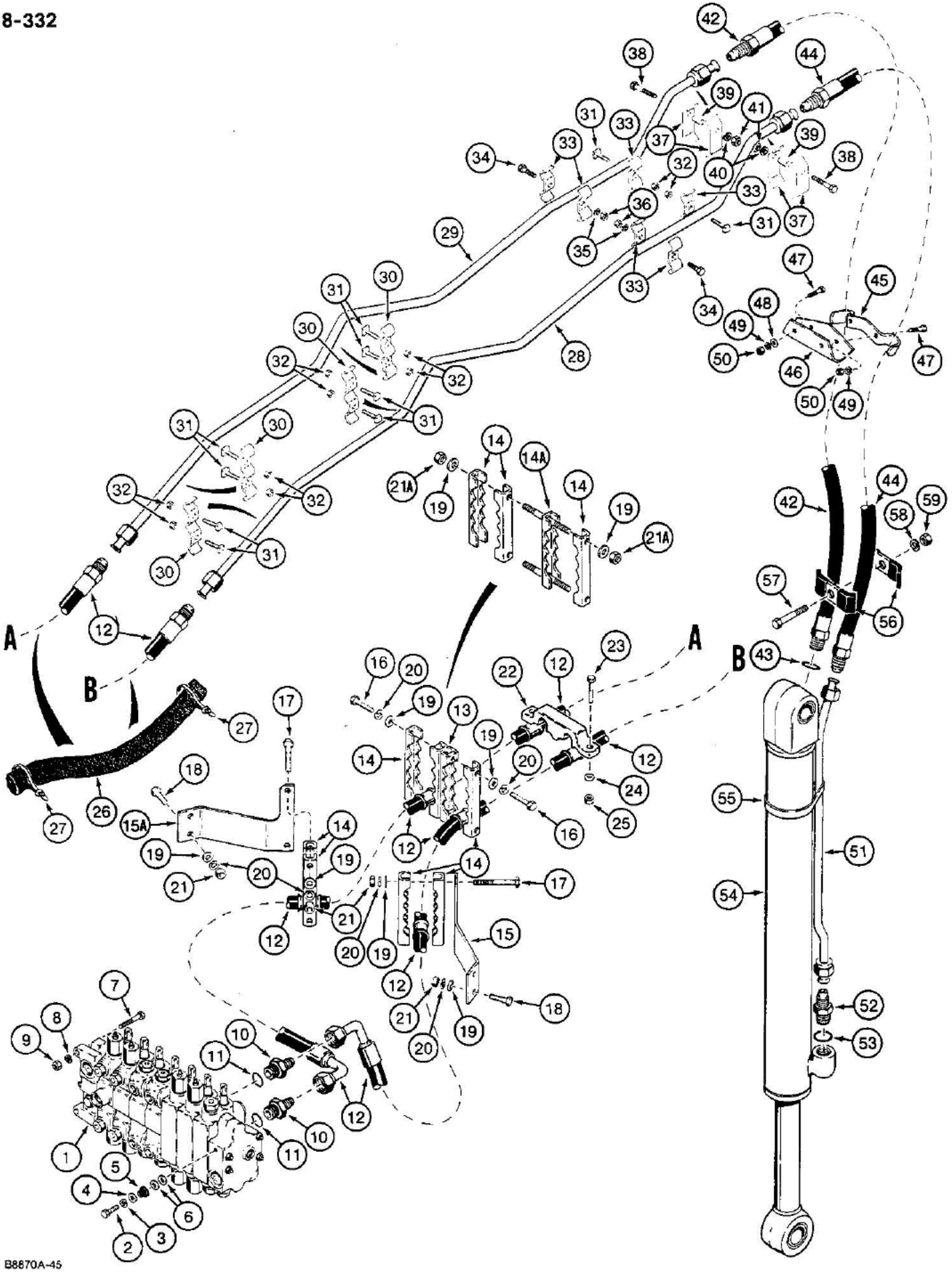

08-332 BACKHOE BUCKET CYLINDER HYDRAULIC CIRCUIT, MODELS WITH EXTENDABLE DIPPER

Ref	Part Number	Qty	Description
1	REF	1	VALVE ASSEMBLY control, backhoe, see Figure 08-372 for parts list, for mounting bracket see Figure 08-310 or 08-316
2	113-209	1	BOLT, Hex, 3/8"-16 x 1 1/2", G5
3	192-21	1	WASHER, LOCK, 3/8"
4	D52275	1	WASHER flat, 3/8", hardened
5	D52276	1	INSULATOR vibration
6	195-2030	2	WASHER flat, 3/8" bolt size, 13/32" ID x 7/8" OD x 1/16" thick
7	113-441	2	BOLT, Hex, 1/2"-13 x 2 1/4", G5
8	192-23	2	WASHER, LOCK, 1/2"
9	129-105	2	NUT, 1/2"-13, G5
10	218-5063	2	ADAPTER straight, bucket section, Includes: Ref. 11
11	237-6012	1	O-RING, 12-1, 90 Duro, .924 ID x .116" Thk, Adapter
12	D140152	2	HOSE, 60-1/16" (1525 mm) long, at backhoe valve bucket section, P/N D140152 is the replacement for P/N D127688 and P/N D127689 in the model 580K, 8-3461 catalog.
13	D140127	1	CLAMP hose, center, two-piece welded, no longer used, order P/N D92721 clamp and P/N D140552 clamp
14	D92721	6-7	CLAMP hose
14A	D140552	1	CLAMP with studs, used with (1) P/N D92721 clamp to replace two-piece welded clamp, Ref. 13, on some models
15	D140030	1	BRACKET right-hand side, support, rear hose clamps
15A	D140031	1	BRACKET left-hand side, support, rear hose clamps
16	113-421	4	BOLT, Hex, 1/2"-13 x 2", G5, If used
17	113-447	4	BOLT, Hex, 1/2"-13 x 3 1/2", G5
18	113-410	4	BOLT, Hex, 1/2"-13 x 1 1/2", G5, Full Thd
19	195-533	12	WASHER flat, 1/2", plated
20	192-23	8-12	WASHER, LOCK, 1/2"
21	129-105	8	NUT, 1/2"-13, G5
21A	131-70	4	NUT hex, self-locking, 1/2"-13 NC
22	D127250	1	CLAMP hose, mounts to swing tower
23	113-425	2	BOLT, Hex, 1/2"-13 x 3", G5
24	195-533	2	WASHER flat, 1/2", plated
25	131-70	2	NUT hex, self-locking, 1/2"-13 NC, plated
26	D132054	2	SLEEVE hose guard
27	L18337	4	STRAP tie, hose, 15", nylon
28	D138057	1	TUBE right-hand side of boom, to bucket cylinder rod end hose
29	D138059	1	TUBE left-hand side of boom, to bucket cylinder closed end hose
30	D127682	4	CLAMP tube to boom
31	17-616	10	BOLT square head, 3/8"-16 NC x 1", grade 2
32	131-666	10	NUT hex, self-locking, 3/8"-16 NC, plated
33	D127681	6	CLAMP tube to boom
34	113-208	2	BOLT, Hex, 3/8"-16 x 1 1/4", G5, Full Thd

08-332 BACKHOE BUCKET CYLINDER HYDRAULIC CIRCUIT, MODELS WITH EXTENDABLE DIPPER

Ref	Part Number	Qty	Description
35	192-21	2	WASHER, LOCK, 3/8"
36	129-103	2	NUT, 3/8"-16, G5
37	D143426	4	CLAMP bucket tube to boom, plated
38	113-213	2	BOLT, Hex, 3/8"-16 x 2 1/4", G5
39	D143412	2	SPACER tube clamp, plated
40	192-21	2	WASHER, LOCK, 3/8"
41	129-103	2	NUT, 3/8"-16, G5
42	D137800	1	HOSE, 74-13/16" (1900 mm) long, to closed end of bucket cylinder, Includes: Ref. 43
43	237-6012	1	O-RING, 12-1, 90 Duro, .924 ID x .116" Thk, Hose
44	D137799	1	HOSE, 76" (1930 mm) long, to bucket cylinder rod end tube
45	D140221	1	CLAMP hose to dipper
46	D140220	1	BRACKET hose clamp, if used
47	113-208	2-4	BOLT, Hex, 3/8"-16 x 1 1/4", G5, Full Thd
48	195-525	2	WASHER flat, 3/8", plated, if used
49	192-21	2-4	WASHER, LOCK, 3/8"
50	129-103	2-4	NUT, 3/8"-16, G5
51	D141248	1	TUBE to rod end of bucket cylinder
52	218-5064	1	CONNECTOR straight, male, at rod end of bucket cylinder, Includes: 53
53	237-6012	1	O-RING, 12-1, 90 Duro, .924 ID x .116" Thk, Connector
54	G110597	1	CYLINDER bucket, see Figure 08-430
55	214-269	1	CLAMP tube to cylinder
56	D40236	2	CLAMP hose
57	113-213	1	BOLT, Hex, 3/8"-16 x 2 1/4", G5
58	192-21	1	WASHER, LOCK, 3/8"
59	129-103	1	NUT, 3/8"-16, G5

08-336 BACKHOE EXTENDABLE DIPPER HYDRAULIC CIRCUIT

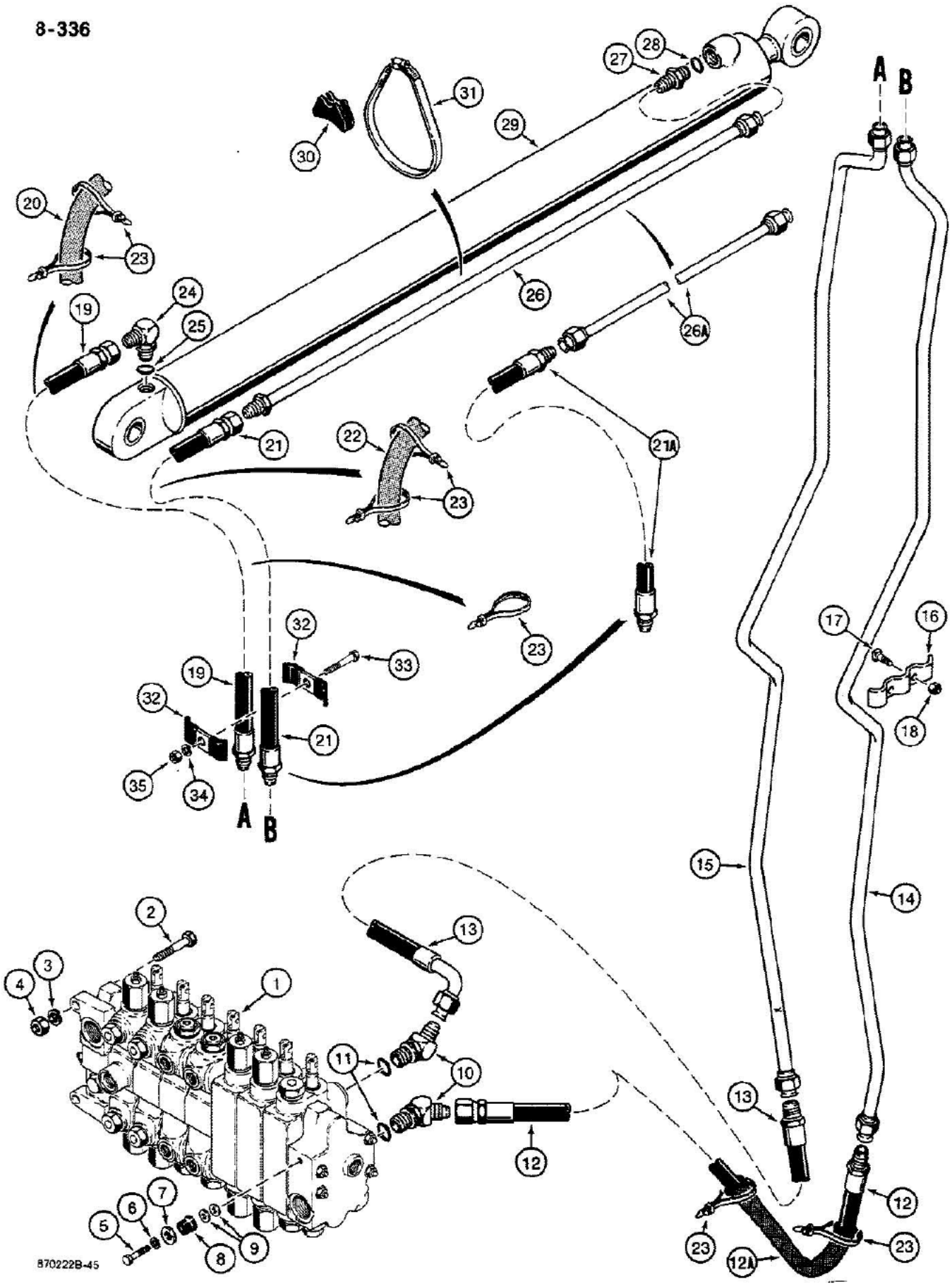

08-336 BACKHOE EXTENDABLE DIPPER HYDRAULIC CIRCUIT

Ref	Part Number	Qty	Description
1	REF	1	VALVE ASSEMBLY control, backhoe, extendahoe, see Figure 08-372 for parts list, for mounting bracket see Figure 08-310 or 08-316
2	113-441	2	BOLT, Hex, 1/2"-13 x 2 1/4", G5
3	192-23	2	WASHER, LOCK, 1/2"
4	129-105	2	NUT, 1/2"-13, G5
5	113-209	1	BOLT, Hex, 3/8"-16 x 1 1/2", G5
6	192-21	1	WASHER, LOCK, 3/8"
7	D52275	1	WASHER flat, 3/8", hardened
8	D52276	1	INSULATOR vibration
9	195-2030	2	WASHER flat, 3/8" bolt size, 13/32" ID x 7/8" OD x 1/16" thick
10	218-5149	2	ELBOW, 45 degree, adjustable, extendable dipper section upper and lower ports, Includes: Ref. 11
11	237-6012	1	O-RING, 12-1, 90 Duro, .924 ID x .116" Thk, Elbow
12	D140130	1	HOSE, 53-5/32" (1350 mm) long, extendahoe section lower port to boom extendable dipper right-hand tube
13	D140117	1	HOSE, 74-13/16" (1900 mm) long, extendahoe section upper port to boom extendable dipper left-hand tube
14	D140055	1	TUBE right-hand side of boom, to extendable dipper cylinder rod end hose, For tubes used on models with auxiliary hydraulics for optional rear attachments, see Figure 08-342.
15	D140053	1	TUBE left-hand side of boom, to extendable dipper cylinder closed end hose, For tubes used on models with auxiliary hydraulics for optional rear attachments, see Figure 08-342.
16	D143421	4	CLAMP boom tubes, plated
17	17-616	8	BOLT square head, 3/8"-16 NC x 1", grade 2
18	131-666	8	NUT hex, self-locking, 3/8"-16 NC, plated
19	D134095	1	HOSE, 27-9/16" (700 mm) long, extendable dipper cylinder closed end
20	D134729	1	SLEEVE hose guard, cylinder closed end hose
21	D140193	1	HOSE, 33-15/32" (850 mm) long, P/N G106708 extendable dipper cylinder rod end
21A	D140708	1	HOSE, 33-15/32" (850 mm) long, P/N 1980200C1 extendable dipper cylinder rod end
22	D134728	1	SLEEVE hose guard, cylinder rod end hose
23	L18337	5	STRAP tie, hose, 15", nylon
24	218-5107	1	ELBOW, 90 degree, adjustable, cylinder closed end, Includes: Ref. 25
25	237-6010	1	O-RING elbow
26	D134089	1	TUBE, P/N G106708 extendable dipper cylinder rod end
26A	D140706	1	TUBE, P/N 1980200C1 extendable dipper cylinder rod end
27	218-5062	1	CONNECTOR straight, extendable dipper cylinder rod end, Includes: Ref. 28
28	237-6010	1	O-RING connector
29	REF	1	CYLINDER extendable dipper, for correct assembly and components see Figure 08-432
30	D38648	1	INSULATOR rubber
31	214-267	1	CLAMP tube to cylinder
32	D40236	2	CLAMP hose
33	113-219	1	BOLT, Hex, 3/8"-16 x 2", G5
34	192-21	1	WASHER, LOCK, 3/8"

08-336 BACKHOE EXTENDABLE DIPPER HYDRAULIC CIRCUIT

Ref	Part Number	Qty	Description
35	129-103	1	NUT, 3/8"-16, G5

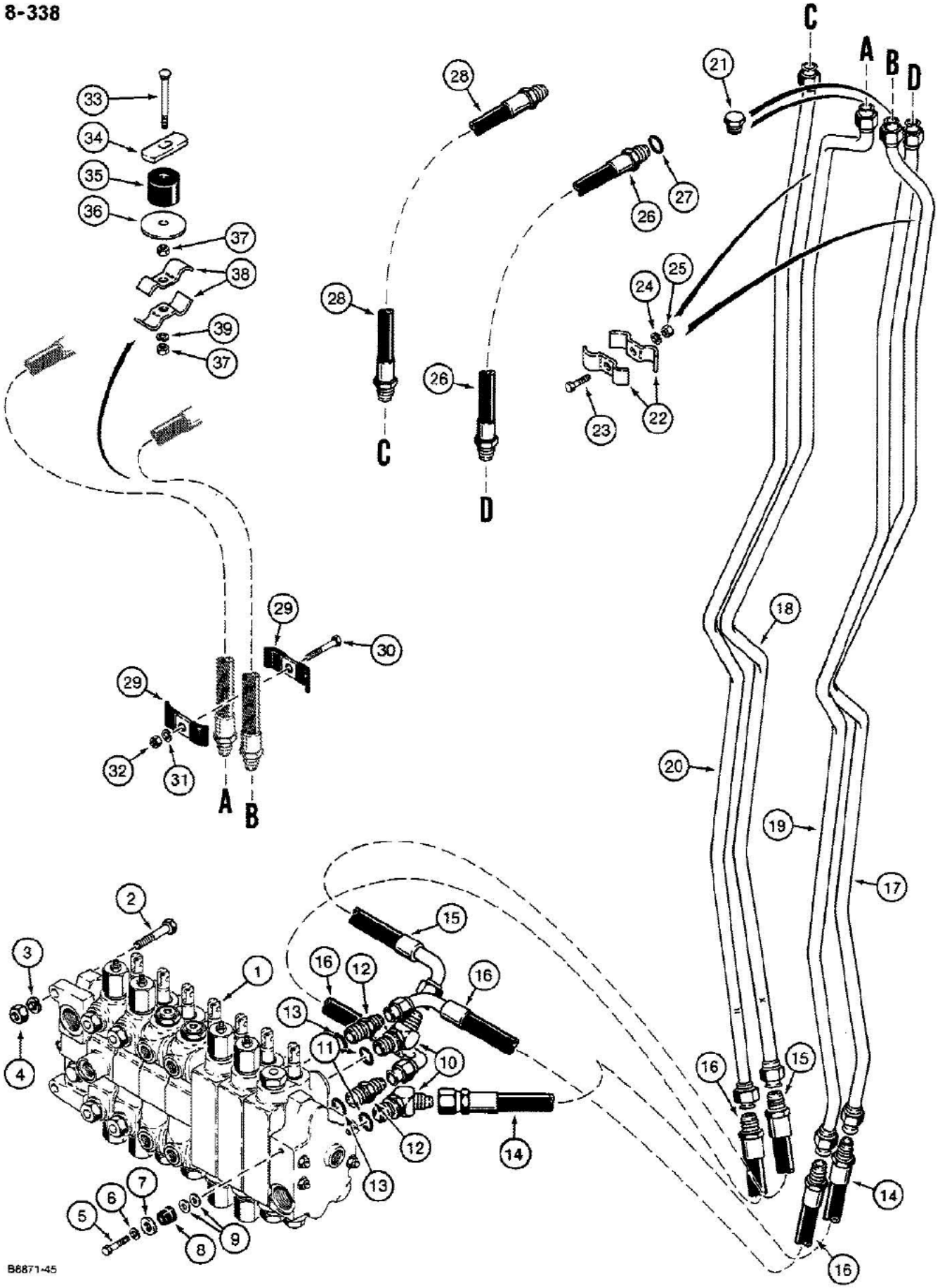
8-338
C
A
B
D
1
2
3
4
5
6
7
8
9
10
11
12
13
14
15
16
17
18
19
20
21
22
23
24
25
26
27
28
29
30
31
32
33
34
35
36
37
38
39
B6871-45

08-338 SPECIAL PARTS USED ON MODELS W/AUX. HYD. FOR OPTIONAL REAR HYD. ATTACHMENTS W/O EXTENDABLE DIPP

Ref	Part Number	Qty	Description
1	G109979	1	VALVE ASSEMBLY control, backhoe, 7-spool, see Figure 08-372, used on models with extendable dipper or models with auxiliary hydraulics, for mounting bracket see Figure 08-310 or 08-316
2	113-441	2	BOLT, Hex, 1/2"-13 x 2 1/4", G5
3	192-23	2	WASHER, LOCK, 1/2"
4	129-105	2	NUT, 1/2"-13, G5
5	113-209	1	BOLT, Hex, 3/8"-16 x 1 1/2", G5
6	192-21	1	WASHER, LOCK, 3/8"
7	D52275	1	WASHER flat, 3/8", hardened
8	D52276	1	INSULATOR vibration
9	195-2030	2	WASHER flat, 3/8" bolt size, 13/32" ID x 7/8" OD x 1/16" thick
10	218-5149	2	ELBOW, 45 degree, adjustable, auxiliary section upper and lower ports, Includes: Ref. 11
11	237-6012	1	O-RING, 12-1, 90 Duro, .924 ID x .116" Thk, Elbow
12	218-5063	2	ADAPTER straight, bucket section upper and lower ports, Includes: Ref. 13
13	237-6012	1	O-RING, 12-1, 90 Duro, .924 ID x .116" Thk, Adapter
14	D140130	1	HOSE, 53-5/32" (1350 mm) long, auxiliary section lower port to boom auxiliary right hand tube
15	D140117	1	HOSE, 74-13/16" (1900 mm) long, auxiliary section upper port to boom auxiliary left hand tube
16	D140152	2	HOSE, 60-1/16" (1525 mm) long, bucket section upper and lower ports, P/N D140152 is the replacement for P/N D127688 and P/N D127689
17	D140055	1	TUBE right-hand side of boom to rear attachment hose, Connecting hoses at dipper shall be supplied by the customer for use with their particular optional rear hydraulic attachment
18	D140053	1	TUBE left-hand side of boom to rear attachment hose, Connecting hoses at dipper shall be supplied by the customer for use with their particular optional rear hydraulic attachment
19	D140156	1	TUBE right-hand side of boom to bucket cylinder closed end hose
20	D140154	1	TUBE left-hand side of boom to bucket cylinder rod end hose
21	218-777	2	PLUG hex head, tube, not required when rear attachment hoses are installed
22	D127681	4	CLAMP boom tubes
23	113-208	2	BOLT, Hex, 3/8"-16 x 1 1/4", G5, Full Thd
24	192-21	2	WASHER, LOCK, 3/8"
25	129-103	2	NUT, 3/8"-16, G5
26	D140303	1	HOSE, 34-1/2" (875 mm) long, to closed end of bucket cylinder, Includes: Ref. 27
27	237-6012	1	O-RING, 12-1, 90 Duro, .924 ID x .116" Thk, Hose
28	D140302	1	HOSE, 34-1/2" (875 mm) long, to rod end of bucket cylinder
29	D40236	2	CLAMP hose
30	113-219	1	BOLT, Hex, 3/8"-16 x 2", G5
31	192-21	1	WASHER, LOCK, 3/8"
32	129-103	1	NUT, 3/8"-16, G5
33	27455R1	1	BOLT carriage, 3/8"-16 NC x 3-1/2", plated
34	D140188	1	PLATE anchor, mounts hoses to underside of dipper frame
35	D140187	1	SPACER hose
36	D140189	1	WASHER special
37	129-103	2	NUT, 3/8"-16, G5

08-338 SPECIAL PARTS USED ON MODELS W/AUX. HYD. FOR OPTIONAL REAR HYD. ATTACHMENTS W/O EXTENDABLE DIPP

Ref	Part Number	Qty	Description
38	D127681	2	CLAMP hose
39	192-21	1	WASHER, LOCK, 3/8"

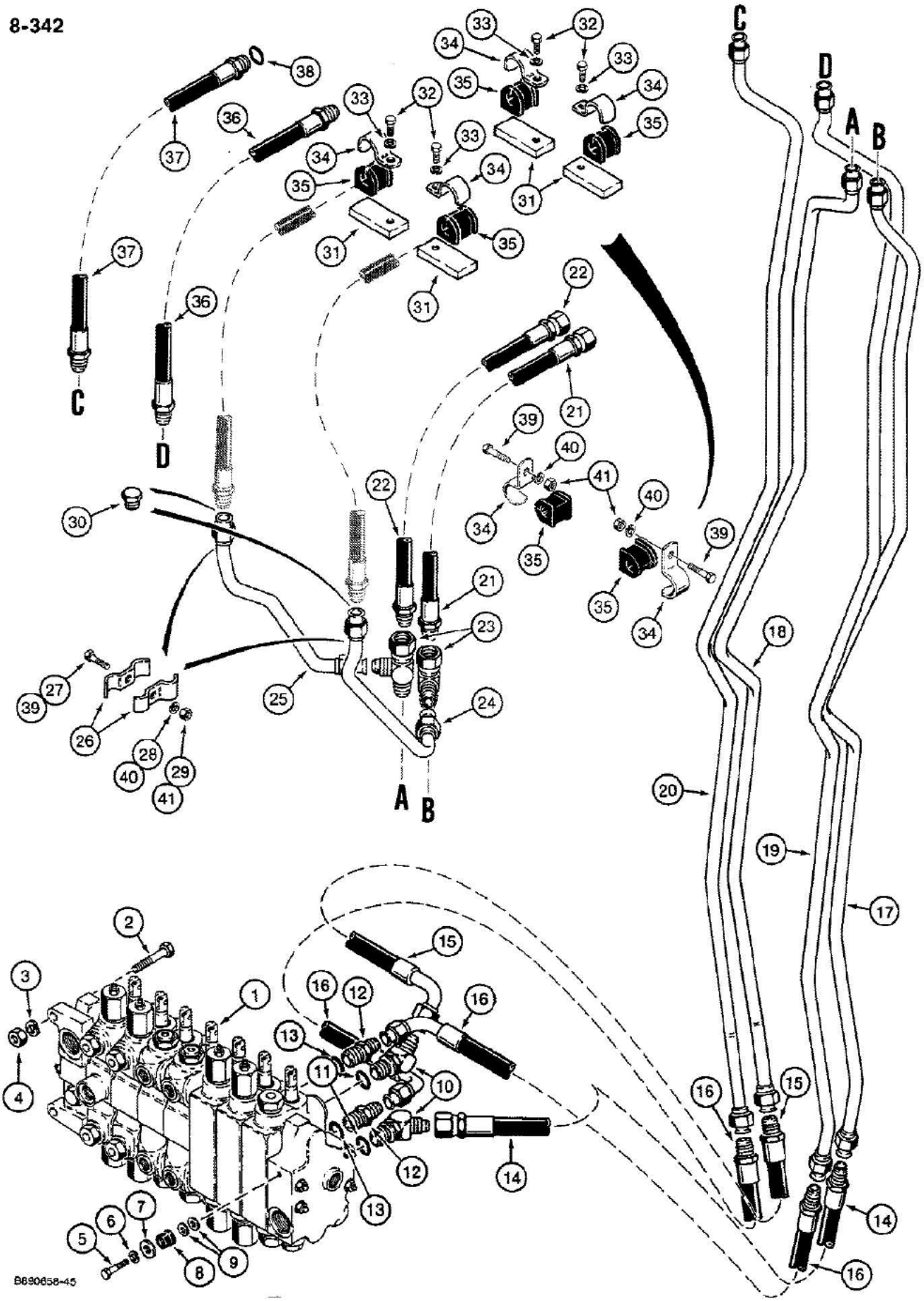
8-342
C
D
A
B
B690658-45

08-342 SPECIAL PARTS USED ON MODELS WITH AUX. HYD. FOR OPTIONAL REAR HYD. ATTACHMENTS W/EXTENDABLE DIP

Ref	Part Number	Qty	Description
1	G109979	1	VALVE ASSEMBLY control, backhoe, 7-spool, see Figure 08-372, used on models with extendable dipper or models with auxiliary hydraulics, for mounting bracket see Figure 08-310 or 08-316
2	113-441	2	BOLT, Hex, 1/2"-13 x 2 1/4", G5
3	192-23	2	WASHER, LOCK, 1/2"
4	129-105	2	NUT, 1/2"-13, G5
5	113-209	1	BOLT, Hex, 3/8"-16 x 1 1/2", G5
6	192-21	1	WASHER, LOCK, 3/8"
7	D52275	1	WASHER flat, 3/8", hardened
8	D52276	1	INSULATOR vibration
9	195-2030	2	WASHER flat, 3/8" bolt size, 13/32" ID x 7/8" OD x 1/16" thick
10	218-5149	2	ELBOW, 45 degree, adjustable, auxiliary section upper and lower ports, Includes: Ref. 11
11	237-6012	1	O-RING, 12-1, 90 Duro, .924 ID x .116" Thk, Elbow
12	218-5063	2	ADAPTER straight, bucket section upper and lower ports, Includes: Ref.13
13	237-6012	1	O-RING, 12-1, 90 Duro, .924 ID x .116" Thk, Adapter
14	D140130	1	HOSE, 53-5/32" (1350 mm) long, auxiliary section lower port to boom auxiliary right hand tube
15	D140117	1	HOSE, 74-13/16" (1900 mm) long, auxiliary section upper port to boom auxiliary left hand tube
16	D140152	2	HOSE, 60-1/16" (1525 mm) long, bucket section upper and lower ports, P/N D140152 is the replacement for K D127688 and P/N D127689 in the model 580K, 8-3461 catalog.
17	D140318	1	TUBE right-hand side of boom to rear attachment hose
18	D140320	1	TUBE left-hand side of boom to rear attachment hose
19	D138057	1	TUBE right-hand side of boom to bucket cylinder rod end hose
20	D138059	1	TUBE left-hand side of boom to bucket cylinder closed end hose
21	D140193	1	HOSE, 33-15/32" (850 mm) long, to extendable dipper cylinder rod end tube
22	D134095	1	HOSE, 27-9/16" (700 mm) long, to extendable dipper cylinder closed end
23	218-5221	2	TEE adjustable
24	D140322	1	TUBE right-hand side of boom, for connecting optional rear attachment hose, Connecting hoses at these tubes shall be supplied by the customer for use with their particular optional rear hydraulic attachment
25	D140324	1	TUBE left-hand side of boom, for connecting optional rear attachment hose, Connecting hoses at these tubes shall be supplied by the customer for use with their particular optional rear hydraulic attachment
26	D127681	4	CLAMP tubes
27	113-208	2	BOLT, Hex, 3/8"-16 x 1 1/4", G5, Full Thd, Used with 2 piece outer extendable dipper member
28	192-21	2	WASHER, LOCK, 3/8", Used with 2 piece outer extendable dipper member
30	218-777	2	PLUG hex head, tube, not required when rear attachment hoses are installed
31	D68529	4	BLOCK tapped, for mounting rear attachment hoses to extendable dipper frame, used with two piece outer extendable dipper member
32	113-205	4	BOLT, Hex, 3/8"-16 x 5/8", G5, Full Thd, Used with two piece outer extendable dipper member
33	192-21	4	WASHER, LOCK, 3/8", Used with 2 piece outer extendable dipper member
34	D68846	4	CLAMP hose
35	D67297	4	INSULATOR, 1"

08-342 SPECIAL PARTS USED ON MODELS WITH AUX. HYD. FOR OPTIONAL REAR HYD. ATTACHMENTS W/EXTENDABLE DIP

Ref	Part Number	Qty	Description
36	D137799	1	HOSE, 76" (1930 mm) long, to bucket cylinder rod end tube
37	D137800	1	HOSE, 74-13/16" (1900 mm) long, to closed end of bucket cylinder, Includes: Ref. 38
38	237-6012	1	O-RING, 12-1, 90 Duro, .924 ID x .116" Thk, Hose
40	492-11038	6	3/8", used with one piece outer extendable dipper member
41	425-106	6	NUT, 3/8"-16, G5, Used with one piece outer extendable dipper member

8-346

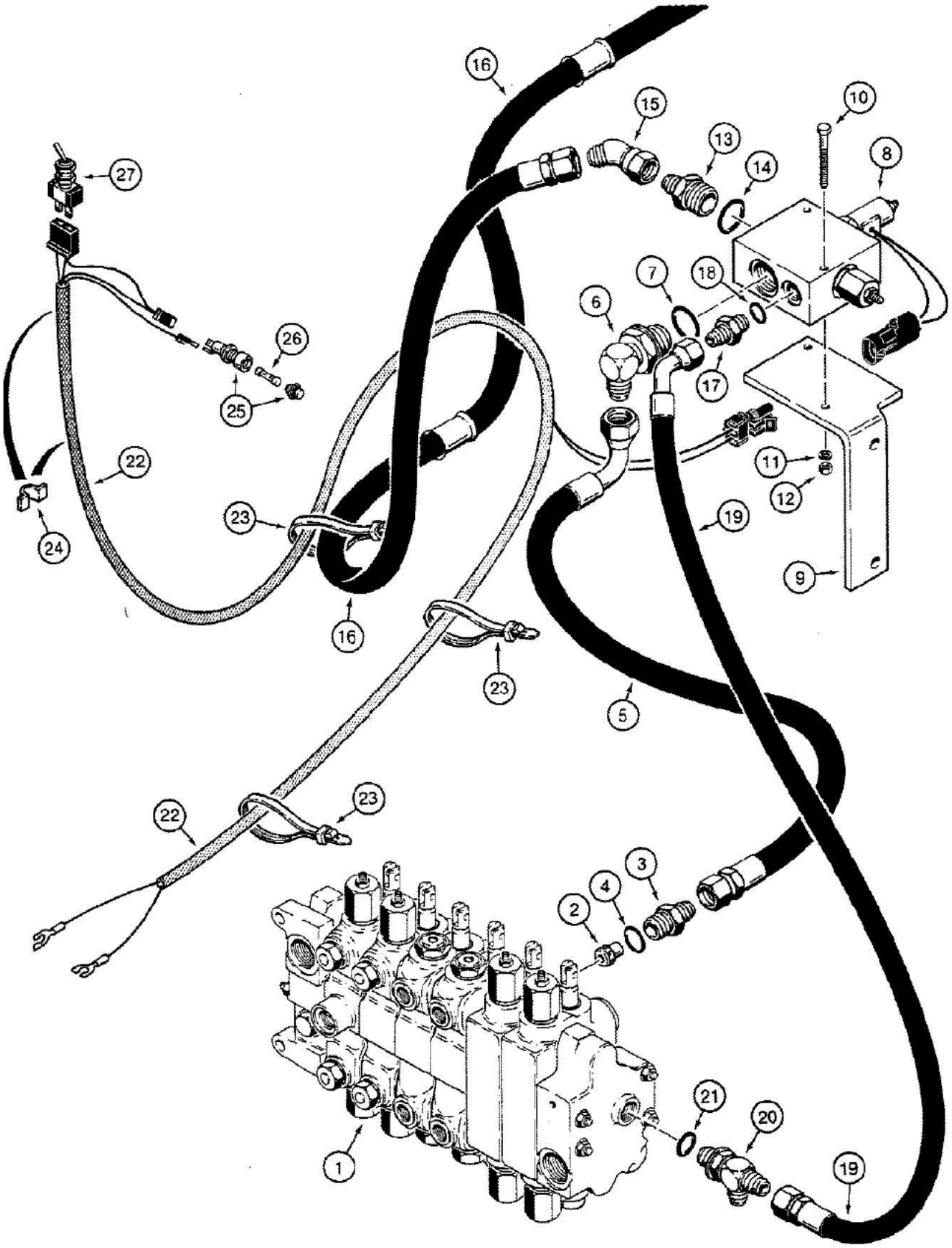

B2204A88W

08-346 BACKHOE BOOM LOCK, HYDRAULIC AND ELECTRICAL CIRCUIT

Ref	Part Number	Qty	Description
1	REF	1	VALVE ASSEMBLY backhoe control, for correct assembly and components see Figure 08-370 or 08-372
2	D77182	1	RESTRICTOR boom section lower port
3	D99170	1	ADAPTER straight, special, boom section lower port, Includes: Ref. 4
4	237-6012	1	O-RING, 12-1, 90 Duro, .924 ID x .116" Thk, Adapter
5	D141974	1	HOSE, 18" (457 mm) long, backhoe control valve to boom lock valve
6	218-5118	1	ELBOW, 90 degree, adjustable, Includes: Ref. 7
7	237-6016	1	O-RING elbow
8	D139523	1	VALVE ASSEMBLY solenoid, backhoe boom lock, see Figure 08-394
9	D141871	1	BRACKET valve mounting, uses existing right-hand support bracket hose clamp hardware
10	113-119	2	BOLT, Hex, 5/16"-18 x 2 3/4", G5
11	192-20	2	WASHER, LOCK, 5/16"
12	9635082	2	NUT, 5/16"-18, G5
13	218-5078	1	ADAPTER straight, Includes: Ref. 14
14	237-6016	1	O-RING adapter
15	218-5174	1	ELBOW, 45 degree, swivel
16	D141966	1	HOSE, 60-7/8" (1545 mm) long, boom lock valve to boom cylinder rod end
17	218-5059	1	CONNECTOR straight, male, Includes: Ref. 18
18	237-6008	1	O-RING, 8-1, 90 Duro, .644" ID x .087" Thk, Connector
19	D141967	1	HOSE, 18-7/8" (478 mm) long, return
20	218-5241	1	TEE adjustable, Includes: Ref. 21
21	237-6016	1	O-RING tee
22	D141972	1	HARNESS boom lock
23	L18337	3	STRAP tie, harness, 15", nylon
24	F93268	2	CLIP harness
25	A22874	1	RETAINER fuse, at backhoe control tower
26	223-38	1	FUSE, 3 ampere, boom lock
27	D67251	1	SWITCH toggle, boom lock

8-348

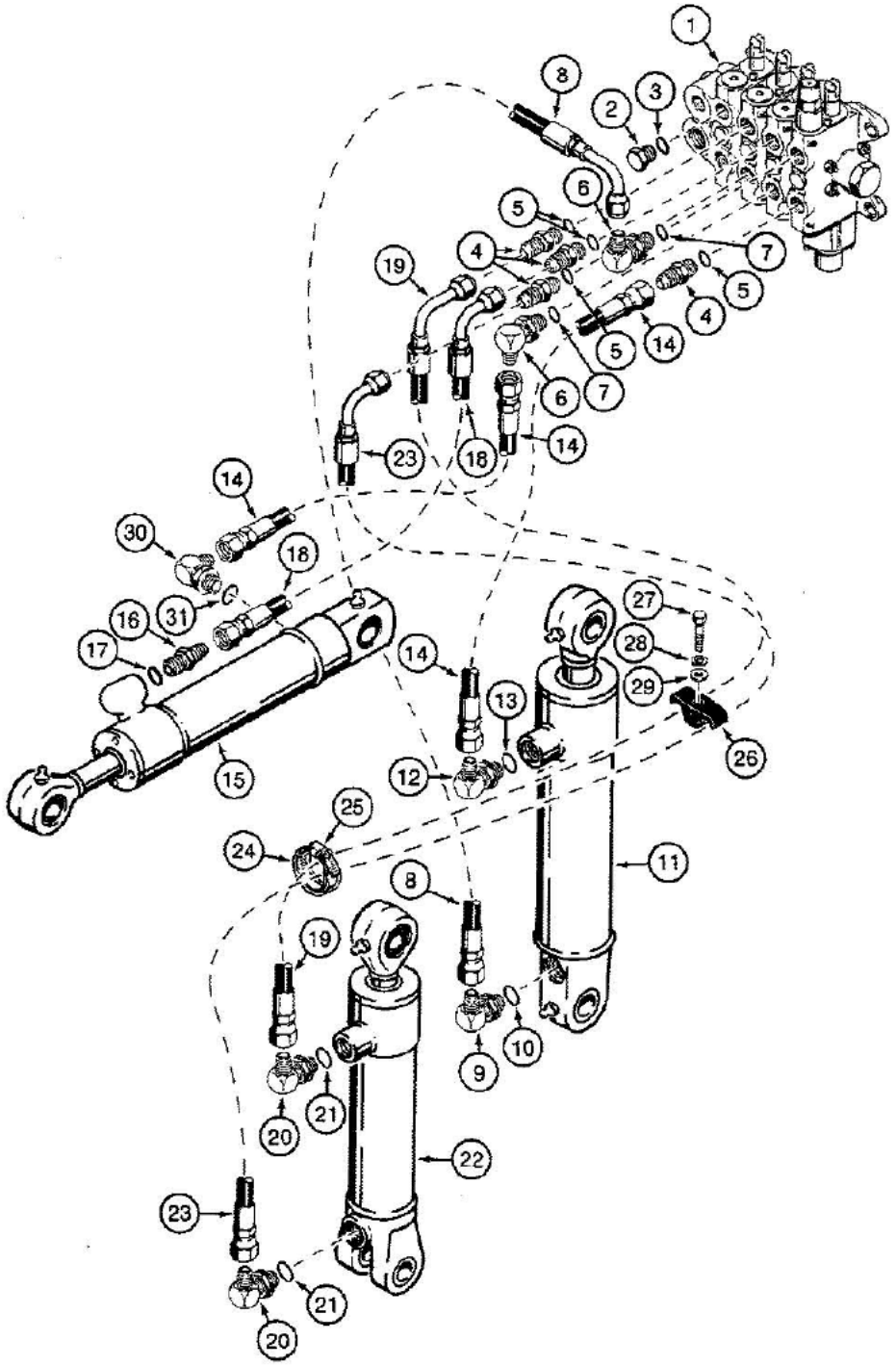

B8892A-45

08-348 THREE-POINT HITCH CYLINDER HYDRAULIC CIRCUIT

Ref	Part Number	Qty	Description
1	D141297	1	VALVE ASSEMBLY control, three-point hitch, see Figure 08-396 for parts list, see Figure 09-530 for valve mounting
2	214389	2	PLUG, Hex Hd, 3/4"-16 ORB, Upper and lower implement section, if used, Includes Ref. 3
3	237-6008	1	O-RING, 8-1, 90 Duro, .644" ID x .087" Thk, Plug
4	218-5059	4	CONNECTOR straight, male, upper and lower port tilt section, pitch section upper port, and lift section lower port, Includes: Ref. 5 and 7
5	237-6008	1	O-RING, 8-1, 90 Duro, .644" ID x .087" Thk, Connector
7	237-6008	1	O-RING, 8-1, 90 Duro, .644" ID x .087" Thk, Elbow
8	D141271	1	HOSE, 53-3/16" (1350 mm) long, upper port lift section to closed end of lift cylinder
9	D135096	1	ELBOW, 90 degree, restriction, closed end of lift cylinder, Includes: Ref. 10
10	237-6010	1	O-RING elbow
11	G101189	1	CYLINDER ASSEMBLY lift, see Figure 08-434
12	218-5121	1	ELBOW, 90 degree, adjustable, rod end of lift cylinder, Includes: Ref. 13
13	237-6010	1	O-RING elbow
14	D141267	2	HOSE, 21-11/16" (550 mm) long, lower port lift section to rod end of lift cylinder, and pitch section lower port to closed end of pitch cylinder
15	1976884C1	1	CYLINDER ASSEMBLY pitch, see Figure 08-438
16	218-5059	1	CONNECTOR straight, male, rod end of pitch cylinder, Includes: Ref. 17
17	237-6008	1	O-RING, 8-1, 90 Duro, .644" ID x .087" Thk, Connector
18	D141268	1	HOSE, 35-7/16" (900 mm) long, upper port pitch section to rod end of pitch cylinder
19	D141270	1	HOSE, 49-1/4" (1250 mm) long, upper port tilt section to rod end of tilt cylinder
20	218-5121	2	ELBOW, 90 degree, adjustable, closed end and rod end of tilt cylinder, Includes: Ref. 21
21	237-6010	1	O-RING elbow
22	G101188	1	CYLINDER ASSEMBLY tilt, see Figure 08-436
23	D141269	1	HOSE, 57-1/8" (1450 mm) long, tilt section lower port to closed end of tilt cylinder
24	D95251	1	GUARD hose protection
25	214-256	1	CLAMP hose
26	D120613	1	CLAMP hose to hitch frame
27	113-122	1	BOLT, Hex, 5/16"-18 x 1 1/2", G5
28	192-20	1	WASHER, LOCK, 5/16"
29	195-521	1	WASHER flat, 5/16", plated
30	218-5106	1	ELBOW, 90 degree, adjustable, closed end of pitch cylinder, Includes: Ref. 31
31	237-6008	1	O-RING, 8-1, 90 Duro, .644" ID x .087" Thk, Elbow

8-350

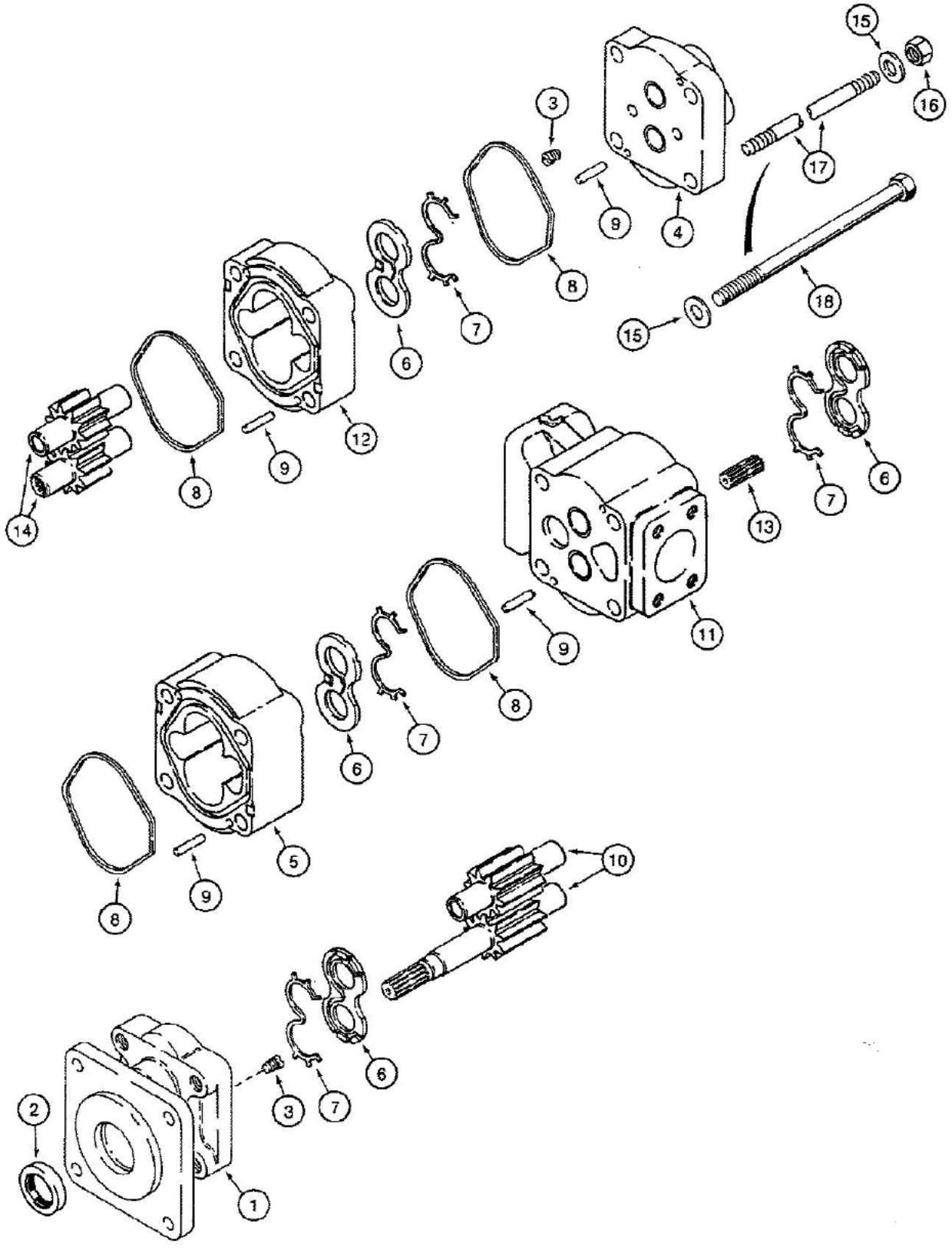

881670A-45

08-350 EQUIPMENT HYDRAULIC PUMP

Ref	Part Number	Qty	Description
	D134590	1	PUMP ASSEMBLY hydraulic equipment, used with split flanged clamps and flanged hoses at outlet ports, if used, Includes: Ref. 1 thru 18
	D140801	1	PUMP ASSEMBLY hydraulic equipment, used with adapters at outlet ports, if used, Includes: Ref. 1 thru 18
1	NSS	1	COVER shaft end, includes a bushing which is not serviced separately
2	L32418	1	SEAL shaft
3	L32320	4	PLUG special, 7/16"-20 NF, P/N D134590 pump
4	NSS	1	COVER closed end, includes a bushing which is not serviced separately
5	N14115	1	HOUSING gear, shaft end
6	N13582	4	PLATE wear, housing
7	N13583	4	RETAINER wear plate
8	L32100	4	SEAL housing, large
9	W16323	8	PIN dowel, gear housing
10	NSS	1	SET gear, shaft end
11	NSS	1	HOUSING center, with ports, includes bushings which are not serviced separately
12	N14116	1	HOUSING gear, closed end
13	N13586	1	SHAFT connecting
14	NSS	1	SET gear, closed end
15	524443R1	4	WASHER flat, 5/8", hardened, used with the stud or bolt
16	129-183	4	NUT, 5/8"-11, G8, If used
17	N14117	4	STUD pump, no longer used, order P/N 26-10144 bolt
18	26-10144	4	BOLT hex head, 5/8"-11 NC x 9", grade 8

8-352

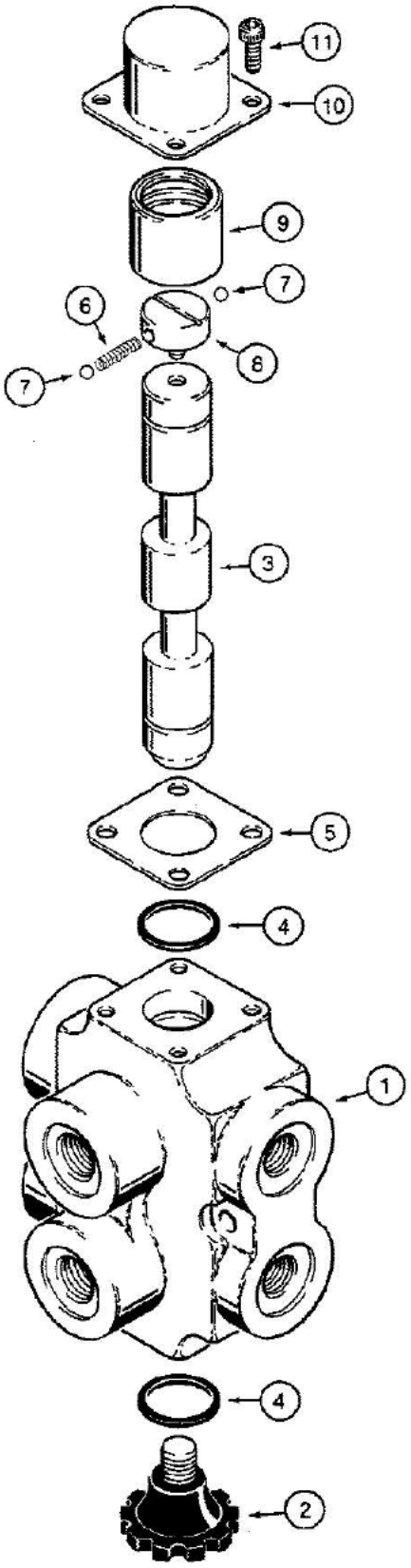

B890660-45

08-352 SELECTOR VALVE - AUXILIARY REMOTE HYDRAULICS FOR HAND HELD ATTACHMENTS

Ref	Part Number	Qty	Description
	D142933	1	VALVE ASSEMBLY selector, auxiliary remote hydraulics for hand held attachments, Includes: Ref. 1 thru 11
1	NSS	1	HOUSING selector valve
2	T36607	1	KNOB control, selector valve
3	NSS	1	SPOOL selector valve
4	R24866	2	SEAL square section, upper and lower spool
5	D54584	1	PLATE spacer
6	851146C1	1	SPRING detent
7	211-357	2	BALL, 1/4", grade 200, carbon steel
8	D145905	1	RETAINER detent
9	D145906	1	SLEEVE detent, two position
10	D54582	1	CAP end
11	61-48	4	BOLT hex socket head, 1/4" NC x 1/2"

8-354

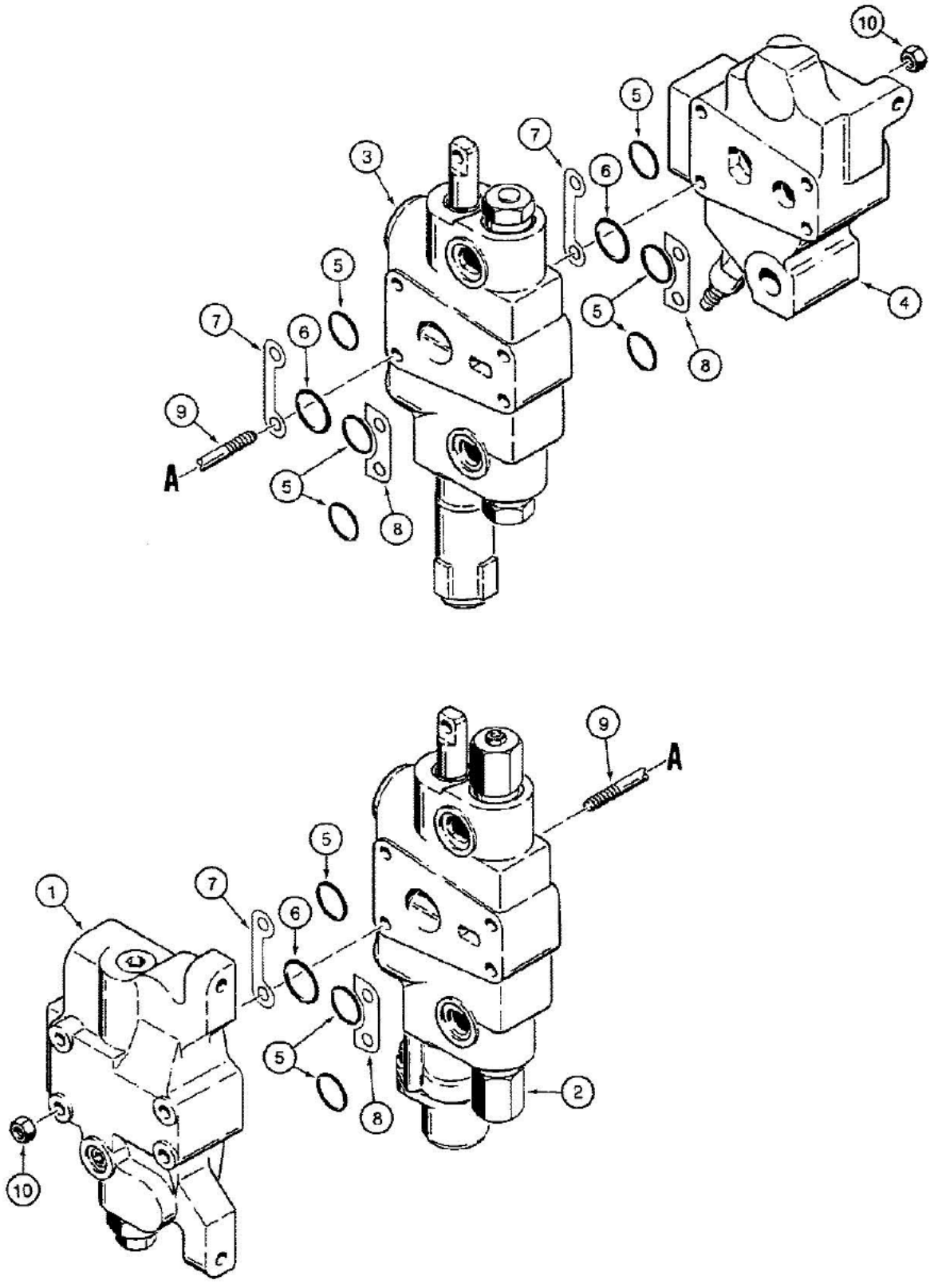

861816-45

08-354 LOADER CONTROL VALVE, TWO SPOOL

Ref	Part Number	Qty	Description
	G109581	1	VALVE ASSEMBLY control, loader, two spool, Includes: Ref. 1 thru 10
1	G110551	1	SECTION inlet, with steering relief valve, see Figure 08-358
2	G109635	1	SECTION bucket, with magnetic detent and circuit relief valve, see Figure 08-360
3	G109634	1	SECTION lift, with manual detent, see Figure 08-362
4	G109637	1	SECTION outlet, with main relief valve, see Figure 08-364
5	G34000	9	O-RING section ports, small
6	G34001	3	O-RING section ports, large
7	G107251	3	SHIM, 0.051mm Thk, Section, Port side of control valve
8	G33965	3	SHIM, 0.051mm Thk, Section, Non-port side of control valve
9	G108870	4	STUD tie, 3/8"-16 NC x 9-3/4"
10	129-103	8	NUT, 3/8"-16, G5

8-356

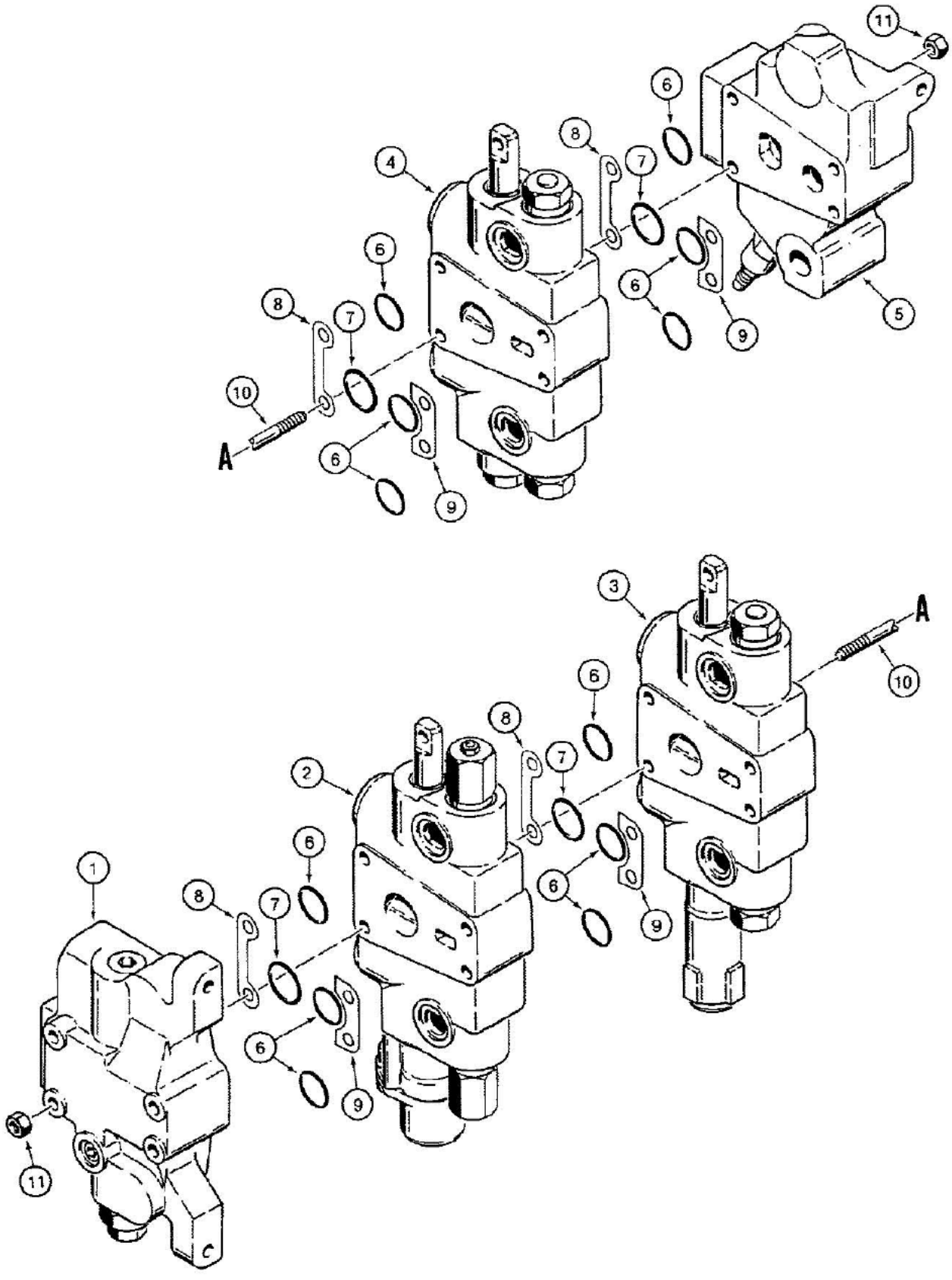

861817-45

08-356 LOADER CONTROL VALVE, THREE SPOOL

Ref	Part Number	Qty	Description
	G109582	1	VALVE ASSEMBLY control, loader, three spool, Includes: Ref. 1 thru 11
1	G110551	1	SECTION inlet, with steering relief valve, see Figure 08-358
2	G109635	1	SECTION bucket, with magnetic detent and circuit relief valve, see Figure 08-360
3	G109634	1	SECTION lift, with manual detent, see Figure 08-362
4	G109640	1	SECTION clam, see Figure 08-366
5	G109637	1	SECTION outlet, with main relief valve, see Figure 08-364
6	G34000	12	O-RING section ports, small
7	G34001	4	O-RING section ports, large
8	G107251	4	SHIM, 0.051mm Thk, Section, Port side of control valve
9	G33965	4	SHIM, 0.051mm Thk, Section, Non-port side of control valve
10	G108805	4	STUD tie, 3/8"-16 NC x 11-3/4"
11	129-103	8	NUT, 3/8"-16, G5

8-358

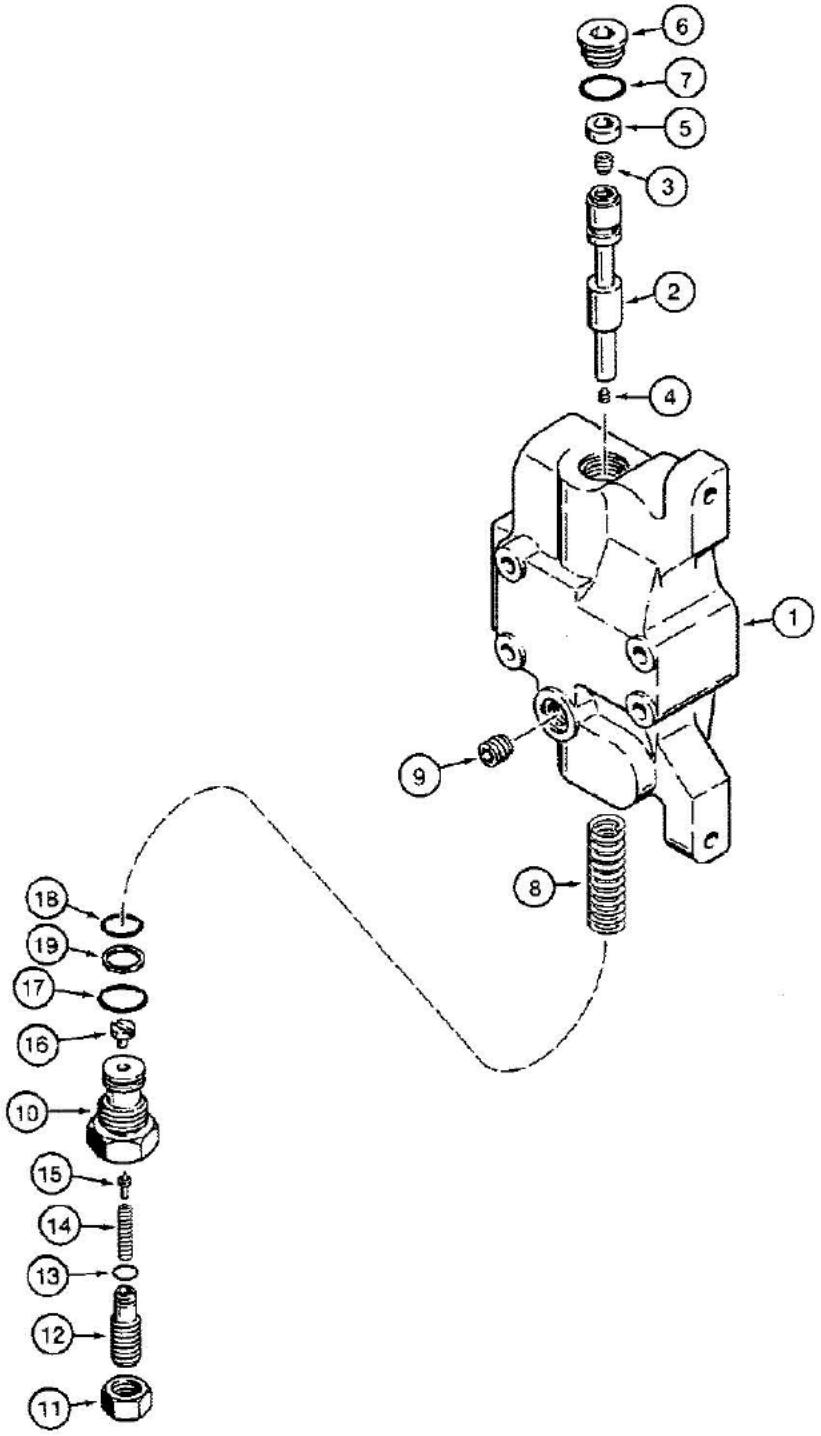

861818-45

08-358 LOADER CONTROL VALVE, INLET SECTION, WITH STEERING RELIEF VALVE

Ref	Part Number	Qty	Description
	G110551	1	SECTION ASSEMBLY inlet, with steering relief valve, Includes: Ref. 1 thru 19
1	G109632	1	HOUSING inlet section
2	NSS	1	SPOOL inlet section
3	NSS	1	PLUG orifice
4	178-424	1	SCREW set, hex socket headless, 1/4"-20 NC x 1/4", flat point
5	NSS	1	SPACER plug, not required
6	86625138	1	PLUG, Hex Soc, 7/8"-14 ORB, Includes Ref. 7
7	237-6010	1	O-RING plug
8	G108877	1	SPRING centering, spool
9	NSS	1	PLUG orifice, steering port, not required
	G108868	1	VALVE ASSEMBLY relief, steering, Includes: Ref. 10 thru 19
10	G108866	1	HOUSING steering relief valve
11	86637932	1	NUT hex, jam, 5/8"-18 NF
12	G108867	1	PLUG adjusting, steering relief
13	A40109	1	O-RING adjusting plug
14	G108136	1	SPRING steering relief
15	G108556	1	POPPET steering relief
16	G108869	1	SEAT poppet, steering relief
17	237-6012	1	O-RING, 12-1, 90 Duro, .924 ID x .116" Thk, Housing
18	G107675	1	O-RING housing, small
19	G35540	1	RING backup, small O-ring, housing

8-360

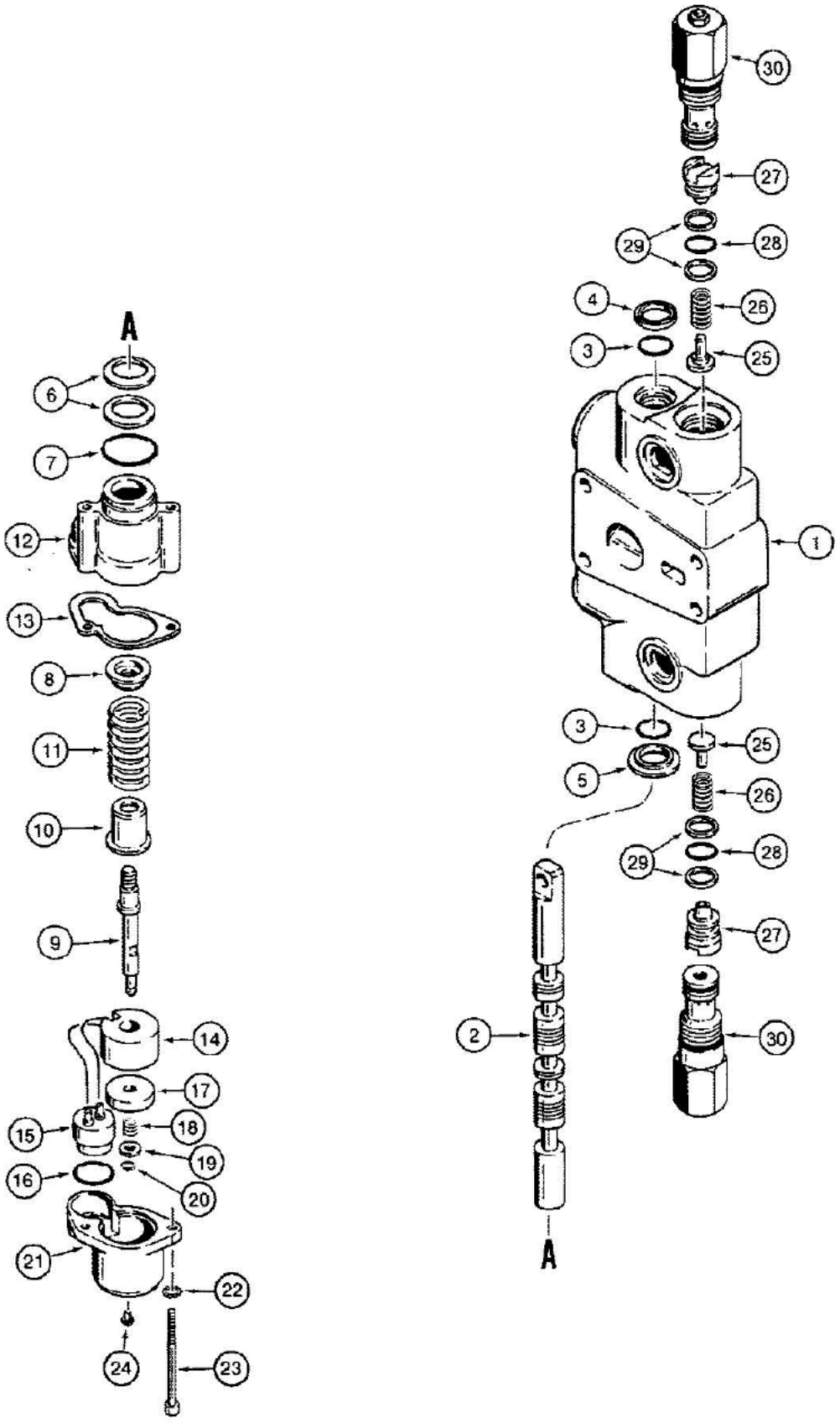

861819-45

Coil resistance for return to dig coil is 19.5 ohms.

08-360 LOADER CONTROL VALVE BUCKET SECTION W/MAGNETIC DETENT & CIRCUIT RELIEF VALVE

Ref	Part Number	Qty	Description
	G109635	1	SECTION ASSEMBLY bucket, with magnetic detent and circuit relief valve, Includes: Ref. 1 thru 30
1	NSS	1	HOUSING bucket section
2	NSS	1	SPOOL bucket section
3	G108461	2	O-RING spool
4	A32309	1	SEAL oil, spool
5	G102711	1	RETAINER, O-ring
6	G106452	2	SPRING belleville, washer
7	A59066	1	O-RING retainer
8	G106442	1	SEAT centering spring, upper
9	G107445	1	SHAFT magnetic detent
10	G106441	1	SEAT centering spring, lower
11	G109302	1	SPRING centering, spool
12	G106423	1	HOUSING magnetic detent
13	G106443	1	GASKET magnetic detent housing
	G110079	1	COIL ASSEMBLY magnetic detent, Includes: Ref. 14 and 15
14	NSS	1	COIL magnetic detent
15	G106450	1	CONNECTOR coil
16	G106453	1	O-RING coil connector
17	G109295	1	WASHER detent
18	G107447	1	SPRING detent washer
19	A50778	1	WASHER shaft
20	A7111	1	Ring, Snap, #25, Ext, washer retaining
21	G106424	1	CAP magnetic detent
22	193-6	2	WASHER, LOCK, Ext Tooth, #10
23	165-46	2	BOLT hex socket head, No. 10-24 NC x 2-3/4", special
24	G107780	1	VALVE check, magnetic detent
25	G33081	2	POPPET load check
26	G33573	2	SPRING load check
27	G104062	2	PLUG load check
28	G110020	2	O-RING plug
29	G103862	4	RING backup, plug O-ring
30	G107786	2	VALVE ASSEMBLY circuit relief, one piece cap, used in production, see Figure 08-368, order P/N G109449 circuit relief valve kit for service, see Figure 08-368 for kit

Coil resistance for return to dig coil is 19.5 ohms.

3-362

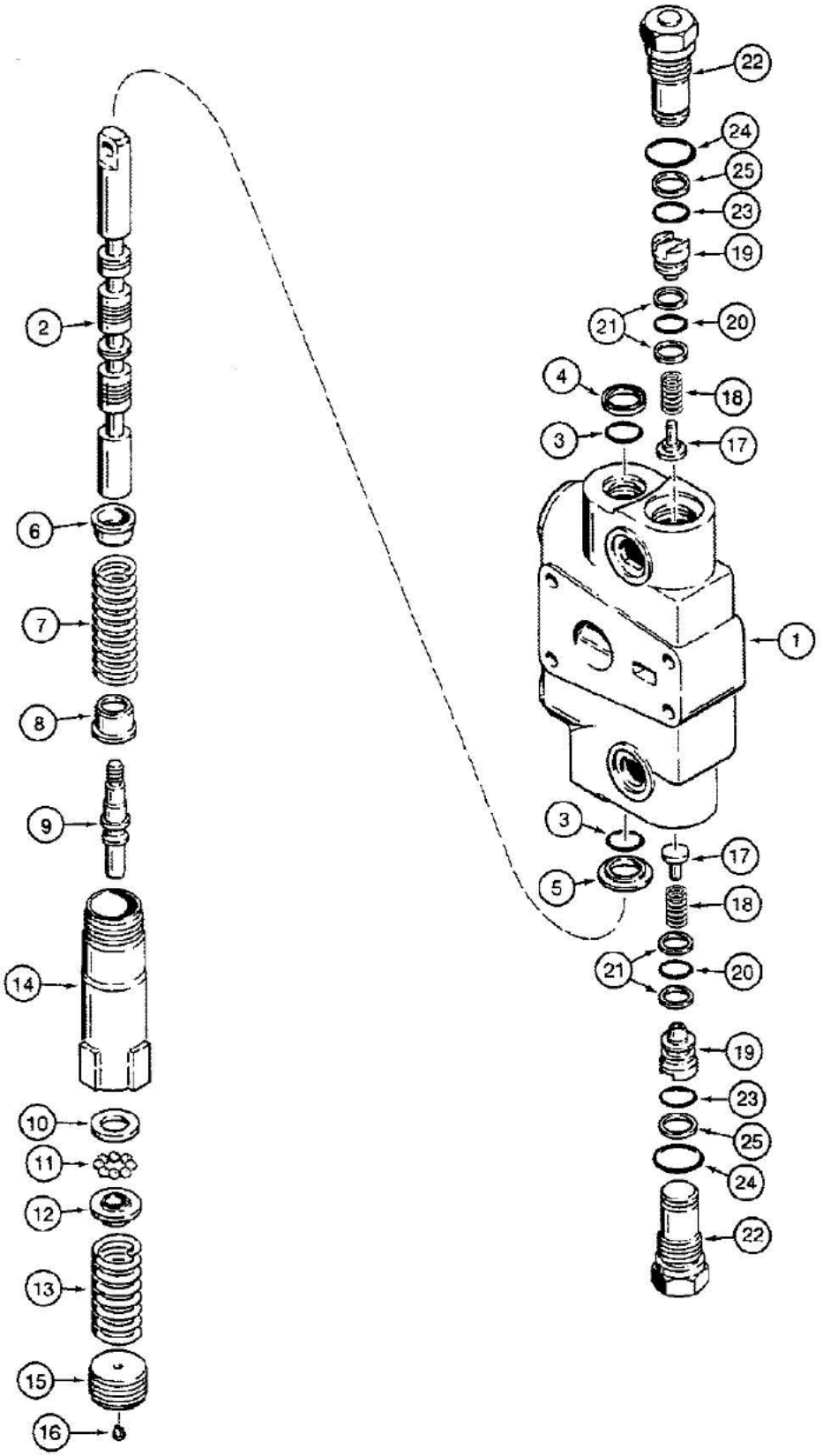

861820-45

580K LOADER BACKHOE (NORTH AMERICA) - Hydraulics

08-362 LOADER CONTROL VALVE, LIFT SECTION, WITH MANUAL DETENT

Ref	Part Number	Qty	Description
	G109634	1	SECTION ASSEMBLY lift, with manual detent, Includes: Ref. 1 thru 25
1	NSS	1	HOUSING lift section
2	NSS	1	SPOOL lift section
3	G108461	2	O-RING spool
4	A32309	1	SEAL oil, spool
5	G102711	1	RETAINER, O-ring
6	G33075	1	SEAT centering spring, upper, small
7	G106455	1	SPRING centering, spool
8	G106395	1	SEAT centering spring, lower, large
9	G106396	1	SHAFT detent
10	G109127	1	WASHER detent, ball retainer
11	211-258	8	BALL, 9/32", grade 50, chrome alloy steel
12	G106398	1	RETAINER ball stop
13	G109081	1	SPRING detent
14	G106425	1	HOUSING detent
15	G109384	1	PLUG detent housing
16	G107780	1	VALVE check, detent plug
17	G33081	2	POPPET load check
18	G33573	2	SPRING load check
19	G104062	2	PLUG load check
20	G110020	2	O-RING plug
21	G103862	4	RING backup, plug O-ring
	G33122	2	PLUG ASSEMBLY load check valve port, Includes: Ref. 22 thru 25
22	NSS	1	PLUG load check valve
23	G107675	1	O-RING small
24	237-6012	1	O-RING, 12-1, 90 Duro, .924 ID x .116" Thk
25	G35540	1	RING backup, small O-ring

3-364

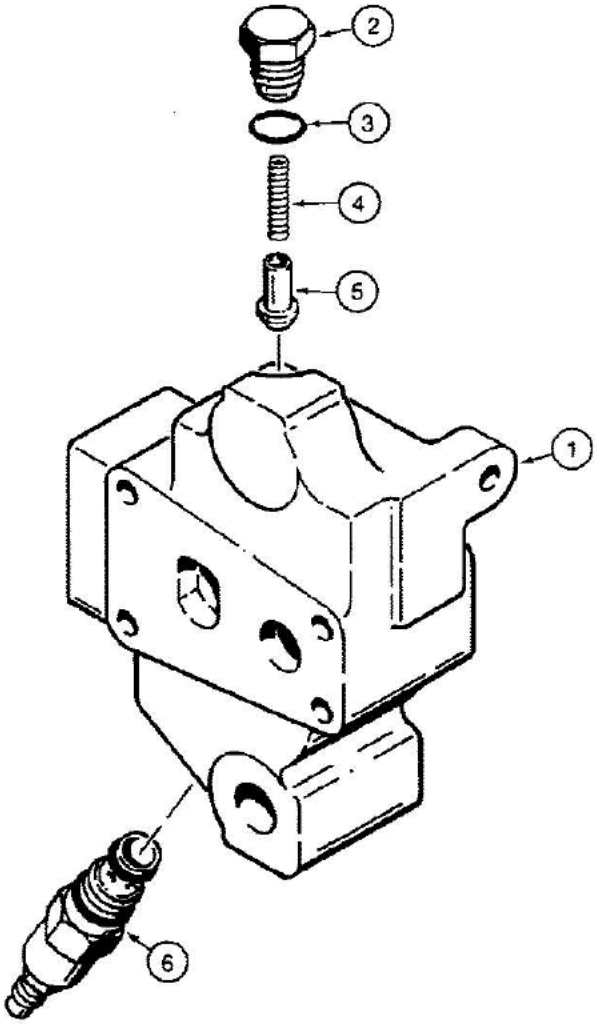

861821-45

08-364 LOADER CONTROL VALVE, OUTLET SECTION, WITH MAIN RELIEF VALVE

Ref	Part Number	Qty	Description
	G109637	1	SECTION ASSEMBLY outlet, with main relief valve, Includes: Ref. 1 thru 6
1	G109643	1	HOUSING outlet section
2	G109644	1	PLUG load check
3	237-6008	1	O-RING, 8-1, 90 Duro, .644" ID x .087" Thk, Plug
4	G109646	1	SPRING load check
5	G109645	1	POPPET load check
6	G110095	1	VALVE ASSEMBLY main relief, cartridge, loader control valve, component parts not serviced separately, cartridge must be serviced complete, external O-rings only may be serviced by ordering P/N G110098 seal kit, see below
	G110098	1	KIT seal, service for external relief valve cartridge seals only, includes (2) O-rings and (1) backup ring which are not serviced separately

8-366

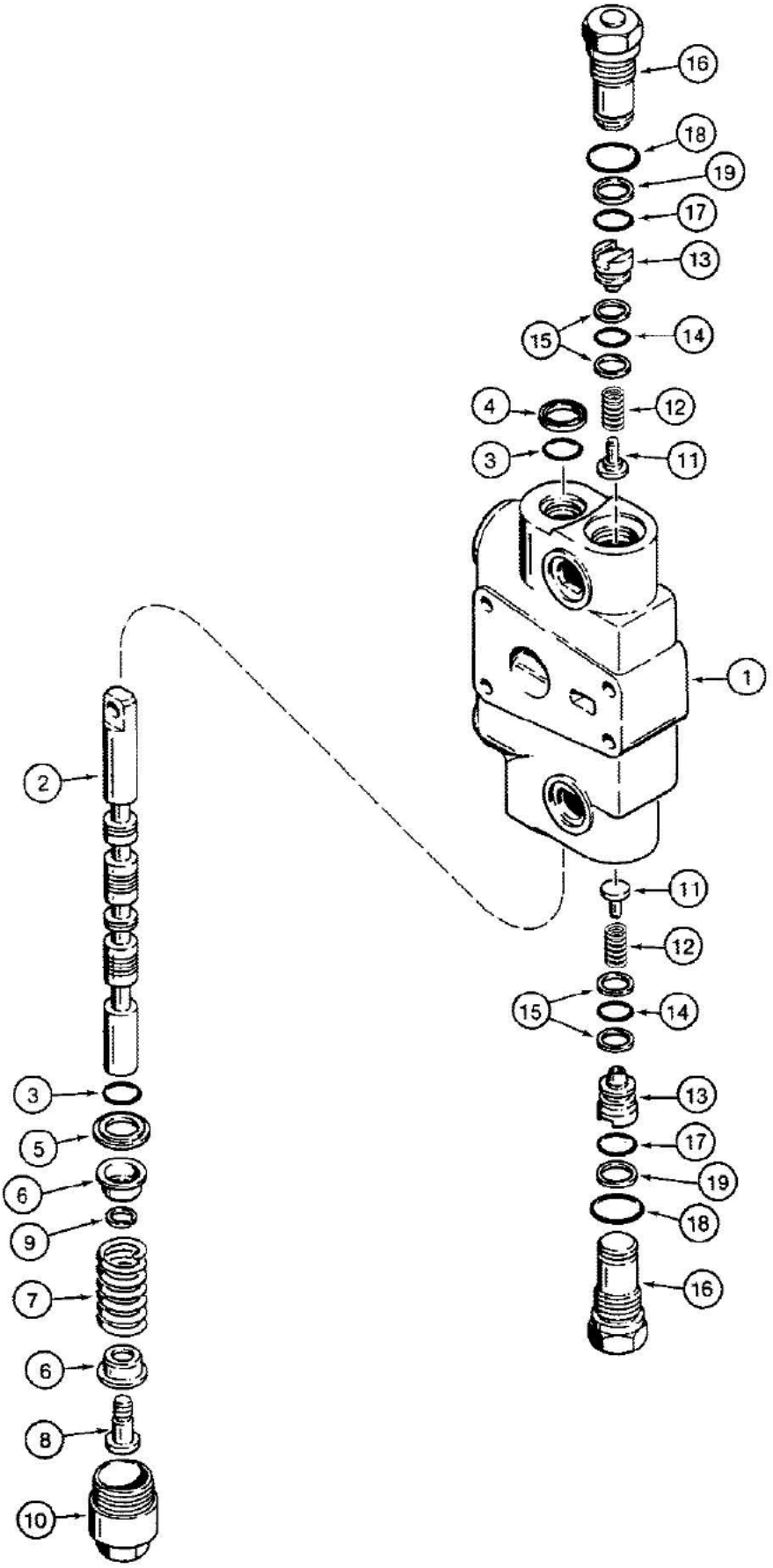

861822-45

580K LOADER BACKHOE (NORTH AMERICA) - Hydraulics

08-366 LOADER CONTROL VALVE, CLAM SECTION

Ref	Part Number	Qty	Description
	G109640	1	SECTION ASSEMBLY clam, three spool valve only, Includes: Ref. 1 thru 19
1	NSS	1	HOUSING clam section
2	NSS	1	SPOOL clam section
3	G108461	2	O-RING spool
4	A32309	1	SEAL oil, spool
5	G102711	1	RETAINER, O-ring
6	G33075	2	SEAT centering spring
7	G108544	1	SPRING centering, spool
8	G106409	1	SCREW spool end
9	G106410	1	SPACER screw
10	G33080	1	CAP spool end, lower
11	G33081	2	POPPET load check
12	G33573	2	SPRING load check
13	G104062	2	PLUG load check
14	G110020	2	O-RING plug
15	G103862	4	RING backup, plug O-ring
	G33122	2	PLUG ASSEMBLY load check valve port, Includes: Ref. 16 thru 19
16	NSS	1	PLUG load check valve
17	G107675	1	O-RING small
18	237-6012	1	O-RING, 12-1, 90 Duro, .924 ID x .116" Thk
19	G35540	1	RING backup, small O-ring

8-368

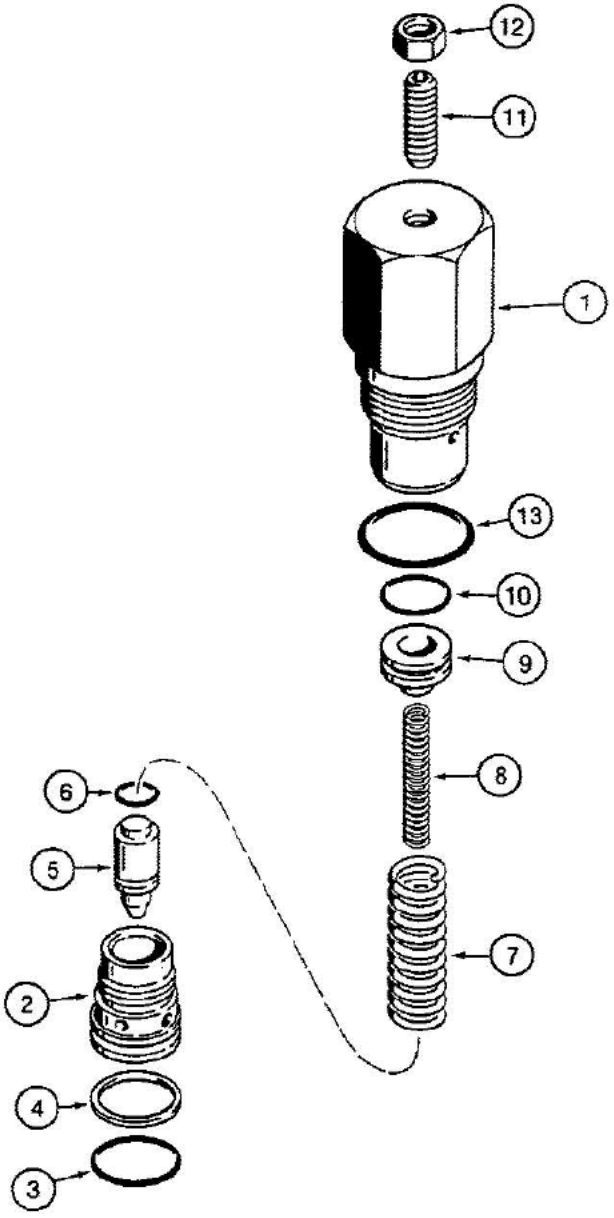

861623-45

08-368 LOADER CONTROL VALVE, CIRCUIT RELIEF VALVE

Ref	Part Number	Qty	Description
	G107786	2	VALVE ASSEMBLY circuit relief, one piece cap, bucket section, used in production, order P/N G109449 kit for service, Includes: Ref. 1 thru 13, The pressure setting of the repair circuit relief valve is not preset for this application. Adjust the setting according to the instructions sent with the repair valve or according to the service manual.
1	NSS	1	HOUSING circuit relief valve
2	NSS	1	SEAT circuit relief valve
3	G107675	1	O-RING circuit relief valve seat
4	G35540	1	RING backup, seat O-ring
5	NSS	1	POPPET circuit relief valve
6	NSS	1	O-RING poppet
7	NSS	1	SPRING relief, outer
8	NSS	1	SPRING relief, inner
9	NSS	1	PISTON circuit relief valve
10	NSS	1	O-RING piston
11	178-890	1	SCREW set, hex socket headless, 5/16"-24 NF x 1", oval point, plated
12	86637933	1	NUT, Jam, 5/16"-24, G5
13	237-6012	1	O-RING, 12-1, 90 Duro, .924 ID x .116" Thk, Housing
	G109449	1	KIT service for P/N G107786 circuit relief valve, kit includes an instruction sheet and P/N G109447 circuit relief valve, Ref. 1-13, which is the same as P/N G107786 except with a different pressure setting, The pressure setting of the repair circuit relief valve is not preset for this application. Adjust the setting according to the instructions sent with the repair valve or according to the service manual.

3-370

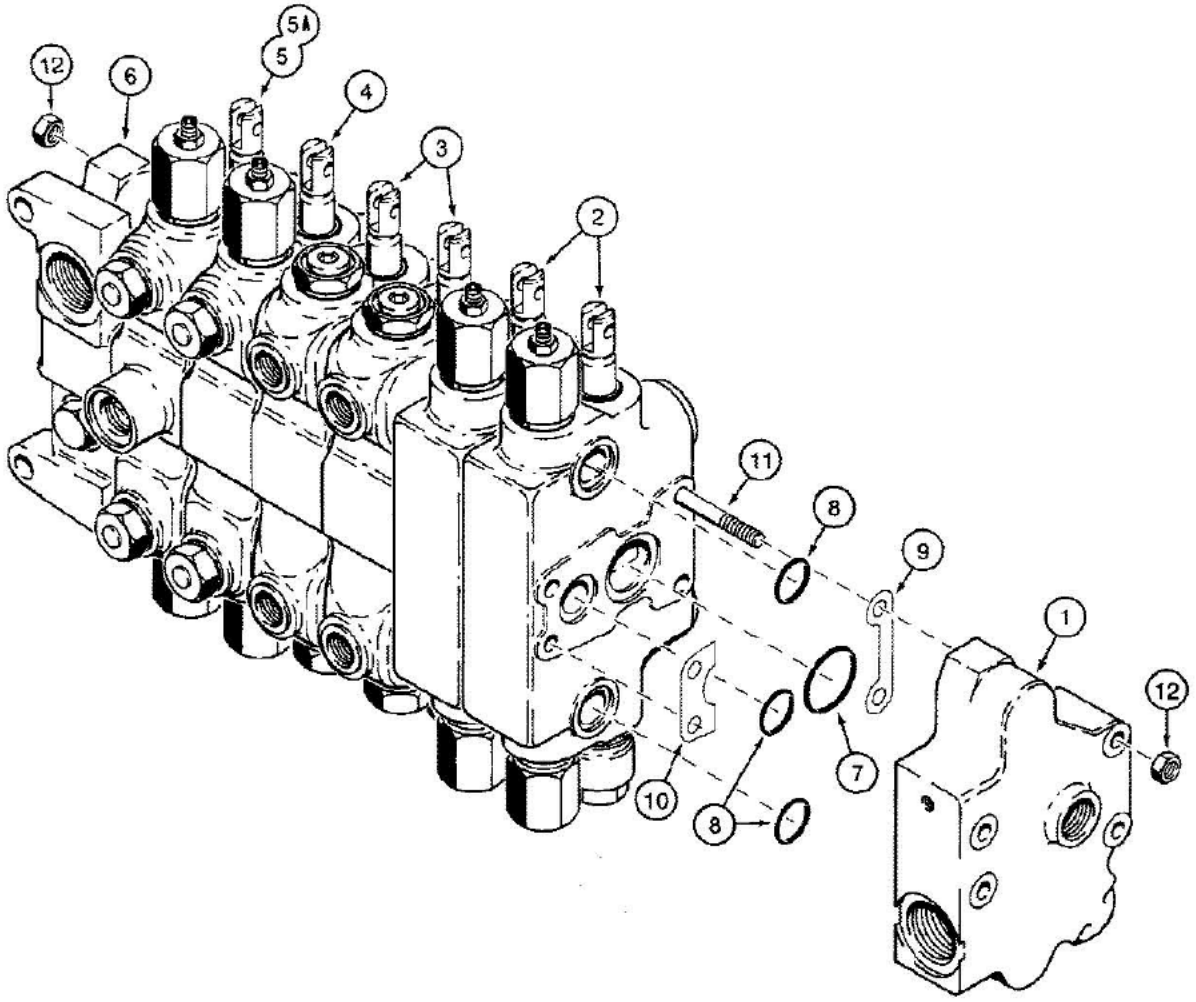

861878-45

08-370 BACKHOE CONTROL VALVES, MODELS WITHOUT EXTENDABLE DIPPER

Ref	Part Number	Qty	Description
	G109980	1	VALVE ASSEMBLY backhoe control, 6 spool, foot swing, no longer used, when replacing P/N G109980 valve, order P/N G110713 valve, (2) P/N D141726 restrictors in Figure 08-316 and 8-75260 instruction sheet, Includes: Ref. 1 thru 12, P/N G109980 and P/N G109583 backhoe control valves are used with P/N G108608, 3-1/4" diameter swing cylinders. P/N D141726 restrictors must be used at the backhoe control valve swing section ports with the 3-1/4" diameter swing cylinders.
	G110713	1	VALVE ASSEMBLY backhoe control, 6 spool, foot swing, Includes: Ref. 1 thru 12
	G109583	1	VALVE ASSEMBLY backhoe control, 6 spool, hand swing, no longer used, when replacing P/N G109583 valve, order P/N G110711 valve, (2) P/N D141726 restrictors in Figure 08-316 and 8-75260 instruction sheet, Includes: Ref. 1 thru 12, P/N G109980 and P/N G109583 backhoe control valves are used with P/N G108608, 3-1/4" diameter swing cylinders. P/N D141726 restrictors must be used at the backhoe control valve swing section ports with the 3-1/4" diameter swing cylinders.
	G110711	1	VALVE ASSEMBLY backhoe control, 6 spool, hand swing, Includes: Ref. 1 thru 12
1	G109759	1	SECTION ASSEMBLY outlet, see Figure 08-374
2	G109570	2	SECTION ASSEMBLY bucket and dipper, see Figure 08-376
3	G109567	2	SECTION ASSEMBLY stabilizer, left-hand and right-hand, see Figure 08-378
4	G109571	1	SECTION ASSEMBLY boom, see Figure 08-380, In 1990 the bottom anti-cavitation was removed. No part number change per ECN C900909.
5	G109963	1	SECTION ASSEMBLY swing, used with P/N G109980 control valve assembly, with heavy swing spring, see Figure 08-384
5	G110710	1	SECTION ASSEMBLY swing, used with P/N G110713 control valve assembly, with heavy swing spring, see Figure 08-384
5A	G109566	1	SECTION ASSEMBLY swing, used with P/N G109583 control valve assembly, see Figure 08-384
5A	G110709	1	SECTION ASSEMBLY swing, used with P/N G110711 control valve assembly, see Figure 08-384
6	G109719	1	SECTION ASSEMBLY inlet, see Figure 08-374
7	G34001	7	O-RING section ports, large
8	G34000	21	O-RING section ports, small
9	G107251	7	SHIM, 0.051mm Thk, Section, Port side of control valve
10	G33965	7	SHIM, 0.051mm Thk, Section, Non-port side of control valve
11	G108900	4	STUD tie, 3/8"-16 NC x 16-15/16"
12	129-103	8	NUT, 3/8"-16, G5

8-372

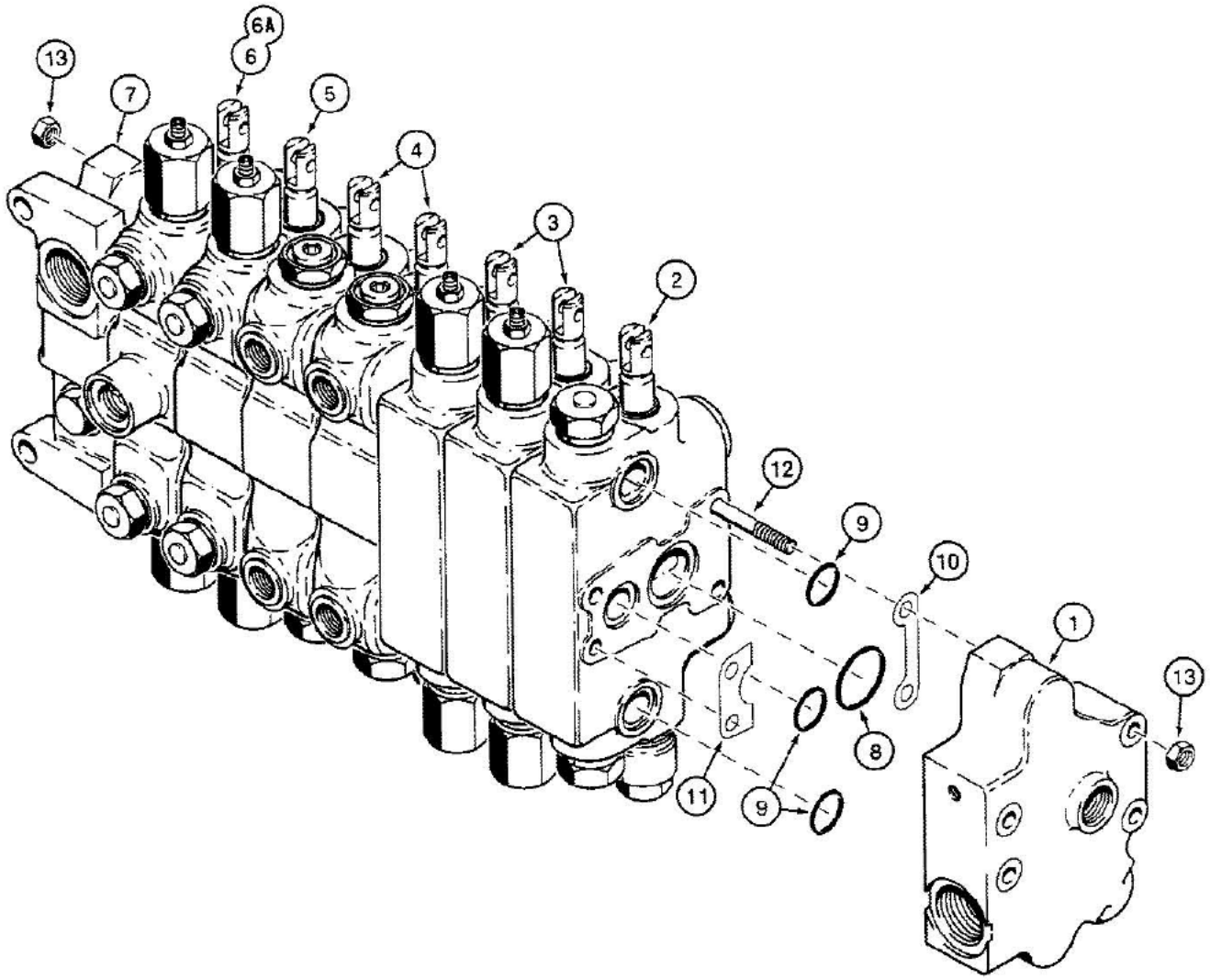

861879-45

08-372 BACKHOE CONTROL VALVES, MODELS W/EXTENDABLE DIPPER OR AUX. HYD. FOR OPTIONAL REAR HYD. ATTACHM

Ref	Part Number	Qty	Description
	G109979	1	VALVE ASSEMBLY backhoe control, 7 spool, foot swing, no longer used, when replacing P/N G109979 valve, order P/N G110714 valve, (2) P/N D141726 restrictors in Figure 08-316 and 8-75260 instruction sheet, Includes: Ref. 1 thru 13, P/N G109979 and P/N G109584 backhoe control valves are used with P/N G108608, 3-1/4" diameter swing cylinders. P/N D141726 restrictors must be used at the backhoe control valve swing section ports with the 3-1/4" diameter swing cylinders.
	G110714	1	VALVE ASSEMBLY backhoe control, 7 spool, foot swing, Includes: Ref. 1 thru 13
	G109584	1	VALVE ASSEMBLY backhoe control, 7 spool, hand swing, no longer used, when replacing P/N G109584 valve, order P/N G110712 valve, (2) P/N D141726 restrictors in Figure 08-316 and 8-75260 instruction sheet, Includes: Ref. 1 thru 13 , P/N G109979 and P/N G109584 backhoe control valves are used with P/N G108608, 3-1/4" diameter swing cylinders. P/N D141726 restrictors must be used at the backhoe control valve swing section ports with the 3-1/4" diameter swing cylinders.
	G110712	1	VALVE ASSEMBLY backhoe control, 7 spool, hand swing, Includes: Ref. 1 thru 13
1	G109759	1	SECTION ASSEMBLY outlet, see Figure 08-374
2	G109968	1	SECTION ASSEMBLY dipper extension, see Figure 08-388
3	G109570	2	SECTION ASSEMBLY bucket and dipper, see Figure 08-376
4	G109567	2	SECTION ASSEMBLY stabilizer, left-hand and right-hand, see Figure 08-378
5	G109571	1	SECTION ASSEMBLY boom, see Figure 08-380
6	G109963	1	SECTION ASSEMBLY swing, used with P/N G109979 control valve assembly, with heavy swing spring, see Figure 08-384
6	G110710	1	SECTION ASSEMBLY swing, used with P/N G110714 control valve assembly, with heavy swing spring, see Figure 08-384
6A	G109566	1	SECTION ASSEMBLY swing, used with P/N G109584 control valve assembly, see Figure 08-384
6A	G110709	1	SECTION ASSEMBLY swing, used with P/N G110712 control valve assembly, see Figure 08-384
7	G109719	1	SECTION ASSEMBLY inlet, see Figure 08-374
8	G34001	8	O-RING section ports, large
9	G34000	24	O-RING section ports, small
10	G107251	8	SHIM, 0.051mm Thk, Section, Port side of control valve
11	G33965	8	SHIM, 0.051mm Thk, Section, Non-port side of control valve
12	G108899	4	STUD tie, 3/8"-16 NC x 18-15/16"
13	129-103	8	NUT, 3/8"-16, G5

8-374

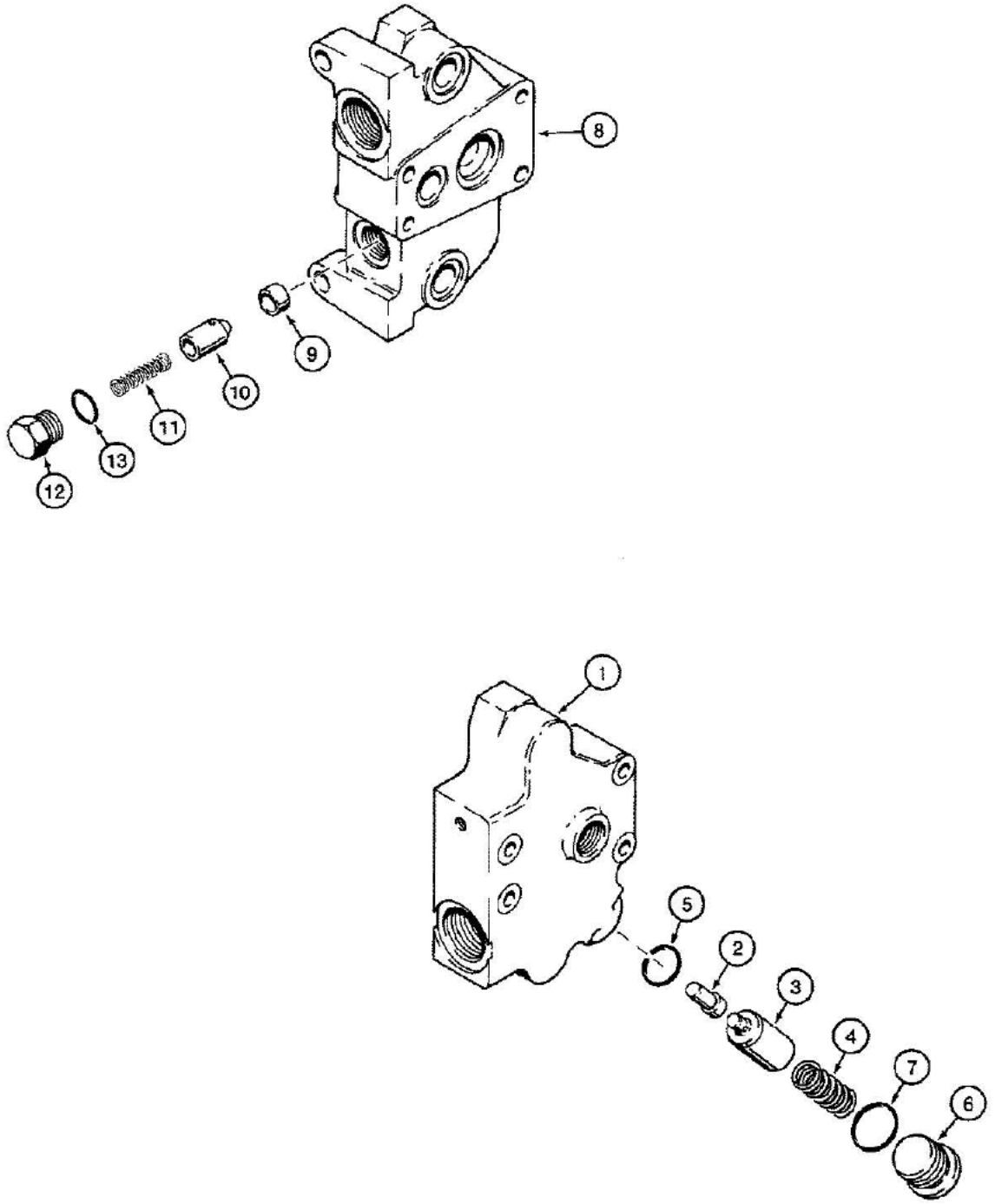

861676-45

08-374 BACKHOE CONTROL VALVE, INLET AND OUTLET SECTIONS

Ref	Part Number	Qty	Description
	G109759	1	SECTION ASSEMBLY outlet, Includes: Ref. 1 thru 7
1	G109760	1	MANIFOLD section body, outlet
2	G108902	1	PISTON regeneration sensing, outlet section
3	G34586	1	SPOOL regeneration, outlet section
4	G33112	1	SPRING regeneration spool, outlet section
5	A35104	1	O-RING spool, internal, outlet section
6	218-5213	1	PLUG hex socket, 1-3/16"-12 NF, spool, outlet section, Includes: Ref. 7
7	218-5009	1	O-RING plug, outlet section
	G109719	1	SECTION ASSEMBLY inlet, Includes: Ref. 8 thru 13
8	G109718	1	MANIFOLD section body, inlet
9	G33104	1	SEAT check valve poppet, inlet section
10	G33105	1	POPPET check valve, inlet section
11	G33106	1	SPRING check valve, inlet section
12	A39586	1	PLUG check valve, inlet section
13	237-6010	1	O-RING plug, inlet section

8-376

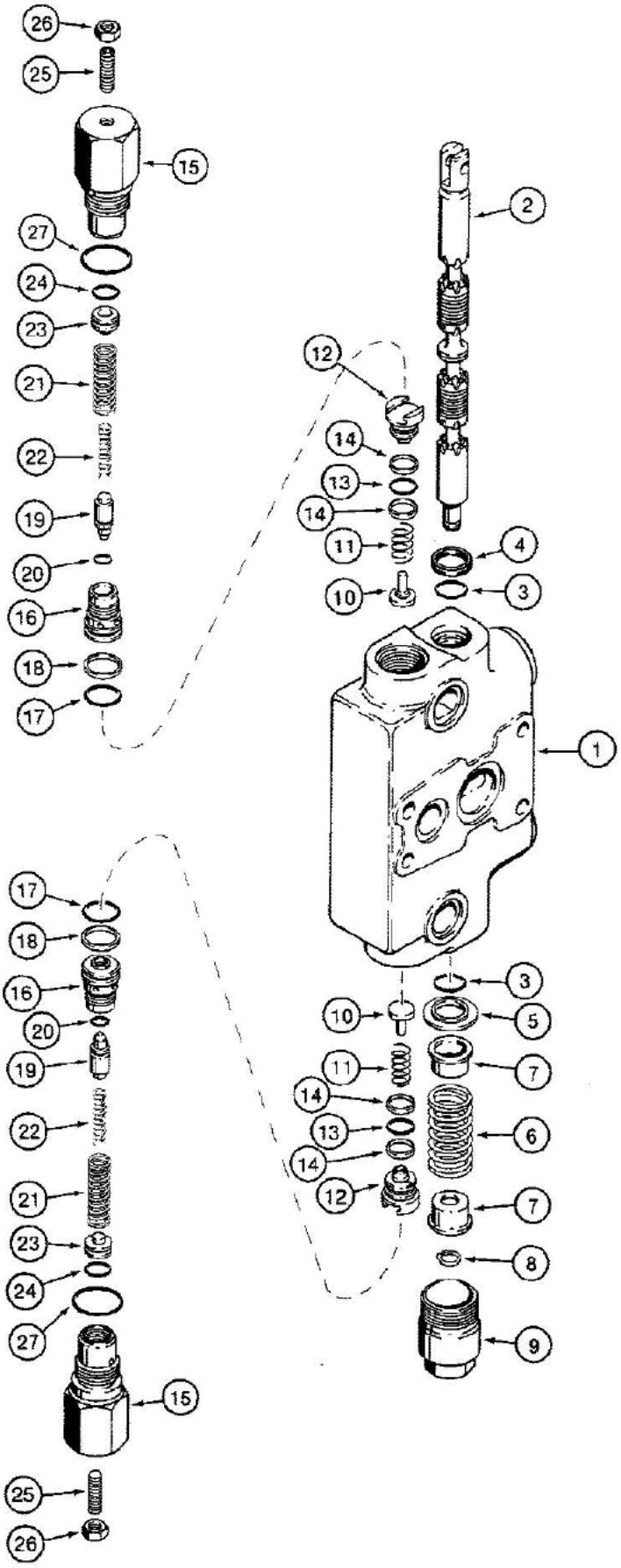

861877-45

08-376 BACKHOE CONTROL VALVE, BUCKET AND DIPPER SECTIONS

Ref	Part Number	Qty	Description
	G109570	2	SECTION ASSEMBLY bucket and dipper, with circuit relief valves, Includes: Ref. 1 thru 27
1	NSS	1	HOUSING bucket and dipper sections
2	NSS	1	SPOOL bucket and dipper sections
3	G108461	2	O-RING spool
4	A32309	1	SEAL oil, spool
5	G102711	1	RETAINER, O-ring
6	G108544	1	SPRING centering, spool
7	G33075	2	SEAT centering spring
8	G33077	1	Ring, Snap, #47, Ext, spool end
9	G33080	1	CAP spool end
10	G33081	2	POPPET load check valve
11	G33573	2	SPRING load check valve
12	G104062	2	PLUG load check valve
13	G110020	2	O-RING plug
14	G103862	4	RING backup, plug O-ring
	G109391	2	VALVE ASSEMBLY circuit relief, bucket and dipper sections, used in production, order P/N G109449 kit for service, Includes: Ref. 15 thru 27, The pressure setting of the repair circuit relief valve is not preset for this application. Adjust the setting according to the instructions sent with the repair valve or according to the service manual.
15	NSS	1	HOUSING circuit relief valve
16	NSS	1	SEAT circuit relief valve
17	G107675	1	O-RING circuit relief valve seat
18	G35540	1	RING backup, seat O-ring
19	NSS	1	POPPET circuit relief valve
20	A28090	1	O-Ring -011, 70 Duro, .031" ID x .070" Thk poppet
21	NSS	1	SPRING relief, outer
22	NSS	1	SPRING relief, inner
23	NSS	1	PISTON circuit relief valve
24	G102845	1	O-RING piston
25	178-890	1	SCREW set, hex socket headless, 5/16"-24 NF x 1", oval point, plated
26	86637933	1	NUT, Jam, 5/16"-24, G5
27	237-6012	1	O-RING, 12-1, 90 Duro, .924 ID x .116" Thk, Housing
	G109449	1	KIT service for P/N G109391 circuit relief valve, kit includes an instruction sheet and P/N G109447 circuit relief valve, Ref. 15 thru 27, which is the same as P/N G109391 except with a different pressure setting, The pressure setting of the repair circuit relief valve is not preset for this application. Adjust the setting according to the instructions sent with the repair valve or according to the service manual.

3-378

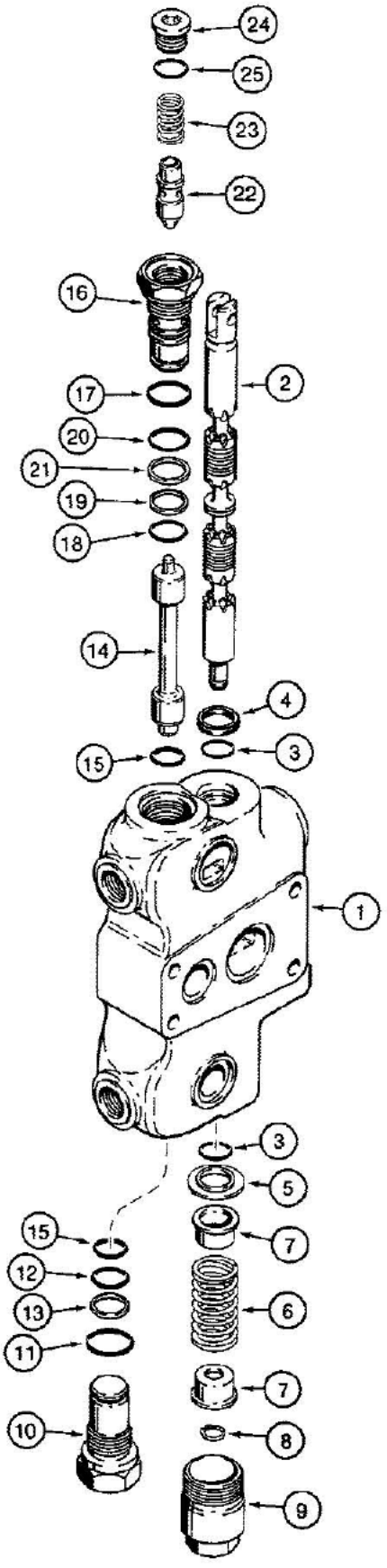

961880-45

08-378 BACKHOE CONTROL VALVE, LEFT-HAND AND RIGHT-HAND STABILIZER SECTIONS

Ref	Part Number	Qty	Description
	G109567	2	SECTION ASSEMBLY left-hand and right-hand stabilizer, with lock check, Includes: Ref. 1 thru 25
1	NSS	1	HOUSING left-hand and right-hand stabilizer sections
2	NSS	1	SPOOL left-hand and right-hand stabilizer sections
3	G108461	2	O-RING spool
4	A32309	1	SEAL oil, spool
5	G102711	1	RETAINER, O-ring
6	G34463	1	SPRING centering, spool
7	G33075	2	SEAT centering spring
8	G33077	1	Ring, Snap, #47, Ext, spool end
9	G33080	1	CAP spool end
	G33122	1	PLUG ASSEMBLY relief, Includes: Ref. 10 thru 13
10	NSS	1	PLUG relief
11	237-6012	1	O-RING, 12-1, 90 Duro, .924 ID x .116" Thk, Plug
12	G107675	1	O-RING plug, small
13	G35540	1	RING backup, small O-ring
14	G109626	1	SPOOL shuttle, lock check
15	G107675	2	O-RING shuttle spool
	G109627	1	PLUG ASSEMBLY lock check, Includes: Ref. 16 thru 25
16	NSS	1	SEAT lock check body
17	237-6012	1	O-RING, 12-1, 90 Duro, .924 ID x .116" Thk, Seat plug end
18	G107675	1	O-RING small, seat lock check end
19	G35540	1	RING backup, small O-ring
20	D26435	1	O-RING seat, center
21	G110468	1	RING backup, center O-ring
22	NSS	1	POPPET lock check
23	G109630	1	SPRING lock check
24	71100209	1	PLUG, Hex Soc, 3/4"-16 ORB, Includes Ref. 25
25	237-6008	1	O-RING, 8-1, 90 Duro, .644" ID x .087" Thk, Plug

B-380

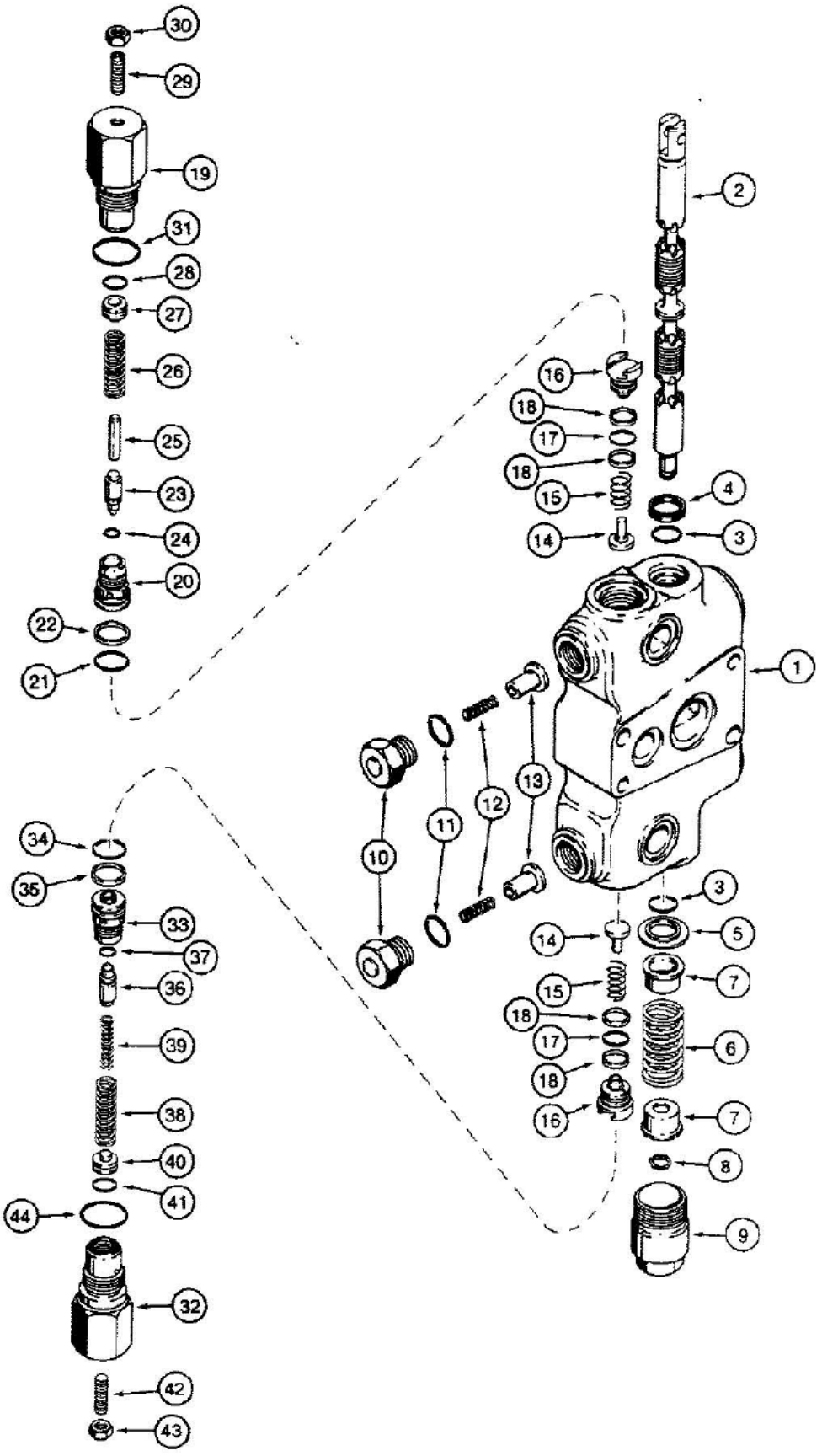

861867-45

580K LOADER BACKHOE (NORTH AMERICA) - Hydraulics

08-380 BACKHOE CONTROL VALVE, BOOM SECTION

Ref	Part Number	Qty	Description
	G109571	1	SECTION ASSEMBLY boom, with circuit relief valves and anticavitation, Includes: Ref. 1 thru 44, In 1990 the bottom anti-cavitation was removed. No part number change per ECN C900909.
1	NSS	1	HOUSING boom section
2	1340866C1	1	SPOOL boom section, service replacement
3	G108461	2	O-RING spool
4	A32309	1	SEAL oil, spool
5	G102711	1	RETAINER, O-ring
6	G108544	1	SPRING centering, spool
7	G33075	2	SEAT centering spring
8	G33077	1	Ring, Snap, #47, Ext, spool end
9	G33080	1	CAP spool end
10	G34937	2	PLUG anticavitation valve
11	237-6010	2	O-RING plug
12	G34458	2	SPRING anticavitation valve
13	G34938	2	POPPET anticavitation valve
14	G33081	2	POPPET load check valve
15	G33573	2	SPRING load check valve
16	G104062	2	PLUG load check valve
17	G110020	2	O-RING plug
18	G103862	4	RING backup, plug O-ring
	G109443	1	VALVE ASSEMBLY circuit relief, upper, boom section, used in production, order P/N G109448 kit for service, Includes: Ref. 19 thru 31, The pressure setting of the repair circuit relief valve is not preset for this application. Adjust the setting according to the instructions sent with the repair valve or according to the service manual.
19	NSS	1	HOUSING circuit relief valve
20	NSS	1	SEAT circuit relief valve
21	G107675	1	O-RING circuit relief valve seat
22	G35540	1	RING backup, seat O-ring
23	NSS	1	POPPET circuit relief valve
24	NSS	1	O-RING poppet
25	NSS	1	PIN stop, relief
26	NSS	1	SPRING circuit relief valve
27	NSS	1	PISTON circuit relief valve
28	NSS	1	O-RING piston
29	178-890	1	SCREW set, hex socket headless, 5/16"-24 NF x 1", oval point, plated
30	86637933	1	NUT, Jam, 5/16"-24, G5
31	237-6012	1	O-RING, 12-1, 90 Duro, .924 ID x .116" Thk, Housing
	G109448	1	KIT service for P/N G109443 circuit relief valve, kit includes an instruction sheet and P/N G109446 circuit relief valve, Ref. 19 thru 31 which is the same as P/N G109443 except with a different pressure setting, The pressure setting of the repair circuit relief valve is not preset for this application. Adjust the setting according to the instructions sent with the repair valve or according to the service manual.

08-380 BACKHOE CONTROL VALVE, BOOM SECTION

Ref	Part Number	Qty	Description
	G110467	1	VALVE ASSEMBLY circuit relief, lower, boom section, used in production, order P/N G110077 kit for service, Includes: Ref. 32 thru 44, The pressure setting of the repair circuit relief valve is not preset for this application. Adjust the setting according to the instructions sent with the repair valve or according to the service manual.
32	NSS	1	HOUSING circuit relief valve
33	NSS	1	SEAT circuit relief valve
34	G107675	1	O-RING circuit relief valve seat
35	G35540	1	RING backup, seat O-ring
36	NSS	1	POPPET circuit relief valve
37	NSS	1	O-RING poppet
38	NSS	1	SPRING relief, outer
39	NSS	1	SPRING relief, inner
40	NSS	1	PISTON circuit relief valve
41	NSS	1	O-RING piston
42	178-890	1	SCREW set, hex socket headless, 5/16"-24 NF x 1", oval point, plated
43	86637933	1	NUT, Jam, 5/16"-24, G5
44	237-6012	1	O-RING, 12-1, 90 Duro, .924 ID x .116" Thk, Housing
	G110077	1	KIT service for P/N G110467 circuit relief valve, kit includes an instruction sheet and P/N G110078 circuit relief valve, Ref. 32 thru 44, which is the same as P/N G110467 except with a different pressure setting, The pressure setting of the repair circuit relief valve is not preset for this application. Adjust the setting according to the instructions sent with the repair valve or according to the service manual.

3-384

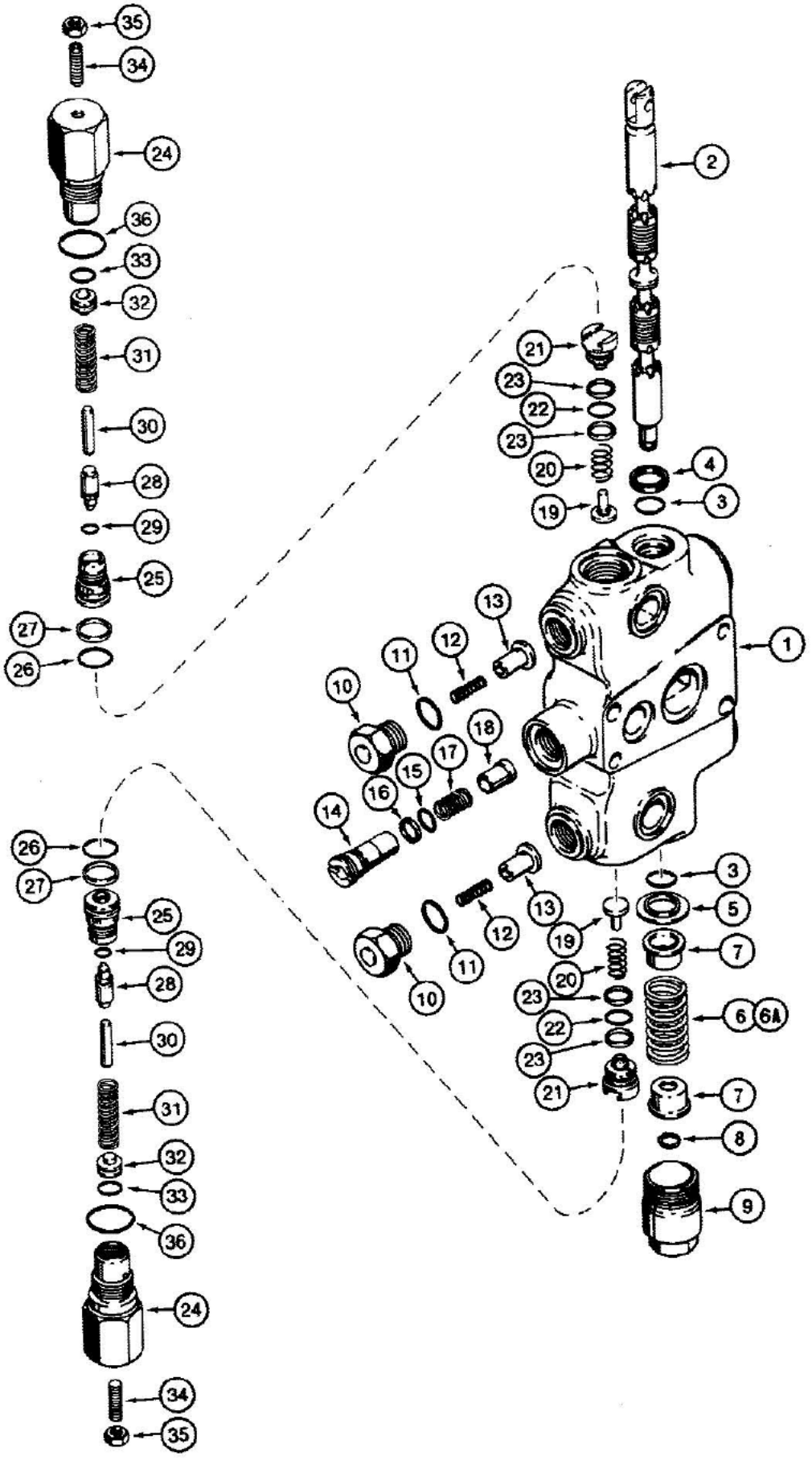

861866-45

08-384 BACKHOE CONTROL VALVE, SWING SECTIONS

Ref	Part Number	Qty	Description
	G109963	1	SECTION ASSEMBLY swing, with heavy swing spring, Ref. 6, used in P/N G109979 or P/N G109980 foot swing control valves, with circuit relief valves and anticavitation, Includes: Ref. 1 thru 36
	G110710	1	SECTION ASSEMBLY swing, with heavy swing spring, Ref. 6, used in P/N G110713 or P/N G110714 foot swing control valves, with circuit relief valves and anticavitation, Includes: Ref. 1 thru 36
	G109566	1	SECTION ASSEMBLY swing, uses Ref. 6A spring, used in P/N G109583 or P/N GA09584 hand swing control valves, with circuit relief valves and anticavitation, Includes: Ref. 1 thru 36
	G110709	1	SECTION ASSEMBLY swing, uses Ref. 6A spring, used in P/N G110711 or P/N G110712 hand swing control valves, with circuit relief valves and anticavitation, Includes: Ref. 1 thru 36
1	NSS	1	HOUSING swing section
2	NSS	1	SPOOL swing section
3	G108461	2	O-RING spool
4	A32309	1	SEAL oil, spool
5	G102711	1	RETAINER, O-ring
6	G34463	1	SPRING centering, spool, black, 2-1/4" free length, used in P/N G109963 or P/N G110710 swing section
6A	G108544	1	SPRING centering, spool, green, 1-15/16" free length, used in P/N G109566 or P/N G110709 swing section
7	G33075	2	SEAT centering spring
8	G33077	1	Ring, Snap, #47, Ext, spool end
9	G33080	1	CAP spool end
10	G34937	2	PLUG anticavitation valve
11	237-6010	2	O-RING plug
12	G34458	2	SPRING anticavitation valve
13	G34938	2	POPPET anticavitation valve
14	G109964	1	HOUSING valve check
15	A65918	1	O-RING valve check housing
16	G108723	1	RING backup, O-ring
17	G109971	1	SPRING valve check
18	1978068C1	1	POPPET valve check
19	G33081	2	POPPET load check valve
20	G33573	2	SPRING load check valve
21	G104062	2	PLUG load check valve
22	G110020	2	O-RING plug
23	G103862	4	RING backup, plug O-ring
	G110253	2	VALVE ASSEMBLY circuit relief, swing section, used in production, order P/N G109448 kit for service, Includes: Ref. 24 thru 36, The pressure setting of the repair circuit relief valve is not preset for this application. Adjust the setting according to the instructions sent with the repair valve or according to the service manual.
24	NSS	1	HOUSING circuit relief valve
25	NSS	1	SEAT circuit relief valve
26	G107675	1	O-RING circuit relief valve seat

08-384 BACKHOE CONTROL VALVE, SWING SECTIONS

Ref	Part Number	Qty	Description
27	G35540	1	RING backup, seat O-ring
28	NSS	1	POPPET circuit relief valve
29	NSS	1	O-RING poppet
30	NSS	1	PIN stop, relief
31	NSS	1	SPRING circuit relief valve
32	NSS	1	PISTON circuit relief valve
33	NSS	1	O-RING piston
34	178-890	1	SCREW set, hex socket headless, 5/16"-24 NF x 1", oval point, plated
35	86637933	1	NUT, Jam, 5/16"-24, G5
36	237-6012	1	O-RING, 12-1, 90 Duro, .924 ID x .116" Thk, Housing
	G109448	1	KIT service for P/N G110253 circuit relief valve, kit includes an instruction sheet and P/N G109446 circuit relief valve, Ref. 24-36, which is the same as P/N G110253 except with a different pressure setting, The pressure setting of the repair circuit relief valve is not preset for this application. Adjust the setting according to the instructions sent with the repair valve or according to the service manual.

B-388

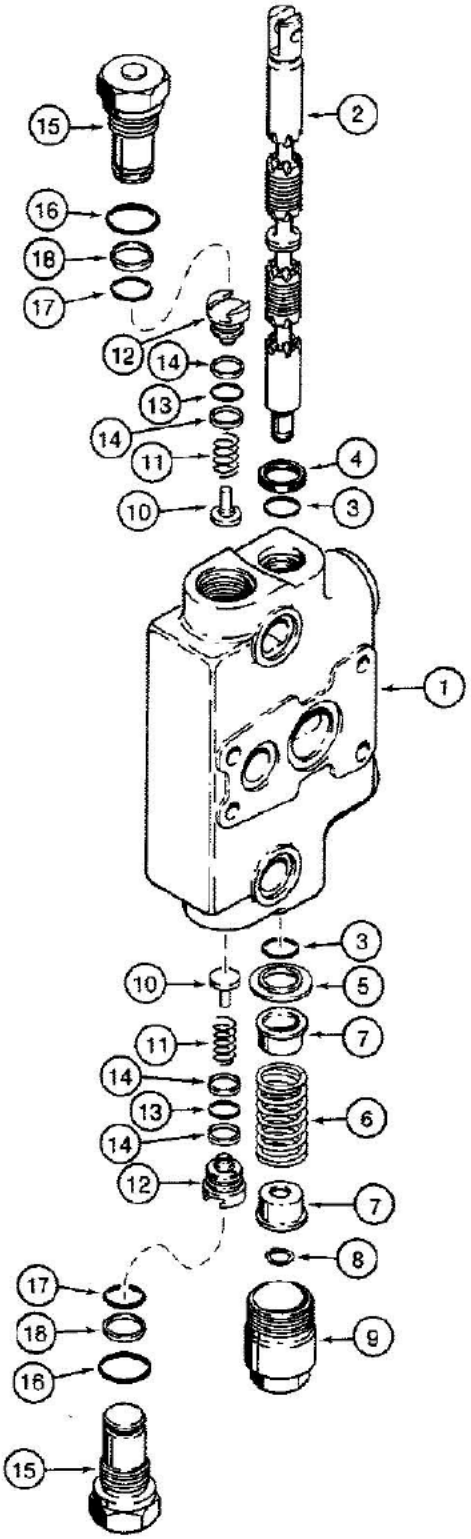

861881-45

08-388 BACKHOE CONTROL VALVE, DIPPER EXTENSION SECTION

Ref	Part Number	Qty	Description
	G109968	1	SECTION ASSEMBLY dipper extension, Includes: Ref. 1 thru 18
1	NSS	1	HOUSING dipper extension section
2	NSS	1	SPOOL dipper extension section
3	G108461	2	O-RING spool
4	A32309	1	SEAL oil, spool
5	G102711	1	RETAINER, O-ring
6	G108544	1	SPRING centering, spool
7	G33075	2	SEAT centering spring
8	G33077	1	Ring, Snap, #47, Ext, spool end
9	G33080	1	CAP spool end
10	G33081	2	POPPET load check valve
11	G33573	2	SPRING load check valve
12	G104062	2	PLUG load check valve
13	G110020	2	O-RING plug
14	G103862	4	RING backup, plug O-ring
	G33122	2	PLUG ASSEMBLY relief, Includes: Ref. 15 thru 18
15	NSS	1	PLUG relief
16	237-6012	1	O-RING, 12-1, 90 Duro, .924 ID x .116" Thk, Plug
17	G107675	1	O-RING plug, small
18	G35540	1	RING backup, small O-ring

8-390

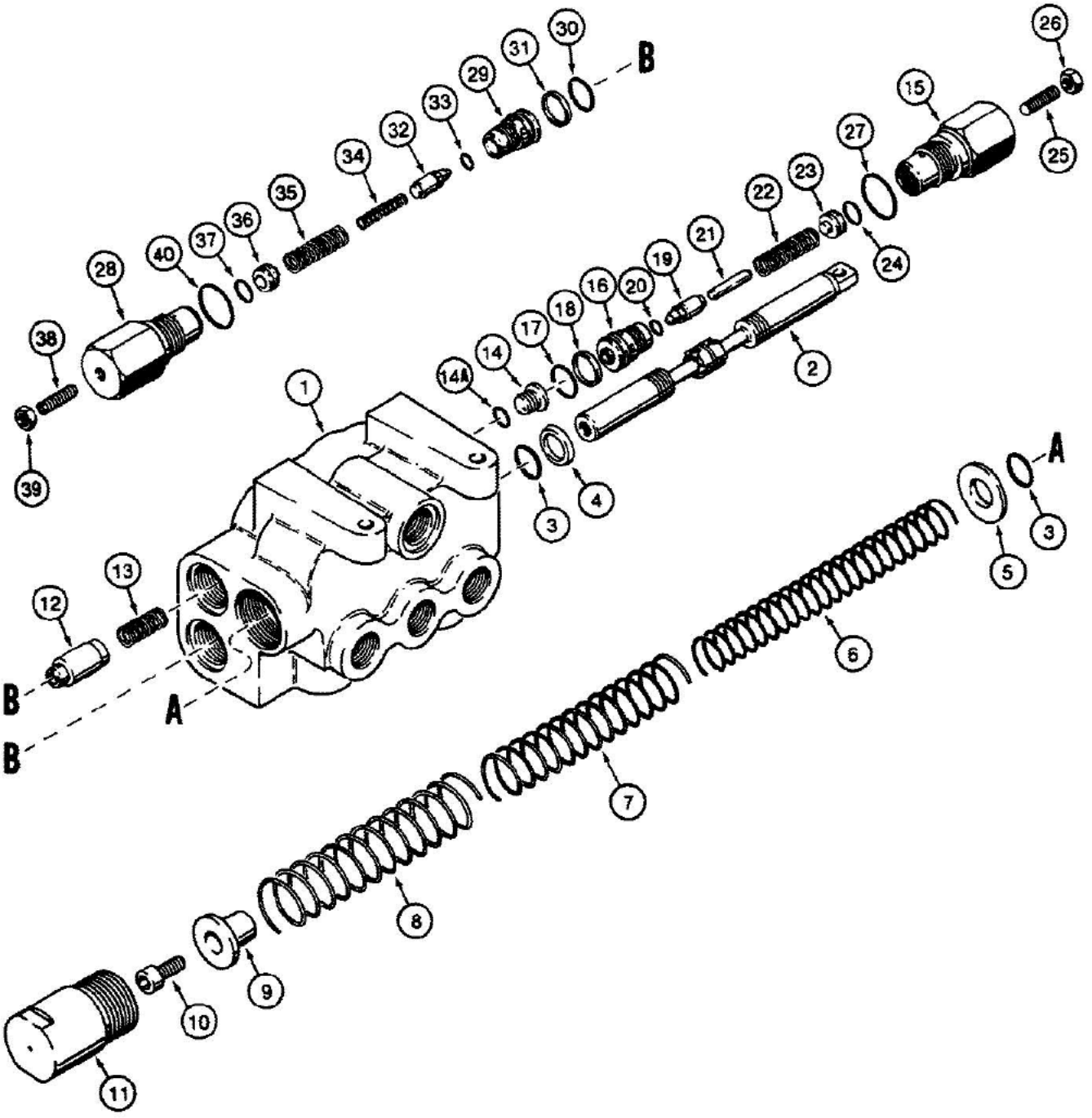

861869-45

08-390 BACKHOE SWING SEQUENCE VALVE

Ref	Part Number	Qty	Description
	G109665	1	VALVE ASSEMBLY backhoe swing sequence, no longer available, order P/N 1980310C1, Includes: Ref. 1 thru 40
	1980310C1	1	VALVE ASSEMBLY backhoe swing sequence, Includes: Ref. 1 thru 40
1	NSS	1	HOUSING backhoe swing sequence valve
2	NSS	1	SPOOL backhoe swing sequence valve
3	G108461	2	O-RING spool
4	A32309	1	SEAL oil, spool
5	G108896	1	RETAINER, O-ring
6	G108895	1	SPRING inner
7	G108892	1	SPRING center
8	G108891	1	SPRING outer
9	G108893	1	SEAT spring
10	61-612	1	BOLT hex socket head, 3/8"-16 NC x 3/4"
11	G108894	1	CAP spool end
12	G108017	1	SPOOL shuttle, orifice
13	G107174	1	SPRING shuttle spool
14	G108903	1	PLUG orifice, Includes: Ref. 14A
	G109764	1	VALVE ASSEMBLY circuit relief, spool eye end, used in production, order P/N G109448 kit for service, Includes: Ref. 15 thru 27, The pressure setting of the repair circuit relief valve is not preset for this application. Adjust the setting according to the instructions sent with the repair valve or according to the service manual.
15	NSS	1	HOUSING circuit relief valve
16	NSS	1	SEAT circuit relief valve
17	G107675	1	O-RING circuit relief valve seat
18	G35540	1	RING backup, seat O-ring
19	NSS	1	POPPET circuit relief valve
20	NSS	1	O-RING poppet
21	NSS	1	PIN stop, relief
22	NSS	1	SPRING circuit relief valve
23	NSS	1	PISTON circuit relief valve
24	NSS	1	O-RING piston
25	178-890	1	SCREW set, hex socket headless, 5/16"-24 NF x 1", oval point, plated
26	86637933	1	NUT, Jam, 5/16"-24, G5
27	237-6012	1	O-RING, 12-1, 90 Duro, .924 ID x .116" Thk, Housing
	G109448	1	KIT service for P/N G109764 circuit relief valve, kit includes an instruction sheet and P/N G109446 circuit relief valve, Ref. 15-27, which is the same as P/N G109764 except with a different pressure setting, The pressure setting of the repair circuit relief valve is not preset for this application. Adjust the setting according to the instructions sent with the repair valve or according to the service manual.

08-390 BACKHOE SWING SEQUENCE VALVE

Ref	Part Number	Qty	Description
	G110543	2	VALVE ASSEMBLY circuit relief, 3620 psi, spool capped end, P/N G109665 valve, used in production, order P/N G110077 kit for service, Includes: Ref. 28 thru 40, The pressure setting of the repair circuit relief valve is not preset for this application. Adjust the setting according to the instructions sent with the repair valve or according to the service manual.
	G110467	2	VALVE ASSEMBLY circuit relief, 4400 psi, spool capped end, P/N 1980310C1 valve, used in production, order P/N G110077 kit for service, Includes: Ref. 28 thru 40, The pressure setting of the repair circuit relief valve is not preset for this application. Adjust the setting according to the instructions sent with the repair valve or according to the service manual.
28	NSS	1	HOUSING circuit relief valve
29	NSS	1	SEAT circuit relief valve
30	G107675	1	O-RING circuit relief valve seat
31	G35540	1	RING backup, seat O-ring
32	NSS	1	POPPET circuit relief valve
33	NSS	1	O-RING poppet
34	NSS	1	SPRING relief, inner
35	NSS	1	SPRING relief, outer
36	NSS	1	PISTON circuit relief valve
37	NSS	1	O-RING piston
38	178-890	1	SCREW set, hex socket headless, 5/16"-24 NF x 1", oval point, plated
39	86637933	1	NUT, Jam, 5/16"-24, G5
40	237-6012	1	O-RING, 12-1, 90 Duro, .924 ID x .116" Thk, Housing
	G110077	1	KIT service for P/N G110543 circuit relief valve, kit includes an instruction sheet and P/N G110078 circuit relief valve, Ref. 28-40 which is the same as P/N G110543 except with a different pressure setting, The pressure setting of the repair circuit relief valve is not preset for this application. Adjust the setting according to the instructions sent with the repair valve or according to the service manual.
14A	237-6006	1	O-Ring, 6-1, 90 Duro, .468" ID x .078" Thk, Plug

3-394

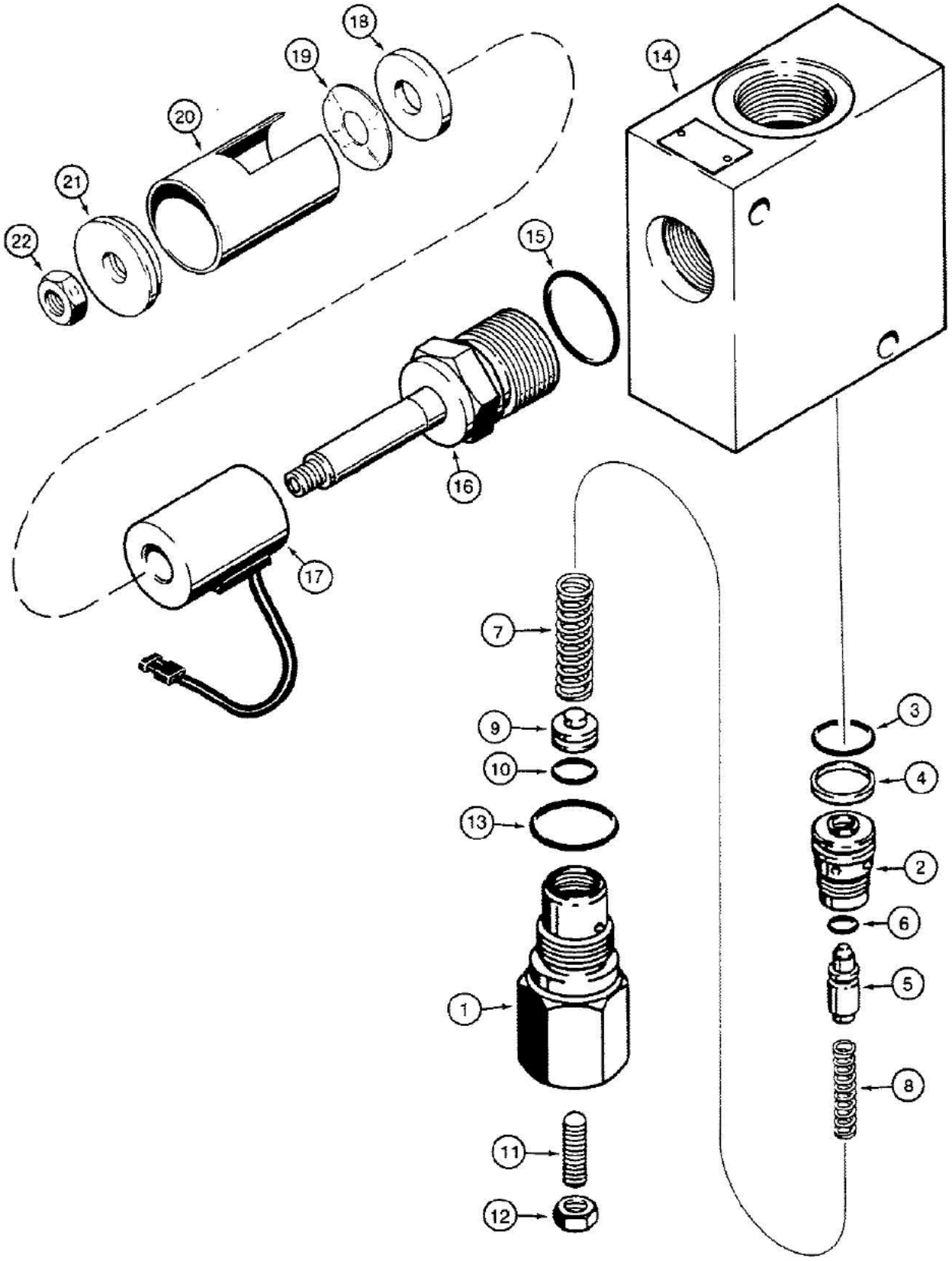

B1685A86W

08-394 BOOM LOCK SOLENOID VALVE

Ref	Part Number	Qty	Description
	D139523	1	VALVE ASSEMBLY solenoid, backhoe boom lock, no longer available, order P/N D144935 valve, Includes: P/N G110467 and Ref. 1 thru 22
	D144935	1	VALVE ASSEMBLY solenoid, backhoe boom lock, component parts not available at time of printing
	G110467	1	RELIEF ASSEMBLY circuit, solenoid, used in production, order P/N G110077 kit for service, Includes: Ref. 1 thru 13, The pressure setting of the repair circuit relief valve is not preset for this application. Adjust the setting according to the instructions sent with the repair valve
1	NSS	1	BODY relief valve
2	NSS	1	SEAT relief valve
3	G107675	1	O-RING relief valve seat
4	G35540	1	RING backup, seat O-ring
5	NSS	1	POPPET relief valve
6	NSS	1	O-RING poppet
7	NSS	1	SPRING relief, outer
8	NSS	1	SPRING relief, inner
9	NSS	1	PISTON relief valve
10	NSS	1	O-RING piston
11	178-890	1	SCREW set, hex socket headless, 5/16"-24 NF x 1", oval point, plated
12	86637933	1	NUT, Jam, 5/16"-24, G5
13	237-6012	1	O-RING, 12-1, 90 Duro, .924 ID x .116" Thk, Body
14	NSS	1	BODY solenoid
15	L33129	1	O-RING solenoid body
16	NSS	1	SOLENOID relief
	N14634	1	COIL ASSEMBLY solenoid, component parts not serviced separately, Includes: Ref. 17 thru 21
17	NSS	1	COIL solenoid
18	NSS	1	SPACER coil
19	NSS	1	WASHER spring
20	NSS	1	COVER coil
21	NSS	1	CAP coil end
22	131-813	1	NUT hex, self-locking, 3/8"-24 NF
	G110077	1	KIT service for P/N G110467 circuit relief valve, Includes: P/N G110078 circuit relief valve assembly, Ref. 1-13, and an instruction sheet, The pressure setting of the repair circuit relief valve is not preset for this application. Adjust the setting according to the instructions sent with the repair valve

8-396

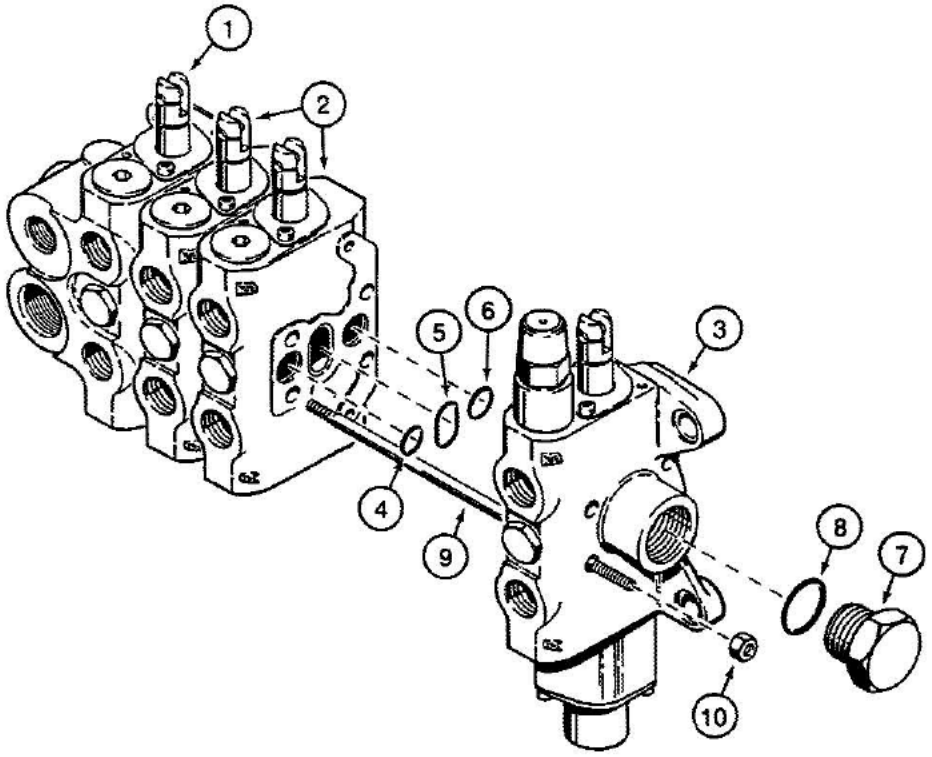

B88115-45

08-396 THREE-POINT HITCH CONTROL VALVE

Ref	Part Number	Qty	Description
	D141297	1	VALVE ASSEMBLY three-point hitch control, four spool, Includes: Ref. 1 thru 10
1	N14263	1	SECTION ASSEMBLY inlet-outlet and implement, see Figure 08-398
2	N14268	2	SECTION ASSEMBLY tilt and pitch, see Figure 08-400
3	N14269	1	SECTION ASSEMBLY lift, see Figure 08-402
	N14286	3	KIT seal, Includes: Ref. 4 thru 6
4	NSS	1	O-RING between sections, port side of control valve
5	NSS	1	O-RING between sections, center
6	NSS	1	O-RING between sections, non-port side of control valve
7	218-5158	1	PLUG lift section, Includes: Ref. 8
8	237-6012	1	O-RING, 12-1, 90 Duro, .924 ID x .116" Thk, Plug
	N14287	1	KIT tie bolt, Includes: Ref. 9 and 10
9	NSS	4	BOLT tie, special, to internal threaded bolt holes in inlet-outlet section
10	NSS	4	NUT self-locking, 6 mm-1.25, tie bolt

3-398

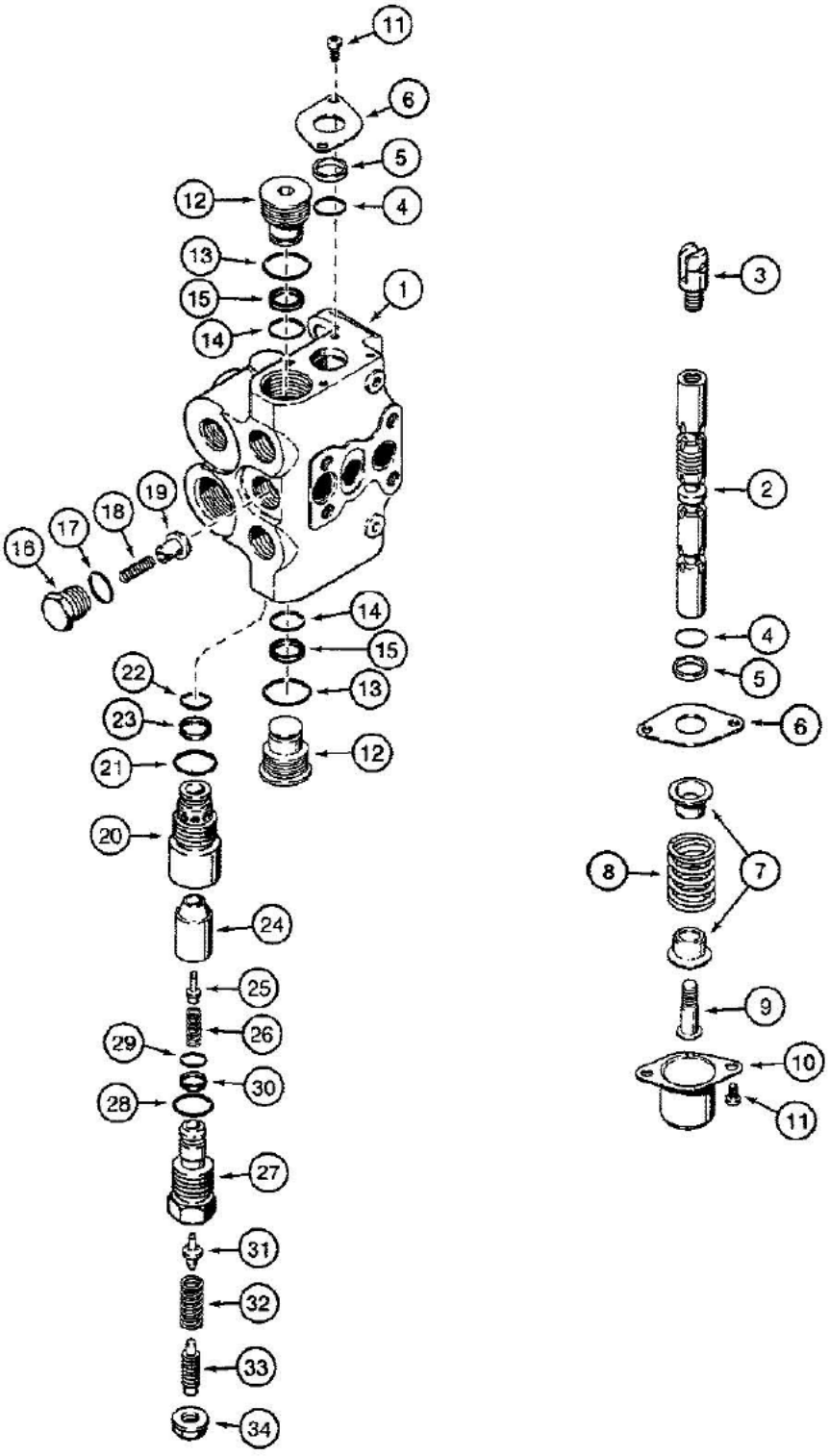

B68116-45

08-398 THREE-POINT HITCH CONTROL VALVE, INLET-OUTLET AND IMPLEMENT SECTION

Ref	Part Number	Qty	Description
	N14263	1	SECTION ASSEMBLY inlet-outlet and implement, Includes: Ref. 1 thru 34
1	NSS	1	HOUSING inlet-outlet and implement section
2	NSS	1	SPOOL inlet-outlet and implement section
3	N14264	1	EYE spool
	N14288	1	KIT wiper, spool, Includes: Ref. 4 and 5
4	NSS	2	O-RING spool
5	NSS	2	WIPER spool
6	NSS	2	RETAINER plate, spool wiper
	N14265	1	KIT spool, cap end, Includes: Ref. 7 thru 10
7	NSS	2	SEAT spring
8	NSS	1	SPRING centering, spool
9	NSS	1	BOLT spool, cap end
10	NSS	1	CAP valve spool
11	NSS	4	BOLT cap and retainer plate
	N14271	2	PLUG ASSEMBLY valve, upper and lower, if used, Includes: Ref. 12 thru 15
12	NSS	1	PLUG valve
13	R15366	1	O-RING plug, outer, large
14	D26265	1	O-RING plug, small
15	A34493	1	RING backup, small O-ring
	N14266	1	VALVE ASSEMBLY load check, valve section, Includes: Ref. 16 thru 19
16	NSS	1	PLUG load check valve
17	N14653	1	O-RING plug
18	N14652	1	SPRING load check valve
19	NSS	1	POPPET load check
	N14267	1	VALVE ASSEMBLY main relief, section, Includes: Ref. 20 thru 34
20	NSS	1	HOUSING main relief valve
21	R15366	1	O-RING housing, outer, large
22	D26265	1	O-RING housing, small
23	A34493	1	RING backup, small O-ring
24	NSS	1	PISTON relief valve
25	NSS	1	PLUNGER piston
26	NSS	1	SPRING plunger, small
27	NSS	1	BODY relief valve
28	A17526	1	O-RING body, outer, large
29	A30825	1	O-RING body, small
30	L31330	1	RING backup, small O-ring
31	NSS	1	POPPET relief valve
32	NSS	1	SPRING poppet
33	NSS	1	SCREW adjusting
34	NSS	1	NUT lock, special

8-400

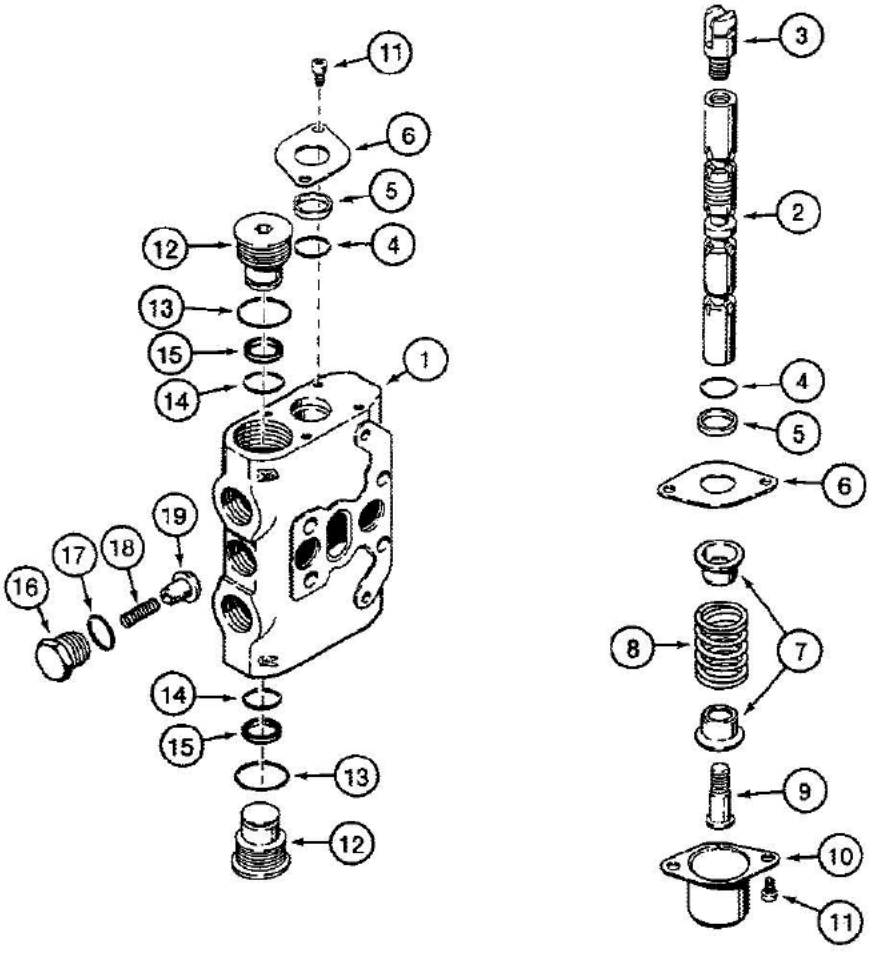

B88117-45

08-400 THREE-POINT HITCH CONTROL VALVE, PITCH AND TILT SECTIONS

Ref	Part Number	Qty	Description
	N14268	2	SECTION ASSEMBLY pitch and tilt, Includes: Ref. 1 thru 19
1	NSS	1	HOUSING pitch and tilt section
2	NSS	1	SPOOL pitch and tilt section
3	N14264	1	EYE spool
	N14288	1	KIT wiper, spool, Includes: Ref. 4 and 5
4	NSS	2	O-RING spool
5	NSS	2	WIPER spool
6	NSS	2	RETAINER plate, spool wiper
	N14265	1	KIT spool, cap end, Includes: Ref. 7 thru 10
7	NSS	2	SEAT spring
8	NSS	1	SPRING centering, spool
9	NSS	1	BOLT spool, cap end
10	NSS	1	CAP valve spool
11	NSS	4	BOLT cap and retainer plate
	N14271	2	PLUG ASSEMBLY valve, upper and lower, if used, Includes: Ref. 12 thru 15
12	NSS	1	PLUG valve
13	R15366	1	O-RING plug, outer, large
14	D26265	1	O-RING plug, small
15	A34493	1	RING backup, small O-ring
	N14266	1	VALVE ASSEMBLY load check, valve section, Includes: Ref. 16 thru 19
16	NSS	1	PLUG load check valve
17	N14653	1	O-RING plug
18	N14652	1	SPRING load check valve
19	NSS	1	POPPET load check

8-402

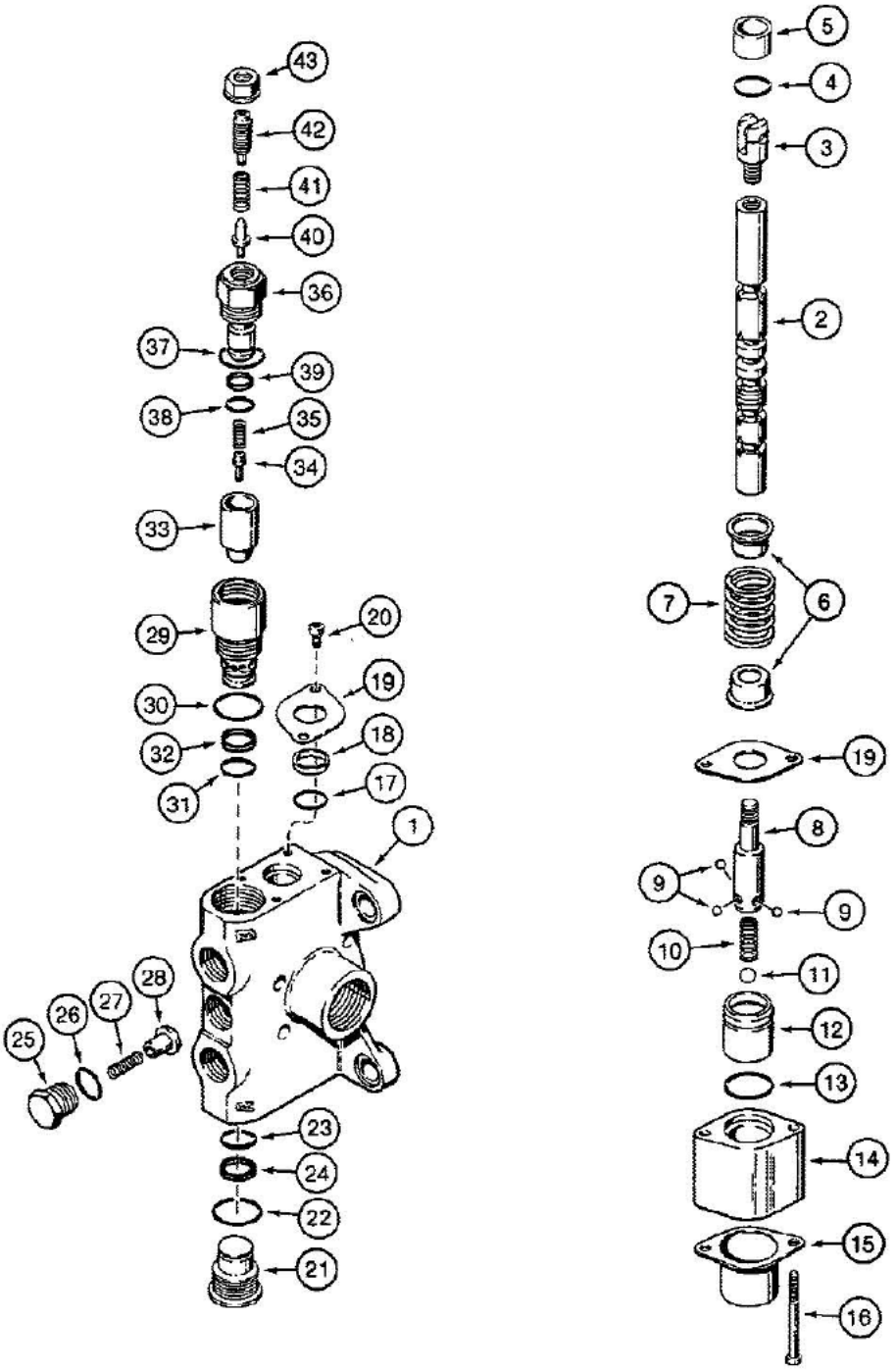

B88118-45

08-402 THREE-POINT HITCH CONTROL VALVE, LIFT SECTION

Ref	Part Number	Qty	Description
	N14269	1	SECTION ASSEMBLY lift, Includes: Ref. 1 thru 43
1	NSS	1	HOUSING lift section
2	NSS	1	SPOOL lift section
3	N14264	1	EYE spool
	N14270	1	KIT spool, cap end, Includes: Ref. 4 thru 16
4	N14657	1	SEAL bushing, spool eye end
5	NSS	1	BUSHING spool
6	NSS	2	SEAT spring
7	NSS	1	SPRING centering, spool
8	NSS	1	RETAINER detent, spool cap end
9	N14654	3	BALL small
10	N14656	1	SPRING detent, small
11	N14655	1	BALL large
12	NSS	1	SLEEVE detent
13	N14658	1	SEAL detent housing
14	NSS	1	HOUSING detent, spool cap end
15	NSS	1	CAP valve spool
16	864-5055	2	BOLT, 5 mm x 55 mm, cap retaining
	N14288	1	KIT wiper, spool, upper, only one O-ring and wiper used in this application, Includes: Ref. 17 and 18
17	NSS	2	O-RING spool
18	NSS	2	WIPER spool
19	N14659	2	RETAINER plate, spool wiper
20	864-5008	2	BOLT, 5 mm x 8 mm, retainer plate
	N14271	1	PLUG ASSEMBLY valve, lower, Includes: Ref. 21 thru 24
21	NSS	1	PLUG valve
22	R15366	1	O-RING plug, outer, large
23	D26265	1	O-RING plug, small
24	A34493	1	RING backup, small O-ring
	N14266	1	VALVE ASSEMBLY load check, valve section, Includes: Ref. 25 thru 28
25	NSS	1	PLUG load check valve
26	N14653	1	O-RING plug
27	N14652	1	SPRING load check valve
28	NSS	1	POPPET load check
	N14267	1	VALVE ASSEMBLY main relief, section, Includes: Ref. 29 thru 43
29	NSS	1	HOUSING main relief valve
30	R15366	1	O-RING housing, outer, large
31	D26265	1	O-RING housing, small
32	A34493	1	RING backup, small O-ring
33	NSS	1	PISTON relief valve
34	NSS	1	PLUNGER piston
35	NSS	1	SPRING plunger, small

08-402 THREE-POINT HITCH CONTROL VALVE, LIFT SECTION

Ref	Part Number	Qty	Description
36	NSS	1	BODY relief valve
37	A17526	1	O-RING body, outer, large
38	A30825	1	O-RING body, small
39	L31330	1	RING backup, small O-ring
40	NSS	1	POPPET relief valve
41	NSS	1	SPRING poppet
42	NSS	1	SCREW adjusting
43	NSS	1	NUT lock, special

3-406

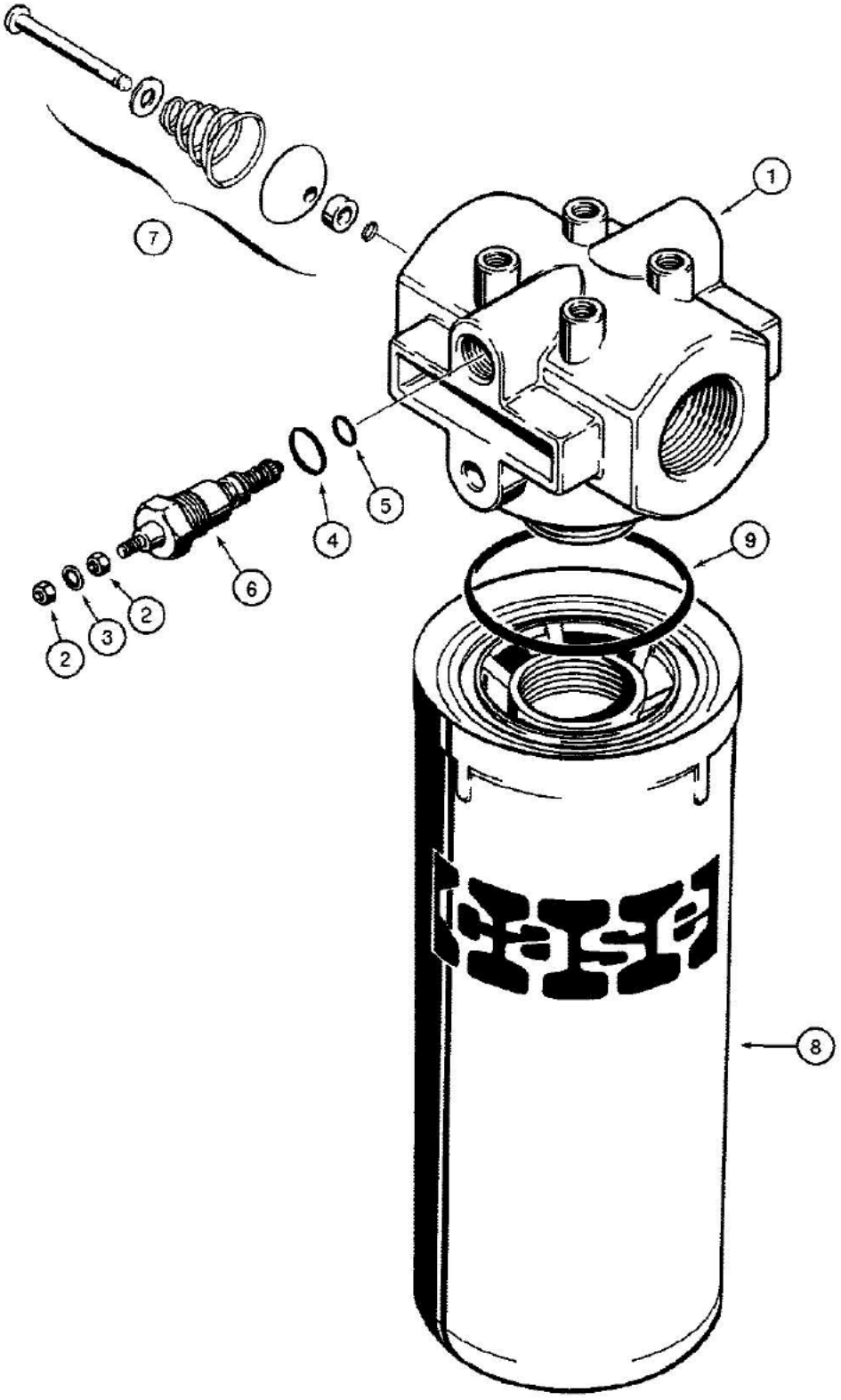

800852-45

08-406 HYDRAULIC OIL FILTER

Ref	Part Number	Qty	Description
	D132933	1	FILTER ASSEMBLY hydraulic oil, Includes: Ref. 1 thru 9
1	NSS	1	HEAD filter, Includes: P/N N6755 and N6941 and Ref. 2 thru 6
	N6755	1	INDICATOR ASSEMBLY restriction, electric, Includes: P/N N6941 and Ref. 2 thru 6
	N6941	1	KIT restriction indicator repair, Includes: Ref. 2 thru 5
2	129-667	2	NUT, #10-32, LH
3	193-99	1	WASHER, LOCK, Int Tooth, #10
5	A28090	1	O-Ring -011, 70 Duro, .031" ID x .070" Thk inner
6	NSS	1	INDICATOR restriction, electric
7	NSS	1	VALVE bypass
	N9025	1	ELEMENT ASSEMBLY filter, Includes: Ref. 8 and 9
8	NSS	1	ELEMENT filter
9	238-5230	1	O-RING, -230, 70 Duro, 2.484" ID x .139" Thk, Filter to head
4	237-6006	1	O-Ring, 6-1, 90 Duro, .468" ID x .078" Thk

B-408

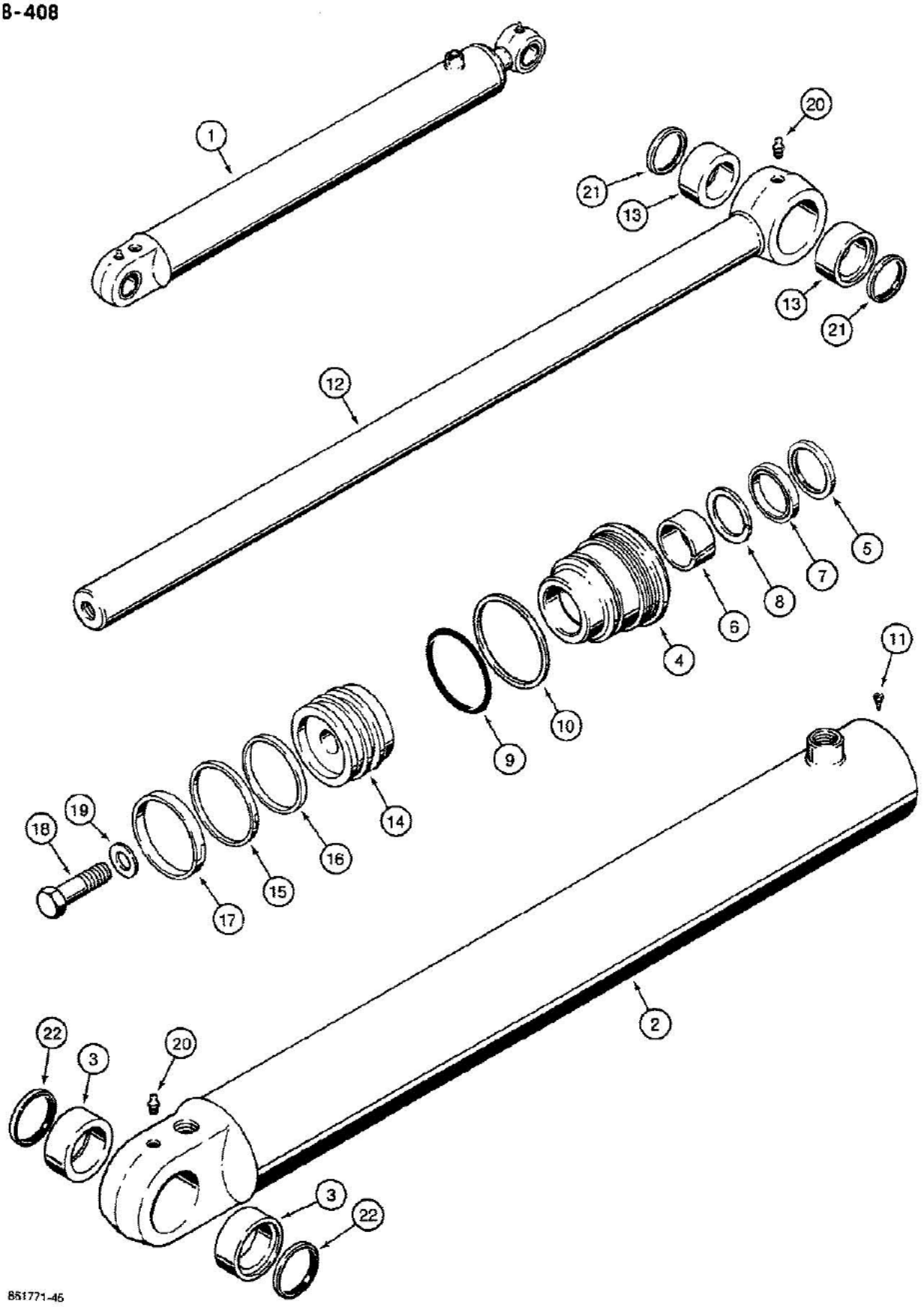
1
20
21
13
13
21
12
5
7
8
6
4
11
10
9
14
16
15
17
18
19
2
22
3
20
3
22
851771-46

08-408 LOADER LIFT CYLINDERS

Ref	Part Number	Qty	Description
1	G108478	2	CYLINDER ASSEMBLY, 3-1/4" (82 mm) ID x 29" (740 mm) stroke, lift, right-hand and left-hand, if used, Includes: Ref. 2 thru 22, The cylinder assembly part number is stamped on some cylinder glands or tubes
1	1980317C1	2	CYLINDER ASSEMBLY, 3-1/4" (82 mm) ID x 29" (740 mm) stroke, lift, right-hand and left-hand, if used, Includes: Ref. 2 thru 22, The cylinder assembly part number is stamped on some cylinder glands or tubes
2	G108502	1	TUBE ASSEMBLY, P/N G108478 cylinder, Includes: Ref. 3
2	1980318C1	1	TUBE ASSEMBLY, P/N 1980317C1 cylinder, Includes: Ref. 3
3	G108698	2	BUSHING, P/N G108502 or 1980318C1 tube
	G110623	1	GLAND ASSEMBLY, P/N G108478 cylinder, Includes: Ref. 4 thru 10
	1980322C1	1	GLAND ASSEMBLY, P/N 1980317C1 cylinder, Includes: Ref. 4 thru 10
4	NSS	1	GLAND cylinder
5	D95143	1	WIPER piston rod, outer, Part of Seal Kit P/N G110053
6	G102425	1	BUSHING center, Part of Seal Kit P/N G110053
7	G107922	1	SEAL, U-cup, with O-ring, piston rod, wide, Part of Seal Kit P/N G110053
8	G109094	1	SEAL buffer, grooved, piston rod, narrow, Part of Seal Kit P/N G110053
9	T11032	1	O-RING gland, Part of Seal Kit P/N G110053
10	G32122	1	RING backup, gland O-ring, Part of Seal Kit P/N G110053
11	187-1524	1	SCREW hex head, slotted, self-tapping, No. 8-32 NC x 3/8", plated
12	G108505	1	ROD ASSEMBLY piston, 1-3/4" (44 mm) diameter, P/N G108478 cylinder, Includes: Ref. 13
12	1978055C1	1	ROD ASSEMBLY piston, 1-3/4" (44 mm) diameter, P/N 1980317C1 cylinder, Includes: Ref. 13
13	G108526	2	BUSHING, P/N G108505 or 1978055C1 piston rod
14	G108184	1	PISTON cylinder
15	G102287	1	SEAL piston, Part of Seal Kit P/N G110053
16	S109444	1	RING backup, piston seal, Part of Seal Kit P/N G110053
17	S109445	1	RING wear, piston, Part of Seal Kit P/N G110053
18	28-1240	1	BOLT hex head, 3/4"-16 NF x 2-1/2", grade 8
19	S94643	1	WASHER flat, 3/4", hardened
20	219-1	2	FITTING grease, straight, 1/8" NPT
21	D127833	2	SEAL rod eye
22	D127866	2	SEAL tube eye
	G110053	1	KIT seal, Includes: Ref. 5 thru 10 and 15 thru 17

8-410

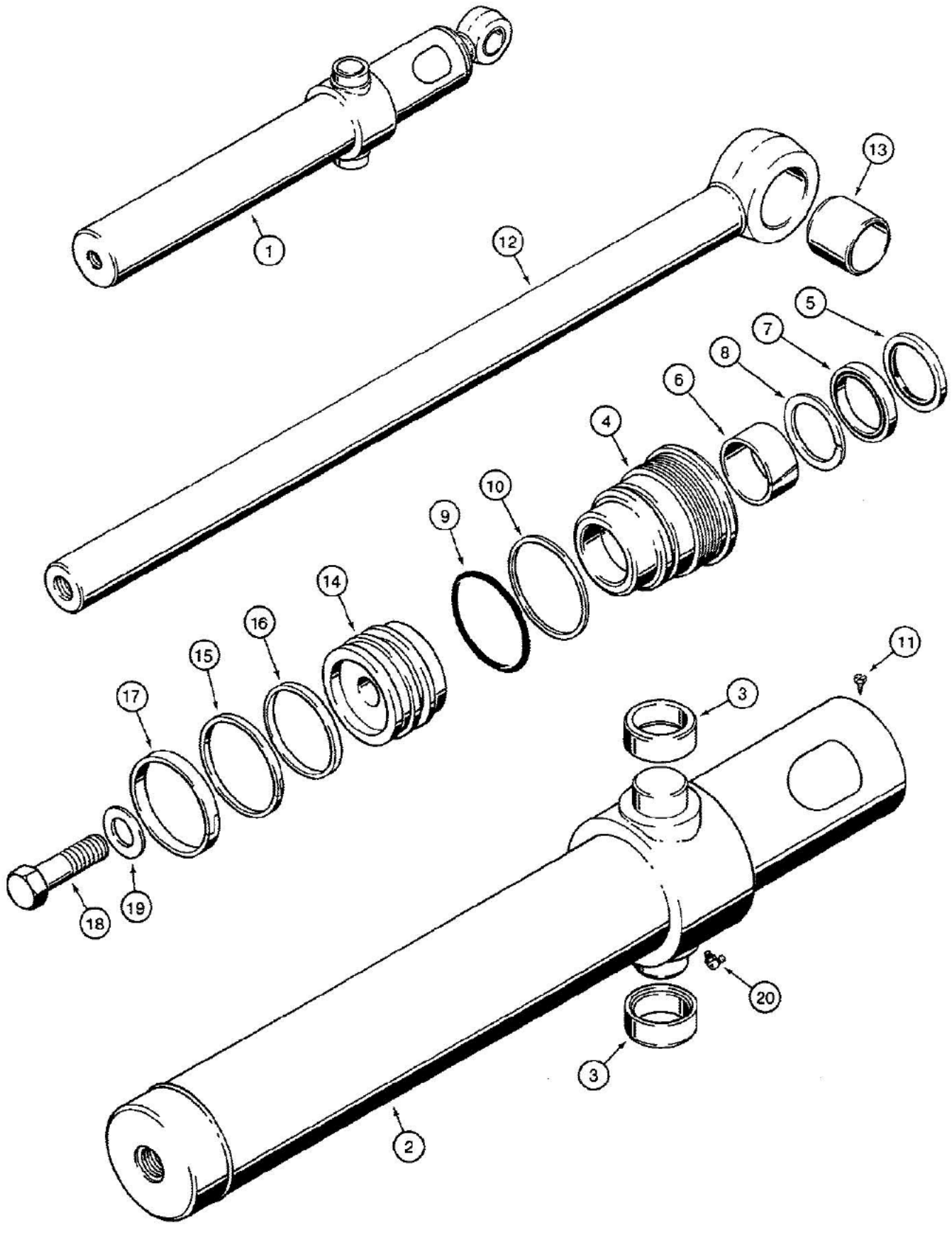

G109882 gland assembly subs to P/N 297280A1 gland and P/N 1543256C1 seal kit.

08-410 LOADER BUCKET CYLINDERS

Ref	Part Number	Qty	Description
1	G108486	1	CYLINDER ASSEMBLY, 3" (76 mm) ID x 21" (522 mm) stroke, bucket, right-hand, includes bushings in cylinder tube, Includes: Ref. 2 thru 20, The cylinder assembly part number is stamped on some cylinder glands or tubes
1	G108487	1	CYLINDER ASSEMBLY, 3" (76 mm) ID x 21" (522 mm) stroke, bucket, left-hand, includes bushings in cylinder tube, Includes: Ref. 2 thru 20, The cylinder assembly part number is stamped on some cylinder glands or tubes
2	G108508	1	TUBE ASSEMBLY cylinder, right-hand, Includes: Ref. 3
2	G108509	1	TUBE ASSEMBLY cylinder, left-hand, Includes: Ref. 3
3	G108512	2	BUSHING, P/N G108508 or G108509 tube
	G109882	1	GLAND ASSEMBLY cylinder, Includes: Ref. 4 thru 10
4	NSS	1	GLAND cylinder
5	D95142	1	WIPER piston rod, outer, Part of Seal Kit P/N G110050
6	G102424	1	BUSHING center, Part of Seal Kit P/N G110050
7	G107921	1	SEAL, U-cup, with O-ring, piston rod, wide, Part of Seal Kit P/N G110050
8	G109093	1	SEAL buffer, grooved, piston rod, narrow, Part of Seal Kit P/N G110050
9	G10389	1	O-RING gland, Part of Seal Kit P/N G110050
10	G109298	1	RING backup, gland O-ring, Part of Seal Kit P/N G110050
11	187-1524	1	SCREW hex head, slotted, self-tapping, No. 8-32 NC x 3/8", plated
12	1978056C1	1	ROD ASSEMBLY piston, 1-1/2" (38 mm) diameter, Includes: Ref. 13
13	G108507	1	BUSHING piston rod
14	G108518	1	PISTON cylinder
15	G102288	1	SEAL piston, Part of Seal Kit P/N G110050
16	G100444	1	RING backup, piston seal, Part of Seal Kit P/N G110050
17	G100449	1	RING wear, piston, Part of Seal Kit P/N G110050
18	28-1240	1	BOLT hex head, 3/4"-16 NF x 2-1/2", grade 8
19	S94643	1	WASHER flat, 3/4", hardened
20	219-55	1	NIPPLE, LUBE, 90e, 1/8" NPT x .84" lg, Special short
	G110050	1	KIT seal, Includes: Ref. 5 thru 10 and 15 thru 17

G109882 gland assembly subs to P/N 297280A1 gland and P/N 1543256C1 seal kit.

8-412

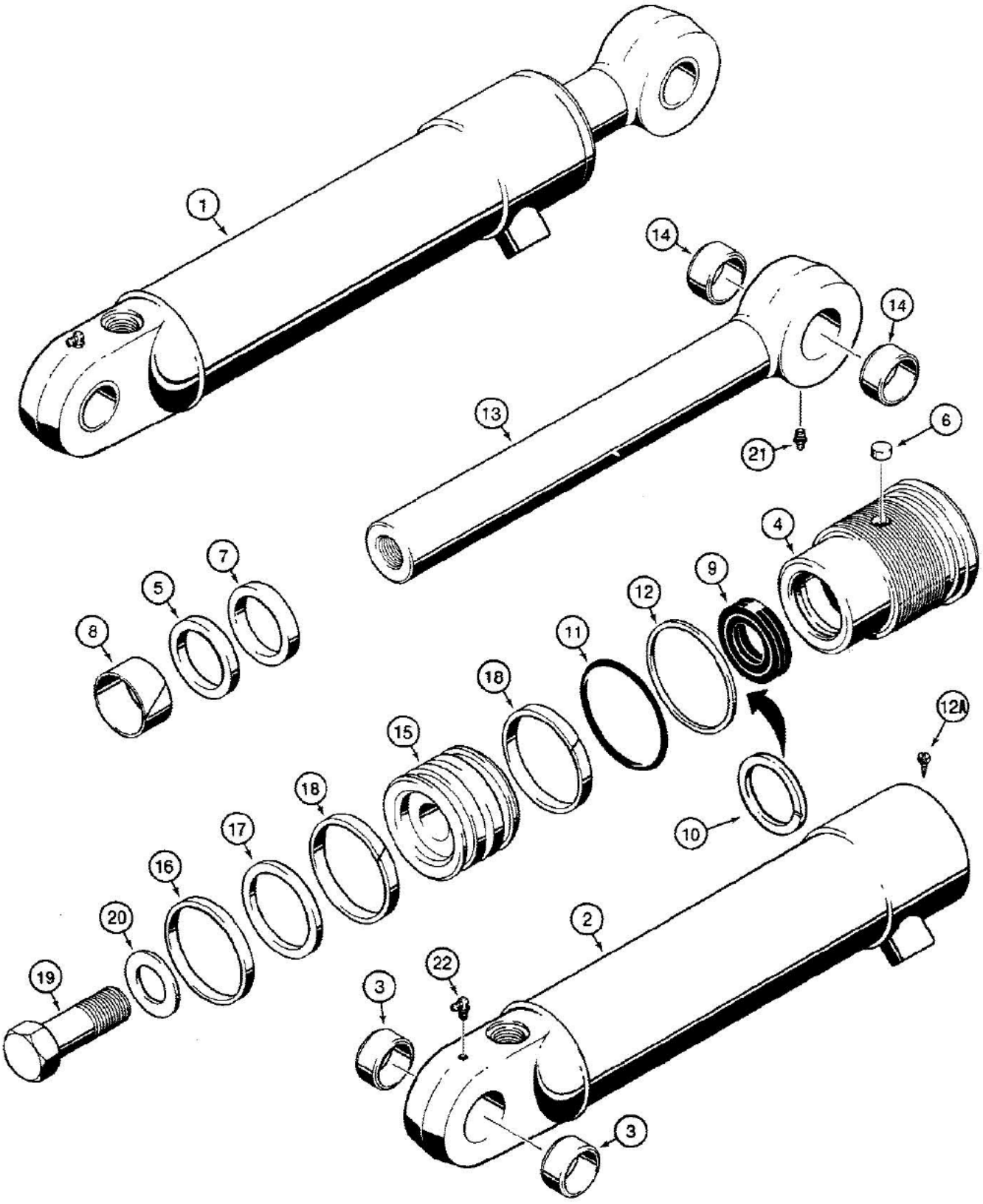

830592 B

08-412 LOADER CLAM CYLINDERS

Ref	Part Number	Qty	Description
1	G101190	1	CYLINDER ASSEMBLY, 3" (76 mm) ID x 9" (229 mm) stroke, clam, right-hand, Includes: Ref. 2 thru 22, The cylinder assembly part number is stamped on some cylinder glands or tubes
1	G101191	1	CYLINDER ASSEMBLY, 3" (76 mm) ID x 9" (229 mm) stroke, clam, left-hand, Includes: Ref. 2 thru 22, The cylinder assembly part number is stamped on some cylinder glands or tubes
2	G32305	1	TUBE ASSEMBLY right-hand cylinder, Includes: Ref. 3
2	G32304	1	TUBE ASSEMBLY left-hand cylinder, Includes: Ref. 3
3	30634	2	BUSHING, P/N G32305 or G32304 tube
	G104240	1	GLAND ASSEMBLY cylinder, Includes: Ref. 4 thru 12
4	NSS	1	GLAND cylinder
5	G34600	1	RING retaining, bushing
6	G102569	1	PLUG nylon, thread locking, gland, if used
7	D95143	1	WIPER piston rod, outer, Part of Seal Kit P/N G109460
8	G102425	1	BUSHING center, Part of Seal Kit P/N G109460
9	G107922	1	SEAL, U-cup, with O-ring, piston rod, wide, Part of Seal Kit P/N G109460
9	G100777	1	SEAL, U-cup, piston rod, service option for severe heat or cold
10	G109094	1	SEAL buffer, grooved, piston rod, narrow, Part of Seal Kit P/N G109460
11	A30095	1	O-RING gland, Part of Seal Kit P/N G109460
12	G32122	1	RING backup, gland O-ring, Part of Seal Kit P/N G109460
12A	187-1524	1	SCREW hex head, slotted, self-tapping, No. 8-32 NC x 3/8", plated, if used
13	G33800	1	ROD ASSEMBLY piston, 1-3/4" (44 mm) diameter, Includes: Ref. 14
14	30634	2	BUSHING piston rod
15	G100704	1	PISTON cylinder
16	G102288	1	SEAL piston, Part of Seal Kit P/N G109460
17	G100444	1	RING backup, piston seal, Part of Seal Kit P/N G109460
18	G100449	2	RING wear, piston, Part of Seal Kit P/N G109460
19	28-1640	1	BOLT hex head, 1"-14 NS x 2-1/2", grade 8
20	G32303	1	WASHER flat, 1", hardened
21	219-1	1	FITTING grease, straight, 1/8" NPT
22	219-55	1	NIPPLE, LUBE, 90ɛ, 1/8" NPT x .84" lg, Special short
	G109460	1	KIT seal, Includes: Ref. 7, 8, 9 P/N G107922, 10, 11, 12, 16, 17 and 18

8-414

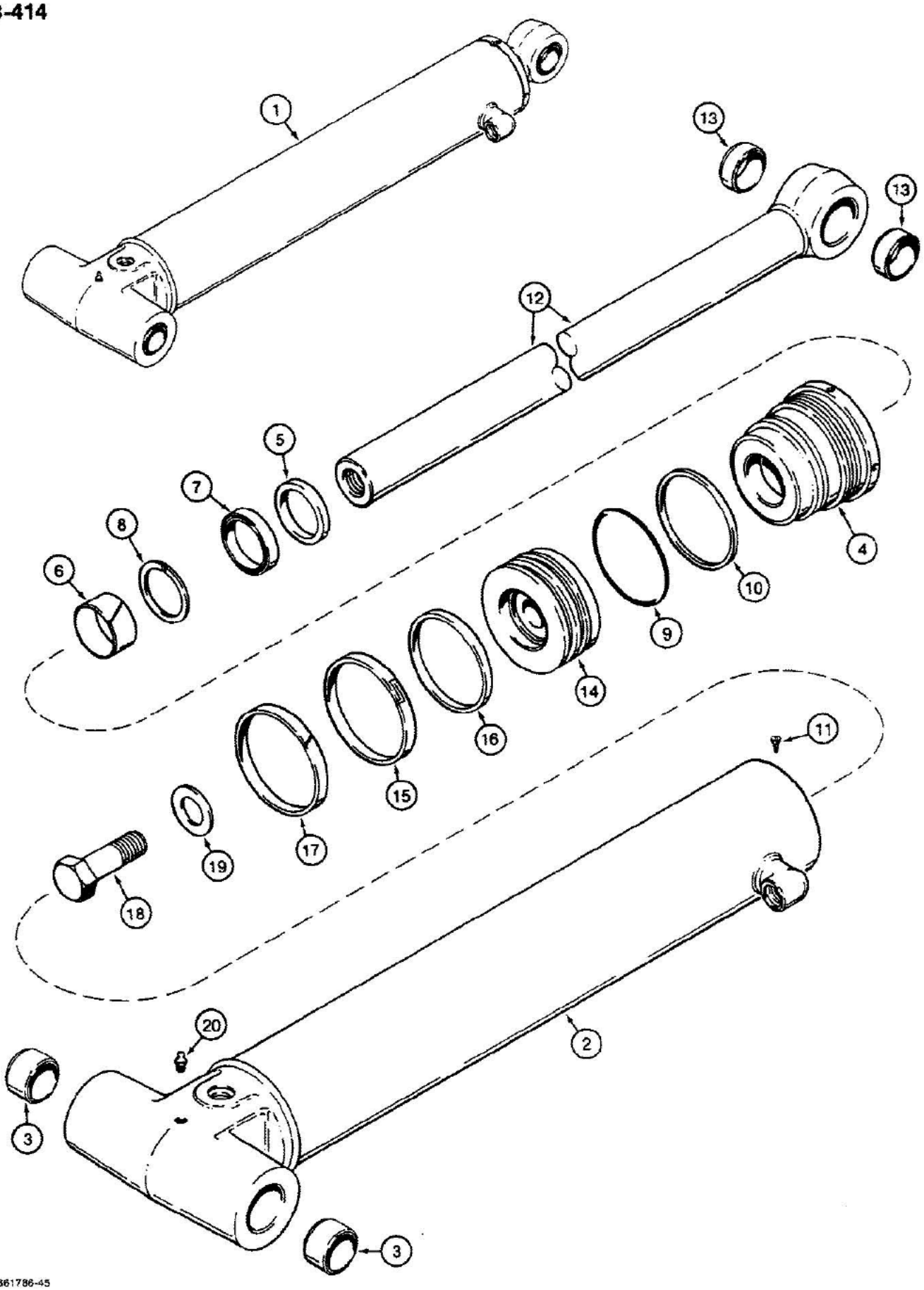

08-414 BACKHOE STABILIZER CYLINDERS

Ref	Part Number	Qty	Description
1	G110510	1	CYLINDER ASSEMBLY, 4-1/4" (108 mm) ID x 21-3/4" (553 mm) stroke, stabilizer, right-hand, with rod bushings, no longer available, for service order P/N G110672 cylinder, Includes: Ref. 2 thru 20, The cylinder assembly part number is stamped on some cylinder glands or tubes, The RH cylinder is shown in the illustration. The LH cylinder has the elbow on the opposite side.
1	G110511	1	CYLINDER ASSEMBLY, 4-1/4" (108 mm) ID x 21-3/4" (553 mm) stroke, stabilizer, left-hand, with rod bushings, no longer available, for service order P/N G110673 cylinder, Includes: Ref. 2 thru 20, The RH cylinder is shown in the illustration. The LH cylinder has the elbow on the opposite side., The cylinder assembly part number is stamped on some cylinder glands or tubes
1	G110672	1	CYLINDER ASSEMBLY, 4-1/4" (108 mm) ID x 21-3/4" (553 mm) stroke, stabalizer, right-hand, without rod bushings, Includes: Ref. 2 thru 20, The cylinder assembly part number is stamped on some cylinder glands or tubes, The RH cylinder is shown in the illustration. The LH cylinder has the elbow on the opposite side.
1	G110673	1	CYLINDER ASSEMBLY, 4-1/4" (108 mm) ID x 21-3/4" (553 mm) stroke, stabalizer, left-hand, without rod bushings, Includes: Ref. 2 thru 20, The RH cylinder is shown in the illustration. The LH cylinder has the elbow on the opposite side., The cylinder assembly part number is stamped on some cylinder glands or tubes
2	G110512	1	TUBE ASSEMBLY cylinder, right-hand, Includes: Ref. 3, The RH cylinder is shown in the illustration. The LH cylinder has the elbow on the opposite side.
2	G110513	1	TUBE ASSEMBLY cylinder, left-hand, Includes: Ref. 3, The RH cylinder is shown in the illustration. The LH cylinder has the elbow on the opposite side.
3	D30932	2	BUSHING, P/N G110512 or G110513 tube
	G110520	1	GLAND ASSEMBLY cylinder, Includes: Ref. 4 thru 10
4	NSS	1	GLAND cylinder
5	D95144	1	WIPER piston rod, Part of Seal Kit P/N G110537
6	G101533	1	BUSHING center, Part of Seal Kit P/N G110537
7	G107923	1	SEAL, U-cup, with O-ring, piston rod, wide, Part of Seal Kit P/N G110537
8	G107997	1	SEAL buffer, grooved, piston rod, narrow, Part of Seal Kit P/N G110537
9	A27817	1	O-RING gland, Part of Seal Kit P/N G110537
10	G32176	1	RING backup, gland O-ring, Part of Seal Kit P/N G110537
11	187-1524	1	SCREW hex head, slotted, self-tapping, No. 8-32 NC x 3/8", plated
12	G110516	1	ROD ASSEMBLY piston, 2" (51 mm) diameter, with bushings, P/N G110510 or G110511 cylinder, Includes: Ref. 13
13	D32865	2	BUSHING, P/N G110516 rod only
13A	1978060C1	1	ROD piston, 2" (51 mm) diameter, without bushings, P/N G110672 or G110673 cylinder, not shown
14	G110522	1	PISTON cylinder
15	G110531	1	SEAL piston, Part of Seal Kit P/N G110537
16	G110529	1	RING backup, piston seal, Part of Seal Kit P/N G110537
17	G110530	1	RING wear, piston, Part of Seal Kit P/N G110537
18	28-1648	1	BOLT hex head, 1"-14 National Super Fine x 3", grade 8
19	G32303	1	WASHER flat, 1", hardened
20	219-1	1	FITTING grease, straight, 1/8" NPT

08-414 BACKHOE STABILIZER CYLINDERS

Ref	Part Number	Qty	Description
	G110537	1	KIT seal, Includes: Ref. 5 thru 10 and 15 thru 17

8-416

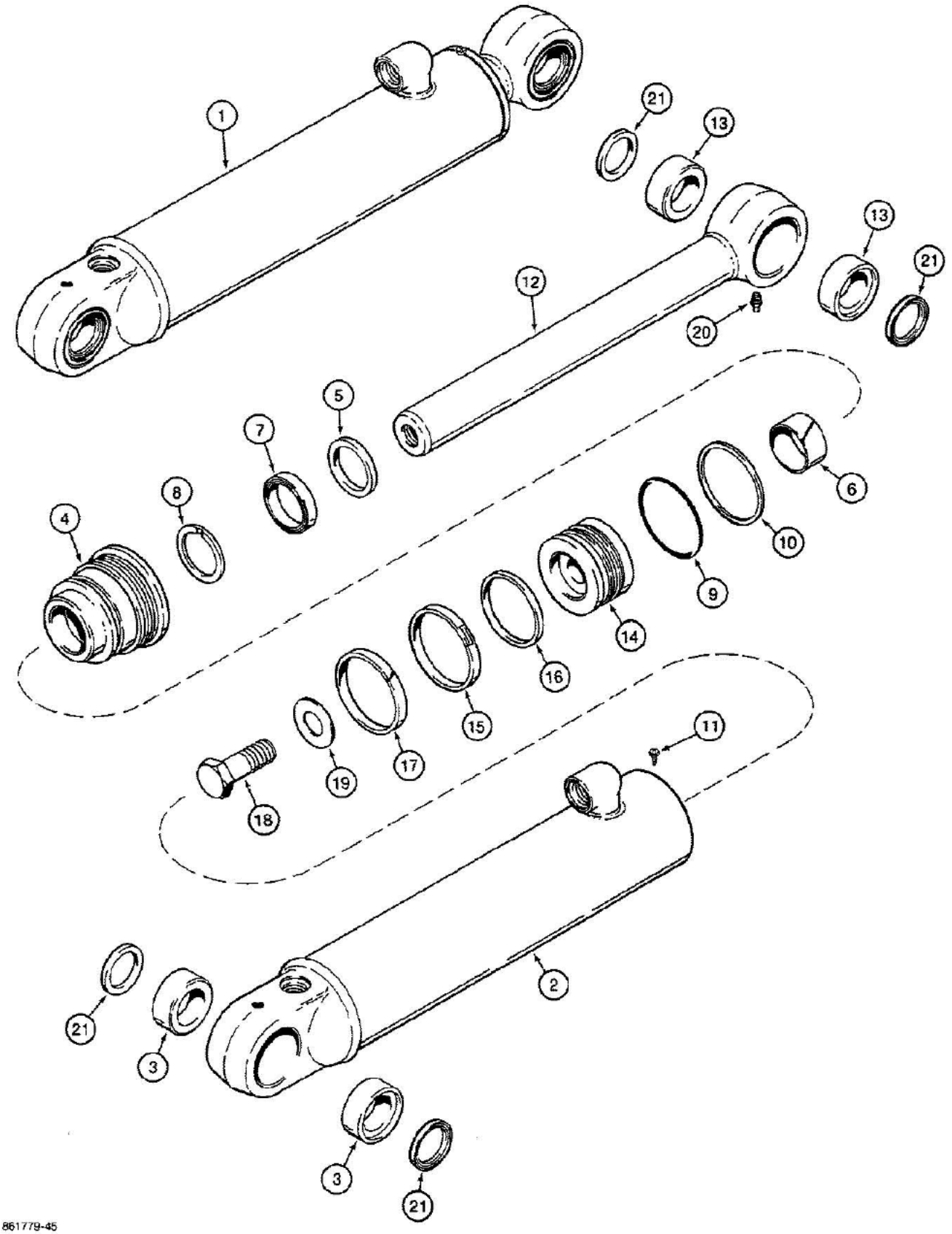

Cylinder Service Kit P/N D103172 replaces the 3-1/4" diameter swing cylinder with a 3-1/2" diameter swing cylinder.

580K LOADER BACKHOE (NORTH AMERICA) - Hydraulics

08-416 BACKHOE SWING CYLINDERS, 3-1/4 INCH INSIDE DIAMETER

Ref	Part Number	Qty	Description
1	G108608	2	CYLINDER ASSEMBLY, 3-1/4" (83 mm) ID x 12" (305 mm) stroke, swing, if used, Includes: Ref. 2 thru 21, The cylinder assembly part number is stamped on some cylinder glands or tubes, P/N G108608 cylinder assembly is now supplied without seal P/N D127833, see Ref. 21, P/N G108608 cylinder assembly must be used with P/N D141726 restrictors at swing section ports in P/N G109583, G109584, G109979, or G109980 backhoe control valves, see Figure 08-316
2	G108668	1	TUBE ASSEMBLY cylinder, Includes: Ref. 3
3	1542668C1	2	BUSHING tube, Replaces: P/N G108526
	G110623	1	GLAND ASSEMBLY cylinder, Includes: Ref. 4 thru 10
4	NSS	1	GLAND cylinder
5	D95143	1	WIPER piston rod, Part of Seal Kit P/N G110053
6	G102425	1	BUSHING center, Part of Seal Kit P/N G110053
7	G107922	1	SEAL, U-cup, with O-ring, piston rod, wide, Part of Seal Kit P/N G110053
8	G109094	1	SEAL buffer, grooved, piston rod, narrow, Part of Seal Kit P/N G110053
9	T11032	1	O-RING gland, Part of Seal Kit P/N G110053
10	G32122	1	RING backup, gland O-ring, Part of Seal Kit P/N G110053
11	187-1524	1	SCREW hex head, slotted, self-tapping, No. 8-32 NC x 3/8", plated
12	G108498	1	ROD ASSEMBLY piston, 1-3/4" (44 mm) diameter, Includes: Ref. 13, P/N G108498 rod assy. is interchangable with P/N 1976961C1 rod assy. or P/N 1978061C1 rod assy. regardless of the cylinder used.
13	1542668C1	2	BUSHING piston rod, Replaces: P/N G108526
14	G108184	1	PISTON cylinder
15	G102287	1	SEAL piston, Part of Seal Kit P/N G110053
16	S109444	1	RING backup, piston seal, Part of Seal Kit P/N G110053
17	S109445	1	RING wear, piston, Part of Seal Kit P/N G110053
18	28-1240	1	BOLT hex head, 3/4"-16 NF x 2-1/2", grade 8
19	S94643	1	WASHER flat, 3/4", hardened
20	219-1	1	FITTING grease, straight, 1/8" NPT
21	D127833	4	SEAL rod and tube eye, used only with P/N G108526 bushing, P/N 1542668C1 bushing does not need this seal, see Ref. 3 and 13
	D103172	1	KIT cylinder service, Includes: 3-1/2" diameter swing cylinder P/N 1971702C2 , P/N D142394 restrictors, and P/N 8-75380 instruction sheet for replacing 3-1/4" diameter swing cylinder with 3-1/2" diameter swing cylinder
	G110053	1	KIT seal, Includes: Ref. 5, 6, 7, 8, 9, 10, 15, 16 and 17

Cylinder Service Kit P/N D103172 replaces the 3-1/4" diameter swing cylinder with a 3-1/2" diameter swing cylinder.

3-418

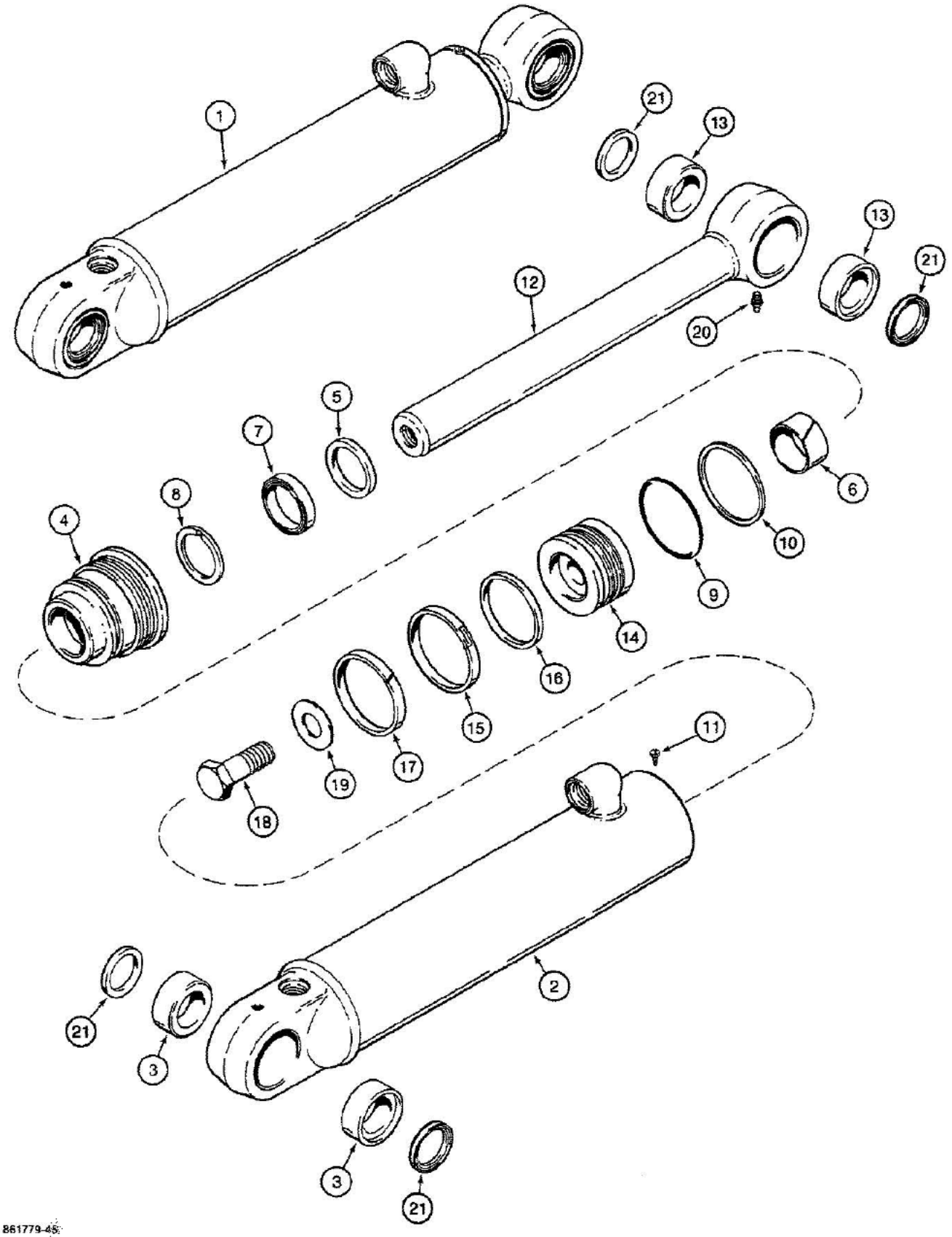

861779-45

08-418 BACKHOE SWING CYLINDERS, 3-1/2 INCH INSIDE DIAMETER

Ref	Part Number	Qty	Description
1	1971702C1	2	CYLINDER ASSEMBLY, 3-1/2" (89 mm) ID x 12" (305 mm) stroke, swing, no longer available, order P/N 1971702C2 cylinder, Includes: Ref. 2 thru 21, This cylinder assembly must be used with P/N 1971713C2 boom cylinder with straight ports, antrictors, at swing section ports in P/N G110711, G110712, G110713, or G110714 backhoe control valve. See Figure 08-316 for hydraulic circuit., The cylinder assembly part number is stamped on some cylinder glands or tubes
1	1971702C2	2	CYLINDER ASSEMBLY, 3-1/2" (89 mm) ID x 12" (305 mm) stroke, swing, if used, Includes: Ref. 2 thru 21, The cylinder assembly part number is stamped on some cylinder glands or tubes, This cylinder assembly must be used with P/N 1971713C2 boom cylinder with straight ports, antrictors, at swing section ports in P/N G110711, G110712, G110713, or G110714 backhoe control valve. See Figure 08-316 for hydraulic circuit.
2	1971704C1	1	TUBE ASSEMBLY, P/N 1971702C1 or P/N 1971702C2 cylinder, Includes: Ref. 3
3	1542668C1	2	BUSHING tube, Replaces: P/N G108526
	1978135C1	1	GLAND ASSEMBLY cylinder, Includes: Ref. 4 thru 10
4	NSS	1	GLAND cylinder
5	D95143	1	WIPER piston rod, Part of Seal Kit P/N G110621
6	G102425	1	BUSHING center, Part of Seal Kit P/N G110621
7	G107922	1	SEAL, U-cup, with O-ring, piston rod, wide, Part of Seal Kit P/N G110621
8	G109094	1	SEAL buffer, grooved, piston rod, narrow, Part of Seal Kit P/N G110621
9	G46889	1	O-RING gland, Part of Seal Kit P/N G110621
10	D38858	1	RING backup, gland O-ring, Part of Seal Kit P/N G110621
11	187-1524	1	SCREW hex head, slotted, self-tapping, No. 8-32 NC x 3/8", plated
12	1976961C1	1	ROD ASSEMBLY piston, 1-3/4" (44 mm) diameter, P/N 1971702C1 cylinder, Includes: Ref. 13, This rod assembly is interchangable with P/N G108498, see Figure 08-416, regardless of cylinder assembly used.
12	1978061C1	1	ROD ASSEMBLY piston, 1-3/4" (44 mm) diameter, P/N 1971702C2 cylinder, Includes: Ref. 13, This rod assembly is interchangable with P/N G108498, see Figure 08-416, regardless of cylinder assembly used.
13	1542668C1	2	BUSHING, P/N 1976961C1 or P/N 1978061C1 piston rod, Replaces: P/N G108526
14	G110110	1	PISTON cylinder
15	G102286	1	SEAL piston, Part of Seal Kit P/N G110621
16	G100710	1	RING backup, piston seal, Part of Seal Kit P/N G110621
17	G100711	1	RING wear, piston, Part of Seal Kit P/N G110621
18	28-1240	1	BOLT hex head, 3/4"-16 NF x 2-1/2", grade 8
19	S94643	1	WASHER flat, 3/4", hardened
20	219-1	1	FITTING grease, straight, 1/8" NPT
21	D127833	4	SEAL rod and tube eye, used only with P/N G108526 bushing, P/N 1542668C1 bushing does not need this seal, see Ref. 3 and 13
	G110621	1	KIT seal, Includes: Ref. 5 thru 10 and 15 thru 17

B-420

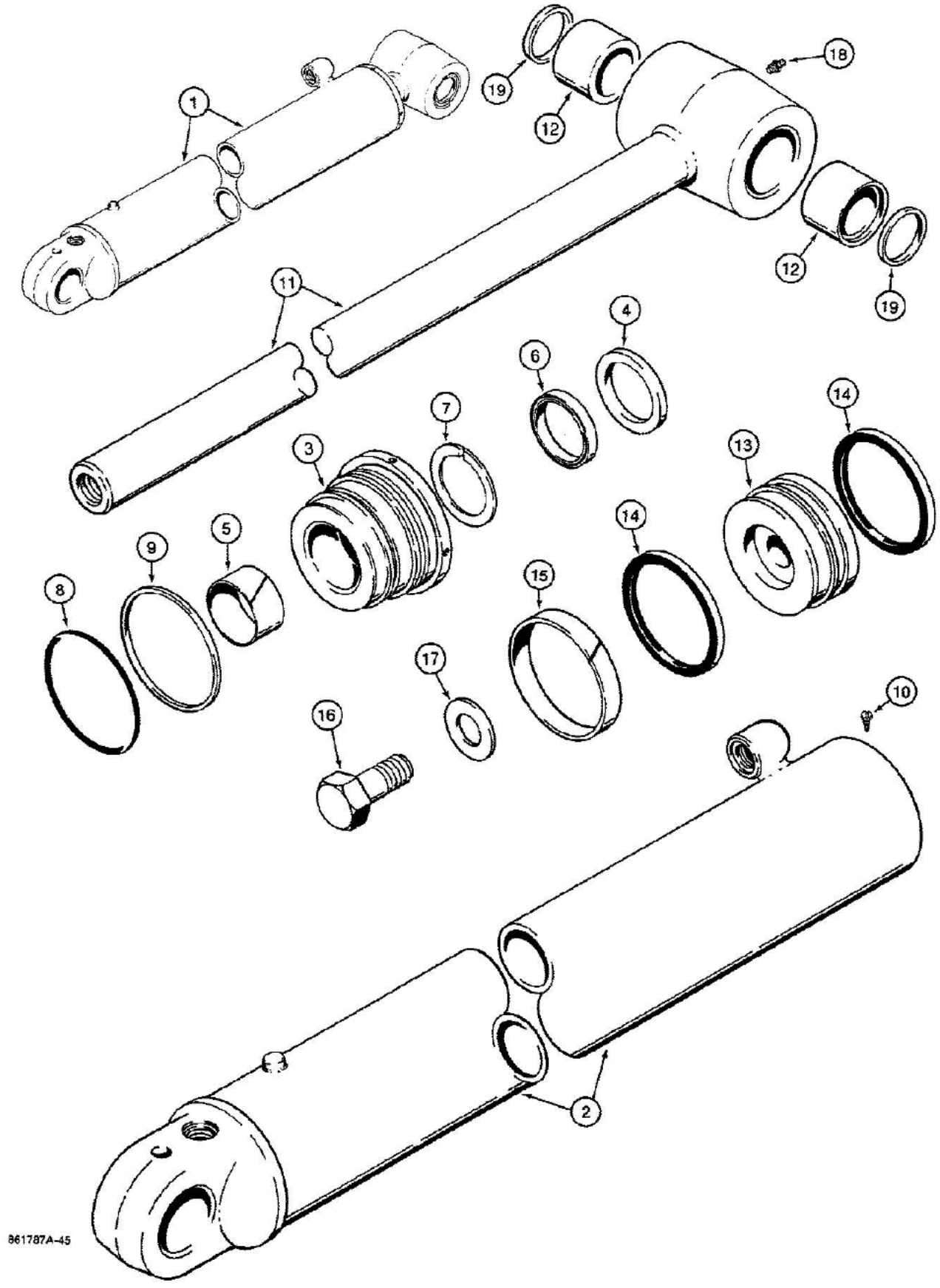

08-420 BACKHOE BOOM CYLINDER, WITH 90 DEGREE PORT

Ref	Part Number	Qty	Description
1	1958013C1	1	CYLINDER ASSEMBLY, 5" (127 mm) ID x 33-3/16" (843 mm) stroke, boom, no longer available, for service order P/N 1980460C2 cylinder in Figure 08-424, and P/N D141614 tube and P/N 218-5108 elbow in Figure 08-320, Includes: Ref. 2 thru 19, The cylinder assembly part number is stamped on some cylinder glands or tubes
1	1958013C2	1	CYLINDER ASSEMBLY, 5" (127 mm) ID x 33-3/16" (843 mm) stroke, boom, no longer available, for service order P/N 1980460C2 cylinder in Figure 08-424, and P/N D141614 tube and P/N 218-5108 elbow in Figure 08-320, Includes: Ref. 2 thru 19, The cylinder assembly part number is stamped on some cylinder glands or tubes
2	1958012C1	1	TUBE cylinder
	G110575	1	GLAND ASSEMBLY cylinder, Includes: Ref. 3 thru 9
3	NSS	1	GLAND cylinder
4	G108712	1	WIPER piston rod, Part of Seal Kit P/N G110583
5	G102426	1	BUSHING center, Part of Seal Kit P/N G110583
6	G107924	1	SEAL, U-cup, piston rod, wide, with O-ring, Part of Seal Kit P/N G110583
7	G109086	1	SEAL buffer, grooved, piston rod, narrow, Part of Seal Kit P/N G110583
8	39738	1	O-RING gland, Part of Seal Kit P/N G110583
9	G107970	1	RING backup, gland O-ring, Part of Seal Kit P/N G110583
10	187-1524	1	SCREW hex head, slotted, self-tapping, No. 8-32 NC x 3/8", plated
11	G108414	1	ROD piston, 2-1/4" (57 mm) diameter, P/N 1958013C1 cylinder, Includes: Ref. 12
11	1978136C1	1	ROD piston, 2-1/4" (57 mm) diameter, P/N 1958013C2 cylinder, Includes: Ref. 12
12	G108417	2	BUSHING, P/N G108414 or P/N 1978136C1 rod
13	1958071C1	1	PISTON ASSEMBLY cylinder, includes relief valve which is not serviced separately
14	G110269	2	SEAL piston, Part of Seal Kit P/N G110583
15	G102090	1	RING wear, piston, Part of Seal Kit P/N G110583
16	28-2048	1	BOLT hex head, 1-1/4"-12 NF x 2-1/2", grade 8
17	G104989	1	WASHER flat, 1-1/4", hardened
18	219-1	1	FITTING grease, straight, 1/8" NPT
19	D123655	2	SEAL rod eye
	G110583	1	KIT seal, Includes: Ref. 4 thru 9 and 14 and 15

8-422

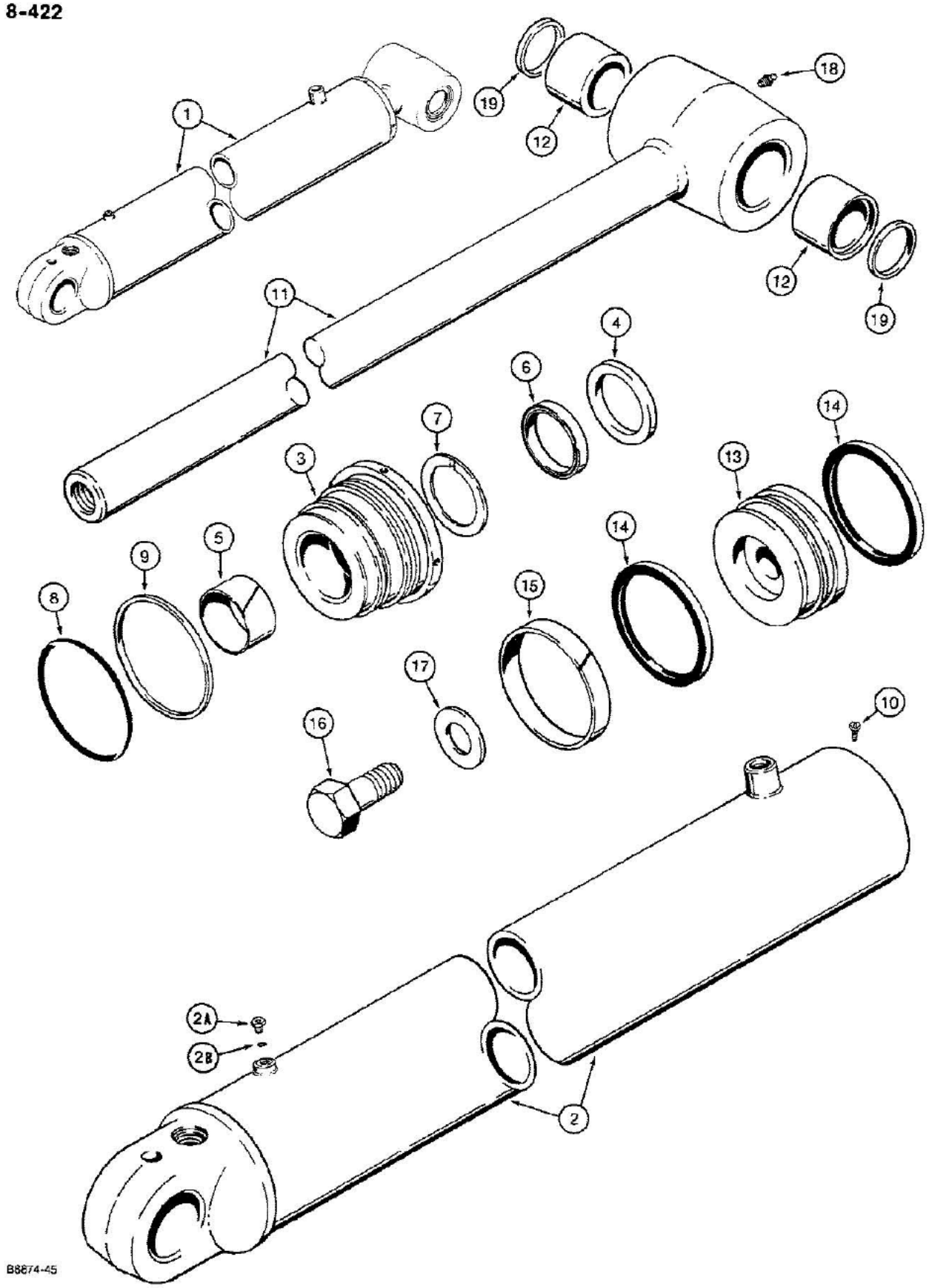

580K LOADER BACKHOE (NORTH AMERICA) - Hydraulics

08-422 BACKHOE BOOM CYLINDER, WITH STRAIGHT PORT

Ref	Part Number	Qty	Description
1	1971713C1	1	CYLINDER ASSEMBLY, 5" (127 mm) ID x 33-3/16" (843 mm) stroke, boom, no longer available, order P/N 1971713C2 cylinder, Includes: Ref. 2 thru 19, The cylinder assembly part number is stamped on some cylinder glands or tubes
1	1971713C2	1	CYLINDER ASSEMBLY, 5" (127 mm) ID x 33-3/16" (843 mm) stroke, boom, if used, Includes: Ref. 2 thru 19, The cylinder assembly part number is stamped on some cylinder glands or tubes
2	1971714C1	1	TUBE, P/N 1971713C1 or P/N 1971713C2 cylinder, Includes: Ref. 2A and 2B
2A	86625138	1	PLUG, Hex Soc, 7/8"-14 ORB, Includes Ref. 2B
2B	237-6010	1	O-RING plug
	G110575	1	GLAND ASSEMBLY cylinder, Includes: Ref. 3 thru 9
3	NSS	1	GLAND cylinder
4	G108712	1	WIPER piston rod, Part of Seal Kit P/N G110583
5	G102426	1	BUSHING center, Part of Seal Kit P/N G110583
6	G107924	1	SEAL, U-cup, piston rod, wide, with O-ring, Part of Seal Kit P/N G110583
7	G109086	1	SEAL buffer, grooved, piston rod, narrow, Part of Seal Kit P/N G110583
8	39738	1	O-RING gland, Part of Seal Kit P/N G110583
9	G107970	1	RING backup, gland O-ring, Part of Seal Kit P/N G110583
10	187-1524	1	SCREW hex head, slotted, self-tapping, No. 8-32 NC x 3/8", plated
11	G108414	1	ROD piston, 2-1/4" (57 mm) diameter, P/N 1971713C1 cylinder, Includes: Ref. 12
11	1978136C1	1	ROD piston, 2-1/4" (57 mm) diameter, P/N 1971713C2 cylinder, Includes: Ref. 12
12	G108417	2	BUSHING, P/N G108414 or P/N 1978136C1 rod
13	1958071C1	1	PISTON ASSEMBLY, P/N 1971713C1 cylinder, includes relief valve which is not serviced separately
13	1958121C1	1	PISTON ASSEMBLY, P/N 1971713C2 cylinder, includes relief valve which is not serviced separately, no longer available, order piston assembly P/N 1958071C1 instead, and must also order seal P/N G110269 and ring P/N G102090, Ref. 14 and 15
14	G110269	2	SEAL piston, Part of Seal Kit P/N G110583
15	G102090	1	RING wear, piston, Part of Seal Kit P/N G110583
16	28-2048	1	BOLT hex head, 1-1/4"-12 NF x 2-1/2", grade 8
17	G104989	1	WASHER flat, 1-1/4", hardened
18	219-1	1	FITTING grease, straight, 1/8" NPT
19	D123655	2	SEAL rod eye
	G110583	1	KIT seal, Includes: Ref. 4 thru 9, 14 and 15

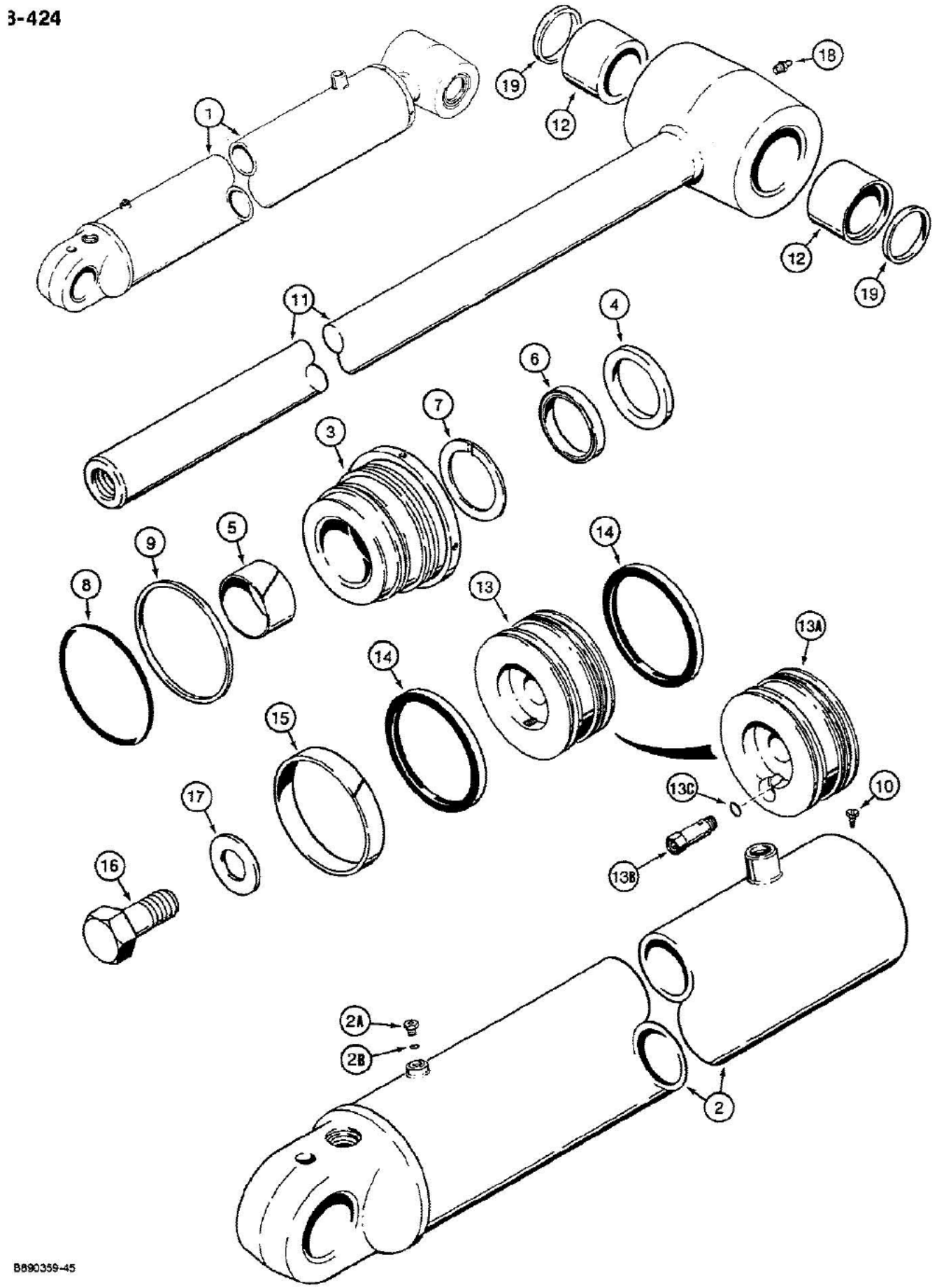

See Figure 09-488 for connection of this cylinder to swing tower and boom.

580K LOADER BACKHOE (NORTH AMERICA) - Hydraulics

08-424 BACKHOE BOOM CYLINDER, WITH STRAIGHT PORT

Ref	Part Number	Qty	Description
1	1980460C1	1	CYLINDER ASSEMBLY, 5" (127 mm) ID x 33-3/16" (843 mm) stroke, boom, no longer available, order P/N 1980460C2 cylinder, Includes: Ref. 2 thru 19, The cylinder assembly part number is stamped on some cylinder glands or tubes
1	1980460C2	1	CYLINDER ASSEMBLY, 5" (127 mm) ID x 33-3/16" (843 mm) stroke, boom, Includes: Ref. 2 thru 19, The cylinder assembly part number is stamped on some cylinder glands or tubes
2	1980464C1	1	TUBE cylinder, Includes: Ref. 2A and 2B
2A	86625138	1	PLUG, Hex Soc, 7/8"-14 ORB, Includes Ref. 2B
2B	237-6010	1	O-RING plug
	G110575	1	GLAND ASSEMBLY cylinder, Includes: Ref. 3 thru 9
3	NSS	1	GLAND cylinder
4	G108712	1	WIPER piston rod, Part of Seal Kit P/N G110583
5	G102426	1	BUSHING center, Part of Seal Kit P/N G110583
6	G107924	1	SEAL, U-cup, piston rod, wide, with O-ring, Part of Seal Kit P/N G110583
7	G109086	1	SEAL buffer, grooved, piston rod, narrow, Part of Seal Kit P/N G110583
8	39738	1	O-RING gland, Part of Seal Kit P/N G110583
9	G107970	1	RING backup, gland O-ring, Part of Seal Kit P/N G110583
10	187-1524	1	SCREW hex head, slotted, self-tapping, No. 8-32 x 3/8", plated
11	1978057C1	1	ROD piston, 2-1/4" (57 mm) diameter, Includes: Ref. 12
12	G108417	2	BUSHING rod
13	1958071C1	1	PISTON ASSEMBLY, P/N 1980460C1 cylinder, includes internal relief valve which is not serviced separately
13A	1958048C1	1	PISTON, P/N 1980460C2 cylinder, used with P/N 1958028C1 relief valve cartridge
13B	1958028C1	1	VALVE ASSEMBLY relief, cartridge, internal component parts not serviced separately, P/N 1958048C1 piston, Includes: Ref. 13C
14	G110269	2	SEAL piston, Part of Seal Kit P/N G110583
15	G102090	1	RING wear, piston, Part of Seal Kit P/N G110583
16	28-2048	1	BOLT hex head, 1-1/4"-12 NF x 2-1/2", grade 8
17	G104989	1	WASHER flat, 1-1/4", hardened
18	219-1	1	FITTING grease, straight, 1/8" NPT
19	D123655	2	SEAL rod
	G110583	1	KIT seal, Includes: Ref. 4 thru 9, 14 and 15
13C	237-6006	1	O-Ring, 6-1, 90 Duro, .468" ID x .078" Thk, Relief valve cartridge, external

See Figure 09-488 for connection of this cylinder to swing tower and boom.

8-426

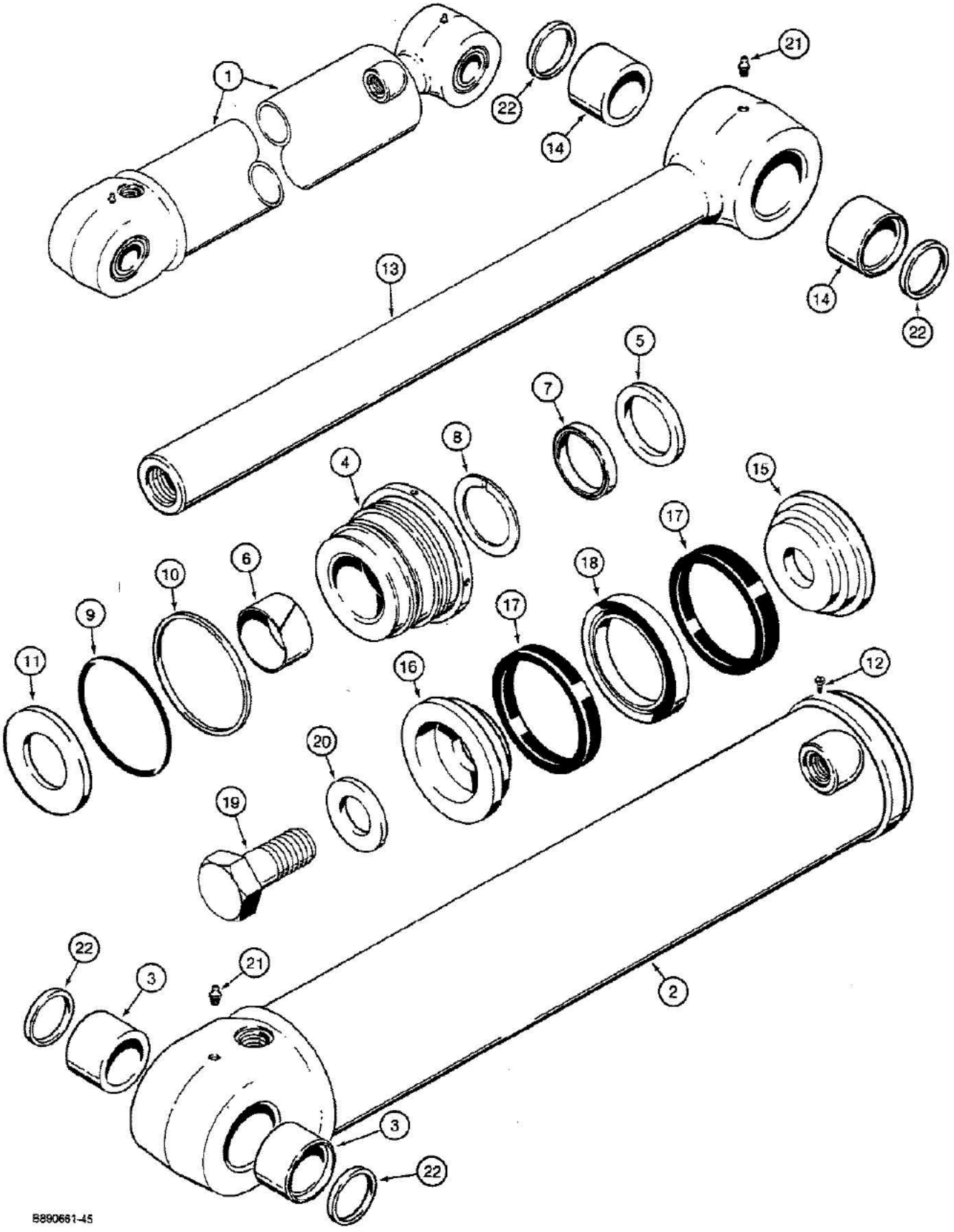
1
22
14
21
13
14
22
5
7
8
4
15
17
6
10
18
9
17
11
16
12
20
19
22
3
21
2
3
22
B890661-45

08-426 BACKHOE DIPPER CYLINDER

Ref	Part Number	Qty	Description
1	G108468	1	CYLINDER ASSEMBLY, 5" (127 mm) ID x 22-15/16" (583 mm) stroke, dipper, no longer available, for service order P/N G110683 cylinder in Figure 08-428, Includes: Ref. 2 thru 22, The cylinder assembly part number is stamped on some cylinder glands or tubes
2	1971535C1	1	TUBE cylinder, Includes: Ref. 3
3	G108417	2	BUSHING tube
	G109906	1	GLAND ASSEMBLY cylinder, Includes: Ref. 4 thru 10
4	NSS	1	GLAND cylinder
5	G108713	1	WIPER piston rod, Part of Seal Kit P/N G110052
6	G102427	1	BUSHING center, Part of Seal Kit P/N G110052
7	G109228	1	SEAL, U-cup, with O-ring, piston rod, wide, Part of Seal Kit P/N G110052
8	G107998	1	SEAL buffer, grooved, piston rod, narrow, Part of Seal Kit P/N G110052
9	39738	1	O-RING gland, Part of Seal Kit P/N G110052
10	G107970	1	RING backup, gland O-ring, Part of Seal Kit P/N G110052
11	1971538C1	1	SPACER gland
12	187-1524	1	SCREW hex head, slotted, self-tapping, No. 8-32 NC x 3/8", plated
13	G108532	1	ROD ASSEMBLY piston, 2-1/2" (64 mm) diameter, Includes: Ref. 14
14	G108417	2	BUSHING rod
15	S220006	1	PISTON split, rod end
16	D49335	1	PISTON split, bolt end
17	D47206	1	PACKING piston, V-type, Part of Seal Kit P/N G110052
18	D47211	1	RING center bearing, Part of Seal Kit P/N G110052
19	28-2456	1	BOLT hex head, 1-1/2"-12 NF x 3-1/2", grade 8
20	G104990	1	WASHER flat, 1-1/2", hardened
21	219-1	2	FITTING grease, straight, 1/8" NPT
22	D123655	4	SEAL rod and tube eyes
	G110052	1	KIT seal, Includes: Ref. 5 thru 10, 17 and 18

8-428

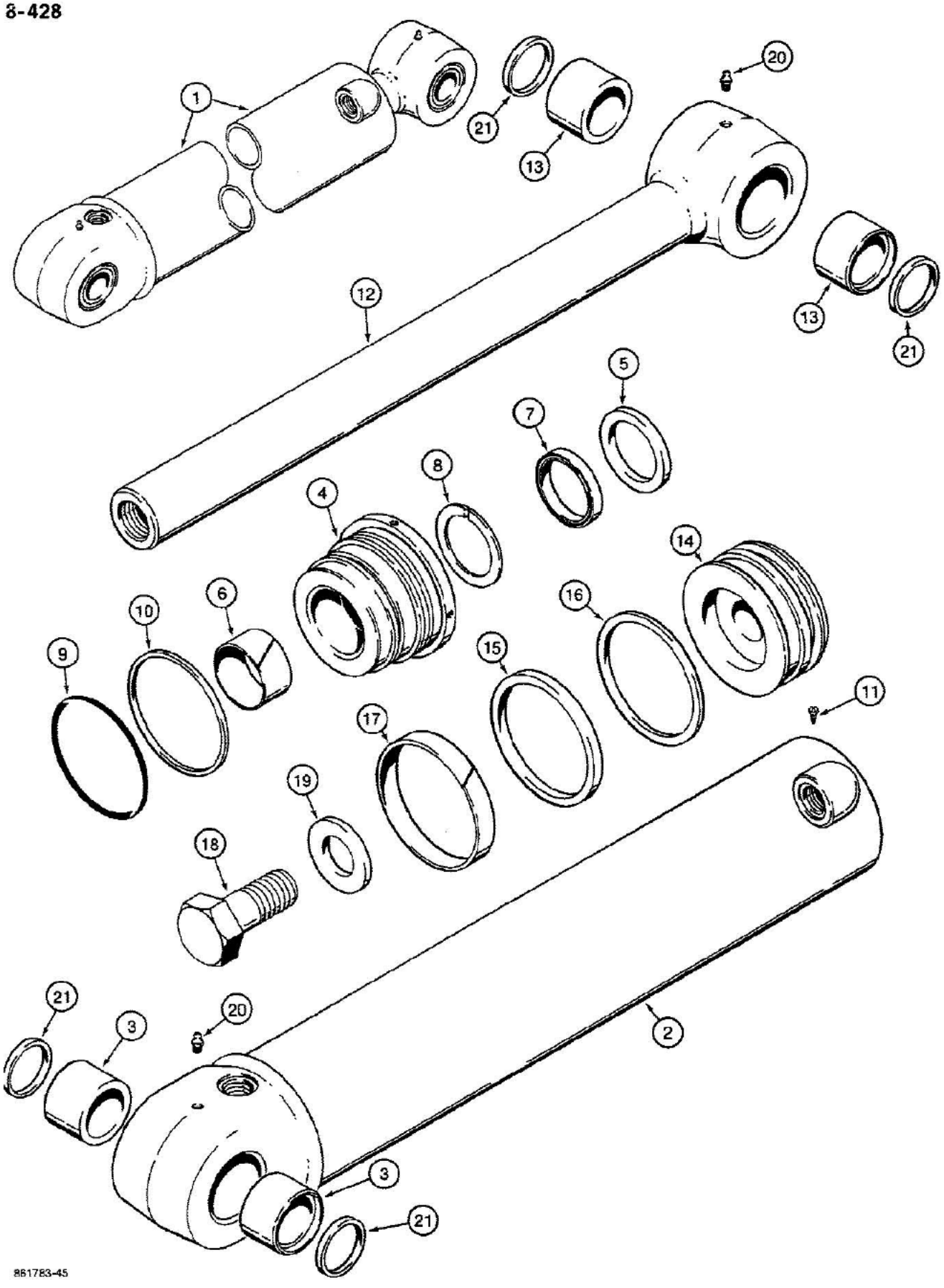
1
21
13
20
12
13
21
5
7
8
4
14
6
10
16
9
15
11
17
19
18
21
3
20
2
3
21
861783-45

08-428 BACKHOE DIPPER CYLINDER

Ref	Part Number	Qty	Description
1	G110560	1	CYLINDER ASSEMBLY, 5" (127 mm) ID x 22-15/16" (583 mm) stroke, dipper, no longer available, for service order P/N G110683 cylinder, Includes: Ref. 2 thru 21, The cylinder assembly part number is stamped on some cylinder glands or tubes
1	G110683	1	CYLINDER ASSEMBLY, 5" (127 mm) ID x 22-15/16" (583 mm) stroke, dipper, Includes: Ref. 2 thru 21, The cylinder assembly part number is stamped on some cylinder glands or tubes
2	G110561	1	TUBE, P/N G110560 cylinder, Includes: Ref. 3
2	G110684	1	TUBE, P/N G110683 cylinder, Includes: Ref. 3
3	G108417	2	BUSHING, P/N G110561 or P/N G110684 tube
	G110567	1	GLAND ASSEMBLY, P/N G110560 cylinder, no longer available, for service order P/N G110687 gland, Includes: Ref. 4 thru 10
	G110687	1	GLAND ASSEMBLY, P/N G110683 cylinder, Includes: Ref. 4 thru 10
4	NSS	1	GLAND cylinder
5	G108713	1	WIPER piston rod, Part of Seal Kit P/N G110582
6	G102427	1	BUSHING center, Part of Seal Kit P/N G110582
7	G109228	1	SEAL, U-cup, with O-ring, piston rod, wide, Part of Seal Kit P/N G110582
8	G107998	1	SEAL buffer, grooved, piston rod, narrow, Part of Seal Kit P/N G110582
9	39738	1	O-RING gland, Part of Seal Kit P/N G110582
10	G107970	1	RING backup, gland O-ring, Part of Seal Kit P/N G110582
11	187-1524	1	SCREW hex head, slotted, self-tapping, No. 8-32 NC x 3/8", plated
12	G110563	1	ROD ASSEMBLY piston, 2-1/2" (64 mm) diameter, P/N G110560 cylinder, Includes: Ref. 13
12	1978058C1	1	ROD ASSEMBLY piston, 2-1/2" (64 mm) diameter, P/N G110683 cylinder, Includes: Ref. 13
13	G108417	2	BUSHING rod
14	G110569	1	PISTON cylinder
15	G102091	1	SEAL piston, Part of Seal Kit P/N G110582
16	G102092	1	RING backup, piston seal, Part of Seal Kit P/N G110582
17	G102090	1	RING wear, piston, Part of Seal Kit P/N G110582
18	28-2456	1	BOLT hex head, 1-1/2"-12 NF x 3-1/2", grade 8
19	G104990	1	WASHER flat, 1-1/2", hardened
20	219-1	2	FITTING grease, straight, 1/8" NPT
21	D123655	4	SEAL rod and tube eyes
	G110582	1	KIT seal, Includes: Ref. 5 thru 10 and 15 thru 17

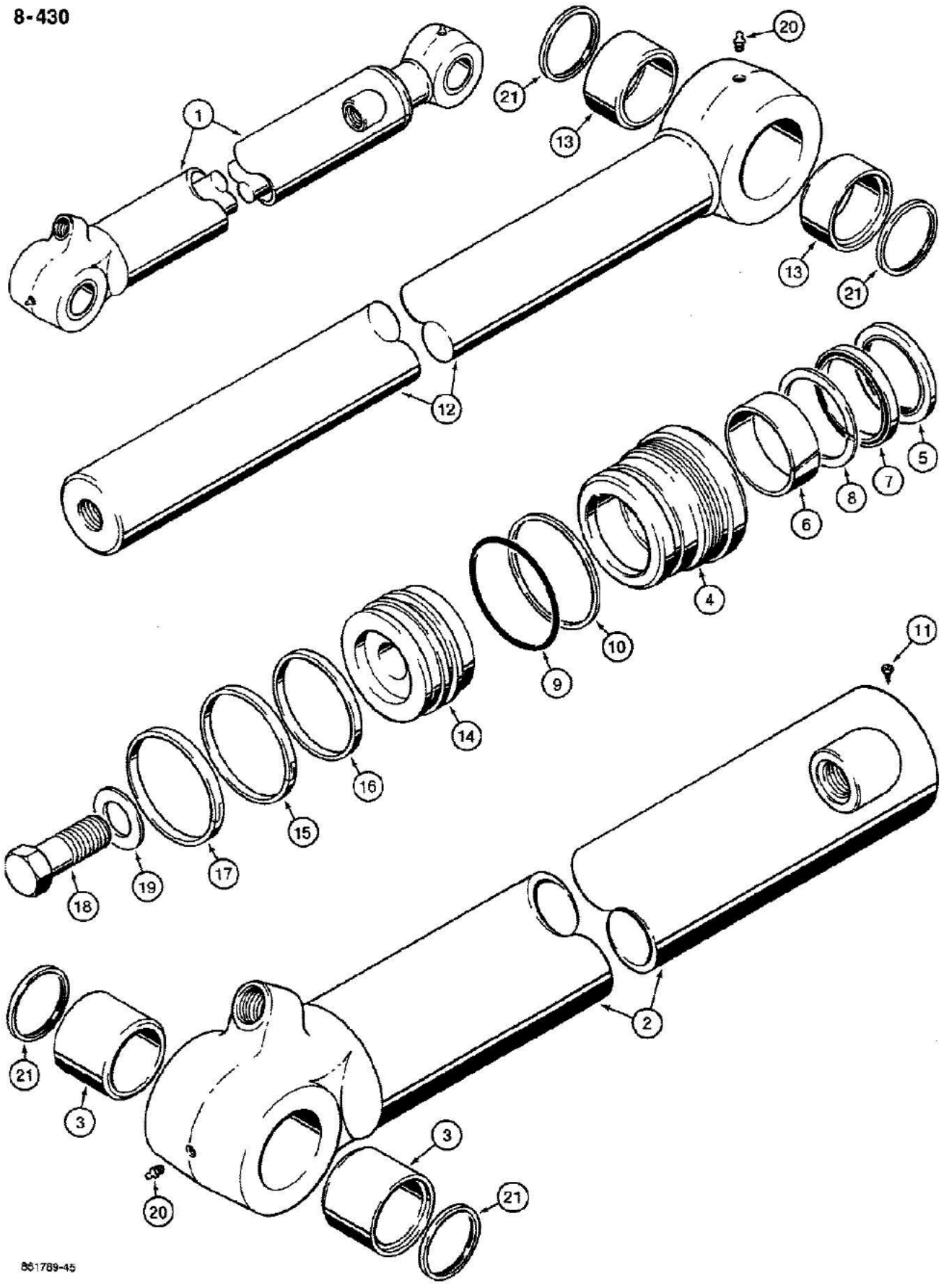
8-430
1
20
21
13
13
21
12
5
7
8
6
4
10
9
14
16
15
19
17
18
11
2
21
3
3
20
21
861789-45

580K LOADER BACKHOE (NORTH AMERICA) - Hydraulics

08-430 BACKHOE BUCKET CYLINDER

Ref	Part Number	Qty	Description
1	G110597	1	CYLINDER ASSEMBLY, 3-1/2" (89 mm) ID x 34-5/16" (872 mm) stroke, bucket, Includes: Ref. 2 thru 21, The cylinder assembly part number is stamped on some cylinder glands or tubes
2	G110598	1	TUBE ASSEMBLY cylinder, Includes: Ref. 3
3	G108417	2	BUSHING tube
	G109894	1	GLAND ASSEMBLY cylinder, Includes: Ref. 4 thru 10
4	NSS	1	GLAND cylinder
5	D95146	1	WIPER piston rod, Part of Seal Kit P/N G110046
6	G109908	1	BUSHING center, Part of Seal Kit P/N G110046
7	G109228	1	SEAL, U-cup, with O-ring, piston rod, wide, Part of Seal Kit P/N G110046
8	G107998	1	SEAL buffer, grooved, piston rod, narrow, Part of Seal Kit P/N G110046
9	G46889	1	O-RING gland, Part of Seal Kit P/N G110046
10	D38858	1	RING backup, gland O-ring, Part of Seal Kit P/N G110046
11	187-1524	1	SCREW hex head, slotted, self-tapping, No. 8-32 NC x 3/8", plated
12	1978059C1	1	ROD ASSEMBLY piston, 2-1/2" (64 mm) diameter, Includes: Ref. 13
13	G108525	2	BUSHING piston rod
14	G107404	1	PISTON cylinder
15	G102286	1	SEAL piston, Part of Seal Kit P/N G110046
16	G100710	1	RING backup, piston seal, Part of Seal Kit P/N G110046
17	G100711	1	RING wear, piston, Part of Seal Kit P/N G110046
18	28-1640	1	BOLT hex head, 1"-14 NS x 2-1/2", grade 8
19	G32303	1	WASHER flat, 1", hardened
20	219-1	2	FITTING grease, straight, 1/8" NPT
21	D123655	4	SEAL tube and rod eyes
	G110046	1	KIT seal, Includes: Ref. 5 thru 10 and 15 thru 17

8-432

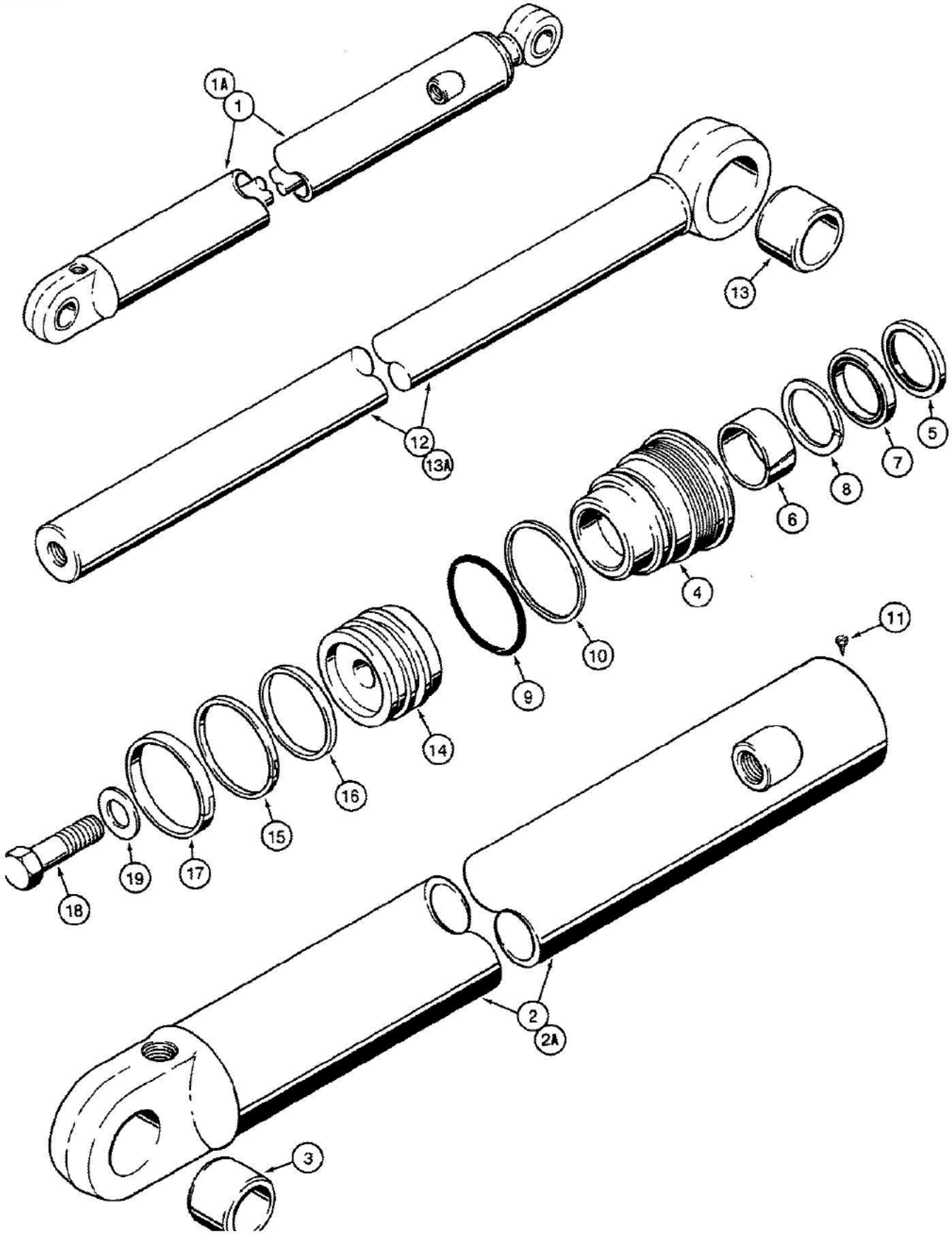

661790A-45

580K LOADER BACKHOE (NORTH AMERICA) - Hydraulics

08-432 BACKHOE DIPPER EXTENSION CYLINDER

Ref	Part Number	Qty	Description
1	G106708	1	CYLINDER ASSEMBLY, 3" (76 mm) ID x 42-1/2" (1080 mm) stroke, dipper extension, used with two-piece outer extendable dipper member, if used, Includes: Ref. 2 thru 19, The cylinder assembly part number is stamped on some cylinder glands or tubes
1A	1980200C1	1	CYLINDER ASSEMBLY, 3" (76 mm) ID x 42-1/16" (1068 mm) stroke, dipper extension, used with one-piece outer extendable dipper member, if used, Includes: Ref. 2 thru 19, The cylinder assembly part number is stamped on some cylinder glands or tubes
2	G108715	1	TUBE ASSEMBLY, P/N G106708 cylinder, Includes: Ref. 3
2A	1980213C1	1	TUBE ASSEMBLY, P/N 1980200C1 cylinder, Includes: Ref. 3
3	G108507	1	BUSHING, P/N G108715 or P/N 1980213C1 tube
	G109885	1	GLAND ASSEMBLY cylinder, Includes: Ref. 4 thru 10
4	NSS	1	GLAND cylinder
5	D95143	1	WIPER piston rod, Part of Seal Kit P/N G110049
6	G102425	1	BUSHING center, Part of Seal Kit P/N G110049
7	G107922	1	SEAL, U-cup, with O-ring, piston rod, wide, Part of Seal Kit P/N G110049
8	G109094	1	SEAL buffer, grooved, piston rod, narrow, Part of Seal Kit P/N G110049
9	G10389	1	O-RING gland, Part of Seal Kit P/N G110049
10	G109298	1	RING backup, gland O-ring, Part of Seal Kit P/N G110049
11	187-1524	1	SCREW hex head, slotted, self-tapping, No. 8-32 NC x 3/8", plated
12	G108718	1	ROD ASSEMBLY piston, 1-3/4" (44 mm) diameter, with bushing, P/N G106708 cylinder, Includes: Ref. 13
13	G108507	1	BUSHING, P/N G108718 rod
13A	1980296C1	1	ROD piston, 1-3/4" (44 mm) diameter, without bushing, P/N 1980200C1 cylinder
14	G107277	1	PISTON cylinder
15	G102288	1	SEAL piston, Part of Seal Kit P/N G110049
16	G100444	1	RING backup, piston seal, Part of Seal Kit P/N G110049
17	G100449	1	RING wear, piston, Part of Seal Kit P/N G110049
18	28-1240	1	BOLT hex head, 3/4"-16 NF x 2-1/2", grade 8
19	S94643	1	WASHER flat, 3/4", hardened
	G110049	1	KIT seal, Includes: Ref. 5 thru 10 and 15 thru 17

8-434

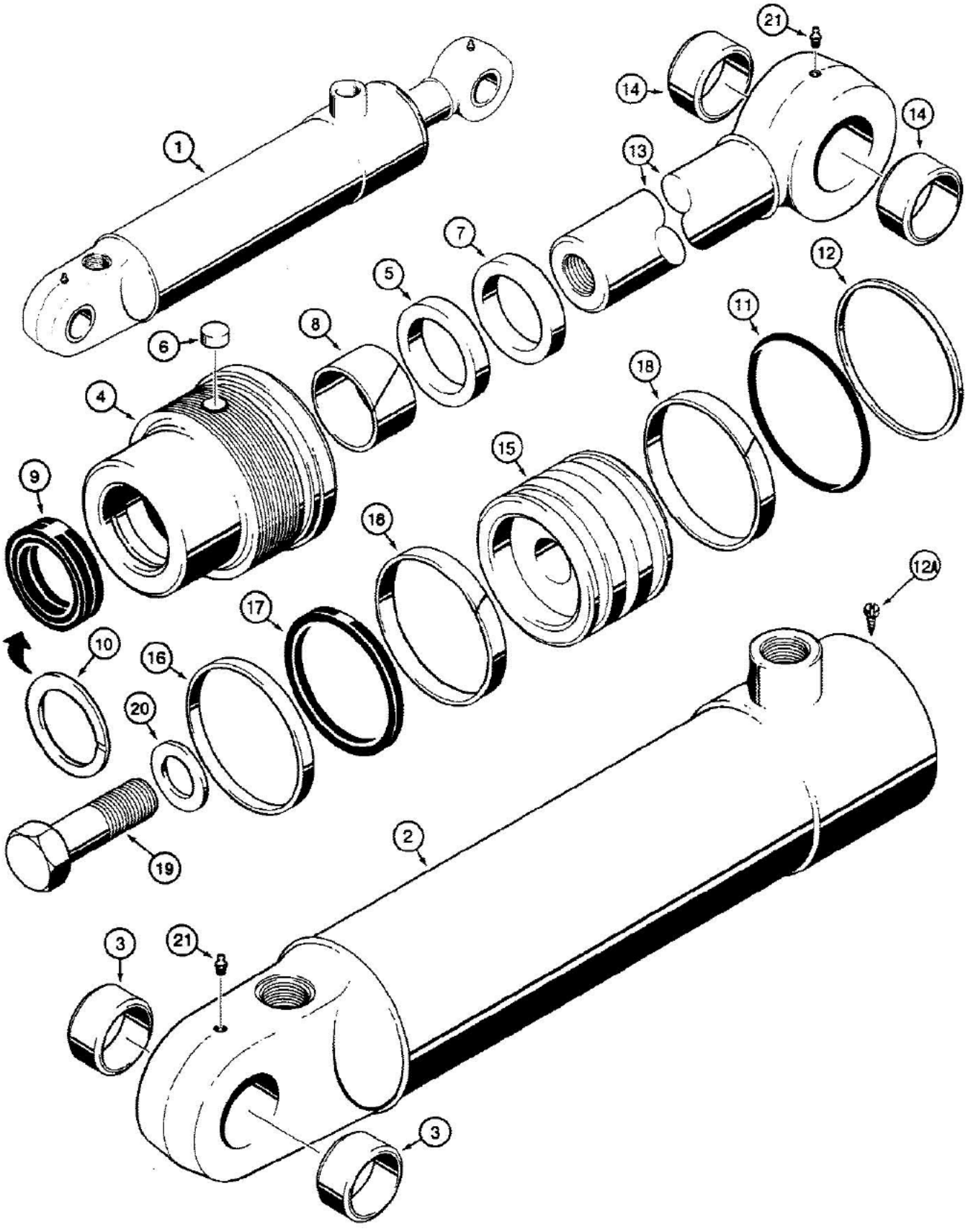

B88232-45

08-434 G101189 THREE-POINT HITCH LIFT CYLINDER

Ref	Part Number	Qty	Description
1	G101189	1	CYLINDER ASSEMBLY, 3" (76 mm) ID x 8-3/8" (213 mm) stroke, lift, Includes: Ref. 2 thur 21, The cylinder assembly part number is stamped on some cylinder glands or tubes
2	G32330	1	TUBE ASSEMBLY cylinder, Includes: Ref. 3
3	30634	2	BUSHING tube
	G104222	1	GLAND ASSEMBLY cylinder, Includes: Ref. 4 thru 12
4	NSS	1	GLAND cylinder
5	NSS	1	RING retaining, bushing
6	G102569	1	PLUG nylon, thread locking, gland, if used
7	D95142	1	WIPER piston rod, Part of Seal Kit P/N G109452
8	G102424	1	BUSHING center, Part of Seal Kit P/N G109452
9	G107921	1	SEAL, U-cup, with O-ring, piston rod, wide, Part of Seal Kit P/N G109452
9	G100776	1	SEAL, U-cup, piston rod, service option for severe heat or cold
10	G109093	1	SEAL buffer, grooved, piston rod, narrow, Part of Seal Kit P/N G109452
11	A30095	1	O-RING gland, Part of Seal Kit P/N G109452
12	G32122	1	RING backup, gland O-ring, Part of Seal Kit P/N G109452
12A	187-1524	1	SCREW hex head, slotted, self-tapping, No. 8-32 NC x 3/8", plated, if used
13	G33457	1	ROD ASSEMBLY piston, 1-1/2" (38 mm) diameter, Includes: Ref. 14
14	30634	2	BUSHING piston rod
15	G100442	1	PISTON cylinder
16	G102288	1	SEAL piston, Part of Seal Kit P/N G109452
17	G100444	1	RING backup, piston seal, Part of Seal Kit P/N G109452
18	G100449	2	RING wear, piston, Part of Seal Kit P/N G109452
19	28-1240	1	BOLT hex head, 3/4"-16 NF x 2-1/2", grade 8
20	G32317	1	WASHER hardened
21	219-1	2	FITTING grease, straight, 1/8" NPT
	G109452	1	KIT seal, Includes: Ref. 7, 8, 9 P/N G107921, Ref. 10, 11, 12 and 16 thru 18

B-436

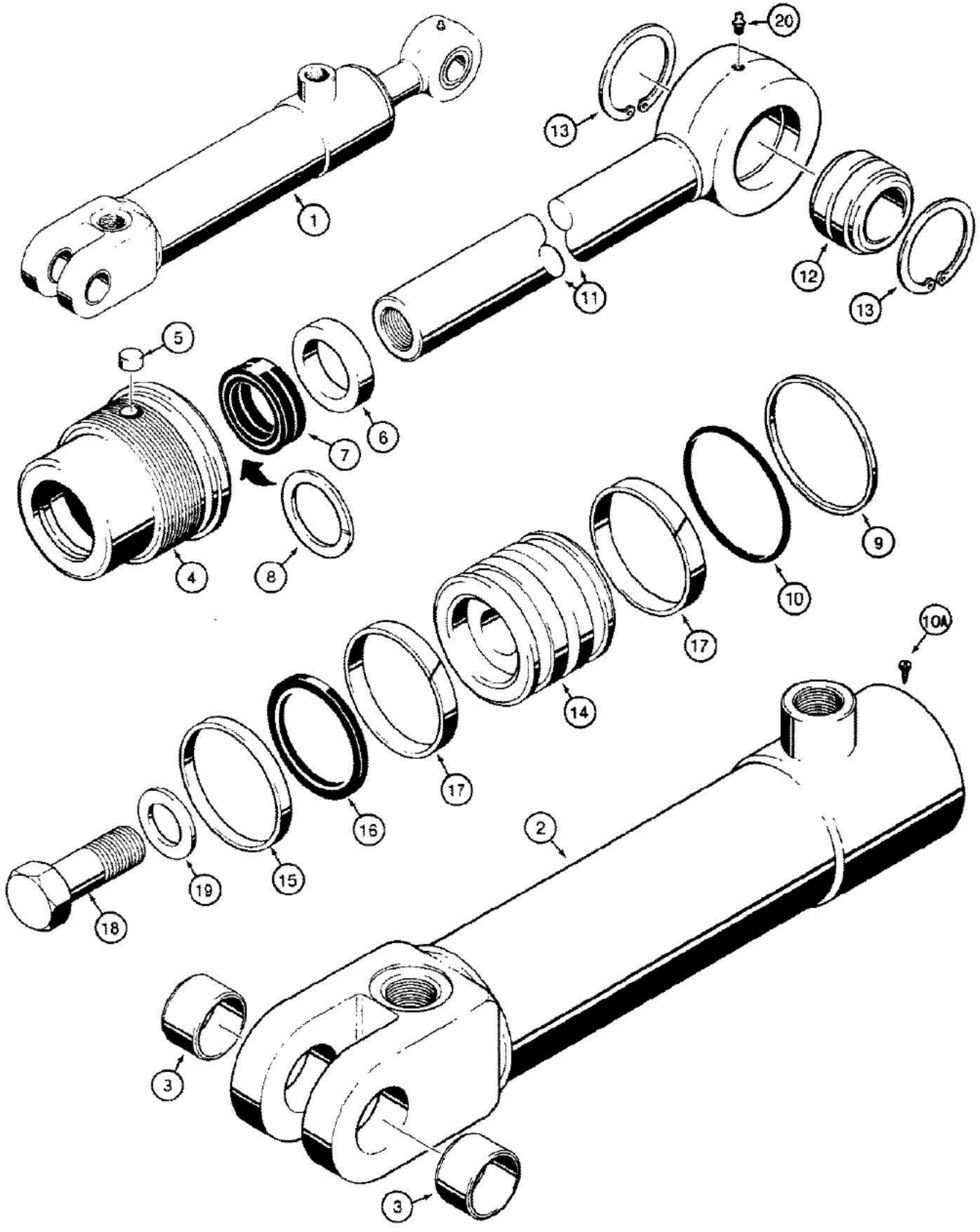

830599B-46

08-436 G101188 THREE-POINT HITCH TILT CYLINDER

Ref	Part Number	Qty	Description
1	G101188	1	CYLINDER ASSEMBLY, 2-1/2" (64 mm) ID x 6-5/16" (160 mm) stroke, tilt, Includes: Ref. 2 thru 20, The cylinder assembly part number is stamped on some cylinder glands or tubes
2	G32313	1	TUBE ASSEMBLY cylinder, Includes: Ref. 3
3	D34359	2	BUSHING tube
	G104915	1	GLAND ASSEMBLY cylinder, Includes: Ref. 4 thru 10
4	NSS	1	GLAND cylinder
5	G102569	1	PLUG nylon, thread locking, gland, if used
6	D95141	1	WIPER piston rod, Part of Seal Kit P/N G109475
7	D36968	1	SEAL, U-cup, piston rod, wide, Part of Seal Kit P/N G109475
7	G100775	1	SEAL, U-cup, piston rod, service option for severe heat or cold
8	G109092	1	SEAL buffer, grooved, piston rod, narrow, Part of Seal Kit P/N G109475
9	G32129	1	RING backup, gland O-ring, Part of Seal Kit P/N G109475
10	A28318	1	O-RING gland, Part of Seal Kit P/N G109475
10A	187-1524	1	SCREW hex head, slotted, self-tapping, No. 8-32 NC x 3/8", plated, if used
11	G33352	1	ROD ASSEMBLY piston, 1-1/4" (32 mm) diameter, Includes: Ref. 12 and 13
12	D22200	1	BUSHING piston rod, self-aligning
13	D27833	2	Ring, Snap, 1.625", Int, #162
14	G100708	1	PISTON cylinder
15	G102289	1	SEAL piston, Part of Seal Kit P/N G109475
16	G100713	1	RING backup, piston seal, Part of Seal Kit P/N G109475
17	G100714	2	RING wear, piston, Part of Seal Kit P/N G109475
18	28-1240	1	BOLT hex head, 3/4"-16 NF x 2-1/2", grade 8
19	G32317	1	WASHER hardened
20	219-1	1	FITTING grease, straight, 1/8" NPT
	G109475	1	KIT seal, Includes: Ref. 6, Ref. 7 P/N D36968, Ref. 8, 9, 10 and 15 thru 17

B-438

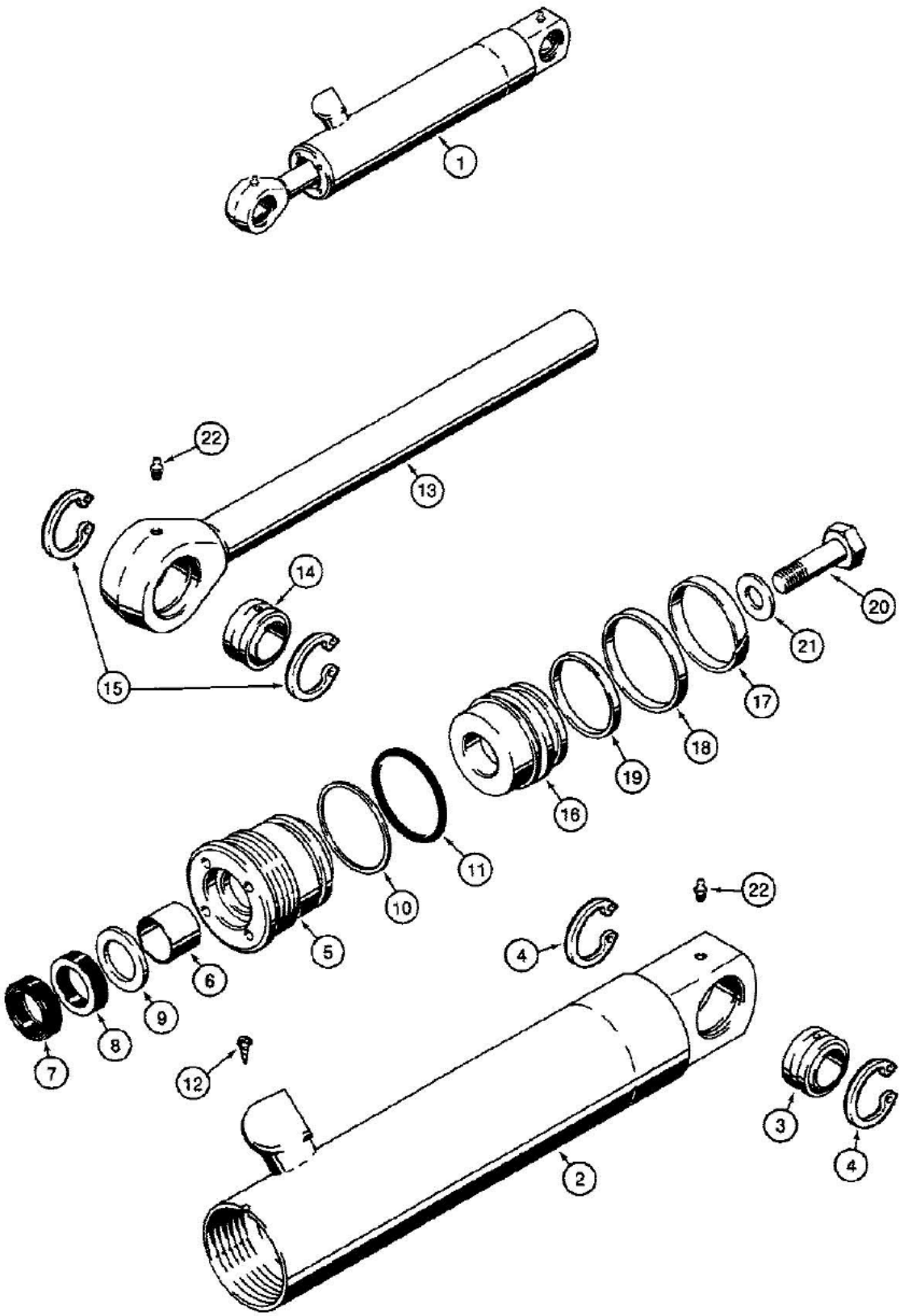

861793-45

580K LOADER BACKHOE (NORTH AMERICA) - Hydraulics

08-438 THREE-POINT HITCH PITCH CYLINDER

Ref	Part Number	Qty	Description
1	1976884C1	1	CYLINDER ASSEMBLY, 2-1/2" (64 mm) ID x 7" (178 mm) stroke, pitch, Includes: Ref. 2 thru 22, The cylinder assembly part number is stamped on some cylinder glands or tubes
2	G109852	1	TUBE ASSEMBLY cylinder, Includes: Ref. 3 and 4
3	D22200	1	BUSHING tube, self-aligning
4	D27833	2	Ring, Snap, 1.625", Int, #162, bushing
	G108971	1	GLAND ASSEMBLY cylinder, Includes: Ref. 5 thru 11
5	NSS	1	GLAND cylinder
6	G102864	1	BUSHING center, Part of Seal Kit P/N G110055
7	D95141	1	WIPER piston rod, Part of Seal Kit P/N G110055
8	D36968	1	SEAL, U-cup, piston rod, wide, Part of Seal Kit P/N G110055
9	G109092	1	SEAL buffer, grooved, piston rod, narrow, Part of Seal Kit P/N G110055
10	G109297	1	RING backup, gland O-ring, Part of Seal Kit P/N G110055
11	A14506	1	O-RING gland, Part of Seal Kit P/N G110055
12	187-1524	1	SCREW hex head, slotted, self-tapping, No. 8-32 NC x 3/8", plated
13	1976902C1	1	ROD ASSEMBLY piston, 1-1/4" (32 mm) diameter, Includes: Ref. 14 and 15
14	D22200	1	BUSHING rod, self-aligning
15	D27833	2	Ring, Snap, 1.625", Int, #162, bushing
16	G108977	1	PISTON cylinder
17	G100714	1	RING wear, piston, Part of Seal Kit P/N G110055
18	G102289	1	SEAL piston, Part of Seal Kit P/N G110055
19	G100713	1	RING backup, piston seal, Part of Seal Kit P/N G110055
20	28-1036	1	BOLT hex head, 5/8"-18 NF x 2-1/4", grade 8
21	D43266	1	WASHER flat, 5/8", hardened
22	219-1	2	FITTING grease, straight, 1/8" NPT
	G110055	1	KIT seal, Includes: Ref. 6 thru 11 and 17 thru 19

580K Construction King Loader Backhoe

PICTORIAL SECTION INDEX



CHASSIS/
MOUNTED
EQUIPMENT

9

B890757

Bur 8-3462

Issued February, 1989

Printed in U.S.A.

9-442

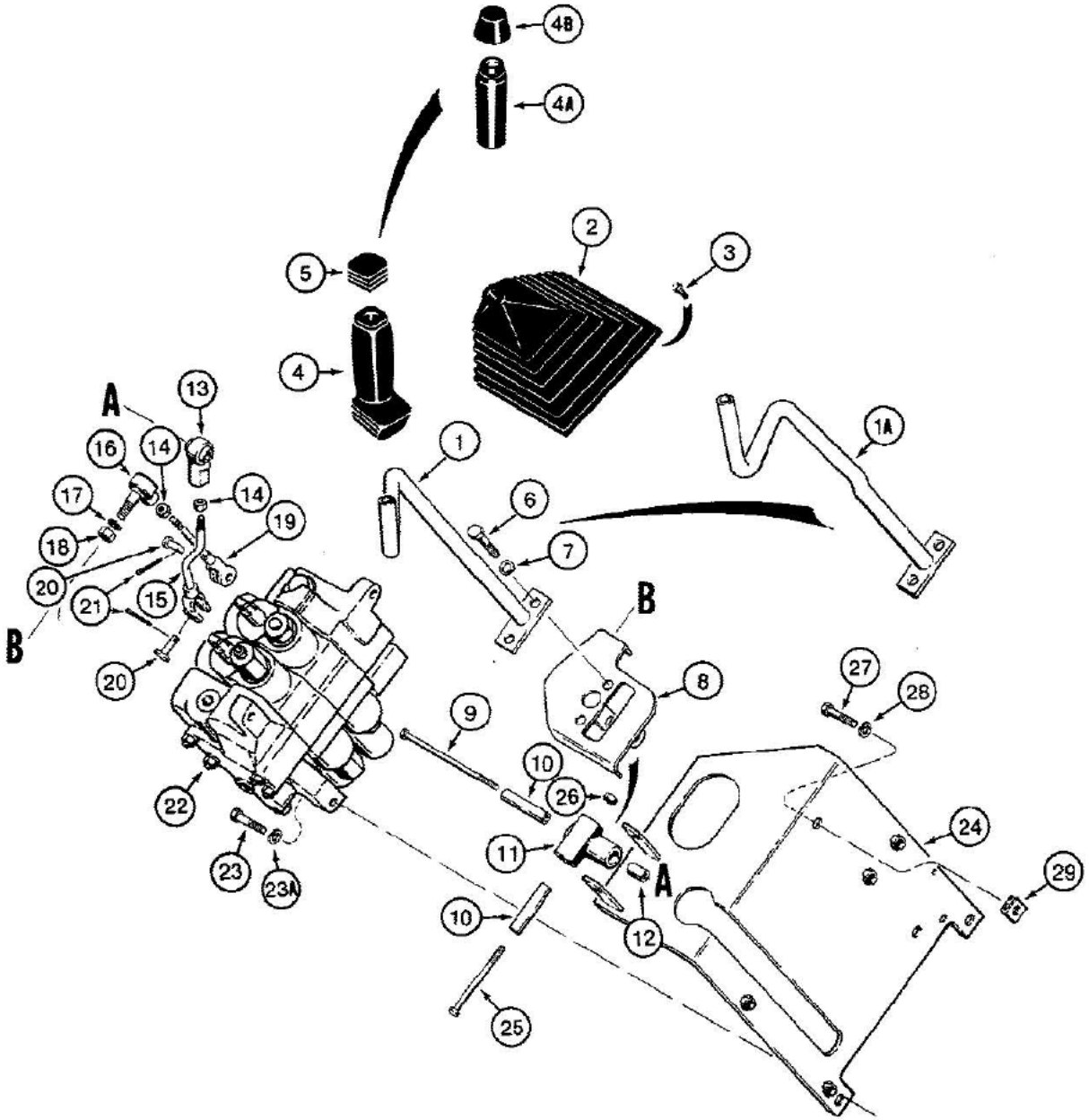

B8675A-45

09-442 LOADER CONTROLS - LIFT AND BUCKET SPOOLS

Ref	Part Number	Qty	Description
1	D137788	1	LEVER control, loader lift and bucket, used on models without tilt/telescoping steering column
1A	D139679	1	LEVER control, loader lift and bucket, used on models with tilt/telescoping steering column
2	D137466	1	BOOT control lever, used on models without clam control lever, see Figure 09-444 for boot used on models with clam control lever
3	187-575	4	SCREW hex washer head, self-tapping, 1/4"-20 NC x 3/4", black
4	D140148	1	KNOB loader control lever, if used
4A	D91439	1	KNOB loader control lever, if used
4B	D138252	1	COVER switch, see Figure 04-122 for fast cycle switch, if used
5	D140149	1	COVER switch, see Figure 04-122 for fast cycle switch
6	113-103	2	BOLT, Hex, 5/16"-18 x 1", G5, Full Thd
7	192-20	2	WASHER, LOCK, 5/16"
8	D136295	1	BRACKET control lever mounting
9	113-2232	1	BOLT hex head, 3/8"-16 NC x 5-1/2", plated, attaches to rollback rod tapped block, see Figure 09-446, Ref. 28
10	D139286	2	SLEEVE pivot, long
11	D136326	1	LEVER pivot
12	D139285	1	SLEEVE pivot, short
13	D136773	1	JOINT ball, female, without stud
14	129-123	2	NUT, 3/8"-24, G5
15	D136722	1	ROD clevis, bucket control
16	R47940	1	JOINT ball, female, with stud
17	192-21	1	WASHER, LOCK, 3/8"
18	129-123	1	NUT, 3/8"-24, G5
19	D136720	1	ROD clevis, lift control
20	141-54	2	PIN clevis, 3/8", plated, special length
21	132-26	2	Pin, Split (Cotter), 3/32" x 3/4"
22	G109581	1	VALVE ASSEMBLY control, loader, two spool, see Figure 08-354
23	113-209	3	BOLT, Hex, 3/8"-16 x 1 1/2", G5, Attaches to weld nuts in valve mounting bracket
23A	192-21	3	WASHER, LOCK, 3/8"
24	D140533	1	BRACKET loader control valve mounting
25	113-203	1	BOLT, Hex, 3/8"-16 x 3 1/2", G5
26	131-52	1	NUT hex, self-locking, 3/8"-16 NC, plated
27	113-208	3	BOLT, Hex, 3/8"-16 x 1 1/4", G5, Full Thd
28	192-21	3	WASHER, LOCK, 3/8"
29	D122307	3	NUT, U-type, 3/8"-16 NC

9-444

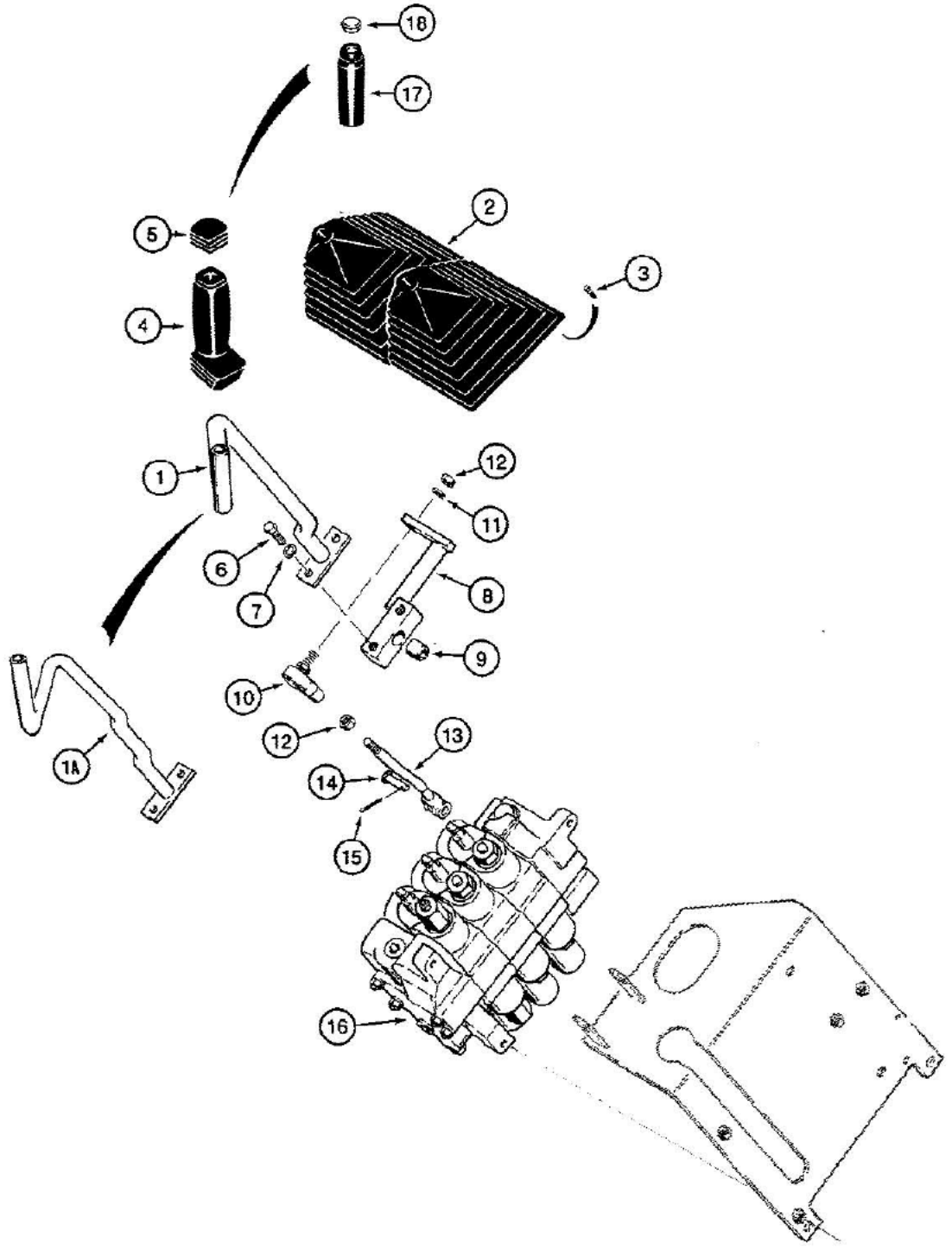

B8676A-45

09-444 LOADER CONTROLS - CLAM SPOOL

Ref	Part Number	Qty	Description
1A	D139681	1	LEVER control, loader clam, used on models with tilt/telescoping steering column
2	D137465	1	BOOT two lever, used on models with clam control lever, see Figure 09-442 for boot used on models without clam control lever
3	187-575	4	SCREW hex washer head, self-tapping, 1/4"-20 NC x 3/4", black
4	D140148	1	KNOB clam loader control lever, if used
5	D140150	1	PLUG plastic, if used
6	113-103	2	BOLT, Hex, 5/16"-18 x 1", G5, Full Thd
7	192-20	2	WASHER, LOCK, 5/16"
8	D136564	1	LEVER pivot, clam, Includes: Ref. 9
9	D136515	1	BUSHING clam pivot lever
10	R47940	1	JOINT ball, female, with stud
11	192-21	1	WASHER, LOCK, 3/8"
12	129-123	2	NUT, 3/8"-24, G5
13	D136720	1	ROD clevis, clam control
14	141-54	1	PIN clevis, 3/8", plated, special length
15	132-26	1	Pin, Split (Cotter), 3/32" x 3/4"
16	G109582	1	VALVE ASSEMBLY control, loader, three spool, see Figure 08-356 for parts list, for mounting see Figure 09-442
17	D91439	1	KNOB clam loader control lever, if used
18	353-406	1	PLUG nylon, 5/8", if used

9-446

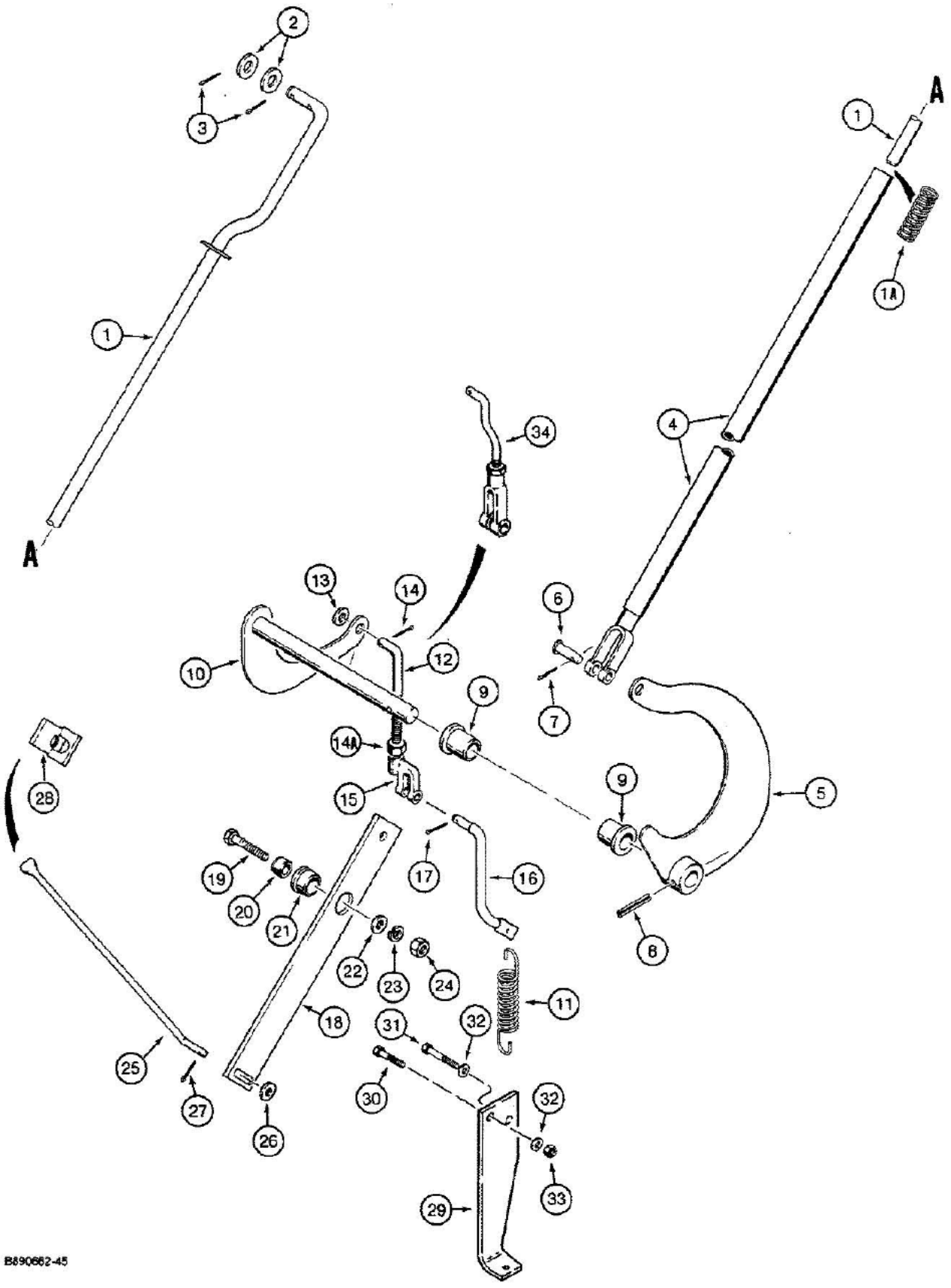
A
A
1
1A
2
3
4
5
6
7
8
9
10
11
12
13
14
14A
15
16
17
18
19
20
21
22
23
24
25
26
27
28
29
30
31
32
33
34
B890662-45

580K LOADER BACKHOE (NORTH AMERICA) - Chassis/Attachments

09-446 LOADER ANTIROLLBACK CONTROL

Ref	Part Number	Qty	Description
1	D140602	1	ROD rollback, attaches to bucket cylinder link
1A	D140612	1	SPRING rollback rod
2	195-533	2	WASHER flat, 1/2", plated
3	132-310	2	PIN, SPLIT (COTTER), 1/8" x 1"
4	D140600	1	TUBE antirollback, rod
5	D140556	1	LEVER rollback, mounts to chassis upright, The illustratioin is incorrect per blueprint. The welded on sleeve should be on the opposite side of the arm.
6	141-54	1	PIN clevis, 3/8", plated, special length
7	132-320	1	PIN, SPLIT (COTTER), 3/32" x 3/4"
8	135-819	1	PIN, GROOVED, 1/4" x 1 1/2", Type E, Hardened
9	D124452	2	BUSHING lever, at chassis upright
10	D140529	1	SHAFT rollback
11	D120911	1	SPRING return
13	195-525	1	WASHER flat, 3/8", plated
14	132-320	1	PIN, SPLIT (COTTER), 3/32" x 3/4"
14A	25-116	1	NUT hex, jam, 3/8"-24 NF, if used
15	L11182	1	CLEVIS, 3/8", offset, used with Ref. 12 rod, if used
16	D140530	1	ROD rollback
17	132-320	1	PIN, SPLIT (COTTER), 3/32" x 3/4"
18	D138927	1	LEVER pivot, rollback
19	113-410	1	BOLT, Hex, 1/2"-13 x 1 1/2", G5, Full Thd
20	D135892	1	BUSHING pivot lever, small
21	D136277	1	BUSHING pivot lever, large
22	195-106	1	WASHER flat, 1/2", plated
23	192-23	1	WASHER, LOCK, 1/2"
24	129-105	1	NUT, 1/2"-13, G5
25	D136726	1	ROD rollback
26	195-521	1	WASHER flat, 5/16", plated
27	132-330	1	PIN, SPLIT (COTTER), 3/32" x 1/2"
28	D136728	1	BLOCK tapped, attaches to loader valve bucket control rod
29	D140531	1	BRACKET spring mounting, attaches to loader control valve mounting bracket
30	113-208	1	BOLT, Hex, 3/8"-16 x 1 1/4", G5, Full Thd
31	113-209	1	BOLT, Hex, 3/8"-16 x 1 1/2", G5
32	192-21	2	WASHER, LOCK, 3/8"
33	129-103	1	NUT, 3/8"-16, G5
34	D143800	1	ROD rollback, attaches to lever shaft

9-448

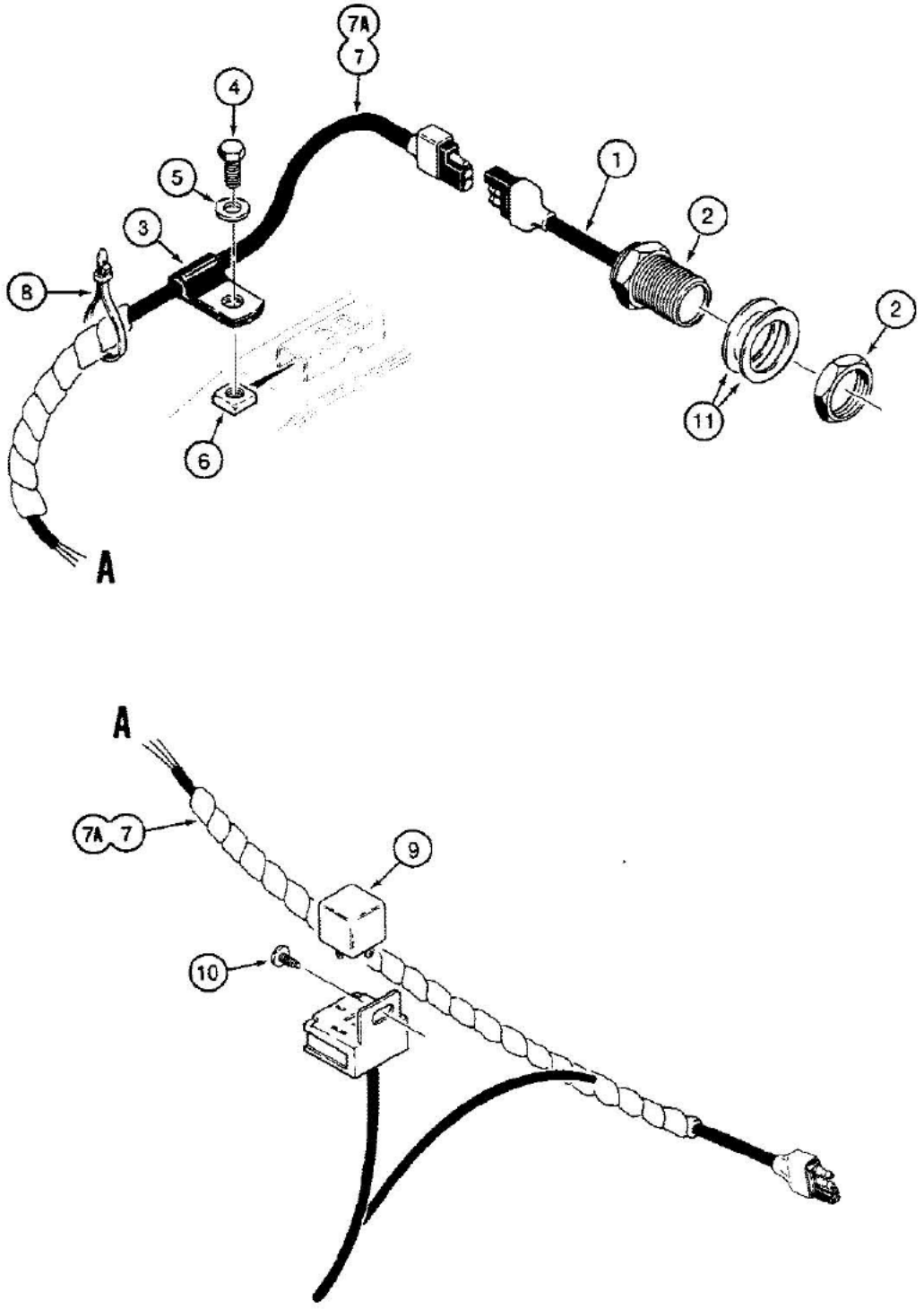

B9877-45

09-448 LOADER RETURN-TO-DIG CONTROL

Ref	Part Number	Qty	Description
1	D136898	1	SWITCH proximity, return-to-dig, includes nuts, Includes: Ref. 2
2	N14113	2	NUT hex, special, return-to-dig switch
3	49851	1	CLAMP, P-type, mounts to cage on top of left-hand loader lift arm
4	113-118	1	BOLT, Hex, 5/16"-18 x 5/8", G5, Full Thd
5	195-103	1	WASHER flat, 5/16", plated
6	25-225	1	NUT square, 5/16"-18 NC
7	D136913	1	HARNESS return-to-dig, attaches to main harness, used on models where relay mounts on chassis channel, if used
7A	D141120	1	HARNESS return-to-dig, attaches to main harness, used on models where relay mounts on chassis loader upright, if used
8	L18337	5	STRAP tie, 15", nylon
9	D128310	1	RELAY, 30 amperes, return-to-dig harness, 40 amperes is marked on the relay. This is the resistance rating. The inductive rating is 30 amperes. We use this inductive rating in our literature.
10	187-576	1	SCREW hex washer head, slotted, self-tapping, No. 10-24 x 3/8", plated, attaches harness socket to relay mounting plate
11	195-2185	2	WASHER flat, 1-1/8", plated

9-450

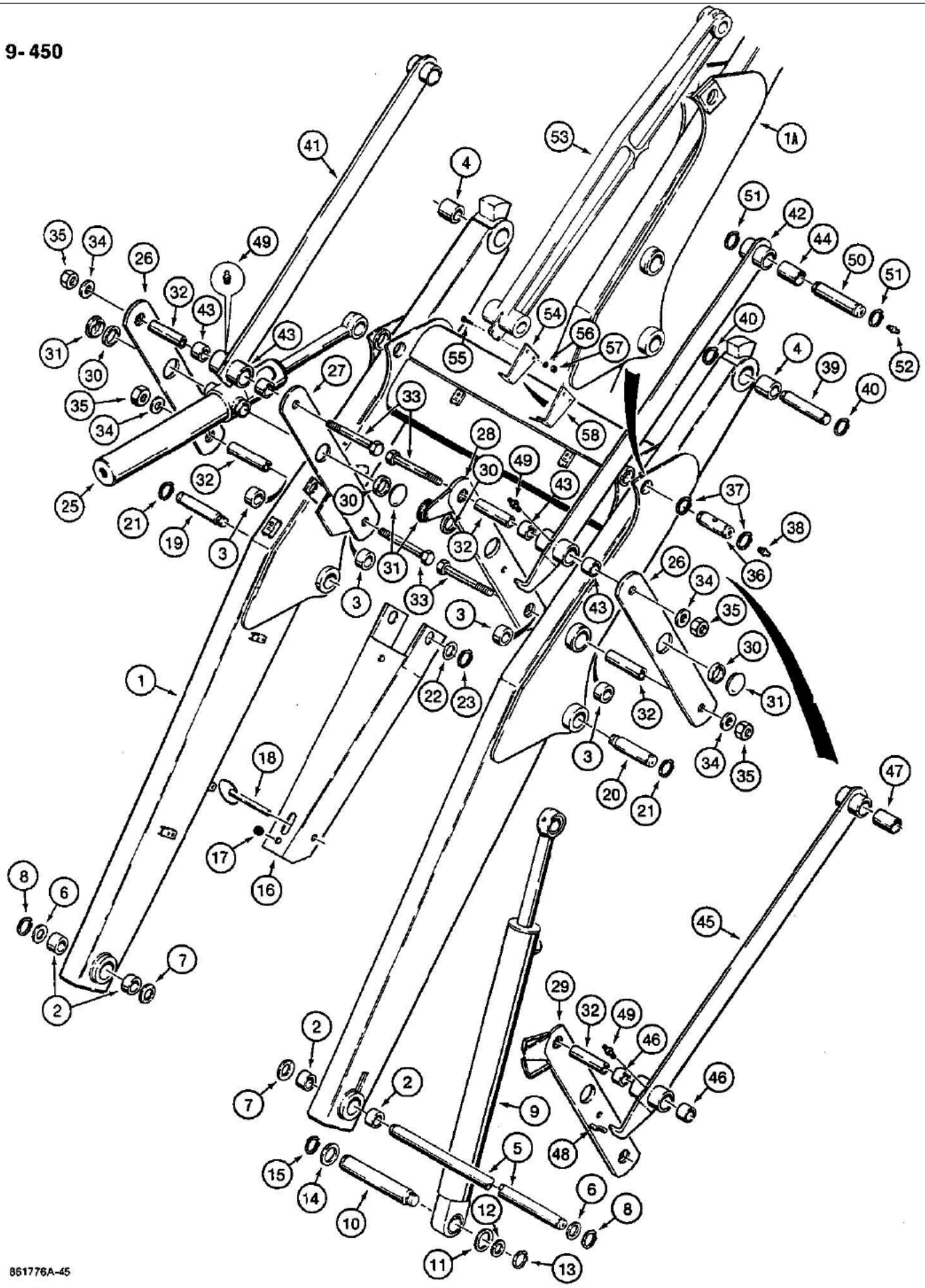
1
1A
2
3
4
5
6
7
8
9
10
11
12
13
14
15
16
17
18
19
20
21
22
23
25
26
27
28
29
30
31
32
33
34
35
36
37
38
39
40
41
42
43
44
45
46
47
48
49
50
51
52
53
54
55
56
57
58
861776A-45

09-450 LOADER FRAME AND MOUNTING PARTS

Ref	Part Number	Qty	Description
1	D134402	1	FRAME loader lift, standard, has (4) cage nuts on left-hand arm and (2) cage nuts on cross tube, no longer available, for service order P/N D141775 loader frame and (1) P/N D88417 cage nut, Includes: Ref. 2 thru 4, The cage nuts welded on the inside of the frame are P/N D88417.
1	D136112	1	FRAME loader lift, models with clam bucket auxiliary hydraulics, has (4) cage nuts on left-hand arm, (3) cage nuts on cross tube, and (3) cage nuts on right-hand arm, no longer available, Includes: Ref. 2 thru 4, The cage nuts welded on the inside of the frame are P/N D88417., For service order P/N D141775 loader frame and (1) P/N D88417 cage nut.
1A	D141775	1	FRAME loader lift, service replacement, Includes: Ref. 2 thru 4
2	D37392	4	BUSHING loader frame pivot
3	D37763	4	BUSHING bucket cylinder link pivot
4	D129240	2	BUSHING bucket mounting
5	D136526	1	SHAFT loader lift frame pivot
6	D143409	2	WASHER flat, special
7	R27181	2	SPRING, Belleville, special, lift frame pivot shaft seal
8	D25280	2	Ring, Snap, #175, Ext, lift frame pivot shaft
9	REF	2	CYLINDER loader lift, right-hand and left-hand, left-hand not shown, for correct assembly and components see Figure 08-408
10	D135669	2	PIN lift cylinder pivot, closed end
11	D143431	2	WASHER special, outer side only
12	195-2152	2	WASHER flat, 1-13/16" ID x 2-1/2" OD x 1/8" thick, outer
13	D25280	2	Ring, Snap, #175, Ext, pin, lift cylinder closed end, outer
14	195-2155	2	WASHER flat, 2-1/16" ID x 3" OD x 1/8" thick, inner
15	800-50050	2	RING snap, pin retaining, lift cylinder closed end, inner
16	D138247	1	STRUT support, loader frame, left-hand lift arm only
17	D121047	1	GROMMET support strut
18	D120675	1	PIN lock, cotterless hitch
19	D135603	1	PIN left-hand lift cylinder rod end
20	D135604	1	PIN right-hand lift cylinder rod end
21	800-50040	2	RING snap, pin retaining, lift cylinder rod end, outer
22	195-2140	2	WASHER flat, 1-7/16" ID x 2" OD x 1/16" thick, inner
23	800-50035	2	RING snap, pin retaining, lift cylinder rod end, inner
24	G108486	1	CYLINDER loader bucket, right-hand, not shown, see Figure 08-410
25	G108487	1	CYLINDER loader bucket, left-hand, see Figure 08-410
26	D137876	2	LINK bucket cylinder, right-hand and left-hand, outer, Includes: Ref. 30 and 31
27	D137875	1	LINK bucket cylinder, left-hand, inner, with return-to-dig indicator, Includes: Ref. 30 and 31
28	D137877	1	LINK bucket cylinder, right-hand, inner, with extra hole for antirollback rod, models without clam bucket see Ref. 29 for models with clam bucket, Includes: Ref. 30 and 31
29	D137874	1	LINK bucket cylinder, right-hand, inner, with extra hole for antirollback rod, models with clam bucket, see Ref. 28 for models without clam bucket, Includes: Ref. 30 and 31
30	D129272	1	BUSHING, one per each link, Ref. 26-29
31	NSS	1	CAP, one per each link, Ref. 26-29, Can be replaced with P/N D151034 closed end bushing

09-450 LOADER FRAME AND MOUNTING PARTS

Ref	Part Number	Qty	Description
32	D132076	4	BUSHING cylinder links, spacer
33	113-931	4	BOLT hex head, 1"-8 NC x 7-1/2", plated
34	195-553	4	WASHER flat, 1", plated
35	129-110	4	NUT, 1"-8, G5
36	D129279	2	PIN bucket cylinder rod end
37	800-50040	4	RING snap, pin retaining, bucket cylinder rod end
38	219-1	2	FITTING grease, straight, 1/8" NPT
39	D129256	2	PIN loader lift frame to lower bucket mounting hole
40	800-50040	4	RING snap, pin retaining, lift frame to lower bucket mounting hole
41	D133235	1	LINK bucket, left-hand, with bushings, no longer available, order P/N D139595 link, see Ref. 53, Includes: Ref. 43 and 44
42	D133236	1	LINK bucket, with bushings, with bucket position indicator, right-hand, models without clam bucket, see Ref. 45 for models with clam bucket, no longer available, Includes: Ref. 43 and 44, For service order (1) P/N D139595 link, (1) P/N D121194 pointer, (2) P/N 413-520 bolts, (2) P/N 492-11031 washers, and (2) P/N 425-105 nuts, see Ref. 53 thru 57.
43	D30933	2	BUSHING, two per each link, Ref. 41 and 42
44	D129240	1	BUSHING bucket mounting, one per each link, Ref. 41 and 42
45	D138975	1	LINK bucket, with bucket position indicator, right-hand, models with clam bucket, see Ref. 42 for models without clam bucket, no longer available, Includes: Ref. 46-48, For service, order (1) P/N D139595 link, (1) P/N D123157 pointer, (2) P/N 413-520 bolts, (2) P/N 492-11031 washers, and (2) P/N 425-105 nuts, see Ref. 53 and 55 thru 58.
46	D30933	2	BUSHING link, bucket indicator end
47	D129240	1	BUSHING bucket mounting
48	D120546	1	POINTER bucket position, welded to position indicator
49	219-1	2	FITTING grease, straight, 1/8" NPT
50	D129257	2	PIN link to upper bucket mounting hole
51	800-50040	4	RING snap, pin retaining, link to bucket
52	219-1	2	FITTING grease, straight, 1/8" NPT
53	D139595	2	LINK bucket, without bushings, left-hand or right-hand, with or without clam bucket
54	D121194	1	POINTER bucket position, models without clam bucket
55	413-520	2	BOLT hex, 5/16" NC x 1-1/4"
56	492-11031	2	WASHER, LOCK, 5/16"
57	425-105	2	NUT - hex, 5/16 inch NC
58	D123157	1	POINTER bucket position, models with clam bucket

9-454

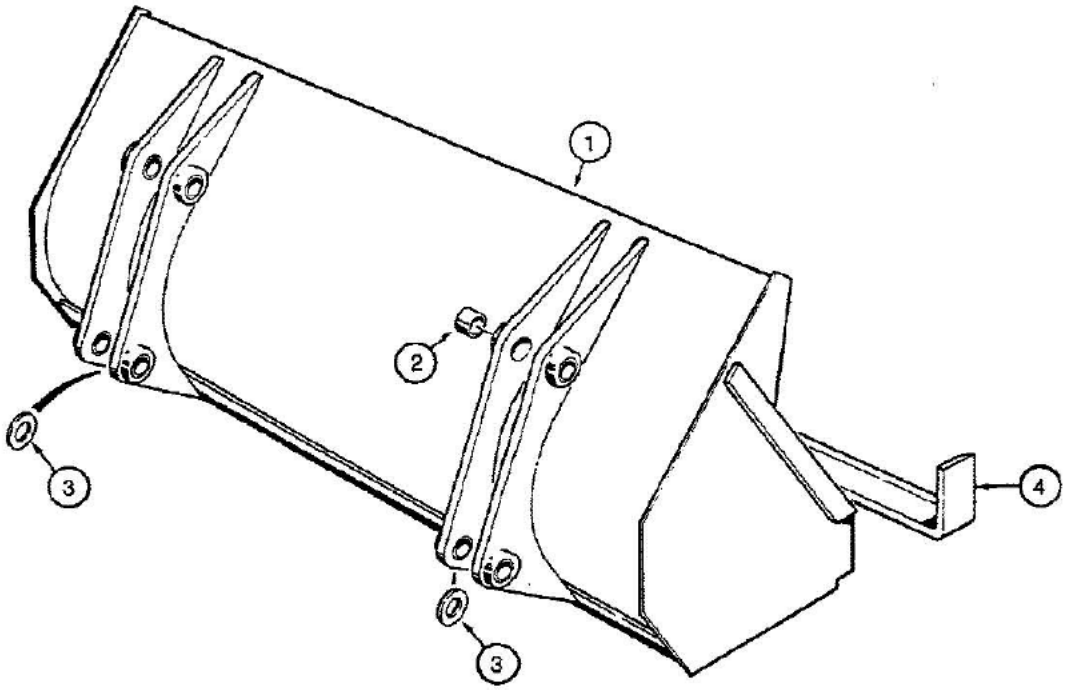

580K LOADER BACKHOE (NORTH AMERICA) - Chassis/Attachments

09-454 LOADER BUCKET, SHORT LIP

Ref	Part Number	Qty	Description
	D134142	1	BUCKET ASSEMBLY loader, 90" (2285 mm) wide, without teeth, machinery item, order from Machinery Price List, Includes: Ref. 1-4
1	NSS	1	BUCKET loader
2	D129264	8	BUSHING bucket ear
3	D135602	2	WASHER, 1-5/8" ID x 2-3/8" OD, hardened, special, used as a spacer, welded to inner ear at lower pin hole only
4	D65287	1	EDGE cutting, front, 90" (2285 mm) bucket
	D147323	UAR	EDGE cutting, bolt-on, 90", with 15 holes to accept 3/4" plow bolts, purchase option for bucket
	118-503	UAR	BOLT, hardware for bolt-on cutting edge P/N D147323
	429-1012	UAR	NUT, hardware for bolt-on cutting edge P/N D147323

09-454(1) LOADER BUCKET, LONG LIP

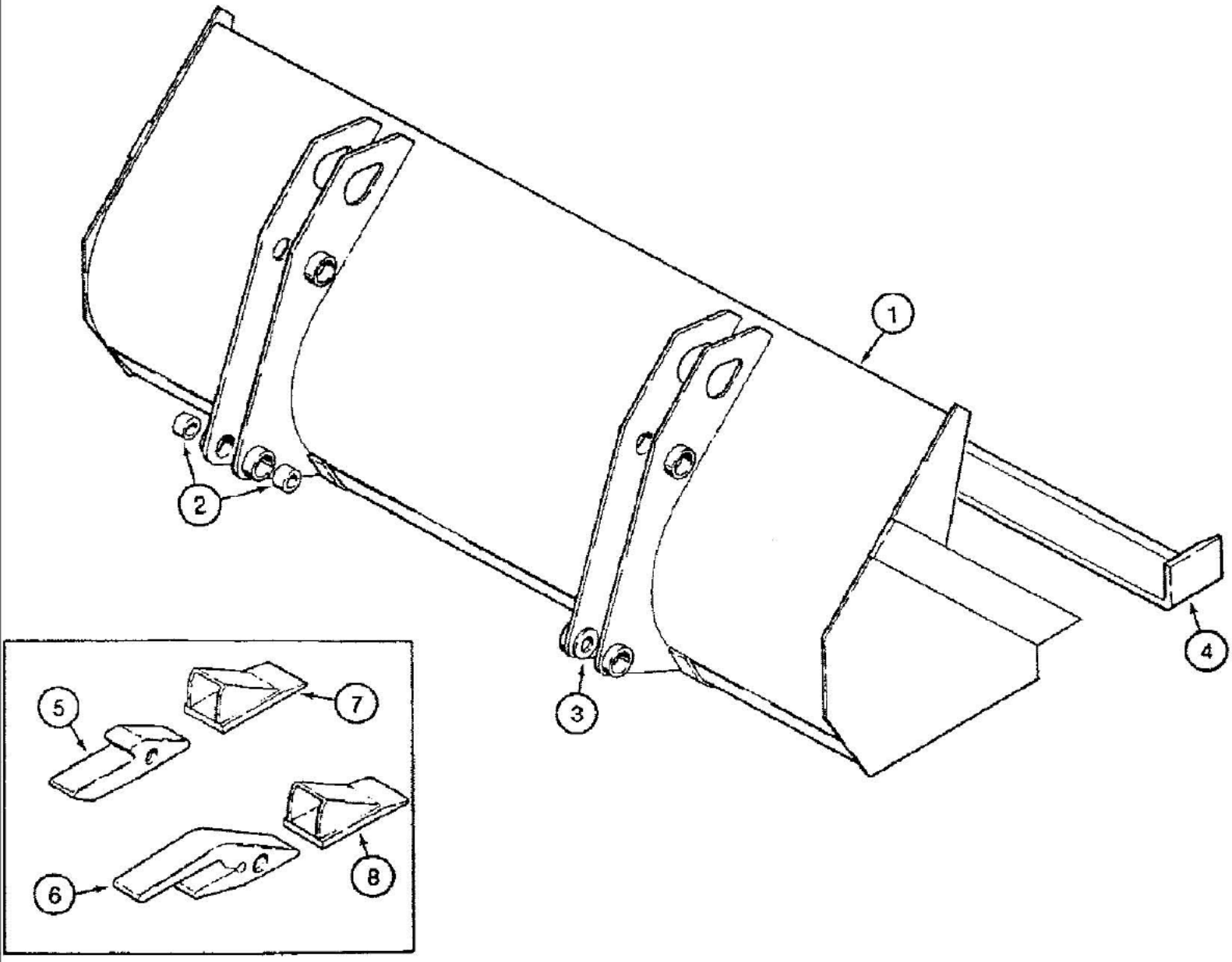

09-454(1) LOADER BUCKET, LONG LIP

Ref	Part Number	Qty	Description
1	D146364	1	BUCKET, BUCKET ASSEMBLY loader, 82" (2083 mm) wide, with teeth, machniery item, order from Machinery Price List, Includes: Ref. 2-4
2	D129264	8	BUSHING, BUSHING bucket ear
3	D135602	2	WASHER, WASHER flat, 1-5/8" ID x 2-3/8" OD, hardened, special, welded to lower inner bucket ear
4	D122568	1	EDGE, CUTTING, EDGE cutting, front, 82" (2083 mm) bucket
5	D26368	10	SUPPORT, SHANK tooth, original equipment, bucket
6	D58499	10	SUPPORT, SHANK tooth, heavy duty service option, bucket
7	D27748	10	TOOTH, POINT tooth, original equipment, bucket
8	D36720	10	TOOTH, POINT tooth, heavy duty service option, bucket
	D145681	UAR	EDGE, EDGE cutting, bolt-on, 82", with 10 holes to accept 3/4" plow bolts, same as ZPC215381 available thru Ship Direct Central, purchase option for bucket
	D145680	UAR	EDGE, CUTTING, EDGE cutting, bolt-on, 82", with bent up edges, weld-in section, same as ZPC21612 available thru Ship Direct Central, purchase option for bucket
	118-503	UAR	BOLT, CARRIAGE, 3/4"-10 x 2 1/4", G8, BOLT, hardware for bolt-on cutting edge P/N D145680 and D145681
	429-1012	UAR	NUT, 3/4"-10, G8, NUT, hardware for bolt-on cutting edge P/N D145680 and D145681

9-456

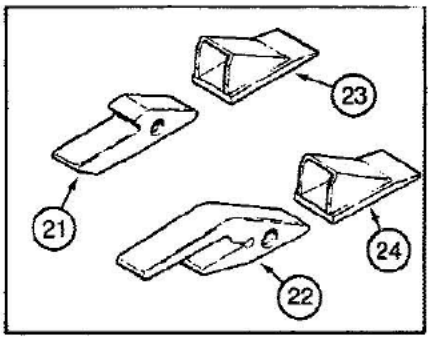

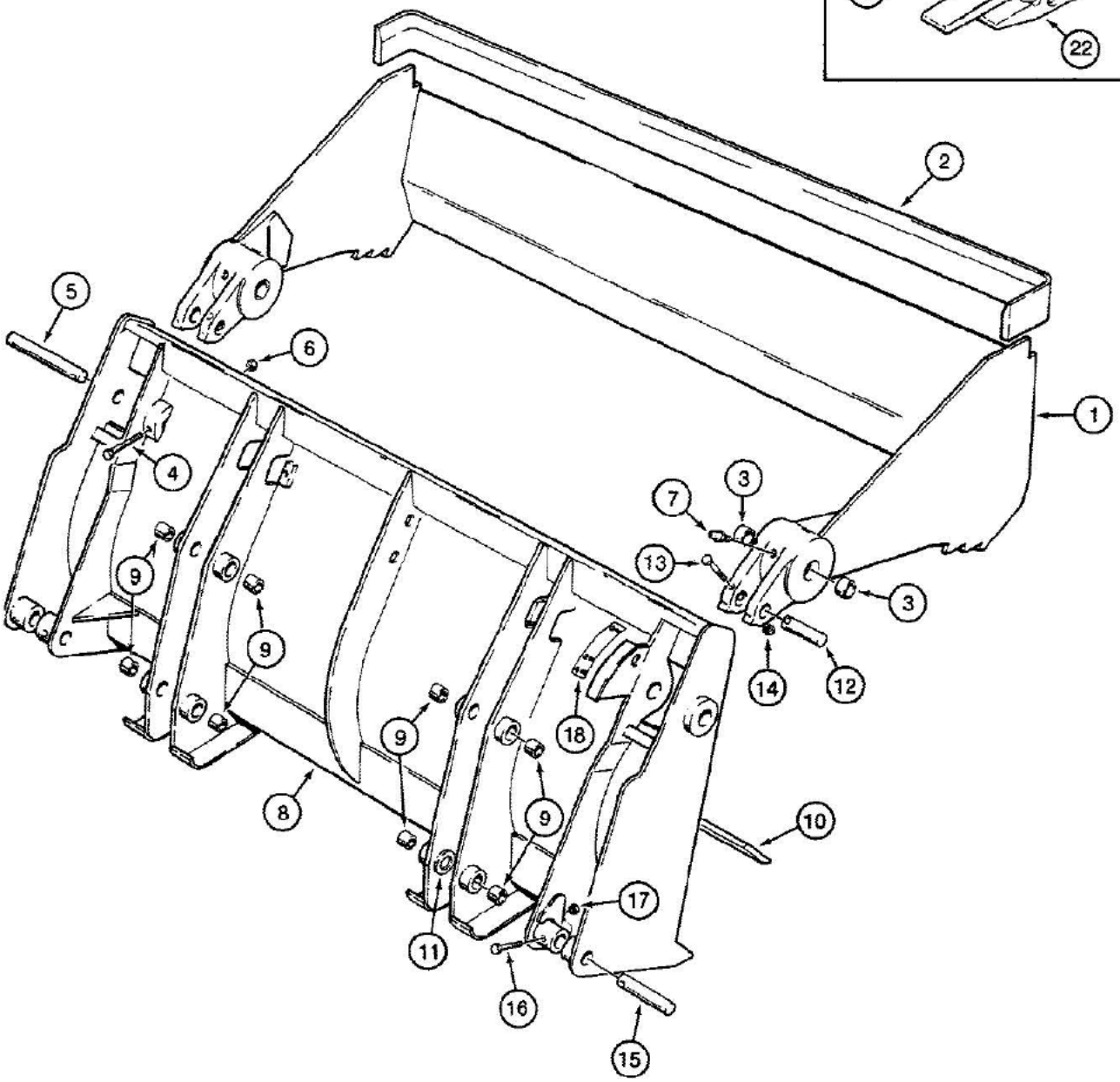

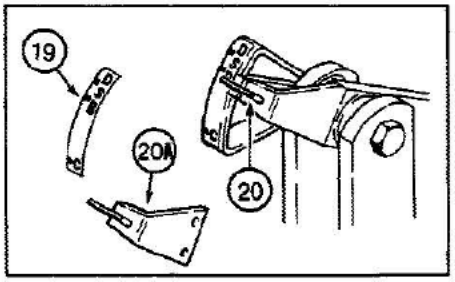

861824A-45

09-456 CLAM BUCKET, OPTIONAL BUCKET TEETH

Ref	Part Number	Qty	Description
	D102070	1	BUCKET ASSEMBLY clam, 82" (2083 mm) wide, machinery item, order from Machinery Price List, Includes: P/N D133816 and Ref. 1 thru 17
	D133816	1	CLAM ASSEMBLY bucket, Includes: Ref. 1 thru 3, P/N D133816 clam assembly uses compaction plate P/N D75630
1	NSS	1	CLAM bucket, For Ref. 1, the wear plate on the back side of the clam assembly is P/N D75630, on the other end from Ref. 2.
2	D76258	1	EDGE cutting, bucket
3	D31140	4	BUSHING clam pivot
4	113-267	2	BOLT, Hex, 3/8"-16 x 4", G5
5	D51391	2	PIN pivot, clam to blade
6	131-666	2	NUT hex, self-locking, 3/8"-16 NC, plated
7	219-1	2	FITTING grease, straight, 1/8" NPT
	D133817	1	BLADE ASSEMBLY clam bucket, Includes: Ref. 8-11
8	NSS	1	BLADE bucket
9	D129264	8	BUSHING bucket ear
10	D75636	1	EDGE cutting, blade
11	D135602	2	WASHER flat, 1-5/8" ID x 2-3/8" OD, hardened, special, welded to lower inner bucket ears
12	D51392	2	PIN cylinder mounting, upper
13	113-203	2	BOLT, Hex, 3/8"-16 x 3 1/2", G5
14	131-666	2	NUT hex, self-locking, 3/8"-16 NC, plated
15	D51393	2	PIN cylinder mounting, lower
16	113-248	2	BOLT, Hex, 3/8"-16 x 2 3/4", G5
17	131-666	2	NUT hex, self-locking, 3/8"-16 NC, plated
18	321-1708	1	DECAL, 0 - 2 - 4, clam bucket opening indicator
19	321-1707	1	DECAL clam bucket position
20	D120546	1	POINTER bucket position, welded to clam bucket link, see Figure 09-450 for link, if used
20A	D123157	1	POINTER bucket position, bolts to clam bucket link, see Figure 09-450 for link and mounting hardware, if used
21	D26368	10	SHANK tooth, original equipment, optional bucket teeth
22	D58499	10	SHANK tooth, heavy duty service option, bucket
23	D27748	10	POINT tooth, original equipment, optional bucket teeth
24	D36720	10	POINT tooth, heavy duty service option, bucket

9-458

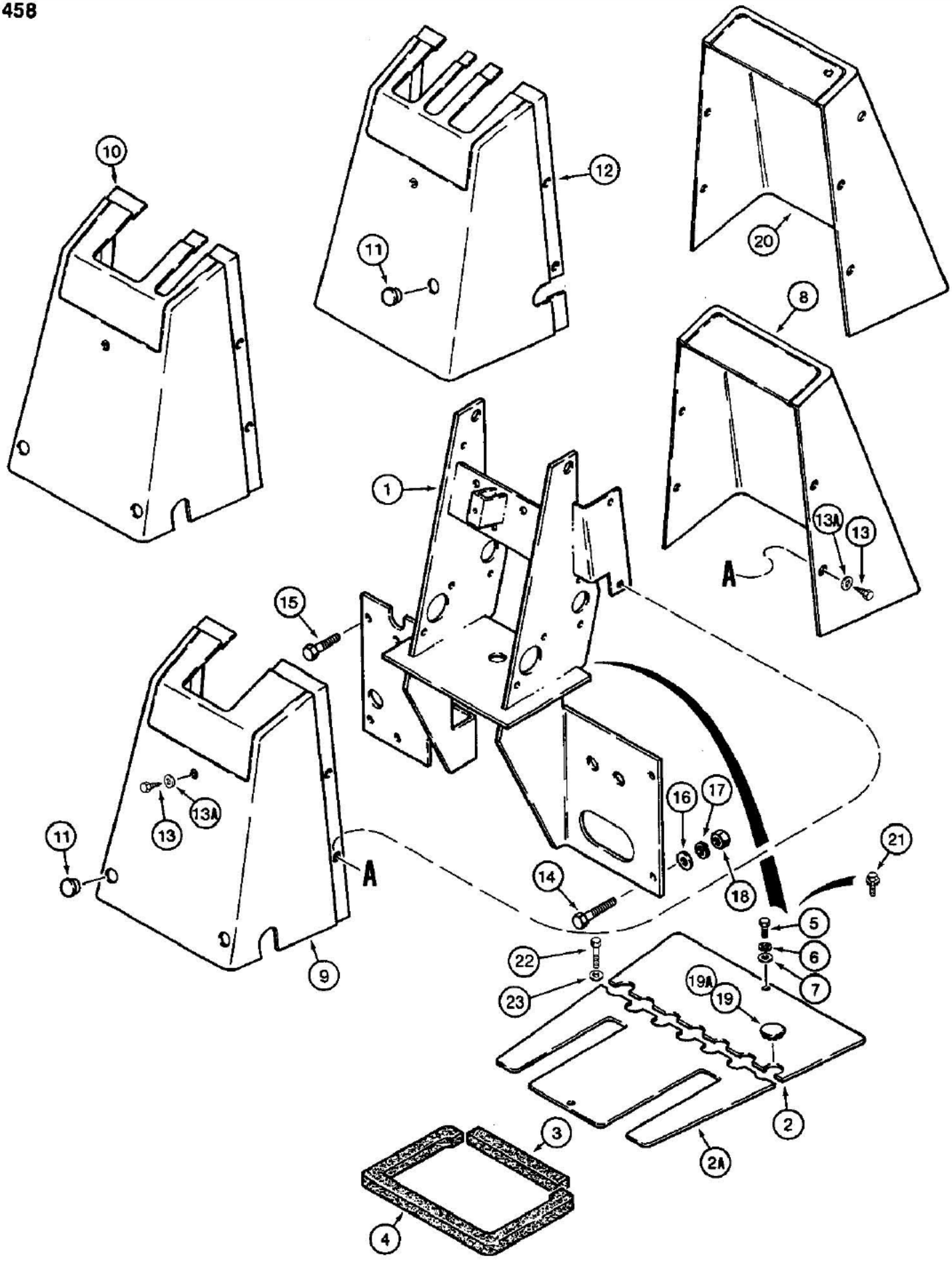
10
12
11
20
8
1
13A
13
A
15
16
17
21
18
14
5
6
7
22
23
19A
19
2
3
2A
4
13A
13
11
A
9

09-458 BACKHOE CONTROL TOWER, USED ON MODELS WITHOUT TILT BACKHOE CONTROLS

Ref	Part Number	Qty	Description
1	D135567	1	SUPPORT backhoe control and valve mounting
2	D140101	1	PLATE floor, backhoe control tower, rear
2A	D140100	1	PLATE floor, backhoe control tower, front
3	D137902	1	SEAL, 7" (178 mm) long, gasket
4	D133491	1	SEAL gasket, backhoe control floor plate
5	113-102	2	BOLT, Hex, 5/16"-18 x 3/4", G5, Full Thd, If used
6	192-20	2	WASHER, LOCK, 5/16", If used
7	195-521	2	WASHER flat, 5/16", plated, if used
8	D134085	1	COVER console, rear, used on all models except models with hydraulic boom lock, see Ref. 20
9	D134086	1	COVER console, front, used on models with foot swing without extendable dipper, for models with auxiliary hydraulics, for optional rear hydraulic attachments order P/N D134087 cover
10	D134087	1	COVER console, front, used on models with foot swing with extendable dipper or models with auxiliary hydraulics for optional rear hydraulic attachments with or without extendable dipper
11	353-411	1-2	PLUG, Dome, 1.000" hole, Nylon
12	D134088	1	COVER console, front, used on models with hand swing with or without extendable dipper
13	187-575	5	SCREW hex washer head, self-tapping, 1/4"-20 NC x 3/4", black
13A	195-124	5	WASHER flat, 1/4", black
14	113-410	3	BOLT, Hex, 1/2"-13 x 1 1/2", G5, Full Thd
15	113-412	1	BOLT, Hex, 1/2"-13 x 1 3/4", G5
16	195-533	4	WASHER flat, 1/2", plated
17	192-23	4	WASHER, LOCK, 1/2"
18	129-105	4	NUT, 1/2"-13, G5
19	205-54	1	PLUG button, 1-3/16" (30 mm) diameter, steel, if used
19A	D140267	1	PLUG button, 1-3/16" (30 mm) diameter, tan, if used
20	D141999	1	COVER console, rear, used on models with hydraulic boom lock
21	D141589	2	BOLT hex washer head, self-tapping, 5/16"-18 NC x 3/4", plated, replaces bolt and washers on some models
22	113-103	2	BOLT, Hex, 5/16"-18 x 1", G5, Full Thd
23	195-524	2	WASHER flat, 5/16", plated

9-460

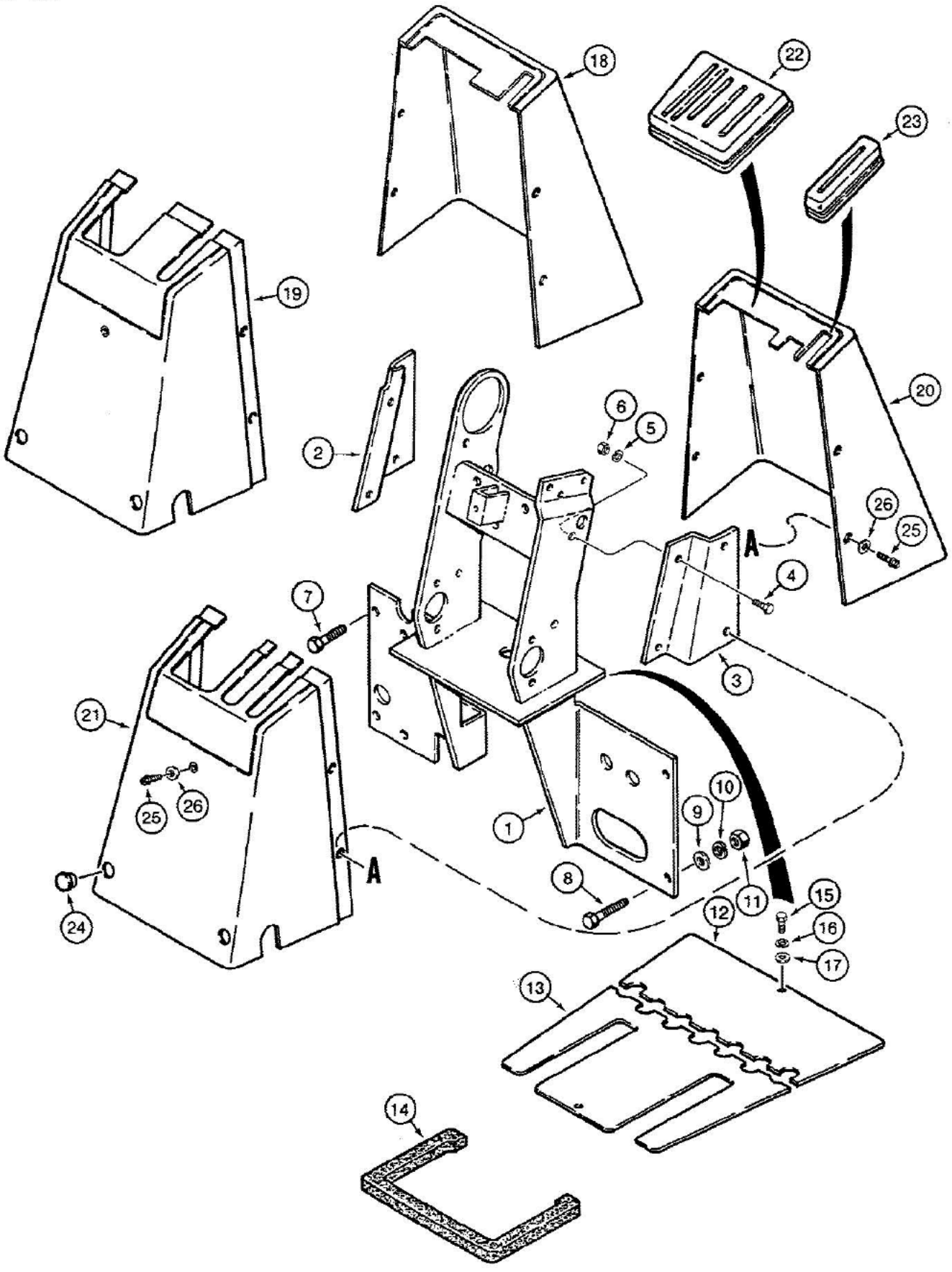

88879-45

09-460 BACKHOE CONTROL TOWER, USED ON MODELS WITH FOOT SWING, WITH TILT BACKHOE CONTROLS

Ref	Part Number	Qty	Description
1	D139404	1	SUPPORT backhoe control and valve mounting
2	D139428	1	BRACKET left hand, cover mounting
3	D139430	1	BRACKET right hand, cover mounting
4	113-102	4	BOLT, Hex, 5/16"-18 x 3/4", G5, Full Thd
5	192-20	4	WASHER, LOCK, 5/16"
6	9635082	4	NUT, 5/16"-18, G5
7	113-412	1	BOLT, Hex, 1/2"-13 x 1 3/4", G5
8	113-410	3	BOLT, Hex, 1/2"-13 x 1 1/2", G5, Full Thd
9	195-533	4	WASHER flat, 1/2", plated
10	192-23	4	WASHER, LOCK, 1/2"
11	129-105	4	NUT, 1/2"-13, G5
12	D139415	1	PLATE floor, backhoe control tower, rear
13	D139414	1	PLATE floor, backhoe control tower, front
14	D139416	1	SEAL gasket, backhoe control floor plate
15	113-102	2	BOLT, Hex, 5/16"-18 x 3/4", G5, Full Thd
16	192-20	2	WASHER, LOCK, 5/16"
17	195-521	2	WASHER flat, 5/16", plated
18	D140863	1	COVER console, rear, used on models with foot swing without extendable dipper, for models with auxiliary hydraulics, for optional rear hydraulic attachments order P/N D140865 cover
19	D140862	1	COVER console, front, used on models with foot swing without extendable dipper, for models with auxiliary hydraulics, for optional rear hydraulic attachments order P/N D140864 cover
20	D140865	1	COVER console, rear, used on models with foot swing with extendable dipper or models with auxiliary hydraulics for optional rear hydraulic attachments with or without extendable dipper
21	D140864	1	COVER console, front, used on models with foot swing with extendable dipper or models with auxiliary hydraulics for optional rear hydraulic attachments with or without extendable dipper
23	D139807	1	BOOT tilt lever, used in addition to Ref. 22 boot on models with extendable dipper
24	353-411	2	PLUG, Dome, 1.000" hole, Nylon
25	187-575	5	SCREW hex washer head, self-tapping, 1/4"-20 NC x 3/4", black
26	195-124	5	WASHER flat, 1/4", black

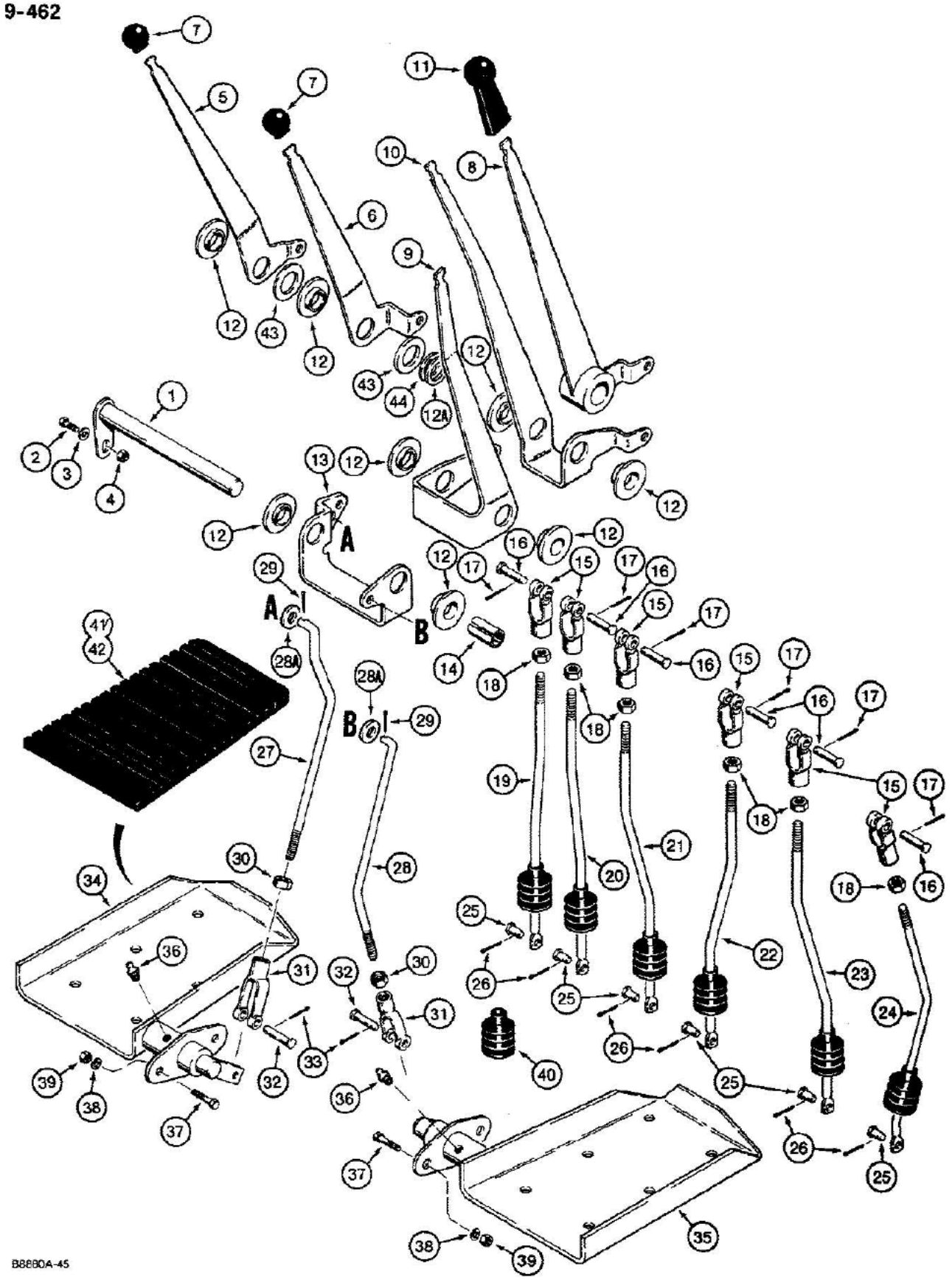

For additional controls used on models with auxiliary hydraulics for optional rear hydraulic attachments, see Figure 09-470. Whole goods kit to convert from foot swing to 2 lever with ext. dipper is P/N D102923 and with standard dipper is P/N D102922.

580K LOADER BACKHOE (NORTH AMERICA) - Chassis/Attachments

09-462 BACKHOE CONTROLS W/FOOT SWING, W/NON-EXTENDABLE DIPPER USED ON MODELS W/O TILT BACKHOE CONTR

Ref	Part Number	Qty	Description
1	D128627	1	SHAFT pivot, control levers
2	113-103	1	BOLT, Hex, 5/16"-18 x 1", G5, Full Thd
3	195-521	1	WASHER flat, 5/16", plated
4	131-4	1	NUT hex, self-locking, 5/16"-18 NC
5	D133471	1	LEVER control, left hand stabilizer
6	D133472	1	LEVER control, right hand stabilizer
7	D135399	2	KNOB stabilizer control levers
8	D133474	1	LEVER control, dipper
9	D133475	1	LEVER control, boom
10	D133473	1	LEVER control, bucket
11	D135387	3	KNOB boom, dipper, and bucket control levers
12	D128616	8	BUSHING plastic, control levers and swing bracket
12A	A30881	UAR	WASHER flat, used as a shim between control levers
13	D134702	1	BRACKET swing
14	D128615	1	SPACER control lever, not used on models with extendable dipper or optional rear hydraulic attachments
15	D134900	6	CLEVIS, 3/8", special
16	141-73	6	PIN clevis, 3/8"
17	132-320	6	PIN, SPLIT (COTTER), 3/32" x 3/4"
18	129-123	6	NUT, 3/8"-24, G5
19	D133477	1	ROD left hand stabilizer control
20	D133478	1	ROD right hand stabilizer control
21	D133480	1	ROD dipper control
22	D133481	1	ROD boom control
23	D133479	1	ROD bucket control
24	D134703	1	ROD swing control
25	141-53	6	PIN clevis, 5/16", plated, special length
26	132-320	6	PIN, SPLIT (COTTER), 3/32" x 3/4"
27	D134704	1	ROD left hand swing pedal to swing bracket
28	D133485	1	ROD right hand swing pedal to swing bracket
28A	195-525	2	WASHER flat, 3/8", plated
29	132-320	2	PIN, SPLIT (COTTER), 3/32" x 3/4"
30	129-123	2	NUT, 3/8"-24, G5
31	213-41	2	CLEVIS, 3/8", plated
32	141-54	2	PIN clevis, 3/8", plated, special length
33	132-320	2	PIN, SPLIT (COTTER), 3/32" x 3/4"
34	D143658	1	PEDAL left hand swing
35	D143657	1	PEDAL right hand swing
36	219-1	2	FITTING grease, straight, 1/8" NPT
37	113-208	4	BOLT, Hex, 3/8"-16 x 1 1/4", G5, Full Thd
38	192-21	4	WASHER, LOCK, 3/8"

For additional controls used on models with auxiliary hydraulics for optional rear hydraulic attachments, see Figure 09-470. Whole goods kit to convert from foot swing to 2 lever with ext. dipper is P/N D102923 and with standard dipper is P/N D102922.

09-462 BACKHOE CONTROLS W/FOOT SWING, W/NON-EXTENDABLE DIPPER USED ON MODELS W/O TILT BACKHOE CONTR

Ref	Part Number	Qty	Description
39	129-103	4	NUT, 3/8"-16, G5
40	D85869	6	BOOT control rods, if used
41	D137492	1	PAD rubber, left hand swing pedal, optional deluxe interior
42	D137491	1	PAD rubber, right hand swing pedal, optional deluxe interior
43	D143388	2	WASHER special
44	D34666	1	WASHER flat, 3/4", hardened

For additional controls used on models with auxiliary hydraulics for optional rear hydraulic attachments, see Figure 09-470. Whole goods kit to convert from foot swing to 2 lever with ext. dipper is P/N D102923 and with standard dipper is P/N D102922.

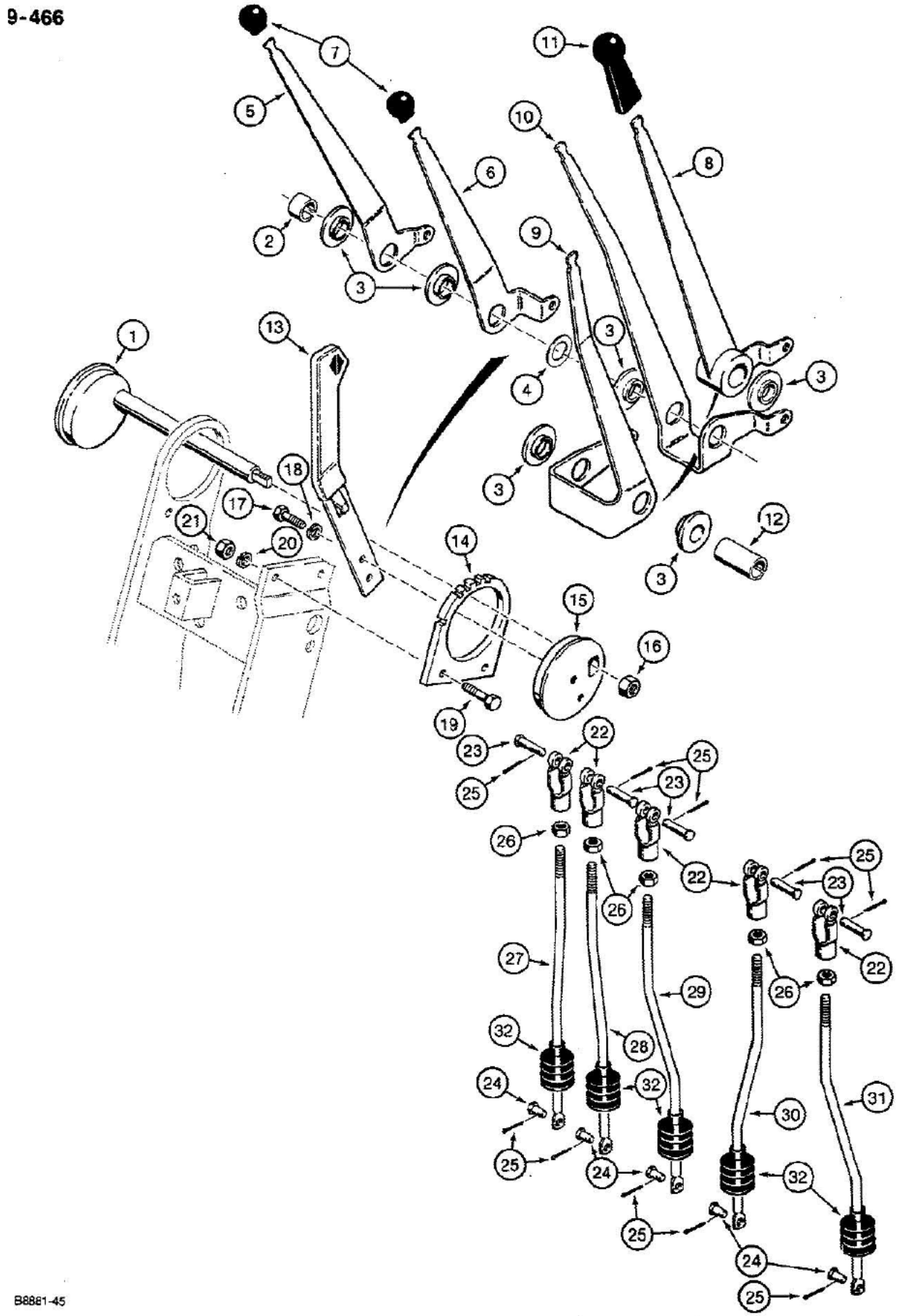

For additional controls used on models with auxiliary hydraulics for optional rear hydraulic attachments, see Figure 09-470. See Figure 09-468 for swing pedal control linkage used in addition to the backhoe boom, dipper, bucket, and stabilizer tilt controls shown in this figure.Whole goods kit to convert from foot swing to 2 lever with ext. dipper is P/N D102923 and with standard dipper is P/N D102922.

09-466 BACKHOE CONTROLS W/FOOT SWING, W/NON-EXTENDABLE DIPPER USED ON MODELS W/TILT BACKHOE CONTROL

Ref	Part Number	Qty	Description
1	D139431	1	SHAFT pivot, control levers
2	D139526	1	SPACER left side of boom lever
3	D128616	6	BUSHING plastic, control levers
4	A30881	UAR	WASHER flat, used as a shim between control levers
5	D139646	1	LEVER control, left hand stabilizer
6	D139647	1	LEVER control, right hand stabilizer
7	D135399	2	KNOB stabilizer control levers
8	D133474	1	LEVER control, dipper
9	D133475	1	LEVER control, boom
10	D133473	1	LEVER control, bucket
11	D135387	3	KNOB boom, dipper, and bucket control levers
12	D139528	1	SPACER not used on models with extendable dipper, see Figure 09-470 for extendable dipper spacer
13	D141290	1	HANDLE lever adjustment
14	D139911	1	BRACKET lever adjustment
15	D139420	1	PLATE lever pivot
16	129-148	1	NUT jam, hex, 3/4"-10 NC, plated
17	113-102	2	BOLT, Hex, 5/16"-18 x 3/4", G5, Full Thd
18	192-20	2	WASHER, LOCK, 5/16"
19	113-103	2	BOLT, Hex, 5/16"-18 x 1", G5, Full Thd
20	192-20	2	WASHER, LOCK, 5/16"
21	9635082	2	NUT, 5/16"-18, G5
22	D134900	5	CLEVIS, 3/8", special
23	141-73	5	PIN clevis, 3/8"
24	141-53	5	PIN clevis, 5/16", plated, special length
25	132-320	10	PIN, SPLIT (COTTER), 3/32" x 3/4"
26	129-123	5	NUT, 3/8"-24, G5
27	D139425	1	ROD left hand stabilizer control
28	D139426	1	ROD right hand stabilizer control
29	D139424	1	ROD dipper control
30	D139423	1	ROD boom control
31	D139422	1	ROD bucket control
32	D85869	5	BOOT rods, at floor plate, if used

For additional controls used on models with auxiliary hydraulics for optional rear hydraulic attachments, see Figure 09-470. See Figure 09-468 for swing pedal control linkage used in addition to the backhoe boom, dipper, bucket, and stabilizer tilt controls shown in this figure.Whole goods kit to convert from foot swing to 2 lever with ext. dipper is P/N D102923 and with standard dipper is P/N D102922.

9-468

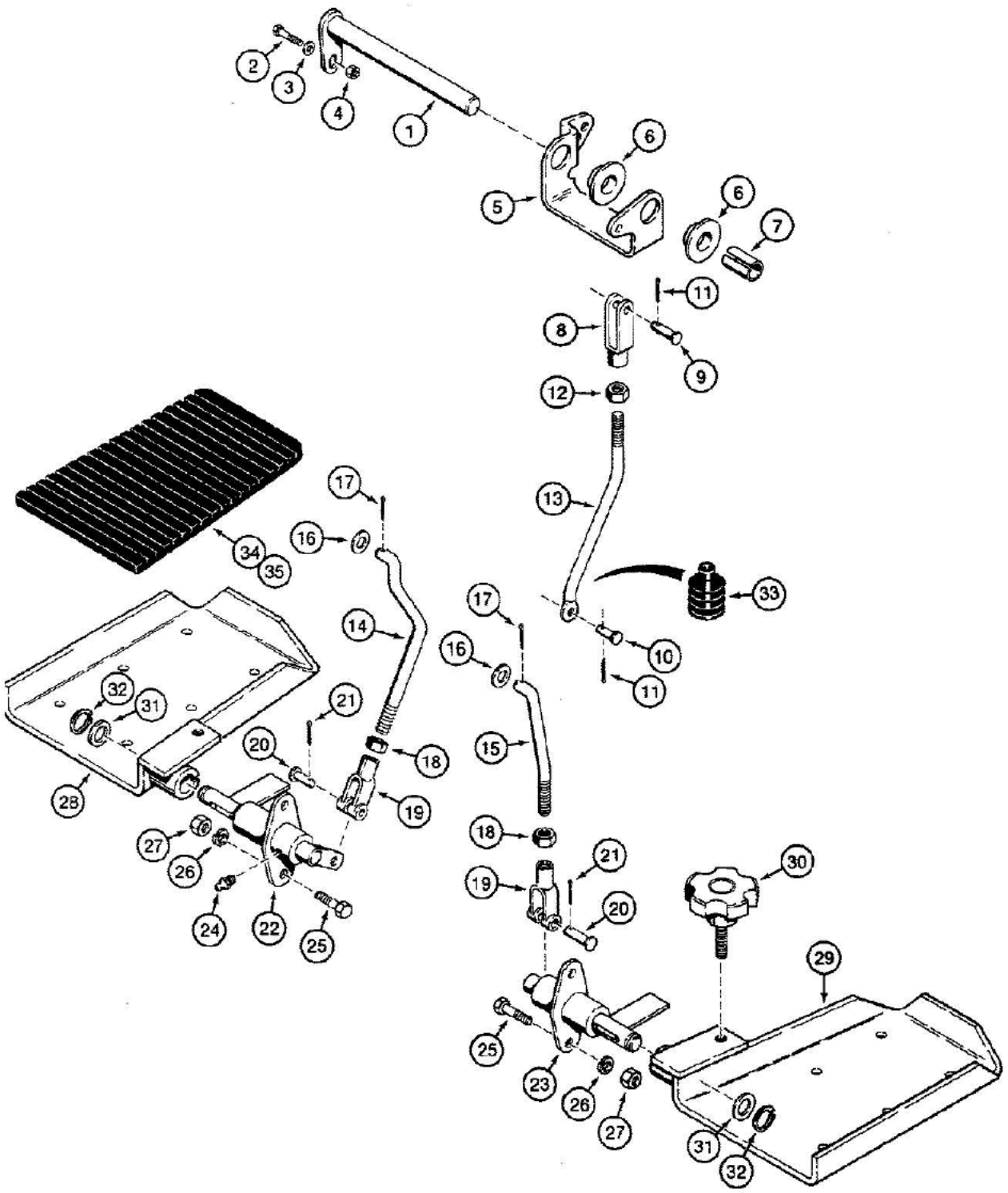

B8882-45

For additional controls used on models with auxiliary hydraulics for optional rear hydraulic attachments, see Figure 09-470. See Figure 09-466 for boom, dipper, bucket, and stabilizer control linkage used in addition to the swing pedal tilt controls shown in this figure.

09-468 BACKHOE CONTROLS W/FOOT SWING, W/NON-EXTENDABLE DIPPER USED ON MODELS W/TILT BACKHOE CONTROL

Ref	Part Number	Qty	Description
1	D139952	1	SHAFT pivot, swing bracket
2	113-103	1	BOLT, Hex, 5/16"-18 x 1", G5, Full Thd
3	195-521	1	WASHER flat, 5/16", plated
4	131-4	1	NUT hex, self-locking, 5/16"-18 NC
5	D134702	1	BRACKET swing
6	D128616	2	BUSHING plastic, swing bracket
7	D139525	1	SPACER swing bracket
8	D134900	1	CLEVIS, 3/8", special
9	141-73	1	PIN clevis, 3/8"
10	141-53	1	PIN clevis, 5/16", plated, special length
11	132-320	2	PIN, SPLIT (COTTER), 3/32" x 3/4"
12	129-123	1	NUT, 3/8"-24, G5
13	D139409	1	ROD swing bracket to backhoe control valve swing section
14	D139410	1	ROD left hand swing pedal to swing bracket
15	D139411	1	ROD right hand swing pedal to swing bracket
16	195-525	2	WASHER flat, 3/8", plated
17	132-320	2	PIN, SPLIT (COTTER), 3/32" x 3/4"
18	129-123	2	NUT, 3/8"-24, G5
19	213-41	2	CLEVIS, 3/8", plated
20	141-54	2	PIN clevis, 3/8", plated
21	132-320	2	PIN, SPLIT (COTTER), 3/32" x 3/4"
22	D139412	1	SHAFT left hand swing pedal
23	D138558	1	SHAFT right hand swing pedal
24	219-1	4	FITTING grease, straight, 1/8" NPT
25	113-208	4	BOLT, Hex, 3/8"-16 x 1 1/4", G5, Full Thd
26	192-21	4	WASHER, LOCK, 3/8"
27	129-103	4	NUT, 3/8"-16, G5
28	D138549	1	PEDAL left hand swing
29	D138556	1	PEDAL right hand swing
30	D138559	2	KNOB swing pedal adjustment
31	A30881	2	WASHER swing pedal shaft
32	D95097	2	RING retaining, swing pedal shaft
33	D85869	1	BOOT swing rod, at floor plate, if used
34	D137492	1	PAD rubber, left hand swing pedal, optional deluxe interior
35	D137491	1	PAD rubber, right hand swing pedal, optional deluxe interior

For additional controls used on models with auxiliary hydraulics for optional rear hydraulic attachments, see Figure 09-470. See Figure 09-466 for boom, dipper, bucket, and stabilizer control linkage used in addition to the swing pedal tilt controls shown in this figure.

9-470

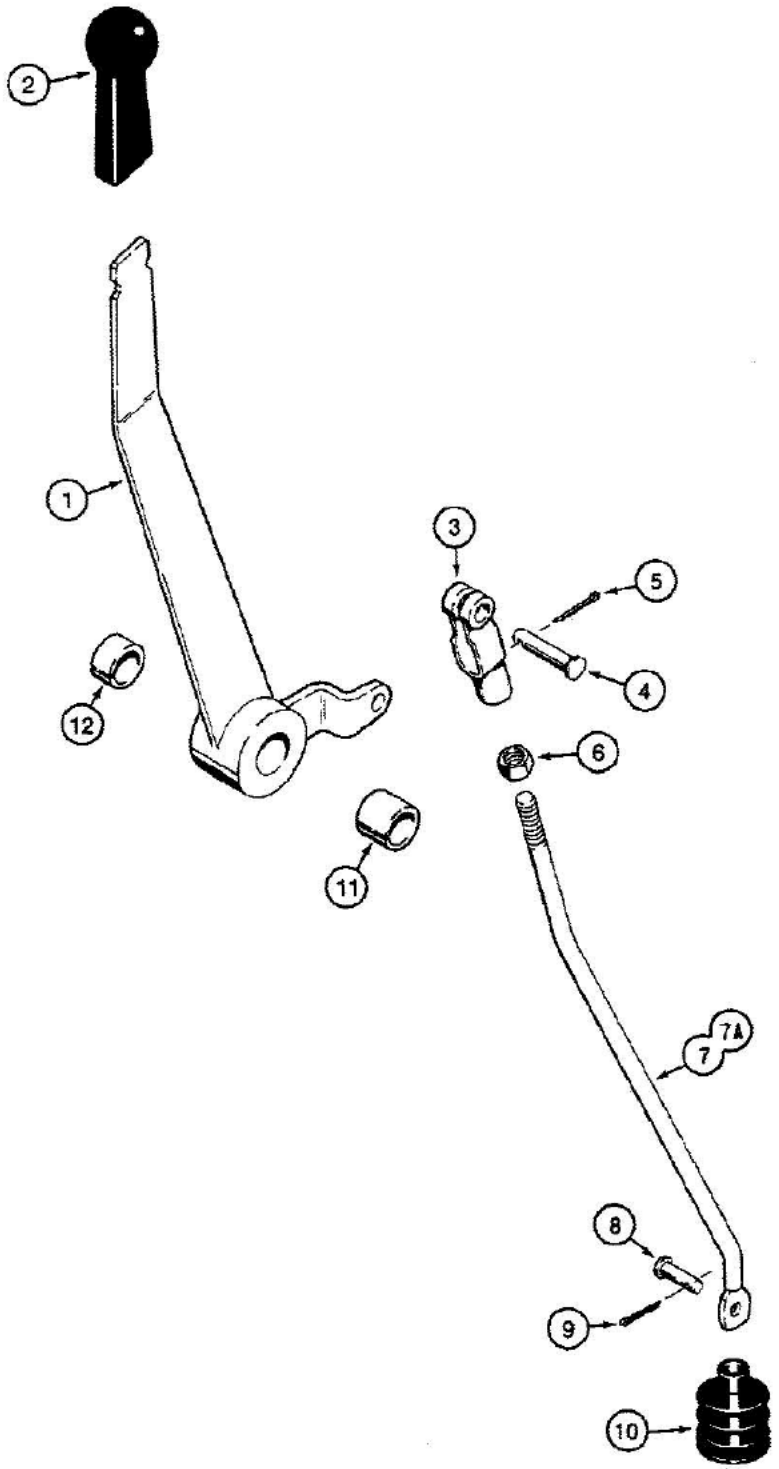

B8883-45

PARTS USED WITH EXTENDABLE DIPPER OR OPTIONAL REAR HYDRAULIC ATTACHMENTS WITH OR WITHOUT TILT BACKHOE CONTROLS

580K LOADER BACKHOE (NORTH AMERICA) - Chassis/Attachments

09-470 BACKHOE CONTROLS WITH FOOT SWING

Ref	Part Number	Qty	Description
1	D133476	1	LEVER control, extendahoe
2	D135387	1	KNOB extendahoe control lever
3	D134900	1	CLEVIS, 3/8", special
4	141-73	1	PIN clevis, 3/8"
5	132-320	1	PIN, SPLIT (COTTER), 3/32" x 3/4"
6	129-123	1	NUT, 3/8"-24, G5
7	D134724	1	ROD extendahoe control, used on models without tilt backhoe controls
7A	D139421	1	ROD extendahoe control, used on models with tilt backhoe controls
8	141-53	1	PIN clevis, 5/16", plated, special length
9	132-320	1	PIN, SPLIT (COTTER), 3/32" x 3/4"
10	D85869	1	BOOT control rod, if used
11	D139527	1	SPACER used only on models with tilt backhoe controls
12	D139526	1	SPACER left side of boom lever, used only on models with tilt backhoe controls

PARTS USED WITH EXTENDABLE DIPPER OR OPTIONAL REAR HYDRAULIC ATTACHMENTS WITH OR WITHOUT TILT BACKHOE CONTROLS

9-472

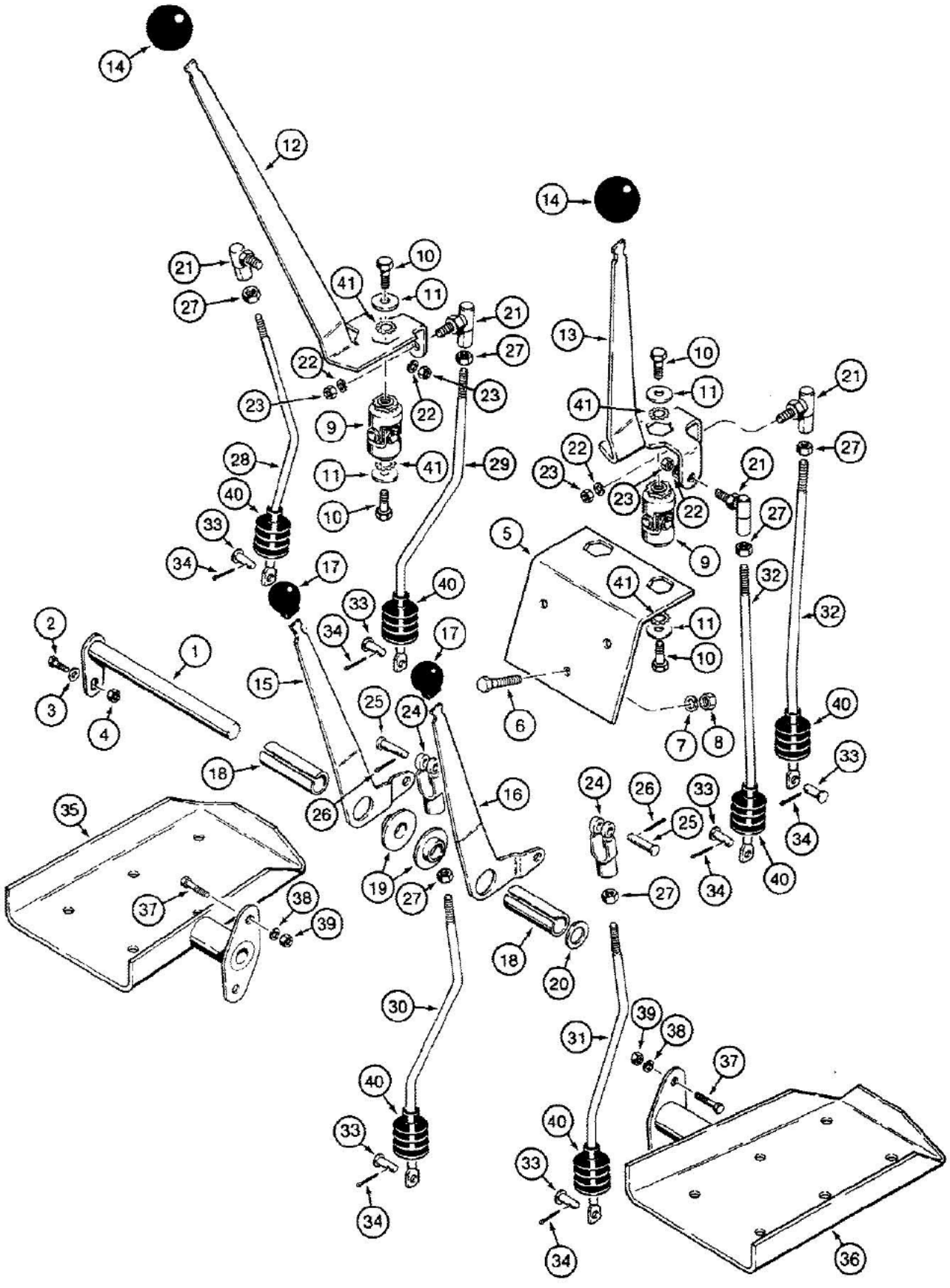

870093A-45

Whole goods kit to convert from foot swing to 2 lever with ext. dipper is P/N D102923 and with standard dipper is P/N D102922.

580K LOADER BACKHOE (NORTH AMERICA) - Chassis/Attachments

09-472 BACKHOE CONTROLS WITH HAND SWING, WITH NON-EXTENDABLE DIPPER

Ref	Part Number	Qty	Description
1	D128627	1	SHAFT pivot, control levers
2	113-103	1	BOLT, Hex, 5/16"-18 x 1", G5, Full Thd
3	195-521	1	WASHER flat, 5/16", plated
4	131-4	1	NUT hex, self-locking, 5/16"-18 NC
5	D133542	1	BRACKET universal joint mounting, attaches to control tower and valve mounting support
6	113-103	3	BOLT, Hex, 5/16"-18 x 1", G5, Full Thd
7	192-20	3	WASHER, LOCK, 5/16"
8	9635082	3	NUT, 5/16"-18, G5
9	D132579	2	JOINT universal, control levers
10	113-206	4	BOLT, Hex, 3/8"-16 x 3/4", G5, Full Thd
11	D52275	4	WASHER flat, 3/8", hardened
12	D133538	1	LEVER control, left hand, boom and swing
13	D133539	1	LEVER control, right hand, bucket and dipper
14	D135401	2	KNOB control levers
15	D133540	1	LEVER control, left hand stabilizer
16	D133541	1	LEVER control, right hand stabilizer
17	D135399	2	KNOB stabilizer control levers
18	D128652	2	SPACER control lever
19	D128616	2	BUSHING plastic
20	195-545	UAR	WASHER flat, 3/4", plated, used as a spacer
21	D121417	4	JOINT ball, rod to lever
22	192-21	4	WASHER, LOCK, 3/8"
23	129-123	4	NUT, 3/8"-24, G5
24	D134900	2	CLEVIS, 3/8", special
25	141-73	2	PIN clevis, 3/8"
26	132-320	2	PIN, SPLIT (COTTER), 3/32" x 3/4"
27	129-123	6	NUT, 3/8"-24, G5
28	D134725	1	ROD swing control
29	D133544	1	ROD boom control
30	D134716	1	ROD left hand stabilizer control
31	D134715	1	ROD right hand stabilizer control
32	D133547	2	ROD dipper and bucket control
33	141-53	6	PIN clevis, 5/16", plated, special length
34	132-320	6	PIN, SPLIT (COTTER), 3/32" x 3/4"
35	D133551	1	PLATFORM left hand foot rest
36	D133552	1	PLATFORM right hand foot rest, not used on models with extendable dipper
37	113-208	4	BOLT, Hex, 3/8"-16 x 1 1/4", G5, Full Thd
38	192-21	4	WASHER, LOCK, 3/8"
39	129-103	4	NUT, 3/8"-16, G5
40	D85869	6	BOOT control rods, if used
41	193-123	4	WASHER, LOCK, Ext-Int Tooth, 3/8"

Whole goods kit to convert from foot swing to 2 lever with ext. dipper is P/N D102923 and with standard dipper is P/N D102922.

9-476

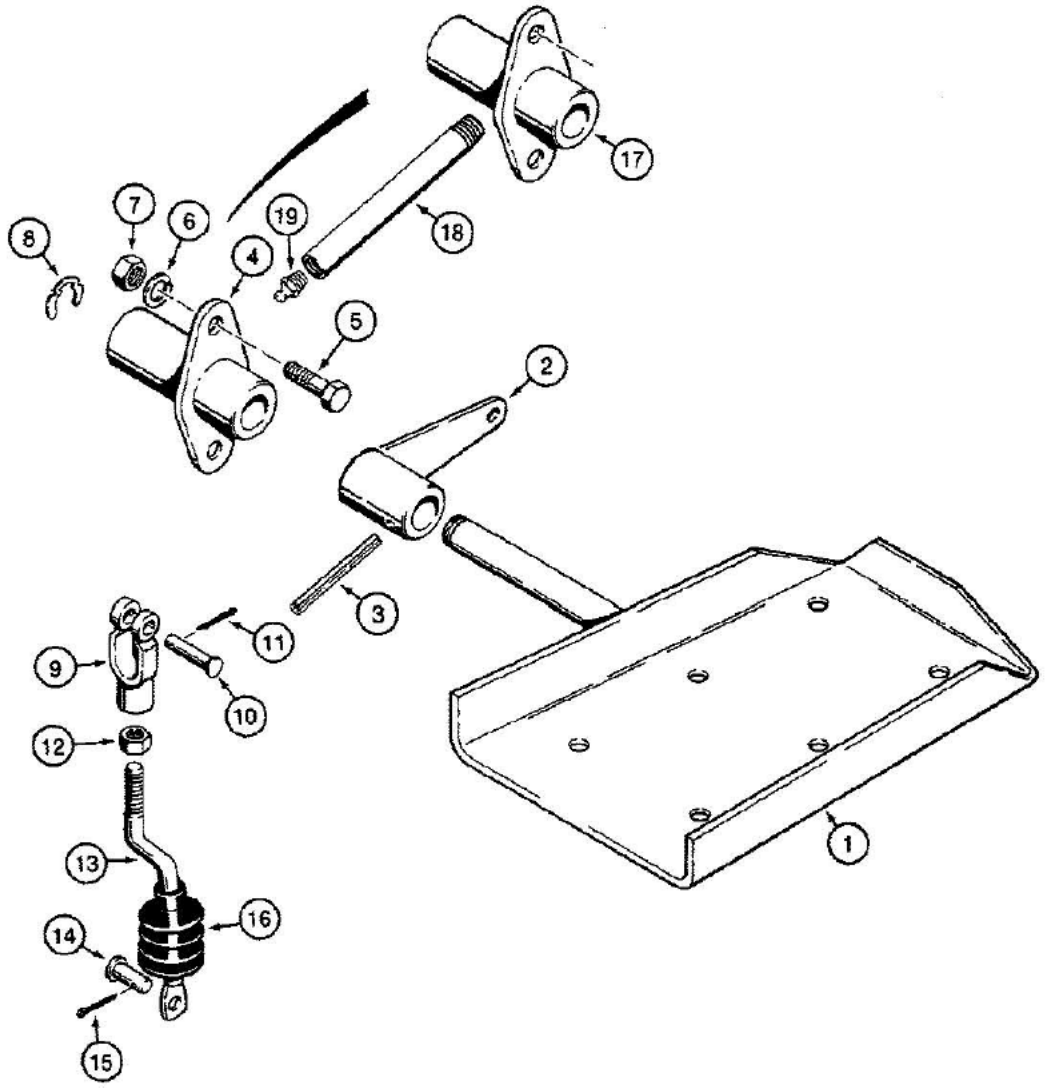

09-476 BACKHOE CONTROLS W/HAND SWING, PARTS USED W/EXTENDABLE DIPPER OR OPTIONAL REAR HYDRAULIC ATTA

Ref	Part Number	Qty	Description
1	D131704	1	PEDAL right hand, extendahoe control
2	D138837	1	LEVER pivot, extendahoe control
3	138-136	1	PIN, 1/4" x 1 1/4", Slotted
4	D138838	1	SUPPORT pedal, without hole for tube and grease fitting, no longer used, order Ref. 17 thru 19
5	113-208	2	BOLT, Hex, 3/8"-16 x 1 1/4", G5, Full Thd
6	192-21	2	WASHER, LOCK, 3/8"
7	129-103	2	NUT, 3/8"-16, G5
8	D95097	1	RETAINER clip ring
9	D134900	1	CLEVIS, 3/8", special
10	141-73	1	PIN clevis, 3/8"
11	132-320	1	PIN, SPLIT (COTTER), 3/32" x 3/4"
12	425-156	1	NUT hex, jam, 3/8" NF
13	D133549	1	ROD extendahoe control
14	141-53	1	PIN clevis, 5/16", plated, special length
15	132-320	1	PIN, SPLIT (COTTER), 3/32" x 3/4"
16	D85869	1	BOOT control rod, if used
17	D140933	1	SUPPORT pedal, with hole for tube and grease fitting
18	D140890	1	TUBE pedal lube
19	219-1	1	FITTING grease, straight, 1/8" NPT

9-478

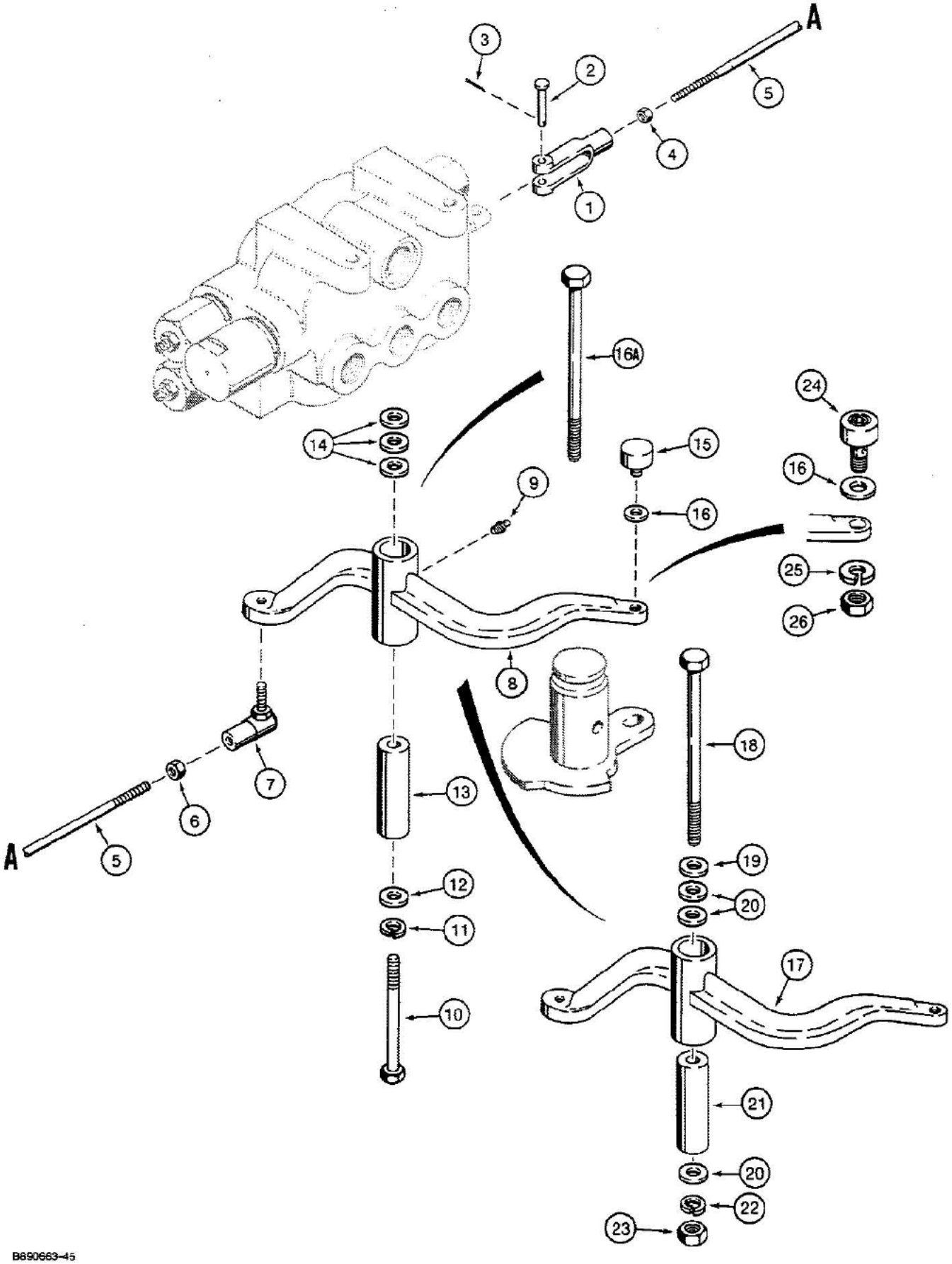

B690663-45

09-478 BACKHOE SWING SEQUENCE VALVE CONTROL

Ref	Part Number	Qty	Description
1	213-3	1	CLEVIS adjustable, 5/16"-24 NF, attaches to swing sequence valve spool, lower mounting bolt used with P/N D135552 backhoe frame in Figure 09-480, This part number is the same for either the lower or the upper mounting bolt arrangement.
2	141-53	1	PIN clevis, 5/16", plated, lower mounting bolt used with P/N D135552 backhoe frame in Figure 09-480, This part number is the same for either the lower or the upper mounting bolt arrangement.
3	132-320	1	PIN, SPLIT (COTTER), 3/32" x 3/4", Lower mounting bolt used with P/N D135552 backhoe frame in Figure 09-480, This part number is the same for either the lower or the upper mounting bolt arrangement.
4	129-122	1	NUT, 5/16"-24, G5, Clevis end, lower mounting bolt used with P/N D135552 backhoe frame in Figure 09-480, This part number is the same for either the lower or the upper mounting bolt arrangement.
5	D143594	1	ROD control, lower mounting bolt used with P/N D135552 backhoe frame in Figure 09-480, This part number is the same for either the lower or the upper mounting bolt arrangement.
6	129-323	1	NUT, 3/8"-24, G5, LH, Ball joint end, lower mounting bolt used with P/N D135552 backhoe frame in Figure 09-480, This part number is the same for either the lower or the upper mounting bolt arrangement.
7	D133522	1	JOINT ball, 3/8", left hand thread, lower mounting bolt used with P/N D135552 backhoe frame in Figure 09-480, This part number is the same for either the lower or the upper mounting bolt arrangement.
8	D138715	1	LEVER, 3-3/8" high pivot tube, crank, swing sequence, lower mounting bolt used with P/N D135552 backhoe frame in Figure 09-480
9	219-1	1	FITTING grease, straight, 1/8" NPT, lower mounting bolt used with P/N D135552 backhoe frame in Figure 09-480, This part number is the same for either the lower or the upper mounting bolt arrangement.
10	113-411	1	BOLT, Hex, 1/2"-13 x 4 1/2", G5, Lower mounting bolt used with P/N D135552 backhoe frame in Figure 09-480
11	192-23	1	WASHER, LOCK, 1/2", Lower mounting bolt used with P/N D135552 backhoe frame in Figure 09-480
12	195-106	1	WASHER flat, 1/2", plated, lower mounting bolt used with P/N D135552 backhoe frame in Figure 09-480
13	D134159	1	SPACER pivot, lower mounting bolt used with P/N D135552 backhoe frame in Figure 09-480
14	195-106	AR	WASHER flat, 1/2", plated, used as a spacer, lower mounting bolt used with P/N D135552 backhoe frame in Figure 09-480
15	D137679	1	FOLLOWER cam, if used, lower mounting bolt used with P/N D135552 backhoe frame in Figure 09-480
16	195-529	1	WASHER flat, 7/16", plated, lower mounting bolt used with P/N D135552 backhoe frame in Figure 09-480, This part number is the same for either the lower or the upper mounting bolt arrangement.
16A	413-8112	1	BOLT hex, 1/2" NC x 7", service replacement, if used, lower mounting bolt used with P/N D135552 backhoe frame in Figure 09-480
17	D145259	1	LEVER, 2-9/32" high pivot tube, crank, swing sequence, upper mounting bolt used with P/N D144455 backhoe frame in Figure 09-480
18	413-896	1	BOLT hex, 1/2" NC x 6", upper mounting bolt used with P/N D144455 backhoe frame in Figure 09-480
19	D73296	1	WASHER flat, 9/16" ID x 1-1/4" OD x 11/64" thick, hardened, upper mounting bolt used with P/N D144455 backhoe frame in Figure 09-480

09-478 BACKHOE SWING SEQUENCE VALVE CONTROL

Ref	Part Number	Qty	Description
20	495-21056	AR	WASHER flat, 1/2", upper mounting bolt used with P/N D144455 backhoe frame in Figure 09-480
21	D145249	1	SPACER pivot, upper mounting bolt used with P/N D144455 backhoe frame in Figure 09-480
22	80679	1	Washer, Lock, 1/2", Upper mounting bolt used with P/N D144455 backhoe frame in Figure 09-480
23	425-108	1	NUT hex, 1/2" NC, Upper mounting bolt used with P/N D144455 backhoe frame in Figure 09-480
24	D145113	1	FOLLOWER cam, hex socket, upper mounting bolt used with P/N D144455 backhoe frame in Figure 09-480
25	492-11044	1	WASHER, LOCK, 7/16", Upper mounting bolt used with P/N D144455 backhoe frame in Figure 09-480
26	425-117	1	NUT hex, 7/16" NF, upper mounting bolt used with P/N D144455 backhoe frame in Figure 09-480

9-480

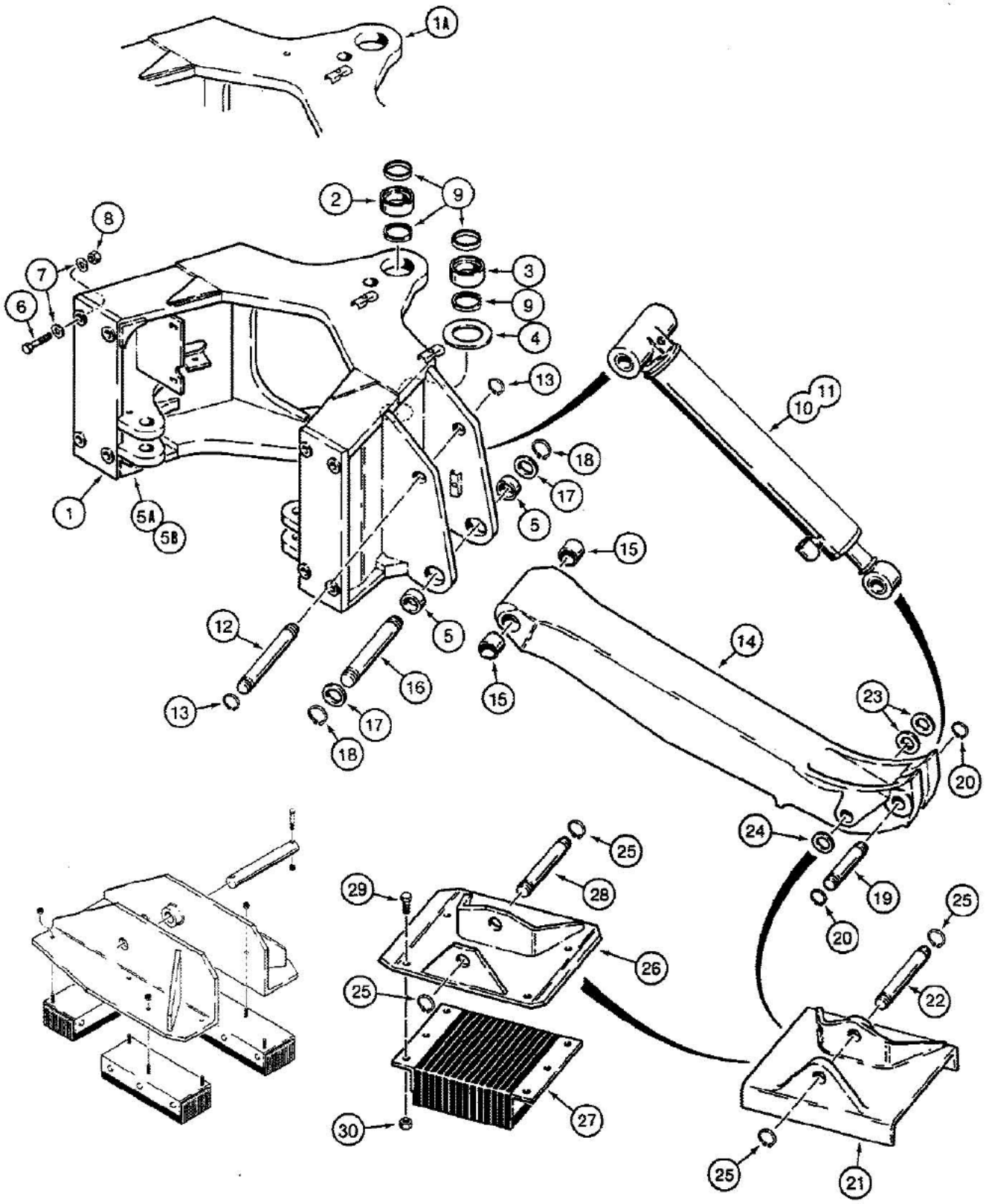

870095A-45

09-480 BACKHOE MOUNTING FRAME AND STABILIZERS

Ref	Part Number	Qty	Description
1	D135552	1	FRAME backhoe mounting, for use on loader models with demountable backhoe only, no longer available, Includes: Ref. 2 thru 5B, For service order P/N D144455 frame shown below, and P/N 413-8112 bolt, P/N D73296 washer, P/N 492-11050 washer, and P/N 425-108 nut in Figure 09-478
1A	D144455	1	FRAME backhoe mounting, for use on loader models with demountable backhoe only, Includes: Ref. 2 thru 5B
2	D135555	1	BUSHING upper, backhoe frame, swing tower mounting
3	D135556	1	BUSHING lower, backhoe frame, swing tower mounting
4	D136472	1	SPACER, 3-1/4" (83 mm) ID x 5-5/16" (135 mm) OD x 1/4" (6 mm) thick, bearing, welds to frame
5	D43940	4	BUSHING lower, side, backhoe frame, at stabilizer leg mounting
5A	D143460	2	PLATE gusset, used with P/N D136740 gusset, also order P/N 8-75630 instruction sheet
5B	D136740	2	GUSSET frame, used with P/N D143460 plate, also order P/N 8-75630 instruction sheet
6	26-1248	8	BOLT hex head, 3/4"-10 NC x 3", grade 8, used with Ref.1 demountable backhoe frame only
7	D34666	16	WASHER flat, 3/4", hardened, used with Ref. 1 demountable backhoe frame only
8	129-572	8	NUT, 3/4"-10, G8, Used with Ref. 1 demountable backhoe frame only
9	D127974	4	SEAL frame, at swing tower mounting
10	REF	1	CYLINDER stabilizer, right hand, see Figure 08-414
11	REF	1	CYLINDER stabilizer, left hand, see Figure 08-414
12	D133509	2	PIN stabilizer cylinder to frame
13	D25279	4	RING snap, pin retaining
14	D133428	2	LEG stabilizer, Includes: Ref. 15
15	D50146	2	BUSHING leg to frame
16	D134723	2	PIN stabilizer leg to frame
17	195-2152	4	WASHER flat, 1-3/4" bolt size, 1-13/16" ID x 2-1/2" OD x 1/8" thick
18	D25280	4	Ring, Snap, #175, Ext, pin
19	D26002	2	PIN stabilizer cylinder to leg
20	D25279	4	RING snap, pin retaining
21	D88427	2	PLATE stabilizer, cleated, if used
22	D28648	2	PIN, P/N D88427 stabilizer plate to leg
23	D31312	UAR	WASHER spacer, 2-3/4" (70 mm) OD x 1/16" (1.6 mm) thick, hardened
24	D28610	2	WASHER spacer, 1-1/2" (38 mm) ID x 2-1/2" (64 mm) OD x 7/64" (3 mm) thick
25	D25279	4	RING snap, pin retaining
26	D61376	2	PLATE stabilizer, street or cemetery, uses P/N D61368 pad, no longer available, order P/N D142519 plate and P/N D39256 pin, see Ref. 37 and 38 in Figure 09-482
27	D61368	2	PAD rubber, used with P/N D61376 plate, if used
28	D50696	2	PIN, 8-7/8" (226 mm) long, P/N D61376 stabilizer plate to leg, if used
29	113-713	8	BOLT, Hex, 3/4"-10 x 1 3/4", G5, If used
30	129-108	8	NUT, 3/4"-10, G5, If used

9-482

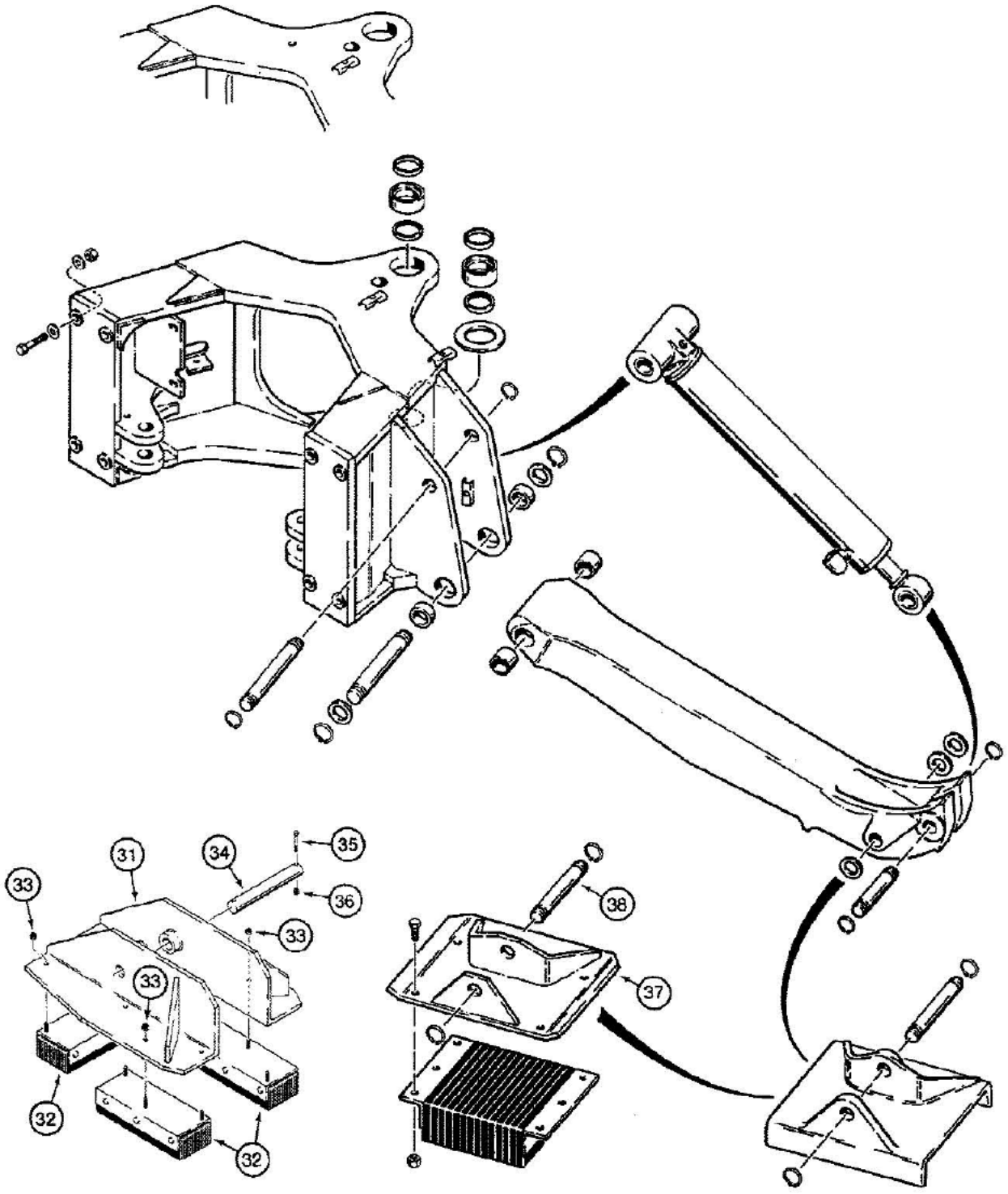

B890712-45

09-482 BACKHOE MOUNTING FRAME AND STABILIZERS

Ref	Part Number	Qty	Description
31	D144673	2	PLATE stabilizer, flip over, Category III, if used
32	D142314	6	PAD rubber, if used
33	131-1129	18	NUT hex, self-locking, 7/16"-14 NC, plated, if used
34	D144672	2	PIN plate to stabilizer leg, if used
35	413-632	4	BOLT, Hex, 3/8"-16 x 2", G5, If used
36	230-4216	4	NUT hex, self-locking, 3/8" NC, If used
37	D142519	2	PLATE stabilizer, street or cemetery, if used
38	D39256	2	PIN, 9-3/8" (238 mm) long, P/N D142519 plate to leg

9-484

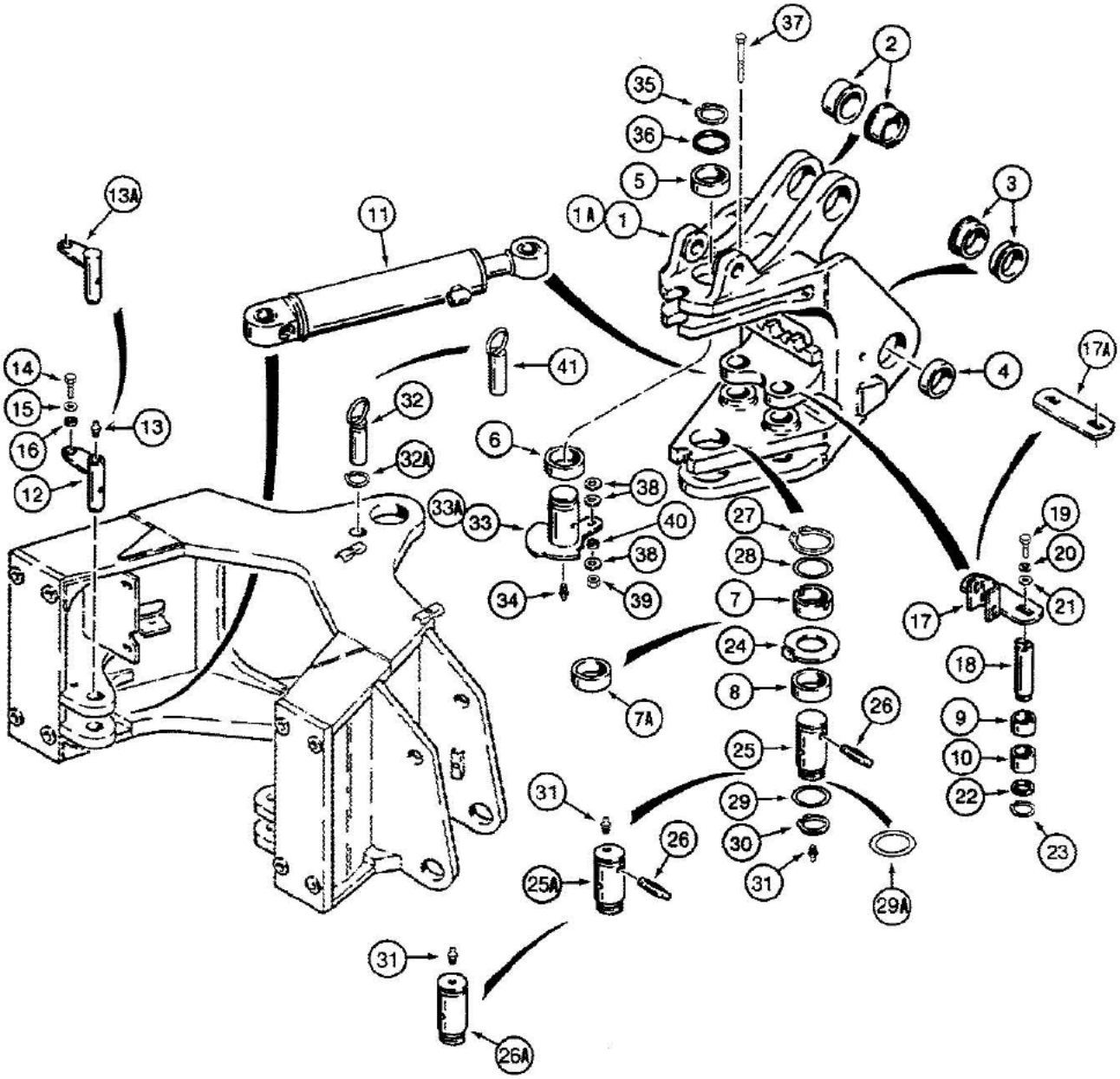
37
2
35
36
5
1A
1
3
13A
11
41
4
17A
14
15
16
13
12
32
32A
6
38
33A
33
40
38
34
39
27
28
7
24
8
7A
19
20
21
17
18
9
10
22
23
26
25
29
30
31
29A
31
26
25A
31
26A

09-484 BACKHOE SWING CYLINDERS AND SWING TOWER

Ref	Part Number	Qty	Description
1	D133597	1	TOWER ASSEMBLY backhoe swing, with inner ears, see Figure 09-488 for boom attaching parts, Includes: Ref. 2 thru 10
1A	D141067	1	TOWER ASSEMBLY backhoe swing, with inner ears, used in production, for service order P/N D133597 swing tower, Includes: Ref. 2 thru 10
2	D135740	2	BUSHING boom cylinder pivot
3	D135742	2	BUSHING inner, boom pivot
4	D135741	2	BUSHING outer, boom pivot
5	D135557	1	BUSHING upper, swing tower pivot
6	D135559	1	BUSHING tower pivot
7	D135558	1	BUSHING with slots for groove pin, tower pivot, P/N D133597 swing tower
7A	D138042	1	BUSHING without slots for groove pin, tower pivot, P/N D141067 swing tower
8	D135559	1	BUSHING lower, tower pivot
9	D136570	2	BUSHING upper, swing cylinder pivot
10	D136571	2	BUSHING lower, swing cylinder pivot
11	REF	2	CYLINDER swing, for correct assembly and components, see Figure 08-416 or 08-418
12	D129305	2	PIN swing cylinder mounting, closed end, used with grease fitting, no longer used, order P/N D139267 pin, Ref. 13A
13	219-1	2	FITTING grease, straight, 1/8" NPT, if used
13A	D139267	2	PIN swing cylinder mounting, closed end, Replaces: Ref. 12 pin and Ref. 13 grease fitting on some models
14	113-424	2	BOLT, Hex, 1/2"-13 x 1", G5, Full Thd
15	195-533	2	WASHER flat, 1/2", plated
16	D23740	2	BUSHING bolt
17	D137419	1	RETAINER pin, no longer used, order P/N D132514 retainer
17A	D132514	1	RETAINER pin
18	D132517	2	PIN swing cylinder rod end to swing tower
19	113-221	2	BOLT, Hex, 3/8"-16 x 7/8", G5, Full Thd
20	192-21	2	WASHER, LOCK, 3/8"
21	R29595	2	WASHER flat, special
22	195-2122	2	WASHER flat, 1-1/4" bolt size, 1-5/16" ID x 1-3/4" OD x 1/16" thick
23	D26918	2	Ring, Snap, #125, Ext, pin
24	D136699	1	WASHER bearing, special, swing tower
25	D136649	1	PIN lower, swing tower to frame, grease fitting mounts in bottom of pin, no longer used, order P/N D140095 pin
25A	D140095	1	PIN lower, swing tower to frame, grease fitting mounts in top of pin, used with Ref. 26 groove pin, if used
26	135-823	1	PIN GROOVED, 1/2" x 3 1/4", Type E, Hardened, Center groove, if used
26A	D138038	1	PIN lower, swing tower to frame, grease fitting mounts in top of pin, without groove pin, if used
27	933568R1	1	RING snap, pin retaining, upper
28	D136392	UAR	SHIM, 3.05mm Thk, (M72 ID x 89 OD) (2-27/32" ID x 3-1/2" OD x 1/8" thk), Upper
29	D136700	1	SHIM, 2-5/8" (67 mm) ID x 3-17/64" (83 mm) OD x 1/16" (2 mm) thick, lower

09-484 BACKHOE SWING CYLINDERS AND SWING TOWER

Ref	Part Number	Qty	Description
29A	D136391	UAR	SHIM, 1.57mm Thk (M72 ID x 89 OD), (2-27/32" ID x 3-1/2" OD x 1/16" thk)
30	800-10065	1	RING snap, pin retaining, lower
31	219-1	1	FITTING grease, straight, 1/8" NPT
32	D137899	1	PIN swing stop, includes snap ring, no longer available, for service order P/N D141720 pin, Ref. 41, Includes: Ref. 32A
32A	800-50040	1	RING snap, swing stop pin
33	D140091	1	PIN swing tower to frame, upper, used without spacer Ref. 40, no longer used, order P/N D140657 pin and P/N D139603 spacer, Ref. 33A and 40
33A	D140657	1	PIN swing tower to frame, upper, replaces pin used without spacer
34	219-1	1	FITTING grease, straight, 1/8" NPT
35	800-10065	1	RING snap, pin retaining
36	D136700	1	SHIM, 2-5/8" (67 mm) ID x 3-17/64" (83 mm) OD x 1/16" (2 mm) thick
37	26-888	1	BOLT hex head, 1/2"-13 NC x 5-1/2", grade 8
38	195-533	UAR	WASHER flat, 1/2", plated, used as a spacer
39	131-70	1	NUT hex, self-locking, 1/2"-13 NC, plated
40	D139603	1	SPACER pin mounting
41	D141720	1	PIN swing stop, without snap ring

9-488

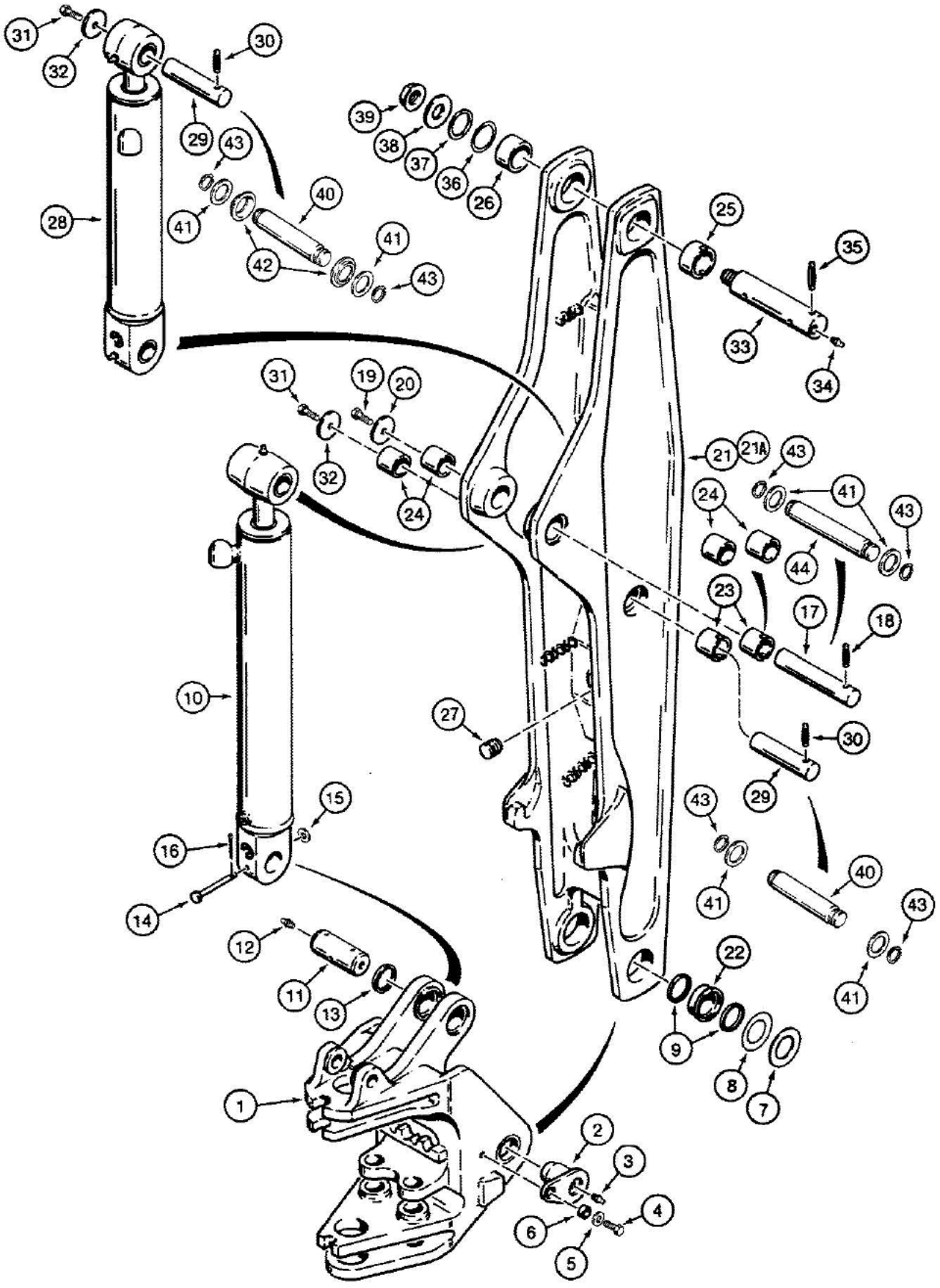

870097A-45

580K LOADER BACKHOE (NORTH AMERICA) - Chassis/Attachments

09-488 BACKHOE SWING TOWER AND BOOM

Ref	Part Number	Qty	Description
1	REF	1	TOWER swing, backhoe, with inner ears, see Figure 09-484 for swing tower and bushings
2	D140093	2	PIN swing tower to boom
3	219-1	2	FITTING grease, straight, 1/8" NPT
4	113-709	2	BOLT, Hex, 3/4"-10 x 1 1/2", G5
5	T53681	2	WASHER flat, 3/4", hardened
6	D132045	2	SPACER bolt
8	R32119	UAR	SHIM, 2-13/16" (71 mm) ID x 4-1/2" (114 mm) OD x 1/16" (2 mm) thick
9	D127974	4	SEAL grease
10	REF	1	CYLINDER boom, for correct assembly and components, see Figure 08-420 thru 08-424
11	D140096	1	Boom Cylinder Closed End to Swing Tower
12	219-1	2	FITTING grease, straight, 1/8" NPT
13	D127974	4	SEAL grease
14	S10835	1	PIN clevis, 9/16" x 5-1/2", hardened
15	195-541	1	WASHER flat, 5/8", plated
16	132-311	1	5/32" x 1 1/4"
17	D136518	1	PIN boom cylinder rod end to boom, if used
18	135-824	1	PIN, GROOVED, 1/2" x 2 1/2", Type E, Hardened, Center groove, if used
19	113-700	1	BOLT, Hex, 3/4"-10 x 1", G5, if used
20	D133631	1	WASHER flat, hardened, special, if used
21	D127159	1	BOOM backhoe, complete, Includes: Ref. 22 thru 27
21A	D140367	1	BOOM backhoe, complete, used in production, for service order P/N D127159 boom, Includes: Ref. 22 thru 27
22	D136569	2	BUSHING, 2-3/4" (70 mm) ID x 1-5/16" (33 mm) long, boom to swing tower pivot
23	D136565	2	BUSHING, 2" (50 mm) ID x 2-1/8" (54 mm) long, with slot for groove pin, right hand side of boom at dipper cylinder closed end pivot and boom cylinder rod end pivot
24	D137217	2-4	BUSHING, 2" (50 mm) ID x 2-1/8" (54 mm) long, without slot for groove pin, left hand side of boom at dipper cylinder closed end pivot and boom cylinder rod end pivot, may be replaced with P/N D136565 bushing on some booms
25	D135739	1	BUSHING, 2-3/4" (70 mm) ID x 1-3/4" (44 mm) long, with slot for groove pin, right hand side of boom at boom to dipper pivot
26	D137218	1	BUSHING, 2-3/4" (70 mm) ID x 1-3/4" (44 mm) long, without slot for groove pin, left hand side of boom at boom to dipper pivot, may be replaced with P/N D135739 bushing on some booms
27	D120450	7	PLUG plastic
28	REF	1	CYLINDER dipper, for correct assembly and components, see Figures 08-426 or 08-428
29	D132492	2	PIN dipper cylinder to boom and dipper, if used
30	135-824	2	PIN, GROOVED, 1/2" x 2 1/2", Type E, Hardened, Center groove, if used
31	113-700	2	BOLT, Hex, 3/4"-10 x 1", G5, if used
32	D133631	2	WASHER flat, hardened, special, if used
33	D132494	1	PIN boom to dipper
34	219-1	2	FITTING grease, straight, 1/8" NPT
35	135-823	1	PIN GROOVED, 1/2" x 3 1/4", Type E, Hardened, Center groove

09-488 BACKHOE SWING TOWER AND BOOM

Ref	Part Number	Qty	Description
36	D136391		UAR SHIM, 1.57mm Thk (M72 ID x 89 OD), (2-27/32" ID x 3-1/2" OD x 1/16" thk), Boom to dipper
37	D136392		UAR SHIM, 3.05mm Thk, (M72 ID x 89 OD) (2-27/32" ID x 3-1/2" OD x 1/8" thk), Boom to dipper
38	D133632	1	WASHER flat, hardened, special
39	D120610	1	NUT hex, 1-3/4"-12 NF, special flanged
40	D138022	2	PIN dipper cylinder to boom and dipper, if used, Either use two of Ref. 41 or two of Ref. 42 for P/N D138022 pin.
41	495-81279	6	WASHER flat, 1-13/16" ID x 2-3/4" OD x 1/8" thick, plated, if used, Either use two of Ref. 41 or two of Ref. 42 for P/N D138022 pin.
42	D141164	2	SPACER, 1-13/16" ID x 3" OD x 1/8" thick, if used, Either use two of Ref. 41 or two of Ref. 42 for P/N D138022 pin.
43	D25280	6	Ring, Snap, #175, Ext, pin, if used
44	D138023	1	PIN boom cylinder rod end to boom, if used

9-492

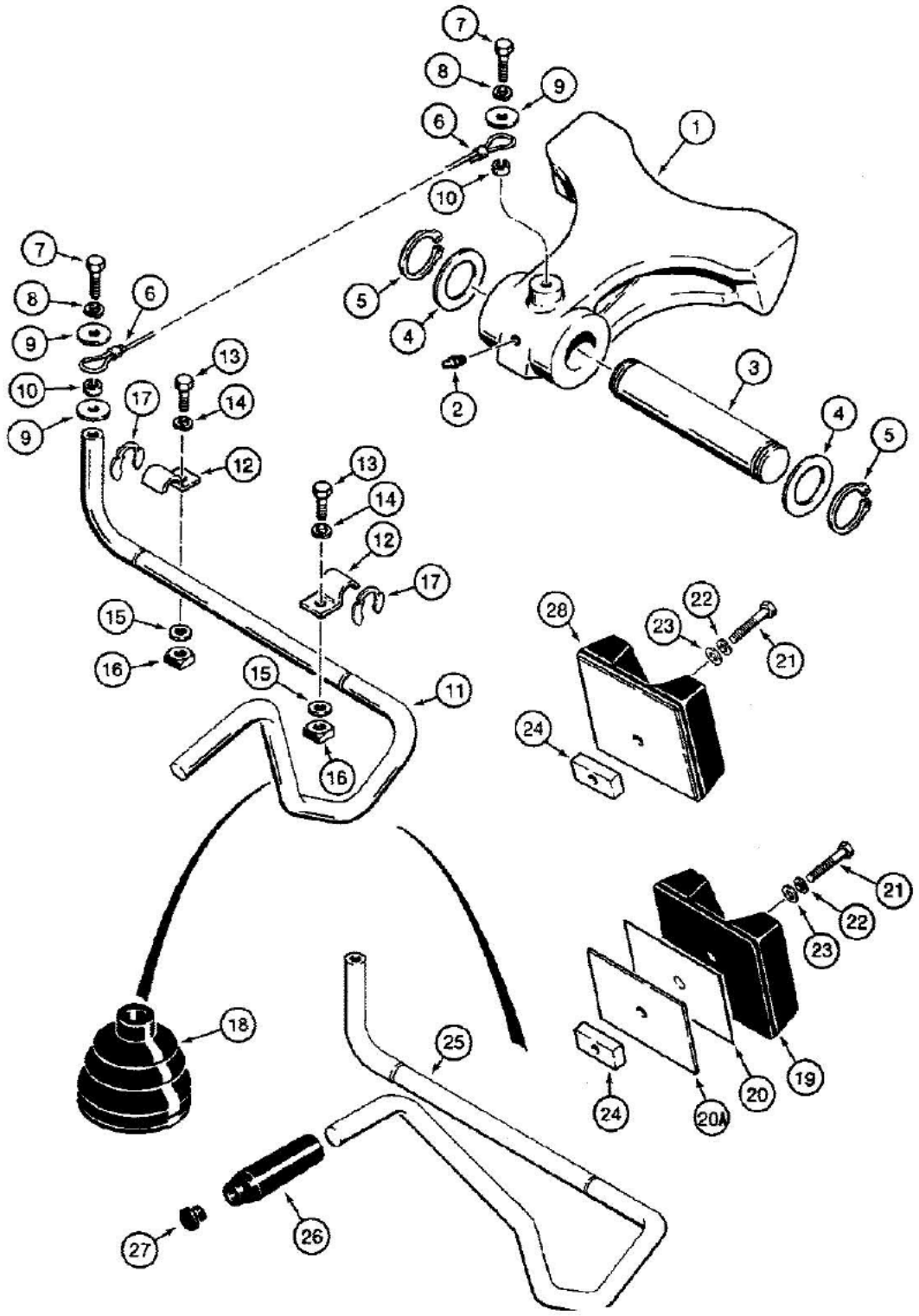

870988B-45

09-492 BOOM LATCH, WITH 3/4" OD ROD

Ref	Part Number	Qty	Description
1	D143296	1	LATCH backhoe boom
2	219-1	1	FITTING grease, straight, 1/8" NPT
3	D129227	1	PIN boom latch to swing tower
4	D127843	2	WASHER flat, 1-5/8" (41 mm) ID x 2-1/2" (64 mm) OD x 1/8" (3 mm) thick
5	800-50040	2	RING snap, pin retaining
6	D129641	1	CABLE latch control
7	113-207	2	BOLT, Hex, 3/8"-16 x 1", G5, Full Thd
8	192-21	2	WASHER, LOCK, 3/8"
9	D52275	3	WASHER flat, 3/8", hardened
10	D123539	2	SPACER, 13/32" (10 mm) ID x 5/8" (16 mm) OD x 1/4" (6 mm) long
11	D129640	1	ROD boom latch control, not used on models with tilt backhoe controls, see Ref. 25 thru 27
12	D30604	2	CLAMP rod
13	113-206	2	BOLT, Hex, 3/8"-16 x 3/4", G5, Full Thd
14	192-21	2	WASHER, LOCK, 3/8"
15	195-525	2	WASHER flat, 3/8", plated
16	25-226	2	NUT square, 3/8"-16 NC
17	D95097	2	RETAINER clip ring
18	D86664	1	BOOT rod
19	D140283	1	BUMPER boom, used with shims, no longer used, order P/N D141556 bumper
20	D136538	UAR	SHIM, 1.6mm Thk (1/16"), Plate, Boom stop, if used
20A	D140833	UAR	SHIM, 6mm Thk (1/4"), Plate, Boom stop, if used
21	113-219	1	BOLT, Hex, 3/8"-16 x 2", G5
22	192-21	1	WASHER, LOCK, 3/8"
23	195-525	1	WASHER flat, 3/8", plated
24	D135667	1	PLATE boom stop
25	D139927	1	ROD boom latch control, used with Ref. 26 and 27 on models with tilt backhoe controls
26	D91439	1	KNOB boom latch rod, used with Ref. 25
27	353-406	1	PLUG, P/N D91439 knob
28	D141556	1	BUMPER boom, used without shims

9-494

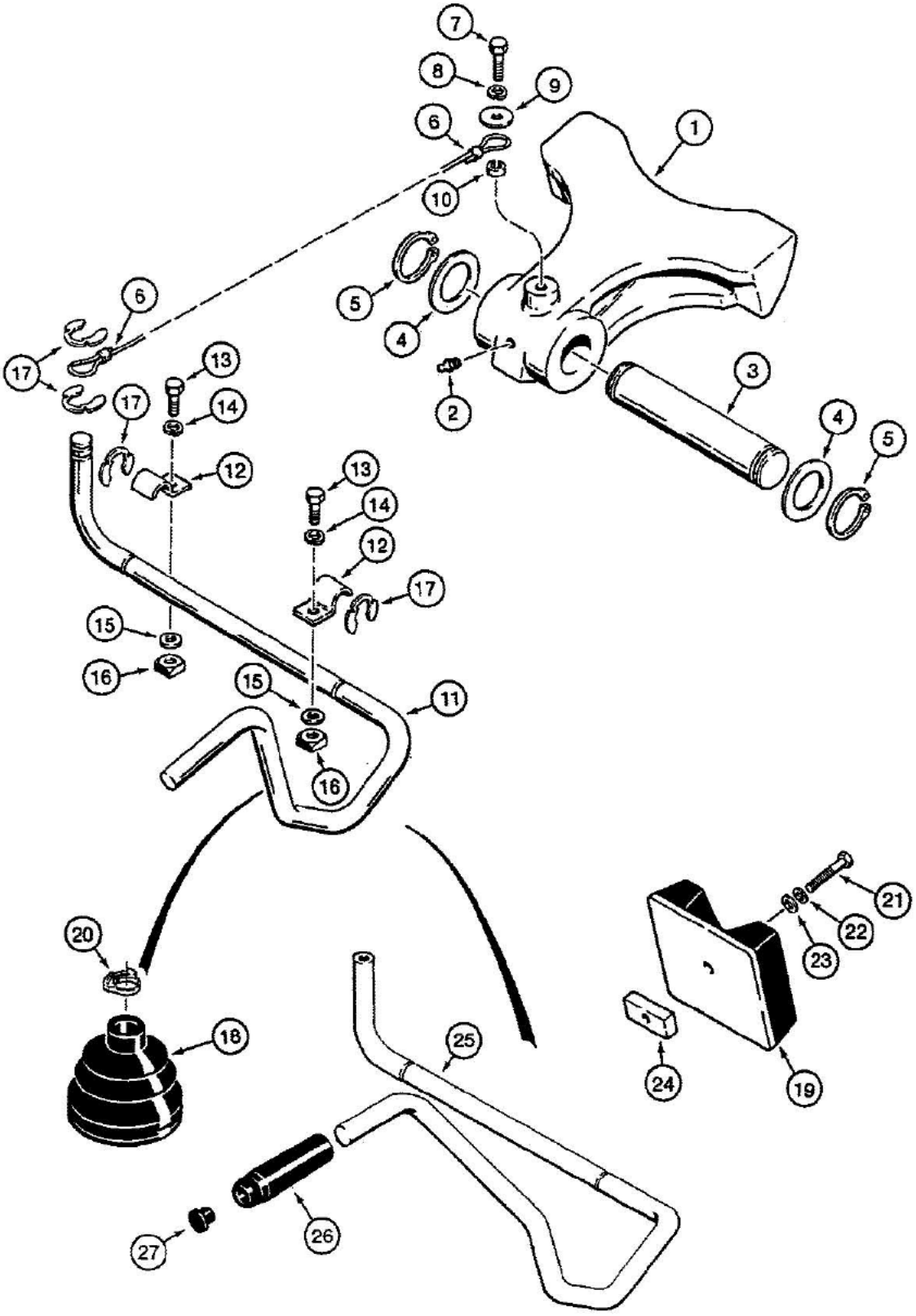

580K LOADER BACKHOE (NORTH AMERICA) - Chassis/Attachments

09-494 BOOM LATCH, WITH 5/8" OD ROD

Ref	Part Number	Qty	Description
1	D143296	1	LATCH backhoe boom
2	219-1	1	FITTING grease, straight, 1/8" NPT
3	D129227	1	PIN boom latch to swing tower
4	D127843	2	WASHER flat, 1-5/8" (41 mm) ID x 2-1/2" (64 mm) OD x 1/8" (3 mm) thick
5	800-50040	2	RING snap, pin retaining
6	D129641	1	CABLE latch control
7	113-207	1	BOLT, Hex, 3/8"-16 x 1", G5, Full Thd
8	192-21	1	WASHER, LOCK, 3/8"
9	496-81003	1	WASHER flat, 3/8"
10	D143417	1	SPACER, 13/32" (10 mm) ID x 5/8" (16 mm) OD x 1/4" (6 mm) long
11	D142634	1	ROD boom latch control, not used on models with tilt backhoe controls, see Ref. 25 thru 27
12	D143723	2	CLAMP rod
13	113-206	2	BOLT, Hex, 3/8"-16 x 3/4", G5, Full Thd
14	192-21	2	WASHER, LOCK, 3/8"
15	195-525	2	WASHER flat, 3/8", plated
16	25-226	2	NUT square, 3/8"-16 NC
17	D143591	4	RETAINER clip ring
18	D86664	1	BOOT rod
19	D141556	1	BUMPER boom
20	D143735	1	CLAMP boot
21	113-219	1	BOLT, Hex, 3/8"-16 x 2", G5
22	192-21	1	WASHER, LOCK, 3/8"
23	195-525	1	WASHER flat, 3/8", plated
24	D143425	1	PLATE boom stop
25	D139927	1	ROD boom latch control, used with Ref. 26 and 27 on models with tilt backhoe controls
26	D91439	1	KNOB boom latch rod, used with Ref. 25
27	353-406	1	PLUG, P/N D91439 knob

9-496

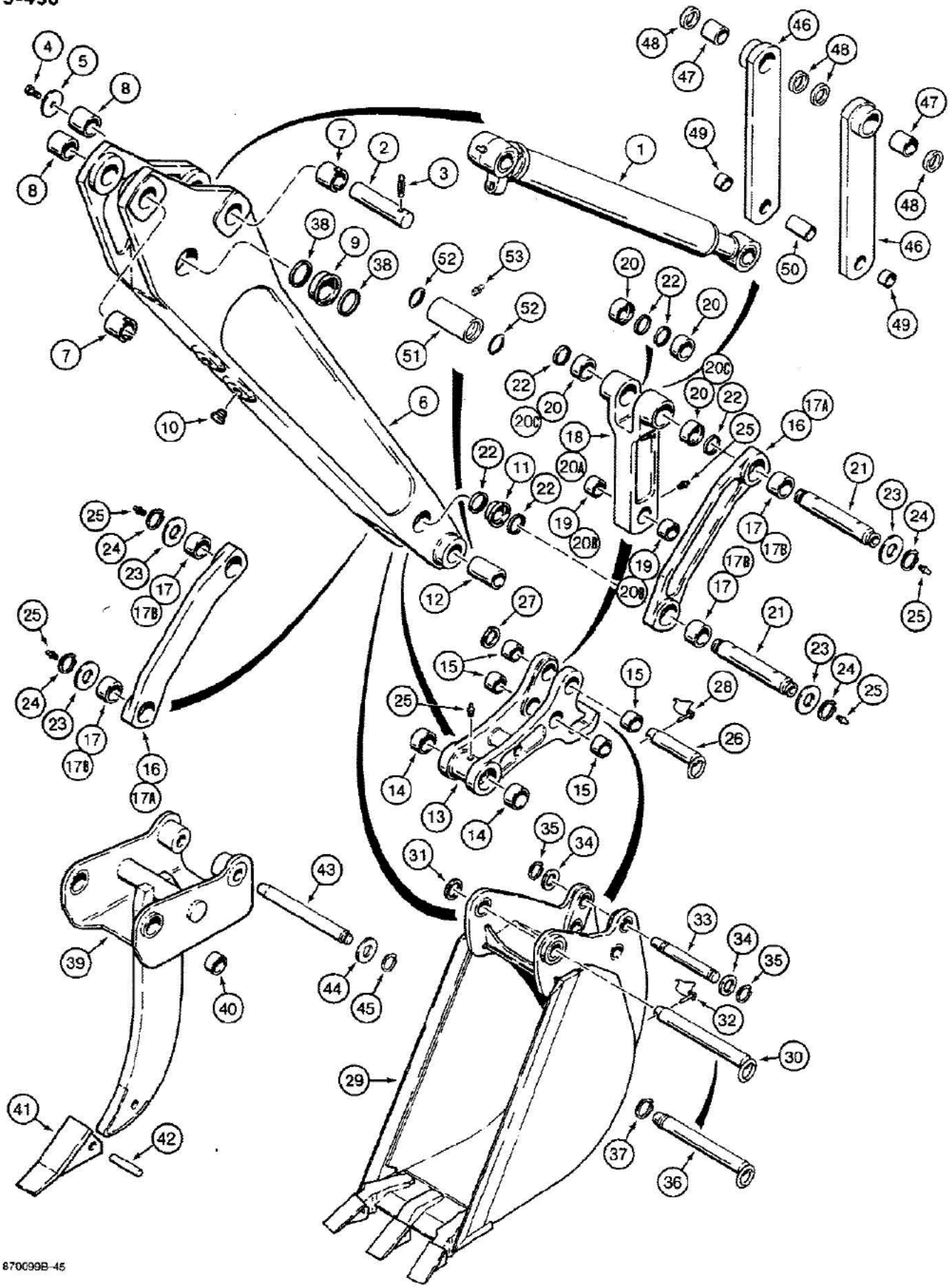

580K LOADER BACKHOE (NORTH AMERICA) - Chassis/Attachments

09-496 BACKHOE DIPPER AND BUCKET, PRIOR TO TRACTOR P.I.N. JJG0012415

Ref	Part Number	Qty	Description
1	G110597	1	CYLINDER bucket, see Figure 08-430
2	D132492	1	PIN bucket cylinder closed end to dipper
3	135-824	1	PIN, GROOVED, 1/2" x 2 1/2", Type E, Hardened, Center groove
4	113-700	1	BOLT, Hex, 3/4"-10 x 1", G5
5	D133631	1	WASHER flat, hardened, special
	D127163	1	DIPPER ASSEMBLY backhoe, Includes: Ref. 6 thru 15
6	NSS	1	DIPPER backhoe
7	D136565	2	BUSHING, 2" (50 mm) ID x 2-1/8" (54 mm) long, with slot for groove pin, right hand side of dipper at dipper cylinder rod end pivot and bucket cylinder closed end pivot
8	D137217	2	BUSHING, 2" (50 mm) ID x 2-1/8" (54 mm) long, without slot for groove pin, left hand side of dipper at dipper cylinder rod end pivot and bucket cylinder closed end pivot, for service order P/N D136565 bushing
9	D135740	2	BUSHING, 2-3/4" (70 mm) ID x 1-7/16" (36 mm) long, dipper to boom pivot
10	D120450	6	PLUG plastic
11	D136573	2	BUSHING, 2" (50 mm) ID x 1-7/16" (36 mm) long, bucket link pivot
12	D127168	2	BUSHING, 1-3/4" (45 mm) ID x 3-11/16" (94 mm) long, bucket coupler pivot
	D139084	1	COUPLER ASSEMBLY bucket, Includes: Ref. 13 thru 15
13	NSS	1	COUPLER backhoe bucket
14	D127167	2	BUSHING, 1-3/16" (30 mm) long, special, at dipper
15	D127172	4	BUSHING, 1-1/8" (28 mm) long, at bucket link
16	D134486	2	LINK bucket guide, with 1-13/32" long bushing, no longer available, order P/N D141468 link, Includes: Ref. 17
17	D136574	2	BUSHING, 2" (50 mm) ID x 2-3/4" (70 mm) OD x 1-13/32" (36 mm) long, guide link
17A	D141468	2	LINK bucket guide, with 1" long bushings, Includes: Ref. 17B
17B	D140029	2	BUSHING, 2" (50 mm) ID x 2-3/8" (60 mm) OD x 1" (25 mm) long
18	D127171	1	LINK bucket dump, with four bushings at forked end, no longer available, order P/N D140007 link, Includes: Ref. 19 and 20
19	D127172	2	BUSHING, 1-1/8" (28 mm) long
20	D135075	4	BUSHING, 1-3/16" (30 mm) long, special, with seals
20A	D140007	1	LINK bucket dump, with two bushings at forked end, Includes: Ref. 20B and 20C
20B	D127172	2	BUSHING, 1-1/8" (28 mm) long
20C	D138047	2	BUSHING, 2-1/8" (54 mm) long
21	D132493	2	PIN, 11-7/8" (302 mm) long, bucket cylinder rod end to links and links to dipper
22	D123655	8	SEAL grease
23	195-2153	4	WASHER flat, 1-3/4" bolt size, 1-13/16" ID x 3-1/2" OD x 1/8" thick
24	D25280	4	Ring, Snap, #175, Ext, pin
25	219-1	6	FITTING grease, straight, 1/8" NPT
26	D140653	1	PIN dump link to bucket coupler
27	195-2152	1	WASHER flat, 1-3/4" bolt size, 1-13/16" ID x 2-1/2" OD x 1/8" thick
28	D130037	1	PIN lock
29	REF	1	BUCKET backhoe, see Figures 09-516 thru 09-526 for bucket options

09-496 BACKHOE DIPPER AND BUCKET, PRIOR TO TRACTOR P.I.N. JJG0012415

Ref	Part Number	Qty	Description
30	D140655	1	PIN dipper to bucket, all buckets except 12" (305 mm) buckets, for models with 12" bucket see Ref. 36 pin
31	195-2152	1	WASHER flat, 1-3/4" bolt size, 1-13/16" ID x 2-1/2" OD x 1/8" thick
32	D130037	1	PIN lock, used with Ref. 30 pin
33	D37614	1	PIN bucket to coupler
34	D28610	2	WASHER spacer, 1-1/2" (38 mm) ID x 2-1/2" (64 mm) OD x 7/64" (3 mm) thick
35	D25279	2	RING snap, pin retaining
36	D135690	1	PIN dipper to bucket, 12" (305 mm) buckets only
37	D25280	1	Ring, Snap, #175, Ext, pin, used with ref. 36 pin
38	D127974	4	SEAL grease
	D140679	1	POINT ASSEMBLY frost, backhoe, Includes: Ref. 39 thru 42
39	NSS	1	BODY frost point
40	D37495	2	BUSHING front point pivot
41	D83306	1	POINT tooth
42	D43417	1	PIN tooth point
43	D54218	1	PIN link to frost point
44	195-63	2	WASHER flat, 1-9/16" ID x 3-1/4" OD x 3/16" thick
45	D25279	2	RING snap, pin retaining
	D141074	2	LINK ASSEMBLY bucket, used with Ref. 16 link, may replace Ref.13 coupler and Ref. 18 link for some attachments, Includes: Ref. 46 thru 49, optional backhoe bucket links for rear attachments
46	NSS	1	LINK attachment, optional backhoe bucket links for rear attachments
47	D138047	1	BUSHING, 2-1/8" (54 mm) long, cylinder pivot, optional backhoe bucket links for rear attachments
48	D123655	2	SEAL grease, optional backhoe bucket links for rear attachments
49	D31140	1	BUSHING, 1" (25 mm) long, pivot, optional backhoe bucket links for rear attachments
50	D141075	1	SPACER, 2-25/32" (71 mm) long, links, optional backhoe bucket links for rear attachments
51	D141076	1	SPACER, 5-7/16" (138 mm) long, dipper end, optional backhoe bucket links for rear attachments
52	A14506	2	O-RING spacer, optional backhoe bucket links for rear attachments
53	219-1	1	FITTING grease. straight, 1/8" NPT, optional backhoe bucket links for rear attachments

09-500 BACKHOE DIPPER AND BUCKET, TRACTOR P.I.N. JJG0012415 AND AFTER

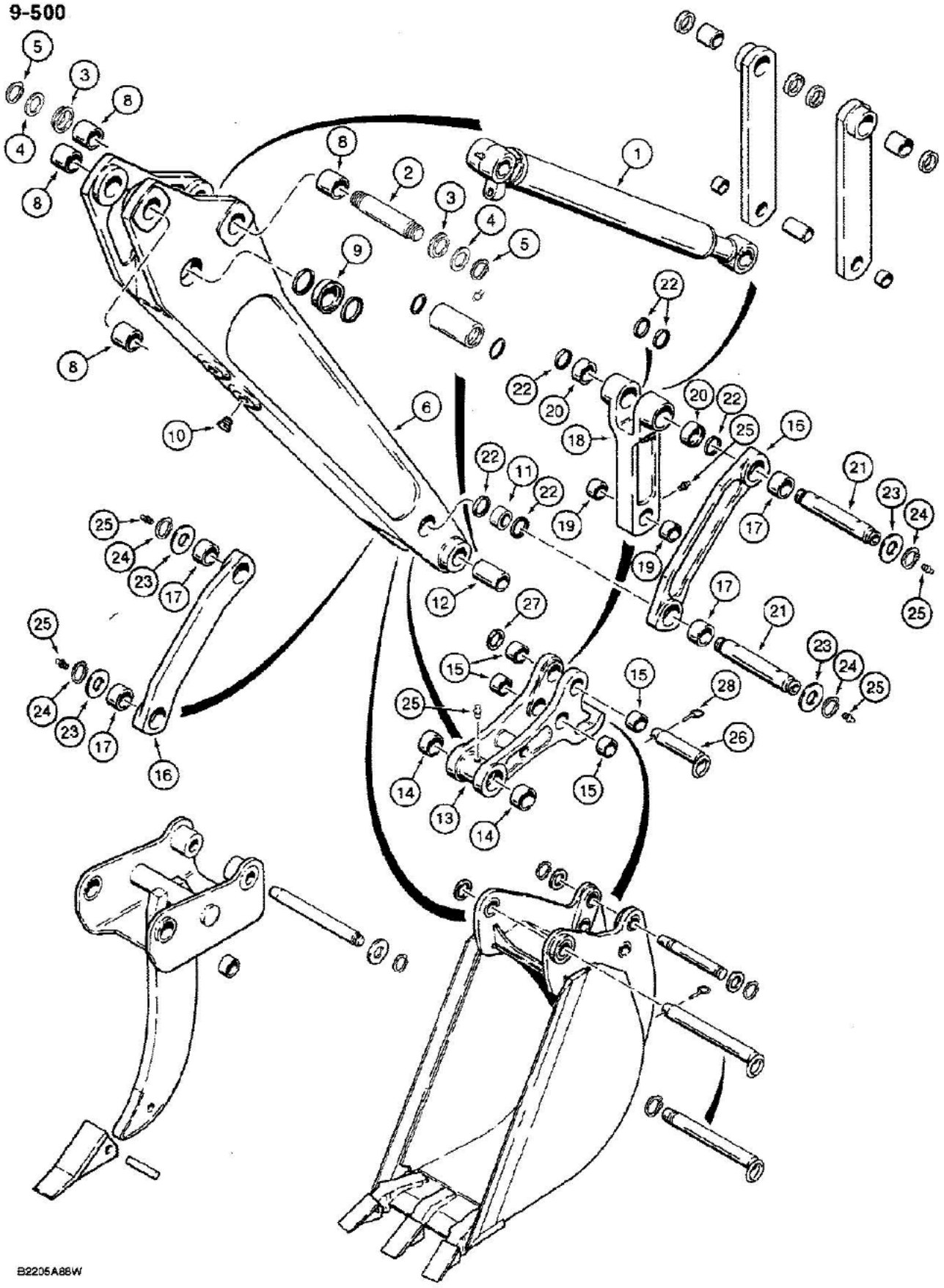

09-500 BACKHOE DIPPER AND BUCKET, TRACTOR P.I.N. JJG0012415 AND AFTER

Ref	Part Number	Qty	Description
1	G110597	1	CYLINDER bucket, see Figure 08-430
2	D138022	1	PIN bucket cylinder closed end to dipper, Either use two of Ref. 3 or two of Ref. 4 with P/N D138022 pin.
3	D141164	2	SPACER, 1-13/16" ID x 3" OD x 1/8" thick, Either use two of Ref. 3 or two of Ref. 4 with P/N D138022 pin.
4	495-81279	2	WASHER flat, 1-13/16" ID x 2-3/4" OD x 1/8" thick, plated, Either use two of Ref. 3 or two of Ref. 4 with P/N D138022 pin.
5	D25280	2	Ring, Snap, #175, Ext, pin
	D140368	1	DIPPER ASSEMBLY backhoe, used in production, for service order P/N D127163 dipper in Figure 09-496, Includes: Ref. 6-15
6	NSS	1	DIPPER backhoe
8	D137217	4	BUSHING, 2" (50 mm) ID x 2-1/8" (54 mm) long, without slot for groove pin, dipper cylinder rod end pivot and bucket cylinder closed end pivot
9	D135740	2	BUSHING, 2-3/4" (70 mm) ID x 1-7/16" (36 mm) long, dipper to boom pivot
10	D120450	6	PLUG plastic
11	D141249	2	BUSHING, 2" (50 mm) ID x 1" (25 mm) long, bucket link pivot
12	D127168	2	BUSHING, 1-3/4" (45 mm) ID x 3-11/16" (94 mm) long, bucket coupler pivot
	D139084	1	COUPLER ASSEMBLY bucket, Includes: Ref. 13-15
13	NSS	1	COUPLER backhoe bucket
14	D127167	2	BUSHING, 1-3/16" (30 mm) long, special, at dipper
15	D127172	4	BUSHING, 1-1/8" (28 mm) long, at bucket link
16	D141468	2	LINK bucket guide, with 1" long bushing, Includes: Ref. 17
17	D140029	2	BUSHING, 2" (50 mm) ID x 2-3/8" (60 mm) OD x 1" (25 mm) long
18	D140007	1	LINK bucket dump, with two bushings at forked end, Includes: Ref. 19 and 20
19	D127172	2	BUSHING, 1-1/8" (28 mm) long
20	D138047	2	BUSHING, 2-1/8" (54 mm) long
21	D141142	2	PIN, 12-3/64" (306 mm) long, bucket cylinder rod end to links and links to dipper
22	D123655	8	SEAL grease
23	495-81282	4	WASHER flat, 2-1/16" ID x 3" OD x 1/8" thick
24	D25280	4	Ring, Snap, #175, Ext, pin
25	219-1	6	FITTING grease, straight, 1/8" NPT
26	D140653	1	PIN dump link to bucket coupler
27	195-2152	1	WASHER flat, 1-3/4" bolt size, 1-13/16" ID x 2-1/2" OD x 1/8" thick
28	392181R1	1	PIN lock, 1.63 ID, If an ID of 1.75 is required, use P/N D130037

9-502

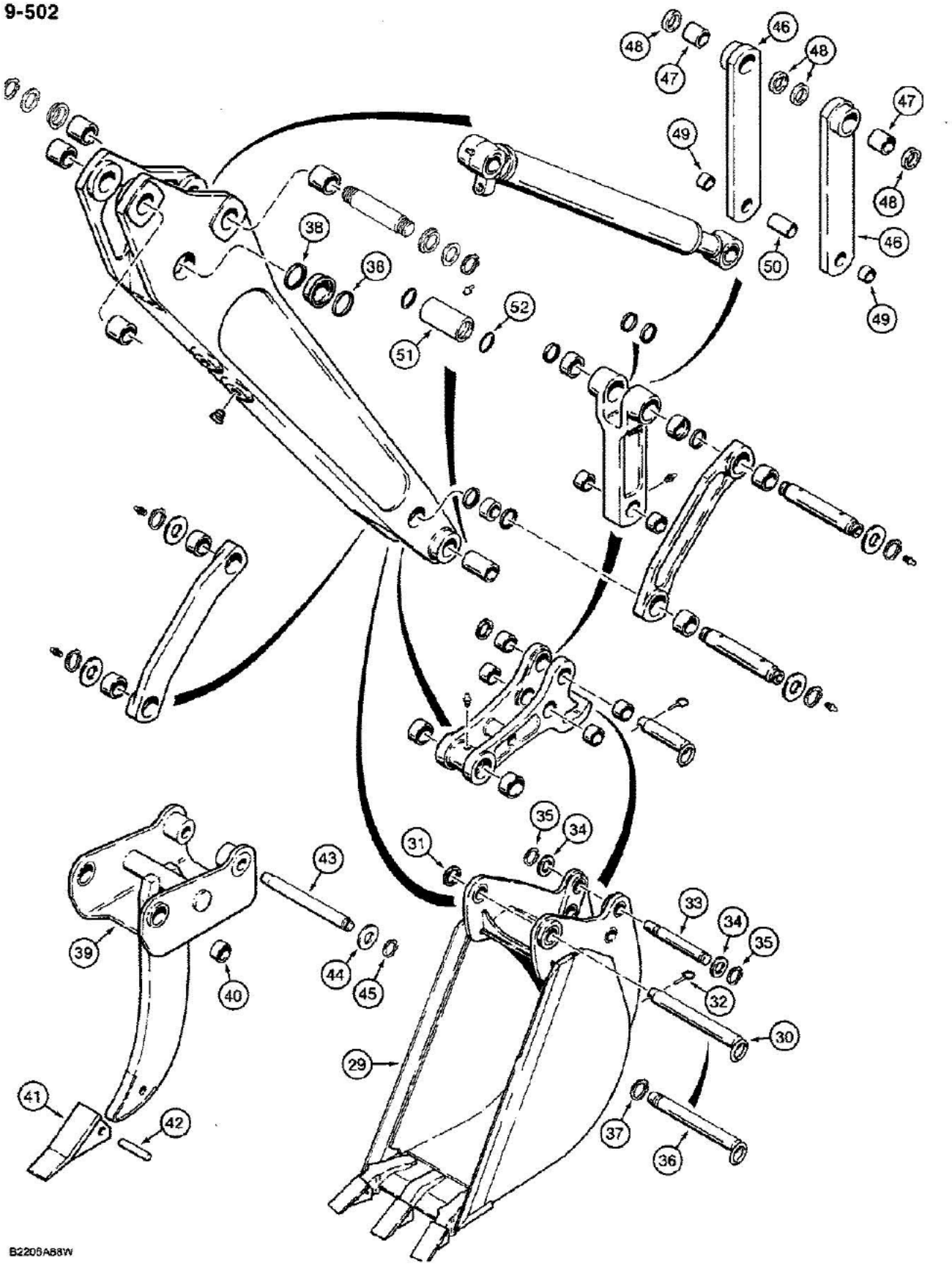
48
47
46
48
47
49
48
46
50
49
38
38
52
51
35
34
31
43
33
34
35
39
40
44
45
32
30
29
41
42
37
36
B2205AB8W

09-502 BACKHOE DIPPER AND BUCKET, TRACTOR P.I.N. JJG0012415 AND AFTER

Ref	Part Number	Qty	Description
29	REF	1	BUCKET backhoe, see Figures 09-516 thru 09-526 for bucket options
30	D140655	1	PIN dipper to bucket, all buckets except 12" (305 mm) buckets, for models with 12" bucket see Ref. 36 pin, Ref. 30 has been replaced by P/N D150619 pin along with (2) retaining rings P/N D25280 and (2) washers P/N 495-81226.
31	195-2152	1	WASHER flat, 1-3/4" bolt size, 1-13/16" ID x 2-1/2" OD x 1/8" thick
32	392181R1	1	PIN lock
33	D37614	1	PIN bucket to coupler
34	D143324	2	WASHER spacer, 1-1/2" (38 mm) ID x 2-1/2" (64 mm) OD x 1/16" (2 mm) thick
35	D25279	2	RING snap, pin retaining
36	D135690	1	PIN dipper to bucket, 12" (305 mm) buckets only
37	D25280	1	Ring, Snap, #175, Ext, pin, used with ref. 36 pin
38	D127974	4	SEAL grease
	D140679	1	POINT ASSEMBLY frost, backhoe, Includes: Ref. 39 thru 42
39	NSS	1	BODY frost point
40	D37495	2	BUSHING front point pivot
41	D83306	1	POINT tooth
42	D43417	1	PIN tooth point
43	D54218	1	PIN link to frost point
44	195-63	2	WASHER flat, 1-9/16" ID x 3-1/4" OD x 3/16" thick
45	D25279	2	RING snap, pin retaining
	D141074	2	LINK ASSEMBLY bucket, used with Ref. 16 link in Figure 09-500, may replace Ref. 13 coupler and Ref. 18 link in Figure 09-500 for some attachments, Includes: Ref. 46 thru 49, optional backhoe bucket links for rear attachments
46	NSS	1	LINK attachment, optional backhoe bucket links for rear attachments
47	D138047	1	BUSHING, 2-1/8" (54 mm) long, cylinder pivot, optional backhoe bucket links for rear attachments
48	D123655	2	SEAL grease, optional backhoe bucket links for rear attachments
49	D31140	1	BUSHING, 1" (25 mm) long, pivot, optional backhoe bucket links for rear attachments
50	D141075	1	SPACER, 2-25/32" (71 mm) long, links, optional backhoe bucket links for rear attachments
51	D141076	1	SPACER, 5-7/16" (138 mm) long, dipper end, optional backhoe bucket links for rear attachments
52	A14506	2	O-RING spacer, optional backhoe bucket links for rear attachments
53	219-1	1	FITTING grease, straight, 1/8" NPT, optional backhoe bucket links for rear attachments

9-504

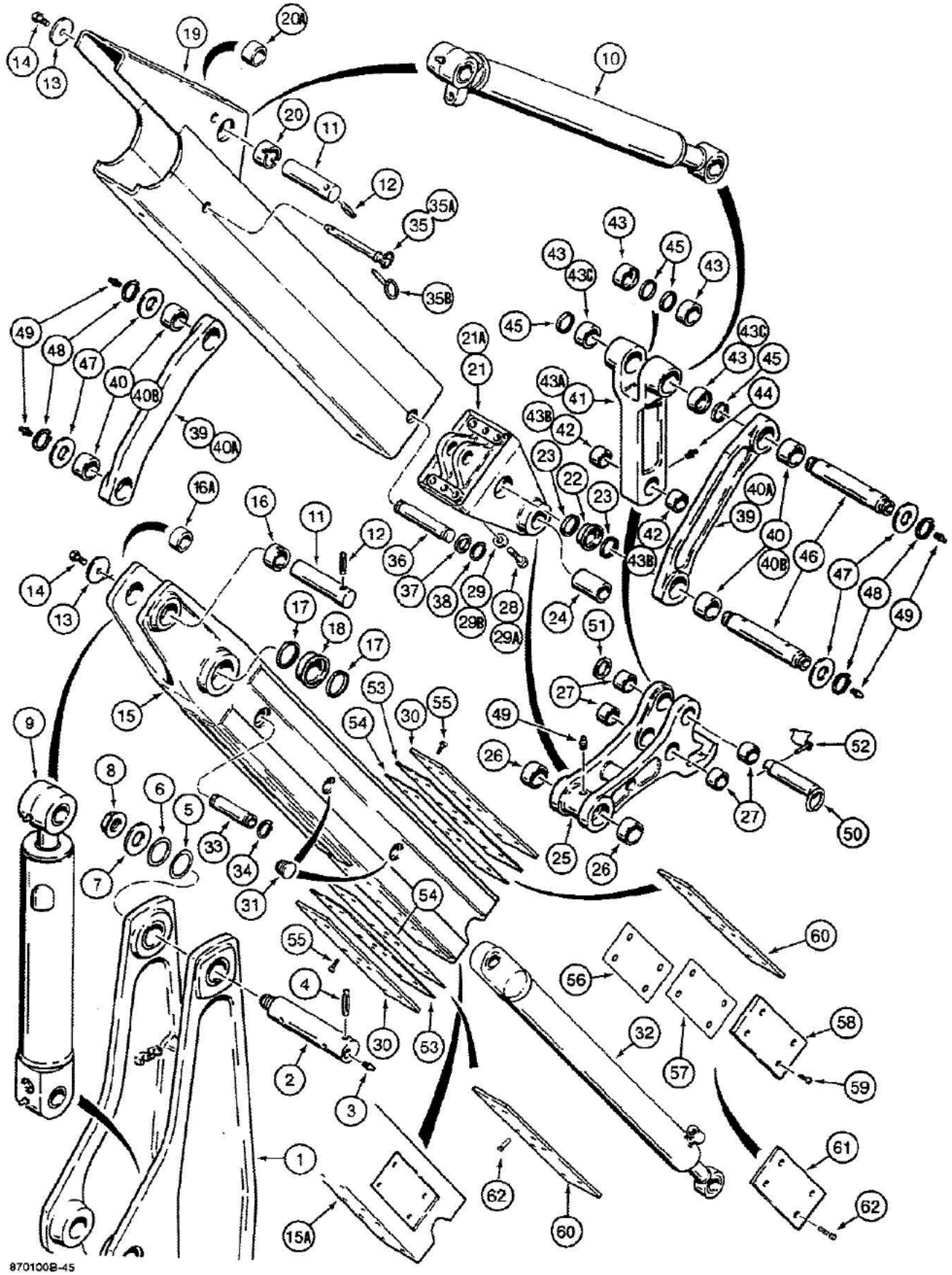

09-504 EXTENDABLE DIPPER, TWO-PIECE OUTER MEMBER, PRIOR TO TRACTOR P.I.N. JJG0012415

Ref	Part Number	Qty	Description
1	REF	1	BOOM backhoe, see Figure 09-488
2	D132494	1	PIN boom to dipper
3	219-1	2	FITTING grease, straight, 1/8" NPT, both ends of Ref. 2 pin
4	135-823	1	PIN GROOVED, 1/2" x 3 1/4", Type E, Hardened, Center groove
5	D136391	2	SHIM, 1.57mm Thk (M72 ID x 89 OD), (2-27/32" ID x 3-1/2" OD x 1/16" thk)
6	D136392	1	SHIM, 3.05mm Thk, (M72 ID x 89 OD) (2-27/32" ID x 3-1/2" OD x 1/8" thk)
7	D133632	1	WASHER flat, hardened, special
8	D120610	1	NUT hex, 1-3/4"-12 NF, special
9	REF	1	CYLINDER dipper, for correct assembly and components, see Figures 08-426 or 08-428
10	REF	1	CYLINDER bucket, see Figure 08-430
11	D133845	2	PIN dipper and bucket cylinder to dippers
12	135-824	2	PIN, GROOVED, 1/2" x 2 1/2", Type E, Hardened, Center groove
13	D133631	2	WASHER flat, hardened, special
14	113-700	2	BOLT, Hex, 3/4"-10 x 1", G5
	D129902	1	DIPPER ASSEMBLY inner extension, no longer used, order P/N D139848 dipper, (2 each) P/N D139861 and P/N D139862 shim, P/N D140260 plate and P/N 164-207 bolt, Includes: Ref. 15 thru 18
	D139848	1	DIPPER ASSEMBLY inner extension, no longer available, order P/N D103366 kit in Figure 09-512, Includes: Ref. 15 thru 18
15	D129904	1	DIPPER inner, for service order P/N D129902 dipper assembly
15A	NSS	1	DIPPER inner, P/N D139848 dipper
16	D136846	1-2	BUSHING, 2" (50 mm) ID x 1-11/32" (34 mm) long, with slots, two used in P/N D129902 dipper and one used in P/N D139848 dipper
16A	D141389	1	BUSHING, 2" (50 mm) ID x 1-11/32" (34 mm) long, without slots, may replace one P/N D136846 bushing in P/N D139848 dipper on some models
17	D127974	4	SEAL grease, P/N D129902 dipper only, Ref. 17, P/N D127974 seal - OD is 3.15, ID is 2.75
18	D135740	2	BUSHING, 2-3/4" (70 mm) ID x 1-7/16" (36 mm) long
	D129900	1	HOUSING ASSEMBLY dipper, outer, uses 3/4" hardware at end cap mounting, used with P/N D129901 end cap, no longer available, order P/N D141890 outer dipper, P/N 166-151 bolts and P/N D34667 washers, Includes: Ref. 19 thru 20A
	D141890	1	HOUSING ASSEMBLY dipper, outer, uses 7/8" hardware at cap mounting, Includes: Ref. 19 thru 20A
19	NSS	1	HOUSING, P/N D129900 or P/N D141890 dipper, outer
20	D136846	1-2	BUSHING, 2" ID x 1-11/32" long, P/N D129900 or P/N D141890 dipper
20A	D141389	1	BUSHING, 2" ID x 1-11/32" long, without slots, may replace one P/N D136846 bushing in P/N D141890 dipper on some models
	D129901	1	COUPLER ASSEMBLY end cap, uses 3/4" hardware, Ref. 28 and 29, no longer available, order P/N D141893 end cap, P/N 166-151 bolts and P/N D34667 washers, Includes: Ref. 21 thru 27
	D141893	1	COUPLER ASSEMBLY end cap, uses 7/8" hardware, Ref. 29A and 29B, Includes: Ref. 21 thru 27
21	D129903	2	CAP end, P/N D129901 end cap, uses 3/4" hardware, Ref. 28 and 29, no longer available, order P/N D141892 end cap

09-504 EXTENDABLE DIPPER, TWO-PIECE OUTER MEMBER, PRIOR TO TRACTOR P.I.N. JJG0012415

Ref	Part Number	Qty	Description
21A	D141892	1	CAP end, P/N D141893 end cap, uses 7/8" hardware, Ref. 29A and 29B, Ref. 21A - Refer to service bulletin NLB SB 012 89 for data on weld on end cap for early units that had the problem with the end caps coming loose. Kit P/N D103585
22	D136573	2	BUSHING, 2" (50 mm) ID x 1-7/16" (36 mm) long, guide link pivot
23	D123655	4	SEAL grease
24	D127168	2	BUSHING, 1-3/4" (45 mm) ID x 3-11/16" (94 mm) long
	D139084	1	COUPLER ASSEMBLY bucket, Includes: Ref. 25 thru 27
25	NSS	1	COUPLER backhoe bucket
26	D127167	2	BUSHING, 1-3/16" (30 mm) long, special, at dipper
27	D127172	4	BUSHING, 1-1/8" (28 mm) long, at bucket link
28	26-1232	6	BOLT hex head, 3/4"-10 NC x 2", grade 8, if used
29	D34666	6	WASHER flat, 3/4", hardened, if used
29A	166-151	6	BOLT, Ferry head, 7/8"-9 NC x 2", grade 8
29B	D34667	6	WASHER flat, 7/8", hardened
30	D138343	2	PLATE wear, plastic
31	D133865	4	PLUG plastic
32	REF	1	CYLINDER dipper extension, for correct assembly and components, see Figure 08-432
33	D129892	1	PIN dipper extension cylinder closed end
34	800-50040	2	RING snap, pin retaining
35	D129893	1	PIN lock, used at dipper extension cylinder closed end when transporting only, used without Ref. 35B lock pin, no longer used, for service order P/N D140247 pin and P/N A33509 lock pin
35A	D140247	1	PIN lock, used at dipper extension cylinder closed end when transporting only, used with Ref. 35B lock pin
35B	A33509	1	PIN lock
36	D129227	1	PIN dipper extension cylinder rod end
37	D127843	2	WASHER flat, special, used as a shim
38	800-50040	2	RING snap, pin retaining
39	D134486	2	LINK bucket guide, with 1-13/32" long bushing, no longer available, order P/N D141468 link, Includes: Ref. 40
40	D136574	2	BUSHING, 2" (50 mm) ID x 2-3/4" (70 mm) OD x 1-13/32" (36 mm) long
40A	D141468	2	LINK bucket guide, with 1" long bushings, Includes: Ref. 40B
40B	D140029	2	BUSHING, 2" (50 mm) ID x 2-3/8" (60 mm) OD x 1" (25 mm) long
41	D127171	1	LINK bucket dump, with four bushings at forked end, no longer available, order P/N D140007 link, Includes: Ref. 42 and 43
42	D127172	2	BUSHING, 1-1/8" (28 mm) long
43	D135075	4	BUSHING, 1-3/16" (30 mm) long, special, with seals
43A	D140007	1	LINK bucket dump, with two bushings at forked end, Includes: Ref. 43B and 43C
43B	D127172	2	BUSHING, 1-1/8" (28 mm) long
43C	D138047	2	BUSHING, 2-1/8" (54 mm) long
44	219-1	1	FITTING grease, straight, 1/8" NPT
45	D123655	4	SEAL grease

09-504 EXTENDABLE DIPPER, TWO-PIECE OUTER MEMBER, PRIOR TO TRACTOR P.I.N. JJG0012415

Ref	Part Number	Qty	Description
46	D132493	2	PIN, 11-7/8" long, cylinder rod end to links and links to dipper
47	195-2153	4	WASHER flat, 1-3/4" bolt size, 1-13/16" ID x 3-1/2" OD x 1/8" thick
48	D25280	4	Ring, Snap, #175, Ext, pin
49	219-1	5	FITTING grease, straight, 1/8" NPT
50	D135692	1	PIN dump link to bucket coupler
51	195-2152	1	WASHER flat, 1-3/4" bolt size, 1-13/16" ID x 2-1/2" OD x 1/8" thick
52	D130037	1	PIN lock
53	D138418	UAR	SHIM, 1/16" (1.6 mm) thick, wear plate
54	D138417	UAR	SHIM, 1/32" (.8 mm) thick, wear plate
55	164-206	16	BOLT hex socket flat head, 5/16"-18 NC x 3/4", plated, grade 8
56	D139861	UAR	SHIM, 1/32" (.8 mm) thick, wear plate
57	D139862	UAR	SHIM, 1/16" (1.6 mm) thick, wear plate
58	D140260	2	PLATE wear, outer
59	164-206	8	BOLT hex socket flat head, 5/16"-18 NC x 3/4", plated, grade 8
60	D138419	UAR	SHIM, 3.0mm Thk (1/8"), Wear plate, top and bottom of extendahoe, may be used as a service replacement, used with P/N 164-207 bolt
61	D140943	UAR	SHIM, 3mm Thk (1/8"), Wear plate, side of extendahoe, may be used as a service replacement, used with P/N 164-207 bolt
62	164-207	4-8	BOLT hex socket flat head, 5/16"-18 NC x 1", plated, grade 8, used with Ref. 60 or 61 shim

09-508 EXTENDABLE DIPPER, TWO-PIECE OUTER MEMBER, TRACTOR P.I.N. JJG0012415 AND AFTER

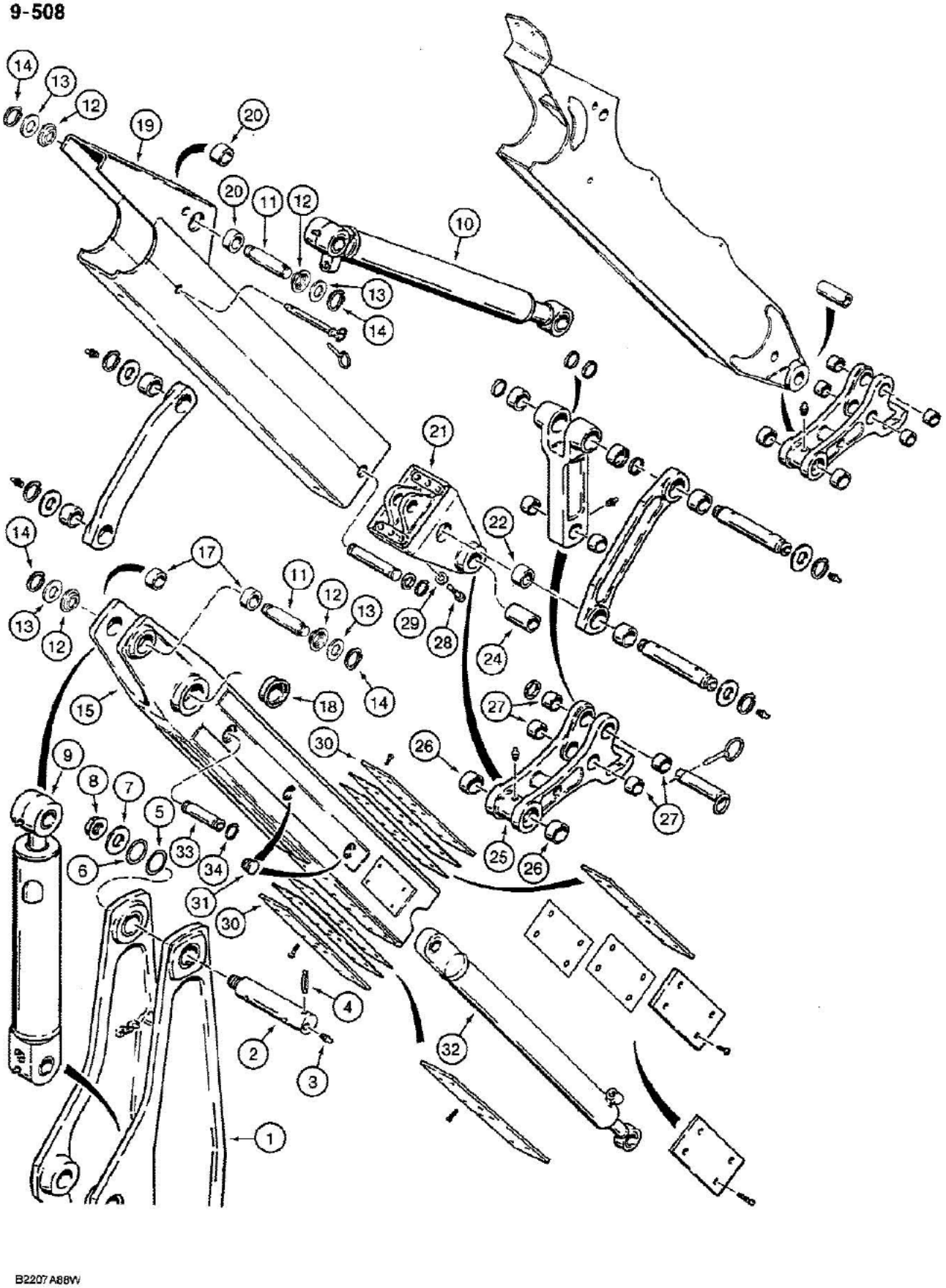

WITH FOUR TAPPED HOLES FOR SHIMS ON LOWER MEMBER OF INNER EXTENSION, (REF. 15)See Figure 09-512 for inner dipper extension with two tapped holes for shims on lower member.

580K LOADER BACKHOE (NORTH AMERICA) - Chassis/Attachments

09-508 EXTENDABLE DIPPER, TWO-PIECE OUTER MEMBER, TRACTOR P.I.N. JJG0012415 AND AFTER

Ref	Part Number	Qty	Description
1	REF	1	BOOM backhoe, see Figure 09-488
2	D132494	1	PIN boom to dipper
3	219-1	2	GREASE FITTING straight, 1/8" NPT, both ends of Ref. 2 pin
4	135-823	1	PIN GROOVED, 1/2" x 3 1/4", Type E, Hardened, Center groove
5	D136391	2	SHIM, 1.57mm Thk (M72 ID x 89 OD), (2-27/32" ID x 3-1/2" OD x 1/16" thk), Boom to dipper
6	D136392	1	SHIM, 3.05mm Thk, (M72 ID x 89 OD) (2-27/32" ID x 3-1/2" OD x 1/8" thk)
7	D133632	1	WASHER flat, hardened, special
8	D120610	1	NUT hex, 1-3/4" - 12 NF, special
9	REF	1	CYLINDER dipper, for correct assembly and components, see Figure 08-426 or 08-428
10	G110597	1	CYLINDER bucket, see Figure 08-430
11	D141666	2	PIN dipper and bucket cylinder to dippers
12	D141164	4	SPACER 1-13/16" ID x 3" O.D. x 1/8" thick, Either use two of Ref. 12 or two of Ref. 13 with P/N D141666 pin.
13	495-81279	4	WASHER flat, 1-13/16" ID x 2-3/4" O.D. x 1/8" thick, plated, Either use two of Ref. 12 or two of Ref. 13 with P/N D141666 pin.
14	D25280	4	Ring, Snap, #175, Ext, pin
	D143299	1	DIPPER ASSEMBLY extension, inner, used in production, for service order D103366 kit in Figure 09-512, Includes: Ref. 15 thru 18
15	NSS	1	DIPPER inner, with four tapped holes for shims on lower member of inner extension
17	D141389	1	BUSHING 2", 50 mm ID x 1-11/32", 34 mm long, without slots for groove pin, dipper cylinder rod end pivot
18	D135740	2	BUSHING 2-3/4", 70 mm ID x 1-7/16", 36 mm long, boom to dipper pivot
	D143336	1	DIPPER HOUSING ASSEMBLY backhoe, outer, used in production, for service order D141890 outer dipper in Figure 09-504, if used, Includes: Ref. 19 thru 20A
19	NSS	1	HOUSING dipper, outer
20	D136846	1-2	BUSHING 2", 50 mm ID x 1-11/32", 34 mm long, bucket cylinder closed end pivot, D129900 or D141890 dipper housing
20A	D141389	2	BUSHING 2", 50 mm ID x 1-11/32", 34 mm long, without slots for groove pin, bucket cylinder closed end pivot
	D143181	1	END CAP COUPLER ASSEMBLY dipper, used in production, for service order D141893 end cap coupler in Figure 09-504, if used, Includes: Ref. 21 thru 27
21	D141892	1	END CAP D141893 end cap coupler assembly, dipper, For weld-on repair end cap order P/N D103585, refer to Service Bulletin NLB SB 012 89
22	D141249	2	BUSHING 2", 50 mm ID x 1", 25 mm long, guide link pivot
24	D127168	2	BUSHING 1-3/4", 45 mm ID x 3-11/16", 94 mm long, bucket coupler pivot
	D139084	1	COUPLER ASSEMBLY bucket, Includes: Ref. 25 thru 27
25	NSS	1	COUPLER backhoe bucket
26	D127167	2	BUSHING 1-3/16", 30 mm long, special, at dipper
27	D127172	4	BUSHING 1-1/8", 28 mm long, at bucket link
28	166-151	6	BOLT Ferry head, 7/8" - 9 NC x 2", grade 8, if used
29	D34667	6	WASHER flat, 7/8", hardened, if used

WITH FOUR TAPPED HOLES FOR SHIMS ON LOWER MEMBER OF INNER EXTENSION, (REF. 15)□□□See Figure 09-512 for inner dipper extension with two tapped holes for shims on lower member.

09-508 EXTENDABLE DIPPER, TWO-PIECE OUTER MEMBER, TRACTOR P.I.N. JJG0012415 AND AFTER

Ref	Part Number	Qty	Description
30	D138343	2	WEAR PLATE plastic
31	D133865	4	PLUG plastic
32	REF	1	CYLINDER dipper extension, see Figure 08-432
33	D129892	1	PIN dipper extension cylinder closed end
34	800-44040	2	RING snap, pin retaining

WITH FOUR TAPPED HOLES FOR SHIMS ON LOWER MEMBER OF INNER EXTENSION, (REF. 15)□□□See Figure 09-512 for inner dipper extension with two tapped holes for shims on lower member.

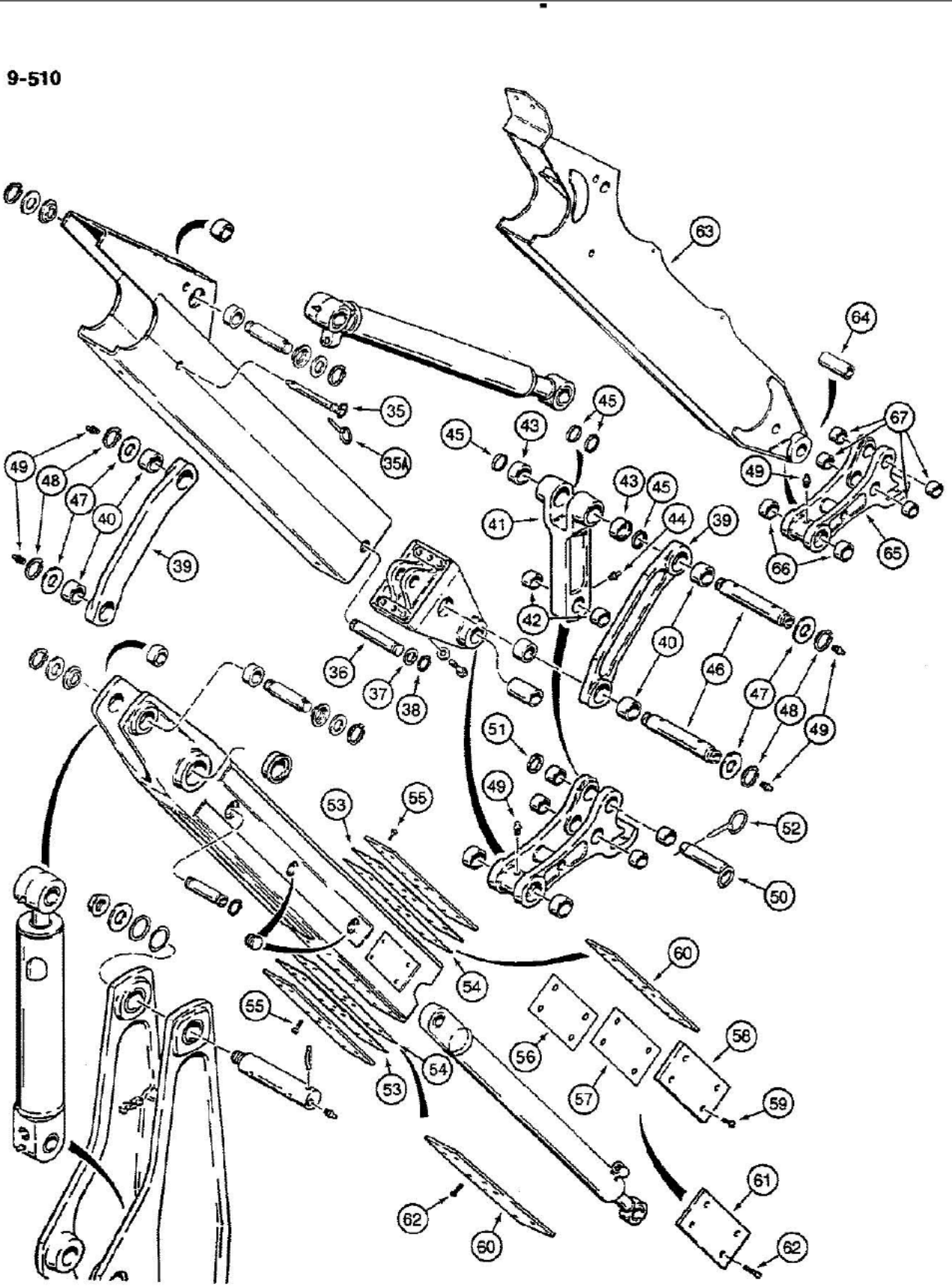

WITH FOUR TAPPED HOLES FOR SHIMS ON LOWER MEMBER OF INNER EXTENSION, (REF. 15 IN FIGURE 09-508)

See Figure 09-512 for inner dipper extension with two tapped holes for shims on lower member.

580K LOADER BACKHOE (NORTH AMERICA) - Chassis/Attachments

09-510 EXTENDABLE DIPPER, TWO-PIECE OUTER MEMBER, TRACTOR P.I.N. JJG0012415 AND AFTER

Ref	Part Number	Qty	Description
35	D140247	1	PIN lock, used at dipper extension cylinder closed end when transporting only, used with Ref. 35A lock pin
35A	A33509	1	PIN lock
36	D129227	1	PIN dipper extension cylinder rod end, D143336 dipper, if used
37	D127843	2	WASHER flat, special, used as a shim, if used
38	800-50040	2	SNAP RING pin retaining, if used
39	D141468	2	LINK bucket guide, with 1" long bushing, Includes: Ref. 40
40	D140029	2	BUSHING 2", 50 mm ID x 2-3/8", 60 mm O.D. x 1", 25 mm long
41	D140007	1	LINK bucket dump, with two bushings at forked end, Includes: Ref. 42 and 43
42	D127172	2	BUSHING 1-1/8", 28 mm long
43	D138047	2	BUSHING 2-1/8", 54 mm long
44	219-1	1	GREASE FITTING straight, 1/8" NPT
45	D123655	4	SEAL grease
46	D141142	2	PIN 12-3/64", 306 mm long, bucket cylinder rod end to links and links to dipper
47	495-81282	4	WASHER flat, 2-1/16" ID x 3" O.D. x 1/8" thick
48	D25280	4	Ring, Snap, #175, Ext, pin
49	219-1	5	GREASE FITTING straight, 1/8" NPT
50	D135692	1	PIN dump link to bucket coupler
51	495-81226	1	WASHER flat, 1-3/4" bolt size, 1-13/16" ID x 2-1/2" O.D. x 1/8" thick
52	392181R1	1	PIN lock
53	D138418	AR	SHIM 1/16", 1.6 mm thick, wear plate
54	D138417	AR	SHIM 1/32", .8 mm thick, wear plate
55	164-206	16	BOLT hex socket flat head, 5/16" - 18 NC x 3/4", plated, grade 8
56	D139861	AR	SHIM 1/32", .8 mm thick, wear plate
57	D139862	AR	SHIM 1/16", 1.6 mm thick, wear plate
58	D140260	2	WEAR PLATE outer
59	164-206	8	BOLT hex socket flat head, 5/16" - 18 NC x 3/4", plated, grade 8
60	D138419	AR	SHIM, 3.0mm Thk (1/8"), Wear plate, top and bottom of extendahoe, may be used as a service replacement, used with 164-207 bolt
61	D140943	AR	SHIM, 3mm Thk (1/8"), Wear plate, side of extendahoe, may be used as a service replacement, used with 164-207 bolt
62	164-207	4-8	BOLT hex socket flat head, 5/16" - 18 NC x 1", plated, grade 8, used with Ref. 60 or 61 shim
	D142136	1	HOUSING ASSEMBLY dipper, outer, if used, Includes: Ref. 63 thru 67
63	NSS	1	HOUSING dipper, outer
64	D127168	2	BUSHING 1-3/4", 45 mm ID x 3-11/16", 94 mm long, bucket coupler pivot
	D139084	1	COUPLER ASSEMBLY bucket, Includes: Ref. 65 thru 67
65	NSS	1	COUPLER backhoe bucket
66	D127167	2	BUSHING 1-3/16", 30 mm long, special, at dipper
67	D127172	4	BUSHING 1-1/8", 28 mm long, at bucket link

WITH FOUR TAPPED HOLES FOR SHIMS ON LOWER MEMBER OF INNER EXTENSION, (REF. 15 IN FIGURE 09-508)□□□□See Figure 09-512 for inner dipper extension with two tapped holes for shims on lower member.

9-512

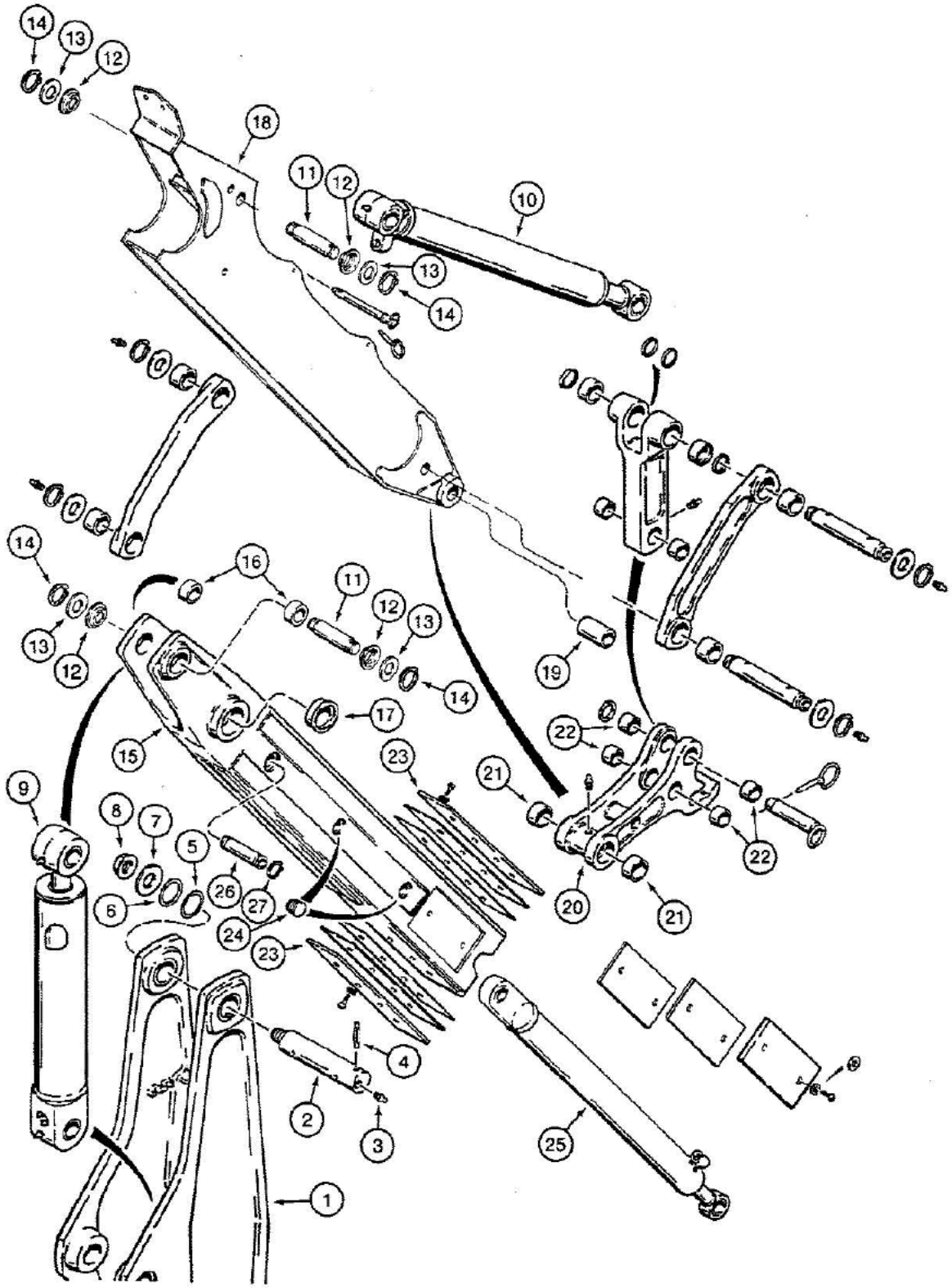

B2209A88W

WITH TWO TAPPED HOLES FOR SHIMS ON LOWER MEMBER OF INNER EXTENSION (REF. 15)See Figure 09-508 for inner dipper extension with four tapped holes for shims on lower member.

09-512 EXTENDABLE DIPPER, ONE-PIECE OUTER MEMBER

Ref	Part Number	Qty	Description
1	REF	1	BOOM backhoe, see Figure 09-488
2	D132494	1	PIN boom to dipper
3	219-1	2	GREASE FITTING straight, 1/8" NPT, both ends of Ref. 2 pin
4	135-823	1	PIN GROOVED, 1/2" x 3 1/4", Type E, Hardened, Center groove
5	D136391	2	SHIM, 1.57mm Thk (M72 ID x 89 OD), (2-27/32" ID x 3-1/2" OD x 1/16" thk), Boom to dipper
6	D136392	1	SHIM, 3.05mm Thk, (M72 ID x 89 OD) (2-27/32" ID x 3-1/2" OD x 1/8" thk)
7	D133632	1	WASHER flat, hardened, special
8	D120610	1	NUT hex, 1-3/4" - 12 NF, special
9	REF	1	CYLINDER dipper, for correct assembly and components, see Figures 08-426 or 08-428
10	G110597	1	CYLINDER bucket, see Figure 08-430
11	D141666	2	PIN, dipper and bucket cylinder to dippers, Part of Service Kit P/N D103366
12	D141164	4	SPACER, 1-13/16" ID x 3" O.D. x 1/8" thick, Part of Service Kit P/N D103366
13	495-81279	4	WASHER flat, 1-13/16" ID x 2-3/4" O.D. x 1/8" thick, plated, Part of Service Kit P/N D103366
14	D25280	4	Ring, Snap, #175, Ext, pin, Part of Service Kit P/N D103366
	D140889	1	DIPPER ASSEMBLY extension, inner, if used, Includes: Ref. 15 thru 17, Part of Service Kit P/N D103366
15	NSS	1	DIPPER inner, with two tapped holes for shims on lower member of inner extension
16	D141389	1	BUSHING, 2", 50 mm, ID x 1-11/32", 34 mm, long, without slots for groove pin, dipper cylinder rod end pivot
17	D135740	2	BUSHING, 2-3/4", 70 mm, ID x 1-7/16", 36 mm, long, boom to dipper pivot
	D142136	1	DIPPER HOUSING ASSEMBLY backhoe, outer, if used, Includes: Ref. 18 thru 22
18	NSS	1	HOUSING dipper, outer
19	D127168	2	BUSHING, 1-3/4", 45 mm, ID x 3-11/16", 94 mm, long, bucket coupler pivot
	D139084	1	COUPLER ASSEMBLY bucket, Includes: Ref. 20 thru 22
20	NSS	1	COUPLER backhoe bucket
21	D127167	2	BUSHING, 1-3/16", 30 mm, long, special, at dipper
22	D127172	4	BUSHING, 1-1/8", 28 mm, long, at bucket link
23	D141998	4	WEAR PLATE plastic, Part of Service Kit P/N D103366
24	D133865	4	PLUG plastic
25	REF	1	CYLINDER dipper extension, see Figure 08-432
26	D129892	1	PIN dipper extension cylinder closed end
27	800-44040	2	RING snap, pin retaining
	D103366	1	KIT service for D139848 and D143299 extendahoe inner dipper assembly, Includes: Ref. 11, 12, 13, 14, 23 and P/N D140889 in this figure and parts in Figure 09-514, plus an instruction sheet

WITH TWO TAPPED HOLES FOR SHIMS ON LOWER MEMBER OF INNER EXTENSION (REF. 15)See Figure 09-508 for inner dipper extension with four tapped holes for shims on lower member.

9-514

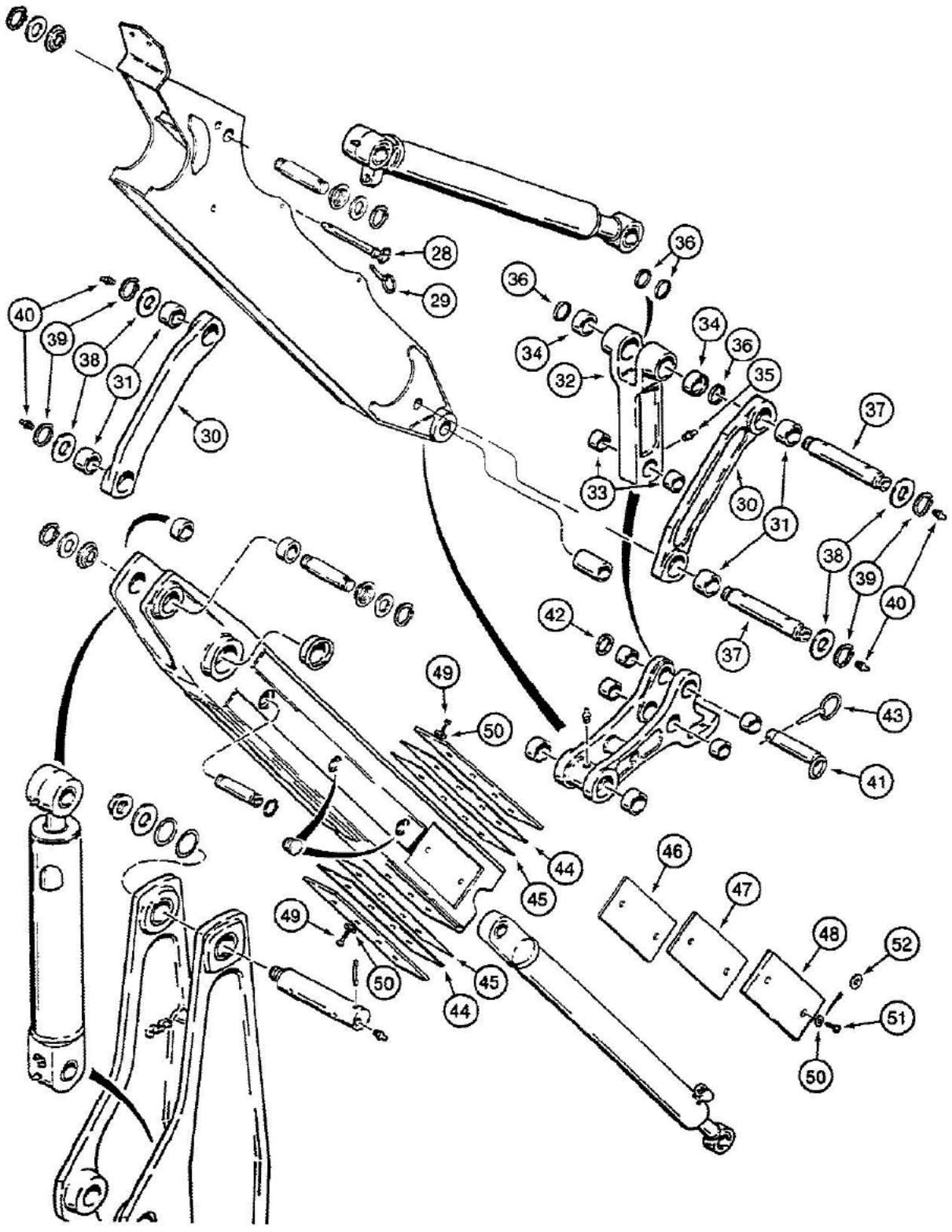

B2210A88W

WITH TWO TAPPED HOLES FOR SHIMS ON LOWER MEMBER OF INNER EXTENSION (REF. 15 IN FIGURE 09-512)IIIISee Figure 09-508 for inner dipper extension with four tapped holes for shims on lower member.

09-514 EXTENDABLE DIPPER, ONE-PIECE OUTER MEMBER

Ref	Part Number	Qty	Description
28	D140247	1	PIN lock, used at dipper extension cylinder closed end when transporting only, used with Ref. 29 lock pin
29	A33509	1	PIN lock
30	D141468	2	LINK bucket guide, with 1" long bushing, Includes: Ref. 31
31	D140029	2	BUSHING, 2", 50 mm, ID x 2-3/8", 60 mm, O.D. x 1", 25 mm, long
32	D140007	1	LINK bucket dump, with two bushings at forked end, Includes: Ref. 33 and 34
33	D127172	2	BUSHING, 1-1/8", 28 mm, long
34	D138047	2	BUSHING, 2-1/8", 54 mm, long
35	219-1	1	GREASE FITTING straight, 1/8" NPT
36	D123655	4	SEAL grease
37	D141142	2	PIN, 12-3/64", 306 mm, long, bucket cylinder rod end to links and links to dipper
38	495-81282	4	WASHER flat, 2-1/16" ID x 3" O.D. x 1/8" thick
39	D25280	4	Ring, Snap, #175, Ext, pin
40	219-1	5	GREASE FITTING straight, 1/8" NPT
41	D135692	1	PIN dump link to bucket coupler
42	495-81226	1	WASHER flat, 1-3/4" bolt size, 1-13/16" ID x 2-1/2" O.D. x 1/8" thick
43	392181R1	1	PIN lock
44	D140874	UAR	SHIM, 1/16", 1.6 mm, thick, wear plate, Part of Service Kit P/N D103366
45	D140873	UAR	SHIM, 1/32", .8 mm, thick, wear plate, Part of Service Kit P/N D103366
46	D140885	UAR	SHIM, 1/32", .8 mm, thick, wear plate, Part of Service Kit P/N D103366
47	D140886	UAR	SHIM, 1/16", 1.6 mm, thick, wear plate, Part of Service Kit P/N D103366
48	D141998	2	WEAR PLATE plastic, outer, Part of Service Kit P/N D103366
49	121-228	8	BOLT, Hex Flg, 3/8"-16 x 3/4", Serr, Part of Service Kit P/N D103366
50	D143167	12	WASHER special, Part of Service Kit P/N D103366
51	D143961	4	BOLT hex flange head, self-locking, 3/8" - 16 NC x 1/2", plated, Part of Service Kit P/N D103366
52	495-11041	4	WASHER flat, 3/8 inch
	D103366	1	KIT service for D139848 and D143299 extendahoe inner dipper assemblies, Includes: Ref. 44, 45, 46, 47, 48, 49, 50 and 51 in this figure and parts in Figure 09-512, plus an instruction sheet

WITH TWO TAPPED HOLES FOR SHIMS ON LOWER MEMBER OF INNER EXTENSION (REF. 15 IN FIGURE 09-512)□□□See Figure 09-508 for inner dipper extension with four tapped holes for shims on lower member.

9-516

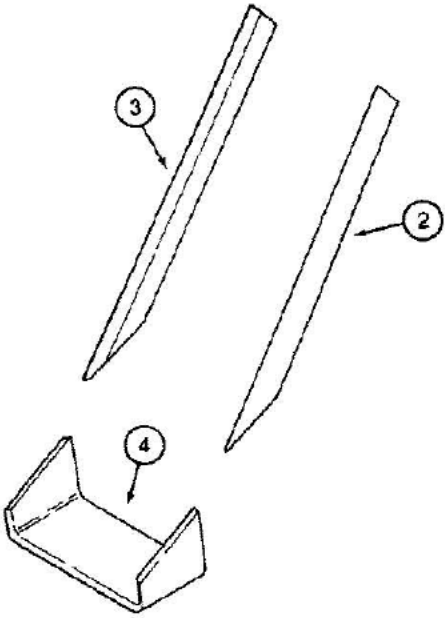

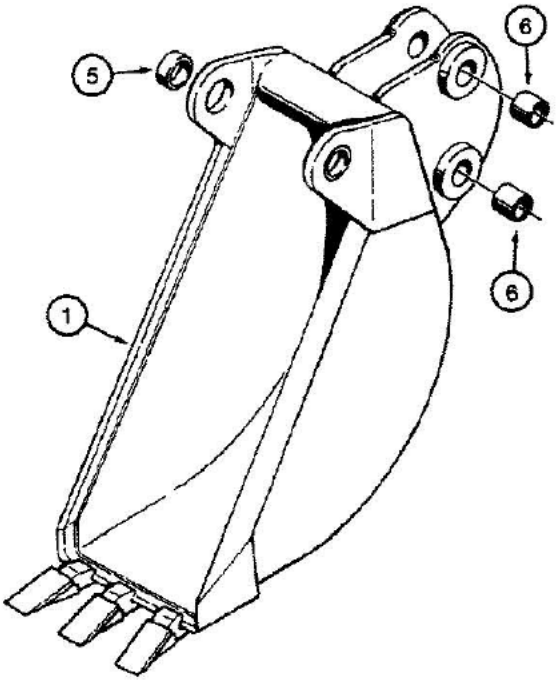

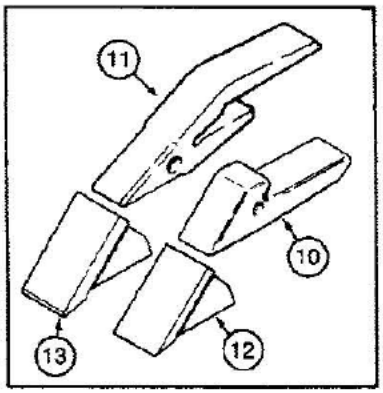

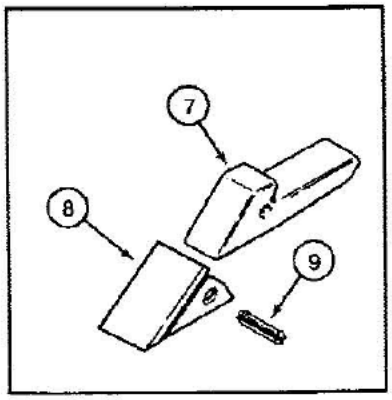

861761A-45

09-516 BACKHOE BUCKET, TRENCHING BUCKET, CRIMPED-ON BUCKET TEETH

Ref	Part Number	Qty	Description
1	D52642	1	BUCKET ASSEMBLY trenching, 12 inch, 305 mm, machinery item, order from the Machinery Price List, Includes: Ref. 2 thru 9
2	D29424	1	CUTTING EDGE trenching bucket, right-hand side
3	D29423	1	CUTTING EDGE trenching bucket, left-hand side
4	D37464	1	CUTTING EDGE trenching bucket, center
5	D40243	2	BUSHING trenching bucket, at dipper
6	D30933	4	BUSHING trenching bucket, at bucket links
	D41659	3	TOOTH ASSEMBLY trenching bucket, pinned-on, Includes: Ref. 7 thru 9
7	NSS	1	SHANK tooth, trenching bucket
8	D39093	1	POINT tooth, trenching bucket
9	D39094	1	PIN flex, point, trenching bucket
10	D26368	AR	SHANK tooth, original equipment, if used, crimped-on bucket teeth
11	D58499	AR	SHANK tooth, service option, if used, crimped-on bucket teeth
12	D27748	AR	POINT tooth, original equipment, if used, crimped-on bucket teeth
13	D36720	AR	POINT tooth, heavy duty service option, if used, crimped-on bucket teeth

9-518

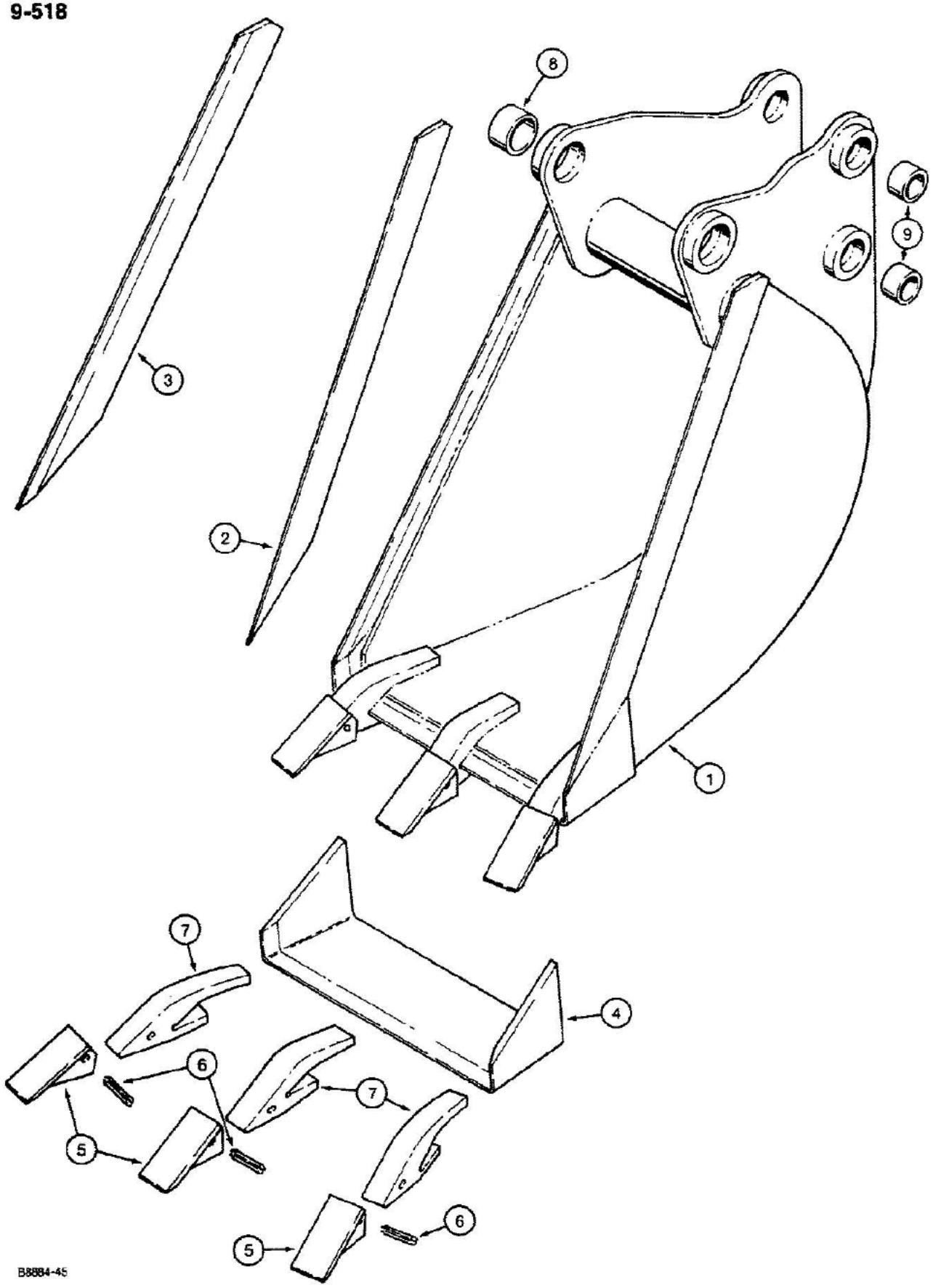

580K LOADER BACKHOE (NORTH AMERICA) - Chassis/Attachments

09-518 BACKHOE BUCKETS, INCLUDES BUCKET TEETH, TRENCHING BUCKETS

Ref	Part Number	Qty	Description
1	D139795	1	BUCKET ASSEMBLY, 18 inch, 457 mm,, with 3 teeth, machinery item, order from the Machinery Price List, Includes: Ref. 2 through 9
2	D21606	1	CUTTING EDGE bucket, right-hand side
3	D21605	1	CUTTING EDGE bucket, left-hand side
4	D37642	1	CUTTING EDGE center, 18 inch, 457 mm, bucket
	D41659	4	TOOTH ASSEMBLY trenching bucket, Includes: Ref. 5 thru 7
5	D39093	1	POINT tooth
6	D39094	1	PIN flex, point
7	NSS	1	SHANK tooth
8	D37495	2	BUSHING, 1-3/4" ID x 2-1/2" O.D. x 1-1/4" long
9	D30933	4	BUSHING, 1-1/2" ID x 1-7/8" O.D. x 1-1/4" long
1	D139796	1	BUCKET ASSEMBLY, 24 inch, 610 mm,, with 5 teeth, not shown, machinery item, order from the Machinery Price List, Includes: Ref. 2 through 9
2	D21606	1	CUTTING EDGE bucket, right hand side
3	D21605	1	CUTTING EDGE bucket, left hand side
4	D37507	1	CUTTING EDGE center, 24 inch, 610 mm, bucket
	D41659	4-5	TOOTH ASSEMBLY trenching bucket, Includes: Ref. 5 thru 7
5	D39093	1	POINT tooth
6	D39094	1	PIN flex, point
7	NSS	1	SHANK tooth
8	D37495	2	BUSHING, 1-3/4" ID x 2-1/2" O.D. x 1-1/4" long
9	D30933	4	BUSHING, 1-1/2" ID x 1-7/8" O.D. x 1-1/4" long

9-520

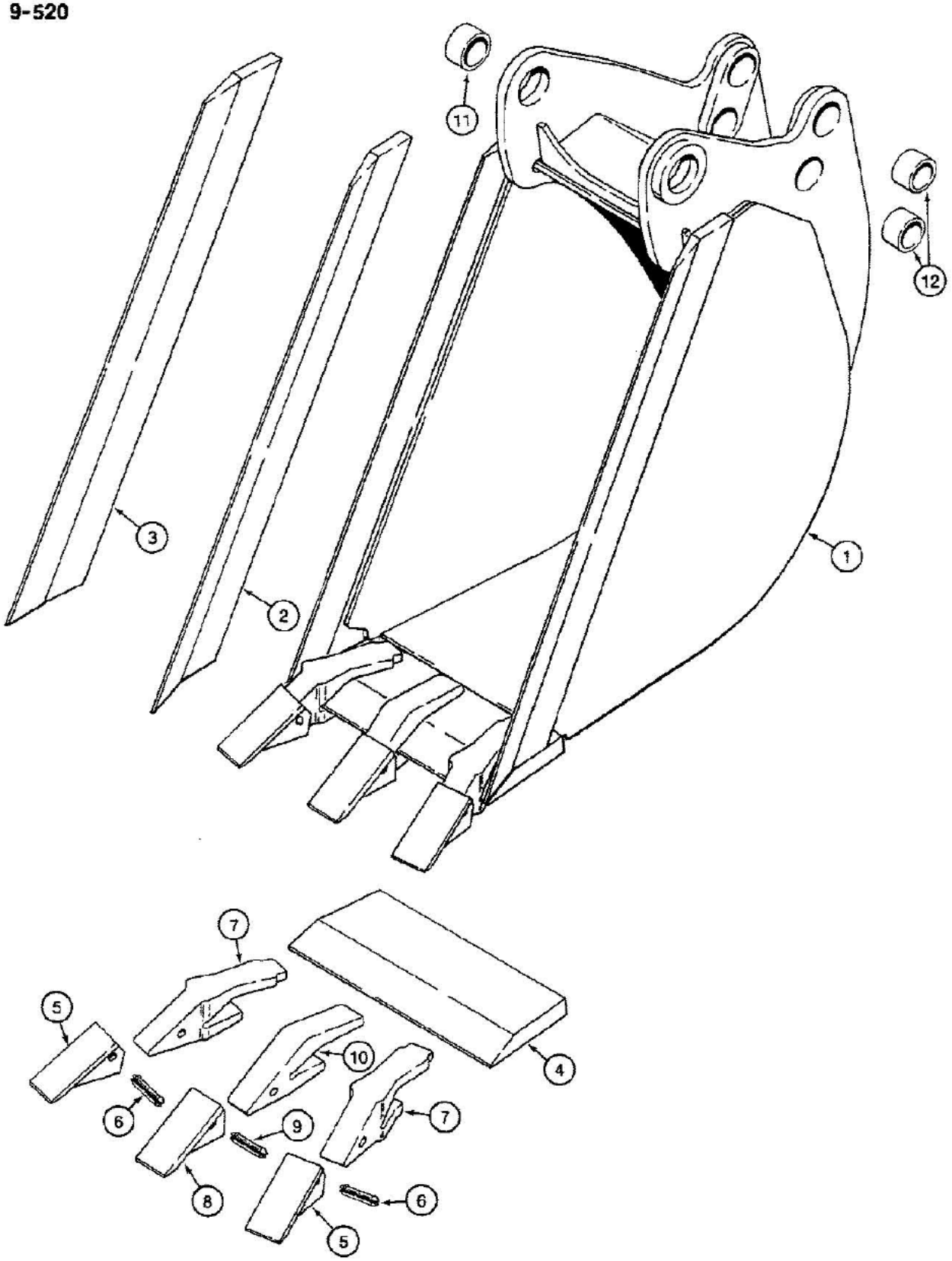

861557

580K LOADER BACKHOE (NORTH AMERICA) - Chassis/Attachments

09-520 BACKHOE BUCKETS, INCLUDES BUCKET TEETH, TRENCHING BUCKETS - HEAVY DUTY

Ref	Part Number	Qty	Description
1	D137891	1	BUCKET ASSEMBLY 16 inch, 406 mm, with 3 teeth, machinery item, order from the Machinery Price List, Includes: Ref. 2thru 12
2	D134982	1	CUTTING EDGE bucket, right hand side
3	D134983	1	CUTTING EDGE bucket, left hand side
4	D135512	1	CUTTING EDGE center, 16 inch, 406 mm bucket
	D139851	2	TOOTH ASSEMBLY outer corners, Includes: Ref. 5 thru 7
5	D51750	1	POINT tooth, outer corners
6	D134686	1	PIN flex, outer point and shank
7	D138157	1	SHANK tooth, outer corners
	D139849	1	TOOTH ASSEMBLY center, Includes: Ref. 8 thru 10
8	D51750	1	POINT tooth, center
9	D39094	1	PIN flex, center point and shank
10	D48212	1	SHANK tooth, center
11	D37495	2	BUSHING 1-3/4" ID x 2-1/4" O.D. x 1-1/4" long
12	D30933	4	BUSHING 1-1/2" ID x 1-7/8" O.D. x 1-1/4" long
1	D138035	1	BUCKET ASSEMBLY 18 inch, 457 mm, with 3 teeth, not shown, machinery item, order from the Machinery Price List, Includes: Ref. 2 thru 12
2	D134982	1	CUTTING EDGE bucket, right hand side
3	D134983	1	CUTTING EDGE bucket, left hand side
4	D135513	1	CUTTING EDGE center, 18 inch, 457 mm bucket
	D139851	2	TOOTH ASSEMBLY outer corners, Includes: Ref. 5 thru 7
5	D39093	1	POINT tooth, outer corners
5	D51750	1	PIN flex, outer point and shank
7	D138157	1	SHANK tooth, outer corners
7	D138157	1	SHANK tooth, outer corners
	D139849	1	TOOTH ASSEMBLY center. Includes: Ref. 8 thru 10
8	D51750	1	POINT tooth, center
9	D39094	1	PIN flex, center point and shank
10	D48212	1	SHANK tooth, center
11	D37495	2	BUSHING 1-3/4" ID x 2-1/4" O.D. x 1-1/4" long
12	D30933	4	BUSHING 1-1/2" ID x 1-7/8" O.D. x 1-1/4" long
1	D137750	1	BUCKET ASSEMBLY 24 inch, 610 mm, with 5 teeth, not shown, machinery item, order from the Machinery Price List, Includes: Ref. 2 thru 12
2	D134982	1	CUTTING EDGE bucket, right hand side
3	D134983	1	CUTTING EDGE bucket, left hand side
4	D135514	1	CUTTING EDGE center, 24 inch, 610 mm bucket
	D139851	2	TOOTH ASSEMBLY outer corners, Includes: Ref. 5 thru 7
5	D51750	1	POINT tooth, outer corners
6	D134686	1	PIN flex, outer point and shank
7	D138157	1	SHANK tooth, outer corners
	D139849	3	TOOTH ASSEMBLY center, Includes: Ref. 8 thru 10

580K LOADER BACKHOE (NORTH AMERICA) - Chassis/Attachments

09-520 BACKHOE BUCKETS, INCLUDES BUCKET TEETH, TRENCHING BUCKETS - HEAVY DUTY

Ref	Part Number	Qty	Description
8	D51750	1	POINT tooth, center
9	D39094	1	PIN flex, center point and shank
10	D48212	1	SHANK tooth, center
11	D37495	2	BUSHING 1-3/4" ID x 2-1/4" O.D. x 1-1/4" long
12	D30933	4	BUSHING 1-1/2" ID x 1-7/8" O.D. x 1-1/4" long
1	D137892	1	BUCKET ASSEMBLY 30 inch, 762 mm, with 5 teeth, not shown, machinery item, order from the Machinery Price List, Includes: Ref. 2 thru 12
2	D134982	1	CUTTING EDGE bucket, right hand side
3	D134983	1	CUTTING EDGE bucket, left hand side
4	D135515	1	CUTTING EDGE center, 30 inch, 762 mm bucket
	D139851	2	TOOTH ASSEMBLY outer corners, Includes: Ref. 5 thru 7
5	D51750	1	POINTtooth, outer corners
6	D134686	1	PIN flex, outer point and shank
7	D138157	1	SHANK tooth, outer corners
	D139849	3	TOOTH ASSEMBLY center, Includes: Ref. 8 thru 10
8	D51750	1	POINT tooth, center
9	D39094	1	PIN flex, center point and shank
10	D48212	1	SHANK tooth, center
11	D37495	2	BUSHING 1-3/4" ID x 2-1/4" O.D. x 1-1/4" long
12	D30933	4	BUSHING 1-1/2" ID x 1-7/8" O.D. x 1-1/4" long
1	D137893	1	BUCKET ASSEMBLY 36 inch, 914 mm, with 7 teeth, not shown, machinery item, order from the Machinery Price List, Includes: Ref. 2 thru 12
2	D134982	1	CUTTING EDGE bucket, right hand side
3	D134983	1	CUTTING EDGE bucket, left hand side
4	D135516	1	CUTTING EDGE center, 36 inch, 914 mm bucket
	D139851	2	TOOTH ASSEMBLY outer corners, Includes: Ref. 5 thru 7
5	D51750	1	POINT tooth, outer corners
6	D134686	1	PIN flex, outer point and shank
7	D138157	1	SHANK tooth, outer corners
	D139849	5	TOOTH ASSEMBLY center, Includes: Ref. 8 thru 10
8	D51750	1	POINT tooth, center
9	D39094	1	PIN flex, center point and shank
10	D48212	1	SHANK tooth, center
11	D37495	2	BUSHING 1-3/4" ID x 2-1/4" O.D. x 1-1/4" long
12	D30933	4	BUSHING 1-1/2" ID x 1-7/8" O.D. x 1-1/4" long

9-524

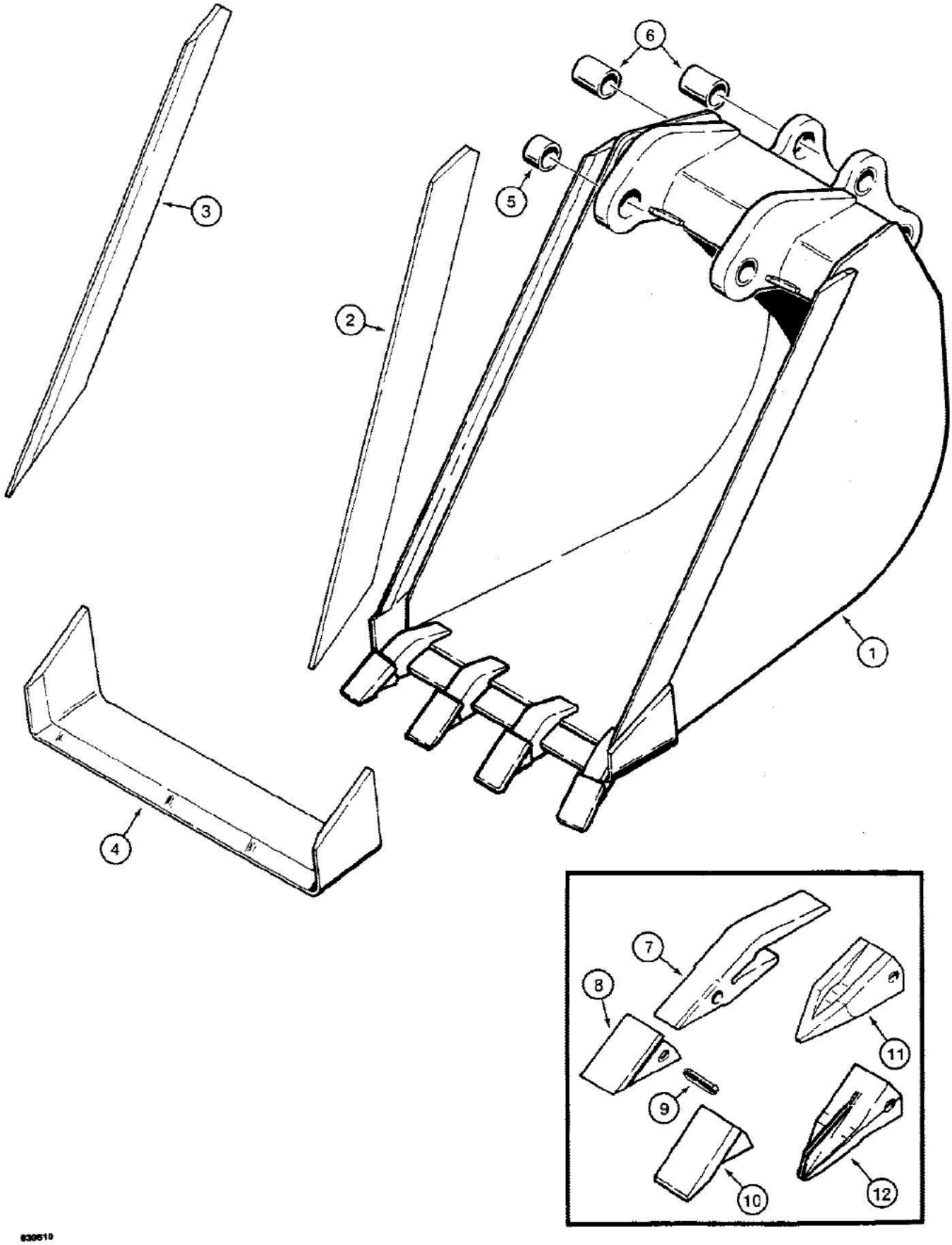

830610

09-524 BACKHOE BUCKET, 24 INCH (610 MM) HIGH CAPACITY TRENCHING BUCKET

Ref	Part Number	Qty	Description
1	L107618	1	BUCKET ASSEMBLY 24 inch, 610 mm, machinery item, order from the Machinery Price List, Includes: Ref. 2-6
2	L70084	1	CUTTING EDGE bucket, right hand side
3	L70083	1	CUTTING EDGE bucket, left hand side
4	D41673	1	CUTTING EDGE bucket, center
5	D37495	2	BUSHING bucket, at dipper
6	D30933	4	BUSHING bucket, at bucket links
	L43266	AR	TOOTH ASSEMBLY high capacity bucket teeth included with bucket, Includes: Ref. 7-9
7	NSS	1	SHANK tooth, bucket teeth included with bucket
8	D39093	1	POINT tooth, bucket teeth included with bucket
9	D39094	1	FLEX PIN point, bucket teeth included with bucket
10	D44193	AR	POINT tooth, heavy duty, flat end, service option, bucket teeth included with bucket
11	D80119	AR	POINT tooth, heavy duty, pointed end, service option, bucket teeth included with bucket
12	D79100	AR	POINT tooth, heavy duty, star point, service option, bucket teeth included with bucket

9-526

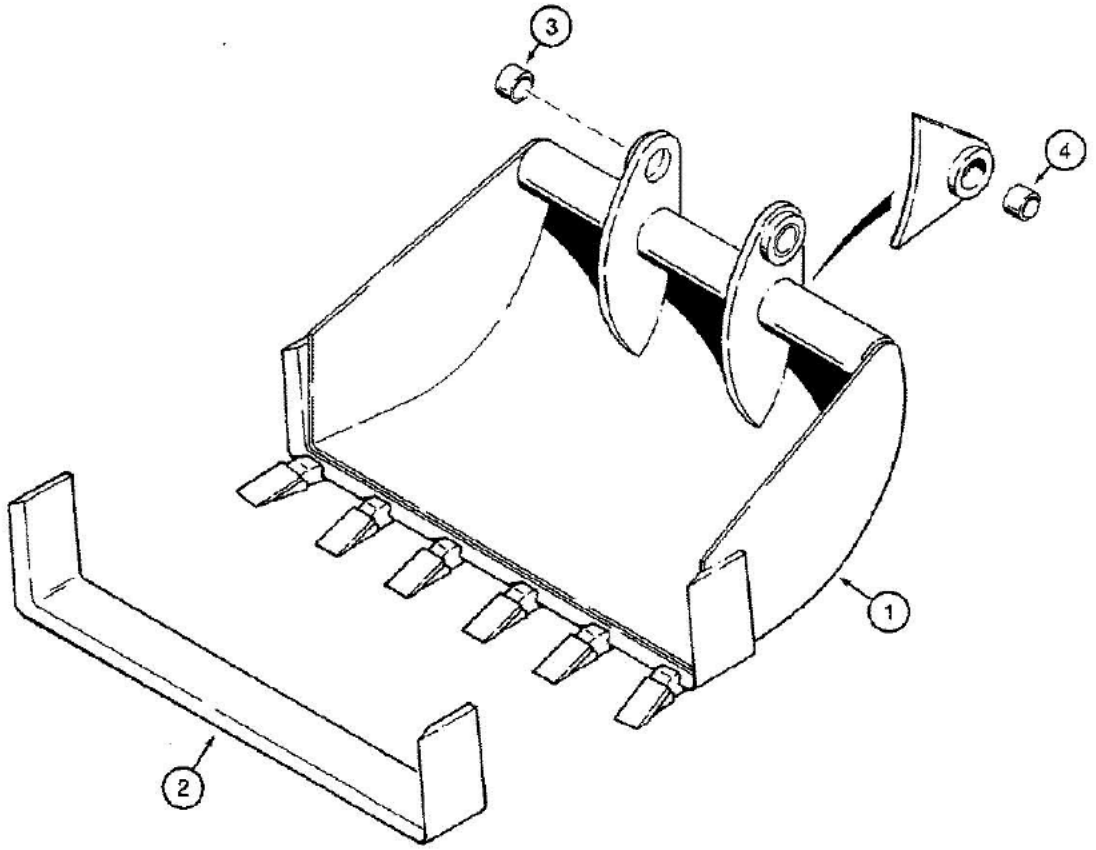

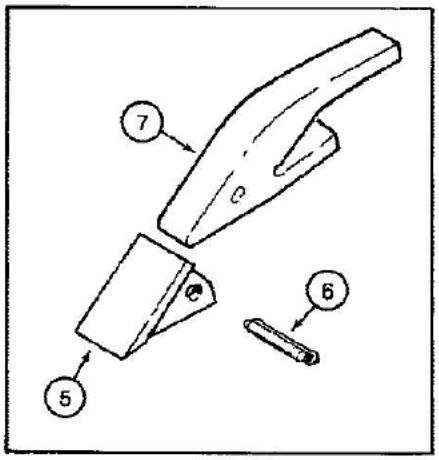

B2211A86W

09-526 BACKHOE BUCKET, COMBINATION BELLHOLE AND GRAVEYARD BUCKET

Ref	Part Number	Qty	Description
1	D140576	1	BUCKET ASSEMBLY 36 inch, 914 mm, with 6 teeth, machinery item, order from the Machinery Price List, Includes: Ref. 2-7
2	D37516	1	EDGE cutting, bucket
3	D37495	2	BUSHING bucket, at dipper, upper
4	D30933	2	BUSHING bucket, at bucket link pin hole, lower
	D41659	6	TOOTH ASSEMBLY bucket, Includes: Ref. 5-7
5	D39093	1	POINT tooth
6	D39094	1	PIN flex, point
7	NSS	1	SHANK tooth

9-528

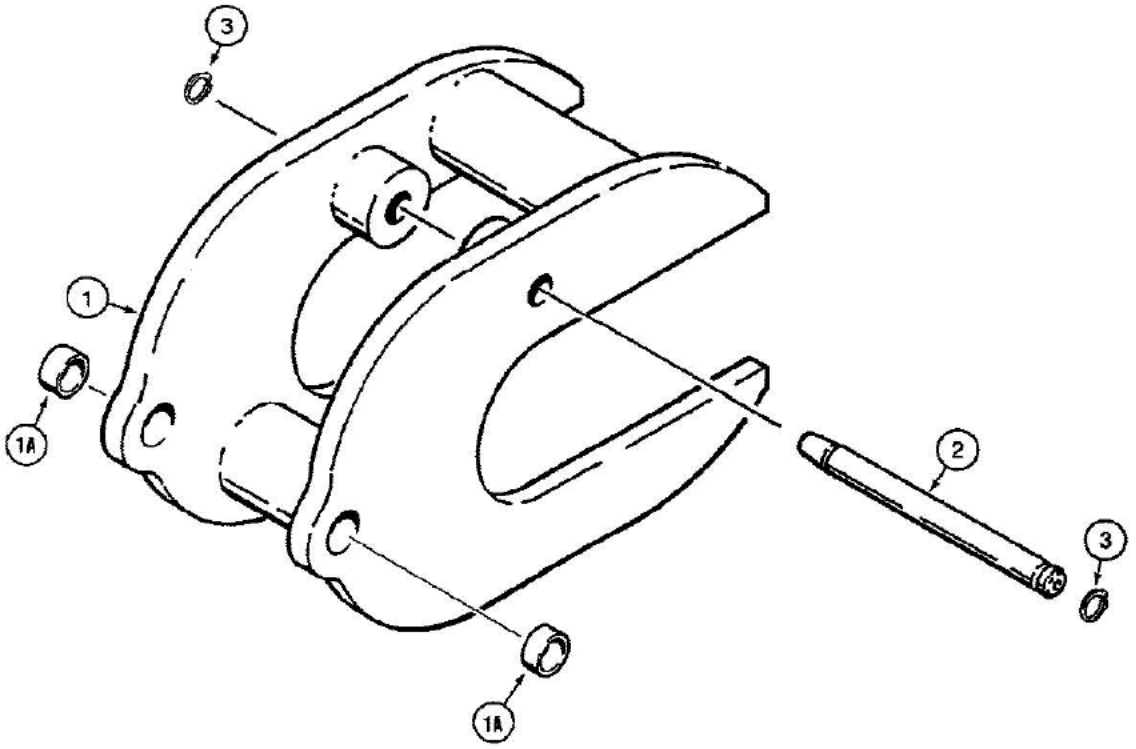

B8685A-45

09-528 CONCRETE BREAKER FORK

Ref	Part Number	Qty	Description
1	D140080	1	FORK concrete breaker, Includes: Ref. 1A
1A	D52521	2	BUSHING fork
2	D37793	1	PIN fork mounting
3	D25279	2	SNAP RING pin retaining

9-530

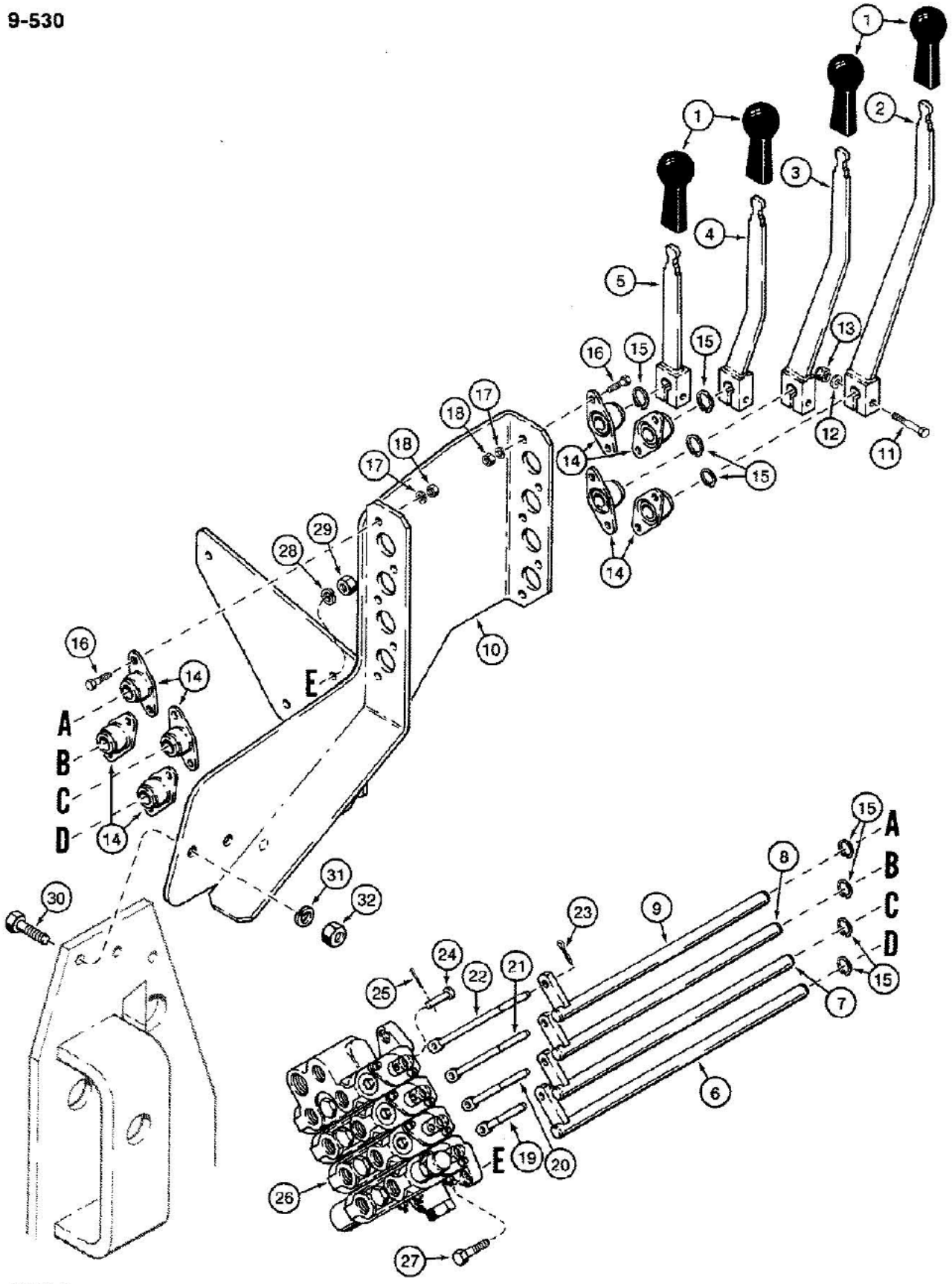
1
2
3
4
5
6
7
8
9
10
11
12
13
14
15
16
17
18
19
20
21
22
23
24
25
26
27
28
29
30
31
32
A
B
C
D
E
B8893A-45

09-530 THREE-POINT HITCH CONTROLS

Ref	Part Number	Qty	Description
1	D135387	4	KNOB control lever
2	D141034	1	CONTROL LEVER lift
3	D141036	1	CONTROL LEVER pitch
4	D141038	1	CONTROL LEVER tilt
5	D137861	1	CONTROL LEVER implement
6	D141025	1	SHAFT lift control lever to rod
7	D141027	1	SHAFT pitch control lever to rod
8	D141029	1	SHAFT tilt control lever to rod
9	D141031	1	SHAFT implement control lever to rod
10	D141043	1	BRACKET valve and control lever mounting
11	113-120	4	BOLT, Hex, 5/16"-18 x 1 3/4", G5
12	195-521	4	WASHER flat, 5/16", plated
13	131-4	4	NUT hex, self-locking, 5/16" - 18 NC
14	L15401	8	BEARING pivot
15	N9959	8	Ring, Snap, #62, Ext, brg
16	113-102	10	BOLT, Hex, 5/16"-18 x 3/4", G5, Full Thd
17	192-20	10	WASHER, LOCK, 5/16"
18	9635082	10	NUT, 5/16"-18, G5
19	D136356	1	ROD lift control, shaft to valve
20	D136357	1	ROD pitch control, shaft to valve
21	D136358	1	ROD tilt control, shaft to valve
22	D136359	1	ROD implement control, shaft to valve
23	132-320	4	PIN, SPLIT (COTTER), 3/32" x 3/4", Rod to shaft
24	141-2	4	CLEVIS PIN 1/4", rod to valve
25	132-329	4	1/16" x 3/4"
26	D141297	1	CONTROL VALVE ASSEMBLY three-point hitch, four spool, see Figure 08-396
27	113-209	3	BOLT, Hex, 3/8"-16 x 1 1/2", G5, Valve mounting
28	192-21	3	WASHER, LOCK, 3/8"
29	129-103	3	NUT, 3/8"-16, G5
30	113-410	3	BOLT, Hex, 1/2"-13 x 1 1/2", G5, Full Thd, Valve mounting bracket to three-point hitch frame
31	192-23	3	WASHER, LOCK, 1/2"
32	129-105	3	NUT hex, 1/2" - 18 NC, plated

9-532

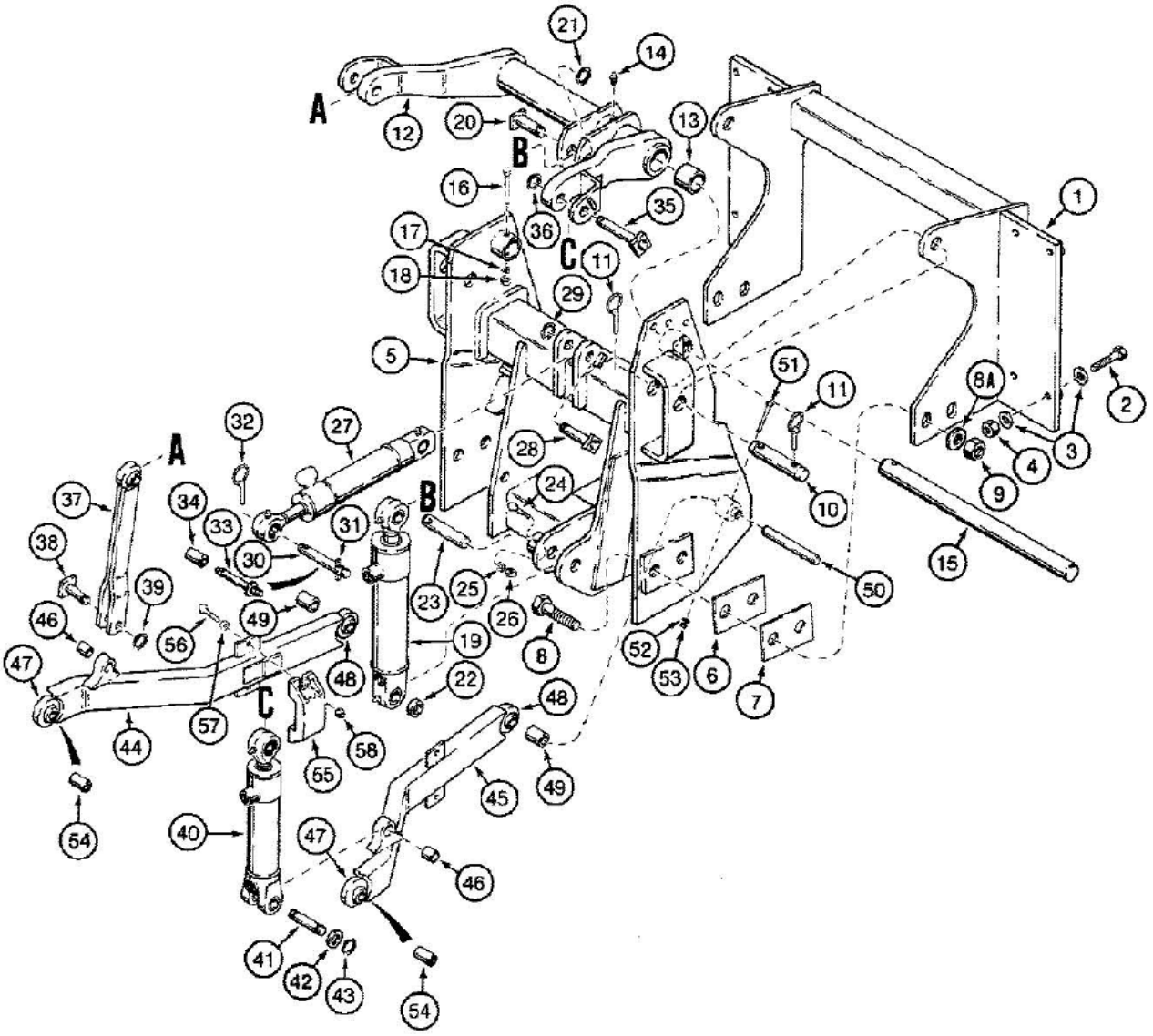

B8894A-45

580K LOADER BACKHOE (NORTH AMERICA) - Chassis/Attachments

09-532 THREE-POINT HITCH FRAME, DRAFT ARMS, LINKAGE, AND CYLINDER MOUNTING

Ref	Part Number	Qty	Description
1	D141042	1	SUPPORT three-point hitch frame
2	26-1248	8	BOLT hex head, 3/4" - 10 NC x 3", grade 8
3	D34666	16	WASHER flat, 3/4", hardened
4	129-138	8	NUT, 3/4"-10, G8
5	D141091	1	FRAME three-point hitch
6	D141094	UAR	SHIM, 1.6mm Thk (1/16")
7	D141095	UAR	SHIM, 3mm Thk (1/8")
8	113-977	4	BOLT, Hex, 1 1/4"-7 x 3 1/2", G5
8A	D64968	4	WASHER flat, 1-1/4", hardened
9	25-1020	4	NUT, 1 1/4"-7, G5
10	D133267	2	PIN hitch frame to support
11	D33805	4	PIN lock
12	D72875	1	TUBE rockshaft, Includes: Ref. 13
13	D50146	2	BUSHING tube
14	219-1	1	GREASE FITTING straight, 1/8" NPT
15	D51569	1	ROCKSHAFT three-point hitch
16	113-241	1	BOLT, Hex, 3/8"-16 x 3", G5
17	192-21	1	WASHER, LOCK, 3/8"
18	129-103	1	NUT, 3/8"-16, G5
19	G101189	1	CYLINDER ASSEMBLY lift, see Figure 08-434
20	D51302	1	PIN mounting, lift cylinder, upper
21	D26918	1	Ring, Snap, #125, Ext, pin
22	D51692	1	SPACER lift cylinder mounting pin, lower
23	D51695	1	PIN mounting, lift cylinder, lower
24	113-257	1	BOLT, Hex, 3/8"-16 x 2 1/2", G5
25	192-21	1	WASHER, LOCK, 3/8"
26	129-103	1	NUT, 3/8"-16, G5
27	1976884C1	1	CYLINDER ASSEMBLY pitch, see Figure 08-438
28	D141090	1	PIN mounting, pitch cylinder at mounting frame
29	D25277	1	SNAP RING pin retaining
30	D140990	1	PIN 1" diameter, pitch cylinder to equipment, for use with category II hitch, if used, Includes: Ref. 31
31	138-140	1	PIN, 1/4" x 1 3/4", Slotted
32	D33805	1	PIN lock
33	D141292	1	PIN 3/4" diameter, pitch cylinder to equipment, for use with category I hitch, if used
34	D141156	1	BUSHING pivot, pitch cylinder rod eye, used with D141292 pin to adapt for use with category I hitch, if used
35	D51299	2	PIN mounting, tilt cylinder and strut, upper
36	D25277	2	SNAP RING pin retaining
37	D51276	1	STRUT stationary
38	D51297	1	PIN mounting, strut, lower
39	D25277	1	SNAP RING pin retaining

09-532 THREE-POINT HITCH FRAME, DRAFT ARMS, LINKAGE, AND CYLINDER MOUNTING

Ref	Part Number	Qty	Description
40	G101188	1	CYLINDER ASSEMBLY tilt, see Figure 08-436
41	D30609	1	PIN mounting, tilt cylinder, lower
42	195-553	2	WASHER flat, 1", plated, cylinder alignment
43	D25277	2	SNAP RING pin retaining
44	D141088	1	ARM draft, left hand
45	D141087	1	ARM draft, right hand, Includes: Ref. 46-48
46	D51608	1	BUSHING arm, 1", 25 mm ID
47	H363424	1	BUSHING self-aligning, 1-1/8" pin size
48	D51609	1	BUSHING self-aligning, 1" pin size
49	D141104	2	BUSHING pivot, draft arm mounting pin
50	D50724	2	PIN mounting, draft arm to mounting frame
51	113-257	2	BOLT, Hex, 3/8"-16 x 2 1/2", G5
52	192-21	2	WASHER, LOCK, 3/8"
53	129-103	2	NUT, 3/8"-16, G5
54	D140991	2	BUSHING draft arm to equipment, for use with category I hitch, if used
55	D141085	2	RETAINER sway, draft arm
56	113-412	4	BOLT, Hex, 1/2"-13 x 1 3/4", G5
57	195-533	4	WASHER flat, 1/2", plated
58	131-70	4	NUT hex, self-locking, 1/2" - 13 NC, plated

9-536

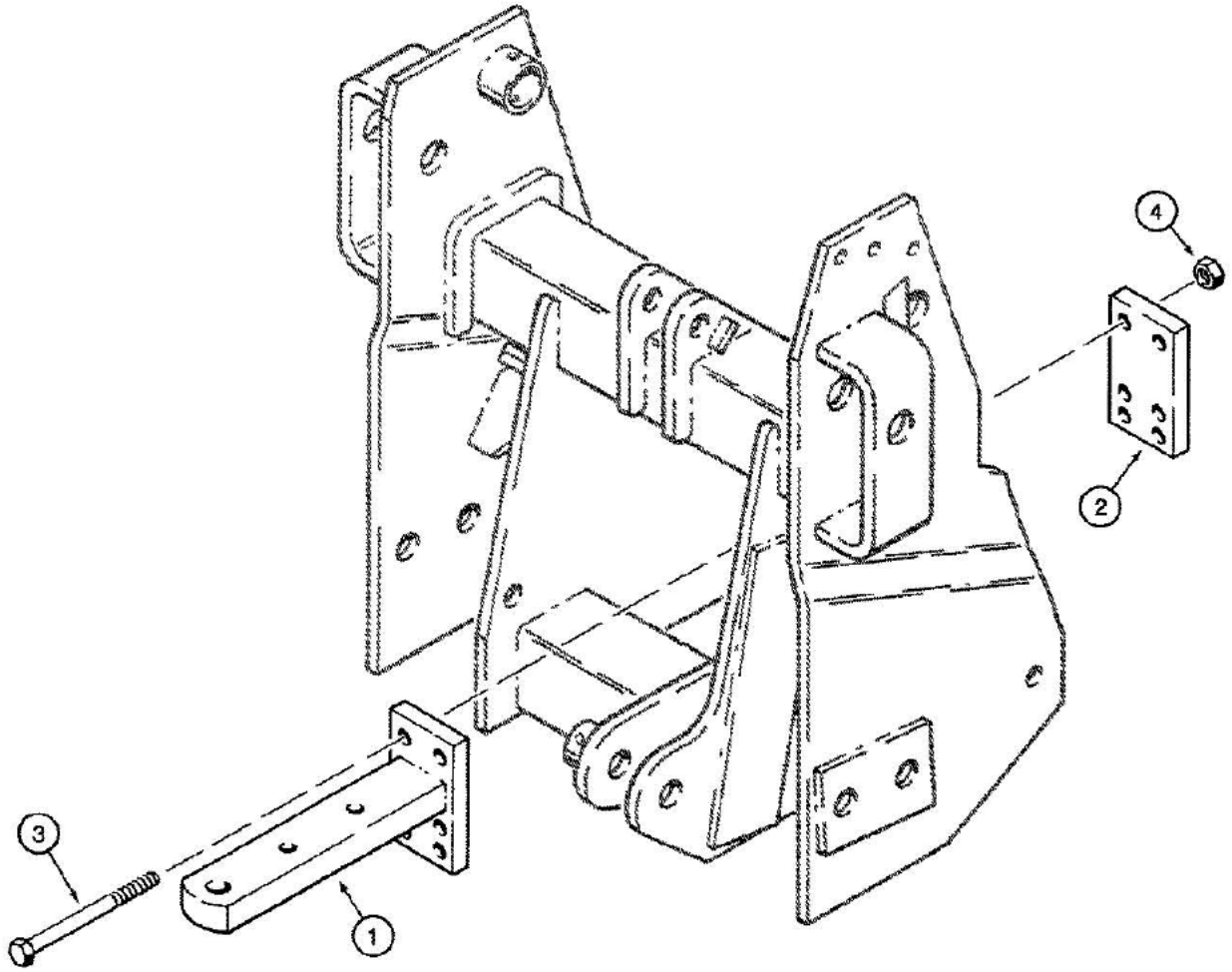

861878A-45

For drawbars used on models with rear counterweight, see Figure 09-540.

09-536 RIGID DRAWBAR, USED WITH THREE-POINT HITCH

Ref	Part Number	Qty	Description
1	D136894	1	DRAWBAR rigid, tractor
2	D136893	1	PLATE mounting
3	413-10104	4	BOLT hex head, 5/8"-11 NC x 6-1/2", plated
4	129-107	4	NUT, 5/8"-11, G5

For drawbars used on models with rear counterweight, see Figure 09-540.

9-538

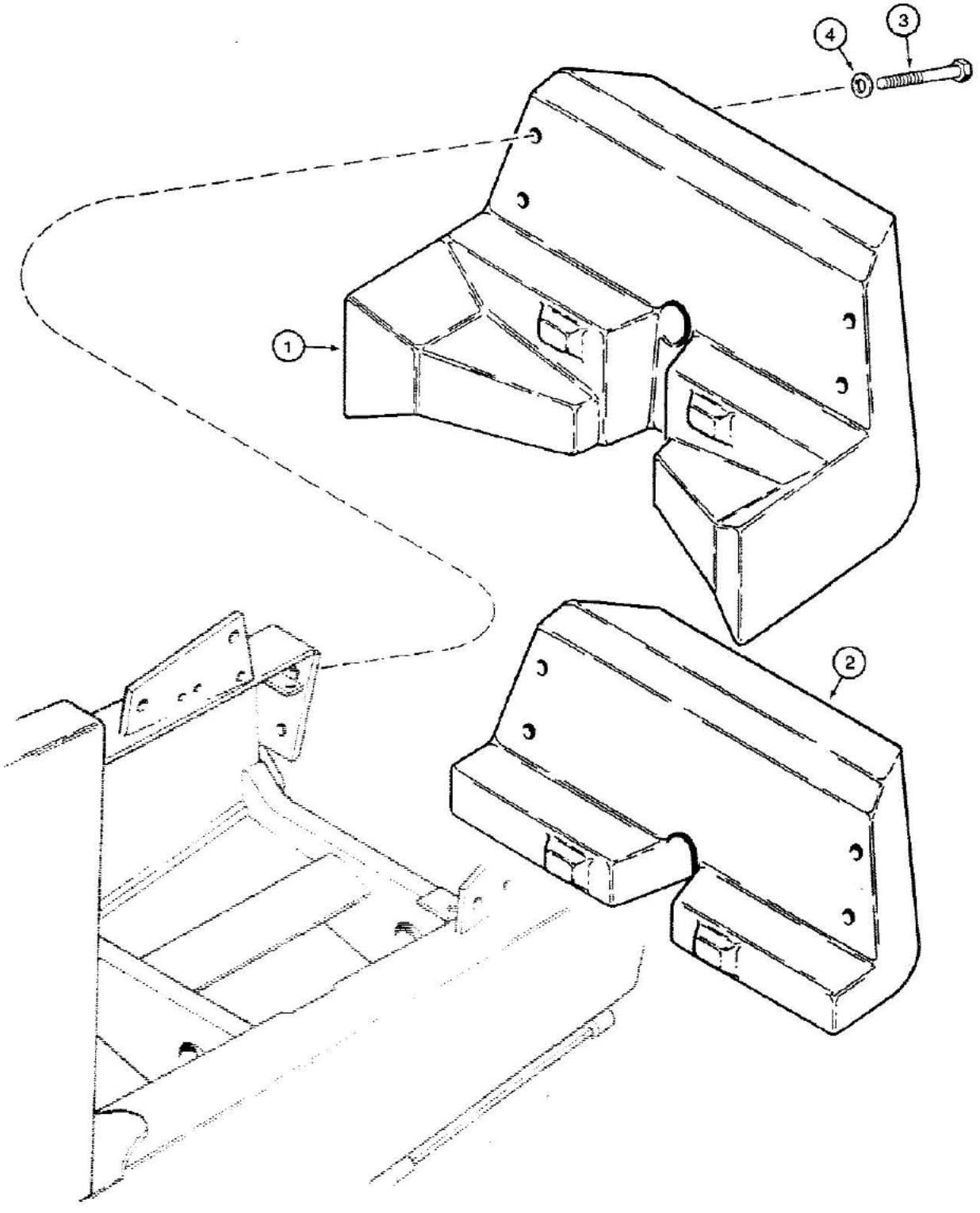

B8886-45

09-538 FRONT COUNTERWEIGHT

Ref	Part Number	Qty	Description
1	D144383	1	COUNTERWEIGHT front, 900 lbs, 408 kg, not used if front pump guard is used, see Figure 09-544 for pump guard and pump guard mounting hardware
2	D141500	1	COUNTERWEIGHT front, 400 lbs, 181 kg, if used
3	113-718	4	BOLT, Hex, 3/4"-10 x 4 1/2", G5, Used with front counterweight only
4	D34666	4	WASHER flat, 3/4", hardened, used with front counterweight only

9-540

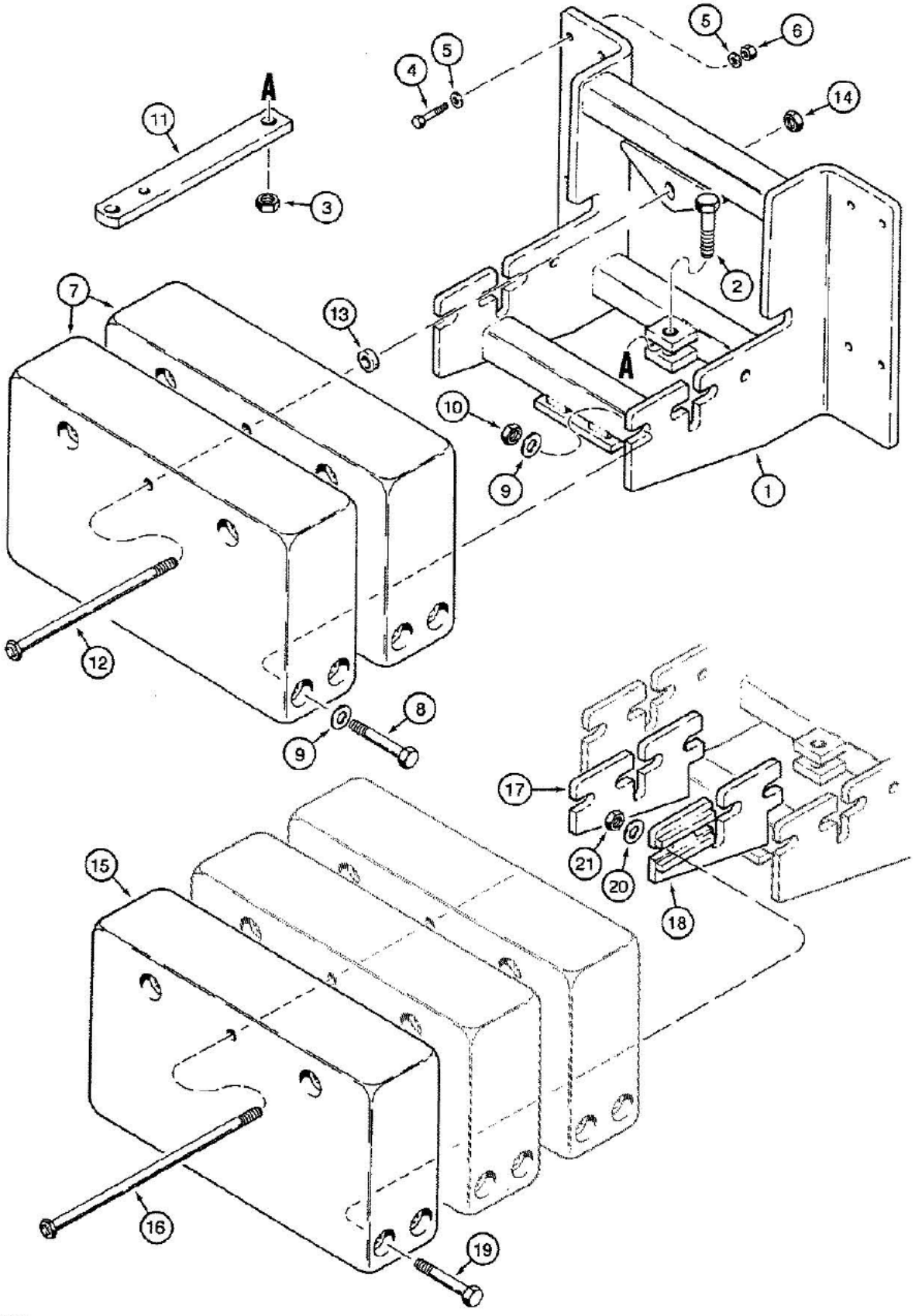

For drawbar used on models with three-point hitch, see Figure 09-536.

09-540 REAR COUNTERWEIGHT AND DRAWBAR

Ref	Part Number	Qty	Description
1	D136658	1	FRAME rear counterweight
2	26-1880	1	BOLT hex head, 1-1/8" - 7 NC x 5", grade 8
3	131-189	1	NUT hex, self-locking, 1-1/8" - 7 NC
4	26-1248	8	BOLT hex head, 3/4" - 10 NC x 3", grade 8
5	D34666	16	WASHER flat, 3/4", hardened
6	129-138	8	NUT, 3/4"-10, G8
7	D31204	2	COUNTERWEIGHT rear, each 1425 lbs, 646 kg
8	113-930	8	BOLT, Hex, 1"-8 x 7", G5
9	195-553	16	WASHER flat, 1", plated
10	129-110	8	NUT, 1"-8, G5
11	D93293	1	DRAWBAR tractor
12	D139275	1	BOLT special
13	H62406	1	SPACER counterweight
14	131-199	1	NUT hex, self-locking, 1" - 8 NC
15	D31204	1	COUNTERWEIGHT rear, 1425 lbs, 646 kg, used with 2800 lbs rear counterweight, if used, special parts used to mount additional 1400 pound rear counterweight
16	D140548	1	BOLT special parts used to mount additional 1400 pound rear counterweight
17	D93344	1	BRACKET left hand, additional counterweight adapter, special parts used to mount additional 1400 pound rear counterweight
18	D93345	1	BRACKET right hand, additional counterweight adapter, special parts used to mount additional 1400 pound rear counterweight
19	113-974	4	BOLT, Hex, 1"-8 x 6 3/4", G5, Special parts used to mount additional 1400 pound rear counterweight
20	195-553	4	WASHER flat, 1", plated, special parts used to mount additional 1400 pound rear counterweight
21	129-110	4	NUT, 1"-8, G5, Special parts used to mount additional 1400 pound rear counterweight

For drawbar used on models with three-point hitch, see Figure 09-536.

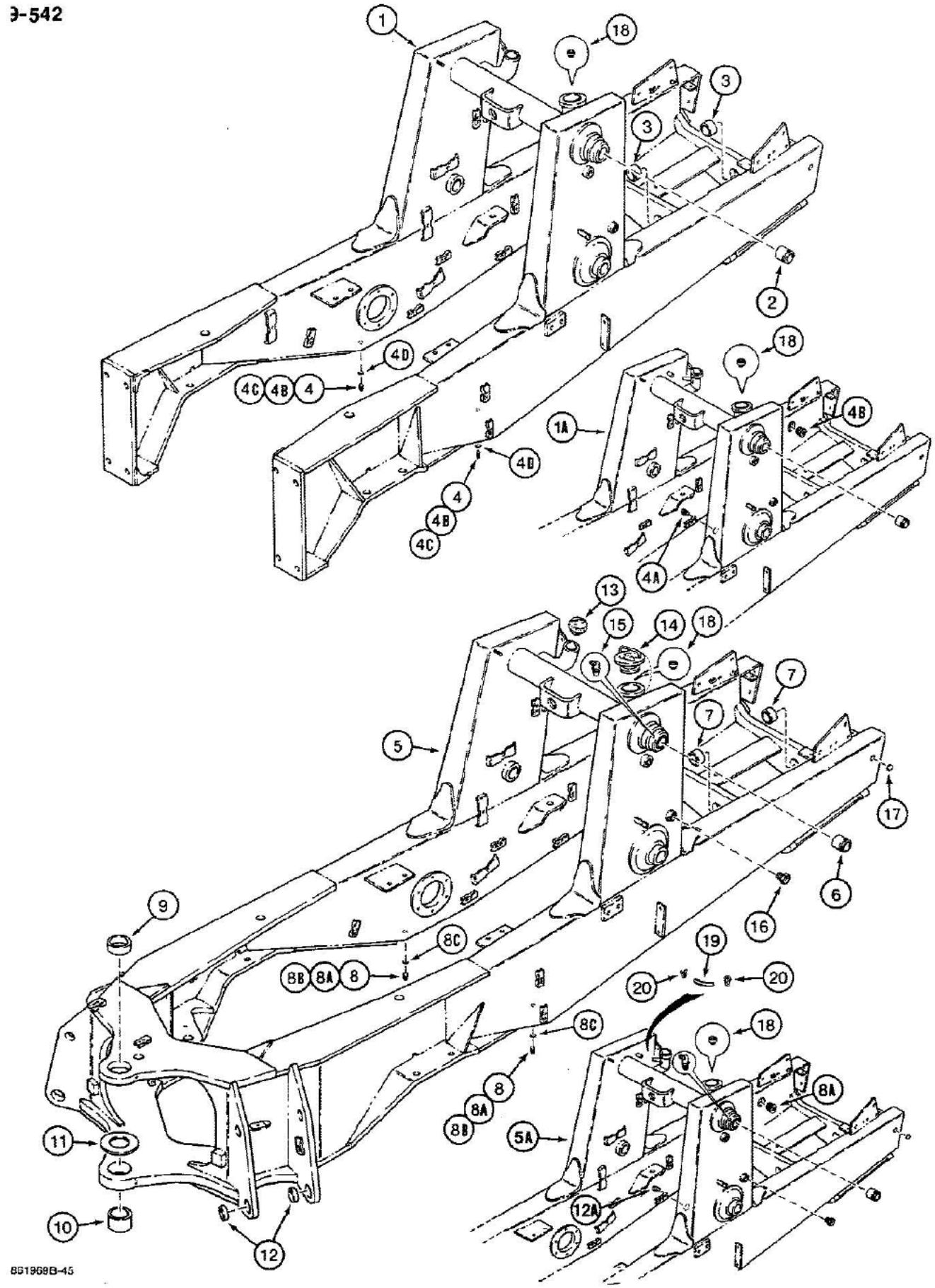

The 3/8" cage nuts welded along chassis are D88417, for battery box. ▯▯▯Ring showing in drawing against uprights of chassis at loader pivot tube are part nbr. D127370, welded to frame during fab. ▯▯▯None of the parts, D127370 reinforcing ring, D150711 tube/w cross, D150714 bushing, required are available from the plant any longer. Provide prints of necessary components to dealer for fabrication. We do have D129061 bushing, part of D150713 bushing/A, in stock.

580K LOADER BACKHOE (NORTH AMERICA) - Chassis/Attachments

09-542 CHASSIS

Ref	Part Number	Qty	Description
1	D135391	1	CHASSIS, loader or demountable backhoe models only, no longer available, for service order D140808 chassis, 1, A51390 cap, 1, N8796 breather, and, 2, 41-1020 expansion plugs, Includes: Ref. 2 thru 4D
1A	D140808	1	CHASSIS, loader or demountable backhoe models only, service replacement for D135391 chassis, Includes: Ref. 2 through 4D
2	D129061	2	BUSHING loader frame pivot
3	D127542	2	BUSHING front axle pivot
4	221-15	2	PLUG square head, 3/4" NPT, hydraulic oil and diesel fuel drain, D135391 chassis
4A	444789	1	PLUG pipe, 1/2" NPT, used with D140808 chassis
4B	D140713	3	PLUG square socket head, 1-1/4" NPT, without O-ring, used with D140808 chassis, no longer used, order 218-5161 plug
4C	218-5161	2	PLUG hex head, 1-1/4" NPT, with O-ring, used with D140808 chassis, Includes: Ref. 4D
4D	237-6020	1	O-RING, 20-1, 90 Duro, 1.475" ID x .118" Thk, Plug
5	D133192	1	CHASSIS, loader with integral backhoe models only, used before tractor P.I.N. No. 17425205, Includes: Ref. 6 thru 12A
5A	D140807	1	CHASSIS, loader with integral backhoe models only, used on tractor P.I.N. No. 17425205 and after, Includes: Ref. 6 through 12A
6	D129061	2	BUSHING loader frame pivot
7	D127542	2	BUSHING front axle pivot
8	221-15	2	PLUG square head, 3/4" NPT, hydraulic oil and diesel fuel drain, used with D133192 chassis
8A	D140713	3	PLUG square socket head, 1-1/4" NPT, without O-ring, used with D140807 chassis, no longer used, order 218-5161 plug
8B	218-5161	2	PLUG hex head, 1-1/4" NPT, with O-ring, used with D140807 chassis, Includes: Ref. 8C
8C	237-6020	1	O-RING, 20-1, 90 Duro, 1.475" ID x .118" Thk, Plug
9	D135555	1	BUSHING upper, backhoe frame, swing tower mounting
10	D135556	1	BUSHING lower, backhoe frame, swing tower mounting
11	D136472	1	SPACER, 3-1/4", 83 mm, ID x 5-5/16", 135 mm, OD x 1/4", 6 mm, thick, bearing, welds to frame
12	D43940	4	BUSHING lower, side, backhoe frame, at stabilizer leg mounting
12A	444789	1	PLUG pipe, 1/2" NPT, used with D140807 chassis
13	D133285	1	CAP diesel fuel reservoir, left-hand, used with D135391 or D133192 chassis
13	A51390	1	CAP diesel fuel reservoir, left-hand, used with D140807 or D140808 chassis, P/N A51390 is a 2-3/4" OD regular cap. You can also use P/N A32120 which is a 2-3/4" OD locking cap or you can order P/N A46523 kit, extension tube w/cap
14	D93981	1	CAP hydraulic oil reservoir, right-hand
15	219-36	2	GREASE FITTING, 45 degree, special short, 1/8" NPT, loader frame pivot
16	D63875	1	SIGHT GAUGE oil level
17	41-1020	2	EXPANSION PLUG cup, 1-1/4"
18	N8796	1	BREATHER vent, hydraulic oil reservoir
19	D140609	1	HOSE, 5/8" ID x 15/16" OD x 4-9/16" long, vent, used with D140807 or D1408089 chassis
20	D140872	2	CLAMP wire form, vent hose

The 3/8" cage nuts welded along chassis are D88417, for battery box. Ring showing in drawing against uprights of chassis at loader pivot tube are part nbr. D127370, welded to frame during fab. None of the parts, D127370 reinforcing ring, D150711 tube/w cross, D150714 bushing, required are available from the plant any longer. Provide prints of necessary components to dealer for fabrication. We do have D129061 bushing, part of D150713 bushing/A, in stock.

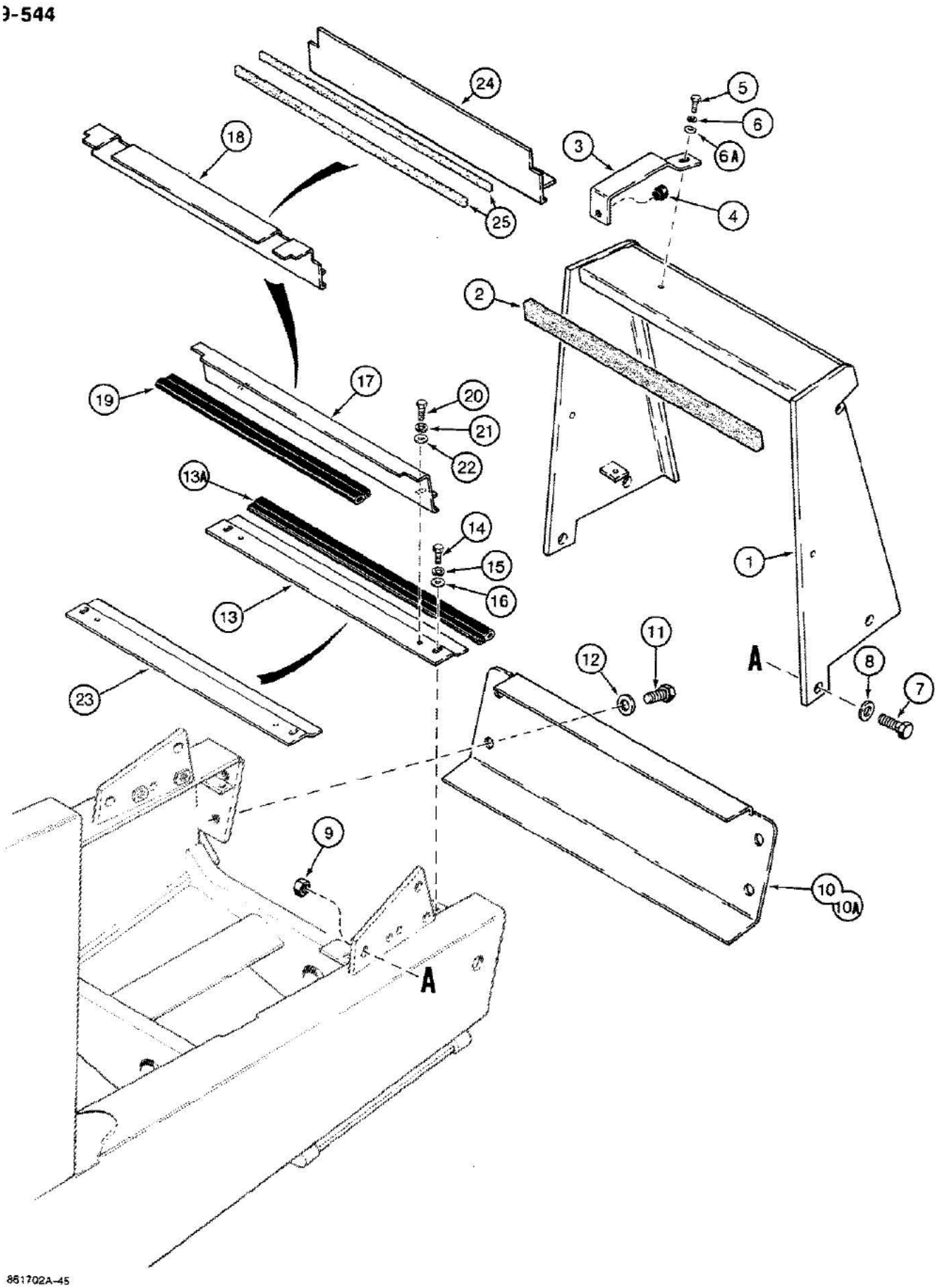
9-544
24
5
6
18
3
6A
25
4
2
17
19
20
21
22
13A
14
15
16
1
13
11
12
A
8
7
23
9
10
10A
A
861702A-45

09-544 RADIATOR SHROUD, PUMP GUARD, AND FRONT COVERS

Ref	Part Number	Qty	Description
1	D136101	1	SHROUD radiator
2	D135947	1	SEAL foam, adhesive back on one side, attaches to upper rear cross tube of shroud
3	D136104	1	BRACKET radiator retaining
4	1977504C1	1	BUMPER rubber
5	113-102	1	BOLT, Hex, 5/16"-18 x 3/4", G5, Full Thd
6	192-20	1	WASHER, LOCK, 5/16"
6A	195-521	1	WASHER flat, 5/16", plated
7	113-713	4	BOLT, Hex, 3/4"-10 x 1 3/4", G5
8	195-545	4	WASHER flat, 3/4", plated
9	129-108	4	NUT, 3/4"-10, G5
10	D124563	1	GUARD pump, may have two or four mounting holes, used with D133192 chassis, see Figure 09-542 for chassis, not used if front counterweight is used, see Figure 09-538 for front counterweight and counterweight mounting hardware
10A	D141011	1	GUARD pump, used with D140807 chassis, see Figure 09-542 for chassis
11	113-704	2-4	BOLT, Hex, 3/4"-10 x 1 1/4", G5, Used with pump guard only
12	195-545	2-4	WASHER flat, 3/4", plated, used with pump guard only
13	D135940	1	PLATE baffle, lower, if used
13A	D135944	1	SEAL, 22-11/16", 576 mm, long, cut from F43117 bulk seal, see below, lower baffle plate, used only on models with front counterweight
14	113-102	2	BOLT, Hex, 5/16"-18 x 3/4", G5, Full Thd
15	192-20	2	WASHER, LOCK, 5/16"
16	195-103	2	WASHER flat, 5/16", plated
17	D135946	1	PLATE baffle, upper, not used on models with air conditioning
18	D138355	1	PLATE baffle, upper, used only on models with air conditioning, if used
19	D128489	1	SEAL, 19-17/32", 496 mm, long, cut from F43117 bulk seal, see below, upper baffle plate
20	113-102	2	BOLT, Hex, 5/16"-18 x 3/4", G5, Full Thd
21	192-20	2	WASHER, LOCK, 5/16"
22	195-103	2	WASHER flat, 5/16", plated
23	D141013	1	PLATE baffle, lower, if used
24	D140971	1	PLATE baffle, lower, used with Ref. 25 seals on models with air conditioning or models with auxiliary hydraulics for optional rear hydraulic attachments, if used
25	D140871	2	SEAL, 22-1/16", 560 mm, long, adhesive back on one side, used with Ref. 24 plate, if used
	F43117	UAR	SEAL bulk, 100 ft, 3048 cm, long

9-546

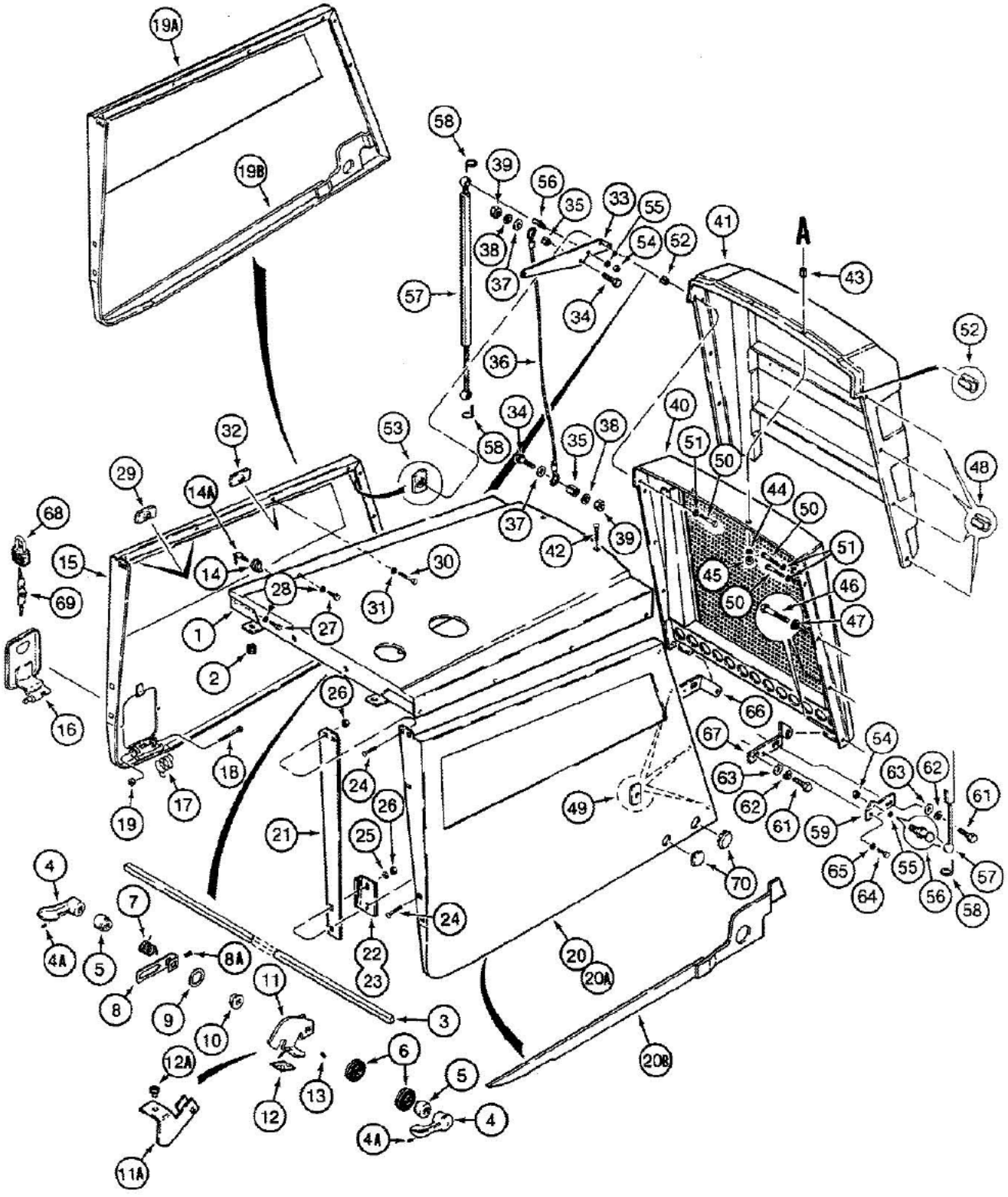

8617468-45

09-546 HOOD, ENGINE SIDE PANELS, AND GRILLE UNIT, USED ON MODELS WITH AIR CLEANER AIR DUCT BOX

Ref	Part Number	Qty	Description
1	D136403	1	HOOD engine, for air cleaner air duct and seal mounted to weld studs under the hood see Figure 02-014, and for muffler exhaust pipe and adapter tube mounted to weld studs under the hood see Figure 02-026
	D102836	1	KIT bumper, includes instruction sheet, Includes: Ref. 2
2	D145721	2	BUMPER hood to air cleaner mounting bracket
3	D136062	1	SHAFT square, hood
4	D136425	2	LEVER hood release, Includes: Ref. 4A
4A	83-54	1	SET SCREW hex socket, 5/16" - 18 NC x 1/4", cup point
5	D136060	2	BEARING shaft to lever
6	D136412	2	GROMMET bearing seal
7	D136467	1	SPRING lever return
8	D136091	1	LEVER hood spring, Includes: Ref. 8A
8A	222335	1	SET SCREW hex socket, No. 8 - 32 NC x 3/8", cone point, may replace slotted head set screw
9	A64584	1	Ring, Snap, #62, Ext, special
10	D136061	1	BEARING hood release bellcrank
11	D136038	1	LEVER hood release, used with Ref. 12 foam pad, if used
11A	D138843	1	LEVER hood release, used with Ref. 12A bumper, if used
12	D136763	1	PAD foam, adhesive back one side, hood stop, if used
12A	L60224	1	BUMPER hood stop, if used
13	178-834	1	SET SCREW hex headless, No. 10 - 24 NC x 1/2", cup point
14	D136114	1	LOCK ASSEMBLY includes two keys, hood, Includes: Ref. 14A
14A	N14119	2	KEYS hood lock, used on tractor PIN 17417801 thru 17417850 only
14A	N14440	2	KEYS hood lock
15	D135397	1	PANEL engine, left-hand side, with access door, without stiffener plate, no longer used, order D143245 panel, Ref. 19A
16	D92446	1	DOOR access, service replacement, remove decal that applies to radiator access only, if used
17	D121677	1	SPRING access door, if used
18	113-53	1	BOLT, Hex, 1/4"-20 x 3 1/4", G5, If used
19	131-2	1	NUT hex, self-locking, 1/4" - 20 NC, if used
19A	D143245	1	PANEL engine, left-hand side, without access door, with stiffener plate, Includes: Ref. 19B
19B	D143260	1	PLATE support, side panel stiffener
20	D135398	1	PANEL engine, right-hand side, without stiffener plate, no longer used, order D143244 panel
20A	D143244	1	PANEL engine, right-hand side, with stiffener plate, Includes: Ref. 20B
20B	D143259	1	PLATE support, side panel stiffener
21	D134654	2	PLATE engine side panels, rear guide
22	D136054	1	BRACKET rear guide, right-hand side panel
23	D136055	1	BRACKET rear guide, left-hand side panel
24	111-364	8	BOLT, CARRIAGE, Short NK, 3/8"-16 x 1 1/4", G5
25	195-525	4	WASHER flat, 3/8", plated, at rear guide brackets, replaces internal/external tooth lock washer on some models
26	131-52	8	NUT hex, self-locking, 3/8" - 16 NC, plated

09-546 HOOD, ENGINE SIDE PANELS, AND GRILLE UNIT, USED ON MODELS WITH AIR CLEANER AIR DUCT BOX

Ref	Part Number	Qty	Description
27	113-1	4	BOLT, Hex, 1/4"-20 x 1/2", G5, Full Thd
28	192-19	4	WASHER, LOCK, 1/4"
29	129-468	4	NUT weld, 1/4" - 20 NC, special
30	113-3	2	BOLT, Hex, 1/4"-20 x 3/4", G5, Full Thd
31	192-19	2	WASHER, LOCK, 1/4"
32	252552C1	2	NUT weld, 1/4" - 20 NC, special
33	D136618	2	BRACKET cylinder retaining, hood
34	113-208	4	BOLT, Hex, 3/8"-16 x 1 1/4", G5, Full Thd
35	D123539	4	SPACER, 13/32", 10 mm, ID x 5/8", 16 mm, OD x 1/4", 6 mm, long
36	D133403	2	CABLE steel, hood retaining
37	195-525	4	WASHER flat, 3/8", plated
38	192-21	4	WASHER, LOCK, 3/8"
39	129-103	4	NUT, 3/8"-16, G5
40	D134661	1	GRILLE tilt
41	D131610	1	GUARD grille, rubber
42	111-272	2	BOLT, CARRIAGE, Short NK, 5/16"- 18 x 1 1/4", Full Thd
43	D76209	2	SPACER, 13/32", 10 mm, ID x 5/8", 16 mm, OD x 5/8", 15 mm, long, replaces 1/2" long spacer used on some models
44	192-20	2	WASHER, LOCK, 5/16"
45	9635082	2	NUT, 5/16"-18, G5
46	113-5	6	BOLT, Hex, 1/4"- 20 x 1 1/2", G5
47	192-19	6	WASHER, LOCK, 1/4"
48	D136619	8	SPACER, 17/64", 7 mm, ID x 3/8", 10 mm, OD x 1/2", 13 mm, long
49	129-468	6	NUT weld, 1/4" - 20 NC, special
50	113-5	4	BOLT, Hex, 1/4"- 20 x 1 1/2", G5
51	192-19	4	WASHER, LOCK, 1/4"
52	D136620	2	SPACER, 17/64", 7 mm, ID x 3/8", 10 mm, OD x 25/64", 10 mm, long, one each side of grille to grille guard uppermost mounting holes only
53	129-468	4	NUT weld, 1/4" - 20 NC, special
54	9635082	4	NUT, 5/16"-18, G5
55	192-20	4	WASHER, LOCK, 5/16"
56	1304648C1	4	STUD ball, cylinder
57	D132726	2	CYLINDER spring, counterbalance, hood
58	F44883	4	CLIP ball stud retainer
59	D136583	1	BRACKET cylinder mounting, lower, right-hand
60	D136584	1	BRACKET cylinder mounting, lower, left-hand, not shown
61	113-233	4	BOLT, Hex, 3/8"-16 x 1 3/4", G5
62	192-21	4	WASHER, LOCK, 3/8"
63	195-525	4	WASHER flat, 3/8", plated
64	113-102	2	BOLT, Hex, 5/16"-18 x 3/4", G5, Full Thd
65	192-20	2	WASHER, LOCK, 5/16"

09-546 HOOD, ENGINE SIDE PANELS, AND GRILLE UNIT, USED ON MODELS WITH AIR CLEANER AIR DUCT BOX

Ref	Part Number	Qty	Description
66	D134669	1	BRACKET hinge, left-hand, attaches grille to chassis
67	D134668	1	BRACKET hinge, right-hand, attaches grille to chassis
68	D93753	1	PADLOCK access lid, if used, Includes: Ref. 69
69	R29555	2	KEY for Master padlock only
69	D93751	2	KEY for Yale padlock only
70	D140267	4	PLUG side panels, if used

9-550

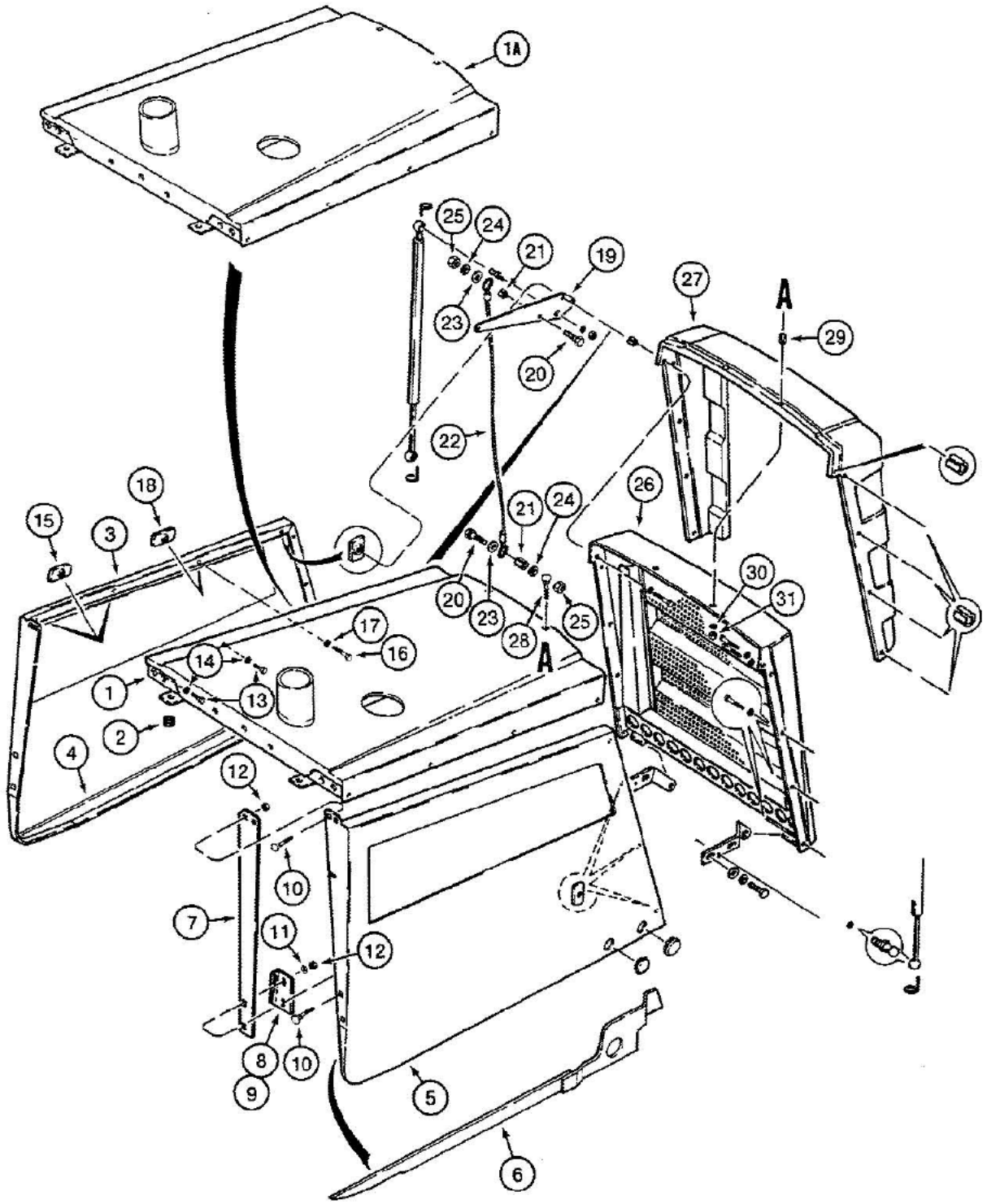

B0189A89W

09-550 HOOD, ENGINE SIDE PANELS, AND GRILLE UNIT, USED ON MODELS WITHOUT AIR CLEANER AIR DUCT BOX

Ref	Part Number	Qty	Description
1	D144397	1	HOOD, used on models without turbocharged engine
1A	D144409	1	HOOD, used on models with turbocharged engine
	D102836	1	KIT bumper, includes instruction sheet, Includes: Ref. 2, Ref. P/N D102836 bumper kit - Order individual bumpers, (2) P/N D139926, Ref. 2.
2	D139926	2	BUMPER hood to air cleaner mounting bracket
3	D143245	1	PANEL engine, left-hand side, Includes: Ref. 4
4	D143260	1	PLATE support, side panel stiffener
5	D143244	1	PANEL engine, right-hand side, Includes: Ref. 6
6	D143259	1	PLATE support, side panel stiffener
7	D134654	2	PLATE engine side panels, rear guide
8	D143714	1	BRACKET rear guide, right-hand side panel
9	D143715	1	BRACKET rear guide, left-hand side panel
10	111-364	8	BOLT, CARRIAGE, Short NK, 3/8"-16 x 1 1/4", G5
11	495-11041	4	WASHER flat, 3/8", plated, at rear guide brackets
12	131-52	8	NUT hex, self-locking, 3/8" - 16 NC, plated
13	113-1	4	BOLT, Hex, 1/4"-20 x 1/2", G5, Full Thd
14	192-19	4	WASHER, LOCK, 1/4"
15	129-468	4	NUT weld, 1/4" - 20 NC, special
16	113-3	2	BOLT, Hex, 1/4"-20 x 3/4", G5, Full Thd
17	192-19	2	WASHER, LOCK, 1/4"
18	129-468	2	NUT weld, 1/4" - 20 NC, special
19	D143903	2	BRACKET cylinder retaining, hood
20	113-208	4	BOLT, Hex, 3/8"-16 x 1 1/4", G5, Full Thd
21	D143417	4	SPACER cable
22	D133403	2	CABLE steel, hood retaining
23	195-525	4	WASHER flat, 3/8", plated
24	192-21	4	WASHER, LOCK, 3/8"
25	129-103	4	NUT, 3/8"-16, G5
26	D143506	1	GRILLE tilt
27	D143461	1	GUARD grille, rubber
28	111-272	2	BOLT, CARRIAGE, Short NK, 5/16"- 18 x 1 1/4", Full Thd
29	D76208	2	SPACER, 13/32", 10 mm, ID x 5/8", 16 mm, OD x 31/64", 12 mm, long
30	192-20	2	WASHER, LOCK, 5/16"
31	9635082	2	NUT, 5/16"-18, G5

9-552

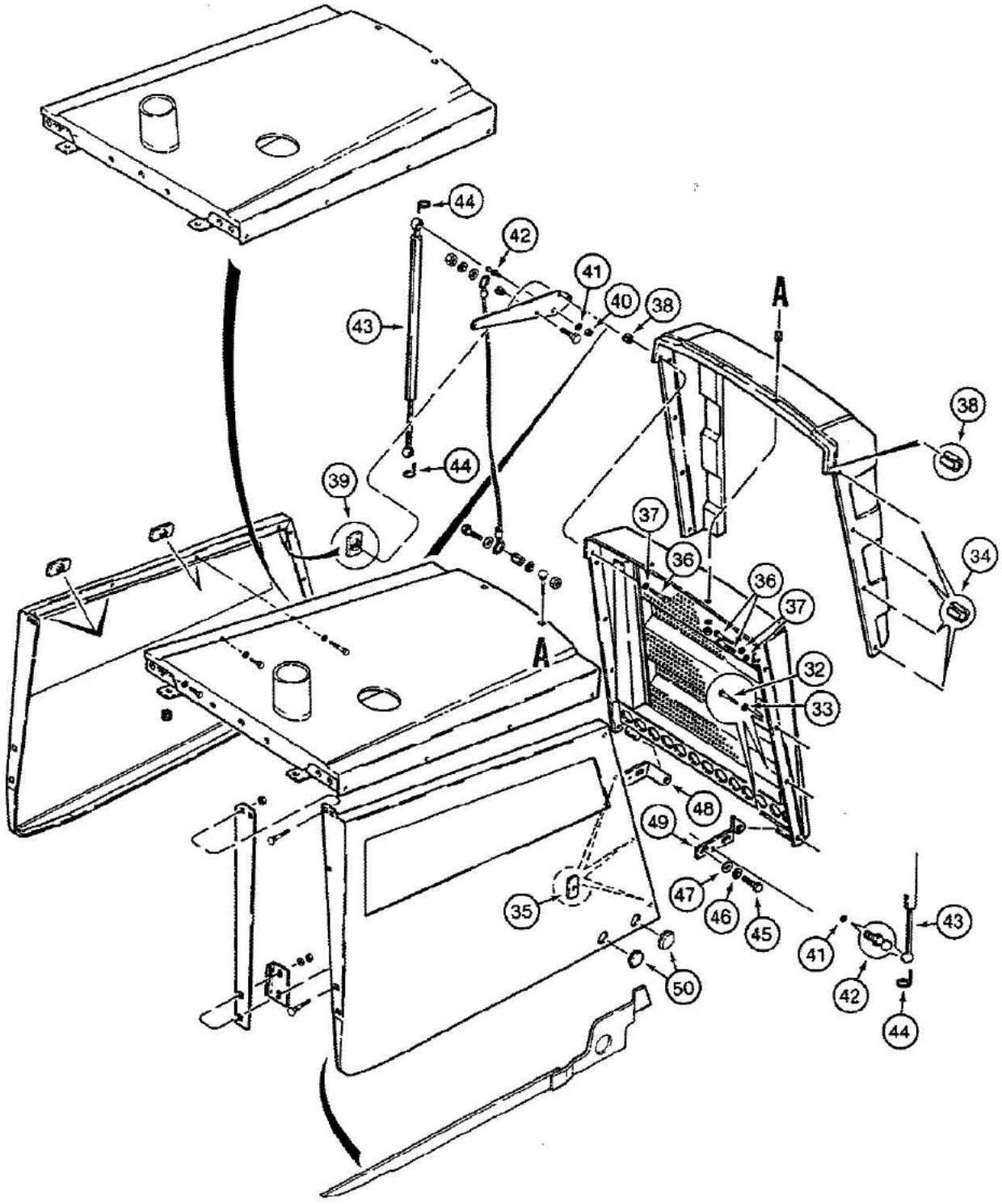

B0190A89W

09-552 HOOD, ENGINE SIDE PANELS, AND GRILLE UNIT, USED ON MODELS WITHOUT AIR CLEANER AIR DUCT BOX

Ref	Part Number	Qty	Description
32	113-5	6	BOLT, Hex, 1/4"- 20 x 1 1/2", G5
33	192-19	6	WASHER, LOCK, 1/4"
34	D136619	8	SPACER, 17/64", 7 mm, ID x 3/8", 10 mm, OD x 1/2", 13 mm, long
35	129-468	6	NUT weld, 1/4" - 20 NC, special
36	113-5	4	BOLT, Hex, 1/4"- 20 x 1 1/2", G5
37	192-19	4	WASHER, LOCK, 1/4"
38	D136620	2	SPACER, 17/64", 7 mm, ID x 3/8", 10 mm, OD x 25/64", 10 mm, long, one each side of grille to grille guard uppermost mounting holes only
39	129-468	4	NUT weld, 1/4" - 20 NC, special
40	9635082	2	NUT, 5/16"-18, G5
41	192-20	4	WASHER, LOCK, 5/16"
42	1304648C1	4	STUD ball, cylinder
43	D132726	2	CYLINDER spring, counterbalance, hood
44	F44883	4	CLIP ball stud retainer
45	113-233	4	BOLT, Hex, 3/8"-16 x 1 3/4", G5
46	192-21	4	WASHER, LOCK, 3/8"
47	195-525	4	WASHER flat, 3/8", plated
48	D134669	1	BRACKET hinge, left-hand, attaches grille to chassis
49	D134668	1	BRACKET hinge, right-hand, attaches grille to chassis
50	D140267	4	PLUG side panels, if used

9-554

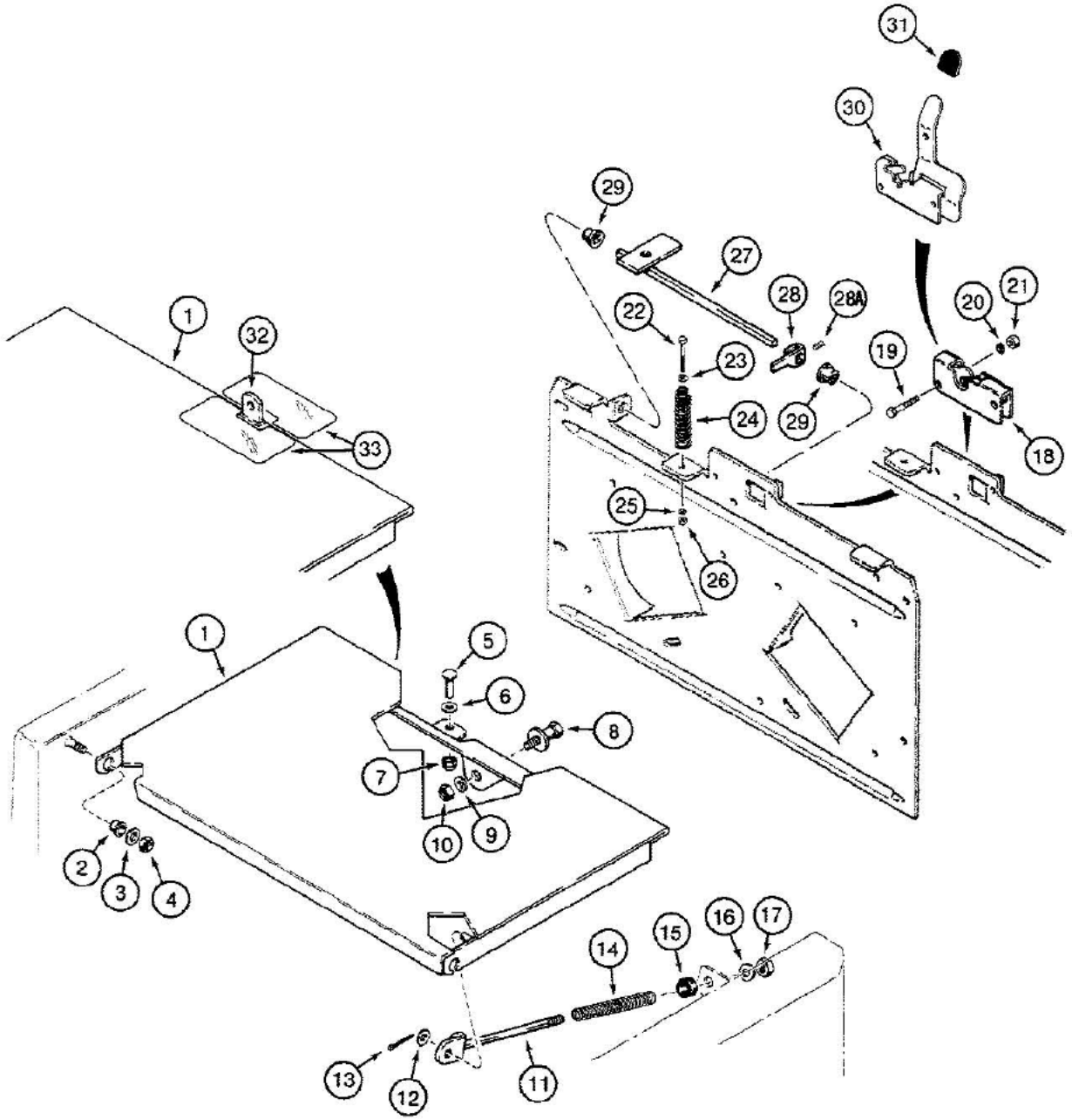

861747A-45

Part shown in phantom in drawing is air cleaner mounting bracket, Ref. 35 in Figure 02-016, P/N D140712.

580K LOADER BACKHOE (NORTH AMERICA) - Chassis/Attachments

09-554 UPRIGHT COVER AND HOOD LATCH RELEASE, USED ON MODELS WITH AIR CLEANER AIR DUCT BOX

Ref	Part Number	Qty	Description
1	D136057	1	COVER chassis upright
2	D134837	2	BEARING cover pivot
3	195-525	2	WASHER flat, 3/8", plated
4	131-52	2	NUT hex, self-locking, 3/8" - 16 NC, plated
5	141-52	1	CLEVIS PIN, 1/4", plated, special length
6	195-518	1	WASHER flat, 1/4", plated
7	131-867	1	NUT, 1/4", push-on type with cap
8	D136115	1	STRIKER upright cover
9	D52275	1	WASHER flat, 3/8", hardened, special
10	230-4216	1	NUT hex, self-locking, 3/8" - 16 NC, plated
11	D134872	1	ROD upright cover support
12	195-521	1	WASHER flat, 5/16", plated
13	132-24	1	PIN, SPLIT (COTTER), 3/32" x 1/2"
14	D125336	1	SPRING return, upright cover
15	D125335	1	BUMPER spring stop
16	195-518	1	WASHER flat, 1/4", plated
17	131-2	1	NUT hex, self-locking, 1/4" - 20 NC
18	D136086	1	LATCH hood release, Replaced by hood latch service kit P/N D103426
19	113-17	2	BOLT, Hex, 1/4"-20 x 1 1/4", G5
20	192-19	2	WASHER, LOCK, 1/4"
21	7770	2	NUT, 1/4"-20, G5
22	113-3	1	BOLT, Hex, 1/4"-20 x 3/4", G5, Full Thd
23	195-518	1	WASHER flat, 1/4", plated
24	D136113	1	SPRING hood pop-up
25	192-19	1	WASHER, LOCK, 1/4"
26	7770	1	NUT, 1/4"-20, G5
27	D136414	1	ROD release, Replaced by hood latch service kit P/N D103426
28	D136037	1	LEVER hood release, Includes: Ref. 28A, Replaced by hood latch service kit P/N D103426
28A	222335	1	SET SCREW hex socket headless, No. 8 - 32 NC x 3/8", cup point, Replaced by hood latch service kit P/N D103426
29	D136061	2	BEARING hood release lever, Replaced by hood latch service kit P/N D103426
	D103426	1	KIT service, hood latch, includes installation instructions, replaces Ref. 18 and 27 through 29, Includes: Ref. 30 through 33
30	D144414	1	LATCH hood release
31	D144519	1	CAP latch lever
32	D136293	1	PLATE tab, welds to upright cover
33	D145370	2	STRIP decal, prevents latch from scratching upright cover and hood

Part shown in phantom in drawing is air cleaner mounting bracket, Ref. 35 in Figure 02-016, P/N D140712.

9-556

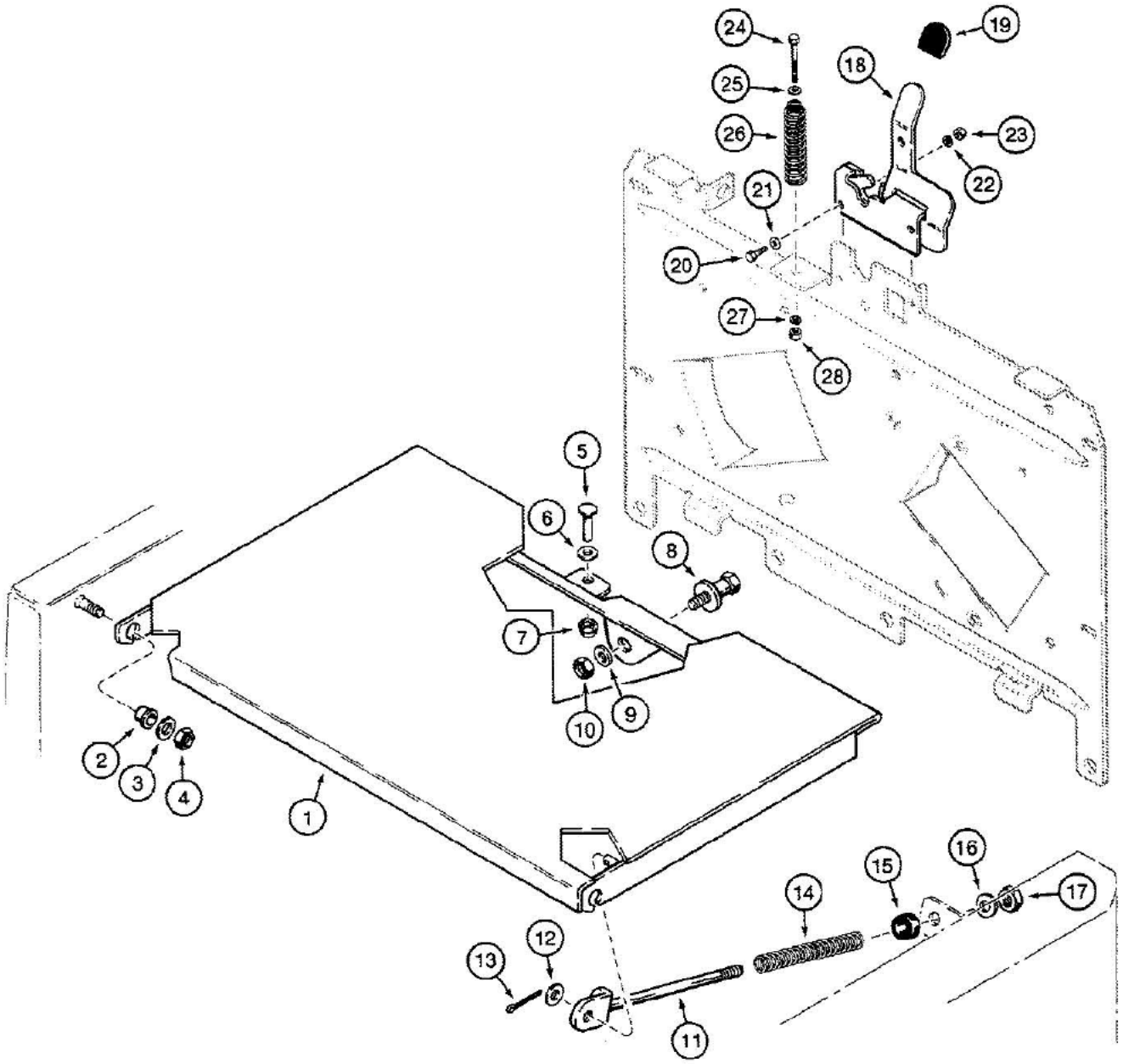

580K LOADER BACKHOE (NORTH AMERICA) - Chassis/Attachments

09-556 UPRIGHT COVER AND HOOD LATCH RELEASE, USED ON MODELS WITHOUT AIR CLEANER AIR DUCT BOX

Ref	Part Number	Qty	Description
1	D144452	1	COVER chassis upright
2	D134837	2	BEARING cover pivot
3	195-525	2	WASHER flat, 3/8", plated
4	131-52	2	NUT hex, self-locking, 3/8" - 16 NC, plated
5	141-52	1	PIN, 1/4", plated, special length
6	195-518	1	WASHER flat, 1/4", plated
7	131-867	1	NUT, 1/4", push-on type with cap
8	D136115	1	STRIKER upright cover
9	D52275	1	WASHER flat, 3/8", hardened, special
10	230-4216	1	NUT hex, self-locking, 3/8" - 16 NC, plated
11	D134872	1	ROD upright cover support
12	195-521	1	WASHER flat, 5/16", plated
13	132-330	1	PIN, SPLIT (COTTER), 3/32" x 1/2"
14	D125336	1	SPRING return, upright cover
15	D125335	1	BUMPER spring stop
16	195-518	1	WASHER flat, 1/4", plated
17	131-2	1	NUT hex, self-locking, 1/4" - 20 NC
18	D144414	1	LATCH hood release
19	D144519	1	CAP latch lever
20	113-17	2	BOLT, Hex, 1/4"-20 x 1 1/4", G5
21	495-21031	2	WASHER flat, 1/4", plated
22	192-19	2	WASHER, LOCK, 1/4"
23	7770	2	NUT, 1/4"-20, G5
24	113-3	1	BOLT, Hex, 1/4"-20 x 3/4", G5, Full Thd
25	195-518	1	WASHER flat, 1/4", plated
26	D136113	1	SPRING hood pop-up
27	192-19	1	WASHER, LOCK, 1/4"
28	7770	1	NUT, 1/4"-20, G5

9-558

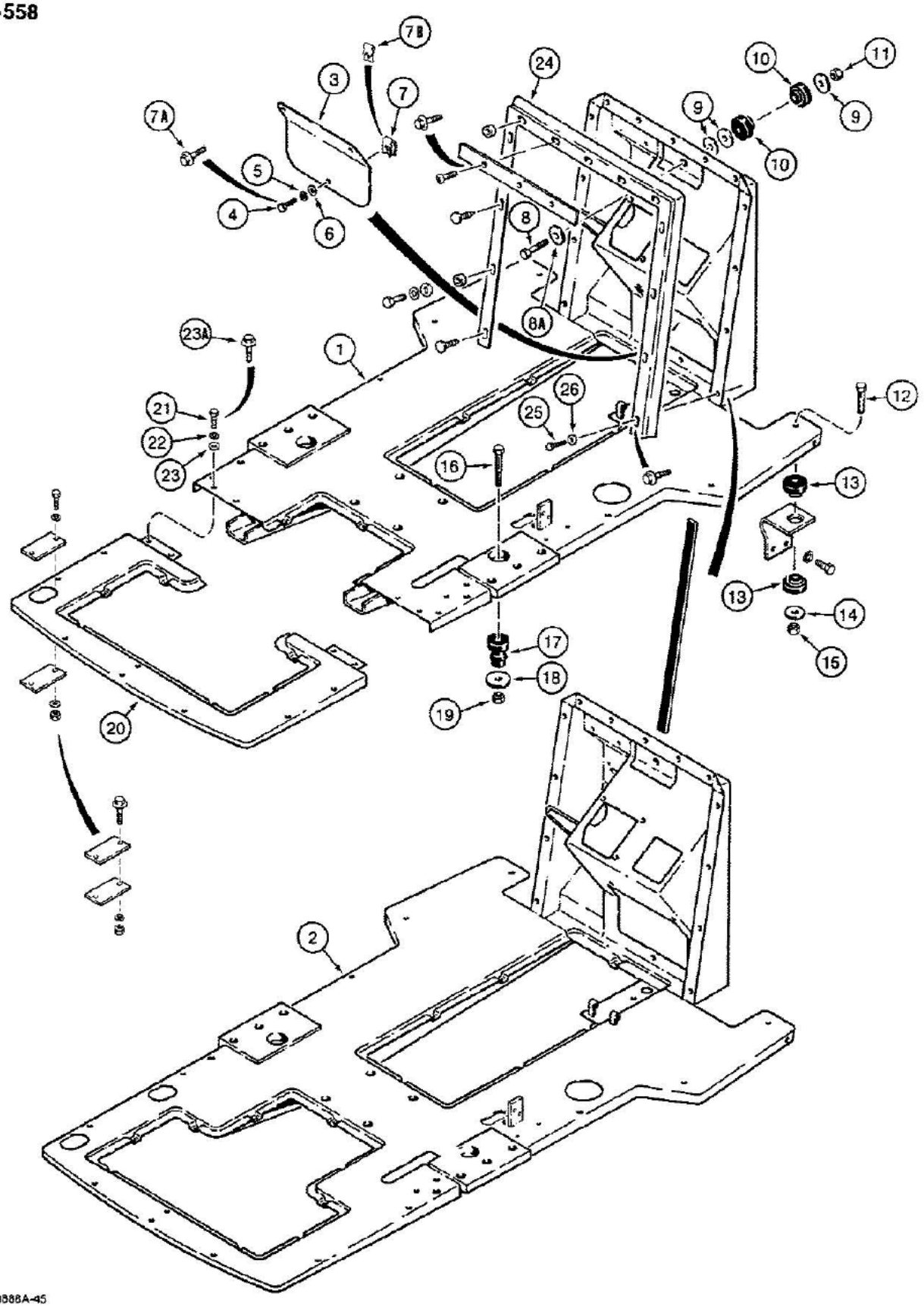
7B
3
7
24
10
11
9
7A
5
4
6
8
8A
23A
1
21
22
23
26
25
12
16
13
13
14
15
17
18
19
20
2
B8888A-45

09-558 OPERATORS COMPARTMENT FRAME AND MOUNTING

Ref	Part Number	Qty	Description
1	D139986	1	FRAME operators compartment, without hole on right-hand side of firewall wrapper, loader models only or used with D141960, Ref. 20, rear frame for bolt-on demountable backhoe models, no longer used, for service order D141567 frame
1A	D141567	1	FRAME operators compartment, with hole on right-hand side of firewall wrapper, loader models only or used with D141960, Ref. 20 rear frame for bolt-on demountable backhoe models, not shown
2	D139985	1	FRAME operators compartment, without hole on right-hand side of firewall wrapper, loader integral backhoe models, no longer used, for service order D141566 frame
2A	D141566	1	FRAME operators compartment, with hole on right-hand side of firewall wrapper, loader integral backhoe models, not shown
3	D139180	1	PLATE access, in firewall
4	113-103	3	BOLT, Hex, 5/16"-18 x 1", G5, Full Thd, If used, may be replaced with Ref. 7A bolt
5	192-20	3	WASHER, LOCK, 5/16", If used
6	195-521	3	WASHER flat, 5/16", plated, if used
7	131-97	3	NUT U-type, 5/16" - 18 NC, if used, may be replaced by J-type nut, Ref. 7B
7A	D141589	3	BOLT hex washer head, self-locking, 5/16" - 18 NC x 3/4", plated
7B	131-637	3	NUT J-type, 5/16" - 18 NC
8	26-1060	1	BOLT hex head, 5/8" - 11 NC x 3-3/4"
8A	D90873	1	WASHER flat, special
9	D89007	3	WASHER flat, 5/8", hardened, special
10	D138565	2	INSULATOR frame mounting, front
11	129-183	1	NUT, 5/8"-11, G8
12	23061R1	2	BOLT hex head, 5/8" - 11 NC x 4", plated
13	D138565	4	INSULATOR frame mounting, front
14	D89007	2	WASHER flat, 5/8", hardened, special
15	129-183	2	NUT, 5/8"-11, G8
16	113-2642	2	BOLT, Hex, 5/8"-11 x 4 1/2", G8
17	A141451	2	INSULATOR frame mount, rear, rubber
18	D89007	2	WASHER flat, 5/8", hardened, special
19	129-183	2	NUT, 5/8"-11, G8
20	D141960	1	FRAME rear, used with D139986 or D141567 frame, Ref. 1 or 1A, frame, cab or canopy models with bolt-on demountable backhoe or cab or canopy loader only models with rear counterweight
21	113-103	4	BOLT, Hex, 5/16"-18 x 1", G5, Full Thd, If used, may be replaced Ref. 23A bolt
22	192-20	4	WASHER, LOCK, 5/16", If used
23	195-521	4	WASHER flat, 5/16", plated, if used
23A	D141589	4	BOLT hex washer head, self-locking, 5/16" - 18 NC x 3/4", plated
24	D132290	1	SEAL firewall, used on models without cab
25	113-102	2	BOLT, Hex, 5/16"-18 x 3/4", G5, Full Thd, Lower mounting holes, used with Ref. 24 seal, for upper mounting hole hardware, see front instrument panel in Figure 04-116, if used, may be replaced by self-locking bolt, Ref. 40 in Figure 09-560
26	195-103	2	WASHER flat, 5/16", plated, used with Ref. 24 seal, if used

9-560

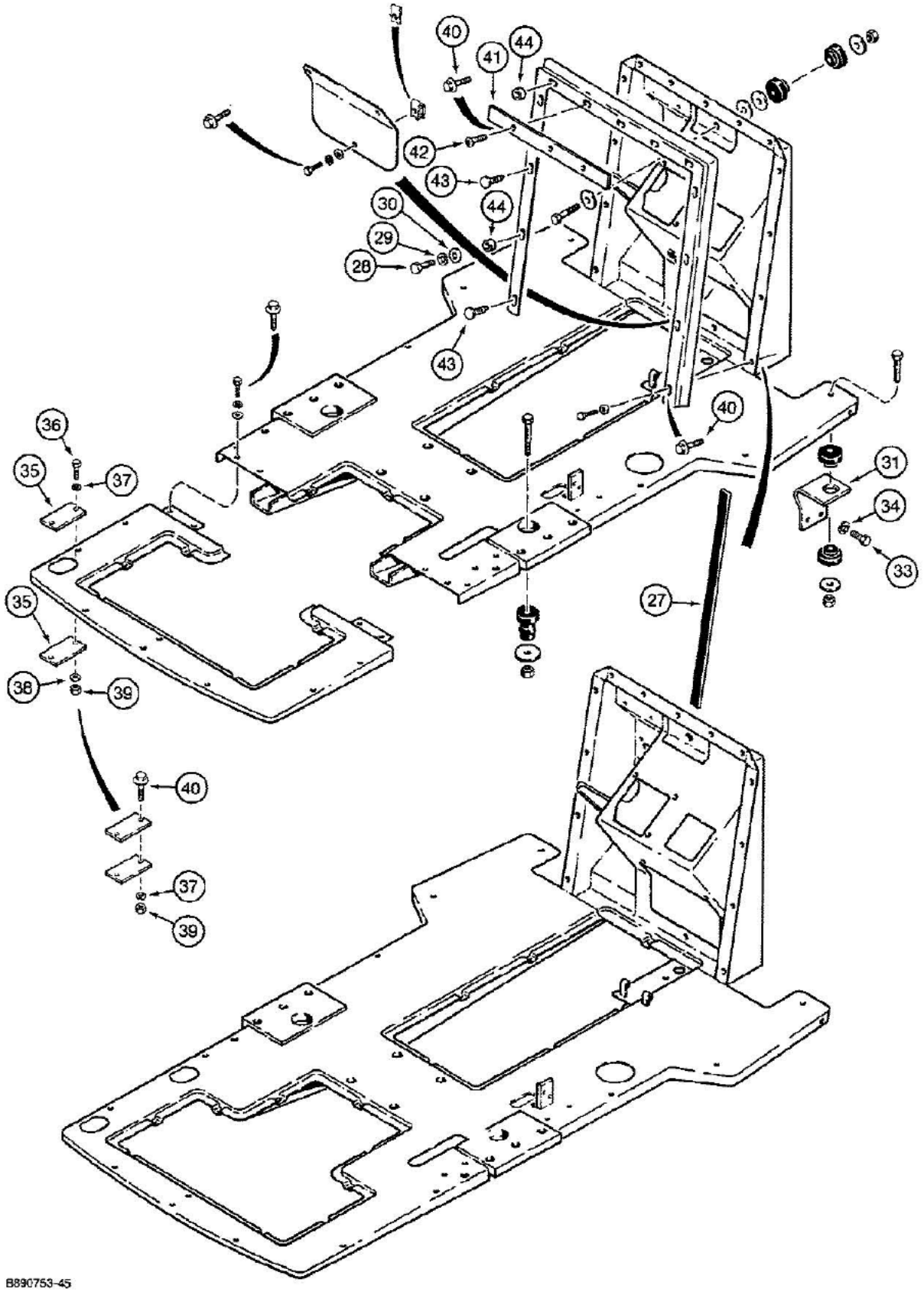
40
41
44
42
43
30
29
28
44
43
36
35
37
40
31
34
33
35
27
38
39
40
37
39
B890753-45

09-560 OPERATORS COMPARTMENT FRAME AND MOUNTING

Ref	Part Number	Qty	Description
27	REF	1	SEAL, 112", 2845 mm, long, cut from L35819 bulk seal, adhesive one side, firewall, used on models with cab
28	113-102	4-7	BOLT, Hex, 5/16"-18 x 3/4", G5, Full Thd, Cab models, see front instrument panel in Figure 04-116 for remainder of hardware, if used
29	192-20	4-7	WASHER, LOCK, 5/16", If used
30	195-521	4-7	WASHER flat, 5/16", plated, if used
31	D140554	1	BRACKET frame mount, right-hand front
32	D140555	1	BRACKET frame mount, left-hand front, not shown
33	113-417	4	BOLT, Hex, 1/2"-13 x 1 1/4", G5, Full Thd
34	192-23	4	WASHER, LOCK, 1/2"
35	D140261	2	PLATE boom latch hole, used on models without backhoe, with rear counterweight
36	113-103	2	BOLT, Hex, 5/16"-18 x 1", G5, Full Thd, If used, may be replaced by Ref. 40 bolt
37	192-20	2	WASHER, LOCK, 5/16"
38	195-521	2	WASHER flat, 5/16", plated, if used
39	9635082	2	NUT, 5/16"-18, G5
40	D141589	5-7	BOLT hex washer head, self-locking, 5/16" - 18 NC x 3/4", plated, may replace bolt and washer on some models
41	D143659	1	PLATE steel
42	182-501	3	SCREW machine, pan Phillips head, 5/16" - 18 NC x 3/4"
43	D143242	4	RETAINER push-in, plastic
44	D35217	4	SPACER, seal to front instrument panel
	L35819	UAR	SEAL foam rubber, bulk roll, adhesive back, 1", 25 mm, wide x 1/8", 3 mm, thick x 50 ft, 15.2 m, long

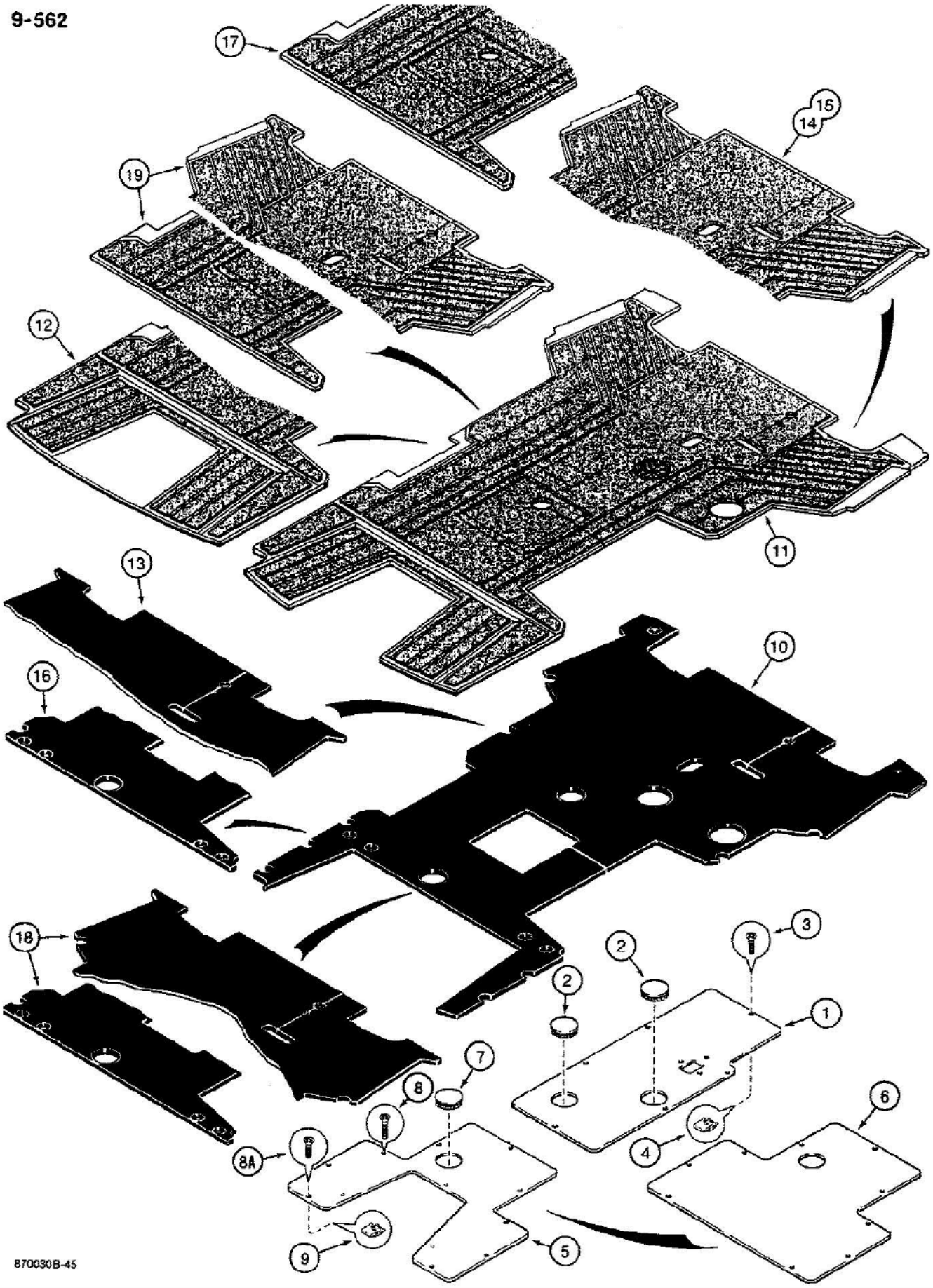

See Figure 09-458 for backhoe control tower floor plate and seals.

09-562 FLOOR PLATES AND FLOORMATS

Ref	Part Number	Qty	Description
1	D127077	1	PLATE floor, front cover, with or without backhoe
2	205-72	2	PLUG button, 3", steel, front floor plate, if used
3	164-206	6	BOLT hex socket flat head, 5/16" - 18 NC x 3/4", grade 8, plated, front floor plate, replaces 1" bolt
4	131-637	6	NUT J-type, 5/16" - 18 NC, replaces U-type nut
5	D133813	1	PLATE floor, rear cover, with plug hole, cab or canopy models with backhoe, may replace plate without plug hole on some models if used with 205-72 plug
6	D135978	1	PLATE floor, rear cover, cab or canopy models without backhoe, with rear counterweight
7	205-72	1	PLUG button, 3", steel, rear floor plate, if used
8	164-207	7	BOLT hex socket flat head, 5/16" - 18 NC x 1", grade 8, plated, rear floor plate, no longer used, order Ref. 8A bolt
8A	164-206	2-9	BOLT hex socket flat head, 5/16" - 18 NC x 3/4"
9	131-637	9	NUT J-type, 5/16" - 18 NC, rear floor plate, replaces U-type nut
10	D138736	1	PAD floormat, service replacement
11	D138735	1	FLOORMAT, used with D138736 pad, cab models with backhoe, for service order D139802 floormat
12	D139802	1	FLOORMAT service replacement
13	D139842	1	PAD, D139802, D139838, or D139839 floormat, used on cab models without backhoe or canopy models with or without backhoe, for service order D138736 pad
14	D139838	1	FLOORMAT, used with D139842 pad, canopy models with backhoe, for service order D139802 floormat
15	D139839	1	FLOORMAT, used with D139842 pad, canopy models without backhoe, for service order D139802 floormat
16	D139843	1	PAD, D139840 floormat, used on cab models with three-point hitch, for service order D138736 pad
17	D139840	1	FLOORMAT, used with D139843 pad, cab models with three-point hitch, for service order D139802 floormat
18	D139844	1	PAD, D139841 floormat, used on canopy models with three-point hitch, for service order D138736 pad
19	D139841	1	FLOORMAT, used with D139844 pad, canopy models with three-point hitch, for service order D139802 floormat

See Figure 09-458 for backhoe control tower floor plate and seals.

9-564

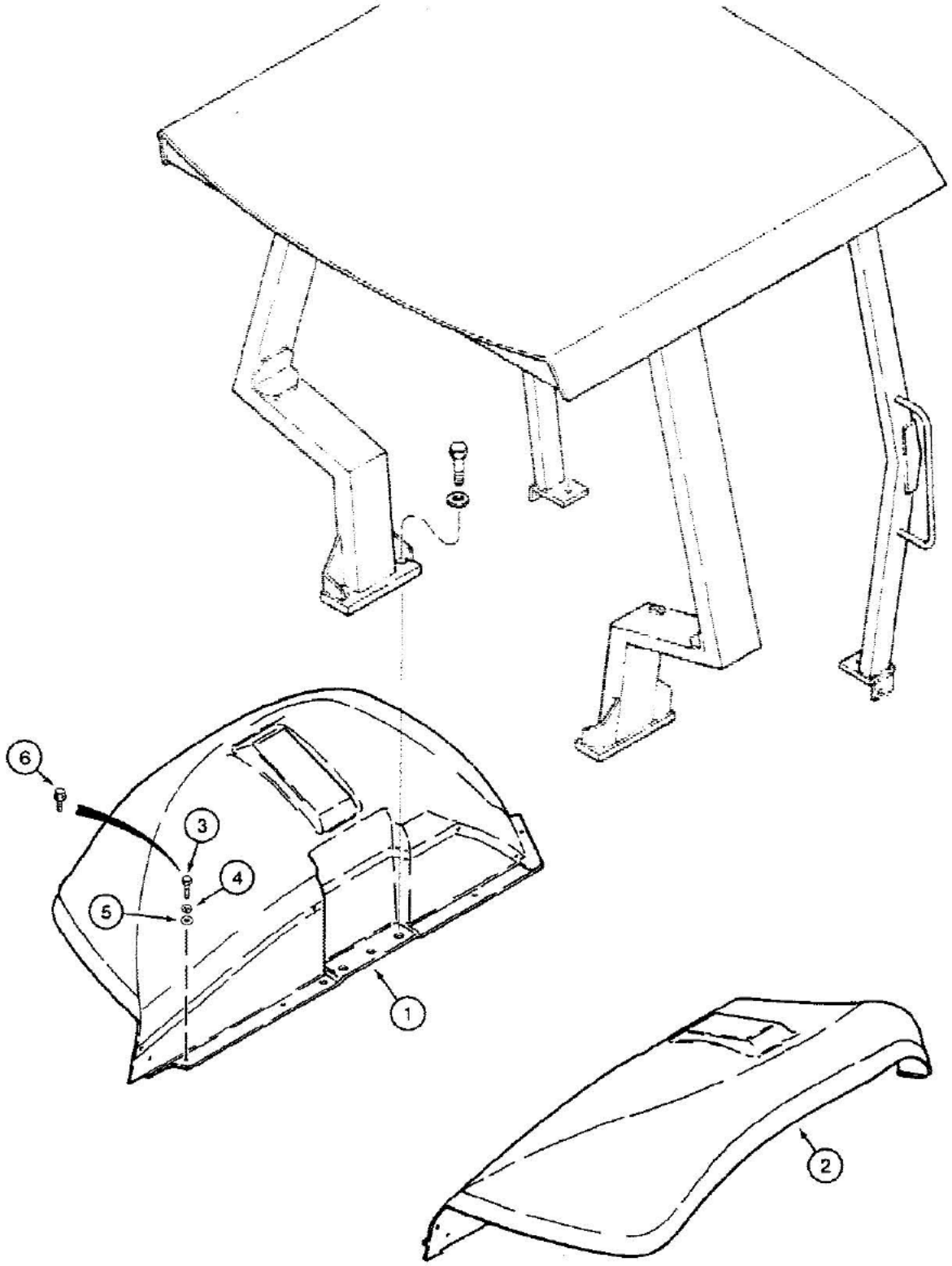

09-564 REAR FENDERS, ROPS CANOPY MODELS

Ref	Part Number	Qty	Description
1	R52549	1	FENDER left-hand
2	R52550	1	FENDER right-hand
3	113-102	8	BOLT, Hex, 5/16"-18 x 3/4", G5, Full Thd, Fender to floor plate, if used, may be replaced by self-locking bolt on some models
4	192-20	8	WASHER, LOCK, 5/16", If used
5	195-103	8	WASHER flat, 5/16", plated, if used
6	D141589	8	BOLT hex washer head, self-locking, 5/16" - 18 NC x 3/4", plated, replaces bolt and washers on some models

9-566

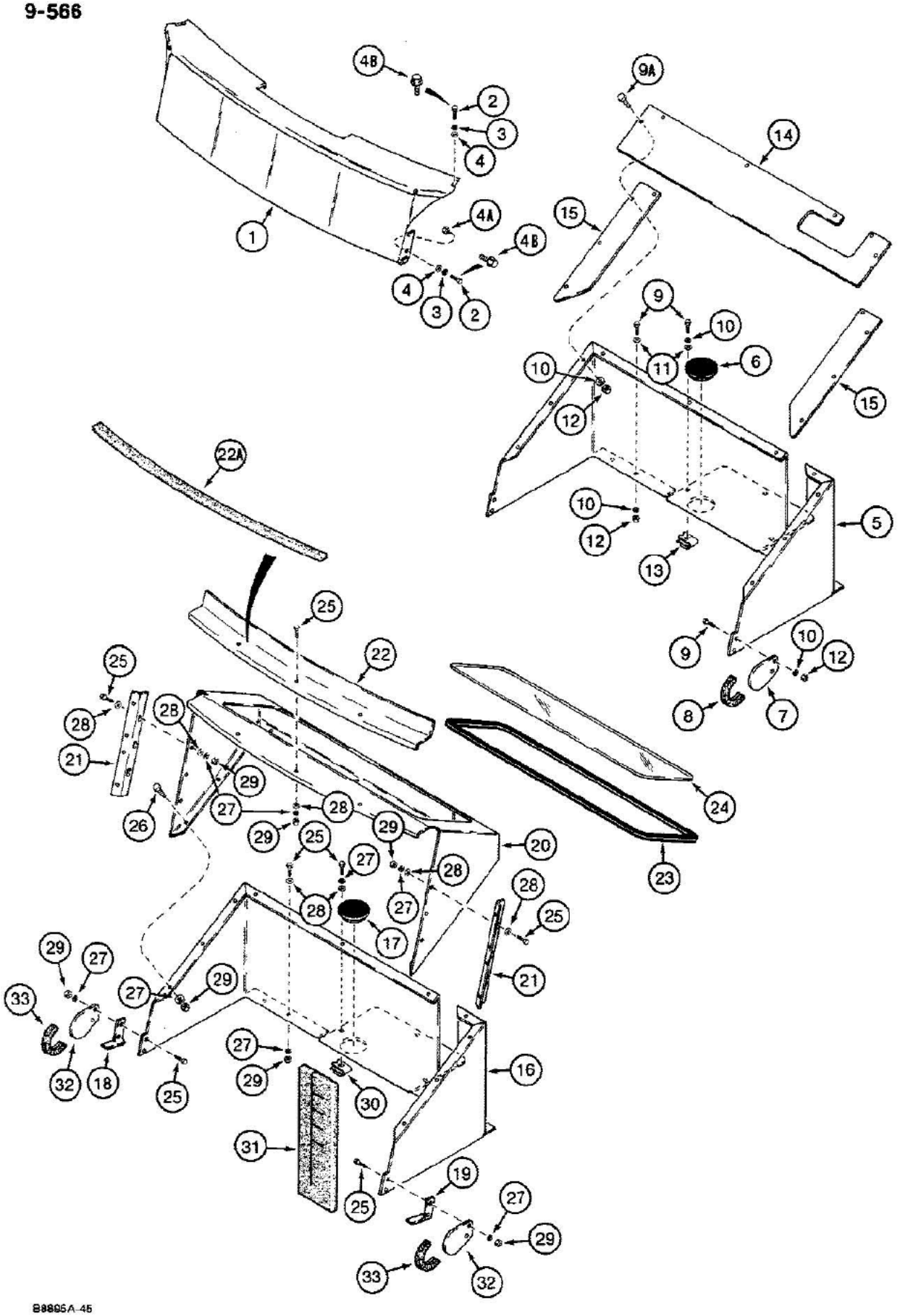

B8895A-45

09-566 REAR CLOSURE PANELS, CANOPY MODELS WITH BACKHOE OR REAR COUNTERWEIGHT OR WITH THREE-POINT HI

Ref	Part Number	Qty	Description
1	D135244	1	PANEL rear closure, canopy models with backhoe or canopy models without backhoe but with rear counterweight, see Figure 09-634 for decal
2	113-102	7	BOLT, Hex, 5/16"-18 x 3/4", G5, Full Thd, If used, canopy models with backhoe or rear counterweight
3	192-20	7	WASHER, LOCK, 5/16", If used, canopy models with backhoe or rear counterweight
4	195-103	7	WASHER flat, 5/16", plated, if used, canopy models with backhoe or rear counterweight
4A	9635082	2	NUT, 5/16"-18, G5, Canopy models with backhoe or rear counterweight
4B	D141589	7	BOLT hex washer head, self-locking, 5/16" - 18 NC x 3/4", plated, replaces bolts and washers on some models, canopy models with backhoe or rear counterweight
5	D141305	1	PANEL rear closure, canopy models without backhoe with three-point hitch
6	205-72	1	PLUG, 3" diameter, if used, canopy models with three-point hitch
7	D141390	2	PLATE corner guard, canopy models with three-point hitch
8	D33500	2	TRIM edge, 7" long, cut from bulk trim, see Parts Substitution List for bulk trim options, canopy models with three-point hitch
9	113-103	11	BOLT, Hex, 5/16"-18 x 1", G5, Full Thd, Canopy models with three-point hitch
9A	113-102	10	BOLT, Hex, 5/16"-18 x 3/4", G5, Full Thd, Canopy models with three-point hitch
10	192-20	21	WASHER, LOCK, 5/16", Canopy models with 3-point hitch
11	195-521	7	WASHER flat, 5/16", plated, canopy models with three-point hitch
12	9635082	18	NUT, 5/16"-18, G5, Canopy models with three-point hitch
13	131-637	3	NUT J-type, 5/16" - 18 NC, replaces U-type nut, canopy models with three-point hitch
14	D141574	1	COVER panel, canopy models with three-point hitch
15	D141573	2	PLATE panel, canopy models with three-point hitch
16	D141305	1	PANEL rear closure, lower, cab models without backhoe with three-point hitch
17	205-72	1	PLUG, 3" diameter, if used, cab models with three-point hitch
18	D136688	1	BRACKET window track stop, left-hand, cab models with three-point hitch
19	D136689	1	BRACKET window track stop, right-hand, cab models with three-point hitch
20	D141945	1	PANEL rear closure, upper, cab models wilth three-point hitch
21	D136690	2	BRACKET angle, window, closure support, may have holes or slots, cab models with three-point hitch
22	D136651	1	BRACKET threshold, window, rear, cab models with three-point hitch
22A	D126201	1	SEAL, 25/32", 20 mm, wide x 13/32", 10 mm, thick x 35-29/32", 912 mm long, adhesive back, cab models with three-point hitch
23	D90207	1	SEAL, 79", 2006 mm, long, cut from A42677 bulk seal, molding, window, cab models with three-point hitch
24	D90206	1	GLASS closure panel, cab models with three-point hitch
	A42677	UAR	SEAL bulk roll, 50 feet, 15.24 cm, long, cab models with three-point hitch
25	113-103	20	BOLT, Hex, 5/16"-18 x 1", G5, Full Thd, Cab models with three-point hitch
26	113-102	10	BOLT, Hex, 5/16"-18 x 3/4", G5, Full Thd, Cab models with three-point
27	192-20	30	WASHER, LOCK, 5/16", Cab models with 3-point hitch
28	195-521	16-22	WASHER flat, 5/16", plated, cab models with three-point hitch
29	9635082	27	NUT, 5/16"-18, G5, Cab models with three-point hitch
30	131-637	3	NUT J-type, 5/16" - 18 NC, black, replaces U-type nut, cab models with three-point hitch
31	D141585	1	SEAL panel, cab models with three-point hitch

CAB MODELS WITH THREE-POINT HITCH

09-566 REAR CLOSURE PANELS, CANOPY MODELS WITH BACKHOE OR REAR COUNTERWEIGHT OR WITH THREE-POINT HI

Ref	Part Number	Qty	Description
32	D141390	2	PLATE corner guard, cab models with three-point hitch
33	D33500	2	TRIM edge, 7" long, cut from bulk trim, see Parts Substitution List for bulk trim options, cab models with three-point hitch

CAB MODELS WITH THREE-POINT HITCH

9-570

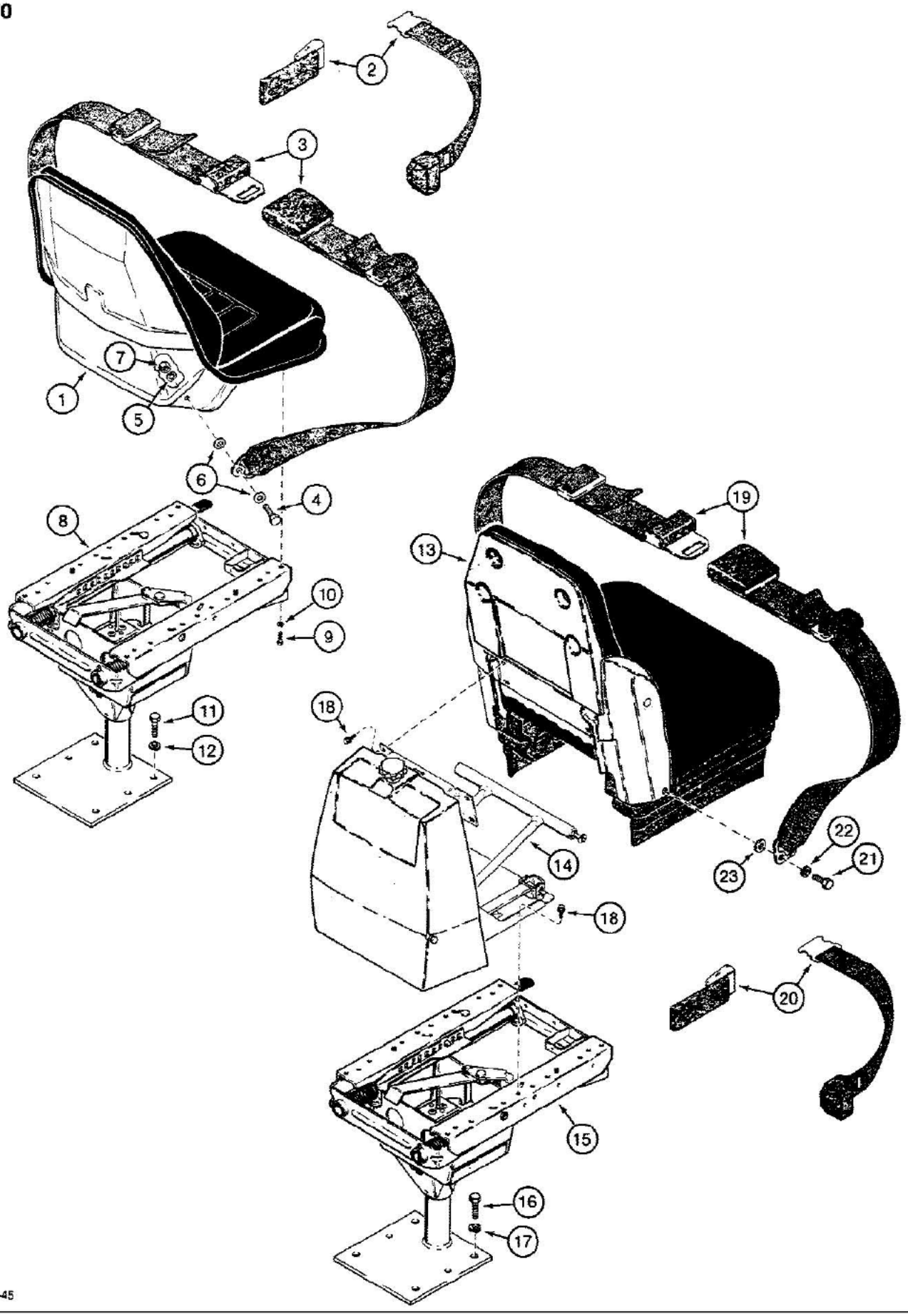

B88269-45

09-570 SEATS AND MOUNTING PARTS, STANDARD AND SUSPENSION

Ref	Part Number	Qty	Description
1	D123196	1	SEAT ASSEMBLY standard, and mounting parts, see Figure 09-572
2	D135623	1	SEAT BELT, 2", 51 mm, wide, with retractor, if used, standard seat and mounting parts
3	D85816	1	SEAT BELT, 3", 76 mm, wide, if used, standard seat and mounting parts
4	114-301	2	BOLT, Hex, 7/16"-20 x 1", G5, Full Thd, Standard seat and mounting parts
5	192-22	2	WASHER, LOCK, 7/16", Standard seat and mounting parts
6	195-529	4	WASHER flat, 7/16", plated, standard seat and mounting parts
7	425-117	2	NUT hex, 7/16" - 20 NF, plated, standard seat and mounting parts
8	D135248	1	SUPPORT ASSEMBLY standard seat and mounting parts, see Figure 09-578
9	113-102	4	BOLT, Hex, 5/16"-18 x 3/4", G5, Full Thd, Standard seat and mounting parts
10	192-20	4	WASHER, LOCK, 5/16", Standard seat and mounting parts
11	113-410	4	BOLT, Hex, 1/2"-13 x 1 1/2", G5, Full Thd, Standard seat and mounting parts
12	192-23	4	WASHER, LOCK, 1/2", Standard seat and mounting parts
	D135232	1	SEAT ASSEMBLY suspension and mounting parts, cloth, with armrests, cab models only, see Figure 09-574 for seat assembly, includes N14296 support, N14297 adjuster, D140113 armrest kit, and Ref. 31-40 in Figure 09-582
	D140825	1	SEAT ASSEMBLY suspension and mounting parts, vinyl, with armrests, cab or canopy models, see Figure 09-574 for seat assembly, includes N14296 support, N14297 adjuster, D140113 armrest kit, and Ref. 31-40 in Figure 09-582
	D136384	1	SEAT ASSEMBLY suspension and mounting parts, vinyl, without armrests, also includes Ref. 31-40 in Figure 09-582, Includes: Ref. 13, 14 and 15
13	N14339	1	SEAT ASSEMBLY, D136384 suspension seat and mounting parts, vinyl, cab or canopy models, without armrests, see Figure 09-574
14	N14297	1	ADJUSTER ASSEMBLY suspension seat and mounting parts, see Figure 09-582
15	N14296	1	SUPPORT ASSEMBLY suspension seat and mounting parts, see Figure 09-580
16	113-410	4	BOLT, Hex, 1/2"-13 x 1 1/2", G5, Full Thd, Suspension seats and mounting parts
17	192-23	4	WASHER, LOCK, 1/2", Suspension seats and mounting parts
18	121-133	8	BOLT, Hex Flg, 5/16"-18 x 5/8", Serr, Suspension seats and mounting parts
19	D85816	1	SEAT BELT, 3", 76 mm, wide, if used, suspension seats and mounting parts
20	D135623	1	SEAT BELT, 2", 51 mm, wide, with retractor, if used, suspension seats and mounting parts
21	114-303	2	BOLT hex head, 7/16" - 20 NF x 1-1/2", plated, suspension seats and mounting parts
22	192-22	2	WASHER, LOCK, 7/16", Suspension seats and mounting parts
23	195-529	2	WASHER flat, 7/16", plated, suspension seats and mounting parts

9-572

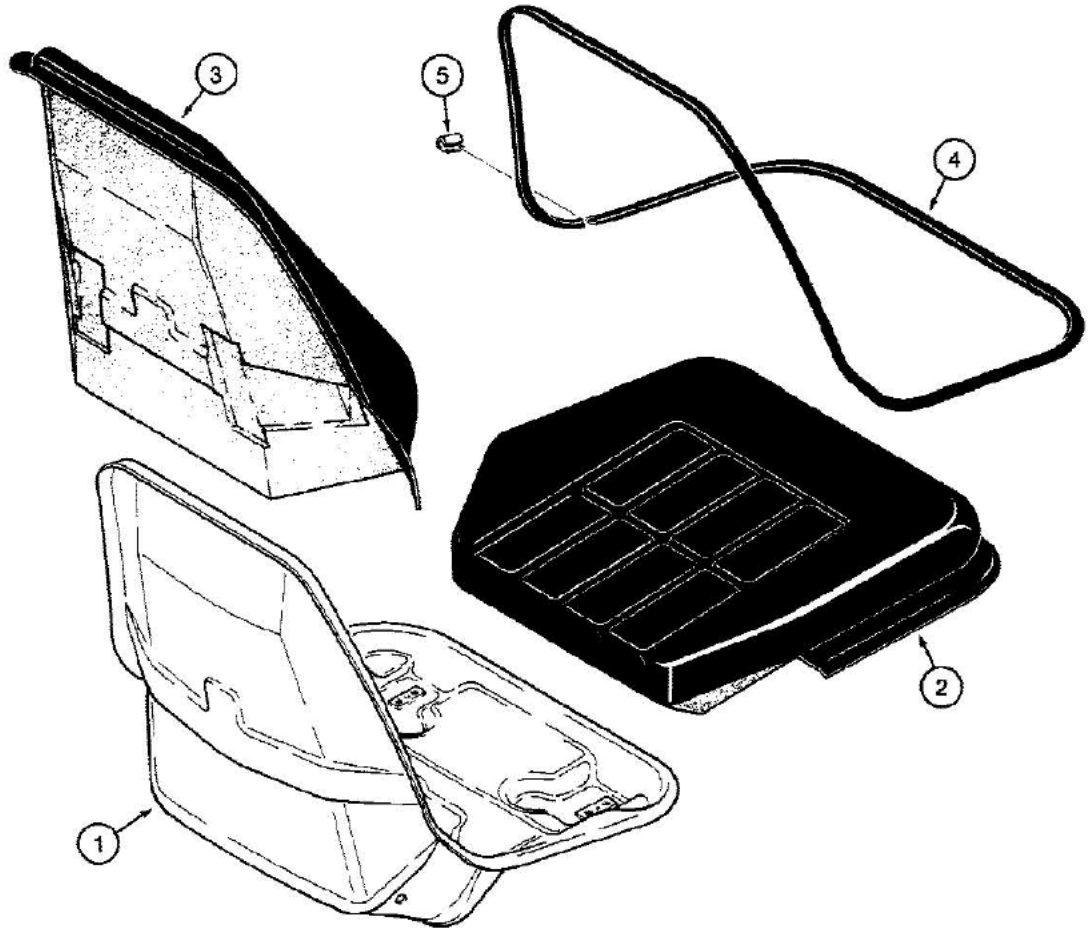

870182

See Figure 09-574 for optional suspension seat assemblies.

09-572 STANDARD SEAT ASSEMBLY, D123196

Ref	Part Number	Qty	Description
	D123196	1	SEAT ASSEMBLY standard, for seat support see Figure 09-578, Includes: Ref. 1 through 5
1	NSS	1	SHELL seat
2	N8462	1	CUSHION seat, includes N7802 clip kit, see below
3	N8461	1	CUSHION backrest, includes N7802 clip kit, see below
4	N14614	1	RETAINER strip, cushion to shell
5	NSS	1	CLIP retainer, order N7802 clip kit, see below, Part of Clip Kit P/N N7802
	345-44	UAR	ADHESIVE pad retaining, in a can, 23 fl. ounces, 680 ml, not shown
	N7802	1	KIT clip, Includes: Ref. 5 clip above plus 6 additional narrow clips

See Figure 09-574 for optional suspension seat assemblies.

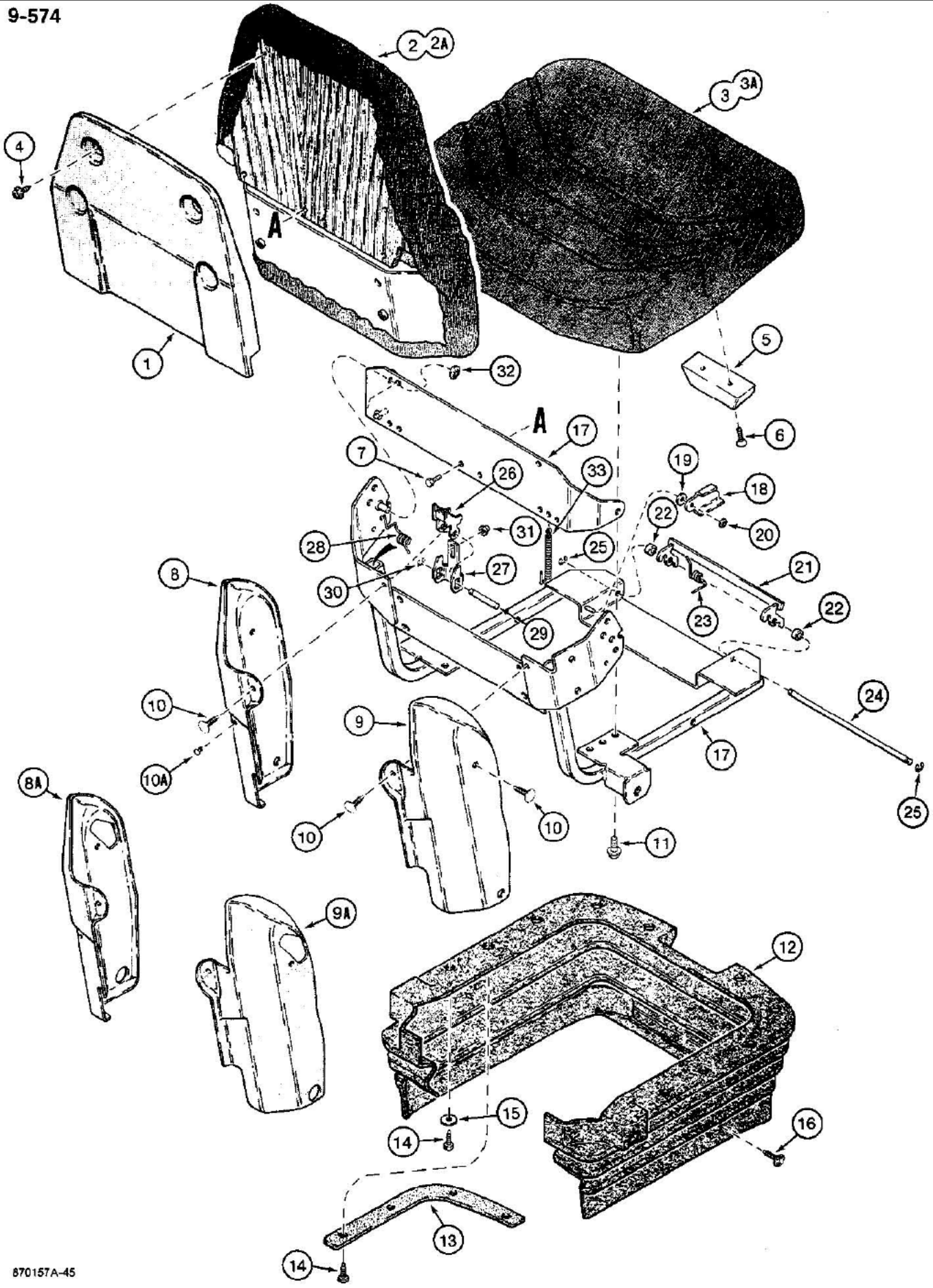

Also includes Ref. 31 through 40 in Figure 09-582. See Figure 09-584 for armrests.

09-574 SUSPENSION SEAT ASSEMBLIES

Ref	Part Number	Qty	Description
	D135232	1	SEAT ASSEMBLY suspension, cloth, with armrests, cab models only, for seat support and adjuster, see Figures 09-580 and 09-582, Includes: Ref. 1 thru 33
	D140825	1	SEAT ASSEMBLY suspension, vinyl, with armrests, cab or canopy models, replaced by D147690 which subs to 108114A3, for seat support and adjuster, see Figures 09-580 and 09-582, Includes: Ref. 1 thru 33
	N14339	1	SEAT ASSEMBLY, D136384 suspension seat, vinyl, without armrests, cab or canopy models, for seat support and adjuster, see Figures 9-580 and 9-582, Includes: Ref. 1 through 33
1	D144559	1	COVER backrest, upper, shield
2	N14321	1	BACKREST seat, cloth
2A	N14341	1	BACKREST seat, vinyl
3	N14318	1	CUSHION seat, cloth
3A	N14340	1	CUSHION seat, vinyl
4	NSS	4	SCREW Phillips, hex washer head, special, Ref. 4 - NSS screw - This is a #10 x 3/4"
5	N14322	1	HANDLE seat cushion adjustment
6	156466	2	SCREW, Cross Flat Hd, 5/16"-18 x 1"
7	113-2	5	BOLT, Hex, 1/4"-20 x 5/8", G5, Full Thd
8	D144721	1	COVER frame, left-hand shroud, used on seats without armrests
8A	D144920	1	COVER frame, left-hand shroud, used on seats with armrests
9	D144720	1	COVER frame, right-hand shroud, used on seats without armrests
9A	D144919	1	COVER frame, right-hand shroud, used on seats with armrests
10	N14323	4	RETAINER plastic, brown
10A	N8487	1	RIVET plastic, yellow, weight indicator
11	121-133	2	BOLT, Hex Flg, 5/16"-18 x 5/8", Serr, N14339 seat
11	113-103	2	BOLT, Hex, 5/16"-18 x 1", G5, Full Thd, D135232 or D140825 seat
12	N14320	1	BOOT seat, protective covering
13	N14319	2	BRACKET boot support
14	NSS	10	SCREW hex head, special
15	195-103	2	WASHER flat, 5/16", plated
16	D144429	9	RETAINER plastic, black
	N14317	1	FRAME ASSEMBLY, N14339 seat, for service order N14852 frame
	N14852	1	FRAME ASSEMBLY seat, not shown, Includes: Ref. 17 through 33
17	NSS	1	FRAME seat
18	N14325	1	BRACKET toggle
19	195-102	1	WASHER flat, 1/4", plated
20	131-433	1	NUT push on type, 1/4"
21	N14324	1	BRACKET latch, cushion adjustment
22	N14334	2	SPACER nylon
23	N14335	1	SPRING torsion
24	N14332	1	SHAFT front seat bracket latch
25	N14331	2	RING C-type, retaining
26	N14326	1	BRACKET latch, upper, backrest adjustment

Also includes Ref. 31 through 40 in Figure 09-582. See Figure 09-584 for armrests.

09-574 SUSPENSION SEAT ASSEMBLIES

Ref	Part Number	Qty	Description
27	N14327	1	BRACKET latch, lower, backrest adjustment
28	N14335	1	SPRING torsion, backrest
29	N14333	1	PIN backrest latch
30	N14331	1	RING C-type, retaining
31	N14336	1	NUT push-on type, special
32	131-435	2	NUT push-on type, 3/8"
33	N14337	1	SPRING extension

Also includes Ref. 31 through 40 in Figure 09-582. See Figure 09-584 for armrests.

9-578

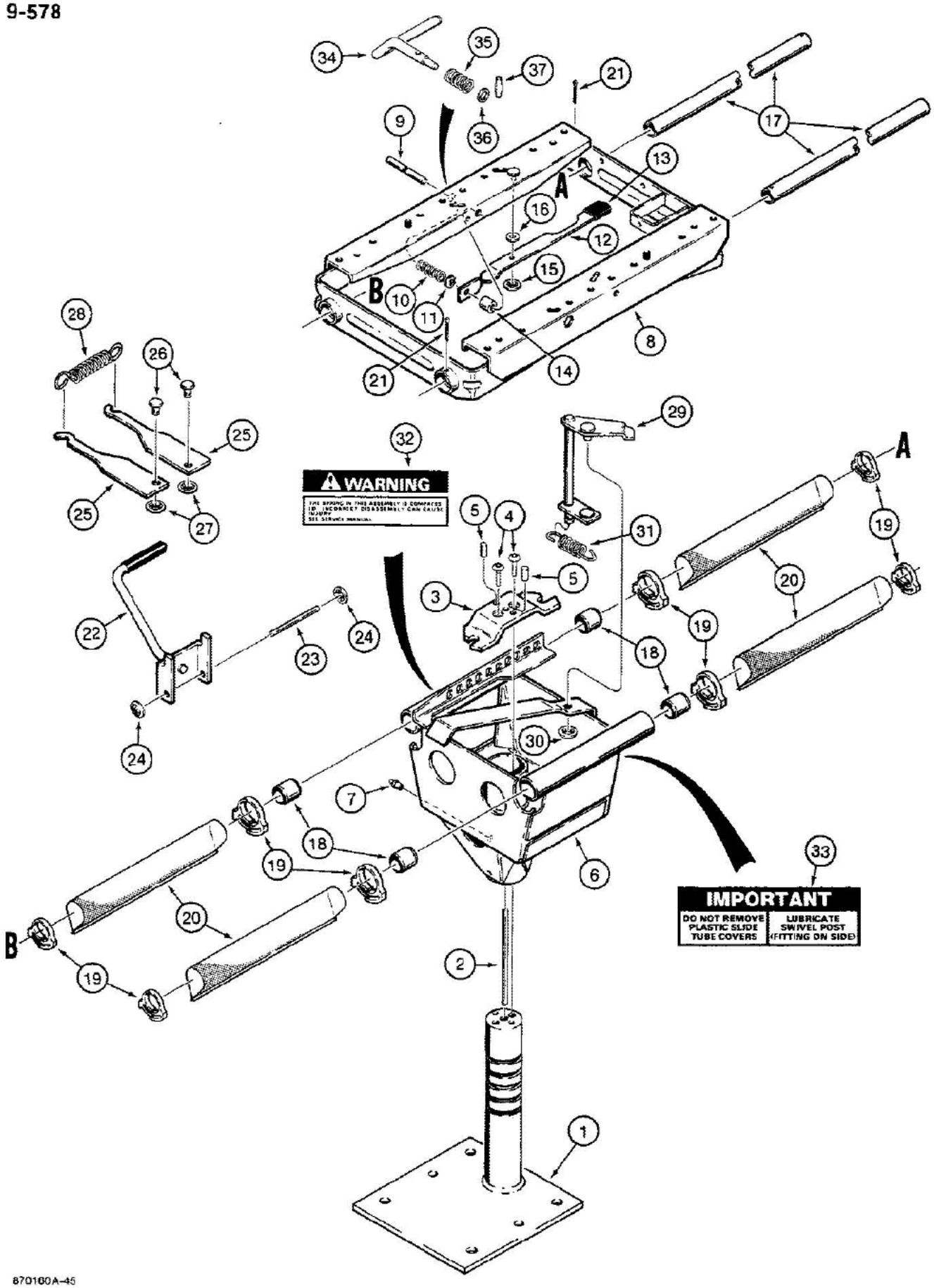

For seat support used with the optional suspension seat, see Figure 09-580.

09-578 STANDARD SEAT SUPPORT

Ref	Part Number	Qty	Description
	D135248	1	SUPPORT ASSEMBLY standard seat, Includes: Ref. 1 through 37
1	N14289	1	BASE seat support
2	N8340	1	SHAFT seat support
3	N8339	1	LATCH seat swivel
4	164-407	2	BOLT hex socket button head, 5/16" - 18 NC x 1/2", plated, .text1, grade 8
5	135-84	2	PIN, GROOVED, 5/16" x 3/4", Type A
6	N14290	1	RISER seat support
7	219-16	1	GREASE FITTING straight, 5/16" drive
8	N14291	1	SLIDE seat
9	N6958	1	PIN slide release, if used
10	N8342	1	SPRING slide release, if used
11	A27795	1	RETAINING RING spring, if used
12	N6956	1	HANDLE slide release, front mounted, if used, Includes: Ref. 13
13	N13687	1	GRIP vinyl, if used
14	N6957	1	SPACER handle, if used
15	131-433	1	NUT push on type, 1/4", if used
16	195-102	1	WASHER flat, 1/4", plated, if used
17	N14292	2	TUBE slide
18	N6950	4	BEARING slide tube
19	N14105	8	CLAMP bellows
20	N6967	4	BELLOWS slide tube
21	132-336	2	PIN, SPLIT (COTTER), 1/8" x 1 1/2"
22	N14294	1	HANDLE seat height adjustment
23	N6962	1	SHAFT pivot
24	131-434	2	NUT push on type, 5/16"
25	N6963	2	LATCH seat height adjustment
26	N6964	2	PIN latch
27	131-435	2	NUT push on type, 3/8"
28	N6970	1	SPRING latch, seat height adjustment
29	N14293	1	LEVER seat swivel
30	131-435	1	NUT push on type, 3/8"
31	N8341	1	SPRING seat swivel, 2-3/8", 60 mm, long
32	321-6774	1	DECAL Warning, the spring in this assembly is compressed, see Figure 09-636 for decal
33	N14295	1	DECAL Important, do not remove plastic slide tube covers, lubricate swivel post, see Figure 09-636 for decal
34	D144387	1	HANDLE slide release, side mounted
35	D144430	1	SPRING compression
36	D144431	1	WASHER flat, special
37	D144432	1	PIN slide lock

For seat support used with the optional suspension seat, see Figure 09-580.

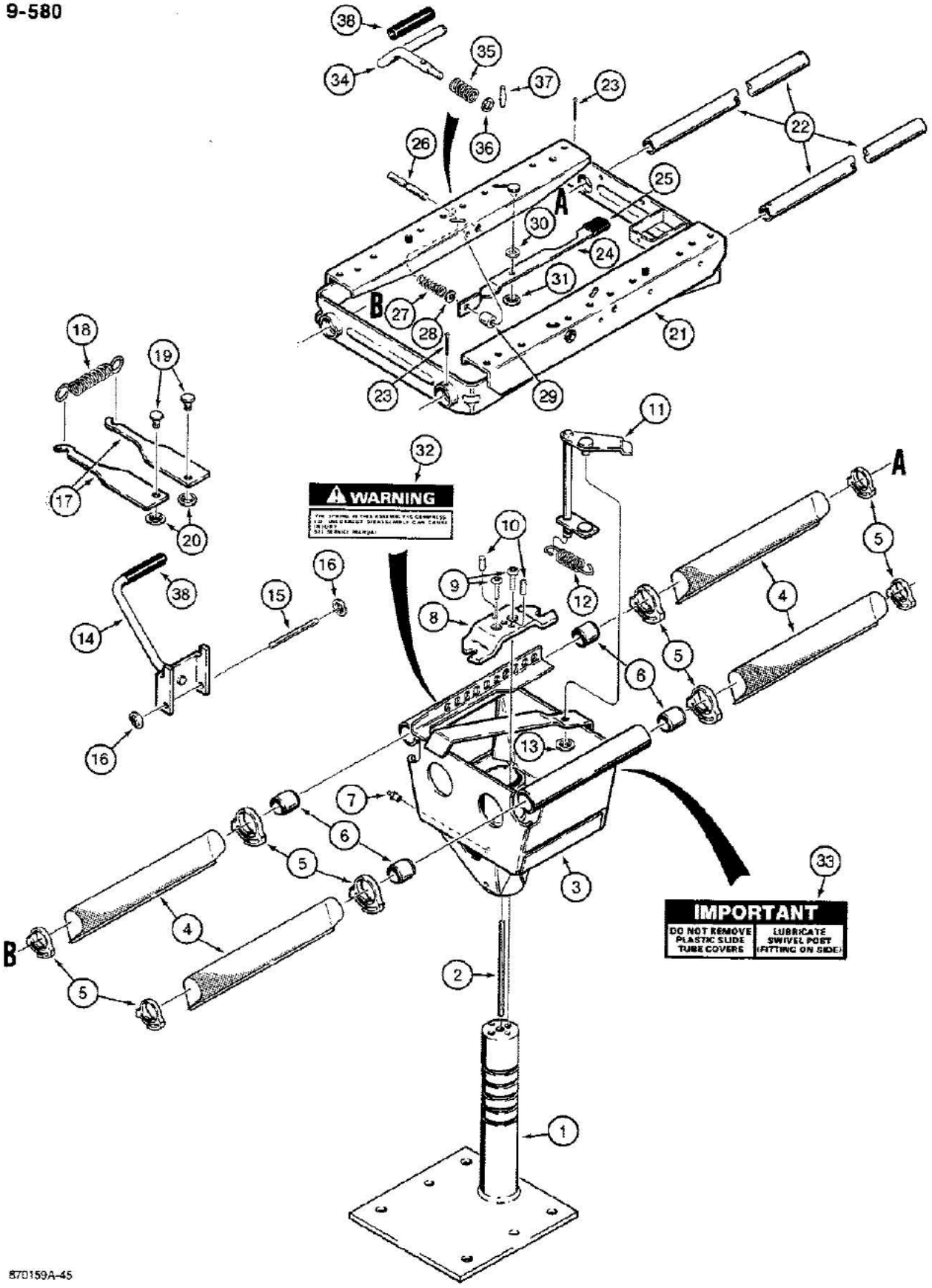

For seat support used with the standard seat, see Figure 09-578.

09-580 SUSPENSION SEAT SUPPORT

Ref	Part Number	Qty	Description
	N14296	1	SUPPORT ASSEMBLY suspension seat, Includes: Ref. 1 through 37
1	N14299	1	BASE seat support
2	N14300	1	SHAFT seat support
3	N14301	1	RISER seat support
4	N6967	4	BELLOWS slide tube
5	N14105	8	CLAMP bellows
6	N6950	4	BEARING slide tube
7	219-16	1	GREASE FITTING straight, 5/16" drive
8	N8339	1	LATCH seat swivel
9	164-407	2	BOLT hex socket button head, 5/16" - 18 NC x 1/2", plated, grade 8
10	135-84	2	PIN, GROOVED, 5/16" x 3/4", Type A
11	N14293	1	LEVER seat swivel
12	N8341	1	SPRING seat swivel
13	131-435	1	NUT push on type, 3/8"
14	N14294	1	HANDLE seat height adjustment
15	N6962	1	SHAFT pivot
16	131-434	2	NUT push on type, 5/16"
17	N6963	2	LATCH seat height adjustment
18	N6970	1	SPRING latch, seat height adjustment
19	N6964	2	PIN latch
20	131-435	2	NUT push on type, 3/8"
21	N14302	1	SLIDE seat
22	N14305	2	TUBE slide
23	132-336	2	PIN, SPLIT (COTTER), 1/8" x 1 1/2"
24	N14303	1	HANDLE slide release, front mounted, if used
25	N14304	1	GRIP vinyl, handle, if used
26	N6958	1	PIN slide release, if used
27	N8342	1	SPRING slide release, if used
28	A27795	1	RETAINING RING spring, if used
29	N6957	1	SPACER handle, if used
30	195-102	1	WASHER flat, 1/4", plated, if used
31	131-433	1	NUT push on type, 1/4", if used
32	321-6774	1	DECAL Warning, the spring in this assembly is compressed, see Figure 09-636 for decal
33	N14295	1	DECAL Important, do not remove plastic slide tube covers, lubricate swivel post, see Figure 09-636 for decal
34	D144387	1	HANDLE slide release, side mounted
35	D144430	1	SPRING compression
36	D144431	1	WASHER flat, special
37	D144432	1	PIN slide lock
38	N14311	2	GRIP seat levers, included with seat assembly

For seat support used with the standard seat, see Figure 09-578.

9-582

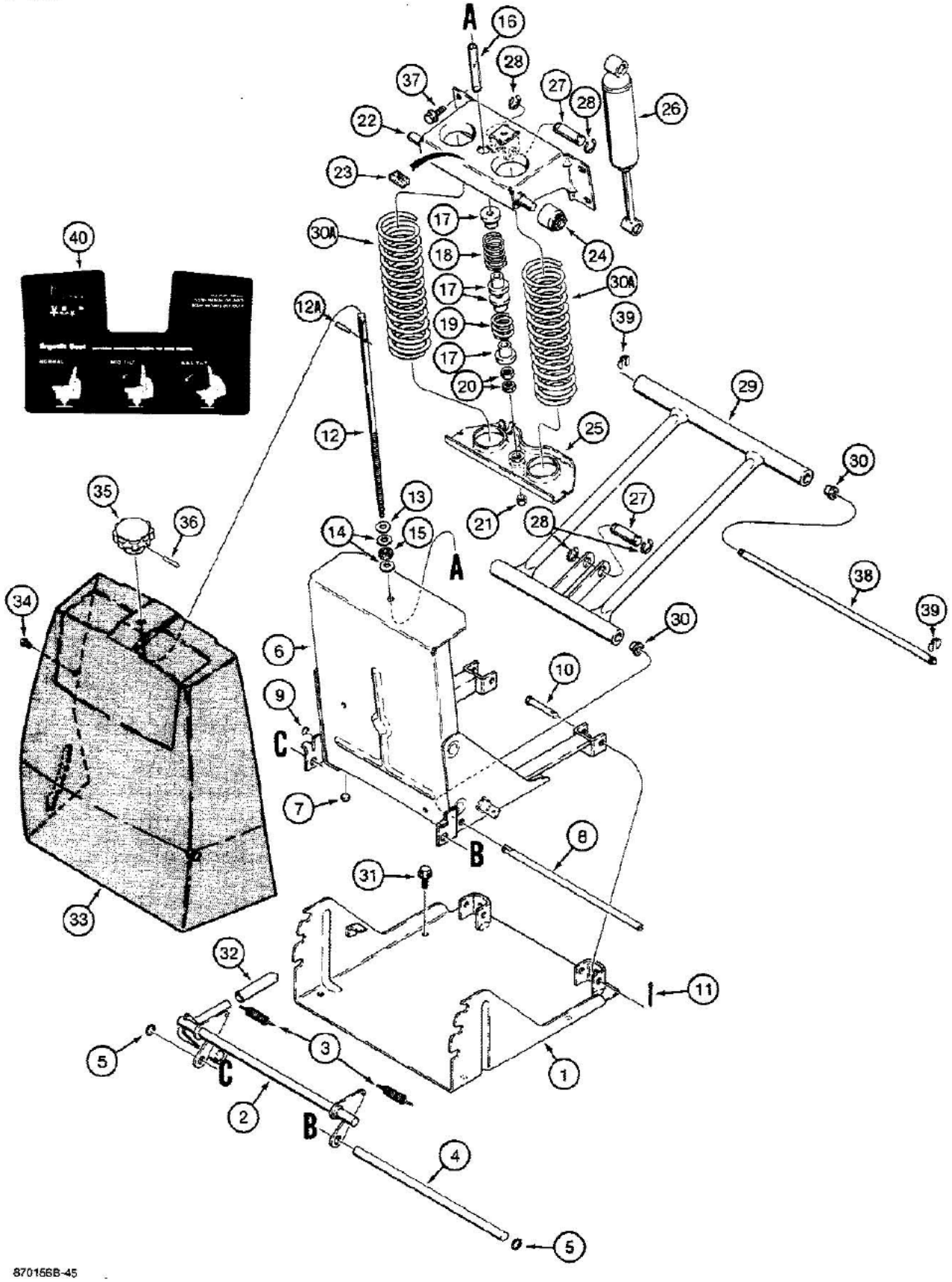

870156B-45

09-582 SUSPENSION SEAT ADJUSTER ASSEMBLY

Ref	Part Number	Qty	Description
	N14297	1	ADJUSTER ASSEMBLY suspension seat, used with N14296 suspension support in Figure 09-580, Includes: Ref. 1 through 30A
1	NSS	1	BASE support
2	N14310	1	LEVER seat tilt
3	N9240	2	SPRING extension
4	N14312	1	SHAFT rear, seat tilt lever
5	N14313	2	SNAP RING shaft retaining
6	NSS	1	HOUSING adjuster assembly
7	N14316	2	BUMPER housing
8	N8492	1	SHAFT seat adjuster arm, rear
9	N14306	1	SNAP RING shaft retaining
10	N14309	2	CLEVIS PIN special, housing to base
11	132-336	2	PIN, SPLIT (COTTER), 1/8" x 1 1/2"
12	N14307	1	SCREW adjusting, seat
12A	D144457	1	PIN spring
13	195-103	1	WASHER flat, 5/16", plated
14	N8502	2	THRUST WASHER adjuster knob
15	F13537	1	THRUST BEARING adjuster knob
16	N8501	1	SPACER, 7/16" ID x 9/16" OD x 3-1/64" long, vinyl, seat adjuster
17	N8495	4	SEAT springs, seat adjuster
18	N8496	1	SPRING compression, upper, seat adjuster
19	N8494	1	SPRING compression, lower, seat adjuster
20	N8497	2	NUT special, seat adjuster, upper
21	131-1280	1	NUT hex, jam, self-locking, 1/4" - 20 NC, plated
22	NSS	1	BRACKET springs, upper
23	N8484	1	BUMPER rubber
24	N8500	2	ROLLER upper bracket, seat adjustment
25	NSS	1	BRACKET springs, lower, Ref. 25, NSS bracket spring lower is now serviced under P/N N8493
26	N8488	1	SHOCK ABSORBER adjuster assembly
27	N8485	2	PIN shock absorber mounting
28	A27785	4	Ring, Retaining, #62, .480" Dia, E-Type
29	NSS	1	ARM seat adjuster
30	N13754	4	BEARING flanged
30A	N8498	2	SPRING compression
31	121-133	4	BOLT, Hex Flg, 5/16"-18 x 5/8", Serr
32	N14311	1	HANDLE seat tilt lever
33	N14314	1	COVER shroud, housing
34	N8487	1	RIVET plastic, yellow, weight indicator
35	N14308	1	KNOB seat adjuster
36	138-77	1	PIN, 5/32" x 1", Slotted
37	121-133	4	BOLT, Hex Flg, 5/16"-18 x 5/8", Serr, Bracket to seat backrest

09-582 SUSPENSION SEAT ADJUSTER ASSEMBLY

Ref	Part Number	Qty	Description
38	N14430	1	SHAFT seat adjuster arm, front
39	D95093	2	RING shaft retaining
40	N14315	1	DECAL seat tilt adjustment, suspension seats only, see Figure 09-636 for decal

9-584

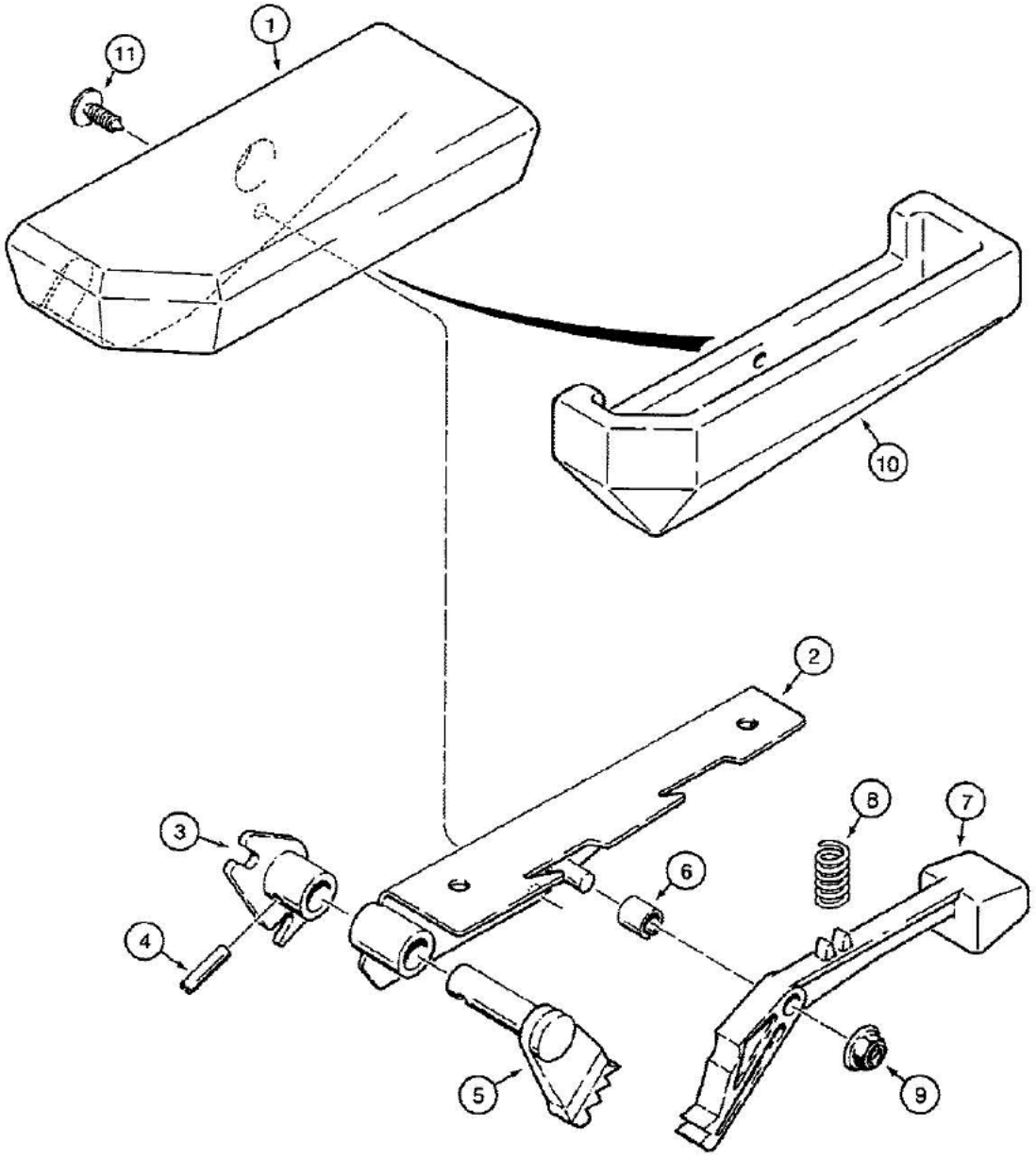

09-584 ARMRESTS

Ref	Part Number	Qty	Description
	N14853	1	ARMREST ASSEMBLY left-hand, not shown, Includes: Ref. 1 through 11
	N14854	1	ARMREST ASSEMBLY right-hand, Includes: Ref. 1 thru 11
1	N14863	1	COVER armrest, upper, right-hand
1A	N14860	1	COVER armrest, upper, left hand, not shown
	N14856	1	RETAINER ASSEMBLY armrest, left-hand, not shown, Includes: Ref. 2 thru 5
	N14862	1	RETAINER ASSEMBLY armrest, right-hand, Includes: Ref. 2 through 5
2	NSS	1	RETAINER armrest
3	NSS	1	BRACKET retainer mounting, Ref. 3 and 5 - NSS retainer mounting brackets, LH - P/N D149163 and RH - P/N D149164, and levers, LH - P/N D149161 and RH - P/N D149162, available only as part of improved assemblies, P/N 101575A1 LH and P/N 101576A1 RH, Refer to Service Bulletin NLB SB 017 92
4	138-134	1	PIN, 1/4" x 1", Slotted
5	NSS	1	LEVER stop, Ref. 3 and 5 - NSS retainer mounting brackets, LH - P/N D149163 and RH - P/N D149164, and levers, LH - P/N D149161 and RH - P/N D149162, available only as part of improved assemblies, P/N 101575A1 LH and P/N 101576A1 RH, Refer to Service Bulletin NLB SB 017 92
6	N14857	1	SPACER split
7	N14858	1	LATCH lever, armrest
8	N14859	1	SPRING compression
9	131-435	1	NUT push-on, 3/8"
10	N14861	1	ARMREST lower, retainer, right-hand
10A	N14855	1	ARMREST lower, retainer, left-hand, not shown
11	N14323	1	RETAINER brown, plastic

9-586

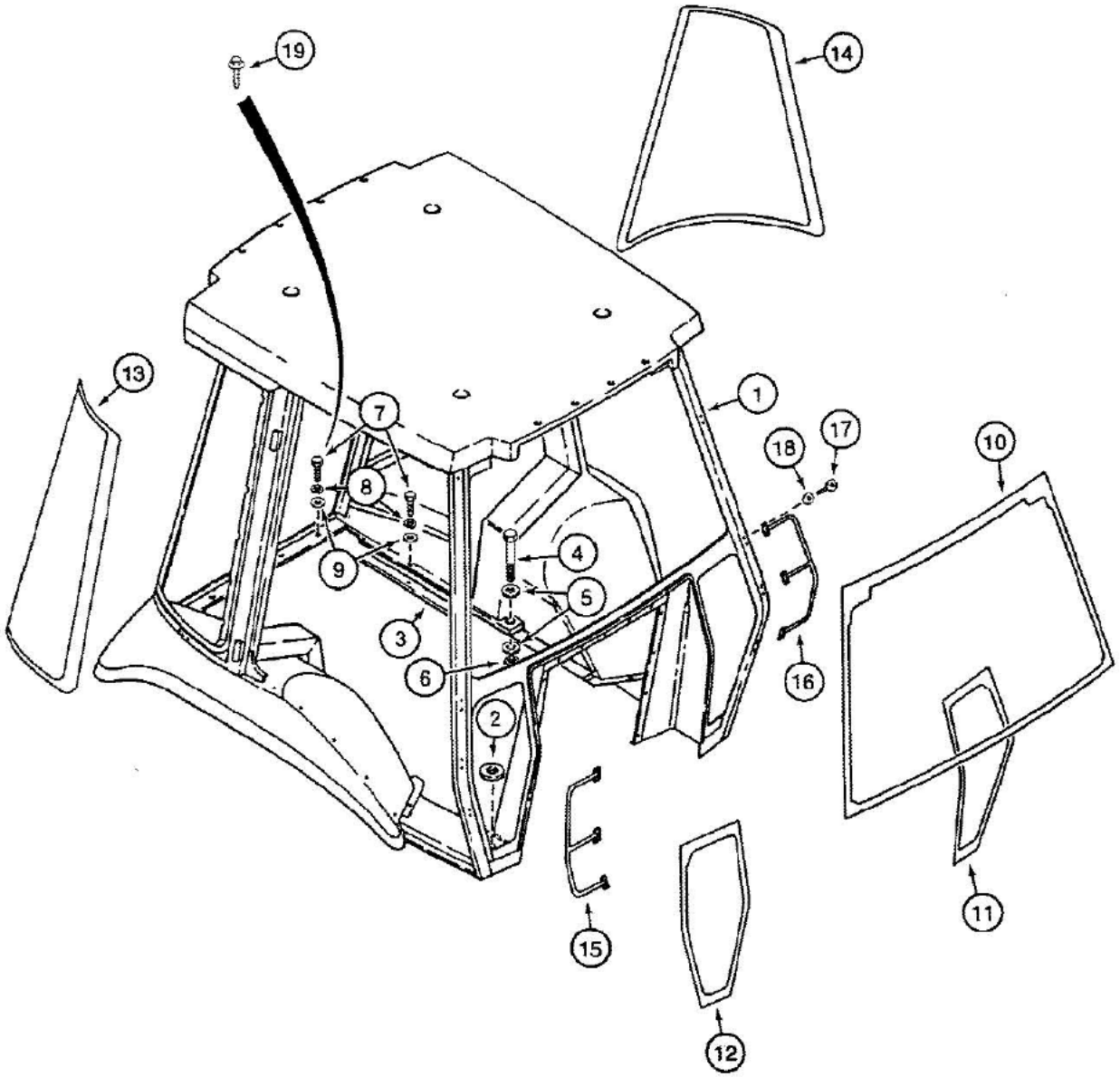

870288A-45

Sealant for windshield, 3M Superfast urethane auto glass sealer.

09-586 ROPS CAB AND MOUNTING PARTS

Ref	Part Number	Qty	Description
1	REF	1	ROPS CAB operators, machinery item, order from Machinery Price List, for parts list see Figures 09-586 through 09-622, ROPS cab is no longer available as complete assy. thru parts or wholegoods. Must order P/N 108762A1 cab frame, made up of P/N 108532A1 frame, P/N 151-525 rivet, 1990696C2 s/n and model plate, and all other primes separately. This frame will fit 580K-I, 580K-III, 580SK.
2	195-2203	2	WASHER flat, 5/8" bolt size, 21/32" ID x 2" OD x 1/4" thick, plated, see page 9-507 for bolt and insulator
3	REF	2	SEAL, 112", 2845 mm, long, adhesive one side, cut from L35819 bulk, rear fender to operator compartment frame
4	26-1452	4	BOLT hex head, 7/8" - 9 NC x 3-1/4", grade 8
5	196-35	4-8	WASHER flat, 7/8", hardened
6	S104373	4	NUT hex, 7/8" - 9 NC, if used
7	113-102	11	BOLT, Hex, 5/16"-18 x 3/4", G5, Full Thd, If used
8	192-20	11	WASHER, LOCK, 5/16", If used
9	195-521	11	WASHER flat, 5/16", plated, if used
10	97290C1	1	GLASS, front windshield
11	D131289	1	GLASS, lower left-hand front window
12	D131288	1	GLASS, lower right-hand front window
13	D126204	1	GLASS, right-hand rear quarter panel window
14	D126205	1	GLASS, left-hand rear quarter panel window
15	R53960	1	HANDLE grab, right-hand
16	R53961	1	HANDLE grab, left-hand
17	165-180	12	BOLT hex socket head, 1/4" - 20 NC x 7/8", plated, grade 8
18	195-516	12	WASHER flat, No. 12, plated
19	D141589	11	BOLT hex washer head, self-locking , 5/16" - 18 NC x 3/4", plated, replaces bolt and washers on some models
	L35819	UAR	SEAL foam rubber, bulk roll, adhesive-back, 1", 25 mm, wide x 1/8", 3 mm, thick x 50 ft, 15.2 m, long

Sealant for windshield, 3M Superfast urethane auto glass sealer.

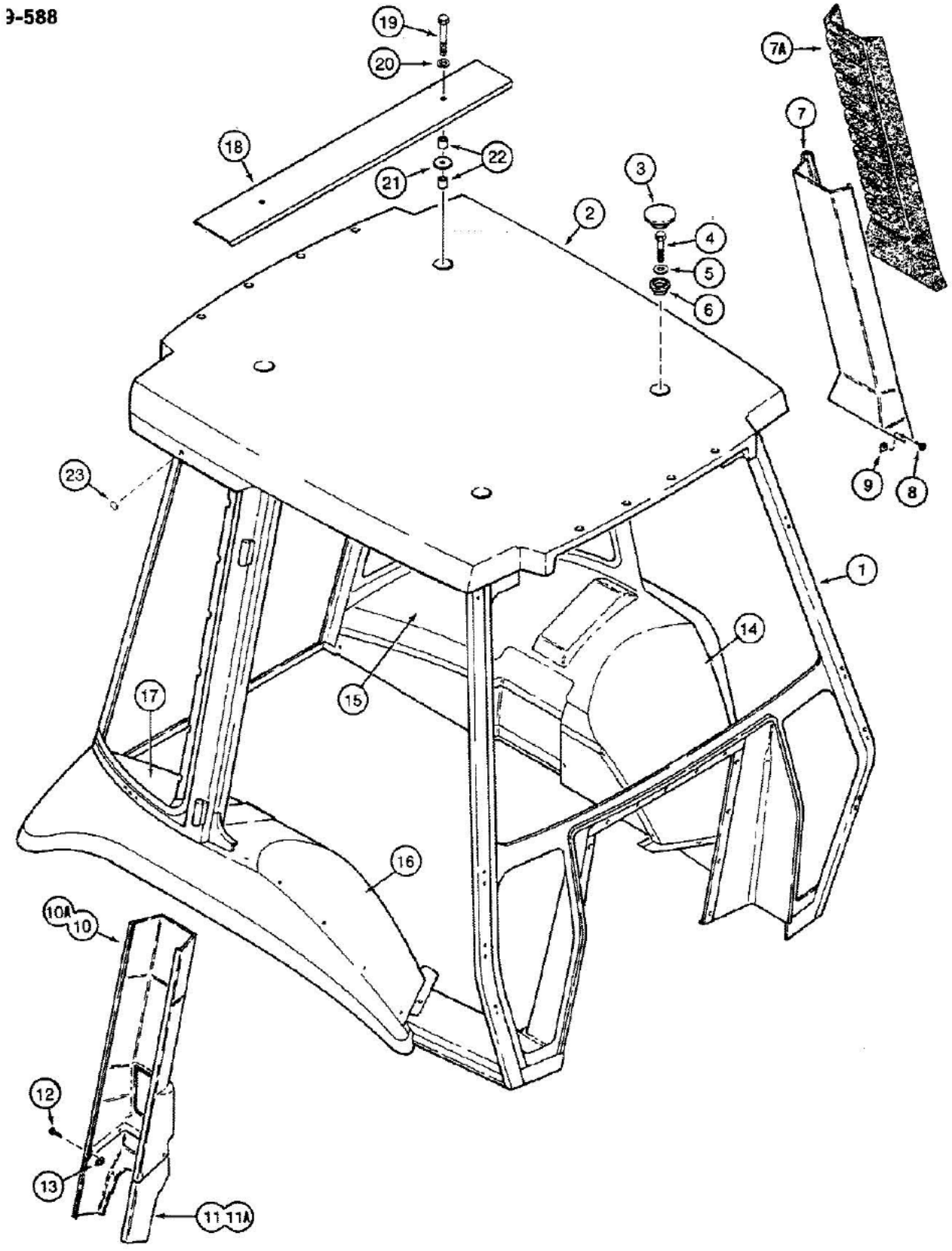
9-588
19
20
18
22
21
3
2
4
5
6
7A
7
9
8
23
1
14
15
17
16
10A
10
12
13
11
11A
870285B-45

09-588 CAB FRAME, ROOF CAP, AND COVERS

Ref	Part Number	Qty	Description
1	108762A1	1	FRAME cab
2	R52559	1	CAP roof, plastic, Ref. 2, THE PLASTIC ROOF CAP, P/N R52559 WAS ELIMINATED PER NLB SB 001 93. TYPICAL ROOF MOUNTED ITEMS CAN BE MOUNTED DIRECT TO METAL FRAME.
3	R54262	4	PLUG, 2-5/64", 53 mm, diameter, cap mounting holes
4	13-836	4	BOLT hex head, 1/2" - 13 NC x 2-1/4", use with Loctite 242, blue, do not use plated bolt with Loctite
5	195-106	4	WASHER flat, 1/2", plated
6	R54261	4	SPACER special
7	97293C1	1	COVER plastic, left-hand post
7A	D138178	1	COVER padded, left-hand post, optional deluxe interior
8	F64519	2	SCREW self-tapping, Phillips head, with washer, No. 10 - 16 x 3/4", black, replaces 1/2" screws
9	131-861	2	NUT U-type, No. 10 - 24 NC
10	R53851	1	COVER plastic, right-hand post, upper
10A	D138179	1	COVER padded, right-hand post, upper, optional deluxe interior
11	97292C1	1	COVER plastic, right-hand post, lower
11A	D138180	1	COVER padded, right-hand post, lower, optional deluxe interior
12	F64519	4	SCREW self-tapping, Phillips head, with washer, No. 10 - 16 x 3/4", black, replaces 1/2" screws
13	131-861	4	NUT U-type, No. 10 - 24 NC
14	D138181	1	COVER padded, left-hand front fender, optional deluxe interior
15	D138182	1	COVER padded, left-hand rear fender, optional deluxe interior
16	D138183	1	COVER padded, right-hand front fender, optional deluxe interior
17	D138184	1	COVER padded, right-hand rear fender, optional deluxe interior
18	97377C1	1	PLATE mounting, used with Ref. 19-22, used on cab models with rotating beacon
19	113-447	2	BOLT, Hex, 1/2"-13 x 3 1/2", G5
20	192-23	2	WASHER, LOCK, 1/2"
21	195-2205	2	WASHER flat, 1/2" ID x 2" OD x 1/4" thick, plated
22	D48528	4	SPACER mounting plate
23	L60224	2	BUMPER rubber, cab roof

9-590

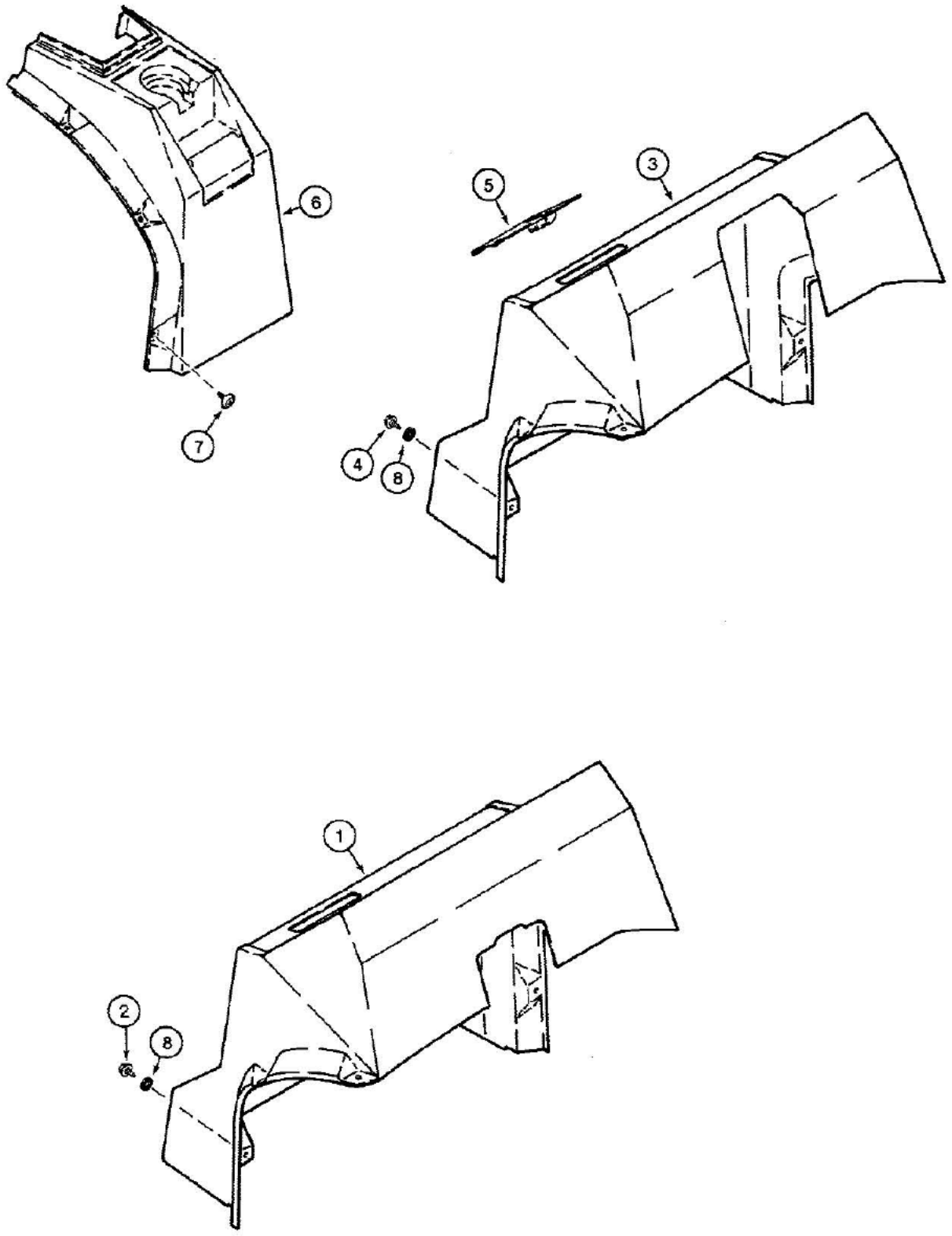

870264A-45

If dealer needs fuse box, ref. 245435C1 for fuse block or box, this should be what he needs, per note in 580K hard copy book.

580K LOADER BACKHOE (NORTH AMERICA) - Chassis/Attachments

09-590 LEFT-HAND AND RIGHT-HAND CONSOLES, FOR ROPS CAB OR CANOPY MODELS

Ref	Part Number	Qty	Description
1	D136319	1	CONSOLE side instrument, right-hand, ROPS canopy models only, When replacing side instrument console, also order, 6, P/N 195-81004 washers, Ref. 8.
2	187-575	6	SCREW hex washer head, self-tapping, 1/4" - 20 NC x 3/4", black
3	D136043	1	CONSOLE side instrument, right-hand, ROPS cab models only, When replacing side instrument console, also order, 6, P/N 195-81004 washers, Ref. 8.
4	187-575	6	SCREW hex washer head, self-tapping, 1/4" - 20 NC x 3/4", black
5	D135678	1	COVER fuse box, mounts in right-hand side instrument console, cab or canopy models, see Figure 09-638 for fuse location decal
6	D143491	1	CONSOLE left-hand side, with cup holder, cab models only, includes 321-6958 decal, see Figure 09-638 for decals
7	F64519	6	SCREW self-tapping, Phillips head, with washer, No. 10 - 16 x 3/4"
8	195-81004	6	WASHER flat, 5/16 inch

If dealer needs fuse box, ref. 245435C1 for fuse block or box, this should be what he needs, per note in 580K hard copy book.

09-592 LEFT-HAND AND RIGHT-HAND CAB DOORS - EXTERIOR, WITH LEVER TYPE LATCHES ON DOOR WINDOWS

9-592

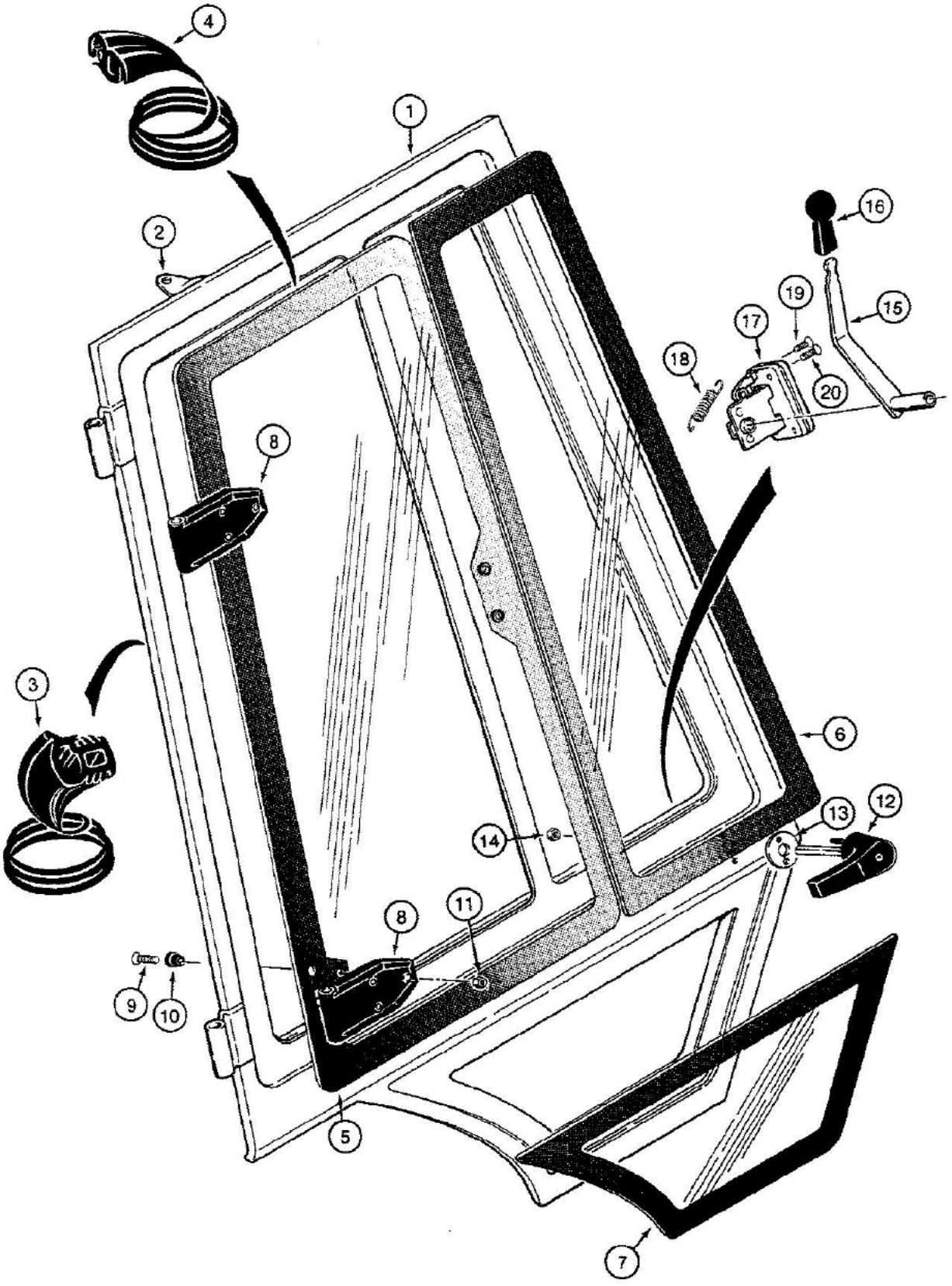

870307

09-592 LEFT-HAND AND RIGHT-HAND CAB DOORS - EXTERIOR, WITH LEVER TYPE LATCHES ON DOOR WINDOWS

Ref	Part Number	Qty	Description
1	R52554	1	FRAME right-hand door, Includes: Ref. 2
1A	R52553	1	FRAME left-hand door, not shown, Includes: Ref. 2
2	R53562	1	BRACKET cable, welded to left-hand or right-hand door frame
3	R52936	2	SEAL, 181-1/2", 4610 mm, long, bulb type, left-hand and right-hand door frames, Sealant used to retain Ref. 3 into the channel of door is P/N 345-157 Loctite adhesive. Make sure the surfaces are free of all dust and oil.
4	R53444	2	SEAL, 105-7/8", 2688 mm, long, bulb type, left-hand and right-hand window frames
5	R54106	1	GLASS right-hand door, rear, window
5A	R54107	1	GLASS left-hand door, rear, window, not shown
6	R52880	1	GLASS right-hand door, front
6A	R52879	1	GLASS left-hand door, front, not shown
7	R52884	1	GLASS right-hand door, lower
7A	R52883	1	GLASS left-hand door, lower, not shown
8	R52917	4	HINGE glass, left-hand and right-hand door window
9	179-166	12	MACHINE SCREW oval Phillips head, No. 10 - 24 NC x 3/4", black, left-hand and right-hand door window hinge
10	F64198	12	SPACER nylon, black, glass to hinge, left-hand and right-hand door window hinge
11	F45165	12	NUT hex, self-locking, No. 10 - 24 NC, Teflon coated, left-hand and right-hand door window hinge
12	R53001	1	HANDLE right-hand door, outer
12A	R53002	1	HANDLE left-hand door, outer, not shown
13	F64342	2	GASKET door handle, left-hand and right-hand
14	86625057	4	NUT, LOCK, #10-24, GB, LH and RH door handles
15	R54625	2	LEVER inner left-hand and right-hand door latch handle
16	D135387	2	KNOB inner door latch levers
17	R55000	1	LATCH ASSEMBLY door, right-hand, rotary, Includes: Ref. 18
17A	R55001	1	LATCH ASSEMBLY door, left-hand, rotary, not shown, Includes: Ref. 18
18	A180163	1	SPRING extension, left-hand or right-hand door latch
19	187-1921	4	SCREW Phillips, No. 10 - 16 NC x 3/4", left-hand and right-hand door latch
20	171-240	8	MACHINE SCREW Phillips flat head, self-locking, 1/4" - 20 NC x 1", left-hand and right-hand door latch

9-594

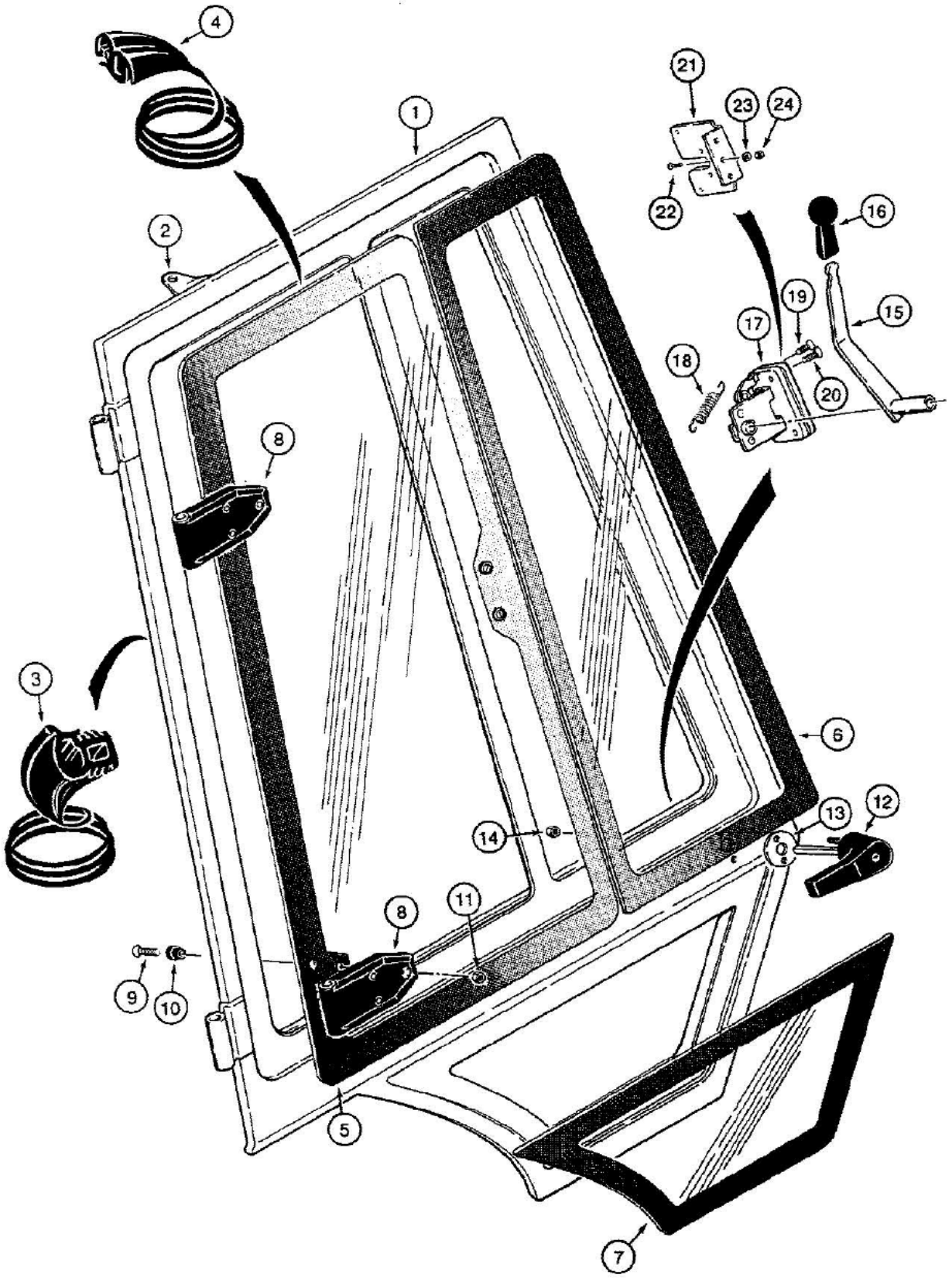

B890452-45

580K LOADER BACKHOE (NORTH AMERICA) - Chassis/Attachments

09-594 LEFT-HAND AND RIGHT-HAND CAB DOORS - EXTERIOR, WITH PUSH TYPE LATCHES ON DOOR WINDOWS

Ref	Part Number	Qty	Description
1	97401C1	1	FRAME right-hand door, Includes: Ref. 2
1A	97402C1	1	FRAME left-hand door, not shown, Includes: Ref. 2
2	R53562	1	BRACKET cable, welded to left-hand or right-hand door frame
3	R52936	2	SEAL, 181-1/2", 4610 mm, long, bulb type, left-hand and right-hand door frames, Sealant used to retain Ref. 3 into the channel of door is P/N 345-157 Loctite adhesive. Make sure the surfaces are free of all dust and oil.
4	R53444	2	SEAL, 105-7/8", 2688 mm, long, bulb type, left-hand and right-hand window frames
5	R54106	1	GLASS right-hand door, rear, window, tinted
5A	R54107	1	GLASS left-hand door, rear, window, tinted, not shown
6	R52880	1	GLASS right-hand door, front, tinted
6A	R52879	1	GLASS left-hand door, front, tinted, not shown
7	R52884	1	GLASS right-hand door, lower, tinted
7A	R52883	1	GLASS left-hand door, lower, tinted, not shown
8	R52917	4	HINGE glass, left-hand and right-hand door window
9	179-166	12	MACHINE SCREW oval Phillips head, No. 10 - 24 NC x 3/4", black, left-hand and right-hand door window hinge
10	F64198	12	SPACER nylon, black, glass to hinge, left-hand and right-hand door window hinge
11	F45165	12	NUT hex, self-locking, No. 10 - 24 NC, Teflon coated, left-hand and right-hand door window hinge
12	R53001	1	HANDLE right-hand door, outer
12A	R53002	1	HANDLE left-hand door, outer, not shown
13	F64342	2	GASKET door handle, left-hand and right-hand
14	86625057	4	NUT, LOCK, #10-24, GB, LH and RH door handles
15	R54625	2	LEVER inner left-hand and right-hand door latch handle
16	D135387	2	KNOB inner door latch levers
17	R55000	1	LATCH ASSEMBLY door, right-hand, rotary, Includes: Ref. 18
17A	R55001	1	LATCH ASSEMBLY door, left-hand, rotary, not shown, Includes: Ref. 18
18	A180163	1	SPRING extension, left-hand or right-hand door latch
19	187-1921	4	SCREW Phillips, No. 10 - 16 NC x 3/4", left-hand and right-hand door latch
20	171-240	8	MACHINE SCREW Phillips flat head, self-locking, 1/4" - 20 NC x 1", left-hand and right-hand door latch
21	1977402C1	1	BRACKET latch, right-hand rotary
21A	1977401C1	1	BRACKET latch, left-hand rotary, not shown
22	171-221	6	SCREW machine, flat head slotted, 5/16" - 18 NC x 3/4", zinc plated
23	492-11031	6	WASHER, LOCK, 5/16"
24	425-105	6	NUT hex, 5/16" - 18 NC, zinc plated

9-596

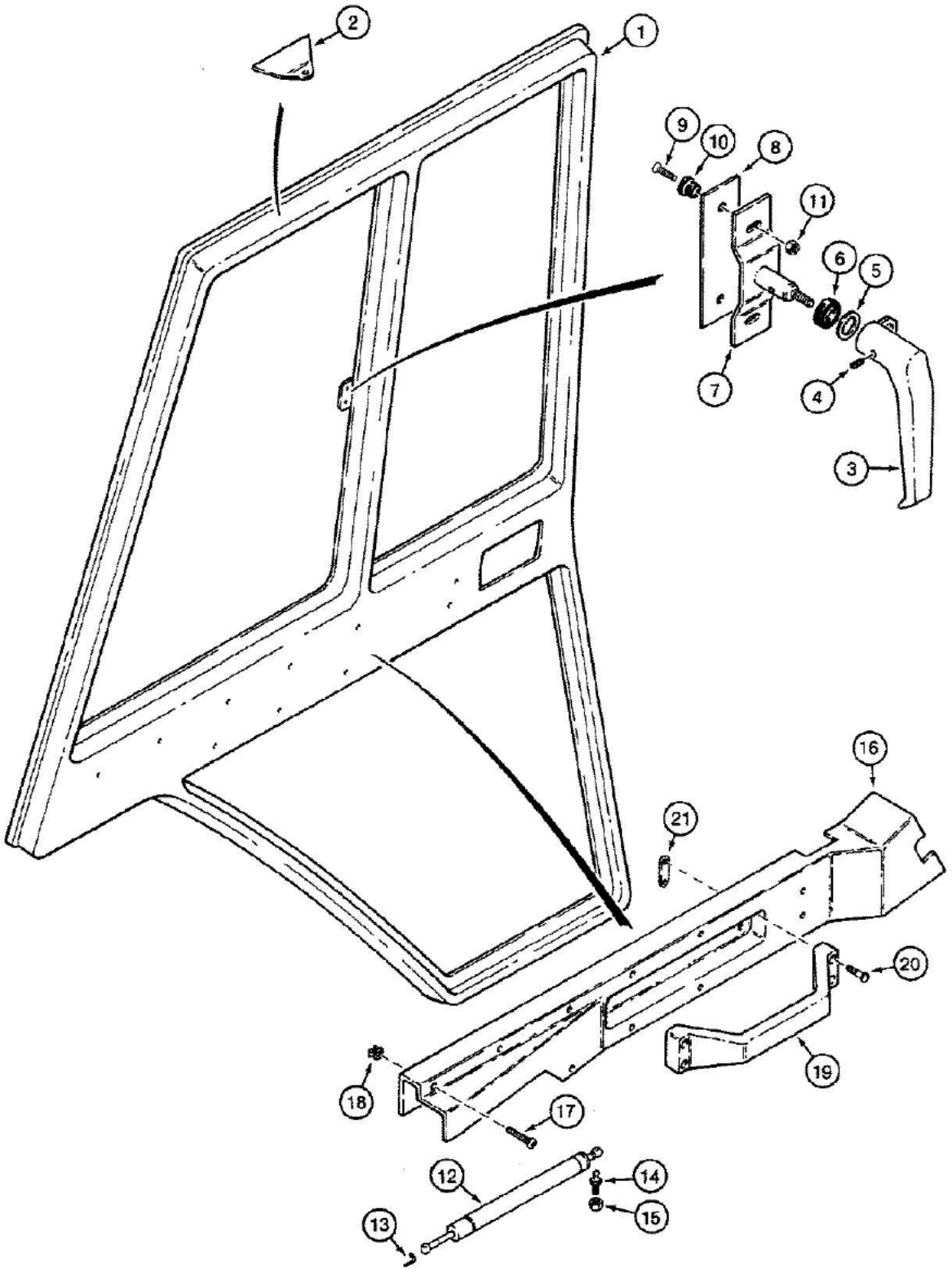

370308B-45

09-596 LEFT-HAND AND RIGHT-HAND CAB DOORS - INTERIOR, WITH LEVER TYPE LATCHES ON DOOR WINDOWS

Ref	Part Number	Qty	Description
1	R52553	1	FRAME left-hand door, Includes: Ref. 2
1A	R52554	1	FRAME right-hand door, not shown, Includes: Ref. 2
2	R53562	1	BRACKET cable, welded to left-hand or right-hand door frame
3	R52922	1	HANDLE left-hand door window
3A	R52921	1	HANDLE right-hand door window, not shown
4	178-7	2	SET SCREW hex socket headless, No. 8 - 32 NC x 1/2", cone point
5	R53014	2	WASHER flat, special, left-hand and right-hand door window latches
6	R54648	2	WASHER flat, rubber, left-hand and right-hand door windows
7	R53010	2	BRACKET left-hand and right-hand door window, window to glass
8	R54047	2	SHIM latch bracket, left-hand and right-hand door window
9	179-166	4	MACHINE SCREW oval Phillips head, No. 10 - 24 NC x 3/4"
10	F64198	4	SPACER nylon, black, glass to bracket
11	F45165	4	NUT hex, self-locking, No. 10 - 24 NC, Teflon coated
12	F44881	2	CYLINDER left-hand and right-hand doors, Ref. 12, P/N F44881 cylinder - Optional cylinder P/N 1343883C1 may be ordered if desired
13	F44883	2	CLIP lock, cylinder
14	1304648C1	2	STUD ball, cylinder, Ref. 14 P/N 1304648C1 stud - Optional stud P/N 1340345C1 may be ordered if desired.
15	131-176	2	NUT hex, self-locking, 5/16" - 18 NC, plated
16	R52938	1	PANEL left-hand door
16A	R52937	1	PANEL right-hand door, not shown
17	187-461	20	SCREW pan Phillips head, self-tapping, No. 10 - 16 x 1-1/2", left-hand and right-hand door panels
18	R53000	20	RETAINER screw, left-hand and right-hand door panels
19	1958970C1	2	HANDLE left-hand and right-hand inner door
20	165-143	8	MACHINE SCREW pan head slotted, 1/4" - 20 NC x 3/4", left-hand and right-hand inner door handles
21	1971368C1	4	PLATE retainer, left-hand and right-hand inner door handles

9-598

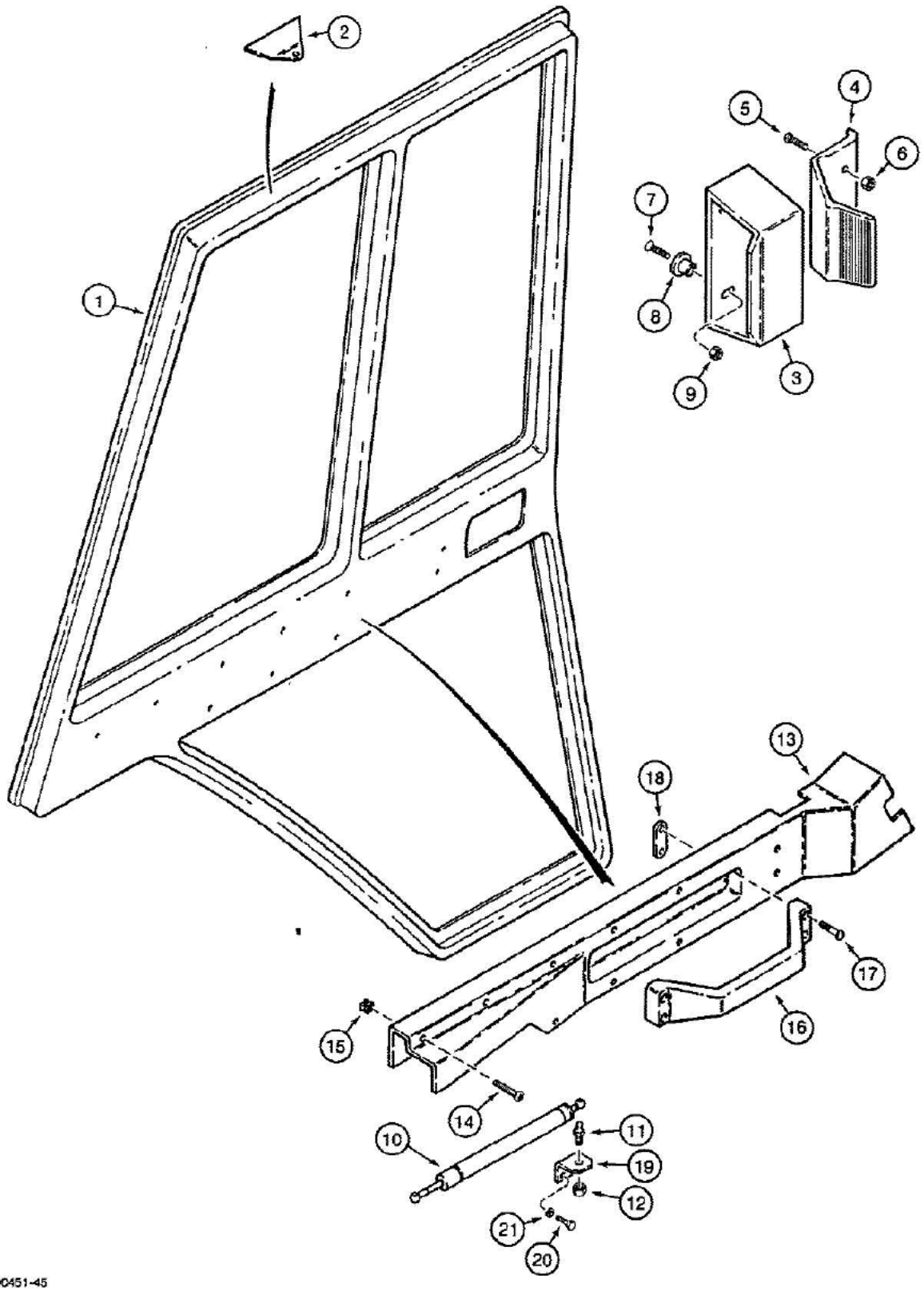

B890451-45

09-598 LEFT-HAND AND RIGHT-HAND CAB DOORS - INTERIOR, WITH PUSH TYPE LATCHES ON DOOR WINDOWS

Ref	Part Number	Qty	Description
1	97402C1	1	FRAME left-hand door, Includes: Ref. 2
1A	97401C1	1	FRAME right-hand door, not shown, Includes: Ref. 2
2	R53562	1	BRACKET cable, welded to left-hand or right-hand door frame
3	97399C1	2	HANDLE door window
4	97398C1	2	LATCH push type, door window
5	182-584	4	SCREW machine, pan Phillips head, No. 10 - 24 NC x 3/4", black Teflon
6	F45165	4	NUT hex, self-locking, No. 10 - 24 NC, Teflon coated
7	179-166	4	MACHINE SCREW oval Phillips head, No. 10 - 24 NC x 3/4"
8	F64198	4	SPACER nylon, black, glass to bracket
9	F45165	4	NUT hex, self-locking, No. 10 - 24 NC, Teflon coated
10	F44881	2	CYLINDER left-hand and right-hand doors, mounting hardware for cylinders to cab frame shown in Figure 09-600
11	1304648C1	2	STUD ball, cylinder
12	131-176	2	NUT hex, self-locking, 5/16" - 18 NC, plated
13	R52938	1	PANEL left-hand door
13A	R52937	1	PANEL right-hand door, not shown
14	187-371	20	SCREW pan Phillips head, self-tapping, No. 10 - 16 x 1-1/2", black, left-hand and right-hand door panels
15	R53000	20	RETAINER screw, left-hand and right-hand door panels
16	1958970C1	2	HANDLE left-hand and right-hand inner door
17	165-129	8	MACHINE SCREW pan head slotted, self-locking, 1/4" - 20 NC x 3/4", black, left-hand and right-hand inner door handles
18	1971368C1	4	PLATE retainer, left-hand and right-hand inner door handles
19	1977399C1	2	BRACKET cylinder
20	413-48	4	BOLT hex head, 1/4" - 20 NC x 1/2", zinc plated
21	492-11025	4	WASHER, LOCK, 1/4"

09-600 LEFT-HAND AND RIGHT-HAND CAB DOOR MOUNTING

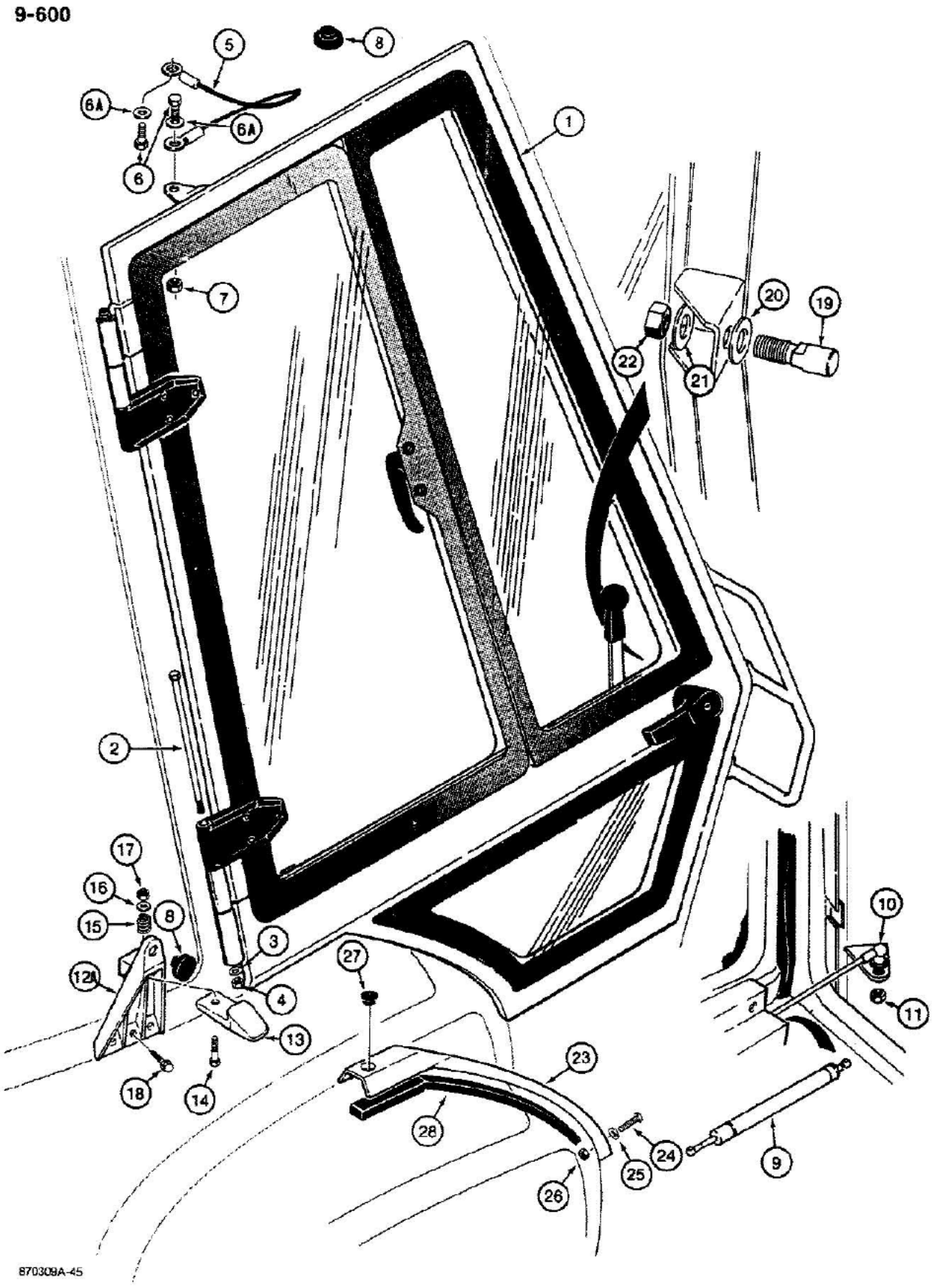

09-600 LEFT-HAND AND RIGHT-HAND CAB DOOR MOUNTING

Ref	Part Number	Qty	Description
1	REF	1	DOOR cab, see Figures 09-592 through 09-598
2	113-529	4	BOLT, Hex, 3/8"-16 x 9 1/2", G5, LH and RH doors to cab frame
3	F64046	4	WASHER thrust, plastic, hinge
4	131-203	4	NUT hex, self-locking, 3/8" - 16 NC, plated
5	R53560	2	CABLE door, upper
6	R53633	4	SHOULDER BOLT special, cable retaining
6A	195-104	4	WASHER flat, 3/8", plated
7	131-176	2	NUT hex, self-locking, 5/16" - 18 NC, plated, door shoulder bolt
8	L60224	4	BUMPER rubber, cab door frame and window latch
9	REF	2	CYLINDER left-hand and right-hand doors, see Figures 09-596 and 09-598
10	1304648C1	2	STUD ball, cylinder
11	131-176	2	NUT hex, self-locking, 5/16" - 18 NC, plated
12	R53957	1	BRACKET left-hand cab door window retaining, mounts to frame, not shown
12A	R53956	1	BRACKET right-hand cab door window retaining, mounts to frame
13	R53958	2	LATCH, door window to cab frame, Ref. 13, P/N R53958 subs to P/N 230588A1.
14	113-17	2	BOLT, Hex, 1/4"-20 x 1 1/4", G5, Latch to bracket
15	D36669	2	SPRING compression, left-hand and right-hand window latch release
16	195-102	2	WASHER flat, 1/4", plated
17	131-1180	2	NUT, LOCK, 1/4"-20, GA
18	121-134	6	BOLT, Hex Flg, 1/4"-20 x 3/4", G5, Full Thd, Bracket to frame
19	R52735	2	STRIKER door latch
20	F44748	2	BELLEVILLE SPRING washer
21	195-2029	2	WASHER flat, 3/8" bolt size, 7/16" ID x 1-1/4" OD x 1/8" thick, plated
22	131-1129	2	NUT hex, self-locking, 7/16" - 14 NC, plated
23	R54972	1	BRACKET plastic, right-hand fender sill
23A	R54971	1	BRACKET plastic, left-hand fender sill, not shown
24	182-588	8	MACHINE SCREW pan Phillips head, 1/4" - 20 NC x 1/2", fender bracket
25	195-2208	8	WASHER flat, 1/4", black Teflon
26	131-1180	8	NUT, LOCK, 1/4"-20, GA
27	353-405	2	PLUG nylon, 9/16", fender bracket
28	1977625C1	1-2	SEAL foam, 711 mm long, door sill, cut to required length from 198530C2 bulk seal, see below, Ref. 28, P/N 1977625C1 seal, and P/N 198530C2, 50' roll of bulk seal, Both replaced by P/N 1281436C1, 100' roll of bulk seal, sold by ft.- cut to length
	198530C2	UAR	SEAL foam, bulk, 50 foot, 1524 cm, long

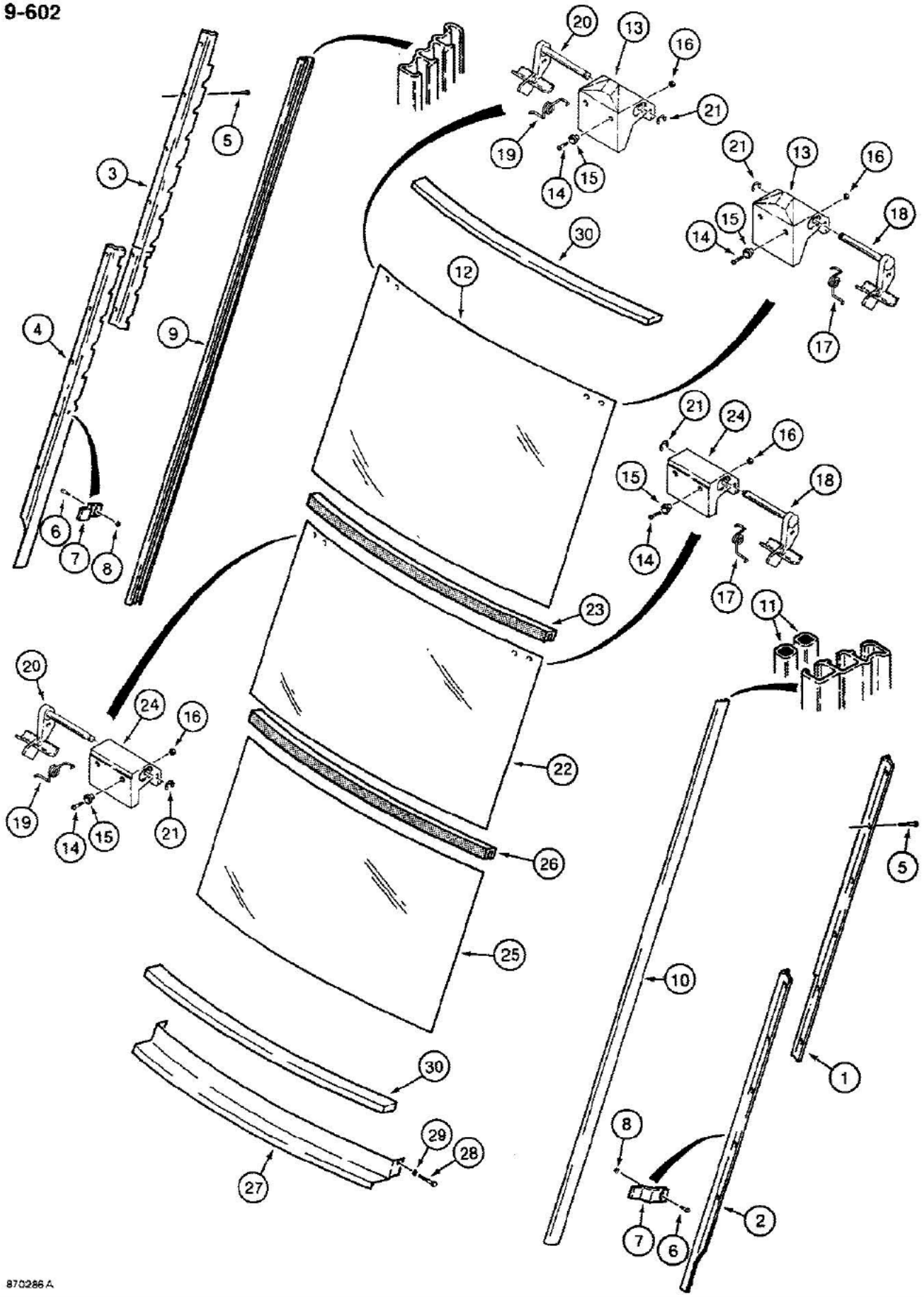
9-602
870286 A

09-602 CAB REAR WINDOW

Ref	Part Number	Qty	Description
1	97256C1	1	BRACKET right-hand, upper
2	97257C1	1	BRACKET right-hand, lower
3	97258C1	1	BRACKET left-hand, upper
4	97259C1	1	BRACKET left-hand, lower
5	187-1309	18	SCREW tri-roundular, self-tapping, No. 10 - 24 NC x 3/4", plated
6	121-134	2	BOLT, Hex Flg, 1/4"-20 x 3/4", G5, Full Thd
7	D129974	2	BRACKET lower rear window
8	131-1351	2	NUT, LOCK, Flg, 1/4"-20
9	R52939	1	CHANNEL track, left-hand side, stationary
10	R52940	1	CHANNEL track, right-hand side, retractable
11	R52942	2	SEAL, 60-15/32", 1536 mm, long, foam, adhesive back, special, right-hand track channel only
12	D129967	1	GLASS, upper rear window only
13	97278C1	2	LATCH, upper rear window only
14	179-159	8	MACHINE SCREW oval Phillips head, No. 10 - 24 NC x 1", plated
15	F64198	8	SPACER special
16	131-1142	8	NUT, LOCK, #10-24, GA
17	F45398	2	SPRING right-hand latch
18	97254C1	2	LEVER latch, right-hand side
19	F45399	2	SPRING left-hand latch
20	97255C1	2	LEVER latch, left-hand side
21	A27795	4	RETAINING RING latch lever
22	D129968	1	GLASS center rear window only
23	D126198	1	SEAL, 35-29/32", 912 mm, long, center window glass
24	97277C1	2	LATCH, center window only
25	D129969	1	GLASS, lower rear window only
26	D126198	1	SEAL, 35-29/32", 912 mm, long, lower window glass
27	D130002	1	BRACKET horizontal, lower, mounts to cab frame
28	113-101	2	BOLT, Hex, 5/16"-18 x 1/2", G5, Full Thd
29	192-20	2	WASHER, LOCK, 5/16"
30	D126201	2	SEAL, 25/32", 20 mm, wide x 13/32", 10 mm, thick x 35-29/32", 912 mm, long, adhesive back

9-604

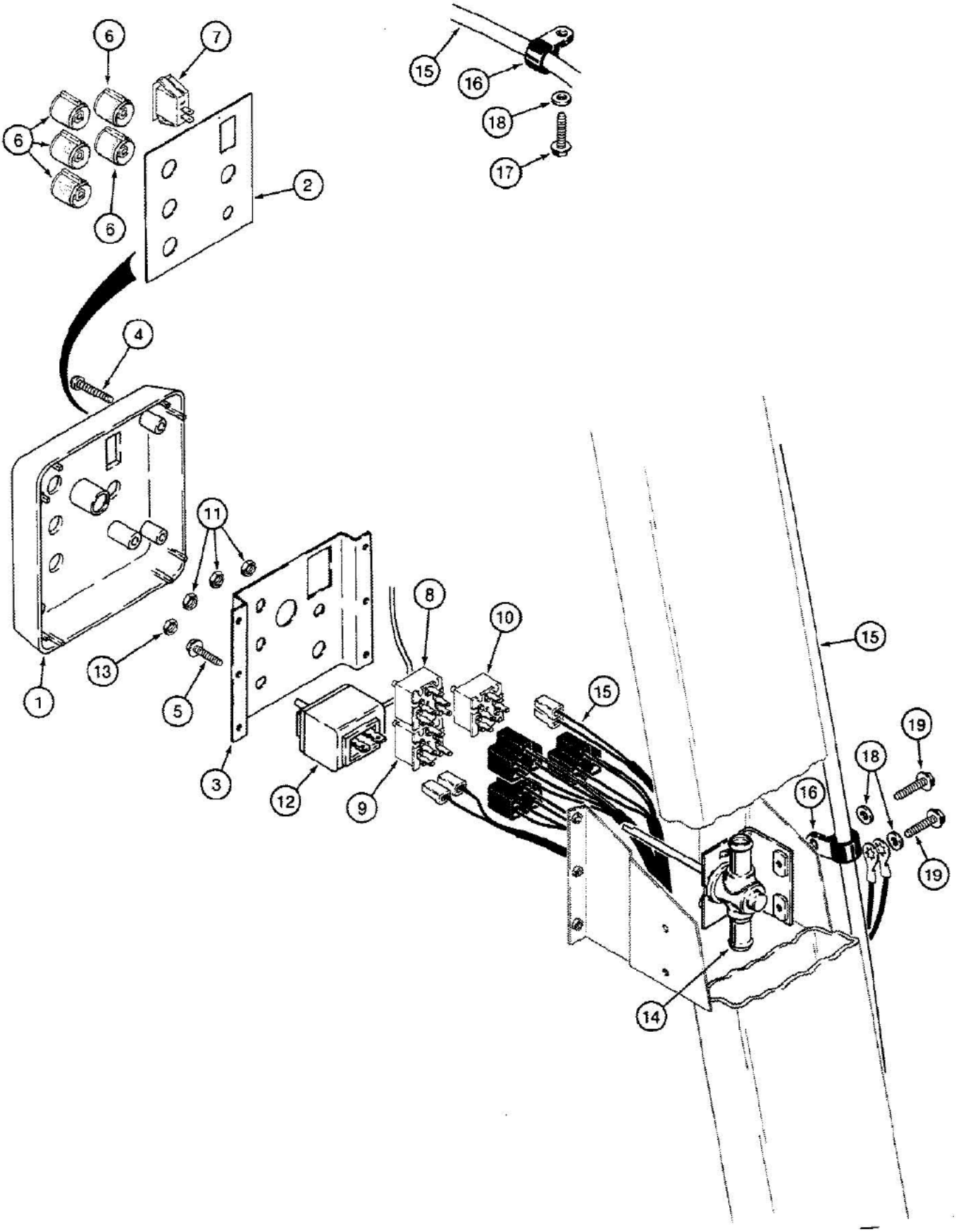

09-604 CAB CONTROL PANEL AND WIRING

Ref	Part Number	Qty	Description
1	R54202	1	PANEL cab control, mounts on right-hand ROPS post
2	REF	1	DECAL instrument panel, cab control, see Figure 09-638 for decal
3	R52436	1	BRACKET switch support
4	286-56520	4	SCREW Fillister head, self-tapping, No. 10 - 24 NC x 1-1/4", black
5	187-1309	2	SCREW hex flange head, No. 10 - 24 NC x 3/4", plated
6	F66127	4-5	KNOB switch, front and rear wiper, heater, blower, and air conditioner
7	F45393	1	SWITCH cab lamp, dome
8	A42622	1	SWITCH blower
9	R52440	1	SWITCH rear wiper
10	R52415	1	SWITCH front wiper
11	A42561	3	NUT retaining, switch
12	R52618	1	SWITCH temperature control, air conditioning
13	25-157	1	NUT hex, jam, 7/16" - 20 NF
14	R52483	1	VALVE temperature control, heater
15	R54147	1	HARNESS cab, main, used on models with two-position lamp switch for single control of front and rear lamps, if used, see Figure 04-126 for connecting harness
15A	A187759	1	HARNESS cab, main, used on models with four-position lamp switch for separate switching of front and rear lamps, if used, not shown, see Figure 04-126 for connecting harness
16	49858	2	CLAMP P-type, harness
17	28286R1	1	SCREW hex flange head, self-tapping, 1/4" - 20 NC x 3/4", plated, lower harness clamp uses existing heater temperature control valve mounting bolt
18	195-102	3	WASHER flat, 1/4", plated
19	121-134	2	BOLT, Hex Flg, 1/4"-20 x 3/4", G5, Full Thd, Mounts heater temperature control valve to ROPS post

9-606

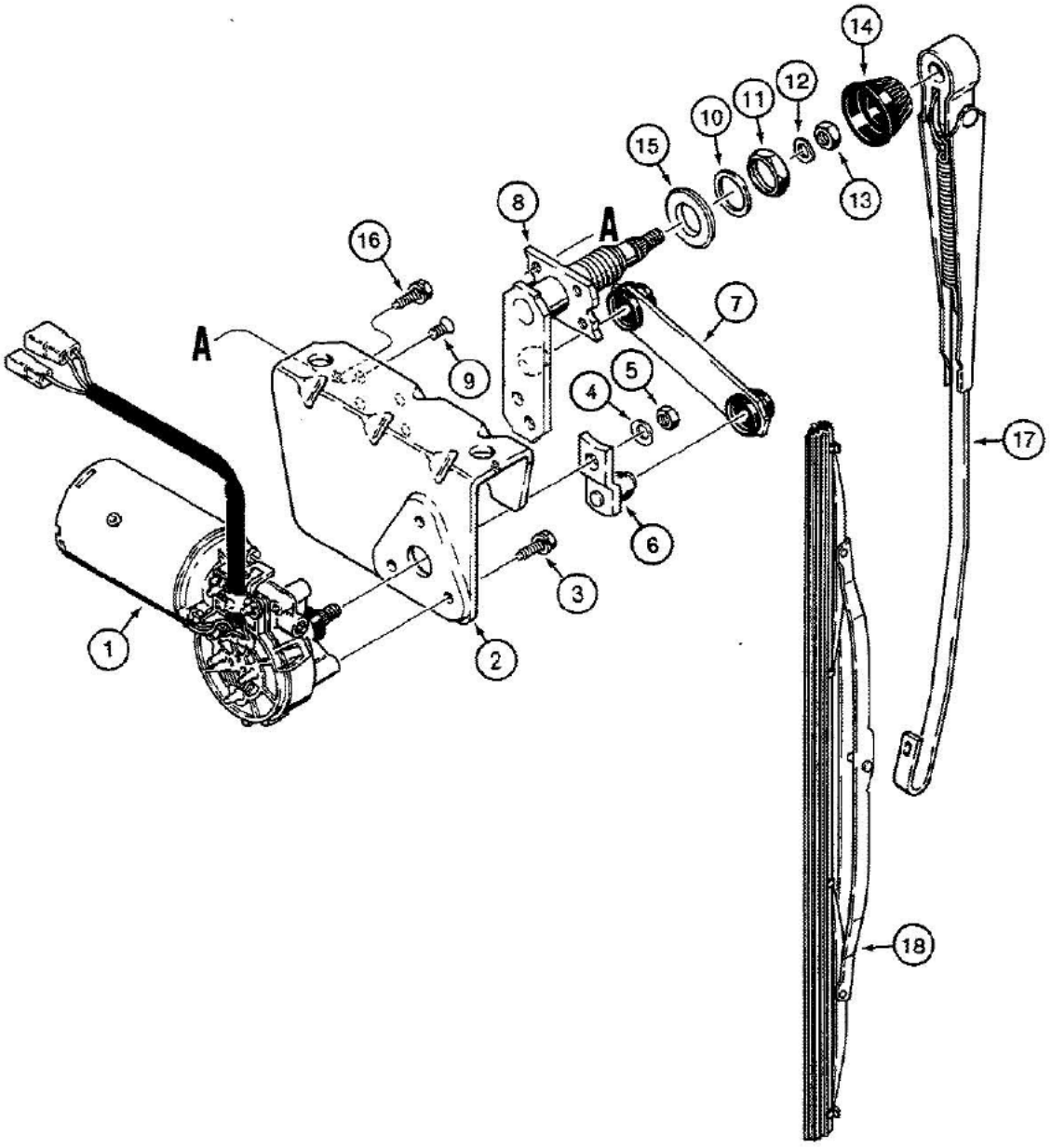

870305

09-606 CAB FRONT WINDSHIELD WIPER

Ref	Part Number	Qty	Description
	D128744	1	MOTOR AND BRACKET ASSEMBLY complete, Includes Ref. 1-14, front windshield wiper, 12 volt, no longer used, order A186171 motor assembly for service
	A186171	1	MOTOR AND BRACKET ASSEMBLY front windshield wiper, 12 volt, Includes: Ref. 1 through 14
1	N14110	1	MOTOR, 12 volt, windshield wiper, included in D128744 motor assembly
1	A186256	1	MOTOR, 12 volt, windshield wiper, included in A186171 motor assembly
2	N8359	1	BRACKET windshield wiper assembly
3	N8362	3	SCREW AND WASHER special, motor to bracket
4	N14111	1	BELLEVILLE SPRING washer, included in D128744 motor assembly
4	N8361	1	BELLEVILLE SPRING washer, included in A186171 motor assembly
5	L112090	1	NUT hex, special, 8 mm
6	N8360	1	ARM drive
7	N8358	1	LINK wiper
8	N14112	1	SHAFT pivot
9	N8356	4	SCREW special, pivot shaft to bracket
10	L112088	1	WASHER special, large, shaft
11	L112087	1	NUT special, large, shaft
12	L112089	1	WASHER wave, special, shaft end
13	L112090	1	NUT hex, special, 8 mm, shaft end
14	L112081	1	CAP pivot shaft end
15	R54241	1	SPACER pivot shaft
16	N8362	2	SCREW AND WASHER special, bracket to cab frame
17	D128745	1	ARM windshield wiper, 22-7/16", 570 mm, long, complete
18	D128746	1	BLADE windshield wiper, 22", 560 mm, long

9-608

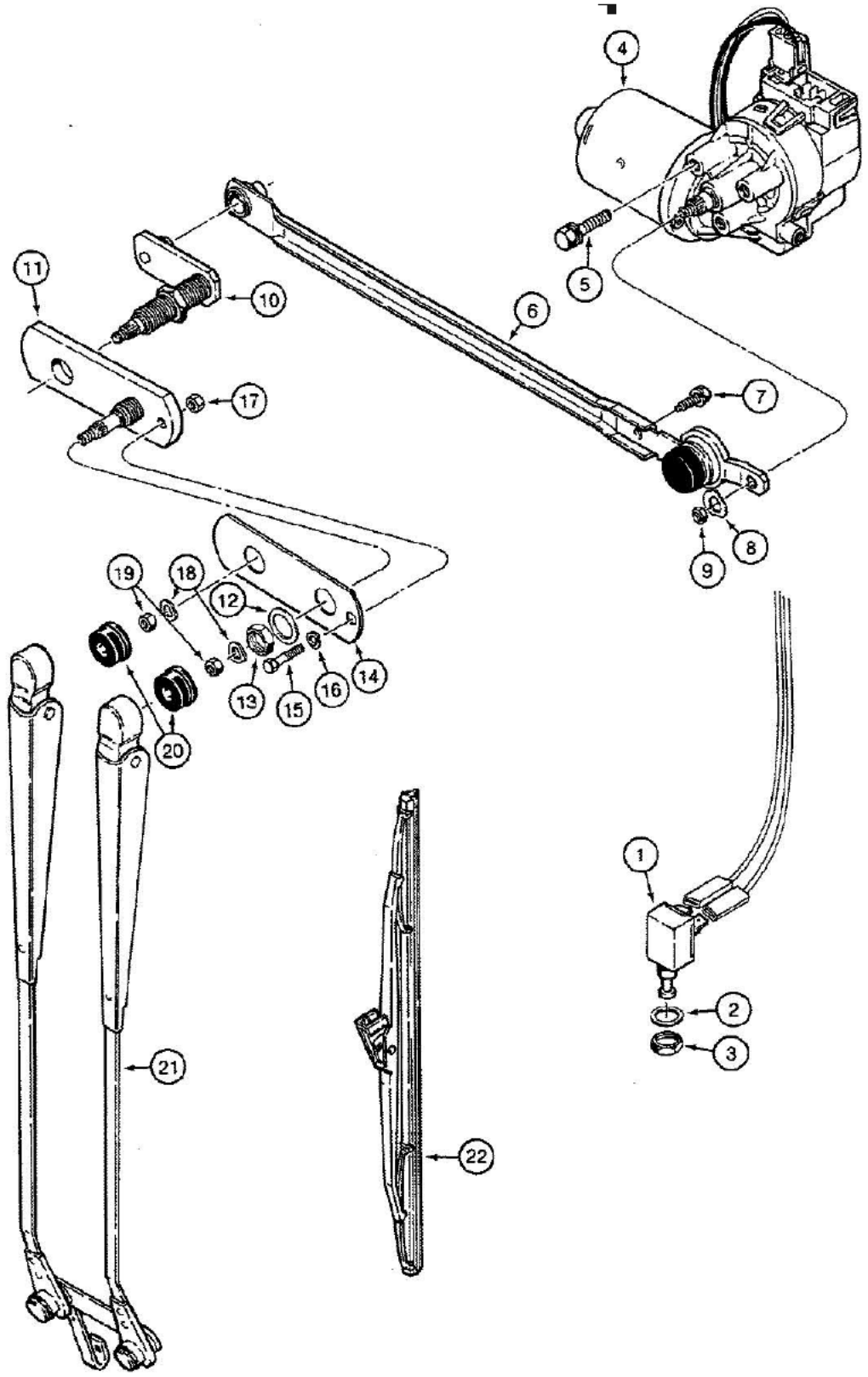

870304

580K LOADER BACKHOE (NORTH AMERICA) - Chassis/Attachments

09-608 CAB REAR WINDSHIELD WIPER

Ref	Part Number	Qty	Description
1	A187714	1	SWITCH wiper stop, mounts to window frame inside filter compartment
2	A165395	1	WASHER flat, 1/2" ID x 1" OD x 1/16" thick, used as a seal
3	129-164	1	NUT, Jam, 7/16"- 20, G5
4	D128017	1	MOTOR rear windshield wiper, 12 volt
5	N8362	3	SCREW AND WASHER special, motor to cab frame
	D128018	1	LINK rear wiper, motor to wiper pivot shafts, Includes: Ref. 6 and 7
6	NSS	1	LINK crank
7	N8362	1	SCREW AND WASHER special
8	N8361	1	WASHER wave, special
9	L112090	1	NUT hex, special, 8 mm
10	D128020	1	SHAFT pivot, with ball, includes nut
11	D128021	1	SHAFT pivot
12	L112088	1	WASHER special, large, shaft
13	L112087	1	NUT special, large, shaft
14	D128019	1	GASKET black
15	113-4	1	BOLT, Hex, 1/4"-20 x 1", G5
16	192-19	1	WASHER, LOCK, 1/4"
17	7770	1	NUT, 1/4"-20, G5
18	L112089	2	WASHER wave, special, shaft end
19	L112090	2	NUT hex, special, 8 mm, shaft end
20	L112081	2	CAP pivot shaft end
21	R52408	1	ARM rear windshield wiper
22	D128022	1	BLADE rear windshield wiper

9-610

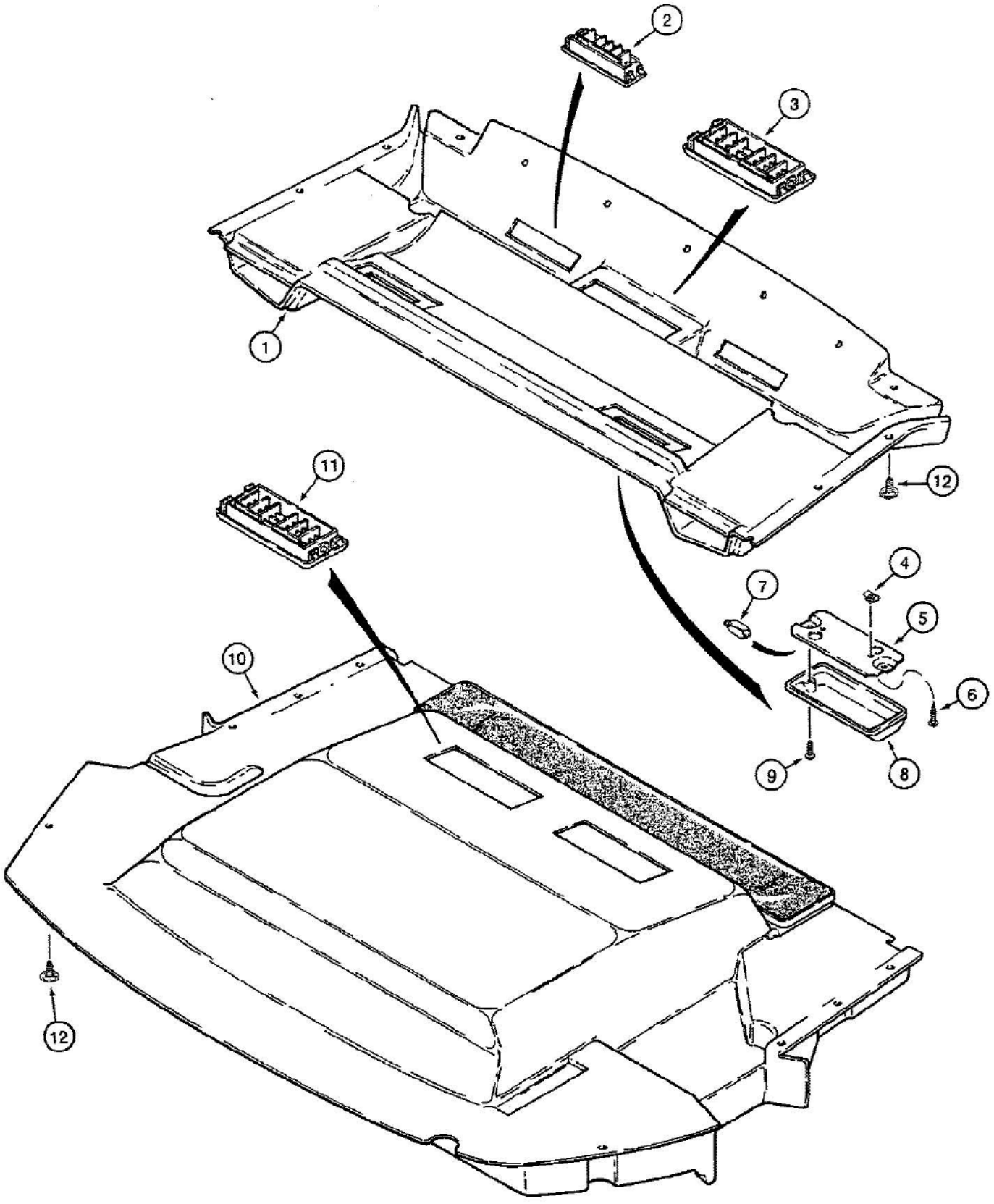

870298A-45

09-610 CAB HEADLINER, LOUVERS, AND DOME LAMPS

Ref	Part Number	Qty	Description
1	R54000	1	HEADLINER front section
2	R54201	2	LOUVER front defrost
3	L109555	3	LOUVER main, front headliner
4	131-861	4	CLIP U-type, cab dome lamp retaining, Ref. 4, P/N 131-861 clip - Can substitute P/N 131-121 nut, if desired.
	R53755	2	DOME LAMP ASSEMBLY, 12 volt, front headliner, Includes: Ref. 5 thru 8
5	NSS	1	BASE dome lamp
6	NSS	2	SCREW special, base to headliner
7	N14466	1	BULB dome lamp
8	N14465	1	LENS dome lamp
9	182-526	4	MACHINE SCREW pan Phillips head, No. 10 - 24 NC x 3/8", plated, base to lens
10	R54009	1	HEADLINER rear section, complete, includes condensation pan and tubes, Ref. 10, P/N R54009 headliner does not include the pan. The pan assy., which included the foam, is P/N 1974613C1 and has since subbed to it's primes, P/N 1971366C1 pan and P/N 1974623C1 foam
11	L109555	4	LOUVER recirculation and rear defrost, rear headliner
12	F64519	17	SCREW self-tapping, Phillips head, with washer, No. 10 - 16 x 3/4", headliner to cab frame
13	1954737C1	1	HEADLINER cab, not shown, special parts used on models without air conditioning
14	R54201	2	LOUVER defrost, not shown, special parts used on models without air conditioning
15	L109555	5	LOUVER rectangular, not shown, special parts used on models without air conditioning
16	1954784C1	1	BRACKET headliner support, not shown, special parts used on models without air conditioning
17	187-1310	4	SCREW hex flange head, self-tapping, 1/4" - 20 NC x 3/4", plated, not shown, special parts used on models without air conditioning

9-612

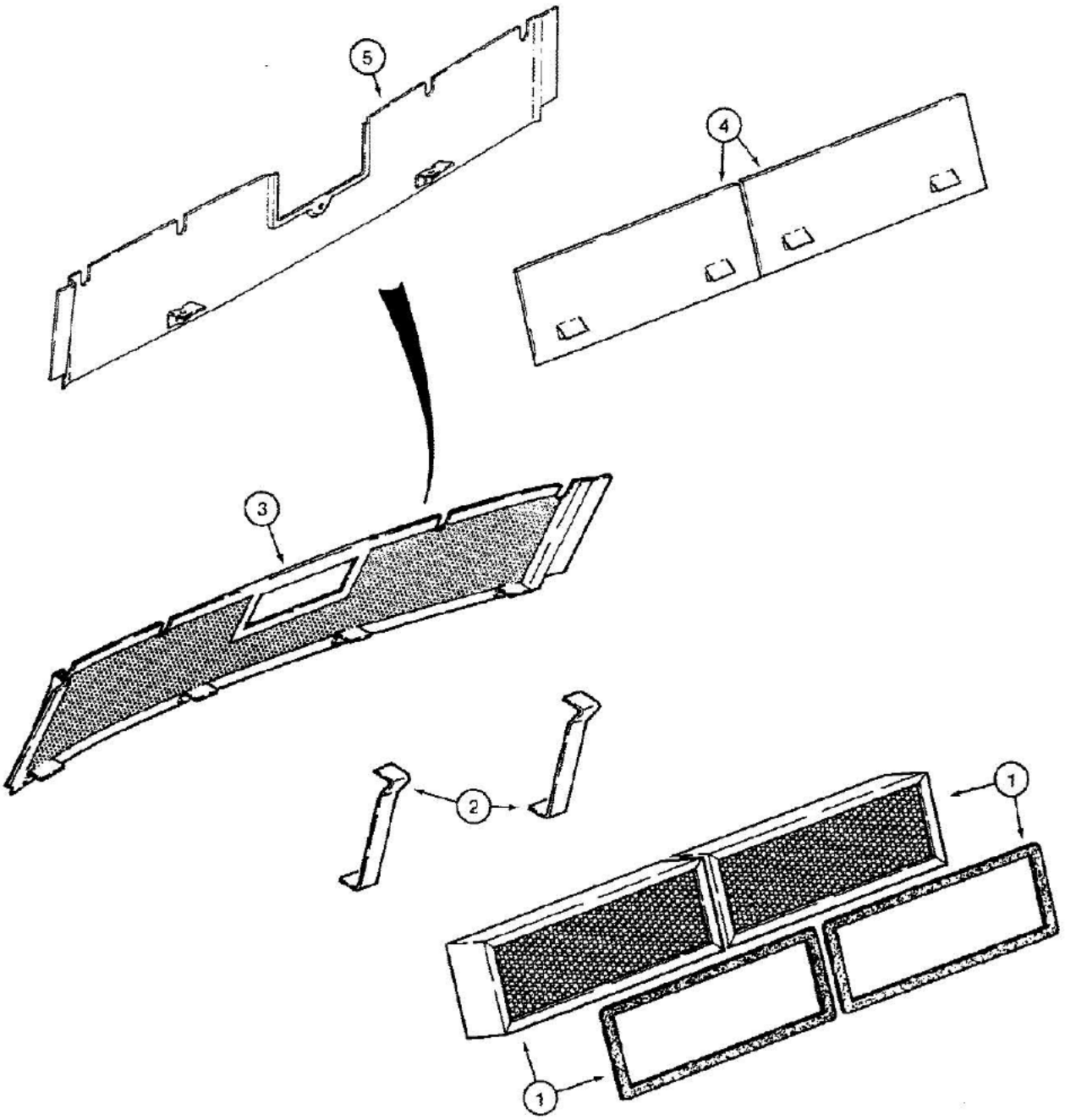

870282B-45

09-612 CAB AIR FILTER

Ref	Part Number	Qty	Description
1	R53519	2	FILTER air, complete, includes gasket
2	R55108	2	BRACKET air filter
3	R54297	1	COVER air filter, rear, no longer available, order 1975880C1
4	R54941	2	PLATE filter blockoff, if used
5	1975880C1	1	COVER air filter, rear

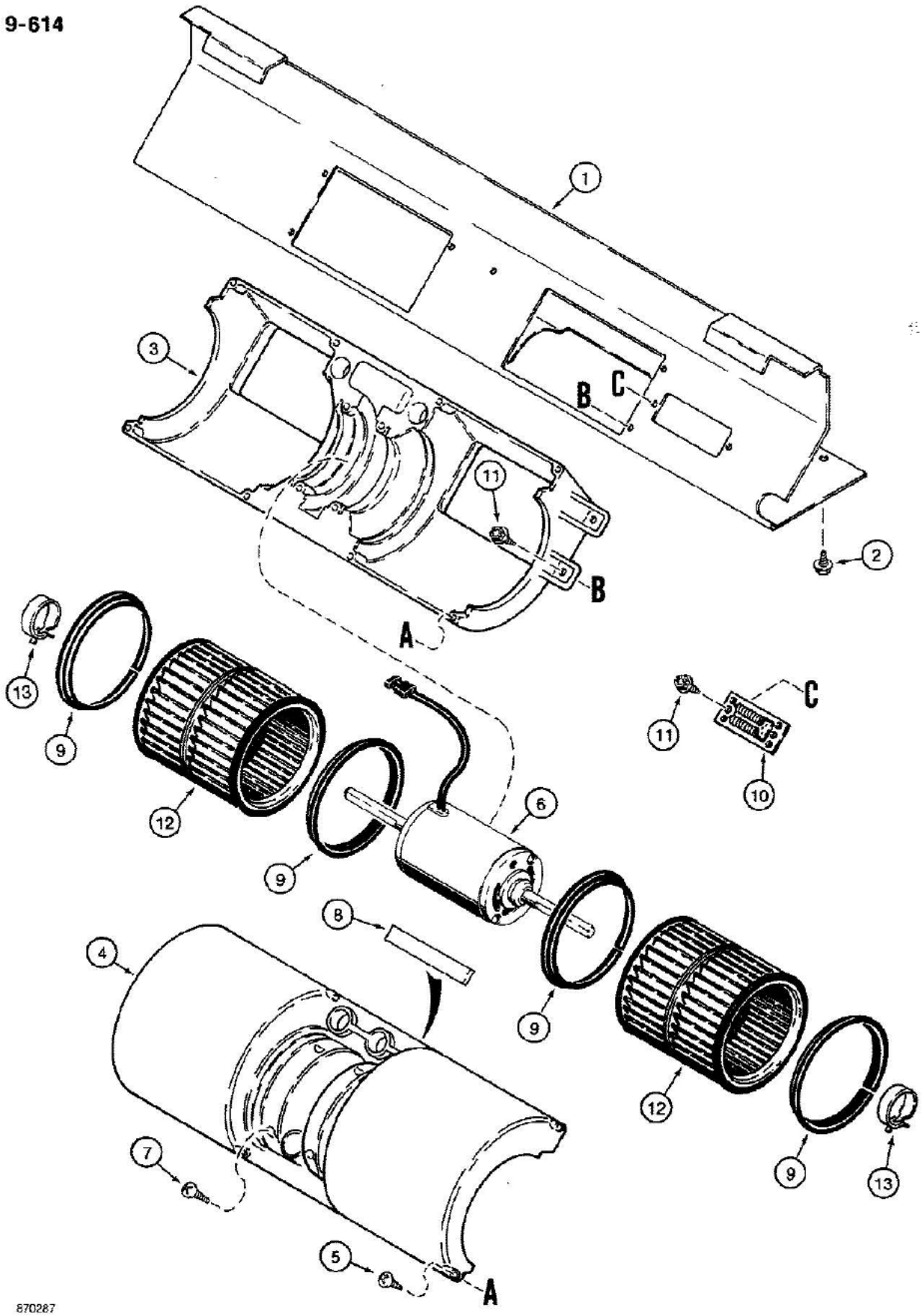
9-614
1
2
3
A
B
C
4
5
6
7
8
9
10
11
12
13
870287

580K LOADER BACKHOE (NORTH AMERICA)

09-614 CAB BLOWER

Ref	Part Number	Qty	Description
1	D126301	1	BRACKET blower mounting
2	121-134	5	BOLT, Hex Flg, 1/4"-20 x 3/4", G5, Full Thd
3	F64740	1	HOUSING fans, lower
4	F64741	1	HOUSING fans, upper
5	187-1916	8	SCREW pan head, self-tapping, No. 8 - 16 x 3/4", plated
6	R54415	1	MOTOR blower, 12 volt
7	187-1920	4	SCREW pan head, self-tapping, No. 8 - 16 x 1", plated
8	F64816	1	SEAL, 3/4" wide x 1/8" thick x 4" long, cut from F64119 bulk seal, see below, foam, upper fan housing
9	F64739	4	RING plastic, fan retaining
10	F44900	1	RESISTOR blower
11	187-1088	6	SCREW hex washer head, slotted, self-tapping, No. 10 - 16 x 1/2", plated
12	F64935	2	FAN blower
13	F64936	2	CLAMP steel spring
	F64119	UAR	SEAL bulk, foam, 100 ft, 3048 cm, long

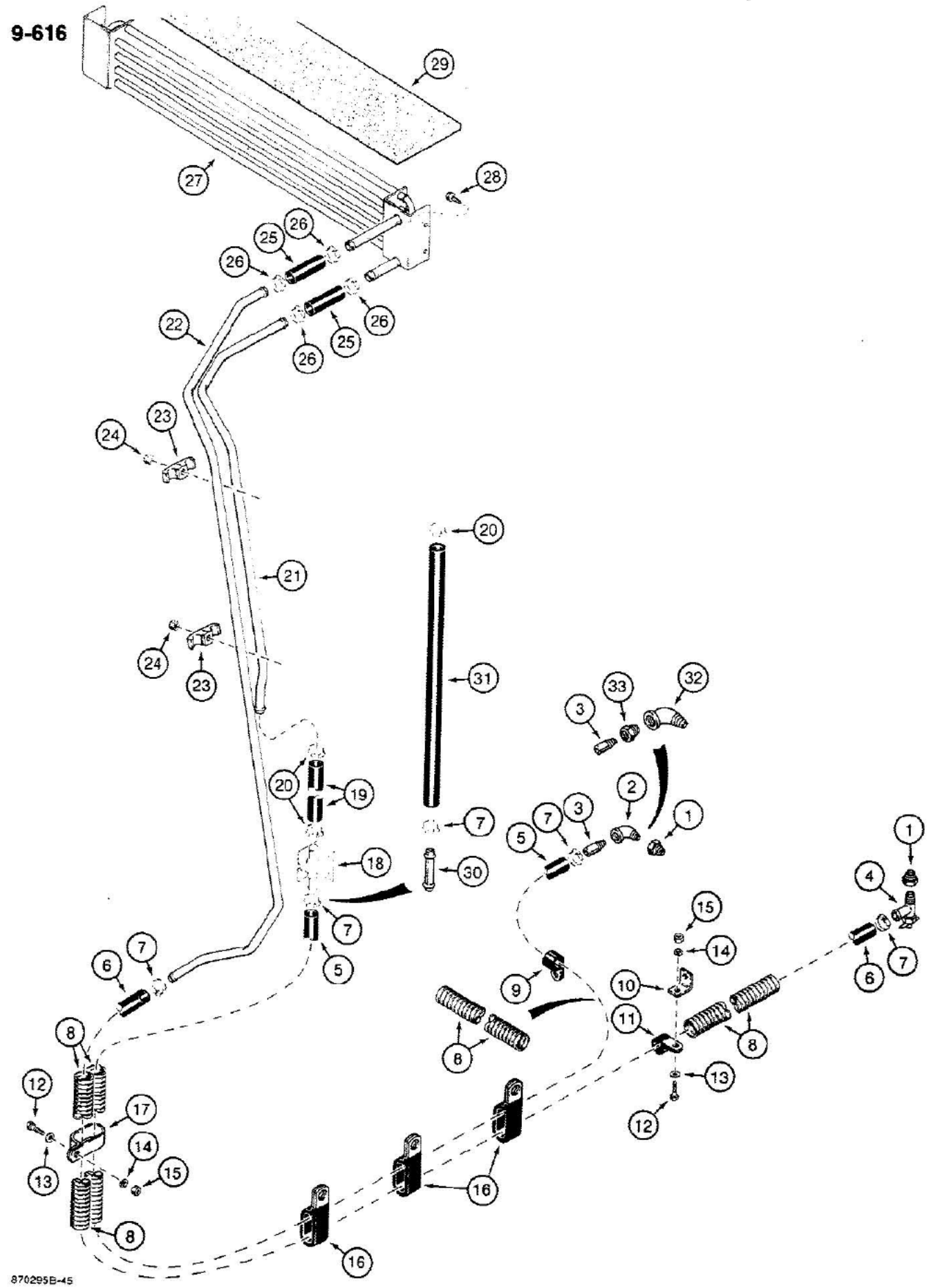
9-616
870295B-45

580K LOADER BACKHOE (NORTH AMERICA)

09-616 CAB HEATER

Ref	Part Number	Qty	Description
1	221-89	2	REDUCER, 1/2" x 3/8" NPT, replaces existing plugs, if used
2	221-413	1	STREET ELBOW, 90 degree, 3/8" NPT, left hand side of engine, if used
3	L17985	1	NIPPLE, 3/8" NPT, left hand side of engine
4	A16764	1	SHUTOFF VALVE right hand side of engine, at water pump
5	D136068	1	HOSE, 5/8", 16 mm, ID x 15/16", 24 mm, O.D. x 124", 3150 mm, long, cut to required length from A42610 bulk hose, see below, left hand, mounts to heater temperature control valve, P/N S104739 tube and P/N R54969 hose Refs. 30 and 31 are used in production with P/N D136068, 124" hose Ref. 5 for ease of pod assembly; however, Refs. 30 and 31 are not required for service if Ref. 5 hose is cut to 146" instead of 124".
6	D132977	1	HOSE, 5/8", 16 mm, ID x 15/16", 24 mm, O.D. x 116-1/8", 2950 mm, long, cut to required length from A42610 bulk hose, see below, right hand
7	214-253	5	CLAMP heater hoses
8	D132982	4	SLEEVE hose guard
9	R14668	1	CLAMP left hand hose, uses existing mounting hardware
10	D126742	1	BRACKET hose clamp support, mounts to engine with existing hardware, if used
11	R14668	1	CLAMP hose, if used
12	113-206	1-2	BOLT, Hex, 3/8"-16 x 3/4", G5, Full Thd
13	195-525	1-2	WASHER flat, 3/8", plated
14	192-21	1-2	WASHER, LOCK, 3/8"
15	129-103	1-2	NUT, 3/8"-16, G5
16	D39696	3	CLAMP hose
17	D132978	1	CLAMP hose, at right hand console
18	R52483	1	VALVE temperature control, heater, see Figure 09-604 for mounting
19	R54968	1	HOSE, 5/8", 16 mm, ID x 8", 205 mm, long, cut to required length from bulk hose, see below, heater temperature control valve to heater inlet tube
20	214-254	3	CLAMP worm screw type, hose
21	R52504	1	TUBE heater inlet
22	R52505	1	TUBE heater outlet
23	R52657	2	CLAMP plastic, tube, mounts on stud on ROPS post
24	131-206	2	NUT hex, self-locking, 3/8" - 16 NC
25	R54967	2	HOSE, 5/8", 16 mm, ID x 2-3/4", 70 mm, long, cut to required length from bulk hose 97252C1, see below, heater core to tubes
	97252C1	UAR	HOSE bulk, 5/8", 16 mm, ID x 50 ft, 1524 cm, long
	A42610	UAR	HOSE bulk, 5/8", 16 mm, ID x 1", 25 mm, O.D. x 50 ft, 1524 cm, long
26	214-254	4	CLAMP worm screw type, hose
27	F45415	1	CORE heater, mounts to cab frame
28	187-1310	4	SCREW hex flange head, self-tapping, 1/4" - 20 NC x 3/4", plated
29	F45457	1	SEAL heater and air conditioner, foam, adhesive back

Ref	Part Number	Qty	Description
30	S104739	1	TUBE, 5/8", 16 mm, O.D. x 3", 76 mm, long, used in production, not required for service, P/N S104739 tube and P/N R54969 hose Refs. 30 and 31 are used in production with P/N D136068, 124" hose Ref. 5 for ease of pod assembly; however, Refs. 30 and 31 are not required for service if Ref. 5 hose is cut to 146" instead of 124".
31	R54969	1	HOSE, 5/8", 16 mm, ID x 22", 558 mm, long, cut to required length from bulk hose R54970, see below, used in production, not required for service, P/N S104739 tube and P/N R54969 hose Refs. 30 and 31 are used in production with P/N D136068, 124" hose Ref. 5 for ease of pod assembly; however, Refs. 30 and 31 are not required for service if Ref. 5 hose is cut to 146" instead of 124".
32	221-1414	1	ELBOW street, 90 degree, 1/2" NPT, galvanized, if used
33	221-1089	2	REDUCER, 1/2" x 3/8" NPT, plated, if used
	R54970	UAR	HOSE bulk, 5/8", 16 mm, ID x 50 ft, 1524 cm, long

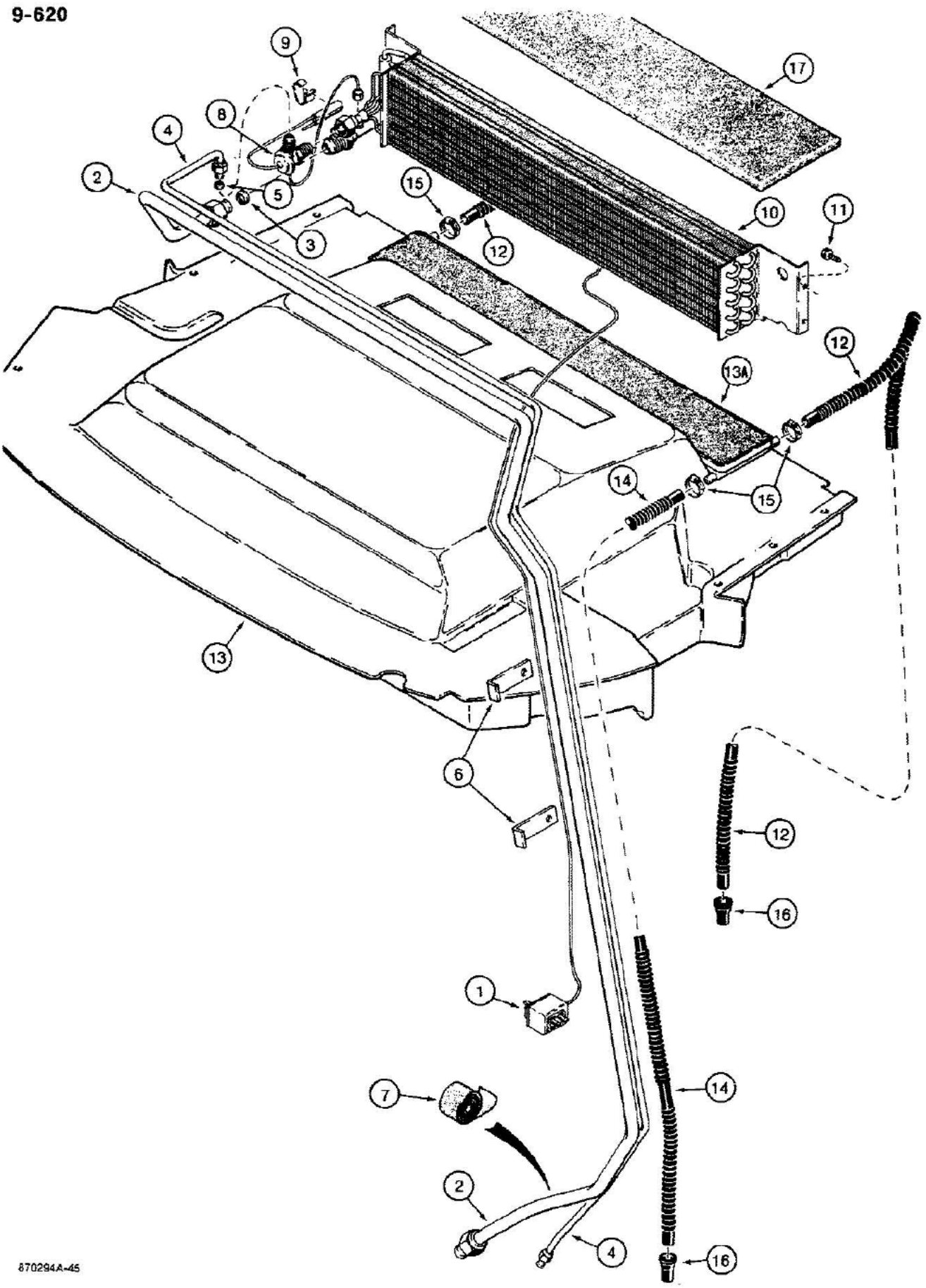
9-620
9
17
8
4
2
5
15
3
12
10
11
12
13A
14
15
13
6
12
16
1
7
14
2
4
16
870294A-45

580K LOADER BACKHOE (NORTH AMERICA)

09-620 CAB AIR CONDITIONER

Ref	Part Number	Qty	Description
1	R52618	1	SWITCH temperature control, air conditioning, see Figure 09-605 for mounting
2	R52507	1	TUBE suction
3	222-996	1	GASKET copper, 3/4", 19 mm, tube OD, suction tube
4	R52506	1	TUBE pressure
5	222-993	1	GASKET, 3/8 Tube, FI, Copper (9 mm), Pressure tube
6	R53634	2	CLAMP bracket, mounts to ROPS post stud with existing heater tube mounting nut
7	A42902	UAR	TAPE cork, insulating, bulk roll, 30 ft, 914 cm, long
8	F64389	1	VALVE expansion
9	98156C1	1	CLAMP valve sensor
10	R52611	1	CORE evaporator
11	28286R1	4	SCREW hex flange head, self-tapping, 1/4" - 20 NC x 3/4", plated
12	F45410	2	HOSE, 110", 2794 mm, long, cut to required length from F64508 bulk hose, front drain
13	R54009	1	HEADLINER rear section, complete, with condensation pan and tubes, see Figure 09-610 for louvers, Includes: Ref. 13A, Ref. 13, P/N R54009 headliner does not include the pan. The pan is Ref. 13A, P/N 1974613C1, and must be ordered separately
13A	1974613C1	1	PAN condensation drain, includes foam
14	F45411	2	HOSE, 80", 2032 mm, long, cut to required length from F64508 bulk hose, rear drain
15	214-274	4	CLAMP, 1/4" hose
16	F44790	4	END rubber, drain hose
17	F45457	1	SEAL heater and air conditioner cores, foam, adhesive back
	F64508	UAR	HOSE bulk, 100 ft, 3048 cm, long, drain

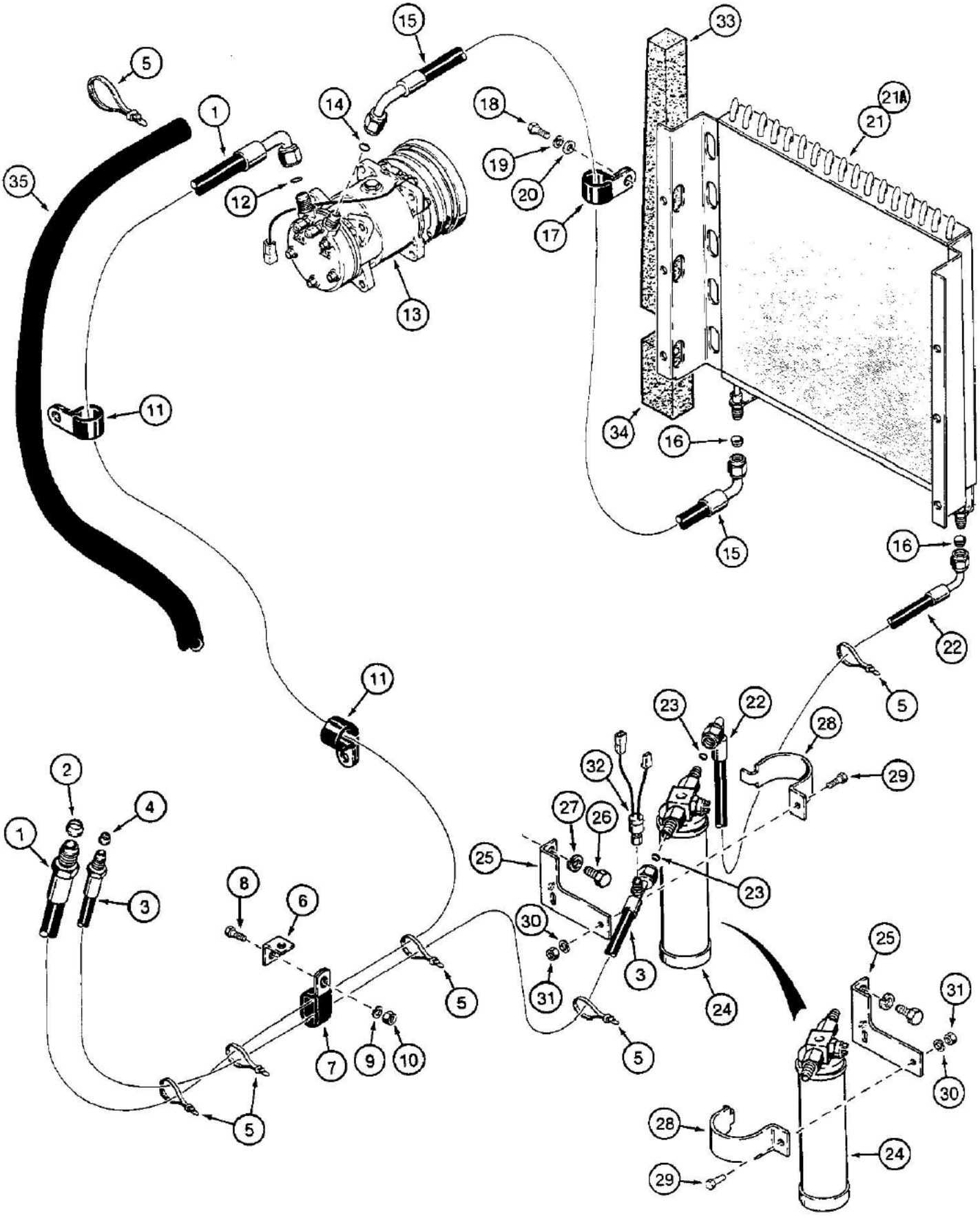
1
2
3
4
5
6
7
8
9
10
11
12
13
14
15
16
17
18
19
20
21
21A
22
23
24
25
26
27
28
29
30
31
32
33
34
35

580K LOADER BACKHOE (NORTH AMERICA)

09-622 CONDENSER, RECEIVER-DRIER AND AIR CONDITIONER LINES

Ref	Part Number	Qty	Description
1	D131559	1	HOSE, 135-7/8", 3450 mm, long, cab to compressor
2	222-996	1	GASKET copper, 3/4", 19 mm
3	D131564	1	HOSE, 104-3/8", 2650 mm, long, receiver-drier to cab
4	222-993	1	GASKET, 3/8 Tube, FI, Copper (9 mm)
5	L18337	5-6	STRAP tie, 15 inch, nylon
6	D126742	1	BRACKET, use existing loader lift tube mounting bracket bolt on chassis
7	D39696	1	CLAMP double tube
8	113-103	1	BOLT, Hex, 5/16"-18 x 1", G5, Full Thd
9	192-20	1	WASHER, LOCK, 5/16"
10	9635082	1	NUT, 5/16"-18, G5
11	D41564	1-2	CLAMP hose, uses existing hardware on air cleaner mounting plate to uprigh and torque converter housing
12	371544R1	1	O-RING, cab to compressor hose at compressor inlet
13	A177068	1	COMPRESSOR ASSEMBLY air conditioning, see Figure 04-094, see Figure 04-098 for mounting parts
14	A8613	1	O-RING, compressor to condenser hose at compressor outlet
15	D131560	1	HOSE, 51-3/16", 1300 mm, long, compressor to condenser
16	222-993	2	GASKET, 3/8 Tube, FI, Copper (9 mm)
17	D41564	1	CLAMP hose
18	814-8020	1	BOLT, Hex, M8 x 20, 8.8
19	192-20	1	WASHER, LOCK, 5/16"
20	195-521	1	WASHER flat, 5/16", plated
21	A184213	1	CONDENSER coil, refrigerant cooler, uses existing oil cooler to radiator hardware, no longer used, for service order A184971 condenser
21A	A184971	1	CONDENSER coil, refrigerant cooler, uses existing oil cooler to radiator hardware
22	D131562	1	HOSE, 33-1/2", 850 mm, long, condenser to receiver-drier
23	A61198	2	O-RING hose, at reciever-drier
24	A76312	1	RECEIVER-DRIER air conditioner
25	D131563	1	BRACKET receiver-drier mounting to engine, may be mounted on left-hand or right-hand side of receiver-drier
26	814-12016	2	BOLT hex head, 12 mm - 1.75 x 16 mm, 8.8, plated
27	192-23	2	WASHER, LOCK, 1/2"
28	A61193	1	CLAMP receiver-drier to mounting bracket, may be mounted on left-hand or right-hand side of receiver-drier
29	113-103	1	BOLT, Hex, 5/16"-18 x 1", G5, Full Thd
30	192-20	1	WASHER, LOCK, 5/16"
31	9635082	1	NUT, 5/16"-18, G5
32	A65779	1	SWITCH high pressure cutout, attaches to engine harness
33	D140840	2	BAFFLE base size is 2-3/16", 55 mm, x 17-3/4", 450 mm, high, cut from D92228 bulk pad, see below
34	D140841	2	BAFFLE base size is 2-3/8", 60 mm, x 3-15/16", 100 mm, high, cut from D92228 bulk pad, see below
35	D134728	1	SLEEVE hose guard, models with turbocharged engine
	D92228	1	BAFFLE bulk pad, 35-1/2", 900 mm, x 55-1/8", 1400 mm, x 1-1/2", 38 mm, use to cut Ref. 33 and 34

09-622 CONDENSER, RECEIVER-DRIER AND AIR CONDITIONER LINES

Ref	Part Number	Qty	Description
	345-44	1	ADHESIVE spray can, for attaching foam pads to metal surfaces

9-626

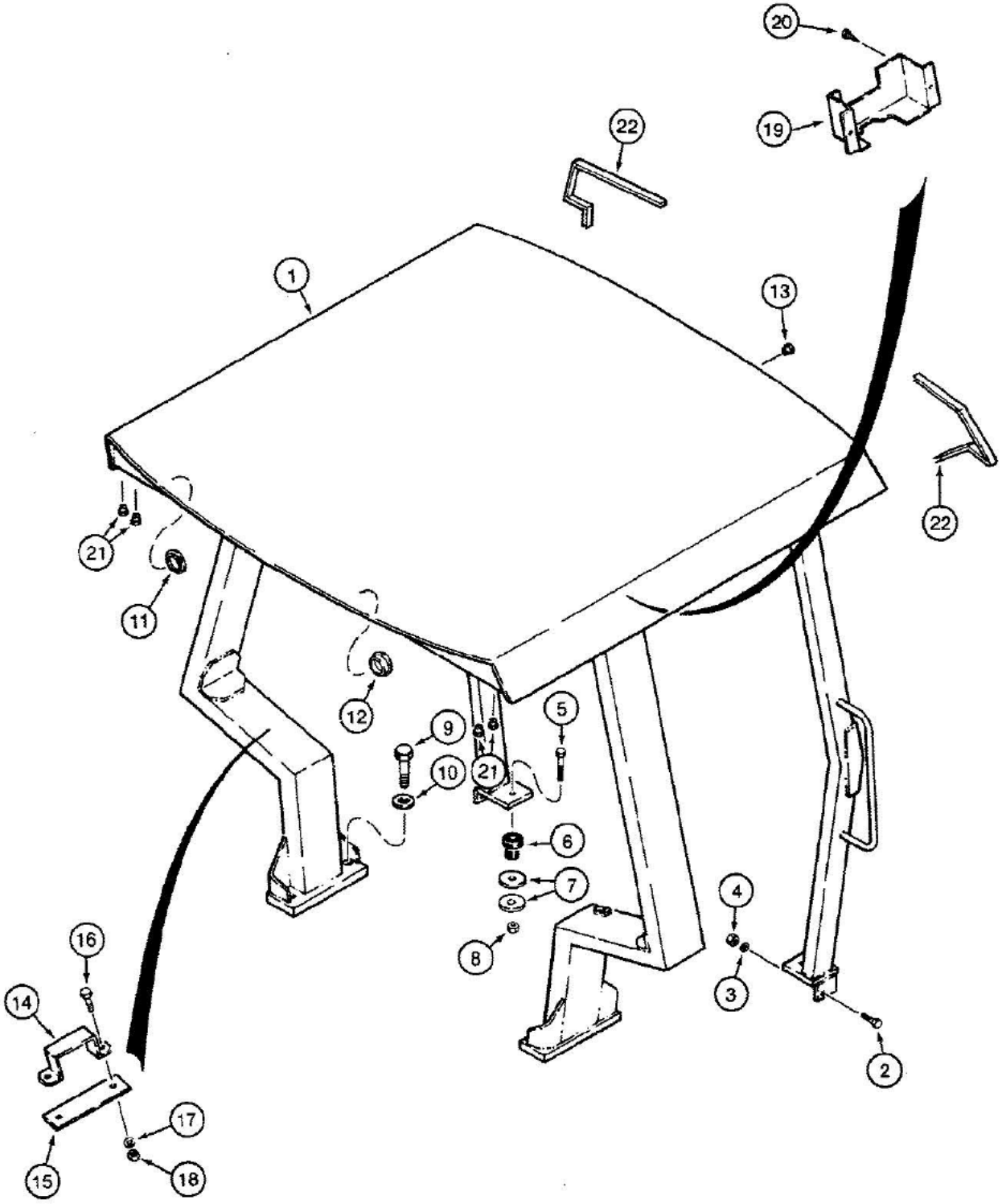

870240A-45

580K LOADER BACKHOE (NORTH AMERICA)

09-626 ROPS CANOPY

Ref	Part Number	Qty	Description
1	REF	1	ROPS CANOPY machinery item, order from Machinery Price List, ROPS CANOPY, this item is no longer available thru wholegoods. Order P/N D104591, which now subs to its primes. P/N D104591 replaces P/N D103145.
2	113-417	2	BOLT, Hex, 1/2"-13 x 1 1/4", G5, Full Thd, Attaches canopy to front corner of floor plate
3	192-23	2	WASHER, LOCK, 1/2"
4	129-105	2	NUT, 1/2"-13, G5
5	23061R1	2	BOLT hex head, 5/8" - 11 NC x 4", plated, mounts canopy to floor plate
6	D138565	4	INSULATOR frame mounting
7	D89007	2	WASHER flat, 5/8", hardened, special
8	129-183	2	NUT, 5/8"-11, G8
9	26-1452	4	BOLT hex head, 7/8" - 9 NC x 3-1/4", grade 8, rear ROPS post mounting to fenders
10	196-35	4	WASHER flat, 7/8", hardened
11	205-72	4	PLUG button, 3", 76 mm, diameter, steel, if used
12	353-417	8	PLUG nylon, 2", 51 mm, diameter, if used
13	353-405	4	PLUG nylon, 9/16", 14 mm, diameter, if used
14	D136652	2	BRACKET support, mounts to fenders
15	D136653	2	PLATE support bracket, mounts under fender
16	113-206	4	BOLT, Hex, 3/8"-16 x 3/4", G5, Full Thd
17	192-21	4	WASHER, LOCK, 3/8"
18	129-103	4	NUT, 3/8"-16, G5
19	D132337	1	COVER wiring
20	187-1090	2	SCREW hex washer head, self-tapping, No. 10 - 24 x 5/8", blunt point, plated
21	353-405	4	PLUG nylon, 9/16", 14 mm, diameter
22	D60180	2	TRIM edge, 14-1/2" long

9-628

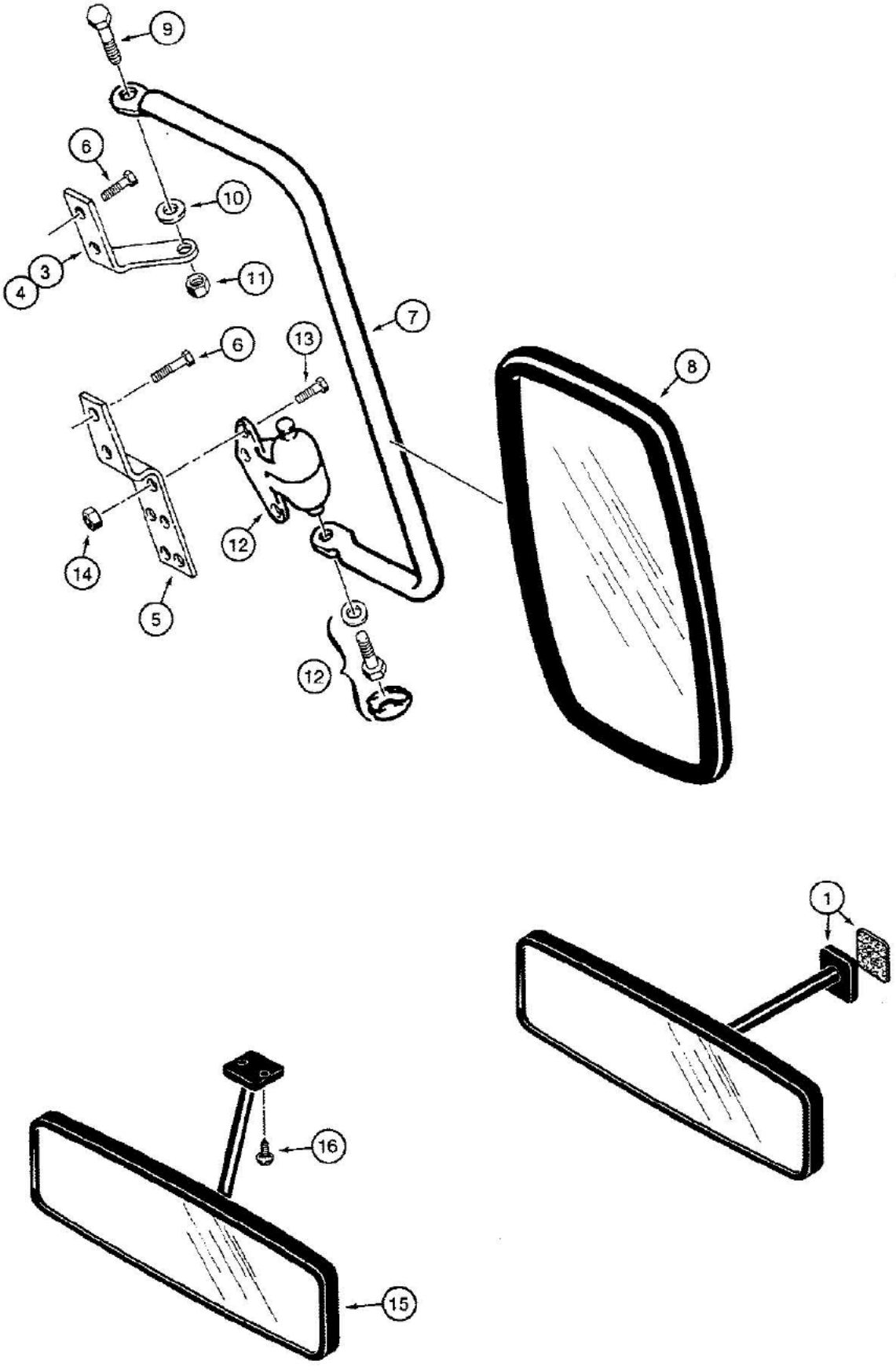

870326A–45

580K LOADER BACKHOE (NORTH AMERICA)

09-628 REAR VIEW MIRROR, ROPS CAB MODELS - INTERIOR AND EXTERIOR AND ROPS CANOPY MODELS - INTERIOR

Ref	Part Number	Qty	Description
1	R54689	1	MIRROR rear view, interior, includes spacer, rops cab models
3	D142084	1	BRACKET mirror, right-hand upper, rops cab models - exterior
4	D142085	1	BRACKET mirror, left-hand upper, not shown, rops cab models - exterior
5	D142083	2	BRACKET mirror, lower, rops cab models - exterior
6	187-1310	8	SCREW hex head, self-tapping, 1/4" - 20 NC x 3/4", plated, rops cab models - exterior
7	D142086	2	SUPPORT mirror, rops cab models - exterior
8	R54682	2	MIRROR rear view, exterior, rops cab models
9	113-103	2	BOLT, Hex, 5/16"-18 x 1", G5, Full Thd, ROPS cab models - exterior
10	A167037	2	WASHER nylon, rops cab models - exterior
11	131-665	2	NUT hex, self-locking, 5/16" - 18 NC, plated, rops cab models - exterior
12	D142144	2	KNUCKLE support pivot, includes hardware, rops cab models - exterior
13	113-3	6	BOLT, Hex, 1/4"-20 x 3/4", G5, Full Thd, ROPS cab models - exterior
14	86625061	6	NUT hex, self-locking, 1/4" - 20 NC, plated, rops cab models - exterior
15	D138952	1	MIRROR rear view, interior, rops canopy models
16	187-576	2	SCREW hex washer head, slotted, self-tapping, No. 10 - 24 x 3/8", plated, rops canopy models - interior

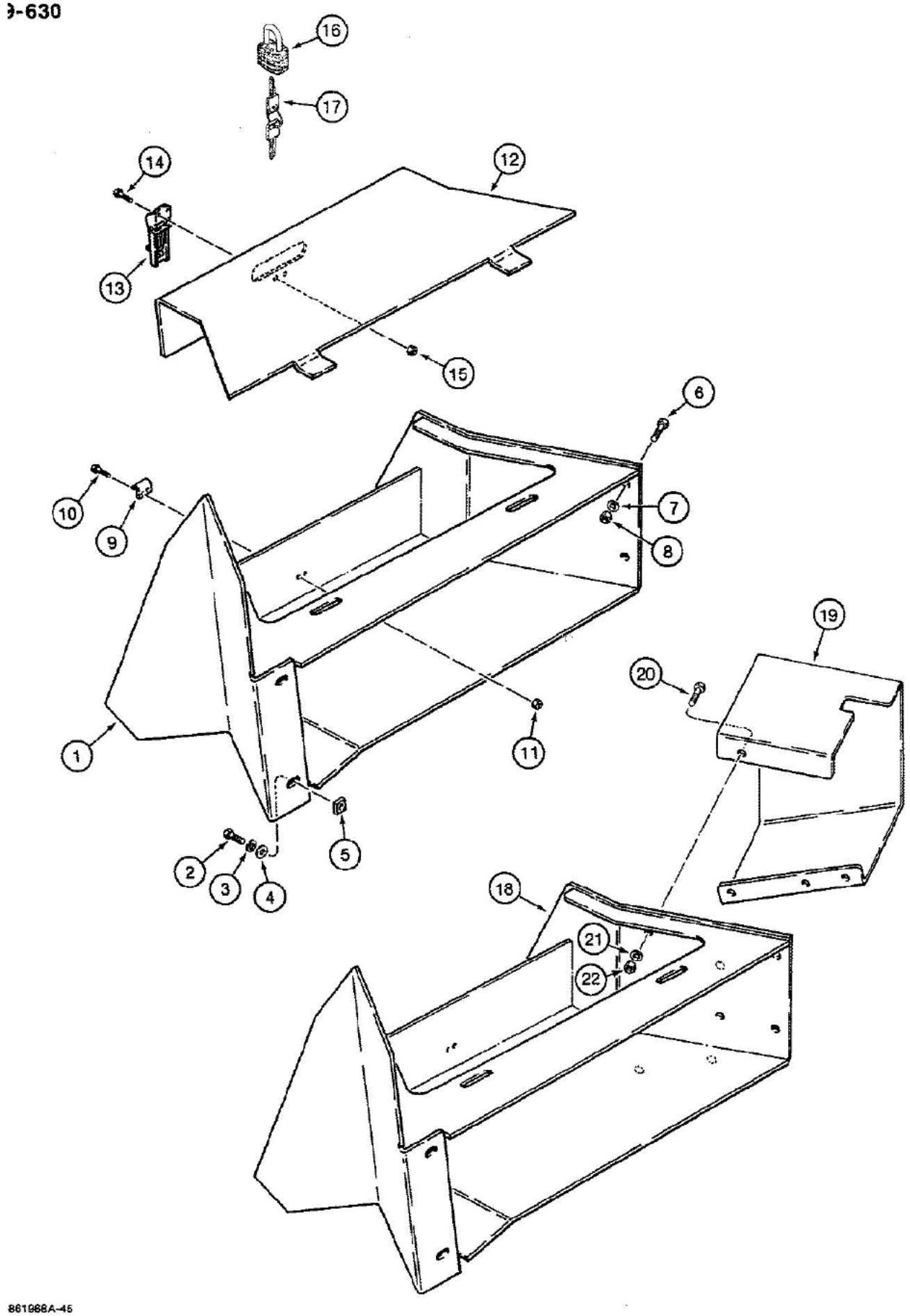

Tool box is also step assy.

580K LOADER BACKHOE (NORTH AMERICA)

09-630 OPERATORS TOOL BOX

Ref	Part Number	Qty	Description
1	D131923	1	BOX tool, tractor, mounts on left-hand side of chassis, used on models without auxiliary remote hydraulics for hand held attachments
2	113-221	2	BOLT, Hex, 3/8"-16 x 7/8", G5, Full Thd
3	192-21	2	WASHER, LOCK, 3/8"
4	195-525	2	WASHER flat, 3/8", plated
5	84899	2	NUT square, 3/8" - 16 NC, plated
6	113-208	2	BOLT, Hex, 3/8"-16 x 1 1/4", G5, Full Thd
7	192-21	2	WASHER, LOCK, 3/8"
8	129-103	2	NUT, 3/8"-16, G5
9	D131941	1	STRIKER tool box latch
10	113-1004	2	SCREW, Hex Hd, #10-24 x 5/8", G5
11	86632551	2	NUT, LOCK, #10-24, GB
12	D131928	1	COVER tool box
13	D131940	1	LATCH tool box
14	113-1004	2	SCREW, Hex Hd, #10-24 x 5/8", G5
15	86632551	2	NUT, LOCK, #10-24, GB
16	D93753	1	PADLOCK tool box, if used, Includes: Ref. 17
17	R29555	2	KEY, for Master padlock only
17	D93751	2	KEY, for Yale padlock only
18	D143612	1	BOX tool, tractor, mounts on left-hand side of chassis, used on models with auxiliary remote hydraulics for hand held attachments
19	D143555	1	GUARD selector valve, used with Ref. 18 tool box
20	113-207	3	BOLT, Hex, 3/8"-16 x 1", G5, Full Thd
21	192-21	3	WASHER, LOCK, 3/8"
22	129-103	3	NUT, 3/8"-16, G5

Tool box is also step assy.

09-632 SLOW MOVING VEHICLE EMBLEM, USED ON MODELS WITH AND WITHOUT BACKHOE

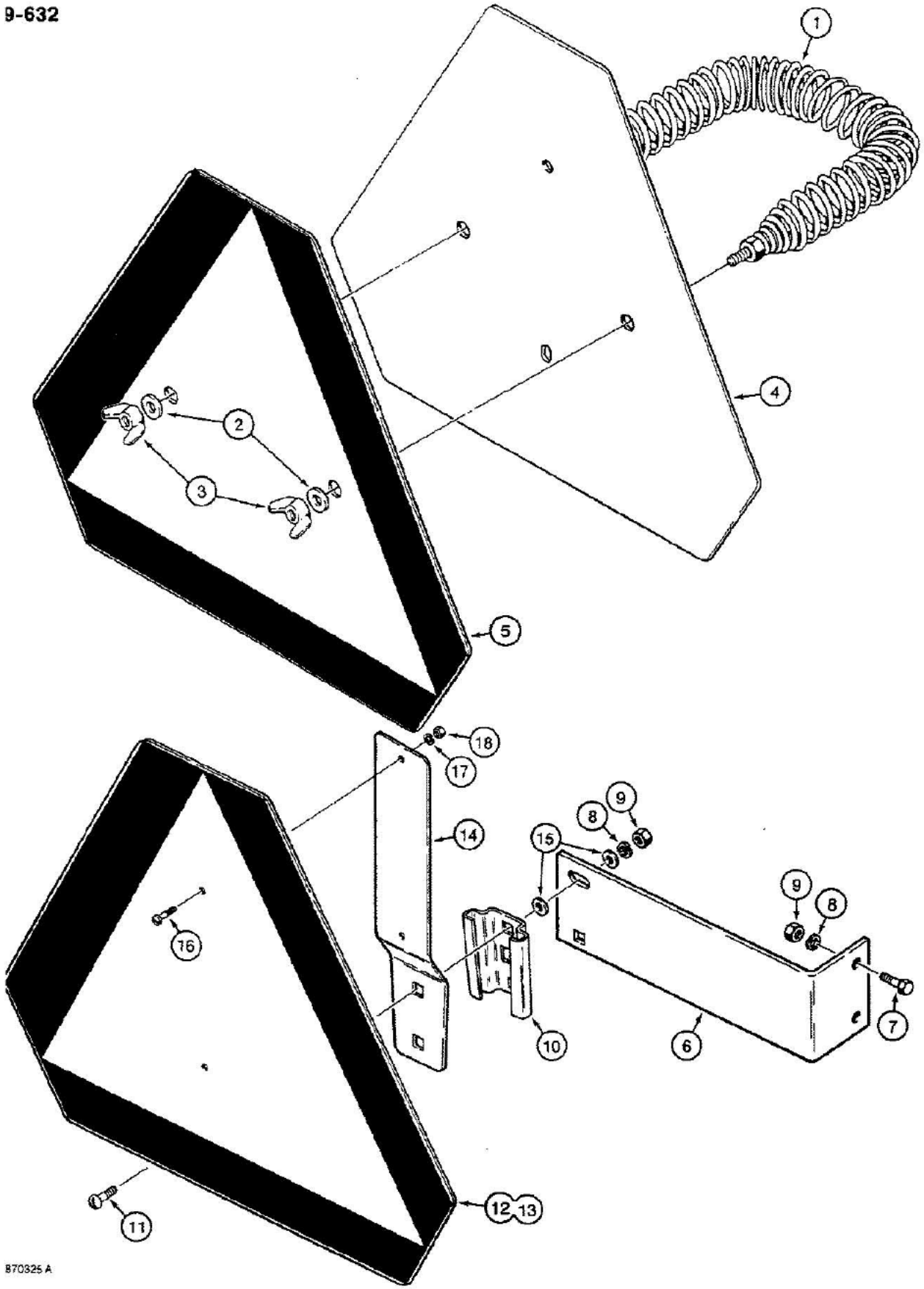

580K LOADER BACKHOE (NORTH AMERICA) - Chassis/Attachments

09-632 SLOW MOVING VEHICLE EMBLEM, USED ON MODELS WITH AND WITHOUT BACKHOE

Ref	Part Number	Qty	Description
1	D52564	1	SPRING emblem retaining, used on models with backhoe
2	195-518	2	WASHER flat, 1/4", plated, used on models with backhoe
3	129-409	2	NUT, WING, 1/4"-20, Used on models with backhoe
4	D123347	1	EMBLEM plate and decal, slow moving vehicle, used on models with backhoe, Includes: Ref. 5
5	321-4311	1	DECAL slow moving vehicle emblem, used on models with backhoe
6	D140308	1	BRACKET slow moving vehicle emblem mounting, horizontal, used on models without backhoe
7	113-102	2	BOLT, Hex, 5/16"-18 x 3/4", G5, Full Thd, Used on models without backhoe
8	192-20	3	WASHER, LOCK, 5/16", Used on models without backhoe
9	9635082	3	NUT, 5/16"-18, G5, Used on models without backhoe
10	A59457	1	BRACKET emblem mounting, short, used on models without backhoe
11	111-215	2	CARRIAGE BOLT short neck, 5/16" - 18 NC x 3/4", plated, used on models without backhoe
	D123347	1	EMBLEM ASSEMBLY plate and decal, used on models without backhoe, Includes: Ref. 12 and 13
12	NSS	1	PLATE SMV emblem, used on models without backhoe
13	321-4311	1	DECAL slow moving vehicle emblem, used on models without backhoe
14	A59451	1	BRACKET emblem mounting, vertical, used on models without backhoe
15	195-521	2	WASHER flat, 5/16", plated, used on models without backhoe
16	182-516	2	MACHINE SCREW pan head slotted, No. 10 - 24 NC x 1/2", plated, used on models without backhoe
17	192-18	2	WASHER, LOCK, #10, Used on models without backhoe
18	129-17	2	NUT hex, No. 10 - 24 NC, plated, used on models without backhoe

9-634



1



10



16



2



11



3

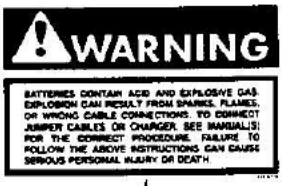

12



17



4



13



5



18



6



14



19
19A



7



15

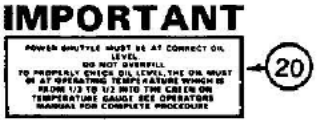

20

8

construction king

9
9A

870320B-45

580K LOADER BACKHOE (NORTH AMERICA)

09-634 DECALS

Ref	Part Number	Qty	Description
	D102875	1	KIT decal, 580K, Includes: Ref. 1 through 20 in this figure and parts in Figures 09-636 and 09-638
1	D136976	2	DECAL, 580K
1A	D140337	2	DECAL, 580K, white color, White decals for use on dark painted tractors are not illustrated and are not included in the decal kit. Order separately.
2	D136977	1	DECAL Case, with treads, right hand side of machine, side panel
2A	D140338	1	DECAL Case, with treads, right hand side of machine, side panel, white color, White decals for use on dark painted tractors are not illustrated and are not included in the decal kit. Order separately.
3	D136978	1	DECAL Case, with treads, left hand side of machine, side panel
3A	D140339	1	DECAL Case, with treads, left hand side of machine, side panel, white color, White decals for use on dark painted tractors are not illustrated and are not included in the decal kit. Order separately.
4	D136980	1	DECAL Case, with right hand treads, standard dipper
4A	D140341	1	DECAL Case, with right hand treads, standard dipper, white color, White decals for use on dark painted tractors are not illustrated and are not included in the decal kit. Order separately.
5	D136979	1	DECAL Case, with left hand treads, standard dipper
5A	D140340	1	DECAL Case, with left hand treads, standard dipper, white color, White decals for use on dark painted tractors are not illustrated and are not included in the decal kit. Order separately.
6	D137086	1	DECAL Case, with right hand treads, extendable dipper
6A	D140344	1	DECAL Case, with right hand treads, extendable dipper, white color, White decals for use on dark painted tractors are not illustrated and are not included in the decal kit. Order separately.
7	D137085	1	DECAL Case, with left hand treads, extendable dipper
7A	D140343	1	DECAL Case, with left hand treads, extendable dipper, white color, White decals for use on dark painted tractors are not illustrated and are not included in the decal kit. Order separately.
8	D136981	1	DECAL Case, with right hand treads, rear closure panel
8A	D140342	1	DECAL Case, with right hand treads, rear closure panel, white color, White decals for use on dark painted tractors are not illustrated and are not included in the decal kit. Order separately.
9	D123950	2	DECAL construction king, brown, ROPS canopy or cab units with yellow fenders
9A	D144674	2	DECAL construction king, tan, ROPS cab units with brown fenders
10	D123945	2	DECAL extendahoe
11	D124183	2	DECAL, 4 x 4, four wheel drive models only
11A	D140345	2	DECAL, 4 x 4, four wheel drive models only, white color, White decals for use on dark painted tractors are not illustrated and are not included in the decal kit. Order separately.
12	321-6714	1	DECAL Warning, batteries contain acid and explosive gas
13	321-4481	2	DECAL Warning, keep clear of this area swinging boom can crush
14	321-6413	1	DECAL Warning, left hand loader lift arm support strut usage
15	321-6671	1	DECAL Warning, right hand loader lift arm support strut usage
16	321-1708	1	DECAL, 0 - 2 - 4, clam bucket opening indicator
17	321-1707	1	DECAL clam bucket position
18	321-3596	2	DECAL Warning, rotating fan and belts
19	321-6718	1	DECAL Warning, wrong jumper cable connections to starter terminals, 4-5/16" high, no longer used, order 321-6872
19A	321-6872	1	DECAL Warning, wrong jumper cable connections to starter terminals, 3-3/16" high

580K LOADER BACKHOE (NORTH AMERICA)

09-634 DECALS

Ref	Part Number	Qty	Description
20	321-3882	1	DECAL Important, power shuttle oil level

9-636

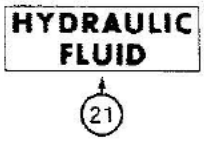

21



28



33



22

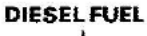

22A



29



23



34

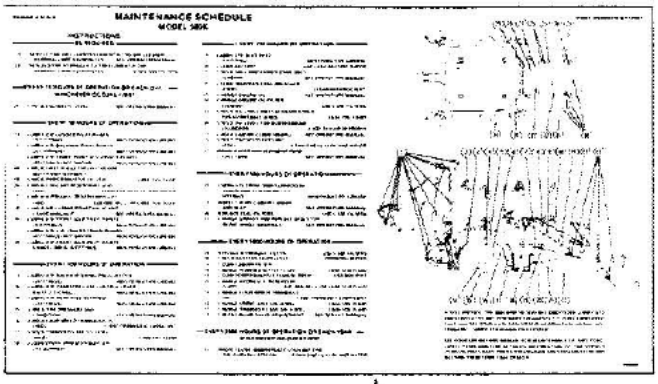

24

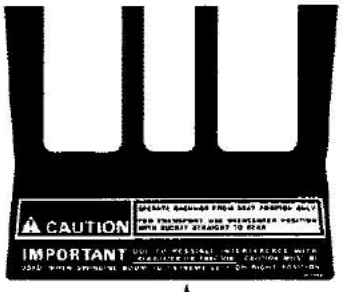

35



27





25



30

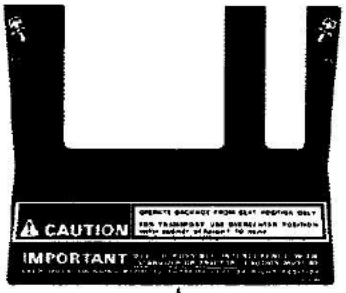

36



26



31



26A



32



36A

870321A-45

580K LOADER BACKHOE (NORTH AMERICA)

09-636 DECALS

Ref	Part Number	Qty	Description
	D102875	1	KIT decal, 580K, Includes: Ref. 21 through 36A in this figure and parts in Figures 09-634 and 09-638
21	321-229	1	DECAL Hydraulic Fluid
22	321-2601	1	DECAL Diesel Fuel, no longer used, order 321-230
22A	321-230	1	DECAL Diesel Fuel
23	321-6672	1	DECAL Warning, check and service cooling system
24	D137607	1	DECAL Maintenance Schedule, 580K
25	321-6046	1	DECAL Warning, backhoe lifting load
26	321-6059	1	DECAL three-point hitch control pattern
26A	D124115	2	DECAL Case, three-point hitch frame
27	N14315	1	DECAL seat tilt adjustment, suspension seats only
28	N14295	1	DECAL Important, do not remove plastic slide tube covers
29	321-6774	1	DECAL Warning, the spring in this assembly is compressed, replaces 321-3055 decal for service
30	D137403	1	DECAL standard backhoe control pattern, with foot swing, upper, for models with auxiliary hydraulics for optional rear hydraulic attachments order D137401, See Figure 09-638 for upper and lower backhoe control pattern decals used on models with tilt backhoe controls.
31	D137405	1	DECAL standard backhoe control pattern, with hand swing, upper
32	D137401	1	DECAL extendahoe control pattern, with foot swing, upper or models with auxiliary hydraulics for optional rear hydraulic attachments, See Figure 09-638 for upper and lower backhoe control pattern decals used on models with tilt backhoe controls.
33	D137407	1	DECAL extendahoe control pattern, with hand swing, upper or models with auxiliary hydraulics for optional rear hydraulic attachments
34	D137404	1	DECAL standard backhoe control pattern, with foot swing, lower, for models with auxiliary hydraulics for optional rear hydraulic attachments order D137402, See Figure 09-638 for upper and lower backhoe control pattern decals used on models with tilt backhoe controls.
35	D137406	1	DECAL standard backhoe control pattern, with hand swing, lower
36	D137402	1	DECAL extendahoe control pattern, lower or models with auxiliary hydraulics for optional rear hydraulic attachments, See Figure 09-638 for upper and lower backhoe control pattern decals used on models with tilt backhoe controls.
36A	D140355	1	DECAL, to prevent overheating do not exceed 1800 rpm when operating an auxiliary backhoe attachment, used on models with auxiliary hydraulics for optional rear hydraulic attachments, on side console, not included in kit, purchase separately

9-638

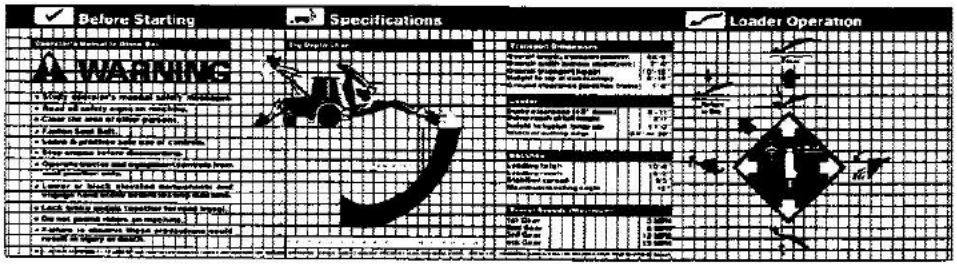

37



38



42



42A



45A

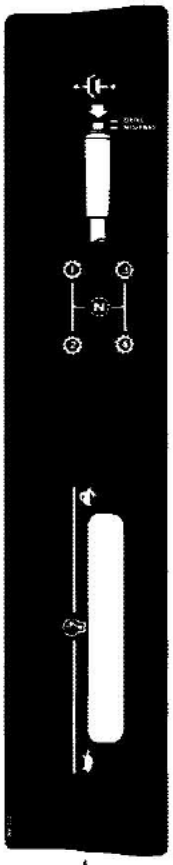

49

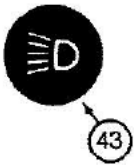

43



39

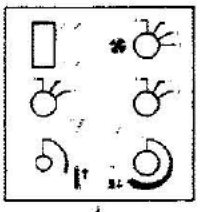

46

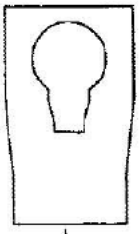

44

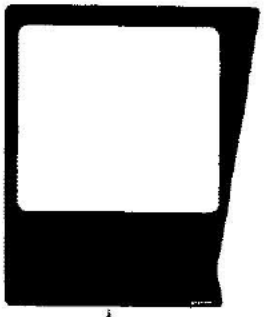

40



47

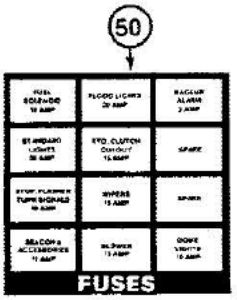

50

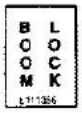

44A

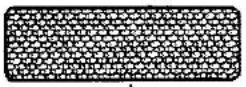

51



48



52

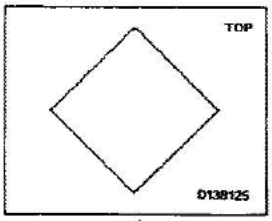

41



45



53

870322B-45

Ref	Part Number	Qty	Description
	D102875	1	KIT decal, 580K, Includes: Ref. 37 through 53 in this figure and parts in Figures 09-634 and 09-636
37	D138014	1	DECAL Warning, before starting engine study operator's manual messages/dig depth specs/loader control pattern, front instrument panel, storage compartment
38	D138704	1	DECAL clam bucket control pattern, front instrument panel, storage compartment
39	D137615	1	DECAL shuttle shift lever control pattern, on steering column cover
40	D137399	1	DECAL, at loader control lever boot, front console
41	D138125	2	DECAL transparent green, under turn signal arrow symbols
42	D137274	1	DECAL flasher lamp symbol, front console switch plate, no longer available, order D141643 flasher decal
42A	D141643	1	DECAL flasher lamp symbol, front console switch plate
43	D137272	1	DECAL driving lamp symbol, front console switch plate
44	R53911	1	DECAL left-hand cab console, upper, at cup holder
44A	L111356	1	DECAL boom lock
45	R53912	1	DECAL left-hand cab console, lower
45A	321-6958	1	DECAL Warning, to avoid inadvertant movement before operating the backhoe
46	97300C1	1	DECAL instrument symbols, heater, air conditioner, blower, wipers, and dome lamp, cab control panel, models with air conditioning, replaces R52439 decal
46	97301C1	1	DECAL instrument symbols, heater, blower, wipers, and dome lamp, cab control panel, models without air conditioning
47	D137273	1	DECAL optional work lamp symbol, right-hand console switch plate
48	D137279	1	DECAL rotating beacon symbol, right-hand console switch plate
49	D137400	1	DECAL hand throttle control pattern, right-hand side console
50	D132958	1	DECAL fuse location, fuse box cover
51	D87870	2	REFLECTOR red
52	D55216	6	STRIP anti-skid, steps
53	D80270	1	STRIP anti-skid, operators compartment

9-640



54



55



56



58

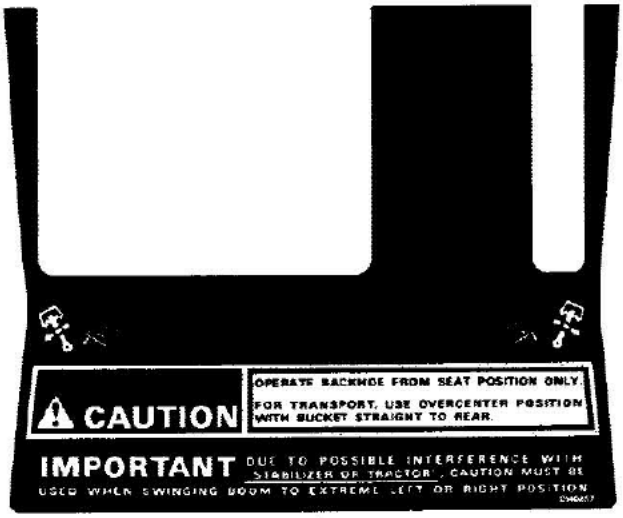

59



62

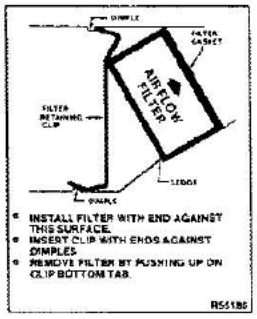

57

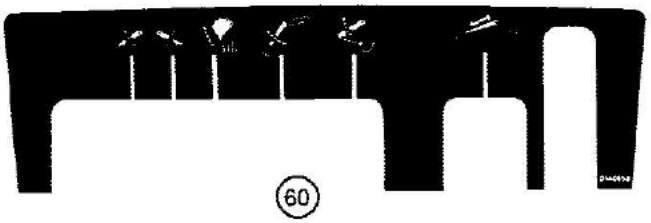

60

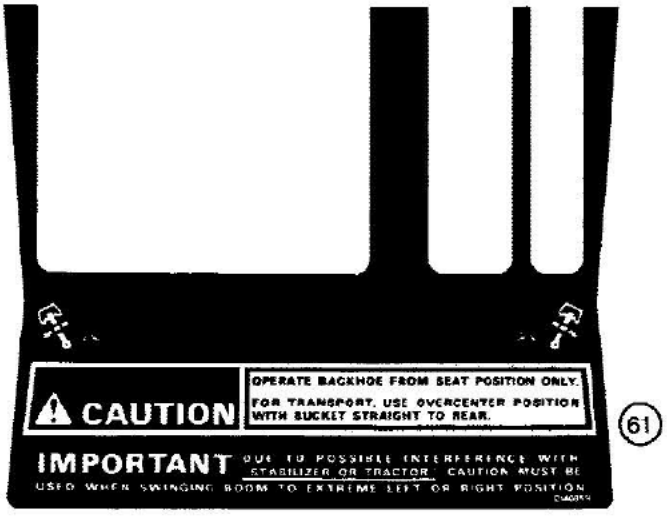

61

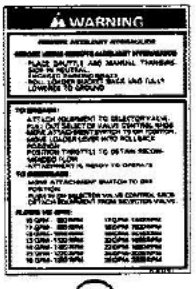

63

B890668-45

Ref	Part Number	Qty	Description
54	321-4739	1	EMBLEM Case, on grille
55	131-431	2	NUT push on type, 1/4", plated, attaches emblem to grille
56	321-4614	1	TAG Do Not Operate
57	R55180	1	DECAL Air Flow Filter, cab models, replaces R55179 decal, not included in kit, purchase separately
58	D140856	1	DECAL tilt backhoe control pattern, upper, used on models without extendable dipper or with optional rear hydraulic attachments, not included in kit, purchase separately
59	D140857	1	DECAL tilt backhoe control pattern, lower, used on models without extendable dipper or with optional rear hydraulic attachments, not included in kit, purchase separately
60	D140858	1	DECAL tilt backhoe control pattern, upper, used on models with extendable dipper or with optional rear hydraulic attachments, not included in kit, purchase separately
61	D140859	1	DECAL tilt backhoe control pattern, lower, used on models with extendable dipper or with optional rear hydraulic attachments, not included in kit, purchase separately
62	D143742	1	DECAL Attachment Hydraulics, for use on models with hand held attachments, not included in kit, purchase separately
63	D143741	1	DECAL Warning, Remote Auxiliary Hydraulics, for use on models with hand held attachments, not included in kit, purchase separately