RUTHZIL TRATOR COMERCIAL DE PEÇAS LTDA 11 97083-6812 ROLANDO CITRANGULO

CATÁLOGO DE PEÇAS

SETEMBRO 2008

RETROESCAVADEIRA

580M
580 SuperM
580 SuperM+
Séries 3

(Origem - Estados Unidos)

Edição 09-08
Impresso no Brasil - 71114321
Copyright © 2007. CNH America, LLC. Todos os Direitos Reservados.

CNH Latin América Ltda reserva o direito para efetuar melhorias a qualquer momento no projeto ou mudanças em especificações sem incorrer qualquer obrigação para os instalar em unidades previamente vendidas.
Todo o conteúdo desta publicação está sujeito a variações de produção.
Dimensões e pesos são só aproximados. Ilustrações não mostram necessariamente produtos em condição standard.

Para informação exata sobre qualquer produto em particular, favor consultar seu revendedor.

Edição Set/2008	Impressão em Set/2008	Retroescavadeira 580M Série 3 580 SuperM Série 3 580 SuperM+ Série 3	71114321

É estritamente proibido qualquer uso do conteúdo editorial ou ilustrações sem permissão por escrito da
CNH Latin América Ltda. - Av. Gal. David Sarnoff, 2237 - 32210-900 - Contagem MG - Brazil

\

580M
580 SuperM
580 SuperM+

Séries 3

1	2	3	4
08-01	01	p1	01/02

HYDRAULIC CYLINDER - 396137A2

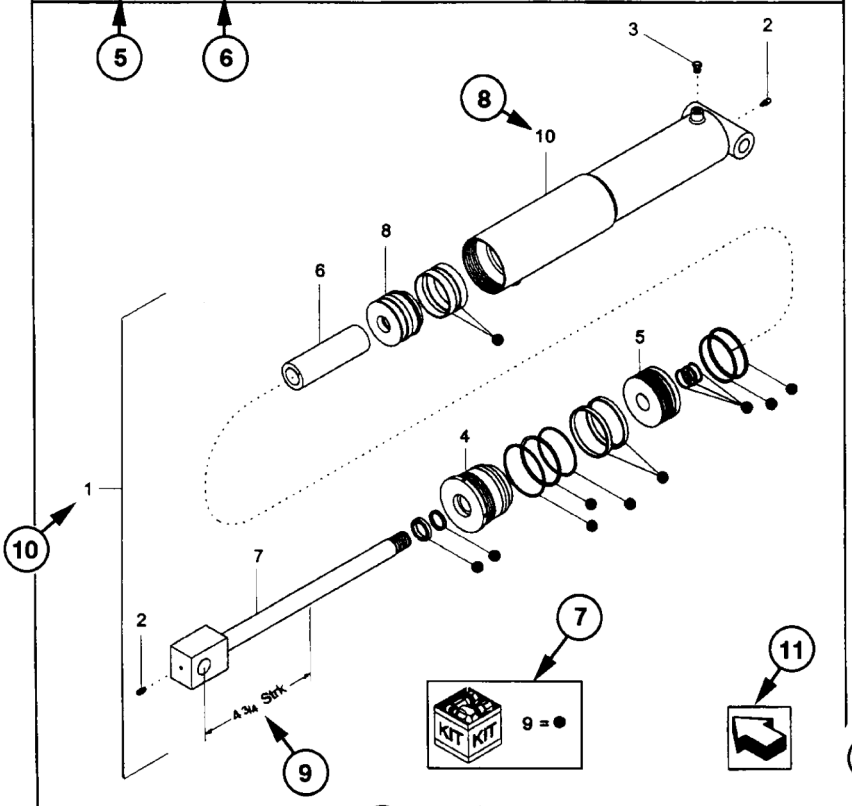

1	2	3	4
08-01	01	p1	01/02

HYDRAULIC CYLINDER - 396137A2

REF	FN	PART NUMBER	YR/SN	QTY	DESCRIPTION
1	1	396137A2	BTW 01/85 & 02/02	1	CYLINDER ASSY. 4-3/4 in strk, Inc 2-10
2		31-95	Before 01/85	2	FITTING
2		219-8	From 01/85	2	NIPPLE, LUBE Grease, 1/4 tpr x 17/32
3		{402475A2}		1	BREATHER
4		402474A1		1	CAP CYLINDER END
5		402468A1	BSN JJC0189199	1	PISTON ROD/GLAND
5		145221C3	ASN JJC0189200	1	PISTON
6		402471A1		1	SPACER
7		402473A1		1	ROD, PISTON
8		402469A1		1	PISTON ROD/GLAND
9		402476A1		1	PACKAGE, SEALS
10		NSS		1	NOT SERVICED SEPARAT CASE ASSEMBLY

(1) 08-20

STANDARD	MODELS

COMO UTILIZAR O CATÁLOGO DE PEÇAS

1 - Número Página
2 - Sequência da Figura
3 - Sequência de Página
4 - Data de impressão (mês/ano)
5 - Descrição da Página
6 - Informações complementares da página
7 - Kits e composições
8 - Sequência de chamada
9 - Característica técnica da peça
10 - Conjunto de peças
11 - Orientação para a frente da máquina
12 - Nota relativa a algum item especifíco
13 - Número de peça
NSS = Não vendido separadamente
14 - Peça não disponível
15 - Ponto de introdução
16 - Quantidade
AR = Conforme necessidade
* = Conforme necessidade
17 - Descrição da peça
18 - Complemento de descrição
19 - Nota da página
20 - Modelo da máquina

TABLE OF CONTENTS

02-01		RADIADOR - SUPORTE
02-02		SISTEMA DE PURGA DE AIRE - SUPORTE
02-04		FILTRO DE AR - PEÇAS DE ADMISSÃO DE AR
02-05		CONJUNTO DO FILTRO DE AR
02-06		SILENCIADOR, ASPIRADOR - SISTEMA DE ESCAPE
02-07		MOTOR - SUPORTE
02-07A		MOTOR - AQUECEDOR DO BLOCO
02-08		MOTOR
02-09		BLOCO DE CILINDRO
02-10		BLOCO DE CILINDRO
02-11		BOMBA DE ÓLEO, RECIPIENTE
02-12		TAMPAS BASE
02-13		BLOCO DE CILINDRO - COBERTURAS
02-14		TAMPAS BASE
02-15		RESPIRADOURO - MOTOR
02-16		CABEÇOTES
02-17		CULATA DEL CILINDRO
02-18		CABEÇOTE DO CILINDRO - MECANISMO DA VÁLVULA
02-19		COLECTOR ESCAPE
02-20		COLECTOR DE DESCARGA
02-21		EIXO MOTOR
02-22		BIELA MOTOR
02-23		PISTÂO - MOTOR
02-24		VOLANTE - MOTOR
02-25		POLIA - EIXO MOTOR
02-26		EQUILIBRADOR, ENGRENAGENS E VEIOS
02-28		EIXO DE CAME
02-29		TURBOCOMPRESOR
02-30		VARETA NÍVEL ÓLEO MOTOR
02-31		BOMBA ÓLEO - MOTOR
02-32		FILTRO ÓLEO - MOTOR
02-33		TUBAGENS - OLEO MOTOR
02-34		TROCADOR DE CALOR - MOTOR
02-35		BOMBA ÁGUA
02-36		SISTEMA DE ARREFECIMENTO - MOTOR
02-37		TERMOSTATO - SISTEMA DE ARREFECIMENTO, MOTOR
02-38		BOMBA DE AGUA - CONTROLE
02-39		TRACÇÃO DA VENTOINHA
02-41		MOTOR - GANCHO DE ELEVAÇÃO
02-42		ALTERNADOR
03-01		LINHAS DE COMBUSTÍVEL, DEPÓSITO
03-01A	01	FILTRO SEPARADOR DE ÁGUA
03-01B	01	FILTRO SEPARADOR DE ÁGUA
03-02		CONTROLES - ACELERADOR DE MÃO
03-03		CONTROLES - ACELERADOR, PEDAL
03-04		BOMBA DE INYECCION
03-05		SISTEMA DE INJEÇÃO DE COMBUSTÍVEL
03-06		SISTEMA DE INJEÇÃO DE COMBUSTÍVEL
03-07		GRUPO INJECÇÂO - TUBAGENS
03-08		FILTRO DE COMBUSTÍVEL
03-09		BOMBA, COMBUSTÍVEL

TABLE OF CONTENTS

03-10	TUBAGENS - COMBUSTÍVEL
03-11	SISTEMA DE INJEÇÃO DE COMBUSTÍVEL
04-01	MOTOR DE ARRANQUE
04-02	ALTERNADOR
04-03	MONTAJE DEL ARRANQUE - MONTAGEM DO ALTERNADOR
04-04	FIOS, MOTOR - MONTAGEM E CONEXÕES
04-05	BATERIA, SIMPLES
04-06	BATERIA, DUPLA - ARRANQUE EN FRIO
04-06A	AQUECEDOR DA GRADE DE ARRANQUE A FRIO
04-07	FIAÇÃO DA CONSOLA DIANTEIRA - INTERRUPTORES
04-08	FIAÇÃO DA CONSOLA DIANTEIRA - SUPORTE
04-09	FIAÇÃO DA CONSOLA LATERAL - INTERRUPTORES
04-10	PAINEL DE INSTRUMENTOS DIANTEIRO - COBERTURAS
04-11	PAINEL DE INSTRUMENTOS, LADO - COBERTURAS (LADO DIREITO)
04-12	CONJUNTO DE INSTRUMENTOS
04-13	SISTEMA ELÉCTRICO - LUZES DA CAPOTA DA ROPS
04-14	SISTEMA ELÉCTRICO - LUZES DA CABINA DA ROPS
04-15	CONJUNTO DA LUZ (CAPOTA DA ROPS)
04-16	BUZINA - ALARME DE MARCHA ATRÁS
04-17	FAROL, ROTATIVO
04-18	ANTENA DO RÁDIO - FIOS, TRASEIROS
04-19	SISTEMA ELÉCTRICO - SISTEMA HIDRÁULICO AUXILIAR DA RETROESCAVADORA
04-20	SISTEMA ELÉCTRICO - SISTEMA HIDRÁULICO AUXILIAR DA RETROESCAVADORA, COM CONTROLO AUTOMÁTICO
05-01	VOLANTE - COLUNA
05-02	SISTEMA HIDRÁULICO - DIREÇÃO
05-02A	SISTEMA HIDRÁULICO - DIREÇÃO
05-03	COLUNA DA DIRECÇÃO
05-04	EIXO, DIANTEIRO (86990837) - STEUN
05-05	EIXO, DIANTEIRO (86990837) - ALOJAMENTO
05-06	EIXO, DIANTEIRO (86990837) - COMPARTIMENTO DE ARTICULAÇÃO
05-07	EIXO, DIANTEIRO (86990837) - CILINDRO DA DIRECÇÃO
05-08	EIXO, DIANTEIRO (86990837) - CUBO E ROLAMENTOS
05-09	RODAS DIANTEIRAS - PNEUS
06-01	EIXO DA TRANSMISSÃO DIANTEIRA - STEUN
06-02	EIXO DA TRANSMISSÃO DIANTEIRA - ALOJAMENTO
06-03	EIXO DA TRANSMISSÃO DIANTEIRA - COMPARTIMENTO DE ARTICULAÇÃO
06-04	EIXO DA TRANSMISSÃO DIANTEIRA - CILINDRO DA DIRECÇÃO
06-05	EIXO DA TRANSMISSÃO DIANTEIRA - VEIOS, EIXO
06-06	EIXO DA TRANSMISSÃO DIANTEIRA - PLANETÁRIO
06-07	EIXO DA TRANSMISSÃO DIANTEIRA - DIFERENCIAL
06-08	EIXO DA TRANSMISSÃO DIANTEIRA - ANEL E PINHÃO
06-09	CARDAN DO EIXO DIANTEIRO
06-10	SISTEMA DE ARREFECIMENTO - TRANSMISSÃO
06-11	TRANSMISSÃO - STEUN
06-12	CONJUNTO DA TRANSMISSÃO, 2WD - FILTRO, ÓLEO
06-13	CONJUNTO DA TRANSMISSÃO, 2WD - ALOJAMENTO
06-14	CONJUNTO DA TRANSMISSÃO, 2WD - BOMBA DE ÓLEO
06-15	CONJUNTO DA TRANSMISSÃO, 2WD - MECANISMO DE ACCIONAMENTO DAS MUDANÇAS
06-16	CONJUNTO DA TRANSMISSÃO, 2WD - EIXO, MARCHA A RÉ E PRIMÁRIO

TABLE OF CONTENTS

06-17		CONJUNTO DA TRANSMISSÃO, 2WD - EIXO DE ENTRADA E TOMADA DE FORÇA
06-18		CONJUNTO DA TRANSMISSÃO, 2WD - EIXO SECUNDÁRIO
06-19		CONJUNTO DA TRANSMISSÃO, 2WD - VÁLVULA, CONTROLE
06-20		CONJUNTO DA TRANSMISSÃO, 4WD - FILTRO, ÓLEO
06-21		CONJUNTO DA TRANSMISSÃO, 4WD - ALOJAMENTO
06-22		CONJUNTO DA TRANSMISSÃO, 4WD - BOMBA DE ÓLEO
06-23		CONJUNTO DA TRANSMISSÃO, 4WD - MECANISMO DE ACCIONAMENTO DAS MUDANÇAS
06-24		CONJUNTO DA TRANSMISSÃO, 4WD - EIXO, MARCHA A RÉ E PRIMÁRIO
06-25		CONJUNTO DA TRANSMISSÃO, 4WD - EIXO DE ENTRADA E TOMADA DE FORÇA
06-26		CONJUNTO DA TRANSMISSÃO, 4WD - EIXO SECUNDÁRIO
06-27		CONJUNTO DA TRANSMISSÃO, 4WD - EIXO, SAÍDA
06-28		CONJUNTO DA TRANSMISSÃO, 4WD - VÁLVULA, CONTROLE
06-29		CONJUNTO DA TRANSMISSÃO, 4WD - SOLENÓIDE DA VÁLVULA
06-30		RODAS TRASEIRAS - PNEUS
06-31		EIXO DA TRANSMISSÃO TRASEIRA - STEUN
06-32		EIXO, TRASEIRO - BLOQUEO DEL DIFERENCIAL
06-33		87395372 EIXO DA TRANSMISSÃO TRASEIRA - ALOJAMENTO
06-34		87395372 EIXO DA TRANSMISSÃO TRASEIRA - DIFERENCIAL
06-35		87395372 EIXO DA TRANSMISSÃO TRASEIRA - ANEL E PINHÃO
06-36		87395372 EIXO DA TRANSMISSÃO TRASEIRA - BLOQUEO DEL DIFERENCIAL
06-37		87395372 EIXO DA TRANSMISSÃO TRASEIRA - PLANETÁRIO
06-38		EIXO DA TRANSMISSÃO TRASEIRO
07-01		CONJUNTO DA TRANSMISSÃO, 2WD - FREIO DE ESTACIONAMENTO
07-01	01	CONJUNTO DA TRANSMISSÃO, 4WD - FREIO DE ESTACIONAMENTO
07-02		EIXO DA TRANSMISSÃO TRASEIRA - TRAVÕES, DIFERENCIAL
07-03		PEDAIS DOS TRAVÕES
07-04		SISTEMA HIDRÁULICO - CILINDRO PRINCIPAL DOS TRAVÕES
07-05		CABOS DOS TRAVÕES AO TRANSMISSÃO - 2WD
07-05A		CABOS DOS TRAVÕES AO TRANSMISSÃO - 4WD
07-06		CABOS DOS TRAVÕES AO EIXOS
07-07		CONJUNTO DO CILINDRO - TRAVÕES, CILINDRO PRINCIPAL
08-01		SISTEMA HIDRÁULICO - BOMBA, VÁLVULA DO FILTRO E CARREGADOR
08-02		SISTEMA HIDRÁULICO - VÁLVULA DO CARREGADOR AO FILTRO
08-03		SISTEMA HIDRÁULICO - ARREFECEDOR, LINHAS E FILTRO DE RETORNO
08-04		SISTEMA HIDRÁULICO - CILINDRO DE ELEVAÇÃO DO CARREGADOR
08-05		SISTEMA HIDRÁULICO - CILINDRO DO BALDE DA RETROESCAVADORA
08-06		SISTEMA HIDRÁULICO - CILINDRO DE ELEVAÇÃO DA CONCHA
08-07		SISTEMA HIDRÁULICO - CILINDRO DE ELEVAÇÃO DA CONCHA
08-07A		SISTEMA HIDRÁULICO - CONCHA DO CARREGADOR (MODELOS SEM CONTROLO AUTOMÁTICO)
08-07B		SISTEMA HIDRÁULICO - CONCHA DO CARREGADOR (MODELOS COM CONTROLO AUTOMÁTICO)
08-08		SISTEMA HIDRÁULICO - CILINDRO, ESTABILIZADOR DA RETROESCAVADORA (MODELOS SEM CONTROLO AUTOMÁTICO)
08-08A		SISTEMA HIDRÁULICO - CILINDRO, ESTABILIZADOR DA RETROESCAVADORA (MODELOS COM CONTROLO AUTOMÁTICO)
08-09		SISTEMA HIDRÁULICO - CILINDRO, OSCILAÇÃO DA RETROESCAVADORA (MODELOS SEM CONTROLO AUTOMÁTICO)
08-09A		SISTEMA HIDRÁULICO - CILINDRO, OSCILAÇÃO DA RETROESCAVADORA (MODELOS COM CONTROLO AUTOMÁTICO)

TABLE OF CONTENTS

08-10	SISTEMA HIDRÁULICO - CILINDRO, LANÇA DA RETROESCAVADORA
08-10A	SISTEMA HIDRÁULICO -
08-11	SISTEMA HIDRÁULICO - CILINDRO, IMERSOR DA RETROESCAVADORA
08-12	SISTEMA HIDRÁULICO - CILINDRO, BALDE DA RETROESCAVADORA (MODELOS SEM IMERSOR EXTENSÍVEL)
08-13	SISTEMA HIDRÁULICO - CILINDRO, BALDE DA RETROESCAVADORA (MODELOS COM IMERSOR EXTENSÍVEL)
08-14	SISTEMA HIDRÁULICO - CILINDRO, IMERSOR EXTENSÍVEL DA RETROESCAVADORA
08-15	SISTEMA HIDRÁULICO - (6 SPOOL, W/O EXT DIPPER, W/O AUX HYDS)
08-16	SISTEMA HIDRÁULICO - (6 SPOOL, W/O EXT DIPPER, W/ AUX HYDS)
08-17	SISTEMA HIDRÁULICO - (7 SPOOL, W/ EXT DIPPER, W/O AUX HYDS)
08-18	SISTEMA HIDRÁULICO - (7 SPOOL, W/ EXT DIPPER, W/ AUX HYDS)
08-19	SISTEMA HIDRÁULICO - (7 SPOOL, W/O EXT DIPPER, W/ AUX HYDS)
08-20	SISTEMA HIDRÁULICO - (8 SPOOL, W/ EXT DIPPER, W/ AUX HYDS)
08-21	SISTEMA HIDRÁULICO - JOYSTICKS CONTROLE PILOTO
08-22	SISTEMA HIDRÁULICO - CONTROLO AUTOMÁTICO
08-23	SISTEMA HIDRÁULICO - RETROESCAVADORA AUXILIAR (MODELOS SEM CONTROLO AUTOMÁTICO)
08-23A	CONJUNTO DA VÁLVULA - AUXILIAR UNI-DIRECIONAL (MODELOS SEM CONTROLO AUTOMÁTICO)
08-23B	SISTEMA HIDRÁULICO - RETROESCAVADORA AUXILIAR (MODELOS COM CONTROLO AUTOMÁTICO)
08-23C	CONJUNTO DA VÁLVULA - AUXILIAR UNI-DIRECIONAL (MODELOS COM CONTROLO AUTOMÁTICO)
08-24	SISTEMA HIDRÁULICO - RETROESCAVADORA AUXILIAR, LANÇA E BRAÇO DE PENETRAÇÃO
08-25	SISTEMA HIDRÁULICO - CONTROLO DA SUSPENSÃO
08-26	SISTEMA HIDRÁULICO - DISPOSITIVO DE ACOPLAMENTO RÁPIDO DO CARREGADOR
08-27	SISTEMA HIDRÁULICO - DISPOSITIVO DE ACOPLAMENTO RÁPIDO DO CARREGADOR, ESTRUTURA BRAÇO DE LEVANTAMENTO
08-28	VÁLVULA, ACOPLADOR (87435909) - FERRAMENTA DO CARREGADOR
08-29	BOMBA DO EQUIPAMENTO HIDRÁULICO
08-30	CONJUNTO DA VÁLVULA - CONTROLO DO CARREGADOR, DUAS BOBINAS
08-31	CONJUNTO DA VÁLVULA - CONTROLO DO CARREGADOR, TRÊS BOBINAS
08-32	CONJUNTO DA VÁLVULA - CONTROLO DA RETROESCAVADORA, 6 BOBINAS (W/O EXT DIPPER, W/O AUX HYDS, W/O PILOT CONTROLS)
08-33	CONJUNTO DA VÁLVULA - CONTROLO DA RETROESCAVADORA, 7 BOBINAS (W/O EXT DIPPER, W/ AUX HYDS, W/O PILOT CONTROLS)
08-34	CONJUNTO DA VÁLVULA - CONTROLO DA RETROESCAVADORA, 7 BOBINAS (W/ EXT DIPPER, W/O AUX HYDS, W/O PILOT CONTROLS)
08-35	CONJUNTO DA VÁLVULA - CONTROLO DA RETROESCAVADORA, 8 BOBINAS (W/ EXT DIPPER, W/ AUX HYDS, W/O PILOT CONTROLS)
08-36	CONJUNTO DA VÁLVULA - CONTROLO DA RETROESCAVADORA, 6 BOBINAS (W/O EXT DIPPER, W/ OR W/O AUX HYDS, W/ PILOT CONTROLS)
08-37	CONJUNTO DA VÁLVULA - CONTROLO DA RETROESCAVADORA, 7 BOBINAS (W/ EXT DIPPER, W/ OR W/O AUX HYDS, W/ PILOT CONTROLS)
08-38	CONJUNTO DA VÁLVULA - CONTROLO DA RETROESCAVADORA, 7 BOBINAS (W/O EXT DIPPER, W/ AUX HYDS, W/ PILOT CONTROLS)

TABLE OF CONTENTS

08-39	CONJUNTO DA VÁLVULA - CONTROLO DA RETROESCAVADORA, 8 BOBINAS (W/ EXT DIPPER, W/ AUX HYDS, W/ PILOT CONTROLS)
08-40	SECÇÃO DA VÁLVULA - OSCILAÇÃO DA RETROESCAVADORA (COM CONTROLO AUTOMÁTICO)
08-41	SECÇÃO DA VÁLVULA - LANÇA DA RETROESCAVADORA (COM CONTROLO AUTOMÁTICO)
08-42	SECÇÃO DA VÁLVULA - ESTABILIZADOR DA RETROESCAVADORA (COM CONTROLO AUTOMÁTICO)
08-43	SECÇÃO DA VÁLVULA - IMERSOR DA RETROESCAVADORA (COM CONTROLO AUTOMÁTICO)
08-44	SECÇÃO DA VÁLVULA - BALDE DA RETROESCAVADORA (COM CONTROLO AUTOMÁTICO)
08-45	SECÇÃO DA VÁLVULA - IMERSOR EXTENSÍVEL (COM CONTROLO AUTOMÁTICO)
08-46	SECÇÃO DA VÁLVULA - OPÇÕES DO SISTEMA HIDRÁULICO AUXILIAR (COM CONTROLO AUTOMÁTICO)
08-47	CONJUNTO VALVULA, PRESSÃO REDUZIDA (2 SPOOL) (COM CONTROLO AUTOMÁTICO)
08-48	CONJUNTO VALVULA, PRESSÃO REDUZIDA (3 SPOOL) (COM CONTROLO AUTOMÁTICO)
08-49	CONJUNTO VALVULA, PRESSÃO REDUZIDA (4 SPOOL) (COM CONTROLO AUTOMÁTICO)
08-50	VALVULA,JOYSTICK (CONTROLE PILOTO) (EMPUNAHDURA ESQUERDA) COM BOTÃO DE BUZINA
08-51	VALVULA, JOYSTICK (CONTROLE PILOTO) (EMPUNAHDURA ESQUERDA) COM BUZINA E BOTÃO UNIDIRECIONAL
08-52	VALVULA, JOYSTICK (CONTROLE PILOTO) (EMPUNAHDURA ESQUERDA) COM BUZINA E BOTÃO BIDIRECIONAL
08-53	VALVULA, JOYSTICK (CONTROLE PIOTO) (EMPUNHADURA DIREITA) SEM BRAÇO EXTENSIVO
08-54	VALVULA, JOYSTICK (CONTROLE PIOTO) (EMPUNHADURA DIREITA) COM BRAÇO EXTENSIVO
08-55	CONJUNTO DA VÁLVULA - SUPORTE DA ARTICULAÇÃO
08-55A	VÁLVULA SOLENÓIDE - TRANCA DA LANÇA
08-56	CONJUNTO DO ACUMULADOR - CONTROLO DA SUSPENSÃO
08-57	FILTRO DE ACEITE
08-58	CONJUNTO DO CILINDRO - ELEVADOR DO CARREGADOR
08-59	CONJUNTO DO CILINDRO - BALDE DO CARREGADOR
08-60	CONJUNTO DO CILINDRO - CONCHA DO CARREGADOR
08-61	CONJUNTO DO CILINDRO - ESTABILIZADOR DA RETROESCAVADORA
08-62	CONJUNTO DO CILINDRO - OSCILAÇÃO DA RETROESCAVADORA
08-63	CONJUNTO DO CILINDRO - LANÇA DA RETROESCAVADORA
08-64	CONJUNTO DO CILINDRO - IMERSOR DA RETROESCAVADORA
08-65	CONJUNTO DO CILINDRO - BALDE DA RETROESCAVADORA
08-66	CONJUNTO DO CILINDRO - IMERSOR EXTENSÍVEL DA RETROESCAVADORA
09-01	CONTROLES - ELEVAÇÃO E BALDE DO CARREGADOR
09-01A	PEGA, CONTROLO DO CARREGADOR - CONJUNTO DA TRANSMISSÃO, 2WD, 4WD
09-02	CONTROLES - CONCHA DO CARREGADOR
09-03	CONTROLES - AUTO-NIVELAMENTO DO CARREGADOR
09-04	ESTRUTURA - ELEVADOR DO CARREGADOR
09-05	ESTRUTURA - LIGAÇÃO DO CARREGADOR
09-06	BALDES DE VIROLA COMPRIDA DO CARREGADOR (82 IN)

TABLE OF CONTENTS

09-07	BALDES DE VIROLA COMPRIDA DO CARREGADOR (93 IN)
09-08	CONCHA DO BALDE DO CARREGADOR
09-09	PROTEÇÃO - VÁLVULA DO CARREGADOR
09-10	DISPOSITIVO DE ACOPLAMENTO RÁPIDO
09-11	COBERTURAS - TORRE DE CONTROLO DA RETROESCAVADORA, SEM CONTROLO AUTOMÁTICO
09-12	SUPORTE E VEDAÇÕES DA TORRE DE CONTROLO DA RETROESCAVADORA, SEM CONTROLO AUTOMÁTICO
09-13	SUPORTE TORRE CONTROLE DA RETRO, COM CONTROLE PILOTO
09-14	RETENTORES E COIFA TORRE CONTROLE RETRO, COM CONTROLE PILOTO
09-15	ALAVANCAS (TRAVA BRAÇO) TORRE CONTROLE RETRO COM CONTROLE PILOTO
09-16	CONTROLES - RETROESCAVADORA, COM PEDAIS DE CONTROLO DA OSCILAÇÃO (CONTROLES COM OSCILAÇÃO POR PEDAIS SEM BRAÇO EXTENSÍVEL) EXTENSÍVEL)
09-17	CONTROLES - RETROESCAVADORA, COM PEDAIS DE CONTROLO DA OSCILAÇÃO (CONTROLES COM OSCILAÇÃO POR PEDAIS E BRAÇO EXTENSÍVEL)
09-18	CONTROLES - RETROESCAVADORA, COM ALAVANCAS DE CONTROLO DA OSCILAÇÃO (CONTROLES COM OSCILAÇÃO POR PEDAIS SEM BRAÇO EXTENSÍVEL) EXTENSÍVEL)
09-19	CONTROLES - RETROESCAVADORA, COM ALAVANCAS DE CONTROLO DA OSCILAÇÃO (CONTROLES COM OSCILAÇÃO POR PEDAIS SEM BRAÇO EXTENSÍVEL) EXTENSÍVEL)
09-19A	CONTROLES - PADRÃO DE CONTROLO DE ESCAVAÇÃO DA RETROESCAVADORA
09-20	CONTROLES - RETROESCAVADORA, COM ALAVANCAS DE CONTROLO DA OSCILAÇÃO
09-21	CONTROLES - SISTEMA HIDRÁULICO AUXILIAR DA RETROESCAVADORA, SEM CONTROLO AUTOMÁTICO
09-22	RETROEXCAVADORA - ESTABILIZADORES, PLACAS E SUPORTES
09-23	RETROEXCAVADORA - TORRE DE CONTROLO DA OSCILAÇÃO E CILINDROS DA OSCILAÇÃO
09-24	RETROEXCAVADORA - TORRE DA LANÇA E DE OSCILAÇÃO
09-24A	LANÇA PROTEÇÃO
09-25	TRINCO DA LANÇA (SEM CONTROLO AUTOMÁTICO)
09-25A	TRINCO DA LANÇA (COM CONTROLO AUTOMÁTICO)
09-26	RETROEXCAVADORA - IMERSOR E BALDE
09-27	RETROEXCAVADORA - IMERSOR EXTENSÍVEL
09-28	BALDE UNIVERSAL DA RETROESCAVADORA (305 MM (12 INCH) WIDE)
09-29	BALDE UNIVERSAL DA RETROESCAVADORA (406 MM (16 INCH) WIDE)
09-30	BALDE UNIVERSAL DA RETROESCAVADORA (457 MM (18 INCH) WIDE)
09-31	BALDE, RETROESCAVADORA (457 MM (18 INCH) WIDE)
09-32	BALDE UNIVERSAL DA RETROESCAVADORA (610 MM (24 INCH) / 762 MM (30 INCH) WIDE)
09-33	BALDE, RETROESCAVADORA (610 MM (24 INCH) WIDE)
09-34	BALDE UNIVERSAL DA RETROESCAVADORA (914 MM (36 INCH) WIDE)
09-35	BALDE UNIVERSAL DA RETROESCAVADORA (610 MM (24 INCH) WIDE)
09-35A	CONJUNTO DO PONTO DE MORDEDURA
09-36	CONTRAPESO, DIANTEIRO
09-37	CHASSI / ALOJAMENTO DOS SUPORTES - TELA, ENTRADA DE AR
09-38	DEPÓSITO DO ÓLEO - CAIXA DA BATERIA E CAIXA DE FERRAMENTAS
09-39	PROTECÇÃO DO RADIADOR
09-40	CAPÔ - PAINÉIS LATERAIS

TABLE OF CONTENTS

09-41		CAPÔ - GRADE
09-42		PLACAS, SUELO - TAPETES
09-43		COBERTURA DO GUARDA-LAMAS ESQUERDO - FECHO DO PAINEL TRASEIRO
09-44		EXTENSÕES DOS GUARDA-LAMAS
09-45		GUARDA-LAMAS
09-46		CONJUNTO DO ASSENTO STANDARD - SUPORTE
09-47		ASSENTO - SUPORTE
09-48		CONJUNTO DO ASSENTO, SUSPENSÃO MECÂNICA
09-49		CONJUNTO DO ASSENTO, SUSPENSÃO PNEUMÁTICA - SUPORTE
09-53		CABINE - RETENÇÃO DOS ESPELHOS RETROVISORES
09-54		CABINE - ESTRUTURA E COBERTURAS
09-55		CABINE - PORTAS
09-56		CABINE - SUPORTE DA PORTA
09-57		CABINE - JANELA, DIREITA, PARA CABINA COM UMA PORTA
09-58		CABINE - JANELA, TRASEIRA
09-59		CABINE - LÁVA PÁRA-BRISAS, PÁRA-BRISAS
09-60		CABINE - LIMPA-PÁRA-BRISAS
09-61		FORRO DO TECTO DA CABINA - FILTRO, FRESTAS, LUZ DO TECTO
09-62		CABINE - FILTRO DE AR
09-63		CABINE - COMPARTIMENTO DO VENTILADOR, CANAIS DE VENTILAÇÃO, LINHAS DE DRENAGEM
09-64		CABINE - AQUECEDOR
09-65		CABINE - LINHAS DO AR CONDICIONADO, NÚCLEO DO EVAPORADOR
09-66		CABINE - AR CONDICIONADO, CONDENSADOR, RECEPTOR-SECADOR
09-67		CABINE - COMPRESSOR DO AR CONDICIONADO
09-68		CAPOTA, ROPS - ESTRUTURA, COBERTURAS, ESPELHO, VISOR
09-69		CAPOTA, ROPS - VIDRO
09-70		CAPOTA, ROPS - LIMPA-PÁRA-BRISAS, LÁVA-PARA-BRISAS DIANTEIROS
09-71		ESPELHO, RETROVISOR - SUPORTE, KABINE
09-72		EMBLEMA VEÍCULO DE MARCHA LENTA
09-73		ADESIVOS
09-74		ADESIVOS
09-75		ADESIVOS
09-76		ADESIVOS - INGLÊS
09-76A	01	DECALQUES - PORTUGUÊS
09-77		ADESIVOS - ESPANHOL PARA A AMÉRICA LATINA
09-78		ADESIVOS - FRANCÊS DO CANADÁ
09-79		ADESIVOS - INGLÊS
09-79A	01	DECALQUES - PORTUGUÊS
09-80		ADESIVOS - ESPANHOL PARA A AMÉRICA LATINA
09-81		ADESIVOS - FRANCÊS DO CANADÁ

SECTION INDEX
Motor

02-01	RADIADOR - SUPORTE
02-02	SISTEMA DE PURGA DE AIRE - SUPORTE
02-04	FILTRO DE AR - PEÇAS DE ADMISSÃO DE AR
02-05	CONJUNTO DO FILTRO DE AR
02-06	SILENCIADOR, ASPIRADOR - SISTEMA DE ESCAPE
02-07	MOTOR - SUPORTE
02-07A	MOTOR - AQUECEDOR DO BLOCO
02-08	MOTOR
02-09	BLOCO DE CILINDRO
02-10	BLOCO DE CILINDRO
02-11	BOMBA DE ÓLEO, RECIPIENTE
02-12	TAMPAS BASE
02-13	BLOCO DE CILINDRO - COBERTURAS
02-14	TAMPAS BASE
02-15	RESPIRADOURO - MOTOR
02-16	CABEÇOTES
02-17	CULATA DEL CILINDRO
02-18	CABEÇOTE DO CILINDRO - MECANISMO DA VÁLVULA
02-19	COLECTOR ESCAPE
02-20	COLECTOR DE DESCARGA
02-21	EIXO MOTOR
02-22	BIELA MOTOR
02-23	PISTÂO - MOTOR
02-24	VOLANTE - MOTOR
02-25	POLIA - EIXO MOTOR
02-26	EQUILIBRADOR, ENGRENAGENS E VEIOS
02-28	EIXO DE CAME
02-29	TURBOCOMPRESOR
02-30	VARETA NÍVEL ÓLEO MOTOR
02-31	BOMBA ÓLEO - MOTOR
02-32	FILTRO ÓLEO - MOTOR
02-33	TUBAGENS - OLEO MOTOR
02-34	TROCADOR DE CALOR - MOTOR
02-35	BOMBA ÁGUA
02-36	SISTEMA DE ARREFECIMENTO - MOTOR
02-37	TERMOSTATO - SISTEMA DE ARREFECIMENTO, MOTOR
02-38	BOMBA DE AGUA - CONTROLE
02-39	TRACÇÃO DA VENTOINHA
02-41	MOTOR - GANCHO DE ELEVAÇÃO
02-42	ALTERNADOR

02-01		p1	07/08

RADIADOR - SUPORTE

1

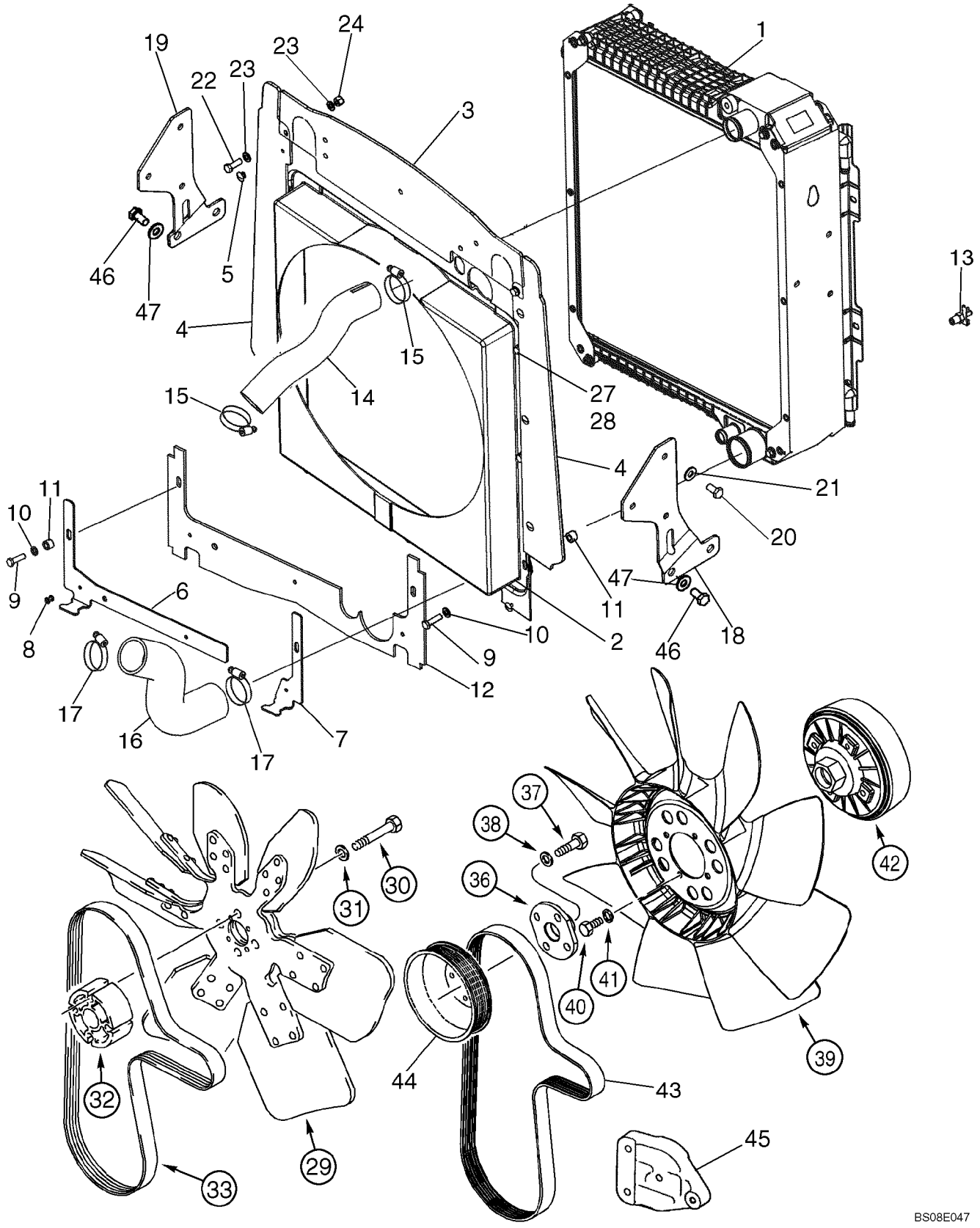

RADIADOR - SUPORTE

REF	FN	PART NUMBER	YR/SN	QTY	DESCRIPTION
1		87576643		1	RADIADOR ARREFECIMENTO, 3 Row Radiator, Models With Or Without Air Conditioning; Component Parts Not Available At Time Of Printing
2		87559003		1	COBERTURA, Fan
3		87628324		1	JUNTAS, Top
4		87628308		2	JUNTAS, Sides
5		87301355		6	REBITE, Pop, 3/16" x .575"
6		87446082		1	PLACA DE FIXAÇÃO, Lower Left-Hand Shroud
7		87446081		1	PLACA DE FIXAÇÃO, Lower Right-Hand Shroud; 195 mm (7-11/16 in) Long
8		87301356		3	REBITE, Pop, 3/16" x .700"
9		614-8030		2	PARAFUSO, Hex, M8 x 30, 8.8
10		895-11008		2	ARRUELA PLANA, M8 x 16 x 1.6
11		407962A1		2	ESPAÇADOR
12		87434978		1	JUNTAS, Lower Seal
13		81465471		1	TORNEIRA, Drain, 1/4
14		87454377		1	MANGOTE, Upper
15		87647029		2	BRACADEIRA MANGUEIRA
16		87454378		1	MANGOTE, Lower; 5.6 mm (7/32 in) Thick
17		214-1440		2	BRACADEIRA MANGUEIRA, #40, 2.06/3.00 Type F Worm
18		87608368		1	SUPORTE, Radiator, RH
19		87608370		1	SUPORTE, Radiator, LH
20		614-10020		6	PARAFUSO, Hex, M10 x 20, 8.8, Full Thd
21		895-15010		6	ARRUELA PLANA, M11 x 24 x 2
22		614-8025		2	PARAFUSO, Hex, M8 x 25, 8.8
23		895-11008		4	ARRUELA PLANA, M8 x 16 x 1.6
24		832-10408		2	CONTRA PORCA, M8 x 1.25, Cl 8
27		806-8016		4	PARAFUSO, Hex, Lock, M8 x 16, Cl 10.9
28		895-11008		4	ARRUELA PLANA, M8 x 16 x 1.6
29		228133A2		1	VENTILADOR, 39 Degrees; With White Identification Dot; Standard Fan Drive; With Air Conditioning; With Turbo
29		185377A1		1	VENTILADOR, 33 Degrees; Standard Fan Drive; Without Air Conditioning; With Or Without Turbo

RADIADOR - SUPORTE

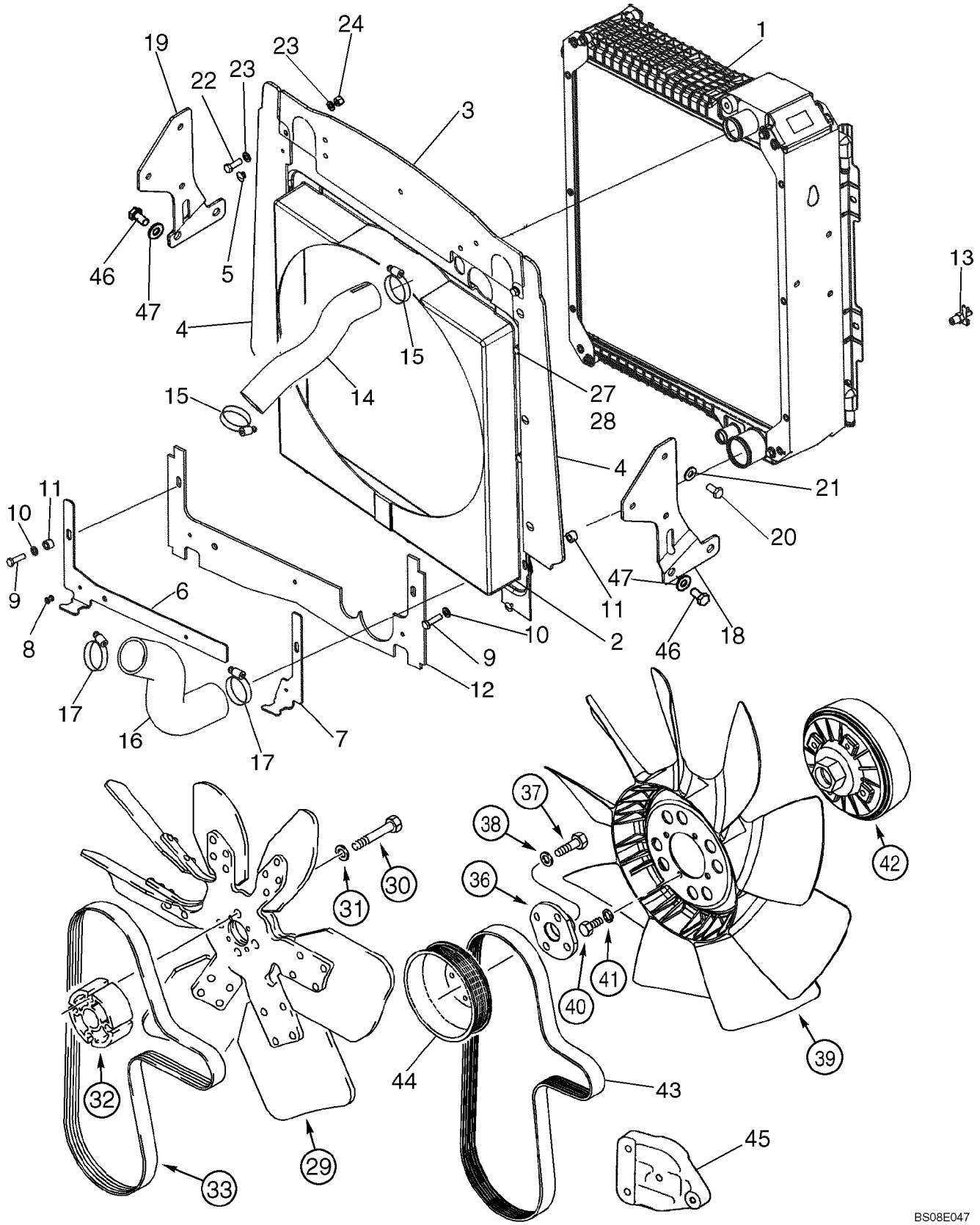

RADIADOR - SUPORTE

REF	FN	PART NUMBER	YR/SN	QTY	DESCRIPTION
30		814-10090		4	PARAFUSO, Hex, M10 x 90, 8.8
31		496-21041		4	ARRUELA PLANA, 13/32" x 13/16" x .089", HDN
32		87353191		1	ESPAÇADOR, 59 mm Long, Standard Fan Drive; With Or Without Air Conditioning; With Or Without Turbo; Replaces 85826229 Aluminium 59 mm Long Spacer that has Part Number Stamped On Spacer Used On Some Models
33		85826230		1	CORREIA, V-Type, Standard Fan Drive; With Or Without Air Conditioning; With Or Without Turbo
36		303192A1		1	ADAPTADOR, Viscous Fan Drive, With Air Conditioning; With Turbo
37		614-10030		4	PARAFUSO, Hex, M10 x 30, 8.8
38		896-11010		4	ARRUELA PLANA, M10 x 21.5 x 2.5, HT
39		277800A1		1	VENTILADOR, 9 Blade, Viscous Fan Drive; With Air Conditioning; With Turbo
40		614-8016		4	PARAFUSO, Hex, M8 x 16, 8.8
41		892-11008		4	ARRUELA-TRAVA, M8
42		87340008		1	IMPULSOR, Fan Drive; Component Parts Not Serviced Separately; Viscous Fan Drive; With Air Conditioning; With Turbo
43		87415774		1	CORREIA, V-Type; Viscous Fan Drive, With Air Conditioning; With Turbo
44		4890343		1	POLIA
45		87442419		1	SUPORTE, Pulley Tensioner Support, Painted
46		614-12025		4	PARAFUSO, Hex, M12 x 25, 8.8
47		896-12012		4	ARRUELA PLANA, M12 x 24.5 x 3, HT

02-02		p1	07/08

SISTEMA DE PURGA DE AIRE - SUPORTE

1

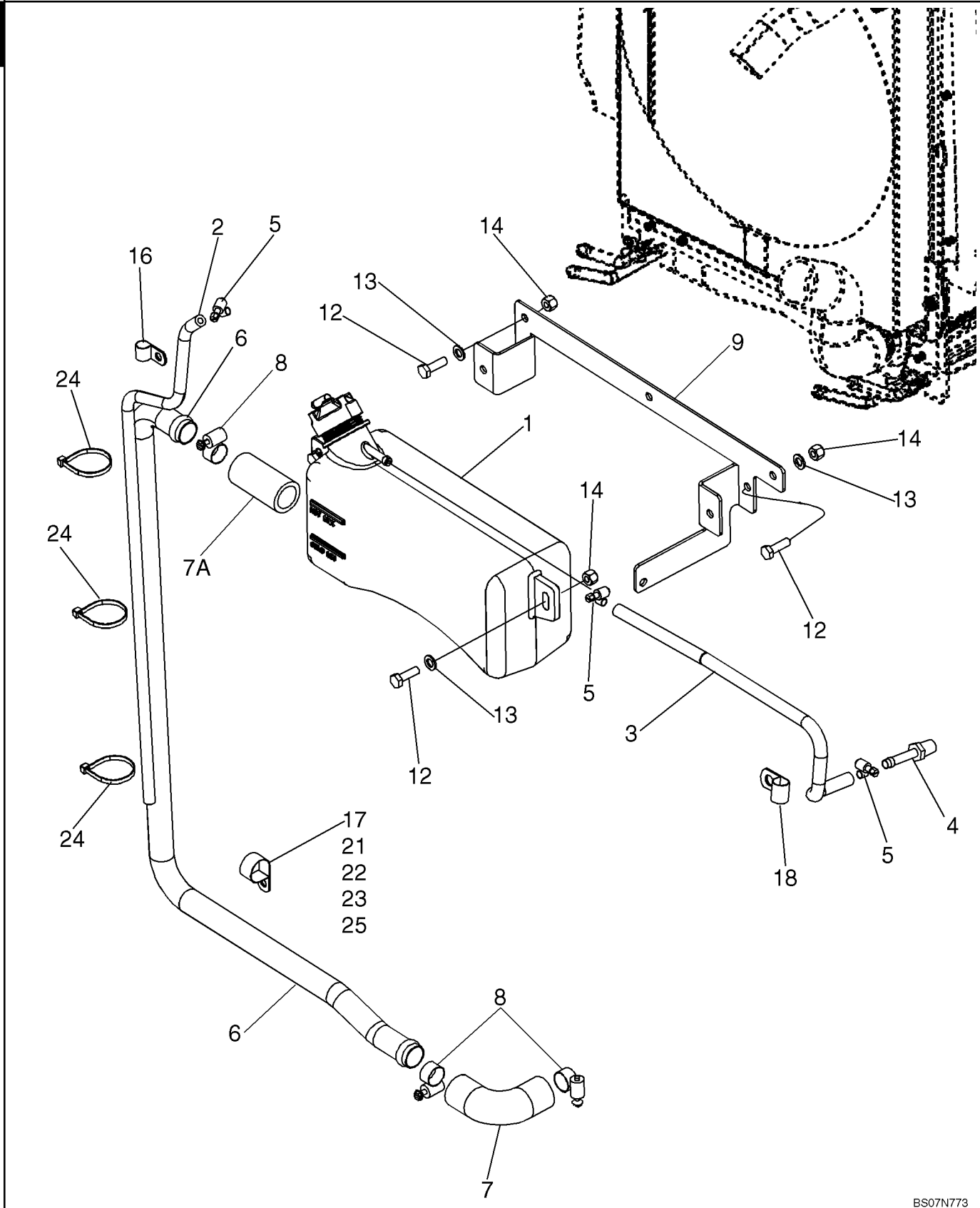

SISTEMA DE PURGA DE AIRE - SUPORTE

REF	FN	PART NUMBER	YR/SN	QTY	DESCRIPTION
1		87674844		1	RESERVATÓRIO DE VÁCUO, Deaeration Reservoir, 3.0 Liters; Includes 85803019 Cap
		85803019		1	TAMPA RESERVATORIO, 13 psi
2		87616934		1	MANGUEIRA, Overflow Hose; 750 mm
3		87715487		1	MANGUEIRA, Recovery, 440 mm; Reservoir to Radiator
4		87301325		1	CONEXAO, 5/16" Hose X 1/4" NPTF Beaded
5		214-1704		3	BRACADEIRA MANGUEIRA, #4, 0.25/0.62 Type M Worm
6		87557237		1	TUBO RÍGIDO
7		87454376		1	MANGUEIRA
7A		87367622		1	MANGUEIRA
8		214-1416		4	BRACADEIRA MANGUEIRA, #16, 0.81/1.50 Type F Worm
9		87632870		1	SUPORTE, Bottle Retaining
12		614-8025		7	PARAFUSO, Hex, M8 x 25, 8.8
13		895-11008		7	ARRUELA PLANA, M8 x 16 x 1.6
14		832-10408		7	CONTRA PORCA, M8 x 1.25, Cl 8
16		515-22127		1	PRENDEDOR, 1/2", Insul, 5/16" Bolt
17		515-22254		1	PRENDEDOR, 1", Insul, 5/16" Bolt
18		515-23143		1	PRENDEDOR, 9/16", Insul, 3/8" Bolt
21		614-8040		1	PARAFUSO, Hex, M8 x 40, 8.8, Full Thd
22		87418360		1	ESPAÇADOR, 8 x 16 mm
23		895-11008		1	ARRUELA PLANA, M8 x 16 x 1.6
24		L18337		3	TIRA DE CABO, 9.95"-12.1" lg
25		832-10408		1	CONTRA PORCA, M8 x 1.25, Cl 8

FILTRO DE AR - PEÇAS DE ADMISSÃO DE AR

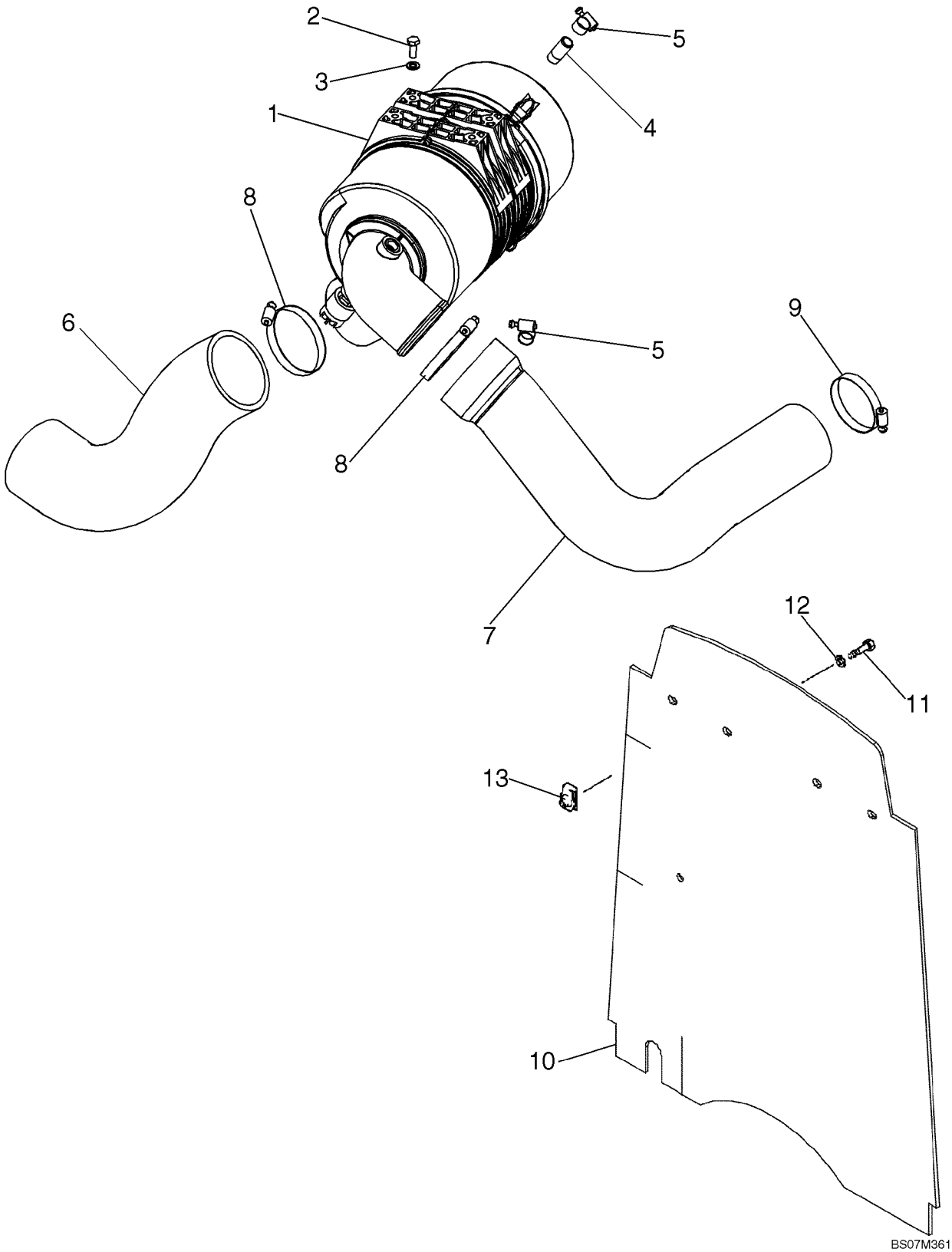

FILTRO DE AR - PEÇAS DE ADMISSÃO DE AR

REF	FN	PART NUMBER	YR/SN	QTY	DESCRIPTION
1		87610338		1	DEPURADOR, See Figure 02-05
2		614-8020		4	PARAFUSO, Hex, M8 x 20, 8.8
3		895-11008		4	ARRUELA PLANA, M8 x 16 x 1.6
4		L17985		1	CONEXAO
5		214-1412		2	BRACADEIRA MANGUEIRA, #12, 0.69/1.25 Type F Worm
6		87545561		1	MANGOTE, Inlet
7		87666451		1	MANGOTE, To Turbocharger
8		214-1464		2	BRACADEIRA MANGUEIRA, #64, 3.56/4.50 Type F Worm
9		214-1456		1	BRACADEIRA MANGUEIRA, #56, 3.06/4.00 Type F Worm
10		87652272		1	CORTINA, Barrier, Heat and Noise Reduction
11		806-8025		4	PARAFUSO, Hex, Lock, M8 x 25, Cl 10.9
12		495-81001		4	ARRUELA PLANA, 5/16"
13		833-40408		4	PORCA, M8, U

CONJUNTO DO FILTRO DE AR

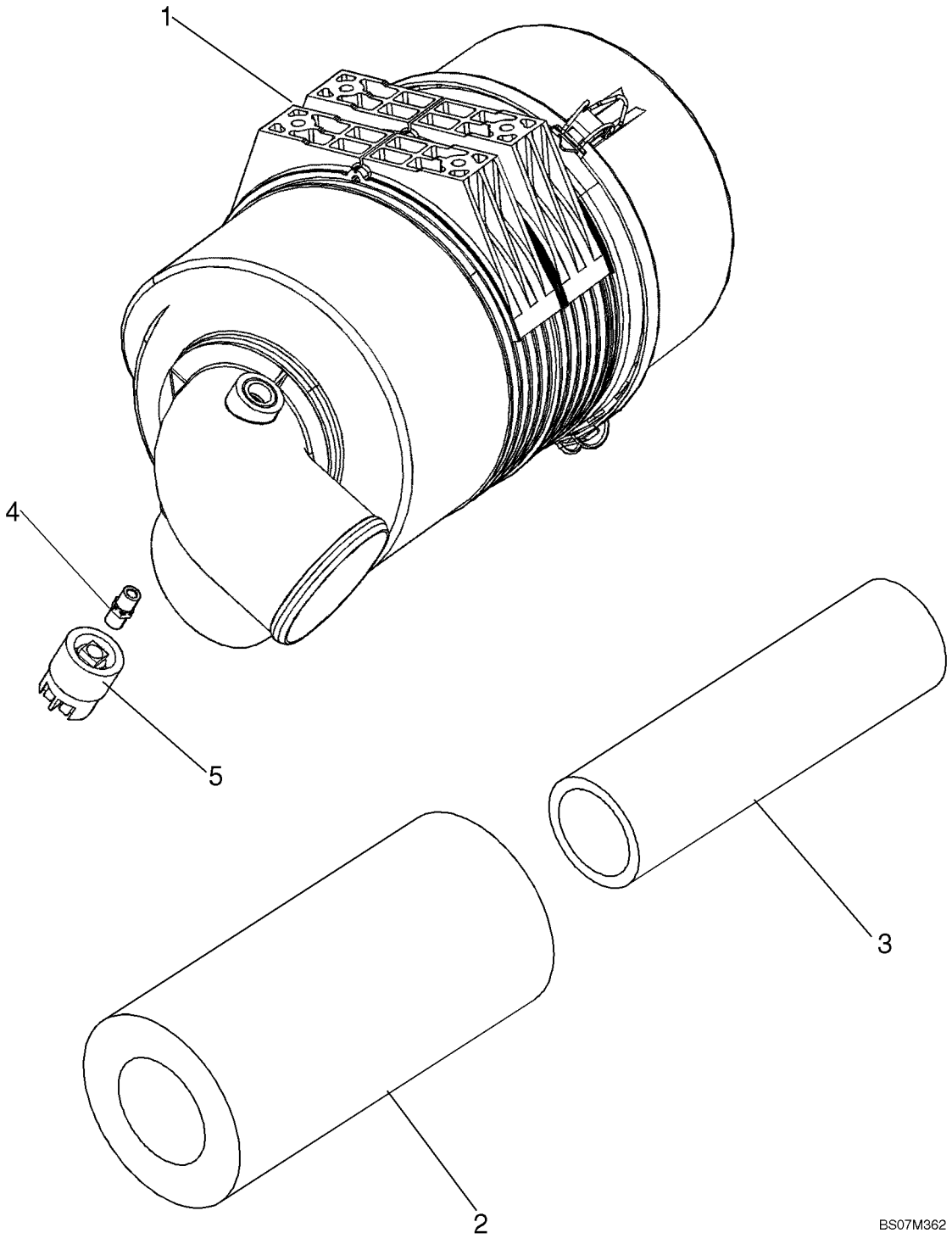

CONJUNTO DO FILTRO DE AR

REF	FN	PART NUMBER	YR/SN	QTY	DESCRIPTION
		87610338		1	DEPURADOR, Air Cleaner; Incl. Ref 1 - 5
1		NSS		1	BOLETIM INFORMATIVO, Body
2		87682993		1	FILTRO DE AR, Primary
3		87682999		1	FILTRO DE AR, Secondary
4		86976679		1	ADAPTADOR
5		79081900		1	INTERRUPTOR DE RESTRICAO, Air Restriction

SILENCIADOR, ASPIRADOR - SISTEMA DE ESCAPE

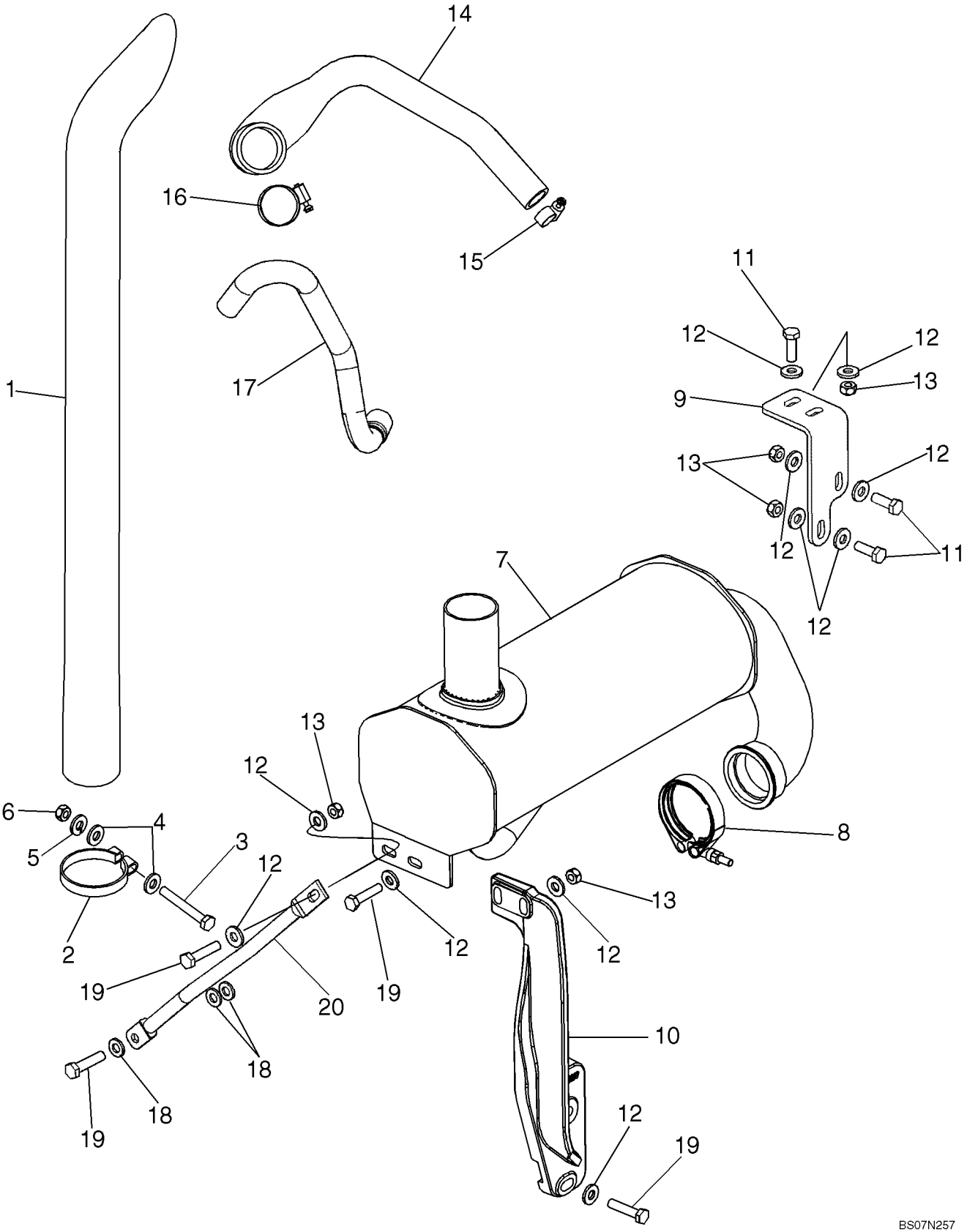

SILENCIADOR, ASPIRADOR - SISTEMA DE ESCAPE

REF	FN	PART NUMBER	YR/SN	QTY	DESCRIPTION
1		87309656		1	ESCAPE VERTICAL, 844 mm (33-1/4 in) Long Exhaust Stack
2		87437804		1	BRACADEIRA TUBO, Stack Clamp
3		614-10080		1	PARAFUSO, Hex, M10 x 80, 8.8, Full Thd
4		896-15010		2	ARRUELA PLANA, M10 x 24.5 x 3, HT
5		892-11010		1	ARRUELA-TRAVA, M10
6		829-1410		1	PORCA, M10, Cl 10
7		87617576		1	SILENCIOSO, Aspirated
8		A170467		1	BRACADEIRA, Includes Hardware
9		87423531		1	SUPORTE, Front Support
10		87451167		1	SUPORTE, Rear Support
11		627-10030		4	PARAFUSO, Hex, M10 x 30, 10.9, Full Thd
12		896-15010		14	ARRUELA PLANA, M10 x 24.5 x 3, HT
13		829-1410		6	PORCA, M10, Cl 10
14		87704858		1	MANGOTE, Aspiration Hose
15		214-1416		1	BRACADEIRA MANGUEIRA, #16, 0.81/1.50 Type F Worm
16		214-1436		1	BRACADEIRA MANGUEIRA, #36, 1.81/2.75 Type F Worm
17		87611852		1	MANGOTE
18		896-11010		3	ARRUELA PLANA, M10 x 21.5 x 2.5, HT
19		827-10045		5	PARAFUSO, Hex, M10 x 45, 10.9
20		87442357		1	TENSOR

MOTOR - SUPORTE

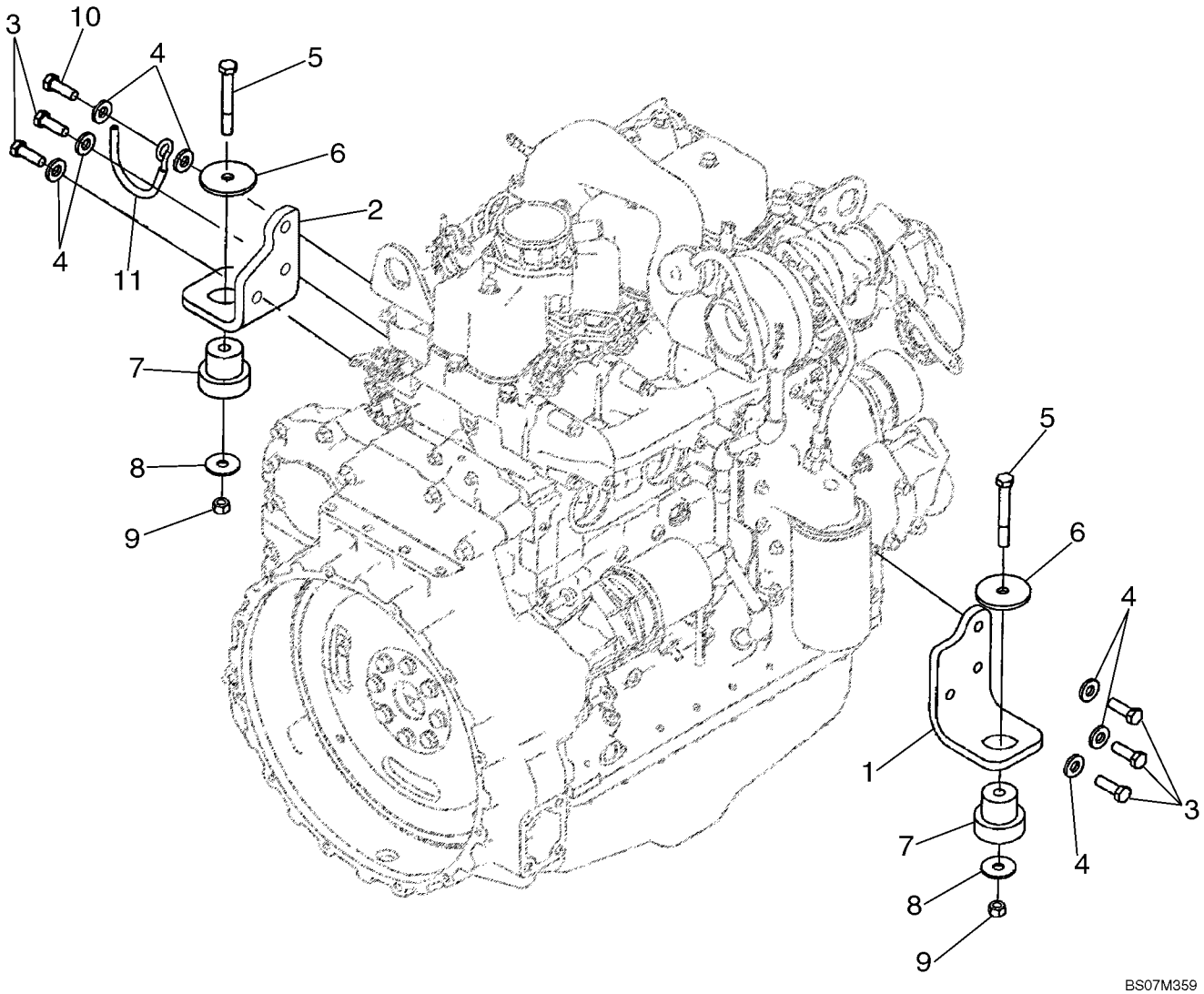

MOTOR - SUPORTE

REF	FN	PART NUMBER	YR/SN	QTY	DESCRIPTION
		87603948		1	MOTOR, 85 hp, Internal Intake EGR; Bosch Injection Pump; Turbocharged Engine; Includes Parts On Figures 02-08 - 02-42, 03-04 - 03-11
1		87411319		1	SUPORTE, Right-Hand
2		87411319		1	SUPORTE, Left-Hand
3		614-12035		5	PARAFUSO, Hex, M12 x 35, 8.8, Full Thd
4		896-15012		7	ARRUELA PLANA, M12 x 28.5 x 4, HT
5		814-12080		2	PARAFUSO, Hex, M12 x 80, 8.8
6		85801585		2	ARRUELA DE VEDAÇÃO
7		87416966		2	ISOLADOR, Insulator, Rubber Mount
8		85802618		2	ARRUELA DE VEDAÇÃO
9		832-10412		2	CONTRA PORCA, M12 x 1.75, Cl 8
10		614-12040		1	PARAFUSO, Hex, M12 x 40, 8.8, Full Thd
11		87431799		1	SUPORTE, Hose Support

MOTOR - AQUECEDOR DO BLOCO

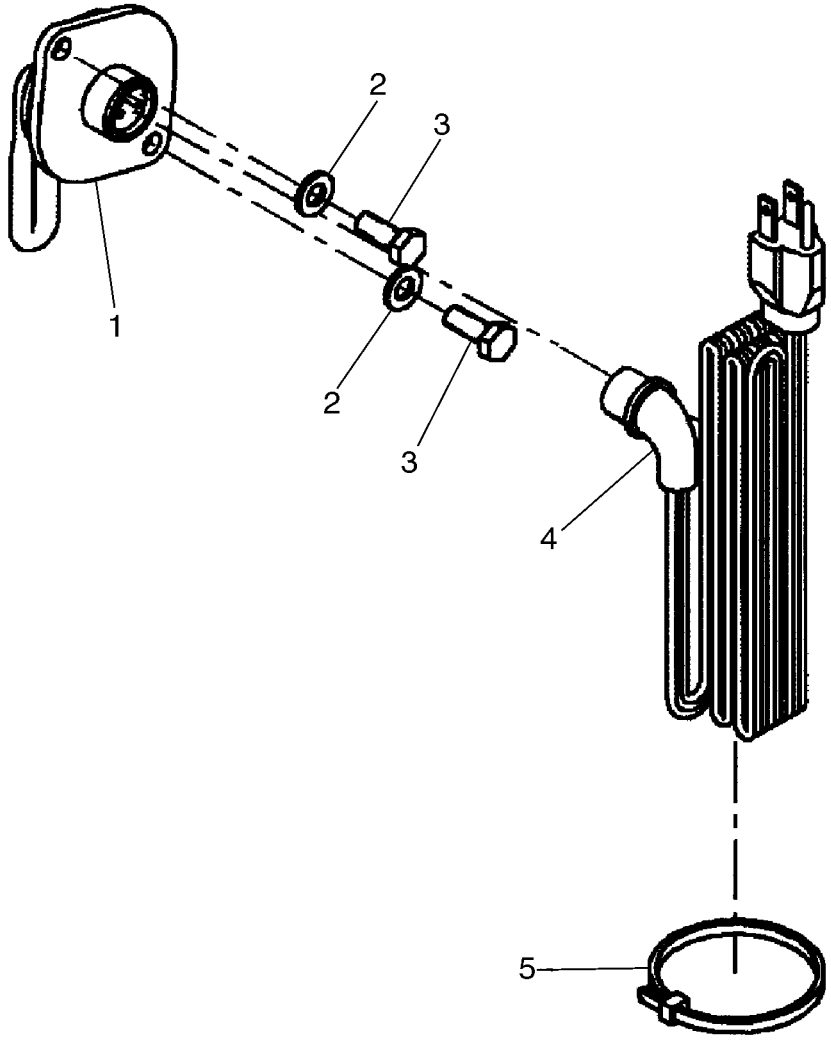

MOTOR - AQUECEDOR DO BLOCO

REF	FN	PART NUMBER	YR/SN	QTY	DESCRIPTION
		87447135		1	KIT, SERVICE, Engine Block Heater Kit; Incl. Ref 1 - 5 and Instructions
1		8602005		1	AQUECEDOR, Block Heater; 750W, 120V
2		896-11008		2	ARRUELA PLANA, M8 x 17.5 x 2, HT
3		627-8020		2	PARAFUSO, Hex, M8 x 20, 10.9
4		196466A1		1	CABO ELÉTRICO, 1829 mm (72 in)
5		L18331		1	TIRA DE CABO, Tie

MOTOR

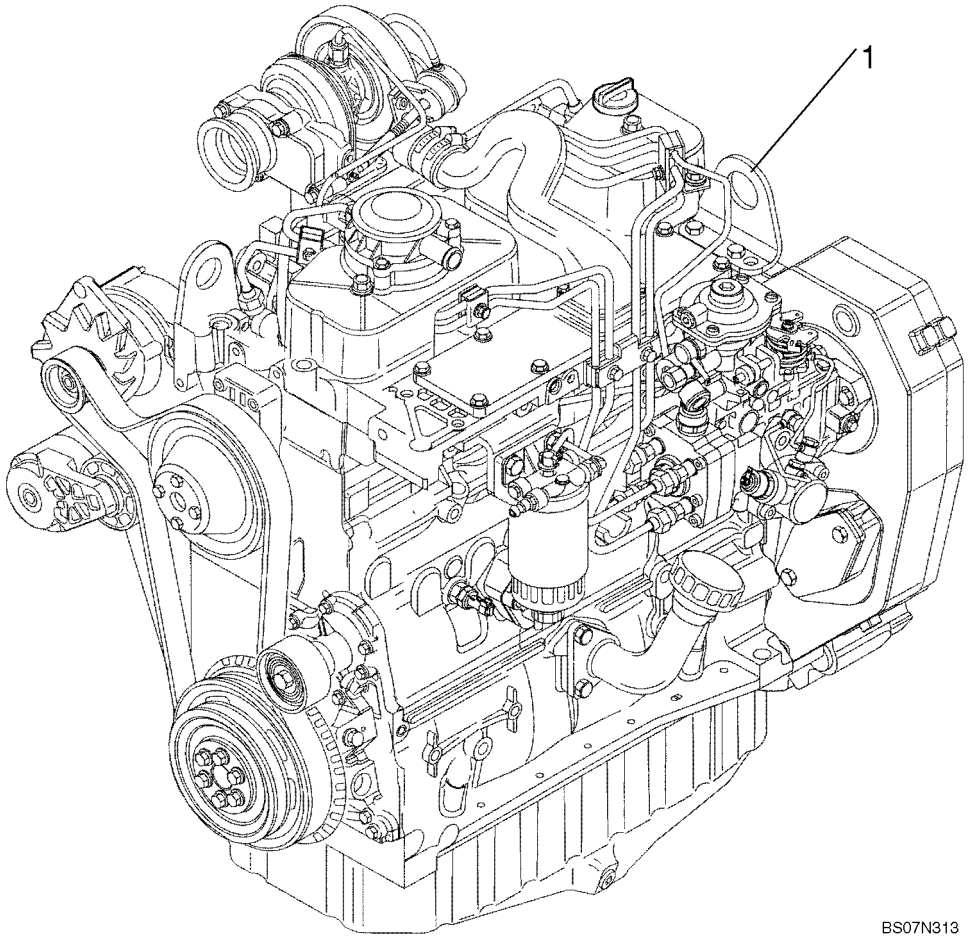

MOTOR

REF	FN	PART NUMBER	YR/SN	QTY	DESCRIPTION
1		87603948		1	MOTOR, 85 hp, Internal Intake EGR; Bosch Injection Pump; Turbocharged Engine; Includes Parts On Figures 02-08 - 02-42, 03-04 - 03-11

BLOCO DE CILINDRO

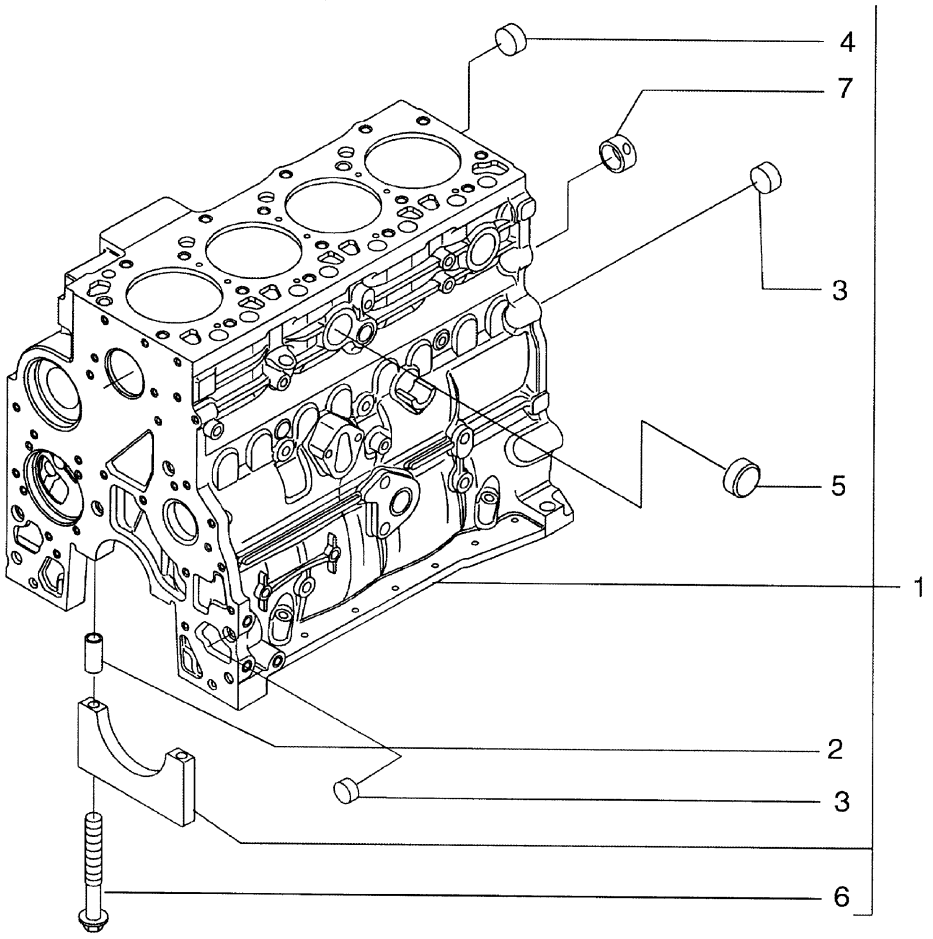

BS04A024

BLOCO DE CILINDRO

REF	FN	PART NUMBER	YR/SN	QTY	DESCRIPTION
1		2830082		1	BLOCO DE CILINDROS, - ASSY; Incl. Ref 2 - 7, Plus Main Bearing Caps
		4895919		4	CASQUILHO VIRABREQUI, Main Bearing Cap; Not Serviced Separately
		4895921		1	CASQUILHO VIRABREQUI, Main Bearing Cap; Not Serviced Separately
2		4899026		10	GUIA
3		4895039		3	BUJÃO
4		4895038		4	BUJÃO
5		4895228		2	BUJÃO
6		4891353		10	PARAFUSO, Flg Hd, M12 x 1.5 x 120
7		4895040		1	BUCHA

BLOCO DE CILINDRO

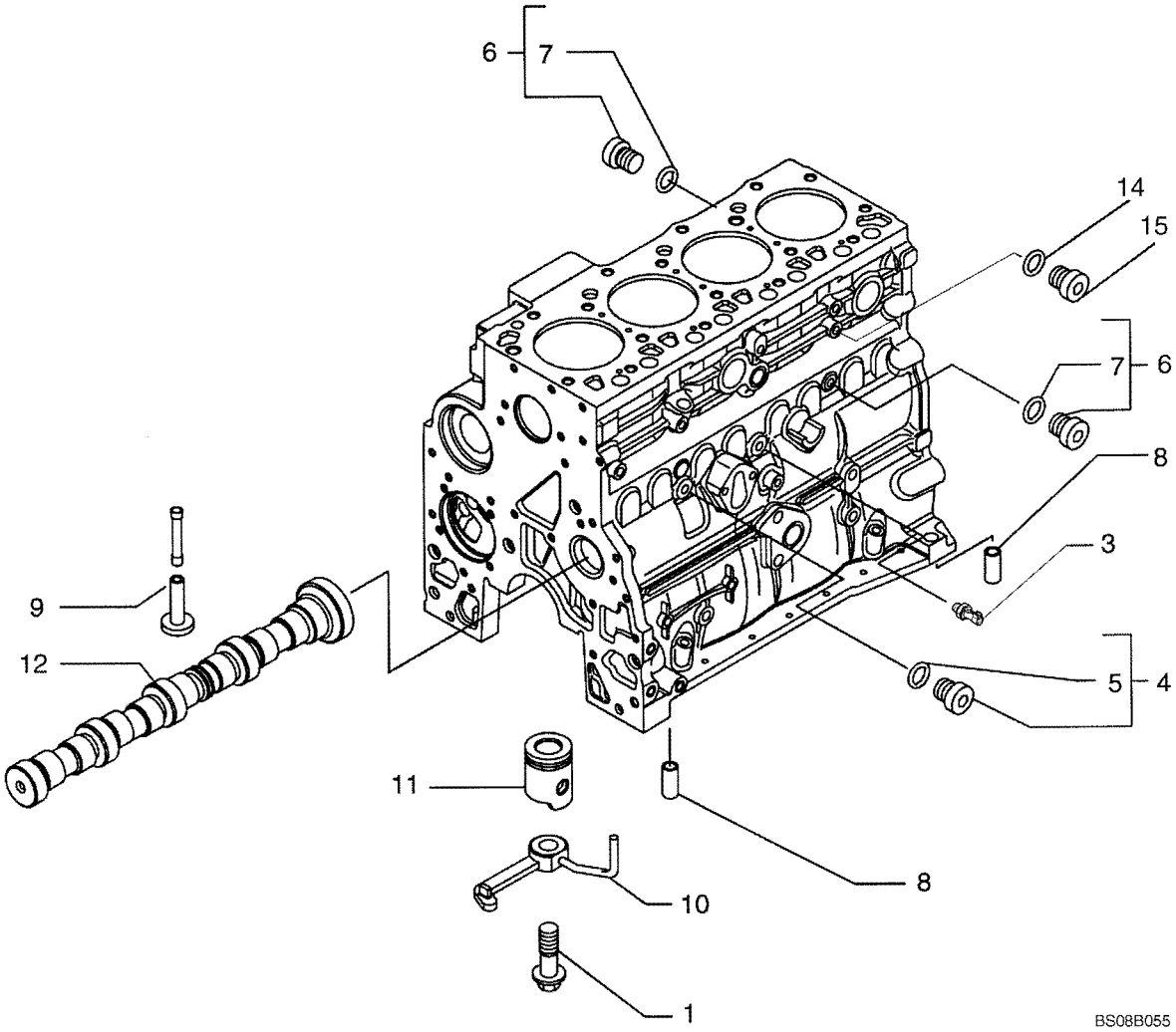

BLOCO DE CILINDRO

REF	FN	PART NUMBER	YR/SN	QTY	DESCRIPTION
1		4894218		4	PARAFUSO
3		2852889		1	INTERRUPTOR DE PRESSÃO
4		4899009		1	BUJÃO, M10 x 1; Incl. Ref 5
5		4899072		1	ANEL "O"
6		4895392		2	BUJÃO, 18 x 1.5; Incl. Ref 7
7		4895393		1	ANEL "O"
8		4895049		2	GUIA
9		4895180		8	TUCHO
10		2852202		4	TUBO, Incl. Ref 1
11		REF		1	INSTRUCAO, PISTON; See Figure 02-23
12		REF		1	INSTRUCAO, CAMSHAFT; See Figure 02-28
13		4896153		1	BUJÃO, Piston Cooling, M6.08 OD x 30 lg; If Used
14		4895623		1	BUJÃO
15		4895625		1	ANEL "O"

BOMBA DE ÓLEO, RECIPIENTE

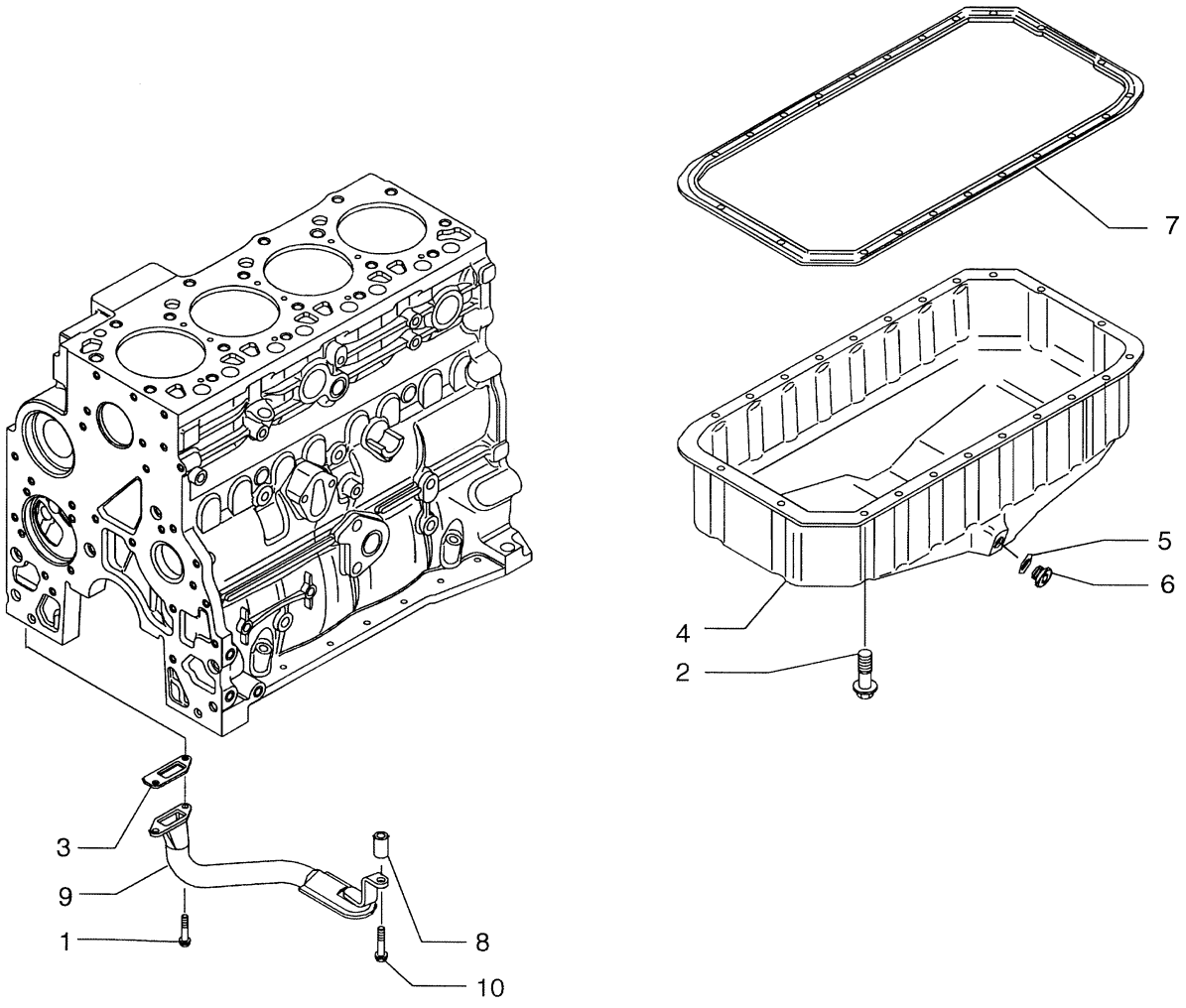

BS04A026

BOMBA DE ÓLEO, RECIPIENTE

REF	FN	PART NUMBER	YR/SN	QTY	DESCRIPTION
1		16673635		2	PARAFUSO, M8 x 20mm
2		4899091		22	PARAFUSO, Hex Flg, M8 x 1.25 x 40
2		4895489		2	PARAFUSO, Flange, M8 x 110
3		4898301		1	JUNTA
4		2852011		1	CÁRTER DE ÓLEO
5		2852978		1	ANEL "O"
6		2856086		1	BUJÃO, 22 x 1.5; Does Not Include Seal, Purchase Seal Separately
7		2852012		1	JUNTA
8		2852016		1	ESPAÇADOR
9		2852013		1	ELEMENTO FILTRO, Tube; Oil Suction, Includes Screen Which Is Not Serviced Separately
10		4895538		1	PARAFUSO, Flange, M10 x 120
		85826260		1	VALVULA DE DRENO, Assembly, Incl. 11 - 17; Used On 4WD Units To Prevent Oil From Draining Onto the Front Driveshaft Guard
		87490402		1	VALVULA DE DRENO, Incl. 11 - 14
11		NSS		1	BOLETIM INFORMATIVO, Plug, Special Oil Drain
12		87497900		1	BUJÃO DE DRENO
13		87698749		1	ANEL "O"
14		14453881		1	ANEL "O", -021, Cl 7, .926 " ID x .070" Thk
		87490403		1	VALVULA DE DRENO, Female Engine Oil Drain; Incl. 15 - 17
15		NSS		1	BOLETIM INFORMATIVO, Connector; Hydraulic, Special Oil Drain
16		NSS		1	BOLETIM INFORMATIVO, Hose, Special Drain Plug
17		14453181		1	ANEL "O", -014, Cl 7, .489" ID x .070" Thk

TAMPAS BASE

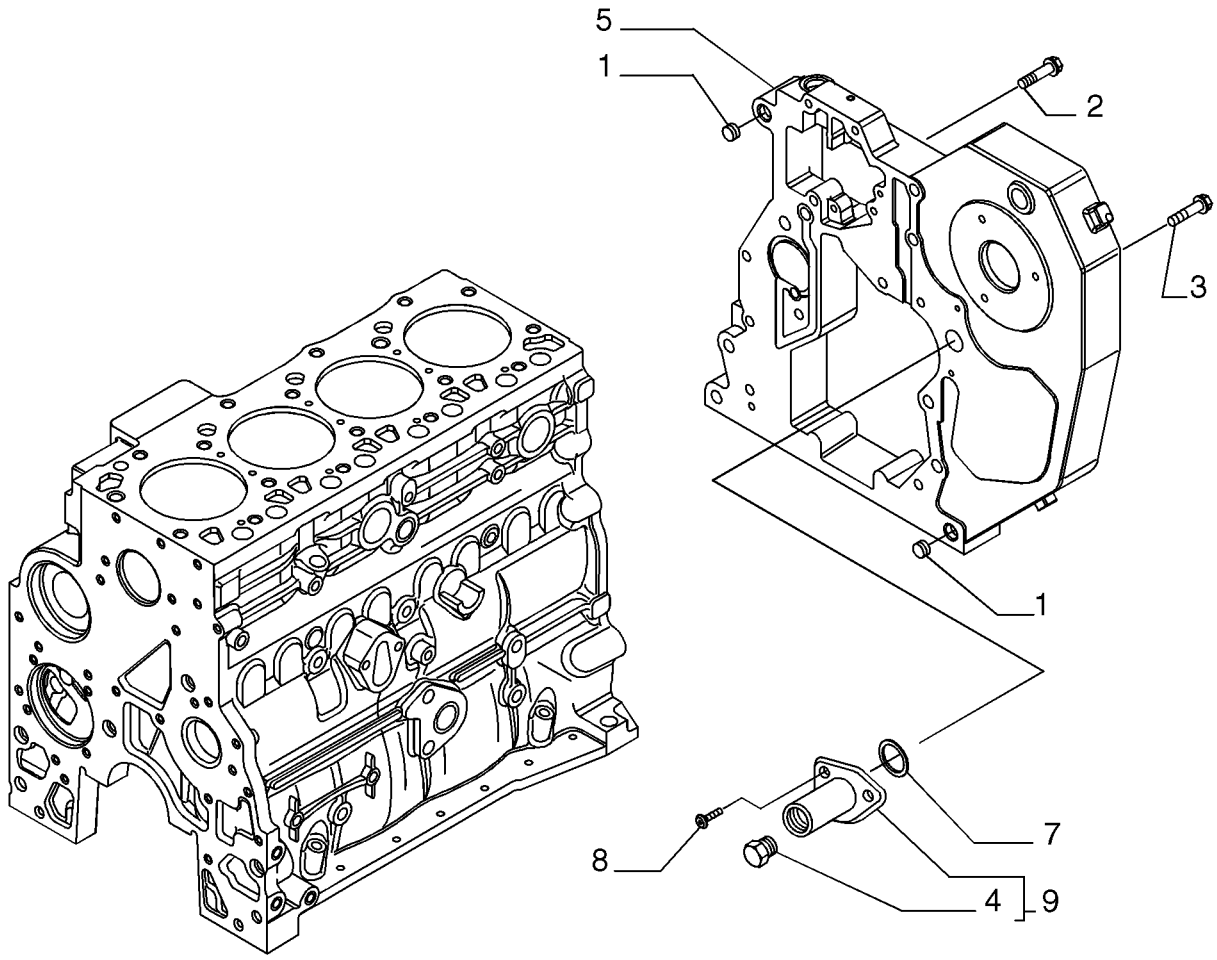

BS07M802

TAMPAS BASE

REF	FN	PART NUMBER	YR/SN	QTY	DESCRIPTION
1		4899026		2	GUIA
2		4899091		4	PARAFUSO, Hex Flg, M8 x 1.25 x 40
3		4899093		5	PARAFUSO, Hex Flg, M10 x 1.5 x 30
3		4899073		1	PARAFUSO, Hex Flg, M12 x 1.75 x 30
4		16882515		1	BUJÃO, Plug
		4899115		1	ANEL "O", (Part of 16882515), Not Shown
5		2853671		1	ALOJAMENTO
7		2852519		1	ANEL "O"
8		4895355		2	PARAFUSO, Torx Rd Hd, M5 x .8 x 17
9		2855287		1	ALOJAMENTO, - ASSY

BLOCO DE CILINDRO - COBERTURAS

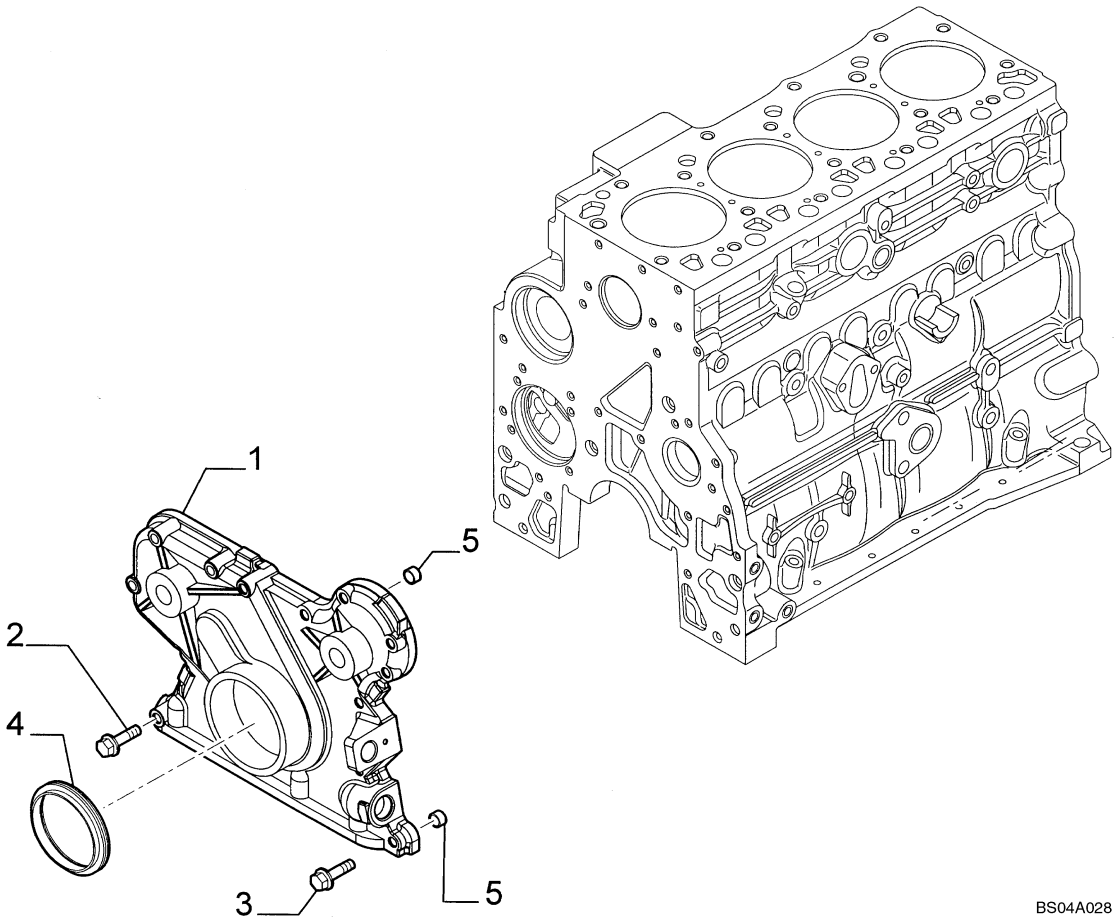

BLOCO DE CILINDRO - COBERTURAS

REF	FN	PART NUMBER	YR/SN	QTY	DESCRIPTION
1		4897024		1	TAMPA, Front Gear
2		4899078		5	PARAFUSO, Hex Flg, M8 x 1.25 x 45
3		4899063		8	PARAFUSO, Hex Flg, M8 x 1.25 x 30
4		4890832		1	ANEL DE VEDACAO
5		4891209		2	GUIA

TAMPAS BASE

1

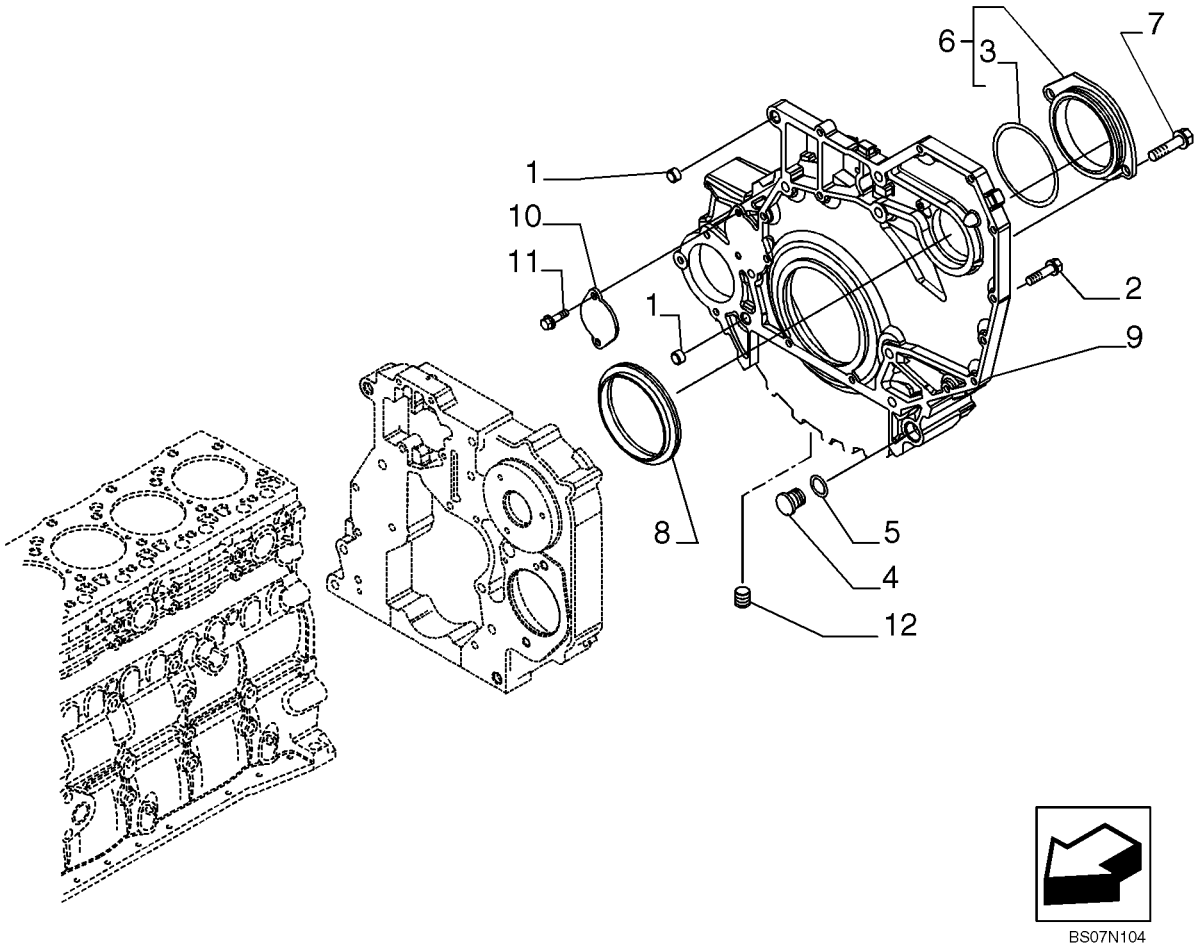

BS07N104

TAMPAS BASE

REF	FN	PART NUMBER	YR/SN	QTY	DESCRIPTION
1		4899026		2	GUIA
2		4899109		3	PARAFUSO, Hex, M10 x 1.5 x 80
2		4892915		7	PARAFUSO, M10 x 1.5 x 40
2		4899076		5	PARAFUSO, Hex Flg, M12 x 1.75 x 80
2		4899074		2	PARAFUSO, Hex Flg, M12 x 1.75 x 120
2		4899143		1	PARAFUSO, Hex Flg, M10 x 1.5 x 140
2		2852865		2	PARAFUSO
3		2854075		1	ANEL "O"
4		4895378		2	BUJÃO
5		4895379		2	ANEL "O", M21.82 ID x 3.53 Thk
6		2854073		1	TAMPA
7		4899020		2	PARAFUSO
8		4890833		1	ANEL DE VEDACAO
9		2855178		1	ALOJAMENTO
10		4895155		1	TAMPA
11		4899068		2	PARAFUSO, Hex Flg, M8 x 1.25 x 16
12		4893036		1	BUJÃO, Alternate part to 2854866
12		2854866		1	BUJÃO, Plug, Alternate part to 4893036

RESPIRADOURO - MOTOR

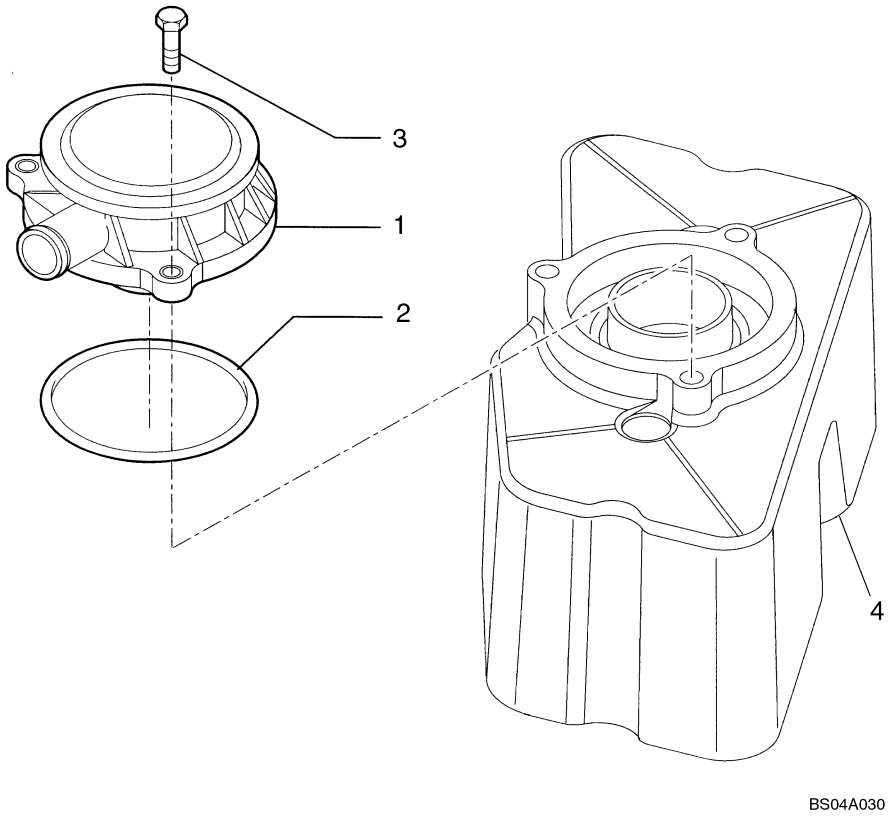

BS04A030

RESPIRADOURO - MOTOR

REF	FN	PART NUMBER	YR/SN	QTY	DESCRIPTION
1		2852531		1	RESPIRO
2		2852028		1	JUNTA
3		4899110		3	PARAFUSO, Hex Flg, M6 x 1 x 20, Alternate Part to 4899092
3		4899092		3	PARAFUSO, Hex Flg, M6 x 1 x 25, Alternate Part to 4899110
4		REF		1	INSTRUCAO, COVER; See Figure 02-17

CABEÇOTES

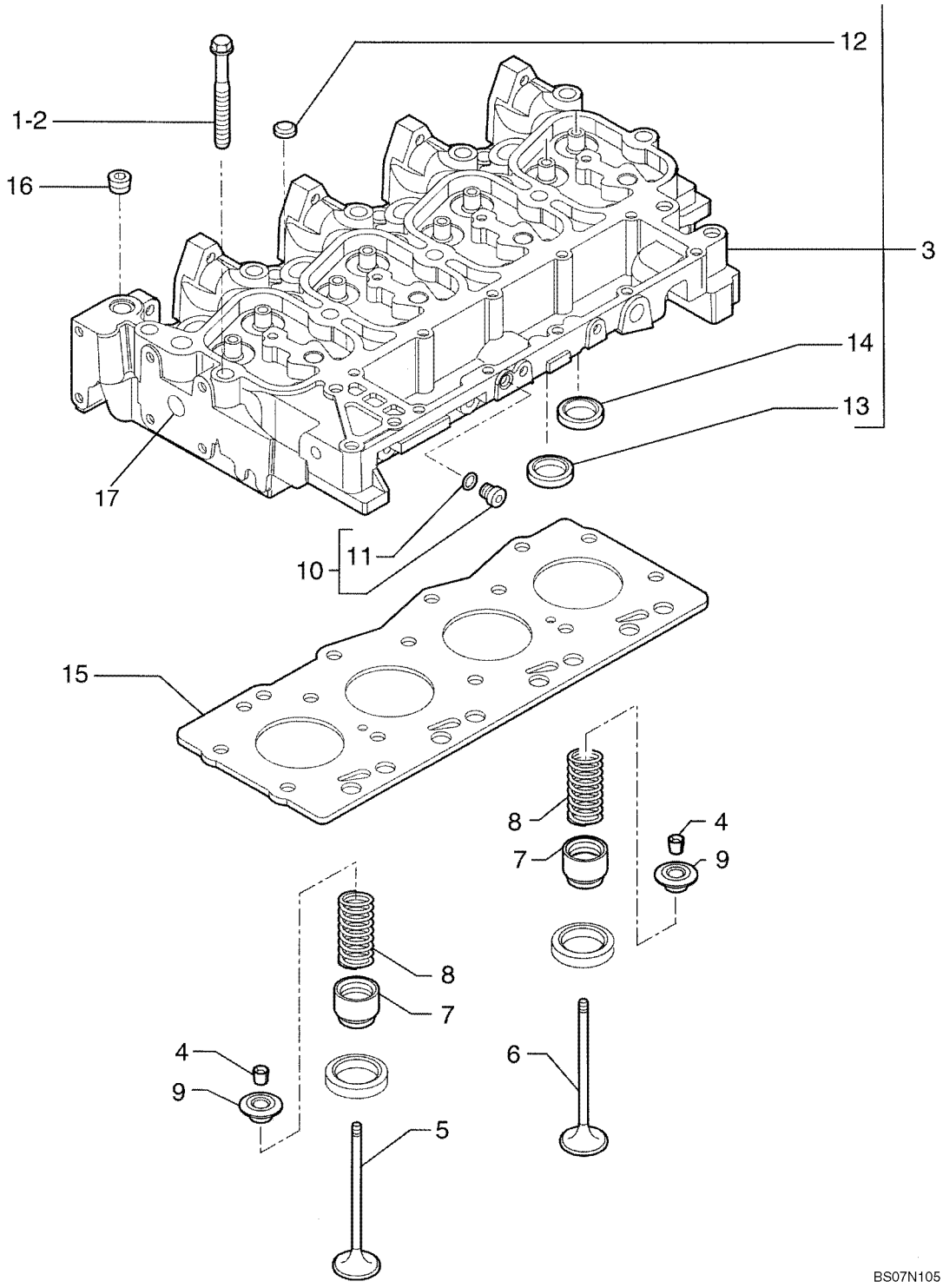

CABEÇOTES

REF	FN	PART NUMBER	YR/SN	QTY	DESCRIPTION
1		4892861		4	PARAFUSO, Wash Hd, M12 x 1.25 x 73
2		4892859		10	PARAFUSO, Wash Hd, M12 x 1.25 x 143
3		2856017		1	CABEÇOTE, Incl. Ref 12 - 14, 17
4		4895183		16	CASQUILHO
5		4895188		4	VÁLVULA DE ESCAPE
6		4895187		4	VÁLVULA DE ADMISSÃO
7		4895347		8	ANEL DE VEDACAO
8		4895215		8	MOLA VALVULA
9		4895184		8	PRENDEDOR
10		4899009		1	BUJÃO, M10 x 1; Incl. Ref 11
11		4899072		1	ANEL "O"
12		4895179		3	BUJÃO
13		4897178		4	SEDE DE VÁLVULA, Intake
14		4897179		4	SEDE DE VÁLVULA, Exhaust
15		2830919		1	JUNTA DO CABEÇOTE, SP=1.25
15		2830920		1	JUNTA DO CABEÇOTE, SP=1.15
16		4895078		5	BUJÃO
17		4895085		1	BUJÃO, 25.74mm

CULATA DEL CILINDRO

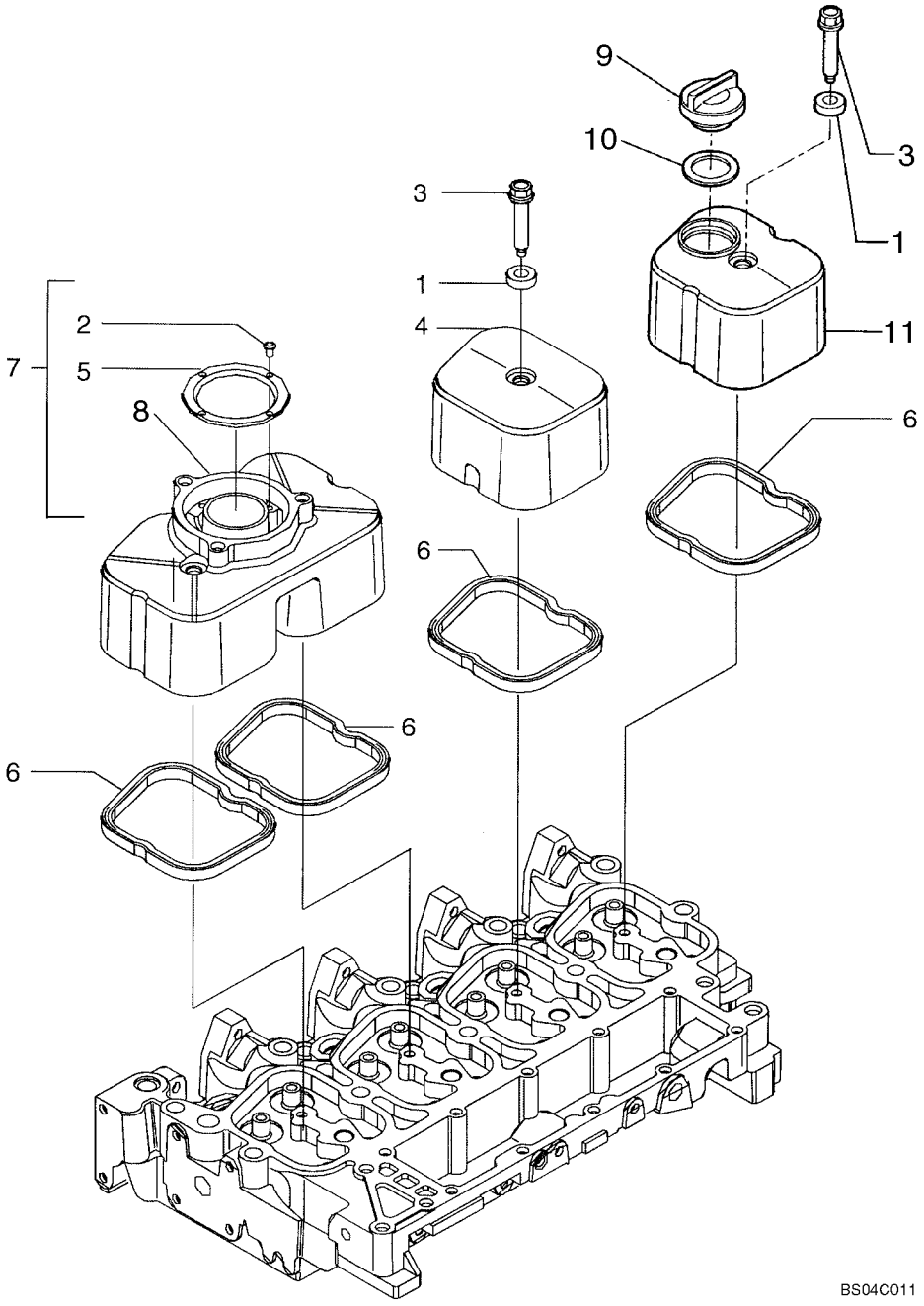

CULATA DEL CILINDRO

REF	FN	PART NUMBER	YR/SN	QTY	DESCRIPTION
1		4895360		4	ISOLADOR
2		2830281		4	PARAFUSO
3		4895214		4	PARAFUSO, Flange
4		2852032		1	TAMPA
5		2830775		1	DEFLETOR
6		2852033		4	JUNTA
7		2830784		1	TAMPA VALVULA, Incl. Ref 2, 5
8		2830769		1	TAMPA
9		4895202		1	TAMPA RESERVATORIO
10		4895296		1	ANEL DE VEDACAO
11		2852894		1	TAMPA

CABEÇOTE DO CILINDRO - MECANISMO DA VÁLVULA

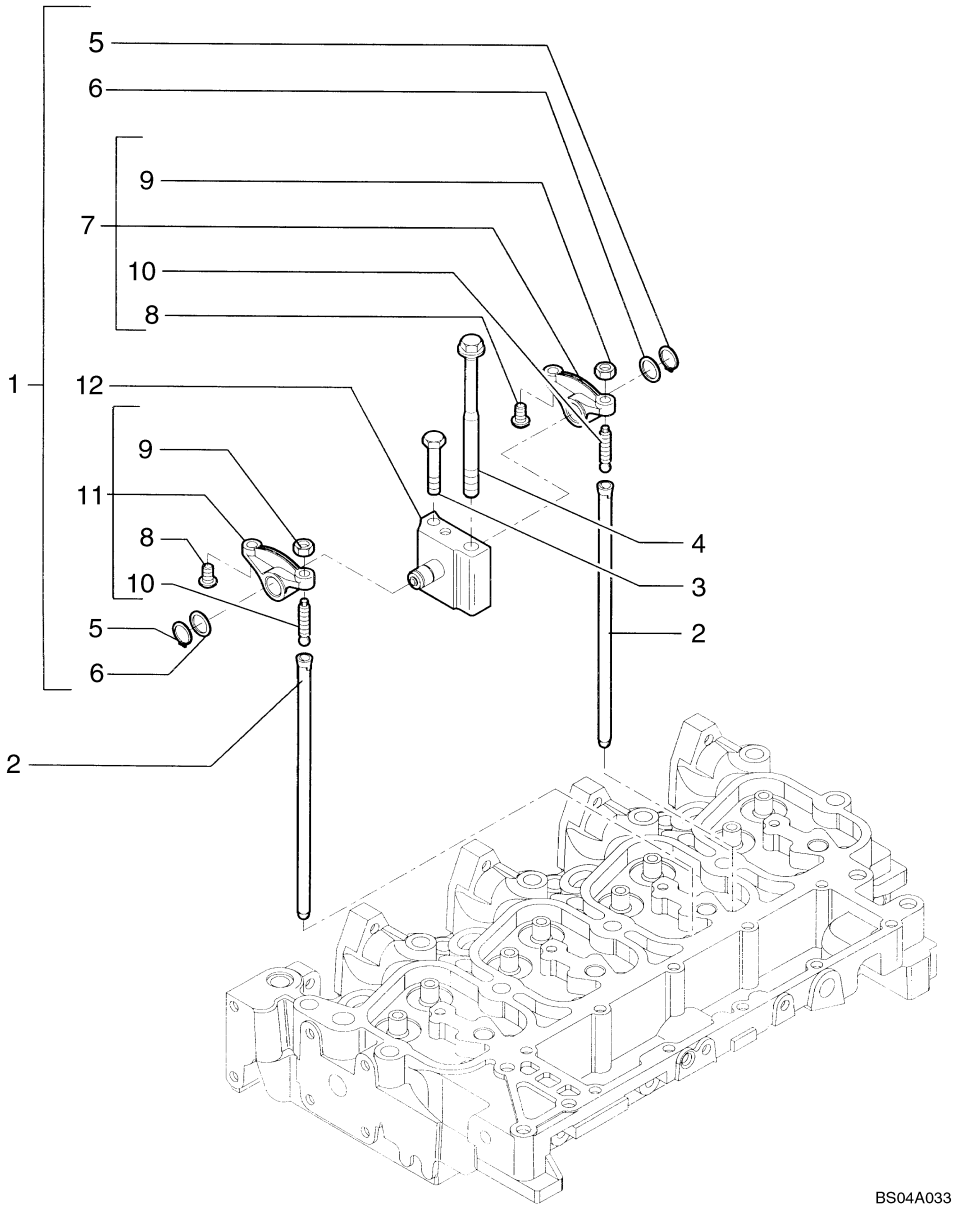

CABEÇOTE DO CILINDRO - MECANISMO DA VÁLVULA

REF	FN	PART NUMBER	YR/SN	QTY	DESCRIPTION
1		4895195		4	BALANCIM, Incl. Ref 5 - 12
2		4895361		8	HASTE DE IMPULSO
3		2852866		4	PARAFUSO, Hex
4		4892860		4	PARAFUSO, Wash Hd, M12 x 1.25 x 183
5		4895363		2	ANEL
6		4895364		2	ARRUELA PLANA
7		4895196		1	BALANCIM, Incl. Ref 8 - 10
8		4895365		2	INSERTO
9		4895198		2	PORCA
10		4895199		2	PARAFUSO
11		4895200		1	BALANCIM, Incl. Ref 8 - 10
12		4895204		1	SUPORTE

COLECTOR ESCAPE

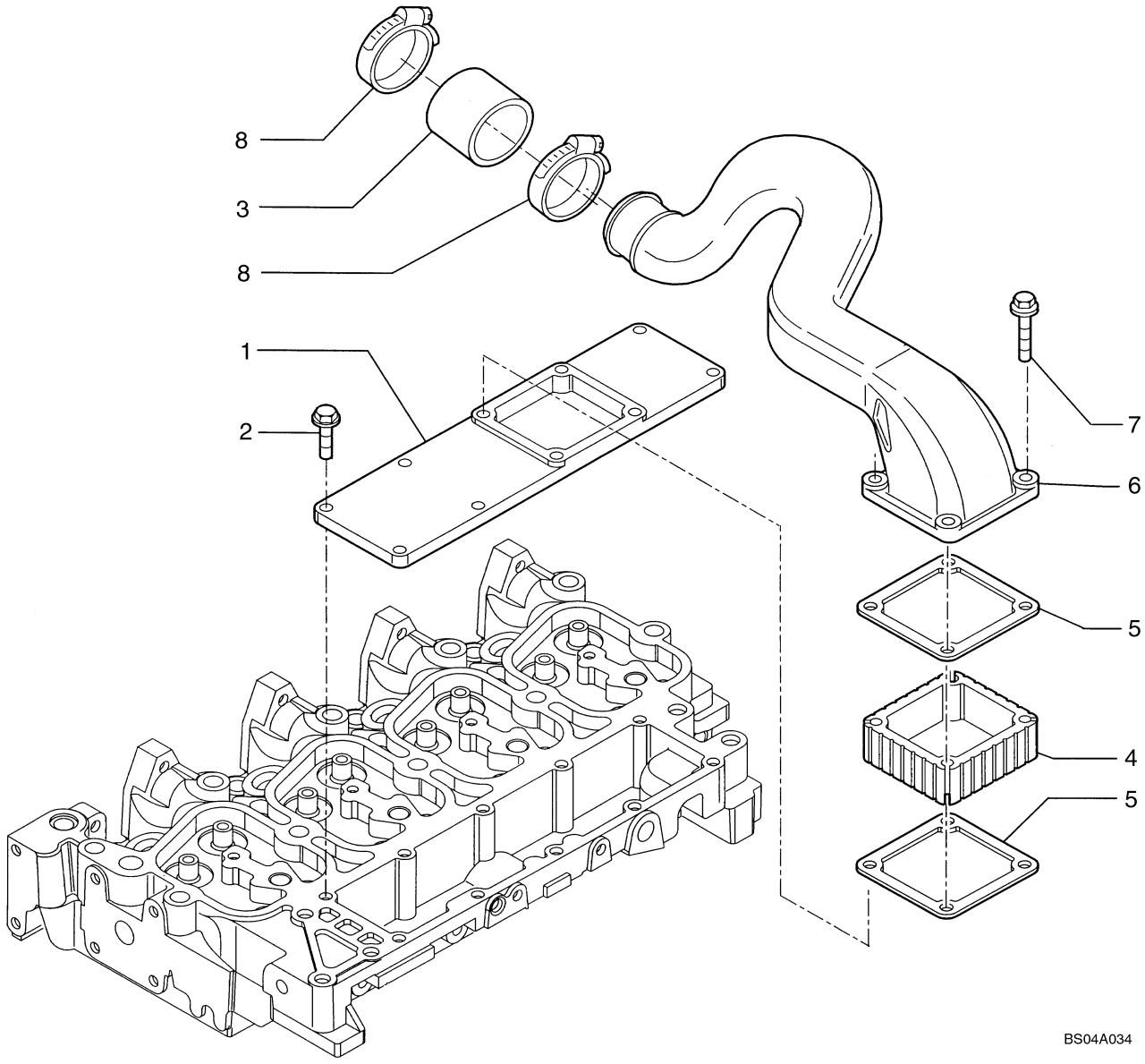

COLECTOR ESCAPE

REF	FN	PART NUMBER	YR/SN	QTY	DESCRIPTION
1		2852044		1	TAMPA, Manifold Inlet; Aluminum; If Used
1		2856462		1	COLETOR DE ADMISSÃO, COVER, Plastic; If Used
2		4899039		6	PARAFUSO, Hex Flg, M8 x 1.25 x 25
3		2852029		1	LUVA DE ACOPLAMENTO
4		2856263		1	ESPAÇADOR, Intake
5		4899921		2	JUNTA
6		2852030		1	TUBO DE ASPIRACAO
7		4895294		4	PARAFUSO, Flange, M8 x 80
8		4895641		2	BRACADEIRA

COLECTOR DE DESCARGA

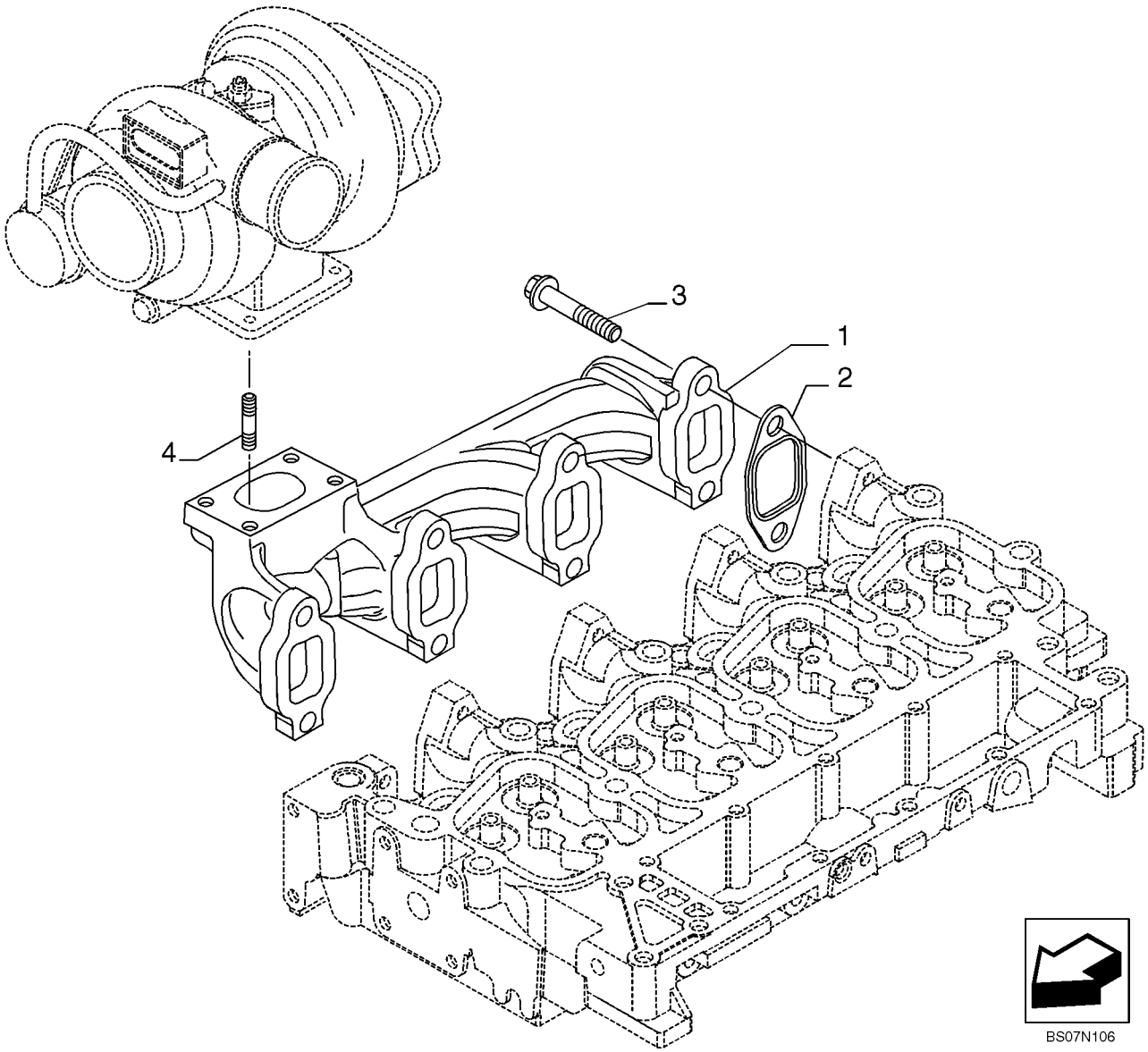

COLECTOR DE DESCARGA

REF	FN	PART NUMBER	YR/SN	QTY	DESCRIPTION
1		2831203		1	COLECTOR DE ESCAPE
2		2852743		4	JUNTA
3		2852834		8	PARAFUSO
4		4899859		4	PRISIONEIRO

EIXO MOTOR

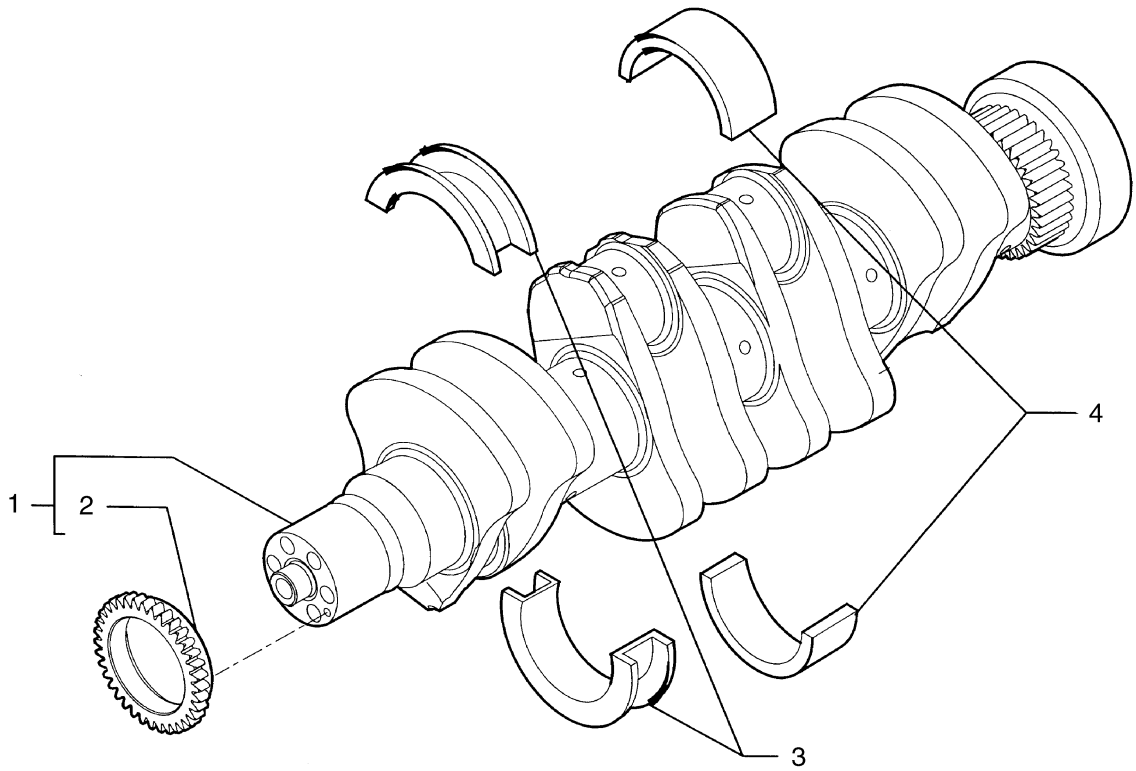

BS04A036

EIXO MOTOR

REF	FN	PART NUMBER	YR/SN	QTY	DESCRIPTION
1		{2856271}		1	Crankshaft Assembly, Incls. Ref. 2
2		4893386		1	ENGRENAGEM
3		{2853816}		1	Set, Thrust Washers (Standard)
3		{2855020}		1	Thrust Bearing Kit; -0.25
3		4895414		1	ROL. ENCOSTO
3		{2855021}		1	Thrust Bearing Kit; -0.5
4		{2853815}		4	Set, Main Bearings (Standard)
3		{2855022}		1	Thrust Bearing Kit; -0.75
3		{2855023}		1	Thrust Bearing Kit; -1
4		{2855016}		4	Main Bearing Kit; -0.25
4		{2855017}		4	Main Bearing Kit; -0.5
4		{2855018}		4	Main Bearing Kit; -0.75
4		{2855019}		4	Main Bearing Kit; -1
4		4895017		4	CASQUILHO VIRABREQUI
5		4899046		1	GUIA, Not Illustrated

BIELA MOTOR

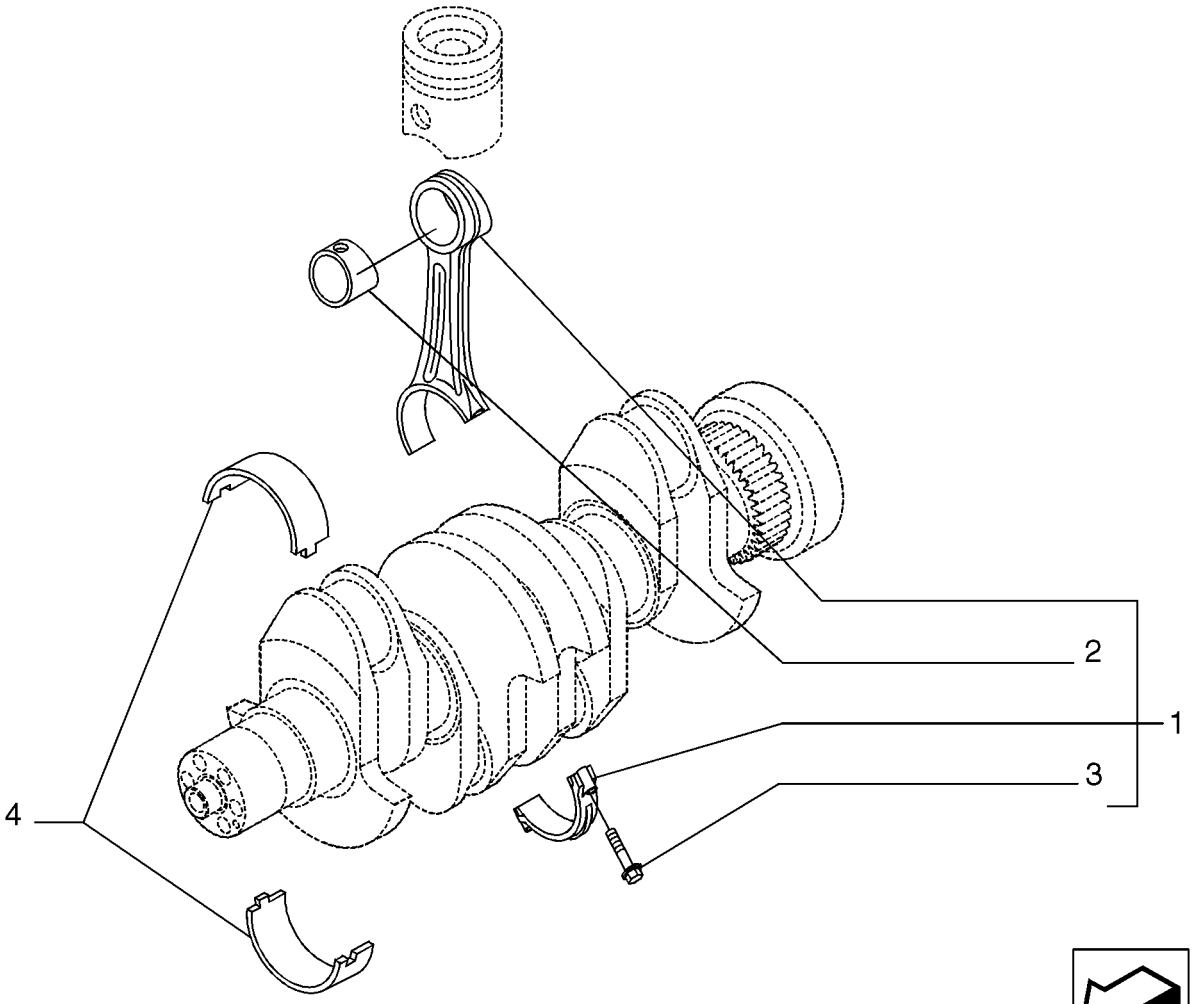

BS07N107

BIELA MOTOR

REF	FN	PART NUMBER	YR/SN	QTY	DESCRIPTION
1		2831298		4	BIELA DE PISTÃO
2		4892708		1	BUCHA
3		2831297		2	PARAFUSO
4		4892715		4	ROLAMENTO
4		{2856309}		4	Bearing, Crankshaft

PISTÂO - MOTOR

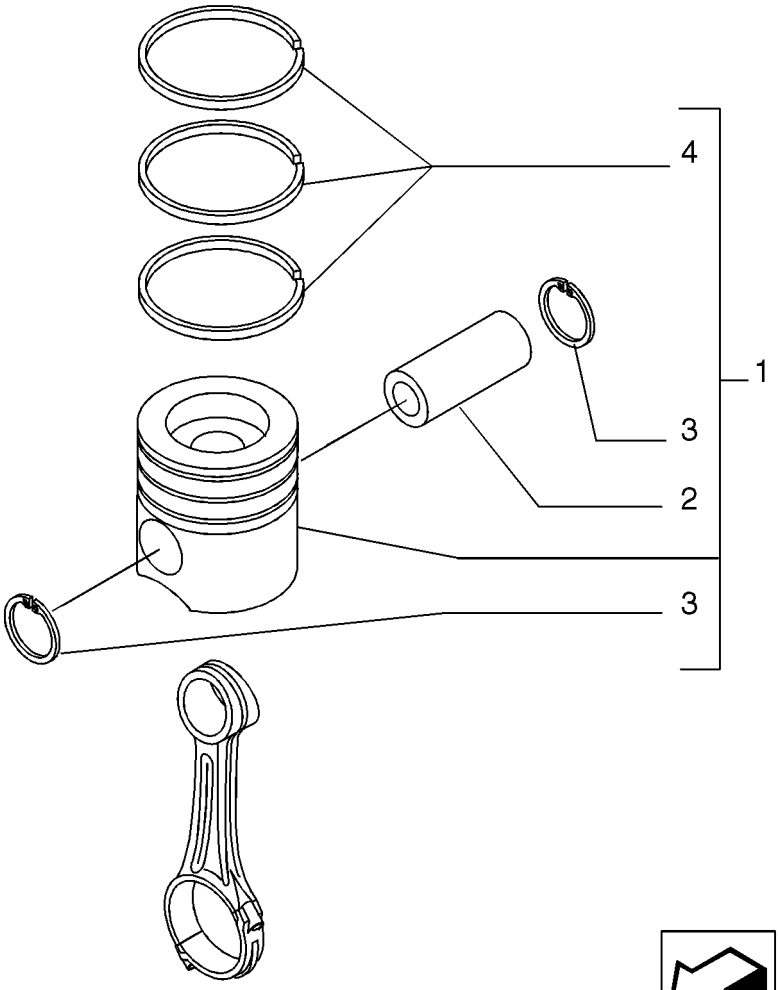

BS07N108

PISTÂO - MOTOR

REF	FN	PART NUMBER	YR/SN	QTY	DESCRIPTION
		87647549		1	JOGO DE PISTÕES, STD, Incl Piston 2855531, Top Compression Ring 2853805, Second Compression Ring 2830158, Oil Control Ring 2852037, Piston Pin 4892712, And Retainer 2854030
1		2855531		4	PISTAO COMPLETO, (Standard)
		87647550		1	JOGO DE PISTÕES, 0.4 mm Oversize, Incl Piston 2856484, Top Compression Ring 2854141, Second Compression Ring 2830159, Oil Control Ring 2853875, Piston Pin 4892712, And Retainer 2854030
2		4892712		4	PINO DE PISTÃO
		87647551		1	JOGO DE PISTÕES, 0.8 mm Oversize, Incl Piston 2856485, Top Compression Ring 2854142, Second Compression Ring 2830160, Oil Control Ring 2853876, Piston Pin 4892712, And Retainer 2854030
3		2854030		8	ANEL
3		4892713		8	ANEL, Alternate with 2854030
		87582179		1	JOGO DE ANÉIS DE PISTÃO, Ring Kit; STD; Incl. Top Cmpression Ring 2854603, Second Compression Ring 2830158, Oil Control Ring 2852037
		87582180		1	JOGO DE ANÉIS DE PISTÃO, Ring Kit; 0.4 mm Oversize; Incl. Top Cmpression Ring 2856713, Second Compression Ring 2830159, Oil Control Ring 2853875
4		2830158		1	ANEL DE PISTÃO, (Standard)
		87582181		1	JOGO DE ANÉIS DE PISTÃO, Ring Kit; 0.8 mm Oversize; Incl. Top Cmpression Ring 2856714, Second Compression Ring 2830160, Oil Control Ring 2853876
4		2852037		1	ANEL DE PISTÃO
4		2854603		1	KIT, Piston seal

VOLANTE - MOTOR

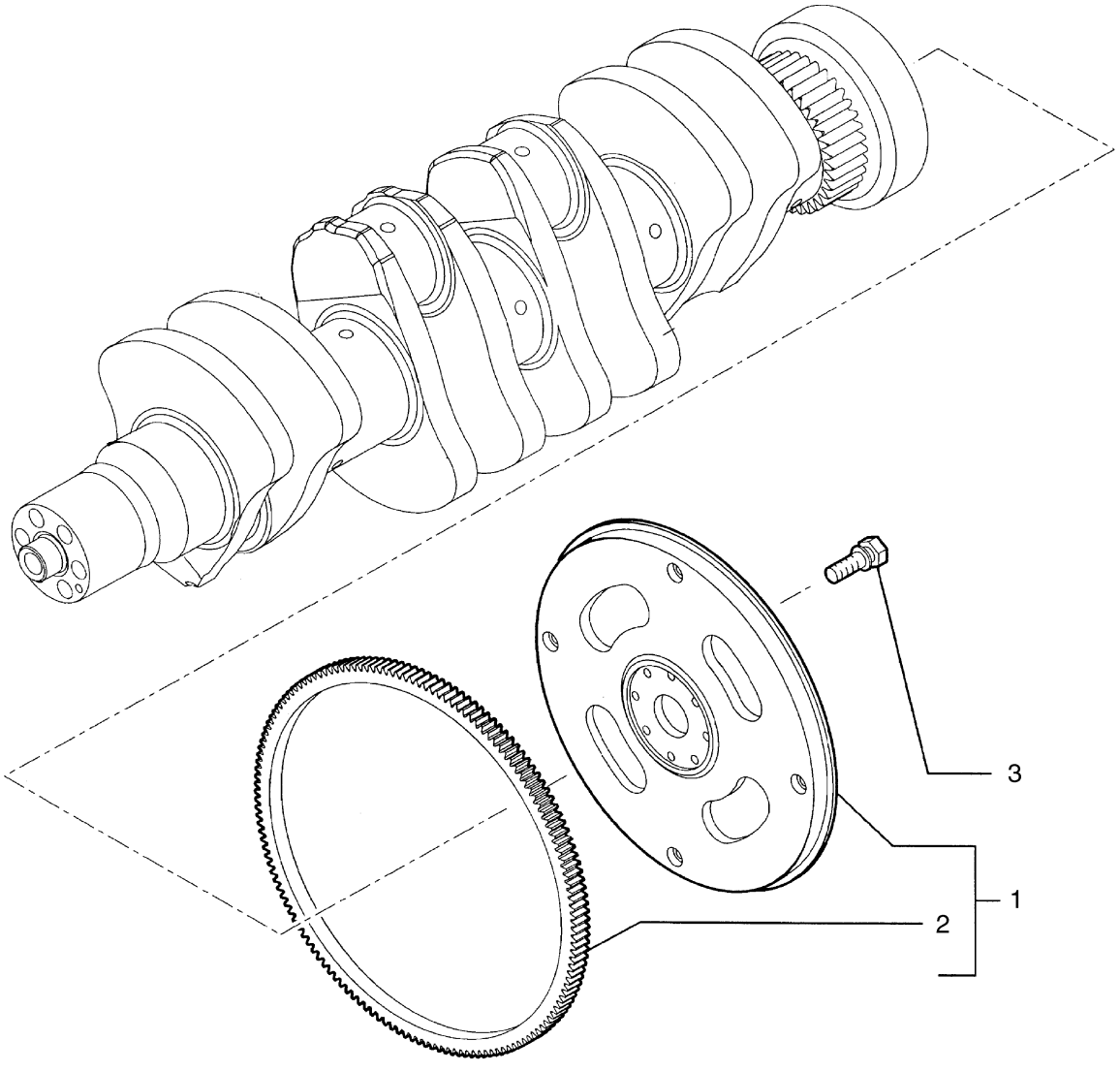

VOLANTE - MOTOR

REF	FN	PART NUMBER	YR/SN	QTY	DESCRIPTION
1		2852049		1	VOLANTE DE MOTOR, - ASSY; Incl. Ref 2
2		2852051		1	COROA DENTADA
3		4894641		8	PARAFUSO, Wash Hd, M12 x 1.25 x 31

POLIA - EIXO MOTOR

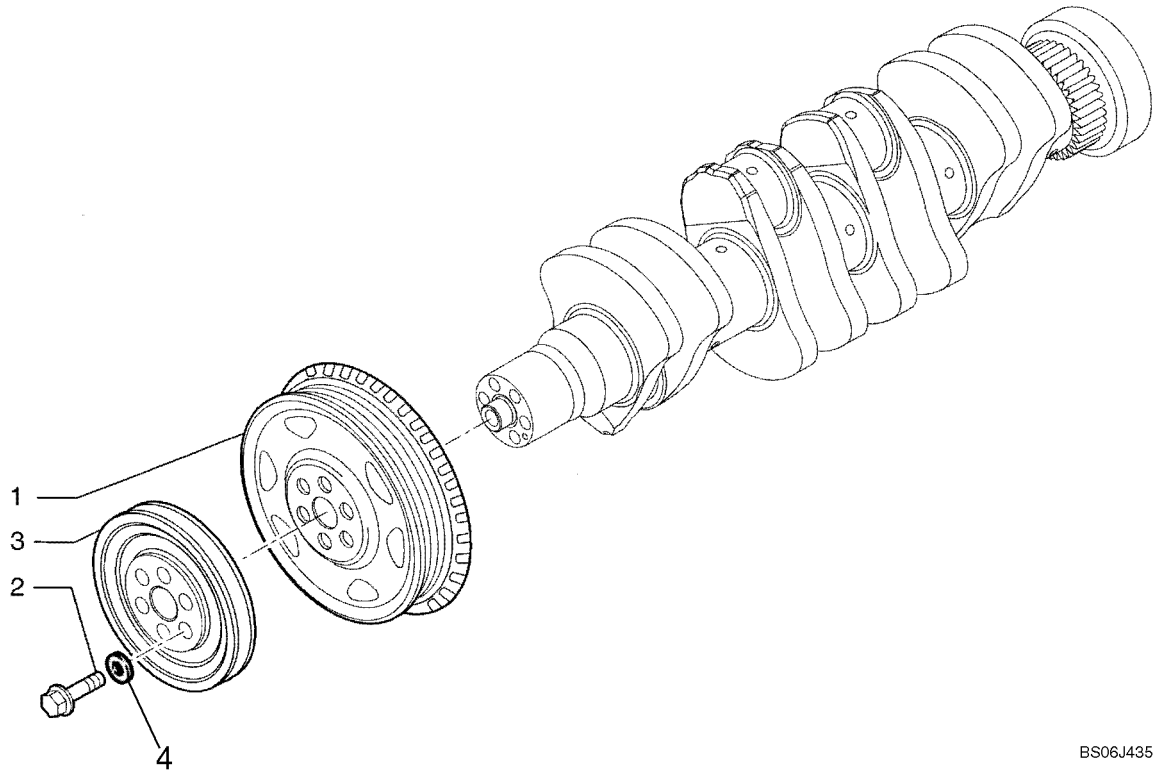

POLIA - EIXO MOTOR

REF	FN	PART NUMBER	YR/SN	QTY	DESCRIPTION
		{2855380}		1	Pulley Assembly, Incl. Ref. 1 - 3
1		4896773		1	POLIA
2		4892867		6	PARAFUSO, Torx Wash Hd, M12 x 1.25 x 78.5, Incl. 4
3		{2855381}		1	Pulley
4		NSS		6	BOLETIM INFORMATIVO, Washer

EQUILIBRADOR, ENGRENAGENS E VEIOS

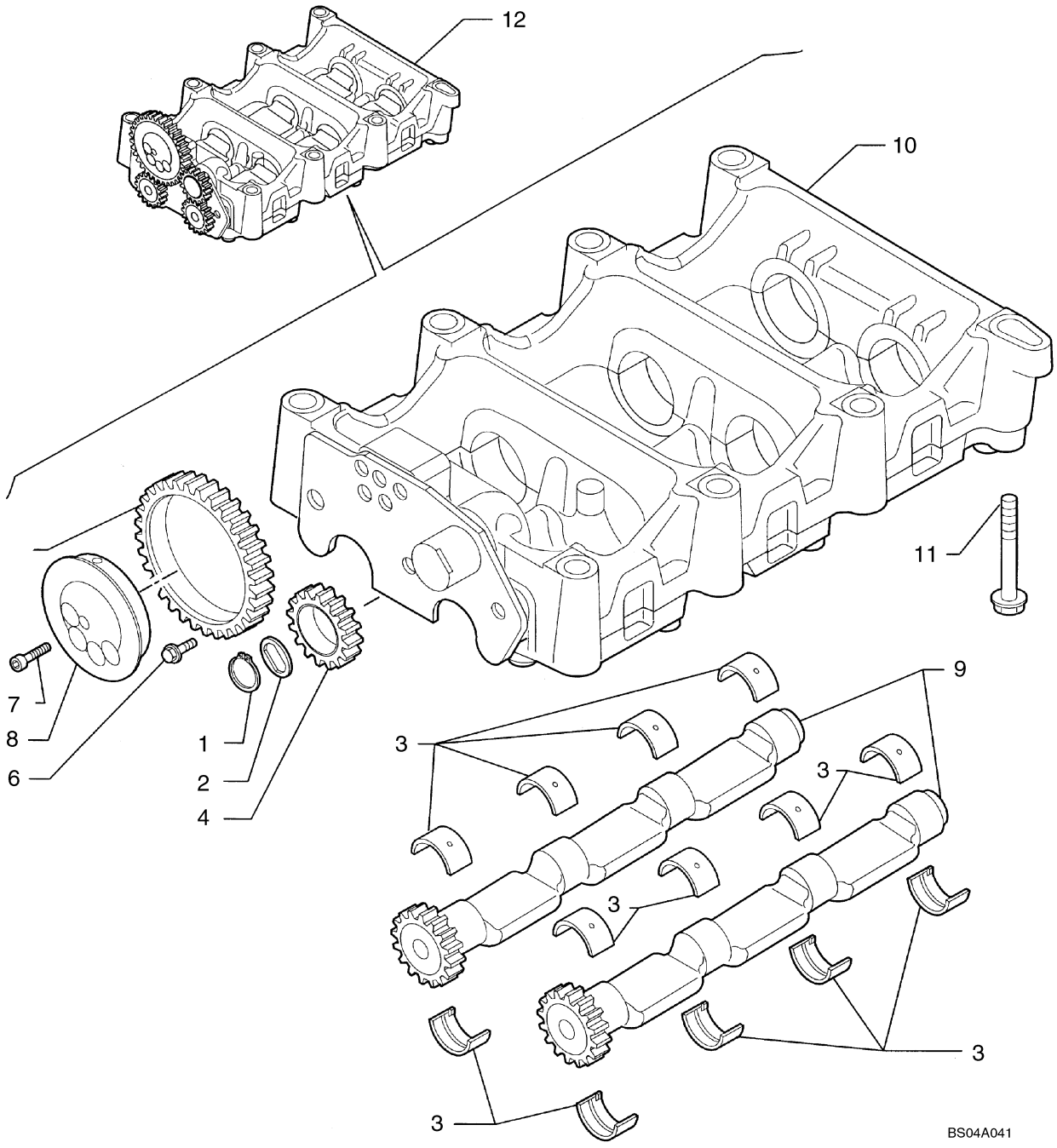

EQUILIBRADOR, ENGRENAGENS E VEIOS

REF	FN	PART NUMBER	YR/SN	QTY	DESCRIPTION
		2855743		1	BALANCIM, Assembly, Incl. Ref 1 - 10
1		4897125		1	ANEL
2		2855753		1	PLACA ENCOSTO
3		8093883		16	CONJ. MEIOS-ROLAMENT
3		2855747		16	BUCHA
4		4897048		1	ENGRENAGEM INTERMEDIÁRIA
4		2855750		1	ENGRENAGEM INTERMEDIÁRIA, Gear Assembly; Alternate Part to 4897048, 4897001
5		4896947		1	ENGRENAGEM INTERMEDIÁRIA
5		2855748		1	ENGRENAGEM INTERMEDIÁRIA, Gear Assembly; Alternate Part to 4896947
6		4895586		3	PARAFUSO, Flange, M8 x 16
7		2830433		5-4	PARAFUSO, Socket; (4) Used With 2830953 Balancer Assy
8		2831031		1	EIXO INTERMEDIÁRIO
9		2831354		2	EIXO
10		NSS		1	BOLETIM INFORMATIVO, Housing
11		4899109		6-7	PARAFUSO, Hex, M10 x 1.5 x 80, Flange
11		4897934		1	PARAFUSO, Flange, M10 x 100
14		2831305		1	GUIA
15		2855746		1	PLACA ENCOSTO
16		2830948		1	EIXO INTERMEDIÁRIO
17		4899027		2	GUIA, Ring

EIXO DE CAME

1

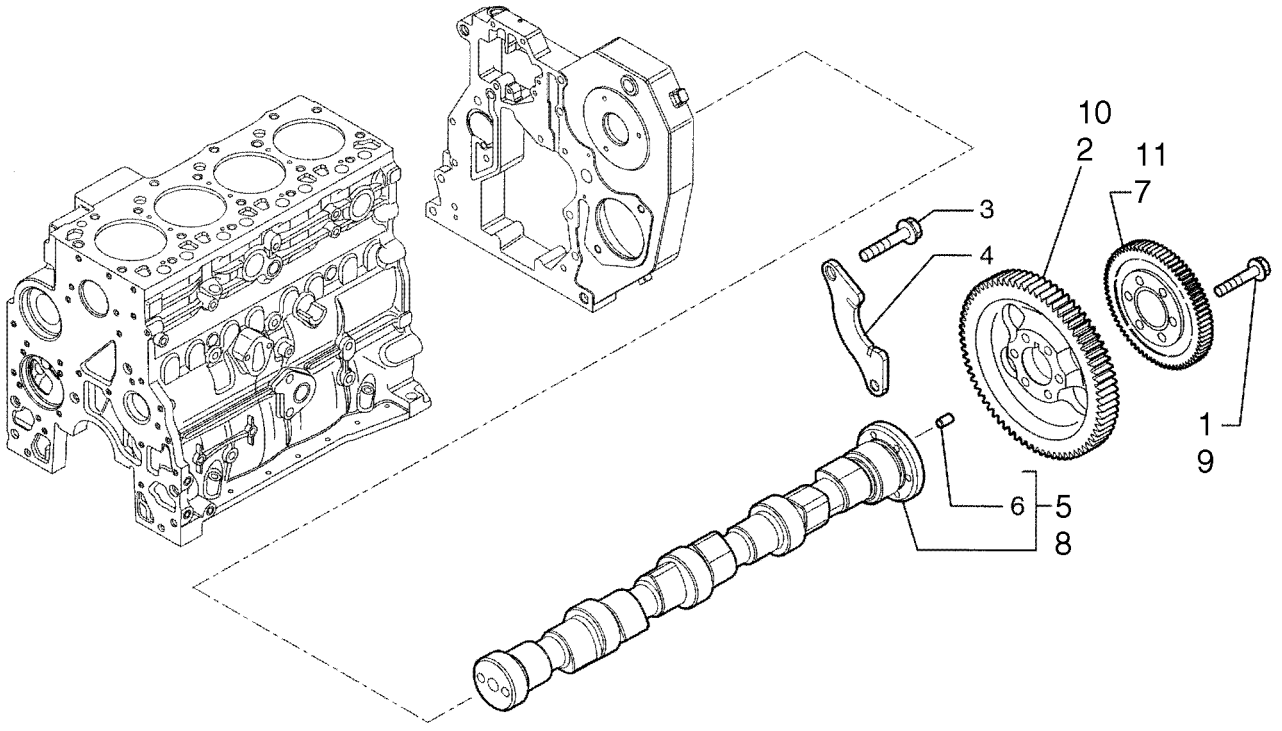

BS06H025

EIXO DE CAME

REF	FN	PART NUMBER	YR/SN	QTY	DESCRIPTION
1		4895323		6	PARAFUSO, M8 x 1.25 x 40 mm
2		2852062		1	ENGRENAGEM
3		4899068		2	PARAFUSO, Hex Flg, M8 x 1.25 x 16
4		4897457		1	SUPORTE
5		2856170		1	EIXO EXCÊNTRICO
6		4899080		1	GUIA, Pin
7		2855183		1	ENGRENAGEM, Gear

TURBOCOMPRESOR

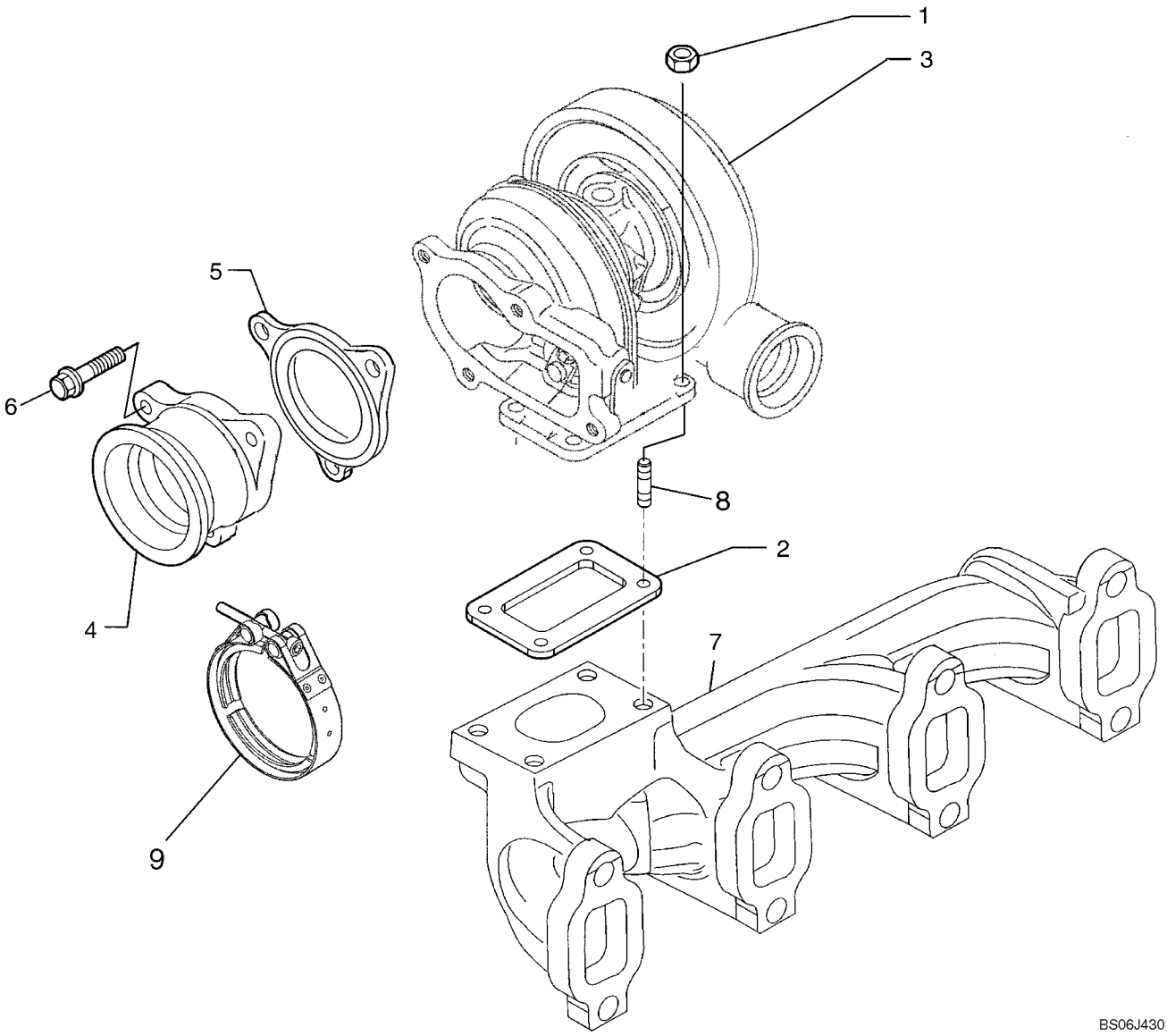

TURBOCOMPRESOR

REF	FN	PART NUMBER	YR/SN	QTY	DESCRIPTION
1		4899118		4	PORCA, Flange, M8
2		4895133		1	JUNTA
3		2852507		1	TURBOCOMPRESSOR, Assembly
4		2852510		1	TUBO RÍGIDO, Exhaust Manifold
5		2852509		1	JUNTA COLECTOR
6		4898482		3	PARAFUSO, Flg Hd, M8 x 1.25 x 30
7		REF		1	INSTRUCAO, EXHAUST MANIFOLD; See Figure 02-20
8		4899859		4	PRISIONEIRO
9		2855273		1	BRAÇADEIRA

VARETA NÍVEL ÓLEO MOTOR

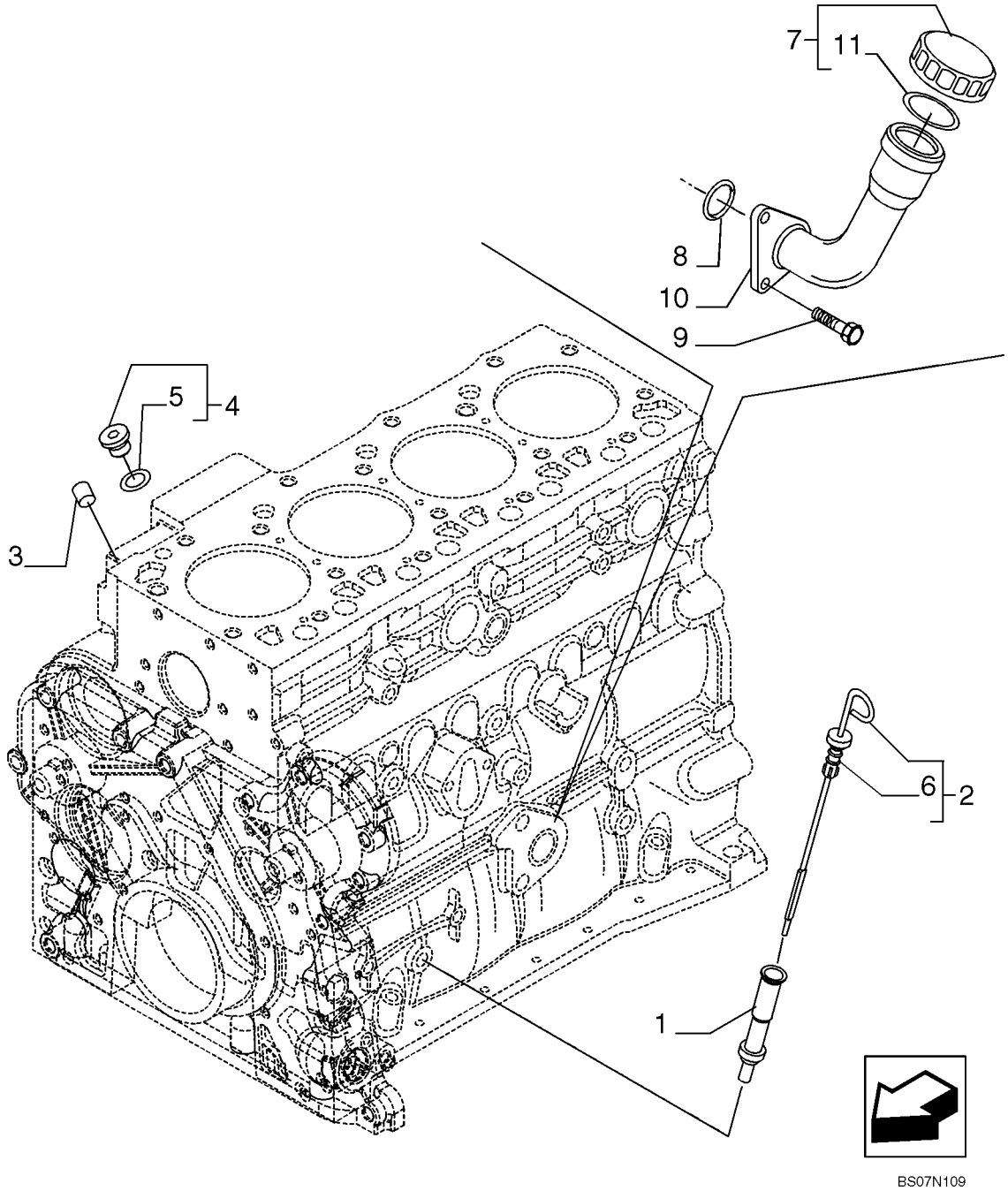

VARETA NÍVEL ÓLEO MOTOR

REF	FN	PART NUMBER	YR/SN	QTY	DESCRIPTION
1		2852122		1	TUBO, Oil Level
2		2852125		1	HASTE DE NÍVEL
3		4895406		1	BUJÃO, 9.8mm OD
4		4897330		2	BUJÃO, Incl. 5
5		4895610		1	ANEL "O"
6		2852127		1	JUNTA
7		2853410		1	BUJÃO DE ENCHIMENTO
8		2852135		1	JUNTA
9		2852134		2	PARAFUSO
10		2853407		1	GARGALO
11		2853412		1	ANEL "O"

BOMBA ÓLEO - MOTOR

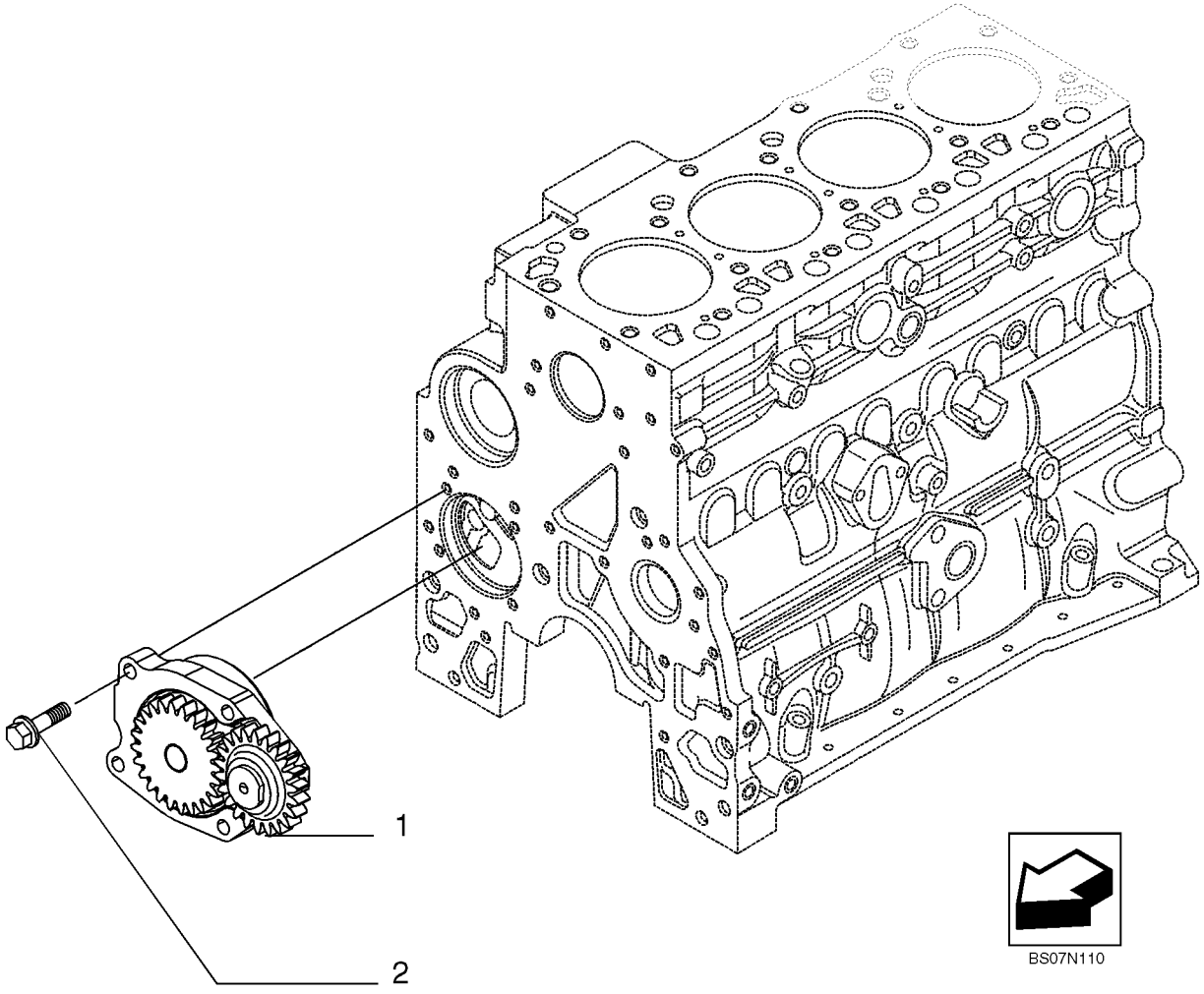

BOMBA ÓLEO - MOTOR

REF	FN	PART NUMBER	YR/SN	QTY	DESCRIPTION
1		4897480		1	BOMBA DE ÓLEO, IN ALTERNATIVE
1		2853414		1	BOMBA DE ÓLEO, IN ALTERNATIVE
2		4899090		4	PARAFUSO, Hex Flg, M8 x 1.25 x 30

FILTRO ÓLEO - MOTOR

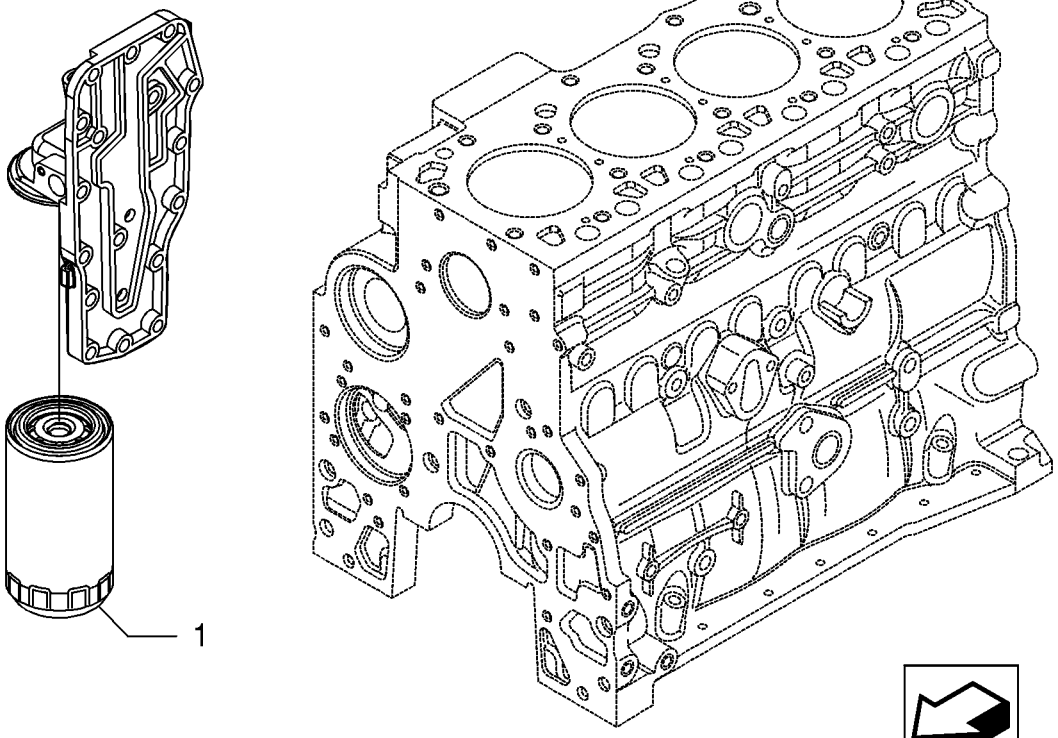

FILTRO ÓLEO - MOTOR

REF	FN	PART NUMBER	YR/SN	QTY	DESCRIPTION
1		87803261		1	FILTRO DE ÓLEO, 2/4V

TUBAGENS - OLEO MOTOR

1

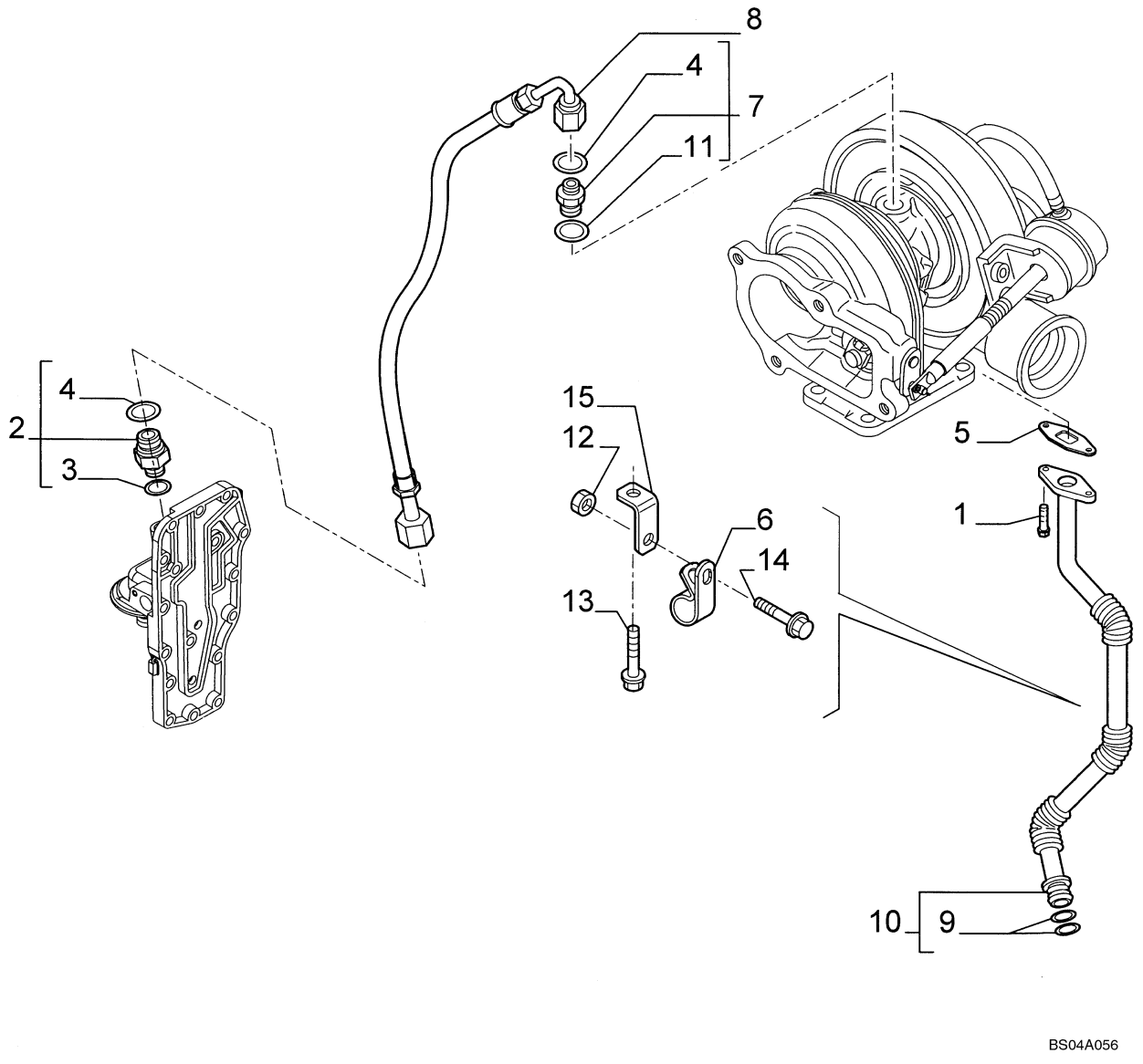

TUBAGENS - OLEO MOTOR

REF	FN	PART NUMBER	YR/SN	QTY	DESCRIPTION
1		4895164		2	PARAFUSO, Flange, M6 x 16
2		4895107		1	CONEXÃO, Incl. Ref 3, 4
3		4899107		1	ANEL "O"
4		4899108		1	ANEL "O"
5		4899467		1	JUNTA, Oil Drain
6		4899519		1	PRENDEDOR, Clamp
6		2854493		1	FIXADOR, Alternate Part To 4899519, Bracket Clamp
7		4899106		1	CONEXÃO, Incl. Ref 4, 11
8		2852195		1	MANGUEIRA HIDRAULICA
9		5135738		2	ANEL "O", -115, Cl 9, .674" ID x .103" Thk
10		2852102		1	TUBO DE INTRODUÇÃO, Tube; Incl. Ref 9
11		NSS		1	BOLETIM INFORMATIVO, Washer
12		2852197		1	PORCA, Flange, M6
13		2852101		1	PARAFUSO, Flange; M6 x 16
14		16586225		1	PARAFUSO, Flange; M8 x 16
15		2852196		1	SUPORTE

TROCADOR DE CALOR - MOTOR

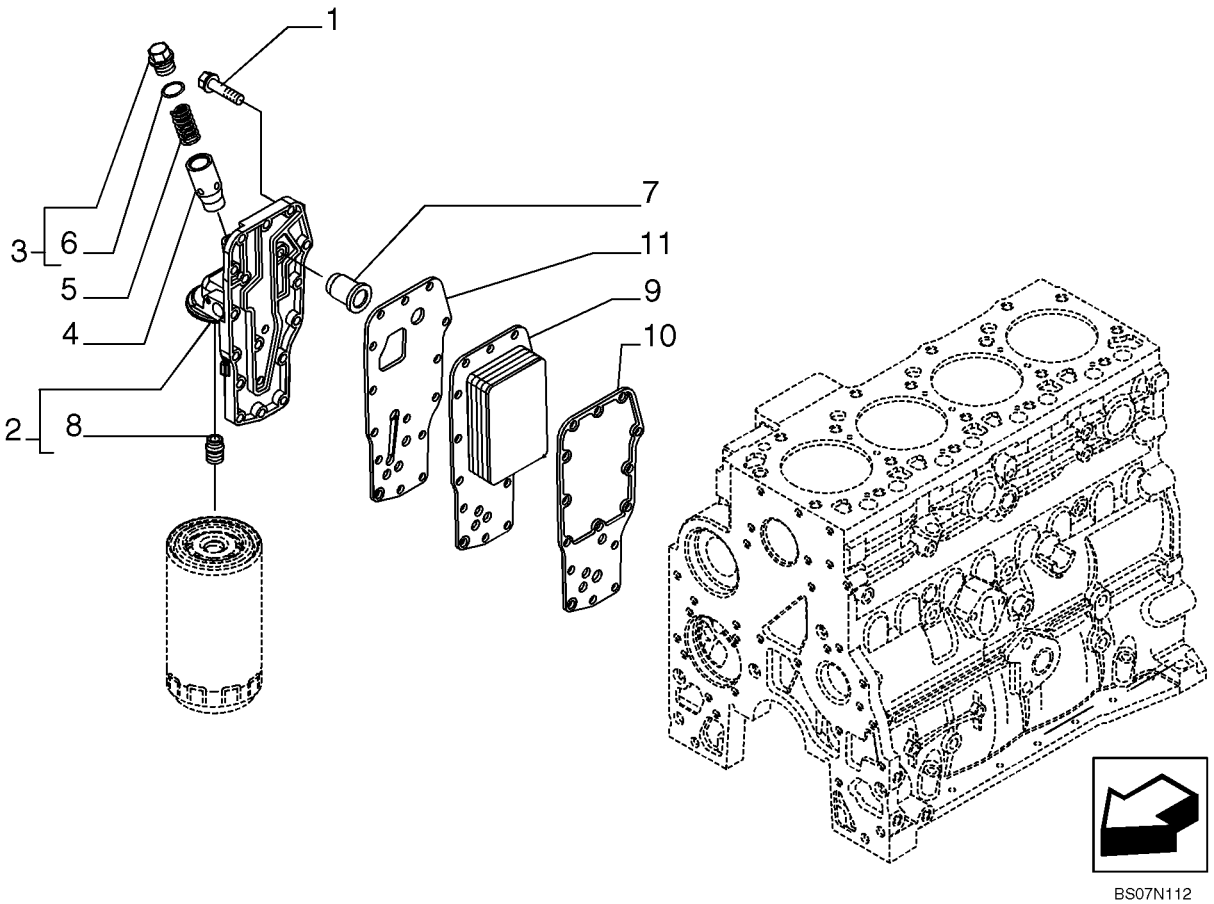

BS07N112

TROCADOR DE CALOR - MOTOR

REF	FN	PART NUMBER	YR/SN	QTY	DESCRIPTION
1		4899019		15	PARAFUSO, Hex Flg, M8 x 1.25 x 35
		2853782		1	CABEZA DE FILTRO, Incls. Refs. 2, 4, 5, 7, 8
2		4899643		1	CABEZA DE FILTRO
3		2853781		1	BUJÃO
4		4896404		1	ÊMBOLO
5		4895045		1	MOLA
6		17916280		1	JUNTA, M18.39 ID x 2.69 Thk
7		4896410		1	VÁLVULA DE SOBRE-PRESSÃO
8		4893391		1	ADAPTADOR
9		2853722		1	TROCADOR DE CALOR
10		2830559		1	JUNTA
11		4896409		1	JUNTA

BOMBA ÁGUA

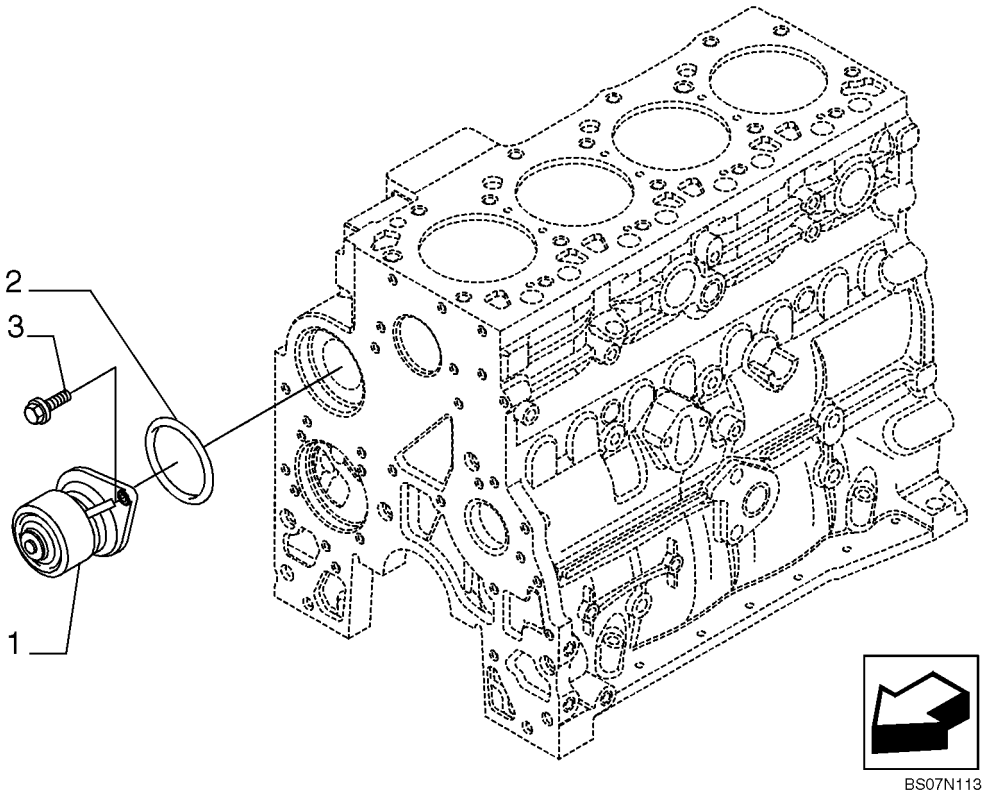

BS07N113

BOMBA ÁGUA

REF	FN	PART NUMBER	YR/SN	QTY	DESCRIPTION
1		2852114		1	BOMBA DE ÁGUA, -ASSY IN ALTERNATIVE
1		4891252		1	BOMBA DE ÁGUA, -ASSY IN ALTERNATIVE
2		2852047		1	ANEL VEDADOR
3		4899079		2	PARAFUSO, Hex Flg, M8 x 1.25 x 25

SISTEMA DE ARREFECIMENTO - MOTOR

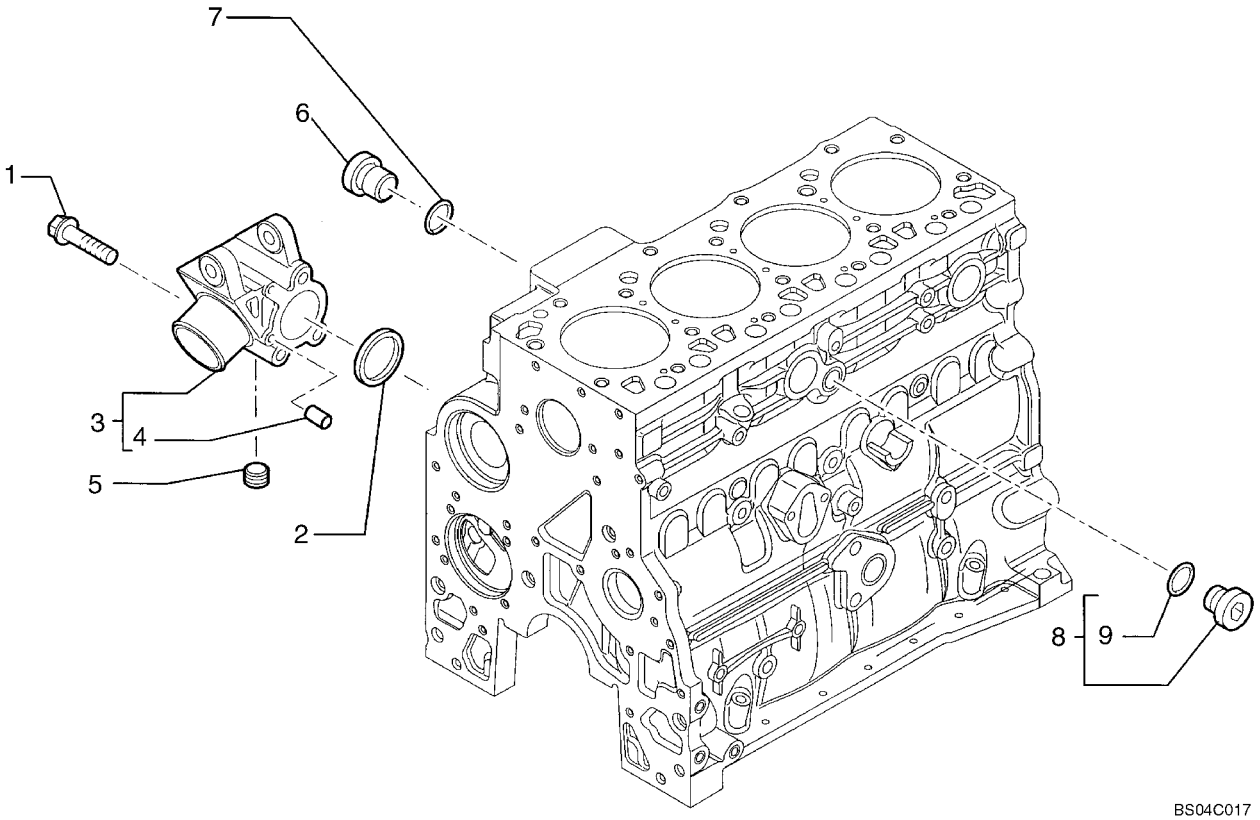

SISTEMA DE ARREFECIMENTO - MOTOR

REF	FN	PART NUMBER	YR/SN	QTY	DESCRIPTION
1		4899109		3	PARAFUSO, Hex, M10 x 1.5 x 80
2		2854072		1	ANEL "O"
3		2852145		1	SUPORTE, Incl. Ref 4
4		NSS		2	BOLETIM INFORMATIVO, Dowel
5		2852511		1	BUJÃO
		4895392		1	BUJÃO, M18; Torque Converter Oil; Incl. Ref 6, 7
6		4895394		1	BUJÃO
7		4895393		1	ANEL "O"
8		4895623		1	BUJÃO, Compressor Plumbing; Incl. Ref 9
9		4895625		1	ANEL "O"

TERMOSTATO - SISTEMA DE ARREFECIMENTO, MOTOR

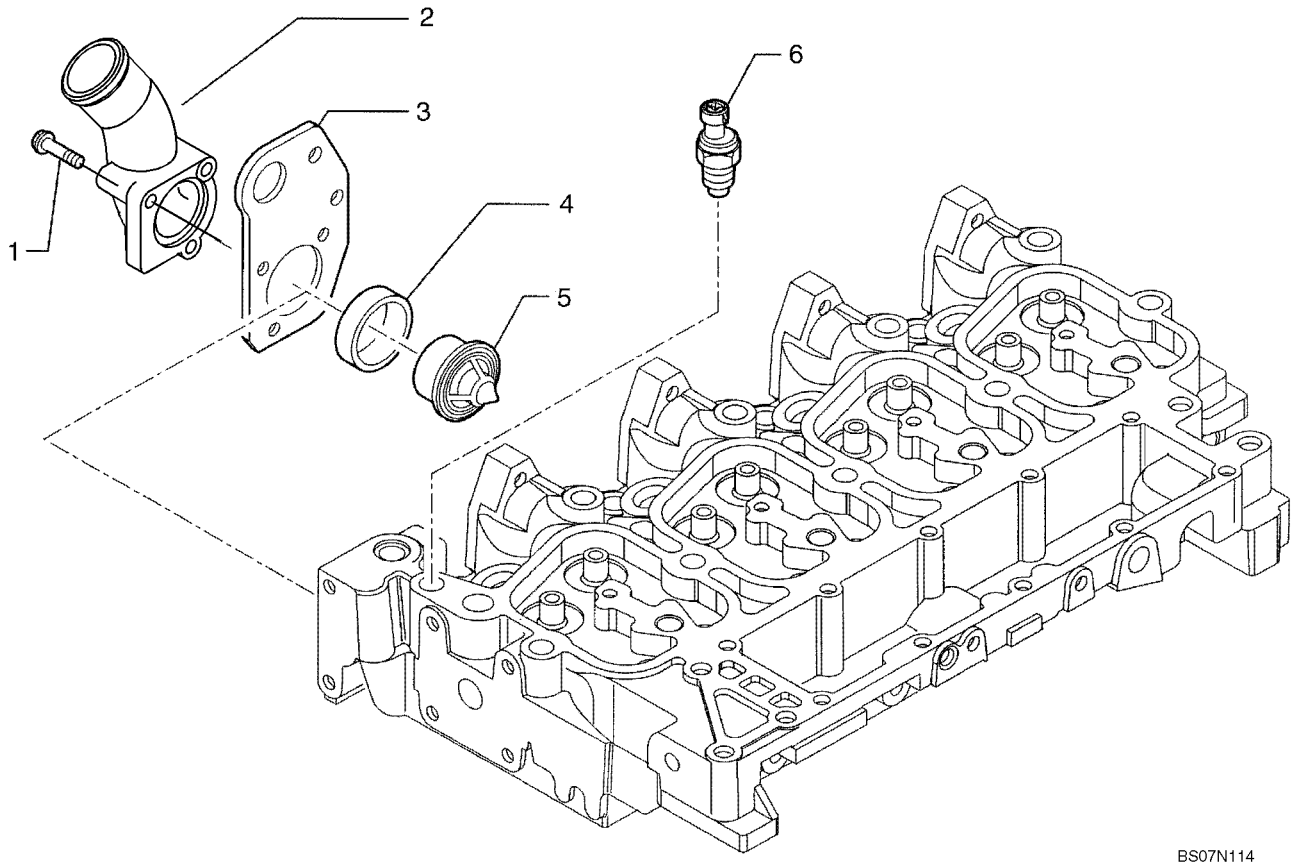

TERMOSTATO - SISTEMA DE ARREFECIMENTO, MOTOR

REF	FN	PART NUMBER	YR/SN	QTY	DESCRIPTION
1		2852151		1	PARAFUSO, Flange; M8 x 35
1		2852155		2	PARAFUSO, Flange; M8 x 80
2		2852153		1	COTOVELO, Thermostat Housing
3		2855894		1	SUPORTE
4		2853133		1	ANEL VEDADOR
5		2853135		1	TERMOSTATO, Kit
		2852473		1	JUNTA, (Part of 2853135)
6		2852157		1	INTERRUPTOR SONDA, Water; Grid Heater

BOMBA DE AGUA - CONTROLE

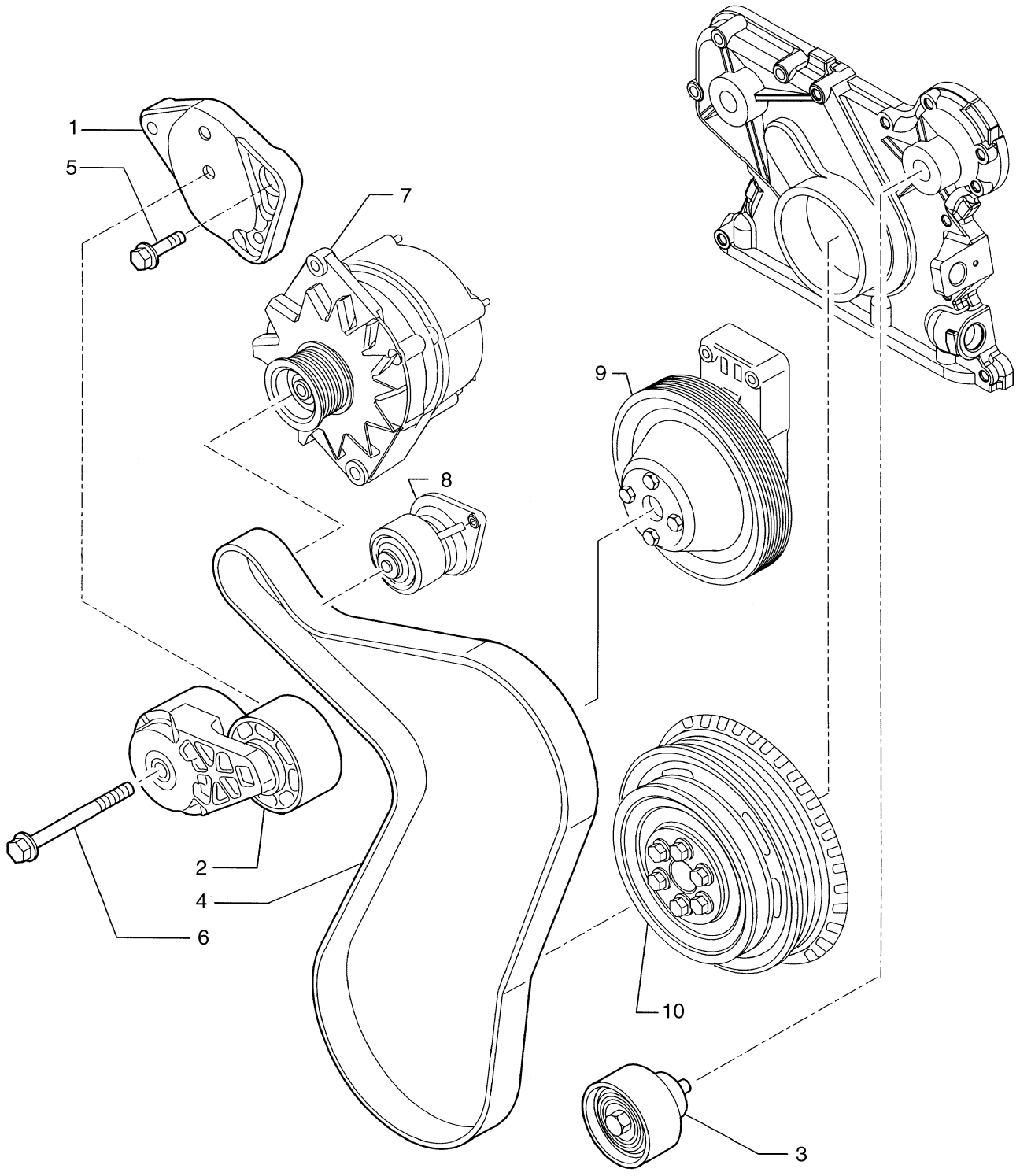

BOMBA DE AGUA - CONTROLE

REF	FN	PART NUMBER	YR/SN	QTY	DESCRIPTION
		2854611		1	POLIA, Incls. 1, 2, 3, 5 & 6
1		2852163		1	SUPORTE, Support
2		2852161		1	TENSOR DE CORREIA
2		2855622		1	TENSOR DE CORREIA, Alternate Part To 2852161
3		2852162		1	POLIA, Pulley
4		REF		1	INSTRUCAO, BELT; See Figure 02-01
5		4899079		2	PARAFUSO, Hex Flg, M8 x 1.25 x 25
6		4899109		1	PARAFUSO, Hex, M10 x 1.5 x 80
7		REF		1	INSTRUCAO, ALTERNATOR; See Figure 04-02
8		REF		1	INSTRUCAO, WATER PUMP; See Figure 02-35
9		REF		1	INSTRUCAO, FAN DRIVE; See Figure 02-39
10		REF		1	INSTRUCAO, CRANKSHAFT PULLEY; See Figure 02-25

TRACÇÃO DA VENTOINHA

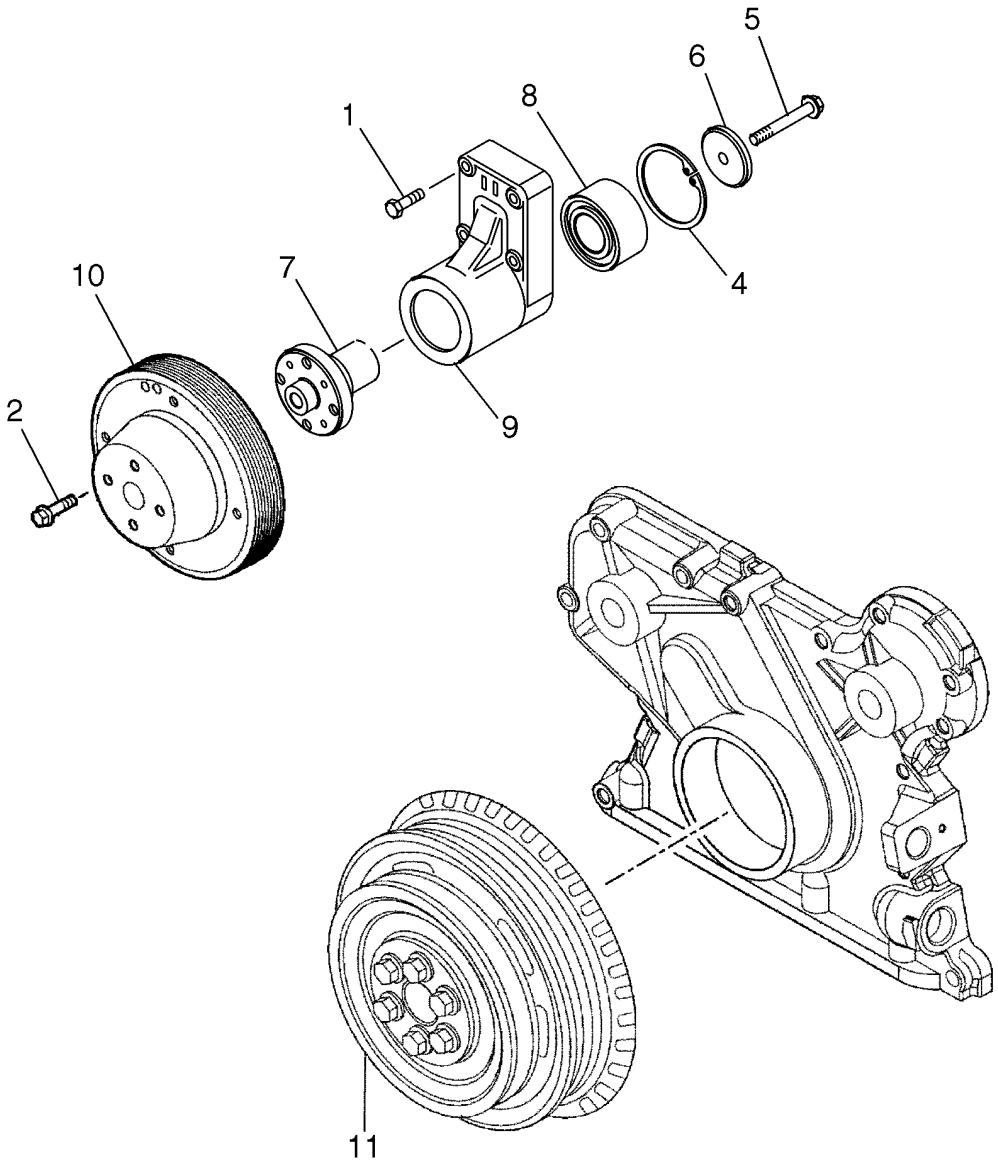

BS07N115

TRACÇÃO DA VENTOINHA

REF	FN	PART NUMBER	YR/SN	QTY	DESCRIPTION
1		4899053		4	PARAFUSO, Hex Flg, M8 x 45
2		4895291		4	PARAFUSO, Hex Flg, M10 x 1.5 x 20
3		2852170		1	SUPORTE, Incls. Refs. 4 - 9
4		2852171		1	ANEL
5		2852172		1	PARAFUSO
6		4892732		1	ROLAMENTO
7		4892426		1	CUBO
8		4890732		1	PRENDEDOR, Hub
9		NSS		1	BOLETIM INFORMATIVO, Support
10		4895301		1	POLIA
11		REF		1	INSTRUCAO, CRANKSHAFT PULLEY; See Figure 02-25

MOTOR - GANCHO DE ELEVAÇÃO

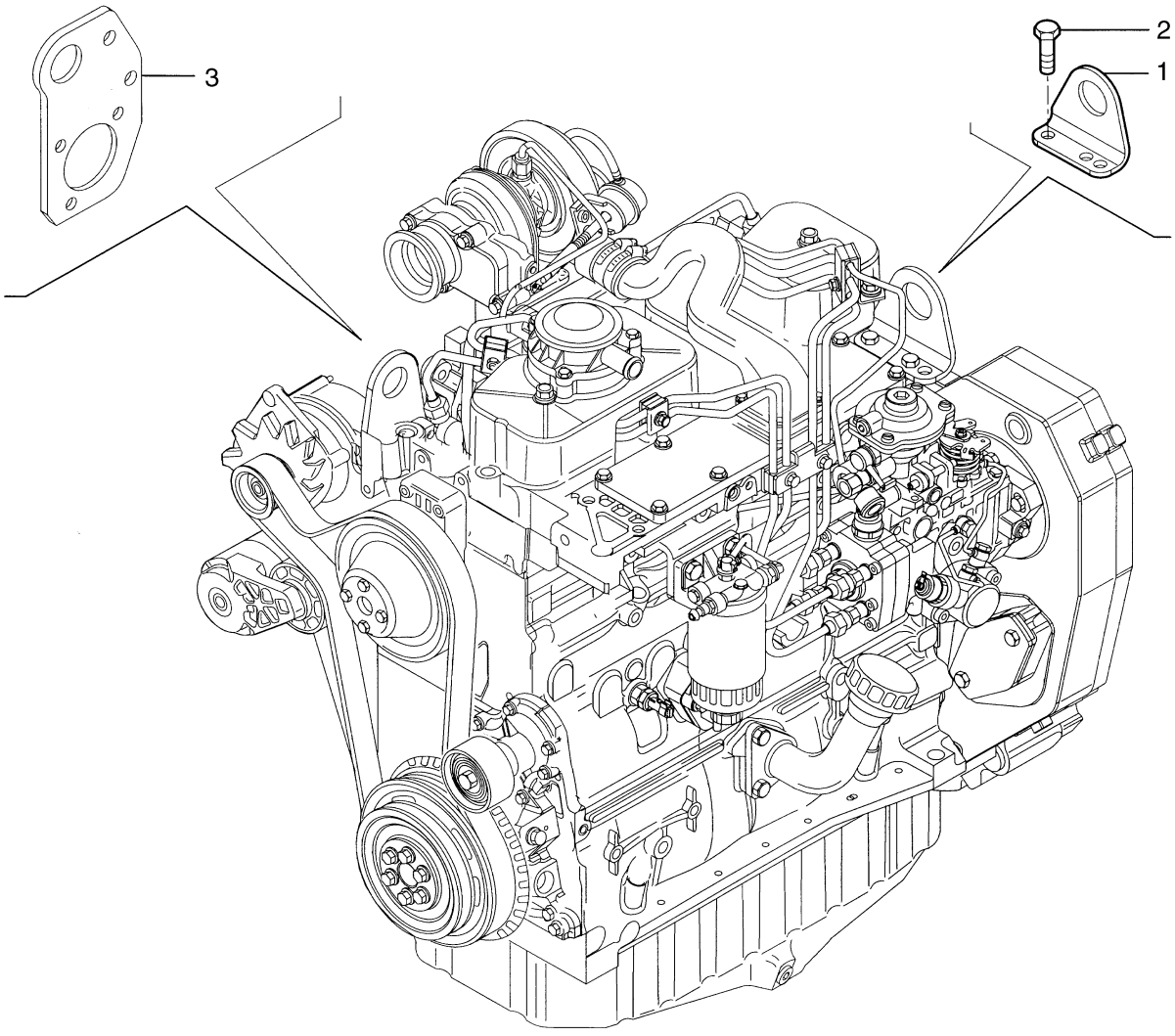

BS04A064

MOTOR - GANCHO DE ELEVAÇÃO

REF	FN	PART NUMBER	YR/SN	QTY	DESCRIPTION
1		2852183		1	SUPORTE
2		4899073		2	PARAFUSO, Hex Flg, M12 x 1.75 x 30
3		2855894		1	SUPORTE, Lift Hook; See Figure 02-37

ALTERNADOR

1

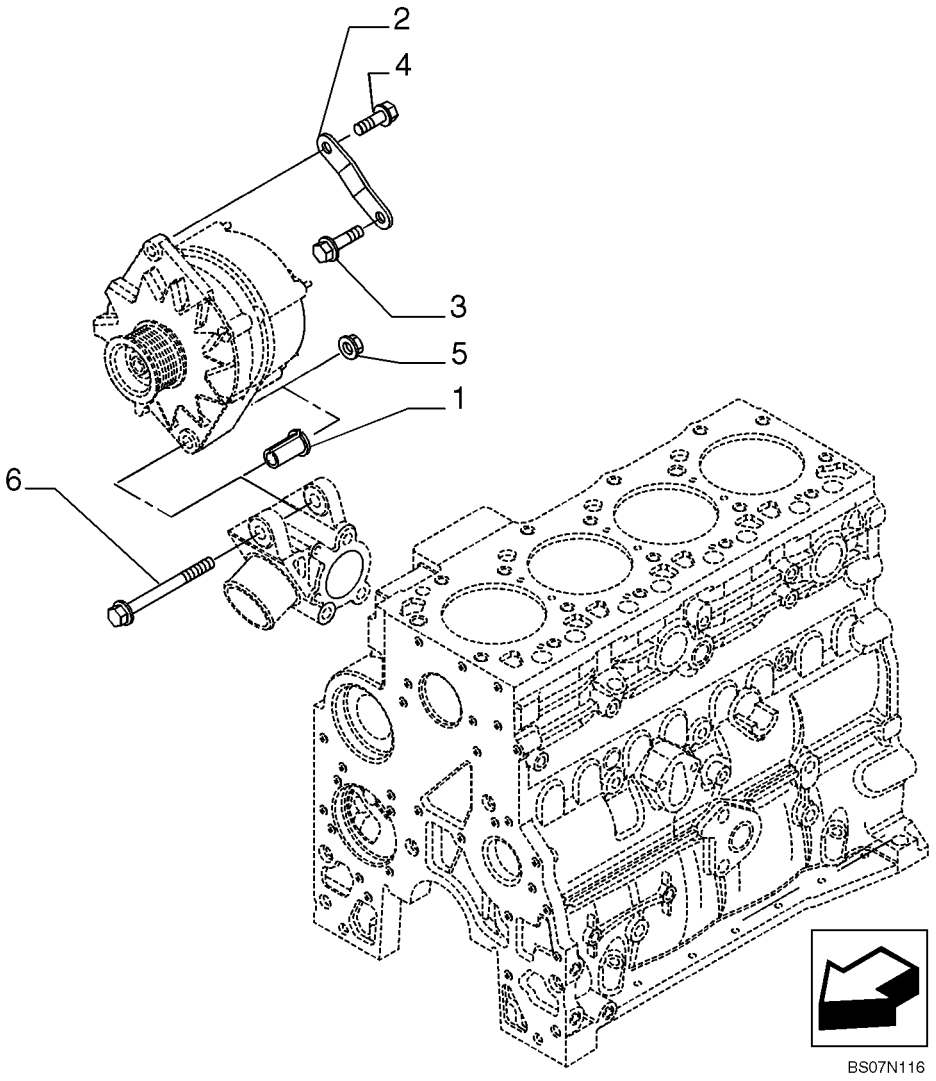

ALTERNADOR

REF	FN	PART NUMBER	YR/SN	QTY	DESCRIPTION
1		2852181		1	ESPAÇADOR
2		2852180		1	SUPORTE
3		4895291		1	PARAFUSO, Hex Flg, M10 x 1.5 x 20
4		4899031		1	PARAFUSO, Hex Flg, M8 x 1.25 x 25
5		4895166		1	PORCA, M10 x 1.5
6		4895538		1	PARAFUSO

SECTION INDEX
Sistema de Combustível

03-01		LINHAS DE COMBUSTÍVEL, DEPÓSITO
03-01A	01	FILTRO SEPARADOR DE ÁGUA
03-01B	01	FILTRO SEPARADOR DE ÁGUA
03-02		CONTROLES - ACELERADOR DE MÃO
03-03		CONTROLES - ACELERADOR, PEDAL
03-04		BOMBA DE INYECCION
03-05		SISTEMA DE INJEÇÃO DE COMBUSTÍVEL
03-06		SISTEMA DE INJEÇÃO DE COMBUSTÍVEL
03-07		GRUPO INJECÇÂO - TUBAGENS
03-08		FILTRO DE COMBUSTÍVEL
03-09		BOMBA, COMBUSTÍVEL
03-10		TUBAGENS - COMBUSTÍVEL
03-11		SISTEMA DE INJEÇÃO DE COMBUSTÍVEL

LINHAS DE COMBUSTÍVEL, DEPÓSITO

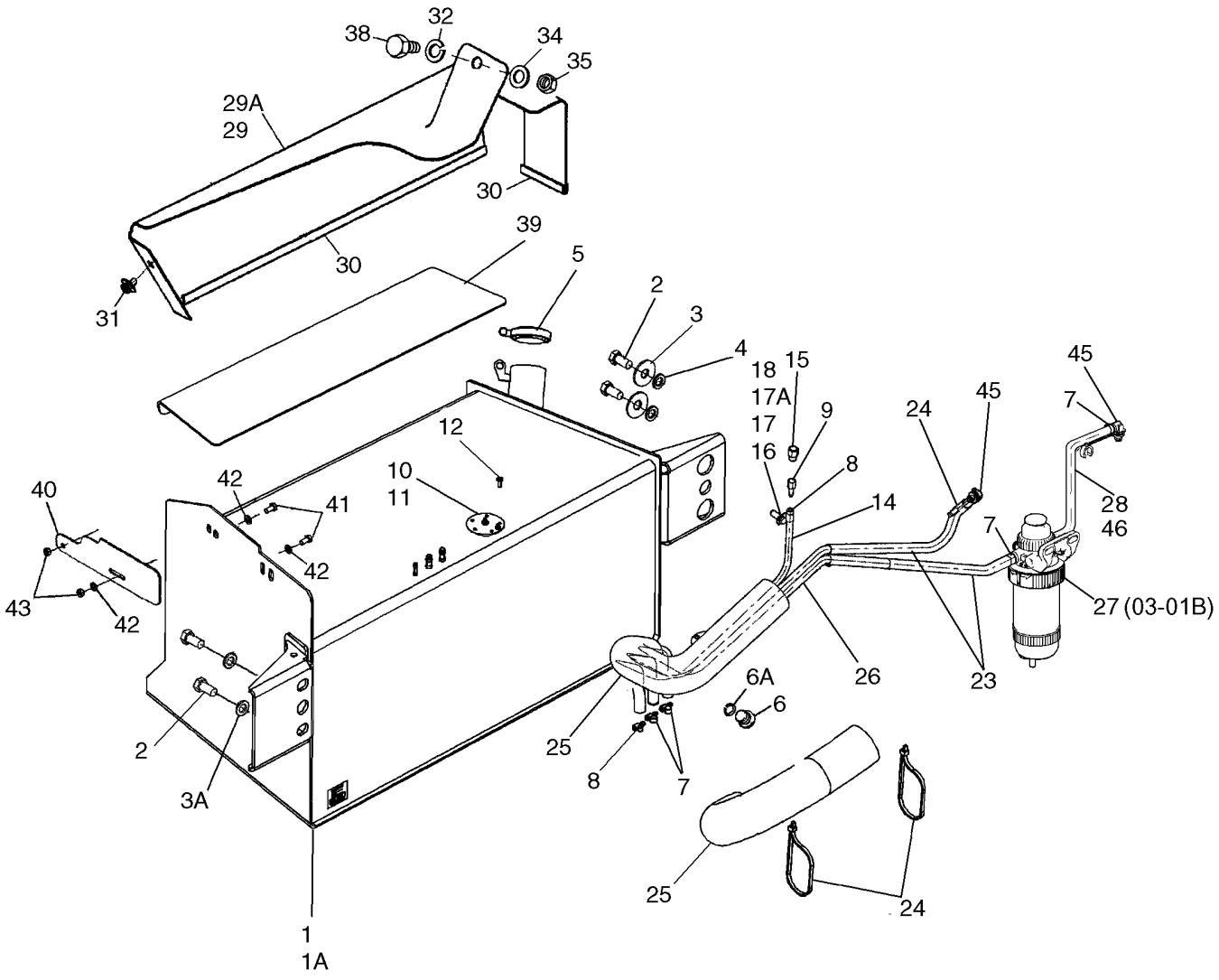

LINHAS DE COMBUSTÍVEL, DEPÓSITO

REF	FN	PART NUMBER	YR/SN	QTY	DESCRIPTION
1		87429310		1	RESERVATÓRIO COMBUSTÍVEL, 31 gal; Incl. Ref 6; With Welded Fuel Sender Tubes; Includes Left Hand Steps, Mounts to Left Hand Side of Chassis
1A		87429314		1	RESERVATÓRIO COMBUSTÍVEL, 40 gal; Incl. Ref 6; Optional; With Welded Fuel Sender Tubes; Includes Left Hand Steps, Mounts to Left Hand Side of Chassis; If Used
2		627-20060		4	PARAFUSO, Hex, M20 x 60, 10.9
3		302358A1		2	ARRUELA PLANA
3A		896-11020		2	ARRUELA PLANA, M20 x 37.5 x 4, HT
4		185926A1		2	ESPAÇADOR, 21 ID x 40 OD x 6.6 mm thk
5		87335469		1	TAMPAO C/CHIAVE
6		86625138		1	BUJÃO, Hex Soc, 7/8"-14 ORB, Drain, Includes Ref. 6A; Included with Ref 1, 1A
6A		237-6010		1	ANEL "O", 10-1, 90 Duro, .755" ID x .097" Thk
7		214-1706		6	BRACADEIRA MANGUEIRA, #6, 0.44/0.78 Type M Worm
8		214-1704		2	BRACADEIRA MANGUEIRA, #4, 0.25/0.62 Type M Worm
9		217-117		1	CONEXAO, 1/4" Hose x 1/4" NPTF, Fem, Barbed, Brass
10		86989676		1	TRANSMISSOR, Fuel Level, 31 Gallon Tank, Without Tubes, Includes Seal and Grounding Hardware, If Used
11		87408480		1	TRANSMISSOR, Fuel Level, 40 Gallon Tank, Without Tubes, Includes Seal and Grounding Hardware, If Used
12		87693492		5	PARAFUSO
14		87656146		1	MANGUEIRA, 880 mm (34-5/8 in), Vent
15		130047A1		1	RESPIRO CONJUNTO, Vent
16		515-23127		1	PRENDEDOR, 1/2", Insul, 3/8" Bolt
17		614-8030		1	PARAFUSO, Hex, M8 x 30, 8.8
17A		892-11008		1	ARRUELA-TRAVA, M8
18		87417383		1	ROSCA POSTIÇA, M8 Nut
23		191704A1		2	TUBO ISOLANTE

LINHAS DE COMBUSTÍVEL, DEPÓSITO

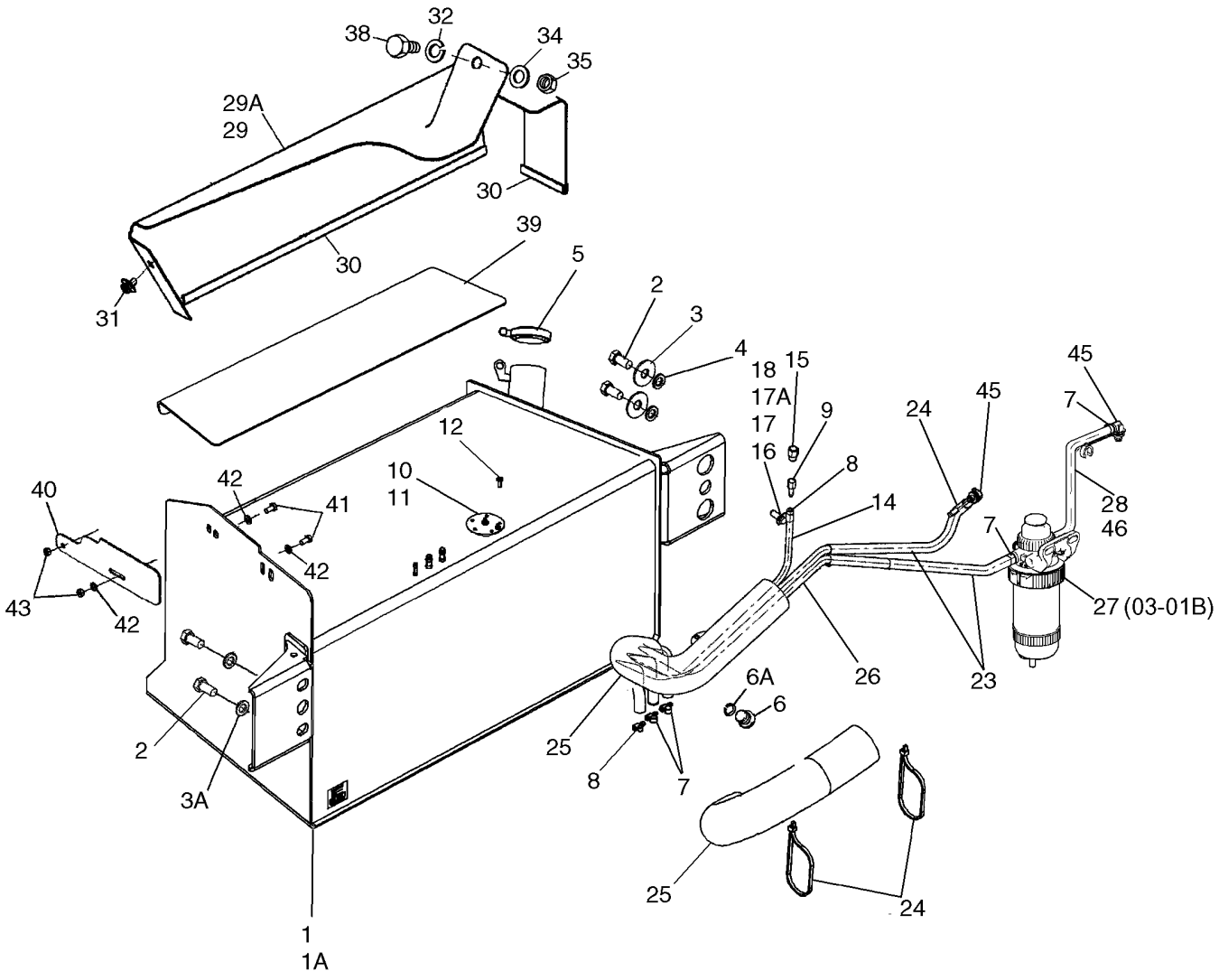

LINHAS DE COMBUSTÍVEL, DEPÓSITO

REF	FN	PART NUMBER	YR/SN	QTY	DESCRIPTION
24		L18337		6	TIRA DE CABO, 9.95"-12.1" lg
25		87656501		1	PROTETOR DE MANGUEIR, 540 mm
26		87658696		1	MANGUEIRA, 1350 mm (53-1/8 in); Inlet and Return
27		87494328		1	FILTRO, Inline
28		87739247		1	MANGUEIRA, 375 mm (24-3/4 in)
29		189602A3		1	TAMPA, Mounted Above Fuel Reservoir; Models With Two Spool Loader Valve
29A		188009A3		1	TAMPA, Mounted Above Fuel Reservoir, Models With Three Spool Loader Valve
30		191046A1		1	TIRA ORNAMENTAL, Trim, 650 mm (25-5/8 in), Cut From A165860; Apply 65 mm (2-9/16 in) of Trim to Front Lower Edge and 575 mm (22-11/16 in) of Trim to Outside Lower Edge of Cover
31		307577A1		1	PARAFUSO, Special, M8 x 20
32		892-11010		1	ARRUELA-TRAVA, M10
34		895-11010		1	ARRUELA PLANA, M10 x 20 x 2
35		829-1410		1	PORCA, M10, Cl 10
38		814-10045		1	PARAFUSO, Hex, M10 x 45, 8.8, Models with Three Spool Loader Valve
38		614-10020		1	PARAFUSO, Hex, M10 x 20, 8.8, Full Thd, Models with Two Spool Loader Valve
39		87679228		1	FAIXA ANTI-DERRAPANTE
40		397548A4		1	PLACA, Mud
41		614-10020		2	PARAFUSO, Hex, M10 x 20, 8.8, Full Thd
42		895-11010		3	ARRUELA PLANA, M10 x 20 x 2
43		829-1410		2	PORCA, M10, Cl 10
45		87414560		3	CONEXAO
46		87498489		1	PROTETOR DE MANGUEIR, 325 mm

03-01A	01	p1	07/08

FILTRO SEPARADOR DE ÁGUA

2

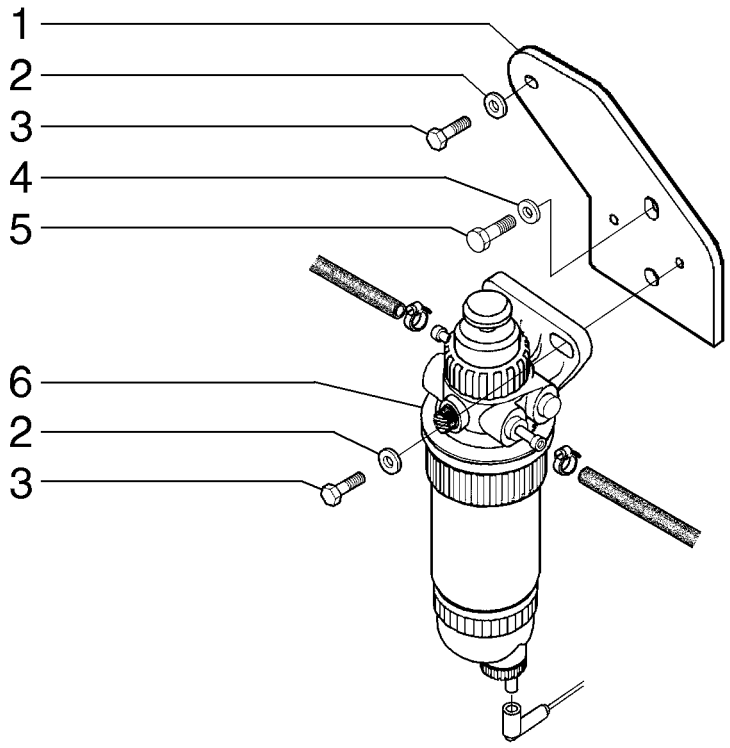

FILTRO SEPARADOR DE ÁGUA

REF	FN	PART NUMBER	YR/SN	QTY	DESCRIPTION
1		84140098		1	SUPORTE
2		895-15008		3	ARRUELA PLANA, M8 x 20 x 1.6
3		614-8025		3	PARAFUSO, Hex, M8 x 25, 8.8
4		895-15012		2	ARRUELA PLANA, M12 x 28 x 2.5
5		614-12025		2	PARAFUSO, Hex, M12 x 25, 8.8
6		87494328		1	FILTRO

03-01B	01	p1	07/08

FILTRO SEPARADOR DE ÁGUA

2

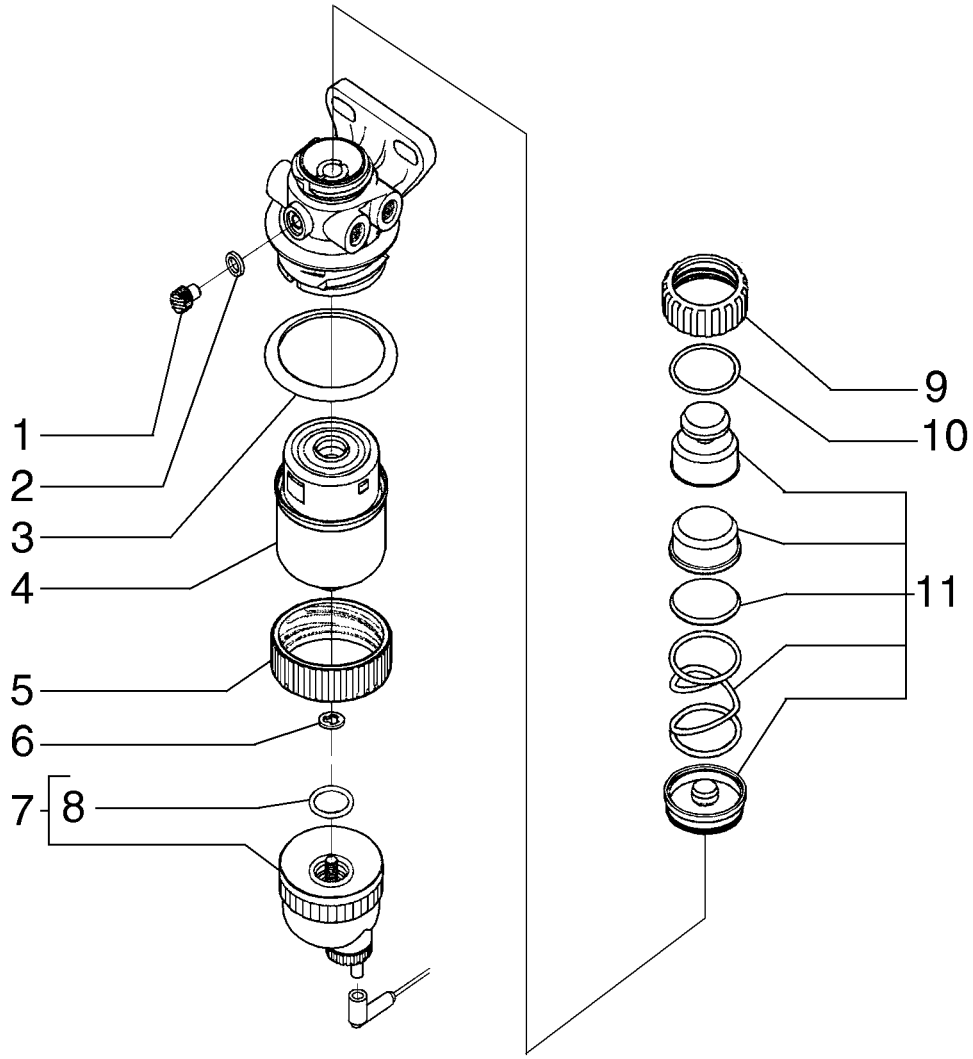

FILTRO SEPARADOR DE ÁGUA

REF	FN	PART NUMBER	YR/SN	QTY	DESCRIPTION
1		87840178		1	BUJÃO
2		87840177		1	ANEL "O"
3		87840171		1	ANEL DE VEDACAO
4		87803445		1	FILTRO DE COMBUSTÍVEL
5		87840170		1	ANEL-ELÁSTICO
6		87612469		1	ANEL DE VEDACAO
7		87801005		1	KIT
8		87612471		1	ANEL DE VEDACAO
9		87840173		1	PRENDEDOR
10		87840174		1	ANEL "O"
11		87612472		1	KIT

CONTROLES - ACELERADOR DE MÃO

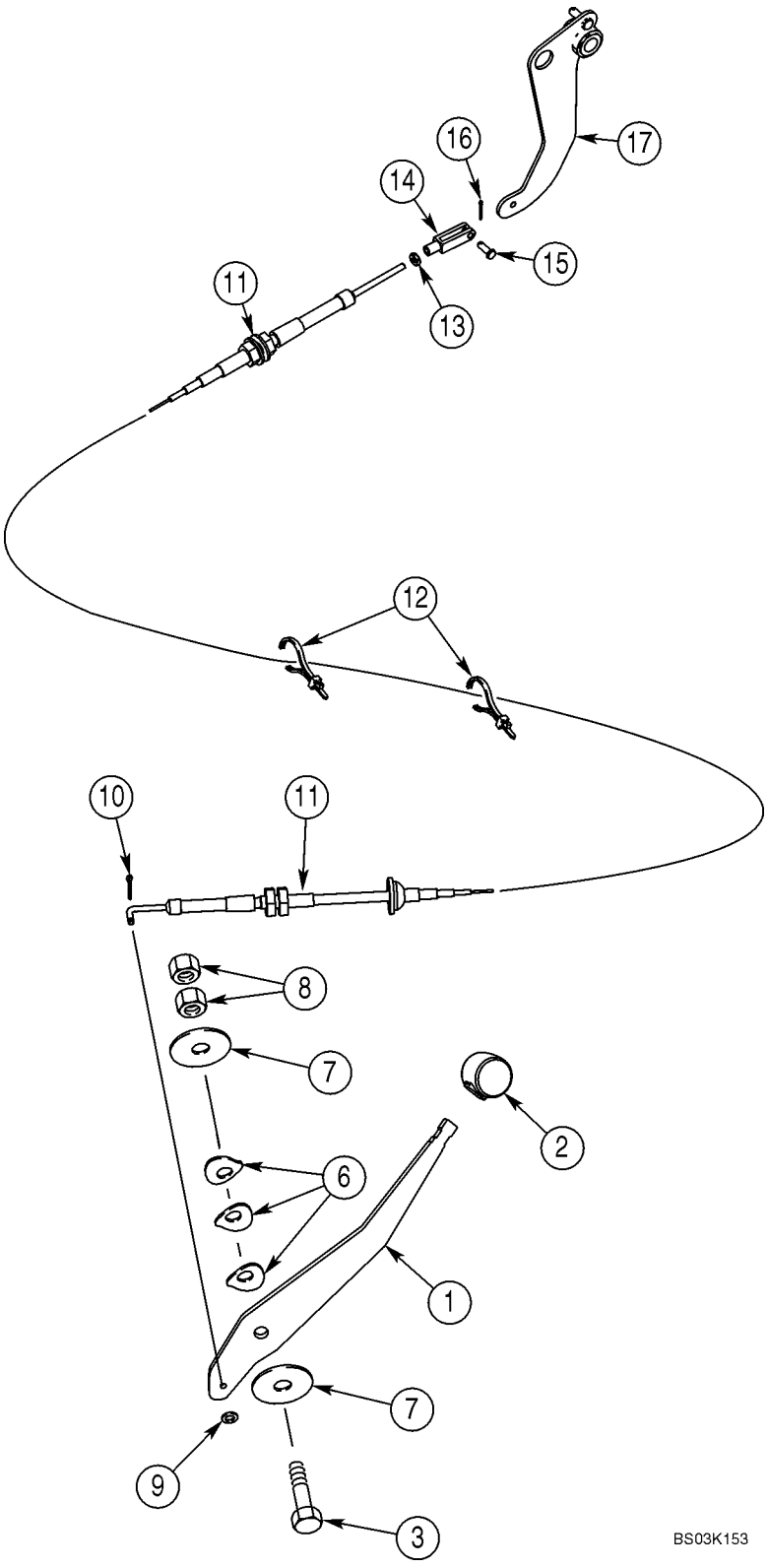

CONTROLES - ACELERADOR DE MÃO

REF	FN	PART NUMBER	YR/SN	QTY	DESCRIPTION
1		395189A2		1	ALAVANCA
2		A177435		1	MANOPLA ESFERICA, Lever
3		514-847		1	PARAFUSO, Hex, M12 x 1.25 x 50, 8.8
6		D148962		3	ARRUELA PLANA
7		496-81018		2	ARRUELA PLANA, 33/64 x 2 x 1/8
8		825-11412		2	PORCA, M12 x 1.25, Cl 8
9		495-31022		1	ARRUELA PLANA, #10
10		432-48		1	GRAMPO, 1/16" x 1/2"
11		87340753		1	CABO
12		L18337		4	TIRA DE CABO, 9.95"-12.1" lg, Nylon, Retaining
13		225-14210		1	PORCA, #10-32
14		213-123		1	BRACADEIRA, #10-32 x 1 9/16"
15		427-3058		1	CUPILHA, 3/16" x .580"
16		432-48		1	GRAMPO, 1/16" x 1/2"
17		378957A3		1	ALAVANCA CONJUNTO

CONTROLES - ACELERADOR, PEDAL

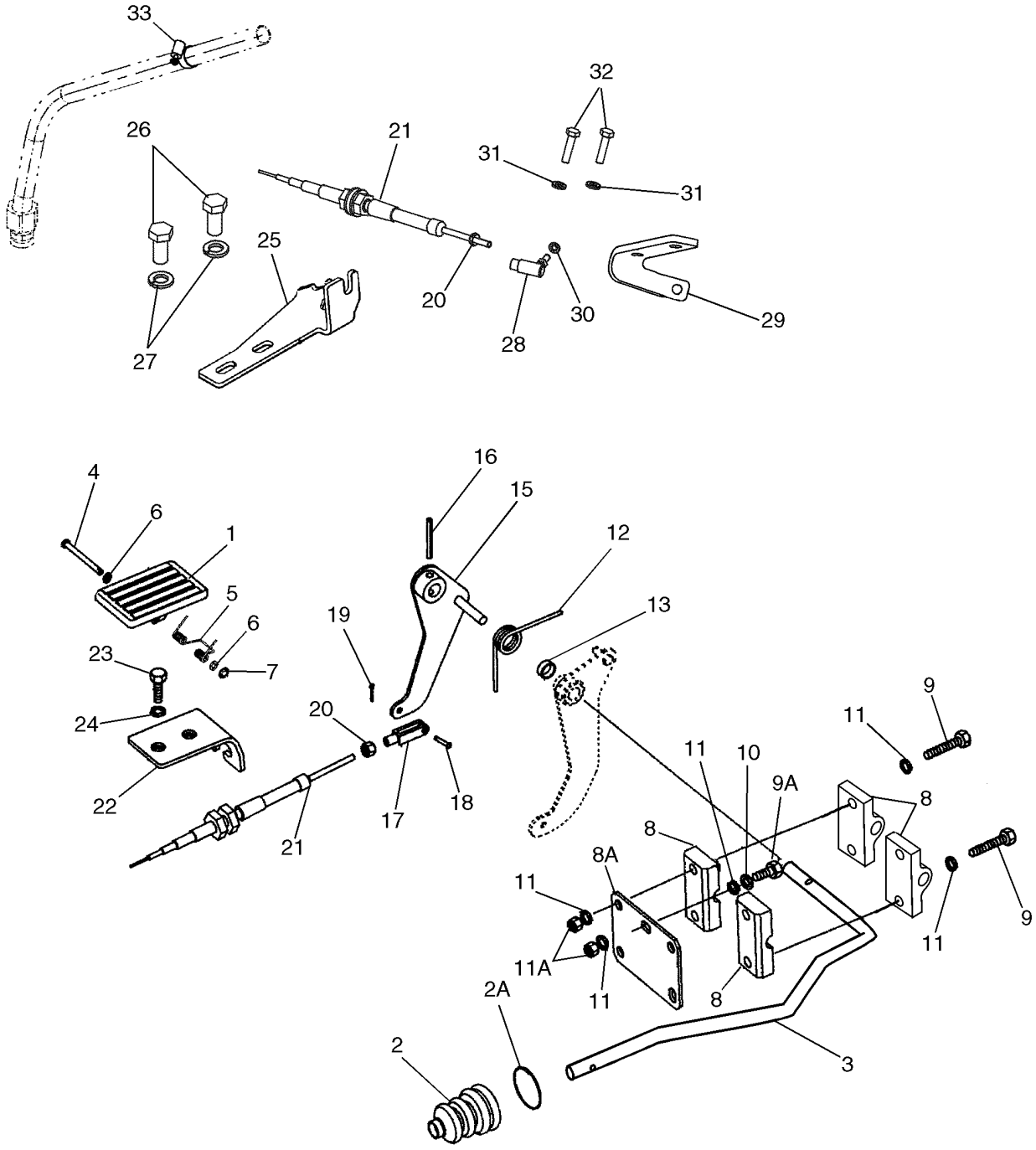

CONTROLES - ACELERADOR, PEDAL

REF	FN	PART NUMBER	YR/SN	QTY	DESCRIPTION
1		282242A1		1	PEDAL, Plastic
2		132931A1		1	FOLE, Boot, Accelerator Pedal Rod
2A		189109A1		1	MOLA, Retainer
3		87593642		1	HASTE
4		322860A1		1	PINO LARGO
5		256776A1		1	MOLA
6		895-11005		2	ARRUELA PLANA, M5 x 10 x 1
7		103-1518		1	ANEL, #18, Ext
8		87345006		1	BLOCO, Throttle Pivot
8A		378955A1		1	PLACA
9		87378776		4	PARAFUSO, Special; M8 x 30
9A		614-8020		1	PARAFUSO, Hex, M8 x 20, 8.8
10		892-11008		1	ARRUELA-TRAVA, M8
11		895-11008		7	ARRUELA PLANA, M8 x 16 x 1.6
11A		829-1408		2	PORCA, M8, Cl 10
12		380483A2		1	MOLA
13		378958A1		1	ANEL ESPACADOR
15		378956A3		1	ALAVANCA CONJUNTO
16		838-3640		1	PINO, M6 x 40, Coiled
17		213-123		1	BRACADEIRA, #10-32 x 1 9/16"
18		427-3058		1	CUPILHA, 3/16" x .580"
19		432-48		1	GRAMPO, 1/16" x 1/2"
20		225-14210		2-3	PORCA, #10-32
21		87340754		1	CABO, To Injection Pump
22		397065A2		1	BRACADEIRA
23		614-10035		2	PARAFUSO, Hex, M10 x 35, 8.8, Full Thd
24		892-11010		2	ARRUELA-TRAVA, M10
25		87648733		1	SUPORTE
26		627-12025		2	PARAFUSO, Hex, M12 x 25, 10.9
27		896-15012		2	ARRUELA PLANA, M12 x 28.5 x 4, HT
28		87421807		1	UNIAO CONJUNTO
29		87452823		1	BLOCO CONJUNTO, BRACKET, Throttle Cable
30		892-11005		1	ARRUELA-TRAVA, M5
31		892-11006		2	ARRUELA-TRAVA, M6
32		614-6016		2	PARAFUSO, Hex, M6 x 16, 8.8

CONTROLES - ACELERADOR, PEDAL

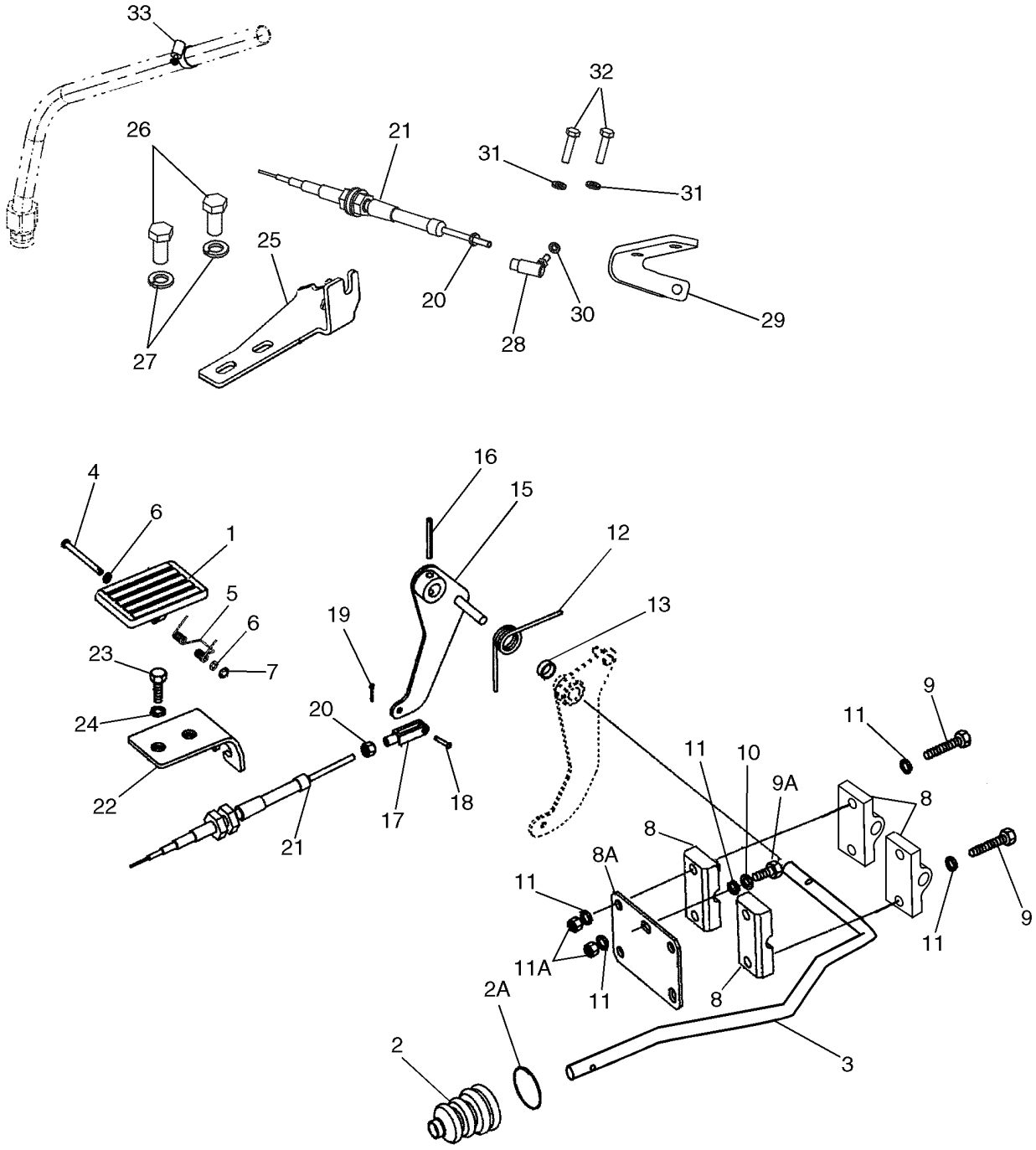

BS07N508

CONTROLES - ACELERADOR, PEDAL

REF	FN	PART NUMBER	YR/SN	QTY	DESCRIPTION
33		214-1416		1	BRACADEIRA MANGUEIRA, #16, 0.81/1.50 Type F Worm, Throttle Cable (Ref 21) To Transmission Dipstick

BOMBA DE INYECCION

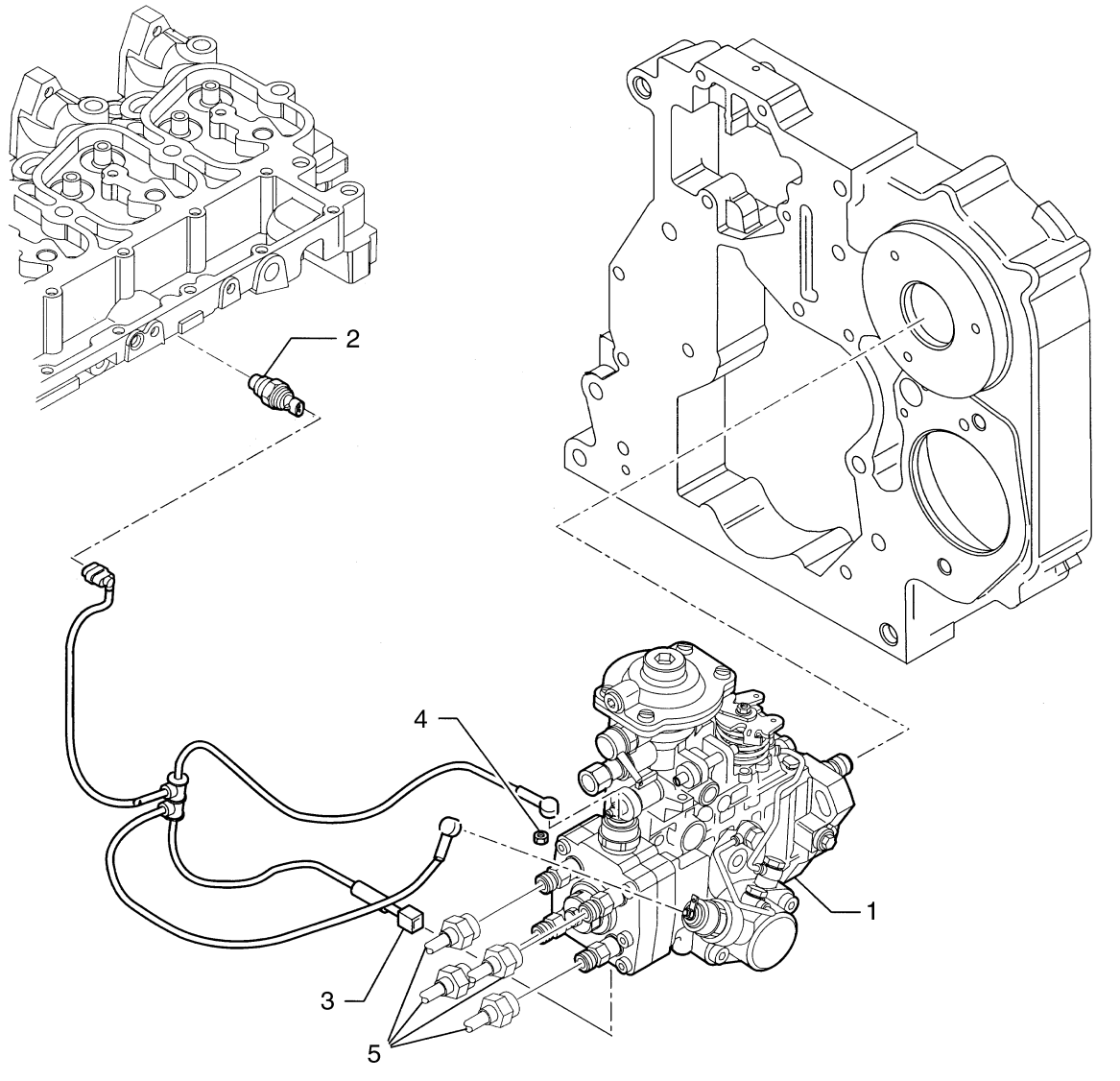

BS04A044

BOMBA DE INYECCION

REF	FN	PART NUMBER	YR/SN	QTY	DESCRIPTION
1		2856352		1	BOMBA INJETORA, Includes 2852741 Fuel Shutoff Solenoid
		2852741		1	SOLEMOID, Fuel Shut-off
2		2856350		1	SENSOR, Water Temperature
3		2852088		1	CHICOTE
4		2852089		2	PORCA, Lock
5		REF		1	INSTRUCAO, TUBE; See Figure 03-07 for Tube Kit

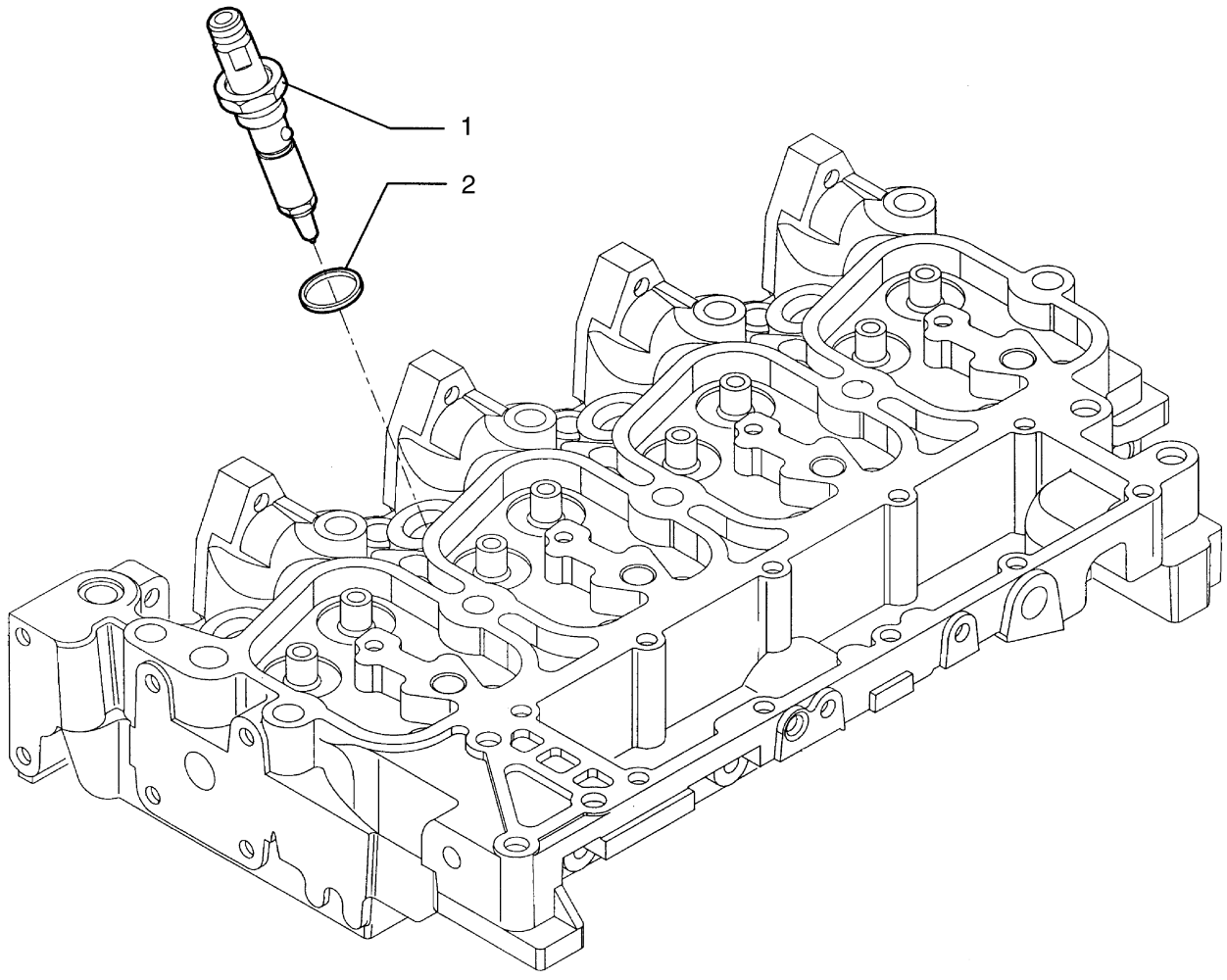

BS04A045

SISTEMA DE INJEÇÃO DE COMBUSTÍVEL

REF	FN	PART NUMBER	YR/SN	QTY	DESCRIPTION
1		2856255		4	INJETOR, Fuel Injector Assembly
		2856436		1	ARRUELA DE COBRE, Washer (Part of 2856255), Not Shown
2		4895297		4	ANEL VEDADOR

SISTEMA DE INJEÇÃO DE COMBUSTÍVEL

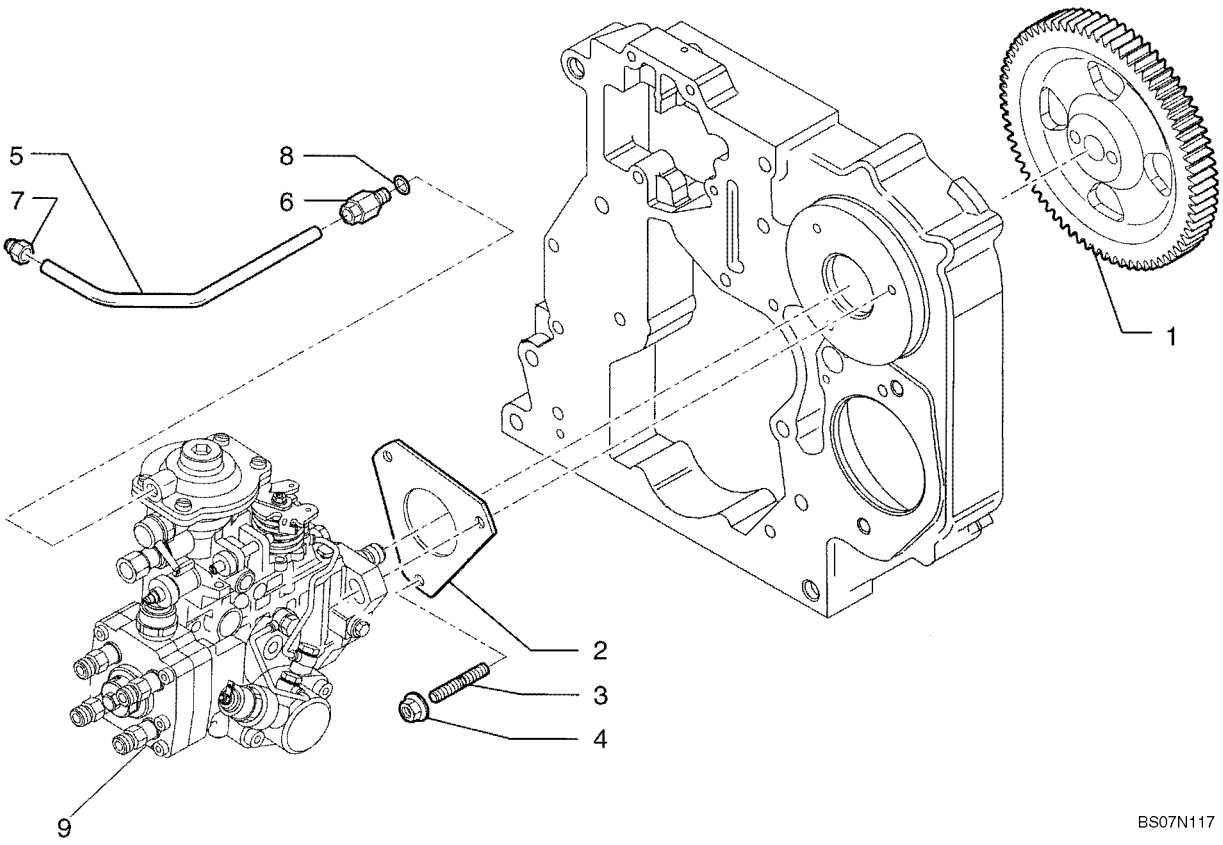

SISTEMA DE INJEÇÃO DE COMBUSTÍVEL

REF	FN	PART NUMBER	YR/SN	QTY	DESCRIPTION
1		2854340		1	ENGRENAGEM
2		2852885		1	JUNTA
3		2852294		3	PRISIONEIRO, M8 x 30
4		4899003		3	PORCA, Flange, M8
5		2852059		1	TUBO RÍGIDO
6		4893518		1	CONEXAO, 8 x 1
7		4896770		1	CONEXAO, 10 x 1
8		2852057		1	VEDADOR
9		REF		1	INSTRUCAO, INJECTION PUMP; See Figure 03-04

GRUPO INJECÇÂO - TUBAGENS

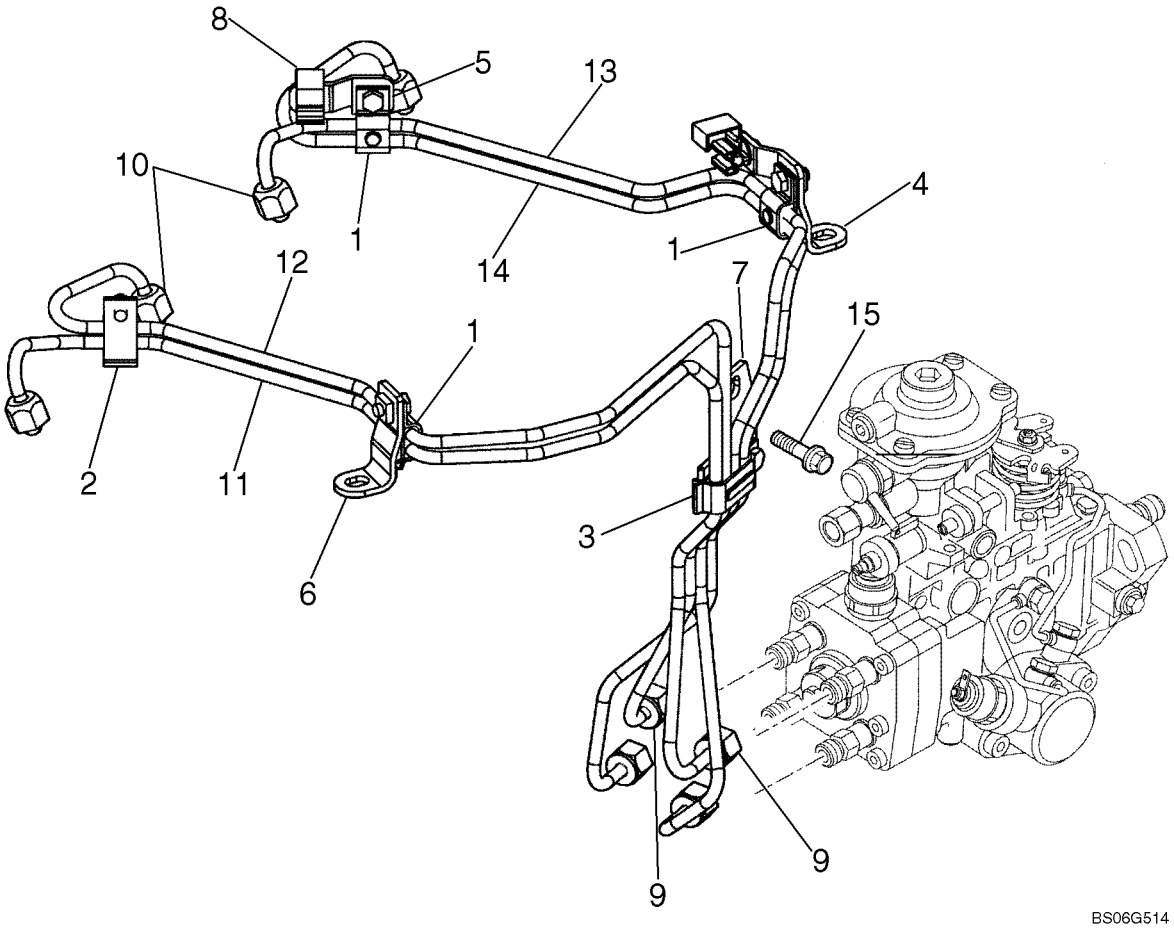

GRUPO INJECÇÂO - TUBAGENS

REF	FN	PART NUMBER	YR/SN	QTY	DESCRIPTION
		2852075		1	KIT, Fuel Injection Tube; Incl Ref 2 - 15
1		2852871		3	SUPORTE, Fuel Injection Pipe
2		2852872		1	SUPORTE, Fuel Injection Pipe
3		2852873		1	SUPORTE, Fuel Injection Pipe
4		2852874		1	SUPORTE, Fuel Injection Pipe
5		2852875		1	SUPORTE, Fuel Injection Pipe
6		2852876		1	SUPORTE, Fuel Injection Pipe
7		2852877		1	SUPORTE, Fuel Injection Pipe
8		2852878		2	SUPORTE DE BRACADEIR
9		2852879		4	PORCA
10		2852880		4	PORCA
11		2852881		1	TUBO INJECAO, Fuel
12		2852882		1	TUBO INJECAO, Fuel
13		2852883		1	TUBO INJECAO, Fuel
14		2852884		1	TUBO INJECAO, Fuel
15		4896884		1	PARAFUSO, M8 x 1.25 x 16mm

FILTRO DE COMBUSTÍVEL

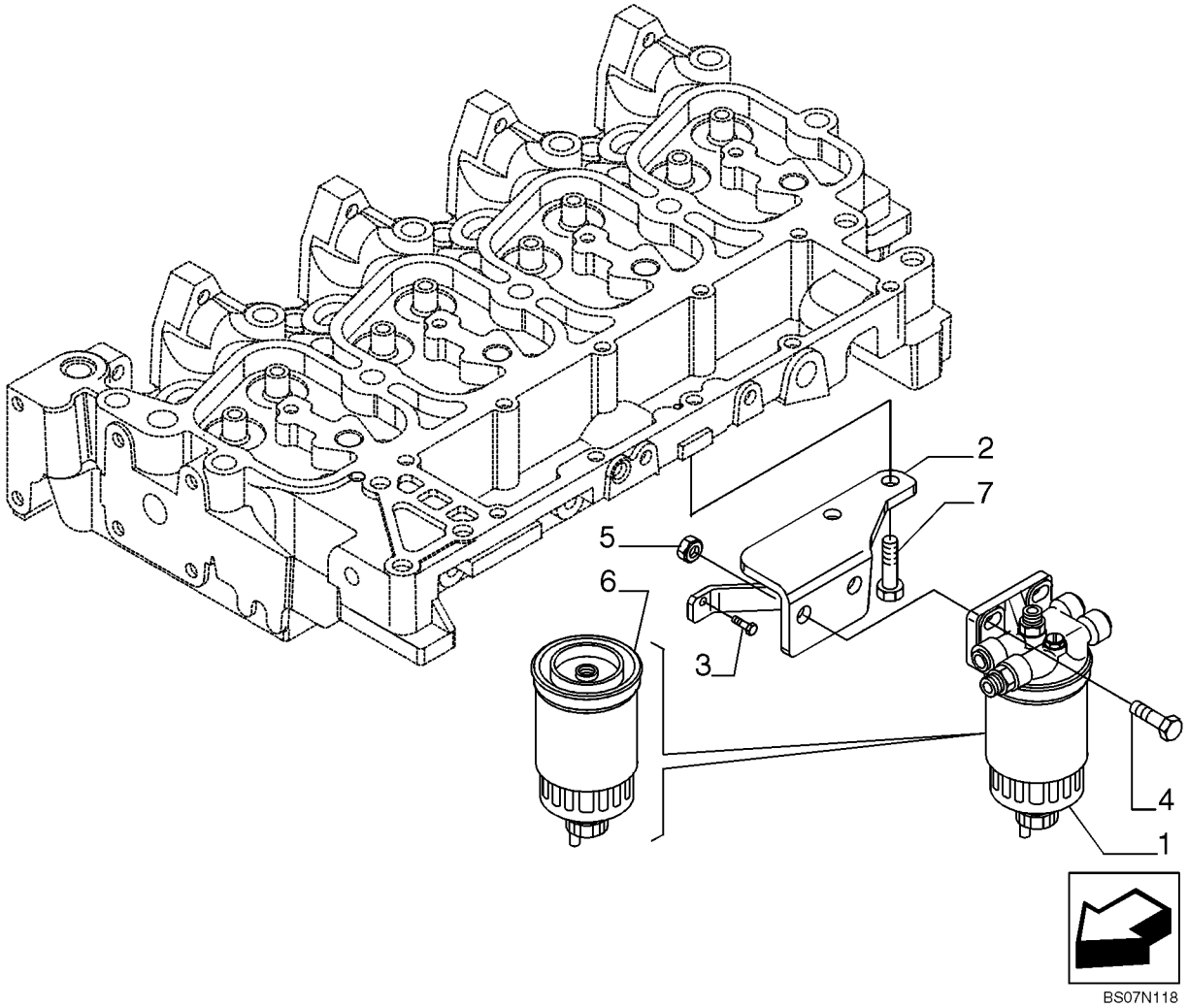

FILTRO DE COMBUSTÍVEL

REF	FN	PART NUMBER	YR/SN	QTY	DESCRIPTION
1		2852098		1	FILTRO CONJ
2		2855103		1	SUPORTE
3		4899068		1	PARAFUSO, Hex Flg, M8 x 1.25 x 16
4		4899849		2	PARAFUSO, M10 x 1.5 x 35
5		4895166		2	PORCA, M10 x 1.5
6		87803194		1	FILTRO DE COMBUSTÍVEL
7		2830411		2	PARAFUSO, M08 x 1.25 x 30

BOMBA, COMBUSTÍVEL

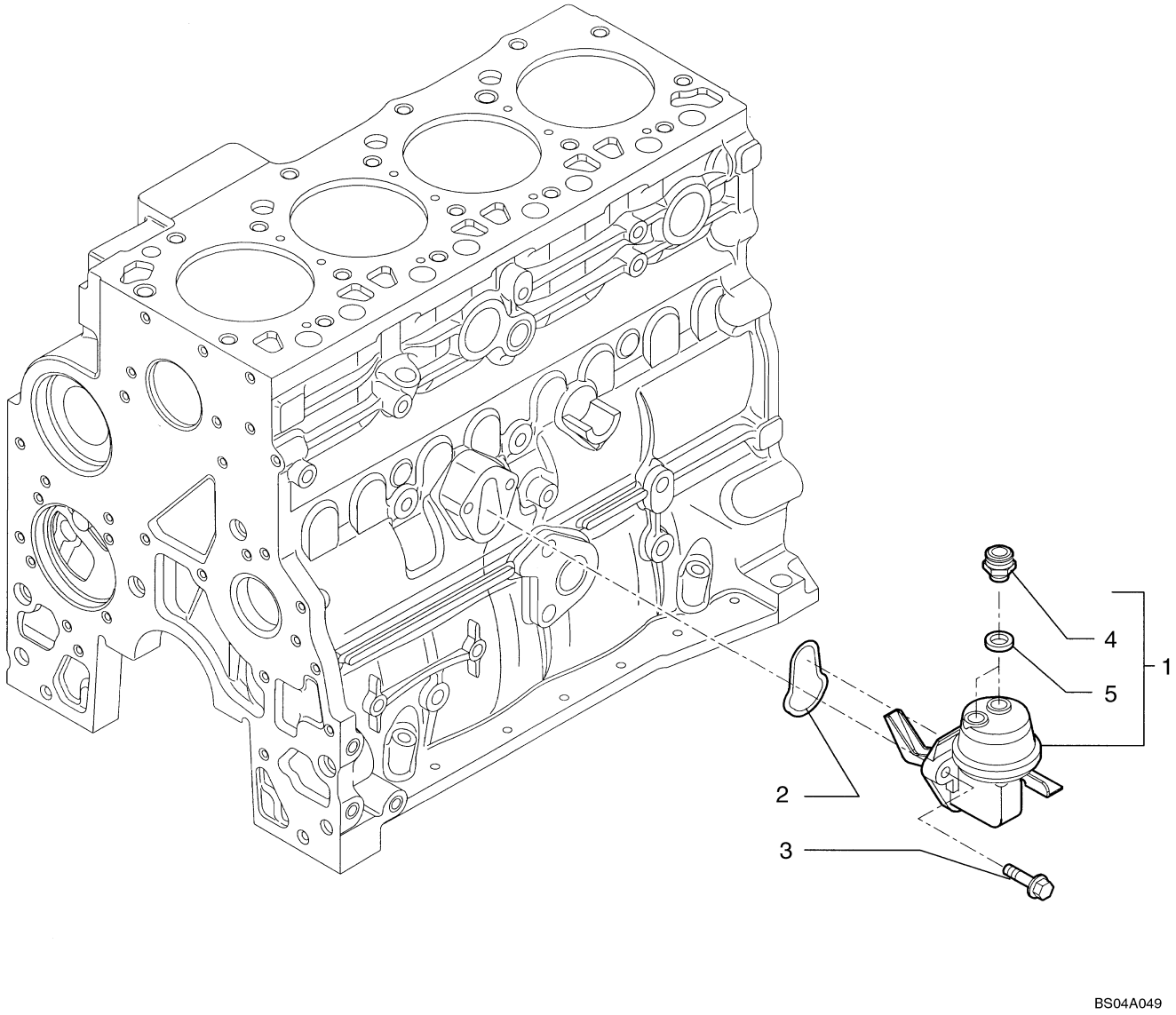

BOMBA, COMBUSTÍVEL

REF	FN	PART NUMBER	YR/SN	QTY	DESCRIPTION
1		2830266		1	BOMBA DE ALIMENTAÇÃO, Transfer; Incl. Ref 4, 5
2		2830156		1	ANEL "O"
3		4899031		2	PARAFUSO, Hex Flg, M8 x 1.25 x 25
4		4890964		2	CONEXAO
5		4894721		2	ARRUELA DE VEDAÇÃO

TUBAGENS - COMBUSTÍVEL

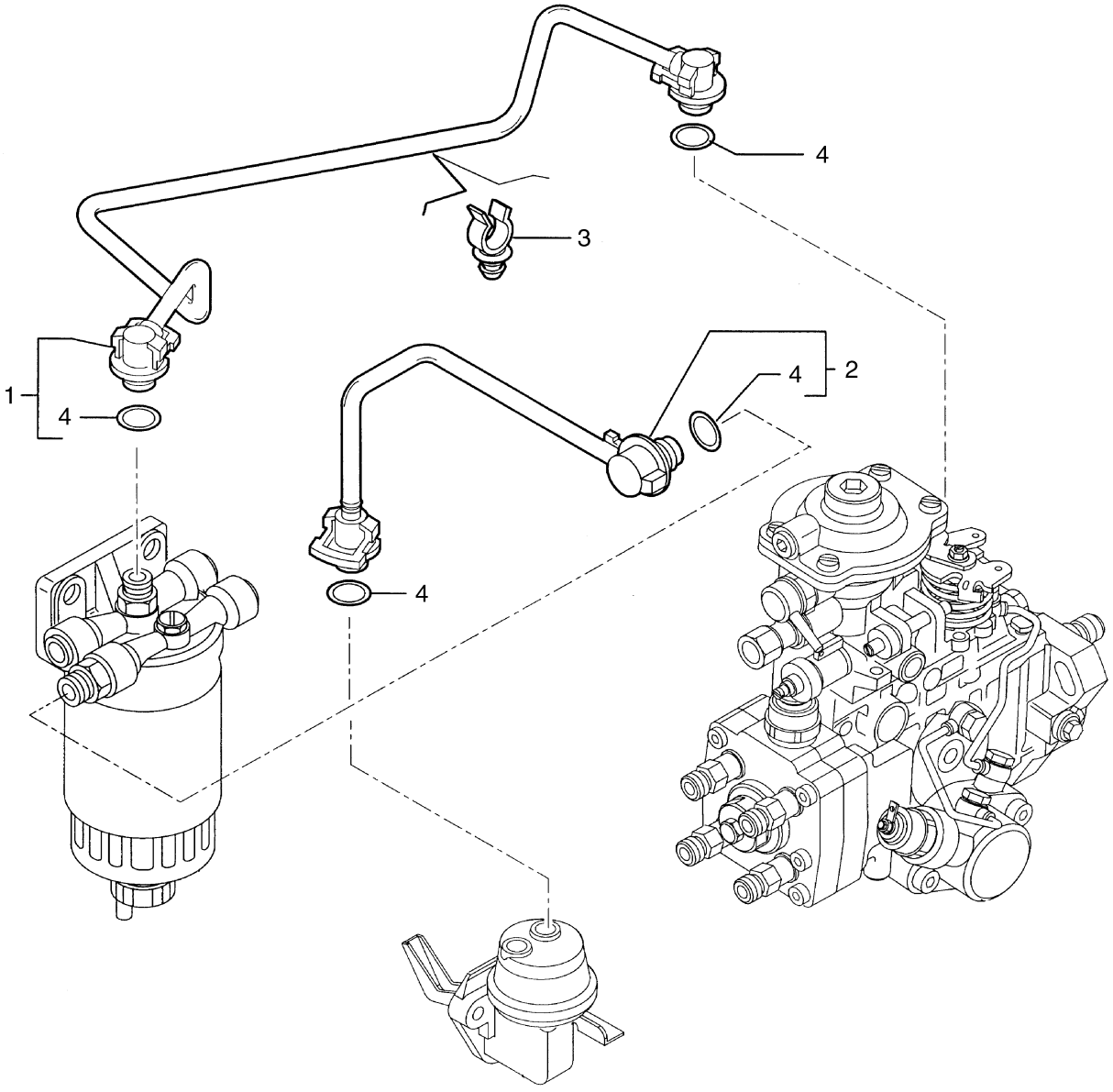

TUBAGENS - COMBUSTÍVEL

REF	FN	PART NUMBER	YR/SN	QTY	DESCRIPTION
1		2852105		1	TUBO, Incl. Ref 4
2		2852594		1	TUBO, Incl. Ref 4
3		2852111		1	PRENDEDOR
4		4894095		2	ANEL "O"

SISTEMA DE INJEÇÃO DE COMBUSTÍVEL

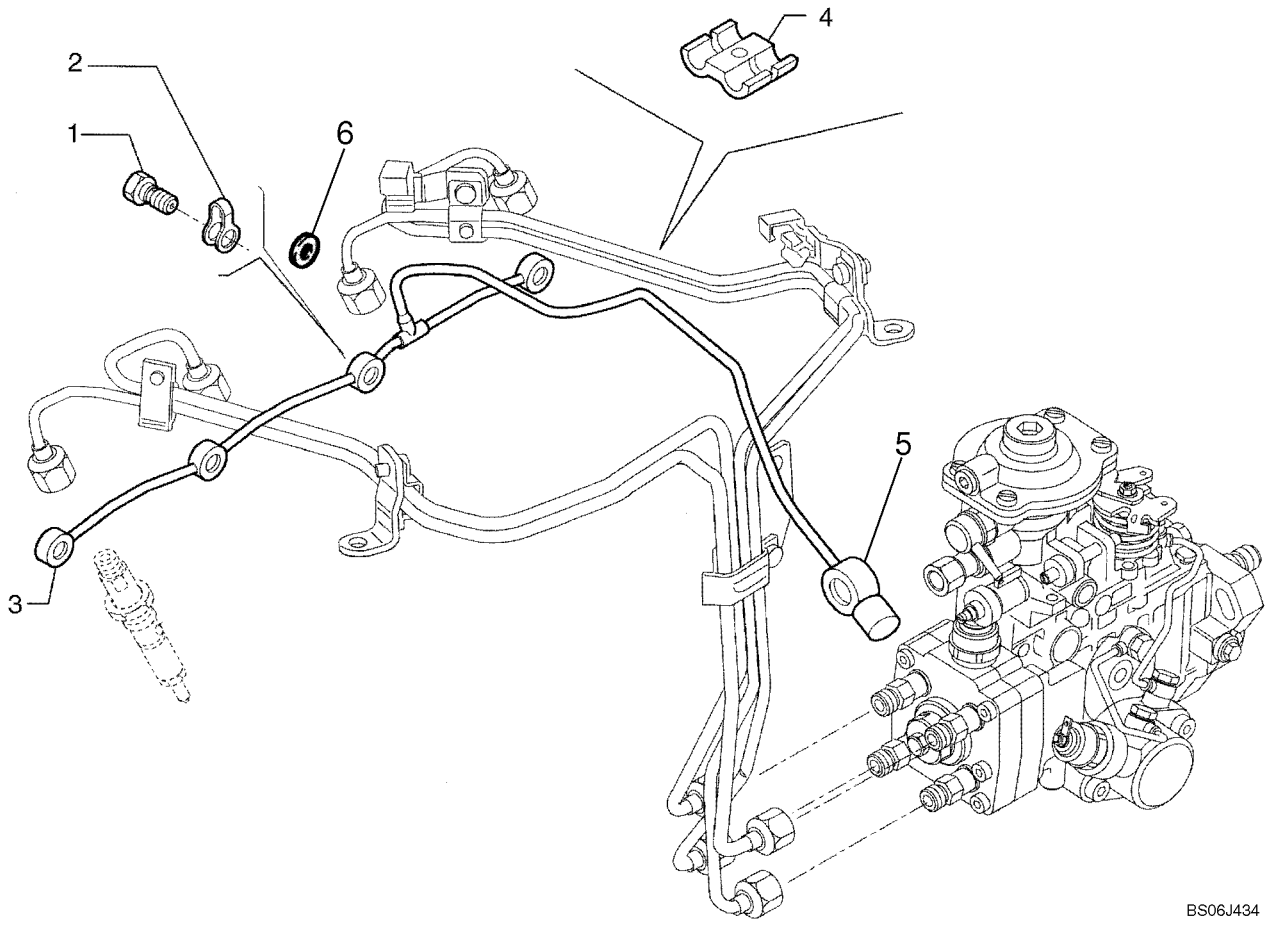

SISTEMA DE INJEÇÃO DE COMBUSTÍVEL

REF	FN	PART NUMBER	YR/SN	QTY	DESCRIPTION
1		4895244		4	BANJO
2		4895305		4	ANEL DE VEDACAO, If Used
3		2852065		1	TUBO RÍGIDO
4		2852521		1	MOLA DE FIXAÇÃO
5		NSS		1	BOLETIM INFORMATIVO, Banjo Connector Assy; Order 2852065 Tube, Ref 3
6		2855903		8	ARRUELA DE VEDAÇÃO, If Used

SECTION INDEX
Sistema Elétrico

04-01	MOTOR DE ARRANQUE
04-02	ALTERNADOR
04-03	MONTAJE DEL ARRANQUE - MONTAGEM DO ALTERNADOR
04-04	FIOS, MOTOR - MONTAGEM E CONEXÕES
04-05	BATERIA, SIMPLES
04-06	BATERIA, DUPLA - ARRANQUE EN FRIO
04-06A	AQUECEDOR DA GRADE DE ARRANQUE A FRIO
04-07	FIAÇÃO DA CONSOLA DIANTEIRA - INTERRUPTORES
04-08	FIAÇÃO DA CONSOLA DIANTEIRA - SUPORTE
04-09	FIAÇÃO DA CONSOLA LATERAL - INTERRUPTORES
04-10	PAINEL DE INSTRUMENTOS DIANTEIRO - COBERTURAS
04-11	PAINEL DE INSTRUMENTOS, LADO - COBERTURAS (LADO DIREITO)
04-12	CONJUNTO DE INSTRUMENTOS
04-13	SISTEMA ELÉCTRICO - LUZES DA CAPOTA DA ROPS
04-14	SISTEMA ELÉCTRICO - LUZES DA CABINA DA ROPS
04-15	CONJUNTO DA LUZ (CAPOTA DA ROPS)
04-16	BUZINA - ALARME DE MARCHA ATRÁS
04-17	FAROL, ROTATIVO
04-18	ANTENA DO RÁDIO - FIOS, TRASEIROS
04-19	SISTEMA ELÉCTRICO - SISTEMA HIDRÁULICO AUXILIAR DA RETROESCAVADORA
04-20	SISTEMA ELÉCTRICO - SISTEMA HIDRÁULICO AUXILIAR DA RETROESCAVADORA, COM CONTROLO AUTOMÁTICO

MOTOR DE ARRANQUE

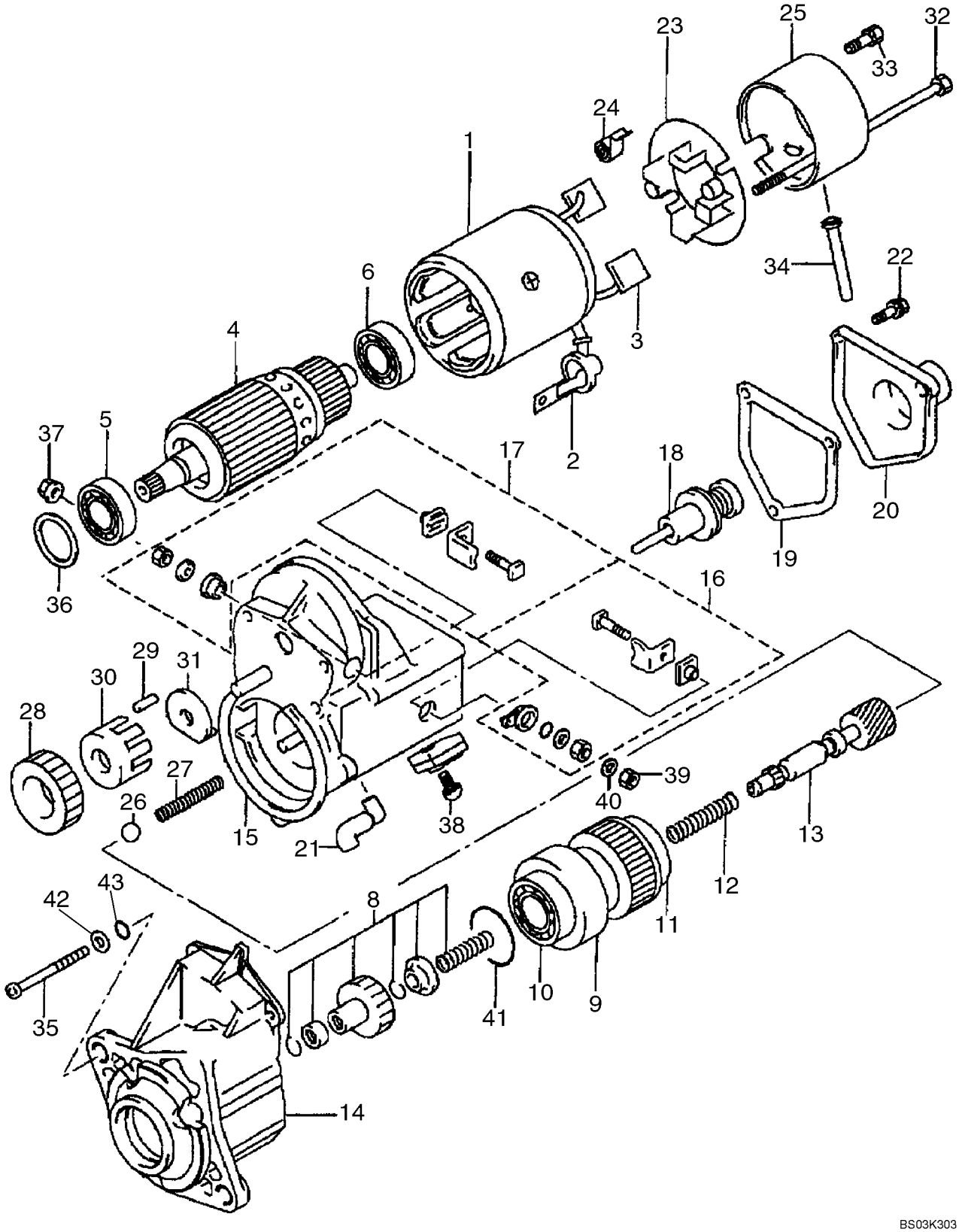

MOTOR DE ARRANQUE

REF	FN	PART NUMBER	YR/SN	QTY	DESCRIPTION
		86992395		1	MOTOR DE PARTIDA, 12 V, 2.7 kw; Incl. Ref 1 - 43
1		87438992		1	GARFO, Housing, Yoke; Incl. Ref 2, 3
2		87438993		1	TAMPA CONJUNTO
3		87438925		2	ESCOVA
4		87438926		1	INDUZIDO, Incl. Ref 5, 6
5		87438927		1	ROLAMENTO, 35 mm OD
6		87438928		1	ROLAMENTO, 30 mm OD
		87438994		1	EMBREAGEM CONJUNTO, Incl. Ref 8 - 13
8		87438929		1	KIT MOTOR ARRANQUE, Clutch Pinion Kit
9		87438930		1	KIT MOTOR ARRANQUE, Clutch Assembly; Incl. Ref 10, 11
10		87438931		1	ROLAMENTO, 47 mm OD
11		87438932		1	ROLAMENTO, 47 mm OD
12		87438933		1	MOLA DE COMPRESAO
13		87438935		1	EIXO, Clutch
14		87438937		1	ALOJAMENTO
15		87438940		1	SOLEMOID, Magnetic; Incl. Ref 16 - 22
16		87438941		1	KIT MOTOR ARRANQUE, Kit, Terminal M
17		87438942		1	KIT MOTOR ARRANQUE, Kit, Terminal C
18		87438944		1	EMBOLO CONJUNTO
19		87438946		1	JUNTA, Solenoid Switch
20		87438948		1	TAMPA, Solenoid
21		87438995		1	BUCHA, Drain
22		87438950		3	PARAFUSO, With Washer; M5 x 14
23		87438996		1	SUPORTE, Brush; Incl. Ref 24
24		87438997		4	MOLA, Brush Tension
25		87438999		1	CHASSI
26		87439000		1	ESFERA
27		87439001		1	MOLA DE COMPRESAO
28		87439002		1	PINHAO, Gear
29		87439003		5	ROLO, Clutch
30		87439004		1	PRENDEDOR
31		87439005		1	PRENDEDOR
32		87438951		2	PARAFUSO
33		87439006		2	PARAFUSO, M5 x 9.4

MOTOR DE ARRANQUE

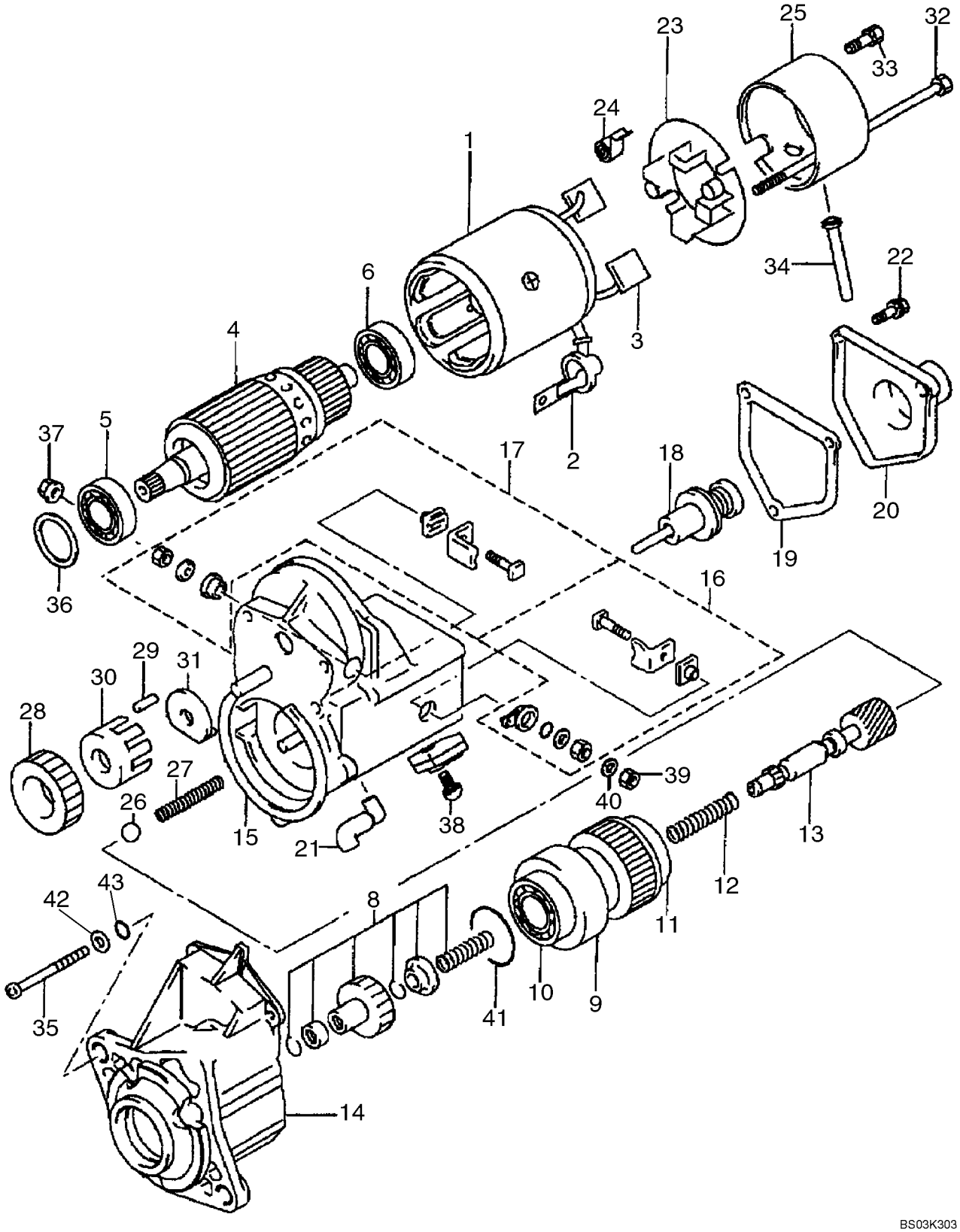

MOTOR DE ARRANQUE

REF	FN	PART NUMBER	YR/SN	QTY	DESCRIPTION
34		87439007		1	BUCHA, Drain
35		87439008		3	PARAFUSO, M6 x 70
36		87438954		1	ARRUELA PLANA, Felt
37		87439009		1	PORCA, M10
38		87438956		1	PARAFUSO, M5 x 10
39		100016		1	PORCA, M10, Cl 8
40		892-11010		1	ARRUELA-TRAVA, M10
41		87439010		1	ANEL DE VEDACAO
42		87439061		3	ARRUELA PLANA, 9/32 x 1/2 x 3/64
43		87439011		3	ANEL "O", 4.8 ID

ALTERNADOR

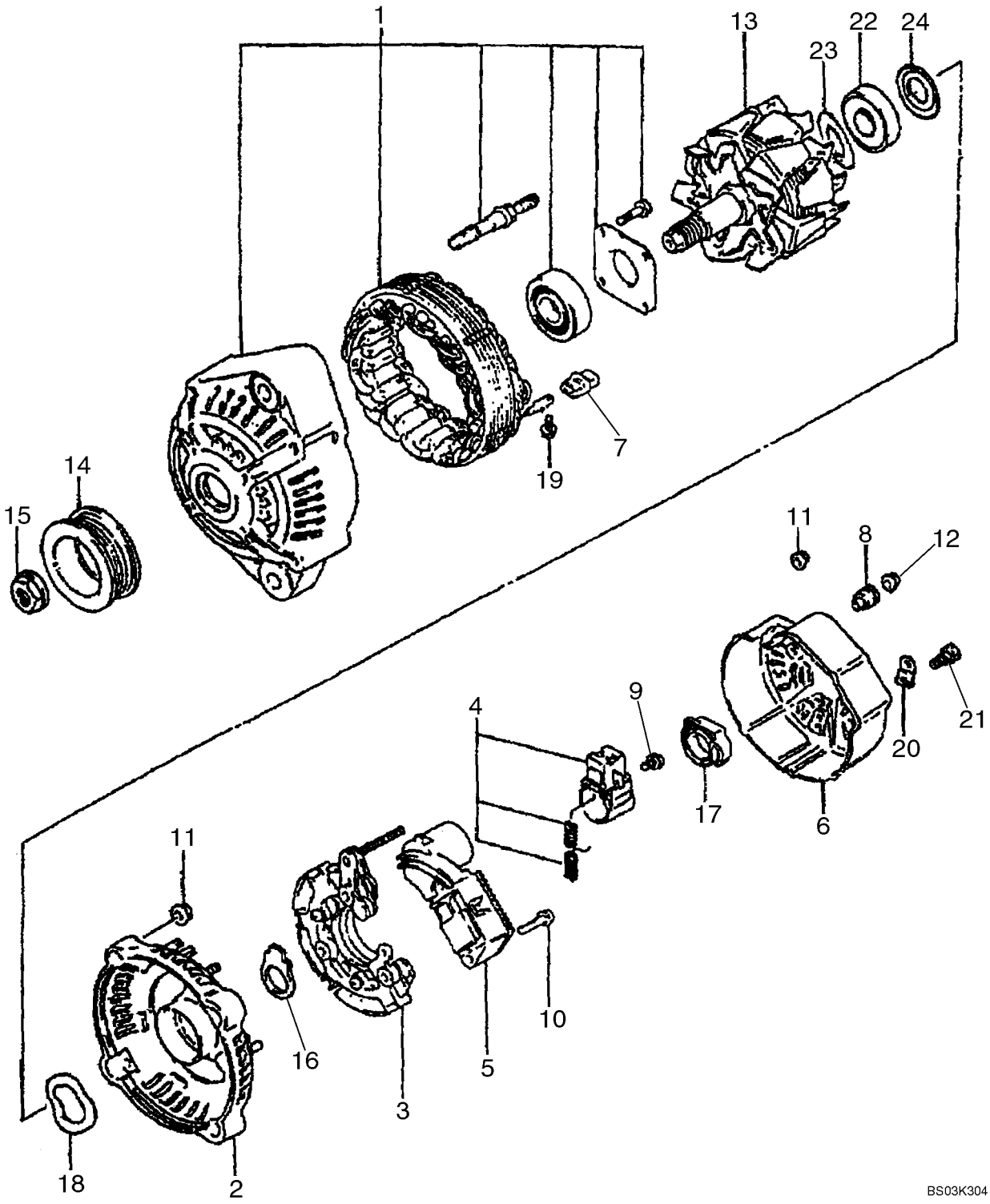

ALTERNADOR

REF	FN	PART NUMBER	YR/SN	QTY	DESCRIPTION
		87422777		1	ALTERNADOR, 12V, 90 amp; Incl. Ref 1 - 24; Connector on 87433543 Engine Harness Attaching to Alternator is (1) 382203A1 3-Pin Plug Connector, (3) 382204A1 Terminal, (3) 382207A1 Seal
1		87438960		1	ESTRUTURA CONJUNTO, Drive End, Includes Stator
2		87438963		1	CHASSI
3		87438965		1	SUPORTE, Rectifier
4		87438967		1	SUPORTE, Brush
5		87438969		1	REGULADOR
6		87438970		1	TAMPA TRASEIRA
7		87438971		4	BUCHA, Insulation
8		87438972		1	BUCHA, Insulation
9		87438973		3	PARAFUSO
10		87438974		2	PARAFUSO
11		87438975		7	PORCA
12		87438976		1	PORCA
13		87438977		1	ROTOR CONJUNTO
14		87438978		1	POLIA
15		87438979		1	PORCA
16		87438980		1	ANEL VEDADOR
17		87438981		1	ANEL VEDADOR
18		87438982		1	ARRUELA PLANA
19		87438983		4	PARAFUSO
20		87438984		1	PLACA, Terminal
21		87438985		1	PARAFUSO
22		87438986		1	ROLAMENTO
23		87438987		1	COBERTURA, Bearing
24		87438989		1	COBERTURA, Bearing

MONTAJE DEL ARRANQUE - MONTAGEM DO ALTERNADOR

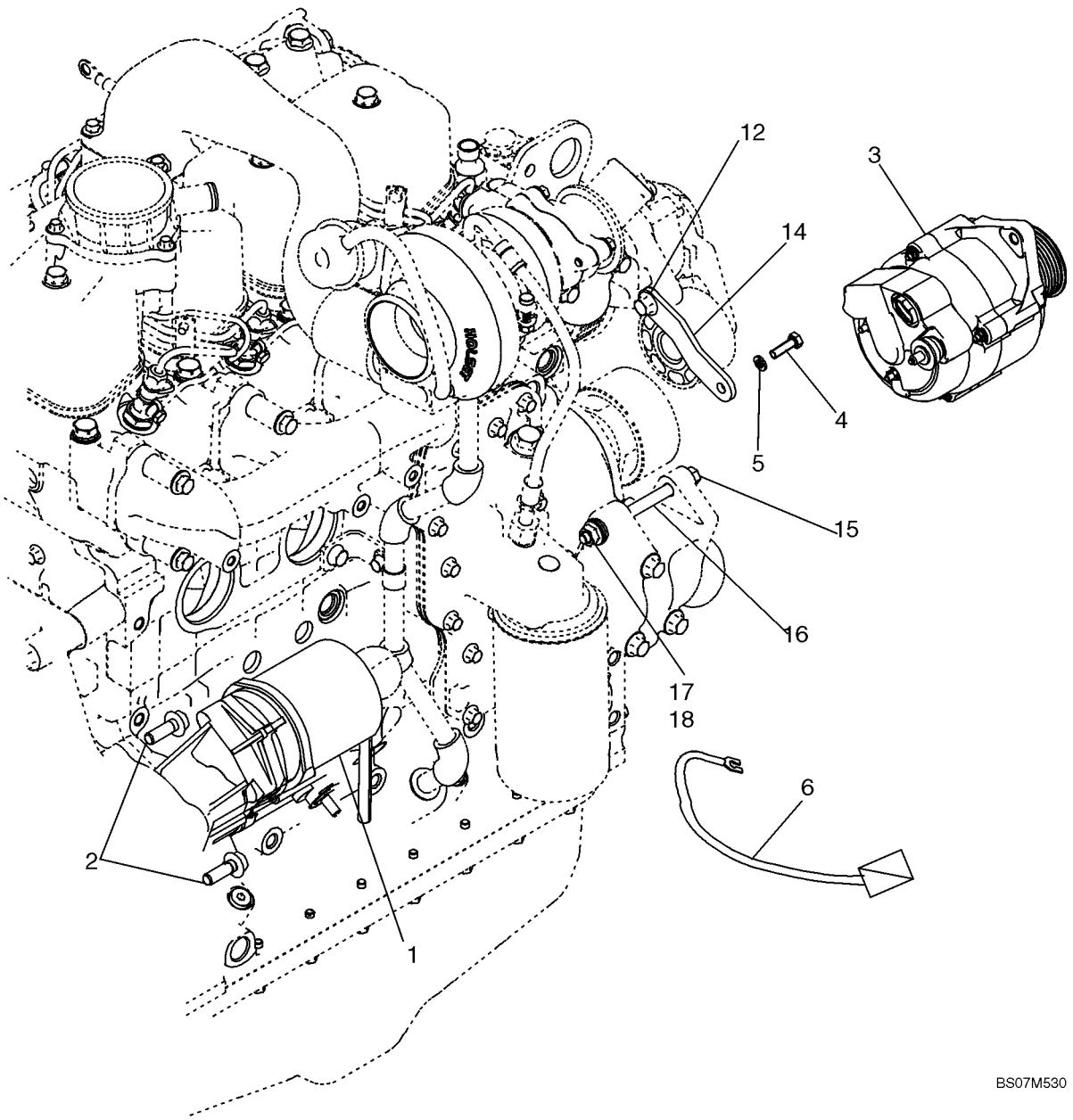

MONTAJE DEL ARRANQUE - MONTAGEM DO ALTERNADOR

REF	FN	PART NUMBER	YR/SN	QTY	DESCRIPTION
1		86992395		1	MOTOR DE PARTIDA, See Figure 04-01
2		844-10035		2	PARAFUSO, Hex Flg, M10 x 35, 8.8
3		87422777		1	ALTERNADOR, See Figure 04-02; Mounting Hardware Included With 87584965 Engine Assembly; See Ref. 12, 14, 16
4		614-8025		1	PARAFUSO, Hex, M8 x 25, 8.8
5		892-11008		1	ARRUELA-TRAVA, M8
6		87433401		1	CABO ELÉTRICO, Starter Solenoid Jumper Cable
12		4895291		1	PARAFUSO, Hex Flg, M10 x 1.5 x 20, Included With 87584965 Engine Assy
14		2852180		1	SUPORTE, Included With 87584965 Engine Assy
15		827-10130		1	PARAFUSO, Hex, M10 x 130, 10.9
16		2852181		1	ESPAÇADOR, Included With 87584965 Engine Assy
17		896-11010		2	ARRUELA PLANA, M10 x 21.5 x 2.5, HT
18		832-10410		1	CONTRA PORCA, M10 x 1.5, Cl 8

FIOS, MOTOR - MONTAGEM E CONEXÕES

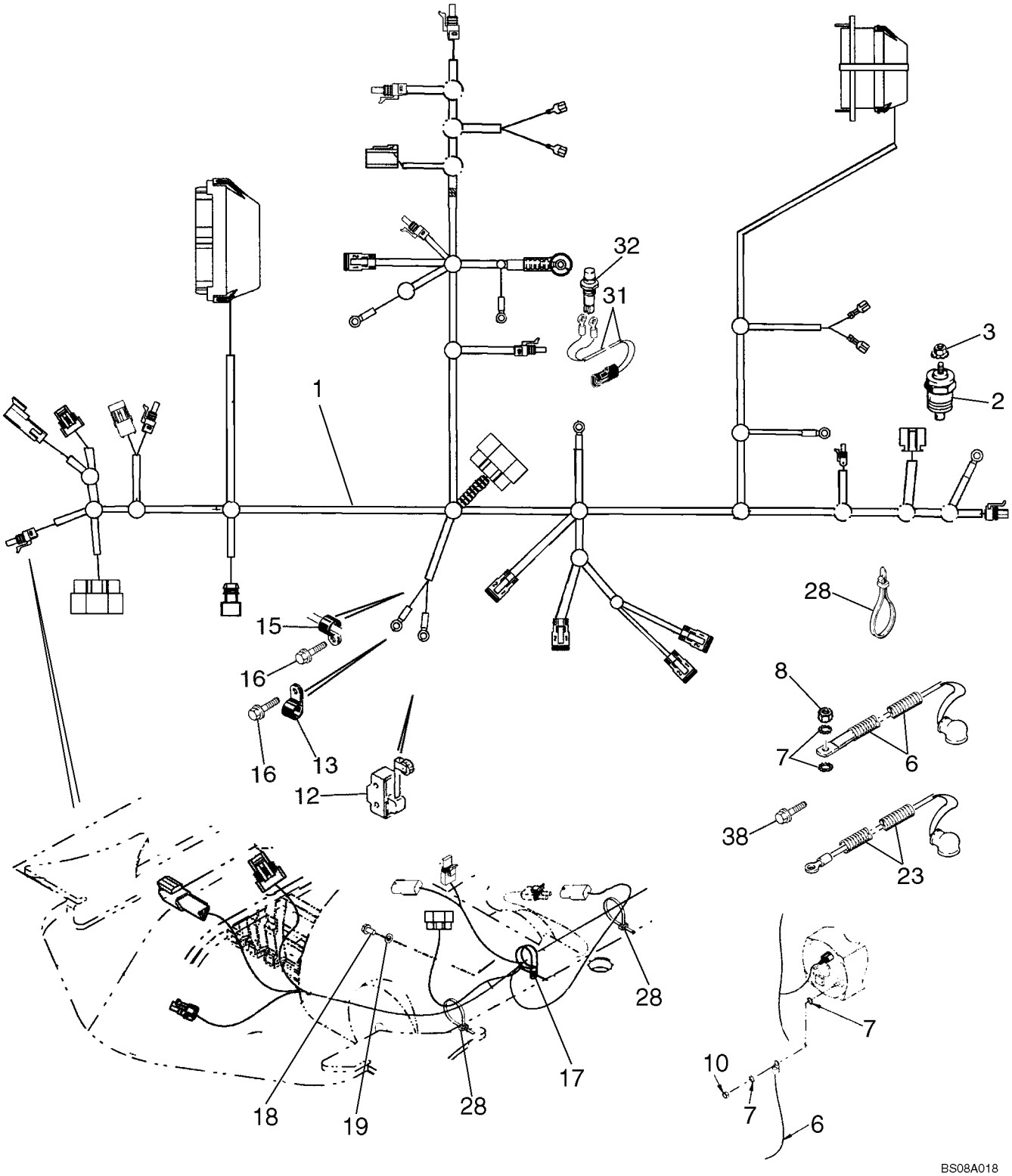

FIOS, MOTOR - MONTAGEM E CONEXÕES

REF	FN	PART NUMBER	YR/SN	QTY	DESCRIPTION
1		87726584		1	CHICOTE DE FIOS, Main Chassis
2		A166057		1	INTERRUPTOR SONDA, Engine Water Coolant Temperature
3		193-1000		1	PORCA, Keps, w/LW,#10-32
6		87423926		1	CABO, Alternator Cable
7		493-21033		2	ARRUELA-TRAVA, Int Tooth, 5/16"
8		829-1408		1	PORCA, M8, Cl 10
12		D137363		1	INTERRUPTOR, Return To Dig; For Mounting; See Figure 09-04
13		515-23127		1	PRENDEDOR, 1/2", Insul, 3/8" Bolt
15		515-23127		1	PRENDEDOR, 1/2", Insul, 3/8" Bolt
16		844-10020		2	PARAFUSO, Hex Flg, M10 x 20, 8.8
17		9827902		1	PRENDEDOR, 1", Insul, 3/8" Bolt
18		614-10030		1	PARAFUSO, Hex, M10 x 30, 8.8
19		895-11010		1	ARRUELA PLANA, M10 x 20 x 2
23		87419229		1	CHICOTE DE FIOS, Power Wire
28		L18337		AR	TIRA DE CABO, 9.95"-12.1" lg
31		123809A2		1	CHICOTE, Clutch Cutout; Transmission Gear Shift Lever; Incl. Ref 31A, 31B
31A		246526A1		1	CONECTOR, Not Illustrated
31B		NSS		2	BOLETIM INFORMATIVO, Eye; Not Illustrated
32		87312712		1	INTERRUPTOR, Push Button; Clutch Cutout; Transmission Gear Shift Lever; For Lever and Knob, See Figure 06-12;
38		128312A1		1	PARAFUSO

BATERIA, SIMPLES

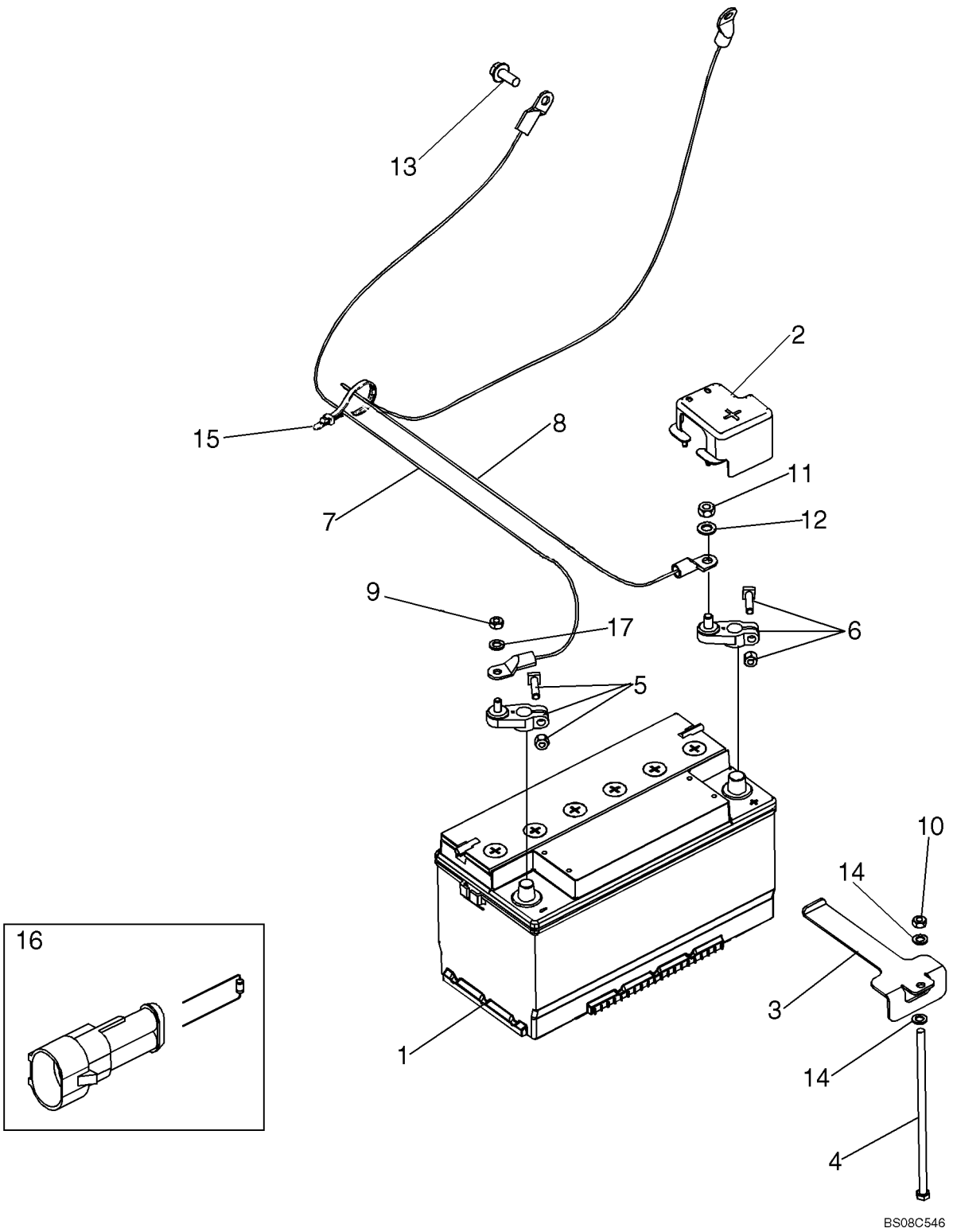

BATERIA, SIMPLES

REF	FN	PART NUMBER	YR/SN	QTY	DESCRIPTION
1		87403835		1	BATERIA T. HUMIDA, 12V; Used In Production, For Service Order B4960W Through Ship Direct
2		87664021		1	COBERTURA, Protective; Battery Positive
3		87653377		1	SUPORTE, Tie Down
4		87522766		1	PARAFUSO
5		87735578		1	TERMINAL, Battery Cable Negative
6		87735577		1	TERMINAL, Battery Cable Positive
7		87610680		1	CABO BATERIA NEGATIV, Battery Negative
8		87610679		1	CABO ELÉTRICO, Battery Positive
9		425-105		1	PORCA, 5/16"-18, G5
10		832-10408		1	CONTRA PORCA, M8 x 1.25, Cl 8
11		425-106		1	PORCA, 3/8"-16, G5
12		495-11041		1	ARRUELA PLANA, 3/8", SAE
13		844-10025		2	PARAFUSO, Hex Flg, M10 x 25, 8.8, Full Thd
14		895-11008		2	ARRUELA PLANA, M8 x 16 x 1.6
15		L18337		2	TIRA DE CABO, 9.95"-12.1" lg
16		87584645		1	RESISTÊNCIA, Grid Heater
17		495-11034		1	ARRUELA PLANA, 5/16", SAE

BATERIA, DUPLA - ARRANQUE EN FRIO

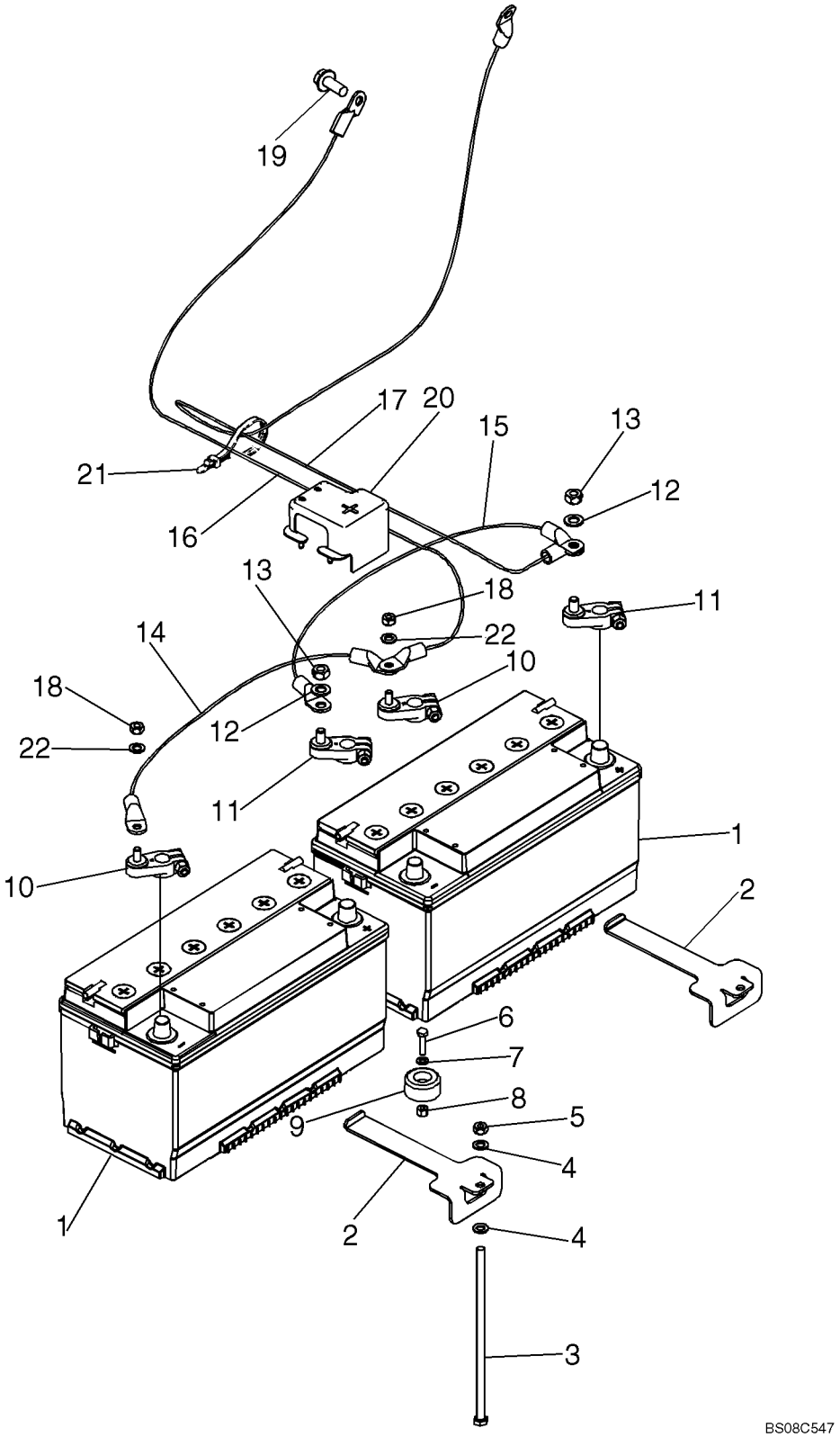

BATERIA, DUPLA - ARRANQUE EN FRIO

REF	FN	PART NUMBER	YR/SN	QTY	DESCRIPTION
1		87403835		2	BATERIA T. HUMIDA, 12V; Used In Production, For Service Order B4960W Through Ship Direct
2		87653377		2	SUPORTE, Tie Down
3		87522766		2	PARAFUSO, M8 x 220
4		895-11008		4	ARRUELA PLANA, M8 x 16 x 1.6
5		832-10408		2	CONTRA PORCA, M8 x 1.25, Cl 8
6		614-6025		1	PARAFUSO, Hex, M6 x 25, 8.8
7		895-11006		1	ARRUELA PLANA, M6
8		832-10406		1	CONTRA PORCA, M6 x 1, Cl 8
9		87671746		1	PÁRA-CHOQUE
10		87735578		2	TERMINAL, Battery Cable Stud, Negative
11		87735577		2	TERMINAL, Battery Cable Stud, Positive
12		495-11041		2	ARRUELA PLANA, 3/8", SAE
13		425-106		2	PORCA, 3/8"-16, G5
14		87610682		1	CABO ELÉTRICO, Negative Jumper
15		87610681		1	CABO ELÉTRICO, Postivie Jumper
16		87610680		1	CABO BATERIA NEGATIV, Negative
17		87610679		1	CABO ELÉTRICO, Positive
18		425-105		2	PORCA, 5/16"-18, G5
19		844-10025		2	PARAFUSO, Hex Flg, M10 x 25, 8.8, Full Thd
20		87664021		2	COBERTURA, Protective; Positive Battery
21		L18337		3	TIRA DE CABO, 9.95"-12.1" lg
22		495-11034		2	ARRUELA PLANA, 5/16", SAE

AQUECEDOR DA GRADE DE ARRANQUE A FRIO

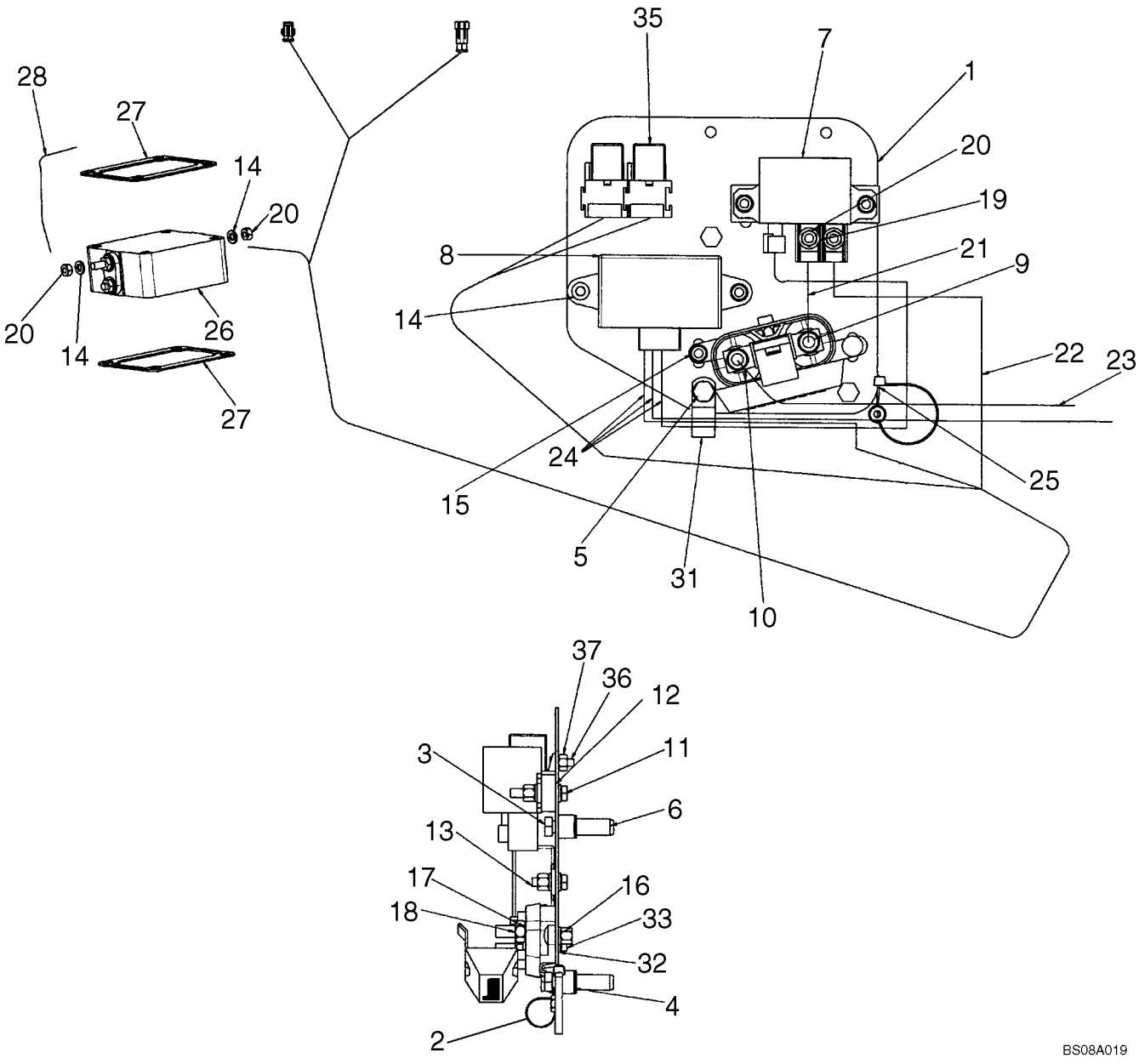

AQUECEDOR DA GRADE DE ARRANQUE A FRIO

REF	FN	PART NUMBER	YR/SN	QTY	DESCRIPTION
1		87397601		1	SUPORTE, Cold Start Plate
2		515-22190		1	PRENDEDOR, 3/4", Insul, 5/16" Bolt
3		614-8040		3	PARAFUSO, Hex, M8 x 40, 8.8, Full Thd
4		407962A1		3	ESPAÇADOR
5		238-5011		3	ANEL "O", -011, 70 Duro, .301" ID x .070" Thk
6		87417383		3	ROSCA POSTIÇA, M8 x 1-1/4
7		86619908		1	CONECTADOR, Cold Start
8		47132002		1	CENTRAL ELETRÔNICA, Electronic Unit Controller, Grid Heater
9		440038A1		1	BLOCK JUNCAO, Fuse Block
10		87410602		1	FUSÍVEL, 300 amp Fuse
11		614-6035		2	PARAFUSO, Hex, M6 x 35, 8.8, Full Thd
12		87414237		1	PLACA, 10 mm Thick Spacer Bar
13		614-6020		3	PARAFUSO, Hex, M6 x 20, 8.8
14		895-11006		13	ARRUELA PLANA, M6
15		832-10406		6	CONTRA PORCA, M6 x 1, Cl 8
16		811-6016		1	PARAFUSO, Short NK, M6 x 16, Cl8.8, Full Thd
17		892-11008		5	ARRUELA-TRAVA, M8
18		829-1408		2	PORCA, M8, Cl 10
19		322357		2	ARRUELA MOLA, Belleville, M6
20		829-1406		4	PORCA, M6, Cl 10
21		87410265		1	CONECTADOR, 90 mm Jumper Wire; Fuse to Relay
22		87608352		1	CABO ELÉTRICO, 650 mm Wire; Relay to Grid Heater
23		87419615		1	CABO CONJUNTO, 1250 mm Wire; Starter to Fuse Block
24		87396228		1	CHICOTE DE FIOS, Cold Start Control
25		L18337		1	TIRA DE CABO, 9.95"-12.1" lg
26		82017872		1	AQUECEDOR, Grid
27		86014151		2	JUNTA
28		87601612		1	CABO, MASSA, 240 mm, Grid Heater Ground
31		515-25190		1	PRENDEDOR, 3/4", Insul, 1/2" Bolt
32		614-12025		1	PARAFUSO, Hex, M12 x 25, 8.8
33		896-11012		1	ARRUELA PLANA, M13.5 x 24.5 x 3, HT
35		87436836		2	CONECTADOR, Mini, 12V, 40A; Engine Crank

AQUECEDOR DA GRADE DE ARRANQUE A FRIO

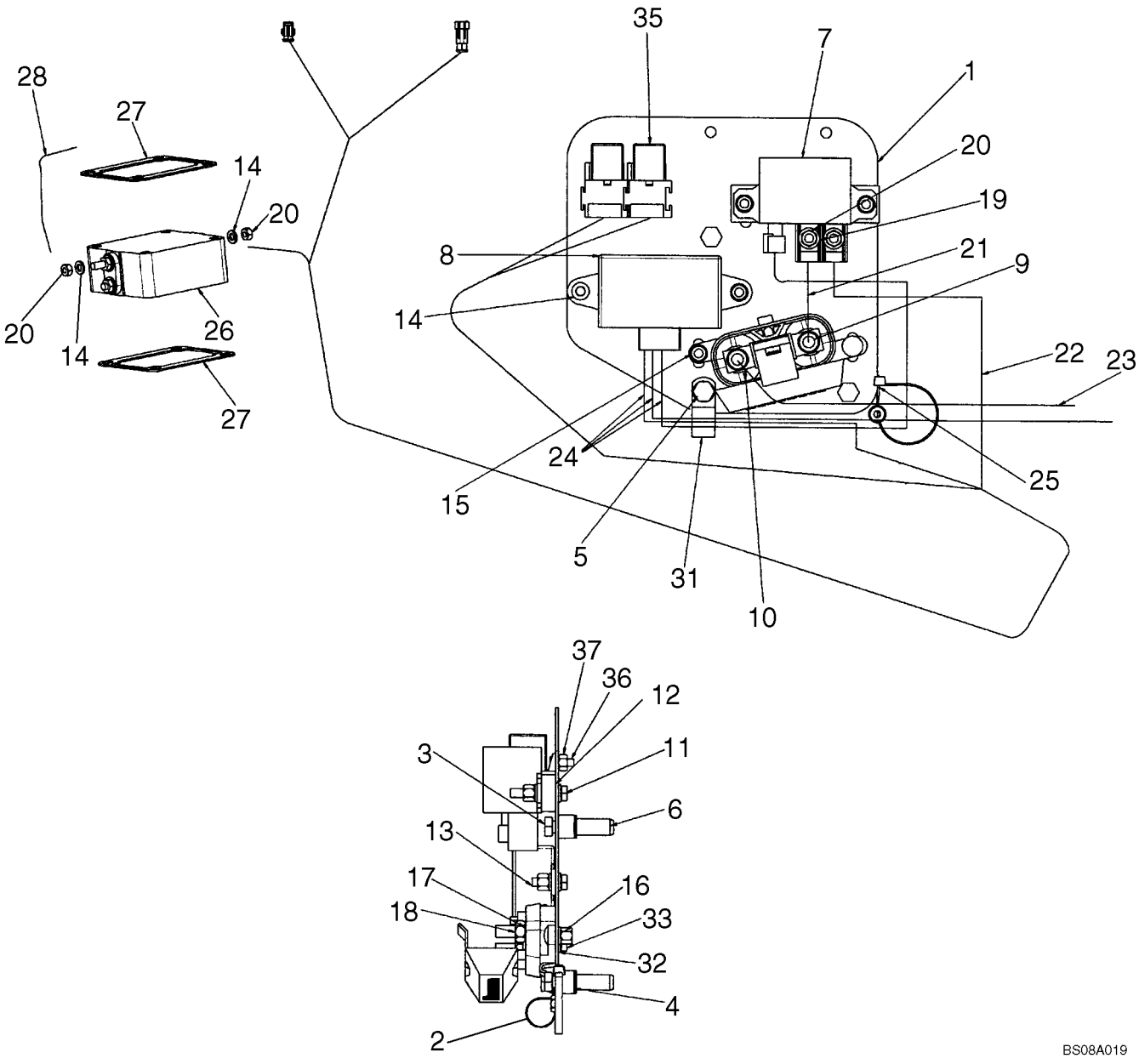

AQUECEDOR DA GRADE DE ARRANQUE A FRIO

REF	FN	PART NUMBER	YR/SN	QTY	DESCRIPTION
36		87301687		2	PARAFUSO, Hex Wash Hd, #10-32 x 1/2"
37		231-24409		2	CONTRA PORCA, #10-32

04-07		p1	07/08

FIAÇÃO DA CONSOLA DIANTEIRA - INTERRUPTORES

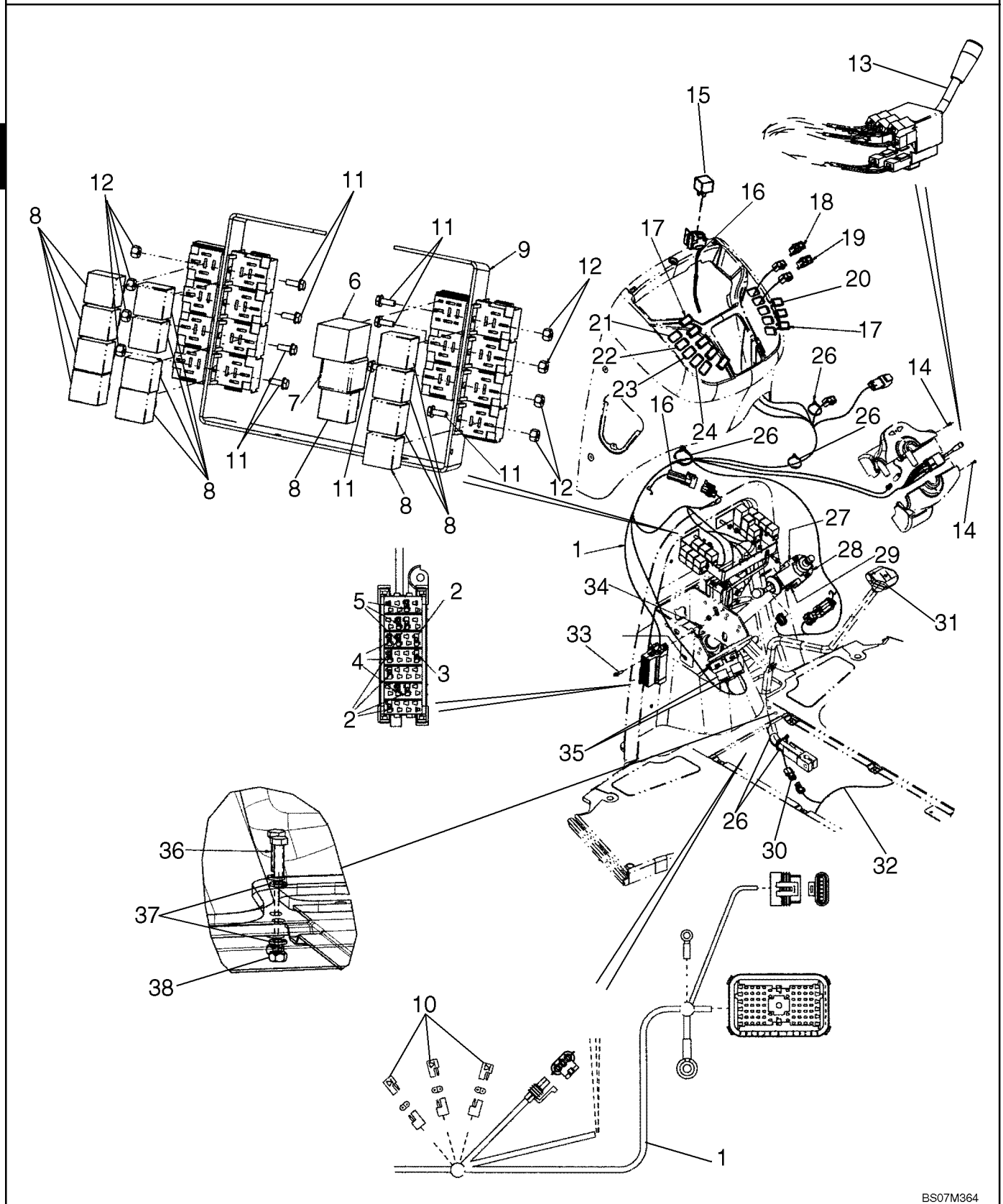

FIAÇÃO DA CONSOLA DIANTEIRA - INTERRUPTORES

REF	FN	PART NUMBER	YR/SN	QTY	DESCRIPTION
1		87726592		1	CHICOTE DE FIOS, Front Console Harness
2		121412A1		5-6	FUSÍVEL, 10 amp; Mini, Red
3		121413A1		2-3	FUSÍVEL, 15 amp; Mini, Blue
4		121414A1		3	FUSÍVEL, 20 amp; Mini, Yellow
5		121416A1		2	FUSÍVEL, 30 amp; Mini, Green
6		87578455		1	LAMPEJADOR, Relay, Flasher, Hazard; Turn Signal
7		347706A3		1	CONECTADOR, Sealed Time Delay, Shuttle Interlock Timing Relay, Forward Reverse Control
8		87436836		13	CONECTADOR, 40 amp, 12V
9		361900A1		1	BRACADEIRA, Relay Mounting
10		L71879		3	ELEMENTO DE DÍODO
11		87301687		8	PARAFUSO, Hex Wash Hd, #10-32 x 1/2"
12		231-24409		8	CONTRA PORCA, #10-32
13		389487A1		1	INTERRUPTOR, Turn Signal/Driving Lamp High/Low Beam
14		404816A1		2	PARAFUSO, M4 x 12
15		87436836		1	CONECTADOR, 40 amp, 12V; Air Conditioning; Attaches To Front Console Options Harness
16		87726574		1	CHICOTE DE FIOS, Front console Options, Includes (1) L71879 Diode
		L71879		1	ELEMENTO DE DÍODO
		490-11012		1	PARAFUSO, Cross Pan Hd, #10-32 x 3/4", Mounts Relay Recepticle
		193-1000		1	PORCA, Keps, w/LW,#10-32, Mounts Relay Recepticle
17		86000535		2-8	BUJÃO, 1.427" x .62", Plastic, Accessory; If used
18		386849A1		1	INTERRUPTOR, Front Work Lamps
19		386850A1		1	INTERRUPTOR, Hazard Lamps
20		386851A1		1	INTERRUPTOR LUZ DE ALERTA, Rotating Beacon; If Used
21		87585817		1	INTERRUPTOR INTERMITENTE, Comfort Steer Switch; If Used
22		386785A1		1	INTERRUPTOR, Front Wiper; If Used
23		386787A1		1	INTERRUPTOR, Front Windshield Washer; If Used
24		398675A2		1	INTERRUPTOR, Loader Tool Quick Coupler; If Used

3

FIAÇÃO DA CONSOLA DIANTEIRA - INTERRUPTORES

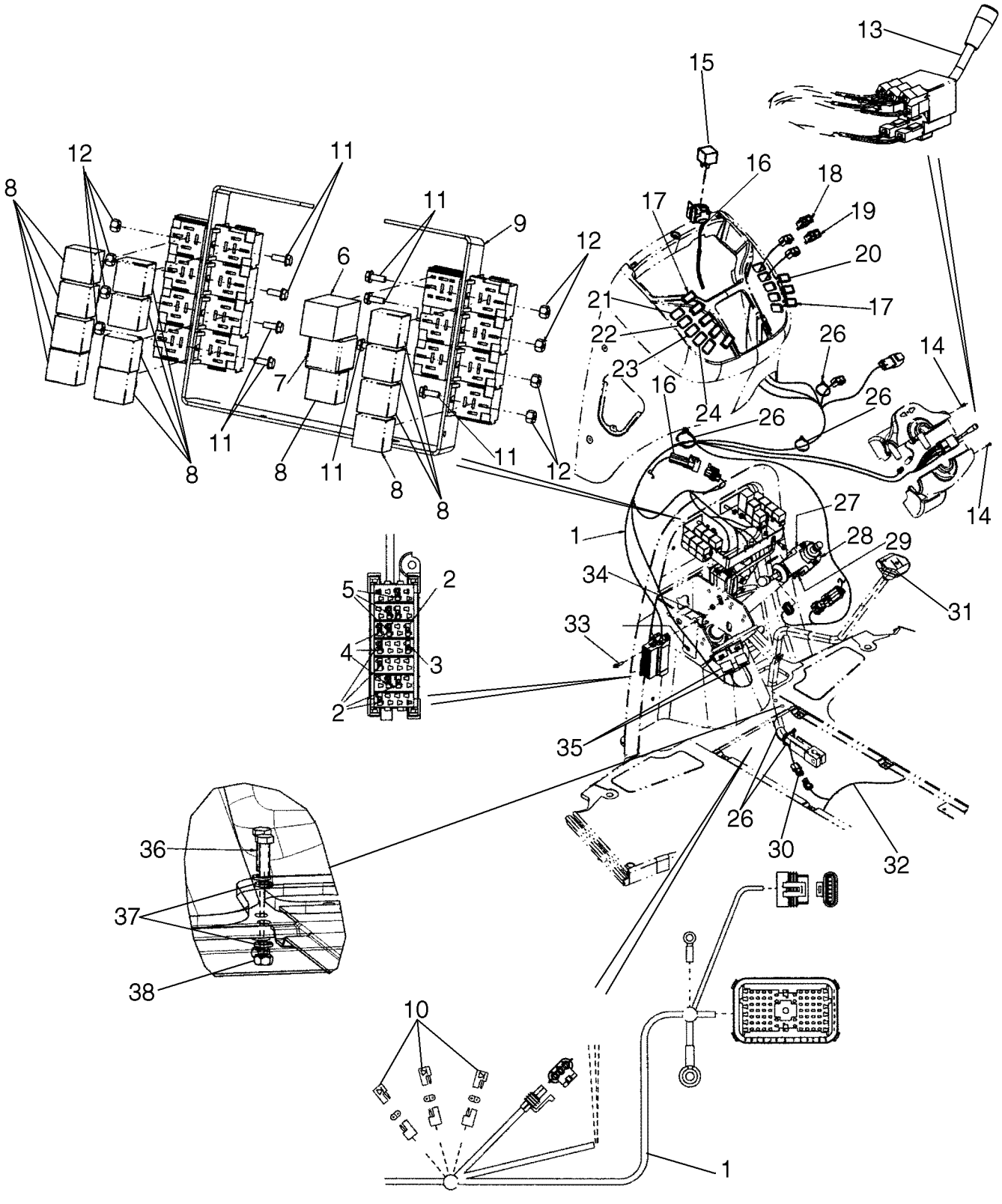

FIAÇÃO DA CONSOLA DIANTEIRA - INTERRUPTORES

REF	FN	PART NUMBER	YR/SN	QTY	DESCRIPTION
26		L18337		4	TIRA DE CABO, 9.95"-12.1" lg, 15 in
27		278328A1		1	INTERRUPTOR, Shuttle Shift; Transmission Forward/Neutral/Reverse Switch
28		366889A2		1	SEMI BRACADEIRA, Shuttle Lever; Includes Threaded Insert
29		397990A1		2	PARAFUSO, M5 x 35
30		123809A2		1	CHICOTE, Clutch Cutout; Transmission Gear Shift Lever; For Lever, See Figure 06-12
31		87312712		1	INTERRUPTOR, Clutch Cutout; For Lever and Knob, See Figure 06-12; Otto 21649 Marking; If Used
32		87726576		1	CHICOTE DE FIOS, Engine, Main Chassis
33		844-6025		1	PARAFUSO, Hex Flg, M6 x 25, 8.8
34		832-10406		1	CONTRA PORCA, M6 x 1, Cl 8
35		82026949		2	INTERRUPTOR, Brake Lamp; Includes Hardware; For Mounting, See Figure 07-03
36		844-8025		2	PARAFUSO, Hex Flg, M8 x 25, 8.8
37		895-15010		4	ARRUELA PLANA, M11 x 24 x 2
38		829-1410		2	PORCA, M10, Cl 10

FIAÇÃO DA CONSOLA DIANTEIRA - SUPORTE

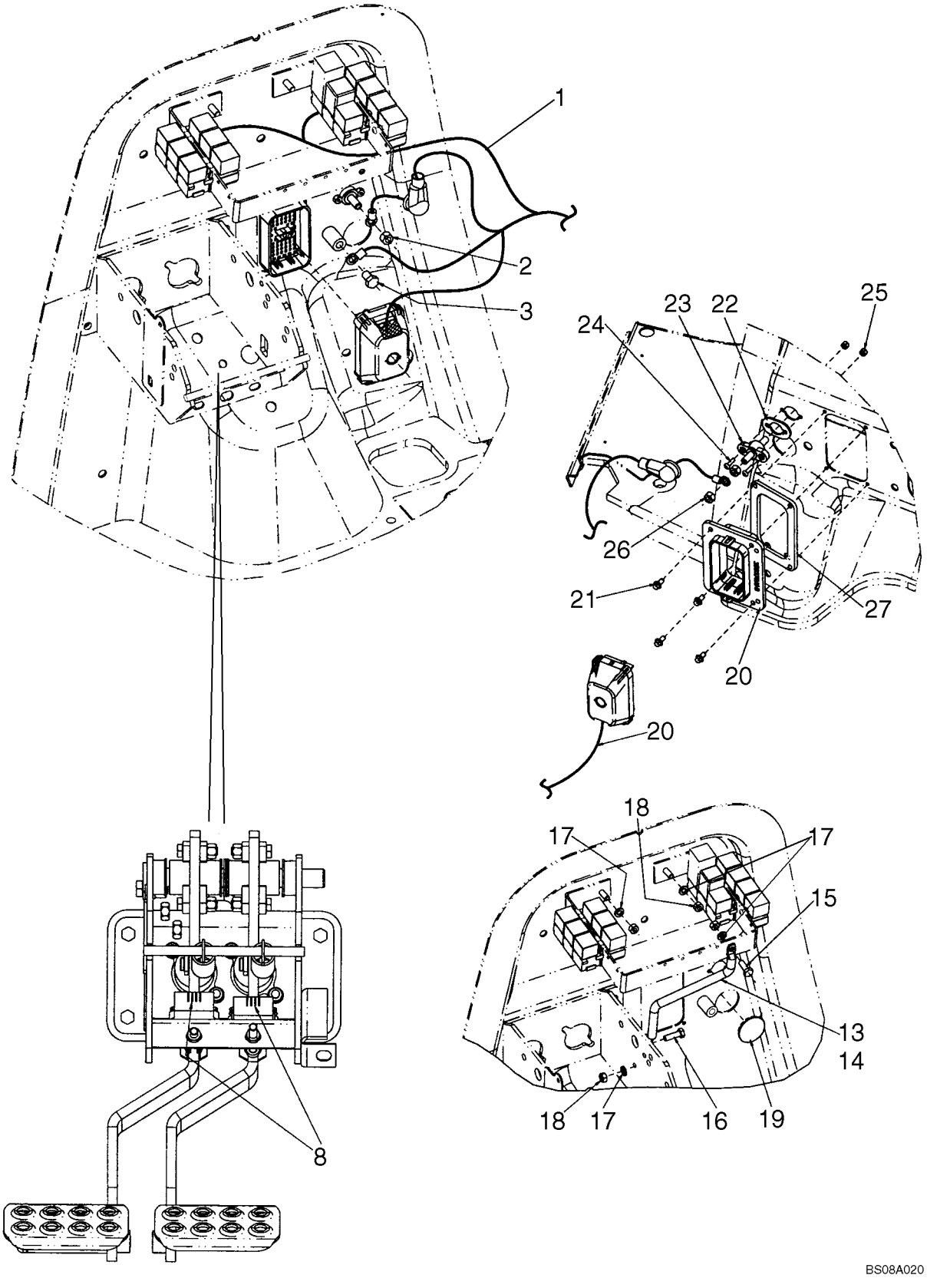

FIAÇÃO DA CONSOLA DIANTEIRA - SUPORTE

REF	FN	PART NUMBER	YR/SN	QTY	DESCRIPTION
1		87726592		1	CHICOTE DE FIOS, Front Console Harness; Mounts To Front Firewall
2		425-106		1	PORCA, 3/8"-16, G5
3		128312A1		1	PARAFUSO, M10 x 15; Mounts To Front Firewall
8		82026949		2	INTERRUPTOR, Brake
13		362930A2		1	TENSOR, Relay Mounting
14		392353A1		1	CONDUITE
15		614-8020		1	PARAFUSO, Hex, M8 x 20, 8.8
16		614-8025		1	PARAFUSO, Hex, M8 x 25, 8.8
17		892-11008		4	ARRUELA-TRAVA, M8
18		829-1408		4	PORCA, M8, Cl 10
19		397876A1		1	BUJÃO, 1-5/8 in, Button
20		87726584		1	CHICOTE DE FIOS, Engine, Main Chassis
21		781-24613		4	PARAFUSO, Hex Flg Hd, M6 x 13
22		357966A1		1	JUNTA
23		357278A1		1	BLOCK JUNCAO, Positive Battery
24		490-11012		2	PARAFUSO, Cross Pan Hd, #10-32 x 3/4"
25		231-24409		2	CONTRA PORCA, #10-32
26		425-106		2	PORCA, 3/8"-16, G5
27		87649405		1	JUNTA

FIAÇÃO DA CONSOLA LATERAL - INTERRUPTORES

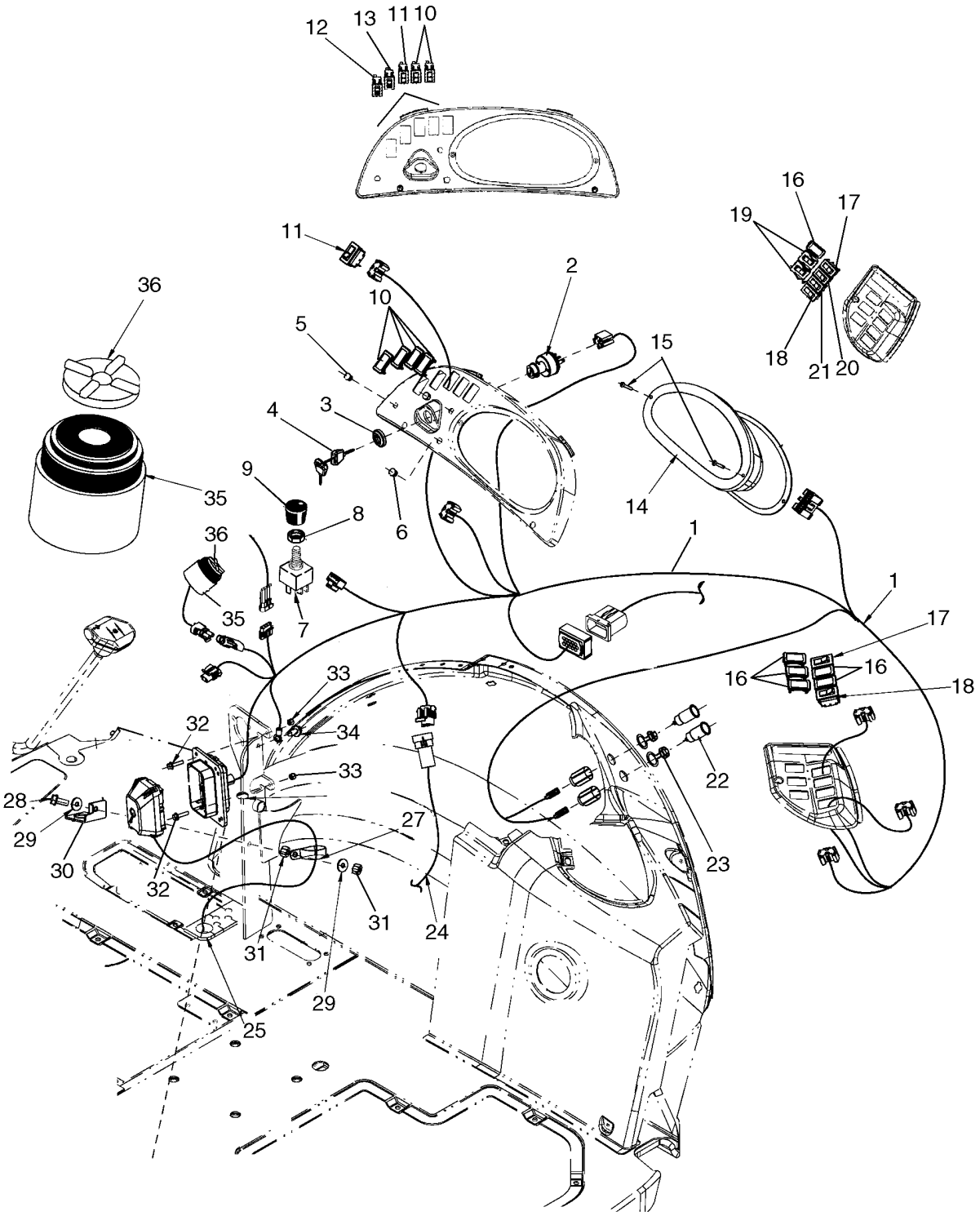

FIAÇÃO DA CONSOLA LATERAL - INTERRUPTORES

REF	FN	PART NUMBER	YR/SN	QTY	DESCRIPTION
1		87726595		1	CHICOTE DE FIOS, Side Console Harness
		282775A1		1	COMUTADOR, Incl. Ref 2 - 4
2		NSS		1	BOLETIM INFORMATIVO, Switch, Without Keys
3		NSS		1	BOLETIM INFORMATIVO, Nut
4		1964831C2		1	JOGO 2 CHAVES, Padded
5		397569A1		2	BUJÃO, 7/16 in, Dome, If Used; For Air Conditioning Switch and Knob; See Figure 09-65
6		397570A1		1	BUJÃO, 1/2 in, Dome, If Used; For Heater Switch and Knob; See Figure 09-64
7		245258A1		1	INTERRUPTOR, Blower
		121415A1		1	FUSÍVEL, 25 amp, Blower
8		A42561		1	PORCA
9		400379A1		1	PLACA
10		86000535		2-4	BUJÃO, 1.427" x .62", Plastic, If Used
11		87614808		1	INTERRUPTOR, Parking Brake
12		133716A1		1	INTERRUPTOR, Four Wheel Drive, If Used
		121412A1		1	FUSÍVEL, 10 Amp; Four Wheel Drive
13		235002A1		1	INTERRUPTOR, Ride Control, If Used
		121413A1		1	FUSÍVEL, 15 Amp, Ride Control
14		87521766		1	INDIC. DE MILHAS/ROTAÇÃO, Instrument Cluster; See Figure 04-12
15		140-119		2	PARAFUSO, Cross Pan Hd, #10-24 x 1 1/4"
16		86000535		1-5	BUJÃO, 1.427" x .62", Plastic, If Used
17		133715A1		1	INTERRUPTOR, Rear Work Lights
18		386852A2		1	INTERRUPTOR, Rear Horn
19		386789A2		2	INTERRUPTOR, Backhoe Quick Coupler, If Used
20		386788A1		1	INTERRUPTOR, Rear Wndshield Washer; If Used
21		386786A1		1	INTERRUPTOR, Rear Wiper; If Used
22		283779A1		2	ESCAPE, Power Plug Outlet, 30 amp Maximum
23		283781A1		2	TAMPA DO RESERVATÓRIO, Power Plug Outlet
24		87726574		1	CHICOTE DE FIOS, Side Options Harness
25		NSS		1	BOLETIM INFORMATIVO, Harness, Loader Control Lever; Included In Loader Control Lever Handle
27		515-23444		1	PRENDEDOR, 1 3/4", Insul, 3/8" Bolt
28		614-8030		1	PARAFUSO, Hex, M8 x 30, 8.8

3

FIAÇÃO DA CONSOLA LATERAL - INTERRUPTORES

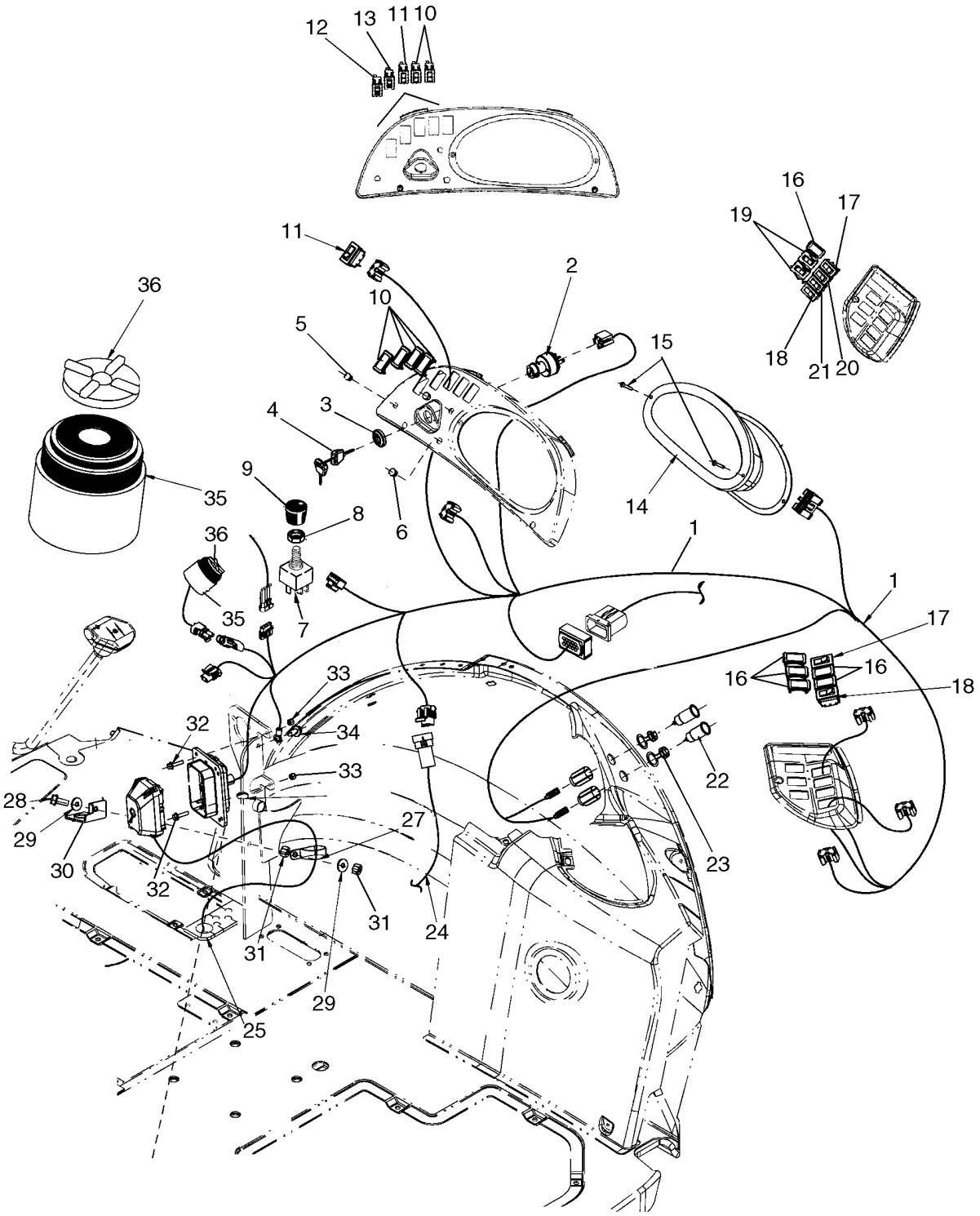

FIAÇÃO DA CONSOLA LATERAL - INTERRUPTORES

REF	FN	PART NUMBER	YR/SN	QTY	DESCRIPTION
29		895-15008		2	ARRUELA PLANA, M8 x 20 x 1.6
30		87700144		2	SUPORTE, Alarm
31		829-1408		2	PORCA, M8, Cl 10
32		844-6025		2	PARAFUSO, Hex Flg, M6 x 25, 8.8
33		832-10406		2	CONTRA PORCA, M6 x 1, Cl 8
34		844-10020		1	PARAFUSO, Hex Flg, M10 x 20, 8.8
35		87527167		1	BUZINA, Alarm, Warning
36		87539792		1	TAMPA, For Muting Audible Alarm, Cab Models Only
		87726573		1	CHICOTE DE FIOS, Chassis Options Harness

PAINEL DE INSTRUMENTOS DIANTEIRO - COBERTURAS

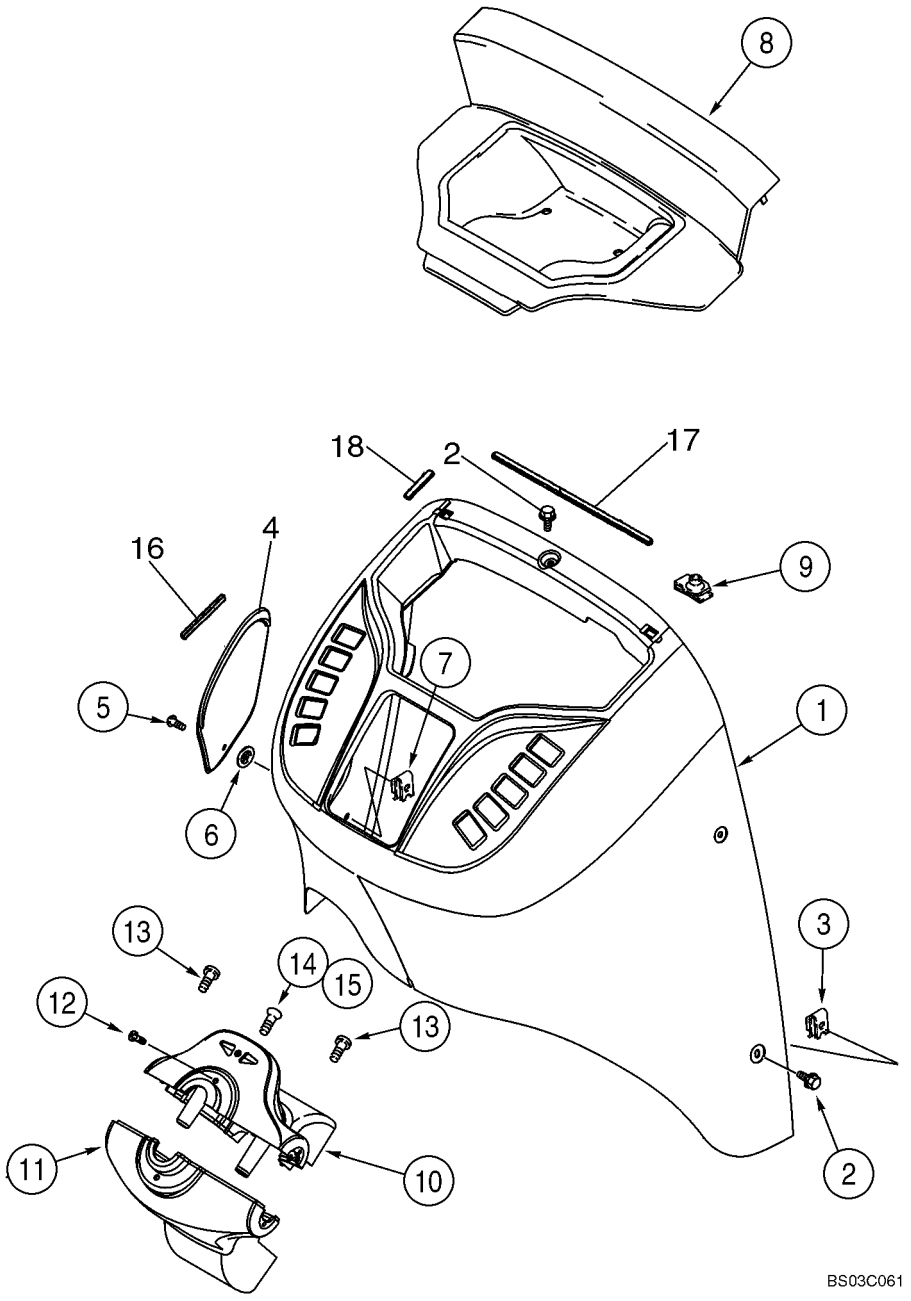

PAINEL DE INSTRUMENTOS DIANTEIRO - COBERTURAS

REF	FN	PART NUMBER	YR/SN	QTY	DESCRIPTION
1		355827A2		1	TAMPA, Front; Standard; If Used
1		87694305		1	PRATELEIRA, Front; Deluxe Cab; If Used
2		87310152		6	PARAFUSO, Hex Flange, M6 x 16, Stainless Steel
3		833-40406		6	PORCA, M6, U
4		360244A1		1	TAMPA, Fuse Access
5		87310086		1	PARAFUSO, Includes Washer, Stainless Steel
6		127009A1		1	GRAMPO
7		131-861		1	PORCA, Tinn, U, #10-24
8		360245A2		1	TAMPA, Relay Access
9		278316A2		2	FIXADOR
10		373689A2		1	TAMPA CONJUNTO, Steering Column, Upper; Incl. Ref 10A - 10E; Components Not Illustrated
10A		360242A2		1	TAMPA
10B		303465A2		1	FAROL, Blinker
10C		303466A1		1	SÍMBOLO, RH Flasher
10D		303467A1		1	SÍMBOLO, LH Flasher
10E		373693A1		1	PARAFUSO, Flat Head, No. 8 x 7/16
11		360243A2		1	TAMPA, Steering Column, Lower
12		87310124		2	PARAFUSO, No. 10 x 1/2, Stainless Steel
13		87310124		2	PARAFUSO, No. 10 x 1/2, Stainless Steel
14		87540980		1	PARAFUSO, No. 10-16 x 1/2, High Grade Stainless Steel
15		131-121		1	PORCA, Tinn, U, #10-24
16		414572A1		1	CINTA, 100 mm, Adhesive Back
17		414034A1		1	CINTA, 330 mm, Adhesive Back
18		414033A1		4	CINTA, 60 mm, Adhesive Back

PAINEL DE INSTRUMENTOS, LADO - COBERTURAS (LADO DIREITO)

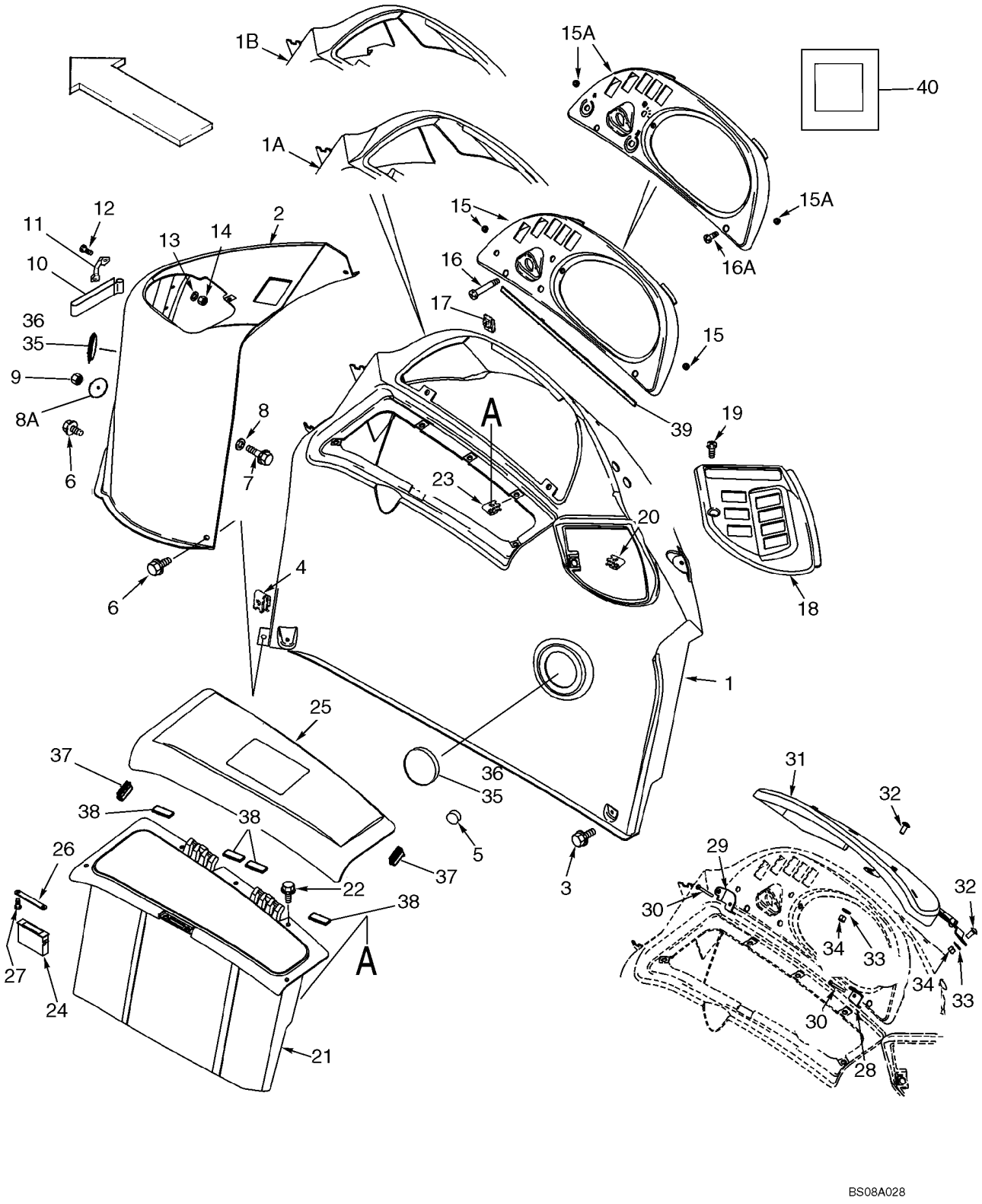

PAINEL DE INSTRUMENTOS, LADO - COBERTURAS (LADO DIREITO)

REF	FN	PART NUMBER	YR/SN	QTY	DESCRIPTION
1		360250A2		1	PRATELEIRA, Canopy Models
1A		355198A2		1	PRATELEIRA, Cab, Single Door
1B		372167A3		1	PRATELEIRA, Cab, Two Door
2		87633581		1	PRATELEIRA, Loader Control
3		87310098		6	PARAFUSO, Flange, M6 x 20, Stainless Steel
4		833-40406		5	PORCA, M6, U
5		L60224		1	PÁRA-CHOQUE, Rubber
6		87310152		2	PARAFUSO, Flange, M6 x 16, Stainless Steel
7		844-6025		1	PARAFUSO, Hex Flg, M6 x 25, 8.8
8		895-15006		1	ARRUELA PLANA, M6 x 25 x 1.6
8A		407660A1		1	ARRUELA PLANA, 7 mm ID x 50 mm OD
9		832-10406		1	CONTRA PORCA, M6 x 1, Cl 8
10		184726A1		1	TIRA DE FIXACAO, Velcro
11		182594A1		2	MANILHA, Velcro Retainer
12		87310184		4	PARAFUSO, M4 x 16; 4.8, Stainless Steel
13		895-11004		4	ARRUELA PLANA, M4, 4,3 x 9 x 0,8 mm
14		832-10404		4	CONTRA PORCA, M4 x .7, Cl 8
15		391818A2		1	AMOSTRA (PLACA), Instrument Cluster Mounting; Canopy Models; Includes 390258A1
		390258A1		2	INSERTO, No. 10, Threaded Insert
15A		390255A2		1	AMOSTRA (PLACA), Instrument Cluster Mounting; Cab Models; Includes 390258A1
		390258A1		2	INSERTO, No. 10, Threaded Insert
16		87310128		2	PARAFUSO, No. 10 x 2-1/4, Stainless Steel; Canopy Models
16A		87310126		2	PARAFUSO, No. 10 x 3/4, Stainless Steel; Cab Models
17		131-619		2	PORCA, J, Ret, #10-24, Cab or Canopy
18		353068A2		1	AMOSTRA (PLACA), Rear Switches
19		87310126		1	PARAFUSO, No. 10 x 3/4, Stainless Steel
20		131-619		1	PORCA, J, Ret, #10-24
21		366632A2		1	CAIXA DE FERRAMENTAS, Right-Hand
22		87310098		5	PARAFUSO, Flange, M6 x 20, Stainless Steel
23		833-40406		5	PORCA, M6, U
24		D127335		1	PRENDEDOR, Magnetic Catch

PAINEL DE INSTRUMENTOS, LADO - COBERTURAS (LADO DIREITO)

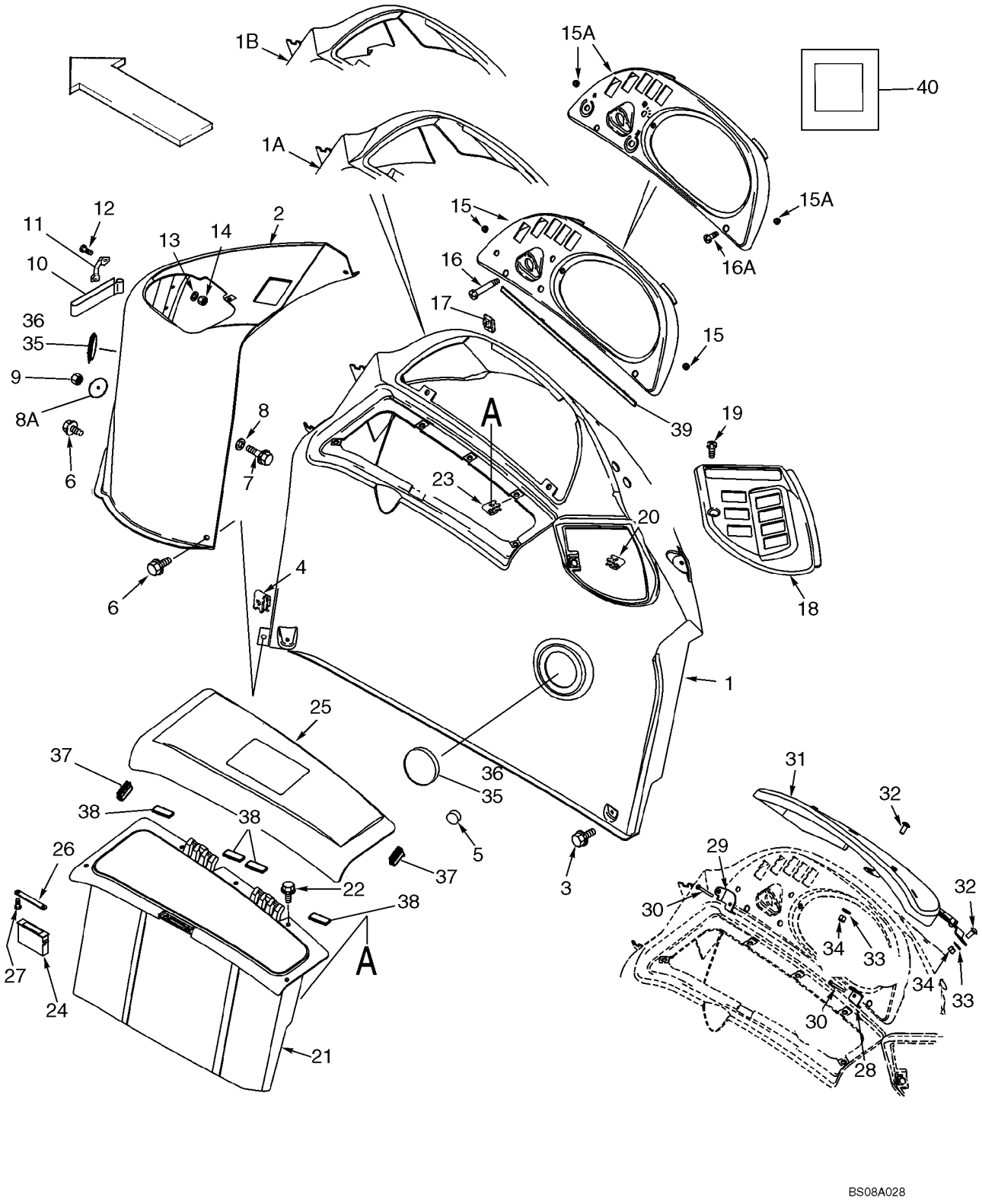

PAINEL DE INSTRUMENTOS, LADO - COBERTURAS (LADO DIREITO)

REF	FN	PART NUMBER	YR/SN	QTY	DESCRIPTION
25		366633A3		1	JANELA (TAMPA), Storage Box
26		375112A1		1	SUPORTE, Striker
27		440-1066		2	PARAFUSO, Cross Pan Hd, #6-32 x 3/8"
28		386369A2		1	BRACADEIRA
29		386368A2		1	BRACADEIRA
30		87310128		2	PARAFUSO, No. 10 x 2-1/4, Stainless Steel
31		385614A4		1	TAMPA CONJUNTO, Instrument Cluster; Anti-Vandalism, Canopy Models; Includes 386502A1, F22426
		386502A1		2	PÁRA-CHOQUE
		F22426		3	BATENTE
32		87310176		2	PARAFUSO, Round Head, M8 x 20, Stainless Steel
33		87310185		2	ARRUELA PLANA, 9 x 20 x 1,6 mm, Stainless Steel
34		832-10408		2	CONTRA PORCA, M8 x 1.25, Cl 8
35		1302758C1		2	BUJÃO, 3 inch
36		87310144		4	PARAFUSO, No. 6 x 1/2, Stainless Steel
37		430471A1		2	ANEL DE VEDAÇÃO, Bulb, 40 mm; Storage Lid Bumper
38		414092A1		4	CINTA, 50 mm, Adhesive Back; Storage Box
39		414071A1		1	TIRA VEDADORA, 480 mm, Adhesive Back
40		412510A1		1	ANEL DE VEDAÇÃO, 25 x 25 x 3 mm, Adhesive Back; Console To Fender

CONJUNTO DE INSTRUMENTOS

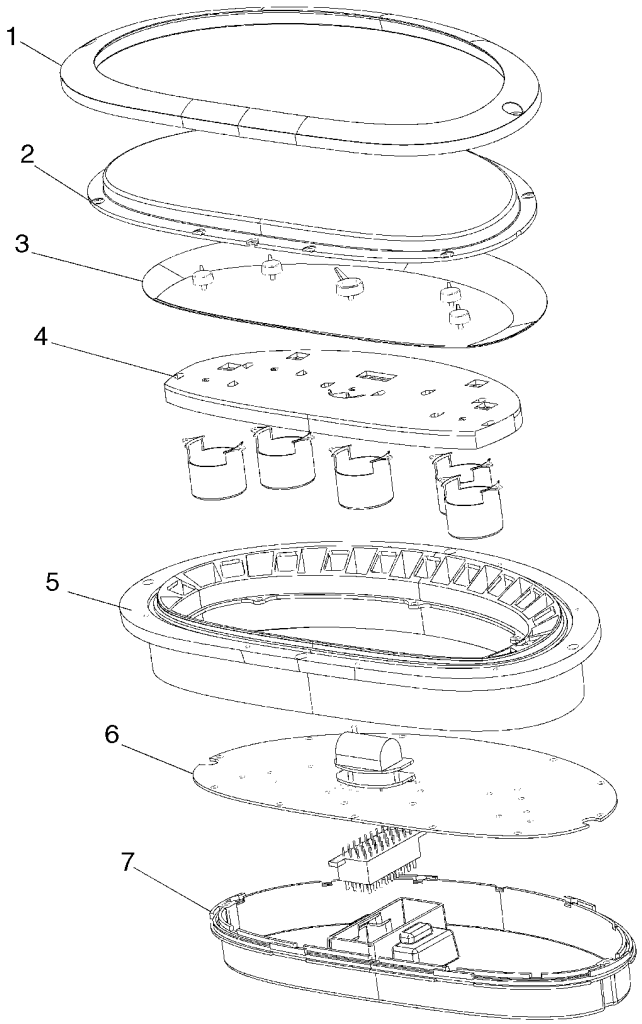

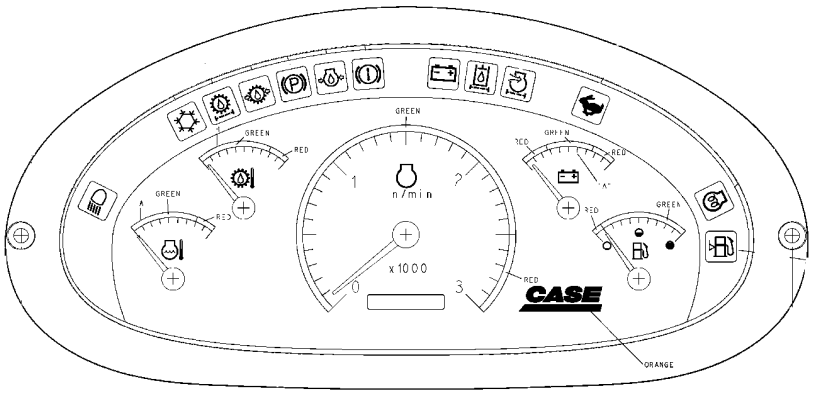

BS08A027

CONJUNTO DE INSTRUMENTOS

REF	FN	PART NUMBER	YR/SN	QTY	DESCRIPTION
		87521766		1	INDIC. DE MILHAS/ROTAÇÃO, Instrument Cluster; Component Parts Not Available At Printing
1		NSS		1	BOLETIM INFORMATIVO, Bezel
2		NSS		1	BOLETIM INFORMATIVO, Lens
3		NSS		1	BOLETIM INFORMATIVO, Overlay
4		NSS		1	BOLETIM INFORMATIVO, Lightpipe
5		NSS		1	BOLETIM INFORMATIVO, Frame
6		NSS		1	BOLETIM INFORMATIVO, PCB
7		NSS		1	BOLETIM INFORMATIVO, Rear Cover

SISTEMA ELÉCTRICO - LUZES DA CAPOTA DA ROPS

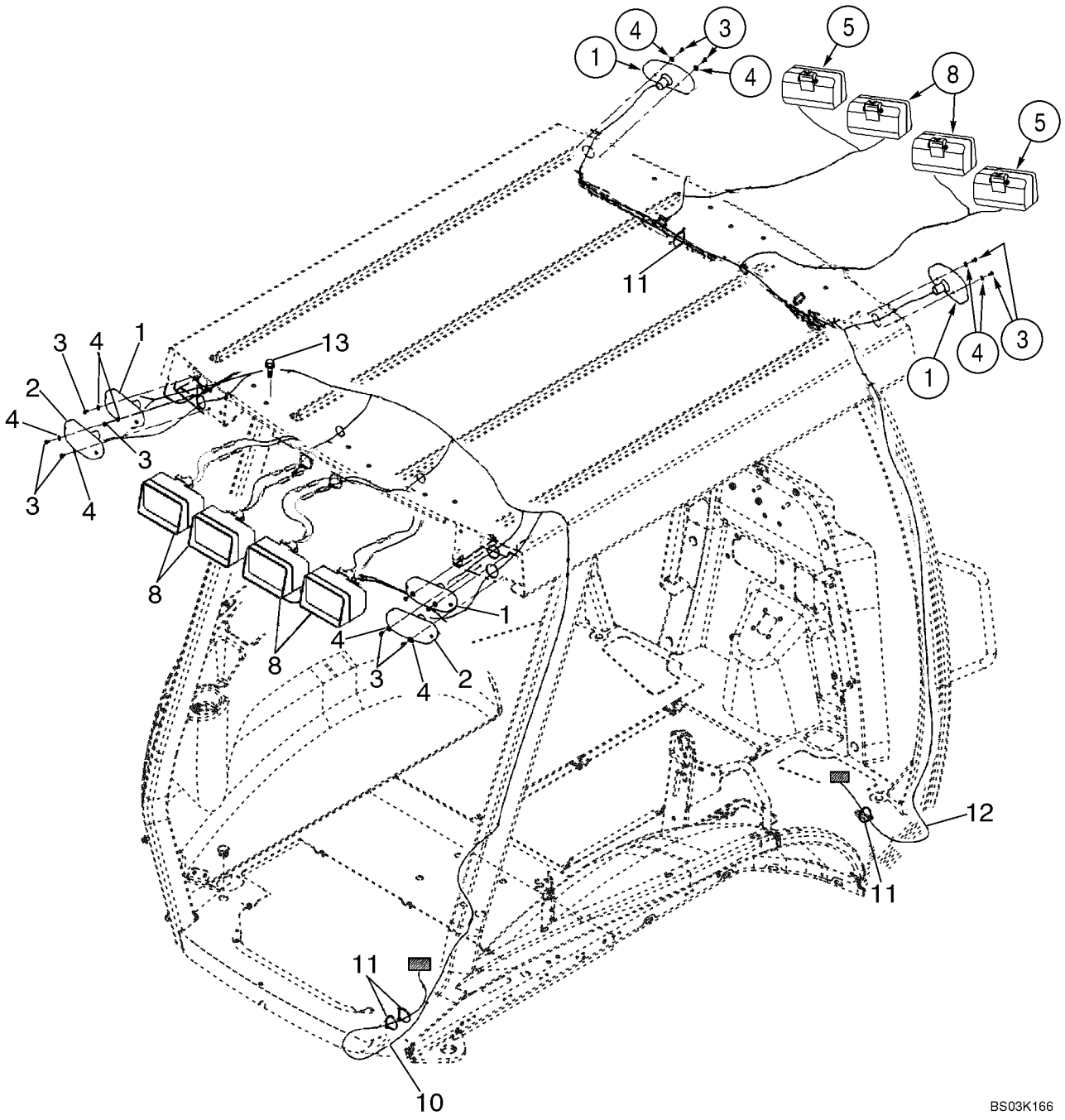

SISTEMA ELÉCTRICO - LUZES DA CAPOTA DA ROPS

REF	FN	PART NUMBER	YR/SN	QTY	DESCRIPTION
1		D135384		4	LANTERNA, Turn Signal and Flasher; See Figure 04-15
2		D121152		2	LAMPADA, Stop And Tail; See Figure 04-15
3		329032A1		12	PARAFUSO, No. 10 x 3/8
4		495-31022		12	ARRUELA PLANA, #10
5		87343247		2	FAROL CONJUNTO, Front Driving; Outer; Incl. 1312210C2 Bulb; Cobo Brand; If Used
		1312210C2		1	LÂMPADA, 12V, 55W, H3
8		398847A3		6	FAROL CONJUNTO, Front and Rear Flood and Work Lamps; Includes 1312210C2, 276498A1; ABL Brand, If Used
8		87443080		6	FAROL CONJUNTO, Front and Rear Flood and Work Lamps; Includes 1312210C2 Bulb; Cobo Brand, If Used
		1312210C2		1	LÂMPADA, 12V, 55W, H3
		276498A1		1	ELEMENTO TRANSPARENT, With Hardened Glass; Replaces 1964801C1 Non-Hardened Lens Used In Production
10		396023A2		1	CHICOTE, Canopy Lamps; Rear
11		L18337		AR	TIRA DE CABO, 9.95"-12.1" lg
12		404617A1		1	CHICOTE, Canopy Lamps and Wiper; Front
13		128312A1		8	PARAFUSO, Flange, M10 x 15

SISTEMA ELÉCTRICO - LUZES DA CABINA DA ROPS

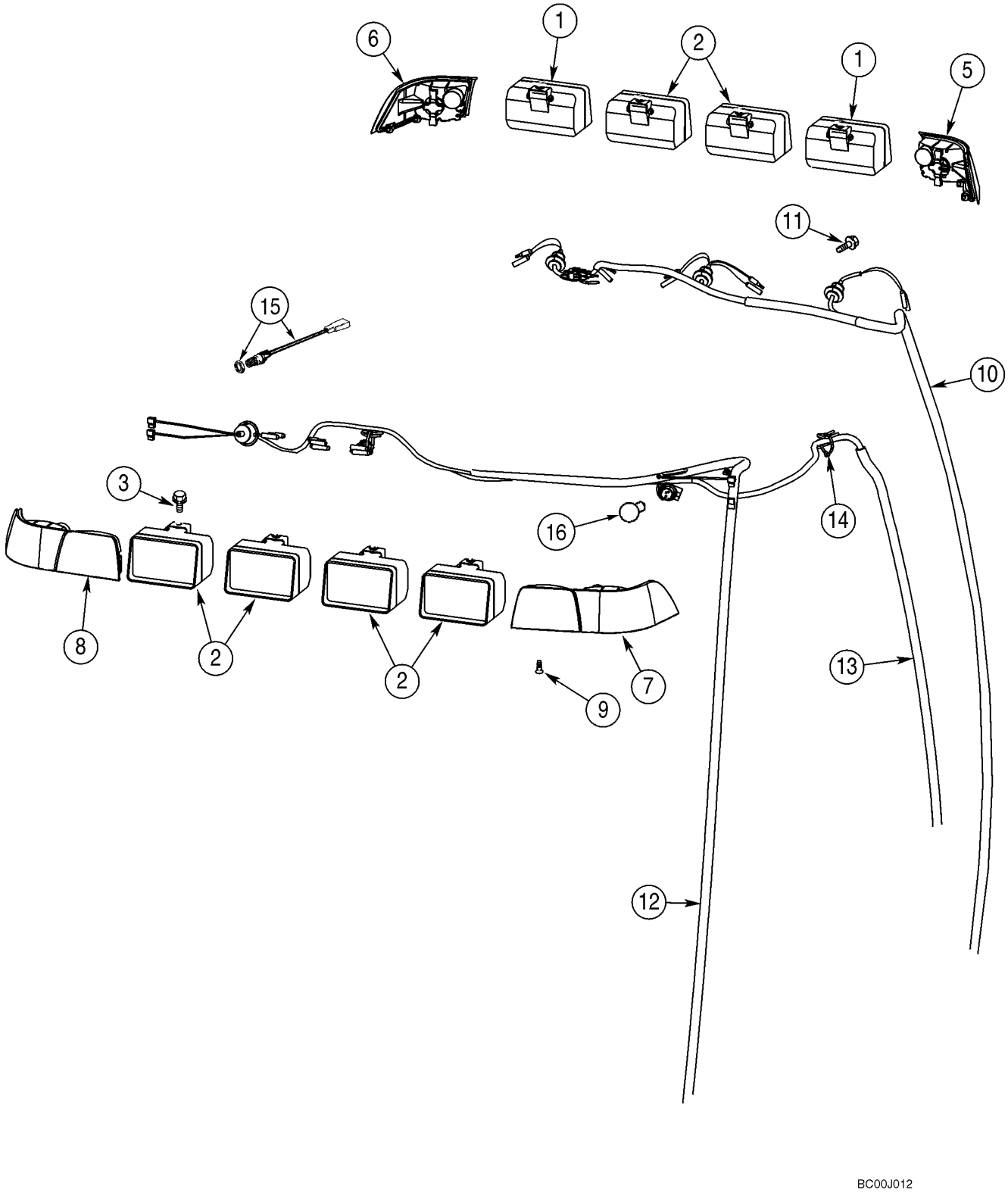

SISTEMA ELÉCTRICO - LUZES DA CABINA DA ROPS

REF	FN	PART NUMBER	YR/SN	QTY	DESCRIPTION
1		87343247		2	FAROL CONJUNTO, Front Driving; Outer; Incl. 9703399 Bulb; Cobo Brand; If Used
		9703399		1	LÂMPADA, 12V, 55W, H3
2		398847A3		6	FAROL CONJUNTO, Front and Rear Flood and Work Lamps; Includes 9703399, 276498A1; ABL Brand, If Used
2		87443080		6	FAROL CONJUNTO, Front and Rear Flood and Work Lamps; Includes 9703399 Bulb; Cobo Brand, If Used
		9703399		1	LÂMPADA, 12V, 55W, H3
		276498A1		1	ELEMENTO TRANSPARENT, With Hardened Glass
3		128312A1		8	PARAFUSO, M10 x 15
5		279224A1		1	LUZ INDICADORA, Amber; Right Front Corner; Includes 87517414 Bulb Holder
6		279223A1		1	LUZ INDICADORA, Amber; Left Front Corner; Incl. 87517414 Bulb Holder
7		357540A1		1	FAROL TRASEIRO, Amber and Red; Right Rear Corner
8		357541A1		1	FAROL TRASEIRO, Amber and Red; Left Rear Corner
9		394863A1		10	PARAFUSO, M6 x 20
10		404617A1		1	CHICOTE, Front
11		844-10020		2	PARAFUSO, Hex Flg, M10 x 20, 8.8
12		398380A3		1	CHICOTE, Rear
13		396018A3		1	CHICOTE, B-Post, Dome Lamp, Radio, Rear Wiper
14		L18337		5	TIRA DE CABO, 9.95"-12.1" lg
15		279265A2		1	INTERRUPTOR, Dome Lamp
16		279916A1		2	LÂMPADA

CONJUNTO DA LUZ (CAPOTA DA ROPS)

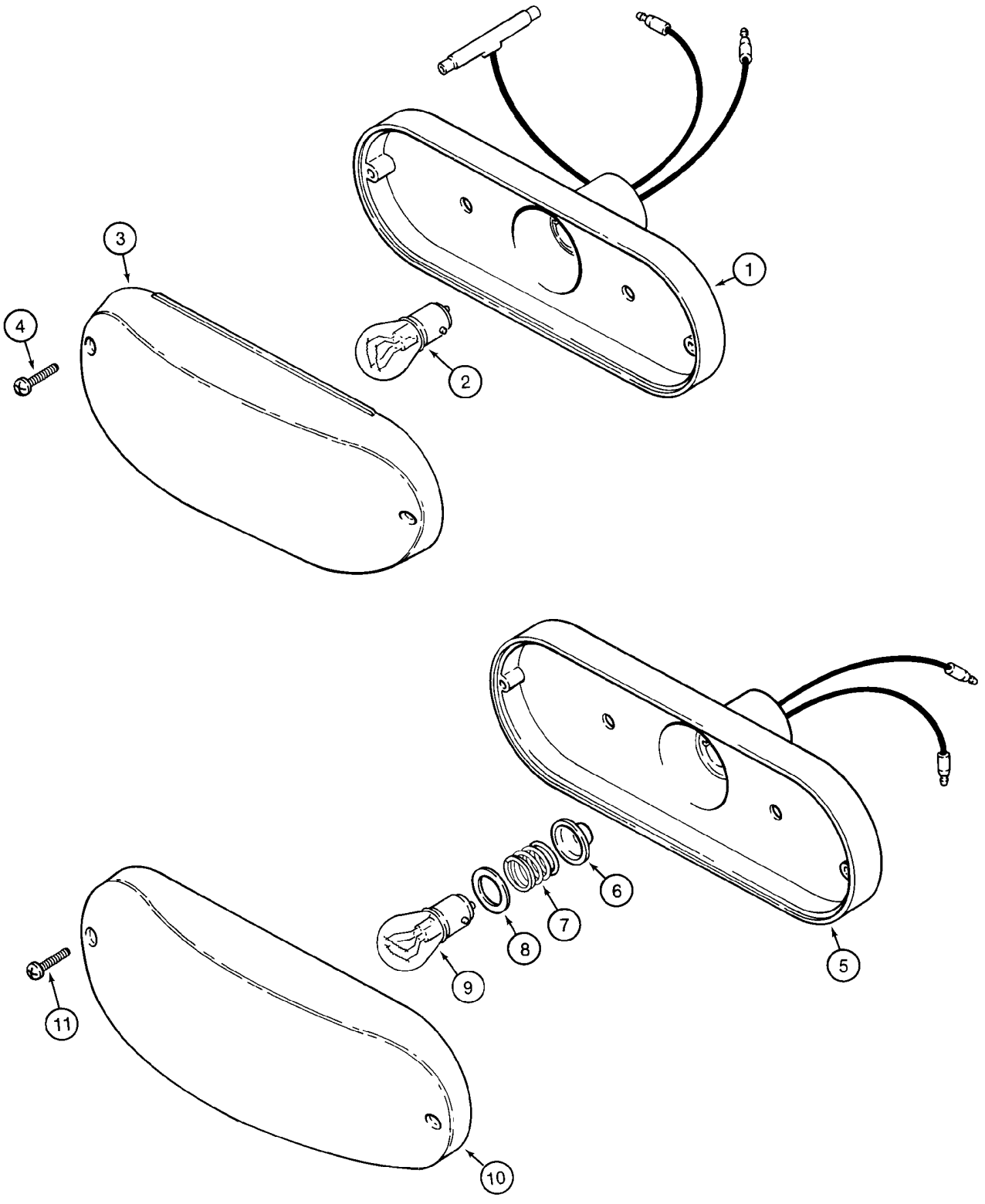

CONJUNTO DA LUZ (CAPOTA DA ROPS)

REF	FN	PART NUMBER	YR/SN	QTY	DESCRIPTION
		D121152		2	LAMPADA, Stop And Tail Lamp; Red; Incl. Ref 1 - 4
1		NSS		1	BOLETIM INFORMATIVO, Housing
2		T34857		1	LÂMPADA, C6, #1157, 12.8V
3		N6836		1	ELEMENTO TRANSPARENT, Red
4		261-14310		2	PARAFUSO, Cross Pan Hd, #6 x 5/8"
		D135384		4	LANTERNA, Turn Signal and Flasher; Amber; Incl. Ref 5 - 11
5		NSS		1	BOLETIM INFORMATIVO, Housing
6		NSS		1	BOLETIM INFORMATIVO, Seal
7		NSS		1	BOLETIM INFORMATIVO, Spring
8		NSS		1	BOLETIM INFORMATIVO, Insulator
9		A41264		1	LÂMPADA, #1156, 12V
10		N14283		1	TRANSPARENTE, Amber
11		261-14310		2	PARAFUSO, Cross Pan Hd, #6 x 5/8"

BUZINA - ALARME DE MARCHA ATRÁS

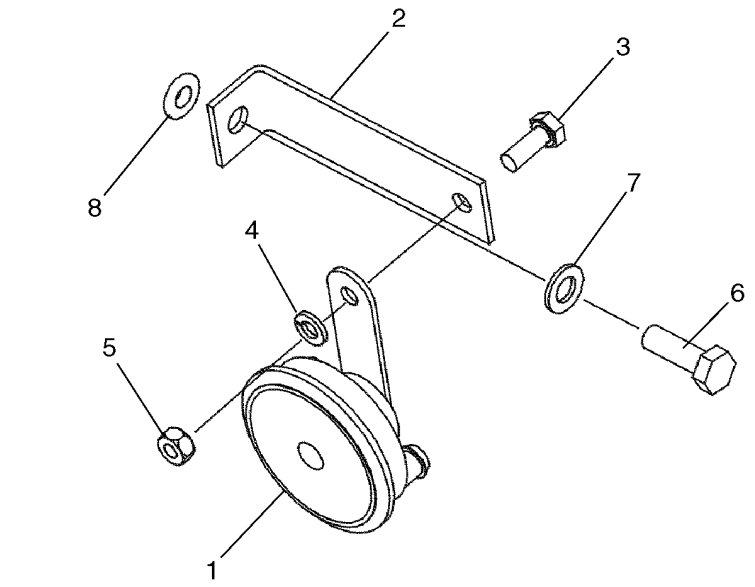

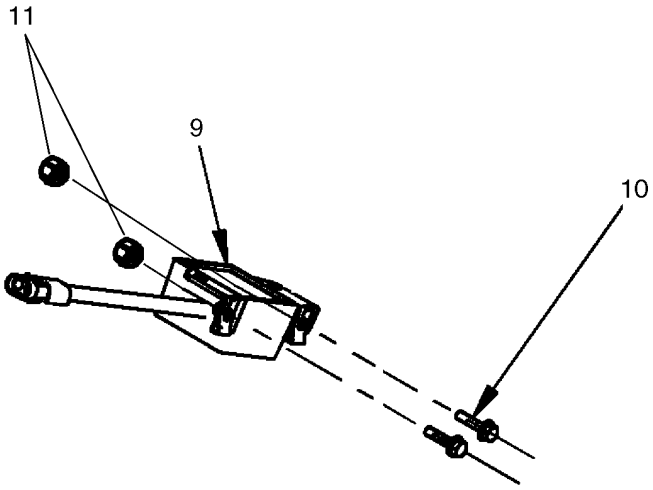

BS08A029

BUZINA - ALARME DE MARCHA ATRÁS

REF	FN	PART NUMBER	YR/SN	QTY	DESCRIPTION
1		237582A1		1	BUZINA, Black
2		87423496		1	SUPORTE
3		614-8020		1	PARAFUSO, Hex, M8 x 20, 8.8
4		892-11008		1	ARRUELA-TRAVA, M8
5		829-1408		1	PORCA, M8, Cl 10
6		614-10030		1	PARAFUSO, Hex, M10 x 30, 8.8
7		895-11010		1	ARRUELA PLANA, M10 x 20 x 2
8		87417721		1	ROSCA POSTIÇA, M10
9		87528887		1	ALARME, Backup; Includes Wire
10		844-6025		2	PARAFUSO, Hex Flg, M6 x 25, 8.8
11		833-40406		2	PORCA, M6, U

FAROL, ROTATIVO

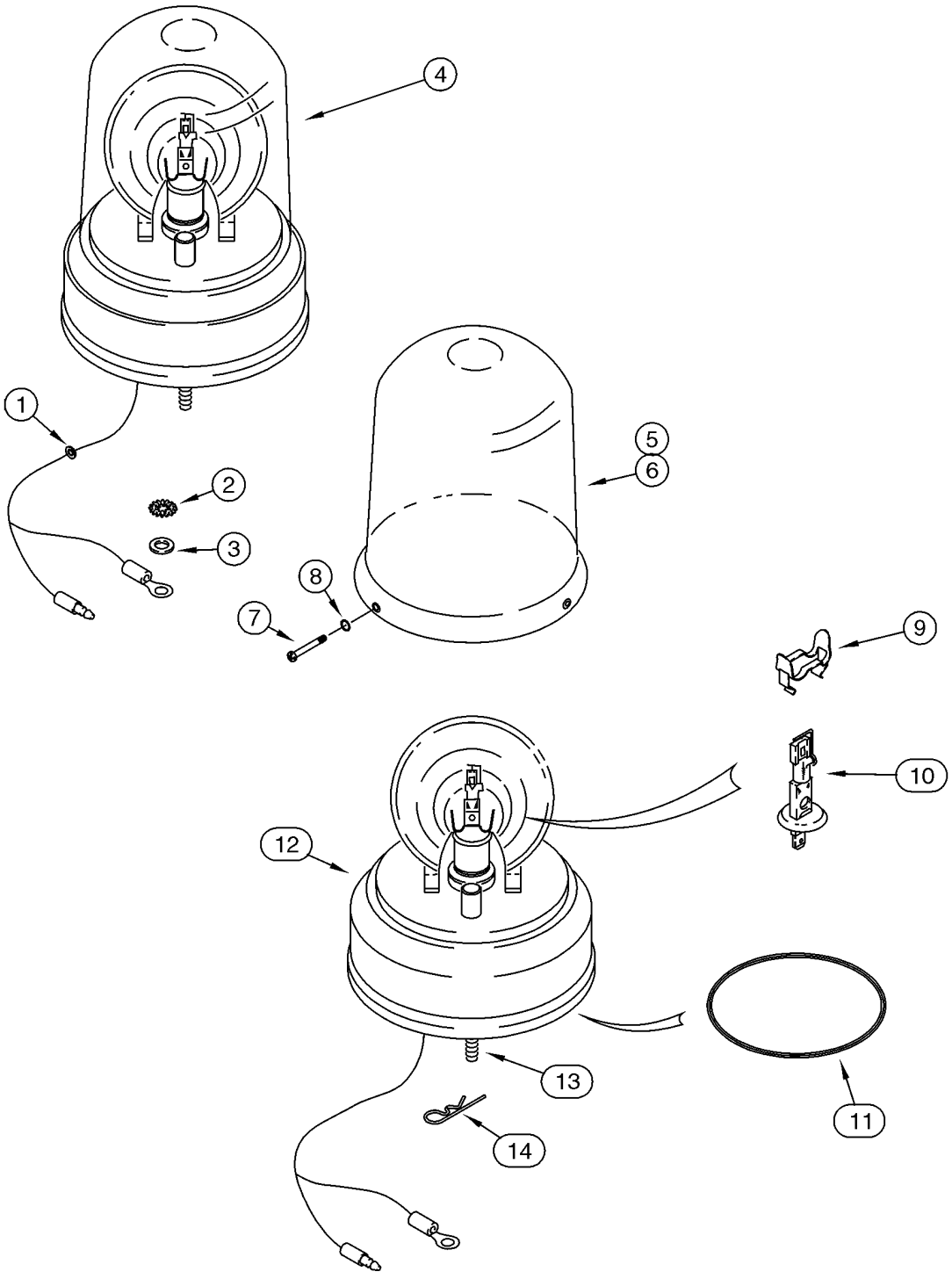

FAROL, ROTATIVO

REF	FN	PART NUMBER	YR/SN	QTY	DESCRIPTION
		387940A1		1	JOGO, Rotating Beacon; Amber, 12V; Incl. Ref 1 - 5, 7 - 16 and Instructions
1		A23870		1	CASQUILHO ISOLADOR
2		493-11026		1	ARRUELA-TRAVA, Ext-Int Tooth, 1/4", Ground
3		495-21031		1	ARRUELA PLANA, 1/4"
4		108366A1		1	LAMPADA ADVERTENCIA, Rotating Beacon Assembly; Amber, 12V; Incl. Ref 5, 7 - 14
5		A187542		1	TRANSPARENTE, Amber; If Used
6		127158A1		1	TRANSPARENTE, Blue; Optional; Not Included In Kit, Purchase Separately; If Used
7		168-71		3	PARAFUSO, Drive, #8 x 1/2"
8		238-5005		3	ANEL "O", -005, 70 Duro, .101" ID x .070" Thk
9		101531A1		1	FIXADOR
10		86616248		1	LÂMPADA, #HI, 55w
11		A187575		1	CORREIAS, Drive Motor
12		NSS		1	BOLETIM INFORMATIVO, Base; With Drive Motor
13		614-6020		3	PARAFUSO, Hex, M6 x 20, 8.8
14		136-54		3	PINO, 1/4 x 11/16
15		386851A1		1	INTERRUPTOR LUZ DE ALERTA, Rotating Beacon; Not Illustrated
16		121412A1		1	FUSÍVEL, Fuse, 10 amp; Not Illustrated

ANTENA DO RÁDIO - FIOS, TRASEIROS

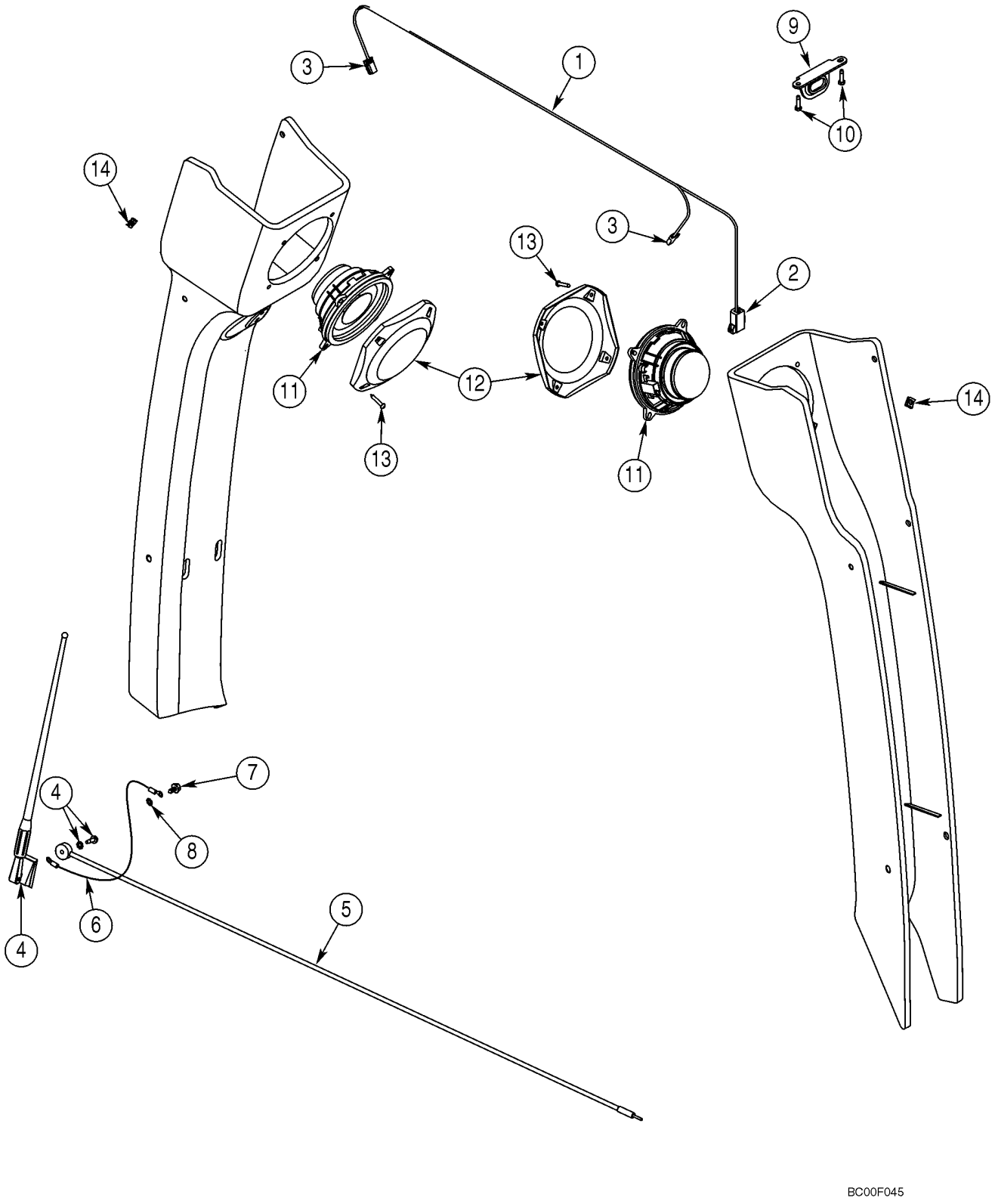

ANTENA DO RÁDIO - FIOS, TRASEIROS

REF	FN	PART NUMBER	YR/SN	QTY	DESCRIPTION
1		382664A2		1	CHICOTE, Speaker; Incl. Ref 2, 3
2		227389A1		1	CONECTOR, To Cab Harness
3		195552A1		2	CONEXAO, Speaker
4		197745A1		1	ANTENA ELÉTRICA, Radio; Includes Flat Washer and Nut Which Are Not Serviced Separately
5		381659A1		1	CABO CONJUNTO
6		291010A1		1	FIO, Ground
7		282-17512		2	PARAFUSO, Hex Wash Hd, #10-16 x 3/4"
8		893-11005		1	ARRUELA-TRAVA, Ext Tooth, M5
9		386927A1		1	BRACADEIRA, Radio Mounting
10		276-26512		2	PARAFUSO, Hex Hd, #10 x 3/4"
11		182721A2		2	ALTO-FALANTE
12		187281A1		2	TAMPA
13		761-17325		8	PARAFUSO, Pan Hd, M4.2 x 25
14		177269A1		8	PORCA, Spring
15		L18331		1	TIRA DE CABO, Tie; Not Illustrated

SISTEMA ELÉCTRICO - SISTEMA HIDRÁULICO AUXILIAR DA RETROESCAVADORA

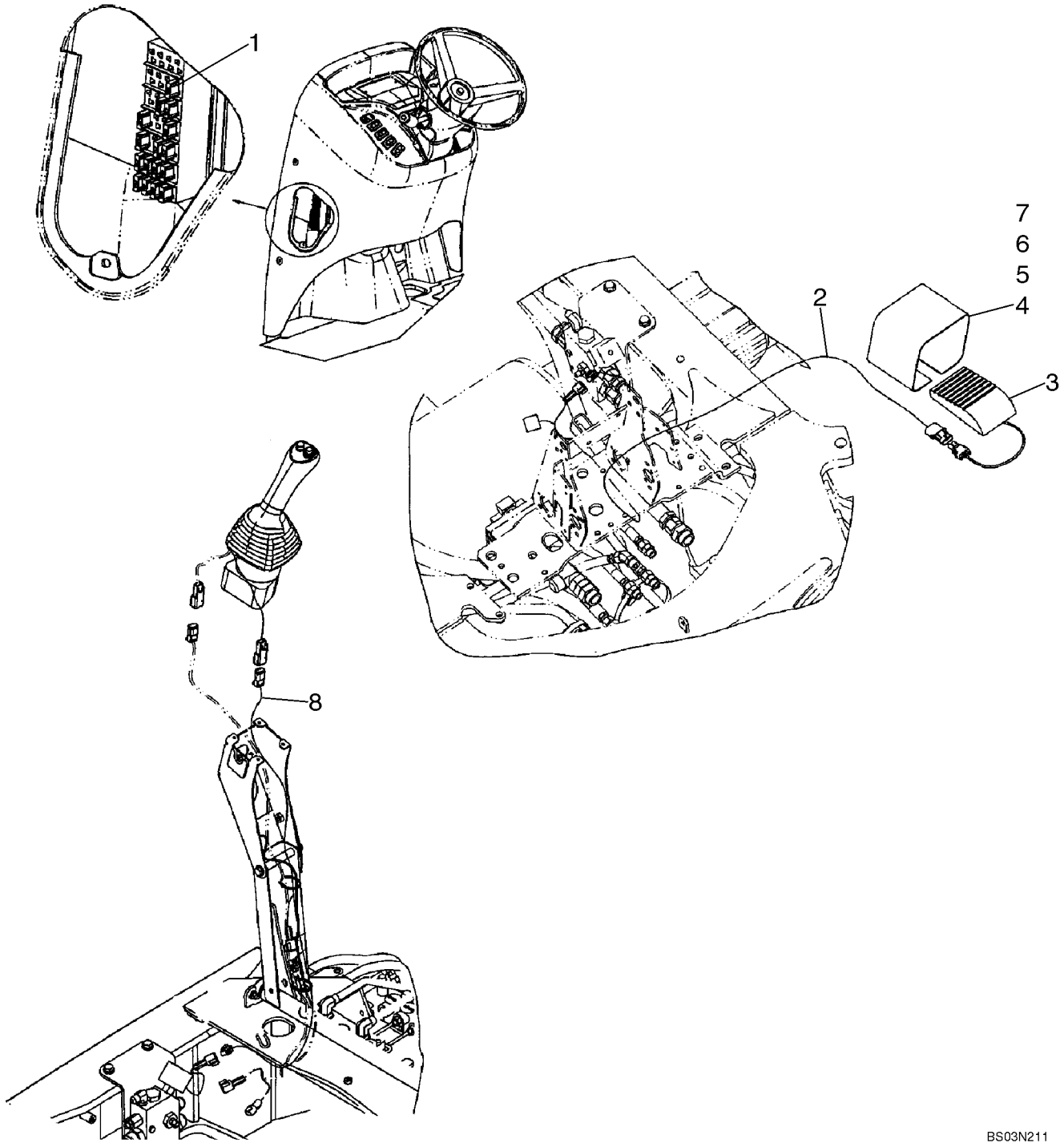

SISTEMA ELÉCTRICO - SISTEMA HIDRÁULICO AUXILIAR DA RETROESCAVADORA

REF	FN	PART NUMBER	YR/SN	QTY	DESCRIPTION
1		121413A1		1	FUSÍVEL, 15 amp
2		87425631		1	CHICOTE DE FIOS, Auxiliary Hydraulic Harness, Uni-Directional; Models Without Pilot Controls
3		137219A1		1	INTERRUPTOR, Foot; Without Pilot Controls
4		300030A1		1	TAMPA, Without Pilot Controls
5		843-1516		2	PARAFUSO, Hex Flat Hd, M5 x 16, 4.8
6		892-11005		2	ARRUELA-TRAVA, M5
7		824-1405		2	PORCA, M5, Cl 5
8		87425635		1	CHICOTE DE FIOS, Auxiliary Hydraulic; Uni-Directional; Models With Pilot Controls

SISTEMA ELÉCTRICO - SISTEMA HIDRÁULICO AUXILIAR DA RETROESCAVADORA, COM CONTROLO AUTOMÁTICO

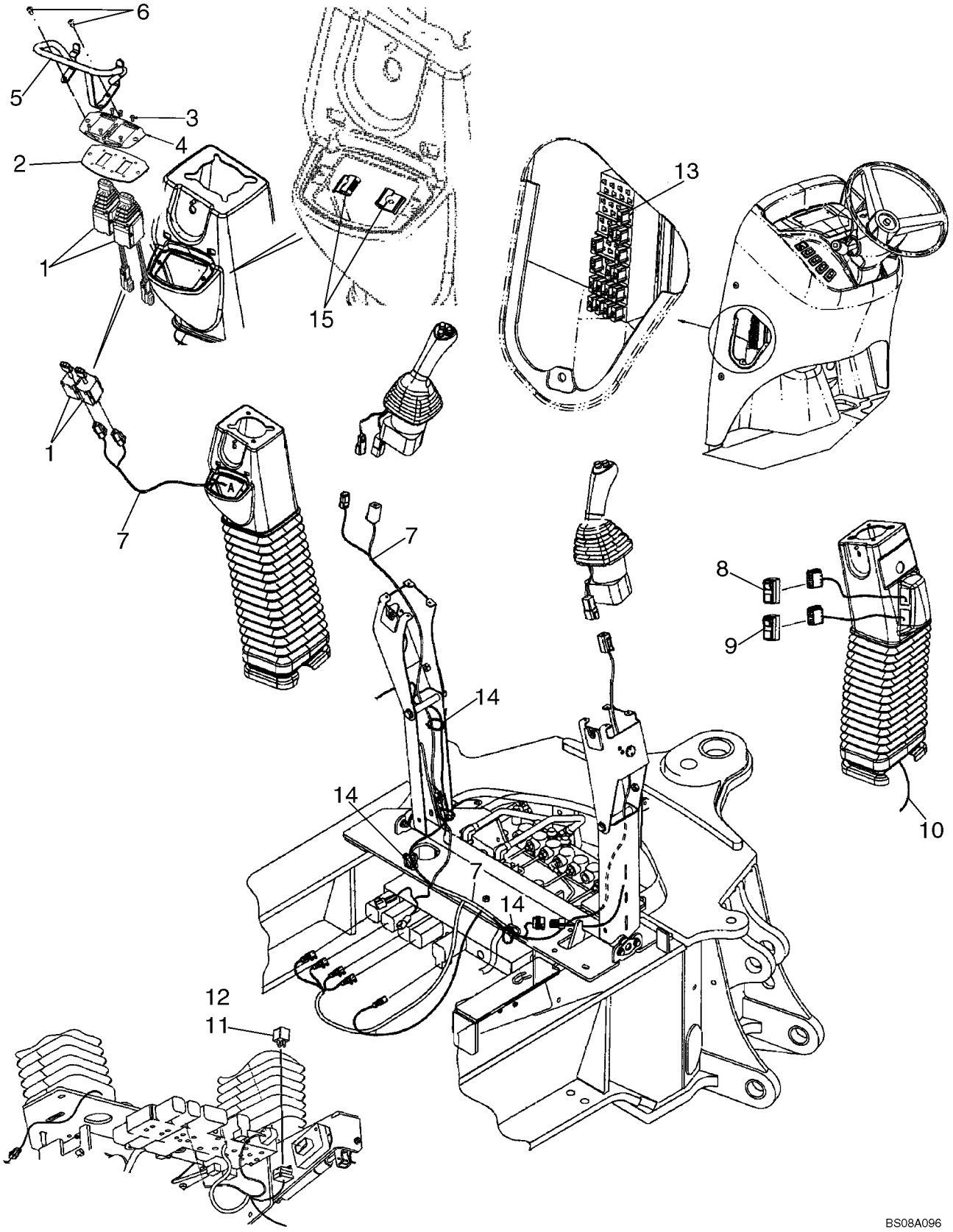

SISTEMA ELÉCTRICO - SISTEMA HIDRÁULICO AUXILIAR DA RETROESCAVADORA, COM CONTROLO AUTOMÁTICO

REF	FN	PART NUMBER	YR/SN	QTY	DESCRIPTION
1		86988086		2	JOYSTICK, Stabilizer
2		87435381		1	PLACA DE MONTAGEM
3		87303784		8	PARAFUSO, Cross Pan Hd, M3 x 8
4		87423812		1	DECALCOMANIA, Stabilizer Switch
5		87307656		1	PROTEÇÃO, Stabilizer Switch Guard
6		87310085		2	PARAFUSO, Hex Washer Head, No. 10-16 x 1, Full Thread
7		87726617		1	CHICOTE DE FIOS, Pilot Control Joystick, Left-Hand
8		87423802		1	INTERRUPTOR, Pilot Control, On/Off
9		87410105		1	INTERRUPTOR, Pilot Control Pattern Selection
10		87425636		1	CHICOTE DE FIOS, Pilot Control Joystick, Right-Hand
11		87436836		1	CONECTADOR, Mini, 12V, 40 amp
12		840-1416		3	PARAFUSO, Cross Pan Hd, M4 x 16
13		121413A1		1	FUSÍVEL, Mini, 15 amp
14		L18337		6	TIRA DE CABO, 9.95"-12.1" lg
15		87452511		2	PORCA, J-Type Nut; If Used

SECTION INDEX
Direção

05-01	VOLANTE - COLUNA
05-02	SISTEMA HIDRÁULICO - DIREÇÃO
05-02A	SISTEMA HIDRÁULICO - DIREÇÃO
05-03	COLUNA DA DIRECÇÃO
05-04	EIXO, DIANTEIRO (86990837) - STEUN
05-05	EIXO, DIANTEIRO (86990837) - ALOJAMENTO
05-06	EIXO, DIANTEIRO (86990837) - COMPARTIMENTO DE ARTICULAÇÃO
05-07	EIXO, DIANTEIRO (86990837) - CILINDRO DA DIRECÇÃO
05-08	EIXO, DIANTEIRO (86990837) - CUBO E ROLAMENTOS
05-09	RODAS DIANTEIRAS - PNEUS

VOLANTE - COLUNA

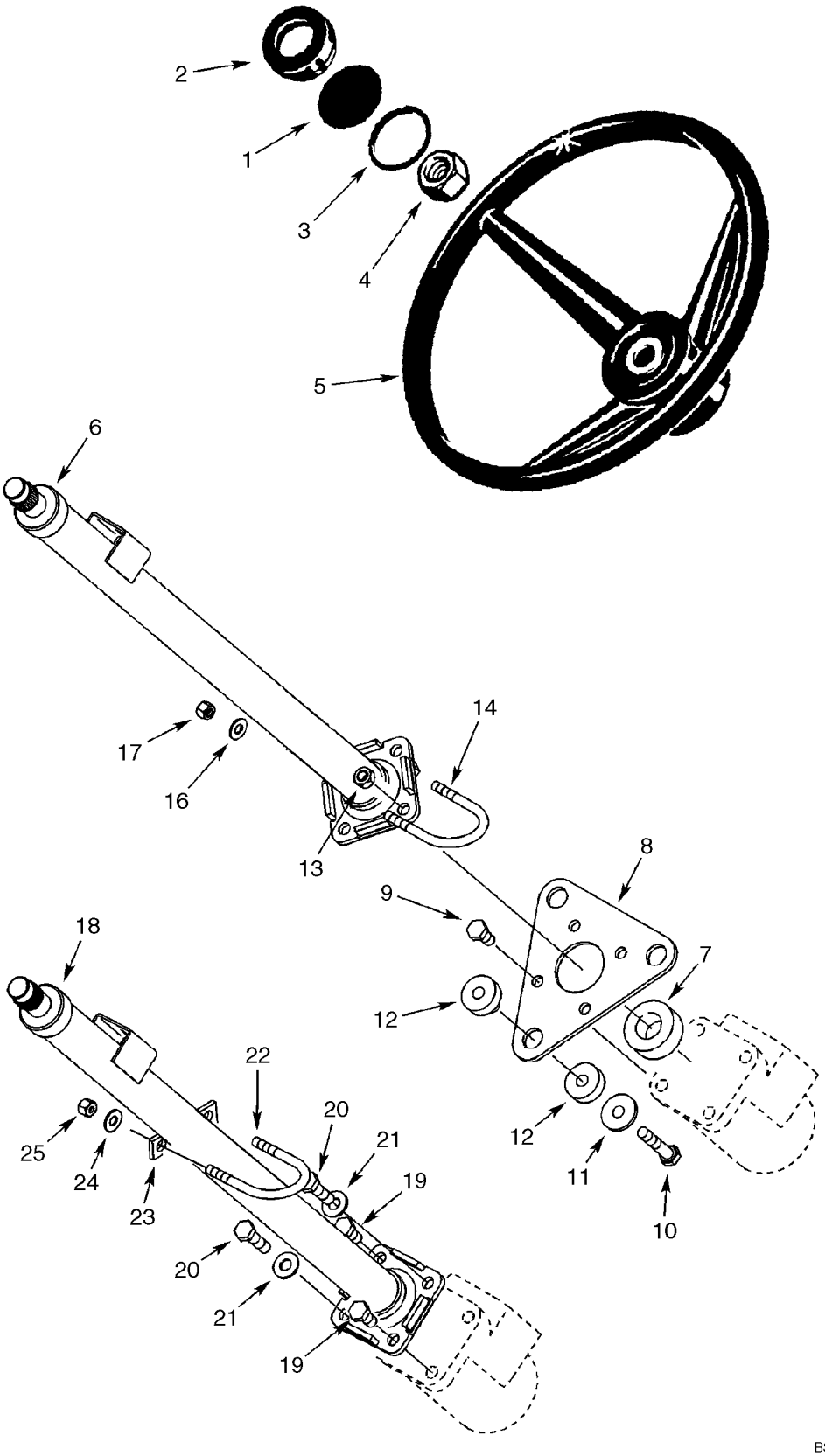

VOLANTE - COLUNA

REF	FN	PART NUMBER	YR/SN	QTY	DESCRIPTION
1		87435569		1	SÍMBOLO, Insert, Case
2		114882A2		1	TAMPA DO RESERVATÓRIO
3		238-5227		1	ANEL "O", -227, 70 Duro, 2.109" ID x .139" Thk
4		1959509C1		1	PORCA
5		A65544		1	VOLANTE DE DIRECAO
6		352568A1		1	COLUNA DE DIREÇÃO, Cab Models, Without Tilt Steering; See Figure 05-03
6		352569A4		1	COLUNA DE DIREÇÃO, Cab Models, With Tilt Steering, 712 mm Long, See Figure 05-03
7		352401A1		1	ANEL DE VEDAÇÃO, 25 x 40 x 19 mm, Sound Insulation
8		388116A2		1	PLACA
9		614-10020		4	PARAFUSO, Hex, M10 x 20, 8.8, Full Thd
10		814-10050		3	PARAFUSO, Hex, M10 x 50, 8.8
11		496-81028		3	ARRUELA PLANA, 13/32" x 1 1/4" x .134", HDN
12		87447450		3	ISOLADOR, 10 mm Hole
13		832-10410		2	CONTRA PORCA, M10 x 1.5, Cl 8
14		379846A1		1	MOLA-TRAVA
16		895-15008		2	ARRUELA PLANA, M8 x 20 x 1.6
17		832-10408		2	CONTRA PORCA, M8 x 1.25, Cl 8
18		348794A1		1	COLUNA DE DIREÇÃO, Canopy Models, See Figure 05-03
19		614-10020		2	PARAFUSO, Hex, M10 x 20, 8.8, Full Thd
20		614-10035		2	PARAFUSO, Hex, M10 x 35, 8.8, Full Thd
21		895-15010		2	ARRUELA PLANA, M11 x 24 x 2
22		379846A1		1	MOLA-TRAVA
23		352727A1		1	ESPAÇADOR
24		895-15008		2	ARRUELA PLANA, M8 x 20 x 1.6
25		832-10408		2	CONTRA PORCA, M8 x 1.25, Cl 8

SISTEMA HIDRÁULICO - DIREÇÃO

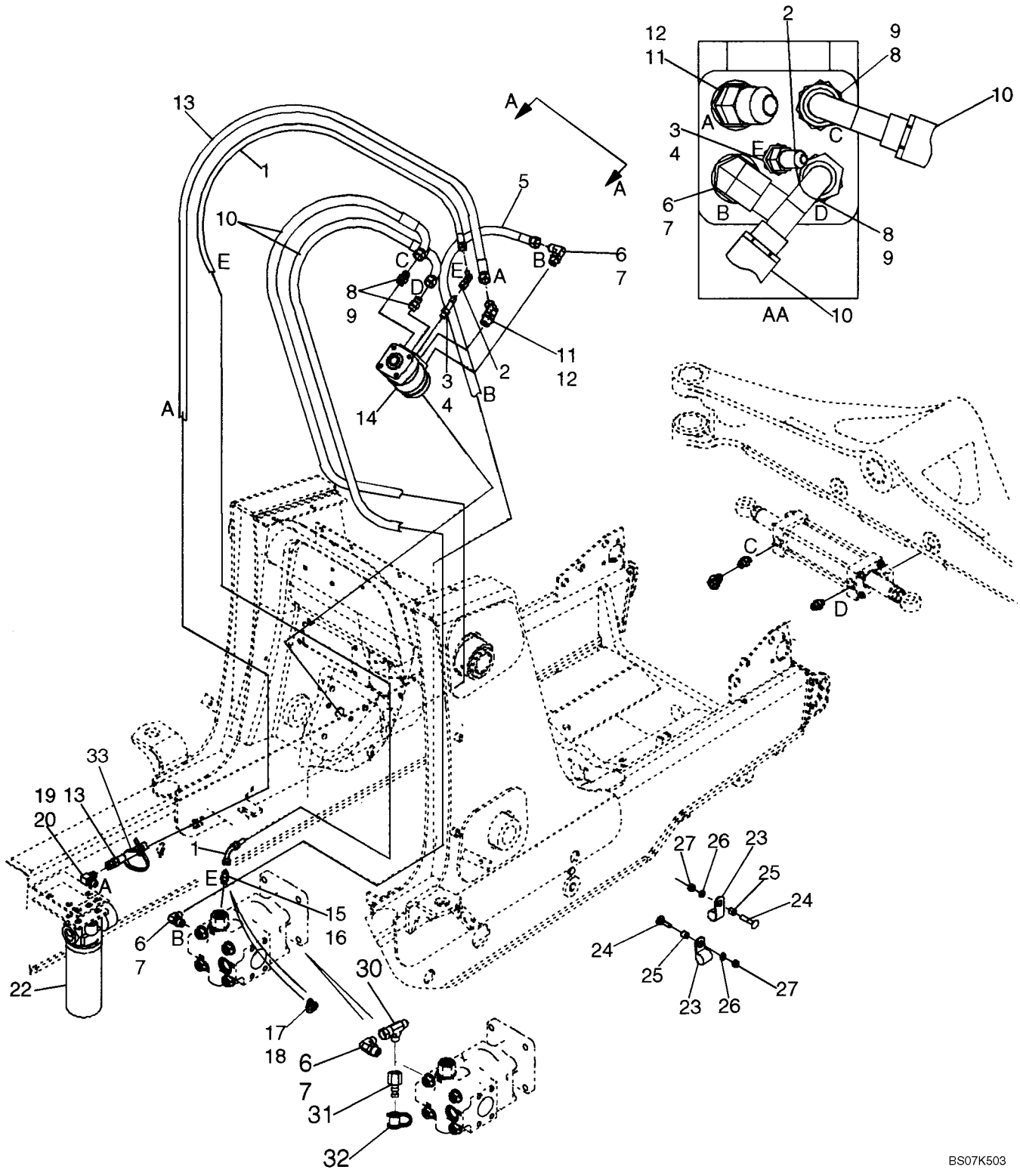

SISTEMA HIDRÁULICO - DIREÇÃO

REF	FN	PART NUMBER	YR/SN	QTY	DESCRIPTION
1		87439137		1	MANGUEIRA CONJUNTO, 1675 mm (66 in), Steering Pilot Hose
2		218-5228		1	COTOVELO, 90º, 7/16"-20, 37º x 7/16"-20, 37º Fem Sw
3		218-5027		1	CONEXÃO, 1/4", Tube x 1/4", NPTF, 37º, Incl. Ref 4
4		237-6004		1	ANEL "O", 4-1, 90 Duro, .351" ID x .072" Thk
5		87439138		1	MANGUEIRA CONJUNTO, 1600 mm (63 in), Steering Pressure
6		218-5106		2	COTOVELO, 90º, 3/4"-16, 37º x 3/4"-16, O-Ring, Incl. Ref 7
7		237-6008		1	ANEL "O", 8-1, 90 Duro, .644" ID x .087" Thk
8		218-5059		2	CONEXÃO, 3/4"-16, 37º x 3/4"-16, O-Ring, Incl. Ref 9
9		237-6008		1	ANEL "O", 8-1, 90 Duro, .644" ID x .087" Thk
10		87429382		2	MANGUEIRA CONJUNTO, 1520 mm (59-7/8 in), To Steering Cylinder
11		218-5136		1	COTOVELO, 45º, 3/4"-16, 37º x 3/4"-16, O-Ring, Incl. Ref 12
12		237-6008		1	ANEL "O", 8-1, 90 Duro, .644" ID x .087" Thk
13		87439136		1	MANGUEIRA CONJUNTO, 1550 mm (61-1/16 in), Return
14		87419636		1	BOMBA, Steering Control Valve; Includes 87454545 Seal Kit, 396592A1 Anti-Cavitation Valve Kit, 396593A1 Bolt Kit
		87454545		1	JOGO DE JUNTAS, Seal; Includes (2) Seals, (8) O-Rings
		396592A1		1	JOGO, Anti-Cavitation Valve; Includes (2) Balls, (4) Springs, (2) Retainers
		396593A1		1	JOGO, Bolt; Includes (7) Bolts
15		218-5057		1	CONEXÃO, 9/16"-18, 37º x 9/16"-18, O-Ring, Incl. Ref 16, Standard Equipment, Models Without Auxiliary Hydraulics
16		237-6006		1	ANEL "O", 6-1, 90 Duro, .468" ID x .078" Thk
17		282428A1		1	VALVULA, CHECK, Tee, 9/16; Incl. Ref 18; Models With Auxiliary Hydraulics
18		237-6006		1	ANEL "O", 6-1, 90 Duro, .468" ID x .078" Thk

SISTEMA HIDRÁULICO - DIREÇÃO

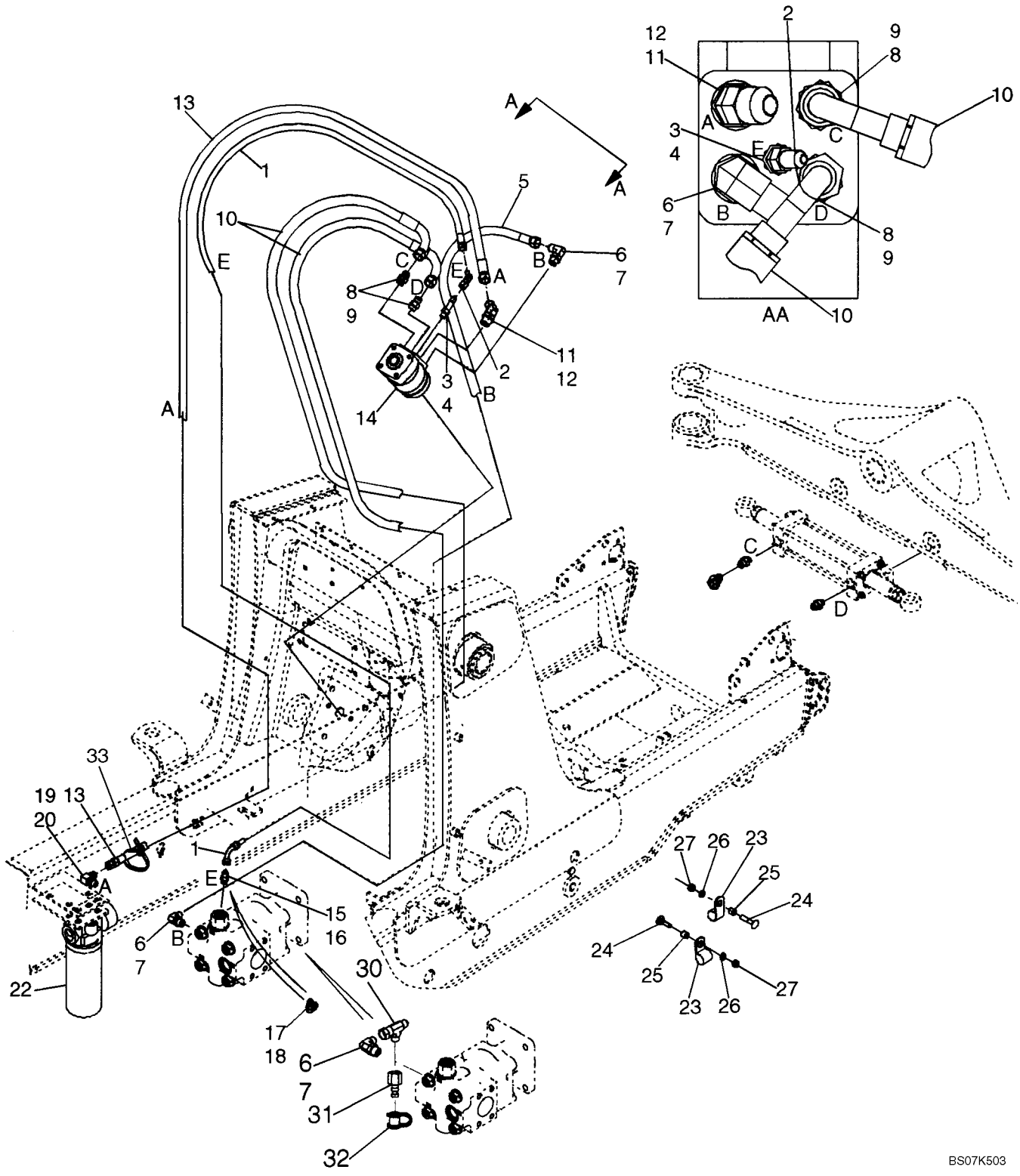

SISTEMA HIDRÁULICO - DIREÇÃO

REF	FN	PART NUMBER	YR/SN	QTY	DESCRIPTION
19		218-5280		1	COTOVELO, 90º, 3/4"-16, 37º x 9/16"-18, O-Ring, Incl. Ref 20
20		237-6006		1	ANEL "O", 6-1, 90 Duro, .468" ID x .078" Thk
22		87440045		1	FILTRO CONJ, Hydraulic Oil, See Figure 08-57
23		515-23159		2	PRENDEDOR, 5/8", Insul, 3/8" Bolt, P-Type
24		711-10050		2	PARAFUSO, Short NK, M10 x 50, Cl8.8
25		120303A1		2	ESPAÇADOR
26		892-11010		2	ARRUELA-TRAVA, M10
27		829-1410		2	PORCA, M10, Cl 10
30		218-845		1	TEE, 37º, 3/4"-16 x 3/4"-16, Fem Sw Run
31		192834A1		1	ACOPLAMENTO, Diagnostic
32		H434163		1	GUARDA-PÓ, Dust
33		L11541		1	TIRA DE CABO

SISTEMA HIDRÁULICO - DIREÇÃO

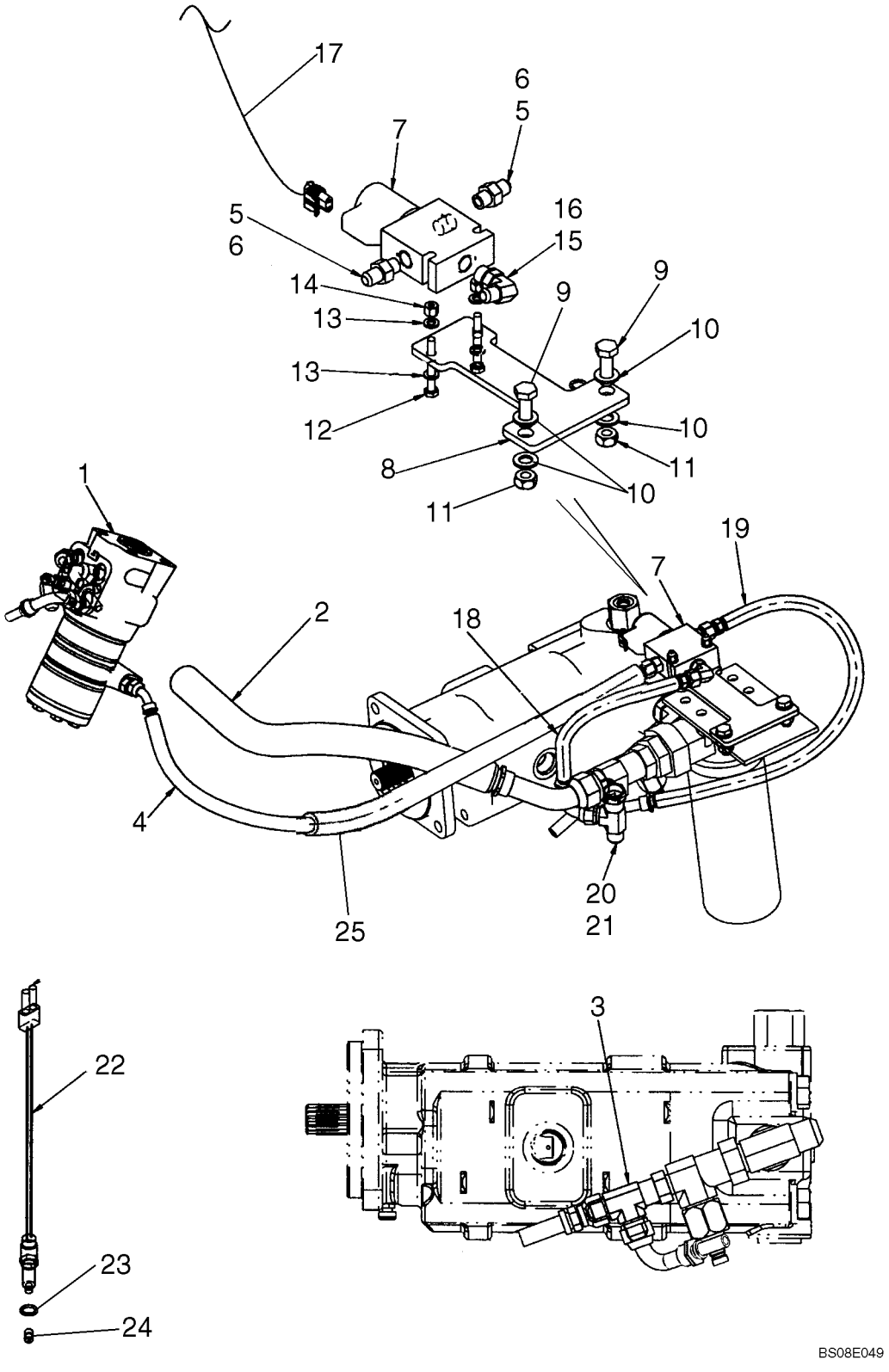

SISTEMA HIDRÁULICO - DIREÇÃO

REF	FN	PART NUMBER	YR/SN	QTY	DESCRIPTION
		REF			INSTRUCAO, For Comfort Steer Electrical, See Figure 04-09A; For Steering Common Parts, See Figure 05-02
1		87579286		1	BOMBA HIDRÁULICA, Steering Control Valve Pump, Dual Speed Steering; Includes 87454545, 396592A1, 87619415; For Attaching Fittings and Hoses, See Figure 05-02
		87454545		1	JOGO DE JUNTAS, Seal Kit; Includes (2) Seals, (8) O-Rings, Instructions
		396592A1		1	JOGO, Anti-Cavitation; Includes (2) Balls, (4) Springs, (2) Retainers
		87619415		1	PARAFUSO, Bolt Kit Includes (7) Capscrews
2		87659613		1	MANGUEIRA CONJUNTO, Return Tube, Filter to Tank; For Fitting at Filter, See Figure 08-03
3		218-845		1	TEE, 37º, 3/4"-16 x 3/4"-16, Fem Sw Run, Used In Addition to Existing Fittings
4		87560508		1	MANGUEIRA CONJUNTO, 1580 mm (62-7/32 in) long Hose; Pilot; Dual Speed
5		218-5057		2	CONEXÃO, 9/16"-18, 37º x 9/16"-18, O-Ring, Incl. Ref 6
6		237-6006		1	ANEL "O", 6-1, 90 Duro, .468" ID x .078" Thk
7		87382811		1	ELETRO VALVULA, Two-Position Three-Way Solenoid Valve; Includes 87348571, 329483A1, 87613159, 87613161
		87348571		1	PORCA, Hex, 1/2-20 NF; Coil
		329483A1		1	JOGO DE JUNTAS
		87613159		1	ELETRO VALVULA, Cartridge, Valve
		87613161		1	SOLEMOID, Coil
8		87610318		1	PLACA DE MONTAGEM, Solenoid Mount Bracket, Painted Tan
9		614-10030		2	PARAFUSO, Hex, M10 x 30, 8.8
10		895-11010		4	ARRUELA PLANA, M10 x 20 x 2
11		829-1410		2	PORCA, M10, Cl 10
12		814-6050		2	PARAFUSO, Hex, M6 x 50, 8.8
13		895-11006		4	ARRUELA PLANA, M6

SISTEMA HIDRÁULICO - DIREÇÃO

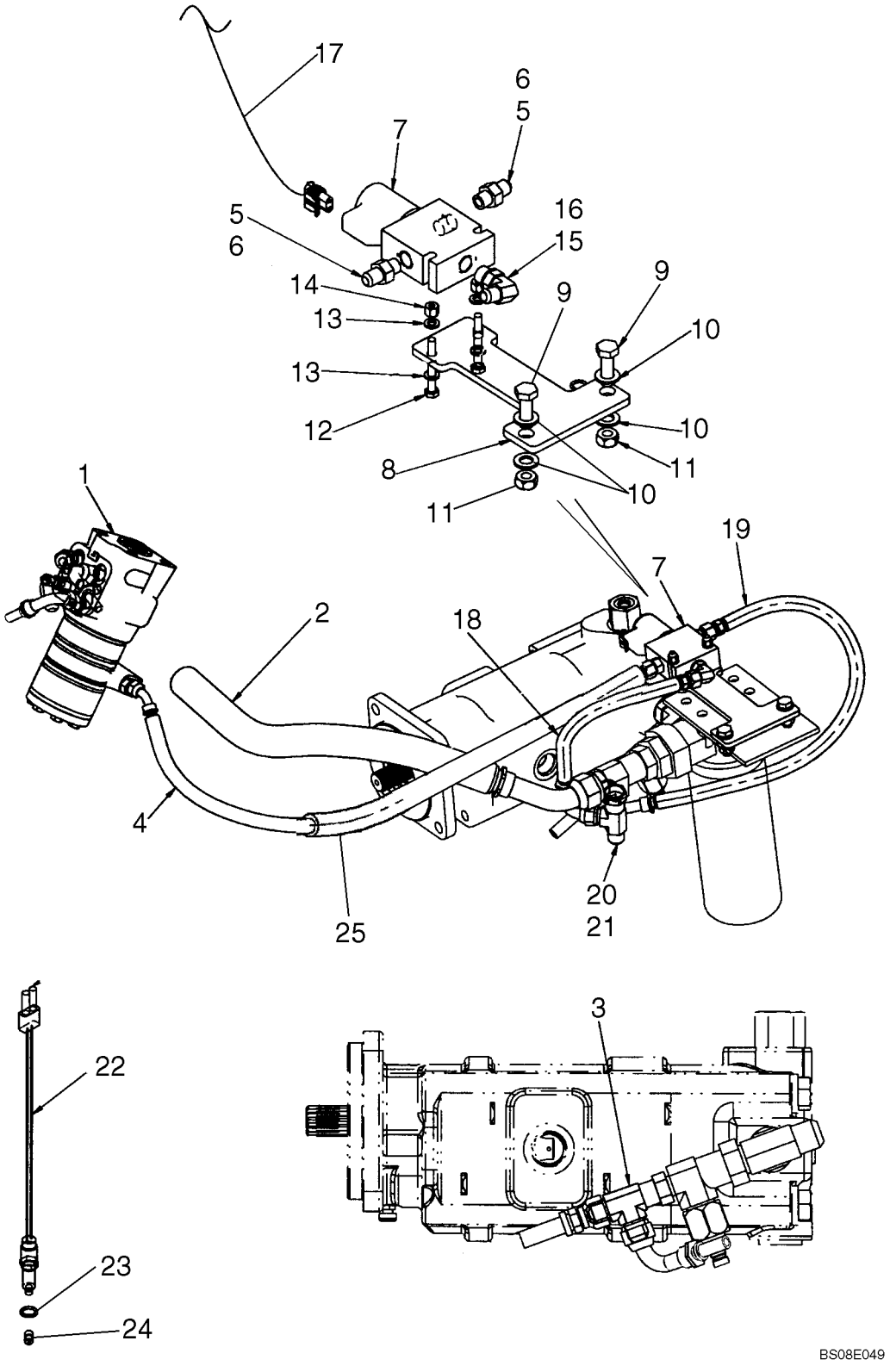

SISTEMA HIDRÁULICO - DIREÇÃO

REF	FN	PART NUMBER	YR/SN	QTY	DESCRIPTION
14		832-10406		2	CONTRA PORCA, M6 x 1, Cl 8
15		218-5105		1	COTOVELO, 90º, 9/16"-18, 37º x 9/16"-18, O-Ring, Incl. Ref 16
16		237-6006		1	ANEL "O", 6-1, 90 Duro, .468" ID x .078" Thk
17		87663365		1	CHICOTE DE FIOS, Comfort Steer Jumper
18		87671893		1	MANGUEIRA CONJUNTO, 315 mm (12-3/8 in) long Hose; Dual Speed To Tank
19		87560507		1	MANGUEIRA CONJUNTO, 705 mm (27-25/32 in) long Hose; Pressure; Dual Speed
20		218-5486		1	TEE, 37º, 7/8"-14 x 7/8"-14, Fem Sw Run x 3/4"-16 Br
21		237-6012		1	ANEL "O", 12-1, 90 Duro, .924 ID x .118" Thk
		87578910		1	SENSOR, Position; Modesl With Standard Transmission Only; Attaches To Chassis Option Harness; Incl. 25 - 27
22		NSS		1	BOLETIM INFORMATIVO, Switch
23		NSS		1	BOLETIM INFORMATIVO, O-Ring
24		NSS		1	BOLETIM INFORMATIVO, Pin
25		87452021		1	TUBO PLASTICO, Hose Guard; 650 mm

COLUNA DA DIRECÇÃO

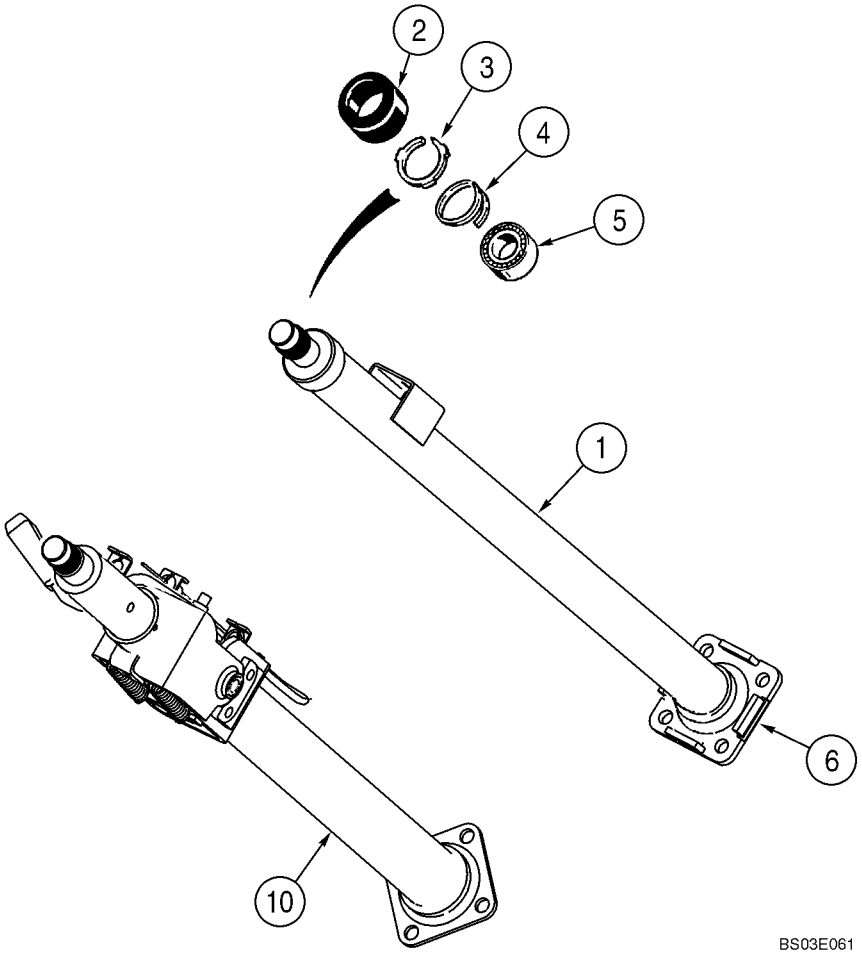

COLUNA DA DIRECÇÃO

REF	FN	PART NUMBER	YR/SN	QTY	DESCRIPTION
		348794A1		1	COLUNA DE DIREÇÃO, Canopy Models, Incl. Ref 1 - 6
1		NSS		1	BOLETIM INFORMATIVO, Column
		352568A1		1	COLUNA DE DIREÇÃO, Cab Models; Without Tilt Steering; Incl. Ref 1 - 6
2		S115351		1	TAMPA DO RESERVATÓRIO
3		NSS		1	BOLETIM INFORMATIVO, Retainer
4		102-1387		1	ANEL, #87, Ext, Spiral
5		NSS		1	BOLETIM INFORMATIVO, Bearing
6		NSS		1	BOLETIM INFORMATIVO, Flange
10		352569A4		1	COLUNA DE DIREÇÃO, 712 mm Long, Cab Models, With Tilt Steering, Includes 87659610, 87659611, 87659612, 87659616
		87659610		1	JOGO DE PEÇAS, Spring Set, Tilt Column, SVC
		87659611		1	JOGO DE PEÇAS, Segment Set, Tilt Column SVC
		87659612		1	JOGO DE PEÇAS, Lever Set, Tilt Column SVC
		87659616		1	JOGO DE PEÇAS, Cable, Tilt Column SVC

EIXO, DIANTEIRO (86990837) - STEUN

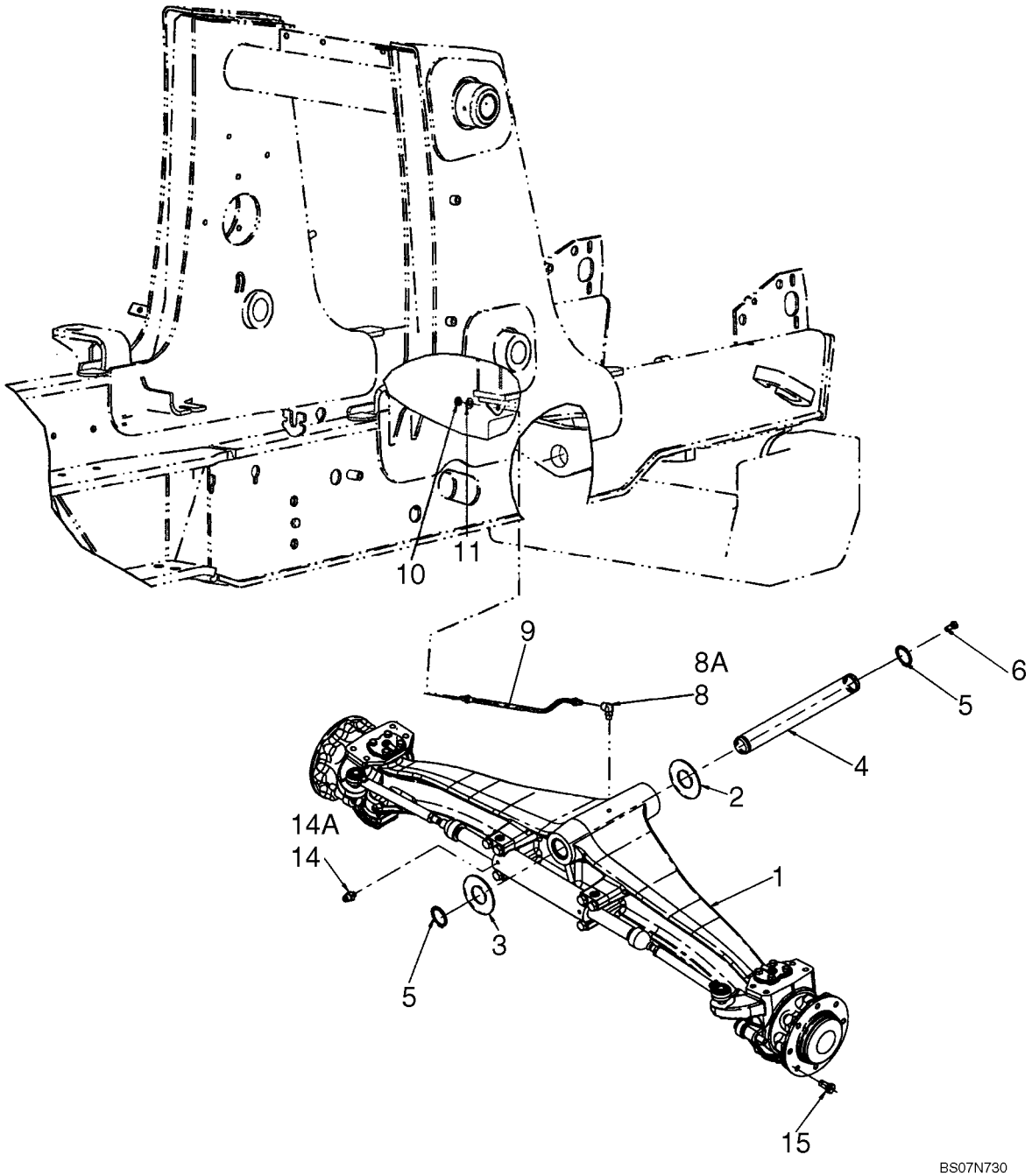

EIXO, DIANTEIRO (86990837) - STEUN

REF	FN	PART NUMBER	YR/SN	QTY	DESCRIPTION
1		86990837		1	EIXO DIRECÃO, Front, Two Wheel Drive, See Figures 05-05 - 05-08
2		191796A1		AR	ARRUELA PLANA, 2 x 4 x 1/16
3		D123684		1	ARRUELA PLANA, Thrust, 2-1/2 x 4-1/2 x 3/16
4		87404197		1	PINO PIVO
5		800-44050		2	ANEL, M50, Ext
6		614-12025		1	PARAFUSO, Hex, M12 x 25, 8.8
8		218-5103		1	COTOVELO, 90º, 7/16"-20, 37º x 7/16"-20, O-Ring, Incl. Ref 8A
8A		237-6004		1	ANEL "O", 4-1, 90 Duro, .351" ID x .072" Thk
9		87572760		1	MANGUEIRA CONJUNTO, 533 mm (21 in), Lubrication Line
10		F53473		1	PORCA
11		495-11047		1	ARRUELA PLANA, 7/16", SAE
14		218-5351		2	CONEXÃO, 3/4"-16, 37º x 9/16"-18, O-Ring, Incl. Ref 14A
14A		237-6006		1	ANEL "O", 6-1, 90 Duro, .468" ID x .078" Thk
15		A38208		16	PARAFUSO, Wheel Bolt

EIXO, DIANTEIRO (86990837) - ALOJAMENTO

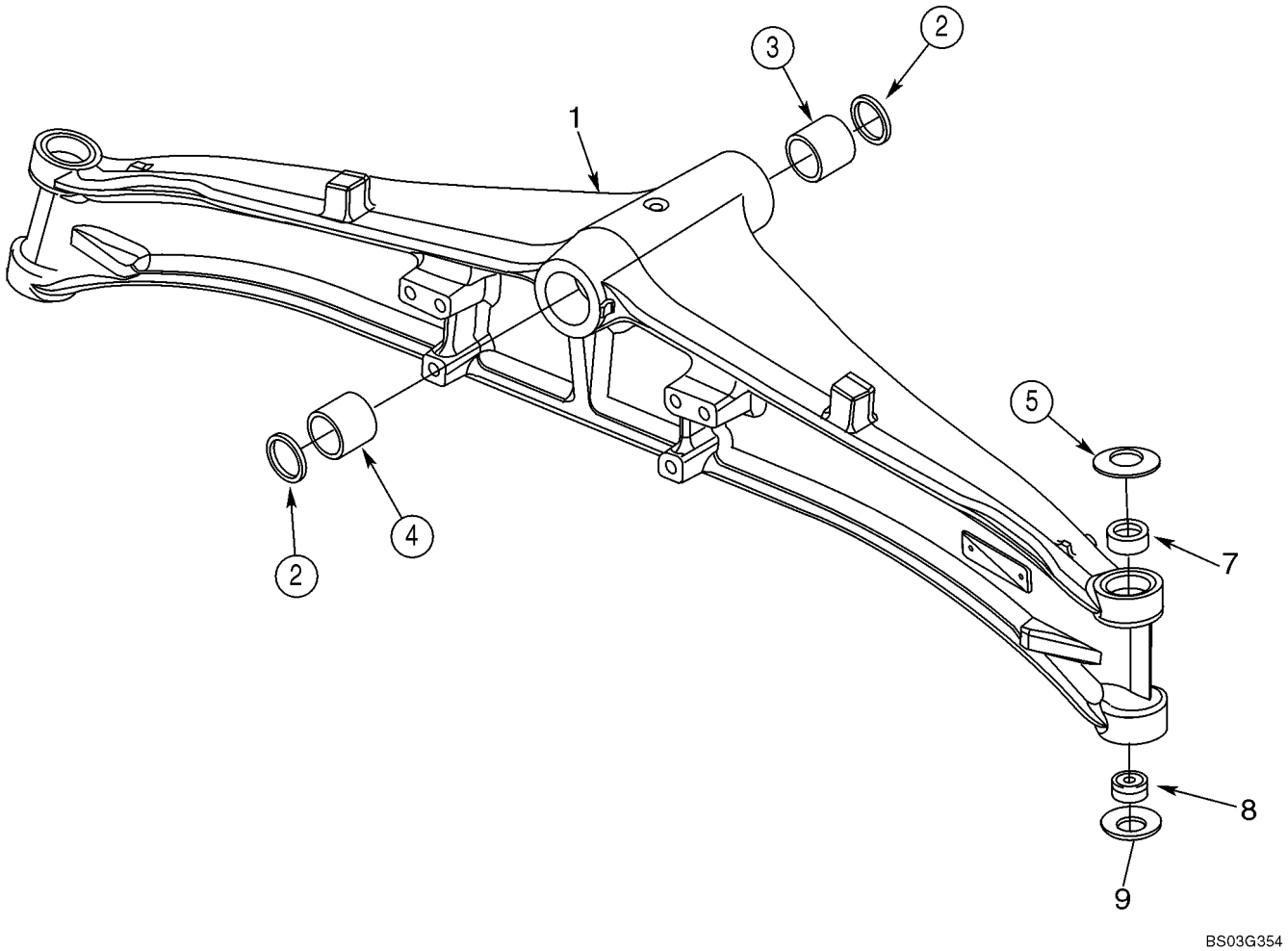

EIXO, DIANTEIRO (86990837) - ALOJAMENTO

REF	FN	PART NUMBER	YR/SN	QTY	DESCRIPTION
		86990837		1	EIXO DIRECÃO, Front, Two Wheel Drive, Incl. 1 - 9; Also Includes Parts On Figures 05-05 - 05-08
1		429230A1		1	ESTRUTURA DO EIXO
2		N14367		2	ANEL DE VEDAÇÃO
3		D149726		1	BUCHA, Front
4		D149725		1	BUCHA, Rear
5		122270A1		2	ARRUELA PLANA, Belleville
7		87400286		2	BUCHA
8		N14373		2	ROLAMENTO, Bushing; Two Piece; 28 ID x 50 OD x 16
9		122261A1		2	ARRUELA PLANA, Belleville

EIXO, DIANTEIRO (86990837) - COMPARTIMENTO DE ARTICULAÇÃO

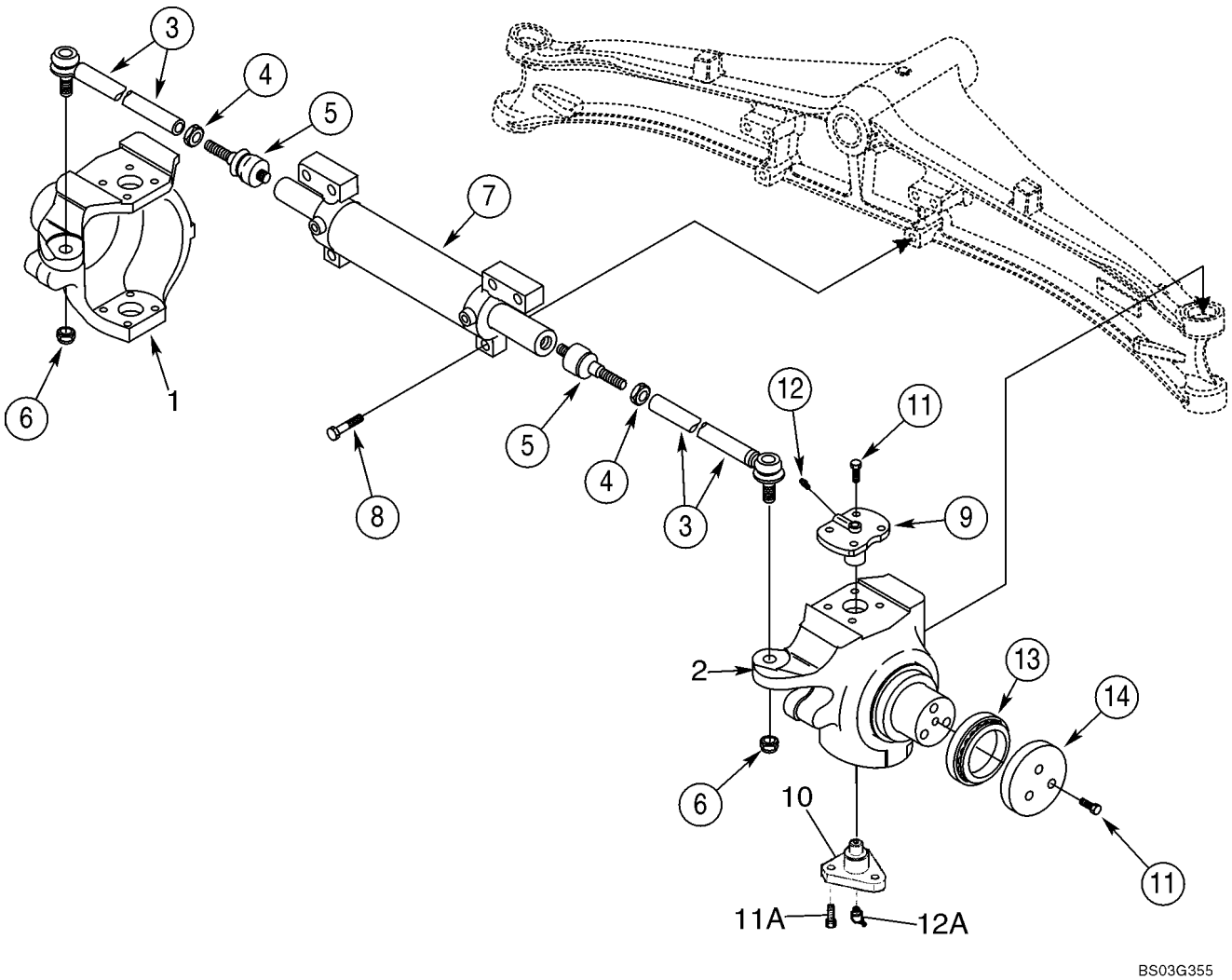

EIXO, DIANTEIRO (86990837) - COMPARTIMENTO DE ARTICULAÇÃO

REF	FN	PART NUMBER	YR/SN	QTY	DESCRIPTION
		86990837		1	EIXO DIRECÃO, Front, Two Wheel Drive, Incl. 1 - 14; Also Includes Parts On Figures 05-05 - 05-08
1		429231A1		1	ALOJAMENTO, Swivel, Left-Hand
2		429232A1		1	ALOJAMENTO, Swivel, Right-Hand
		401052A1		2	DIRECAO CONJUNTO, Arm, Incl. Ref 3 - 5
3		401054A1		1	TIRANTE
4		934727R1		1	PORCA, Thin, M18 x 1.5, Cl 04
5		112509A1		1	JUNTA ESFÉRICA
6		905839R1		2	CONTRA PORCA, M18 x 1.5, Thin
7		401055A1		1	CILINDRO DE DIRECAO, See Figure 05-07
8		863-16070		6	PARAFUSO, Hex Soc Hd, M16 x 70, 12.9
9		122265A1		2	PINO LARGO, King Pin, Upper
10		122259A1		2	PIVO, King Pin, Lower; Triangular Shape
11		100533A1		14	PARAFUSO, Lock, M12 x 30
11A		D150214		6	PARAFUSO, Lock, M14 x 35; Lower King Pin
12		321204		2	GRAXEIRA, M6 x 1, 16mm lg
12A		N13505		2	GRAXEIRA, 45º, M6 x 1, Lower King Pin
13		401059A1		2	ROLAMENTO ROLETES, Thrust
14		401060A1		2	ARRUELA

EIXO, DIANTEIRO (86990837) - CILINDRO DA DIRECÇÃO

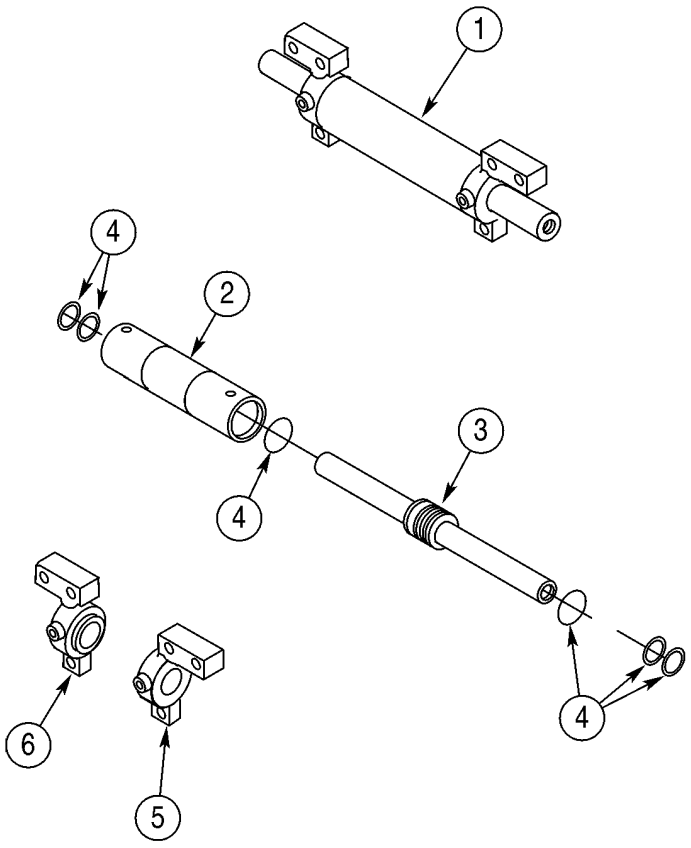

BC00G065

EIXO, DIANTEIRO (86990837) - CILINDRO DA DIRECÇÃO

REF	FN	PART NUMBER	YR/SN	QTY	DESCRIPTION
		86990837		1	EIXO DIRECÃO, Front, Two Wheel Drive, Incl. 1 - 6; Also Includes Parts On Figures 05-05 - 05-08
1		401055A1		1	CILINDRO DE DIRECAO, Incl. Ref 2 - 6
2		NSS		1	BOLETIM INFORMATIVO, Tube, Cylinder
3		401062A1		1	HASTE CILINDRO
4		401061A1		1	JOGO DE JUNTAS, Seal, Component Parts Not Serviced Separately
5		401063A1		1	CABECA CONJUNTO, Right-Hand
6		401064A1		1	CABECA CONJUNTO, Left-Hand

EIXO, DIANTEIRO (86990837) - CUBO E ROLAMENTOS

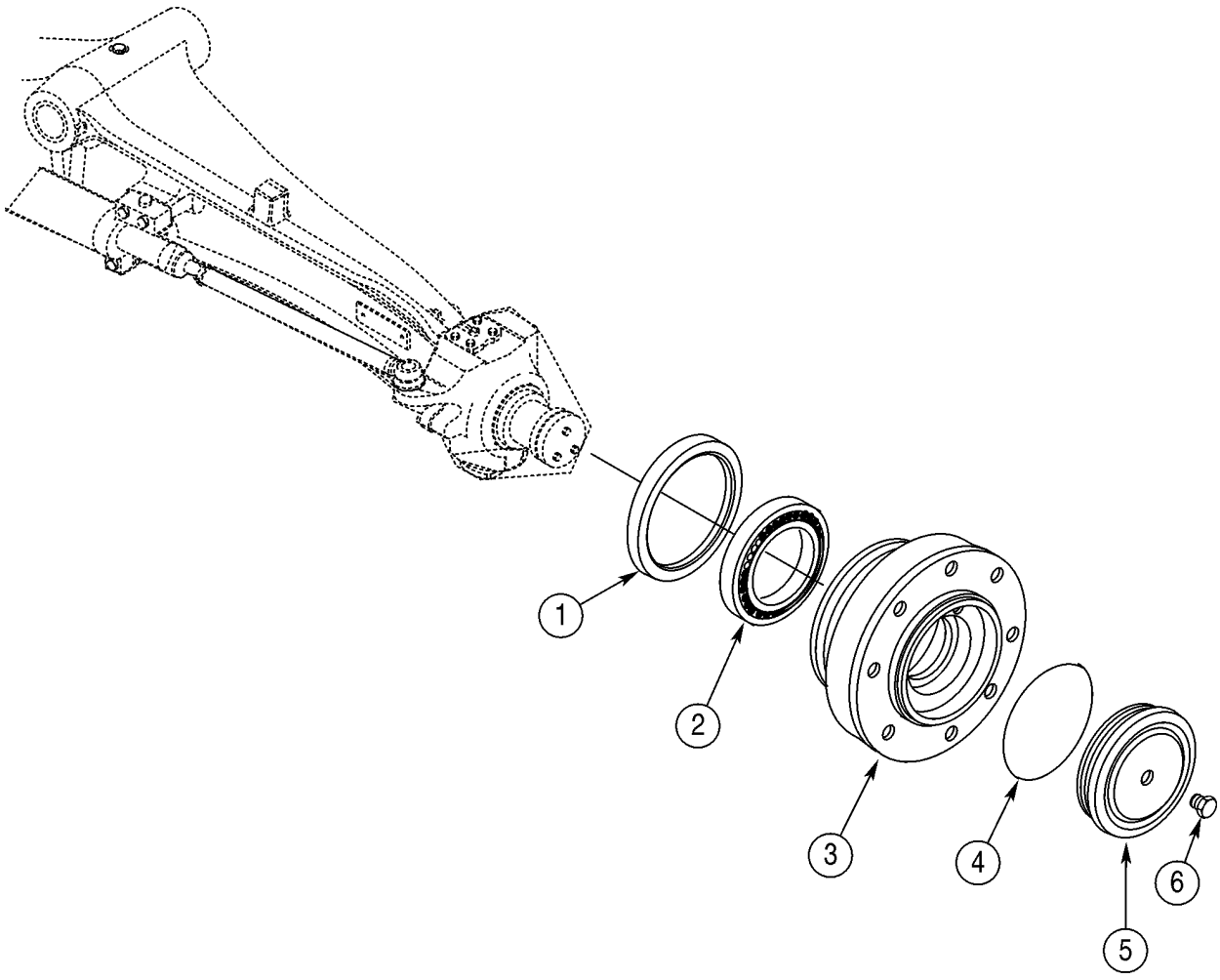

BC00G066

EIXO, DIANTEIRO (86990837) - CUBO E ROLAMENTOS

REF	FN	PART NUMBER	YR/SN	QTY	DESCRIPTION
		86990837		1	EIXO DIRECÃO, Front, Two Wheel Drive; Incl. 1 - 6; Also Includes Parts On Figures 05-05 - 05-08
1		311569A1		2	VEDADOR DE OLEO
2		324213A1		2	ROLAMENTO
3		401065A1		2	CUBO
4		401066A1		2	ANEL O
5		401067A1		2	TAMPA
6		D142898		2	BUJÃO, 10 x 1 mm

RODAS DIANTEIRAS - PNEUS

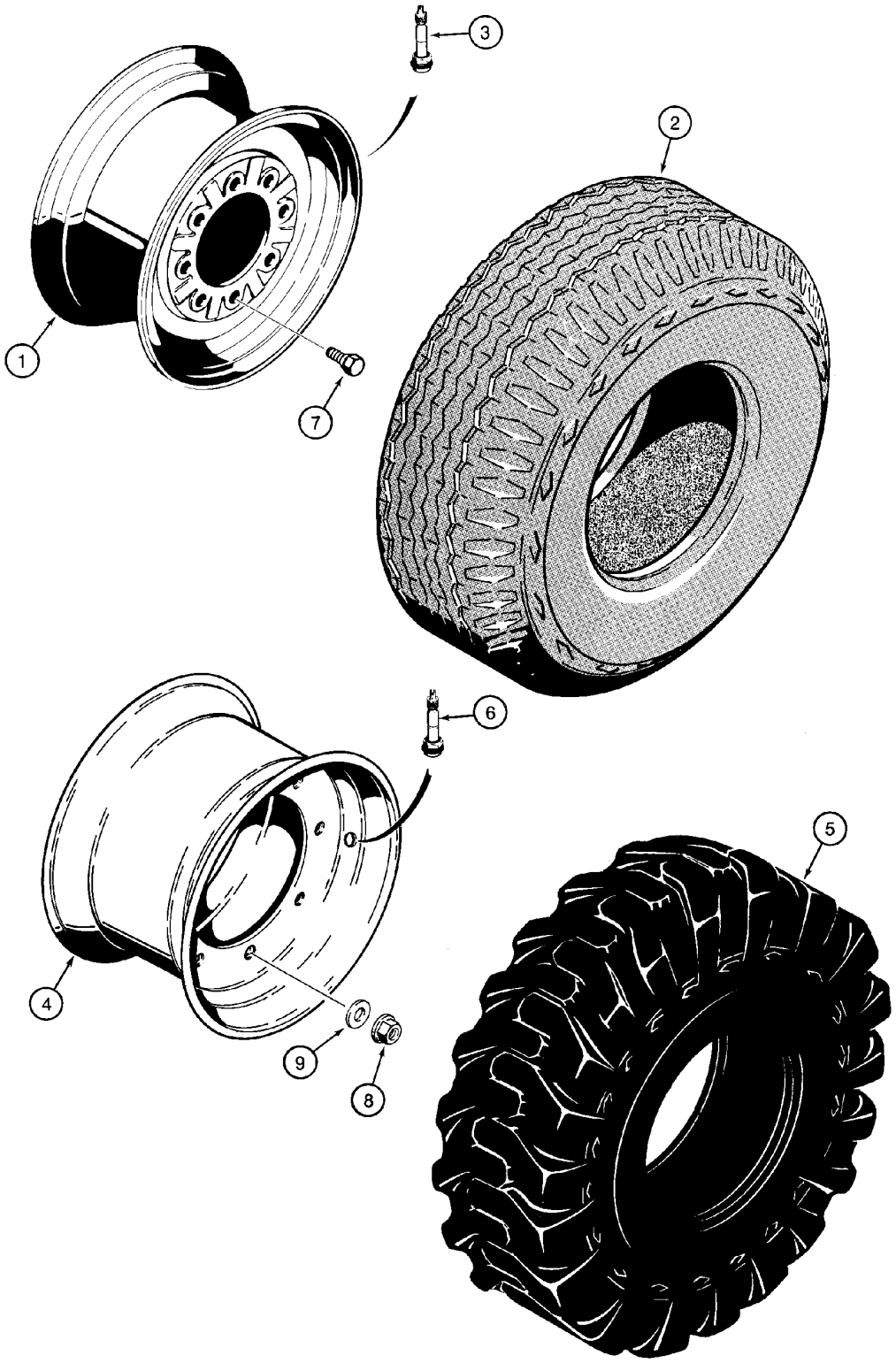

B902735S

RODAS DIANTEIRAS - PNEUS

REF	FN	PART NUMBER	YR/SN	QTY	DESCRIPTION
1		D125223		2	ARO, For 11L x 16 - 10 PR F3 Tires; Two Wheel or Four Wheel Drive Models
1		197771A1		2	RODA VEICULAR, For 11L x 16 - 10 PR F3 Tires; Two Wheel or Four Wheel Drive Models
2		REF		2	INSTRUCAO, Tire, Purchase Locally
3		387897R91		2	HASTE DA VALVULA
4		119243A1		2	ARO, For 12 x 16.5 - 8 or 10 Ply Tires; Two Wheel or Four Wheel Drive Models
5		REF		2	INSTRUCAO, Tire, Purchase Locally
6		387897R91		2	HASTE DA VALVULA
7		A38208		16	PARAFUSO, Wheel Bolts; Two Wheel Drive Models
8		825-11418		16	PORCA, M18 x 1.5, Cl 8, Wheel Nuts; Four Wheel Drive Models
9		496-81000		16	ARRUELA PLANA, 25/32" x 1 3/8" x .134", HDN, Wheel Nuts; Four Wheel Drive Models

SECTION INDEX
Trem de Potência

06-01	EIXO DA TRANSMISSÃO DIANTEIRA - STEUN
06-02	EIXO DA TRANSMISSÃO DIANTEIRA - ALOJAMENTO
06-03	EIXO DA TRANSMISSÃO DIANTEIRA - COMPARTIMENTO DE ARTICULAÇÃO
06-04	EIXO DA TRANSMISSÃO DIANTEIRA - CILINDRO DA DIRECÇÃO
06-05	EIXO DA TRANSMISSÃO DIANTEIRA - VEIOS, EIXO
06-06	EIXO DA TRANSMISSÃO DIANTEIRA - PLANETÁRIO
06-07	EIXO DA TRANSMISSÃO DIANTEIRA - DIFERENCIAL
06-08	EIXO DA TRANSMISSÃO DIANTEIRA - ANEL E PINHÃO
06-09	CARDAN DO EIXO DIANTEIRO
06-10	SISTEMA DE ARREFECIMENTO - TRANSMISSÃO
06-11	TRANSMISSÃO - STEUN
06-12	CONJUNTO DA TRANSMISSÃO, 2WD - FILTRO, ÓLEO
06-13	CONJUNTO DA TRANSMISSÃO, 2WD - ALOJAMENTO
06-14	CONJUNTO DA TRANSMISSÃO, 2WD - BOMBA DE ÓLEO
06-15	CONJUNTO DA TRANSMISSÃO, 2WD - MECANISMO DE ACCIONAMENTO DAS MUDANÇAS
06-16	CONJUNTO DA TRANSMISSÃO, 2WD - EIXO, MARCHA A RÉ E PRIMÁRIO
06-17	CONJUNTO DA TRANSMISSÃO, 2WD - EIXO DE ENTRADA E TOMADA DE FORÇA
06-18	CONJUNTO DA TRANSMISSÃO, 2WD - EIXO SECUNDÁRIO
06-19	CONJUNTO DA TRANSMISSÃO, 2WD - VÁLVULA, CONTROLE
06-20	CONJUNTO DA TRANSMISSÃO, 4WD - FILTRO, ÓLEO
06-21	CONJUNTO DA TRANSMISSÃO, 4WD - ALOJAMENTO
06-22	CONJUNTO DA TRANSMISSÃO, 4WD - BOMBA DE ÓLEO
06-23	CONJUNTO DA TRANSMISSÃO, 4WD - MECANISMO DE ACCIONAMENTO DAS MUDANÇAS
06-24	CONJUNTO DA TRANSMISSÃO, 4WD - EIXO, MARCHA A RÉ E PRIMÁRIO
06-25	CONJUNTO DA TRANSMISSÃO, 4WD - EIXO DE ENTRADA E TOMADA DE FORÇA
06-26	CONJUNTO DA TRANSMISSÃO, 4WD - EIXO SECUNDÁRIO
06-27	CONJUNTO DA TRANSMISSÃO, 4WD - EIXO, SAÍDA
06-28	CONJUNTO DA TRANSMISSÃO, 4WD - VÁLVULA, CONTROLE
06-29	CONJUNTO DA TRANSMISSÃO, 4WD - SOLENÓIDE DA VÁLVULA
06-30	RODAS TRASEIRAS - PNEUS
06-31	EIXO DA TRANSMISSÃO TRASEIRA - STEUN
06-32	EIXO, TRASEIRO - BLOQUEO DEL DIFERENCIAL
06-33	87395372 EIXO DA TRANSMISSÃO TRASEIRA - ALOJAMENTO
06-34	87395372 EIXO DA TRANSMISSÃO TRASEIRA - DIFERENCIAL
06-35	87395372 EIXO DA TRANSMISSÃO TRASEIRA - ANEL E PINHÃO
06-36	87395372 EIXO DA TRANSMISSÃO TRASEIRA - BLOQUEO DEL DIFERENCIAL
06-37	87395372 EIXO DA TRANSMISSÃO TRASEIRA - PLANETÁRIO
06-38	EIXO DA TRANSMISSÃO TRASEIRO

EIXO DA TRANSMISSÃO DIANTEIRA - STEUN

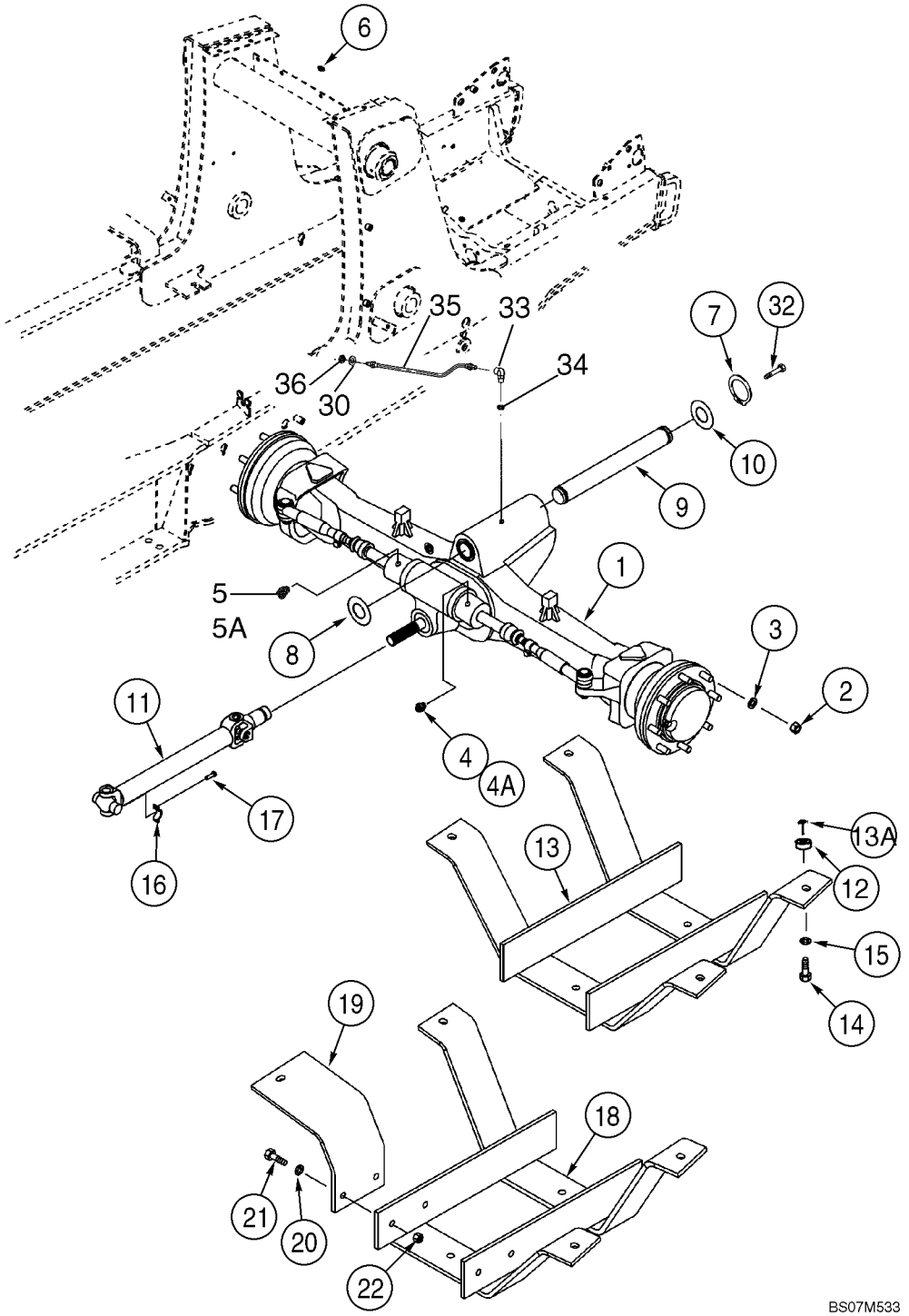

EIXO DA TRANSMISSÃO DIANTEIRA - STEUN

REF	FN	PART NUMBER	YR/SN	QTY	DESCRIPTION
1		87395365		1	EIXO CONJUNTO 4WD, Front; See Figures 06-02 - 06-08
		{87395365R}			Axle Assy, 4WD, Remanufactured
		{87395365C}			Axle Assy, 4WD, Core
2		825-11418		16	PORCA, M18 x 1.5, Cl 8
3		496-81000		16	ARRUELA PLANA, 25/32" x 1 3/8" x .134", HDN
4		218-5351		1	CONEXÃO, 3/4"-16, 37º x 9/16"-18, O-Ring, Incl. Ref 4A
4A		237-6006		1	ANEL "O", 6-1, 90 Duro, .468" ID x .078" Thk
5		218-5529		1	COTOVELO, 45º, 3/4"-16, 37º x 9/16"-18, O-Ring, Incl. Ref 5A
5A		237-6006		1	ANEL "O", 6-1, 90 Duro, .468" ID x .078" Thk
6		219-1		1	GRAXEIRA, 1/8"-27 x .66 lg
7		800-44050		2	ANEL, M50, Ext
8		191796A1		AR	ARRUELA PLANA, 2 x 4 x 1/16
9		87404197		1	PINO PIVO, Pivot Pin
10		D123684		1	ARRUELA PLANA, Thrust, 2-1/2 x 4-1/2 x 3/16
11		87694656		1	EIXO COMANDO, See Figure 06-09
12		87649398		4	ESPAÇADOR
13		137223A2		1	PROTEÇÃO, Drive Shaft, Used On Models With 31 Gallon Fuel Tank
13A		238-6012		4	ANEL "O", -012, 90 Duro, .364" ID x .070" Thk
14		1637759		4	PARAFUSO, Hex, M12 x 60, 10.9, Full Thd
15		495-81025		4	ARRUELA PLANA, 17/32" x 1 1/4" x .179"
16		90-6682T1		2	BRACADEIRA
17		9637611		4	PARAFUSO, Hex Flange Head, Locking, Special, 5/16 - 24 UNF x 1-1/16; Replaces D137627 Bolt
18		282038A2		1	PROTECTOR CONJUNTO, Drive Shaft, Used On Models With 40 Gallon Fuel Tank
19		87699880		1	SUPORTE
20		495-81025		8	ARRUELA PLANA, 17/32" x 1 1/4" x .179"
21		827-12060		6	PARAFUSO, Hex, M12 x 60, 10.9
22		829-1412		2	PORCA, M12, Cl 10
30		495-11047		1	ARRUELA PLANA, 7/16", SAE
32		614-12025		1	PARAFUSO, Hex, M12 x 25, 8.8

EIXO DA TRANSMISSÃO DIANTEIRA - STEUN

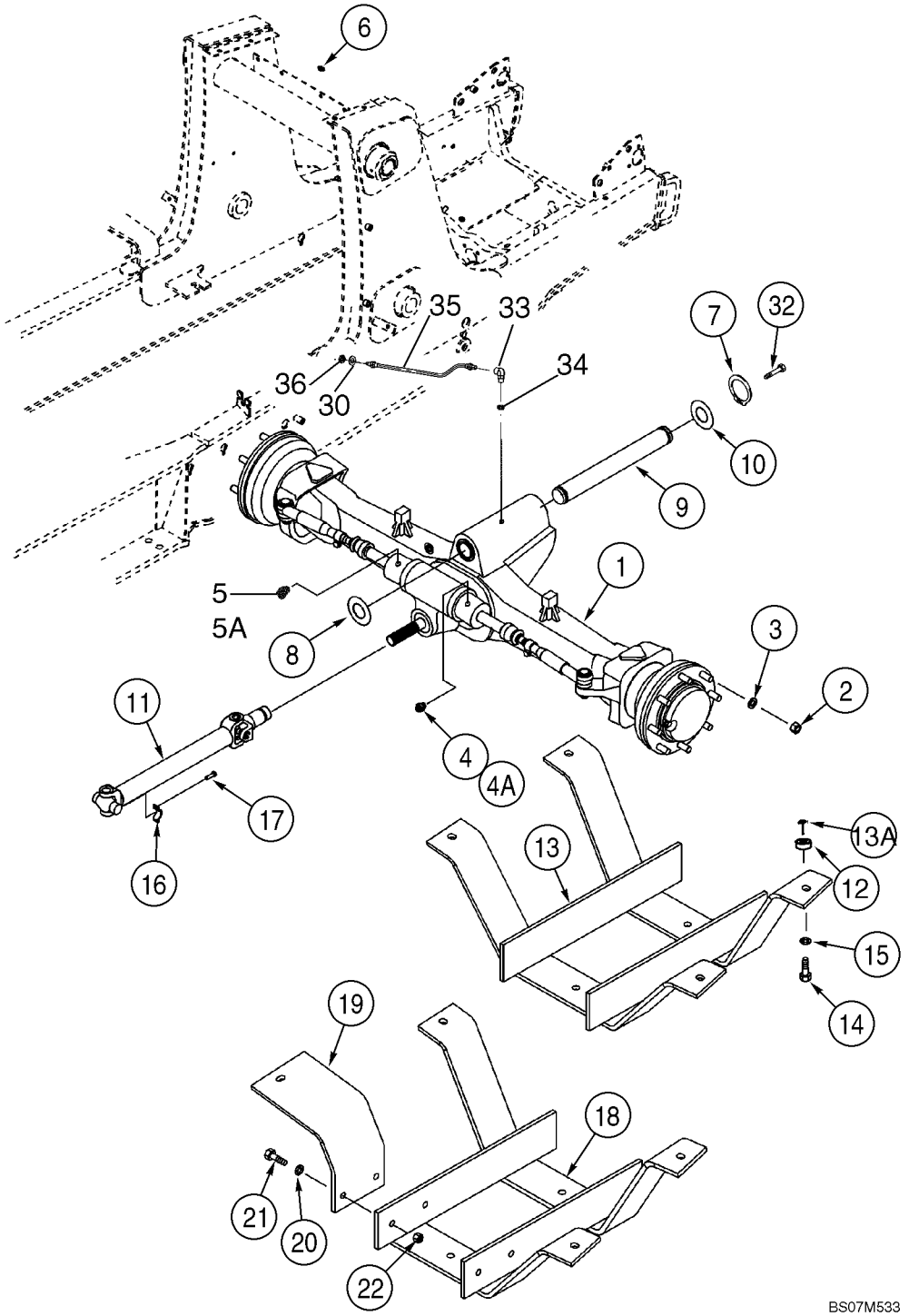

EIXO DA TRANSMISSÃO DIANTEIRA - STEUN

REF	FN	PART NUMBER	YR/SN	QTY	DESCRIPTION
33		218-5103		1	COTOVELO, 90º, 7/16"-20, 37º x 7/16"-20, O-Ring, Incl. Ref 34
34		237-6004		1	ANEL "O", 4-1, 90 Duro, .351" ID x .072" Thk
35		87572760		1	MANGUEIRA CONJUNTO, 7/16-20 Fem Swivel x 1/8 NPSN x 21 inch; Remote Lube; Includes Grease Fitting
36		F53473		1	PORCA, Hex

EIXO DA TRANSMISSÃO DIANTEIRA - ALOJAMENTO

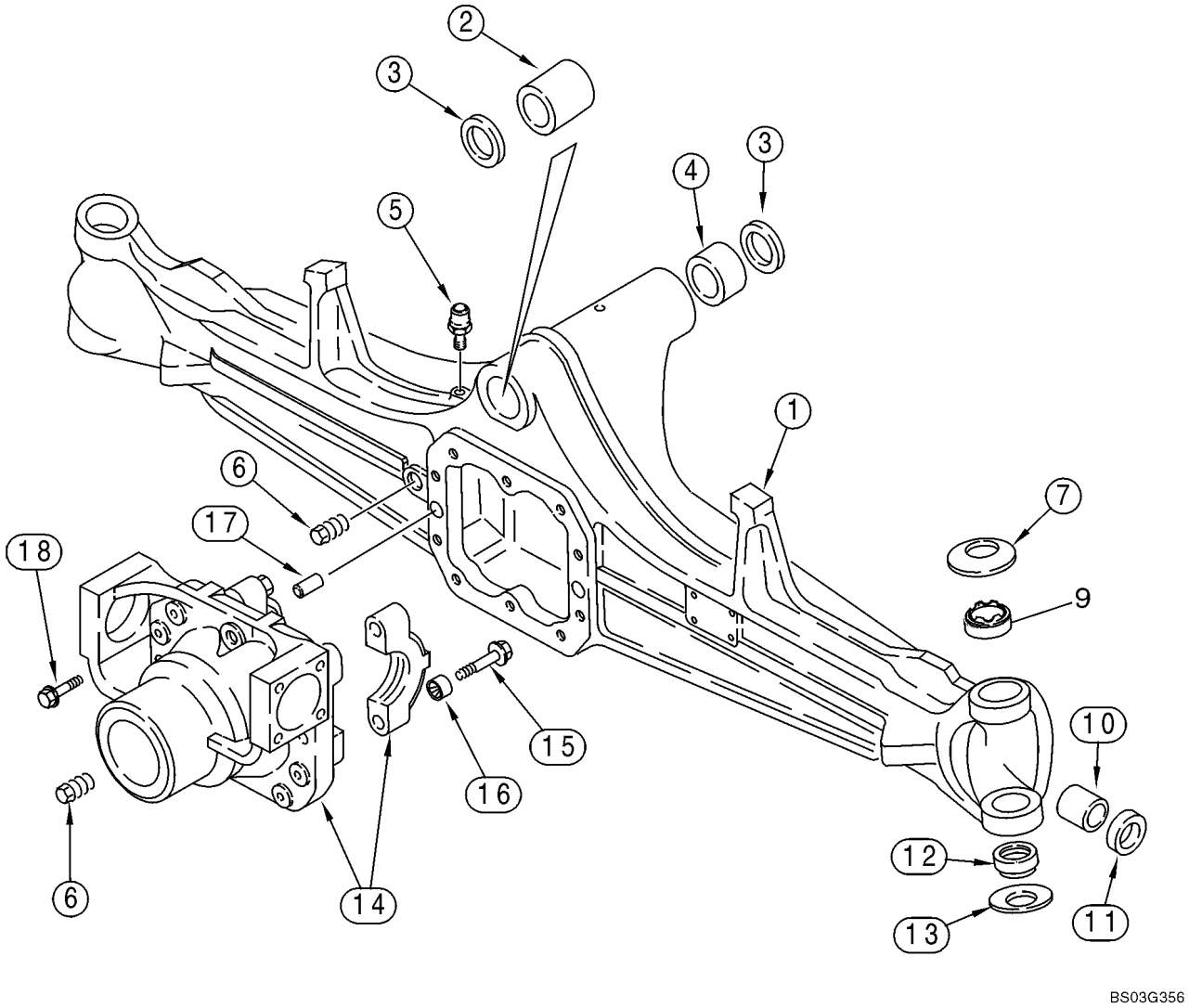

EIXO DA TRANSMISSÃO DIANTEIRA - ALOJAMENTO

REF	FN	PART NUMBER	YR/SN	QTY	DESCRIPTION
		87395365		1	EIXO CONJUNTO 4WD, Front, Incl. Ref 1 - 18; Also Includes Parts On Figures 06-02 - 06-08
1		427107A1		1	ESTRUTURA DO EIXO
2		D149725		1	BUCHA
3		N14367		2	ANEL DE VEDAÇÃO
4		D149726		1	BUCHA
5		1966149C2		1	RESPIRO
6		A156873		2	BUJÃO DE DRENO, 22 mm
7		122270A1		2	ARRUELA PLANA, Belleville
9		87400286		2	BUCHA
10		1966186C1		2	BUCHA
11		87710155		2	ANEL VEDADOR
12		100520A1		2	JUNTA ESFÉRICA, Bushing, Two Piece
13		122268A1		2	ARRUELA PLANA, Belleville
		87710131		1	SUPORTE, Differential Carrier; Incl. Ref 14 - 16
14		NSS		1	BOLETIM INFORMATIVO, Carrier
15		S301065		4	PARAFUSO, Hex Flg, M14 x 75, 12.9
16		1966136C1		4	BUCHA
17		1966138C1		2	GUIA
18		5194169		10	PARAFUSO, Hex Flg, M12 x 33, 12.9

EIXO DA TRANSMISSÃO DIANTEIRA - COMPARTIMENTO DE ARTICULAÇÃO

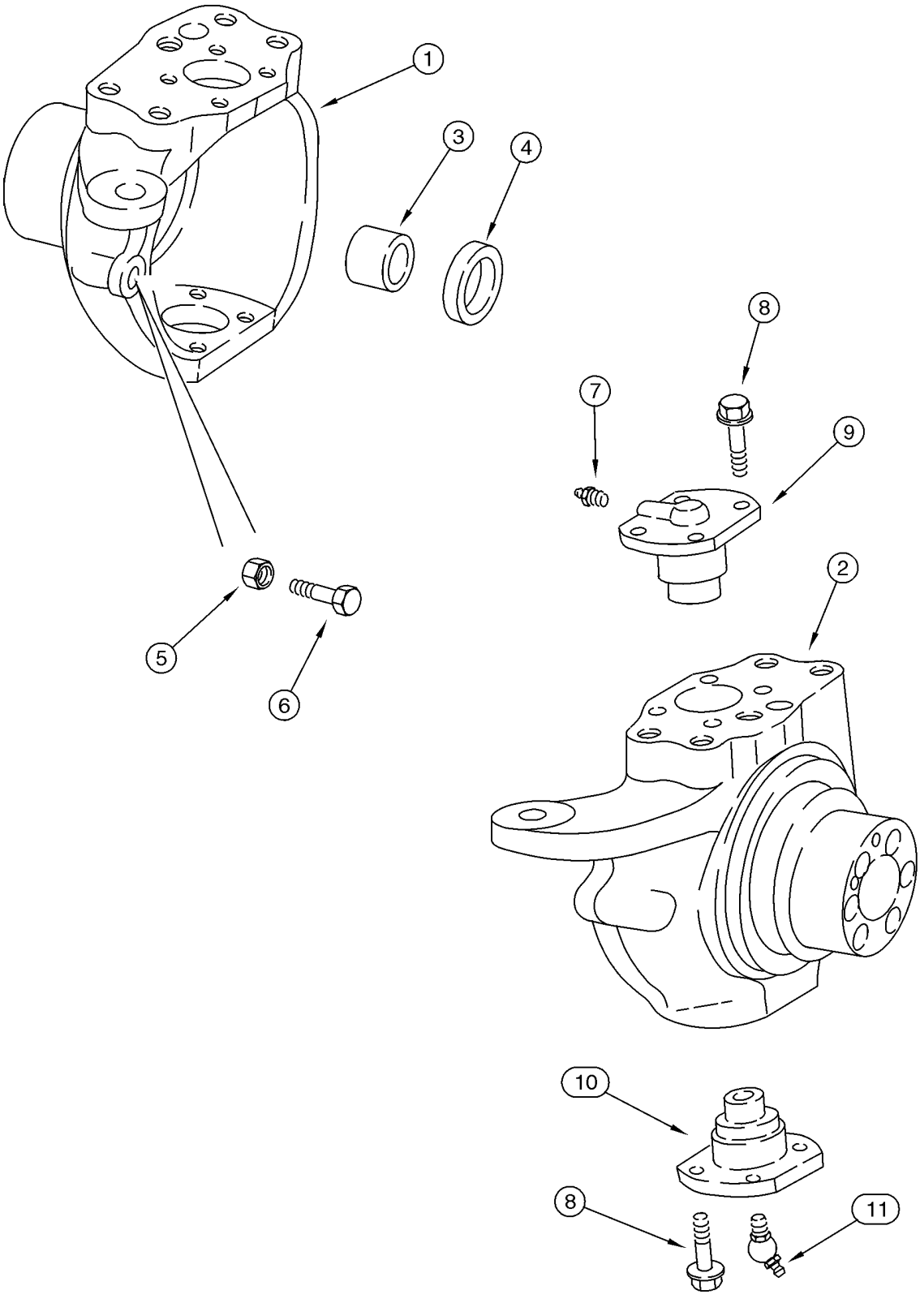

EIXO DA TRANSMISSÃO DIANTEIRA - COMPARTIMENTO DE ARTICULAÇÃO

REF	FN	PART NUMBER	YR/SN	QTY	DESCRIPTION
		87395365		1	EIXO CONJUNTO 4WD, Front, Incl. Ref 1 - 11; Also Includes Parts On Figures 06-02 - 06-08
1		87710156		1	ALOJAMENTO, Left-Hand
2		87710159		1	ALOJAMENTO, Right-Hand
3		100532A1		2	BUCHA, Used With Right-Hand or Left-Hand Swivel Housing, Not Included With Housing, Purchase Separately
4		87710145		2	ANEL VEDADOR
5		85805986		2	PORCA, M16
6		5194264		2	PARAFUSO, M16 X 75
7		321204		2	GRAXEIRA, M6 x 1, 16mm lg
8		100533A1		16	PARAFUSO, M12 x 30
9		122265A1		2	PINO LARGO, King Pin
10		122264A1		2	PINO LARGO, King Pin
11		N13505		2	GRAXEIRA, 45º, M6 x 1

EIXO DA TRANSMISSÃO DIANTEIRA - CILINDRO DA DIRECÇÃO

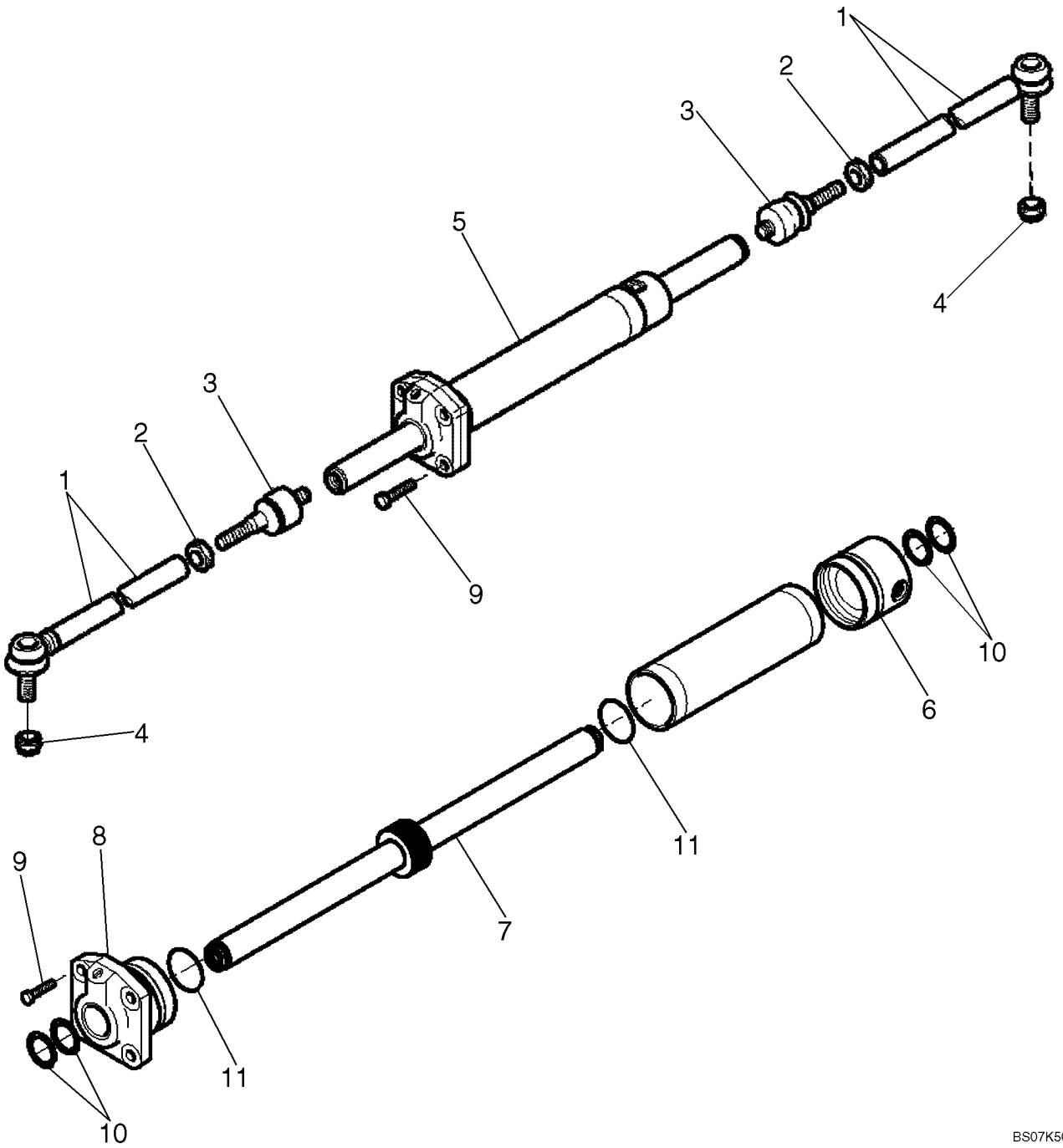

EIXO DA TRANSMISSÃO DIANTEIRA - CILINDRO DA DIRECÇÃO

REF	FN	PART NUMBER	YR/SN	QTY	DESCRIPTION
		87395365		1	EIXO CONJUNTO 4WD, Front, Incl. Ref 1 - 11; Also Includes Parts On Figures 06-02 - 06-08
		144457A1		2	BRAÇO, Incl. Ref 1 - 3
1		87710157		1	TIRANTE, Ball Joint
2		934727R1		1	PORCA, Thin, M18 x 1.5, Cl 04
3		112509A1		1	JUNTA ESFÉRICA
4		905839R1		2	CONTRA PORCA, M18 x 1.5, Thin
5		87710158		1	CILINDRO DE DIRECAO, Incl. Ref 6 - 16, Order 87710144 Kit to Service Seals
6		87710142		1	CABEÇOTE
7		87710143		1	HASTE
8		87710141		1	CABEÇOTE
9		87710137		4	PARAFUSO
10		NSS		4	BOLETIM INFORMATIVO, Seal, Wiper
11		NSS		2	BOLETIM INFORMATIVO, O-Ring
		87710144		1	JOGO DE JUNTAS, Incl. Ref 10, 11

EIXO DA TRANSMISSÃO DIANTEIRA - VEIOS, EIXO

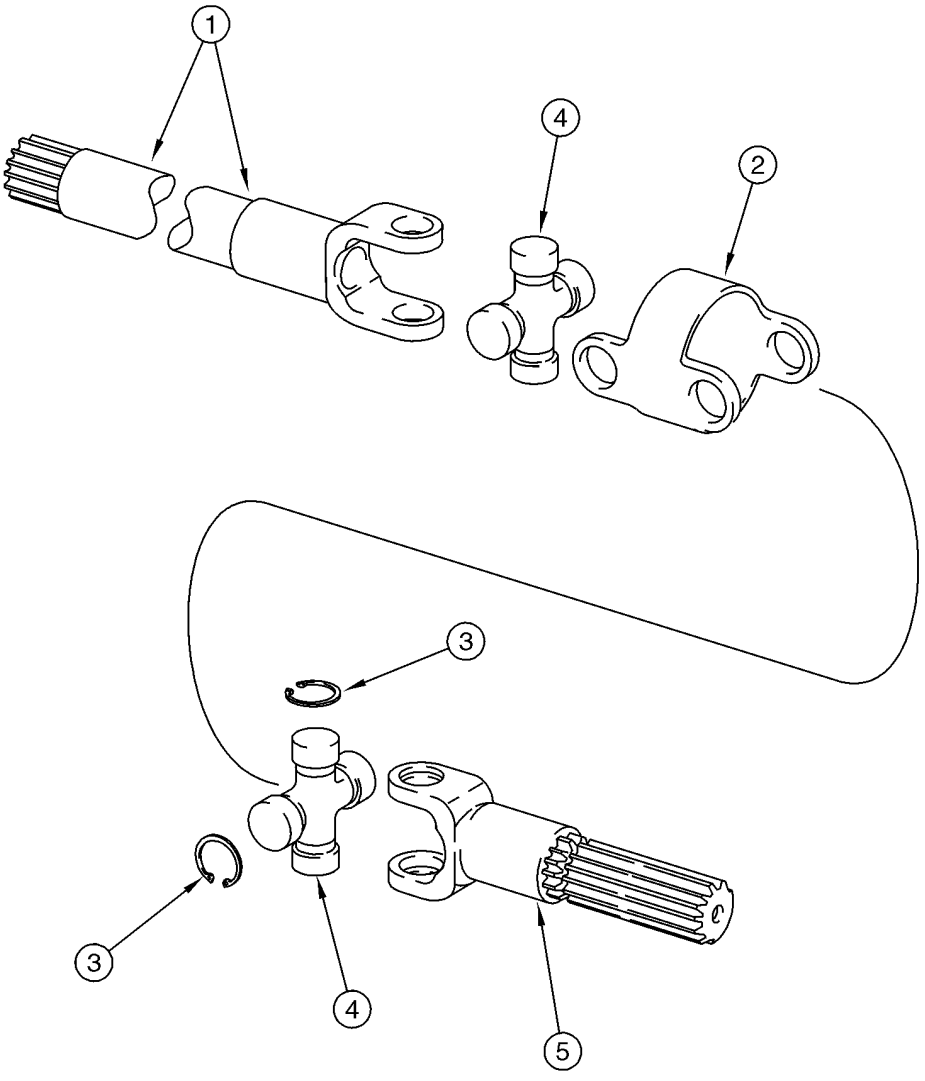

B9407022

EIXO DA TRANSMISSÃO DIANTEIRA - VEIOS, EIXO

REF	FN	PART NUMBER	YR/SN	QTY	DESCRIPTION
		87395365		1	EIXO CONJUNTO 4WD, Front, Incl. Ref 1 - 5; Also Includes Parts On Figures 06-02 - 06-08
		144461A1		2	SEMI-EIXO, Incl. Ref 1 - 5
1		144462A1		2	GARFO, Shaft, Long, Differential Side
2		390029A1		2	CORPO
3		N14410		16	ANEL
4		144465A1		4	CRUZETA DO CARDAN, Incl. Ref 3
5		144463A1		2	EIXO, Short, Wheel Side

EIXO DA TRANSMISSÃO DIANTEIRA - PLANETÁRIO

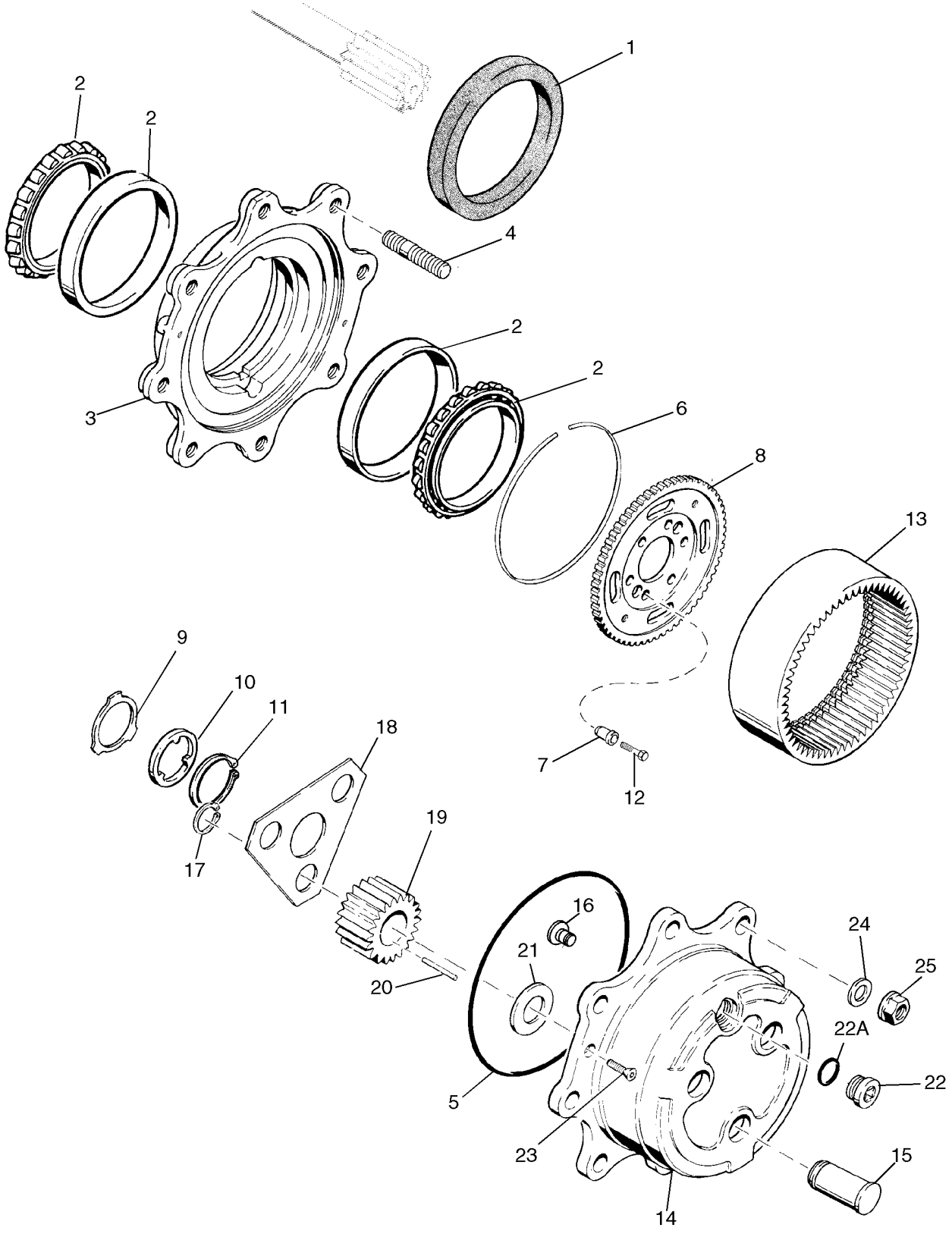

EIXO DA TRANSMISSÃO DIANTEIRA - PLANETÁRIO

REF	FN	PART NUMBER	YR/SN	QTY	DESCRIPTION
		87395365		1	EIXO CONJUNTO 4WD, Front, Incl. Ref 1 - 23; Also Includes Parts On Figures 06-02 - 06-08
1		311569A1		2	VEDADOR DE OLEO, Triple Lip
2		1966169C1		4	CONE
		144466A1		2	CUBO, Incl. Ref 3, 4
3		NSS		1	BOLETIM INFORMATIVO, Hub
4		100556A1		8	PRISIONEIRO
5		100552A1		2	ANEL O
6		100559A1		2	ANEL ESPECIAL
7		116426A1		12	BUCHA
8		116427A1		2	ENGRENAGEM, CARRIER, Gear
9		190684A1		2	ARRUELA PLANA, Thrust
10		190682A1		2	ARRUELA PLANA, Thrust
11		A48041		2	ANEL-ELÁSTICO
12		116425A1		12	PARAFUSO
13		100561A1		2	ENGRENAGEM, Ring
		100554A1		2	PORTA SATELITES, PLANETARY, Includes 100553A1, Ref 14 - 22A
		100553A1		2	CARCAÇA CONJUNTO, Carrier, Incl. Ref 14 - 16
14		NSS		1	BOLETIM INFORMATIVO, Carrier
15		NSS		3	BOLETIM INFORMATIVO, Shaft, Pinion
16		K395093		1	PINO COM CABECA, Lock
17		800-1134		6	ANEL, M34, Ext
18		100555A1		2	PLACA ESPESSA, Retainer
19		100562A1		6	PLANETÁRIO
20		114295A1		9	JOGO 10 AGULHAS
21		K395091		6	ARRUELA PLANA, Thrust
22		100557A1		2	BUJÃO DE DRENO, Incl. Ref 22A
22A		238-6121		1	ANEL "O", -121, 90 Duro, 1.049" ID x .103" Thk
23		K395082		4	PARAFUSO, M8 x 20
24		496-81000		16	ARRUELA PLANA, 25/32" x 1 3/8" x .134", HDN, Not Included In Assembly, Purchase Separately
25		825-11418		16	PORCA, M18 x 1.5, Cl 8, Not Included In Assembly, Purchase Separately

EIXO DA TRANSMISSÃO DIANTEIRA - DIFERENCIAL

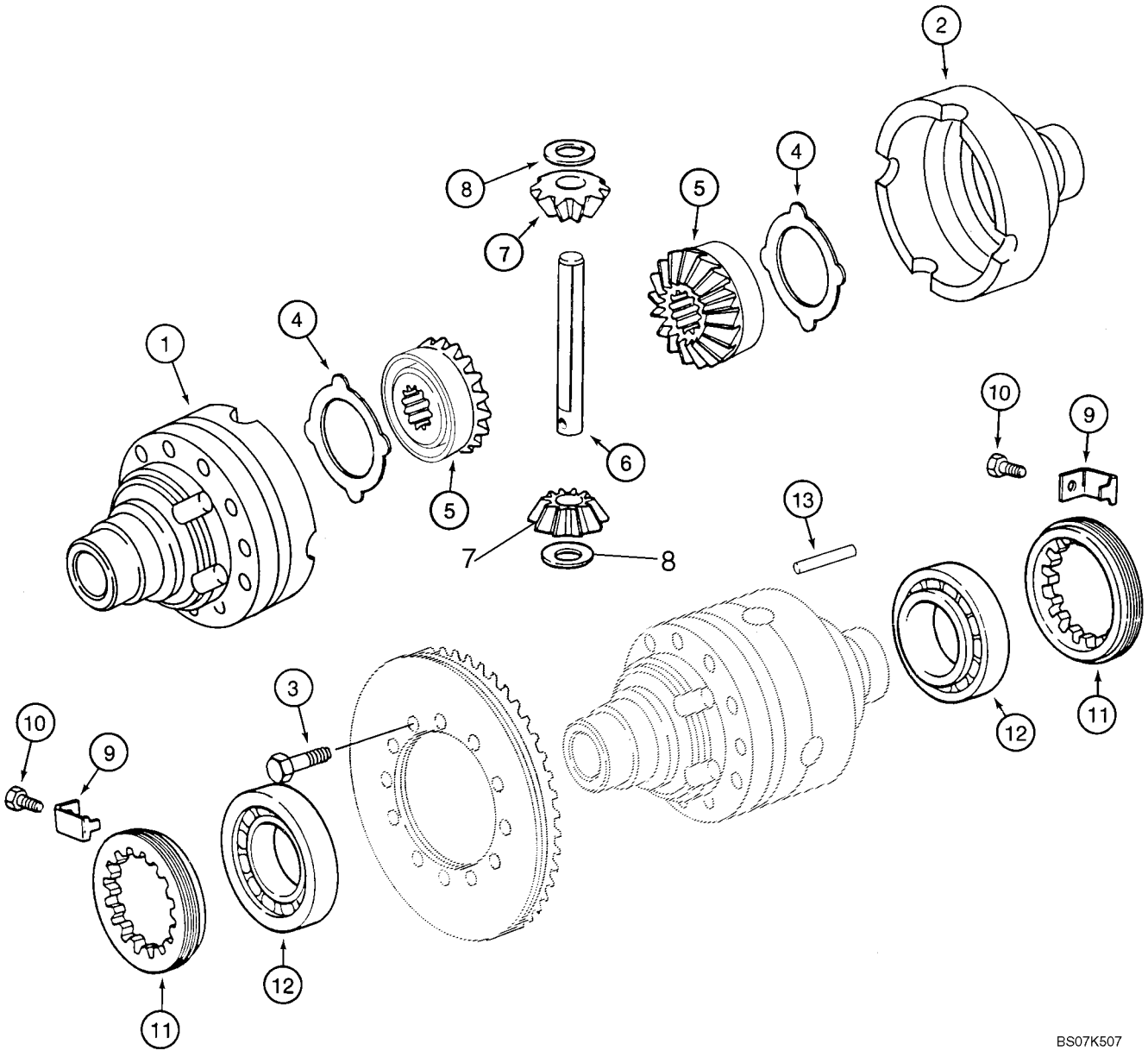

EIXO DA TRANSMISSÃO DIANTEIRA - DIFERENCIAL

REF	FN	PART NUMBER	YR/SN	QTY	DESCRIPTION
		87395365		1	EIXO CONJUNTO 4WD, Front, Incl. Ref 1 - 13; Also Includes Parts On Figures 06-02 - 06-08
		294933A1		1	SUPORTE CONJUNTO, Differential Housing, Incl. Ref 1, 2
1		NSS		1	BOLETIM INFORMATIVO, Housing, Flange Half
2		NSS		1	BOLETIM INFORMATIVO, Housing, Plain Half
3		5194194		12	PARAFUSO, M10 x 75
4		1967003C1		2	ANEL DE ENCOSTO
		231397A1		1	JOGO DE PEÇAS, Differential Gear Set, Service Replacement, Incl. Ref 5 - 8
5		NSS		2	BOLETIM INFORMATIVO, Gear, Side
6		NSS		1	BOLETIM INFORMATIVO, Shaft, Pinion Gear
7		NSS		2	BOLETIM INFORMATIVO, Pinion Gear
8		9966352		2	ANILHA DE ENCOSTO
9		5194191		2	FIXADOR, Bracket
10		112486A1		2	PORCA DE TRAVA, Hex, M6 x 12
11		5194190		2	PORCA DO BUCIM, Locking Ring
12		561201		2	ROLAMENTO
13		9966356		1	PINO-ELÁSTICO

EIXO DA TRANSMISSÃO DIANTEIRA - ANEL E PINHÃO

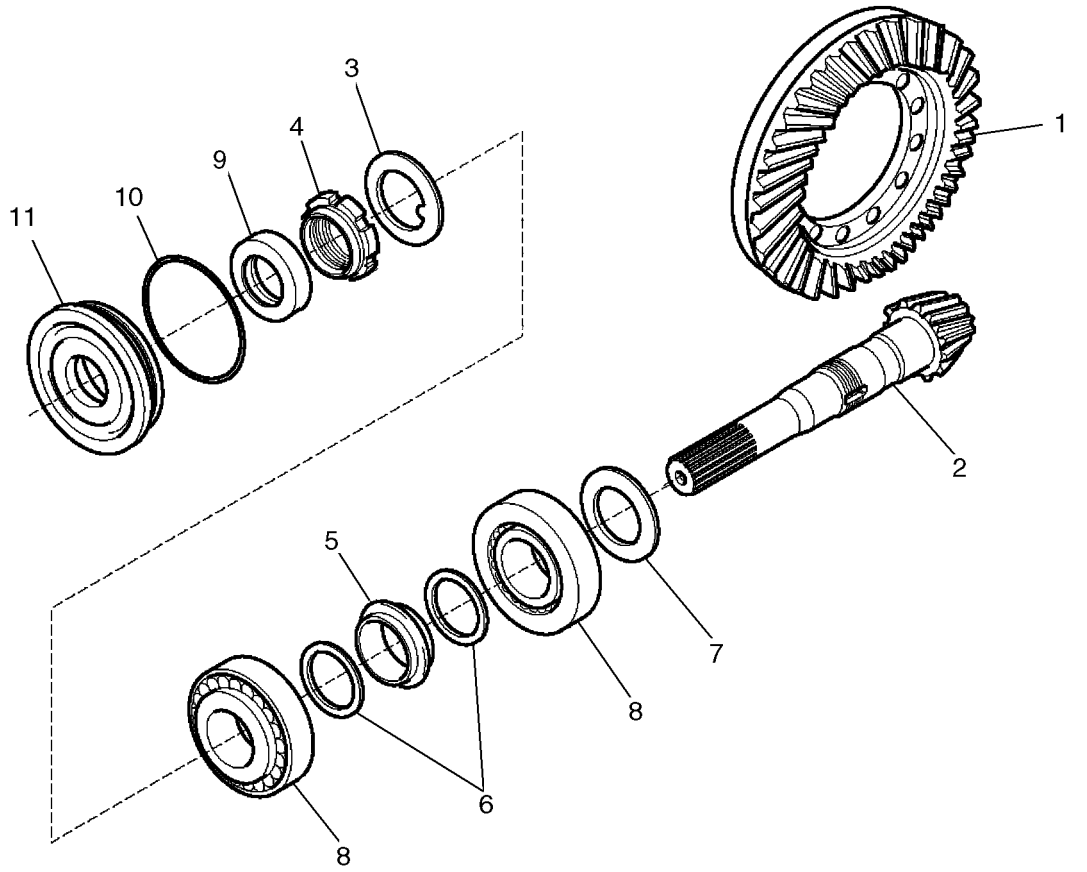

EIXO DA TRANSMISSÃO DIANTEIRA - ANEL E PINHÃO

REF	FN	PART NUMBER	YR/SN	QTY	DESCRIPTION
		87395365		1	EIXO CONJUNTO 4WD, Front, Incl. Ref 1 - 11; Also Includes Parts On Figures 06-02 - 06-08
		144460A1		1	PAR CÔNICO, Ring and Pinion Gear Set, Incl. Ref 1 - 6
1		NSS		1	BOLETIM INFORMATIVO, Ring, Gear
2		NSS		1	BOLETIM INFORMATIVO, Pinion Gear
3		9968031		1	ARRUELA-TRAVA
4		K261014		1	PORCA, Ring
5		1349058C1		1	ESPAÇADOR, Collapsible
6		1349059C1		2	ARRUELA PLANA
7		140954A1		AR	CALCO DE AFINACAO, 2.50mm Thk, (0.098")
7		140953A1		AR	CALCO DE AFINACAO, 2.60mm Thk, (0.102")
7		140951A1		AR	CALCO DE AFINACAO, 2.70mm Thk, (0.106")
7		140949A1		AR	CALCO DE AFINACAO, 2.80mm Thk, (0.110")
7		140948A1		AR	CALCO DE AFINACAO, 2.90mm Thk, (0.114")
7		140943A1		AR	CALCO DE AFINACAO, 3.00mm Thk, (0.118")
7		140944A1		AR	CALCO DE AFINACAO, 3.10mm Thk, (0.122")
7		140945A1		AR	CALCO DE AFINACAO, 3.20mm Thk, (0.125")
7		140946A1		AR	CALCO DE AFINACAO, 3.30mm Thk, (0.129")
7		140947A1		AR	CALCO DE AFINACAO, 3.40mm Thk, (0.133")
8		K395090		2	ROLAMENTO
9		K262143		1	ANEL DE VEDAÇÃO, Oil
10		238-5152		1	ANEL "O", -152, 70 Duro, 3.237" ID x .103" Thk
11		128570A1		1	FLANGE, Cover, Differential

CARDAN DO EIXO DIANTEIRO

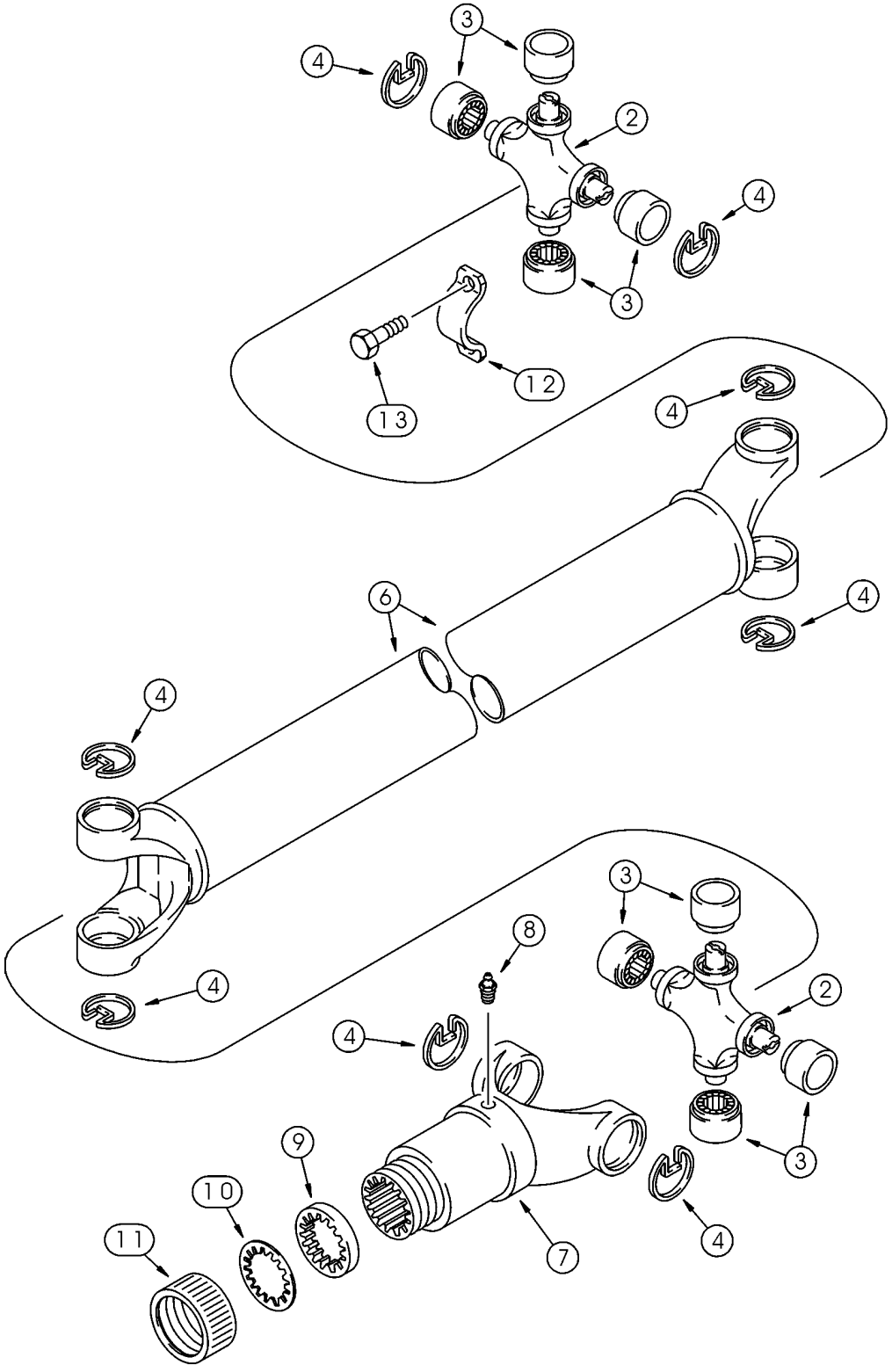

CARDAN DO EIXO DIANTEIRO

REF	FN	PART NUMBER	YR/SN	QTY	DESCRIPTION
		87694656		1	EIXO COMANDO, With or Without Powershift Transmission, Incl. Ref 2 - 11
		393231A1		2	JOGO, Universal Joint, Incl. Ref 2 - 4
2		NSS		1	BOLETIM INFORMATIVO, Joint, Universal
3		NSS		4	BOLETIM INFORMATIVO, Bearing, Journal
4		NSS		4	BOLETIM INFORMATIVO, Ring, Retaining
6		87716824		1	TAMPA DO RESERVATÓRIO
7		87716823		1	GARFO
8		219-10		1	GRAXEIRA, 1/4"-28 NPT x .68" lg
		D149860		1	JOGO DE SERVICO(PACO, Incl. Ref 9 - 11; If Used
9		NSS		1	BOLETIM INFORMATIVO, Washer, Cork
10		NSS		1	BOLETIM INFORMATIVO, Washer, Steel
11		NSS		1	BOLETIM INFORMATIVO, Cap
12		87538515		2	PRENDEDOR
13		9637611		4	PARAFUSO, Hex Flange Head, Locking, Special, 5/16 - 24 UNF x 1-1/16

SISTEMA DE ARREFECIMENTO - TRANSMISSÃO

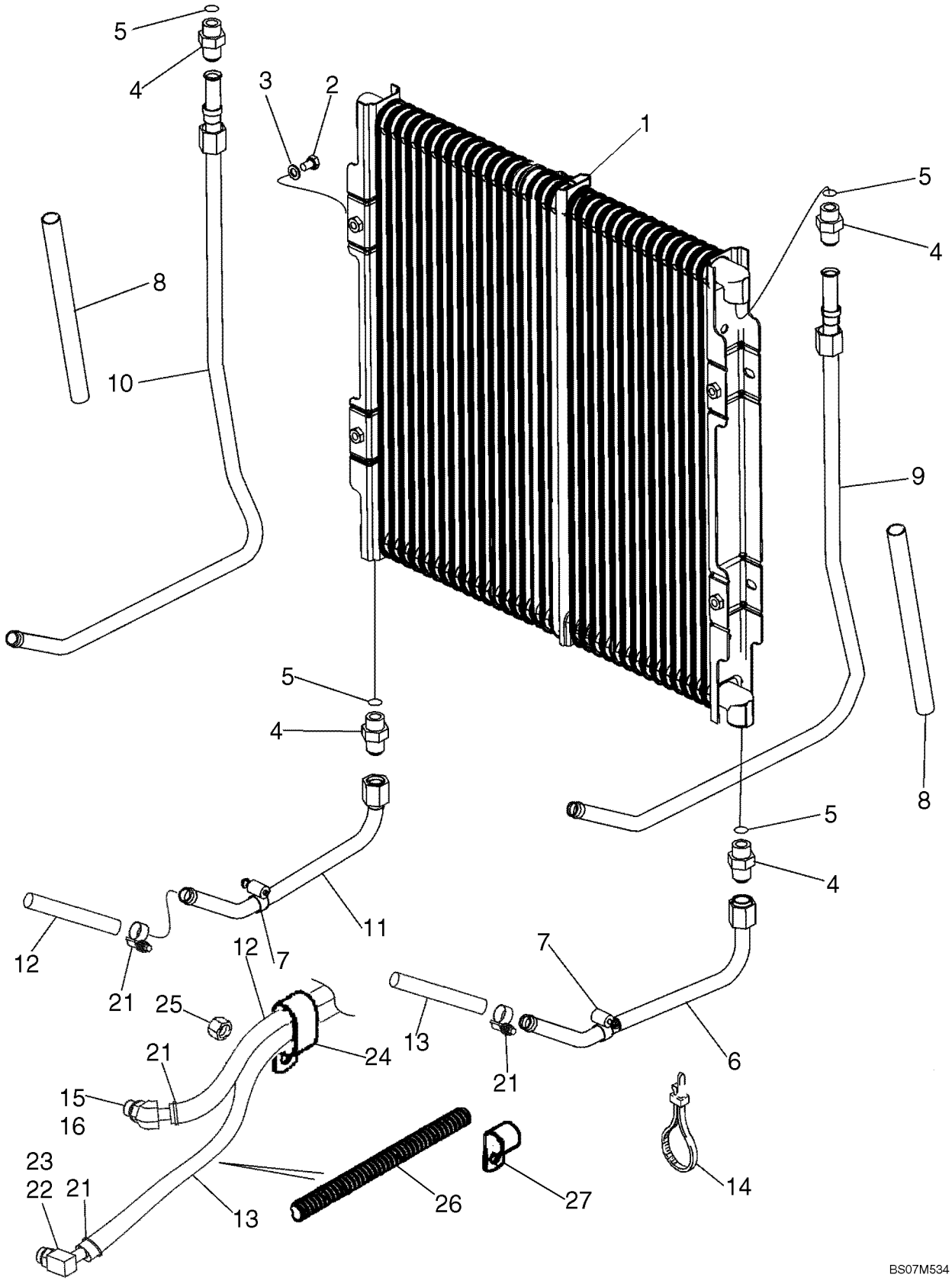

SISTEMA DE ARREFECIMENTO - TRANSMISSÃO

REF	FN	PART NUMBER	YR/SN	QTY	DESCRIPTION
1		87441876		1	ARREFECEDOR, Hydraulic
2		614-8012		4	PARAFUSO, Hex, M8 x 12, 8.8, Full Thd
3		895-11008		4	ARRUELA PLANA, M8 x 16 x 1.6
4		218-5062		4	CONEXÃO, 7/8"-14, 37º x 7/8"-14, O-Ring, Incl. Ref 5
5		237-6010		1	ANEL "O", 10-1, 90 Duro, .755" ID x .097" Thk
6		87435078		1	TUBO, Lower Right-Hand Tube
7		214-1412		2	BRACADEIRA MANGUEIRA, #12, 0.69/1.25 Type F Worm
8		87311219		2	TUBO PLASTICO, 250 mm (9-7/8 in) Sleeve
9		87435076		1	TUBO, Right-Hand Upper Cooler
10		87435080		1	TUBO, Left-Hand Upper Cooler
11		87435082		1	TUBO, Left-Hand Lower
12		87422597		1	MANGUEIRA CONJUNTO, 975 mm (38-13/32 in), Transmission to Cooler Inlet
13		87422598		1	MANGUEIRA CONJUNTO, 1225 mm (48-1/4 in), Cooler Outlet to Transmission
14		L18337		1	TIRA DE CABO, 9.95"-12.1" lg
15		217-314		1	CONEXAO, 45º, 5/8" Hose x 7/8"-14 ORB Beaded, Incl. Ref 16
16		237-6010		1	ANEL "O", 10-1, 90 Duro, .755" ID x .097" Thk
21		328186A1		4	BRACADEIRA MANGUEIRA
22		217-349		1	CONEXAO, 90º, 5/8" Hose x 7/8"-14 ORB Beaded, Incl. Ref 23
23		237-6010		1	ANEL "O", 10-1, 90 Duro, .755" ID x .097" Thk
24		D39696		1	BRACADEIRA, Double P
25		829-1410		1	PORCA, M10, Cl 10
26		D132982		1	TUBO ISOLANTE
27		515-25190		2	PRENDEDOR, 3/4", Insul, 1/2" Bolt

TRANSMISSÃO - STEUN

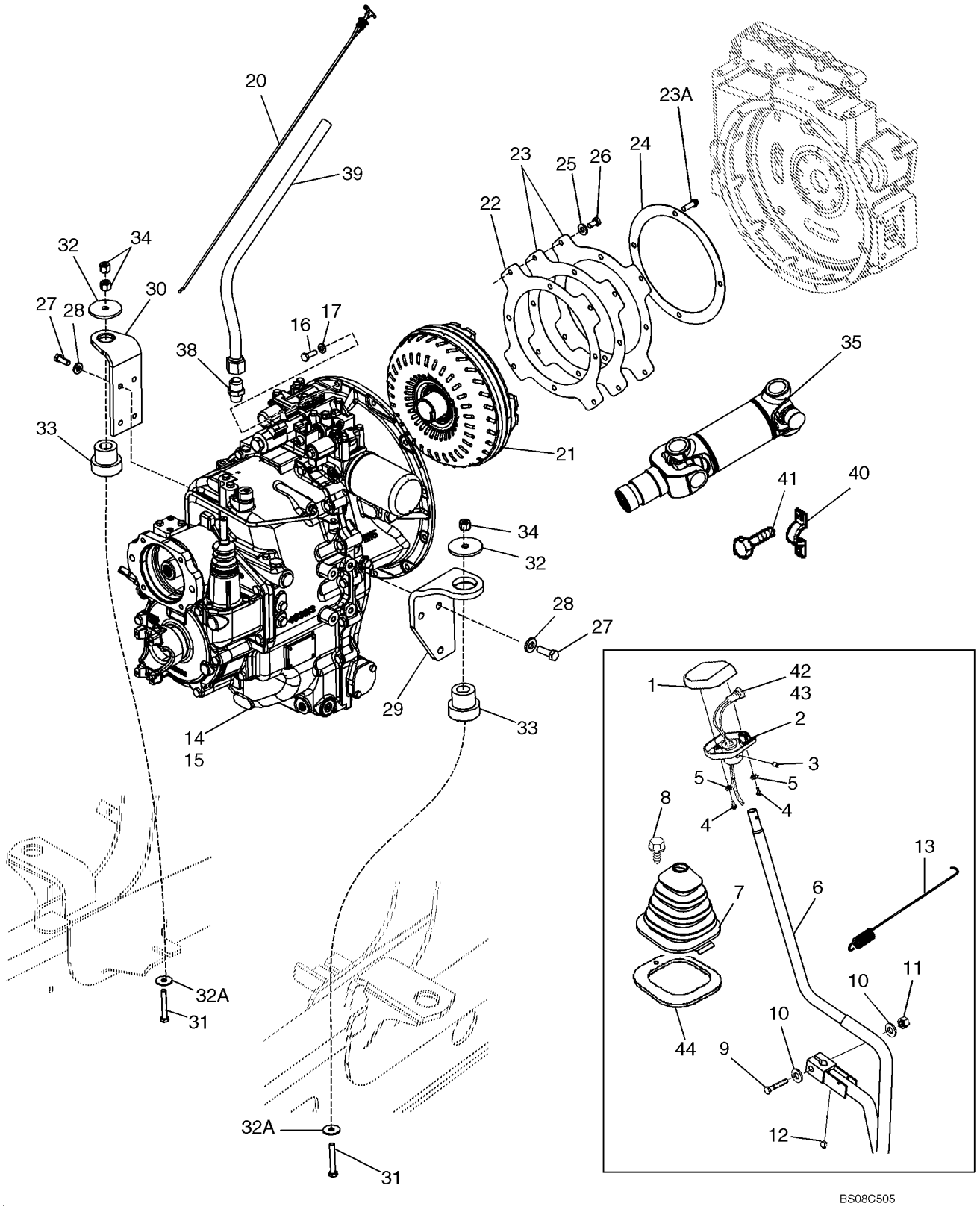

TRANSMISSÃO - STEUN

REF	FN	PART NUMBER	YR/SN	QTY	DESCRIPTION
		309747A1		1	PLACA, Gear Shift Lever, Includes NSS Gasket, Incl. Ref 1, 2, 4, 5
		NSS		2	BOLETIM INFORMATIVO, GASKET, Knob
1		187714A1		1	BOTÃO, Knob, Upper
2		187715A1		1	BOTÃO, Knob, Lower
3		484-6316		1	JOGO PARAFUSO, Hex Soc, 5/16"-24 x 3/8"
4		87020181		2	PARAFUSO, No. 10 NF x 7/8
5		493-41020		2	ARRUELA-TRAVA, Ext Tooth, #10
6		379314A4		1	ALAVANCA CONJUNTO, Gear Shift
7		400588A2		1	COIFA
8		87310096		1	PARAFUSO, M6 x 25, Includes Washer, Stainless Steel
9		827-12065		1	PARAFUSO, Hex, M12 x 65, 10.9
10		896-11012		2	ARRUELA PLANA, M13.5 x 24.5 x 3, HT
11		832-10412		1	CONTRA PORCA, M12 x 1.75, Cl 8
12		126-116		1	CHAVETA MEIA LUA, #9, 3/16" x 3/4", HT
13		380537A2		1	MOLA
14		87395300		1	CAIXA DE MARCHAS, Two Wheel Drive Models, See Figure 06-12 - 06-19, 07-01
		{87395300R}			Transmission, 2WD, Remanufactured
		{87395300C}			Transmission, 2WD, Core
15		87395301		1	CAIXA DE MARCHAS, Four Wheel Drive Models, See Figure 06-19(00) - 06-19(10), 07-01(01)
		{87395301R}			Transmission, 4WD, Remanufactured
		{87395301C}			Transmission, 4WD, Core
16		627-10030		12	PARAFUSO, Hex, M10 x 30, 10.9, Full Thd
17		496-21041		12	ARRUELA PLANA, 13/32" x 13/16" x .089", HDN
20		87601345		1	HASTE DE NÍVEL
21		87702194		1	CONVERSOR DE TORQUE, New
22		87406934		1	PLACA, Flex Plate, With Caged Nuts
23		86993546		2	PLACA, Flex Plate
23A		87019767		4	PARAFUSO, 12 Pt Hd, M10 x 1.25 x 30, 12.9
24		87409201		1	PLACA DE APOYO
25		896-15010		4	ARRUELA PLANA, M10 x 24.5 x 3, HT
26		614-10020		4	PARAFUSO, Hex, M10 x 20, 8.8, Full Thd

TRANSMISSÃO - STEUN

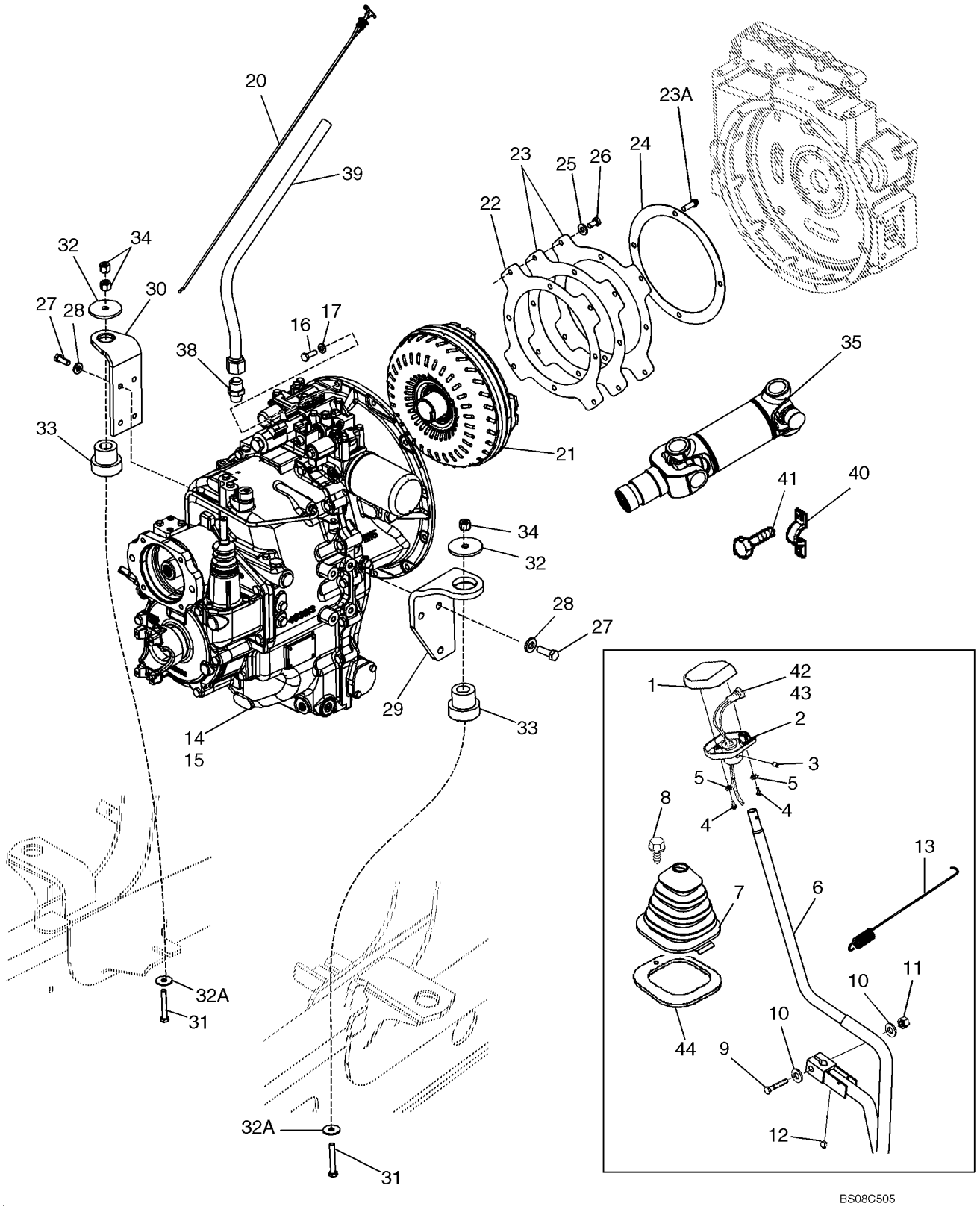

TRANSMISSÃO - STEUN

REF	FN	PART NUMBER	YR/SN	QTY	DESCRIPTION
27		614-12035		7	PARAFUSO, Hex, M12 x 35, 8.8, Full Thd
28		896-15012		7	ARRUELA PLANA, M12 x 28.5 x 4, HT
29		87735097		1	SUPORTE, Right-Hand Bracket
30		87735096		1	SUPORTE, Left-Hand Bracket
31		814-12080		2	PARAFUSO, Hex, M12 x 80, 8.8
32		85801585		2	ARRUELA DE VEDAÇÃO, Special
32A		85802618		2	ARRUELA DE VEDAÇÃO
33		87416967		2	SUPORTE
34		832-10412		3	CONTRA PORCA, M12 x 1.75, Cl 8
35		87613924		1	EIXO COMANDO, Transmission to Rear Axle; See Figure 06-38
38		218-459		1	CONEXÃO, 1 5/16"-12, 37° x 3/4"-14, NPTF
39		87601338		1	TUBO, Dipstick
40		87538515		2	PRENDEDOR
41		9637611		4	PARAFUSO, Hex Flange Head, Locking, Special, 5/16 - 24 UNF x 1-1/16
42		87312712		1	INTERRUPTOR, Push Button, Clutch Cutout
43		123809A2		1	CHICOTE, Clutch Cutout, Transmission Gear Shift Lever
44		410561A1		1	ANEL DE VEDAÇÃO, Shift Lever Boot, Cab Models

CONJUNTO DA TRANSMISSÃO, 2WD - FILTRO, ÓLEO

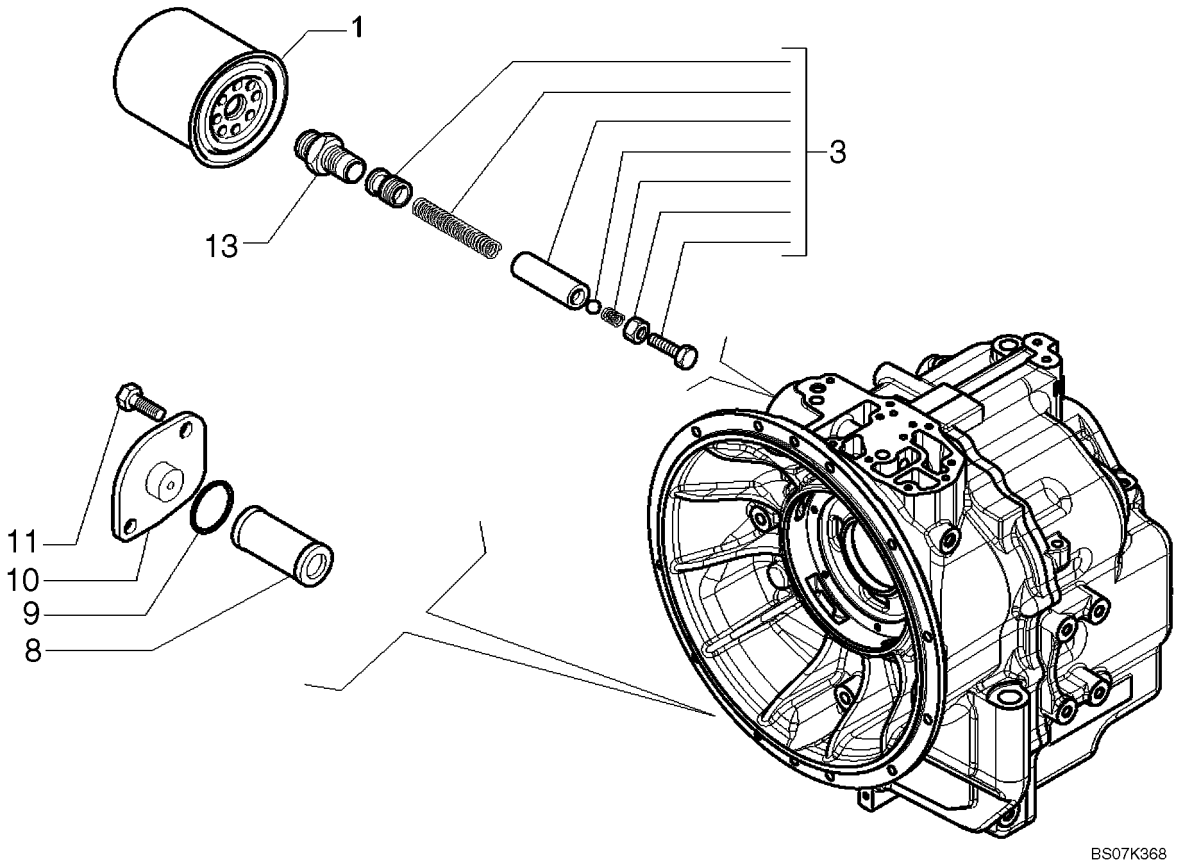

CONJUNTO DA TRANSMISSÃO, 2WD - FILTRO, ÓLEO

REF	FN	PART NUMBER	YR/SN	QTY	DESCRIPTION
		87395300		1	CAIXA DE MARCHAS, Two Wheel Drive, Incl. Ref 1 - 13; Also Includes Parts On Figures 06-12 - 06-19, 07-01
1		254686A2		1	FILTRO, Oil
3		84127891		1	JOGO, Valve
8		278534A1		1	FILTRO TELA, Oil
9		100748A1		1	ANEL O
10		181219A1		1	TAMPA
11		614-8018		2	PARAFUSO, Hex, M8 x 18, 8.8, Full Thd
13		181202A1		1	CONEXAO

CONJUNTO DA TRANSMISSÃO, 2WD - ALOJAMENTO

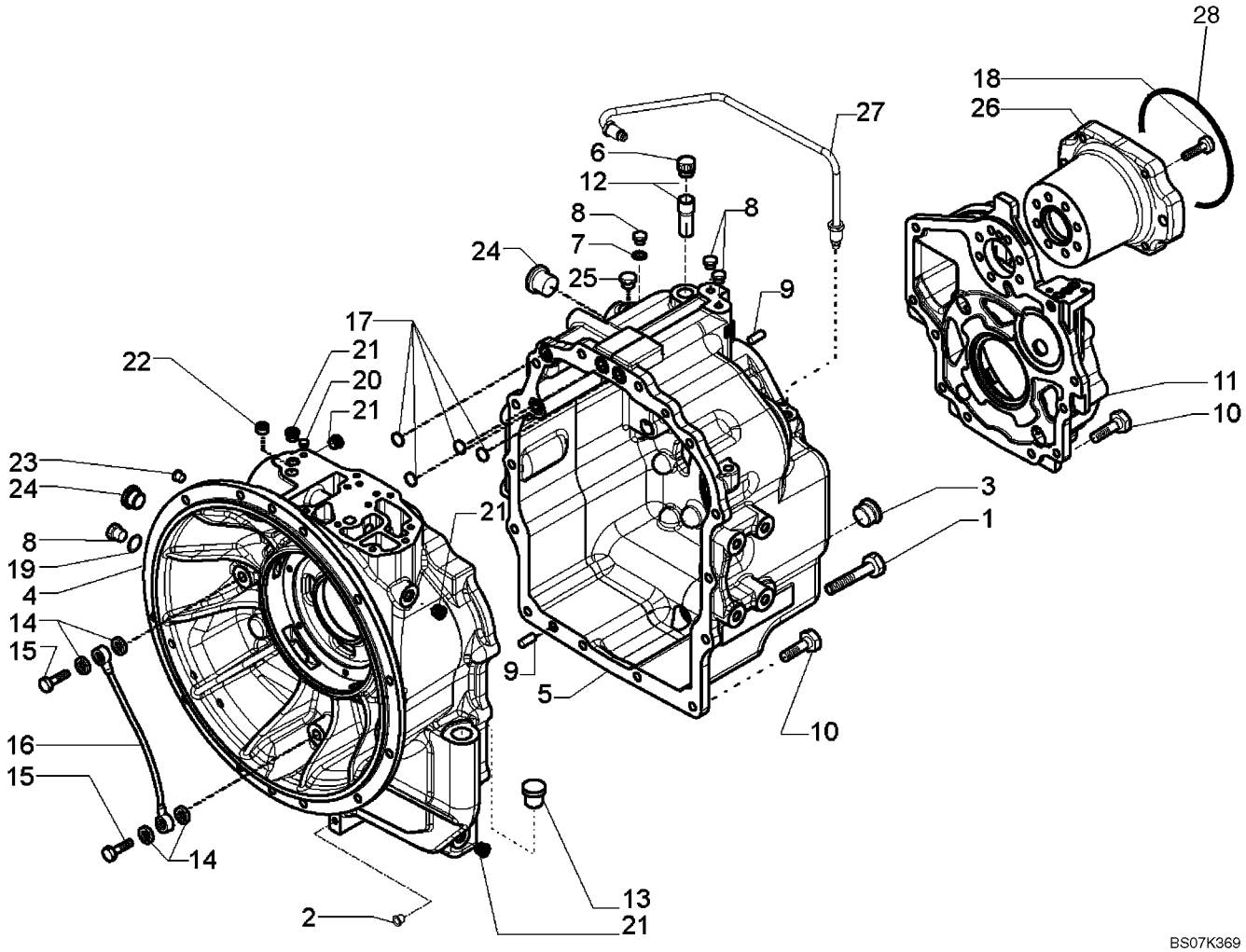

CONJUNTO DA TRANSMISSÃO, 2WD - ALOJAMENTO

REF	FN	PART NUMBER	YR/SN	QTY	DESCRIPTION
		87395300		1	CAIXA DE MARCHAS, Two Wheel Drive, Incl. Ref 1 - 28; Also Includes Parts On Figures 06-12 - 06-19, 07-01
1		814-10150		2	PARAFUSO, Hex, M10 x 150, 8.8
2		NSS		1	BOLETIM INFORMATIVO, PLUG, Shipping Plug
3		100557A1		1	BUJÃO DE DRENO, M30 x 2; Incl 238-6121 O-Ring
		238-6121		1	ANEL "O", -121, 90 Duro, 1.049" ID x .103" Thk
4		87701253		1	CAIXA DE TRANSMISSÃO, Front
5		87701255		1	CAIXA DE TRANSMISSÃO, Rear
6		1530028C1		1	RESPIRO CONJUNTO
7		934667R1		3	ARRUELA DE VEDAÇÃO, M10 x 14 x 1
8		181100A1		4	BUJÃO
9		K260177		3	PINO, 10 x 25
10		614-10030		17	PARAFUSO, Hex, M10 x 30, 8.8
11		87701257		1	TAMPA
12		310772A1		1	TUBO DE INTRODUÇÃO, Breather
13		NSS		1	BOLETIM INFORMATIVO, PLUG, Shipping Plug
14		181105A1		4	ARRUELA DE COBRE
15		181179A1		2	TORNILLO HUECO, M14 x 1.5
16		181232A1		1	TUBO DE INTRODUÇÃO, Lubrication
17		181141A1		4	ANEL O
18		87701258		7	PARAFUSO, M10 x 45
19		87429985		1	ARRUELA DE VEDAÇÃO, Copper, 10 x 18 x 1.5 mm
20		87702570		1	BUJÃO
21		E135809		4	BUJÃO, 9/16
22		87701260		1	BUJÃO, M16 x 1.5
23		181101A1		1	BUJÃO, M14 x 1.5
24		NSS		1	BOLETIM INFORMATIVO, PLUG, Shipping Plug
25		NSS		1	BOLETIM INFORMATIVO, PLUG, Shipping Plug
26		87701269		1	FLANGE, PTO
27		87701270		1	TUBO DE INTRODUÇÃO, Oil Tube
28		87429982		1	ANEL "O", Pump Mounting

CONJUNTO DA TRANSMISSÃO, 2WD - BOMBA DE ÓLEO

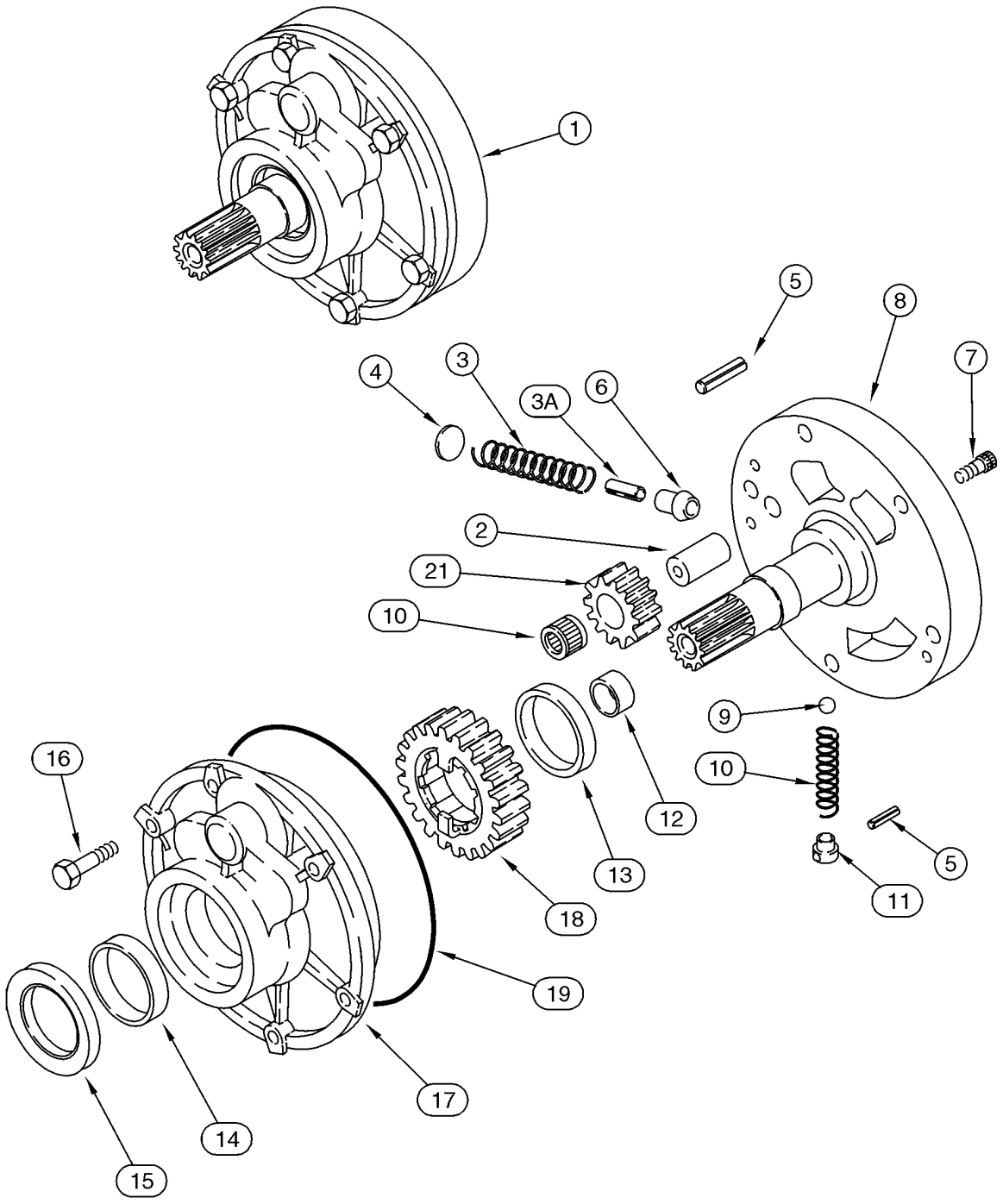

CONJUNTO DA TRANSMISSÃO, 2WD - BOMBA DE ÓLEO

REF	FN	PART NUMBER	YR/SN	QTY	DESCRIPTION
		87395300		1	CAIXA DE MARCHAS, Two Wheel Drive, Incl. Ref 1 - 21; Also Includes Parts On Figures 06-12 - 06-19, 07-01
1		87429970		1	BOMBA, Charge, Incl. Ref 2 - 21
2		NSS		1	BOLETIM INFORMATIVO, Shaft
3		NSS		1	BOLETIM INFORMATIVO, Spring
3A		NSS		1	BOLETIM INFORMATIVO, Pin
4		NSS		1	BOLETIM INFORMATIVO, Stop
5		NSS		2	BOLETIM INFORMATIVO, Pin, Roll
6		NSS		1	BOLETIM INFORMATIVO, Piston
7		NSS		2	BOLETIM INFORMATIVO, Bolt
8		NSS		1	BOLETIM INFORMATIVO, Support
9		NSS		1	BOLETIM INFORMATIVO, Ball
10		NSS		1	BOLETIM INFORMATIVO, Spring
11		NSS		1	BOLETIM INFORMATIVO, Guide
12		NSS		1	BOLETIM INFORMATIVO, Bushing
13		NSS		1	BOLETIM INFORMATIVO, Bushing
14		NSS		1	BOLETIM INFORMATIVO, Bushing
15		87429971		1	VEDADOR DE OLEO
16		814-8060		6	PARAFUSO, Hex, M8 x 60, 8.8
17		NSS		1	BOLETIM INFORMATIVO, Housing
18		NSS		1	BOLETIM INFORMATIVO, Gear, 23T
19		181142A1		1	ANEL O
20		NSS		1	BOLETIM INFORMATIVO, Bearing, Needle
21		NSS		1	BOLETIM INFORMATIVO, Gear, 12T

CONJUNTO DA TRANSMISSÃO, 2WD - MECANISMO DE ACCIONAMENTO DAS MUDANÇAS

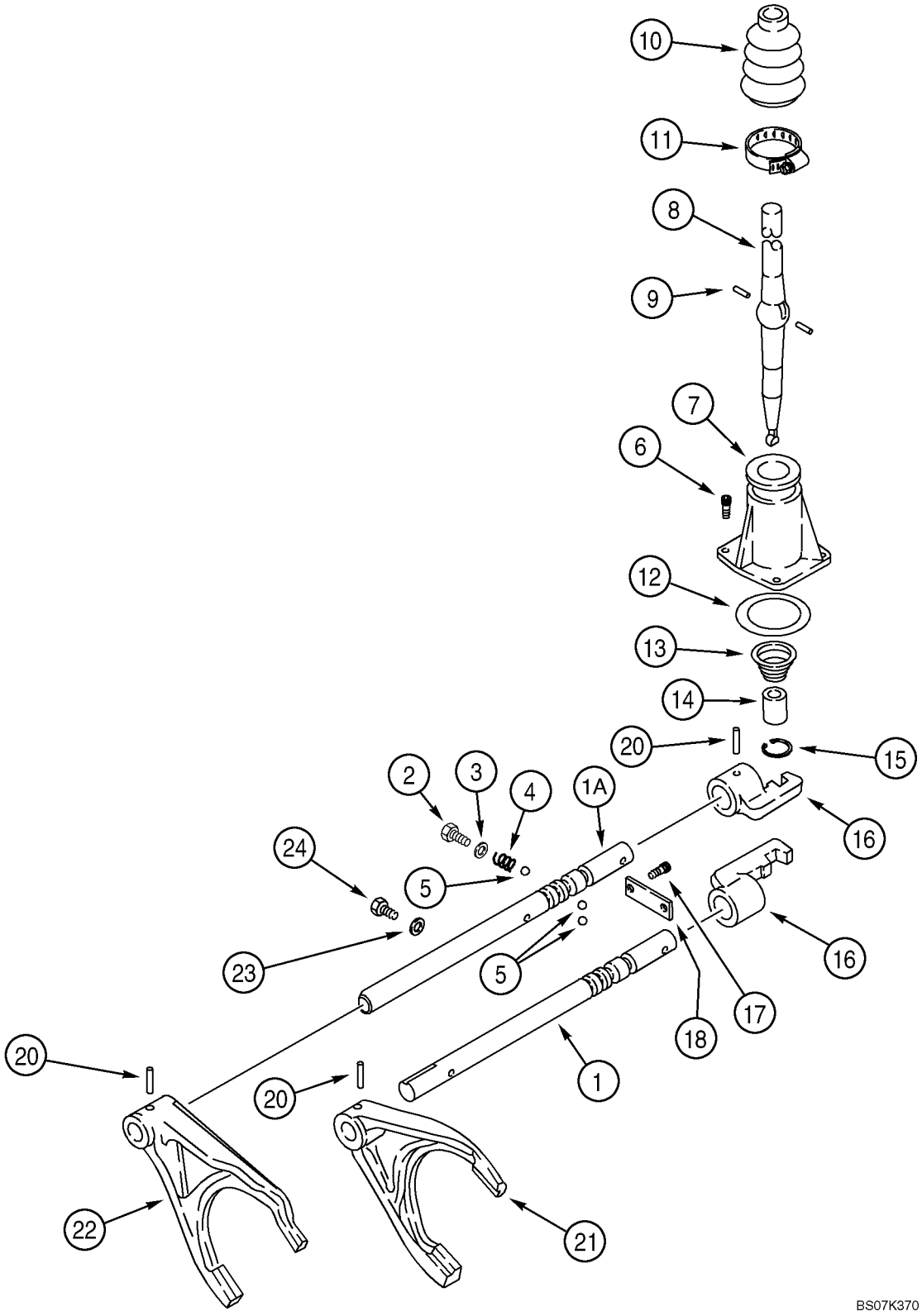

CONJUNTO DA TRANSMISSÃO, 2WD - MECANISMO DE ACCIONAMENTO DAS MUDANÇAS

REF	FN	PART NUMBER	YR/SN	QTY	DESCRIPTION
		87395300		1	CAIXA DE MARCHAS, Two Wheel Drive, Incl. Ref 1 - 24; Also Includes Parts On Figures 06-12 - 06-19, 07-01
1		181245A2		1	HASTE, Shifter Fork Rail; First and Second
1A		87578867		1	TRILHO, Shifter Fork Rail; Third and Fourth
2		87701338		2	PARAFUSO
3		87429994		2	ARRUELA DE VEDAÇÃO, 12 x 20 x 1.5 mm
4		1966993C1		2	MOLA
5		181139A1		4	ESFERA
6		864-8025		3	PARAFUSO, Hex Soc Hd, M8 x 25, 8.8
7		181171A1		1	TAMPA
8		190428A3		1	ALAVANCA DE CONTROLE
9		1967585C1		2	PINO
10		1967581C1		1	CAPA
11		181177A1		1	BRACADEIRA
12		181138A1		1	ANEL O
13		278533A1		1	MOLA
14		278532A1		1	BUCHA
15		279039A1		1	ANEL TRAVA
16		181173A1		2	SELETOR, Shifter
17		864-10025		2	PARAFUSO, Hex Soc Hd, M10 x 25, 8.8
18		181175A1		1	PLACA ESPESSA
20		905794R1		4	PINO, M6 x 30, Coiled
21		181203A1		1	FORQUILHA, First and Second
22		181174A2		1	FORQUILHA, Third and Fourth
23		87429985		1	ARRUELA DE VEDAÇÃO
24		181100A1		1	BUJÃO, M10 x 23

CONJUNTO DA TRANSMISSÃO, 2WD - EIXO, MARCHA A RÉ E PRIMÁRIO

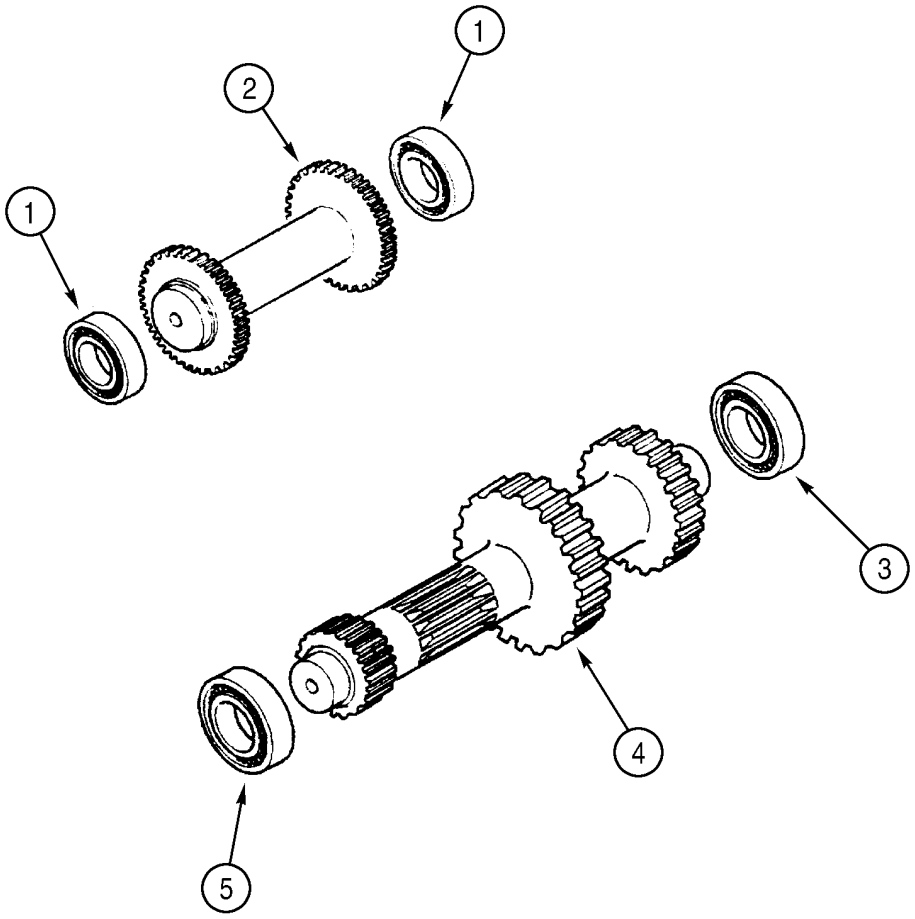

BS99H168

CONJUNTO DA TRANSMISSÃO, 2WD - EIXO, MARCHA A RÉ E PRIMÁRIO

REF	FN	PART NUMBER	YR/SN	QTY	DESCRIPTION
		87395300		1	CAIXA DE MARCHAS, Two Wheel Drive, Incl. Ref 1 - 6; Also Includes Parts On Figures 06-12 - 06-19, 07-01
1		ST205A		2	ROLAMENTO
2		358636A1		1	EIXO, Idler/Reverse Shaft
3		181126A1		1	ROLAMENTO
4		87701276		1	EIXO PRIMÁRIO, Primary Shaft
5		181132A1		1	ROLAMENTO
6		A48041		1	ANEL-ELÁSTICO, Bearing to Axle Housing; Not Illustrated

CONJUNTO DA TRANSMISSÃO, 2WD - EIXO DE ENTRADA E TOMADA DE FORÇA

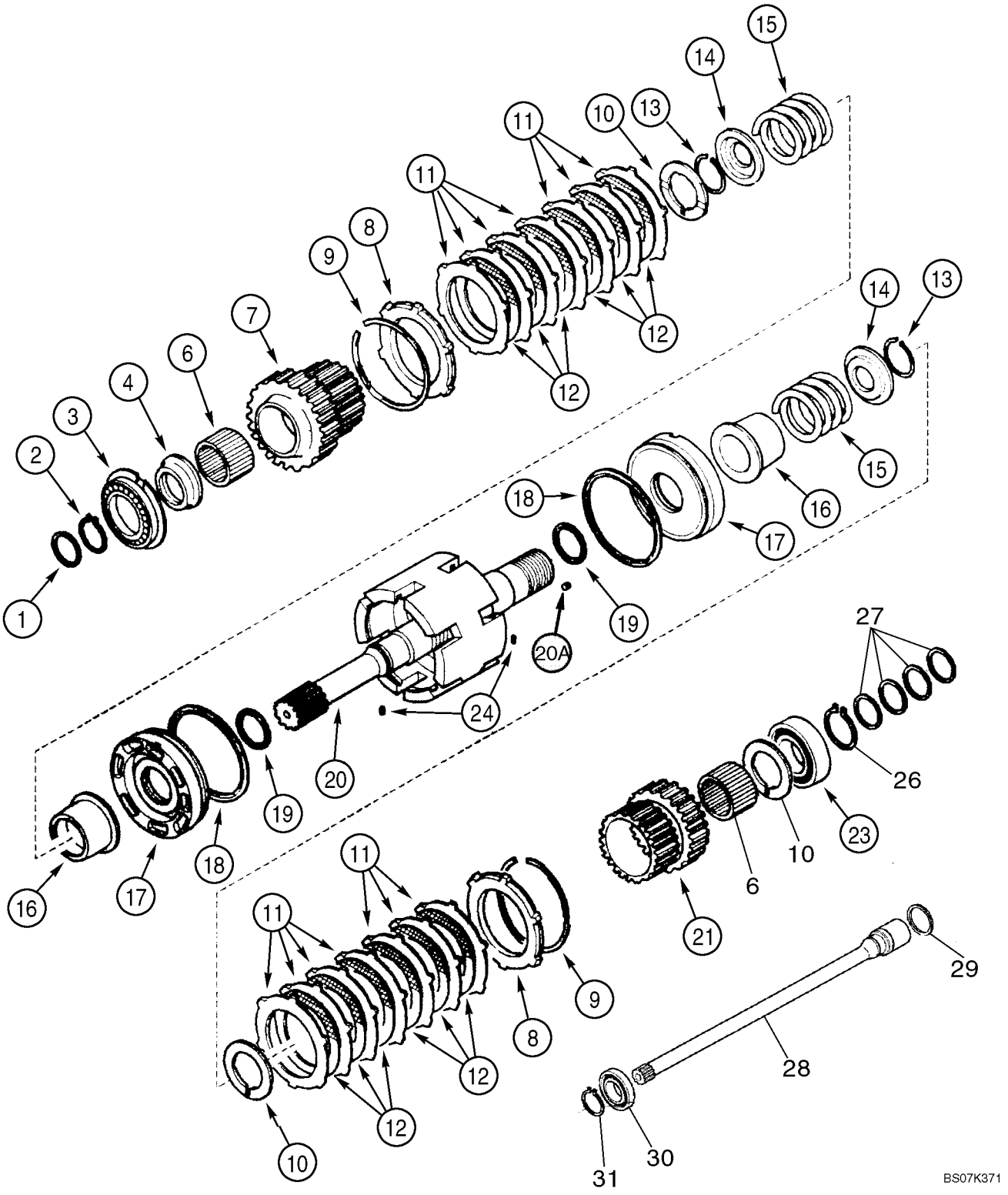

CONJUNTO DA TRANSMISSÃO, 2WD - EIXO DE ENTRADA E TOMADA DE FORÇA

REF	FN	PART NUMBER	YR/SN	QTY	DESCRIPTION
		87395300		1	CAIXA DE MARCHAS, Two Wheel Drive, Incl. Ref 1 - 31; Also Includes Parts On Figures 06-12 - 06-19, 07-01
1		358645A1		2	VEDADOR DE OLEO
2		A48041		1	ANEL-ELÁSTICO
3		181128A1		1	ROLAMENTO
4		358635A1		1	ESPAÇADOR, 68 x 45 x 105 mm
6		358633A1		2	ROLAMENTO
7		358632A1		1	PINHAO, Gear, 35T
8		310519A1		2	PLACA
9		181116A1		2	ANEL-TRAVA
10		358640A1		3	ARRUELA PLANA, Thrust
11		181159A1		14	DISCO, Plate
12		181158A1		12	DISCO CONJUNTO, Plate
13		181111A1		2	ANEL-TRAVA
14		181161A1		2	PLACA ENCOSTO, Pressure
15		358637A1		2	MOLA
16		358641A1		2	ACOPLAMENTO
17		358644A1		2	PISTÃO
18		358643A1		2	ANEL TRAVA, Seal Ring
19		358642A1		2	ANEL VEDADOR
20		87525849		1	KIT DE REPARO, Input Shaft, Incl Ref 20A (4) 139312A1 Rivets; Also Incl (1) 87429973 Input Shaft Which Is Not Serviced Separately
20A		139312A1		4	BUJÃO, Rivet
21		358638A1		1	PINHAO, Gear, 29T
23		ST264		1	ROLAMENTO
24		181108A1		2	ANEL ELASTICO
26		800-1150		1	ANEL, M50, Ext
27		87429984		4	ANEL
28		87705460		1	TOMADA DE FORÇA
29		358645A1		1	VEDADOR DE OLEO
30		87429983		1	ROLAMENTO
31		800-1130		1	ANEL, M30, Ext

CONJUNTO DA TRANSMISSÃO, 2WD - EIXO SECUNDÁRIO

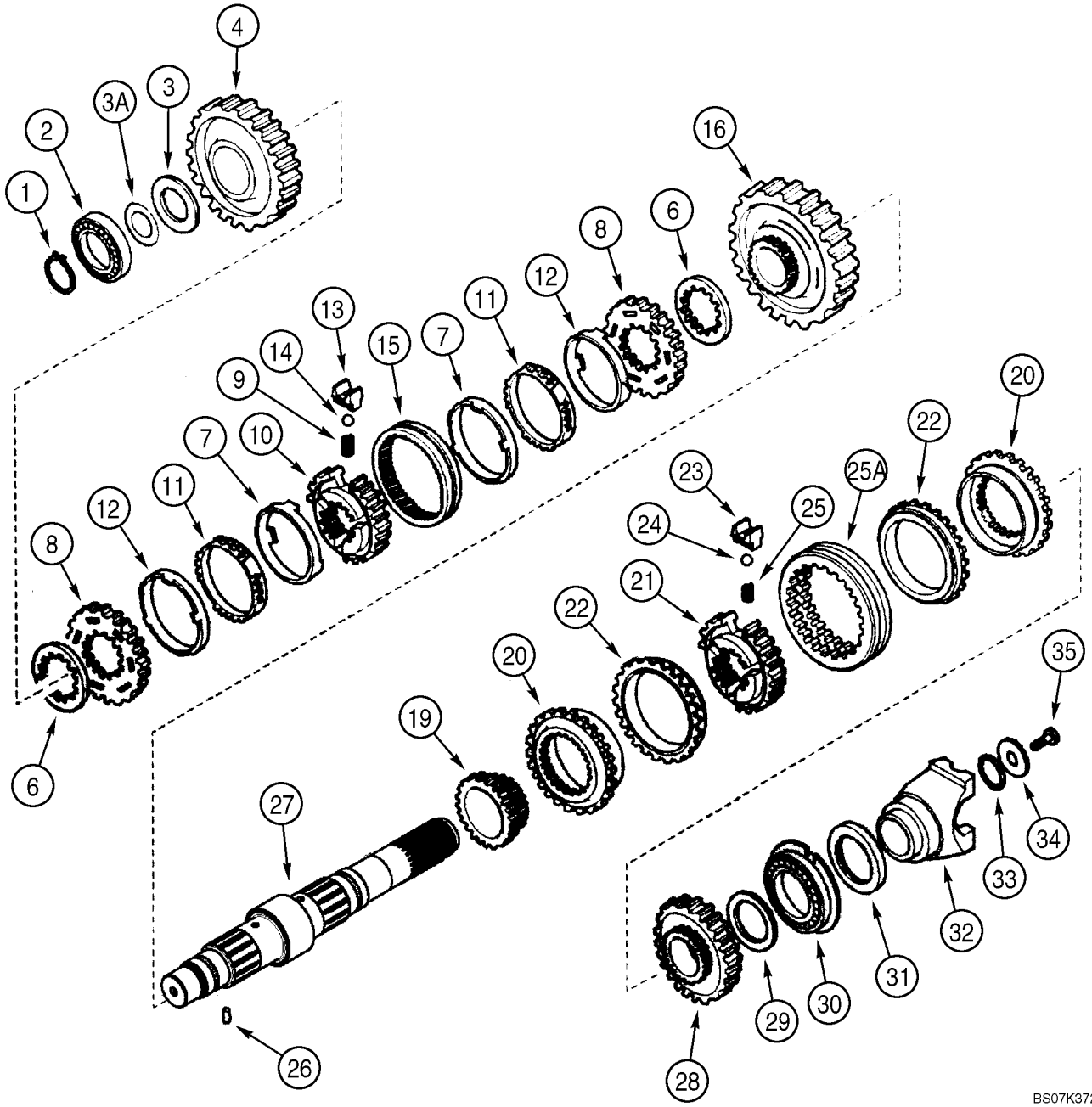

CONJUNTO DA TRANSMISSÃO, 2WD - EIXO SECUNDÁRIO

REF	FN	PART NUMBER	YR/SN	QTY	DESCRIPTION
		87395300		1	CAIXA DE MARCHAS, Two Wheel Drive, Incl. Ref 1 - 35; Also Includes Parts On Figures 06-12 - 06-19, 07-01
1		181118A1		1	ANEL-TRAVA
2		181132A1		1	ROLAMENTO
3		358649A1		1	ARRUELA PLANA, Thrust
3A		358650A1		AR	CALCO DE AFINACAO, 0,05 mm
3A		358651A1		AR	CALCO DE AFINACAO, 0,10 mm
3A		358652A1		AR	CALCO DE AFINACAO, 0,30 mm
3A		196454A1		AR	CALCO DE AFINACAO, 0,50 mm
4		87701278		1	ENGRENAGEM, Driven, Second, 44T Pinion Gear
6		244109A1		2	ESPAÇADOR
		190427A1		1	SINCRONIZADOR, Service Kit, Incl. Ref 7 - 15
7		NSS		2	BOLETIM INFORMATIVO, Ring
8		NSS		2	BOLETIM INFORMATIVO, Ring
9		384773A1		3	MOLA DE TRACAO
10		NSS		1	BOLETIM INFORMATIVO, Hub
11		NSS		2	BOLETIM INFORMATIVO, Ring
12		NSS		2	BOLETIM INFORMATIVO, Ring
13		326865A1		3	PLACA ESPACADORA
14		384769A1		3	ESFERA
15		NSS		1	BOLETIM INFORMATIVO, Sleeve
16		87701293		1	ENGRENAGEM, Driven, First, 50T Pinion Gear
19		358282A1		1	ENGRENAGEM, Driven, Fourth, 23T
		87429974		1	SINCRONIZADOR, Service Kit, Incl. Ref 20 - 25A
20		NSS		2	BOLETIM INFORMATIVO, Ring
21		NSS		1	BOLETIM INFORMATIVO, Hub
22		NSS		2	BOLETIM INFORMATIVO, Ring
23		NSS		3	BOLETIM INFORMATIVO, Plate
24		NSS		3	BOLETIM INFORMATIVO, Ball
25		NSS		3	BOLETIM INFORMATIVO, Spring
25A		NSS		1	BOLETIM INFORMATIVO, Sleeve
26		181108A1		1	ANEL ELASTICO
27		87701294		1	EIXO, Secondary
28		358283A1		1	PINHAO, Gear, Driven, Third, 33T

CONJUNTO DA TRANSMISSÃO, 2WD - EIXO SECUNDÁRIO

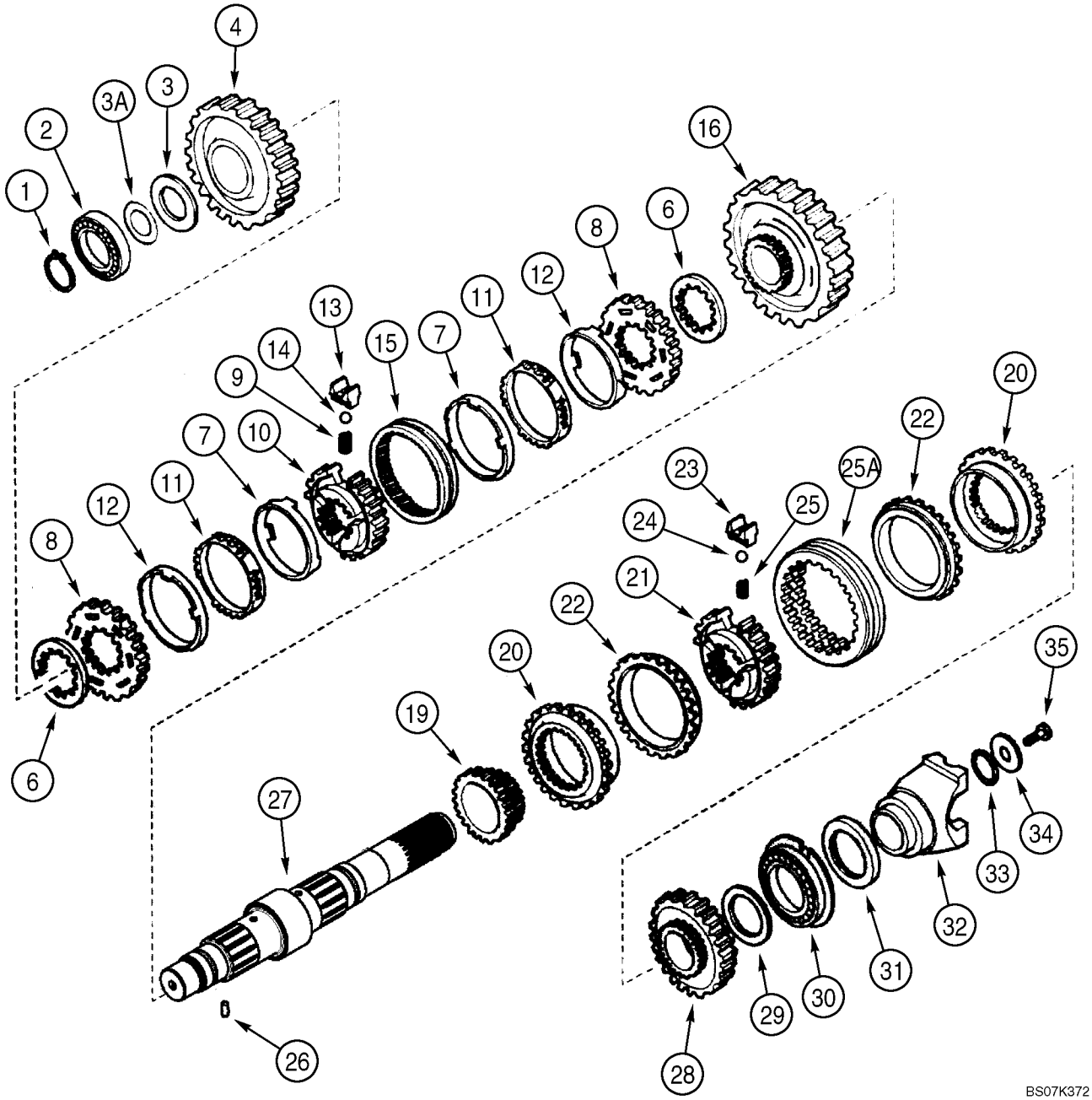

CONJUNTO DA TRANSMISSÃO, 2WD - EIXO SECUNDÁRIO

REF	FN	PART NUMBER	YR/SN	QTY	DESCRIPTION
29		358639A1		1	ARRUELA PLANA, Thrust, 68 x 45 x 4 mm
30		181130A1		1	ROLAMENTO
31		181123A1		1	VEDADOR DE OLEO, 60 x 75 x 8 mm
32		233284A1		1	GARFO, Yoke
33		181144A1		1	ANEL O
34		181165A1		1	ARRUELA PLANA, 52 x 12.5 x 5 mm
35		P3533055		1	PARAFUSO, 12 x 25 mm

CONJUNTO DA TRANSMISSÃO, 2WD - VÁLVULA, CONTROLE

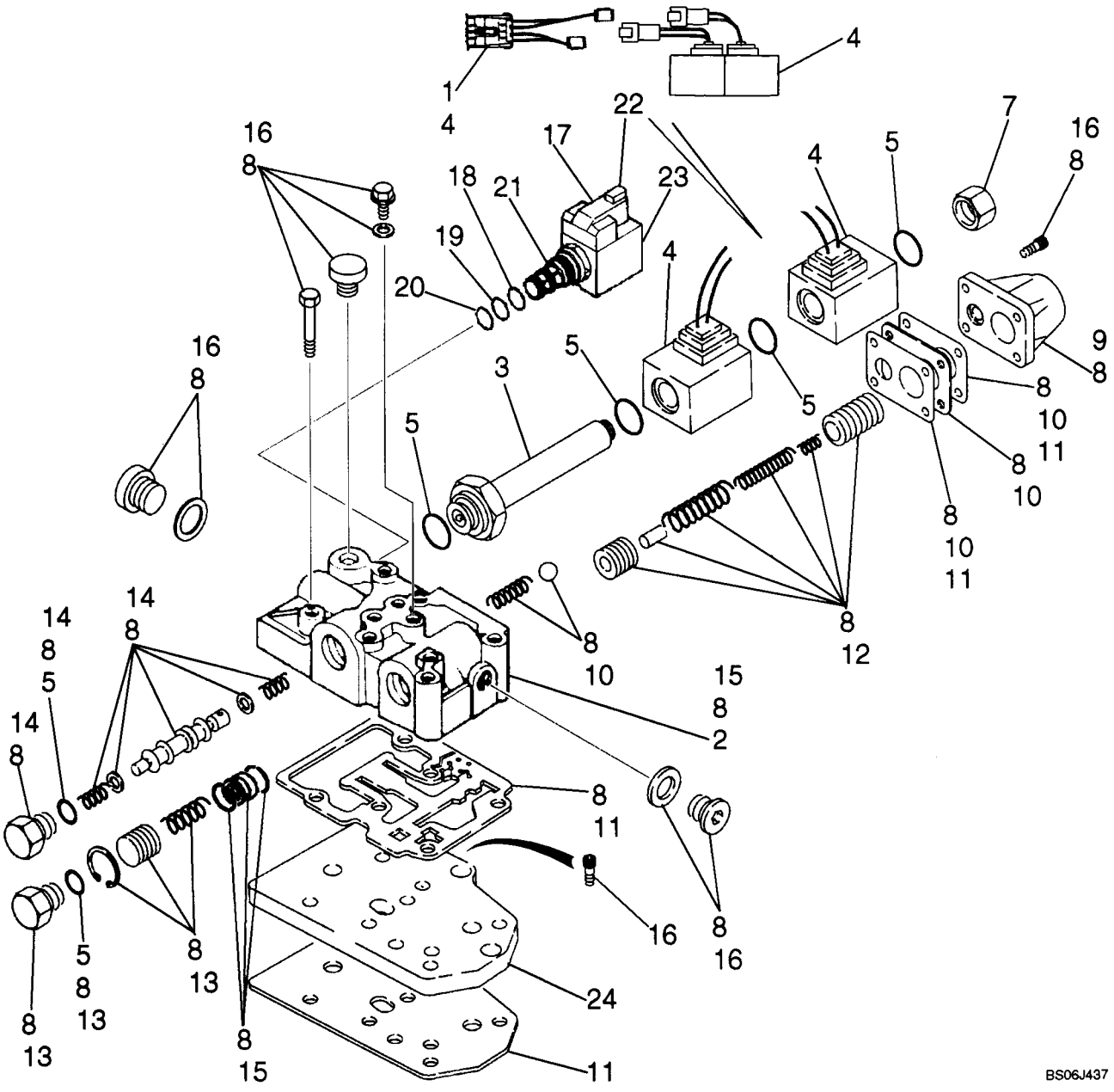

CONJUNTO DA TRANSMISSÃO, 2WD - VÁLVULA, CONTROLE

REF	FN	PART NUMBER	YR/SN	QTY	DESCRIPTION
		87395300		1	CAIXA DE MARCHAS, Two Wheel Drive, Incl. Ref 1 - 23; Also Includes Parts On Figures 06-12 - 06-19, 07-01
		87525756		1	KIT DE REPARO, Transmission Control Valve With Jumper Harness; Includes (1) 87456968 Forward/Reverse Jumper Harness, Ref 1; Plus (1) 87524409 Control Valve, Ref 1 - 23
1		87456968		1	CHICOTE DE FIOS, Jumper; If Used; Required On Transmissions Prior To Ones With Deutsch Connector Type Solenoids
		87524409		1	DISTRIBUIDOR, Transmission Control, With Improved Snap Ring at Flow Divider Area; Incl. Ref 2 - 23
2		NSS		1	BOLETIM INFORMATIVO, Housing
3		190442A1		1	ÊMBOLO
4		87456900		1	KIT, SERVICE, Solenoid; Includes (2) Solenoids, (1) Jumper Wire Used For Transmissions Prior to Ones With The Solenoids With Plastic Connections
5		87524436		1	KIT DE REPARO, Seal; Includes (6) O-Rings; Component Parts Not Serviced Separately
7		87530365		1	BUJÃO
8		87524441		1	CONJUNTO, Valve Body Kit; Component Parts Not Serviced Separately
9		181251A1		1	TAMPA, Modulation
10		87524439		1	KIT DE REPARO, Plate; Includes (1) Plate, (2) Gasket, (1) Ball, (1) Spring; Component Parts Not Serviced Separately
11		87524437		1	KIT DE REPARO, Gasket; Includes (4) Gasket Plates; Component Parts Not Serviced Separately
12		87524438		1	KIT DE REPARO, Modulation Valve; Includes (2) Piston, (1) Pin, (3) Spring; Component Parts Not Serviced Separately
13		87524433		1	KIT DE REPARO, Flow Divider Piston; Includes (1 each) Plug, O-Ring, Spring, Piston, Snap Ring; Component Parts Not Serviced Separately

CONJUNTO DA TRANSMISSÃO, 2WD - VÁLVULA, CONTROLE

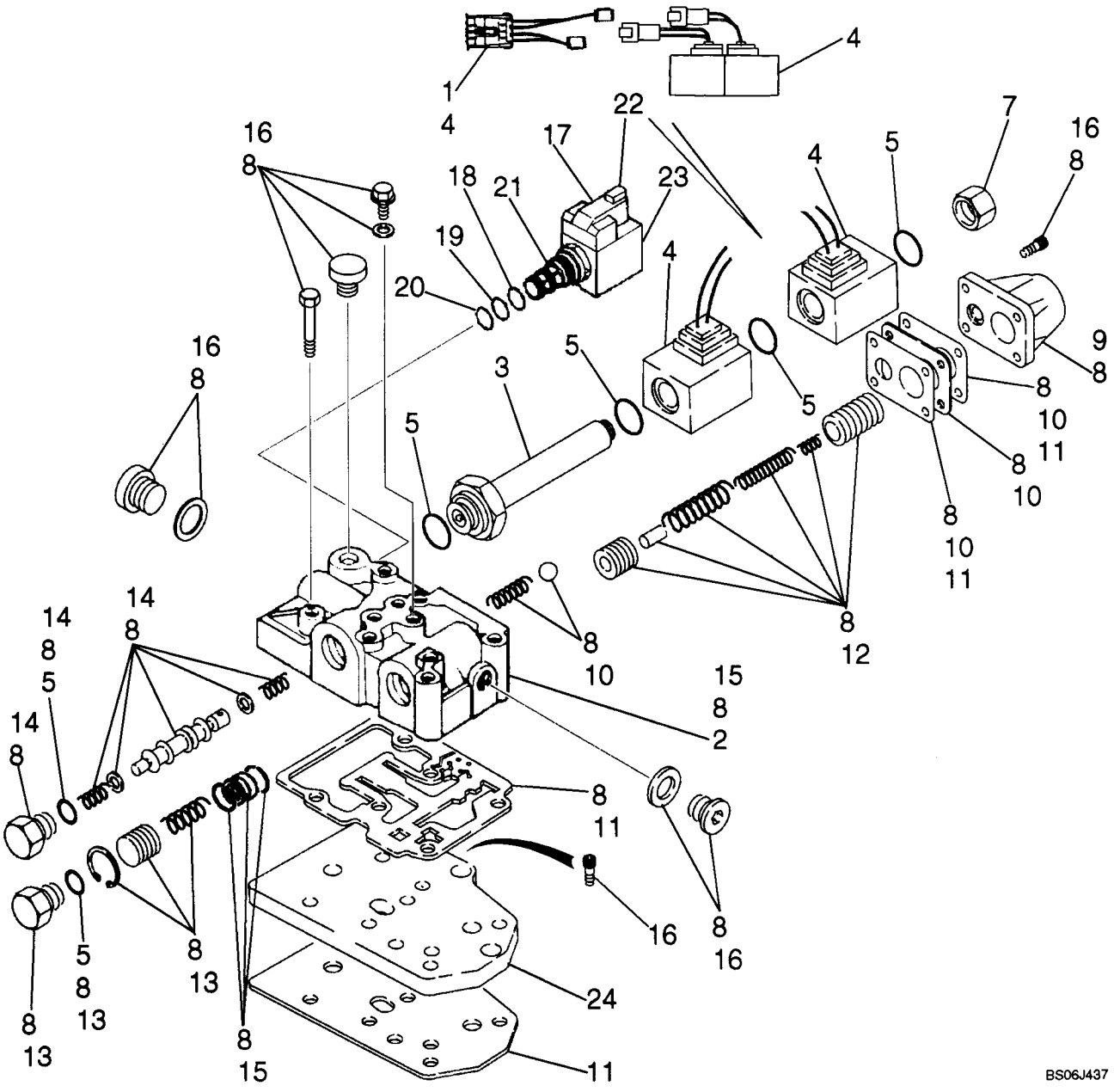

CONJUNTO DA TRANSMISSÃO, 2WD - VÁLVULA, CONTROLE

REF	FN	PART NUMBER	YR/SN	QTY	DESCRIPTION
14		87524432		1	KIT DE REPARO, Forward/Reverse Spool; Includes (1) O-Ring, (2) Washer, (1) Plug, (1) Piston Spool, (2) Spring; Component Parts Not Serviced Separately
15		87524440		1	KIT DE REPARO, Control Valve Body/Housing; Includes (1) Housing, Plus (1) Bushing, (2) Snap Rings at Flow Divider; Component Parts Not Serviced Separately
16		87524435		1	KIT DE REPARO, Bolt; Includes (7) Plugs, (13) Bolts, (6) Copper Washers; Component Parts Not Serviced Separately
17		349295A1		1	ELETRO VALVULA, Differential Lock Solenoid Valve; Incl. Ref 18 - 23
18		237-6008		1	ANEL "O", 8-1, 90 Duro, .644" ID x .087" Thk
19		238-5014		1	ANEL "O", -014, 70 Duro, .489" ID x .070" Thk
20		238-5013		1	ANEL "O", -013, 70 Duro, .426" ID x .070" Thk
21		349291A1		1	CARTUCHO, Valve, Cartridge, Component Parts Not Serviced Separately
21A		196096A1		1	TELA, Relief Valve, Internal; Not Illustrated
22		298614A1		1	SOLEMOID
23		349292A1		1	PORCA
24		181207A1		1	PLACA ESPESSA, Feeding; Not Included In Assembly, Purchase Separately

CONJUNTO DA TRANSMISSÃO, 4WD - FILTRO, ÓLEO

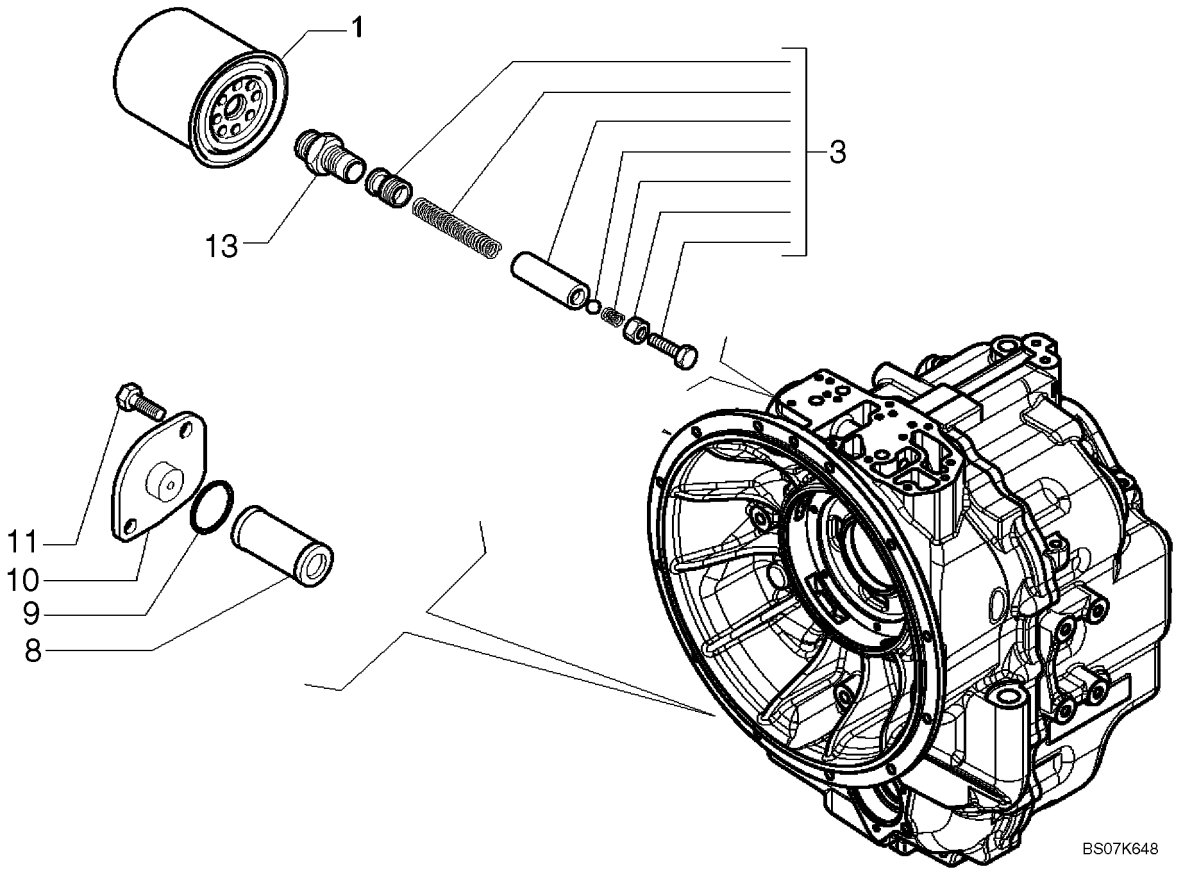

CONJUNTO DA TRANSMISSÃO, 4WD - FILTRO, ÓLEO

REF	FN	PART NUMBER	YR/SN	QTY	DESCRIPTION
		87395301		1	CAIXA DE MARCHAS, Four Wheel Drive, Incl. Ref 1 - 13; Also Includes Parts On Figures 06-20 - 06-29, 07-01(01)
1		254686A2		1	FILTRO, Oil
3		181274A1		1	JOGO DE PEÇAS, Valve
8		278534A1		1	FILTRO TELA, Oil
9		100748A1		1	ANEL O
10		181219A1		1	TAMPA
11		614-8018		2	PARAFUSO, Hex, M8 x 18, 8.8, Full Thd
13		181202A1		1	CONEXAO

CONJUNTO DA TRANSMISSÃO, 4WD - ALOJAMENTO

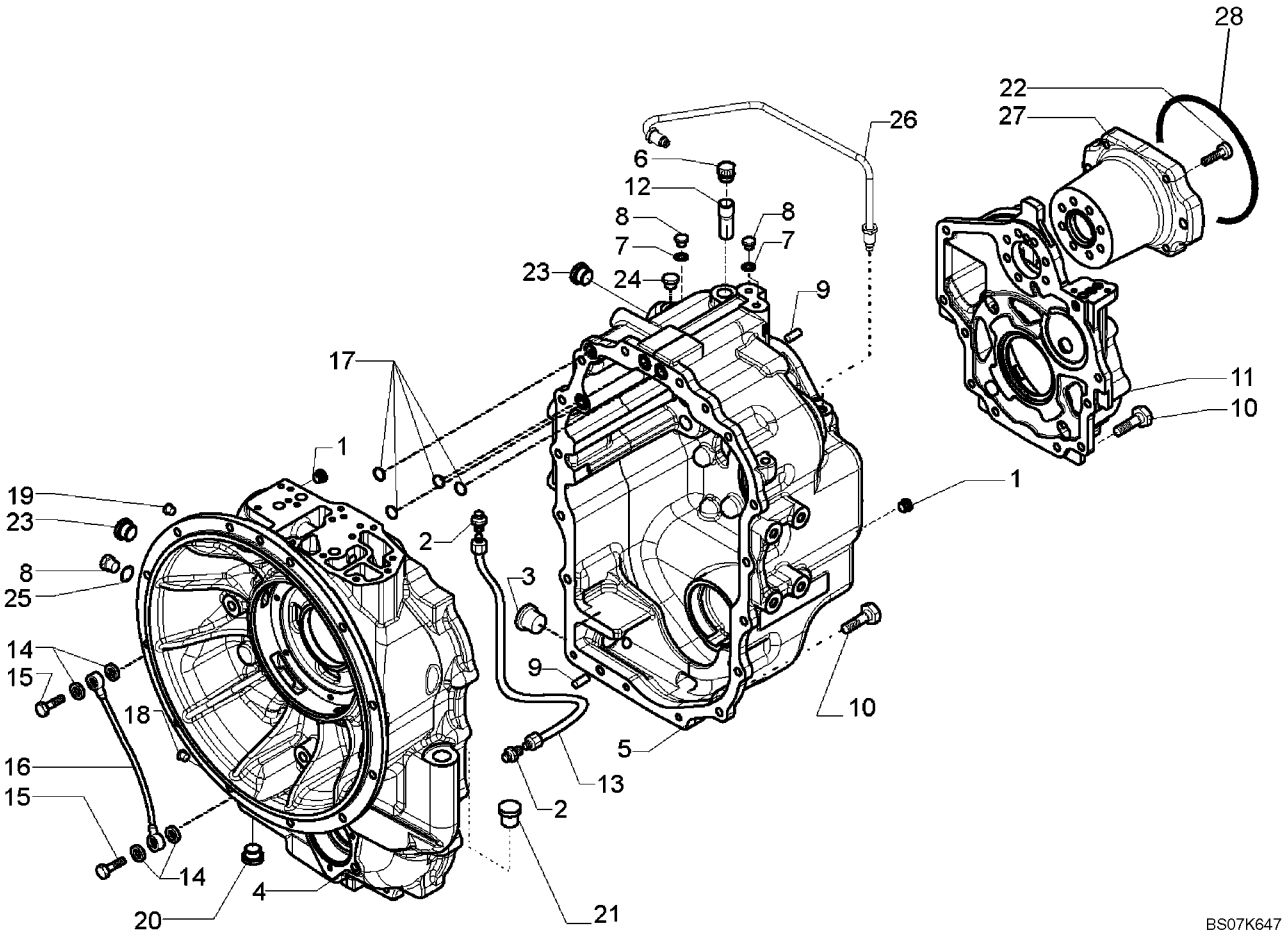

CONJUNTO DA TRANSMISSÃO, 4WD - ALOJAMENTO

REF	FN	PART NUMBER	YR/SN	QTY	DESCRIPTION
		87395301		1	CAIXA DE MARCHAS, Four Wheel Drive, Incl. Ref 1 - 28; Also Includes Parts On Figures 06-20 - 06-29, 07-01(01)
1		E135809		2	BUJÃO, 9/16
2		218-1023		2	CONEXÃO, 1/2"-20, 37º x 1/4"-18, NPTF
3		100557A1		1	BUJÃO DE DRENO, M30 x 2; Incl 238-6121 O-Ring
		238-6121		1	ANEL "O", -121, 90 Duro, 1.049" ID x .103" Thk
4		87701053		1	CAIXA DE TRANSMISSÃO, Front Housing
5		87701777		1	CAIXA DE TRANSMISSÃO, Rear Housing
6		1530028C1		1	RESPIRO CONJUNTO
7		934667R1		4	ARRUELA DE VEDAÇÃO, M10 x 14 x 1
8		181100A1		4	BUJÃO
9		K260177		3	PINO, 10 x 25
10		614-10030		21	PARAFUSO, Hex, M10 x 30, 8.8
11		87701257		1	TAMPA, Cover
12		310772A1		1	TUBO DE INTRODUÇÃO, Breather
13		181176A1		1	TUBO DE INTRODUÇÃO, Oil Tube
14		181105A1		4	ARRUELA DE COBRE
15		181179A1		2	TORNILLO HUECO, M14 x 1.5
16		181232A1		1	TUBO DE INTRODUÇÃO, Lubrication
17		181141A1		4	ANEL O
18		87702570		1	BUJÃO, Plug
19		181101A1		1	BUJÃO, M14 x 1.5
20		239606A1		1	BUJÃO
21		NSS		1	BOLETIM INFORMATIVO, PLUG, Shipping Plug
22		87701258		7	PARAFUSO, M10 x 45 Bolt
23		NSS		1	BOLETIM INFORMATIVO, PLUG, Shipping Plug
24		NSS		1	BOLETIM INFORMATIVO, PLUG, Shipping Plug
25		87429985		1	ARRUELA DE VEDAÇÃO, Copper, 10 x 18 x 1.5 mm
26		87701270		1	TUBO DE INTRODUÇÃO, Oil Tube
27		87701269		1	FLANGE, PTO
28		87429982		1	ANEL "O", Pump Mounting

CONJUNTO DA TRANSMISSÃO, 4WD - BOMBA DE ÓLEO

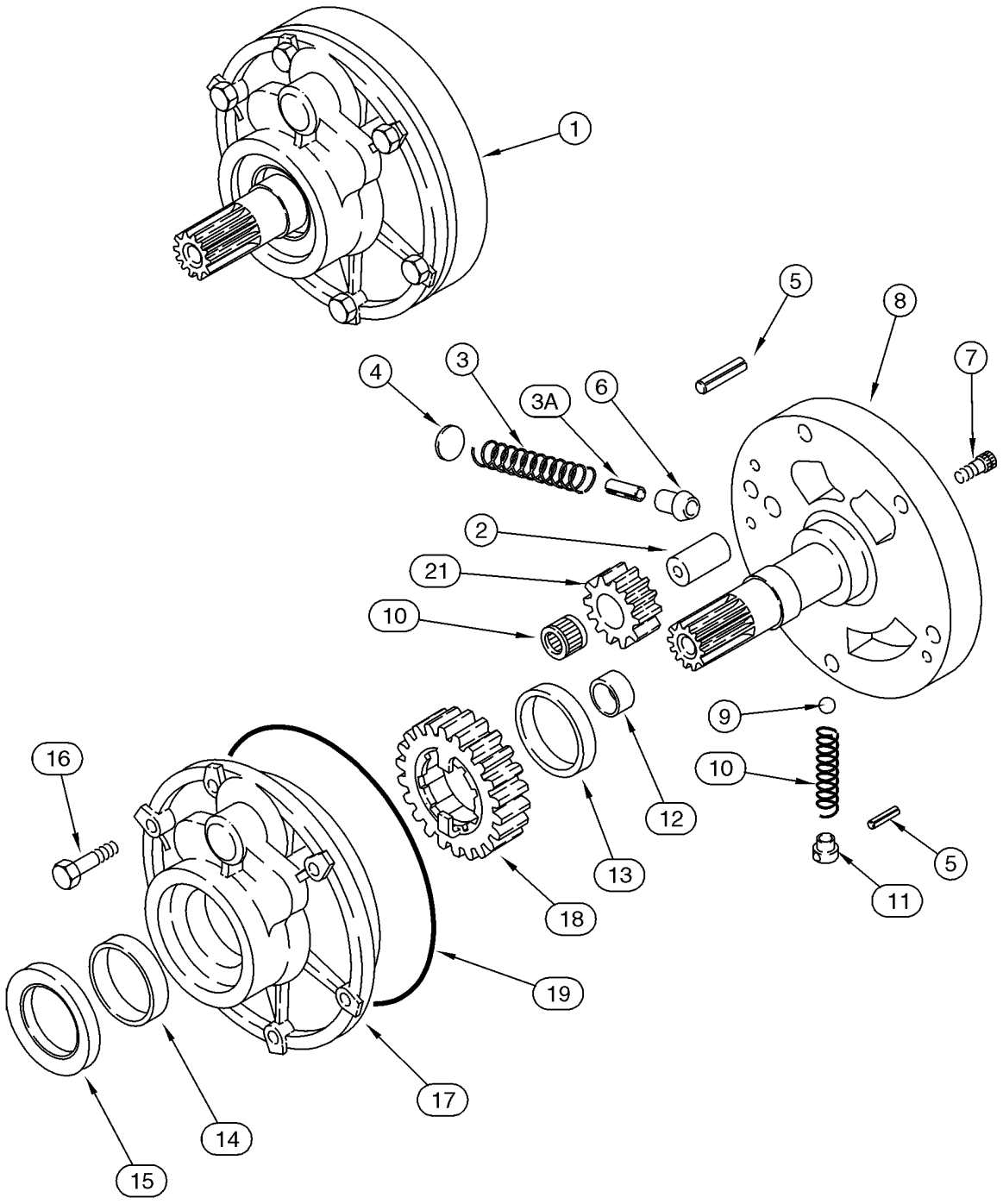

CONJUNTO DA TRANSMISSÃO, 4WD - BOMBA DE ÓLEO

REF	FN	PART NUMBER	YR/SN	QTY	DESCRIPTION
		87395301		1	CAIXA DE MARCHAS, Four Wheel Drive, Incl. Ref 1 - 21; Also Includes Parts On Figures 06-20 - 06-29, 07-01(01)
1		87429970		1	BOMBA, Charge, Incl. Ref 2 - 21
2		NSS		1	BOLETIM INFORMATIVO, Shaft
3		NSS		1	BOLETIM INFORMATIVO, Spring
3A		NSS		1	BOLETIM INFORMATIVO, Pin
4		NSS		1	BOLETIM INFORMATIVO, Stop
5		NSS		2	BOLETIM INFORMATIVO, Pin, Roll
6		NSS		1	BOLETIM INFORMATIVO, Piston
7		NSS		2	BOLETIM INFORMATIVO, Bolt
8		NSS		1	BOLETIM INFORMATIVO, Support
9		NSS		1	BOLETIM INFORMATIVO, Ball
10		NSS		1	BOLETIM INFORMATIVO, Spring
11		NSS		1	BOLETIM INFORMATIVO, Guide
12		NSS		1	BOLETIM INFORMATIVO, Bushing
13		NSS		1	BOLETIM INFORMATIVO, Bushing
14		NSS		1	BOLETIM INFORMATIVO, Bushing
15		87429971		1	VEDADOR DE OLEO
16		814-8060		6	PARAFUSO, Hex, M8 x 60, 8.8
17		NSS		1	BOLETIM INFORMATIVO, Housing
18		NSS		1	BOLETIM INFORMATIVO, Gear, 23T
19		181142A1		1	ANEL O
20		NSS		1	BOLETIM INFORMATIVO, Bearing, Needle
21		NSS		1	BOLETIM INFORMATIVO, Gear, 12T

CONJUNTO DA TRANSMISSÃO, 4WD - MECANISMO DE ACCIONAMENTO DAS MUDANÇAS

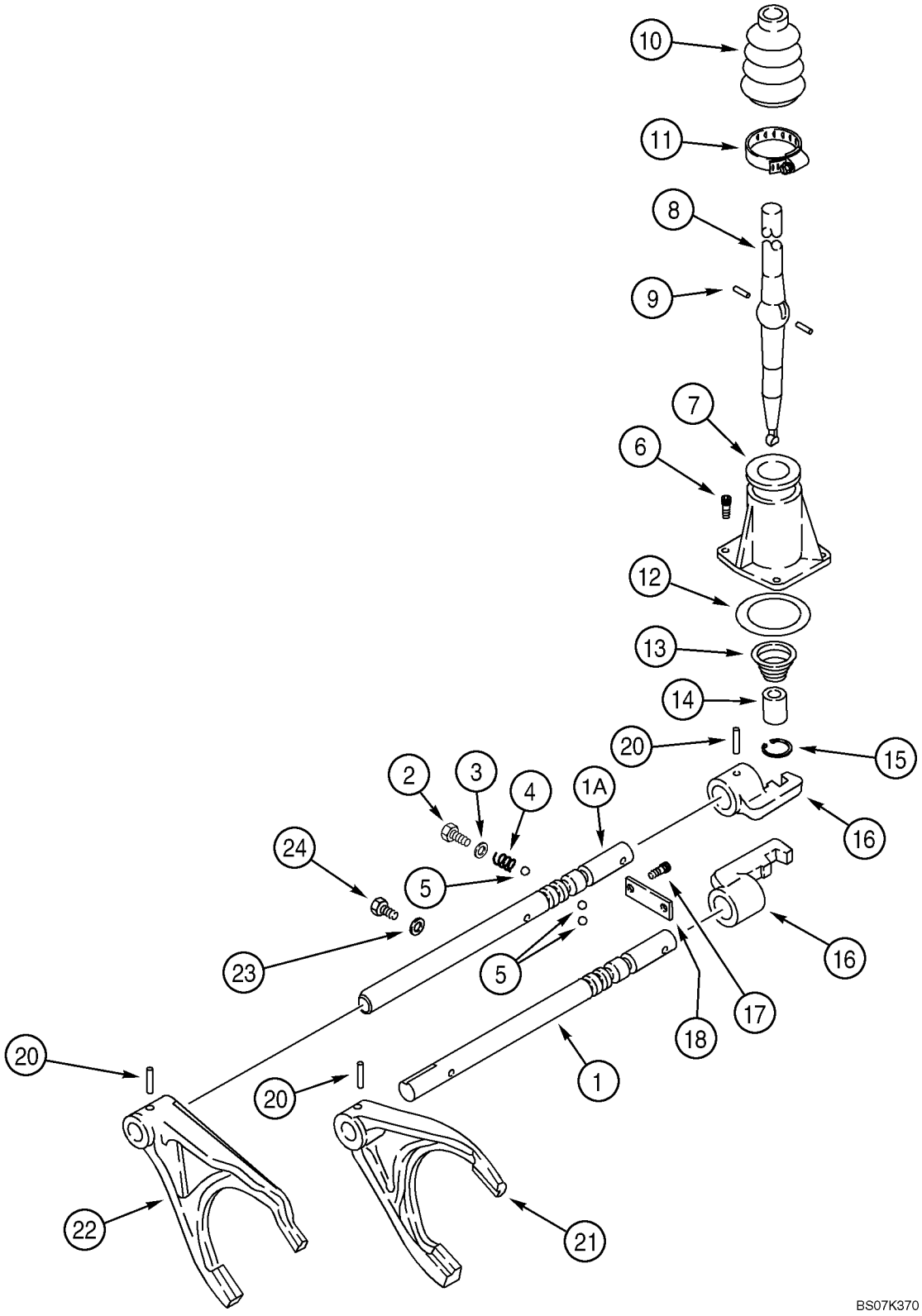

CONJUNTO DA TRANSMISSÃO, 4WD - MECANISMO DE ACCIONAMENTO DAS MUDANÇAS

REF	FN	PART NUMBER	YR/SN	QTY	DESCRIPTION
		87395301		1	CAIXA DE MARCHAS, Four Wheel Drive, Incl. Ref 1 - 24; Also Includes Parts On Figures 06-20 - 06-29, 07-01(01)
1		181245A2		1	HASTE, Shifter Fork Rail; First and Second
1A		87578867		1	TRILHO, Shifter Fork Rail; Third and Fourth
2		614-12016		2	PARAFUSO, Hex, M12 x 16, 8.8, Full Thd
3		87429994		2	ARRUELA DE VEDAÇÃO, 12 x 20 x 1.5 mm
4		1966993C1		2	MOLA
5		181139A1		4	ESFERA
6		864-8025		3	PARAFUSO, Hex Soc Hd, M8 x 25, 8.8
7		181171A1		1	TAMPA
8		190428A3		1	ALAVANCA DE CONTROLE
9		1967585C1		2	PINO
10		1967581C1		1	CAPA
11		181177A1		1	BRACADEIRA
12		181138A1		1	ANEL O
13		278533A1		1	MOLA
14		278532A1		1	BUCHA
15		279039A1		1	ANEL TRAVA
16		181173A1		2	SELETOR, Shifter
17		864-10025		2	PARAFUSO, Hex Soc Hd, M10 x 25, 8.8
18		181175A1		1	PLACA ESPESSA
20		905794R1		4	PINO, M6 x 30, Coiled
21		181203A1		1	FORQUILHA, First and Second
22		181174A2		1	FORQUILHA, Third and Fourth
23		87429985		1	ARRUELA DE VEDAÇÃO
24		181100A1		1	BUJÃO, M10 x 23

CONJUNTO DA TRANSMISSÃO, 4WD - EIXO, MARCHA A RÉ E PRIMÁRIO

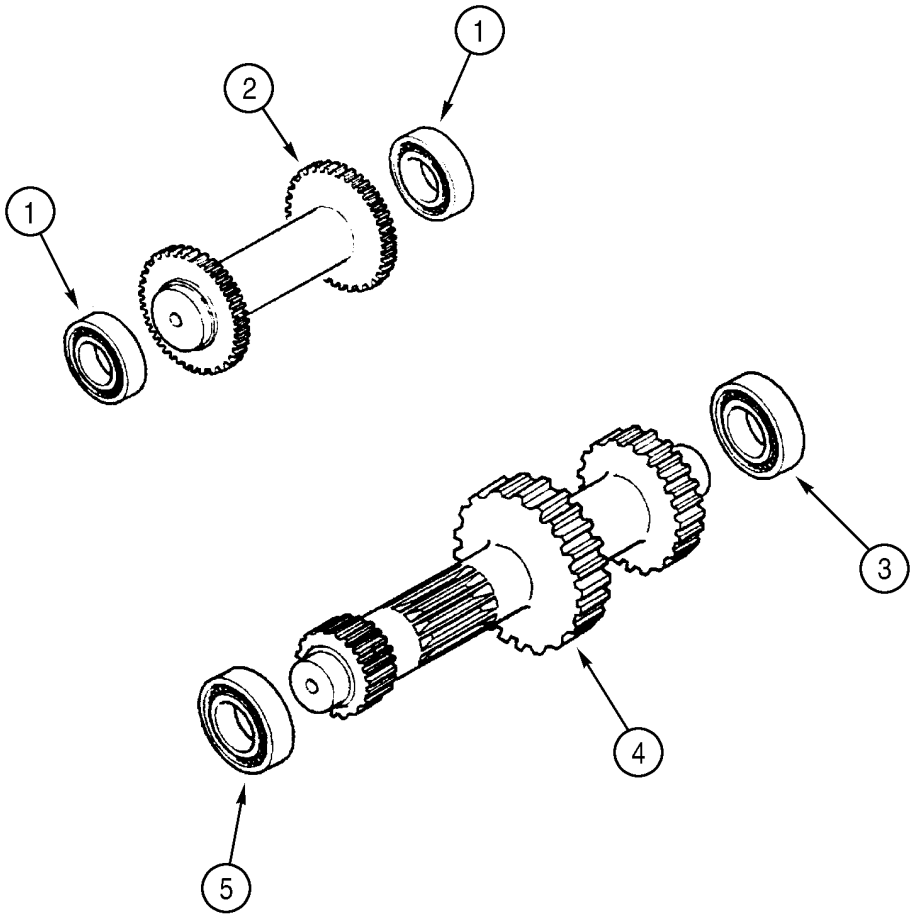

BS99H168

CONJUNTO DA TRANSMISSÃO, 4WD - EIXO, MARCHA A RÉ E PRIMÁRIO

REF	FN	PART NUMBER	YR/SN	QTY	DESCRIPTION
		87395301		1	CAIXA DE MARCHAS, Four Wheel Drive, Incl. Ref 1 - 6; Also Includes Parts On Figures 06-20 - 06-29, 07-01(01)
1		ST205A		2	ROLAMENTO
2		358636A1		1	EIXO, Idler/Reverse
3		181126A1		1	ROLAMENTO
4		87701276		1	EIXO PRIMÁRIO
5		181132A1		1	ROLAMENTO
6		A48041		1	ANEL-ELÁSTICO, Bearing to Axle Housing; Not Illustrated

CONJUNTO DA TRANSMISSÃO, 4WD - EIXO DE ENTRADA E TOMADA DE FORÇA

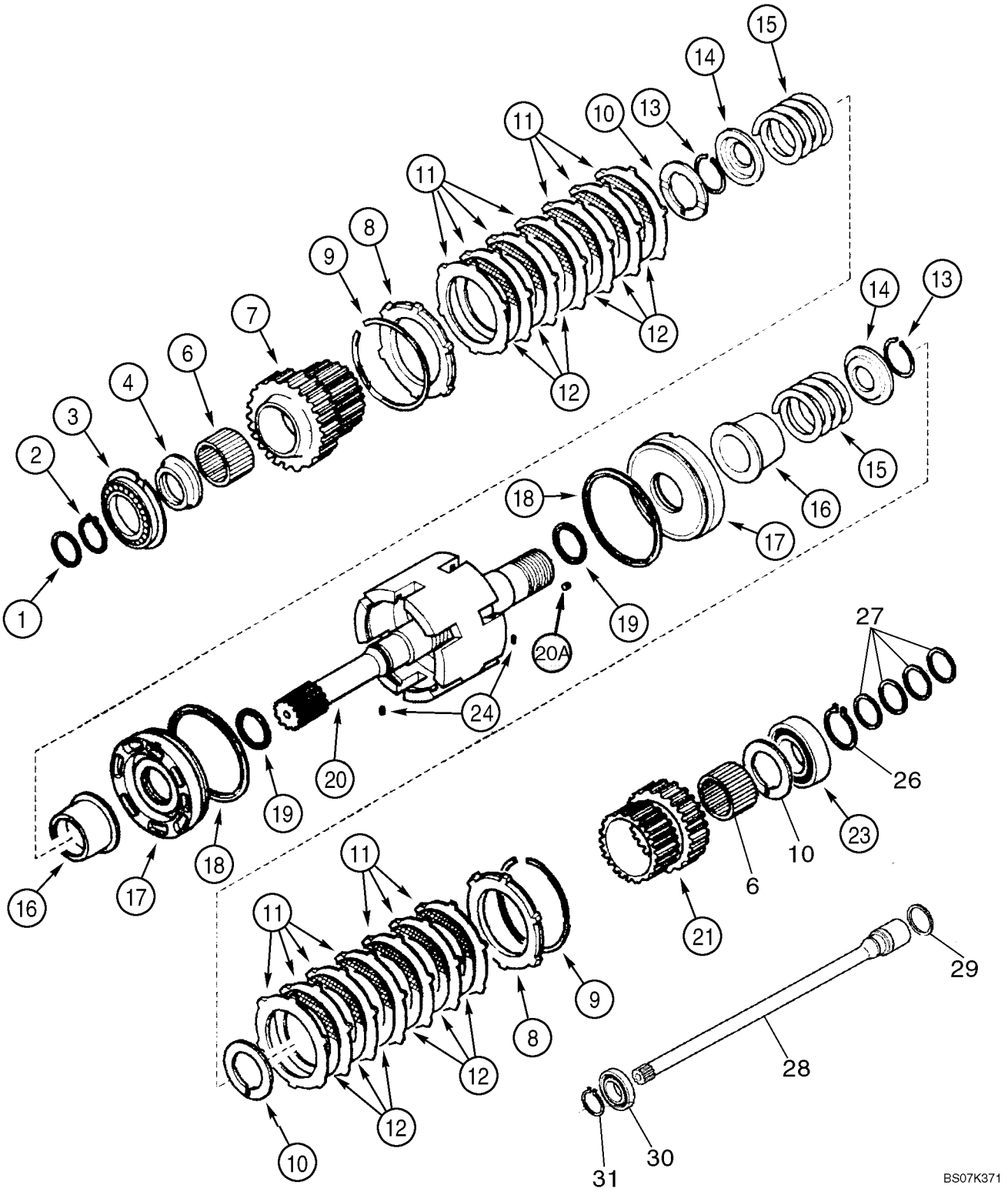

CONJUNTO DA TRANSMISSÃO, 4WD - EIXO DE ENTRADA E TOMADA DE FORÇA

REF	FN	PART NUMBER	YR/SN	QTY	DESCRIPTION
		87395301		1	CAIXA DE MARCHAS, Four Wheel Drive, Incl. Ref 1 - 31; Also Includes Parts On Figures 06-20 - 06-29, 07-01(01)
1		358645A1		1	VEDADOR DE OLEO
2		A48041		1	ANEL-ELÁSTICO
3		181128A1		1	ROLAMENTO
4		358635A1		1	ESPAÇADOR, 68 x 45 x 105 mm
6		358633A1		2	ROLAMENTO
7		358632A1		1	PINHAO, Gear, 35T
8		310519A1		2	PLACA
9		181116A1		2	ANEL-TRAVA
10		358640A1		3	ARRUELA PLANA, Thrust
11		181159A1		14	DISCO, Plate
12		181158A1		12	DISCO CONJUNTO, Plate
13		181111A1		2	ANEL-TRAVA
14		181161A1		2	PLACA ENCOSTO, Pressure
15		358637A1		2	MOLA
16		358641A1		2	ACOPLAMENTO
17		358644A1		2	PISTÃO
18		358643A1		2	ANEL TRAVA
19		358642A1		2	ANEL VEDADOR
20		87525849		1	KIT DE REPARO, Input Shaft, Incl Ref 20A (4) 139312A1 Rivets; Also Incl (1) 87429973 Input Shaft Which Is Not Serviced Separately
20A		139312A1		4	BUJÃO, Rivet
21		358638A1		1	PINHAO, Gear, 29T
23		ST264		1	ROLAMENTO
24		181108A1		2	ANEL ELASTICO
26		800-1150		1	ANEL, M50, Ext
27		87429984		4	ANEL
28		87701275		1	EIXO
29		358645A1		1	VEDADOR DE OLEO
30		87429983		1	ROLAMENTO
31		800-1130		1	ANEL, M30, Ext

CONJUNTO DA TRANSMISSÃO, 4WD - EIXO SECUNDÁRIO

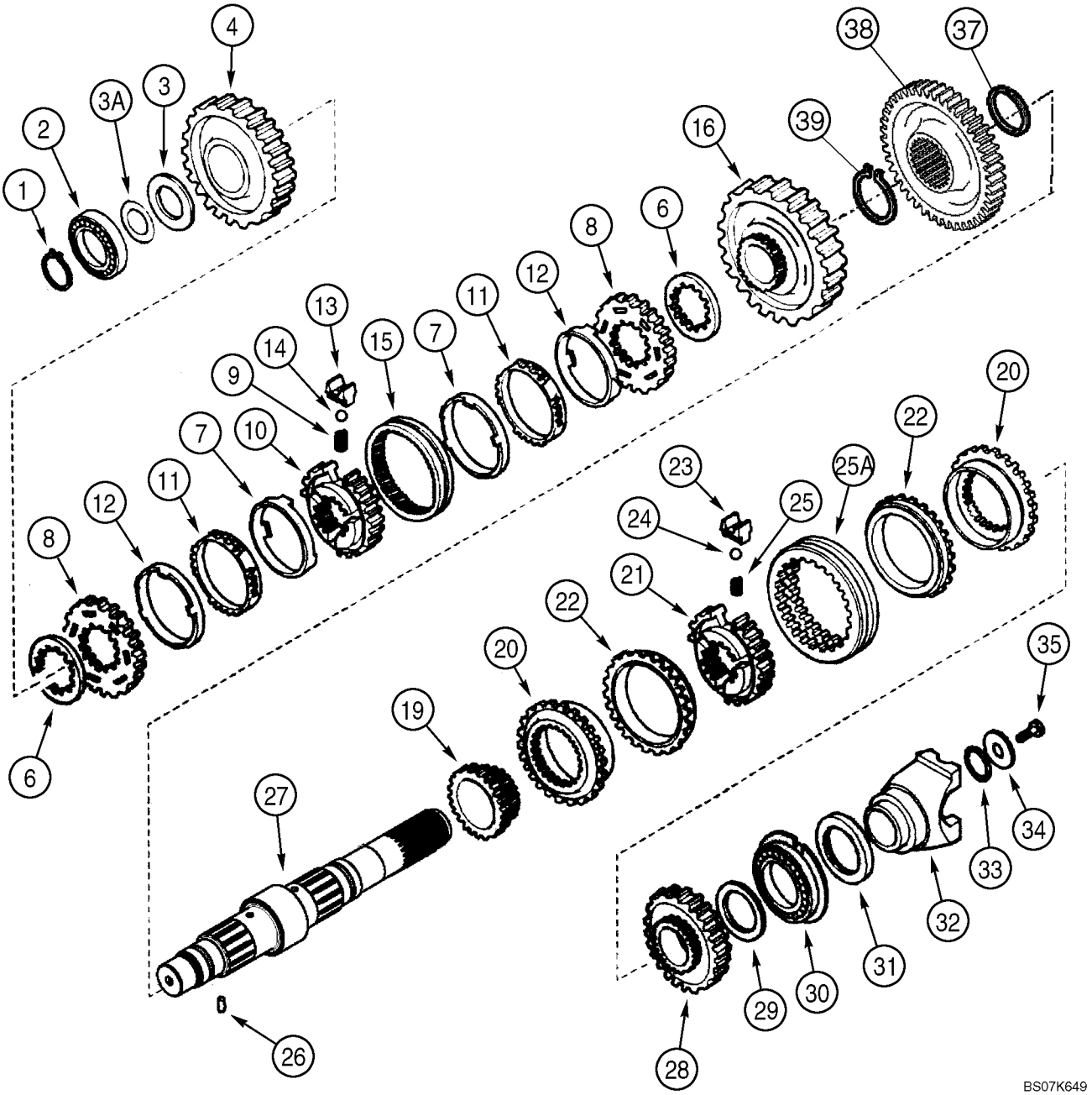

CONJUNTO DA TRANSMISSÃO, 4WD - EIXO SECUNDÁRIO

REF	FN	PART NUMBER	YR/SN	QTY	DESCRIPTION
		87395301		1	CAIXA DE MARCHAS, Four Wheel Drive, Incl. Ref 1 - 39; Also Includes Parts On Figures 06-20 - 06-29, 07-01(01)
1		181118A1		1	ANEL-TRAVA
2		181132A1		1	ROLAMENTO
3		358649A1		1	ARRUELA PLANA, Thrust
3A		358650A1		AR	CALCO DE AFINACAO, 0,05 mm
3A		358651A1		AR	CALCO DE AFINACAO, 0,10 mm
3A		358652A1		AR	CALCO DE AFINACAO, 0,30 mm
3A		196454A1		AR	CALCO DE AFINACAO, 0,50 mm
4		87701278		1	ENGRENAGEM, Driven, Second, 44T Pinion Gear
6		244109A1		2	ESPAÇADOR
		190427A1		1	SINCRONIZADOR, Service Kit, Incl. Ref 7 - 15
7		NSS		2	BOLETIM INFORMATIVO, Ring
8		NSS		2	BOLETIM INFORMATIVO, Ring
9		384773A1		3	MOLA DE TRACAO
10		NSS		1	BOLETIM INFORMATIVO, Hub
11		NSS		2	BOLETIM INFORMATIVO, Ring
12		NSS		2	BOLETIM INFORMATIVO, Ring
13		326865A1		3	PLACA ESPACADORA
14		384769A1		3	ESFERA
15		NSS		1	BOLETIM INFORMATIVO, Sleeve
16		87701293		1	ENGRENAGEM, Driven, First, 50T Pinion Gear
19		358282A1		1	ENGRENAGEM, Driven, Fourth, 23T
		87429974		1	SINCRONIZADOR, Service Kit, Incl. Ref 20 - 25A
20		NSS		2	BOLETIM INFORMATIVO, Ring
21		NSS		1	BOLETIM INFORMATIVO, Hub
22		NSS		2	BOLETIM INFORMATIVO, Ring
23		NSS		3	BOLETIM INFORMATIVO, Plate
24		NSS		3	BOLETIM INFORMATIVO, Ball
25		NSS		3	BOLETIM INFORMATIVO, Spring
25A		NSS		1	BOLETIM INFORMATIVO, Sleeve
26		181108A1		1	ANEL ELASTICO
27		87701775		1	EIXO, Secondary, Four Wheel Drive Models
28		358283A1		1	PINHAO, Gear, Driven, Third, 33T

CONJUNTO DA TRANSMISSÃO, 4WD - EIXO SECUNDÁRIO

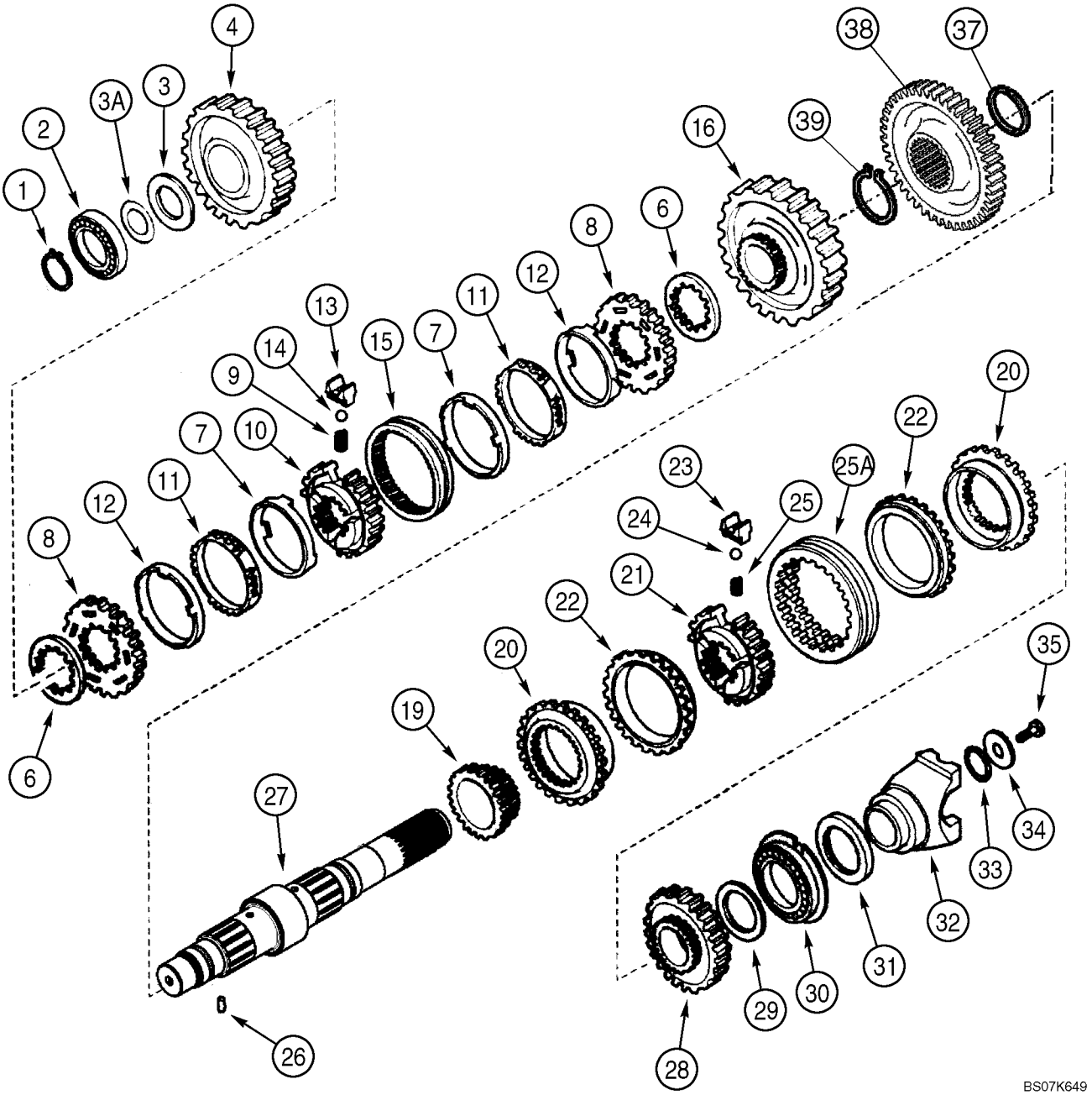

CONJUNTO DA TRANSMISSÃO, 4WD - EIXO SECUNDÁRIO

REF	FN	PART NUMBER	YR/SN	QTY	DESCRIPTION
29		358639A1		1	ARRUELA PLANA, Thrust, 68 x 45 x 4 mm
30		181130A1		1	ROLAMENTO
31		181123A1		1	VEDADOR DE OLEO, 60 x 75 x 8 mm
32		233284A1		1	GARFO, Yoke
33		181144A1		1	ANEL O
34		181165A1		1	ARRUELA PLANA, 52 x 12.5 x 5 mm
35		P3533055		1	PARAFUSO, 12 x 25 mm
37		358654A1		1	ANEL TRAVA, Four Wheel Drive Models
38		358656A1		1	ENGRENAGEM, 44T, Four Wheel Drive Models
39		358655A1		1	ANEL TRAVA, Four Wheel Drive Models

CONJUNTO DA TRANSMISSÃO, 4WD - EIXO, SAÍDA

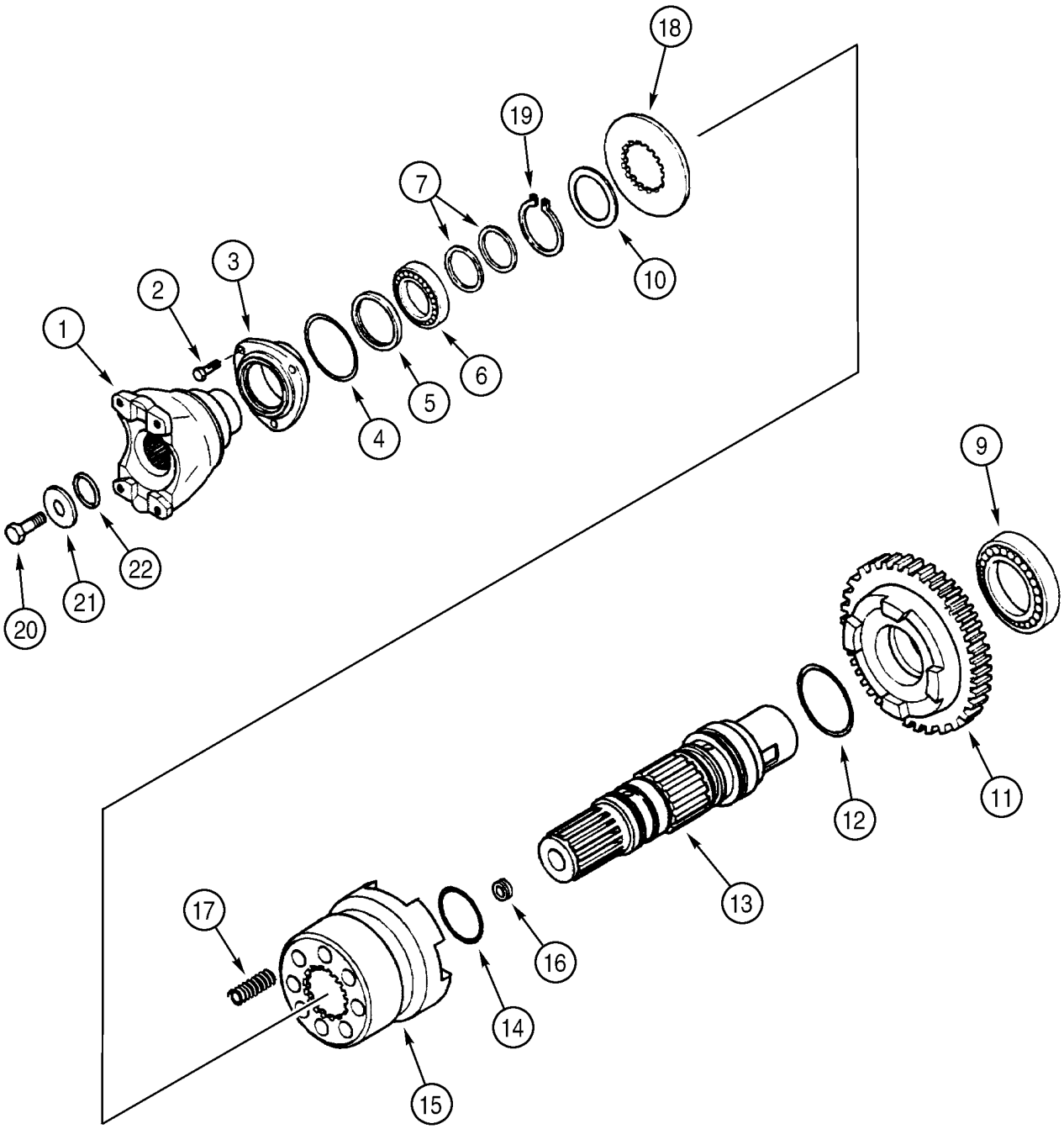

CONJUNTO DA TRANSMISSÃO, 4WD - EIXO, SAÍDA

REF	FN	PART NUMBER	YR/SN	QTY	DESCRIPTION
		87395301		1	CAIXA DE MARCHAS, Four Wheel Drive, Incl. Ref 1 - 22; Also Includes Parts On Figures 06-20 - 06-29, 07-01(01)
1		87704971		1	GARFO, Fork, Front
2		614-8022		3	PARAFUSO, Hex, M8 x 22, 8.8, Full Thd
3		181198A1		1	TAMPA
4		112517A1		1	ANEL O
5		181122A1		1	VEDADOR DE OLEO, 50 x 65 x 8 mm
6		ST205A		1	ROLAMENTO
7		358645A1		2	VEDADOR DE OLEO
9		181126A1		1	ROLAMENTO
10		P2745478		1	ARRUELA PLANA
11		366234A1		1	PINHAO, Gear, Driven, 36T
12		366235A1		1	ANEL O
13		366230A1		1	EIXO, Output
14		366236A1		2	ANEL O
15		366232A1		1	ACOPLAMENTO
16		D142898		1	BUJÃO, 10 x 1 mm
17		100753A1		8	MOLA
18		366231A1		1	ARRUELA PLANA
19		800-5145		1	ANEL, M45, Ext
20		P3533055		1	PARAFUSO, 12 x 25 mm
21		P2745466		1	ARRUELA PLANA
22		238-8217		1	ANEL "O", -217, Cl 8, 1.171" ID x .139" Thk

CONJUNTO DA TRANSMISSÃO, 4WD - VÁLVULA, CONTROLE

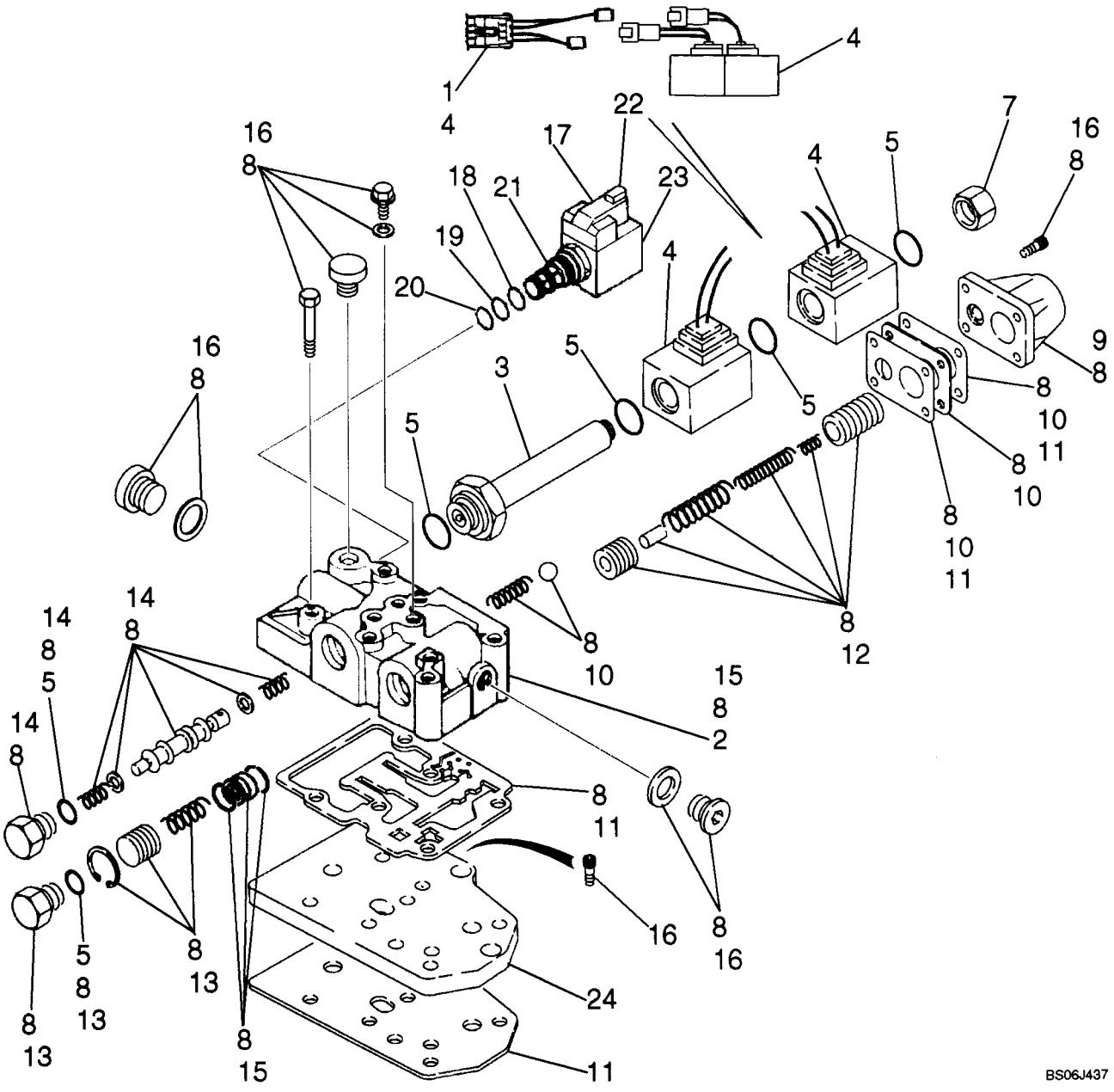

CONJUNTO DA TRANSMISSÃO, 4WD - VÁLVULA, CONTROLE

REF	FN	PART NUMBER	YR/SN	QTY	DESCRIPTION
		87395301		1	CAIXA DE MARCHAS, Four Wheel Drive, Incl. Ref 1 - 23; Also Includes Parts On Figures 06-20 - 06-29, 07-01(01)
		87525756		1	KIT DE REPARO, Transmission Control Valve With Jumper Harness; Includes (1) 87456968 Forward/Reverse Jumper Harness, Ref 1; Plus (1) 87524409 Control Valve, Ref 1 - 23
1		87456968		1	CHICOTE DE FIOS, Jumper; If Used; Required On Transmissions Prior To Ones With Deutsch Connector Type Solenoids
		87524409		1	DISTRIBUIDOR, Transmission Control, With Improved Snap Ring at Flow Divider Area; Incl. Ref 2 - 23
2		NSS		1	BOLETIM INFORMATIVO, Housing
3		190442A1		1	ÊMBOLO
4		87456900		1	KIT, SERVICE, Solenoid; Includes (2) Solenoids, (1) Jumper Wire Used For Transmissions Prior to Ones With The Solenoids With Plastic Connections
5		87524436		1	KIT DE REPARO, Seal; Includes (6) O-Rings; Component Parts Not Serviced Separately
7		87530365		1	BUJÃO
8		87524441		1	CONJUNTO, Valve Body Kit; Component Parts Not Serviced Separately
9		181251A1		1	TAMPA, Modulation
10		87524439		1	KIT DE REPARO, Plate; Includes (1) Plate, (2) Gasket, (1) Ball, (1) Spring; Component Parts Not Serviced Separately
11		87524437		1	KIT DE REPARO, Gasket; Includes (4) Gasket Plates; Component Parts Not Serviced Separately
12		87524438		1	KIT DE REPARO, Modulation Valve; Includes (2) Piston, (1) Pin, (3) Spring; Component Parts Not Serviced Separately
13		87524433		1	KIT DE REPARO, Flow Divider Piston; Includes (1 each) Plug, O-Ring, Spring, Piston, Snap Ring; Component Parts Not Serviced Separately

CONJUNTO DA TRANSMISSÃO, 4WD - VÁLVULA, CONTROLE

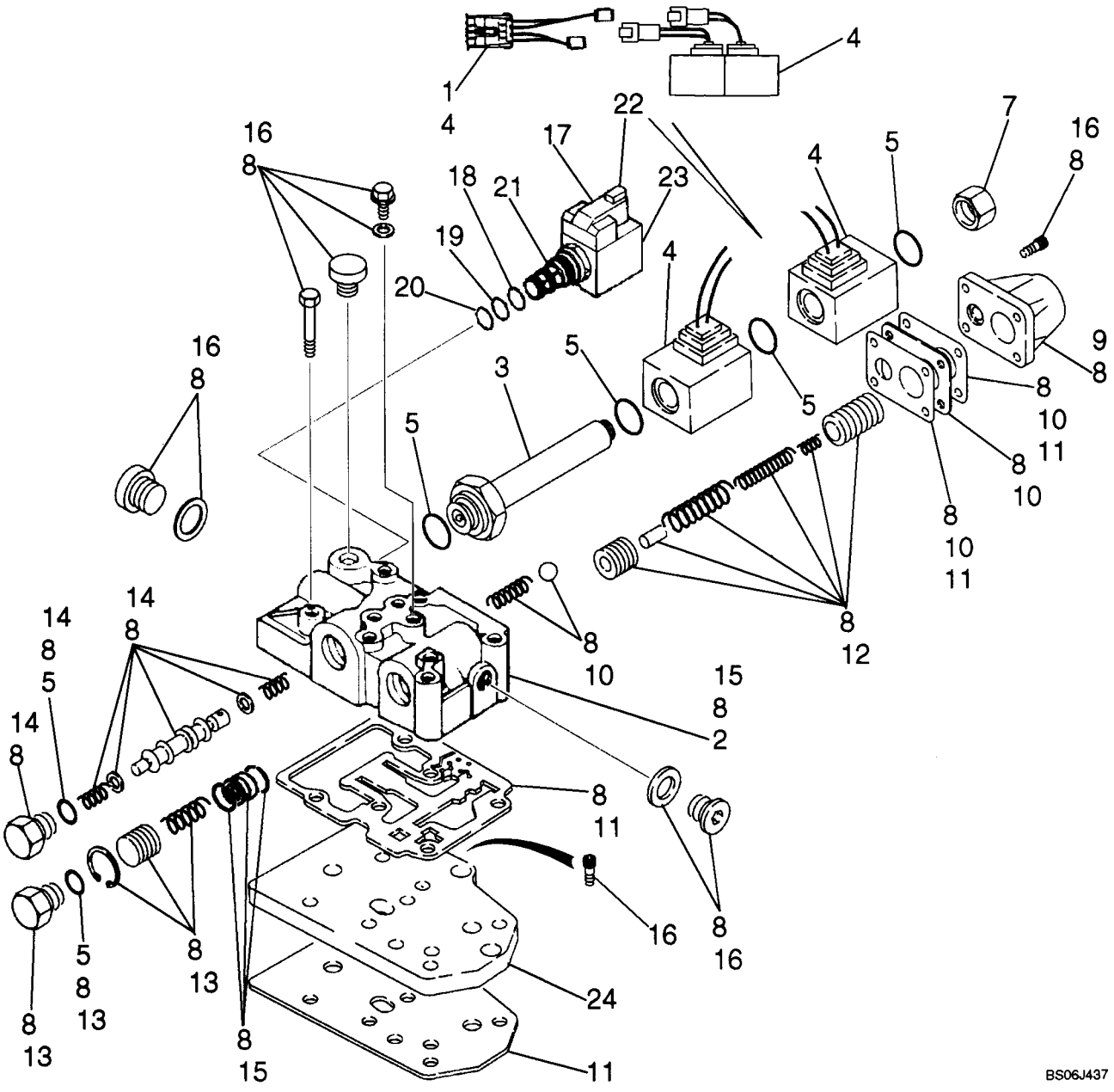

CONJUNTO DA TRANSMISSÃO, 4WD - VÁLVULA, CONTROLE

REF	FN	PART NUMBER	YR/SN	QTY	DESCRIPTION
14		87524432		1	KIT DE REPARO, Forward/Reverse Spool; Includes (1) O-Ring, (2) Washer, (1) Plug, (1) Piston Spool, (2) Spring; Component Parts Not Serviced Separately
15		87524440		1	KIT DE REPARO, Control Valve Body/Housing; Includes (1) Housing, Plus (1) Bushing, (2) Snap Rings at Flow Divider; Component Parts Not Serviced Separately
16		87524435		1	KIT DE REPARO, Bolt; Includes (7) Plugs, (13) Bolts, (6) Copper Washers; Component Parts Not Serviced Separately
17		349295A1		1	ELETRO VALVULA, Differential Lock Solenoid Valve; Incl. Ref 18 - 23
18		237-6008		1	ANEL "O", 8-1, 90 Duro, .644" ID x .087" Thk
19		238-5014		1	ANEL "O", -014, 70 Duro, .489" ID x .070" Thk
20		238-5013		1	ANEL "O", -013, 70 Duro, .426" ID x .070" Thk
21		349291A1		1	CARTUCHO, Valve, Cartridge, Component Parts Not Serviced Separately
21A		196096A1		1	TELA, Relief Valve, Internal; Not Illustrated
22		298614A1		1	SOLEMOID
23		349292A1		1	PORCA
24		181207A1		1	PLACA ESPESSA, Feeding; Not Included In Assembly, Purchase Separately

CONJUNTO DA TRANSMISSÃO, 4WD - SOLENÓIDE DA VÁLVULA

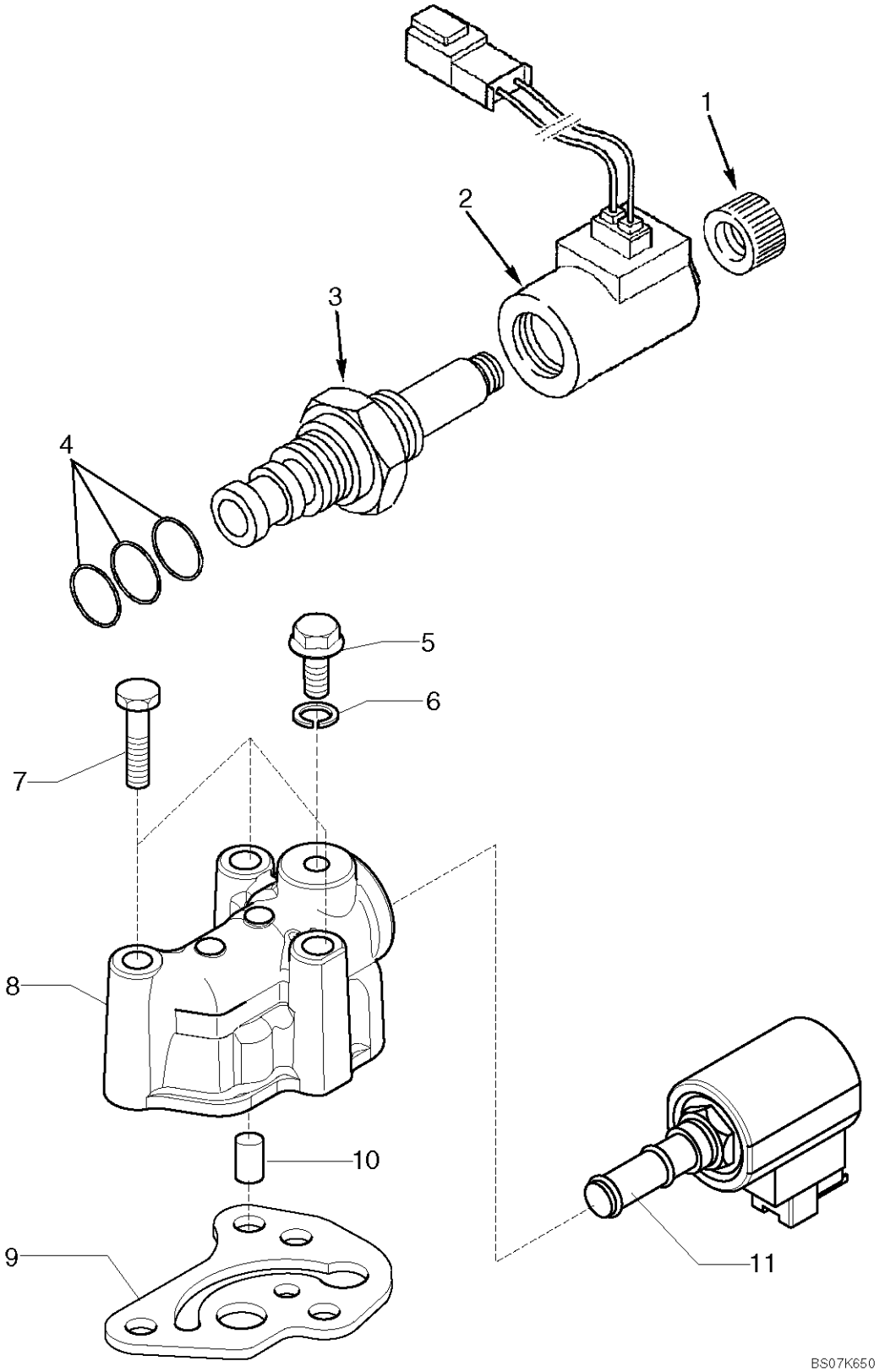

CONJUNTO DA TRANSMISSÃO, 4WD - SOLENÓIDE DA VÁLVULA

REF	FN	PART NUMBER	YR/SN	QTY	DESCRIPTION
		87395301		1	CAIXA DE MARCHAS, Four Wheel Drive, Incl. Ref 1 - 10; Also Includes Parts On Figures 06-20 - 06-29, 07-01(01)
		87429978		1	ELETRO VALVULA, Valve, Incl. Ref 1 - 4; With Deutsch Connectors
1		NSS		1	BOLETIM INFORMATIVO, Nut
2		NSS		1	BOLETIM INFORMATIVO, Coil
3		NSS		1	BOLETIM INFORMATIVO, Valve, Solenoid
4		NSS		1	BOLETIM INFORMATIVO, Kit, Seal, Includes 238-5014, 238-5015, 237-6010 O-Rings, Kit Not Serviced Separately
5		181100A1		1	BUJÃO, M10 x 23
6		934667R1		1	ARRUELA DE VEDAÇÃO, M10 x 14 x 1, Copper Washer
7		814-8060		3	PARAFUSO, Hex, M8 x 60, 8.8
8		321428A1		1	ALOJAMENTO
9		366910A1		1	ANEL DE VEDAÇÃO
10		190431A1		1	VALVULA, Installed Between Ref 8 and 9
11		87456901		1	ELETRO VALVULA, Component Parts Not Serviced Separately; Includes Solenoid and Ref 12 Jumper Harness; Jumper Is For Coverting Transmissions Prior to Connector Change From Weather Pack to Deutsch
12		87456969		1	CHICOTE DE FIOS, Jumper; Weather Pack Connector/Deutsch Connector

RODAS TRASEIRAS - PNEUS

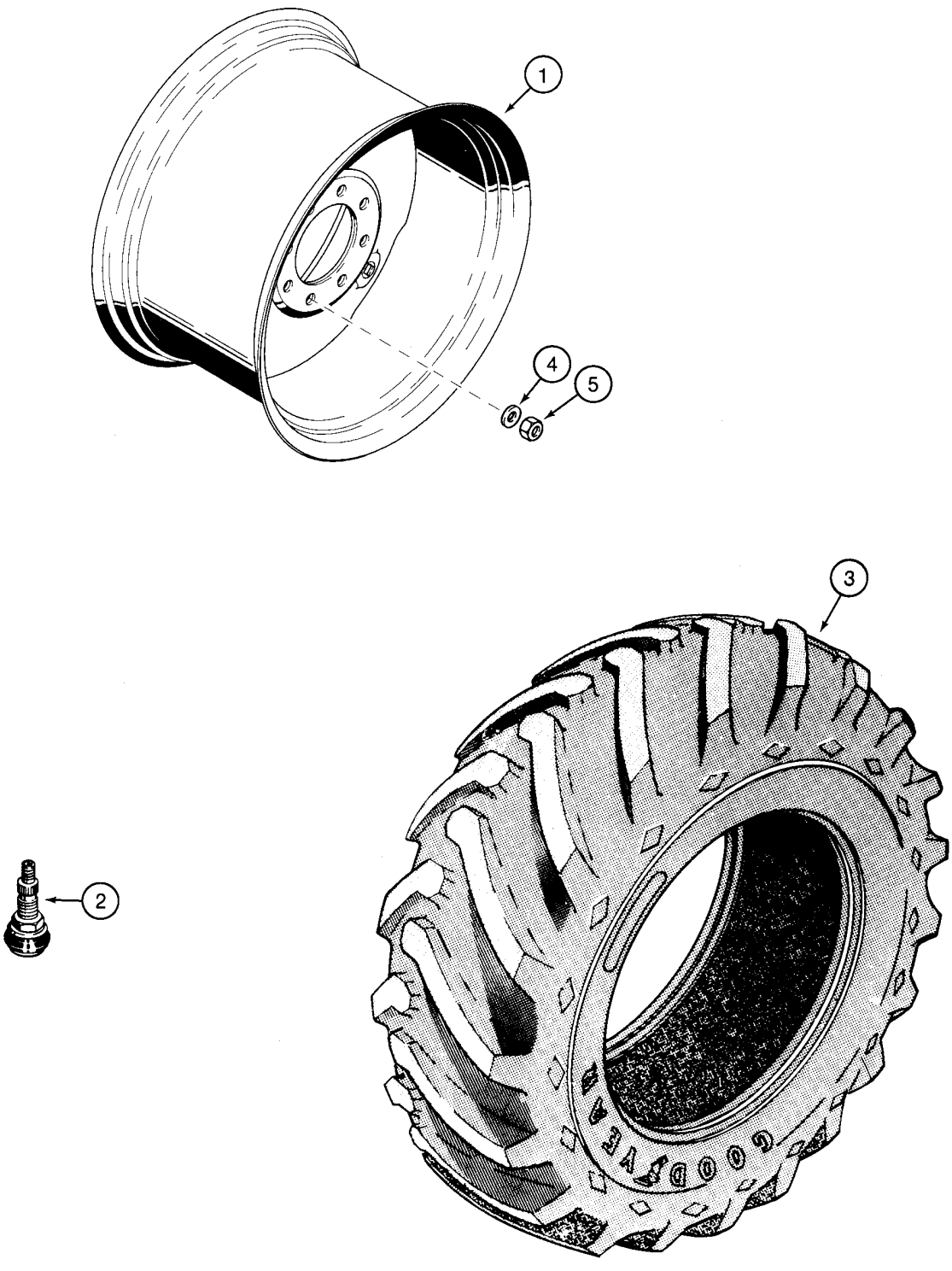

RODAS TRASEIRAS - PNEUS

REF	FN	PART NUMBER	YR/SN	QTY	DESCRIPTION
1		104907A1		2	ARO, 19.5L x 24 Tires - 10 PR or 14 Ply; Two Wheel or Four Wheel Drive
2		27549R1		2	VALVULA
3		REF		2	INSTRUCAO, Tire, Purchase Locally
1		119241A1		2	ARO, 17.5L x 24 Tires - 10 PR, R4; Two Wheel or Four Wheel Drive
2		27549R1		2	VALVULA
3		REF		2	INSTRUCAO, Tire, Purchase Locally
4		D138380		20	ARRUELA PLANA, Wheel Nuts
5		D138492		20	PORCA, M22; Wheel Nuts

EIXO DA TRANSMISSÃO TRASEIRA - STEUN

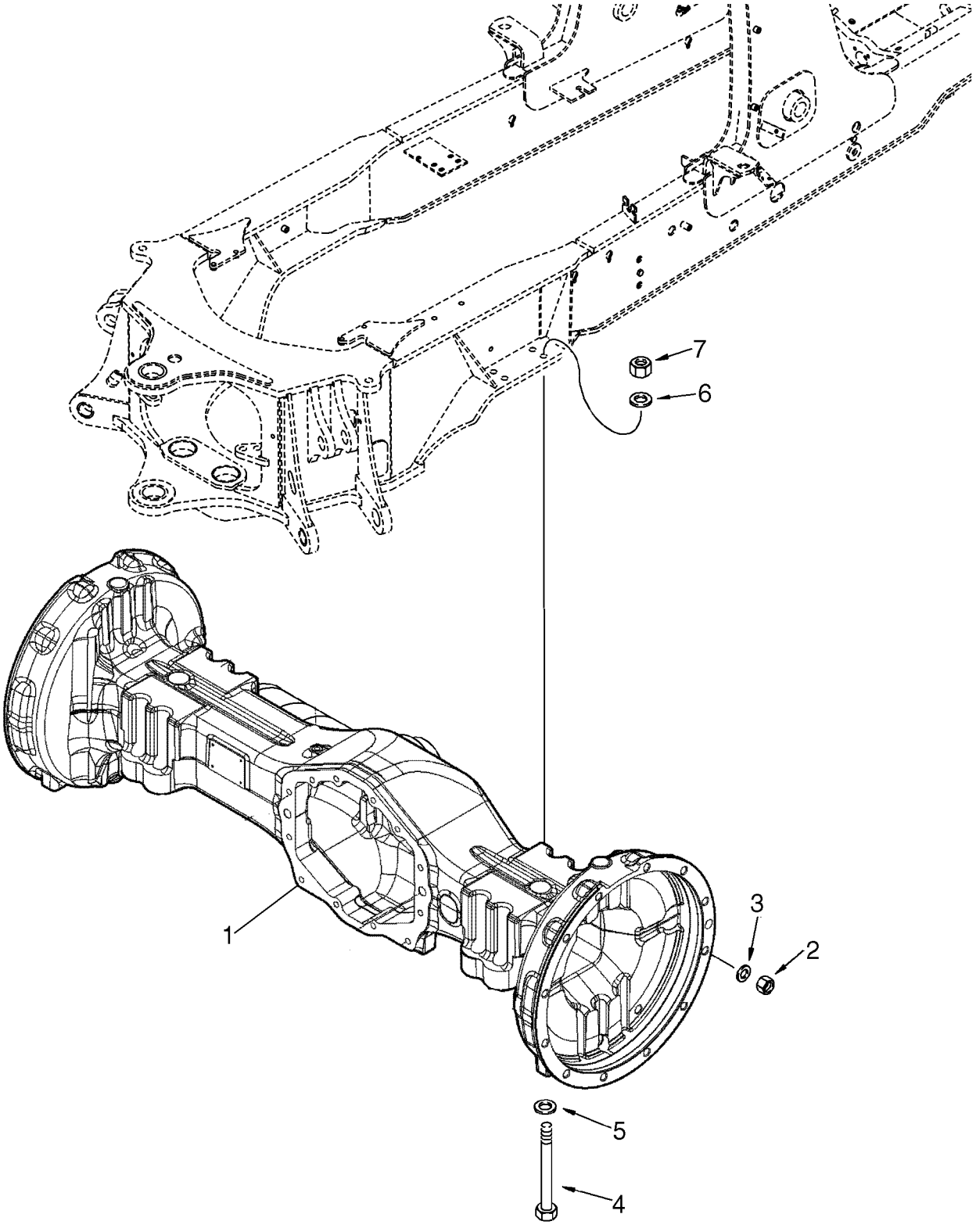

EIXO DA TRANSMISSÃO TRASEIRA - STEUN

REF	FN	PART NUMBER	YR/SN	QTY	DESCRIPTION
1		87395372		1	EIXO TRASEIRO, See Figures 06-33 - 06-37, 07-02
		{87395372R}		1	Axle, Rear; Remanufactured
		{87395372C}		1	Axle, Rear; Core
2		D138492		20	PORCA, 22 mm
3		87313544		20	ARRUELA PLANA, 22.52 ID x 44.0 OD x 5.0 mm thk, Hardened
4		827-20200		8	PARAFUSO, Hex, M20 x 200, 10.9
5		896-11020		8	ARRUELA PLANA, M20 x 37.5 x 4, HT
6		87618533		8	ARRUELA PLANA, M20
7		829-1420		8	PORCA, M20, Cl 10

EIXO, TRASEIRO - BLOQUEO DEL DIFERENCIAL

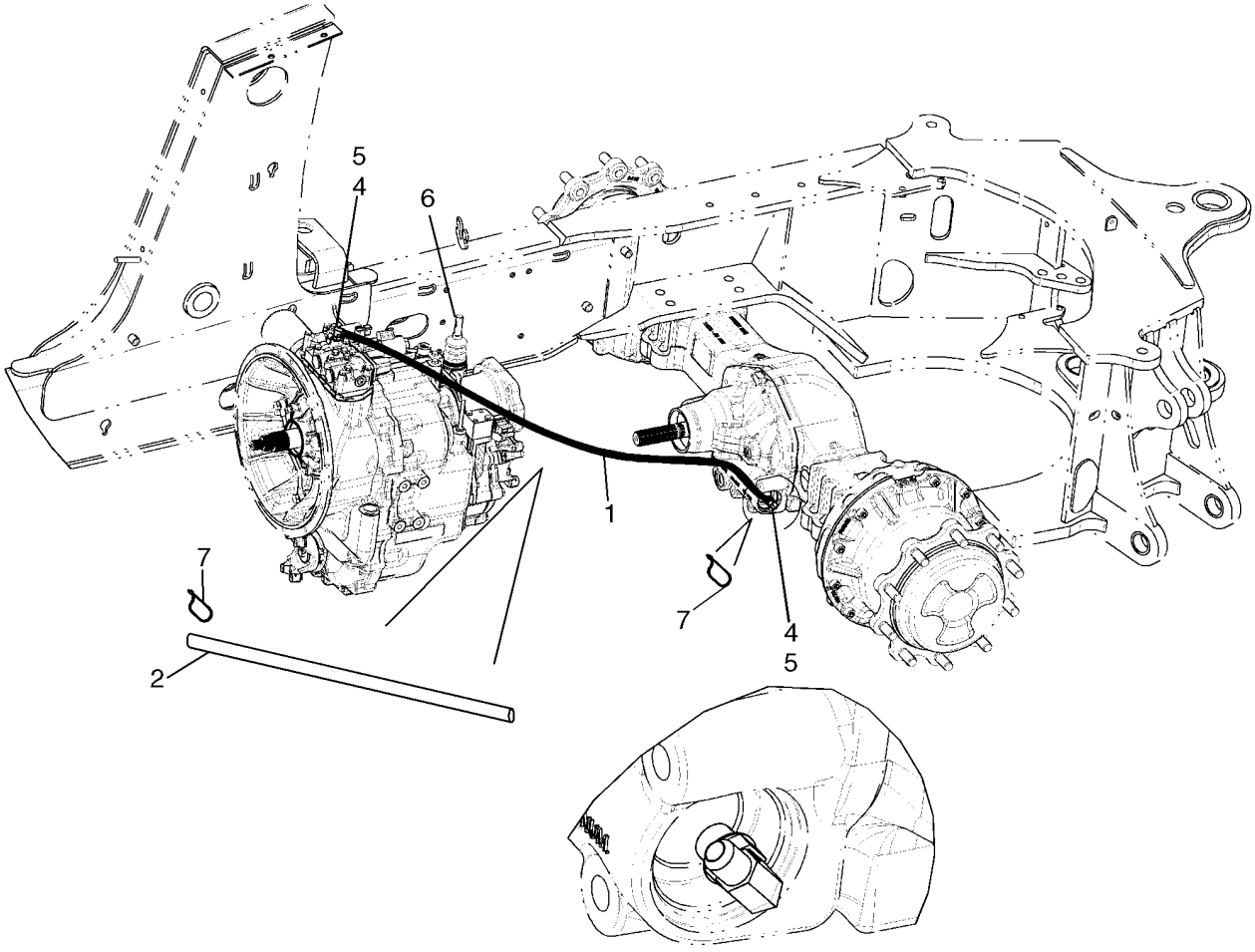

BS07N589

EIXO, TRASEIRO - BLOQUEO DEL DIFERENCIAL

REF	FN	PART NUMBER	YR/SN	QTY	DESCRIPTION
1		87431701		1	MANGUEIRA CONJUNTO, 1350 mm (53-1/8 in)
2		191704A1		1	TUBO ISOLANTE
4		218-5105		1	COTOVELO, 90º, 9/16"-18, 37º x 9/16"-18, O-Ring, Incl. Ref 5
5		237-6006		1	ANEL "O", 6-1, 90 Duro, .468" ID x .078" Thk
6		E135809		1	BUJÃO, If Used
7		L18337		2	TIRA DE CABO, 9.95"-12.1" lg

87395372 EIXO DA TRANSMISSÃO TRASEIRA - ALOJAMENTO

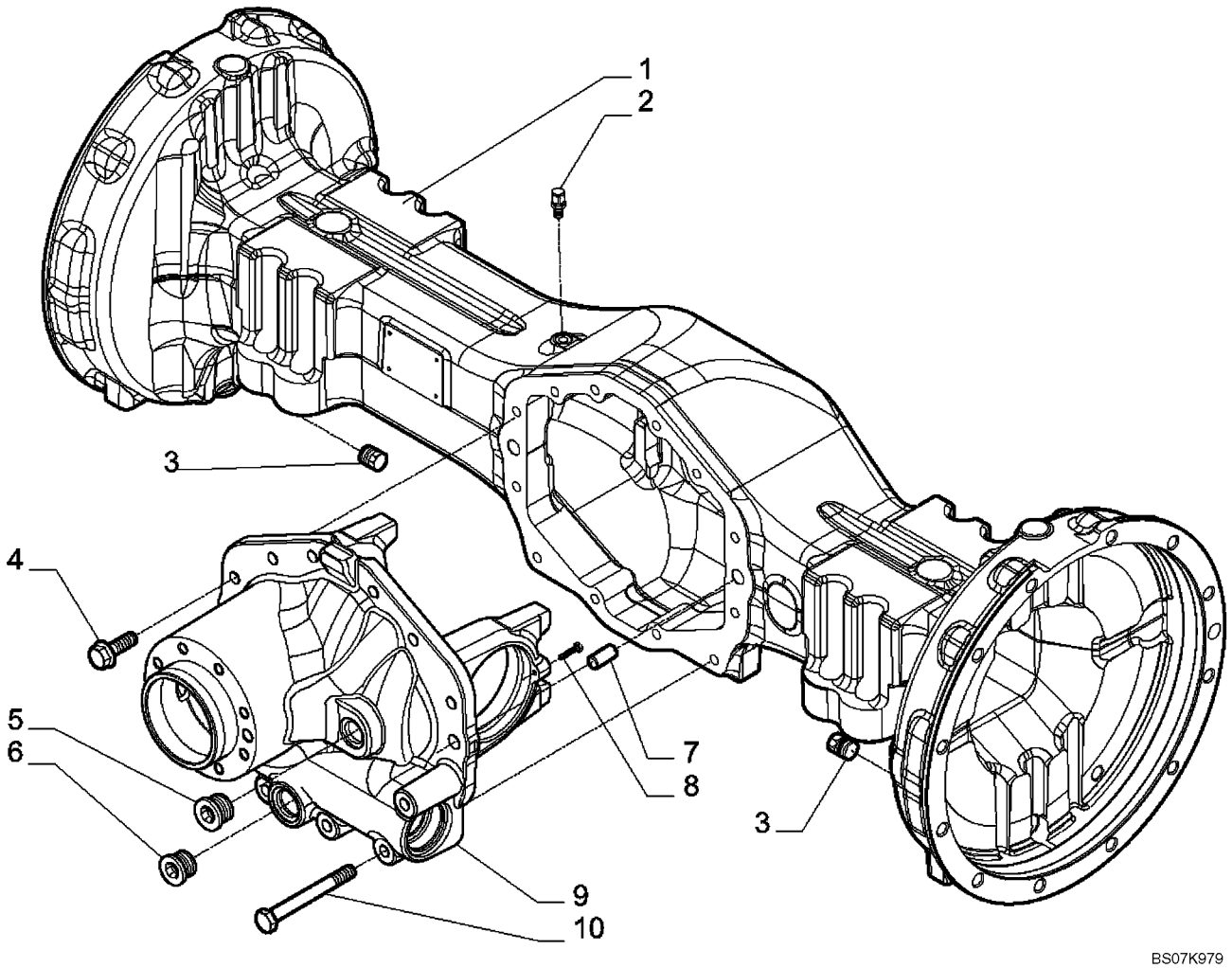

87395372 EIXO DA TRANSMISSÃO TRASEIRA - ALOJAMENTO

REF	FN	PART NUMBER	YR/SN	QTY	DESCRIPTION
		87395372		1	EIXO TRASEIRO, Incl. Ref 1 - 10; Also Includes Parts On Figures 06-33 - 06-37, 07-02
1		87708390		1	ESTRUTURA DO EIXO, Housing, Axle
2		1966149C1		1	RESPIRO, M10 x 1
3		A156873		2	BUJÃO DE DRENO, M22 x 1.5
4		S301064		8	PARAFUSO, M12 x 1.75
5		{434746A1}		1	Plug; M24 x 1.5
6		100557A1		1	BUJÃO DE DRENO, M30 x 2
7		1966138C1		2	GUIA
8		864-6025		2	PARAFUSO, Hex Soc Hd, M6 x 25, 8.8
9		87708391		1	SUPORTE, Differential
10		87708392		4	PARAFUSO, M12 x 100

87395372 EIXO DA TRANSMISSÃO TRASEIRA - DIFERENCIAL

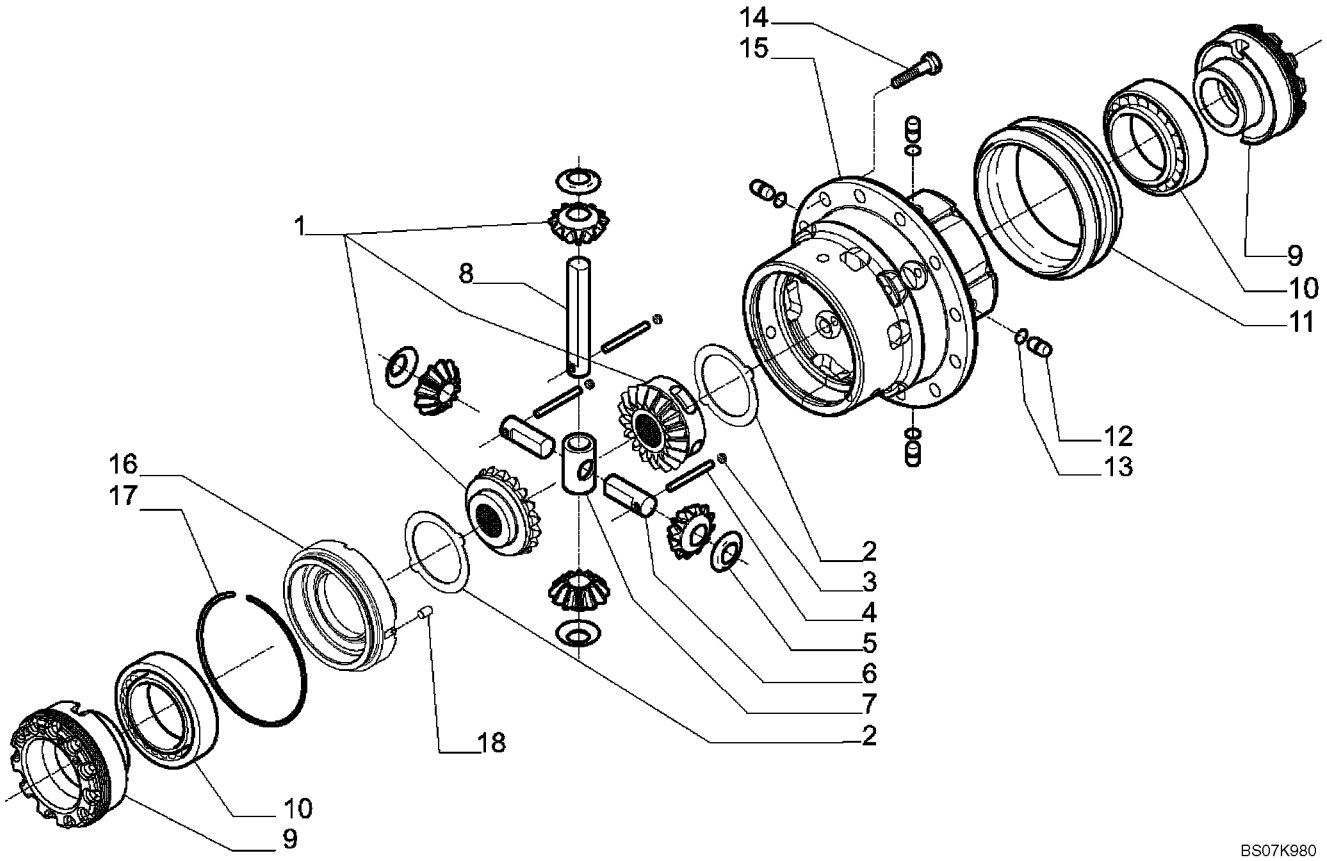

87395372 EIXO DA TRANSMISSÃO TRASEIRA - DIFERENCIAL

REF	FN	PART NUMBER	YR/SN	QTY	DESCRIPTION
		87395372		1	EIXO TRASEIRO, Incl. Ref 1 - 18; Also Includes Parts On Figures 06-33 - 06-37, 07-02
1		87708394		1	DIFERENCIAL CONJUNTO
2		87708395		2	PLACA DE COMANDO, Differential
3		D142898		3	BUJÃO, M10 x 1
4		87708396		2	PINO, 9 x 45
5		E135777		4	ARRUELA PLANA, Thrust
6		87708397		2	PINO DO FREIO, Differential Pin
7		87708398		1	CRUZETA, Gear
8		87708399		1	PINO DO FREIO, Differential Pin
9		87708400		2	PORCA DO BUCIM, M104 x 1.5
10		E135785		2	ROLAMENTO
11		87708401		1	LUVA DE ACOPLAMENTO
12		292207A1		4	PINO LARGO
13		292208A1		4	ANEL O
14		87708402		12	PARAFUSO, M12 x 25
15		87708403		1	ALOJAMENTO, Differential
16		87708408		1	TAMPA, Differential Housing
17		87708409		1	ANEL-TRAVA, Differential
18		87708411		1	ROLO, Pin; 8 x 12

87395372 EIXO DA TRANSMISSÃO TRASEIRA - ANEL E PINHÃO

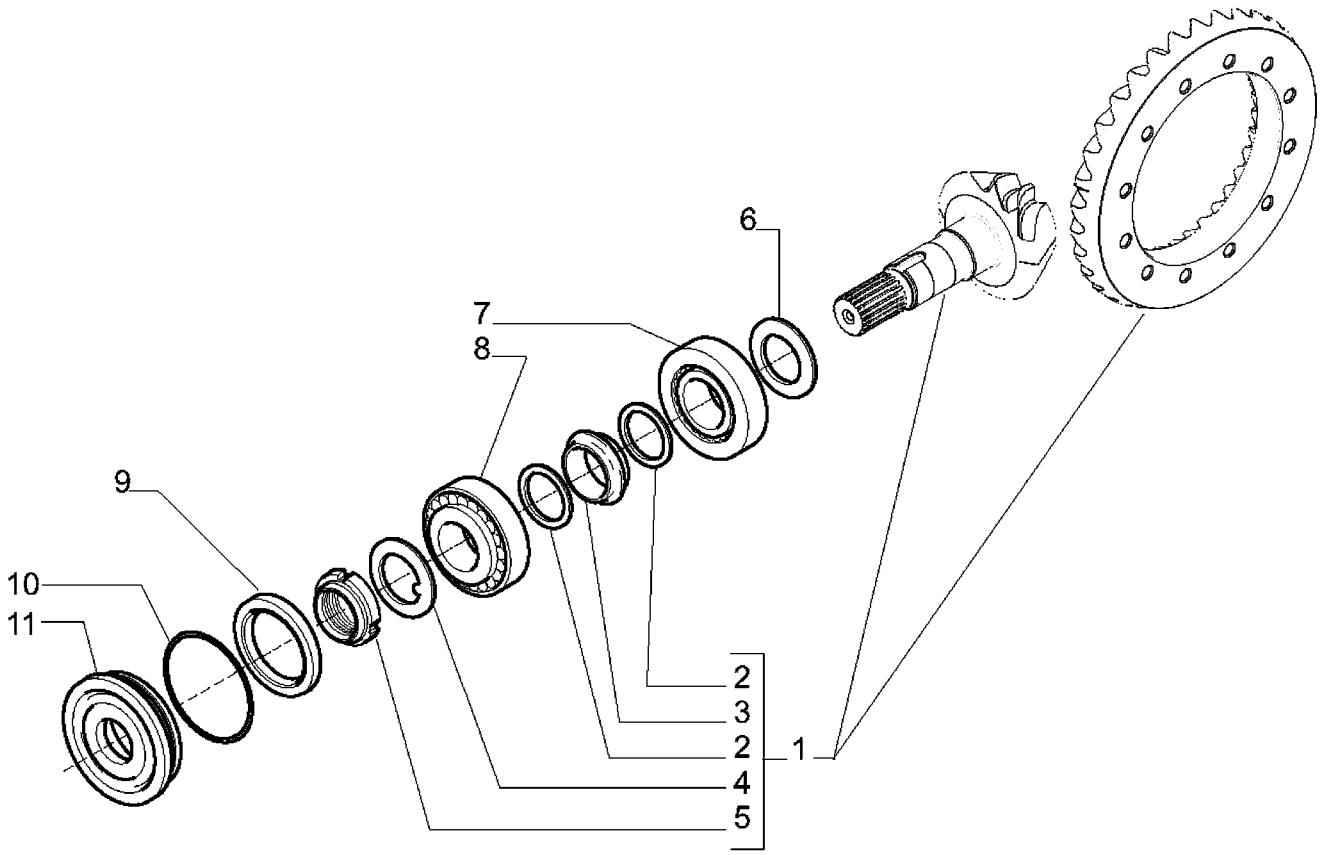

87395372 EIXO DA TRANSMISSÃO TRASEIRA - ANEL E PINHÃO

REF	FN	PART NUMBER	YR/SN	QTY	DESCRIPTION
		87395372		1	EIXO TRASEIRO, Incl. Ref 1 - 11; Also Includes Parts On Figures 06-33 - 06-37, 07-02
1		87708393		1	PAR DE ENGRENAGENS, Bevel, 14/35
2		1349059C1		2	ARRUELA PLANA, Elastic
3		175957A1		1	ESPAÇADOR
4		N7536		1	ARRUELA PLANA, Lock
5		K261014		2	PORCA, Ring; M40 x 105
6		190506A1		AR	CALCO DE AFINACAO, 2.5mm Thk, (0.098")
6		190508A1		AR	CALCO DE AFINACAO, 2.6mm Thk, (0.102")
6		190509A1		AR	CALCO DE AFINACAO, 2.7mm Thk, (0.106")
6		190510A1		AR	CALCO DE AFINACAO, 2.8mm Thk, (0.110")
6		190511A1		AR	CALCO DE AFINACAO, 2.9mm Thk, (0.114")
6		190512A1		AR	CALCO DE AFINACAO, 3.0mm Thk, (0.118")
6		190513A1		AR	CALCO DE AFINACAO, 3.1mm Thk, (0.122")
6		190514A1		AR	CALCO DE AFINACAO, 3.2mm Thk, (0.125")
6		190515A1		AR	CALCO DE AFINACAO, 3.3mm Thk, (0.129")
6		190516A1		AR	CALCO DE AFINACAO, 3.4mm Thk, (0.133")
7		{P1139855X}		1	Bearing, Tapered
8		K395090		1	ROLAMENTO
9		K262143		1	ANEL DE VEDAÇÃO, Ring
10		445720A1		1	ANEL O
11		128570A1		1	FLANGE, Seal

87395372 EIXO DA TRANSMISSÃO TRASEIRA - BLOQUEO DEL DIFERENCIAL

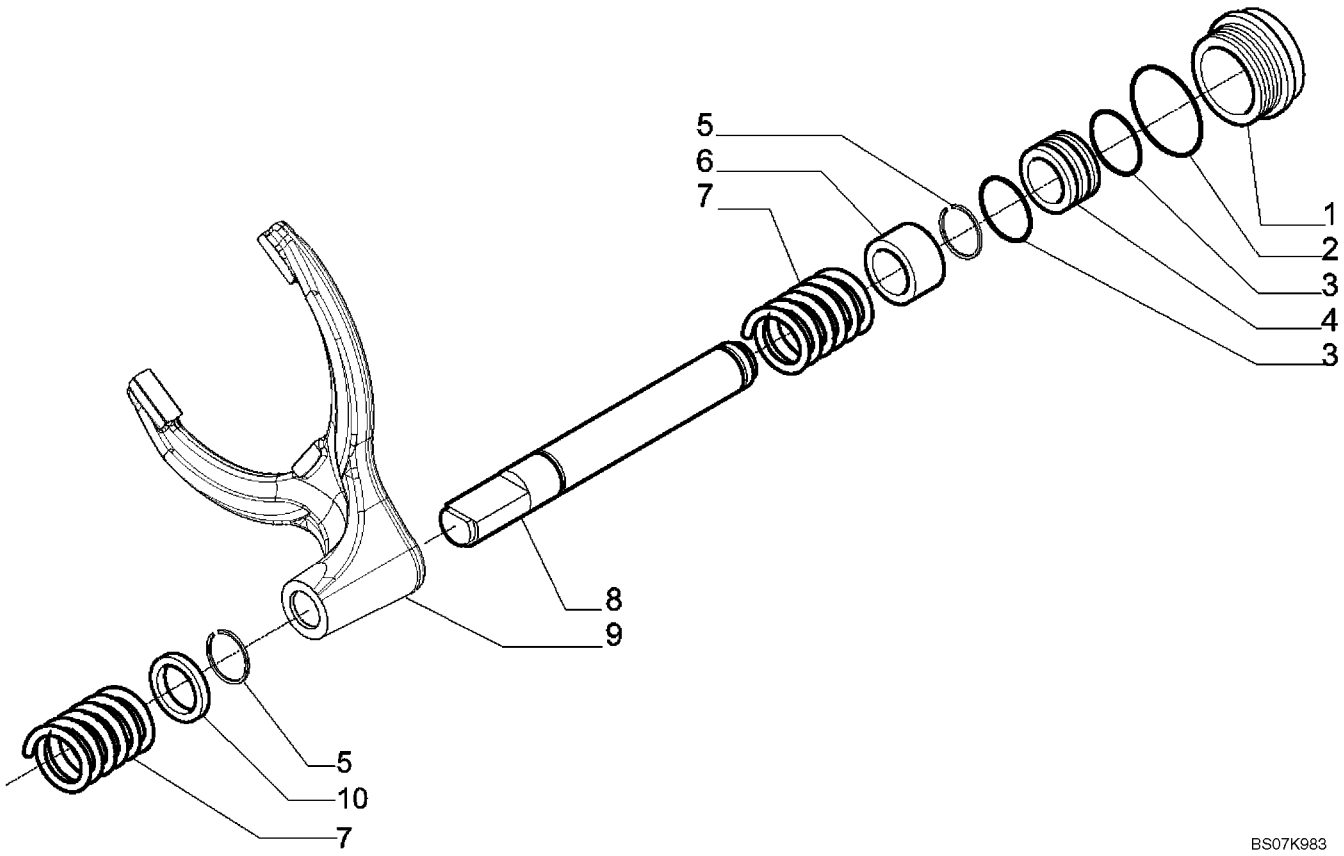

87395372 EIXO DA TRANSMISSÃO TRASEIRA - BLOQUEO DEL DIFERENCIAL

REF	FN	PART NUMBER	YR/SN	QTY	DESCRIPTION
		87395372		1	EIXO TRASEIRO, Incl. Ref 1 - 10; Also Includes Parts On Figures 06-33 - 06-37, 07-02
1		87708413		1	CILINDRO, Differential Lock
2		87708415		1	ANEL "O"
3		292210A1		2	ANEL DE VEDAÇÃO
4		292212A1		1	PISTÃO
5		87708417		2	ANEL-TRAVA
6		87708420		1	BUCHA
7		175966A1		2	MOLA
8		87708422		1	PISTÃO, Control Piston, Differential Locking
9		87708424		1	GARFO
10		87708427		1	ESPAÇADOR

87395372 EIXO DA TRANSMISSÃO TRASEIRA - PLANETÁRIO

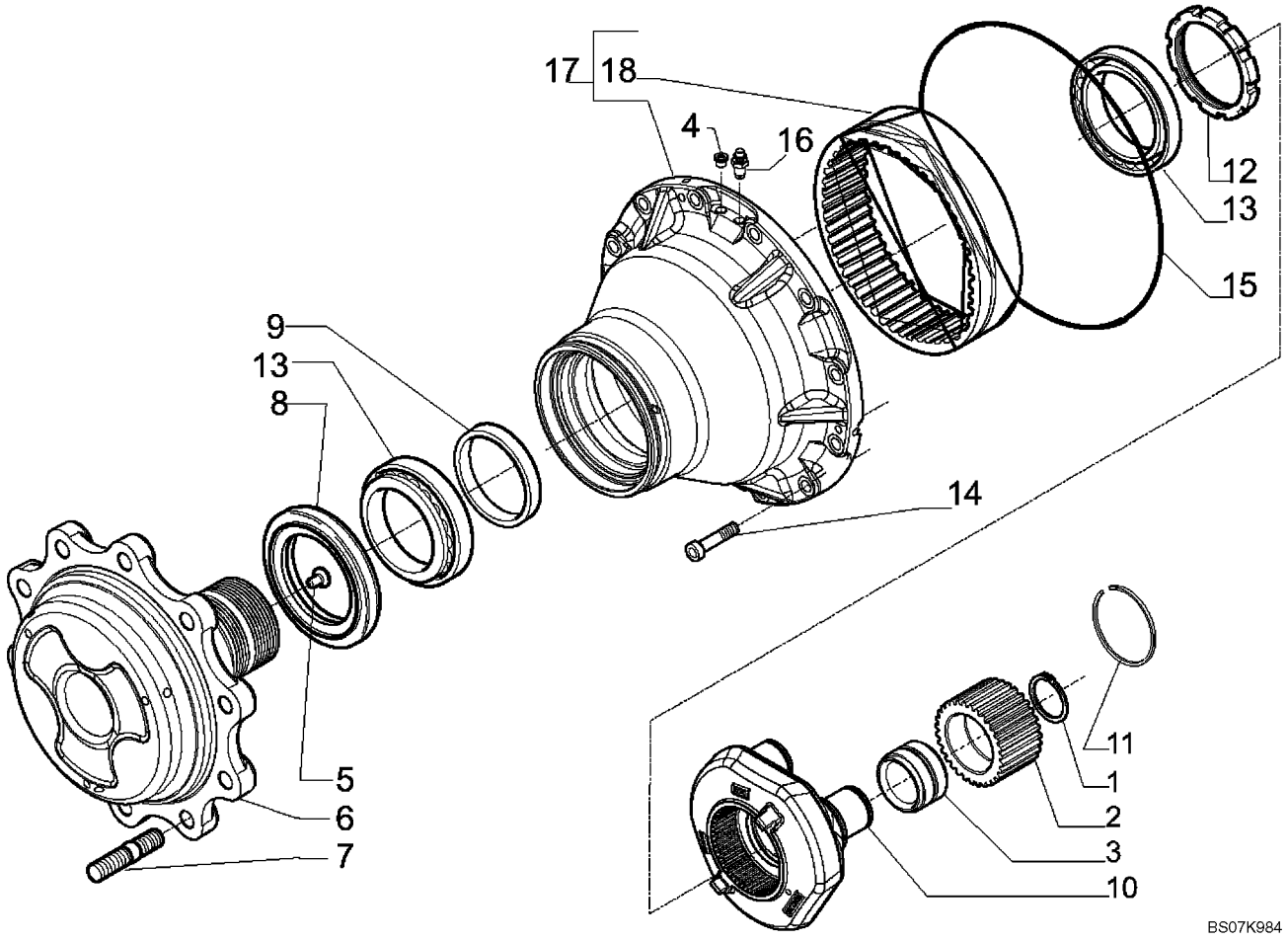

87395372 EIXO DA TRANSMISSÃO TRASEIRA - PLANETÁRIO

REF	FN	PART NUMBER	YR/SN	QTY	DESCRIPTION
		87395372		1	EIXO TRASEIRO, Incl. Ref 1 - 18; Also Includes Parts On Figures 06-33 - 06-37, 07-02
1		800-1150		6	ANEL, M50, Ext
2		87708443		6	ENGRENAGEM, Wheel Hub
3		87708444		6	TUCHO COM ROLETE
4		9625178		2	BUJÃO, Hex Soc, 9/16"-18 ORB
5		K395093		2	PINO COM CABECA
6		87708445		2	FLANGE, Wheel
7		D142986		20	PRISIONEIRO
8		452140A1		2	ANEL VEDADOR
9		87708447		2	ESPAÇADOR
10		87708452		2	SUPORTE PLANETARIO
11		87708453		2	ANEL-TRAVA
12		87708454		2	PORCA DO BUCIM, M108 x 2
13		K395101		4	TUCHO COM ROLETE
14		403955A1		24	PARAFUSO, M14 x 45
15		87711038		2	ANEL, Wheel Hub
16		E135810		2	PARAFUSO-RESPIRO
17		87708466		2	JOGO ENGR CAIXA MUDANÇAS, Gear Kit
18		87708467		2	COROA DENTADA

EIXO DA TRANSMISSÃO TRASEIRO

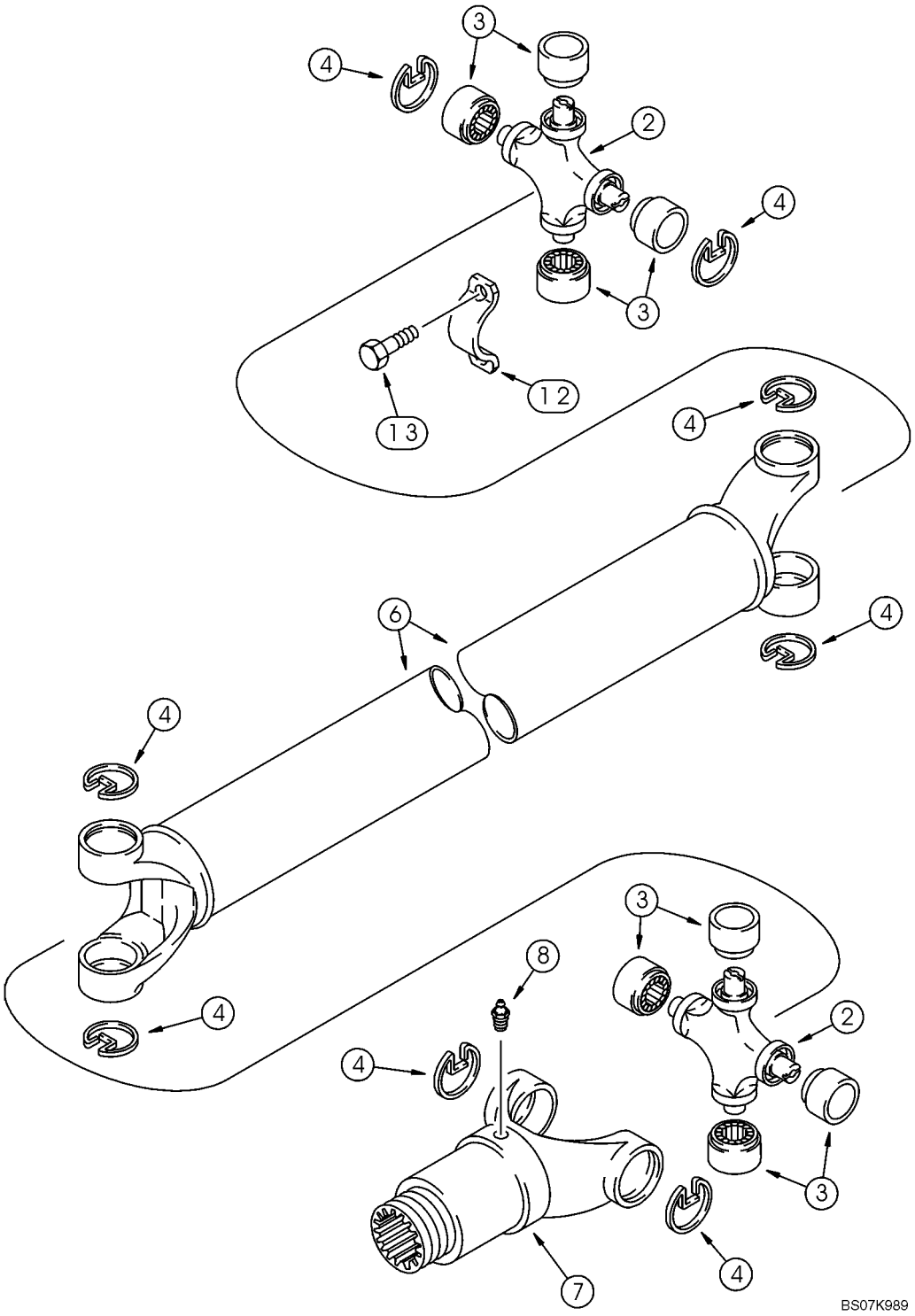

EIXO DA TRANSMISSÃO TRASEIRO

REF	FN	PART NUMBER	YR/SN	QTY	DESCRIPTION
		87613924		1	EIXO COMANDO, Incl. 2 - 8
		393231A1		2	JOGO, Universal Joint, Incl. Ref 2 - 4
2		NSS		1	BOLETIM INFORMATIVO, Joint, Universal
3		NSS		4	BOLETIM INFORMATIVO, Bearing, Journal
4		NSS		4	BOLETIM INFORMATIVO, Ring
6		87716823		1	GARFO
7		87716824		1	TAMPA DO RESERVATÓRIO
8		219-10		1	GRAXEIRA, 1/4"-28 NPT x .68" lg
12		87538515		2	PRENDEDOR
13		9637611		4	PARAFUSO, Hex Flange Head, Locking, Special, 5/16-24 NF x 1-1/15

SECTION INDEX

Freios

07-01		CONJUNTO DA TRANSMISSÃO, 2WD - FREIO DE ESTACIONAMENTO
07-01	01	CONJUNTO DA TRANSMISSÃO, 4WD - FREIO DE ESTACIONAMENTO
07-02		EIXO DA TRANSMISSÃO TRASEIRA - TRAVÕES, DIFERENCIAL
07-03		PEDAIS DOS TRAVÕES
07-04		SISTEMA HIDRÁULICO - CILINDRO PRINCIPAL DOS TRAVÕES
07-05		CABOS DOS TRAVÕES AO TRANSMISSÃO - 2WD
07-05A		CABOS DOS TRAVÕES AO TRANSMISSÃO - 4WD
07-06		CABOS DOS TRAVÕES AO EIXOS
07-07		CONJUNTO DO CILINDRO - TRAVÕES, CILINDRO PRINCIPAL

CONJUNTO DA TRANSMISSÃO, 2WD - FREIO DE ESTACIONAMENTO

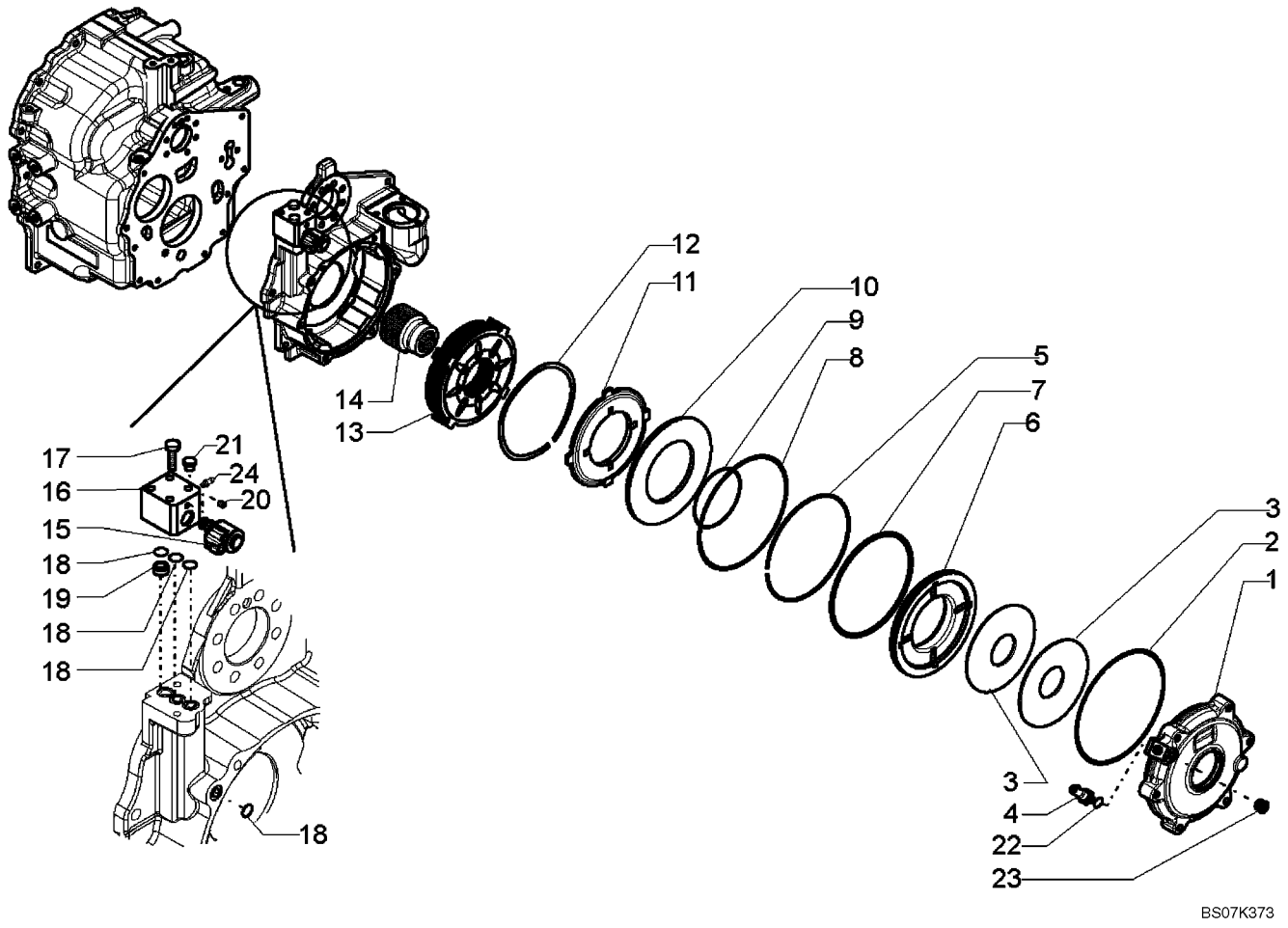

CONJUNTO DA TRANSMISSÃO, 2WD - FREIO DE ESTACIONAMENTO

REF	FN	PART NUMBER	YR/SN	QTY	DESCRIPTION
		87395300		1	CAIXA DE MARCHAS, Two Wheel Drive; Incl Ref 1 - 24; Also Includes Parts On Figures 06-12 - 06-19, 07-01
1		87701309		1	TAMPA, Brake Cover
2		87701310		1	ANEL "O", O-Ring
3		363485A1		2	ARRUELA MOLA, Belleville Washer
4		87701313		1	SENSOR, Pressure Sensor
5		87701315		1	ANEL, Stop Ring
6		87701317		1	PISTÃO, Brake Piston
7		87701318		1	ANEL VEDADOR, Seal With O-Ring
8		87701320		1	ANEL "O", O-Ring
9		87701321		1	ANEL VEDADOR, Seal With O-Ring
10		87701323		1	PLACA DE FIXAÇÃO, Retaining Plate
11		87701324		1	PLACA FREIO, Brake Counterplate
12		87701325		5	ESPAÇADOR, Spacer
13		87701327		1	PACOTE DE FREIO, Brake Pack
14		87701328		1	BUCHA, Link Bushing
15		87701329		1	ELETRO-VÁLVULA, Electrovalve
16		87701330		1	BLOCO DE COMANDO, Control Block
17		814-8055		2	PARAFUSO, Hex, M8 x 55, 8.8
18		346583A1		4	ANEL O
19		87701333		1	BUCHA, Bushing
20		139312A1		1	BUJÃO
21		NSS		1	BOLETIM INFORMATIVO, PLUG, Shipping Plug
22		100760A1		1	ANEL O
23		E135809		1	BUJÃO, 9/16
24		933781R1		1	GRAXEIRA, M10 x 1

CONJUNTO DA TRANSMISSÃO, 4WD - FREIO DE ESTACIONAMENTO

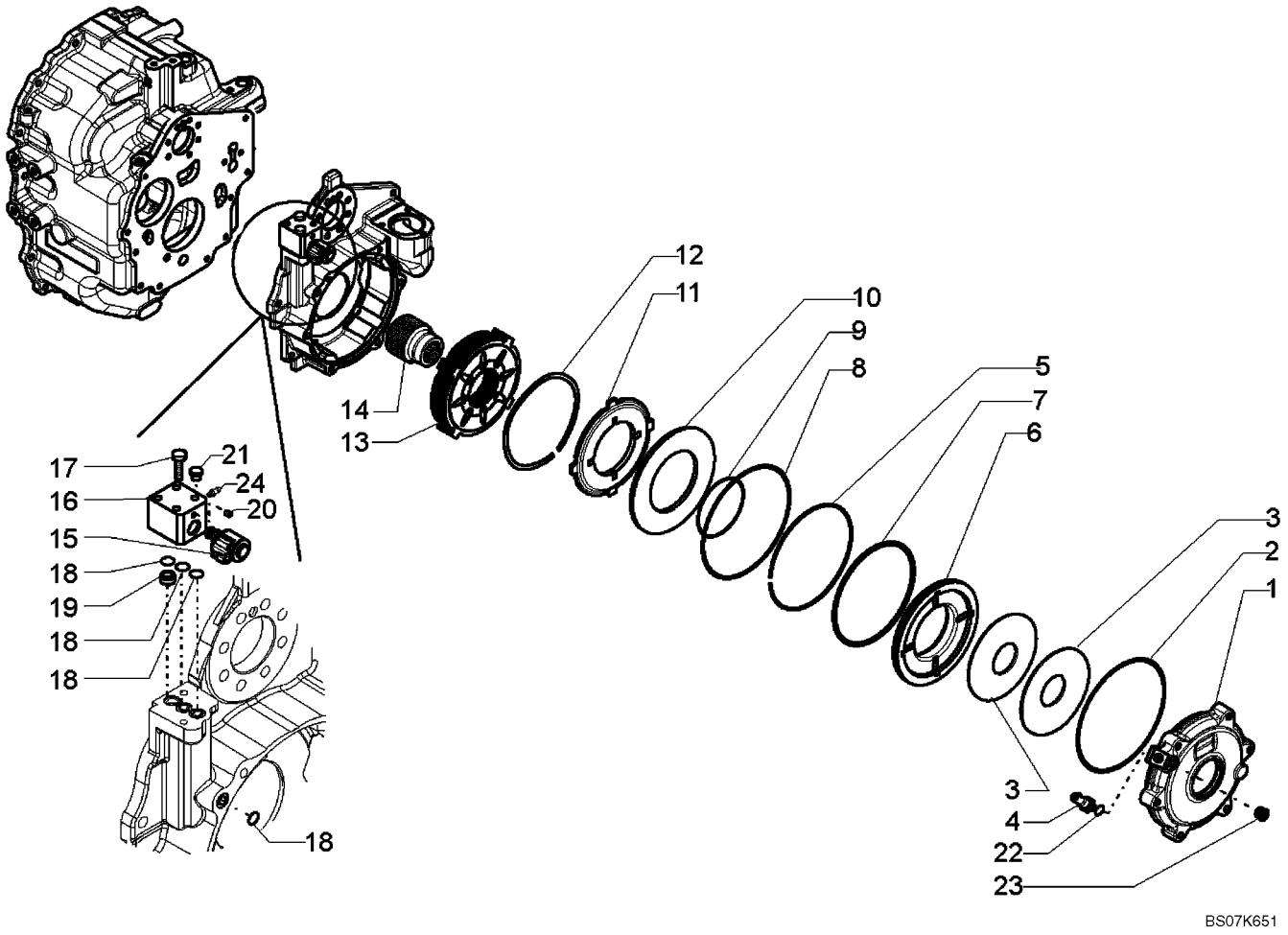

CONJUNTO DA TRANSMISSÃO, 4WD - FREIO DE ESTACIONAMENTO

REF	FN	PART NUMBER	YR/SN	QTY	DESCRIPTION
		87395301		1	CAIXA DE MARCHAS, Four Wheel Drive; Incl Ref 1 - 24; Also Includes Parts On Figures 06-20 - 06-29, 07-01(01)
1		87701309		1	TAMPA, Brake Cover
2		87701310		1	ANEL "O", O-Ring
3		363485A1		2	ARRUELA MOLA, Belleville Washer
4		87701313		1	SENSOR, Pressure Sensor
5		87701315		1	ANEL, Stop Ring
6		87701317		1	PISTÃO, Brake Piston
7		87701318		1	ANEL VEDADOR, Seal With O-Ring
8		87701320		1	ANEL "O", O-Ring
9		87701321		1	ANEL VEDADOR, Seal With O-Ring
10		87701323		1	PLACA DE FIXAÇÃO, Retaining Plate
11		87701324		1	PLACA FREIO, Brake Counterplate
12		87701325		5	ESPAÇADOR, Spacer
13		87701327		1	PACOTE DE FREIO, Brake Pack
14		87701328		1	BUCHA, Link Bushing
15		87701329		1	ELETRO-VÁLVULA, Electrovalve
16		87701330		1	BLOCO DE COMANDO, Control Block
17		814-8055		2	PARAFUSO, Hex, M8 x 55, 8.8
18		346583A1		4	ANEL O
19		87701333		1	BUCHA, Bushing
20		139312A1		1	BUJÃO
21		NSS		1	BOLETIM INFORMATIVO, PLUG, Shipping Plug
22		100760A1		1	ANEL O
23		E135809		1	BUJÃO, 9/16
24		933781R1		1	GRAXEIRA, M10 x 1

EIXO DA TRANSMISSÃO TRASEIRA - TRAVÕES, DIFERENCIAL

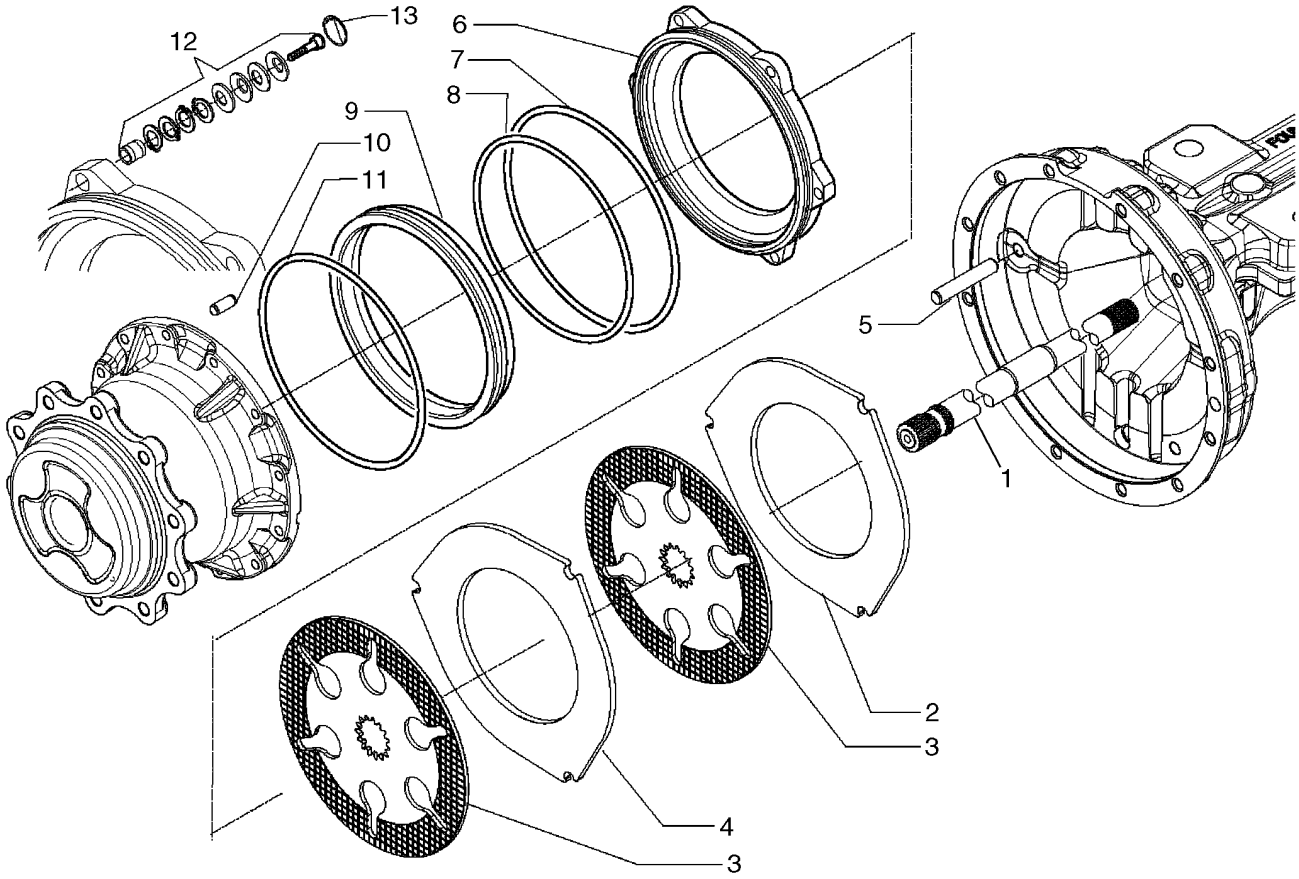

BS07N834

EIXO DA TRANSMISSÃO TRASEIRA - TRAVÕES, DIFERENCIAL

REF	FN	PART NUMBER	YR/SN	QTY	DESCRIPTION
		87395372		1	EIXO TRASEIRO, Incl. Ref 1 - 13; Also Includes Parts On Figures 06-26 - 06-30, 07-02
1		87708431		1	EIXO, LH Half Shaft
1		87708432		1	EIXO, RH Half Shaft
2		87708433		2	PLACA FREIO, Brake Separation Plate, 5 thk
3		87708434		4	PLACA FREIO, Brake Plate
4		87708435		2	PLACA FREIO, Brake Separation Plate, 8 thk
5		139294A1		6	GUIA
6		87708436		2	CILINDRO COM SAPATAS, Brake Piston
7		87708438		2	ANEL "O", O-Ring
8		371144A1		2	ANEL O, Piston, External
9		87708440		2	PISTÃO, Brake Piston
10		D142890		2	GRÃO
11		371145A1		2	ANEL O, Piston Carrier
12		87708441		6	CORRETOR DE FRENAGEM, Kit, Rear Axle Self Adjust; 0.6 mm
13		87708442		6	ANEL-TRAVA, Lock Ring

07-03		p1	07/08

PEDAIS DOS TRAVÕES

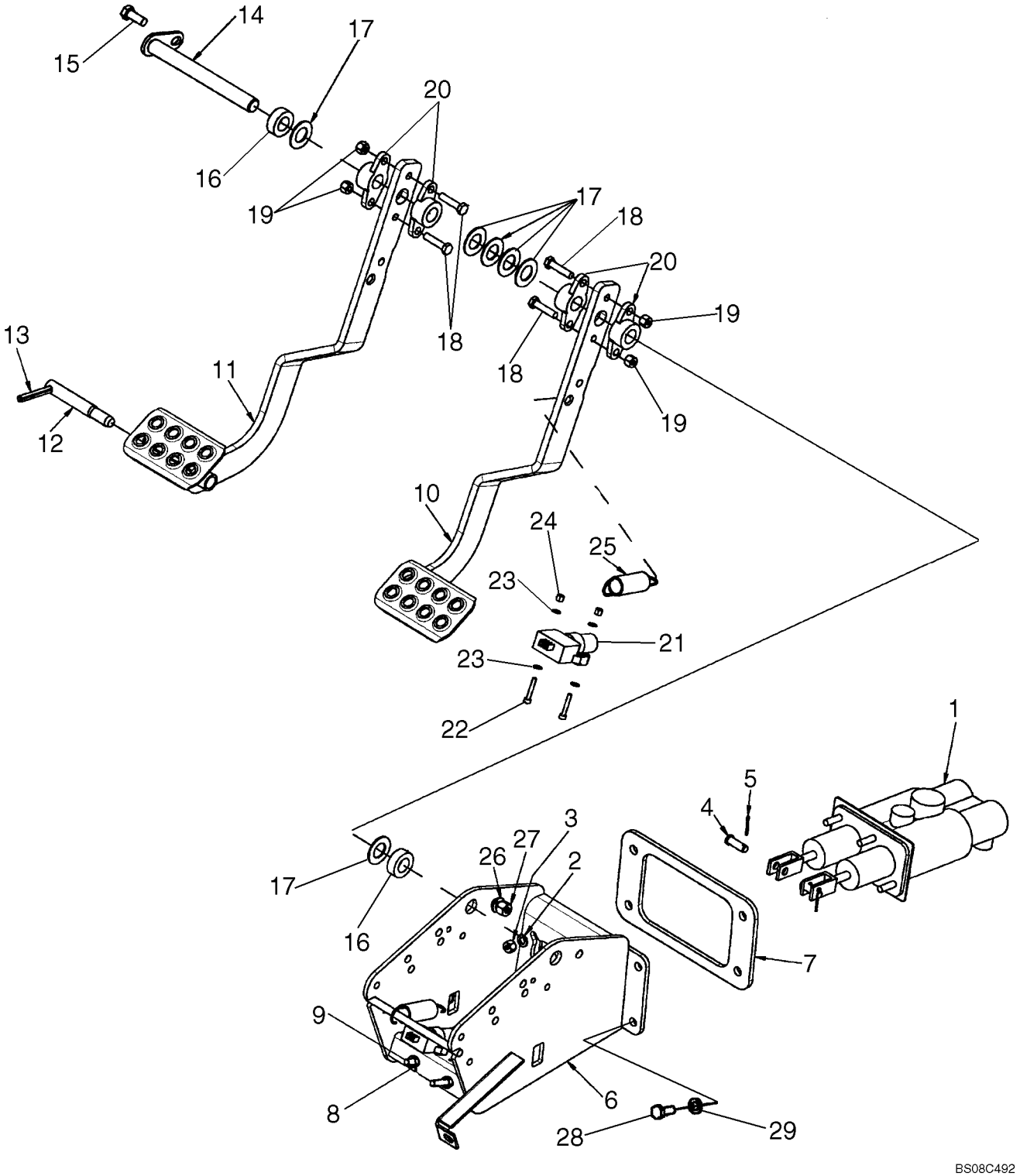

PEDAIS DOS TRAVÕES

REF	FN	PART NUMBER	YR/SN	QTY	DESCRIPTION
1		87714038		1	CILINDRO MESTRE, See Figure 07-07
2		895-11008		4	ARRUELA PLANA, M8 x 16 x 1.6
3		832-10408		4	CONTRA PORCA, M8 x 1.25, Cl 8
4		427-6106		2	CUPILHA, 3/8" x 1 1/16"
5		432-612		2	GRAMPO, 3/32" x 3/4"
6		87642370		1	SUPORTE, Brake Pedal and Brake Master Cylinder Mounting
7		87644495		1	JUNTA
8		829-1408		4	PORCA, M8, Cl 10
9		87644497		2	ISOLADOR, Brake Pedal
10		87642365		1	PEDAL, Right-Hand
11		87642364		1	PEDAL, Left-Hand
12		D124530		1	PINO, Brake Pedal Lock
13		86625112		1	PINO DE FIXAÇÃO, 5/16" x 2 1/2", Slotted
14		D140035		1	PINO LARGO, Shaft
15		614-10025		1	PARAFUSO, Hex, M10 x 25, 8.8, Full Thd
16		D124529		2	ESPAÇADOR
17		495-81261		X	ARRUELA PLANA, 13/16" x 1 1/2" x .067", HDN, Used As A Spacer
18		814-8035		4	PARAFUSO, Hex, M8 x 35, 8.8
19		832-10408		4	CONTRA PORCA, M8 x 1.25, Cl 8
20		A77310		4	PIVO, Bearing
21		82026949		2	INTERRUPTOR, Push Button, Brake Lamp, Attaches To Front Console Wiring Harness
22		87016468		4	PARAFUSO, Hex Soc Hd, M4 x 25, 8.8
23		895-11004		8	ARRUELA PLANA, M4
24		832-10404		4	CONTRA PORCA, M4 x .7, Cl 8
25		230973A1		2	MOLA
26		895-11010		1	ARRUELA PLANA, M10 x 20 x 2
27		832-10410		1	CONTRA PORCA, M10 x 1.5, Cl 8
28		614-8020		4	PARAFUSO, Hex, M8 x 20, 8.8
29		895-11008		4	ARRUELA PLANA, M8 x 16 x 1.6

SISTEMA HIDRÁULICO - CILINDRO PRINCIPAL DOS TRAVÕES

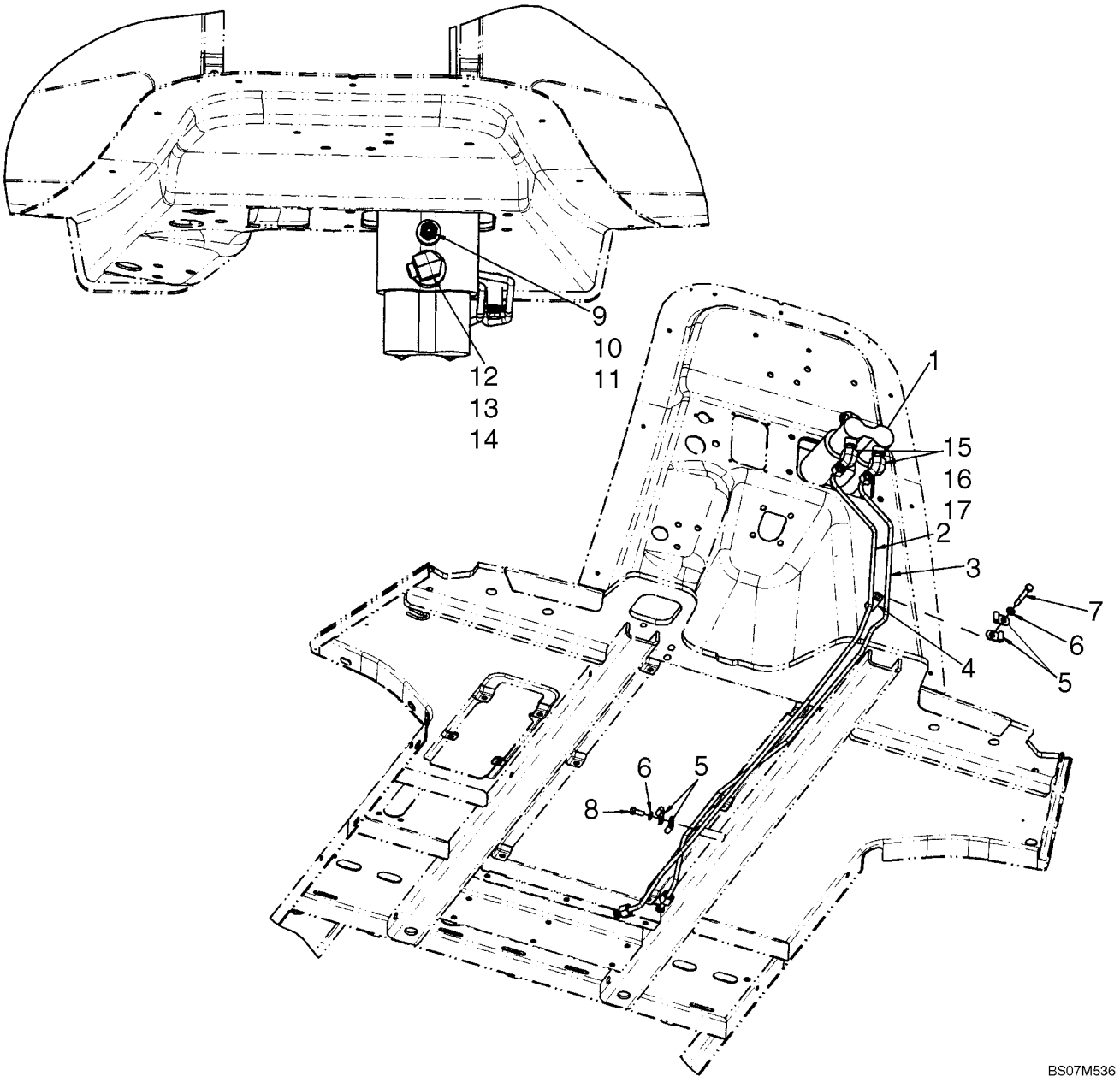

SISTEMA HIDRÁULICO - CILINDRO PRINCIPAL DOS TRAVÕES

REF	FN	PART NUMBER	YR/SN	QTY	DESCRIPTION
1		87714038		1	CILINDRO MESTRE, See Figure 07-07
2		87697589		1	TUBULAÇÃO HIDRAULICO, RH Brake
3		87697590		1	TUBULAÇÃO HIDRAULICO, LH Brake
4		87449579		1	ESPAÇADOR, Brake Tube
5		515-2379		4	PRENDEDOR, 5/16", Insul, 3/8" Bolt
6		895-11008		2	ARRUELA PLANA, M8 x 16 x 1.6
7		814-8070		1	PARAFUSO, Hex, M8 x 70, 8.8
8		614-8030		1	PARAFUSO, Hex, M8 x 30, 8.8
9		700-101		1	CONEXÃO, 11/16"-16 ORFS x M14 x 1.5 ORB, Incl. 10, 11
10		238-6012		1	ANEL "O", -012, 90 Duro, .364" ID x .070" Thk, Face Seal End
11		637-63113		1	ANEL "O", Cl 6, 11.3MM ID x 2.2 Thk
12		700-345		1	COTOVELO, 90º, 11/16"-18 ORFS x M18 x 1.5 ORB, Incl. 13, 14
13		637-63153		1	ANEL "O", Cl 6, 15.3MM ID x 2.2 Thk
14		238-6012		1	ANEL "O", -012, 90 Duro, .364" ID x .070" Thk, Face Seal End
15		700-304		2	COTOVELO, 90º, 11/16"-18 ORFS x M14 x 1.5 ORB, Incl. 16, 17
16		238-6012		1	ANEL "O", -012, 90 Duro, .364" ID x .070" Thk, Face Seal End
17		637-63113		1	ANEL "O", Cl 6, 11.3MM ID x 2.2 Thk

CABOS DOS TRAVÕES AO TRANSMISSÃO - 2WD

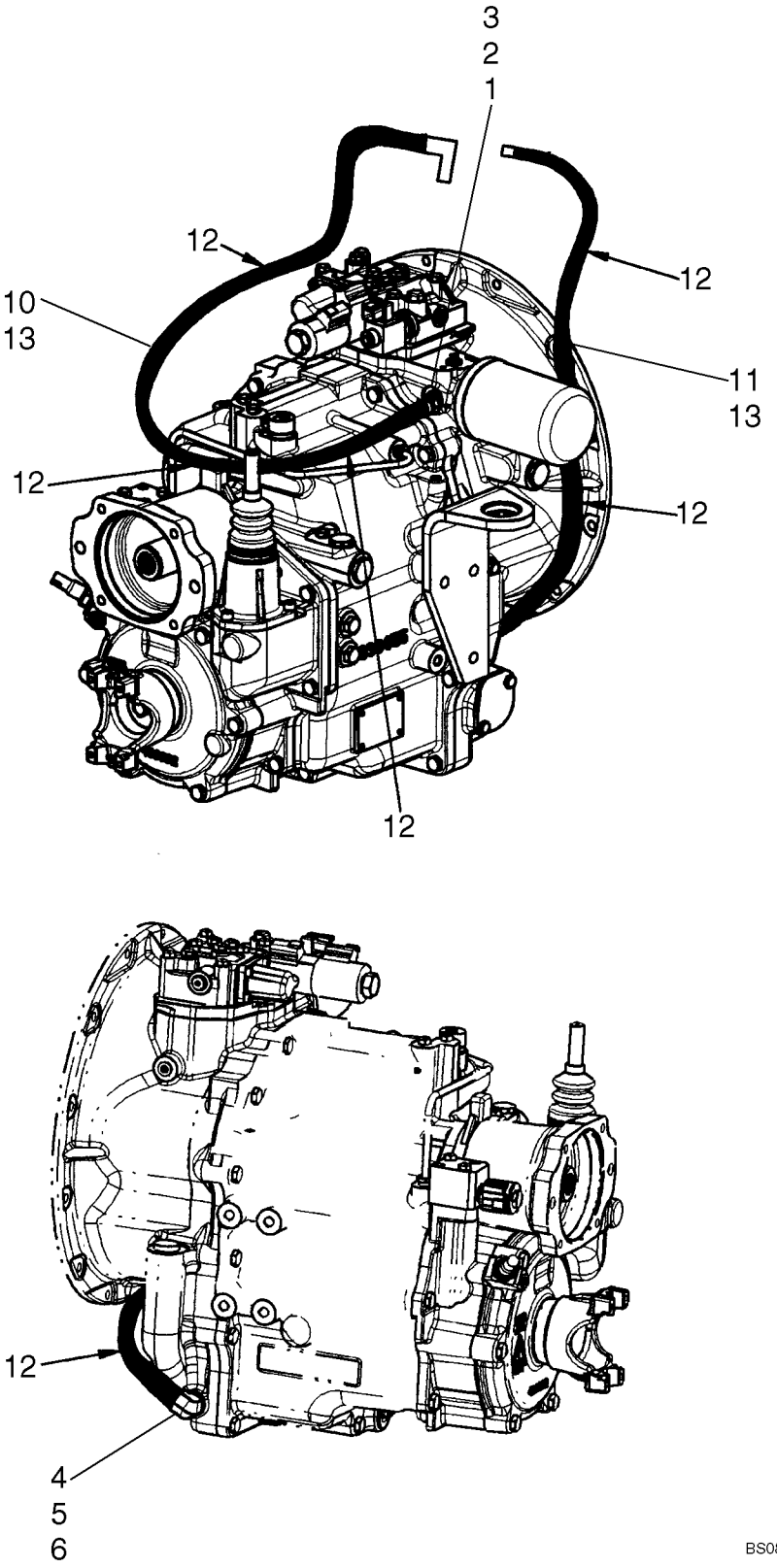

CABOS DOS TRAVÕES AO TRANSMISSÃO - 2WD

REF	FN	PART NUMBER	YR/SN	QTY	DESCRIPTION
1		201-101		1	CONEXÃO, 11/16"-16 ORFS x 9/16"-18 ORB, Incl. 2, 3
2		237-6006		1	ANEL "O", 6-1, 90 Duro, .468" ID x .078" Thk, Face Seal End
3		238-6012		1	ANEL "O", -012, 90 Duro, .364" ID x .070" Thk, Boss End
4		201-304		1	COTOVELO, 90º, 11/16"-16 x 9/16"-18 Adj, ORFS, Incl. 5, 6
5		238-6012		1	ANEL "O", -012, 90 Duro, .364" ID x .070" Thk, Face Seal End
6		237-6006		1	ANEL "O", 6-1, 90 Duro, .468" ID x .078" Thk, Boss End
10		87603513		1	MANGUEIRA CONJUNTO, 1525 mm; Supply
11		87603514		1	MANGUEIRA CONJUNTO, 1425 mm; Return
12		191704A1		5	TUBO ISOLANTE, 450 mm Long; No Longer Used; For Service Order (2) Ref 13, 87491619
13		{87491619}		2	Hose Guard; 1400 mm Long

CABOS DOS TRAVÕES AO TRANSMISSÃO - 4WD

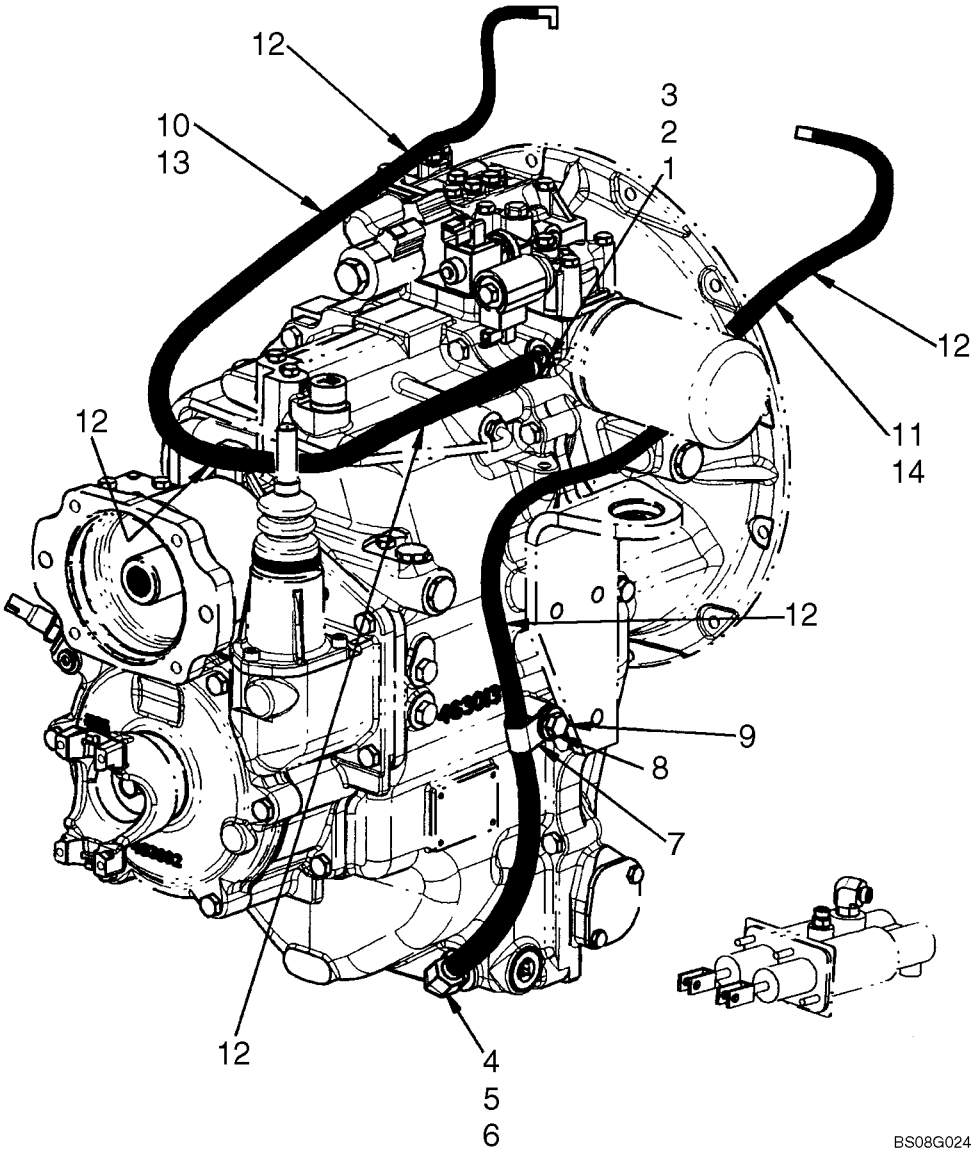

CABOS DOS TRAVÕES AO TRANSMISSÃO - 4WD

REF	FN	PART NUMBER	YR/SN	QTY	DESCRIPTION
1		201-101		1	CONEXÃO, 11/16"-16 ORFS x 9/16"-18 ORB, Incl. 2, 3
2		237-6006		1	ANEL "O", 6-1, 90 Duro, .468" ID x .078" Thk, Face Seal End
3		238-6012		1	ANEL "O", -012, 90 Duro, .364" ID x .070" Thk, Boss End
4		201-304		1	COTOVELO, 90º, 11/16"-16 x 9/16"-18 Adj, ORFS, Incl. 5, 6
5		238-6012		1	ANEL "O", -012, 90 Duro, .364" ID x .070" Thk, Face Seal End
6		237-6006		1	ANEL "O", 6-1, 90 Duro, .468" ID x .078" Thk, Boss End
7		515-25190		1	PRENDEDOR, 3/4", Insul, 1/2" Bolt
8		896-15012		1	ARRUELA PLANA, M12 x 28.5 x 4, HT
9		614-12025		1	PARAFUSO, Hex, M12 x 25, 8.8
10		87603513		1	MANGUEIRA CONJUNTO, 1525 mm; Supply
11		87603514		1	MANGUEIRA CONJUNTO, 1425 mm; Return
12		191704A1		5	TUBO ISOLANTE, 450 mm Long; No Longer Used; For Service Order (2) Ref 13, 87491619
13		{87491619}		1	Hose Guard; 1400 mm Long
14		{87491620}		1	Hose Guard; 1090 mm Long

CABOS DOS TRAVÕES AO EIXOS

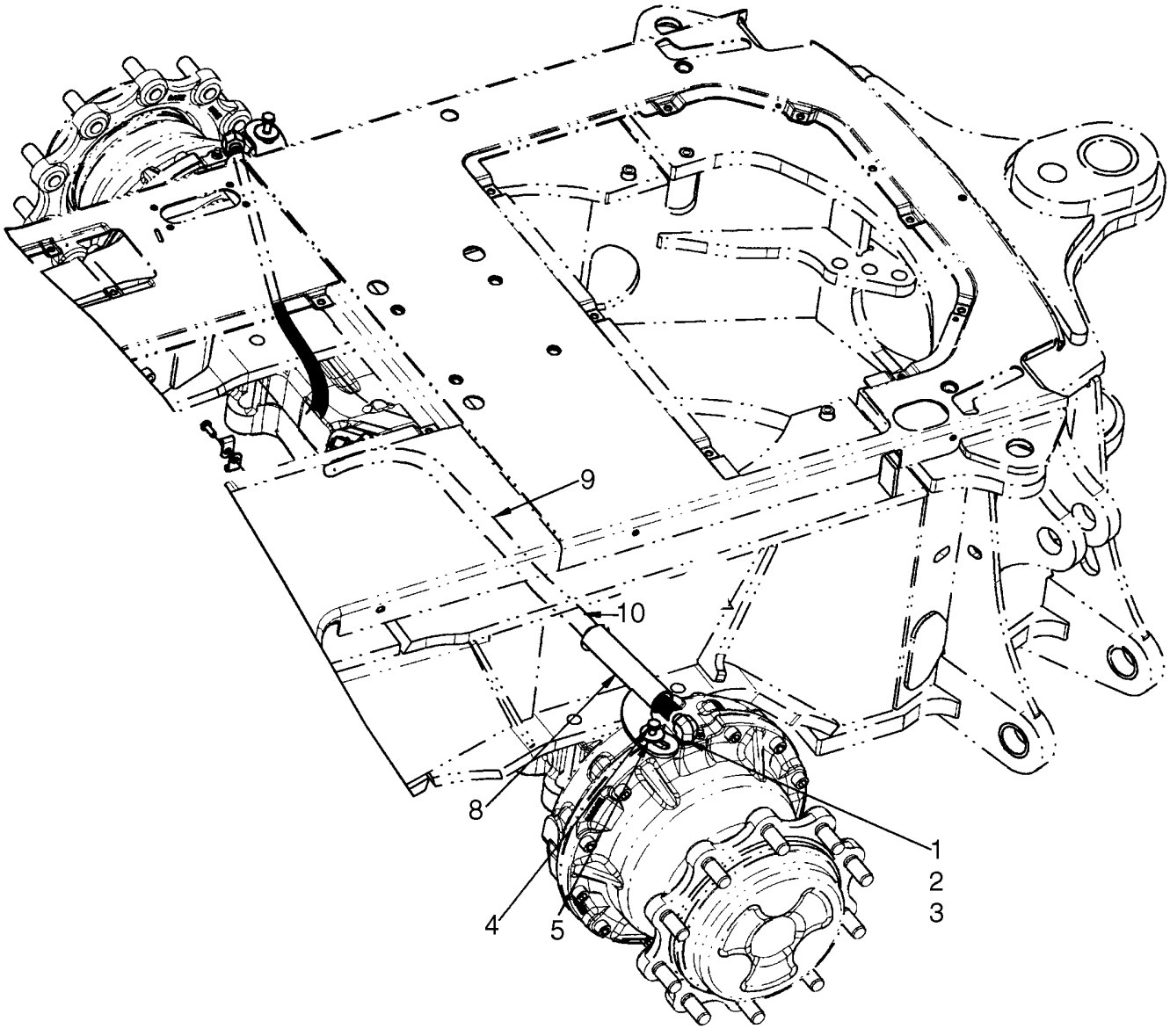

BS07N258

CABOS DOS TRAVÕES AO EIXOS

REF	FN	PART NUMBER	YR/SN	QTY	DESCRIPTION
1		700-304		2	COTOVELO, 90º, 11/16"-18 ORFS x M14 x 1.5 ORB, Incl. 2, 3
2		238-6012		1	ANEL "O", -012, 90 Duro, .364" ID x .070" Thk, Face Seal End
3		237-6006		1	ANEL "O", 6-1, 90 Duro, .468" ID x .078" Thk, Boss End
4		614-10020		2	PARAFUSO, Hex, M10 x 20, 8.8, Full Thd
5		12644301		2	ARRUELA PLANA, M10 x 35 x 3
8		87699881		2	PROTEÇÃO
9		87603511		2	MANGUEIRA CONJUNTO
10		191704A1		2	TUBO ISOLANTE

CONJUNTO DO CILINDRO - TRAVÕES, CILINDRO PRINCIPAL

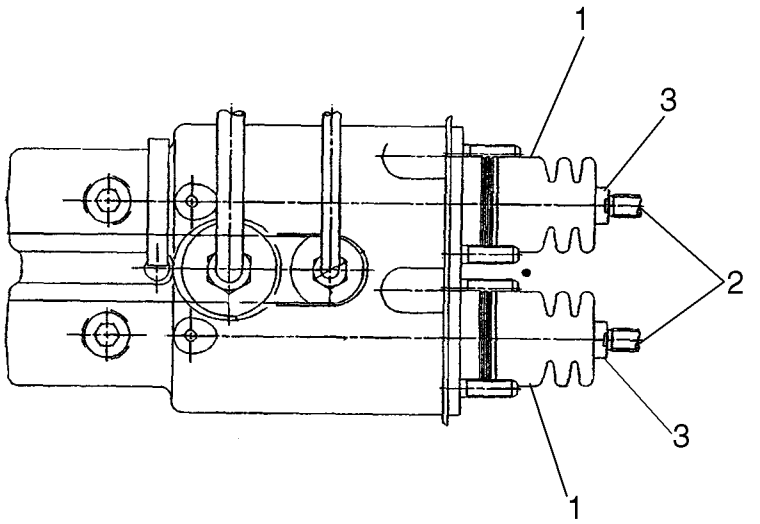

BS07M539

CONJUNTO DO CILINDRO - TRAVÕES, CILINDRO PRINCIPAL

REF	FN	PART NUMBER	YR/SN	QTY	DESCRIPTION
		87714038		1	CILINDRO MESTRE, Incl. Ref 1 - 3
1		87716969		2	TAMPA DE PROTECAO
2		87716970		2	GARFO
3		829-1410		2	PORCA, M10, Cl 10

SECTION INDEX
Sistema Hidráulico

08-01	SISTEMA HIDRÁULICO - BOMBA, VÁLVULA DO FILTRO E CARREGADOR
08-02	SISTEMA HIDRÁULICO - VÁLVULA DO CARREGADOR AO FILTRO
08-03	SISTEMA HIDRÁULICO - ARREFECEDOR, LINHAS E FILTRO DE RETORNO
08-04	SISTEMA HIDRÁULICO - CILINDRO DE ELEVAÇÃO DO CARREGADOR
08-05	SISTEMA HIDRÁULICO - CILINDRO DO BALDE DA RETROESCAVADORA
08-06	SISTEMA HIDRÁULICO - CILINDRO DE ELEVAÇÃO DA CONCHA
08-07	SISTEMA HIDRÁULICO - CILINDRO DE ELEVAÇÃO DA CONCHA
08-07A	SISTEMA HIDRÁULICO - CONCHA DO CARREGADOR (MODELOS SEM CONTROLO AUTOMÁTICO)
08-07B	SISTEMA HIDRÁULICO - CONCHA DO CARREGADOR (MODELOS COM CONTROLO AUTOMÁTICO)
08-08	SISTEMA HIDRÁULICO - CILINDRO, ESTABILIZADOR DA RETROESCAVADORA (MODELOS SEM CONTROLO AUTOMÁTICO)
08-08A	SISTEMA HIDRÁULICO - CILINDRO, ESTABILIZADOR DA RETROESCAVADORA (MODELOS COM CONTROLO AUTOMÁTICO)
08-09	SISTEMA HIDRÁULICO - CILINDRO, OSCILAÇÃO DA RETROESCAVADORA (MODELOS SEM CONTROLO AUTOMÁTICO)
08-09A	SISTEMA HIDRÁULICO - CILINDRO, OSCILAÇÃO DA RETROESCAVADORA (MODELOS COM CONTROLO AUTOMÁTICO)
08-10	SISTEMA HIDRÁULICO - CILINDRO, LANÇA DA RETROESCAVADORA
08-10A	SISTEMA HIDRÁULICO -
08-11	SISTEMA HIDRÁULICO - CILINDRO, IMERSOR DA RETROESCAVADORA
08-12	SISTEMA HIDRÁULICO - CILINDRO, BALDE DA RETROESCAVADORA (MODELOS SEM IMERSOR EXTENSÍVEL)
08-13	SISTEMA HIDRÁULICO - CILINDRO, BALDE DA RETROESCAVADORA (MODELOS COM IMERSOR EXTENSÍVEL)
08-14	SISTEMA HIDRÁULICO - CILINDRO, IMERSOR EXTENSÍVEL DA RETROESCAVADORA
08-15	SISTEMA HIDRÁULICO - (6 SPOOL, W/O EXT DIPPER, W/O AUX HYDS)
08-16	SISTEMA HIDRÁULICO - (6 SPOOL, W/O EXT DIPPER, W/ AUX HYDS)
08-17	SISTEMA HIDRÁULICO - (7 SPOOL, W/ EXT DIPPER, W/O AUX HYDS)
08-18	SISTEMA HIDRÁULICO - (7 SPOOL, W/ EXT DIPPER, W/ AUX HYDS)
08-19	SISTEMA HIDRÁULICO - (7 SPOOL, W/O EXT DIPPER, W/ AUX HYDS)
08-20	SISTEMA HIDRÁULICO - (8 SPOOL, W/ EXT DIPPER, W/ AUX HYDS)
08-21	SISTEMA HIDRÁULICO - JOYSTICKS CONTROLE PILOTO
08-22	SISTEMA HIDRÁULICO - CONTROLO AUTOMÁTICO
08-23	SISTEMA HIDRÁULICO - RETROESCAVADORA AUXILIAR (MODELOS SEM CONTROLO AUTOMÁTICO)
08-23A	CONJUNTO DA VÁLVULA - AUXILIAR UNI-DIRECIONAL (MODELOS SEM CONTROLO AUTOMÁTICO)
08-23B	SISTEMA HIDRÁULICO - RETROESCAVADORA AUXILIAR (MODELOS COM CONTROLO AUTOMÁTICO)
08-23C	CONJUNTO DA VÁLVULA - AUXILIAR UNI-DIRECIONAL (MODELOS COM CONTROLO AUTOMÁTICO)
08-24	SISTEMA HIDRÁULICO - RETROESCAVADORA AUXILIAR, LANÇA E BRAÇO DE PENETRAÇÃO
08-25	SISTEMA HIDRÁULICO - CONTROLO DA SUSPENSÃO
08-26	SISTEMA HIDRÁULICO - DISPOSITIVO DE ACOPLAMENTO RÁPIDO DO CARREGADOR
08-27	SISTEMA HIDRÁULICO - DISPOSITIVO DE ACOPLAMENTO RÁPIDO DO CARREGADOR, ESTRUTURA BRAÇO DE LEVANTAMENTO

SECTION INDEX
Sistema Hidráulico

08-28	VÁLVULA, ACOPLADOR (87435909) - FERRAMENTA DO CARREGADOR
08-29	BOMBA DO EQUIPAMENTO HIDRÁULICO
08-30	CONJUNTO DA VÁLVULA - CONTROLO DO CARREGADOR, DUAS BOBINAS
08-31	CONJUNTO DA VÁLVULA - CONTROLO DO CARREGADOR, TRÊS BOBINAS
08-32	CONJUNTO DA VÁLVULA - CONTROLO DA RETROESCAVADORA, 6 BOBINAS (W/O EXT DIPPER, W/O AUX HYDS, W/O PILOT CONTROLS)
08-33	CONJUNTO DA VÁLVULA - CONTROLO DA RETROESCAVADORA, 7 BOBINAS (W/O EXT DIPPER, W/ AUX HYDS, W/O PILOT CONTROLS)
08-34	CONJUNTO DA VÁLVULA - CONTROLO DA RETROESCAVADORA, 7 BOBINAS (W/ EXT DIPPER, W/O AUX HYDS, W/O PILOT CONTROLS)
08-35	CONJUNTO DA VÁLVULA - CONTROLO DA RETROESCAVADORA, 8 BOBINAS (W/ EXT DIPPER, W/ AUX HYDS, W/O PILOT CONTROLS)
08-36	CONJUNTO DA VÁLVULA - CONTROLO DA RETROESCAVADORA, 6 BOBINAS (W/O EXT DIPPER, W/ OR W/O AUX HYDS, W/ PILOT CONTROLS)
08-37	CONJUNTO DA VÁLVULA - CONTROLO DA RETROESCAVADORA, 7 BOBINAS (W/ EXT DIPPER, W/ OR W/O AUX HYDS, W/ PILOT CONTROLS)
08-38	CONJUNTO DA VÁLVULA - CONTROLO DA RETROESCAVADORA, 7 BOBINAS (W/O EXT DIPPER, W/ AUX HYDS, W/ PILOT CONTROLS)
08-39	CONJUNTO DA VÁLVULA - CONTROLO DA RETROESCAVADORA, 8 BOBINAS (W/ EXT DIPPER, W/ AUX HYDS, W/ PILOT CONTROLS)
08-40	SECÇÃO DA VÁLVULA - OSCILAÇÃO DA RETROESCAVADORA (COM CONTROLO AUTOMÁTICO)
08-41	SECÇÃO DA VÁLVULA - LANÇA DA RETROESCAVADORA (COM CONTROLO AUTOMÁTICO)
08-42	SECÇÃO DA VÁLVULA - ESTABILIZADOR DA RETROESCAVADORA (COM CONTROLO AUTOMÁTICO)
08-43	SECÇÃO DA VÁLVULA - IMERSOR DA RETROESCAVADORA (COM CONTROLO AUTOMÁTICO)
08-44	SECÇÃO DA VÁLVULA - BALDE DA RETROESCAVADORA (COM CONTROLO AUTOMÁTICO)
08-45	SECÇÃO DA VÁLVULA - IMERSOR EXTENSÍVEL (COM CONTROLO AUTOMÁTICO)
08-46	SECÇÃO DA VÁLVULA - OPÇÕES DO SISTEMA HIDRÁULICO AUXILIAR (COM CONTROLO AUTOMÁTICO)
08-47	CONJUNTO VALVULA, PRESSÃO REDUZIDA (2 SPOOL) (COM CONTROLO AUTOMÁTICO)
08-48	CONJUNTO VALVULA, PRESSÃO REDUZIDA (3 SPOOL) (COM CONTROLO AUTOMÁTICO)
08-49	CONJUNTO VALVULA, PRESSÃO REDUZIDA (4 SPOOL) (COM CONTROLO AUTOMÁTICO)
08-50	VALVULA,JOYSTICK (CONTROLE PILOTO) (EMPUNAHDURA ESQUERDA) COM BOTÃO DE BUZINA
08-51	VALVULA, JOYSTICK (CONTROLE PILOTO) (EMPUNAHDURA ESQUERDA) COM BUZINA E BOTÃO UNIDIRECIONAL
08-52	VALVULA, JOYSTICK (CONTROLE PILOTO) (EMPUNAHDURA ESQUERDA) COM BUZINA E BOTÃO BIDIRECIONAL
08-53	VALVULA, JOYSTICK (CONTROLE PIOTO) (EMPUNHADURA DIREITA) SEM BRAÇO EXTENSIVO
08-54	VALVULA, JOYSTICK (CONTROLE PIOTO) (EMPUNHADURA DIREITA) COM BRAÇO EXTENSIVO
08-55	CONJUNTO DA VÁLVULA - SUPORTE DA ARTICULAÇÃO
08-55A	VÁLVULA SOLENÓIDE - TRANCA DA LANÇA

SECTION INDEX
Sistema Hidráulico

08-56	CONJUNTO DO ACUMULADOR - CONTROLO DA SUSPENSÃO
08-57	FILTRO DE ACEITE
08-58	CONJUNTO DO CILINDRO - ELEVADOR DO CARREGADOR
08-59	CONJUNTO DO CILINDRO - BALDE DO CARREGADOR
08-60	CONJUNTO DO CILINDRO - CONCHA DO CARREGADOR
08-61	CONJUNTO DO CILINDRO - ESTABILIZADOR DA RETROESCAVADORA
08-62	CONJUNTO DO CILINDRO - OSCILAÇÃO DA RETROESCAVADORA
08-63	CONJUNTO DO CILINDRO - LANÇA DA RETROESCAVADORA
08-64	CONJUNTO DO CILINDRO - IMERSOR DA RETROESCAVADORA
08-65	CONJUNTO DO CILINDRO - BALDE DA RETROESCAVADORA
08-66	CONJUNTO DO CILINDRO - IMERSOR EXTENSÍVEL DA RETROESCAVADORA

SISTEMA HIDRÁULICO - BOMBA, VÁLVULA DO FILTRO E CARREGADOR

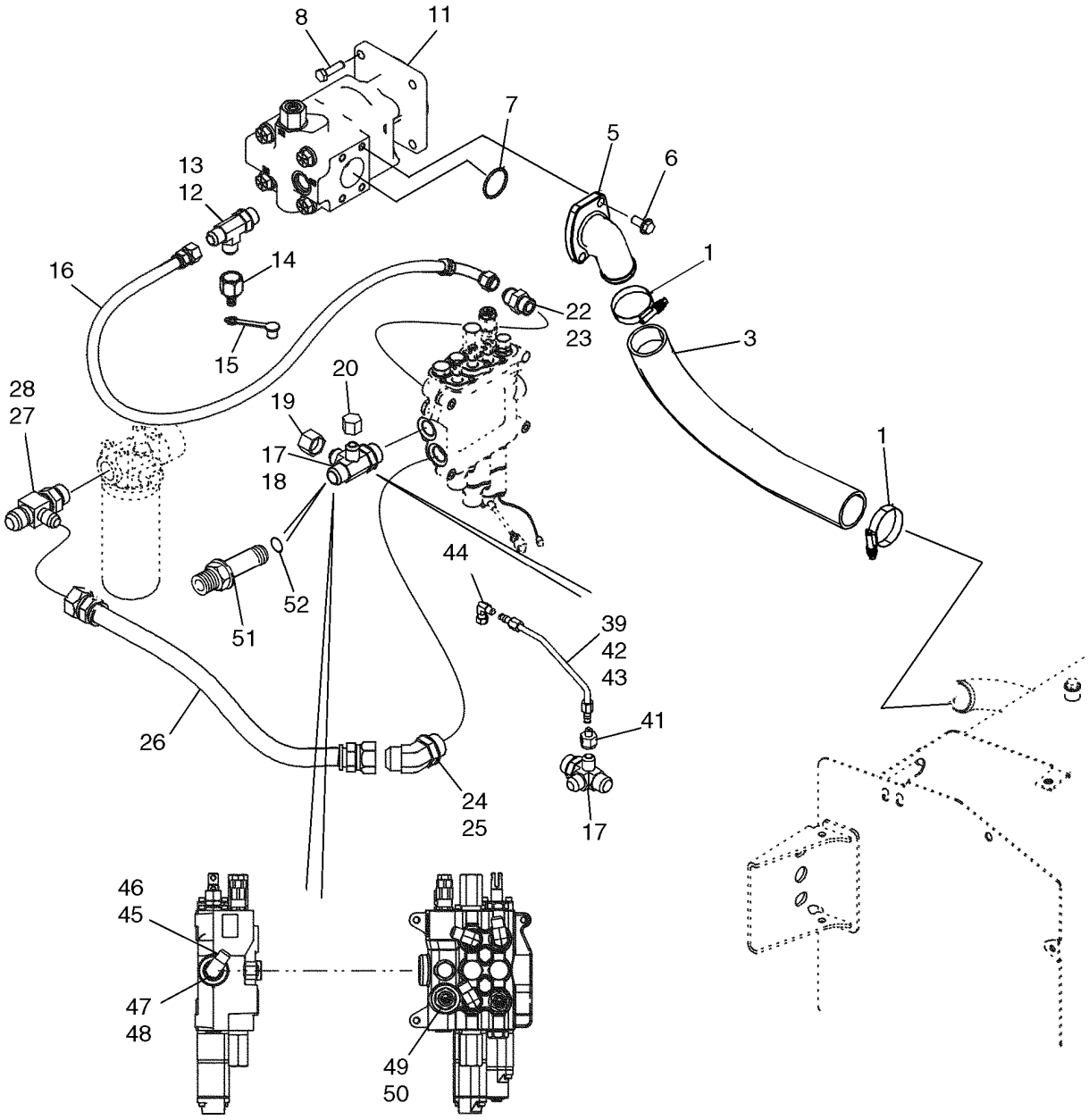

BS07K510

SISTEMA HIDRÁULICO - BOMBA, VÁLVULA DO FILTRO E CARREGADOR

REF	FN	PART NUMBER	YR/SN	QTY	DESCRIPTION
1		259044A1		2	BRACADEIRA
3		87627903		1	MANGOTE, Suction
5		87592658		1	FLANGE, Pump
6		864-12030		3	PARAFUSO, Hex Soc Hd, M12 x 30, 8.8
7		238-5228		1	ANEL "O", -228, 70 Duro, 2.234" ID x .139" Thk
8		514-832		4	PARAFUSO, Hex, M12 x 1.25 x 35, 8.8, Full Thd
11		87434672		1	BOMBA HIDRÁULICA, Equipment, See Figure 08-29
12		218-5239		1	TEE, 1 1/16"-12, 37º x 1 1/16"-12, O-Ring run, Incl. Ref 13
13		237-6012		1	ANEL "O", 12-1, 90 Duro, .924 ID x .118" Thk
14		D137625		1	ACOPLAMENTO, Quick Disconnect; Includes (1) 425-1120 Nut
15		H434163		1	GUARDA-PÓ
16		87452399		1	MANGUEIRA CONJUNTO, 775 mm (30-9/16 in)
17		87436066		1	CONEXAO, 4-Way Special Fitting; Incl. Ref 18; If Used
18		237-6016		1	ANEL "O", 16-1, 90 Duro, 1.171" ID x .118" Thk
19		218-335		1	TAMPA DO RESERVATÓRIO, 37º, 1 1/16"-12, Models Without Pilot Controls; If Used
20		218-756		1	TAMPA DO RESERVATÓRIO, 37º, 7/8"-14, Models Without Pilot Controls; If Used
22		218-5064		1	CONEXÃO, 1 1/16"-12, 37º x 1 1/16"-12, O-Ring, Incl. Ref 23
23		237-6012		1	ANEL "O", 12-1, 90 Duro, .924 ID x .118" Thk
24		218-5140		1	COTOVELO, 45º, 1 5/16"-12 x 1 5/16"-12, O-Ring, Incl. Ref 25
25		237-6016		1	ANEL "O", 16-1, 90 Duro, 1.171" ID x .118" Thk
26		87452400		1	MANGUEIRA CONJUNTO, 635 mm (25 in), Loader Valve to Filter
27		218-5584		1	TEE, 37º, 1 5/16"-12, 1 5/16"-12 O-Ring Run, 1 1/16"-12, Incl. Ref 28
28		237-6016		1	ANEL "O", 16-1, 90 Duro, 1.171" ID x .118" Thk
39		87437655		1	TUBO CONJUNTO, Two Spool Loader Valve; Models Without Pilot Controls

SISTEMA HIDRÁULICO - BOMBA, VÁLVULA DO FILTRO E CARREGADOR

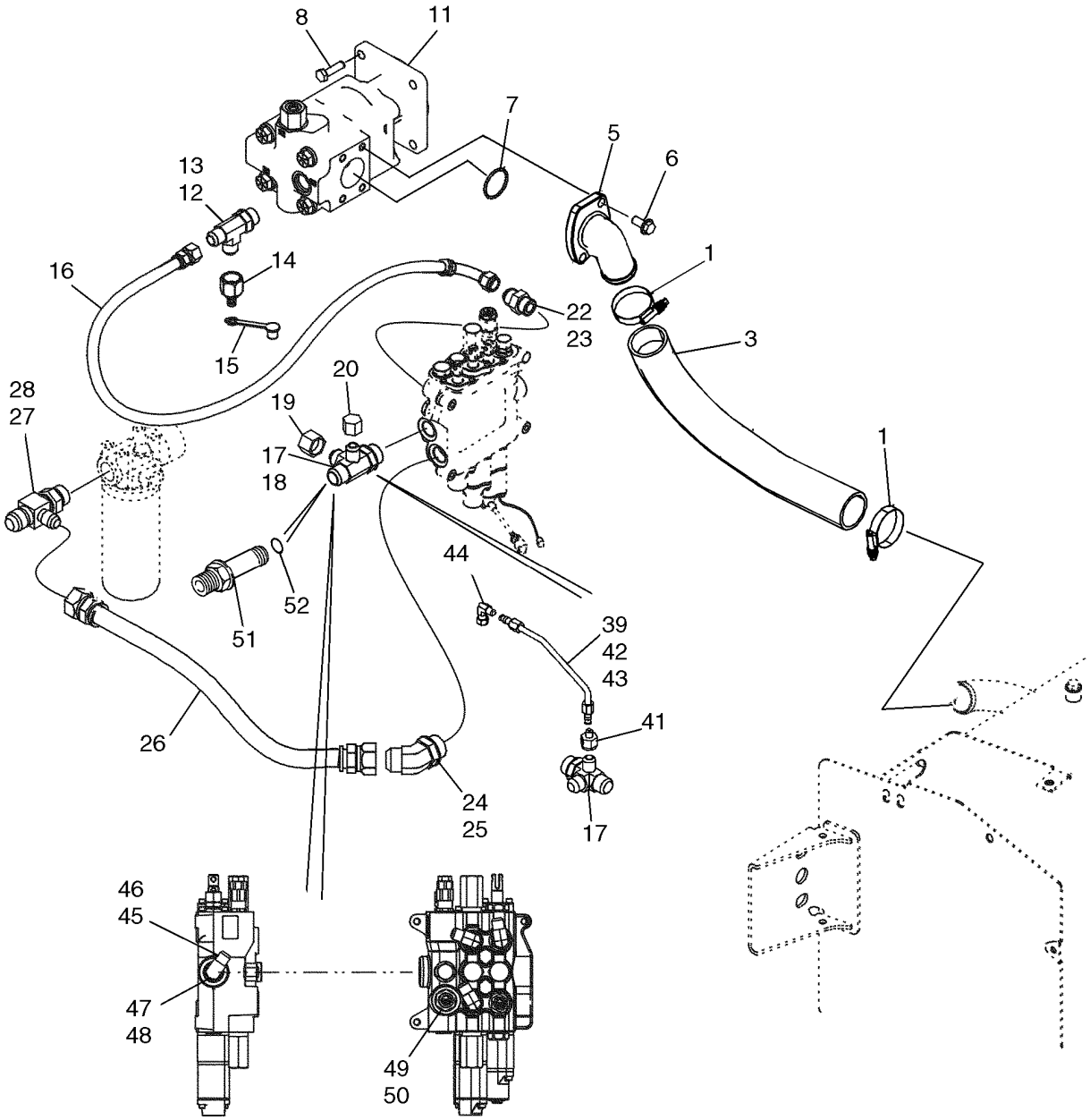

BS07K510

SISTEMA HIDRÁULICO - BOMBA, VÁLVULA DO FILTRO E CARREGADOR

REF	FN	PART NUMBER	YR/SN	QTY	DESCRIPTION
39		87437657		1	TUBO CONJUNTO, Three Spool Loader Valve; Models Without Pilot Controls
41		218-765		1	REDUÇÃO, 37º, 7/8"-14, Fem x 9/16"-18 Male, Models With Pilot Controls
42		87437980		1	TUBO CONJUNTO, Two Spool Loader Valve; Models With Pilot Controls
43		87437982		1	TUBO CONJUNTO, Three Spool Loader Valve; Models With Pilot Controls
44		218-980		1	COTOVELO, 90º, 9/16"-18, 37º x 9/16"-18, 37º Fem Sw, Models With Pilot Controls
45		218-5107		1	COTOVELO, 90º, 7/8"-14, 37º x 7/8"-14, O-Ring, Incl. Ref 46; Models Without Pilot Controls
46		237-6010		1	ANEL "O", 10-1, 90 Duro, .755" ID x .097" Thk
47		86512512		1	BUJÃO, Hex Hd, 7/8"-14 ORB, Incl. Ref 48; Models with Pilot Controls
48		237-6010		1	ANEL "O", 10-1, 90 Duro, .755" ID x .097" Thk
49		218-5064		1	CONEXÃO, 1 1/16"-12, 37º x 1 1/16"-12, O-Ring, Incl. Ref 50
50		237-6012		1	ANEL "O", 12-1, 90 Duro, .924 ID x .118" Thk
51		218-5034		1	CONEXÃO, 3/8"-24, 37º x 3/8"-24, Pipe, Incl. Ref 52
52		237-6016		1	ANEL "O", 16-1, 90 Duro, 1.171" ID x .118" Thk

SISTEMA HIDRÁULICO - VÁLVULA DO CARREGADOR AO FILTRO

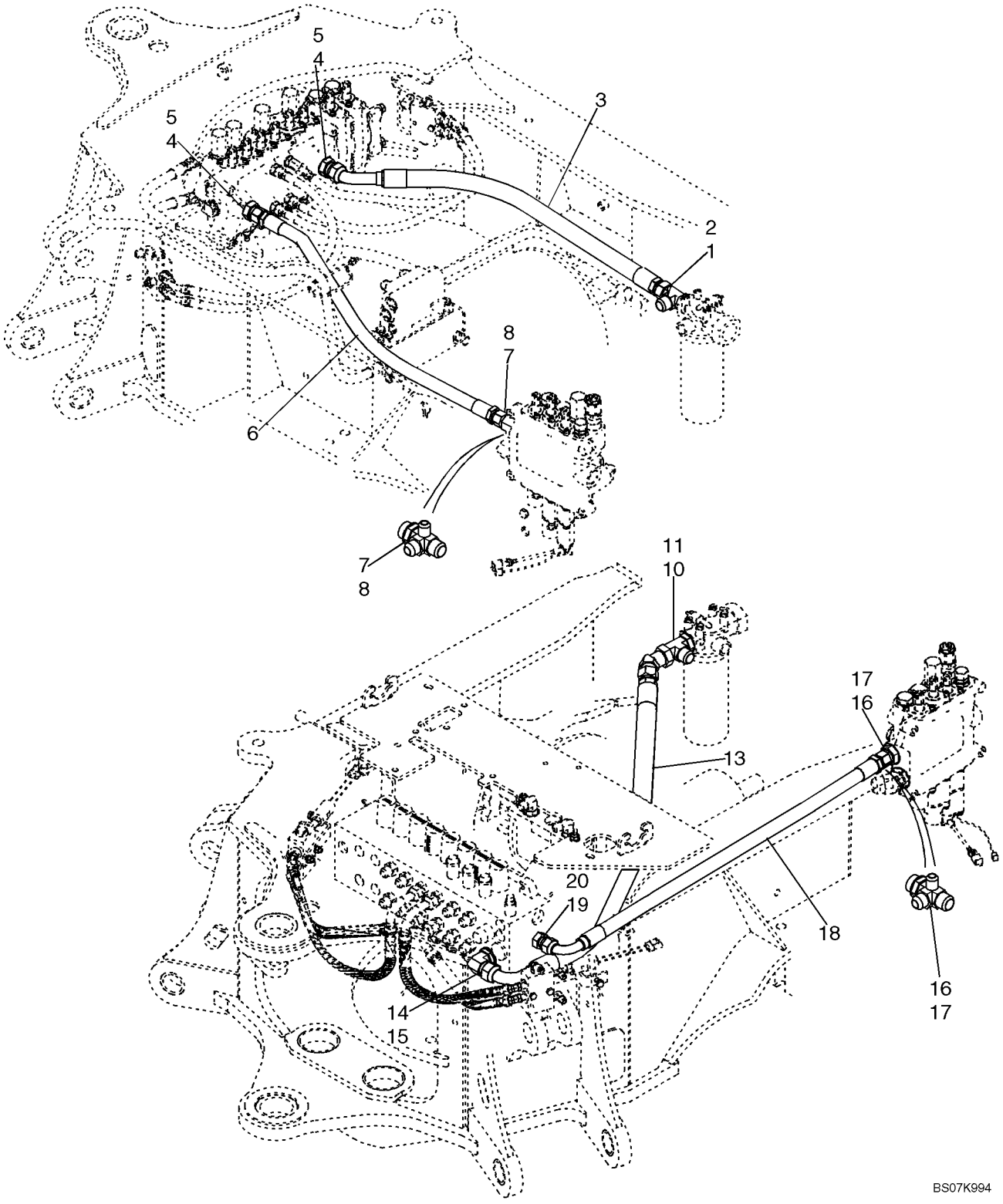

SISTEMA HIDRÁULICO - VÁLVULA DO CARREGADOR AO FILTRO

REF	FN	PART NUMBER	YR/SN	QTY	DESCRIPTION
		REF			INSTRUCAO, MODELS WITHOUT PILOT CONTROLS
1		218-5584		1	TEE, 37º, 1 5/16"-12, 1 5/16"-12 O-Ring Run, 1 1/16"-12, Incl. Ref 2
2		237-6016		1	ANEL "O", 16-1, 90 Duro, 1.171" ID x .118" Thk
3		313648A1		1	MANGUEIRA, 910 mm (35-7/8 in); Return; Models Without Pilot Controls
4		218-5069		2	CONEXÃO, 1 5/16"-12, 37º x 1 5/16"-12, O-Ring, Incl. Ref 5
5		237-6016		1	ANEL "O", 16-1, 90 Duro, 1.171" ID x .118" Thk
6		87437441		1	MANGUEIRA CONJUNTO, 1025 mm (40-3/8 in); 2 or 3 Spool Valve; Without Auxiliary Hydraulics, Without Pilot Controls; Loader Valve Power Beyond to Backhoe Valve
6		87437232		1	MANGUEIRA CONJUNTO, 420 mm (16-9/16 in); 2 Spool Valve; With Auxiliary Hydraulics; With or Without Pilot Controls; Loader Valve Power Beyond to Backhoe Valve
6		87437231		1	MANGUEIRA CONJUNTO, 370 mm (14-5/8 in); 3 Spool Valve; With Auxiliary Hydraulics; With or Without Pilot Controls; Loader Valve Power Beyond to Backhoe Valve
7		87436066		1	CONEXAO, 4-Way Special Tee; Incl. Ref 8
8		237-6016		1	ANEL "O", 16-1, 90 Duro, 1.171" ID x .118" Thk
		REF			INSTRUCAO, MODELS WITH PILOT CONTROLS
10		218-5584		1	TEE, 37º, 1 5/16"-12, 1 5/16"-12 O-Ring Run, 1 1/16"-12, Incl. Ref 11
11		237-6016		1	ANEL "O", 16-1, 90 Duro, 1.171" ID x .118" Thk
13		87450456		1	MANGUEIRA CONJUNTO, 1254 mm (49-3/8 in); Return; Models With Pilot Controls
14		218-5110		1	COTOVELO, 90º, 1 5/16"-12, 37º x 1 5/16"-12, O-Ring, Incl. Ref 15
15		237-6016		1	ANEL "O", 16-1, 90 Duro, 1.171" ID x .118" Thk
16		87436066		1	CONEXAO, 4-Way Tee, Special, 1-5/16 fl x Or; Incl. Ref 17

SISTEMA HIDRÁULICO - VÁLVULA DO CARREGADOR AO FILTRO

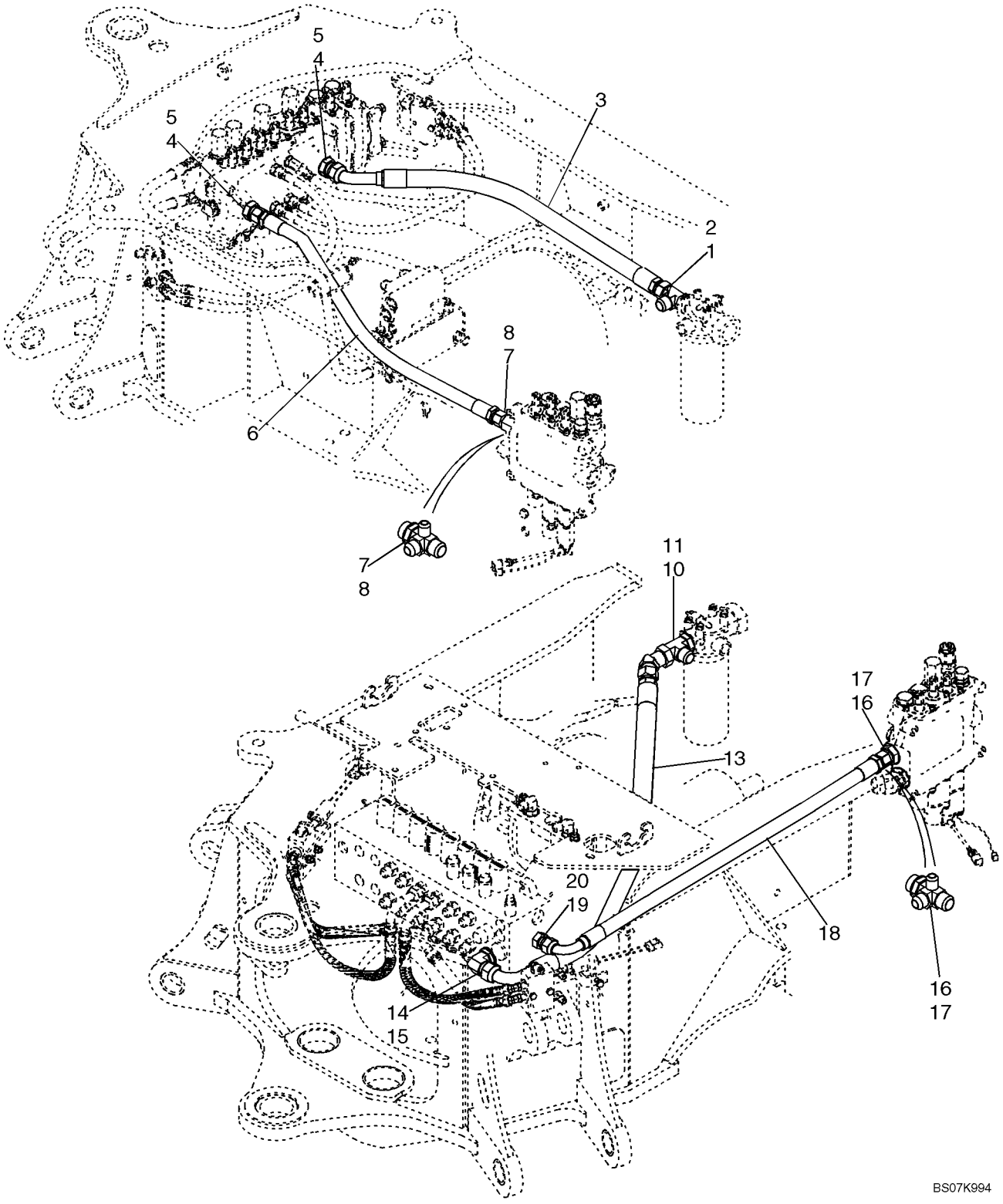

SISTEMA HIDRÁULICO - VÁLVULA DO CARREGADOR AO FILTRO

REF	FN	PART NUMBER	YR/SN	QTY	DESCRIPTION
17		237-6016		1	ANEL "O", 16-1, 90 Duro, 1.171" ID x .118" Thk
18		87455832		1	MANGUEIRA CONJUNTO, 1020 mm (40-5/32 in); 2 or 3 Spool Valve; Without Auxiliary Hydraulics, With Pilot Controls; Power Beyond
18		87437232		1	MANGUEIRA CONJUNTO, 420 mm (16-9/16 in); 2 Spool Valve; With Auxiliary Hydraulics; With or Without Pilot Controls; Loader Valve Power Beyond to Backhoe Valve
18		87437231		1	MANGUEIRA CONJUNTO, 370 mm (14-5/8 in); 3 Spool Valve; With Auxiliary Hydraulics; With or Without Pilot Controls; Loader Valve Power Beyond to Backhoe Valve
19		218-5064		1	CONEXÃO, 1 1/16"-12, 37° x 1 1/16"-12, O-Ring, Incl. Ref 20
20		237-6012		1	ANEL "O", 12-1, 90 Duro, .924 ID x .118" Thk

SISTEMA HIDRÁULICO - ARREFECEDOR, LINHAS E FILTRO DE RETORNO

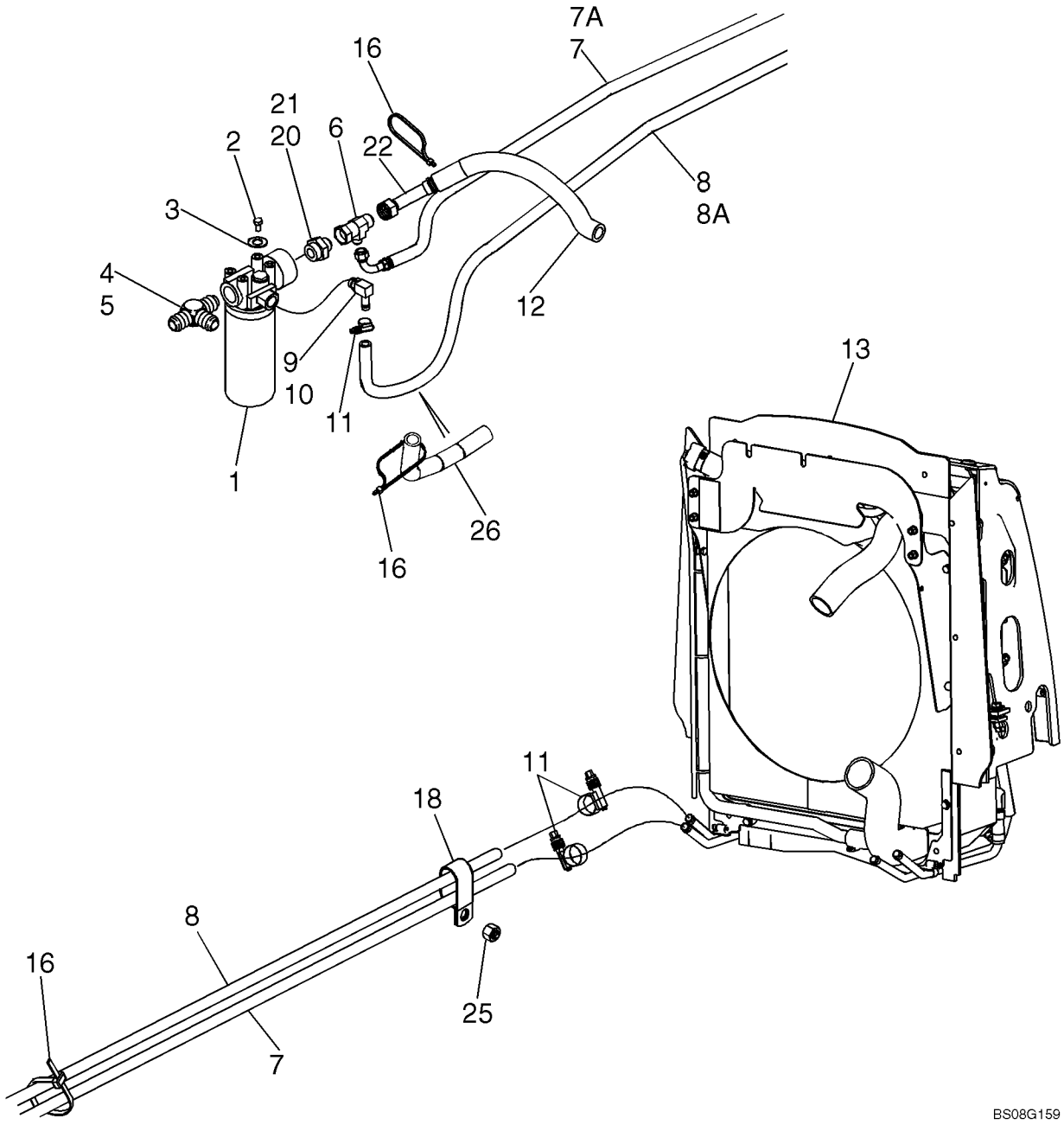

SISTEMA HIDRÁULICO - ARREFECEDOR, LINHAS E FILTRO DE RETORNO

REF	FN	PART NUMBER	YR/SN	QTY	DESCRIPTION
1		87440045		1	FILTRO CONJ, Hydraulic Oil; See Figure 08-57
2		614-10020		4	PARAFUSO, Hex, M10 x 20, 8.8, Full Thd
3		895-11010		4	ARRUELA PLANA, M10 x 20 x 2
4		218-5584		1	TEE, 37º, 1 5/16"-12, 1 5/16"-12 O-Ring Run, 1 1/16"-12, Incl. Ref 5
5		237-6016		1	ANEL "O", 16-1, 90 Duro, 1.171" ID x .118" Thk
6		218-5490		1	TEE, 37º, 1 1/16"-12x1 1/16"-12, Fem Sw Runx7/8"-14 Br
7		87659604		1	MANGUEIRA CONJUNTO, 1570 mm; Hydraulic Cooler Outlet To Filter; No Longer Used In This Application, For Serivce Order 87494346, Ref 7A
7A		87494346		1	MANGUEIRA CONJUNTO, 1605 mm; Hydraulic Cooler Outlet To Filter
8		87659784		1	MANGUEIRA, 1862 mm; Cooler Return To Filter; No Longer Used In This Applicaiton, For Service Order 87491256, Ref 8A
8A		87491256		1	MANGUEIRA EM METRO, 1862 mm; Cooler Return To Filter
9		217-349		1	CONEXAO, 90º, 5/8" Hose x 7/8"-14 ORB Beaded, Incl. Ref 10
10		237-6010		1	ANEL "O", 10-1, 90 Duro, .755" ID x .097" Thk
11		328186A1		3	BRACADEIRA MANGUEIRA
12		87656501		1	PROTETOR DE MANGUEIR
13		REF		1	INSTRUCAO, Hydraulic Oil Cooler; For Cooler and Attaching Parts, See Figure 06-10
16		L18337		4	TIRA DE CABO, 9.95"-12.1" lg
18		D39696		1	BRACADEIRA, Double P-Type
20		218-5086		1	CONEXÃO, 1 5/16"-12, 37º x 1 5/8"-12, O-Ring, Incl. Ref 21
21		237-6020		1	ANEL "O", 20-1, 90 Duro, 1.475" ID x .118" Thk
22		87659613		1	MANGUEIRA CONJUNTO, Return To Tank
25		829-1410		1	PORCA, M10, Cl 10
26		D132982		1	TUBO ISOLANTE

SISTEMA HIDRÁULICO - CILINDRO DE ELEVAÇÃO DO CARREGADOR

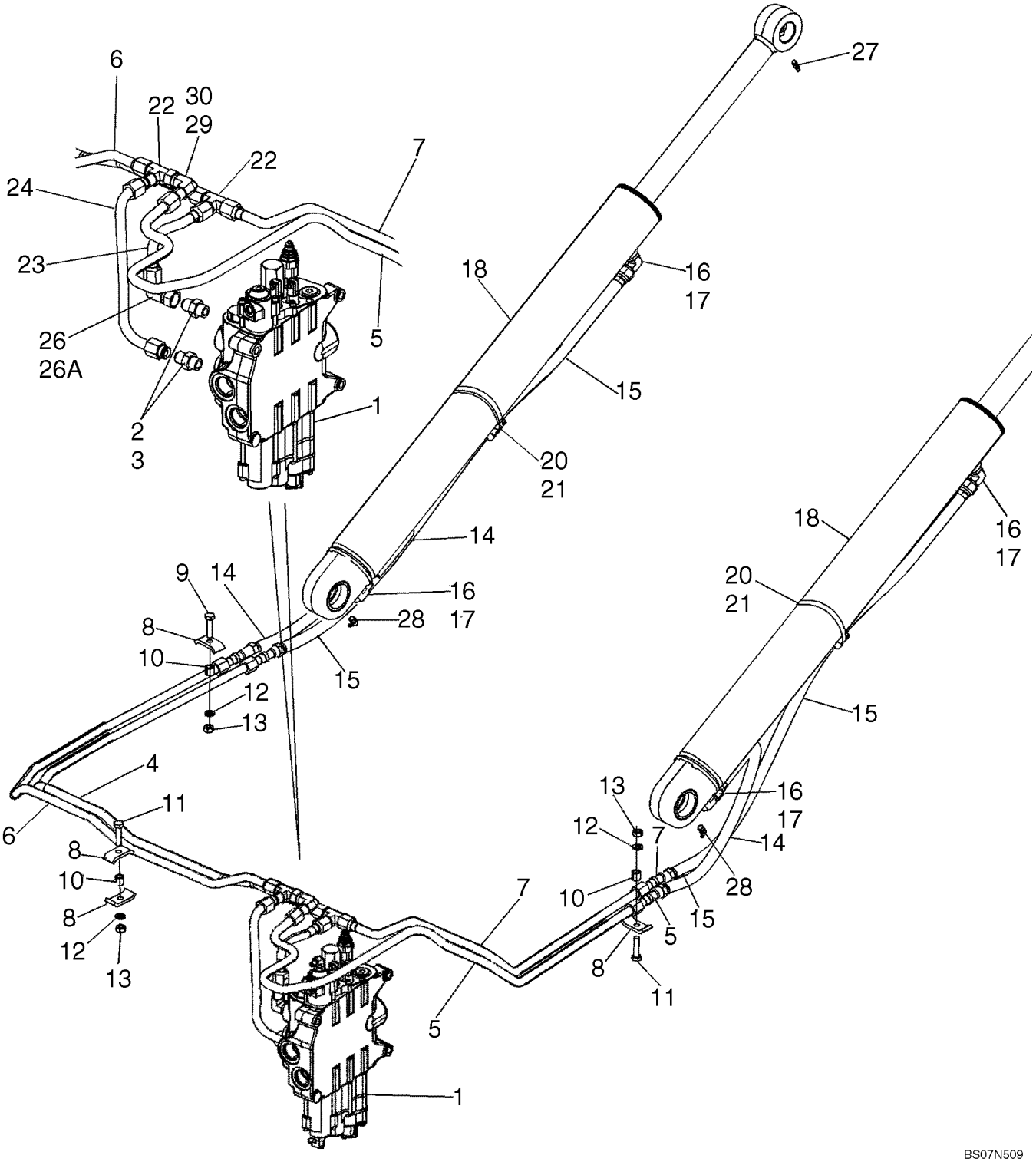

SISTEMA HIDRÁULICO - CILINDRO DE ELEVAÇÃO DO CARREGADOR

REF	FN	PART NUMBER	YR/SN	QTY	DESCRIPTION
1		REF		1	INSTRUCAO, LOADER CONTROL VALVE; For Correct Assembly and Components, See Figures 08-30, 08-31; For Mounting, See Figure 09-01
2		218-5062		2	CONEXÃO, 7/8"-14, 37º x 7/8"-14, O-Ring, Incl. Ref 3
3		237-6010		1	ANEL "O", 10-1, 90 Duro, .755" ID x .097" Thk
4		87622718		1	TUBULAÇÃO HIDRAULICO, Upper Lift Port
5		87712299		1	TUBULAÇÃO HIDRAULICO, Lower Lift Port
6		87622714		1	TUBULAÇÃO HIDRAULICO, Lower Lift Port
7		87642658		1	TUBULAÇÃO HIDRAULICO, Upper Lift Port
8		D138055		5	BRACADEIRA
9		614-10040		1	PARAFUSO, Hex, M10 x 40, 8.8, Full Thd
10		120303A1		4	ESPAÇADOR
11		614-10045		3	PARAFUSO, Hex, M10 x 45, 8.8, Full Thd
12		892-11010		4	ARRUELA-TRAVA, M10
13		829-1410		4	PORCA, M10, Cl 10
14		87443150		2	MANGUEIRA CONJUNTO, 740 mm (29-5/32 in)
15		87443149		2	MANGUEIRA CONJUNTO, 1130 mm (44-1/2 in)
16		218-5107		4	COTOVELO, 90º, 7/8"-14, 37º x 7/8"-14, O-Ring, Incl. Ref 17
17		237-6010		1	ANEL "O", 10-1, 90 Duro, .755" ID x .097" Thk
18		384240A1		2	CILINDRO CONJUNTO, 82.6 ID x 766 mm strk; Loader Lift Cylinder; See Figure 08-58
20		D142787		2	ESPAÇADOR
21		214-1472		2	BRACADEIRA MANGUEIRA, #72, 4.06/5.00 Type F Worm
22		218-595		2	TEE, 7/8"-14, 37º
23		87625976		1	TUBULAÇÃO HIDRAULICO, Upper Lift Port
24		87675513		1	TUBULAÇÃO HIDRAULICO, Lower Lift Port
26		218-5232		1	COTOVELO, 90º, 7/8"-14, 37º x 7/8"-14, 37º Fem Sw, Incl. 26A
26A		237-6010		1	ANEL "O", 10-1, 90 Duro, .755" ID x .097" Thk
27		219-1		2	GRAXEIRA, 1/8"-27 x .66 lg
28		219-55		2	GRAXEIRA, 90º, 1/8" NPT x .84" lg
29		218-5232		1	COTOVELO, 90º, 7/8"-14, 37º x 7/8"-14, 37º Fem Sw, Incl. 30

SISTEMA HIDRÁULICO - CILINDRO DE ELEVAÇÃO DO CARREGADOR

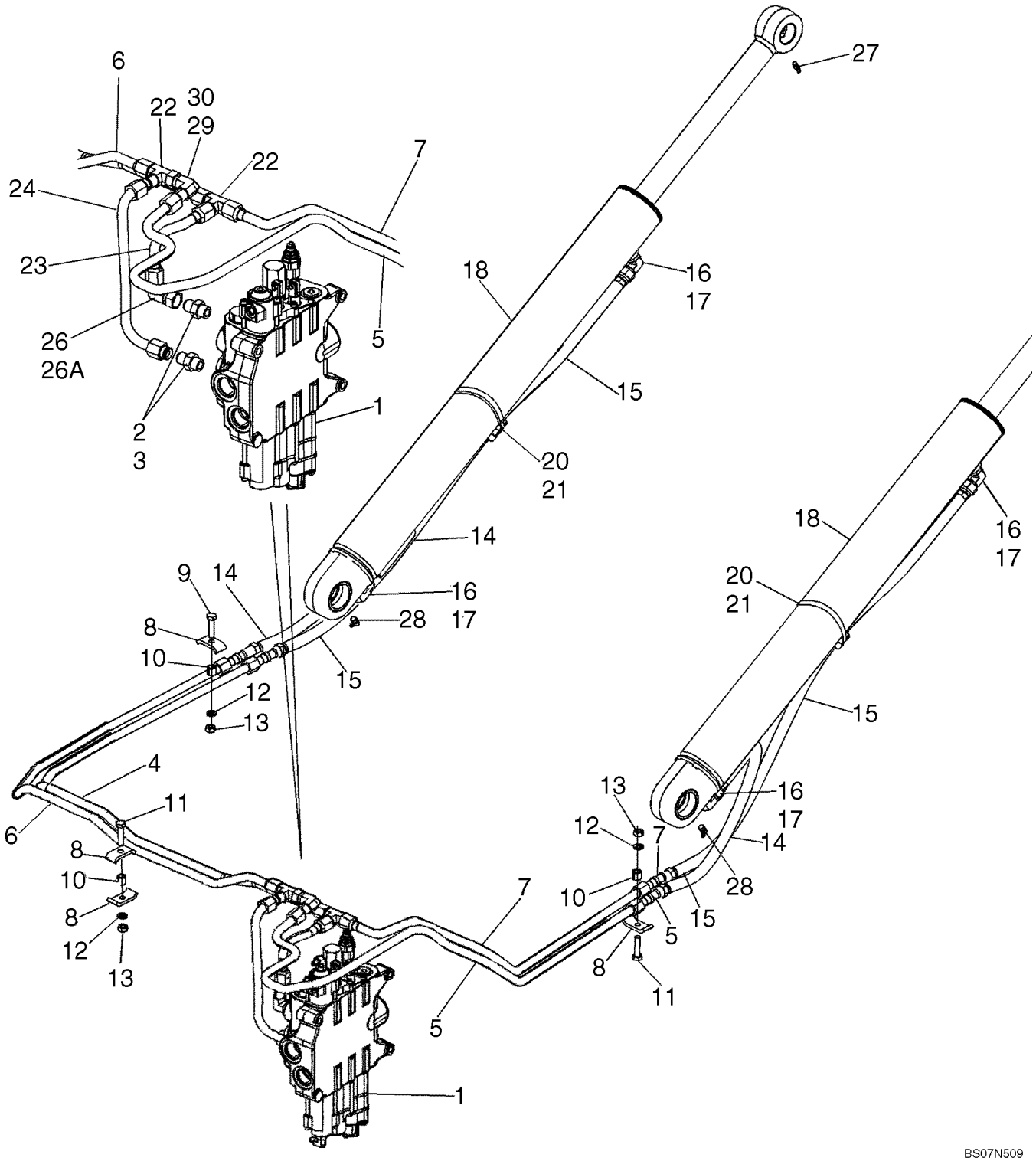

SISTEMA HIDRÁULICO - CILINDRO DE ELEVAÇÃO DO CARREGADOR

REF	FN	PART NUMBER	YR/SN	QTY	DESCRIPTION
30		237-6010		1	ANEL "O", 10-1, 90 Duro, .755" ID x .097" Thk

SISTEMA HIDRÁULICO - CILINDRO DO BALDE DA RETROESCAVADORA

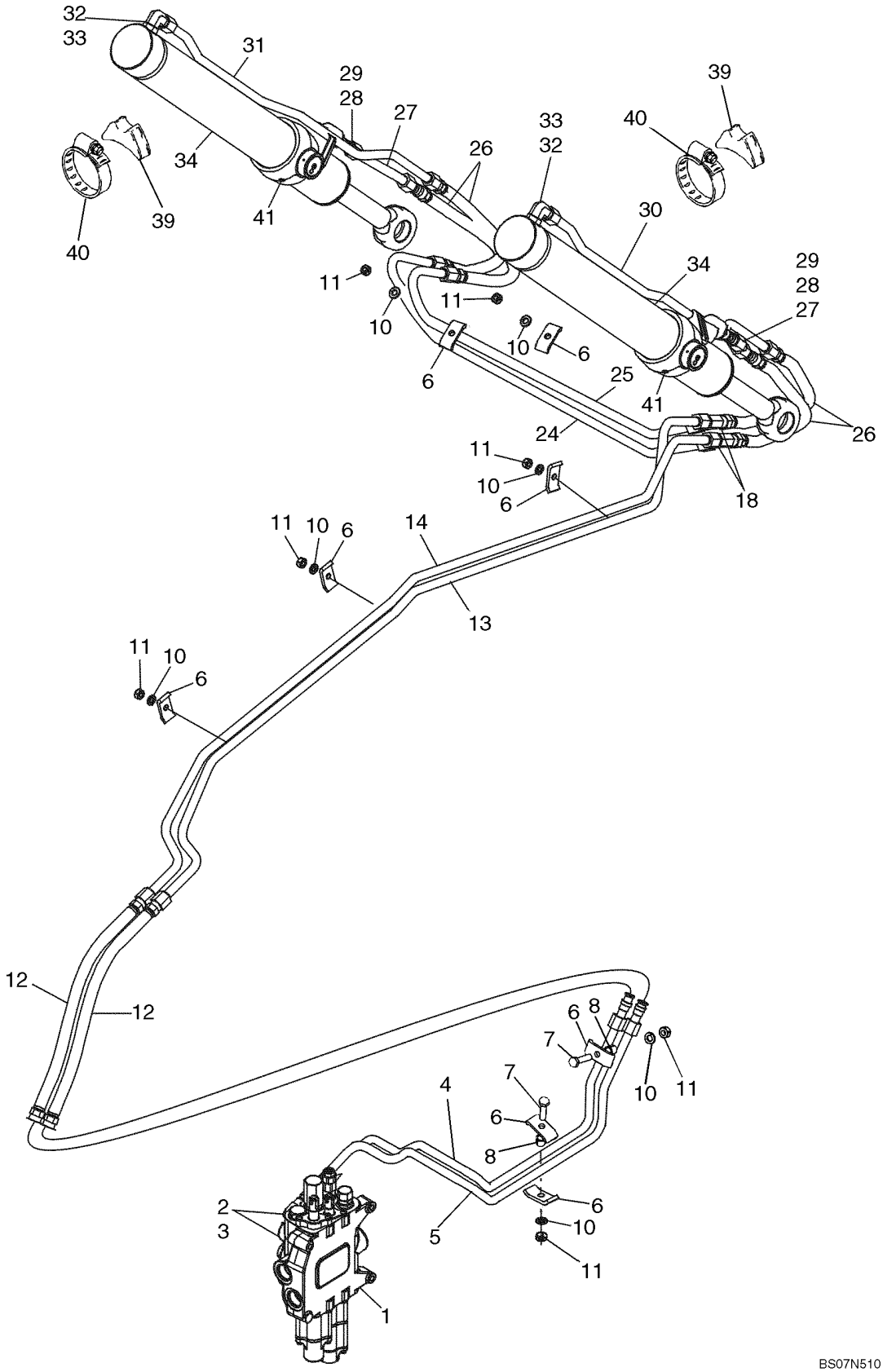

SISTEMA HIDRÁULICO - CILINDRO DO BALDE DA RETROESCAVADORA

REF	FN	PART NUMBER	YR/SN	QTY	DESCRIPTION
1		REF		1	INSTRUCAO, LOADER CONTROL VALVE; For Correct Assembly and Components, See Figures 08-30, 08-31; For Mounting, See Figure 09-01
2		218-5107		2	COTOVELO, 90º, 7/8"-14, 37º x 7/8"-14, O-Ring, Incl. Ref 3
3		237-6010		1	ANEL "O", 10-1, 90 Duro, .755" ID x .097" Thk, Boss Seal
4		87421918		1	TUBO CONJUNTO, Upper Bucket Port
5		87421920		1	TUBO CONJUNTO, Lower Bucket Port
6		D138055		8	BRACADEIRA
7		614-10045		2	PARAFUSO, Hex, M10 x 45, 8.8, Full Thd
8		120303A1		2	ESPAÇADOR
10		892-11010		7	ARRUELA-TRAVA, M10
11		829-1410		7	PORCA, M10, Cl 10
12		87429287		2	MANGUEIRA CONJUNTO, 710 mm (28 in)
13		87716480		1	TUBULAÇÃO HIDRAULICO, To Upper Port
14		87716482		1	TUBULAÇÃO HIDRAULICO
18		218-5220		2	TEE, 37º, 7/8"-14 x 7/8"-14, Fem Sw Run
24		196815A1		1	TUBO DE INTRODUÇÃO, Rear
25		196813A1		1	TUBO DE INTRODUÇÃO, Front
26		371031A1		4	MANGUEIRA CONJUNTO, 840 mm (33 in)
27		87316049		2	TUBO CONJUNTO, Bucket Cylinder Rod End
28		218-5062		2	CONEXÃO, 7/8"-14, 37º x 7/8"-14, O-Ring, Incl. Ref 29
29		237-6010		1	ANEL "O", 10-1, 90 Duro, .755" ID x .097" Thk, Boss Seal
30		87316270		1	TUBO CONJUNTO, Right-Hand Cylinder Closed End
31		87316264		1	TUBO CONJUNTO, Left-Hand Cylinder Closed End
32		218-5107		2	COTOVELO, 90º, 7/8"-14, 37º x 7/8"-14, O-Ring, Incl. Ref 33
33		237-6010		1	ANEL "O", 10-1, 90 Duro, .755" ID x .097" Thk, Boss Seal
34		87609669		2	CILINDRO HIDRÁULICO, 76 ID x 522 mm strk; Loader Bucket Cylinder; See Figure 08-59
39		L79937		2	ASSENTO

SISTEMA HIDRÁULICO - CILINDRO DO BALDE DA RETROESCAVADORA

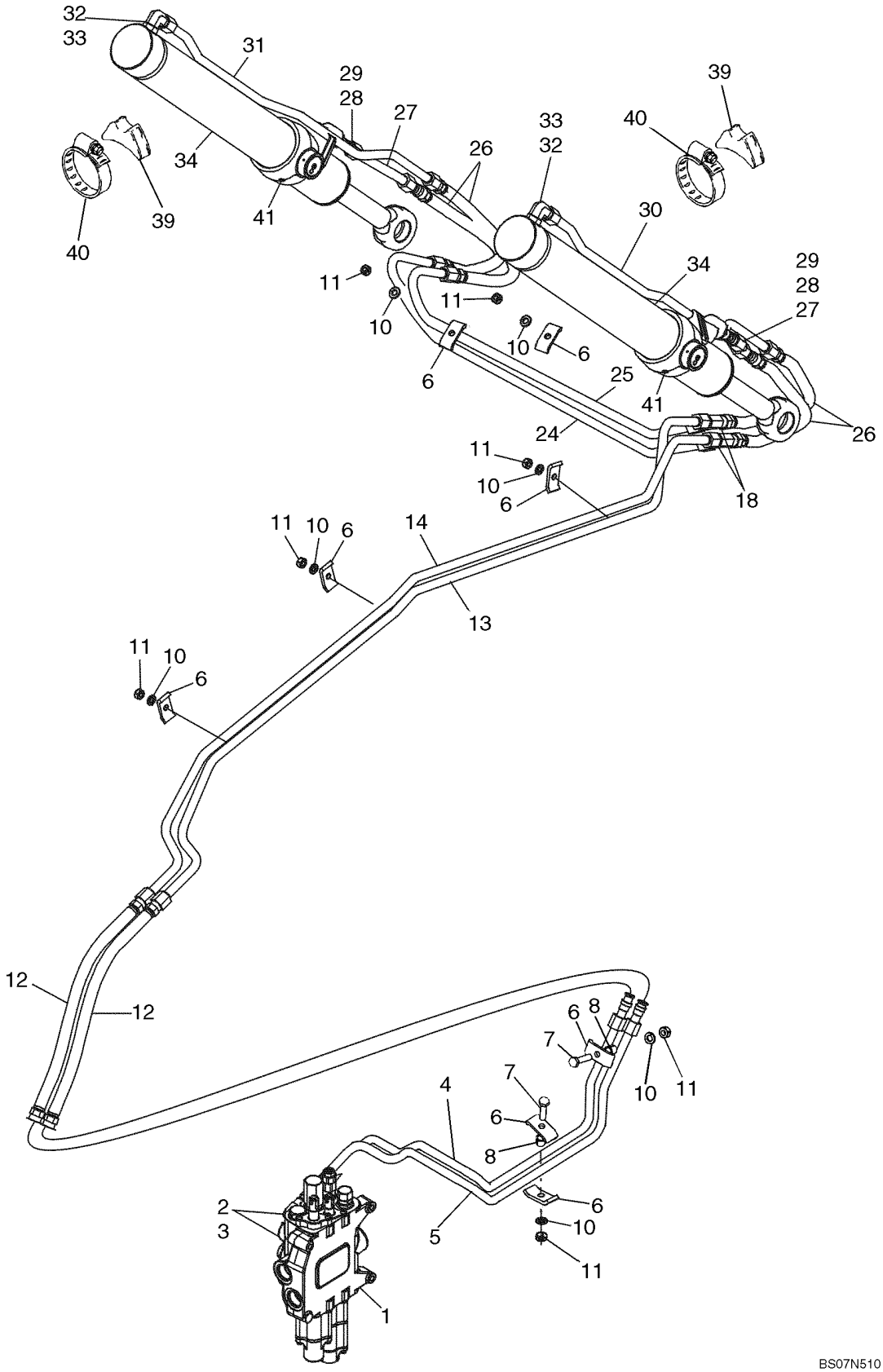

SISTEMA HIDRÁULICO - CILINDRO DO BALDE DA RETROESCAVADORA

REF	FN	PART NUMBER	YR/SN	QTY	DESCRIPTION
40		214-1464		2	BRACADEIRA MANGUEIRA, #64, 3.56/4.50 Type F Worm
41		219-55		2	GRAXEIRA, 90º, 1/8" NPT x .84" lg

SISTEMA HIDRÁULICO - CILINDRO DE ELEVAÇÃO DA CONCHA

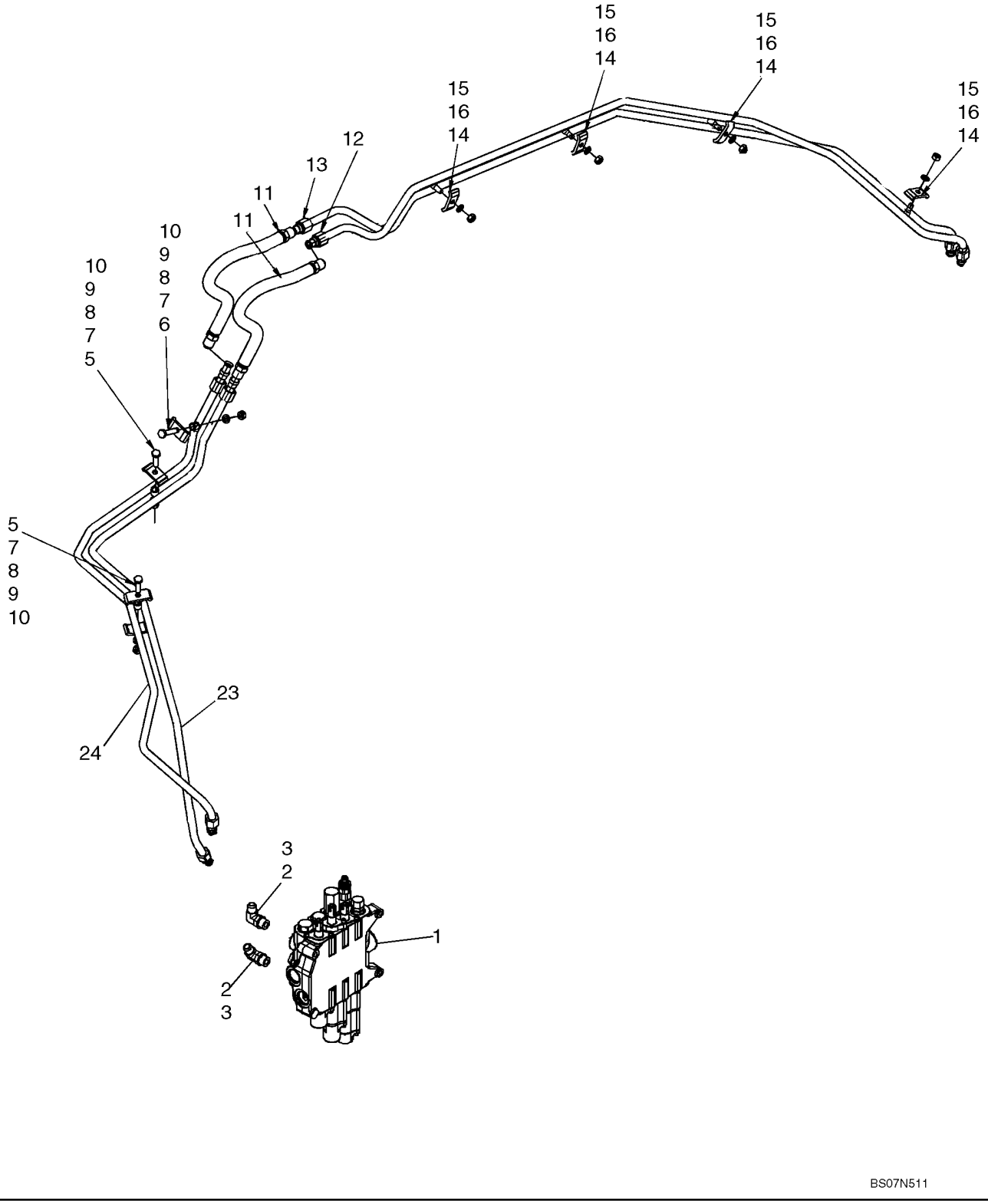

SISTEMA HIDRÁULICO - CILINDRO DE ELEVAÇÃO DA CONCHA

REF	FN	PART NUMBER	YR/SN	QTY	DESCRIPTION
1		REF		1	INSTRUCAO, LOADER CONTROL VALVE; Three Spool; See Figure 08-31 for Valve Options; For Mounting, See Figure 09-01
2		218-5107		2	COTOVELO, 90º, 7/8"-14, 37º x 7/8"-14, O-Ring, Incl. Ref 3
3		237-6010		1	ANEL "O", 10-1, 90 Duro, .755" ID x .097" Thk, Boss Seal
5		614-10040		2	PARAFUSO, Hex, M10 x 40, 8.8, Full Thd
6		614-10045		1	PARAFUSO, Hex, M10 x 45, 8.8, Full Thd
7		D138055		4	BRACADEIRA
8		120303A1		3	ESPAÇADOR
9		892-11010		3	ARRUELA-TRAVA, M10
10		829-1410		3	PORCA, M10, Cl 10
11		87429287		2	MANGUEIRA CONJUNTO, 710 mm (28 in)
12		87716486		1	TUBULAÇÃO HIDRAULICO, Upper Clam Port
13		87716488			TUBULAÇÃO HIDRAULICO, Lower Clam Port
14		D138055		4	BRACADEIRA
15		829-1410		4	PORCA, M10, Cl 10
16		892-11010		4	ARRUELA-TRAVA, M10
23		87478483		1	TUBULAÇÃO HIDRAULICO, Tube, Upper Clam Port
24		87449440		1	TUBO CONJUNTO, Lower Clam Port

SISTEMA HIDRÁULICO - CILINDRO DE ELEVAÇÃO DA CONCHA

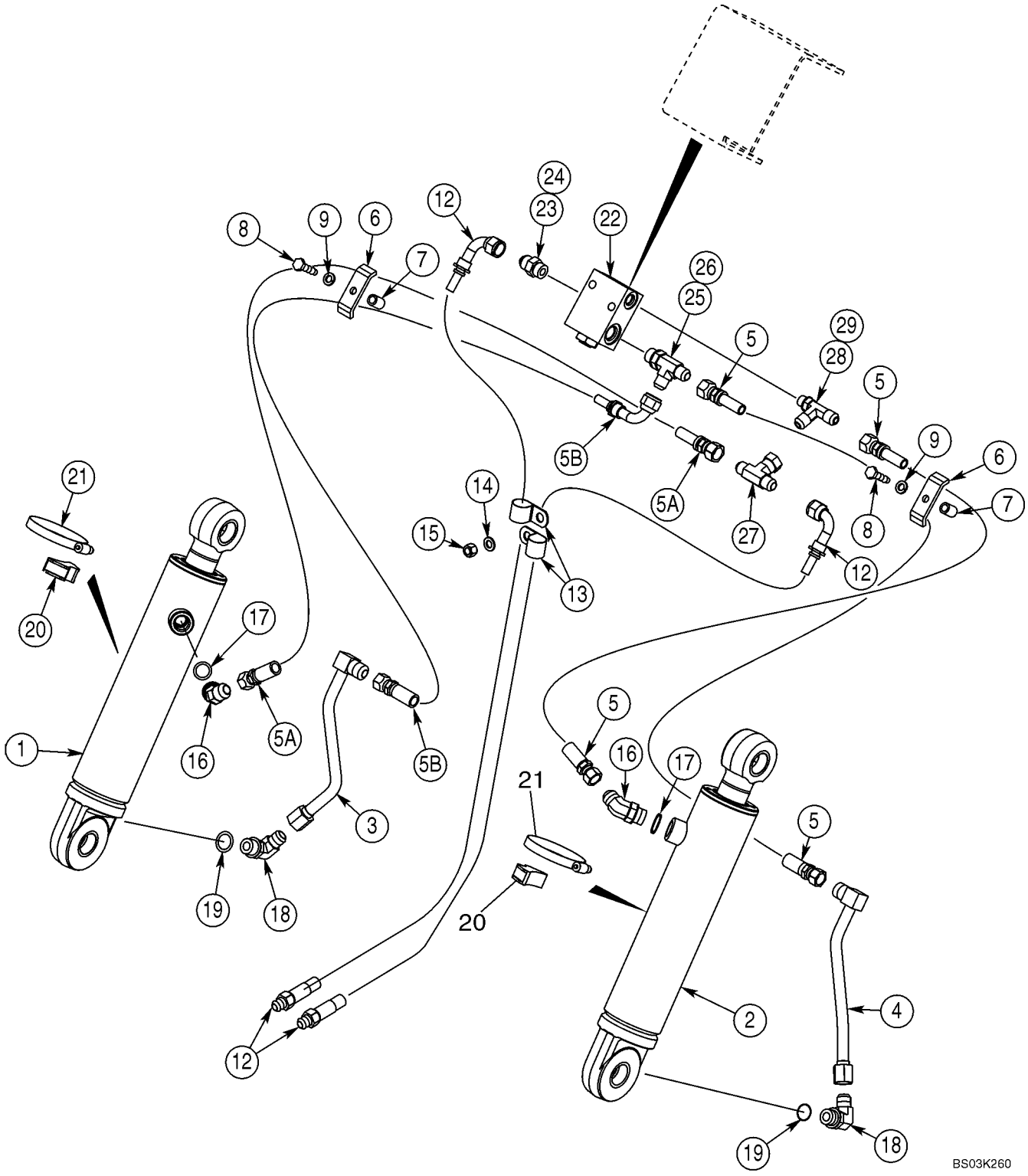

SISTEMA HIDRÁULICO - CILINDRO DE ELEVAÇÃO DA CONCHA

REF	FN	PART NUMBER	YR/SN	QTY	DESCRIPTION
1		87454016		1	CILINDRO CONJUNTO, 76 ID x 231 mm strk: Loader Clam Cylinder; Left-Hand; See Figure 08-60
2		87454017		1	CILINDRO CONJUNTO, 76 ID x 231 mm strk; Loader Clam Cylinder; Right-Hand; See Figure 08-60
3		192352A1		1	TUBO DE INTRODUÇÃO, LH Cylinder
4		192345A1		1	TUBO DE INTRODUÇÃO, RH Cylinder
5		353167A1		2	MANGUEIRA CONJUNTO, 1100 mm (43-5/16 in); Right-Hand Cylinder
5A		353103A1		1	MANGUEIRA CONJUNTO, 1200 mm (47-1/4 in); Left-Hand Cylinder
5B		367352A1		1	MANGUEIRA CONJUNTO, 1200 mm (47-1/4 in); Left-Hand Cylinder
6		D143846		2	FREIO, CLAMP
7		R46493		2	ESPAÇADOR
8		614-10040		2	PARAFUSO, Hex, M10 x 40, 8.8, Full Thd
9		892-11010		2	ARRUELA-TRAVA, M10
12		356743A1		2	MANGUEIRA CONJUNTO, 1170 mm (46-1/16 in); Lift Frame
13		515-25254		2	PRENDEDOR, 1", Insul, 1/2" Bolt
14		895-11010		1	ARRUELA PLANA, M10 x 20 x 2
15		832-10410		1	CONTRA PORCA, M10 x 1.5, Cl 8
16		218-5137		2	COTOVELO, 45º, 7/8"-14 x 7/8"-14, O-Ring, Incl. Ref 17
17		237-6010		1	ANEL "O", 10-1, 90 Duro, .755" ID x .097" Thk, Boss Seal
18		218-5107		2	COTOVELO, 90º, 7/8"-14, 37º x 7/8"-14, O-Ring, Incl. Ref 19
19		237-6010		1	ANEL "O", 10-1, 90 Duro, .755" ID x .097" Thk, Boss Seal
20		D38648		2	BLOCO
21		214-1464		2	BRACADEIRA MANGUEIRA, #64, 3.56/4.50 Type F Worm
22		325465A2		1	VALVULA CHECAGEM, Pilot Operated Check Valve; For Mounting, See Figure 09-08

SISTEMA HIDRÁULICO - CILINDRO DE ELEVAÇÃO DA CONCHA

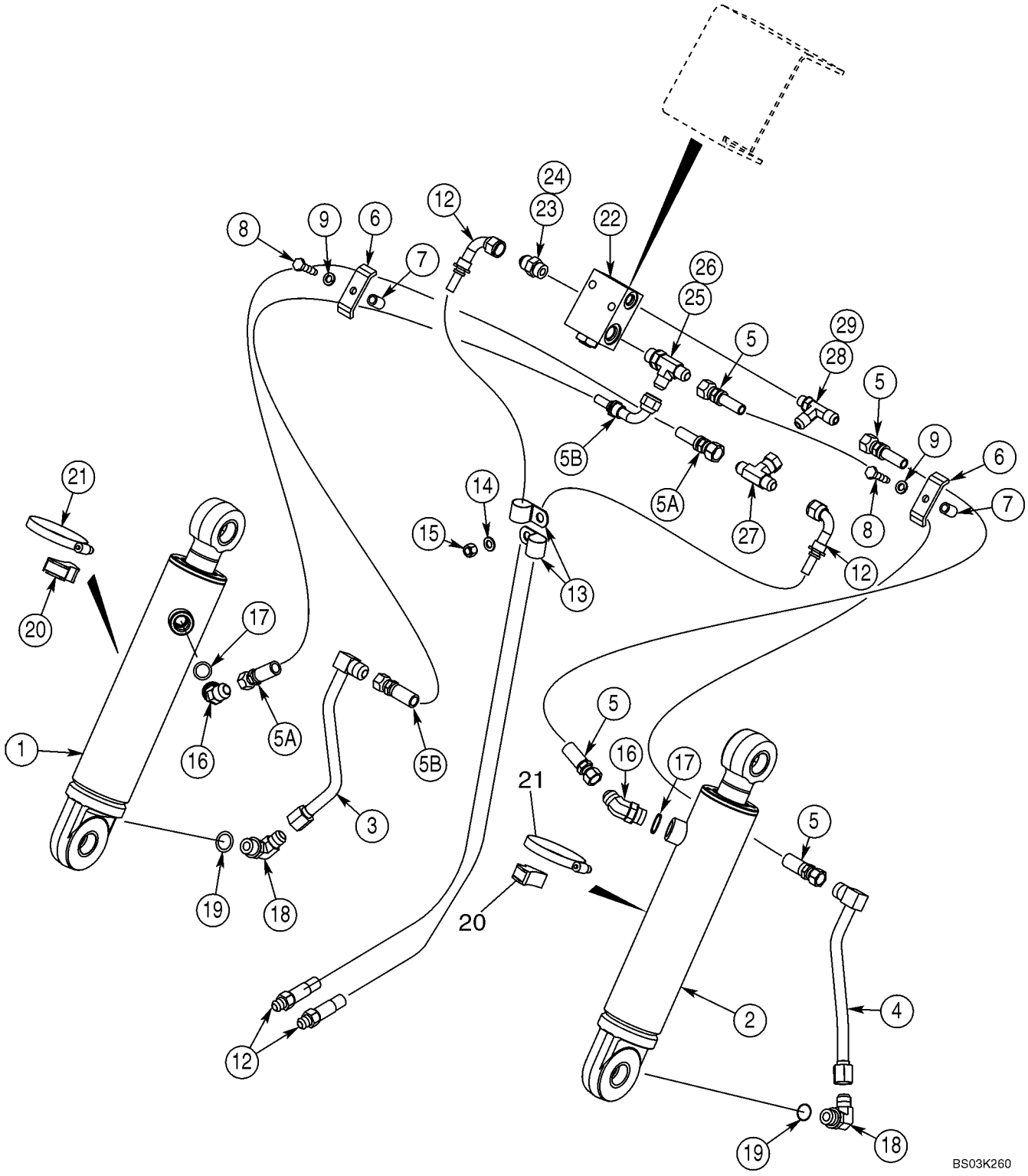

SISTEMA HIDRÁULICO - CILINDRO DE ELEVAÇÃO DA CONCHA

REF	FN	PART NUMBER	YR/SN	QTY	DESCRIPTION
		399963A1		1	JOGO, Seal; For Use With 325465A2 Valve; Includes (1) Piston, (1) Backup Ring, (2) O-Rings and Instructions
23		218-5059		1	CONEXÃO, 3/4"-16, 37º x 3/4"-16, O-Ring, Incl. Ref 24
24		237-6008		1	ANEL "O", 8-1, 90 Duro, .644" ID x .087" Thk, Boss seal
25		218-5242		1	TEE, 3/4"-16, 37º x 3/4"-18, O-Ring Run, Incl. Ref 26
26		237-6008		1	ANEL "O", 8-1, 90 Duro, .644" ID x .087" Thk, Boss seal
27		218-840		1	TEE, 37º, 3/4"-16 x 3/4"-16, Fem Sw Br
28		218-5650		1	TEE, 37º, 3/4"-16, 9/16"-18 O-Ring Run, 3/4"-16, Incl. Ref 29
29		237-6006		1	ANEL "O", 6-1, 90 Duro, .468" ID x .078" Thk, Boss seal

SISTEMA HIDRÁULICO - CONCHA DO CARREGADOR (MODELOS SEM CONTROLO AUTOMÁTICO)

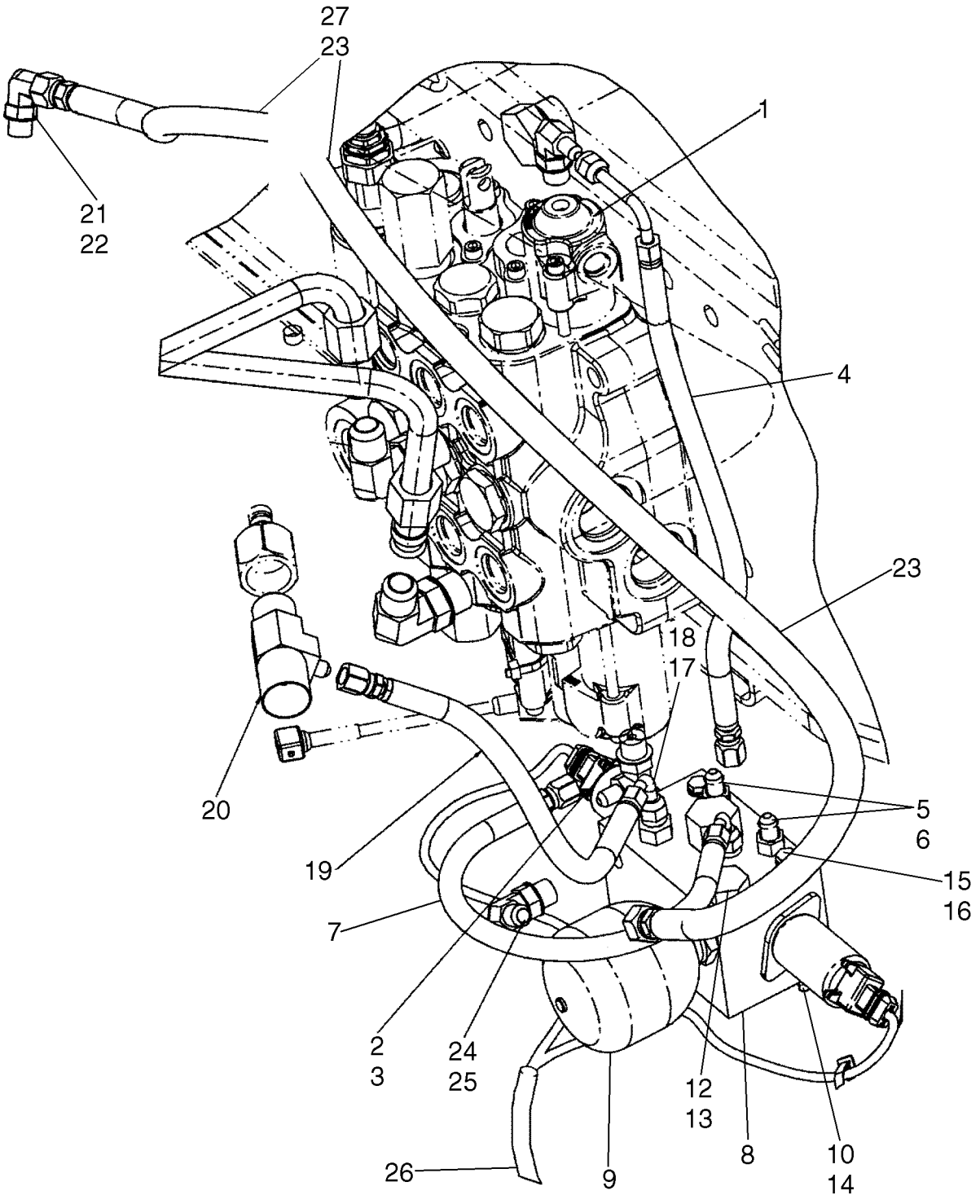

SISTEMA HIDRÁULICO - CONCHA DO CARREGADOR (MODELOS SEM CONTROLO AUTOMÁTICO)

REF	FN	PART NUMBER	YR/SN	QTY	DESCRIPTION
1		REF		1	INSTRUCAO, LOADER CONTROL VALVE; Three Spool; See Figure 08-31; For Mounting, See Figure 09-01
2		218-5283		2	COTOVELO, 90º, 7/16"-20, 37º x 9/16"-18, O-Ring, Incl. 3
3		237-6006		1	ANEL "O", 6-1, 90 Duro, .468" ID x .078" Thk
4		87662930		1	MANGUEIRA CONJUNTO, Loader Control Valve To Proportional Control Valve
5		218-5053		2	CONEXÃO, 7/16"-20, 37º x 7/16"-20, O-Ring, Incl. 6
6		237-6004		1	ANEL "O", 4-1, 90 Duro, .351" ID x .072" Thk
7		87662928		1	MANGUEIRA CONJUNTO, Proportional Control Valve
8		87566480		1	VALVULA, Proportional Control; Component Parts Not Available At Time Of Printing
9		87425225		1	ACUMULADOR, Includes 237-6008 O-Ring
10		814-6090		2	PARAFUSO, Hex, M6 x 90, 8.8
12		218-5156		1	BUJÃO, Hex Hd, 3/4"-16 ORB, Incl. 13
13		237-6008		1	ANEL "O", 8-1, 90 Duro, .644" ID x .087" Thk
14		895-25006		2	ARRUELA PLANA, M6 x 18 x 1.6
15		892-11006		2	ARRUELA-TRAVA, M6
16		829-1406		2	PORCA, M6, Cl 10
17		218-5089		1	CONEXÃO, 7/16"-20, 37º x 9/16"-18, O-Ring, Incl. 18
18		237-6006		1	ANEL "O", 6-1, 90 Duro, .468" ID x .078" Thk
19		87662932		1	MANGUEIRA CONJUNTO, Proportional Control Valve To Pump
20		218-5411		1	TEE, 37º, 7/8"-14 x 3/4"-16, Fem Sw Run x 7/16"-20 Br
21		218-5105		1	COTOVELO, 90º, 9/16"-18, 37º x 9/16"-18, O-Ring, Incl. 22
22		237-6006		1	ANEL "O", 6-1, 90 Duro, .468" ID x .078" Thk
23		87650602		1	MANGUEIRA CONJUNTO, Proportional Control Valve To Tank
24		218-5105		1	COTOVELO, 90º, 9/16"-18, 37º x 9/16"-18, O-Ring, Incl. 25
25		237-6006		1	ANEL "O", 6-1, 90 Duro, .468" ID x .078" Thk

SISTEMA HIDRÁULICO - CONCHA DO CARREGADOR (MODELOS SEM CONTROLO AUTOMÁTICO)

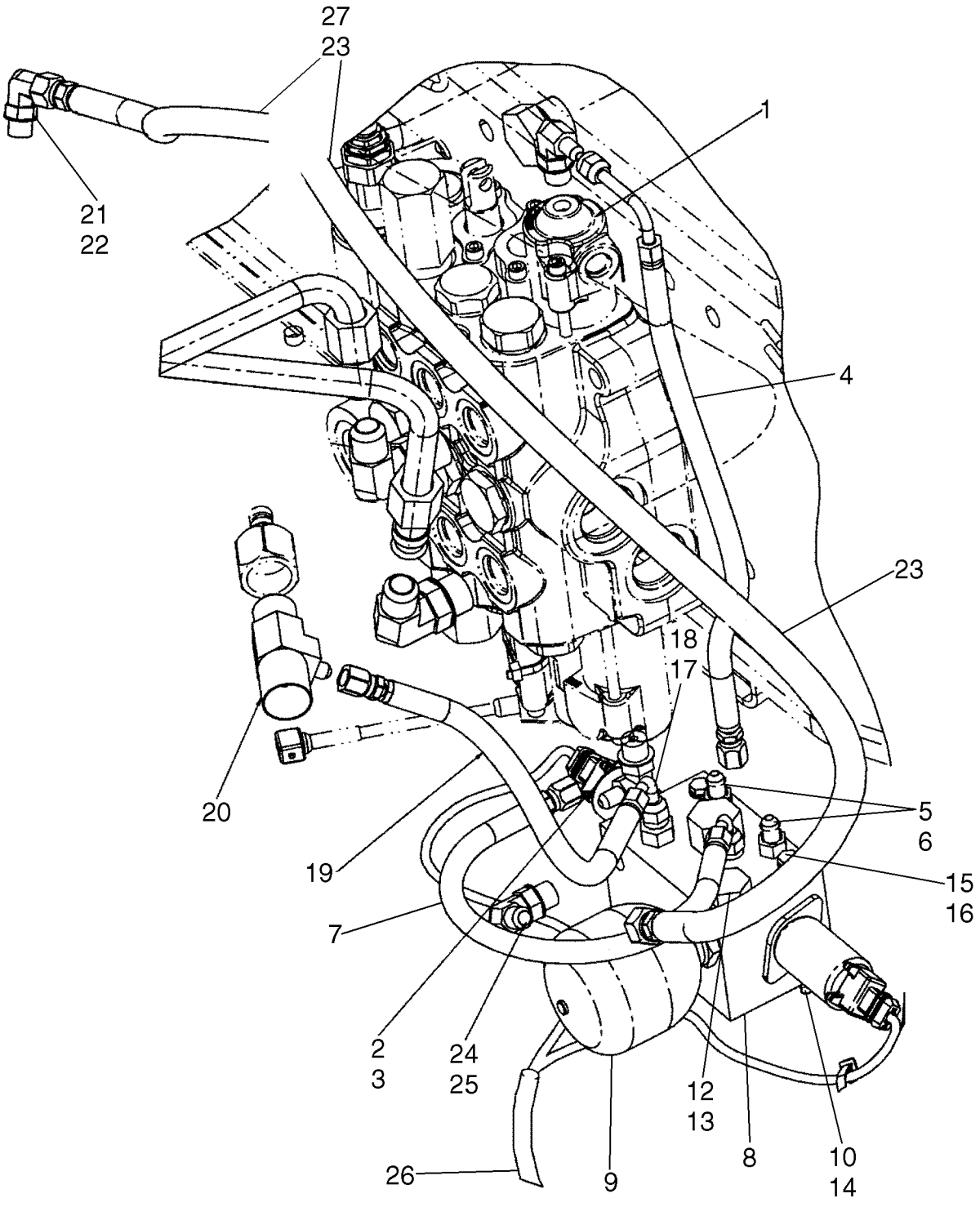

SISTEMA HIDRÁULICO - CONCHA DO CARREGADOR (MODELOS SEM CONTROLO AUTOMÁTICO)

REF	FN	PART NUMBER	YR/SN	QTY	DESCRIPTION
26		87651975		1	CHICOTE DE FIOS, Jumper
27		87452021		1	TUBO PLASTICO, 650 mm; Hose Guard

SISTEMA HIDRÁULICO - CONCHA DO CARREGADOR (MODELOS COM CONTROLO AUTOMÁTICO)

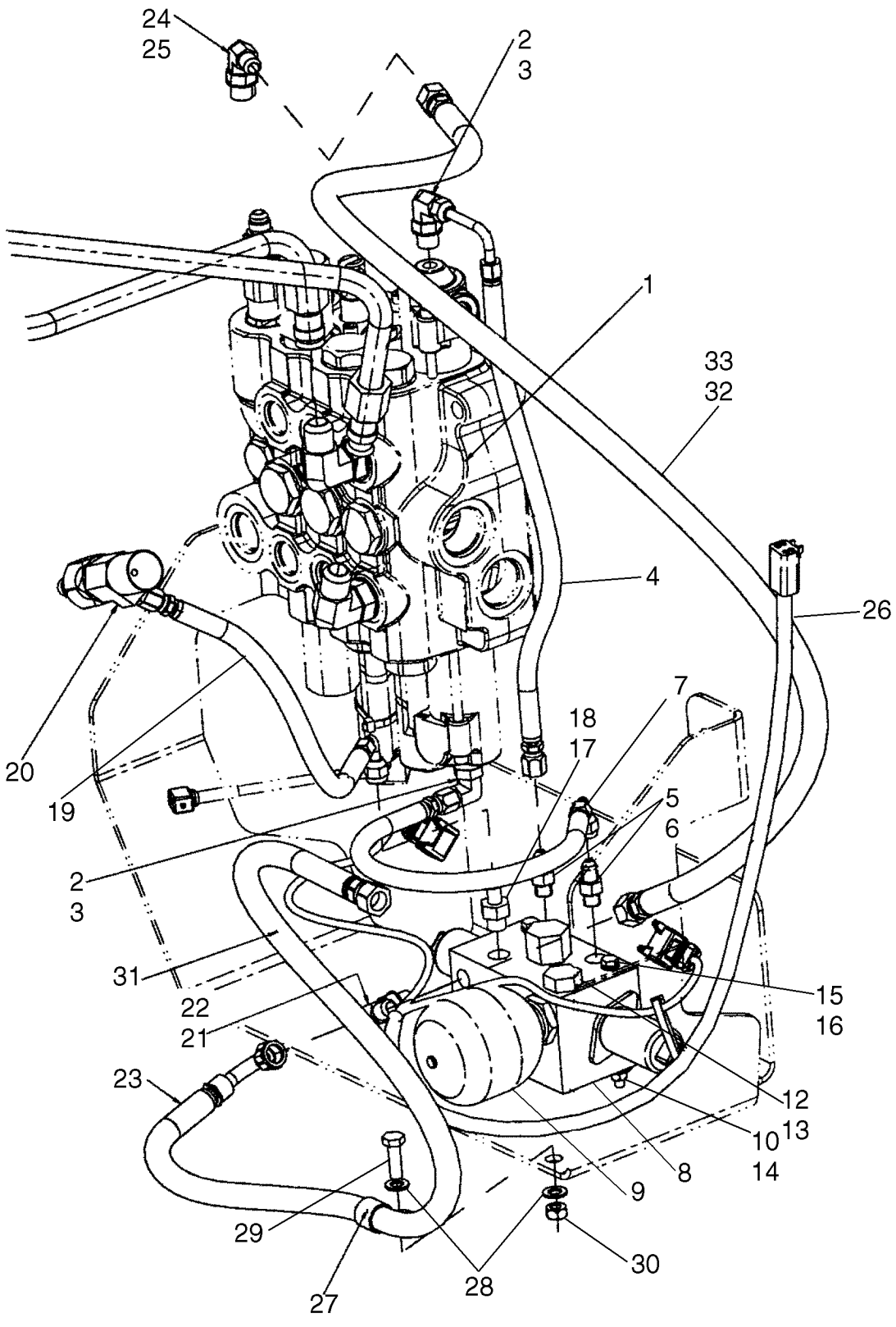

SISTEMA HIDRÁULICO - CONCHA DO CARREGADOR (MODELOS COM CONTROLO AUTOMÁTICO)

REF	FN	PART NUMBER	YR/SN	QTY	DESCRIPTION
1		REF		1	INSTRUCAO, LOADER CONTROL VALVE; Three Spool; See Figure 08-31; For Mounting, See Figure 09-01
2		218-5283		2	COTOVELO, 90º, 7/16"-20, 37º x 9/16"-18, O-Ring, Incl. 3
3		237-6006		1	ANEL "O", 6-1, 90 Duro, .468" ID x .078" Thk
4		87662930		1	MANGUEIRA CONJUNTO, Loader Control Valve To Proportional Control Valve
5		218-5053		2	CONEXÃO, 7/16"-20, 37º x 7/16"-20, O-Ring, Incl. 6
6		237-6004		1	ANEL "O", 4-1, 90 Duro, .351" ID x .072" Thk
7		87662928		1	MANGUEIRA CONJUNTO, Proportional Control Valve
8		87566480		1	VALVULA, Proportional Control; Component Parts Not Available At Time Of Printing
9		87425225		1	ACUMULADOR
10		814-6090		2	PARAFUSO, Hex, M6 x 90, 8.8
12		218-5156		1	BUJÃO, Hex Hd, 3/4"-16 ORB, Incl. 13
13		237-6008		1	ANEL "O", 8-1, 90 Duro, .644" ID x .087" Thk
14		895-25006		2	ARRUELA PLANA, M6 x 18 x 1.6
15		892-11006		2	ARRUELA-TRAVA, M6
16		829-1406		2	PORCA, M6, Cl 10
17		218-5089		1	CONEXÃO, 7/16"-20, 37º x 9/16"-18, O-Ring, Incl. 18
18		237-6006		1	ANEL "O", 6-1, 90 Duro, .468" ID x .078" Thk
19		87662932		1	MANGUEIRA CONJUNTO, Proportional Control Valve To Pump
20		218-5411		1	TEE, 37º, 7/8"-14 x 3/4"-16, Fem Sw Run x 7/16"-20 Br
21		218-5182		1	TEE, 9/16"-18, 37º x 9/16"-18, O-Ring Br, Incl. 22
22		237-6006		1	ANEL "O", 6-1, 90 Duro, .468" ID x .078" Thk
23		87668167		1	MANGUEIRA CONJUNTO, Proportional Control Valve To Tank
24		218-5105		1	COTOVELO, 90º, 9/16"-18, 37º x 9/16"-18, O-Ring, Incl. 25
25		237-6006		1	ANEL "O", 6-1, 90 Duro, .468" ID x .078" Thk
26		87651975		1	CHICOTE DE FIOS, Jumper

SISTEMA HIDRÁULICO - CONCHA DO CARREGADOR (MODELOS COM CONTROLO AUTOMÁTICO)

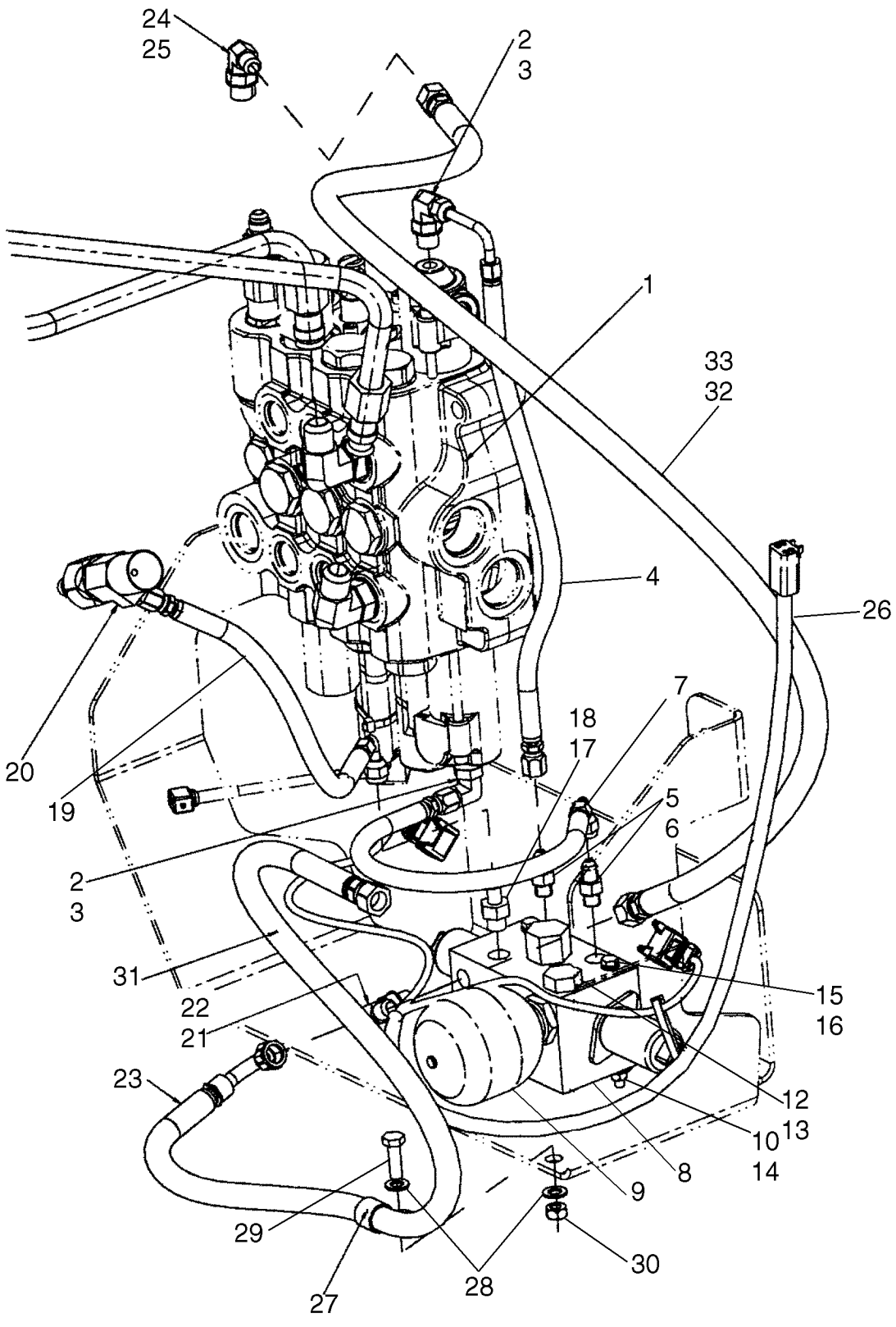

SISTEMA HIDRÁULICO - CONCHA DO CARREGADOR (MODELOS COM CONTROLO AUTOMÁTICO)

REF	FN	PART NUMBER	YR/SN	QTY	DESCRIPTION
27		515-22190		1	PRENDEDOR, 3/4", Insul, 5/16" Bolt
28		895-11008		2	ARRUELA PLANA, M8 x 16 x 1.6
29		614-8025		1	PARAFUSO, Hex, M8 x 25, 8.8
30		829-1408		1	PORCA, M8, Cl 10
31		191704A1		1	TUBO ISOLANTE
32		87650602		1	MANGUEIRA CONJUNTO
33		87452021		1	TUBO PLASTICO, 650 mm; Hose Guard

SISTEMA HIDRÁULICO - CILINDRO, ESTABILIZADOR DA RETROESCAVADORA (MODELOS SEM CONTROLO AUTOMÁTICO)

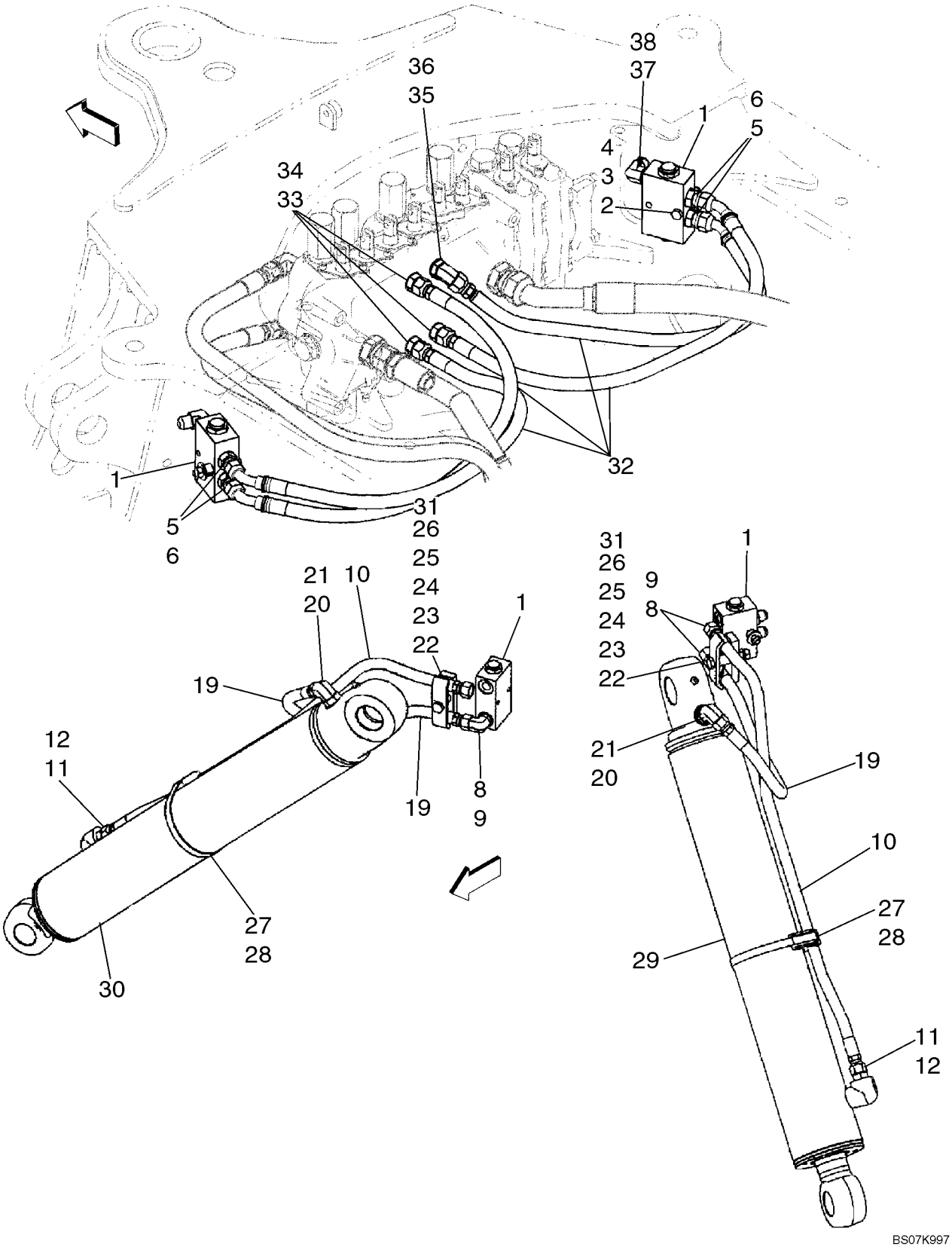

SISTEMA HIDRÁULICO - CILINDRO, ESTABILIZADOR DA RETROESCAVADORA (MODELOS SEM CONTROLO AUTOMÁTICO)

REF	FN	PART NUMBER	YR/SN	QTY	DESCRIPTION
		REF			INSTRUCAO, MODELS WITHOUT PILOT CONTROLS
1		85802820		2	VALVULA CHECAGEM, Load Check; Includes 85820159, 85820160, 85821126
		85820159		1	ÊMBOLO
		85820160		1	VÁLVULA HYDRAULICA
		85821126		1	KIT
2		814-8060		2	PARAFUSO, Hex, M8 x 60, 8.8
		87437840		2	ESPAÇADOR
4		829-1408		2	PORCA, M8, Cl 10
3		496-81028		2	ARRUELA PLANA, 13/32" x 1 1/4" x .134", HDN
5		218-5057		4	CONEXÃO, 9/16"-18, 37º x 9/16"-18, O-Ring, Incl. Ref 6
6		237-6006		1	ANEL "O", 6-1, 90 Duro, .468" ID x .078" Thk
8		218-5105		4	COTOVELO, 90º, 9/16"-18, 37º x 9/16"-18, O-Ring, Incl. Ref 9
9		237-6006		1	ANEL "O", 6-1, 90 Duro, .468" ID x .078" Thk
10		87439306		2	MANGUEIRA CONJUNTO, 830 mm (32-11/16 in)
19		87429584		2	MANGUEIRA CONJUNTO, 500 mm (19-11/16 in) Hose
11		218-5059		2	CONEXÃO, 3/4"-16, 37º x 3/4"-16, O-Ring, Incl. Ref 12
20		218-5121		2	COTOVELO, 90º, 3/4"-16, 37º x 7/8"-14, O-Ring, Incl. Ref 21
12		237-6008		1	ANEL "O", 8-1, 90 Duro, .644" ID x .087" Thk
21		237-6008		1	ANEL "O", 8-1, 90 Duro, .644" ID x .087" Thk
22		814-10070		2	PARAFUSO, Hex, M10 x 70, 8.8
24		87439665		2	ESPAÇADOR
23		87420673		2	BRACADEIRA MANGUEIRA
25		87420672		2	ESPAÇADOR
		496-81028		2	ARRUELA PLANA, 13/32" x 1 1/4" x .134", HDN
26		829-1410		2	PORCA, M10, Cl 10
27		D142787		2	ESPAÇADOR
28		214-3188		2	BRACADEIRA MANGUEIRA, 4.75/5.625 HD Worm

SISTEMA HIDRÁULICO - CILINDRO, ESTABILIZADOR DA RETROESCAVADORA (MODELOS SEM CONTROLO AUTOMÁTICO)

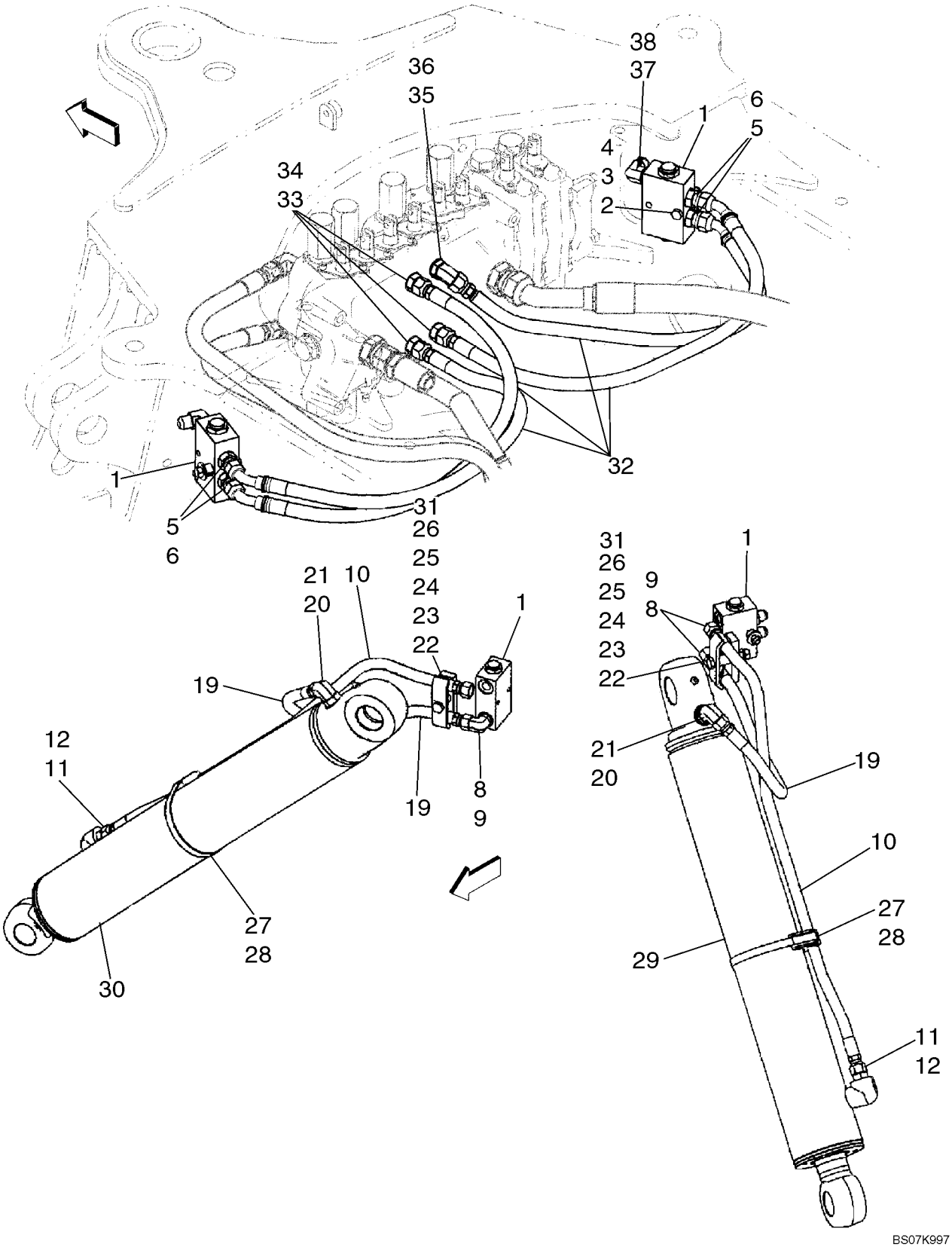

SISTEMA HIDRÁULICO - CILINDRO, ESTABILIZADOR DA RETROESCAVADORA (MODELOS SEM CONTROLO AUTOMÁTICO)

REF	FN	PART NUMBER	YR/SN	QTY	DESCRIPTION
29		195504A1		1	CILINDRO, 102 ID x 553 mm strk; Stabilizer Cylinder; Left-Hand; See Figure 08-61
30		195503A1		1	CILINDRO CONJUNTO, 102 ID x 553 mm strk; Stabilizer Cylinder; Right-Hand; See Figure 08-61
31		895-11010		2	ARRUELA PLANA, M10 x 20 x 2
32		87429654		4	MANGUEIRA CONJUNTO, 720 mm (28-3/8 in)
33		218-5059		3	CONEXÃO, 3/4"-16, 37º x 3/4"-16, O-Ring, Incl. Ref 34
34		237-6008		1	ANEL "O", 8-1, 90 Duro, .644" ID x .087" Thk
35		218-5136		1	COTOVELO, 45º, 3/4"-16, 37º x 3/4"-16, O-Ring, Incl. Ref 36
36		237-6008		1	ANEL "O", 8-1, 90 Duro, .644" ID x .087" Thk
37		218-5280		2	COTOVELO, 90º, 3/4"-16, 37º x 9/16"-18, O-Ring, Incl. Ref 38
38		237-6006		1	ANEL "O", 6-1, 90 Duro, .468" ID x .078" Thk

SISTEMA HIDRÁULICO - CILINDRO, ESTABILIZADOR DA RETROESCAVADORA (MODELOS COM CONTROLO AUTOMÁTICO)

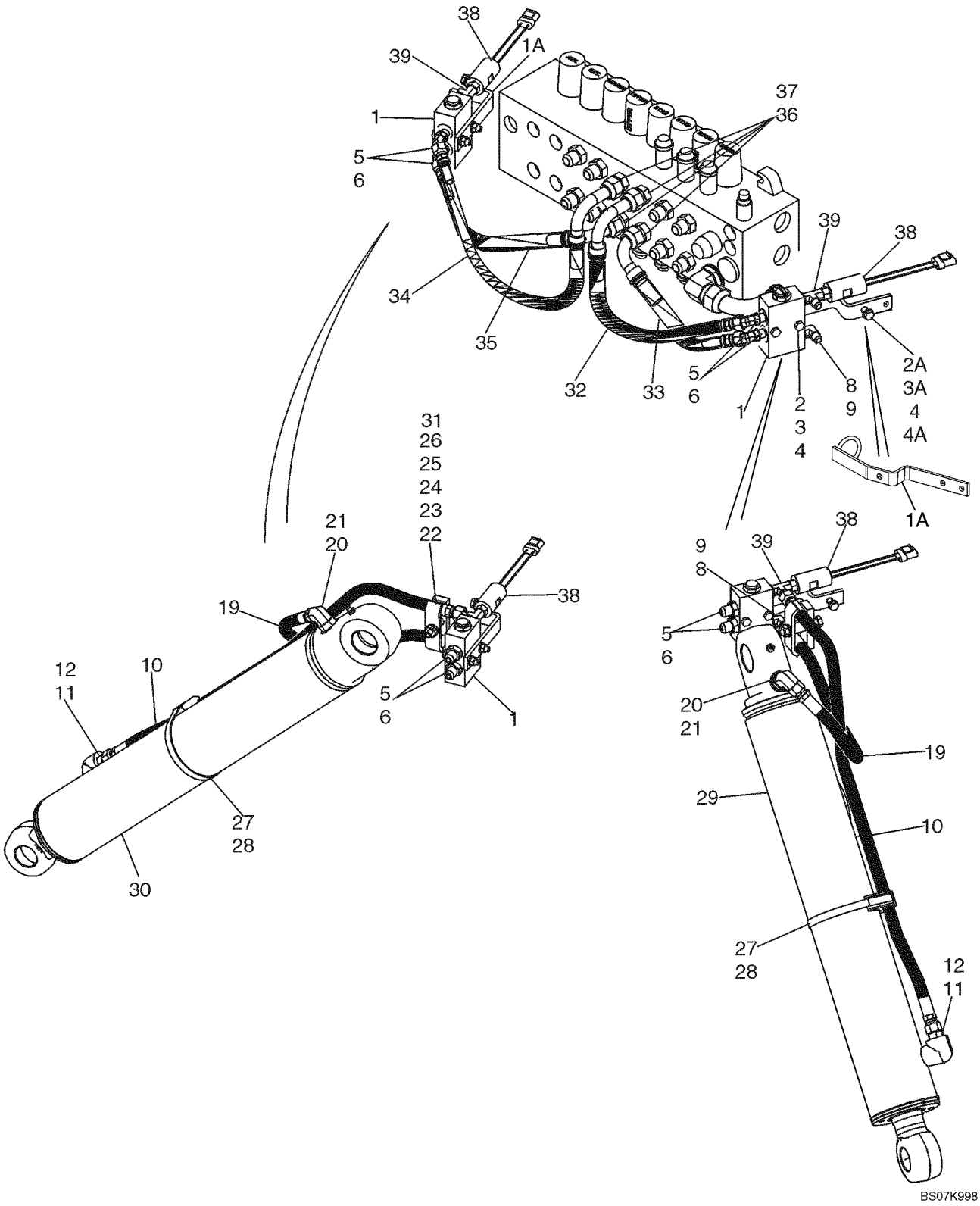

SISTEMA HIDRÁULICO - CILINDRO, ESTABILIZADOR DA RETROESCAVADORA (MODELOS COM CONTROLO AUTOMÁTICO)

REF	FN	PART NUMBER	YR/SN	QTY	DESCRIPTION
		REF			INSTRUCAO, MODELS WITH PILOT CONTROLS
1		85802820		2	VALVULA CHECAGEM, Load Check; Includes 85820159, 85820160, 85821126
		85820159		1	ÊMBOLO
		85820160		1	VÁLVULA HYDRAULICA
		85821126		1	KIT
1A		87450318		2	SUPORTE
2		814-8055		4	PARAFUSO, Hex, M8 x 55, 8.8
2A		814-8035		2	PARAFUSO, Hex, M8 x 35, 8.8
3		496-81028		2	ARRUELA PLANA, 13/32" x 1 1/4" x .134", HDN
3A		895-11008		6	ARRUELA PLANA, M8 x 16 x 1.6
4		829-1408		6	PORCA, M8, Cl 10
4A		87437840		2	ESPAÇADOR
5		218-5135		4	COTOVELO, 45º, 9/16"-18, 37º x 9/16"-18, O-Ring, Incl. Ref 6
6		237-6006		1	ANEL "O", 6-1, 90 Duro, .468" ID x .078" Thk
8		218-5105		2-4	COTOVELO, 90º, 9/16"-18, 37º x 9/16"-18, O-Ring, Incl. Ref 9; (2) Used On Models With Auto-Up; (4) Used On Models Without Auto-Up
9		237-6006		1	ANEL "O", 6-1, 90 Duro, .468" ID x .078" Thk
10		87439306		2	MANGUEIRA CONJUNTO, 830 mm (32-11/16 in)
11		218-5059		2	CONEXÃO, 3/4"-16, 37º x 3/4"-16, O-Ring, Incl. Ref 12
12		237-6008		1	ANEL "O", 8-1, 90 Duro, .644" ID x .087" Thk
19		87429584		2	MANGUEIRA CONJUNTO, 500 mm (19-11/16 in) Hose
20		218-5121		2	COTOVELO, 90º, 3/4"-16, 37º x 7/8"-14, O-Ring, Incl. Ref 21
21		237-6008		1	ANEL "O", 8-1, 90 Duro, .644" ID x .087" Thk
22		814-10070		2	PARAFUSO, Hex, M10 x 70, 8.8
23		87420673		2	BRACADEIRA MANGUEIRA, Clamp
		496-81028		2	ARRUELA PLANA, 13/32" x 1 1/4" x .134", HDN
24		87439665		2	ESPAÇADOR
25		87420672		2	ESPAÇADOR, Clamp
26		829-1410		2	PORCA, M10, Cl 10

SISTEMA HIDRÁULICO - CILINDRO, ESTABILIZADOR DA RETROESCAVADORA (MODELOS COM CONTROLO AUTOMÁTICO)

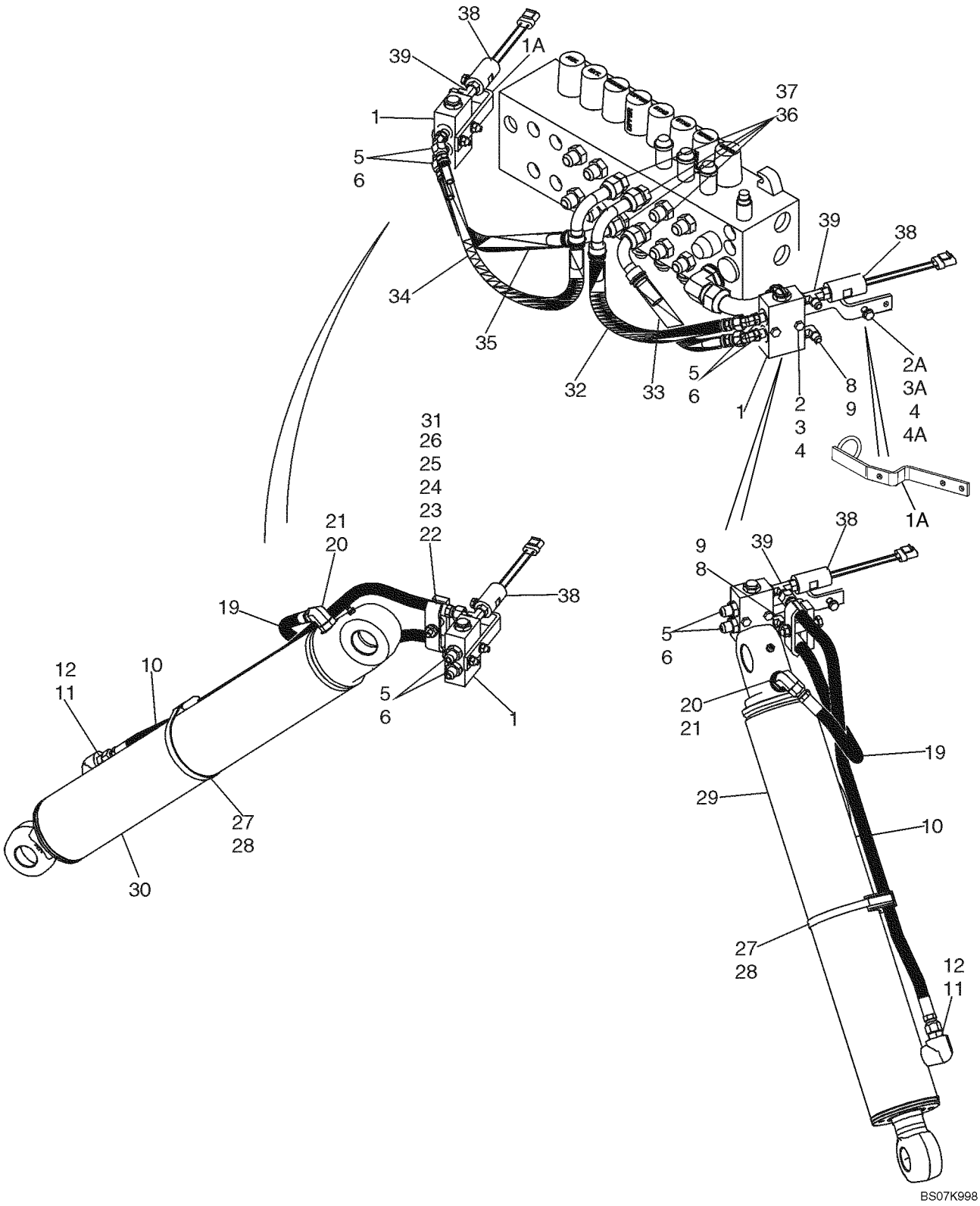

SISTEMA HIDRÁULICO - CILINDRO, ESTABILIZADOR DA RETROESCAVADORA (MODELOS COM CONTROLO AUTOMÁTICO)

REF	FN	PART NUMBER	YR/SN	QTY	DESCRIPTION
27		D142787		2	ESPAÇADOR
28		214-3188		2	BRACADEIRA MANGUEIRA, 4.75/5.625 HD Worm
29		195504A1		1	CILINDRO, 102 ID x 553 mm strk; Stabilizer Cylinder; Left-Hand; See Figure 08-61
30		195503A1		1	CILINDRO CONJUNTO, 102 ID x 553 mm strk; Stabilizer Cylinder; Right-Hand; See Figure 08-61
31		895-11010		2	ARRUELA PLANA, M10 x 20 x 2
32		87437939		1	MANGUEIRA CONJUNTO, 440 mm (17-3/8 in)
33		87437938		1	MANGUEIRA CONJUNTO, 350 mm (13-13/16 in)
34		87437941		1	MANGUEIRA CONJUNTO, 485 mm (19-1/8 in)
35		87437940		1	MANGUEIRA CONJUNTO, 400 mm (15-3/4 in)
36		218-5070		4	CONEXÃO, 3/4"-16, 37° x 1 1/16"-12, O-Ring, Incl. Ref 37
37		237-6012		1	ANEL "O", 12-1, 90 Duro, .924 ID x .118" Thk
38		87482634		2	INTERRUPTOR DE PRESSÃO, Pilot Control; Includes 237-6004 O-Ring; Used On Models With Auto-Up; 12 inch Wire Lead; With Rubber Snubbing; CNH Part Number Stamped On Body Of Switch; North American Models; Replaces 87439163 Switch
38		86992557		2	INTERRUPTOR DE PRESSÃO, Pilot Control; Includes 237-6004 O-Ring; Used On Models With Auto-Up; 6 inch Wire Lead; CNH Part Number Stamped On Body Of Switch; European Models
39		87423033		2	TEE, 9/16 x 9/16 Or x 7/16 Or; Includes 237-6004, 237-6006 O-Ring; Used On Models With Auto-Up

SISTEMA HIDRÁULICO - CILINDRO, OSCILAÇÃO DA RETROESCAVADORA (MODELOS SEM CONTROLO AUTOMÁTICO)

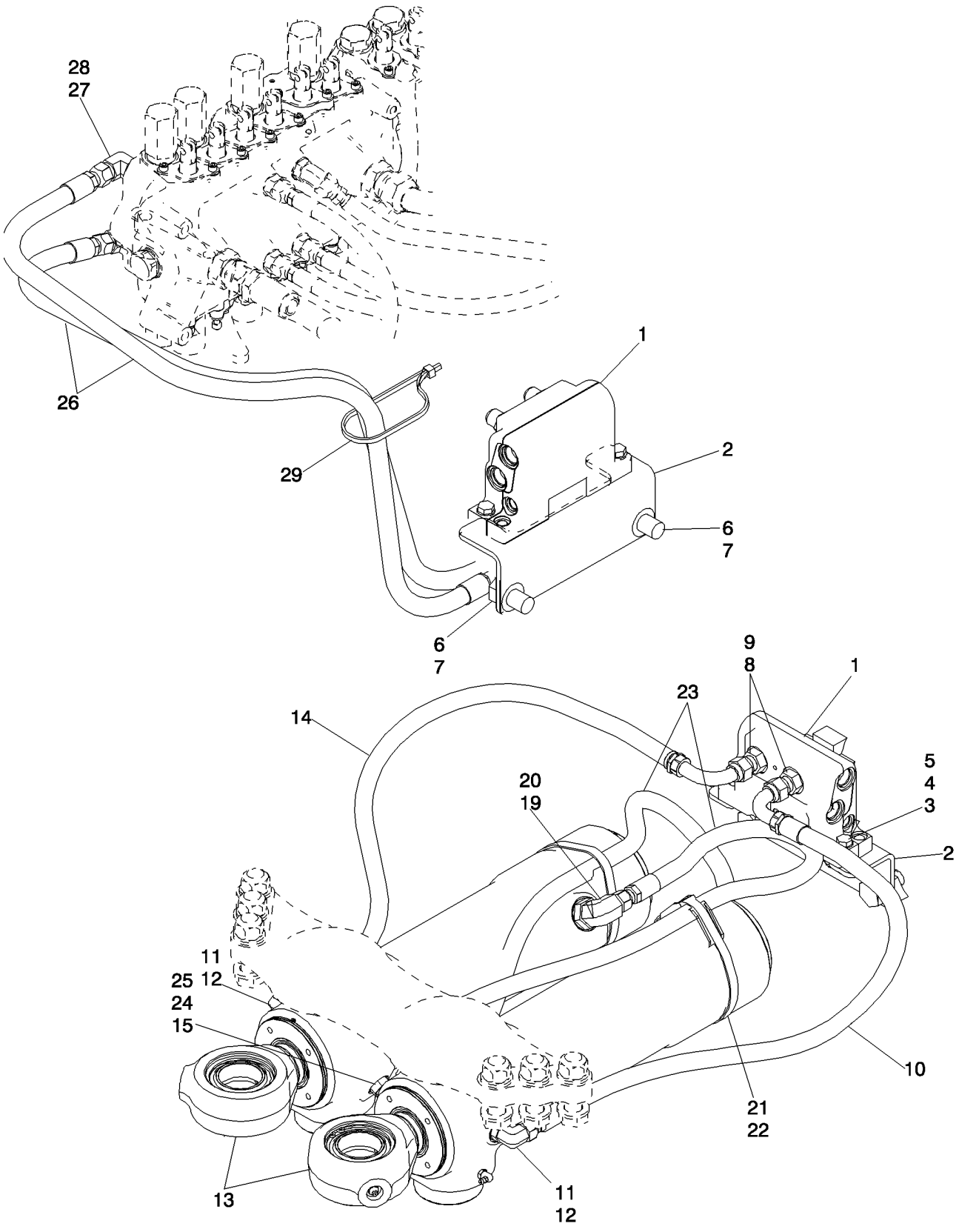

SISTEMA HIDRÁULICO - CILINDRO, OSCILAÇÃO DA RETROESCAVADORA (MODELOS SEM CONTROLO AUTOMÁTICO)

REF	FN	PART NUMBER	YR/SN	QTY	DESCRIPTION
		REF			INSTRUCAO, MODELS WITHOUT PILOT CONTROLS
1		87480653		1	VÁLVULA AMORTECEDORA, Swing Cushion; See Figure 08-55; ; Replaces 87449373
2		87428140		1	SUPORTE, Valve Bracket
3		814-10040		2	PARAFUSO, Hex, M10 x 40, 8.8, Full Thd
4		895-11010		4	ARRUELA PLANA, M10 x 20 x 2
5		829-1410		2	PORCA, M10, Cl 10
6		614-18035		2	PARAFUSO, Hex, M18 x 35, 8.8, Full Thd
7		895-11018		4	ARRUELA PLANA, M18 x 34 x 3
8		218-5062		4	CONEXÃO, 7/8"-14, 37º x 7/8"-14, O-Ring, Incl. Ref 9
9		237-6010		1	ANEL "O", 10-1, 90 Duro, .755" ID x .097" Thk
10		87423356		1	MANGUEIRA CONJUNTO, 850 mm (33-1/2 in)
11		218-5106		2	COTOVELO, 90º, 3/4"-16, 37º x 3/4"-16, O-Ring, Incl. Ref 12
12		237-6008		1	ANEL "O", 8-1, 90 Duro, .644" ID x .087" Thk, Boss seal
13		188027A2		2	CILINDRO CONJUNTO, 95 ID x 292 mm strk; Swing Cylinder, See Figure 08-62
14		87423356		1	MANGUEIRA CONJUNTO, 850 mm (33-1/2 in)
15		192971A1		2	ORIFICIO, Restrictor
19		218-5119		2	COTOVELO, 90º, 7/8"-14, 37º x 1 1/16"-12, O-Ring, Incl. Ref 20
20		237-6012		1	ANEL "O", 12-1, 90 Duro, .924 ID x .118" Thk, Boss Seal
21		D142787		2	ESPAÇADOR
22		214-1492		2	BRACADEIRA MANGUEIRA, #92, 5.38/6.25 Type F Worm, W/liner
23		87441076		2	MANGUEIRA CONJUNTO, 802 mm (31-19/32 in)
24		218-5106		2	COTOVELO, 90º, 3/4"-16, 37º x 3/4"-16, O-Ring, Incl. Ref 25
25		237-6008		1	ANEL "O", 8-1, 90 Duro, .644" ID x .087" Thk, Boss seal
26		87428158		2	MANGUEIRA CONJUNTO, 1194 mm (47 in)

SISTEMA HIDRÁULICO - CILINDRO, OSCILAÇÃO DA RETROESCAVADORA (MODELOS SEM CONTROLO AUTOMÁTICO)

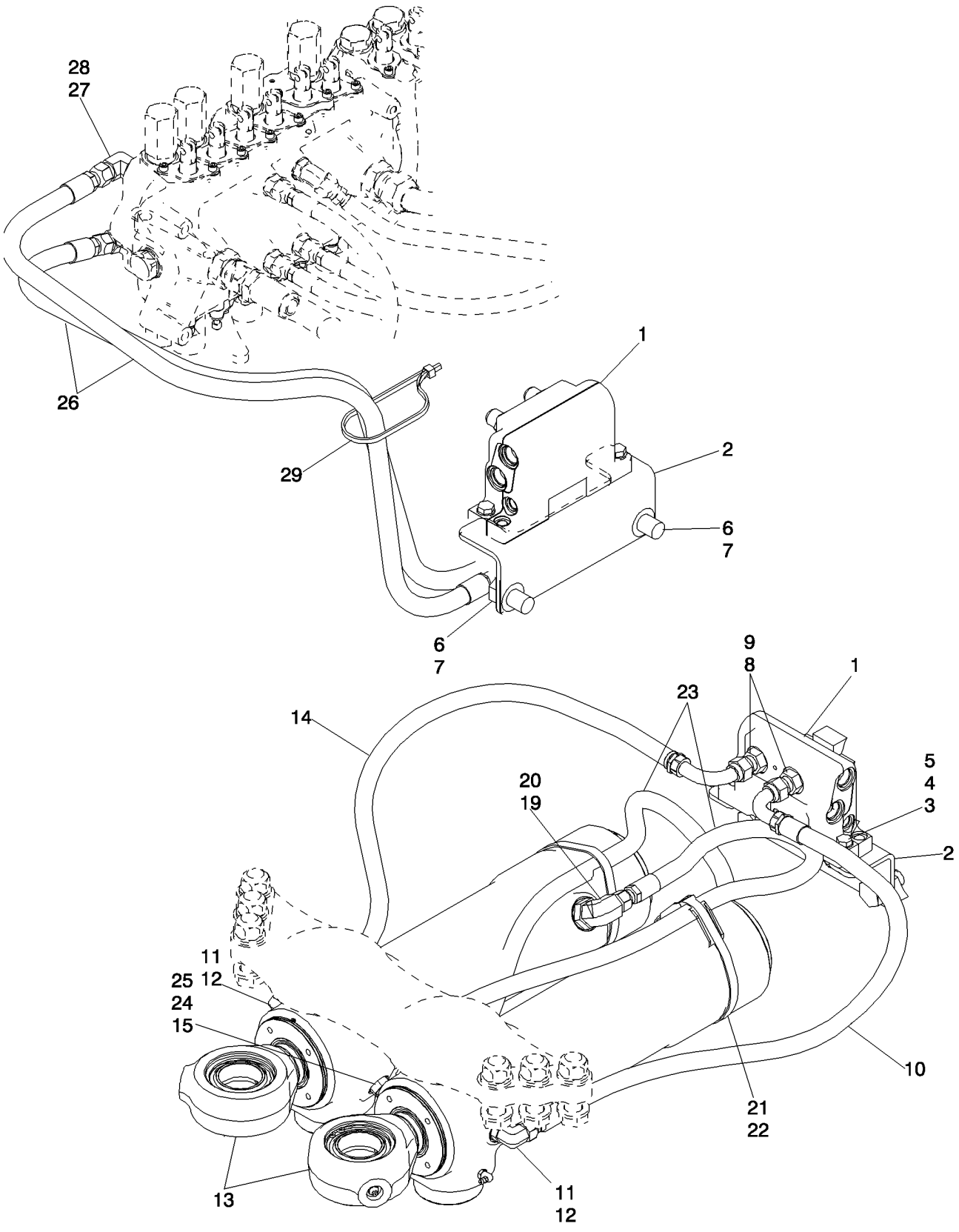

SISTEMA HIDRÁULICO - CILINDRO, OSCILAÇÃO DA RETROESCAVADORA (MODELOS SEM CONTROLO AUTOMÁTICO)

REF	FN	PART NUMBER	YR/SN	QTY	DESCRIPTION
27		218-5107		2	COTOVELO, 90º, 7/8"-14, 37º x 7/8"-14, O-Ring, Incl. Ref 28
28		237-6010		1	ANEL "O", 10-1, 90 Duro, .755" ID x .097" Thk
29		L18337		1	TIRA DE CABO, 9.95"-12.1" lg

SISTEMA HIDRÁULICO - CILINDRO, OSCILAÇÃO DA RETROESCAVADORA (MODELOS COM CONTROLO AUTOMÁTICO)

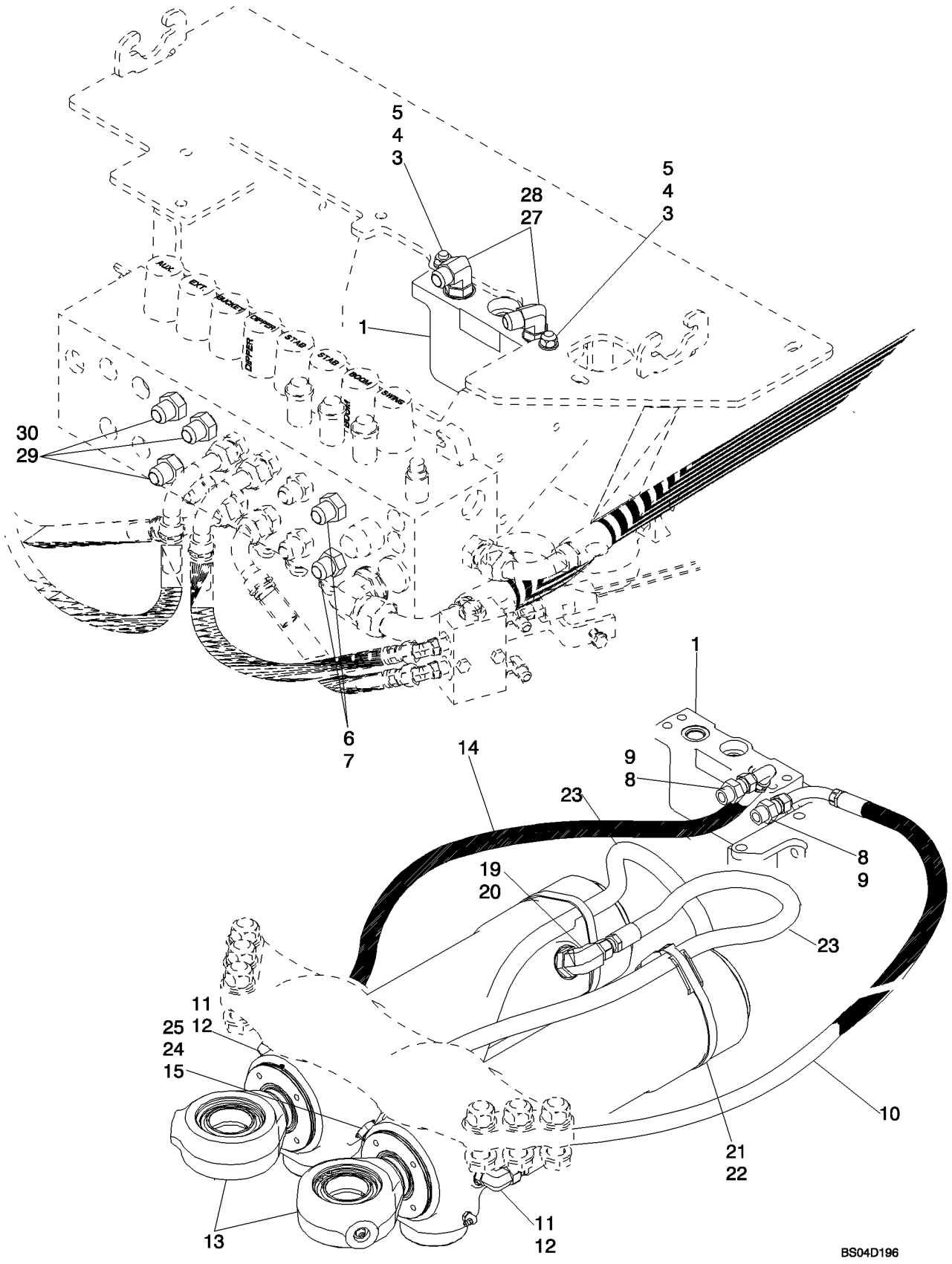

SISTEMA HIDRÁULICO - CILINDRO, OSCILAÇÃO DA RETROESCAVADORA (MODELOS COM CONTROLO AUTOMÁTICO)

REF	FN	PART NUMBER	YR/SN	QTY	DESCRIPTION
		REF			INSTRUCAO, MODELS WITH PILOT CONTROLS
1		87480653		1	VÁLVULA AMORTECEDORA, Swing Cushion; See Figure 08-55; Replaces 87449373
3		814-10045		2	PARAFUSO, Hex, M10 x 45, 8.8
4		895-11010		4	ARRUELA PLANA, M10 x 20 x 2
5		829-1410		2	PORCA, M10, Cl 10
6		218-5063		2	CONEXÃO, 7/8"-14, 37º x 1 1/16"-12, O-Ring, Incl. Ref 7
7		237-6012		1	ANEL "O", 12-1, 90 Duro, .924 ID x .118" Thk
8		218-5062		2	CONEXÃO, 7/8"-14, 37º x 7/8"-14, O-Ring, Incl. Ref 9
9		237-6010		1	ANEL "O", 10-1, 90 Duro, .755" ID x .097" Thk
10		87440812		1	MANGUEIRA CONJUNTO, 950 mm (37-13/32 in)
11		218-5106		2	COTOVELO, 90º, 3/4"-16, 37º x 3/4"-16, O-Ring, Incl. Ref 12
12		237-6008		1	ANEL "O", 8-1, 90 Duro, .644" ID x .087" Thk, Boss seal
13		188027A2		2	CILINDRO CONJUNTO, 95 ID x 292 mm strk; Swing Cylinder, See Figure 08-62
14		87450698		1	MANGUEIRA CONJUNTO, 1285 mm (50-19/32 in)
15		192971A1		2	ORIFICIO, Restrictor
19		218-5119		2	COTOVELO, 90º, 7/8"-14, 37º x 1 1/16"-12, O-Ring, Incl. Ref 20
20		237-6012		1	ANEL "O", 12-1, 90 Duro, .924 ID x .118" Thk, Boss Seal
21		D142787		2	ESPAÇADOR
22		214-1492		2	BRACADEIRA MANGUEIRA, #92, 5.38/6.25 Type F Worm, W/liner
23		87441076		2	MANGUEIRA CONJUNTO, 802 mm (31-19/32 in)
24		218-5106		2	COTOVELO, 90º, 3/4"-16, 37º x 3/4"-16, O-Ring, Incl. Ref 25
25		237-6008		1	ANEL "O", 8-1, 90 Duro, .644" ID x .087" Thk, Boss seal
27		218-5107		2	COTOVELO, 90º, 7/8"-14, 37º x 7/8"-14, O-Ring, Incl. Ref 28
28		237-6010		1	ANEL "O", 10-1, 90 Duro, .755" ID x .097" Thk

SISTEMA HIDRÁULICO - CILINDRO, OSCILAÇÃO DA RETROESCAVADORA (MODELOS COM CONTROLO AUTOMÁTICO)

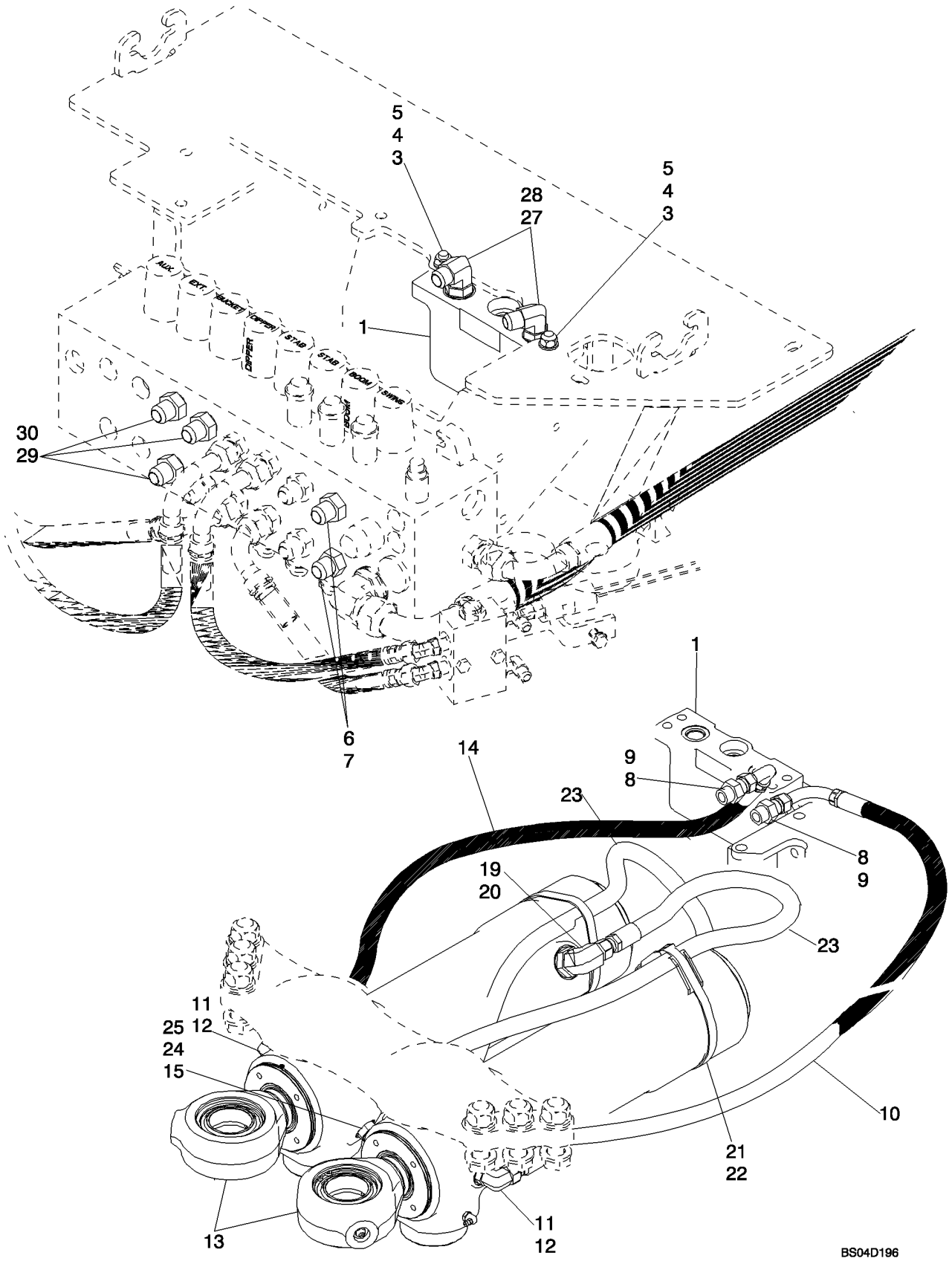

SISTEMA HIDRÁULICO - CILINDRO, OSCILAÇÃO DA RETROESCAVADORA (MODELOS COM CONTROLO AUTOMÁTICO)

REF	FN	PART NUMBER	YR/SN	QTY	DESCRIPTION
29		218-5063		6	CONEXÃO, 7/8"-14, 37º x 1 1/16"-12, O-Ring, Incl. Ref 30
30		237-6012		1	ANEL "O", 12-1, 90 Duro, .924 ID x .118" Thk

SISTEMA HIDRÁULICO - CILINDRO, LANÇA DA RETROESCAVADORA

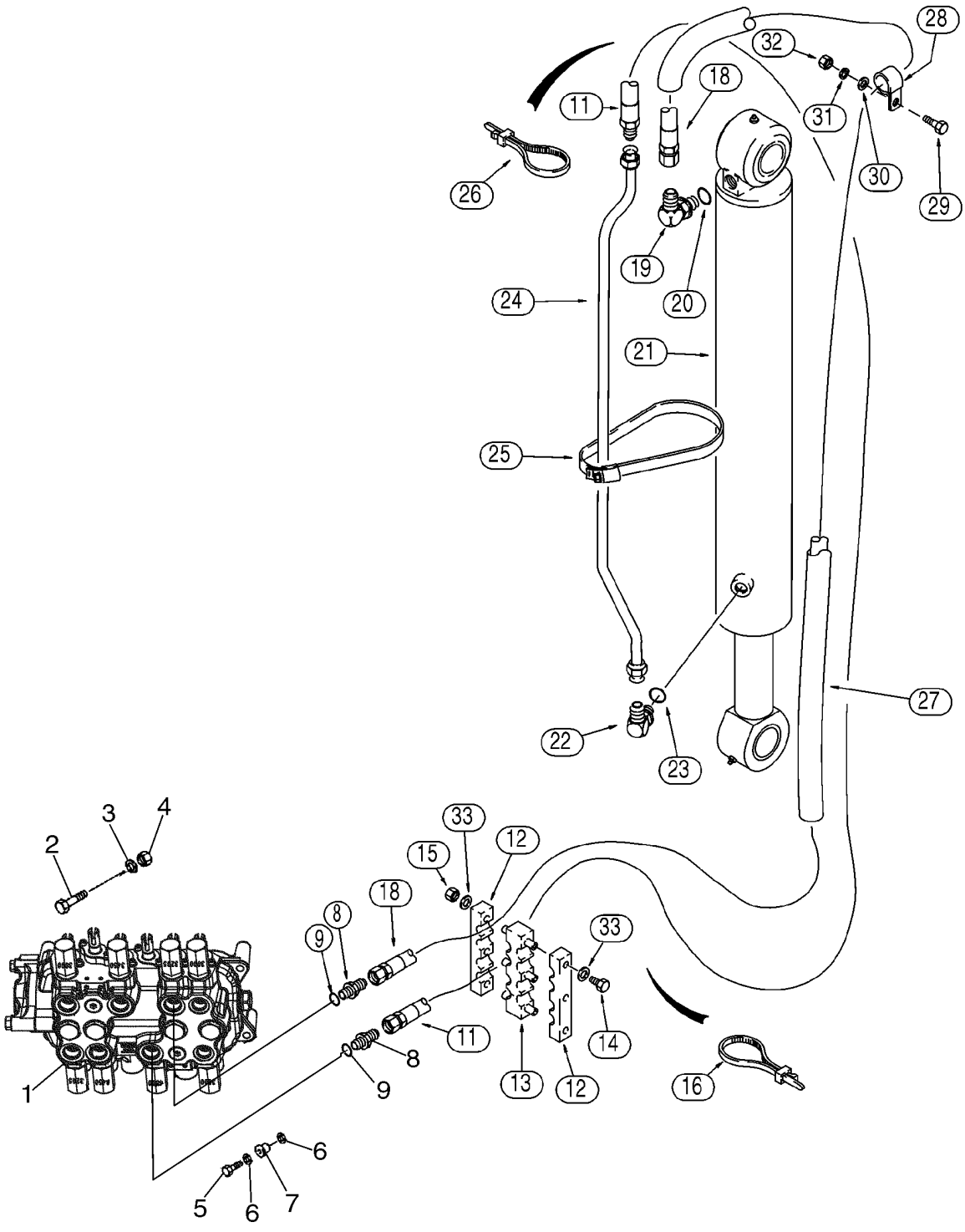

BS03M026

SISTEMA HIDRÁULICO - CILINDRO, LANÇA DA RETROESCAVADORA

REF	FN	PART NUMBER	YR/SN	QTY	DESCRIPTION
1		REF		1	INSTRUCAO, Valve Assy, Control; Backhoe Control Valve; For Correct Assembly and Components, See Figures 08-32 - 08-39
2		814-10080		2	PARAFUSO, Hex, M10 x 80, 8.8
3		896-11010		2	ARRUELA PLANA, M10 x 21.5 x 2.5, HT
4		829-1410		2	PORCA, M10, Cl 10
5		614-10035		1	PARAFUSO, Hex, M10 x 35, 8.8, Full Thd
6		496-41041		2	ARRUELA PLANA, 13/32" x 1 1/8" x .134"
7		D52276		1	ISOLADOR
8		218-5063		2	CONEXÃO, 7/8"-14, 37º x 1 1/16"-12, O-Ring, Incl. Ref 9
9		237-6012		1	ANEL "O", 12-1, 90 Duro, .924 ID x .118" Thk, Boss Seal
11		397786A1		1	MANGUEIRA CONJUNTO, 3470 mm (136-5/8 in), Lower Valve Port
12		178951A1		2	BRACADEIRA
13		178952A1		1	BRACADEIRA
14		814-10120		3	PARAFUSO, Hex, M10 x 120, 8.8
15		832-10410		3	CONTRA PORCA, M10 x 1.5, Cl 8
16		L18337		4	TIRA DE CABO, 9.95"-12.1" lg
18		393369A1		1	MANGUEIRA CONJUNTO, 3495 mm (137-5/8 in)
19		218-5107		1	COTOVELO, 90º, 7/8"-14, 37º x 7/8"-14, O-Ring, Incl. Ref 20
20		237-6010		1	ANEL "O", 10-1, 90 Duro, .755" ID x .097" Thk, Boss Seal
21		189653A2		1	CILINDRO CONJUNTO, 114 ID x 982 mm strk, Boom Cylinder, See Figure 08-63
22		218-5107		1	COTOVELO, 90º, 7/8"-14, 37º x 7/8"-14, O-Ring, Incl. Ref 23
23		237-6010		1	ANEL "O", 10-1, 90 Duro, .755" ID x .097" Thk, Boss Seal
24		357471A1		1	TUBO CONJUNTO
25		214-1488		2	BRACADEIRA MANGUEIRA, #88, 5.12/6.00 Type F Worm
26		L18337		4	TIRA DE CABO, 9.95"-12.1" lg

SISTEMA HIDRÁULICO - CILINDRO, LANÇA DA RETROESCAVADORA

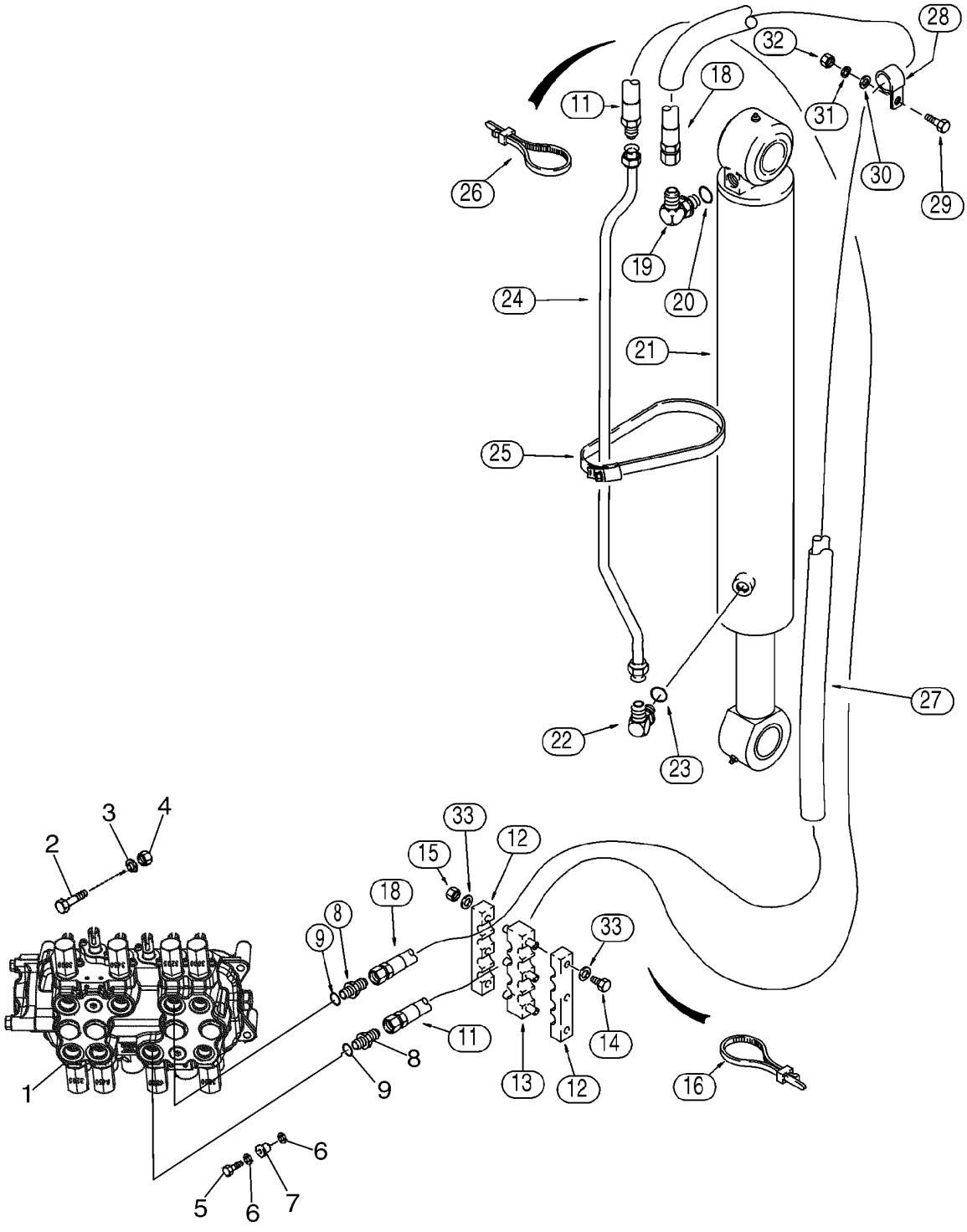

BS03M026

SISTEMA HIDRÁULICO - CILINDRO, LANÇA DA RETROESCAVADORA

REF	FN	PART NUMBER	YR/SN	QTY	DESCRIPTION
27		224057A1		2	MANGUEIRA RÍGIDA, 946 mm (37-15/64 in)
28		515-23254		1	PRENDEDOR, 1", Insul, 3/8" Bolt
28		R24840		1	BRACADEIRA, 1-1/8 in ID
29		614-10035		2	PARAFUSO, Hex, M10 x 35, 8.8, Full Thd
30		895-11010		2	ARRUELA PLANA, M10 x 20 x 2
31		892-11010		2	ARRUELA-TRAVA, M10
32		829-1410		2	PORCA, M10, Cl 10
33		895-11010		6	ARRUELA PLANA, M10 x 20 x 2

SISTEMA HIDRÁULICO -

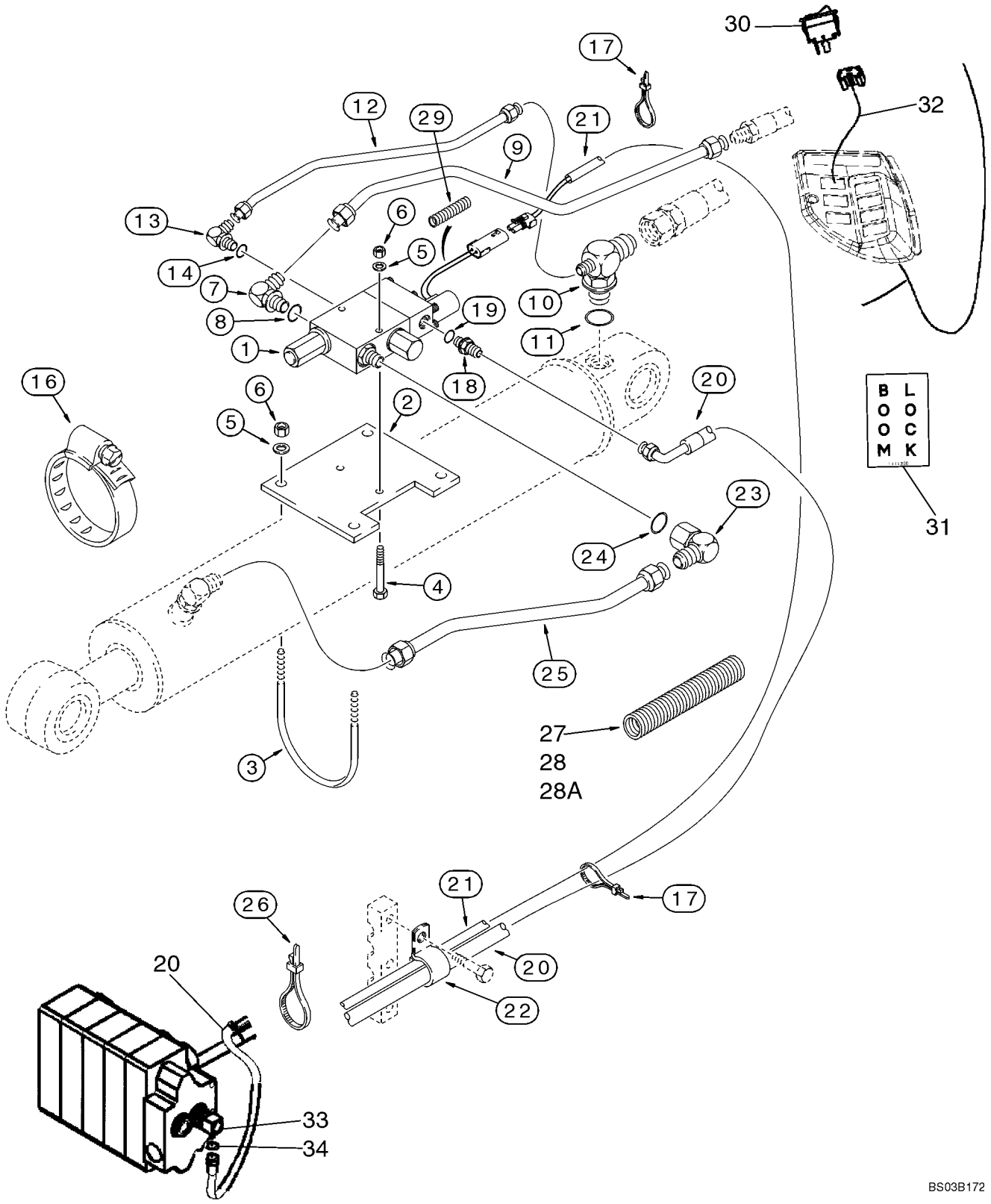

SISTEMA HIDRÁULICO -

REF	FN	PART NUMBER	YR/SN	QTY	DESCRIPTION
		399227A1		1	JOGO, Backhoe Boom Lock, Incl. Ref 1 - 34 and an Instruction Sheet; Also Includes Boom Lock Valve On Figure 08-55A
1		189957A1		1	VALVULA, Solenoid, Backhoe Boom Lock, Incl. (2) 321-6046 Warning Decals; See Figure 08-55A
2		D150054		1	PLACA ESPESSA, Valve Mounting
3		D150053		2	PARAFUSO, 3/8 in
4		413-648		2	PARAFUSO, Hex, 3/8"-16 x 3", G5
5		495-11041		6	ARRUELA PLANA, 3/8", SAE
6		231-1446		6	CONTRA PORCA, 3/8"-16, GB
7		218-5118		1	COTOVELO, 90º, 1 1/16"-12, 37º x 1 5/16"-12, O-Ring, Incl. Ref 8
8		237-6016		1	ANEL "O", 16-1, 90 Duro, 1.171" ID x .118" Thk, Boss Seal
9		191756A1		1	TUBO, Valve Port; Attaches to Ref 11 Hose on Figure 08-10
10		191063A1		1	CONEXAO, Reducer, Boom Cylinder Closed End; Attaches to Ref 18 Hose, Figure 08-10
11		237-6010		1	ANEL "O", 10-1, 90 Duro, .755" ID x .097" Thk, Boss Seal
12		191790A1		1	TUBO, Pilot Port
13		218-5283		1	COTOVELO, 90º, 7/16"-20, 37º x 9/16"-18, O-Ring, Incl. Ref 14
14		237-6006		1	ANEL "O", 6-1, 90 Duro, .468" ID x .078" Thk, Boss Seal
16		214-31104		1	BRACADEIRA MANGUEIRA, 5.75/6.625 HD Worm
17		L18337		15	TIRA DE CABO, 9.95"-12.1" lg
18		218-5359		1	CONEXÃO, 7/16"-20, 37º x 3/4"-16, O-Ring, Incl. Ref 19
19		237-6008		1	ANEL "O", 8-1, 90 Duro, .644" ID x .087" Thk, Boss seal
20		189103A1		1	MANGUEIRA, 3700 mm (145-11/16 in), Return; Attaches to Elbow at Backhoe Valve
21		189263A1		1	CHICOTE, Boom Lock Valve to Control Tower Harness

SISTEMA HIDRÁULICO -

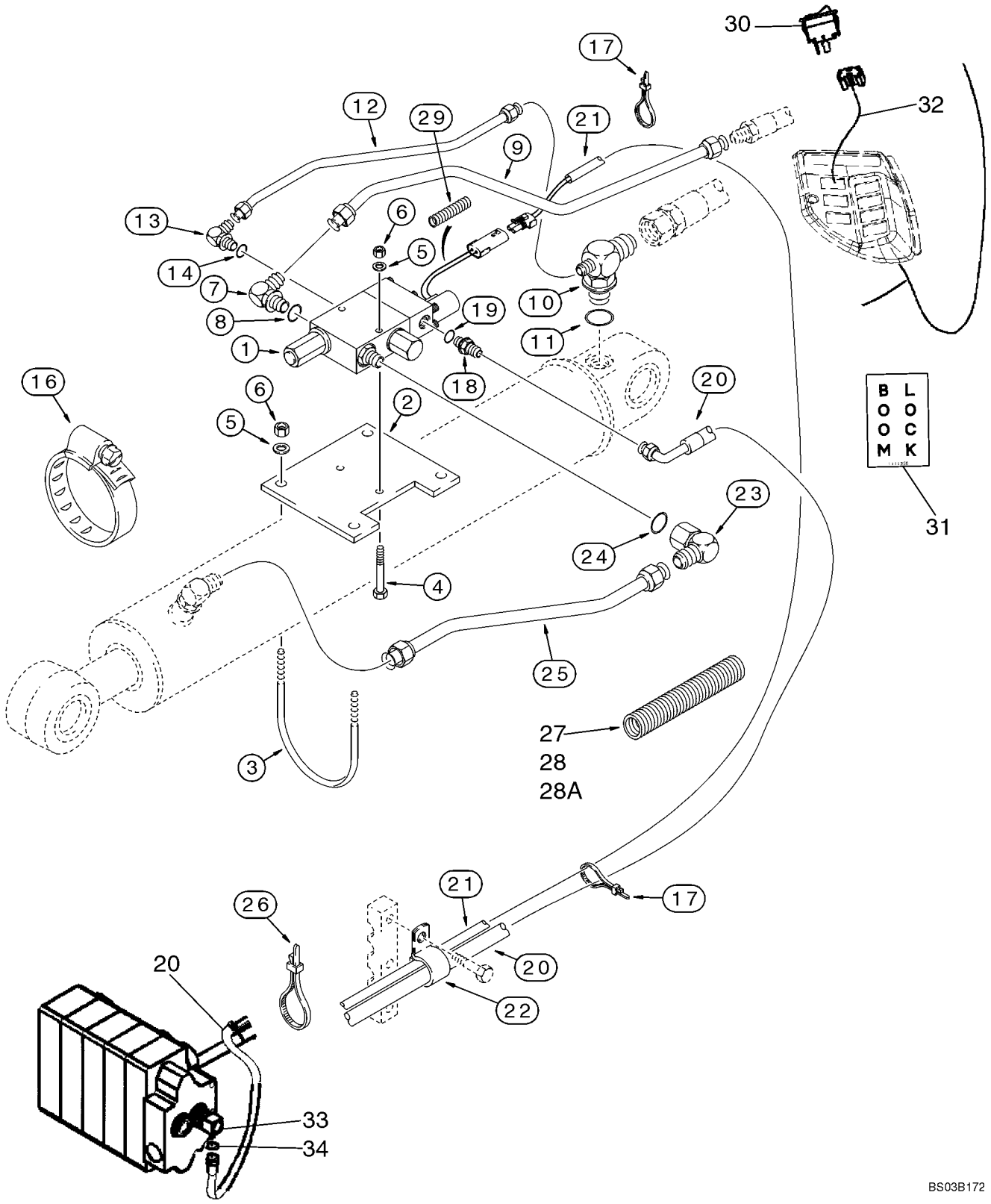

SISTEMA HIDRÁULICO -

REF	FN	PART NUMBER	YR/SN	QTY	DESCRIPTION
22		515-25190		1	PRENDEDOR, 3/4", Insul, 1/2" Bolt, Return Hose
23		218-5382		1	COTOVELO, 90º, 1 1/16"-12, 37º x 1 5/16"-12, 37º Fem Sw, Incl. Ref 24
24		237-6016		1	ANEL "O", 16-1, 90 Duro, 1.171" ID x .118" Thk, Boss Seal
25		187612A1		1	TUBO, Boom Lock Valve to Boom Cylinder Rod End, See Figure 08-10, Ref 22 for Elbow
26		D147773		1	BRACADEIRA, Tie, 11 in
27		226582A1		1	PROTETOR, 1850 mm lg, Harness Guard, Below Floor Plate
28		220276A1		1	MANGUEIRA RÍGIDA, 610 mm lg, Harness Ahead of Swing Tower Opening
28A		404907A1		1	MANGUEIRA RÍGIDA, 740 mm lg, Harness Behind Swing Tower Opening
29		1999528C1		1	CONDUITE CONJUNTO, 455 mm lg, Solenoid Wire
30		400016A1		1	INTERRUPTOR, Rocker, Boom Lock
31		L111356		1	DECALCOMANIA, Boom Lock
32		399246A1		1	CHICOTE, Cab To Solenoid
33		189414A1		1	COTOVELO, 90 deg, Incl. Ref 34
34		237-6010		1	ANEL "O", 10-1, 90 Duro, .755" ID x .097" Thk, Boss Seal

SISTEMA HIDRÁULICO - CILINDRO, IMERSOR DA RETROESCAVADORA

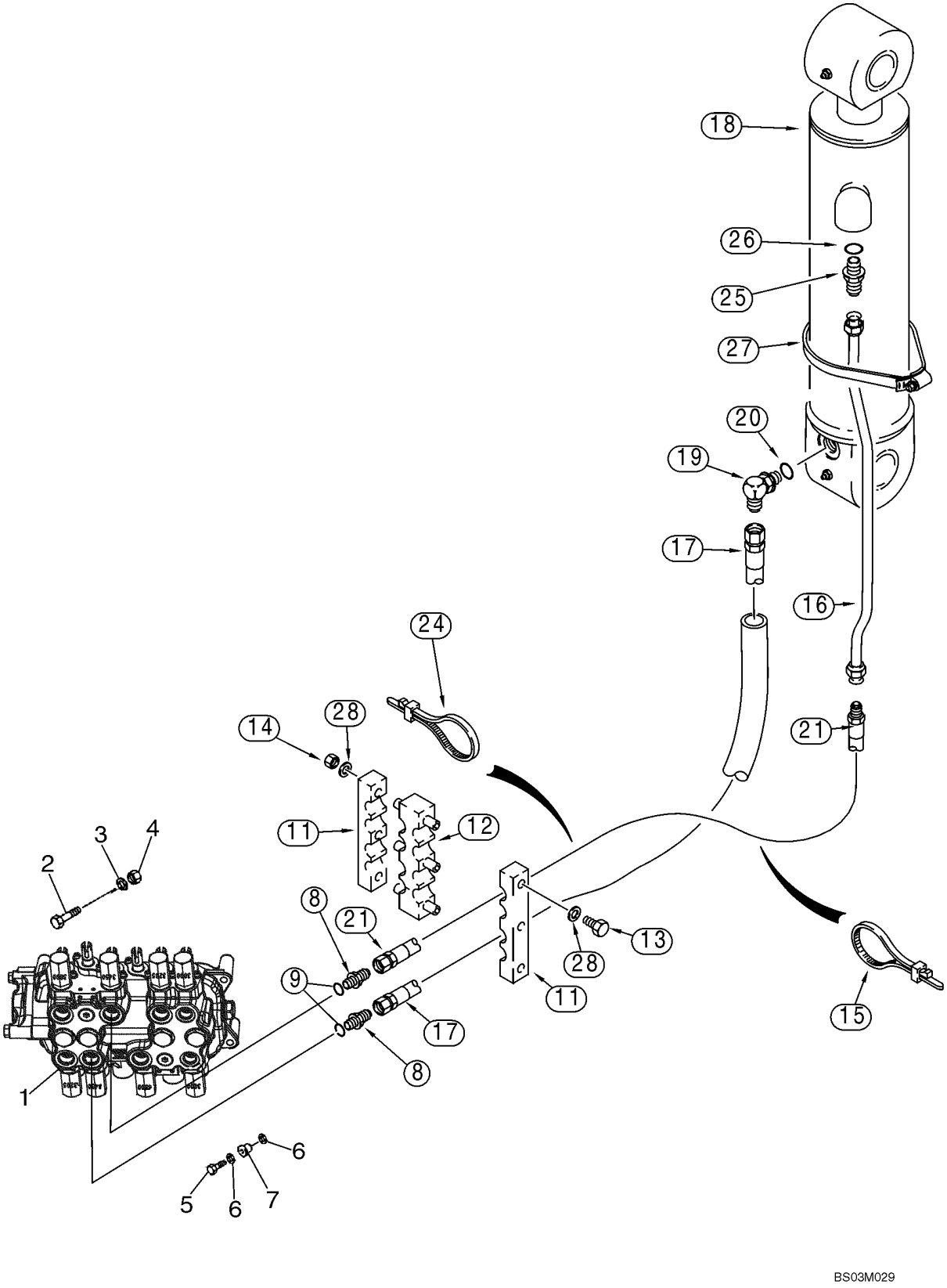

SISTEMA HIDRÁULICO - CILINDRO, IMERSOR DA RETROESCAVADORA

REF	FN	PART NUMBER	YR/SN	QTY	DESCRIPTION
1		REF		1	INSTRUCAO, Valve Assy, Control; Backhoe Control Valve; For Correct Assembly and Components, See Figures 08-32 - 08-39
2		814-10080		2	PARAFUSO, Hex, M10 x 80, 8.8
3		896-11010		2	ARRUELA PLANA, M10 x 21.5 x 2.5, HT
4		829-1410		2	PORCA, M10, Cl 10
5		614-10035		1	PARAFUSO, Hex, M10 x 35, 8.8, Full Thd
6		496-41041		2	ARRUELA PLANA, 13/32" x 1 1/8" x .134"
7		D52276		1	ISOLADOR
8		218-5063		2	CONEXÃO, 7/8"-14, 37º x 1 1/16"-12, O-Ring, Incl. Ref 9
9		237-6012		1	ANEL "O", 12-1, 90 Duro, .924 ID x .118" Thk, Boss Seal
11		178951A1		2	BRACADEIRA
12		178952A1		1	BRACADEIRA
13		814-10120		3	PARAFUSO, Hex, M10 x 120, 8.8
14		832-10410		3	CONTRA PORCA, M10 x 1.5, Cl 8
15		L18337		4	TIRA DE CABO, 9.95"-12.1" lg
16		357469A1		1	TUBO CONJUNTO
17		393371A1		1	MANGUEIRA CONJUNTO, 2025 mm (79-3/4 in), Lower Valve Port
18		233114A2		1	CILINDRO CONJUNTO, 108 ID x 686 mm strk; Dipper Cylinder, See Figure 08-64
19		218-5107		1	COTOVELO, 90º, 7/8"-14, 37º x 7/8"-14, O-Ring, Incl. Ref 20
20		237-6010		1	ANEL "O", 10-1, 90 Duro, .755" ID x .097" Thk, Boss Seal
21		397787A1		1	MANGUEIRA CONJUNTO, 2025 mm (79-3/4 in), Upper Valve Port
24		L18337		2-4	TIRA DE CABO, 9.95"-12.1" lg
25		218-5062		1	CONEXÃO, 7/8"-14, 37º x 7/8"-14, O-Ring, Incl. Ref 26
26		237-6010		1	ANEL "O", 10-1, 90 Duro, .755" ID x .097" Thk
27		214-1488		1	BRACADEIRA MANGUEIRA, #88, 5.12/6.00 Type F Worm

SISTEMA HIDRÁULICO - CILINDRO, IMERSOR DA RETROESCAVADORA

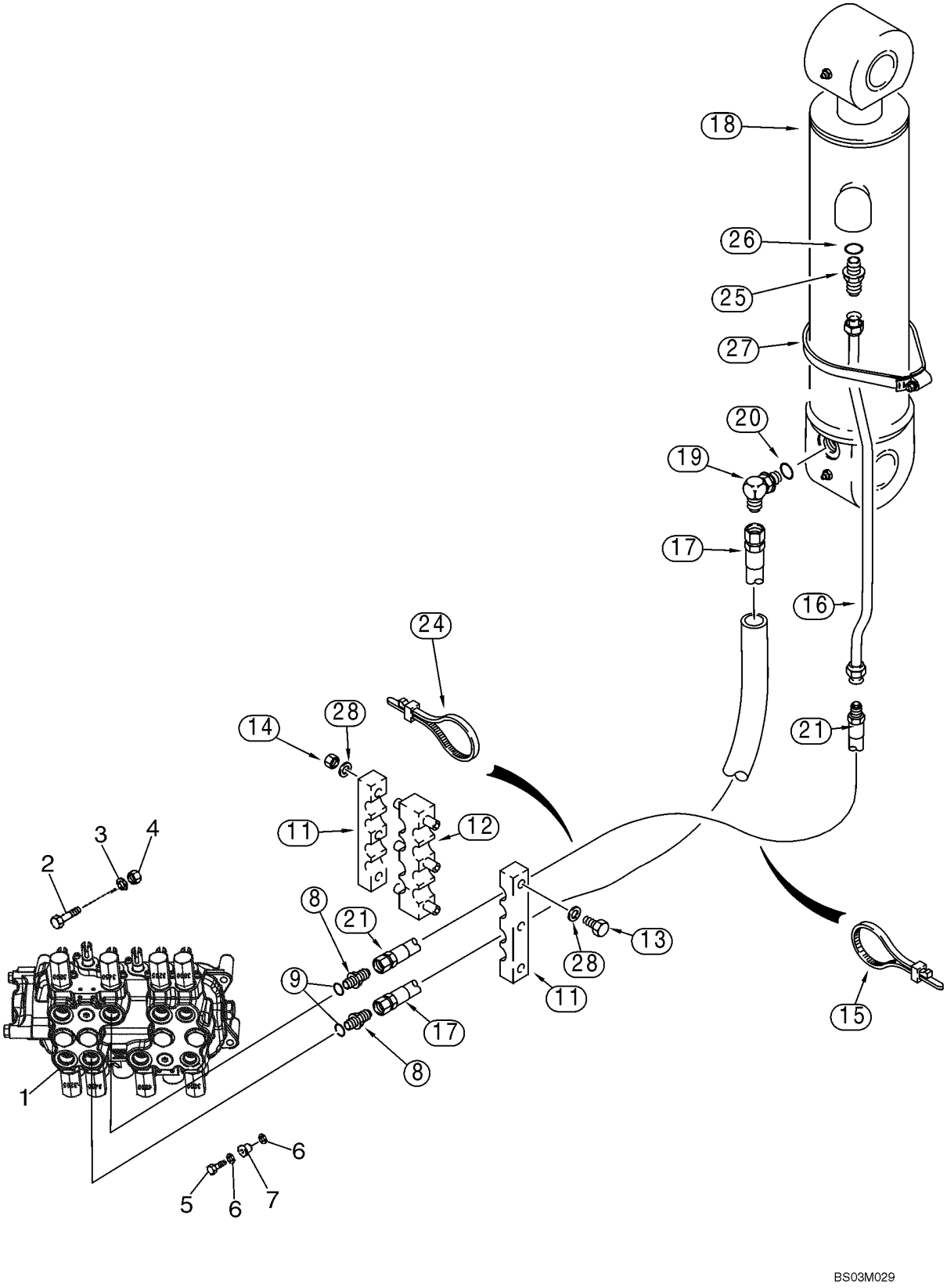

SISTEMA HIDRÁULICO - CILINDRO, IMERSOR DA RETROESCAVADORA

REF	FN	PART NUMBER	YR/SN	QTY	DESCRIPTION
28		895-11010		6	ARRUELA PLANA, M10 x 20 x 2

SISTEMA HIDRÁULICO - CILINDRO, BALDE DA RETROESCAVADORA (MODELOS SEM IMERSOR EXTENSÍVEL)

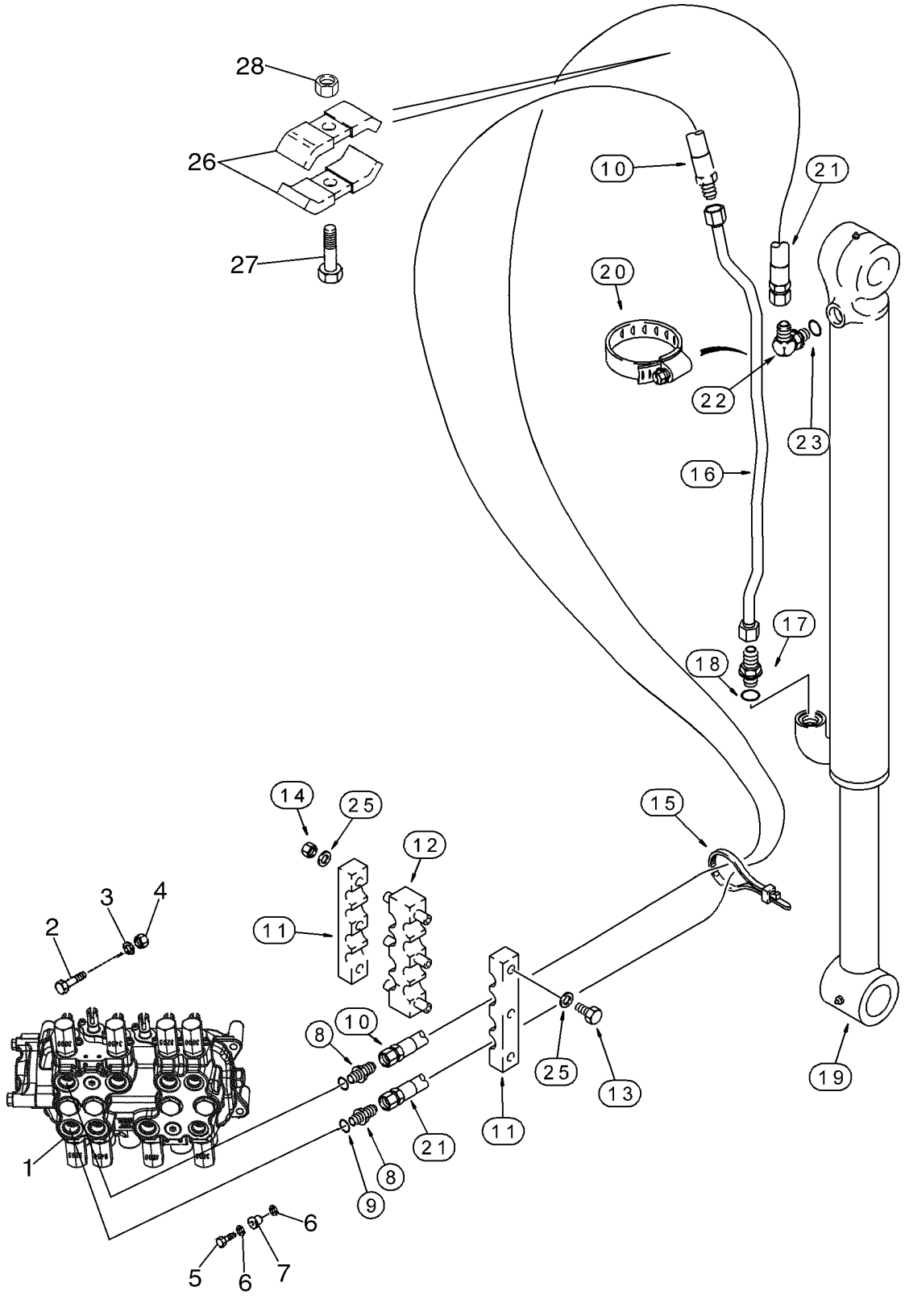

SISTEMA HIDRÁULICO - CILINDRO, BALDE DA RETROESCAVADORA (MODELOS SEM IMERSOR EXTENSÍVEL)

REF	FN	PART NUMBER	YR/SN	QTY	DESCRIPTION
1		REF		1	INSTRUCAO, Valve Assy, Control; Backhoe Control Valve; For Correct Assembly and Components, See Figures 08-32, 08-33, 08-36, 08-38
2		814-10080		2	PARAFUSO, Hex, M10 x 80, 8.8
3		896-11010		2	ARRUELA PLANA, M10 x 21.5 x 2.5, HT
4		829-1410		2	PORCA, M10, Cl 10
5		614-10035		1	PARAFUSO, Hex, M10 x 35, 8.8, Full Thd
6		496-41041		2	ARRUELA PLANA, 13/32" x 1 1/8" x .134"
7		D52276		1	ISOLADOR
8		218-5063		2	CONEXÃO, 7/8"-14, 37º x 1 1/16"-12, O-Ring, Incl. Ref 9
9		237-6012		1	ANEL "O", 12-1, 90 Duro, .924 ID x .118" Thk, Boss Seal
10		397788A1		1	MANGUEIRA CONJUNTO, 3860 mm (152 in)
11		178951A1		2	BRACADEIRA
12		178952A1		1	BRACADEIRA
13		814-10120		3	PARAFUSO, Hex, M10 x 120, 8.8
14		832-10410		3	CONTRA PORCA, M10 x 1.5, Cl 8
15		L18337		2-4	TIRA DE CABO, 9.95"-12.1" lg
16		396339A1		1	TUBO CONJUNTO, Models Without Backhoe Auxiliary Hydraulics
16		357470A1		1	TUBO CONJUNTO, Models With Backhoe Auxiliary Hydraulics
17		218-5062		1	CONEXÃO, 7/8"-14, 37º x 7/8"-14, O-Ring, Incl. Ref 18
18		237-6010		1	ANEL "O", 10-1, 90 Duro, .755" ID x .097" Thk, Boss Seal
19		128760A1		1	CILINDRO CONJUNTO, 83 ID x 872 mm strk; Bucket Cylinder, See Figure 08-65
20		214-1464		1	BRACADEIRA MANGUEIRA, #64, 3.56/4.50 Type F Worm
21		393360A1		1	MANGUEIRA CONJUNTO, 3860 mm (152 in)
22		218-5107		1	COTOVELO, 90º, 7/8"-14, 37º x 7/8"-14, O-Ring, Incl. Ref 23
23		237-6010		1	ANEL "O", 10-1, 90 Duro, .755" ID x .097" Thk

SISTEMA HIDRÁULICO - CILINDRO, BALDE DA RETROESCAVADORA (MODELOS SEM IMERSOR EXTENSÍVEL)

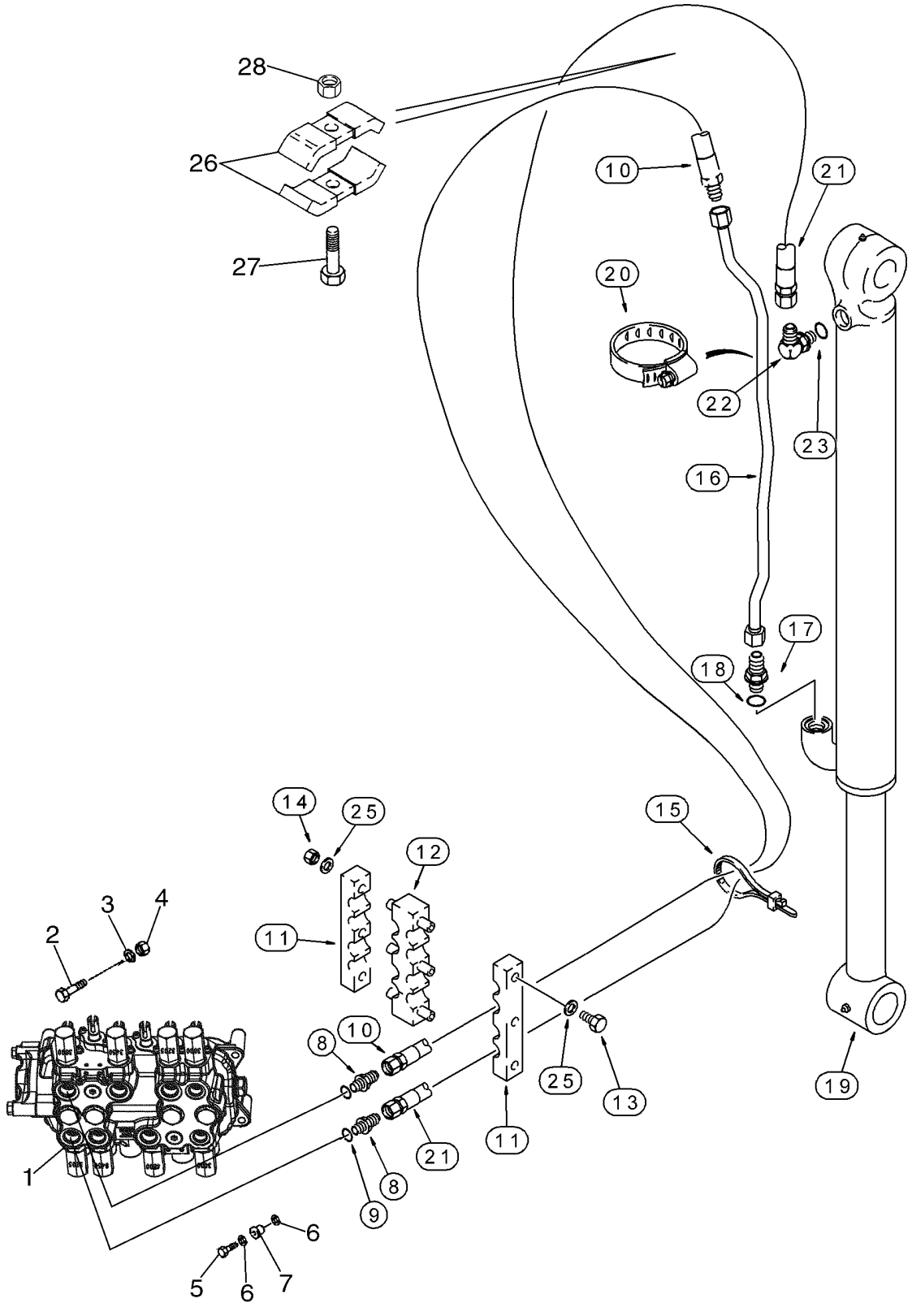

SISTEMA HIDRÁULICO - CILINDRO, BALDE DA RETROESCAVADORA (MODELOS SEM IMERSOR EXTENSÍVEL)

REF	FN	PART NUMBER	YR/SN	QTY	DESCRIPTION
25		895-11010		6	ARRUELA PLANA, M10 x 20 x 2
26		D143846		2	FREIO, Clamp
27		814-10055		1	PARAFUSO, Hex, M10 x 55, 8.8
28		832-10410		1	CONTRA PORCA, M10 x 1.5, Cl 8

SISTEMA HIDRÁULICO - CILINDRO, BALDE DA RETROESCAVADORA (MODELOS COM IMERSOR EXTENSÍVEL)

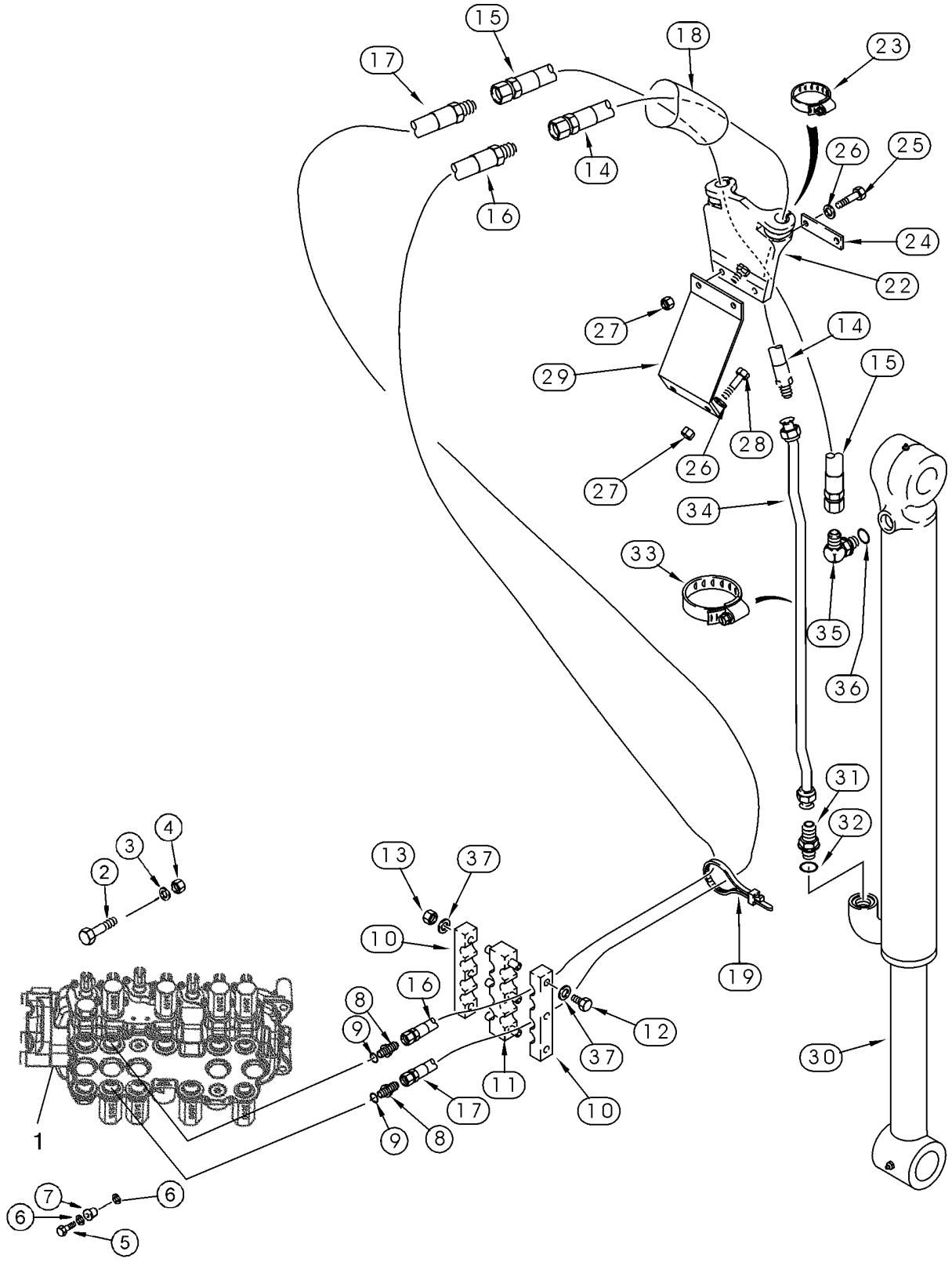

SISTEMA HIDRÁULICO - CILINDRO, BALDE DA RETROESCAVADORA (MODELOS COM IMERSOR EXTENSÍVEL)

REF	FN	PART NUMBER	YR/SN	QTY	DESCRIPTION
1		REF		1	INSTRUCAO, Valve Assy, Control; Backhoe Control Valve; For Correct Assembly and Components, See Figures 08-34, 08-35, 08-37, 08-39
2		814-10080		2	PARAFUSO, Hex, M10 x 80, 8.8
3		896-11010		2	ARRUELA PLANA, M10 x 21.5 x 2.5, HT
4		829-1410		2	PORCA, M10, Cl 10
5		614-10035		1	PARAFUSO, Hex, M10 x 35, 8.8, Full Thd
6		496-41041		2	ARRUELA PLANA, 13/32" x 1 1/8" x .134"
7		D52276		1	ISOLADOR
8		218-5063		2	CONEXÃO, 7/8"-14, 37º x 1 1/16"-12, O-Ring, Incl. Ref 9
9		237-6012		1	ANEL "O", 12-1, 90 Duro, .924 ID x .118" Thk
10		178951A1		2	BRACADEIRA
11		178952A1		1	BRACADEIRA
12		814-10120		3	PARAFUSO, Hex, M10 x 120, 8.8
13		832-10410		3	CONTRA PORCA, M10 x 1.5, Cl 8
14		365309A1		1	MANGUEIRA CONJUNTO, 2052 mm (80-3/4 in)
15		143400A1		1	MANGUEIRA, 2052 mm (80-3/4 in)
16		393361A1		1	MANGUEIRA CONJUNTO, 3048 mm (120 in)
17		393362A1		1	MANGUEIRA CONJUNTO, 3048 mm (120 in)
18		87455961		1	TUBO PLASTICO, Sleeve; 87.4 Flat ID x 2000 mm
19		L18337		2-5	TIRA DE CABO, 9.95"-12.1" lg
22		184297A1		1	SUPORTE
23		214-3132		2	BRACADEIRA MANGUEIRA, 1.25/2.125 HD Worm
24		101479A1		1	SUPORTE
25		814-10045		2	PARAFUSO, Hex, M10 x 45, 8.8
26		895-11010		4	ARRUELA PLANA, M10 x 20 x 2
27		832-10410		4	CONTRA PORCA, M10 x 1.5, Cl 8
28		614-10030		2	PARAFUSO, Hex, M10 x 30, 8.8
29		183736A1		1	SUPORTE
30		128760A1		1	CILINDRO CONJUNTO, 83 ID x 872 mm strk; Bucket Cylinder, See Figure 08-65
31		218-5062		1	CONEXÃO, 7/8"-14, 37º x 7/8"-14, O-Ring, Incl. Ref 32
32		237-6010		1	ANEL "O", 10-1, 90 Duro, .755" ID x .097" Thk

SISTEMA HIDRÁULICO - CILINDRO, BALDE DA RETROESCAVADORA (MODELOS COM IMERSOR EXTENSÍVEL)

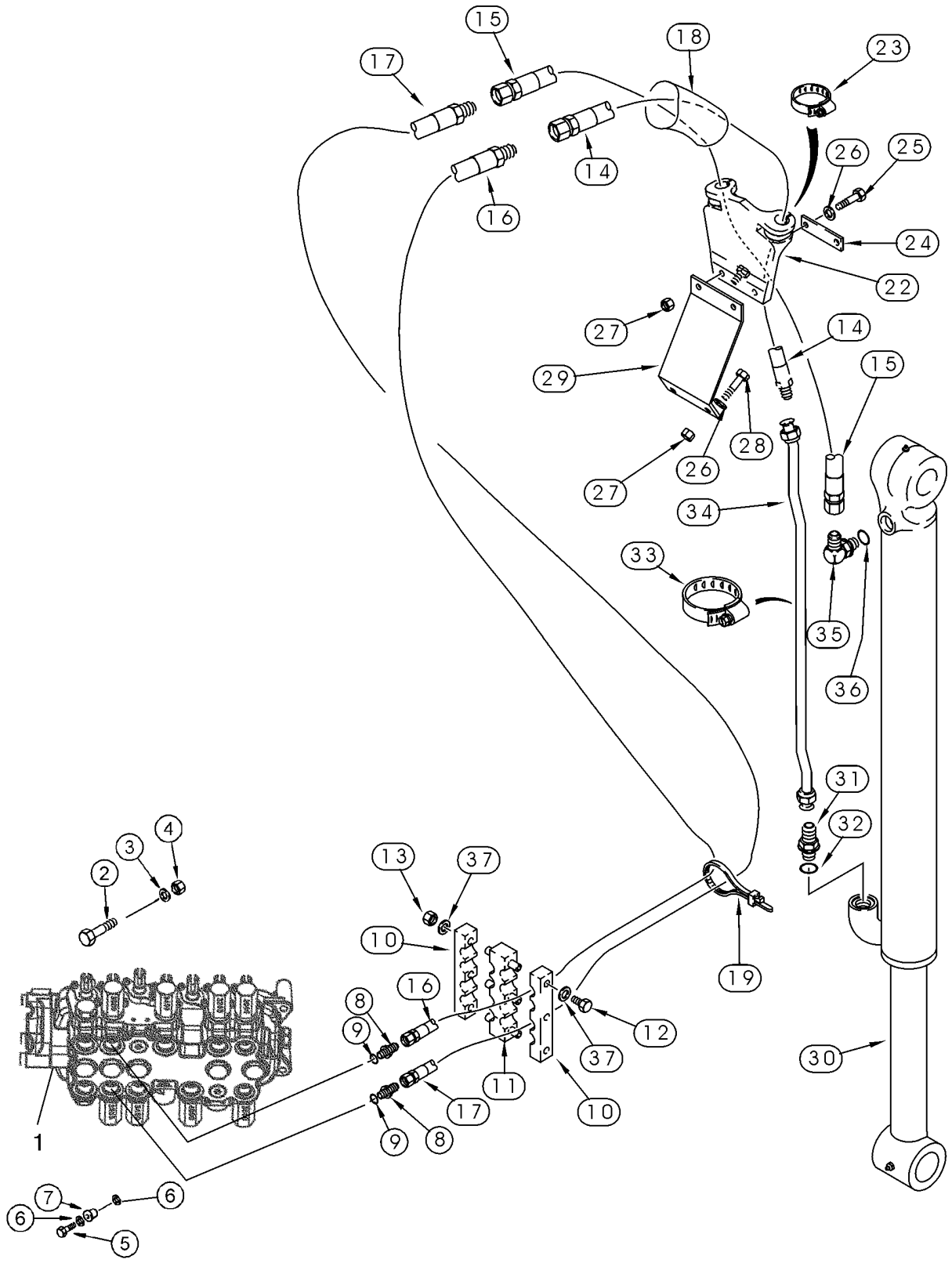

SISTEMA HIDRÁULICO - CILINDRO, BALDE DA RETROESCAVADORA (MODELOS COM IMERSOR EXTENSÍVEL)

REF	FN	PART NUMBER	YR/SN	QTY	DESCRIPTION
33		214-1464		2	BRACADEIRA MANGUEIRA, #64, 3.56/4.50 Type F Worm
34		396339A1		1	TUBO CONJUNTO, Models Without Auxiliary Hydraulics
34		357470A1		1	TUBO CONJUNTO, Models With Auxiliary Hydraulics
35		218-5107		1	COTOVELO, 90º, 7/8"-14, 37º x 7/8"-14, O-Ring, Incl. Ref 36
36		237-6010		1	ANEL "O", 10-1, 90 Duro, .755" ID x .097" Thk
37		895-11010		6	ARRUELA PLANA, M10 x 20 x 2

SISTEMA HIDRÁULICO - CILINDRO, IMERSOR EXTENSÍVEL DA RETROESCAVADORA

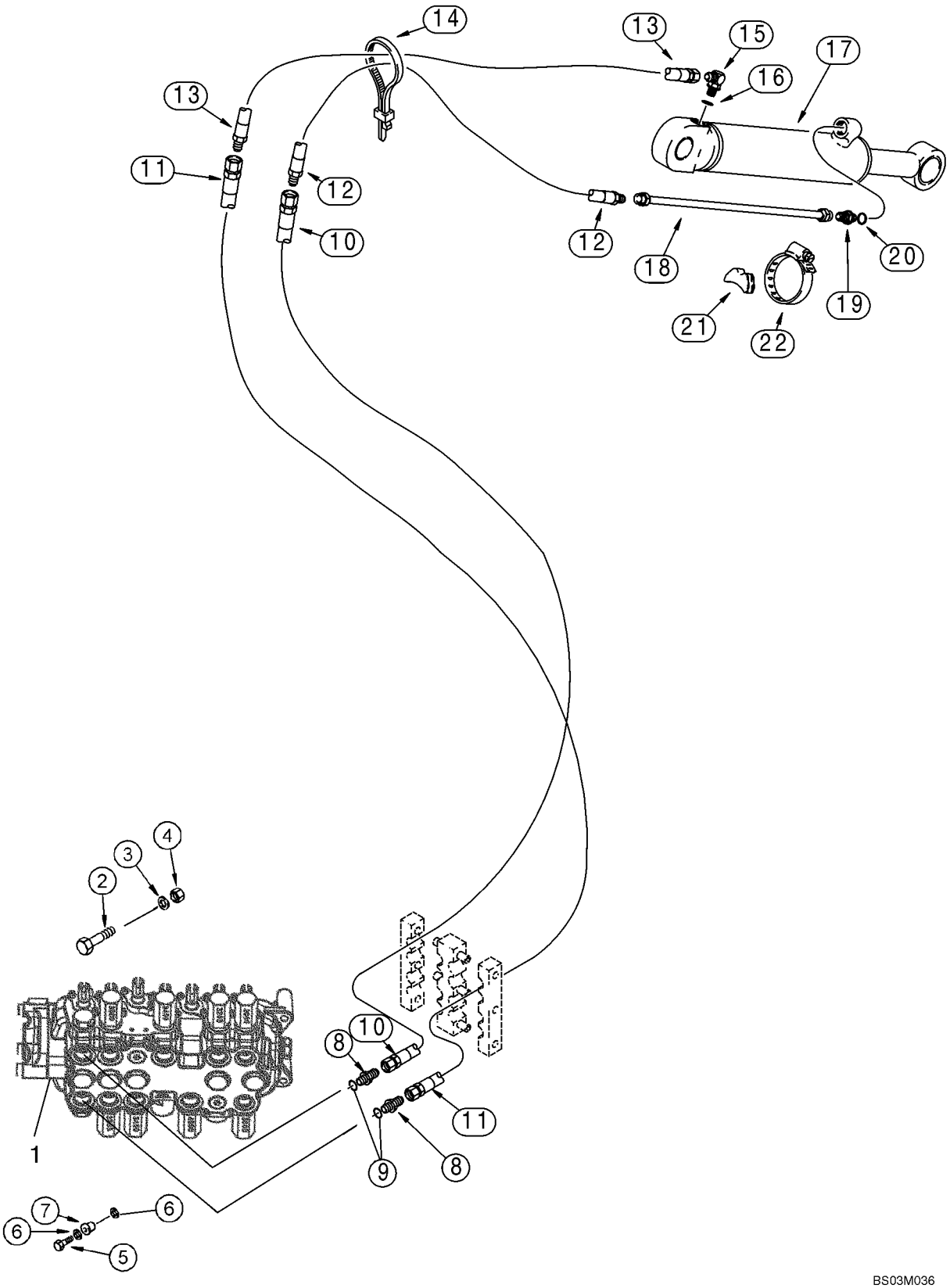

SISTEMA HIDRÁULICO - CILINDRO, IMERSOR EXTENSÍVEL DA RETROESCAVADORA

REF	FN	PART NUMBER	YR/SN	QTY	DESCRIPTION
1		REF		1	INSTRUCAO, Valve Assy, Control; Backhoe Control Valve; For Correct Assembly and Components, See Figures 08-34, 08-35, 08-37, 08-39
2		814-10080		2	PARAFUSO, Hex, M10 x 80, 8.8
3		896-11010		2	ARRUELA PLANA, M10 x 21.5 x 2.5, HT
4		829-1410		2	PORCA, M10, Cl 10
5		614-10035		1	PARAFUSO, Hex, M10 x 35, 8.8, Full Thd
6		496-41041		2	ARRUELA PLANA, 13/32" x 1 1/8" x .134"
7		D52276		1	ISOLADOR
8		218-5063		2	CONEXÃO, 7/8"-14, 37º x 1 1/16"-12, O-Ring, Incl. Ref 9
9		237-6012		1	ANEL "O", 12-1, 90 Duro, .924 ID x .118" Thk
10		393354A1		1	MANGUEIRA CONJUNTO, 3073 mm (121 in)
11		393357A1		1	MANGUEIRA CONJUNTO, 3073 mm (121 in)
12		184617A1		1	MANGUEIRA, 850 mm (33-1/2 in)
13		184616A1		1	MANGUEIRA, 700 mm (27-9/16 in)
14		L18337		4	TIRA DE CABO, 9.95"-12.1" lg
15		218-5107		1	COTOVELO, 90º, 7/8"-14, 37º x 7/8"-14, O-Ring, Incl. Ref 16
16		237-6010		1	ANEL "O", 10-1, 90 Duro, .755" ID x .097" Thk
17		1340969C2		1	CILINDRO CONJUNTO, 76 ID x 1068 mm strk; Extendable Dipper Cylinder, See Figure 08-66
18		87439537		1	TUBO CONJUNTO
19		218-5062		1	CONEXÃO, 7/8"-14, 37º x 7/8"-14, O-Ring, Incl. Ref 20
20		237-6010		1	ANEL "O", 10-1, 90 Duro, .755" ID x .097" Thk
21		D38648		1	BLOCO
22		214-1464		1	BRACADEIRA MANGUEIRA, #64, 3.56/4.50 Type F Worm

08-15		p1	07/08

SISTEMA HIDRÁULICO - (6 SPOOL, W/O EXT DIPPER, W/O AUX HYDS)

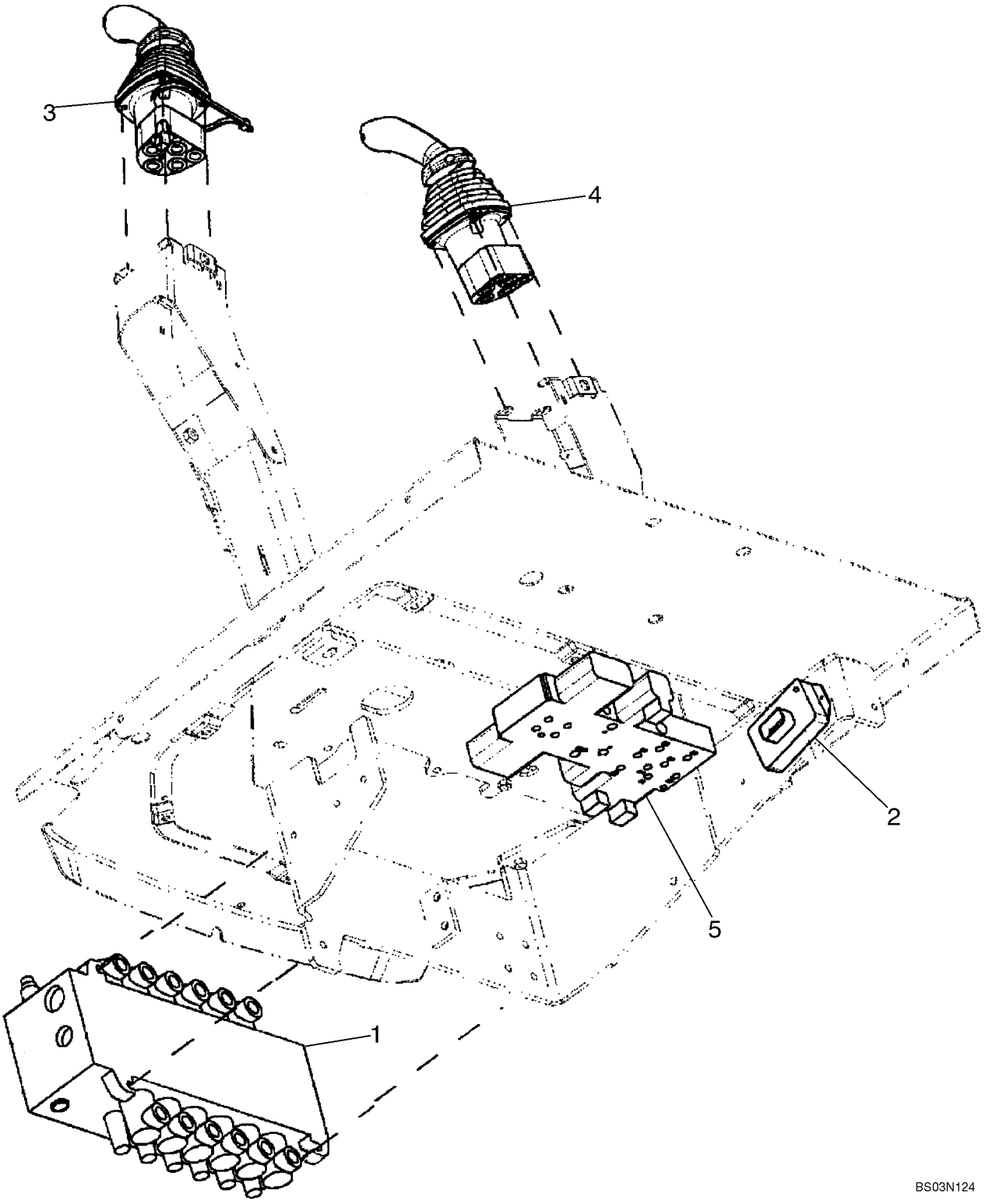

8

SISTEMA HIDRÁULICO - (6 SPOOL, W/O EXT DIPPER, W/O AUX HYDS)

REF	FN	PART NUMBER	YR/SN	QTY	DESCRIPTION
		REF			INSTRUCAO, SIX SPOOL VALVE WITHOUT EXTENDABLE DIPPER; WITH AUTO-UP; WITHOUT AUXILIARY HYDRAULICS, WITHOUT UNI-DIRECTIONAL OR BI-DIRECTIONAL
1		87577343		1	DISTRIBUIDOR, Backhoe, 6 Spool; Rexroth No. 08 403 273; See Figure 08-36; For Mounting See Figure 08-22
2		87746673		1	MODULE, Box; Pilot Control Power Supply Module
		840-1416		2	PARAFUSO, Cross Pan Hd, M4 x 16
3		87685948		1	DISTRIBUIDOR, LH; With Horn Button; See Figure 08-50
4		87685954		1	DISTRIBUIDOR, RH; See Figure 08-53
5		85827472		1	VÁLVULA HYDRAULICA, Pressure Reducing, 2 Spool; See Figure 08-47

SISTEMA HIDRÁULICO - (6 SPOOL, W/O EXT DIPPER, W/ AUX HYDS)

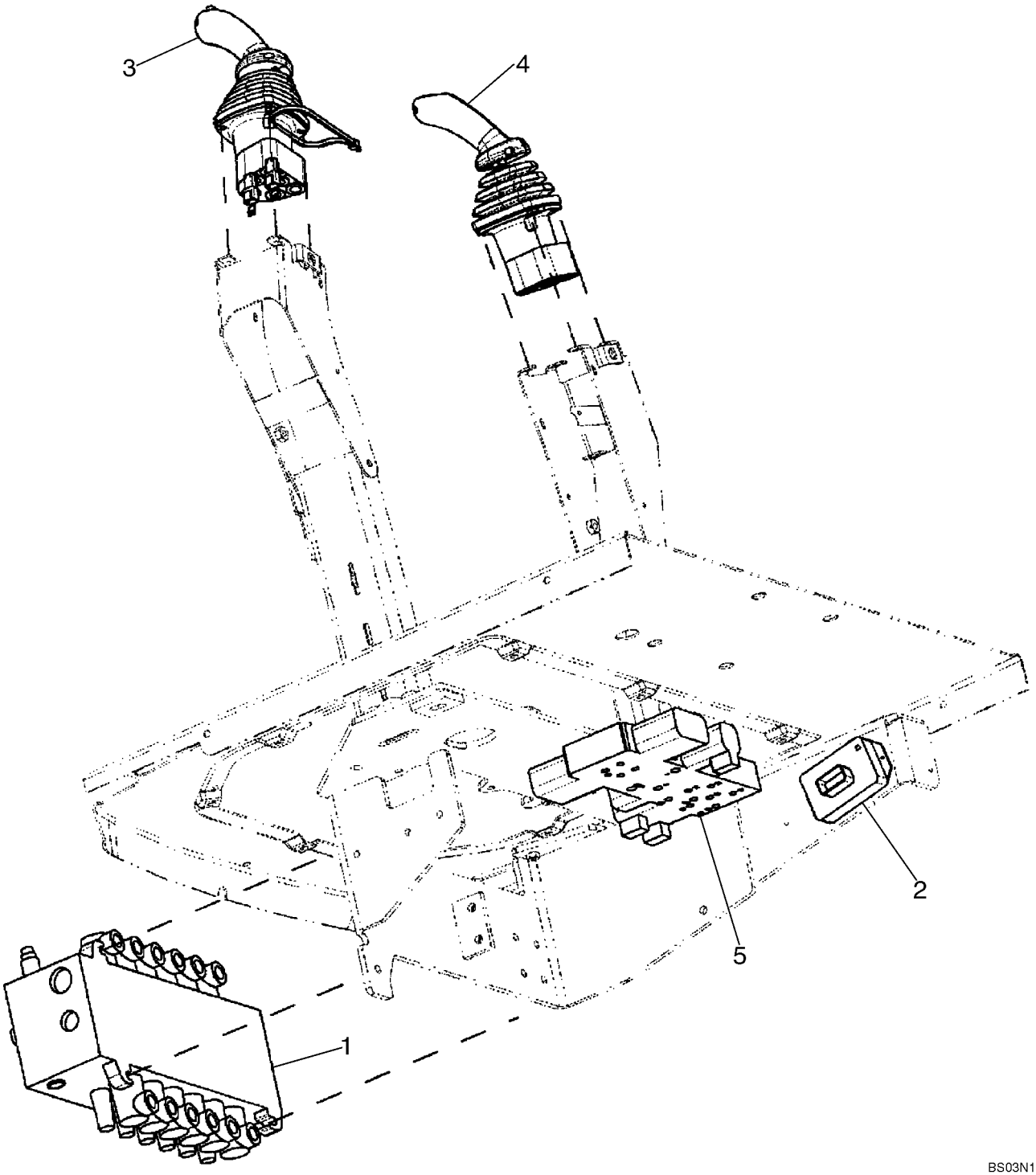

SISTEMA HIDRÁULICO - (6 SPOOL, W/O EXT DIPPER, W/ AUX HYDS)

REF	FN	PART NUMBER	YR/SN	QTY	DESCRIPTION
		REF			INSTRUCAO, SIX SPOOL VALVE WITHOUT EXTENDABLE DIPPER; WITH AUTO-UP; WITH AUXILIARY HYDRAULICS, WITH UNI-DIRECTIONAL
1		87577343		1	DISTRIBUIDOR, Backhoe, 6 Spool; Rexroth No. 08 403 273; See Figure 08-36; For Mounting See Figure 08-22
2		87746673		1	MODULE, Box; Pilot Control Power Supply Module
		840-1416		2	PARAFUSO, Cross Pan Hd, M4 x 16
3		87685953		1	DISTRIBUIDOR, LH; With Horn and Uni-Directional Buttons; See Figure 08-51
4		87685954		1	DISTRIBUIDOR, RH; See Figure 08-53
5		85827472		1	VÁLVULA HYDRAULICA, Pressure Reducing, 2 Spool; See Figure 08-47

SISTEMA HIDRÁULICO - (7 SPOOL, W/ EXT DIPPER, W/O AUX HYDS)

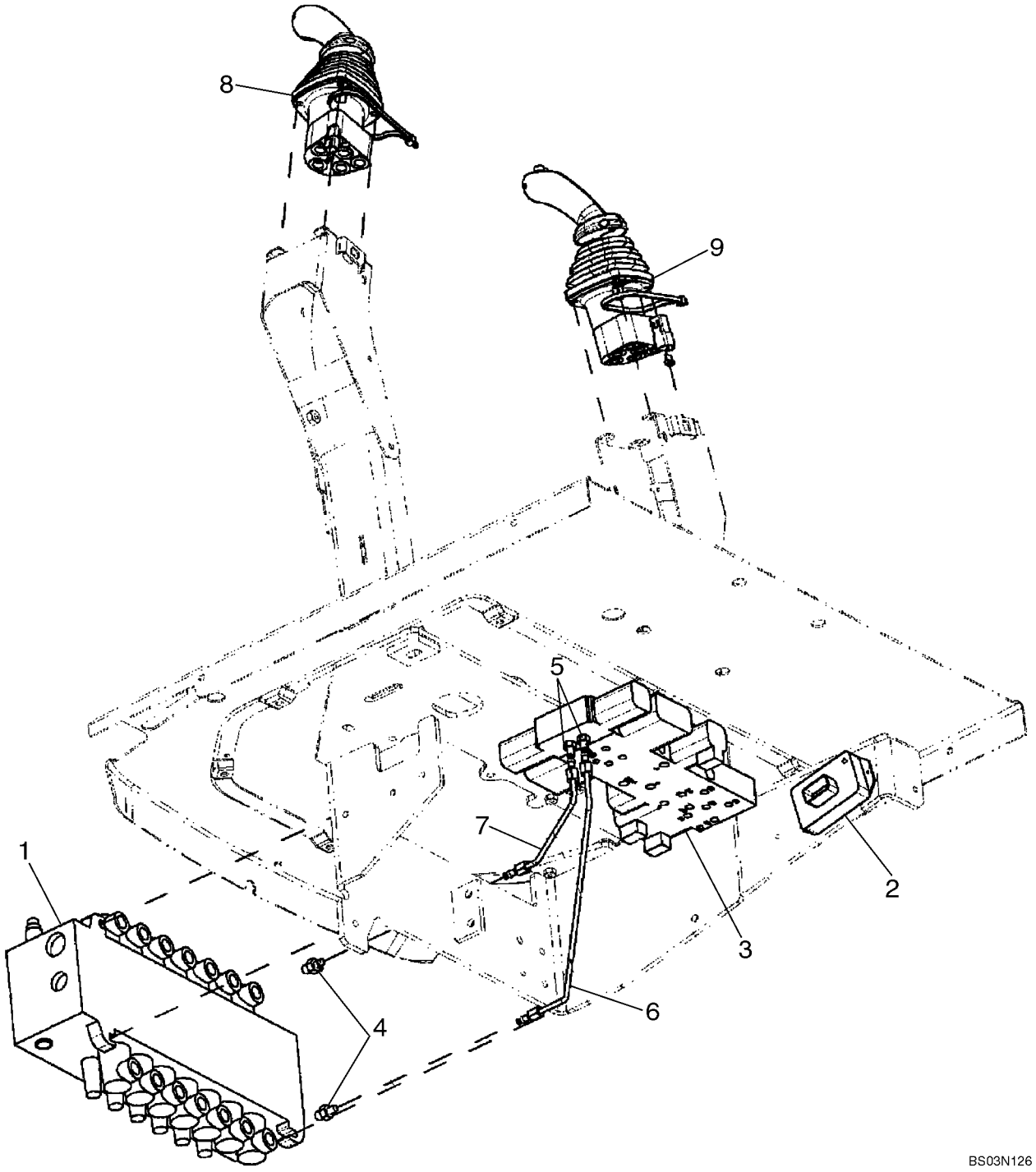

SISTEMA HIDRÁULICO - (7 SPOOL, W/ EXT DIPPER, W/O AUX HYDS)

REF	FN	PART NUMBER	YR/SN	QTY	DESCRIPTION
		REF			INSTRUCAO, SEVEN SPOOL VALVE WITH EXTENDABLE DIPPER; WITHOUT AUXILIARY HYDRAULICS; WITH AUTO-UP; WITHOUT UNI-DIRECTIONAL OR BI-DIRECTIONAL
1		87577346		1	DISTRIBUIDOR, Backhoe, 7 Spool; Rexroth No. 08 402 663; See Figure 08-37; For Mounting See Figure 08-22
2		87746673		1	MODULE, Box; Pilot Control Power Supply Module
		840-1416		2	PARAFUSO, Cross Pan Hd, M4 x 16
3		85827471		1	VÁLVULA HYDRAULICA, Pressure Reducing, 3 Spool; See Figure 08-48
4		218-5089		2	CONEXÃO, 7/16"-20, 37º x 9/16"-18, O-Ring, Includes 237-6006 O-Ring
		237-6006		1	ANEL "O", 6-1, 90 Duro, .468" ID x .078" Thk
5		218-5053		2	CONEXÃO, 7/16"-20, 37º x 7/16"-20, O-Ring, Incl. 237-6004 O-Ring
		237-6004		1	ANEL "O", 4-1, 90 Duro, .351" ID x .072" Thk
6		87437633		1	TUBO CONJUNTO, To Lower Extendable Dipper Port
7		87437635		1	TUBO CONJUNTO, To Upper Extendable Dipper Port
8		87685948		1	DISTRIBUIDOR, LH; With Horn Button; See Figure 08-50
9		87685955		1	DISTRIBUIDOR, RH; See Figure 08-54

SISTEMA HIDRÁULICO - (7 SPOOL, W/ EXT DIPPER, W/ AUX HYDS)

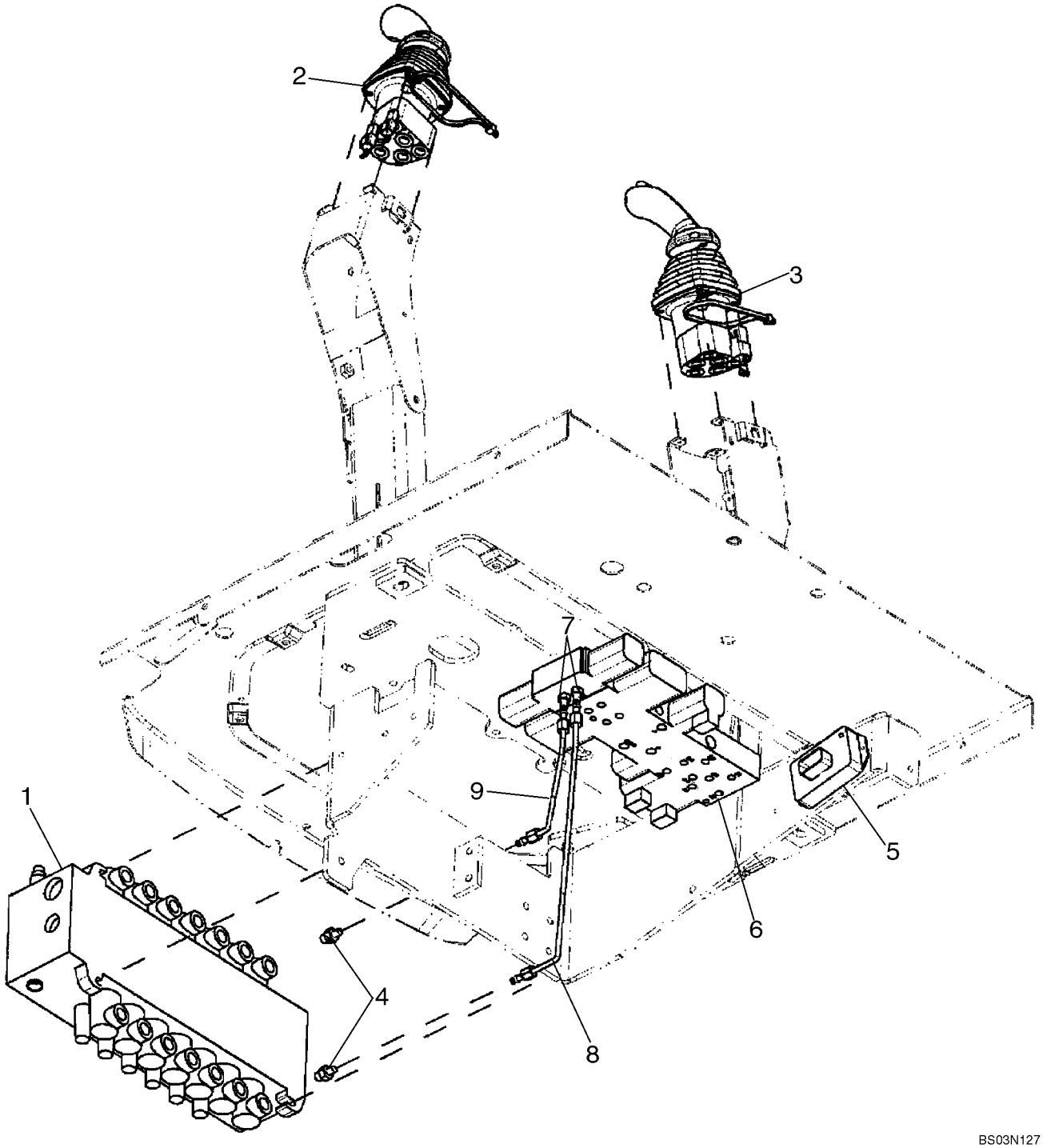

SISTEMA HIDRÁULICO - (7 SPOOL, W/ EXT DIPPER, W/ AUX HYDS)

REF	FN	PART NUMBER	YR/SN	QTY	DESCRIPTION
		REF			INSTRUCAO, SEVEN SPOOL VALVE WITH EXTENDABLE DIPPER; WITH AUXILIARY HYDRAULICS; WITH AUTO-UP; WITH UNI-DIRECTIONAL
1		87577346		1	DISTRIBUIDOR, Backhoe, 7 Spool; Rexroth No. 08 402 663; See Figure 08-37; For Mounting See Figure 08-22
2		87685953		1	DISTRIBUIDOR, LH; With Horn and Uni-Directional Buttons; See Figure 08-51
3		87685955		1	DISTRIBUIDOR, RH; See Figure 08-54
4		218-5089		2	CONEXÃO, 7/16"-20, 37º x 9/16"-18, O-Ring, Includes 237-6006 O-Ring
		237-6006		1	ANEL "O", 6-1, 90 Duro, .468" ID x .078" Thk
5		87746673		1	MODULE, Box; Pilot Control Power Supply Module
		840-1416		2	PARAFUSO, Cross Pan Hd, M4 x 16
6		85827471		1	VÁLVULA HYDRAULICA, Pressure Reducing, 3 Spool; See Figure 08-48
7		218-5053		2	CONEXÃO, 7/16"-20, 37º x 7/16"-20, O-Ring, Incl. 237-6004 O-Ring
		237-6004		1	ANEL "O", 4-1, 90 Duro, .351" ID x .072" Thk
8		87437633		1	TUBO CONJUNTO, To Lower Extendable Dipper Port
9		87437635		1	TUBO CONJUNTO, To Upper Extendable Dipper Port

SISTEMA HIDRÁULICO - (7 SPOOL, W/O EXT DIPPER, W/ AUX HYDS)

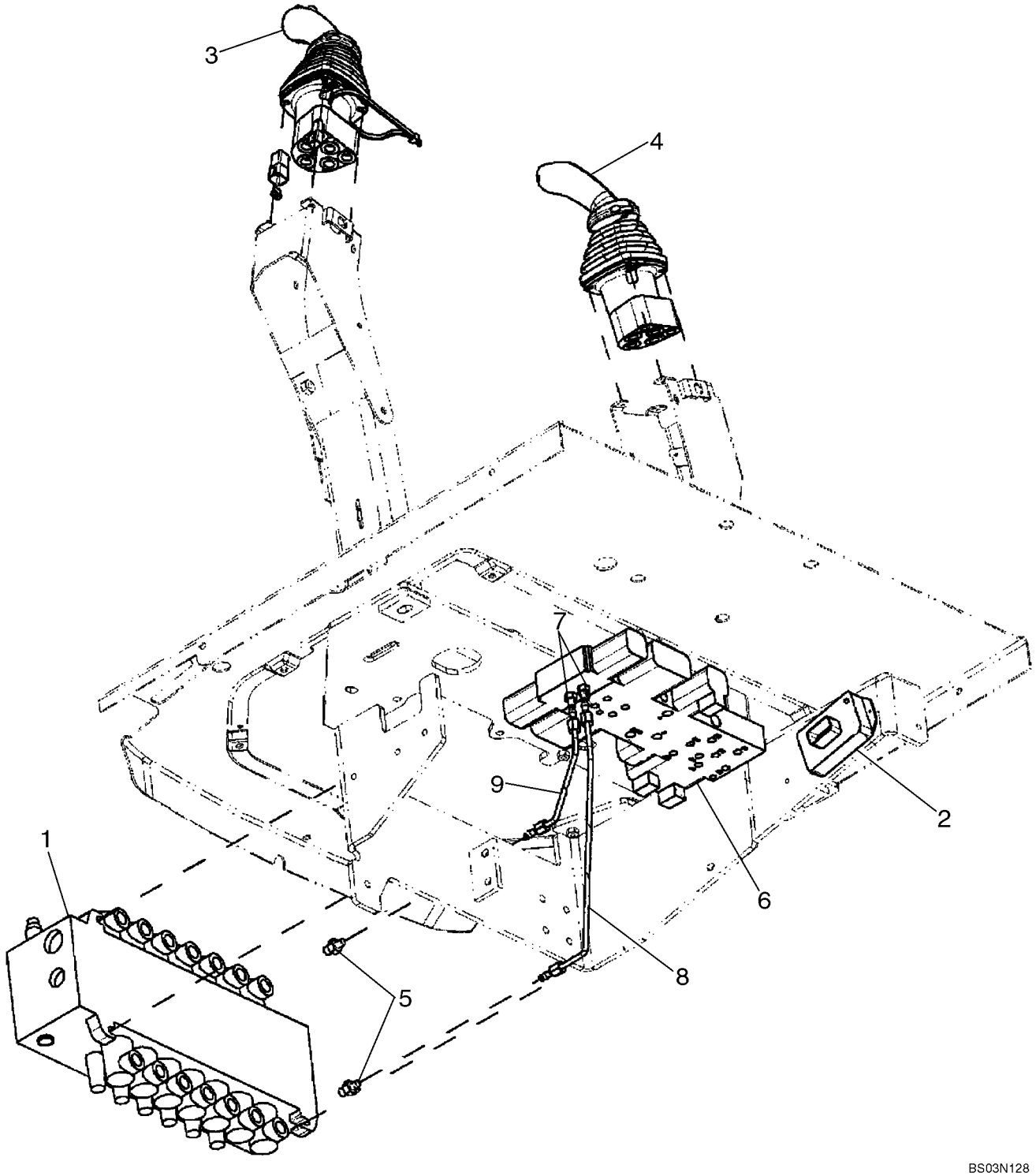

SISTEMA HIDRÁULICO - (7 SPOOL, W/O EXT DIPPER, W/ AUX HYDS)

REF	FN	PART NUMBER	YR/SN	QTY	DESCRIPTION
		REF			INSTRUCAO, SEVEN SPOOL VALVE WITHOUT EXTENDABLE DIPPER; WITH AUXILIARY HYDRAULICS; WITH AUTO-UP; WITH BI-DIRECTIONAL
1		87577348		1	DISTRIBUIDOR, Backhoe, 7 Spool; Rexroth No. 08 403 27; See Figure 08-38; For Mounting See Figure 08-22
2		87746674		1	MODULE, Box; Pilot Control Power Supply Module
		840-1416		2	PARAFUSO, Cross Pan Hd, M4 x 16
3		87685952		1	DISTRIBUIDOR, LH; With Horn and Bi-Directional Buttons; See Figure 08-52
4		87685954		1	DISTRIBUIDOR, RH; See Figure 08-53
5		218-5089		2	CONEXÃO, 7/16"-20, 37º x 9/16"-18, O-Ring, Includes 237-6006 O-Ring
		237-6006		1	ANEL "O", 6-1, 90 Duro, .468" ID x .078" Thk
6		85827471		1	VÁLVULA HYDRAULICA, Pressure Reducing, 3 Spool; See Figure 08-48
7		218-5053		2	CONEXÃO, 7/16"-20, 37º x 7/16"-20, O-Ring, Incl. 237-6004 O-Ring
		237-6004		1	ANEL "O", 4-1, 90 Duro, .351" ID x .072" Thk
8		87438012		1	TUBO CONJUNTO, To Lower Auxiliary Port
9		87438015		1	TUBO CONJUNTO, To Upper Auxiliary Port

08-20		p1	07/08

SISTEMA HIDRÁULICO - (8 SPOOL, W/ EXT DIPPER, W/ AUX HYDS)

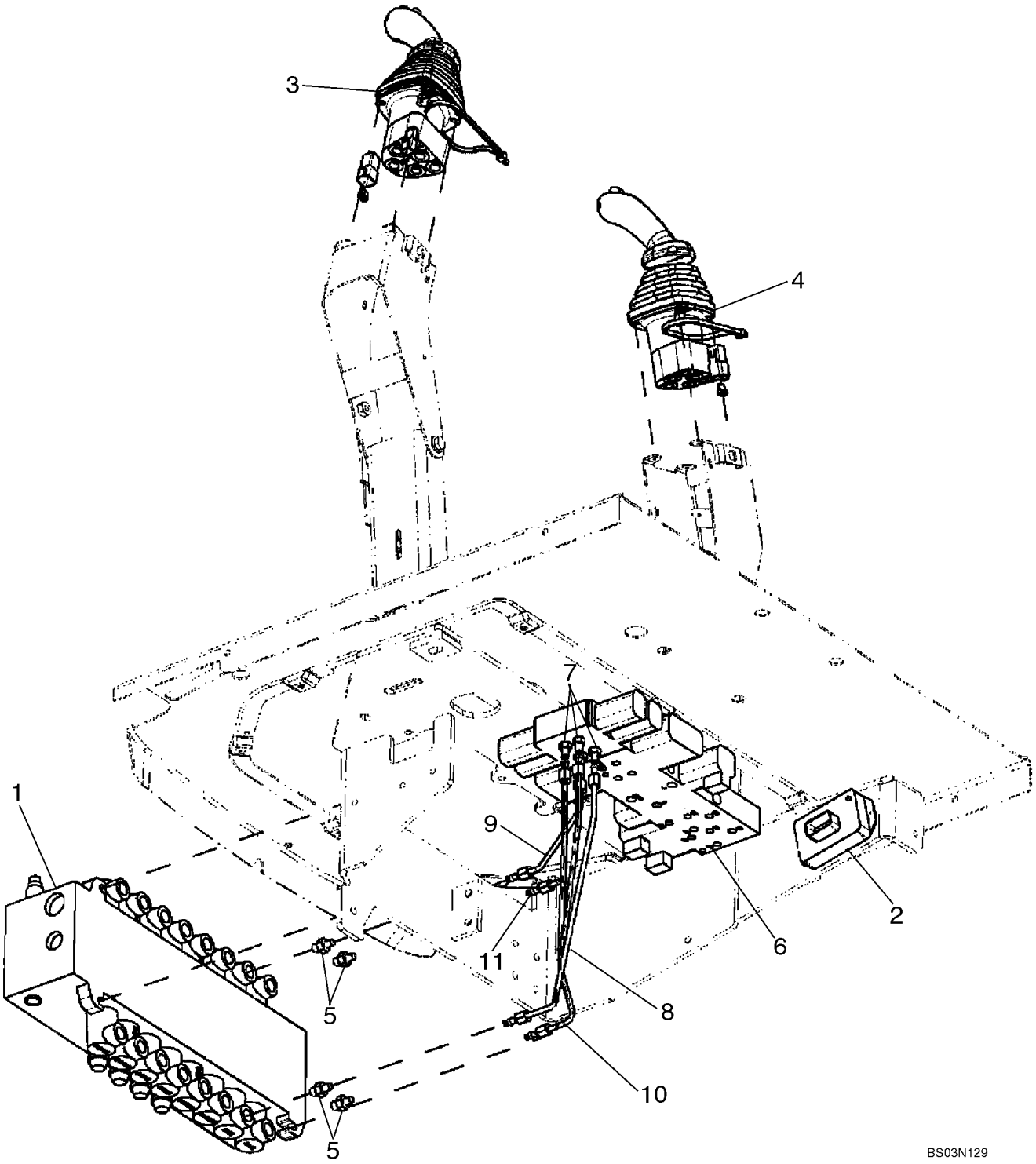

SISTEMA HIDRÁULICO - (8 SPOOL, W/ EXT DIPPER, W/ AUX HYDS)

REF	FN	PART NUMBER	YR/SN	QTY	DESCRIPTION
		REF			INSTRUCAO, EIGHT SPOOL VALVE WITH EXTENDABLE DIPPER; WITH AUXILIARY HYDRAULICS; WITH AUTO-UP; WITH BI-DIRECTIONAL
1		87577349		1	DISTRIBUIDOR, Backhoe, 8 Spool; Rexroth No. 08 403 271; See Figure 08-39; For Mounting See Figure 08-22
2		87746674		1	MODULE, Box; Pilot Control Power Supply Module
		840-1416		2	PARAFUSO, Cross Pan Hd, M4 x 16
3		87685952		1	DISTRIBUIDOR, LH; With Horn and Bi-Directional Buttons; See Figure 08-52
4		87685955		1	DISTRIBUIDOR, RH; See Figure 08-54
5		218-5089		4	CONEXÃO, 7/16"-20, 37º x 9/16"-18, O-Ring, Includes 237-6006 O-Ring
		237-6006		1	ANEL "O", 6-1, 90 Duro, .468" ID x .078" Thk
6		87434621		1	DISTRIBUIDOR, Pressure Reducing, 4 Spool; See Figure 08-49
7		218-5053		4	CONEXÃO, 7/16"-20, 37º x 7/16"-20, O-Ring, Incl. 237-6004 O-Ring
		237-6004		1	ANEL "O", 4-1, 90 Duro, .351" ID x .072" Thk
8		87437633		1	TUBO CONJUNTO, To Lower Extendable Dipper Port
9		87437635		1	TUBO CONJUNTO, To Upper Extendable Dipper Port
10		87440835		1	TUBO CONJUNTO, Tube, To Lower Auxiliary Port
11		87440837		1	TUBO CONJUNTO, Tube, To Upper Auxiliary Port

SISTEMA HIDRÁULICO - JOYSTICKS CONTROLE PILOTO

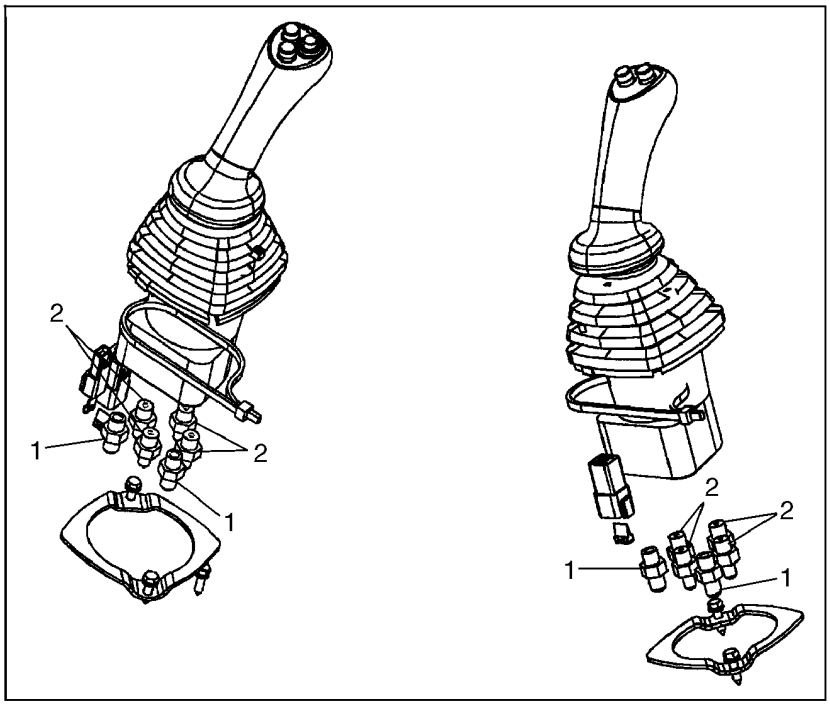

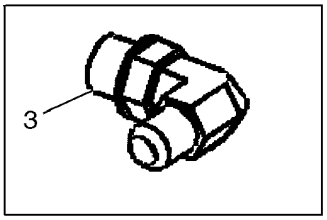

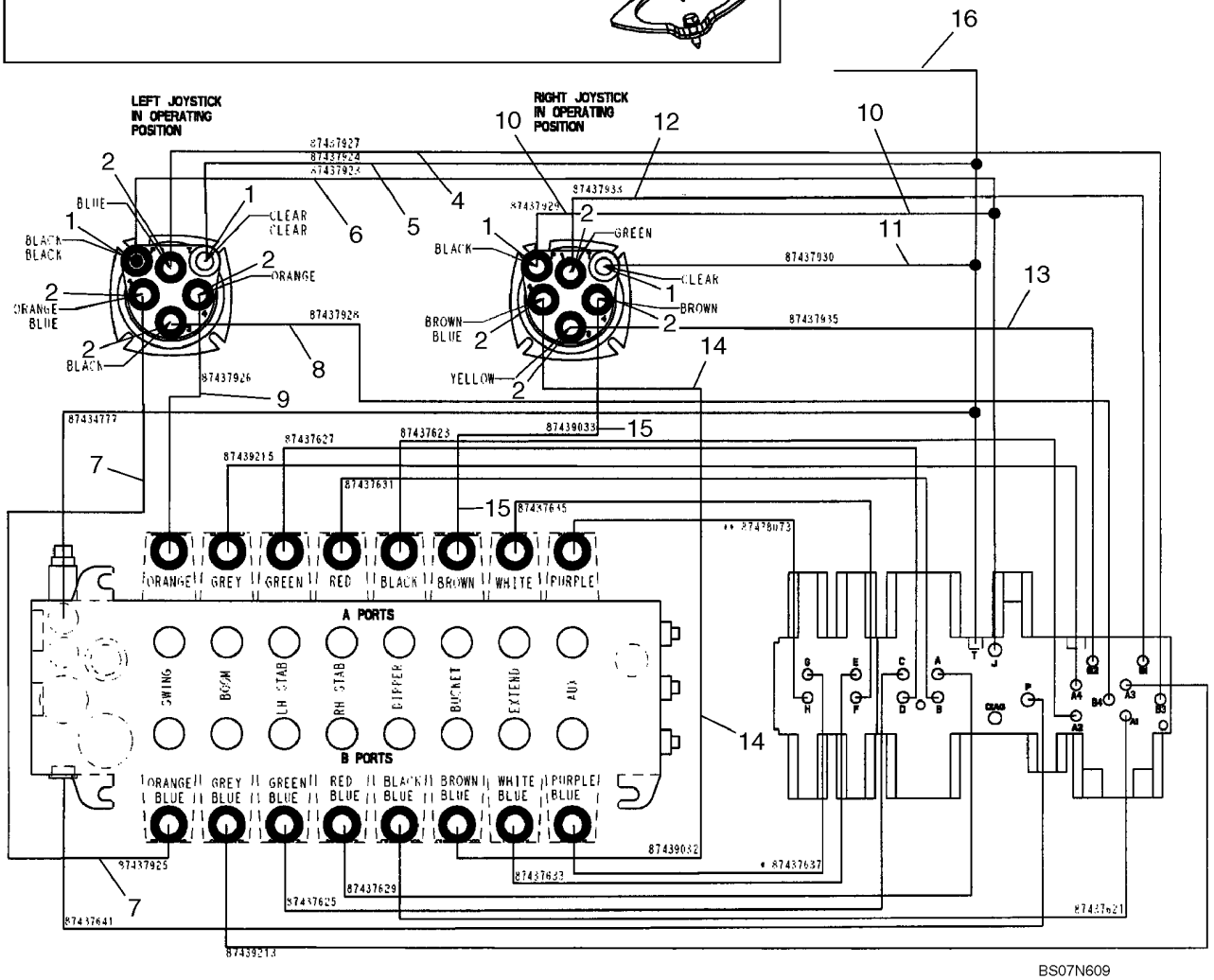

BS07N609

SISTEMA HIDRÁULICO - JOYSTICKS CONTROLE PILOTO

REF	FN	PART NUMBER	YR/SN	QTY	DESCRIPTION
1		218-5057		4	CONEXÃO, 9/16"-18, 37º x 9/16"-18, O-Ring, Incl. 237-6006 O-Ring
2		218-5089		8	CONEXÃO, 7/16"-20, 37º x 9/16"-18, O-Ring, Includes 237-6006 O-Ring
3		218-5105		1	COTOVELO, 90º, 9/16"-18, 37º x 9/16"-18, O-Ring, Includes 237-6006; Installs in Hydraulic Tank for Pilot Return
4		87437927		1	MANGUEIRA CONJUNTO, 1295 mm (51 in); LH Joystick No. 1 to Selector Valve B3
5		87437924		1	MANGUEIRA CONJUNTO, 1000 mm (39-3/8 in); LH Joystick Tank to Pressure Reducing Valve T
6		87437923		1	MANGUEIRA CONJUNTO, 1035 mm (40-3/4 in); LH Joystick Pressure to Pressure Reducing Valve J
7		87437925		1	MANGUEIRA CONJUNTO, 1075 mm (42-3/8 in); LH Joystick No. 2 to Swing Port B
8		87437928		1	MANGUEIRA CONJUNTO, 1270 mm (50 in); LH Joystick No. 3 to Selector Valve B4
		399004A1		1	PROTEÇÃO, Hose, 38.9 ID x 270 mm long; Used With Ref 4 - 8
9		87437926		1	MANGUEIRA CONJUNTO, 825 mm (32-1/2 in); LH Joystick No. 4 to Swing Port A
10		87437929		1	MANGUEIRA CONJUNTO, 1105 mm (43-1/2 in); RH Joystick Pressure to Pressure Reducing Valve J
11		87437930		1	MANGUEIRA CONJUNTO, 1345 mm (53 in); RH Joystick Tank to Pressure Reducing Valve T
		191703A1		1	TUBO ISOLANTE, Hose Guard, 28 ID x 400 mm long; Used With Ref 10, 11
12		87437933		1	MANGUEIRA CONJUNTO, 1185 mm (46-11/16 in); RH Joystick No. 1 to Selector Valve B1
13		87437935		1	MANGUEIRA CONJUNTO, 1175 mm (46-5/16 in); RH Joystick No. 3 to Selector Valve B2
14		87439032		1	MANGUEIRA CONJUNTO, 1090 mm (42-15/16 in); RH Joystick No. 2 to Bucket Port B
15		87439033		1	MANGUEIRA CONJUNTO, 915 mm (36-1/32 in); RH Joystick No. 4 to Bucket Port A

SISTEMA HIDRÁULICO - JOYSTICKS CONTROLE PILOTO

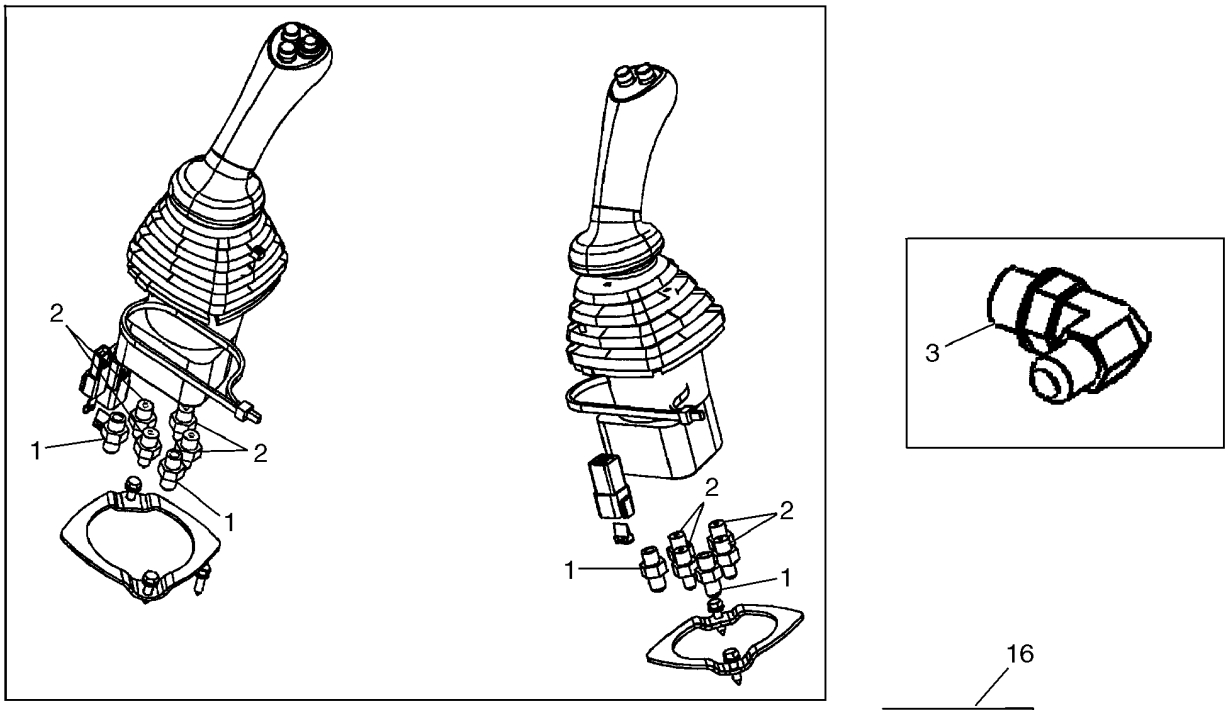

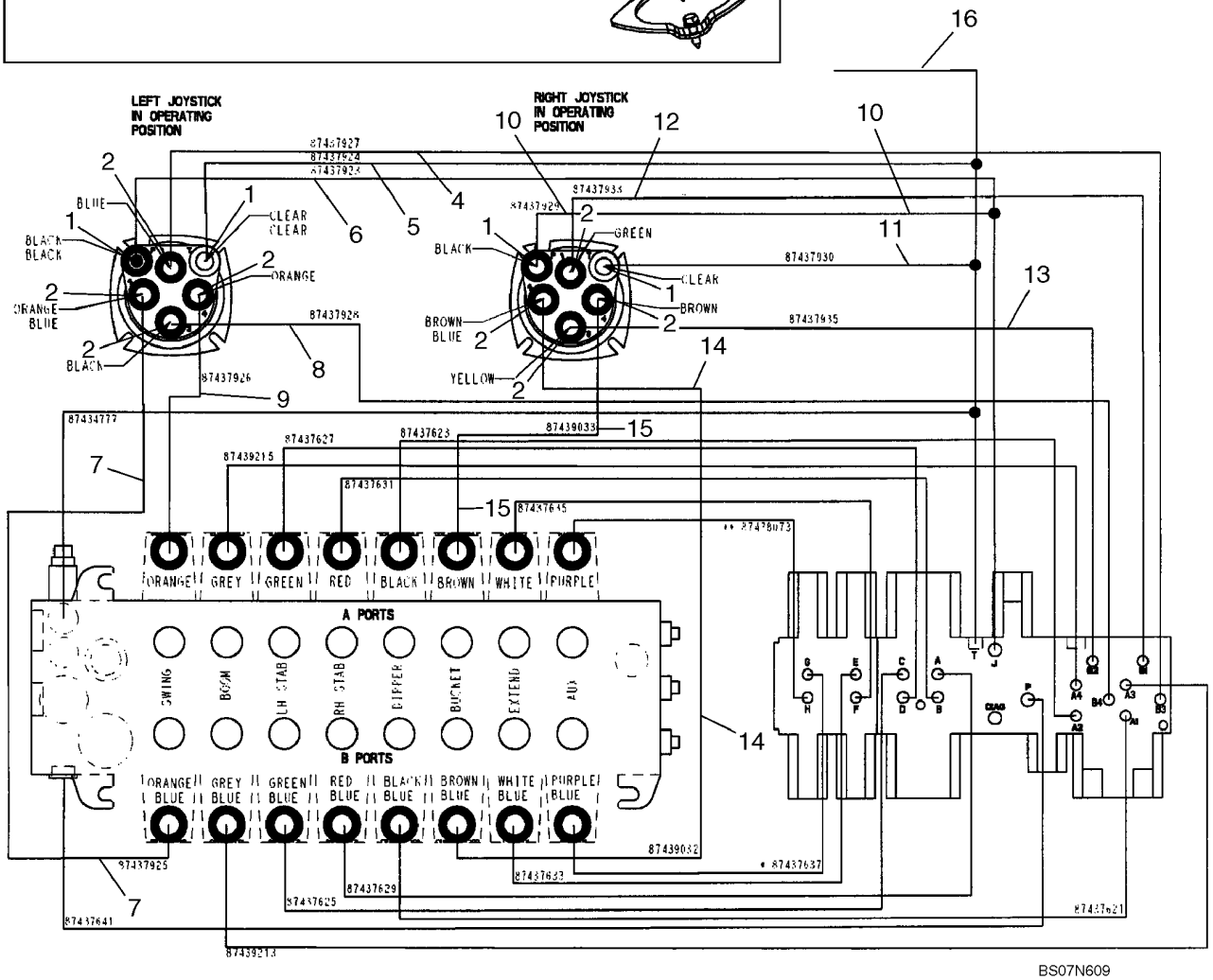

BS07N609

SISTEMA HIDRÁULICO - JOYSTICKS CONTROLE PILOTO

REF	FN	PART NUMBER	YR/SN	QTY	DESCRIPTION
		191703A1		1	TUBO ISOLANTE, Hose Guard, 28 ID x 400 mm long; Used With Ref 12 - 15
16		87452405		1	MANGUEIRA CONJUNTO, 1520 mm (59-7/8 in); Pressure Reducing Valve T to Tank; Replaces 87435073
		143219A1		1	PROTETOR, HOSE GUARD, 19 ID x 450 mm long; Used With Ref 16
		L18337		AR	TIRA DE CABO, 9.95"-12.1" lg

SISTEMA HIDRÁULICO - CONTROLO AUTOMÁTICO

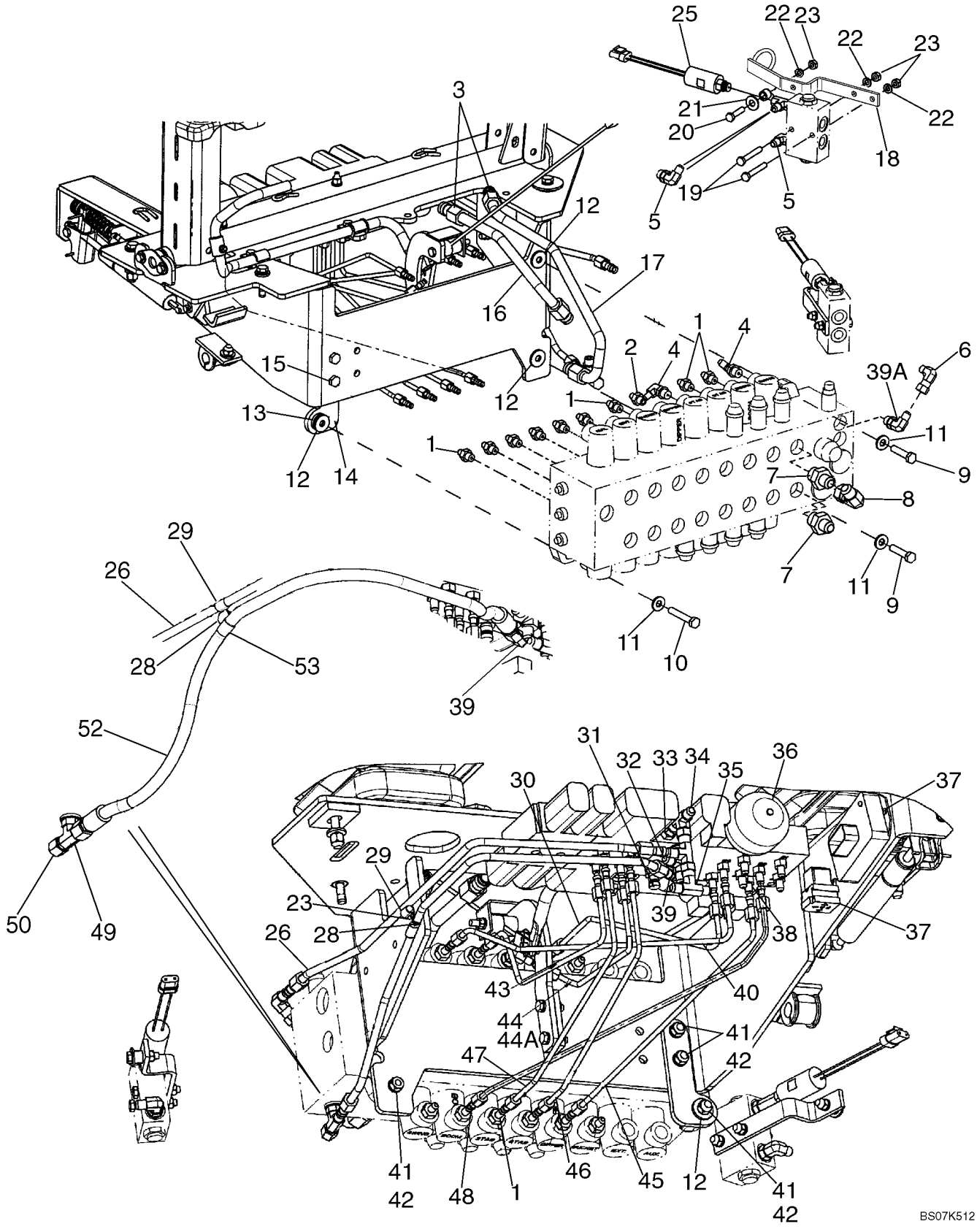

SISTEMA HIDRÁULICO - CONTROLO AUTOMÁTICO

REF	FN	PART NUMBER	YR/SN	QTY	DESCRIPTION
1		218-5089		9	CONEXÃO, 7/16"-20, 37º x 9/16"-18, O-Ring, Includes 237-6006 O-Ring
2		87423401		1	CONEXAO, Special Orifice; 7/16 fl x 9/16 Or; Incl. 237-6006 O-Ring; If Unit Experiences Dipper Stuttering, As Dipper Is Moving Toward the Unit, Replace Ref 2 Fitting & Ref 30 & 45 Tubes, With (1) 87594363 Snubber, (2) 87594364 Hoses
2		87594363		1	VÁLVULA AMORTECEDORA, Snubber Fitting; Incl. 237-6006 O-ring; Used In Place of 87423401 Fitting On Models With Dipper Stuttering
3		218-5107		1	COTOVELO, 90º, 7/8"-14, 37º x 7/8"-14, O-Ring, Includes 237-6010 O-Ring
4		218-5365		2	COTOVELO, 45º, 7/16"-20, 37º x 9/16"-18, O-Ring, Includes 237-6006 O-Ring
5		218-5105		2-4	COTOVELO, 90º, 9/16"-18, 37º x 9/16"-18, O-Ring, Includes 237-6006; 2 Used on Models With Auto Up; 4 Used on Models Without Auto Up
6		218-980		1	COTOVELO, 90º, 9/16"-18, 37º x 9/16"-18, 37º Fem Sw
7		218-5063		2	CONEXÃO, 7/8"-14, 37º x 1 1/16"-12, O-Ring, Includes 237-6012 O-Ring
8		218-5232		1	COTOVELO, 90º, 7/8"-14, 37º x 7/8"-14, 37º Fem Sw
9		814-10045		2	PARAFUSO, Hex, M10 x 45, 8.8
10		814-10060		1	PARAFUSO, Hex, M10 x 60, 8.8
11		896-15010		3	ARRUELA PLANA, M10 x 24.5 x 3, HT
12		496-41041		5	ARRUELA PLANA, 13/32" x 1 1/8" x .134"
13		D52276		1	ISOLADOR, Mount
14		87440712		1	SUPORTE, Valve Mounting Bracket
15		614-10030		2	PARAFUSO, Hex, M10 x 30, 8.8
16		87426488		1	TUBO CONJUNTO, Swing Dampening Upper Port
17		87427948		1	TUBO CONJUNTO, Swing Dampening Lower Port
18		87450318		2	SUPORTE
19		814-8055		4	PARAFUSO, Hex, M8 x 55, 8.8
20		814-8035		2	PARAFUSO, Hex, M8 x 35, 8.8
21		496-81028		2	ARRUELA PLANA, 13/32" x 1 1/4" x .134", HDN

SISTEMA HIDRÁULICO - CONTROLO AUTOMÁTICO

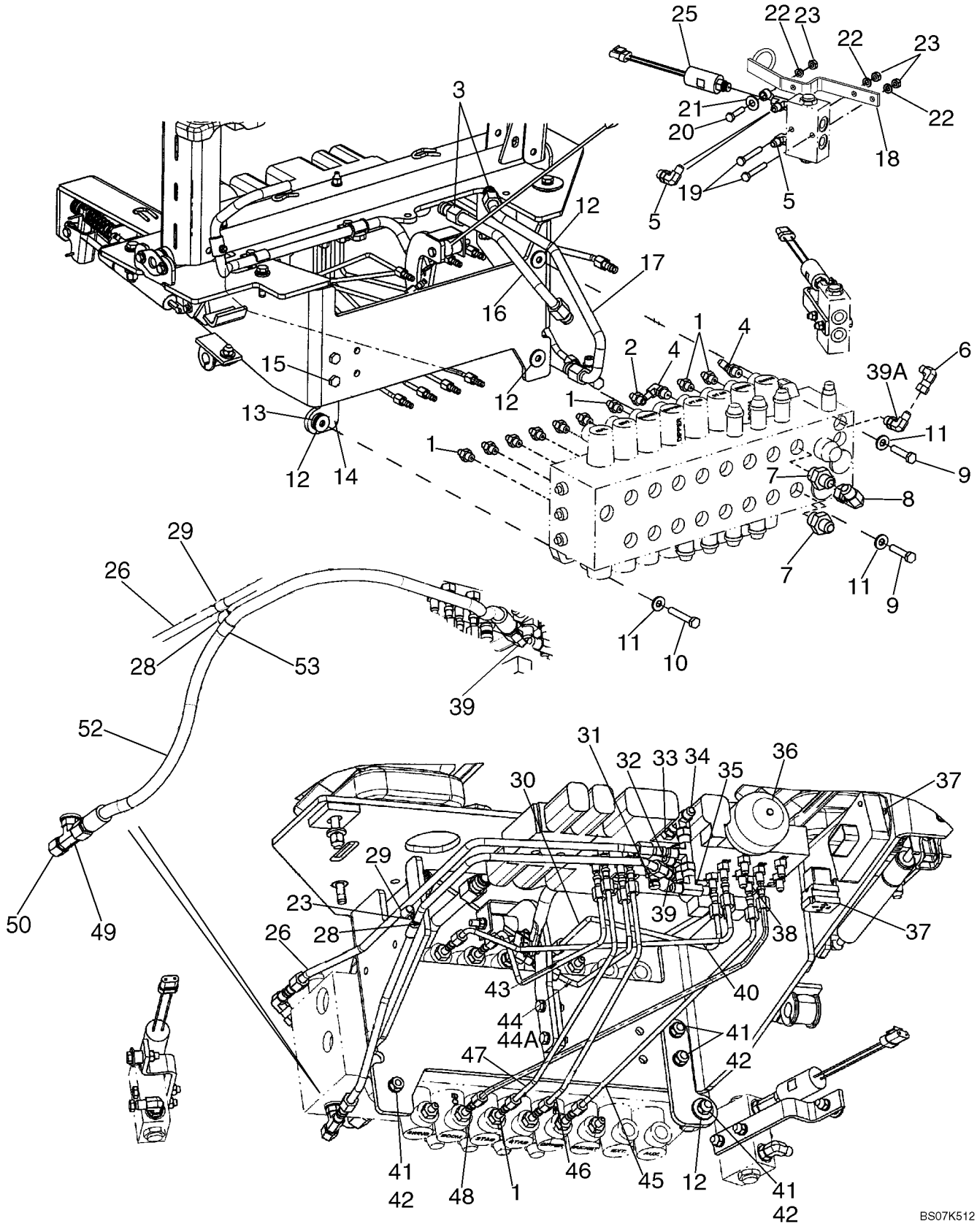

BS07K512

SISTEMA HIDRÁULICO - CONTROLO AUTOMÁTICO

REF	FN	PART NUMBER	YR/SN	QTY	DESCRIPTION
21A		87437840		2	ESPAÇADOR, Not Illustrated
22		895-11008		6	ARRUELA PLANA, M8 x 16 x 1.6
23		829-1408		7	PORCA, M8, Cl 10
24		87423033		2	TEE, Includes 237-6004 O-Ring, 237-6006 O-Ring; Models With Auto Up, If Used
25		87482634		2	INTERRUPTOR DE PRESSÃO, Includes 237-6004 O-Ring; Models With Auto Up, 12 inch Wire Lead; With Rubber Snubbing; CNH Part Number Stamped On Body Of Switch; North American Models; Replaces 87439163 Switch
26		87434777		1	TUBO CONJUNTO, Reducing Valve Tank to Backhoe Valve
28		614-8025		1	PARAFUSO, Hex, M8 x 25, 8.8
29		515-2295		1-2	PRENDEDOR, 3/8", Insul, 5/16" Bolt
30		87437623		1	TUBO CONJUNTO, Selector A2 to Dipper Port A; If Unit Experiences Dipper Stuttering, As Dipper Is Moving Toward the Unit, Replace Ref 2 Fitting & Ref 30 & 45 Tubes, With (1) 87594363 Snubber, (2) 87594364 Hoses
30		87594364		1	MANGUEIRA CONJUNTO, 550 mm (21-21/32 in); Used in Place of 87437623 Tube On Models With Dipper Stuttering
31		86596853		1	ENGATE RÁPIDO, Includes 9617873 O-Ring
32		218-5243		1	TEE, 9/16"-18, 37º x 9/16"-18, O-Ring Run, Includes 237-6006 O-Ring
33		218-5057		1	CONEXÃO, 9/16"-18, 37º x 9/16"-18, O-Ring, Incl. 237-6006 O-Ring
34		218-5222		2	TEE, 37º, 9/16"-18, x 9/16"-18, Fem Sw Run
35		218-836		1	TEE, 37º, 9/16"-18 x 9/16"-18, Fem Sw Br
36		87425225		1	ACUMULADOR, Includes 237-6008 O-Ring
37		840-1416		3	PARAFUSO, Cross Pan Hd, M4 x 16, See Figure 08-15 - 08-20 For Pilot Control Power Supply Control Unit; See Figure 04-20 For Relay
38		218-5053		12	CONEXÃO, 7/16"-20, 37º x 7/16"-20, O-Ring, Incl. 237-6004 O-Ring

SISTEMA HIDRÁULICO - CONTROLO AUTOMÁTICO

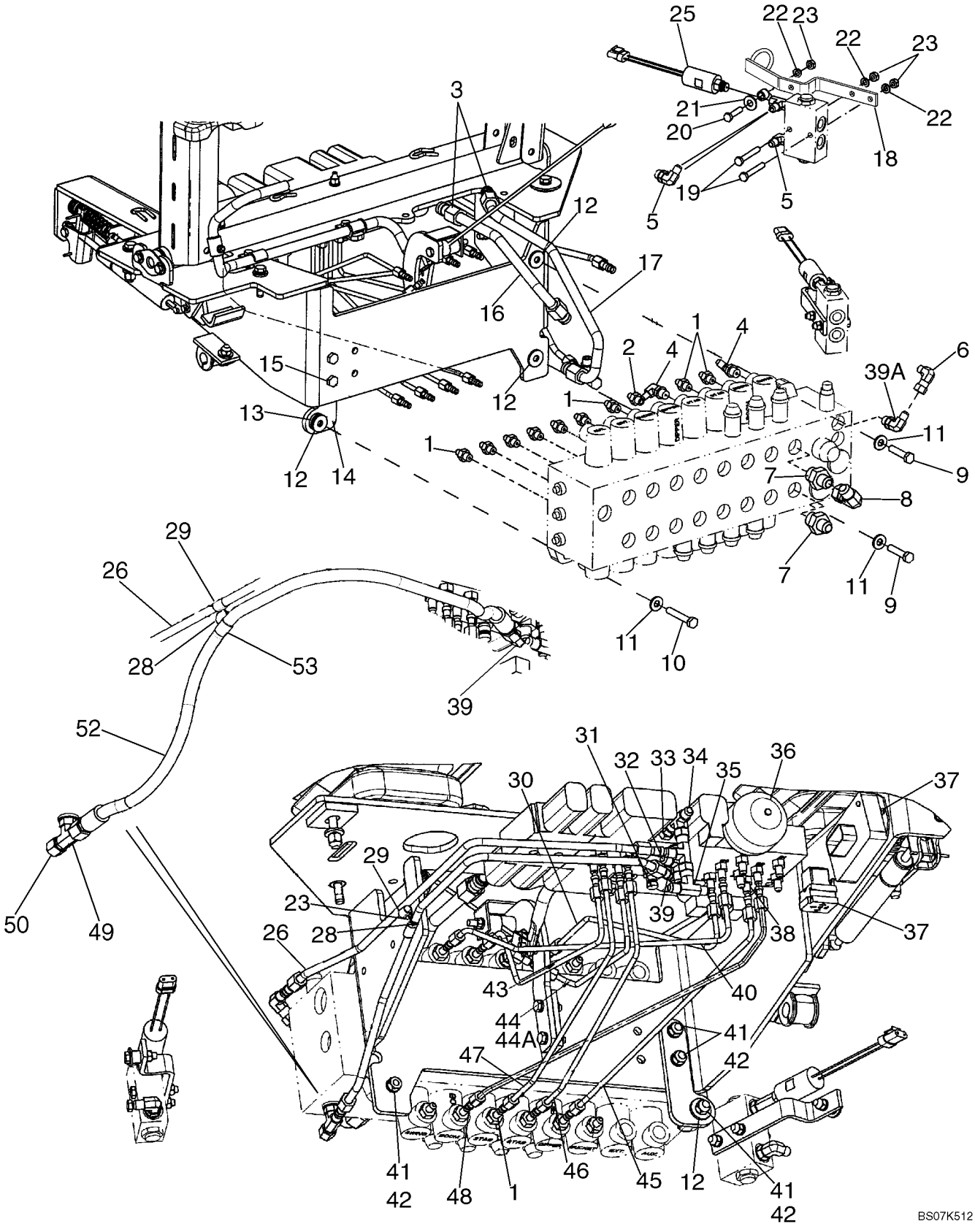

BS07K512

SISTEMA HIDRÁULICO - CONTROLO AUTOMÁTICO

REF	FN	PART NUMBER	YR/SN	QTY	DESCRIPTION
39		218-5105		2	COTOVELO, 90º, 9/16"-18, 37º x 9/16"-18, O-Ring, Includes 237-6006 O-Ring
39A		87448990		1	COTOVELO, Includes Orifice; Includes 237-6006 O-Ring
40		87439215		1	TUBO CONJUNTO, Selector A4 to Boom Port A
41		829-1410		5	PORCA, M10, Cl 10
42		892-11010		4	ARRUELA-TRAVA, M10
43		87437627		1	TUBO CONJUNTO, Reducing Valve to Left-Hand Stabilizer Port A
44		87445557		1	TUBO CONJUNTO, Reducing Valve to Right-Hand Stabilizer Port A; Used With 45 deg Elbow, Ref 44B
45		87437621		1	TUBO CONJUNTO, Selector A1 to Dipper Port B; If Unit Experiences Dipper Stuttering, As Dipper Is Moving Toward the Unit, Replace Ref 2 Fitting & Ref 30 & 45 Tubes, With (1) 87594363 Snubber, (2) 87594364 Hoses
45		87594364		1	MANGUEIRA CONJUNTO, 550 mm (21-21/32 in); Used in Place of 87437621 Tube On Models With Dipper Stuttering
46		87437629		1	TUBO CONJUNTO, Reducing Valve to Right-Hand Stabilizer Port B
47		87437625		1	TUBO CONJUNTO, Reducing Valve to Left-Hand Stabilizer Port B
48		87439213		1	TUBO CONJUNTO, Selector A3 to Boom Port B
49		218-5182		1	TEE, 9/16"-18, 37º x 9/16"-18, O-Ring Br, Includes 237-6006 O-Ring
50		218-754		1	TAMPA DO RESERVATÓRIO, 37º, 9/16"-18
52		87352590		1	MANGUEIRA CONJUNTO, 809 mm (31-7/8 in); Reducing Valve Pressure to Backhoe Valve
53		515-22127		1	PRENDEDOR, 1/2", Insul, 5/16" Bolt

SISTEMA HIDRÁULICO - RETROESCAVADORA AUXILIAR (MODELOS SEM CONTROLO AUTOMÁTICO)

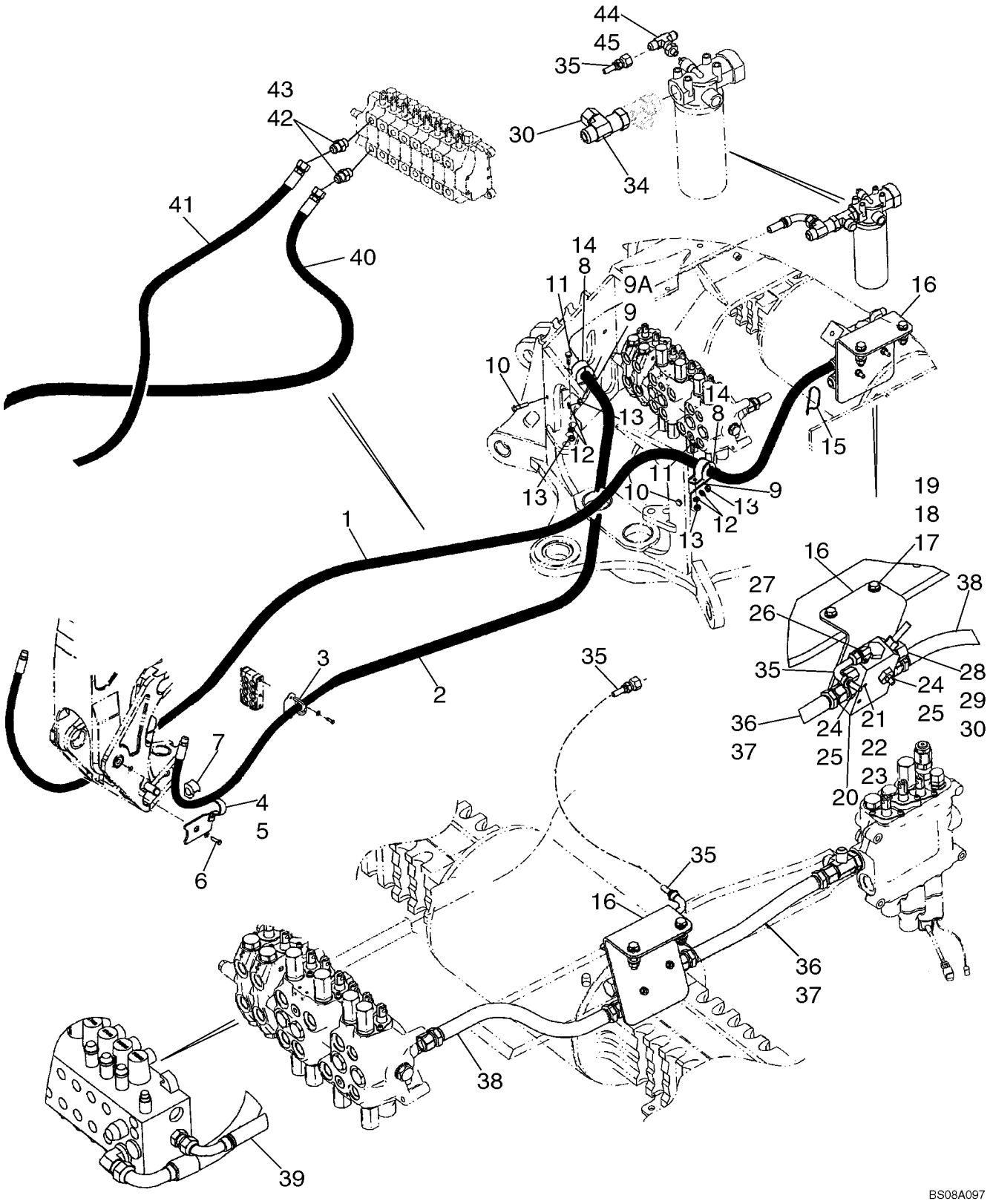

SISTEMA HIDRÁULICO - RETROESCAVADORA AUXILIAR (MODELOS SEM CONTROLO AUTOMÁTICO)

REF	FN	PART NUMBER	YR/SN	QTY	DESCRIPTION
1		87430972		1	MANGUEIRA CONJUNTO, 2467 mm (97-1/8 in) Hose; Models With Uni-Directional
2		87429387		1	MANGUEIRA CONJUNTO, 2890 mm (113-13/16 in) Hose; Models With Uni-Directional
3		87431630		2	BRACADEIRA
4		329799A1		1	SUPORTE, LH
5		329797A1		1	SUPORTE, RH
6		604-20045		2	PARAFUSO, Hex, Lock, M20 x 45, Cl 8.8
7		144477A1		2	AMORTECEDOR DE CHOQ
8		144479A1		2	BRACADEIRA
9		413778A1		1-2	BRACADEIRA, 45 degree Bend
9A		282842A1		1	SUPORTE, 90 degree Bend
10		614-10040		2	PARAFUSO, Hex, M10 x 40, 8.8, Full Thd
11		614-10025		2	PARAFUSO, Hex, M10 x 25, 8.8, Full Thd
12		892-11010		4	ARRUELA-TRAVA, M10
13		829-1410		4	PORCA, M10, Cl 10
14		144477A1		2	AMORTECEDOR DE CHOQ
15		L18337		1	TIRA DE CABO, 9.95"-12.1" lg
16		87440694		1	SUPORTE
17		814-12050		2	PARAFUSO, Hex, M12 x 50, 8.8
18		896-11012		4	ARRUELA PLANA, M13.5 x 24.5 x 3, HT
19		829-1412		2	PORCA, M12, Cl 10
20		87421836		1	VÁLVULA HYDRAULICA, Auxiliary Uni-Directional Valve; See Figure 08-23A
21		814-8070		2	PARAFUSO, Hex, M8 x 70, 8.8
22		892-11008		2	ARRUELA-TRAVA, M8
23		829-1408		2	PORCA, M8, Cl 10
24		218-5050		2	CONEXÃO, 1 5/16"-12, 37° x 1 1/16"-12, O-Ring, Incl. Ref 25
25		237-6012		1	ANEL "O", 12-1, 90 Duro, .924 ID x .118" Thk
26		218-5280		1	COTOVELO, 90°, 3/4"-16, 37° x 9/16"-18, O-Ring, Incl. Ref 27
27		237-6006		1	ANEL "O", 6-1, 90 Duro, .468" ID x .078" Thk
28		218-5064		1	CONEXÃO, 1 1/16"-12, 37° x 1 1/16"-12, O-Ring, Incl. Ref 29

SISTEMA HIDRÁULICO - RETROESCAVADORA AUXILIAR (MODELOS SEM CONTROLO AUTOMÁTICO)

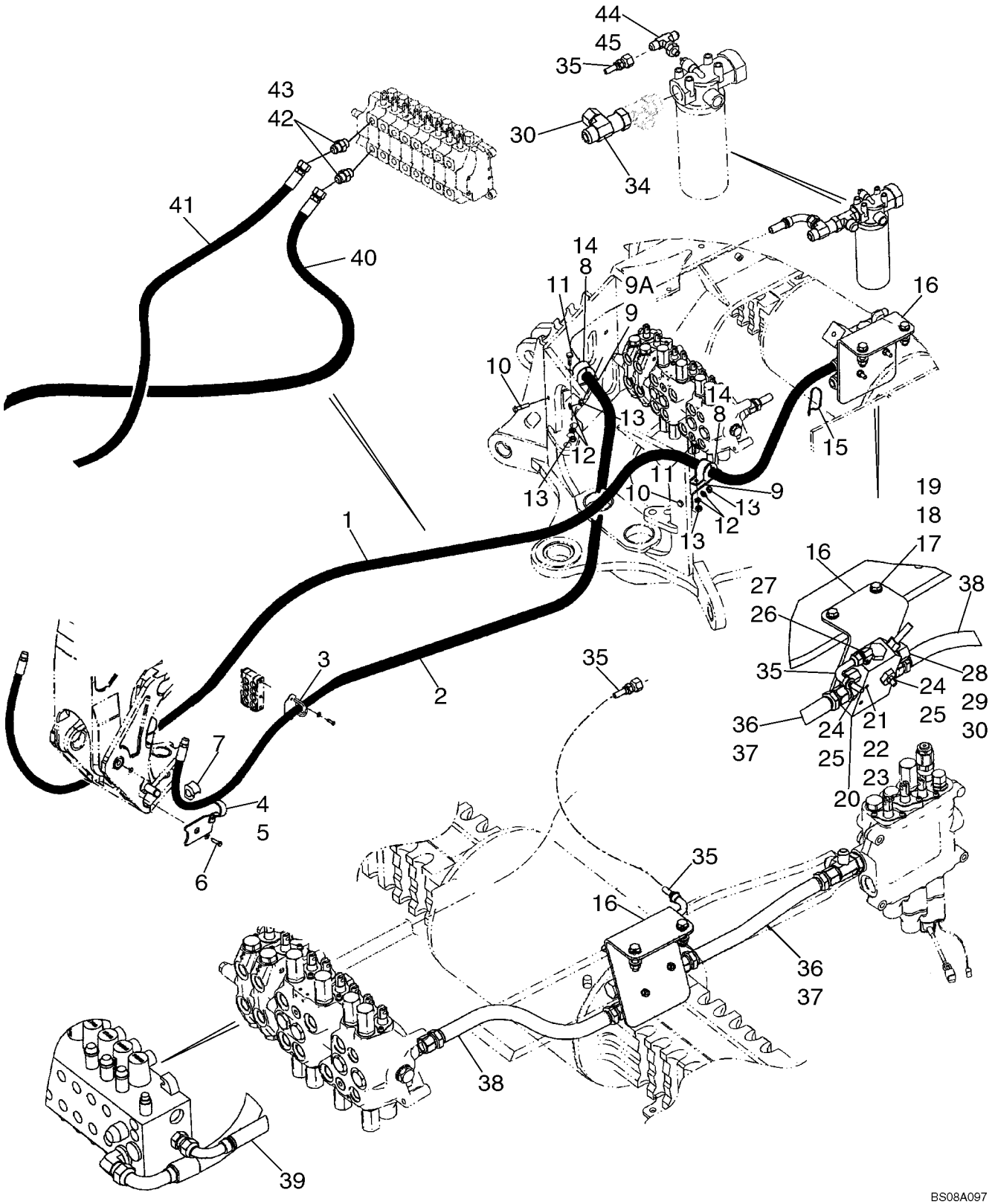

SISTEMA HIDRÁULICO - RETROESCAVADORA AUXILIAR (MODELOS SEM CONTROLO AUTOMÁTICO)

REF	FN	PART NUMBER	YR/SN	QTY	DESCRIPTION
29		237-6012		1	ANEL "O", 12-1, 90 Duro, .924 ID x .118" Thk
30		218-335		2	TAMPA DO RESERVATÓRIO, 37º, 1 1/16"-12
34		218-5216		1	TEE, 37º, 1 1/16"-12x1 1/16"-12, Fem Sw Runx1 1/16"-12
35		87422948		1	MANGUEIRA CONJUNTO, 930 mm (36-5/8 in)
36		87437232		1	MANGUEIRA CONJUNTO, 420 mm (16-9/16 in); Two Spool Loader Valve
37		87437231		1	MANGUEIRA CONJUNTO, 370 mm (14-19/32 in); Three Spool Loader Valve
38		87422977		1	MANGUEIRA CONJUNTO, 465 mm (18-5/16 in); Power Beyond; Models Without Pilot Controls; Hose Lengthened to 485 mm (19-3/32 in)
39		87428814		1	MANGUEIRA CONJUNTO, 458 mm (18-1/32 in); Power Beyond; Models With Pilot Controls
40		87423969		1	MANGUEIRA CONJUNTO, 1500 mm (59-1/16 in); Models With Bi-Directional
41		87423970		1	MANGUEIRA CONJUNTO, 1725 mm (67-15/16 in); Models With Bi Directional
42		218-5064		2	CONEXÃO, 1 1/16"-12, 37º x 1 1/16"-12, O-Ring, Incl. Ref 43
43		237-6012		1	ANEL "O", 12-1, 90 Duro, .924 ID x .118" Thk
44		218-5511		1	TEE, 37º, 3/4"-16 x 9/16"-18, O-Ring Br, Incl. Ref 45
45		237-6006		1	ANEL "O", 6-1, 90 Duro, .468" ID x .078" Thk

CONJUNTO DA VÁLVULA - AUXILIAR UNI-DIRECIONAL (MODELOS SEM CONTROLO AUTOMÁTICO)

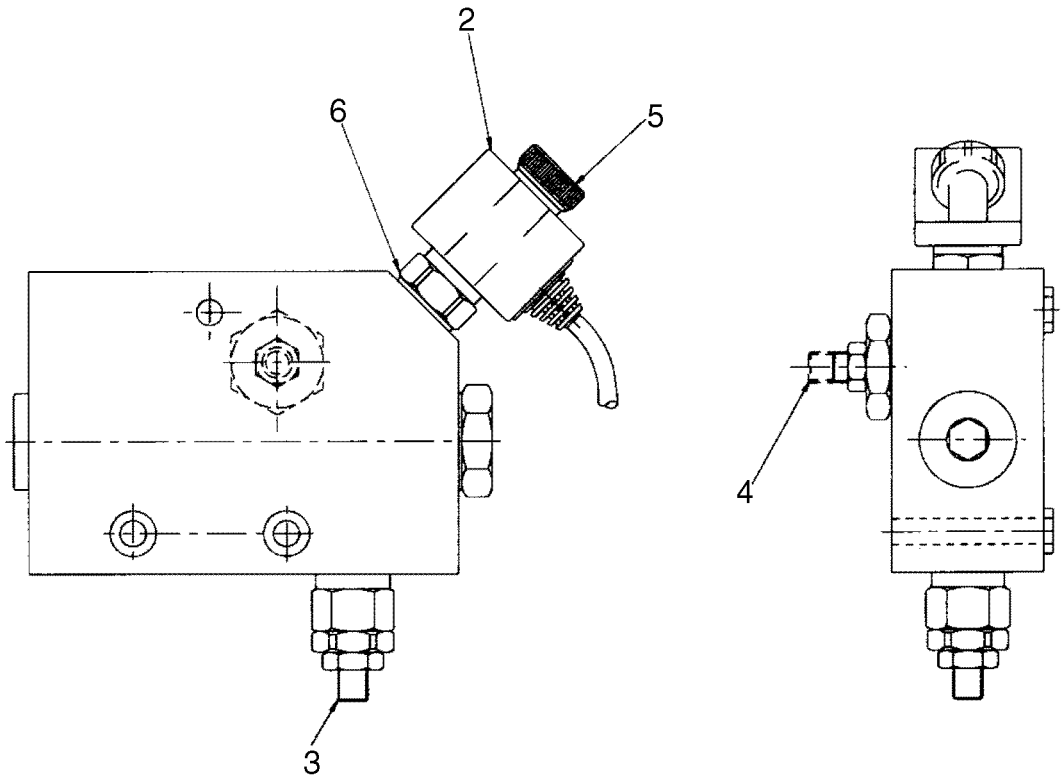

BS07E500

CONJUNTO DA VÁLVULA - AUXILIAR UNI-DIRECIONAL (MODELOS SEM CONTROLO AUTOMÁTICO)

REF	FN	PART NUMBER	YR/SN	QTY	DESCRIPTION
		87421836		1	VÁLVULA HYDRAULICA, Auxiliary Uni-Directional Valve; Incl. 1 - 6
1		9970181		1	JOGO DE JUNTAS, Miscellaneous Gaskets; Not Illustrated
2		87421832		1	BOBINA, Solenoid With Connector
3		9970178		1	VÁLVULA DE SOBRE-PRESSÃO
4		9970179		1	REGULADOR, Voltage Assy
5		9970384		1	PORCA, Ring
6		9970180		1	ELETRO VALVULA

SISTEMA HIDRÁULICO - RETROESCAVADORA AUXILIAR (MODELOS COM CONTROLO AUTOMÁTICO)

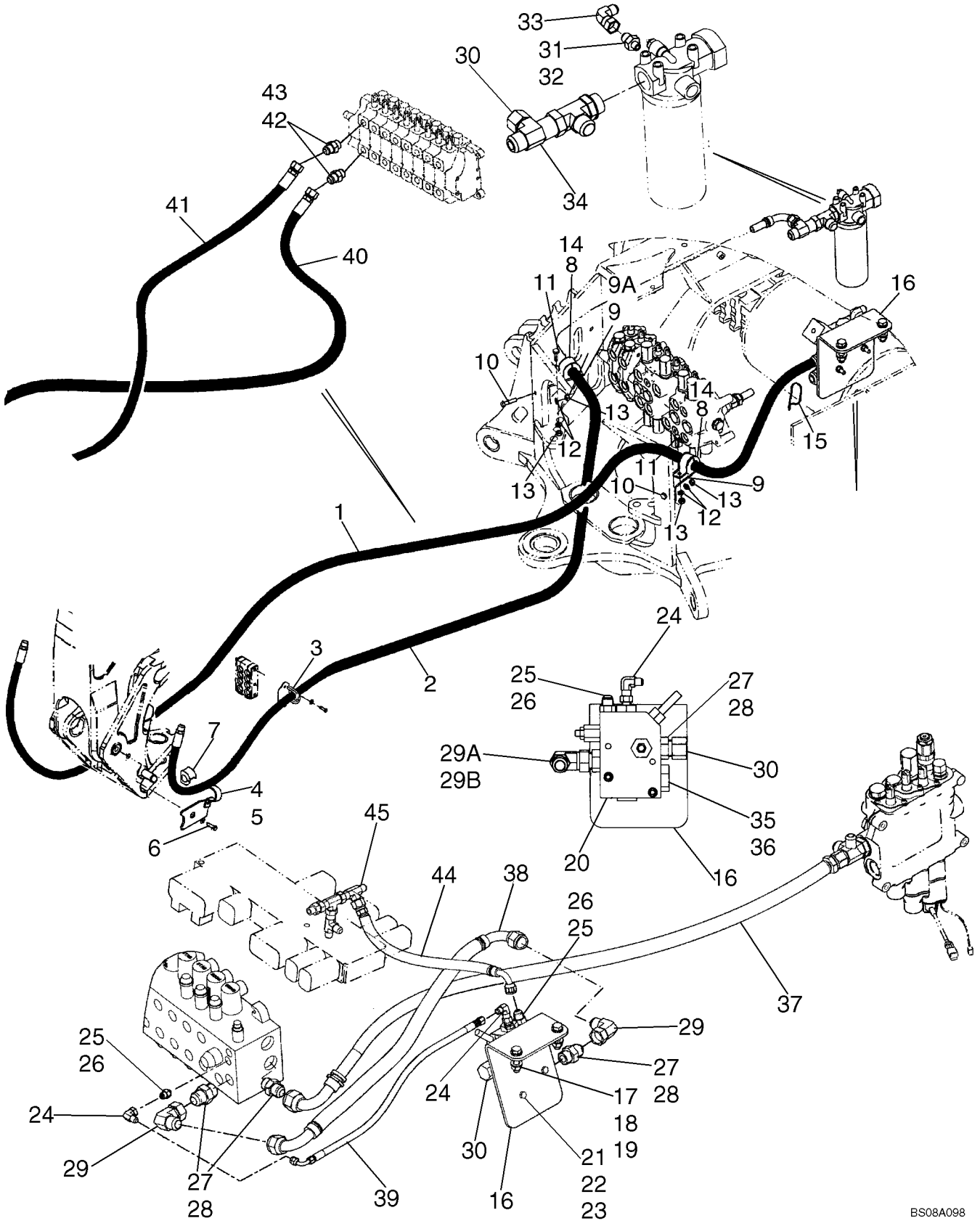

SISTEMA HIDRÁULICO - RETROESCAVADORA AUXILIAR (MODELOS COM CONTROLO AUTOMÁTICO)

REF	FN	PART NUMBER	YR/SN	QTY	DESCRIPTION
1		87430972		1	MANGUEIRA CONJUNTO, 2467 mm (97-1/8 in) Hose; Models With Uni-Directional
2		87429387		1	MANGUEIRA CONJUNTO, 2890 mm (113-13/16 in) Hose; Models With Uni-Directional
3		87431630		2	BRACADEIRA
4		329799A1		1	SUPORTE, LH
5		329797A1		1	SUPORTE, RH
6		604-20045		2	PARAFUSO, Hex, Lock, M20 x 45, Cl 8.8
7		144477A1		2	AMORTECEDOR DE CHOQ
8		144479A1		2	BRACADEIRA
9		413778A1		1-2	BRACADEIRA, 45 degree Bend
9A		282842A1		1	SUPORTE, 90 degree Bend
10		614-10040		2	PARAFUSO, Hex, M10 x 40, 8.8, Full Thd
11		614-10025		2	PARAFUSO, Hex, M10 x 25, 8.8, Full Thd
12		892-11010		4	ARRUELA-TRAVA, M10
13		829-1410		4	PORCA, M10, Cl 10
14		144477A1		2	AMORTECEDOR DE CHOQ
15		L18337		1	TIRA DE CABO, 9.95"-12.1" lg
16		87440694		1	SUPORTE
17		814-12050		2	PARAFUSO, Hex, M12 x 50, 8.8
18		896-11012		4	ARRUELA PLANA, M13.5 x 24.5 x 3, HT
19		829-1412		2	PORCA, M12, Cl 10
20		87448993		1	VÁLVULA HYDRAULICA, Auxiliary Hammer Uni-Directional Valve; See Figure 08-23C
21		814-8070		2	PARAFUSO, Hex, M8 x 70, 8.8
22		892-11008		2	ARRUELA-TRAVA, M8
23		829-1408		2	PORCA, M8, Cl 10
24		218-980		2	COTOVELO, 90º, 9/16"-18, 37º x 9/16"-18, 37º Fem Sw
25		218-5057		2	CONEXÃO, 9/16"-18, 37º x 9/16"-18, O-Ring, Incl. Ref 26
26		237-6006		1	ANEL "O", 6-1, 90 Duro, .468" ID x .078" Thk
27		218-5064		4	CONEXÃO, 1 1/16"-12, 37º x 1 1/16"-12, O-Ring, Incl. Ref 28
28		237-6012		1	ANEL "O", 12-1, 90 Duro, .924 ID x .118" Thk

SISTEMA HIDRÁULICO - RETROESCAVADORA AUXILIAR (MODELOS COM CONTROLO AUTOMÁTICO)

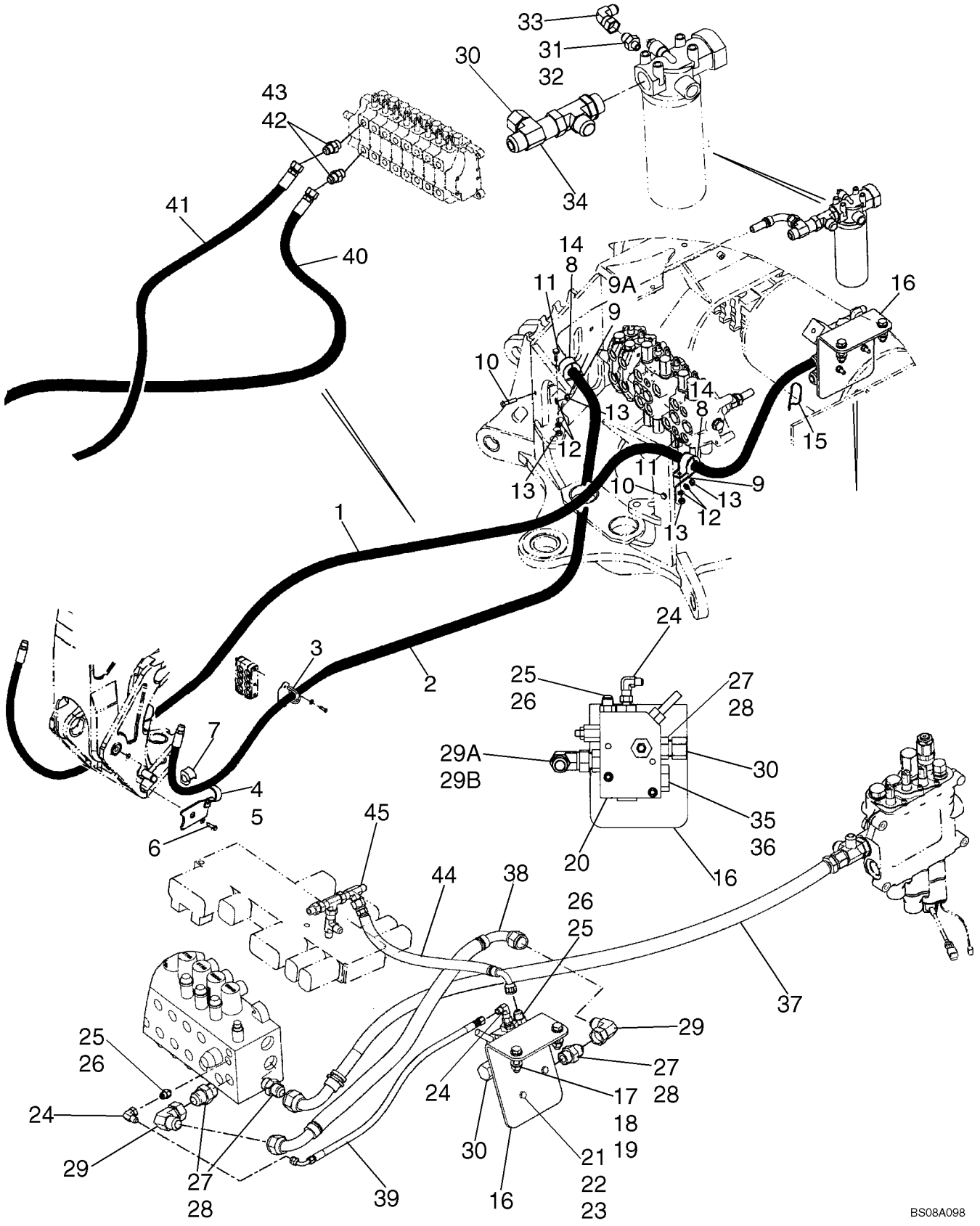

SISTEMA HIDRÁULICO - RETROESCAVADORA AUXILIAR (MODELOS COM CONTROLO AUTOMÁTICO)

REF	FN	PART NUMBER	YR/SN	QTY	DESCRIPTION
29		218-5231		1	COTOVELO, 90º, 1 1/16"-12, 37º x 1 1/16"-12, 37º Fem Sw
29A		218-5108		1	COTOVELO, 90º, 1 1/16"-12, 37º x 1 1/16"-12, O-Ring
30		218-335		2	TAMPA DO RESERVATÓRIO, 37º, 1 1/16"-12
29B		237-6012		1	ANEL "O", 12-1, 90 Duro, .924 ID x .118" Thk
32		237-6006		1	ANEL "O", 6-1, 90 Duro, .468" ID x .078" Thk
31		218-5351		1	CONEXÃO, 3/4"-16, 37º x 9/16"-18, O-Ring, Incl. Ref 32
33		218-5230		1	COTOVELO, 90º, 3/4"-16, 37º x 3/4"-16, 37º Fem Sw
34		218-5216		1	TEE, 37º, 1 1/16"-12x1 1/16"-12, Fem Sw Runx1 1/16"-12
35		218-5158		1	BUJÃO, Hex Hd, 1 1/16"-12 ORB, Incl. Ref 36
36		237-6012		1	ANEL "O", 12-1, 90 Duro, .924 ID x .118" Thk
37		87455832		1	MANGUEIRA CONJUNTO, 1020 mm (40-3/16 in); Loader Valve to Backhoe Valve; Power Beyond
38		87518479		1	MANGUEIRA CONJUNTO, 770 mm (30-11/32 in); 'E' Port Auxiliary Hammer Uni-Directional Valve to Backhoe Valve
39		87443052		1	MANGUEIRA CONJUNTO, 715 mm (28-5/32 in); 'LS' Port Auxiliary Hammer Uni-Direction Valve to Backhoe Valve
40		87423969		1	MANGUEIRA CONJUNTO, 1500 mm (59-1/16 in); Models With Bi-Directional
41		87423970		1	MANGUEIRA CONJUNTO, 1725 mm (67-15/16 in); Models With Bi Directional
42		218-5064		2	CONEXÃO, 1 1/16"-12, 37º x 1 1/16"-12, O-Ring, Incl. Ref 43
43		237-6012		1	ANEL "O", 12-1, 90 Duro, .924 ID x .118" Thk
44		87445794		1	MANGUEIRA CONJUNTO, 375 mm (14-13/16 in)
45		218-5222		1	TEE, 37º, 9/16"-18, x 9/16"-18, Fem Sw Run

CONJUNTO DA VÁLVULA - AUXILIAR UNI-DIRECIONAL (MODELOS COM CONTROLO AUTOMÁTICO)

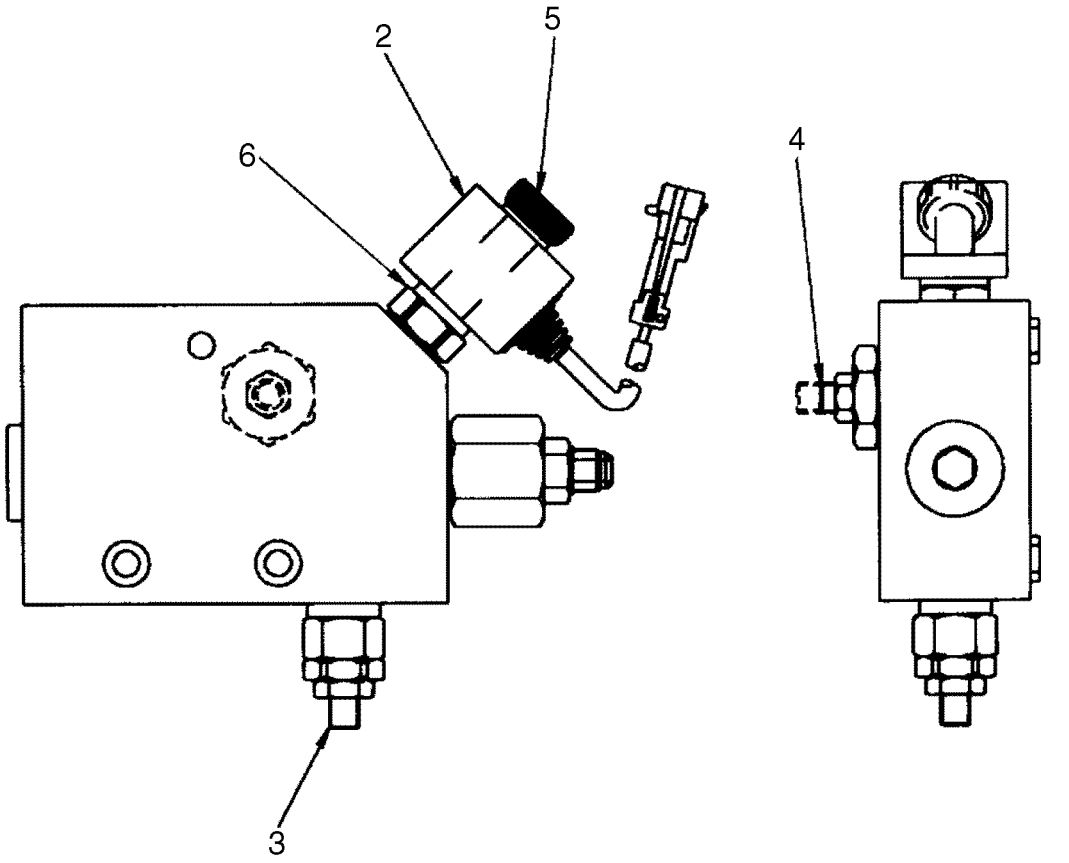

BS07E499

CONJUNTO DA VÁLVULA - AUXILIAR UNI-DIRECIONAL (MODELOS COM CONTROLO AUTOMÁTICO)

REF	FN	PART NUMBER	YR/SN	QTY	DESCRIPTION
		87448993		1	VÁLVULA HYDRAULICA, Auxiliary Uni-Directional Valve; Incl. 1 - 6
1		9970181		1	JOGO DE JUNTAS, Miscellaneous Gaskets; Not Illustrated
2		87421832		1	BOBINA, Solenoid With Connector
3		9970178		1	VÁLVULA DE SOBRE-PRESSÃO
4		9970179		1	REGULADOR, Voltage Assy
5		9970384		1	PORCA, Ring
6		9970180		1	ELETRO VALVULA

SISTEMA HIDRÁULICO - RETROESCAVADORA AUXILIAR, LANÇA E BRAÇO DE PENETRAÇÃO

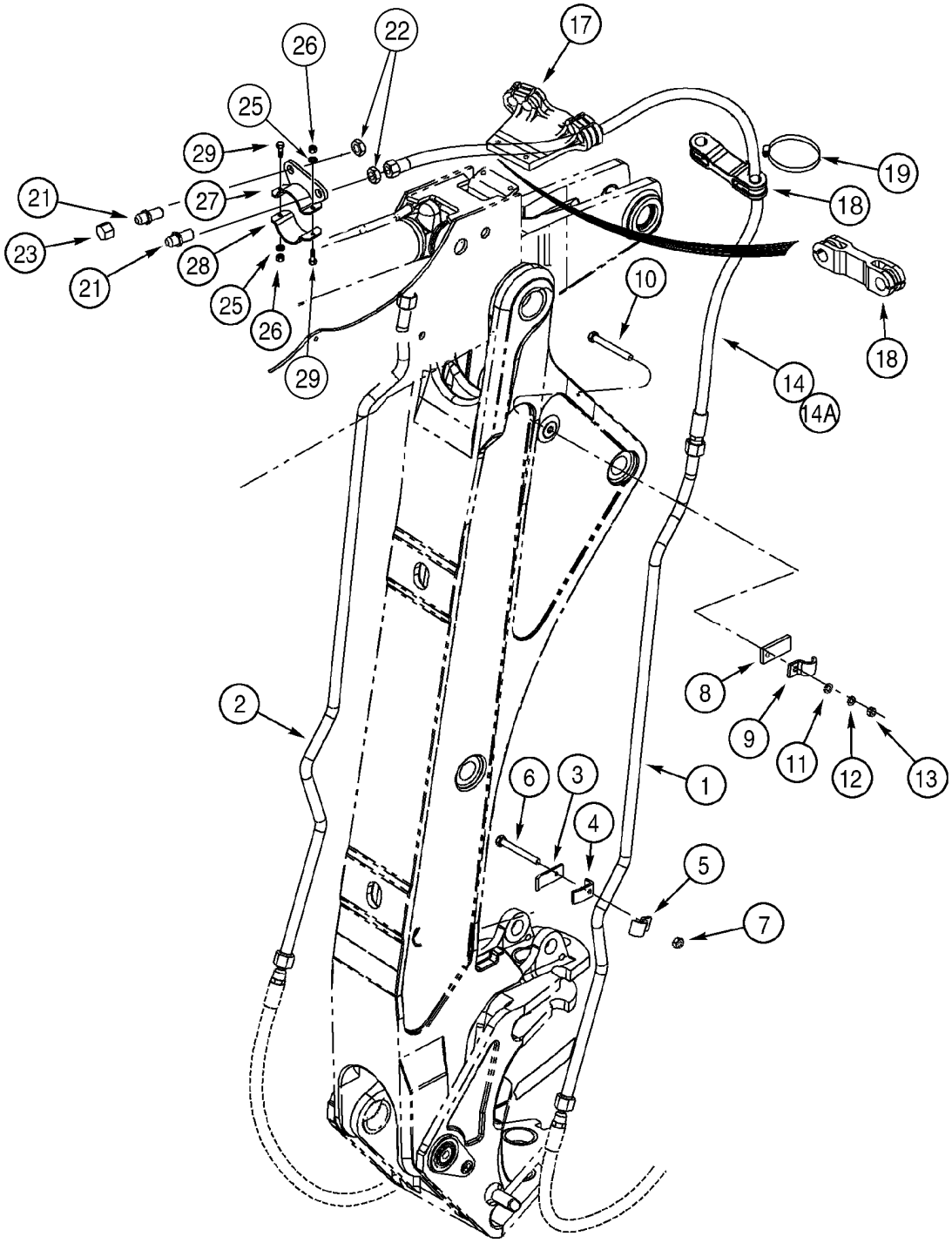

BS07K514

SISTEMA HIDRÁULICO - RETROESCAVADORA AUXILIAR, LANÇA E BRAÇO DE PENETRAÇÃO

REF	FN	PART NUMBER	YR/SN	QTY	DESCRIPTION
		REF			INSTRUCAO, AT BOOM AND DIPPER
1		243300A1		1	TUBO DE INTRODUÇÃO, Tube
2		243404A1		1	TUBO DE INTRODUÇÃO, Tube
3		D149309		2	BRACADEIRA
4		243298A1		2	BRACADEIRA
5		242459A1		2	FREIO, Clamp
6		814-10060		2	PARAFUSO, Hex, M10 x 60, 8.8
7		829-1410		2	PORCA, M10, Cl 10
8		243398A1		2	SUPORTE
9		242459A1		2	FREIO, Clamp
10		814-10050		2	PARAFUSO, Hex, M10 x 50, 8.8, Not Required With Standard Dipper
11		895-11010		2	ARRUELA PLANA, M10 x 20 x 2
12		892-11010		2	ARRUELA-TRAVA, M10
13		829-1410		2	PORCA, M10, Cl 10
14		243679A2		2	MANGUEIRA, 2665 mm (104-15/16 in); Models With Extendable Dipper
14A		256210A2		2	MANGUEIRA, 1285 mm (50-19/32 in); Models Without Extendable Dipper
17		246151A1		1	SUPORTE, Models With Extendable Dipper; Used With (2) 214-3156 Clamps
18		103670A1		2	BRACADEIRA MANGUEIRA, Rubber
19		214-3132		4	BRACADEIRA MANGUEIRA, 1.25/2.125 HD Worm
21		218-676		2	CONEXAO, Blkhd, 1 1/16"-12, 37º x 1 1/16"-12, 37º
22		218-1256		2	CONTRA PORCA, Blkhd, 1 1/16"-12
23		218-335		2	TAMPA DO RESERVATÓRIO, 37º, 1 1/16"-12
25		896-11010		2	ARRUELA PLANA, M10 x 21.5 x 2.5, HT
26		832-10410		2	CONTRA PORCA, M10 x 1.5, Cl 8
27		314319A1		1	BRACADEIRA
28		314320A1		1	BRACADEIRA
29		614-10040		2	PARAFUSO, Hex, M10 x 40, 8.8, Full Thd

SISTEMA HIDRÁULICO - CONTROLO DA SUSPENSÃO

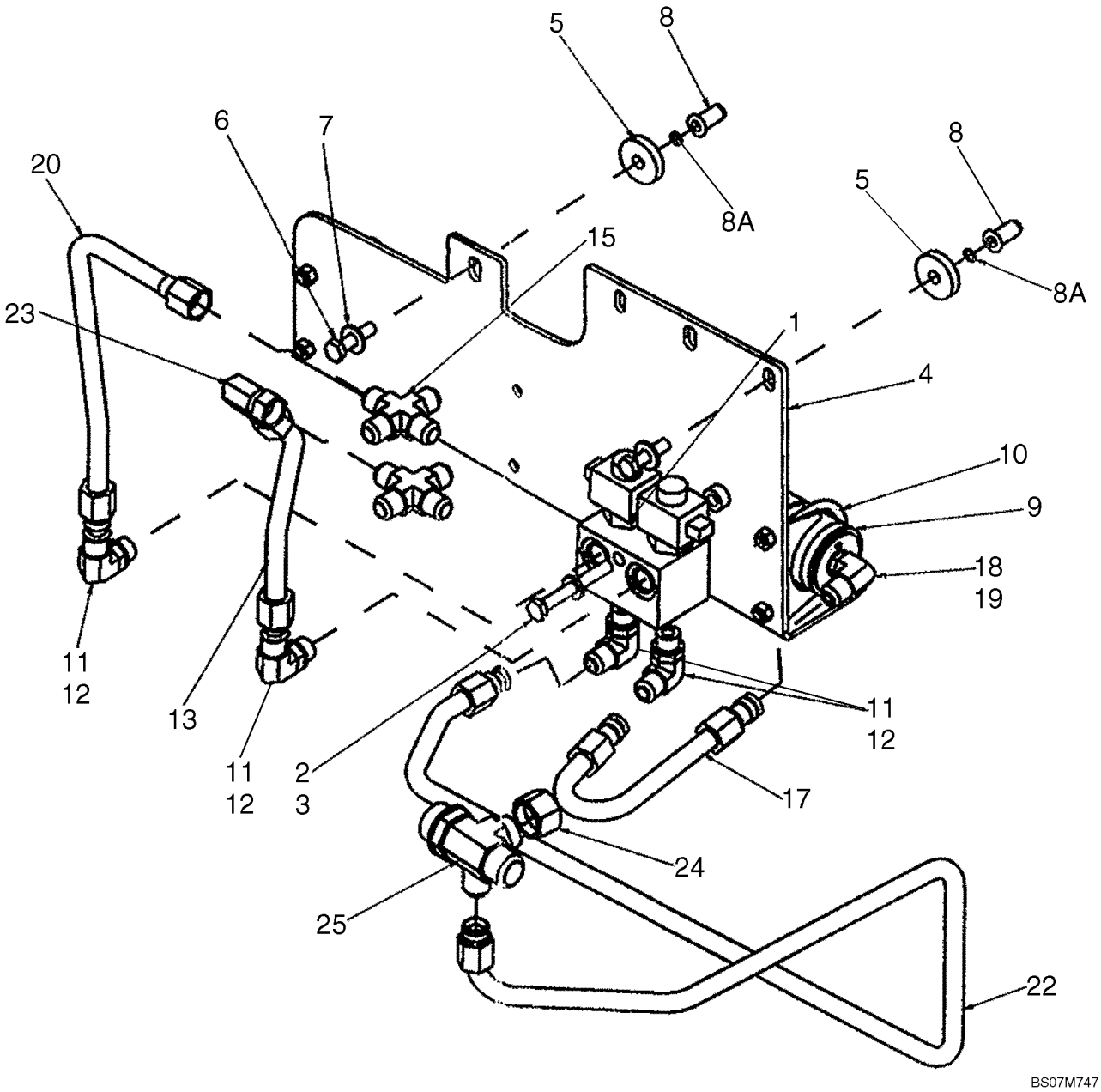

SISTEMA HIDRÁULICO - CONTROLO DA SUSPENSÃO

REF	FN	PART NUMBER	YR/SN	QTY	DESCRIPTION
		REF			INSTRUCAO, RIDE CONTROL HYDRAULIC AND ELECTRICAL CIRCUIT
1		87433240		1	ELETRO VALVULA, Ride Control; Component Parts Not Available At Time Of Printing
2		814-10080		1	PARAFUSO, Hex, M10 x 80, 8.8
3		895-11010		1	ARRUELA PLANA, M10 x 20 x 2
4		87421213		1	SUPORTE
5		87423067		2	ESPAÇADOR
6		814-10040		2	PARAFUSO, Hex, M10 x 40, 8.8, Full Thd
7		895-15010		2	ARRUELA PLANA, M11 x 24 x 2
8		87417721		2	ROSCA POSTIÇA, M10
8A		238-5011		2	ANEL "O", -011, 70 Duro, .301" ID x .070" Thk
9		448284A1		1	ACUMULADOR, Ride Control; Component Parts Not Serviced Separately; Used In Production, For Service, Order 234412A1 Accumulator
9		234412A1		1	ACUMULADOR, Ride Control; See Figure 08-60
10		A13240		2	BRACADEIRA, Two Piece; Includes Hardware
11		218-5117		4	COTOVELO, 90º, 7/8"-14, 37º x 3/4"-16, O-Ring, Incl. Ref 12
12		237-6008		1	ANEL "O", 8-1, 90 Duro, .644" ID x .087" Thk
13		87675026		1	TUBULAÇÃO HIDRAULICO, Solenoid Valve to Loader Control Valve Lower Lift Section Port
15		218-655		2	CONEXÃO DE QUATRO VIAS, 7/8"-14, 37º
17		87420696		1	TUBO CONJUNTO, Accumulator to Solenoid Valve
18		218-5600		1	COTOVELO, 90º, 7/8"-14, 37º x 3/4"-16, O-Ring, Incl. Ref 19
19		237-6008		1	ANEL "O", 8-1, 90 Duro, .644" ID x .087" Thk
20		87675071		1	TUBULAÇÃO HIDRAULICO, Solenoid Valve To Loader Control Valve Upper Lift Section Port
22		87675074		1	TUBULAÇÃO HIDRAULICO, Solenoid Valve To Filter
23		218-5232		1	COTOVELO, 90º, 7/8"-14, 37º x 7/8"-14, 37º Fem Sw
24		218-335		1	TAMPA DO RESERVATÓRIO, 37º, 1 1/16"-12
25		87436066		1	CONEXAO
26		235002A1		1	INTERRUPTOR, Ride Control; Not Illustrated; See Figure 04-10

SISTEMA HIDRÁULICO - DISPOSITIVO DE ACOPLAMENTO RÁPIDO DO CARREGADOR

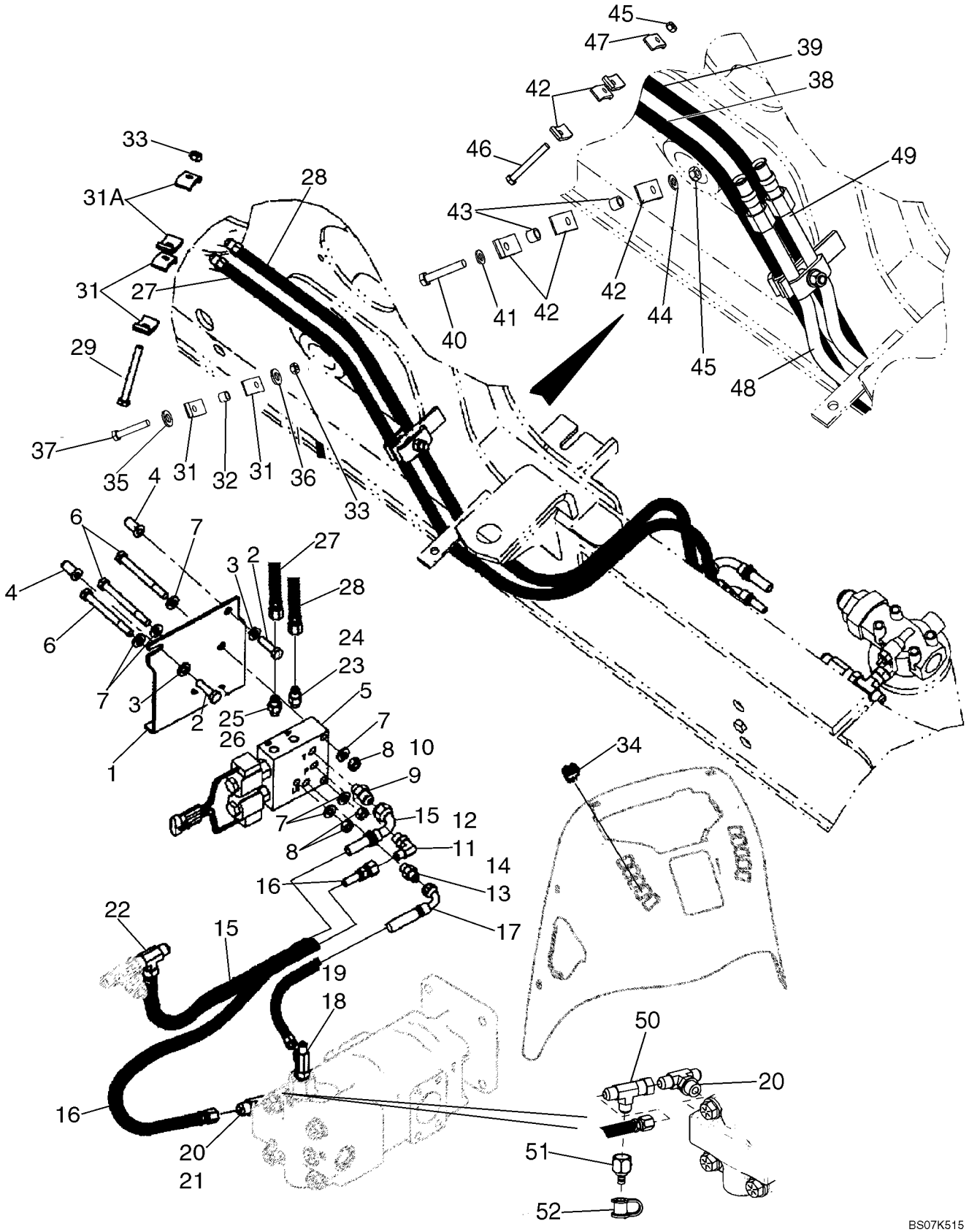

SISTEMA HIDRÁULICO - DISPOSITIVO DE ACOPLAMENTO RÁPIDO DO CARREGADOR

REF	FN	PART NUMBER	YR/SN	QTY	DESCRIPTION
1		87437263		1	SUPORTE, Coupler Valve Mounting
2		614-10035		2	PARAFUSO, Hex, M10 x 35, 8.8, Full Thd
3		896-11010		2	ARRUELA PLANA, M10 x 21.5 x 2.5, HT
4		87417721		2	ROSCA POSTIÇA, M10
5		87435909		1	ELETRO VALVULA, Coupler; Loader Tool; See Figure 08-28
6		814-10060		3	PARAFUSO, Hex, M10 x 60, 8.8
7		896-11010		6	ARRUELA PLANA, M10 x 21.5 x 2.5, HT
8		829-1410		3	PORCA, M10, Cl 10
9		218-5351		1	CONEXÃO, 3/4"-16, 37º x 9/16"-18, O-Ring, Incl. Ref 10
10		237-6006		1	ANEL "O", 6-1, 90 Duro, .468" ID x .078" Thk
11		218-5105		1	COTOVELO, 90º, 9/16"-18, 37º x 9/16"-18, O-Ring, Incl. Ref 12
12		237-6006		1	ANEL "O", 6-1, 90 Duro, .468" ID x .078" Thk
13		218-5057		1	CONEXÃO, 9/16"-18, 37º x 9/16"-18, O-Ring, Incl. Ref 14
14		237-6006		1	ANEL "O", 6-1, 90 Duro, .468" ID x .078" Thk
15		87434265		1	MANGUEIRA CONJUNTO, 500 mm (19-11/16 in); Coupler Valve to Filter
16		87452402		1	MANGUEIRA CONJUNTO, 830 mm (32-11/16 in); Pump to Coupler Pressure Port
17		87452403		1	MANGUEIRA CONJUNTO, 600 mm (23-5/8 in); Pump to Coupler Valve Load Sense Port
18		282428A1		1	VALVULA, Check Tee; Incl. Ref 19
19		237-6006		1	ANEL "O", 6-1, 90 Duro, .468" ID x .078" Thk
20		218-5183		1	TEE, 3/4"-16, 37º x 3/4"-16, O-Ring Br, Incl. Ref 21; Replaces Standard Steering Fitting
21		237-6008		1	ANEL "O", 8-1, 90 Duro, .644" ID x .087" Thk
22		218-845		1	TEE, 37º, 3/4"-16 x 3/4"-16, Fem Sw Run, Attaches to Tee At Back Of Filter
23		218-5053		1	CONEXÃO, 7/16"-20, 37º x 7/16"-20, O-Ring, Incl. Ref 24
24		237-6004		1	ANEL "O", 4-1, 90 Duro, .351" ID x .072" Thk

SISTEMA HIDRÁULICO - DISPOSITIVO DE ACOPLAMENTO RÁPIDO DO CARREGADOR

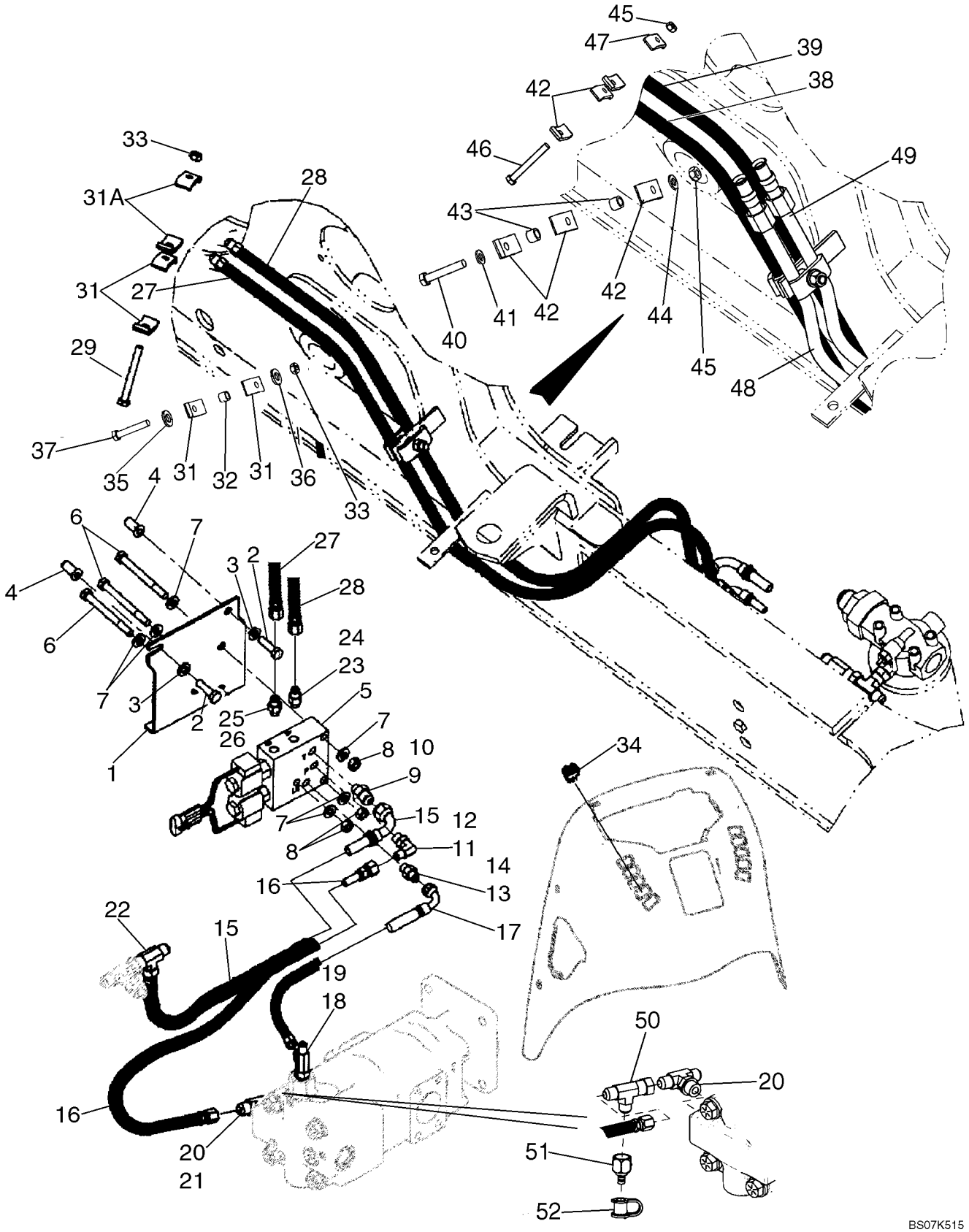

SISTEMA HIDRÁULICO - DISPOSITIVO DE ACOPLAMENTO RÁPIDO DO CARREGADOR

REF	FN	PART NUMBER	YR/SN	QTY	DESCRIPTION
25		218-5056		1	CONEXÃO, 1/2"-20, 37º x 1/2"-20, O-Ring, Incl. Ref 26
26		237-6005		1	ANEL "O", 5-1, 90 Duro, .414" ID x .072" Thk
		REF			INSTRUCAO, COUPLER ONLY (SEE REF 38-49 FOR CLAMPING ON MODELS WITH COUPLER AND 3-SPOOL LOADER VALVE)
27		87427539		1	MANGUEIRA CONJUNTO, 1815 mm (71-1/2 in); B Port
28		87427537		1	MANGUEIRA CONJUNTO, 1815 mm (71-1/2 in); A Port
29		814-10090		1	PARAFUSO, Hex, M10 x 90, 8.8
31		D138055		5	BRACADEIRA
31A		D143846		2	FREIO, CLAMP
32		120303A1		1	ESPAÇADOR
33		832-10410		2	CONTRA PORCA, M10 x 1.5, Cl 8
34		398675A2		1	INTERRUPTOR, Loader Tool Quick Coupler
35		892-11010		1	ARRUELA-TRAVA, M10
36		896-11010		1	ARRUELA PLANA, M10 x 21.5 x 2.5, HT
37		83931335		1	PARAFUSO, Hex, M10 x 75, 8.8
		REF			INSTRUCAO, COUPLER AND 3-SPOOL LOADER VALVE (SEE REF 27-37 FOR CLAMPING ON MODELS WITH COUPLER ONLY)
38		87427539		1	MANGUEIRA CONJUNTO, 1815 mm (71-1/2 in); B Port
39		87427537		1	MANGUEIRA CONJUNTO, 1815 mm (71-1/2 in); A Port
40		83931335		1	PARAFUSO, Hex, M10 x 75, 8.8
41		892-11010		1	ARRUELA-TRAVA, M10
42		D138055		5	BRACADEIRA
43		120303A1		2	ESPAÇADOR
44		896-11010		1	ARRUELA PLANA, M10 x 21.5 x 2.5, HT
45		832-10410		2	CONTRA PORCA, M10 x 1.5, Cl 8
46		814-10090		1	PARAFUSO, Hex, M10 x 90, 8.8
47		D143846		2	FREIO, Clamp

SISTEMA HIDRÁULICO - DISPOSITIVO DE ACOPLAMENTO RÁPIDO DO CARREGADOR

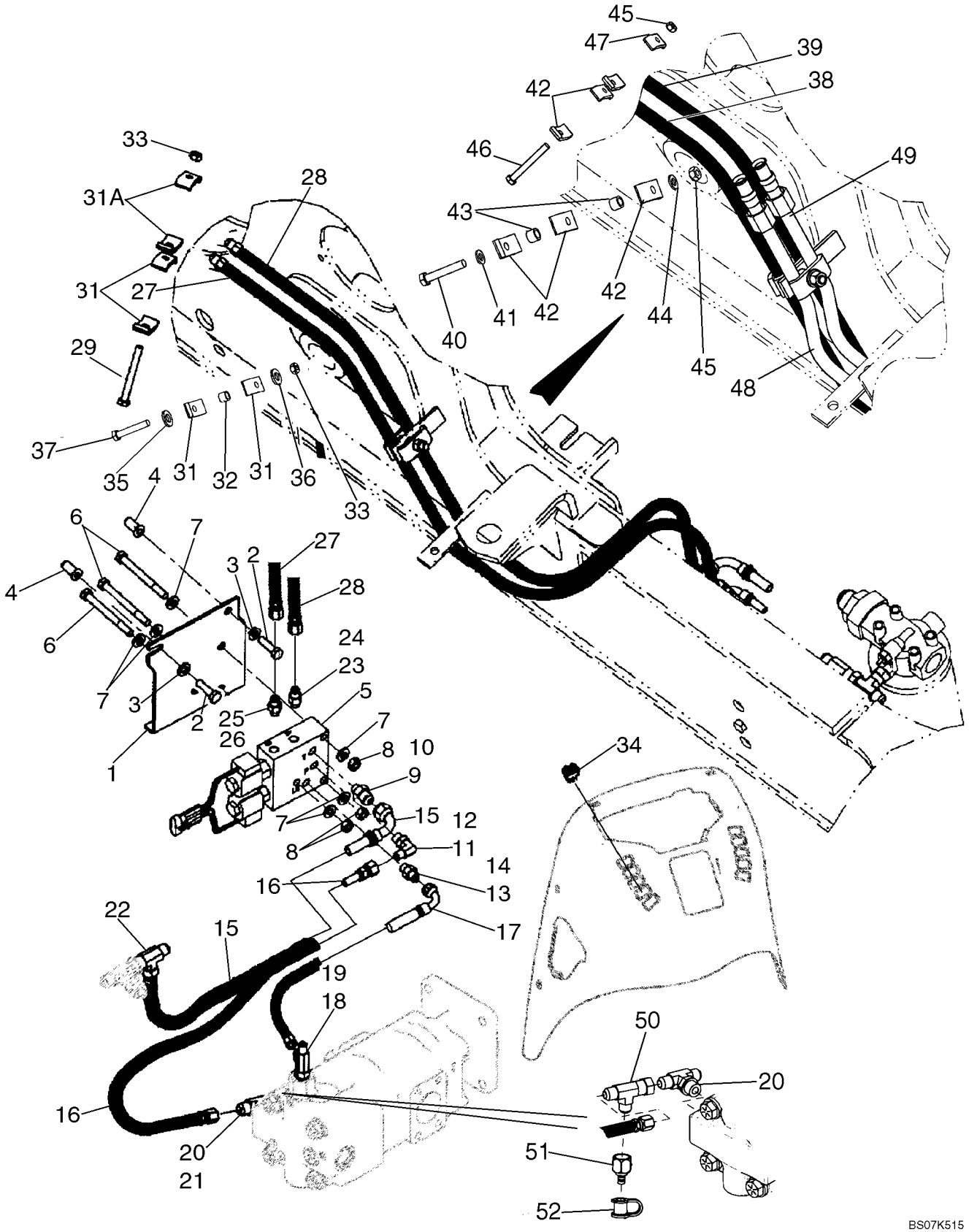

SISTEMA HIDRÁULICO - DISPOSITIVO DE ACOPLAMENTO RÁPIDO DO CARREGADOR

REF	FN	PART NUMBER	YR/SN	QTY	DESCRIPTION
48		87478483		1	TUBULAÇÃO HIDRAULICO, Tube, Loader Clam; A Port
49		87449440		1	TUBO CONJUNTO, Loader Clam; B Port
50		218-845		1	TEE, 37º, 3/4"-16 x 3/4"-16, Fem Sw Run
51		192834A1		1	ACOPLAMENTO, Diagnostic
52		H434163		1	GUARDA-PÓ

SISTEMA HIDRÁULICO - DISPOSITIVO DE ACOPLAMENTO RÁPIDO DO CARREGADOR, ESTRUTURA BRAÇO DE LEVANTAMENTO

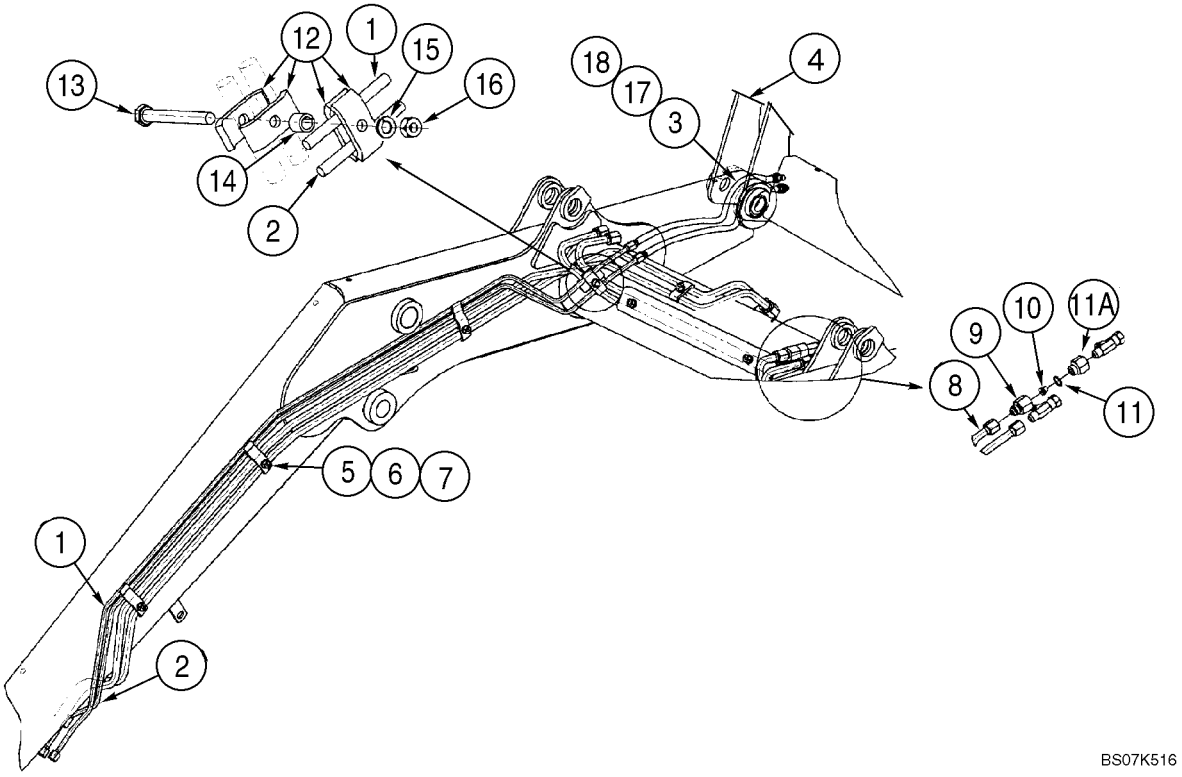

SISTEMA HIDRÁULICO - DISPOSITIVO DE ACOPLAMENTO RÁPIDO DO CARREGADOR, ESTRUTURA BRAÇO DE LEVANTAMENTO

REF	FN	PART NUMBER	YR/SN	QTY	DESCRIPTION
		REF			INSTRUCAO, AT LOADER LIFT FRAME
1		87716490		1	TUBULAÇÃO HIDRAULICO
2		87716492		1	TUBULAÇÃO HIDRAULICO
3		300996A3		2	MANGUEIRA CONJUNTO, 772 mm (30-13/32 in)
4		REF		1	INSTRUCAO, Coupler, Hydr., Loader Tool Quick Coupler; For Complete Assembly, See Figure 09-10; Order From Machinery Price List; Use Standard Loader Bucket Pins To Mount Coupler
5		302820A2		3	BRACADEIRA
6		892-11010		3	ARRUELA-TRAVA, M10
7		829-1410		3	PORCA, M10, Cl 10
8		87716484		1	TUBULAÇÃO HIDRAULICO
9		304424A1		1	CONECTOR
10		304890A1		1	REDUTOR
11		237-6010		1	ANEL "O", 10-1, 90 Duro, .755" ID x .097" Thk
11A		309674A1		1	CONECTOR, 7/8 male x 7/8 female
12		D138055		4	BRACADEIRA
13		814-10090		1	PARAFUSO, Hex, M10 x 90, 8.8
14		120303A1		1	ESPAÇADOR
15		892-11010		1	ARRUELA-TRAVA, M10
16		829-1410		1	PORCA, M10, Cl 10
17		307277A1		1	BUCHA
18		L18337		2	TIRA DE CABO, 9.95"-12.1" lg

VÁLVULA, ACOPLADOR (87435909) - FERRAMENTA DO CARREGADOR

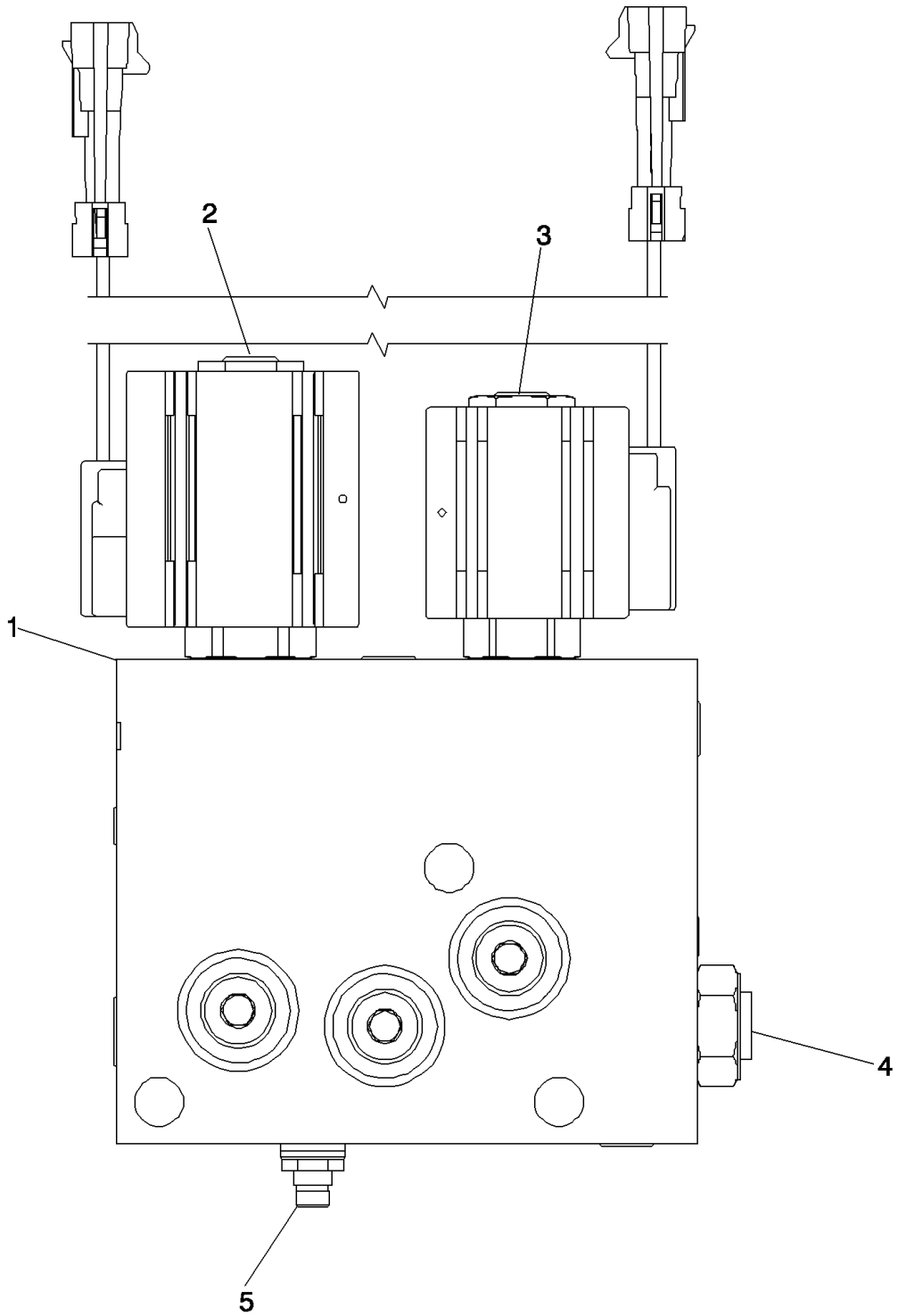

BS03M143

VÁLVULA, ACOPLADOR (87435909) - FERRAMENTA DO CARREGADOR

REF	FN	PART NUMBER	YR/SN	QTY	DESCRIPTION
		87435909		1	ELETRO VALVULA, Incl. Ref 1 - 5
1		NSS		1	BOLETIM INFORMATIVO, Body
2		87438021		1	ELETRO VALVULA, 4-Way Cartridge With Coil; Includes 87438022, 87438023, 87438024
		87438022		1	VÁLVULA HYDRAULICA, Cartridge
		87438023		1	BOBINA, Solenoid
		87438024		1	JOGO DE JUNTAS, 4-Way Solenoid
3		87438025		1	ELETRO VALVULA, 2-Way 2-Position Cartridge With Coil; Includes 87438026, 87438027, 87438028
		87438026		1	VÁLVULA HYDRAULICA, Cartridge
		87438027		1	BOBINA, Solenoid
		87438028		1	JOGO DE JUNTAS, 2-Way Solenoid
4		87438029		1	VALVULA CHECAGEM, Includes 87438028 Seal Kit
		87438028		1	JOGO DE JUNTAS, 2-Way Solenoid
5		87438031		1	VÁLVULA DE SOBRE-PRESSÃO, Includes 87438032
		87438032		1	JOGO DE JUNTAS, Relief Valve

BOMBA DO EQUIPAMENTO HIDRÁULICO

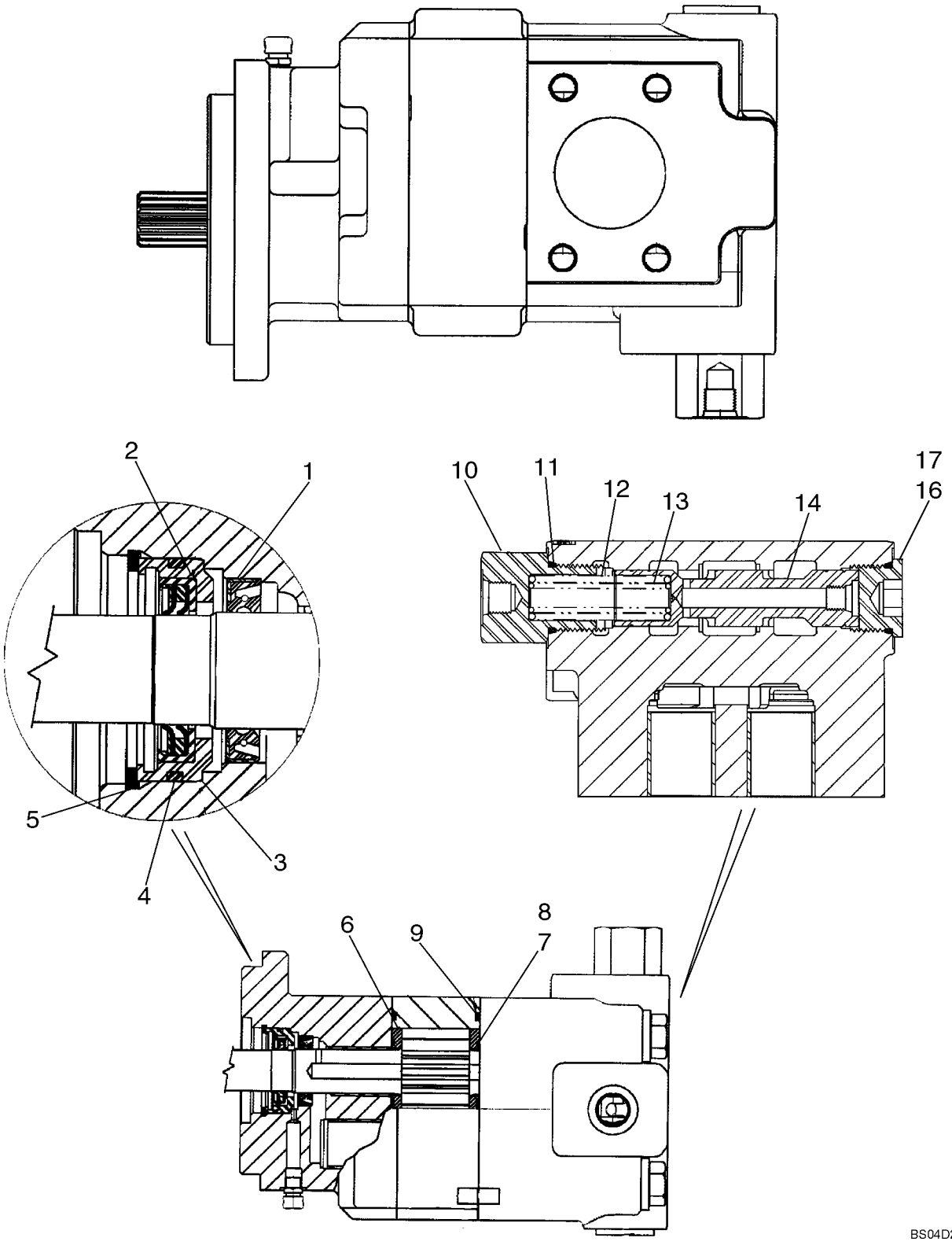

BOMBA DO EQUIPAMENTO HIDRÁULICO

REF	FN	PART NUMBER	YR/SN	QTY	DESCRIPTION
		87434672		1	BOMBA HIDRÁULICA, Component Parts Not Serviced Separately, Except for 87434070 and 87438045 Service Kits, Ref 1 - 17, See Below
		87434070		1	KIT REP. BOMBA HIDR., Pump Service Kit, Single Section; Incl. Ref 1 - 9
1		L32418		1	ANEL DE VEDAÇÃO, Double Lip
2		87434075		1	ANEL DE VEDACAO, Lip Seal
3		87434076		1	RETENTOR
4		87434077		1	ANEL VEDADOR
5		102-23206		1	ANEL, #206, 2.190", Int, Spiral
6		N13582		2	PLACA, Thrust
7		144173A1		2	ANEL DE VEDAÇÃO
8		178051A1		2	VEDADOR ESPECIAL
9		L32100		2	ANEL DE VEDAÇÃO, Gear Housing Gasket
		87438045		1	KIT REP. BOMBA HIDR., Priority Valve Service Kit, Single; Incl. Ref 10 - 17
10		87437899		1	BUJÃO, Load Sense
11		237-6014		1	ANEL "O", 14-1, 90 Duro, 1.048" ID x .118" Thk
12		87437905		1	MOLA-TRAVA, Spool Spring, 100 psi
13		87437906		1	MOLA-TRAVA, Spool Spring, 50 psi
14		87437914		1	CARRETO, Priority Valve Spool
16		218-5213		1	BUJÃO, Hex Soc, 1 3/16"-12 ORB, Incl. Ref 17
17		237-6014		1	ANEL "O", 14-1, 90 Duro, 1.048" ID x .118" Thk

CONJUNTO DA VÁLVULA - CONTROLO DO CARREGADOR, DUAS BOBINAS

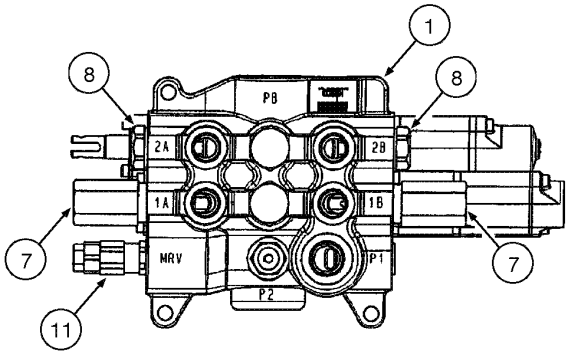

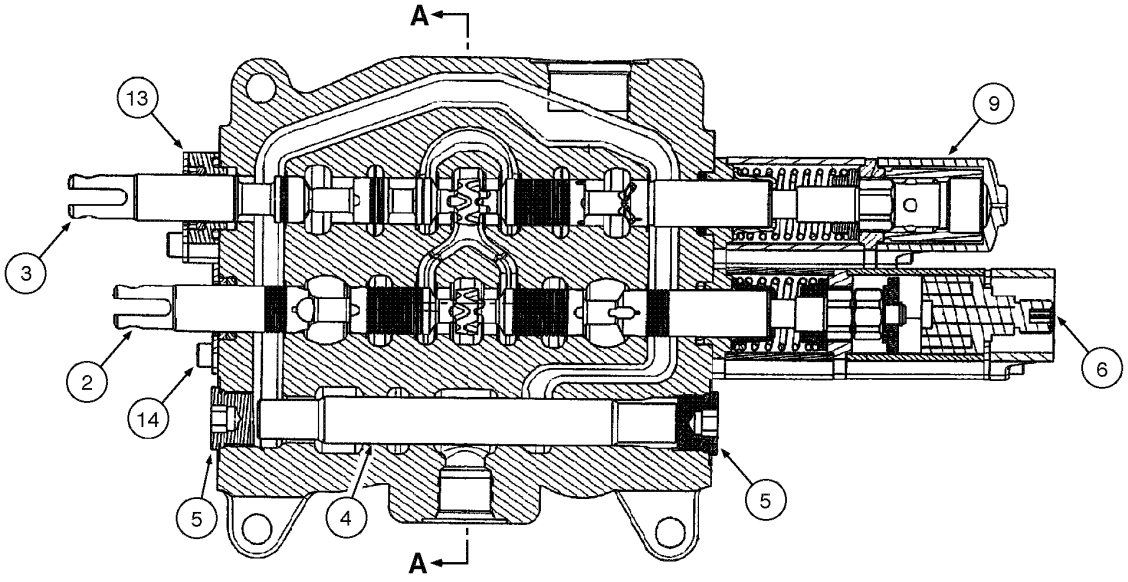

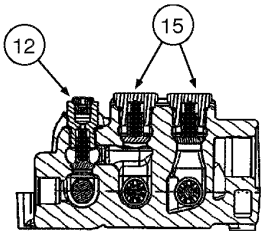

A - A

CONJUNTO DA VÁLVULA - CONTROLO DO CARREGADOR, DUAS BOBINAS

REF	FN	PART NUMBER	YR/SN	QTY	DESCRIPTION
		87554105		1	DISTRIBUIDOR, (2 spool) Assy
1		NSS		1	BOLETIM INFORMATIVO, HOUSING
2		NSS		1	BOLETIM INFORMATIVO, SPOOL bucket
3		NSS		1	BOLETIM INFORMATIVO, SPOOL lift
4		NSS		1	BOLETIM INFORMATIVO, SPOOL
5		87426233		2	BUJÃO
6		87426221		1	DETENTE, magnetic
7		87426232		2	VÁLVULA DE SOBRE-PRESSÃO
8		81868381		2	VALVULA CHECAGEM, anti-void Assy
8	1	87455580		1	JOGO DE JUNTAS
9		87426227		1	DETENTE, manual
11		87426717		1	VÁLVULA DE SOBRE-PRESSÃO
11	1	87455551		1	KIT, SERVICE, ring
12		87426716		1	VALVULA CHECAGEM
13		87541940		1	JOGO DE JUNTAS, lift spool Assy
13	1	85999136		1	VEDADOR CILINDRO
13	1	71103058		1	ANEL "O"
13	1	87455538		1	ANEL "O"
13	1	87455534		2	PARAFUSO
13	1	87455539		1	ESPAÇADOR
13	1	87455536		2	PLACA DE FIXAÇÃO
14		87541939		1	JOGO DE JUNTAS, bucket spool Assy
14	1	85999136		1	VEDADOR CILINDRO
14	1	71103058		1	ANEL "O"
14	1	87455540		2	PARAFUSO
14	1	87455536		2	PLACA DE FIXAÇÃO
15		87426238		2	VALVULA CHECAGEM
15	1	87455975		1	ANEL "O"

(1) Não ilustrado

CONJUNTO DA VÁLVULA - CONTROLO DO CARREGADOR, TRÊS BOBINAS

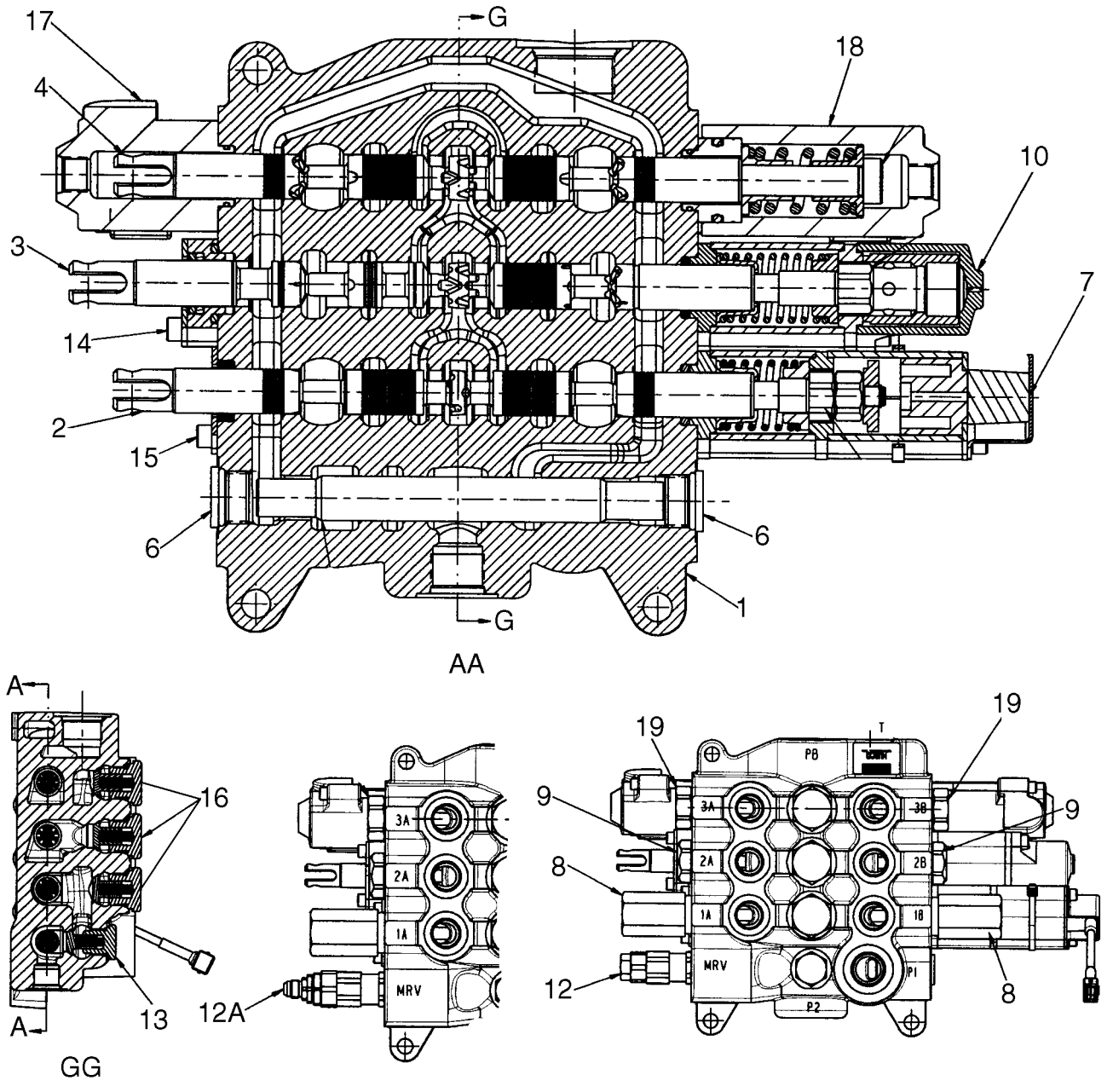

BS08B073

CONJUNTO DA VÁLVULA - CONTROLO DO CARREGADOR, TRÊS BOBINAS

REF	FN	PART NUMBER	YR/SN	QTY	DESCRIPTION
		87593382		1	DISTRIBUIDOR, Three Spool Loader Valve, Used On Models Without Pilot Controls; Incl. Ref 1 - 12, 13 - 19
		87593381		1	DISTRIBUIDOR, Three Spool Loader Valve, Used On Models With Pilot Controls; Incl. 1 - 10, 12A, 13 - 19
1		NSS		1	BOLETIM INFORMATIVO, Housing
2		NSS		1	BOLETIM INFORMATIVO, Spool, Bucket
3		NSS		1	BOLETIM INFORMATIVO, Spool, Lift
4		NSS		1	BOLETIM INFORMATIVO, Spool, Clam
5		NSS		1	BOLETIM INFORMATIVO, Spool
6		87426233		2	BUJÃO, 7/8 - 14 NF Plug, Serviceable Includes (1) 87455974 O-Ring
7		84124604		1	DETENTE, Magnetic Detent Kit, Bucket; Included In 87351496 or 87351501 Valve, Some Component Parts Not Serviced Separately; Serviceable Includes (1) 87454547 O-Ring, (1) 87515957 Magnet, (2) 87310278 Screw; Replaces 87515955
8		87450978		2	VÁLVULA DE SOBRE-PRESSÃO, Relief Valve Assembly; Some Component Parts Not Serviced Separately; Includes Serviceable 87455549 Seal Kit
9		81868381		2	VALVULA CHECAGEM, Load Check Valve, Anti-Void; Component Parts Not Serviced Separately; Includes Serviceable 87455580 Seal Kit
10		87426227		1	DETENTE, Manual Detent Assembly, Lift; Some Component Parts Not Serviced Separately; Serviceable Includes (1) 87454547 O-Ring, (2) 87310275 Screw, (4) 87310276 Ball Bearing
12		87426717		1	VÁLVULA DE SOBRE-PRESSÃO, Main Relief Valve Assembly, Single Stage; 87434767 or 87351496Loader Valve, Models Without Pilot Controls; Component Parts Not Serviced Separately; Includes Serviceable 87455551 Seal Kit

CONJUNTO DA VÁLVULA - CONTROLO DO CARREGADOR, TRÊS BOBINAS

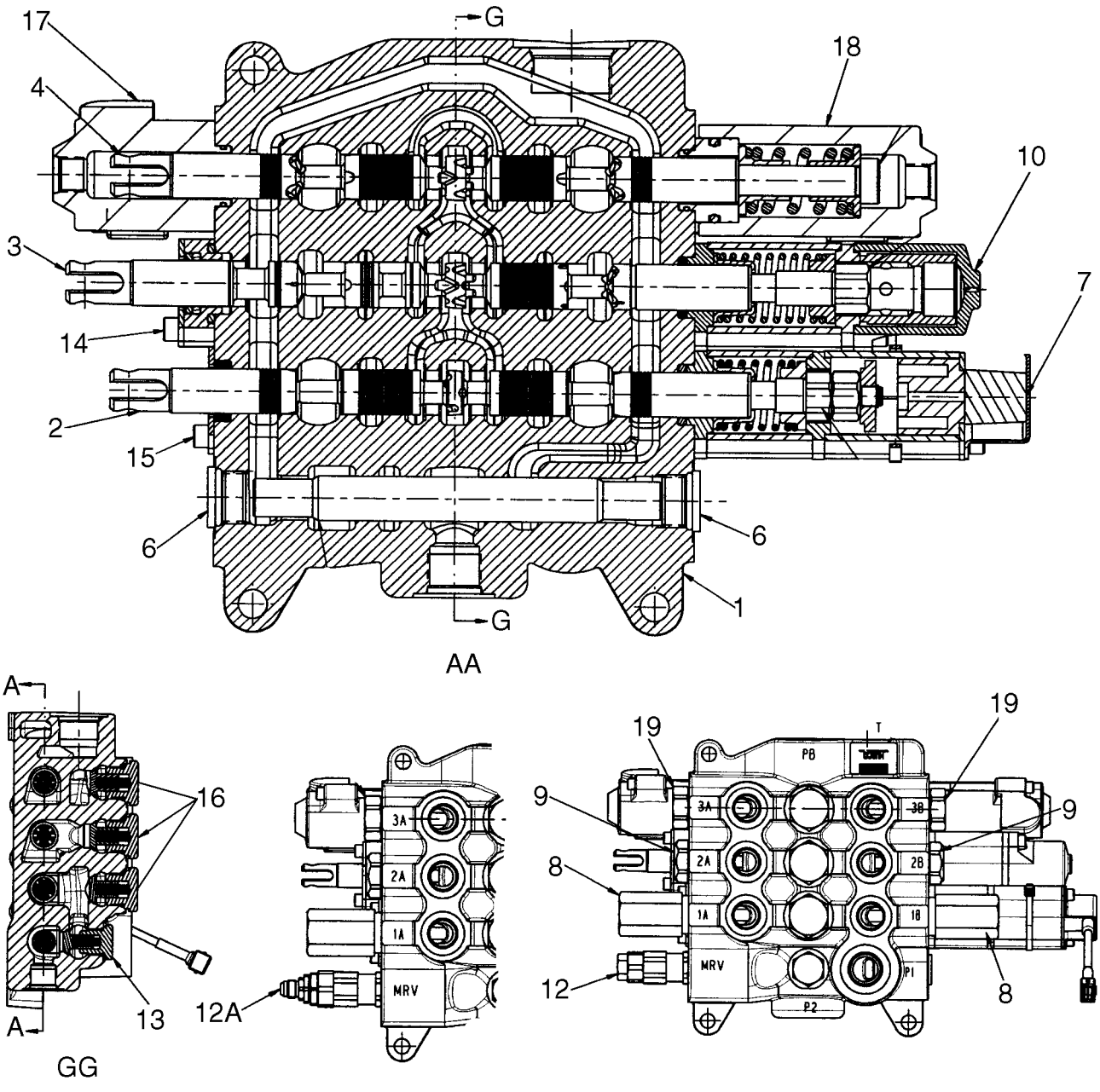

CONJUNTO DA VÁLVULA - CONTROLO DO CARREGADOR, TRÊS BOBINAS

REF	FN	PART NUMBER	YR/SN	QTY	DESCRIPTION
12A		87426235		1	VÁLVULA DE SOBRE-PRESSÃO, Main Relief Valve Assembly, Two Stage; 87434769 or 87351501 Loader Valve, Models With Pilot Controls; Component Parts Not Serviced Separately; Includes Serviceable 87455550 Seal Kit
13		87426716		1	VALVULA CHECAGEM, Some Component Parts Not Serviced Separately; Serviceable Includes (1) 87455974 O-Ring, (1) 87309001 O-Ring, (1) 87446002 Poppet, (1) 87446003 Spring
14		87440815		1	PLACA CONJUNTO, Lift Spool Plate and Seal Assembly; Some Component Parts Not Serviced Separately; Serviceable Includes (1) 87454547 O-Ring, (1) 87454548 Seal, (1) 87455538 O-Ring, (2) 87455534 Screw
15		87440814		1	PLACA CONJUNTO, Bucket and Clam Spool Plate and Seal Assembly; Some Component Parts Not Serviced Separately; Serviceable Includes (1) 87454547 O-Ring, (1) 87454548 Seal, (2) 87455540 Screw
16		87426238		3	VALVULA CHECAGEM, Component Parts Not Serviced Separately; Includes Serviceable 87455975 O-Ring
17		87757931		1	EXTREMIDADE, End Cap; Clam Spool; Component Parts Not Available At Time Of Printing
18		87757932		1	EXTREMIDADE, End Cap; Clam Spool; Component Parts Not Available At Time Of Printing
19		83981068		2	CONECTOR DE FECHAMENTO, Shut-Off Plug Assembly Includes Seal; Component Parts Not Serviced Separately

CONJUNTO DA VÁLVULA - CONTROLO DA RETROESCAVADORA, 6 BOBINAS (W/O EXT DIPPER, W/O AUX HYDS, W/O PILOT CONTROLS)

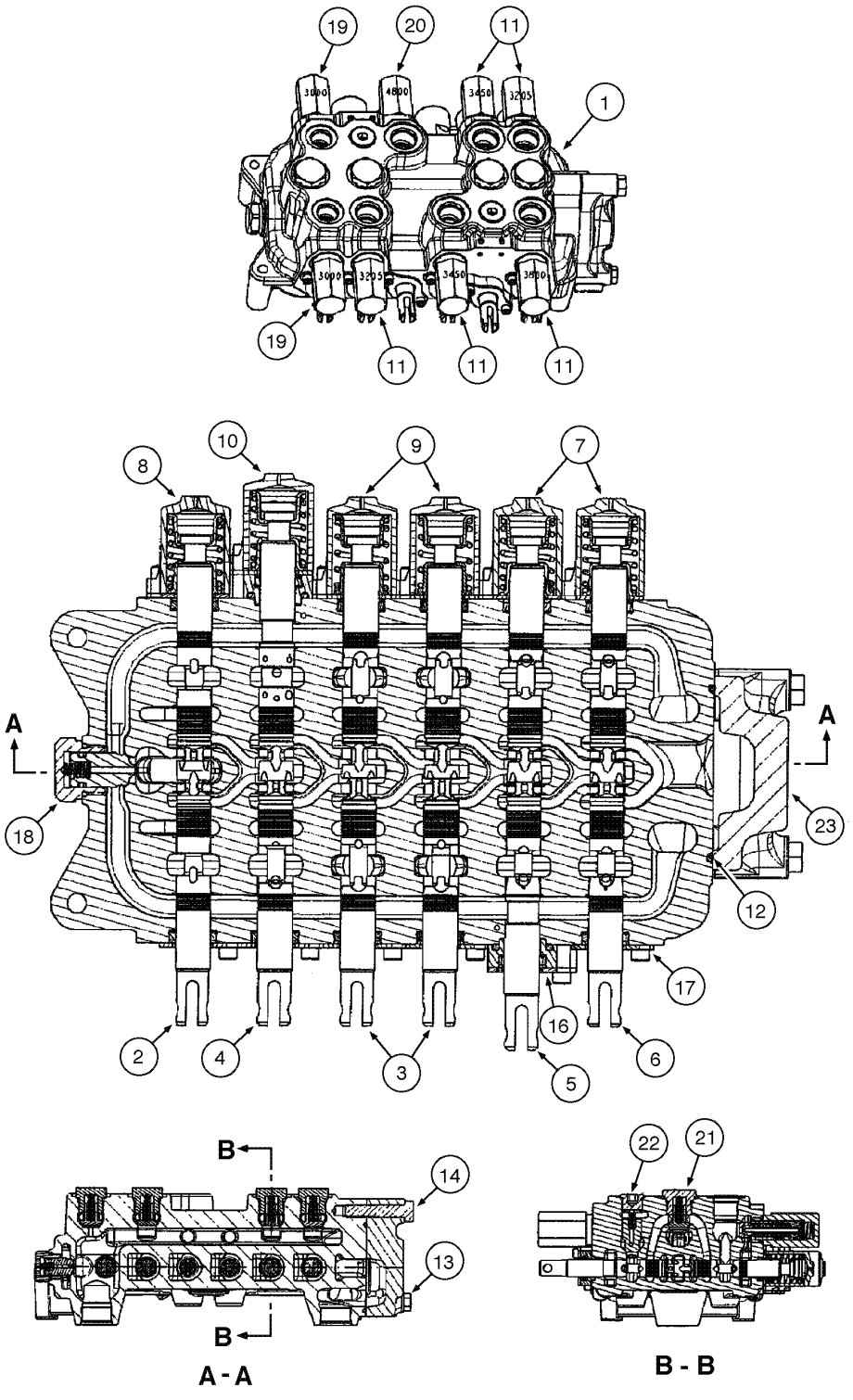

CONJUNTO DA VÁLVULA - CONTROLO DA RETROESCAVADORA, 6 BOBINAS (W/O EXT DIPPER, W/O AUX HYDS, W/O PILOT CONTROLS

REF	FN	PART NUMBER	YR/SN	QTY	DESCRIPTION
	1	87541852		1	DISTRIBUIDOR, (6 spool) Assy
	2	87541853		1	VÁLVULA HYDRAULICA, (6 spool) Assy
1		NSS		1	BOLETIM INFORMATIVO, HOUSING
2		NSS		1	BOLETIM INFORMATIVO, SPOOL swing
3		NSS		2	BOLETIM INFORMATIVO, SPOOL stabilizer
4		NSS		1	BOLETIM INFORMATIVO, SPOOL boom
5		NSS		1	BOLETIM INFORMATIVO, SPOOL dipper
6		NSS		1	BOLETIM INFORMATIVO, SPOOL bucket
7		87426241		2	EXTREMIDADE FINAL
7	3	87454547		1	ANEL "O"
7	3	87454548		1	ANEL DE VEDACAO
7	3	87444567		1	MOLA VALVULA
7	3	87455541		2	PARAFUSO
8		87428500		1	EXTREMIDADE FINAL, (valve 87541852)
8	3	87454547		1	ANEL "O"
8	3	87454548		1	ANEL DE VEDACAO
8	3	87429151		1	MOLA VALVULA
8	3	87455541		2	PARAFUSO
8		87426241		1	EXTREMIDADE FINAL, valve 87541853)
8	3	87454547		1	ANEL "O"
8	3	87454548		1	ANEL DE VEDACAO
8	3	87444567		1	MOLA VALVULA
8	3	87455541		2	PARAFUSO
9		87428497		2	EXTREMIDADE FINAL
9	3	87454547		2	ANEL "O"
9	3	87454548		1	ANEL DE VEDACAO
9	3	87455533		1	MOLA VALVULA
9	3	87455541		2	PARAFUSO
10		87433029		1	EXTREMIDADE FINAL
10	3	87454547		1	ANEL "O"
10	3	87454548		1	ANEL DE VEDACAO
10	3	87444567		1	MOLA VALVULA

(1) Comando por pedais
(2) Comando por alavancas
(3) Não ilustrado

CONJUNTO DA VÁLVULA - CONTROLO DA RETROESCAVADORA, 6 BOBINAS (W/O EXT DIPPER, W/O AUX HYDS, W/O PILOT CONTROLS)

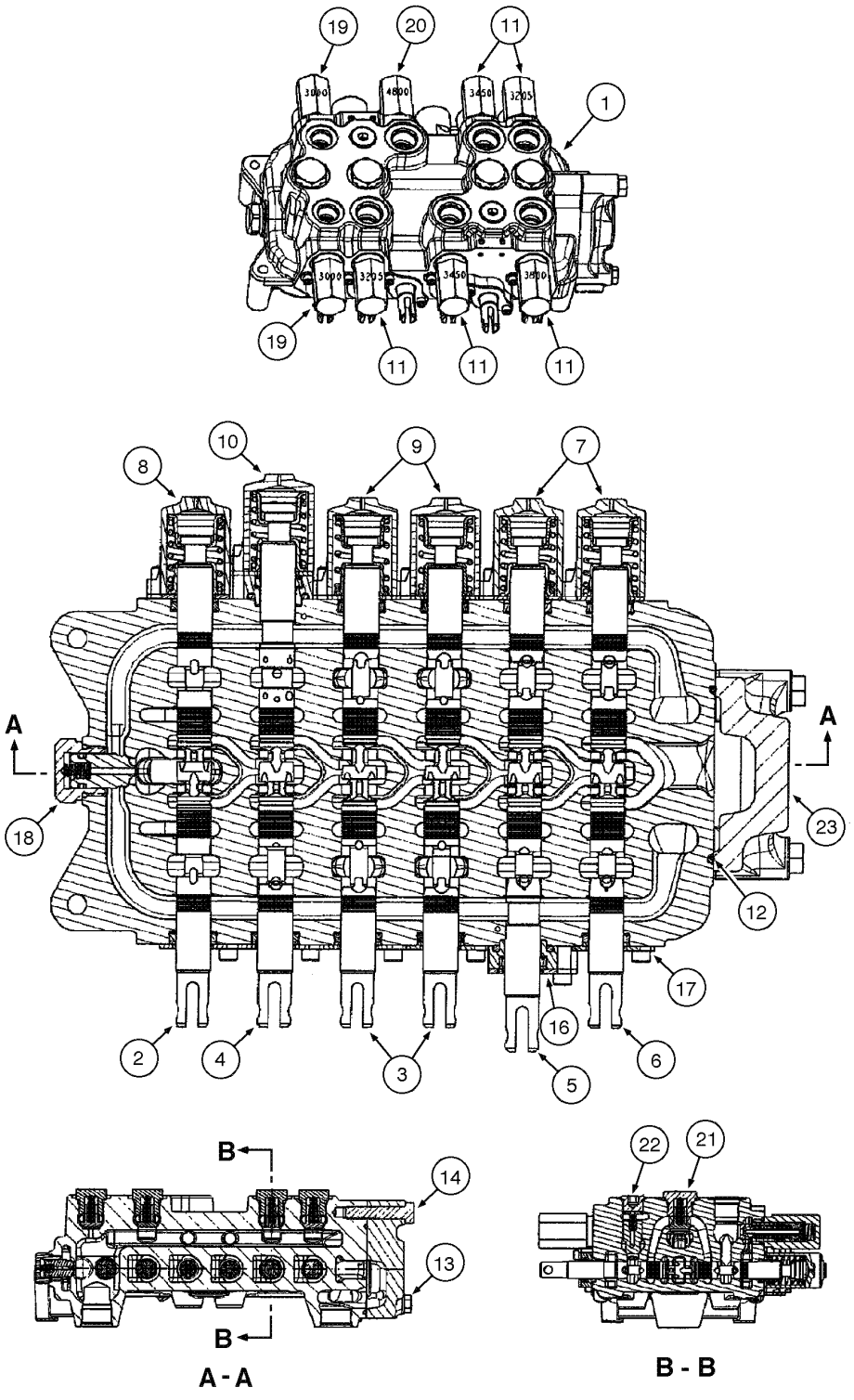

CONJUNTO DA VÁLVULA - CONTROLO DA RETROESCAVADORA, 6 BOBINAS (W/O EXT DIPPER, W/O AUX HYDS, W/O PILOT CONTROLS

REF	FN	PART NUMBER	YR/SN	QTY	DESCRIPTION
10	1	87455538		1	ANEL "O"
10	1	87455545		2	PARAFUSO
11		NSS		5	BOLETIM INFORMATIVO, VALVE relief
11	1	87450978		2	VÁLVULA DE SOBRE-PRESSÃO, (3205 psi)
11	1	87450979		2	VÁLVULA DE SOBRE-PRESSÃO, (3450 psi)
11	1	87450980		1	VÁLVULA DE SOBRE-PRESSÃO, (3800 psi)
11	1	87455549		1	JOGO DE JUNTAS, ring
12		87428495		1	ANEL "O"
13		87428491		2	PARAFUSO
14		87428492		1	PARAFUSO
16		87541940		1	JOGO DE JUNTAS, dipper spool Assy
16	1	85999136		1	VEDADOR CILINDRO
16	1	71103058		1	ANEL "O"
16	1	87455538		1	ANEL "O"
16	1	87455534		2	PARAFUSO
16	1	87455539		1	ESPAÇADOR
16	1	87455536		2	PLACA DE FIXAÇÃO
17		87541939		5	JOGO DE JUNTAS, spool
17	1	85999136		1	VEDADOR CILINDRO
17	1	71103058		1	ANEL "O"
17	1	87455540		2	PARAFUSO
17	1	87455536		2	PLACA DE FIXAÇÃO
18		81868381		1	VALVULA CHECAGEM, anti-void
18	1	87455580		1	JOGO DE JUNTAS
19		87428490		2	VÁLVULA DE SOBRE-PRESSÃO, (3000psi)
19	1	87455549		1	JOGO DE JUNTAS, ring
20		87428488		1	VÁLVULA DE SOBRE-PRESSÃO, (4800psi)
20	1	87455549		1	JOGO DE JUNTAS, ring
21		87426238		4	VALVULA CHECAGEM
21	1	87455975		1	ANEL "O"
22		87428486		2	VALVULA CHECAGEM
22	1	87455974		1	ANEL "O"
23		87433030		1	VALVULA HYDR CONTROL

(1) Não ilustrado

CONJUNTO DA VÁLVULA - CONTROLO DA RETROESCAVADORA, 7 BOBINAS (W/O EXT DIPPER, W/ AUX HYDS, W/O PILOT CONTROLS)

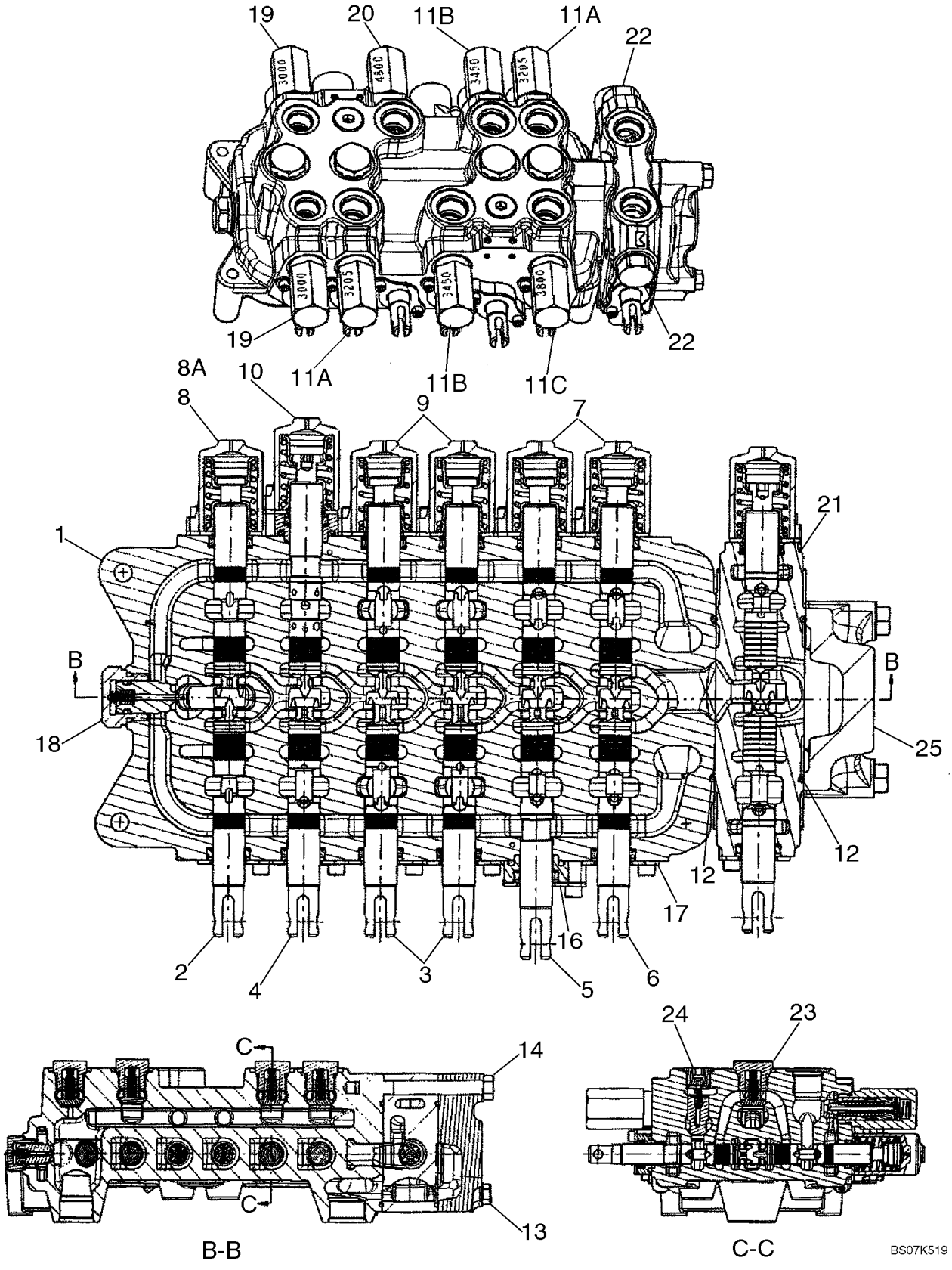

CONJUNTO DA VÁLVULA - CONTROLO DA RETROESCAVADORA, 7 BOBINAS (W/O EXT DIPPER, W/ AUX HYDS, W/O PILOT CONTROLS)

REF	FN	PART NUMBER	YR/SN	QTY	DESCRIPTION
		REF			INSTRUCAO, MODELS WITHOUT EXTENDABLE DIPPER, WITH AUXILIARY HYDRAULICS, WITHOUT PILOT CONTROLS
		87555536		1	VÁLVULA HYDRAULICA, 7 Spool, Foot Swing; Incl. Ref 1 - 8, 9 - 25; If Used
		87555530		1	VÁLVULA HYDRAULICA, 7 Spool, Hand Swing; Incl. Ref 1 - 7, 8A, 9 - 24, 25A; If Used
1		NSS		1	BOLETIM INFORMATIVO, HOUSING
2		NSS		1	BOLETIM INFORMATIVO, SPOOL, SWING
3		NSS		2	BOLETIM INFORMATIVO, SPOOL, STABILIZER, Left-Hand and Right-Hand
4		NSS		1	BOLETIM INFORMATIVO, SPOOL, BOOM
5		NSS		1	BOLETIM INFORMATIVO, SPOOL, DIPPER
6		NSS		1	BOLETIM INFORMATIVO, SPOOL, BUCKET
7		87426241		2	EXTREMIDADE FINAL, Cap Assembly, Bucket and Dipper Spool End; Some Component Parts Not Serviced Separately; Serviceable Includes (1) 87454547 O-Ring, (1) 87454548 Seal, (1) 87444567 Spring, (2) 87455541 Screw
8		87428500		1	EXTREMIDADE FINAL, Cap Assembly, Swing Spool End; 87555536 Foot Swing Valve; Some Component Parts Not Serviced Separately; Serviceable Includes (1) 87454547 O-Ring, (1) 87454548 Seal, (1) 87429151 Centering Spring, (2) 87455541 Screw
8A		87426241		1	EXTREMIDADE FINAL, Cap Assembly, Swing Spool End; 87555530 Hand Swing Valve; Some Component Parts Not Serviced Separately; Serviceable Includes (1) 87454547 O-Ring, (1) 87454548 Seal, (1) 87444567 Spring, (2) 87455541 Screw

CONJUNTO DA VÁLVULA - CONTROLO DA RETROESCAVADORA, 7 BOBINAS (W/O EXT DIPPER, W/ AUX HYDS, W/O PILOT CONTROLS)

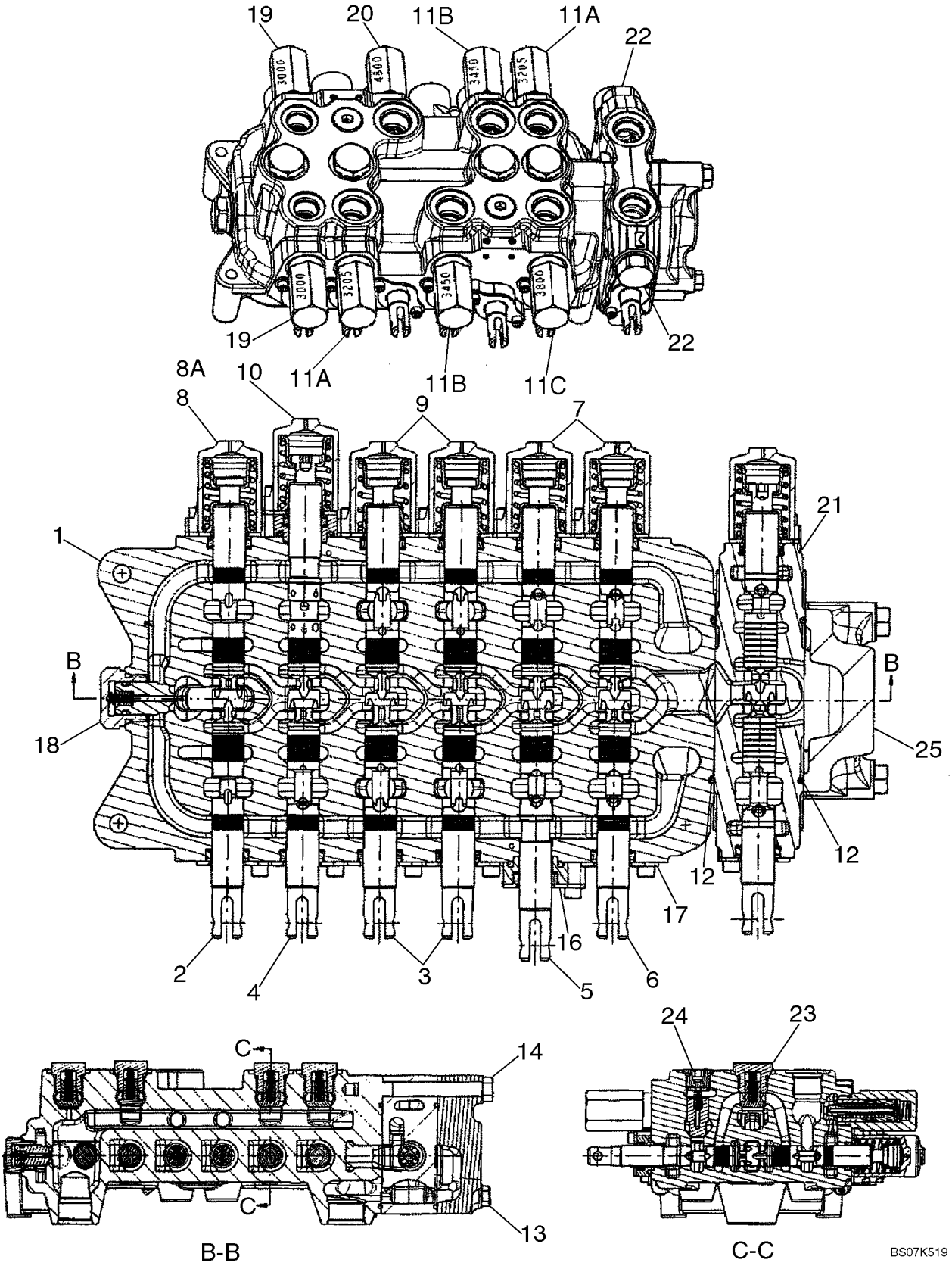

CONJUNTO DA VÁLVULA - CONTROLO DA RETROESCAVADORA, 7 BOBINAS (W/O EXT DIPPER, W/ AUX HYDS, W/O PILOT CONTROLS)

REF	FN	PART NUMBER	YR/SN	QTY	DESCRIPTION
9		87428497		2	EXTREMIDADE FINAL, Cap Assembly, Stabilizer Spool Ends; Some Component Parts Not Serviced Separately; Serviceable Includes (2) 87454547 O-Ring, (1) 87454548 Seal, (1) 87455533 Spring, (2) 87455541 Screw
10		87433029		1	EXTREMIDADE FINAL, Cap Assembly, Boom Spool End; Some Component Parts Not Serviced Separately; Serviceable Includes (1) 87454547 O-Ring, (1) 87454548 Seal, (1) 87444567 Spring, (1) 87455538 O-Ring, (2) 87455545 Screw
11A		87450978		2	VÁLVULA DE SOBRE-PRESSÃO, Circuit; 3205 psi; Component Parts Not Serviced Separately; Includes 87455549 Seal Kit
11B		87450979		2	VÁLVULA DE SOBRE-PRESSÃO, Circuit; 3450 psi; Component Parts Not Serviced Separately; Includes 87455549 Seal Kit
11C		87450980		1	VÁLVULA DE SOBRE-PRESSÃO, Circuit; 3800 psi; Component Parts Not Serviced Separately; Includes 87455549 Seal Kit
12		87428495		2	ANEL "O", Auxiliary/Outlet Section
13		87428476		2	PARAFUSO
14		87428477		1	PARAFUSO
16		87440815		1	PLACA CONJUNTO, Seal, Dipper Spool; Some Component Parts Not Serviced Separately; Serviceable Includes (1) 87454547 O-Ring, (1) 87454548 Seal, (1) 87455538 O-Ring, (2) 87455534 Screw
17		87440814		5	PLACA CONJUNTO, Seal; Some Component Parts Not Serviced Separately; Serviceable Includes (1) 87454547 O-Ring, (1) 87454548 Seal, (2) 87455540 Screw
18		81868381		1	VALVULA CHECAGEM, Anti-Void Valve; Component Parts Not Serviced Separately; Includes 87455580 Seal Kit

CONJUNTO DA VÁLVULA - CONTROLO DA RETROESCAVADORA, 7 BOBINAS (W/O EXT DIPPER, W/ AUX HYDS, W/O PILOT CONTROLS)

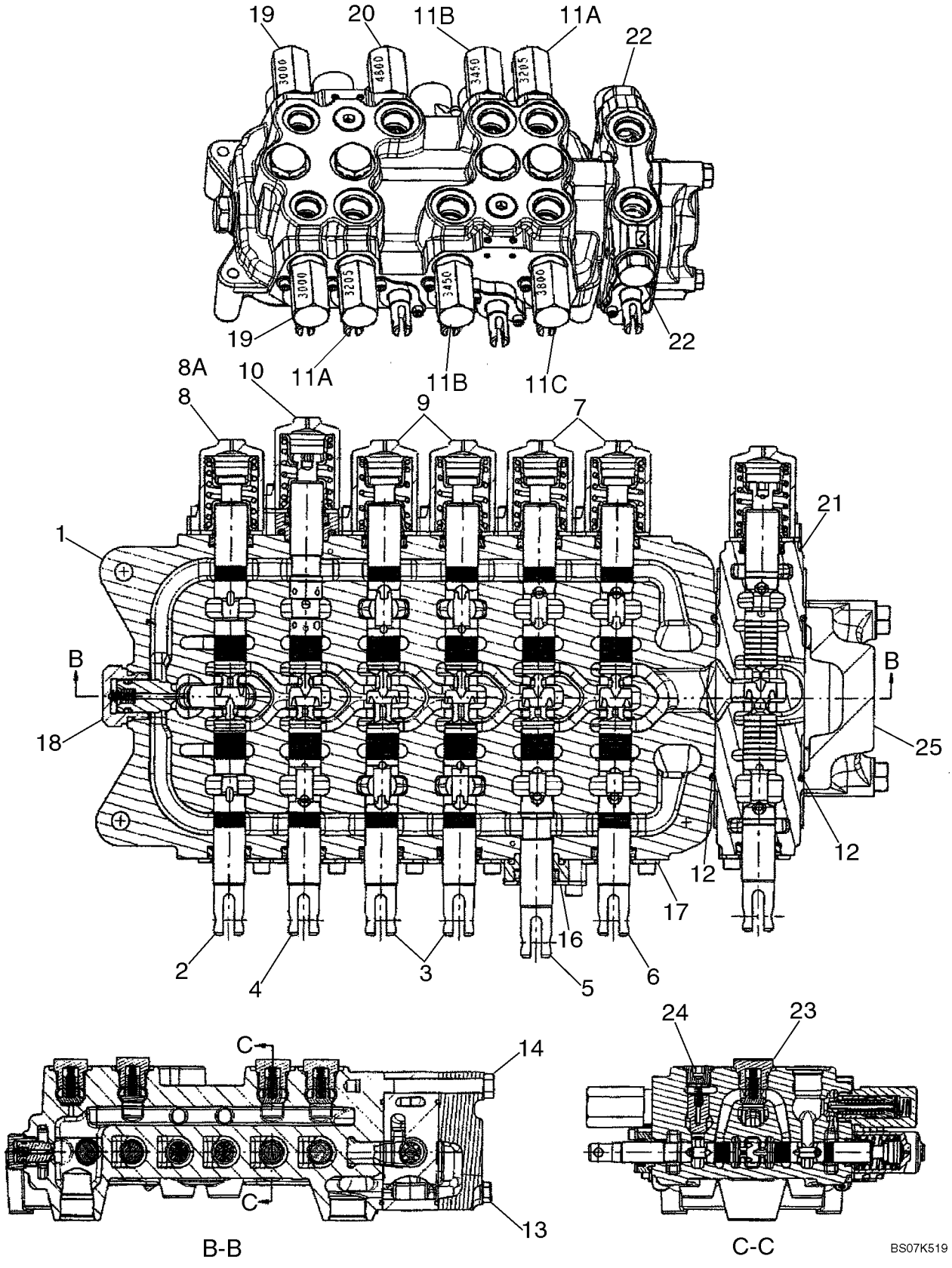

CONJUNTO DA VÁLVULA - CONTROLO DA RETROESCAVADORA, 7 BOBINAS (W/O EXT DIPPER, W/ AUX HYDS, W/O PILOT CONTROLS)

REF	FN	PART NUMBER	YR/SN	QTY	DESCRIPTION
19		87428490		2	VÁLVULA DE SOBRE-PRESSÃO, 3000 psi; Component Parts Not Serviced Separately; Includes 87455549 Seal Kit
20		87566237		1	VÁLVULA DE SOBRE-PRESSÃO, 4800 psi; Component Parts Not Serviced Separately; Includes 87455549 Seal Kit
21		87428501		1	VALVULA HYDR CONTROL, Spool Section Assembly; Auxiliary Hydraulics; Incl. Ref 21A - 21I, Which Are Not Illustrated; Remainder Component Parts Not Serviced Separately
21A		87433028		1	EXTREMIDADE FINAL, Spool; Incl. Ref 21B - 21E, Which Are Not Illustrated; Remainder Components Not Serviced Separately
21B		87454547		1	ANEL "O"
21C		87454548		1	ANEL DE VEDACAO, Wiper
21D		87429150		1	MOLA VALVULA
21E		87455541		2	PARAFUSO
21F		87428495		1	ANEL "O"
21G		87455564		1	VALVULA, Load Check
21H		87455565		1	MOLA VALVULA, Load Check
21I		83981068		2	CONECTOR DE FECHAMENTO
22		83981068		2	CONECTOR DE FECHAMENTO, Component Parts Not Serviced Separately; Now Included With Ref 21
23		87426238		4	VALVULA CHECAGEM, Hex Head; Component Parts Not Serviced Separately; Includes (1) 87455975 O-Ring
24		87428486		2	VALVULA CHECAGEM, Hex Socket Head; Component Parts Not Serviced Separately; Includes (1) 87455974 O-Ring
25		87433030		1	VALVULA HYDR CONTROL, Outlet Section Assembly; Component Parts Not Serviced Separately

CONJUNTO DA VÁLVULA - CONTROLO DA RETROESCAVADORA, 7 BOBINAS (W/ EXT DIPPER, W/O AUX HYDS, W/O PILOT CONTROLS)

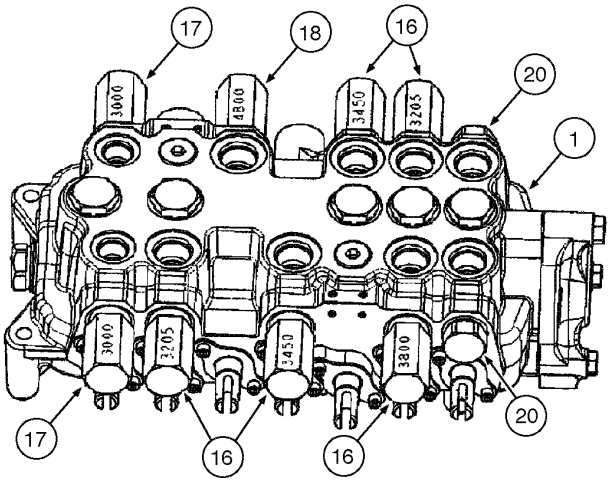

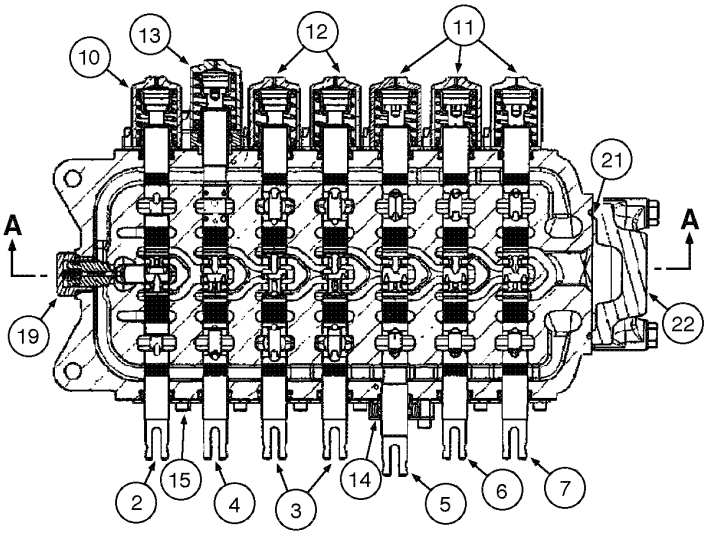

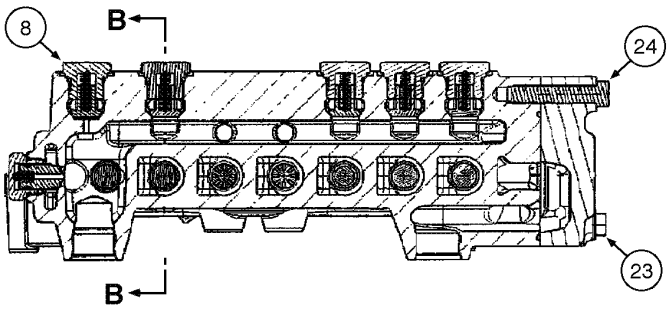

A - A

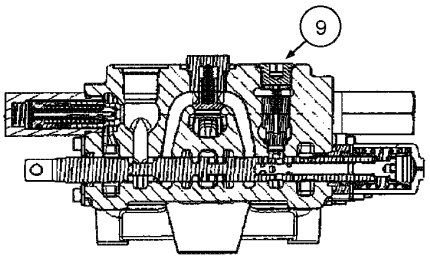

B - B

CONJUNTO DA VÁLVULA - CONTROLO DA RETROESCAVADORA, 7 BOBINAS (W/ EXT DIPPER, W/O AUX HYDS, W/O PILOT CONTROLS)

REF	FN	PART NUMBER	YR/SN	QTY	DESCRIPTION
	1	87541855		1	DISTRIBUIDOR, (7 spool) Assy
	2	87541854		1	DISTRIBUIDOR, (7 spool) Assy
1		NSS		1	BOLETIM INFORMATIVO, HOUSING
2		NSS		1	BOLETIM INFORMATIVO, SPOOL swing
3		NSS		2	BOLETIM INFORMATIVO, SPOOL stabilizer
4		NSS		1	BOLETIM INFORMATIVO, SPOOL boom
5		NSS		1	BOLETIM INFORMATIVO, SPOOL dipper
6		NSS		1	BOLETIM INFORMATIVO, SPOOL bucket
7		NSS		1	BOLETIM INFORMATIVO, SPOOL ext.dipper
8		87426238		5	VALVULA CHECAGEM
8	3	87455975		1	ANEL "O"
9		87428486		1	VALVULA CHECAGEM
9	3	87455974		1	ANEL "O"
10		87428500		1	EXTREMIDADE FINAL, (valve 87541855)
10	3	87454547		1	ANEL "O"
10	3	87454548		1	ANEL DE VEDACAO
10	3	87429151		1	MOLA VALVULA
10	3	87455541		2	PARAFUSO
10		87426241		1	EXTREMIDADE FINAL, (valve 87541854)
10	3	87454547		1	ANEL "O"
10	3	87454548		1	ANEL DE VEDACAO
10	3	87444567		1	MOLA VALVULA
10	3	87455541		2	PARAFUSO
11		87426241		3	EXTREMIDADE FINAL
11	3	87454547		2	ANEL "O"
11	3	87454548		1	ANEL DE VEDACAO
11	3	87444567		1	MOLA VALVULA
11	3	87455541		2	PARAFUSO
12		87428497		2	EXTREMIDADE FINAL
12	3	87454547		2	ANEL "O"
12	3	87454548		1	ANEL DE VEDACAO
12	3	87455533		1	MOLA VALVULA

(1) Comando por pedais
(2) Comando por alavancas
(3) Não ilustrado

PARA MÁQUINAS COM BRAÇO EXTENSÍVEL, SEM SIST. HIDRÁULICO AUXILIAR E SEM CONTROLE PILOTO

580M

CONJUNTO DA VÁLVULA - CONTROLO DA RETROESCAVADORA, 7 BOBINAS (W/ EXT DIPPER, W/O AUX HYDS, W/O PILOT CONTROLS)

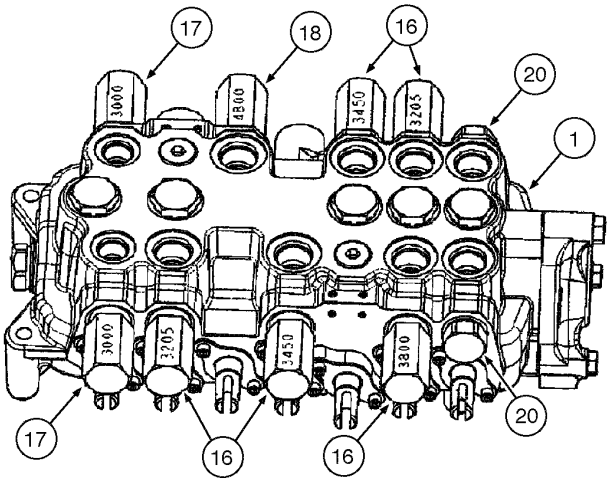

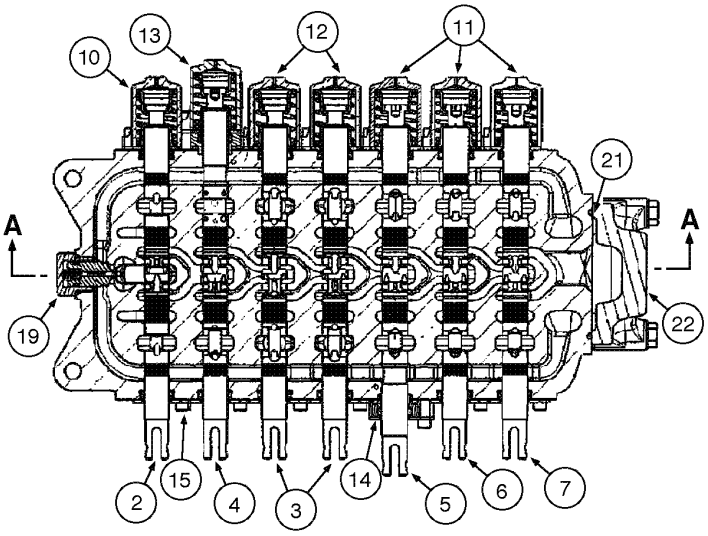

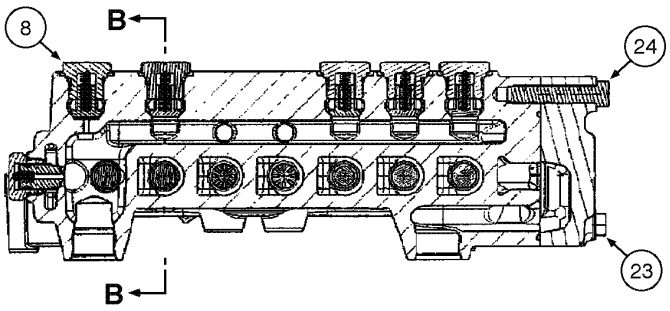

A - A

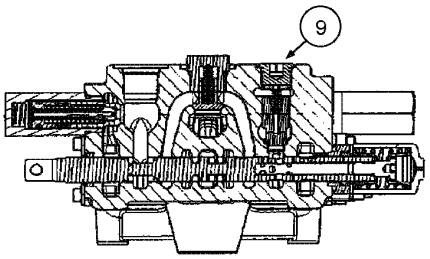

B - B

CONJUNTO DA VÁLVULA - CONTROLO DA RETROESCAVADORA, 7 BOBINAS (W/ EXT DIPPER, W/O AUX HYDS, W/O PILOT CONTROLS)

REF	FN	PART NUMBER	YR/SN	QTY	DESCRIPTION
12	1	87455541		2	PARAFUSO
13		87433029		1	EXTREMIDADE FINAL
13	1	87454547		1	ANEL "O"
13	1	87454548		1	ANEL DE VEDACAO
13	1	87444567		1	MOLA VALVULA
13	1	87455538		1	ANEL "O"
13	1	87455541		2	PARAFUSO
14		87541940		1	JOGO DE JUNTAS, dipper spool
14	1	85999136		1	VEDADOR CILINDRO
14	1	71103058		1	ANEL "O"
14	1	87455538		1	ANEL "O"
14	1	87455534		2	PARAFUSO
14	1	87455539		1	ESPAÇADOR
14	1	87455536		2	PLACA DE FIXAÇÃO
15		87541939		6	JOGO DE JUNTAS, spool
15	1	85999136		1	VEDADOR CILINDRO
15	1	71103058		1	ANEL "O"
15	1	87455540		2	PARAFUSO
15	1	87455536		2	PLACA DE FIXAÇÃO
16		NSS		5	BOLETIM INFORMATIVO, VALVE relief
16		87450978		2	VÁLVULA DE SOBRE-PRESSÃO, (3205psi)
16		87450979		2	VÁLVULA DE SOBRE-PRESSÃO, (3450psi)
16		87450980		1	VÁLVULA DE SOBRE-PRESSÃO, (3800psi)
16		87455549		1	JOGO DE JUNTAS
17		87428490		2	VÁLVULA DE SOBRE-PRESSÃO, (3000psi)
17		87455549		1	JOGO DE JUNTAS
18		87428488		1	VÁLVULA DE SOBRE-PRESSÃO, (4800psi)
18		87455549		1	JOGO DE JUNTAS
19		81868381		1	VALVULA CHECAGEM, anti-void
19		87455580		1	JOGO DE JUNTAS
20		83981068		2	CONECTOR DE FECHAMENTO
21		87428495		1	ANEL "O"
22		87433030		1	VALVULA HYDR CONTROL
23		87428491		2	PARAFUSO

(1) Não ilustrado

PARA MÁQUINAS COM BRAÇO EXTENSÍVEL, SEM SIST. HIDRÁULICO AUXILIAR E SEM CONTROLE PILOTO

580M

CONJUNTO DA VÁLVULA - CONTROLO DA RETROESCAVADORA, 7 BOBINAS (W/ EXT DIPPER, W/O AUX HYDS, W/O PILOT CONTROLS)

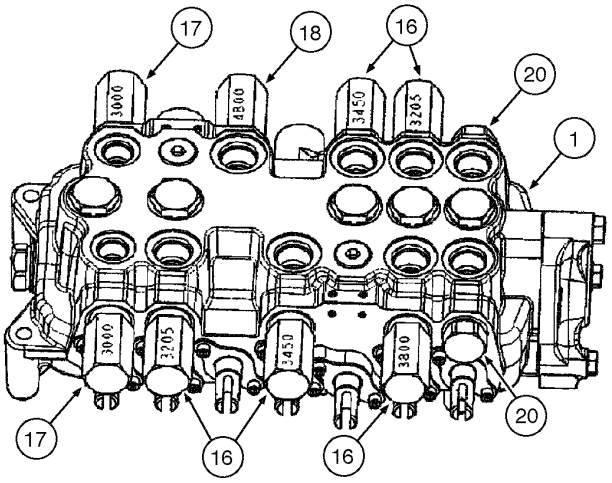

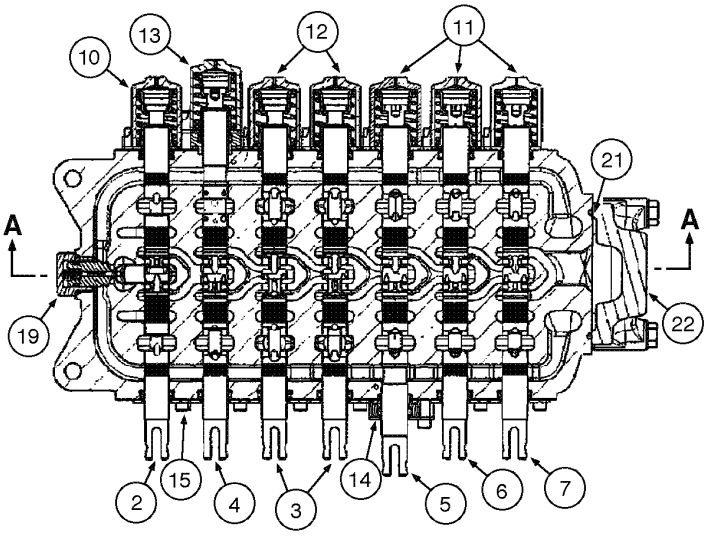

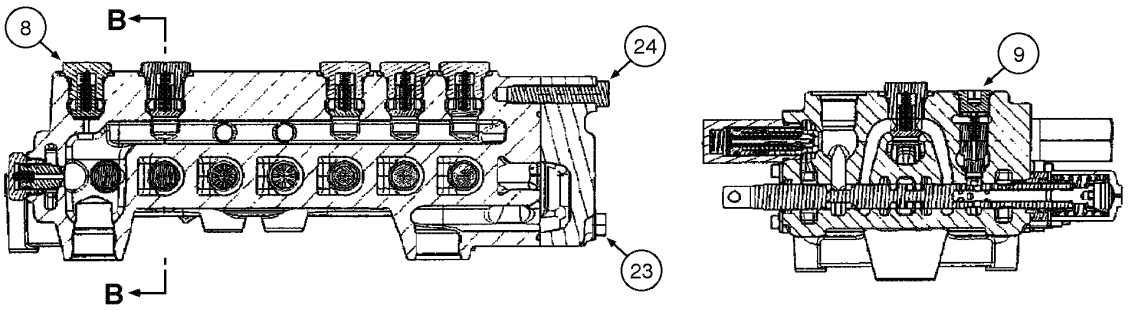

A - A

B - B

CONJUNTO DA VÁLVULA - CONTROLO DA RETROESCAVADORA, 7 BOBINAS (W/ EXT DIPPER, W/O AUX HYDS, W/O PILOT CONTROLS)

REF	FN	PART NUMBER	YR/SN	QTY	DESCRIPTION
24		87428492		1	PARAFUSO

CONJUNTO DA VÁLVULA - CONTROLO DA RETROESCAVADORA, 8 BOBINAS (W/ EXT DIPPER, W/ AUX HYDS, W/O PILOT CONTROLS)

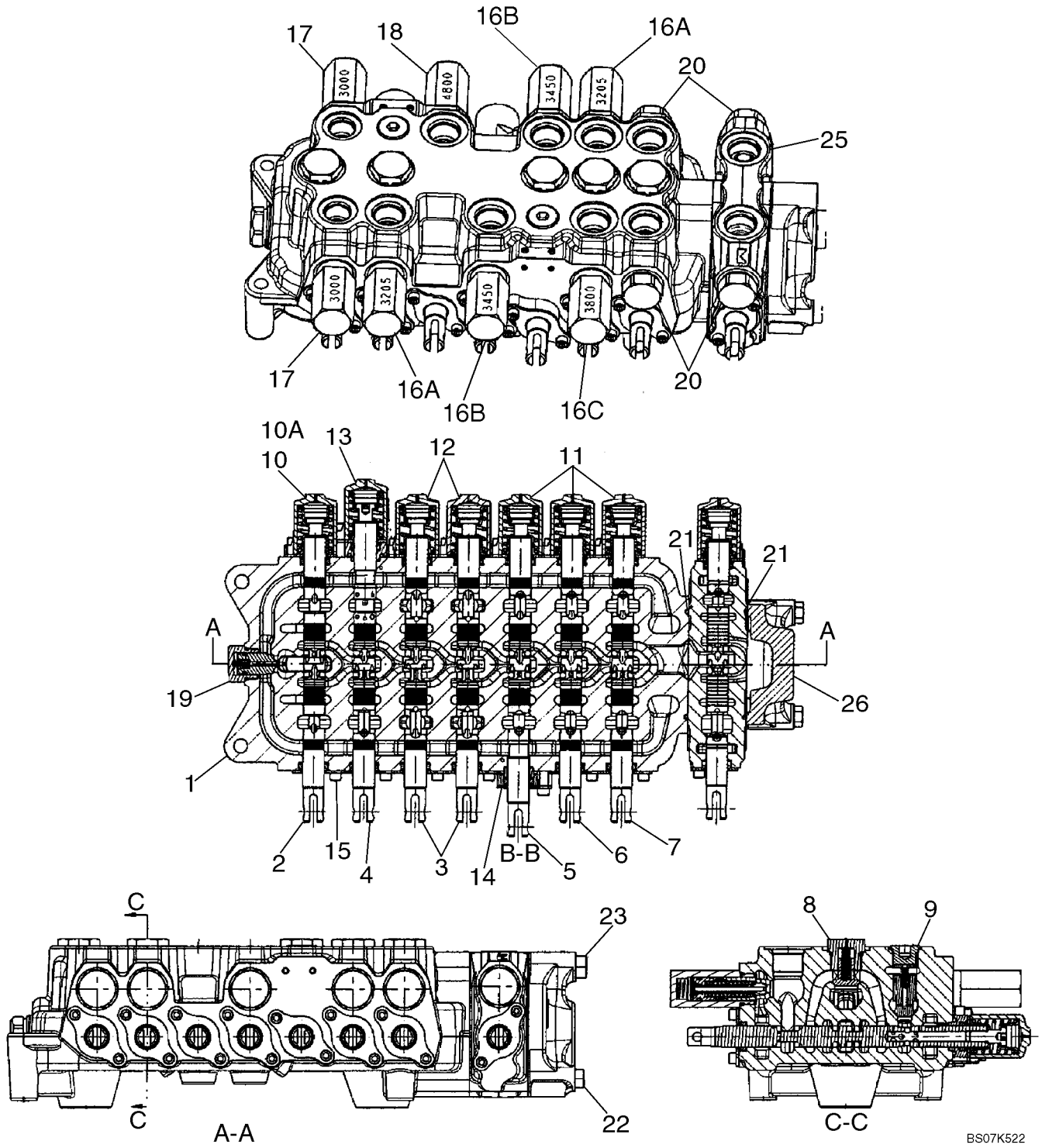

CONJUNTO DA VÁLVULA - CONTROLO DA RETROESCAVADORA, 8 BOBINAS (W/ EXT DIPPER, W/ AUX HYDS, W/O PILOT CONTROLS)

REF	FN	PART NUMBER	YR/SN	QTY	DESCRIPTION
		REF			INSTRUCAO, MODELS WITH EXTENDABLE DIPPER, WITH AUXILIARY HYDRAULICS, WITHOUT PILOT CONTROLS
		87555570		1	VÁLVULA HYDRAULICA, 8 Spool, Foot Swing; Incl. Ref 1 - 10, 12 - 26; If Used
		87555567		1	VÁLVULA HYDRAULICA, 8 Spool, Hand Swing; Incl. Ref 1 - 9, 10A, 11 - 25, 26A; If Used
1		NSS		1	BOLETIM INFORMATIVO, HOUSING
2		NSS		1	BOLETIM INFORMATIVO, SPOOL, SWING
3		NSS		2	BOLETIM INFORMATIVO, SPOOL, STABILIZER, Right-Hand and Left-Hand
4		NSS		1	BOLETIM INFORMATIVO, SPOOL, BOOM
5		NSS		1	BOLETIM INFORMATIVO, SPOOL, DIPPER
6		NSS		1	BOLETIM INFORMATIVO, SPOOL, BUCKET
7		NSS		1	BOLETIM INFORMATIVO, SPOOL, EXTENDABLE DIPPER
8		87426238		5	VALVULA CHECAGEM, Hex Head; Component Parts Not Serviced Separately; Includes (1) 87455975 O-Ring
9		87428486		2	VALVULA CHECAGEM, Hex Socket Head; Component Parts Not Serviced Separately; Includes (1) 87455974 O-Ring
10		87428500		1	EXTREMIDADE FINAL, Cap Assembly, Swing Spool End; 87555570 Foot Swing Valve; Component Parts Not Serviced Separately; Includes 87429151 Centering Spring
10A		87426241		1	EXTREMIDADE FINAL, Cap Assembly, Swing Spool End; 87555567 Hand Swing Valve; Some Component Parts Not Serviced Separately; Serviceable Includes (1) 87454547 O-Ring, (1) 87454548 Seal, (1) 87444567 Spring, (2) 87455541 Screw

CONJUNTO DA VÁLVULA - CONTROLO DA RETROESCAVADORA, 8 BOBINAS (W/ EXT DIPPER, W/ AUX HYDS, W/O PILOT CONTROLS)

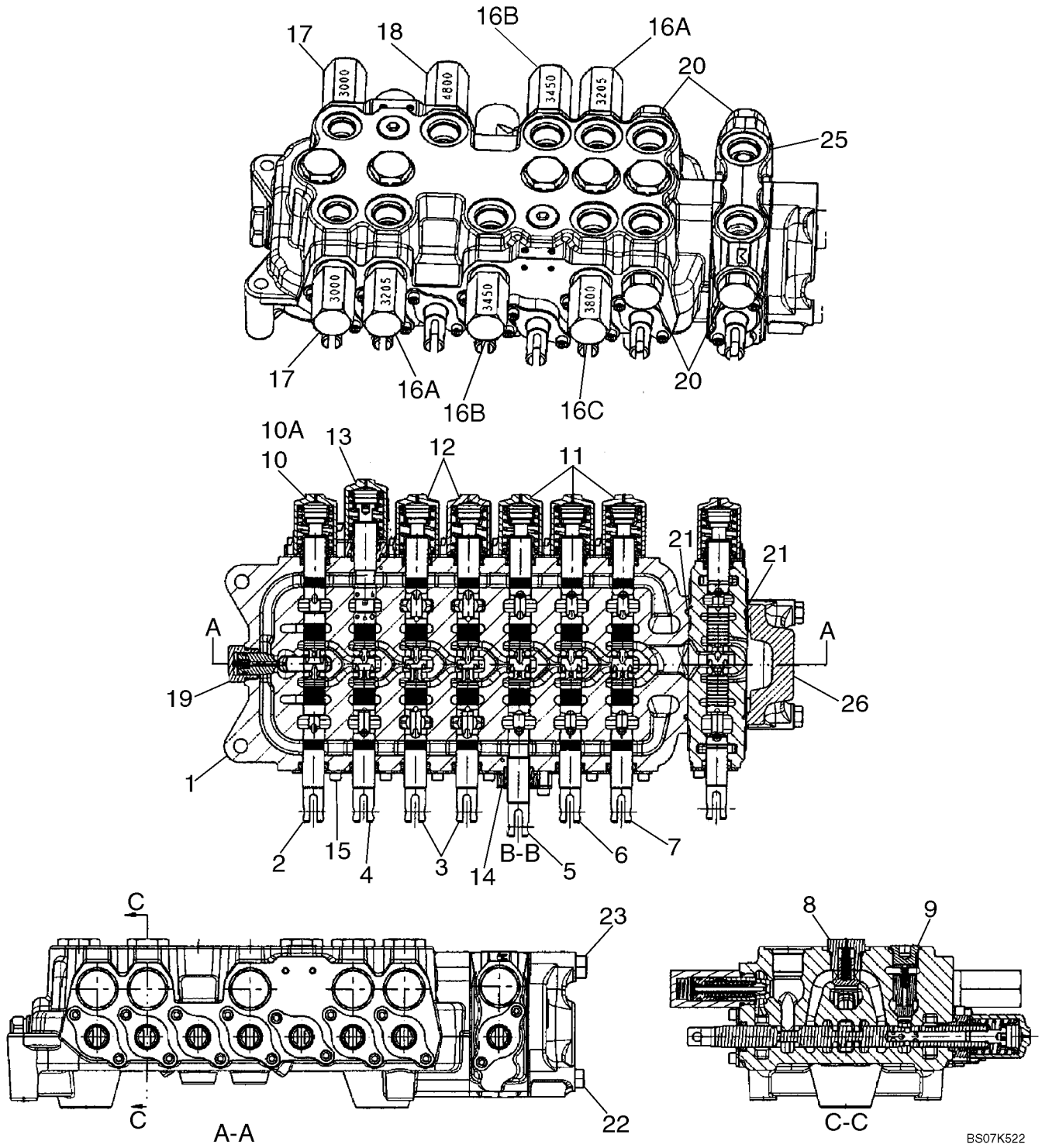

CONJUNTO DA VÁLVULA - CONTROLO DA RETROESCAVADORA, 8 BOBINAS (W/ EXT DIPPER, W/ AUX HYDS, W/O PILOT CONTROLS)

REF	FN	PART NUMBER	YR/SN	QTY	DESCRIPTION
11		87426241		3	EXTREMIDADE FINAL, Cap Assembly, Bucket, Dipper and Extendahoe Spool Ends; Some Component Parts Not Serviced Separately; Serviceable Includes (1) 87454547 O-Ring, (1) 87454548 Seal, (1) 87444567 Spring, (2) 87455541 Screw
12		87428497		2	EXTREMIDADE FINAL, Cap Assembly, Stabilizer Spool Ends; Some Component Parts Not Serviced Separately; Serviceable Includes (1) 87454547 O-Ring, (1) 87454548 Seal, (1) 87455533 Spring, (2) 87455541 Screw
13		87433029		1	EXTREMIDADE FINAL, Cap Assembly, Boom Spool End; Some Component Parts Not Serviced Separately; Serviceable Includes (1) 87454547 O-Ring, (1) 87454548 Seal, (1) 87444567 Spring, (1) 87455538 O-Ring, (2) 87455545 Screw
14		87440815		1	PLACA CONJUNTO, Seal, Dipper Spool; Some Component Parts Not Serviced Separately; Serviceable Includes (1) 87454547 O-Ring, (1) 87454548 Seal, (1) 87455538 O-Ring, (2) 87455534 Screw
15		87440814		6	PLACA CONJUNTO, Seal; Some Component Parts Not Serviced Separately; Serviceable Includes (1) 87454547 O-Ring, (1) 87454548 Seal, (2) 87455540 Screw
16A		87450978		2	VÁLVULA DE SOBRE-PRESSÃO, Circuit; 3205 psi; Component Parts Not Serviced Separately; Includes 87455549 Seal Kit
16B		87450979		2	VÁLVULA DE SOBRE-PRESSÃO, Circuit; 3450 psi; Component Parts Not Serviced Separately; Includes 87455549 Seal Kit
16C		87450980		1	VÁLVULA DE SOBRE-PRESSÃO, Circuit; 3800 psi; Component Parts Not Serviced Separately; Includes 87455549 Seal Kit

CONJUNTO DA VÁLVULA - CONTROLO DA RETROESCAVADORA, 8 BOBINAS (W/ EXT DIPPER, W/ AUX HYDS, W/O PILOT CONTROLS)

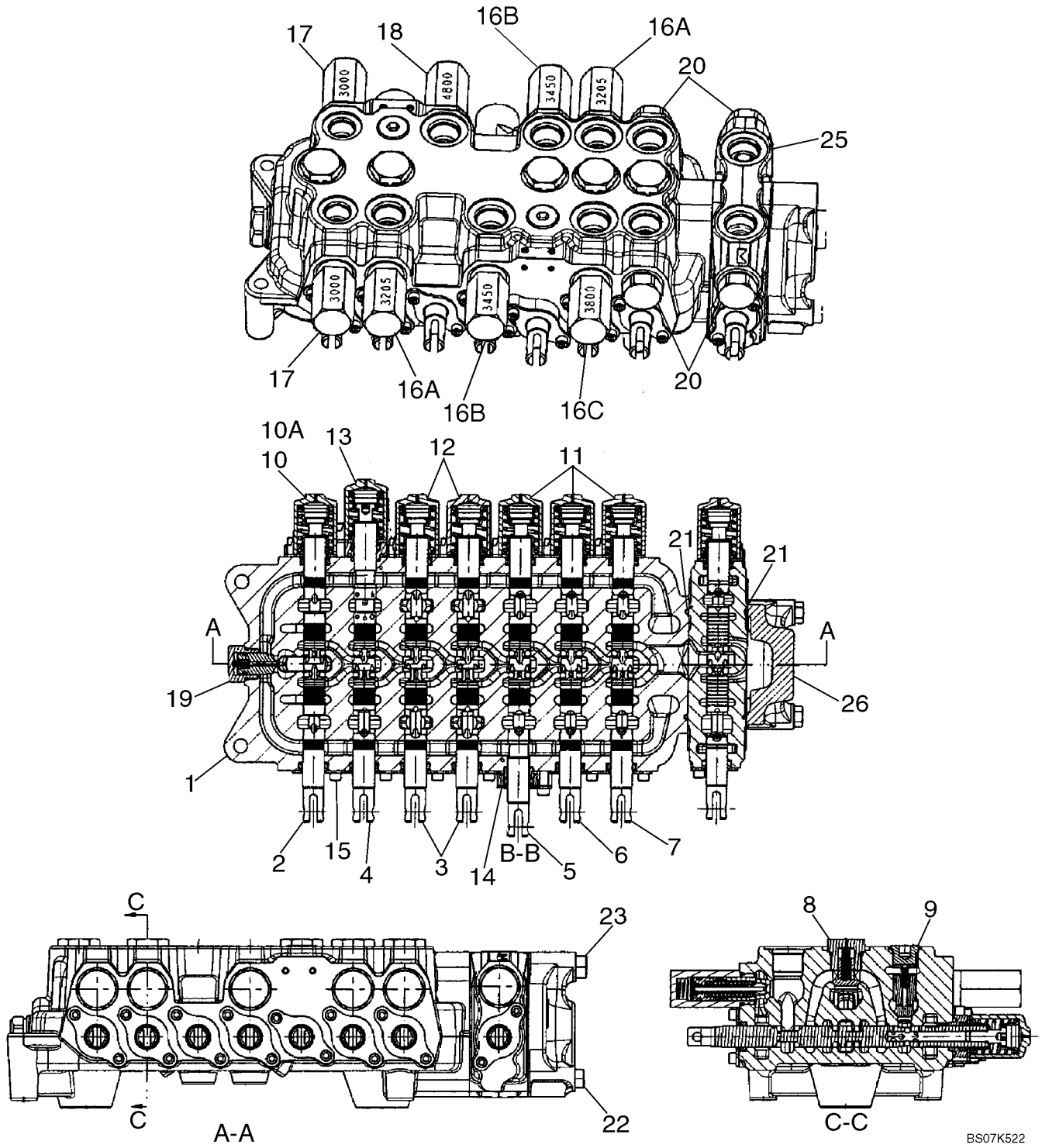

CONJUNTO DA VÁLVULA - CONTROLO DA RETROESCAVADORA, 8 BOBINAS (W/ EXT DIPPER, W/ AUX HYDS, W/O PILOT CONTROLS)

REF	FN	PART NUMBER	YR/SN	QTY	DESCRIPTION
17		87428490		2	VÁLVULA DE SOBRE-PRESSÃO, 3000 psi; Component Parts Not Serviced Separately; Includes 87455549 Seal Kit
18		87566237		1	VÁLVULA DE SOBRE-PRESSÃO, 4800 psi; Component Parts Not Serviced Separately; Includes 87455549 Seal Kit
19		81868381		1	VALVULA CHECAGEM, Anti-Void Valve; Component Parts Not Serviced Separately; Includes 87455580 Seal Kit
20		83981068		4	CONECTOR DE FECHAMENTO, Component Parts Not Serviced Separately; (2) Are Now Included With Ref 25
21		87428495		2	ANEL "O", Auxiliary/Outlet Section
22		87428476		2	PARAFUSO
23		87428477		1	PARAFUSO
25		87428501		1	VALVULA HYDR CONTROL, Spool Section Assembly; Auxiliary Hydraulics; Includes Ref 25A - 25I, Which Are Not Illustrated; Remainder Component Parts Not Serviced Separately
25A		87433028		1	EXTREMIDADE FINAL, Spool; Incl. Ref 25B - 25E, Which Are Not Illustrated; Remainder Component Parts Not Serviced Separately
25B		87454547		1	ANEL "O"
25C		87454548		1	ANEL DE VEDACAO, Wiper
25D		87429150		1	MOLA VALVULA
25E		87455541		2	PARAFUSO
25F		87428495		1	ANEL "O"
25G		87455564		1	VALVULA, Load Check
25H		87455565		1	MOLA VALVULA, Load Check
25I		83981068		2	CONECTOR DE FECHAMENTO
26		87433030		1	VALVULA HYDR CONTROL, Outlet Section Assembly; Component Parts Not Serviced Separately

CONJUNTO DA VÁLVULA - CONTROLO DA RETROESCAVADORA, 6 BOBINAS (W/O EXT DIPPER, W/ OR W/O AUX HYDS, W/ PILOT CONTRO

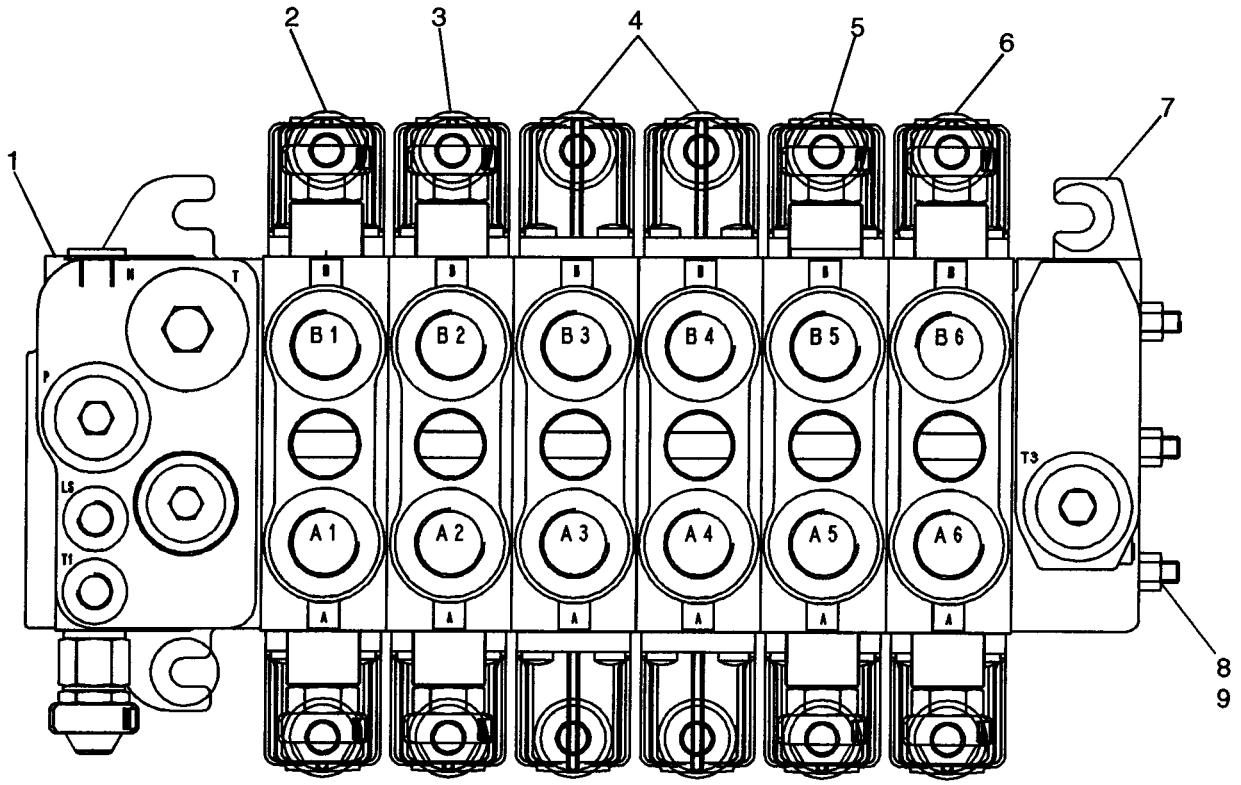

CONJUNTO DA VÁLVULA - CONTROLO DA RETROESCAVADORA, 6 BOBINAS (W/O EXT DIPPER, W/ OR W/O AUX HYDS, W/ PILOT CONTI

REF	FN	PART NUMBER	YR/SN	QTY	DESCRIPTION
		87577343		1	DISTRIBUIDOR, Backhoe 6 Spool; Rexroth No. 08 403 273; Check Data Plate On Valve For Part Number; Incl. Ref 1 - 9
1		87441495		1	VALVULA HYDR CONTROL, Inlet Section; With Orifice Threaded In LS Cavity; See Figure 08-39A
2		85826339		1	VALVULA HYDR CONTROL, Swing Section; See Figure 08-40
3		85826337		1	VALVULA HYDR CONTROL, Boom Section; See Figure 08-41
4		87617618		2	VALVULA HYDR CONTROL, Stabilizer Section; Without Flow Sharing to Provide Open Center Performance; See Figure 08-42
5		85826338		1	VALVULA HYDR CONTROL, Dipper Section; See Figure 08-43
6		85826365		1	VALVULA HYDR CONTROL, Bucket Section; See Figure 08-44
7		NSS		1	BOLETIM INFORMATIVO, Outlet Section
8		NSS		3	BOLETIM INFORMATIVO, Tie Bolt
9		NSS		3	BOLETIM INFORMATIVO, Nut

CONJUNTO DA VÁLVULA - CONTROLO DA RETROESCAVADORA, 7 BOBINAS (W/ EXT DIPPER, W/ OR W/O AUX HYDS, W/ PILOT CONTROL

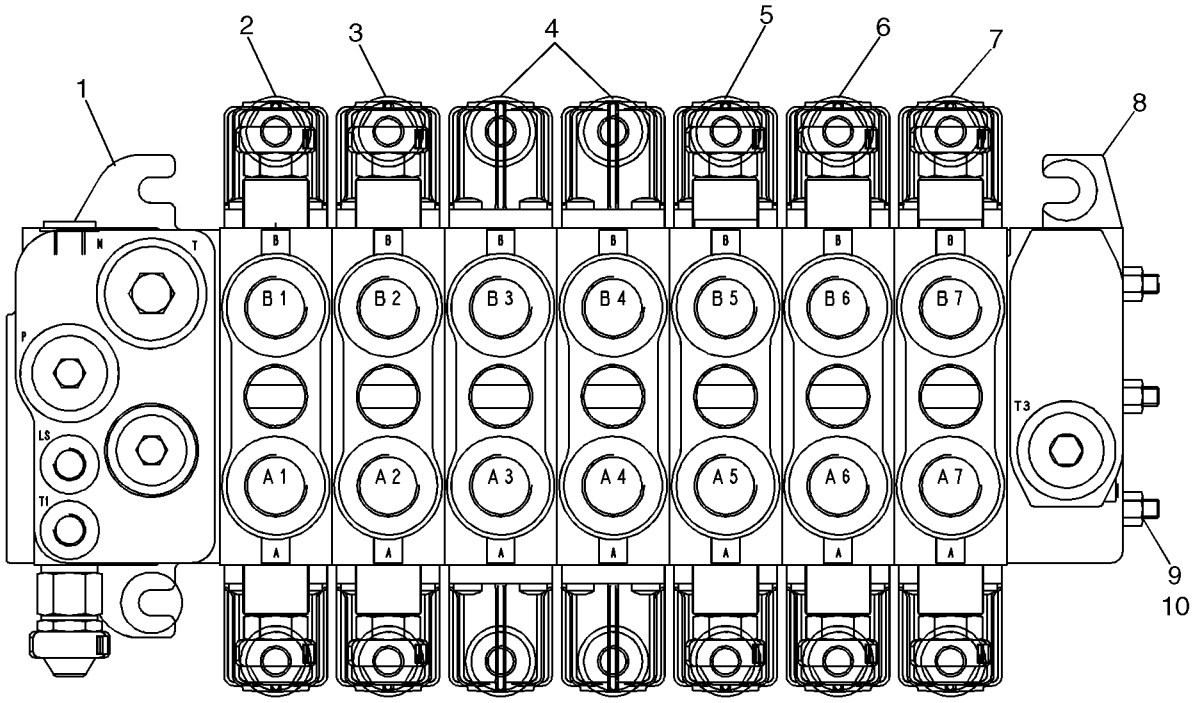

BS07K524

CONJUNTO DA VÁLVULA - CONTROLO DA RETROESCAVADORA, 7 BOBINAS (W/ EXT DIPPER, W/ OR W/O AUX HYDS, W/ PILOT CONTRO

REF	FN	PART NUMBER	YR/SN	QTY	DESCRIPTION
		87577346		1	DISTRIBUIDOR, Backhoe 7 Spool; Rexroth No. 08 402 663; Check Data Plate On Valve For Part Number; Incl. Ref 1 - 10;
1		87441495		1	VALVULA HYDR CONTROL, Inlet Section; With Orifice Threaded In LS Cavity; See Figure 08-39A
2		85826339		1	VALVULA HYDR CONTROL, Swing Section; See Figure 08-40
3		85826337		1	VALVULA HYDR CONTROL, Boom Section; See Figure 08-41
4		87617618		2	VALVULA HYDR CONTROL, Stabilizer Section; Without Flow Sharing to Provide Open Center Performance; 87577346 Valve; See Figure 08-42
5		85826338		1	VALVULA HYDR CONTROL, Dipper Section; See Figure 08-43
6		85826365		1	VALVULA HYDR CONTROL, Bucket Section; See Figure 08-44
7		85826341		1	VALVULA HYDR CONTROL, Extendable Dipper Section; See Figure 08-45
8		NSS		1	BOLETIM INFORMATIVO, Outlet Section
9		NSS		3	BOLETIM INFORMATIVO, Tie Bolt
10		NSS		3	BOLETIM INFORMATIVO, Nut

CONJUNTO DA VÁLVULA - CONTROLO DA RETROESCAVADORA, 7 BOBINAS (W/O EXT DIPPER, W/ AUX HYDS, W/ PILOT CONTROLS)

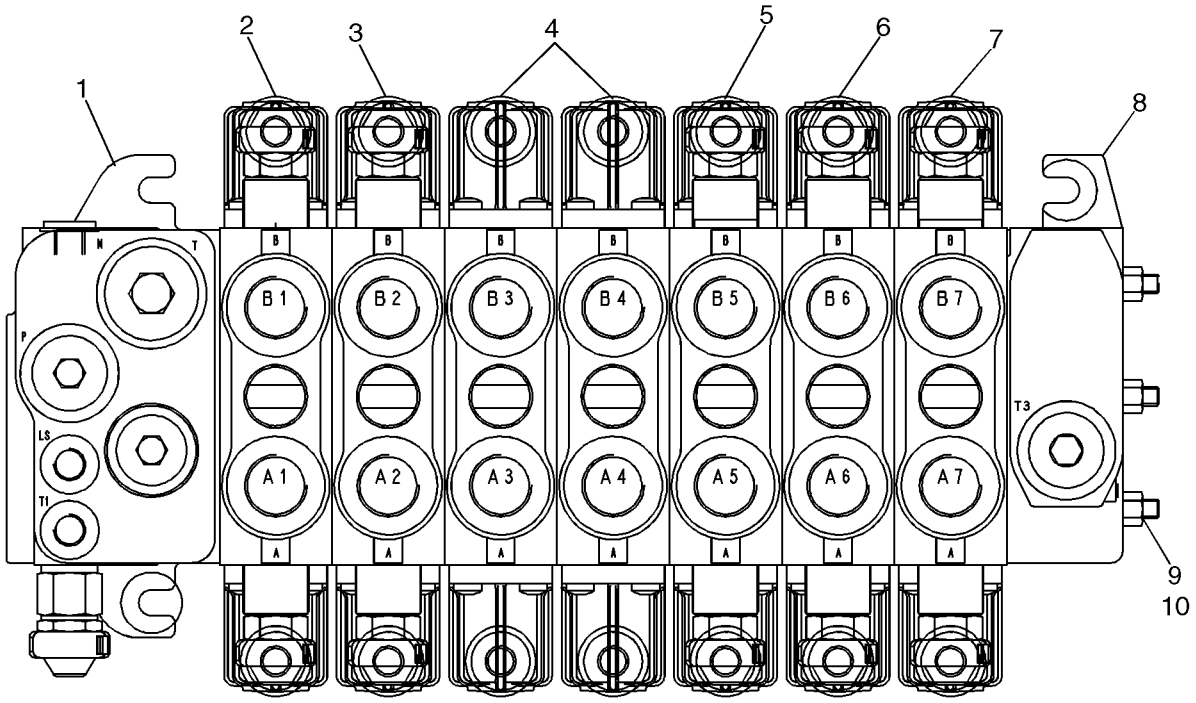

BS07K524

CONJUNTO DA VÁLVULA - CONTROLO DA RETROESCAVADORA, 7 BOBINAS (W/O EXT DIPPER, W/ AUX HYDS, W/ PILOT CONTROLS)

REF	FN	PART NUMBER	YR/SN	QTY	DESCRIPTION
		87577348		1	DISTRIBUIDOR, Backhoe 7 Spool; Rexroth No. 08 403 272; Check Data Plate On Valve For Part Number; Incl. Ref 1 - 10
1		87441495		1	VALVULA HYDR CONTROL, Inlet Section; With Orifice Threaded In LS Cavity; See Figure 08-39A
2		85826339		1	VALVULA HYDR CONTROL, Swing Section; See Figure 08-40
3		85826337		1	VALVULA HYDR CONTROL, Boom Section; See Figure 08-41
4		87617618		2	VALVULA HYDR CONTROL, Stabilizer Section; Without Flow Sharing to Provide Open Center Performance; See Figure 08-42
5		85826338		1	VALVULA HYDR CONTROL, Dipper Section; See Figure 08-43
6		85826365		1	VALVULA HYDR CONTROL, Bucket Section; See Figure 08-44
7		85826342		1	VALVULA HYDR CONTROL, Auxiliary Section; See Figure 08-46
8		NSS		1	BOLETIM INFORMATIVO, Outlet Section
9		NSS		3	BOLETIM INFORMATIVO, Tie Bolt
10		NSS		3	BOLETIM INFORMATIVO, Nut

CONJUNTO DA VÁLVULA - CONTROLO DA RETROESCAVADORA, 8 BOBINAS (W/ EXT DIPPER, W/ AUX HYDS, W/ PILOT CONTROLS)

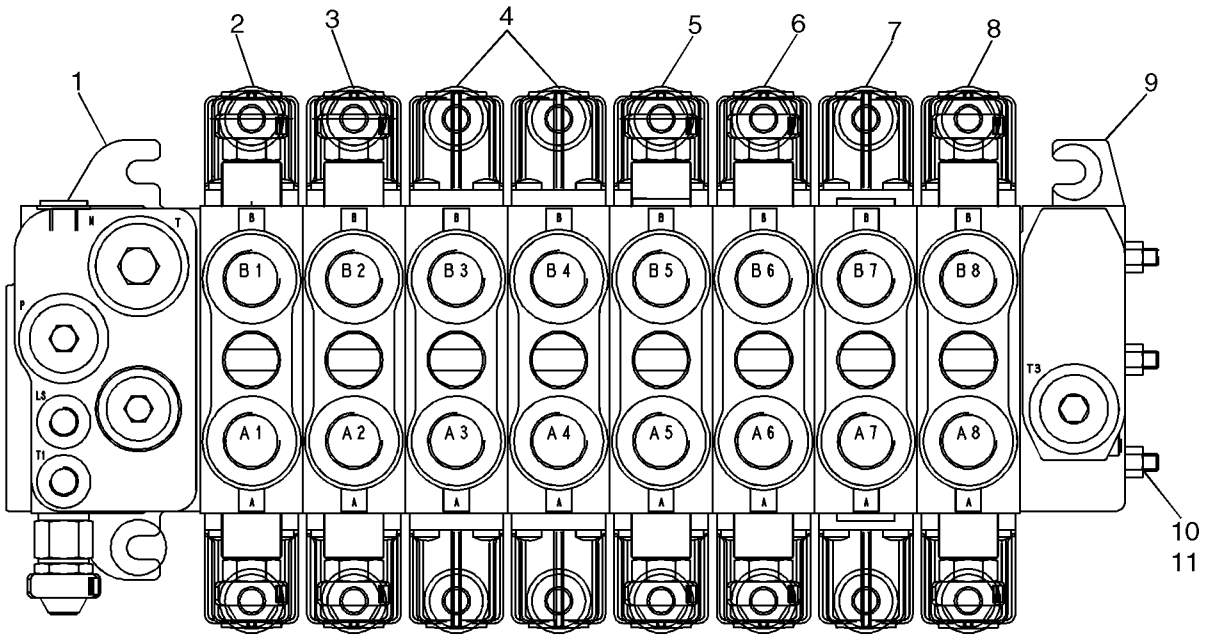

BS07M008

CONJUNTO DA VÁLVULA - CONTROLO DA RETROESCAVADORA, 8 BOBINAS (W/ EXT DIPPER, W/ AUX HYDS, W/ PILOT CONTROLS)

REF	FN	PART NUMBER	YR/SN	QTY	DESCRIPTION
		87577349		1	DISTRIBUIDOR, Backhoe 8 Spool; Rexroth No. 08 403 271; Check Data Plate On Valve For Part Number; Incl. Ref 1 - 11
1		87441495		1	VALVULA HYDR CONTROL, Inlet Section; With Orifice Threaded In LS Cavity; See Figure 08-43A
2		85826339		1	VALVULA HYDR CONTROL, Swing Section; See Figure 08-44
3		85826337		1	VALVULA HYDR CONTROL, Boom Section; See Figure 08-45
4		87617618		2	VALVULA HYDR CONTROL, Stabilizer Section; Without Flow Sharing to Provide Open Center Performance; 87577349 Valve; See Figure 08-46; If Used
5		85826338		1	VALVULA HYDR CONTROL, Dipper Section; See Figure 08-47
6		85826365		1	VALVULA HYDR CONTROL, Bucket Section; See Figure 08-48
7		85826341		1	VALVULA HYDR CONTROL, Extendable Dipper Section; See Figure 08-49
8		85826342		1	VALVULA HYDR CONTROL, Auxiliary Section; See Figure 08-50
9		NSS		1	BOLETIM INFORMATIVO, Outlet Section
10		87447477		3	JOGO DE PEÇAS, Tie Bolt
11		280136		3	PORCA, 3/8"-16, G8

SECÇÃO DA VÁLVULA - OSCILAÇÃO DA RETROESCAVADORA (COM CONTROLO AUTOMÁTICO)

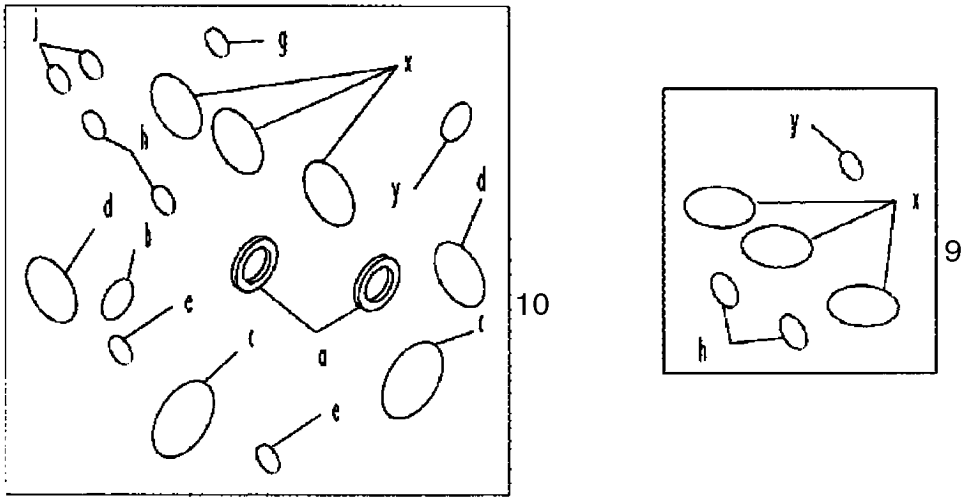

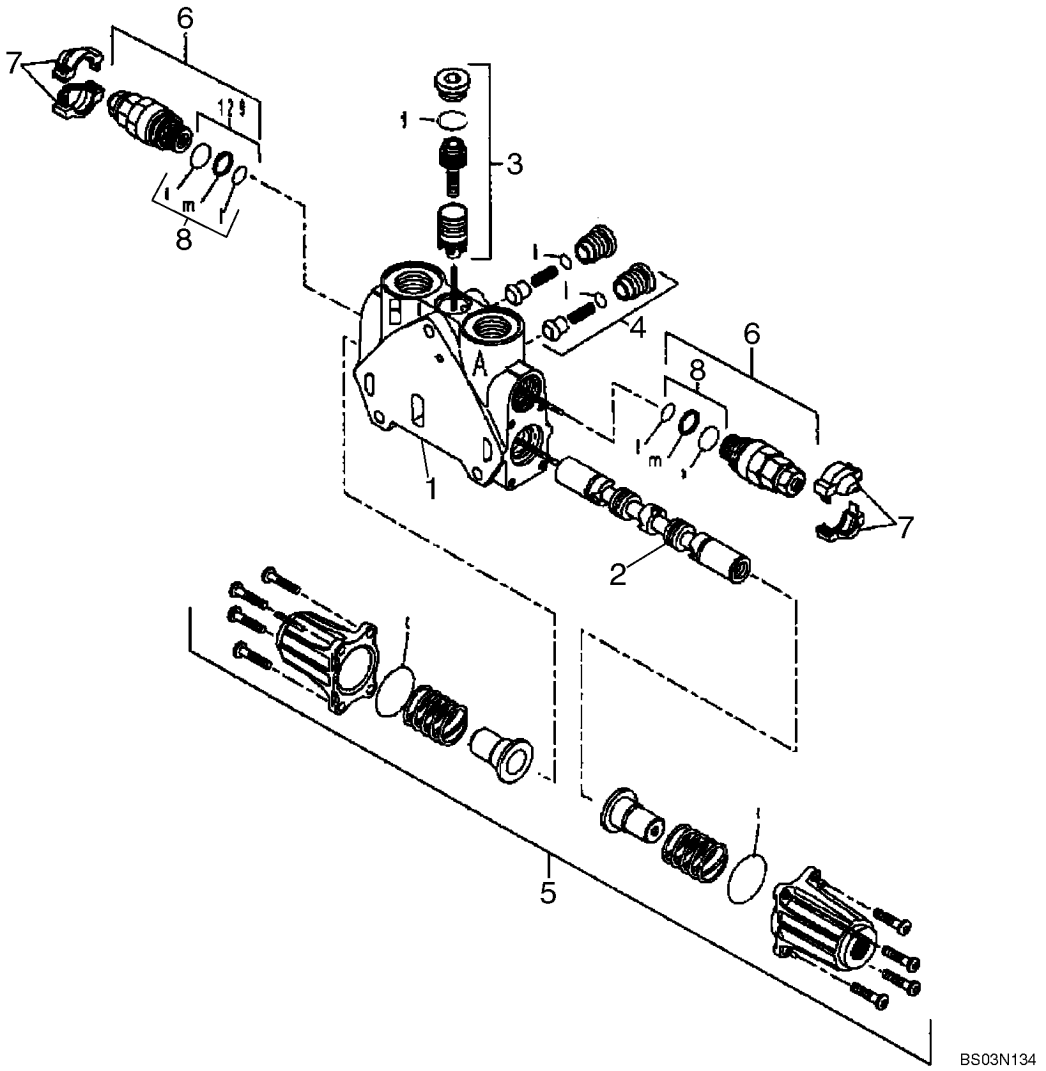

SECÇÃO DA VÁLVULA - OSCILAÇÃO DA RETROESCAVADORA (COM CONTROLO AUTOMÁTICO)

REF	FN	PART NUMBER	YR/SN	QTY	DESCRIPTION
		85826339		1	VALVULA HYDR CONTROL, Swing; Incl. Ref 1 - 10
1		NSS		1	BOLETIM INFORMATIVO, HOUSING
2		NSS		1	BOLETIM INFORMATIVO, SPOOL
3		85826345		1	KIT, Pressure Compensator; Component Parts Not Serviced Separately
4		85811938		2	VALVULA CHECAGEM, Component Parts Not Serviced Separately
5		85826344		1	KIT, End Cap; Component Parts Not Serviced Separately
6		85812114		2	VÁLVULA HYDRAULICA, Pressure Relief Valve; Some Component Parts Not Serviced Separately; Serviceable Includes 85811933, Ref 8 Kit
7		85811934		2	KIT, Cover, Orange
8		85811933		2	JOGO DE JUNTAS, Includes (2) O-Rings, (1) Thrust Ring; Component Parts Not Serviced Separately
9		85819148		1	JOGO DE JUNTAS, Includes (6) O-Rings; Component Parts Not Serviced Separately
10		85824282		1	KIT, Seal, Includes (15) O-Rings, (2) Lip Seals; Component Parts Not Serviced Separately

SECÇÃO DA VÁLVULA - LANÇA DA RETROESCAVADORA (COM CONTROLO AUTOMÁTICO)

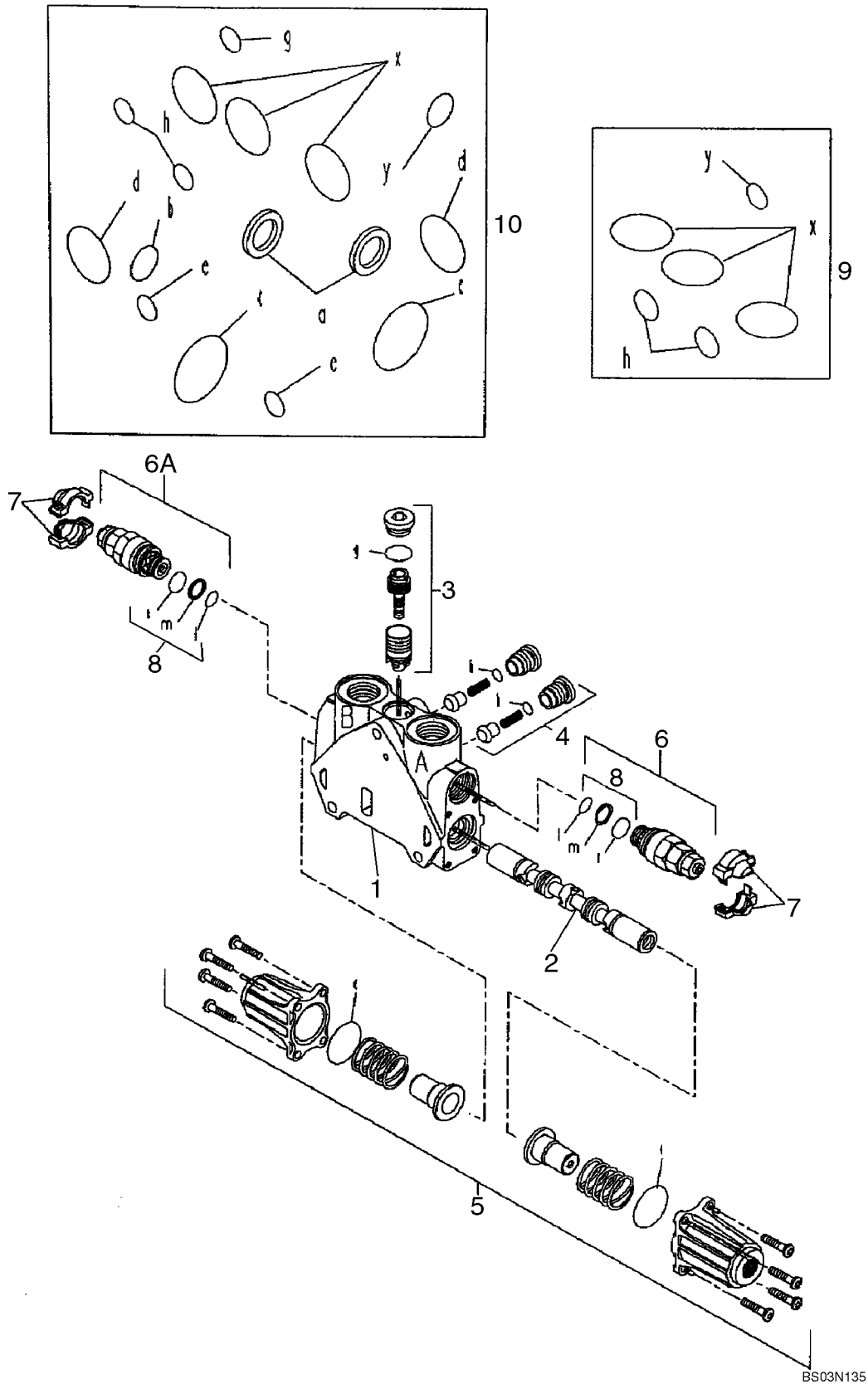

SECÇÃO DA VÁLVULA - LANÇA DA RETROESCAVADORA (COM CONTROLO AUTOMÁTICO)

REF	FN	PART NUMBER	YR/SN	QTY	DESCRIPTION
		85826337		1	VALVULA HYDR CONTROL, Boom; Incl. Ref 1 - 10
1		NSS		1	BOLETIM INFORMATIVO, HOUSING
2		NSS		1	BOLETIM INFORMATIVO, SPOOL
3		85819378		1	JOGO DE JUNTAS, Pressure Compensator; Component Parts Not Serviced Separately
4		85811938		2	VALVULA CHECAGEM, Component Parts Not Serviced Separately
5		85826344		1	KIT, End Cap; Component Parts Not Serviced Separately
6		85812115		1	VÁLVULA HYDRAULICA, Pressure Relief Valve Kit; Side A; Some Component Parts Not Serviced Separately; Serviceable Includes 85811933, Ref 8 Kit
6A		85826346		1	VÁLVULA DE SOBRE-PRESSÃO, Pressure Relief Valve Kit; Side B; Component Parts Not Serviced Separately
7		85811934		2	KIT, Cover, Orange
7		85811935		2	KIT, Cover, Blue
8		85811933		2	JOGO DE JUNTAS, Seal Kit Includes (2) O-Rings, (1) Thrust Ring; Component Parts Not Serviced Separately
9		85819148		1	JOGO DE JUNTAS, Seal Kit Includes (6) O-Rings; Component Parts Not Serviced Separately
10		85824281		1	JOGO DE JUNTAS, Seal Kit Includes (13) O-Rings, (2) Lip Seals; Component Parts Not Serviced Separately

SECÇÃO DA VÁLVULA - ESTABILIZADOR DA RETROESCAVADORA (COM CONTROLO AUTOMÁTICO)

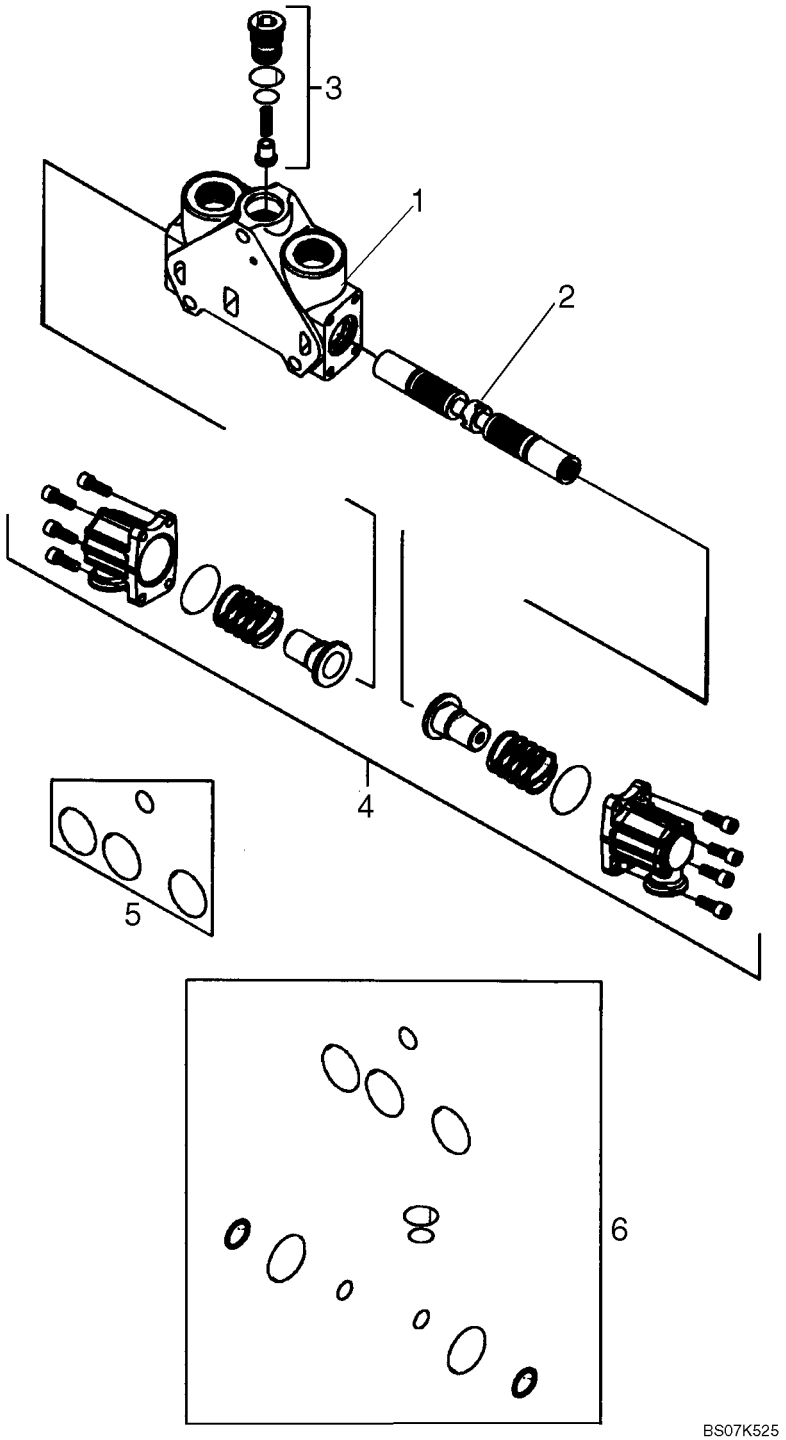

SECÇÃO DA VÁLVULA - ESTABILIZADOR DA RETROESCAVADORA (COM CONTROLO AUTOMÁTICO)

REF	FN	PART NUMBER	YR/SN	QTY	DESCRIPTION
		87617618		2	VALVULA HYDR CONTROL, Stabilizer; Left-Hand and Right-Hand; Without Flow Sharing to Provide Open Center Performance; Incl. Ref 1 - 6
1		NSS		1	BOLETIM INFORMATIVO, HOUSING
2		NSS		1	BOLETIM INFORMATIVO, SPOOL
3		87617655		1	VALVULA CHECAGEM, Kit; Component Parts Not Serviced Separately
4		85826344		1	KIT, End Cap; Component Parts Not Serviced Separately
5		85825473		1	JOGO DE JUNTAS, Includes (4) O-Rings; Component Parts Not Serviced Separately
6		87617657		1	CONJUNTO DE O-RING, Includes (12) Seals; Component Parts Not Serviced Separately

SECÇÃO DA VÁLVULA - IMERSOR DA RETROESCAVADORA (COM CONTROLO AUTOMÁTICO)

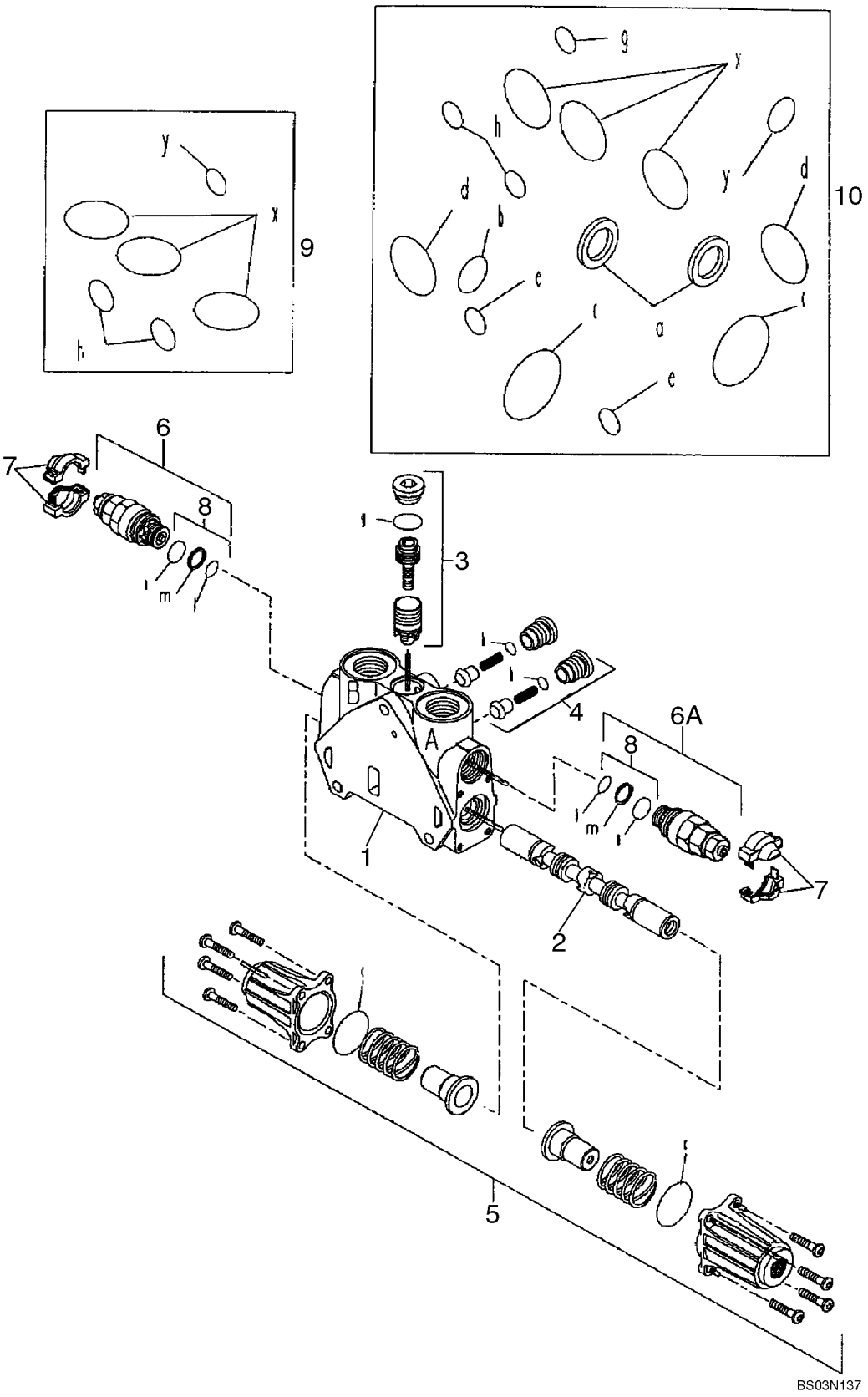

SECÇÃO DA VÁLVULA - IMERSOR DA RETROESCAVADORA (COM CONTROLO AUTOMÁTICO)

REF	FN	PART NUMBER	YR/SN	QTY	DESCRIPTION
		85826338		1	VALVULA HYDR CONTROL, Dipper; Incl. Ref 1 - 10
1		NSS		1	BOLETIM INFORMATIVO, HOUSING
2		NSS		1	BOLETIM INFORMATIVO, SPOOL
3		85826345		1	KIT, Pressure Compensator; Component Parts Not Serviced Separately
4		85811938		2	VALVULA CHECAGEM, Kit; Component Parts Not Serviced Separately
5		85826344		1	KIT, End Cap; Component Parts Not Serviced Separately
6		85812116		1	VÁLVULA DE SOBRE-PRESSÃO, Side B; Some Component Parts Not Serviced Separately; Serviceable Includes 85811933, Ref 8 Kit
6A		85826343		1	VÁLVULA DE SOBRE-PRESSÃO, Side A; Component Parts Not Serviced Separately
7		85811934		2	KIT, Cover, Orange
7		85811935		2	KIT, Cover, Blue
8		85811933		2	JOGO DE JUNTAS, Includes (2) O-Rings, (1) Thrust Ring; Component Parts Not Serviced Separately
9		85819148		1	JOGO DE JUNTAS, Includes (6) O-Rings; Component Parts Not Serviced Separately
10		85824281		1	JOGO DE JUNTAS, Includes (13) O-Rings, (2) Lip Seals; Component Parts Not Serviced Separately

SECÇÃO DA VÁLVULA - BALDE DA RETROESCAVADORA (COM CONTROLO AUTOMÁTICO)

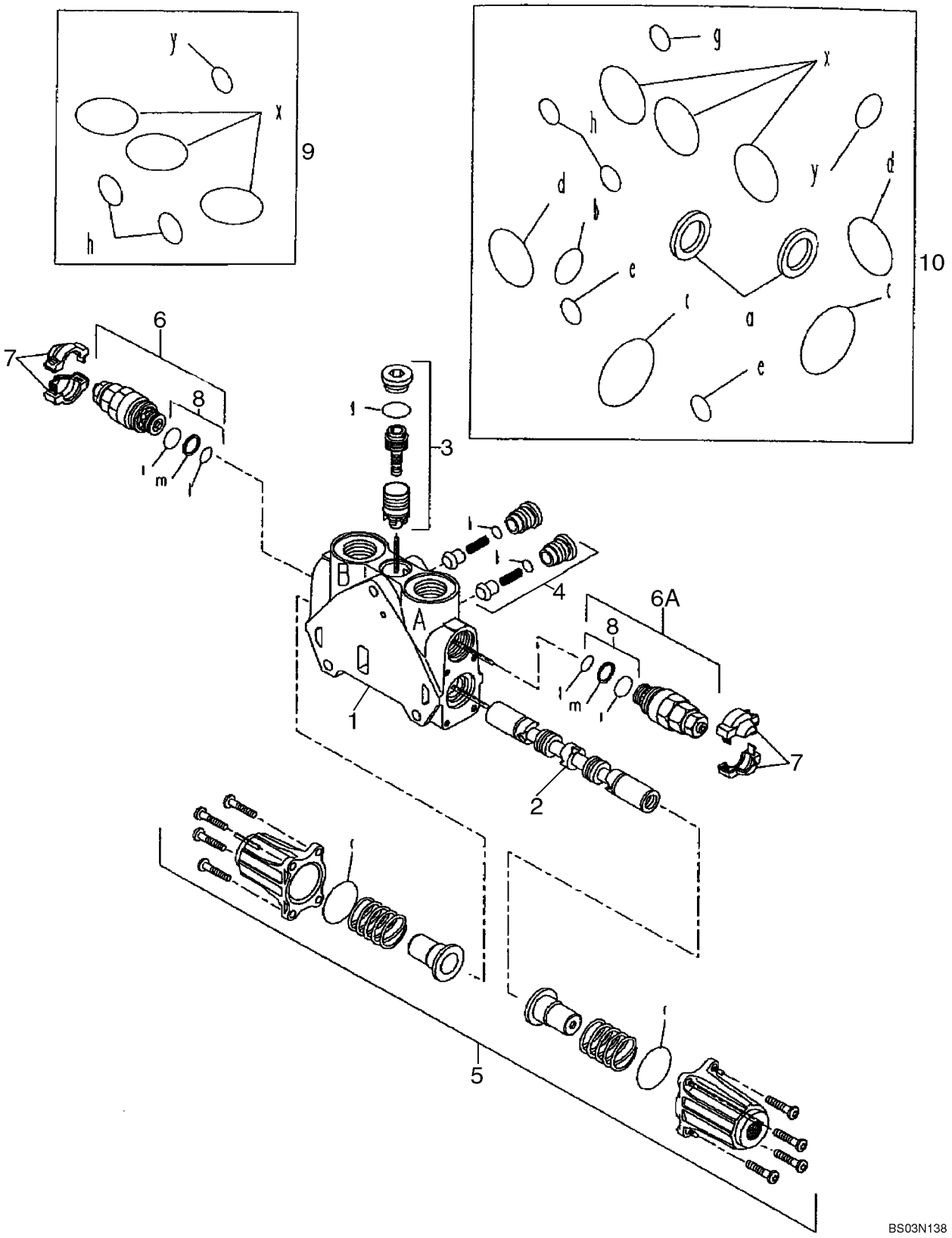

SECÇÃO DA VÁLVULA - BALDE DA RETROESCAVADORA (COM CONTROLO AUTOMÁTICO)

REF	FN	PART NUMBER	YR/SN	QTY	DESCRIPTION
		85826365		1	VALVULA HYDR CONTROL, Bucket; Incl. Ref 1 - 10
1		NSS		1	BOLETIM INFORMATIVO, HOUSING
2		NSS		1	BOLETIM INFORMATIVO, SPOOL
3		85819378		1	JOGO DE JUNTAS, Pressure Compensator; Component Parts Not Serviced Separately
4		85811938		2	VALVULA CHECAGEM, Kit; Component Parts Not Serviced Separately
5		85826344		1	KIT, End Cap; Component Parts Not Serviced Separately
6		85812116		1	VÁLVULA DE SOBRE-PRESSÃO, Side B; Some Component Parts Not Serviced Separately; Serviceable Includes 85811933, Ref 8 Kit
6A		85826905		1	VÁLVULA DE SOBRE-PRESSÃO, Side A; Some Component Parts Not Serviced Separately; Serviceable Includes 85811933, Ref 8 Kit
7		85811934		2	KIT, Cover, Orange
7		85811935		2	KIT, Cover, Blue
8		85811933		2	JOGO DE JUNTAS, Includes (2) O-Rings, (1) Thrust Ring; Component Parts Not Serviced Separately
9		85819148		1	JOGO DE JUNTAS, Includes (6) O-Rings; Component Parts Not Serviced Separately
10		85824281		1	JOGO DE JUNTAS, Includes (13) O-Rings, (2) Lip Seals; Component Parts Not Serviced Separately

SECÇÃO DA VÁLVULA - IMERSOR EXTENSÍVEL (COM CONTROLO AUTOMÁTICO)

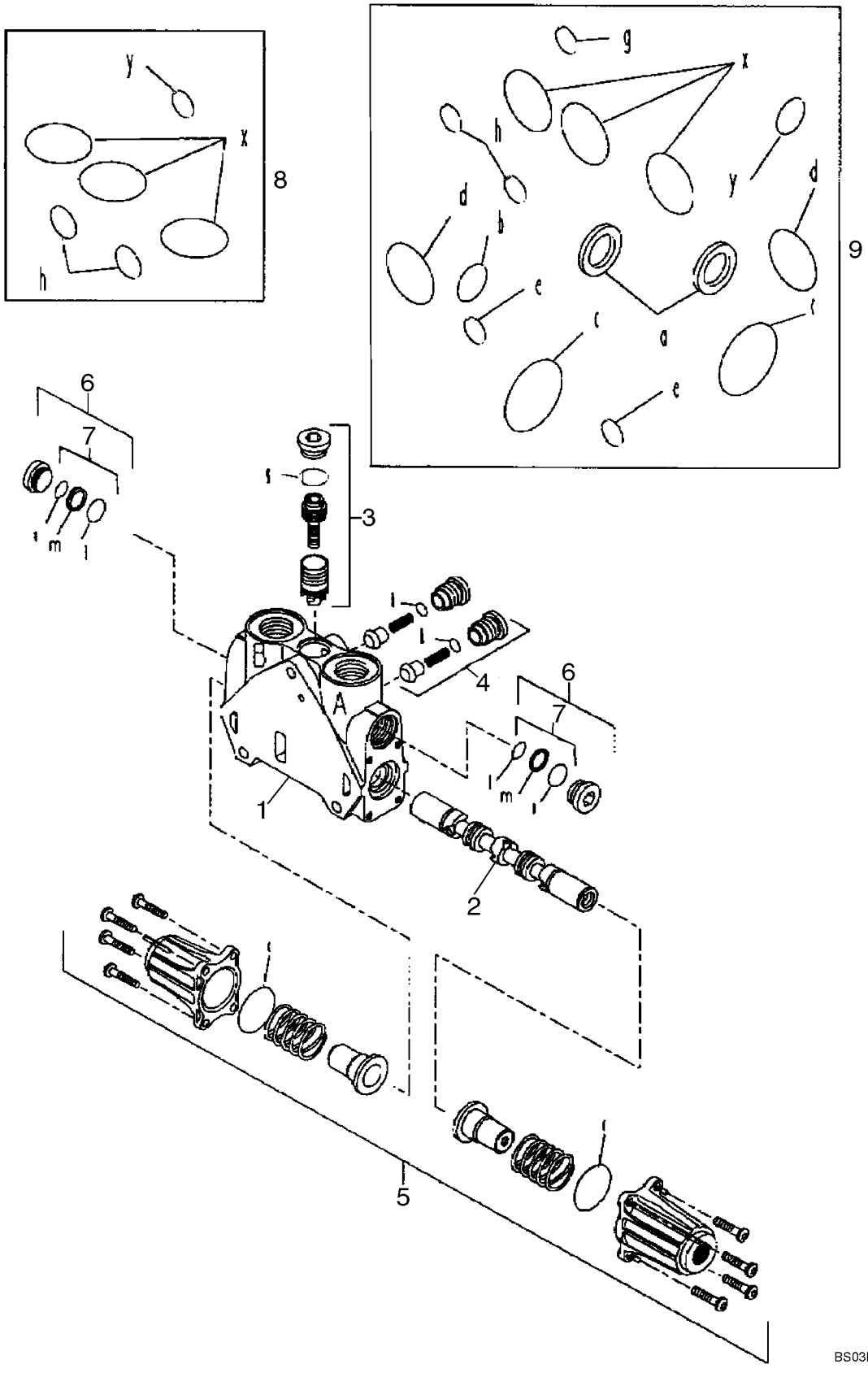

SECÇÃO DA VÁLVULA - IMERSOR EXTENSÍVEL (COM CONTROLO AUTOMÁTICO)

REF	FN	PART NUMBER	YR/SN	QTY	DESCRIPTION
		85826341		1	VALVULA HYDR CONTROL, Extendable Dipper; Incl. Ref 1 - 9
1		NSS		1	BOLETIM INFORMATIVO, HOUSING
2		NSS		1	BOLETIM INFORMATIVO, SPOOL
3		85819378		1	JOGO DE JUNTAS, Pressure Compensator Kit; Component Parts Not Serviced Separately
4		85811938		2	VALVULA CHECAGEM, Check Valve Kit; Component Parts Not Serviced Separately
5		85826344		1	KIT, End Cap Kit; Component Parts Not Serviced Separately
6		85811937		2	BUJÃO, Plug Assembly Kit; Some Component Parts Not Serviced Separately; Serviceable Includes 85811933, Ref 7 Kit
7		85811933		2	JOGO DE JUNTAS, Seal Kit Includes (2) O-Rings, (1) Thrust Ring; Component Parts Not Serviced Separately
8		85819148		1	JOGO DE JUNTAS, Seal Kit Includes (6) O-Rings; Component Parts Not Serviced Separately
9		85824281		1	JOGO DE JUNTAS, Seal Kit Includes (13) O-Rings, (2) Lip Seals; Component Parts Not Serviced Separately

SECÇÃO DA VÁLVULA - OPÇÕES DO SISTEMA HIDRÁULICO AUXILIAR (COM CONTROLO AUTOMÁTICO)

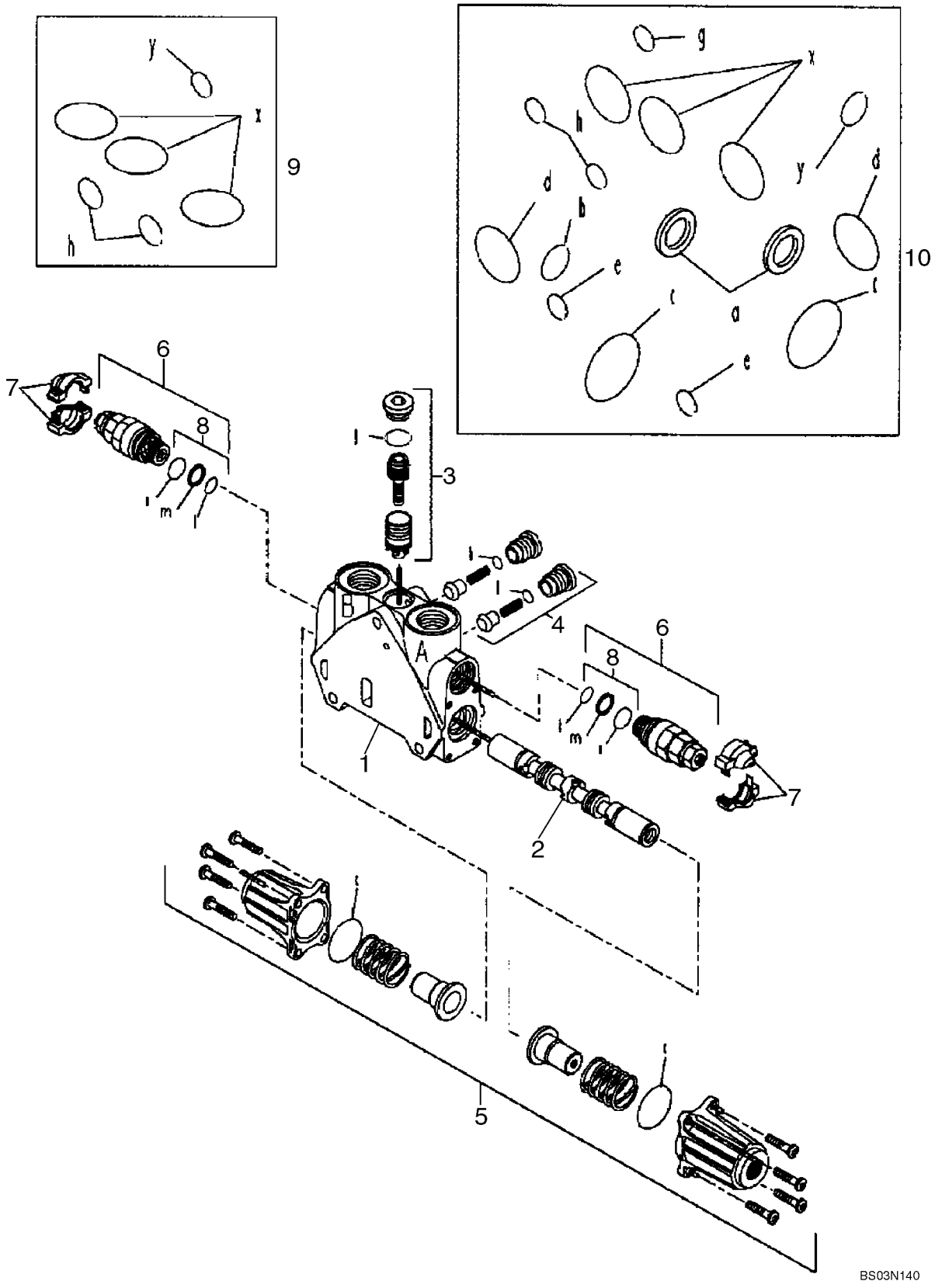

SECÇÃO DA VÁLVULA - OPÇÕES DO SISTEMA HIDRÁULICO AUXILIAR (COM CONTROLO AUTOMÁTICO)

REF	FN	PART NUMBER	YR/SN	QTY	DESCRIPTION
		85826342		1	VALVULA HYDR CONTROL, Options, Auxiliary Hydraulics; Incl. Ref 1 - 10
1		NSS		1	BOLETIM INFORMATIVO, HOUSING
2		NSS		1	BOLETIM INFORMATIVO, SPOOL
3		85819378		1	JOGO DE JUNTAS, Pressure Compensator Kit; Component Parts Not Serviced Separately
4		85811938		2	VALVULA CHECAGEM, Check Valve Kit; Component Parts Not Serviced Separately
5		85826344		1	KIT, End Cap Kit; Component Parts Not Serviced Separately
6		85812115		2	VÁLVULA HYDRAULICA, Pressure Relief Valve; Some Component Parts Not Serviced Separately; Serviceable Includes 85811933, Ref 8 Kit
7		85811934		2	KIT, Cover, Orange
7		85811935		2	KIT, Cover, Blue
8		85811933		2	JOGO DE JUNTAS, Seal Kit Includes (2) O-Rings, (1) Thrust Ring; Component Parts Not Serviced Separately
9		85819148		1	JOGO DE JUNTAS, Seal Kit Includes (6) O-Rings; Component Parts Not Serviced Separately
10		85824281		1	JOGO DE JUNTAS, Seal Kit Includes (13) O-Rings, (2) LIp Seals; Component Parts Not Serviced Separately

CONJUNTO VALVULA, PRESSÃO REDUZIDA (2 SPOOL) (COM CONTROLO AUTOMÁTICO)

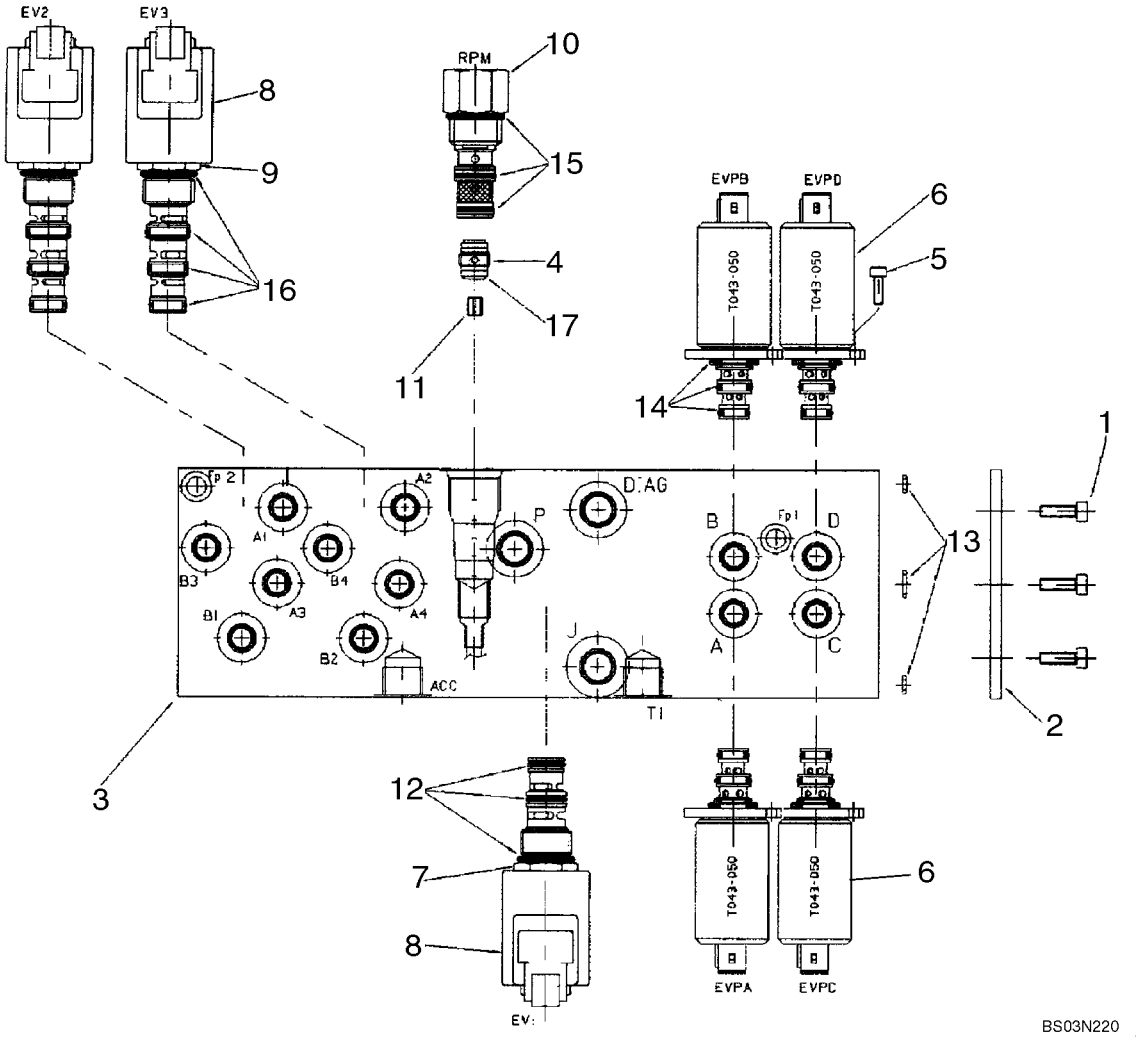

CONJUNTO VALVULA, PRESSÃO REDUZIDA (2 SPOOL) (COM CONTROLO AUTOMÁTICO)

REF	FN	PART NUMBER	YR/SN	QTY	DESCRIPTION
		85827472		1	VÁLVULA HYDRAULICA, Pressure Reducing, Two Spool, Pilot Controls; Incl. Ref 1 - 17
1		14304021		3	PARAFUSO, Hex Soc Hd, M5 x 10, 8.8
2		85827991		1	PLACA, Sealing
3		85828013		1	CORPO, Manifold Block
4		85827992		1	VALVULA CHECAGEM, Incl. 17
5		14302921		8	PARAFUSO, Hex, M4 x 10, 8.8, Full Thd
6		85827993		4	ELETRO VALVULA, Pressure Reducing Valve; Incl. 14
7		85827994		1	ELETRO VALVULA, Valve Cartridge, 3 Way, 2 Position; Incl. Ref 8, 12
8		85827995		3	BOBINA, With Diode
9		85827996		2	ELETRO VALVULA, Valve Cartridge, 4 Way, 2 Position; Incl. Ref 8, 16
10		85827997		1	VALVULA, Mechanical Pressure Reducing Valve With Fixed Setting; Incl. 15
11		85828005		1	ORIFICIO, 1.8 mm
12		85827998		1	JOGO DE JUNTAS
13		85827999		1	JOGO DE JUNTAS
14		85828000		4	JOGO DE JUNTAS
15		85828001		1	JOGO DE JUNTAS
16		85828002		2	JOGO DE JUNTAS
17		85828003		1	ANEL "O", D9x1

CONJUNTO VALVULA, PRESSÃO REDUZIDA (3 SPOOL) (COM CONTROLO AUTOMÁTICO)

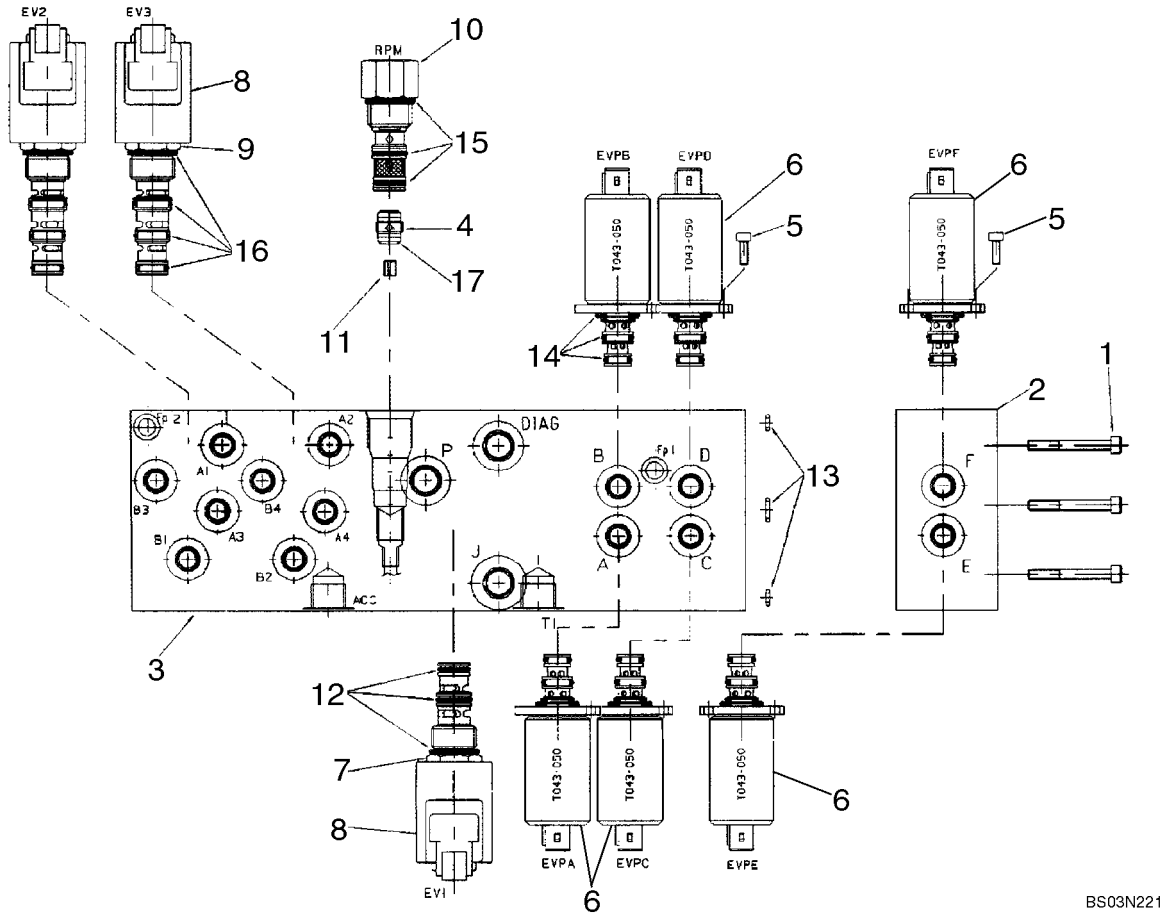

CONJUNTO VALVULA, PRESSÃO REDUZIDA (3 SPOOL) (COM CONTROLO AUTOMÁTICO)

REF	FN	PART NUMBER	YR/SN	QTY	DESCRIPTION
		85827471		1	VÁLVULA HYDRAULICA, Pressure Reducing, Three Spool, Pilot Controls; Incl. Ref 1 - 17
1		14358921		3	PARAFUSO, Hex Soc Hd, M5 x 45, 10.9
2		85828004		1	CORPO, One Function Add-On Manifold Block; Incl. 1, 5, 6
3		85828015		1	CORPO, Manifold Block
4		85827992		1	VALVULA CHECAGEM, Incl. 17
5		14302921		12	PARAFUSO, Hex, M4 x 10, 8.8, Full Thd
6		85827993		6	ELETRO VALVULA, Pressure Reducing Valve; Incl. 14
7		85827994		1	ELETRO VALVULA, Valve Cartridge, 3 Way, 2 Position; Incl. Ref 8, 12
8		85827995		3	BOBINA, With Diode
9		85827996		2	ELETRO VALVULA, Valve Cartridge, 4 Way, 2 Position; Incl. Ref 8, 16
10		85827997		1	VALVULA, Mechanical Pressure Reducing Valve With Fixed Setting; Incl. 15
11		85828005		1	ORIFICIO, 1.8 mm
12		85827998		1	JOGO DE JUNTAS
13		85827999		1	JOGO DE JUNTAS
14		85828000		6	JOGO DE JUNTAS
15		85828001		1	JOGO DE JUNTAS
16		85828002		2	JOGO DE JUNTAS
17		85828003		1	ANEL "O", D9x1

CONJUNTO VALVULA, PRESSÃO REDUZIDA (4 SPOOL) (COM CONTROLO AUTOMÁTICO)

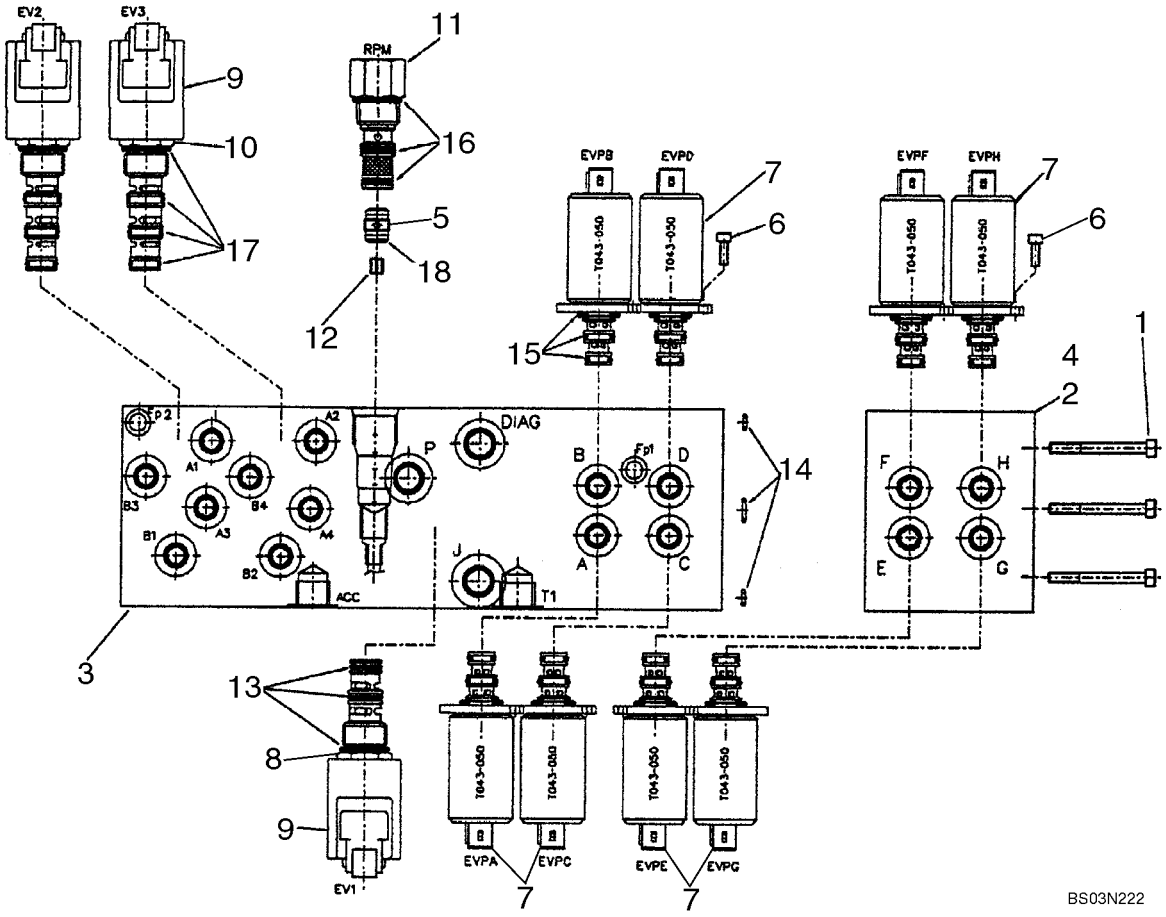

CONJUNTO VALVULA, PRESSÃO REDUZIDA (4 SPOOL) (COM CONTROLO AUTOMÁTICO)

REF	FN	PART NUMBER	YR/SN	QTY	DESCRIPTION
		87434621		1	DISTRIBUIDOR, Pressure Reducing, Four Spool, Pilot Controls; Incl. Ref 1 - 18
1		85828061		3	PARAFUSO, M5 x 80
2		85828048		1	VALVULA COLETORA, Manifold Block
3		85828015		1	CORPO, Manifold Block
4		85828054		1	VALVULA COLETORA, Manifold Block
5		85827992		1	VALVULA CHECAGEM
6		14302921		16	PARAFUSO, Hex, M4 x 10, 8.8, Full Thd
7		85827993		8	ELETRO VALVULA, Pressure Reducing Valve
8		85827994		1	ELETRO VALVULA, Valve Cartridge, 3 Way, 2 Position; Incl. Ref 9, 13
9		85827995		3	BOBINA, With Diode
10		85827996		2	ELETRO VALVULA, Valve Cartridge, 4 Way, 2 Position; Incl. Ref 9, 17
11		85827997		1	VALVULA, Mechanical Pressure Reducing Valve With Fixed Setting
12		85828005		1	ORIFICIO, 1.8 mm
13		85827998		1	JOGO DE JUNTAS
14		85827999		1	JOGO DE JUNTAS
15		85828000		8	JOGO DE JUNTAS
16		85828001		1	JOGO DE JUNTAS
17		85828002		2	JOGO DE JUNTAS
18		85828003		1	ANEL "O", D9x1

08-50		p1	07/08

VALVULA,JOYSTICK (CONTROLE PILOTO) (EMPUNAHDURA ESQUERDA) COM BOTÃO DE BUZINA

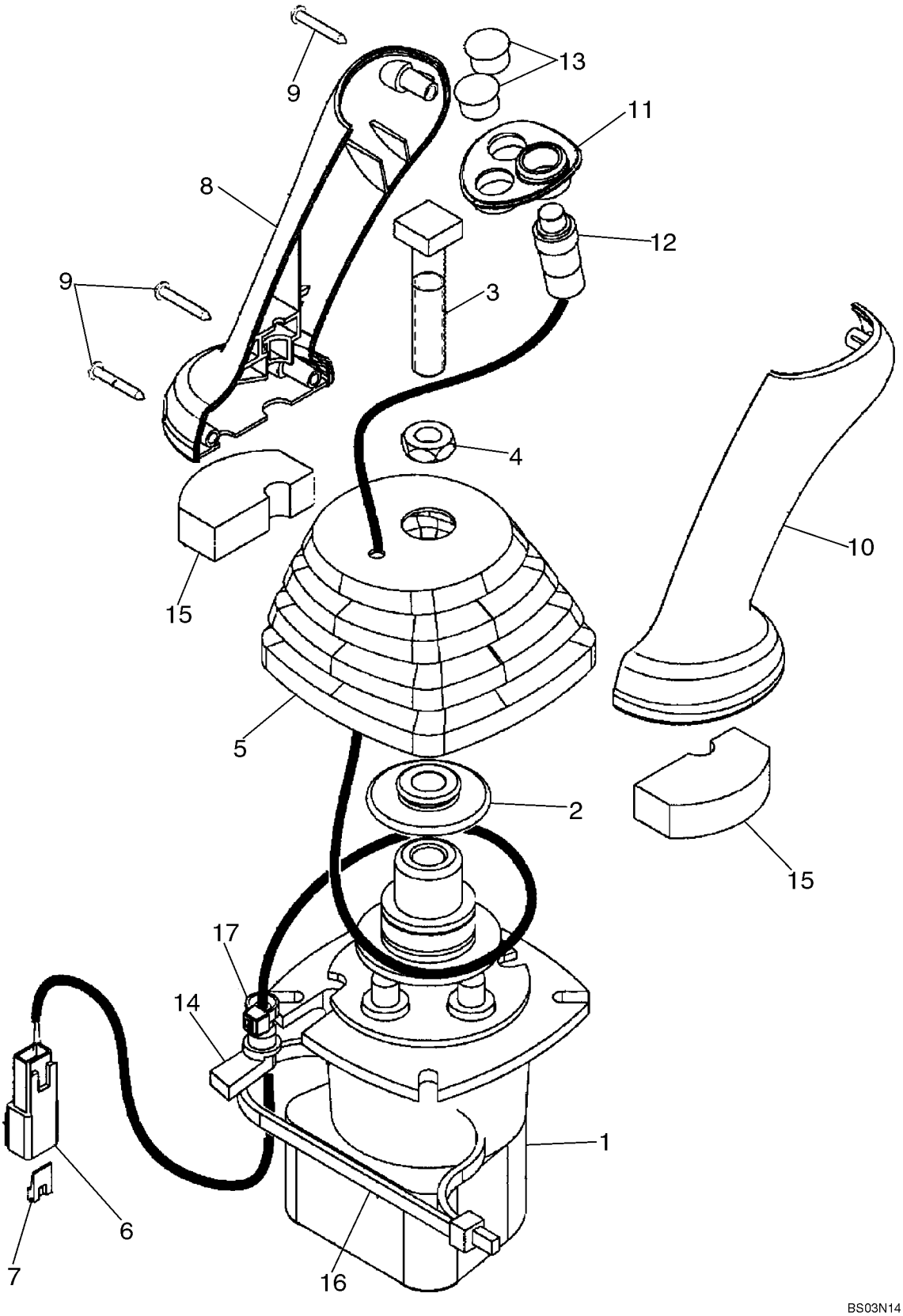

VALVULA,JOYSTICK (CONTROLE PILOTO) (EMPUNAHDURA ESQUERDA) COM BOTÃO DE BUZINA

REF	FN	PART NUMBER	YR/SN	QTY	DESCRIPTION
		87685948		1	DISTRIBUIDOR, Pilot Controls, LH; With Horn Button; Incl. Ref 1 - 17; Part Number Stamped On Valve Base
1		87687141		1	VALVULA PILOTO, Includes 87473380, 87586772, 87586773
		87473380		4	GUIA, Plunger Assy, Guide
		87586772		4	REGULADOR, Spring
		87586773		1	KIT, Set of 4 Return Springs
		87586776		1	MANILHA, Incl. Ref 2 - 17
2		87436225		1	PRENDEDOR, Control Boot Retainer
3		87428023		1	PARAFUSO, Square Head Bolt
4		87037944		1	PORCA, Thin, M12 x 1.75, Cl 05
5		87443721		1	CAPA, Control Handle
6		225315C1		1	CONECTOR
7		225318C1		1	CORTE DE TECIDO, Connector
8		87308838		1	EMPUNHADURA, Joystick Control Handle
9		15687475		3	PARAFUSO, Pan Hd, M3.5 x 25, Stainless
10		87308839		1	EMPUNHADURA, Joystick Control Handle
11		87435243		1	AMOSTRA (PLACA), Switch Mounting
12		87437372		1	INTERRUPTOR, Push Button Horn
13		86625128		2	BUJÃO, Dome, .562" hole, Nylon
14		87424267		1	CASQUILHO ISOLADOR, Wire
15		87435506		2	ANEL DE VEDACAO, Pilot Control Handle Seal, Lower
16		87438046		1	TIRA DE CABO
17		87000312		1	TIRA DE CABO

08-51		p1	07/08

VALVULA, JOYSTICK (CONTROLE PILOTO) (EMPUNAHDURA ESQUERDA) COM BUZINA E BOTÃO UNIDIRECIONAL

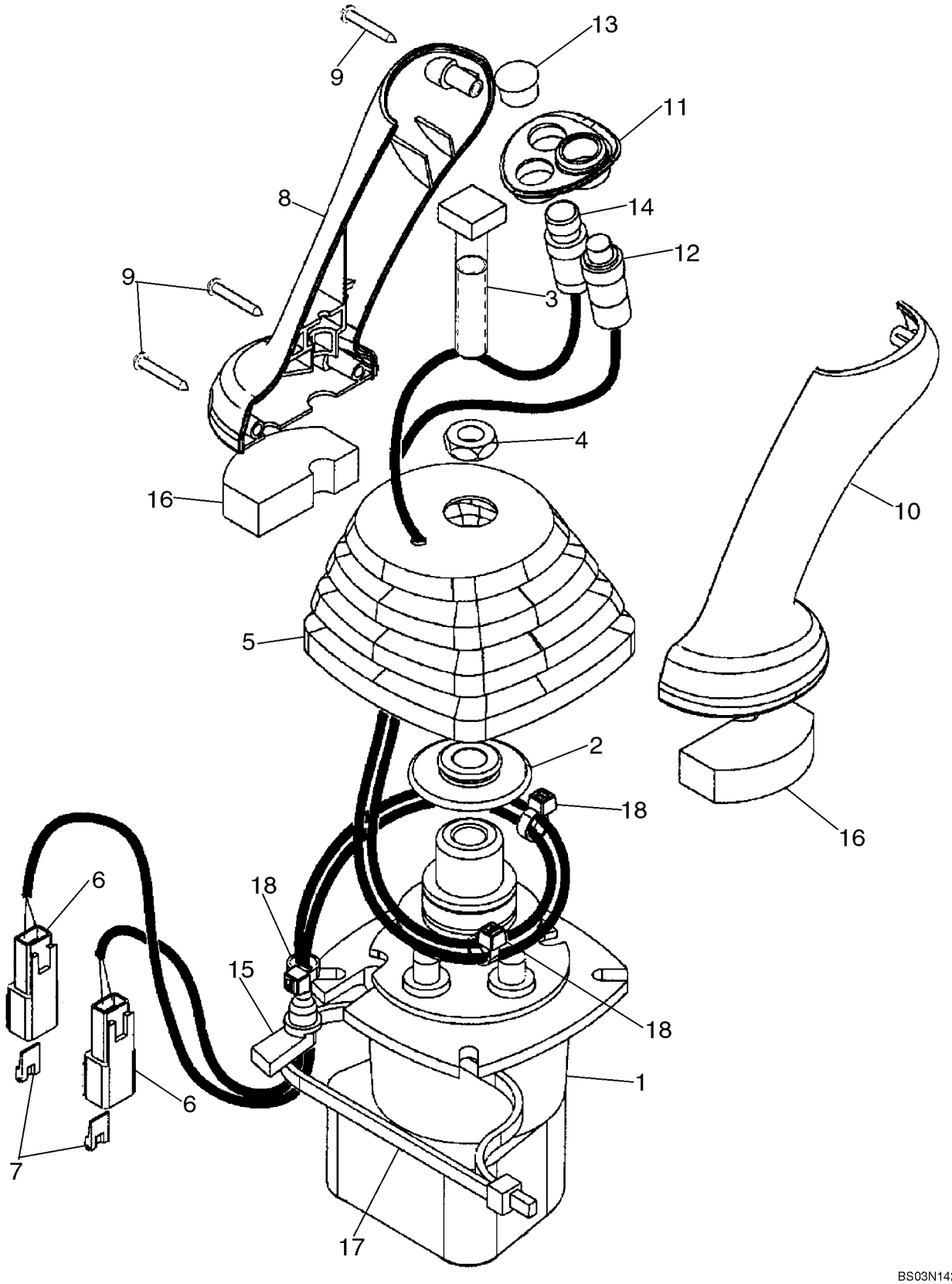

VALVULA, JOYSTICK (CONTROLE PILOTO) (EMPUNAHDURA ESQUERDA) COM BUZINA E BOTÃO UNIDIRECIONAL

REF	FN	PART NUMBER	YR/SN	QTY	DESCRIPTION
		87685953		1	DISTRIBUIDOR, Pilot Controls, LH; With Horn and Uni-Directional Buttons; Incl. Ref 1 - 18; Part Number Stamped On Valve Base
1		87687141		1	VALVULA PILOTO, Includes 87473380, 87586772, 87586773
		87473380		4	GUIA, Plunger Assy, Guide
		87586772		4	REGULADOR, Spring
		87586773		1	KIT, Set of 4 Return Springs
2		87436225		1	PRENDEDOR, Control Boot
3		87428023		1	PARAFUSO, Square Head
4		87037944		1	PORCA, Thin, M12 x 1.75, Cl 05
5		87443721		1	CAPA, Control Handle
6		225315C1		2	CONECTOR
7		225318C1		2	CORTE DE TECIDO, Connector
8		87308838		1	EMPUNHADURA, Joystick Control Handle
9		15687475		3	PARAFUSO, Pan Hd, M3.5 x 25, Stainless
10		87308839		1	EMPUNHADURA, Joystick Control Handle
11		87435243		1	AMOSTRA (PLACA), Switch Mounting
12		87437372		1	INTERRUPTOR, Push Button Horn
13		86625128		1	BUJÃO, Dome, .562" hole, Nylon
14		87437373		1	INTERRUPTOR INTERMITENTE, Push Button Uni-Directional Auxiliary Hydraulic Switch
15		87424267		1	CASQUILHO ISOLADOR, Wire
16		87435506		2	ANEL DE VEDACAO, Pilot Control Handle Seal, Lower
17		L18331		1	TIRA DE CABO
18		L11541		3	TIRA DE CABO

08-52		p1	07/08

VALVULA, JOYSTICK (CONTROLE PILOTO) (EMPUNAHDURA ESQUERDA) COM BUZINA E BOTÃO BIDIRECIONAL

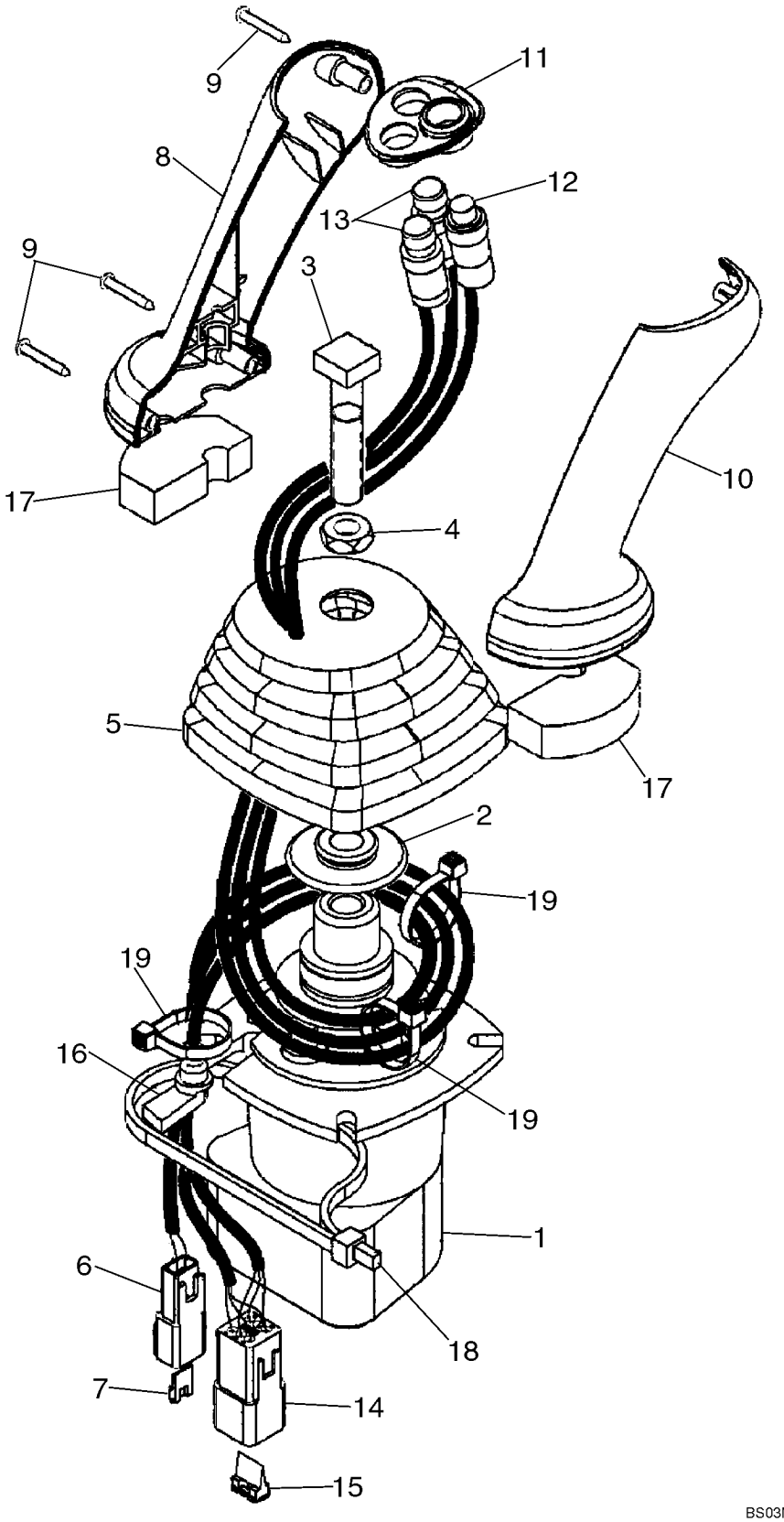

VALVULA, JOYSTICK (CONTROLE PILOTO) (EMPUNAHDURA ESQUERDA) COM BUZINA E BOTÃO BIDIRECIONAL

REF	FN	PART NUMBER	YR/SN	QTY	DESCRIPTION
		87685952		1	DISTRIBUIDOR, Pilot Controls, LH; With Horn and Bi-Directional Buttons; Incl. Ref 1 - 19; Part Number Stamped On Valve Base
1		87687141		1	VALVULA PILOTO, Includes 87473380, 87586772, 87586773
2		87436225		1	PRENDEDOR, Control Boot
		87473380		4	GUIA, Plunger Assy, Guide
		87586772		4	REGULADOR, Spring
		87586773		1	KIT, Set of 4 Return Springs
3		87428023		1	PARAFUSO, Square Head
4		87037944		1	PORCA, Thin, M12 x 1.75, Cl 05
5		87443721		1	CAPA, Control Handle
6		225315C1		1	CONECTOR
7		225318C1		1	CORTE DE TECIDO, Connector
8		87308838		1	EMPUNHADURA, Joystick Control Handle
9		15687475		3	PARAFUSO, Pan Hd, M3.5 x 25, Stainless
10		87308839		1	EMPUNHADURA, Joystick Control Handle
11		87435243		1	AMOSTRA (PLACA), Switch Mounting
12		87437372		1	INTERRUPTOR, Push Button Horn
13		87437371		2	INTERRUPTOR, Push Button Bi-Directional Auxiliary Hydraulic
14		225350C1		1	CONECTOR
15		225353C1		1	CORTE DE TECIDO, Connector
16		87424267		1	CASQUILHO ISOLADOR, Wire
17		87435506		2	ANEL DE VEDACAO, Pilot Control Handle Seal, Lower
18		87438046		1	TIRA DE CABO
19		87000312		3	TIRA DE CABO, Black

08-53		p1	07/08

VALVULA, JOYSTICK (CONTROLE PIOTO) (EMPUNHADURA DIREITA) SEM BRAÇO EXTENSIVO

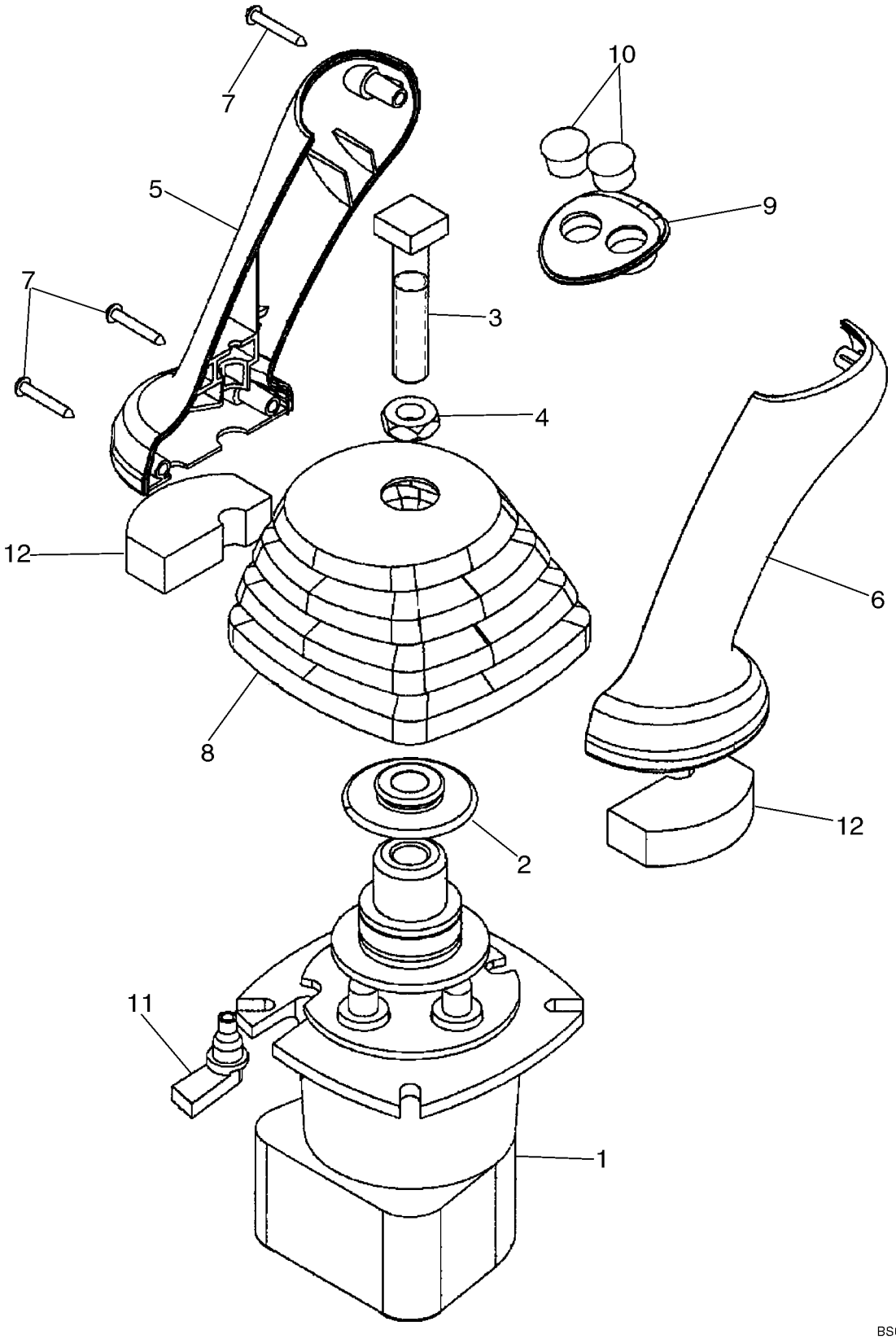

VALVULA, JOYSTICK (CONTROLE PIOTO) (EMPUNHADURA DIREITA) SEM BRAÇO EXTENSIVO

REF	FN	PART NUMBER	YR/SN	QTY	DESCRIPTION
		87685954		1	DISTRIBUIDOR, Pilot Controls, RH; Without Extendable Dipper; Incl. Ref 1 - 12; Part Number Stamped On Valve Base
1		87687141		1	VALVULA PILOTO, Includes 87473380, 87586772, 87586773
2		87436225		1	PRENDEDOR, Control Boot
		87473380		4	GUIA, Plunger Assy, Guide
		87586772		4	REGULADOR, Spring
		87586773		1	KIT, Set of 4 Return Springs
3		87428023		1	PARAFUSO, Square Head
4		87037944		1	PORCA, Thin, M12 x 1.75, Cl 05
5		87308838		1	EMPUNHADURA, Joystick Control Handle
6		87308839		1	EMPUNHADURA, Joystick Control Handle
7		15687475		3	PARAFUSO, Pan Hd, M3.5 x 25, Stainless
8		87443722		1	CAPA, Joystick Control
9		87435242		1	AMOSTRA (PLACA), Switch Mounting
10		86625128		2	BUJÃO, Dome, .562" hole, Nylon
11		87451448		1	CASQUILHO ISOLADOR, Wire
12		87435506		2	ANEL DE VEDACAO, Pilot Control Handle, Lower

VALVULA, JOYSTICK (CONTROLE PIOTO) (EMPUNHADURA DIREITA) COM BRAÇO EXTENSIVO

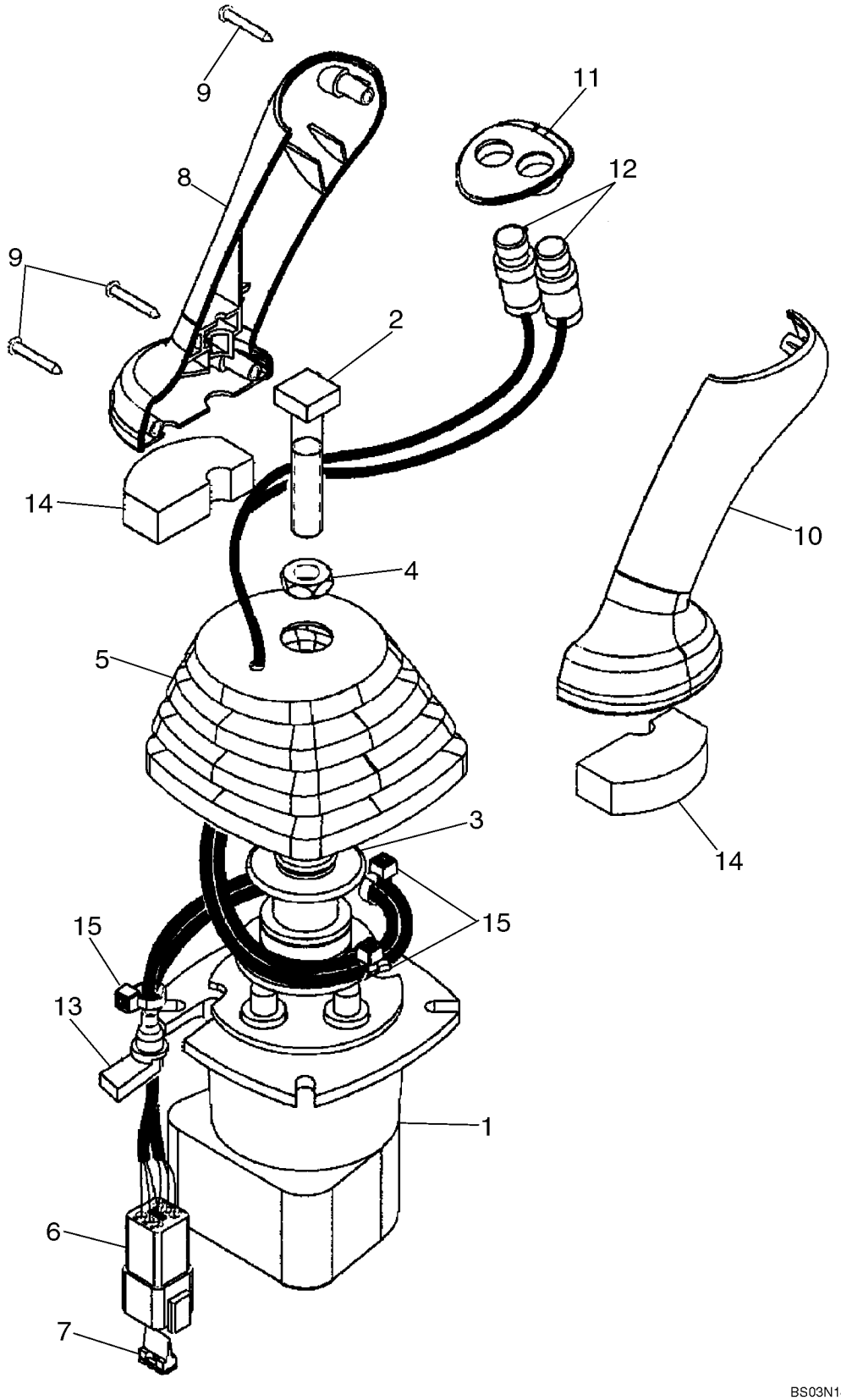

VALVULA, JOYSTICK (CONTROLE PIOTO) (EMPUNHADURA DIREITA) COM BRAÇO EXTENSIVO

REF	FN	PART NUMBER	YR/SN	QTY	DESCRIPTION
		87685955		1	DISTRIBUIDOR, Pilot Controls, RH; With Extendable Dipper; Includes 87687141 Base Valve; Incl. Ref 1 - 15; Part Number Stamped On Valve Base
1		87687141		1	VALVULA PILOTO, Includes 87473380, 87586772, 87586773
		87473380		4	GUIA, Plunger Assy, Guide
		87586772		4	REGULADOR, Spring
		87586773		1	KIT, Set of 4 Return Springs
		87587017		1	MANILHA, Assy, Incl. Ref 2 - 16
2		87428023		1	PARAFUSO, Square Head
3		87436225		1	PRENDEDOR, Control Boot
4		87037944		1	PORCA, Thin, M12 x 1.75, Cl 05
5		87443721		1	CAPA, Joystick Control
6		225350C1		1	CONECTOR
7		225353C1		1	CORTE DE TECIDO, Connector
8		87308838		1	EMPUNHADURA, Joystick Control Handle
9		15687475		3	PARAFUSO, Pan Hd, M3.5 x 25, Stainless
10		87308839		1	EMPUNHADURA, Joystick Control Handle
11		87435242		1	AMOSTRA (PLACA), Switch Mounting
12		87437371		2	INTERRUPTOR, Push Button Retract and Extendahoe
13		87424267		1	CASQUILHO ISOLADOR, Wire
14		87435506		2	ANEL DE VEDACAO, Pilot Control Handle Seal, Lower
15		87000312		3	TIRA DE CABO
16		87438046		1	TIRA DE CABO, Not Illustrated

CONJUNTO DA VÁLVULA - SUPORTE DA ARTICULAÇÃO

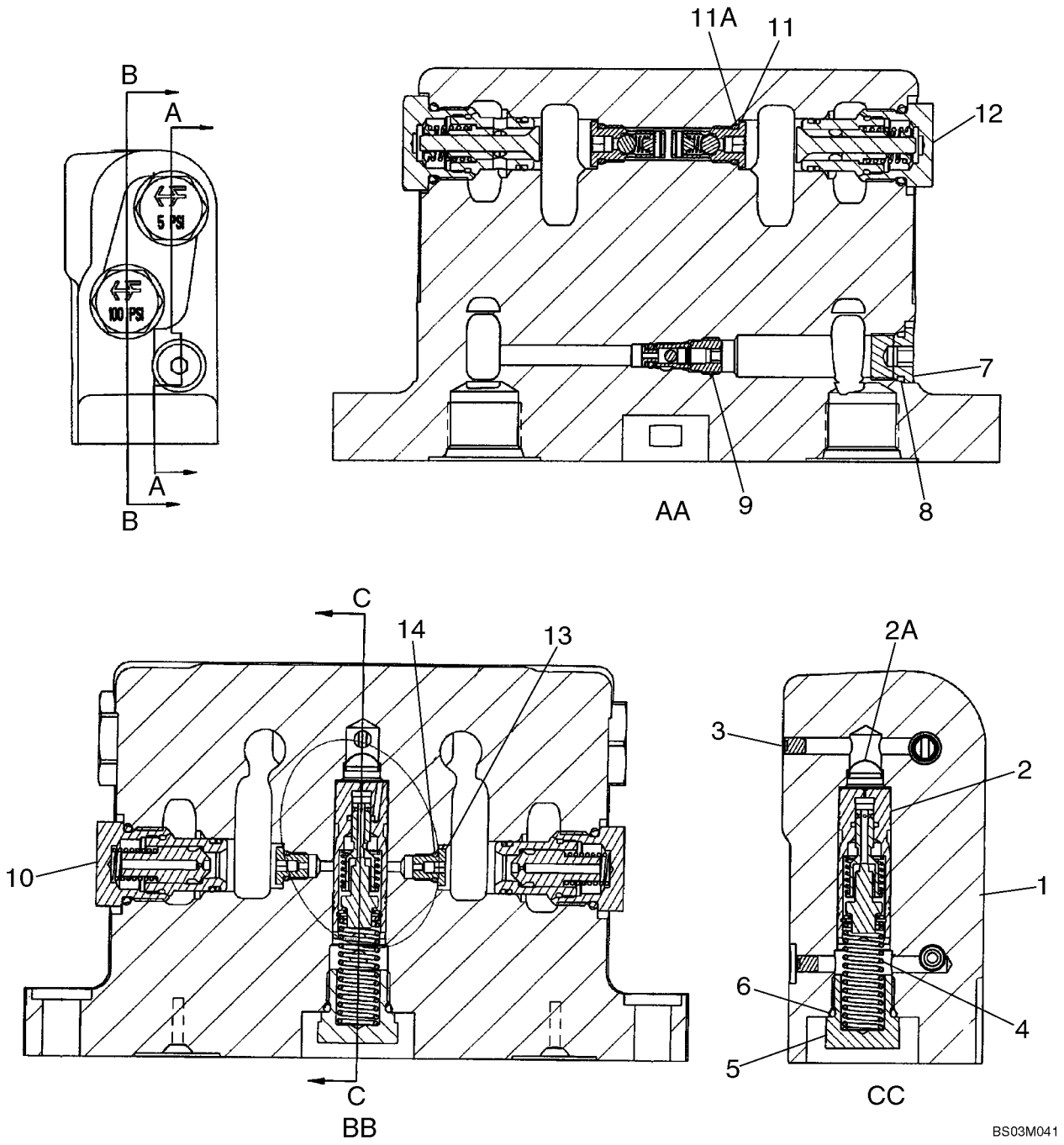

CONJUNTO DA VÁLVULA - SUPORTE DA ARTICULAÇÃO

REF	FN	PART NUMBER	YR/SN	QTY	DESCRIPTION
		87449373		1	VÁLVULA HYDRAULICA, Swing Cushion; Incl. Ref 1 - 14; No Longer Available, For Service Order 87480653
		87480653		1	VÁLVULA AMORTECEDORA, Swing Cushion; Incl. Ref 1 - 14
1		NSS		1	BOLETIM INFORMATIVO, Housing
2		87449374		1	CARRETO, Thermal Compensating; Component Parts Not Serviced Separately
2A		1976955C1		1	CARTUCHO FILTRO, Screen, Filter
3		369372A1		2	BUJÃO, Expansion; M5
4		388881A1		1	MOLA DE TRACAO
5		409025A1		1	BUJÃO, Relief Check; Incl. Ref 6
6		237-6008		1	ANEL "O", 8-1, 90 Duro, .644" ID x .087" Thk, Boss seal
7		9625178		1	BUJÃO, Hex Soc, 9/16"-18 ORB, Incl. Ref 8
8		237-6006		1	ANEL "O", 6-1, 90 Duro, .468" ID x .078" Thk, Boss seal
9		388712A2		1	VALVULA, Bi-Directional Check Valve; Includes 388713A1 Seal Kit
		388713A1		1	JOGO, Seal; Includes An O-Ring and Backup Ring; Component Parts Not Serviced Separately
10		396422A2		2	VALVULA CHECAGEM, 100 psi, Orifice Check Valve; Component Parts Not Serviced Separately; Order 1542830C2 Seal Kit To Service External Seals
		443432A1		1	JOGO DE JUNTAS, For Servicing External Seals on Ref 9, 10, 11 or 12 Valve; If Used
11		400296A2		2	VALVULA CHECAGEM, In-Line Check Valve; Component Parts Not Serviced Separately; Incl. Ref 11A
11A		237-6004		1	ANEL "O", 4-1, 90 Duro, .351" ID x .072" Thk, Boss seal
12		8605073		2	VALVULA CHECAGEM, 5 psi; Component Parts Not Serviced Separately; Order 1542830C2 Seal Kit To Service External Seals; Replaces 389541A1; 87449373 Valve Only

CONJUNTO DA VÁLVULA - SUPORTE DA ARTICULAÇÃO

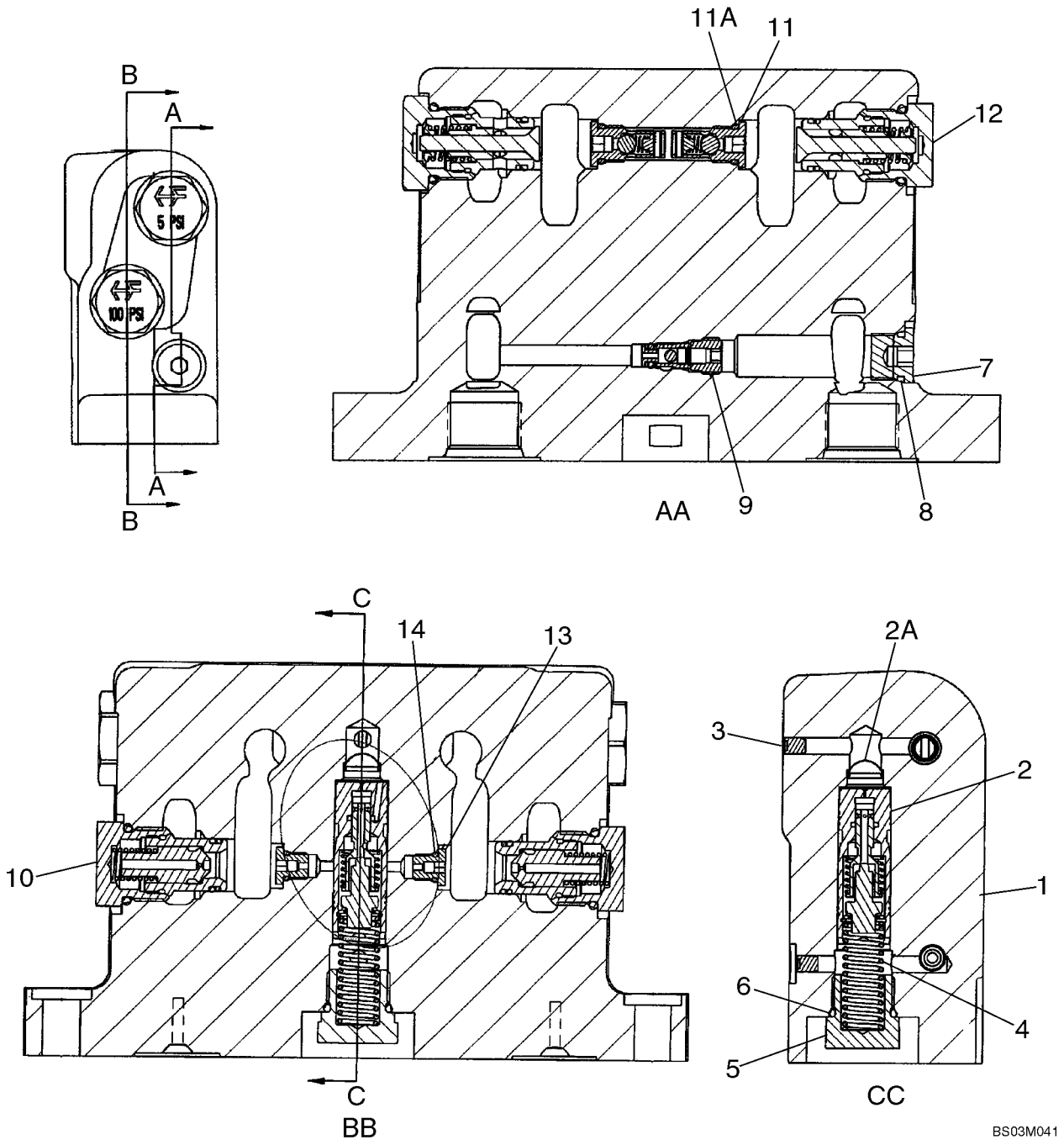

CONJUNTO DA VÁLVULA - SUPORTE DA ARTICULAÇÃO

REF	FN	PART NUMBER	YR/SN	QTY	DESCRIPTION
		1542830C2		1	JOGO DE JUNTAS, For Servicing External Seals on Ref 10 or 12 Valve
12		87753055		2	VALVULA CHECAGEM, 5 psi; Component Parts Not Serviced Separately; 87480653 Valve Only
13		400657A1		2	BUJÃO, Orifice 1.85 mm; Incl. Ref 14
14		237-6002		1	ANEL "O", 2-1, .239" ID x .064" Thk

VÁLVULA SOLENÓIDE - TRANCA DA LANÇA

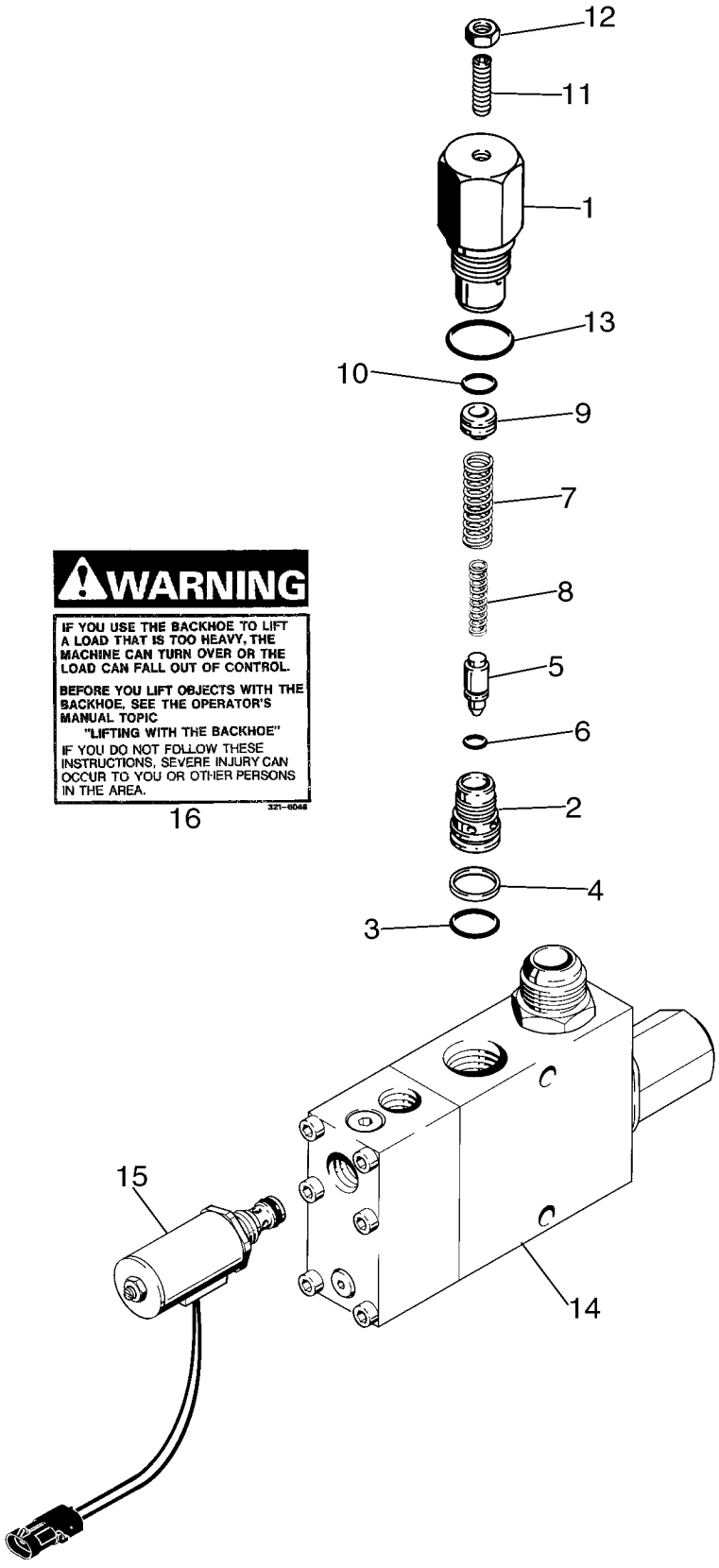

BS03B174

VÁLVULA SOLENÓIDE - TRANCA DA LANÇA

REF	FN	PART NUMBER	YR/SN	QTY	DESCRIPTION
		189957A1		1	VALVULA, Solenoid, Backhoe Boom Lock; Incl. Ref 1 - 16; Included In 399227A1 Backhoe Boom Lock Kit
		G110467		1	VÁLVULA DE SOBRE-PRESSÃO, Circuit, Solenoid; Used In Production; Order G110077, Kit For Service
1		NSS		1	BOLETIM INFORMATIVO, Body, Relief Valve
2		NSS		1	BOLETIM INFORMATIVO, Seat, Relief Valve
3		238-6018		1	ANEL "O", -018, 90 Duro, .739" ID x .070" Thk, Face Seal
4		G35540		1	ANEL, Backup, Seat
5		NSS		1	BOLETIM INFORMATIVO, Poppet
6		NSS		1	BOLETIM INFORMATIVO, O-Ring
7		NSS		1	BOLETIM INFORMATIVO, Spring, Relief, Outer
8		NSS		1	BOLETIM INFORMATIVO, Spring, Relief, Inner
9		NSS		1	BOLETIM INFORMATIVO, Piston
10		NSS		1	BOLETIM INFORMATIVO, O-Ring
11		484-43120		1	JOGO PARAFUSO, Hex Soc, 5/16"-24 x 1 1/4"
12		425-155		1	PORCA, Jam, 5/16"-24, G5
13		237-6012		1	ANEL "O", 12-1, 90 Duro, .924 ID x .118" Thk, Boss Seal
14		NSS		1	BOLETIM INFORMATIVO, Body, Solenoid
15		221168A1		1	ELETRO VALVULA, 12 Volt; Relief, With Connector
		D150781		1	JOGO, Repair; Incl. (3) Springs, (1) Ball, (1) Poppet, (1) Plug; Not Serviced Separately; and D150810 Seal Kit, Not Shown
		D150810		1	ANEL DE VEDAÇÃO, Kit, Incl. (8) O-Rings and (2) Backup Rings; Which Are Not Serviced Separately, Not Shown
		G110077		1	JOGO, Service For G110467, Circuit Relief Valve; Incl. G110078, Circuit Relief Valve Assembly (Ref. 1 - 13), Instruction Sheet
16		321-6046		2	DECALCOMANIA, Warning, If You Use The Backhoe To Lift A Load That Is Too Heavy

CONJUNTO DO ACUMULADOR - CONTROLO DA SUSPENSÃO

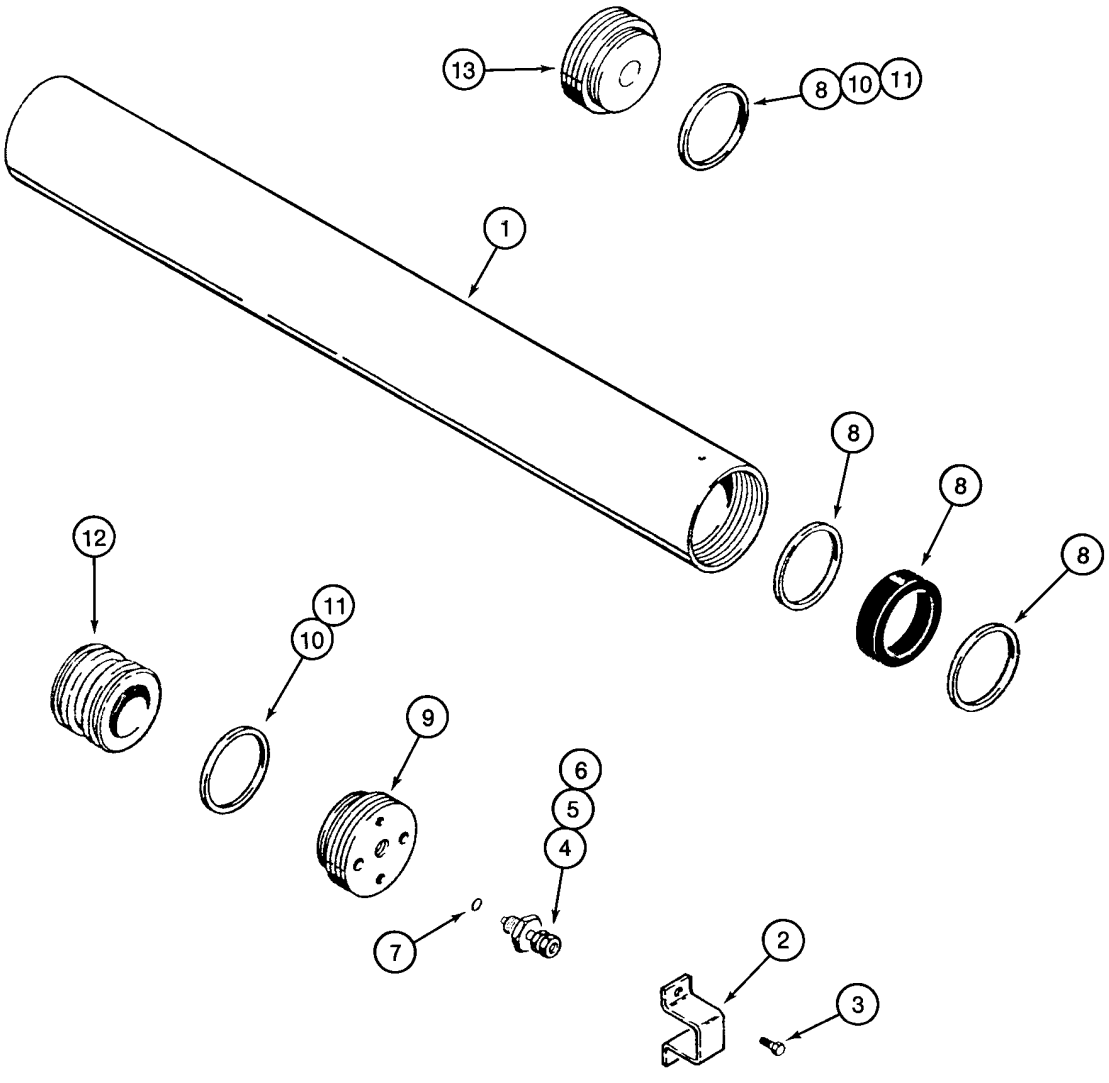

BS97C154

CONJUNTO DO ACUMULADOR - CONTROLO DA SUSPENSÃO

REF	FN	PART NUMBER	YR/SN	QTY	DESCRIPTION
		234412A1		1	ACUMULADOR, Incl. Ref 1 - 13
1		NSS		1	BOLETIM INFORMATIVO, Body
2		192895A1		1	PROTETOR
3		276-2456		2	PARAFUSO, Hex Hd, #10 x 3/8"
		1978142C1		1	VALVULA, Incl. Ref 4 - 6
4		NSS		1	BOLETIM INFORMATIVO, Valve, Pressure
5		1978143C1		1	PISTÃO
6		1978144C1		1	TAMPA DO RESERVATÓRIO
7		1978158C1		1	ANEL "O"
8		1978141C1		1	JOGO DE JUNTAS, Includes (1) V-Type O-Ring, (2) Teflon Bearing Rings and (1) Body End Seal Ring; Component Parts Not Serviced Separately
9		NSS		1	BOLETIM INFORMATIVO, Gland, Cylinder
10		NSS		2	BOLETIM INFORMATIVO, O-Ring
11		NSS		2	BOLETIM INFORMATIVO, Ring, Backup, If Used
12		NSS		1	BOLETIM INFORMATIVO, Piston
13		NSS		1	BOLETIM INFORMATIVO, Cap

FILTRO DE ACEITE

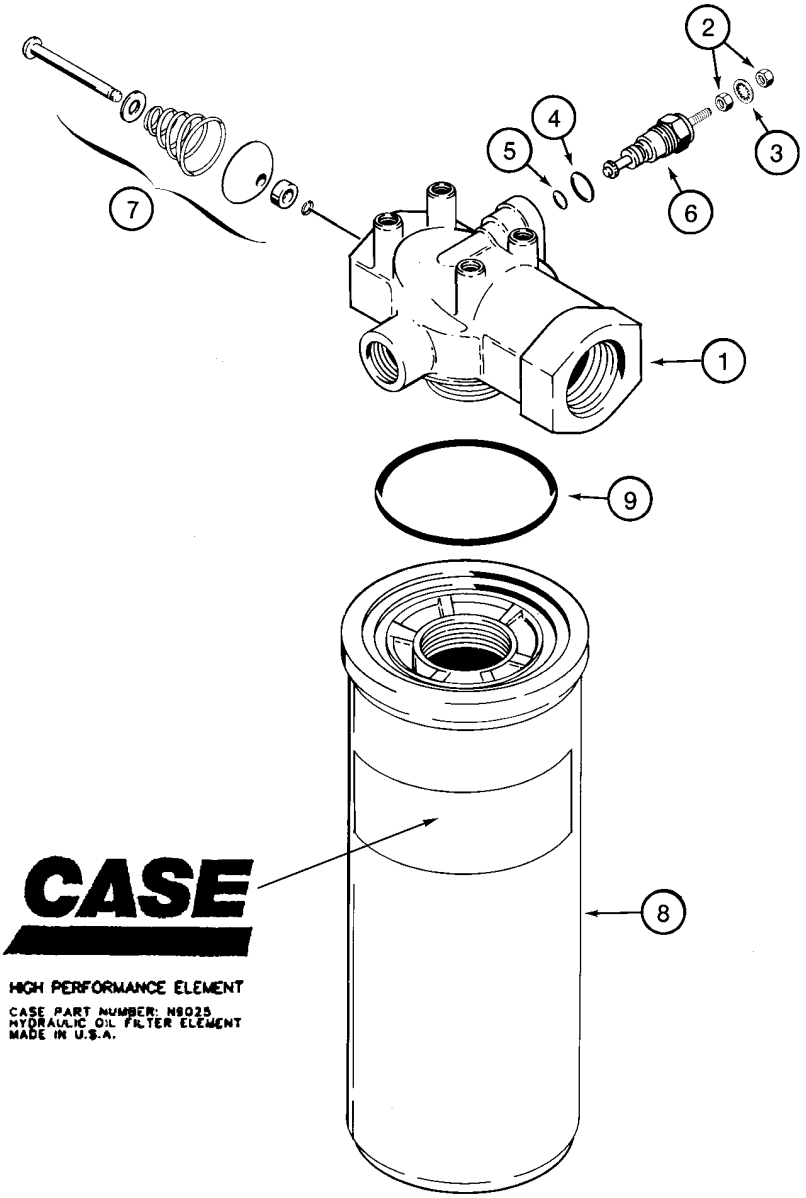

BS00D009

FILTRO DE ACEITE

REF	FN	PART NUMBER	YR/SN	QTY	DESCRIPTION
		87440045		1	FILTRO CONJ, Hydraulic Oil Filter; Incl. Ref 1 - 9
1		NSS		1	BOLETIM INFORMATIVO, Head, Filter
		N6755		1	SINALIZADOR, Restriction; Includes N6941, Ref 6
		N6941		1	JOGO, Restriction Indicator Repair; Incl. Ref 2 - 5; Order Ref 2 - 5
2		129-667		2	PORCA, #10-32, LH
3		493-21020		1	ARRUELA-TRAVA, Int Tooth, #10
4		237-6006		1	ANEL "O", 6-1, 90 Duro, .468" ID x .078" Thk, Boss Seal
5		238-5011		1	ANEL "O", -011, 70 Duro, .301" ID x .070" Thk
6		NSS		1	BOLETIM INFORMATIVO, Indicator
7		NSS		1	BOLETIM INFORMATIVO, Valve, By-Pass
		N9025		1	ELEMENTO FILTRANTE, Incl. Ref 8, 9
8		NSS		1	BOLETIM INFORMATIVO, Element
9		238-5230		1	ANEL "O", -230, 70 Duro, 2.484" ID x .139" Thk

CONJUNTO DO CILINDRO - ELEVADOR DO CARREGADOR

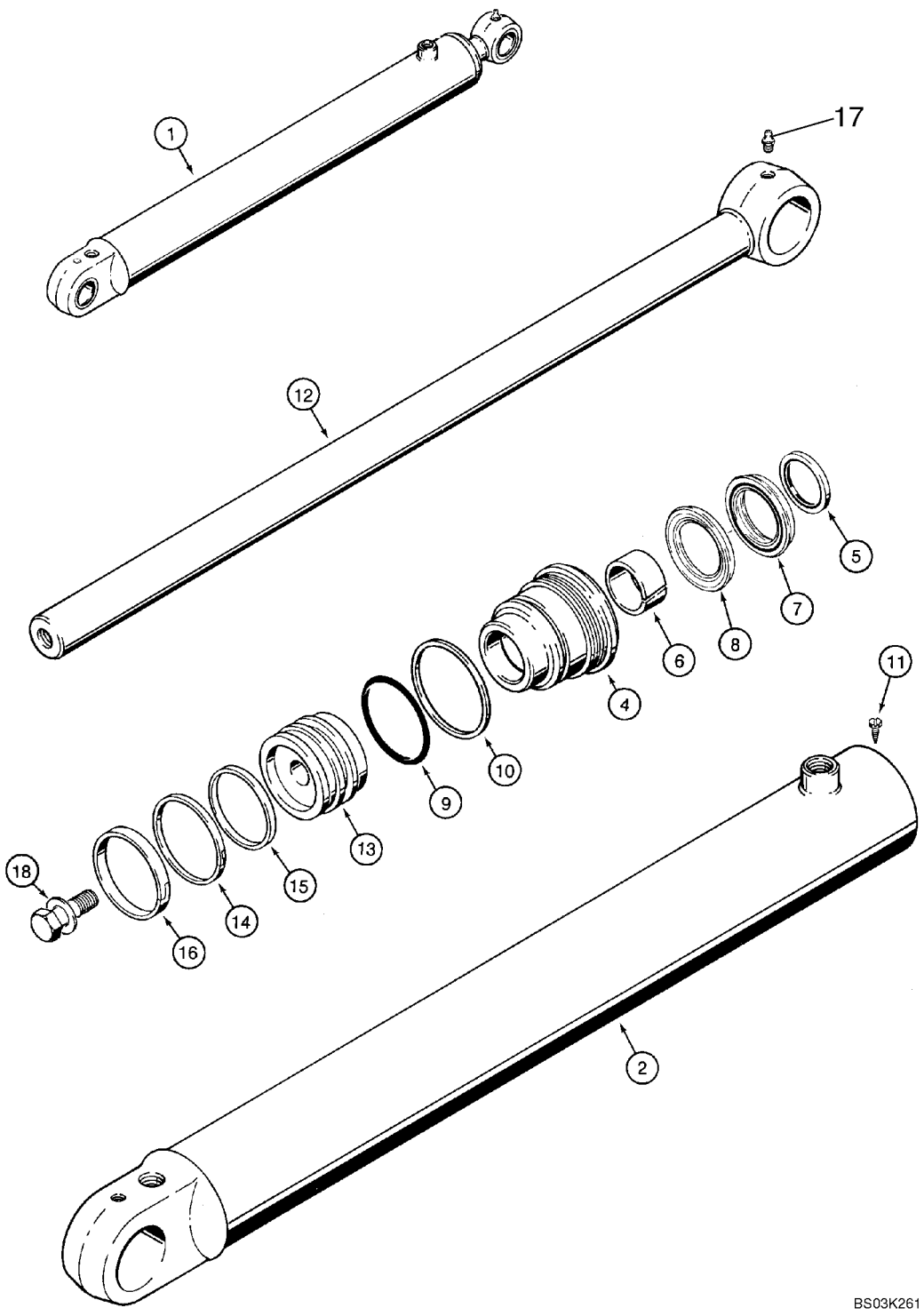

CONJUNTO DO CILINDRO - ELEVADOR DO CARREGADOR

REF	FN	PART NUMBER	YR/SN	QTY	DESCRIPTION
1		384240A1		2	CILINDRO CONJUNTO, 82.6 ID x 766 mm strk; Loader Lift; Incl. Ref 2 - 18
2		384241A1		1	LUVO CILINDRO, TUBE, Without Bushings
4		1980321C3		1	PACOTE DE ESTOPA
		1543260C1		1	JOGO DE JUNTAS, Seal Repair, Incl. Ref 5 - 10, 14 - 16
5		D95143		1	ANEL DE VEDACAO, Wiper
6		G102425		1	BUCHA
		1542875C1		1	JOGO DE JUNTAS, Rod and Buffer Seal Kit; Incl. Ref 7, 8
7		NSS		1	BOLETIM INFORMATIVO, Rod Seal
8		NSS		1	BOLETIM INFORMATIVO, Buffer Seal
9		238-5233		1	ANEL "O", -233, 70 Duro, 2.859" ID x .139" Thk
10		G32122		1	ANEL
11		86642312		1	PARAFUSO, Hex Hd, #8 x 3/8"
12		133083A1		1	HASTE CILINDRO, 44 mm (1-3/4 in) dia
13		135161A1		1	PISTÃO
14		G102287		1	ANEL DE VEDAÇÃO
15		S109444		1	ANEL
16		S109445		1	ANEL
17		219-1		1	GRAXEIRA, 1/8"-27 x .66 lg
18		86982437		1	PARAFUSO ESPECIAL, 1 x 2,5 in; Includes Washer

CONJUNTO DO CILINDRO - BALDE DO CARREGADOR

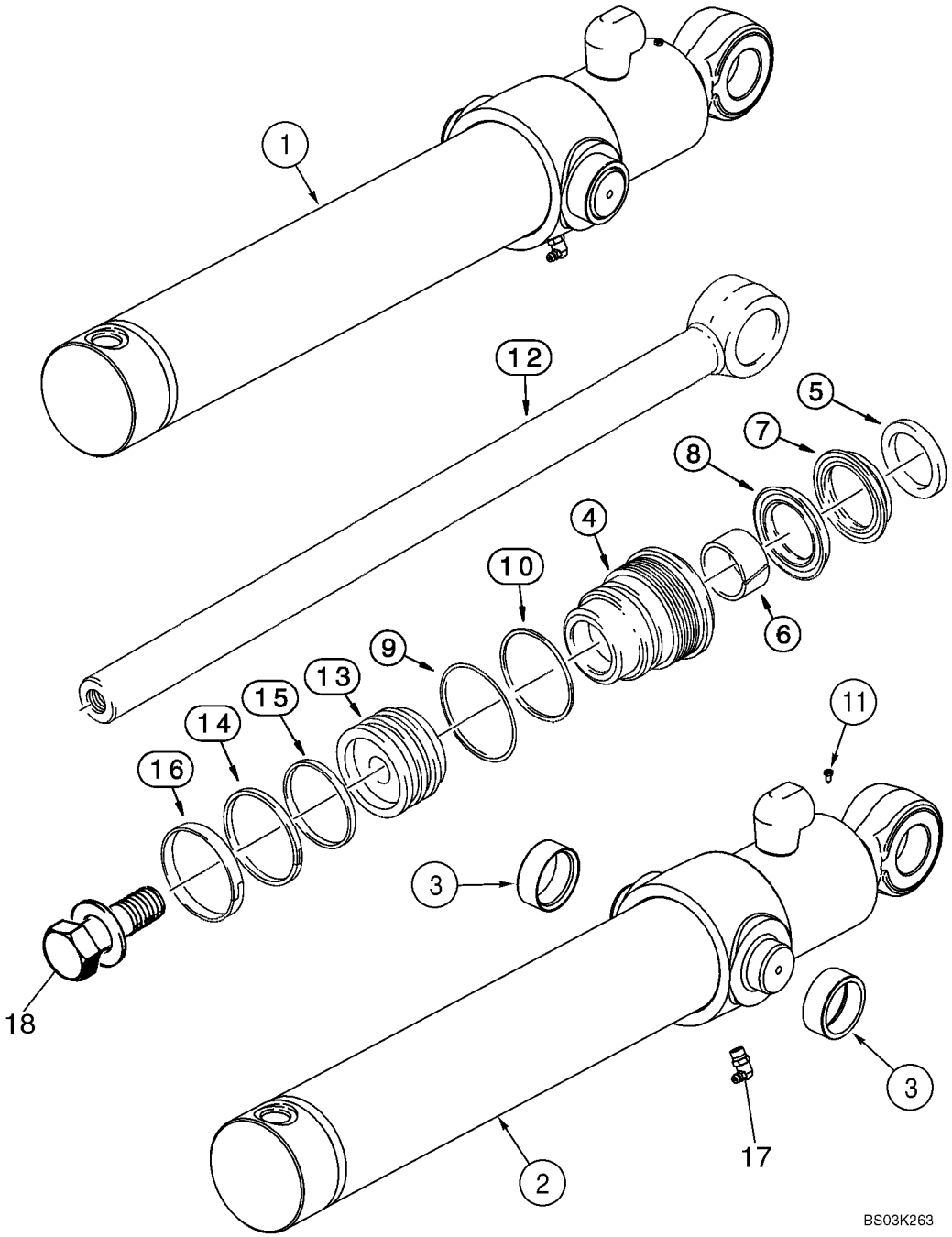

CONJUNTO DO CILINDRO - BALDE DO CARREGADOR

REF	FN	PART NUMBER	YR/SN	QTY	DESCRIPTION
1		87609669		2	CILINDRO HIDRÁULICO, 76 ID x 522 mm strk; Loader Bucket; Incl. Ref 2- 18
2		113135A2		1	LUVO CILINDRO, TUBE, Incl. Ref 3
3		G108512		2	BUCHA
4		297280A1		1	PACOTE DE ESTOPA
		1543256C1		1	JOGO DE JUNTAS, Seal Repair; Incl. Ref 5 - 10, 14 - 16
5		D95142		1	ANEL DE VEDACAO, Wiper
6		G102424		1	BUCHA
		1542874C1		1	PACOTE, Rod and Buffer Seal Kit; Incl. Ref 7, 8; Not Serviced Separately; Order 1543256C1 Seal Kit
7		NSS		1	BOLETIM INFORMATIVO, Rod Seal; Order 1543256C1 Seal Kit
8		NSS		1	BOLETIM INFORMATIVO, Buffer Seal; Order 1543256C1 Seal Kit
9		238-5231		1	ANEL "O", -231, 70 Duro, 2.609" ID x .139" Thk
10		G109298		1	ANEL
11		86642312		1	PARAFUSO, Hex Hd, #8 x 3/8", No. 8 x 3/8, self-tapping
12		87609666		1	HASTE CILINDRO, Rod, Piston; 38 mm (1-1/2 in) dia
13		G108518		1	PISTÃO
14		G102288		1	VEDADOR CONJUNTO
15		G100444		1	ANEL DE VEDAÇÃO
16		G100449		1	ANILLO DE DESGASTE
17		219-55		1	GRAXEIRA, 90º, 1/8" NPT x .84" lg
18		86982435		1	PARAFUSO ESPECIAL, 3/4 x 2,5 in, Includes Washer

CONJUNTO DO CILINDRO - CONCHA DO CARREGADOR

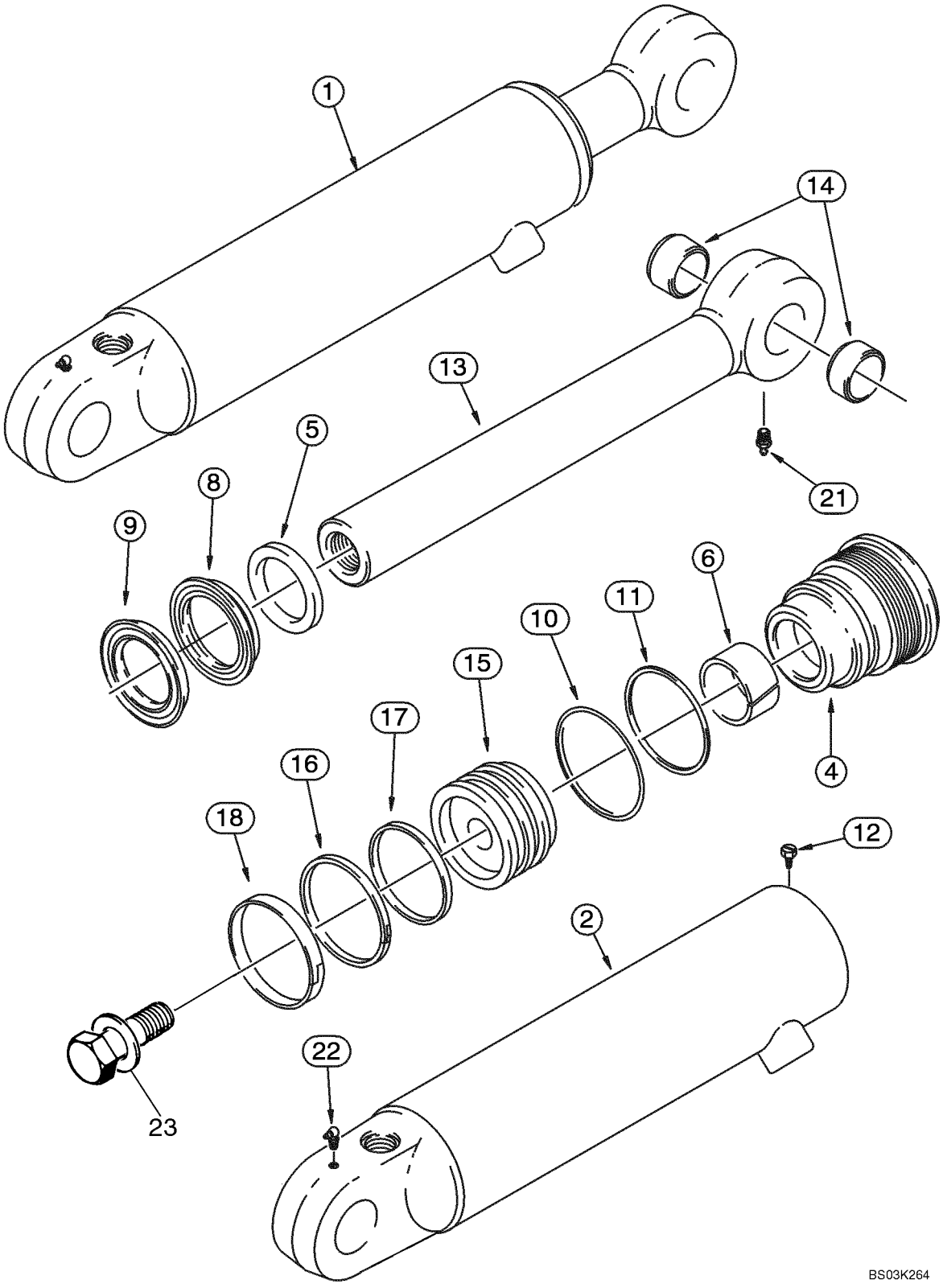

CONJUNTO DO CILINDRO - CONCHA DO CARREGADOR

REF	FN	PART NUMBER	YR/SN	QTY	DESCRIPTION
1		87454017		1	CILINDRO CONJUNTO, 76 ID x 231 mm strk; RH; Incl. Ref 2 - 23
1		87454016		1	CILINDRO CONJUNTO, 76 ID x 231 mm strk; LH; Incl. Ref 2 - 23
2		87454907		1	TUBO CONJUNTO, RH; 87454017 Cylinder; Includes (2) 30634 Bushings, Ref 14
2		87454908		1	TUBO CONJUNTO, LH; 87454016 Cylinder; Includes (2) 30634 Bushings, Ref 14
4		297281A1		1	TAMPA CILINDRO, Gland
		1543267C1		1	JOGO DE JUNTAS, Seal Repair; Incl. Ref 5 - 11, 16 - 18
5		D95143		1	ANEL DE VEDACAO
6		G102425		1	BUCHA
		1542875C1		1	JOGO DE JUNTAS, Rod and Buffer Seal; Incl. Ref 8, 9; Not Serviced Separately; Order 1543267C1 Seal Kit
8		NSS		1	BOLETIM INFORMATIVO, Rod Seal; Order 1543267C1 Seal Kit
9		NSS		1	BOLETIM INFORMATIVO, Buffer Seal; Order 1543267C1 Seal Kit
10		238-5231		1	ANEL "O", -231, 70 Duro, 2.609" ID x .139" Thk
11		G109298		1	ANEL
12		86642312		1	PARAFUSO, Hex Hd, #8 x 3/8"
13		1346195C1		1	HASTE CILINDRO, 44 mm (1-3/4 in) dia; Incl. Ref 14
14		30634		2	BUCHA
15		1340798C1		1	PISTÃO
16		G102288		1	VEDADOR CONJUNTO
17		G100444		1	ANEL DE VEDAÇÃO
18		G100449		1	ANILLO DE DESGASTE
21		219-1		1	GRAXEIRA, 1/8"-27 x .66 lg
22		219-55		1	GRAXEIRA, 90º, 1/8" NPT x .84" lg
23		86982437		1	PARAFUSO ESPECIAL, 1,0 x 2,5 in, Includes Washer

08-61		p1	07/08

CONJUNTO DO CILINDRO - ESTABILIZADOR DA RETROESCAVADORA

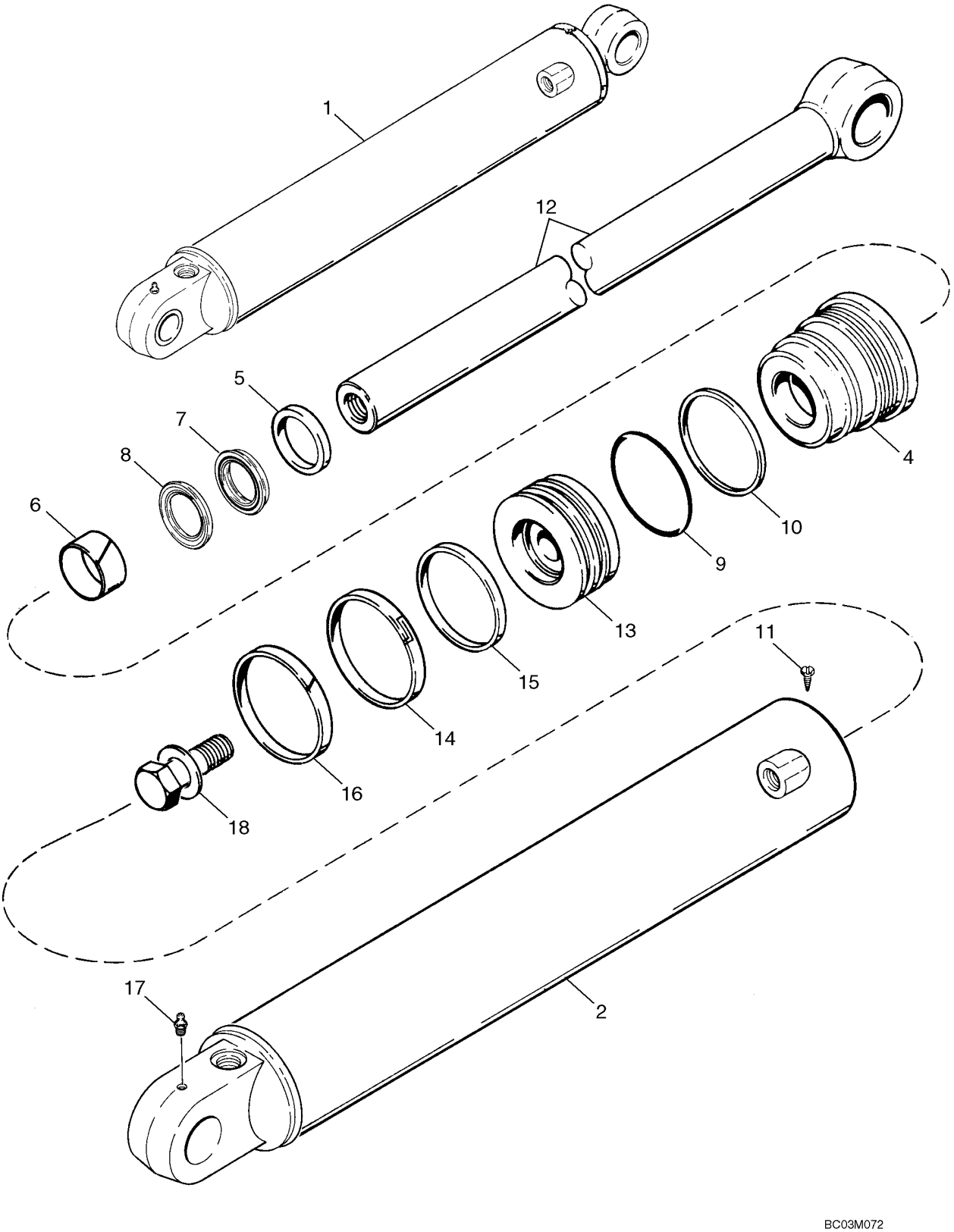

CONJUNTO DO CILINDRO - ESTABILIZADOR DA RETROESCAVADORA

REF	FN	PART NUMBER	YR/SN	QTY	DESCRIPTION
1		195503A1		1	CILINDRO CONJUNTO, 102 ID x 553 mm strk, RH, Incl. Ref 2 - 18
1		195504A1		1	CILINDRO, 102 ID x 553 mm strk, LH, Incl. Ref 2 - 18
2		195505A1		1	TUBO, RH
2		195506A1		1	TUBO, LH
4		128135A2		1	PACOTE DE ESTOPA
		1543269C1		1	JOGO DE JUNTAS, Seal, Incl. Ref 5 - 10, 14 - 16
5		D95144		1	ANEL VEDADOR, WIPER
6		G101533		1	ANILLO DE DESGASTE
		1542876C1		1	JOGO DE SERVICO(PACO, Rod and Buffer Seal; Incl. Ref 7, 8; Not Serviced Separately; Order 1543269C1 Seal Kit
7		NSS		1	BOLETIM INFORMATIVO, Rod Seal; Order 1543269C1 Seal Kit
8		NSS		1	BOLETIM INFORMATIVO, Buffer Seal; Order 1543269C1 Seal Kit
9		238-5239		1	ANEL "O", -239, 70 Duro, 3.609" ID x .139" Thk
10		G109299		1	ANEL, Backup
11		276-2446		1	PARAFUSO, Hex Hd, #8 x 3/8"
12		123726A1		1	HASTE CILINDRO, 51 mm (2 in) dia
13		G108123		1	PISTÃO
14		G102285		1	ANEL DE VEDAÇÃO
15		G100440		1	ANEL
16		G100448		1	ANEL
17		219-1		1	GRAXEIRA, 1/8"-27 x .66 lg
18		86982440		1	PARAFUSO ESPECIAL, 1,25 x 2,75; Incl. Washer

CONJUNTO DO CILINDRO - OSCILAÇÃO DA RETROESCAVADORA

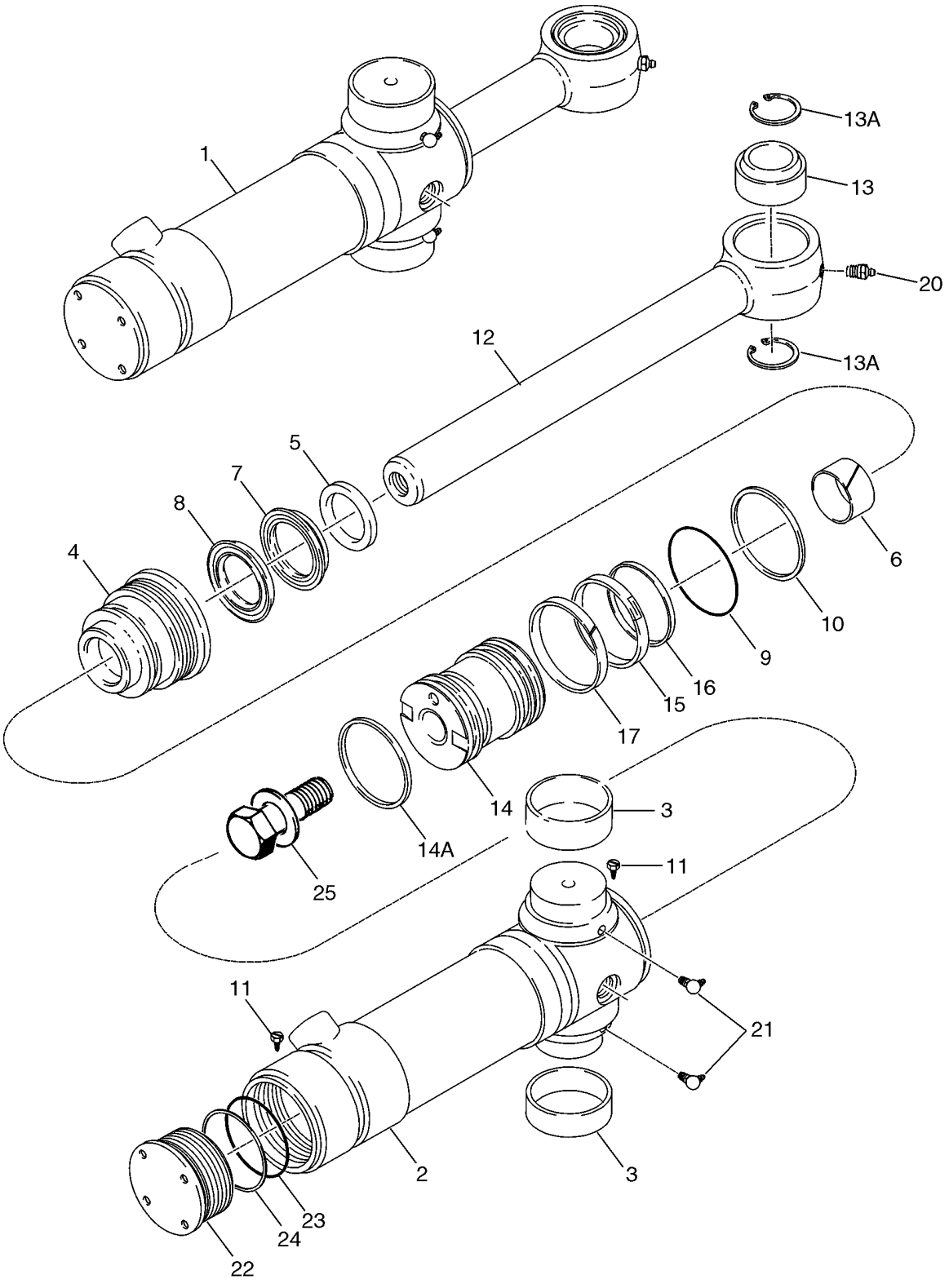

CONJUNTO DO CILINDRO - OSCILAÇÃO DA RETROESCAVADORA

REF	FN	PART NUMBER	YR/SN	QTY	DESCRIPTION
1		188027A2		2	CILINDRO CONJUNTO, 95 ID x 292 mm strk, Incl. Ref 2 - 25
2		220165A2		1	TUBO, Incl. Ref 2, 3, 11, 22 - 24; Not Available As An Assembly; Order Components
2		188028A2		1	TUBO CONJUNTO, Incl. Ref 3
3		124568A2		2	ANEL, Bushing
4		188032A2		1	PACOTE DE ESTOPA
		191747A1		1	ANEL DE VEDAÇÃO, KIT, Incl. Ref 5 - 10, 14A - 17, 23, 24
5		D95144		1	ANEL VEDADOR, WIPER
6		G101533		1	ANILLO DE DESGASTE
		1542876C1		1	JOGO DE SERVICO(PACO, Rod and Buffer Seal; Incl. Ref 7, 8; Not Serviced Separately; Order 191747A1 Seal Kit
7		NSS		1	BOLETIM INFORMATIVO, Rod Seal; Order 191747A1 Seal Kit
8		NSS		1	BOLETIM INFORMATIVO, Buffer Seal; Order 191747A1 Seal Kit
9		238-5237		1	ANEL "O", -237, 70 Duro, 3.359" ID x .139" Thk
10		G32126		1	ANEL, Backup
11		86642312		2	PARAFUSO, Hex Hd, #8 x 3/8"
12		87413722		1	HASTE CILINDRO, 51 mm (2 in) dia, Incl. Ref 13, 13A
13		137248A1		1	ANEL
13A		100-21315		2	ANEL, 3.156", Int, #315
14		188034A3		1	PISTÃO
14A		191252A1		1	VEDADOR DE OLEO, Cast Iron
15		1340764C1		1	VEDADOR CONJUNTO
16		1340763C1		1	ANEL
17		1980245C1		1	VEDADOR DE OLEO
20		219-1		1	GRAXEIRA, 1/8"-27 x .66 lg
21		219-55		2	GRAXEIRA, 90º, 1/8" NPT x .84" lg
		188035A1		1	TAMPA CILINDRO, Incl. Ref 22 - 24; Not Available As An Assembly, Order Components
22		188036A1		1	TAMPA DO RESERVATÓRIO, End
23		238-5239		1	ANEL "O", -239, 70 Duro, 3.609" ID x .139" Thk

CONJUNTO DO CILINDRO - OSCILAÇÃO DA RETROESCAVADORA

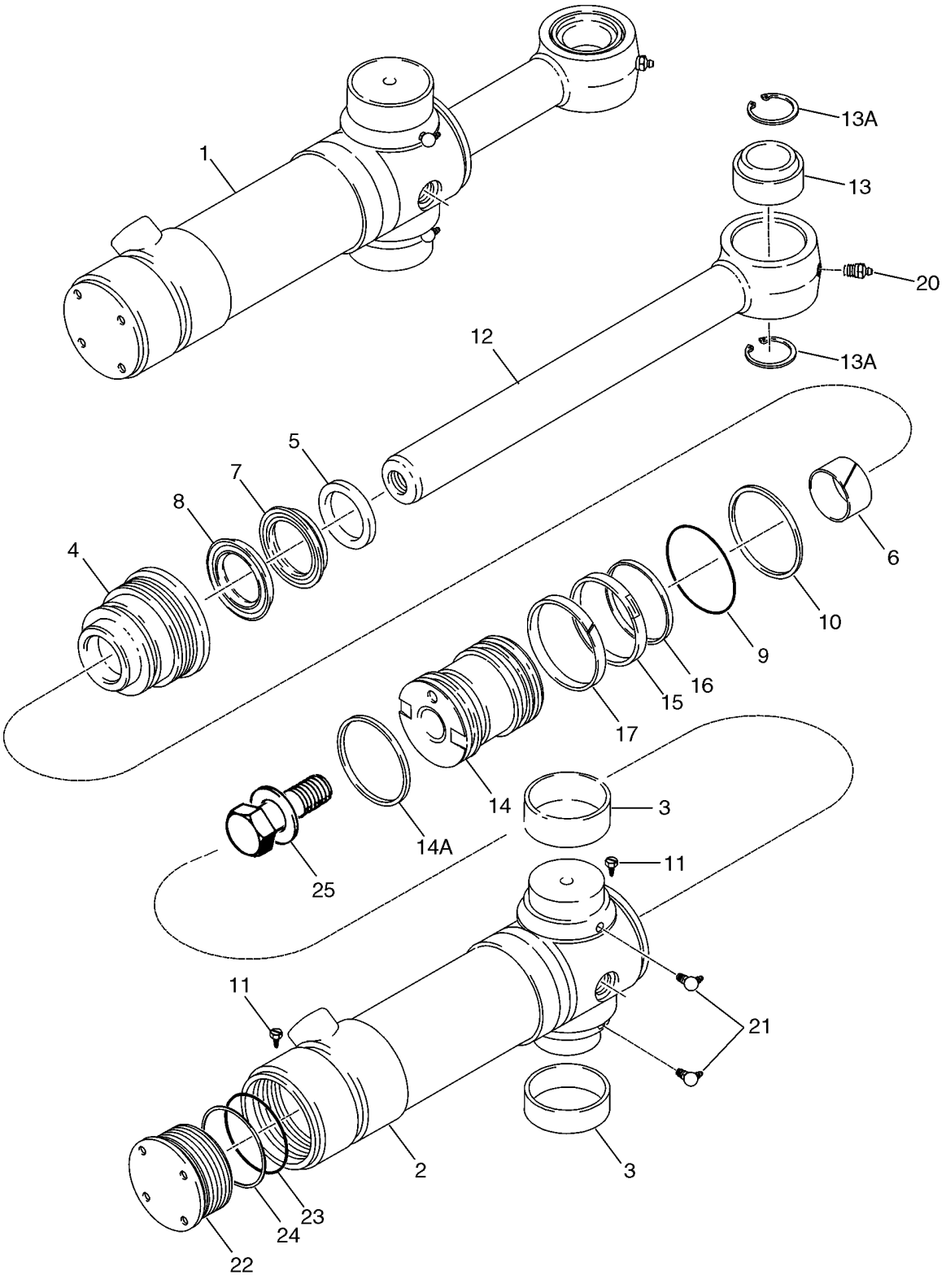

CONJUNTO DO CILINDRO - OSCILAÇÃO DA RETROESCAVADORA

REF	FN	PART NUMBER	YR/SN	QTY	DESCRIPTION
24		G109299		1	ANEL, Backup
25		86982439		1	PARAFUSO ESPECIAL, 1 x 4,0; Incl. Washer

CONJUNTO DO CILINDRO - LANÇA DA RETROESCAVADORA

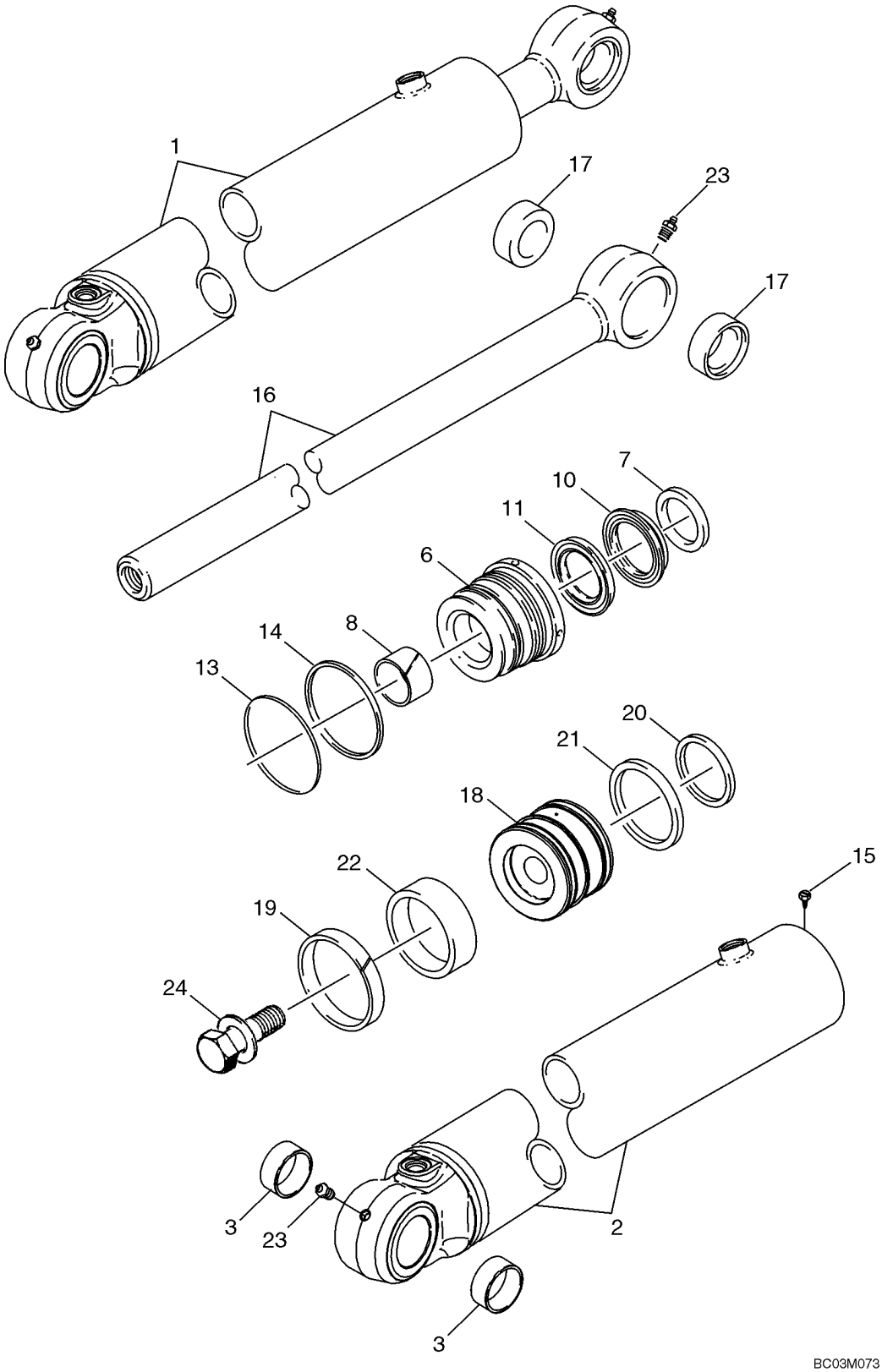

CONJUNTO DO CILINDRO - LANÇA DA RETROESCAVADORA

REF	FN	PART NUMBER	YR/SN	QTY	DESCRIPTION
1		189653A2		1	CILINDRO CONJUNTO, 114 ID x 982 mm strk, Incl. Ref 2 - 24
2		397080A1		1	LUVO CILINDRO, Incl. Ref 3
3		D149079		2	BUCHA, 50 x 34 mm lg
6		127862A2		1	TAMPA CILINDRO, GLAND
		182218A1		1	JOGO DE JUNTAS, Incl. Ref 7 - 14, 19 - 22
7		D95145		1	ANEL DE VEDACAO
8		G102426		1	BUCHA
		1542877C1		1	JOGO DE JUNTAS, Rod and Buffer Seal; Incl. Ref 10, 11; Not Serviced Separately; Order 182218A1 Seal Kit
10		NSS		1	BOLETIM INFORMATIVO, Rod Seal; Order 182218A1 Seal Kit
11		NSS		1	BOLETIM INFORMATIVO, Buffer Seal; Order 182218A1 Seal Kit
13		238-5243		1	ANEL "O", -243, 70 Duro, 4.109" ID x .139" Thk
14		G109300		1	ANEL, Backup
15		86642312		1	PARAFUSO, Hex Hd, #8 x 3/8"
16		182109A1		1	HASTE CILINDRO, 57 mm (2-1/4 in) dia, Incl. Ref 17
17		D149079		2	BUCHA, 50 x 34 mm lg
18		189657A2		1	PISTAO DO CILINDRO
19		182116A1		1	ANEL, Cast Iron
20		G101995		1	ANEL VEDADOR
21		G101994		2	ANEL DE VEDAÇÃO
22		G101996		1	ANILLO DE DESGASTE
23		219-1		2	GRAXEIRA, 1/8"-27 x .66 lg
24		86982442		1	PARAFUSO ESPECIAL, 1,25 x 3,25; Incl. Washer

CONJUNTO DO CILINDRO - IMERSOR DA RETROESCAVADORA

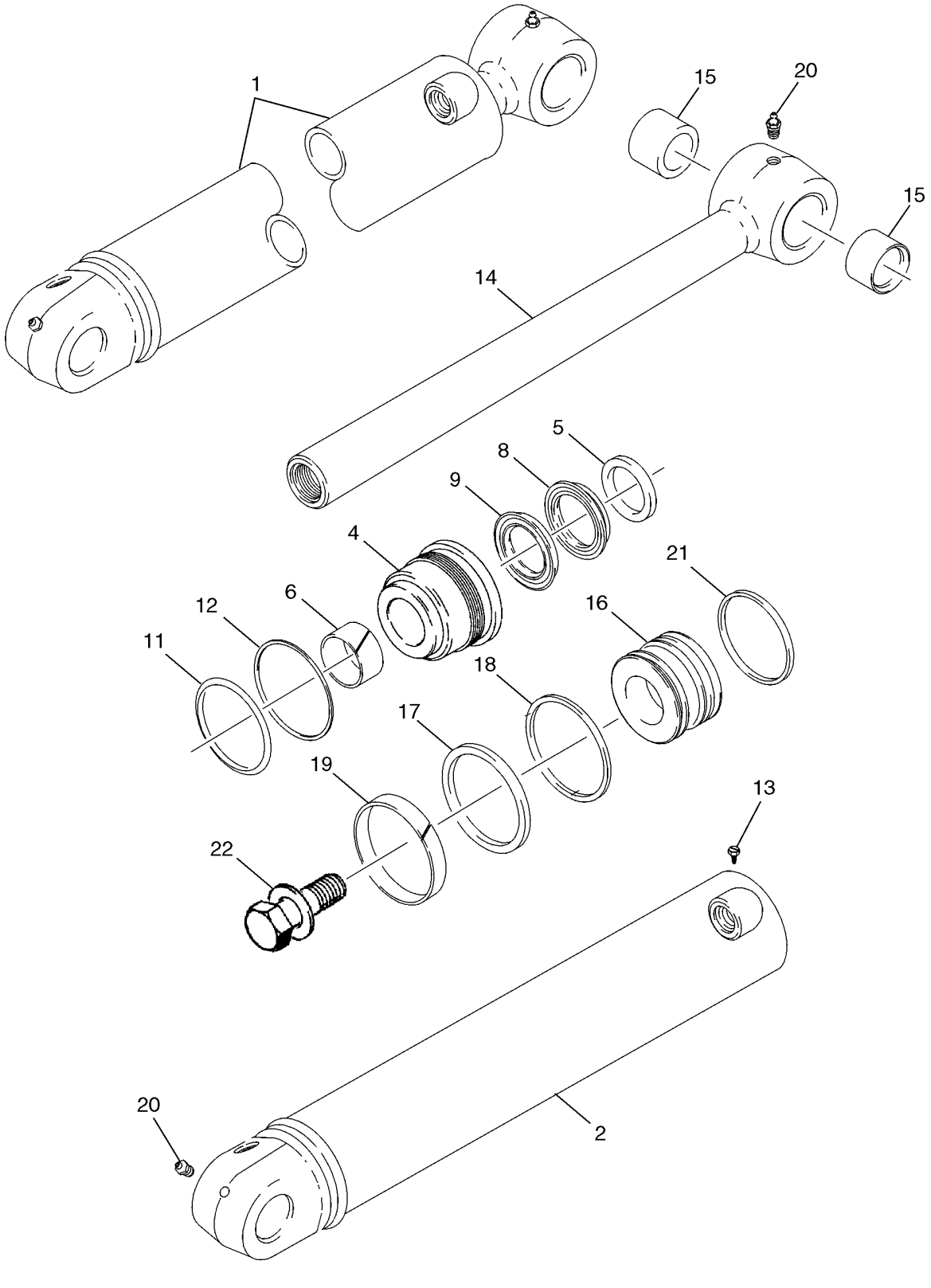

CONJUNTO DO CILINDRO - IMERSOR DA RETROESCAVADORA

REF	FN	PART NUMBER	YR/SN	QTY	DESCRIPTION
1		233114A2		1	CILINDRO CONJUNTO, 108 ID x 686 mm strk, Incl. Ref 2 - 22
2		297952A1		1	TUBO DE INTRODUÇÃO, TUBE
4		234141A2		1	TAMPA CILINDRO, GLAND
		234844A1		1	JOGO DE JUNTAS, Incl. Ref 5 - 12, 17 - 19, 21
5		D95145		1	ANEL DE VEDACAO
6		G102426		1	BUCHA
		1542877C1		1	JOGO DE JUNTAS, Rod and Buffer Seal; Incl. Ref 8, 9; Not Serviced Separately; Order 234844A1 Seal Kit
8		NSS		1	BOLETIM INFORMATIVO, Rod Seal; Order 234844A1 Seal Kit
9		NSS		1	BOLETIM INFORMATIVO, Buffer Seal; Order 234844A1 Seal Kit
11		238-5241		1	ANEL "O", -241, 70 Duro, 3.859" ID x .139" Thk
12		G32176		1	ANEL, Backup
13		86642312		1	PARAFUSO, Hex Hd, #8 x 3/8"
14		175778A1		1	HASTE CILINDRO, 57 mm (2-1/4 in) dia, Incl. Ref 15
15		D149079		2	BUCHA
16		233110A2		1	PISTÃO
17		G110531		1	ANEL DE VEDAÇÃO
18		G110529		1	ANEL
19		G110530		1	ANEL
20		219-1		2	GRAXEIRA, 1/8"-27 x .66 lg
21		233104A1		1	ANEL, Cast Iron
22		86982443		1	PARAFUSO ESPECIAL, 1-3/8 x 3,5; Incl. Washer

CONJUNTO DO CILINDRO - BALDE DA RETROESCAVADORA

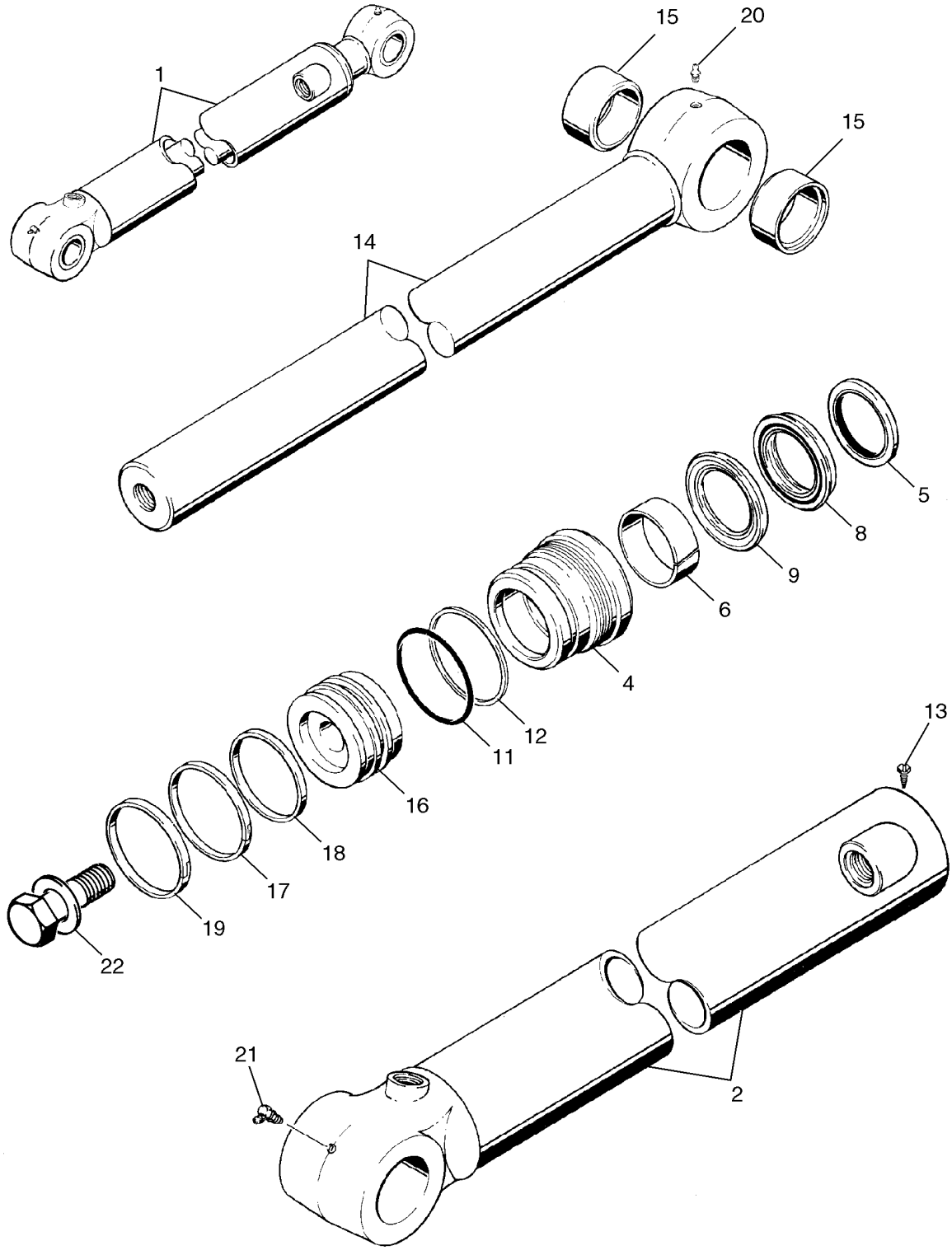

BC03M075

CONJUNTO DO CILINDRO - BALDE DA RETROESCAVADORA

REF	FN	PART NUMBER	YR/SN	QTY	DESCRIPTION
1		128760A1		1	CILINDRO CONJUNTO, 83 ID x 872 mm strk, Incl. Ref 2 - 22
2		128761A1		1	LUVO CILINDRO, TUBE
4		128770A2		1	TAMPA CILINDRO, GLAND
		131750A2		1	JOGO DE JUNTAS, Seal, Incl. Ref 5 - 12, 17 - 19
5		D95145		1	ANEL DE VEDACAO
6		1346476C1		1	ANEL
		1542877C1		1	JOGO DE JUNTAS, Rod and Buffer Seal; Incl. Ref 8, 9; Not Serviced Separately; Order 131750A2 Seal Kit
8		NSS		1	BOLETIM INFORMATIVO, Rod Seal; Order 131750A2 Seal Kit
9		NSS		1	BOLETIM INFORMATIVO, Buffer Seal; Order 131750A2 Seal Kit
11		238-5233		1	ANEL "O", -233, 70 Duro, 2.859" ID x .139" Thk
12		G32122		1	ANEL, Backup
13		86642312		1	PARAFUSO, Hex Hd, #8 x 3/8"
14		198033A1		1	HASTE CILINDRO, 57 mm (2-1/4 in) dia, Incl. Ref 15
15		D140029		2	BUCHA
16		128772A1		1	PISTÃO
17		G102287		1	ANEL DE VEDAÇÃO
18		S109444		1	ANEL
19		S109445		1	ANEL
20		219-1		1	GRAXEIRA, 1/8"-27 x .66 lg
21		219-36		1	GRAXEIRA, 45º, 1/8" NPT x 7/8" lg
22		86982441		1	PARAFUSO ESPECIAL, 1,25 x 3,00; Incl. Washer

CONJUNTO DO CILINDRO - IMERSOR EXTENSÍVEL DA RETROESCAVADORA

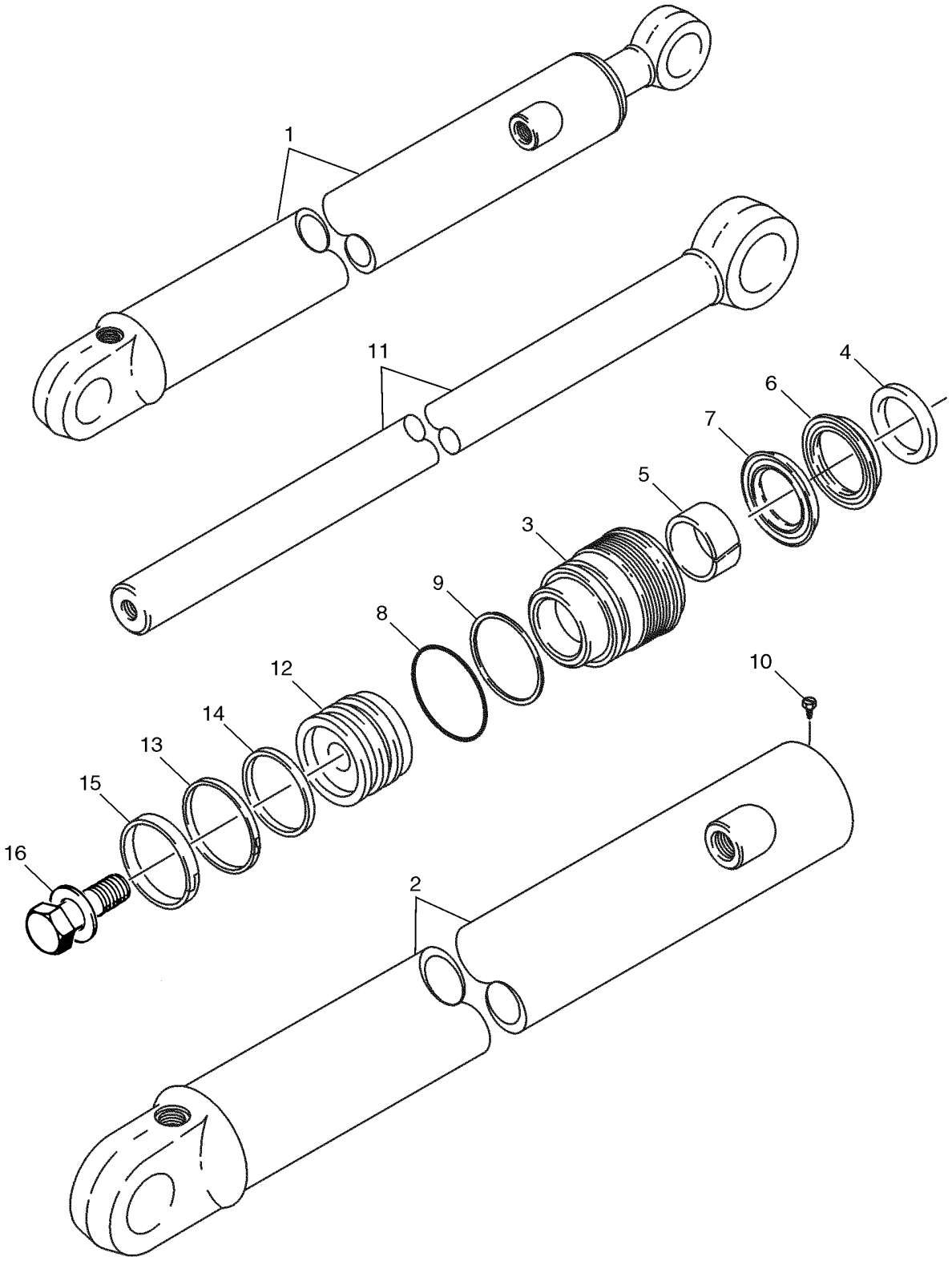

CONJUNTO DO CILINDRO - IMERSOR EXTENSÍVEL DA RETROESCAVADORA

REF	FN	PART NUMBER	YR/SN	QTY	DESCRIPTION
1		1340969C2		1	CILINDRO CONJUNTO, 76 ID x 1068 mm strk; Incl. Ref 2 - 16
2		1340970C1		1	LUVO CILINDRO, TUBE
3		297281A1		1	TAMPA CILINDRO, GLAND
		1543267C1		1	JOGO DE JUNTAS, Seal; Incl. Ref 4 - 9, 13 - 15
4		D95143		1	ANEL DE VEDACAO, WIPER
5		G102425		1	BUCHA
		1542875C1		1	JOGO DE JUNTAS, Rod and Buffer Seal; Incl. Ref 6, 7; Not Serviced Separately; Order 1543267C1 Seal Kit
6		NSS		1	BOLETIM INFORMATIVO, Rod Seal; Order 1543267C1 Seal Kit
7		NSS		1	BOLETIM INFORMATIVO, Buffer Seal; Order 1543267C1 Seal Kit
8		238-5231		1	ANEL "O", -231, 70 Duro, 2.609" ID x .139" Thk
9		G109298		1	ANEL, Backup
10		276-2446		1	PARAFUSO, Hex Hd, #8 x 3/8"
11		1980296C1		1	HASTE CILINDRO, 44 mm (1-3/4 in) dia
12		G107277		1	PISTÃO
13		G102288		1	VEDADOR CONJUNTO
14		G100444		1	ANEL DE VEDAÇÃO
15		G100449		1	ANILLO DE DESGASTE
16		86982435		1	PARAFUSO ESPECIAL, 3/4 x 2,5 in, Incl. Washer

SECTION INDEX
Chassi/Acessórios

09-01	CONTROLES - ELEVAÇÃO E BALDE DO CARREGADOR
09-01A	PEGA, CONTROLO DO CARREGADOR - CONJUNTO DA TRANSMISSÃO, 2WD, 4WD
09-02	CONTROLES - CONCHA DO CARREGADOR
09-03	CONTROLES - AUTO-NIVELAMENTO DO CARREGADOR
09-04	ESTRUTURA - ELEVADOR DO CARREGADOR
09-05	ESTRUTURA - LIGAÇÃO DO CARREGADOR
09-06	BALDES DE VIROLA COMPRIDA DO CARREGADOR (82 IN)
09-07	BALDES DE VIROLA COMPRIDA DO CARREGADOR (93 IN)
09-08	CONCHA DO BALDE DO CARREGADOR
09-09	PROTEÇÃO - VÁLVULA DO CARREGADOR
09-10	DISPOSITIVO DE ACOPLAMENTO RÁPIDO
09-11	COBERTURAS - TORRE DE CONTROLO DA RETROESCAVADORA, SEM CONTROLO AUTOMÁTICO
09-12	SUPORTE E VEDAÇÕES DA TORRE DE CONTROLO DA RETROESCAVADORA, SEM CONTROLO AUTOMÁTICO
09-13	SUPORTE TORRE CONTROLE DA RETRO, COM CONTROLE PILOTO
09-14	RETENTORES E COIFA TORRE CONTROLE RETRO, COM CONTROLE PILOTO
09-15	ALAVANCAS (TRAVA BRAÇO) TORRE CONTROLE RETRO COM CONTROLE PILOTO
09-16	CONTROLES - RETROESCAVADORA, COM PEDAIS DE CONTROLO DA OSCILAÇÃO (CONTROLES COM OSCILAÇÃO POR PEDAIS SEM BRAÇO EXTENSÍVEL)
09-17	CONTROLES - RETROESCAVADORA, COM PEDAIS DE CONTROLO DA OSCILAÇÃO (CONTROLES COM OSCILAÇÃO POR PEDAIS E BRAÇO EXTENSÍVEL)
09-18	CONTROLES - RETROESCAVADORA, COM ALAVANCAS DE CONTROLO DA OSCILAÇÃO (CONTROLES COM OSCILAÇÃO POR PEDAIS SEM BRAÇO EXTENSÍVEL)
09-19	CONTROLES - RETROESCAVADORA, COM ALAVANCAS DE CONTROLO DA OSCILAÇÃO (CONTROLES COM OSCILAÇÃO POR PEDAIS SEM BRAÇO EXTENSÍVEL)
09-19A	CONTROLES - PADRÃO DE CONTROLO DE ESCAVAÇÃO DA RETROESCAVADORA
09-20	CONTROLES - RETROESCAVADORA, COM ALAVANCAS DE CONTROLO DA OSCILAÇÃO
09-21	CONTROLES - SISTEMA HIDRÁULICO AUXILIAR DA RETROESCAVADORA, SEM CONTROLO AUTOMÁTICO
09-22	RETROEXCAVADORA - ESTABILIZADORES, PLACAS E SUPORTES
09-23	RETROEXCAVADORA - TORRE DE CONTROLO DA OSCILAÇÃO E CILINDROS DA OSCILAÇÃO
09-24	RETROEXCAVADORA - TORRE DA LANÇA E DE OSCILAÇÃO
09-24A	LANÇA PROTEÇÃO
09-25	TRINCO DA LANÇA (SEM CONTROLO AUTOMÁTICO)
09-25A	TRINCO DA LANÇA (COM CONTROLO AUTOMÁTICO)
09-26	RETROEXCAVADORA - IMERSOR E BALDE
09-27	RETROEXCAVADORA - IMERSOR EXTENSÍVEL
09-28	BALDE UNIVERSAL DA RETROESCAVADORA (305 MM (12 INCH) WIDE)
09-29	BALDE UNIVERSAL DA RETROESCAVADORA (406 MM (16 INCH) WIDE)
09-30	BALDE UNIVERSAL DA RETROESCAVADORA (457 MM (18 INCH) WIDE)
09-31	BALDE, RETROESCAVADORA (457 MM (18 INCH) WIDE)
09-32	BALDE UNIVERSAL DA RETROESCAVADORA (610 MM (24 INCH) / 762 MM (30 INCH) WIDE)
09-33	BALDE, RETROESCAVADORA (610 MM (24 INCH) WIDE)
09-34	BALDE UNIVERSAL DA RETROESCAVADORA (914 MM (36 INCH) WIDE)

SECTION INDEX
Chassi/Acessórios

09-35		BALDE UNIVERSAL DA RETROESCAVADORA (610 MM (24 INCH) WIDE)
09-35A		CONJUNTO DO PONTO DE MORDEDURA
09-36		CONTRAPESO, DIANTEIRO
09-37		CHASSI / ALOJAMENTO DOS SUPORTES - TELA, ENTRADA DE AR
09-38		DEPÓSITO DO ÓLEO - CAIXA DA BATERIA E CAIXA DE FERRAMENTAS
09-39		PROTECÇÃO DO RADIADOR
09-40		CAPÔ - PAINÉIS LATERAIS
09-41		CAPÔ - GRADE
09-42		PLACAS, SUELO - TAPETES
09-43		COBERTURA DO GUARDA-LAMAS ESQUERDO - FECHO DO PAINEL TRASEIRO
09-44		EXTENSÕES DOS GUARDA-LAMAS
09-45		GUARDA-LAMAS
09-46		CONJUNTO DO ASSENTO STANDARD - SUPORTE
09-47		ASSENTO - SUPORTE
09-48		CONJUNTO DO ASSENTO, SUSPENSÃO MECÂNICA
09-49		CONJUNTO DO ASSENTO, SUSPENSÃO PNEUMÁTICA - SUPORTE
09-53		CABINE - RETENÇÃO DOS ESPELHOS RETROVISORES
09-54		CABINE - ESTRUTURA E COBERTURAS
09-55		CABINE - PORTAS
09-56		CABINE - SUPORTE DA PORTA
09-57		CABINE - JANELA, DIREITA, PARA CABINA COM UMA PORTA
09-58		CABINE - JANELA, TRASEIRA
09-59		CABINE - LÁVA PÁRA-BRISAS, PÁRA-BRISAS
09-60		CABINE - LIMPA-PÁRA-BRISAS
09-61		FORRO DO TECTO DA CABINA - FILTRO, FRESTAS, LUZ DO TECTO
09-62		CABINE - FILTRO DE AR
09-63		CABINE - COMPARTIMENTO DO VENTILADOR, CANAIS DE VENTILAÇÃO, LINHAS DE DRENAGEM
09-64		CABINE - AQUECEDOR
09-65		CABINE - LINHAS DO AR CONDICIONADO, NÚCLEO DO EVAPORADOR
09-66		CABINE - AR CONDICIONADO, CONDENSADOR, RECEPTOR-SECADOR
09-67		CABINE - COMPRESSOR DO AR CONDICIONADO
09-68		CAPOTA, ROPS - ESTRUTURA, COBERTURAS, ESPELHO, VISOR
09-69		CAPOTA, ROPS - VIDRO
09-70		CAPOTA, ROPS - LIMPA-PÁRA-BRISAS, LÁVA-PARA-BRISAS DIANTEIROS
09-71		ESPELHO, RETROVISOR - SUPORTE, KABINE
09-72		EMBLEMA VEÍCULO DE MARCHA LENTA
09-73		ADESIVOS
09-74		ADESIVOS
09-75		ADESIVOS
09-76		ADESIVOS - INGLÊS
09-76A	01	DECALQUES - PORTUGUÊS
09-77		ADESIVOS - ESPANHOL PARA A AMÉRICA LATINA
09-78		ADESIVOS - FRANCÊS DO CANADÁ
09-79		ADESIVOS - INGLÊS
09-79A	01	DECALQUES - PORTUGUÊS
09-80		ADESIVOS - ESPANHOL PARA A AMÉRICA LATINA
09-81		ADESIVOS - FRANCÊS DO CANADÁ

09-01		p1	07/08

CONTROLES - ELEVAÇÃO E BALDE DO CARREGADOR

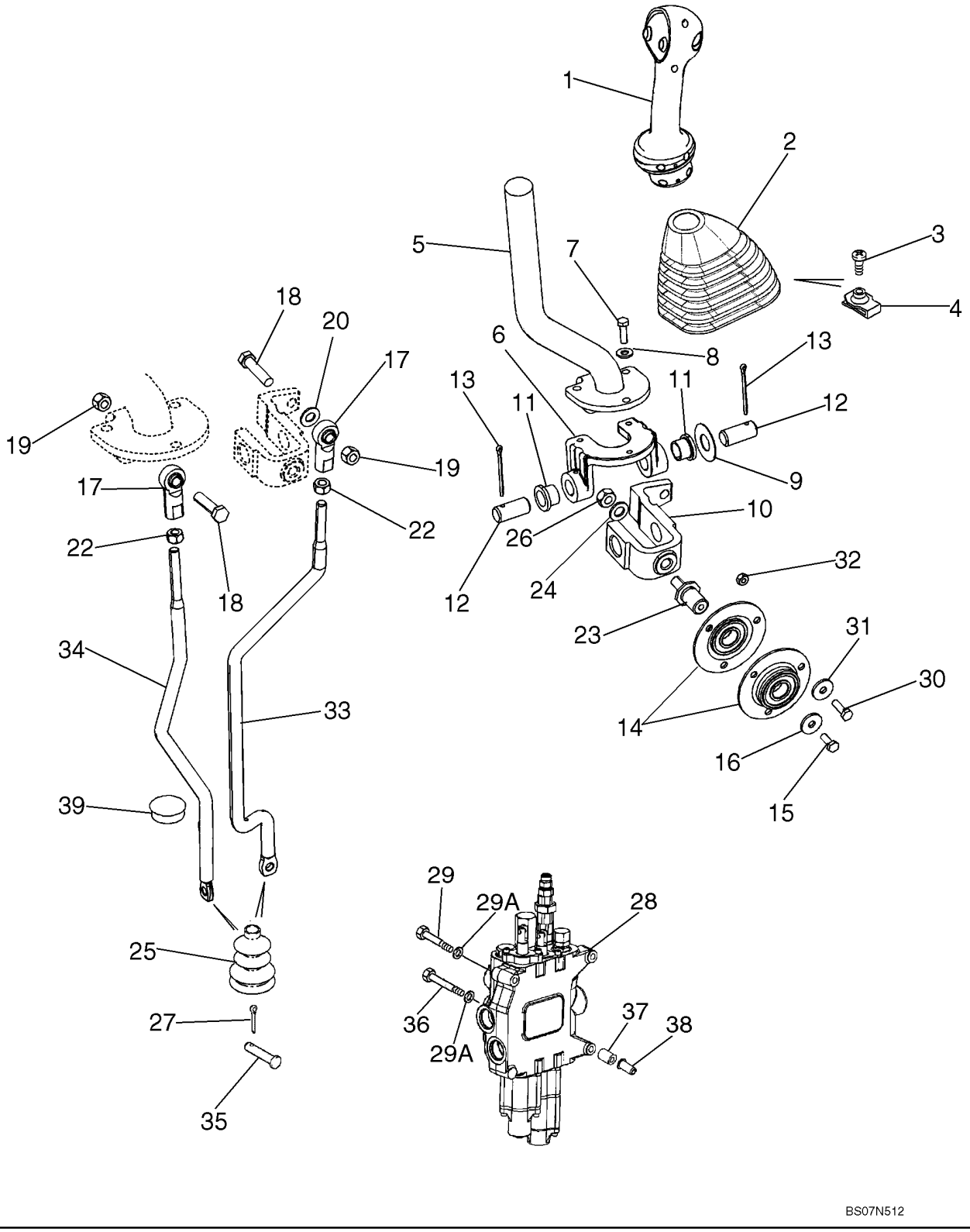

CONTROLES - ELEVAÇÃO E BALDE DO CARREGADOR

REF	FN	PART NUMBER	YR/SN	QTY	DESCRIPTION
1		87638046		1	MANILHA, Loader Control Lever; Two Button, Declutch and Differential Lock Switches; 2 Spool With Standard Transmission; See Figure 09-01A
		256347A1		1	CONECTOR
		258616A1		1	FECHADURA
		298176A1		1	BUJÃO
		87301351		AR	RESINA, Permabond Adhesive, F246, 1 ml With No. 5 Initiator
2		87632920		1	CAPA
3		140-107		1	PARAFUSO, Cross Pan Hd, #10-24 x 3/4"
4		131-121		1	PORCA, Tinn, U, #10-24
5		87708015		1	EIXO COM PRESILHA
6		87681261		1	SUPORTE EM "U"
7		614-6020		3	PARAFUSO, Hex, M6 x 20, 8.8
8		495-11028		3	ARRUELA PLANA, 1/4", SAE
9		495-81184		1	ARRUELA PLANA, 21/32" x 1 1/2" x .030"
10		87586156		1	FORQUILHA
11		108088A1		2	BUCHA
12		102761A1		2	PINO LARGO
13		432-828		2	GRAMPO, 1/8" x 1 3/4"
14		112380A1		2	ROLAMENTO, Incl. Ref 14A
14A		362804		1	ROLAMENTO, Not Illustrated
15		614-6016		1	PARAFUSO, Hex, M6 x 16, 8.8
16		396-41028		1	ARRUELA PLANA, .281" x 7/8" x .098", HDN
17		87382812		2	ROLAMENTO, BALLJOINT; 3/8 NF
18		413-624		1	PARAFUSO, Hex, 3/8"-16 x 1 1/2", G5
19		232-4246		2	CONTRA PORCA, 3/8"-16, GC
20		496-11041		1	ARRUELA PLANA, 13/32" x 13/16" x .065", HDN
22		425-116		2	PORCA, 3/8"-24, G5
23		176309A1		1	EIXO
24		895-11010		1	ARRUELA PLANA, M10 x 20 x 2
25		132931A1		1	FOLE
		189109A1		2	MOLA
26		829-1410		1	PORCA, M10, Cl 10
27		432-612		2	GRAMPO, 3/32" x 3/4"

CONTROLES - ELEVAÇÃO E BALDE DO CARREGADOR

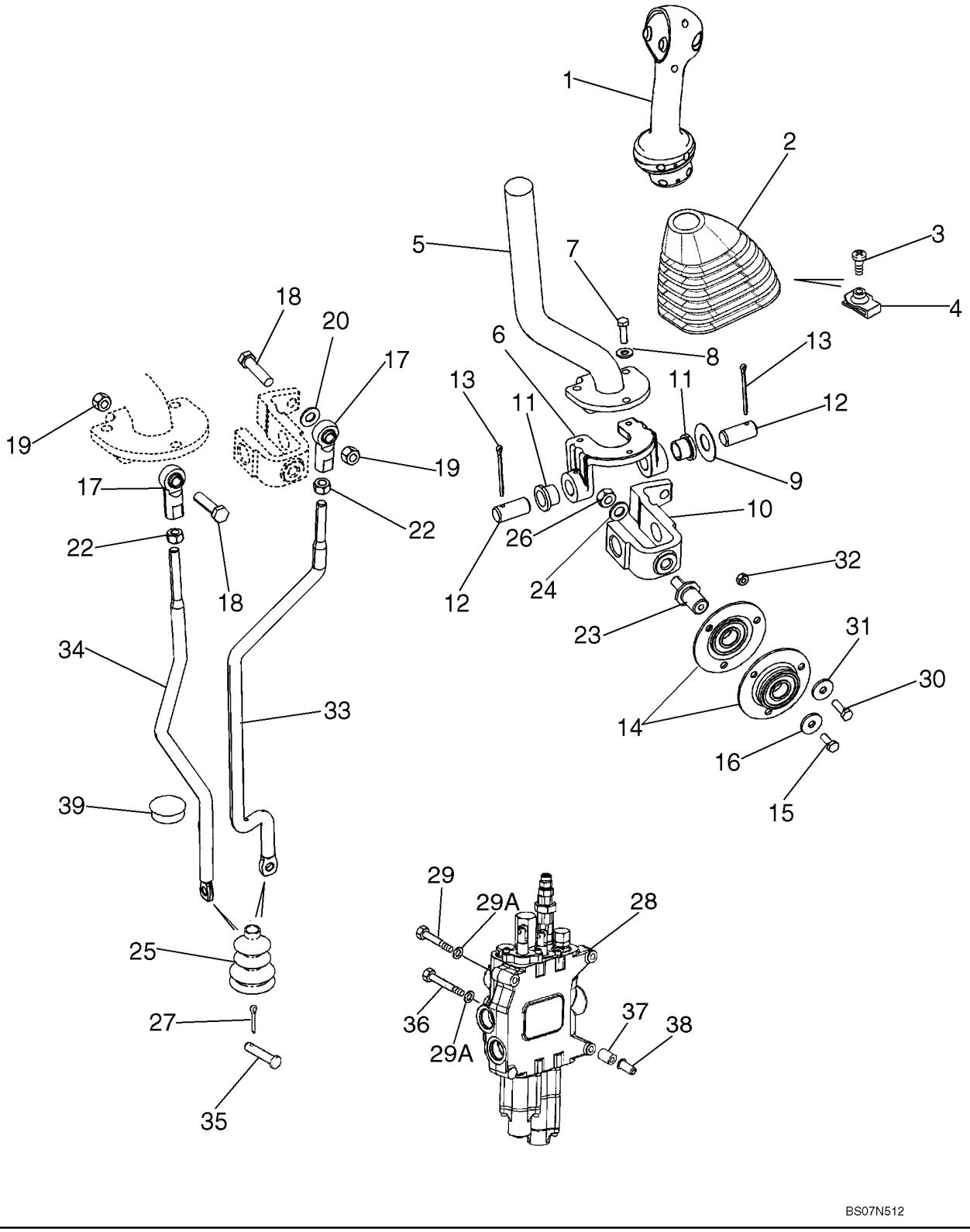

CONTROLES - ELEVAÇÃO E BALDE DO CARREGADOR

REF	FN	PART NUMBER	YR/SN	QTY	DESCRIPTION
28		REF		1	INSTRUCAO, LOADER CONTROL VALVE; Two Spool, See Figure 08-30 for Two Spool Valve Options
29		814-10090		2	PARAFUSO, Hex, M10 x 90, 8.8
29A		896-11010		3	ARRUELA PLANA, M10 x 21.5 x 2.5, HT
30		614-6020		3	PARAFUSO, Hex, M6 x 20, 8.8
31		396-41028		3	ARRUELA PLANA, .281" x 7/8" x .098", HDN
32		829-1406		3	PORCA, M6, Cl 10
33		87664425		1	BIELA DE PISTÃO, Bucket Control Rod
34		87664422		1	BIELA DE PISTÃO, Lift Control Rod
35		D149287		2	PINO LARGO
36		814-10110		1	PARAFUSO, Hex, M10 x 110, 8.8
37		87417599		3	ESPAÇADOR
38		87417721		3	ROSCA POSTIÇA, M10
39		353-422		1	BUJÃO, Dome, 1.250" hole, Nylon

PEGA, CONTROLO DO CARREGADOR - CONJUNTO DA TRANSMISSÃO, 2WD, 4WD

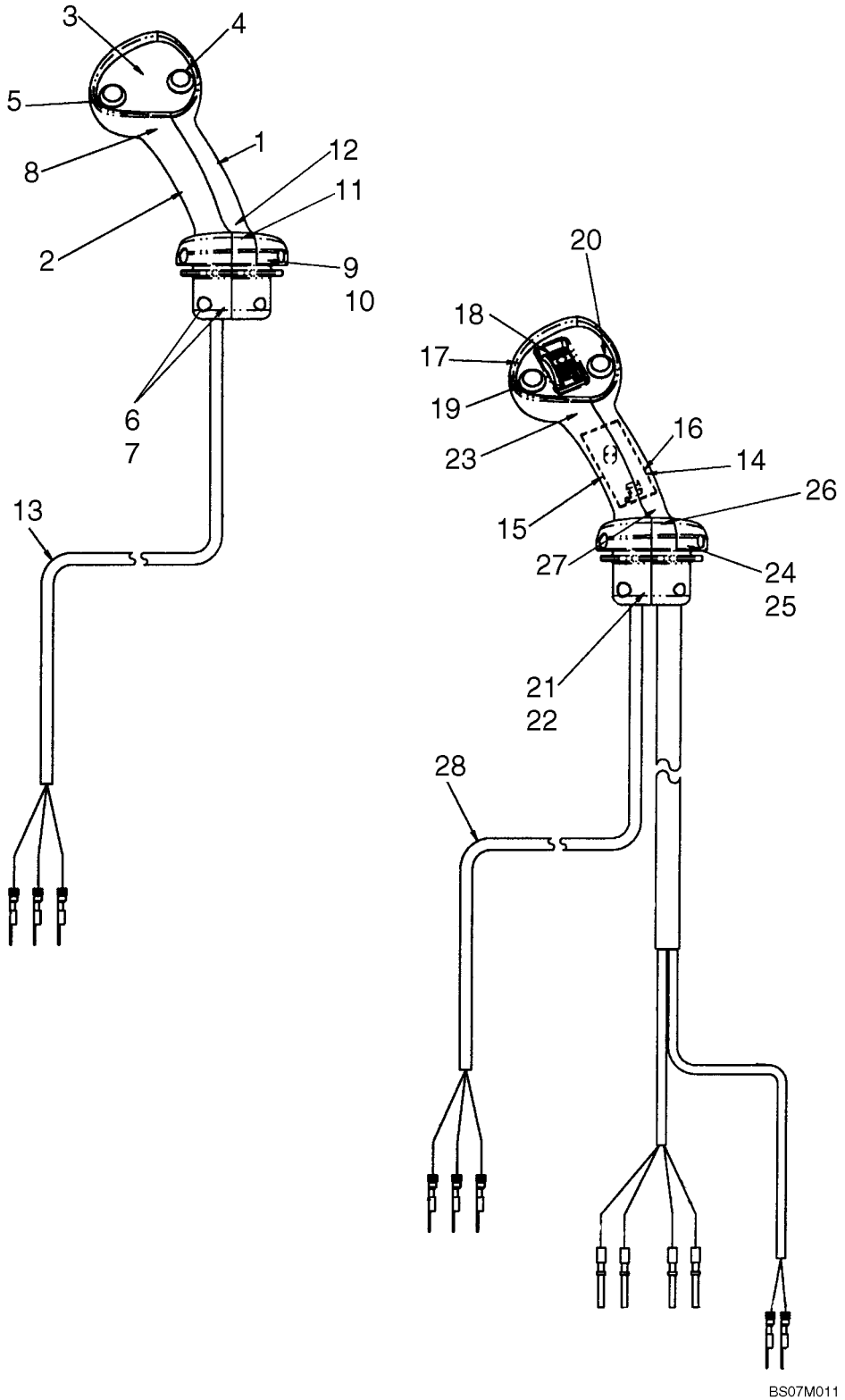

PEGA, CONTROLO DO CARREGADOR - CONJUNTO DA TRANSMISSÃO, 2WD, 4WD

REF	FN	PART NUMBER	YR/SN	QTY	DESCRIPTION
		87638046		1	MANILHA, Loader Control Lever, Two Button, DeClutch and Differential Lock Switches; 2 Spool With Standard Transmission; Incl. 1 - 13
1		87623338		1	EMPUNHADURA, Loader Control, RH Half
2		87623339		1	EMPUNHADURA, Loader Control, LH Half
3		NSS		1	BOLETIM INFORMATIVO, Bezel, Switch Mounting
4		NSS		1	BOLETIM INFORMATIVO, Switch, Push Button, Differential Lock
5		NSS		1	BOLETIM INFORMATIVO, Switch, Push Button, De-Clutch
6		825-1404		4	PORCA, M4, Cl 8
7		86639294		4	PARAFUSO, Hex Soc Hd, M4 x 20, 8.8
8		260-16312		2	PARAFUSO
9		87019103		2	JOGO PARAFUSO
10		87638350		2	PORCA
11		87689189		1	TIRA DE CABO
12		87689338		1	PARAFUSO
13		NSS		1	BOLETIM INFORMATIVO, Harness, Differential Lock and De-Clutch
		87638047		1	MANILHA, Loader Control Lever, Two Button, DeClutch and Differential Lock, Prop Roller With Detent; 3 Spool With Standard Transmission; Incl. 14 - 28
14		87623338		1	EMPUNHADURA, Loader Control, RH Half
15		87623339		1	EMPUNHADURA, Loader Control, LH Half
16		NSS		1	BOLETIM INFORMATIVO, Circuit Board With Harness; Bi-Directional PWM Driver
17		NSS		1	BOLETIM INFORMATIVO, Bezel, Switch Mounting
18		NSS		1	BOLETIM INFORMATIVO, Switch, Prop Roller With Detent
19		NSS		1	BOLETIM INFORMATIVO, Switch, Push Button, De-Clutch
20		NSS		1	BOLETIM INFORMATIVO, Switch, Push Button, Differential Lock
21		825-1404		4	PORCA, M4, Cl 8

PEGA, CONTROLO DO CARREGADOR - CONJUNTO DA TRANSMISSÃO, 2WD, 4WD

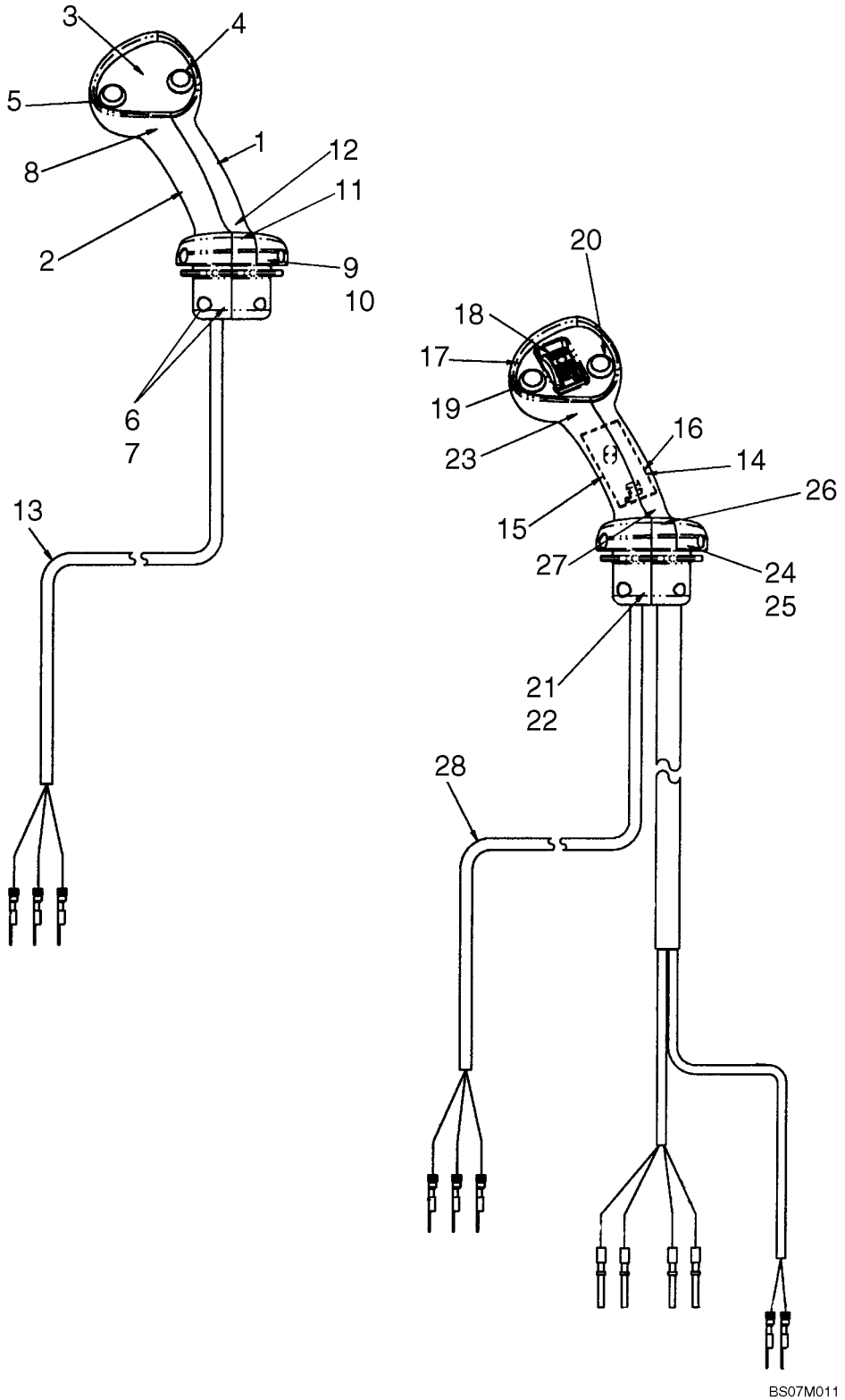

PEGA, CONTROLO DO CARREGADOR - CONJUNTO DA TRANSMISSÃO, 2WD, 4WD

REF	FN	PART NUMBER	YR/SN	QTY	DESCRIPTION
22		86639294		4	PARAFUSO, Hex Soc Hd, M4 x 20, 8.8
23		260-16312		2	PARAFUSO
24		87019103		2	JOGO PARAFUSO
25		87638350		2	PORCA
26		87689189		1	TIRA DE CABO
27		87689338		1	PARAFUSO
28		NSS		1	BOLETIM INFORMATIVO, Harness, Differential Lock and De-Clutch

CONTROLES - CONCHA DO CARREGADOR

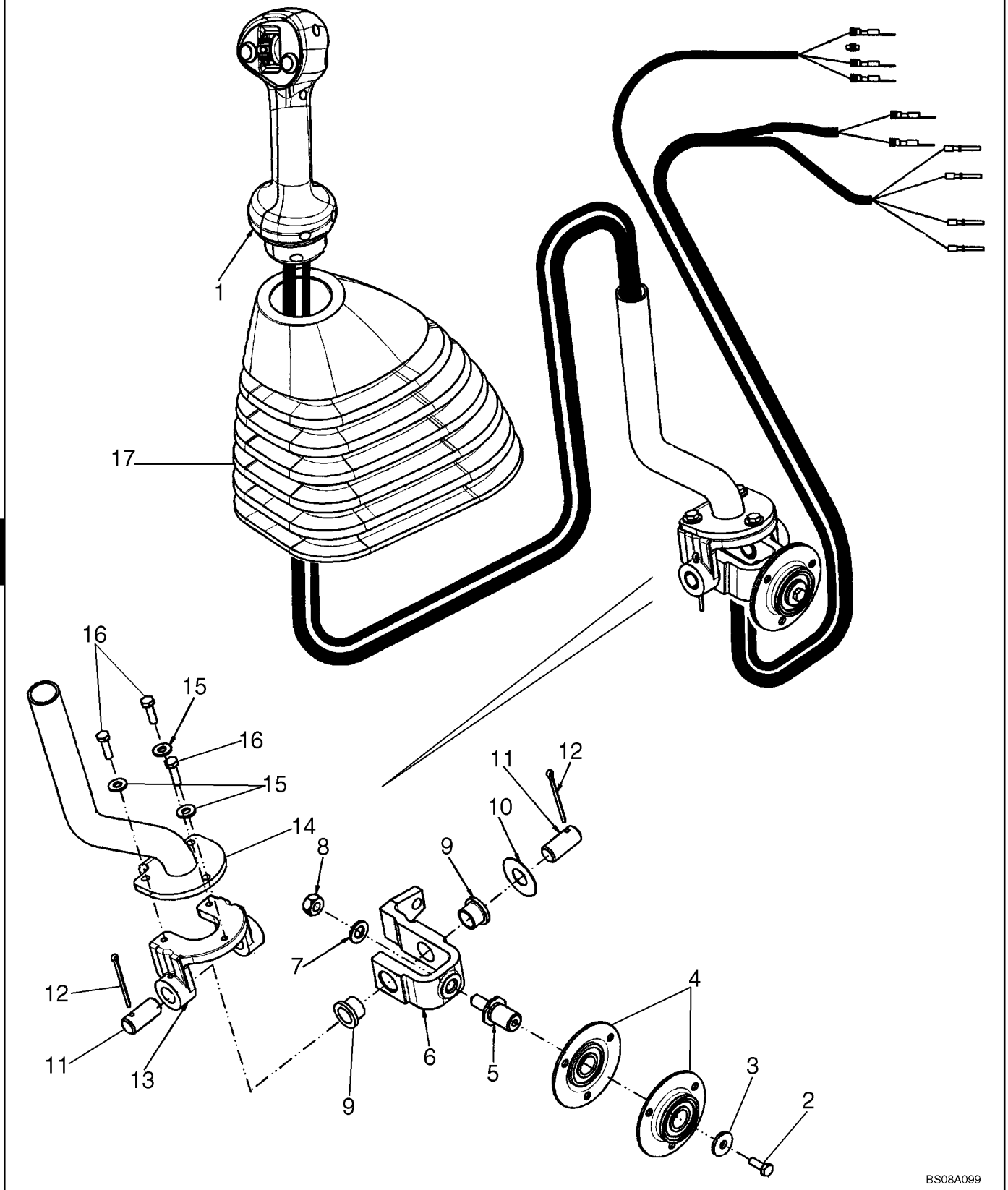

CONTROLES - CONCHA DO CARREGADOR

REF	FN	PART NUMBER	YR/SN	QTY	DESCRIPTION
1		87638047		1	MANILHA, Loader Control Lever, Two Button, DeClutch and Differential Lock, Prop Roller With Detent; 3 Spool; See Figure 09-01A
		256347A1		1	CONECTOR
		258616A1		1	FECHADURA
		298176A1		1	BUJÃO
2		614-6016		1	PARAFUSO, Hex, M6 x 16, 8.8
3		396-41028		1	ARRUELA PLANA, .281" x 7/8" x .098", HDN
4		112380A1		2	ROLAMENTO
5		176309A1		1	EIXO
6		87586156		1	FORQUILHA
7		895-11010		1	ARRUELA PLANA, M10 x 20 x 2
8		829-1410		1	PORCA, M10, Cl 10
9		108088A1		2	BUCHA
10		495-81184		1	ARRUELA PLANA, 21/32" x 1 1/2" x .030"
11		102761A1		2	PINO LARGO
12		432-828		2	GRAMPO, 1/8" x 1 3/4"
13		87681261		1	SUPORTE EM "U"
14		87708015		1	EIXO COM PRESILHA
15		495-11028		3	ARRUELA PLANA, 1/4", SAE
16		614-6020		3	PARAFUSO, Hex, M6 x 20, 8.8
17		87632920		1	CAPA

09-03		p1	07/08

CONTROLES - AUTO-NIVELAMENTO DO CARREGADOR

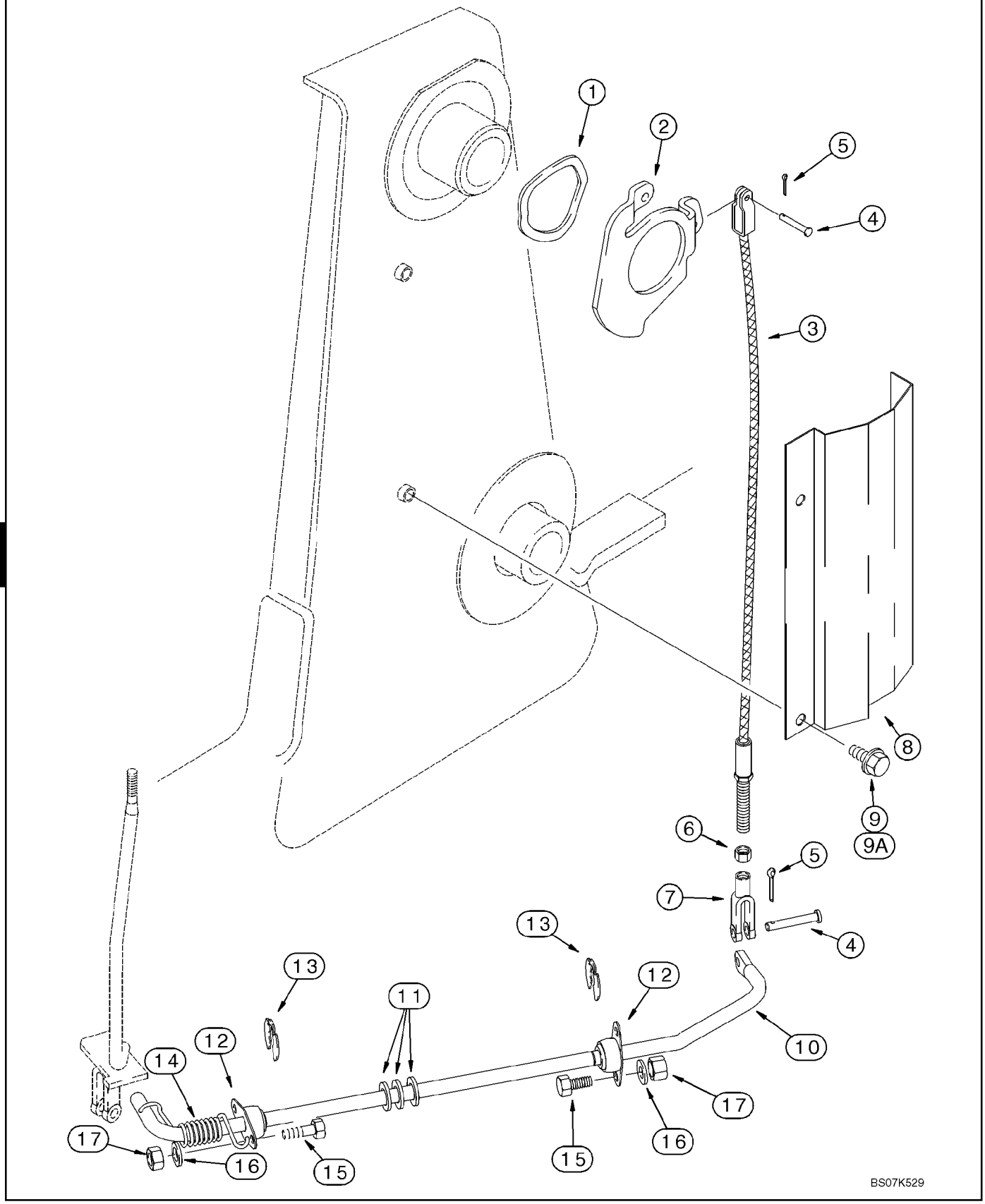

CONTROLES - AUTO-NIVELAMENTO DO CARREGADOR

REF	FN	PART NUMBER	YR/SN	QTY	DESCRIPTION
1		137283A1		1	ARRUELA PLANA
2		142404A1		1	CAME
3		87428645		1	CABO, Self-Leveling
4		D149287		2	PINO LARGO
5		432-612		2	GRAMPO, 3/32" x 3/4"
6		425-115		1	PORCA, 5/16"-24, G5
7		239406A1		1	GARFO, 5/16
8		139865A1		1	PROTETOR
9		614-10020		2	PARAFUSO, Hex, M10 x 20, 8.8, Full Thd
9A		895-11010		2	ARRUELA PLANA, M10 x 20 x 2
		87417601		1	HASTE CONJUNTO, Incl. Ref 10 - 12
10		NSS		1	BOLETIM INFORMATIVO, Rod
11		A30881		3	ARRUELA PLANA
12		L15401		2	ROLAMENTO
13		D95096		2	ANEL
14		124721A1		1	MOLA
15		614-8025		4	PARAFUSO, Hex, M8 x 25, 8.8
16		895-11008		4	ARRUELA PLANA, M8 x 16 x 1.6
17		829-1408		4	PORCA, M8, Cl 10

09-04		p1	07/08

ESTRUTURA - ELEVADOR DO CARREGADOR

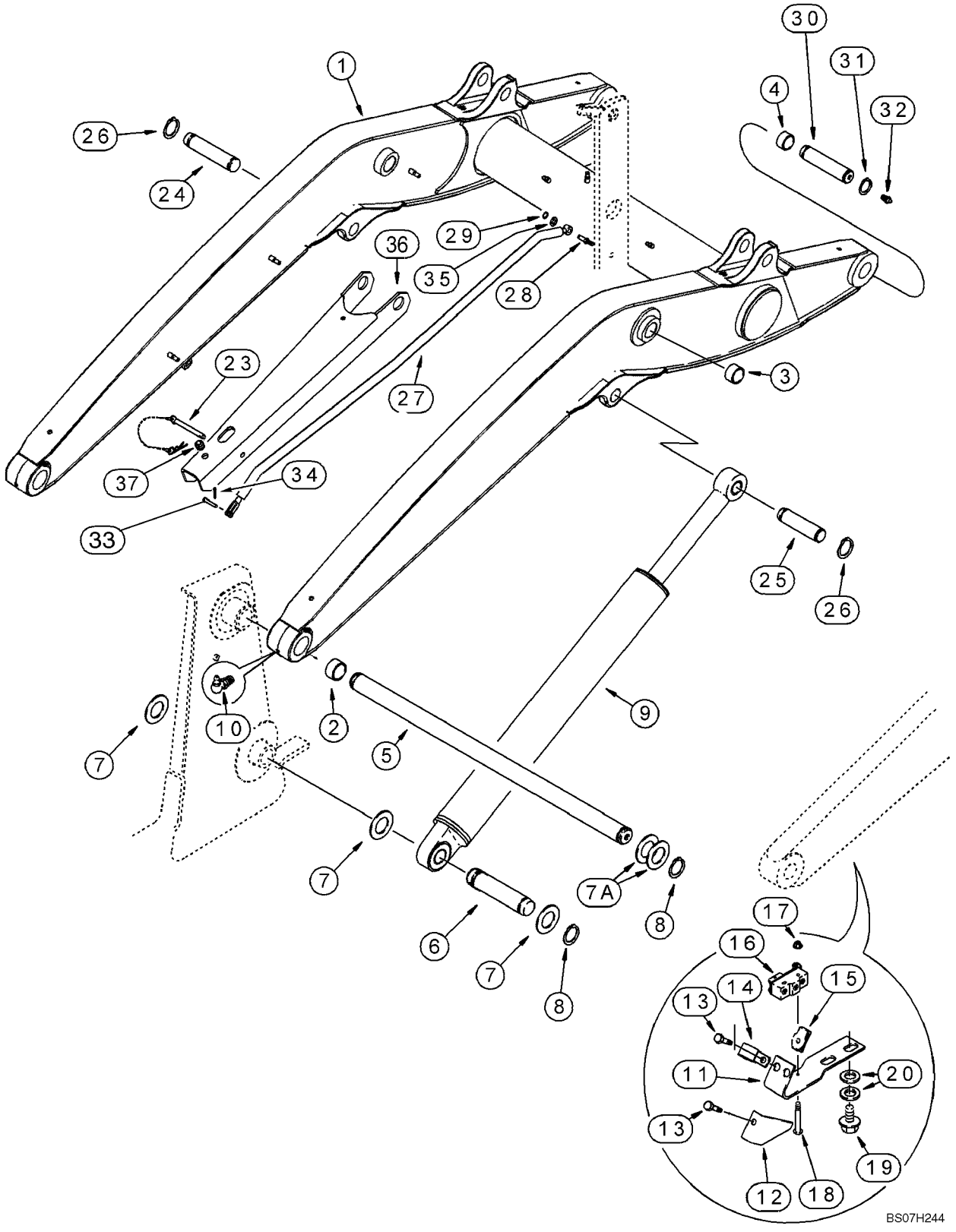

ESTRUTURA - ELEVADOR DO CARREGADOR

REF	FN	PART NUMBER	YR/SN	QTY	DESCRIPTION
		REF			INSTRUCAO, LIFT CYLINDER, SUPPORT STRUT, RETURN-TO-DIG AND ANTIROLLBACK
1		87566994		1	BRAÇO DE LEVANTAMENTO, Loader; Incl. Ref 2, 4
2		D127542		4	BUCHA
3		100696A1		4	BUCHA, Bucket Cylinder Link Pivot; Not Included With Frame; Purchase Separately
4		109268A1		4	BUCHA
5		111522A1		1	PINO, SHAFT
6		335177A1		2	PINO
7		495-81282		6	ARRUELA PLANA, 2 1/16" x 3" x .109"
7A		181842A1		AR	ARRUELA PLANA
8		800-44050		6	ANEL, M50, Ext
9		384240A1		2	CILINDRO CONJUNTO, 82.6 ID x 766 mm strk; Loader Lift; See Figure 08-58
10		219-55		2	GRAXEIRA, 90º, 1/8" NPT x .84" lg
11		128818A1		1	SUPORTE, Return-To-Dig
12		142524A1		1	PROTETOR
13		614-6016		2	PARAFUSO, Hex, M6 x 16, 8.8
14		515-2179		1	PRENDEDOR, 5/16", Insul, 1/4" Bolt
15		833-40406		2	PORCA, M6, U
16		D137363		1	INTERRUPTOR, Return-To-Dig
17		193-1003		2	PORCA, Keps, w/LW,#6-32
18		440-10616		2	PARAFUSO, Cross Pan Hd, #6-32 x 1"
19		128312A1		2	PARAFUSO, M10 x 15
20		895-11010		4	ARRUELA PLANA, M10 x 20 x 2
23		104824A1		1	PINO LARGO
24		118900A1		1	PINO LARGO
25		87623771		1	PERNO ESTRIADO
26		800-44040		4	ANEL, M40, Ext
27		87712370		1	HASTE, Anti-Rollback
28		192815A1		1	PINO
29		103-3350		1	ANEL-TRAVA, #50, .392" Dia, E-Type
30		118901A1		2	PINO LARGO
31		800-44040		4	ANEL, M40, Ext
32		219-1		2	GRAXEIRA, 1/8"-27 x .66 lg

ESTRUTURA - ELEVADOR DO CARREGADOR

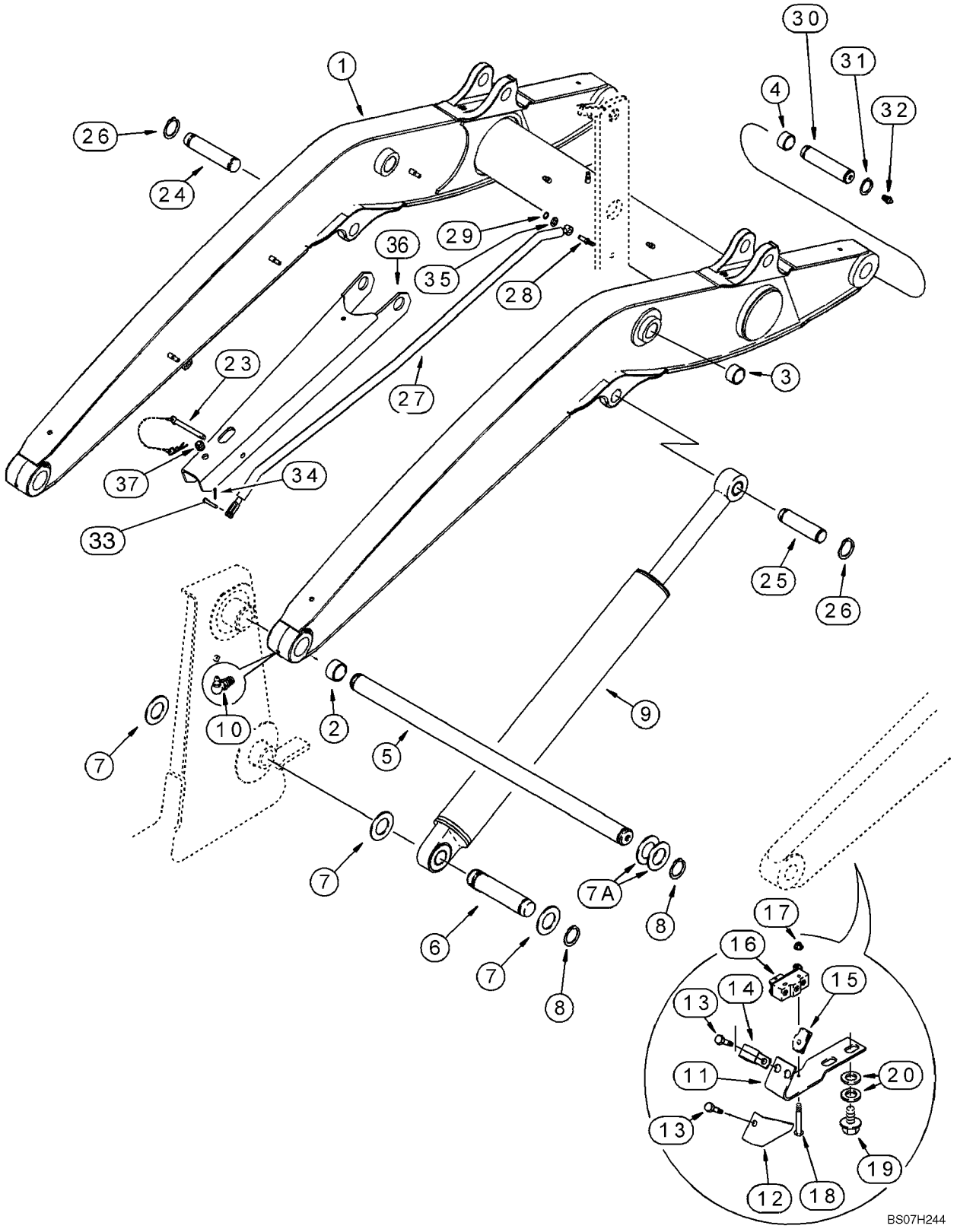

ESTRUTURA - ELEVADOR DO CARREGADOR

REF	FN	PART NUMBER	YR/SN	QTY	DESCRIPTION
33		427-6100		1	CUPILHA, 3/8" x 1"
34		432-612		1	GRAMPO, 3/32" x 3/4"
35		495-11053		1	ARRUELA PLANA, 1/2", SAE
36		341564A2		1	SUPORTE
37		344892A1		1	CASQUILHO ISOLADOR

09-05		p1	07/08

ESTRUTURA - LIGAÇÃO DO CARREGADOR

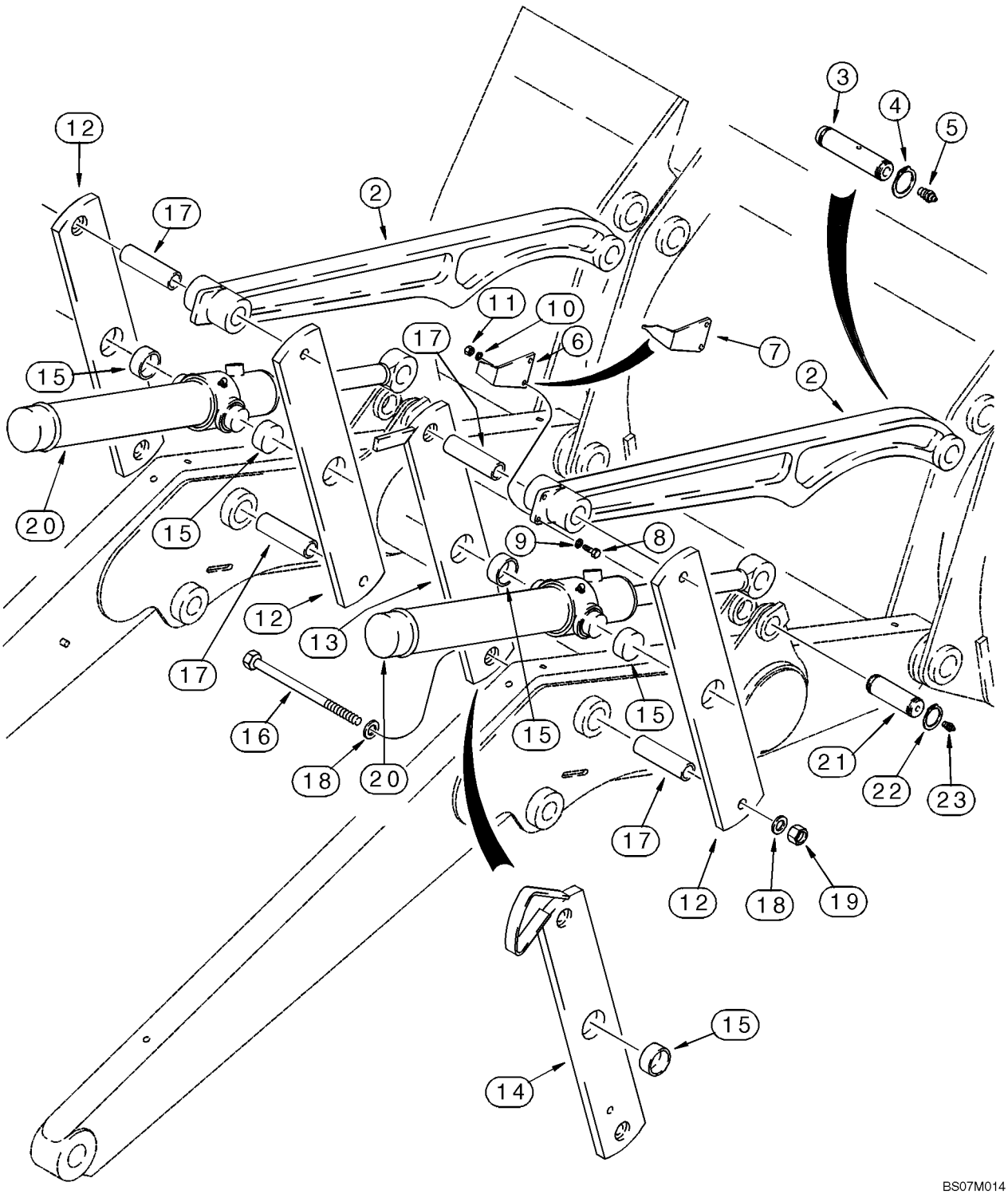

ESTRUTURA - LIGAÇÃO DO CARREGADOR

REF	FN	PART NUMBER	YR/SN	QTY	DESCRIPTION
2		331620A1		2	BIELA DE CONEXAO, Bucket, Left-Hand and Right-Hand
3		118901A1		2	PINO LARGO
4		800-44040		4	ANEL, M40, Ext
5		219-1		2	GRAXEIRA, 1/8"-27 x .66 lg
6		D121194		1	INDICADOR, Models Without Clam Bucket
7		250851A1		1	INDICADOR, Models With Clam Bucket
8		614-8030		2	PARAFUSO, Hex, M8 x 30, 8.8
9		895-11008		2	ARRUELA PLANA, M8 x 16 x 1.6
10		892-11008		2	ARRUELA-TRAVA, M8
11		829-1408		2	PORCA, M8, Cl 10
12		139180A1		3	ELO CONJUNTO, Bucket Cylinder, Outer Right-Hand; Inner and Outer Left-Hand; Incl. Ref 15
13		139235A1		1	BIELA DE CONEXAO, Bucket Cylinder, Inner Right-Hand; With Extra Hole For Antirollback Rod; Models Without Clam Bucket; Incl. Ref 15
14		139195A1		1	BIELA DE CONEXAO, Bucket Cylinder, Inner Right-Hand; With Extra Hole For Antirollback Rod; Models With Clam Bucket; Incl. Ref 15
15		D151034		1	BUCHA
16		827-20190		4	PARAFUSO, Hex, M20 x 190, 10.9
17		D132076		4	ESPAÇADOR
18		896-11020		8	ARRUELA PLANA, M20 x 37.5 x 4, HT
19		829-1420		4	PORCA, M20, Cl 10
20		87609669		2	CILINDRO HIDRÁULICO, 76 ID x 522 mm strk; Loader Bucket Cylinder; See Figure 08-59
21		87724438		2	PERNO ESTRIADO
22		800-44040		4	ANEL, M40, Ext
23		219-1		2	GRAXEIRA, 1/8"-27 x .66 lg

BALDES DE VIROLA COMPRIDA DO CARREGADOR (82 IN)

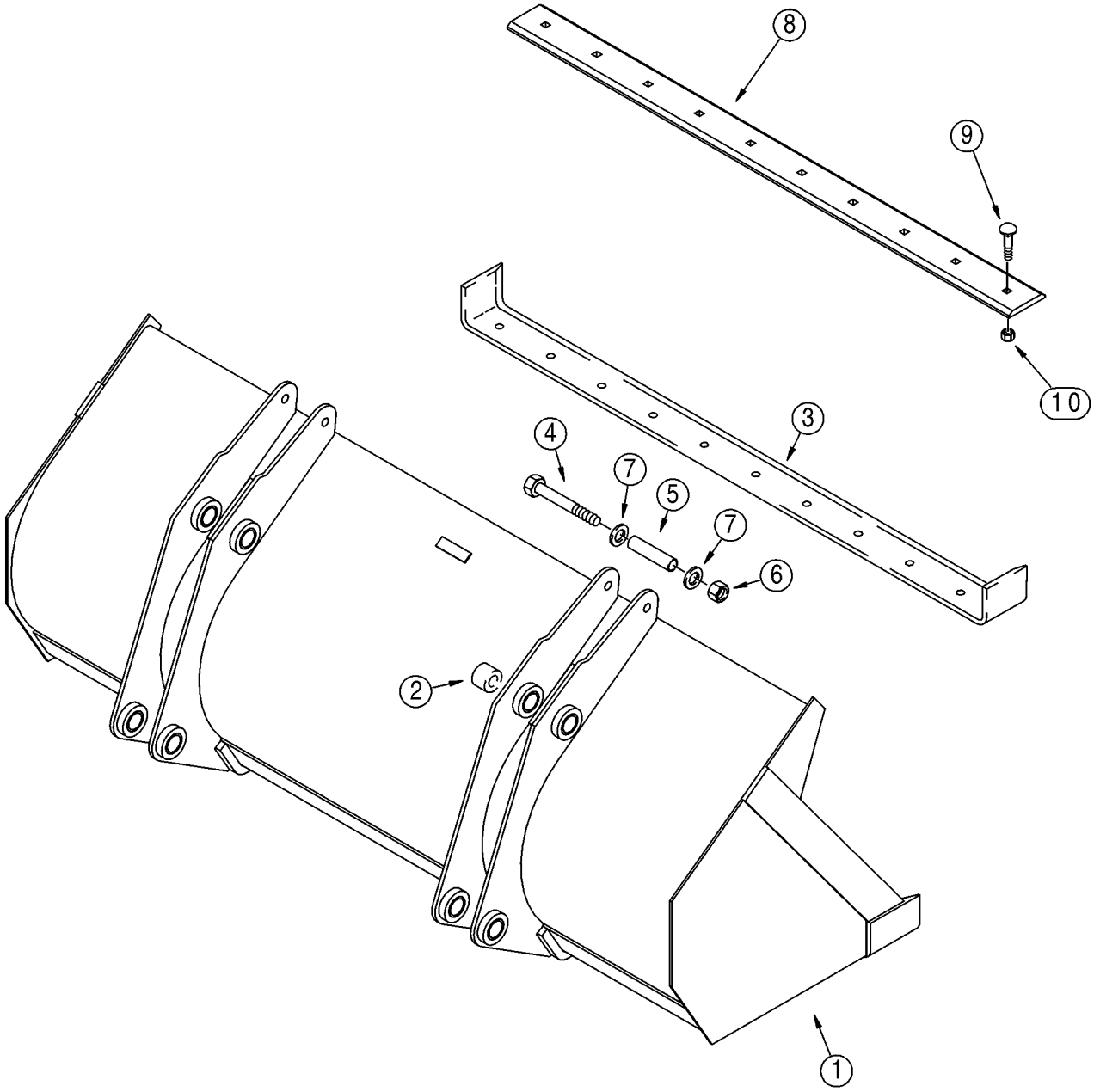

BALDES DE VIROLA COMPRIDA DO CARREGADOR (82 IN)

REF	FN	PART NUMBER	YR/SN	QTY	DESCRIPTION
		87368702		1	CAÇAMBA, ASSEMBLY, 2083 mm (82 in); Assembly Does Not Include Bolt-On Cutting Edge; Without Bucket Teeth; Incl. Ref 1 - 7; Order Through Parts Marketing; Replaces 385588A1 Bucket
1		NSS		1	BOLETIM INFORMATIVO, Bucket; Incl. Ref 2, 3
2		D129264		8	BUCHA
3		132988A1		1	BORDA, Welded-On
4		828-20160		2	PARAFUSO, Hex, M20 x 160, 10.9, M20 x 160; 10.9
5		142538A1		2	ESPAÇADOR
6		832-10420		2	CONTRA PORCA, M20 x 2.5, Cl 8
7		896-11020		4	ARRUELA PLANA, M20 x 37.5 x 4, HT
8		411661A1		1	FACA, Bolt-On; Unpainted; For Painted Edge, Order 112946A1 Edge
8		112946A1		1	LAMINA DE CORTE, Bolt-On; Tan; Not Included In 385588A1or 87368702 Bucket Assembly, Purchase Separately
9		420-21232		10	PARAFUSO, 3/4"-10 x 2", G5
10		429-1012		10	PORCA, 3/4"-10, G8
		87577141		1	CAÇAMBA, ASSEMBLY, 2083 mm (82 in); Assembly Includes 87365015 Bucket Assy; Ref 1 - 10; Order Through Parts Marketing
		87365015		1	CAÇAMBA, ASSEMBLY, 2083 mm (82 in); Assembly Includes 87368737 Bucket and 411661A1 Bolt-On Cutting Edge; Incl. Ref 1 - 10; Order Through Parts Marketing
1		NSS		1	BOLETIM INFORMATIVO, Bucket; Incl. Ref 2, 3
2		D129264		8	BUCHA
3		132988A1		1	BORDA, Weld-On
4		828-20160		2	PARAFUSO, Hex, M20 x 160, 10.9, M20 x 160; 10.9
5		142538A1		2	ESPAÇADOR
6		832-10420		2	CONTRA PORCA, M20 x 2.5, Cl 8
7		896-11020		4	ARRUELA PLANA, M20 x 37.5 x 4, HT
8		411661A1		1	FACA, Bolt-On; Unpainted; For Painted Edge, Order 112946A1 Edge

BALDES DE VIROLA COMPRIDA DO CARREGADOR (82 IN)

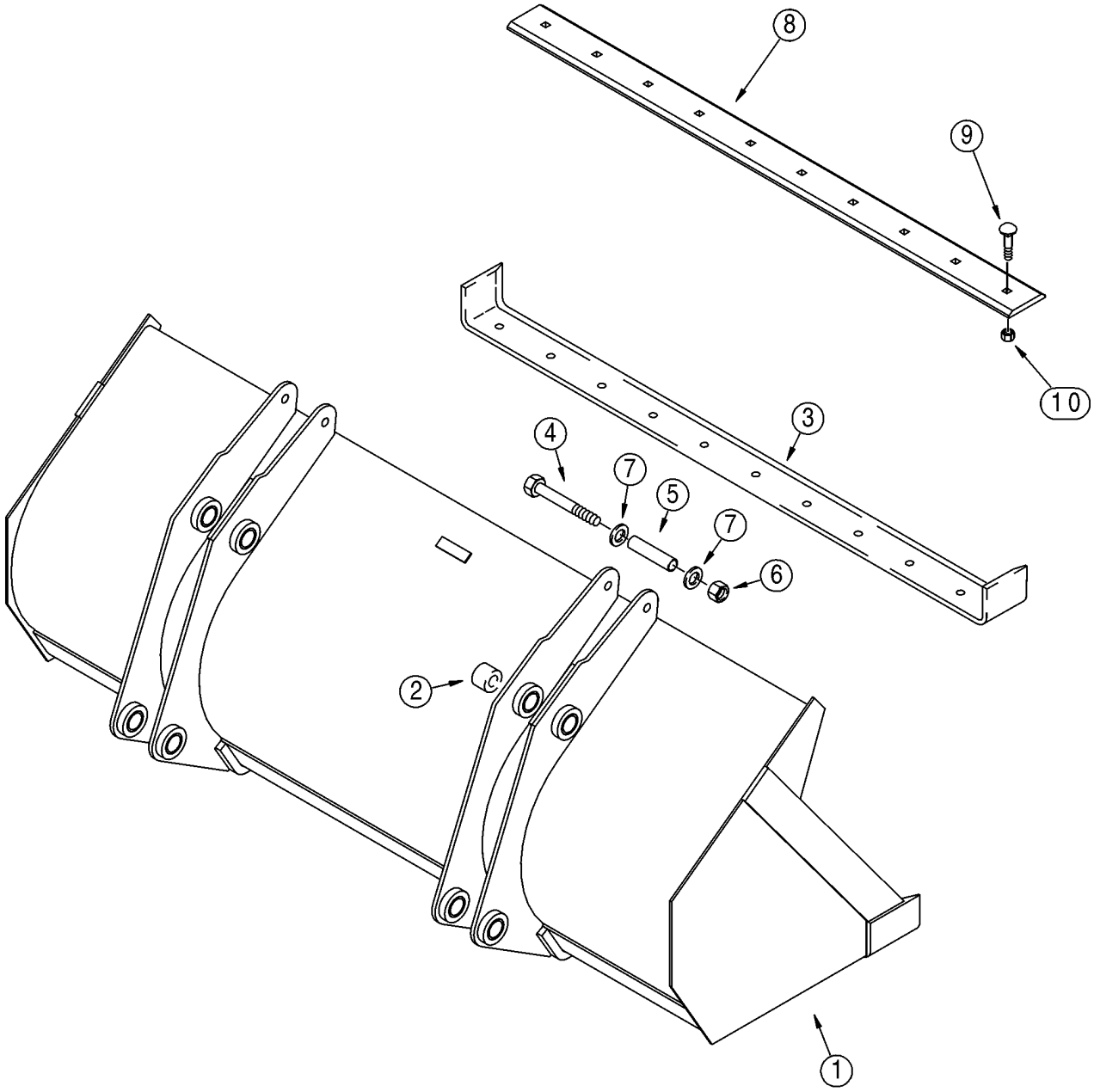

BALDES DE VIROLA COMPRIDA DO CARREGADOR (82 IN)

REF	FN	PART NUMBER	YR/SN	QTY	DESCRIPTION
9		20-21232		10	PARAFUSO, 3/4"-10 x 2", G8, Non-Plated; Replaces 420-21232 Plated Bolt Used On Some Models
10		29-1012		10	PORCA, 3/4"-10, G8, 3/4; 8; Non-Plated; Replaces 429-1012 Plated Nut Used On Some Models

BALDES DE VIROLA COMPRIDA DO CARREGADOR (93 IN)

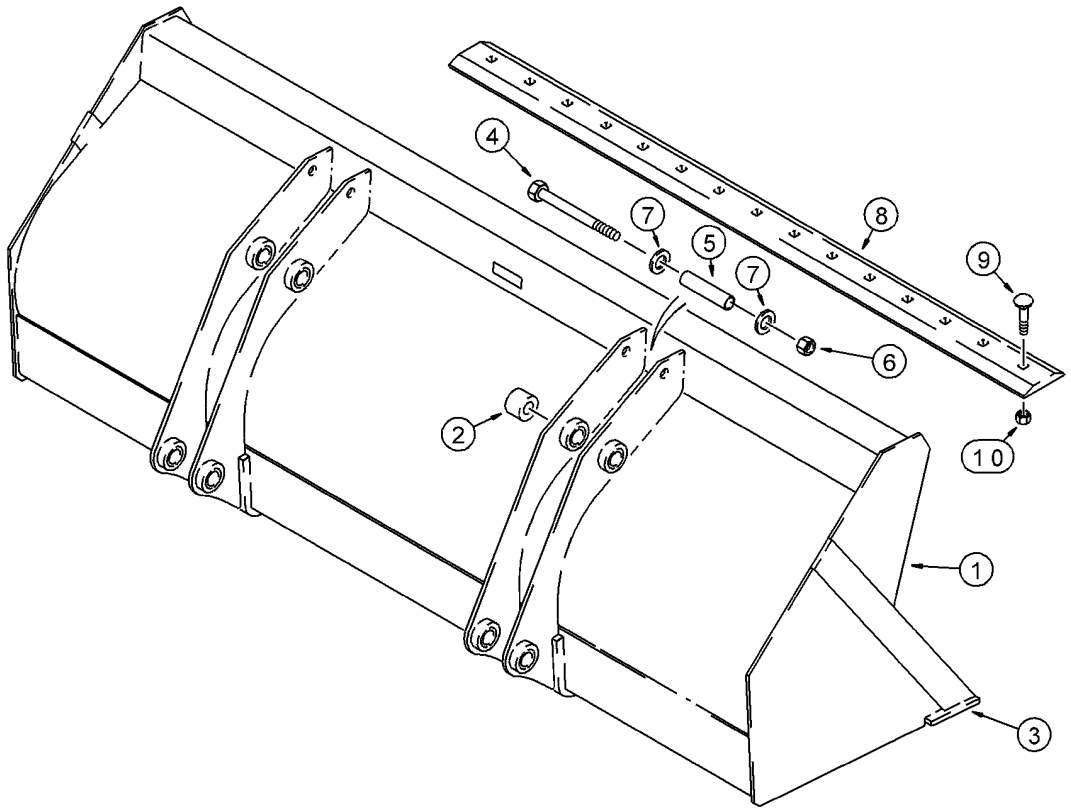

BS00C247

BALDES DE VIROLA COMPRIDA DO CARREGADOR (93 IN)

REF	FN	PART NUMBER	YR/SN	QTY	DESCRIPTION
		87368710		1	CAÇAMBA, 2362 mm (93 in), Without Bucket Teeth; Assembly Includes Bolt-On Cutting Edge; Incl. Ref 1 - 10; Order Through Parts Marketing
1		NSS		1	BOLETIM INFORMATIVO, Bucket, Incl. Ref 2, 3
2		D129264		8	BUCHA
3		134844A1		1	PLACA ESPESSA, Weld-On
4		828-20160		2	PARAFUSO, Hex, M20 x 160, 10.9
5		142538A1		2	ESPAÇADOR
6		832-10420		2	CONTRA PORCA, M20 x 2.5, Cl 8
7		896-11020		4	ARRUELA PLANA, M20 x 37.5 x 4, HT
8		87375240		1	BORDA, Bolt-On Blade, Unpainted;Production Only; For Service Order 185506A1 Blade
8		185506A1		1	BORDA, Bolt-On Blade, Tan
9		20-21232		10	PARAFUSO, 3/4"-10 x 2", G8
10		429-1012		10	PORCA, 3/4"-10, G8

09-08		p1	07/08

CONCHA DO BALDE DO CARREGADOR

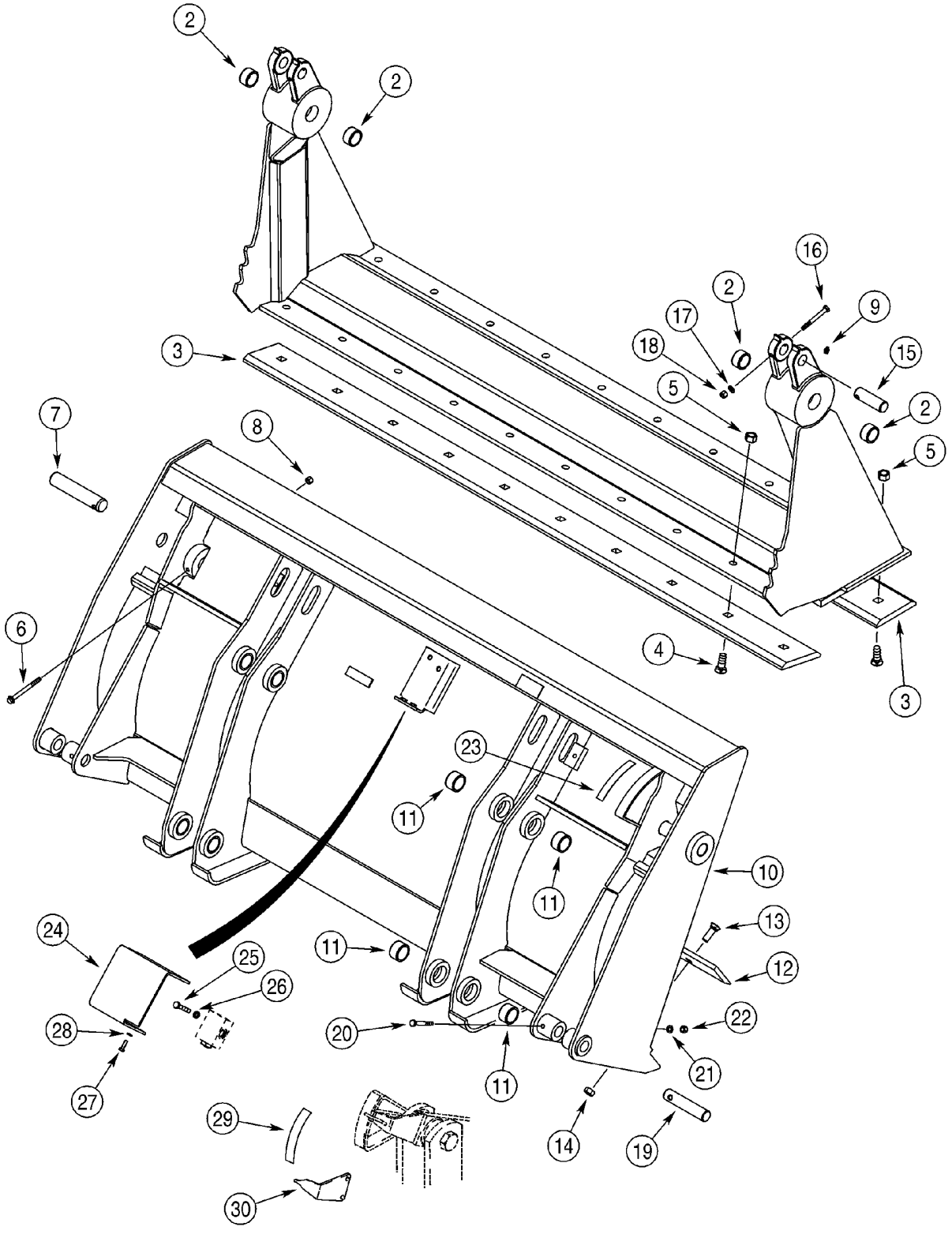

BC00A162

CONCHA DO BALDE DO CARREGADOR

REF	FN	PART NUMBER	YR/SN	QTY	DESCRIPTION
		87455509		1	CAÇAMBA, ASSEMBLY; 2083 mm (82 in); With Hydraulics; Includes 376288A2 Bucket Assembly, Ref 1 - 28; Also Includes Hydraulics on Figure 08-07, Ref 1 - 29; Order Through Parts Marketing
		{}		1	376288A2 BUCKET ASSEMBLY; 2083 mm (82 in); Without Hydraulics; Includes 411668A1 Bucket and (2) Ref 7 Pins; Order Through Parts Marketing
		411668A1		1	CAÇAMBA, BUCKET ASSEMBLY; 2083 mm (82 in); Without Hydraulics; Incl. Ref 1 - 6, 8 - 14
		175156A1		1	CONCHA, CLAM, Incl. Ref 1, 2
1		NSS		1	BOLETIM INFORMATIVO, Clam Assy
2		D31140		4	BUCHA
3		142300A1		2	LAMINA
4		20-21232		20	PARAFUSO, 3/4"-10 x 2", G8
5		29-1012		20	PORCA, 3/4"-10, G8
6		844-10110		2	PARAFUSO, Hex Flg, M10 x 110, 8.8
7		D51391		2	PINO LARGO
8		832-10410		2	CONTRA PORCA, M10 x 1.5, Cl 8
9		219-1		2	GRAXEIRA, 1/8"-27 x .66 lg
		376286A2		1	CAÇAMBA, BLADE, Incl. Ref 10, 11
10		NSS		1	BOLETIM INFORMATIVO, Blade Assy, Dozer
11		D129264		8	BUCHA
12		121920A1		1	BORDA, Cutting
13		20-21032		10	PARAFUSO, 5/8"-11 x 2", G8, Full Thd
14		29-1010		10	PORCA, 5/8"-11, G8
15		D51392		2	PINO
16		814-10090		2	PARAFUSO, Hex, M10 x 90, 8.8
17		895-11010		2	ARRUELA PLANA, M10 x 20 x 2
18		832-10410		2	CONTRA PORCA, M10 x 1.5, Cl 8
19		D51393		2	PINO LARGO
20		814-10080		2	PARAFUSO, Hex, M10 x 80, 8.8
21		895-11010		2	ARRUELA PLANA, M10 x 20 x 2
22		832-10410		2	CONTRA PORCA, M10 x 1.5, Cl 8
23		321-1708		1	DECALCOMANIA
24		388848A1		1	PROTEÇÃO, Pilot Operated Check Valve

CONCHA DO BALDE DO CARREGADOR

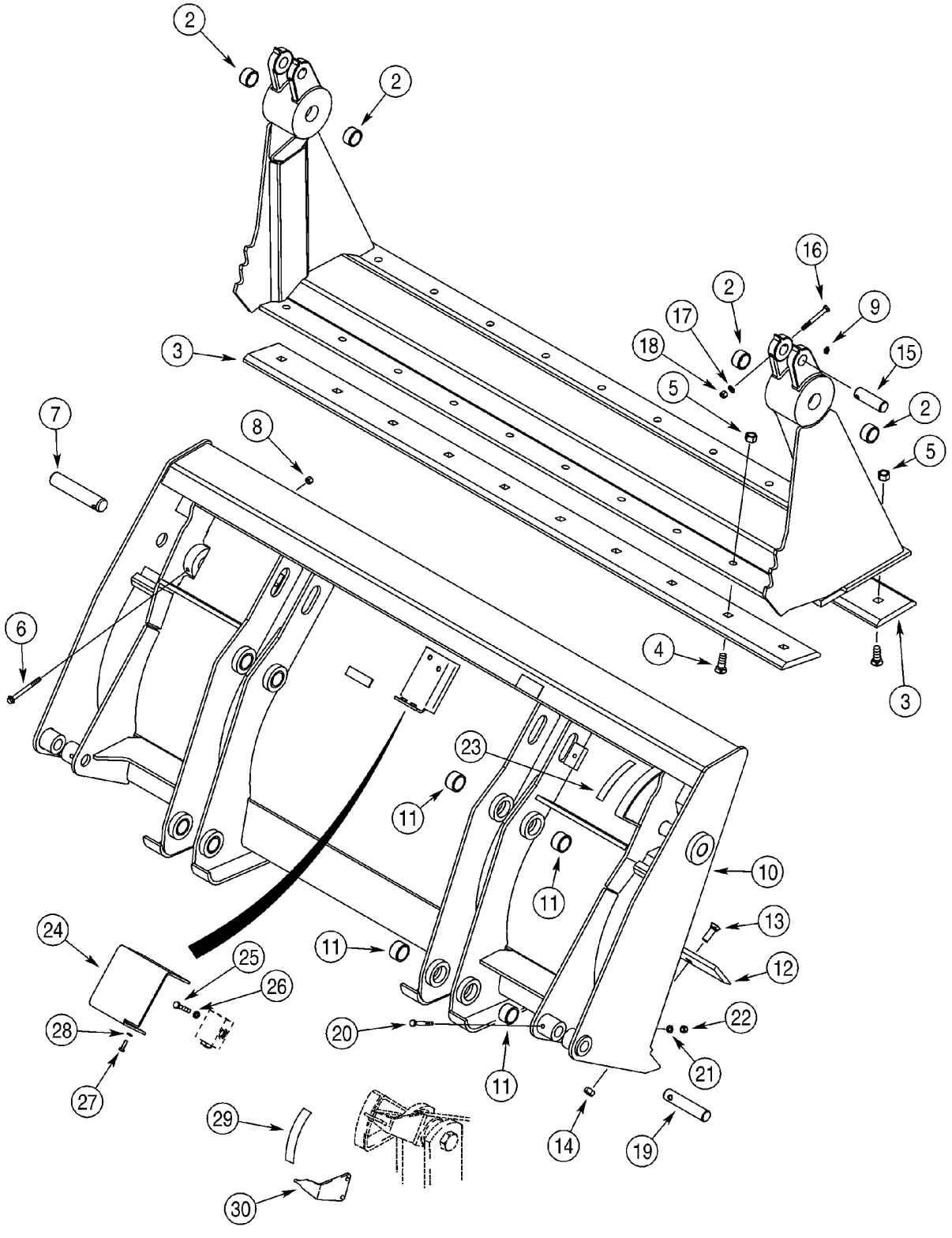

CONCHA DO BALDE DO CARREGADOR

REF	FN	PART NUMBER	YR/SN	QTY	DESCRIPTION
25		814-10060		2	PARAFUSO, Hex, M10 x 60, 8.8
26		892-11010		2	ARRUELA-TRAVA, M10
27		614-8025		2	PARAFUSO, Hex, M8 x 25, 8.8
28		892-11008		2	ARRUELA-TRAVA, M8
29		321-1707		1	DECALCOMANIA
30		250851A1		1	INDICADOR

PROTEÇÃO - VÁLVULA DO CARREGADOR

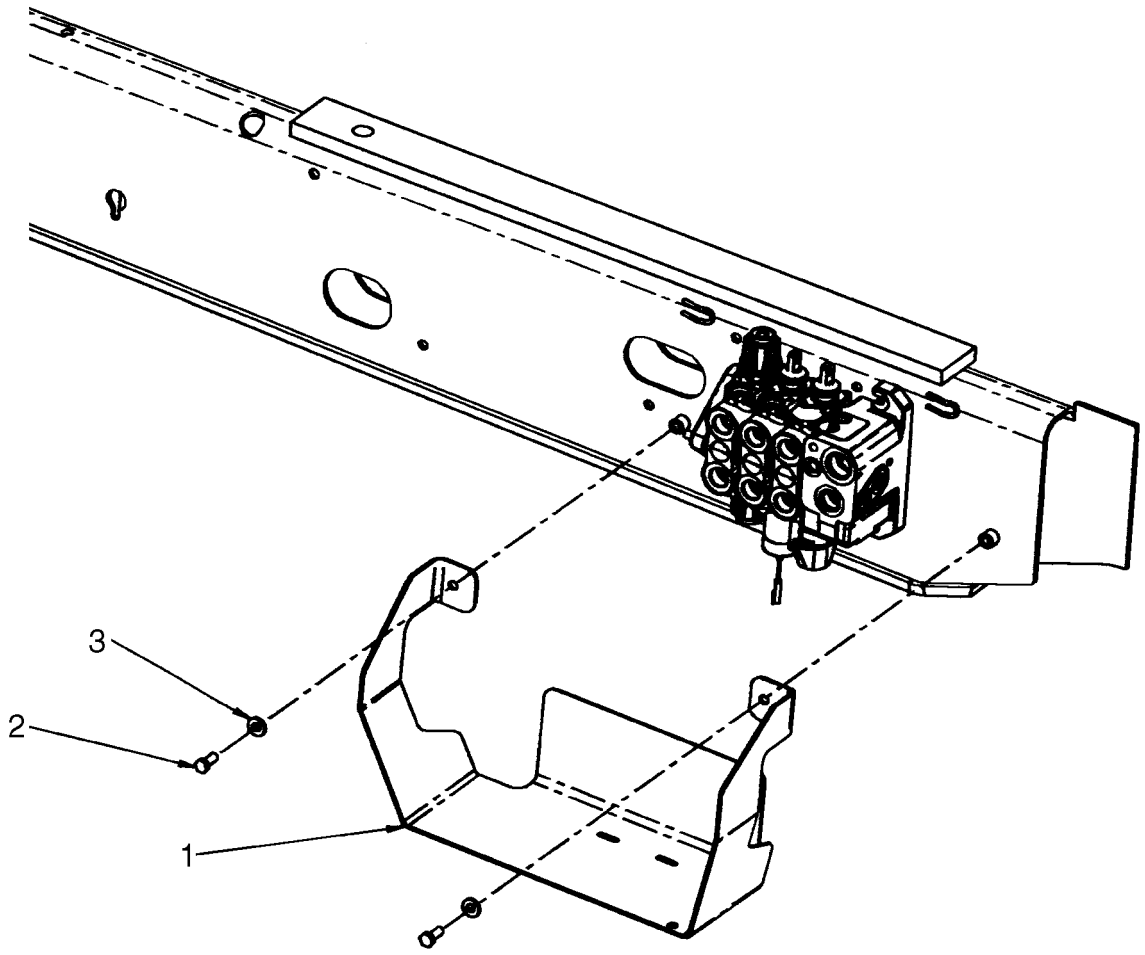

BS07M540

PROTEÇÃO - VÁLVULA DO CARREGADOR

REF	FN	PART NUMBER	YR/SN	QTY	DESCRIPTION
1		87630445		1	PROTEÇÃO, Loader Valve
2		614-10025		2	PARAFUSO, Hex, M10 x 25, 8.8, Full Thd
3		896-15010		2	ARRUELA PLANA, M10 x 24.5 x 3, HT

DISPOSITIVO DE ACOPLAMENTO RÁPIDO

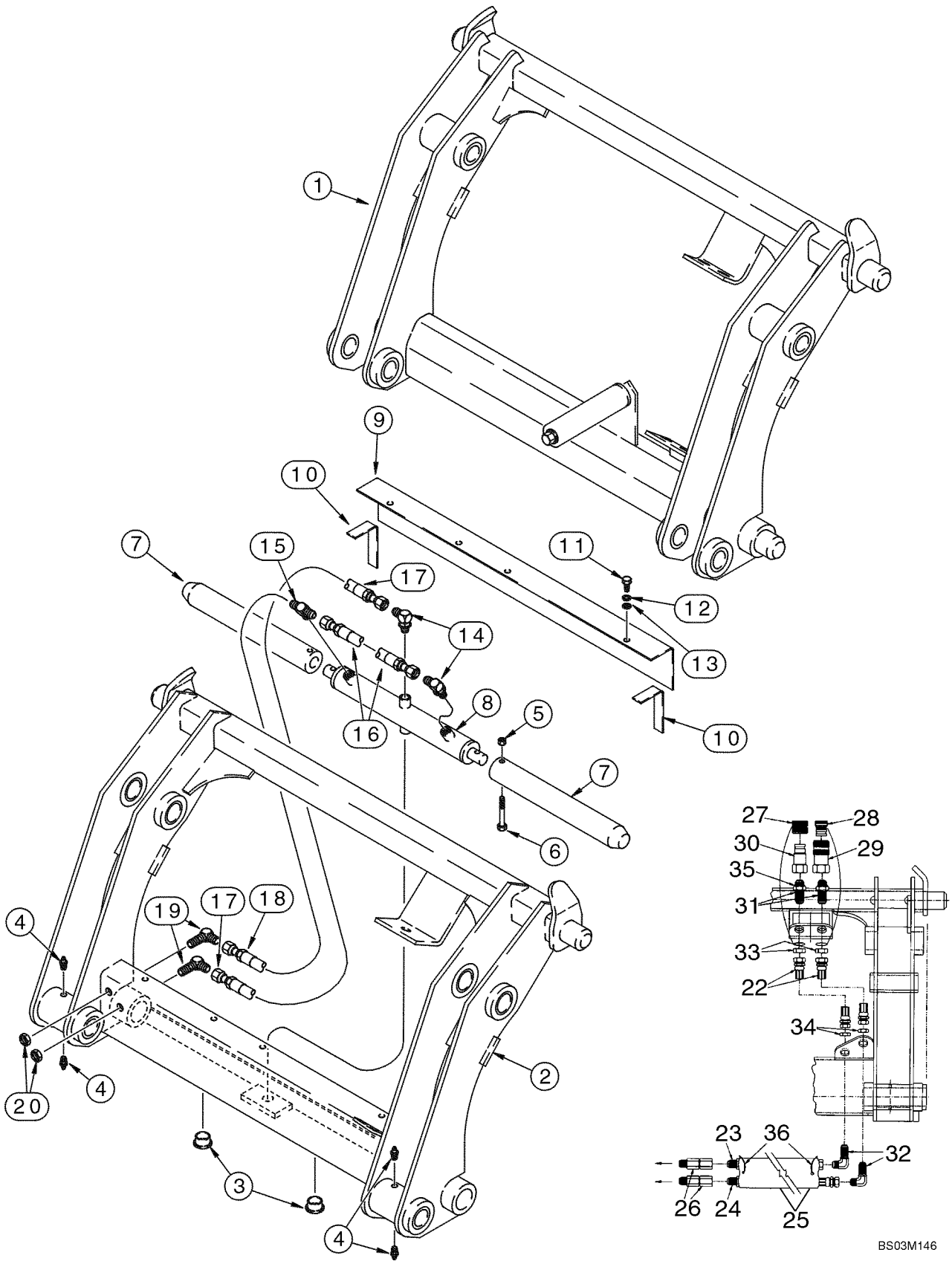

DISPOSITIVO DE ACOPLAMENTO RÁPIDO

REF	FN	PART NUMBER	YR/SN	QTY	DESCRIPTION
		87602620		1	CABEÇA DE SINO, Loader; Incl. Ref 2 - 35; With Auxiliary Hydraulics; For Complete Assembly, Order From Machinery Price List; Category III; For Hydraulic Tool Quick Coupler Hydraulics, See Figure 08-26, 08-27
2		NSS		1	BOLETIM INFORMATIVO, Frame
3		305497A1		2	BUJÃO, 1-1/4 ID x 1/2 in OD; Plastic
4		219-87		4	GRAXEIRA, 1/4"-28 x .56" lg, Self-Tap
5		231-4246		2	CONTRA PORCA, 3/8"-16, GB
6		326-640		2	PARAFUSO, Hex, 3/8"-16 x 2 1/2", G8
7		305496A1		2	PINO, 1-15/16 OD x 15 in lg
8		305499A1		1	CILINDRO, Double Acting; Component Parts Not Serviced Separately
9		305495A1		1	TAMPA
10		NSS		2	BOLETIM INFORMATIVO, Seal; Foam
11		413-516		3	PARAFUSO, Hex, 5/16"-18 x 1", G5, Full Thd
12		492-11031		3	ARRUELA-TRAVA, 5/16"
13		495-11034		3	ARRUELA PLANA, 5/16", SAE
14		218-5105		2	COTOVELO, 90º, 9/16"-18, 37º x 9/16"-18, O-Ring, Includes 237-6006 O-Ring
		237-6006		1	ANEL "O", 6-1, 90 Duro, .468" ID x .078" Thk
15		218-5182		1	TEE, 9/16"-18, 37º x 9/16"-18, O-Ring Br, Includes 237-6006 O-Ring
		237-6006		1	ANEL "O", 6-1, 90 Duro, .468" ID x .078" Thk
16		305492A1		1	MANGUEIRA CONJUNTO, 260 mm (10-1/4 in)
17		305494A1		1	MANGUEIRA CONJUNTO, 387 mm (15-1/4 in)
18		305493A1		1	MANGUEIRA CONJUNTO, 235 mm (9-1/4 in)
19		218-693		2	COTOVELO, 90º Blkhd, 9/16"-18, 37º x 9/16"-18, 37º
20		218-1254		2	CONTRA PORCA, Blkhd, 9/16"-18
21		305508A1		1	JOGO, Decal; Includes Four Decals; Not Illustrated
22		307385A1		2	MANGUEIRA CONJUNTO, 387 mm (15-1/4 in)
23		307386A1		1	MANGUEIRA CONJUNTO, 629 mm (24-3/4 in)
24		307387A1		1	MANGUEIRA CONJUNTO, 718 mm (28-1/4 in)
25		307388A1		1	MANGUEIRA, SLEEVE, 660 mm (26 in)
26		307389A1		2	PIVOTE, Swivel

DISPOSITIVO DE ACOPLAMENTO RÁPIDO

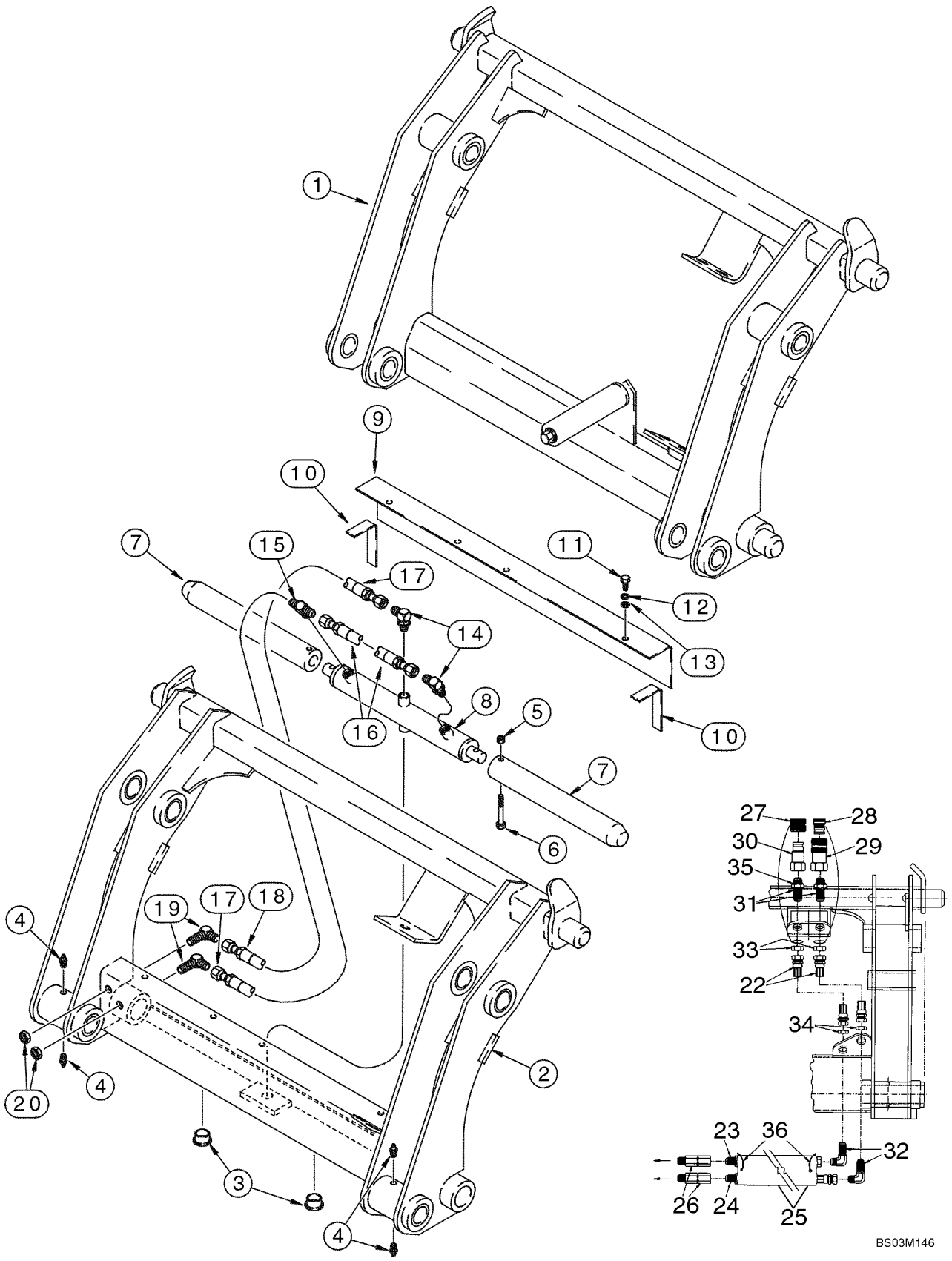

DISPOSITIVO DE ACOPLAMENTO RÁPIDO

REF	FN	PART NUMBER	YR/SN	QTY	DESCRIPTION
27		137344A1		1	BUJÃO, Male Coupling
28		137343A1		1	BUJÃO, Female Coupling
29		123537A1		1	CONEXAO, Quick Disconnect; Female
30		245423A1		1	CONEXAO
31		126155A1		2	CONEXAO, 1-1/16 blkhd fl x Or
32		218-695		2	COTOVELO, 90º Blkhd, 7/8"-14, 37º x 7/8"-14, 37º
33		218-1256		2	CONTRA PORCA, Blkhd, 1 1/16"-12
34		218-1279		2	CONTRA PORCA, Blkhd, 7/8"-14
35		237-6012		2	ANEL "O", 12-1, 90 Duro, .924 ID x .118" Thk
36		L18337		2	TIRA DE CABO, 9.95"-12.1" lg

09-11		p1	07/08

COBERTURAS - TORRE DE CONTROLO DA RETROESCAVADORA, SEM CONTROLO AUTOMÁTICO

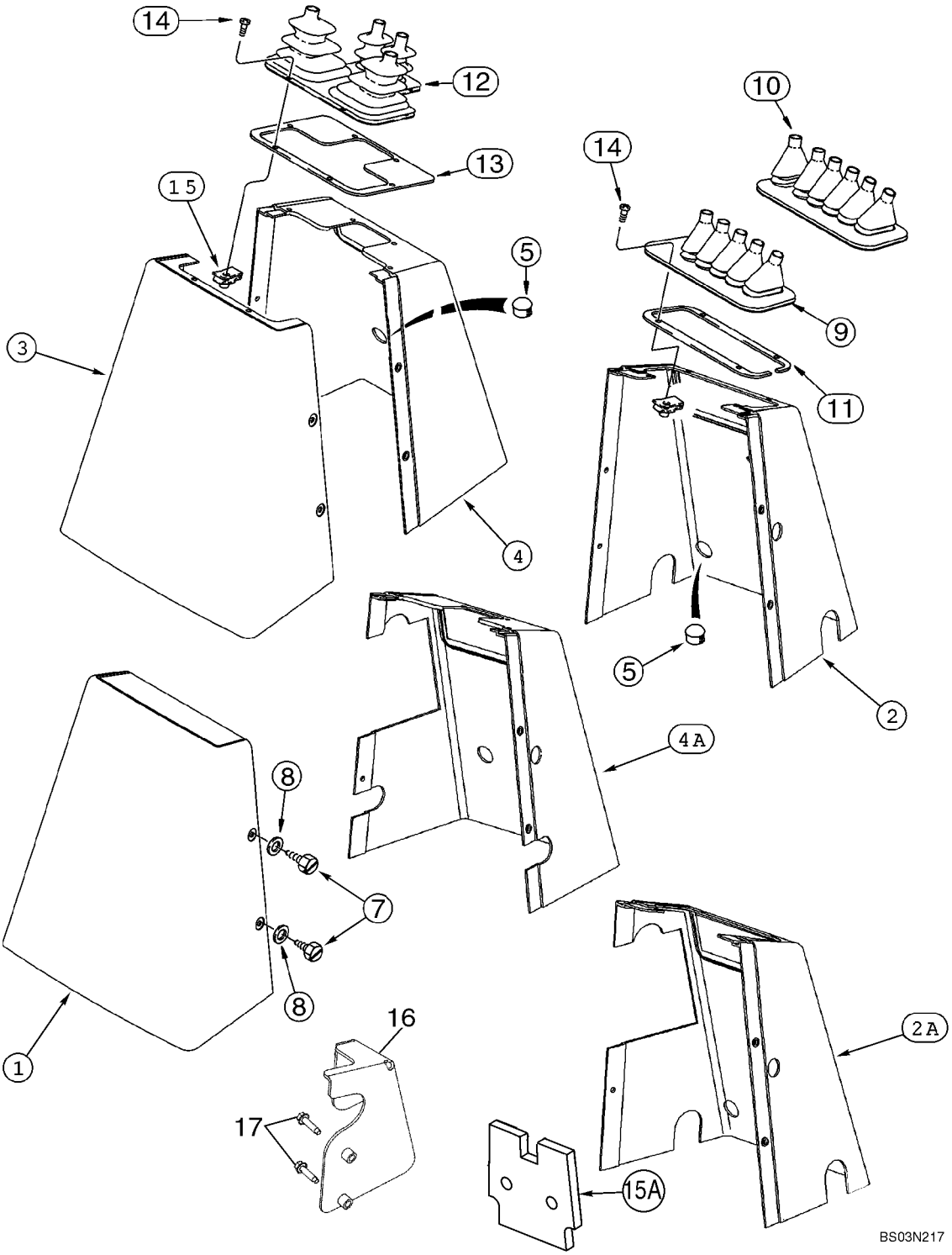

COBERTURAS - TORRE DE CONTROLO DA RETROESCAVADORA, SEM CONTROLO AUTOMÁTICO

REF	FN	PART NUMBER	YR/SN	QTY	DESCRIPTION
1		390759A1		1	TAMPA DE PROTECAO, Rear; All Models With Foot Swing
2		390760A1		1	TAMPA DE PROTECAO, Front; Foot Swing; Without Auxiliary Hydraulics
2A		87411083		1	TAMPA DE PROTECAO, Front; Foot Swing; With Auxiliary Hydraulics
3		390758A1		1	TAMPA DE PROTECAO, Rear; All Models With Hand Swing
4		390690A1		1	TAMPA DE PROTECAO, Front; Hand Swing; Without Auxiliary Hydraulics
4A		87411084		1	TAMPA DE PROTECAO, Front; Hand Swing; With Auxiliary Hydraulics
5		353-411		1-2	BUJÃO, Dome, 1.000" hole, Nylon
7		87310156		5	PARAFUSO, M6.3 x 16 st, Stainless Steel
8		87310139		5	ARRUELA PLANA, 9/32 ID x 5/8 OD x 1/16 thk, Stainless Steel
9		D149866		1	COIFA, 5 Control Levers
10		D149867		1	COIFA, 6 Control Levers
11		136822A1		1	PRENDEDOR
12		D149868		1	FOLE, 4 Control Levers
13		136824A1		1	PLACA ESPESSA, Used With Ref 12 Only
14		87310124		4	PARAFUSO, No. 10 x 1/2, Stainless Steel
14		87310126		6	PARAFUSO, No. 10 x 3/4, Stainless Steel; Used With Ref 13 Retainer; Replaces 140-107 Non-Stainless Steel Screw Used On Some Models
15		131-861		4-6	PORCA, Tinn, U, #10-24, Used With Ref 11 Retainer; (6) Used With Ref 13 Retainer
15A		397870A3		2	ANEL DE VEDAÇÃO, Front and Rear Console Covers; Noise Barrier; Adhesive Back
16		87425122		1	BRACADEIRA, Models With Backhoe Auxiliary Hydraulics
		87430677		1	DECALCOMANIA, Auxiliary Hydraulics
17		281-14716		2	PARAFUSO, Hex Wash Hd, 1/4" x 1"

SUPORTE E VEDAÇÕES DA TORRE DE CONTROLO DA RETROESCAVADORA, SEM CONTROLO AUTOMÁTICO

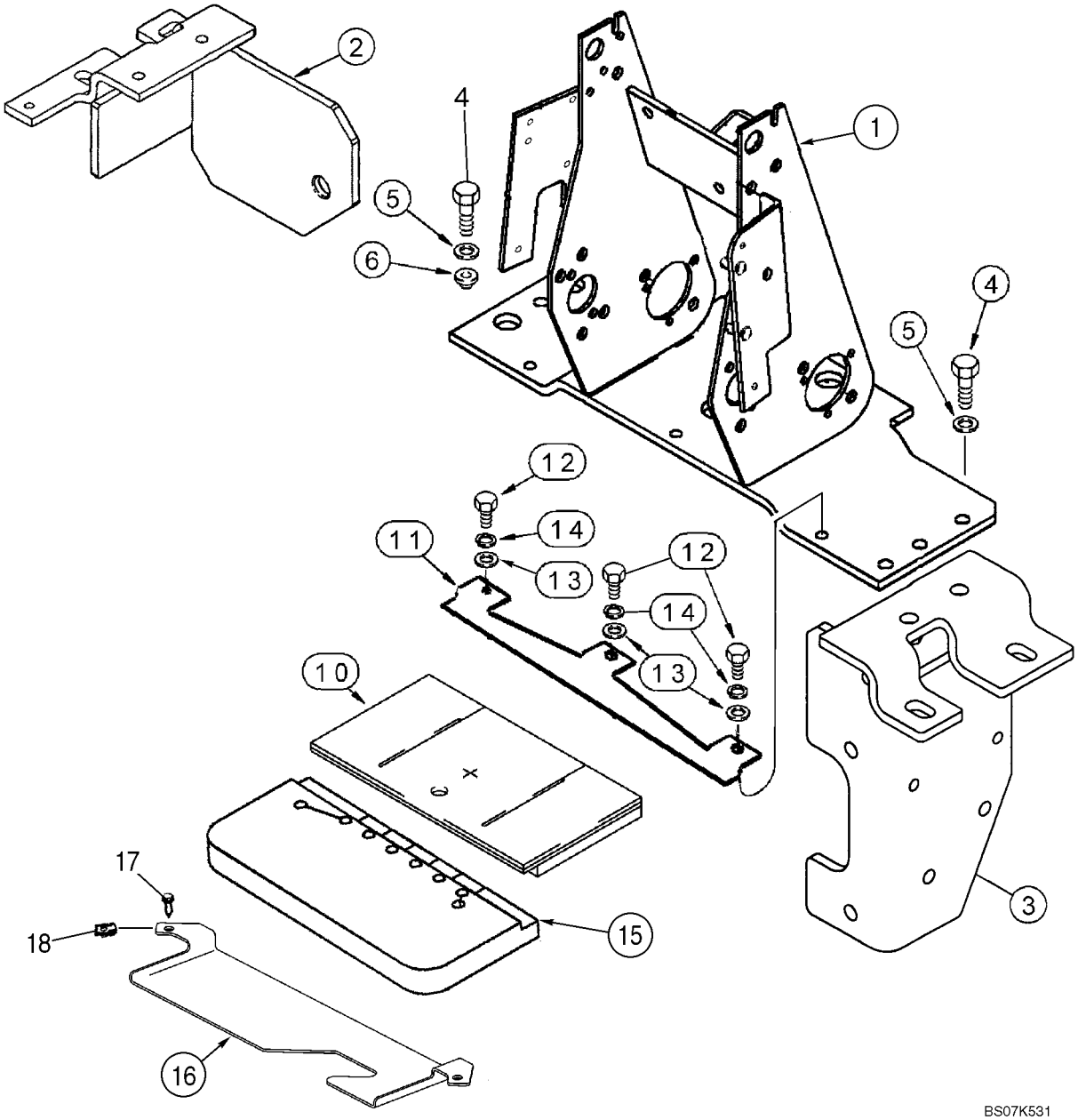

SUPORTE E VEDAÇÕES DA TORRE DE CONTROLO DA RETROESCAVADORA, SEM CONTROLO AUTOMÁTICO

REF	FN	PART NUMBER	YR/SN	QTY	DESCRIPTION
1		87418516		1	SUPORTE
2		87448059		1	SUPORTE, LH
3		87452627		1	SUPORTE, RH
4		614-10035		8	PARAFUSO, Hex, M10 x 35, 8.8, Full Thd
5		496-41041		8	ARRUELA PLANA, 13/32" x 1 1/8" x .134"
6		179956A1		2	AMORTECEDOR DE CHOQ
10		400069A1		1	ESPUMA
11		87418518		1	SUPORTE
12		614-8020		3	PARAFUSO, Hex, M8 x 20, 8.8
13		895-11008		3	ARRUELA PLANA, M8 x 16 x 1.6
14		892-11008		3	ARRUELA-TRAVA, M8
15		87439210		1	ESPUMA
16		397911A1		1	BRACADEIRA
17		87310096		2	PARAFUSO, M6 x 25, Includes Washer, Stainless Steel
18		833-40406		2	PORCA, M6, U

09-13		p1	07/08

SUPORTE TORRE CONTROLE DA RETRO, COM CONTROLE PILOTO

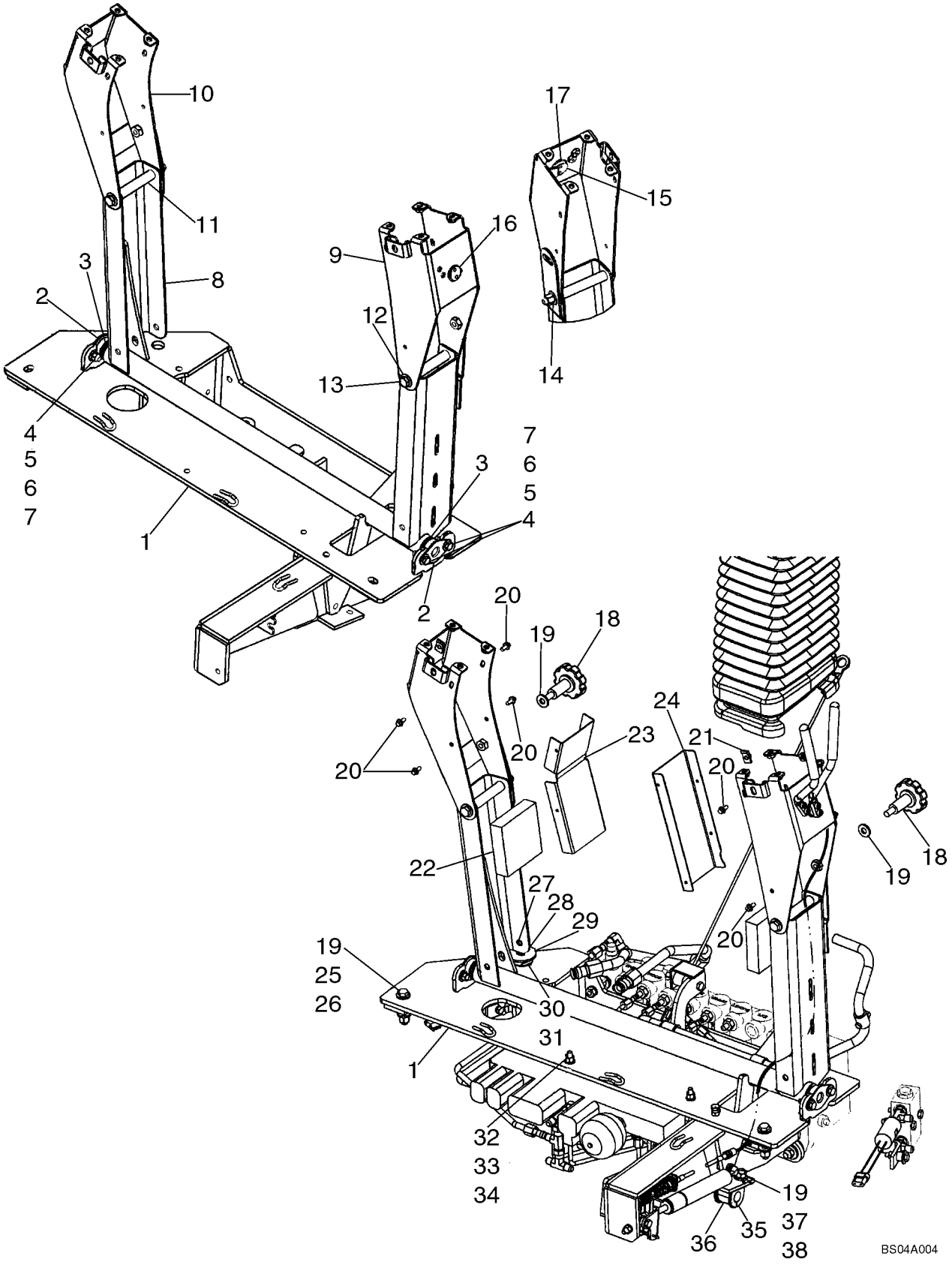

10

SUPORTE TORRE CONTROLE DA RETRO, COM CONTROLE PILOTO

REF	FN	PART NUMBER	YR/SN	QTY	DESCRIPTION
		87440711		1	KBECOT, Tower Assembly; Pilot Controls; Includes Ref 1 - 17
1		87440710		1	SUPORTE, Tower
2		D148993		2	ROLAMENTO
3		A30881		4	ARRUELA PLANA, Seal
4		895-15008		8	ARRUELA PLANA, M8 x 20 x 1.6
5		614-8025		4	PARAFUSO, Hex, M8 x 25, 8.8
6		892-11008		4	ARRUELA-TRAVA, M8
7		829-1408		4	PORCA, M8, Cl 10
8		87435275		1	PIVO CONJUNTO
9		87440704		1	SUPORTE, Right-Hand Joystick Mounting
10		87440706		1	SUPORTE, Left-Hand Joystick Mounting
11		87329475		2	ESPAÇADOR
12		895-15010		4	ARRUELA PLANA, M11 x 24 x 2
13		814-10130		2	PARAFUSO, Hex, M10 x 130, 8.8
14		832-10410		2	CONTRA PORCA, M10 x 1.5, Cl 8
15		87431529		1	ALAVANCA CONJUNTO, Control Tower Release
16		103-11100		1	ANEL, #100, .925", Ext
17		87405706		1	ARRUELA PLANA, Wave, 1 inch
18		87437688		2	MANÍPULO, Lateral Adjustment Pilot Control Tower
19		896-15010		8	ARRUELA PLANA, M10 x 24.5 x 3, HT
20		781-24613		8	PARAFUSO, Hex Flg Hd, M6 x 13
21		833-40406		2	PORCA, M6, U
22		87425696		2	JUNTAS
23		87431301		1	PROTEÇÃO, Shield, Left-Hand
24		87431300		1	PROTEÇÃO, Shield, Right-Hand
25		814-10060		2	PARAFUSO, Hex, M10 x 60, 8.8
26		832-10410		2	CONTRA PORCA, M10 x 1.5, Cl 8
27		87450914		2	PARAFUSO, Locking, M10 x 40
28		892-11010		2	ARRUELA-TRAVA, M10
29		496-81018		1	ARRUELA PLANA, 17/32 x 2 x 1/8
30		D148962		1	ARRUELA PLANA, Belleville
31		87440381		1	ESPAÇADOR
32		896-11008		2	ARRUELA PLANA, M8 x 17.5 x 2, HT
33		832-10408		2	CONTRA PORCA, M8 x 1.25, Cl 8

09-13		p2	07/08

SUPORTE TORRE CONTROLE DA RETRO, COM CONTROLE PILOTO

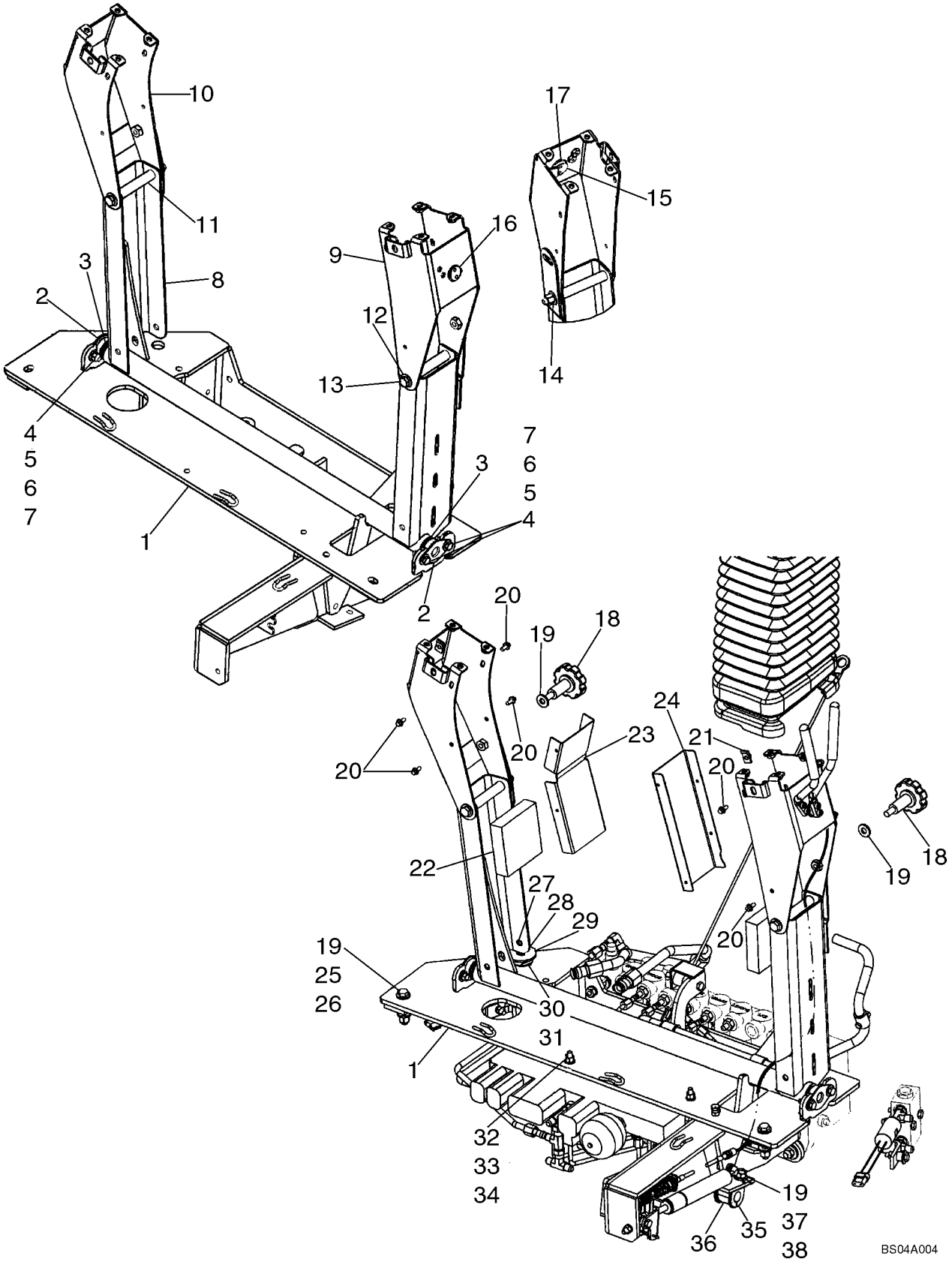

SUPORTE TORRE CONTROLE DA RETRO, COM CONTROLE PILOTO

REF	FN	PART NUMBER	YR/SN	QTY	DESCRIPTION
34		864-8055		2	PARAFUSO, Hex Soc Hd, M8 x 55, 8.8
35		D143411		1	BRACADEIRA
36		D74182		1	CASQUILHO ISOLADOR, Isolation Block
37		829-1410		1	PORCA, M10, Cl 10
38		614-10025		1	PARAFUSO, Hex, M10 x 25, 8.8, Full Thd

09-14		p1	07/08

RETENTORES E COIFA TORRE CONTROLE RETRO, COM CONTROLE PILOTO

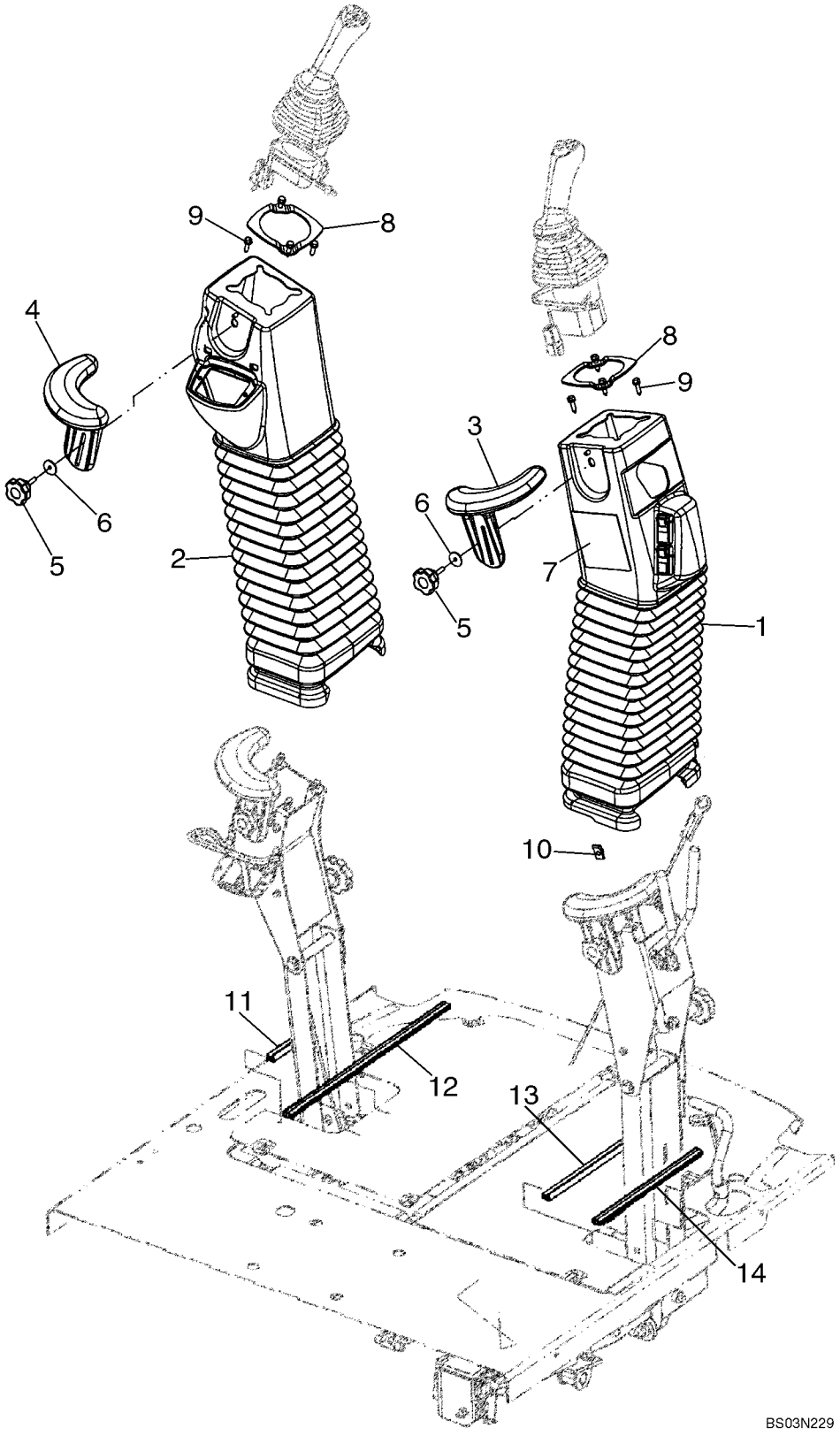

RETENTORES E COIFA TORRE CONTROLE RETRO, COM CONTROLE PILOTO

REF	FN	PART NUMBER	YR/SN	QTY	DESCRIPTION
1		87309924		1	CAPA
2		87309923		1	CAPA
3		87437366		1	APOIA-BRAÇO, Wrist, RH
4		87437369		1	APOIA-BRAÇO, Wrist, LH
5		87437689		2	MANÍPULO
6		87310186		2	ARRUELA PLANA, 6.6 ID x 25 OD x 1.6 mm thk, Stainless Steel
7		87305413		1	DECALCOMANIA, Pattern Selecting; With Backhoe/Excavator Black Silhouette on Decal; Not Illustrated
8		87435372		2	PLACA DE FIXAÇÃO
9		87608777		8	PARAFUSO
10		833-40406		2	PORCA, M6, U
11		87433008		1	JUNTAS, 183 mm (7-1/4 in); Cut From 87438002
12		87433006		1	JUNTAS, 428 mm (16-7/8 in); Cut From 87438002
13		87433005		1	JUNTAS, 335 mm (13-3/16 in); Cut From 87438002
14		87433007		1	JUNTAS, 275 mm (10-7/8 in); Cut From 87438002

09-15		p1	07/08

ALAVANCAS (TRAVA BRAÇO) TORRE CONTROLE RETRO COM CONTROLE PILOTO

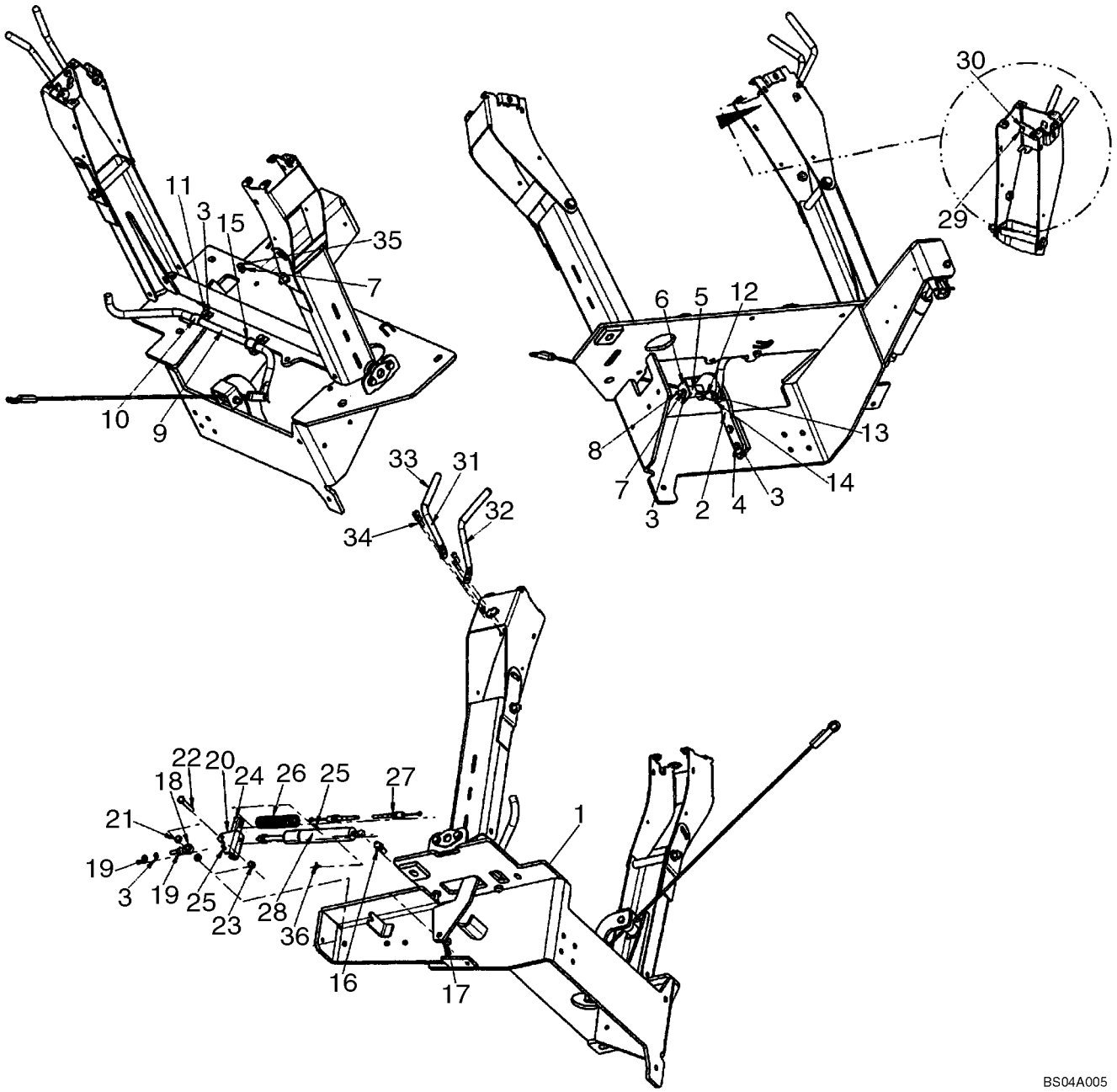

ALAVANCAS (TRAVA BRAÇO) TORRE CONTROLE RETRO COM CONTROLE PILOTO

REF	FN	PART NUMBER	YR/SN	QTY	DESCRIPTION
1		87440711		1	KBECOT, Pilot Control Tower Assembly; See Figure 09-13
2		86984544		1	SUPORTE, Roller Mounting
3		892-11008		6	ARRUELA-TRAVA, M8
4		614-8030		2	PARAFUSO, Hex, M8 x 30, 8.8
5		86984547		2	GUIA
6		86984545		1	SUPORTE
7		829-1408		2	PORCA, M8, Cl 10
8		814-8070		1	PARAFUSO, Hex, M8 x 70, 8.8
9		87441850		1	HASTE, Boom Latch Release
10		D143723		2	FREIO, Clamp
11		614-8025		2	PARAFUSO, Hex, M8 x 25, 8.8
12		87435924		1	CABO, Boom Latch
13		427-5094		1	CUPILHA, 5/16" x .940"
		895-11008		1	ARRUELA PLANA, M8 x 16 x 1.6, Used with Ref 13 and 14
14		432-612		1	GRAMPO, 3/32" x 3/4"
15		D143591		2	ANEL TRAVA
16		85824067		1	PINO COM RÓTULA, Stud
17		832-10410		1	CONTRA PORCA, M10 x 1.5, Cl 8
18		85824081		1	JUNTA ESFÉRICA
19		425-115		2	PORCA, 5/16"-24, G5
20		85824080		1	SUPORTE
21		85821520		2	ESPAÇADOR
22		413-528		1	PARAFUSO, Hex, 5/16"-18 x 1 3/4", G5
23		231-1445		1	CONTRA PORCA, 5/16"-18, GB
24		86984549		1	CANAL
25		432-828		2	GRAMPO, 1/8" x 1 3/4"
26		87443692		1	MOLA
27		87437806		1	FLEXÍVEL, Pilot Control Positioner
28		86989616		1	COMPASSO, Cylinder
29		140-108		1	PARAFUSO, Cross Pan Hd, #10-24 x 3/4"
30		231-14409		1	CONTRA PORCA, #10-24, GB
31		87418368		1	HASTE, Tower Stationary
32		87418369		1	HASTE, Tower Position

09-15		p2	07/08

ALAVANCAS (TRAVA BRAÇO) TORRE CONTROLE RETRO COM CONTROLE PILOTO

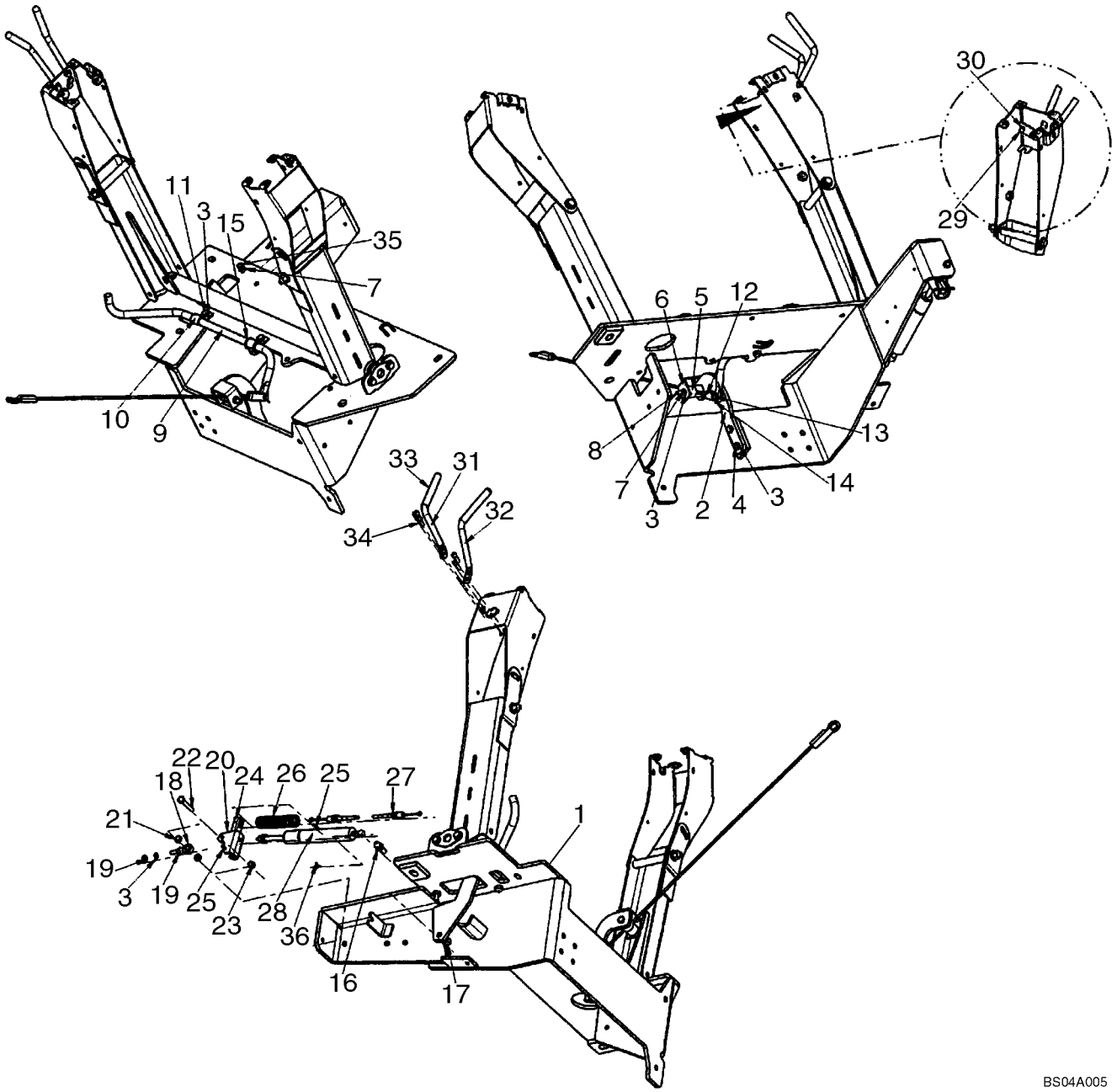

ALAVANCAS (TRAVA BRAÇO) TORRE CONTROLE RETRO COM CONTROLE PILOTO

REF	FN	PART NUMBER	YR/SN	QTY	DESCRIPTION
33		87442409		2	MACANETA
34		87310098		4	PARAFUSO, Hex Flange, M6 x 20, Black Oxide
35		614-8050		1	PARAFUSO, Hex, M8 x 50, 8.8, Full Thd
36		3233348R1		1	FIXADOR

CONTROLES - RETROESCAVADORA, COM PEDAIS DE CONTROLO DA OSCILAÇÃO (CONTROLES COM OSCILAÇÃO POR PEDAIS SEM BRA

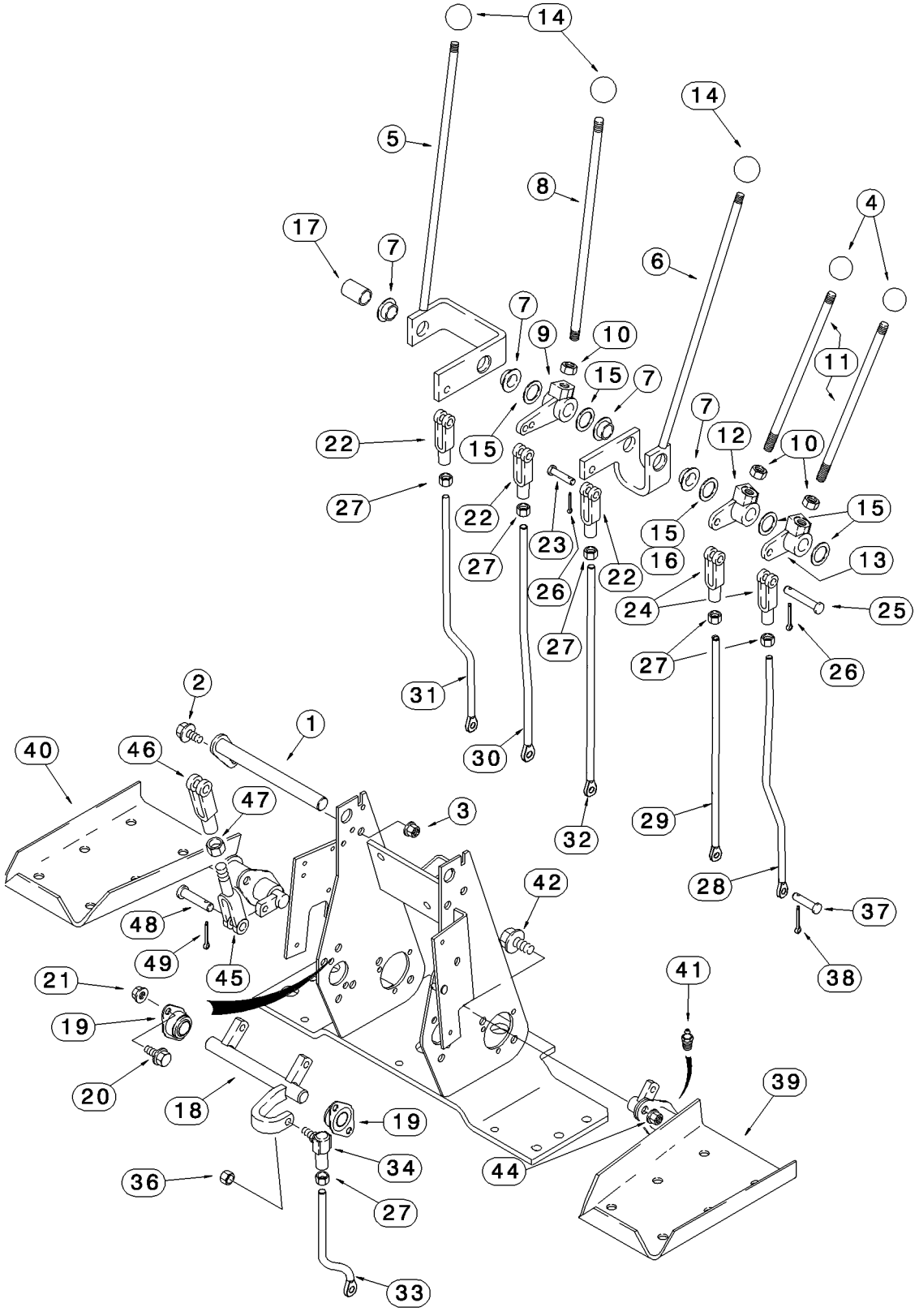

CONTROLES - RETROESCAVADORA, COM PEDAIS DE CONTROLO DA OSCILAÇÃO (CONTROLES COM OSCILAÇÃO POR PEDAIS SEM B

REF	FN	PART NUMBER	YR/SN	QTY	DESCRIPTION
1		87401203		1	EIXO CONJUNTO
2		614-8025		1	PARAFUSO, Hex, M8 x 25, 8.8
3		832-10408		1	CONTRA PORCA, M8 x 1.25, Cl 8
4		D59912		2	PLACA, Stabilizer Control Levers
5		136267A1		1	ALAVANCA, Boom; Incl. Ref 7
6		136269A1		1	ALAVANCA, Bucket; Incl. Ref 7
7		D148992		2	BUCHA
8		136263A1		1	HASTE, Dipper
9		D150397		1	ALAVANCA, Dipper
10		425-118		3	PORCA, 1/2"-20, G5
11		136261A1		2	ALAVANCA DE CONTROLE, Stabilizer
12		D150435		1	ALAVANCA, Right-Hand Stabilizer Control
13		D150434		1	ALAVANCA, Left-Hand Stabilizer Control
14		L54563		3	PLACA, Boom, Dipper, and Bucket
15		A30881		AR	ARRUELA PLANA, 49/64 x 1-15/64 x 1/32; Used As A Shim
16		D34666		1	ARRUELA PLANA, 25/32 x 1-3/8 x 9/64; May Be Used In Place Of Ref 15
17		D150486		1	ESPAÇADOR, Not Used On Models With Extendable Dipper
18		D148994		1	EIXO, Swing
19		D139039		2	ROLAMENTO
20		614-8025		4	PARAFUSO, Hex, M8 x 25, 8.8
21		832-10408		4	CONTRA PORCA, M8 x 1.25, Cl 8
22		213-126		3	BRACADEIRA, 3/8"-24 x 2 1/2"
23		D149288		3	PINO LARGO, Special
24		D150493		2	GARFO
25		427-6088		2	CUPILHA, 3/8" x 3/4"
26		432-612		5	GRAMPO, 3/32" x 3/4"
27		425-156		6	PORCA, Jam, 3/8"-24, G5
28		87422243		1	HASTE ROSCADA, Left-Hand Stabilizer Control
29		87422245		1	HASTE ROSCADA, Right-Hand Stabilizer Control
30		87422247		1	HASTE ROSCADA, Dipper
31		87422241		1	HASTE ROSCADA, Boom
32		87422249		1	HASTE ROSCADA, Bucket

CONTROLES - RETROESCAVADORA, COM PEDAIS DE CONTROLO DA OSCILAÇÃO (CONTROLES COM OSCILAÇÃO POR PEDAIS SEM BRA

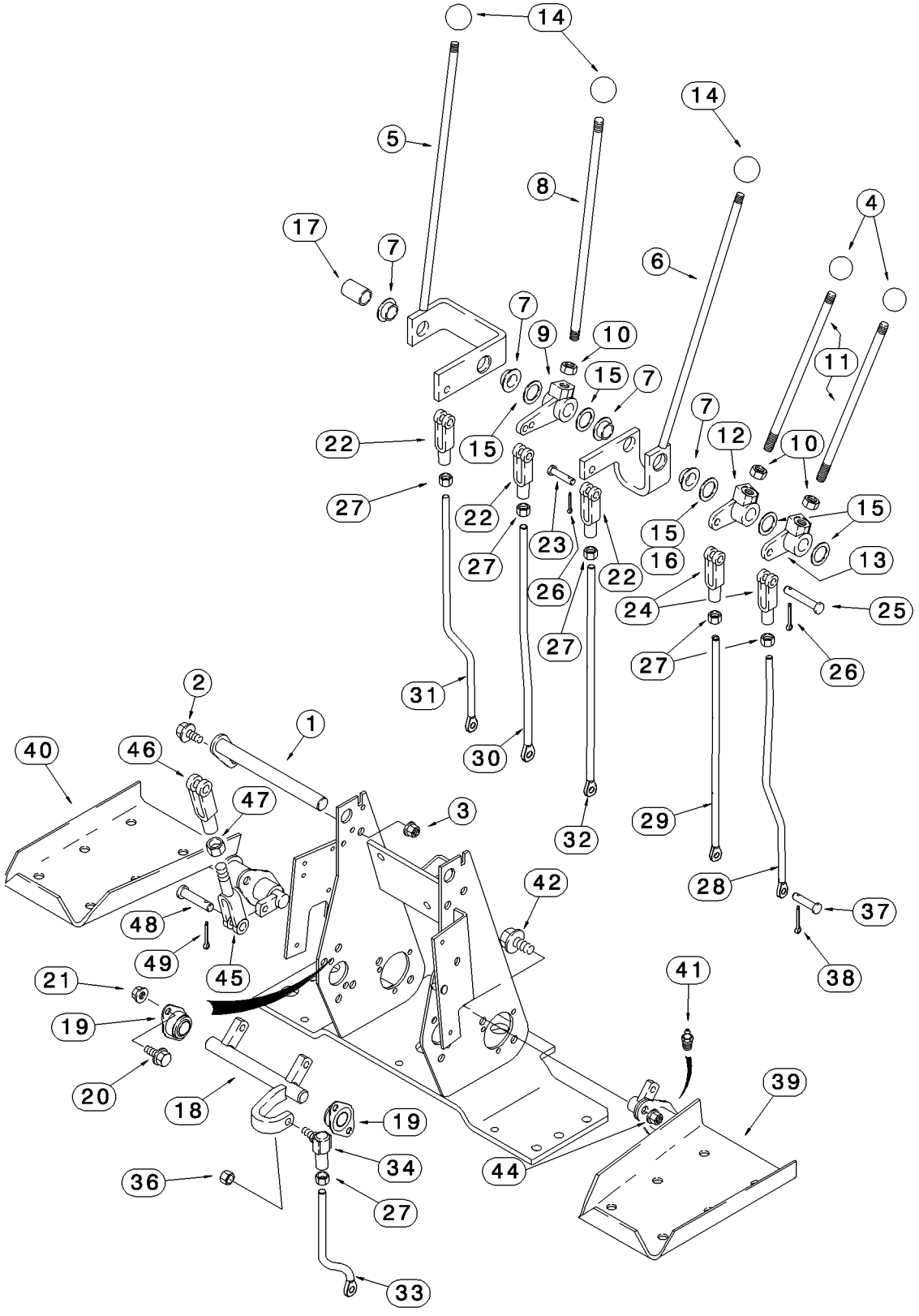

CONTROLES - RETROESCAVADORA, COM PEDAIS DE CONTROLO DA OSCILAÇÃO (CONTROLES COM OSCILAÇÃO POR PEDAIS SEM B

REF	FN	PART NUMBER	YR/SN	QTY	DESCRIPTION
33		87422239		1	HASTE ROSCADA, Swing
34		D149295		1	JUNTA ESFÉRICA, 3/8
36		425-116		1	PORCA, 3/8"-24, G5
37		D149287		6	PINO LARGO, 5/16
38		432-612		6	GRAMPO, 3/32" x 3/4"
39		136271A2		1	PEDAL CONJUNTO, Left-Hand Swing; Without Pilot Controls
40		136270A2		1	PEDAL CONJUNTO, Right-Hand Swing; Without Pilot Controls
41		219-4		2	GRAXEIRA, 1/8"-27 NPTF, Short
42		614-10025		4	PARAFUSO, Hex, M10 x 25, 8.8, Full Thd
44		832-10410		4	CONTRA PORCA, M10 x 1.5, Cl 8
45		D150503		2	EXTREMIDADE, Yoke
46		D149262		2	GARFO, 3/8
47		425-156		2	PORCA, Jam, 3/8"-24, G5
48		D149288		4	PINO LARGO, 3/8
49		432-612		4	GRAMPO, 3/32" x 3/4"

CONTROLES - RETROESCAVADORA, COM PEDAIS DE CONTROLO DA OSCILAÇÃO (CONTROLES COM OSCILAÇÃO POR PEDAIS E BRAÇ

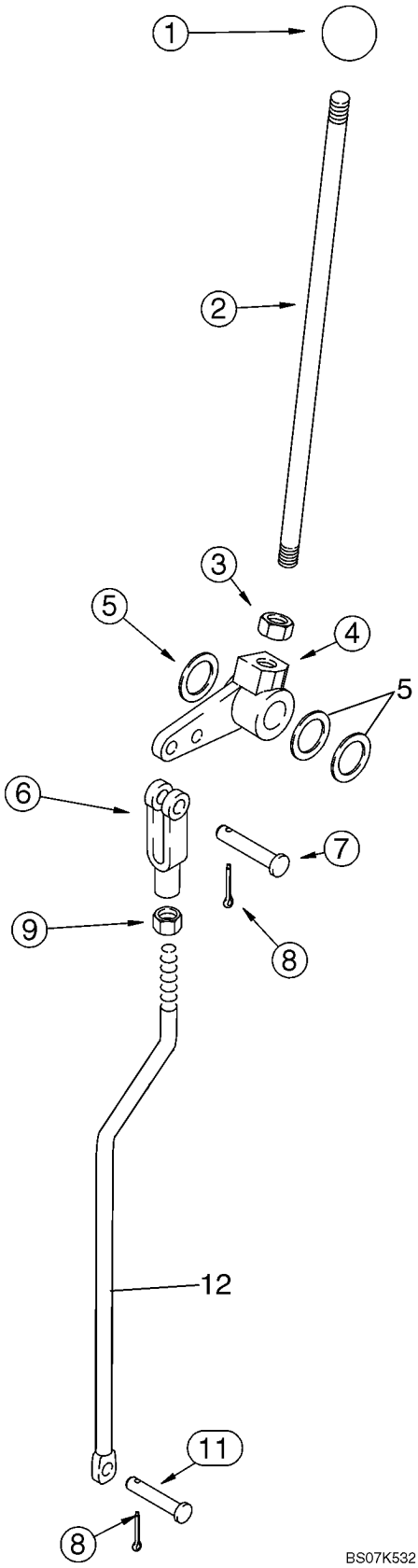

CONTROLES - RETROESCAVADORA, COM PEDAIS DE CONTROLO DA OSCILAÇÃO (CONTROLES COM OSCILAÇÃO POR PEDAIS E BRA

REF	FN	PART NUMBER	YR/SN	QTY	DESCRIPTION
1		L54563		1	PLACA, Extendahoe
2		136263A1		1	HASTE, Extendahoe
3		425-118		1	PORCA, 1/2"-20, G5
4		182006A1		1	ALAVANCA, Bellcrank
5		A30881		AR	ARRUELA PLANA
6		213-126		1	BRACADEIRA, 3/8"-24 x 2 1/2"
7		427-6088		1	CUPILHA, 3/8" x 3/4"
8		432-612		2	GRAMPO, 3/32" x 3/4"
9		425-156		1	PORCA, Jam, 3/8"-24, G5
11		D149287		1	PINO LARGO
12		87446113		1	HASTE ROSCADA, Extendahoe; Mounts In Inner Bellcrank Lever Hole

CONTROLES - RETROESCAVADORA, COM ALAVANCAS DE CONTROLO DA OSCILAÇÃO (CONTROLES COM OSCILAÇÃO POR PEDAIS SEM

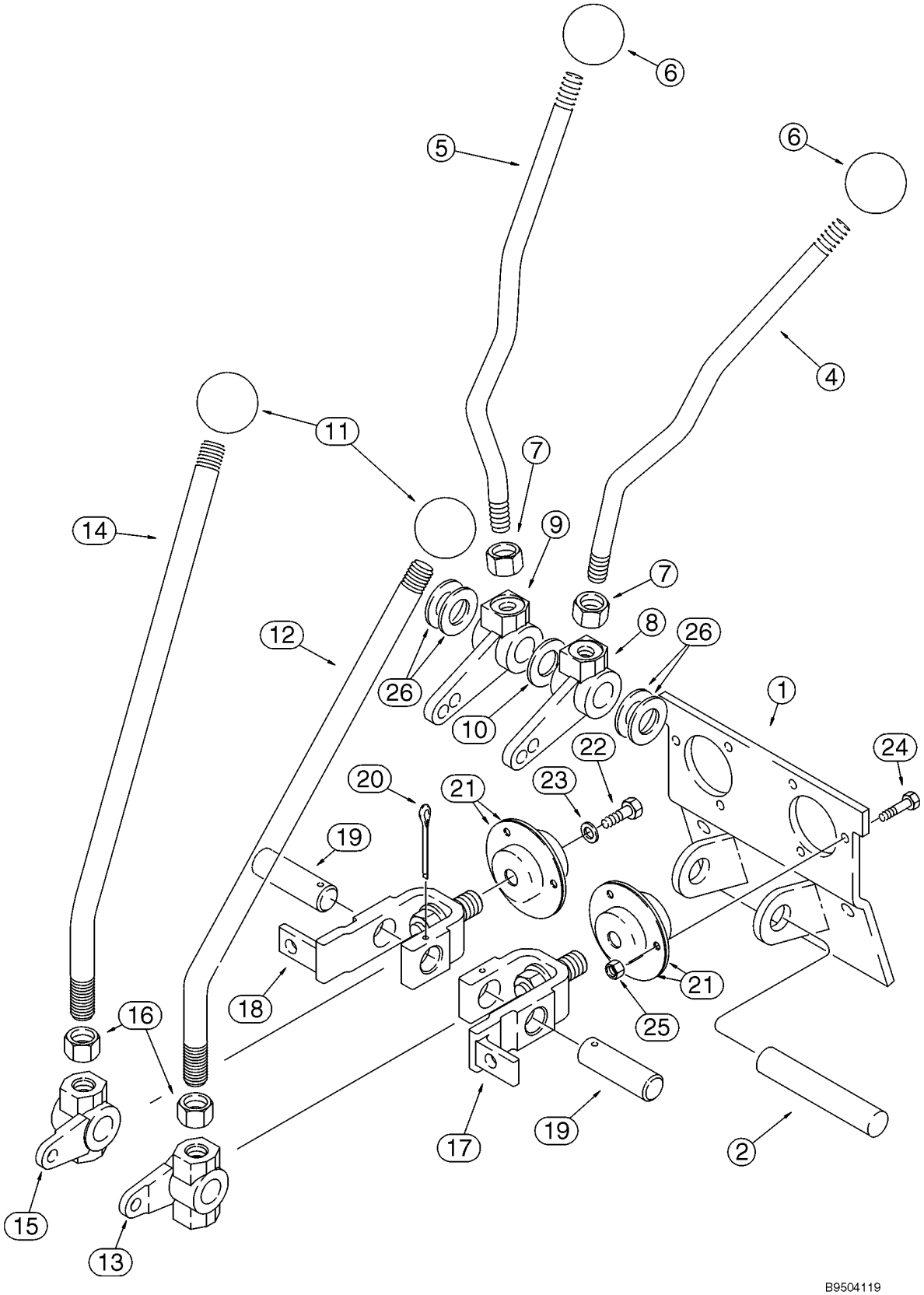

CONTROLES - RETROESCAVADORA, COM ALAVANCAS DE CONTROLO DA OSCILAÇÃO (CONTROLES COM OSCILAÇÃO POR PEDAIS S

REF	FN	PART NUMBER	YR/SN	QTY	DESCRIPTION
		REF			INSTRUCAO, UPPER CONTROL LEVERS
1		108864A1		1	SUPORTE
2		D148947		1	PINO LARGO, Stabilizer
4		409672A1		1	ALAVANCA, Left-Hand; Stabilizer
5		409673A1		1	ALAVANCA, Right-Hand; Stabilizer
6		D59912		2	PLACA, Stabilizer
7		425-118		2	PORCA, 1/2"-20, G5
8		108924A1		1	ALAVANCA
9		108923A1		1	ALAVANCA
10		495-11081		1	ARRUELA PLANA, 3/4", SAE
11		D39118		2	PLACA
12		125113A1		1	ALAVANCA, Boom and Swing
13		106989A1		1	ALAVANCA, Left-Hand Boom and Swing Lever
14		125113A1		1	ALAVANCA, Bucket and Dipper
15		106990A1		1	ALAVANCA, Right-Hand Bucket and Dipper Lever
16		425-1110		2	PORCA, 5/8"-18, G5
17		178006A1		1	ALAVANCA, Boom and Swing
18		178004A1		1	ALAVANCA, Bucket and Dipper
19		102765A1		2	PINO LARGO, Bellcrank
20		432-828		2	GRAMPO, 1/8" x 1 3/4"
21		112380A1		4	ROLAMENTO
22		614-6016		2	PARAFUSO, Hex, M6 x 16, 8.8
23		396-41028		2	ARRUELA PLANA, .281" x 7/8" x .098", HDN
24		614-6020		6	PARAFUSO, Hex, M6 x 20, 8.8
25		829-1406		6	PORCA, M6, Cl 10
26		A30881		AR	ARRUELA PLANA, 49/64 x 1-15/64 x 1/32

CONTROLES - RETROESCAVADORA, COM ALAVANCAS DE CONTROLO DA OSCILAÇÃO (CONTROLES COM OSCILAÇÃO POR PEDAIS SEM

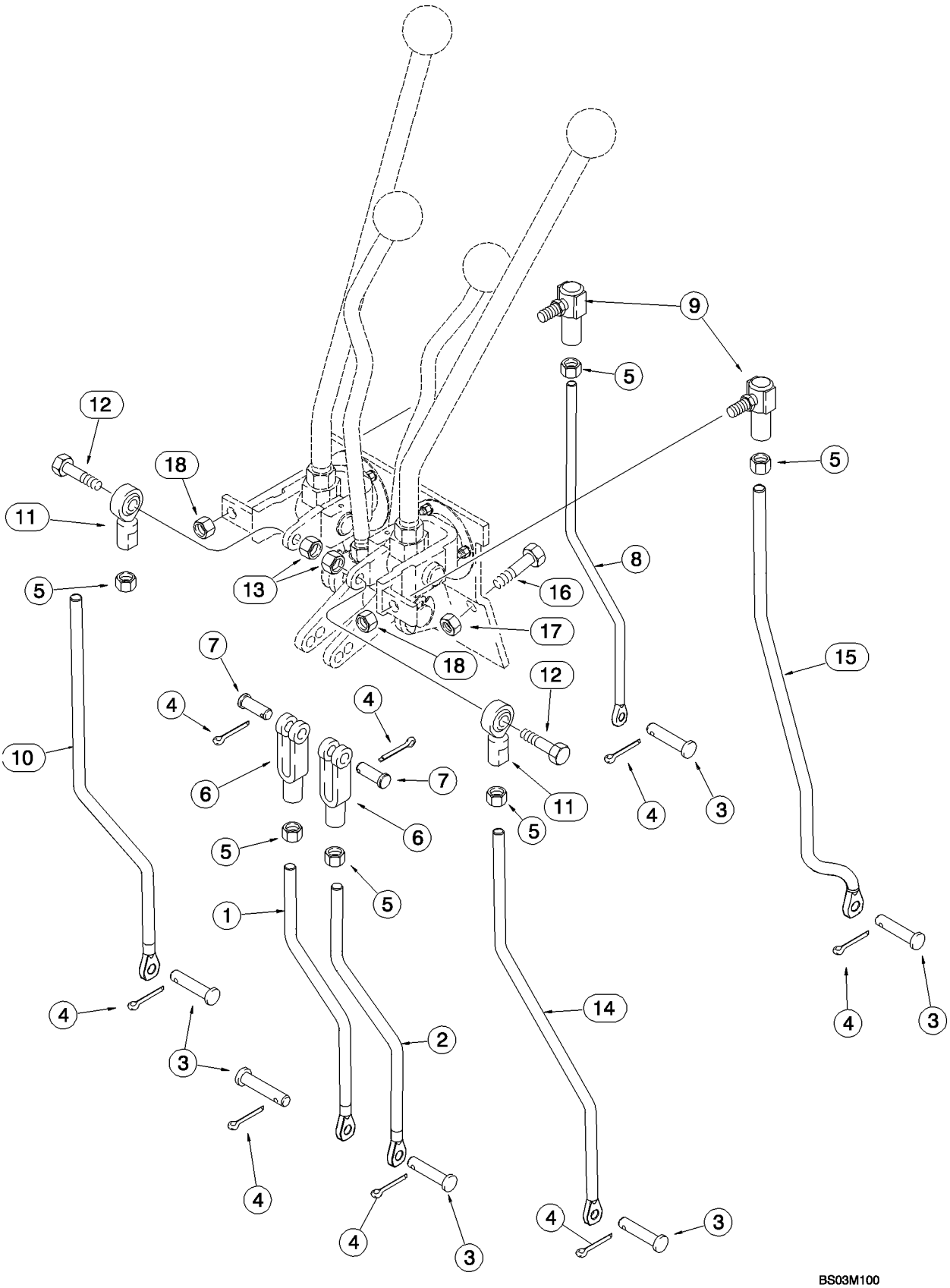

CONTROLES - RETROESCAVADORA, COM ALAVANCAS DE CONTROLO DA OSCILAÇÃO (CONTROLES COM OSCILAÇÃO POR PEDAIS S

REF	FN	PART NUMBER	YR/SN	QTY	DESCRIPTION
		REF			INSTRUCAO, LOWER CONTROL LEVERS
1		87452406		1	HASTE ROSCADA, Right-Hand; Stabilizer; 286.6 mm (11-9/32 in) Long
2		87452404		1	HASTE ROSCADA, Left-Hand; Stabilizer; 286.6 mm (11-9/32 in) Long
3		D149287		6	PINO LARGO
4		432-612		8	GRAMPO, 3/32" x 3/4"
5		425-116		6	PORCA, 3/8"-24, G5
6		213-126		2	BRACADEIRA, 3/8"-24 x 2 1/2"
7		D149288		2	PINO LARGO, Special
8		87422264		1	HASTE ROSCADA, Bucket
9		D149295		2	JUNTA ESFÉRICA
10		87422262		1	HASTE ROSCADA, Dipper
11		87382812		2	ROLAMENTO, BALLJOINT; 3/8NF
12		413-624		2	PARAFUSO, Hex, 3/8"-16 x 1 1/2", G5
13		425-106		2	PORCA, 3/8"-16, G5
14		87422256		1	HASTE ROSCADA, Boom
15		87422253		1	HASTE ROSCADA, Swing
16		614-10025		2	PARAFUSO, Hex, M10 x 25, 8.8, Full Thd
17		832-10410		2	CONTRA PORCA, M10 x 1.5, Cl 8
18		231-2446		2	CONTRA PORCA, 3/8"-24, GB

CONTROLES - PADRÃO DE CONTROLO DE ESCAVAÇÃO DA RETROESCAVADORA

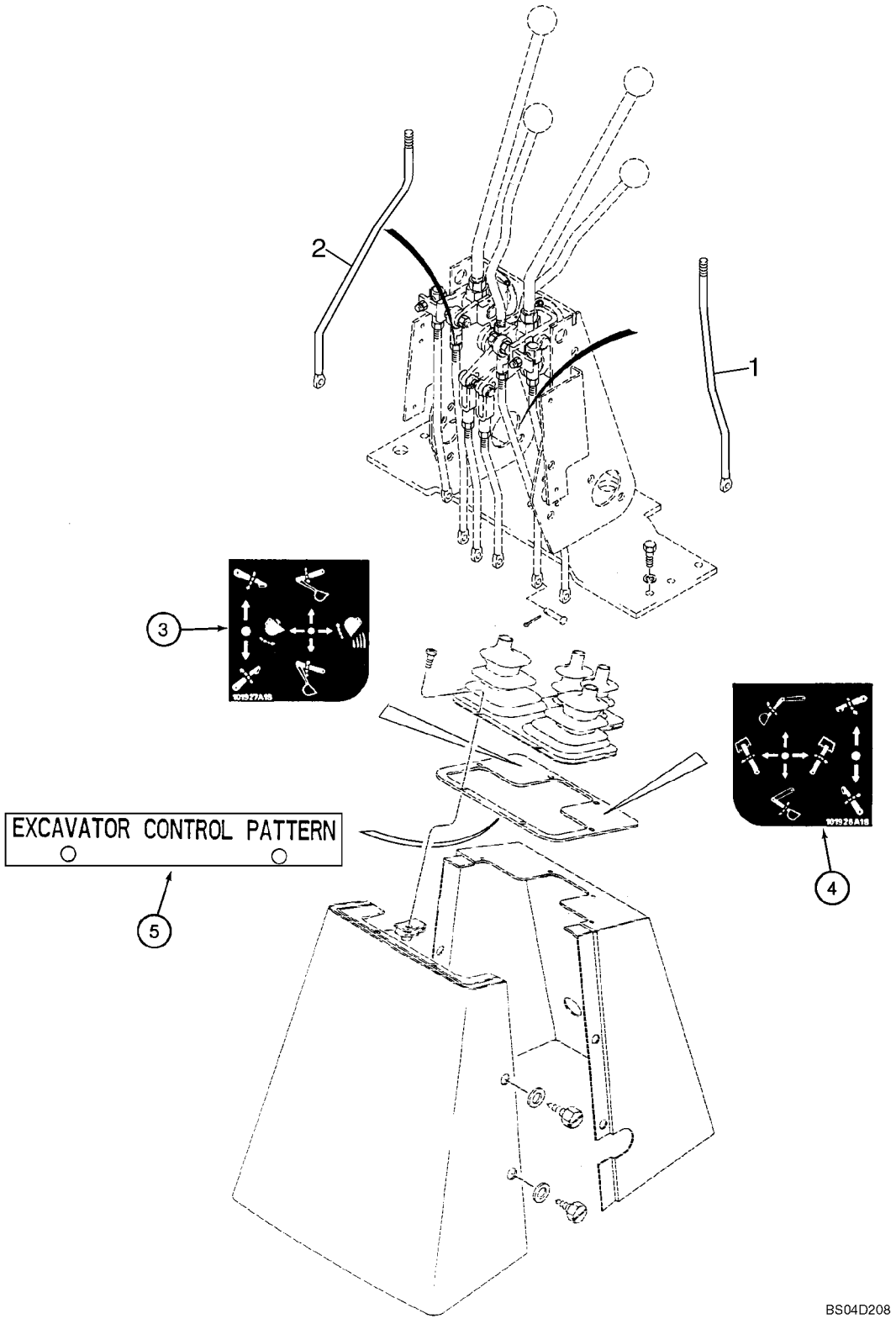

CONTROLES - PADRÃO DE CONTROLO DE ESCAVAÇÃO DA RETROESCAVADORA

REF	FN	PART NUMBER	YR/SN	QTY	DESCRIPTION
		87447088		1	KIT, SERVICE, Excavator Control Pattern; Incl. Ref 1 - 5; Purchase From Parts and Components; Machine Must Be Equipped With Hand Swing Controls; If Machine Is Equipped With Foot Swing Controls, Foot Swing to Hand Swing Controls Kit Must Be Ordered and Installed First
1		87422272		1	HASTE ROSCADA, Dipper; Replaces Existing Boom Control Rod; Right-Hand Control Lever Which Used To Control The Dipper, Now Controls The Boom
2		87422270		1	HASTE ROSCADA, Boom; Replaces Existing Dipper Control Rod; The Left-Hand Control Lever Which Used To Control The Boom, Now Controls The Dipper
3		E49498		1	DECALCOMANIA, Control; Right-Hand
4		E49497		1	DECALCOMANIA, Control; Left-Hand
5		198410A1		1	PLACA ESPESSA, Excavator Control Pattern

CONTROLES - RETROESCAVADORA, COM ALAVANCAS DE CONTROLO DA OSCILAÇÃO

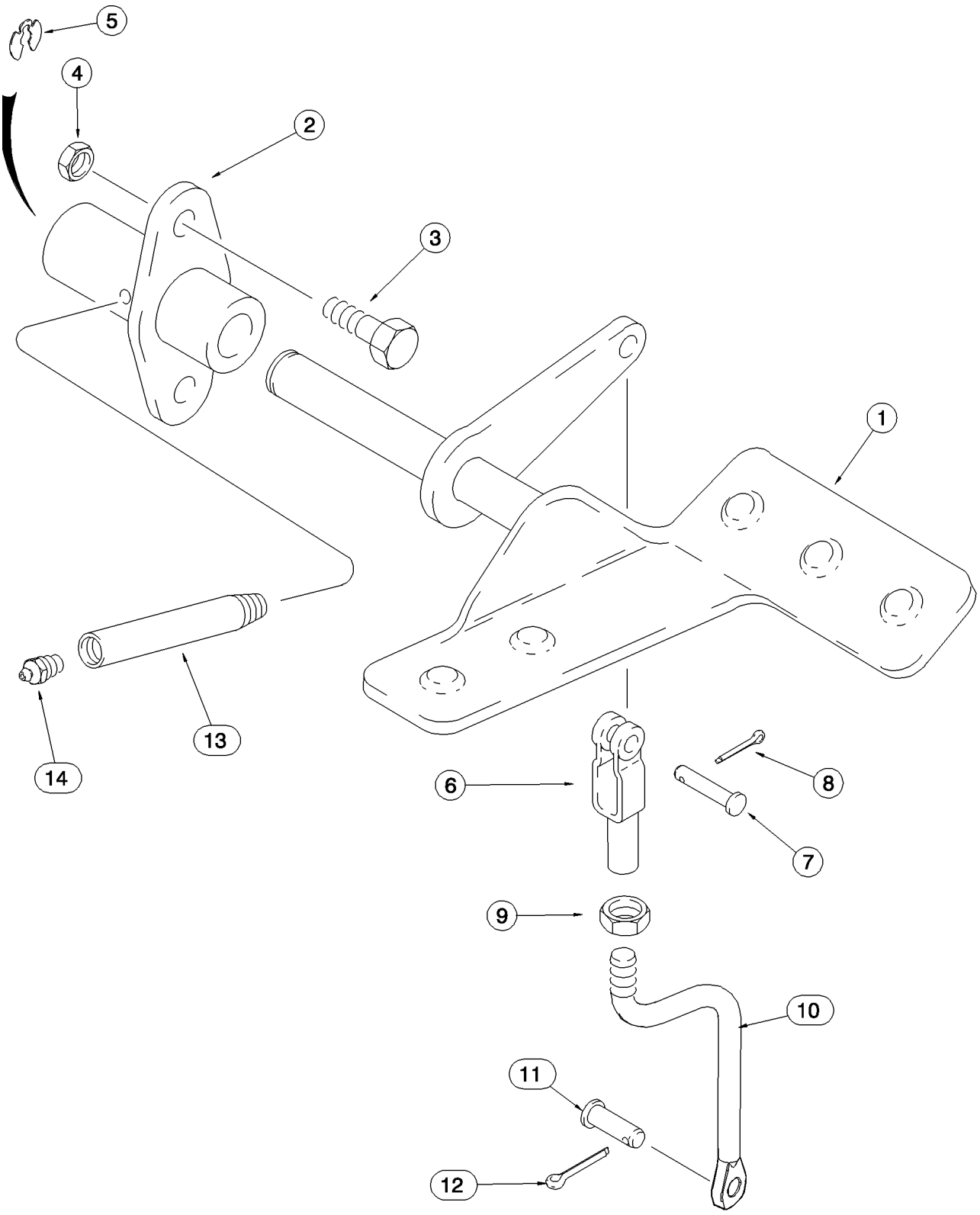

CONTROLES - RETROESCAVADORA, COM ALAVANCAS DE CONTROLO DA OSCILAÇÃO

REF	FN	PART NUMBER	YR/SN	QTY	DESCRIPTION
1		179029A1		1	PEDAL, Right-Hand; Extendahoe
2		126918A1		1	SUPORTE CONJUNTO
3		614-10025		2	PARAFUSO, Hex, M10 x 25, 8.8, Full Thd
4		832-10410		2	CONTRA PORCA, M10 x 1.5, Cl 8
5		D143416		1	ANEL-ELÁSTICO
6		D134900		1	GARFO
7		427-6088		1	CUPILHA, 3/8" x 3/4"
8		432-612		1	GRAMPO, 3/32" x 3/4"
9		425-156		1	PORCA, Jam, 3/8"-24, G5
10		87440058		1	HASTE ROSCADA, Extendahoe Rod
11		D149287		1	PINO LARGO
12		432-612		1	GRAMPO, 3/32" x 3/4"
13		D150032		1	TUBO, Lube
14		219-1		1	GRAXEIRA, 1/8"-27 x .66 lg

CONTROLES - SISTEMA HIDRÁULICO AUXILIAR DA RETROESCAVADORA, SEM CONTROLO AUTOMÁTICO

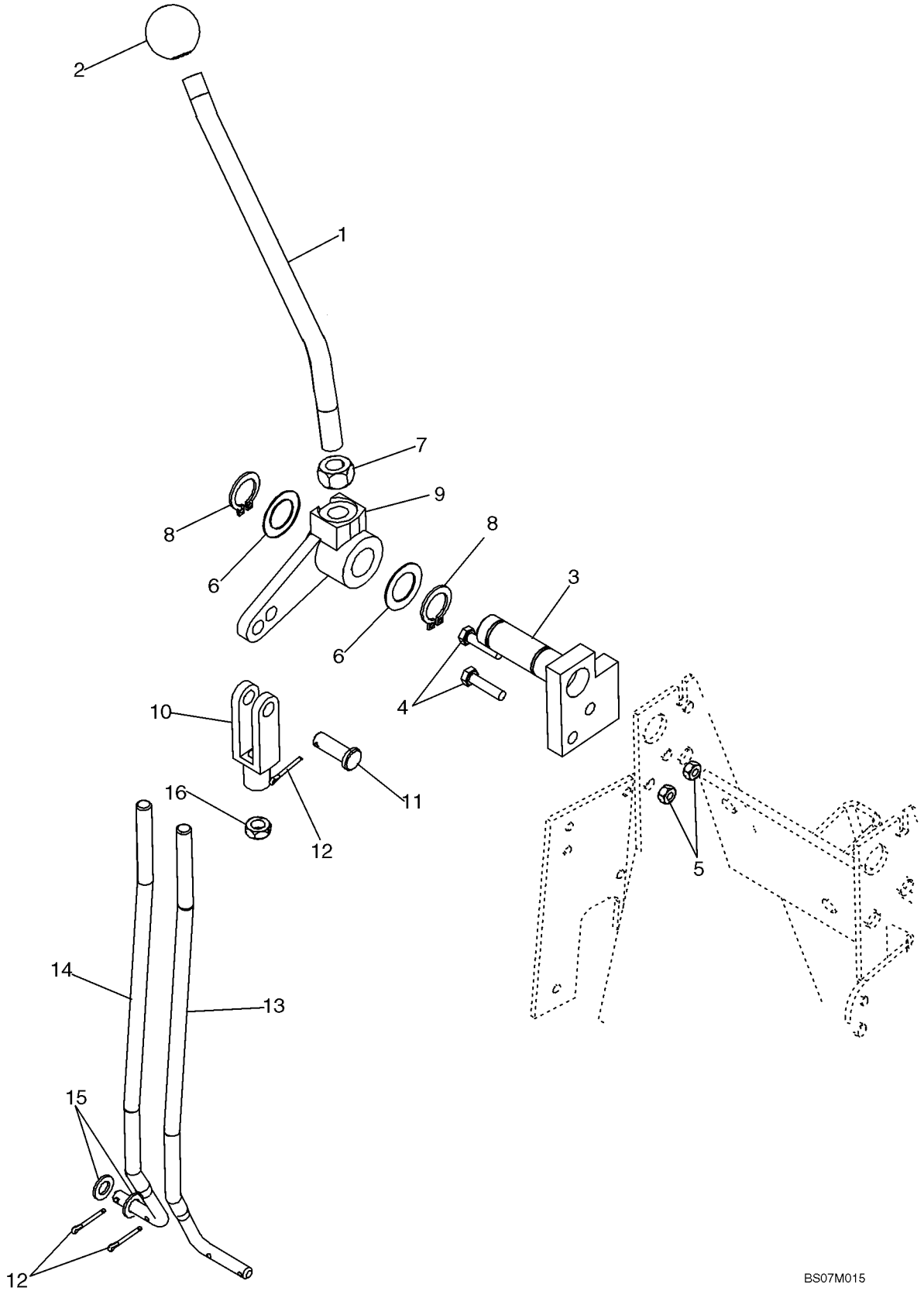

CONTROLES - SISTEMA HIDRÁULICO AUXILIAR DA RETROESCAVADORA, SEM CONTROLO AUTOMÁTICO

REF	FN	PART NUMBER	YR/SN	QTY	DESCRIPTION
1		221477A1		1	ALAVANCA DE CONTROLE, Auxiliary Control; 250 mm (9-27/32 in) long
2		D59912		1	PLACA
3		87425117		1	PIVO CONJUNTO, 7 or 8 Spool Valve
4		614-6025		2	PARAFUSO, Hex, M6 x 25, 8.8
5		829-1406		2	PORCA, M6, Cl 10
6		A30881		2	ARRUELA PLANA, Used As A Shim
7		425-118		1	PORCA, 1/2"-20, G5
8		103-1475		2	ANEL, #75, Ext
9		182006A1		1	ALAVANCA
10		213-126		1	BRACADEIRA, 3/8"-24 x 2 1/2"
11		D149288		1	PINO LARGO
12		432-612		3	GRAMPO, 3/32" x 3/4"
13		87439135		1	HASTE ROSCADA, 7 Spool Valve; If Used
14		87438157		1	HASTE ROSCADA, 8 Spool Valve; If Used
15		895-11008		2	ARRUELA PLANA, M8 x 16 x 1.6
16		425-156		1	PORCA, Jam, 3/8"-24, G5

RETROEXCAVADORA - ESTABILIZADORES, PLACAS E SUPORTES

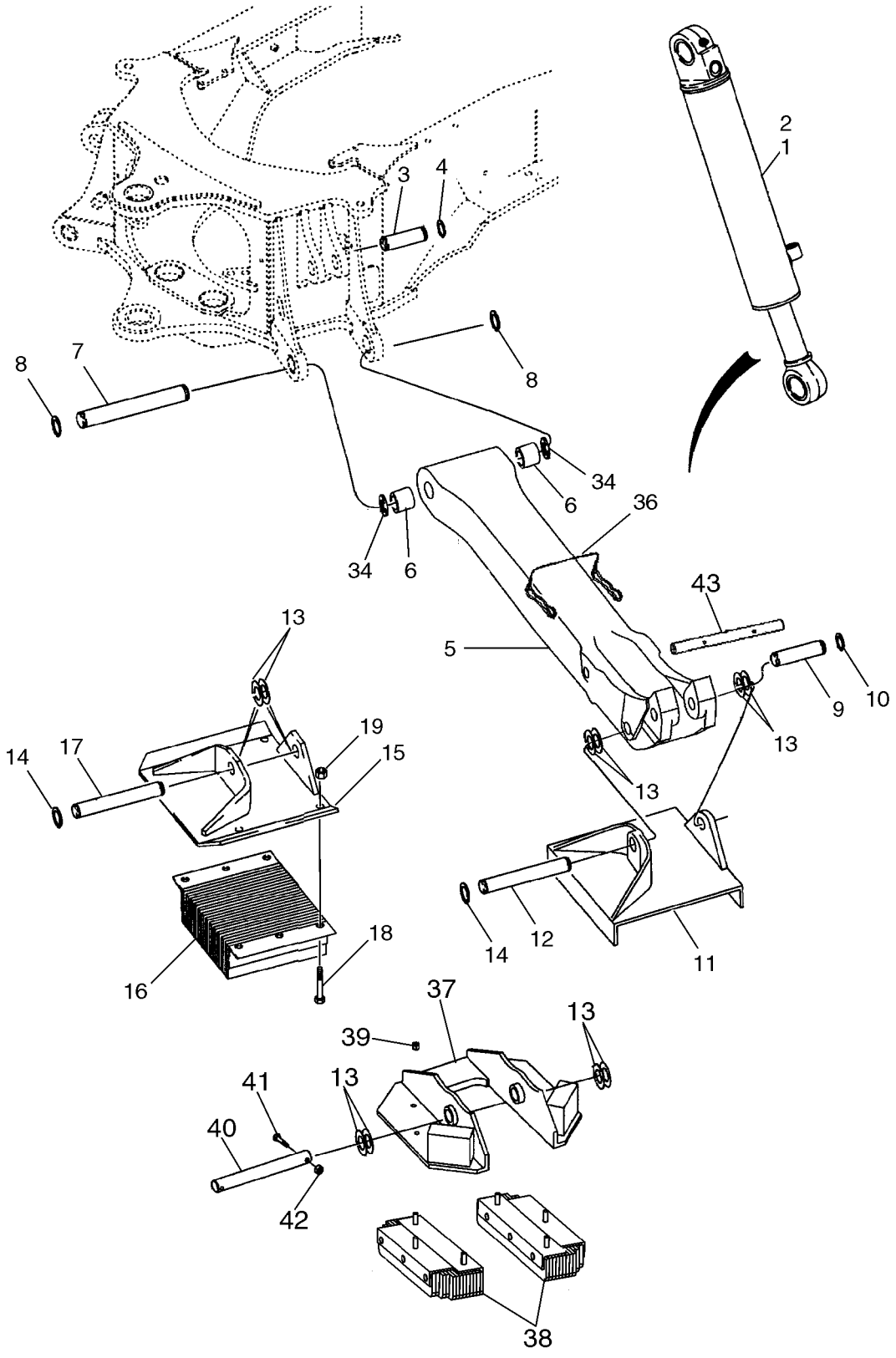

RETROEXCAVADORA - ESTABILIZADORES, PLACAS E SUPORTES

REF	FN	PART NUMBER	YR/SN	QTY	DESCRIPTION
1		195503A1		1	CILINDRO CONJUNTO, 102 ID x 553 mm strk; Stabilizer; Right-Hand; See Figure 08-61
2		195504A1		1	CILINDRO, 102 ID x 553 mm strk; Stabilizer; Left-Hand; See Figure 08-61
3		D38907		2	PINO, Stabilizer Cylinder to Chassis
4		103-16175		4	ANEL, #175, Ext
5		446222A1		2	ESTABILIZADOR, 1135 mm (44-11/16 in), Leg; Incl. Ref 6
6		D50146		2	BUCHA, 1.760" x 2.250" x 1.50"
7		121665A1		2	PINO LARGO, Stabilizer Leg to Chassis
8		103-16175		4	ANEL, #175, Ext
9		D26002		2	PINO, Stabilizer Cylinder
10		D25279		4	ANEL
11		87456199		2	CUNHA, Plate; Cleated, Tan
12		D28648		2	PINO, Plate/Pad to Leg
13		D143406		AR	ARRUELA PLANA, Used as a Spacer
14		D25279		4	ANEL
15		87389813		2	CUNHA, Street or Cemetery, If Used
16		D61368		2	AMORTECEDOR DE CHOQ, Rubber, If Used
17		D53812		2	PINO PIVO, 10-9/64 in Long; Plate to Leg
18		413-1228		8	PARAFUSO, Hex, 3/4"-10 x 1 3/4", G5
19		425-1012		8	PORCA, 3/4"-10, G5
34		495-81226		AR	ARRUELA PLANA, 1 13/16" x 2 1/2" x .109"
36		446454A1		2	PINO DE FIXAÇÃO
37		386000A2		2	CUNHA, Anti-Flipover
38		395753A2		4	BUJÃO DE BORRACHA
39		231-4247		12	CONTRA PORCA, 7/16"-14, GB
40		D149033		2	PINO LARGO
41		814-10050		2	PARAFUSO, Hex, M10 x 50, 8.8
42		832-10410		2	CONTRA PORCA, M10 x 1.5, Cl 8
43		87436782		2	PINO PIVO

RETROEXCAVADORA - TORRE DE CONTROLO DA OSCILAÇÃO E CILINDROS DA OSCILAÇÃO

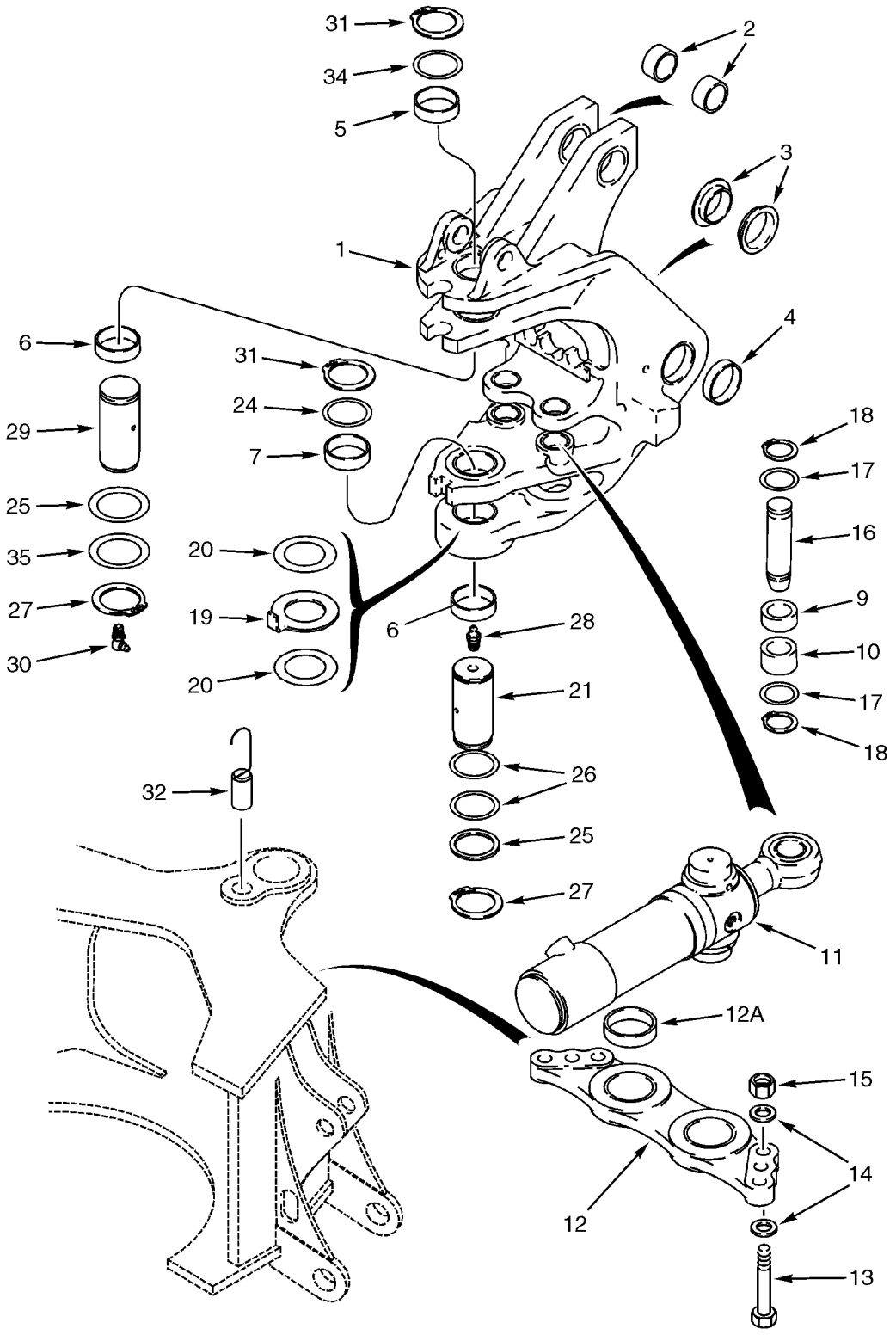

RETROEXCAVADORA - TORRE DE CONTROLO DA OSCILAÇÃO E CILINDROS DA OSCILAÇÃO

REF	FN	PART NUMBER	YR/SN	QTY	DESCRIPTION
		87737557		1	KBECOT, Swing; Incl. 1 - 10
1		326806A1		1	KBECOT, Swing
2		D149079		2	BUCHA, 50 x 34 mm wide
3		121778A1		2	BUCHA
4		329998A1		2	BUCHA
5		D135557		1	BUCHA
6		D135559		2	BUCHA, 70.22 ID x 86 OD x 28 mm wide
7		D138042		1	BUCHA, 70.22 ID x 86 OD x 34 mm wide
9		135249A1		2	BUCHA, 28.6 mm wide
10		135248A1		2	BUCHA, 38.1 mm wide
11		188027A2		2	CILINDRO CONJUNTO, 95 ID x 292 mm strk; Swing; See Figure 08-62
12		198976A1		1	PLACA ESPESSA, Incl. Ref 12A
12A		114318A1		2	BUCHA, 80 x 90 x 29.3 mm
13		827-20075		6	PARAFUSO, Hex, M20 x 75, 10.9, Full Thd
14		896-11020		12	ARRUELA PLANA, M20 x 37.5 x 4, HT
15		829-1420		6	PORCA, M20, Cl 10
16		386092A2		2	PINO LARGO
17		495-81227		4	ARRUELA PLANA, 2 1/16" x 2 15/16" x .060"
18		103-16200		4	ANEL, #200, Ext
19		243084A1		1	ARRUELA PLANA, 5 mm thk
20		134167A1		AR	CALCO DE AFINACAO, 2.05 mm (.08 in) thk
21		D151065		1	PINO LARGO
24		D136392		AR	CALCO DE AFINACAO, 3.05mm Thk, (M72 ID x 89 OD)
25		D136700		2	CALCO DE AFINACAO, 1.57mm Thk, 67 x 83 x 2.0 mm
26		D136391		AR	CALCO DE AFINACAO, 1.57mm Thk, (M72 ID x 89 OD)
27		800-40065		2	ANEL, M65, Ext
28		219-1		1	GRAXEIRA, 1/8"-27 x .66 lg
29		292385A1		1	PINO LARGO
30		219-55		1	GRAXEIRA, 90º, 1/8" NPT x .84" lg
31		800-40070		2	ANEL, M70 Ext
32		384815A1		1	PINO CONJUNTO, Swing Stop

RETROEXCAVADORA - TORRE DE CONTROLO DA OSCILAÇÃO E CILINDROS DA OSCILAÇÃO

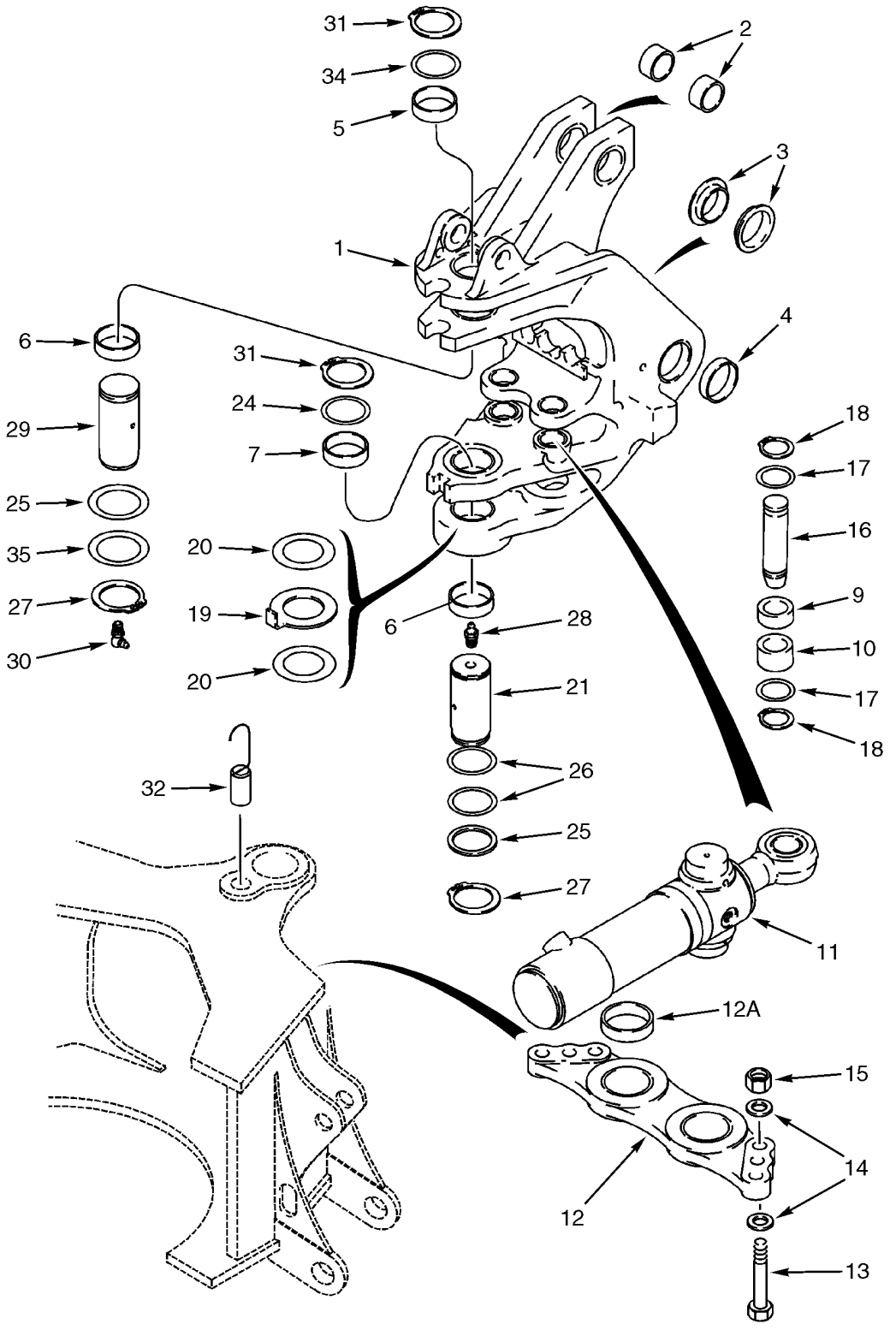

RETROEXCAVADORA - TORRE DE CONTROLO DA OSCILAÇÃO E CILINDROS DA OSCILAÇÃO

REF	FN	PART NUMBER	YR/SN	QTY	DESCRIPTION
34		293636A1		1	ARRUELA PLANA, Upper
35		D144423		AR	ARRUELA PLANA, 2-5/8 x 3-3/8 x 1/8; Used As A Shim

RETROEXCAVADORA - TORRE DA LANÇA E DE OSCILAÇÃO

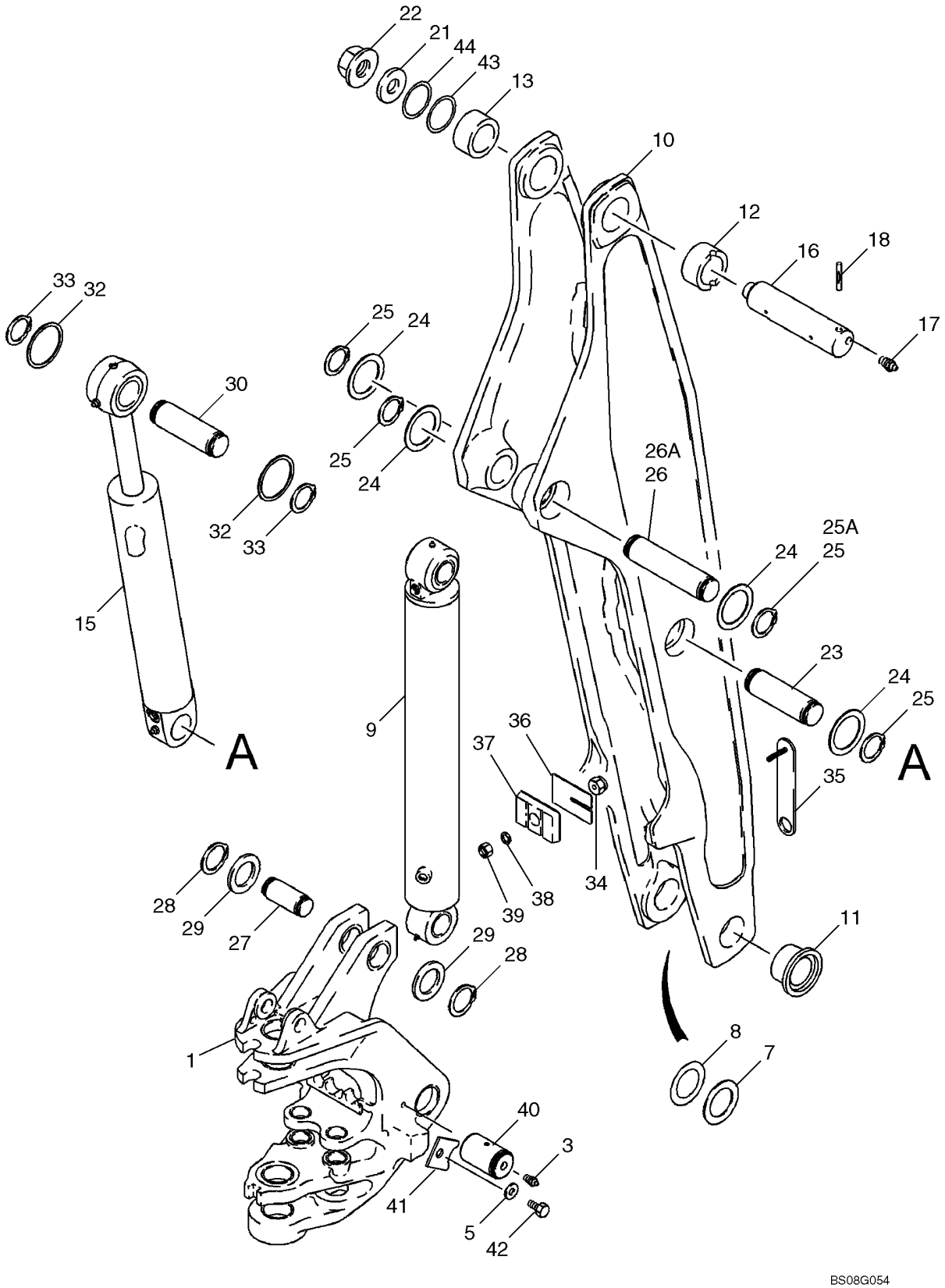

RETROEXCAVADORA - TORRE DA LANÇA E DE OSCILAÇÃO

REF	FN	PART NUMBER	YR/SN	QTY	DESCRIPTION
1		87737557		1	KBECOT, Swing; See Figure 09-23 For Bushings
3		219-1		2	GRAXEIRA, 1/8"-27 x .66 lg
5		896-11020		2	ARRUELA PLANA, M20 x 37.5 x 4, HT
7		H71514		AR	ARRUELA PLANA
8		R32119		AR	ARRUELA PLANA, 71 ID x 114 mm
9		189653A2		1	CILINDRO CONJUNTO, 114 ID x 982 mm strk; Boom; See Figure 08-63
10		129883A1		1	BRACO, Incl. Ref 11 - 13
11		D151071		2	BUCHA, 70 ID x 34 mm lg
12		D135739		1	BUCHA, 70 ID x 44 mm lg; With Slot For Groove Pin; Right-Hand Side
13		D137218		1	BUCHA, 70 ID x 44 mm lg; Without Slot For Groove Pin; Left-Hand Side
15		233114A2		1	CILINDRO CONJUNTO, 108 ID x 686 mm strk; Dipper; See Figure 08-64
16		D132494		1	PINO LARGO
17		219-1		2	GRAXEIRA, 1/8"-27 x .66 lg
18		135-51652		1	PERNO ESTRIADO, 1/2" x 3 1/4"
21		D133632		1	ARRUELA PLANA
22		181042A1		1	PORCA, Flange, Special
23		129040A1		1	PINO LARGO
24		495-81226		4	ARRUELA PLANA, 1 13/16" x 2 1/2" x .109"
25		103-16175		4	ANEL, #175, Ext, Used With Ref 26, 129040A1 Pin
25A		5135061		1	ANEL, M45, Ext, Used With Ref 26A, 87713665 Pin
26		129040A1		1	PINO LARGO, No Longer Used; For Service Order 87713665, Ref 26A
26A		87713665		1	PERNO ESTRIADO
27		142842A1		1	PINO LARGO
28		800-44050		2	ANEL, M50, Ext
29		495-81227		AR	ARRUELA PLANA, 2 1/16" x 2 15/16" x .060"
30		129041A1		1	PINO LARGO
32		495-81226		AR	ARRUELA PLANA, 1 13/16" x 2 1/2" x .109"
33		103-16175		2	ANEL, #175, Ext
34		87592819		1	BUJÃO, Boom Bumper Plug; 11.04 ID x 25.4 OD x 14.5 wide; Headless

RETROEXCAVADORA - TORRE DA LANÇA E DE OSCILAÇÃO

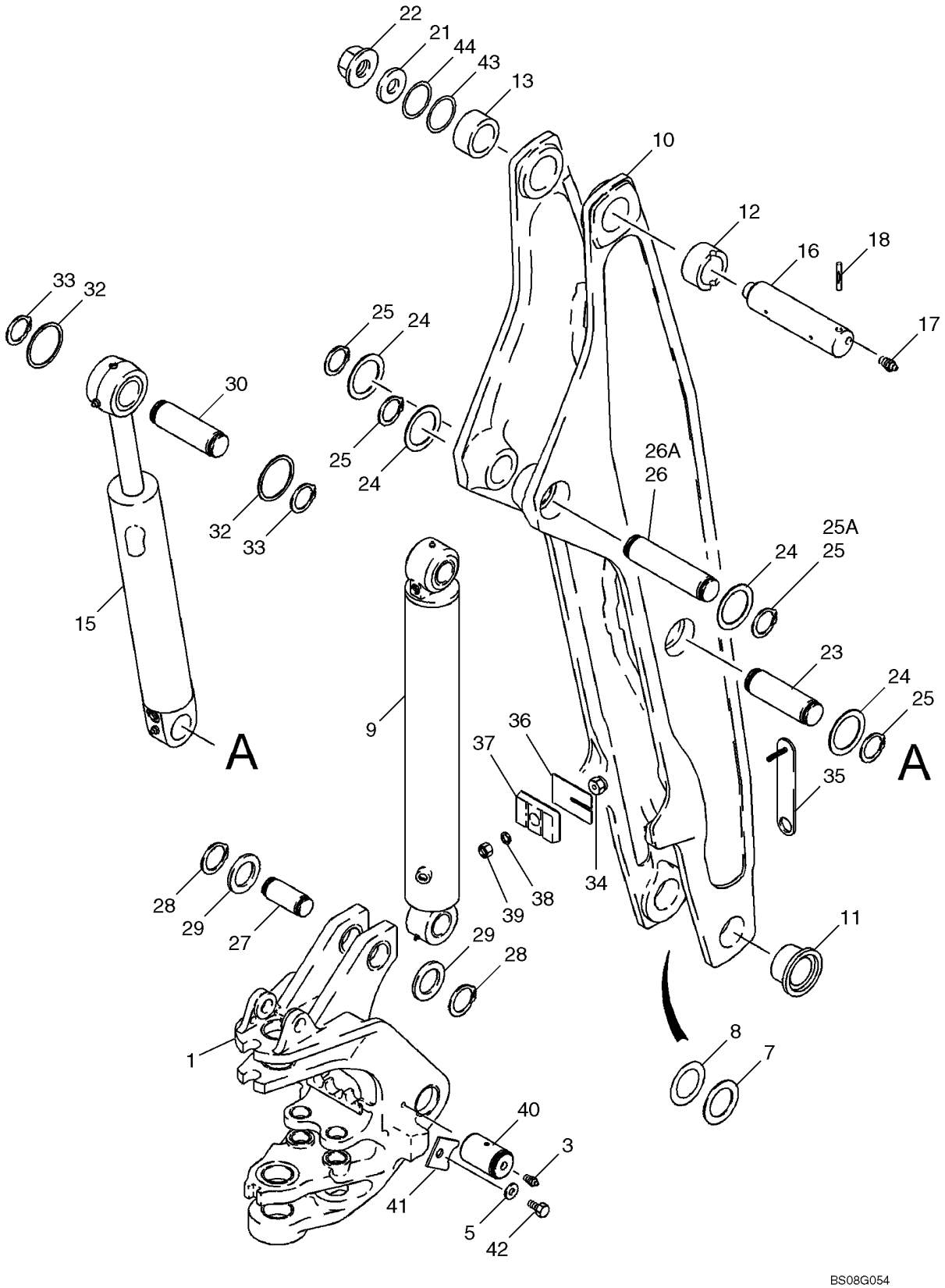

RETROEXCAVADORA - TORRE DA LANÇA E DE OSCILAÇÃO

REF	FN	PART NUMBER	YR/SN	QTY	DESCRIPTION
35		184723A1		1	SUPORTE
36		138624A1		AR	BLOCO, 1.5 mm thk Shim
37		87491322		1	PÁRA-CHOQUE, Replaces 87371132
38		496-81018		1	ARRUELA PLANA, Flat
39		829-1410		1	PORCA, M10, Cl 10
40		87326813		2	PERNO ESTRIADO
41		303646A1		2	BRACADEIRA
42		604-20035		2	PARAFUSO, Hex, Lock, M20 x 35, Cl 8.8
43		404834A1		AR	CALCO DE AFINACAO, 5 mm thk, Concave
44		404835A1		AR	CALCO DE AFINACAO, 5 mm thk, Concave

LANÇA PROTEÇÃO

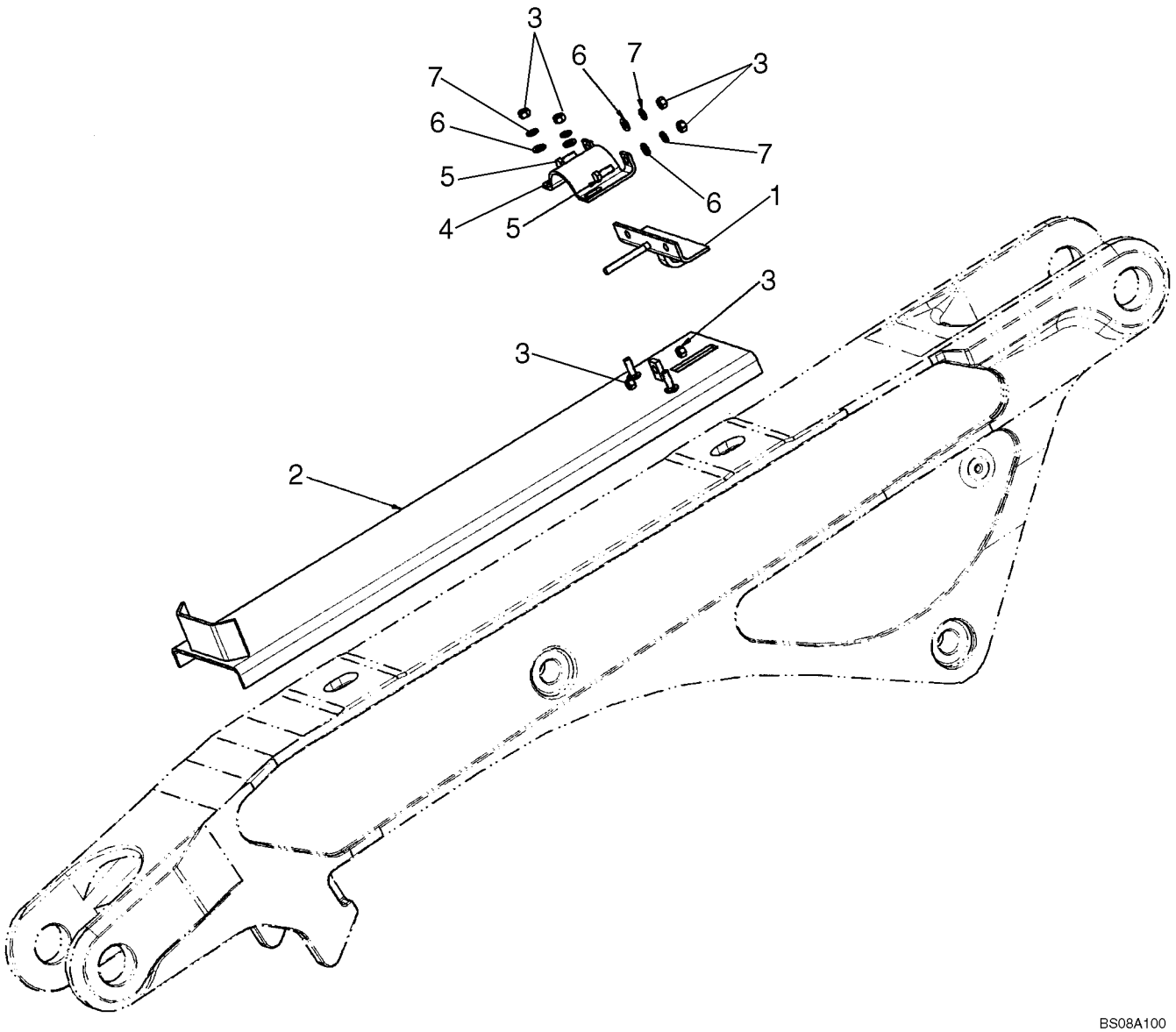

LANÇA PROTEÇÃO

REF	FN	PART NUMBER	YR/SN	QTY	DESCRIPTION
		87537209		1	PROTEÇÃO, Boom; Incl. 1 - 7
1		87537207		1	PROTEÇÃO, Clevis
2		87537201		1	PROTEÇÃO, Boom
3		829-1412		6	PORCA, M12, Cl 10
4		87537208		1	PROTEÇÃO, Cover
5		614-12030		2	PARAFUSO, Hex, M12 x 30, 8.8
6		896-11012		4	ARRUELA PLANA, M13.5 x 24.5 x 3, HT
7		892-11012		4	ARRUELA-TRAVA, M12

09-25		p1	07/08

TRINCO DA LANÇA (SEM CONTROLO AUTOMÁTICO)

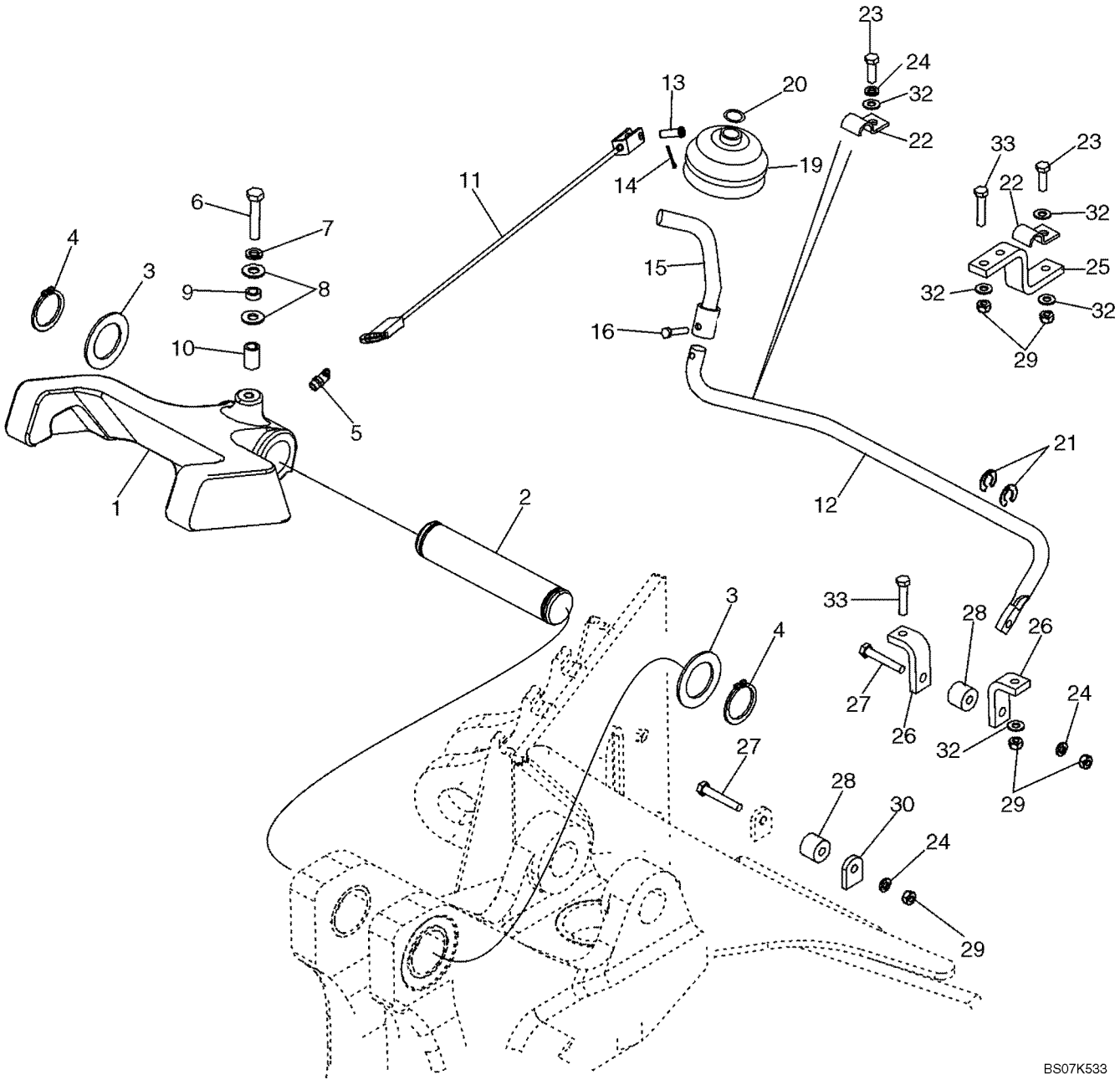

10

TRINCO DA LANÇA (SEM CONTROLO AUTOMÁTICO)

REF	FN	PART NUMBER	YR/SN	QTY	DESCRIPTION
1		379941A1		1	TRINCO
2		D129227		1	PINO LARGO
3		D144592		2	ARRUELA PLANA
4		800-44040		2	ANEL, M40, Ext
5		219-55		1	GRAXEIRA, 90º, 1/8" NPT x .84" lg
6		614-10050		1	PARAFUSO, Hex, M10 x 50, 8.8, Full Thd
7		892-11010		1	ARRUELA-TRAVA, M10
8		895-15010		2	ARRUELA PLANA, M11 x 24 x 2
9		87445245		1	ESPAÇADOR, 15.88 OD x 6.4 W x 2.41 mm thick wall
10		396092A1		1	ESPAÇADOR
11		87435924		1	CABO
12		87441850		1	HASTE, Boom Latch Release; 6.0 mm Mounting Hole
13		427-5094		1	CUPILHA, 5/16" x .940"
14		432-612		1	GRAMPO, 3/32" x 3/4"
15		87444149		1	HASTE CONJUNTO
16		87041331		4	PARAFUSO, Hex, Lock, M6 x 16, Cl 8.8
19		D86664		1	COIFA
20		D143735		1	BRACADEIRA, Ring
21		D143591		2	ANEL TRAVA, 5/8 dia
22		D143723		2	FREIO, CLAMP, 5/8
23		614-8025		2	PARAFUSO, Hex, M8 x 25, 8.8
24		892-11008		3	ARRUELA-TRAVA, M8
25		87449995		1	SUPORTE, Rod
26		87449996		2	SUPORTE, Cable
27		814-8050		2	PARAFUSO, Hex, M8 x 50, 8.8
28		86984547		2	GUIA, Roller, Cable Guide
29		829-1408		7	PORCA, M8, Cl 10
30		87432811		1	SUPORTE
32		895-11008		7	ARRUELA PLANA, M8 x 16 x 1.6
33		614-8030		4	PARAFUSO, Hex, M8 x 30, 8.8

TRINCO DA LANÇA (COM CONTROLO AUTOMÁTICO)

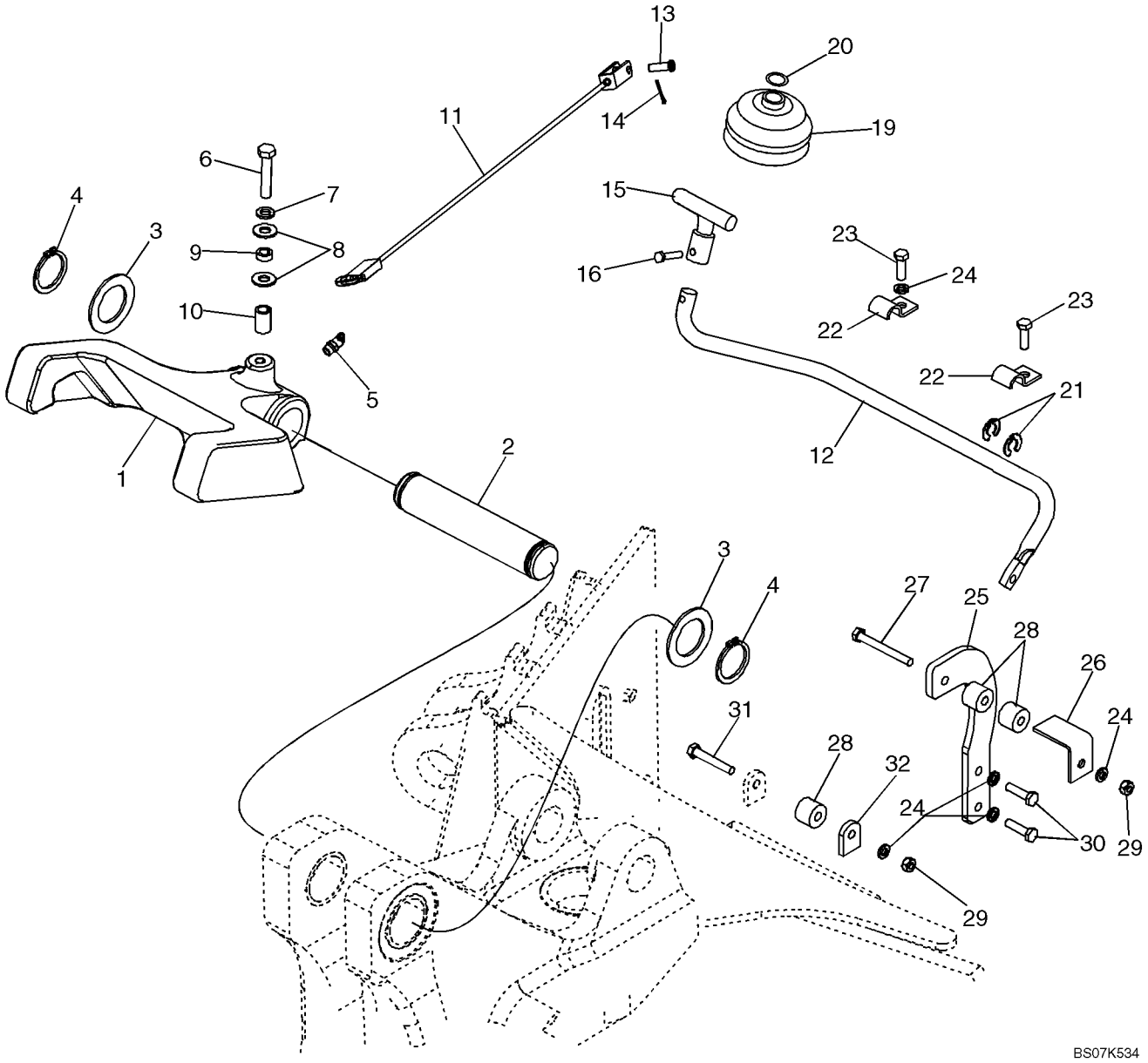

TRINCO DA LANÇA (COM CONTROLO AUTOMÁTICO)

REF	FN	PART NUMBER	YR/SN	QTY	DESCRIPTION
1		379941A1		1	TRINCO
2		D129227		1	PINO LARGO
3		D144592		2	ARRUELA PLANA
4		800-44040		2	ANEL, M40, Ext
5		219-55		1	GRAXEIRA, 90º, 1/8" NPT x .84" lg
6		614-10050		1	PARAFUSO, Hex, M10 x 50, 8.8, Full Thd
7		892-11010		1	ARRUELA-TRAVA, M10
8		895-15010		2	ARRUELA PLANA, M11 x 24 x 2
9		87445245		1	ESPAÇADOR
10		396092A1		1	ESPAÇADOR
11		87435924		1	CABO
12		87441850		1	HASTE, Boom Latch Release
13		427-5094		1	CUPILHA, 5/16" x .940"
14		432-612		1	GRAMPO, 3/32" x 3/4"
15		87427775		1	HASTE CONJUNTO
16		87041331		1	PARAFUSO, Hex, Lock, M6 x 16, Cl 8.8
19		D86664		1	COIFA
20		D143735		1	BRACADEIRA, Ring
21		D143591		2	ANEL TRAVA
22		D143723		2	FREIO, CLAMP, 5/8
23		614-8025		2	PARAFUSO, Hex, M8 x 25, 8.8
24		892-11008		5	ARRUELA-TRAVA, M8
25		86984544		1	SUPORTE, Roller Mounting
26		86984545		1	SUPORTE, Cable
27		814-8070		1	PARAFUSO, Hex, M8 x 70, 8.8
28		86984547		3	GUIA, Roller, Cable Guide
29		829-1408		2	PORCA, M8, Cl 10
30		614-8030		2	PARAFUSO, Hex, M8 x 30, 8.8
31		814-8050		1	PARAFUSO, Hex, M8 x 50, 8.8
32		87432811		1	SUPORTE

RETROEXCAVADORA - IMERSOR E BALDE

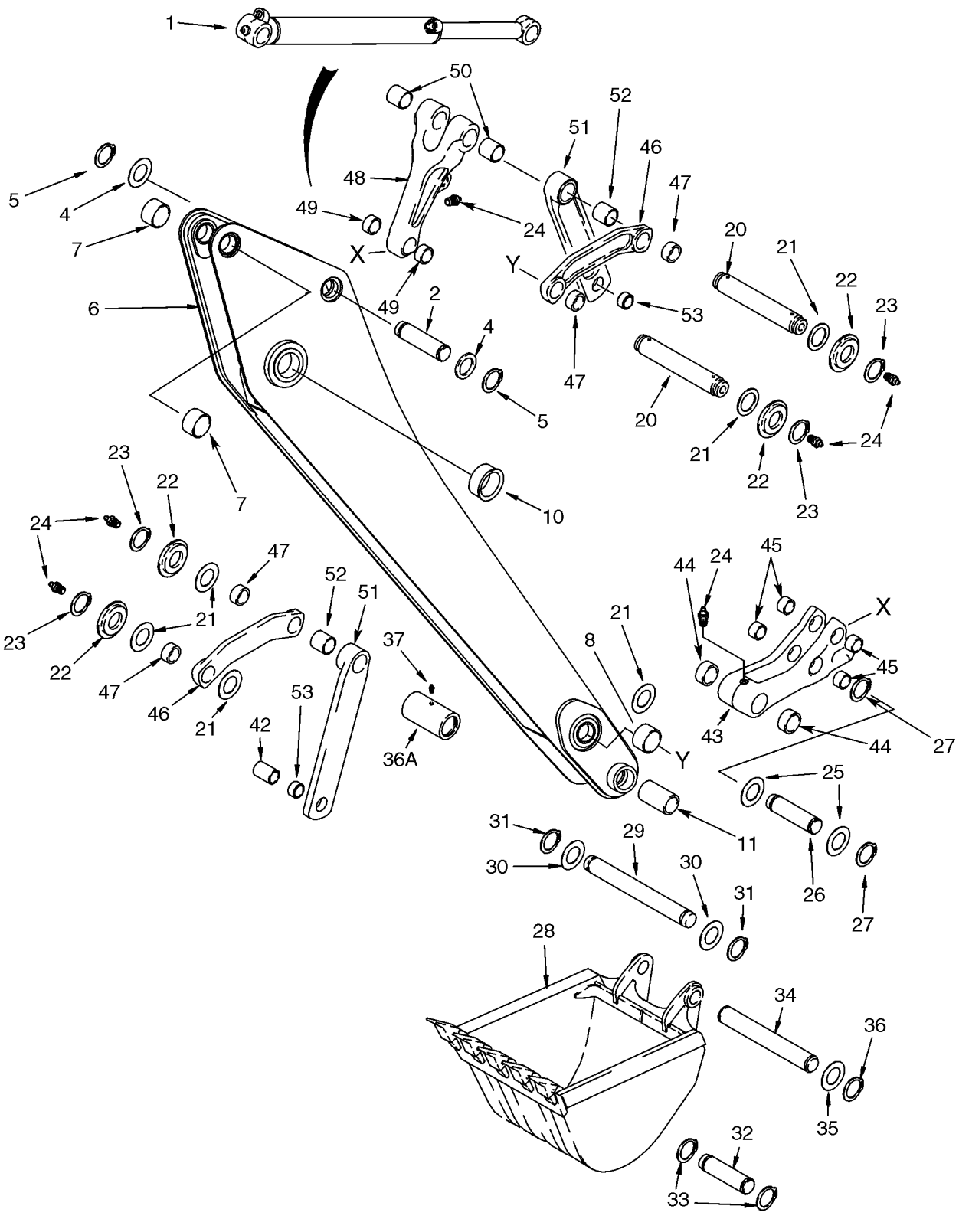

RETROEXCAVADORA - IMERSOR E BALDE

REF	FN	PART NUMBER	YR/SN	QTY	DESCRIPTION
1		128760A1		1	CILINDRO CONJUNTO, 83 ID x 872 mm strk; Bucket; See Figure 08-65
2		129041A1		1	PINO LARGO
4		495-81226		AR	ARRUELA PLANA, 1 13/16" x 2 1/2" x .109"
5		103-16175		2	ANEL, #175, Ext
		129884A2		1	BALANCÍN, Incl. Ref 6 - 10
6		NSS		1	BOLETIM INFORMATIVO, Dipper
7		D145978		2	BUCHA
8		D140029		2	BUCHA, 50 x 60 x 25.5 mm lg
10		D150121		2	BUCHA, 70 ID x 36 mm lg
11		87451279		2	BUCHA, 44.6 (1-3/4) ID x 57.15 (2-1/4) OD x 68 mm (2-11/16 in) long; Not Included In Assembly; Purchase Separately
20		D141142		2	PINO LARGO, 306 mm lg, Guide Link
21		495-81282		AR	ARRUELA PLANA, 2 1/16" x 3" x .109"
22		D141164		4	ESPAÇADOR
23		103-16175		4	ANEL, #175, Ext
24		219-1		6	GRAXEIRA, 1/8"-27 x .66 lg
25		495-81226		2	ARRUELA PLANA, 1 13/16" x 2 1/2" x .109"
26		D146288		1	PINO LARGO
27		103-16175		2	ANEL, #175, Ext
28		REF		1	INSTRUCAO, Bucket; See Figure(s) 09-28 - 09-35
29		D37614		1	PINO
30		D143324		2	ARRUELA PLANA
31		D25279		2	ANEL
32		D149298		1	PINO, 305 mm (12 inch) Universal Bucket Only
33		103-16175		2	ANEL, #175, Ext
34		D150619		1	PINO LARGO, All Buckets Except 12 Inch (305 mm) Buckets
35		495-81226		AR	ARRUELA PLANA, 1 13/16" x 2 1/2" x .109"
36		103-16175		2	ANEL, #175, Ext
36A		87451280		1	ESPAÇADOR, 67 (2-5/8) OD x 138 mm (5-7/16 in) long
37		219-1		1	GRAXEIRA, 1/8"-27 x .66 lg

RETROEXCAVADORA - IMERSOR E BALDE

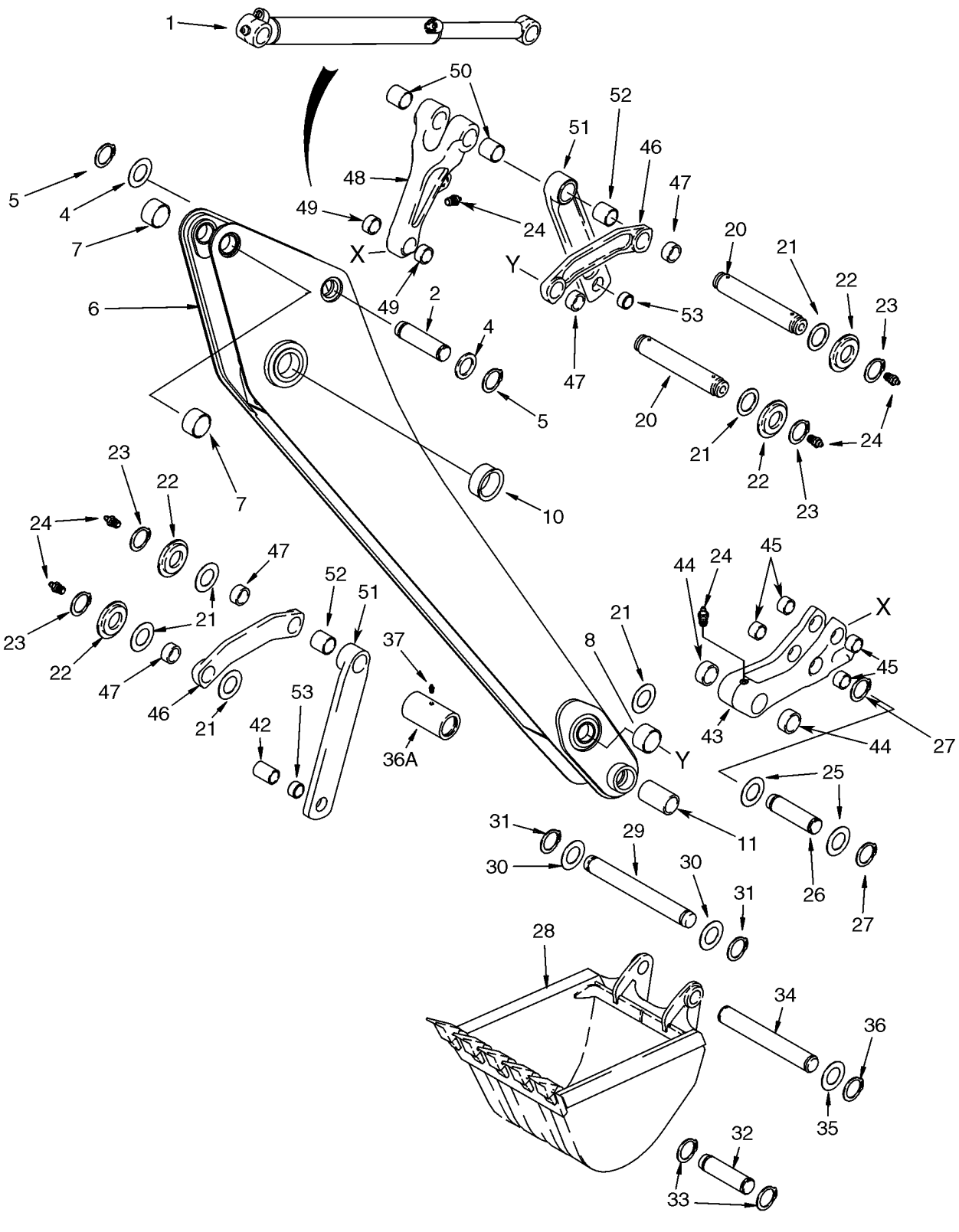

RETROEXCAVADORA - IMERSOR E BALDE

REF	FN	PART NUMBER	YR/SN	QTY	DESCRIPTION
42		D141075		1	ESPAÇADOR, 40 (1-9/16) ID x 47 (1-27/32) OD x 71 mm (2-51/64 in) long
		281185A1		1	CABEÇA DE SINO, Bucket, Incl. Ref 43 - 45
43		NSS		1	BOLETIM INFORMATIVO, Coupler, Quick
44		D127167		2	BUCHA, 30 mm lg
45		107124A1		4	BUCHA, 29 mm lg
46		348706A1		2	ELO CONJUNTO, Bucket Guide, Incl. Ref 47
47		D149079		2	BUCHA, 50 x 34 mm lg
48		400398A1		1	ELO CONJUNTO, Bucket Dump, Incl. Ref 49, 50
49		107124A1		2	BUCHA
50		D138047		2	BUCHA, 54 mm (2-1/8 in) lg
51		244790A1		2	ELO CONJUNTO, Standard Equipment; Bucket Dump; Incl. Ref 52, 53
52		D138047		1	BUCHA, 54 mm (2-1/8 in) lg
53		D31140		1	BUCHA

RETROEXCAVADORA - IMERSOR EXTENSÍVEL

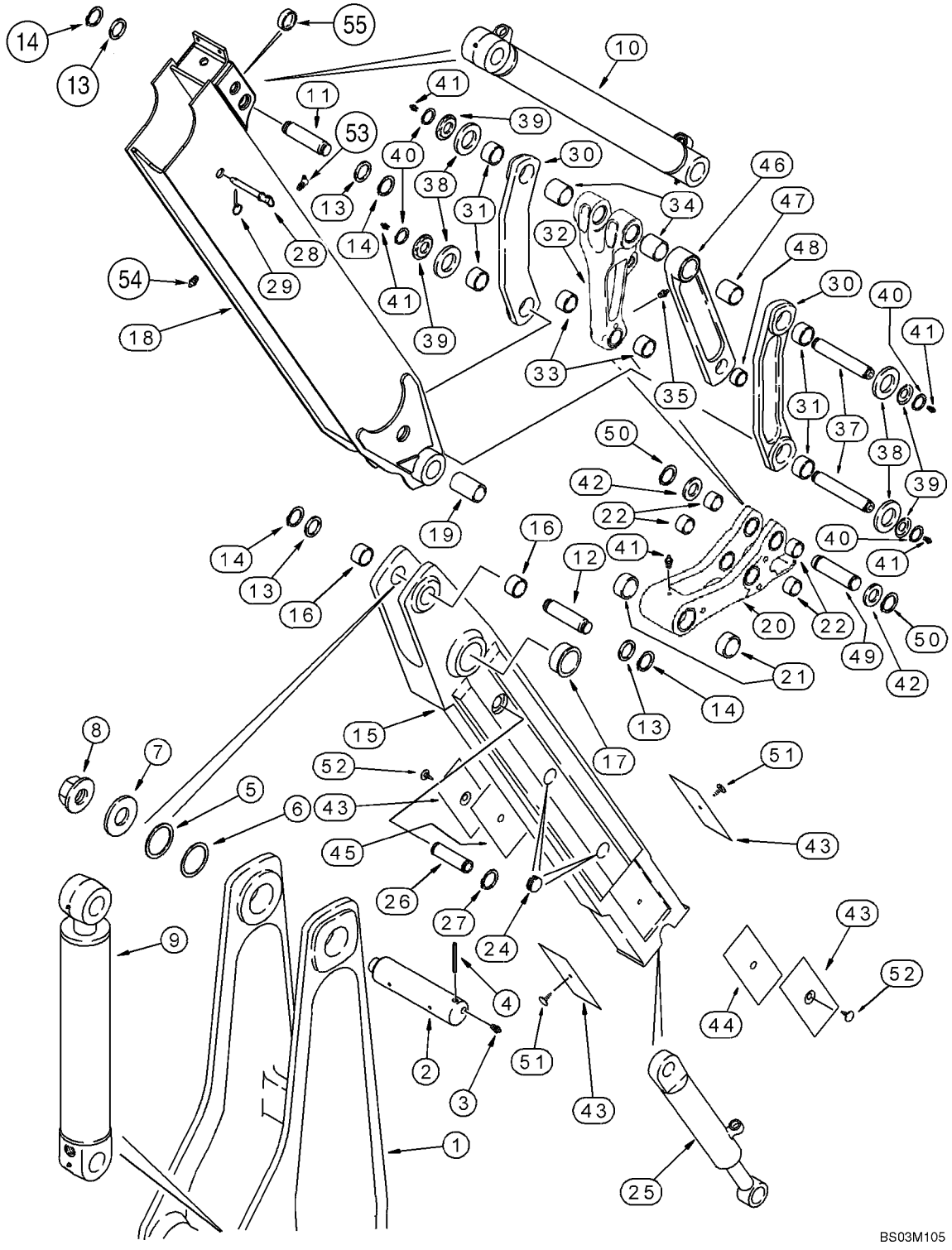

RETROEXCAVADORA - IMERSOR EXTENSÍVEL

REF	FN	PART NUMBER	YR/SN	QTY	DESCRIPTION
1		129883A1		1	BRACO, See Figure 09-24
2		D132494		1	PINO LARGO
3		219-1		2	GRAXEIRA, 1/8"-27 x .66 lg
4		135-51652		1	PERNO ESTRIADO, 1/2" x 3 1/4"
5		404834A1		AR	CALCO DE AFINACAO
6		404835A1		AR	CALCO DE AFINACAO
7		D133632		1	ARRUELA PLANA
8		181042A1		1	PORCA, Flange, Special
9		233114A2		1	CILINDRO CONJUNTO, 108 ID x 686 mm strk, Dipper; See Figure 08-64
10		128760A1		1	CILINDRO CONJUNTO, 83 ID x 872 mm strk, Bucket; See Figure 08-65
11		D141666		1	PINO LARGO
12		129041A1		1	PINO LARGO
13		495-81282		2	ARRUELA PLANA, 2 1/16" x 3" x .109"
14		103-16175		4	ANEL, #175, Ext
		122503A1		1	BALANCÍN, Inner; Incl. Ref 15 - 17
15		NSS		1	BOLETIM INFORMATIVO, Dipper
16		D145978		2	BUCHA
17		D150121		2	BUCHA, 70 ID x 36 mm lg
18		87619781		1	BALANCÍN, Outer Dipper; Incl. Ref 53, 54; Replaces 87436235
19		307186A1		2	BUCHA, 104 mm lg
		281185A1		1	CABEÇA DE SINO, Bucket; Incl. Ref 20 - 22
20		NSS		1	BOLETIM INFORMATIVO, Coupler, Quick
21		D127167		2	BUCHA, 30 mm lg
22		107124A1		4	BUCHA, 29 mm lg
24		D133865		4	BUJÃO
25		1340969C2		1	CILINDRO CONJUNTO, 76 ID x 1068 mm strk, Extendable Dipper; See Figure 08-66
26		300588A1		1	PINO LARGO
27		800-44040		2	ANEL, M40, Ext
28		D140247		1	PINO LARGO, Lock, Transport
29		A33509		1	PINO LARGO
30		348706A1		2	ELO CONJUNTO, Bucket Guide, Incl. Ref 31

RETROEXCAVADORA - IMERSOR EXTENSÍVEL

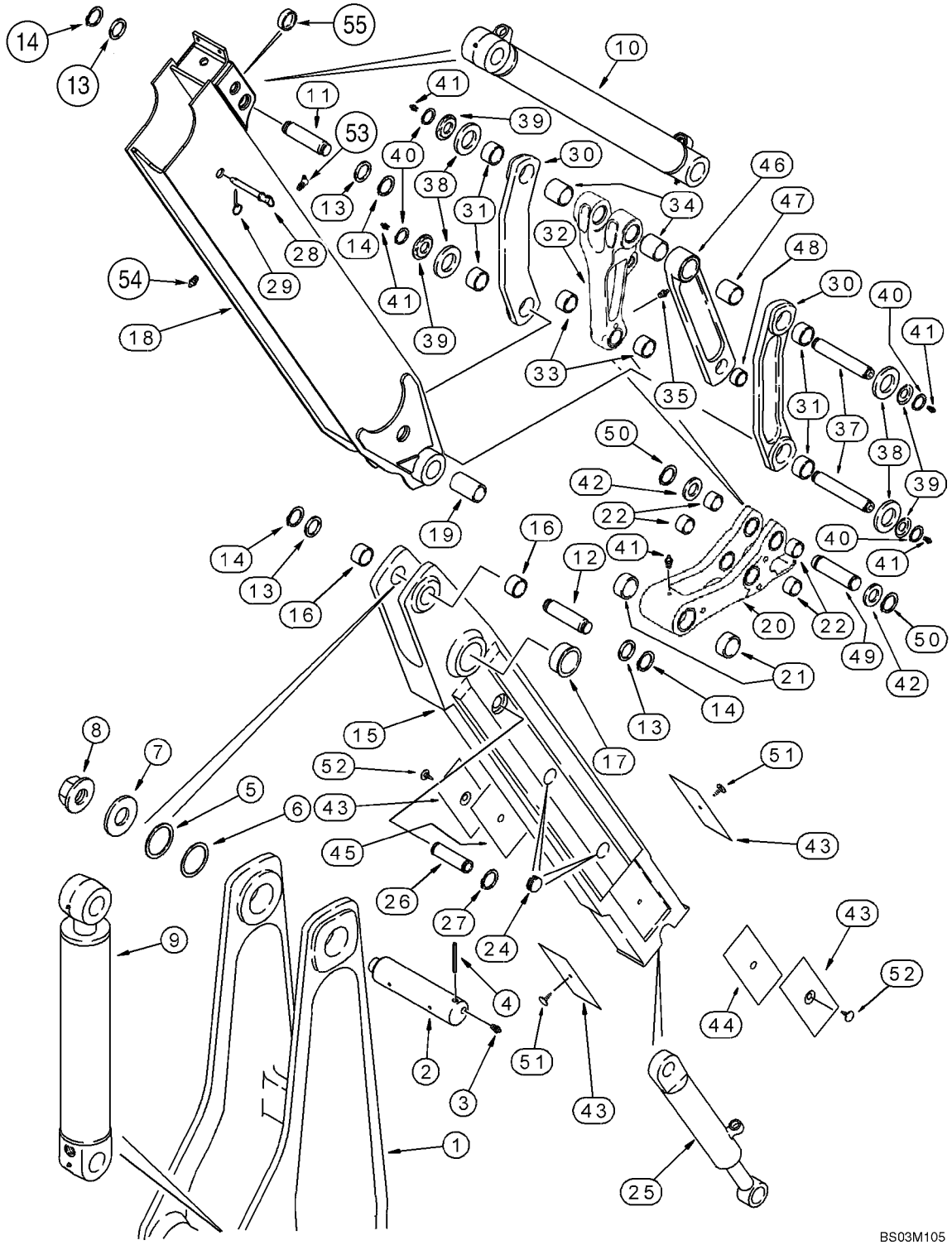

RETROEXCAVADORA - IMERSOR EXTENSÍVEL

REF	FN	PART NUMBER	YR/SN	QTY	DESCRIPTION
31		D149079		2	BUCHA, 50 x 34 mm lg
32		400398A1		1	ELO CONJUNTO, Bucket Dump, Incl. Ref 33, 34
33		107124A1		2	BUCHA
34		D138047		2	BUCHA, 54 mm (2-1/8 in) lg
35		219-1		1	GRAXEIRA, 1/8"-27 x .66 lg
37		D141142		2	PINO LARGO, 306 mm lg
38		495-81282		4	ARRUELA PLANA, 2 1/16" x 3" x .109"
39		D141164		4	ESPAÇADOR
40		103-16175		4	ANEL, #175, Ext
41		219-1		5	GRAXEIRA, 1/8"-27 x .66 lg
42		495-81226		2	ARRUELA PLANA, 1 13/16" x 2 1/2" x .109"
43		451384A1		4	PLACA
44		132844A1		1	CALCO DE AFINACAO, 0.8 mm thk
45		132842A1		1	CALCO DE AFINACAO, 1.6 mm thk
46		244790A1		2	ELO CONJUNTO, Bucket Dump; Standard Equipment; Incl. Ref 47, 48
47		D138047		1	BUCHA, 54 mm (2-1/8 in) lg
48		D31140		1	BUCHA
49		D146288		1	PINO LARGO
50		103-16175		2	ANEL, #175, Ext
51		183443A1		2	PINO LARGO
52		183509A1		2	PINO LARGO
53		219-89		1	GRAXEIRA, 45º, 1/8" NPT x .78" lg, Drive
54		219-86		1	GRAXEIRA, 1/8" x .62" lg, Drive
55		396483A1		2	ESPAÇADOR

BALDE UNIVERSAL DA RETROESCAVADORA (305 MM (12 INCH) WIDE)

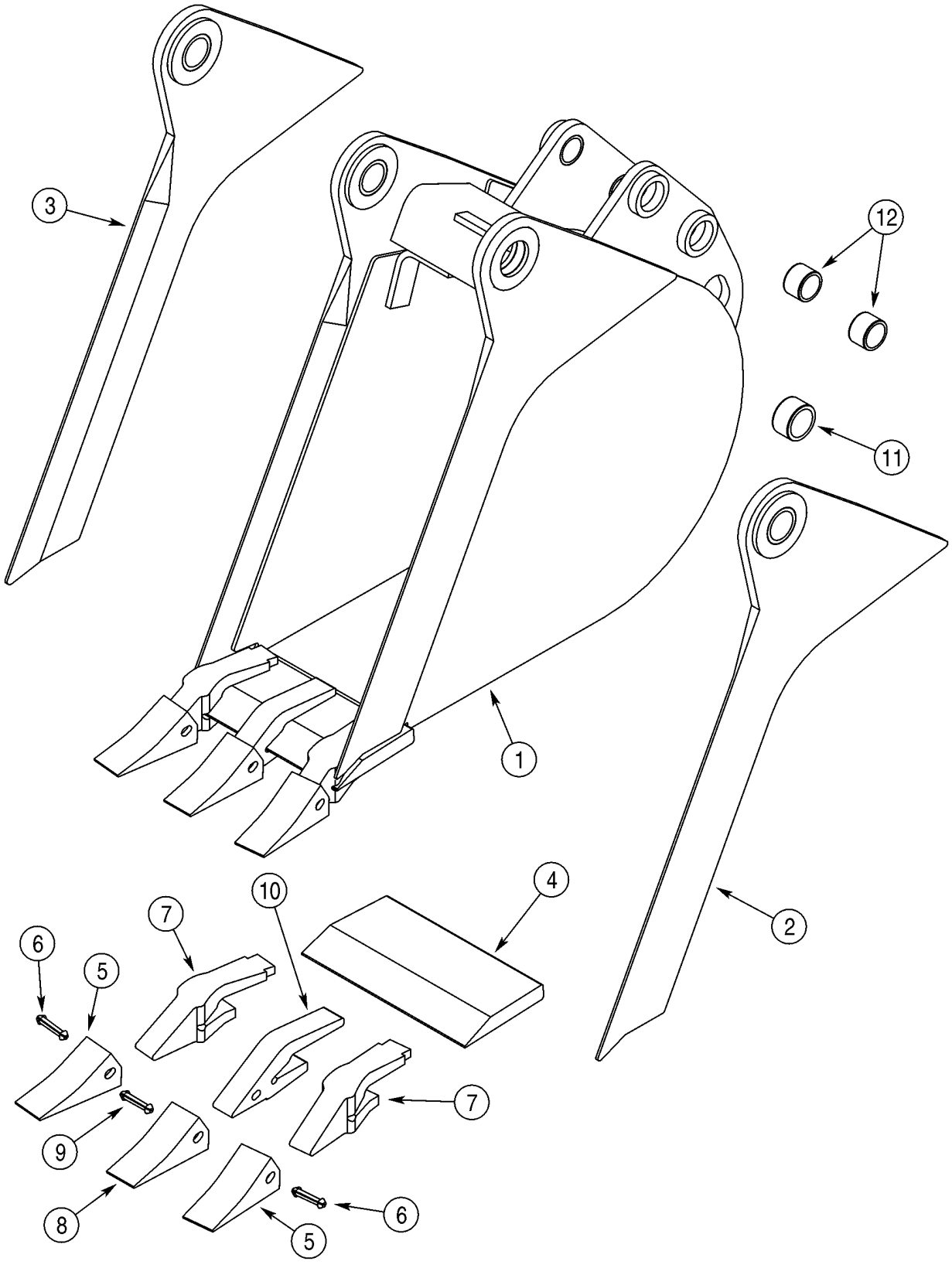

BALDE UNIVERSAL DA RETROESCAVADORA (305 MM (12 INCH) WIDE)

REF	FN	PART NUMBER	YR/SN	QTY	DESCRIPTION
1		87724903		1	CAÇAMBA, 305 mm (12 in); With 3 Teeth; Order Through Parts Marketing; Incl. Ref 2 - 12; Replaces 381488A4
2		NSS		1	BOLETIM INFORMATIVO, Edge, Right-Hand; Incl. Ref 11
3		NSS		1	BOLETIM INFORMATIVO, Edge, Left-Hand; Incl. Ref 11
4		D147409		1	LAMINA DE CORTE
		D139851		2	DENTE, Outer; Incl. Ref 5 - 7
5		D51750		1	PONTA
6		245466A1		1	PINO
7		D138157		1	HASTE
		D139849		1	DENTE, Center; Incl. Ref 8 - 10; Order Ref 8 - 10
8		D51750		1	PONTA
9		245466A1		1	PINO
10		D48212		1	HASTE
11		D43940		2	BUCHA, 1-3/4 x 2-1/4 x 1
12		D30933		4	BUCHA

BALDE UNIVERSAL DA RETROESCAVADORA (406 MM (16 INCH) WIDE)

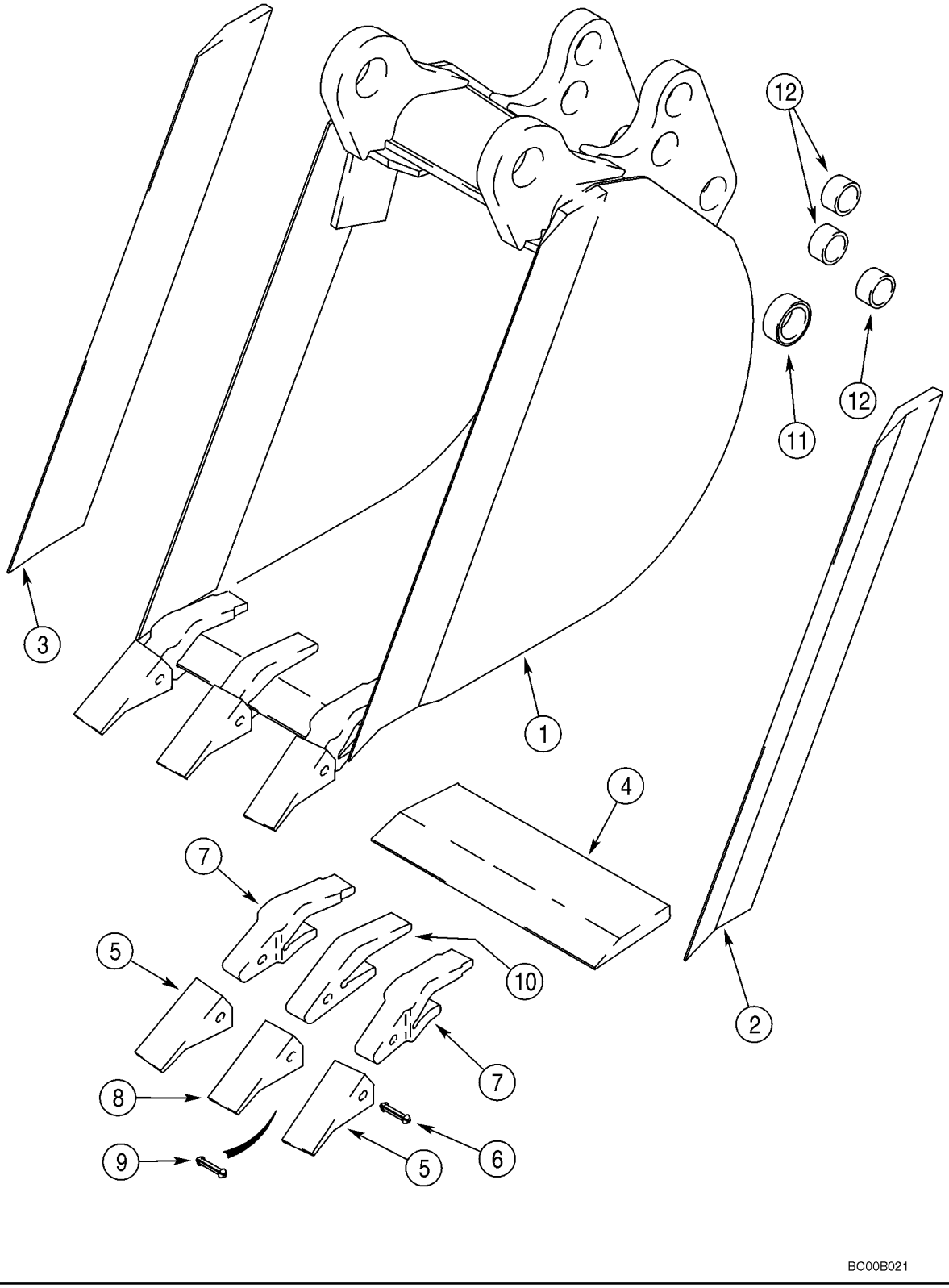

BALDE UNIVERSAL DA RETROESCAVADORA (406 MM (16 INCH) WIDE)

REF	FN	PART NUMBER	YR/SN	QTY	DESCRIPTION
1		388843A1		1	CAÇAMBA, 406 mm (16 in); With 3 Teeth; Order Through Parts Marketing; Incl. Ref 2 - 12
2		D146421		1	LAMINA DE CORTE, Right-Hand
3		D146420		1	LAMINA DE CORTE, Left-Hand
4		D147249		1	BORDA
		D139851		2	DENTE, Outer; Incl. Ref 5 - 7
5		D51750		1	PONTA
6		245466A1		1	PINO
7		D138157		1	HASTE
		D139849		1	DENTE, Center; Incl. Ref 8 - 10; Order Ref 8 - 10
8		D51750		1	PONTA
9		245466A1		1	PINO
10		D48212		1	HASTE
11		D37495		2	BUCHA
12		D30933		6	BUCHA

BALDE UNIVERSAL DA RETROESCAVADORA (457 MM (18 INCH) WIDE)

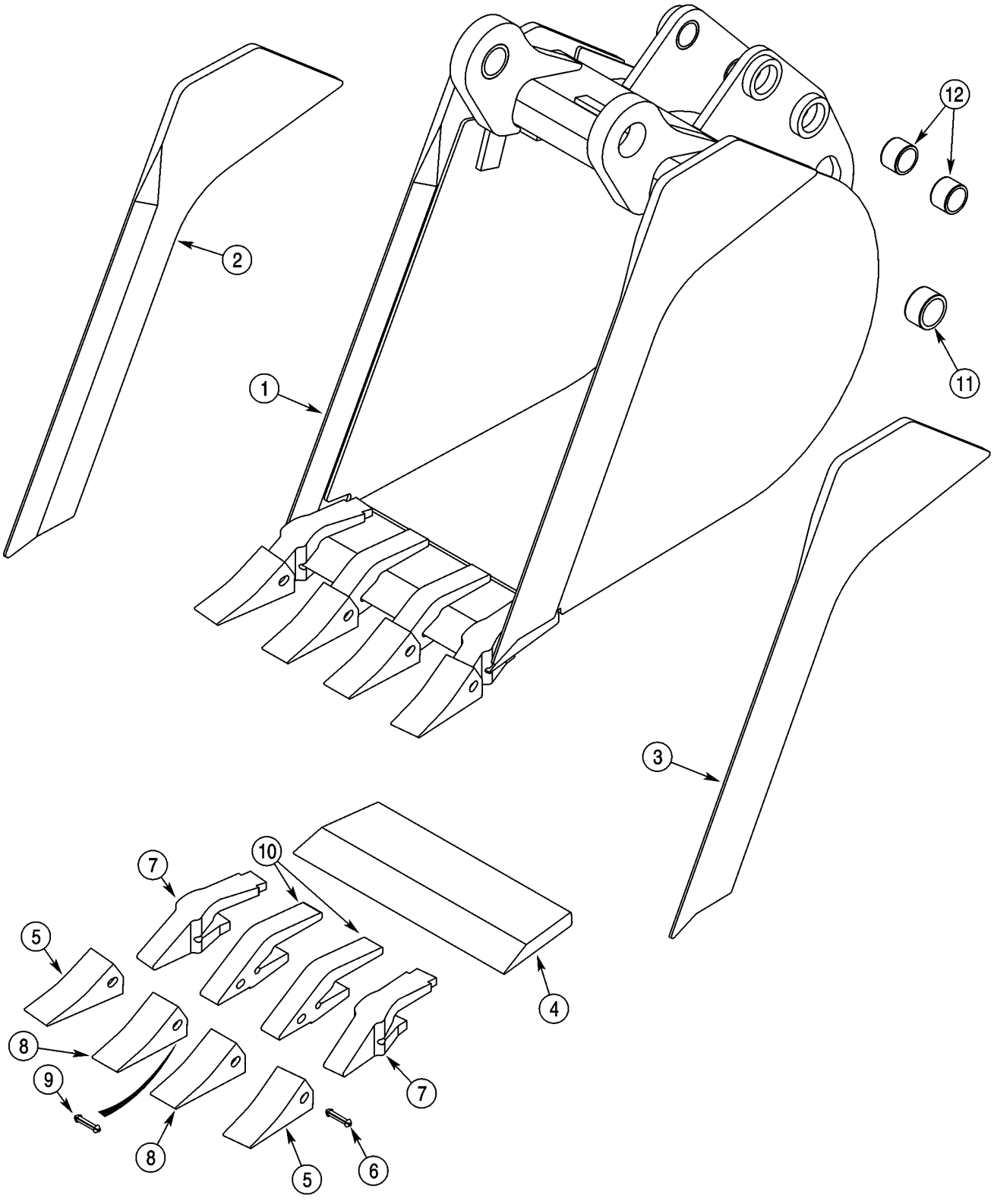

BALDE UNIVERSAL DA RETROESCAVADORA (457 MM (18 INCH) WIDE)

REF	FN	PART NUMBER	YR/SN	QTY	DESCRIPTION
1		87724905		1	CAÇAMBA, 457 mm (18 in); With 4 Teeth; Order Through Parts Marketing; Incl. Ref 2 - 12; Replaces 376384A1
2		NSS		1	BOLETIM INFORMATIVO, Edge, Right-Hand
3		NSS		1	BOLETIM INFORMATIVO, Edge, Left-Hand
4		NSS		1	BOLETIM INFORMATIVO, Edge
		D139851		2	DENTE, Outer; Incl. Ref 5 - 7
5		D51750		1	PONTA
6		245466A1		1	PINO
7		D138157		1	HASTE
		D139849		2	DENTE, Center; Incl. Ref 8 - 10; Order Ref 8 - 10
8		D51750		1	PONTA
9		245466A1		1	PINO
10		D48212		1	HASTE
11		D37495		2	BUCHA
12		D30933		4	BUCHA

09-31		p1	07/08

BALDE, RETROESCAVADORA (457 MM (18 INCH) WIDE)

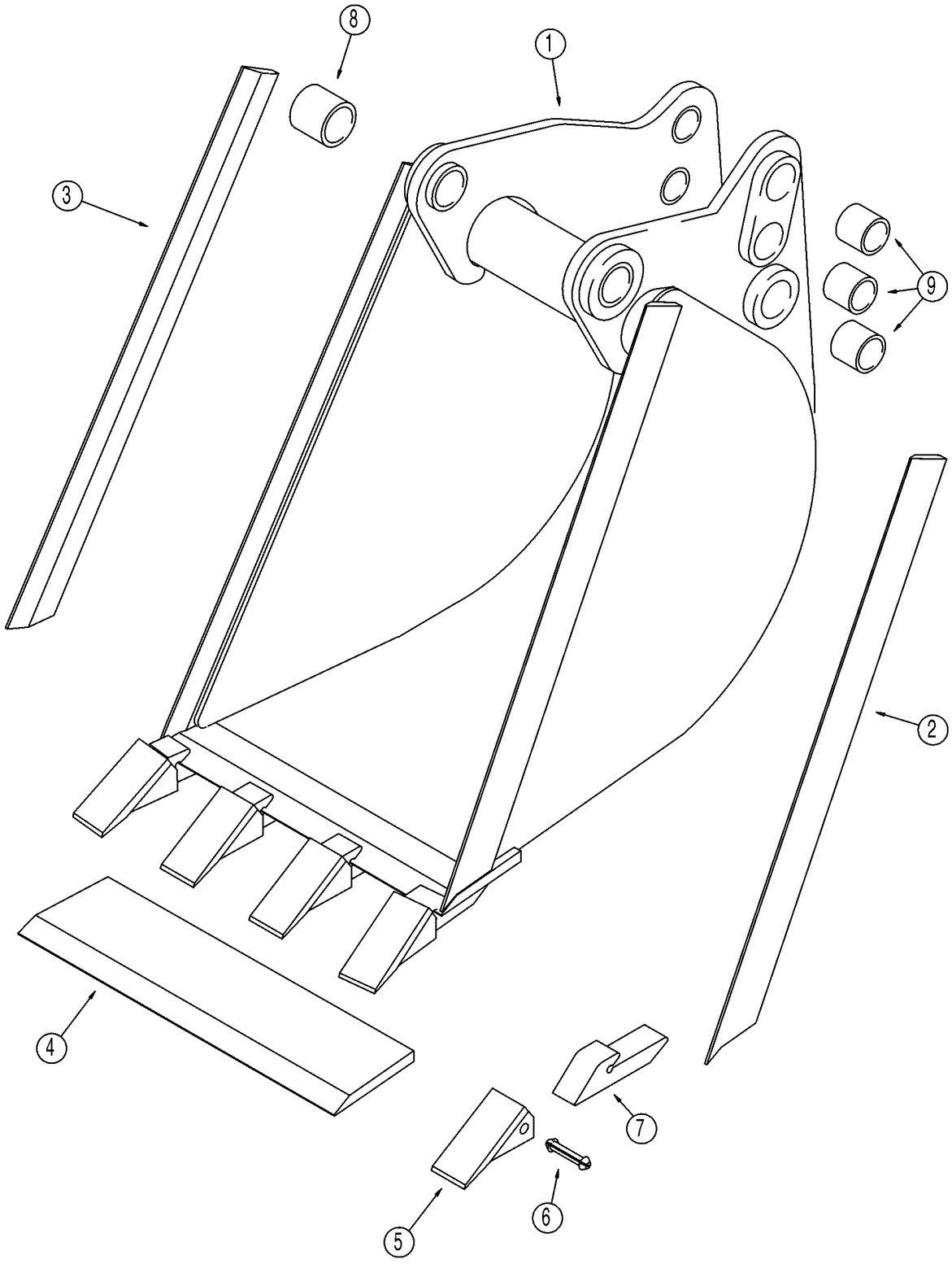

10

BALDE, RETROESCAVADORA (457 MM (18 INCH) WIDE)

REF	FN	PART NUMBER	YR/SN	QTY	DESCRIPTION
1		183808A1		1	CAÇAMBA, 457 mm (18 in); With 4 Teeth; Order Through Parts Marketing; Incl. Ref 2 - 9
2		129894A1		1	BORDA, Right-Hand
3		129893A1		1	BORDA, Left-Hand
4		183810A1		1	BORDA
		D41659		4	DENTE, Incl. Ref 5 - 7
5		D51750		1	PONTA
6		245466A1		1	PINO
7		NSS		1	BOLETIM INFORMATIVO, Shank
8		D37495		2	BUCHA
9		D30933		6	BUCHA

BALDE UNIVERSAL DA RETROESCAVADORA (610 MM (24 INCH) / 762 MM (30 INCH) WIDE)

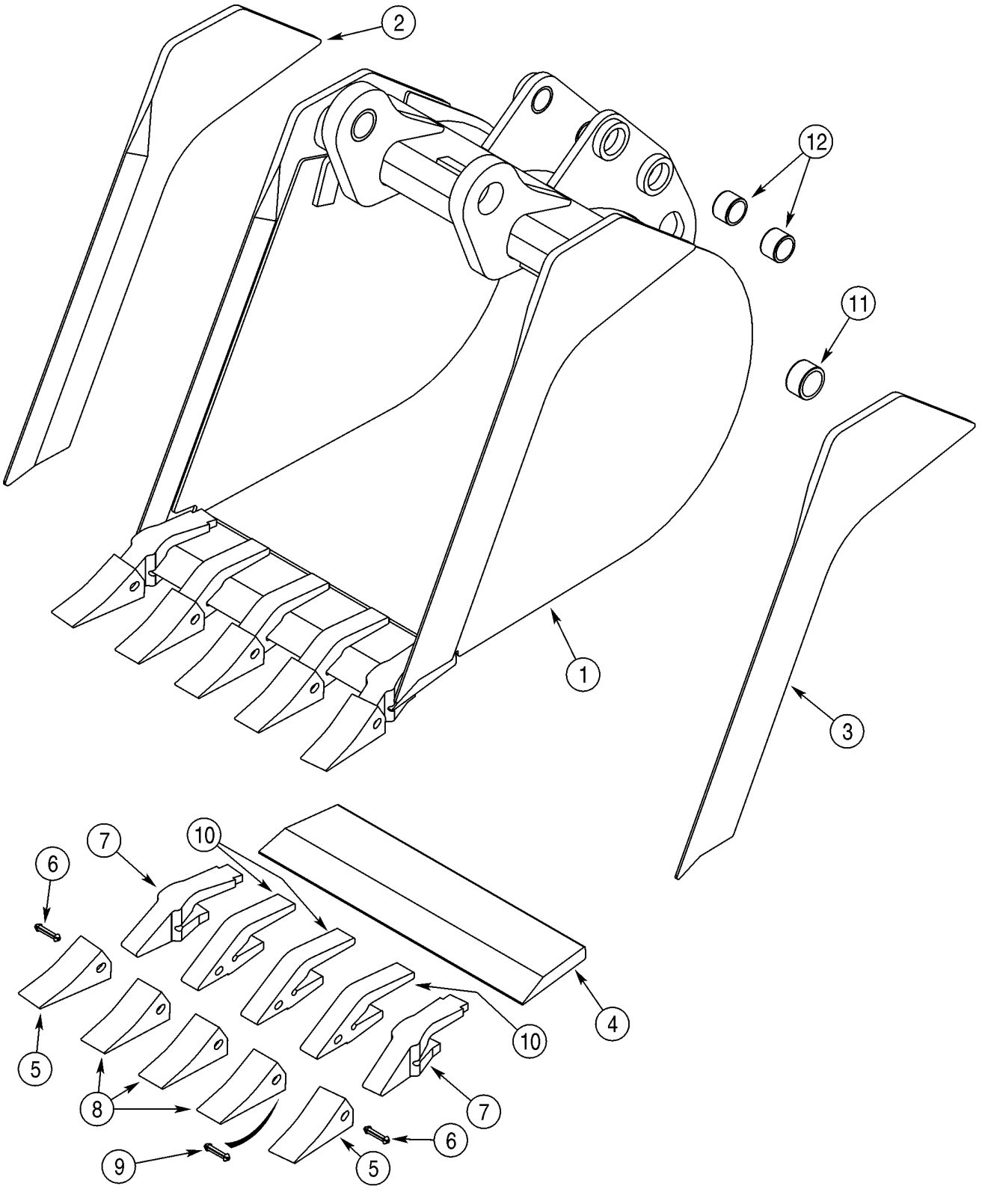

BALDE UNIVERSAL DA RETROESCAVADORA (610 MM (24 INCH) / 762 MM (30 INCH) WIDE)

REF	FN	PART NUMBER	YR/SN	QTY	DESCRIPTION
1		87724906		1	CAÇAMBA, 610 mm (24 in); With 5 Teeth; Order Through Parts Marketing; Incl. Ref 2 - 12; Replaces 365328A1
2		NSS		1	BOLETIM INFORMATIVO, Edge, Right-Hand
3		NSS		1	BOLETIM INFORMATIVO, Edge, Left-Hand
4		NSS		1	BOLETIM INFORMATIVO, Edge
		D139851		2	DENTE, Outer; Incl. Ref 5 - 7
5		D51750		1	PONTA
6		245466A1		1	PINO
7		D138157		1	HASTE
		D139849		3	DENTE, Center; Incl. Ref 8 - 10; Order Ref 8 - 10
8		D51750		1	PONTA
9		245466A1		1	PINO
10		D48212		1	HASTE
11		D37495		2	BUCHA
12		D30933		4	BUCHA
1		87724908		1	CAÇAMBA, 762 mm (30 in); With 6 Teeth; Not Illustrated; Order Through Parts Marketing; Incl. Ref 2 - 12; Replaces 376385A1
2		NSS		1	BOLETIM INFORMATIVO, Edge, Right-Hand
3		NSS		1	BOLETIM INFORMATIVO, Edge, Left-Hand
4		NSS		1	BOLETIM INFORMATIVO, Edge
		D139851		2	DENTE, Outer; Incl. Ref 5 - 7
5		D51750		1	PONTA
6		245466A1		1	PINO
7		D138157		1	HASTE
		D139849		4	DENTE, Center; Incl. Ref 8 - 10; Order Ref 8 - 10
8		D51750		1	PONTA
9		245466A1		1	PINO
10		D48212		1	HASTE
11		D37495		2	BUCHA
12		D30933		4	BUCHA

BALDE, RETROESCAVADORA (610 MM (24 INCH) WIDE)

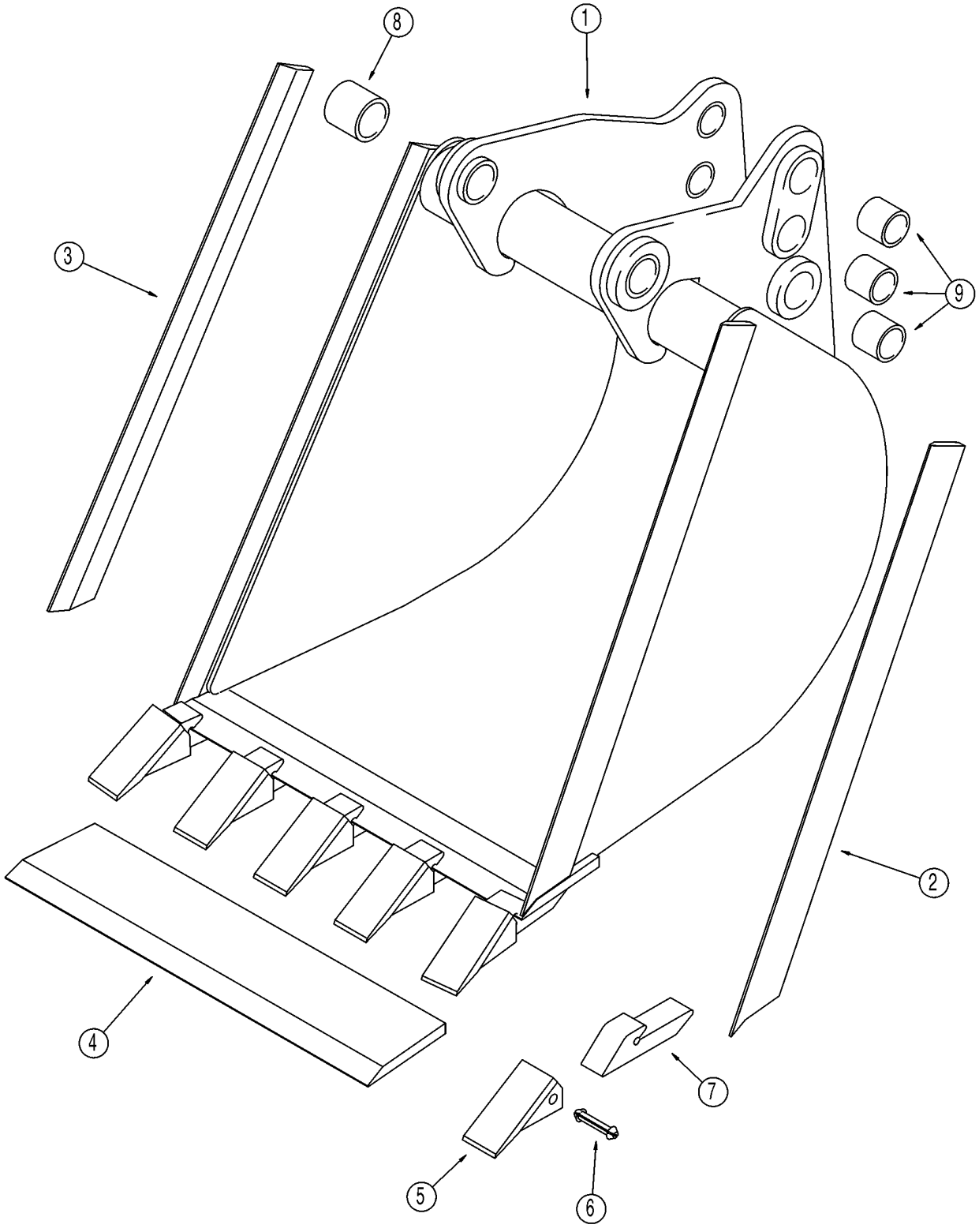

BALDE, RETROESCAVADORA (610 MM (24 INCH) WIDE)

REF	FN	PART NUMBER	YR/SN	QTY	DESCRIPTION
1		129885A1		1	CAÇAMBA, 610 mm (24 in); With 5 Teeth; Order Through Parts Marketing; Incl. Ref 2 - 9
2		129894A1		1	BORDA, Right-Hand
3		129893A1		1	BORDA, Left-Hand
4		129944A1		1	SUPORTE
		D41659		5	DENTE, Incl. Ref 5 - 7
5		D51750		1	PONTA
6		245466A1		1	PINO
7		NSS		1	BOLETIM INFORMATIVO, Shank
8		D37495		2	BUCHA
9		D30933		6	BUCHA

BALDE UNIVERSAL DA RETROESCAVADORA (914 MM (36 INCH) WIDE)

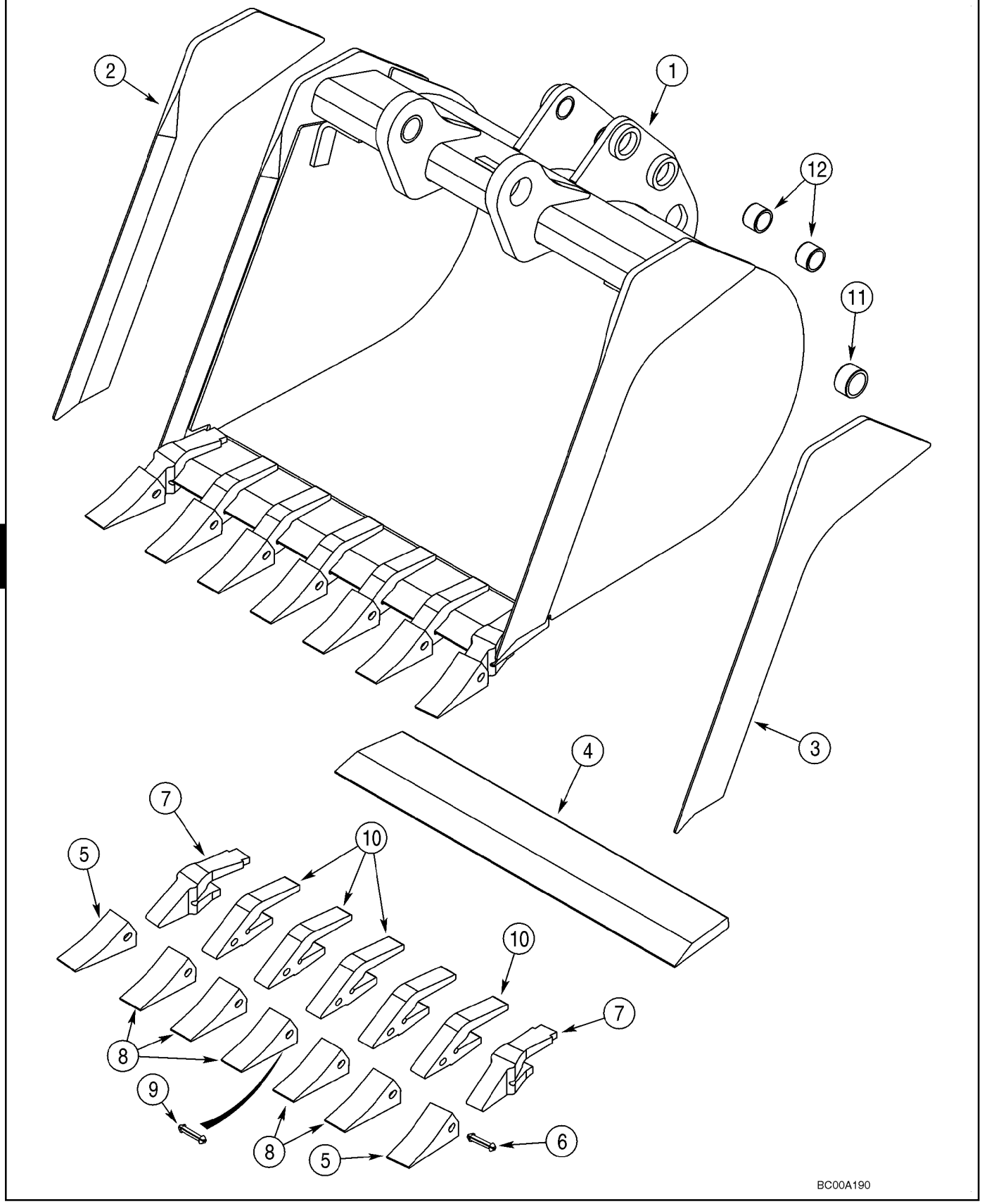

BALDE UNIVERSAL DA RETROESCAVADORA (914 MM (36 INCH) WIDE)

REF	FN	PART NUMBER	YR/SN	QTY	DESCRIPTION
1		87724910		1	CAÇAMBA, 914 mm (36 in); With 7 Teeth; Order Through Parts Marketing; Incl. Ref 2 - 12; Replaces 376386A1
2		365941A1		1	FACA, Edge, Left-Hand
3		365942A1		1	FACA, Edge, Right-Hand
		370747A1		1	DENTE DA NAVALHA, CUTTING EDGE ASSEMBLY; With Teeth; Incl Ref 4 - 10
4		NSS		1	BOLETIM INFORMATIVO, Edge
		D139851		2	DENTE, Outer; Incl. Ref 5 - 7
5		D51750		1	PONTA
6		245466A1		1	PINO
7		D138157		1	HASTE
		D139849		5	DENTE, Center; Incl. Ref 8 - 10; Order Ref 8 - 10
8		D51750		1	PONTA
9		245466A1		1	PINO
10		D48212		1	HASTE
11		D37495		2	BUCHA
12		D30933		4	BUCHA

BALDE UNIVERSAL DA RETROESCAVADORA (610 MM (24 INCH) WIDE)

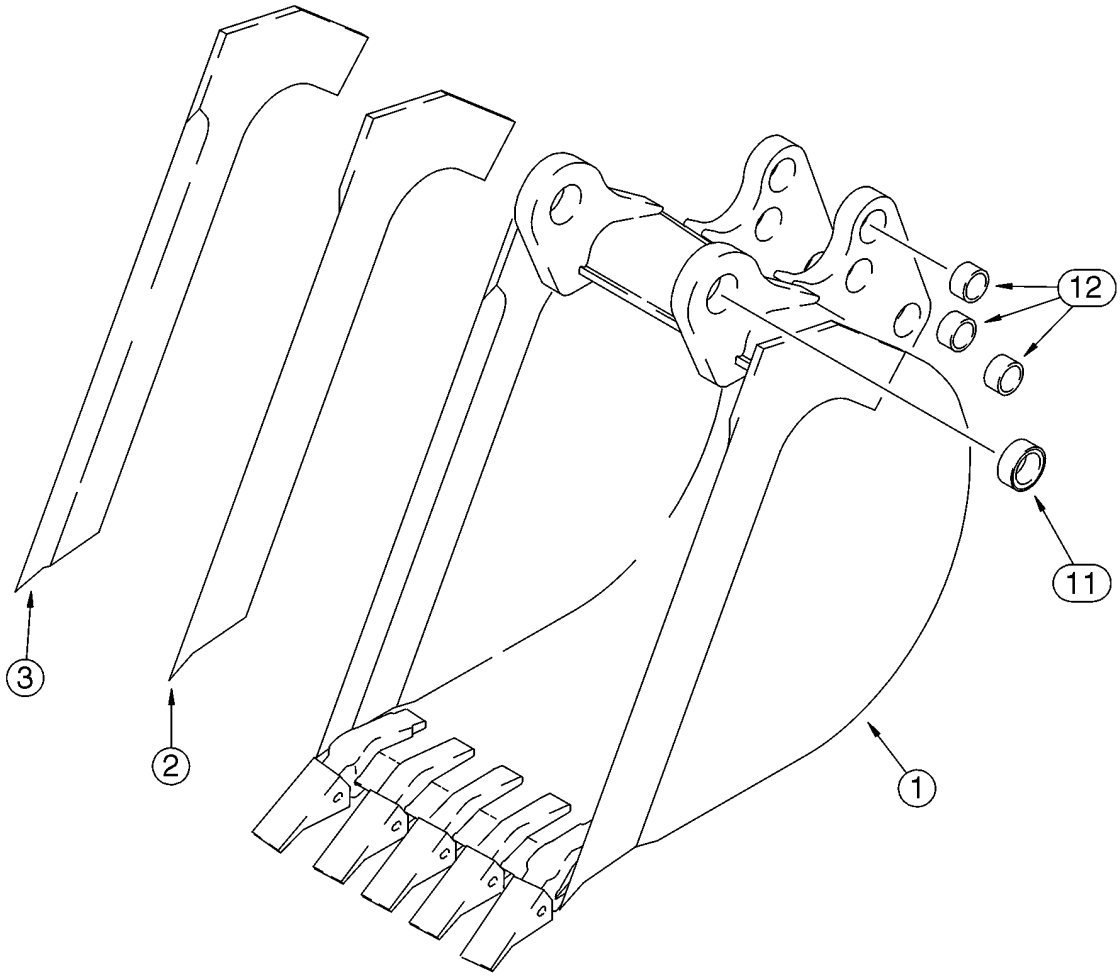

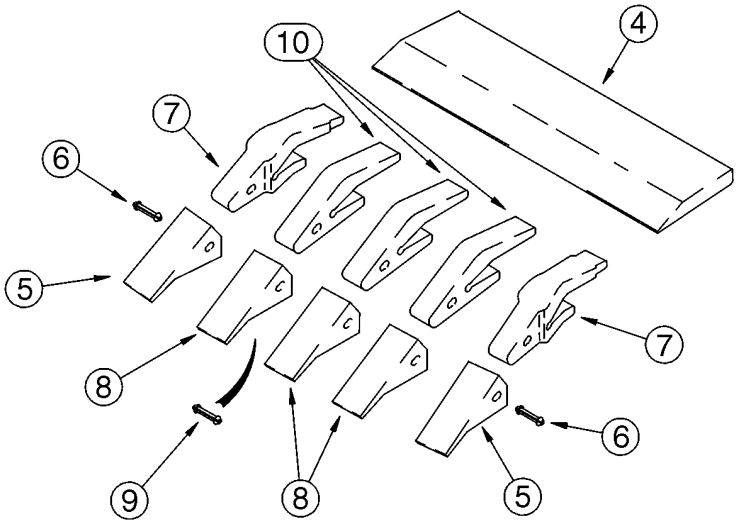

B9405159

BALDE UNIVERSAL DA RETROESCAVADORA (610 MM (24 INCH) WIDE)

REF	FN	PART NUMBER	YR/SN	QTY	DESCRIPTION
1		87724907		1	CAÇAMBA, 610 mm (24 in); With 5 Teeth; Order Through Parts Marketing; Incl. Ref 2 - 12; Replaces 141232A2
2		141234A1		1	LAMINA DE CORTE, Right-Hand
3		141233A1		1	LAMINA DE CORTE, Left-Hand
4		D142012		1	LAMINA DE CORTE
		D139851		2	DENTE, Outer; Incl. Ref 5 - 7
5		D51750		1	PONTA
6		245466A1		1	PINO
7		D138157		1	HASTE
		D139849		3	DENTE, Center; Incl. Ref 8 - 10; Order Ref 8 - 10
8		D51750		1	PONTA
9		245466A1		1	PINO
10		D48212		1	HASTE
11		D37495		2	BUCHA
12		D30933		6	BUCHA

CONJUNTO DO PONTO DE MORDEDURA

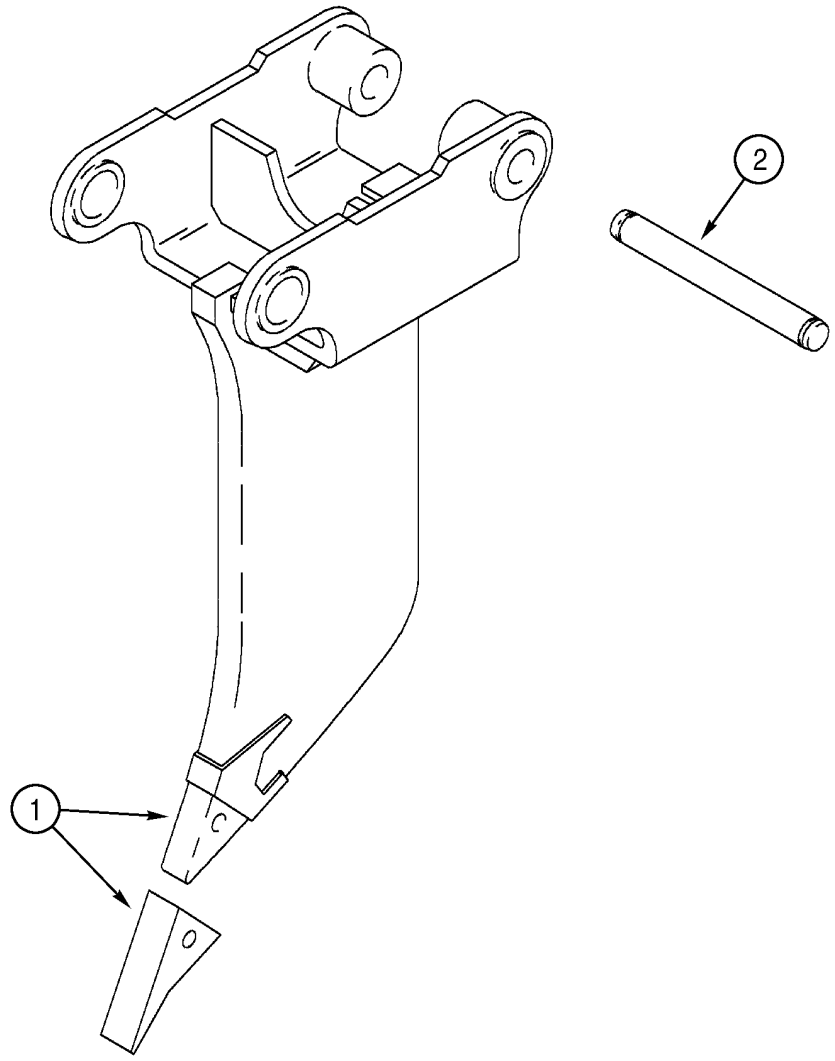

BS00H128

CONJUNTO DO PONTO DE MORDEDURA

REF	FN	PART NUMBER	YR/SN	QTY	DESCRIPTION
1		319467A1		1	PONTA, Frost Point Assembly; Includes (2) Pin Retaining Bolts; Component Parts Not Serviced Separately
2		D50696		1	PINO

CONTRAPESO, DIANTEIRO

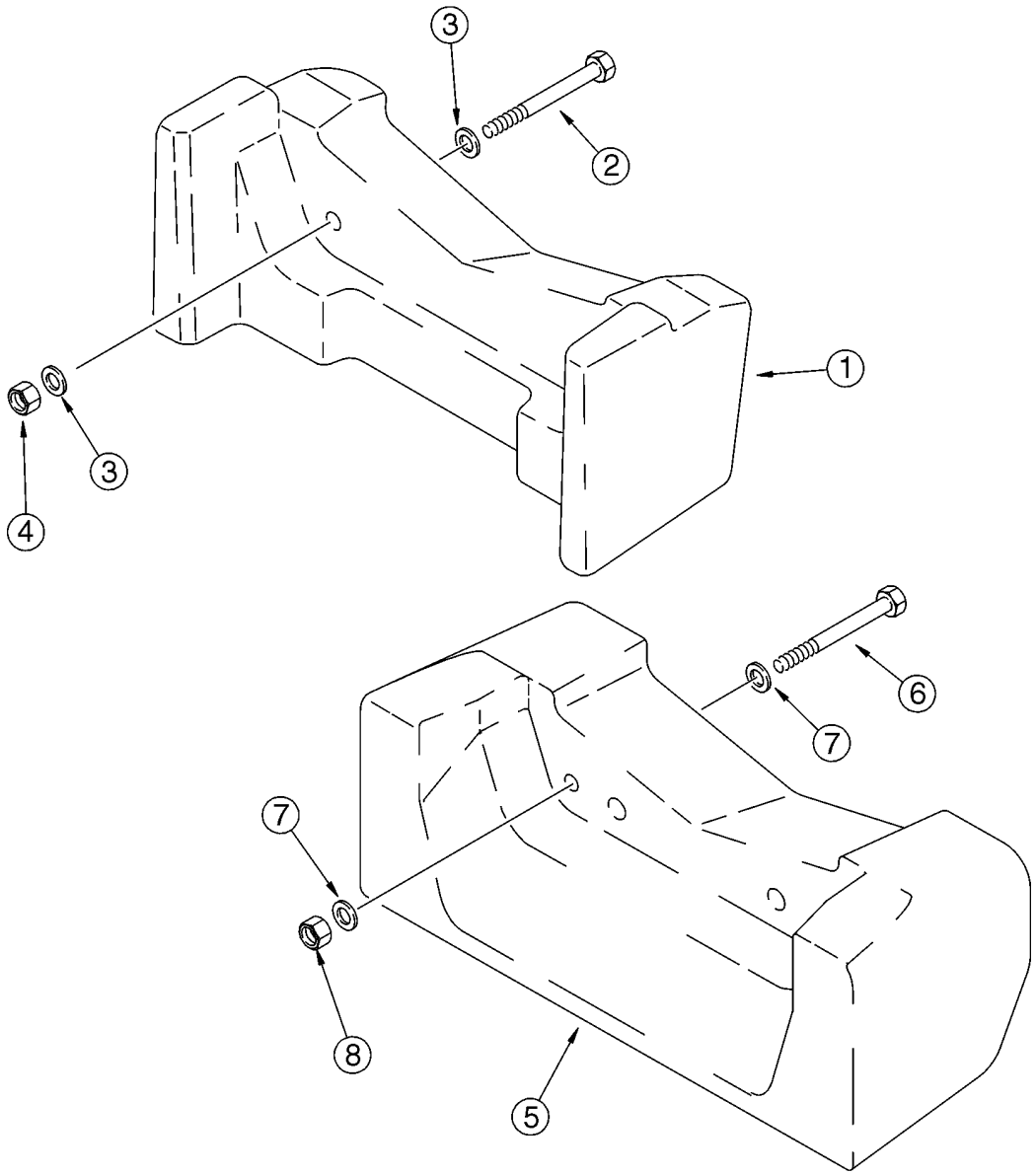

BT97N084

CONTRAPESO, DIANTEIRO

REF	FN	PART NUMBER	YR/SN	QTY	DESCRIPTION
1		360867A1		1	CONTRAPESO, 200 kg (441 lbs); If Used
2		827-20170		2	PARAFUSO, Hex, M20 x 170, 10.9
3		896-11020		4	ARRUELA PLANA, M20 x 37.5 x 4, HT
4		829-1420		2	PORCA, M20, Cl 10
5		87425456		1	BALANCIM, 408 kg (900 lbs); If Used
6		827-20170		2	PARAFUSO, Hex, M20 x 170, 10.9
7		896-11020		4	ARRUELA PLANA, M20 x 37.5 x 4, HT
8		829-1420		2	PORCA, M20, Cl 10

09-37		p1	07/08

CHASSI / ALOJAMENTO DOS SUPORTES - TELA, ENTRADA DE AR

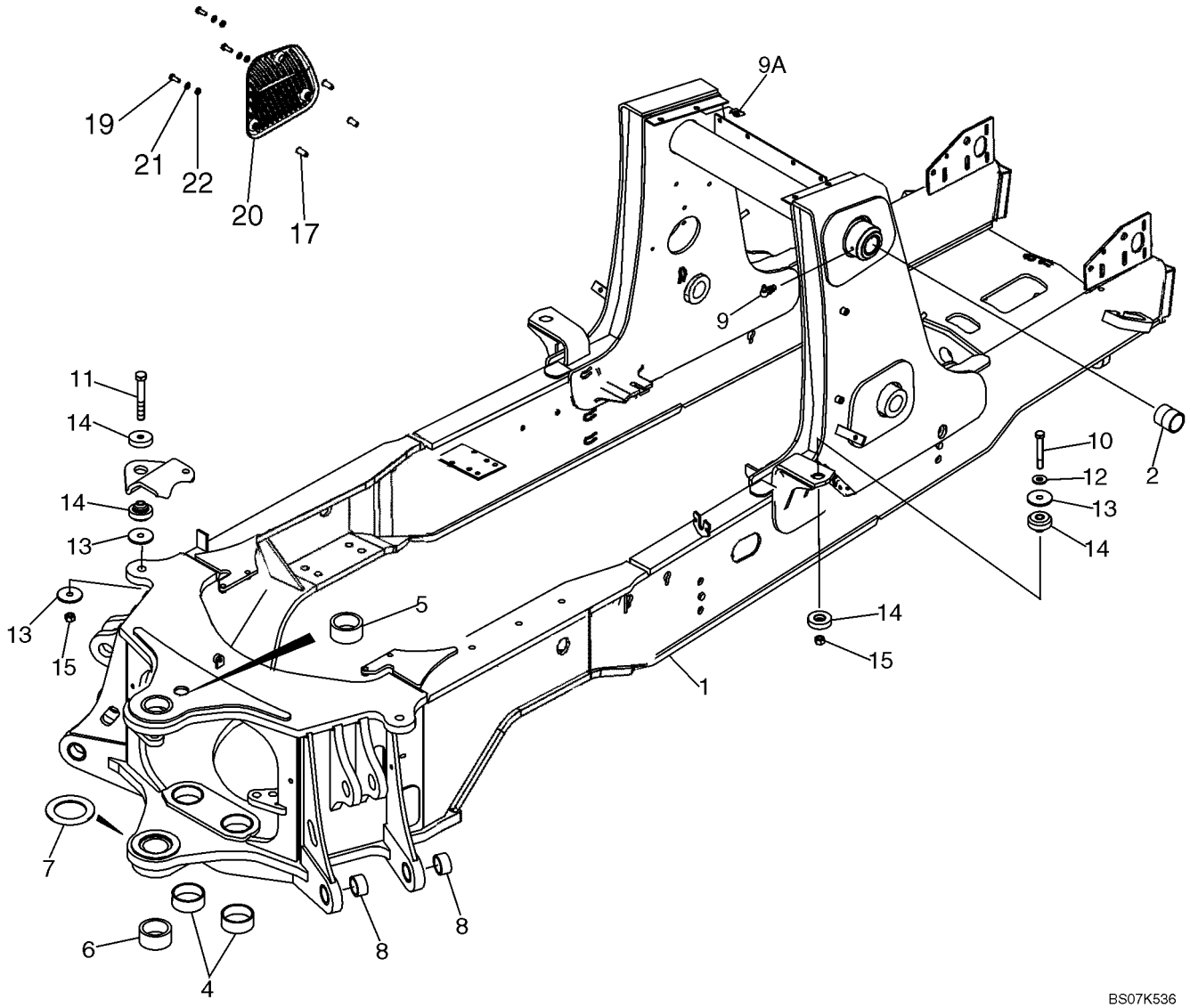

10

CHASSI / ALOJAMENTO DOS SUPORTES - TELA, ENTRADA DE AR

REF	FN	PART NUMBER	YR/SN	QTY	DESCRIPTION
1		87716973		1	ESTRUTURA CHASSI, Chassis, Incl. Ref 2 - 8
2		180427A1		2	BUCHA
4		114318A1		2	BUCHA, 80 x 5 x 28.8
5		D151069		1	BUCHA, 70 x 10 x 32 mm
6		D151070		1	BUCHA, 70 x 10 x 38 mm
7		220413A1		1	ESPAÇADOR, 93 x 135 x 5 mm; Welded-On
8		107124A1		4	BUCHA
9		219-55		2	GRAXEIRA, 90º, 1/8" NPT x .84" lg
9A		833-40310		4	PORCA, M10, U
10		827-16085		2	PARAFUSO, Hex, M16 x 85, 10.9
11		827-16100		2	PARAFUSO, Hex, M16 x 100, 10.9
12		896-15016		2	ARRUELA PLANA, M17.5 x 34 x 5, HT
13		186977A1		6	ARRUELA PLANA, 4,5 mm thick
14		411892A1		4	MONTAGEM DE BORRACHA, M16; Operator Compartment Pod Mounts
15		829-1416		4	PORCA, M16, Cl 10
17		87417383		3	ROSCA POSTIÇA
19		614-8030		3	PARAFUSO, Hex, M8 x 30, 8.8
20		87324160		1	TELA, Air Inlet, Plastic, With Slots
21		895-15008		3	ARRUELA PLANA, M8 x 20 x 1.6
22		87310109		3	ESPAÇADOR, 9.5 ID x 15 OD x 3.0 mm thk

09-38		p1	07/08

DEPÓSITO DO ÓLEO - CAIXA DA BATERIA E CAIXA DE FERRAMENTAS

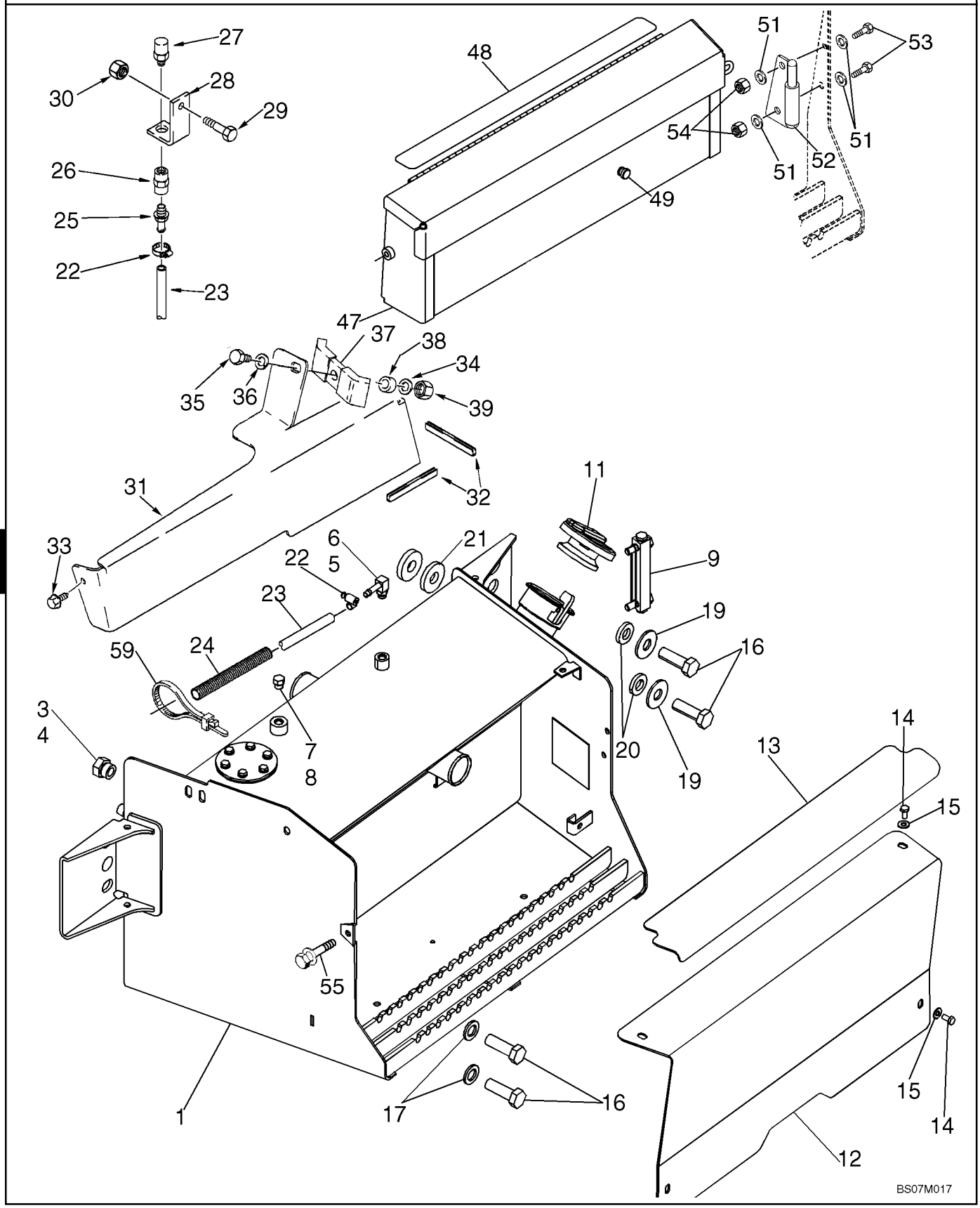

10

DEPÓSITO DO ÓLEO - CAIXA DA BATERIA E CAIXA DE FERRAMENTAS

REF	FN	PART NUMBER	YR/SN	QTY	DESCRIPTION
		87651830		1	RESERVATORIO DE OLEO, ASSEMBLY; Incl. Ref 1 - 11
1		87651790		1	RESERVATORIO DE OLEO, Right-Hand Side of Chassis
2		321-229		1	DECALCOMANIA, Not Illustrated
3		218-5158		1	BUJÃO, Hex Hd, 1 1/16"-12 ORB, Incl. 4
4		237-6012		1	ANEL "O", 12-1, 90 Duro, .924 ID x .118" Thk
5		217-347		1	CONEXAO, 90º, 3/8" Hose x 9/16"-18 ORB Beaded, Incl. 6
6		237-6006		1	ANEL "O", 6-1, 90 Duro, .468" ID x .078" Thk
7		218-5155		1	BUJÃO, Hex Hd, 9/16"-18 ORB, Incl. 8
8		237-6006		1	ANEL "O", 6-1, 90 Duro, .468" ID x .078" Thk
9		226456A1		1	GABARITO, Aluminum; Incl. (2) Hollow Head Bolts and (4) 238-6114 O-Rings, Used With Ref 10
9A		87673270		1	CINTA ADESIVA, Adhesive Backed; Not Illustrated
10		345-49		1	LOCTITE, 242; 1 ml; Not Illustrated
11		138595A1		1	TAMPA RESERVATORIO, CAP
12		87348192		1	COBERTURA, Battery
13		87719444		1	FAIXA ANTI-DERRAPANTE
14		614-8016		4	PARAFUSO, Hex, M8 x 16, 8.8
15		895-15008		4	ARRUELA PLANA, M8 x 20 x 1.6
16		443375A1		4	PARAFUSO, M20 x 60; 10.9; Thread to Head
17		896-11020		2	ARRUELA PLANA, M20 x 37.5 x 4, HT
19		302358A1		2	ARRUELA PLANA
20		185926A1		2	ESPAÇADOR
21		87360280		1	ESPAÇADOR
22		214-1406		2	BRACADEIRA MANGUEIRA, #06, .44/.78 Type F Worm
23		87363421		1	MANGUEIRA EM METRO, 912 mm (35-29/32 in); Vent
24		87452021		1	TUBO PLASTICO, 650 mm (25-19/32 in)
25		217-380		1	CONEXAO, 3/8" Hose X 3/8" NPTF Beaded, 3/8 stem x PT; Use With 345-147 Sealant
26		217-1102		1	CONEXÃO, 3/8"-18 NPTF, Female
27		87674850		1	RESPIRO, Use With 345-147 Sealant

DEPÓSITO DO ÓLEO - CAIXA DA BATERIA E CAIXA DE FERRAMENTAS

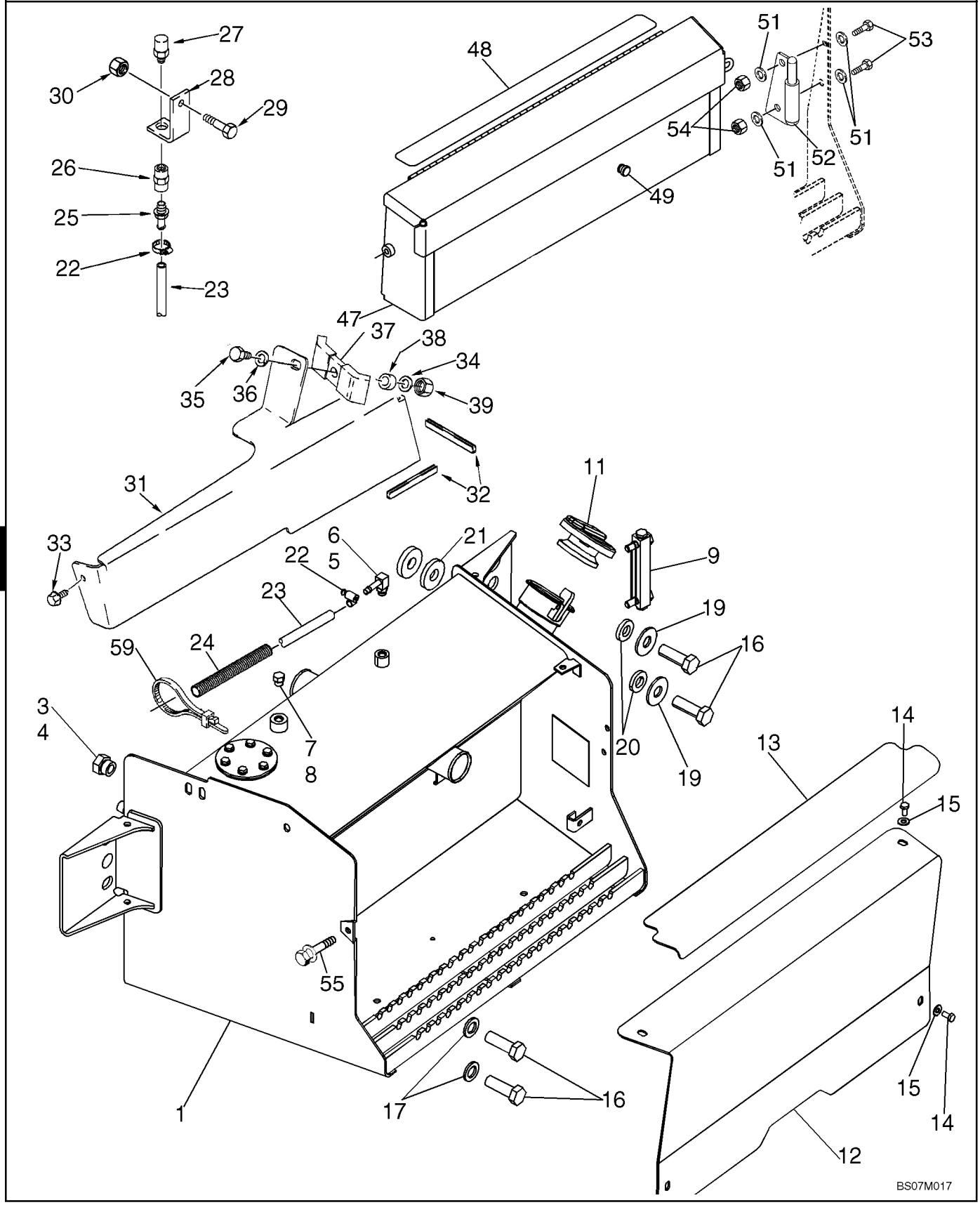

DEPÓSITO DO ÓLEO - CAIXA DA BATERIA E CAIXA DE FERRAMENTAS

REF	FN	PART NUMBER	YR/SN	QTY	DESCRIPTION
28		122603A1		1	SUPORTE
29		711-10030		1	PARAFUSO, Short NK, M10 x 30, Cl8.8, Full Thd
30		829-1410		1	PORCA, M10, Cl 10
31		399959A2		1	TAMPA
32		191047A1		1	MOLDURA, 305 mm (12 in) lg; Apply 65 mm (2-9/16 in) Of Trim To Front Lower Edge and 240 mm (9-1/2 in) Of Trim To Outisde Lower Edge of Cover
33		307577A1		1	PARAFUSO, With Washer, M8 x 20
34		895-11010		1	ARRUELA PLANA, M10 x 20 x 2
35		814-10045		1	PARAFUSO, Hex, M10 x 45, 8.8
36		892-11010		1	ARRUELA-TRAVA, M10
37		D138055		1	BRACADEIRA
38		120303A1		1	ESPAÇADOR
39		829-1410		1	PORCA, M10, Cl 10
47		380807A4		1	CAIXA DE FERRAMENTAS
48		87694065		1	FAIXA ANTI-DERRAPANTE
49		L60224		1	PÁRA-CHOQUE, 1/2 in Hole
51		895-11010		4	ARRUELA PLANA, M10 x 20 x 2
52		382202A2		1	DOBRADIÇA
53		614-10025		2	PARAFUSO, Hex, M10 x 25, 8.8, Full Thd
54		829-1410		2	PORCA, M10, Cl 10
55		121856A1		1	PARAFUSO, Hex Wash Hd, M10 x 1.5 x 30, 10.9, Includes Washer
59		L18337		2	TIRA DE CABO, 9.95"-12.1" lg

PROTECÇÃO DO RADIADOR

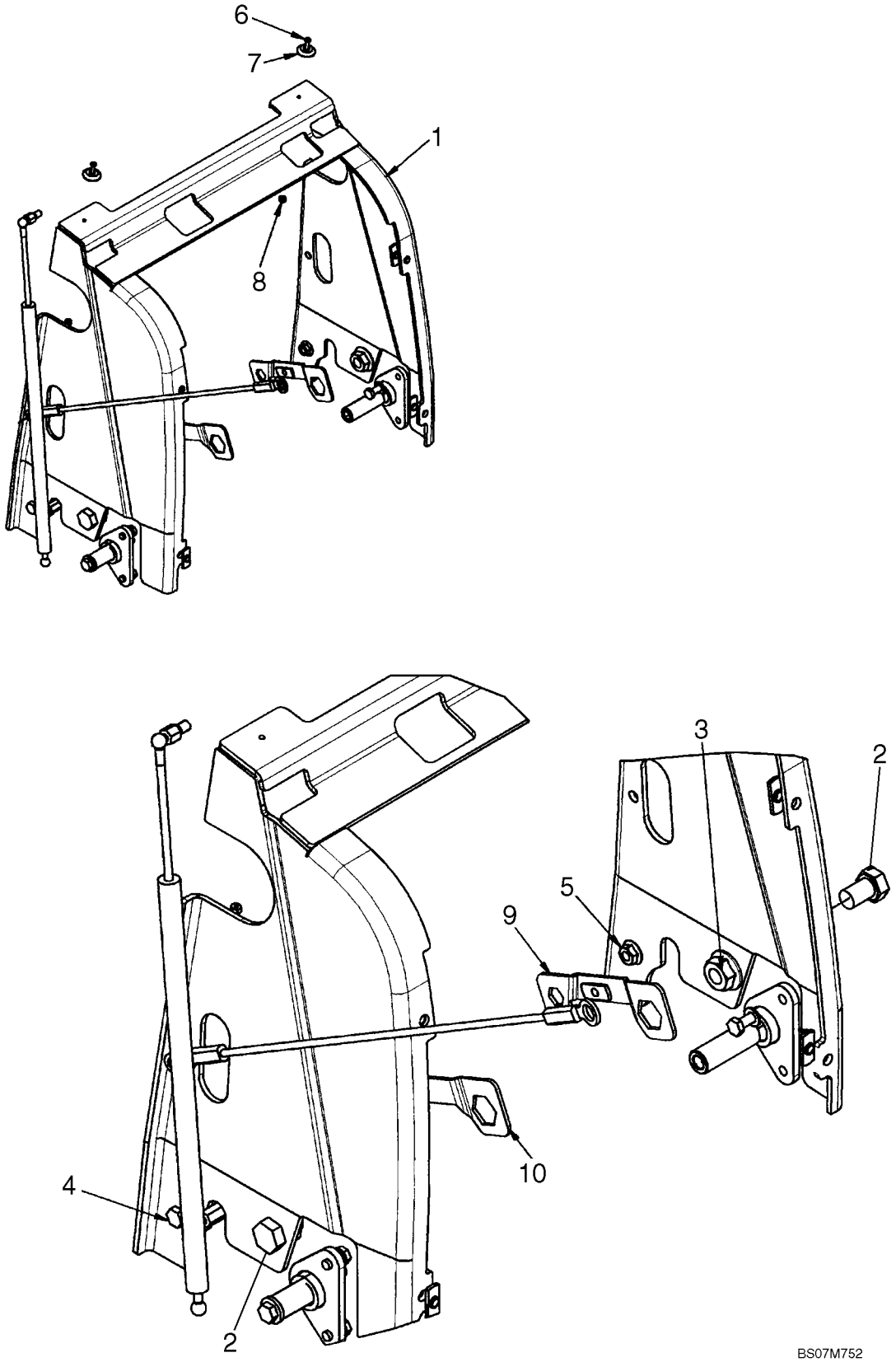

PROTECÇÃO DO RADIADOR

REF	FN	PART NUMBER	YR/SN	QTY	DESCRIPTION
1		87719412		1	BLOCO DE FIXAÇÃO, Wrapper
2		614-20030		2	PARAFUSO, Hex, M20 x 30, 8.8, Full Thd
3		829-2420		2	PORCA, M20 x 2.5, Flg, Cl 10
4		614-12030		2	PARAFUSO, Hex, M12 x 30, 8.8
5		829-2412		2	PORCA, M12 x 1.75, Flg, Cl 10
6		440-11012		2	PARAFUSO, Cross Pan Hd, #10-24 x 3/4"
7		109879A1		2	ESPAÇADOR, Hood; Plastic
8		231-14109		2	CONTRA PORCA, #10-24, GB
9		87725886		1	PRENDEDOR
10		87725883		1	PRENDEDOR

CAPÔ - PAINÉIS LATERAIS

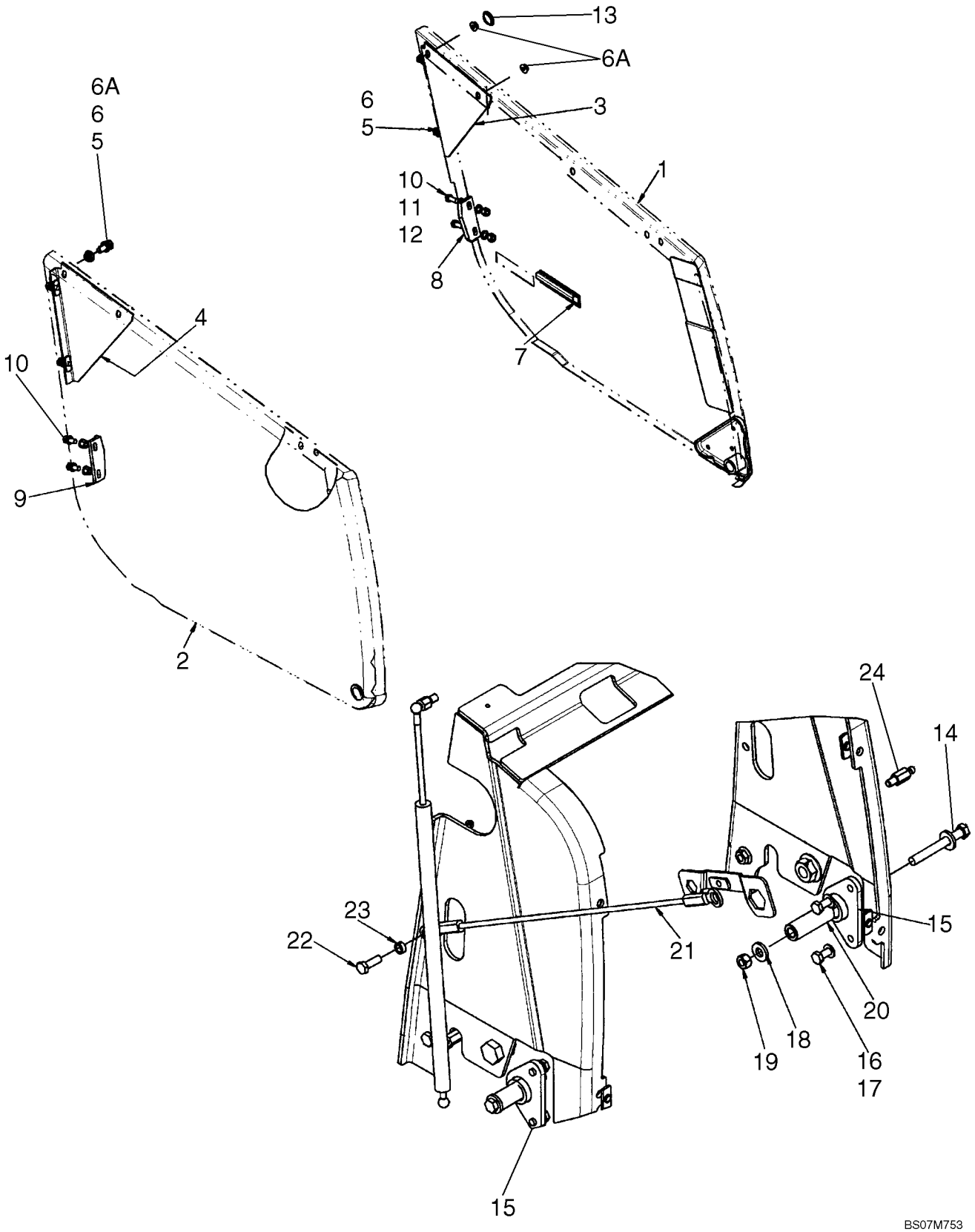

CAPÔ - PAINÉIS LATERAIS

REF	FN	PART NUMBER	YR/SN	QTY	DESCRIPTION
1		87444148		1	PAINEL LATERAL, Left-Hand Side
2		87444147		1	PAINEL LATERAL, Right-Hand Side
3		362609A1		1	TENSOR, Left-Hand
4		362607A1		1	TENSOR, Right-Hand
5		614-10025		8	PARAFUSO, Hex, M10 x 25, 8.8, Full Thd
6		895-11010		8	ARRUELA PLANA, M10 x 20 x 2
6A		825-2410		4	PORCA, M10 x 1.5, Flg, Cl 8
7		183168A1		1	MANILHA, Left-Hand
8		D143715		1	SUPORTE, Guide, Left-Hand
9		D143714		1	SUPORTE, Guide, Right-Hand
10		614-10025		4	PARAFUSO, Hex, M10 x 25, 8.8, Full Thd
11		895-11010		8	ARRUELA PLANA, M10 x 20 x 2
12		832-10410		4	CONTRA PORCA, M10 x 1.5, Cl 8
13		D140267		2	BUJÃO
14		814-12100		2	PARAFUSO, Hex, M12 x 100, 8.8
15		87606502		2	PIVOTE
16		614-10020		4	PARAFUSO, Hex, M10 x 20, 8.8, Full Thd
17		895-11010		4	ARRUELA PLANA, M10 x 20 x 2
18		896-15012		4	ARRUELA PLANA, M12 x 28.5 x 4, HT
19		829-1412		2	PORCA, M12, Cl 10
20		87412060		2	TUBO
21		144908A2		1	CABO
22		614-10030		1	PARAFUSO, Hex, M10 x 30, 8.8
23		D143417		1	ESPAÇADOR
24		87561131		2	JUNTA ESFÉRICA

09-41		p1	07/08

CAPÔ - GRADE

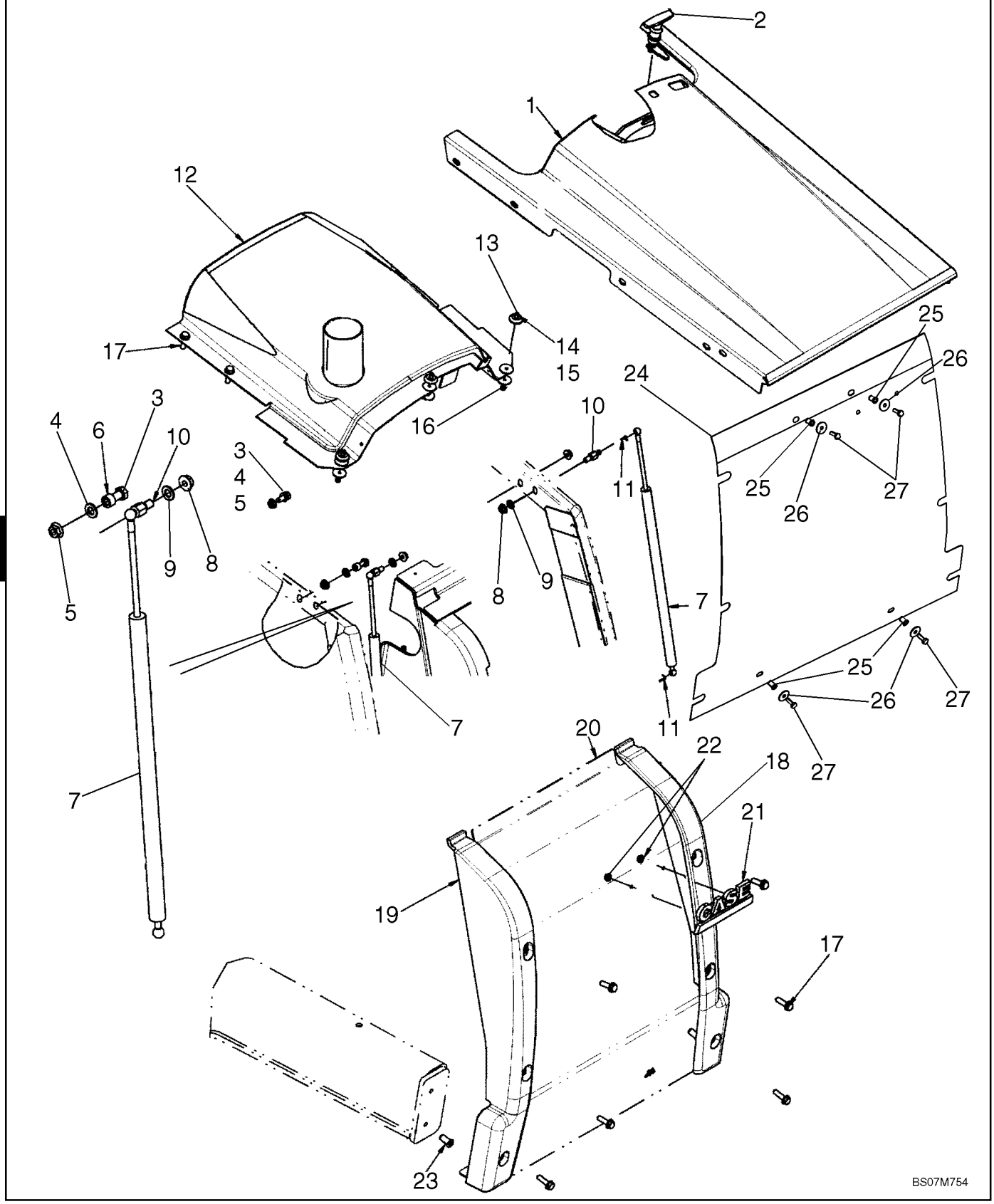

CAPÔ - GRADE

REF	FN	PART NUMBER	YR/SN	QTY	DESCRIPTION
1		87594903		1	CAPO DE MOTOR, Engine; Tilt
2		175599A1		1	TRINCO
3		614-10025		4	PARAFUSO, Hex, M10 x 25, 8.8, Full Thd
4		895-11010		4	ARRUELA PLANA, M10 x 20 x 2
5		825-2410		4	PORCA, M10 x 1.5, Flg, Cl 8
6		396605A1		1	ESPAÇADOR
7		114980A1		2	AMORTECEDOR, Spring; Counterbalance
8		825-2410		2	PORCA, M10 x 1.5, Flg, Cl 8
9		895-11010		2	ARRUELA PLANA, M10 x 20 x 2
10		139363A1		2	JUNTA ESFÉRICA, Stud
11		F44883		4	FIXADOR
12		87545557		1	BLOCO DE FIXAÇÃO, Fixed Hood
13		440-11012		3	PARAFUSO, Cross Pan Hd, #10-24 x 3/4"
14		109879A1		3	ESPAÇADOR
15		185325A1		8	ESPAÇADOR
16		231-14109		3	CONTRA PORCA, #10-24, GB
17		392828A2		10	PARAFUSO, With Washer, M10 x 40
18		87719497		1	PÁRA-CHOQUE, LH Front
19		87719495		1	PÁRA-CHOQUE, RH Front
20		87585167		1	TELA, Front Grille
21		186989A1		1	SÍMBOLO, CASE Medallion
22		131-431		2	CONTRA PORCA, Self, Threading, 1/4"
23		87417721		2	ROSCA POSTIÇA
24		87726055		1	TELA, Screen, Chaff
25		255447A1		4	REBITE, Insert, Threaded
26		257382A1		4	ARRUELA PLANA, 6.6 x 25 x 1.6 mm
27		257381A1		4	PARAFUSO, 1/4 NF x 3/4

09-42		p1	07/08

PLACAS, SUELO - TAPETES

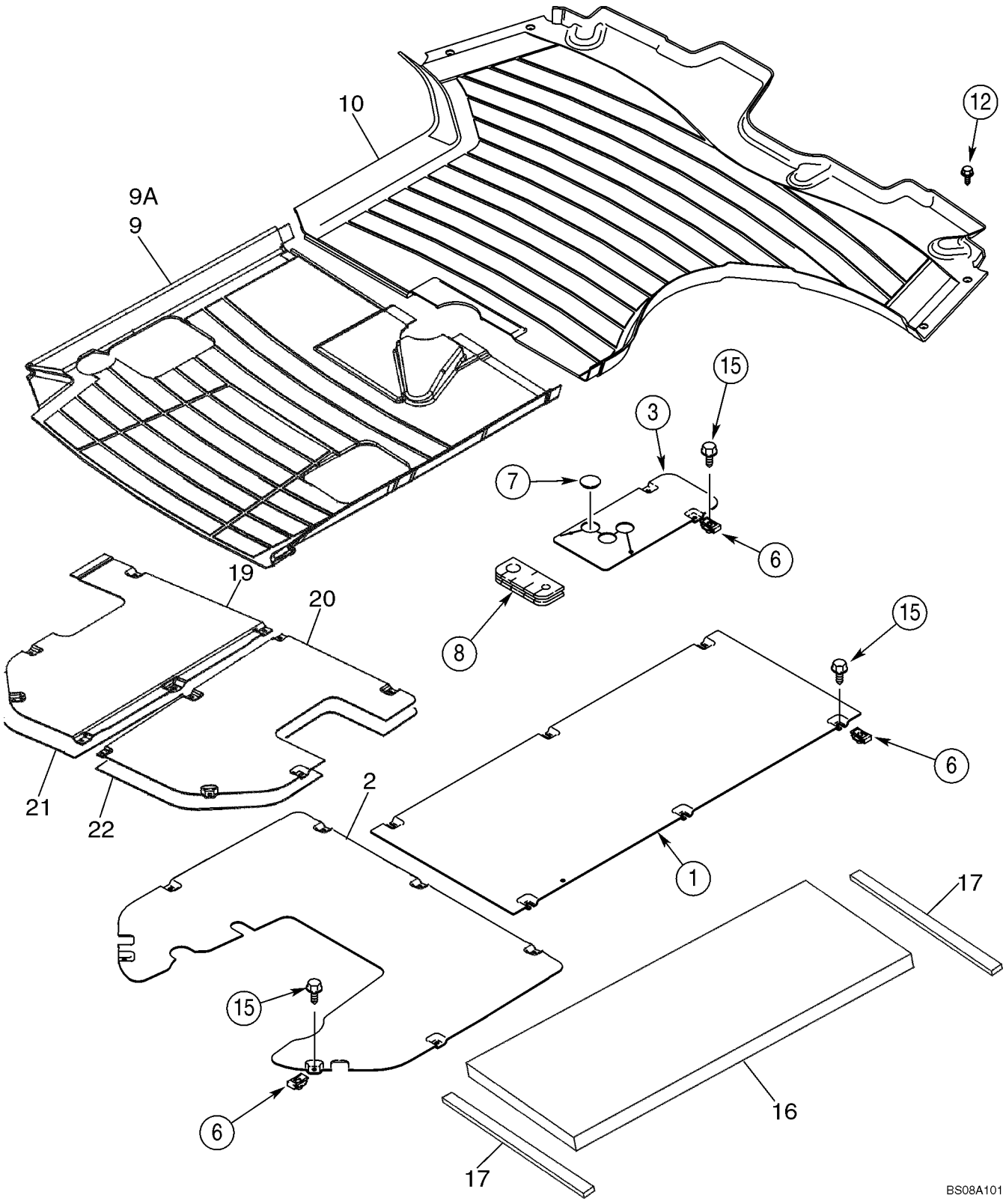

PLACAS, SUELO - TAPETES

REF	FN	PART NUMBER	YR/SN	QTY	DESCRIPTION
1		355984A2		1	PLACA ESPESSA, Front
2		86983190		1	PLAQUETA, Rear; Without Pilot Controls
3		87436076		1	PLAQUETA, Loader Control Lever
6		833-40406		16-17	PORCA, M6, U
7		353-422		1	BUJÃO, Dome, 1.250" hole, Nylon, Models Without Clam Bucket
8		393623A1		1	BLOCO, Floor
9		86983325		1	TAPETE DE ASSOALHO, Rear, Canopy Models, Without Pilot Controls
9A		86983269		1	TAPETE DE ASSOALHO, Rear, Canopy Models, With Pilot Controls; Not Illustrated
10		390551A2		1	TAPETE DE ASSOALHO, Front, Cab or Canopy Models
12		87310085		4	PARAFUSO, Hex Washer Head, No. 10 x 1, Self-Tapping, Stainless Steel
15		87310096		16-17	PARAFUSO, M6 x 25, Includes Washer, Stainless Steel
16		411074A1		1	ANEL DE VEDAÇÃO, Cab Models
17		181981A1		2	TIRA VEDADORA, Foam; Adhesive Back; Cab Models
19		87434049		1	PLAQUETA, Rear, With Pilot Controls
20		87434050		1	PLAQUETA, Rear, With Pilot Controls
21		87442376		1	ESPUMA ISOLANTE, Heat Barrier, Left-Hand, Canopy Models With Pilot Controls
22		87442377		1	ESPUMA ISOLANTE, Heat Barrier, Right-Hand, Canopy Models With Pilot Controls

09-43		p1	07/08

COBERTURA DO GUARDA-LAMAS ESQUERDO - FECHO DO PAINEL TRASEIRO

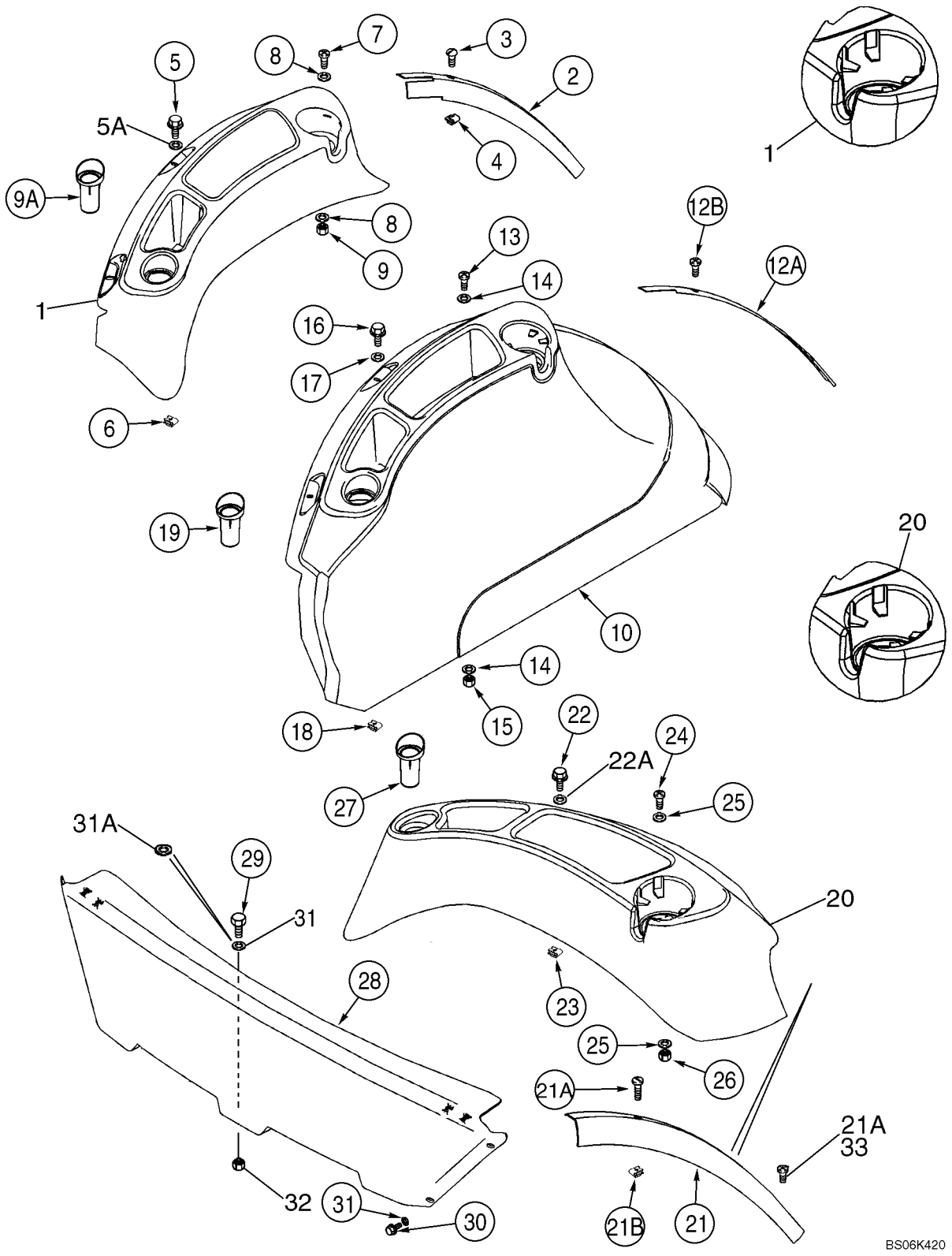

10

COBERTURA DO GUARDA-LAMAS ESQUERDO - FECHO DO PAINEL TRASEIRO

REF	FN	PART NUMBER	YR/SN	QTY	DESCRIPTION
1		86992247		1	BANDEJA, Cab Models, With Standard Interior; Includes 86992284, 400077A1
		NSS		1	BOLETIM INFORMATIVO, Tray
		86992284		4	PÁRA-CHOQUE
		400077A1		1	TIRA DE METRO, 1300 mm (51-3/16 in); Cut From 1977224C1
2		397026A3		1	TIRA DE PROTECAO, Trim, Left-Hand Fender, Cab Models With Standard Interior
3		87310088		3	PARAFUSO, No. 10 x 3/4, Stainless Steel
4		131-869		3	PORCA, Ret, J, #10-24
5		87310098		2	PARAFUSO, Flange, M6 x 20, Stainless Steel
5A		87310186		2	ARRUELA PLANA, 6.6 ID x 25 OD x 1.6 mm thk, Stainless Steel
6		833-40406		2	PORCA, M6, U
7		87310127		2	PARAFUSO, No. 10 x 1, Stainless Steel
8		87310146		4	ARRUELA PLANA, 13/64 x 3/4 x 1/16, Stainless Steel
9		86625057		2	CONTRA PORCA, #10-24, GB
9A		378742A3		1	INSERTO, Swing Pin Holder
10		86992245		1	TAMPA CONJUNTO, Cab Models With Deluxe Interior; Includes (4) 86992284 Bumpers
12A		397774A3		1	CINTA, Deluxe Interior
12B		87310088		3	PARAFUSO, No. 10 x 3/4, Stainless Steel
13		87310127		2	PARAFUSO, No. 10 x 1, Stainless Steel
14		87310146		4	ARRUELA PLANA, 13/64 x 3/4 x 1/16, Stainless Steel
15		86625057		2	CONTRA PORCA, #10-24, GB
16		87310098		2	PARAFUSO, Flange, M6 x 20, Stainless Steel
17		87310186		2	ARRUELA PLANA, 6.6 ID x 25 OD x 1.6 mm thk, Stainless Steel
18		833-40406		2	PORCA, M6, U
19		378742A3		1	INSERTO, Swing Pin Holder
20		86992243		1	BANDEJA CONJUNTO, Canopy Models; Includes 86992284, 4000077A1
		NSS		1	BOLETIM INFORMATIVO, Tray

COBERTURA DO GUARDA-LAMAS ESQUERDO - FECHO DO PAINEL TRASEIRO

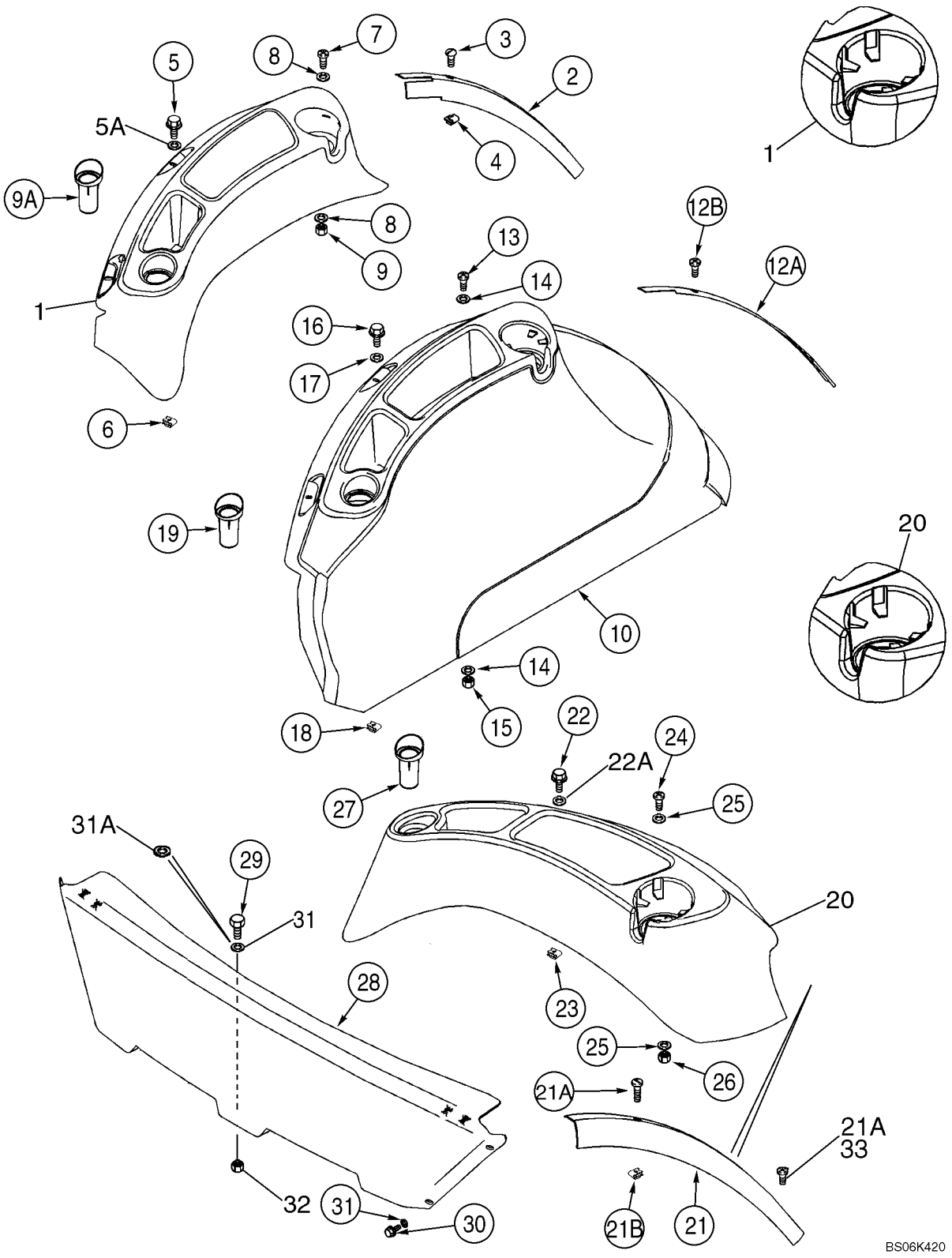

COBERTURA DO GUARDA-LAMAS ESQUERDO - FECHO DO PAINEL TRASEIRO

REF	FN	PART NUMBER	YR/SN	QTY	DESCRIPTION
		86992284		4	PÁRA-CHOQUE
		400077A1		1	TIRA DE METRO, 1300 mm (51-3/16 in); Cut From 1977224C1
21		397025A2		1	TIRA DE PROTECAO, Trim, Canopy Models
21A		87534992		2-3	PARAFUSO, Pan Hd Slotted Rec, #10 x 1 SST
21B		131-869		3	PORCA, Ret, J, #10-24
22		87310098		2	PARAFUSO, Flange, M6 x 20, Stainless Steel
22A		87310186		2	ARRUELA PLANA, 6.6 ID x 25 OD x 1.6 mm thk, Stainless Steel
23		833-40406		2	PORCA, M6, U
24		87310127		2	PARAFUSO, No. 10 x 1, Stainless Steel
25		87310146		4	ARRUELA PLANA, 13/64 x 3/4 x 1/16, Stainless Steel
26		86625057		2	CONTRA PORCA, #10-24, GB
27		378742A3		1	INSERTO, Swing Pin Holder
28		86992977		1	PAINEL, Rear Closure Panel; Canopy Models
29		87310154		1	PARAFUSO, M8 x 25, Stainless Steel
30		781-24820		4	PARAFUSO, Hex Flg Hd, M8 x 20
31		895-15008		4-5	ARRUELA PLANA, M8 x 20 x 1.6
31A		87310185		1	ARRUELA PLANA, 9 x 20 x 1,6 mm, Stainless Steel
32		832-10408		1	CONTRA PORCA, M8 x 1.25, Cl 8
33		87310126		1	PARAFUSO, Pan Hd Cross Rec, No. 10 x 3/4 Stainless Steel

EXTENSÕES DOS GUARDA-LAMAS

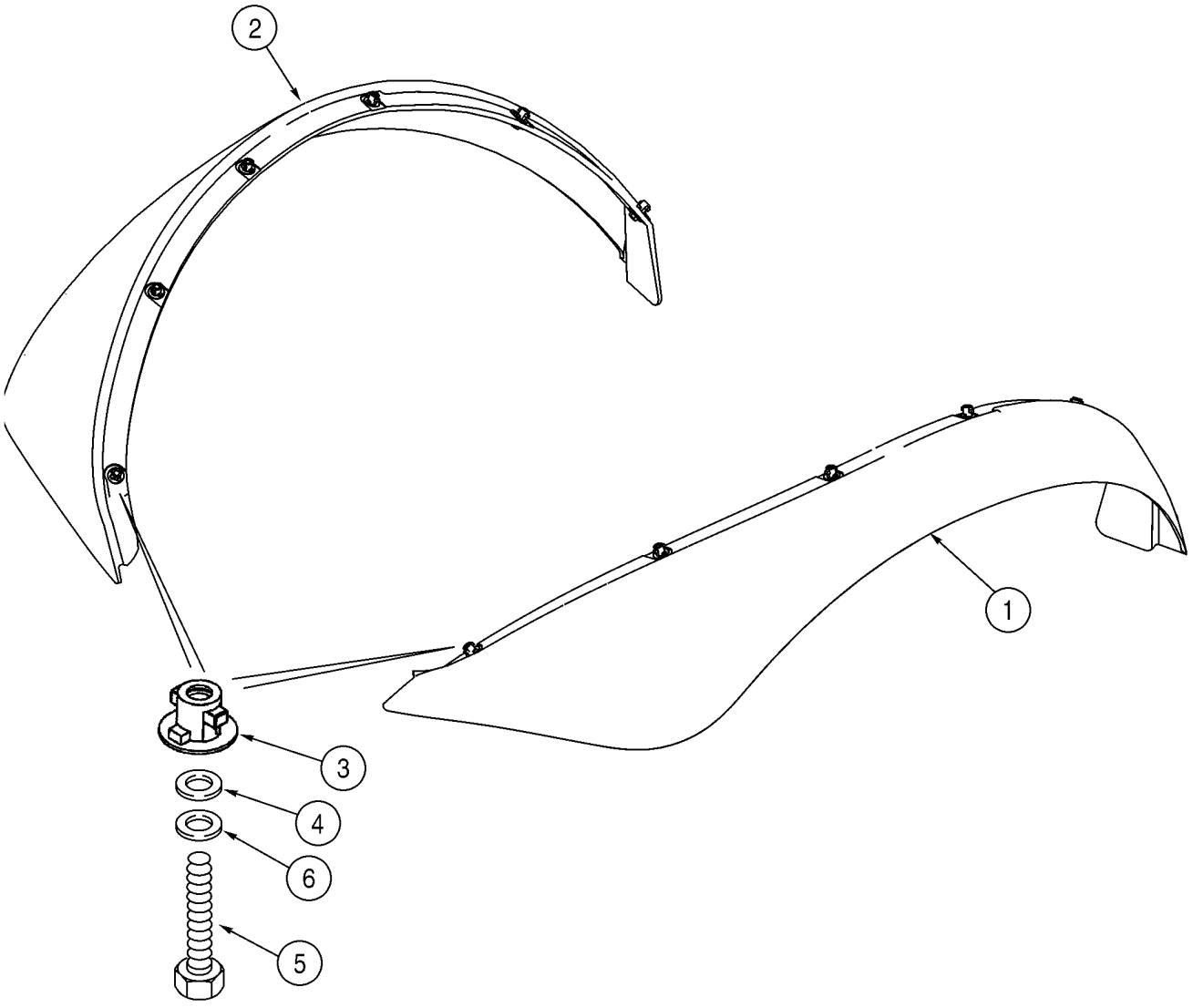

BC00F002

EXTENSÕES DOS GUARDA-LAMAS

REF	FN	PART NUMBER	YR/SN	QTY	DESCRIPTION
1		340998A3		1	PÁRA-LAMA, Right-Hand
2		340997A3		1	PÁRA-LAMA, Left-Hand
3		345231A1		12	BOTÃO DE IMPULSO
4		496-41041		12	ARRUELA PLANA, 13/32" x 1 1/8" x .134"
5		614-8030		12	PARAFUSO, Hex, M8 x 30, 8.8
6		892-11008		12	ARRUELA-TRAVA, M8

09-45		p1	07/08

GUARDA-LAMAS

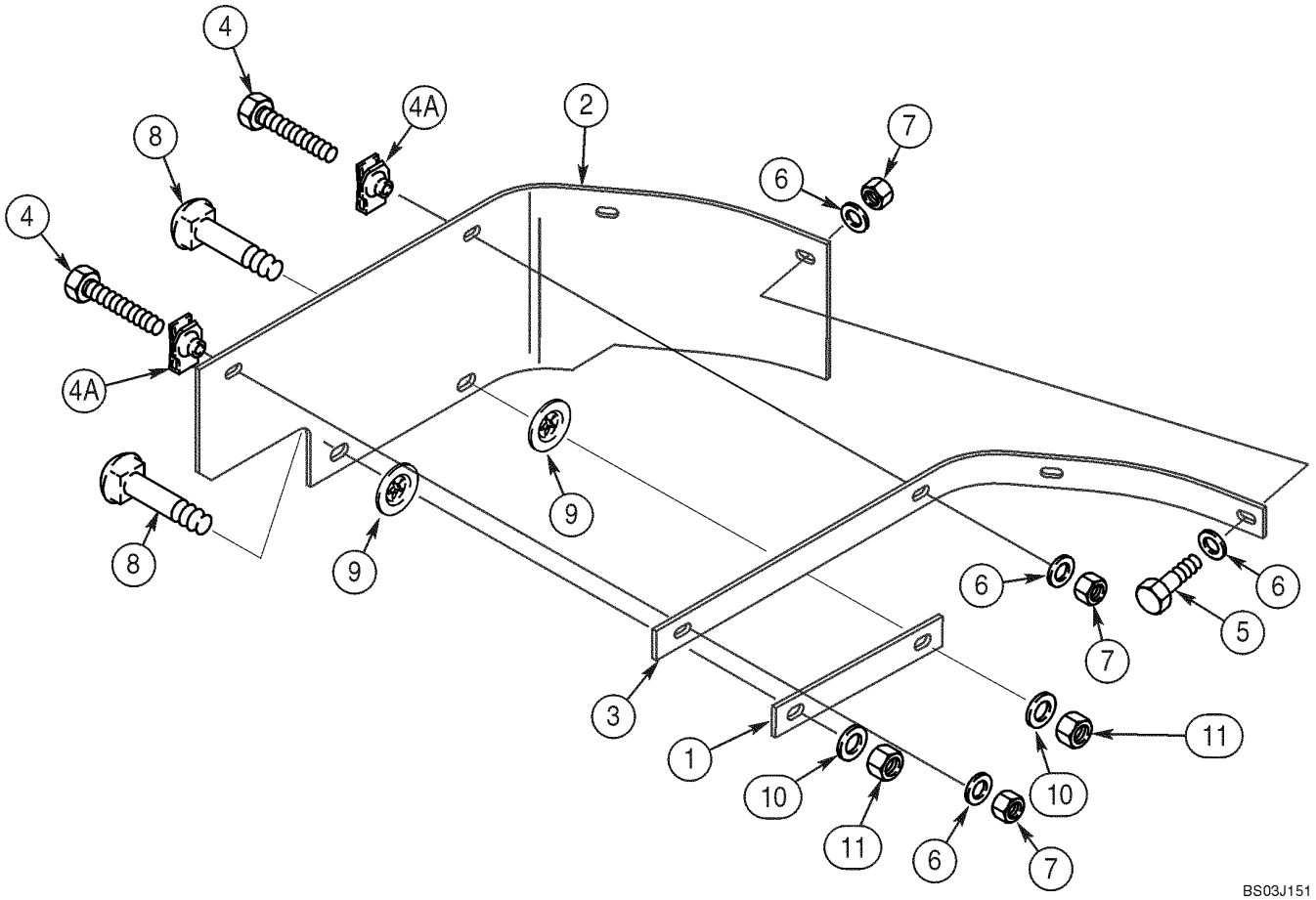

GUARDA-LAMAS

REF	FN	PART NUMBER	YR/SN	QTY	DESCRIPTION
1		362557A1		1	CINTA, Plate
2		362556A2		1	PROTEÇÃO, Mounts At Right-Hand Fender
3		362558A1		1	CINTA, Angle
4		614-8040		2	PARAFUSO, Hex, M8 x 40, 8.8, Full Thd
4A		833-40408		2	PORCA, M8, U
5		614-8030		2	PARAFUSO, Hex, M8 x 30, 8.8
6		495-21038		6	ARRUELA PLANA, 5/16"
7		832-10408		4	CONTRA PORCA, M8 x 1.25, Cl 8
8		711-10040		2	PARAFUSO, Short NK, M10 x 40, Cl8.8, Full Thd
9		368417A1		2	ARRUELA PLANA
10		895-11010		2	ARRUELA PLANA, M10 x 20 x 2
11		832-10410		2	CONTRA PORCA, M10 x 1.5, Cl 8

09-46		p1	07/08

CONJUNTO DO ASSENTO STANDARD - SUPORTE

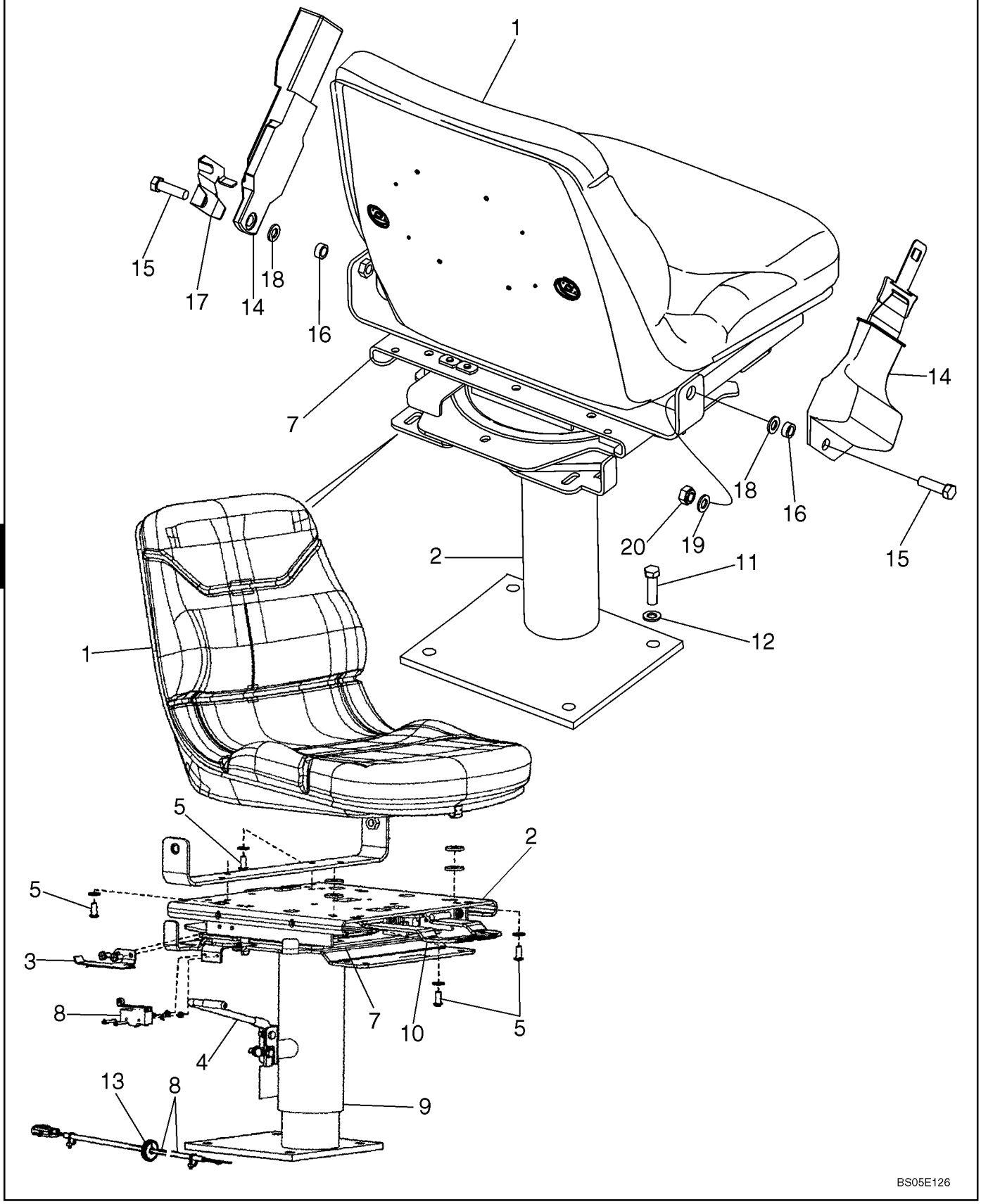

10

CONJUNTO DO ASSENTO STANDARD - SUPORTE

REF	FN	PART NUMBER	YR/SN	QTY	DESCRIPTION
		87454292		1	ASSENTO CONJUNTO, Standard, Vinyl, Without Armrest, Sears Brand; Includes Seat, Swivel and Pedestal, and Swivel Bearing Kit, Ref 1 - 10
1		87338681		1	ENCOSTO, Seat Only
2		87346606		1	ACCESORIO BANCOS, Swivel and Pedestal; Component Parts Not Serviced Separately
3		87346607		1	ACCESORIO BANCOS, Lever, Switch Actuator
4		87346611		1	ACCESORIO BANCOS, Handle, Height Adjustment
5		87346612		4	ACCESORIO BANCOS, Button Head Screw, 5/16 x 3/4
6		87346615		1	ACCESORIO BANCOS, Spring Not Illustrated
7		87308132		1	ROLAMENTO, Swivel Bearing Kit; Includes (1) Bolt, (8) Bearings, (1) Clip, (1) Nut, (1) Cotter Pin, (1) Plastic Washer, (1) Ball Retainer; Component Parts Not Serviced Separately
8		87346625		1	ACCESORIO BANCOS, Kit, Switch/Harness, Adj. Height
9		87346633		1	ACCESORIO BANCOS, Kit, Pedestal
10		87346634		1	ACCESORIO BANCOS, Kit, Slide/Swivel
11		604-12030		4	PARAFUSO, Hex, Lock, M10 x 30, Cl 8.8
12		896-15012		4	ARRUELA PLANA, M12 x 28.5 x 4, HT
13		248-2373		1	CASQUILHO ISOLADOR, 1/2" ID x 1 1/4" Groove Dia, Str Cut
14		87408888		1	CINTO DE SEGURANÇA, 76 mm (3 in); Retractable, If Used
14		87408889		1	CINTO DE SEGURANÇA, 51 mm (2 in), Retractable, If Used
15		414-724		2	PARAFUSO, Hex, 7/16"-20 x 1 1/2", G5
16		87311572		2	ESPAÇADOR
17		87310149		1	SUPORTE, Left-Hand; Seat Belt Mounting/Standard Seat
18		495-81169		2	ARRUELA PLANA, 17/32" x 2 1/2" x .120"
19		496-81010		4	ARRUELA PLANA
20		232-4617		2	CONTRA PORCA, 7/16"-20, GC

ASSENTO - SUPORTE

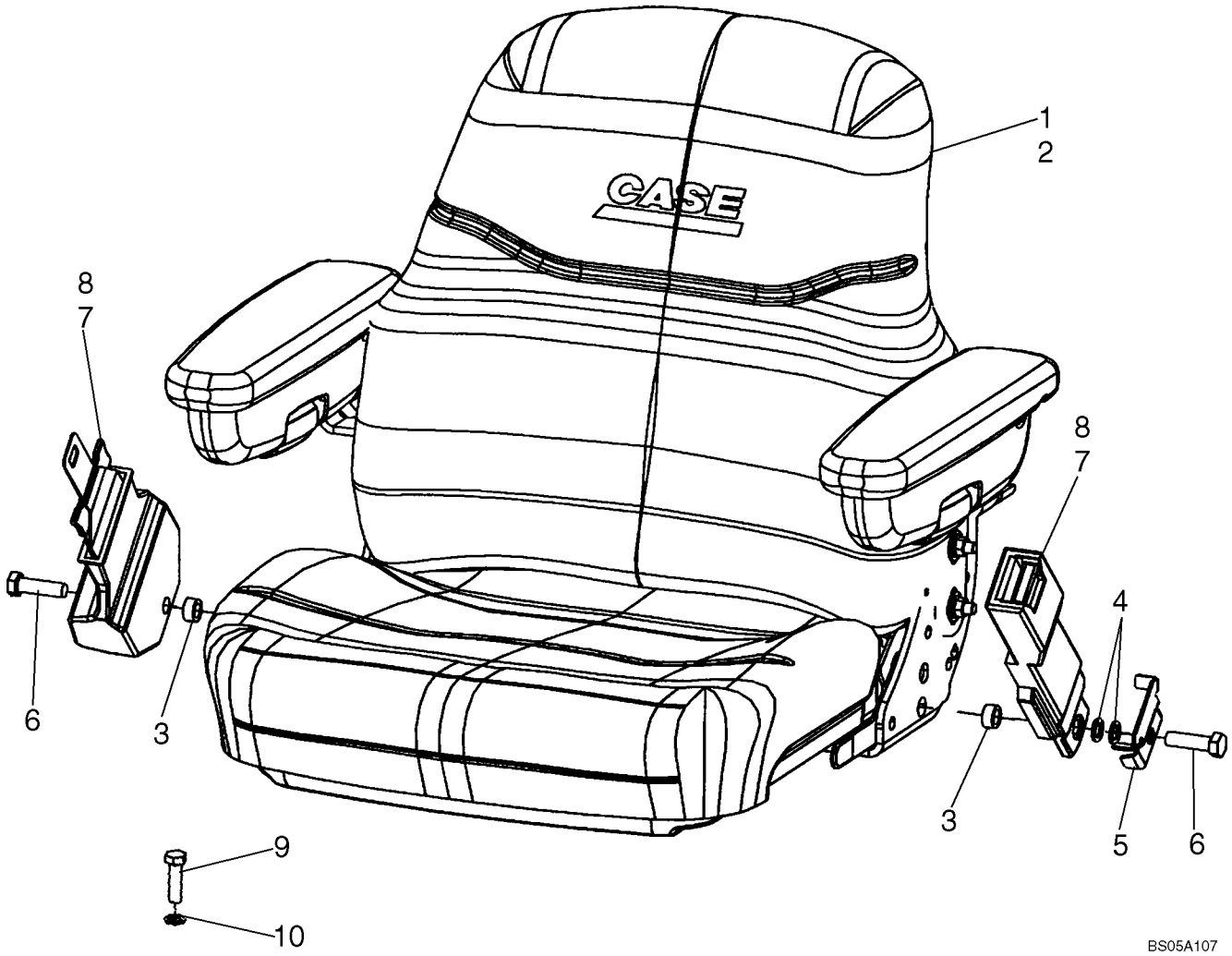

ASSENTO - SUPORTE

REF	FN	PART NUMBER	YR/SN	QTY	DESCRIPTION
1		87399492		1	ASSENTO CONJUNTO, Mechanical Suspension, Vinyl, With Armrests; This Seat is Located 19 mm (3/4 in) Farther Forward From Center of Pedestal; See Figure 09-48
2		87399491		1	ASSENTO CONJUNTO, Mechanical Suspension, Cloth, With Armrests; This Seat is Located 19 mm (3/4 in) Farther Forward From Center of Pedestal; See Figure 09-48
3		87311572		2	ESPAÇADOR
4		895-18012		2	ARRUELA PLANA, M12 x 20 x 2, Left-Hand Side
5		87310149		1	SUPORTE, Belt Mounting
6		614-12040		2	PARAFUSO, Hex, M12 x 40, 8.8, Full Thd
7		87408888		1	CINTO DE SEGURANÇA, 76 mm (3 in), Retractable, If Used
8		87408889		1	CINTO DE SEGURANÇA, 51 mm (2 in), If Used
9		604-12030		4	PARAFUSO, Hex, Lock, M10 x 30, Cl 8.8, Seat Pedestal to Floor
10		896-15012		4	ARRUELA PLANA, M12 x 28.5 x 4, HT

09-48		p1	07/08

CONJUNTO DO ASSENTO, SUSPENSÃO MECÂNICA

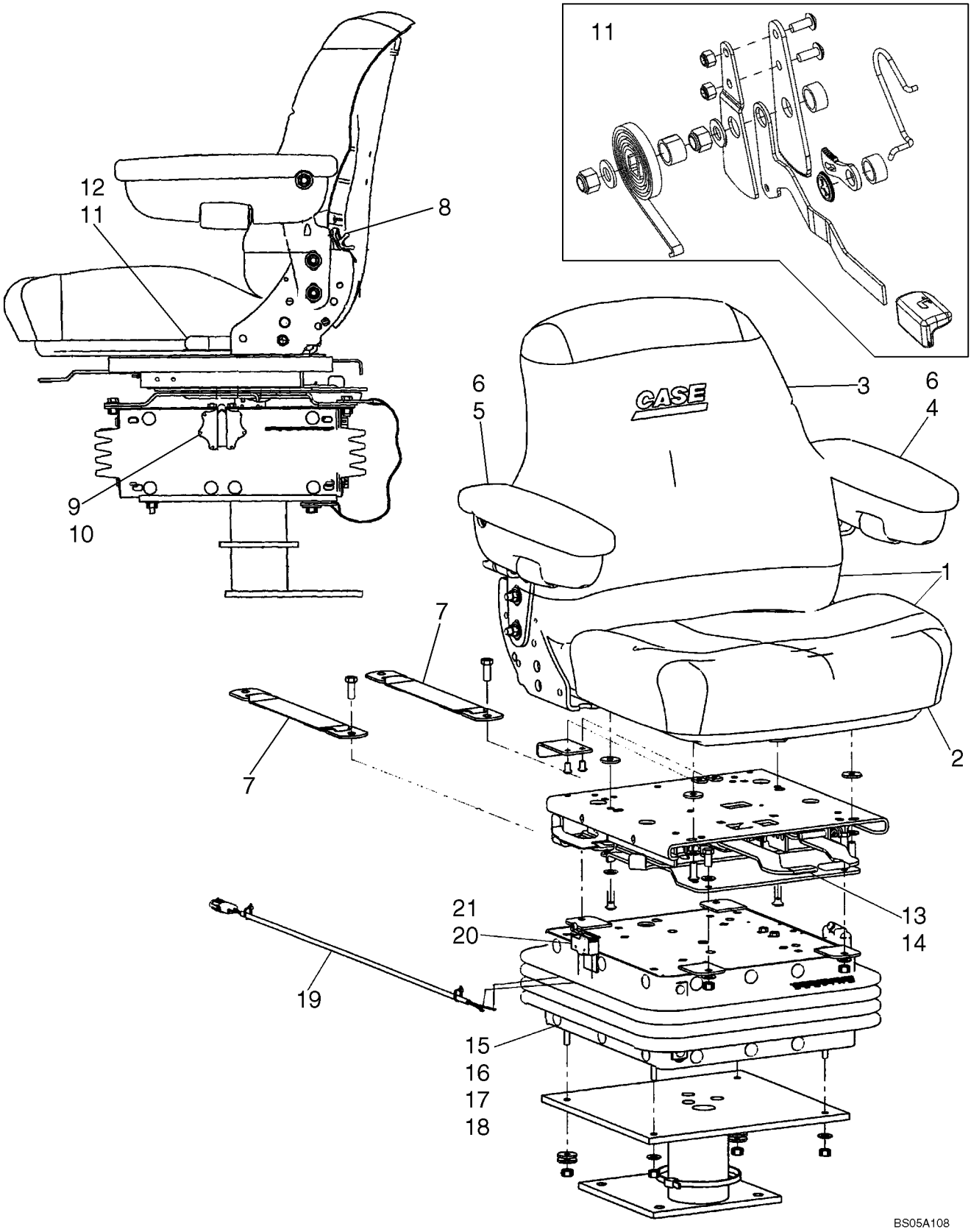

10

CONJUNTO DO ASSENTO, SUSPENSÃO MECÂNICA

REF	FN	PART NUMBER	YR/SN	QTY	DESCRIPTION
		87399492		1	ASSENTO CONJUNTO, Vinyl, Mechanical Suspension, This Seat is Located 19 mm (3/4 in) Farther Forward From Center of Pedestal; Incl. Ref 1 - 21; Also Includes 87555125 Pedestal Assy; Replaces 87454295 Seat Assy, Which Included 87349995 Pedestal
		87399491		1	ASSENTO CONJUNTO, Cloth, Mechanical Suspension, This Seat is Located 19 mm (3/4 in) Farther Forward From Center of Pedestal; Incl. Ref 1 - 21; Also Includes 87555125 Pedestal Assy; Replaces 87454294 Seat Assy, Which Included 87349995 Pedestal
		87555125		1	ACCESORIO BANCOS, Pedestal Assembly
1		87308118		1	ENCOSTO, Seat Top Assy, Vinyl; Includes Back and Seat Cushions
1		87308157		1	ENCOSTO, Seat Top Assy, Cloth; Includes Back and Seat Cushions
2		87308119		1	COXIM, Vinyl
2		87308158		1	COXIM, Cloth
3		87308127		1	ENCOSTO, Vinyl
3		87308159		1	ENCOSTO, Cloth
4		87308153		1	BRACO CONJUNTO, Left-Hand
5		87308152		1	BRACO CONJUNTO, Right-Hand
6		87308154		2	ACCESORIO BANCOS, Kit, Arm Pad; Includes (1) Arm Pad, (1) Screw
7		87308128		1	ACCESORIO BANCOS, Kit, Tether Belt; Includes (2) Tether Belts, (2) Bolts, (4) Washers, (2) Lock Nuts
8		87037462		1	DISPOS. REGUL. ENCOSTO, Lumbar Knob Kit; Includes Knob, 1/8 x 5/8 Roll Pin
		87308130		1	DISPOS. REGUL. ENCOSTO, Kit, Lumbar; Includes (2) Screws, (2) Rivets, (1) Back Support, (1) Lumbar Shaft Yoke
9		123969A1		1	BOTÃO, Kit, Height/Weight Adjustment; Includes (1) Knob, (1) Shaft, (1) 5/32 x 1 in Roll Pin
10		38-11016		1	PINO DE FIXAÇÃO, 5/32" x 1", Slotted

CONJUNTO DO ASSENTO, SUSPENSÃO MECÂNICA

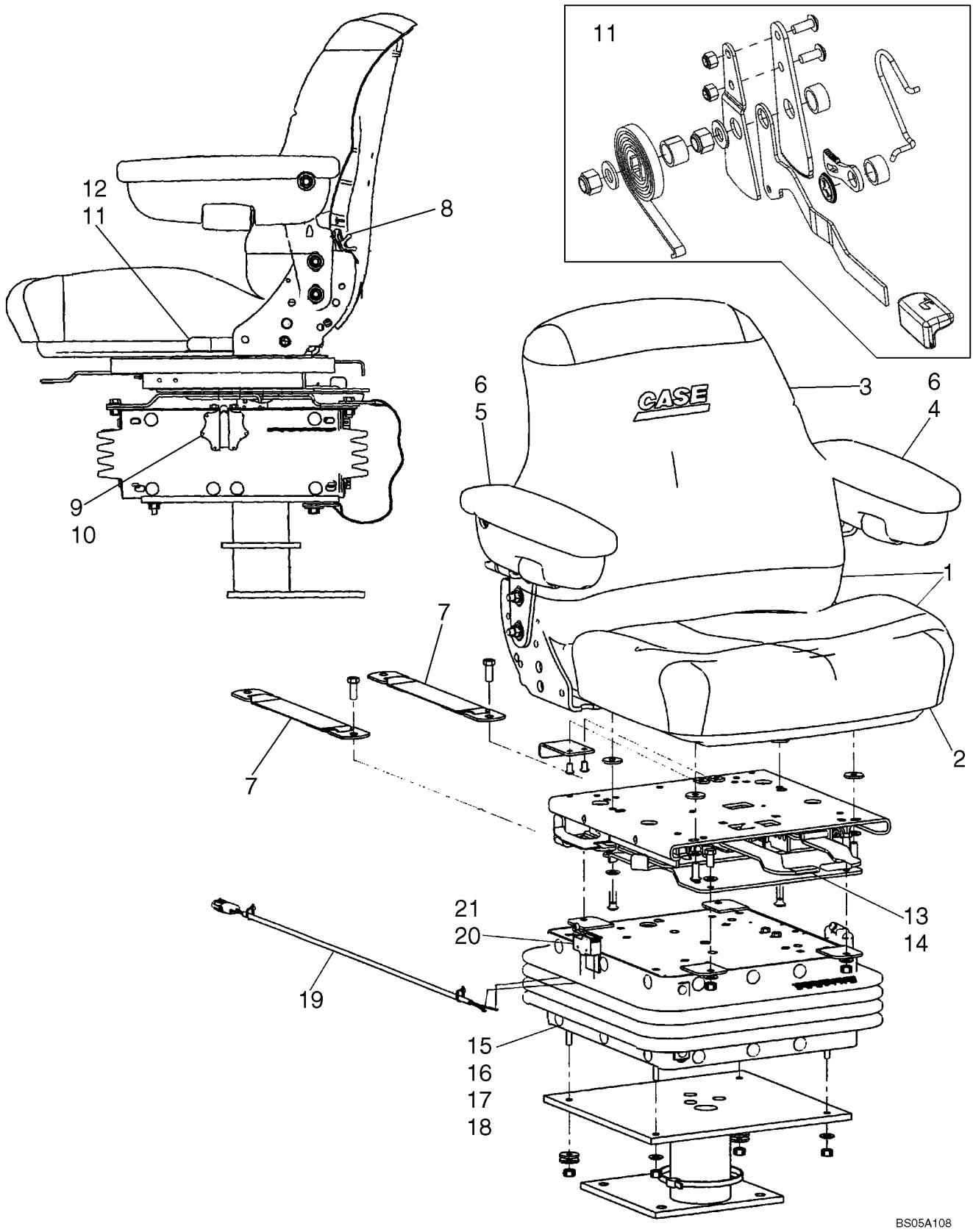

CONJUNTO DO ASSENTO, SUSPENSÃO MECÂNICA

REF	FN	PART NUMBER	YR/SN	QTY	DESCRIPTION
		130674A1		1	JOGOS, Kit, Weight Adjustment; Includes (1) Thrust Washer, (2) Shaft and Gear
		87308145		1	ANILHA DE ENCOSTO, 2 OD x .6 in ID
11		86994165		1	ACCESORIO BANCOS, Recliner Kit; Includes (2) Brackets, (3) Spacers, (2) Springs, Knob, Latch, Lever, (2) Bolts, (2) Washers, (5) Nuts
12		87416475		1	MANÍPULO, Recliner Cap
		87308143		1	SUPORTEC ASSENTO, Upper Housing, Boxed
		1977725C1		1	DESLIZADOR, Kit, Bearing, Slider Block; Includes (4) Tube Bearings, (1) Ride Indicator, (1) A45512 Slider Block, (1) A45515 Slider Block, (1) A45516 Slider Block, (1) NSS Slider Block
13		87308131		1	ACCESORIO BANCOS, Swivel Assembly
14		87308132		1	ROLAMENTO, Kit, Swivel Bearing; Includes (1) Bolt, (8) Ball Bearings, (1) Clip, (1) Nut, (1) Cotter Pin, (1) Plastic Washer, (1) Ball Retainer
15		87308141		1	SUPORTEC ASSENTO, Kit, Suspension Assembly, Boxed
16		87308144		1	SUPORTEC ASSENTO, Suspension Arm, Boxed
17		87308146		1	ACCESORIO BANCOS, Kit, Spring, Suspension
18		87308147		1	ACCESORIO BANCOS, Kit, Boot, Suspension, Boxed; Includes (1) Boot, (26) Buttons
		87308148		1	ACCESORIO BANCOS, Kit, Shock Absorber, Boxed; Includes (1) Shock Absorber, (2) Bushings
		51200906		1	BRACADEIRA, Shaft, Suspension
		112884A1		2	EIXO, Bearing Shaft Weldment, Boxed
		A45504		1	ARRUELA PLANA, Spring, Square, With Weldnut
		A45505		1	ENGRENAGEM, Large Gear and Shaft Weldment
		A45513		1	ENGRENAGEM, Gear and Shaft Weldment
		A45054		2	PÁRA-CHOQUE, Rubber, Black
		87308142		1	SUPORTEC ASSENTO, Lower Housing, Boxed
19		87308149		1	CHICOTE DE FIOS
20		87308150		1	INTERRUPTOR, Seat

CONJUNTO DO ASSENTO, SUSPENSÃO MECÂNICA

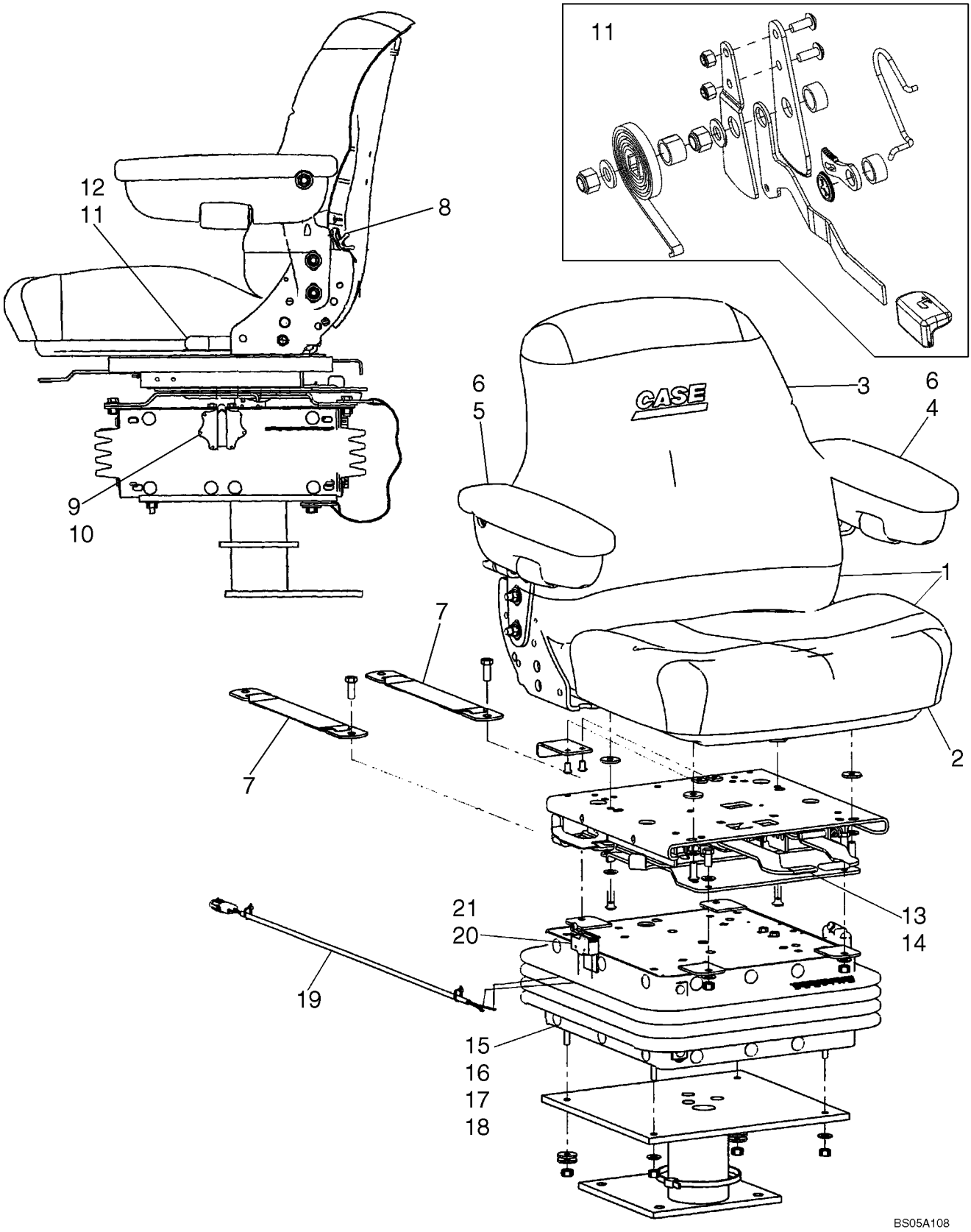

CONJUNTO DO ASSENTO, SUSPENSÃO MECÂNICA

REF	FN	PART NUMBER	YR/SN	QTY	DESCRIPTION
21		87308151		1	ACCESORIO BANCOS, Kit, Switch and Actuator Lever; Includes Switch, Actuator, (4) Screws, (2) Lock Washers, (2) Nuts

CONJUNTO DO ASSENTO, SUSPENSÃO PNEUMÁTICA - SUPORTE

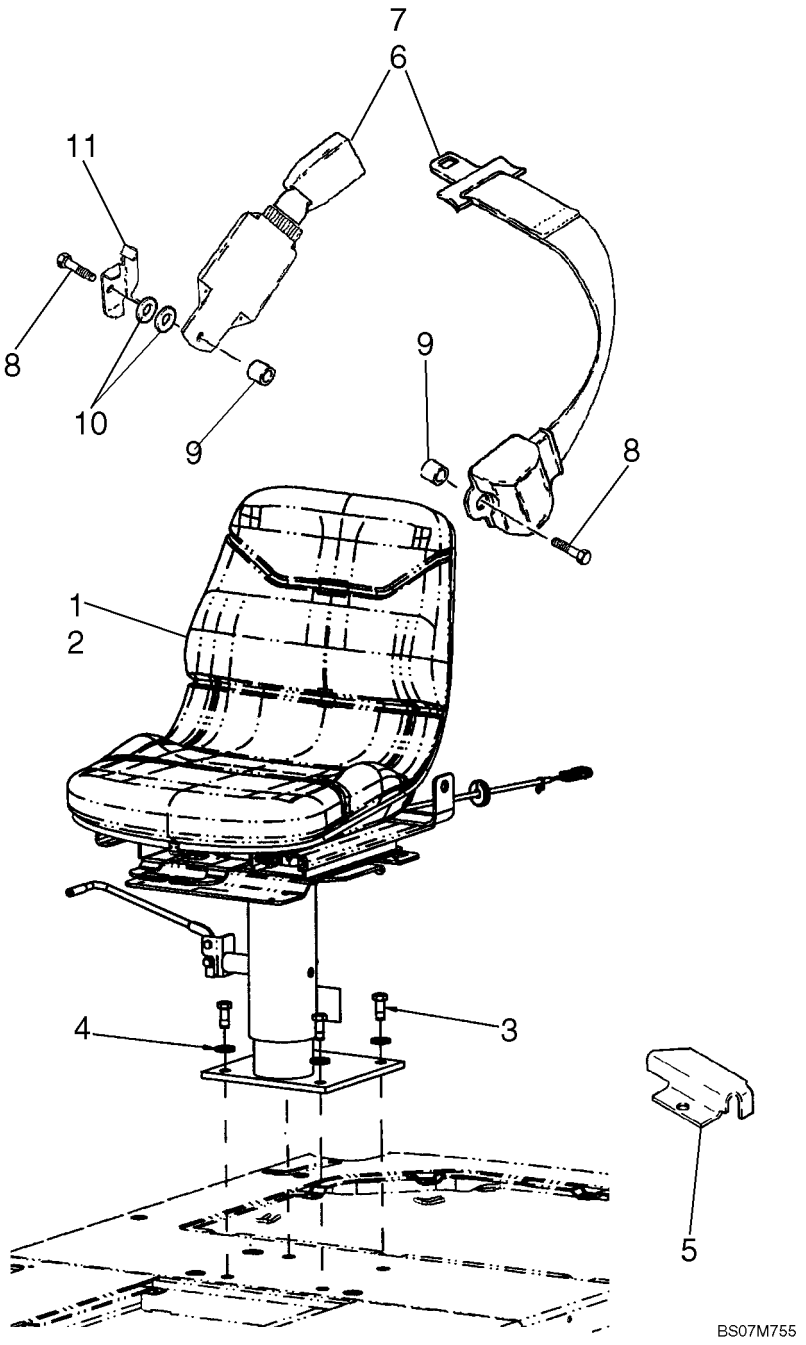

CONJUNTO DO ASSENTO, SUSPENSÃO PNEUMÁTICA - SUPORTE

REF	FN	PART NUMBER	YR/SN	QTY	DESCRIPTION
1		87578905		1	ASSENTO, Air Suspension, Vinyl; Component Parts Not Available At Time Of Printing
2		87578904		1	ASSENTO, Air Suspension, Cloth; Component Parts Not Available At Time Of Printing; Not Illustrated
3		604-12030		4	PARAFUSO, Hex, Lock, M10 x 30, Cl 8.8
4		896-15012		4	ARRUELA PLANA, M12 x 28.5 x 4, HT
5		186351A1		1	PROTEÇÃO, Harness
6		87408889		1	CINTO DE SEGURANÇA, 51 mm (2 in), If Used; Suspension Seat Belt Mounting
7		87408888		1	CINTO DE SEGURANÇA, 76 mm (3 in), Retractable, If Used; Suspension Seat Belt Mounting
8		614-12040		2	PARAFUSO, Hex, M12 x 40, 8.8, Full Thd
9		87311572		2	ESPAÇADOR
10		895-18012		2	ARRUELA PLANA, M12 x 20 x 2
11		87310149		1	SUPORTE

CABINE - RETENÇÃO DOS ESPELHOS RETROVISORES

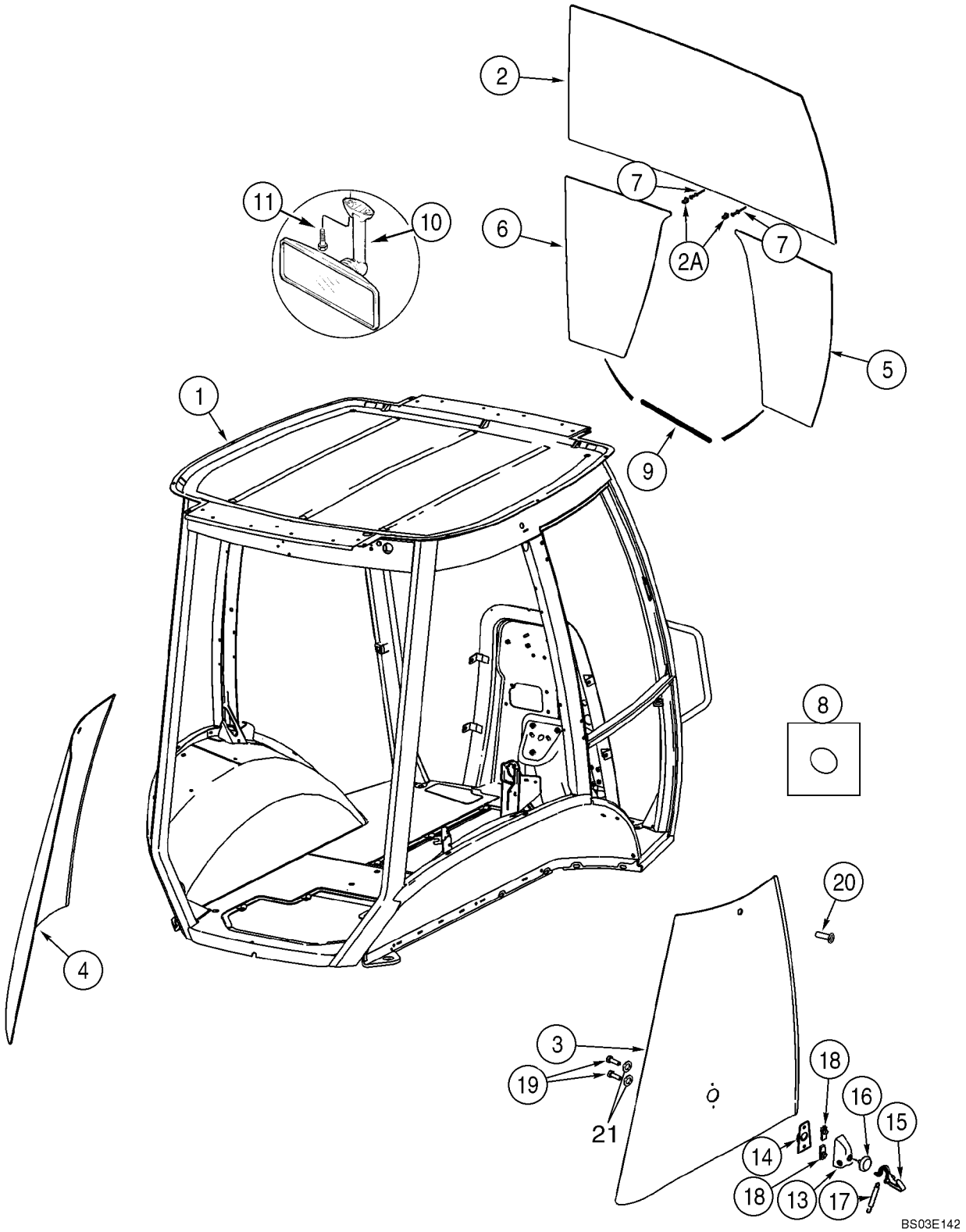

CABINE - RETENÇÃO DOS ESPELHOS RETROVISORES

REF	FN	PART NUMBER	YR/SN	QTY	DESCRIPTION
1		87636560		1	CABINE, Single Door; Includes Frame, Left-Hand Door, All Glass, Front and Rear Wipers and Exterior Lamps; Order From Machinery Price List
1		87636562		1	CABINE, Two Door; Includes Frame, Left-Hand Door, All Glass, Front and Rear Wipers and Exterior Lamps; Order From Machinery Price List
2		448607A1		1	PARA-BRISA
2A		279482A1		2	BRACADEIRA, Windshield
3		338425A1		1	JANELA, Right Rear Quarter Panel
4		338424A1		1	JANELA, Left Rear Quarter Panel
5		448609A1		1	PARA-BRISA, Lower Right-Hand
6		448608A1		1	PARA-BRISA, Lower Left-Hand
7		151-516		2	REBITE, Pop, 1/8" x .775"
8		391827A1		36	ESPAÇADOR
9		395793A1		2	TIRA DE PROTECAO
10		87406924		1	ESPELHO RETROVISOR, Interior
11		286-56520		2	PARAFUSO, Cross Fil Hd, #10-24 x 1 1/4"
13		405740A1		2	TAMPA
14		405739A1		2	CORPO
15		405738A1		2	ALAVANCA, Hold Open
16		400573A1		2	CASQUILHO ISOLADOR
17		405741A1		2	MOLA DE TRACAO, Latch Back
18		405742A1		4	PORCA, M8
19		400572A1		4	PARAFUSO, M8; Nylon
20		400571A2		2	PÁRA-CHOQUE
21		431801A1		4	ARRUELA PLANA, Black Nylon

09-54		p1	07/08

CABINE - ESTRUTURA E COBERTURAS

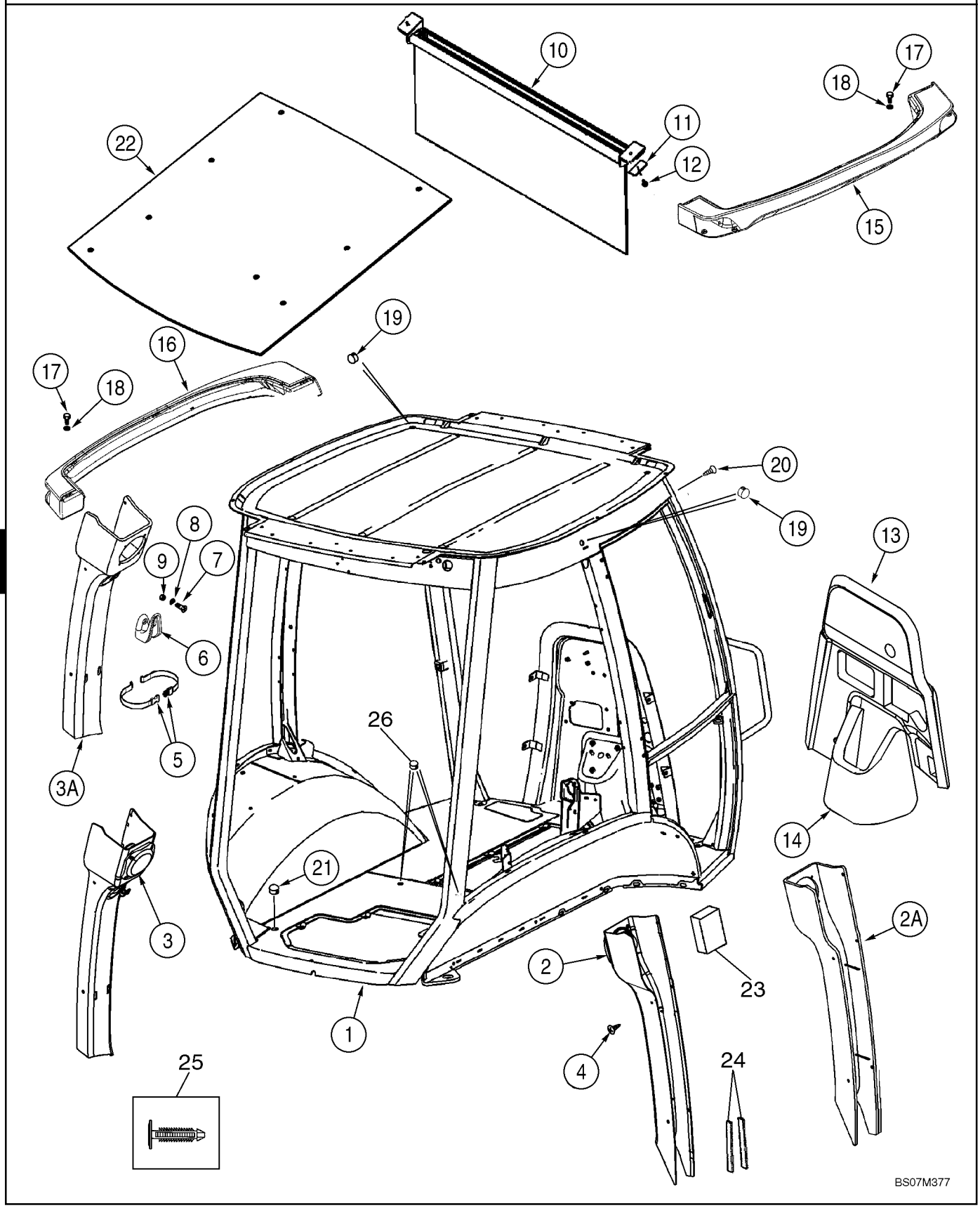

CABINE - ESTRUTURA E COBERTURAS

REF	FN	PART NUMBER	YR/SN	QTY	DESCRIPTION
1		87636561		1	CHARPENTE CAB, Single Door
1		87636563		1	CHARPENTE CAB, Two Door
2		87657149		1	TAMPA, Plastic; Right-Hand Post; Standard Interior
2A		379425A3		1	TAMPA, Vinyl; Right-Hand Post; Deluxe Interior
3		87657148		1	TAMPA, Plastic; Left-Hand Post; Standard Interior
3A		379424A2		1	TAMPA, Vinyl; Left-Hand Post; Deluxe Interior
4		401949A1		10	BOTÃO DE IMPULSO
5		378227A1		1	TIRA, Garment
6		114549A1		1	CABIDE
7		87310147		2	PARAFUSO, M4 x 16, Stainless Steel
8		895-11004		2	ARRUELA PLANA, M4
9		832-10404		2	CONTRA PORCA, M4 x .7, Cl 8
10		364180A1		1	PARA-SOL
11		409618A1		2	PLACA, 1/4 in Mounting Hole
12		396516A1		3	PARAFUSO DE PONTA, No. 10 x 1; With Washer; Phillips
13		87704851		1	TAMPA DE PROTECAO, Firewall, Upper
14		87440283		1	TAMPA DE PROTECAO, Firewall, Lower
15		360247A3		1	FAROL CONJUNTO, Right-Hand
16		360246A3		1	FAROL CONJUNTO, Left-Hand
17		394863A1		10	PARAFUSO, M6 x 20
18		395387A1		10	ARRUELA PLANA, 6.4 ID; Nylon
19		395388A1		3	BUJÃO
		353-415		1	BUJÃO, Dome, 1.500" hole, Nylon, Cab Roof; Models Without Radio Antenna
		353-410		1	BUJÃO, Dome, .875" hole, Nylon, Upper Windshield Frame; Models Without Radio Antenna
		353-407		1	BUJÃO, Dome, .687" hole, Nylon, Rear Filter Plate On Models Without Windshield Washer
		353-425		2	BUJÃO, 7/16 in dia
		353-421		1	BUJÃO, Dome, .187" hole, Nylon
		353-405		1	BUJÃO, Dome, .562" hole, Nylon
		353-408		1	BUJÃO, Dome, .750" hole, Nylon
20		402610A1		8	BOTÃO DE IMPULSO, Cab Frame; Models Without Exterior Mirrors

CABINE - ESTRUTURA E COBERTURAS

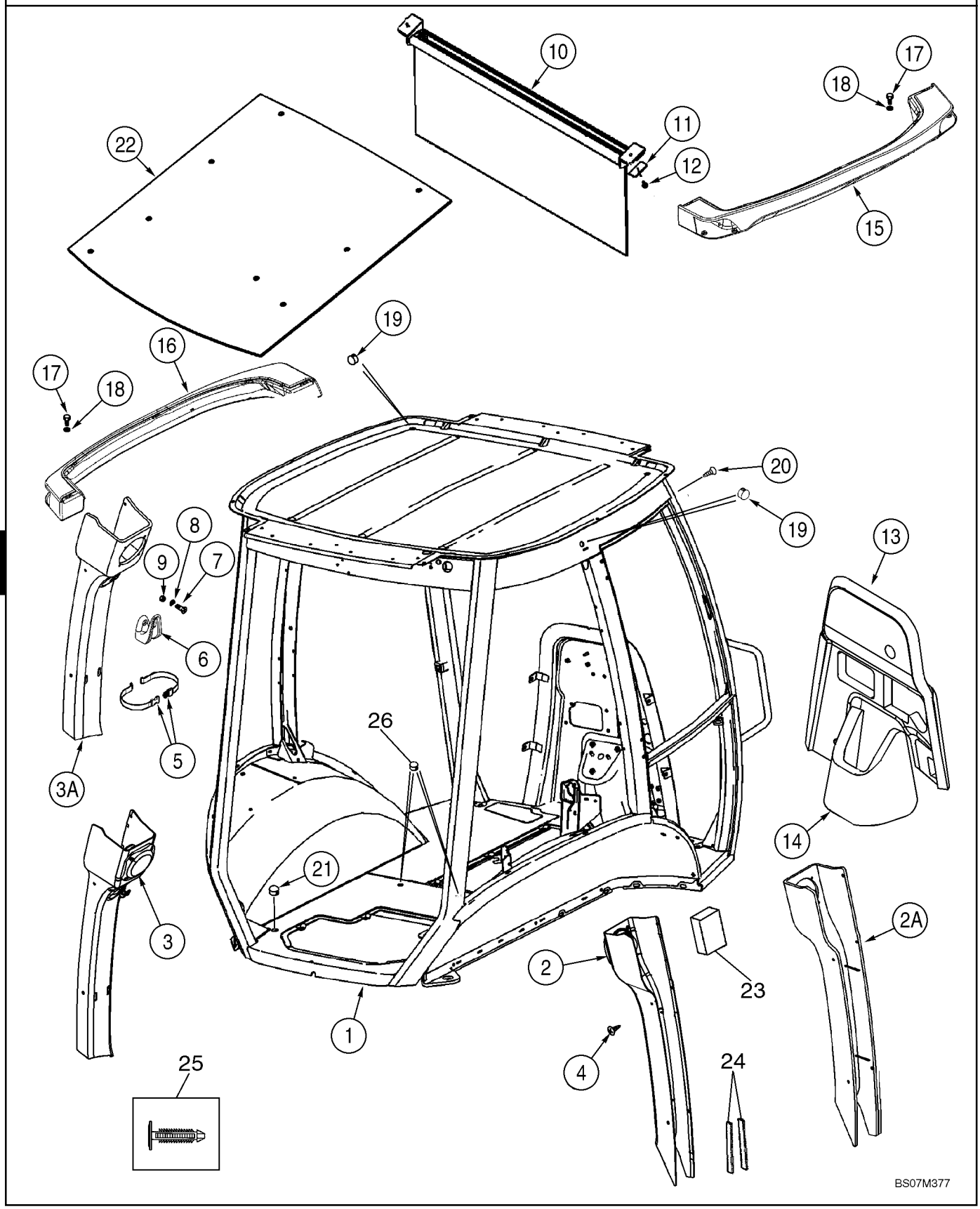

CABINE - ESTRUTURA E COBERTURAS

REF	FN	PART NUMBER	YR/SN	QTY	DESCRIPTION
21		382298A1		2	BUJÃO
22		368809A1		1	ISOLANTE, Insulation
23		412285A1		1	CINTA, Foam; Adhesive Back; B-Post
24		414939A1		2	TIRA VEDADORA, Adhesive Back; B Post
25		411399A1		1	BOTÃO DE IMPULSO, For 1/4 in dia Hole; Christmas Tree Clip
26		D140267		2	BUJÃO, 1-3/16 Hole Size; Brake Bleeder

CABINE - PORTAS

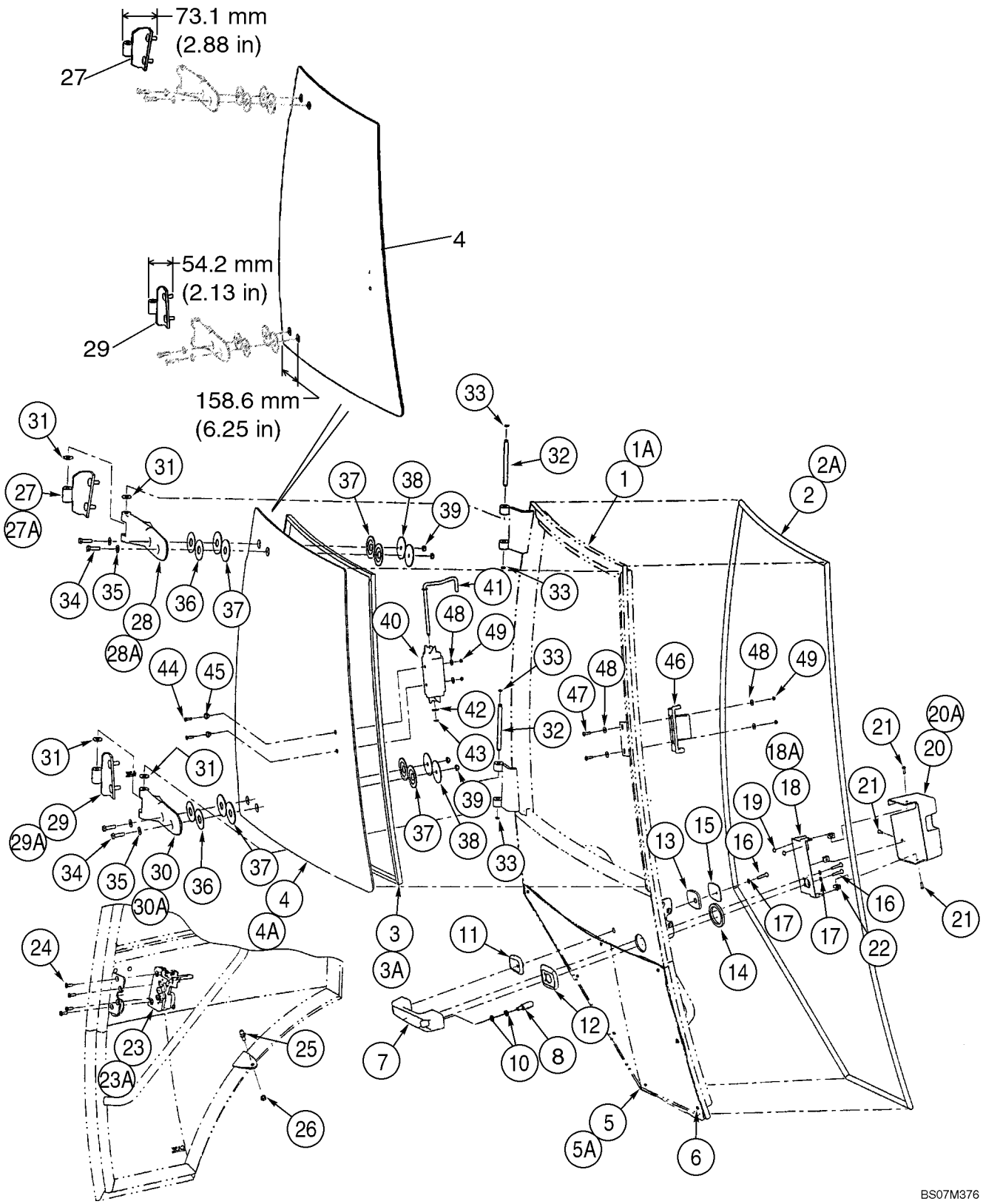

CABINE - PORTAS

REF	FN	PART NUMBER	YR/SN	QTY	DESCRIPTION
		REF			INSTRUCAO, Left-Hand and Right-Hand Cab Doors; Left-Hand Door Not Illustrated
		87439726		1	PORTA DE CABINA, DIREITA, Right-Hand Door; Incl. Ref 1 - 49, Except Where Noted For Left-Hand Door
		341743A3		1	PORTA DE CABINA, E., Left-Hand Door; Incl. Ref 1A - 49, Except Where Noted For Right-Hand Door
1		87439728		1	ESTRUTURA CONJUNTO, Right-Hand Door
1A		87443691		1	ESTRUTURA CONJUNTO, Left-Hand Door
2		394707A1		1	TIRA DE BORRACHA, Right-Hand Door
2A		390838A1		1	TIRA DE BORRACHA, Left-Hand Door
3		394708A1		1	VEDADOR, Upper; Right-Hand Door
3A		391850A1		1	VEDADOR, Upper; Left-Hand Door
		87448199		1	JANELA CONJUNTO, SERVICE KIT, Right-Hand Door Window and Hinges; Includes Ref 4, 27, 29, Plus Instructions
4		87439725		1	VIDRO, Upper; Right-Hand Door
4A		338429A1		1	VIDRO, Upper; Left-Hand Door
5		338427A1		1	JANELA, Lower; Right-Hand Door
5A		338426A1		1	JANELA, Lower; Left-Hand Door
6		391827A1		4	ESPAÇADOR, 4 Per Door; Cut Bumpers In Half For 8 Locations
7		60-7083T1		1	MANILHA, Outer
8		442718A1		1	BOTÃO, Release
10		895-11006		1	ARRUELA PLANA, M6
11		315276A1		1	AMOSTRA (PLACA), Small
12		315273A1		1	AMOSTRA (PLACA), Large
13		391847A1		1	JUNTA, Small
14		391838A1		1	JUNTA, Large
15		391848A1		1	PLACA TRASEIRA
16		393203A1		3	PARAFUSO
17		393202A1		3	ARRUELA PLANA, 6 mm
18		394704A1		1	BRACADEIRA, Cover Mounting; Right-Hand Door
18A		391841A1		1	BRACADEIRA, Cover Mounting; Left-Hand Door
19		391827A1		2	ESPAÇADOR

CABINE - PORTAS

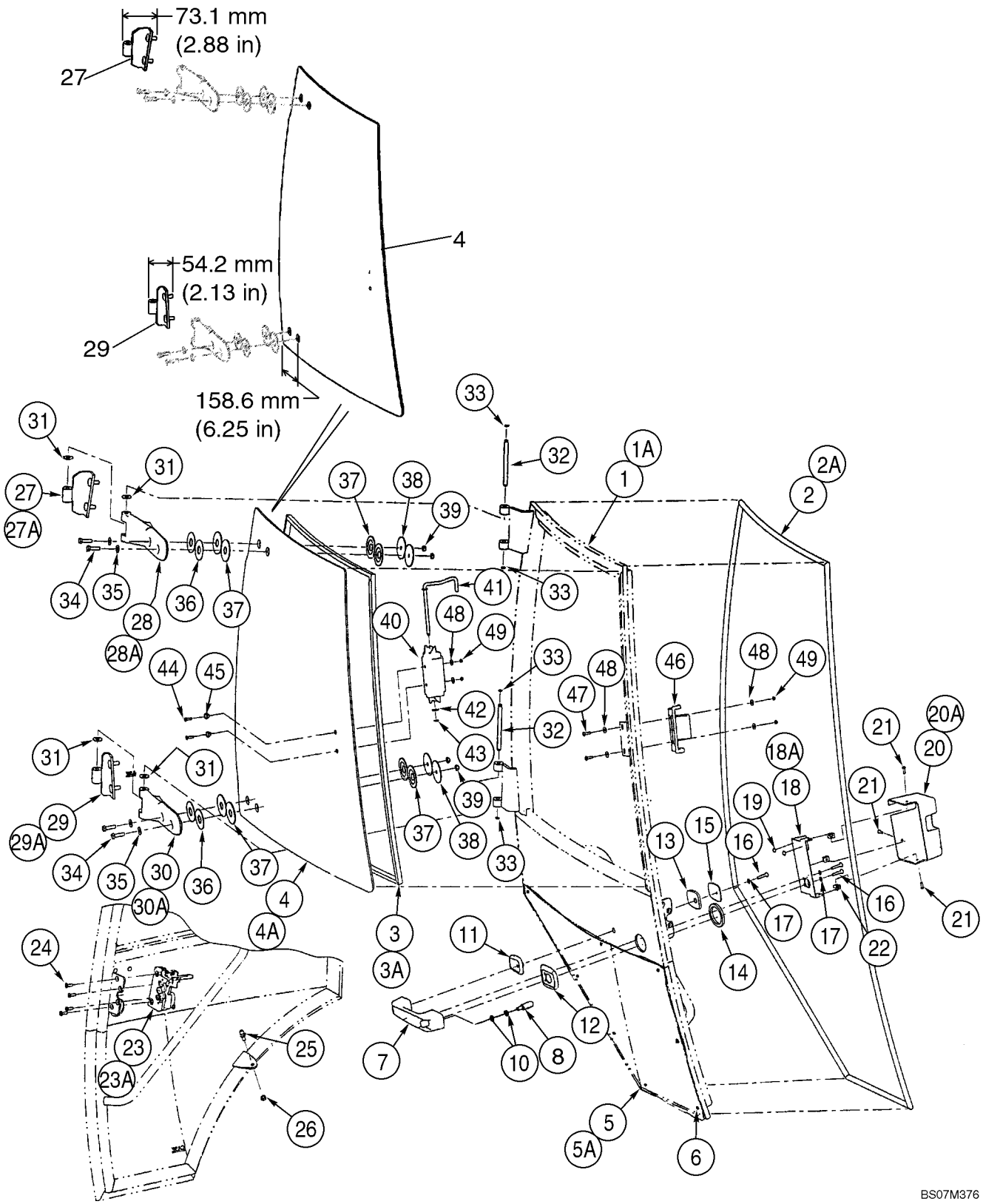

CABINE - PORTAS

REF	FN	PART NUMBER	YR/SN	QTY	DESCRIPTION
20		394705A1		1	TAMPA, Latch; Right-Hand Door
20A		391842A1		1	TAMPA, Latch; Left-Hand Door
21		390-100		3	PARAFUSO, Cross Pan Hd, #10-32 x 5/8"
22		393209A1		3	PORCA ESPECIAL
23		382777A1		1	TRINCO, Right-Hand Door
23A		382775A1		1	TRINCO, Left-Hand Door
24		569-4		4	PARAFUSO, Hex Soc Flat Hd, M6 x 20, 8.8
25		3234063R1		1	JUNTA ESFÉRICA, M10
26		832-10410		1	CONTRA PORCA, M10 x 1.5, Cl 8
27		87439722		1	DOBRADIÇA, Upper; Right-Hand Door
27A		390840A1		1	DOBRADIÇA, Upper; Left-Hand Door
28		364134A2		1	DOBRADIÇA, Plastic; Upper; Right-Hand Door
28A		364132A2		1	DOBRADIÇA, Plastic; Upper; Left-Hand Door
29		87439723		1	DOBRADIÇA, Lower; Right-Hand Door
29A		390841A1		1	DOBRADIÇA, Lower; Left-Hand Door
30		364135A2		1	DOBRADIÇA, Plastic; Lower; Right-Hand Door
30A		364133A2		1	DOBRADIÇA, Plastic; Lower; Left-Hand Door
31		391845A1		4	ARRUELA PLANA, Nylon
32		391843A1		2	PINO
33		442773A1		4	ANEL-ELÁSTICO
34		514-633		4	PARAFUSO, Hex, M8 x 30, 8.8, Full Thd
35		895-30107		4	ARRUELA PLANA, M8 x 20 x 2
36		376334A1		4	ARRUELA PLANA, 55 mm OD; Yellow
37		376336A1		8	ARRUELA DE BORRACHA
38		376332A1		4	ARRUELA PLANA, 60 mm OD; Black
39		832-10508		4	CONTRA PORCA, M8 x 1.25, Cl 8
40		87344860		1	MANILHA, Slam Latch
41		87534372		1	HASTE
42		906086R1		1	ARRUELA PLANA, M8.4 ID x 16 OD x 1.6 Thk
43		100-39001		1	ANEL-TRAVA, #X31, Ext, E-Type
44		140-104		2	PARAFUSO, Cross Pan Hd, #8-32 x 3/4"
45		F64198		2	ESPAÇADOR, Nylon
46		87344859		1	TRINCO, Slam Latch
47		142-103		2	PARAFUSO, Cross Oval Hd, #10-24 x 3/4"
48		195-81023		6	ARRUELA PLANA, #12

CABINE - PORTAS

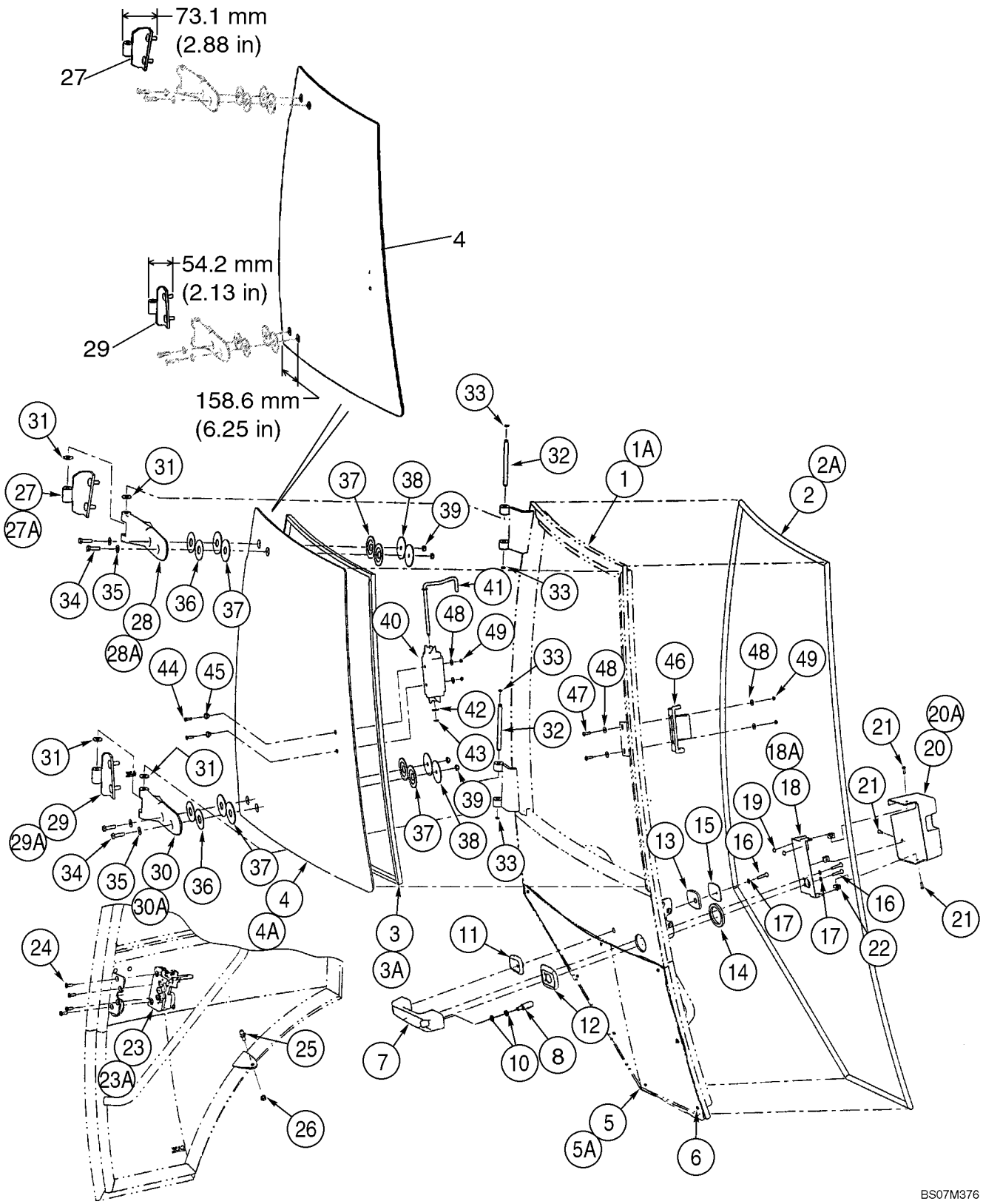

CABINE - PORTAS

REF	FN	PART NUMBER	YR/SN	QTY	DESCRIPTION
49		F45165		4	PORCA SEGURANCA, No. 10

CABINE - SUPORTE DA PORTA

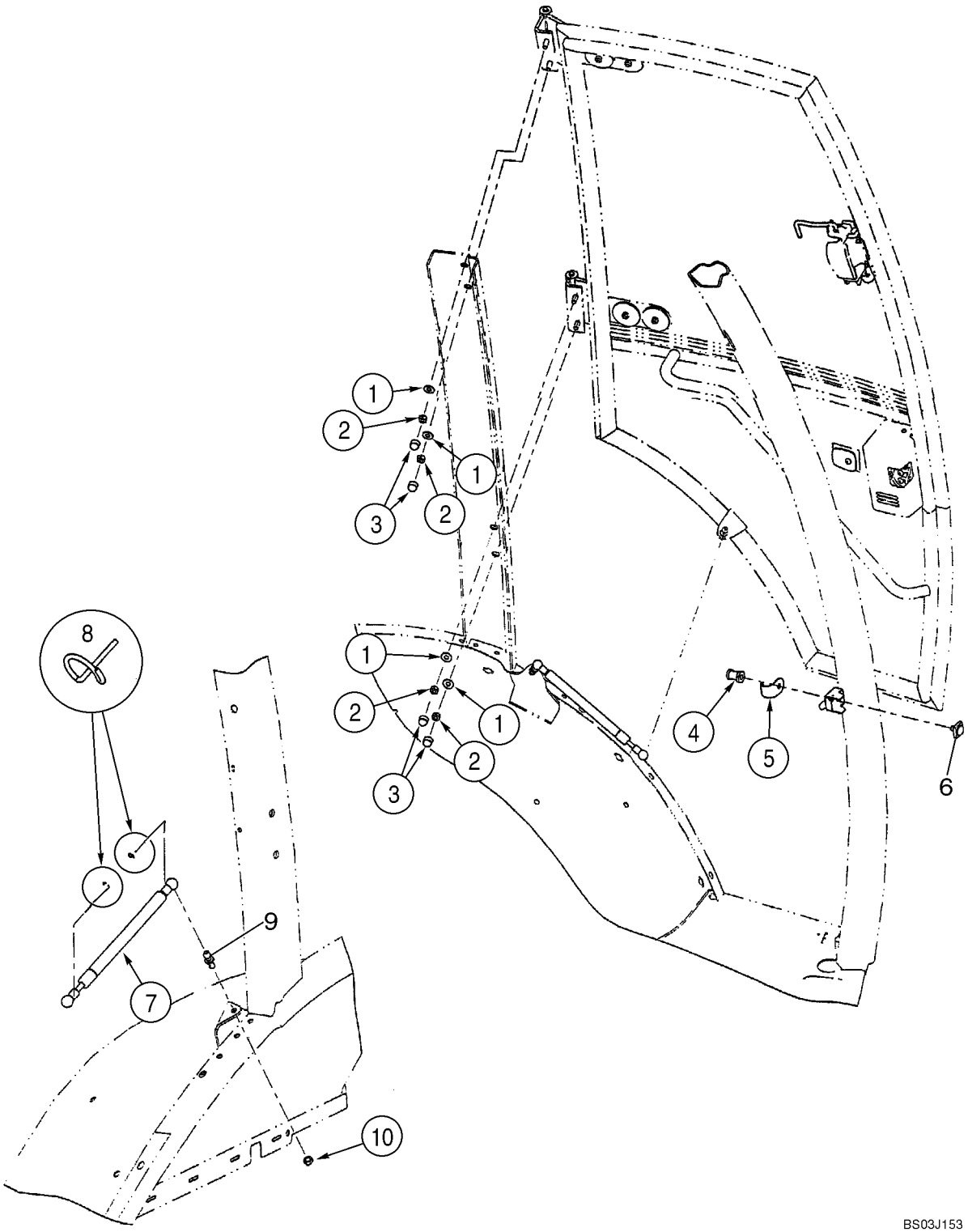

CABINE - SUPORTE DA PORTA

REF	FN	PART NUMBER	YR/SN	QTY	DESCRIPTION
		REF			INSTRUCAO, Left-Hand and Right-Hand Cab Doors; Left-Hand Cab Door Shown
1		397064A1		4-8	ARRUELA ESPECIAL, 3/8 x 7/8 x 1/16 thk
2		232-1446		4-8	CONTRA PORCA, 3/8"-16, GC
3		396841A1		4-8	TAMPA DO RESERVATÓRIO
4		87411108		1-2	PARAFUSO ESPECIAL, Striker
5		393211A1		1-2	PROTEÇÃO
6		442842A1		1-2	BLOCO CONJUNTO, Striker
7		394800A1		1-2	MOLA, Gas Spring
8		3233348R1		2-4	FIXADOR
9		432431A1		1-2	PRISIONEIRO, Ball
10		832-10408		1-2	CONTRA PORCA, M8 x 1.25, Cl 8

09-57		p1	07/08

CABINE - JANELA, DIREITA, PARA CABINA COM UMA PORTA

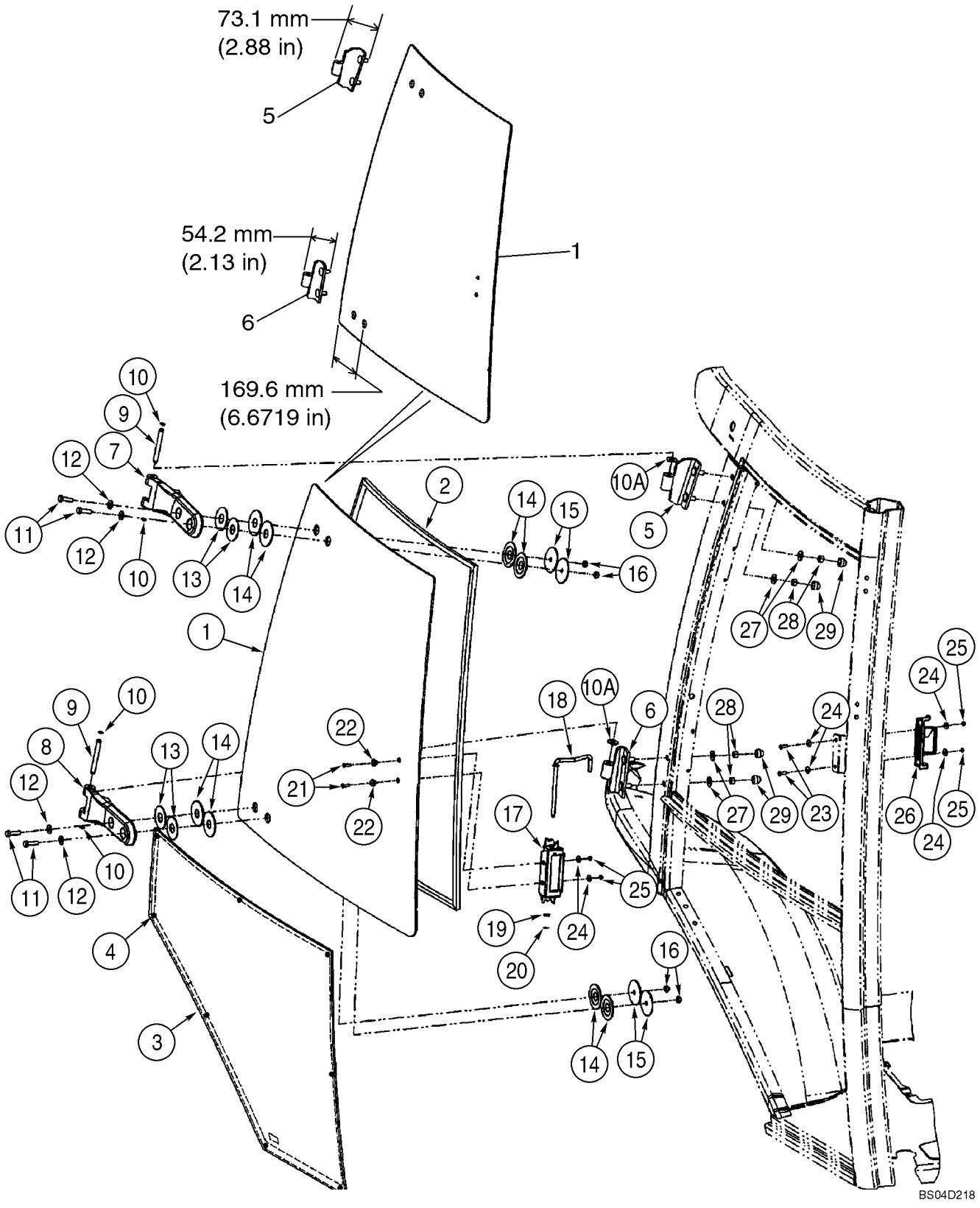

CABINE - JANELA, DIREITA, PARA CABINA COM UMA PORTA

REF	FN	PART NUMBER	YR/SN	QTY	DESCRIPTION
		{}		1	87442204 Window Assy; Right-Hand; Incl. Ref 1 - 29; Not Available As An Assembly, Order Components
		87448198		1	JANELA CONJUNTO, SERVICE KIT, Right-Hand Window and Hinges; Incl. Ref 1, 5, 6, Plus Instructions
1		87439724		1	JANELA, Upper
2		394864A1		1	VEDADOR
3		338428A1		1	JANELA CONJUNTO, Lower
4		391827A1		4	ESPAÇADOR, Cut Bumpers In Half For 8 Locations
5		87439722		1	DOBRADIÇA, Upper
6		87439723		1	DOBRADIÇA, Lower
7		364134A2		1	DOBRADIÇA, Plastic; Upper
8		364135A2		1	DOBRADIÇA, Plastic; Lower
9		394865A1		2	PINO
10		393330A1		4	ANEL
10A		391845A1		4	ARRUELA PLANA, Nylon
11		514-633		4	PARAFUSO, Hex, M8 x 30, 8.8, Full Thd
12		895-30107		4	ARRUELA PLANA, M8 x 20 x 2
13		376334A1		4	ARRUELA PLANA, 55 mm OD; Yellow
14		376336A1		8	ARRUELA DE BORRACHA, Rubber
15		376332A1		4	ARRUELA PLANA, 60 mm OD; Black
16		832-10508		4	CONTRA PORCA, M8 x 1.25, Cl 8
17		87344860		1	MANILHA, Slam Latch
18		87534372		1	HASTE
19		906086R1		1	ARRUELA PLANA, M8.4 ID x 16 OD x 1.6 Thk
20		100-39001		1	ANEL-TRAVA, #X31, Ext, E-Type
21		140-104		2	PARAFUSO, Cross Pan Hd, #8-32 x 3/4"
22		F64198		2	ESPAÇADOR, Nylon
23		142-103		2	PARAFUSO, Cross Oval Hd, #10-24 x 3/4"
24		195-81023		6	ARRUELA PLANA, #12
25		F45165		4	PORCA SEGURANCA, No. 10
26		87344859		1	TRINCO, Slam
27		397064A1		4	ARRUELA ESPECIAL, 3/8 x 7/8 x 1/16 thk
28		232-1446		4	CONTRA PORCA, 3/8"-16, GC
29		396841A1		4	TAMPA DO RESERVATÓRIO

09-58		p1	07/08

CABINE - JANELA, TRASEIRA

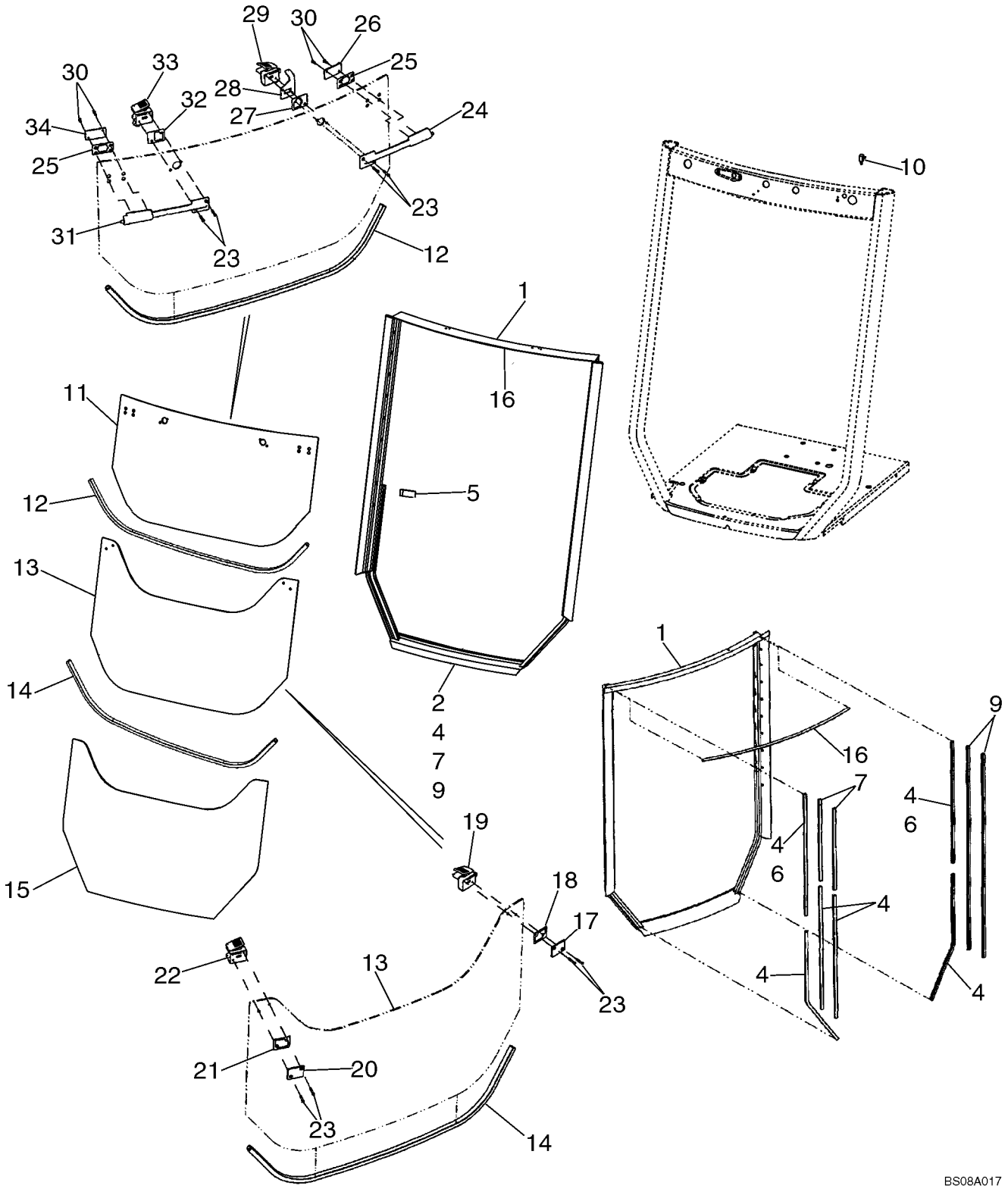

10

CABINE - JANELA, TRASEIRA

REF	FN	PART NUMBER	YR/SN	QTY	DESCRIPTION
		411850A1		1	JOGO, Frame and Seal; Incl. 1, 4, 7, 9, 16
1		87435929		1	ESTRUTURA CONJUNTO, Included in 411850A1 Frame and Seal Kit
2		410867A1		1	JUNTA, Rubber Seal; Bulb Type
		411851A1		1	JOGO, Seal; Incl. 4, 7, 9, 16
4		404228A1		6	ANEL DE VEDAÇÃO, 760 mm (29-15/16 in), Flocked Channel Seals; Cut From 402852A1; Included in 411851A1 Seal Kit and 411850A1 Frame and Seal Kit
5		400200A1		2	TIRA DE BORRACHA, Stop
6		404226A1		2	ANEL DE VEDAÇÃO, 787 mm (31 in), Flocked Channel Seals; Cut From 402852A1
7		404229A1		2	ANEL DE VEDAÇÃO, 508 mm (20 in), Flocked Channel Seals; Cut From 402852A1; Included In 411851A1 Seal Kit and 411850A1 Frame and Seal Kit
9		404227A1		2	ANEL DE VEDAÇÃO, 1270 mm (50 in), Flocked Channel Seals; Cut From 402852A1; Included in 411851A1 Seal Kit and 411850A1 Frame and Seal Kit
10		A187714		1	INTERRUPTOR, Rear Wiper Cutout
11		352208A1		1	JANELA, Upper
12		395348A1		1	TIRA ORNAMENTAL, 1210 mm (47-21/32 in), Lower Glass Edge; Cut From 404426A1
		87434783		1	JANELA CONJUNTO, Center; Includes Ref 13, 19, 22, 23; Plus (1) 87426969 Backing Plate and (4) Backing Plates and (4) Grommets Which Are Not Serviced Separately; Includes Instructions
13		352209A1		1	JANELA, Center
14		395348A1		1	TIRA ORNAMENTAL, 1210 mm (47-21/32 in), Lower Glass Edge; Cut From 404426A1
15		352210A1		1	JANELA, Lower
16		400494A1		1	ANEL DE VEDAÇÃO, 1095 mm (43-1/8 in), Hollow Seal; Cut From 404231A1; Included in 411851A1 Seal Kit and 411850A1 Frame and Seal Kit

09-58		p2	07/08

CABINE - JANELA, TRASEIRA

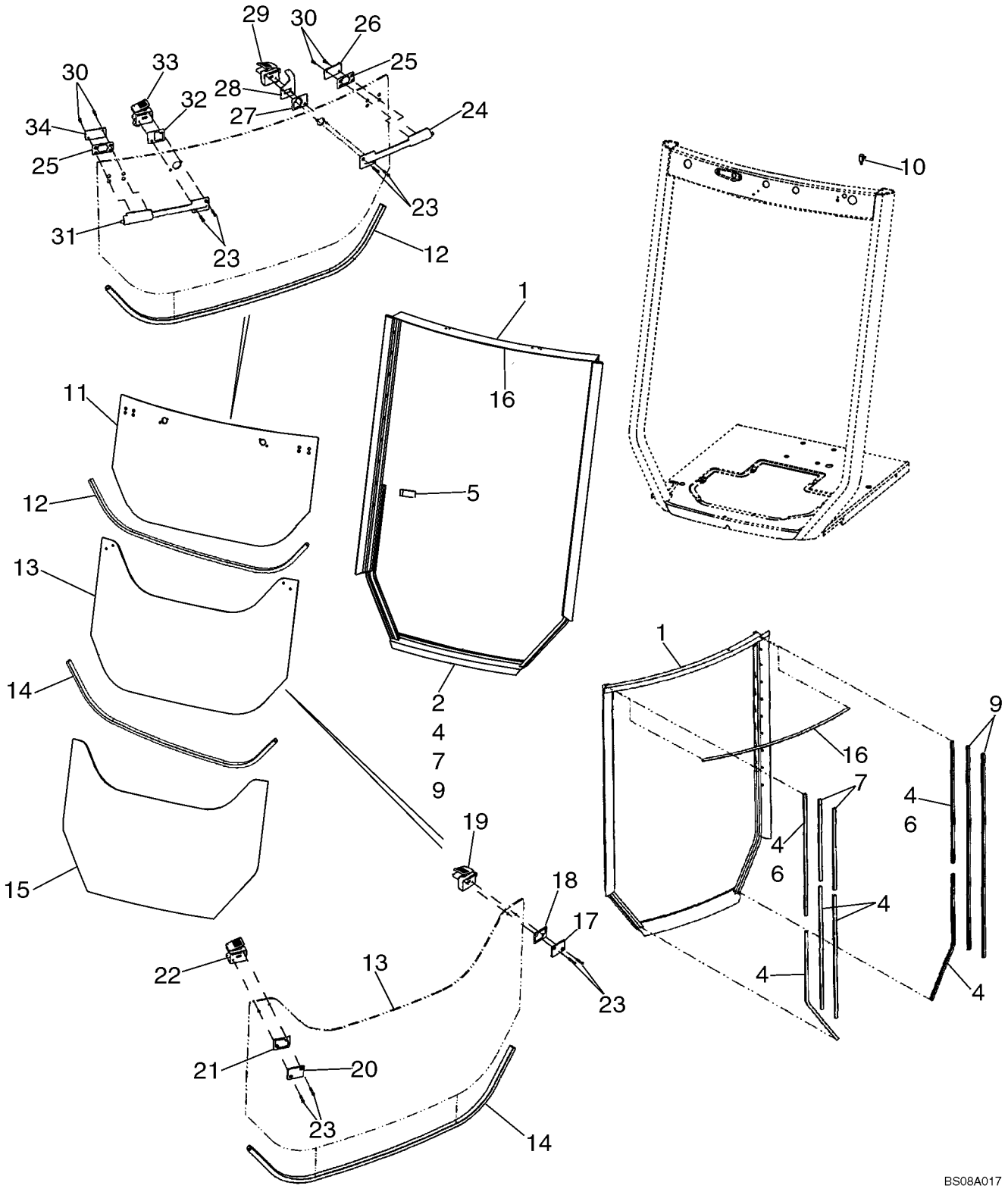

10

CABINE - JANELA, TRASEIRA

REF	FN	PART NUMBER	YR/SN	QTY	DESCRIPTION
17		411917A1		1	PLACA TRASEIRA, Kit; Includes 1 Each 402849A1 Plate, 411942A1 Gasket Pad
18		402847A1		1	PLACA PLASTICA, Bushing
19		411909A1		1	TRINCO, Kit, Includes 1 Each 402868A1 Cover, 402867A1 Lever, 402833A1 Plunger, 402831A1 Housing, 402830A1 Bushing, 402870A1 Spring, 402869A1 Rivet, 402865A1 Bumper
20		411916A1		1	PLACA TRASEIRA, Kit; Includes 1 Each 402848A1 Plate, 411942A1 Gasket Pad
21		402846A1		1	PLACA PLASTICA, Bushing
22		411908A1		1	TRINCO, Kit, Includes 1 Each 402871A1 Cover, 402872A1 Lever, 402873A1 Plunger, 402832A1 Housing, 402830A1 Bushing, 402870A1 Spring, 402869A1 Rivet, 402865A1 Bumper
23		87435453		8	PARAFUSO, Flat Head Socket, M5 x 25
24		411910A1		1	TRINCO, Kit, Bolt Assy; Includes 1 Each 402860A1 Housing, 402840A1 Gasket, 402837A1 Bolt, 402861A1 Insert, 402838A1 Rod, 402856A1 Spring
25		402843A1		2	PLACA PLASTICA
26		87423503		1	PLACA TRASEIRA, Backing Plate
27		402844A1		1	PLACA PLASTICA
28		402836A1		1	BRACADEIRA, Rear Wiper Cutout Switch
29		411914A1		1	TRINCO, Kit, Includes 1 Each 402831A1 Housing, 402866A1 Bumper, 402830A1 Bushing, 402833A1 Plunger, 402867A1 Lever, 402868A1 Cover
30		87445051		4	PARAFUSO, Flat Head Socket, M5 x 16
31		411911A1		1	TRINCO, Kit, Bolt Assy; Includes 1 Each 402863A1 Housing, 402851A1 Gasket, 402856A1 Spring, 402841A1 Bolt, 402861A1 Insert, 402838A1 Rod
32		402845A1		1	PLACA PLASTICA
33		411912A1		1	TRINCO, Kit, Includes 1 Each 402832A1 Housing, 402866A1 Bumper, 402830A1 Bushing, 402873A1 Plunger, 402872A1 Lever, 402871A1 Cover
34		87423502		1	PLACA TRASEIRA, Backing Plate

CABINE - LÁVA PÁRA-BRISAS, PÁRA-BRISAS

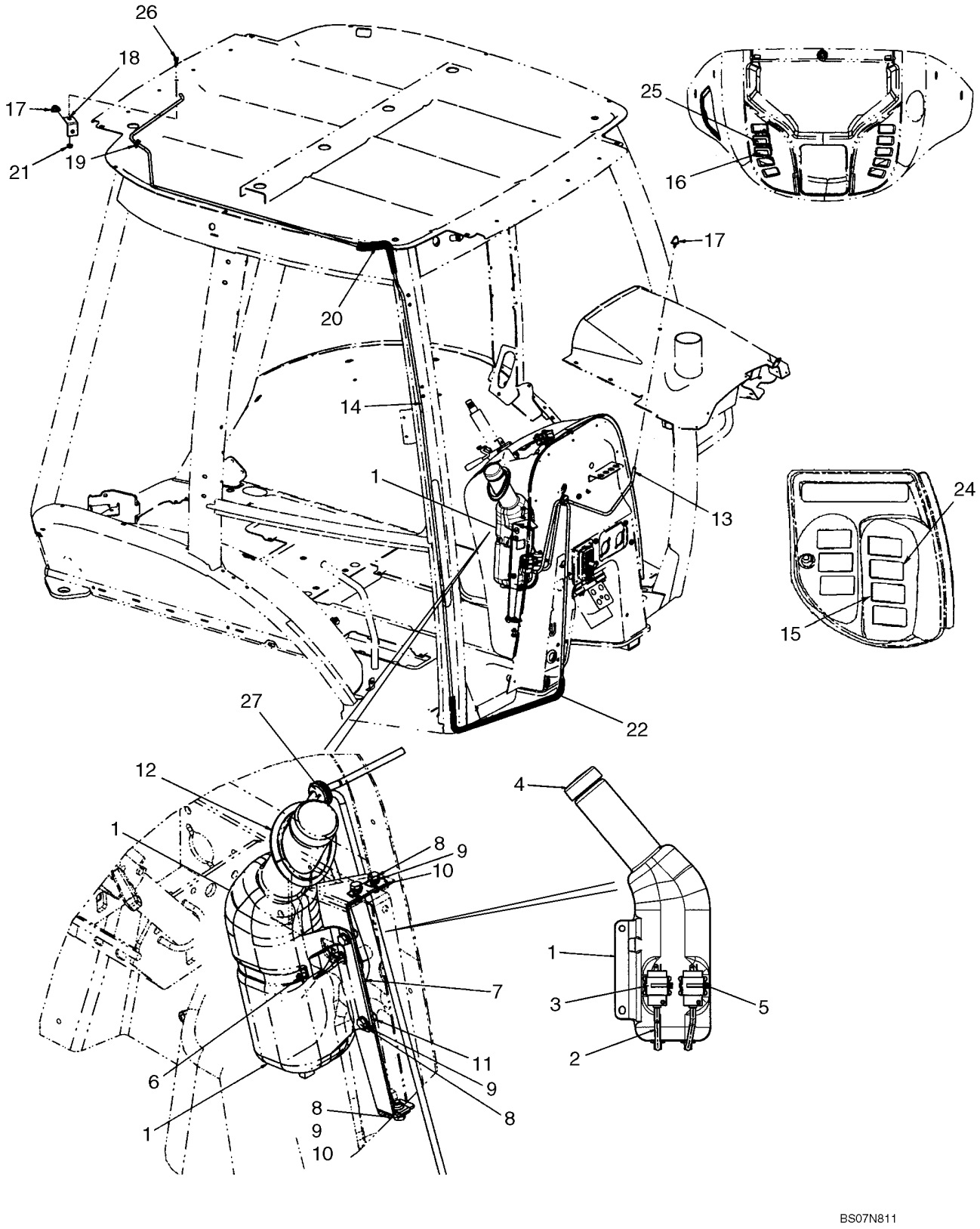

CABINE - LÁVA PÁRA-BRISAS, PÁRA-BRISAS

REF	FN	PART NUMBER	YR/SN	QTY	DESCRIPTION
1		87675208		1	RESERV. LAV. PÁRA-BRISA
2		87700794		2	MANGUEIRA EM METRO, Washer Bottle; 135 mm
3		86507198		2	BOMBINHA, Window Washer
4		87711985		1	TAMPA RESERVATORIO, Washer Bottle
5		L11541		2	TIRA DE CABO
6		214-3180		1	BRACADEIRA MANGUEIRA, 4.25/5.125 HD Worm
7		87491347		2	SUPORTE, Replaces 87676276
8		614-8020		5	PARAFUSO, Hex, M8 x 20, 8.8
9		895-11008		5	ARRUELA PLANA, M8 x 16 x 1.6
10		833-40408		3	PORCA, M8, U
11		832-10408		2	CONTRA PORCA, M8 x 1.25, Cl 8
12		87748047		1	JUNTAS
13		87699640		1	MANGUEIRA EM METRO, Front Washer; 700 mm, Cut From 87282056
14		87741446		1	MANGUEIRA, Rear Washer; 5500 mm; Cut From 1968141CX
15		386788A1		1	INTERRUPTOR, Rocker; Rear Washer
16		386787A1		1	INTERRUPTOR, Rocker; Front Washer
17		E43769		2	VAPORIZADOR, Nozzle, Windshield Spray
18		386720A1		1	BRACADEIRA, Washer Nozzle, Rear
19		87442441		1	CASQUILHO ISOLADOR, Washer Hose, Rear
20		408965A1		1	PROTEÇÃO, 550 mm, Rear Washer Hose, Cut From 397155A2
21		825-2408		1	PORCA, M8 x 1.25, Flg, Cl 8
22		87741447		1	PROTETOR DE MANGUEIR, Guard; 1800 mm, Front Washer Hose, Cut From 397155A2
24		386786A1		1	INTERRUPTOR, Rocker; Windshield Wiper, Rear
25		386785A1		1	INTERRUPTOR, Rocker; Windshield Wiper, Front
26		614-8020		1	PARAFUSO, Hex, M8 x 20, 8.8
27		87637384		1	CASQUILHO ISOLADOR, Washer Hose

CABINE - LIMPA-PÁRA-BRISAS

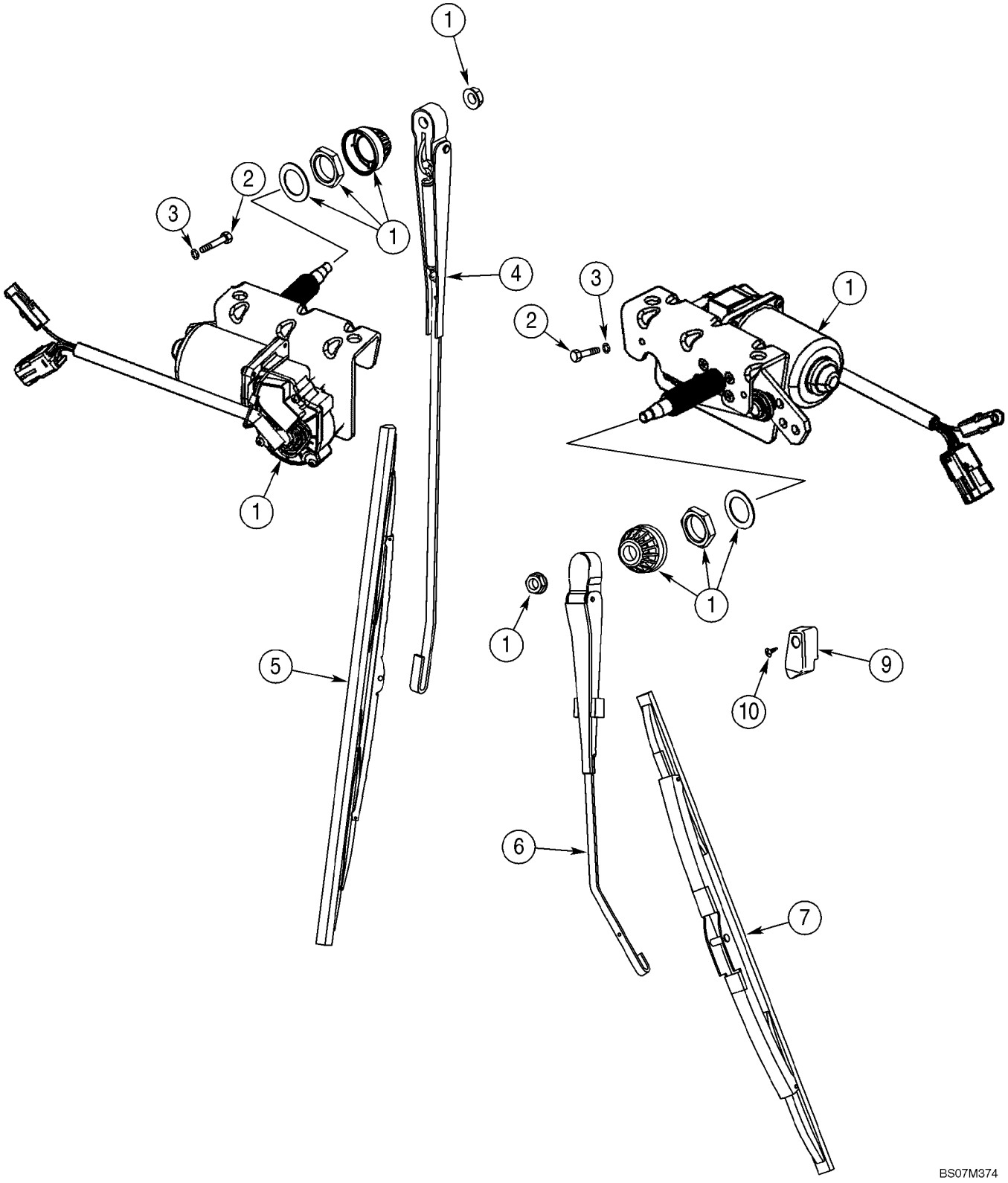

CABINE - LIMPA-PÁRA-BRISAS

REF	FN	PART NUMBER	YR/SN	QTY	DESCRIPTION
1		87669381		2	LIMPADOR DE PÁRA-BRISA, 12V
		404617A1		1	CHICOTE, Front Lamps and Wiper
		396018A3		1	CHICOTE, Cab, B-Post, Rear Wiper, Radio, Blower, Dome Lamp
		386786A1		1	INTERRUPTOR, Rear Wiper
		386785A1		1	INTERRUPTOR, Front Wiper
		A187714		1	INTERRUPTOR, Rear Wiper Cutout Switch
		495-11047		2	ARRUELA PLANA, 7/16", SAE
		425-147		1	PORCA, Jam, 7/16"-14, G5
2		814-6050		4	PARAFUSO, Hex, M6 x 50, 8.8
3		892-11006		4	ARRUELA-TRAVA, M6
4		87669391		1	BRAÇO LIMP. PÁRA-BRISA, Front Wiper
5		87669761		1	PALHETA LIMP. PÁRA-BRISA, Front Wiper
6		87669712		1	BRAÇO LIMP. PÁRA-BRISA, Rear Wiper
7		87669401		1	PALHETA LIMP. PÁRA-BRISA, Rear Wiper
9		395026A1		1	RAMPA, Block
10		395389A1		1	PARAFUSO, M6

09-61		p1	07/08

FORRO DO TECTO DA CABINA - FILTRO, FRESTAS, LUZ DO TECTO

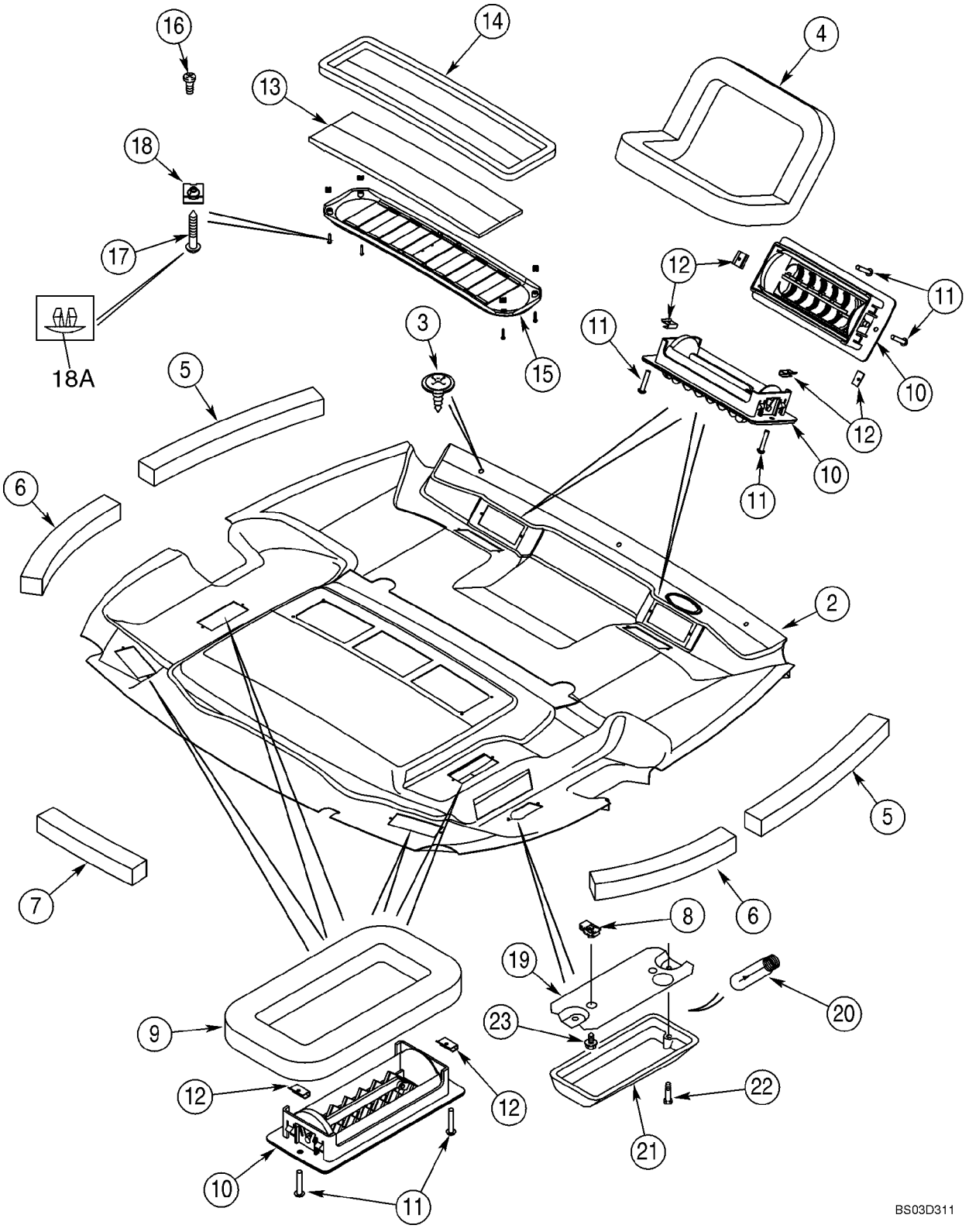

10

FORRO DO TECTO DA CABINA - FILTRO, FRESTAS, LUZ DO TECTO

REF	FN	PART NUMBER	YR/SN	QTY	DESCRIPTION
		{87653246}		1	HEADLINER ASSY, Standard Interior; Incl. Ref 1, 4 - 18A
		360272A6		1	REVESTIMENTO TETO, HEADLINER ASSY, Deluxe Interior; Incl. Ref 2, 4 - 18A
1		87653245		1	TUBO ISOLANTE, Shell; Standard Interior; Not Illustrated
2		381696A5		1	REVESTIMENTO TETO, Shell With Foam and Fabric Covering; Deluxe Interior
3		396516A1		3	PARAFUSO DE PONTA
4		368813A2		2	ANEL DE VEDAÇÃO, Defrost
5		379160A1		2	ANEL DE VEDACAO, 494 mm; Foam; Adhesive Back; Front
6		379161A1		2	ANEL DE VEDACAO, 379 mm; Foam; Adhesive Back; Rear
7		379209A1		1	ANEL DE VEDACAO, 303 mm; Foam; Adhesive Back, Center, Rear
8		131-861		2	PORCA, Tinn, U, #10-24, Dome Lamp
9		377194A1		4	ANEL DE VEDACAO, Heat and Air
10		363883A1		8	GRELHA
11		140-103		16	PARAFUSO, Cross Pan Hd, #6-32 x 3/4"
12		125749A1		16	PORCA, J-Type, No. 6
13		377594A5		1	FILTRO, Air Recirculation
14		381972A1		1	ANEL DE VEDAÇÃO
15		369450A1		1	GRELHA, Air Recirculation; Incl. Ref 16
16		260-1436		2	PARAFUSO, Cross Pan Hd, #6 x 3/8"
17		414600A1		4	PARAFUSO
18		177269A1		4	PORCA
18A		409723A1		4	BUJÃO, Plastic; Fits 5,5 mm Hole
		380719A2		1	FAROL, Dome Lamp; Incl. Ref 19 - 21
19		NSS		1	BOLETIM INFORMATIVO, Base
20		N14466		1	LÂMPADA
21		NSS		1	BOLETIM INFORMATIVO, Lens; With Switch
22		440-1088		2	PARAFUSO, Cross Pan Hd, #8-32 x 1/2", Base To Lens

FORRO DO TECTO DA CABINA - FILTRO, FRESTAS, LUZ DO TECTO

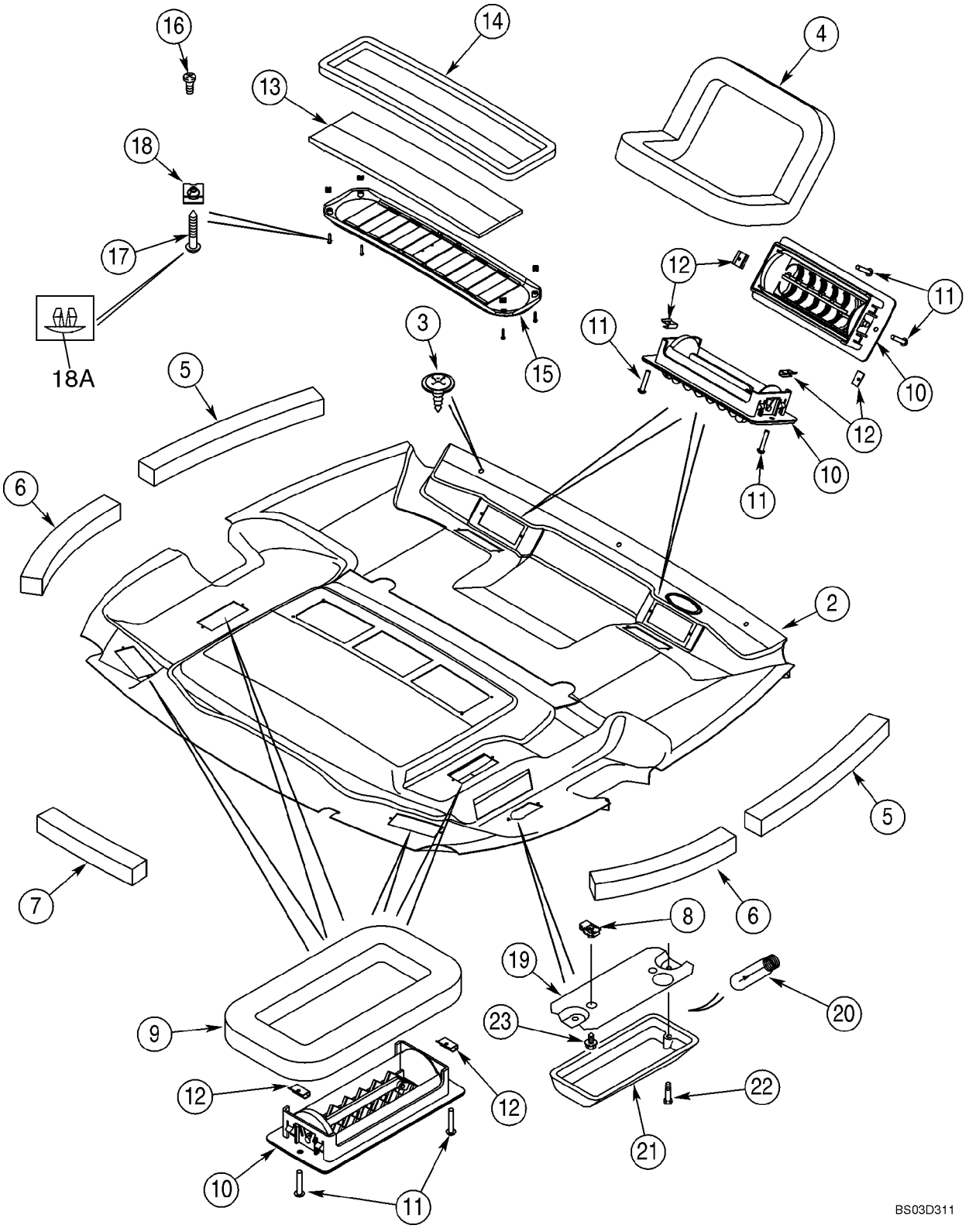

FORRO DO TECTO DA CABINA - FILTRO, FRESTAS, LUZ DO TECTO

REF	FN	PART NUMBER	YR/SN	QTY	DESCRIPTION
23		281-54512		2	PARAFUSO, Hex Wash Hd, #10-24 x 3/4", Lamp To Headliner

09-62		p1	07/08

CABINE - FILTRO DE AR

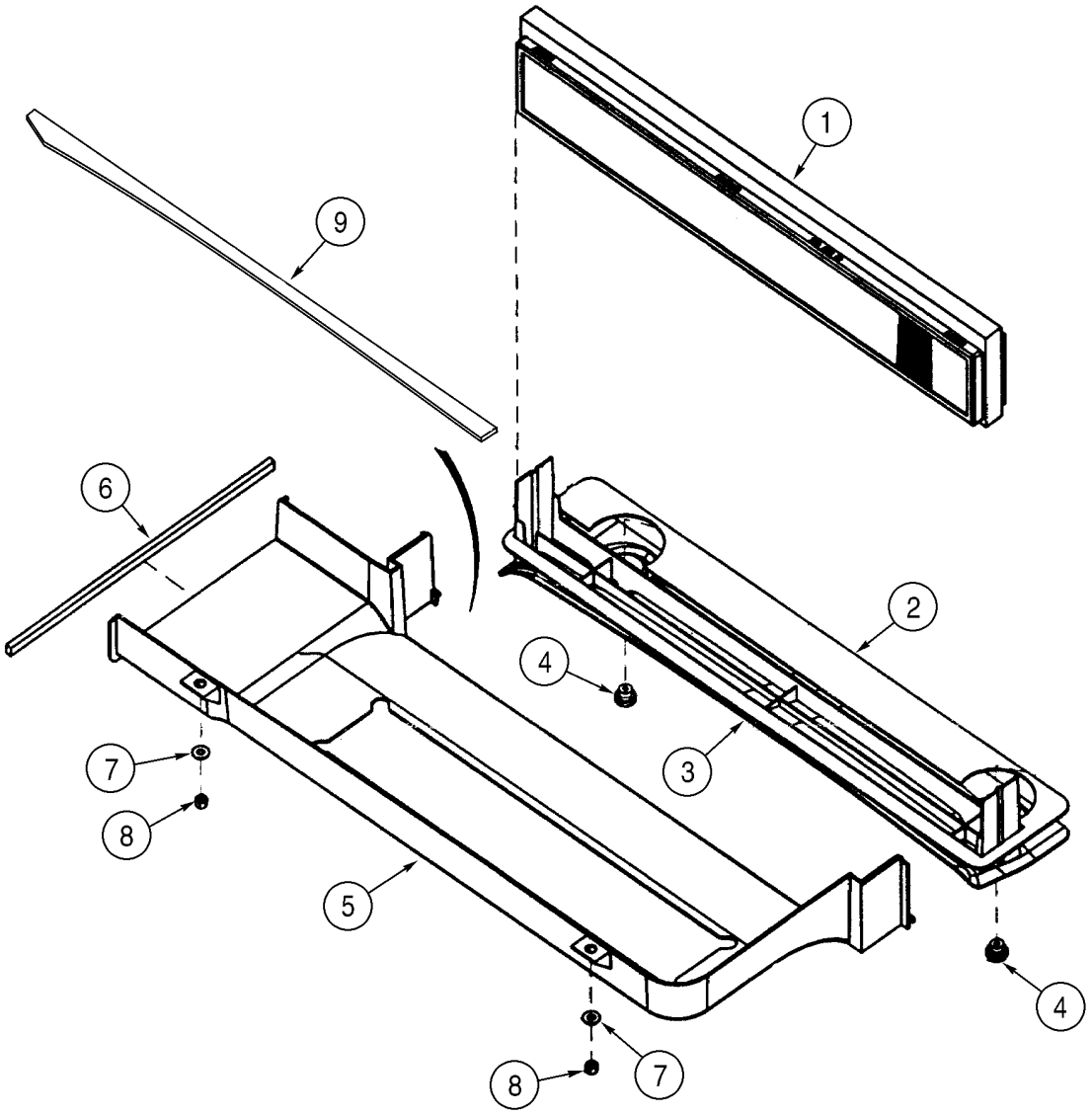

BS00F073

CABINE - FILTRO DE AR

REF	FN	PART NUMBER	YR/SN	QTY	DESCRIPTION
1		360260A2		1	ELEMENTO FILTRANTE, Includes Foam Seal
2		382770A2		1	ANEL DE VEDAÇÃO
3		360261A1		1	BANDEJA
4		398738A1		2	PLACA, Fresh Air Duct Retainer
5		360252A2		1	CONDUTO, Fresh Air Intake
6		368990A1		1	ANEL DE VEDAÇÃO
7		895-15008		2	ARRUELA PLANA, M8 x 20 x 1.6
8		832-10408		2	CONTRA PORCA, M8 x 1.25, Cl 8
9		403271A1		1	ANEL DE VEDAÇÃO, 882 mm; Adhesive Back

CABINE - COMPARTIMENTO DO VENTILADOR, CANAIS DE VENTILAÇÃO, LINHAS DE DRENAGEM

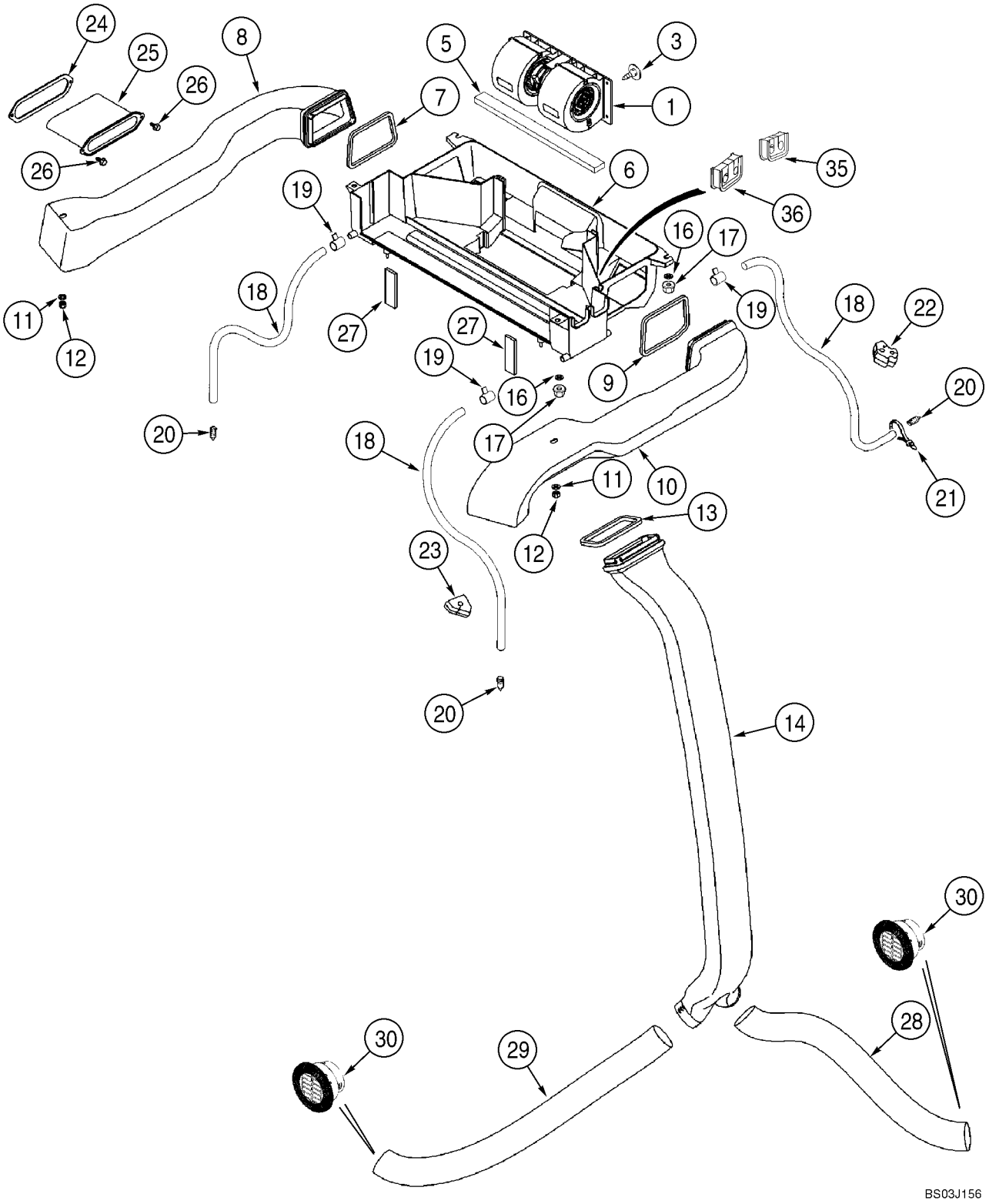

CABINE - COMPARTIMENTO DO VENTILADOR, CANAIS DE VENTILAÇÃO, LINHAS DE DRENAGEM

REF	FN	PART NUMBER	YR/SN	QTY	DESCRIPTION
1		377220A2		1	VENTILADOR CONJUNTO, Component Parts Not Serviced Separately; Kysor/Westran Brand; If Used; For Blower Switch, See Figure 04-10
1		377241A2		1	VENTILADOR CONJUNTO, Component Parts Not Serviced Separately; Aurora Brand; If Used; For Blower Switch, See Figure 04-10
3		182697A1		1	FECHO
5		181981A1		1	TIRA VEDADORA, 6 x 20 x 355 mm; Adhesive Back; Under Blower
6		360251A3		1	CARCAÇA CONJUNTO, Heat and Air; Includes 373995A1
		373995A1		2	INSERTO
7		368805A1		1	ANEL DE VEDAÇÃO, Left-Hand Duct
8		360253A3		1	CONDUTO, Left-Hand
9		369249A1		1	ANEL DE VEDAÇÃO, Right-Hand Duct
10		360254A3		1	CONDUTO, Right-Hand
11		895-15010		2	ARRUELA PLANA, M11 x 24 x 2
12		832-10408		2	CONTRA PORCA, M8 x 1.25, Cl 8
13		368807A1		1	ANEL DE VEDAÇÃO
14		360255A1		1	CONDUTO
16		895-15008		4	ARRUELA PLANA, M8 x 20 x 1.6
17		832-10408		4	CONTRA PORCA, M8 x 1.25, Cl 8
18		87615800		4	MANGUEIRA, 3050 mm; Drain
19		214-1406		4	BRACADEIRA MANGUEIRA, #06, .44/.78 Type F Worm
20		365789A1		4	VALVULA DE DRENO, Drain
21		L18337		2	TIRA DE CABO, 9.95"-12.1" lg
22		383794A2		2	BUJÃO
23		383795A2		2	BUJÃO
24		381113A2		1	ANEL DE VEDAÇÃO
25		381111A2		1	MANGUEIRA RÍGIDA
26		281-18712		2	PARAFUSO, Hex Wash Hd, 1/4" x 3/4"
27		377230A3		2	ANEL DE VEDAÇÃO, 16 mm thk; Fresh Air Duct To Ventilation Housing
28		375392A1		1	MANGOTE, 750 mm; Cut From 236559A1

CABINE - COMPARTIMENTO DO VENTILADOR, CANAIS DE VENTILAÇÃO, LINHAS DE DRENAGEM

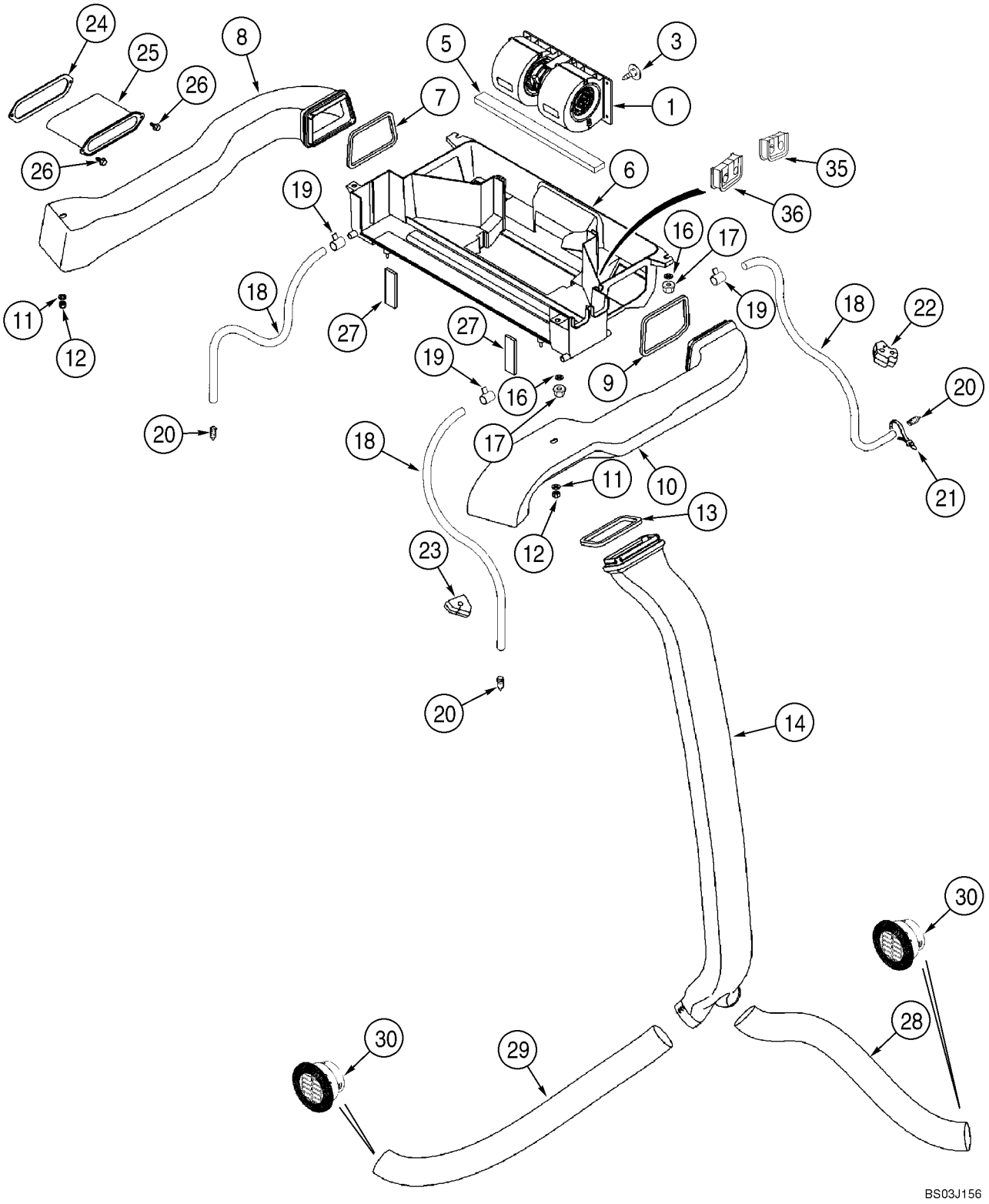

CABINE - COMPARTIMENTO DO VENTILADOR, CANAIS DE VENTILAÇÃO, LINHAS DE DRENAGEM

REF	FN	PART NUMBER	YR/SN	QTY	DESCRIPTION
29		368818A1		1	MANGOTE, 1015 mm; Cut From 236559A1
30		398986A1		2	RESPIRO
32		D88052		2	BRACADEIRA, Not Illustrated
35		403225A1		1	ANEL DE VEDAÇÃO, Heater Tubes At Housing
36		403193A1		1	ANEL DE VEDAÇÃO, Air Conditioning Tubes At Housing

CABINE - AQUECEDOR

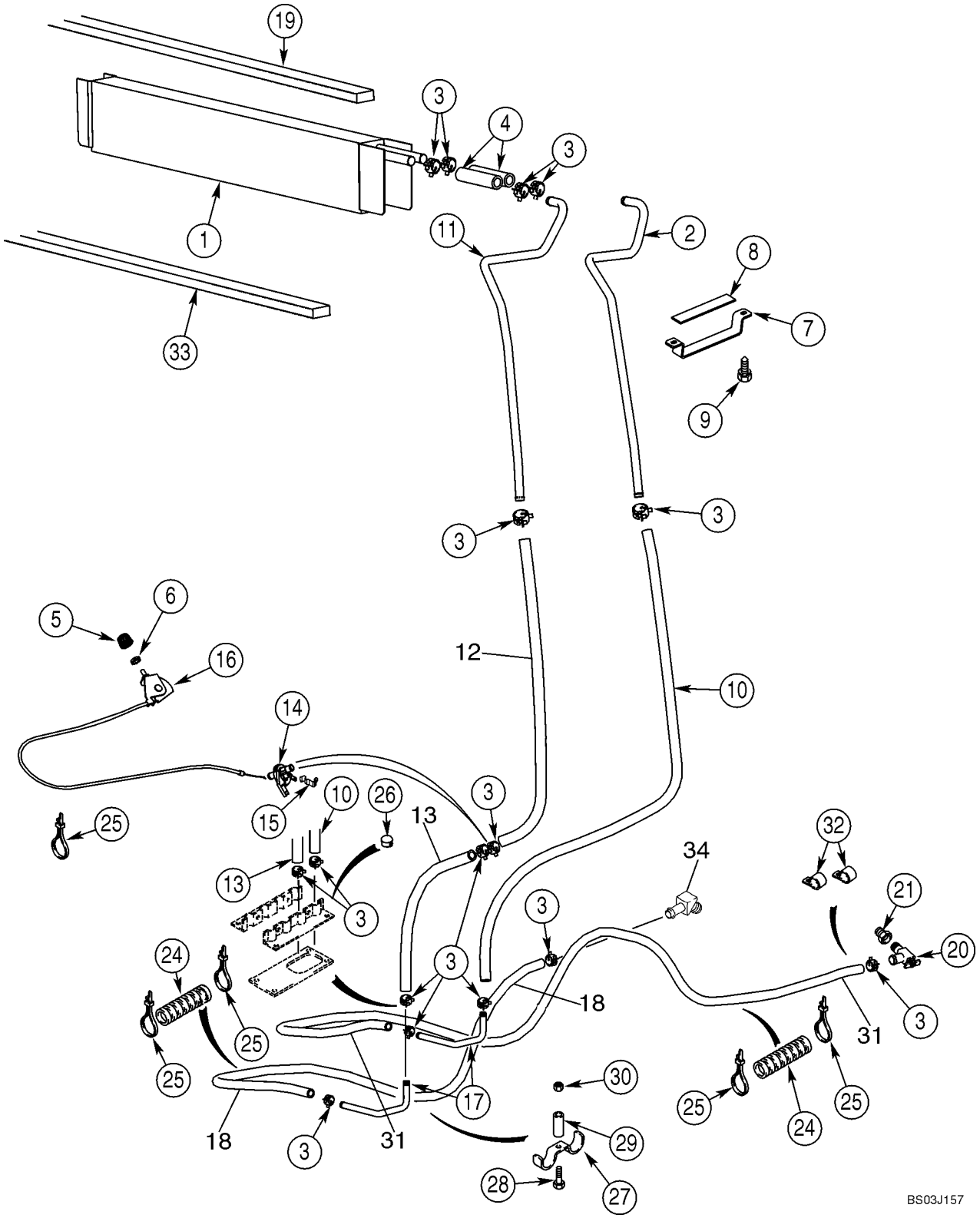

CABINE - AQUECEDOR

REF	FN	PART NUMBER	YR/SN	QTY	DESCRIPTION
1		360262A2		1	INTERCAMBIADOR, Core, Mounts In Blower Housing Box; Seal Mounts On Top Of Core On Models With Heat Only
2		400282A1		1	TUBO, Front
3		1954736C1		12-14	BRACADEIRA MANGUEIRA, No. 24
3		214-1410		2	BRACADEIRA MANGUEIRA, #10, 0.56/1.06 Type F Worm
4		377222A1		2	MANGUEIRA, 100 mm; Cut From 97252CX
5		400379A1		1	PLACA, 23 mm
6		A42561		1	PORCA
7		388762A1		1	BRACADEIRA
8		389402A1		1	ANEL DE VEDAÇÃO
9		281-14520		2	PARAFUSO, Hex Wash Hd, #10 x 1/4"
10		368801A2		1	MANGUEIRA, 1361 mm; Cut From 97252CX
11		400280A1		1	TUBO, Rear
12		448428A1		1	MANGUEIRA EM METRO, 1175 mm (46-1/4 in); Heater Valve To Core; Cut From 97252CX
13		448429A1		1	MANGUEIRA EM METRO, 150 mm (5-29/32 in) Floor To Valve; Cut From 97252CX
14		1331087C1		1	DISTRIBUIDOR, Heater
15		1954626C1		1	BRACADEIRA
16		1999666C1		1	CONTROLE, Heater; Includes 1999667C1, 1999668C1
		1999667C1		1	CONTROLE
		1999668C1		1	CABO
17		190675A1		2	TUBO DE INTRODUÇÃO
18		377232A2		1	MANGOTE, 2650 mm (104-21/64 in); Heater; Return To Water Pump; Cut From 97252CX
19		406287A1		1	ANEL DE VEDAÇÃO, 19 x 19 x 736 mm; Location Of Seal On Models With Heat Only; On Models With Air Conditioning, Seal Is Located On Evaporator Cor
20		87686604		1	VALVULA DE PARADA
21		221-89		1	REDUÇÃO, Hex, 1/2" x 3/8" NPT
24		D132982		7	TUBO ISOLANTE, Sleeve, 400 mm (15-3/4 in)
25		L18337		6	TIRA DE CABO, 9.95"-12.1" lg

CABINE - AQUECEDOR

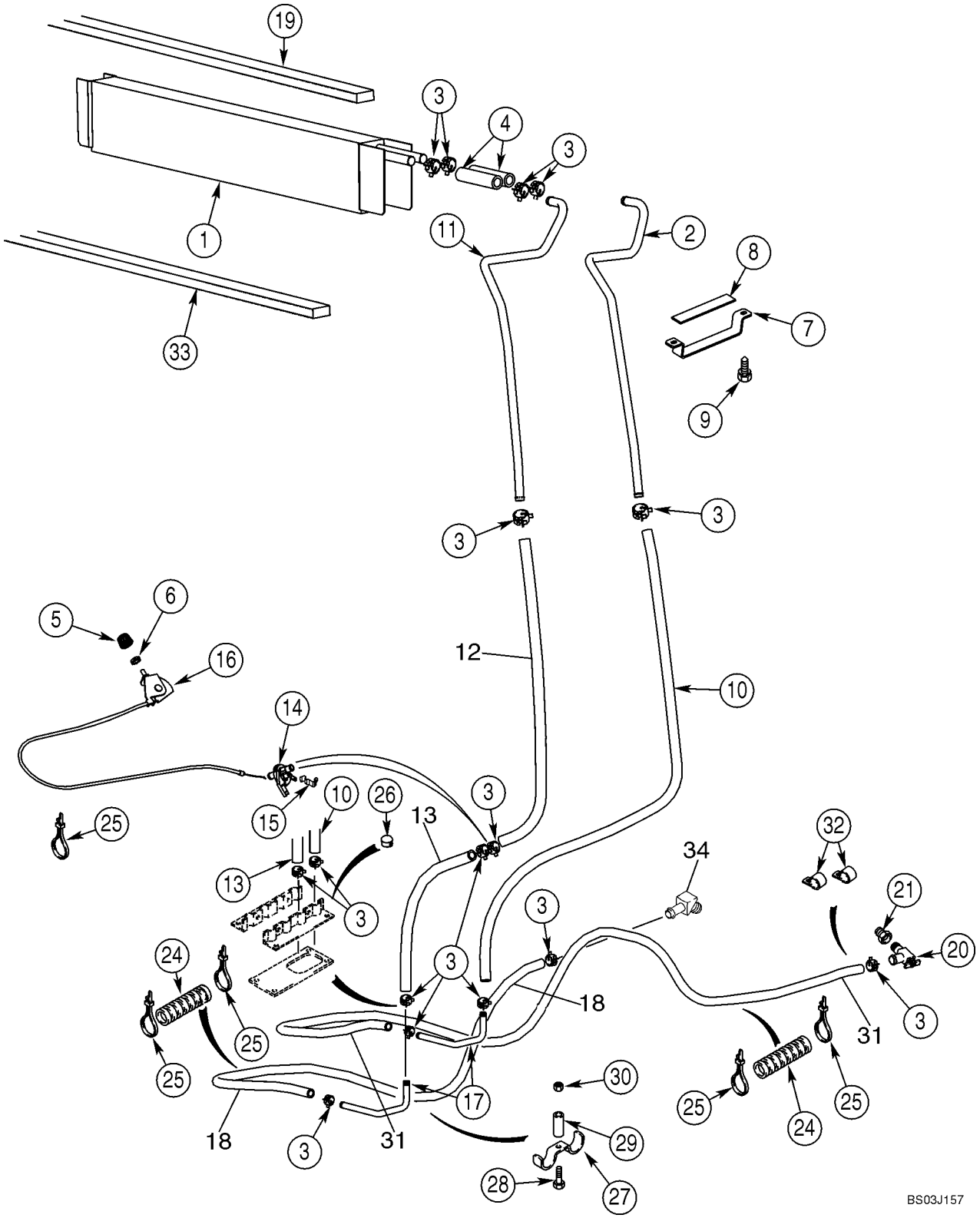

CABINE - AQUECEDOR

REF	FN	PART NUMBER	YR/SN	QTY	DESCRIPTION
26		353-410		2	BUJÃO, Dome, .875" hole, Nylon, Models With Heat Only
27		D143427		1	BRACADEIRA
28		614-8030		1	PARAFUSO, Hex, M8 x 30, 8.8
29		D143417		1	ESPAÇADOR
30		825-2408		1	PORCA, M8 x 1.25, Flg, Cl 8
31		377233A2		1	MANGOTE, 1830 mm (72-3/64 in); Heater; Inlet From Engine; Cut From 97252CX
32		D88052		2	BRACADEIRA
33		1987096C1		1	PLACA ESPESSA, Seal, Below Heater Core; Location Of Seal On Models With Heat Only; On Models With Air Conditioning, Seal Is Located At Rear Of Housing
34		217-425		1	CONEXAO, 45º, 5/8" Hose x 3/4" NPTF Beaded

CABINE - LINHAS DO AR CONDICIONADO, NÚCLEO DO EVAPORADOR

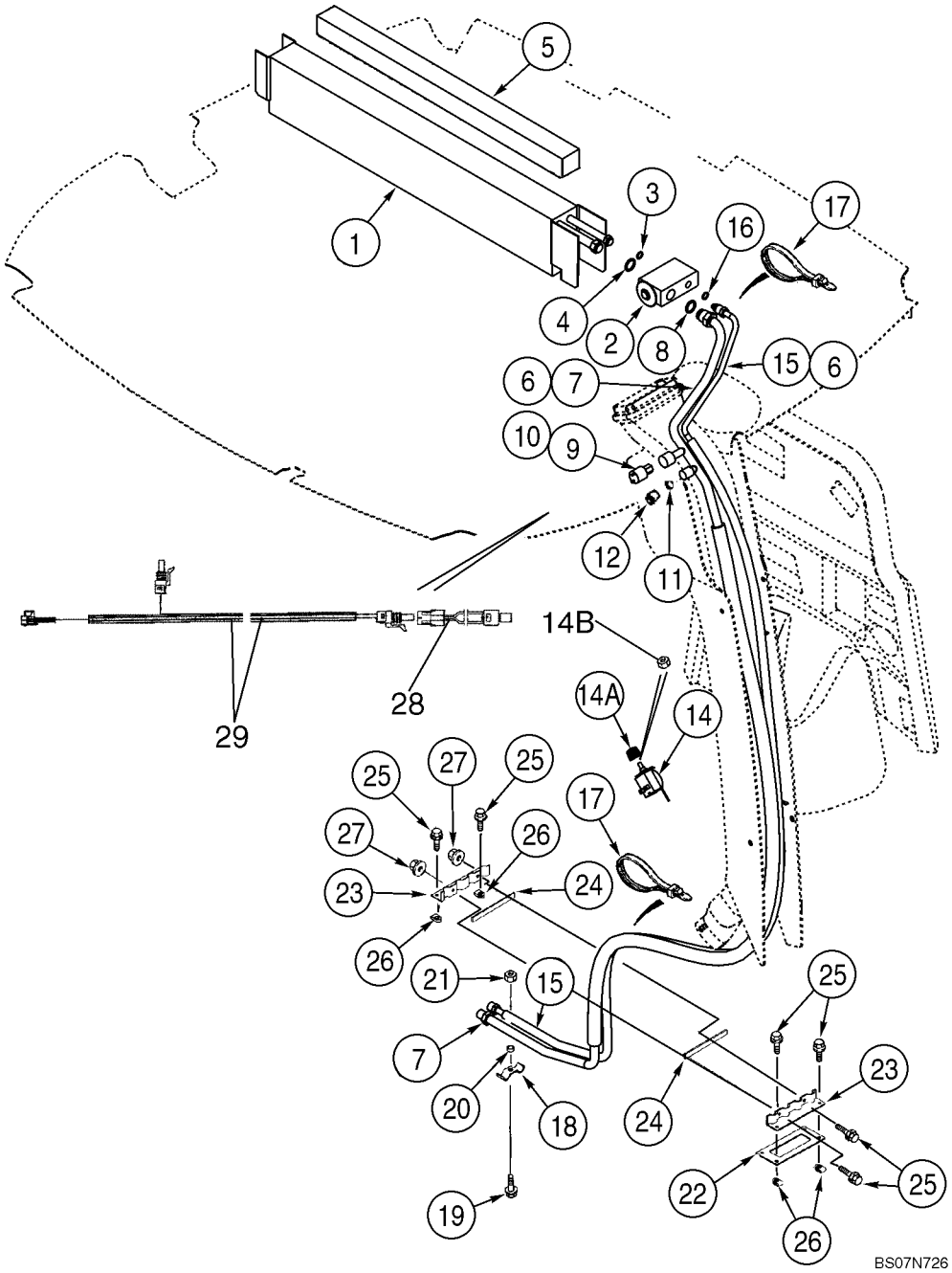

CABINE - LINHAS DO AR CONDICIONADO, NÚCLEO DO EVAPORADOR

REF	FN	PART NUMBER	YR/SN	QTY	DESCRIPTION
		363832A5		1	EVAPORADOR, Incl. Ref 1 - 4; Not Available as An Assembly; Order Components
1		360263A4		1	EVAPORADOR, Core
2		386535A1		1	VALVULA
3		128484A1		1	ANEL "O", 7/16 ID x 1/16
4		128485A1		1	ANEL "O", 9/16 ID x 1/16
		83822C1		3	CINTA, Insulation; 63,5 (2-1/2 in) x 610 mm (24-1/64 in)
5		406287A1		1	ANEL DE VEDAÇÃO, 19 x 19 x 736 mm; Adhesive Back; Models With Heat and Air, Locate Seal On Top Of Core
		345-621		2	CINTA, 2 x 6 in
7		360257A1		1	TUBO PLASTICO, Suction; Incl. Ref 8 - 12
8		128485A1		1	ANEL "O", 9/16 ID x 1/16
9		128483A1		1	ANEL "O", 5/16 ID x 1/16; Valve Core
10		1250594C1		1	NUCLÉO, Low Pressure Switch
11		1250594C1		1	NUCLÉO, Low Side Service Port
12		122553A1		1	TAMPA DO RESERVATÓRIO
14		370381A1		1	INTERRUPTOR, Temperature Control; Air Conditioning
14A		400379A1		1	PLACA, 23 mm
14B		A42561		1	PORCA, 7/16
15		360256A1		1	TUBO PLASTICO, Pressure; Incl. Ref 16
16		128483A1		1	ANEL "O", 5/16 ID x 1/16
17		L18337		4	TIRA DE CABO, 9.95"-12.1" lg
18		D143427		1	BRACADEIRA
19		614-8030		1	PARAFUSO, Hex, M8 x 30, 8.8
20		D143417		1	ESPAÇADOR
21		825-2408		1	PORCA, M8 x 1.25, Flg, Cl 8
22		124011A1		1	JUNTA
23		123980A1		2	FREIO, CLAMP, Heater and Air Conditioning Hoses
24		181979A1		2	TIRA VEDADORA
25		845-6020		6	PARAFUSO, Hex Flg, M6 x 20, 8.8, Full Thd
26		833-40406		4	PORCA, M6, U
27		825-2406		2	PORCA, M6 x 1, Flg, Cl 8

CABINE - LINHAS DO AR CONDICIONADO, NÚCLEO DO EVAPORADOR

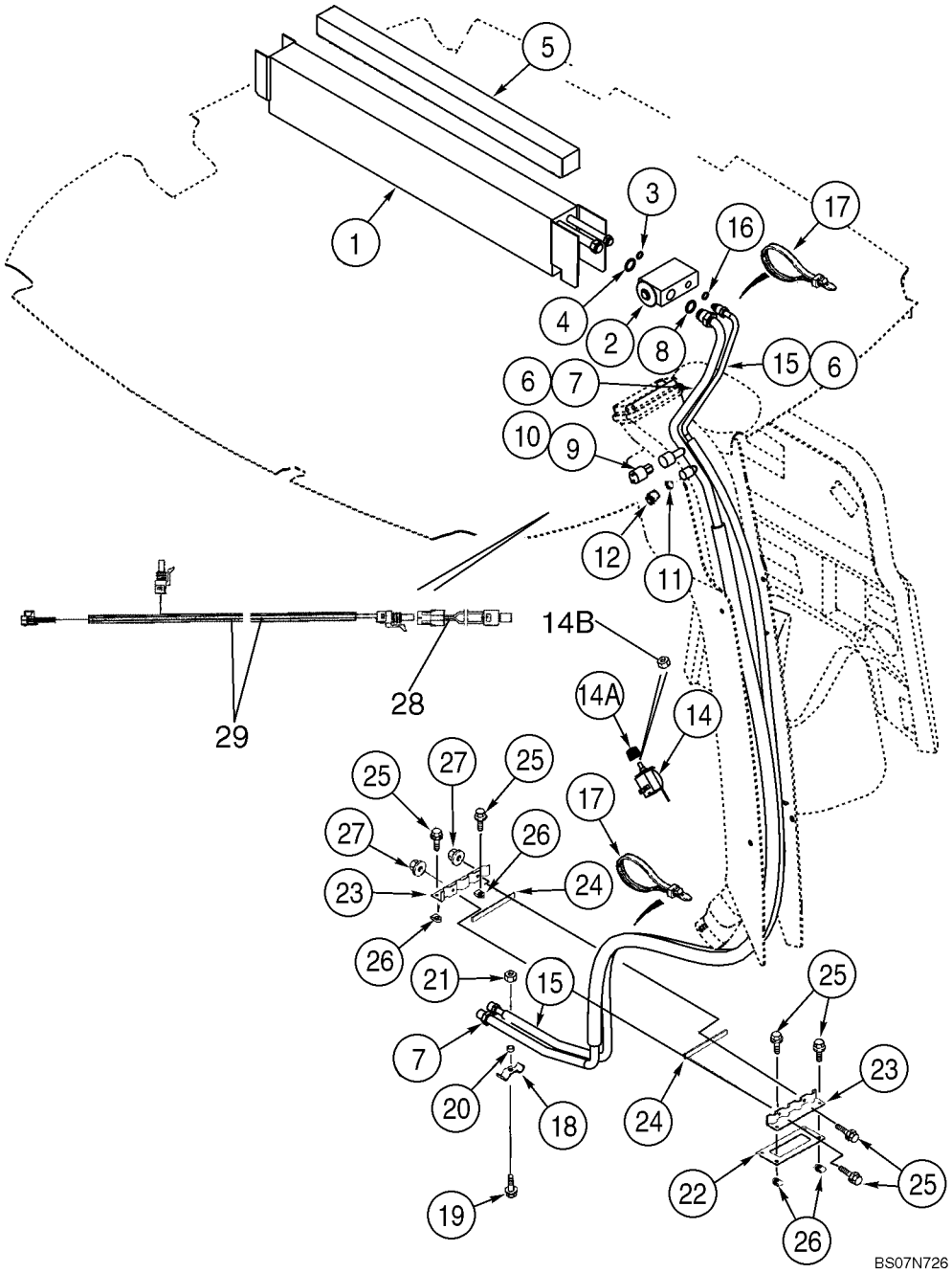

CABINE - LINHAS DO AR CONDICIONADO, NÚCLEO DO EVAPORADOR

REF	FN	PART NUMBER	YR/SN	QTY	DESCRIPTION
28		87000228		1	INTERRUPTOR DE PRESSÃO, A/C Low Pressure; Blue Wire
29		87538167		1	CHICOTE DE FIOS, Service; A/C Low Pressure Switch; Connects to A/C Compressor and A/C Relay
30		401949A1		5	BOTÃO DE IMPULSO, Xmas Tree Clips; B Post Cover; Not Illustrated
31		L11541		10	TIRA DE CABO, Tie; Not Illustrated

CABINE - AR CONDICIONADO, CONDENSADOR, RECEPTOR-SECADOR

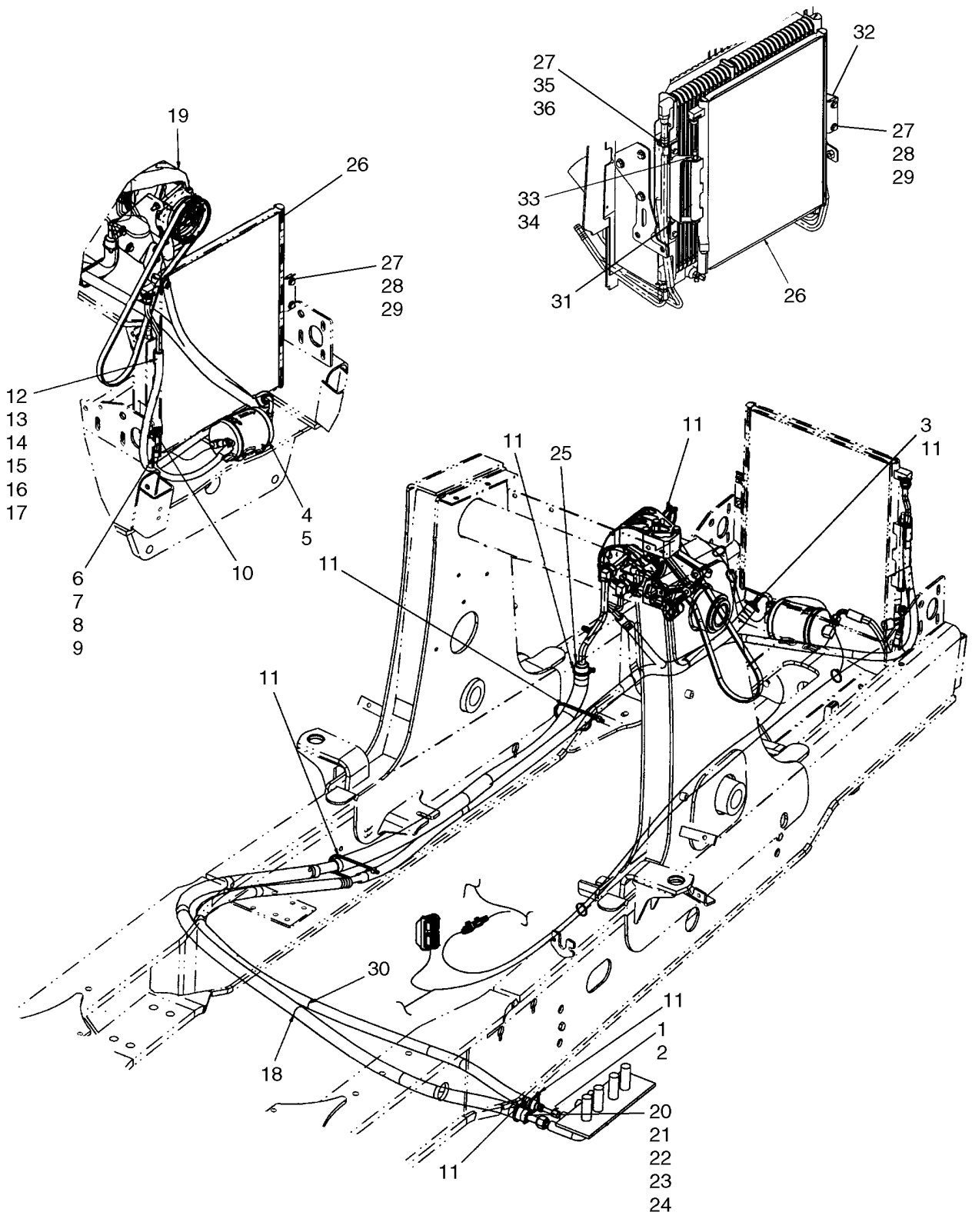

CABINE - AR CONDICIONADO, CONDENSADOR, RECEPTOR-SECADOR

REF	FN	PART NUMBER	YR/SN	QTY	DESCRIPTION
1		87630219		1	MANGUEIRA CONJUNTO, 2930 mm, Receiver Drier to Cab; Incl. Ref 2
2		128483A1		2	ANEL "O", 5/16 ID x 1/16
3		191704A1		2	TUBO ISOLANTE, 460 mm (18-1/8 in)
4		86984155		1	DESIDRATADOR
5		214-1464		2	BRACADEIRA MANGUEIRA, #64, 3.56/4.50 Type F Worm
6		87630218		1	MANGUEIRA CONJUNTO, 340 mm, Condenser to Drier; Incl. Ref 7 - 9
7		128483A1		3	ANEL "O", 5/16 ID x 1/16
8		1250594C1		1	NUCLÉO, Valve, High Pressure Switch
9		122081A1		1	CONEXAO, Switch
10		232948A1		1	INTERRUPTOR DE PRESSÃO, High Pressure
11		L18337		10	TIRA DE CABO, 9.95"-12.1" lg
12		87590156		1	MANGUEIRA CONJUNTO, 1350 mm; Compressor to Condenser; Incl. Ref 13 - 17
13		128484A1		1	ANEL "O", 7/16 D x 1/16
14		128485A1		1	ANEL "O", 9/16 ID x 1/16
15		1999926C1		1	BOCAL TUBO
16		1250594C1		1	NUCLÉO, Valve
17		122554A1		1	TAMPA DO RESERVATÓRIO, Sealing Cap
18		87726951		1	PROTETOR DE MANGUEIR, Guard, 1200 mm (47-1/4 in)
19		87430122		1	COMPRESSOR AR COND., Component Parts Not Serviced Separately, See Figure 09-66 for Mounting
20		87630220		1	MANGUEIRA CONJUNTO, 2425 mm, Cab to Compressor; Incl. Ref 21 - 24
21		128485A1		2	ANEL "O", 9/16 ID x 1/16
22		1999927C1		1	BOCAL TUBO
23		1250594C1		1	NUCLÉO, Valve
24		122553A1		1	TAMPA DO RESERVATÓRIO, Sealing
25		191703A1		1	TUBO ISOLANTE, Sleeve, 400 mm (15-3/4 in)
26		87546291		1	CONDENSADOR
27		614-8020		6	PARAFUSO, Hex, M8 x 20, 8.8
28		895-15008		2	ARRUELA PLANA, M8 x 20 x 1.6

CABINE - AR CONDICIONADO, CONDENSADOR, RECEPTOR-SECADOR

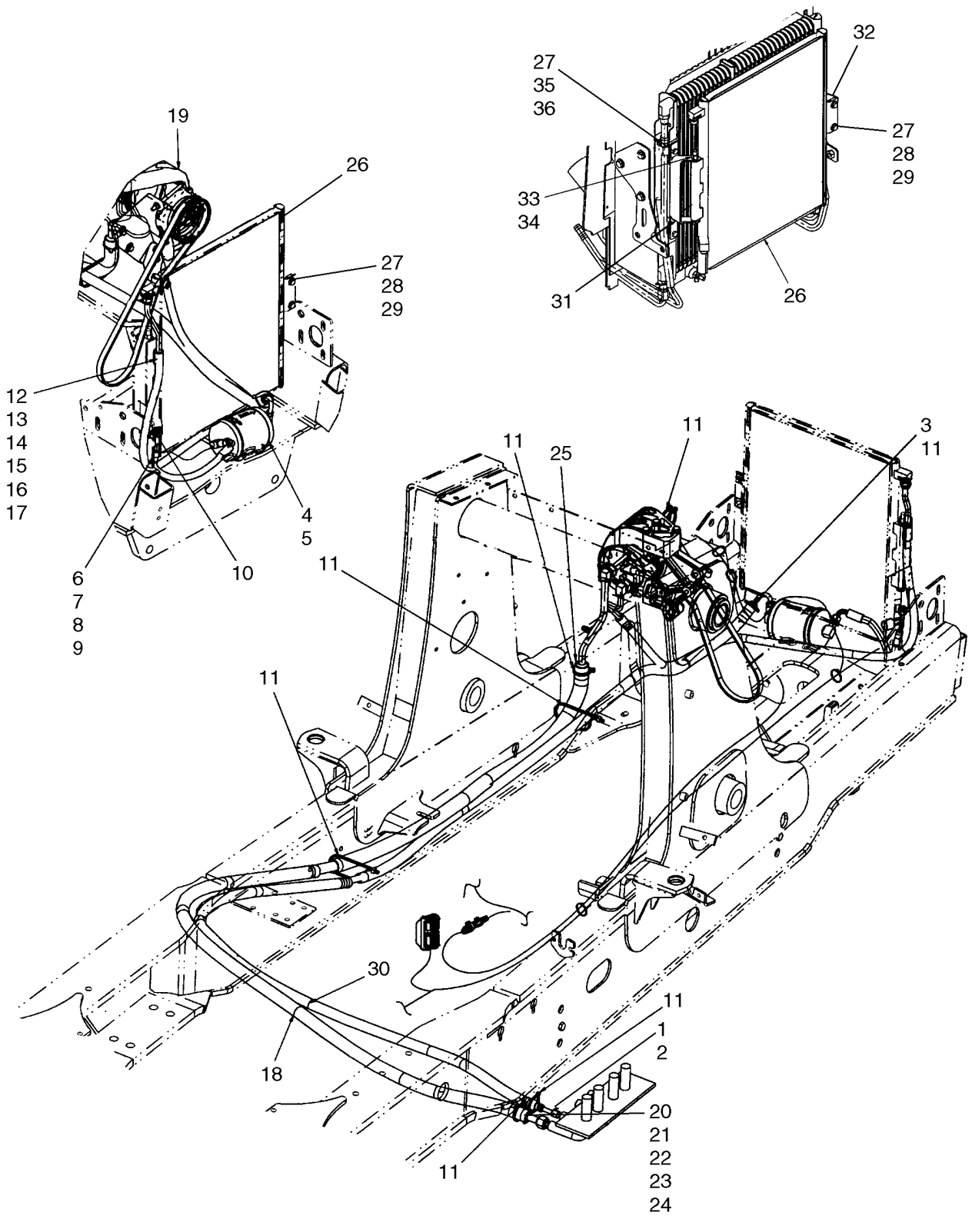

CABINE - AR CONDICIONADO, CONDENSADOR, RECEPTOR-SECADOR

REF	FN	PART NUMBER	YR/SN	QTY	DESCRIPTION
29		833-40408		2	PORCA, M8, U
30		87726950		1	PROTETOR DE MANGUEIR, Guard, 1200 mm (47-1/4 in)
31		87598501		1	PIVO JUNTA GIRATORIA
32		87589025		1	SUPORTE
33		814-10220		1	PARAFUSO, Hex, M10 x 220, 8.8
34		832-10410		1	CONTRA PORCA, M10 x 1.5, Cl 8
35		829-1408		4	PORCA, M8, Cl 10
36		895-11008		6	ARRUELA PLANA, M8 x 16 x 1.6

CABINE - COMPRESSOR DO AR CONDICIONADO

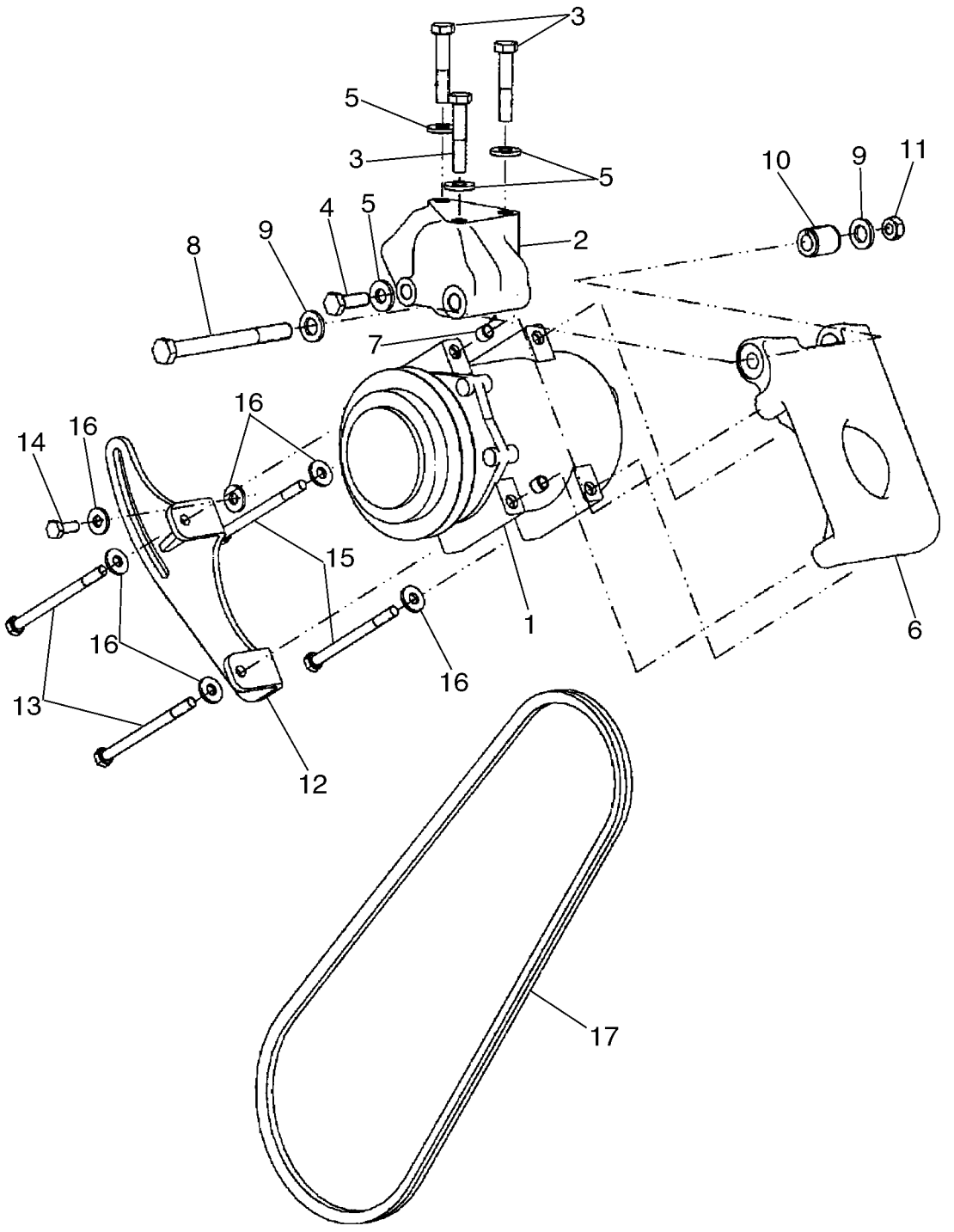

CABINE - COMPRESSOR DO AR CONDICIONADO

REF	FN	PART NUMBER	YR/SN	QTY	DESCRIPTION
1		87430122		1	COMPRESSOR AR COND., Compressor Component Parts Not Serviced Separately
2		87429950		1	SUPORTE, Mounting Support
3		814-10055		3	PARAFUSO, Hex, M10 x 55, 8.8
4		614-10030		1	PARAFUSO, Hex, M10 x 30, 8.8
5		896-15010		4	ARRUELA PLANA, M10 x 24.5 x 3, HT
6		87429948		1	SUPORTE
7		87429952		2	ANEL
8		814-12130		1	PARAFUSO, Hex, M12 x 130, 8.8
9		896-11012		2	ARRUELA PLANA, M13.5 x 24.5 x 3, HT
10		87429951		1	ESPAÇADOR, Pivot
11		829-1412		1	PORCA, M12, Cl 10
12		87429949		1	SUPORTE
13		814-8110		2	PARAFUSO, Hex, M8 x 110, 8.8
14		614-8020		1	PARAFUSO, Hex, M8 x 20, 8.8
15		814-8100		2	PARAFUSO, Hex, M8 x 100, 8.8
16		896-15008		6	ARRUELA PLANA, M8 x 21.5 x 2.5, HT
17		87393292		1	CORREIA DE TRANSMISSÃO, V-Belt

09-68		p1	07/08

CAPOTA, ROPS - ESTRUTURA, COBERTURAS, ESPELHO, VISOR

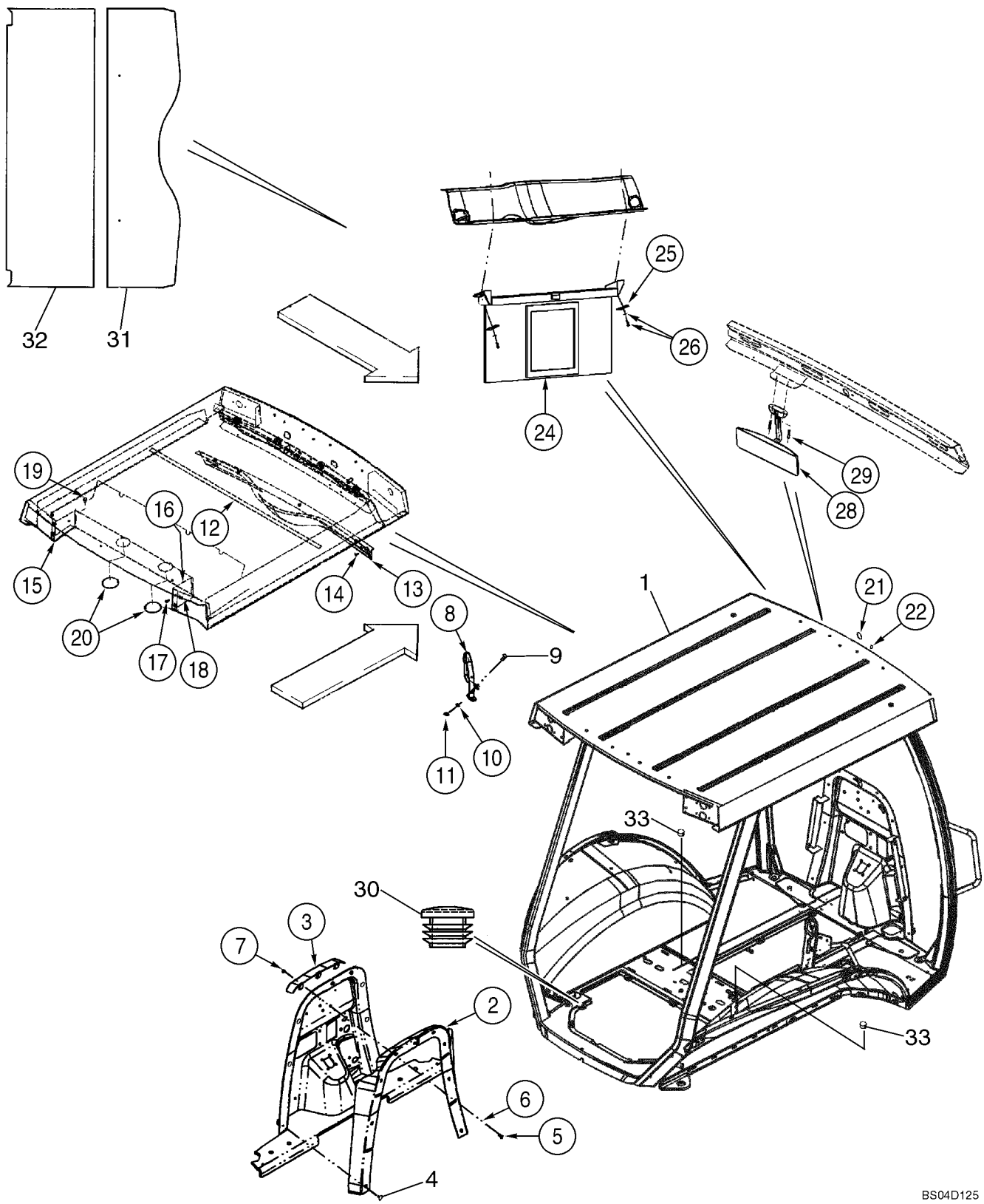

10

CAPOTA, ROPS - ESTRUTURA, COBERTURAS, ESPELHO, VISOR

REF	FN	PART NUMBER	YR/SN	QTY	DESCRIPTION
		87636559		1	CHASSI DE SEGURANÇA, ASSEMBLY, Includes 87636554 Frame, Glass, Wiper and Roof Foam Panels
1		87636554		1	CHASSI DE SEGURANÇA, Canopy Frame; Order From Machinery Price List
2		396938A3		1	MOLDURA, Firewall
3		395478A3		1	BRACADEIRA
4		D143242		6	BUJÃO, Push-In Fastener
5		614-8020		3	PARAFUSO, Hex, M8 x 20, 8.8
6		495-81001		3	ARRUELA PLANA, 5/16"
7		832-10408		3	CONTRA PORCA, M8 x 1.25, Cl 8
8		87627072		1	GALERIA
9		87310177		2	PARAFUSO, M10 x 25; 8.8, Round Head Square Neck, Stainless Steel
10		495-81267		2	ARRUELA PLANA, .469" x 1 1/2" x .134"
11		832-10410		2	CONTRA PORCA, M10 x 1.5, Cl 8
12		385506A1		1	TIRA DE PROTECAO, 127 mm; Foam; Adhesive Back
13		367712A3		1	TAMPA, Harness
14		F64519		5	PARAFUSO, Cross Wash Hd, #10-16 x 3/4", For Service, Order 265-16512, F64315
15		357099A1		1	TAMPA, Left-Hand
16		357100A1		1	TAMPA, Right-Hand
17		87310098		4	PARAFUSO, Flange, M6 x 20, Stainless Steel
18		833-40406		4	PORCA, M6, U
19		353-402		4	BUJÃO, Dome, .375" hole, Nylon, Models With 4 Lamps; Not Used On Models With 8 Lamps
20		1302758C1		2	BUJÃO, 3 in
		353-410		1	BUJÃO, Dome, .875" hole, Nylon
21		411549A1		1	BUJÃO, 1 in; Windshield Frame
22		353-421		2	BUJÃO, Dome, .187" hole, Nylon, Upper Windshield Frame
24		364180A1		1	PARA-SOL
25		409618A1		2	PLACA, 1/4 in Mounting Hole

CAPOTA, ROPS - ESTRUTURA, COBERTURAS, ESPELHO, VISOR

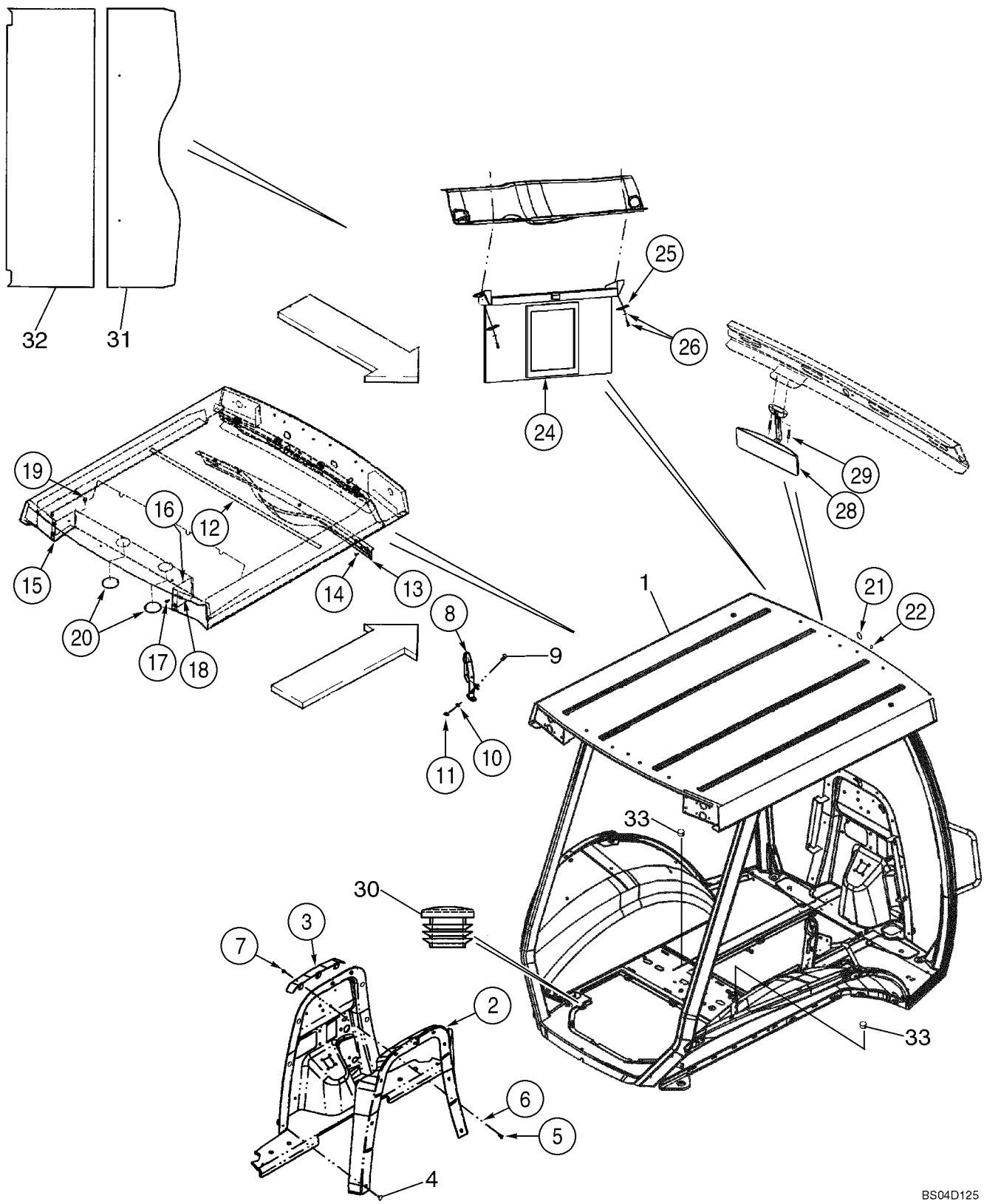

CAPOTA, ROPS - ESTRUTURA, COBERTURAS, ESPELHO, VISOR

REF	FN	PART NUMBER	YR/SN	QTY	DESCRIPTION
26		396516A1		2	PARAFUSO DE PONTA, No 10 x 1 st; With Washer; Phillips
28		87406924		1	ESPELHO RETROVISOR
29		286-56520		2	PARAFUSO, Cross Fil Hd, #10-24 x 1 1/4"
30		382298A1		2	BUJÃO, 7/8 in
31		431583A1		1	PAINEL, Foam; Roof Front
32		431584A1		1	PAINEL, Foam: Roof Rear
33		353-413		2	BUJÃO, Dome, 1.187" hole, Nylon, 1-3/16 Hole Size, Black Nylon; Brake Bleeder

CAPOTA, ROPS - VIDRO

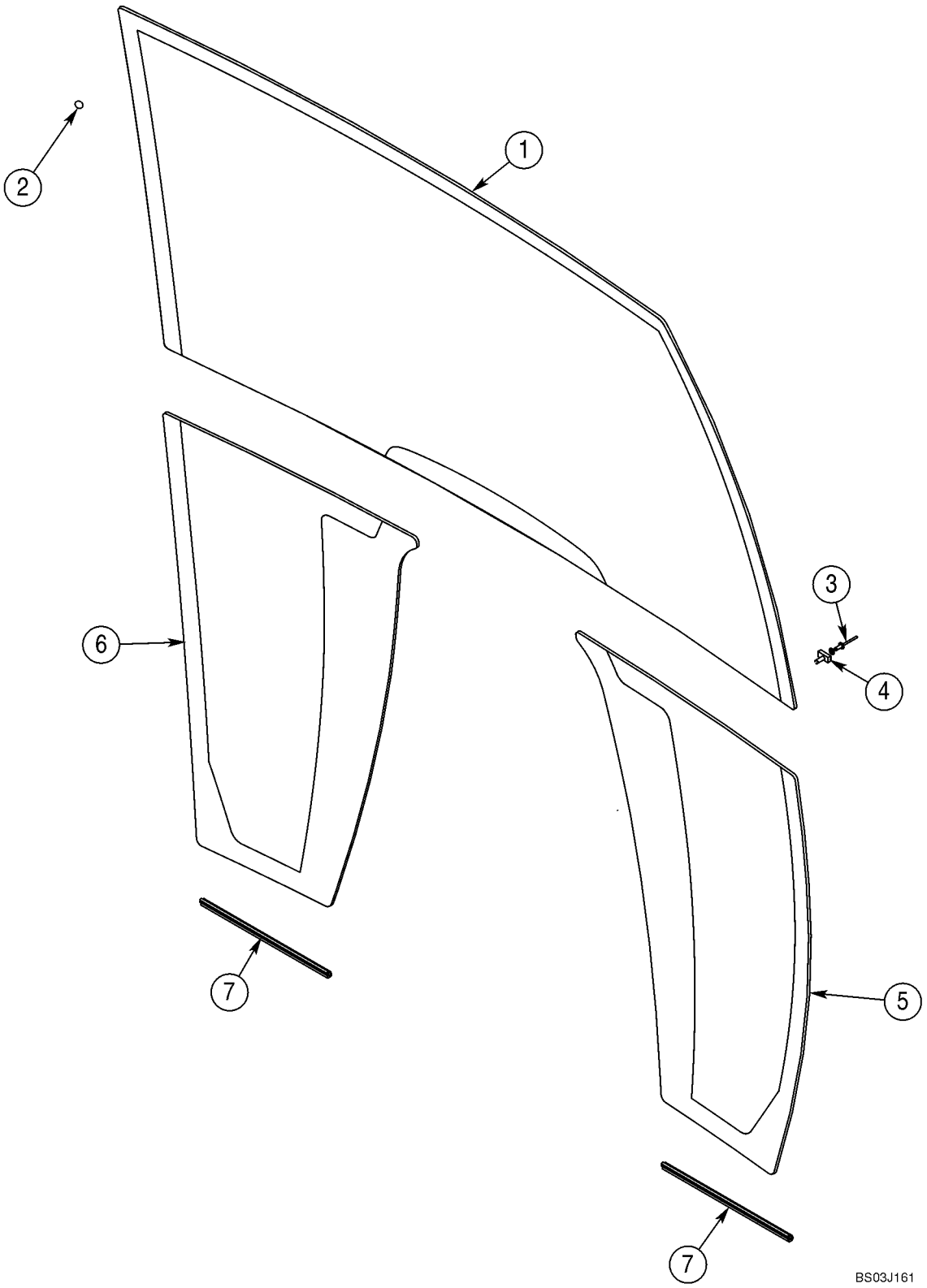

CAPOTA, ROPS - VIDRO

REF	FN	PART NUMBER	YR/SN	QTY	DESCRIPTION
1		448607A1		1	PARA-BRISA
2		391827A1		28	ESPAÇADOR
3		151-516		2	REBITE, Pop, 1/8" x .775"
4		279482A1		2	BRACADEIRA
5		448609A1		1	PARA-BRISA, Lower; Right-Hand
6		448608A1		1	PARA-BRISA, Lower; Left-Hand
7		395793A1		2	TIRA DE PROTECAO, Lower Glass Trim

CAPOTA, ROPS - LIMPA-PÁRA-BRISAS, LÁVA-PARA-BRISAS DIANTEIROS

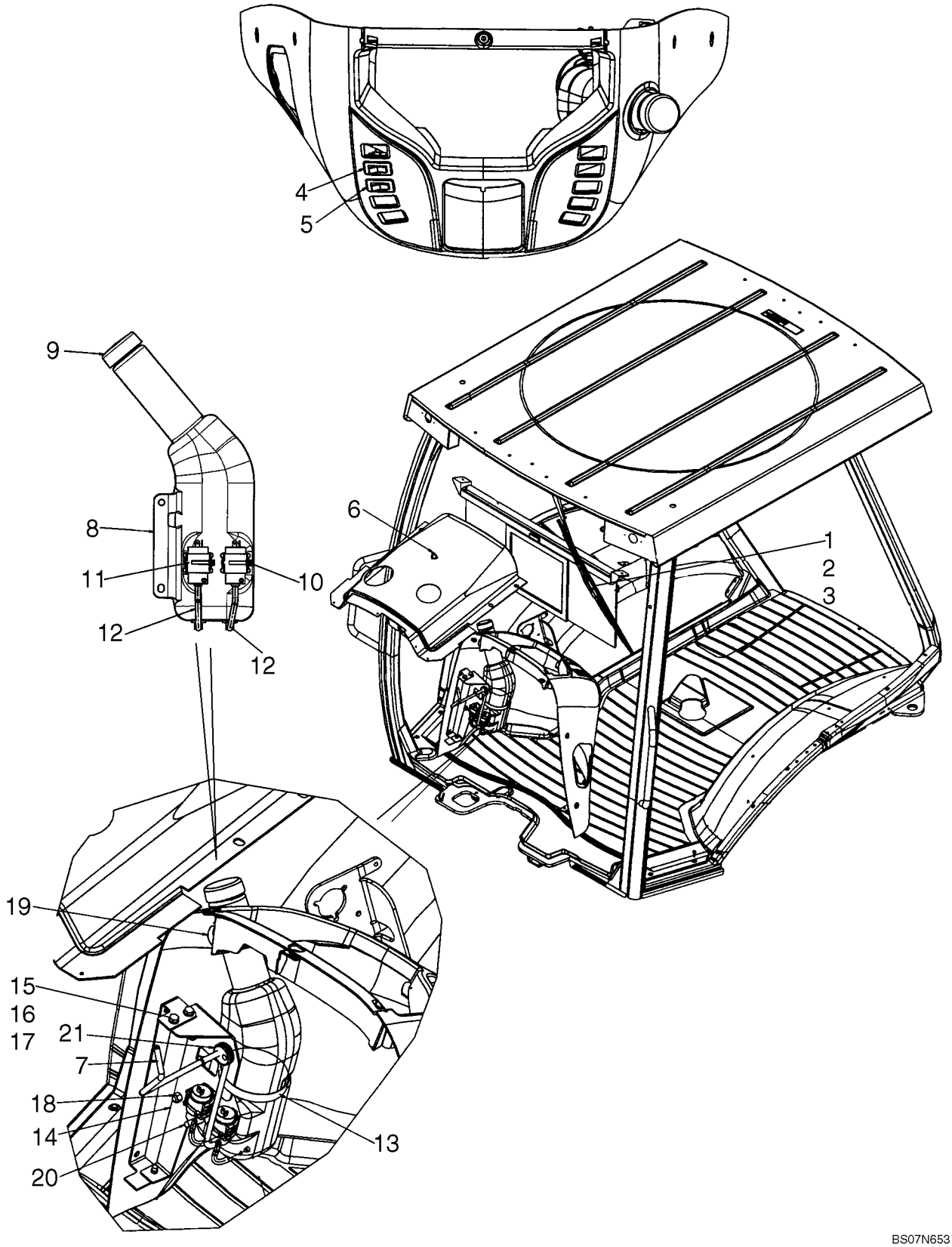

CAPOTA, ROPS - LIMPA-PÁRA-BRISAS, LÁVA-PARA-BRISAS DIANTEIROS

REF	FN	PART NUMBER	YR/SN	QTY	DESCRIPTION
1		87669381		1	LIMPADOR DE PÁRA-BRISA, 12V; See Figure 09-60
		814-6050		2	PARAFUSO, Hex, M6 x 50, 8.8, Wiper Motor Mounting
		892-11006		2	ARRUELA-TRAVA, M6
2		87669391		1	BRAÇO LIMP. PÁRA-BRISA, See Figure 09-60
3		87669761		1	PALHETA LIMP. PÁRA-BRISA, 600 mm; See Figure 09-60
4		386785A1		1	INTERRUPTOR, Front Wiper
5		386787A1		1	INTERRUPTOR, Windshield Washer
6		E43769		1	VAPORIZADOR, NOZZLE; Front; Includes Rubber Gasket; Plastic
7		87699640		1	MANGUEIRA EM METRO, 700 mm (27-1/2 in); Cut From 87282056
8		87675208		1	RESERV. LAV. PÁRA-BRISA
9		87711985		1	TAMPA RESERVATORIO, Cap; Washer Bottle
10		L11541		2	TIRA DE CABO
11		86507198		2	BOMBINHA, Window Washer
12		87700794		2	MANGUEIRA EM METRO, Washer Bottle
13		214-3180		1	BRACADEIRA MANGUEIRA, 4.25/5.125 HD Worm
14		87491347		2	SUPORTE, Replaces 87676276
15		614-8020		5	PARAFUSO, Hex, M8 x 20, 8.8
16		895-11008		5	ARRUELA PLANA, M8 x 16 x 1.6
17		833-40408		3	PORCA, M8, U
18		832-10408		2	CONTRA PORCA, M8 x 1.25, Cl 8
19		87748047		1	JUNTAS
20		87441758		1	PRATO, Reservoir
21		87637384		1	CASQUILHO ISOLADOR, Washer Hose
		404617A1		1	CHICOTE, Front Lamps and Wiper
		87726574		1	CHICOTE DE FIOS, Front Console Options; Includes (1) L71879 Diode
		87726573		1	CHICOTE DE FIOS, Chassis Options; Includes (4) L71879 Diodes; Not Illustrated]

09-71		p1	07/08

ESPELHO, RETROVISOR - SUPORTE, KABINE

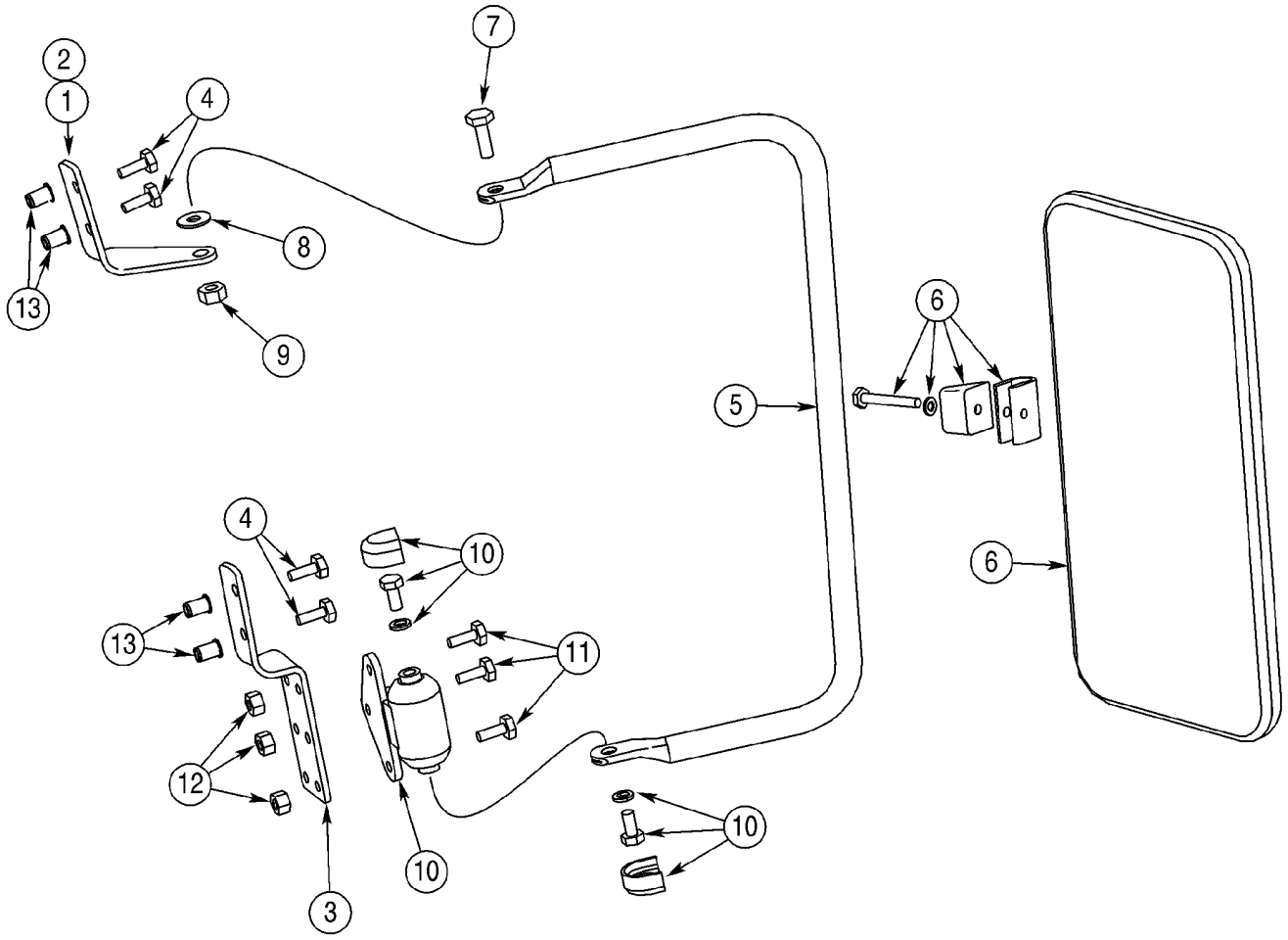

BC00H065

ESPELHO, RETROVISOR - SUPORTE, KABINE

REF	FN	PART NUMBER	YR/SN	QTY	DESCRIPTION
		397974A1		1	JOGO, Outside Mirror; Incl. Ref 1 - 14 and Instructions
1		402933A1		1	BRACADEIRA, Upper; Right-Hand
2		402934A1		1	BRACADEIRA, Upper; Left-Hand; Not Illustrated
3		402936A1		2	BRACADEIRA, Lower
4		413-412		8	PARAFUSO, Hex, 1/4"-20 x 3/4", G5, Full Thd
5		402935A1		2	SUPORTE TUBO
6		R54682		2	ESPELHO, Exterior
7		413-516		2	PARAFUSO, Hex, 5/16"-18 x 1", G5, Full Thd, 5/16 x 1
8		A167037		2	ARRUELA PLANA
9		231-4115		2	CONTRA PORCA, 5/16"-18, GB
10		D142144		2	ARTICULACAO DIRECAO, Includes Hardware
11		413-412		6	PARAFUSO, Hex, 1/4"-20 x 3/4", G5, Full Thd
12		231-1444		6	CONTRA PORCA, 1/4"-20, GB
13		255447A1		10	REBITE, Threaded Insert; Cab Front ROPS Post
14		NSS		1	BOLETIM INFORMATIVO, Tool, Insert Nut; Not Illustrated

EMBLEMA VEÍCULO DE MARCHA LENTA

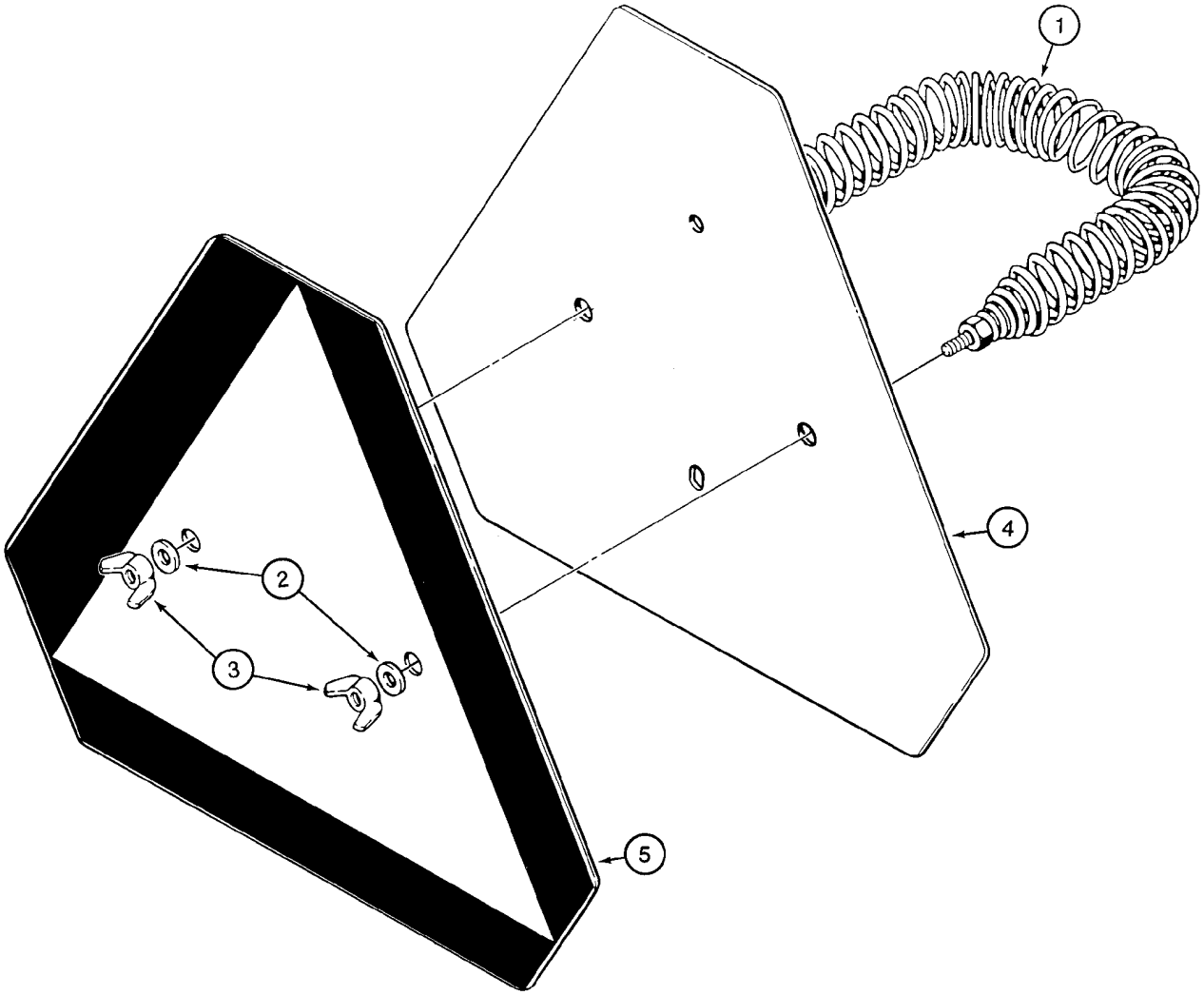

B9409034

EMBLEMA VEÍCULO DE MARCHA LENTA

REF	FN	PART NUMBER	YR/SN	QTY	DESCRIPTION
1		D52564		1	MOLA
2		495-11028		2	ARRUELA PLANA, 1/4", SAE, 9/32 x 5/8 x 1/16
3		126177		2	DISCO, 1/4
4		86547710		1	TRIÂNGULO, Incl. Ref 5
5		321-4311		1	DECALCOMANIA, Slow Moving Vehicle

ADESIVOS



1

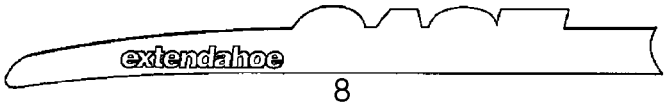

8



1B

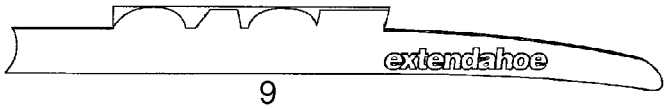

9

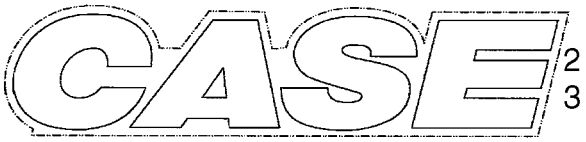

2
3

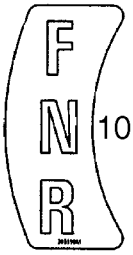

10



11

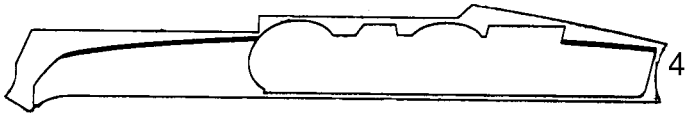
4



12

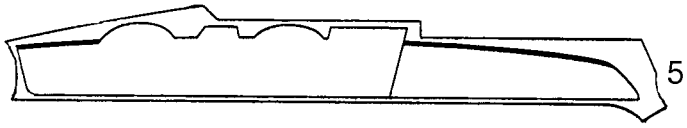
5

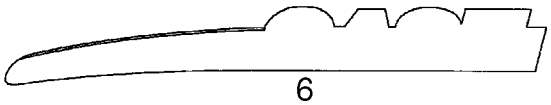
6



13


14

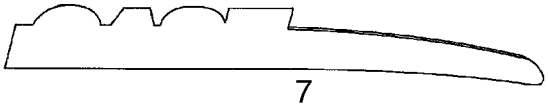
7



15

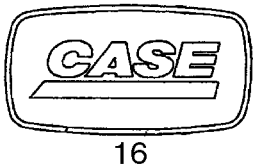

16

BS08A289

10

ADESIVOS

REF	FN	PART NUMBER	YR/SN	QTY	DESCRIPTION
1		87754369		2	DECALCOMANIA, 580M Model Designation
1B		87412815		2	DECALCOMANIA, Series 3
2		401457A1		2	DECALCOMANIA, 525 mm (20-11/16 in) Wide; Case Logo; Loader Arm
3		401458A1		4	DECALCOMANIA, 655 mm (25-13/16 in) Wide, Case Logo; Backhoe Dipper
4		87751884		1	DECALCOMANIA, Case, Loader Arm Pin Stripe, Left-Hand Stripe
5		87751885		1	DECALCOMANIA, Case, Loader Arm Pin Stripe, Right-Hand Stripe
6		407009A2		1	DECALCOMANIA, Case, Standard Dipper, Left-Hand Stripe
7		407010A2		1	DECALCOMANIA, Case, Standard Dipper, Right-Hand Stripe
8		373698A2		1	DECALCOMANIA, Case, Extendahoe Dipper, Left-Hand Stripe
9		373699A2		1	DECALCOMANIA, Case, Extendahoe Dipper, Right-Hand Stripe
10		395910A2		1	DECALCOMANIA, FNR (Forward/Neutral/Reverse); Shuttle Shift Lever Control Pattern
11		321-1708		1	DECALCOMANIA, 0-2-4, Clam Bucket Opening Indicator
12		87435569		1	SÍMBOLO, Insert, Case; Steering Wheel
13		186989A1		1	SÍMBOLO, Case
14		131-431		2	CONTRA PORCA, Self, Threading, 1/4"
15		87415931		2	DECALCOMANIA, Case, 37 x 70 mm; Located On Engine Filters
16		87429186		1	SÍMBOLO, Case, 37 x 70 mm; Located On Engine

ADESIVOS

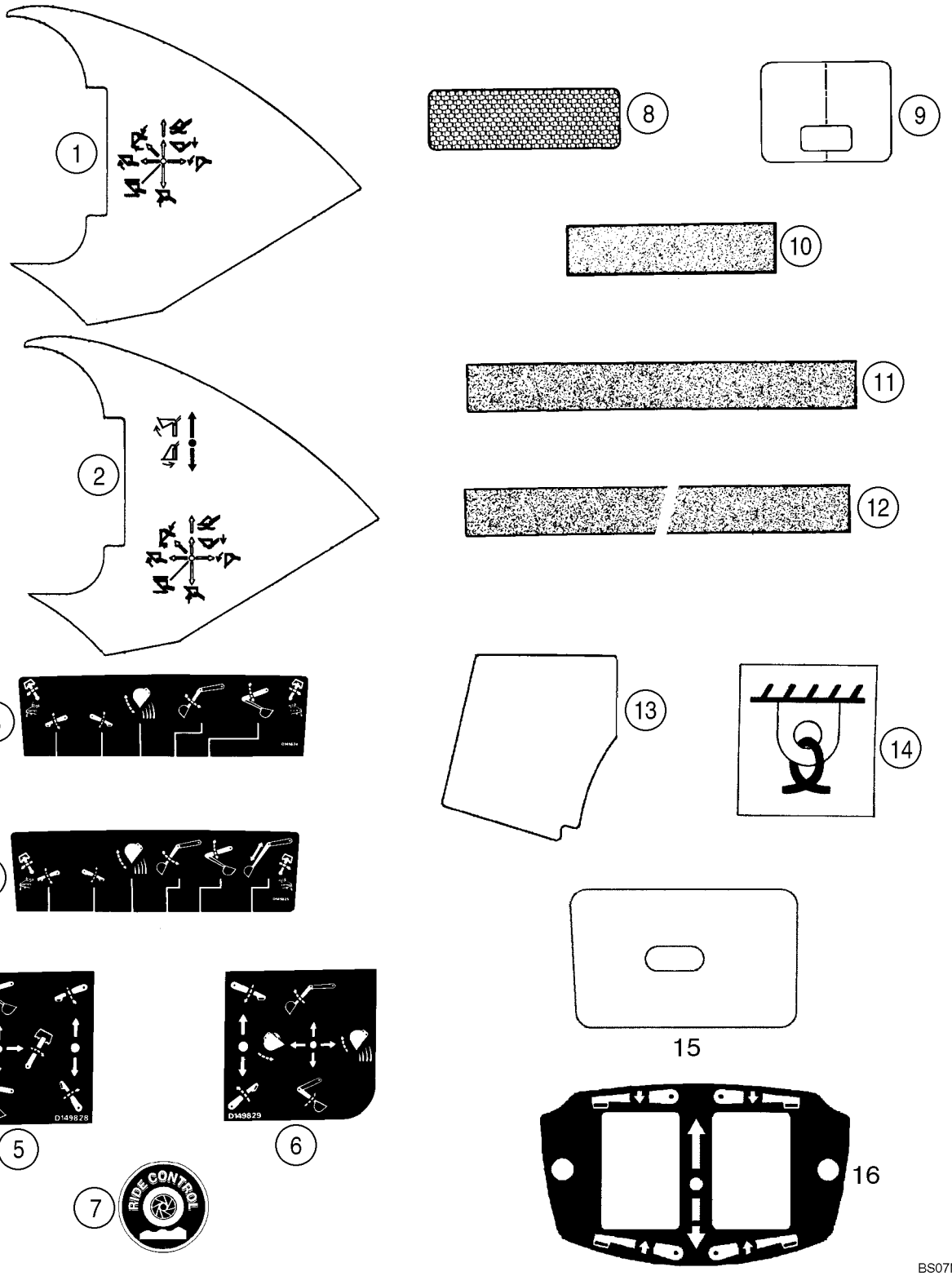
1
2
3
4
5
6
7
8
9
10
11
12
13
14
15
16
D149828
DM9829
RIDE CONTROL
BS07M371

ADESIVOS

REF	FN	PART NUMBER	YR/SN	QTY	DESCRIPTION
1		87702261		1	DECALCOMANIA, Two Function Loader Control
2		87480903		1	DECALCOMANIA, Decal; Three Function Loader Control
3		D149824		1	DECALCOMANIA, Upper; Standard Backhoe Control Pattern
4		D149825		1	DECALCOMANIA, Upper; Extendahoe Control Pattern; With Foot Swing
5		D149828		1	DECALCOMANIA, Upper; Standard Backhoe Control Pattern; With Hand Swing; Left-Hand Side Of Console
6		D149829		1	DECALCOMANIA, Upper; Standard Backhoe Control Pattern; With Hand Swing; Right-Hand Side Of Console
7		304083A1		2	DECALCOMANIA, Ride Control
8		449842A1		2	DECALCOMANIA, 2 x 6-5/16 in; Red, Reflector
9		192450A1		1	DECALCOMANIA, Clear Vinyl; Hood
10		D55216		2-11	FAIXA ANTI-DERRAPANTE, 2 x 9 in; Anti-Skid
11		D80270		3-4	CINTA, 635 mm (25 in); Anti-Skid
12		307348A1		2	CINTA, 700 mm (27-9/16 in); Anti-Skid; 40 gallon fuel tank
13		367848A2		1	CUNHA, Anti-Skid; Canopy Models
14		87626017		4	DECALCOMANIA, Tie Down; Replaces 139728A1
15		406723A1		1	DECALCOMANIA, Poly Film; Lockup Cover; Canopy Models
16		87423812		1	DECALCOMANIA, Stabilizer Switch; Models With Pilot Controls
17		T41159		1	CINTA, Not Illustrated

ADESIVOS

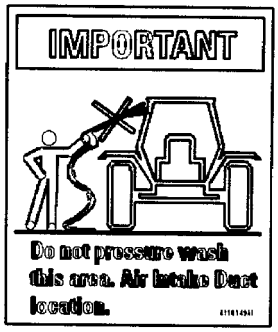

2

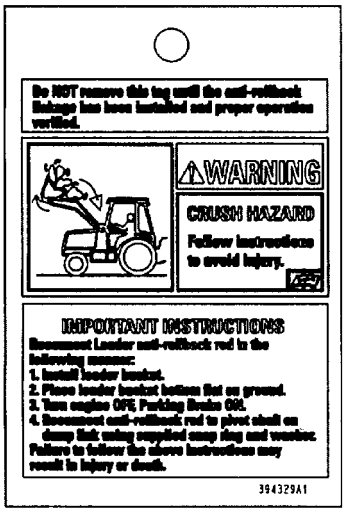

3

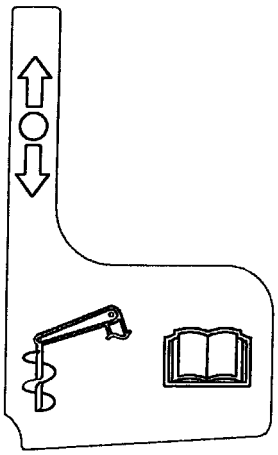

4

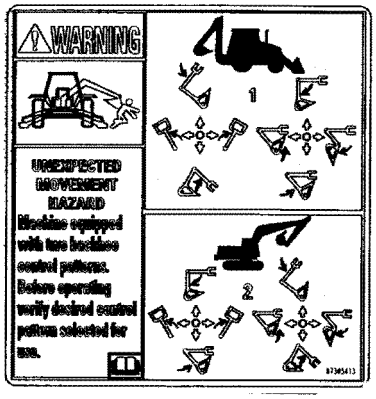

5

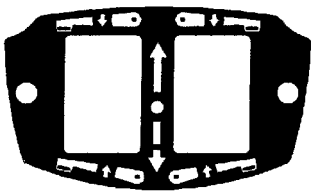

6

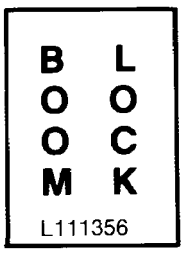

7



8



9

BS07M814

ADESIVOS

REF	FN	PART NUMBER	YR/SN	QTY	DESCRIPTION
2		411049A1		1	DECALCOMANIA, Important; Do Not Pressure Wash This Area
3		87738175		1	ETIQUETA, Warning; Anti-Rollback Hazard; English
3		87738597		1	ETIQUETA, Warning; Anti-Rollback Hazard; Latin American Spanish
3		87738598		1	ETIQUETA, Warning; Anti-Rollback Hazard; Canadian French
3		{84149986}		1	Warning; Anti-Rollback Hazard; Portuguese
4		87430677		1	DECALCOMANIA, Auxiliary Hydraulics
5		87305413		1	DECALCOMANIA, Warning, Unexpected Movement; Pattern Selecting; English
5		87336843		1	DECALCOMANIA, Warning, Unexpected Movement; Pattern Selecting; Latin American Spanish
5		87336844		1	DECALCOMANIA, Warning, Unexpected Movement; Pattern Selecting; French Canadian
5		{84149988}		1	Warning, Unexpected Movement; Pattern Selecting; Portuguese
6		87423812		1	DECALCOMANIA, Stabilizer Control Switch
7		L111356		1	DECALCOMANIA, Boom Lock; Included In 399221A1 Backhoe Boom Lock Kit
8		321-6046		2	DECALCOMANIA, Warning, If You Use The Backhoe To Lift A Load That Is Too Heavy; Included With 189957A1 Boom Lock Valve Used In 399221A1 Backhoe Boom Lock Kit
9		87444776		1	DECALCOMANIA, Warning, Crush Hazard; When Changing A Machine to Foot Swing Controls; English
9		87307893		1	DECALCOMANIA, Warning, Crush Hazard; When Changing A Machine to Foot Swing Controls; Latin American spanish
9		87307896		1	DECALCOMANIA, Warning, Crush Hazard; When Changing A Machine to Foot Swing Controls; Canadian French
9		{84149987}		1	Warning, Crush Hazard; When Changing A Machine to Foot Swing Controls; Portuguese

ADESIVOS - INGLÊS

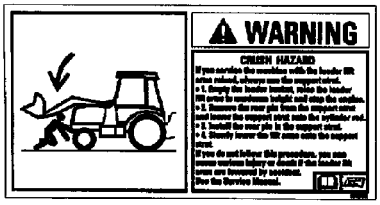

1

FUSES			87652902
SPARE	....	....	....
SPARE	POWER OUTLET 30A	SPARE	PILOT CONTROLS BH AUX (OPT) 15AMP
FRONT WORK LIGHTS 20A	POWER OUTLET 30A	AIR SUSP. SEAT-AIR COMP. (OPT) 20A	RETURN TO DIG 10A
REAR WORK LIGHTS 20A	PWRSHIFT CTRL, COMFORT STEER (OPT) 10A	SPARE	DRIVING LIGHTS 15A
FUEL SHUTOFF 10A	BLOWER 25A	DOME LIGHT 10A	ROTATING BEACON (OPT) 10A
INSTRUMENTS ALARMS SYS. 10A	SIGNAL LIGHTS PARK BRAKE 20A	HORN 10A	4WD (OPT) 10A
STARTING TRANSMISSION CONTROL 10A	RADIO, RIDE CONTROL, QUICK COUPLER 15A	RADIO (BATT) (OPT) 10A	WIPERS 15A

8

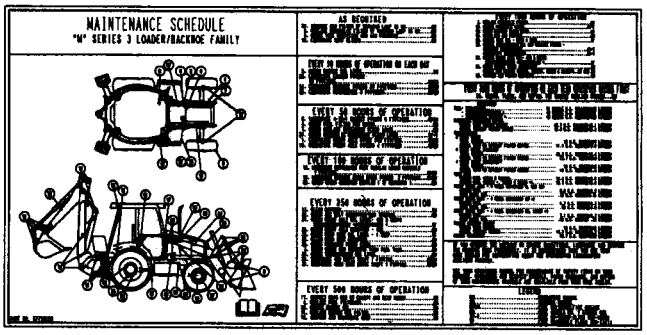

2

POWER RELAY #1	POWER RELAY #4	FLASHER RELAY	STARTER RELAY
POWER RELAY #2	LDR LVR DIFF LK RELAY	SHUTTLE INTLK TIMING RELAY	NEUTRAL RELAY
POWER RELAY #3	CLUTCH RELAY	SHUTTLE INTLK RELAY	FORWARD RELAY
PARK BRAKE RELAY	....	....	REVERSE RELAY
		AC RELAY (OPT)	....
COMFORT STEER POWER (OPT)	COMFORT STEER CUTOUT (OPT)		

RELAYS

9



3

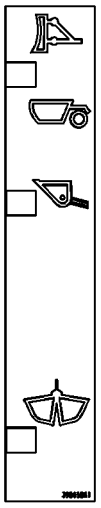

5

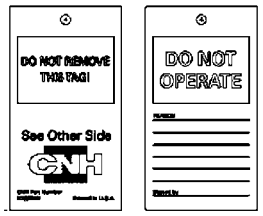

11

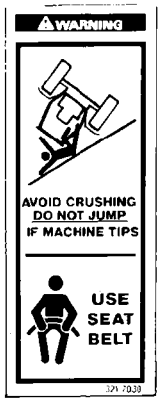

10



12

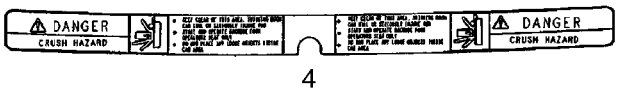

4

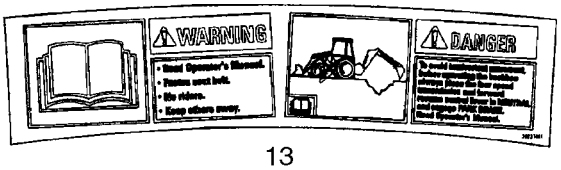

13



6

IMPORTANT

- Operators manual in box underneath this cover. Do not remove. Before operating, read all operators manual(s), safety and instructional signs on this machine.
- It is your responsibility to follow all laws and regulations and to follow all instructions in the operators manual.
- See your Case dealer for additional operators manuals, parts manuals and service manuals.

7

PARKING BRAKE

Always set parking brake before leaving seat. After startup, cycle park brake switch ON-OFF to release parking brake.

14

BS08A110

ADESIVOS - INGLÊS

REF	FN	PART NUMBER	YR/SN	QTY	DESCRIPTION
1		384264A1		1	DECALCOMANIA, Warning; Crush Hazard; Loader Arm Support Strut
2		87735103		1	DECALCOMANIA, Maintenance Schedule; Supplied by Parts and Components
3		8603092		1	DECALQUE DE AVISO, Warning; Explosion Hazard, Do Not Use Ether
4		86992976		1	DECALCOMANIA, Danger; Crush Hazard
5		398658A1		1	DECALCOMANIA, Clam Bucket Position
6		383972A1		1	DECALCOMANIA, Warning; Do Not Modify or Repair ROPS or FOPS In Any Manner
7		144193A3		1	DECALCOMANIA, Important; Operator's Manual In Box Underneath This Cover; Glove Box Lid
8		87652902		1	DECALCOMANIA, Fuse Location
9		87647001		1	DECALCOMANIA, Relay
10		321-7030		2	DECALCOMANIA, Warning; Avoid Crushing; Do Not Jump / Use Seat Belt
11		87358697		1	ETIQUETA, TAG, Do Not Operate
12		86992975		2	DECALCOMANIA, Warning; No Step/Not An Exit; Canopy
13		392374A1		1	DECALCOMANIA, Warning/Danger; Read the Operator's Manual
14		87702297		1	DECALCOMANIA, Parking Brake

DECALQUES - PORTUGUÊS

1

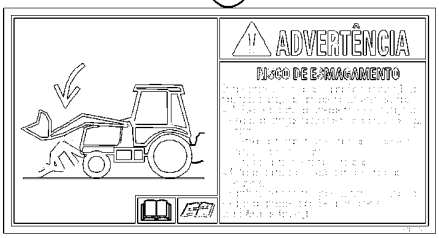

13



6

FUSÍVEIS

RESERVA			
RESERVA	TOMADA DE FORÇA 30 A	RESERVA	CONTROLES AUX. HIDROSC. (OPC.) 10 A
LUZES DE TRABALHO DIANTEIRAS 20 A	TOMADA DE FORÇA 30 A	ASSENTO COM SUSPENSÃO PNEUMÁTICA (OPC.) 20 A	RETORNO DA ESCAMAÇÃO 10 A
LUZES DE TRABALHO TRASEIRAS 20 A	RESERVA	RESERVA	LUZ DE TRÁFEGO 10 A
CORTE DE COMBUSTÍVEL 10 A	VENTILADOR 30 A	LUZ DE TETO 10 A	LUZ ROTATIVA (OPC.) 10 A
SISTEMA DE ALARME DOS INSTRUMENTOS 10 A	LUZES INDICADORAS 10 A	BUZINA 10 A	RÁDIO (OPC.) 10 A
PARTIDA CONTROLE DA TRANSMISSÃO 10 A	RÁDIO, AUX. HIDR. TRANSPORTE EIXOS TRÁS RÁPIDOS 10 A	RÁDIO(BAT) (OPC.) 10 A	LIMPADOR PARABRISAS 10 A
			CODE 87592656

10



2

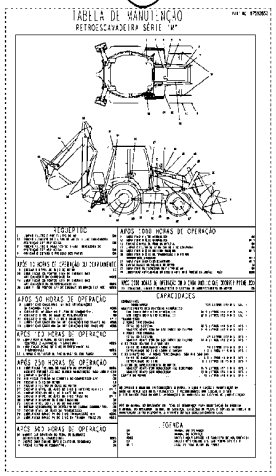

3



7

RELÉS

RELÉ DE FORÇA Nº1	RELÉ DE FORÇA Nº4	RELÉ DA LUZ DE [illegible] INTERMITENTE	RELÉ DE PARTIDA
RELÉ DE FORÇA Nº3	RELÉ TRAVA DE SEGURANÇA ALAV. DA [illegible]	RELÉ DE [illegible] DA TRANSMISSÃO	RELÉ DE RETORNO
RELÉ DE FORÇA Nº2	RELÉ DA BUZINA	RELÉ DE FREIO DA TRANSMISSÃO	RELÉ DE AVANÇO
			RELÉ DE REVERSÃO
CODE		RELÉ DE [illegible]	87592655

13

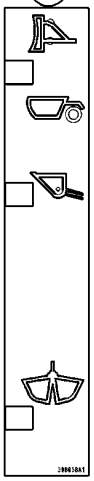

8



12



9

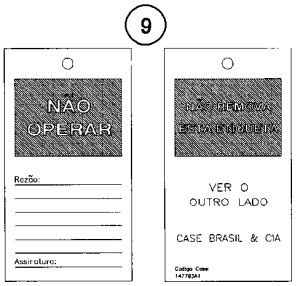

5

IMPORTANTE

–MANUAL DO OPERADOR NA CAIXA DEBAIXO DESTA TAMPA NÃO REMOVA.
ANTES DE OPERAR, LEIA TODO O MANUAL DO OPERADOR, SINAIS DE INSTRUÇÃO E SEGURANÇA DESTA MÁQUINA.

–É SUA RESPONSABILIDADE SEGUIR TODAS AS NORMAS, REGULAMENTOS E INSTRUÇÕES DO MANUAL DO OPERADOR.

–PARA MAIORES INFORMAÇÕES E SOLICITAÇÃO DE MANUAL DO OPERADOR, CATÁLOGO DE PEÇAS E MANUAL DE SERVICO CONSULTE SEU DISTRIBUIDOR "CASE".

148554A1

11



4

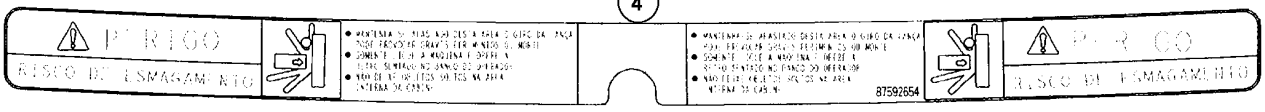

DECALQUES - PORTUGUÊS

REF	FN	PART NUMBER	YR/SN	QTY	DESCRIPTION
1		87413674		1	DECALCOMANIA, Crush Hazard
2		{84141393}		1	Maintenance
3		8603095		1	DECALQUE DE AVISO
4		87592654		1	DECALCOMANIA, Crush Hazard
5		148554A1		1	DECALCOMANIA, Important
6		{84140046}		1	Fuse
7		{84138977}		1	Relay
8		124273A1		2	DECALCOMANIA, Use Seat Belt
9		147783A1		1	ETIQUETA, Do Not Operate
10		87595723		2	DECALCOMANIA, No Step
11		87595724		1	DECALCOMANIA, Read Operator's Manual
12		{84139361}		1	Parking Brake
13		398658A1		1	DECALCOMANIA, Bucket Position

ADESIVOS - ESPANHOL PARA A AMÉRICA LATINA

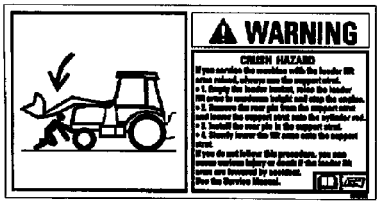

1

FUSES			87652902
SPARE	....	....	....
SPARE	POWER OUTLET 30A	SPARE	PILOT CONTROLS BH AUX (OPT) 15AMP
FRONT WORK LIGHTS 20A	POWER OUTLET 30A	AIR SUSP. SEAT-AIR COMP. (OPT) 20A	RETURN TO DIG 10A
REAR WORK LIGHTS 20A	PWRSHIFT CTRL, COMFORT STEER (OPT) 10A	SPARE	DRIVING LIGHTS 15A
FUEL SHUTOFF 10A	BLOWER 25A	DOME LIGHT 10A	ROTATING BEACON (OPT) 10A
INSTRUMENTS ALARMS SYS. 10A	SIGNAL LIGHTS PARK BRAKE 20A	HORN 10A	4WD (OPT) 10A
STARTING TRANSMISSION CONTROL 10A	RADIO, RIDE CONTROL, QUICK COUPLER 15A	RADIO (BATT) (OPT) 10A	WIPERS 15A

8

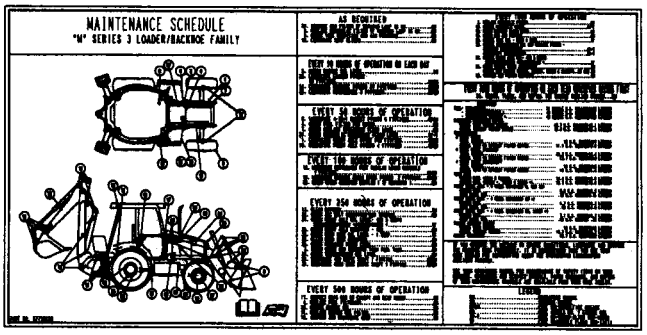

2

POWER RELAY #1	POWER RELAY #4	FLASHER RELAY	STARTER RELAY
POWER RELAY #2	LDR LVR DIFF LK RELAY	SHUTTLE INTLK TIMING RELAY	NEUTRAL RELAY
POWER RELAY #3	CLUTCH RELAY	SHUTTLE INTLK RELAY	FORWARD RELAY
PARK BRAKE RELAY	....	....	REVERSE RELAY
		AC RELAY (OPT)	....
COMFORT STEER POWER (OPT)	COMFORT STEER CUTOUT (OPT)		

RELAYS

9



3

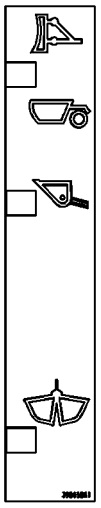

5

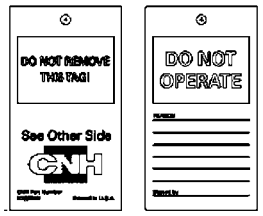

11

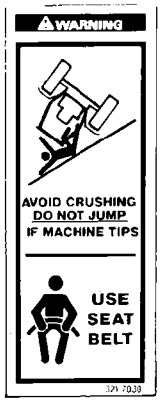

10



12

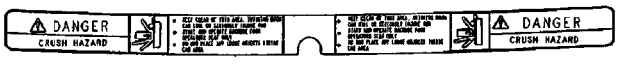

4

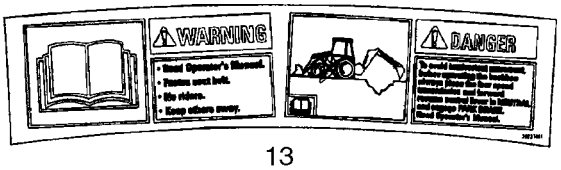

13



6

IMPORTANT

- Operators manual in box underneath this cover. Do not remove. Before operating, read all operators manual(s), safety and instructional signs on this machine.
- It is your responsibility to follow all laws and regulations and to follow all instructions in the operators manual.
- See your Case dealer for additional operators manuals, parts manuals and service manuals.

7

PARKING BRAKE

Always set parking brake before leaving seat. After startup, cycle park brake switch ON-OFF to release parking brake.

14

BS08A110

ADESIVOS - ESPANHOL PARA A AMÉRICA LATINA

REF	FN	PART NUMBER	YR/SN	QTY	DESCRIPTION
1		398576A1		1	DECALCOMANIA, Warning; Crush Hazard; Loader Arm Support Strut
2		87735105		1	DECALCOMANIA, Maintenance Schedule; Supplied by Parts and Components
3		8603094		1	DECALCOMANIA, Warning; Explosion Hazard, Do Not Use Ether
4		86992981		1	DECALCOMANIA, Danger; Crush Hazard
5		398658A1		1	DECALCOMANIA, Clam Bucket Position
6		389729A1		1	DECALCOMANIA, Warning; Do Not Modify or Repair ROPS or FOPS In Any Manner
7		398662A1		1	DECALCOMANIA, Important; Operator's Manual In Box Underneath This Cover; Glove Box Lid
8		87706237		1	DECALCOMANIA, Fuse Location
9		87706250		1	DECALCOMANIA, Relay
10		398672A1		2	DECALCOMANIA, Warning; Avoid Crushing; Do Not Jump / Use Seat Belt
11		87380559		1	ETIQUETA, Do Not Operate
12		86992980		2	DECALCOMANIA, Warning; No Step/Not An Exit; Canopy
13		398598A1		1	DECALCOMANIA, Warning/Danger; Read the Operator's Manual
14		87708227		1	DECALCOMANIA, Parking Brake
15		148095A1		1	DECALCOMANIA, Attention; Welding; Not Illustrated

ADESIVOS - FRANCÊS DO CANADÁ

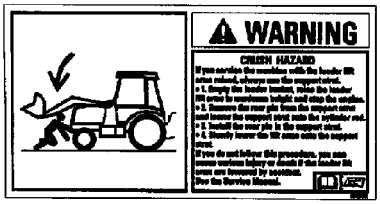

1

FUSES			87652902
SPARE	....	....	....
SPARE	POWER OUTLET 30A	SPARE	PILOT CONTROLS BH AUX (OPT) 15AMP
FRONT WORK LIGHTS 20A	POWER OUTLET 30A	AIR SUSP. SEAT-AIR COMP. (OPT) 20A	RETURN TO DIG 10A
REAR WORK LIGHTS 20A	PWRSHIFT CTRL, COMFORT STEER (OPT) 10A	SPARE	DRIVING LIGHTS 15A
FUEL SHUTOFF 10A	BLOWER 25A	DOME LIGHT 10A	ROTATING BEACON (OPT) 10A
INSTRUMENTS ALARMS SYS. 10A	SIGNAL LIGHTS PARK BRAKE 20A	HORN 10A	4WD (OPT) 10A
STARTING TRANSMISSION CONTROL 10A	RADIO, RIDE CONTROL, QUICK COUPLER 15A	RADIO (BATT) (OPT) 10A	WIPERS 15A

8

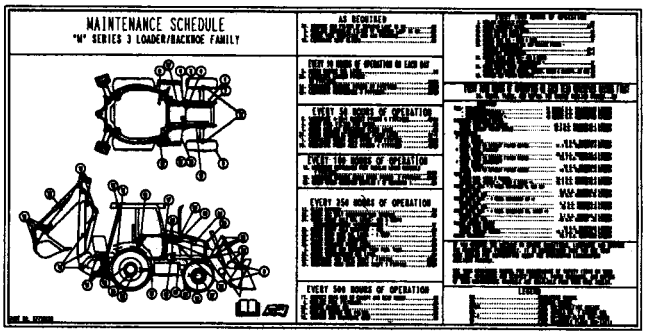

2

POWER RELAY #1	POWER RELAY #4	FLASHER RELAY	STARTER RELAY
POWER RELAY #2	LDR LVR DIFF LK RELAY	SHUTTLE INTLK TIMING RELAY	NEUTRAL RELAY
POWER RELAY #3	CLUTCH RELAY	SHUTTLE INTLK RELAY	FORWARD RELAY
PARK BRAKE RELAY	....	....	REVERSE RELAY
		AC RELAY (OPT)	....
COMFORT STEER POWER (OPT)	COMFORT STEER CUTOUT (OPT)		

RELAYS

9



3

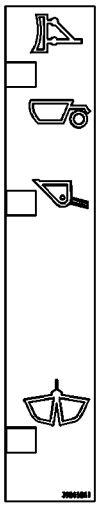

5

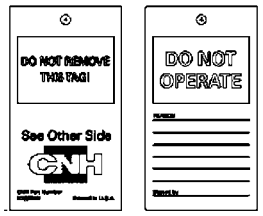

11

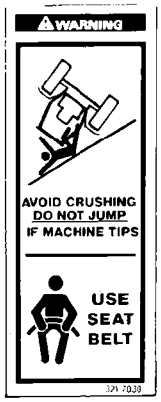

10



12

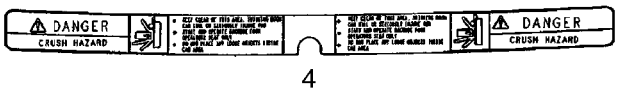

4

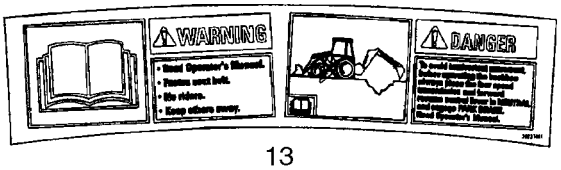

13



6

IMPORTANT

- Operators manual in box underneath this cover. Do not remove. Before operating, read all operators manual(s), safety and instructional signs on this machine.
- It is your responsibility to follow all laws and regulations and to follow all instructions in the operators manual.
- See your Case dealer for additional operators manuals, parts manuals and service manuals.

7

PARKING BRAKE

Always set parking brake before leaving seat. After startup, cycle park brake switch ON-OFF to release parking brake.

14

BS08A110

ADESIVOS - FRANCÊS DO CANADÁ

REF	FN	PART NUMBER	YR/SN	QTY	DESCRIPTION
		87307896		1	DECALCOMANIA, Warning, Crush Hazard; When Changing A Machine to Foot Swing Controls; For Illustration See Ref 9 On Figure 09-75
1		398577A1		1	DECALCOMANIA, Warning; Crush Hazard; Loader Arm Support Strut
2		87735104		1	DECALCOMANIA, Maintenance Schedule; Supplied by Parts and Components
3		8603093		1	DECALCOMANIA, Warning; Explosion Hazard, Do Not Use Ether
4		86992979		1	DECALCOMANIA, Danger; Crush Hazard
5		398658A1		1	DECALCOMANIA, Clam Bucket Position
6		389730A1		1	DECALCOMANIA, Warning; Do Not Modify or Repair ROPS or FOPS In Any Manner
7		398663A1		1	DECALCOMANIA, Important; Operator's Manual In Box Underneath This Cover; Glove Box Lid
8		87706239		1	DECALCOMANIA, Fuse Location
9		87706251		1	DECALCOMANIA, Relay
10		398673A1		2	DECALCOMANIA, Warning; Avoid Crushing; Do Not Jump / Use Seat Belt
11		87380558		1	ETIQUETA, TAG, Do Not Operate
12		86992978		2	DECALCOMANIA, Warning; No Step/Not An Exit; Canopy
13		398599A1		1	DECALCOMANIA, Warning/Danger; Read the Operator's Manual
16		87708242		1	DECALCOMANIA, Parking Brake

ADESIVOS - INGLÊS

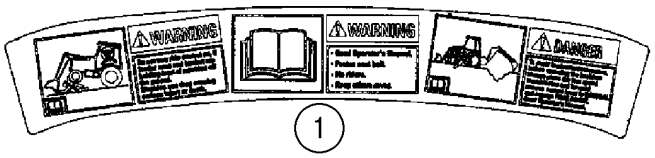

1

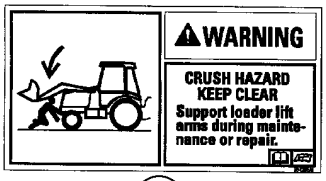

2

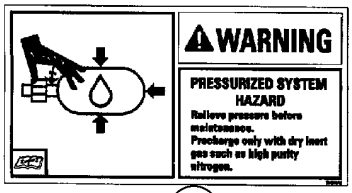

9



10



11



3

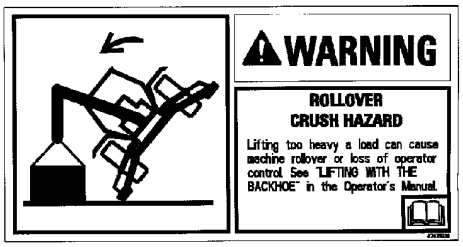

12

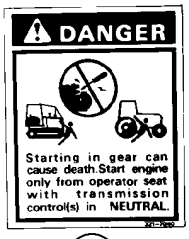

4



5

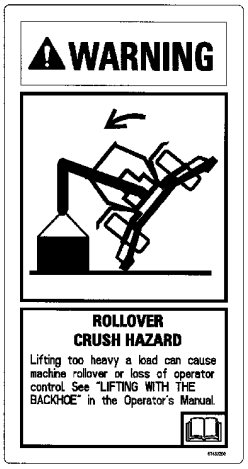

12A



14

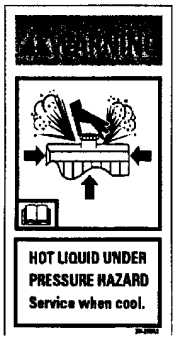

6



7

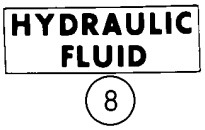

8

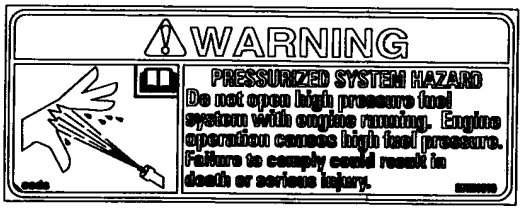

15



8A



13

BS07M816

ADESIVOS - INGLÊS

REF	FN	PART NUMBER	YR/SN	QTY	DESCRIPTION
1		392375A1		1	DECALCOMANIA, Warning/Warning/Danger; Front, With Ride Control; Do Not Turn Ride Control On/Read Operator's Manual/To Avoid Inadvertent Movement
2		384265A1		1	DECALCOMANIA, Warning; Crush Hazard; Keep Clear; Support Loader Lift Arms During Maintenance
3		384267A1		2	DECALCOMANIA, Warning; Entanglement Hazard, Fan; Keep Clear or Stop Engine Before Servicing
4		321-7040		1	DECALCOMANIA, Danger; Starting In Gear
5		384269A1		2	DECALCOMANIA, Danger; Jump Start
6		384258A1		1	DECALCOMANIA, Warning; Hot Liquid Under Pressure
7		321-230		1	DECALCOMANIA, Diesel Fuel
8		321-229		1	DECALCOMANIA, Hydraulic Fluid; Used In Production; For Service, Order 321-6376, English Decal Only
8A		321-6376		1	DECALCOMANIA, Hydraulic Fluid
9		384260A1		1	DECALCOMANIA, Warning; Ride Control Accumulator
10		D149826		1	DECALCOMANIA, Caution/Important; For All Models With Foot Swing Backhoe Controls and Standard Backhoe Models With Hand Swing
11		D149827		1	DECALCOMANIA, Caution/Important; Extendahoe Backhoe Models With Hand Swing
12		87435938		1	DECALCOMANIA, Warning; Rollover Crush Hazard; Lifting Too Heavy A Load; Models Without Pilot Controls
12A		87433209		1	DECALCOMANIA, Warning; Rollover Crush Hazard; Lifting Too Heavy A Load; Models With Pilot Controls
13		321-6774		1	DECALCOMANIA, Warning; Seat Spring
14		87423813		2	DECALCOMANIA, Warning; Unexpected Movement Hazard; Before Adjusting Windows
15		87581010		1	DECALCOMANIA, Warning; Pressurized System Hazard

DECALQUES - PORTUGUÊS

1

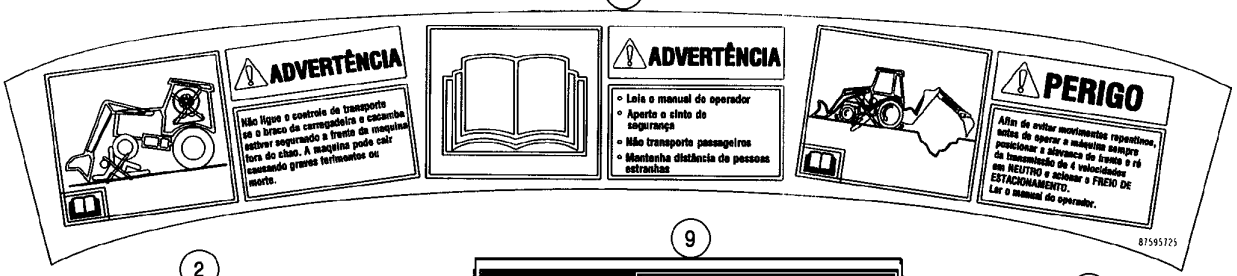

2

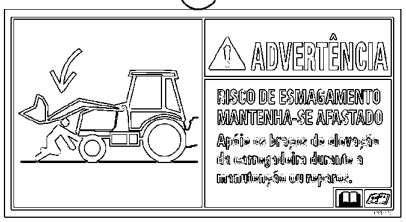

9

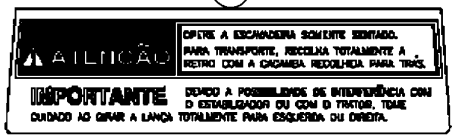

13



11

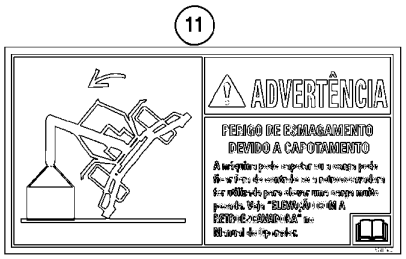

5

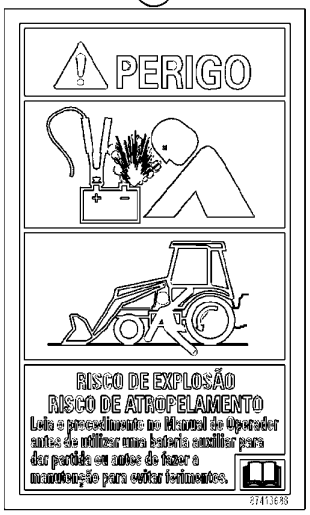

7



3



15



8



4



6

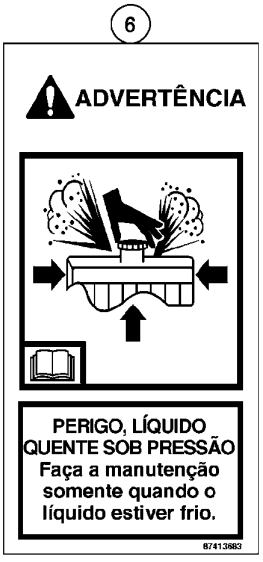

12



10

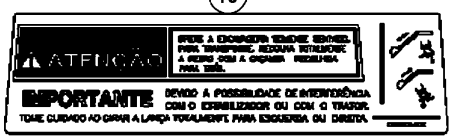

14

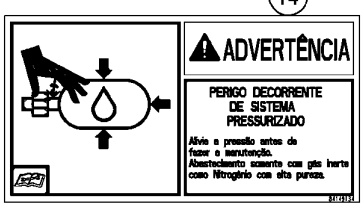

DECALQUES - PORTUGUÊS

REF	FN	PART NUMBER	YR/SN	QTY	DESCRIPTION
1		87595725		1	DECALCOMANIA, Do not use Ride Control
2		87413676		1	DECALCOMANIA, Crush Hazard
3		87413685		2	DECALCOMANIA, Entanglement Hazard
4		147114A1		1	DECALCOMANIA, Do not Start in Gear
5		87413688		2	DECALCOMANIA, Jump Start
6		87413683		1	DECALCOMANIA, Hot Liquid
7		E155859		1	DECALCOMANIA, Diesel Fuel
8		321-2403		1	DECALCOMANIA, Hydraulic Fluid
9		147675A1		1	DECALCOMANIA, Important - Extendahoe
10		147679A1		1	DECALCOMANIA, Important - Extendahoe
11		87413692		1	DECALCOMANIA, Rollover
12		148017A1		1	DECALCOMANIA, Warning/Spring
13		87595756		2	DECALCOMANIA, Unexpected Movement
14		{84149134}		1	
15		{84149131}		1	

ADESIVOS - ESPANHOL PARA A AMÉRICA LATINA

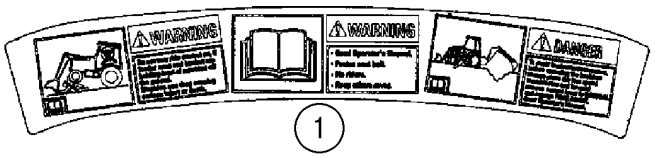

1

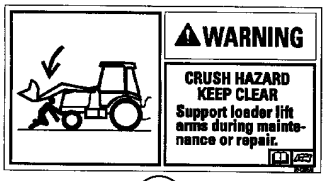

2

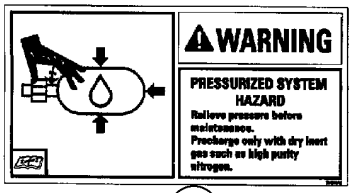

9



10



11



3

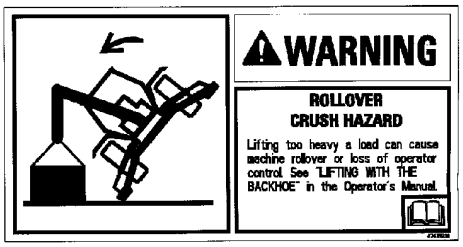

12

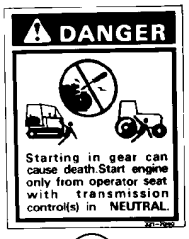

4



5

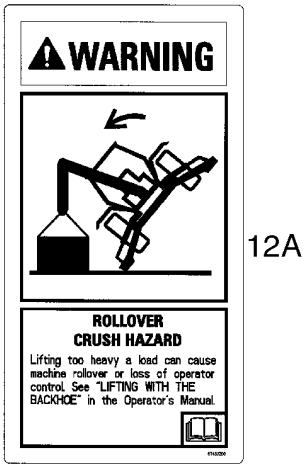

12A



14

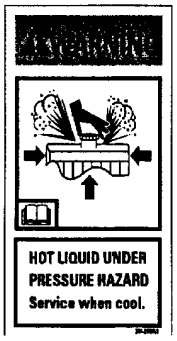

6

DIESEL FUEL

7

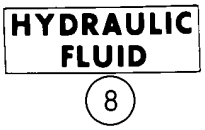

8

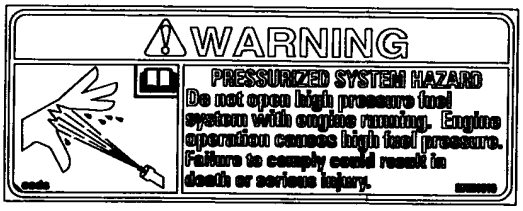

15



8A



13

BS07M816

ADESIVOS - ESPANHOL PARA A AMÉRICA LATINA

REF	FN	PART NUMBER	YR/SN	QTY	DESCRIPTION
1		398600A1		1	DECALCOMANIA, Warning/Warning/Danger; Front, With Ride Control; Do Not Turn Ride Control On/Read Operator's Manual/To Avoid Inadvertent Movement
2		398578A1		1	DECALCOMANIA, Warning; Crush Hazard; Keep Clear; Support Loader Lift Arms During Maintenance
3		398580A1		2	DECALCOMANIA, Warning; Entanglement Hazard, Fan; Keep Clear or Stop Engine Before Servicing
4		398674A1		1	DECALCOMANIA, Danger; Starting In Gear
5		398582A1		2	DECALCOMANIA, Danger; Jump Start
6		398570A1		1	DECALCOMANIA, Warning; Hot Liquid Under Pressure
7		398667A1		1	DECALCOMANIA, Diesel Fuel
8		398665A1		1	DECALCOMANIA, Hydraulic Fluid
8A		321-6376		1	DECALCOMANIA, Hydraulic Fluid, English Decal Only
9		398572A1		1	DECALCOMANIA, Warning; Ride Control Accumulator
10		398677A1		1	DECALCOMANIA, Caution/Important; For All Models With Foot Swing Backhoe Controls and Standard Backhoe Models With Hand Swing
11		398669A1		1	DECALCOMANIA, Caution/Important; Extendahoe Backhoe Models With Hand Swing
12		87435939		1	DECALCOMANIA, Warning; Rollover Crush Hazard; Lifting Too Heavy A Load; Models Without Pilot Controls
12A		87434771		1	DECALCOMANIA, Warning; Rollover Crush Hazard; Lifting Too Heavy A Load; Models With Pilot Controls
13		398670A1		1	DECALCOMANIA, Warning; Seat Spring
14		87429163		2	DECALCOMANIA, Warning; Unexpected Movement Hazard; Before Adjusting Windows
15		87622505		1	DECALCOMANIA, Warning; Pressurized System Hazard

ADESIVOS - FRANCÊS DO CANADÁ

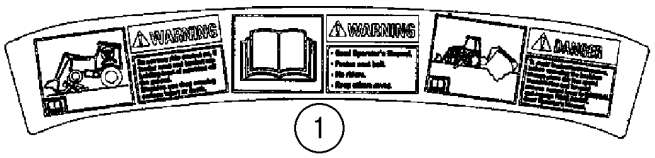

1

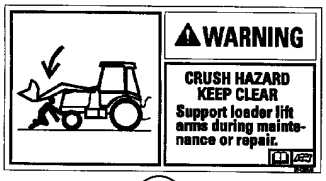

2



3

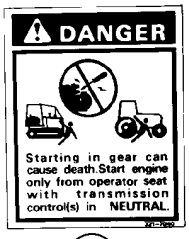

4



5

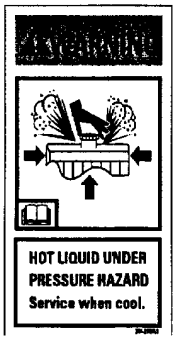

6



7



8



8A



13



9



10



11

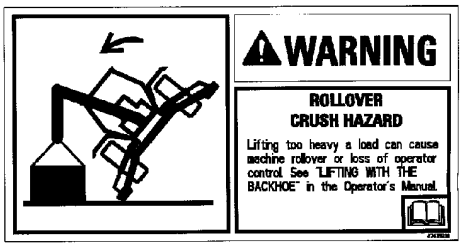

12

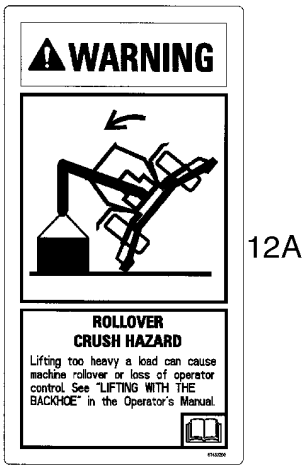

12A



14



15

BS07M816

10

ADESIVOS - FRANCÊS DO CANADÁ

REF	FN	PART NUMBER	YR/SN	QTY	DESCRIPTION
1		398601A1		1	DECALCOMANIA, Warning/Warning/Danger; Front, With Ride Control; Do Not Turn Ride Control On/Read Operator's Manual/To Avoid Inadvertent Movement
2		398579A1		1	DECALCOMANIA, Warning; Crush Hazard; Keep Clear; Support Loader Lift Arms During Maintenance
3		398581A1		2	DECALCOMANIA, Warning; Entanglement Hazard, Fan; Keep Clear or Stop Engine Before Servicing
4		398676A1		1	DECALCOMANIA, Danger; Starting In Gear
5		398583A1		2	DECALCOMANIA, Danger; Jump Start
6		398571A1		1	DECALCOMANIA, Warning; Hot Liquid Under Pressure
7		398668A1		1	DECALCOMANIA, Diesel Fuel
8		398666A1		1	DECALCOMANIA, Hydraulic Fluid
8A		321-6376		1	DECALCOMANIA, Hydraulic Fluid, English Decal Only
9		398573A1		1	DECALCOMANIA, Warning; Ride Control Accumulator
10		398656A1		1	DECALCOMANIA, Caution/Important; For All Models With Foot Swing Backhoe Controls and Standard Backhoe Models With Hand Swing
11		398654A1		1	DECALCOMANIA, Caution/Important; Extendahoe Backhoe Models With Hand Swing
12		87435940		1	DECALCOMANIA, Warning; Rollover Crush Hazard; Lifting Too Heavy A Load; Models Without Pilot Controls
12A		87434772		1	DECALCOMANIA, Warning; Rollover Crush Hazard; Lifting Too Heavy A Load; Models With Pilot Controls
13		398671A1		1	DECALCOMANIA, Warning; Seat Spring
14		87429164		2	DECALCOMANIA, Warning; Unexpected Movement Hazard; Before Adjusting Windows
15		87622506		1	DECALCOMANIA, Warning; Pressurized System Hazard

Number	Figure	Sequence	Ref.
{}	09-08		
	09-57		
{2853815}	02-21		4
{2853816}	02-21		3
{2855016}	02-21		4
{2855017}	02-21		4
{2855018}	02-21		4
{2855019}	02-21		4
{2855020}	02-21		3
{2855021}	02-21		3
{2855022}	02-21		3
{2855023}	02-21		3
{2855380}	02-25		
{2855381}	02-25		3
{2856271}	02-21		1
{2856309}	02-22		4
{434746A1}	06-33		5
{84138977}	09-76A	01	7
{84139361}	09-76A	01	12
{84140046}	09-76A	01	6
{84141393}	09-76A	01	2
{84149131}	09-79A	01	15
{84149134}	09-79A	01	14
{84149986}	09-75		3
{84149987}	09-75		9
{84149988}	09-75		5
{87395300C}	06-11		
{87395300R}	06-11		
{87395301C}	06-11		
{87395301R}	06-11		
{87395365C}	06-01		
{87395365R}	06-01		
{87395372C}	06-31		
{87395372R}	06-31		
{87491619}	07-05		13
	07-05A		13
{87491620}	07-05A		14
{87653246}	09-61		
{P1139855X}	06-35		7
100-21315	08-62		13A
100-39001	09-55		43
	09-57		20
100016	04-01		39
100520A1	06-02		12
100532A1	06-03		3
100533A1	05-06		11
	06-03		8
100552A1	06-06		5
100553A1	06-06		
100554A1	06-06		
100555A1	06-06		18
100556A1	06-06		4
100557A1	06-06		22
	06-13		3
	06-21		3
	06-33		6
100559A1	06-06		6
100561A1	06-06		13
100562A1	06-06		19
100696A1	09-04		3
100748A1	06-12		9
	06-20		9
100753A1	06-27		17
100760A1	07-01		22
	07-01	01	22
101479A1	08-13		24
101531A1	04-17		9
102-1387	05-03		4
102-23206	08-29		5
102761A1	09-01		12
	09-02		11
102765A1	09-18		19
103-11100	09-13		16
103-1475	09-21		8
103-1518	03-03		7
103-16175	09-22		4
	09-22		8
	09-24		25
103-16175	09-24		33
	09-26		23
	09-26		27
	09-26		33
	09-26		36
	09-26		5
	09-27		14
	09-27		40
	09-27		50
103-16200	09-23		18
103-3350	09-04		29
103670A1	08-24		18
104824A1	09-04		23
104907A1	06-30		1
106989A1	09-18		13
106990A1	09-18		15
107124A1	09-26		45
	09-26		49
	09-27		22
	09-27		33
	09-37		8
108088A1	09-01		11
	09-02		9
108366A1	04-17		4
108864A1	09-18		1
108923A1	09-18		9
108924A1	09-18		8
109268A1	09-04		4
109879A1	09-39		7
	09-41		14
111522A1	09-04		5
112380A1	09-01		14
	09-02		4
	09-18		21
112486A1	06-07		10
112509A1	05-06		5
	06-04		3
112517A1	06-27		4
112884A1	09-48		
112946A1	09-06		8
113135A2	08-59		2
114295A1	06-06		20
114318A1	09-23		12A
	09-37		4
114549A1	09-54		6
114882A2	05-01		2
114980A1	09-41		7
116425A1	06-06		12
116426A1	06-06		7
116427A1	06-06		8
118900A1	09-04		24
118901A1	09-04		30
	09-05		3
119241A1	06-30		1
119243A1	05-09		4
120303A1	05-02		25
	08-04		10
	08-05		8
	08-06		8
	08-26		32
	08-26		43
	08-27		14
	09-38		38
121412A1	04-07		2
	04-09		
	04-17		16
121413A1	04-07		3
	04-09		
	04-19		1
	04-20		13
121414A1	04-07		4
	04-09		
121415A1	04-07		5
121416A1	09-22		7
121665A1	09-23		3
121778A1	09-38		55
121856A1	09-08		12
121920A1	09-66		9
122081A1			

Number	Figure	Sequence	Ref.
122259A1	05-06		10
122261A1	05-05		9
122264A1	06-03		10
122265A1	05-06		9
	06-03		9
122268A1	06-02		13
122270A1	05-05		5
	06-02		7
122503A1	09-27		
122553A1	09-65		12
	09-66		24
122554A1	09-66		17
122603A1	09-38		28
123537A1	09-10		29
123726A1	08-61		12
123809A2	04-04		31
	04-07		30
	06-11		43
123969A1	09-48		9
123980A1	09-65		23
124011A1	09-65		22
124273A1	09-76A	01	8
124568A2	08-62		3
124721A1	09-03		14
1250594C1	09-65		10
	09-65		11
	09-66		16
	09-66		23
	09-66		8
125113A1	09-18		12
	09-18		14
125749A1	09-61		12
126-116	06-11		12
126155A1	09-10		31
126177	09-72		3
12644301	07-06		5
126918A1	09-20		2
127009A1	04-10		6
127158A1	04-17		6
127862A2	08-63		6
128135A2	08-61		4
128312A1	04-04		38
	04-08		3
	04-13		13
	04-14		3
	09-04		19
128483A1	09-65		16
	09-65		9
	09-66		2
	09-66		7
128484A1	09-65		3
	09-66		13
128485A1	09-65		4
	09-65		8
	09-66		14
	09-66		21
128570A1	06-08		11
	06-35		11
128760A1	08-12		19
	08-13		30
	08-65		1
	09-26		1
	09-27		10
128761A1	08-65		2
128770A2	08-65		4
128772A1	08-65		16
128818A1	09-04		11
129-667	08-57		2
129040A1	09-24		23
	09-24		26
129041A1	09-24		30
	09-26		2
	09-27		12
129883A1	09-24		10
	09-27		1
129884A2	09-26		
129885A1	09-33		1
129893A1	09-31		3
129893A1	09-33		3
129894A1	09-31		2
	09-33		2
129944A1	09-33		4
130047A1	03-01		15
1302758C1	04-11		35
	09-68		20
130674A1	09-48		
131-121	04-10		15
	09-01		4
131-431	09-41		22
	09-73		14
131-619	04-11		17
	04-11		20
131-861	04-10		7
	09-11		15
	09-61		8
131-869	09-43		21B
	09-43		4
1312210C2	04-13		
	04-13		
131750A2	08-65		
132842A1	09-27		45
132844A1	09-27		44
132931A1	03-03		2
	09-01		25
132988A1	09-06		3
	09-06		3
133083A1	08-58		12
1331087C1	09-64		14
133715A1	04-09		17
133716A1	04-09		12
1340763C1	08-62		16
1340764C1	08-62		15
1340798C1	08-60		15
1340969C2	08-14		17
	08-66		1
	09-27		25
1340970C1	08-66		2
134167A1	09-23		20
1346195C1	08-60		13
1346476C1	08-65		6
134844A1	09-07		3
1349058C1	06-08		5
1349059C1	06-08		6
	06-35		2
135-51652	09-24		18
	09-27		4
135161A1	08-58		13
135248A1	09-23		10
135249A1	09-23		9
136-54	04-17		14
136261A1	09-16		11
136263A1	09-16		8
	09-17		2
136267A1	09-16		5
136269A1	09-16		6
136270A2	09-16		40
136271A2	09-16		39
136822A1	09-11		11
136824A1	09-11		13
137219A1	04-19		3
137223A2	06-01		13
137248A1	08-62		13
137283A1	09-03		1
137343A1	09-10		28
137344A1	09-10		27
138595A1	09-38		11
138624A1	09-24		36
139180A1	09-05		12
139195A1	09-05		14
139235A1	09-05		13
139294A1	07-02		5
139312A1	06-17		20A
	06-25		20A
	07-01		20
	07-01	01	20
139363A1	09-41		10

Number	Figure	Sequence	Ref.
139865A1	09-03		8
140-103	09-61		11
140-104	09-55		44
	09-57		21
140-107	09-01		3
140-108	09-15		29
140-119	04-09		15
140943A1	06-08		7
140944A1	06-08		7
140945A1	06-08		7
140946A1	06-08		7
140947A1	06-08		7
140948A1	06-08		7
140949A1	06-08		7
140951A1	06-08		7
140953A1	06-08		7
140954A1	06-08		7
141233A1	09-35		3
141234A1	09-35		2
142-103	09-55		47
	09-57		23
142300A1	09-08		3
142404A1	09-03		2
142524A1	09-04		12
142538A1	09-06		5
	09-06		5
	09-07		5
142842A1	09-24		27
14302921	08-47		5
	08-48		5
	08-49		6
14304021	08-47		1
143219A1	08-21		
143400A1	08-13		15
14358921	08-48		1
144173A1	08-29		7
144193A3	09-76		7
144457A1	06-04		
144460A1	06-08		
144461A1	06-05		
144462A1	06-05		1
144463A1	06-05		5
144465A1	06-05		4
144466A1	06-06		
144477A1	08-23		14
	08-23		7
	08-23B		14
	08-23B		7
144479A1	08-23		8
	08-23B		8
14453181	02-11		17
14453881	02-11		14
144908A2	09-40		21
147114A1	09-79A	01	4
147675A1	09-79A	01	9
147679A1	09-79A	01	10
147783A1	09-76A	01	9
148017A1	09-79A	01	12
148095A1	09-77		15
148554A1	09-76A	01	5
151-516	09-53		7
	09-69		3
1530028C1	06-13		6
	06-21		6
1542830C2	08-55		
1542874C1	08-59		
1542875C1	08-58		
	08-60		
	08-66		
1542876C1	08-61		
	08-62		
1542877C1	08-63		
	08-64		
	08-65		
1543256C1	08-59		
1543260C1	08-58		
1543267C1	08-60		
	08-66		
1543269C1	08-61		
15687475	08-50		9
	08-51		9
	08-52		9
	08-53		7
	08-54		9
1637759	06-01		14
16586225	02-33		14
16673635	02-11		1
168-71	04-17		7
16882515	02-12		4
175156A1	09-08		
175599A1	09-41		2
175778A1	08-64		14
175957A1	06-35		3
175966A1	06-36		7
176309A1	09-01		23
	09-02		5
177269A1	04-18		14
	09-61		18
178004A1	09-18		18
178006A1	09-18		17
178051A1	08-29		8
178951A1	08-10		12
	08-11		11
	08-12		11
	08-13		10
178952A1	08-10		13
	08-11		12
	08-12		12
	08-13		11
179029A1	09-20		1
17916280	02-34		6
179956A1	09-12		6
180427A1	09-37		2
181042A1	09-24		22
	09-27		8
181100A1	06-13		8
	06-15		24
	06-21		8
	06-23		24
	06-29		5
181101A1	06-13		23
	06-21		19
181105A1	06-13		14
	06-21		14
181108A1	06-17		24
	06-18		26
	06-25		24
	06-26		26
181111A1	06-17		13
	06-25		13
181116A1	06-17		9
	06-25		9
181118A1	06-18		1
	06-26		1
181122A1	06-27		5
181123A1	06-18		31
	06-26		31
181126A1	06-16		3
	06-24		3
	06-27		9
181128A1	06-17		3
	06-25		3
181130A1	06-18		30
	06-26		30
181132A1	06-16		5
	06-18		2
	06-24		5
	06-26		2
181138A1	06-15		12
	06-23		12
181139A1	06-15		5
	06-23		5
181141A1	06-13		17
	06-21		17
181142A1	06-14		19
	06-22		19

Number	Figure	Sequence	Ref.
181144A1	06-18		33
	06-26		33
181158A1	06-17		12
	06-25		12
181159A1	06-17		11
	06-25		11
181161A1	06-17		14
	06-25		14
181165A1	06-18		34
	06-26		34
181171A1	06-15		7
	06-23		7
181173A1	06-15		16
	06-23		16
181174A2	06-15		22
	06-23		22
181175A1	06-15		18
	06-23		18
181176A1	06-21		13
181177A1	06-15		11
	06-23		11
181179A1	06-13		15
	06-21		15
181198A1	06-27		3
181202A1	06-12		13
	06-20		13
181203A1	06-15		21
	06-23		21
181207A1	06-19		24
	06-28		24
181219A1	06-12		10
	06-20		10
181232A1	06-13		16
	06-21		16
181245A2	06-15		1
	06-23		1
181251A1	06-19		9
	06-28		9
181274A1	06-20		3
181842A1	09-04		7A
181979A1	09-65		24
181981A1	09-42		17
	09-63		5
182006A1	09-17		4
	09-21		9
182109A1	08-63		16
182116A1	08-63		19
182218A1	08-63		
182594A1	04-11		11
182697A1	09-63		3
182721A2	04-18		11
183168A1	09-40		7
183443A1	09-27		51
183509A1	09-27		52
183736A1	08-13		29
183808A1	09-31		1
183810A1	09-31		4
184297A1	08-13		22
184616A1	08-14		13
184617A1	08-14		12
184723A1	09-24		35
184726A1	04-11		10
185325A1	09-41		15
185377A1	02-01		29
185506A1	09-07		8
185926A1	03-01		4
	09-38		20
186351A1	09-49		5
186977A1	09-37		13
186989A1	09-41		21
	09-73		13
187281A1	04-18		12
187612A1	08-10A		25
187714A1	06-11		1
187715A1	06-11		2
188009A3	03-01		29A
188027A2	08-09		13
	08-09A		13
188027A2	08-62		1
	09-23		11
188028A2	08-62		2
188032A2	08-62		4
188034A3	08-62		14
188035A1	08-62		
188036A1	08-62		22
189103A1	08-10A		20
189109A1	03-03		2A
	09-01		
189263A1	08-10A		21
189414A1	08-10A		33
189602A3	03-01		29
189653A2	08-10		21
	08-63		1
	09-24		9
189657A2	08-63		18
189957A1	08-10A		1
	08-55A		
190427A1	06-18		
	06-26		
190428A3	06-15		8
	06-23		8
190431A1	06-29		10
190442A1	06-19		3
	06-28		3
190506A1	06-35		6
190508A1	06-35		6
190509A1	06-35		6
190510A1	06-35		6
190511A1	06-35		6
190512A1	06-35		6
190513A1	06-35		6
190514A1	06-35		6
190515A1	06-35		6
190516A1	06-35		6
190675A1	09-64		17
190682A1	06-06		10
190684A1	06-06		9
191046A1	03-01		30
191047A1	09-38		32
191063A1	08-10A		10
191252A1	08-62		14A
191703A1	08-21		
	08-21		
	09-66		25
191704A1	03-01		23
	06-32		2
	07-05		12
	07-05A		12
	07-06		10
	08-07B		31
	09-66		3
191747A1	08-62		
191756A1	08-10A		9
191790A1	08-10A		12
191796A1	05-04		2
	06-01		8
192345A1	08-07		4
192352A1	08-07		3
192450A1	09-74		9
192815A1	09-04		28
192834A1	05-02		31
	08-26		51
192895A1	08-56		2
192971A1	08-09		15
	08-09A		15
193-1000	04-04		3
	04-07		
193-1003	09-04		17
195-81023	09-55		48
	09-57		24
1954626C1	09-64		15
1954736C1	09-64		3
195503A1	08-08		30
	08-08A		30
	08-61		1
	09-22		1

Number	Figure	Sequence	Ref.
195504A1	08-08		29
	08-08A		29
	08-61		1
	09-22		2
195505A1	08-61		2
195506A1	08-61		2
195552A1	04-18		3
1959509C1	05-01		4
196096A1	06-19		21A
	06-28		21A
196454A1	06-18		3A
	06-26		3A
196466A1	02-07A		4
1964831C2	04-09		4
1966136C1	06-02		16
1966138C1	06-02		17
	06-33		7
1966149C1	06-33		2
1966149C2	06-02		5
1966169C1	06-06		2
1966186C1	06-02		10
1966993C1	06-15		4
	06-23		4
1967003C1	06-07		4
1967581C1	06-15		10
	06-23		10
1967585C1	06-15		9
	06-23		9
196813A1	08-05		25
196815A1	08-05		24
1976955C1	08-55		2A
197745A1	04-18		4
197771A1	05-09		1
1977725C1	09-48		
1978141C1	08-56		8
1978142C1	08-56		
1978143C1	08-56		5
1978144C1	08-56		6
1978158C1	08-56		7
1980245C1	08-62		17
1980296C1	08-66		11
1980321C3	08-58		4
198033A1	08-65		14
198410A1	09-19A		5
1987096C1	09-64		33
198976A1	09-23		12
1999528C1	08-10A		29
1999666C1	09-64		16
1999667C1	09-64		
1999668C1	09-64		
1999926C1	09-66		15
1999927C1	09-66		22
20-21032	09-08		13
20-21232	09-06		9
	09-07		9
	09-08		4
201-101	07-05		1
	07-05A		1
201-304	07-05		4
	07-05A		4
213-123	03-02		14
	03-03		17
213-126	09-16		22
	09-17		6
	09-19		6
	09-21		10
214-1406	09-38		22
	09-63		19
214-1410	09-64		3
214-1412	02-04		5
	06-10		7
214-1416	02-02		8
	02-06		15
	03-03		33
214-1436	02-06		16
214-1440	02-01		17
214-1456	02-04		9
214-1464	02-04		8
214-1464	08-05		40
	08-07		21
	08-12		20
	08-13		33
	08-14		22
	09-66		5
214-1472	08-04		21
214-1488	08-10		25
	08-11		27
214-1492	08-09		22
	08-09A		22
214-1704	02-02		5
	03-01		8
214-1706	03-01		7
214-31104	08-10A		16
214-3132	08-13		23
	08-24		19
214-3180	09-59		6
	09-70		13
214-3188	08-08		28
	08-08A		28
217-1102	09-38		26
217-117	03-01		9
217-314	06-10		15
217-347	09-38		5
217-349	06-10		22
	08-03		9
217-380	09-38		25
217-425	09-64		34
218-1023	06-21		2
218-1254	09-10		20
218-1256	08-24		22
	09-10		33
218-1279	09-10		34
218-335	08-01		19
	08-23		30
	08-23B		30
	08-24		23
	08-25		24
218-459	06-11		38
218-5027	05-02		3
218-5034	08-01		51
218-5050	08-23		24
218-5053	08-07A		5
	08-07B		5
	08-17		5
	08-18		7
	08-19		7
	08-20		7
	08-22		38
	08-26		23
218-5056	08-26		25
218-5057	05-02		15
	05-02A		5
	08-08		5
	08-21		1
	08-22		33
	08-23B		25
	08-26		13
218-5059	05-02		8
	08-07		23
	08-08		11
	08-08		33
	08-08A		11
218-5062	06-10		4
	08-04		2
	08-05		28
	08-09		8
	08-09A		8
	08-11		25
	08-12		17
	08-13		31
	08-14		19
218-5063	08-09A		29
	08-09A		6
	08-10		8
	08-11		8
	08-12		8

Number	Figure	Sequence	Ref.
218-5063	08-13		8
	08-14		8
	08-22		7
218-5064	08-01		22
	08-01		49
	08-02		19
	08-23		28
	08-23		42
	08-23B		27
	08-23B		42
218-5069	08-02		4
218-5070	08-08A		36
218-5086	08-03		20
218-5089	08-07A		17
	08-07B		17
	08-17		4
	08-18		4
	08-19		5
	08-20		5
	08-21		2
	08-22		1
218-5103	05-04		8
	06-01		33
218-5105	05-02A		15
	06-32		4
	08-07A		21
	08-07A		24
	08-07B		24
	08-08		8
	08-08A		8
	08-21		3
	08-22		39
	08-22		5
	08-26		11
	09-10		14
218-5106	05-02		6
	08-09		11
	08-09		24
	08-09A		11
	08-09A		24
218-5107	08-01		45
	08-04		16
	08-05		2
	08-05		32
	08-06		2
	08-07		18
	08-09		27
	08-09A		27
	08-10		19
	08-10		22
	08-11		19
	08-12		22
	08-13		35
	08-14		15
	08-22		3
218-5108	08-23B		29A
218-5110	08-02		14
218-5117	08-25		11
218-5118	08-10A		7
218-5119	08-09		19
	08-09A		19
218-5121	08-08		20
	08-08A		20
218-5135	08-08A		5
218-5136	05-02		11
	08-08		35
218-5137	08-07		16
218-5140	08-01		24
218-5155	09-38		7
218-5156	08-07A		12
	08-07B		12
218-5158	08-23B		35
	09-38		3
218-5182	08-07B		21
	08-22		49
	09-10		15
218-5183	08-26		20
218-5213	08-29		16
218-5216	08-23		34
	08-23B		34
218-5220	08-05		18
218-5222	08-22		34
	08-23B		45
218-5228	05-02		2
218-5230	08-23B		33
218-5231	08-23B		29
218-5232	08-04		26
	08-04		29
	08-22		8
	08-25		23
218-5239	08-01		12
218-5242	08-07		25
218-5243	08-22		32
218-5280	05-02		19
	08-08		37
	08-23		26
218-5283	08-07A		2
	08-07B		2
	08-10A		13
218-5351	05-04		14
	06-01		4
	08-23B		31
	08-26		9
218-5359	08-10A		18
218-5365	08-22		4
218-5382	08-10A		23
218-5411	08-07A		20
	08-07B		20
218-5486	05-02A		20
218-5490	08-03		6
218-5511	08-23		44
218-5529	06-01		5
218-5584	08-01		27
	08-02		1
	08-02		10
	08-03		4
218-5600	08-25		18
218-5650	08-07		28
218-595	08-04		22
218-655	08-25		15
218-676	08-24		21
218-693	09-10		19
218-695	09-10		32
218-754	08-22		50
218-756	08-01		20
218-765	08-01		41
218-836	08-22		35
218-840	08-07		27
218-845	05-02		30
	05-02A		3
	08-26		22
	08-26		50
218-980	08-01		44
	08-22		6
	08-23B		24
219-1	06-01		6
	08-04		27
	08-58		17
	08-60		21
	08-61		17
	08-62		20
	08-63		23
	08-64		20
	08-65		20
	09-04		32
	09-05		23
	09-05		5
	09-08		9
	09-20		14
	09-23		28
	09-24		17
	09-24		3
	09-26		24
	09-26		37
	09-27		3
	09-27		35

Number	Figure	Sequence	Ref.
219-1	09-27		41
219-10	06-09		8
	06-38		8
219-36	08-65		21
219-4	09-16		41
219-55	08-04		28
	08-05		41
	08-59		17
	08-60		22
	08-62		21
	09-04		10
	09-23		30
	09-25		5
	09-25A		5
	09-37		9
219-86	09-27		54
219-87	09-10		4
219-89	09-27		53
220165A2	08-62		2
220276A1	08-10A		28
220413A1	09-37		7
221-89	09-64		21
221168A1	08-55A		15
221477A1	09-21		1
224057A1	08-10		27
225-14210	03-02		13
	03-03		20
225315C1	08-50		6
	08-51		6
	08-52		6
225318C1	08-50		7
	08-51		7
	08-52		7
225350C1	08-52		14
	08-54		6
225353C1	08-52		15
	08-54		7
226456A1	09-38		9
226582A1	08-10A		27
227389A1	04-18		2
228133A2	02-01		29
230973A1	07-03		25
231-14109	09-39		8
	09-41		16
231-14409	09-15		30
231-1444	09-71		12
231-1445	09-15		23
231-1446	08-10A		6
231-24409	04-06A		37
	04-07		12
	04-08		25
231-2446	09-19		18
231-4115	09-71		9
231-4246	09-10		5
231-4247	09-22		39
231397A1	06-07		
232-1446	09-56		2
	09-57		28
232-4246	09-01		19
232-4617	09-46		20
232948A1	09-66		10
233104A1	08-64		21
233110A2	08-64		16
233114A2	08-11		18
	08-64		1
	09-24		15
	09-27		9
233284A1	06-18		32
	06-26		32
234141A2	08-64		4
234412A1	08-25		9
	08-56		
234844A1	08-64		
235002A1	04-09		13
	08-25		26
237-6002	08-55		14
237-6004	05-02		4
	05-04		8A
237-6004	06-01		34
	08-07A		6
	08-07B		6
	08-17		
	08-18		
	08-19		
	08-20		
	08-26		24
	08-55		11A
237-6005	08-26		26
237-6006	05-02		16
	05-02		18
	05-02		20
	05-02A		16
	05-02A		6
	05-04		14A
	06-01		4A
	06-01		5A
	06-32		5
	07-05		2
	07-05		6
	07-05A		2
	07-05A		6
	07-06		3
	08-07		29
	08-07A		18
	08-07A		22
	08-07A		25
	08-07A		3
	08-07B		18
	08-07B		22
	08-07B		25
	08-07B		3
	08-08		38
	08-08		6
	08-08		9
	08-08A		6
	08-08A		9
	08-10A		14
	08-17		
	08-18		
	08-19		
	08-20		
	08-23		27
	08-23		45
	08-23B		26
	08-23B		32
	08-26		10
	08-26		12
	08-26		14
	08-26		19
	08-55		8
	08-57		4
	09-10		
	09-10		
	09-38		6
	09-38		8
237-6008	05-02		12
	05-02		7
	05-02		9
	06-19		18
	06-28		18
	08-07		24
	08-07		26
	08-07A		13
	08-07B		13
	08-08		12
	08-08		21
	08-08		34
	08-08		36
	08-08A		12
	08-08A		21
	08-09		12
	08-09		25
	08-09A		12
	08-09A		25
	08-10A		19
	08-25		12

Number	Figure	Sequence	Ref.	Number	Figure	Sequence	Ref.
237-6008	08-25		19	237582A1	04-16		1
	08-26		21	238-5005	04-17		8
	08-55		6	238-5011	04-06A		5
237-6010	03-01		6A		08-25		8A
	06-10		16		08-57		5
	06-10		23	238-5013	06-19		20
	06-10		5		06-28		20
	08-01		46	238-5014	06-19		19
	08-01		48		06-28		19
	08-03		10	238-5152	06-08		10
	08-04		17	238-5227	05-01		3
	08-04		26A	238-5228	08-01		7
	08-04		3	238-5230	08-57		9
	08-04		30	238-5231	08-59		9
	08-05		29		08-60		10
	08-05		3		08-66		8
	08-05		33	238-5233	08-58		9
	08-06		3		08-65		11
	08-07		17	238-5237	08-62		9
	08-07		19	238-5239	08-61		9
	08-09		28		08-62		23
	08-09		9	238-5241	08-64		11
	08-09A		28	238-5243	08-63		13
	08-09A		9	238-6012	06-01		13A
	08-10		20		07-04		10
	08-10		23		07-04		14
	08-10A		11		07-04		16
	08-10A		34		07-05		3
	08-11		20		07-05		5
	08-11		26		07-05A		3
	08-12		18		07-05A		5
	08-12		23		07-06		2
	08-13		32	238-6018	08-55A		3
	08-13		36	238-6121	06-06		22A
	08-14		16		06-13		
	08-14		20		06-21		
	08-27		11	238-8217	06-27		22
237-6012	05-02A		21	239406A1	09-03		7
	08-01		13	239606A1	06-21		20
	08-01		23	242459A1	08-24		5
	08-01		50		08-24		9
	08-02		20	243084A1	09-23		19
	08-08A		37	243298A1	08-24		4
	08-09		20	243300A1	08-24		1
	08-09A		20	243398A1	08-24		8
	08-09A		30	243404A1	08-24		2
	08-09A		7	243679A2	08-24		14
	08-10		9	244109A1	06-18		6
	08-11		9		06-26		6
	08-12		9	244790A1	09-26		51
	08-13		9		09-27		46
	08-14		9	245258A1	04-09		7
	08-23		25	245423A1	09-10		30
	08-23		29	245466A1	09-28		6
	08-23		43		09-28		9
	08-23B		28		09-29		6
	08-23B		29B		09-29		9
	08-23B		36		09-30		6
	08-23B		43		09-30		9
	08-55A		13		09-31		6
	09-10		35		09-32		6
	09-38		4		09-32		6
237-6014	08-29		11		09-32		9
	08-29		17		09-32		9
237-6016	08-01		18		09-33		6
	08-01		25		09-34		6
	08-01		28		09-34		9
	08-01		52		09-35		6
	08-02		11		09-35		9
	08-02		15	246151A1	08-24		17
	08-02		17	246526A1	04-04		31A
	08-02		2	248-2373	09-46		13
	08-02		5	250851A1	09-05		7
	08-02		8		09-08		30
	08-03		5	254686A2	06-12		1
	08-10A		24		06-20		1
	08-10A		8	255447A1	09-41		25
237-6020	08-03		21		09-71		13

Number	Figure	Sequence	Ref.	Number	Figure	Sequence	Ref.
256210A2	08-24		14A	2852013	02-11		9
256347A1	09-01			2852016	02-11		8
	09-02			2852028	02-15		2
256776A1	03-03		5	2852029	02-19		3
257381A1	09-41		27	2852030	02-19		6
257382A1	09-41		26	2852032	02-17		4
258616A1	09-01			2852033	02-17		6
	09-02			2852037	02-23		4
259044A1	08-01		1	2852044	02-19		1
260-1436	09-61		16	2852047	02-35		2
260-16312	09-01A		23	2852049	02-24		1
	09-01A		8	2852051	02-24		2
261-14310	04-15		11	2852057	03-06		8
	04-15		4	2852059	03-06		5
27549R1	06-30		2	2852062	02-28		2
	06-30		2	2852065	03-11		3
276-2446	08-61		11	2852075	03-07		
	08-66		10	2852088	03-04		3
276-2456	08-56		3	2852089	03-04		4
276-26512	04-18		10	2852098	03-08		1
276498A1	04-13			2852101	02-33		13
	04-14			2852102	02-33		10
277800A1	02-01		39	2852105	03-10		1
278316A2	04-10		9	2852111	03-10		3
278328A1	04-07		27	2852114	02-35		1
278532A1	06-15		14	2852122	02-30		1
	06-23		14	2852125	02-30		2
278533A1	06-15		13	2852127	02-30		6
	06-23		13	2852134	02-30		9
278534A1	06-12		8	2852135	02-30		8
	06-20		8	2852145	02-36		3
279039A1	06-15		15	2852151	02-37		1
	06-23		15	2852153	02-37		2
279223A1	04-14		6	2852155	02-37		1
279224A1	04-14		5	2852157	02-37		6
279265A2	04-14		15	2852161	02-38		2
279482A1	09-53		2A	2852162	02-38		3
	09-69		4	2852163	02-38		1
279916A1	04-14		16	2852170	02-39		3
280136	08-39		11	2852171	02-39		4
281-14520	09-64		9	2852172	02-39		5
281-14716	09-11		17	2852180	02-42		2
281-18712	09-63		26		04-03		14
281-54512	09-61		23	2852181	02-42		1
281185A1	09-26				04-03		16
	09-27			2852183	02-41		1
282-17512	04-18		7	2852195	02-33		8
282038A2	06-01		18	2852196	02-33		15
282242A1	03-03		1	2852197	02-33		12
282428A1	05-02		17	2852202	02-10		10
	08-26		18	2852294	03-06		3
282775A1	04-09			2852473	02-37		
282842A1	08-23		9A	2852507	02-29		3
	08-23B		9A	2852509	02-29		5
2830082	02-09		1	2852510	02-29		4
2830156	03-09		2	2852511	02-36		5
2830158	02-23		4	2852519	02-12		7
2830266	03-09		1	2852521	03-11		4
2830281	02-17		2	2852531	02-15		1
2830411	03-08		7	2852594	03-10		2
2830433	02-26		7	2852741	03-04		
2830559	02-34		10	2852743	02-20		2
2830769	02-17		8	2852834	02-20		3
2830775	02-17		5	2852865	02-14		2
2830784	02-17		7	2852866	02-18		3
2830919	02-16		15	2852871	03-07		1
2830920	02-16		15	2852872	03-07		2
2830948	02-26		16	2852873	03-07		3
2831031	02-26		8	2852874	03-07		4
2831203	02-20		1	2852875	03-07		5
2831297	02-22		3	2852876	03-07		6
2831298	02-22		1	2852877	03-07		7
2831305	02-26		14	2852878	03-07		8
2831354	02-26		9	2852879	03-07		9
283779A1	04-09		22	2852880	03-07		10
283781A1	04-09		23	2852881	03-07		11
2852011	02-11		4	2852882	03-07		12
2852012	02-11		7	2852883	03-07		13

Number	Figure	Sequence	Ref.	Number	Figure	Sequence	Ref.
2852884	03-07		14	303466A1	04-10		10C
2852885	03-06		2	303467A1	04-10		10D
2852889	02-10		3	303646A1	09-24		41
2852894	02-17		11	304083A1	09-74		7
2852978	02-11		5	304424A1	08-27		9
2853133	02-37		4	304890A1	08-27		10
2853135	02-37		5	305492A1	09-10		16
2853407	02-30		10	305493A1	09-10		18
2853410	02-30		7	305494A1	09-10		17
2853412	02-30		11	305495A1	09-10		9
2853414	02-31		1	305496A1	09-10		7
2853671	02-12		5	305497A1	09-10		3
2853722	02-34		9	305499A1	09-10		8
2853781	02-34		3	305508A1	09-10		21
2853782	02-34			30634	08-60		14
2854030	02-23		3	307186A1	09-27		19
2854072	02-36		2	307277A1	08-27		17
2854073	02-14		6	307348A1	09-74		12
2854075	02-14		3	307385A1	09-10		22
2854340	03-06		1	307386A1	09-10		23
2854493	02-33		6	307387A1	09-10		24
2854603	02-23		4	307388A1	09-10		25
2854611	02-38			307389A1	09-10		26
2854866	02-14		12	307577A1	03-01		31
2855103	03-08		2		09-38		33
2855178	02-14		9	309674A1	08-27		11A
2855183	02-28		7	309747A1	06-11		
2855273	02-29		9	310519A1	06-17		8
2855287	02-12		9		06-25		8
2855531	02-23		1	310772A1	06-13		12
2855622	02-38		2		06-21		12
2855743	02-26			311569A1	05-08		1
2855746	02-26		15		06-06		1
2855747	02-26		3	313648A1	08-02		3
2855748	02-26		5	314319A1	08-24		27
2855750	02-26		4	314320A1	08-24		28
2855753	02-26		2	315273A1	09-55		12
2855894	02-37		3	315276A1	09-55		11
	02-41		3	319467A1	09-35A		1
2855903	03-11		6	321-1707	09-08		29
2856017	02-16		3	321-1708	09-08		23
2856086	02-11		6		09-73		11
2856170	02-28		5	321-229	09-38		2
2856255	03-05		1		09-79		8
2856263	02-19		4	321-230	09-79		7
2856350	03-04		2	321-2403	09-79A	01	8
2856352	03-04		1	321-4311	09-72		5
2856436	03-05			321-6046	08-55A		16
2856462	02-19		1		09-75		8
286-56520	09-53		11	321-6376	09-79		8A
	09-68		29		09-80		8A
29-1010	09-08		14		09-81		8A
29-1012	09-06		10	321-6774	09-79		13
	09-08		5	321-7030	09-76		10
291010A1	04-18		6	321-7040	09-79		4
292207A1	06-34		12	321204	05-06		12
292208A1	06-34		13		06-03		7
292210A1	06-36		3	321428A1	06-29		8
292212A1	06-36		4	322357	04-06A		19
292385A1	09-23		29	322860A1	03-03		4
293636A1	09-23		34	3233348R1	09-15		36
294933A1	06-07				09-56		8
297280A1	08-59		4	3234063R1	09-55		25
297281A1	08-60		4	324213A1	05-08		2
	08-66		3	325465A2	08-07		22
297952A1	08-64		2	326-640	09-10		6
298176A1	09-01			326806A1	09-23		1
	09-02			326865A1	06-18		13
298614A1	06-19		22		06-26		13
	06-28		22	328186A1	06-10		21
300030A1	04-19		4		08-03		11
300588A1	09-27		26	329032A1	04-13		3
300996A3	08-27		3	329483A1	05-02A		
302358A1	03-01		3	329797A1	08-23		5
	09-38		19		08-23B		5
302820A2	08-27		5	329799A1	08-23		4
303192A1	02-01		36		08-23B		4
303465A2	04-10		10B	329998A1	09-23		4

Number	Figure	Sequence	Ref.
331620A1	09-05		2
335177A1	09-04		6
338424A1	09-53		4
338425A1	09-53		3
338426A1	09-55		5A
338427A1	09-55		5
338428A1	09-57		3
338429A1	09-55		4A
340997A3	09-44		2
340998A3	09-44		1
341564A2	09-04		36
341743A3	09-55		
344892A1	09-04		37
345-49	09-38		10
345-621	09-65		
345231A1	09-44		3
346583A1	07-01		18
	07-01	01	18
347706A3	04-07		7
348706A1	09-26		46
	09-27		30
348794A1	05-01		18
	05-03		
349291A1	06-19		21
	06-28		21
349292A1	06-19		23
	06-28		23
349295A1	06-19		17
	06-28		17
352208A1	09-58		11
352209A1	09-58		13
352210A1	09-58		15
352401A1	05-01		7
352568A1	05-01		6
	05-03		
352569A4	05-01		6
	05-03		10
352727A1	05-01		23
353-402	09-68		19
353-405	09-54		
353-407	09-54		
353-408	09-54		
353-410	09-54		
	09-64		26
	09-68		
353-411	09-11		5
353-413	09-68		33
353-415	09-54		
353-421	09-54		
	09-68		22
353-422	09-01		39
	09-42		7
353-425	09-54		
353068A2	04-11		18
353103A1	08-07		5A
353167A1	08-07		5
355198A2	04-11		1A
355827A2	04-10		1
355984A2	09-42		1
356743A1	08-07		12
357099A1	09-68		15
357100A1	09-68		16
357278A1	04-08		23
357469A1	08-11		16
357470A1	08-12		16
	08-13		34
357471A1	08-10		24
357540A1	04-14		7
357541A1	04-14		8
357966A1	04-08		22
358282A1	06-18		19
	06-26		19
358283A1	06-18		28
	06-26		28
358632A1	06-17		7
	06-25		7
358633A1	06-17		6
	06-25		6
358635A1	06-17		4
	06-25		4
358636A1	06-16		2
	06-24		2
358637A1	06-17		15
	06-25		15
358638A1	06-17		21
	06-25		21
358639A1	06-18		29
	06-26		29
358640A1	06-17		10
	06-25		10
358641A1	06-17		16
	06-25		16
358642A1	06-17		19
	06-25		19
358643A1	06-17		18
	06-25		18
358644A1	06-17		17
	06-25		17
358645A1	06-17		1
	06-17		29
	06-25		1
	06-25		29
	06-27		7
358649A1	06-18		3
	06-26		3
358650A1	06-18		3A
	06-26		3A
358651A1	06-18		3A
	06-26		3A
358652A1	06-18		3A
	06-26		3A
358654A1	06-26		37
358655A1	06-26		39
358656A1	06-26		38
360242A2	04-10		10A
360243A2	04-10		11
360244A1	04-10		4
360245A2	04-10		8
360246A3	09-54		16
360247A3	09-54		15
360250A2	04-11		1
360251A3	09-63		6
360252A2	09-62		5
360253A3	09-63		8
360254A3	09-63		10
360255A1	09-63		14
360256A1	09-65		15
360257A1	09-65		7
360260A2	09-62		1
360261A1	09-62		3
360262A2	09-64		1
360263A4	09-65		1
360272A6	09-61		
360867A1	09-36		1
361900A1	04-07		9
362556A2	09-45		2
362557A1	09-45		1
362558A1	09-45		3
362607A1	09-40		4
362609A1	09-40		3
362804	09-01		14A
362930A2	04-08		13
363485A1	07-01		3
	07-01	01	3
363832A5	09-65		
363883A1	09-61		10
364132A2	09-55		28A
364133A2	09-55		30A
364134A2	09-55		28
	09-57		7
364135A2	09-55		30
	09-57		8
364180A1	09-54		10
	09-68		24
365309A1	08-13		14
365789A1	09-63		20

Number	Figure	Sequence	Ref.	Number	Figure	Sequence	Ref.
365941A1	09-34		2	381113A2	09-63		24
365942A1	09-34		3	381659A1	04-18		5
366230A1	06-27		13	381696A5	09-61		2
366231A1	06-27		18	381972A1	09-61		14
366232A1	06-27		15	382202A2	09-38		52
366234A1	06-27		11	382298A1	09-54		21
366235A1	06-27		12		09-68		30
366236A1	06-27		14	382664A2	04-18		1
366632A2	04-11		21	382770A2	09-62		2
366633A3	04-11		25	382775A1	09-55		23A
366889A2	04-07		28	382777A1	09-55		23
366910A1	06-29		9	383794A2	09-63		22
367352A1	08-07		5B	383795A2	09-63		23
367712A3	09-68		13	383972A1	09-76		6
367848A2	09-74		13	384240A1	08-04		18
368417A1	09-45		9		08-58		1
368801A2	09-64		10		09-04		9
368805A1	09-63		7	384241A1	08-58		2
368807A1	09-63		13	384258A1	09-79		6
368809A1	09-54		22	384260A1	09-79		9
368813A2	09-61		4	384264A1	09-76		1
368818A1	09-63		29	384265A1	09-79		2
368990A1	09-62		6	384267A1	09-79		3
369249A1	09-63		9	384269A1	09-79		5
369372A1	08-55		3	384769A1	06-18		14
369450A1	09-61		15		06-26		14
370381A1	09-65		14	384773A1	06-18		9
370747A1	09-34				06-26		9
371031A1	08-05		26	384815A1	09-23		32
371144A1	07-02		8	385506A1	09-68		12
371145A1	07-02		11	385614A4	04-11		31
372167A3	04-11		1B	386000A2	09-22		37
373689A2	04-10		10	386092A2	09-23		16
373693A1	04-10		10E	386368A2	04-11		29
373698A2	09-73		8	386369A2	04-11		28
373699A2	09-73		9	386502A1	04-11		
373995A1	09-63			386535A1	09-65		2
375112A1	04-11		26	386720A1	09-59		18
375392A1	09-63		28	386785A1	04-07		22
376286A2	09-08				09-59		25
376332A1	09-55		38		09-60		
	09-57		15		09-70		4
376334A1	09-55		36	386786A1	04-09		21
	09-57		13		09-59		24
376336A1	09-55		37		09-60		
	09-57		14	386787A1	04-07		23
377194A1	09-61		9		09-59		16
377220A2	09-63		1		09-70		5
377222A1	09-64		4	386788A1	04-09		20
377230A3	09-63		27		09-59		15
377232A2	09-64		18	386789A2	04-09		19
377233A2	09-64		31	386849A1	04-07		18
377241A2	09-63		1	386850A1	04-07		19
377594A5	09-61		13	386851A1	04-07		20
378227A1	09-54		5		04-17		15
378742A3	09-43		19	386852A2	04-09		18
	09-43		27	386927A1	04-18		9
	09-43		9A	387897R91	05-09		3
378955A1	03-03		8A		05-09		6
378956A3	03-03		15	387940A1	04-17		
378957A3	03-02		17	388116A2	05-01		8
378958A1	03-03		13	388712A2	08-55		9
379160A1	09-61		5	388713A1	08-55		
379161A1	09-61		6	388762A1	09-64		7
379209A1	09-61		7	388843A1	09-29		1
379314A4	06-11		6	388848A1	09-08		24
379424A2	09-54		3A	388881A1	08-55		4
379425A3	09-54		2A	389402A1	09-64		8
379846A1	05-01		14	389487A1	04-07		13
	05-01		22	389729A1	09-77		6
379941A1	09-25		1	389730A1	09-78		6
	09-25A		1	390-100	09-55		21
38-11016	09-48		10	390029A1	06-05		2
380483A2	03-03		12	390255A2	04-11		15A
380537A2	06-11		13	390258A1	04-11		
380719A2	09-61				04-11		
380807A4	09-38		47	390551A2	09-42		10
381111A2	09-63		25	390690A1	09-11		4

Number	Figure	Sequence	Ref.
390758A1	09-11		3
390759A1	09-11		1
390760A1	09-11		2
390838A1	09-55		2A
390840A1	09-55		27A
390841A1	09-55		29A
391818A2	04-11		15
391827A1	09-53		8
	09-55		19
	09-55		6
	09-57		4
	09-69		2
391838A1	09-55		14
391841A1	09-55		18A
391842A1	09-55		20A
391843A1	09-55		32
391845A1	09-55		31
	09-57		10A
391847A1	09-55		13
391848A1	09-55		15
391850A1	09-55		3A
392353A1	04-08		14
392374A1	09-76		13
392375A1	09-79		1
392828A2	09-41		17
393202A1	09-55		17
393203A1	09-55		16
393209A1	09-55		22
393211A1	09-56		5
393231A1	06-09		
	06-38		
393330A1	09-57		10
393354A1	08-14		10
393357A1	08-14		11
393360A1	08-12		21
393361A1	08-13		16
393362A1	08-13		17
393369A1	08-10		18
393371A1	08-11		17
393623A1	09-42		8
394704A1	09-55		18
394705A1	09-55		20
394707A1	09-55		2
394708A1	09-55		3
394800A1	09-56		7
394863A1	04-14		9
	09-54		17
394864A1	09-57		2
394865A1	09-57		9
395026A1	09-60		9
395189A2	03-02		1
395348A1	09-58		12
	09-58		14
395387A1	09-54		18
395388A1	09-54		19
395389A1	09-60		10
395478A3	09-68		3
395753A2	09-22		38
395793A1	09-53		9
	09-69		7
395910A2	09-73		10
396-41028	09-01		16
	09-01		31
	09-02		3
	09-18		23
396018A3	04-14		13
	09-60		
396023A2	04-13		10
396092A1	09-25		10
	09-25A		10
396339A1	08-12		16
	08-13		34
396422A2	08-55		10
396483A1	09-27		55
396516A1	09-54		12
	09-61		3
	09-68		26
396592A1	05-02		

Number	Figure	Sequence	Ref.
396592A1	05-02A		
396593A1	05-02		
396605A1	09-41		6
396841A1	09-56		3
	09-57		29
396938A3	09-68		2
397025A2	09-43		21
397026A3	09-43		2
397064A1	09-56		1
	09-57		27
397065A2	03-03		22
397080A1	08-63		2
397548A4	03-01		40
397569A1	04-09		5
397570A1	04-09		6
397774A3	09-43		12A
397786A1	08-10		11
397787A1	08-11		21
397788A1	08-12		10
397870A3	09-11		15A
397876A1	04-08		19
397911A1	09-12		16
397974A1	09-71		
397990A1	04-07		29
398380A3	04-14		12
398570A1	09-80		6
398571A1	09-81		6
398572A1	09-80		9
398573A1	09-81		9
398576A1	09-77		1
398577A1	09-78		1
398578A1	09-80		2
398579A1	09-81		2
398580A1	09-80		3
398581A1	09-81		3
398582A1	09-80		5
398583A1	09-81		5
398598A1	09-77		13
398599A1	09-78		13
398600A1	09-80		1
398601A1	09-81		1
398654A1	09-81		11
398656A1	09-81		10
398658A1	09-76		5
	09-76A	01	13
	09-77		5
	09-78		5
398662A1	09-77		7
398663A1	09-78		7
398665A1	09-80		8
398666A1	09-81		8
398667A1	09-80		7
398668A1	09-81		7
398669A1	09-80		11
398670A1	09-80		13
398671A1	09-81		13
398672A1	09-77		10
398673A1	09-78		10
398674A1	09-80		4
398675A2	04-07		24
	08-26		34
398676A1	09-81		4
398677A1	09-80		10
398738A1	09-62		4
398847A3	04-13		8
	04-14		2
398986A1	09-63		30
399004A1	08-21		
399227A1	08-10A		
399246A1	08-10A		32
399959A2	09-38		31
399963A1	08-07		
400016A1	08-10A		30
400069A1	09-12		10
400077A1	09-43		
	09-43		
400200A1	09-58		5
400280A1	09-64		11

Number	Figure	Sequence	Ref.
400282A1	09-64		2
400296A2	08-55		11
400379A1	04-09		9
	09-64		5
	09-65		14A
400398A1	09-26		48
	09-27		32
400494A1	09-58		16
400571A2	09-53		20
400572A1	09-53		19
400573A1	09-53		16
400588A2	06-11		7
400657A1	08-55		13
401052A1	05-06		
401054A1	05-06		3
401055A1	05-06		7
	05-07		1
401059A1	05-06		13
401060A1	05-06		14
401061A1	05-07		4
401062A1	05-07		3
401063A1	05-07		5
401064A1	05-07		6
401065A1	05-08		3
401066A1	05-08		4
401067A1	05-08		5
401457A1	09-73		2
401458A1	09-73		3
401949A1	09-54		4
	09-65		30
402610A1	09-54		20
402836A1	09-58		28
402843A1	09-58		25
402844A1	09-58		27
402845A1	09-58		32
402846A1	09-58		21
402847A1	09-58		18
402933A1	09-71		1
402934A1	09-71		2
402935A1	09-71		5
402936A1	09-71		3
403193A1	09-63		36
403225A1	09-63		35
403271A1	09-62		9
403955A1	06-37		14
404226A1	09-58		6
404227A1	09-58		9
404228A1	09-58		4
404229A1	09-58		7
404617A1	04-13		12
	04-14		10
	09-60		
	09-70		
404816A1	04-07		14
404834A1	09-24		43
	09-27		5
404835A1	09-24		44
	09-27		6
404907A1	08-10A		28A
405738A1	09-53		15
405739A1	09-53		14
405740A1	09-53		13
405741A1	09-53		17
405742A1	09-53		18
406287A1	09-64		19
	09-65		5
406723A1	09-74		15
407009A2	09-73		6
407010A2	09-73		7
407660A1	04-11		8A
407962A1	02-01		11
	04-06A		4
408965A1	09-59		20
409025A1	08-55		5
409618A1	09-54		11
	09-68		25
409672A1	09-18		4
409673A1	09-18		5
409723A1	09-61		18A
410561A1	06-11		44
410867A1	09-58		2
411049A1	09-75		2
411074A1	09-42		16
411399A1	09-54		25
411549A1	09-68		21
411661A1	09-06		8
	09-06		8
411668A1	09-08		
411850A1	09-58		
411851A1	09-58		
411892A1	09-37		14
411908A1	09-58		22
411909A1	09-58		19
411910A1	09-58		24
411911A1	09-58		31
411912A1	09-58		33
411914A1	09-58		29
411916A1	09-58		20
411917A1	09-58		17
412285A1	09-54		23
412510A1	04-11		40
413-1228	09-22		18
413-412	09-71		11
	09-71		4
413-516	09-10		11
	09-71		7
413-528	09-15		22
413-624	09-01		18
	09-19		12
413-648	08-10A		4
413778A1	08-23		9
	08-23B		9
414-724	09-46		15
414033A1	04-10		18
414034A1	04-10		17
414071A1	04-11		39
414092A1	04-11		38
414572A1	04-10		16
414600A1	09-61		17
414939A1	09-54		24
420-21232	09-06		9
425-1012	09-22		19
425-105	04-05		9
	04-06		18
425-106	04-05		11
	04-06		13
	04-08		2
	04-08		26
	09-19		13
425-1110	09-18		16
425-115	09-03		6
	09-15		19
425-116	09-01		22
	09-16		36
	09-19		5
425-118	09-16		10
	09-17		3
	09-18		7
	09-21		7
425-147	09-60		
425-155	08-55A		12
425-156	09-16		27
	09-16		47
	09-17		9
	09-20		9
	09-21		16
427-3058	03-02		15
	03-03		18
427-5094	09-15		13
	09-25		13
	09-25A		13
427-6088	09-16		25
	09-17		7
	09-20		7
427-6100	09-04		33
427-6106	07-03		4

Number	Figure	Sequence	Ref.	Number	Figure	Sequence	Ref.
427107A1	06-02		1	4892861	02-16		1
429-1012	09-06		10	4892867	02-25		2
	09-07		10	4892915	02-14		2
429230A1	05-05		1	4893036	02-14		12
429231A1	05-06		1	4893386	02-21		2
429232A1	05-06		2	4893391	02-34		8
430471A1	04-11		37	4893518	03-06		6
431583A1	09-68		31	4894095	03-10		4
431584A1	09-68		32	4894218	02-10		1
431801A1	09-53		21	4894641	02-24		3
432-48	03-02		10	4894721	03-09		5
	03-02		16	4895017	02-21		4
	03-03		19	4895038	02-09		4
432-612	07-03		5	4895039	02-09		3
	09-01		27	4895040	02-09		7
	09-03		5	4895045	02-34		5
	09-04		34	4895049	02-10		8
	09-15		14	4895078	02-16		16
	09-16		26	4895085	02-16		17
	09-16		38	4895107	02-33		2
	09-16		49	4895133	02-29		2
	09-17		8	4895155	02-14		10
	09-19		4	4895164	02-33		1
	09-20		12	4895166	02-42		5
	09-20		8		03-08		5
	09-21		12	4895179	02-16		12
	09-25		14	4895180	02-10		9
	09-25A		14	4895183	02-16		4
432-828	09-01		13	4895184	02-16		9
	09-02		12	4895187	02-16		6
	09-15		25	4895188	02-16		5
	09-18		20	4895195	02-18		1
432431A1	09-56		9	4895196	02-18		7
440-10616	09-04		18	4895198	02-18		9
440-1066	04-11		27	4895199	02-18		10
440-1088	09-61		22	4895200	02-18		11
440-11012	09-39		6	4895202	02-17		9
	09-41		13	4895204	02-18		12
440038A1	04-06A		9	4895214	02-17		3
442718A1	09-55		8	4895215	02-16		8
442773A1	09-55		33	4895228	02-09		5
442842A1	09-56		6	4895244	03-11		1
443375A1	09-38		16	4895291	02-39		2
443432A1	08-55				02-42		3
445720A1	06-35		10		04-03		12
446222A1	09-22		5	4895294	02-19		7
446454A1	09-22		36	4895296	02-17		10
448284A1	08-25		9	4895297	03-05		2
448428A1	09-64		12	4895301	02-39		10
448429A1	09-64		13	4895305	03-11		2
448607A1	09-53		2	4895323	02-28		1
	09-69		1	4895347	02-16		7
448608A1	09-53		6	4895355	02-12		8
	09-69		6	4895360	02-17		1
448609A1	09-53		5	4895361	02-18		2
	09-69		5	4895363	02-18		5
449842A1	09-74		8	4895364	02-18		6
451384A1	09-27		43	4895365	02-18		8
452140A1	06-37		8	4895378	02-14		4
47132002	04-06A		8	4895379	02-14		5
484-43120	08-55A		11	4895392	02-10		6
484-6316	06-11		3		02-36		
4890343	02-01		44	4895393	02-10		7
4890732	02-39		8		02-36		7
4890832	02-13		4	4895394	02-36		6
4890833	02-14		8	4895406	02-30		3
4890964	03-09		4	4895414	02-21		3
4891209	02-13		5	4895489	02-11		2
4891252	02-35		1	4895538	02-11		10
4891353	02-09		6		02-42		6
4892426	02-39		7	4895586	02-26		6
4892708	02-22		2	4895610	02-30		5
4892712	02-23		2	4895623	02-10		14
4892713	02-23		3		02-36		8
4892715	02-22		4	4895625	02-10		15
4892732	02-39		6		02-36		9
4892859	02-16		2	4895641	02-19		8
4892860	02-18		4	4895919	02-09		

Number	Figure	Sequence	Ref.
4895921	02-09		
4896153	02-10		13
4896404	02-34		4
4896409	02-34		11
4896410	02-34		7
4896770	03-06		7
4896773	02-25		1
4896884	03-07		15
4896947	02-26		5
4897024	02-13		1
4897048	02-26		4
4897125	02-26		1
4897178	02-16		13
4897179	02-16		14
4897330	02-30		4
4897457	02-28		4
4897480	02-31		1
4897934	02-26		11
4898301	02-11		3
4898482	02-29		6
4899003	03-06		4
4899009	02-10		4
	02-16		10
4899019	02-34		1
4899020	02-14		7
4899026	02-09		2
	02-12		1
	02-14		1
4899027	02-26		17
4899031	02-42		4
	03-09		3
4899039	02-19		2
4899046	02-21		5
4899053	02-39		1
4899063	02-13		3
4899068	02-14		11
	02-28		3
	03-08		3
4899072	02-10		5
	02-16		11
4899073	02-12		3
	02-41		2
4899074	02-14		2
4899076	02-14		2
4899078	02-13		2
4899079	02-35		3
	02-38		5
4899080	02-28		6
4899090	02-31		2
4899091	02-11		2
	02-12		2
4899092	02-15		3
4899093	02-12		3
4899106	02-33		7
4899107	02-33		3
4899108	02-33		4
4899109	02-14		2
	02-26		11
	02-36		1
	02-38		6
4899110	02-15		3
4899115	02-12		
4899118	02-29		1
4899143	02-14		2
4899467	02-33		5
4899519	02-33		6
4899643	02-34		2
4899849	03-08		4
4899859	02-20		4
	02-29		8
4899921	02-19		5
490-11012	04-07		
	04-08		24
492-11031	09-10		12
493-11026	04-17		2
493-21020	08-57		3
493-21033	04-04		7
493-41020	06-11		5
495-11028	09-01		8
	09-02		15
	09-72		2
495-11034	04-05		17
	04-06		22
	09-10		13
495-11041	04-05		12
	04-06		12
	08-10A		5
495-11047	05-04		11
	06-01		30
	09-60		
495-11053	09-04		35
495-11081	09-18		10
495-21031	04-17		3
495-21038	09-45		6
495-31022	03-02		9
	04-13		4
495-81001	02-04		12
	09-68		6
495-81025	06-01		15
	06-01		20
495-81169	09-46		18
495-81184	09-01		9
	09-02		10
495-81226	09-22		34
	09-24		24
	09-24		32
	09-26		25
	09-26		35
	09-26		4
	09-27		42
495-81227	09-23		17
	09-24		29
495-81261	07-03		17
495-81267	09-68		10
495-81282	09-04		7
	09-26		21
	09-27		13
	09-27		38
496-11041	09-01		20
496-21041	02-01		31
	06-11		17
496-41041	08-10		6
	08-11		6
	08-12		6
	08-13		6
	08-14		6
	08-22		12
	09-12		5
	09-44		4
496-81000	05-09		9
	06-01		3
	06-06		24
496-81010	09-46		19
496-81018	03-02		7
	09-13		29
	09-24		38
496-81028	05-01		11
	08-08		
	08-08		3
	08-08A		
	08-08A		3
	08-22		21
51200906	09-48		
5135061	09-24		25A
5135738	02-33		9
514-633	09-55		34
	09-57		11
514-832	08-01		8
514-847	03-02		3
515-2179	09-04		14
515-22127	02-02		16
	08-22		53
515-22190	04-06A		2
	08-07B		27
515-22254	02-02		17
515-2295	08-22		29

Number	Figure	Sequence	Ref.
515-23127	03-01		16
	04-04		13
	04-04		15
515-23143	02-02		18
515-23159	05-02		23
515-23254	08-10		28
515-23444	04-09		27
515-2379	07-04		5
515-25190	04-06A		31
	06-10		27
	07-05A		7
	08-10A		22
515-25254	08-07		13
5194169	06-02		18
5194190	06-07		11
5194191	06-07		9
5194194	06-07		3
5194264	06-03		6
561201	06-07		12
569-4	09-55		24
60-7083T1	09-55		7
604-12030	09-46		11
	09-47		9
	09-49		3
604-20035	09-24		42
604-20045	08-23		6
	08-23B		6
614-10020	02-01		20
	03-01		38
	03-01		41
	05-01		19
	05-01		9
	06-11		26
	07-06		4
	08-03		2
	09-03		9
	09-40		16
614-10025	07-03		15
	08-23		11
	08-23B		11
	09-09		2
	09-13		38
	09-16		42
	09-19		16
	09-20		3
	09-38		53
	09-40		10
	09-40		5
	09-41		3
614-10030	02-01		37
	04-04		18
	04-16		6
	05-02A		9
	06-13		10
	06-21		10
	08-13		28
	08-22		15
	09-40		22
	09-67		4
614-10035	03-03		23
	05-01		20
	08-10		29
	08-10		5
	08-11		5
	08-12		5
	08-13		5
	08-14		5
	08-26		2
	09-12		4
614-10040	08-04		9
	08-06		5
	08-07		8
	08-23		10
	08-23B		10
	08-24		29
614-10045	08-04		11
	08-05		7
	08-06		6
614-10050	09-25		6
	09-25A		6
614-10080	02-06		3
614-12016	06-23		2
614-12025	02-01		46
	03-01A	01	5
	04-06A		32
	05-04		6
	06-01		32
	07-05A		9
614-12030	09-24A		5
	09-39		4
614-12035	02-07		3
	06-11		27
614-12040	02-07		10
	09-47		6
	09-49		8
614-18035	08-09		6
614-20030	09-39		2
614-6016	03-03		32
	09-01		15
	09-02		2
	09-04		13
	09-18		22
614-6020	04-06A		13
	04-17		13
	09-01		30
	09-01		7
	09-02		16
	09-18		24
614-6025	04-06		6
	09-21		4
614-6035	04-06A		11
614-8012	06-10		2
614-8016	02-01		40
	09-38		14
614-8018	06-12		11
	06-20		11
614-8020	02-04		2
	03-03		9A
	04-08		15
	04-16		3
	07-03		28
	09-12		12
	09-59		26
	09-59		8
	09-66		27
	09-67		14
	09-68		5
	09-70		15
614-8022	06-27		2
614-8025	02-01		22
	02-02		12
	03-01A	01	3
	04-03		4
	04-08		16
	08-07B		29
	08-22		28
	09-03		15
	09-08		27
	09-13		5
	09-15		11
	09-16		2
	09-16		20
	09-25		23
	09-25A		23
614-8030	02-01		9
	03-01		17
	04-09		28
	07-04		8
	09-05		8
	09-15		4
	09-25		33
	09-25A		30
	09-37		19
	09-44		5
	09-45		5
	09-64		28

Number	Figure	Sequence	Ref.
614-8030	09-65		19
614-8040	02-02		21
	04-06A		3
	09-45		4
614-8050	09-15		35
627-10030	02-06		11
	06-11		16
627-12025	03-03		26
627-20060	03-01		2
627-8020	02-07A		3
637-63113	07-04		11
	07-04		17
637-63153	07-04		13
700-101	07-04		9
700-304	07-04		15
	07-06		1
700-345	07-04		12
711-10030	09-38		29
711-10040	09-45		8
711-10050	05-02		24
71103058	08-30		13
	08-30		14
	08-32		16
	08-32		17
	08-34		14
	08-34		15
761-17325	04-18		13
781-24613	04-08		21
	09-13		20
781-24820	09-43		30
79081900	02-05		5
800-1130	06-17		31
	06-25		31
800-1134	06-06		17
800-1150	06-17		26
	06-25		26
	06-37		1
800-40065	09-23		27
800-40070	09-23		31
800-44040	09-04		26
	09-04		31
	09-05		22
	09-05		4
	09-25		4
	09-25A		4
	09-27		27
800-44050	05-04		5
	06-01		7
	09-04		8
	09-24		28
800-5145	06-27		19
806-8016	02-01		27
806-8025	02-04		11
8093883	02-26		3
811-6016	04-06A		16
814-10040	08-09		3
	08-25		6
814-10045	03-01		38
	08-09A		3
	08-13		25
	08-22		9
	09-38		35
814-10050	05-01		10
	08-24		10
	09-22		41
814-10055	08-12		27
	09-67		3
814-10060	08-22		10
	08-24		6
	08-26		6
	09-08		25
	09-13		25
814-10070	08-08		22
	08-08A		22
814-10080	08-10		2
	08-11		2
	08-12		2
	08-13		2
814-10080	08-14		2
	08-25		2
	09-08		20
814-10090	02-01		30
	08-26		29
	08-26		46
	08-27		13
	09-01		29
	09-08		16
814-10110	09-01		36
814-10120	08-10		14
	08-11		13
	08-12		13
	08-13		12
814-10130	09-13		13
814-10150	06-13		1
814-10220	09-66		33
814-12050	08-23		17
	08-23B		17
814-12080	02-07		5
	06-11		31
814-12100	09-40		14
814-12130	09-67		8
814-6050	05-02A		12
	09-60		2
	09-70		
814-6090	08-07A		10
	08-07B		10
814-8035	07-03		18
	08-08A		2A
	08-22		20
814-8050	09-25		27
	09-25A		31
814-8055	07-01		17
	07-01	01	17
	08-08A		2
	08-22		19
814-8060	06-14		16
	06-22		16
	06-29		7
	08-08		2
814-8070	07-04		7
	08-23		21
	08-23B		21
	09-15		8
	09-25A		27
814-8100	09-67		15
814-8110	09-67		13
81465471	02-01		13
81868381	08-30		8
	08-31		9
	08-32		18
	08-33		18
	08-34		19
	08-35		19
82017872	04-06A		26
82026949	04-07		35
	04-08		8
	07-03		21
824-1405	04-19		7
825-11412	03-02		8
825-11418	05-09		8
	06-01		2
	06-06		25
825-1404	09-01A		21
	09-01A		6
825-2406	09-65		27
825-2408	09-59		21
	09-64		30
	09-65		21
825-2410	09-40		6A
	09-41		5
	09-41		8
827-10045	02-06		19
827-10130	04-03		15
827-12060	06-01		21
827-12065	06-11		9
827-16085	09-37		10

Number	Figure	Sequence	Ref.
827-16100	09-37		11
827-20075	09-23		13
827-20170	09-36		2
	09-36		6
827-20190	09-05		16
827-20200	06-31		4
828-20160	09-06		4
	09-06		4
	09-07		4
829-1406	04-06A		20
	08-07A		16
	08-07B		16
	09-01		32
	09-18		25
	09-21		5
829-1408	03-03		11A
	04-04		8
	04-06A		18
	04-08		18
	04-09		31
	04-16		5
	07-03		8
	08-07B		30
	08-08		4
	08-08A		4
	08-22		23
	08-23		23
	08-23B		23
	09-03		17
	09-05		11
	09-13		7
	09-15		7
	09-25		29
	09-25A		29
	09-66		35
829-1410	02-06		13
	02-06		6
	03-01		35
	03-01		43
	04-07		38
	05-02		27
	05-02A		11
	06-10		25
	07-07		3
	08-03		25
	08-04		13
	08-05		11
	08-06		10
	08-06		15
	08-08		26
	08-08A		26
	08-09		5
	08-09A		5
	08-10		32
	08-10		4
	08-11		4
	08-12		4
	08-13		4
	08-14		4
	08-22		41
	08-23		13
	08-23B		13
	08-24		13
	08-24		7
	08-26		8
	08-27		16
	08-27		7
	09-01		26
	09-02		8
	09-13		37
	09-24		39
	09-38		30
	09-38		39
	09-38		54
829-1412	06-01		22
	08-23		19
	08-23B		19
	09-24A		3
829-1412	09-40		19
	09-67		11
829-1416	09-37		15
829-1420	06-31		7
	09-05		19
	09-23		15
	09-36		4
	09-36		8
829-2412	09-39		5
829-2420	09-39		3
832-10404	04-11		14
	07-03		24
	09-54		9
832-10406	04-06		8
	04-06A		15
	04-07		34
	04-09		33
	04-11		9
	05-02A		14
832-10408	02-01		24
	02-02		14
	02-02		25
	04-05		10
	04-06		5
	04-11		34
	05-01		17
	05-01		25
	07-03		19
	07-03		3
	09-13		33
	09-16		21
	09-16		3
	09-43		32
	09-45		7
	09-56		10
	09-59		11
	09-62		8
	09-63		12
	09-63		17
	09-68		7
	09-70		18
832-10410	04-03		18
	05-01		13
	07-03		27
	08-07		15
	08-10		15
	08-11		14
	08-12		14
	08-12		28
	08-13		13
	08-13		27
	08-24		26
	08-26		33
	08-26		45
	09-08		18
	09-08		22
	09-08		8
	09-13		14
	09-13		26
	09-15		17
	09-16		44
	09-19		17
	09-20		4
	09-22		42
	09-40		12
	09-45		11
	09-55		26
	09-66		34
	09-68		11
832-10412	02-07		9
	06-11		11
	06-11		34
832-10420	09-06		6
	09-06		6
	09-07		6
832-10508	09-55		39
	09-57		16
833-40310	09-37		9A

Number	Figure	Sequence	Ref.
833-40406	04-10		3
	04-11		23
	04-11		4
	04-16		11
	09-04		15
	09-12		18
	09-13		21
	09-14		10
	09-42		6
	09-43		18
	09-43		23
	09-43		6
	09-65		26
	09-68		18
833-40408	02-04		13
	09-45		4A
	09-59		10
	09-66		29
	09-70		17
838-3640	03-03		16
83822C1	09-65		
83931335	08-26		37
	08-26		40
83981068	08-31		19
	08-33		21I
	08-33		22
	08-34		20
	08-35		20
	08-35		25I
840-1416	04-20		12
	08-15		
	08-16		
	08-17		
	08-18		
	08-19		
	08-20		
	08-22		37
84124604	08-31		7
84127891	06-12		3
84140098	03-01A	01	1
843-1516	04-19		5
844-10020	04-04		16
	04-09		34
	04-14		11
844-10025	04-05		13
	04-06		19
844-10035	04-03		2
844-10110	09-08		6
844-6025	04-07		33
	04-09		32
	04-11		7
	04-16		10
844-8025	04-07		36
845-6020	09-65		25
85801585	02-07		6
	06-11		32
85802618	02-07		8
	06-11		32A
85802820	08-08		1
	08-08A		1
85803019	02-02		
85805986	06-03		5
85811933	08-40		8
	08-41		8
	08-43		8
	08-44		8
	08-45		7
	08-46		8
85811934	08-40		7
	08-41		7
	08-43		7
	08-44		7
	08-46		7
85811935	08-41		7
	08-43		7
	08-44		7
	08-46		7
85811937	08-45		6
85811938	08-40		4
	08-41		4
	08-43		4
	08-44		4
	08-45		4
	08-46		4
85812114	08-40		6
85812115	08-41		6
	08-46		6
85812116	08-43		6
	08-44		6
85819148	08-40		9
	08-41		9
	08-43		9
	08-44		9
	08-45		8
	08-46		9
85819378	08-41		3
	08-44		3
	08-45		3
	08-46		3
85820159	08-08		
	08-08A		
85820160	08-08		
	08-08A		
85821126	08-08		
	08-08A		
85821520	09-15		21
85824067	09-15		16
85824080	09-15		20
85824081	09-15		18
85824281	08-41		10
	08-43		10
	08-44		10
	08-45		9
	08-46		10
85824282	08-40		10
85825473	08-42		5
85826230	02-01		33
85826260	02-11		
85826337	08-36		3
	08-37		3
	08-38		3
	08-39		3
	08-41		
85826338	08-36		5
	08-37		5
	08-38		5
	08-39		5
	08-43		
85826339	08-36		2
	08-37		2
	08-38		2
	08-39		2
	08-40		
85826341	08-37		7
	08-39		7
	08-45		
85826342	08-38		7
	08-39		8
	08-46		
85826343	08-43		6A
85826344	08-40		5
	08-41		5
	08-42		4
	08-43		5
	08-44		5
	08-45		5
	08-46		5
85826345	08-40		3
	08-43		3
85826346	08-41		6A
85826365	08-36		6
	08-37		6
	08-38		6
	08-39		6
	08-44		
85826905	08-44		6A

Number	Figure	Sequence	Ref.	Number	Figure	Sequence	Ref.
85827471	08-17		3	86507198	09-59		3
	08-18		6		09-70		11
	08-19		6	86512512	08-01		47
	08-48			86547710	09-72		4
85827472	08-15		5	86596853	08-22		31
	08-16		5	86616248	04-17		10
	08-47			86619908	04-06A		7
85827991	08-47		2	86625057	09-43		15
85827992	08-47		4		09-43		26
	08-48		4		09-43		9
	08-49		5	86625112	07-03		13
85827993	08-47		6	86625128	08-50		13
	08-48		6		08-51		13
	08-49		7		08-53		10
85827994	08-47		7	86625138	03-01		6
	08-48		7	86639294	09-01A		22
	08-49		8		09-01A		7
85827995	08-47		8	86642312	08-58		11
	08-48		8		08-59		11
	08-49		9		08-60		12
85827996	08-47		9		08-62		11
	08-48		9		08-63		15
	08-49		10		08-64		13
85827997	08-47		10		08-65		13
	08-48		10	86976679	02-05		4
	08-49		11	86982435	08-59		18
85827998	08-47		12		08-66		16
	08-48		12	86982437	08-58		18
	08-49		13		08-60		23
85827999	08-47		13	86982439	08-62		25
	08-48		13	86982440	08-61		18
	08-49		14	86982441	08-65		22
85828000	08-47		14	86982442	08-63		24
	08-48		14	86982443	08-64		22
	08-49		15	86983190	09-42		2
85828001	08-47		15	86983269	09-42		9A
	08-48		15	86983325	09-42		9
	08-49		16	86984155	09-66		4
85828002	08-47		16	86984544	09-15		2
	08-48		16		09-25A		25
	08-49		17	86984545	09-15		6
85828003	08-47		17		09-25A		26
	08-48		17	86984547	09-15		5
	08-49		18		09-25		28
85828004	08-48		2		09-25A		28
85828005	08-47		11	86984549	09-15		24
	08-48		11	86988086	04-20		1
	08-49		12	86989616	09-15		28
85828013	08-47		3	86989676	03-01		10
85828015	08-48		3	86990837	05-04		1
	08-49		3		05-05		
85828048	08-49		2		05-06		
85828054	08-49		4		05-07		
85828061	08-49		1		05-08		
85999136	08-30		13	86992243	09-43		20
	08-30		14	86992245	09-43		10
	08-32		16	86992247	09-43		1
	08-32		17	86992284	09-43		
	08-34		14		09-43		
	08-34		15	86992395	04-01		
86000535	04-07		17		04-03		1
	04-09		10	86992557	08-08A		38
	04-09		16	86992975	09-76		12
86014151	04-06A		27	86992976	09-76		4
8602005	02-07A		1	86992977	09-43		28
8603092	09-76		3	86992978	09-78		12
8603093	09-78		3	86992979	09-78		4
8603094	09-77		3	86992980	09-77		12
8603095	09-76A	01	3	86992981	09-77		4
8605073	08-55		12	86993546	06-11		23
863-16070	05-06		8	86994165	09-48		11
864-10025	06-15		17	87000228	09-65		28
	06-23		17	87000312	08-50		17
864-12030	08-01		6		08-52		19
864-6025	06-33		8		08-54		15
864-8025	06-15		6	87016468	07-03		22
	06-23		6	87019103	09-01A		24
864-8055	09-13		34		09-01A		9

Number	Figure	Sequence	Ref.
87019767	06-11		23A
87020181	06-11		4
87037462	09-48		8
87037944	08-50		4
	08-51		4
	08-52		4
	08-53		4
	08-54		4
87041331	09-25		16
	09-25A		16
87301325	02-02		4
87301351	09-01		
87301355	02-01		5
87301356	02-01		8
87301687	04-06A		36
	04-07		11
87303784	04-20		3
87305413	09-14		7
	09-75		5
87307656	04-20		5
87307893	09-75		9
87307896	09-75		9
	09-78		
87308118	09-48		1
87308119	09-48		2
87308127	09-48		3
87308128	09-48		7
87308130	09-48		
87308131	09-48		13
87308132	09-46		7
	09-48		14
87308141	09-48		15
87308142	09-48		
87308143	09-48		
87308144	09-48		16
87308145	09-48		
87308146	09-48		17
87308147	09-48		18
87308148	09-48		
87308149	09-48		19
87308150	09-48		20
87308151	09-48		21
87308152	09-48		5
87308153	09-48		4
87308154	09-48		6
87308157	09-48		1
87308158	09-48		2
87308159	09-48		3
87308838	08-50		8
	08-51		8
	08-52		8
	08-53		5
	08-54		8
87308839	08-50		10
	08-51		10
	08-52		10
	08-53		6
	08-54		10
87309656	02-06		1
87309923	09-14		2
87309924	09-14		1
87310085	04-20		6
	09-42		12
87310086	04-10		5
87310088	09-43		12B
	09-43		3
87310096	06-11		8
	09-12		17
	09-42		15
87310098	04-11		22
	04-11		3
	09-15		34
	09-43		16
	09-43		22
	09-43		5
	09-68		17
87310109	09-37		22
87310124	04-10		12
87310124	04-10		13
	09-11		14
87310126	04-11		16A
	04-11		19
	09-11		14
	09-43		33
87310127	09-43		13
	09-43		24
	09-43		7
87310128	04-11		16
	04-11		30
87310139	09-11		8
87310144	04-11		36
87310146	09-43		14
	09-43		25
	09-43		8
87310147	09-54		7
87310149	09-46		17
	09-47		5
	09-49		11
87310152	04-10		2
	04-11		6
87310154	09-43		29
87310156	09-11		7
87310176	04-11		32
87310177	09-68		9
87310184	04-11		12
87310185	04-11		33
	09-43		31A
87310186	09-14		6
	09-43		17
	09-43		22A
	09-43		5A
87311219	06-10		8
87311572	09-46		16
	09-47		3
	09-49		9
87312712	04-04		32
	04-07		31
	06-11		42
87313544	06-31		3
87316049	08-05		27
87316264	08-05		31
87316270	08-05		30
87324160	09-37		20
87326813	09-24		40
87329475	09-13		11
87335469	03-01		5
87336843	09-75		5
87336844	09-75		5
87338681	09-46		1
87340008	02-01		42
87340753	03-02		11
87340754	03-03		21
87343247	04-13		5
	04-14		1
87344859	09-55		46
	09-57		26
87344860	09-55		40
	09-57		17
87345006	03-03		8
87346606	09-46		2
87346607	09-46		3
87346611	09-46		4
87346612	09-46		5
87346615	09-46		6
87346625	09-46		8
87346633	09-46		9
87346634	09-46		10
87348192	09-38		12
87348571	05-02A		
87352590	08-22		52
87353191	02-01		32
87358697	09-76		11
87360280	09-38		21
87363421	09-38		23
87365015	09-06		
87367622	02-02		7A

Number	Figure	Sequence	Ref.	Number	Figure	Sequence	Ref.
87368702	09-06			87411108	09-56		4
87368710	09-07			87411319	02-07		1
87375240	09-07		8		02-07		2
87378776	03-03		9	87412060	09-40		20
87380558	09-78		11	87412815	09-73		1B
87380559	09-77		11	87413674	09-76A	01	1
87382811	05-02A		7	87413676	09-79A	01	2
87382812	09-01		17	87413683	09-79A	01	6
	09-19		11	87413685	09-79A	01	3
87389813	09-22		15	87413688	09-79A	01	5
87393292	09-67		17	87413692	09-79A	01	11
87395300	06-11		14	87413722	08-62		12
	06-12			87414237	04-06A		12
	06-13			87414560	03-01		45
	06-14			87415774	02-01		43
	06-15			87415931	09-73		15
	06-16			87416475	09-48		12
	06-17			87416966	02-07		7
	06-18			87416967	06-11		33
	06-19			87417383	03-01		18
	07-01				04-06A		6
87395301	06-11		15		09-37		17
	06-20			87417599	09-01		37
	06-21			87417601	09-03		
	06-22			87417721	04-16		8
	06-23				08-25		8
	06-24				08-26		4
	06-25				09-01		38
	06-26				09-41		23
	06-27			87418360	02-02		22
	06-28			87418368	09-15		31
	06-29			87418369	09-15		32
	07-01	01		87418516	09-12		1
87395365	06-01		1	87418518	09-12		11
	06-02			87419229	04-04		23
	06-03			87419615	04-06A		23
	06-04			87419636	05-02		14
	06-05			87420672	08-08		25
	06-06				08-08A		25
	06-07			87420673	08-08		23
	06-08				08-08A		23
87395372	06-31		1	87420696	08-25		17
	06-33			87421213	08-25		4
	06-34			87421807	03-03		28
	06-35			87421832	08-23A		2
	06-36				08-23C		2
	06-37			87421836	08-23		20
	07-02				08-23A		
87396228	04-06A		24	87421918	08-05		4
87397601	04-06A		1	87421920	08-05		5
87399491	09-47		2	87422239	09-16		33
	09-48			87422241	09-16		31
87399492	09-47		1	87422243	09-16		28
	09-48			87422245	09-16		29
87400286	05-05		7	87422247	09-16		30
	06-02		9	87422249	09-16		32
87401203	09-16		1	87422253	09-19		15
87403835	04-05		1	87422256	09-19		14
	04-06		1	87422262	09-19		10
87404197	05-04		4	87422264	09-19		8
	06-01		9	87422270	09-19A		2
87405706	09-13		17	87422272	09-19A		1
87406924	09-53		10	87422597	06-10		12
	09-68		28	87422598	06-10		13
87406934	06-11		22	87422777	04-02		
87408480	03-01		11		04-03		3
87408888	09-46		14	87422948	08-23		35
	09-47		7	87422977	08-23		38
	09-49		7	87423033	08-08A		39
87408889	09-46		14		08-22		24
	09-47		8	87423067	08-25		5
	09-49		6	87423356	08-09		10
87409201	06-11		24		08-09		14
87410105	04-20		9	87423401	08-22		2
87410265	04-06A		21	87423496	04-16		2
87410602	04-06A		10	87423502	09-58		34
87411083	09-11		2A	87423503	09-58		26
87411084	09-11		4A	87423531	02-06		9

Number	Figure	Sequence	Ref.
87423802	04-20		8
87423812	04-20		4
	09-74		16
	09-75		6
87423813	09-79		14
87423926	04-04		6
87423969	08-23		40
	08-23B		40
87423970	08-23		41
	08-23B		41
87424267	08-50		14
	08-51		15
	08-52		16
	08-54		13
87425117	09-21		3
87425122	09-11		16
87425225	08-07A		9
	08-07B		9
	08-22		36
87425456	09-36		5
87425631	04-19		2
87425635	04-19		8
87425636	04-20		10
87425696	09-13		22
87426221	08-30		6
87426227	08-30		9
	08-31		10
87426232	08-30		7
87426233	08-30		5
	08-31		6
87426235	08-31		12A
87426238	08-30		15
	08-31		16
	08-32		21
	08-33		23
	08-34		8
	08-35		8
87426241	08-32		7
	08-32		8
	08-33		7
	08-33		8A
	08-34		10
	08-34		11
	08-35		10A
	08-35		11
87426488	08-22		16
87426716	08-30		12
	08-31		13
87426717	08-30		11
	08-31		12
87427537	08-26		28
	08-26		39
87427539	08-26		27
	08-26		38
87427775	09-25A		15
87427948	08-22		17
87428023	08-50		3
	08-51		3
	08-52		3
	08-53		3
	08-54		2
87428140	08-09		2
87428158	08-09		26
87428476	08-33		13
	08-35		22
87428477	08-33		14
	08-35		23
87428486	08-32		22
	08-33		24
	08-34		9
	08-35		9
87428488	08-32		20
	08-34		18
87428490	08-32		19
	08-33		19
	08-34		17
	08-35		17
87428491	08-32		13
87428491	08-34		23
87428492	08-32		14
	08-34		24
87428495	08-32		12
	08-33		12
	08-33		21F
	08-34		21
	08-35		21
	08-35		25F
87428497	08-32		9
	08-33		9
	08-34		12
	08-35		12
87428500	08-32		8
	08-33		8
	08-34		10
	08-35		10
87428501	08-33		21
	08-35		25
87428645	09-03		3
87428814	08-23		39
87429150	08-33		21D
	08-35		25D
87429151	08-32		8
	08-34		10
87429163	09-80		14
87429164	09-81		14
87429186	09-73		16
87429287	08-05		12
	08-06		11
87429310	03-01		1
87429314	03-01		1A
87429382	05-02		10
87429387	08-23		2
	08-23B		2
87429584	08-08		19
	08-08A		19
87429654	08-08		32
87429948	09-67		6
87429949	09-67		12
87429950	09-67		2
87429951	09-67		10
87429952	09-67		7
87429970	06-14		1
	06-22		1
87429971	06-14		15
	06-22		15
87429974	06-18		
	06-26		
87429978	06-29		
87429982	06-13		28
	06-21		28
87429983	06-17		30
	06-25		30
87429984	06-17		27
	06-25		27
87429985	06-13		19
	06-15		23
	06-21		25
	06-23		23
87429994	06-15		3
	06-23		3
87430122	09-66		19
	09-67		1
87430677	09-11		
	09-75		4
87430972	08-23		1
	08-23B		1
87431300	09-13		24
87431301	09-13		23
87431529	09-13		15
87431630	08-23		3
	08-23B		3
87431701	06-32		1
87431799	02-07		11
87432811	09-25		30
	09-25A		32
87433005	09-14		13

Number	Figure	Sequence	Ref.	Number	Figure	Sequence	Ref.
87433006	09-14		12	87437231	08-23		37
87433007	09-14		14	87437232	08-02		18
87433008	09-14		11		08-02		6
87433028	08-33		21A		08-23		36
	08-35		25A	87437263	08-26		1
87433029	08-32		10	87437366	09-14		3
	08-33		10	87437369	09-14		4
	08-34		13	87437371	08-52		13
	08-35		13		08-54		12
87433030	08-32		23	87437372	08-50		12
	08-33		25		08-51		12
	08-34		22		08-52		12
	08-35		26	87437373	08-51		14
87433209	09-79		12A	87437441	08-02		6
87433240	08-25		1	87437621	08-22		45
87433401	04-03		6	87437623	08-22		30
87434049	09-42		19	87437625	08-22		47
87434050	09-42		20	87437627	08-22		43
87434070	08-29			87437629	08-22		46
87434075	08-29		2	87437633	08-17		6
87434076	08-29		3		08-18		8
87434077	08-29		4		08-20		8
87434265	08-26		15	87437635	08-17		7
87434621	08-20		6		08-18		9
	08-49				08-20		9
87434672	08-01		11	87437655	08-01		39
	08-29			87437657	08-01		39
87434771	09-80		12A	87437688	09-13		18
87434772	09-81		12A	87437689	09-14		5
87434777	08-22		26	87437804	02-06		2
87434783	09-58			87437806	09-15		27
87434978	02-01		12	87437840	08-08		
87435076	06-10		9		08-08A		4A
87435078	06-10		6		08-22		21A
87435080	06-10		10	87437899	08-29		10
87435082	06-10		11	87437905	08-29		12
87435242	08-53		9	87437906	08-29		13
	08-54		11	87437914	08-29		14
87435243	08-50		11	87437923	08-21		6
	08-51		11	87437924	08-21		5
	08-52		11	87437925	08-21		7
87435275	09-13		8	87437926	08-21		9
87435372	09-14		8	87437927	08-21		4
87435381	04-20		2	87437928	08-21		8
87435453	09-58		23	87437929	08-21		10
87435506	08-50		15	87437930	08-21		11
	08-51		16	87437933	08-21		12
	08-52		17	87437935	08-21		13
	08-53		12	87437938	08-08A		33
	08-54		14	87437939	08-08A		32
87435569	05-01		1	87437940	08-08A		35
	09-73		12	87437941	08-08A		34
87435909	08-26		5	87437980	08-01		42
	08-28			87437982	08-01		43
87435924	09-15		12	87438012	08-19		8
	09-25		11	87438015	08-19		9
	09-25A		11	87438021	08-28		2
87435929	09-58		1	87438022	08-28		
87435938	09-79		12	87438023	08-28		
87435939	09-80		12	87438024	08-28		
87435940	09-81		12	87438025	08-28		3
87436066	08-01		17	87438026	08-28		
	08-02		16	87438027	08-28		
	08-02		7	87438028	08-28		
	08-25		25		08-28		
87436076	09-42		3	87438029	08-28		4
87436225	08-50		2	87438031	08-28		5
	08-51		2	87438032	08-28		
	08-52		2	87438045	08-29		
	08-53		2	87438046	08-50		16
	08-54		3		08-52		18
87436782	09-22		43		08-54		16
87436836	04-06A		35	87438157	09-21		14
	04-07		15	87438925	04-01		3
	04-07		8	87438926	04-01		4
	04-20		11	87438927	04-01		5
87437231	08-02		18	87438928	04-01		6
	08-02		6	87438929	04-01		8

Number	Figure	Sequence	Ref.	Number	Figure	Sequence	Ref.
87438930	04-01		9	87439724	09-57		1
87438931	04-01		10	87439725	09-55		4
87438932	04-01		11	87439726	09-55		
87438933	04-01		12	87439728	09-55		1
87438935	04-01		13	87440045	05-02		22
87438937	04-01		14		08-03		1
87438940	04-01		15		08-57		
87438941	04-01		16	87440058	09-20		10
87438942	04-01		17	87440283	09-54		14
87438944	04-01		18	87440381	09-13		31
87438946	04-01		19	87440694	08-23		16
87438948	04-01		20		08-23B		16
87438950	04-01		22	87440704	09-13		9
87438951	04-01		32	87440706	09-13		10
87438954	04-01		36	87440710	09-13		1
87438956	04-01		38	87440711	09-13		
87438960	04-02		1		09-15		1
87438963	04-02		2	87440712	08-22		14
87438965	04-02		3	87440812	08-09A		10
87438967	04-02		4	87440814	08-31		15
87438969	04-02		5		08-33		17
87438970	04-02		6		08-35		15
87438971	04-02		7	87440815	08-31		14
87438972	04-02		8		08-33		16
87438973	04-02		9		08-35		14
87438974	04-02		10	87440835	08-20		10
87438975	04-02		11	87440837	08-20		11
87438976	04-02		12	87441076	08-09		23
87438977	04-02		13		08-09A		23
87438978	04-02		14	87441495	08-36		1
87438979	04-02		15		08-37		1
87438980	04-02		16		08-38		1
87438981	04-02		17		08-39		1
87438982	04-02		18	87441758	09-70		20
87438983	04-02		19	87441850	09-15		9
87438984	04-02		20		09-25		12
87438985	04-02		21		09-25A		12
87438986	04-02		22	87441876	06-10		1
87438987	04-02		23	87442357	02-06		20
87438989	04-02		24	87442376	09-42		21
87438992	04-01		1	87442377	09-42		22
87438993	04-01		2	87442409	09-15		33
87438994	04-01			87442419	02-01		45
87438995	04-01		21	87442441	09-59		19
87438996	04-01		23	87443052	08-23B		39
87438997	04-01		24	87443080	04-13		8
87438999	04-01		25		04-14		2
87439000	04-01		26	87443149	08-04		15
87439001	04-01		27	87443150	08-04		14
87439002	04-01		28	87443691	09-55		1A
87439003	04-01		29	87443692	09-15		26
87439004	04-01		30	87443721	08-50		5
87439005	04-01		31		08-51		5
87439006	04-01		33		08-52		5
87439007	04-01		34		08-54		5
87439008	04-01		35	87443722	08-53		8
87439009	04-01		37	87444147	09-40		2
87439010	04-01		41	87444148	09-40		1
87439011	04-01		43	87444149	09-25		15
87439032	08-21		14	87444567	08-32		10
87439033	08-21		15		08-32		7
87439061	04-01		42		08-32		8
87439135	09-21		13		08-34		10
87439136	05-02		13		08-34		11
87439137	05-02		1		08-34		13
87439138	05-02		5	87444776	09-75		9
87439210	09-12		15	87445051	09-58		30
87439213	08-22		48	87445245	09-25		9
87439215	08-22		40		09-25A		9
87439306	08-08		10	87445557	08-22		44
	08-08A		10	87445794	08-23B		44
87439537	08-14		18	87446081	02-01		7
87439665	08-08		24	87446082	02-01		6
	08-08A		24	87446113	09-17		12
87439722	09-55		27	87447088	09-19A		
	09-57		5	87447135	02-07A		
87439723	09-55		29	87447450	05-01		12
	09-57		6	87447477	08-39		10

Number	Figure	Sequence	Ref.	Number	Figure	Sequence	Ref.
87448059	09-12		2	87454548	08-34		10
87448198	09-57				08-34		11
87448199	09-55				08-34		12
87448990	08-22		39A		08-34		13
87448993	08-23B		20		08-35		25C
	08-23C			87454907	08-60		2
87449373	08-55			87454908	08-60		2
87449374	08-55		2	87455509	09-08		
87449440	08-06		24	87455533	08-32		9
	08-26		49		08-34		12
87449579	07-04		4	87455534	08-30		13
87449995	09-25		25		08-32		16
87449996	09-25		26		08-34		14
87450318	08-08A		1A	87455536	08-30		13
	08-22		18		08-30		14
87450456	08-02		13		08-32		16
87450698	08-09A		14		08-32		17
87450914	09-13		27		08-34		14
87450978	08-31		8		08-34		15
	08-32		11	87455538	08-30		13
	08-33		11A		08-32		10
	08-34		16		08-32		16
	08-35		16A		08-34		13
87450979	08-32		11		08-34		14
	08-33		11B	87455539	08-30		13
	08-34		16		08-32		16
	08-35		16B		08-34		14
87450980	08-32		11	87455540	08-30		14
	08-33		11C		08-32		17
	08-34		16		08-34		15
	08-35		16C	87455541	08-32		7
87451167	02-06		10		08-32		8
87451279	09-26		11		08-32		8
87451280	09-26		36A		08-32		9
87451448	08-53		11		08-33		21E
87452021	05-02A		25		08-34		10
	08-07A		27		08-34		10
	08-07B		33		08-34		11
	09-38		24		08-34		12
87452399	08-01		16		08-34		13
87452400	08-01		26		08-35		25E
87452402	08-26		16	87455545	08-32		10
87452403	08-26		17	87455549	08-32		11
87452404	09-19		2		08-32		19
87452405	08-21		16		08-32		20
87452406	09-19		1		08-34		16
87452511	04-20		15		08-34		17
87452627	09-12		3		08-34		18
87452823	03-03		29	87455551	08-30		11
87454016	08-07		1	87455564	08-33		21G
	08-60		1		08-35		25G
87454017	08-07		2	87455565	08-33		21H
	08-60		1		08-35		25H
87454292	09-46			87455580	08-30		8
87454376	02-02		7		08-32		18
87454377	02-01		14		08-34		19
87454378	02-01		16	87455832	08-02		18
87454545	05-02				08-23B		37
	05-02A			87455961	08-13		18
87454547	08-32		10	87455974	08-32		22
	08-32		7		08-34		9
	08-32		8	87455975	08-30		15
	08-32		8		08-32		21
	08-32		9		08-34		8
	08-33		21B	87456199	09-22		11
	08-34		10	87456900	06-19		4
	08-34		10		06-28		4
	08-34		11	87456901	06-29		11
	08-34		12	87456968	06-19		1
	08-34		13		06-28		1
	08-35		25B	87456969	06-29		12
87454548	08-32		10	87473380	08-50		
	08-32		7		08-51		
	08-32		8		08-52		
	08-32		8		08-53		
	08-32		9		08-54		
	08-33		21C	87478483	08-06		23
	08-34		10		08-26		48

Number	Figure	Sequence	Ref.	Number	Figure	Sequence	Ref.
87480653	08-09		1	87555530	08-33		
	08-09A		1	87555536	08-33		
	08-55			87555567	08-35		
87480903	09-74		2	87555570	08-35		
87482634	08-08A		38	87557237	02-02		6
	08-22		25	87559003	02-01		2
87490402	02-11			87560507	05-02A		19
87490403	02-11			87560508	05-02A		4
87491256	08-03		8A	87561131	09-40		24
87491322	09-24		37	87566237	08-33		20
87491347	09-59		7		08-35		18
	09-70		14	87566480	08-07A		8
87494328	03-01		27		08-07B		8
	03-01A	01	6	87566994	09-04		1
87494346	08-03		7A	87572760	05-04		9
87497900	02-11		12		06-01		35
87498489	03-01		46	87576643	02-01		1
87518479	08-23B		38	87577141	09-06		
87521766	04-09		14	87577343	08-15		1
	04-12				08-16		1
87522766	04-05		4		08-36		
	04-06		3	87577346	08-17		1
87524409	06-19				08-18		1
	06-28				08-37		
87524432	06-19		14	87577348	08-19		1
	06-28		14		08-38		
87524433	06-19		13	87577349	08-20		1
	06-28		13		08-39		
87524435	06-19		16	87578455	04-07		6
	06-28		16	87578867	06-15		1A
87524436	06-19		5		06-23		1A
	06-28		5	87578904	09-49		2
87524437	06-19		11	87578905	09-49		1
	06-28		11	87578910	05-02A		
87524438	06-19		12	87579286	05-02A		1
	06-28		12	87581010	09-79		15
87524439	06-19		10	87582179	02-23		
	06-28		10	87582180	02-23		
87524440	06-19		15	87582181	02-23		
	06-28		15	87584645	04-05		16
87524441	06-19		8	87585167	09-41		20
	06-28		8	87585817	04-07		21
87525756	06-19			87586156	09-01		10
	06-28				09-02		6
87525849	06-17		20	87586772	08-50		
	06-25		20		08-51		
87527167	04-09		35		08-52		
87528887	04-16		9		08-53		
87530365	06-19		7		08-54		
	06-28		7	87586773	08-50		
87534372	09-55		41		08-51		
	09-57		18		08-52		
87534992	09-43		21A		08-53		
87537201	09-24A		2		08-54		
87537207	09-24A		1	87586776	08-50		
87537208	09-24A		4	87587017	08-54		
87537209	09-24A			87589025	09-66		32
87538167	09-65		29	87590156	09-66		12
87538515	06-09		12	87592654	09-76A	01	4
	06-11		40	87592658	08-01		5
	06-38		12	87592819	09-24		34
87539792	04-09		36	87593381	08-31		
87540980	04-10		14	87593382	08-31		
87541852	08-32			87593642	03-03		3
87541853	08-32			87594363	08-22		2
87541854	08-34			87594364	08-22		30
87541855	08-34				08-22		45
87541939	08-30		14	87594903	09-41		1
	08-32		17	87595723	09-76A	01	10
	08-34		15	87595724	09-76A	01	11
87541940	08-30		13	87595725	09-79A	01	1
	08-32		16	87595756	09-79A	01	13
	08-34		14	87598501	09-66		31
87545557	09-41		12	87601338	06-11		39
87545561	02-04		6	87601345	06-11		20
87546291	09-66		26	87601612	04-06A		28
87554105	08-30			87602620	09-10		
87555125	09-48			87603511	07-06		9

Number	Figure	Sequence	Ref.
87603513	07-05		10
	07-05A		10
87603514	07-05		11
	07-05A		11
87603948	02-07		
	02-08		1
87606502	09-40		15
87608352	04-06A		22
87608368	02-01		18
87608370	02-01		19
87608777	09-14		9
87609666	08-59		12
87609669	08-05		34
	08-59		1
	09-05		20
87610318	05-02A		8
87610338	02-04		1
	02-05		
87610679	04-05		8
	04-06		17
87610680	04-05		7
	04-06		16
87610681	04-06		15
87610682	04-06		14
87611852	02-06		17
87612469	03-01B	01	6
87612471	03-01B	01	8
87612472	03-01B	01	11
87613159	05-02A		
87613161	05-02A		
87613924	06-11		35
	06-38		
87614808	04-09		11
87615800	09-63		18
87616934	02-02		2
87617576	02-06		7
87617618	08-36		4
	08-37		4
	08-38		4
	08-39		4
	08-42		
87617655	08-42		3
87617657	08-42		6
87618533	06-31		6
87619415	05-02A		
87619781	09-27		18
87622505	09-80		15
87622506	09-81		15
87622714	08-04		6
87622718	08-04		4
87623338	09-01A		1
	09-01A		14
87623339	09-01A		15
	09-01A		2
87623771	09-04		25
87625976	08-04		23
87626017	09-74		14
87627072	09-68		8
87627903	08-01		3
87628308	02-01		4
87628324	02-01		3
87630218	09-66		6
87630219	09-66		1
87630220	09-66		20
87630445	09-09		1
87632870	02-02		9
87632920	09-01		2
	09-02		17
87633581	04-11		2
87636554	09-68		1
87636559	09-68		
87636560	09-53		1
87636561	09-54		1
87636562	09-53		1
87636563	09-54		1
87637384	09-59		27
	09-70		21
87638046	09-01		1
87638046	09-01A		
87638047	09-01A		
	09-02		1
87638350	09-01A		10
	09-01A		25
87642364	07-03		11
87642365	07-03		10
87642370	07-03		6
87642658	08-04		7
87644495	07-03		7
87644497	07-03		9
87647001	09-76		9
87647029	02-01		15
87647549	02-23		
87647550	02-23		
87647551	02-23		
87648733	03-03		25
87649398	06-01		12
87649405	04-08		27
87650602	08-07A		23
	08-07B		32
87651790	09-38		1
87651830	09-38		
87651975	08-07A		26
	08-07B		26
87652272	02-04		10
87652902	09-76		8
87653245	09-61		1
87653377	04-05		3
	04-06		2
87656146	03-01		14
87656501	03-01		25
	08-03		12
87657148	09-54		3
87657149	09-54		2
87658696	03-01		26
87659604	08-03		7
87659610	05-03		
87659611	05-03		
87659612	05-03		
87659613	05-02A		2
	08-03		22
87659616	05-03		
87659784	08-03		8
87662928	08-07A		7
	08-07B		7
87662930	08-07A		4
	08-07B		4
87662932	08-07A		19
	08-07B		19
87663365	05-02A		17
87664021	04-05		2
	04-06		20
87664422	09-01		34
87664425	09-01		33
87666451	02-04		7
87668167	08-07B		23
87669381	09-60		1
	09-70		1
87669391	09-60		4
	09-70		2
87669401	09-60		7
87669712	09-60		6
87669761	09-60		5
	09-70		3
87671746	04-06		9
87671893	05-02A		18
87673270	09-38		9A
87674844	02-02		1
87674850	09-38		27
87675026	08-25		13
87675071	08-25		20
87675074	08-25		22
87675208	09-59		1
	09-70		8
87675513	08-04		24
87679228	03-01		39
87681261	09-01		6

Number	Figure	Sequence	Ref.	Number	Figure	Sequence	Ref.
87681261	09-02		13	87701320	07-01	01	8
87682993	02-05		2	87701321	07-01		9
87682999	02-05		3		07-01	01	9
87685948	08-15		3	87701323	07-01		10
	08-17		8		07-01	01	10
	08-50			87701324	07-01		11
87685952	08-19		3		07-01	01	11
	08-20		3	87701325	07-01		12
	08-52				07-01	01	12
87685953	08-16		3	87701327	07-01		13
	08-18		2		07-01	01	13
	08-51			87701328	07-01		14
87685954	08-15		4		07-01	01	14
	08-16		4	87701329	07-01		15
	08-19		4		07-01	01	15
	08-53			87701330	07-01		16
87685955	08-17		9		07-01	01	16
	08-18		3	87701333	07-01		19
	08-20		4		07-01	01	19
	08-54			87701338	06-15		2
87686604	09-64		20	87701775	06-26		27
87687141	08-50		1	87701777	06-21		5
	08-51		1	87702194	06-11		21
	08-52		1	87702261	09-74		1
	08-53		1	87702297	09-76		14
	08-54		1	87702570	06-13		20
87689189	09-01A		11		06-21		18
	09-01A		26	87704851	09-54		13
87689338	09-01A		12	87704858	02-06		14
	09-01A		27	87704971	06-27		1
87693492	03-01		12	87705460	06-17		28
87694065	09-38		48	87706237	09-77		8
87694305	04-10		1	87706239	09-78		8
87694656	06-01		11	87706250	09-77		9
	06-09			87706251	09-78		9
87697589	07-04		2	87708015	09-01		5
87697590	07-04		3		09-02		14
87698749	02-11		13	87708227	09-77		14
87699640	09-59		13	87708242	09-78		16
	09-70		7	87708390	06-33		1
87699880	06-01		19	87708391	06-33		9
87699881	07-06		8	87708392	06-33		10
87700144	04-09		30	87708393	06-35		1
87700794	09-59		2	87708394	06-34		1
	09-70		12	87708395	06-34		2
87701053	06-21		4	87708396	06-34		4
87701253	06-13		4	87708397	06-34		6
87701255	06-13		5	87708398	06-34		7
87701257	06-13		11	87708399	06-34		8
	06-21		11	87708400	06-34		9
87701258	06-13		18	87708401	06-34		11
	06-21		22	87708402	06-34		14
87701260	06-13		22	87708403	06-34		15
87701269	06-13		26	87708408	06-34		16
	06-21		27	87708409	06-34		17
87701270	06-13		27	87708411	06-34		18
	06-21		26	87708413	06-36		1
87701275	06-25		28	87708415	06-36		2
87701276	06-16		4	87708417	06-36		5
	06-24		4	87708420	06-36		6
87701278	06-18		4	87708422	06-36		8
	06-26		4	87708424	06-36		9
87701293	06-18		16	87708427	06-36		10
	06-26		16	87708431	07-02		1
87701294	06-18		27	87708432	07-02		1
87701309	07-01		1	87708433	07-02		2
	07-01	01	1	87708434	07-02		3
87701310	07-01		2	87708435	07-02		4
	07-01	01	2	87708436	07-02		6
87701313	07-01		4	87708438	07-02		7
	07-01	01	4	87708440	07-02		9
87701315	07-01		5	87708441	07-02		12
	07-01	01	5	87708442	07-02		13
87701317	07-01		6	87708443	06-37		2
	07-01	01	6	87708444	06-37		3
87701318	07-01		7	87708445	06-37		6
	07-01	01	7	87708447	06-37		9
87701320	07-01		8	87708452	06-37		10

Number	Figure	Sequence	Ref.	Number	Figure	Sequence	Ref.
87708453	06-37		11	87737557	09-24		1
87708454	06-37		12	87738175	09-75		3
87708466	06-37		17	87738597	09-75		3
87708467	06-37		18	87738598	09-75		3
87710131	06-02			87739247	03-01		28
87710137	06-04		9	87741446	09-59		14
87710141	06-04		8	87741447	09-59		22
87710142	06-04		6	87746673	08-15		2
87710143	06-04		7		08-16		2
87710144	06-04				08-17		2
87710145	06-03		4		08-18		5
87710155	06-02		11	87746674	08-19		2
87710156	06-03		1		08-20		2
87710157	06-04		1	87748047	09-59		12
87710158	06-04		5		09-70		19
87710159	06-03		2	87751884	09-73		4
87711038	06-37		15	87751885	09-73		5
87711985	09-59		4	87753055	08-55		12
	09-70		9	87754369	09-73		1
87712299	08-04		5	87757931	08-31		17
87712370	09-04		27	87757932	08-31		18
87713665	09-24		26A	87801005	03-01B	01	7
87714038	07-03		1	87803194	03-08		6
	07-04		1	87803261	02-32		1
	07-07			87803445	03-01B	01	4
87715487	02-02		3	87840170	03-01B	01	5
87716480	08-05		13	87840171	03-01B	01	3
87716482	08-05		14	87840173	03-01B	01	9
87716484	08-27		8	87840174	03-01B	01	10
87716486	08-06		12	87840177	03-01B	01	2
87716488	08-06		13	87840178	03-01B	01	1
87716490	08-27		1	892-11005	03-03		30
87716492	08-27		2		04-19		6
87716823	06-09		7	892-11006	03-03		31
	06-38		6		08-07A		15
87716824	06-09		6		08-07B		15
	06-38		7		09-60		3
87716969	07-07		1		09-70		
87716970	07-07		2	892-11008	02-01		41
87716973	09-37		1		03-01		17A
87719412	09-39		1		03-03		10
87719444	09-38		13		04-03		5
87719495	09-41		19		04-06A		17
87719497	09-41		18		04-08		17
87724438	09-05		21		04-16		4
87724903	09-28		1		08-23		22
87724905	09-30		1		08-23B		22
87724906	09-32		1		09-05		10
87724907	09-35		1		09-08		28
87724908	09-32		1		09-12		14
87724910	09-34		1		09-13		6
87725883	09-39		10		09-15		3
87725886	09-39		9		09-25		24
87726055	09-41		24		09-25A		24
87726573	04-09				09-44		6
	09-70			892-11010	02-06		5
87726574	04-07		16		03-01		32
	04-09		24		03-03		24
	09-70				04-01		40
87726576	04-07		32		05-02		26
87726584	04-04		1		08-04		12
	04-08		20		08-05		10
87726592	04-07		1		08-06		16
	04-08		1		08-06		9
87726595	04-09		1		08-07		9
87726617	04-20		7		08-10		31
87726950	09-66		30		08-22		42
87726951	09-66		18		08-23		12
87735096	06-11		30		08-23B		12
87735097	06-11		29		08-24		12
87735103	09-76		2		08-26		35
87735104	09-78		2		08-26		41
87735105	09-77		2		08-27		15
87735577	04-05		6		08-27		6
	04-06		11		09-08		26
87735578	04-05		5		09-13		28
	04-06		10		09-25		7
87737557	09-23				09-25A		7

Number	Figure	Sequence	Ref.
892-11010	09-38		36
892-11012	09-24A		7
893-11005	04-18		8
895-11004	04-11		13
	07-03		23
	09-54		8
895-11005	03-03		6
895-11006	04-06		7
	04-06A		14
	05-02A		13
	09-55		10
895-11008	02-01		10
	02-01		23
	02-01		28
	02-02		13
	02-02		23
	02-04		3
	03-03		11
	04-05		14
	04-06		4
	06-10		3
	07-03		2
	07-03		29
	07-04		6
	08-07B		28
	08-08A		3A
	08-22		22
	09-03		16
	09-05		9
	09-12		13
	09-15		
	09-21		15
	09-25		32
	09-59		9
	09-66		36
	09-70		16
895-11010	03-01		34
	03-01		42
	04-04		19
	04-16		7
	05-02A		10
	07-03		26
	08-03		3
	08-07		14
	08-08		31
	08-08A		31
	08-09		4
	08-09A		4
	08-10		30
	08-10		33
	08-11		28
	08-12		25
	08-13		26
	08-13		37
	08-24		11
	08-25		3
	09-01		24
	09-02		7
	09-03		9A
	09-04		20
	09-08		17
	09-08		21
	09-38		34
	09-38		51
	09-40		11
	09-40		17
	09-40		6
	09-41		4
	09-41		9
	09-45		10
895-11018	08-09		7
895-15006	04-11		8
895-15008	03-01A	01	2
	04-09		29
	05-01		16
	05-01		24
	09-13		4
	09-37		21
895-15008	09-38		15
	09-43		31
	09-62		7
	09-63		16
	09-66		28
895-15010	02-01		21
	04-07		37
	05-01		21
	08-25		7
	09-13		12
	09-25		8
	09-25A		8
	09-63		11
895-15012	03-01A	01	4
895-18012	09-47		4
	09-49		10
895-25006	08-07A		14
	08-07B		14
895-30107	09-55		35
	09-57		12
896-11008	02-07A		2
	09-13		32
896-11010	02-01		38
	02-06		18
	04-03		17
	08-10		3
	08-11		3
	08-12		3
	08-13		3
	08-14		3
	08-24		25
	08-26		3
	08-26		36
	08-26		44
	08-26		7
	09-01		29A
896-11012	04-06A		33
	06-11		10
	08-23		18
	08-23B		18
	09-24A		6
	09-67		9
896-11020	03-01		3A
	06-31		5
	09-05		18
	09-06		7
	09-06		7
	09-07		7
	09-23		14
	09-24		5
	09-36		3
	09-36		7
	09-38		17
896-12012	02-01		47
896-15008	09-67		16
896-15010	02-06		12
	02-06		4
	06-11		25
	08-22		11
	09-09		3
	09-13		19
	09-67		5
896-15012	02-07		4
	03-03		27
	06-11		28
	07-05A		8
	09-40		18
	09-46		12
	09-47		10
	09-49		4
896-15016	09-37		12
90-6682T1	06-01		16
905794R1	06-15		20
	06-23		20
905839R1	05-06		6
	06-04		4
906086R1	09-55		42
	09-57		19

Number	Figure	Sequence	Ref.
933781R1	07-01		24
	07-01	01	24
934667R1	06-13		7
	06-21		7
	06-29		6
934727R1	05-06		4
	06-04		2
9625178	06-37		4
	08-55		7
9637611	06-01		17
	06-09		13
	06-11		41
	06-38		13
9703399	04-14		
	04-14		
9827902	04-04		17
9966352	06-07		8
9966356	06-07		13
9968031	06-08		3
9970178	08-23A		3
	08-23C		3
9970179	08-23A		4
	08-23C		4
9970180	08-23A		6
	08-23C		6
9970181	08-23A		1
	08-23C		1
9970384	08-23A		5
	08-23C		5
A13240	08-25		10
A156873	06-02		6
	06-33		3
A166057	04-04		2
A167037	09-71		8
A170467	02-06		8
A177435	03-02		2
A187542	04-17		5
A187575	04-17		11
A187714	09-58		10
	09-60		
A23870	04-17		1
A30881	09-03		11
	09-13		3
	09-16		15
	09-17		5
	09-18		26
	09-21		6
A33509	09-27		29
A38208	05-04		15
	05-09		7
A41264	04-15		9
A42561	04-09		8
	09-64		6
	09-65		14B
A45054	09-48		
A45504	09-48		
A45505	09-48		
A45513	09-48		
A48041	06-06		11
	06-16		6
	06-17		2
	06-24		6
	06-25		2
A65544	05-01		5
A77310	07-03		20
D121152	04-13		2
	04-15		
D121194	09-05		6
D123684	05-04		3
	06-01		10
D124529	07-03		16
D124530	07-03		12
D125223	05-09		1
D127167	09-26		44
	09-27		21
D127335	04-11		24
D127542	09-04		2
D129227	09-25		2
D129227	09-25A		2
D129264	09-06		2
	09-06		2
	09-07		2
	09-08		11
D132076	09-05		17
D132494	09-24		16
	09-27		2
D132982	06-10		26
	08-03		26
	09-64		24
D133632	09-24		21
	09-27		7
D133865	09-27		24
D134900	09-20		6
D135384	04-13		1
	04-15		
D135557	09-23		5
D135559	09-23		6
D135739	09-24		12
D136391	09-23		26
D136392	09-23		24
D136700	09-23		25
D137218	09-24		13
D137363	04-04		12
	09-04		16
D137625	08-01		14
D138042	09-23		7
D138047	09-26		50
	09-26		52
	09-27		34
	09-27		47
D138055	08-04		8
	08-05		6
	08-06		14
	08-06		7
	08-26		31
	08-26		42
	08-27		12
	09-38		37
D138157	09-28		7
	09-29		7
	09-30		7
	09-32		7
	09-32		7
	09-34		7
	09-35		7
D138380	06-30		4
D138492	06-30		5
	06-31		2
D139039	09-16		19
D139849	09-28		
	09-29		
	09-30		
	09-32		
	09-32		
	09-34		
	09-35		
D139851	09-28		
	09-29		
	09-30		
	09-32		
	09-32		
	09-34		
	09-35		
D140029	08-65		15
	09-26		8
D140035	07-03		14
D140247	09-27		28
D140267	09-40		13
	09-54		26
D141075	09-26		42
D141142	09-26		20
	09-27		37
D141164	09-26		22
	09-27		39
D141666	09-27		11
D142012	09-35		4

Number	Figure	Sequence	Ref.
D142144	09-71		10
D142787	08-04		20
	08-08		27
	08-08A		27
	08-09		21
	08-09A		21
D142890	07-02		10
D142898	05-08		6
	06-27		16
	06-34		3
D142986	06-37		7
D143242	09-68		4
D143324	09-26		30
D143406	09-22		13
D143411	09-13		35
D143416	09-20		5
D143417	09-40		23
	09-64		29
	09-65		20
D143427	09-64		27
	09-65		18
D143591	09-15		15
	09-25		21
	09-25A		21
D143714	09-40		9
D143715	09-40		8
D143723	09-15		10
	09-25		22
	09-25A		22
D143735	09-25		20
	09-25A		20
D143846	08-07		6
	08-12		26
	08-26		31A
	08-26		47
D144423	09-23		35
D144592	09-25		3
	09-25A		3
D145978	09-26		7
	09-27		16
D146288	09-26		26
	09-27		49
D146420	09-29		3
D146421	09-29		2
D147249	09-29		4
D147409	09-28		4
D147773	08-10A		26
D148947	09-18		2
D148962	03-02		6
	09-13		30
D148992	09-16		7
D148993	09-13		2
D148994	09-16		18
D149033	09-22		40
D149079	08-63		17
	08-63		3
	08-64		15
	09-23		2
	09-26		47
	09-27		31
D149262	09-16		46
D149287	09-01		35
	09-03		4
	09-16		37
	09-17		11
	09-19		3
	09-20		11
D149288	09-16		23
	09-16		48
	09-19		7
	09-21		11
D149295	09-16		34
	09-19		9
D149298	09-26		32
D149309	08-24		3
D149725	05-05		4
	06-02		2
D149726	05-05		3
D149726	06-02		4
D149824	09-74		3
D149825	09-74		4
D149826	09-79		10
D149827	09-79		11
D149828	09-74		5
D149829	09-74		6
D149860	06-09		
D149866	09-11		9
D149867	09-11		10
D149868	09-11		12
D150032	09-20		13
D150053	08-10A		3
D150054	08-10A		2
D150121	09-26		10
	09-27		17
D150214	05-06		11A
D150397	09-16		9
D150434	09-16		13
D150435	09-16		12
D150486	09-16		17
D150493	09-16		24
D150503	09-16		45
D150619	09-26		34
D150781	08-55A		
D150810	08-55A		
D151034	09-05		15
D151065	09-23		21
D151069	09-37		5
D151070	09-37		6
D151071	09-24		11
D25279	09-22		10
	09-22		14
	09-26		31
D26002	09-22		9
D28648	09-22		12
D30933	09-28		12
	09-29		12
	09-30		12
	09-31		9
	09-32		12
	09-32		12
	09-33		9
	09-34		12
	09-35		12
D31140	09-08		2
	09-26		53
	09-27		48
D34666	09-16		16
D37495	09-29		11
	09-30		11
	09-31		8
	09-32		11
	09-32		11
	09-33		8
	09-34		11
	09-35		11
D37614	09-26		29
D38648	08-07		20
	08-14		21
D38907	09-22		3
D39118	09-18		11
D39696	06-10		24
	08-03		18
D41659	09-31		
	09-33		
D43940	09-28		11
D48212	09-28		10
	09-29		10
	09-30		10
	09-32		10
	09-32		10
	09-34		10
	09-35		10
D50146	09-22		6
D50696	09-35A		2
D51391	09-08		7
D51392	09-08		15

Number	Figure	Sequence	Ref.
D51393	09-08		19
D51750	09-28		5
	09-28		8
	09-29		5
	09-29		8
	09-30		5
	09-30		8
	09-31		5
	09-32		5
	09-32		5
	09-32		8
	09-32		8
	09-33		5
	09-34		5
	09-34		8
	09-35		5
	09-35		8
D52276	08-10		7
	08-11		7
	08-12		7
	08-13		7
	08-14		7
	08-22		13
D52564	09-72		1
D53812	09-22		17
D55216	09-74		10
D59912	09-16		4
	09-18		6
	09-21		2
D61368	09-22		16
D74182	09-13		36
D80270	09-74		11
D86664	09-25		19
	09-25A		19
D88052	09-63		32
	09-64		32
D95096	09-03		13
D95142	08-59		5
D95143	08-58		5
	08-60		5
	08-66		4
D95144	08-61		5
	08-62		5
D95145	08-63		7
	08-64		5
	08-65		5
E135777	06-34		5
E135785	06-34		10
E135809	06-13		21
	06-21		1
	06-32		6
	07-01		23
	07-01	01	23
E135810	06-37		16
E155859	09-79A	01	7
E43769	09-59		17
	09-70		6
E49497	09-19A		4
E49498	09-19A		3
F22426	04-11		
F44883	09-41		11
F45165	09-55		49
	09-57		25
F53473	05-04		10
	06-01		36
F64198	09-55		45
	09-57		22
F64519	09-68		14
G100440	08-61		15
G100444	08-59		15
	08-60		17
	08-66		14
G100448	08-61		16
G100449	08-59		16
	08-60		18
	08-66		15
G101533	08-61		6
	08-62		6
G101994	08-63		21
G101995	08-63		20
G101996	08-63		22
G102285	08-61		14
G102287	08-58		14
	08-65		17
G102288	08-59		14
	08-60		16
	08-66		13
G102424	08-59		6
G102425	08-58		6
	08-60		6
	08-66		5
G102426	08-63		8
	08-64		6
G107277	08-66		12
G108123	08-61		13
G108512	08-59		3
G108518	08-59		13
G109298	08-59		10
	08-60		11
	08-66		9
G109299	08-61		10
	08-62		24
G109300	08-63		14
G110077	08-55A		
G110467	08-55A		
G110529	08-64		18
G110530	08-64		19
G110531	08-64		17
G32122	08-58		10
	08-65		12
G32126	08-62		10
G32176	08-64		12
G35540	08-55A		4
H434163	05-02		32
	08-01		15
	08-26		52
H71514	09-24		7
K260177	06-13		9
	06-21		9
K261014	06-08		4
	06-35		5
K262143	06-08		9
	06-35		9
K395082	06-06		23
K395090	06-08		8
	06-35		8
K395091	06-06		21
K395093	06-06		16
	06-37		5
K395101	06-37		13
L111356	08-10A		31
	09-75		7
L11541	05-02		33
	08-51		18
	09-59		5
	09-65		31
	09-70		10
L15401	09-03		12
L17985	02-04		4
L18331	02-07A		5
	04-18		15
	08-51		17
L18337	02-02		24
	03-01		24
	03-02		12
	04-04		28
	04-05		15
	04-06		21
	04-06A		25
	04-07		26
	04-13		11
	04-14		14
	04-20		14
	06-10		14
	06-32		7
	08-03		16

Number	Figure	Sequence	Ref.
L18337	08-09		29
	08-10		16
	08-10		26
	08-10A		17
	08-11		15
	08-11		24
	08-12		15
	08-13		19
	08-14		14
	08-21		
	08-23		15
	08-23B		15
	08-27		18
	09-10		36
	09-38		59
	09-63		21
	09-64		25
	09-65		17
	09-66		11
L32100	08-29		9
L32418	08-29		1
L54563	09-16		14
	09-17		1
L60224	04-11		5
	09-38		49
L71879	04-07		
	04-07		10
L79937	08-05		39
N13505	05-06		12A
	06-03		11
N13582	08-29		6
N14283	04-15		10
N14367	05-05		2
	06-02		3
N14373	05-05		8
N14410	06-05		3
N14466	09-61		20
N6755	08-57		
N6836	04-15		3
N6941	08-57		
N7536	06-35		4
N9025	08-57		
NSS	02-05		1
	02-11		11
	02-11		15
	02-11		16
	02-25		4
	02-26		10
	02-33		11
	02-36		4
	02-39		9
	03-11		5
	04-04		31B
	04-09		2
	04-09		25
	04-09		3
	04-12		1
	04-12		2
	04-12		3
	04-12		4
	04-12		5
	04-12		6
	04-12		7
	04-15		1
	04-15		5
	04-15		6
	04-15		7
	04-15		8
	04-17		12
	05-02A		22
	05-02A		23
	05-02A		24
	05-03		1
	05-03		3
	05-03		5
	05-03		6
	05-07		2
	06-02		14
NSS	06-04		10
	06-04		11
	06-06		14
	06-06		15
	06-06		3
	06-07		1
	06-07		2
	06-07		5
	06-07		6
	06-07		7
	06-08		1
	06-08		2
	06-09		10
	06-09		11
	06-09		2
	06-09		3
	06-09		4
	06-09		9
	06-11		
	06-13		13
	06-13		2
	06-13		24
	06-13		25
	06-14		10
	06-14		11
	06-14		12
	06-14		13
	06-14		14
	06-14		17
	06-14		18
	06-14		2
	06-14		20
	06-14		21
	06-14		3
	06-14		3A
	06-14		4
	06-14		5
	06-14		6
	06-14		7
	06-14		8
	06-14		9
	06-18		10
	06-18		11
	06-18		12
	06-18		15
	06-18		20
	06-18		21
	06-18		22
	06-18		23
	06-18		24
	06-18		25
	06-18		25A
	06-18		7
	06-18		8
	06-19		2
	06-21		21
	06-21		23
	06-21		24
	06-22		10
	06-22		11
	06-22		12
	06-22		13
	06-22		14
	06-22		17
	06-22		18
	06-22		2
	06-22		20
	06-22		21
	06-22		3
	06-22		3A
	06-22		4
	06-22		5
	06-22		6
	06-22		7
	06-22		8
	06-22		9
	06-26		10
	06-26		11

Number	Figure	Sequence	Ref.	Number	Figure	Sequence	Ref.
NSS	06-26		12	NSS	08-44		2
	06-26		15		08-45		1
	06-26		20		08-45		2
	06-26		21		08-46		1
	06-26		22		08-46		2
	06-26		23		08-55		1
	06-26		24		08-55A		1
	06-26		25		08-55A		10
	06-26		25A		08-55A		14
	06-26		7		08-55A		2
	06-26		8		08-55A		5
	06-28		2		08-55A		6
	06-29		1		08-55A		7
	06-29		2		08-55A		8
	06-29		3		08-55A		9
	06-29		4		08-56		1
	06-38		2		08-56		10
	06-38		3		08-56		11
	06-38		4		08-56		12
	07-01		21		08-56		13
	07-01	01	21		08-56		4
	08-28		1		08-56		9
	08-30		1		08-57		1
	08-30		2		08-57		6
	08-30		3		08-57		7
	08-30		4		08-57		8
	08-31		1		08-58		7
	08-31		2		08-58		8
	08-31		3		08-59		7
	08-31		4		08-59		8
	08-31		5		08-60		8
	08-32		1		08-60		9
	08-32		11		08-61		7
	08-32		2		08-61		8
	08-32		3		08-62		7
	08-32		4		08-62		8
	08-32		5		08-63		10
	08-32		6		08-63		11
	08-33		1		08-64		8
	08-33		2		08-64		9
	08-33		3		08-65		8
	08-33		4		08-65		9
	08-33		5		08-66		6
	08-33		6		08-66		7
	08-34		1		09-01A		13
	08-34		16		09-01A		16
	08-34		2		09-01A		17
	08-34		3		09-01A		18
	08-34		4		09-01A		19
	08-34		5		09-01A		20
	08-34		6		09-01A		28
	08-34		7		09-01A		3
	08-35		1		09-01A		4
	08-35		2		09-01A		5
	08-35		3		09-03		10
	08-35		4		09-06		1
	08-35		5		09-06		1
	08-35		6		09-07		1
	08-35		7		09-08		1
	08-36		7		09-08		10
	08-36		8		09-10		10
	08-36		9		09-10		2
	08-37		10		09-26		43
	08-37		8		09-26		6
	08-37		9		09-27		15
	08-38		10		09-27		20
	08-38		8		09-28		2
	08-38		9		09-28		3
	08-39		9		09-30		2
	08-40		1		09-30		3
	08-40		2		09-30		4
	08-41		1		09-31		7
	08-41		2		09-32		2
	08-42		1		09-32		2
	08-42		2		09-32		3
	08-43		1		09-32		3
	08-43		2		09-32		4
	08-44		1		09-32		4

Number	Figure	Sequence	Ref.
NSS	09-33		7
	09-34		4
	09-43		
	09-43		
	09-61		19
	09-61		21
	09-71		14
P2745466	06-27		21
P2745478	06-27		10
P3533055	06-18		35
	06-26		35
	06-27		20
R24840	08-10		28
R32119	09-24		8
R46493	08-07		7
R54682	09-71		6
REF	02-10		11
	02-10		12
	02-15		4
	02-29		7
	02-38		10
	02-38		4
	02-38		7
	02-38		8
	02-38		9
	02-39		11
	03-04		5
	03-06		9
	05-02A		
	05-09		2
	05-09		5
	06-30		3
	06-30		3
	08-02		
	08-02		
	08-03		13
	08-04		1
	08-05		1
	08-06		1
	08-07A		1
	08-07B		1
	08-08		
	08-08A		
	08-09		
	08-09A		
	08-10		1
	08-11		1
	08-12		1
	08-13		1
	08-14		1
	08-15		
	08-16		
	08-17		
	08-18		
	08-19		
	08-20		
	08-24		
	08-25		
	08-26		
	08-26		
	08-27		
	08-27		4
	08-33		
	08-35		
	09-01		28
	09-04		
	09-18		
	09-19		
	09-26		28
	09-55		
	09-56		
S109444	08-58		15
	08-65		18
S109445	08-58		16
	08-65		19
S115351	05-03		2
S301064	06-33		4
S301065	06-02		15

Number	Figure	Sequence	Ref.
ST205A	06-16		1
	06-24		1
	06-27		6
ST264	06-17		23
	06-25		23
T34857	04-15		2
T41159	09-74		17