RUTHZIL TRATOR COMERCIAL DE PEÇAS LTDA 11 97083-6812 ROLANDO CITRANGULO

# 580M SERIES 2
# LOADER BACKHOE

## PARTS CATALOG

Publication Part Number: 7-9030NA




BD04A005
Photograph may show installation of optional equipment.

This unit first become available in February, 2004.

TABLE OF CONTENTS
GENERAL INFORMATION
SECTION 2 – ENGINE
SECTION 3 – FUEL SYSTEM
SECTION 4 – ELECTRICAL SYSTEM
SECTION 5 – TRACKS / STEERING
SECTION 6 – POWER TRAIN
SECTION 7 – BRAKES
SECTION 8 – HYDRAULICS
SECTION 9 – CHASSIS/ATTACHMENTS
INDEX

HTTP://WWW.MINNPARBACKHOEPARTS.COM

Issued February, 2004 (Revised November, 2003) • 7-9030NA • Bur
Copyright © CNH America LLC. All Rights Reserved.

HTTP://WWW.MINNPARBACKHOEPARTS.COM

# TABLE OF CONTENTS


| | |
|---|---|
| 02-01 | RADIATOR - MOUNTING |
| 02-02 | DEAERATION SYSTEM - MOUNTING |
| 02-03 | RADIATOR ASSY (WITH OR WITHOUT AIR CONDITIONING) |
| 02-04 | AIR CLEANER - AIR INTAKE PARTS (WITHOUT TURBOCHARGER) |
| 02-04A | AIR CLEANER - AIR INTAKE PARTS (WITH TURBOCHARGER) |
| 02-05 | AIR CLEANER (WITHOUT TURBOCHARGER) |
| 02-05A | AIR CLEANER (WITH TURBOCHARGER) |
| 02-06 | MUFFLER - EXHAUST SYSTEM (WITH TURBOCHARGER) |
| 02-06A | MUFFLER, ASPIRATED - EXHAUST SYSTEM |
| 02-06B | MUFFLER - EXHAUST SYSTEM (WITHOUT TURBOCHARGER) |
| 02-07 | ENGINE - MOUNTING |
| 02-08 | ENGINE |
| 02-09 | CYLINDER BLOCK |
| 02-10 | CYLINDER BLOCK |
| 02-11 | OIL PUMP, PAN |
| 02-12 | CYLINDER BLOCK - COVERS |
| 02-13 | CYLINDER BLOCK - COVERS |
| 02-14 | CYLINDER BLOCK - COVERS |
| 02-15 | BREATHER - ENGINE |
| 02-16 | CYLINDER HEAD |
| 02-17 | CYLINDER HEAD - COVERS |
| 02-18 | CYLINDER HEAD - VALVE MECHANISM |
| 02-19 | MANIFOLD - INTAKE |
| 02-20 | MANIFOLD - EXHAUST |
| 02-21 | CRANKSHAFT |
| 02-22 | PISTONS - CONNECTING ROD |
| 02-23 | PISTONS - CONNECTING ROD |
| 02-24 | FLYWHEEL - ENGINE |
| 02-25 | PULLEY - CRANKSHAFT |
| 02-26 | DYNAMIC BALANCER, GEARS & SHAFTS |
| 02-27 | DYNAMIC BALANCER, GEARS & SHAFTS (2830952) |
| 02-28 | CAMSHAFT |
| 02-29 | TURBOCHARGER |
| 02-30 | ENGINE, OIL |
| 02-31 | OIL PUMP - ENGINE |
| 02-32 | OIL FILTERS - ENGINE |
| 02-33 | PIPING - ENGINE OIL |
| 02-34 | OIL FILTER AND COOLER |
| 02-35 | WATER PUMP |
| 02-36 | COOLING SYSTEM - ENGINE |
| 02-37 | THERMOSTAT - ENGINE COOLING SYSTEM |
| 02-38 | WATER PUMP - CONTROL |
| 02-39 | FAN DRIVE |
| 02-40 | POWER TAKE-OFF |
| 02-41 | ENGINE - LIFT HOOK |
| 03-01 | FUEL LINES, RESERVOIR - FILTER, IN-LINE FUEL |
| 03-02 | CONTROLS - THROTTLE, HAND |
| 03-03 | CONTROLS - THROTTLE, FOOT |
| 03-04 | FUEL INJECTION PUMP |
| 03-05 | FUEL INJECTION SYSTEM |
| 03-06 | FUEL INJECTION SYSTEM |

HTTP://WWW.MINNPARBACKHOEPARTS.COM

# TABLE OF CONTENTS


| | |
|---|---|
| 03-07 | FUEL INJECTION SYSTEM |
| 03-08 | FUEL FILTER |
| 03-09 | FUEL PUMP |
| 03-10 | FUEL INJECTION SYSTEM |
| 03-11 | FUEL INJECTION SYSTEM |
| 04-01 | STARTER |
| 04-02 | ALTERNATOR |
| 04-03 | STARTER MOUNTING - ALTERNATOR MOUNTING |
| 04-04 | HARNESS, ENGINE - MOUNTING AND CONNECTIONS |
| 04-05 | BATTERY CABLES (MODELS WITHOUT COLD START) |
| 04-06 | BATTERY, DUAL - COLD START |
| 04-06A | COLD START GRID HEATER |
| 04-07 | HARNESS, FRONT CONSOLE - SWITCHES |
| 04-08 | HARNESS, FRONT CONSOLE - MOUNTING |
| 04-09 | HARNESS, SIDE CONSOLE - SWITCHES |
| 04-10 | INSTRUMENT PANEL, FRONT - COVERS |
| 04-11 | INSTRUMENT PANEL, SIDE - COVERS (RIGHT-HAND SIDE) |
| 04-12 | INSTRUMENT CLUSTER |
| 04-13 | ELECTRICAL - LAMPS, ROPS CANOPY |
| 04-14 | ELECTRICAL - LAMPS, ROPS CAB |
| 04-15 | LAMP ASSY (ROPS CANOPY MODELS) |
| 04-16 | HORN - ALARM, BACKUP |
| 04-17 | BEACON, ROTATING (CAB OR CANOPY MODELS) |
| 04-18 | ANTENNA, RADIO - HARNESS, RADIO |
| 04-19 | ELECTRICAL - BACKHOE AUXILIARY HYDRAULIC, UNI-DIRECTIONAL |
| 04-20 | ELECTRICAL - BACKHOE AUXILIARY HYDRAULIC, WITH PILOT CONTROLS |
| 05-01 | STEERING WHEEL - COLUMN |
| 05-02 | HYDRAULICS - STEERING |
| 05-03 | STEERING COLUMN |
| 05-04 | AXLE, FRONT (86990837) - MOUNTING |
| 05-05 | AXLE, FRONT (86990837) - HOUSING |
| 05-06 | AXLE, FRONT (86990837) - HOUSING, SWIVEL |
| 05-07 | AXLE, FRONT (86990837) - CYLINDER, STEERING |
| 05-08 | AXLE, FRONT (86990837) - HUB AND BEARINGS |
| 05-09 | WHEELS, FRONT - TIRES |
| 06-01 | AXLE, FRONT DRIVE - MOUNTING |
| 06-02 | AXLE, FRONT DRIVE - HOUSING |
| 06-03 | AXLE, FRONT DRIVE - HOUSING, SWIVEL |
| 06-04 | AXLE, FRONT DRIVE - CYLINDER, STEERING |
| 06-05 | AXLE, FRONT DRIVE - SHAFTS, AXLE |
| 06-06 | AXLE, FRONT DRIVE - PLANETARY |
| 06-07 | AXLE, FRONT DRIVE - DIFFERENTIAL |
| 06-08 | AXLE, FRONT DRIVE - RING AND PINION |
| 06-09 | DRIVE SHAFT, FRONT AXLE |
| 06-10 | COOLING SYSTEM - TRANSMISSION |
| 06-11 | TRANSMISSION - MOUNTING |
| 06-12 | TRANSMISSION ASSY - FILTER, OIL |
| 06-13 | TRANSMISSION ASSY (2WD) - HOUSING |
| 06-14 | TRANSMISSION ASSY (4WD) - HOUSING |
| 06-15 | TRANSMISSION ASSY - PUMP, OIL |
| 06-16 | TRANSMISSION ASSY - SHIFTER MECHANISM |

HTTP://WWW.MINNPARBACKHOEPARTS.COM

# TABLE OF CONTENTS


| | |
|---|---|
| 06-17 | TRANSMISSION ASSY - SHAFT, IDLER AND PRIMARY |
| 06-18 | TRANSMISSION ASSY - SHAFT, INPUT |
| 06-19 | TRANSMISSION ASSY - SHAFT, SECONDARY |
| 06-20 | TRANSMISSION ASSY (4WD) - SHAFT, OUTPUT |
| 06-21 | TRANSMISSION ASSY - VALVE, CONTROL |
| 06-22 | TRANSMISSION ASSY (4WD) - VALVE, SOLENOID |
| 06-23 | WHEELS, REAR - TIRES |
| 06-24 | AXLE, REAR DRIVE - MOUNTING |
| 06-25 | AXLE, REAR - DIFFERENTIAL LOCK |
| 06-26 | AXLE, REAR DRIVE - HOUSING |
| 06-27 | AXLE, REAR DRIVE - DIFFERENTIAL |
| 06-28 | AXLE, REAR DRIVE - RING AND PINION |
| 06-29 | AXLE, REAR DRIVE - DIFFERENTIAL LOCK |
| 06-30 | AXLE, REAR DRIVE - PLANETARY |
| 06-31 | DRIVE SHAFT, REAR AXLE |
| 07-01 | AXLE, REAR DRIVE - BRAKE, DIFFERENTIAL |
| 07-02 | AXLE, REAR DRIVE - BRAKE, PARKING |
| 07-03 | BRAKE - PEDALS |
| 07-04 | HYDRAULICS - BRAKE MASTER CYLINDER |
| 07-05 | CYLINDER ASSY - BRAKE MASTER |
| 07-06 | CONTROLS - BRAKE, PARKING |
| 08-01 | HYDRAULICS - PUMP, FILTER AND LOADER VALVE |
| 08-02 | HYDRAULICS - LOADER VALVE AND FILTER TO BACKHOE VALVE |
| 08-03 | HYDRAULICS - COOLER, RETURN LINES AND FILTER |
| 08-04 | HYDRAULICS - CYLINDER, LOADER LIFT |
| 08-05 | HYDRAULICS - CYLINDER, LOADER BUCKET |
| 08-06 | HYDRAULICS - CYLINDER, LOADER CLAM |
| 08-07 | HYDRAULICS - CYLINDER, LOADER CLAM |
| 08-08 | HYDRAULICS - CYLINDER, BACKHOE STABILIZER (WITHOUT PILOT CONTROLS) |
| 08-08A | HYDRAULICS - CYLINDER, BACKHOE STABILIZER (WITH PILOT CONTROLS) |
| 08-09 | HYDRAULICS - CYLINDER, BACKHOE SWING (WITHOUT PILOT CONTROLS) |
| 08-09A | HYDRAULICS - CYLINDER, BACKHOE SWING (WITH PILOT CONTROLS) |
| 08-10 | HYDRAULICS - CYLINDER, BACKHOE BOOM |
| 08-11 | HYDRAULICS - CYLINDER, BACKHOE DIPPER |
| 08-12 | HYDRAULICS - CYLINDER, BACKHOE BUCKET (MODELS WITHOUT EXTENDABLE DIPPER) |
| 08-13 | HYDRAULICS - CYLINDER, BACKHOE BUCKET (MODELS WITH EXTENDABLE DIPPER) |
| 08-14 | HYDRAULICS - CYLINDER, BACKHOE EXTENDABLE DIPPER |
| 08-15 | HYDRAULICS - VALVE, PILOT CONTROL AND JOYSTICKS (6 SPOOL, W/O EXT DIPPER, W/O AUX HYDS) |
| 08-16 | HYDRAULICS - VALVE, PILOT CONTROL AND JOYSTICKS (6 SPOOL, W/O EXT DIPPER, W/ AUX HYDS) |
| 08-17 | HYDRAULICS - VALVE, PILOT CONTROL AND JOYSTICKS (7 SPOOL, W/ EXT DIPPER, W/O AUX HYDS) |
| 08-18 | HYDRAULICS - VALVE, PILOT CONTROL AND JOYSTICKS (7 SPOOL, W/ EXT DIPPER, W/ AUX HYDS) |
| 08-19 | HYDRAULICS - VALVE, PILOT CONTROL AND JOYSTICKS (7 SPOOL, W/O EXT DIPPER, W/ AUX HYDS) |
| 08-20 | HYDRAULICS - VALVE, PILOT CONTROL AND JOYSTICKS (8 SPOOL, W/ EXT DIPPER, W/ AUX HYDS) |

HTTP://WWW.MINNPARBACKHOEPARTS.COM

# TABLE OF CONTENTS


| | |
|---|---|
| 08-21 | HYDRAULICS - PILOT CONTROL JOYSTICKS |
| 08-22 | HYDRAULICS - PILOT CONTROLS |
| 08-23 | HYDRAULICS - BACKHOE AUXILIARY |
| 08-24 | HYDRAULICS - BACKHOE AUXILIARY |
| 08-25 | HYDRAULICS - RIDE CONTROL (87433240 SOLENOID VALVE) |
| 08-26 | HYDRAULICS - COUPLER, LOADER TOOL QUICK |
| 08-27 | HYDRAULICS - COUPLER, LOADER TOOL QUICK |
| 08-28 | VALVE, COUPLER (87435909) - LOADER TOOL |
| 08-29 | PUMP, EQUIPMENT HYDRAULIC |
| 08-30 | VALVE ASSY - LOADER CONTROL, TWO SPOOL |
| 08-31 | VALVE ASSY - LOADER CONTROL, THREE SPOOL |
| 08-32 | VALVE ASSY - BACKHOE CONTROL, 6 SPOOL (W/O EXT DIPPER, W/O AUX HYDS, W/O PILOT CONTROLS) |
| 08-33 | VALVE ASSY - BACKHOE CONTROL, 7 SPOOL (W/O EXT DIPPER, W/ AUX HYDS, W/O PILOT CONTROLS) |
| 08-34 | VALVE ASSY - BACKHOE CONTROL, 7 SPOOL (W/ EXT DIPPER, W/O AUX HYDS, W/O PILOT CONTROLS) |
| 08-35 | VALVE ASSY - BACKHOE CONTROL, 8 SPOOL (W/ EXT DIPPER, W/ AUX HYDS, W/O PILOT CONTROLS) |
| 08-36 | VALVE ASSY - BACKHOE CONTROL, 6 SPOOL (W/O EXT DIPPER, W/ OR W/O AUX HYDS, W/ PILOT CONTROLS) |
| 08-37 | VALVE ASSY - BACKHOE CONTROL, 7 SPOOL (W/ EXT DIPPER, W/ OR W/O AUX HYDS, W/ PILOT CONTROLS) |
| 08-38 | VALVE ASSY - BACKHOE CONTROL, 7 SPOOL (W/O EXT DIPPER, W/ AUX HYDS, W/ PILOT CONTROLS) |
| 08-39 | VALVE ASSY - BACKHOE CONTROL, 8 SPOOL (W/ EXT DIPPER, W/ AUX HYDS, W/ PILOT CONTROLS) |
| 08-40 | VALVE SECTION - BACKHOE SWING (WITH PILOT CONTROLS) |
| 08-41 | VALVE SECTION - BACKHOE BOOM (WITH PILOT CONTROLS) |
| 08-42 | VALVE SECTION - BACKHOE STABILIZER (WITH PILOT CONTROLS) |
| 08-43 | VALVE SECTION - BACKHOE DIPPER (WITH PILOT CONTROLS) |
| 08-44 | VALVE SECTION - BACKHOE BUCKET (WITH PILOT CONTROLS) |
| 08-45 | VALVE SECTION - EXTENDABLE DIPPER (WITH PILOT CONTROLS) |
| 08-46 | VALVE SECTION - OPTIONS, AUXILIARY HYDRAULICS (WITH PILOT CONTROLS) |
| 08-47 | VALVE ASSY, PRESSURE REDUCING (2 SPOOL) (WITH PILOT CONTROLS) |
| 08-48 | VALVE ASSY, PRESSURE REDUCING (3 SPOOL) (WITH PILOT CONTROLS) |
| 08-49 | VALVE ASSY, PRESSURE REDUCING (4 SPOOL) (WITH PILOT CONTROLS) |
| 08-50 | VALVE, JOYSTICK (PILOT CONTROLS) (LEFT-HAND) WITH HORN BUTTON |
| 08-51 | VALVE, JOYSTICK (PILOT CONTROLS) (LEFT-HAND) WITH HORN & UNI-DIRECTIONAL BUTTONS |
| 08-52 | VALVE, JOYSTICK (PILOT CONTROLS) (LEFT-HAND) WITH HORN & BI-DIRECTIONAL BUTTONS |
| 08-53 | VALVE, JOYSTICK (PILOT CONTROLS) (RIGHT-HAND) WITHOUT EXTENDABLE DIPPER |
| 08-54 | VALVE, JOYSTICK (PILOT CONTROLS) (RIGHT-HAND) WITH EXTENDABLE DIPPER |
| 08-55 | VALVE ASSY - SWING CUSHION (DAMPENING) |
| 08-56 | ACCUMULATOR ASSY - RIDE CONTROL |
| 08-57 | FILTER ASSY, OIL |
| 08-58 | CYLINDER ASSY - LOADER LIFT |
| 08-59 | CYLINDER ASSY - LOADER BUCKET |
| 08-60 | CYLINDER ASSY - LOADER CLAM |

HTTP://WWW.MINNPARBACKHOEPARTS.COM

# TABLE OF CONTENTS


| | |
|---|---|
| 08-61 | CYLINDER ASSY - BACKHOE STABILIZER |
| 08-62 | CYLINDER ASSY - BACKHOE SWING |
| 08-63 | CYLINDER ASSY - BACKHOE BOOM |
| 08-64 | CYLINDER ASSY - BACKHOE DIPPER |
| 08-65 | CYLINDER ASSY - BACKHOE BUCKET |
| 08-66 | CYLINDER ASSY - BACKHOE EXTENDABLE DIPPER |
| 09-01 | CONTROLS - LOADER LIFT AND BUCKET |
| 09-02 | CONTROLS - LOADER CLAM |
| 09-03 | CONTROLS - LOADER SELF-LEVELING |
| 09-04 | FRAME - LOADER LIFT |
| 09-05 | FRAME - LOADER LINKAGE |
| 09-06 | BUCKETS, LOADER LONG LIP (82 IN) |
| 09-07 | BUCKET, LOADER LONG LIP (93 IN) |
| 09-08 | BUCKET, LOADER CLAM |
| 09-09 | GUARD - VALVE, LOADER |
| 09-10 | COUPLER, TOOL QUICK |
| 09-11 | COVERS - BACKHOE CONTROL TOWER, WITHOUT PILOT CONTROLS |
| 09-12 | BACKHOE CONTROL TOWER SUPPORT AND SEALS, WITHOUT PILOT CONTROLS |
| 09-13 | BACKHOE CONTROL TOWER SUPPORT, WITH PILOT CONTROLS |
| 09-14 | BACKHOE CONTROL TOWER BOOTS AND SEALS, WITH PILOT CONTROLS |
| 09-15 | BACKHOE CONTROL TOWER LEVERS (BOOM LATCH), WITH PILOT CONTROLS |
| 09-16 | CONTROLS - BACKHOE, WITH FOOT SWING (MODELS WITHOUT EXTENDABLE DIPPER) |
| 09-17 | CONTROLS - BACKHOE, WITH FOOT SWING (MODELS WITH EXTENDABLE DIPPER) |
| 09-18 | CONTROLS - BACKHOE, WITH HAND SWING (MODELS WITHOUT EXTENDABLE DIPPER) |
| 09-19 | CONTROLS - BACKHOE, WITH HAND SWING (MODELS WITHOUT EXTENDABLE DIPPER) |
| 09-20 | CONTROLS - BACKHOE, WITH HAND SWING (MODELS WITH EXTENDABLE DIPPER) |
| 09-21 | CONTROLS - BACKHOE AUXILIARY HYDRAULICS, WITHOUT PILOT CONTROLS |
| 09-22 | BACKHOE - STABILIZERS, PLATES AND PADS |
| 09-23 | BACKHOE - SWING TOWER AND SWING CYLINDERS |
| 09-24 | BACKHOE - BOOM AND SWING TOWER |
| 09-25 | BOOM LATCH (WITHOUT PILOT CONTROLS) |
| 09-25A | BOOM LATCH (WITH PILOT CONTROLS) |
| 09-26 | BACKHOE - DIPPER AND BUCKET |
| 09-27 | BACKHOE - DIPPER, EXTENDABLE |
| 09-28 | BUCKET, UNIVERSAL BACKHOE (305 MM (12 INCH) WIDE) |
| 09-29 | BUCKET, UNIVERSAL BACKHOE (406 MM (16 INCH) WIDE) |
| 09-30 | BUCKET, UNIVERSAL BACKHOE (457 MM (18 INCH) WIDE) |
| 09-31 | BUCKET, BACKHOE (457 MM (18 INCH) WIDE) |
| 09-32 | BUCKET, UNIVERSAL BACKHOE (610 MM (24 INCH) / 762 MM (30 INCH) WIDE) |
| 09-33 | BUCKET, BACKHOE (610 MM (24 INCH) WIDE) |
| 09-34 | BUCKET, UNIVERSAL BACKHOE (914 MM (36 INCH) WIDE) |
| 09-35 | BUCKET, UNIVERSAL BACKHOE (610 MM (24 INCH) WIDE) |
| 09-36 | COUNTERWEIGHT, FRONT |
| 09-37 | CHASSIS / MOUNTS, POD - SCREEN, AIR INLET |
| 09-38 | TANK, OIL - BOX, BATTERY AND TOOL |
| 09-39 | RADIATOR WRAPPER |
| 09-40 | HOOD - PANELS, SIDE |
| 09-41 | HOOD - GRILLE |

HTTP://WWW.MINNPARBACKHOEPARTS.COM

# TABLE OF CONTENTS


| | |
|---|---|
| 09-42 | PLATES, FLOOR - FLOORMATS |
| 09-43 | FENDER COVER, LEFT-HAND - PANEL, REAR CLOSURE (STORAGE TRAY WITH CUP HOLDER) |
| 09-44 | FENDER EXTENSIONS |
| 09-45 | GUARD, MUD |
| 09-46 | SEAT - MOUNTING |
| 09-47 | SEAT ASSY, STANDARD |
| 09-48 | SEAT SUPPORT AND PEDESTAL, STANDARD |
| 09-49 | SEAT ASSY, MECHANICAL SUSPENSION |
| 09-50 | SEAT PEDESTAL AND SUSPENSION, MECHANICAL SUSPENSION |
| 09-51 | SEAT ASSY, AIR SUSPENSION |
| 09-52 | SEAT PEDESTAL AND SUSPENSION, AIR SUSPENSION |
| 09-53 | CAB - GLASS, MIRROR AND HOLD OPEN |
| 09-54 | CAB - FRAME AND COVERS |
| 09-55 | CAB - DOORS |
| 09-56 | CAB - DOOR MOUNTING |
| 09-57 | CAB - WINDOW, RIGHT-HAND, FOR SINGLE DOOR CAB FRAMES |
| 09-58 | CAB - WINDOW, REAR |
| 09-59 | CAB - WASHER, WINDSHIELD |
| 09-60 | CAB - WIPERS |
| 09-61 | CAB HEADLINER - FILTER, LOUVERS, DOME LAMP |
| 09-62 | CAB - FILTER, AIR |
| 09-63 | CAB - BLOWER HOUSING, VENTILATION DUCTS, DRAIN LINES |
| 09-64 | CAB - HEATER |
| 09-65 | CAB - AIR CONDITIONING LINES, EVAPORATOR CORE |
| 09-66 | CAB - AIR CONDITIONING, CONDENSER, RECEIVER-DRIER |
| 09-67 | CAB - AIR CONDITIONING COMPRESSOR |
| 09-68 | CANOPY, ROPS - FRAME, COVERS, MIRROR, VISOR |
| 09-69 | CANOPY, ROPS - GLASS |
| 09-70 | CANOPY, ROPS - WIPER, FRONT AND WINDSHIELD WASHER |
| 09-71 | MIRROR, REAR VIEW - MOUNTING, CAB MODELS |
| 09-72 | SLOW MOVING VEHICLE EMBLEM |
| 09-73 | DECALS |
| 09-74 | DECALS |
| 09-75 | DECALS |
| 09-76 | DECALS - ENGLISH |
| 09-77 | DECALS - LATIN AMERICAN SPANISH |
| 09-78 | DECALS - CANADIAN FRENCH |
| 09-79 | DECALS - ENGLISH |
| 09-80 | DECALS - LATIN AMERICAN SPANISH |
| 09-81 | DECALS - CANADIAN FRENCH |

HTTP://WWW.MINNPARBACKHOEPARTS.COM

# GENERAL INFORMATION

## PROPRIETARY NOTICE

The contents of this manual are proprietary data of this company. Reproduction or use of any part for other than the operation and maintenance of our equipment is permissible only if expressly authorized in writing.

Additional copies may be obtained from your dealer. Address requests for copies to your Dealer and refer to the publication part number appearing on the bottom of the rear catalog cover or on the title page.

## COMPANY POLICY

Company policy, which is one of continuous improvement, reserves the right to change prices and to make changes in design and specification at any time without notice and without obligation to modify units previously built.

All data given in this book is subject to production variations. Dimensions and weights are approximate only and the illustrations do not necessarily show machines in standard condition. For exact information about any particular machine please consult your dealer.

## PARTS AND ACCESSORIES

Genuine parts and accessories have been specifically designed for these machines.

We would like to point out that “non-genuine” parts and accessories have NOT been examined and released by the Company. The installation and or use of such products could have negative effects upon the design characteristics of your machine and thereby affect its safety. The company is not liable for any damage caused by the use of “non-genuine” parts and accessories.

## IMPROVEMENTS

We are continually striving to improve our products. We reserve the right to make improvements or changes when it becomes practical and possible to do so, without incurring any obligation to make changes or additions to the equipment sold previously.

## MODEL CODES

The range of machines listed may not be available in all countries or markets therefore, for the latest information consult your local dealer.

## OWNER ASSISTANCE

We want you to be completely satisfied with your investment. Normally any problems with your equipment will be handled by your dealer's Service Department; however, misunderstandings can occur. If your problem has not been handled to your satisfaction, we suggest the following:

1. Contact the owner or General Manager of the dealership, explain the problem, and request assistance. When additional assistance is needed, your dealer has direct access to our office.
2. Provide your dealer with:
   - Your Name, Address, and Telephone number
   - Machine Model and Serial Number
   - Dealership Name and Address
   - Machine purchase date and amount of use
   - Nature of problem

Be aware that your problem will likely be resolved in the dealership using the dealer's facilities, equipment, and personnel. So it is important that your initial contact be with the dealer.

## SPARE PARTS

To maintain operating efficiency, use original spare parts.

When ordering parts, give the following information:

- Machine Model
- Machine and Engine Serial Numbers
- Part Number from the Parts Catalog

HTTP://WWW.MINNPARBACKHOEPARTS.COM

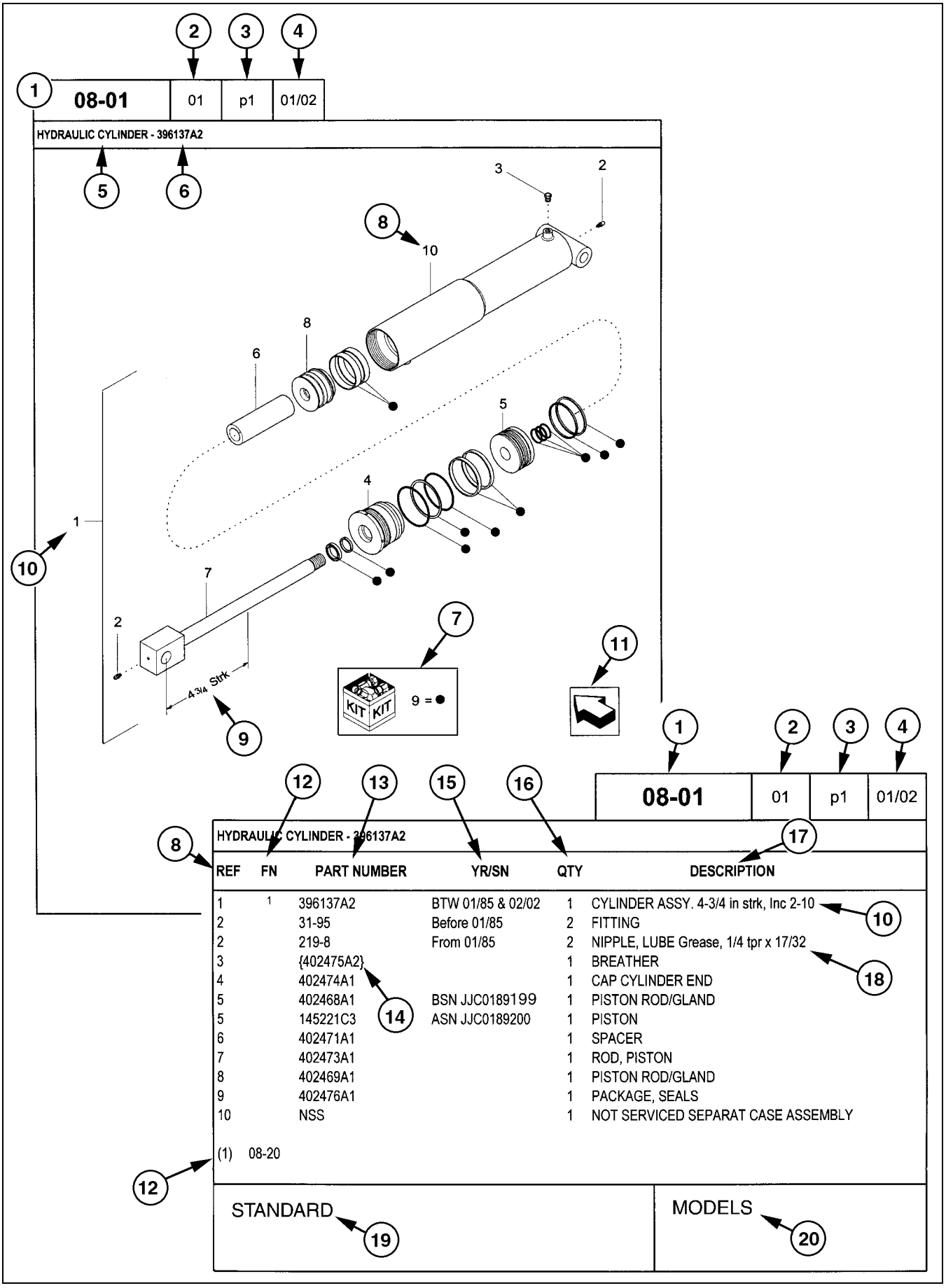


| REF | FN | PART NUMBER | YR/SN | QTY | DESCRIPTION |
|---|---|---|---|---|---|
| 1 | 1 | 396137A2 | BTW 01/85 & 02/02 | 1 | CYLINDER ASSY. 4-3/4 in strk, Inc 2-10 |
| 2 | | 31-95 | Before 01/85 | 2 | FITTING |
| 2 | | 219-8 | From 01/85 | 2 | NIPPLE, LUBE Grease, 1/4 tpr x 17/32 |
| 3 | | {402475A2} | | 1 | BREATHER |
| 4 | | 402474A1 | | 1 | CAP CYLINDER END |
| 5 | | 402468A1 | BSN JJC0189199 | 1 | PISTON ROD/GLAND |
| 5 | | 145221C3 | ASN JJC0189200 | 1 | PISTON |
| 6 | | 402471A1 | | 1 | SPACER |
| 7 | | 402473A1 | | 1 | ROD, PISTON |
| 8 | | 402469A1 | | 1 | PISTON ROD/GLAND |
| 9 | | 402476A1 | | 1 | PACKAGE, SEALS |
| 10 | | NSS | | 1 | NOT SERVICED SEPARAT CASE ASSEMBLY |

(1) 08-20

STANDARD

MODELS

HTTP://WWW.MINNPARBACKHOEPARTS.COM

# HOW TO USE YOUR PARTS CATALOG

1. Figure Number
2. Sequence Code within the Figure Number
3. Page Number within the Sequence Code
4. Date of Printing (month / year)
5. Figure Description
6. General information regarding the figure
7. Parts supplied in repair kits per symbol reference
8. Figure call-out of the part number (REF)
9. Technical specifications relating to the part indicated
10. Figure call-out includes bracketed items, the included items may also be listed in the additional description area
11. Orientation - Arrow indicates front of the machine
12. Footnote - Additional information relating to the part number. In this example, 08-20 equals another figure that this part is shown on
13. Part Number
    NSS = Not Serviced Separately (Non-serviced parts)
    Bracketed numbers = not available as service parts in this market
14. Not Available as service part in this market
15. YR/SN
    Year
    Before 01/85 = Part valid for production January 1985 and before
    From 01/85 = Part valid for production from January 1985 and after
    BTW 01/85 & 02/02 = Part valid for machines produced between January 1985 and February 2002.
    Serial Number (P.I.N.)
    BSN JJC0268800 = Part valid for serial number JJC0268800 and below
    ASN JJC0268800 = Part valid for serial number JJC0268800 and above
    BTW JJC0178000 & JJC0179000 = Part valid for serial numbers between JJC0178000 & JJC0179000
16. Total Quantity of the Part referred to in the page. The quantity can be replaced by the following indications:
    AR = As Required
    X = As required
17. Part Description
18. Additional description of the part to help confirm identification
19. Figure Notes
20. Model Number(s)

## RIGHT-HAND AND LEFT-HAND

The reference to right-hand and left-hand in this catalog is identified by the operator standing at the rear of the basic unit (without rear attachment), looking toward the front of the machine (in normal forward travel).

For pages covering any machine attachments, right-hand and left-hand are defined by the operator sitting in the position for proper operation of the attachment.

## DIMENSIONS

Metric and U.S. hardware dimensions do not show the numeric designations of standard coarse threads. A number following a semi colon (;) is the class or grade of hardware. A comma (,) represents the decimal point (.) used in U.S. dimensions.

HTTP://WWW.MINNPARBACKHOEPARTS.COM

# EXPLANATION OF ABBREVIATIONS

| | |
|---|---|
| AC | Alternating Current |
| adj | adjustable |
| amp | ampere |
| AR | As required |
| ASN | Serial number and after<br>P.I.N. and after |
| blkhd | bulkhead |
| br | branch |
| BSN | before Serial number<br>before P.I.N. |
| BTW | between |
| cc | cubic centimetre |
| cl | class |
| cmprsn | compression |
| cn pt | cone point |
| cp pt | cup point |
| CRS | Chrome Alloy Steel |
| CST | Carbon Steel |
| cu yd | cubic yard |
| DC | Direct Current |
| deg | degree |
| dg pt | dog point |
| dia | diameter |
| dr type | drive type |
| fc | face |
| fc sl | face seal |
| fem | female |
| fem PT | female pipe thread |
| fl | flare |
| flat pt | flat point |
| ft | feet or foot |
| ga | gauge |
| gal | gallon or gallons |
| gpm | gallons per minute |
| gr | grade |
| hd | head |
| hdg pt | half dog point |
| hp | horsepower |
| ID | inside diameter |
| in | inch or inches |
| Incl. | Includes |
| inv fl | inverted flare |
| K | kilo |
| kg | kilogram |
| km/h | kilometers per hour |
| L | litre |
| lb | pounds |
| lb-ft | pound-foot |
| lg | long |
| LH | left-hand |
| LH thd | left-hand thread |
| M | (prefix) metric thread size |
| m | metre |
| ml | milliliter |
| mm | millimetre |
| NF | National Fine |
| No. | number |
| NPT | National Pipe Thread |
| NS | National Super Fine |
| OD | outside diameter |
| ohm | electrical unit of resistance |
| Or | O-ring |
| ORB | O-ring boss |
| ORFS | O-ring face seal |
| ov cntr | over center |
| ov pt | oval point |
| oz | ounce |
| P | pitch |
| psi | pounds per square inch |
| pt | pint |
| PT | pipe thread |
| rd | round |
| rd holes | round holes |
| RH | right-hand |
| RH thd | right-hand thread |
| rpm | revolutions per minute |
| sl | self-locking |
| sq | square |
| SST | Stainless Steel |
| st | self-tapping |
| strk | stroke |
| sw | swivel |
| T | teeth |
| thk | thick |
| tpr | taper |
| tube OD | tube outside diameter |
| V | volt or volts |
| W | watt or watts |
| X | as required |
| yd | yard |

HTTP://WWW.MINNPARBACKHOEPARTS.COM

# SECTION INDEX


| | |
|---|---|
| 02-01 | RADIATOR - MOUNTING |
| 02-02 | DEAERATION SYSTEM - MOUNTING |
| 02-03 | RADIATOR ASSY (WITH OR WITHOUT AIR CONDITIONING) |
| 02-04 | AIR CLEANER - AIR INTAKE PARTS (WITHOUT TURBOCHARGER) |
| 02-04A | AIR CLEANER - AIR INTAKE PARTS (WITH TURBOCHARGER) |
| 02-05 | AIR CLEANER (WITHOUT TURBOCHARGER) |
| 02-05A | AIR CLEANER (WITH TURBOCHARGER) |
| 02-06 | MUFFLER - EXHAUST SYSTEM (WITH TURBOCHARGER) |
| 02-06A | MUFFLER, ASPIRATED - EXHAUST SYSTEM |
| 02-06B | MUFFLER - EXHAUST SYSTEM (WITHOUT TURBOCHARGER) |
| 02-07 | ENGINE - MOUNTING |
| 02-08 | ENGINE |
| 02-09 | CYLINDER BLOCK |
| 02-10 | CYLINDER BLOCK |
| 02-11 | OIL PUMP, PAN |
| 02-12 | CYLINDER BLOCK - COVERS |
| 02-13 | CYLINDER BLOCK - COVERS |
| 02-14 | CYLINDER BLOCK - COVERS |
| 02-15 | BREATHER - ENGINE |
| 02-16 | CYLINDER HEAD |
| 02-17 | CYLINDER HEAD - COVERS |
| 02-18 | CYLINDER HEAD - VALVE MECHANISM |
| 02-19 | MANIFOLD - INTAKE |
| 02-20 | MANIFOLD - EXHAUST |
| 02-21 | CRANKSHAFT |
| 02-22 | PISTONS - CONNECTING ROD |
| 02-23 | PISTONS - CONNECTING ROD |
| 02-24 | FLYWHEEL - ENGINE |
| 02-25 | PULLEY - CRANKSHAFT |
| 02-26 | DYNAMIC BALANCER, GEARS & SHAFTS |
| 02-27 | DYNAMIC BALANCER, GEARS & SHAFTS (2830952) |
| 02-28 | CAMSHAFT |
| 02-29 | TURBOCHARGER |
| 02-30 | ENGINE, OIL |
| 02-31 | OIL PUMP - ENGINE |
| 02-32 | OIL FILTERS - ENGINE |
| 02-33 | PIPING - ENGINE OIL |
| 02-34 | OIL FILTER AND COOLER |
| 02-35 | WATER PUMP |
| 02-36 | COOLING SYSTEM - ENGINE |
| 02-37 | THERMOSTAT - ENGINE COOLING SYSTEM |
| 02-38 | WATER PUMP - CONTROL |
| 02-39 | FAN DRIVE |
| 02-40 | POWER TAKE-OFF |
| 02-41 | ENGINE - LIFT HOOK |

HTTP://WWW.MINNPARBACKHOEPARTS.COM



RADIATOR - MOUNTING

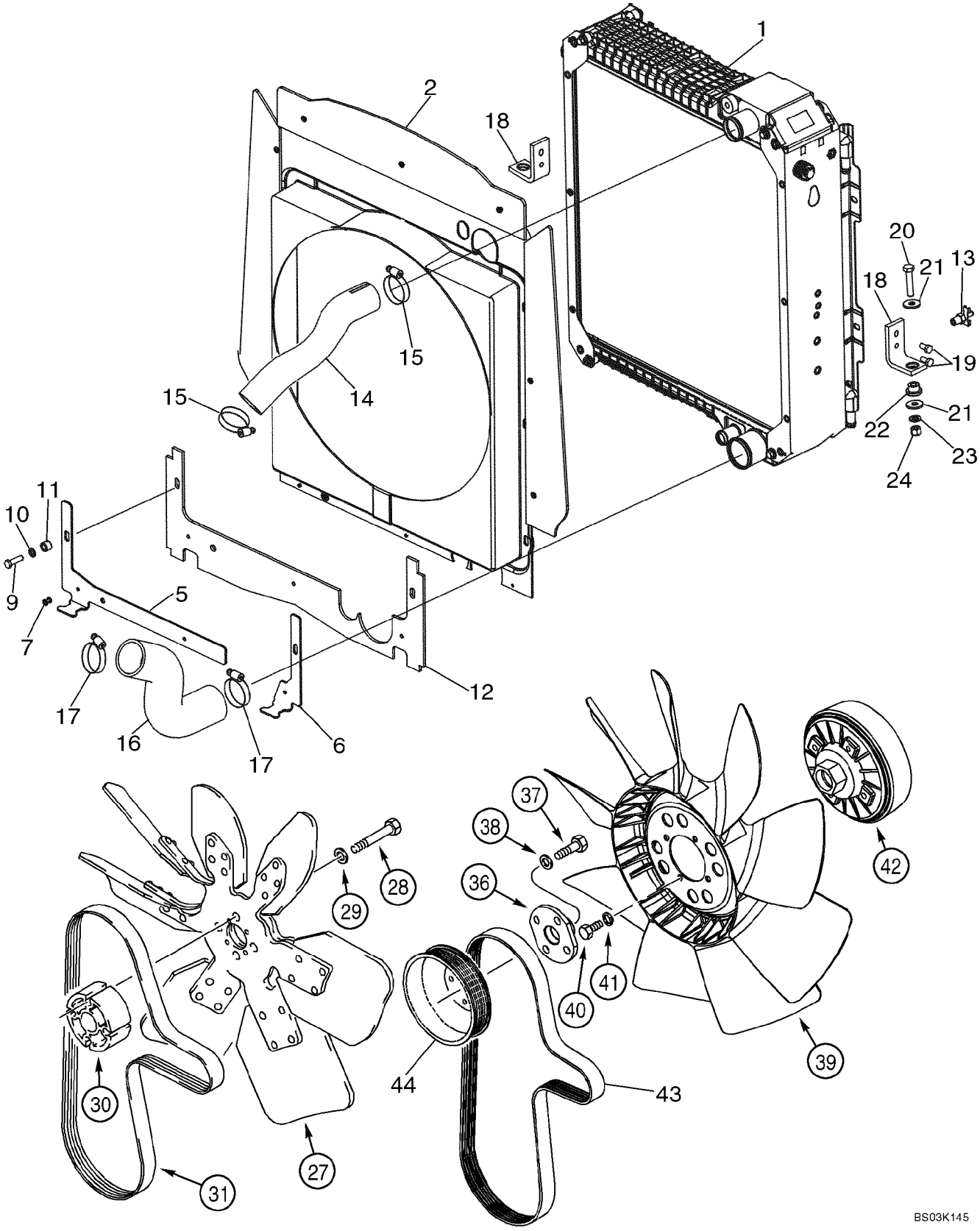

HTTP://WWW.MINNPARBACKHOEPARTS.COM



RADIATOR - MOUNTING

| REF | FN | PART NUMBER | YR/SN | QTY | DESCRIPTION |
|---|---|---|---|---|---|
| 1 | | 87410096 | | 1 | RADIATOR 3 Row Radiator, Models With Or Without Air Conditioning; See Figure 02-03 |
| 2 | | 87434793 | | 1 | SHROUD Shroud; Includes Seals |
| 5 | | 87434614 | | 1 | PLATE, RETAINING Plate, Lower Left-Hand Shroud |
| 6 | | 87434649 | | 1 | PLATE, RETAINING Plate, Lower Right-Hand Shroud |
| 7 | | 151-532 | | 3 | RIVET 3/16 x 11/16 |
| 9 | | 614-8030 | | 2 | SCREW M8 x 30 |
| 10 | | 895-11008 | | 2 | WASHER 9 x 16 x 1,6 mm |
| 11 | | 407962A1 | | 2 | SPACER |
| 12 | | 87434978 | | 1 | SEAL, RUBBER Lower Seal |
| 13 | | 76904 | | 1 | VALVE Drain, 1/4 |
| 14 | | 87413237 | | 1 | TUBE, RIGID Upper Hose |
| 15 | | 214-1432 | | 2 | CLAMP 1-9/16 x 2-1/2 |
| 16 | | 87407272 | | 1 | TUBE, RIGID Lower Hose |
| 17 | | 214-1440 | | 2 | CLAMP 2-1/16 - 3 |
| 18 | | 87407771 | | 2 | BRACKET, SUPPORTING Radiator Mounting Support |
| 19 | | 614-8016 | | 4 | SCREW M8 x 16 |
| 20 | | 814-10050 | | 2 | SCREW M10 x 50 |
| 21 | | K691987 | | 4 | WASHER Flat, 10 mm |
| 22 | | D52276 | | 2 | ISOLATOR Rubber |
| 23 | | 895-11010 | | 2 | WASHER 11 x 20 x 2 mm |
| 24 | | 832-10410 | | 2 | NUT M10 |
| 27 | | 228133A2 | | 1 | FAN 39 Degrees; With White Identification Dot; Standard Fan Drive; With Air Conditioning; With Turbo |
| 27 | | 127181A2 | | 1 | FAN 27 Degrees; Standard Fan Drive; Without Air Conditioning; With Or Without Turbo |
| 28 | | 814-10090 | | 4 | SCREW M10 x 90 |
| 29 | | 496-21041 | | 4 | WASHER 13/32 x 13/16 x 3/32 |
| 30 | | 85826229 | | 1 | SPACER 59 mm Long, Standard Fan Drive; With Or Without Air Conditioning; With Or Without Turbo |
| 31 | | 85826230 | | 1 | BELT V-Type, Standard Fan Drive; With Or Without Air Conditioning; With Or Without Turbo |
| 36 | | 303192A1 | | 1 | ADAPTER Viscous Fan Drive, With Air Conditioning; With Turbo |

HTTP://WWW.MINNPARBACKHOEPARTS.COM

| 02-01 | | p2 | 10/03 |
|---|---|---|---|

RADIATOR - MOUNTING

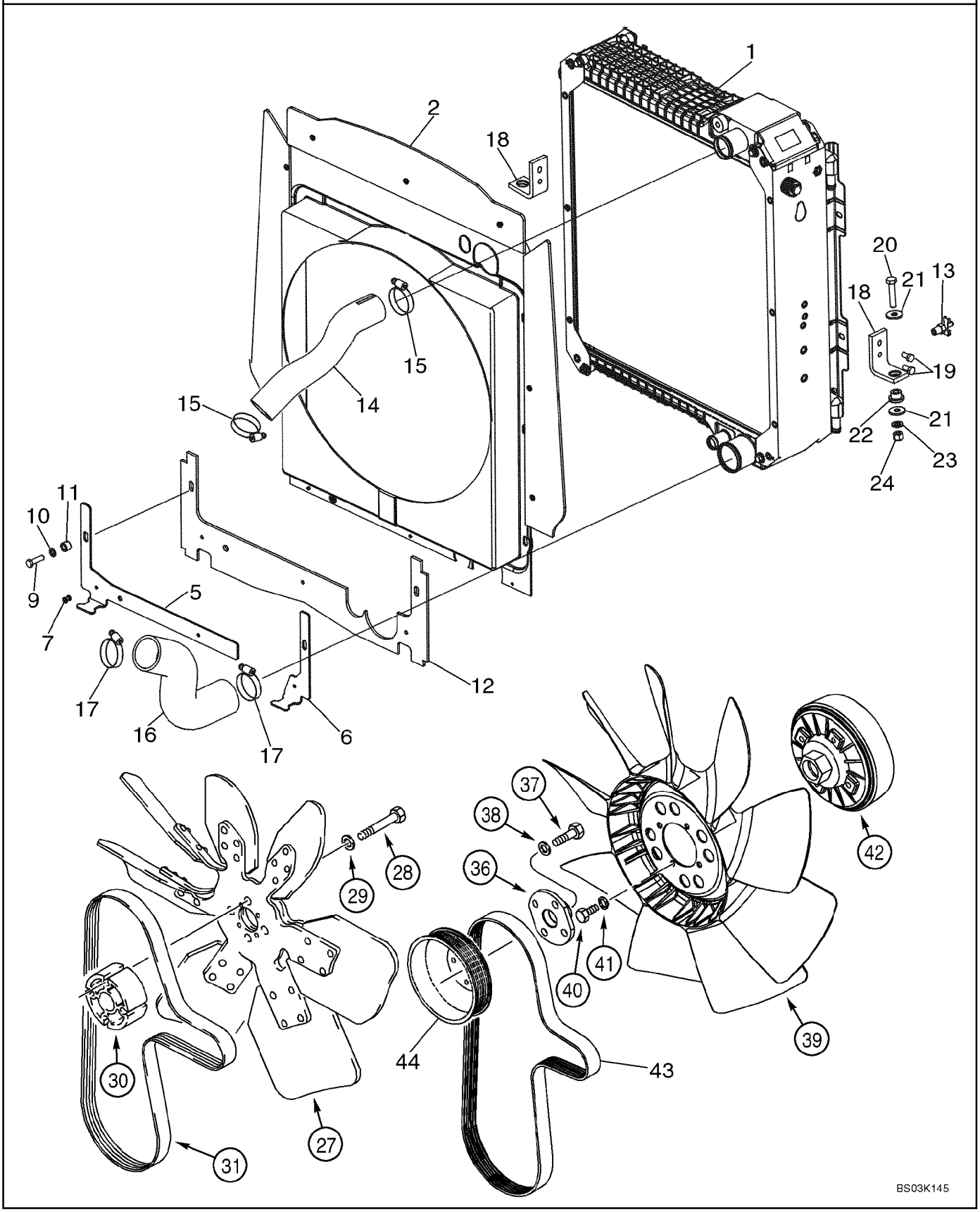

HTTP://WWW.MINNPARBACKHOEPARTS.COM



RADIATOR - MOUNTING

| REF | FN | PART NUMBER | YR/SN | QTY | DESCRIPTION |
|---|---|---|---|---|---|
| 37 | | 614-10030 | | 4 | SCREW M10 x 30 |
| 38 | | 896-11010 | | 4 | WASHER 11 x 21 x 2,5 mm |
| 39 | | 277800A1 | | 1 | FAN 9 Blade, Viscous Fan Drive; With Air Conditioning; With Turbo |
| 40 | | 614-8016 | | 4 | SCREW M8 x 16 |
| 41 | | 892-11008 | | 4 | WASHER M8 |
| 42 | | 303195A1 | | 1 | ASSEMBLY Fan Drive; Component Parts Not Serviced Separately; Viscous Fan Drive; With Air Conditioning; With Turbo |
| 43 | | 87415774 | | 1 | BELT, TRANSMISSION V-Type; Viscous Fan Drive, With Air Conditioning; With Turbo |
| | | {87419385} | | 1 | Fan 1:4 Ratio Pulley Kit; Includes Ref 44, 45; Viscous Fan Drive; With Air Conditioning |
| 44 | | 4890343 | | 1 | PULLEY |
| 45 | | {2852621} | | 1 | Pulley Tensioner Support, Not Illustrated |

HTTP://WWW.MINNPARBACKHOEPARTS.COM

| 02-02 | | p1 | 10/03 |
|---|---|---|---|

DEAERATION SYSTEM - MOUNTING

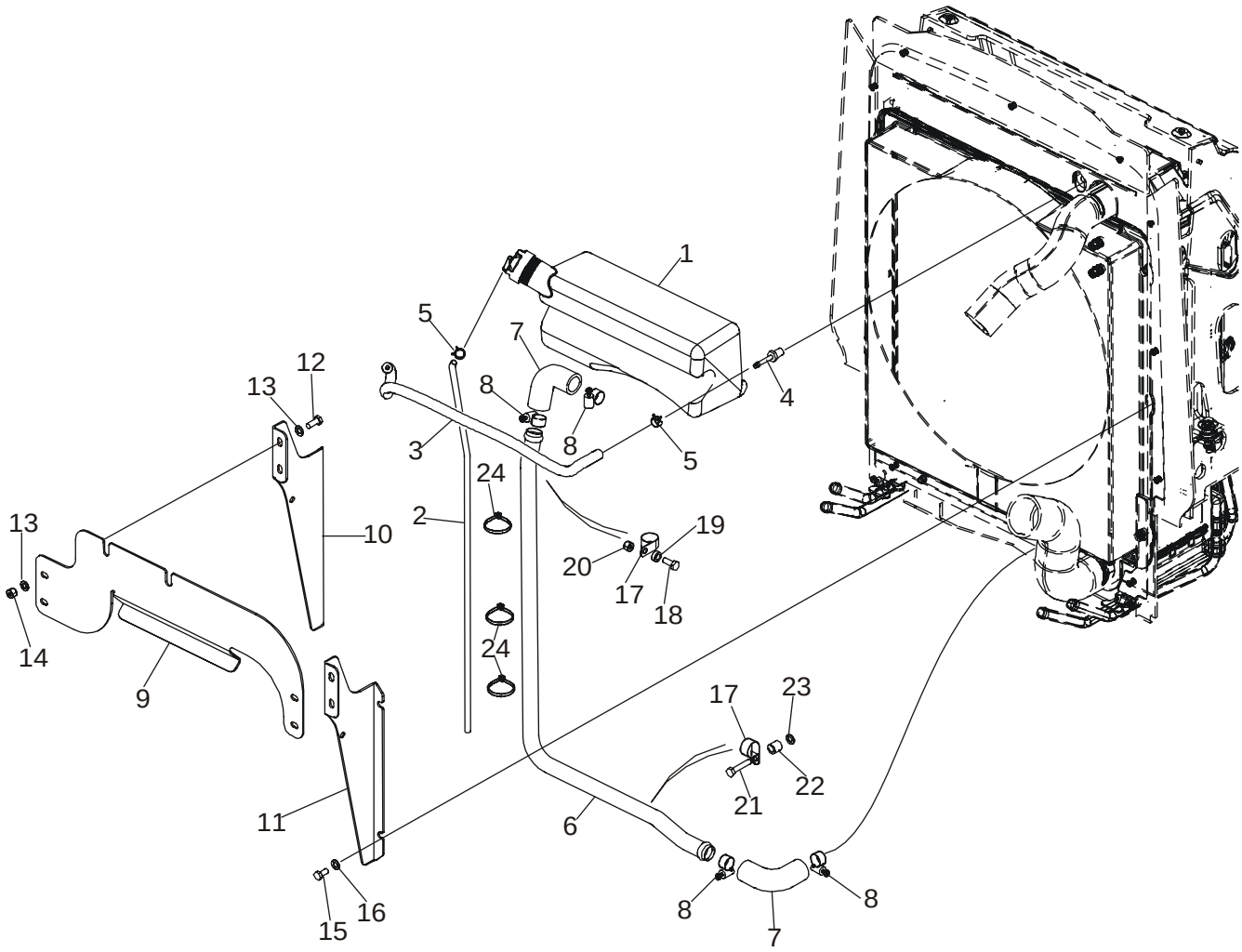


BS03G352

HTTP://WWW.MINNPARBACKHOEPARTS.COM



DEAERATION SYSTEM - MOUNTING

| REF | FN | PART NUMBER | YR/SN | QTY | DESCRIPTION |
|---|---|---|---|---|---|
| 1 | | 87412139 | | 1 | RESERVOIR, COOLANT EXPNSN Deaeration Reservoir, 3.5 Liters; Includes 85803019 Cap |
| | | 85803019 | | 1 | CAP ASSY. Cap, 13 psi |
| 2 | | 87435409 | | 1 | HOSE Overflow Hose |
| 3 | | 87417300 | | 1 | HOSE Recovery, 5/16 ID x 19/32 OD x 22-11/64; Reservoir to Radiator |
| 4 | | 217-154 | | 1 | FITTING 1/4 Stem x 1/4 NPTF |
| 5 | | 1348264C1 | | 2 | CLAMP, HOSE |
| 6 | | 87433503 | | 1 | TUBE |
| 7 | | 87417299 | | 2 | HOSE |
| 8 | | 214-1416 | | 4 | CLAMP Type F, No. 16 |
| 9 | | 87417223 | | 1 | BRACKET |
| 10 | | 87417225 | | 1 | BRACKET Left-Hand Bracket |
| 11 | | 87417224 | | 1 | BRACKET Right-Hand Bracket |
| 12 | | 614-8020 | | 4 | SCREW M8 x 20 |
| 13 | | 895-11008 | | 8 | WASHER 9 x 16 x 1,6 mm |
| 14 | | 832-10408 | | 4 | NUT M8 |
| 15 | | 806-8016 | | 4 | SCREW M8 x 16 |
| 16 | | 895-11008 | | 4 | WASHER 9 x 16 x 1,6 mm |
| 17 | | 515-22254 | | 2 | CLAMP |
| 18 | | 614-8020 | | 1 | SCREW M8 x 20 |
| 19 | | 87418359 | | 1 | SPACER 8 x 6 mm Spacer |
| 20 | | 829-1408 | | 2 | NUT M8 |
| 21 | | 614-8040 | | 1 | SCREW M8 x 40 |
| 22 | | 87418360 | | 1 | SPACER 8 x 16 mm Spacer |
| 23 | | 895-11008 | | 1 | WASHER 9 x 16 x 1,6 mm |
| 24 | | L18337 | | 3 | STRAP Tie |

HTTP://WWW.MINNPARBACKHOEPARTS.COM

| 02-03 | | p1 | 09/03 |
|---|---|---|---|

RADIATOR ASSY (WITH OR WITHOUT AIR CONDITIONING)

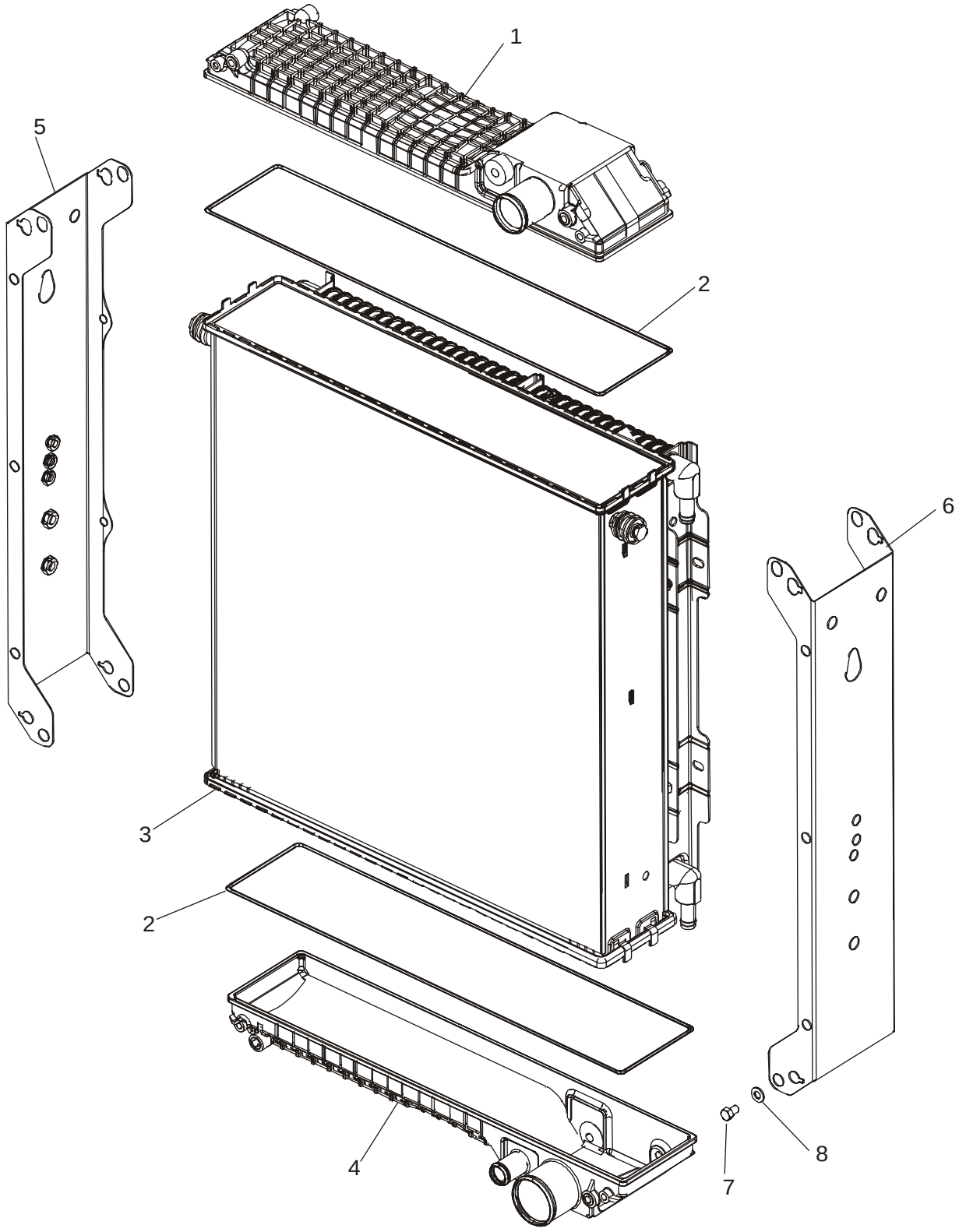

HTTP://WWW.MINNPARBACKHOEPARTS.COM



RADIATOR ASSY (WITH OR WITHOUT AIR CONDITIONING)

| REF | FN | PART NUMBER | YR/SN | QTY | DESCRIPTION |
|---|---|---|---|---|---|
| | | 87410096 | | 1 | RADIATOR 3 Row Radiator, Models With or Without Air Conditioning; Incl. Ref 1 - 8 |
| 1 | | {87429694} | | 1 | Upper Reservoir |
| 2 | | 254409A1 | | 2 | SEAL |
| 3 | | {87429690} | | 1 | Core |
| 4 | | {87429695} | | 1 | Lower Reservoir |
| 5 | | {87429692} | | 1 | Left-Hand |
| 6 | | {87429693} | | 1 | Right-Hand |
| 7 | | 614-8012 | | 8 | SCREW M8 x 12 |
| 8 | | 895-11008 | | 8 | WASHER 9 x 17 x 1,6 mm |

HTTP://WWW.MINNPARBACKHOEPARTS.COM

| 02-04 | | p1 | 09/03 |
|---|---|---|---|

AIR CLEANER - AIR INTAKE PARTS (WITHOUT TURBOCHARGER)

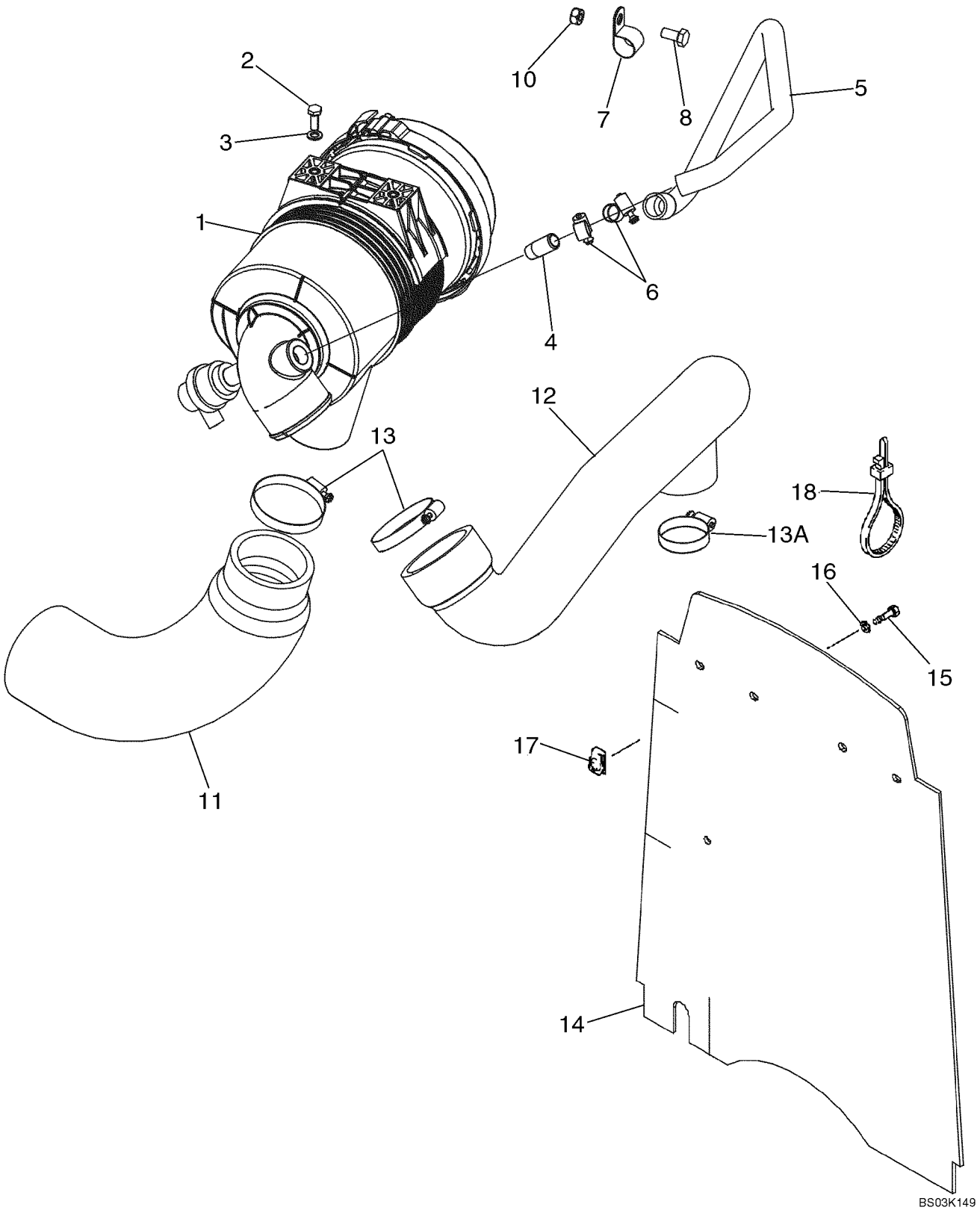

HTTP://WWW.MINNPARBACKHOEPARTS.COM



AIR CLEANER - AIR INTAKE PARTS (WITHOUT TURBOCHARGER)

| REF | FN | PART NUMBER | YR/SN | QTY | DESCRIPTION |
|---|---|---|---|---|---|
| 1 | | 87419133 | | 1 | AIR CLEANER Air Cleaner, Models Without Turbocharged Engines, See Figure 02-05 |
| 2 | | 614-8020 | | 2 | SCREW M8 x 20 |
| 3 | | 895-11008 | | 2 | WASHER 9 x 16 x 1,6 mm |
| 4 | | L17985 | | 1 | FITTING |
| 5 | | 87423457 | | 1 | HOSE |
| 6 | | 214-1412 | | 2 | CLAMP Type F, No. 12 |
| 7 | | 515-24238 | | 1 | CLAMP P |
| 8 | | 614-10020 | | 1 | SCREW M10 x 20 |
| 9 | | 896-15010 | | 1 | WASHER 11 x 24 x 3 mm |
| 10 | | 829-1410 | | 1 | NUT M10 |
| 11 | | 87419135 | | 1 | HOSE, LARGE Inlet |
| 12 | | 87418036 | | 1 | HOSE, LARGE To Turbocharger |
| 13 | | 214-1456 | | 2 | CLAMP Type F, No. 56 |
| 13A | | 214-1440 | | 1 | CLAMP Type F, No. 40 |
| 14 | | 87434099 | | 1 | CURTAIN Barrier, Heat and Noise Reduction |
| 15 | | 806-8025 | | 4 | SCREW M8 x 25; 10.9 |
| 16 | | 495-81001 | | 4 | WASHER 9,5 x 29 x 1,6 mm |
| 17 | | 833-40408 | | 4 | NUT U-Type, M8 |
| 18 | | L18337 | | 2 | STRAP 15 in |

HTTP://WWW.MINNPARBACKHOEPARTS.COM

| 02-04A | | p1 | 09/03 |
|---|---|---|---|

AIR CLEANER - AIR INTAKE PARTS (WITH TURBOCHARGER)

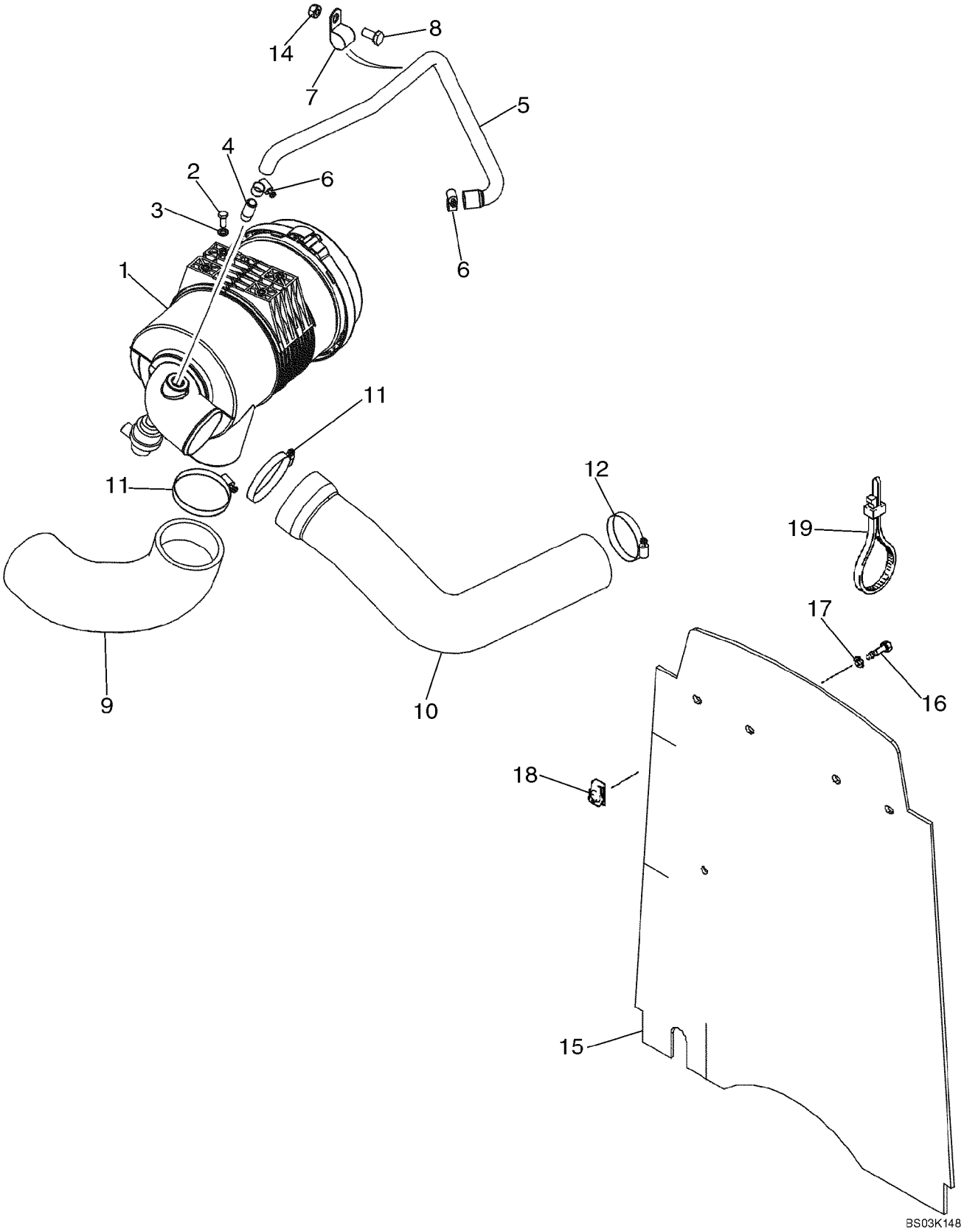

HTTP://WWW.MINNPARBACKHOEPARTS.COM



AIR CLEANER - AIR INTAKE PARTS (WITH TURBOCHARGER)

| REF | FN | PART NUMBER | YR/SN | QTY | DESCRIPTION |
|---|---|---|---|---|---|
| 1 | | 87412636 | | 1 | AIR CLEANER Air Cleaner; Models With Turbocharged Engine; See Figure 02-05A |
| 2 | | 614-8020 | | 4 | SCREW M8 x 20 |
| 3 | | 895-11008 | | 4 | WASHER 9 x 16 x 1,6 mm |
| 4 | | L17985 | | 1 | FITTING |
| 5 | | 87423457 | | 1 | HOSE |
| 6 | | 214-1412 | | 2 | CLAMP Type F, No. 12 |
| 7 | | 515-24238 | | 1 | CLAMP P |
| 8 | | 614-10020 | | 1 | SCREW M10 x 20 |
| 9 | | 87420834 | | 1 | HOSE, LARGE Inlet |
| 10 | | 87412489 | | 1 | HOSE, LARGE To Turbocharger |
| 11 | | 214-1464 | | 2 | CLAMP Type F, No. 64, 3-9/16 - 4-1/2 |
| 12 | | 214-1456 | | 1 | CLAMP Type F, No. 56 |
| 13 | | 896-15010 | | 1 | WASHER 11 x 24 x 3 mm |
| 14 | | 829-1410 | | 1 | NUT M10 |
| 15 | | 87434099 | | 1 | CURTAIN Barrier, Heat and Noise Reduction |
| 16 | | 806-8025 | | 4 | SCREW M8 x 25; 10.9 |
| 17 | | 495-81001 | | 4 | WASHER 9,5 x 29 x 1,6 mm |
| 18 | | 833-40408 | | 4 | NUT U-Type, M8 |
| 19 | | L18337 | | 2 | STRAP 15 in |

HTTP://WWW.MINNPARBACKHOEPARTS.COM



AIR CLEANER (WITHOUT TURBOCHARGER)

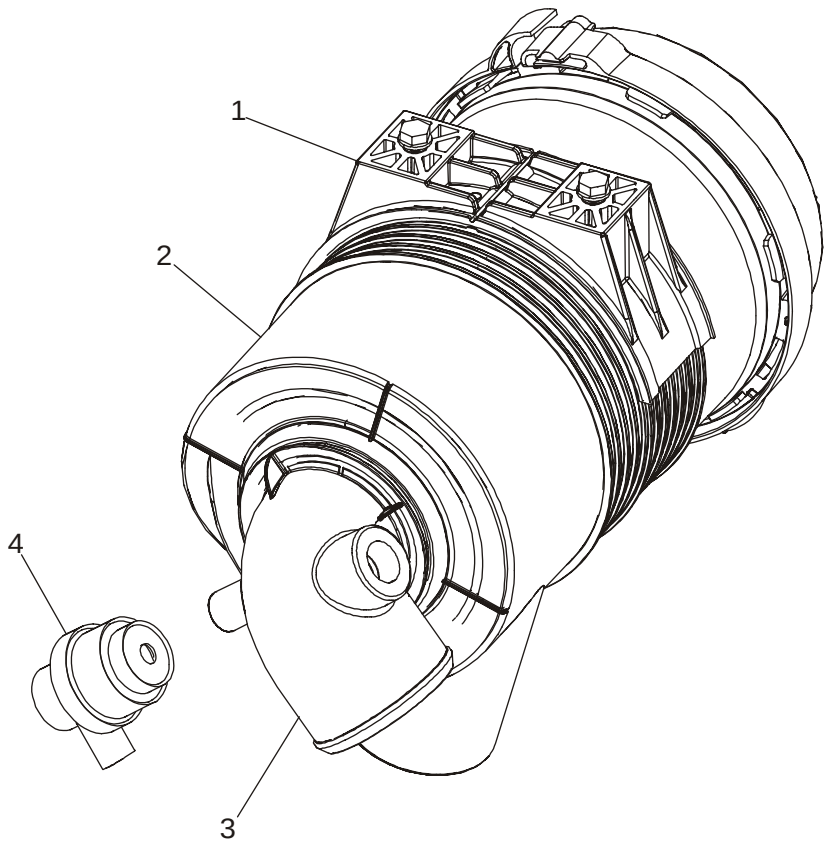


BS03K150

HTTP://WWW.MINNPARBACKHOEPARTS.COM



AIR CLEANER (WITHOUT TURBOCHARGER)

| REF | FN | PART NUMBER | YR/SN | QTY | DESCRIPTION |
|---|---|---|---|---|---|
| | | 87419133 | | 1 | AIR CLEANER Air Cleaner; Models Without Turbocharged Engines; Incl. Ref 1 - 4 |
| 1 | | 87418166 | | 1 | AIR CLEANER Includes Rear Cover |
| 2 | | 87418366 | | 1 | FILTER, ELEMENT Primary |
| 3 | | 87418367 | | 1 | FILTER, ELEMENT Secondary |
| 4 | | 87405661 | | 1 | SWITCH Air Restriction Switch |

HTTP://WWW.MINNPARBACKHOEPARTS.COM



AIR CLEANER (WITH TURBOCHARGER)

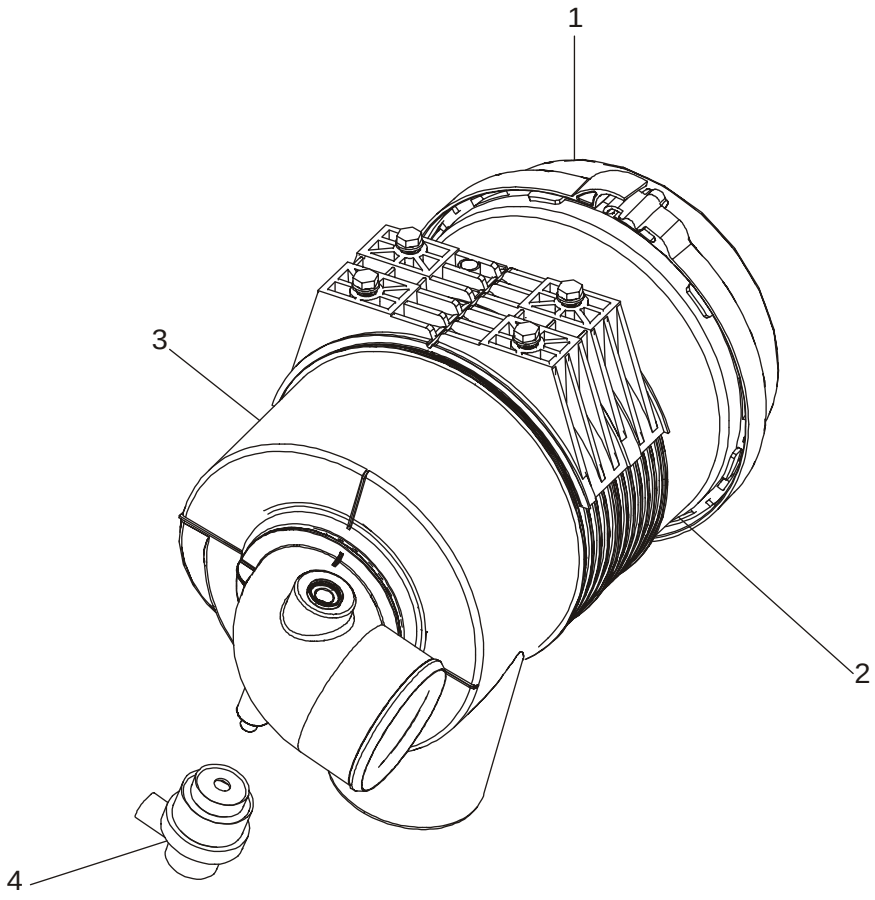


BS03K151

HTTP://WWW.MINNPARBACKHOEPARTS.COM



AIR CLEANER (WITH TURBOCHARGER)

| REF | FN | PART NUMBER | YR/SN | QTY | DESCRIPTION |
|---|---|---|---|---|---|
| | | 87412636 | | 1 | AIR CLEANER Air Cleaner; Models With Turbocharged Engines; Incl. Ref 1 - 4 |
| 1 | | 87412635 | | 1 | AIR CLEANER Includes Rear Cover |
| 2 | | 87418364 | | 1 | FILTER, ELEMENT Primary |
| 3 | | 87418365 | | 1 | FILTER, ELEMENT Secondary |
| 4 | | 87405661 | | 1 | SWITCH Air Restriction Switch |

HTTP://WWW.MINNPARBACKHOEPARTS.COM

| 02-06 | | p1 | 12/03 |
|---|---|---|---|

MUFFLER - EXHAUST SYSTEM (WITH TURBOCHARGER)

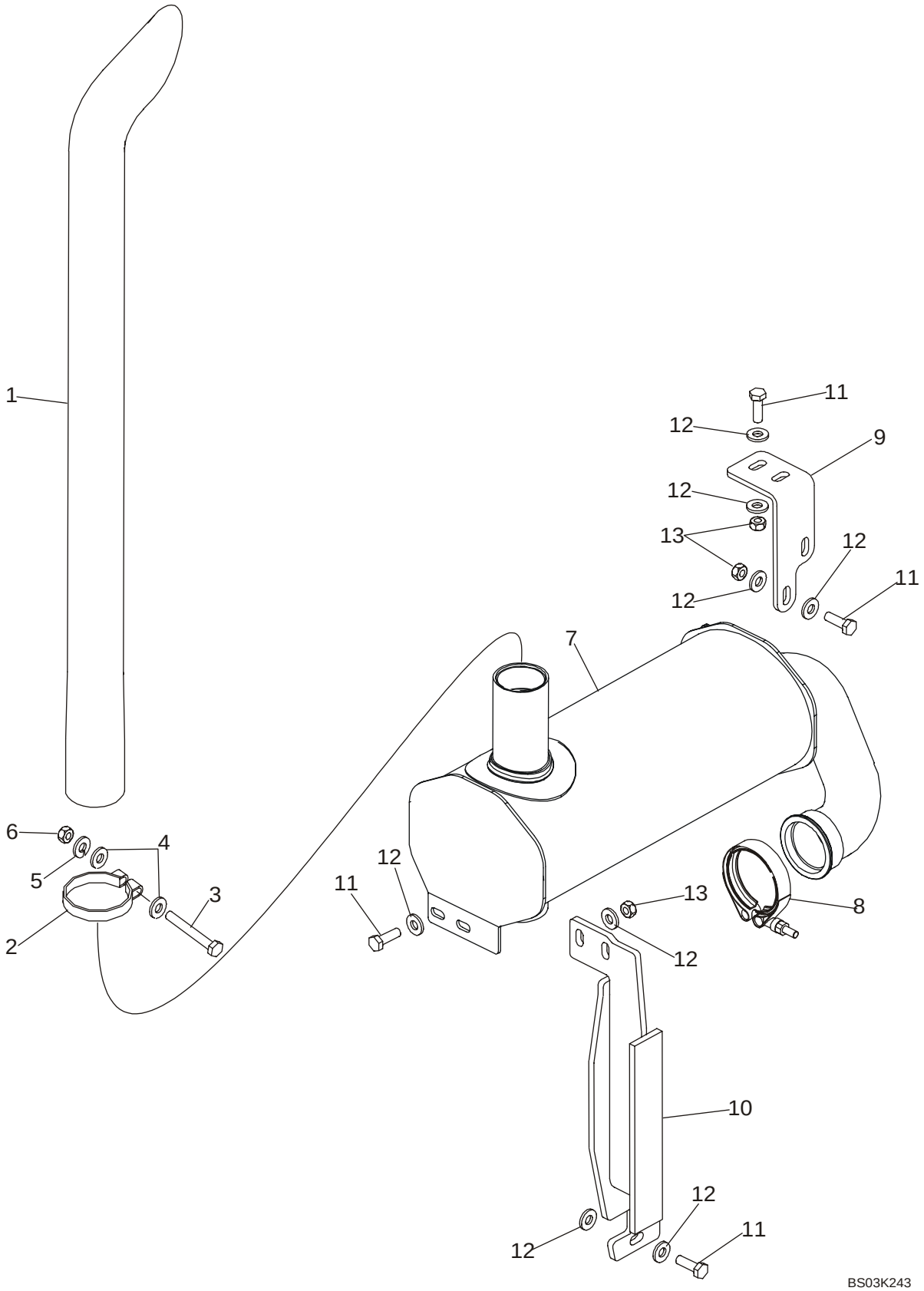

HTTP://WWW.MINNPARBACKHOEPARTS.COM



MUFFLER - EXHAUST SYSTEM (WITH TURBOCHARGER)

| REF | FN | PART NUMBER | YR/SN | QTY | DESCRIPTION |
|---|---|---|---|---|---|
| 1 | | 87437805 | | 1 | PIPE, EXHAUST SYSTEM Exhaust Stack |
| 2 | | 87437804 | | 1 | PIPE CLAMP Stack Clamp |
| 3 | | 614-10080 | | 1 | SCREW M10 x 80 |
| 4 | | 896-15010 | | 2 | WASHER Flat |
| 5 | | 892-11010 | | 1 | WASHER, LOCK M10 |
| 6 | | 829-1410 | | 1 | NUT M10 |
| 7 | | 87437834 | | 1 | MUFFLER Turbo Engine |
| 8 | | A170467 | | 1 | CLAMP Includes Hardware |
| 9 | | 87423531 | | 1 | BRACKET, SUPPORTING Front Support Bracket |
| 10 | | 87439444 | | 1 | BRACKET, SUPPORTING Rear Support Bracket |
| 11 | | 627-10030 | | 8 | SCREW M10 x 30 |
| 12 | | 896-15010 | | 16 | WASHER 11 x 24 x 3 mm |
| 13 | | 829-1410 | | 7 | NUT M10 |

HTTP://WWW.MINNPARBACKHOEPARTS.COM

| 02-06A | | p1 | 12/03 |
|---|---|---|---|

MUFFLER, ASPIRATED - EXHAUST SYSTEM

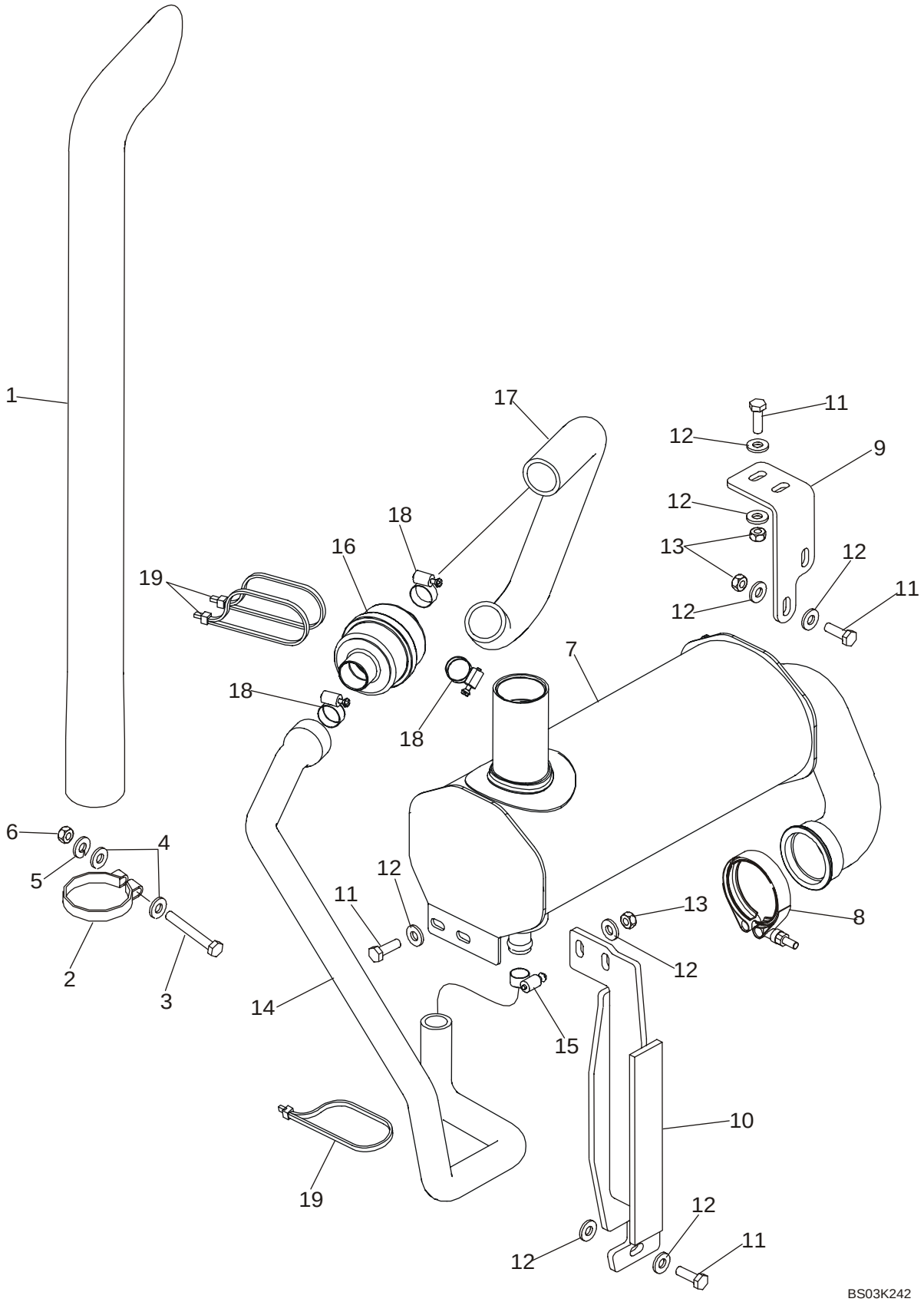

HTTP://WWW.MINNPARBACKHOEPARTS.COM



MUFFLER, ASPIRATED - EXHAUST SYSTEM

| REF | FN | PART NUMBER | YR/SN | QTY | DESCRIPTION |
|---|---|---|---|---|---|
| 1 | | 87437805 | | 1 | PIPE, EXHAUST SYSTEM Exhaust Stack |
| 2 | | 87437804 | | 1 | PIPE CLAMP Stack Clamp |
| 3 | | 614-10080 | | 1 | SCREW M10 x 80 |
| 4 | | 896-15010 | | 2 | WASHER Flat |
| 5 | | 892-11010 | | 1 | WASHER, LOCK M10 |
| 6 | | 829-1410 | | 1 | NUT M10 |
| 7 | | 87435499 | | 1 | MUFFLER Aspirated and Spark Arrestor; For Gasket, Elbow and Attaching Hardware, See Figure 02-06B, Ref 9 - 12 |
| 8 | | A170467 | | 1 | CLAMP Includes Hardware |
| 9 | | 87423531 | | 1 | BRACKET, SUPPORTING Front Support Bracket |
| 10 | | 87439444 | | 1 | BRACKET, SUPPORTING Rear Support Bracket |
| 11 | | 627-10030 | | 8 | SCREW M10 x 30 |
| 12 | | 896-15010 | | 16 | WASHER 11 x 24 x 3 mm |
| 13 | | 829-1410 | | 7 | NUT M10 |
| 14 | | 87436615 | | 1 | HOSE Aspiration Hose, Check Valve to Muffler |
| 15 | | 214-1416 | | 1 | CLAMP #16, Type F |
| 16 | | 307123A1 | | 1 | VALVE Aspirator Check |
| 17 | | 87436614 | | 1 | HOSE Aspiration Hose, Air Cleaner to Valve |
| 18 | | 214-1424 | | 3 | CLAMP #24, Type F |
| 19 | | L18337 | | 3 | STRAP Tie |

HTTP://WWW.MINNPARBACKHOEPARTS.COM

| 02-06B | | p1 | 12/03 |
|---|---|---|---|

MUFFLER - EXHAUST SYSTEM (WITHOUT TURBOCHARGER)

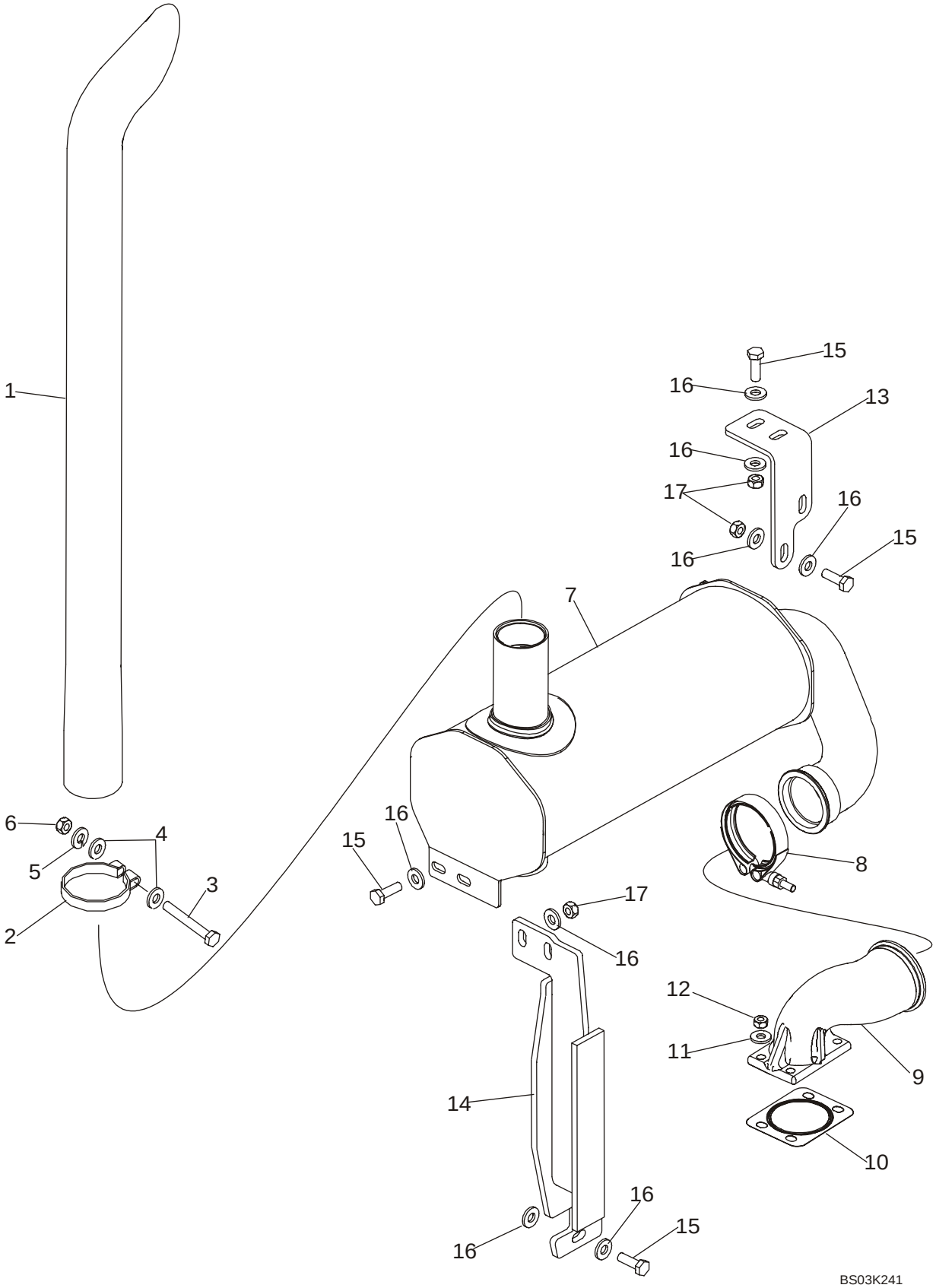

HTTP://WWW.MINNPARBACKHOEPARTS.COM



MUFFLER - EXHAUST SYSTEM (WITHOUT TURBOCHARGER)

| REF | FN | PART NUMBER | YR/SN | QTY | DESCRIPTION |
|---|---|---|---|---|---|
| 1 | | 87437805 | | 1 | PIPE, EXHAUST SYSTEM Exhaust Stack |
| 2 | | 87437804 | | 1 | PIPE CLAMP Stack Clamp |
| 3 | | 614-10080 | | 1 | SCREW M10 x 80 |
| 4 | | 896-15010 | | 2 | WASHER Flat |
| 5 | | 892-11010 | | 1 | WASHER, LOCK M10 |
| 6 | | 829-1410 | | 1 | NUT M10 |
| 7 | | 87437836 | | 1 | MUFFLER Naturally Aspirated Engine |
| 8 | | A170467 | | 1 | CLAMP Includes Hardware |
| 9 | | 87410196 | | 1 | ELBOW |
| 10 | | J936995 | | 1 | GASKET |
| 11 | | 896-15008 | | 4 | WASHER 9 x 21 x 2,5 mm |
| 12 | | 829-1408 | | 4 | NUT M8 |
| 13 | | 87423531 | | 1 | BRACKET, SUPPORTING Front Support Bracket |
| 14 | | 87439444 | | 1 | BRACKET, SUPPORTING Rear Support Bracket |
| 15 | | 627-10030 | | 8 | SCREW M10 x 30 |
| 16 | | 896-15010 | | 16 | WASHER 11 x 24 x 3 mm |
| 17 | | 829-1410 | | 7 | NUT M10 |

HTTP://WWW.MINNPARBACKHOEPARTS.COM



ENGINE - MOUNTING

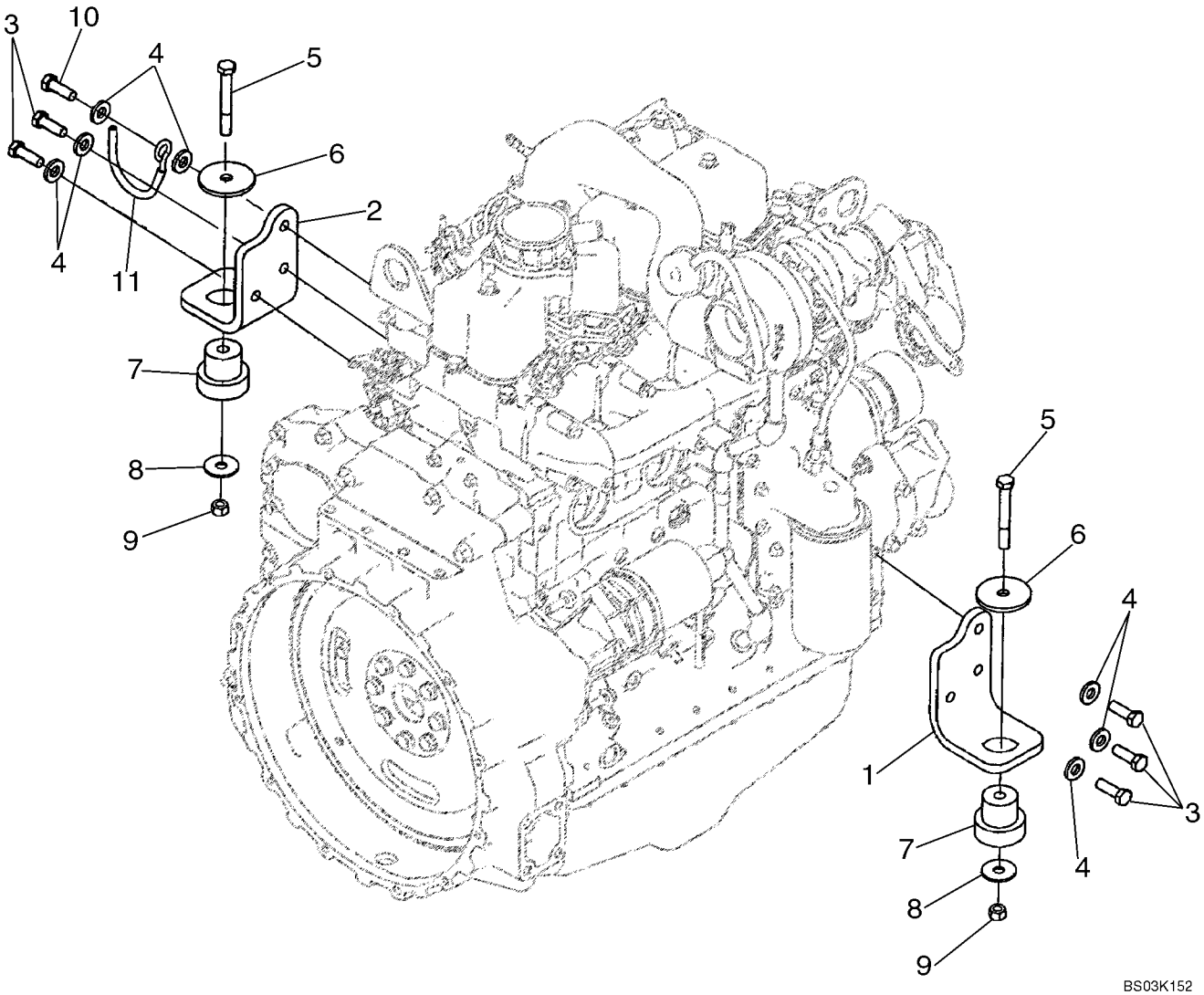

HTTP://WWW.MINNPARBACKHOEPARTS.COM



ENGINE - MOUNTING

| REF | FN | PART NUMBER | YR/SN | QTY | DESCRIPTION |
|---|---|---|---|---|---|
| | | {86990708} | | 1 | 80 hp Engine, Models Without Turbocharged Engine; Includes Parts On Figures 02-08 - 02-41, 03-4 - 03-11 |
| | | {86990709} | | 1 | 85 hp Engine, Models With Turbocharged Engine; Includes Parts On Figures 02-08 - 02-41, 03-4 - 03-11 |
| 1 | | 87411319 | | 1 | BRACKET Right-Hand |
| 2 | | 87411320 | | 1 | BRACKET Left-Hand |
| 3 | | 614-12035 | | 5 | SCREW M12 x 35 |
| 4 | | 896-15012 | | 7 | WASHER 13,5 x 28 x 4 mm |
| 5 | | 814-12080 | | 2 | SCREW M12 x 80 |
| 6 | | 85801585 | | 2 | WASHER |
| 7 | | 87416966 | | 2 | SUPPORT Insulator, Rubber Mount |
| 8 | | 85802618 | | 2 | WASHER, SEALING |
| 9 | | 832-10412 | | 2 | NUT M12 |
| 10 | | 614-12040 | | 1 | SCREW M12 x 40 |
| 11 | | 87431799 | | 1 | SUPPORT Hose Support |

HTTP://WWW.MINNPARBACKHOEPARTS.COM



ENGINE

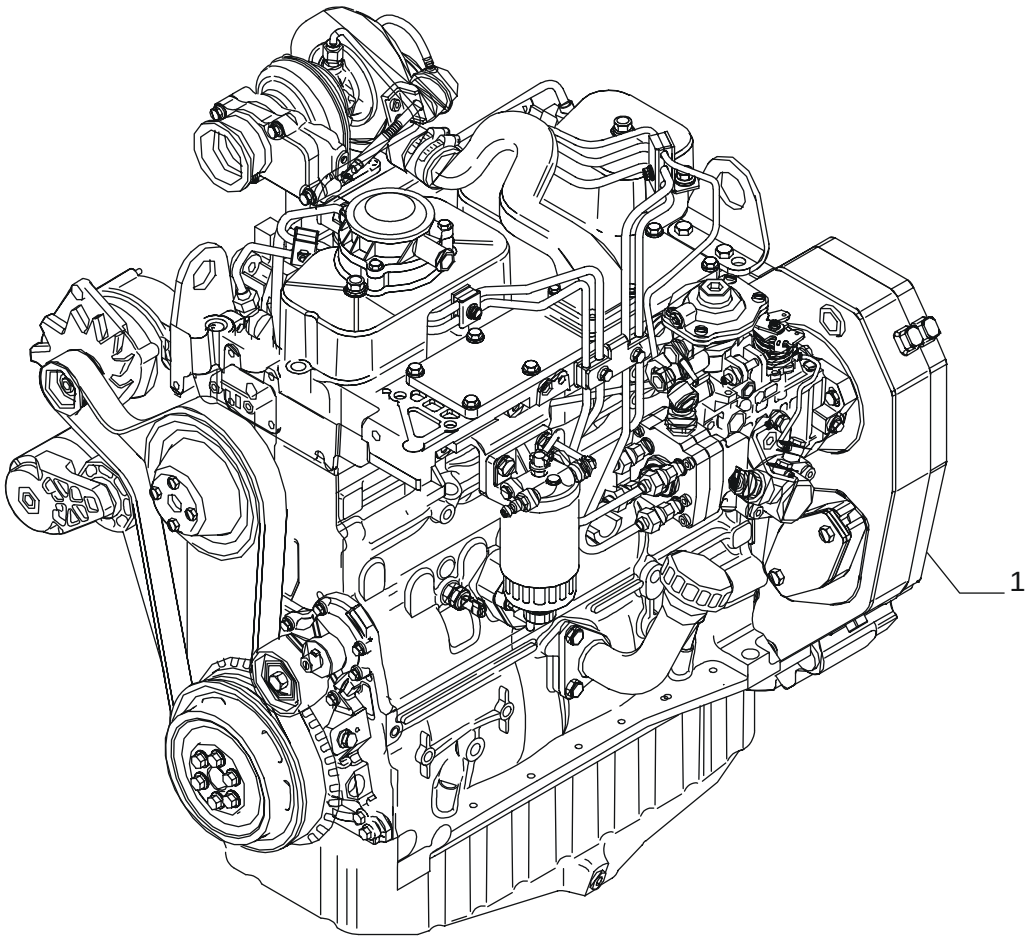


BS04A023

HTTP://WWW.MINNPARBACKHOEPARTS.COM



ENGINE

| REF | FN | PART NUMBER | YR/SN | QTY | DESCRIPTION |
|---|---|---|---|---|---|
| 1 | | {86990708} | | 1 | 80hp Engine, Models Without Turbocharged Engine; Includes Parts On Figures 02-08 - 02-41, 03-04 - 03-11 |
| 1 | | {86990709} | | 1 | 85hp Engine, Models With Turbocharged Engine; Includes Parts On Figures 02-08 - 02-41, 03-04 - 03-11 |

HTTP://WWW.MINNPARBACKHOEPARTS.COM



CYLINDER BLOCK

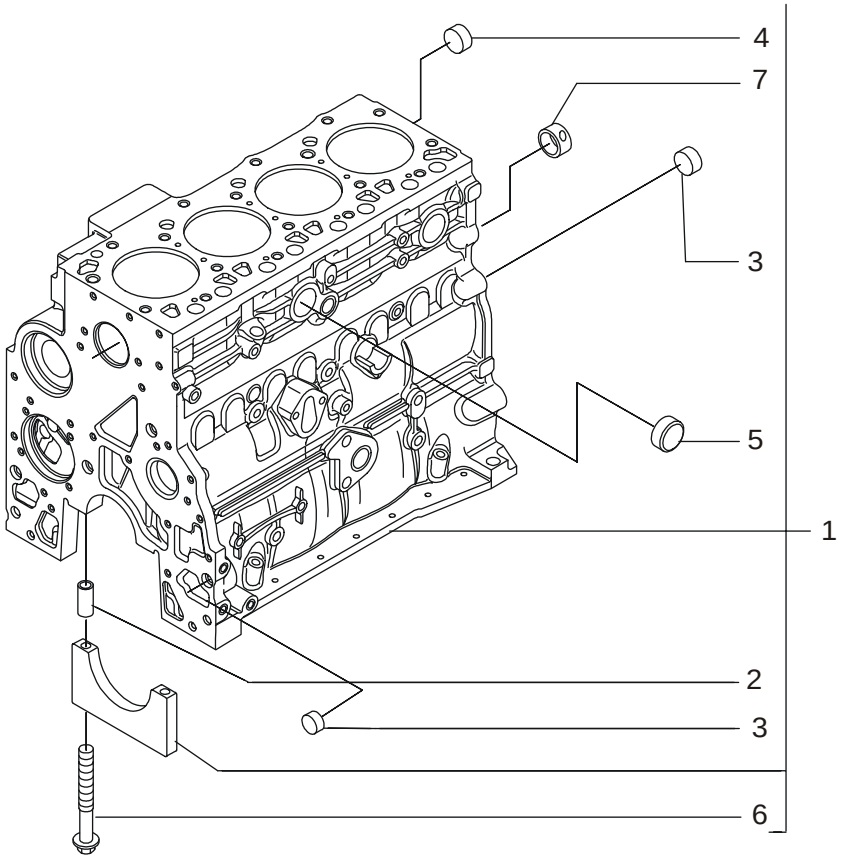


BS04A024

HTTP://WWW.MINNPARBACKHOEPARTS.COM



CYLINDER BLOCK

| REF | FN | PART NUMBER | YR/SN | QTY | DESCRIPTION |
|---|---|---|---|---|---|
| 1 | | 2830082 | | 1 | CYLINDER BLOCK - ASSY |
| 2 | | 4899026 | | 10 | DOWEL |
| 3 | | 4895039 | | 3 | PLUG |
| 4 | | 4895038 | | 4 | PLUG |
| 5 | | 4895228 | | 2 | PLUG |
| 6 | | 4891353 | | 10 | SCREW 12X120 |
| 7 | | 4895040 | | 1 | BUSHING |

HTTP://WWW.MINNPARBACKHOEPARTS.COM



CYLINDER BLOCK

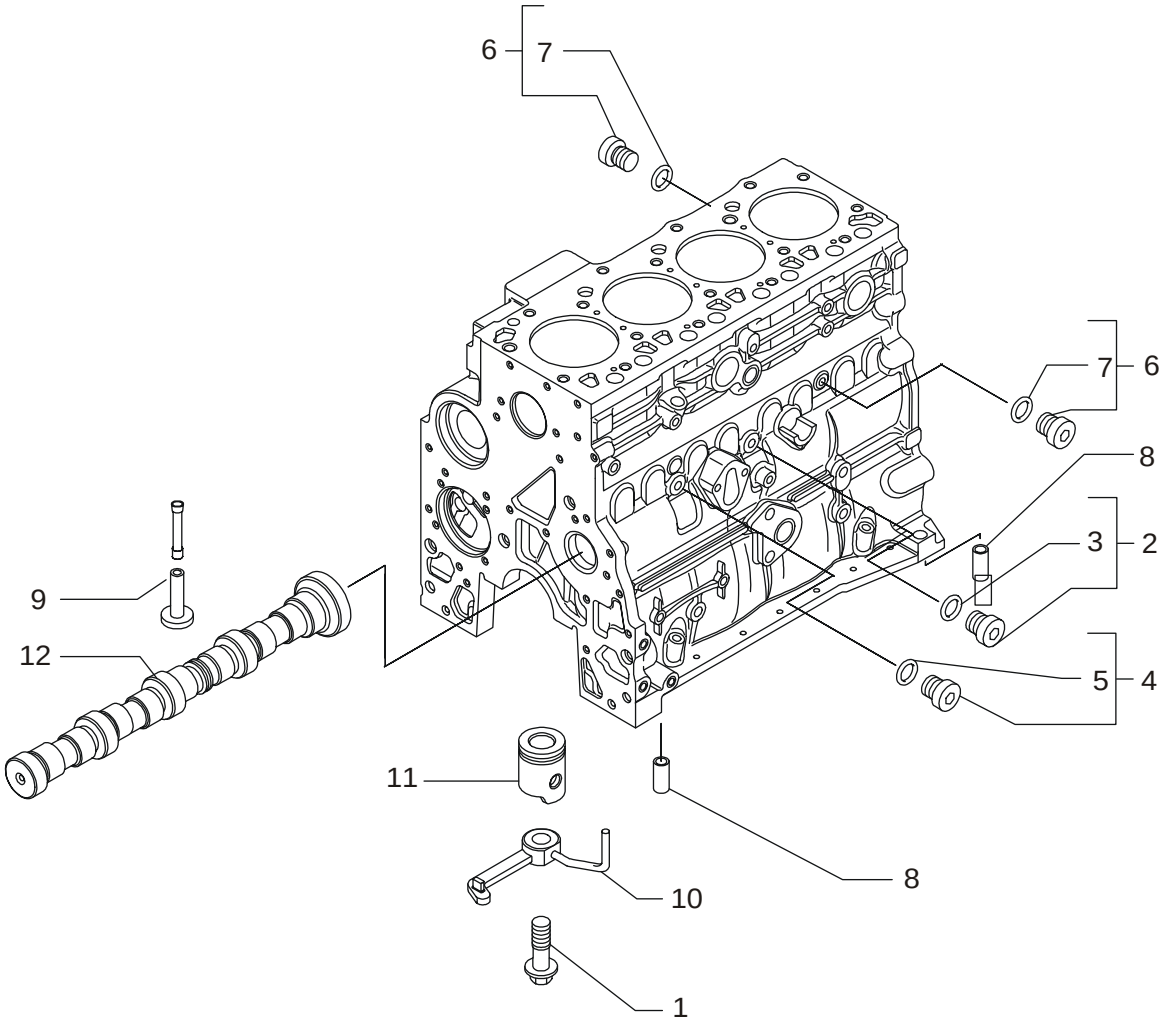

HTTP://WWW.MINNPARBACKHOEPARTS.COM



CYLINDER BLOCK

| REF | FN | PART NUMBER | YR/SN | QTY | DESCRIPTION |
|---|---|---|---|---|---|
| 1 | | 4894218 | | 4 | SCREW |
| 2 | | 4895605 | | 1 | PLUG 14X1.5 - ASSY |
| 3 | | 4899115 | | 1 | O-RING |
| 4 | | 4899009 | | 1 | PLUG 10X1.5 - ASSY |
| 5 | | 4899072 | | 1 | O-RING |
| 6 | | 4895392 | | 2 | PLUG 18X1.5 - ASSY |
| 7 | | 4895393 | | 1 | O-RING |
| 8 | | 4895049 | | 2 | DOWEL |
| 9 | | 4895180 | | 8 | TAPPET |
| 10 | | 504047260 | | 4 | NOZZLE, LUB. OIL JET |
| 11 | | REF | | 1 | INSTRUCTION PISTON; See Figure 02-23 |
| 12 | | REF | | 1 | INSTRUCTION CAMSHAFT; See Figure 02-28 |

HTTP://WWW.MINNPARBACKHOEPARTS.COM



OIL PUMP, PAN

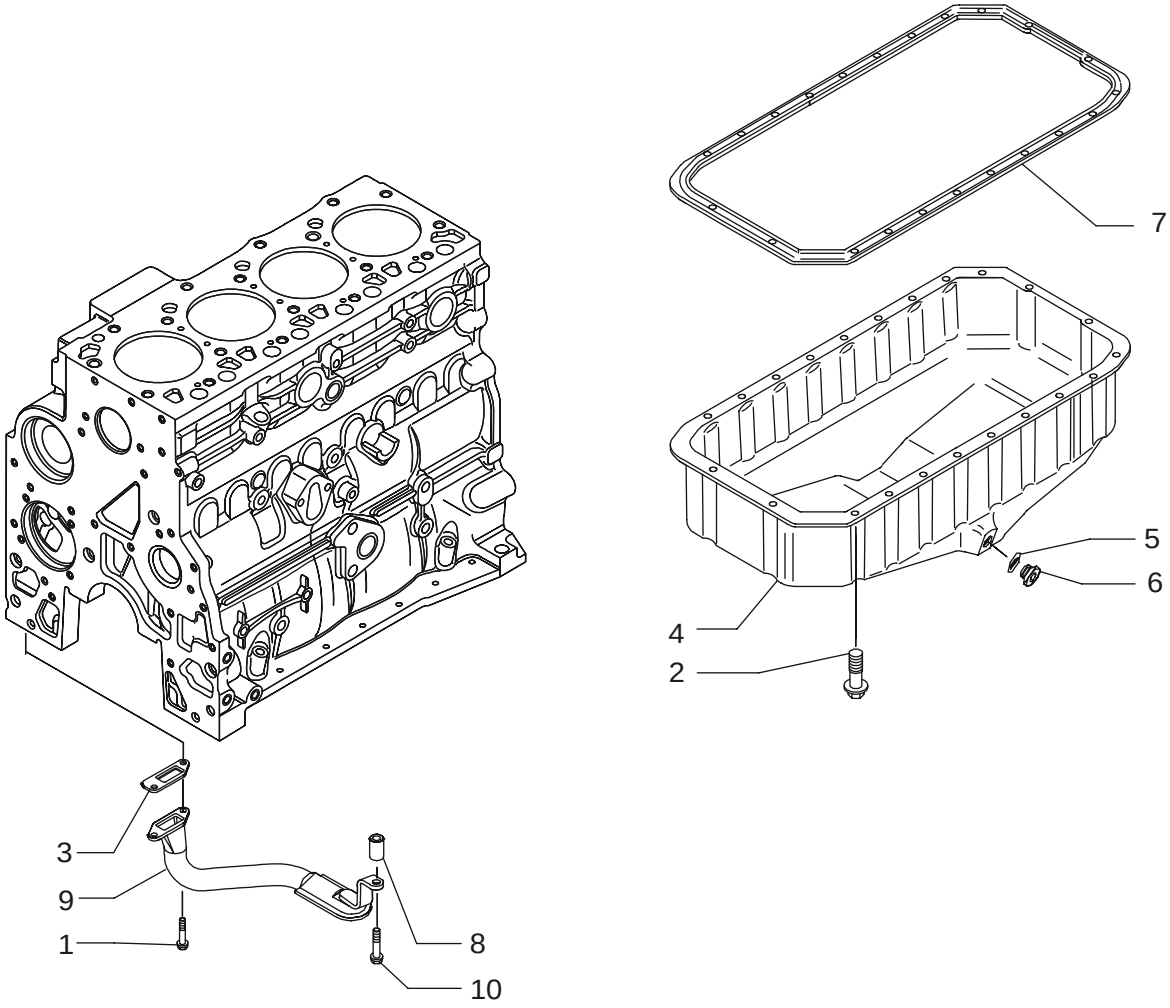


BS04A026

HTTP://WWW.MINNPARBACKHOEPARTS.COM



OIL PUMP, PAN

| REF | FN | PART NUMBER | YR/SN | QTY | DESCRIPTION |
|---|---|---|---|---|---|
| 1 | | 4899020 | | 2 | SCREW 8X20 |
| 2 | | 4899091 | | 22 | SCREW |
| 2 | | 4895489 | | 2 | SCREW |
| 3 | | 4898301 | | 1 | GASKET |
| 4 | | {504043550} | | 1 | Oil Pan |
| 5 | | 4895584 | | 1 | GASKET |
| 6 | | 4894139 | | 1 | PLUG 22X1.5 |
| 7 | | 504069777 | | 1 | GASKET |
| 8 | | 504062812 | | 1 | SPACER |
| 9 | | {504042165} | | 1 | Tube |
| 10 | | 4895538 | | 1 | SCREW |

HTTP://WWW.MINNPARBACKHOEPARTS.COM

| 02-12 | | p1 | 01/04 |
|---|---|---|---|

CYLINDER BLOCK - COVERS

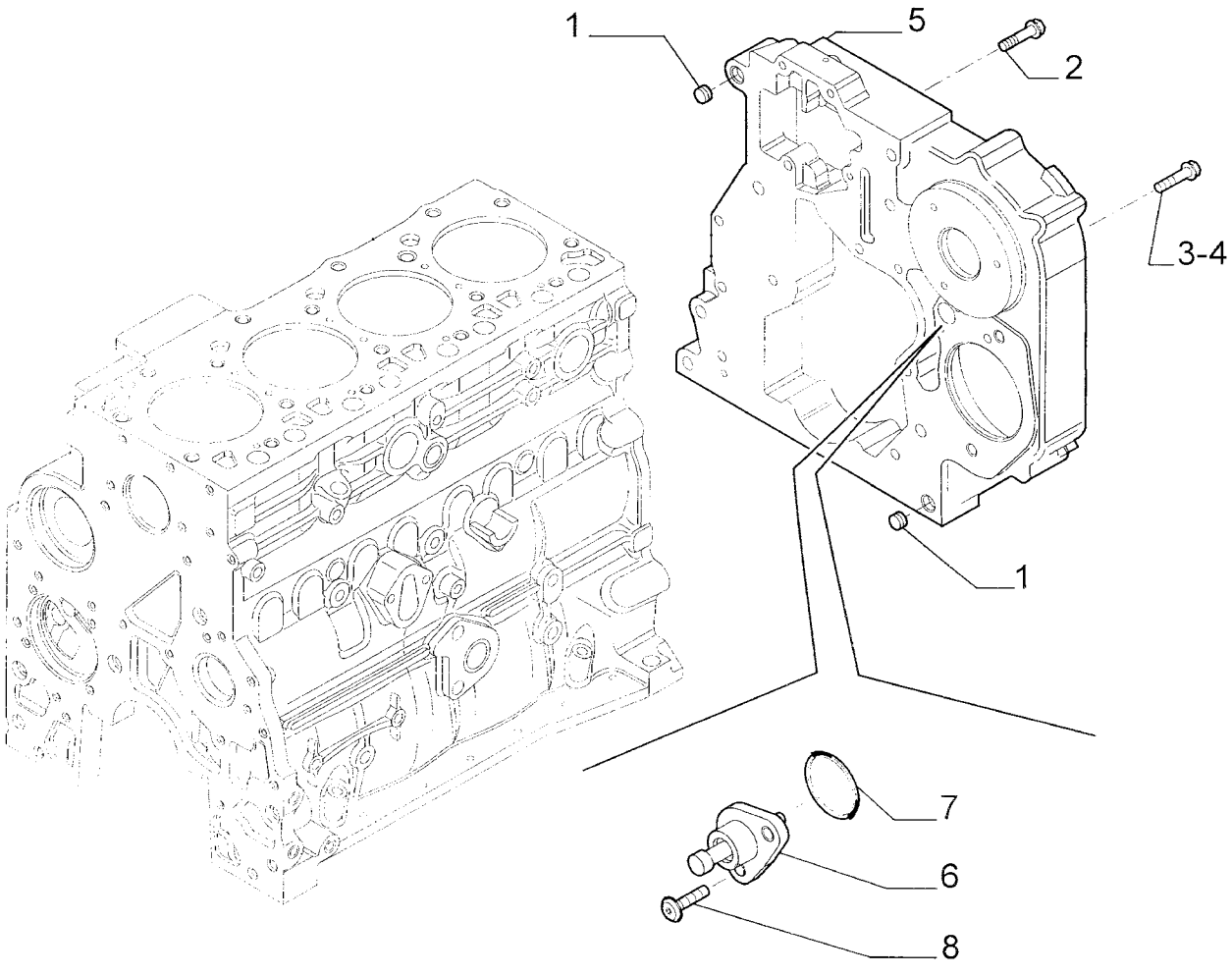

HTTP://WWW.MINNPARBACKHOEPARTS.COM



CYLINDER BLOCK - COVERS

| REF | FN | PART NUMBER | YR/SN | QTY | DESCRIPTION |
|---|---|---|---|---|---|
| 1 | | 4899026 | | 2 | DOWEL |
| 2 | | 4899091 | | 4 | SCREW |
| 3 | | 4899093 | | 5 | SCREW |
| 4 | | 4899073 | | 2 | SCREW |
| 5 | | 504050848 | | 1 | COVER |
| 6 | | 504074001 | | 1 | COVER |
| 7 | | 17278780 | | 1 | O-RING |
| 8 | | 4895355 | | 2 | SCREW 5X17 |

HTTP://WWW.MINNPARBACKHOEPARTS.COM



CYLINDER BLOCK - COVERS

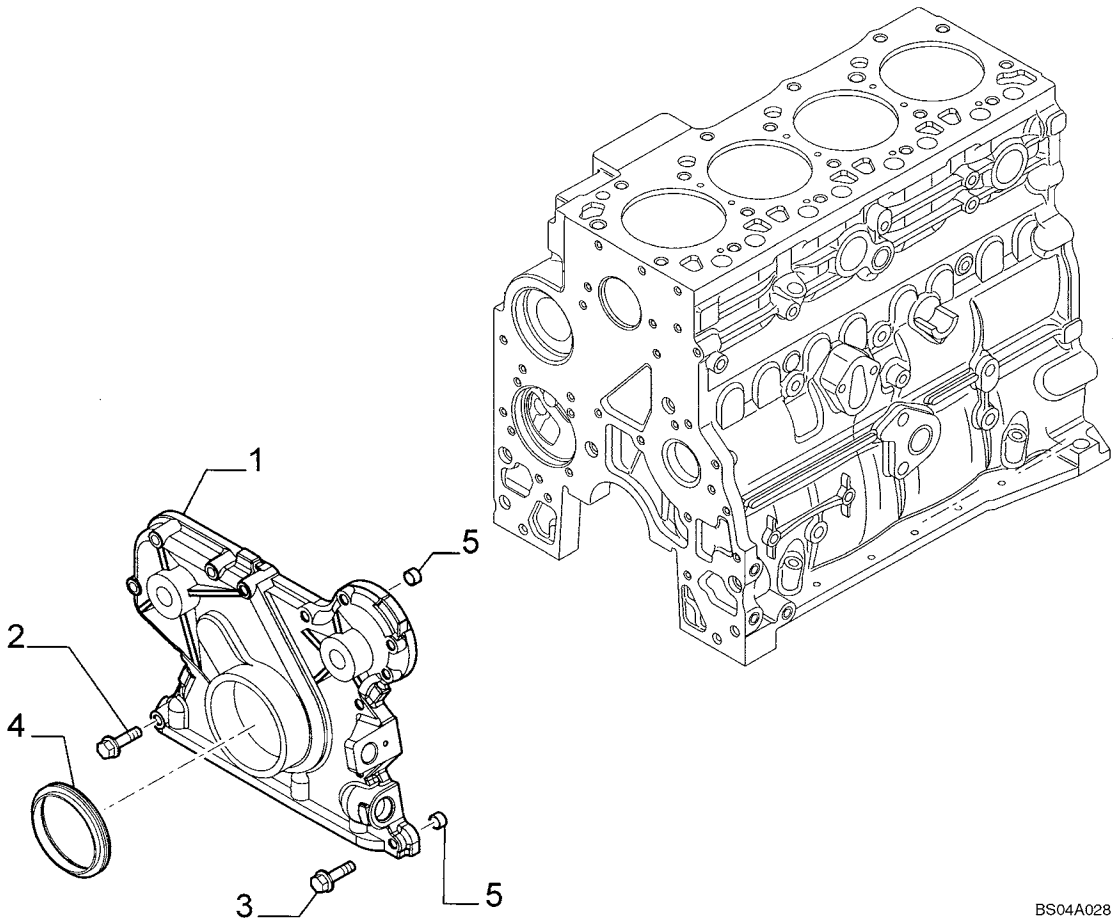

HTTP://WWW.MINNPARBACKHOEPARTS.COM



CYLINDER BLOCK - COVERS

| REF | FN | PART NUMBER | YR/SN | QTY | DESCRIPTION |
|---|---|---|---|---|---|
| 1 | | 4897024 | | 1 | COVER |
| 2 | | 4899078 | | 5 | SCREW |
| 3 | | 4899063 | | 8 | SCREW M8X30 |
| 4 | | 4890832 | | 1 | GASKET |
| 5 | | 4891209 | | 2 | DOWEL |

HTTP://WWW.MINNPARBACKHOEPARTS.COM



CYLINDER BLOCK - COVERS

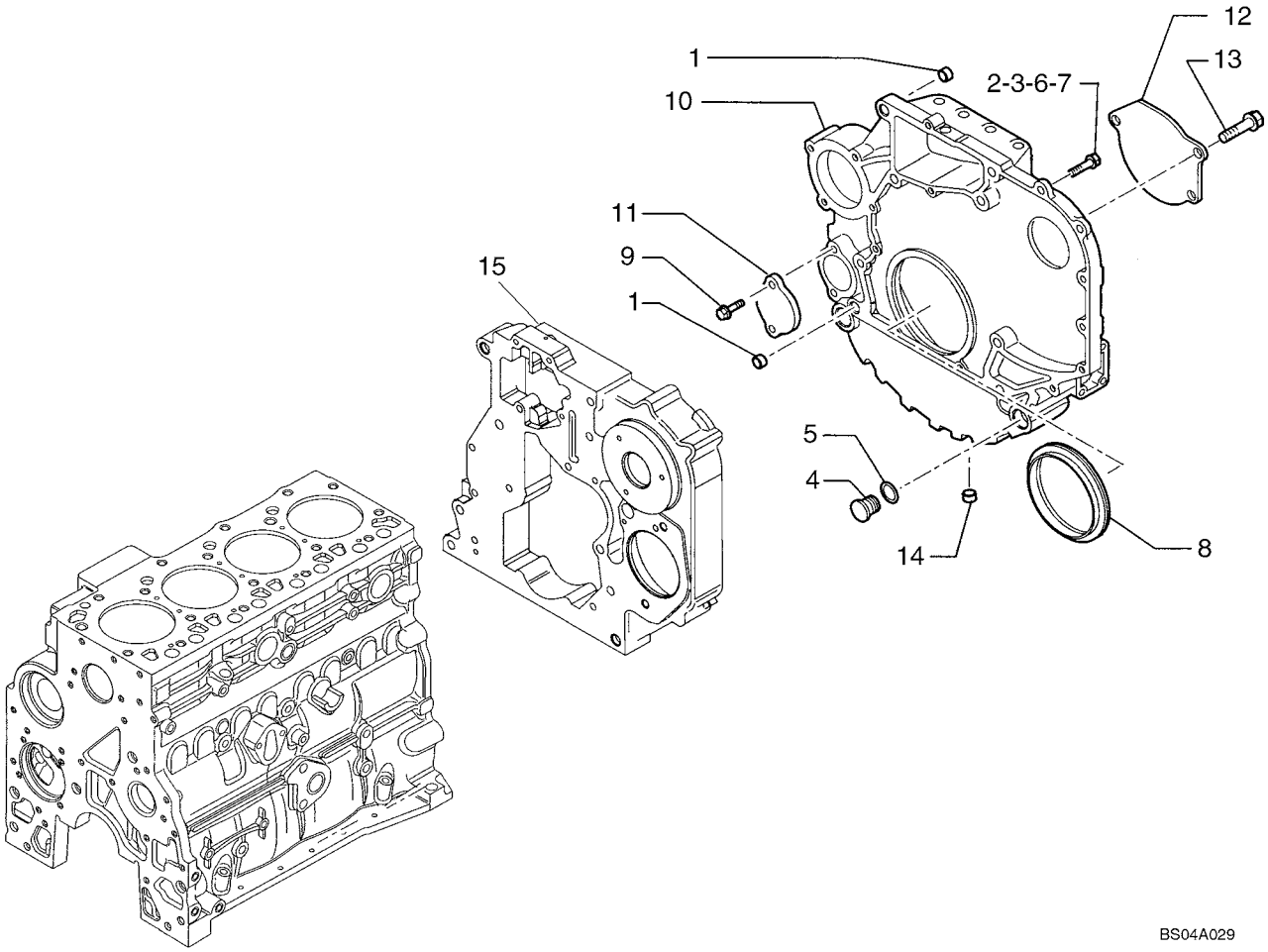

HTTP://WWW.MINNPARBACKHOEPARTS.COM



CYLINDER BLOCK - COVERS

| REF | FN | PART NUMBER | YR/SN | QTY | DESCRIPTION |
|---|---|---|---|---|---|
| 1 | | 4899026 | | 2 | DOWEL |
| 2 | | 4899109 | | 3 | SCREW M10X1.5X80 |
| 3 | | 4899075 | | 8 | SCREW M10X1.5X40 |
| 4 | | 4895378 | | 2 | PLUG |
| 5 | | 4895379 | | 2 | O-RING |
| 6 | | 4899076 | | 5 | SCREW M12X80 |
| 7 | | 4899074 | | 2 | SCREW |
| 8 | | 4890833 | | 1 | GASKET |
| 9 | | 4899103 | | 2 | SCREW |
| 10 | | 504069775 | | 1 | COVER |
| 11 | | 4895358 | | 1 | COVER |
| 12 | | 504030423 | | 1 | COVER |
| 13 | | 4899020 | | 1 | SCREW M8X20 |
| 13 | | 504062964 | | 2 | SCREW |
| 14 | | 4895079 | | 1 | PLUG |
| 15 | | REF | | 1 | INSTRUCTION COVER; See Figure 02-12 |

HTTP://WWW.MINNPARBACKHOEPARTS.COM



BREATHER - ENGINE

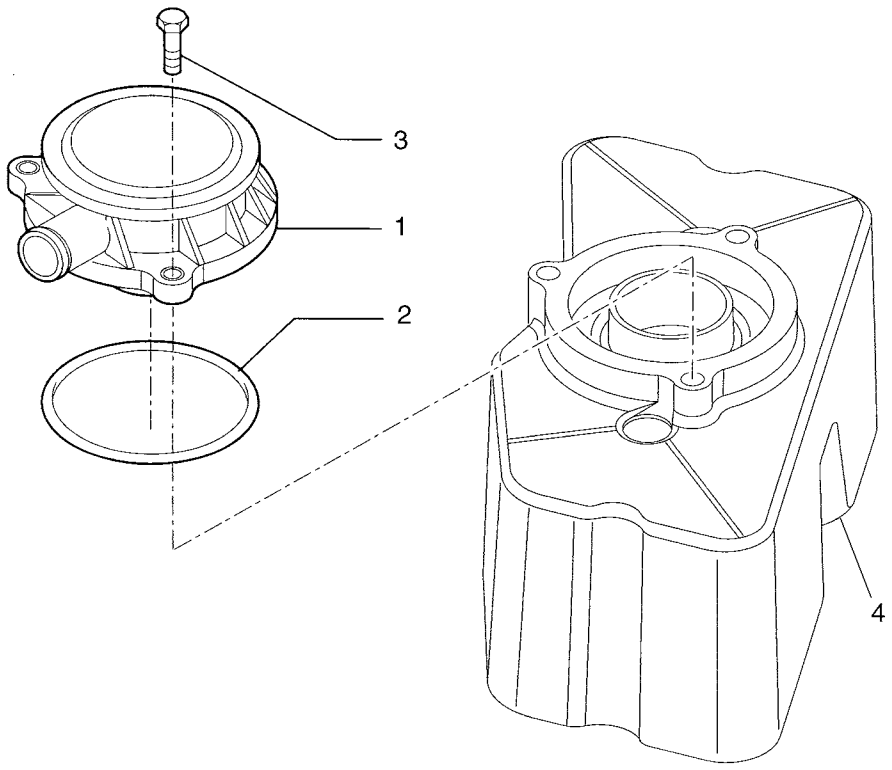

HTTP://WWW.MINNPARBACKHOEPARTS.COM



BREATHER - ENGINE

| REF | FN | PART NUMBER | YR/SN | QTY | DESCRIPTION |
|---|---|---|---|---|---|
| 1 | | 504069558 | | 1 | BREATHER |
| 2 | | 500315795 | | 1 | GASKET |
| 3 | | 4899110 | | 3 | SCREW |
| 4 | | REF | | 1 | INSTRUCTION COVER; See Figure 02-17 |

HTTP://WWW.MINNPARBACKHOEPARTS.COM

| 02-16 | | p1 | 01/04 |
|---|---|---|---|

CYLINDER HEAD

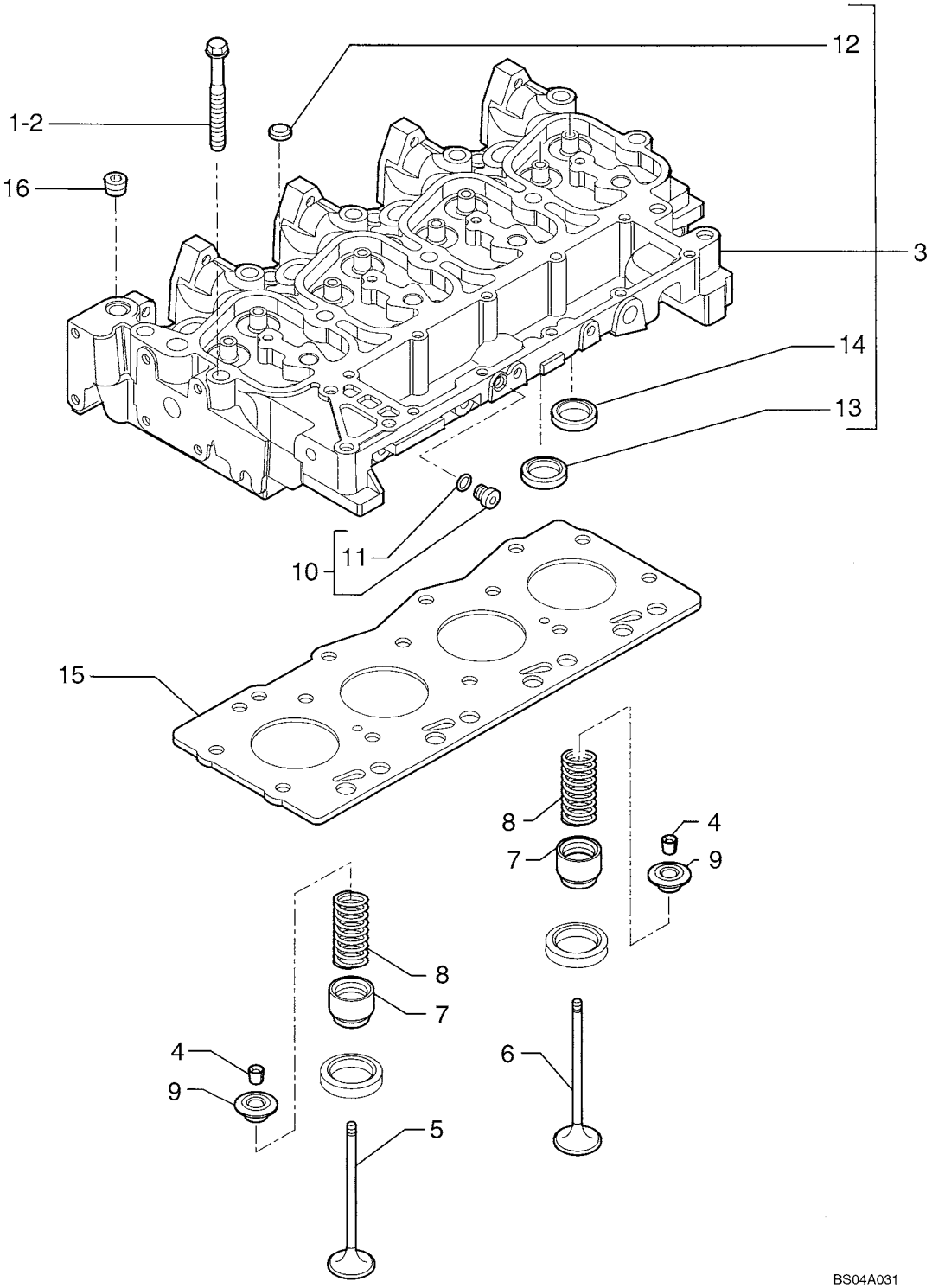

HTTP://WWW.MINNPARBACKHOEPARTS.COM



CYLINDER HEAD

| REF | FN | PART NUMBER | YR/SN | QTY | DESCRIPTION |
|---|---|---|---|---|---|
| 1 | | 4892861 | | 4 | SCREW |
| 2 | | 4892859 | | 10 | SCREW |
| 3 | | 4895790 | | 1 | CYLINDER HEAD - ASSY |
| 4 | | 4895183 | | 16 | COTTER, ROCKER ARM |
| 5 | | 4895188 | | 4 | VALVE, ENG EXHAUST, STD |
| 6 | | 4895187 | | 4 | VALVE, ENGINE, INLET, STD |
| 7 | | 4895347 | | 8 | CUP |
| 8 | | 4895215 | | 8 | SPRING |
| 9 | | 4895184 | | 8 | CUP |
| 10 | | 4899009 | | 1 | PLUG - ASSY 10X1.5 |
| 11 | | 4899072 | | 1 | O-RING |
| 12 | | 4895179 | | 3 | PLUG |
| 13 | | 4897178 | | 4 | VALVE SEAT |
| 14 | | 4897179 | | 4 | VALVE SEAT |
| 15 | | 2830919 | | 1 | GASKET, CYLINDER HEAD SP= 1.25 |
| 16 | | 4895078 | | 5 | PLUG |

HTTP://WWW.MINNPARBACKHOEPARTS.COM



CYLINDER HEAD - COVERS

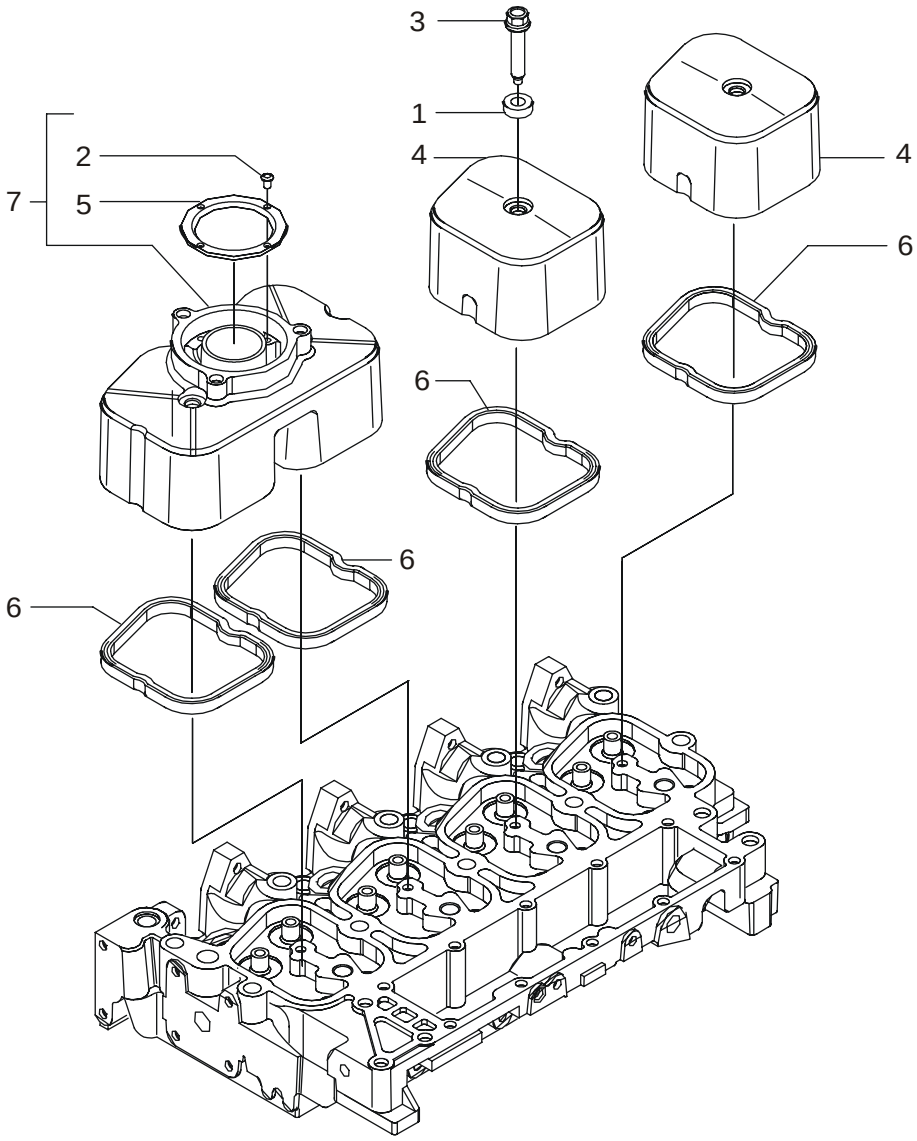


BS04A032

HTTP://WWW.MINNPARBACKHOEPARTS.COM



CYLINDER HEAD - COVERS

| REF | FN | PART NUMBER | YR/SN | QTY | DESCRIPTION |
|---|---|---|---|---|---|
| 1 | | 4895360 | | 4 | BUSHING |
| 2 | | 16784504 | | 4 | SCREW |
| 3 | | 4895214 | | 4 | SCREW |
| 4 | | 504065040 | | 2 | COVER |
| 5 | | 2830775 | | 1 | COLLAR, STEPPED |
| 6 | | 504053522 | | 4 | GASKET |
| 7 | | 2830784 | | 1 | COVER - ASSY |

HTTP://WWW.MINNPARBACKHOEPARTS.COM



CYLINDER HEAD - VALVE MECHANISM

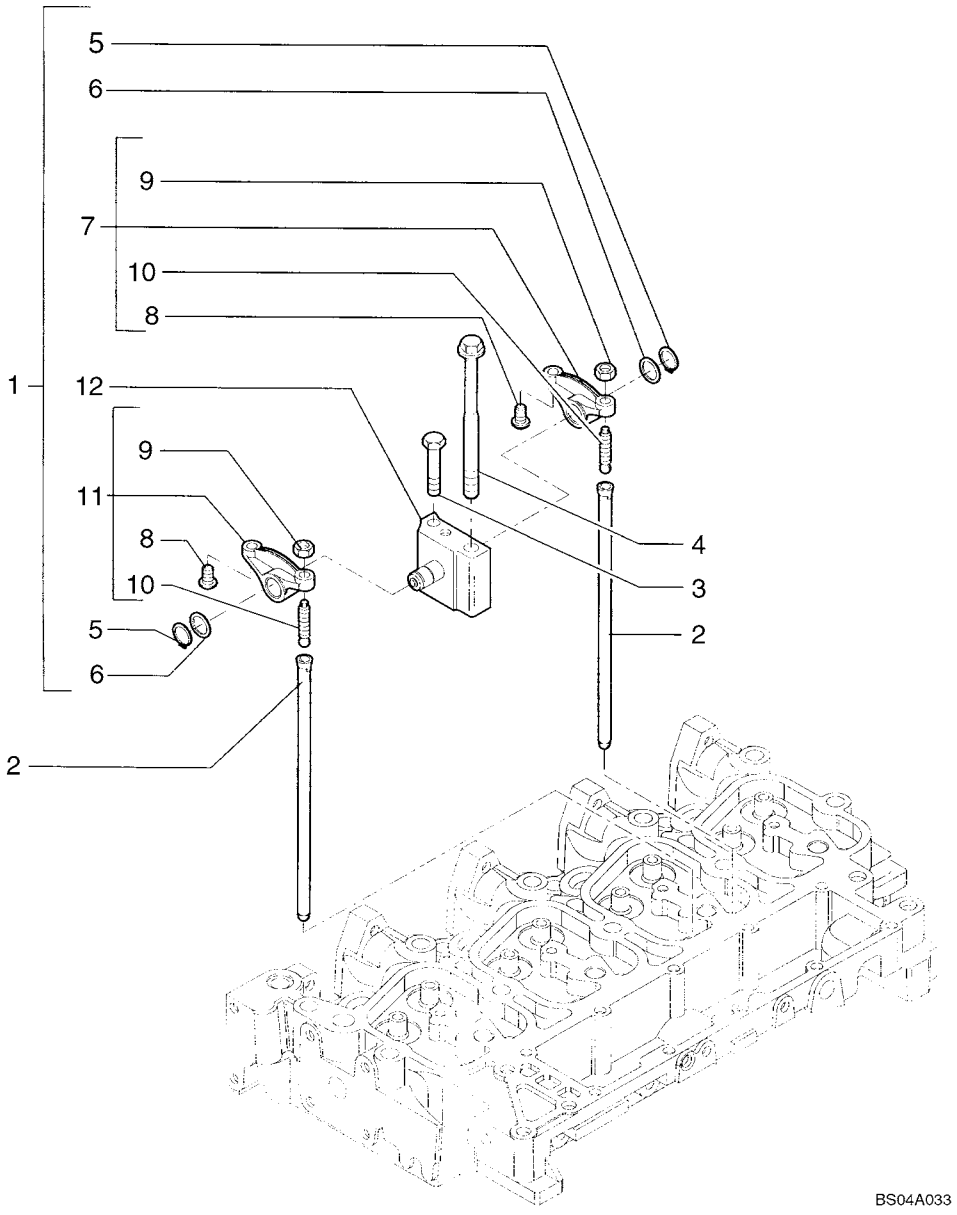

HTTP://WWW.MINNPARBACKHOEPARTS.COM



CYLINDER HEAD - VALVE MECHANISM

| REF | FN | PART NUMBER | YR/SN | QTY | DESCRIPTION |
|---|---|---|---|---|---|
| 1 | | 4895195 | | 4 | ROCKER ARM - ASSY |
| 2 | | 4895361 | | 8 | ROD, PUSH |
| 3 | | 4895193 | | 4 | SCREW |
| 4 | | 4892860 | | 4 | SCREW |
| 5 | | 4895363 | | 2 | RING |
| 6 | | 4895364 | | 2 | WASHER |
| 7 | | 4895196 | | 1 | ROCKER ARM - ASSY |
| 8 | | 4895365 | | 2 | SPACER |
| 9 | | 4895198 | | 2 | NUT |
| 10 | | 4895199 | | 2 | SCREW |
| 11 | | 4895200 | | 1 | ROCKER ARM - ASSY |
| 12 | | 4895204 | | 1 | SUPPORT |

HTTP://WWW.MINNPARBACKHOEPARTS.COM

| 02-19 | | p1 | 01/04 |
|---|---|---|---|

MANIFOLD - INTAKE

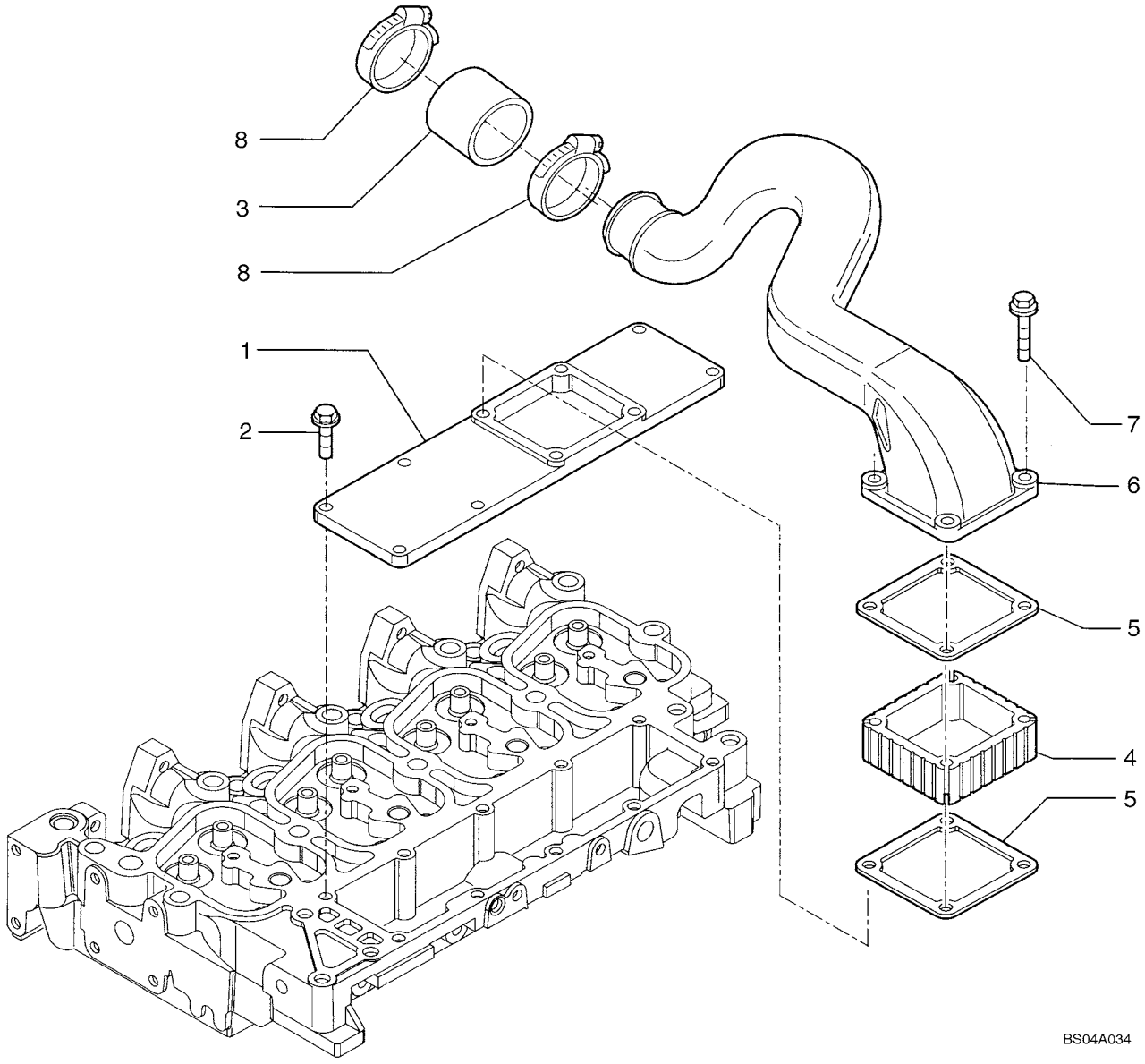

HTTP://WWW.MINNPARBACKHOEPARTS.COM



MANIFOLD - INTAKE

| REF | FN | PART NUMBER | YR/SN | QTY | DESCRIPTION |
|---|---|---|---|---|---|
| 1 | | 504064865 | | 1 | COVER |
| 2 | | 4899039 | | 6 | SCREW 8X1.25X25 |
| 3 | | 504063980 | | 1 | SLEEVE |
| 4 | | 4895648 | | 1 | SPACER |
| 5 | | 4899921 | | 2 | GASKET |
| 6 | | 504052006 | | 1 | HOSE ASSY. |
| 7 | | 4895294 | | 4 | SCREW 8X140 |
| 8 | | {4899629} | | 2 | Clamp |

HTTP://WWW.MINNPARBACKHOEPARTS.COM



MANIFOLD - EXHAUST

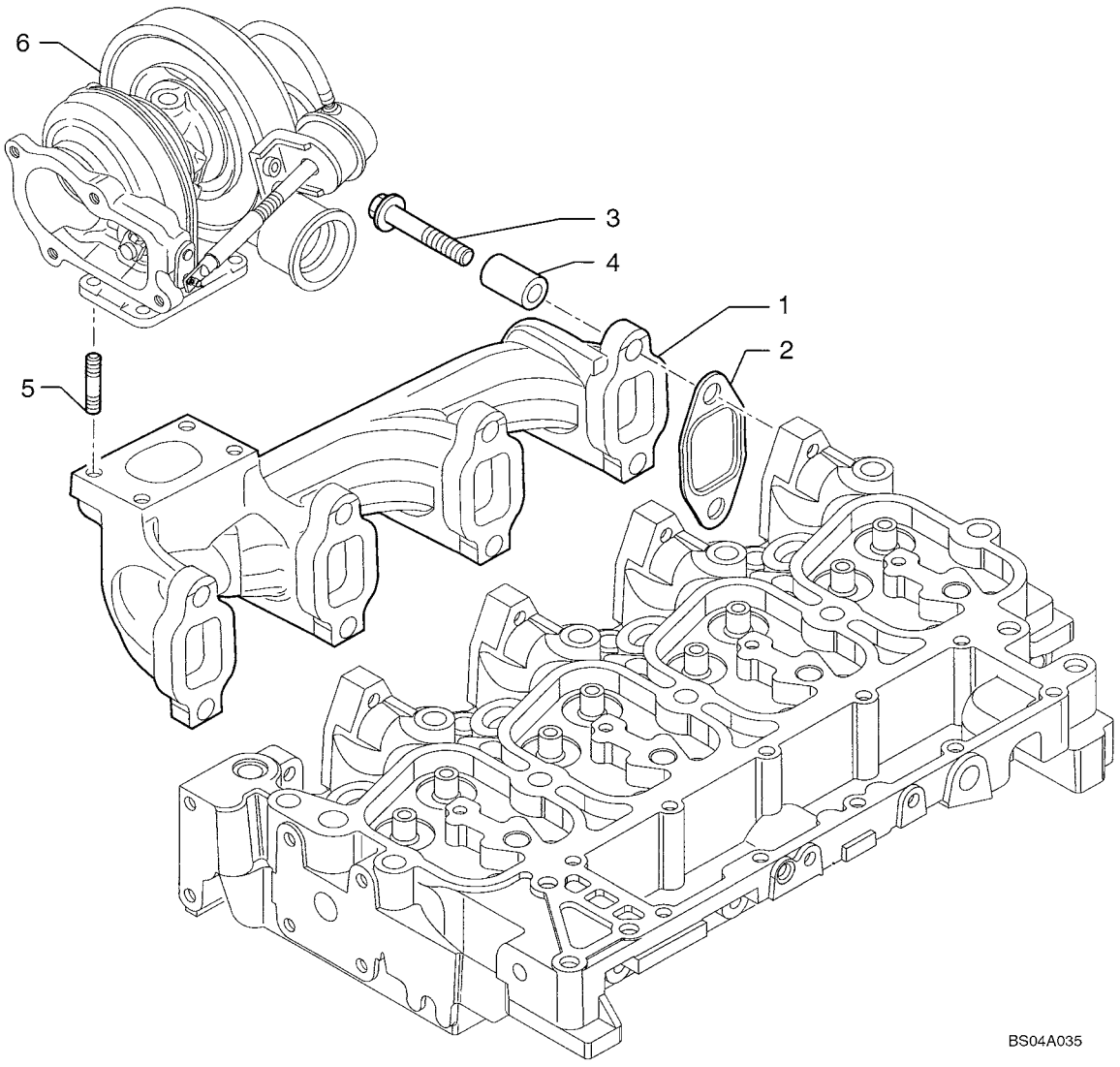

HTTP://WWW.MINNPARBACKHOEPARTS.COM



MANIFOLD - EXHAUST

| REF | FN | PART NUMBER | YR/SN | QTY | DESCRIPTION |
|---|---|---|---|---|---|
| 1 | | {4895273} | | 1 | Manifold, Exhaust |
| 2 | | 2830445 | | 4 | GASKET |
| 3 | | 4895174 | | 8 | SCREW |
| 4 | | 4895336 | | 8 | SPACER |
| 5 | | 4899119 | | 4 | STUD |
| 6 | | REF | | 1 | INSTRUCTION TURBOCHARGER; See Figure 2-29 |

HTTP://WWW.MINNPARBACKHOEPARTS.COM



CRANKSHAFT

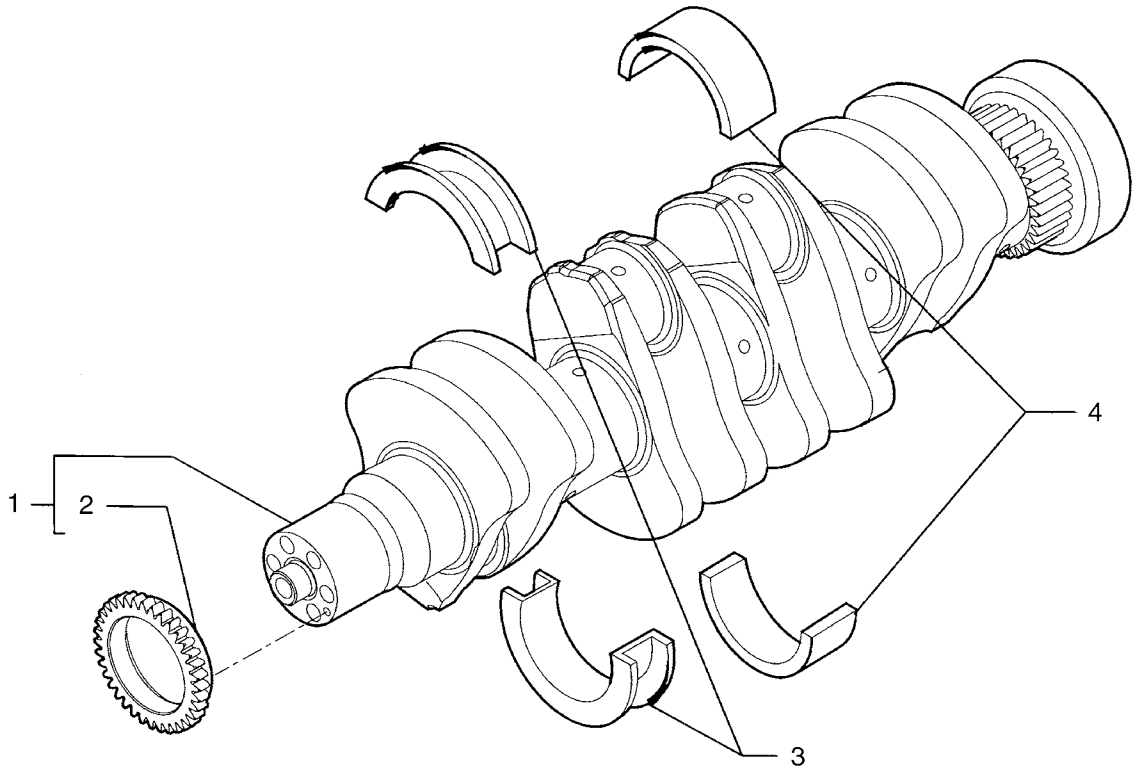


BS04A036

HTTP://WWW.MINNPARBACKHOEPARTS.COM



CRANKSHAFT

| REF | FN | PART NUMBER | YR/SN | QTY | DESCRIPTION |
|---|---|---|---|---|---|
| 1 | | 504048350 | | 1 | CRANKSHAFT - ASSY |
| 2 | | 4893386 | | 1 | GEAR |
| 4 | | 2992147 | | 4 | SET, CONN ROD BRGS (STD) ( - 0.000) (- 0.000) |
| 4 | | 2992148 | | 4 | SET, CONN ROD BRGS (STD) ( - 0.254) ( - 0.250) |
| 4 | | 2992149 | | 4 | SET, CONN ROD BRGS (STD) ( - 0.508) ( - 0.500) |
| 3 | | 2992153 | | 1 | SET, CONN ROD BRGS (STD) (+ 0.000) ( + 0.000) |
| 3 | | 2992154 | | 1 | SET, CONN ROD BRGS (STD) ( + 0.254) ( + 0.250) |
| 3 | | 2992155 | | 1 | SET, CONN ROD BRGS (STD) ( + 0.508) ( + 0.500) |

HTTP://WWW.MINNPARBACKHOEPARTS.COM



PISTONS - CONNECTING ROD

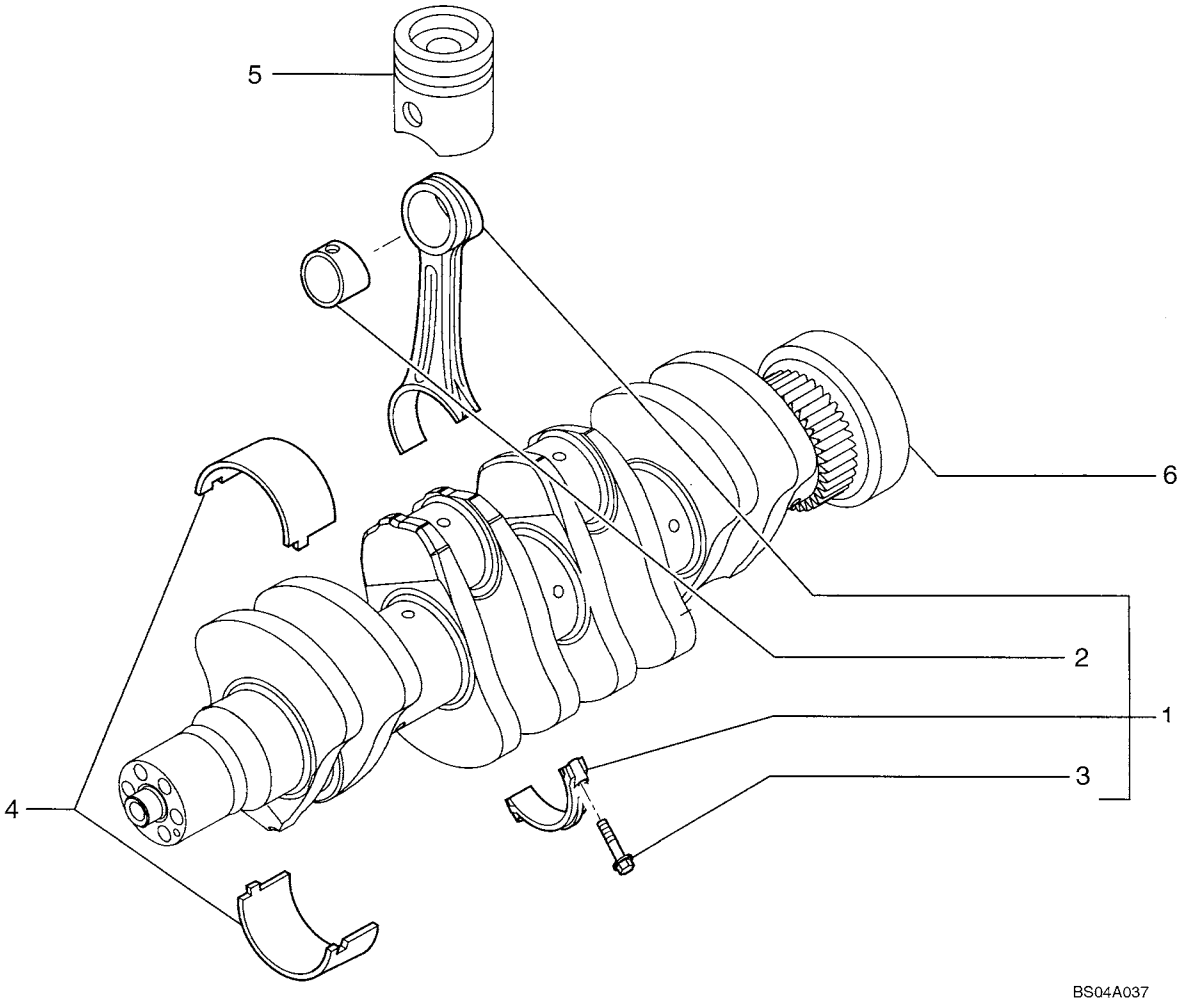

HTTP://WWW.MINNPARBACKHOEPARTS.COM



PISTONS - CONNECTING ROD

| REF | FN | PART NUMBER | YR/SN | QTY | DESCRIPTION |
|---|---|---|---|---|---|
| 1 | | 4895748 | | 4 | ROD, CONNECTING - ASSY |
| 2 | | 4892708 | | 1 | BUSHING |
| 3 | | 4892707 | | 2 | SCREW |
| 4 | | 8093882 | | 4 | SET, CONN ROD BRGS (STD) |
| 5 | | REF | | 1 | INSTRUCTION PISTON; See Figure 02-23 |
| 6 | | REF | | 1 | INSTRUCTION CRANKSHAFT; See Figure 02-21 |

HTTP://WWW.MINNPARBACKHOEPARTS.COM



PISTONS - CONNECTING ROD

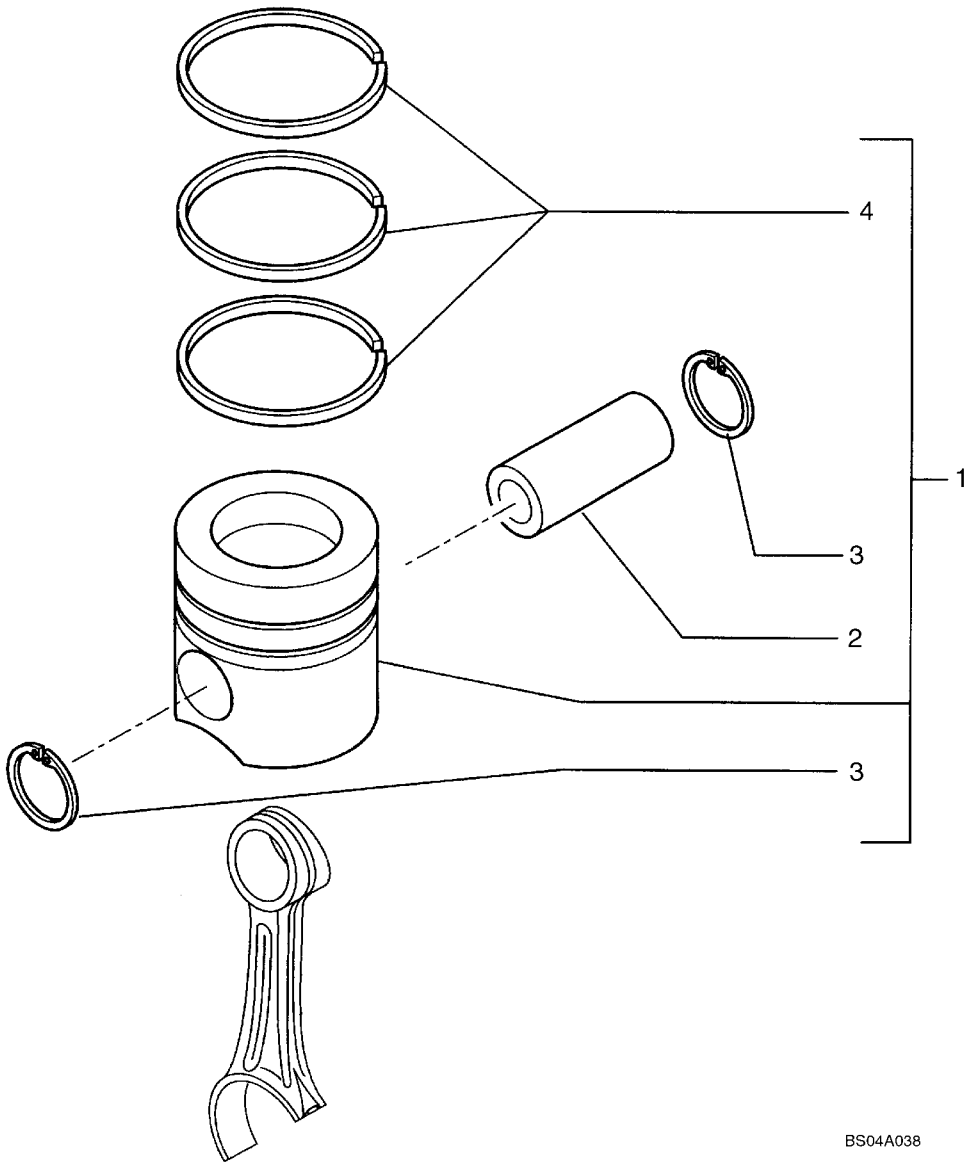

HTTP://WWW.MINNPARBACKHOEPARTS.COM



PISTONS - CONNECTING ROD

| REF | FN | PART NUMBER | YR/SN | QTY | DESCRIPTION |
|---|---|---|---|---|---|
| 1 | | 8093880 | | 4 | KIT, PISTON & RINGS |
| 2 | | 4892712 | | 1 | PIN, PISTON |
| 3 | | 4892713 | | 2 | RING, LOCKING |
| 4 | | 8093881 | | 1 | KIT, PISTON RINGS |

HTTP://WWW.MINNPARBACKHOEPARTS.COM



FLYWHEEL - ENGINE

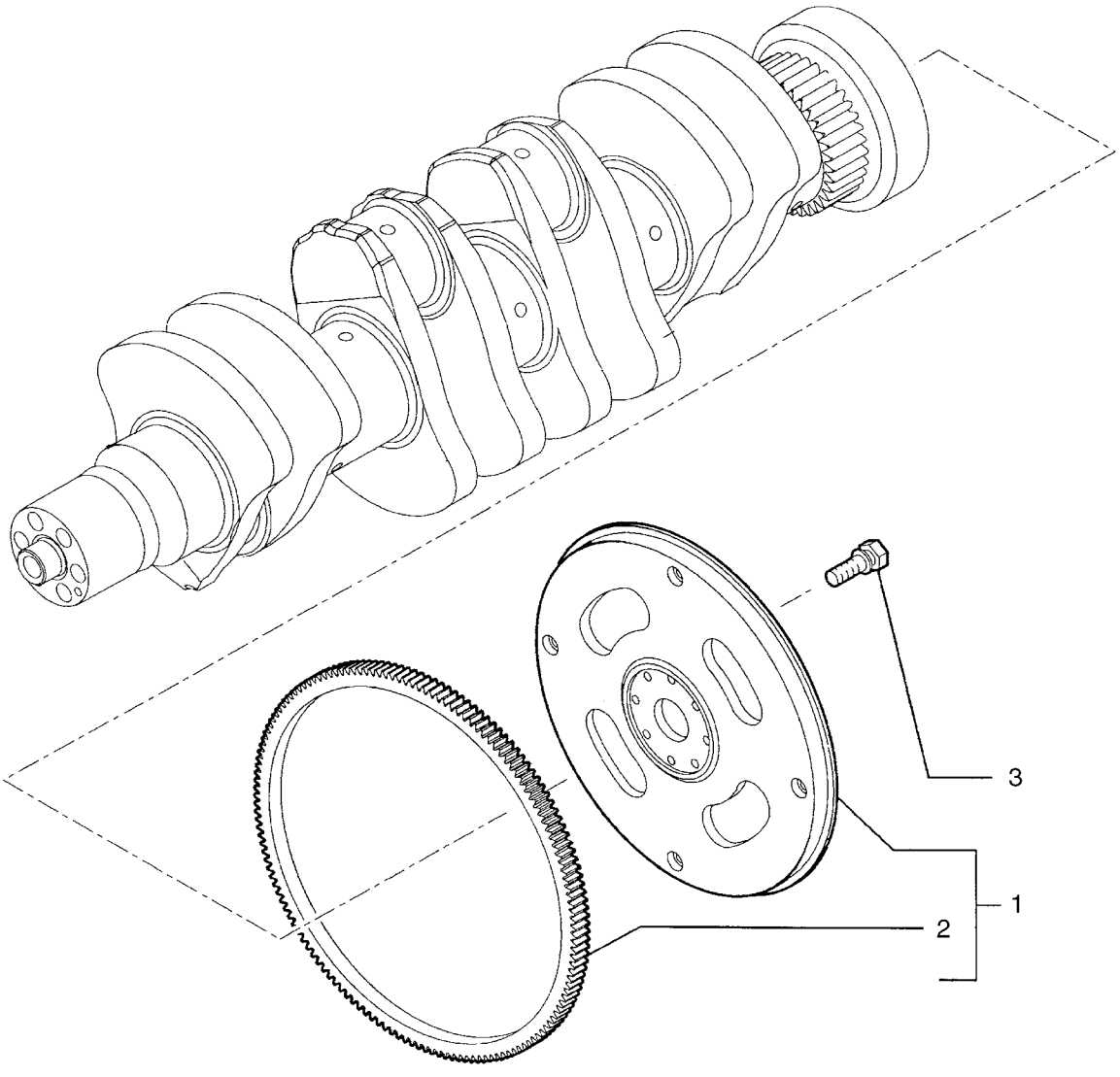

HTTP://WWW.MINNPARBACKHOEPARTS.COM



FLYWHEEL - ENGINE

| REF | FN | PART NUMBER | YR/SN | QTY | DESCRIPTION |
|---|---|---|---|---|---|
| 1 | | 504057736 | | 1 | FLYWHEEL - ASSY |
| 2 | | 504062460 | | 1 | GEAR, RING |
| 3 | | 4894641 | | 8 | SCREW |

HTTP://WWW.MINNPARBACKHOEPARTS.COM



PULLEY - CRANKSHAFT

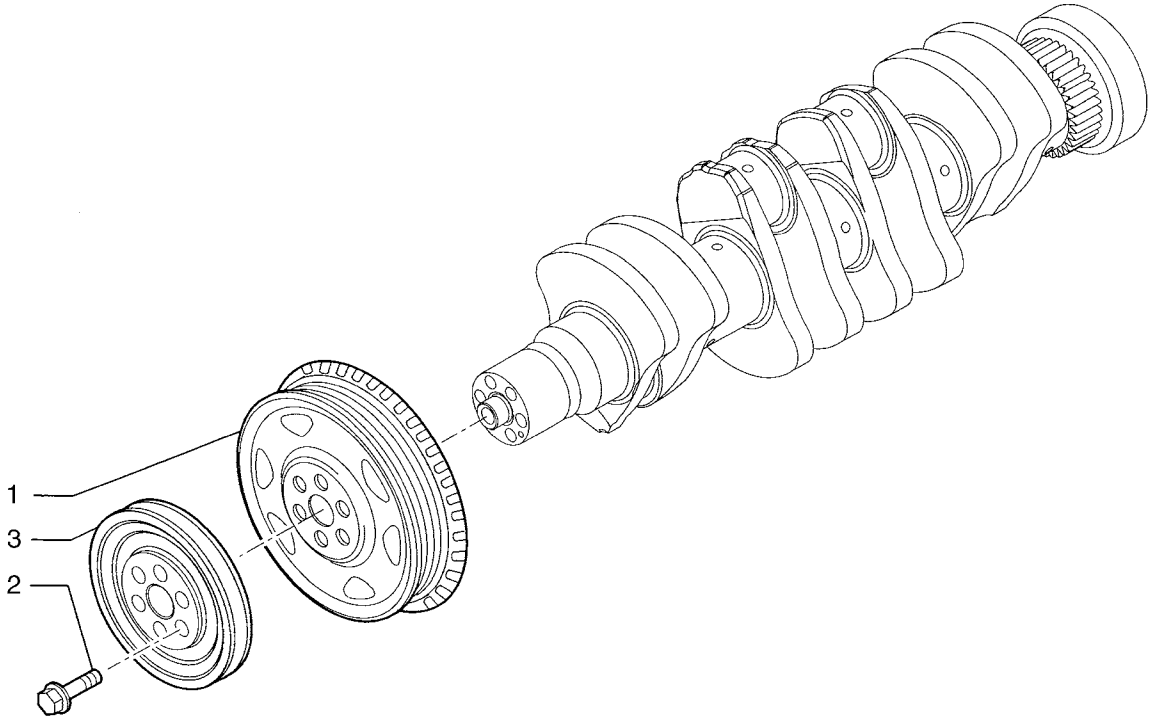


BS04A040

HTTP://WWW.MINNPARBACKHOEPARTS.COM



PULLEY - CRANKSHAFT

| REF | FN | PART NUMBER | YR/SN | QTY | DESCRIPTION |
|---|---|---|---|---|---|
| 1 | | 504035087 | | 1 | PULLEY |
| 2 | | 4892867 | | 6 | SCREW |
| 3 | | 504061622 | | 1 | PULLEY |

HTTP://WWW.MINNPARBACKHOEPARTS.COM



DYNAMIC BALANCER, GEARS & SHAFTS

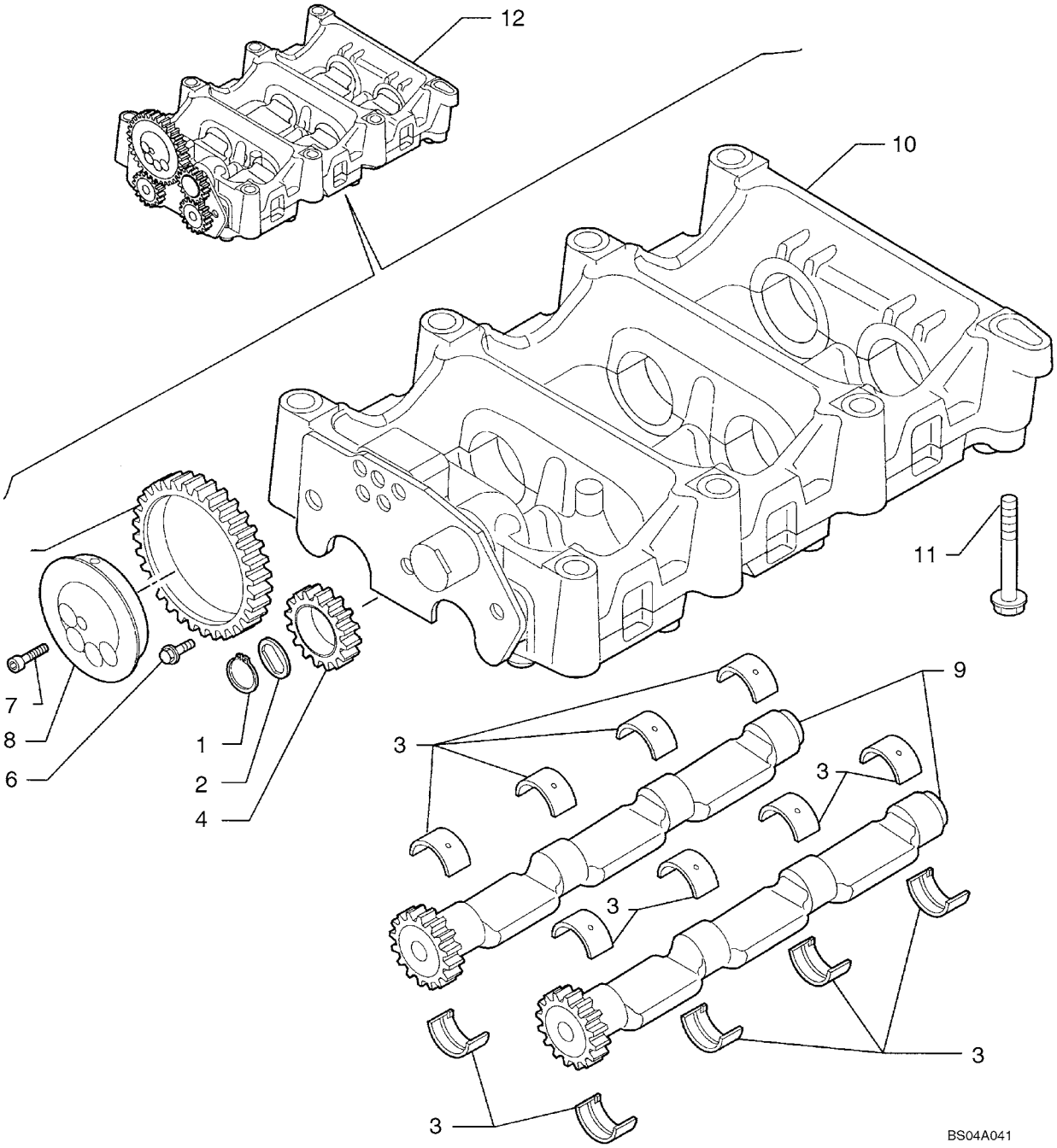

HTTP://WWW.MINNPARBACKHOEPARTS.COM



DYNAMIC BALANCER, GEARS & SHAFTS

| REF | FN | PART NUMBER | YR/SN | QTY | DESCRIPTION |
|---|---|---|---|---|---|
| 1 | | 16866473 | | 1 | CIRCLIP |
| 2 | | 4897123 | | 1 | PLATE, THRUST |
| 3 | | 4897071 | | 16 | BUSHING |
| 4 | | 4897048 | | 1 | GEAR, DRIVEN |
| 5 | | 4896947 | | 1 | GEAR, DRIVEN |
| 6 | | 4895586 | | 3 | SCREW |
| 7 | | 2830433 | | 4 | SCREW |
| 8 | | 2831031 | | 1 | SHAFT, IDLE |
| 9 | | 2831023 | | 2 | SHAFT |
| 10 | | 2830952 | | 1 | HOUSING - ASSY; See Figure 02-27 |
| 11 | | 4899109 | | 7 | SCREW |
| 11 | | 4897934 | | 1 | SCREW |
| 12 | | 2830953 | | 1 | BALANCER - ASSY |

HTTP://WWW.MINNPARBACKHOEPARTS.COM



DYNAMIC BALANCER, GEARS & SHAFTS (2830952)

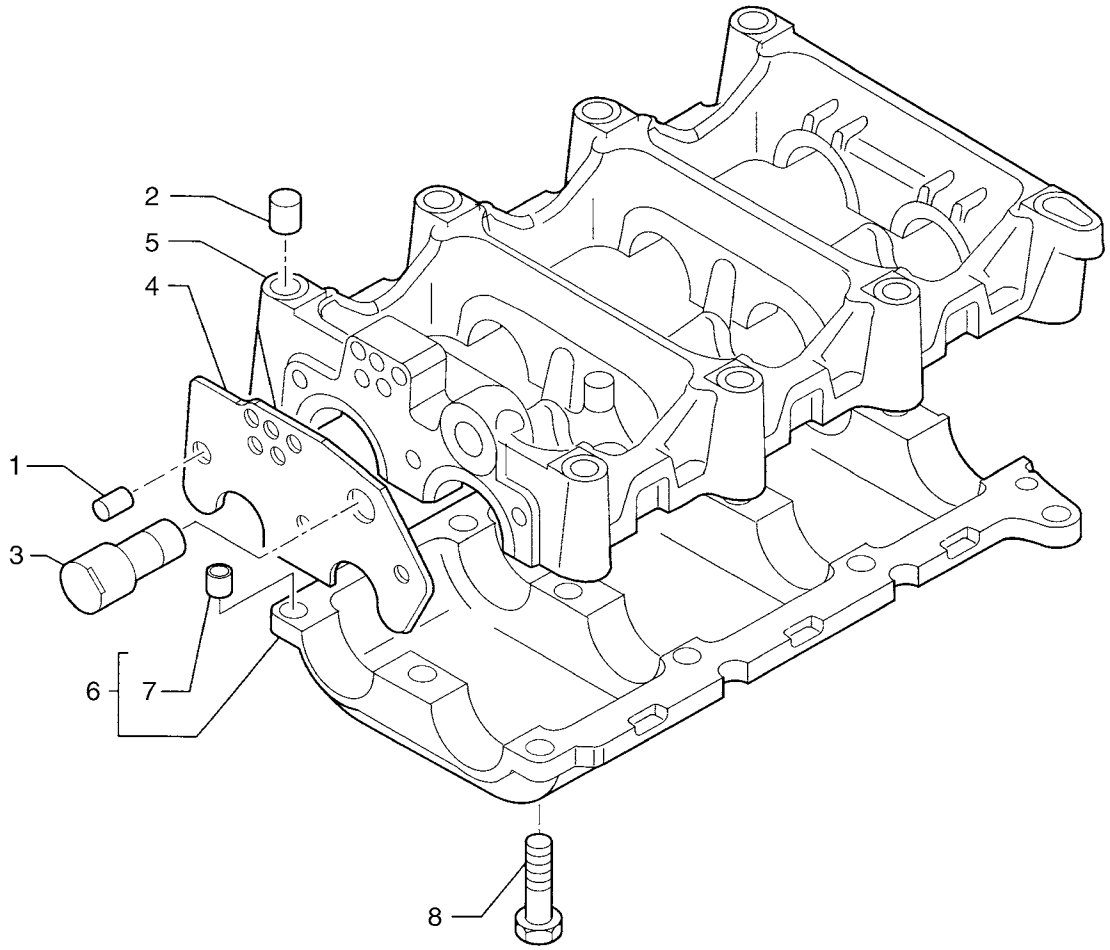

HTTP://WWW.MINNPARBACKHOEPARTS.COM



DYNAMIC BALANCER, GEARS & SHAFTS (2830952)

| REF | FN | PART NUMBER | YR/SN | QTY | DESCRIPTION |
|---|---|---|---|---|---|
| | | 2830952 | | 1 | HOUSING Assy; Incl. Ref 1 - 8 |
| 1 | | 4892836 | | 1 | DOWEL |
| 2 | | 4899027 | | 2 | DOWEL |
| 3 | | 2830948 | | 1 | SHAFT, IDLE |
| 4 | | 2830905 | | 1 | PLATE, THRUST |
| 5 | | 2830934 | | 1 | HOUSING |
| 6 | | 2831101 | | 1 | HOUSING - ASSY |
| 7 | | 4891209 | | 2 | DOWEL |
| 8 | | 2830411 | | 3 | SCREW |
| 8 | | 4895323 | | 9 | SCREW |

HTTP://WWW.MINNPARBACKHOEPARTS.COM



CAMSHAFT

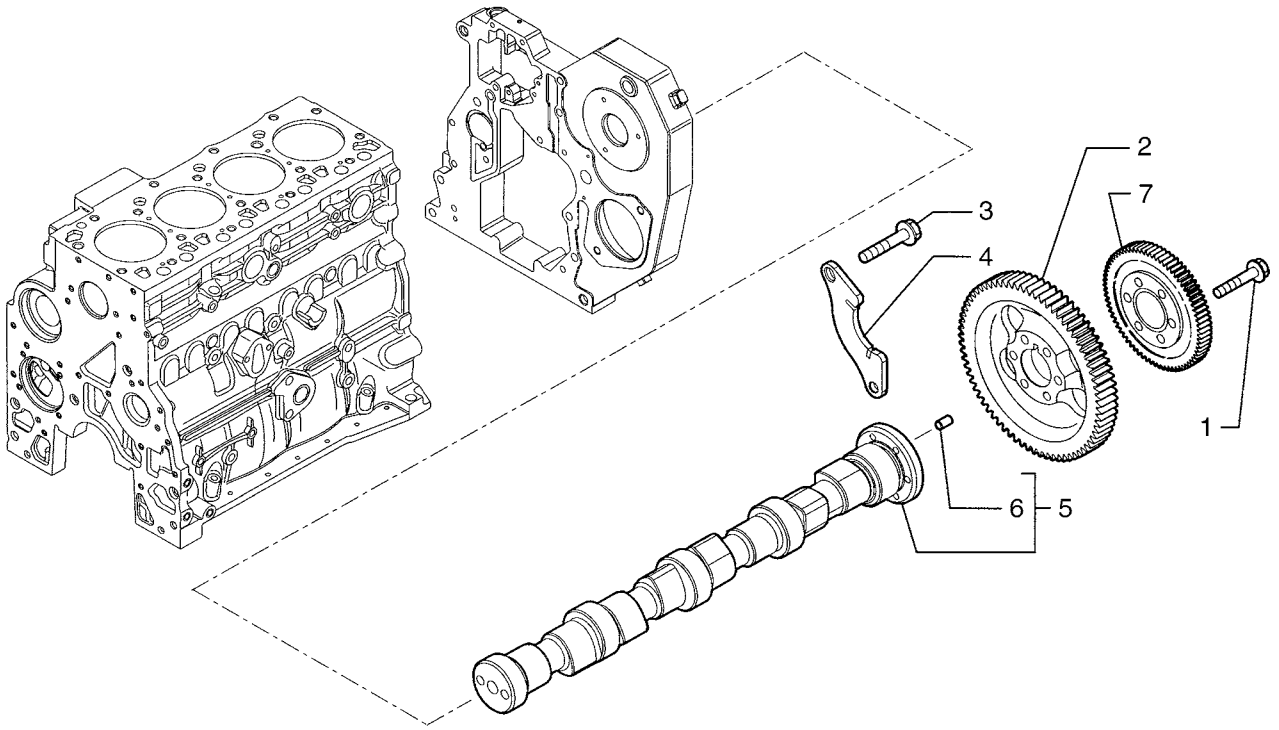


BS04A043

HTTP://WWW.MINNPARBACKHOEPARTS.COM



CAMSHAFT

| REF | FN | PART NUMBER | YR/SN | QTY | DESCRIPTION |
|---|---|---|---|---|---|
| 1 | | 4895323 | | 6 | SCREW |
| 2 | | 504062752 | | 1 | GEAR |
| 3 | | 4899068 | | 2 | SCREW 8X17 |
| 4 | | 4897457 | | 1 | FLANGE |
| 5 | | 4899610 | | 1 | CAMSHAFT - ASSY |
| 6 | | 4899080 | | 1 | DOWEL |
| 7 | | 504034954 | | 1 | GEAR, DRIVEN |

HTTP://WWW.MINNPARBACKHOEPARTS.COM



TURBOCHARGER

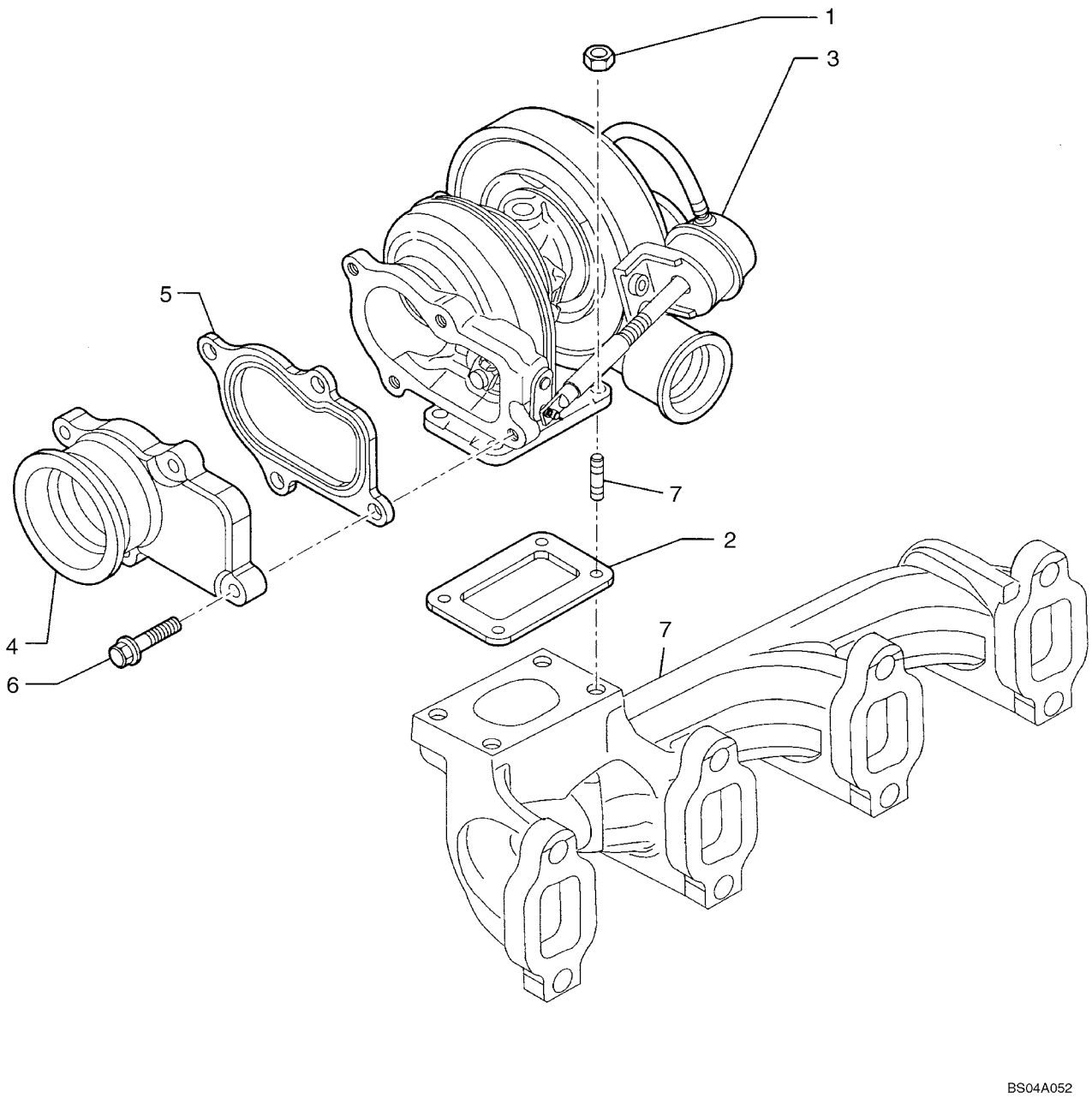

HTTP://WWW.MINNPARBACKHOEPARTS.COM



TURBOCHARGER

| REF | FN | PART NUMBER | YR/SN | QTY | DESCRIPTION |
|---|---|---|---|---|---|
| 1 | | 4899118 | | 4 | NUT |
| 2 | | 4895133 | | 1 | GASKET |
| 3 | | {504061374} | | 1 | Turbocharger Assembly |
| 4 | | 504010786 | | 1 | MANIFOLD, EXHAUST |
| 5 | | 504035094 | | 1 | GASKET |
| 6 | | 4898482 | | 4 | SCREW |
| 7 | | REF | | 1 | INSTRUCTION EXHAUST MANIFOLD; See Figure 02-20 |

HTTP://WWW.MINNPARBACKHOEPARTS.COM



ENGINE, OIL

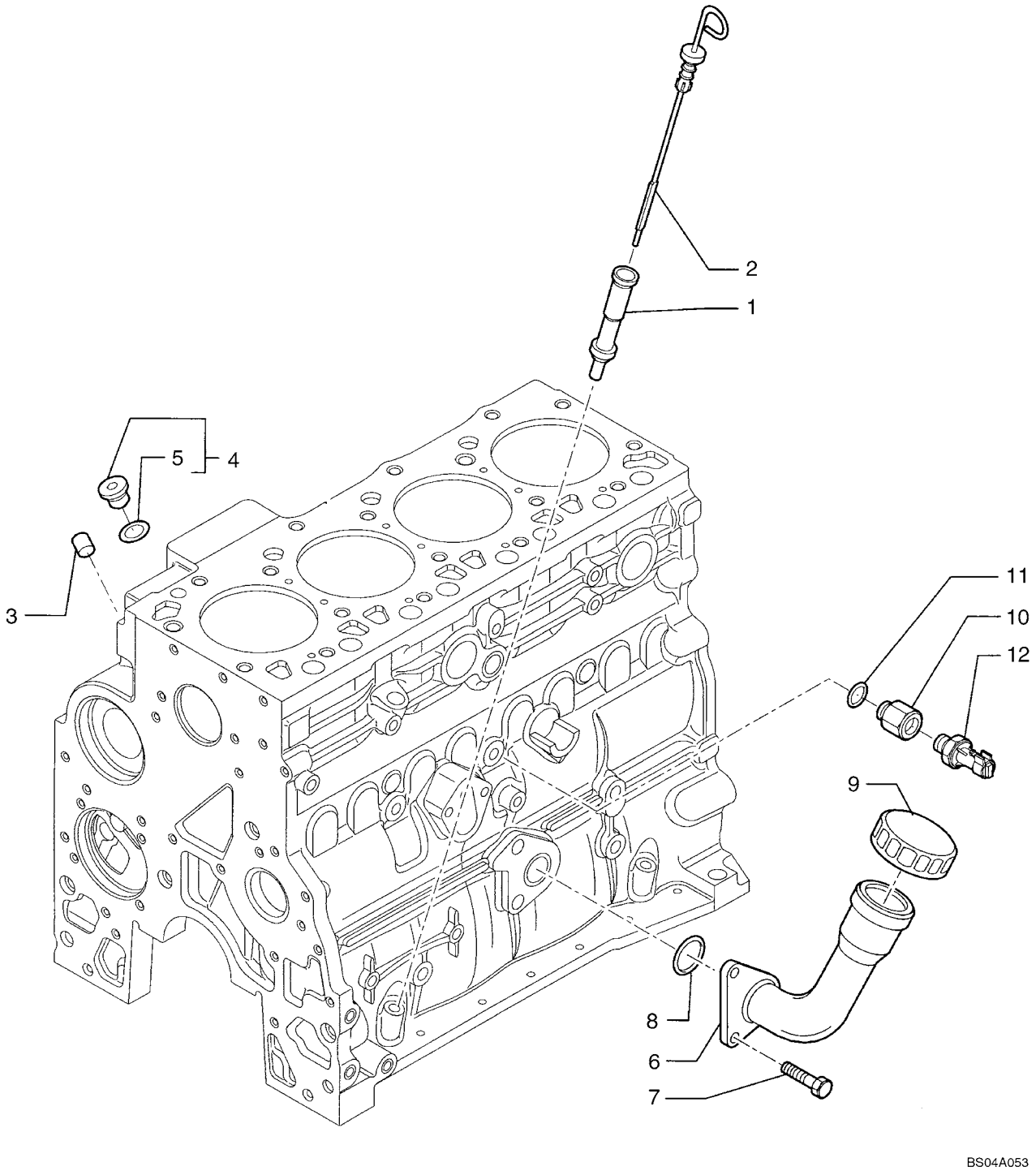

HTTP://WWW.MINNPARBACKHOEPARTS.COM



ENGINE, OIL

| REF | FN | PART NUMBER | YR/SN | QTY | DESCRIPTION |
|---|---|---|---|---|---|
| 1 | | 504011329 | | 1 | TUBE, RIGID |
| 2 | | 504062795 | | 1 | DIPSTICK |
| 3 | | 4899036 | | 1 | PLUG |
| 4 | | 4897330 | | 2 | PLUG - ASSY |
| 5 | | 4895610 | | 1 | O-RING |
| 6 | | 504011338 | | 1 | TUBE, RIGID |
| 7 | | 16587924 | | 2 | SCREW |
| 8 | | 17283181 | | 1 | O-RING |
| 9 | | 98429552 | | 1 | CAP, INTRODUCTION |
| 10 | | {504036358} | | 1 | Reducer |
| 11 | | 4899115 | | 1 | O-RING |
| 12 | | 98442879 | | 1 | SWITCH Sipea version |
| 12 | | 98445111 | | 1 | SWITCH Borletti version |

HTTP://WWW.MINNPARBACKHOEPARTS.COM



OIL PUMP - ENGINE

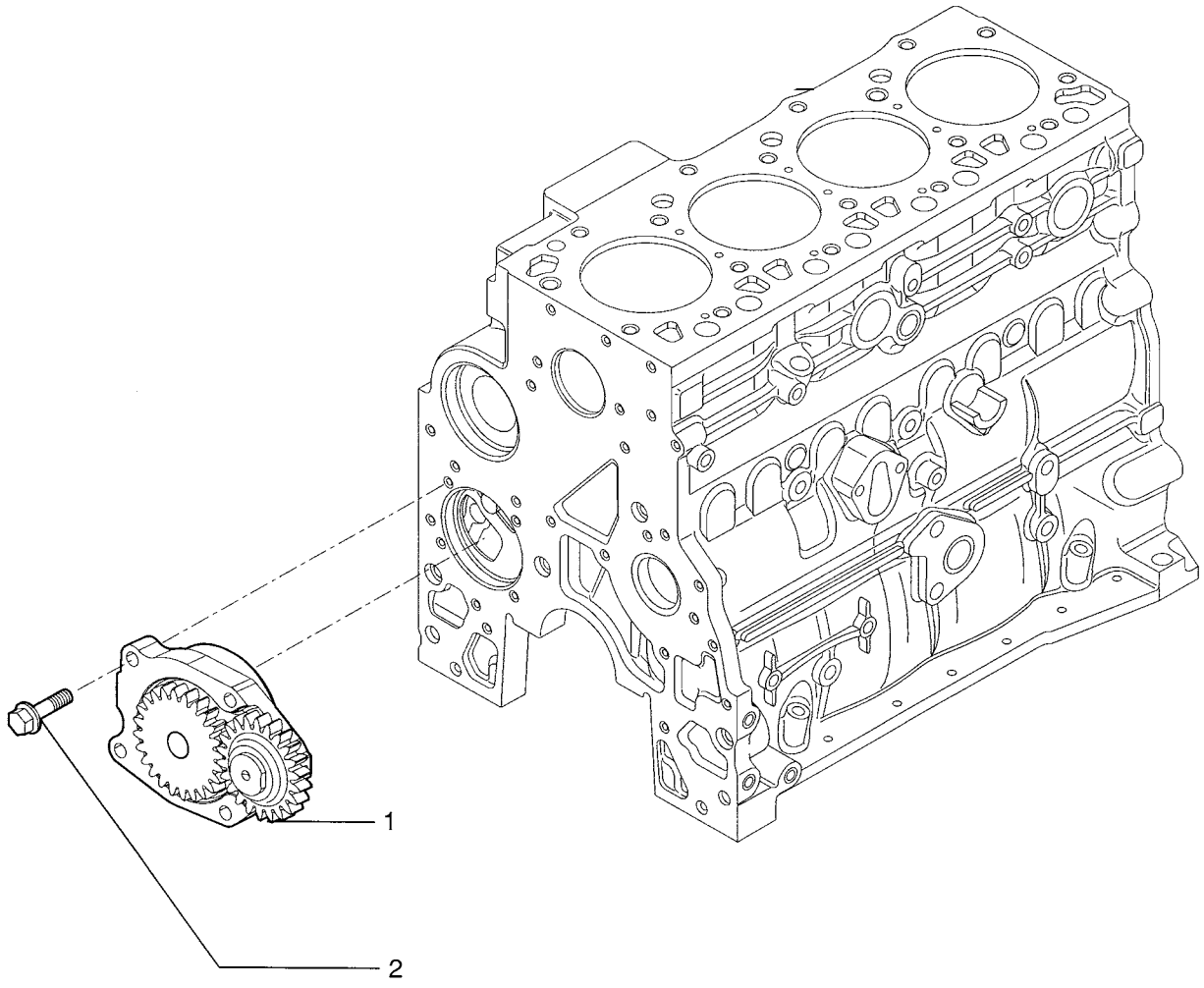

HTTP://WWW.MINNPARBACKHOEPARTS.COM



OIL PUMP - ENGINE

| REF | FN | PART NUMBER | YR/SN | QTY | DESCRIPTION |
|---|---|---|---|---|---|
| 1 | | 4897480 | | 1 | PUMP, ENGINE OIL |
| 2 | | 4899090 | | 4 | SCREW |

HTTP://WWW.MINNPARBACKHOEPARTS.COM



OIL FILTERS - ENGINE

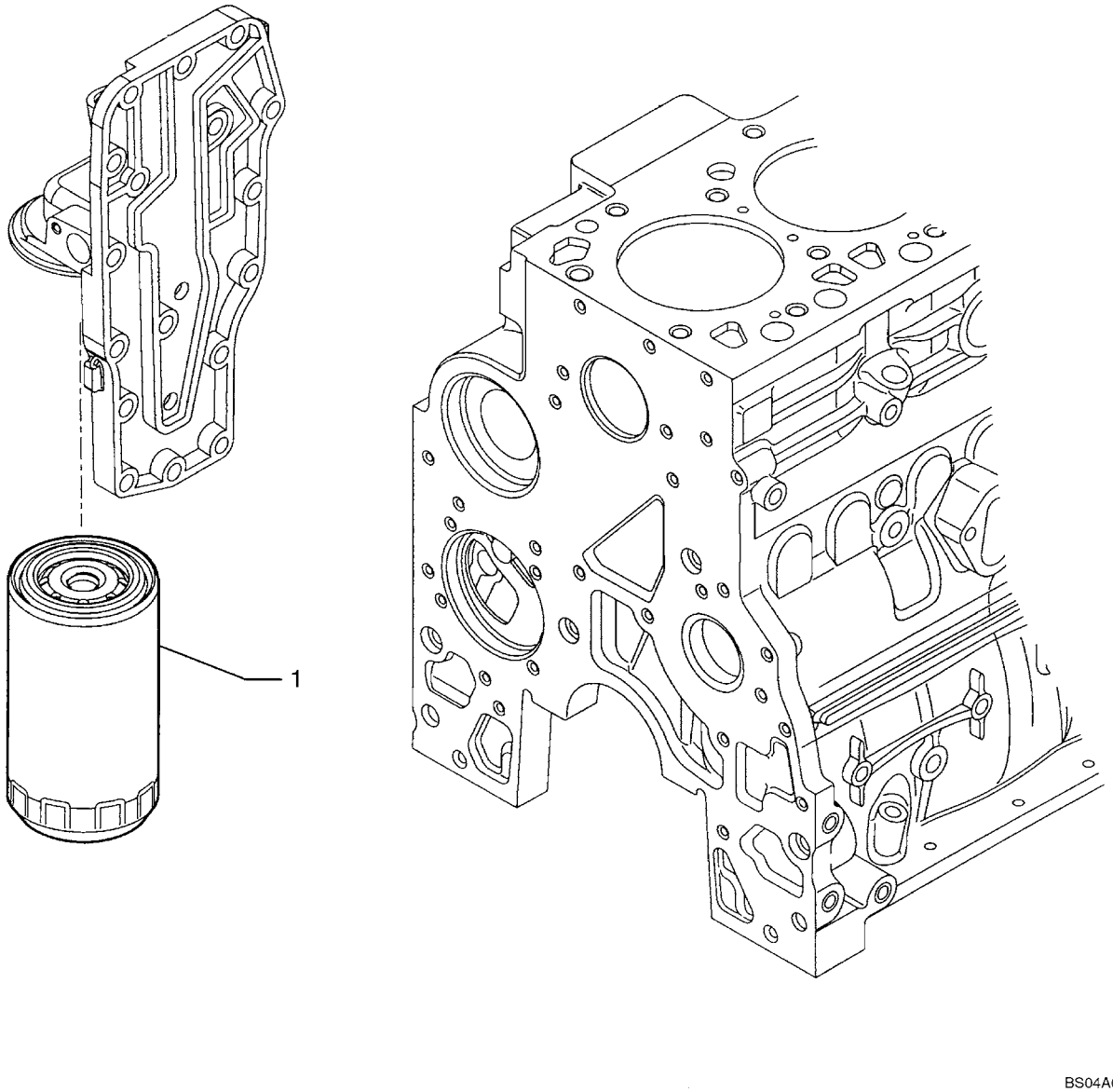

HTTP://WWW.MINNPARBACKHOEPARTS.COM



OIL FILTERS - ENGINE

| REF | FN | PART NUMBER | YR/SN | QTY | DESCRIPTION |
|---|---|---|---|---|---|
| 1 | | 87803261 | | 1 | FILTER, ENGINE OIL |

HTTP://WWW.MINNPARBACKHOEPARTS.COM



PIPING - ENGINE OIL

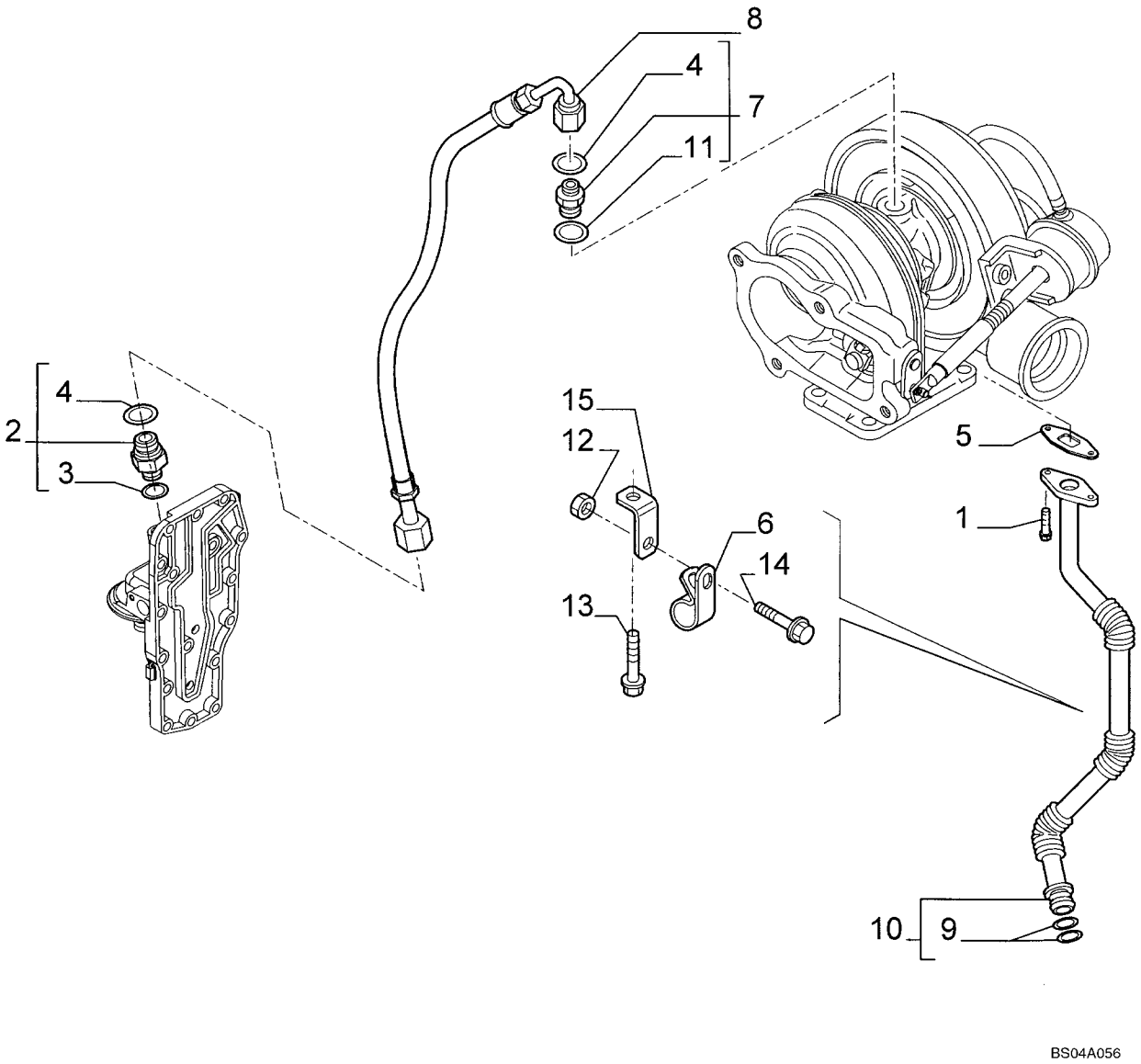

HTTP://WWW.MINNPARBACKHOEPARTS.COM



PIPING - ENGINE OIL

| REF | FN | PART NUMBER | YR/SN | QTY | DESCRIPTION |
|---|---|---|---|---|---|
| 1 | | 4895164 | | 2 | SCREW |
| 2 | | 4895107 | | 1 | CONNECTOR, HYD. - ASSY |
| 3 | | 4899107 | | 1 | O-RING |
| 4 | | 4899108 | | 2 | O-RING |
| 5 | | 4899467 | | 1 | GASKET |
| 6 | | 4899519 | | 1 | BRACKET |
| 7 | | 4899106 | | 1 | CONNECTOR, HYD. |
| 8 | | 504053173 | | 1 | HOSE ASSY. |
| 9 | | 4899058 | | 2 | O-RING |
| 10 | | {504053166} | | 1 | - ASSY; Tube |
| 11 | | 4899121 | | 1 | GASKET |
| 12 | | 17044625 | | 1 | NUT M6 |
| 13 | | 18138324 | | 1 | SCREW M8X1.25X16 |
| 14 | | 18137824 | | 1 | SCREW M8X16 |
| 15 | | 504053894 | | 1 | BRACKET |

HTTP://WWW.MINNPARBACKHOEPARTS.COM



OIL FILTER AND COOLER

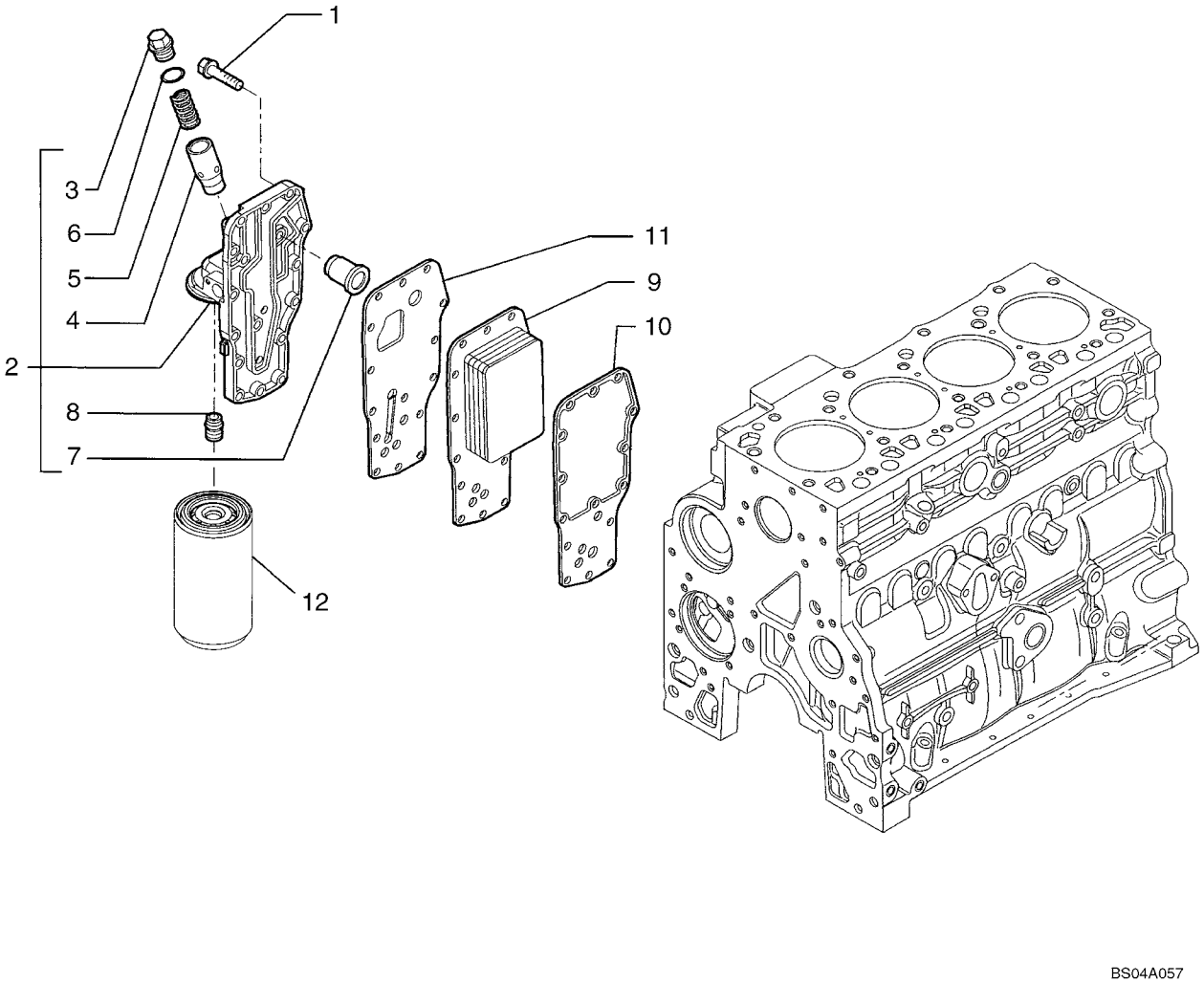

HTTP://WWW.MINNPARBACKHOEPARTS.COM



OIL FILTER AND COOLER

| REF | FN | PART NUMBER | YR/SN | QTY | DESCRIPTION |
|---|---|---|---|---|---|
| 1 | | 4899019 | | 15 | SCREW 8X35 |
| 2 | | 4892774 | | 1 | HEAT EXCHANGER - ASSY |
| 3 | | 4895043 | | 1 | PLUG |
| 4 | | 4896404 | | 1 | HOUSING |
| 5 | | 4895045 | | 1 | SPRING, VALVE |
| 6 | | 4899035 | | 1 | O-RING |
| 7 | | 4896410 | | 1 | VALVE, HYDRAULIC |
| 8 | | 4893391 | | 1 | CONNECTOR, HYD. |
| 9 | | 4896406 | | 1 | RADIATOR |
| 10 | | 4895742 | | 1 | GASKET |
| 11 | | 4896409 | | 1 | GASKET |
| 12 | | REF | | 1 | INSTRUCTION FILTER, ENGINE OIL; See Figure 02-32 |

HTTP://WWW.MINNPARBACKHOEPARTS.COM



WATER PUMP

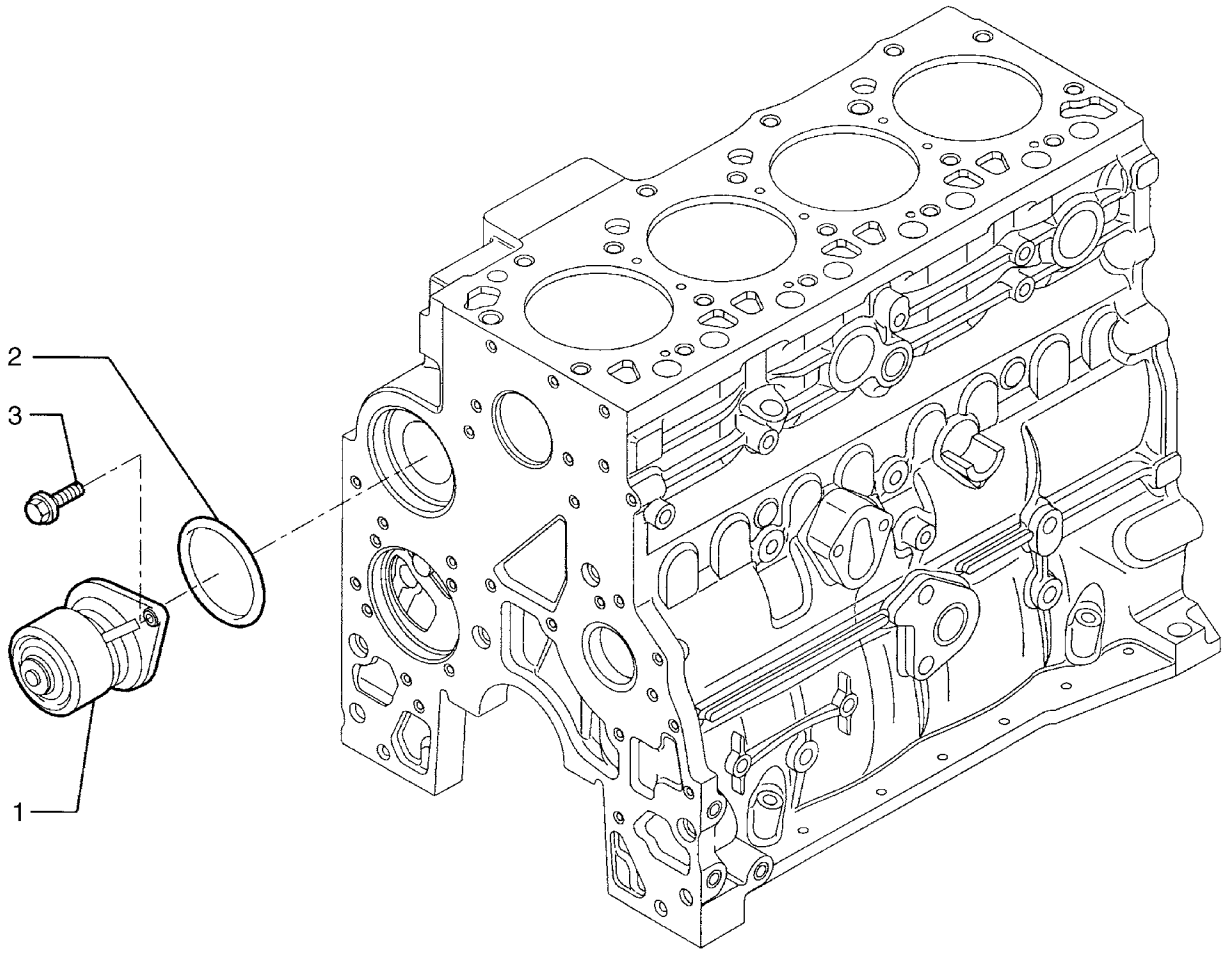


BS04A058

HTTP://WWW.MINNPARBACKHOEPARTS.COM



WATER PUMP

| REF | FN | PART NUMBER | YR/SN | QTY | DESCRIPTION |
|---|---|---|---|---|---|
| 1 | | 4891252 | | 1 | PUMP, WATER |
| 2 | | 504062856 | | 1 | GASKET |
| 3 | | 4899031 | | 2 | SCREW 8X25 |

HTTP://WWW.MINNPARBACKHOEPARTS.COM



COOLING SYSTEM - ENGINE

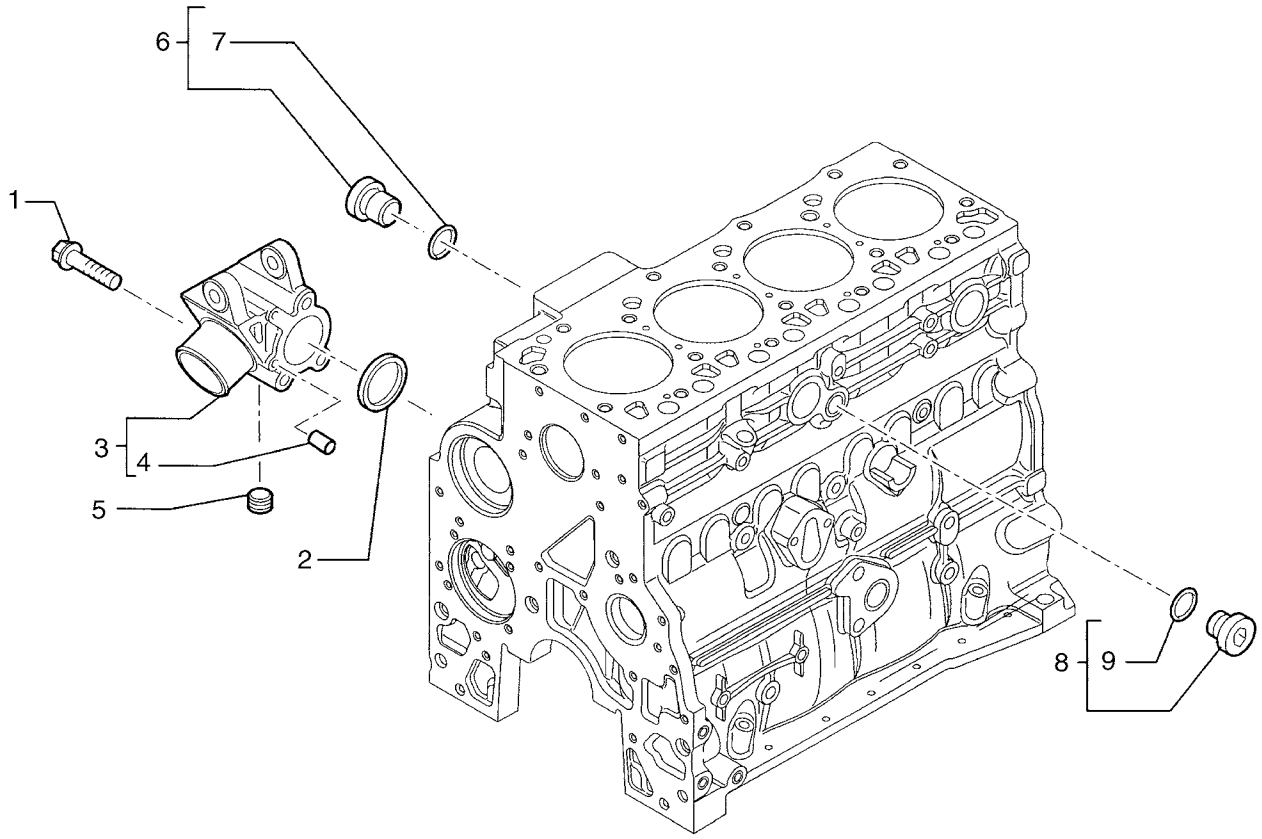

HTTP://WWW.MINNPARBACKHOEPARTS.COM



COOLING SYSTEM - ENGINE

| REF | FN | PART NUMBER | YR/SN | QTY | DESCRIPTION |
|---|---|---|---|---|---|
| 1 | | 4899109 | | 3 | SCREW |
| 2 | | 4895121 | | 1 | GASKET |
| 3 | | 504064336 | | 1 | SUPPORT - ASSY |
| 4 | | 4895576 | | 2 | DOWEL |
| 5 | | 504074178 | | 1 | PLUG |
| 6 | | 4895392 | | 1 | PLUG - ASSY M18X1.5 |
| 7 | | 4895393 | | 1 | O-RING |
| 8 | | 4895623 | | 1 | PLUG - ASSY |
| 9 | | 4895625 | | 1 | O-RING |

HTTP://WWW.MINNPARBACKHOEPARTS.COM



THERMOSTAT - ENGINE COOLING SYSTEM

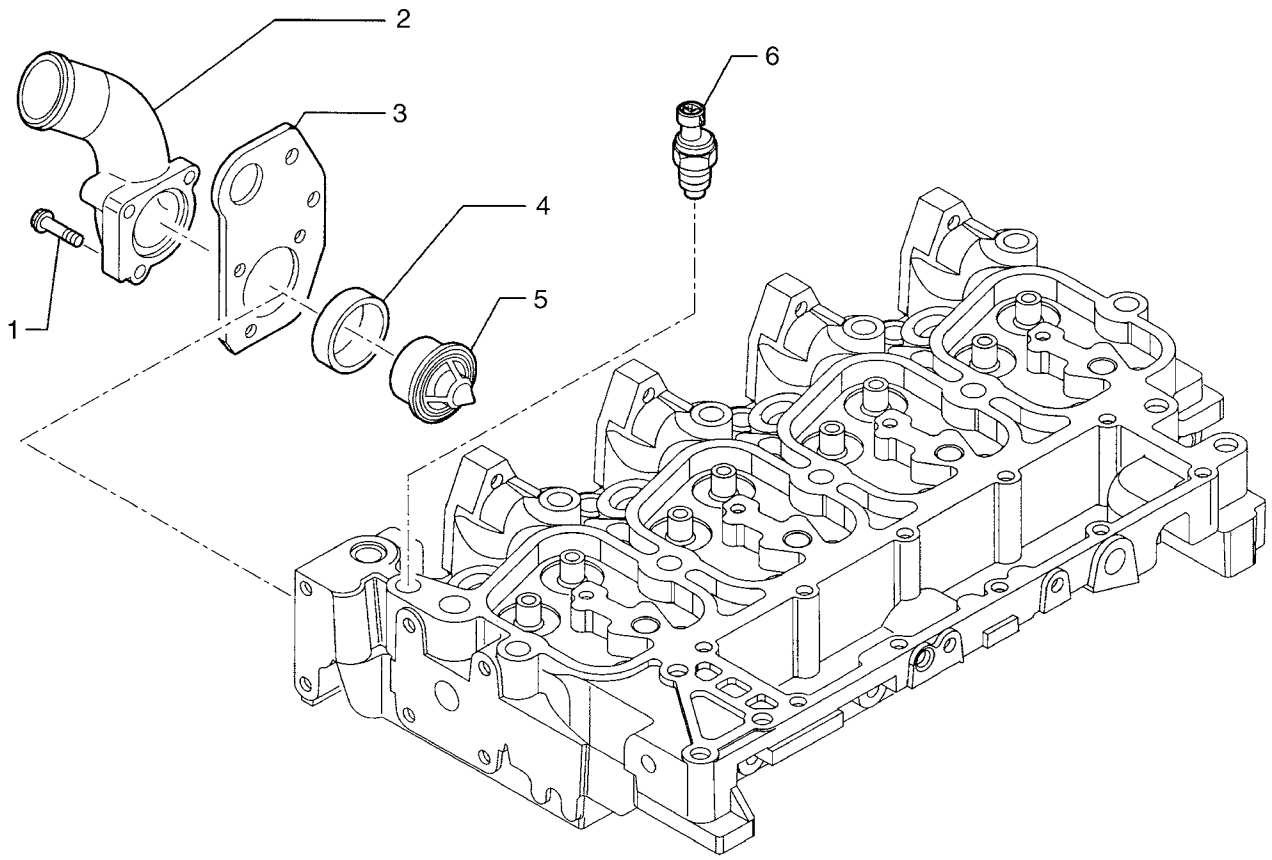


BS04A060

HTTP://WWW.MINNPARBACKHOEPARTS.COM



THERMOSTAT - ENGINE COOLING SYSTEM

| REF | FN | PART NUMBER | YR/SN | QTY | DESCRIPTION |
|---|---|---|---|---|---|
| 1 | | 16586624 | | 1 | SCREW 8X35 |
| 1 | | 16592624 | | 2 | SCREW |
| 2 | | 504051210 | | 1 | ELBOW |
| 3 | | 504052013 | | 1 | RING, LIFTING |
| 4 | | 504053512 | | 1 | GASKET |
| 5 | | 504038890 | | 1 | THERMOSTAT |
| 6 | | 504025599 | | 1 | SENDOR, TEMPERATURE |

HTTP://WWW.MINNPARBACKHOEPARTS.COM



WATER PUMP - CONTROL

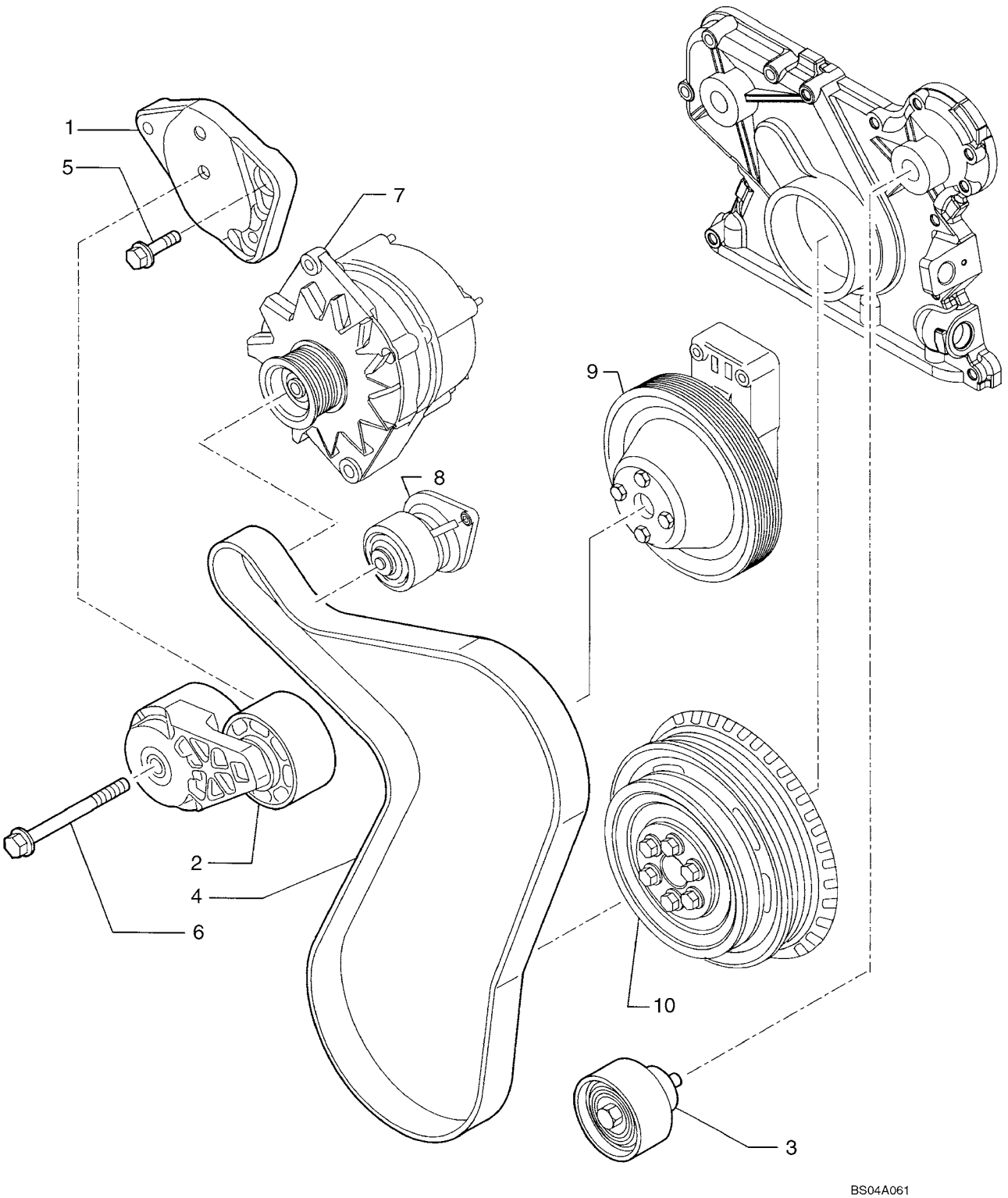

HTTP://WWW.MINNPARBACKHOEPARTS.COM



WATER PUMP - CONTROL

| REF | FN | PART NUMBER | YR/SN | QTY | DESCRIPTION |
|---|---|---|---|---|---|
| 1 | | 504064340 | | 1 | BRACKET |
| 2 | | 504028028 | | 1 | TENSIONER, BELT |
| 3 | | 504065880 | | 1 | PULLEY |
| 4 | | REF | | 1 | INSTRUCTION BELT; See Figure 02-01 |
| 5 | | 4899031 | | 1 | SCREW |
| 6 | | 4899109 | | 1 | SCREW |
| 7 | | REF | | 1 | INSTRUCTION ALTERNATOR; See Figure 04-02 |
| 8 | | REF | | 1 | INSTRUCTION WATER PUMP; See Figure 02-35 |
| 9 | | REF | | 1 | INSTRUCTION FAN DRIVE; See Figure 02-39 |
| 10 | | REF | | 1 | INSTRUCTION CRANKSHAFT PULLEY; See Figure 02-25 |

HTTP://WWW.MINNPARBACKHOEPARTS.COM



FAN DRIVE

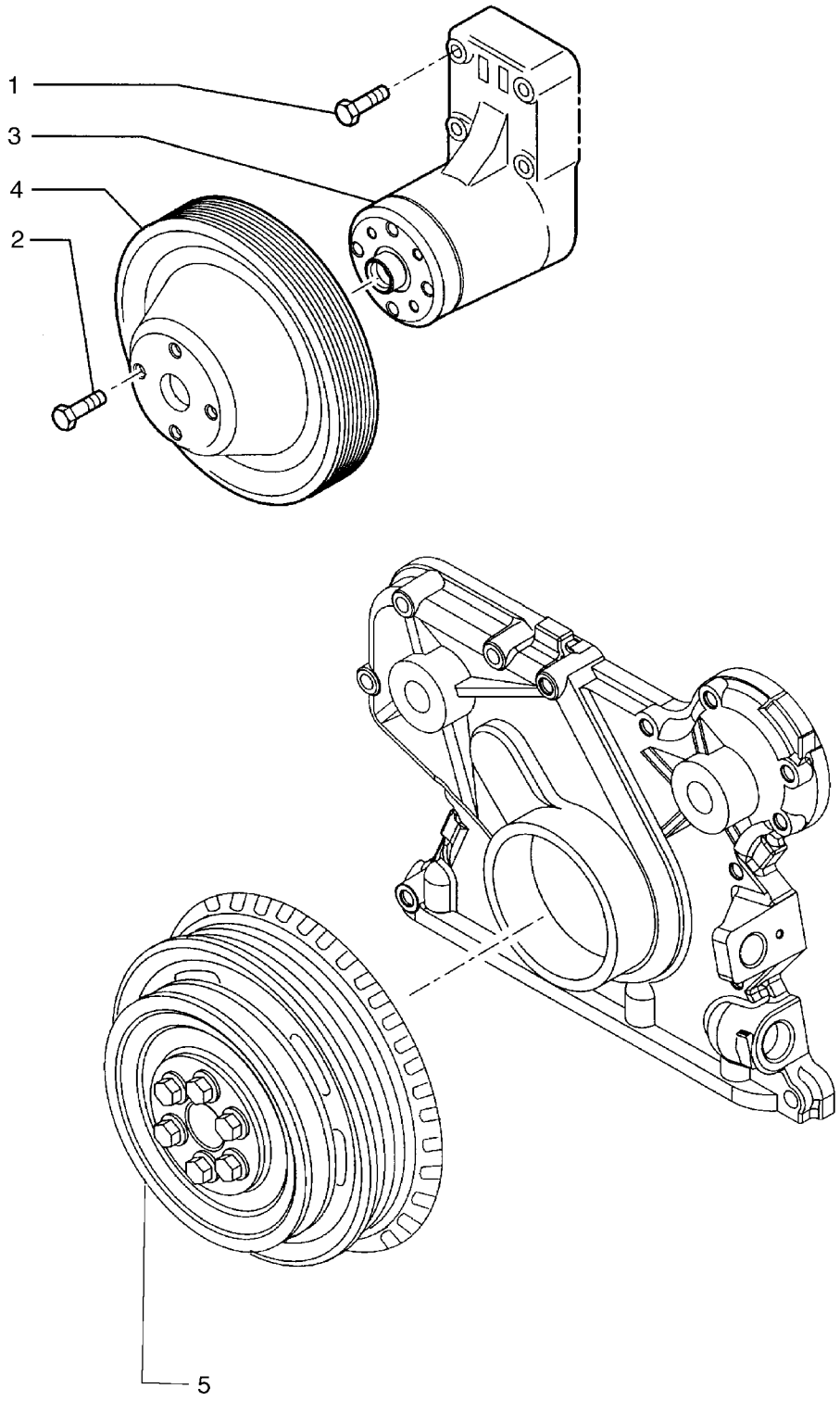

HTTP://WWW.MINNPARBACKHOEPARTS.COM



FAN DRIVE

| REF | FN | PART NUMBER | YR/SN | QTY | DESCRIPTION |
|---|---|---|---|---|---|
| 1 | | 4899053 | | 4 | SCREW |
| 2 | | 4895291 | | 4 | SCREW |
| 3 | | 504035148 | | 1 | SUPPORT M10X1.5X80 |
| 4 | | 4895301 | | 1 | PULLEY |
| 5 | | REF | | 1 | INSTRUCTION CRANKSHAFT PULLEY; See Figure 02-25 |

HTTP://WWW.MINNPARBACKHOEPARTS.COM



POWER TAKE-OFF

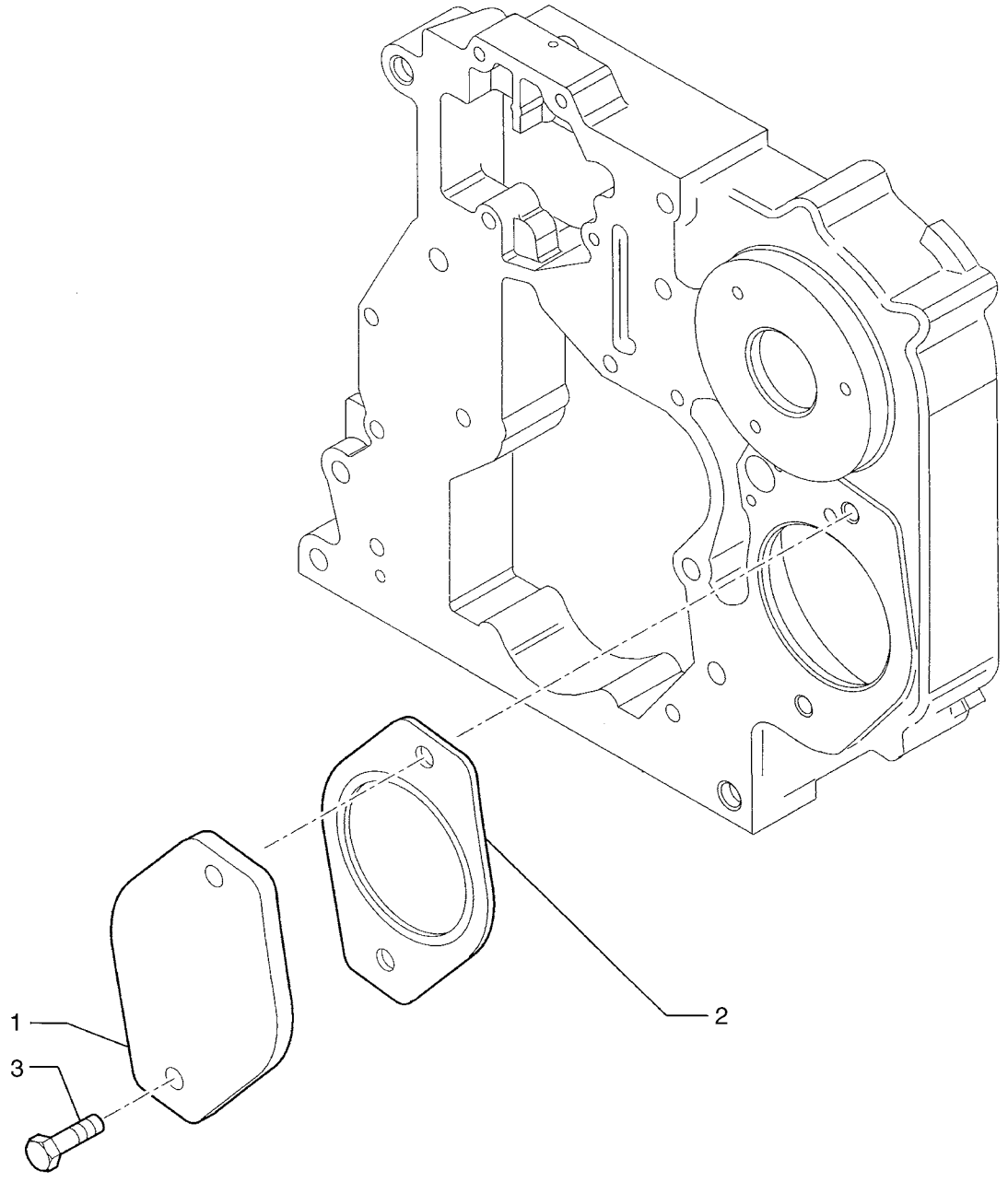

HTTP://WWW.MINNPARBACKHOEPARTS.COM



POWER TAKE-OFF

| REF | FN | PART NUMBER | YR/SN | QTY | DESCRIPTION |
|---|---|---|---|---|---|
| 1 | | 504049033 | | 1 | COVER |
| 2 | | 4896897 | | 1 | GASKET |
| 3 | | 4895327 | | 2 | SCREW |

HTTP://WWW.MINNPARBACKHOEPARTS.COM



ENGINE - LIFT HOOK

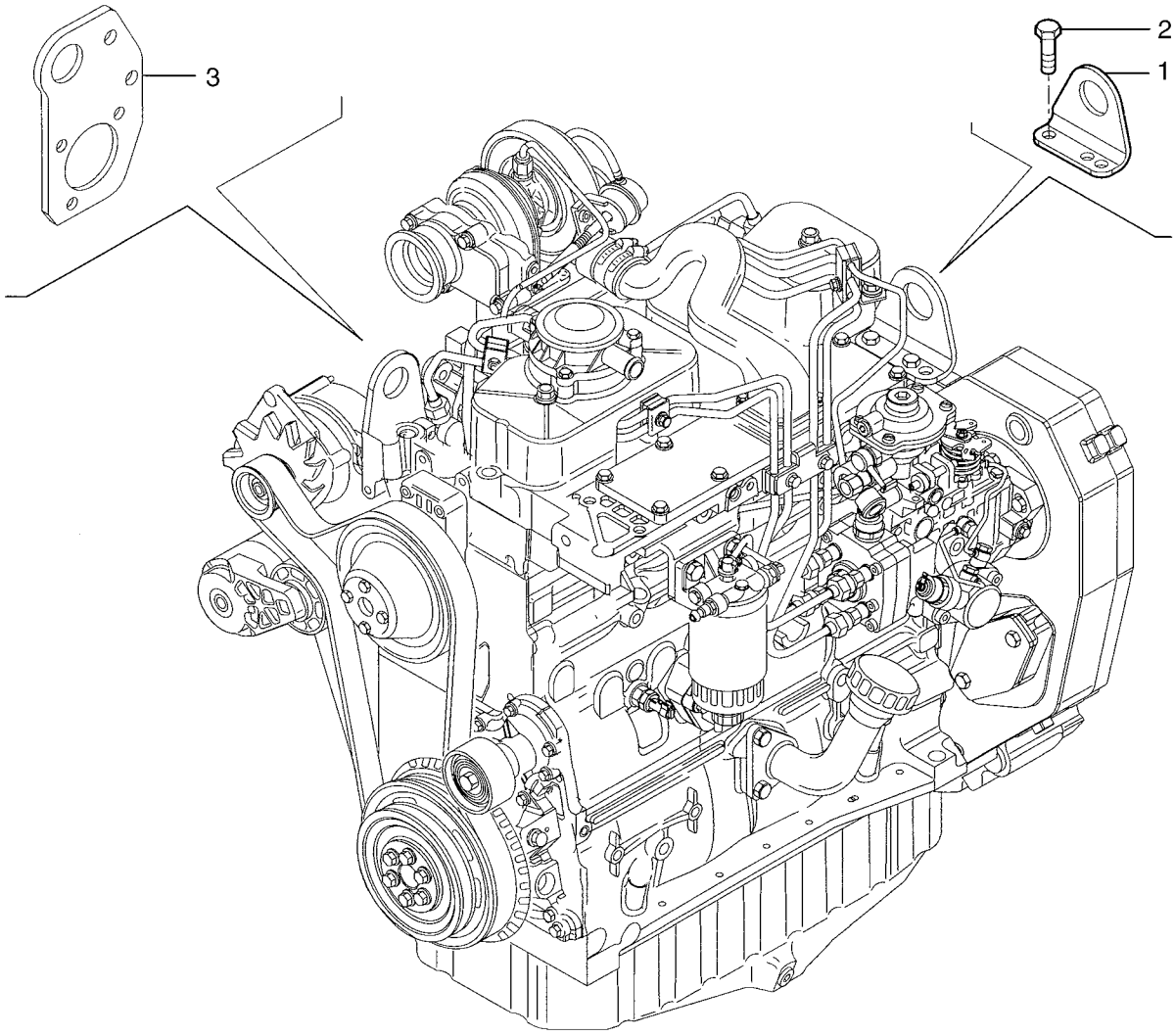

HTTP://WWW.MINNPARBACKHOEPARTS.COM



ENGINE - LIFT HOOK

| REF | FN | PART NUMBER | YR/SN | QTY | DESCRIPTION |
|---|---|---|---|---|---|
| 1 | | 504026078 | | 1 | RING, LIFTING |
| 2 | | 4899073 | | 2 | SCREW |
| 3 | | REF | | 1 | INSTRUCTION LIFT RING; See Figure 02-37 |

HTTP://WWW.MINNPARBACKHOEPARTS.COM

HTTP://WWW.MINNPARBACKHOEPARTS.COM

# SECTION INDEX


| | |
|---|---|
| 03-01 | FUEL LINES, RESERVOIR - FILTER, IN-LINE FUEL |
| 03-02 | CONTROLS - THROTTLE, HAND |
| 03-03 | CONTROLS - THROTTLE, FOOT |
| 03-04 | FUEL INJECTION PUMP |
| 03-05 | FUEL INJECTION SYSTEM |
| 03-06 | FUEL INJECTION SYSTEM |
| 03-07 | FUEL INJECTION SYSTEM |
| 03-08 | FUEL FILTER |
| 03-09 | FUEL PUMP |
| 03-10 | FUEL INJECTION SYSTEM |
| 03-11 | FUEL INJECTION SYSTEM |

HTTP://WWW.MINNPARBACKHOEPARTS.COM

| 03-01 | | p1 | 09/03 |
|---|---|---|---|

FUEL LINES, RESERVOIR - FILTER, IN-LINE FUEL

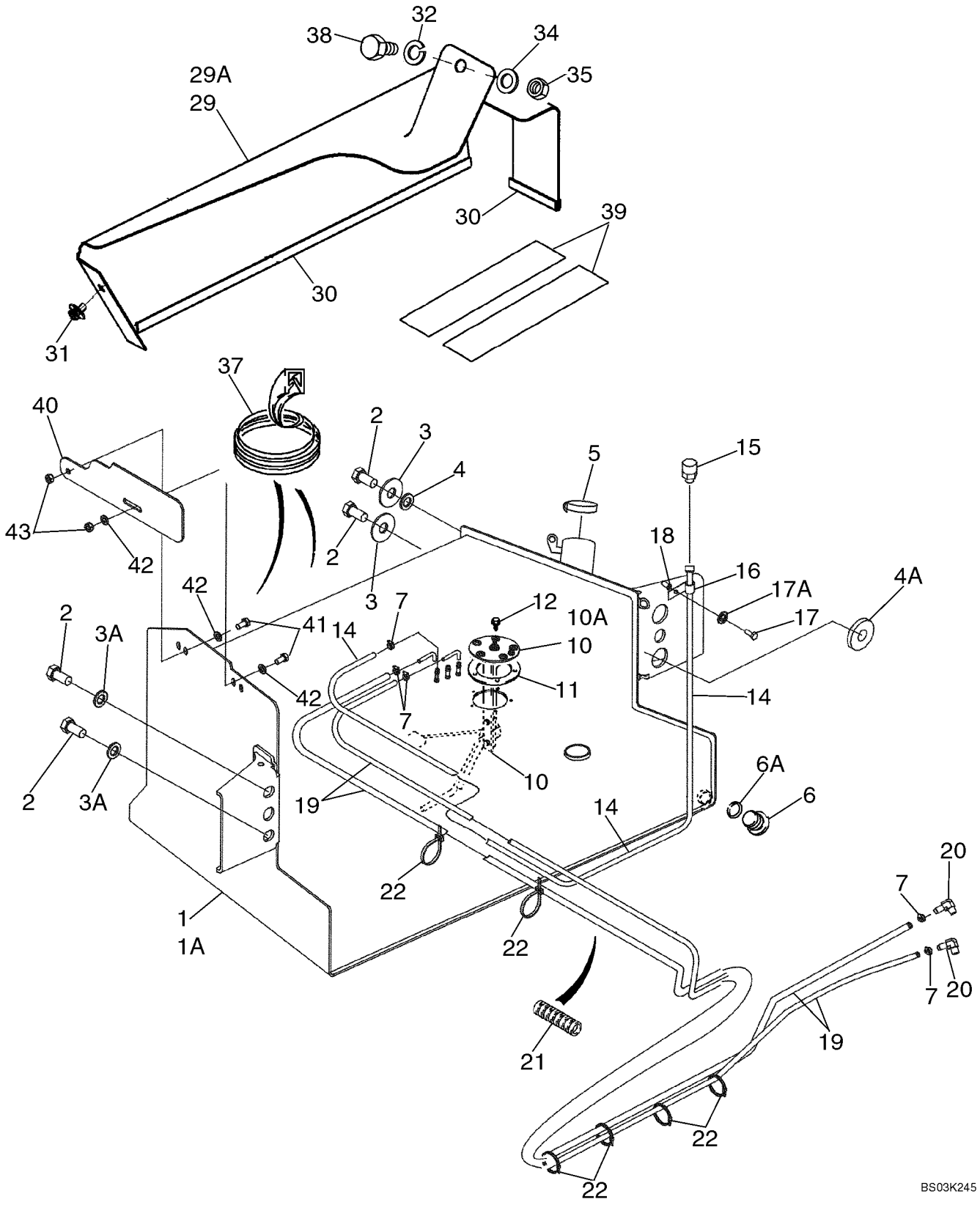

HTTP://WWW.MINNPARBACKHOEPARTS.COM



FUEL LINES, RESERVOIR - FILTER, IN-LINE FUEL

| REF | FN | PART NUMBER | YR/SN | QTY | DESCRIPTION |
|---|---|---|---|---|---|
| 1 | | 87429310 | | 1 | FUEL TANK 31 gal; Incl. Ref 6; With Welded Fuel Sender Tubes; Includes Left Hand Steps, Mounts to Left Hand Side of Chassis |
| 1A | | 87429314 | | 1 | FUEL TANK 40 gal; Incl. Ref 6; Optional; With Welded Fuel Sender Tubes; Includes Left Hand Steps, Mounts to Left Hand Side of Chassis; If Used |
| 2 | | 443375A1 | | 4 | BOLT M20 x 60; With Loctite |
| 3 | | 302358A1 | | 2 | WASHER |
| 3A | | 896-11020 | | 2 | WASHER 22 x 37 x 4 mm |
| 4 | | 185926A1 | | 1 | SPACER Upper Left Hand Side of Tank |
| 4A | | 409472A1 | | 1 | SPACER Lower Left Hand Side of Tank |
| 5 | | 130049A1 | | 1 | CAP, FILLER Cap; Non-Vented |
| 6 | | 218-5211 | | 1 | PLUG Hex Socket, 7/8 Or, Drain, Incl. Ref 6A; Included With Ref 1, 1A |
| 6A | | 237-6010 | | 1 | O-RING 3/4 ID x 3/32 |
| 7 | | 214-1704 | | 5 | CLAMP 1/4 - 5/8 |
| 10 | | 86989676 | | 1 | SENDER UNIT Fuel Level, 31 Gallon Tank, Without Tubes, If Used |
| 10A | | 87408480 | | 1 | SENDER UNIT Fuel Level, 40 Gallon Tank, Without Tubes, If Used |
| 11 | | 188311A2 | | 1 | GASKET |
| 12 | | D75465 | | 5 | SCREW No. 10 NF x 5/8 |
| 14 | | 234892A1 | | 1 | HOSE, LARGE 1/4 ID x 1100 mm (43-5/16 in), Vent |
| 15 | | 130047A1 | | 1 | STRAINER ASSY. Vent |
| 16 | | 515-23127 | | 1 | CLAMP 1/2 ID |
| 17 | | 276-24924 | | 1 | SCREW 3/8 x 1-1/2 |
| 17A | | 495-11041 | | 1 | WASHER 13/32 x 13/16 x 1/16 |
| 18 | | 87417383 | | 1 | INSERT, THREADED M8 Nut |
| 19 | | 87427943 | | 2 | HOSE 3/8 ID x 1800 mm (70-7/8 in); To Fuel Lift Pump and Injector Pump |
| 20 | | 87414560 | | 2 | CONNECTOR, HYD. ELBOW, 90 deg, Includes O-Ring |
| 21 | | 399004A1 | | 1 | GUARD 270 mm (10-5/8 in) |
| 22 | | L18337 | | X | STRAP 15 in |
| 29 | | 189602A3 | | 1 | COVER Mounted Above Fuel Reservoir; Models With Two Spool Loader Valve |

HTTP://WWW.MINNPARBACKHOEPARTS.COM

| 03-01 | | p2 | 09/03 |
|---|---|---|---|

FUEL LINES, RESERVOIR - FILTER, IN-LINE FUEL

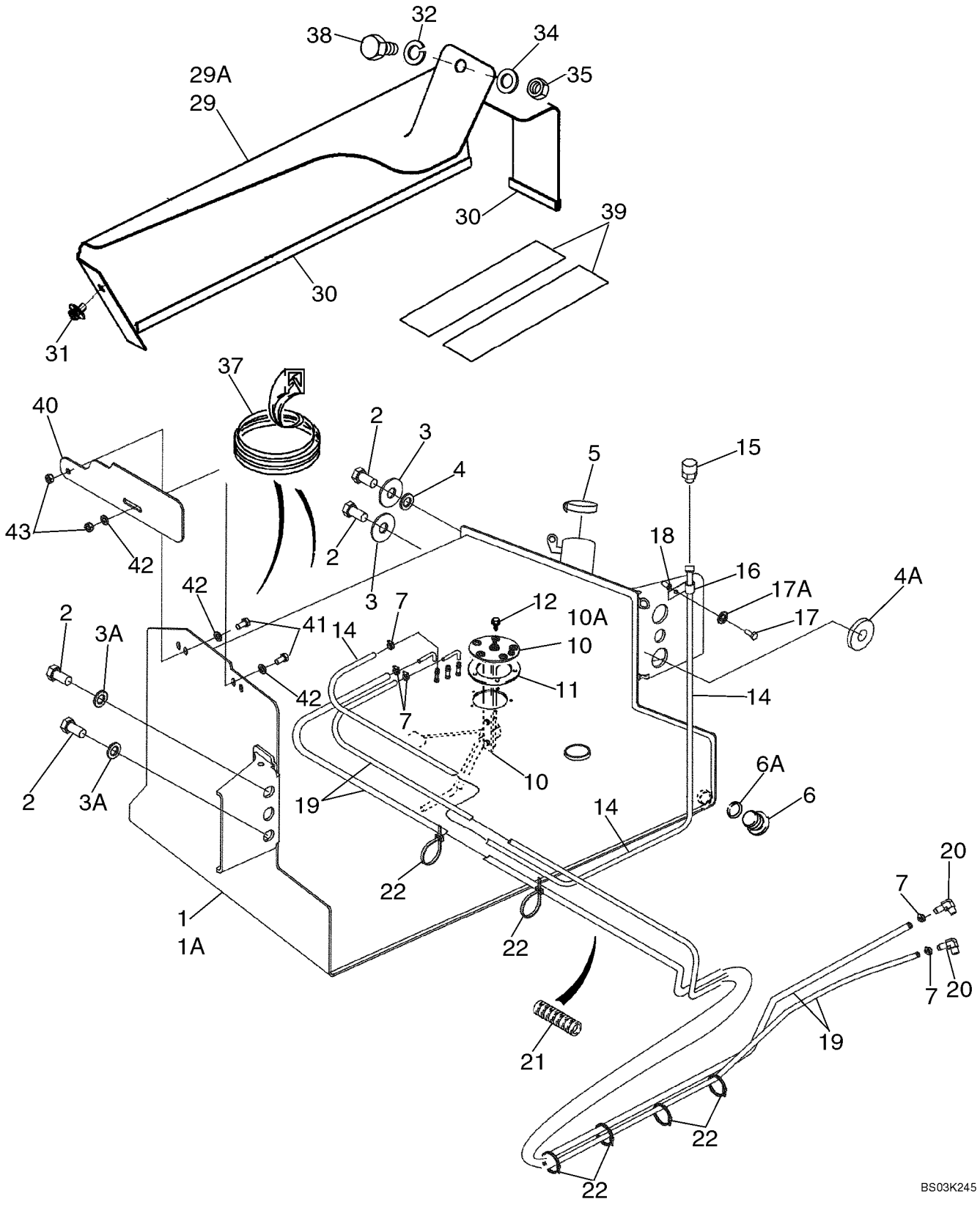

HTTP://WWW.MINNPARBACKHOEPARTS.COM



FUEL LINES, RESERVOIR - FILTER, IN-LINE FUEL

| REF | FN | PART NUMBER | YR/SN | QTY | DESCRIPTION |
|---|---|---|---|---|---|
| 29A | | 188009A3 | | 1 | COVER Mounted Above Fuel Reservoir, Models With Three Spool Loader Valve |
| 30 | | 191046A1 | | 1 | STRIP, ORNAMENTAL Trim, 650 mm (25-5/8 in), Cut From A165860; Apply 65 mm (2-9/16 in) of Trim to Front Lower Edge and 575 mm (22-11/16 in) of Trim to Outside Lower Edge of Cover |
| 31 | | 307577A1 | | 1 | BOLT Special, M8 x 20 |
| 32 | | 892-11010 | | 1 | WASHER, LOCK M10 |
| 34 | | 895-11010 | | 1 | WASHER 11 x 21 x 2 mm |
| 35 | | 829-1410 | | 1 | NUT M10; 10.9 |
| 37 | | D40442 | | 1 | MOLDING Trim, 305 mm (12 in), Cut From F42827; If Used |
| 38 | | 814-10045 | | 1 | SCREW M10 x 45; Models With Three Spool Loader Valve |
| 38 | | 614-10020 | | 1 | SCREW M10 x 20; Models With Two Spool Loader Valve |
| 39 | | D80270 | | 2 | STRIP 635 mm (25 in), 31 Gallon Tank |
| 39 | | 307348A1 | | 2 | STRIP 700 mm (27-9/16 in), 40 Gallon Tank |
| 40 | | 397548A4 | | 1 | PLATE Mud |
| 41 | | 614-10020 | | 2 | SCREW M10 x 20 |
| 42 | | 895-11010 | | 3 | WASHER 11 x 21 x 2 mm |
| 43 | | 829-1410 | | 2 | NUT M10; 10.9 |

HTTP://WWW.MINNPARBACKHOEPARTS.COM



CONTROLS - THROTTLE, HAND

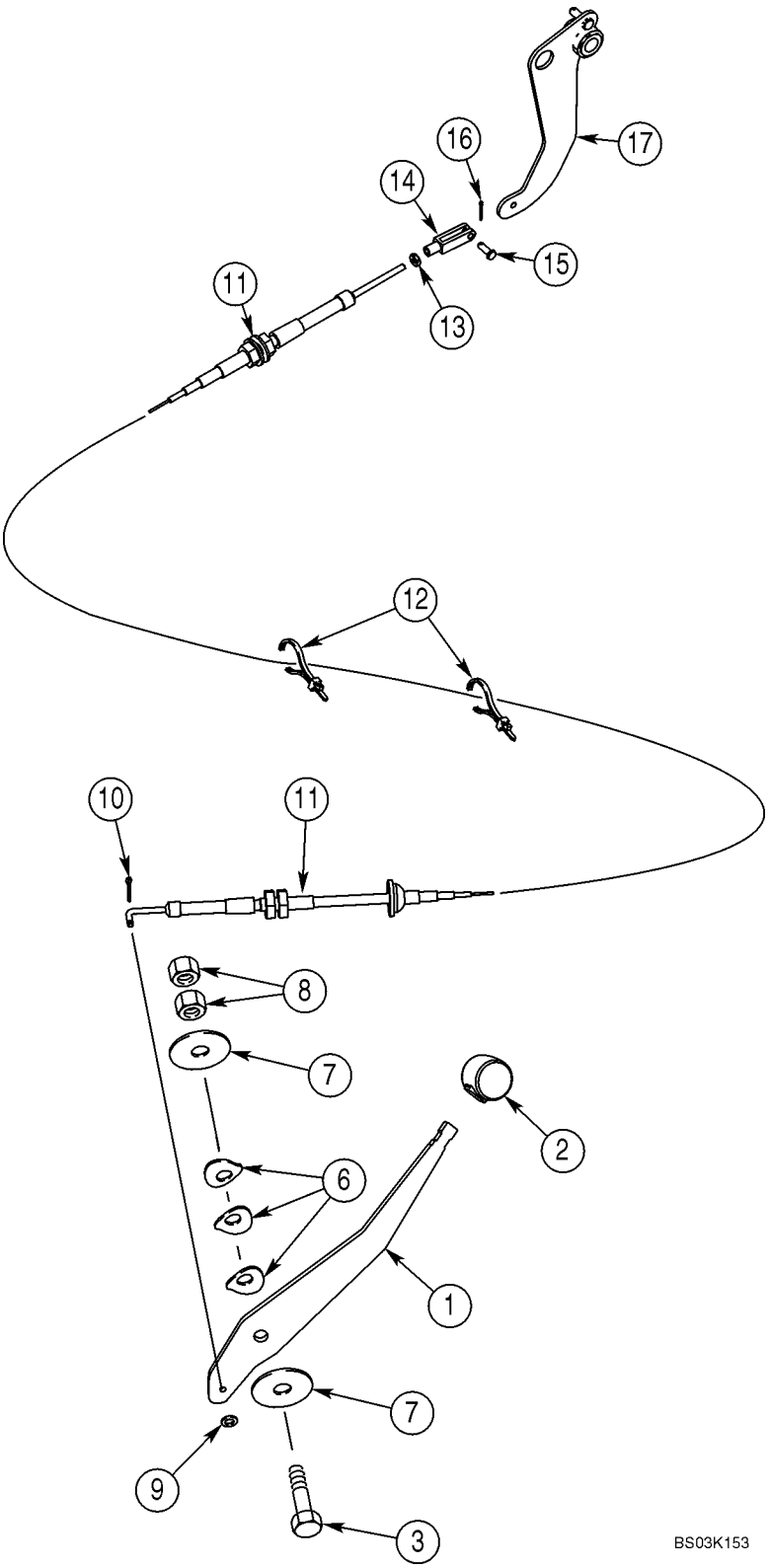

HTTP://WWW.MINNPARBACKHOEPARTS.COM



CONTROLS - THROTTLE, HAND

| REF | FN | PART NUMBER | YR/SN | QTY | DESCRIPTION |
|---|---|---|---|---|---|
| 1 | | 395189A2 | | 1 | LEVER |
| 2 | | A177435 | | 1 | KNOB,BALL Lever |
| 3 | | 514-847 | | 1 | BOLT M12 x 50 |
| 6 | | D148962 | | 3 | WASHER |
| 7 | | 496-81018 | | 2 | WASHER 33/64 x 2 x 1/8 |
| 8 | | 825-11412 | | 2 | NUT M12 |
| 9 | | 495-31022 | | 1 | WASHER 7/32 x 1/2 x 3/64 |
| 10 | | 432-48 | | 1 | PIN, SPLIT (COTTER) 1/16 x 1/2 |
| 11 | | 350014A3 | | 1 | CABLE |
| 12 | | L18337 | | 4 | STRAP 15 in, Nylon, Retaining |
| 13 | | 225-14210 | | 1 | NUT No. 10 NF |
| 14 | | 213-123 | | 1 | CLEVIS No. 10 NF |
| 15 | | 427-3058 | | 1 | PIN, CLEVIS 3/16 x 9/16 |
| 16 | | 432-48 | | 1 | PIN, SPLIT (COTTER) 1/16 x 1/2 |
| 17 | | 378957A3 | | 1 | LEVER ASSY. |

HTTP://WWW.MINNPARBACKHOEPARTS.COM

| 03-03 | | p1 | 10/03 |
|---|---|---|---|

CONTROLS - THROTTLE, FOOT

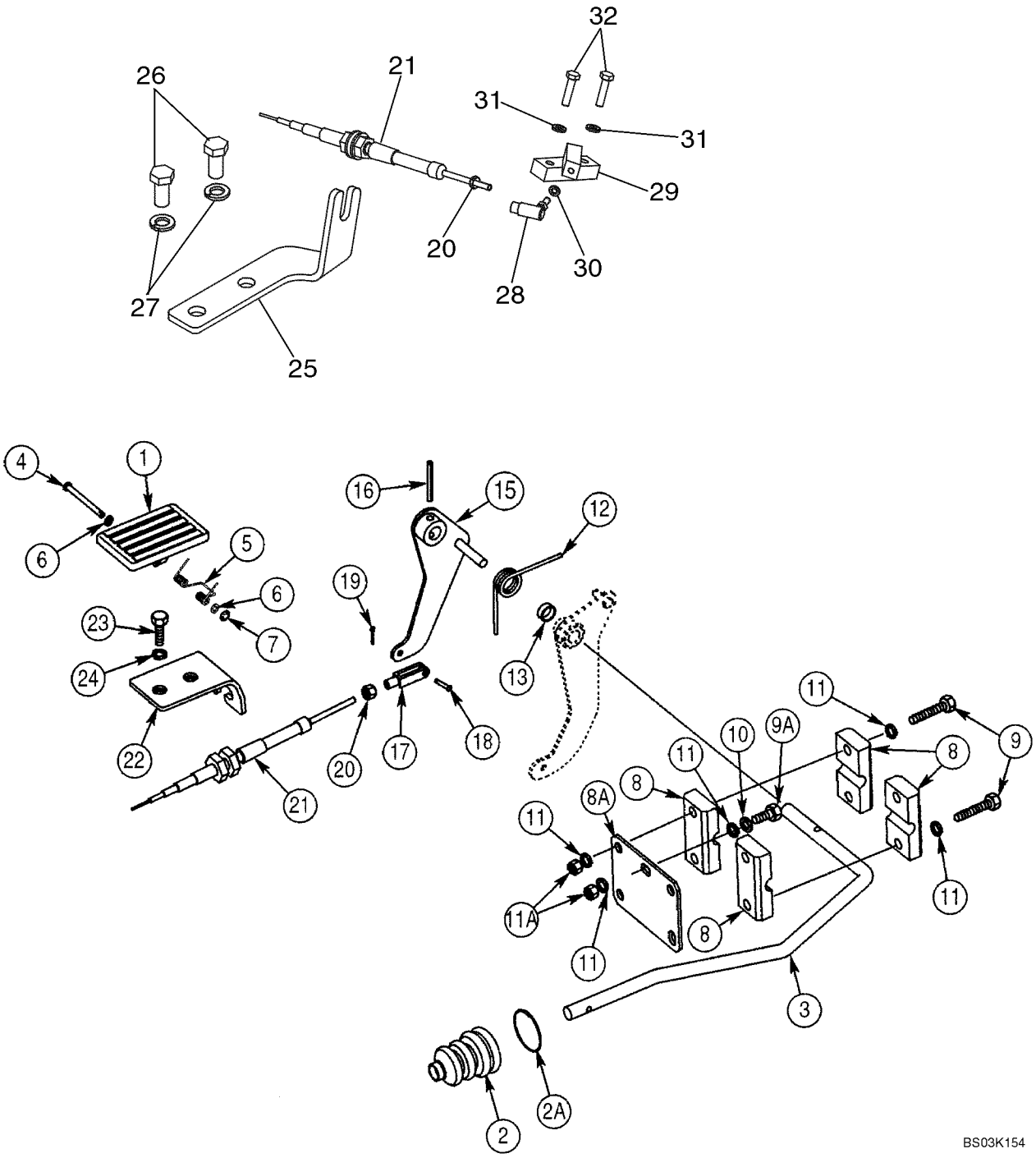

HTTP://WWW.MINNPARBACKHOEPARTS.COM



CONTROLS - THROTTLE, FOOT

| REF | FN | PART NUMBER | YR/SN | QTY | DESCRIPTION |
|---|---|---|---|---|---|
| 1 | | 282242A1 | | 1 | PEDAL Plastic |
| 2 | | 132931A1 | | 1 | BELLOWS Boot, Accelerator Pedal Rod |
| 2A | | 189109A1 | | 1 | SPRING Retainer |
| 3 | | 378960A1 | | 1 | ROD |
| 4 | | 322860A1 | | 1 | PIN, LARGE |
| 5 | | 256776A1 | | 1 | CARRIER |
| 6 | | 895-11005 | | 2 | WASHER 5,5 x 10 x 1 mm |
| 7 | | 103-1518 | | 1 | SNAP RING No. 18 |
| 8 | | D124857 | | 4 | CLAMP |
| 8A | | 378955A1 | | 1 | PLATE |
| 9 | | 604-8050 | | 4 | BOLT Locking, M8 x 50 |
| 9A | | 614-8020 | | 1 | SCREW M8 x 20 |
| 10 | | 892-11008 | | 1 | WASHER M8 |
| 11 | | 895-11008 | | 7 | WASHER 9 x 17 x 1,6 mm |
| 11A | | 829-1408 | | 2 | NUT M8; 10 |
| 12 | | 380483A2 | | 1 | SPRING |
| 13 | | 378958A1 | | 1 | SPACER, RING |
| 15 | | 378956A3 | | 1 | LEVER ASSY. |
| 16 | | 838-3640 | | 1 | PIN 6 x 40 mm |
| 17 | | 213-123 | | 1 | CLEVIS No. 10 NF |
| 18 | | 427-3058 | | 1 | PIN, CLEVIS 3/16 x 9/16 |
| 19 | | 432-48 | | 1 | PIN, SPLIT (COTTER) 1/16 x 1/2 |
| 20 | | 225-14210 | | 2 | NUT No. 10 NF |
| 21 | | 380021A1 | | 1 | CABLE To Injection Pump |
| 22 | | 397065A2 | | 1 | BRACKET |
| 23 | | 614-10035 | | 2 | SCREW M10 x 35 |
| 24 | | 892-11010 | | 2 | WASHER, LOCK M10 |
| 25 | | 87432547 | | 1 | BRACKET |
| 26 | | 627-12025 | | 2 | SCREW M12 x 25 |
| 27 | | 896-15012 | | 2 | WASHER 13,5 x 28 x 4 mm |
| 28 | | 87421807 | | 1 | JOINT ASSY. |
| 29 | | 87421471 | | 1 | BLOCK ASSY. |
| 30 | | 892-11005 | | 1 | WASHER, LOCK M5 |
| 31 | | 892-11006 | | 2 | WASHER, LOCK M6 |
| 32 | | 614-6025 | | 2 | SCREW M6 x 25 |

HTTP://WWW.MINNPARBACKHOEPARTS.COM



FUEL INJECTION PUMP

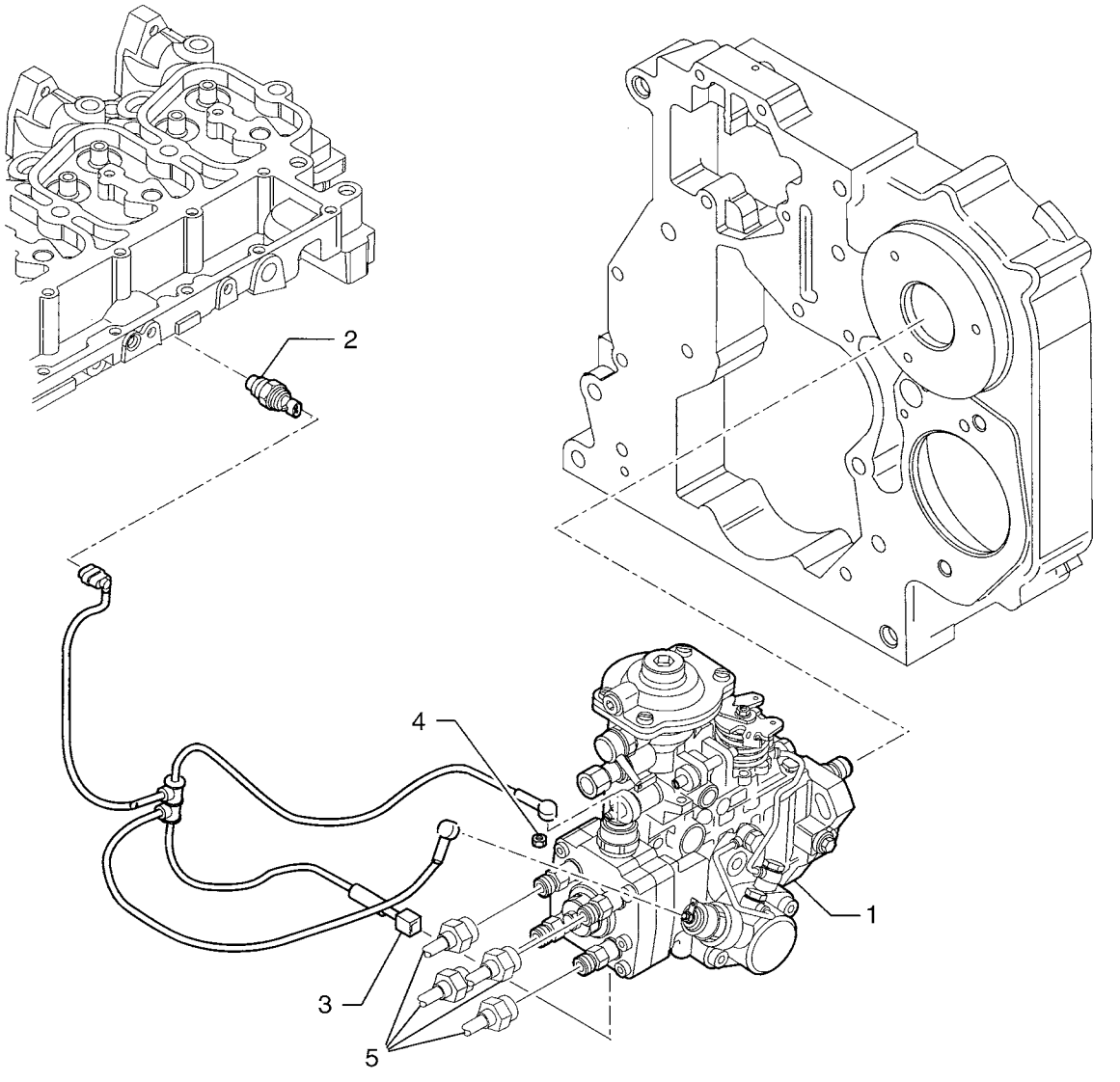

HTTP://WWW.MINNPARBACKHOEPARTS.COM



FUEL INJECTION PUMP

| REF | FN | PART NUMBER | YR/SN | QTY | DESCRIPTION |
|---|---|---|---|---|---|
| 1 | | {504063450} | | 1 | - ASSY; Injection Pump |
| 2 | | 504032877 | | 1 | SENDER UNIT |
| 3 | | 504060728 | | 1 | CONNECTOR, WIRE |
| 4 | | 16979231 | | 2 | NUT |
| 5 | | REF | | 1 | INSTRUCTION TUBE; See Figure 03-07 for Tube Kit |

HTTP://WWW.MINNPARBACKHOEPARTS.COM



FUEL INJECTION SYSTEM

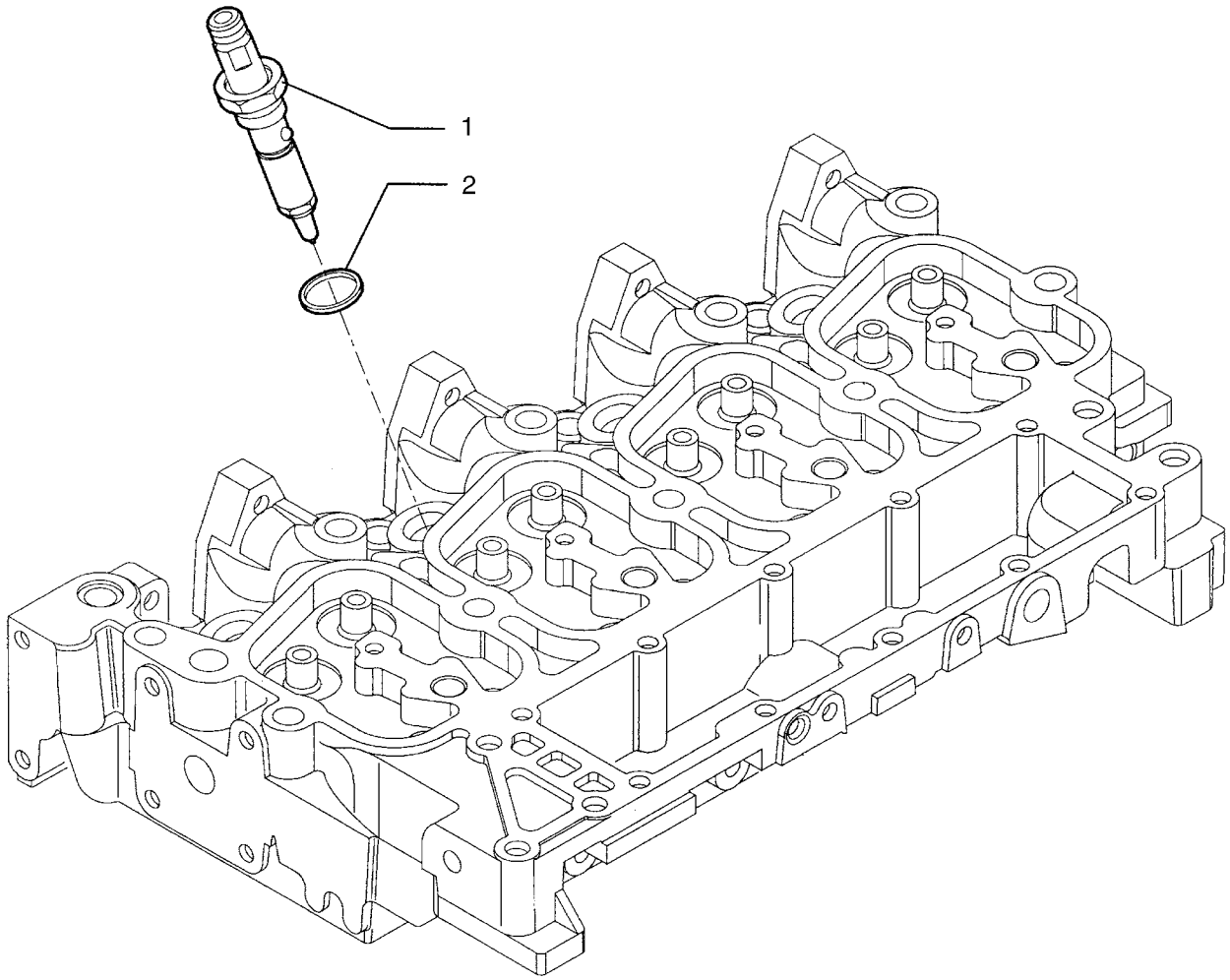


BS04A045

HTTP://WWW.MINNPARBACKHOEPARTS.COM



FUEL INJECTION SYSTEM

| REF | FN | PART NUMBER | YR/SN | QTY | DESCRIPTION |
|---|---|---|---|---|---|
| 1 | | {500390441} | | 4 | Injector |
| 2 | | 4895297 | | 4 | GASKET |

HTTP://WWW.MINNPARBACKHOEPARTS.COM



FUEL INJECTION SYSTEM

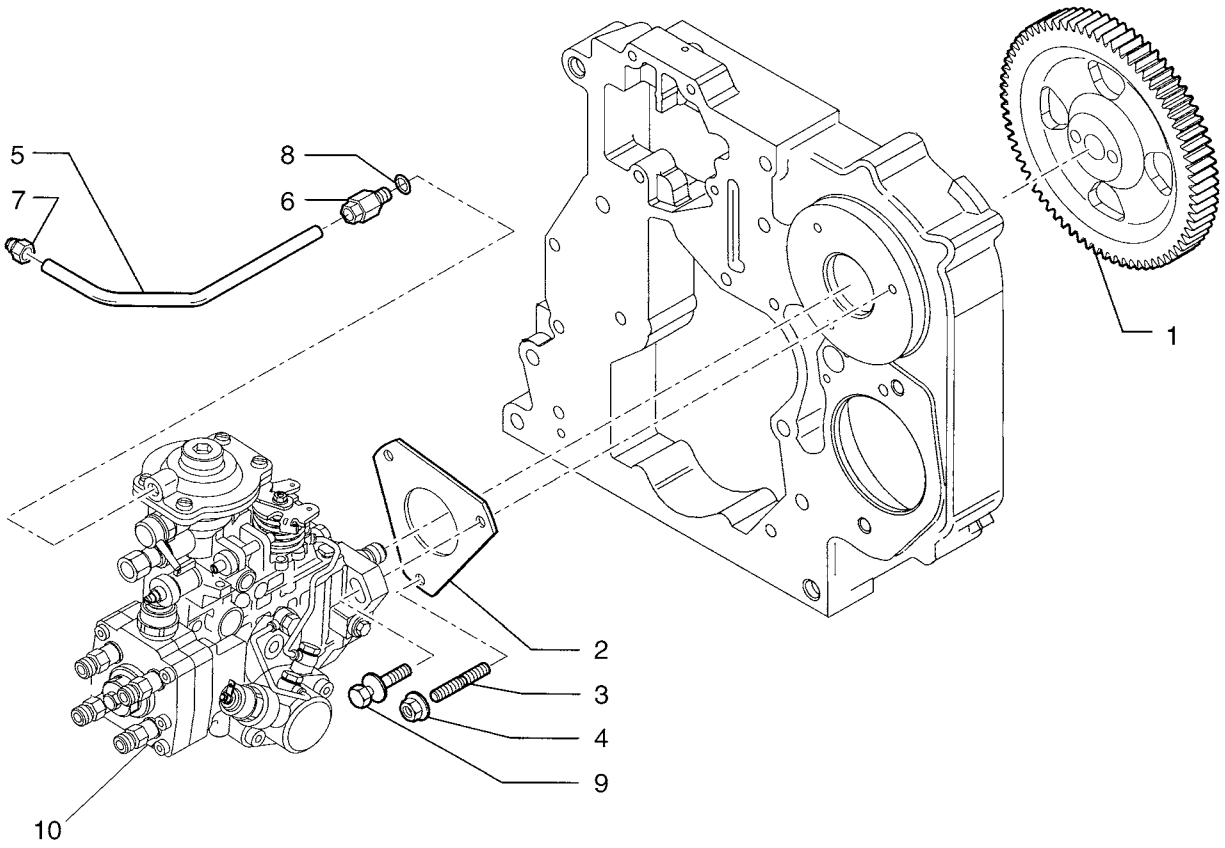


BS04A046

HTTP://WWW.MINNPARBACKHOEPARTS.COM



FUEL INJECTION SYSTEM

| REF | FN | PART NUMBER | YR/SN | QTY | DESCRIPTION |
|---|---|---|---|---|---|
| 1 | | 4894774 | | 1 | GEAR, DRIVEN |
| 2 | | 4895090 | | 1 | GASKET |
| 3 | | {16746824} | | 2 | Stud |
| 4 | | 4899003 | | 2 | NUT 8X1.25 |
| 5 | | 504057292 | | 1 | TUBE, RIGID |
| 6 | | 4893518 | | 1 | CONNECTOR, HYD. 8X1 |
| 7 | | 4896770 | | 1 | CONNECTOR, HYD. 10X1 |
| 8 | | 4858605 | | 1 | GASKET |
| 9 | | 504065099 | | 1 | SCREW |
| 10 | | REF | | 1 | INSTRUCTION INJECTION PUMP; See Figure 03-04 |

HTTP://WWW.MINNPARBACKHOEPARTS.COM



FUEL INJECTION SYSTEM

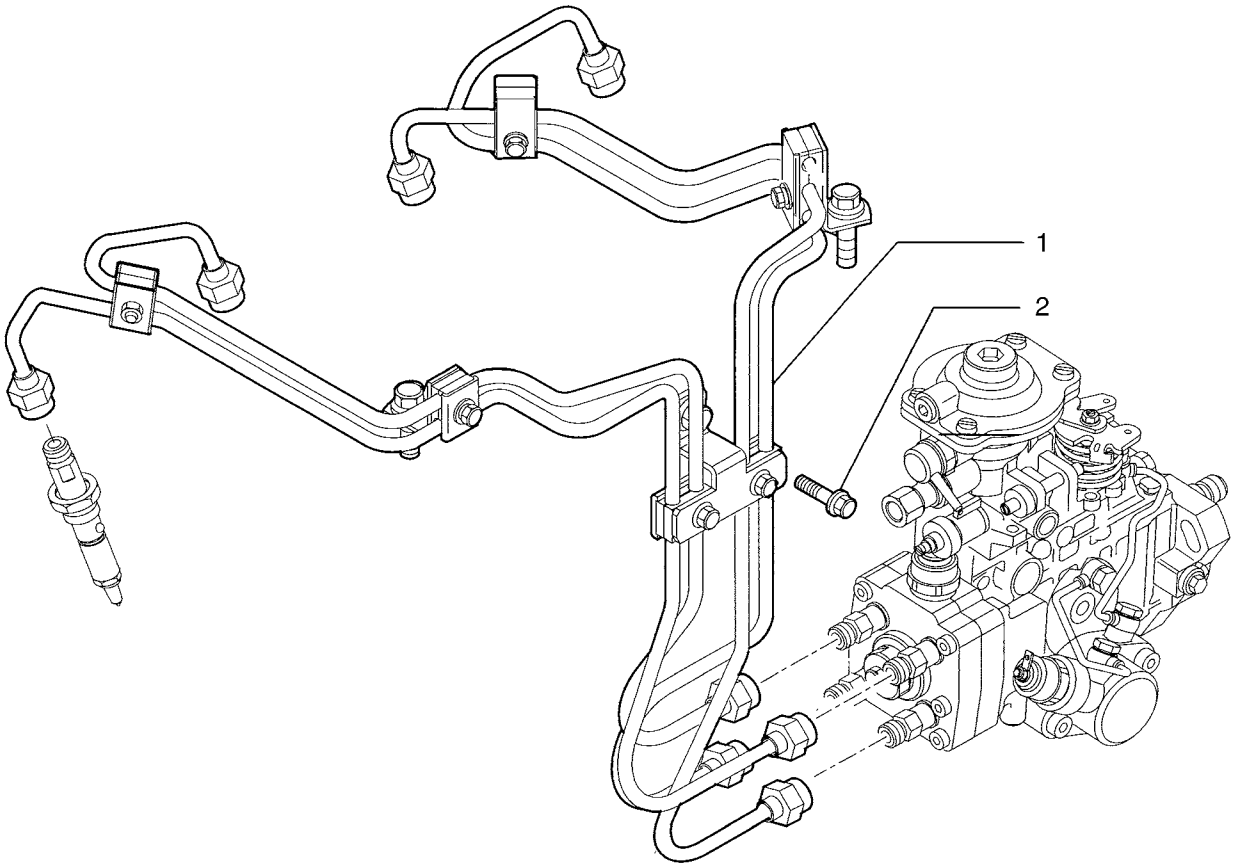


BS04A047

HTTP://WWW.MINNPARBACKHOEPARTS.COM



FUEL INJECTION SYSTEM

| REF | FN | PART NUMBER | YR/SN | QTY | DESCRIPTION |
|---|---|---|---|---|---|
| 1 | | 504042116 | | 1 | KIT - ASSY |
| 2 | | 4899068 | | 1 | SCREW |

HTTP://WWW.MINNPARBACKHOEPARTS.COM

| 03-08 | | p1 | 01/04 |
|---|---|---|---|

FUEL FILTER

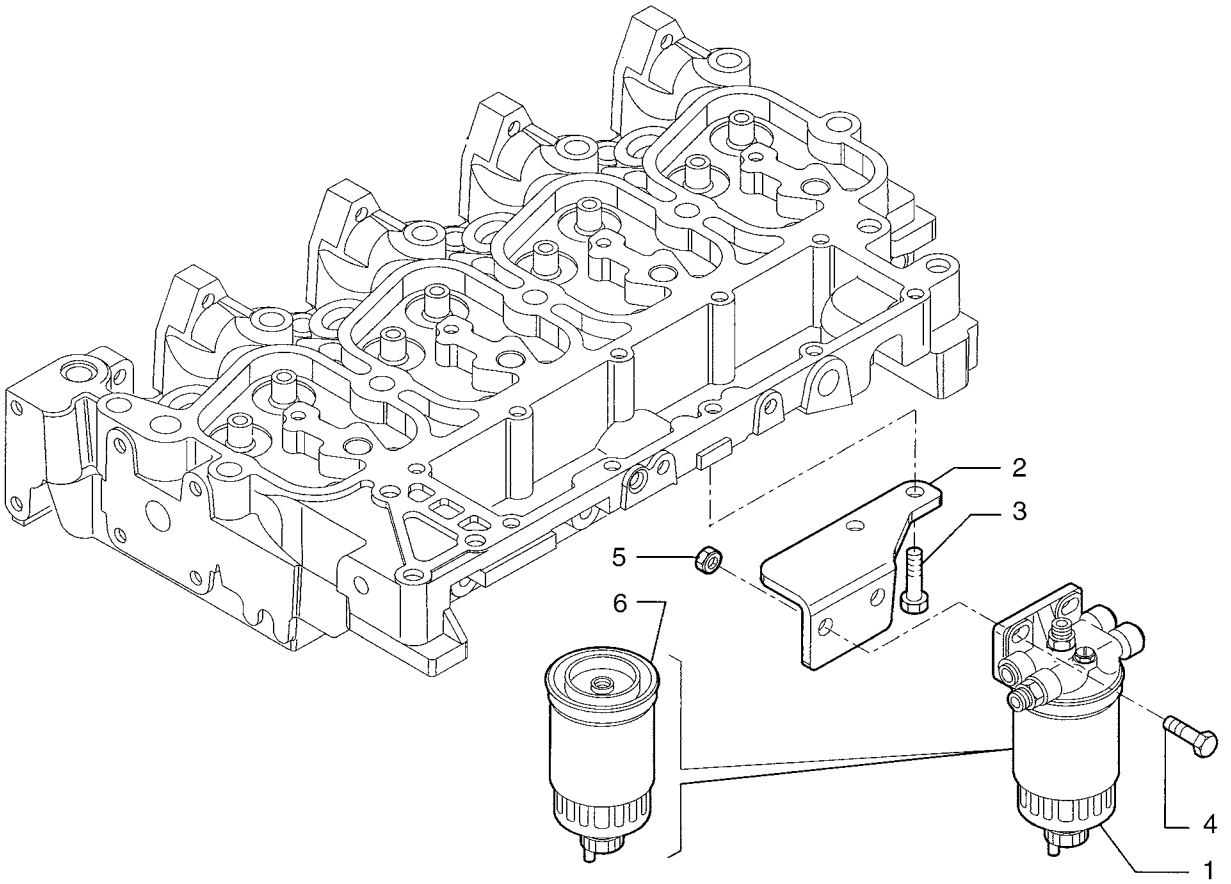


BS04A048

HTTP://WWW.MINNPARBACKHOEPARTS.COM



FUEL FILTER

| REF | FN | PART NUMBER | YR/SN | QTY | DESCRIPTION |
|---|---|---|---|---|---|
| 1 | | 504066077 | | 1 | FILTER ASSY. - ASSY |
| 2 | | 504001088 | | 1 | SUPPORT |
| 3 | | 4899068 | | 2 | SCREW 8X17 |
| 4 | | 4899093 | | 2 | SCREW |
| 5 | | 4895166 | | 2 | NUT 10X1.5 |
| 6 | | 87803194 | | 1 | FILTER, FUEL |

HTTP://WWW.MINNPARBACKHOEPARTS.COM



FUEL PUMP

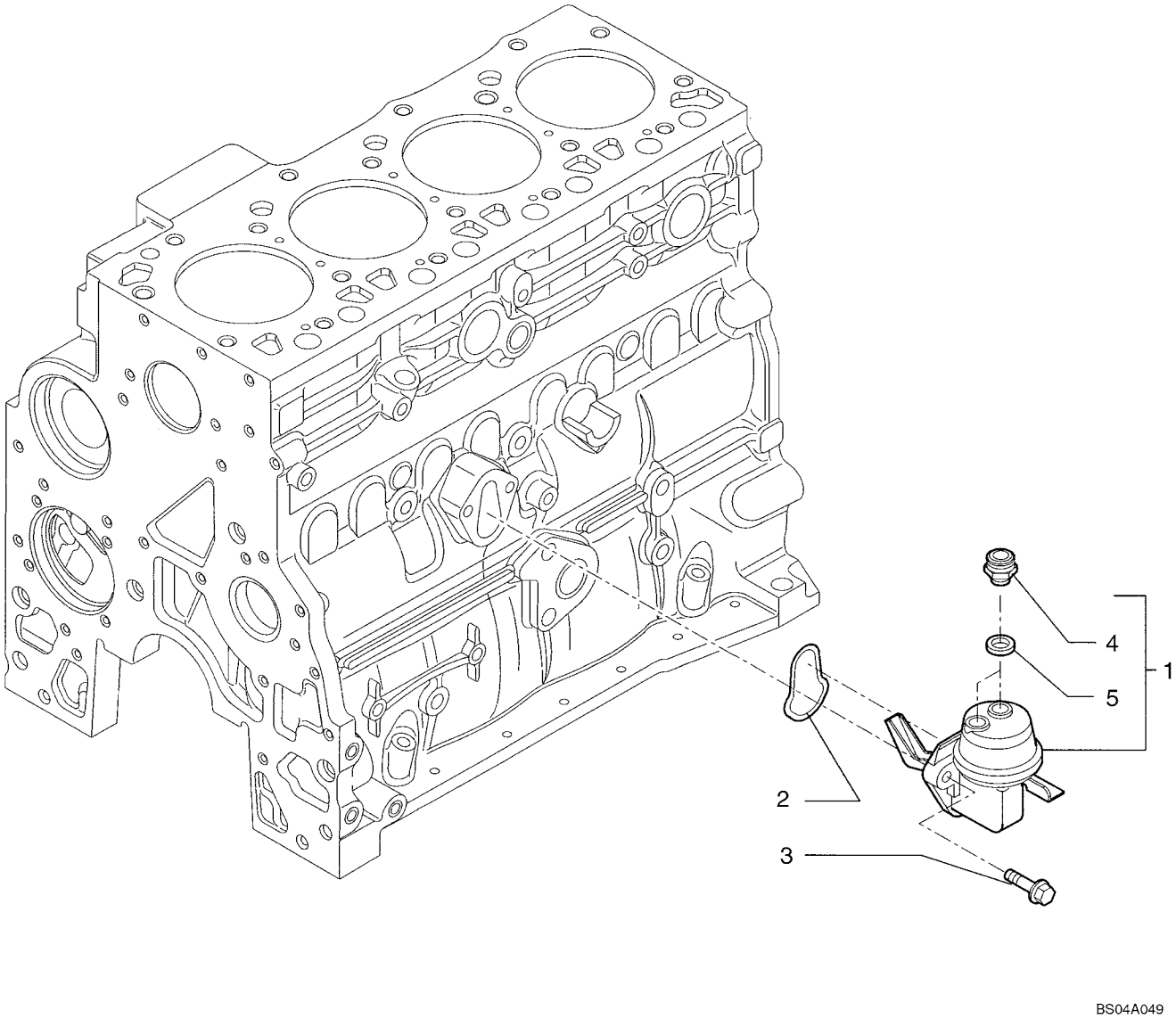

HTTP://WWW.MINNPARBACKHOEPARTS.COM



FUEL PUMP

| REF | FN | PART NUMBER | YR/SN | QTY | DESCRIPTION |
|---|---|---|---|---|---|
| 1 | | 2830266 | | 1 | PUMP, FUEL - ASSY |
| 2 | | 2830156 | | 1 | O-RING |
| 3 | | 4899031 | | 2 | SCREW 8X25 |
| 4 | | 4890964 | | 2 | CONNECTOR, HYD. |
| 5 | | 4894721 | | 2 | GASKET |

HTTP://WWW.MINNPARBACKHOEPARTS.COM



FUEL INJECTION SYSTEM

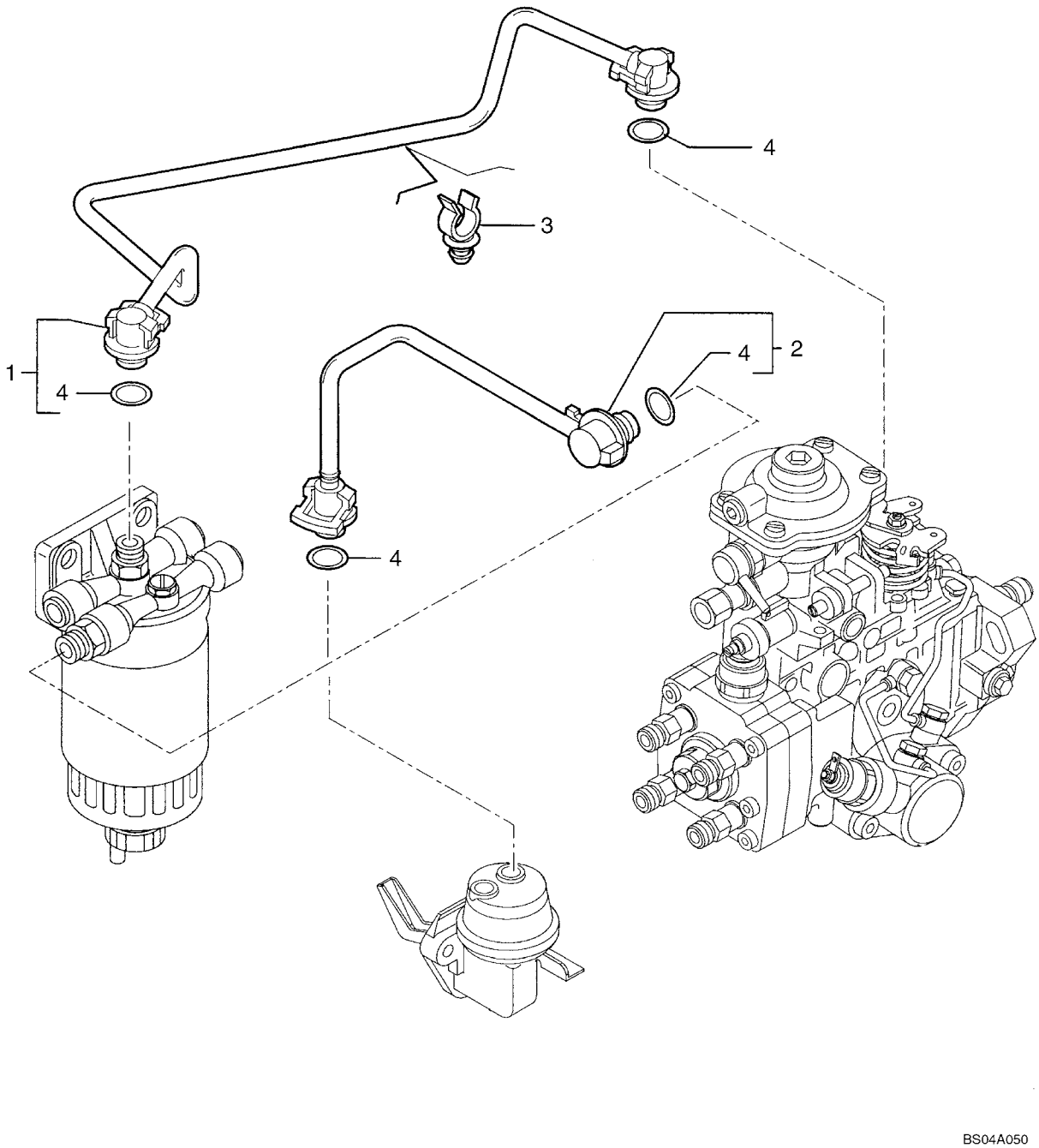

HTTP://WWW.MINNPARBACKHOEPARTS.COM



FUEL INJECTION SYSTEM

| REF | FN | PART NUMBER | YR/SN | QTY | DESCRIPTION |
|---|---|---|---|---|---|
| 1 | | 504057288 | | 1 | TUBE - ASSY; Tube |
| 2 | | 504046458 | | 1 | TUBE, RIGID - ASSY |
| 3 | | 504065285 | | 1 | CLAMP |
| 4 | | 4894095 | | 2 | O-RING |

HTTP://WWW.MINNPARBACKHOEPARTS.COM



FUEL INJECTION SYSTEM

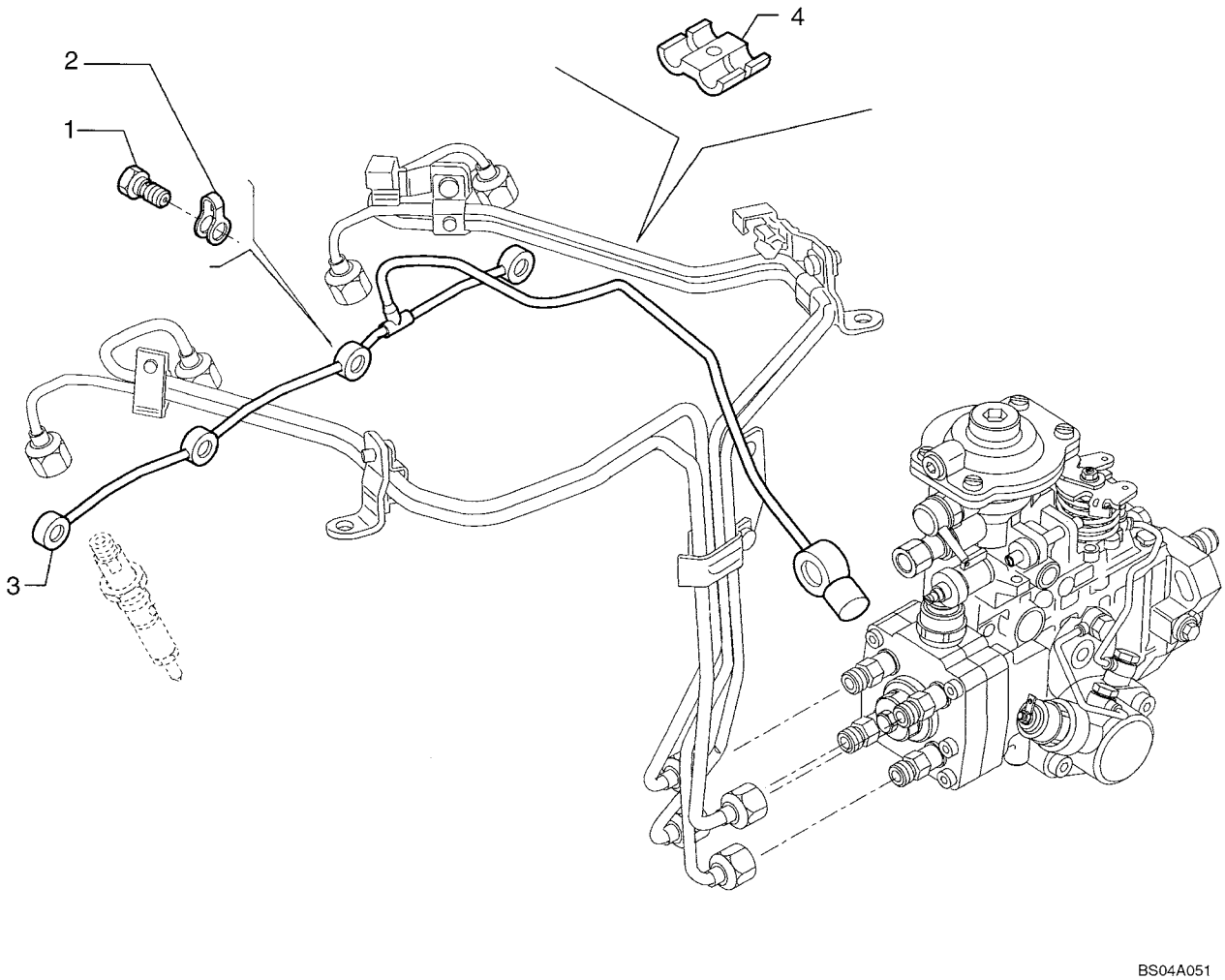

HTTP://WWW.MINNPARBACKHOEPARTS.COM



FUEL INJECTION SYSTEM

| REF | FN | PART NUMBER | YR/SN | QTY | DESCRIPTION |
|---|---|---|---|---|---|
| 1 | | 4895244 | | 4 | JACK SCREW |
| 2 | | 4895305 | | 4 | GASKET |
| 3 | | 504051276 | | 1 | TUBE, RIGID |
| 4 | | 98429625 | | 1 | CLIP, SPRING |

HTTP://WWW.MINNPARBACKHOEPARTS.COM

HTTP://WWW.MINNPARBACKHOEPARTS.COM

# SECTION INDEX


| | |
|---|---|
| 04-01 | STARTER |
| 04-02 | ALTERNATOR |
| 04-03 | STARTER MOUNTING - ALTERNATOR MOUNTING |
| 04-04 | HARNESS, ENGINE - MOUNTING AND CONNECTIONS |
| 04-05 | BATTERY CABLES (MODELS WITHOUT COLD START) |
| 04-06 | BATTERY, DUAL - COLD START |
| 04-06A | COLD START GRID HEATER |
| 04-07 | HARNESS, FRONT CONSOLE - SWITCHES |
| 04-08 | HARNESS, FRONT CONSOLE - MOUNTING |
| 04-09 | HARNESS, SIDE CONSOLE - SWITCHES |
| 04-10 | INSTRUMENT PANEL, FRONT - COVERS |
| 04-11 | INSTRUMENT PANEL, SIDE - COVERS (RIGHT-HAND SIDE) |
| 04-12 | INSTRUMENT CLUSTER |
| 04-13 | ELECTRICAL - LAMPS, ROPS CANOPY |
| 04-14 | ELECTRICAL - LAMPS, ROPS CAB |
| 04-15 | LAMP ASSY (ROPS CANOPY MODELS) |
| 04-16 | HORN - ALARM, BACKUP |
| 04-17 | BEACON, ROTATING (CAB OR CANOPY MODELS) |
| 04-18 | ANTENNA, RADIO - HARNESS, RADIO |
| 04-19 | ELECTRICAL - BACKHOE AUXILIARY HYDRAULIC, UNI-DIRECTIONAL |
| 04-20 | ELECTRICAL - BACKHOE AUXILIARY HYDRAULIC, WITH PILOT CONTROLS |

HTTP://WWW.MINNPARBACKHOEPARTS.COM

| 04-01 | | p1 | 10/03 |
|---|---|---|---|

STARTER

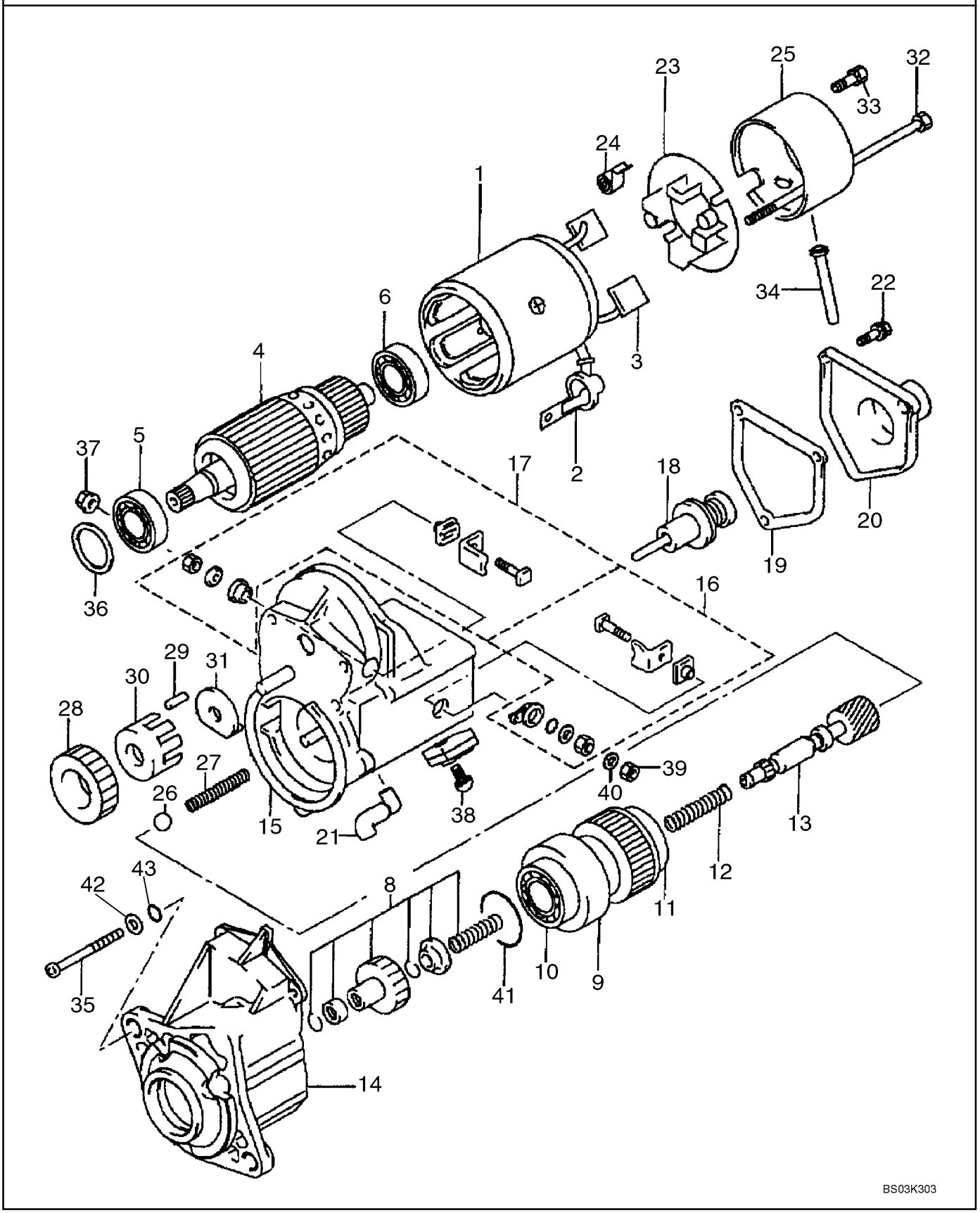

HTTP://WWW.MINNPARBACKHOEPARTS.COM



STARTER

| REF | FN | PART NUMBER | YR/SN | QTY | DESCRIPTION |
|---|---|---|---|---|---|
| | | 86992395 | | 1 | MOTOR, STARTER 12 V, 2.7 kw; Incl. Ref 1 - 43 |
| 1 | | {87438992} | | 1 | Housing, Yoke; Incl. Ref 2, 3 |
| 2 | | {87438993} | | 1 | Cover/Ring |
| 3 | | {87438925} | | 2 | Brush Kit |
| 4 | | {87438926} | | 1 | Armature; Incl. Ref 5, 6 |
| 5 | | {87438927} | | 1 | Ball Bearing, 35 mm OD |
| 6 | | {87438928} | | 1 | Ball Bearing, 30 mm OD |
| | | {87438994} | | 1 | Clutch; Incl. Ref 8 - 13 |
| 8 | | {87438929} | | 1 | Clutch Pinion Kit |
| 9 | | {87438930} | | 1 | Clutch Assembly; Incl. Ref 10, 11 |
| 10 | | {87438931} | | 1 | Ball Bearing, 47 mm OD |
| 11 | | {87438932} | | 1 | Ball Bearing, 47 mm OD |
| 12 | | {87438933} | | 1 | Compression Spring |
| 13 | | {87438935} | | 1 | Clutch Shaft |
| 14 | | {87438937} | | 1 | Housing |
| 15 | | {87438940} | | 1 | Magnetic Switch Assembly; Incl. Ref 16 - 22 |
| 16 | | {87438941} | | 1 | Kit, Terminal M |
| 17 | | {87438942} | | 1 | Kit, Terminal C |
| 18 | | {87438944} | | 1 | Plunger |
| 19 | | {87438946} | | 1 | Solenoid Switch Gasket |
| 20 | | {87438948} | | 1 | Solenoid Cover |
| 21 | | {87438995} | | 1 | Bushing, Drain |
| 22 | | {87438950} | | 3 | Bolt With Washer; M5 x 14 |
| 23 | | {87438996} | | 1 | Brush Holder; Incl. Ref 24 |
| 24 | | {87438997} | | 4 | Brush Tension Spring |
| 25 | | {87438999} | | 1 | Housing |
| 26 | | {87439000} | | 1 | Ball |
| 27 | | {87439001} | | 1 | Compression Spring |
| 28 | | {87439002} | | 1 | Pinion Gear |
| 29 | | {87439003} | | 5 | Roller, Clutch |
| 30 | | {87439004} | | 1 | Retainer |
| 31 | | {87439005} | | 1 | Snap Retainer |
| 32 | | {87438951} | | 2 | M6 x 182 Bolt |
| 33 | | {87439006} | | 2 | Bolt With Washer; M5 x 9.4 |
| 34 | | {87439007} | | 1 | Bushing, Drain |
| 35 | | {87439008} | | 3 | Adapter Screw, M6 x 70 |

HTTP://WWW.MINNPARBACKHOEPARTS.COM

| 04-01 | | p2 | 10/03 |
|---|---|---|---|

STARTER

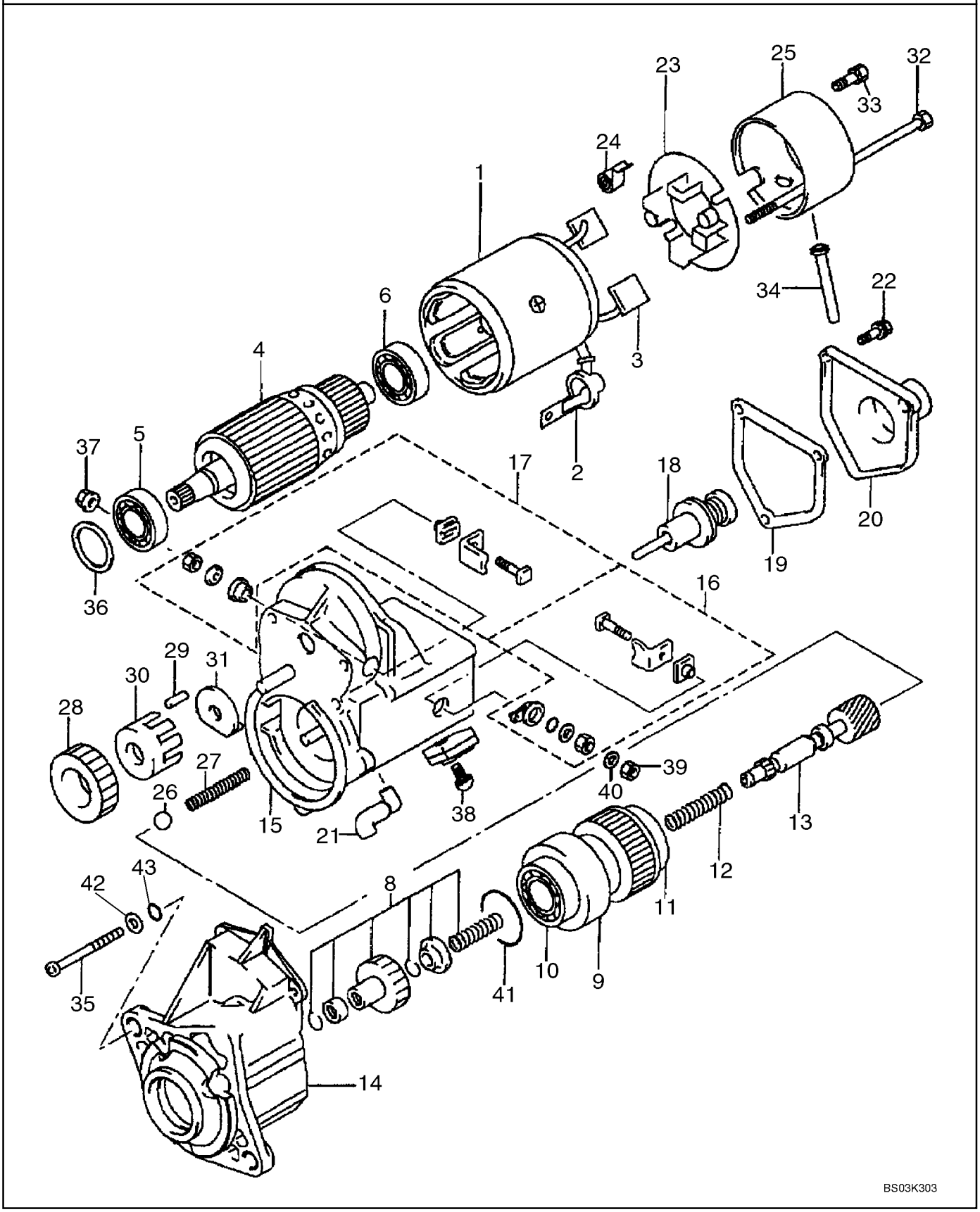

HTTP://WWW.MINNPARBACKHOEPARTS.COM



STARTER

| REF | FN | PART NUMBER | YR/SN | QTY | DESCRIPTION |
|---|---|---|---|---|---|
| 36 | | {87438954} | | 1 | Felt Washer |
| 37 | | {87439009} | | 1 | M10 Nut |
| 38 | | {87438956} | | 1 | M5 x 10 Bolt |
| 39 | | 100016 | | 1 | NUT M10 |
| 40 | | 140028 | | 1 | WASHER Lock, M10 |
| 41 | | {87439010} | | 1 | Seal |
| 42 | | {87439061} | | 3 | Washer, 9/32 x 1/2 x 3/64 |
| 43 | | {87439011} | | 3 | O-Ring, 4.8 ID |

HTTP://WWW.MINNPARBACKHOEPARTS.COM



ALTERNATOR

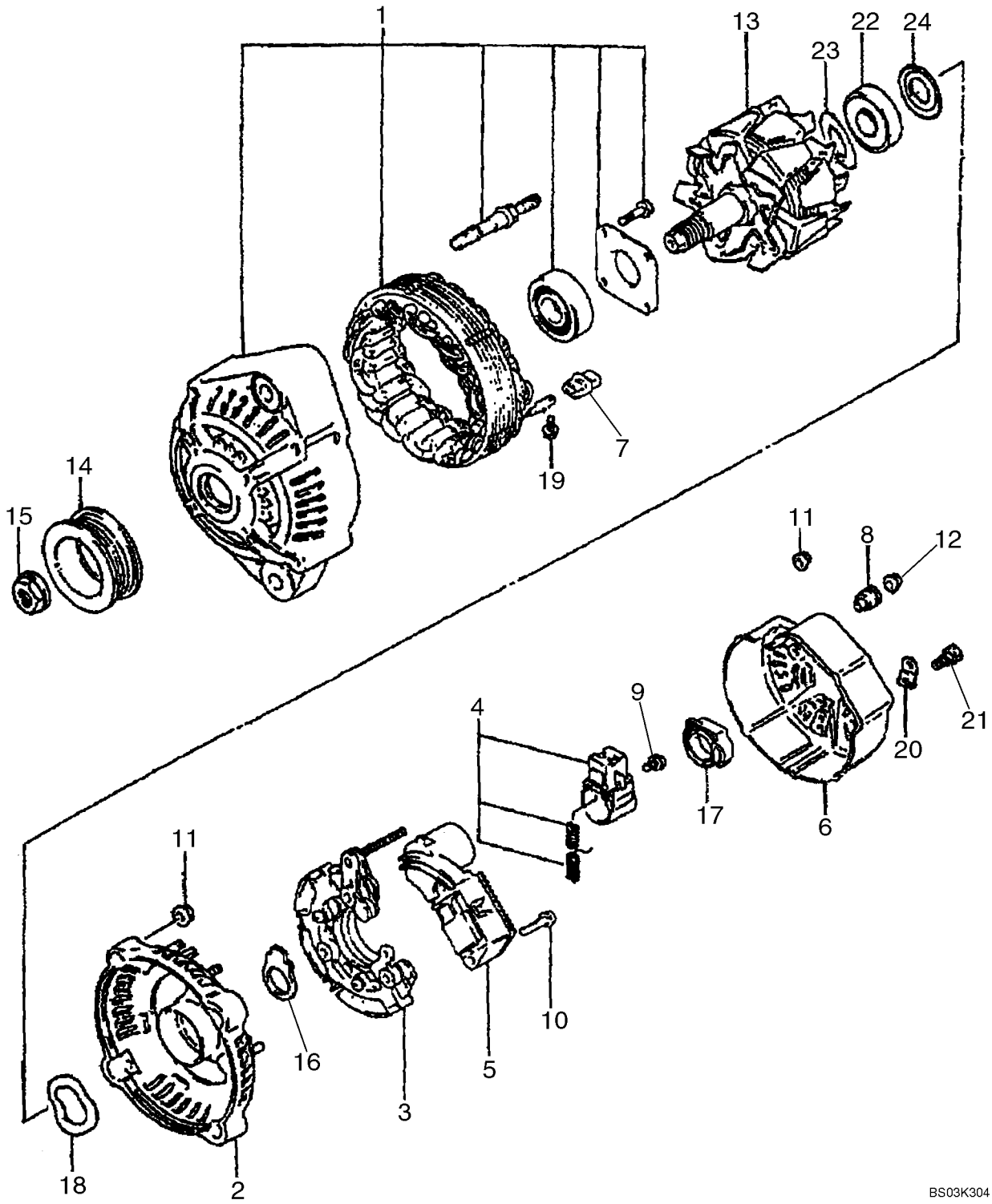

HTTP://WWW.MINNPARBACKHOEPARTS.COM



ALTERNATOR

| REF | FN | PART NUMBER | YR/SN | QTY | DESCRIPTION |
|---|---|---|---|---|---|
| | | 87422777 | | 1 | ALTERNATOR 12V, 90 amp; Incl. Ref 1 - 24 |
| 1 | | {87438960} | | 1 | Housing; Drive End, Includes Stator |
| 2 | | {87438963} | | 1 | Housing |
| 3 | | {87438965} | | 1 | Rectifier |
| 4 | | {87438967} | | 1 | Brush and Holder |
| 5 | | {87438969} | | 1 | Regulator |
| 6 | | {87438970} | | 1 | Cover |
| 7 | | {87438971} | | 4 | Insulation Bushing |
| 8 | | {87438972} | | 1 | Insulation Bushing |
| 9 | | {87438973} | | 3 | Screw |
| 10 | | {87438974} | | 2 | Bolt With Washer |
| 11 | | {87438975} | | 7 | Nut |
| 12 | | {87438976} | | 1 | Nut |
| 13 | | {87438977} | | 1 | Rotor |
| 14 | | {87438978} | | 1 | Pulley |
| 15 | | {87438979} | | 1 | Nut |
| 16 | | {87438980} | | 1 | Seal |
| 17 | | {87438981} | | 1 | Seal |
| 18 | | {87438982} | | 1 | Wave Washer |
| 19 | | {87438983} | | 4 | Bolt With Washer |
| 20 | | {87438984} | | 1 | Terminal Plate |
| 21 | | {87438985} | | 1 | Screw |
| 22 | | {87438986} | | 1 | Ball Bearing |
| 23 | | {87438987} | | 1 | Cover, Bearing |
| 24 | | {87438989} | | 1 | Cover, Bearing |

HTTP://WWW.MINNPARBACKHOEPARTS.COM

| 04-03 | | p1 | 10/03 |
|---|---|---|---|

STARTER MOUNTING - ALTERNATOR MOUNTING

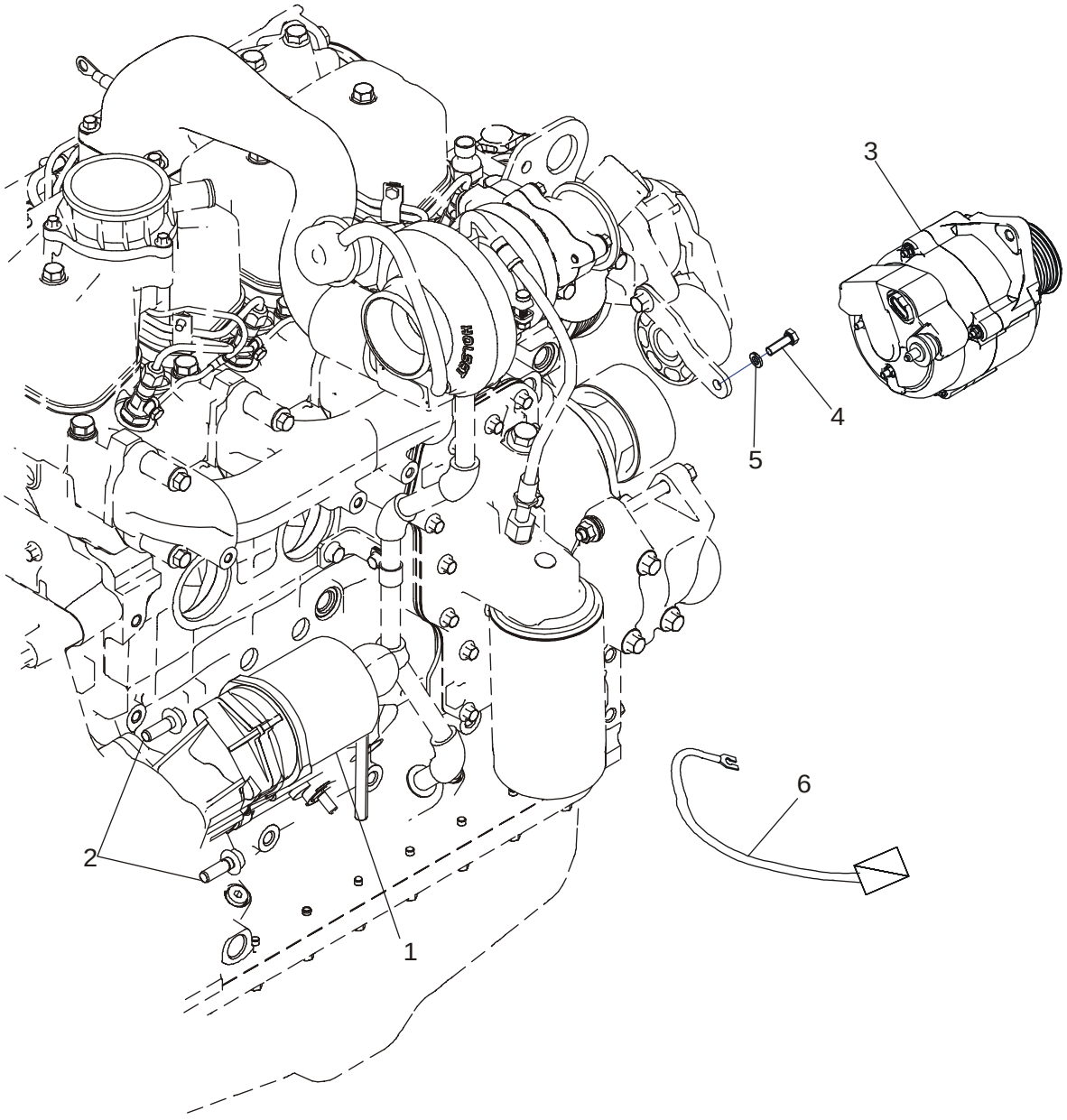

HTTP://WWW.MINNPARBACKHOEPARTS.COM



STARTER MOUNTING - ALTERNATOR MOUNTING

| REF | FN | PART NUMBER | YR/SN | QTY | DESCRIPTION |
|---|---|---|---|---|---|
| 1 | | 86992395 | | 1 | MOTOR, STARTER See Figure 04-01 |
| 2 | | 844-10035 | | 2 | SCREW M10 x 35 |
| 3 | | 87422777 | | 1 | ALTERNATOR See Figure 04-02; Mounting Hardware Included With Engine Assembly |
| 4 | | 614-8025 | | 1 | SCREW M8 x 25 |
| 5 | | 892-11008 | | 1 | WASHER Lock, M8 |
| 6 | | 87433401 | | 1 | CABLE, ELECTRIC Starter Solenoid Jumper Cable |

HTTP://WWW.MINNPARBACKHOEPARTS.COM

| 04-04 | | p1 | 01/04 |
|---|---|---|---|

HARNESS, ENGINE - MOUNTING AND CONNECTIONS

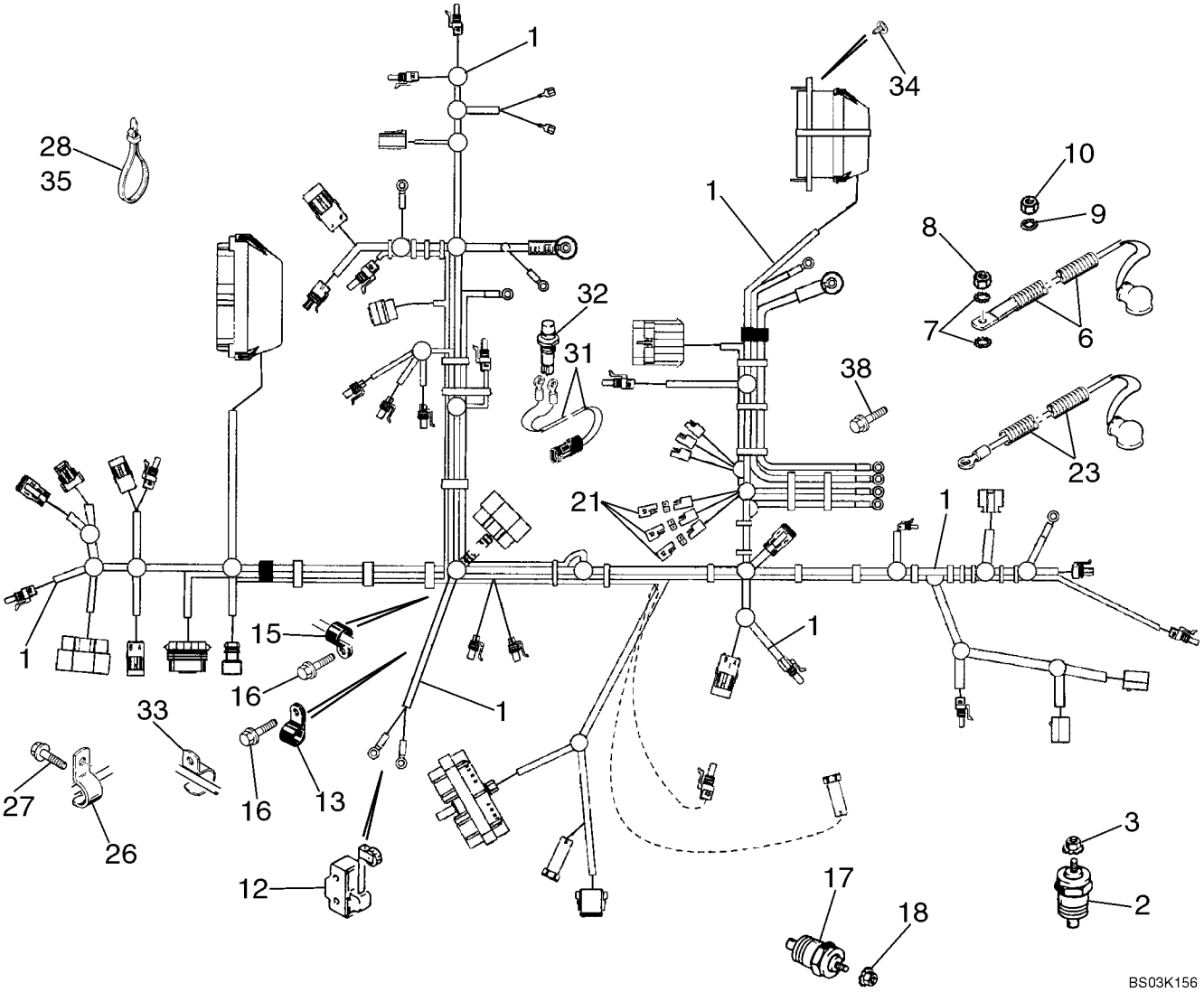

HTTP://WWW.MINNPARBACKHOEPARTS.COM



HARNESS, ENGINE - MOUNTING AND CONNECTIONS

| REF | FN | PART NUMBER | YR/SN | QTY | DESCRIPTION |
|---|---|---|---|---|---|
| 1 | | 87433543 | | 1 | HARNESS, WIRE Engine, Main Chassis, Includes (3) L71879 Diodes |
| 2 | | A166057 | | 1 | PROBE Engine Water Coolant Temperature |
| 3 | | 193-1000 | | 1 | NUT No. 10 NF; With External Tooth Lock Washer |
| 6 | | 87423926 | | 1 | HARNESS, WIRE Alternator Cable |
| 7 | | 493-21033 | | 2 | WASHER, LOCK 5/16 |
| 8 | | 829-1408 | | 1 | NUT M8; 10 |
| 9 | | 493-21020 | | 1 | WASHER, LOCK 3/16 |
| 10 | | 824-1405 | | 1 | NUT M5 |
| 12 | | D137363 | | 1 | SWITCH Return To Dig; For Mounting; See Figure 09-04 |
| 13 | | 515-23127 | | 1 | CLAMP 1/2 ID |
| 15 | | 515-23127 | | 1 | CLAMP 1/2 ID |
| 16 | | 844-10020 | | 2 | SCREW M10 x 20 |
| 17 | | A166057 | | 1 | PROBE Transmission Temperature |
| 18 | | 193-1000 | | 1 | NUT No. 10 NF; With External Tooth Lock Washer |
| 21 | | L71879 | | 3 | DIODE |
| 23 | | 87419229 | | 1 | HARNESS, WIRE Power Wire |
| 26 | | 87032428 | | 1 | CLAMP, WIRE J-Clip For Brake Cable Bracket, See Figure 07-06 |
| 27 | | 814-10060 | | 1 | SCREW M10 x 60 |
| 28 | | L18337 | | 32 | STRAP 15 in |
| 31 | | 123809A2 | | 1 | HARNESS Clutch Cutout; Transmission Gear Shift Lever; Incl. Ref 31A, 31B |
| 31A | | 246526A1 | | 1 | CONNECTOR Not Illustrated |
| 31B | | NSS | | 2 | NOT SERVICED SEPARATELY Eye; Not Illustrated |
| 32 | | 123097A1 | | 1 | SWITCH Push Button; Clutch Cutout; Transmission Gear Shift Lever; For Lever and Knob, See Figure 06-11 |
| 33 | | D147383 | | 1 | CLIP Use Existing Hardware |
| 34 | | 781-24613 | | 4 | SCREW M6 x 13 |
| 35 | | 305342A1 | | 1 | STRAP 450 mm (18 in); Air Filter Restriction Branch to Air Filter Inlet Tube |
| 38 | | 844-10020 | | 1 | SCREW M10 x 20; Ground to Firewall |

HTTP://WWW.MINNPARBACKHOEPARTS.COM

| 04-05 | | p1 | 12/03 |
|---|---|---|---|

BATTERY CABLES (MODELS WITHOUT COLD START)

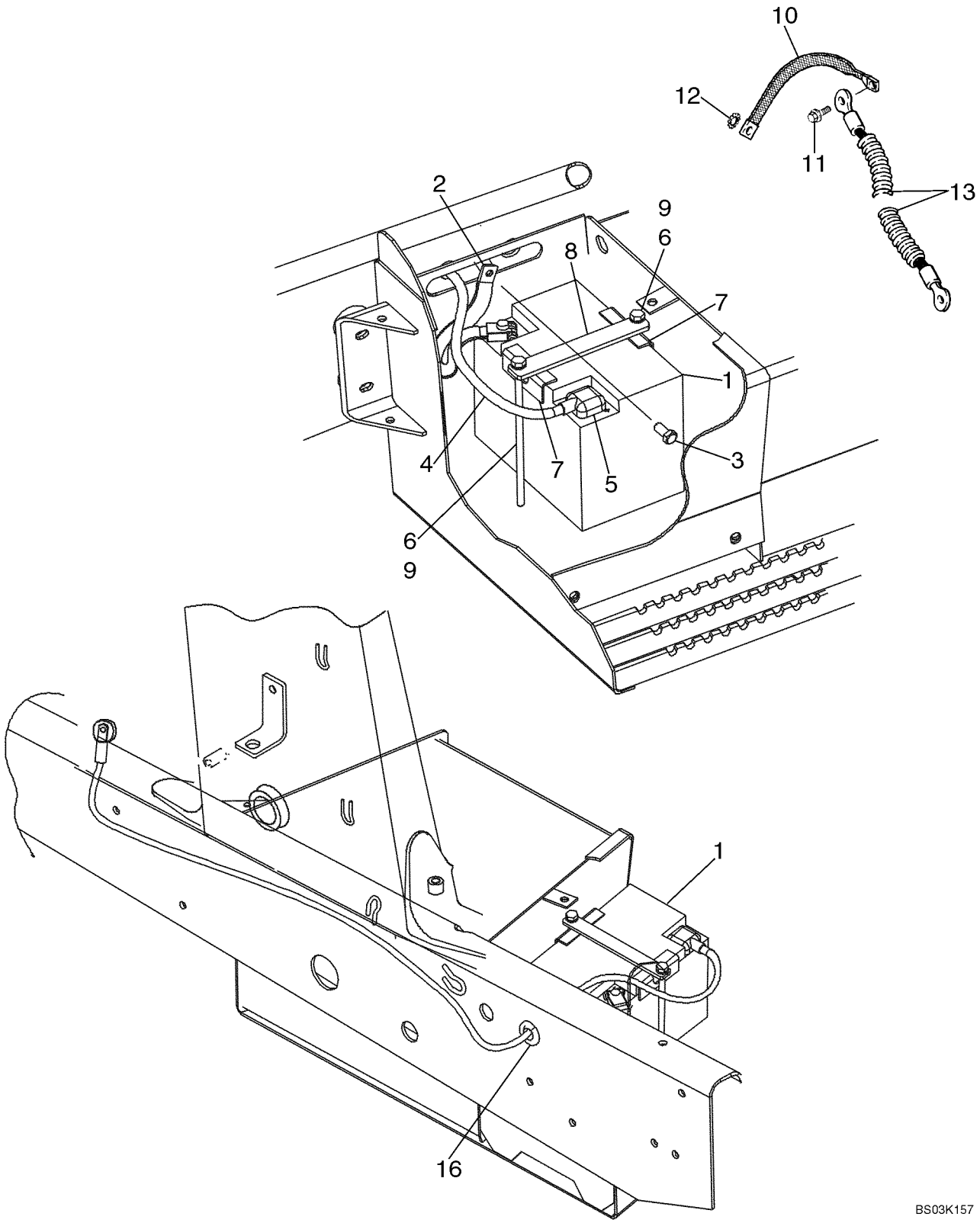

HTTP://WWW.MINNPARBACKHOEPARTS.COM



BATTERY CABLES (MODELS WITHOUT COLD START)

| REF | FN | PART NUMBER | YR/SN | QTY | DESCRIPTION |
|---|---|---|---|---|---|
| 1 | | 87403835 | | 1 | BATTERY, WET 12V; Models Without Cold Start; Used In Production, For Service Order B4960W Through Ship Direct |
| 2 | | 87419259 | | 1 | CABLE, BATTERY (NEG) 350 mm; Negative Ground |
| 3 | | 844-10020 | | 1 | SCREW M10 x 20; Negative Battery Cable Ground; Bolt To Chassis |
| 4 | | 87419257 | | 1 | CABLE, ELECTRIC 1550 mm; Positive; Incl. Ref 5; Battery to Starter |
| 5 | | 383619R1 | | 1 | COVER |
| 6 | | 814-10220 | | 2 | SCREW M10 x 220 mm |
| 7 | | D125079 | | 2 | BRACKET Battery Hold-Down |
| 8 | | 87415781 | | 1 | BRACKET Plate |
| 9 | | 495-11041 | | 2 | WASHER 13/32 x 13/16 x 1/16 |
| 10 | | 87407206 | | 2 | CABLE 330 mm; Ground Strap to Chassis |
| 11 | | 844-10020 | | 1 | SCREW M10 x 20 |
| 12 | | 493-11039 | | 1 | WASHER 3/8; Internal External Tooth Lock Washer |
| 13 | | 381261A1 | | 1 | WIRE Ground; Cab to Chassis |
| 16 | | 87423677 | | 2 | GROMMET Battery Cable Grommet; Mounts In Chassis Side Channel |

HTTP://WWW.MINNPARBACKHOEPARTS.COM

| 04-06 | | p1 | 10/03 |
|---|---|---|---|

BATTERY, DUAL - COLD START

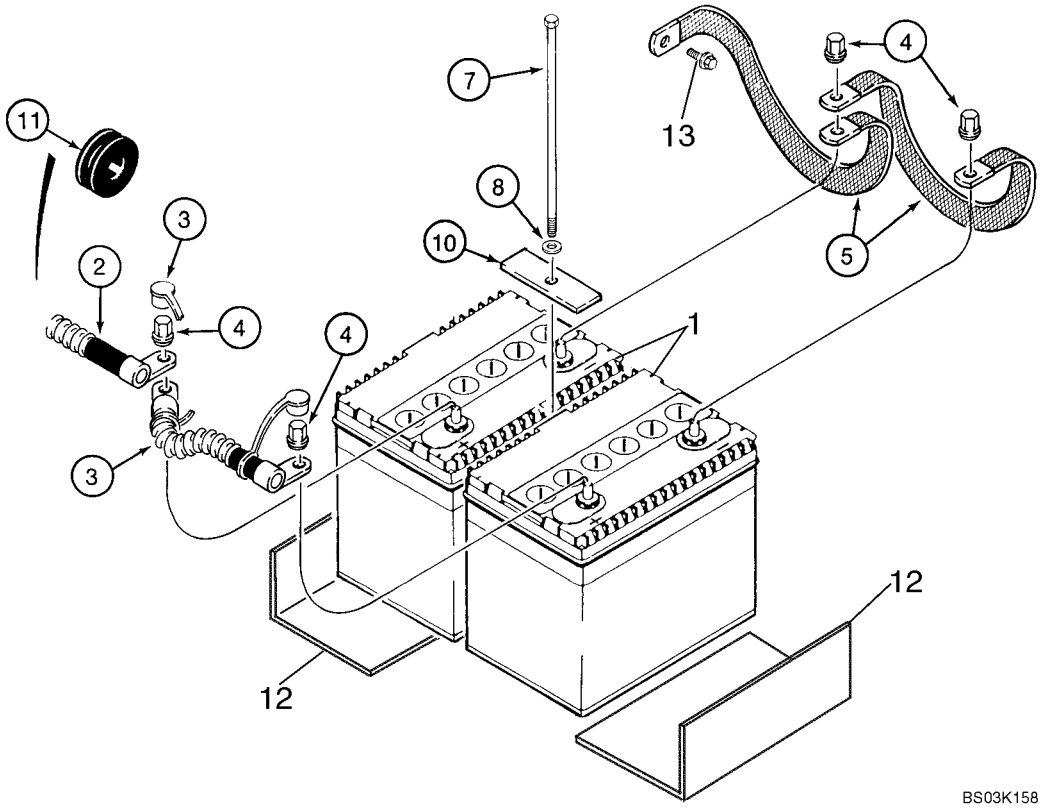

HTTP://WWW.MINNPARBACKHOEPARTS.COM



BATTERY, DUAL - COLD START

| REF | FN | PART NUMBER | YR/SN | QTY | DESCRIPTION |
|---|---|---|---|---|---|
| 1 | | BMF28S | | 2 | BATTERY, DRY 12V |
| 2 | | 87423675 | | 1 | CABLE, ELECTRIC 1460 mm, Positive Cable; Chassis |
| 3 | | 184497A1 | | 1 | CABLE 227 mm, Positive Jumper |
| 4 | | D126409 | | 4 | NUT 3/8 |
| 5 | | 87423676 | | 2 | CABLE, BATTERY (NEG) 324 mm Flat Ground Strap |
| 7 | | 814-10245 | | 1 | BOLT M10 x 245 mm |
| 8 | | 495-11041 | | 1 | WASHER 13/32 x 13/16 x 1/16 |
| 10 | | 250854A1 | | 1 | STRAP |
| 11 | | 87423677 | | 2 | GROMMET Battery Cable Grommet; Mounts In Chassis Side Channel |
| 12 | | 408535A1 | | 2 | PLATE 255 mm (10-1/32 in); Battery Support |
| 13 | | 844-10020 | | 1 | SCREW Flange, M10 x 20 |

HTTP://WWW.MINNPARBACKHOEPARTS.COM

| 04-06A | | p1 | 10/03 |
|---|---|---|---|

COLD START GRID HEATER

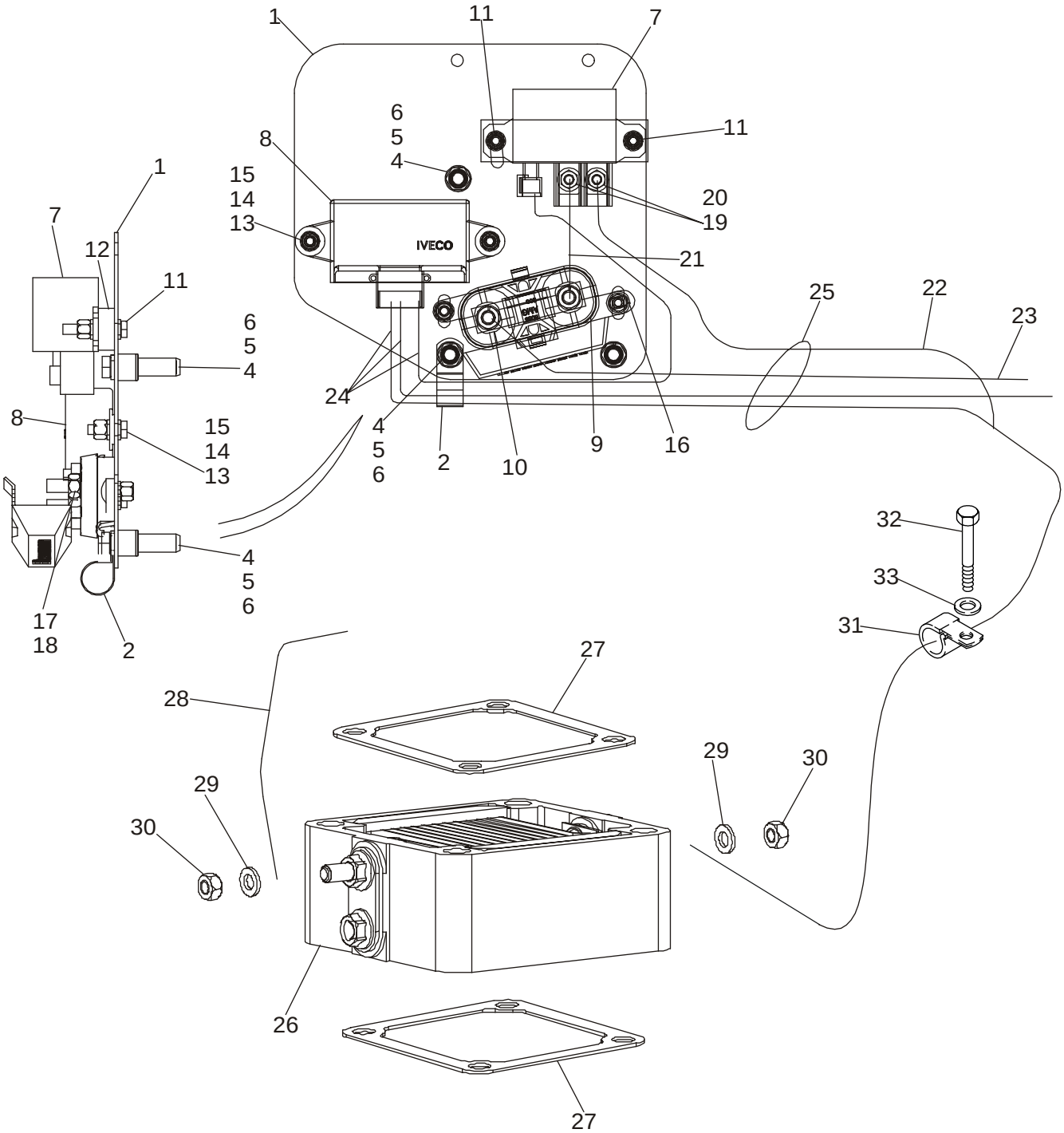

HTTP://WWW.MINNPARBACKHOEPARTS.COM



COLD START GRID HEATER

| REF | FN | PART NUMBER | YR/SN | QTY | DESCRIPTION |
|---|---|---|---|---|---|
| 1 | | 87410603 | | 1 | PLATE Cold Start Plate |
| 2 | | 515-22190 | | 1 | CLAMP |
| 3 | | 614-8040 | | 3 | SCREW M8 x 40 |
| 4 | | 407962A1 | | 3 | SPACER |
| 5 | | 238-5011 | | 3 | O-RING 1/16 x 5/16 |
| 6 | | 87417383 | | 3 | INSERT, THREADED M8 x 1-1/4 |
| 7 | | 86619908 | | 1 | RELAY Cold Start Relay |
| 8 | | 87409046 | | 1 | ELECTRONIC UNIT, CONTROL Controller, Grid Heater |
| 9 | | 440038A1 | | 1 | JUNCTION Fuse Block |
| 10 | | 87410602 | | 1 | FUSE 300 amp Fuse |
| 11 | | 614-6035 | | 2 | SCREW M6 x 35 |
| 12 | | 87414237 | | 1 | PLATE 10 mm Thick Spacer Bar |
| 13 | | 614-6020 | | 3 | BOLT M6 x 20 |
| 14 | | 895-11006 | | 11 | WASHER Flat, 6,6 x 12 x 1,6 mm |
| 15 | | 832-10406 | | 6 | NUT M6 |
| 16 | | 811-6016 | | 1 | SCREW Round Head, M6 x 16 |
| 17 | | 892-11008 | | 5 | WASHER Lock, M8 |
| 18 | | 829-1408 | | 2 | NUT M8 |
| 19 | | 322357 | | 2 | WASHER, LOCK |
| 20 | | 829-1406 | | 2 | NUT M6 |
| 21 | | 87410265 | | 1 | CABLE, GROUND 90 mm Jumper Wire; Fuse to Relay |
| 22 | | 87419616 | | 1 | CABLE ASSY. 500 mm Wire; Relay to Grid Heater |
| 23 | | 87419615 | | 1 | CABLE ASSY. 1250 mm Wire; Starter to Fuse Block |
| 24 | | 87433544 | | 1 | HARNESS, WIRE Controller Harness, Cold Start Control; Attaches to Engine Harness |
| 25 | | D150521 | | 1 | CLAMP 292 mm Long Nylon Tie Strap |
| 26 | | 82017872 | | 1 | HEATER Grid |
| 27 | | 86014151 | | 2 | GASKET |
| 28 | | 87413162 | | 1 | CABLE, GROUND 150 mm Ground Wire |
| 29 | | 895-11006 | | 2 | WASHER Flat, 6,6 x 12 x 1,6 mm |
| 30 | | 829-1406 | | 2 | NUT M6 |
| 31 | | 515-25190 | | 1 | CLAMP |
| 32 | | 614-12025 | | 1 | SCREW M12 x 25 |
| 33 | | 896-11012 | | 1 | WASHER |

HTTP://WWW.MINNPARBACKHOEPARTS.COM

| 04-07 | | p1 | 01/04 |
|---|---|---|---|

HARNESS, FRONT CONSOLE - SWITCHES

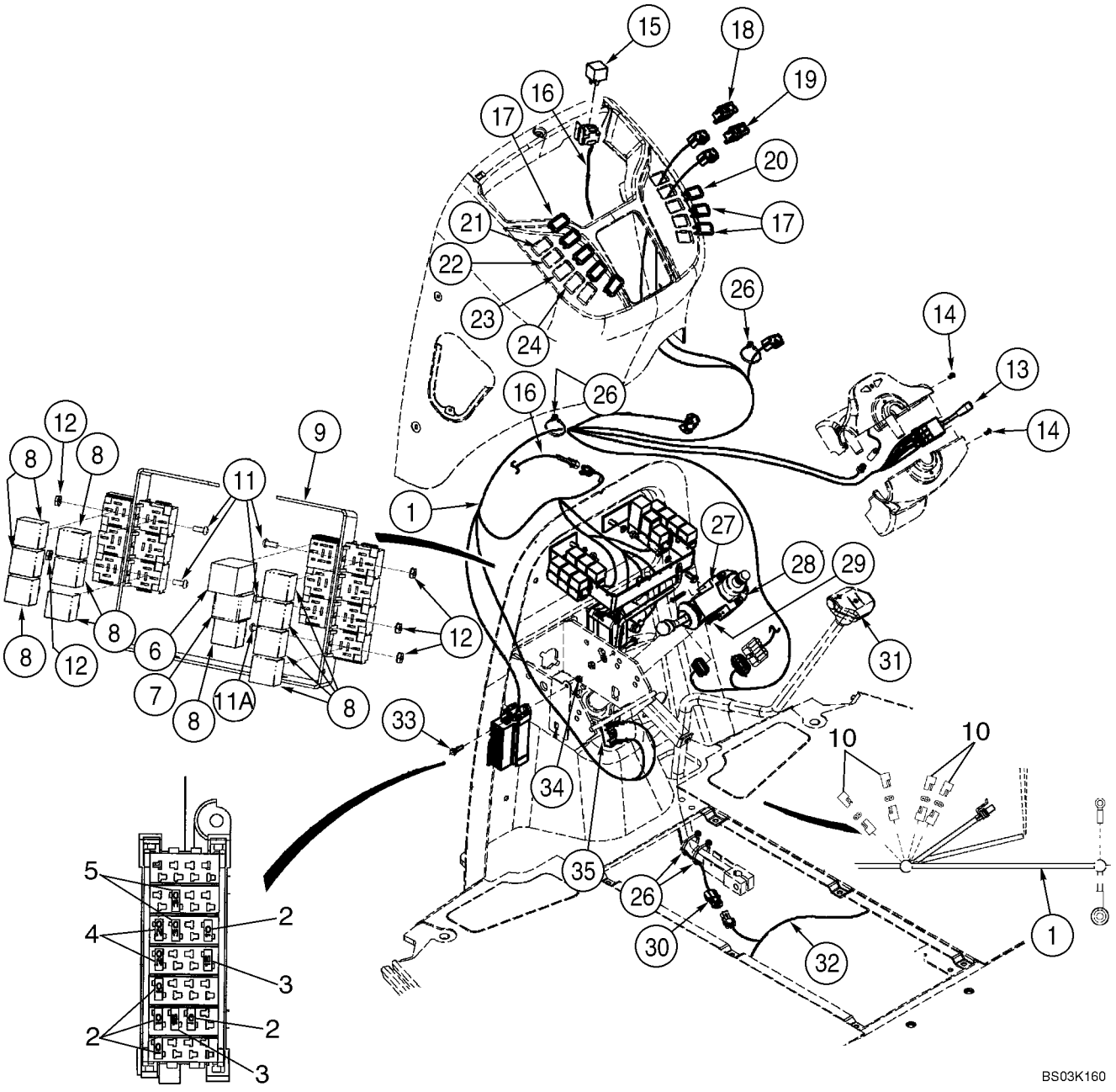

HTTP://WWW.MINNPARBACKHOEPARTS.COM



HARNESS, FRONT CONSOLE - SWITCHES

| REF | FN | PART NUMBER | YR/SN | QTY | DESCRIPTION |
|---|---|---|---|---|---|
| 1 | | 87418541 | | 1 | HARNESS, WIRE Front Console Harness, Incl. Ref 13 |
| 2 | | 121412A1 | | 5-6 | FUSE 10 amp; Mini, Red |
| 3 | | 121413A1 | | 2-3 | FUSE 15 amp; Mini, Blue |
| 4 | | 121414A1 | | 2 | FUSE 20 amp; Mini, Yellow |
| 5 | | 121416A1 | | 2 | FUSE 30 amp; Mini, Green |
| 6 | | D147166 | | 1 | UNIT, FLASHER Relay, Flasher, Hazard; Turn Signal |
| 7 | | 347706A3 | | 1 | RELAY Sealed Time Delay, Shuttle Interlock Timing Relay, Forward Reverse Control |
| 8 | | 87436836 | | 11 | RELAY 40 amp, 12V |
| 9 | | 361900A1 | | 1 | BRACKET Relay Mounting |
| 10 | | L71879 | | 4 | DIODE |
| 11 | | 490-1108 | | 6 | SCREW No. 10 NF x 1/2 |
| 11A | | 490-1106 | | 1 | SCREW No 10 x 3/8 |
| 12 | | 193-1000 | | 7 | NUT No. 10 NF; With External Tooth Lock Washer |
| 13 | | 389487A1 | | 1 | SWITCH, DIP Turn Signal/Driving Lamp High/Low Beam |
| 14 | | 404816A1 | | 2 | SCREW M4 x 12 |
| 15 | | 87436836 | | 1 | RELAY 40 amp, 12V; Air Conditioning; Attaches To Front Console Options Harness |
| 16 | | 87433546 | | 1 | HARNESS, WIRE Front Console Options; Includes (1) L71879 Diode |
| | | L71879 | | 1 | DIODE |
| | | 490-1108 | | 1 | SCREW No. 10 NF x 1/2; Mounts Relay Recepticle |
| | | 193-1000 | | 1 | NUT No. 10 NF; Mounts Relay Recepticle |
| 17 | | 126844A1 | | 2-8 | PLUG Accessory; If Used |
| 18 | | 386849A1 | | 1 | SWITCH Front Work Lamps |
| 19 | | 386850A1 | | 1 | SWITCH Hazard Lamps |
| 20 | | 386851A1 | | 1 | SWITCH Rotating Beacon; If Used |
| 21 | | 126844A1 | | 1 | PLUG If Used |
| 22 | | 386785A1 | | 1 | SWITCH Front Wiper; If Used |
| 23 | | 386787A1 | | 1 | SWITCH Front Windshield Washer; If Used |
| 24 | | 398675A2 | | 1 | SWITCH Loader Tool Quick Coupler; If Used |
| 26 | | L18337 | | 4 | STRAP 15 in |

HTTP://WWW.MINNPARBACKHOEPARTS.COM



HARNESS, FRONT CONSOLE - SWITCHES

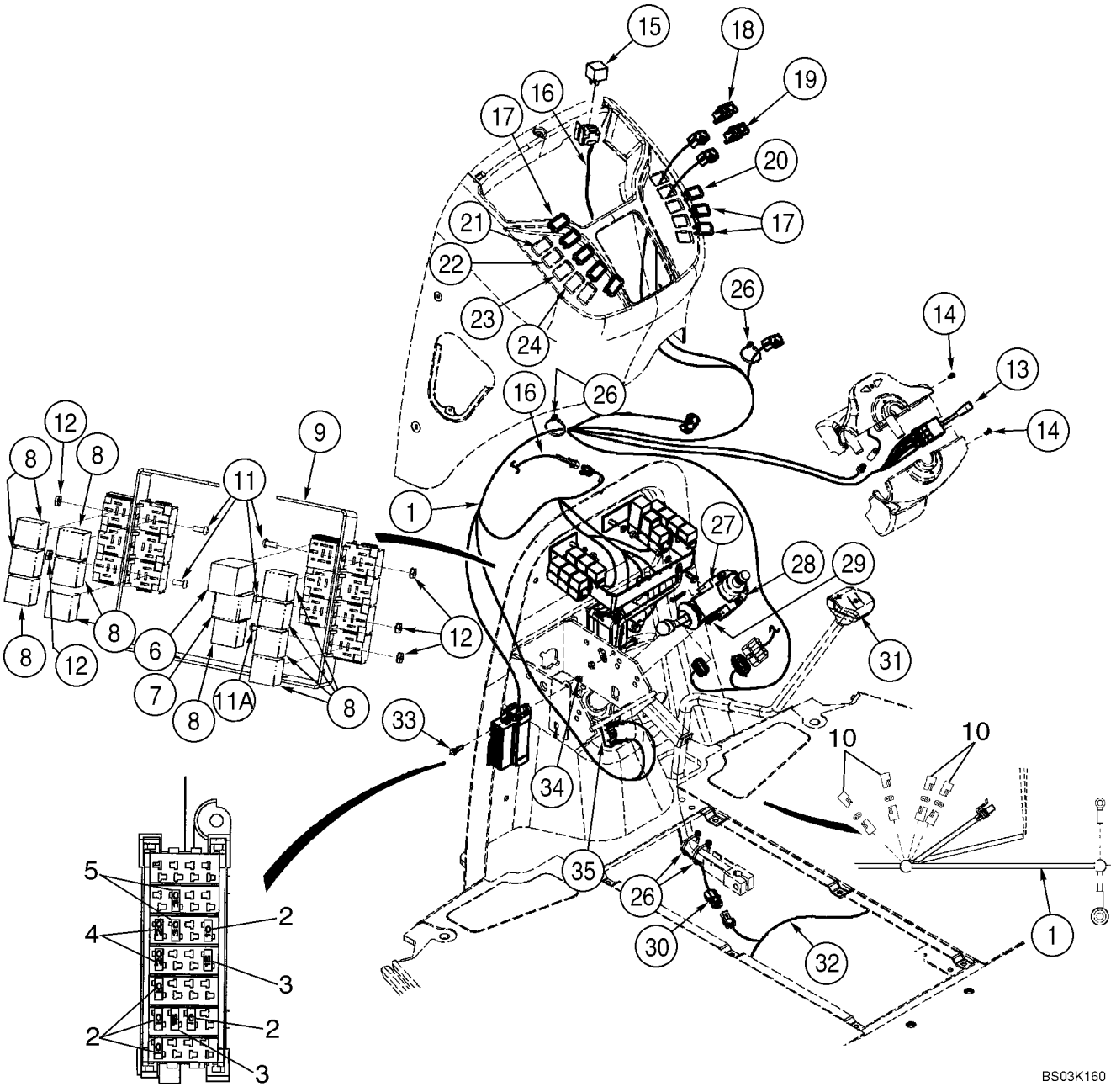

HTTP://WWW.MINNPARBACKHOEPARTS.COM



HARNESS, FRONT CONSOLE - SWITCHES

| REF | FN | PART NUMBER | YR/SN | QTY | DESCRIPTION |
|---|---|---|---|---|---|
| 27 | | 278328A1 | | 1 | SWITCH Shuttle Shift; Transmission Forward/Neutral/Reverse Switch |
| 28 | | 366889A2 | | 1 | HALF COLLAR Shuttle Lever; Includes Threaded Insert |
| 29 | | 397990A1 | | 2 | SCREW M5 x 35 |
| 30 | | 123809A2 | | 1 | HARNESS Clutch Cutout; Transmission Gear Shift Lever; For Lever, See Figure 06-11 |
| 31 | | 123097A1 | | 1 | SWITCH Clutch Cutout; For Lever and Knob, See Figure 06-11 |
| 32 | | 87433543 | | 1 | HARNESS, WIRE Engine Harness, Main Chassis, Includes (3) L71879 Diodes |
| | | L71879 | | 3 | DIODE |
| 33 | | 844-6025 | | 1 | SCREW M6 x 25 |
| 34 | | 832-10406 | | 1 | NUT M6 |
| 35 | | D148108 | | 1 | SWITCH Brake Lamp; Includes Hardware; For Mounting, See Figure 07-03 |
| | | 87436675 | | 1 | HARNESS, WIRE Chassis Options; Includes (4) L71879 Diodes |
| | | L71879 | | 4 | DIODE |

HTTP://WWW.MINNPARBACKHOEPARTS.COM

| 04-08 | | p1 | 10/03 |
|---|---|---|---|

HARNESS, FRONT CONSOLE - MOUNTING

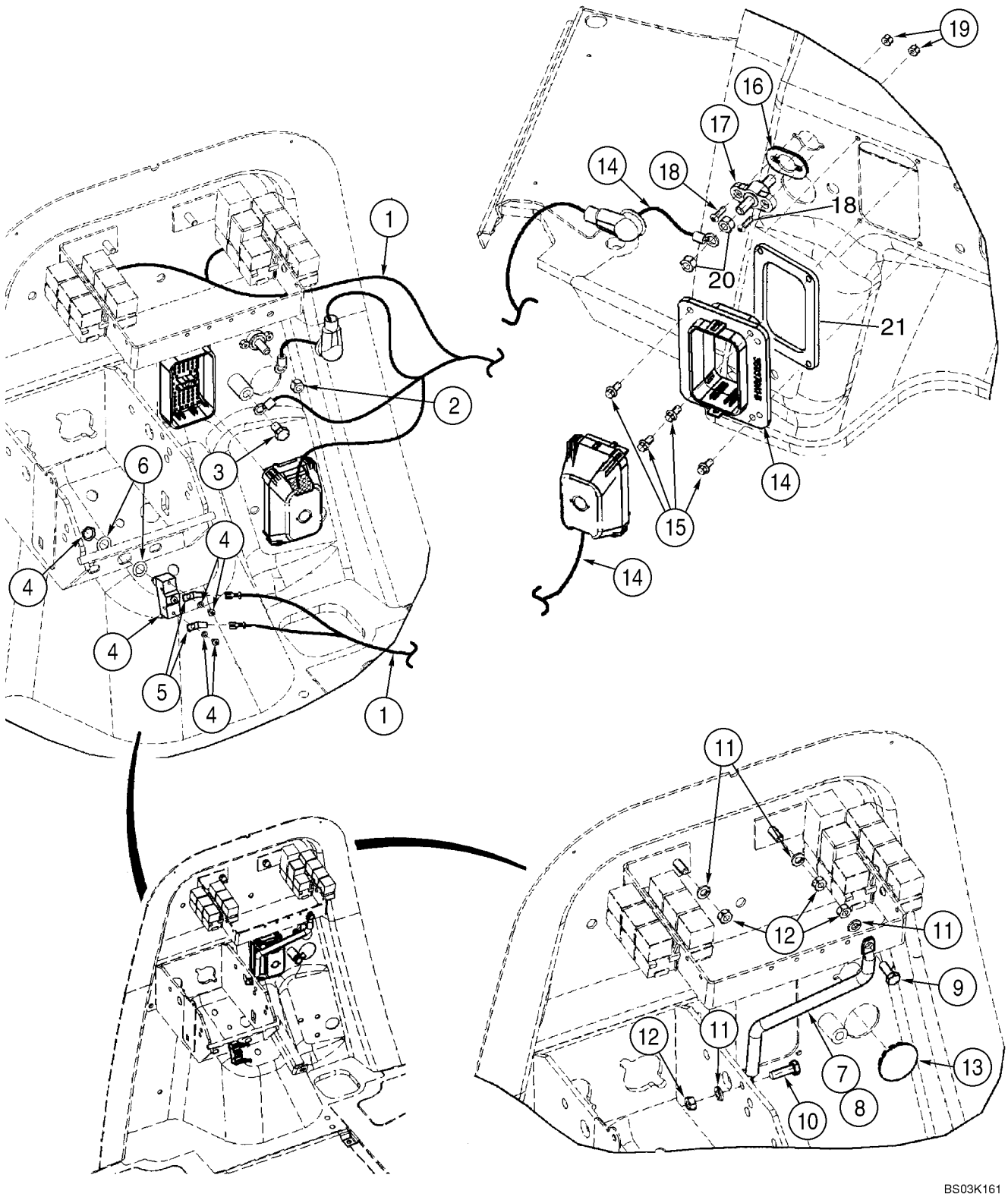

HTTP://WWW.MINNPARBACKHOEPARTS.COM



HARNESS, FRONT CONSOLE - MOUNTING

| REF | FN | PART NUMBER | YR/SN | QTY | DESCRIPTION |
|---|---|---|---|---|---|
| 1 | | 87418541 | | 1 | HARNESS, WIRE Front Console Harness; Mounts To Front Firewall |
| 2 | | 425-106 | | 1 | NUT 3/8 |
| 3 | | 128312A1 | | 1 | BOLT M10 x 15; Mounts To Front Firewall |
| 4 | | D148108 | | 1 | SWITCH Brake Lamp; Includes Hardware |
| 5 | | A187990 | | 2 | TERMINAL CONNECTOR Male |
| 6 | | 495-81153 | | 2 | WASHER 15/32 x 3/4 x 1/32 |
| 7 | | 362930A2 | | 1 | BRACE Relay Mounting |
| 8 | | 392353A1 | | 1 | CONDUIT |
| 9 | | 614-8020 | | 1 | SCREW M8 x 20 |
| 10 | | 614-8025 | | 1 | SCREW M8 x 25 |
| 11 | | 892-11008 | | 4 | WASHER M8 |
| 12 | | 829-1408 | | 4 | NUT M8; 10 |
| 13 | | 397876A1 | | 1 | PLUG 1-5/8 in, Button |
| 14 | | 87433543 | | 1 | HARNESS, WIRE Engine Harness, Main Chassis; Mounts Behind Front Firewall; Includes (3) L71879 Diodes |
| | | L71879 | | 3 | DIODE |
| 15 | | 781-24613 | | 4 | SCREW Flange, M6 x 13 |
| 16 | | 357966A1 | | 1 | GASKET |
| 17 | | 357278A1 | | 1 | JUNCTION BLOCK Positive Battery |
| 18 | | 490-11012 | | 2 | SCREW No. 10 NF x 3/4 |
| 19 | | 231-24409 | | 2 | NUT, LOCK No. 10 |
| 20 | | 425-106 | | 2 | NUT 3/8 |
| 21 | | 414174A1 | | 1 | GASKET |

HTTP://WWW.MINNPARBACKHOEPARTS.COM



HARNESS, SIDE CONSOLE - SWITCHES

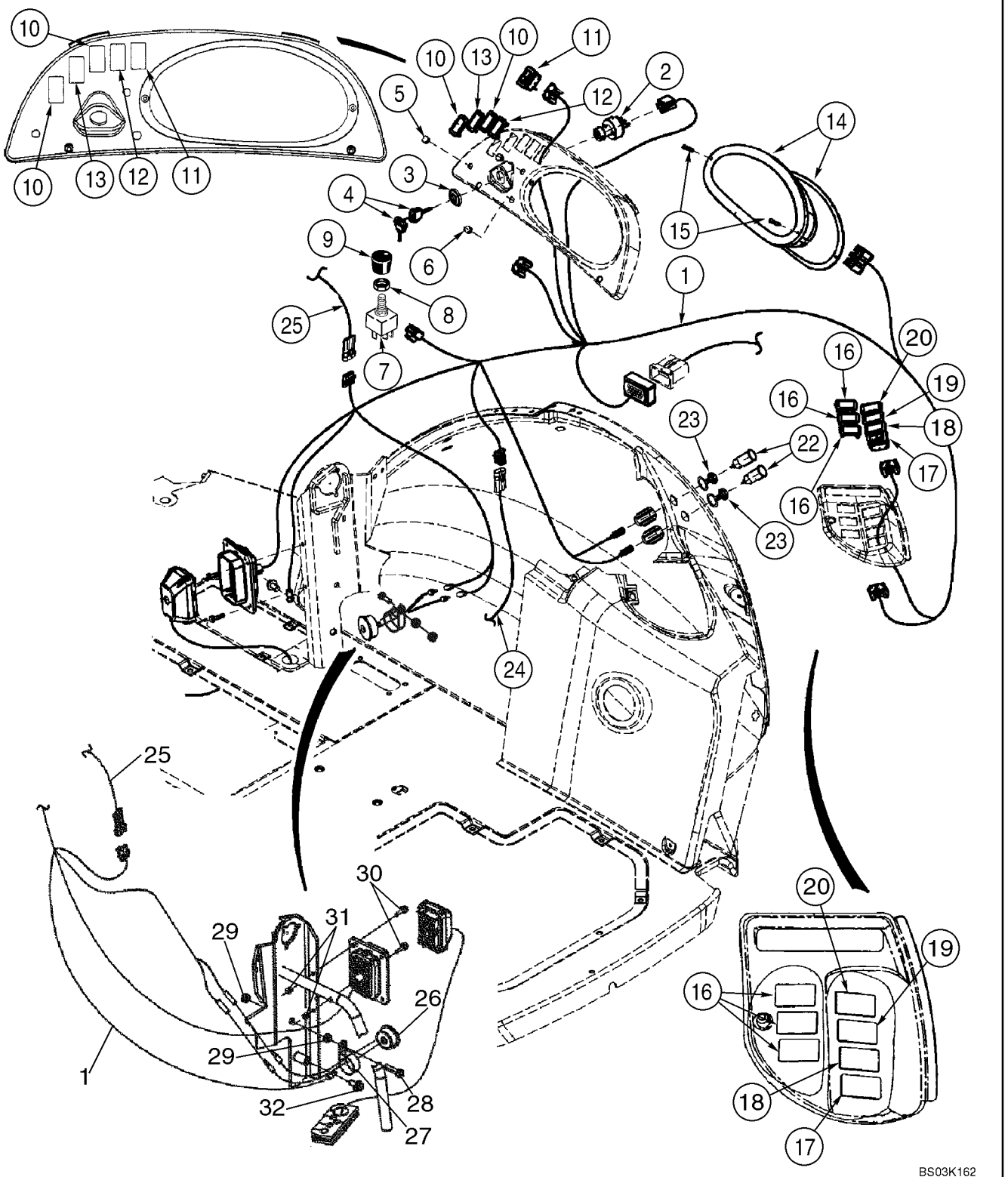

HTTP://WWW.MINNPARBACKHOEPARTS.COM



HARNESS, SIDE CONSOLE - SWITCHES

| REF | FN | PART NUMBER | YR/SN | QTY | DESCRIPTION |
|---|---|---|---|---|---|
| 1 | | 87418542 | | 1 | HARNESS, WIRE Side Console Harness |
| | | 282775A1 | | 1 | SWITCH, IGNITION Incl. Ref 2 - 4 |
| 2 | | NSS | | 1 | NOT SERVICED SEPARATELY Switch, Without Keys |
| 3 | | NSS | | 1 | NOT SERVICED SEPARATELY Nut |
| 4 | | NSS | | 1 | NOT SERVICED SEPARATELY Key, Ignition; Set Of Two; Padded |
| 5 | | 397569A1 | | 2 | PLUG 7/16 in, Dome, If Used; For Air Conditioning Switch and Knob; See Figure 09-65 |
| 6 | | 397570A1 | | 1 | PLUG 1/2 in, Dome, If Used; For Heater Switch and Knob; See Figure 09-64 |
| 7 | | 245258A1 | | 1 | SWITCH Blower |
| | | 121415A1 | | 1 | FUSE 25 amp, Blower And Wiper |
| 8 | | A42561 | | 1 | NUT |
| 9 | | 400379A1 | | 1 | KNOB |
| 10 | | 126844A1 | | 1-4 | PLUG If Used |
| 11 | | 133715A1 | | 1 | SWITCH Rear Work Lamps |
| 12 | | 235002A1 | | 1 | SWITCH Ride Control, If Used |
| 13 | | 133716A1 | | 1 | SWITCH Four Wheel Drive, If Used |
| | | 121412A1 | | 1 | FUSE 10 amp; Four Wheel Drive |
| 14 | | 87419320 | | 1 | INSTRUMENT CLUSTER See Figure 04-12 |
| 15 | | 140-119 | | 2 | SCREW No. 10 x 1-1/4 |
| 16 | | 126844A1 | | 1-6 | PLUG If Used |
| 17 | | 386852A2 | | 1 | SWITCH Horn |
| 18 | | 386788A1 | | 1 | SWITCH Rear Window Washer, If Used |
| 19 | | 386786A1 | | 1 | SWITCH Rear Wiper, If Used |
| 20 | | 126844A1 | | 1 | PLUG If Used |
| 22 | | 283779A1 | | 2 | OUTLET Power Plug Outlet, 30 amp Maximum |
| 23 | | 283781A1 | | 2 | CAP Power Plug Outlet |
| 25 | | NSS | | 1 | NOT SERVICED SEPARATELY Harness, Loader Control Lever; Included In Loader Control Lever Handle |
| 26 | | D137468 | | 1 | BUZZER Engine Water Temperature, Engine Oil Pressure and Parking Brake |
| 27 | | 515-23444 | | 1 | CLAMP 1-3/4 |
| 28 | | 614-10030 | | 1 | SCREW M10 x 30 |

HTTP://WWW.MINNPARBACKHOEPARTS.COM



HARNESS, SIDE CONSOLE - SWITCHES

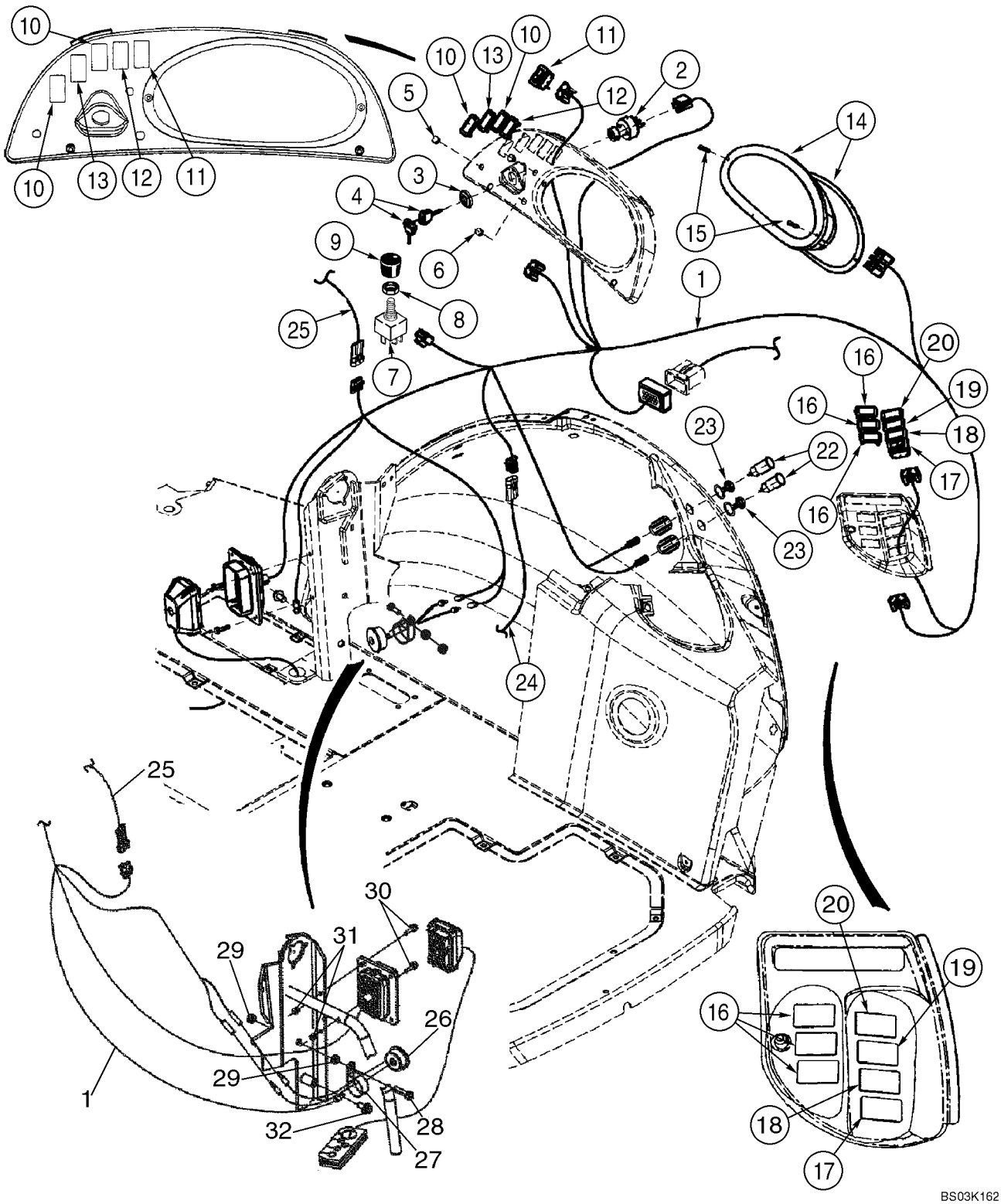

HTTP://WWW.MINNPARBACKHOEPARTS.COM



HARNESS, SIDE CONSOLE - SWITCHES

| REF | FN | PART NUMBER | YR/SN | QTY | DESCRIPTION |
|---|---|---|---|---|---|
| 29 | | 829-1410 | | 2 | NUT M10 |
| 30 | | 844-6025 | | 2 | SCREW M6 x 25 |
| 31 | | 832-10406 | | 2 | NUT M6 |
| 32 | | 844-10020 | | 1 | SCREW M10 x 20 |
| | | 87436675 | | 1 | HARNESS, WIRE Chassis Options Harness; Includes (4) L71879 Diodes |
| | | L71879 | | 4 | DIODE |

HTTP://WWW.MINNPARBACKHOEPARTS.COM

| 04-10 | | p1 | 08/03 |
|---|---|---|---|

INSTRUMENT PANEL, FRONT - COVERS

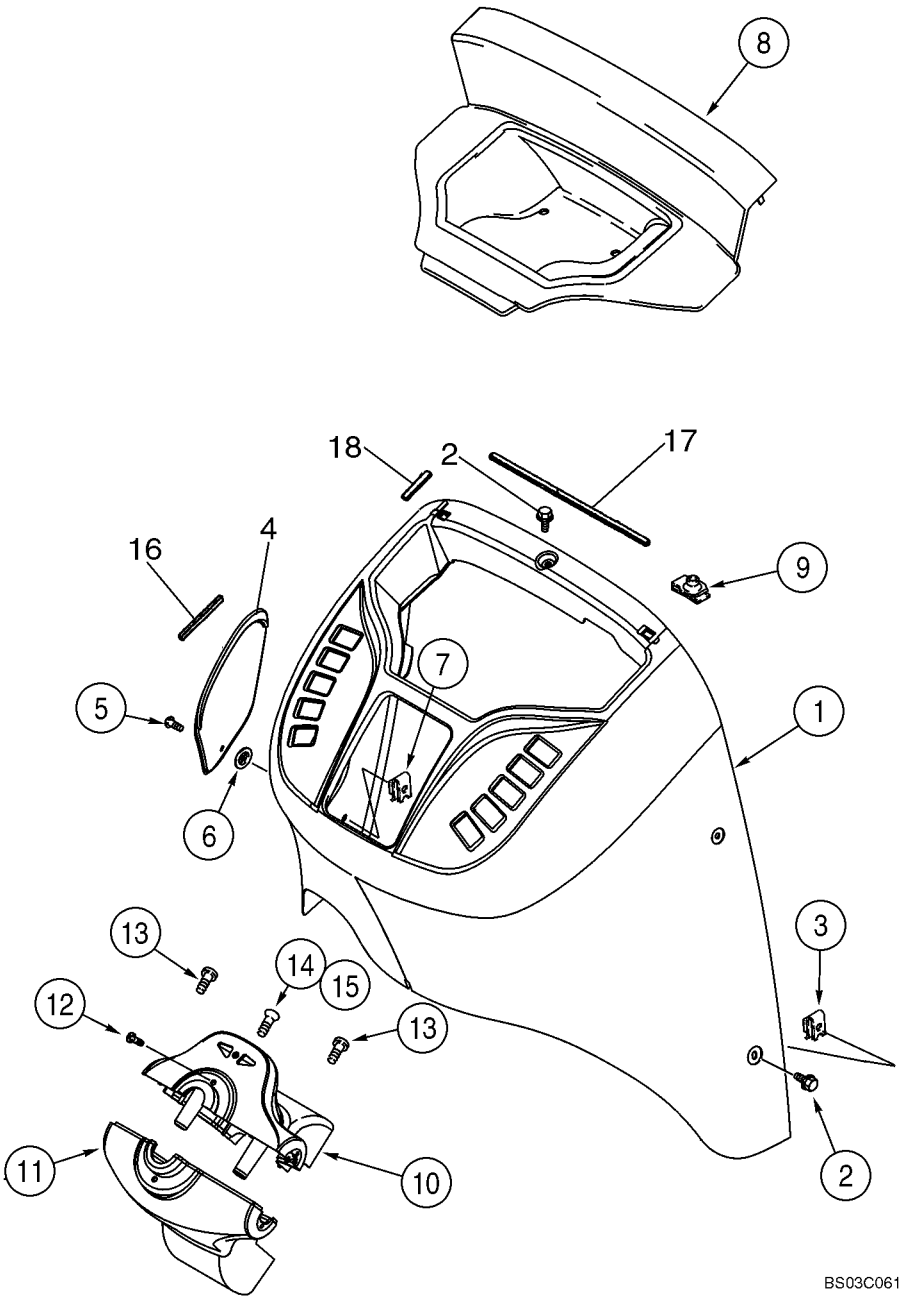

HTTP://WWW.MINNPARBACKHOEPARTS.COM



INSTRUMENT PANEL, FRONT - COVERS

| REF | FN | PART NUMBER | YR/SN | QTY | DESCRIPTION |
|---|---|---|---|---|---|
| 1 | | 355827A2 | | 1 | COVER Front |
| 2 | | 555-10 | | 6 | BOLT |
| 3 | | 833-40406 | | 6 | NUT M6 |
| 4 | | 360244A1 | | 1 | COVER Fuse Access |
| 5 | | 182276A1 | | 1 | SCREW |
| 6 | | 127009A1 | | 1 | CLIP, ELECTRICAL |
| 7 | | 131-861 | | 1 | NUT No. 10 |
| 8 | | 360245A2 | | 1 | COVER Relay Access |
| 9 | | 278316A2 | | 2 | CLIP |
| 10 | | 373689A2 | | 1 | COVER ASSY Steering Column, Upper; Incl. Ref 10A - 10E; Components Not Illustrated |
| 10A | | 360242A2 | | 1 | COVER |
| 10B | | 303465A2 | | 1 | LAMP Blinker |
| 10C | | 303466A1 | | 1 | SYMBOLS Right Flasher |
| 10D | | 303467A1 | | 1 | SYMBOLS Left Flasher |
| 10E | | 373693A1 | | 1 | SCREW Flat Head, No. 8 x 7/16 |
| 11 | | 360243A2 | | 1 | COVER Steering Column, Lower |
| 12 | | 140-106 | | 2 | SCREW No. 10 x 1/2 |
| 13 | | 140-106 | | 2 | SCREW No. 10 x 1/2 |
| 14 | | 260-1358 | | 1 | SCREW No. 10-16 x 1/2 |
| 15 | | 131-121 | | 1 | NUT, SPECIAL No. 10 |
| 16 | | 414572A1 | | 1 | STRIP 100 mm, Adhesive Back |
| 17 | | 414034A1 | | 1 | STRIP 330 mm, Adhesive Back |
| 18 | | 414033A1 | | 4 | STRIP 60 mm, Adhesive Back |

HTTP://WWW.MINNPARBACKHOEPARTS.COM

| 04-11 | | p1 | 01/04 |
|---|---|---|---|

INSTRUMENT PANEL, SIDE - COVERS (RIGHT-HAND SIDE)

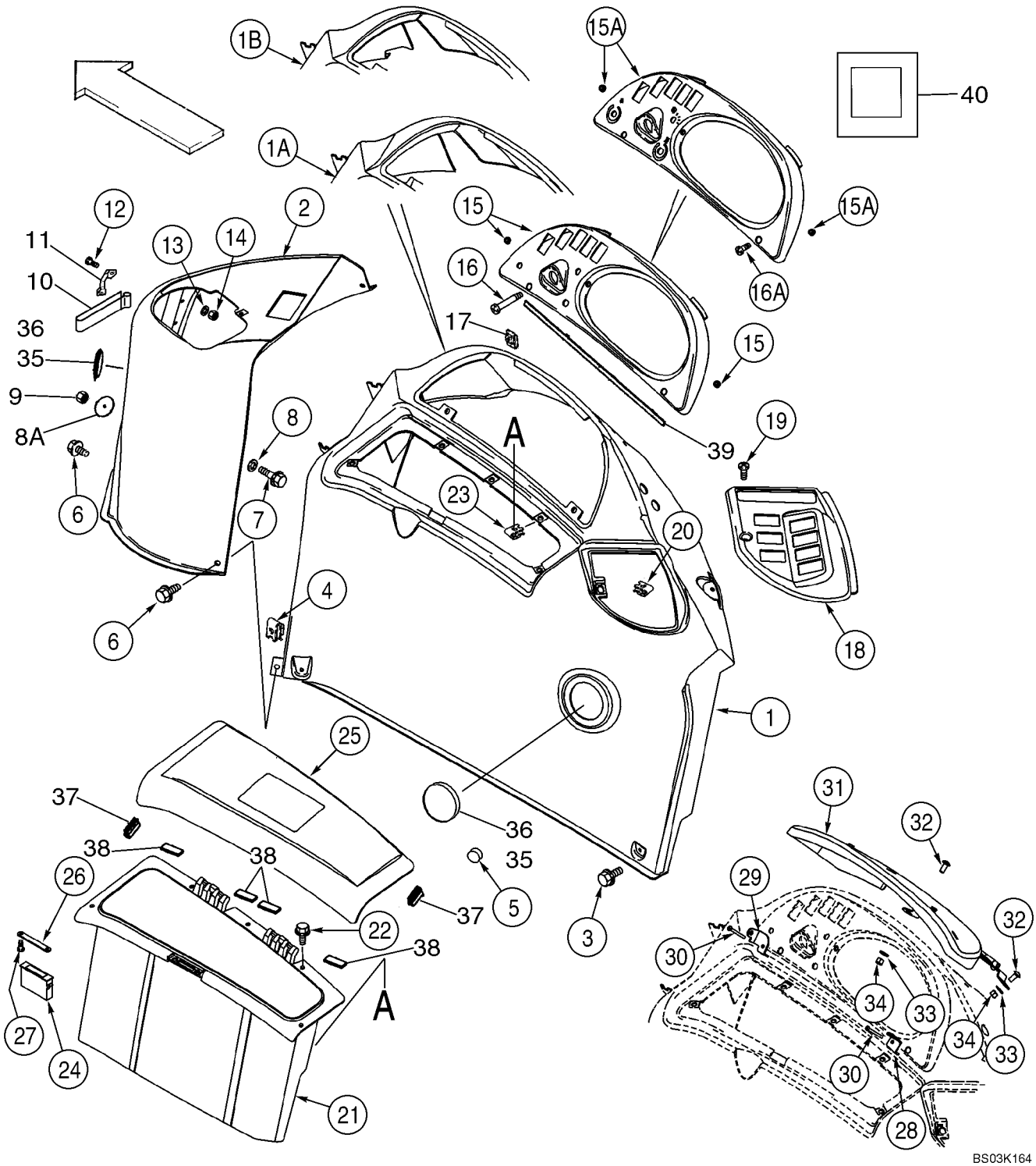

HTTP://WWW.MINNPARBACKHOEPARTS.COM



INSTRUMENT PANEL, SIDE - COVERS (RIGHT-HAND SIDE)

| REF | FN | PART NUMBER | YR/SN | QTY | DESCRIPTION |
|---|---|---|---|---|---|
| 1 | | 360250A2 | | 1 | CONSOLE Canopy Models |
| 1A | | 355198A2 | | 1 | CONSOLE Cab, Single Door |
| 1B | | 372167A3 | | 1 | CONSOLE Cab, Two Door |
| 2 | | 355197A2 | | 1 | CONSOLE Loader Control |
| 3 | | 555-2 | | 6 | SCREW Flange, M6 x 20 |
| 4 | | 833-40406 | | 5 | NUT M6 |
| 5 | | L60224 | | 1 | DAMPER, HITCH Rubber |
| 6 | | 555-10 | | 2 | BOLT Flange, M6 x 16 |
| 7 | | 844-6025 | | 1 | SCREW Flange, M6 x 25 |
| 8 | | 895-15006 | | 1 | WASHER 6,6 x 25 x 1,6 mm |
| 8A | | 407660A1 | | 1 | WASHER 7 mm ID x 50 mm OD |
| 9 | | 832-10406 | | 1 | NUT M6 |
| 10 | | 184726A1 | | 1 | STRIP, FIXING Velcro |
| 11 | | 182594A1 | | 2 | HANDLE Velcro Retainer |
| 12 | | 842-1416 | | 4 | SCREW M4 x 16; 4.8 |
| 13 | | 895-11004 | | 4 | WASHER 4,3 x 9 x 0,8 mm |
| 14 | | 832-10404 | | 4 | NUT M4 |
| 15 | | 391818A2 | | 1 | BEZEL Instrument Cluster Mounting; Canopy Models; Includes 390258A1 |
| | | 390258A1 | | 2 | INSERT No. 10, Threaded Insert |
| 15A | | 390255A2 | | 1 | BEZEL Instrument Cluster Mounting; Cab Models; Includes 390258A1 |
| | | 390258A1 | | 2 | INSERT No. 10, Threaded Insert |
| 16 | | 140-120 | | 2 | SCREW No. 10 x 2-1/4, Canopy Models |
| 16A | | 140-107 | | 2 | SCREW No. 10 x 3/4, Cab Models |
| 17 | | 131-619 | | 2 | NUT No. 10, Cab or Canopy |
| 18 | | 353068A2 | | 1 | BEZEL Rear Switches |
| 19 | | 140-107 | | 1 | SCREW No. 10 x 3/4 |
| 20 | | 131-619 | | 1 | NUT No. 10 |
| 21 | | 366632A2 | | 1 | BOX, TOOL Right-Hand |
| 22 | | 555-2 | | 5 | SCREW M6 x 20 |
| 23 | | 833-40406 | | 5 | NUT M6 |
| 24 | | D127335 | | 1 | RETAINER Magnetic Catch |
| 25 | | 366633A3 | | 1 | LID Storage Box |
| 26 | | 375112A1 | | 1 | PLATE, CATCH Striker |
| 27 | | 440-1066 | | 2 | SCREW No. 6 x 3/8 |

HTTP://WWW.MINNPARBACKHOEPARTS.COM

| 04-11 | | p2 | 01/04 |
|---|---|---|---|

INSTRUMENT PANEL, SIDE - COVERS (RIGHT-HAND SIDE)

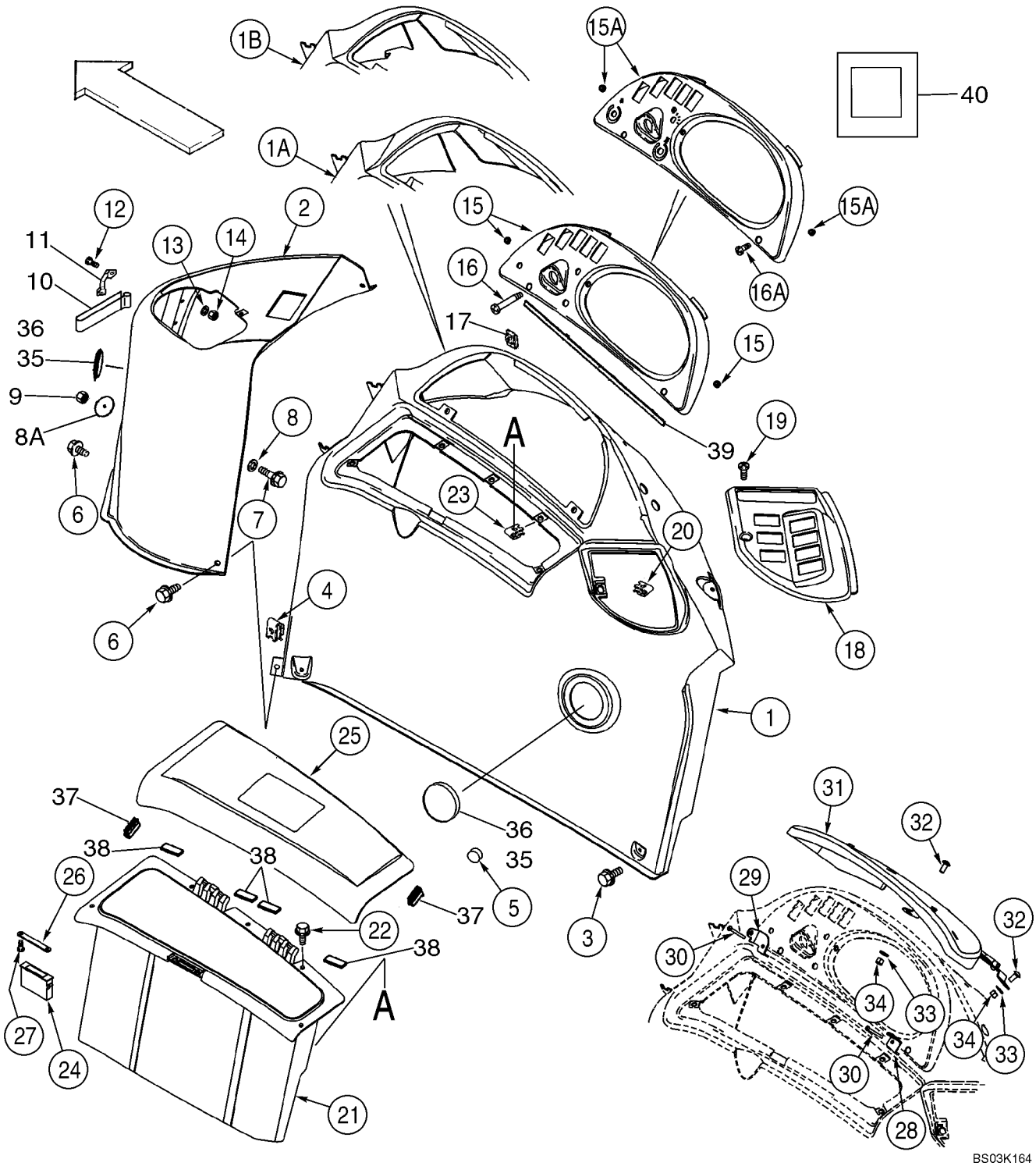

HTTP://WWW.MINNPARBACKHOEPARTS.COM



INSTRUMENT PANEL, SIDE - COVERS (RIGHT-HAND SIDE)

| REF | FN | PART NUMBER | YR/SN | QTY | DESCRIPTION |
|---|---|---|---|---|---|
| 28 | | 386369A2 | | 1 | BRACKET |
| 29 | | 386368A2 | | 1 | BRACKET |
| 30 | | 140-120 | | 2 | SCREW No. 10 x 2-1/4 |
| 31 | | 385614A4 | | 1 | COVER ASSY Instrument Cluster; Anti-Vandalism, Canopy Models; Includes 386502A1, F22426 |
| | | 386502A1 | | 2 | BUMPER |
| | | F22426 | | 3 | STOP |
| 32 | | 811-8020 | | 2 | SCREW Round Head, M8 x 20 |
| 33 | | 895-15008 | | 2 | WASHER 9 x 20 x 1,6 mm |
| 34 | | 832-10408 | | 2 | NUT M8 |
| 35 | | 1302758C1 | | 2 | PLUG 3 inch |
| 36 | | 413054A1 | | 4 | SCREW No. 6 x 1/2 |
| 37 | | 430471A1 | | 2 | SEAL Bulb, 40 mm; Storage Lid Bumper |
| 38 | | 414092A1 | | 4 | STRIP 50 mm, Adhesive Back; Storage Box |
| 39 | | 414071A1 | | 1 | STRIP, SEALING 480 mm, Adhesive Back |
| 40 | | 412510A1 | | 1 | SEAL 25 x 25 x 3 mm, Adhesive Back; Console To Fender |

HTTP://WWW.MINNPARBACKHOEPARTS.COM



INSTRUMENT CLUSTER

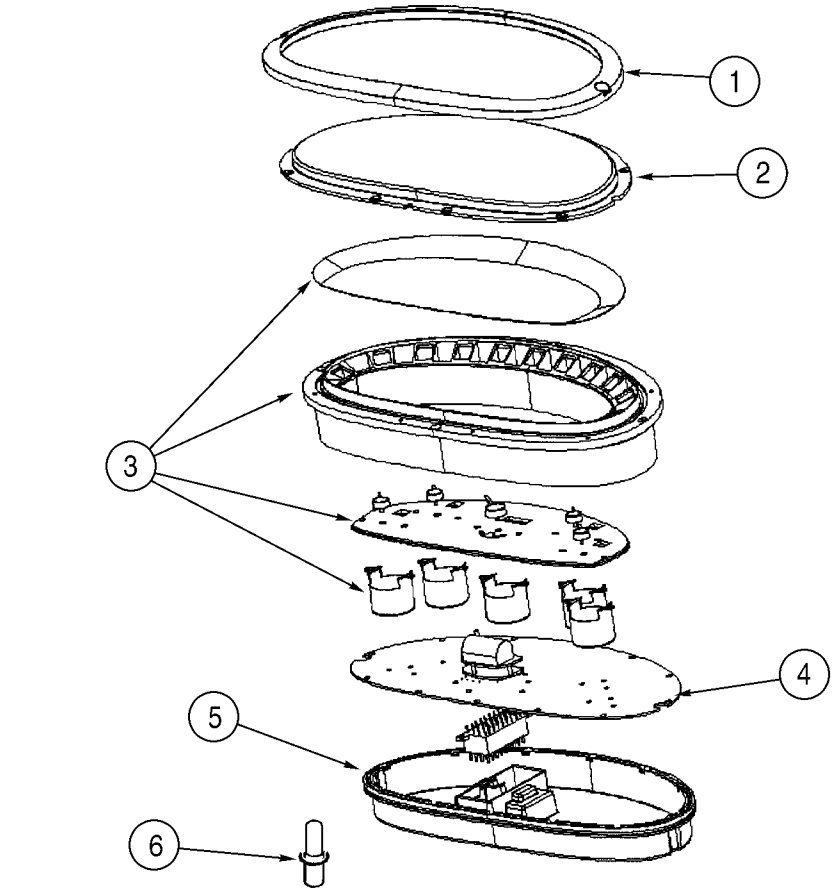


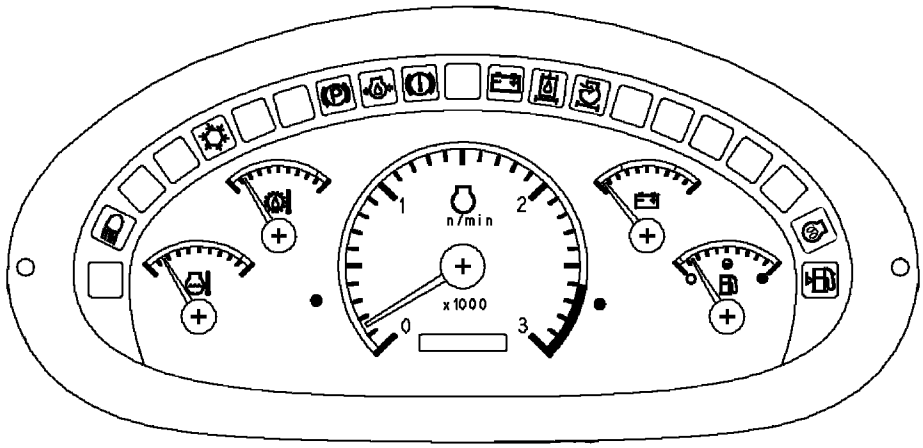


BS03K165

HTTP://WWW.MINNPARBACKHOEPARTS.COM



INSTRUMENT CLUSTER

| REF | FN | PART NUMBER | YR/SN | QTY | DESCRIPTION |
|---|---|---|---|---|---|
| | | 87419320 | | 1 | INSTRUMENT CLUSTER Incl. Ref 1 - 6 |
| 1 | | 370755A1 | | 1 | BEZEL Black |
| | | NSS | | 2 | NOT SERVICED SEPARATELY No. 6 x 1/4, Screw; Trim |
| 2 | | 370756A1 | | 1 | LENS Clear; Includes O-Ring Which Is Not Serviced Separately |
| 3 | | 87423396 | | 1 | GAUGE ASSY. Gauge Includes Overlay, Seal and Gauges Which Are Not Serviced Separately |
| 4 | | 87423397 | | 1 | HOURMETER Hourmeter, Circuit Board; Includes Seal and Hourmeter Which Are Not Serviced Separately |
| | | NSS | | 25 | NOT SERVICED SEPARATELY No. 6 x 3/8, Screw |
| 5 | | 370760A1 | | 1 | COVER, REAR Rear; Includes O-Ring Which Is Not Serviced Separately |
| | | NSS | | 2 | NOT SERVICED SEPARATELY No. 6 x 3/4, Screw; Rear Cover |
| 6 | | 388053A2 | | 1 | BULB 1W, 14V; Includes Socket |

HTTP://WWW.MINNPARBACKHOEPARTS.COM

| 04-13 | | p1 | 08/03 |
|---|---|---|---|

ELECTRICAL - LAMPS, ROPS CANOPY

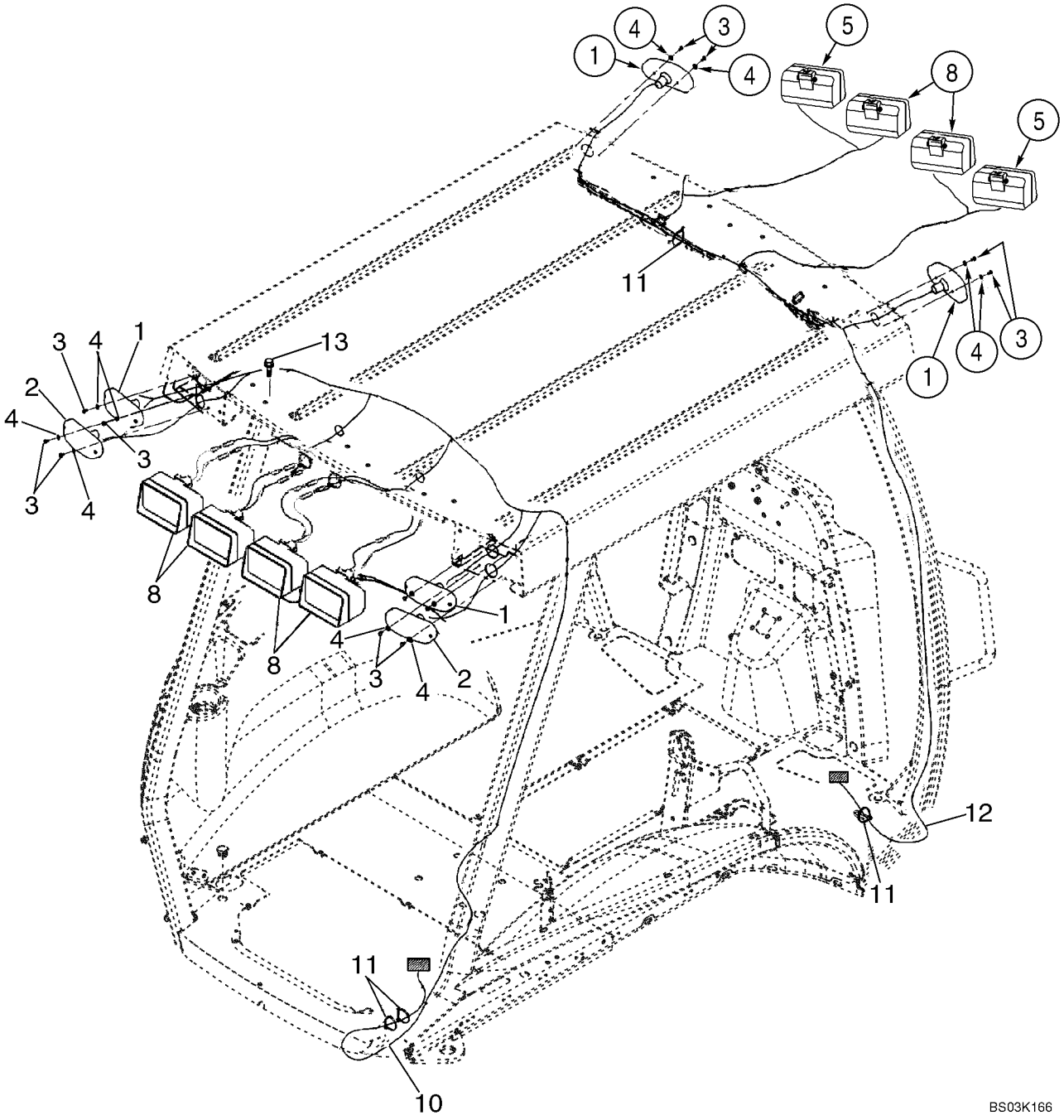

HTTP://WWW.MINNPARBACKHOEPARTS.COM



ELECTRICAL - LAMPS, ROPS CANOPY

| REF | FN | PART NUMBER | YR/SN | QTY | DESCRIPTION |
|---|---|---|---|---|---|
| 1 | | D135384 | | 4 | LAMP Turn Signal and Flasher; See Figure 04-15 |
| 2 | | D121152 | | 2 | LAMP Stop And Tail; See Figure 04-15 |
| 3 | | 329032A1 | | 12 | SCREW No. 10 x 3/8 |
| 4 | | 495-31022 | | 12 | WASHER 7/32 x 1/2 x 3/64 |
| 5 | | 398846A3 | | 2 | LIGHT ASSY. Front Driving; Incl. 1312210C2 |
| | | 1312210C2 | | 1 | BULB 12V, 55W |
| 8 | | 398847A3 | | 2-6 | LIGHT ASSY. Front and Rear Flood and Work Lamps, Incl. 1312210C2, 276498A1 |
| | | 1312210C2 | | 1 | BULB 12V, 55W |
| | | 276498A1 | | 1 | LENS With Hardened Glass; Replaces 1964801C1 Non-Hardened Lens Used In Production |
| 10 | | 396023A2 | | 1 | HARNESS Canopy Lamps, Rear |
| 11 | | L18337 | | X | STRAP 15 in |
| 12 | | 404617A1 | | 1 | HARNESS Canopy Lamps and Wiper, Front |
| 13 | | 128312A1 | | 4-8 | BOLT Flange, M10 x 15 |

HTTP://WWW.MINNPARBACKHOEPARTS.COM

| 04-14 | | p1 | 08/03 |
|---|---|---|---|

ELECTRICAL - LAMPS, ROPS CAB

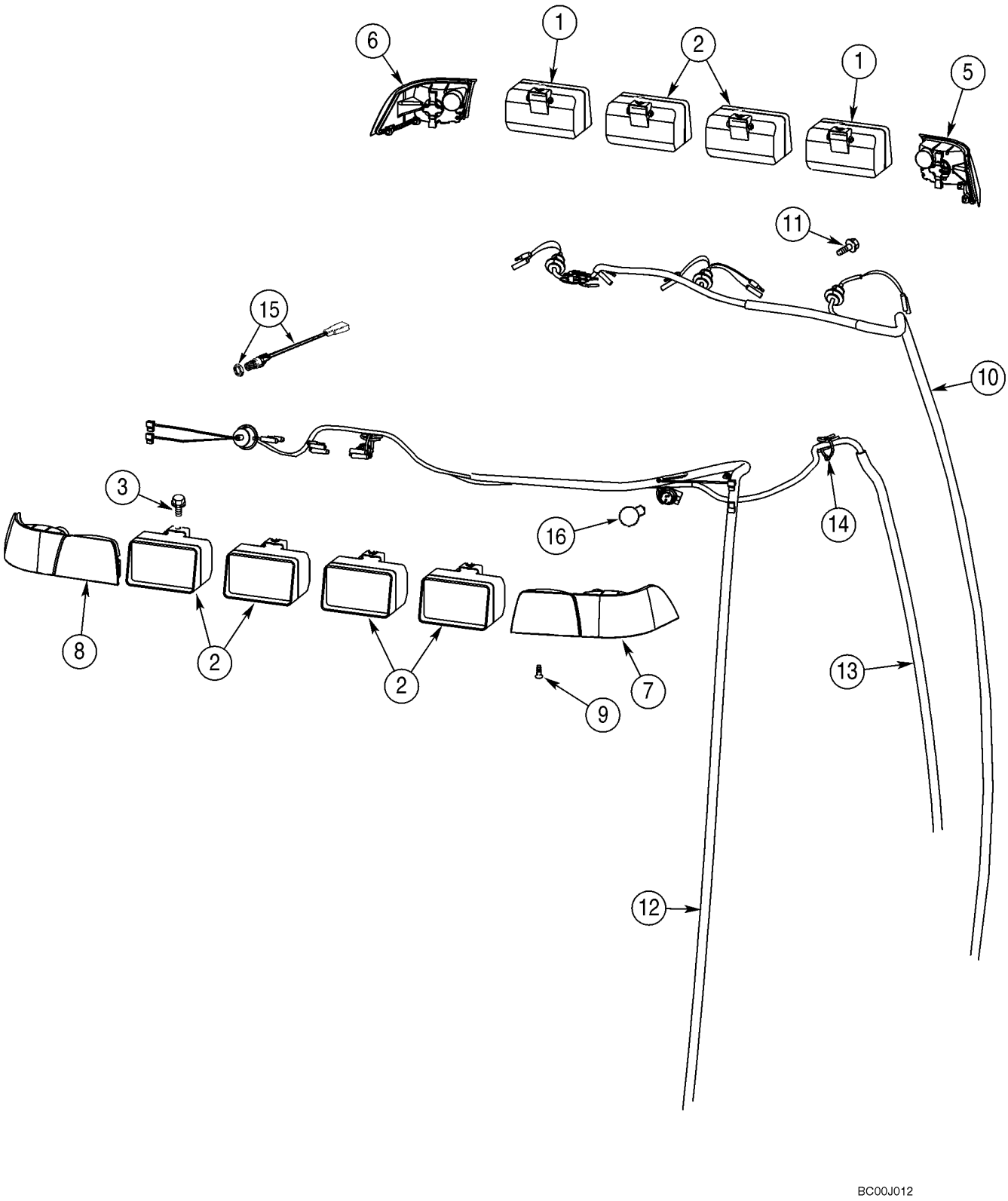

HTTP://WWW.MINNPARBACKHOEPARTS.COM



ELECTRICAL - LAMPS, ROPS CAB

| REF | FN | PART NUMBER | YR/SN | QTY | DESCRIPTION |
|---|---|---|---|---|---|
| 1 | | 398846A3 | | 2 | LIGHT ASSY. Front Driving, 1312210C2 |
| | | 1312210C2 | | 1 | BULB 12V, 55W |
| 2 | | 398847A3 | | 6 | LIGHT ASSY. Front and Rear Flood and Work Lamps, Incl. 1312210C2, 276498A1 |
| | | 1312210C2 | | 1 | BULB 12V, 55W |
| | | 276498A1 | | 1 | LENS With Hardened Glass; Replaces 1964801C1 Non-Hardened Lens Used In Production |
| 3 | | 128312A1 | | 8 | BOLT M10 x 15 |
| 5 | | 279224A1 | | 1 | LIGHT, TAIL Amber; Right Front Corner |
| 6 | | 279223A1 | | 1 | LIGHT, TAIL Amber; Left Front Corner |
| 7 | | 357540A1 | | 1 | LIGHT ASSY. Amber and Red; Right Rear Corner |
| 8 | | 357541A1 | | 1 | LIGHT ASSY. Amber and Red; Left Rear Corner |
| 9 | | 394863A1 | | 10 | SCREW M6 x 20 |
| 10 | | 404617A1 | | 1 | HARNESS Front |
| 11 | | 844-10020 | | 2 | SCREW M10 x 20 |
| 12 | | 398380A3 | | 1 | HARNESS Rear |
| 13 | | 396018A2 | | 1 | HARNESS B-Post, Dome Lamp, Radio, Rear Wiper |
| 14 | | L18337 | | 5 | STRAP 15 in |
| 15 | | 279265A2 | | 1 | SWITCH Dome Lamp |
| 16 | | 279916A1 | | 2 | BULB |

HTTP://WWW.MINNPARBACKHOEPARTS.COM

| 04-15 | | p1 | 08/03 |
|---|---|---|---|

LAMP ASSY (ROPS CANOPY MODELS)

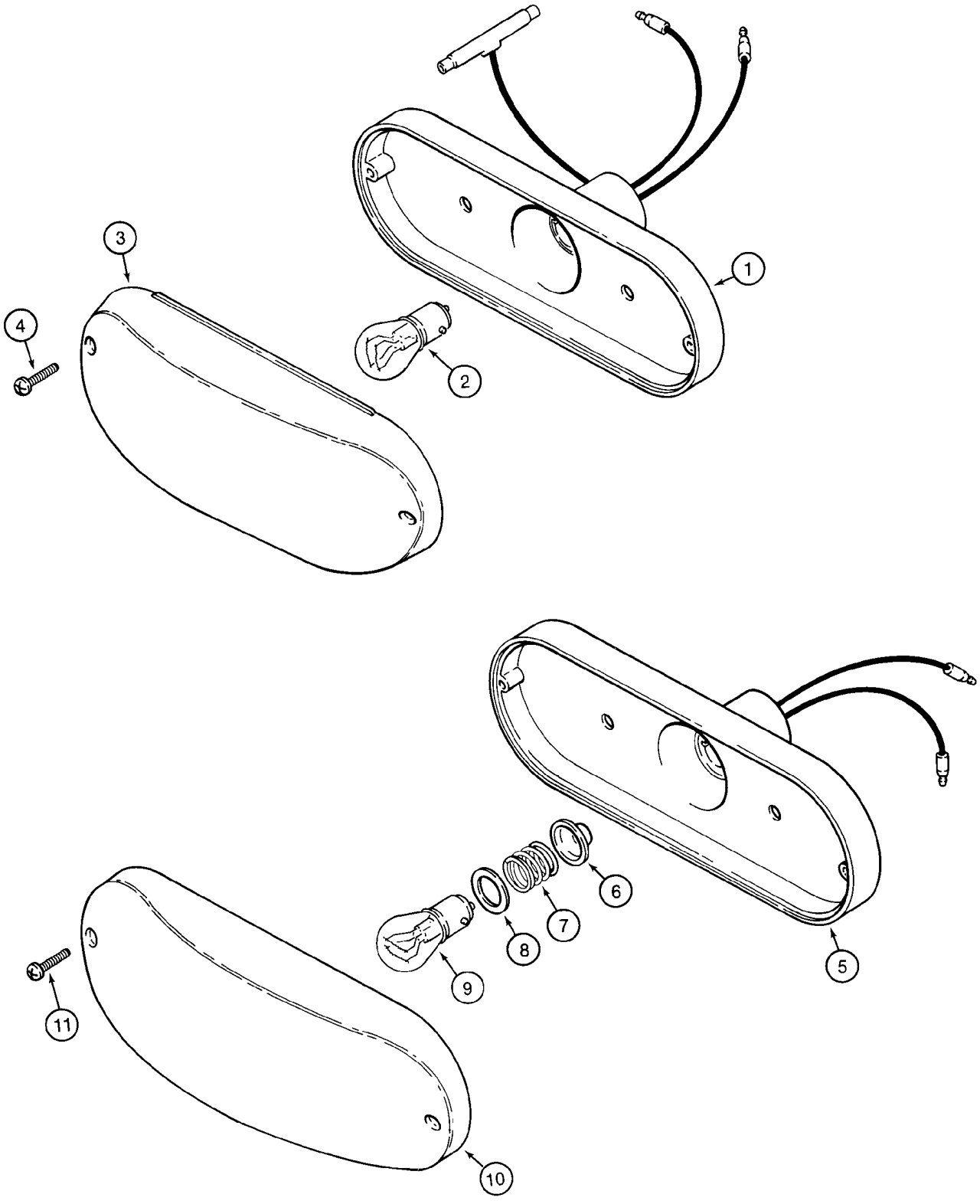

HTTP://WWW.MINNPARBACKHOEPARTS.COM



LAMP ASSY (ROPS CANOPY MODELS)

| REF | FN | PART NUMBER | YR/SN | QTY | DESCRIPTION |
|---|---|---|---|---|---|
| | | D121152 | | 2 | LAMP Stop And Tail Lamp; Red; Incl. Ref 1 - 4 |
| 1 | | NSS | | 1 | NOT SERVICED SEPARATELY Housing |
| 2 | | T34857 | | 1 | BULB No. 1157 |
| 3 | | N6836 | | 1 | LENS Red |
| 4 | | 261-14310 | | 2 | SCREW No. 6 st x 5/8 |
| | | D135384 | | 4 | LAMP Turn Signal and Flasher; Amber; Incl. Ref 5 - 11 |
| 5 | | NSS | | 1 | NOT SERVICED SEPARATELY Housing |
| 6 | | NSS | | 1 | NOT SERVICED SEPARATELY Seal |
| 7 | | NSS | | 1 | NOT SERVICED SEPARATELY Spring |
| 8 | | NSS | | 1 | NOT SERVICED SEPARATELY Insulator |
| 9 | | A41264 | | 1 | BULB 12V, No. 1156 |
| 10 | | N14283 | | 1 | LENS Amber |
| 11 | | 261-14310 | | 2 | SCREW No. 6 st x 5/8 |

HTTP://WWW.MINNPARBACKHOEPARTS.COM

| 04-16 | | p1 | 01/04 |
|---|---|---|---|

HORN - ALARM, BACKUP

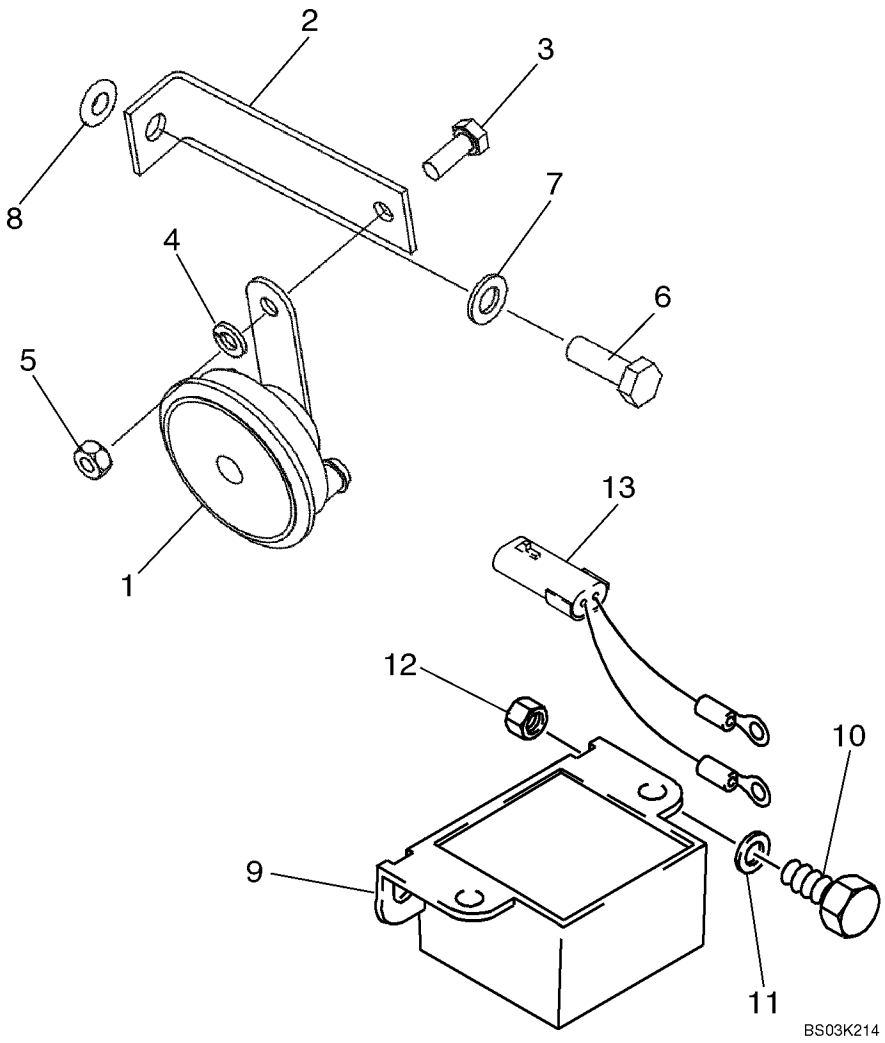

HTTP://WWW.MINNPARBACKHOEPARTS.COM



HORN - ALARM, BACKUP

| REF | FN | PART NUMBER | YR/SN | QTY | DESCRIPTION |
|---|---|---|---|---|---|
| 1 | | 237582A1 | | 1 | HORN Black |
| 2 | | {87423496} | | 1 | Bracket |
| 3 | | 614-8020 | | 1 | SCREW M8 x 20 |
| 4 | | 892-11008 | | 1 | WASHER M8 |
| 5 | | 829-1408 | | 1 | NUT M8; 10 |
| 6 | | 614-10030 | | 1 | SCREW M10 x 30 |
| 7 | | 895-11010 | | 1 | WASHER |
| 8 | | 87417721 | | 1 | INSERT, THREADED M10 Rivnut |
| 9 | | 109511A1 | | 1 | BUZZER Backup Alarm; Includes Nuts |
| 10 | | 614-8025 | | 2 | SCREW M8 x 25 |
| 11 | | 895-11008 | | 2 | WASHER 9 x 17 x 1,6 mm |
| 12 | | 832-10408 | | 2 | NUT M8 |
| 13 | | {87425869} | | 1 | Pigtail Wire; Backup Alarm |

HTTP://WWW.MINNPARBACKHOEPARTS.COM

| 04-17 | | p1 | 08/03 |
|---|---|---|---|

BEACON, ROTATING (CAB OR CANOPY MODELS)

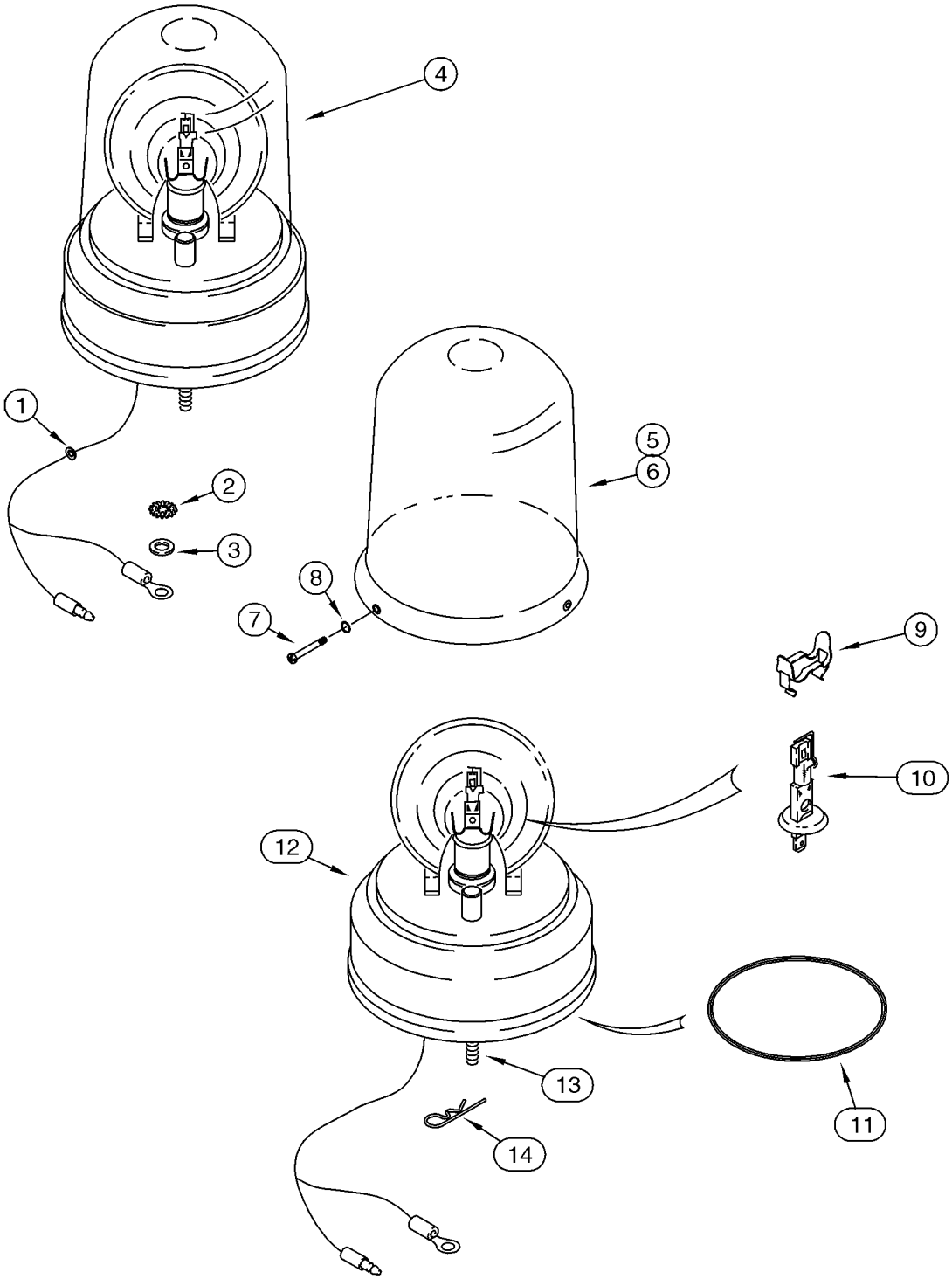

HTTP://WWW.MINNPARBACKHOEPARTS.COM



BEACON, ROTATING (CAB OR CANOPY MODELS)

| REF | FN | PART NUMBER | YR/SN | QTY | DESCRIPTION |
|---|---|---|---|---|---|
| 1 | | A23870 | | 1 | GROMMET |
| 2 | | 493-11026 | | 1 | WASHER 1/4; Internal External Tooth Lock Washer; Ground |
| 3 | | 495-21031 | | 1 | WASHER 5/16 x 3/4 x 1/16 |
| 4 | | 108366A1 | | 1 | LIGHT, WARNING Incl. Ref 5 - 14 |
| 5 | | A187542 | | 1 | LENS Amber; If Used |
| 6 | | 127158A1 | | 1 | LENS Blue; If Used |
| 7 | | 168-71 | | 3 | SCREW No. 8 x 1/2 |
| 8 | | 238-5005 | | 3 | O-RING 3/32 ID x 1/16 |
| 9 | | 101531A1 | | 1 | CLIP |
| 10 | | 3125705R1 | | 1 | BULB 12V, 55W |
| 11 | | A187575 | | 1 | BELT Drive Motor |
| 12 | | NSS | | 1 | NOT SERVICED SEPARATELY Base; With Drive Motor |
| 13 | | 614-6020 | | 3 | BOLT M6 x 20 |
| 14 | | 136-54 | | 3 | PIN 1/4 x 11/16 |
| 15 | | 386851A1 | | 1 | SWITCH Rotating Beacon; Not Illustrated |
| 16 | | 121412A1 | | 1 | FUSE 10 amp; Not Illustrated |

HTTP://WWW.MINNPARBACKHOEPARTS.COM

| 04-18 | | p1 | 08/03 |
|---|---|---|---|

ANTENNA, RADIO - HARNESS, RADIO

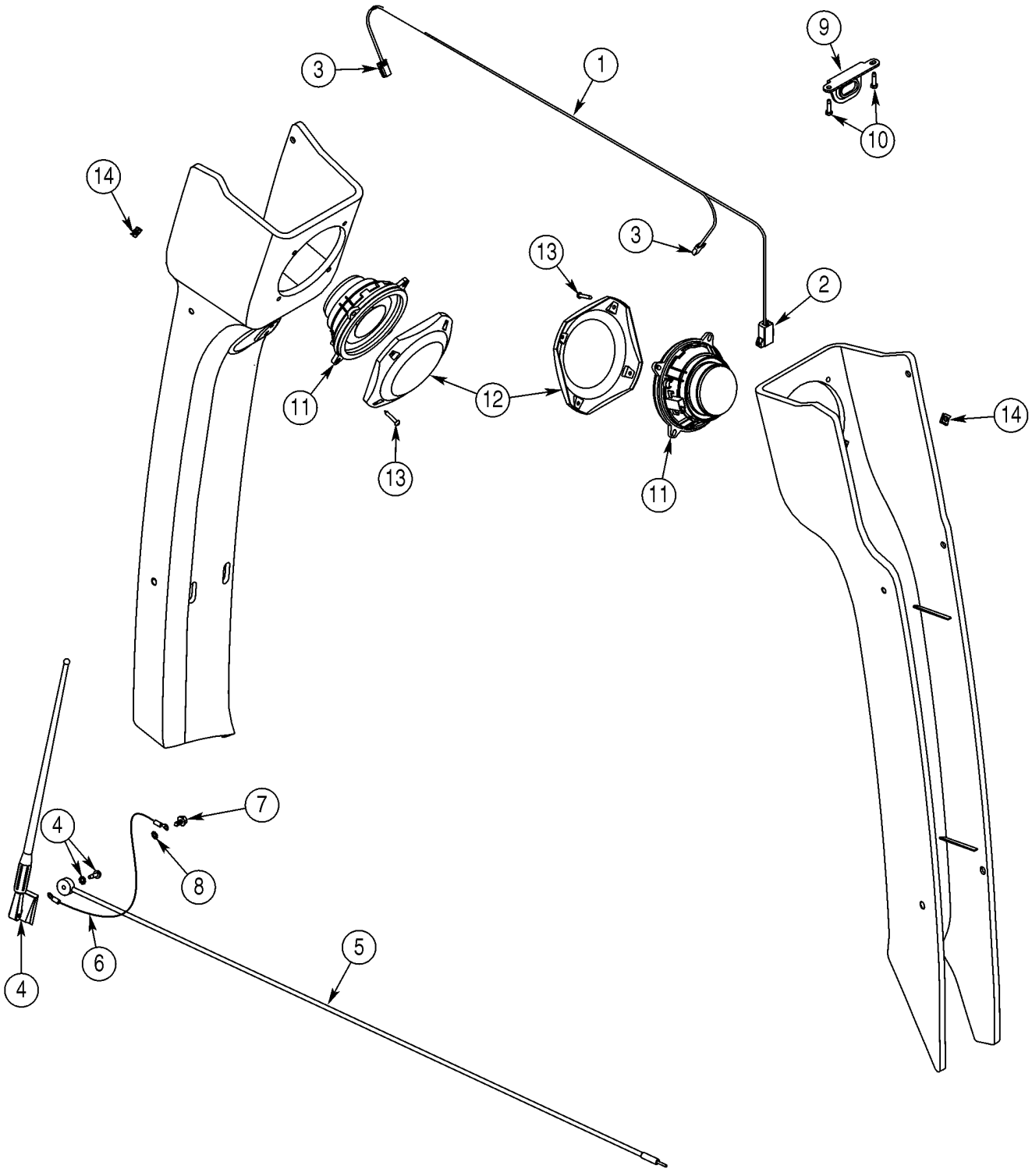

HTTP://WWW.MINNPARBACKHOEPARTS.COM



ANTENNA, RADIO - HARNESS, RADIO

| REF | FN | PART NUMBER | YR/SN | QTY | DESCRIPTION |
|---|---|---|---|---|---|
| 1 | | 382664A2 | | 1 | HARNESS Speaker; Incl. Ref 2, 3 |
| 2 | | 227389A1 | | 1 | CONNECTOR To Cab Harness |
| 3 | | 195552A1 | | 2 | FITTING Speaker |
| 4 | | 197745A1 | | 1 | ANTENNA Radio; Includes Flat Washer and Nut Which Are Not Serviced Separately |
| 5 | | 381659A1 | | 1 | CABLE ASSY. |
| 6 | | 291010A1 | | 1 | WIRE Ground |
| 7 | | 282-16512 | | 1 | SCREW No. 10 x 3/4 |
| 8 | | 893-11005 | | 1 | WASHER M5 |
| 9 | | 386927A1 | | 1 | BRACKET Radio Mounting |
| 10 | | 276-26512 | | 2 | SCREW No. 10 x 3/4 |
| 11 | | 182721A2 | | 2 | SPEAKER |
| 12 | | 187281A1 | | 2 | COVER |
| 13 | | 761-17325 | | 8 | SCREW M4,2 x 25 |
| 14 | | 177269A1 | | 8 | NUT |

HTTP://WWW.MINNPARBACKHOEPARTS.COM

| 04-19 | | p1 | 12/03 |
|---|---|---|---|

ELECTRICAL - BACKHOE AUXILIARY HYDRAULIC, UNI-DIRECTIONAL

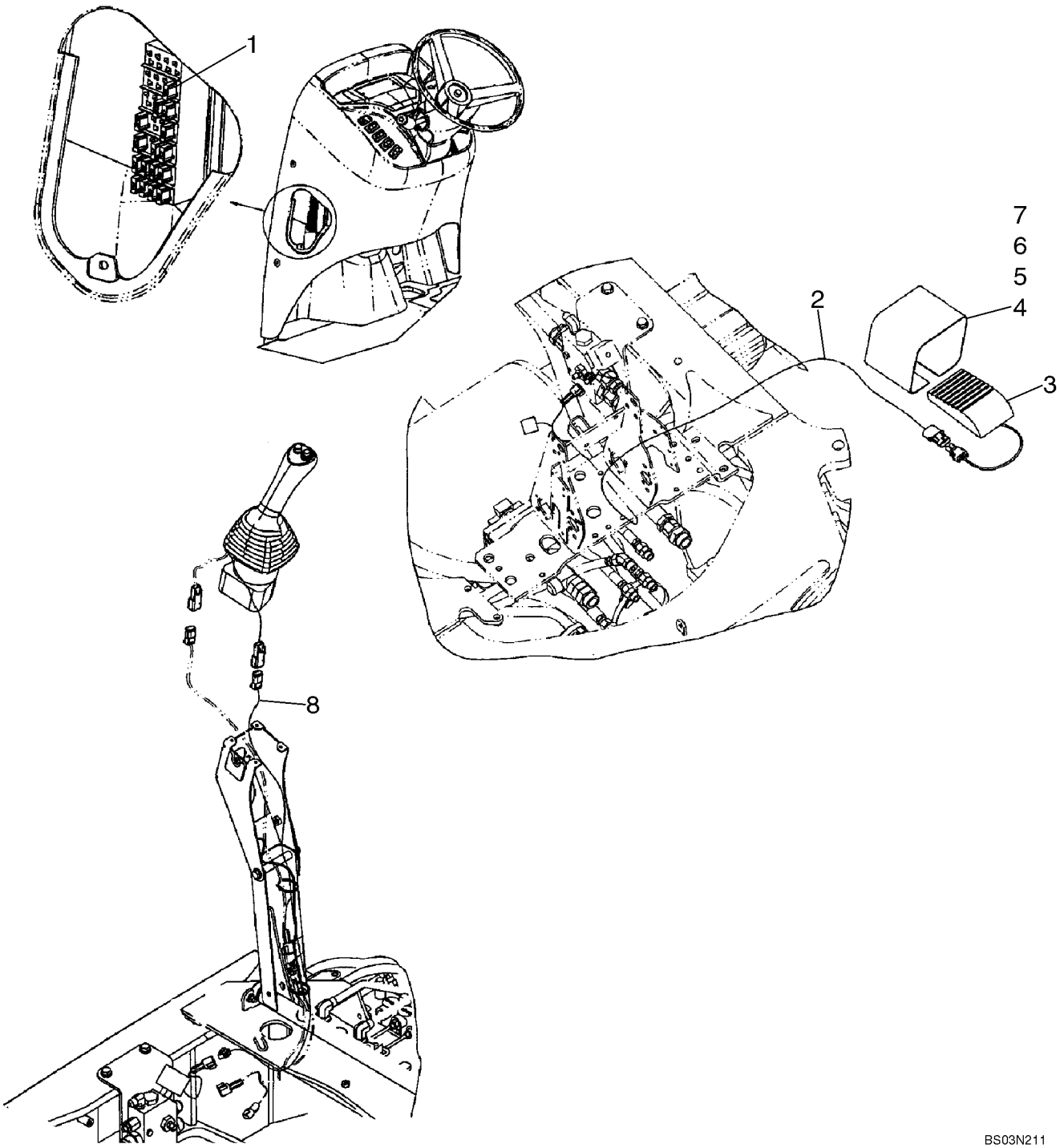

HTTP://WWW.MINNPARBACKHOEPARTS.COM



ELECTRICAL - BACKHOE AUXILIARY HYDRAULIC, UNI-DIRECTIONAL

| REF | FN | PART NUMBER | YR/SN | QTY | DESCRIPTION |
|---|---|---|---|---|---|
| 1 | | 121413A1 | | 1 | FUSE 15 amp |
| 2 | | {87425631} | | 1 | Auxiliary Hydraulic Harness, Uni-Directional; Models Without Pilot Controls |
| 3 | | 137219A1 | | 1 | SWITCH Foot; Without Pilot Controls |
| 4 | | 300030A1 | | 1 | COVER Without Pilot Controls |
| 5 | | 843-1516 | | 2 | SCREW M5 x 16 |
| 6 | | 892-11005 | | 2 | WASHER, LOCK M5 |
| 7 | | 824-1405 | | 2 | NUT M5 |
| 8 | | 87425635 | | 1 | HARNESS, WIRE Auxiliary Hydraulic; Uni-Directional; Models With Pilot Controls |

HTTP://WWW.MINNPARBACKHOEPARTS.COM



ELECTRICAL - BACKHOE AUXILIARY HYDRAULIC, WITH PILOT CONTROLS

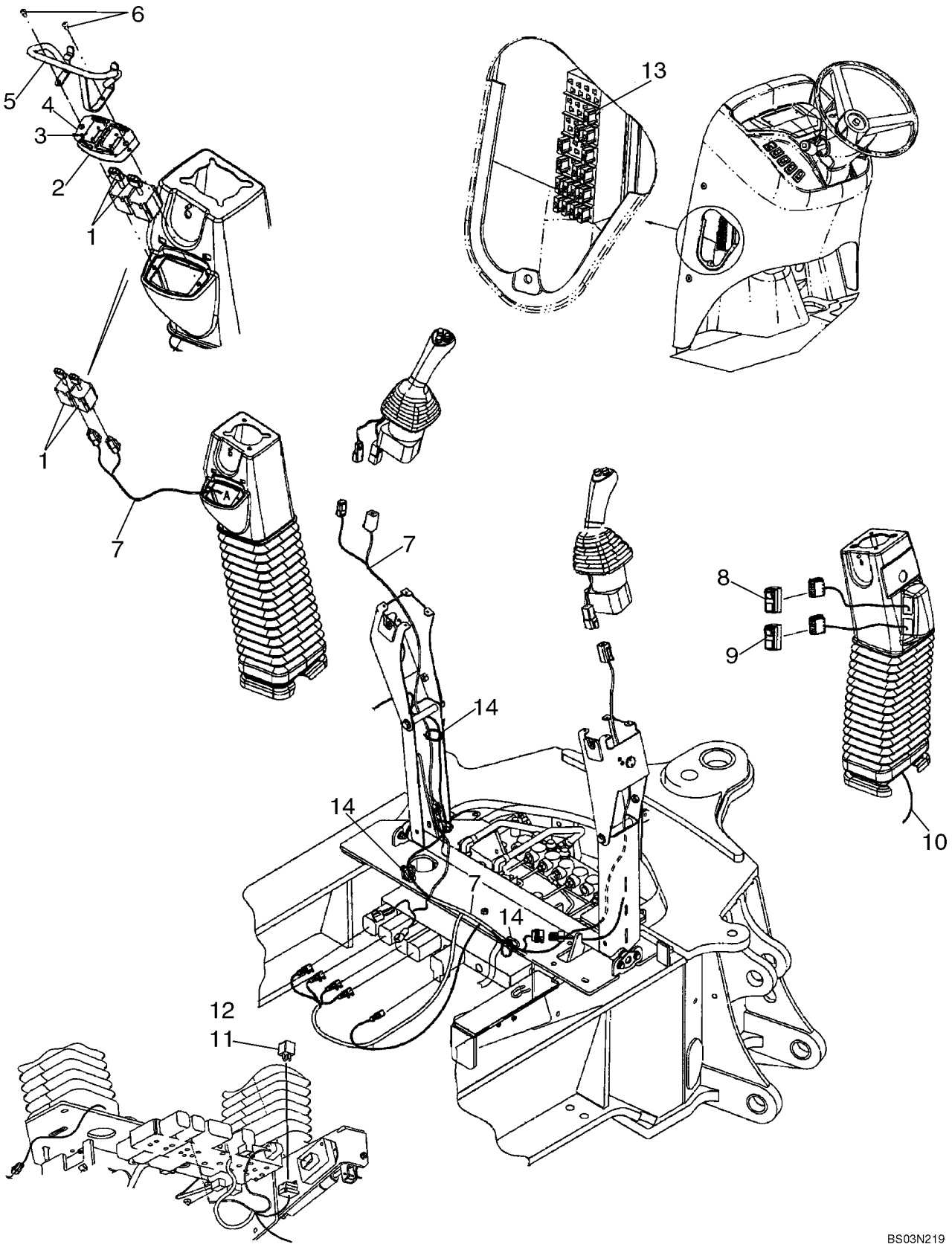

HTTP://WWW.MINNPARBACKHOEPARTS.COM



ELECTRICAL - BACKHOE AUXILIARY HYDRAULIC, WITH PILOT CONTROLS

| REF | FN | PART NUMBER | YR/SN | QTY | DESCRIPTION |
|---|---|---|---|---|---|
| 1 | | 86988086 | | 2 | SWITCH, TOGGLE Stabilizer |
| 2 | | 87435381 | | 1 | PLATE, MOUNTING |
| 3 | | 87022296 | | 8 | SCREW |
| 4 | | 87423812 | | 1 | DECAL Stabilizer Switch |
| 5 | | 87436396 | | 1 | BRACKET Stabilizer Switch Guard |
| 6 | | 140-106 | | 2 | SCREW |
| 7 | | 87436676 | | 1 | HARNESS, WIRE Pilot Control Joystick, Left-Hand |
| 8 | | 87423802 | | 1 | SWITCH Pilot Control, On/Off |
| 9 | | 87410105 | | 1 | SWITCH Pilot Control Pattern Selection |
| 10 | | 87425636 | | 1 | HARNESS, WIRE Pilot Control Joystick, Right-Hand |
| 11 | | 87436836 | | 1 | RELAY Mini, 12V |
| 12 | | 840-1416 | | 3 | SCREW M4 x 16 |
| 13 | | 121413A1 | | 1 | FUSE Mini, 15 amp |
| 14 | | L18337 | | 6 | STRAP |

HTTP://WWW.MINNPARBACKHOEPARTS.COM

HTTP://WWW.MINNPARBACKHOEPARTS.COM

# SECTION INDEX


| | |
|---|---|
| 05-01 | STEERING WHEEL - COLUMN |
| 05-02 | HYDRAULICS - STEERING |
| 05-03 | STEERING COLUMN |
| 05-04 | AXLE, FRONT (86990837) - MOUNTING |
| 05-05 | AXLE, FRONT (86990837) - HOUSING |
| 05-06 | AXLE, FRONT (86990837) - HOUSING, SWIVEL |
| 05-07 | AXLE, FRONT (86990837) - CYLINDER, STEERING |
| 05-08 | AXLE, FRONT (86990837) - HUB AND BEARINGS |
| 05-09 | WHEELS, FRONT - TIRES |

HTTP://WWW.MINNPARBACKHOEPARTS.COM



STEERING WHEEL - COLUMN

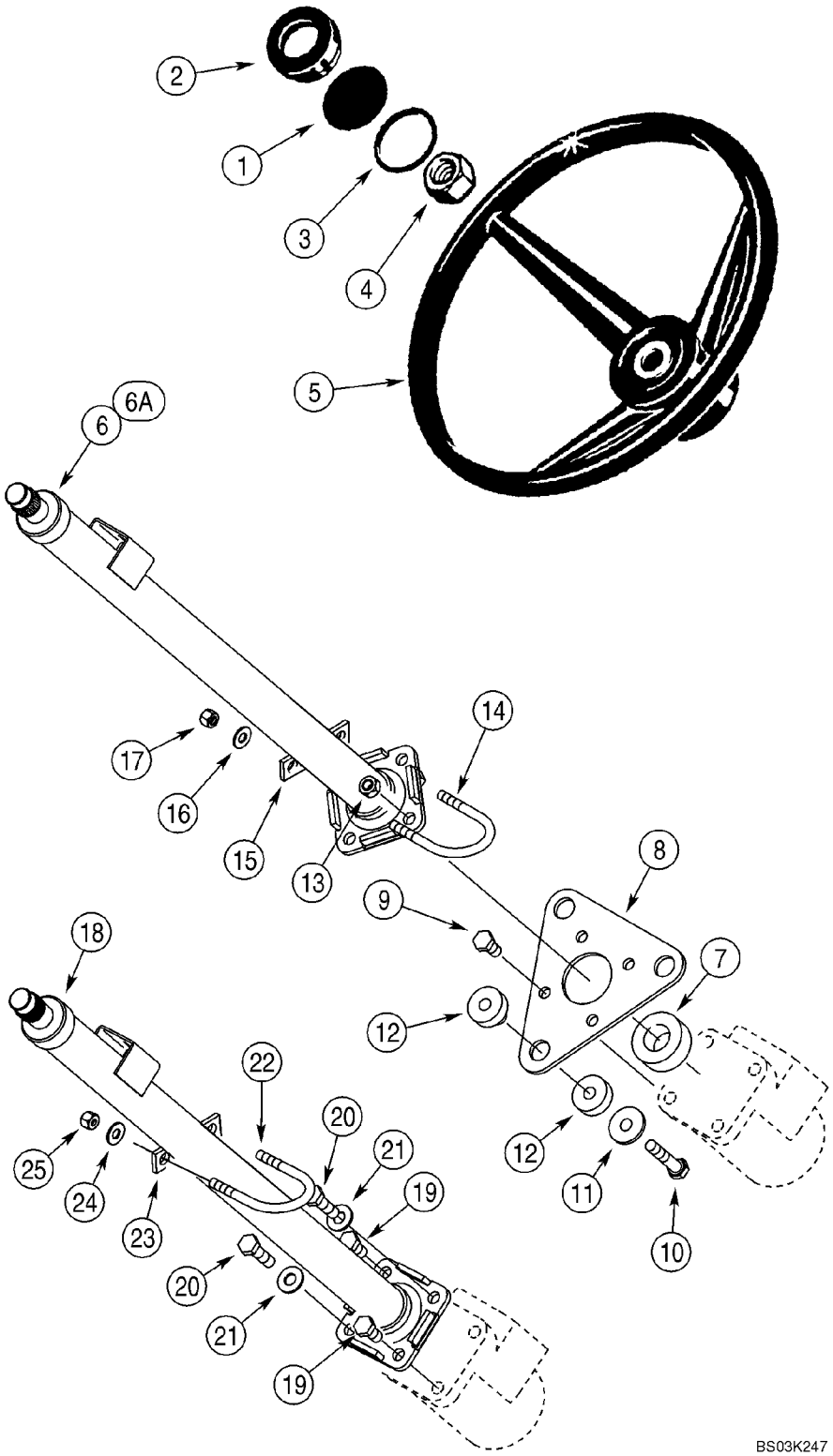

HTTP://WWW.MINNPARBACKHOEPARTS.COM



STEERING WHEEL - COLUMN

| REF | FN | PART NUMBER | YR/SN | QTY | DESCRIPTION |
|---|---|---|---|---|---|
| 1 | | {87435569} | | 1 | Insert, Case |
| 2 | | 114882A2 | | 1 | CAP |
| 3 | | 238-5227 | | 1 | O-RING 2-1/8 ID x 2-3/8 |
| 4 | | 1959509C1 | | 1 | NUT |
| 5 | | A65544 | | 1 | WHEEL (STEERING) |
| 6 | | 352568A1 | | 1 | STEERING COLUMN Cab Models, Without Tilt Steering, See Figure 05-03 |
| 6A | | 352569A4 | | 1 | STEERING COLUMN Cab Models, With Tilt Steering, 712 mm Long, See Figure 05-03 |
| 7 | | 352401A1 | | 1 | SEAL 25 x 40 x 19 mm, Sound Insulation |
| 8 | | 388116A2 | | 1 | PLATE |
| 9 | | 614-10020 | | 4 | SCREW M10 x 20 |
| 10 | | 814-10050 | | 3 | SCREW M10 x 50 |
| 11 | | 496-81028 | | 3 | WASHER 13/32 x 1-1/4 x 1/8 in |
| 12 | | 141747A1 | | 3 | ISOLATOR |
| 13 | | 832-10410 | | 2 | NUT Lock, M10 |
| 14 | | 379846A1 | | 1 | U-BOLT |
| 15 | | 352727A1 | | 1 | SPACER |
| 16 | | 895-15008 | | 2 | WASHER 9 x 20 x 1,6 mm |
| 17 | | 832-10408 | | 2 | NUT Lock, M8 |
| 18 | | 348794A1 | | 1 | STEERING COLUMN Canopy Models, See Figure 05-03 |
| 19 | | 614-10020 | | 2 | SCREW M10 x 20 |
| 20 | | 614-10035 | | 2 | SCREW M10 x 35 |
| 21 | | 895-15010 | | 2 | WASHER 11 x 24 x 2 mm |
| 22 | | 379846A1 | | 1 | U-BOLT |
| 23 | | 352727A1 | | 1 | SPACER |
| 24 | | 895-15008 | | 2 | WASHER 9 x 20 x 1,6 mm |
| 25 | | 832-10408 | | 2 | NUT Lock, M8 |

HTTP://WWW.MINNPARBACKHOEPARTS.COM



HYDRAULICS - STEERING

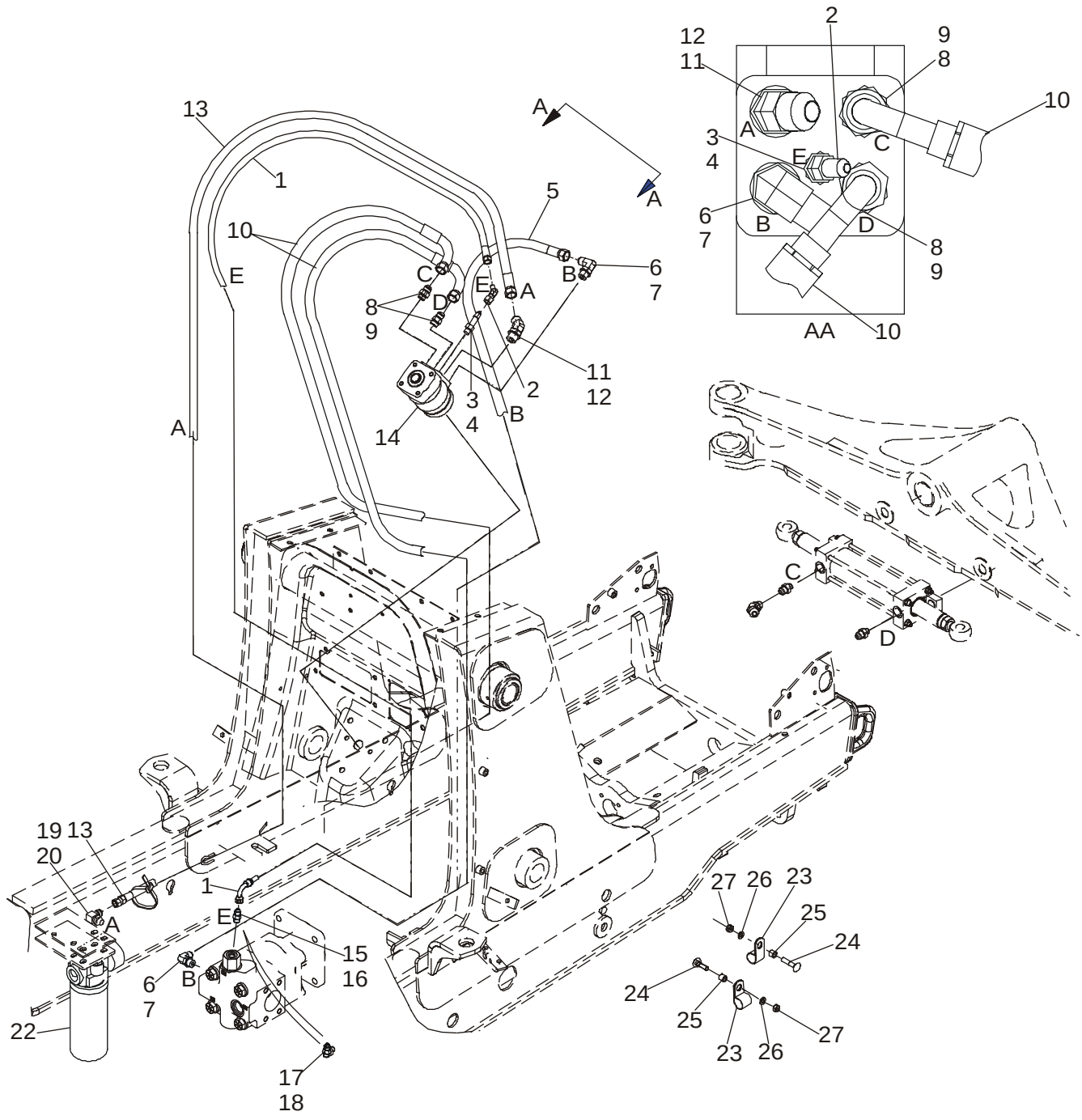


BS03M019

HTTP://WWW.MINNPARBACKHOEPARTS.COM



HYDRAULICS - STEERING

| REF | FN | PART NUMBER | YR/SN | QTY | DESCRIPTION |
|---|---|---|---|---|---|
| 1 | | 87439137 | | 1 | HOSE ASSY. 1675 mm (66 in), Steering Pilot Hose |
| 2 | | 218-5170 | | 1 | FITTING Elbow, 45 deg, 7/16 fl x fem |
| 3 | | 218-5027 | | 1 | CONNECTOR 7/16 fl x Or, Incl. Ref 4 |
| 4 | | 237-6004 | | 1 | O-RING 23/64 ID x 5/64 |
| 5 | | 87439138 | | 1 | HOSE ASSY. 1600 mm (63 in), Steering Pressure |
| 6 | | 218-5106 | | 2 | FITTING Elbow, 90 deg, 3/4 Or, Incl. Ref 7 |
| 7 | | 237-6008 | | 1 | O-RING |
| 8 | | 218-5059 | | 2 | CONNECTOR, HYD. 3/4 fl x Or, Incl. Ref 9 |
| 9 | | 237-6008 | | 1 | O-RING 41/64 ID x 3/32 |
| 10 | | 87429382 | | 2 | HOSE ASSY. 1520 mm (59-7/8 in), To Steering Cylinder |
| 11 | | 218-5136 | | 1 | ELBOW 45 deg, 3/4 Or; Incl. Ref 12 |
| 12 | | 237-6008 | | 1 | O-RING |
| 13 | | 87439136 | | 1 | HOSE ASSY. 1550 mm (61-1/16 in), Return |
| 14 | | 87419634 | | 1 | PUMP Steering Control Valve; Includes 396591A1 Seal Kit, 396592A1 Anti-Cavitation Valve Kit, 396593A1 Bolt Kit |
| 15 | | 218-5057 | | 1 | CONNECTOR, HYD. 9/16 fl x Or, Incl. Ref 16, Standard Equipment, Models Without Auxiliary Hydraulics |
| 16 | | 237-6006 | | 1 | O-RING |
| 17 | | 282428A1 | | 1 | POPPET, VALVE CHECK, Tee, 9/16; Incl. Ref 18; Models With Auxiliary Hydraulics |
| 18 | | 237-6006 | | 1 | O-RING |
| 19 | | 218-5280 | | 1 | FITTING ELBOW, 90 deg, 3/4 fl x 9/16 Or; Incl. Ref 20 |
| 20 | | 237-6008 | | 1 | O-RING 41/64 ID x 3/32 |
| 22 | | 445674A1 | | 1 | FILTER ASSY. Hydraulic Oil, See Figure 08-57 |
| 23 | | 515-23159 | | 2 | CLAMP P-Type |
| 24 | | 711-10050 | | 2 | BOLT M10 x 50 |
| 25 | | 120303A1 | | 2 | SPACER |
| 26 | | 892-11010 | | 2 | WASHER, LOCK M10 |
| 27 | | 829-1410 | | 2 | NUT M10; 10.9 |

HTTP://WWW.MINNPARBACKHOEPARTS.COM

| 05-03 | | p1 | 09/03 |
|---|---|---|---|

STEERING COLUMN

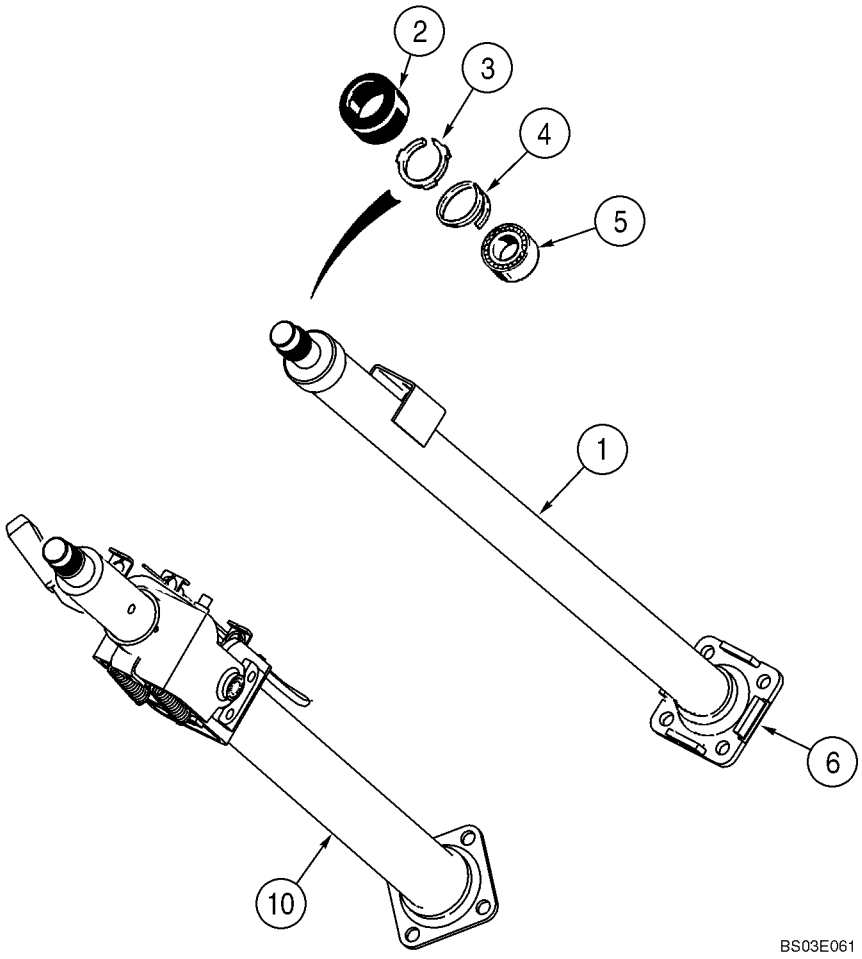

HTTP://WWW.MINNPARBACKHOEPARTS.COM



STEERING COLUMN

| REF | FN | PART NUMBER | YR/SN | QTY | DESCRIPTION |
|---|---|---|---|---|---|
| | | 348794A1 | | 1 | STEERING COLUMN Canopy Models, Incl. Ref 1 - 6 |
| | | 352568A1 | | 1 | STEERING COLUMN Cab Models, Without Tilt Steering, Incl. Ref 1 - 6 |
| 1 | | NSS | | 1 | NOT SERVICED SEPARATELY Column |
| 2 | | S115351 | | 1 | CAP |
| 3 | | NSS | | 1 | NOT SERVICED SEPARATELY Retainer |
| 4 | | 102-1387 | | 1 | SNAP RING No. 87 |
| 5 | | NSS | | 1 | NOT SERVICED SEPARATELY Bearing |
| 6 | | NSS | | 1 | NOT SERVICED SEPARATELY Flange |
| 10 | | 352569A4 | | 1 | STEERING COLUMN 712 mm Long, Cab Models, With Tilt Steering, Component Parts Not Serviced Separately |

HTTP://WWW.MINNPARBACKHOEPARTS.COM

| 05-04 | | p1 | 01/04 |
|---|---|---|---|

AXLE, FRONT (86990837) - MOUNTING

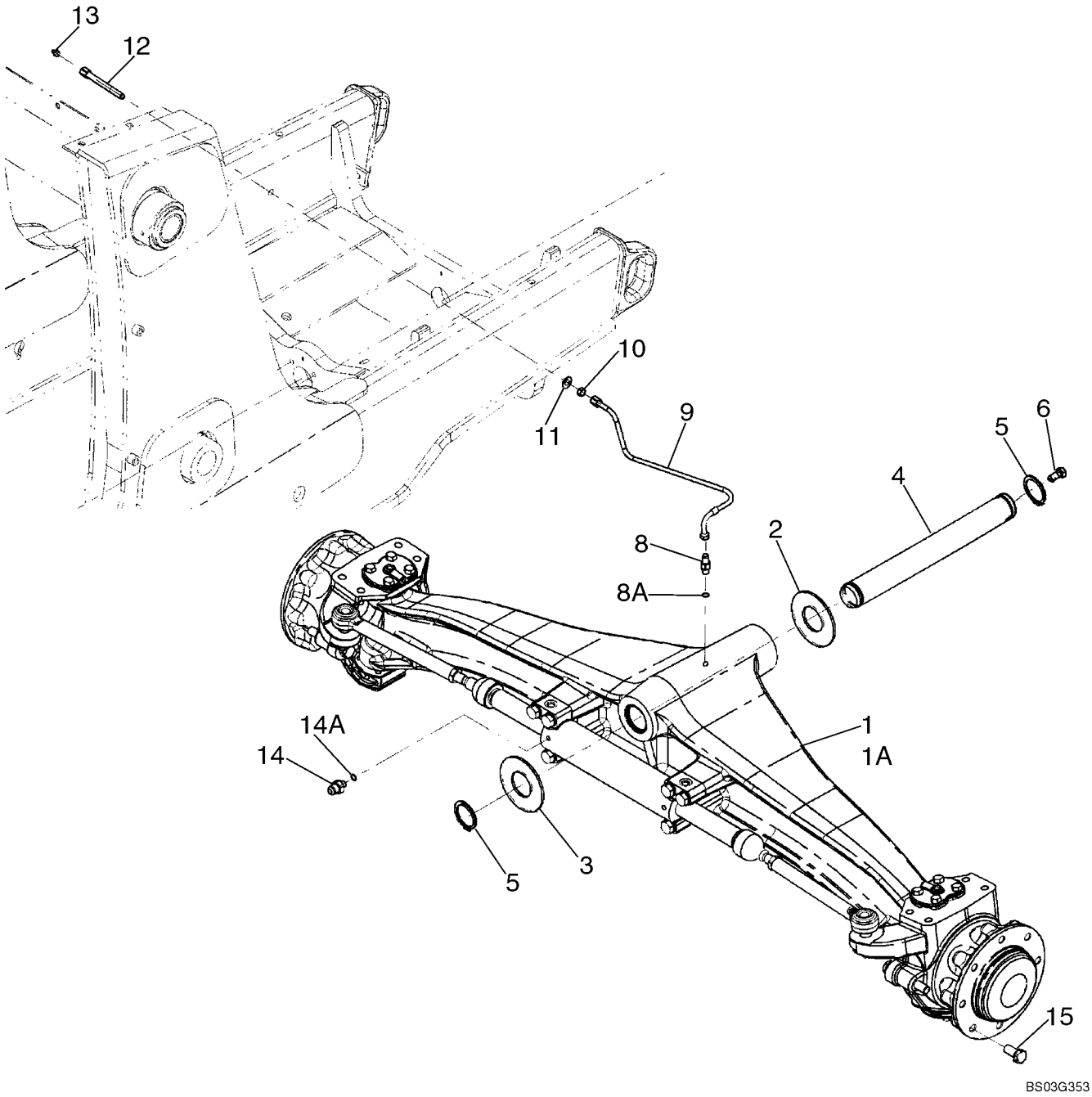

HTTP://WWW.MINNPARBACKHOEPARTS.COM



AXLE, FRONT (86990837) - MOUNTING

| REF | FN | PART NUMBER | YR/SN | QTY | DESCRIPTION |
|---|---|---|---|---|---|
| 1 | | 86990837 | | 1 | AXLE, STEERING Front, Two Wheel Drive, See Figures 05-05 - 05-08 |
| 2 | | 191796A1 | | X | WASHER 2 x 4 x 1/16 |
| 3 | | D123684 | | 1 | WASHER Thrust, 2-1/2 x 4-1/2 x 3/16 |
| 4 | | 87404197 | | 1 | PIN, PIVOT |
| 5 | | 800-44050 | | 2 | SNAP RING No. 50 |
| 6 | | 614-12025 | | 1 | SCREW M12 x 25 |
| 8 | | 218-5053 | | 1 | CONNECTOR, HYD. 7/16 fl x adj Or; Incl. Ref 8A |
| 8A | | 237-6004 | | 1 | O-RING 23/64 ID x 5/64 |
| 9 | | 87433730 | | 1 | HOSE ASSY. 500 mm (19-11/16 in), Lubrication Line |
| 10 | | 218-1275 | | 1 | NUT, LOCK 7/16 |
| 11 | | 495-11047 | | 1 | WASHER 15/32 x 59/64 x 1/16 |
| 12 | | 381442A1 | | 1 | CONNECTION |
| 13 | | 219-1 | | 1 | NIPPLE, LUBE 1/8 PT x 21/32 Grease Fitting |
| 14 | | 218-5351 | | 2 | CONNECTOR, HYD. 3/4 fl x 9/16 Or, Incl. Ref 14A |
| 14A | | 237-6006 | | 1 | O-RING 15/32 ID x 5/64 |
| 15 | | A38208 | | 16 | BOLT Wheel Bolt |

HTTP://WWW.MINNPARBACKHOEPARTS.COM

| 05-05 | | p1 | 01/04 |
|---|---|---|---|

AXLE, FRONT (86990837) - HOUSING

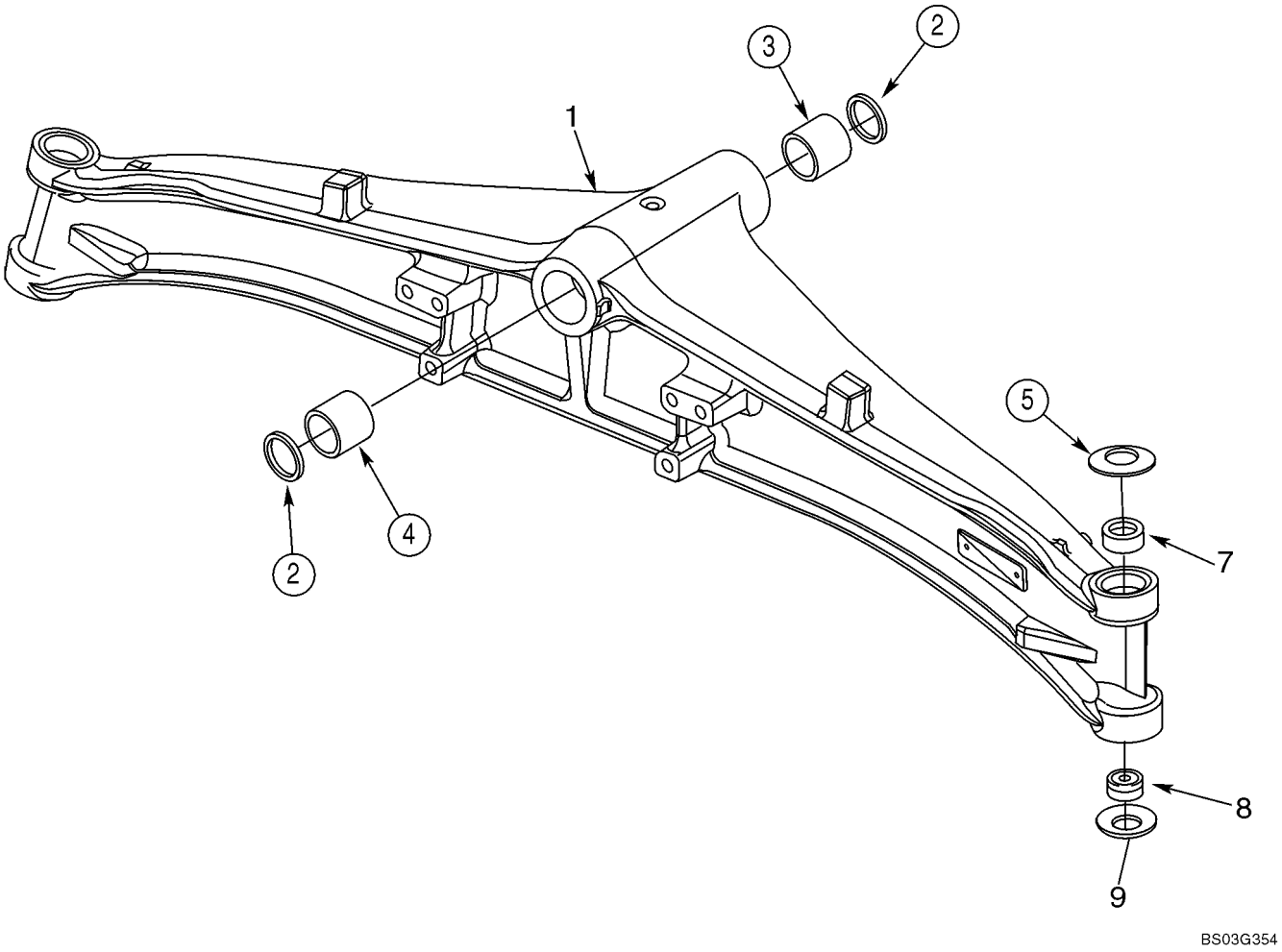

HTTP://WWW.MINNPARBACKHOEPARTS.COM



AXLE, FRONT (86990837) - HOUSING

| REF | FN | PART NUMBER | YR/SN | QTY | DESCRIPTION |
|---|---|---|---|---|---|
| | | 86990837 | | 1 | AXLE, STEERING Front, Two Wheel Drive, Incl. Figures 05-05 - 05-08 |
| 1 | | 429230A1 | | 1 | HOUSING, AXLE |
| 2 | | N14367 | | 2 | SEAL |
| 3 | | D149726 | | 1 | BUSHING Front |
| 4 | | D149725 | | 1 | BUSHING Rear |
| 5 | | 122270A1 | | 2 | WASHER Belleville |
| 7 | | 87400286 | | 2 | BUSHING |
| 8 | | N14373 | | 2 | BEARING Bushing; Two Piece; 28 ID x 50 OD x 16 |
| 9 | | 122261A1 | | 2 | WASHER Belleville |

HTTP://WWW.MINNPARBACKHOEPARTS.COM



AXLE, FRONT (86990837) - HOUSING, SWIVEL

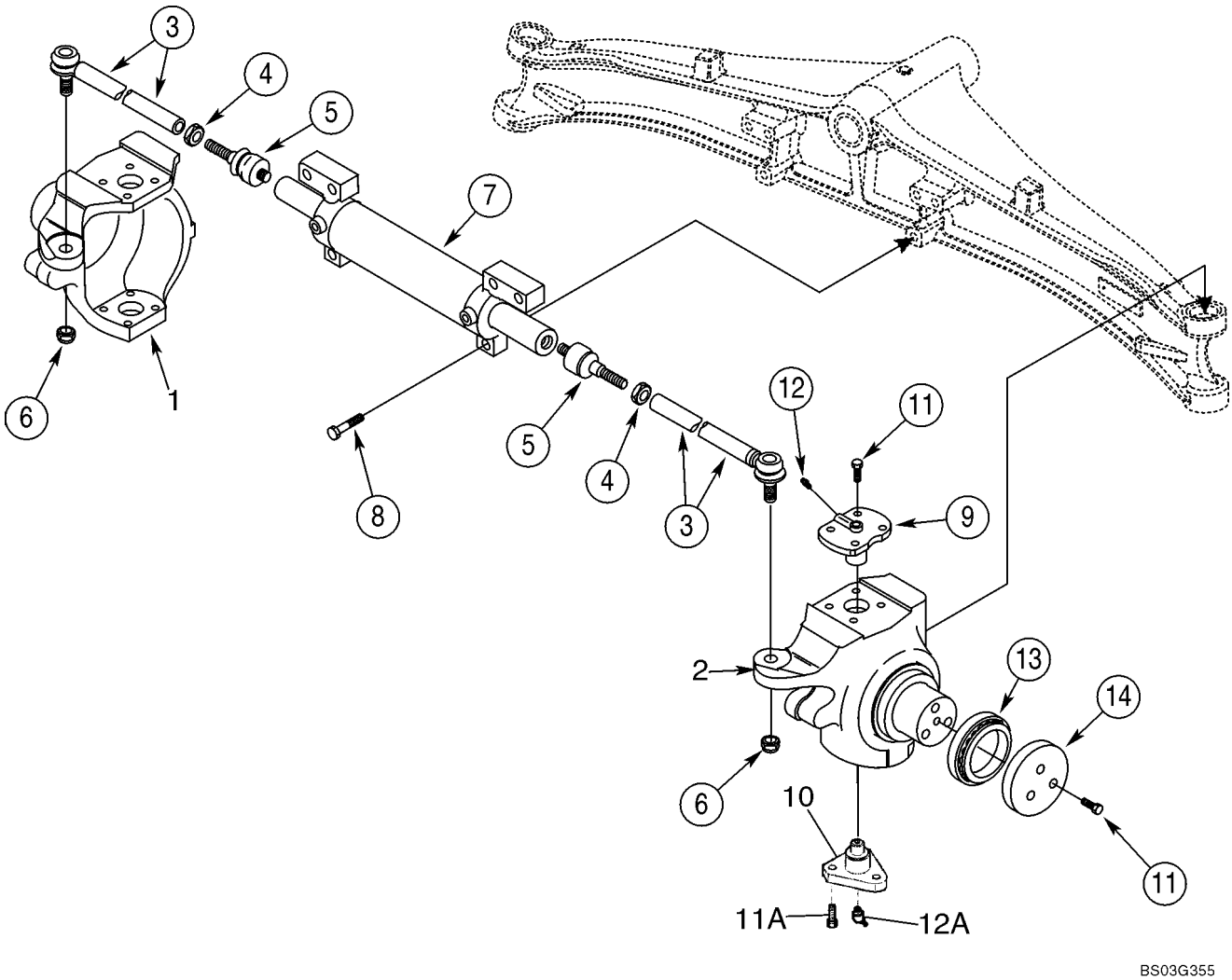

HTTP://WWW.MINNPARBACKHOEPARTS.COM



AXLE, FRONT (86990837) - HOUSING, SWIVEL

| REF | FN | PART NUMBER | YR/SN | QTY | DESCRIPTION |
|---|---|---|---|---|---|
| | | 86990837 | | 1 | AXLE, STEERING Front, Two Wheel Drive, Incl. Figures 05-05 - 05-08 |
| 1 | | 429231A1 | | 1 | HOUSING Swivel, Left-Hand |
| 2 | | 429232A1 | | 1 | HOUSING Swivel, Right-Hand |
| | | 401052A1 | | 2 | STEERING ASSY Arm, Incl. Ref 3 - 5 |
| 3 | | 401054A1 | | 1 | TIE ROD |
| 4 | | 934727R1 | | 1 | NUT M18 |
| 5 | | 112509A1 | | 1 | BALL JOINT |
| 6 | | 905839R1 | | 2 | NUT M18 |
| 7 | | 401055A1 | | 1 | CYLINDER STEERING See Figure 05-07 |
| 8 | | 863-16070 | | 6 | BOLT Socket Head, M16 x 70; 12.9 |
| 9 | | 122265A1 | | 2 | PIN, LARGE King Pin, Upper |
| 10 | | 122259A1 | | 2 | PIVOT King Pin, Lower; Triangular Shape |
| 11 | | 100533A1 | | 14 | BOLT Lock, M12 x 30 |
| 11A | | D150214 | | 6 | SCREW Lock, M14 x 35; Lower King Pin |
| 12 | | 712998R91 | | 2 | NIPPLE, LUBE M6x1, Grease Fitting |
| 12A | | N13505 | | 2 | NIPPLE, LUBE M6x1, 45 deg Grease Fitting; Lower King Pin |
| 13 | | 401059A1 | | 2 | BEARING, ROLLER Thrust |
| 14 | | 401060A1 | | 2 | WASHER, THRUST |

HTTP://WWW.MINNPARBACKHOEPARTS.COM



AXLE, FRONT (86990837) - CYLINDER, STEERING

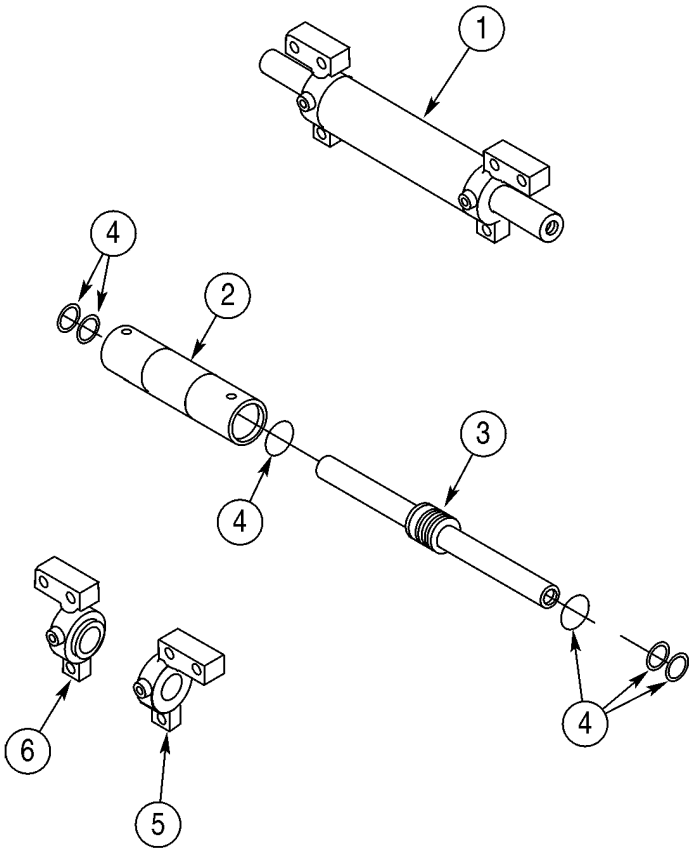


BC00G065

HTTP://WWW.MINNPARBACKHOEPARTS.COM



AXLE, FRONT (86990837) - CYLINDER, STEERING

| REF | FN | PART NUMBER | YR/SN | QTY | DESCRIPTION |
|---|---|---|---|---|---|
| | | 86990837 | | 1 | AXLE, STEERING Front, Two Wheel Drive, Incl. Figures 05-05 - 05-08 |
| 1 | | 401055A1 | | 1 | CYLINDER STEERING Incl. Ref 2 - 6 |
| 2 | | NSS | | 1 | NOT SERVICED SEPARATELY Tube, Cylinder |
| 3 | | 401062A1 | | 1 | ROD, PISTON |
| 4 | | 401061A1 | | 1 | PACKAGE, SEALS Seal, Component Parts Not Serviced Separately |
| 5 | | 401063A1 | | 1 | HEAD ASSY. Right-Hand |
| 6 | | 401064A1 | | 1 | HEAD ASSY. Left-Hand |

HTTP://WWW.MINNPARBACKHOEPARTS.COM

| 05-08 | | p1 | 01/04 |
|---|---|---|---|

AXLE, FRONT (86990837) - HUB AND BEARINGS

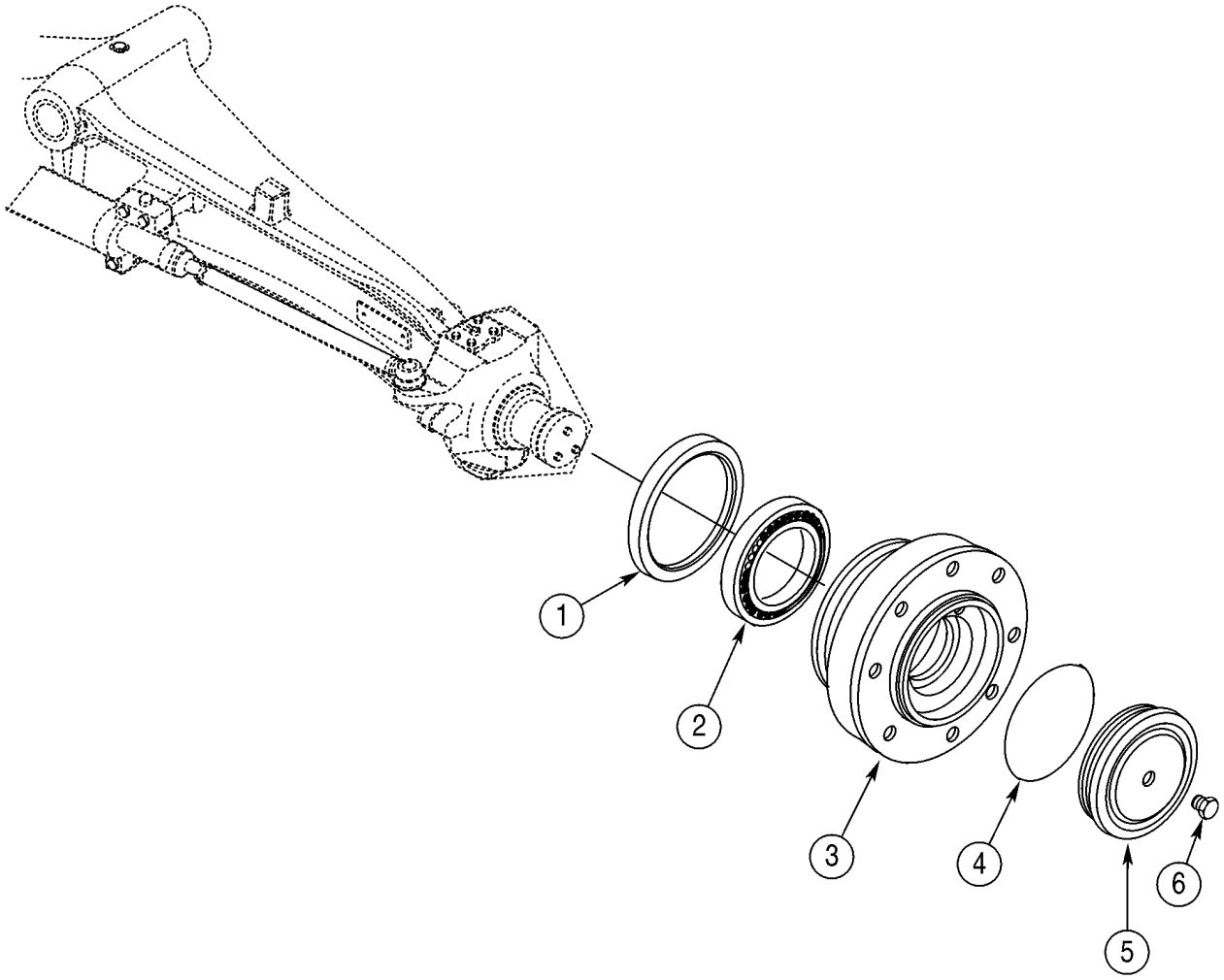


BC00G066

HTTP://WWW.MINNPARBACKHOEPARTS.COM



AXLE, FRONT (86990837) - HUB AND BEARINGS

| REF | FN | PART NUMBER | YR/SN | QTY | DESCRIPTION |
|---|---|---|---|---|---|
| | | 86990837 | | 1 | AXLE, STEERING Front, Two Wheel Drive; Incl. Figures 05-05 - 05-08 |
| 1 | | 311569A1 | | 2 | SEAL, OIL |
| 2 | | 324213A1 | | 2 | BEARING |
| 3 | | 401065A1 | | 2 | HUB |
| 4 | | 401066A1 | | 2 | O-RING |
| 5 | | 401067A1 | | 2 | COVER |
| 6 | | D142898 | | 2 | PLUG 10 x 1 mm |

HTTP://WWW.MINNPARBACKHOEPARTS.COM



WHEELS, FRONT - TIRES

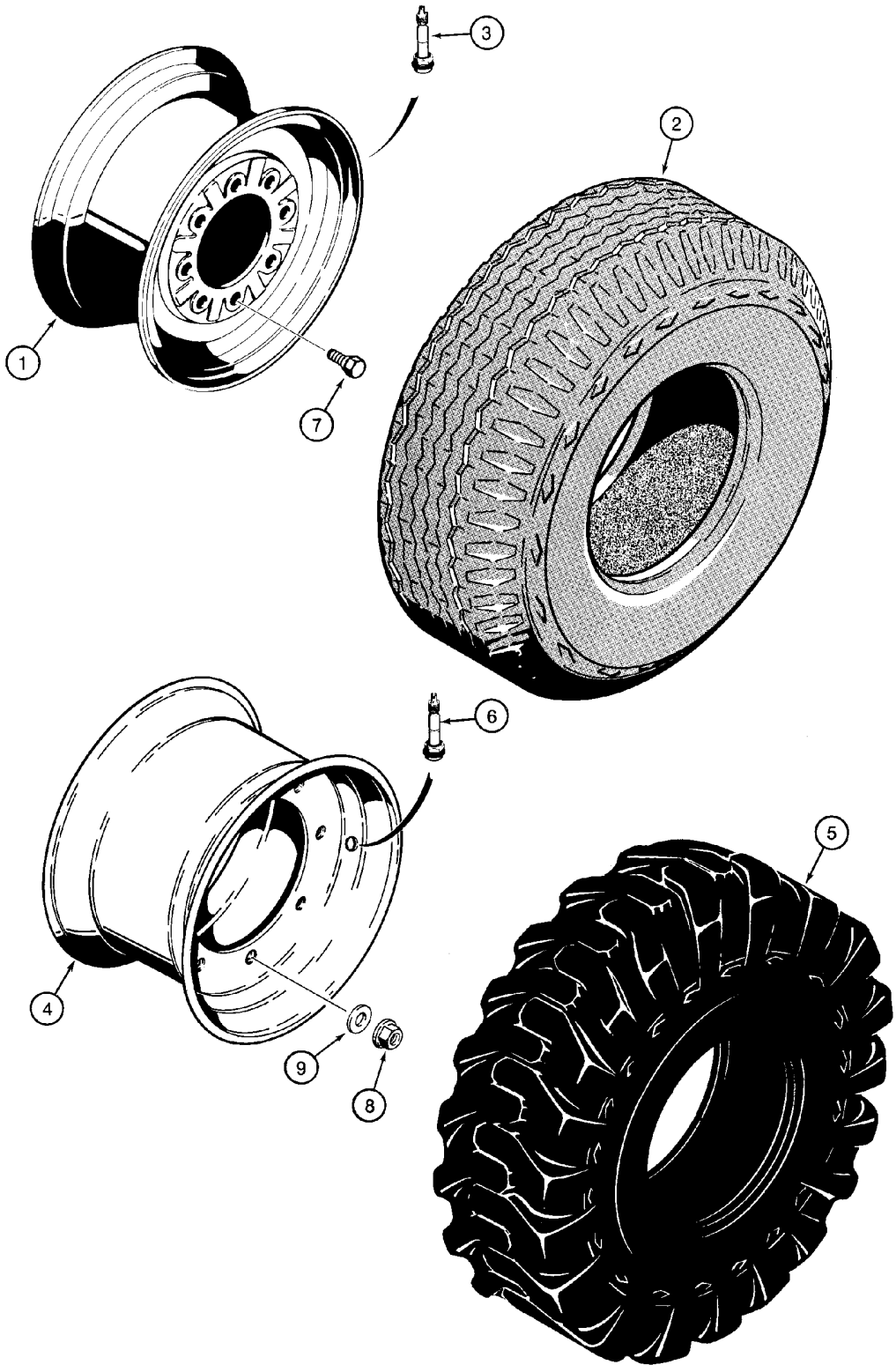

HTTP://WWW.MINNPARBACKHOEPARTS.COM



WHEELS, FRONT - TIRES

| REF | FN | PART NUMBER | YR/SN | QTY | DESCRIPTION |
|---|---|---|---|---|---|
| 1 | | D125223 | | 2 | RIM For 11L x 16 - 10 PR F3 Tires; Two Wheel or Four Wheel Drive Models |
| 2 | | REF | | 2 | INSTRUCTION Tire, Purchase Locally |
| 3 | | 387897R91 | | 2 | VALVE |
| 4 | | 119243A1 | | 2 | RIM For 12 x 16.5 - 8 or 10 Ply Tires; Two Wheel or Four Wheel Drive Models |
| 5 | | REF | | 2 | INSTRUCTION Tire, Purchase Locally |
| 6 | | 387897R91 | | 2 | VALVE |
| 7 | | A38208 | | 16 | BOLT Wheel Bolts; Two Wheel Drive Models |
| 8 | | 825-11418 | | 16 | NUT M18; Wheel Nuts; Four Wheel Drive Models |
| 9 | | 496-81000 | | 16 | WASHER 25/32 x 1-3/8 x 1/8; Wheel Nuts; Four Wheel Drive Models |

HTTP://WWW.MINNPARBACKHOEPARTS.COM

HTTP://WWW.MINNPARBACKHOEPARTS.COM

# SECTION INDEX


| | |
|---|---|
| 06-01 | AXLE, FRONT DRIVE - MOUNTING |
| 06-02 | AXLE, FRONT DRIVE - HOUSING |
| 06-03 | AXLE, FRONT DRIVE - HOUSING, SWIVEL |
| 06-04 | AXLE, FRONT DRIVE - CYLINDER, STEERING |
| 06-05 | AXLE, FRONT DRIVE - SHAFTS, AXLE |
| 06-06 | AXLE, FRONT DRIVE - PLANETARY |
| 06-07 | AXLE, FRONT DRIVE - DIFFERENTIAL |
| 06-08 | AXLE, FRONT DRIVE - RING AND PINION |
| 06-09 | DRIVE SHAFT, FRONT AXLE |
| 06-10 | COOLING SYSTEM - TRANSMISSION |
| 06-11 | TRANSMISSION - MOUNTING |
| 06-12 | TRANSMISSION ASSY - FILTER, OIL |
| 06-13 | TRANSMISSION ASSY (2WD) - HOUSING |
| 06-14 | TRANSMISSION ASSY (4WD) - HOUSING |
| 06-15 | TRANSMISSION ASSY - PUMP, OIL |
| 06-16 | TRANSMISSION ASSY - SHIFTER MECHANISM |
| 06-17 | TRANSMISSION ASSY - SHAFT, IDLER AND PRIMARY |
| 06-18 | TRANSMISSION ASSY - SHAFT, INPUT |
| 06-19 | TRANSMISSION ASSY - SHAFT, SECONDARY |
| 06-20 | TRANSMISSION ASSY (4WD) - SHAFT, OUTPUT |
| 06-21 | TRANSMISSION ASSY - VALVE, CONTROL |
| 06-22 | TRANSMISSION ASSY (4WD) - VALVE, SOLENOID |
| 06-23 | WHEELS, REAR - TIRES |
| 06-24 | AXLE, REAR DRIVE - MOUNTING |
| 06-25 | AXLE, REAR - DIFFERENTIAL LOCK |
| 06-26 | AXLE, REAR DRIVE - HOUSING |
| 06-27 | AXLE, REAR DRIVE - DIFFERENTIAL |
| 06-28 | AXLE, REAR DRIVE - RING AND PINION |
| 06-29 | AXLE, REAR DRIVE - DIFFERENTIAL LOCK |
| 06-30 | AXLE, REAR DRIVE - PLANETARY |
| 06-31 | DRIVE SHAFT, REAR AXLE |

HTTP://WWW.MINNPARBACKHOEPARTS.COM

| 06-01 | | p1 | 08/03 |
|---|---|---|---|

AXLE, FRONT DRIVE - MOUNTING

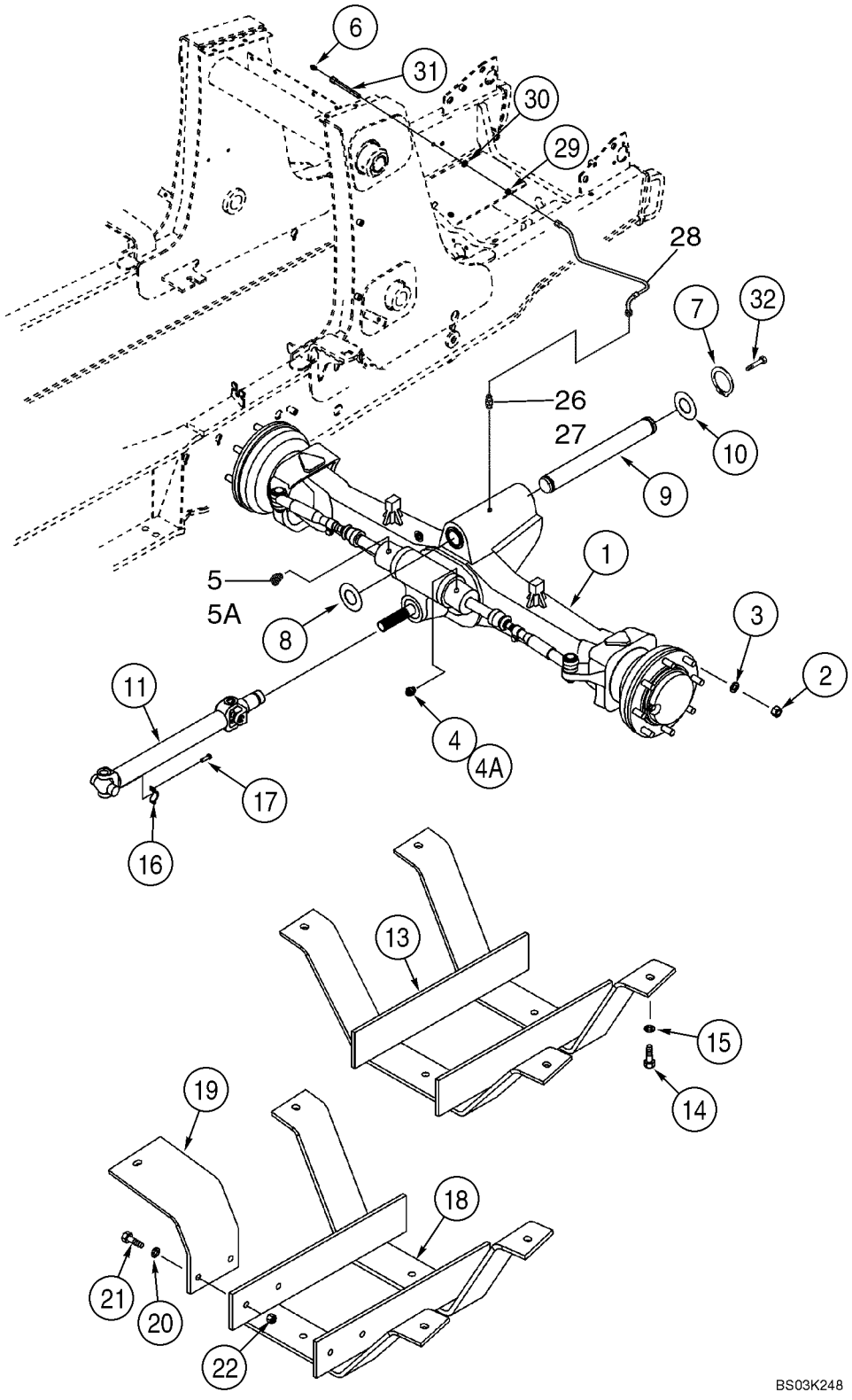

HTTP://WWW.MINNPARBACKHOEPARTS.COM



AXLE, FRONT DRIVE - MOUNTING

| REF | FN | PART NUMBER | YR/SN | QTY | DESCRIPTION |
|---|---|---|---|---|---|
| 1 | | 87417387 | | 1 | AXLE ASSY, 4WD Front, See Figure 06-02 - 06-08 |
| 2 | | 825-11418 | | 16 | NUT M18 |
| 3 | | 496-81000 | | 16 | WASHER 25/32 x 1-3/8 x 1/8 |
| 4 | | 218-5351 | | 1 | CONNECTOR, HYD. 3/4 fl x 9/16 Or; Incl. Ref 4A |
| 4A | | 237-6006 | | 1 | O-RING 15/32 ID x 5/64 |
| 5 | | 218-5529 | | 1 | ELBOW 45 deg, 3/4 fl x 9/16 Or; Incl. Ref 5A |
| 5A | | 237-6006 | | 1 | O-RING 15/32 ID x 5/64 |
| 6 | | 219-1 | | 1 | NIPPLE, LUBE 1/8 PT x 21/32 |
| 7 | | 800-44050 | | 2 | SNAP RING No. 50 |
| 8 | | 191796A1 | | X | WASHER 2 x 4 x 1/16 |
| 9 | | 87404197 | | 1 | PIN, PIVOT Pivot Pin |
| 10 | | D123684 | | 1 | WASHER Thrust, 2-1/2 x 4-1/2 x 3/16 |
| 11 | | 367861A2 | | 1 | SHAFT, DRIVE See Figure 06-09 |
| 13 | | 137223A2 | | 1 | GUARD Drive Shaft, Used On Models With 31 Gallon Fuel Tank |
| 14 | | 827-12045 | | 4 | SCREW M12 x 45; 10.9 |
| 15 | | 495-21056 | | 4 | WASHER 9/16 x 1-3/8 x 7/64 |
| 16 | | 90-6682T1 | | 2 | CLAMP |
| 17 | | D137627 | | 4 | BOLT |
| 18 | | 282038A2 | | 1 | GUARD ASSY. Drive Shaft, Used On Models With 40 Gallon Fuel Tank |
| 19 | | 282033A1 | | 1 | BRACKET |
| 20 | | 495-21056 | | 8 | WASHER 9/16 x 1-3/8 x 7/64 |
| 21 | | 827-12045 | | 6 | SCREW M12 x 45; 10.9 |
| 22 | | 829-1412 | | 2 | NUT M12; 10 |
| 26 | | 218-5053 | | 1 | CONNECTOR, HYD. 7/16 fl x adj Or; Incl. Ref 27 |
| 27 | | 237-6004 | | 1 | O-RING 23/64 ID x 5/64 |
| 28 | | 87433730 | | 1 | HOSE ASSY. 500 mm (19-11/16 in), Lubrication Line |
| 29 | | 218-1275 | | 1 | NUT, LOCK 7/16 |
| 30 | | 495-11047 | | 1 | WASHER 15/32 x 59/64 x 1/16 |
| 31 | | 381442A1 | | 1 | CONNECTION Lubrication Line |
| 32 | | 614-12025 | | 1 | SCREW M12 x 25 |

HTTP://WWW.MINNPARBACKHOEPARTS.COM



AXLE, FRONT DRIVE - HOUSING

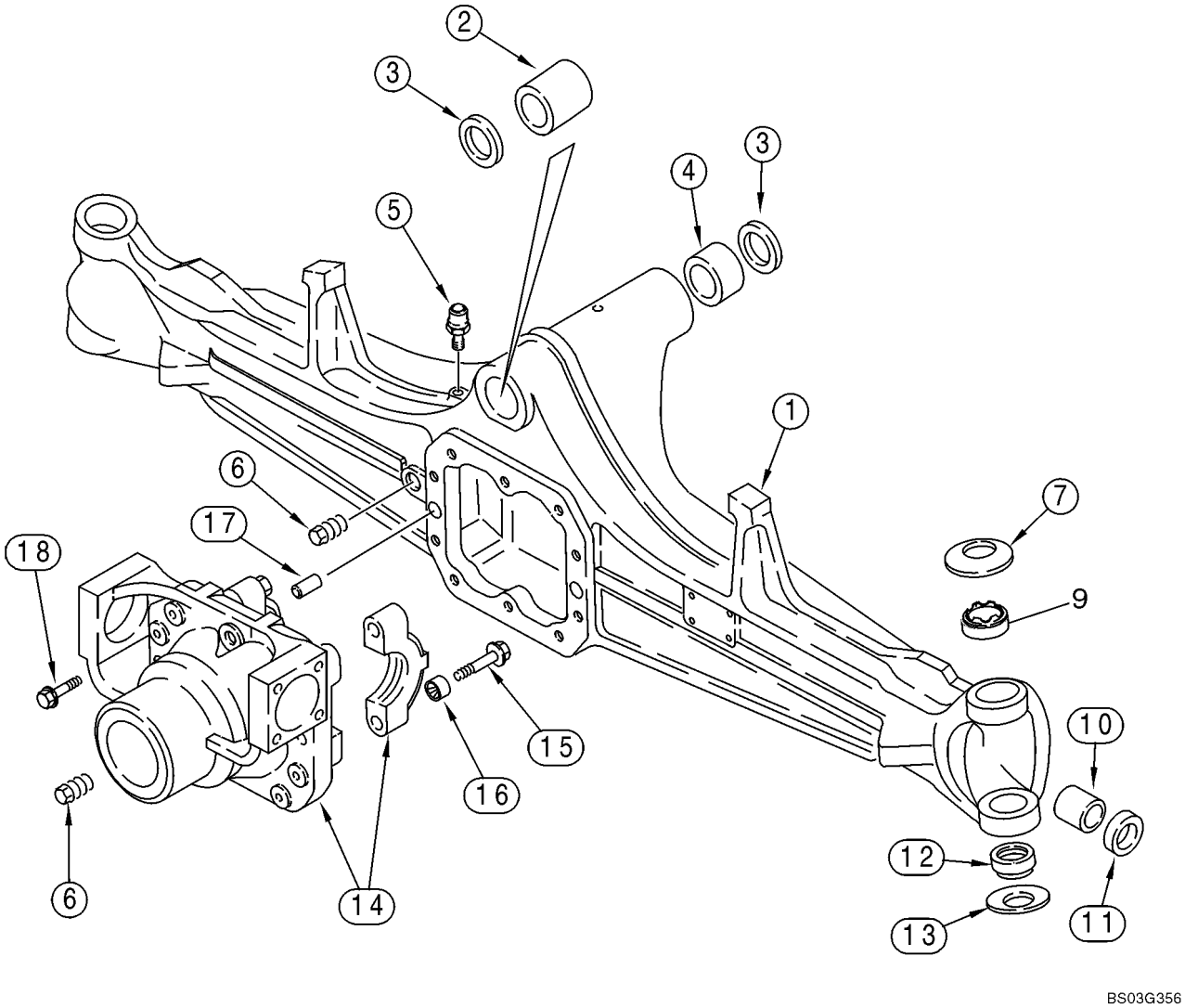

HTTP://WWW.MINNPARBACKHOEPARTS.COM



AXLE, FRONT DRIVE - HOUSING

| REF | FN | PART NUMBER | YR/SN | QTY | DESCRIPTION |
|---|---|---|---|---|---|
| | | 87417387 | | 1 | AXLE ASSY, 4WD Front; Incl. Ref 1 - 18; Also Includes Parts On Figures 06-02 - 06-08 |
| 1 | | 427107A1 | | 1 | HOUSING, AXLE |
| | | B17575 | | X | FLUID 89 ml, Black RTV Silicone; Differential Carrier to Axle Housing |
| 2 | | D149725 | | 1 | BUSHING |
| 3 | | N14367 | | 2 | SEAL |
| 4 | | D149726 | | 1 | BUSHING |
| 5 | | 1966149C2 | | 1 | BREATHER |
| 6 | | A156873 | | 2 | PLUG, DRAIN 22 mm |
| 7 | | 122270A1 | | 2 | WASHER Belleville |
| 9 | | 87400286 | | 2 | BUSHING |
| 10 | | 1966186C1 | | 2 | BUSHING |
| 11 | | 311565A1 | | 2 | SEAL Oil, 30 x 44 x 14 mm thk, Triple Lip, Used In 15 mm Deep Counterbore |
| 12 | | 100520A1 | | 2 | BALL JOINT Bushing, Two Piece |
| 13 | | 122268A1 | | 2 | WASHER Belleville |
| | | 144454A1 | | 1 | SUPPORT ASSY. Differential Carrier; Incl. Ref 14 - 16 |
| 14 | | NSS | | 1 | NOT SERVICED SEPARATELY Carrier |
| 15 | | S301065 | | 4 | SCREW 14 x 75 mm |
| 16 | | 1966136C1 | | 4 | NUT, SPECIAL Bushing |
| 17 | | 1966138C1 | | 2 | PIN, LARGE Dowel |
| 18 | | S301064 | | 10 | SCREW Flange, M12 x 33; 12.9 |
| | | B17575 | | X | FLUID 89 ml, Black RTV Silicone, Differential Carrier to Axle Housing |

HTTP://WWW.MINNPARBACKHOEPARTS.COM



AXLE, FRONT DRIVE - HOUSING, SWIVEL

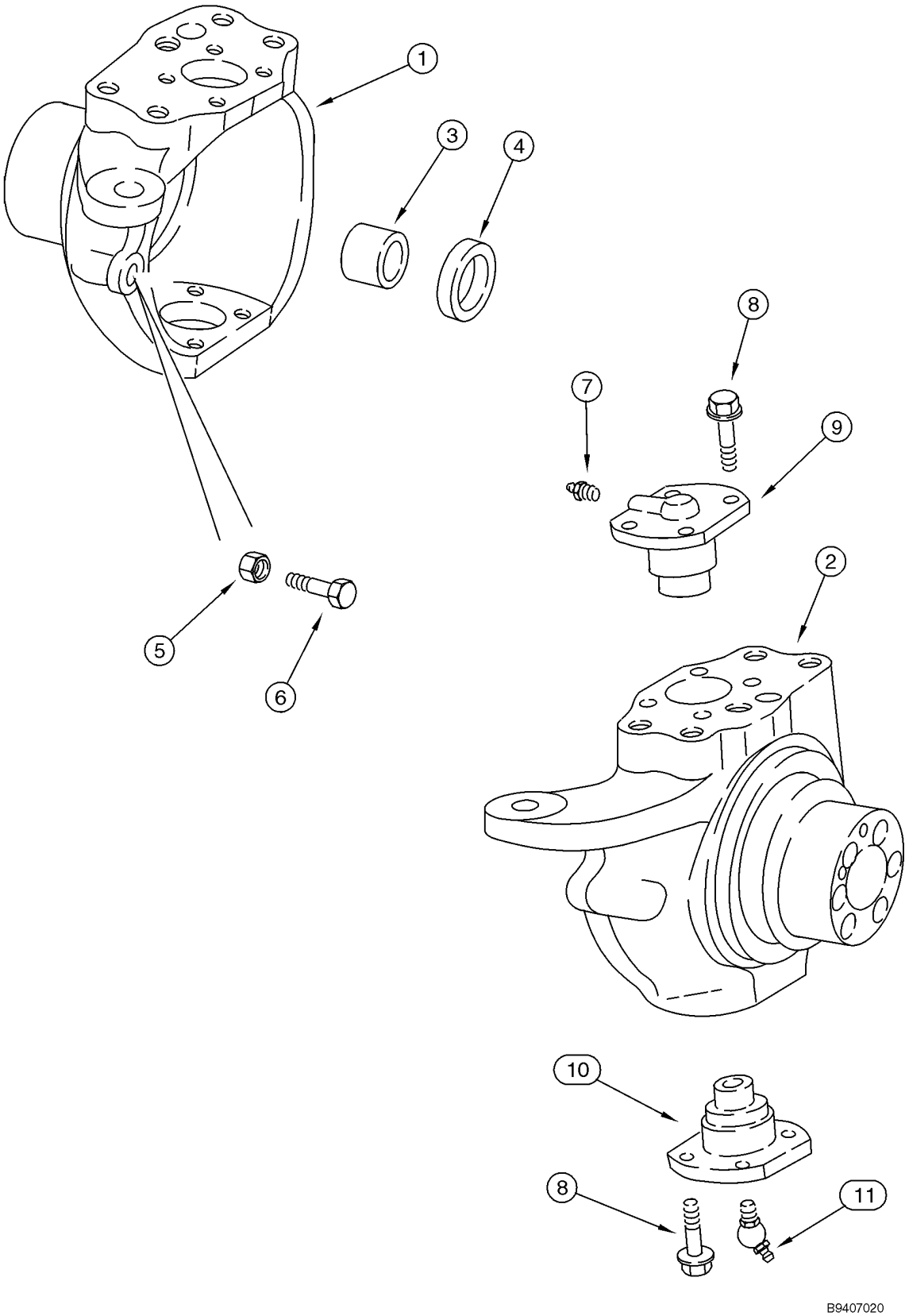

HTTP://WWW.MINNPARBACKHOEPARTS.COM



AXLE, FRONT DRIVE - HOUSING, SWIVEL

| REF | FN | PART NUMBER | YR/SN | QTY | DESCRIPTION |
|---|---|---|---|---|---|
| | | 87417387 | | 1 | AXLE ASSY, 4WD Front; Incl. Ref 1 - 11; Also Includes Parts On Figures 06-02 - 06-08 |
| 1 | | 397653A1 | | 1 | HOUSING, AXLE Left-Hand, 60 mm Diameter Axle Shaft Seal Counterbore |
| | | B17575 | | X | FLUID 89 ml, Black RTV Silicone, Wear Ring to Swivel Housing |
| 2 | | 397654A1 | | 1 | HOUSING, AXLE Right-Hand, 60 mm Diameter Axle Shaft Seal Counterbore |
| 3 | | 100532A1 | | 2 | BUSHING, LARGE Used With Right-Hand or Left-Hand Swivel Housing, Not Included With Housing, Purchase Separately |
| 4 | | 402359A1 | | 2 | SEAL 45 x 60 x 16 mm thk, Triple Lip |
| 5 | | 1537663C1 | | 2 | NUT M16 |
| 6 | | 1537664C1 | | 2 | SCREW |
| 7 | | 712998R91 | | 2 | NIPPLE, LUBE M6 x 1 |
| 8 | | 100533A1 | | 16 | BOLT M12 x 30 |
| 9 | | 122265A1 | | 2 | PIN, LARGE King Pin |
| 10 | | 122264A1 | | 2 | PIN, LARGE King Pin |
| 11 | | N13505 | | 2 | NIPPLE, LUBE 45 deg, M6x1 |

HTTP://WWW.MINNPARBACKHOEPARTS.COM



AXLE, FRONT DRIVE - CYLINDER, STEERING

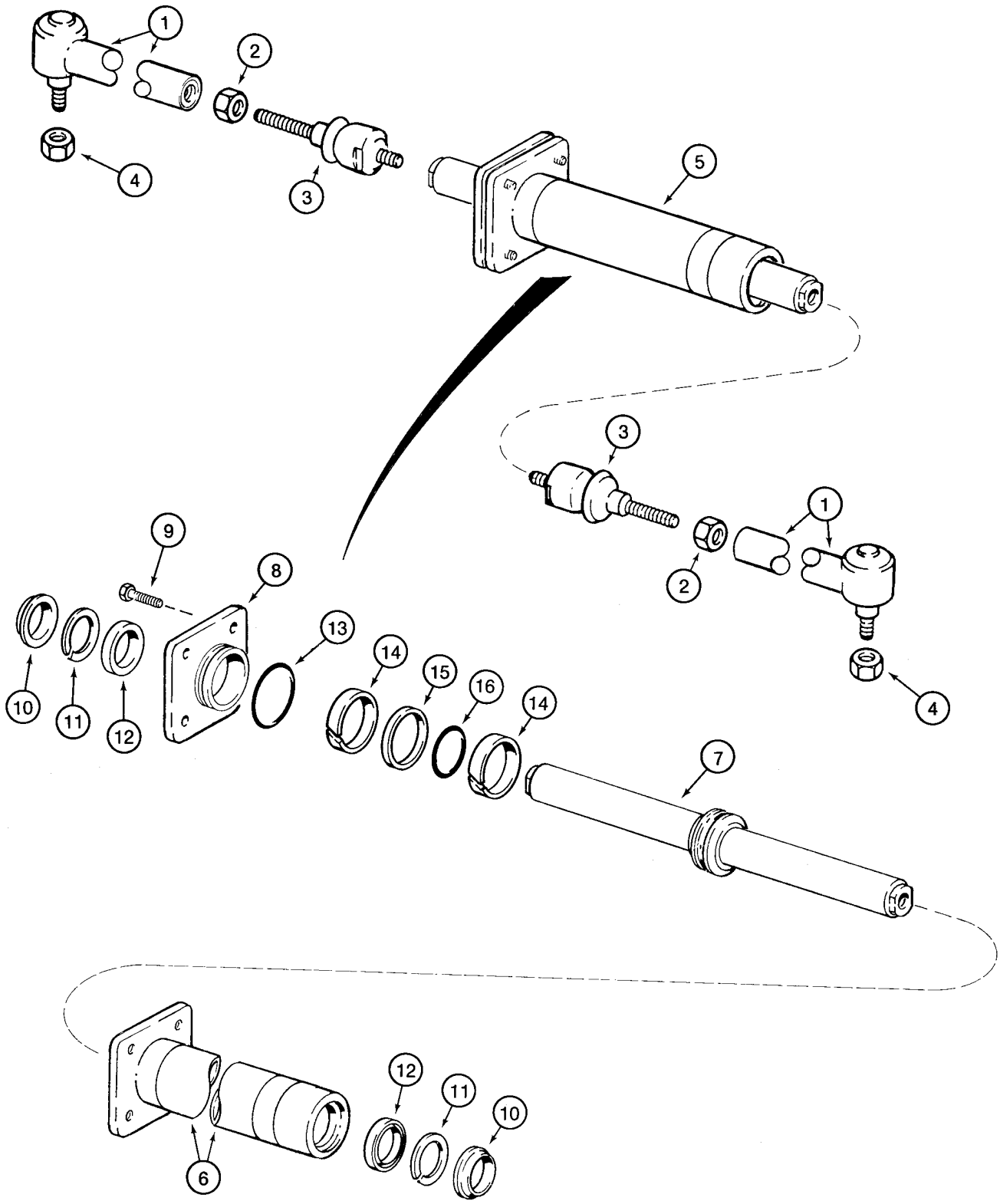

HTTP://WWW.MINNPARBACKHOEPARTS.COM



AXLE, FRONT DRIVE - CYLINDER, STEERING

| REF | FN | PART NUMBER | YR/SN | QTY | DESCRIPTION |
|---|---|---|---|---|---|
| | | 87417387 | | 1 | AXLE ASSY, 4WD Front; Incl. Ref 1 - 16; Also Includes Parts On Figures 06-02 - 06-08 |
| | | 144457A1 | | 2 | ARM Incl. Ref 1 - 3 |
| 1 | | NSS | | 1 | NOT SERVICED SEPARATELY Ball Joint |
| 2 | | 934727R1 | | 1 | NUT M18 |
| 3 | | 112509A1 | | 1 | BALL JOINT |
| 4 | | 905839R1 | | 2 | NUT M18 |
| 5 | | 144458A1 | | 1 | CYLINDER Steering, Incl. Ref 6 - 16, Order D149739 Kit to Service Seals |
| 6 | | D149738 | | 1 | CYLINDER STEERING TUBE |
| 7 | | 144459A1 | | 1 | ROD Piston |
| 8 | | D149737 | | 1 | GLAND GLAND |
| | | B17575 | | X | FLUID 89 ml, Black RTV Silicone, Cylinder Flange to Cylinder |
| 9 | | 114296A1 | | 4 | SCREW For Service Order 100524A1 Bolt and 892-11012 Washer |
| 10 | | NSS | | 2 | NOT SERVICED SEPARATELY Seal, Wiper |
| 11 | | NSS | | 2 | NOT SERVICED SEPARATELY Ring, Backup |
| 12 | | NSS | | 2 | NOT SERVICED SEPARATELY Seal |
| 13 | | NSS | | 1 | NOT SERVICED SEPARATELY O-Ring |
| 14 | | NSS | | 2 | NOT SERVICED SEPARATELY Ring, Wear |
| 15 | | NSS | | 1 | NOT SERVICED SEPARATELY Seal |
| 16 | | NSS | | 1 | NOT SERVICED SEPARATELY O-Ring |
| | | D149739 | | 1 | PACKAGE, SEALS Incl. Ref 10 - 16 |

HTTP://WWW.MINNPARBACKHOEPARTS.COM



AXLE, FRONT DRIVE - SHAFTS, AXLE

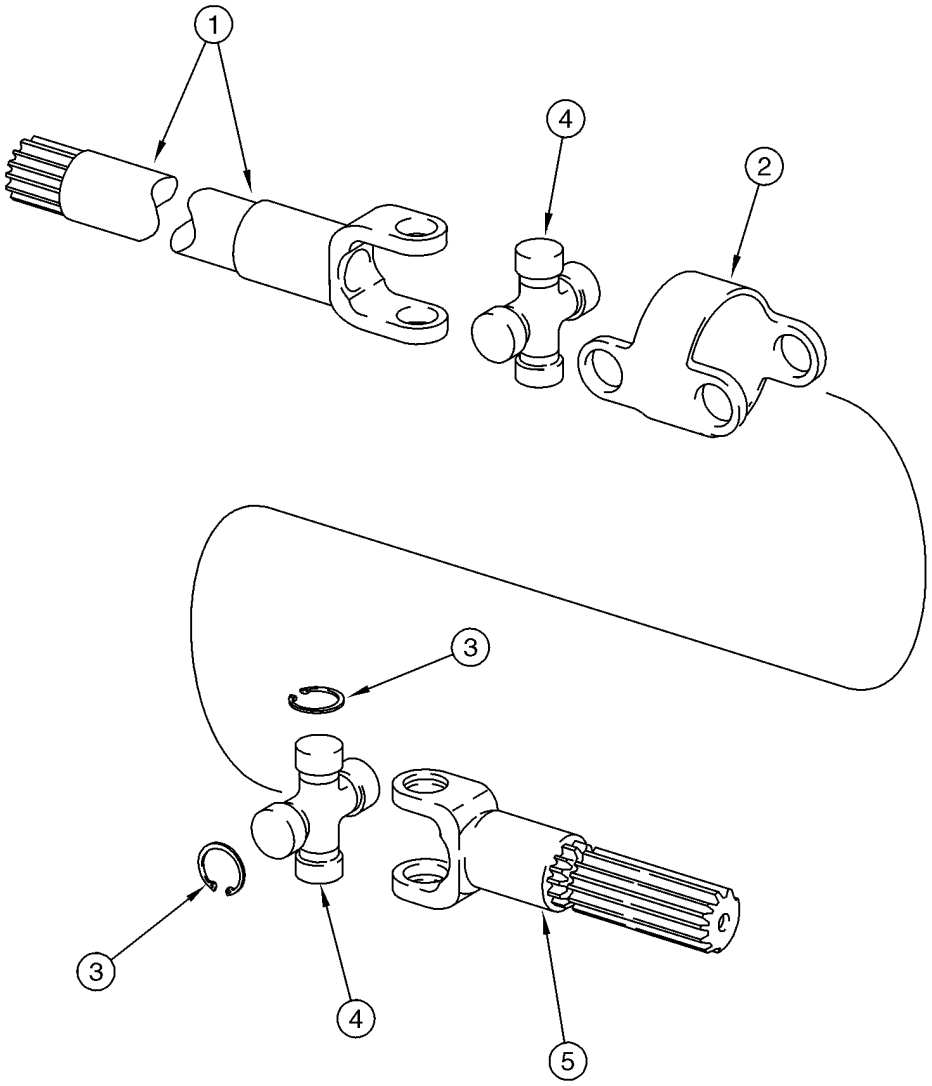


B9407022

HTTP://WWW.MINNPARBACKHOEPARTS.COM



AXLE, FRONT DRIVE - SHAFTS, AXLE

| REF | FN | PART NUMBER | YR/SN | QTY | DESCRIPTION |
|---|---|---|---|---|---|
| | | 87417387 | | 1 | AXLE ASSY, 4WD Front; Incl. Ref 1 - 5; Also Includes Parts On Figures 06-02 - 06-08 |
| | | 144461A1 | | 2 | AXLE SHAFT Incl. Ref 1 - 5; Not Available As An Assembly, Order Components |
| 1 | | 144462A1 | | 2 | FORK Shaft, Long, Differential Side |
| 2 | | 390029A1 | | 2 | BODY |
| 3 | | N14410 | | 16 | RING |
| 4 | | 144465A1 | | 4 | SPIDER, U-JOINT Incl. Ref 3 |
| 5 | | 144463A1 | | 2 | SHAFT Short, Wheel Side |

HTTP://WWW.MINNPARBACKHOEPARTS.COM



AXLE, FRONT DRIVE - PLANETARY

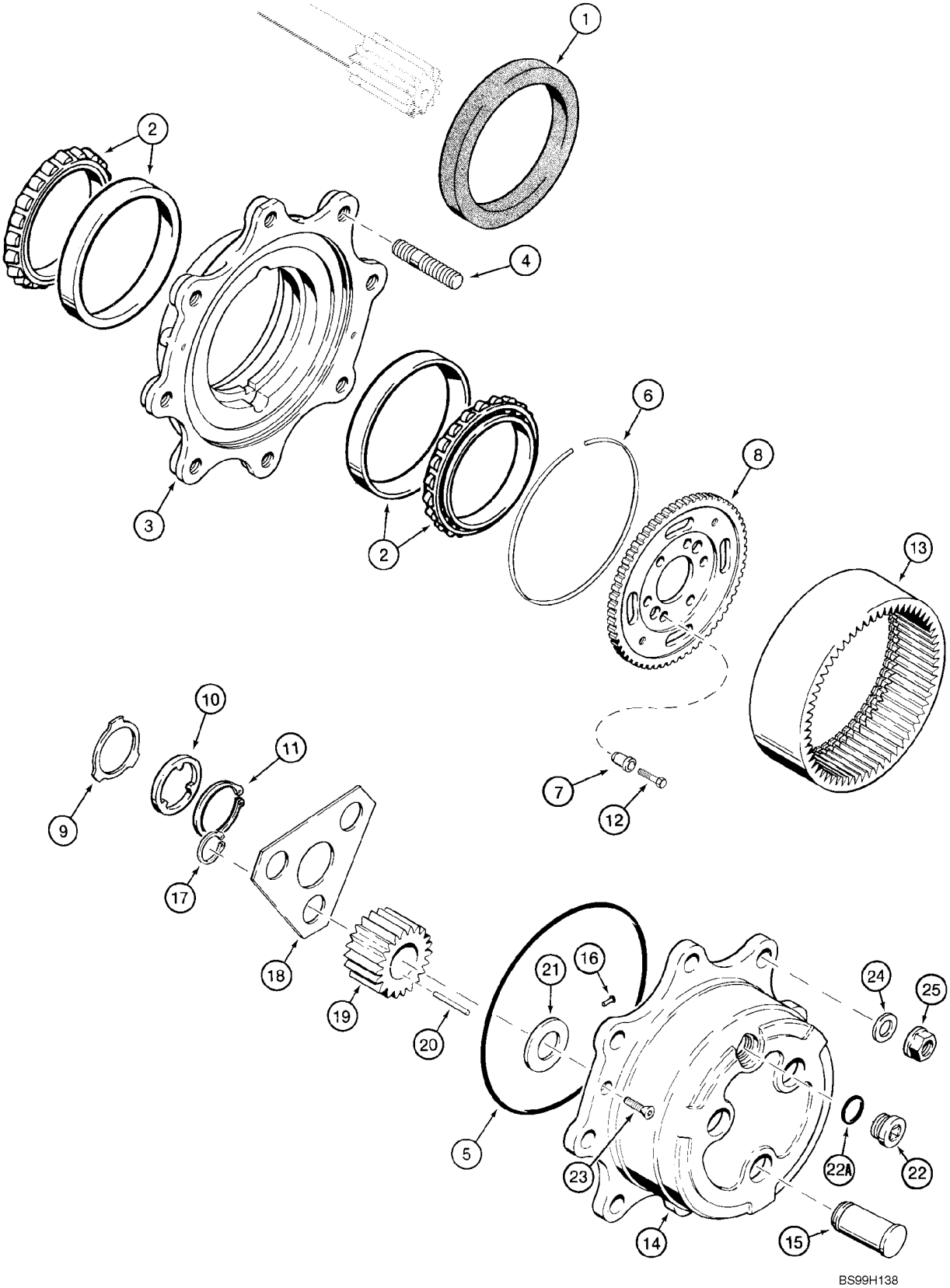

HTTP://WWW.MINNPARBACKHOEPARTS.COM



AXLE, FRONT DRIVE - PLANETARY

| REF | FN | PART NUMBER | YR/SN | QTY | DESCRIPTION |
|---|---|---|---|---|---|
| | | 87417387 | | 1 | AXLE ASSY, 4WD Front; Incl. Ref 1 - 25; Also Includes Parts On Figures 06-02 - 06-08 |
| 1 | | 311569A1 | | 2 | SEAL, OIL Triple Lip |
| 2 | | 1966169C1 | | 4 | BEARING |
| | | 144466A1 | | 2 | HUB Incl. Ref 3, 4 |
| 3 | | NSS | | 1 | NOT SERVICED SEPARATELY Hub |
| 4 | | 100556A1 | | 8 | STUD |
| | | B17575 | | X | FLUID 89 ml, RTV Silicone, Planetary Cover to Hub |
| 5 | | 100552A1 | | 2 | O-RING |
| 6 | | 100559A1 | | 2 | RING,SPECIAL |
| 7 | | 116426A1 | | 12 | CENTERING RING Bushing |
| 8 | | 116427A1 | | 2 | GEAR CARRIER, Ring Gear |
| 9 | | 190684A1 | | 2 | WASHER Thrust |
| 10 | | 190682A1 | | 2 | WASHER Thrust |
| 11 | | A48041 | | 2 | CIRCLIP |
| 12 | | 116425A1 | | 12 | SCREW |
| 13 | | 100561A1 | | 2 | GEAR Ring |
| | | 100554A1 | | 2 | CARRIER PLANETARY, Includes 100553A1, Ref 14 - 22A |
| | | 100553A1 | | 2 | HOUSING ASSY. Carrier, Incl. Ref 14 - 16 |
| 14 | | NSS | | 1 | NOT SERVICED SEPARATELY Carrier |
| 15 | | NSS | | 3 | NOT SERVICED SEPARATELY Shaft, Pinion |
| 16 | | K395093 | | 1 | PIN, HEADED Lock |
| 17 | | 800-1134 | | 6 | SNAP RING No. 34 |
| 18 | | 100555A1 | | 2 | PLATE, LARGE Retainer |
| 19 | | 100562A1 | | 6 | GEAR, PLANETARY Pinion Gear |
| | | B17575 | | X | FLUID , 89 ml, Black RTV Silicone, Planetary Cover to Hub |
| 20 | | 114295A1 | | 9 | KIT, 10 NEEDLE BRGS |
| 21 | | K395091 | | 6 | WASHER Thrust |
| 22 | | 100557A1 | | 2 | PLUG, DRAIN Incl. Ref 22A |
| 22A | | 238-6121 | | 1 | O-RING 1-1/16 ID x 3/32 |
| 23 | | K395082 | | 4 | SCREW M8 x 20 |
| 24 | | 496-81000 | | 16 | WASHER 25/32 x 1-3/8 x 1/8, Not Included In Assembly, Purchase Separately |

HTTP://WWW.MINNPARBACKHOEPARTS.COM



AXLE, FRONT DRIVE - PLANETARY

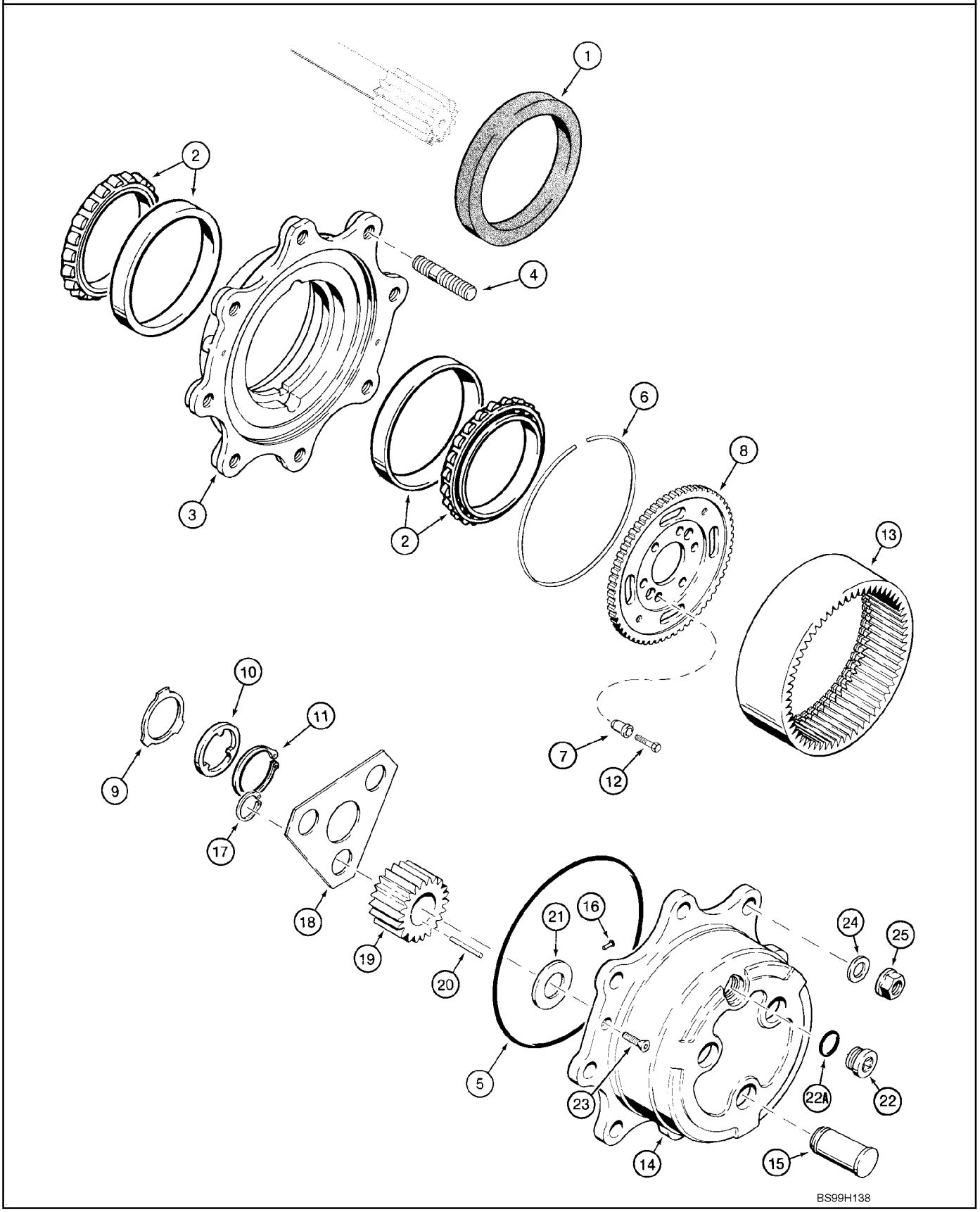

HTTP://WWW.MINNPARBACKHOEPARTS.COM



AXLE, FRONT DRIVE - PLANETARY

| REF | FN | PART NUMBER | YR/SN | QTY | DESCRIPTION |
|---|---|---|---|---|---|
| 25 | | 825-11418 | | 16 | NUT M18, Not Included In Assembly, Purchase Separately |

HTTP://WWW.MINNPARBACKHOEPARTS.COM



AXLE, FRONT DRIVE - DIFFERENTIAL

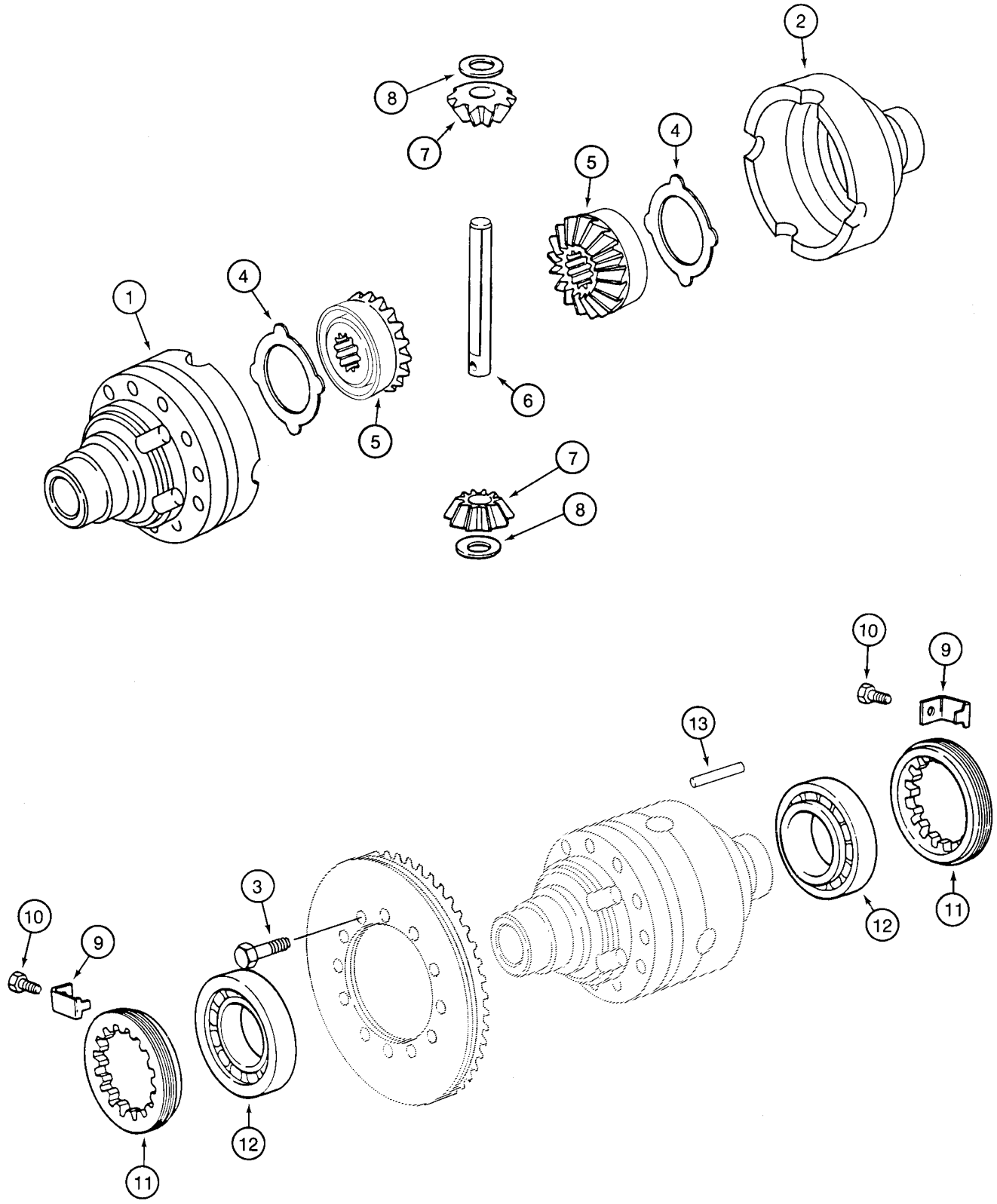

HTTP://WWW.MINNPARBACKHOEPARTS.COM



AXLE, FRONT DRIVE - DIFFERENTIAL

| REF | FN | PART NUMBER | YR/SN | QTY | DESCRIPTION |
|---|---|---|---|---|---|
| | | 87417387 | | 1 | AXLE ASSY, 4WD Front; Incl. Ref 1 - 13; Also Includes Parts On Figures 06-02 - 06-08 |
| | | 294933A1 | | 1 | SUPPORT ASSY. Differential Housing, Incl. Ref 1, 2 |
| 1 | | NSS | | 1 | NOT SERVICED SEPARATELY Housing, Flange Half |
| 2 | | NSS | | 1 | NOT SERVICED SEPARATELY Housing, Plain Half |
| | | B17575 | | X | FLUID 89 ml, Black RTV Silicone, Bolt to Differential Housing |
| 3 | | 827-10075 | | 12 | SCREW M10 x 75; 10.9 |
| 4 | | 1967003C1 | | 2 | WASHER, THRUST |
| | | 231397A1 | | 1 | SET OF PARTS Differential Gear Set, Service Replacement, Incl. Ref 5 - 8, 13 |
| 5 | | N14407 | | 2 | GEAR Side, No Longer Available, Order 231397A1 Differential Gear Set Kit |
| 6 | | K395087 | | 1 | PIN, LARGE Shaft, Pinion Gear, No Longer Available, Order 231397A1 Differential Gear Set Kit |
| 7 | | N14408 | | 2 | SUN GEAR Pinion Gear, No Longer Available, Order 231397A1 Differential Gear Set Kit |
| 8 | | K395075 | | 2 | WASHER Thrust, No Longer Available, Order 231397A1 Differential Gear Set Kit |
| 9 | | 1966153C1 | | 2 | PLATE, LOCKING Bracket |
| 10 | | 112486A1 | | 2 | SCREW M6 x 12 |
| 11 | | 1966559C1 | | 2 | NUT Locking Ring |
| 12 | | K395027 | | 2 | BEARING |
| 13 | | K395086 | | 1 | PIN, LARGE Dowel, No Longer Available, Order 231397A1 Differential Gear Set Kit |

HTTP://WWW.MINNPARBACKHOEPARTS.COM



AXLE, FRONT DRIVE - RING AND PINION

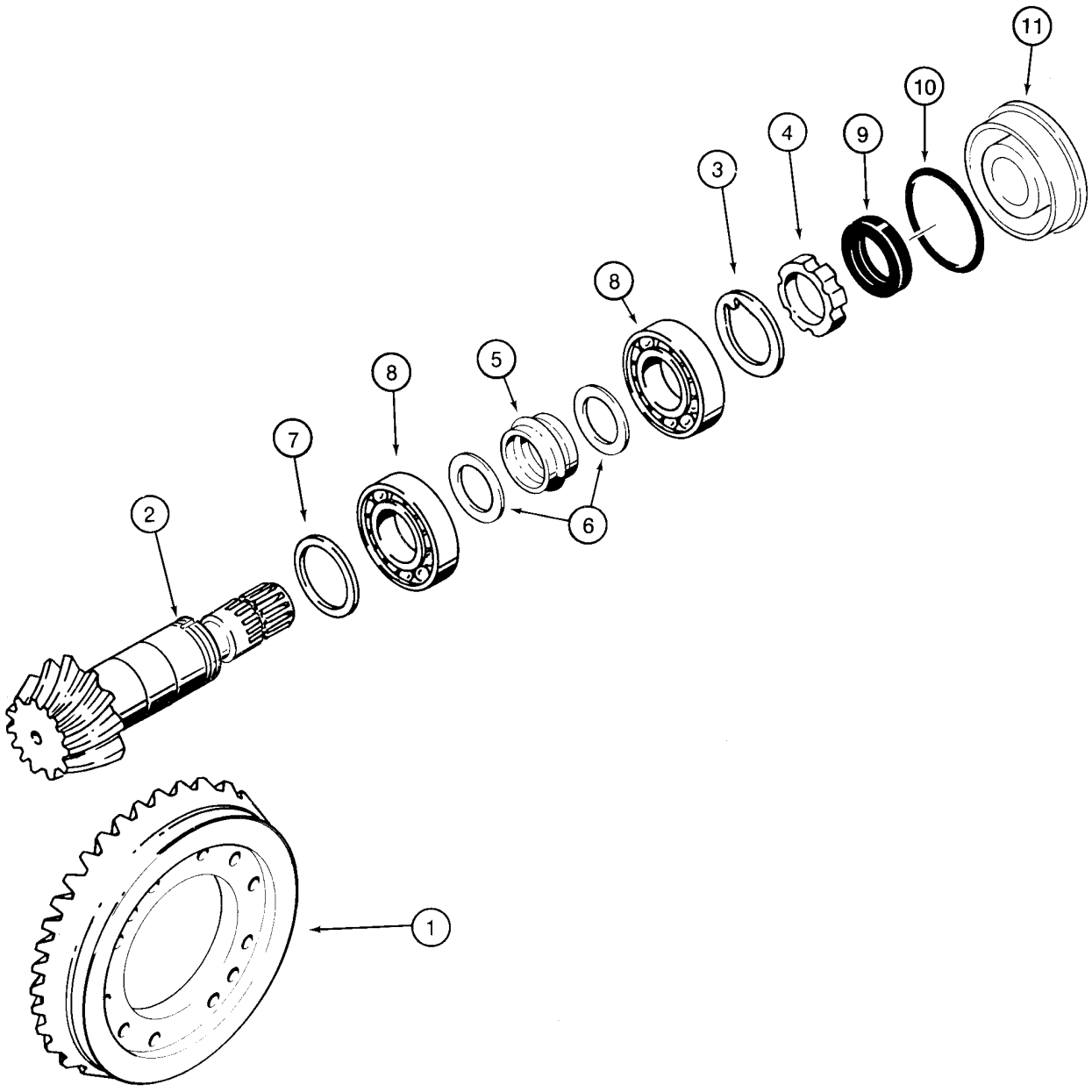


B9407025

HTTP://WWW.MINNPARBACKHOEPARTS.COM



AXLE, FRONT DRIVE - RING AND PINION

| REF | FN | PART NUMBER | YR/SN | QTY | DESCRIPTION |
|---|---|---|---|---|---|
| | | 87417387 | | 1 | AXLE ASSY, 4WD Front; Incl. Ref 1 - 11; Also Includes Parts On Figures 06-02 - 06-08 |
| | | 144460A1 | | 1 | KIT Ring and Pinion Gear Set, Incl. Ref 1 - 6 |
| 1 | | NSS | | 1 | NOT SERVICED SEPARATELY Ring, Gear |
| 2 | | NSS | | 1 | NOT SERVICED SEPARATELY Gear, Pinion Gear |
| 3 | | K261065 | | 1 | WASHER |
| 4 | | K261014 | | 1 | NUT Ring |
| 5 | | 1349058C1 | | 1 | SPACER Collapsible |
| 6 | | 1349059C1 | | 2 | WASHER |
| 7 | | 140954A1 | | X | SHIM 2,5 mm (0,098 in) |
| 7 | | 140953A1 | | X | SHIM 2,6 mm (0,102 in) |
| 7 | | 140951A1 | | X | SHIM 2,7 mm (0,106 in) |
| 7 | | 140949A1 | | X | SHIM 2,8 mm (0,110 in) |
| 7 | | 140948A1 | | X | SHIM 2,9 mm (0,114 in) |
| 7 | | 140943A1 | | X | SHIM 3,0 mm (0,118 in) |
| 7 | | 140944A1 | | X | SHIM 3,1 mm (0,122 in) |
| 7 | | 140945A1 | | X | SHIM 3,2 mm (0,125 in) |
| 7 | | 140946A1 | | X | SHIM 3,3 mm (0,129 in) |
| 7 | | 140947A1 | | X | SHIM 3,4 mm (0,133 in) |
| 8 | | K395090 | | 2 | BEARING, BALL |
| 9 | | K262143 | | 1 | SEAL Oil |
| 10 | | 238-5152 | | 1 | O-RING 3-1/4 ID x 3/32 |
| 11 | | 128570A1 | | 1 | FLANGE Cover, Differential |
| | | B17575 | | X | FLUID 89 ml, Black RTV Silicone, Differential Cover to Differential Carrier |

HTTP://WWW.MINNPARBACKHOEPARTS.COM



DRIVE SHAFT, FRONT AXLE

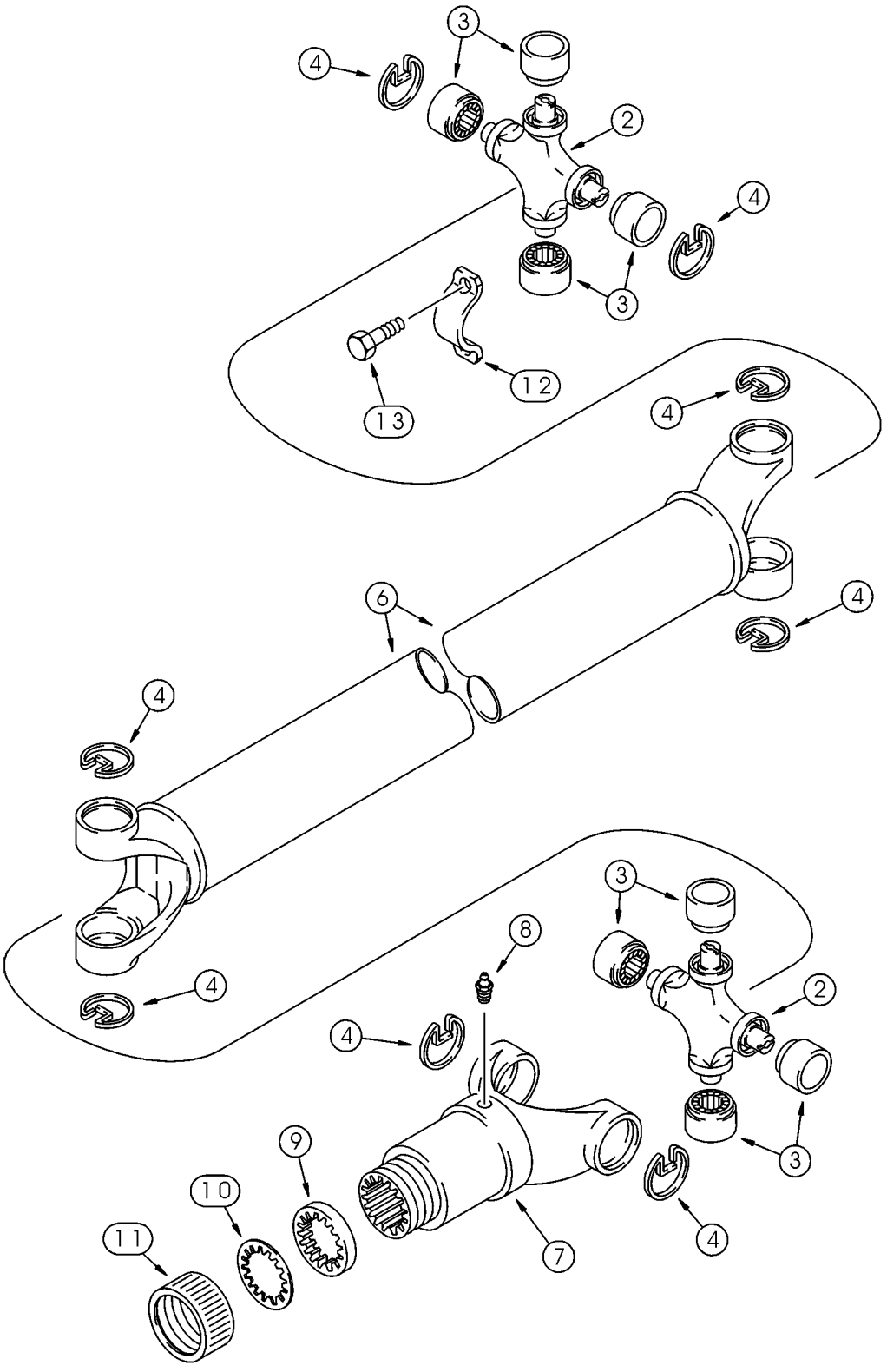

HTTP://WWW.MINNPARBACKHOEPARTS.COM



DRIVE SHAFT, FRONT AXLE

| REF | FN | PART NUMBER | YR/SN | QTY | DESCRIPTION |
|---|---|---|---|---|---|
| | | 367861A2 | | 1 | SHAFT, DRIVE Incl. 393231A1, Ref 2 - 13 |
| | | 393231A1 | | 2 | KIT Universal Joint, Incl. Ref 2 - 4 |
| 2 | | NSS | | 1 | NOT SERVICED SEPARATELY Joint, Universal |
| 3 | | NSS | | 4 | NOT SERVICED SEPARATELY Bearing, Journal |
| 4 | | NSS | | 4 | NOT SERVICED SEPARATELY Ring, Retaining |
| 6 | | 393234A1 | | 1 | SHAFT, DRIVE |
| 7 | | 144279A1 | | 1 | YOKE |
| 8 | | 219-10 | | 1 | NIPPLE, LUBE 1/4 tpr x 11/16 |
| | | D149860 | | 1 | PACKAGE,SERVICE Incl. Ref 9 - 11 |
| 9 | | NSS | | 1 | NOT SERVICED SEPARATELY Washer, Cork |
| 10 | | NSS | | 1 | NOT SERVICED SEPARATELY Washer, Steel |
| 11 | | NSS | | 1 | NOT SERVICED SEPARATELY Cap |
| 12 | | 90-6682T1 | | 2 | CLAMP |
| 13 | | D137627 | | 4 | BOLT |

HTTP://WWW.MINNPARBACKHOEPARTS.COM

| 06-10 | | p1 | 10/03 |
|---|---|---|---|

COOLING SYSTEM - TRANSMISSION

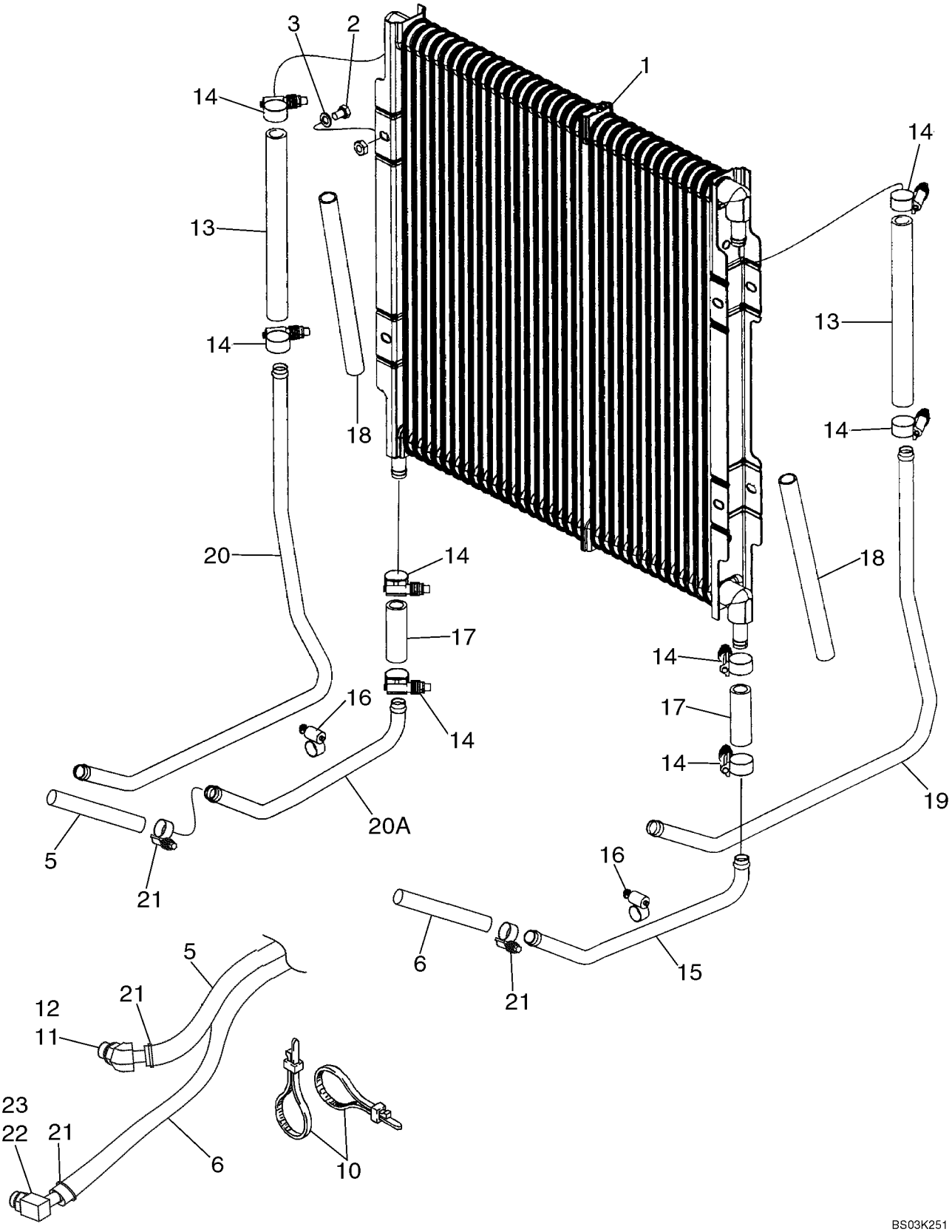

HTTP://WWW.MINNPARBACKHOEPARTS.COM



COOLING SYSTEM - TRANSMISSION

| REF | FN | PART NUMBER | YR/SN | QTY | DESCRIPTION |
|---|---|---|---|---|---|
| 1 | | 87427158 | | 1 | COOLER, OIL Hydraulic Oil Cooler |
| 2 | | 614-8012 | | 4 | SCREW M8 x 12 |
| 3 | | 895-11008 | | 4 | WASHER 9 x 16 x 1,6 mm |
| 5 | | 87422597 | | 1 | HOSE ASSY. 975 mm (38-13/32 in), Transmission to Cooler Inlet |
| 6 | | 87422598 | | 1 | HOSE ASSY. 1225 mm (48-1/4 in), Cooler Outlet to Transmission |
| 10 | | L18337 | | 3 | STRAP 15 in |
| 11 | | 217-314 | | 1 | ELBOW 45 deg, 5/8 stem x 7/8 Or, Incl. Ref 12 |
| 12 | | 237-6010 | | 1 | O-RING 3/4 ID x 3/32 |
| 13 | | 87417238 | | 2 | HOSE 235 mm (9-9/32 in) |
| 14 | | 328186A1 | | 8 | CLAMP, HOSE |
| 15 | | 87435277 | | 1 | TUBE Lower |
| 16 | | 214-1412 | | 2 | CLAMP No. 12 |
| 17 | | 87426742 | | 2 | HOSE 68 mm (2-11/16 in) |
| 18 | | 87428998 | | 2 | TUBE, PLASTIC-RUBBER 250 mm (9-7/8 in) Sleeve |
| 19 | | 87435278 | | 1 | TUBE Right-Hand Upper Cooler |
| 20 | | 87435280 | | 1 | TUBE Left-Hand Upper Cooler |
| 20A | | 87435279 | | 1 | TUBE Lower |
| 21 | | 328186A1 | | 4 | CLAMP, HOSE |
| 22 | | 217-349 | | 1 | ELBOW 90 deg, Incl. Ref 23 |
| 23 | | 237-6010 | | 1 | O-RING |

HTTP://WWW.MINNPARBACKHOEPARTS.COM



TRANSMISSION - MOUNTING

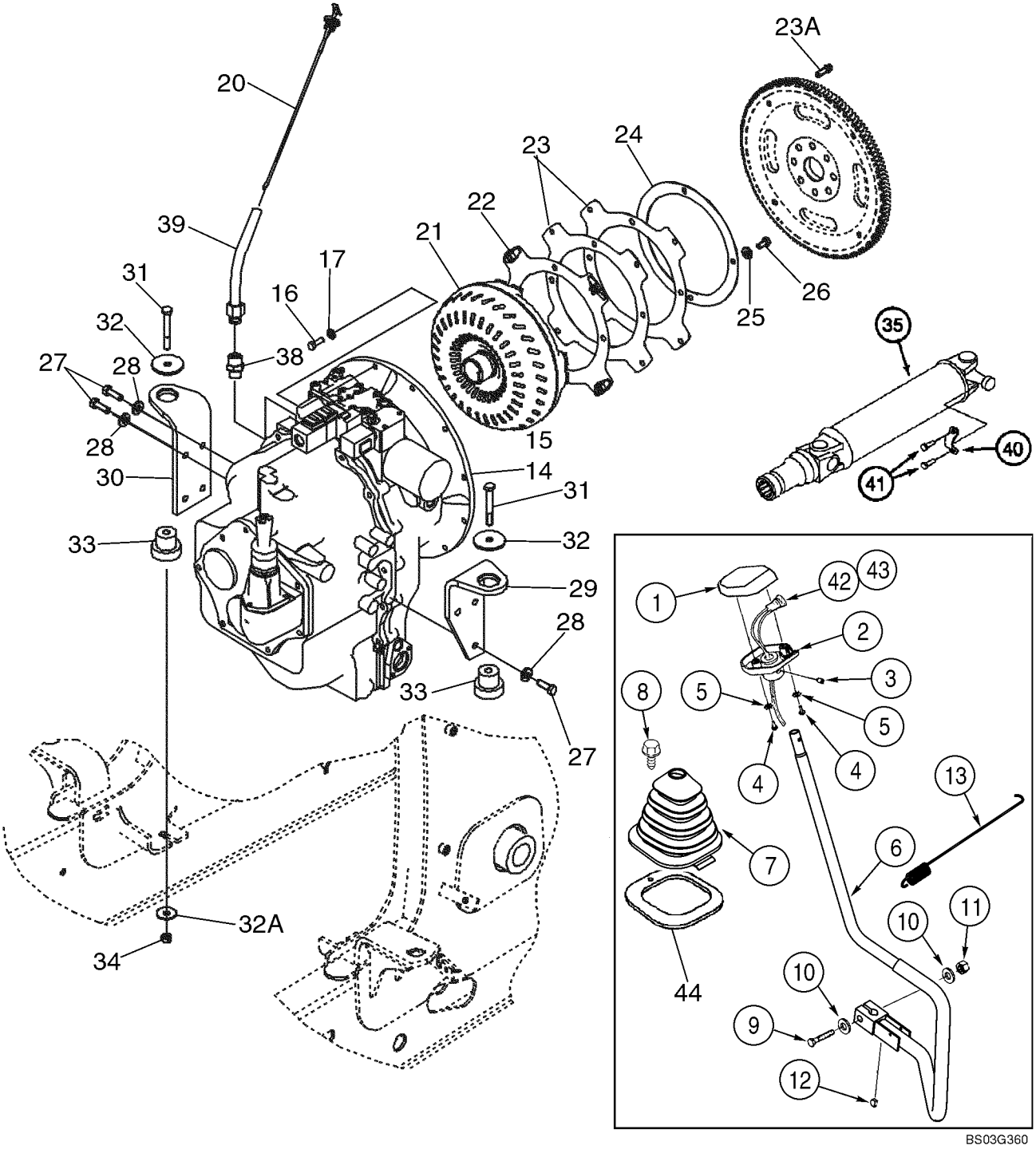

HTTP://WWW.MINNPARBACKHOEPARTS.COM



TRANSMISSION - MOUNTING

| REF | FN | PART NUMBER | YR/SN | QTY | DESCRIPTION |
|---|---|---|---|---|---|
| | | 309747A1 | | 1 | KNOB Gear Shift Lever, Includes NSS Gasket, Incl. Ref 1, 2, 4, 5 |
| | | NSS | | 2 | NOT SERVICED SEPARATELY GASKET, Knob |
| 1 | | 187714A1 | | 1 | BUTTON Knob, Upper |
| 2 | | 187715A1 | | 1 | BUTTON Knob, Lower |
| 3 | | 484-6316 | | 1 | SCREW Setscrew, 5/16 NF x 3/8; hdg pt |
| 4 | | 87020181 | | 2 | SCREW No. 10 NF x 7/8 |
| 5 | | 493-41020 | | 2 | WASHER, LOCK 3/16 |
| 6 | | 379314A4 | | 1 | LEVER ASSY. Gear Shift Lever |
| 7 | | 400588A2 | | 1 | BOOT |
| 8 | | 233724A1 | | 1 | SCREW M6 x 25 |
| 9 | | 827-12065 | | 1 | BOLT M12 x 65; 10.9 |
| 10 | | 896-11012 | | 2 | WASHER 13,5 x 24 x 3 mm |
| 11 | | 832-10412 | | 1 | NUT M12 |
| 12 | | 126-116 | | 1 | KEY, BUCKET TOOTHRT 3/16 x 3/4 Woodruff Key |
| 13 | | 380537A2 | | 1 | SPRING |
| 14 | | 86984097 | | 1 | TRANSMISSION Two Wheel Drive Models, See Figures 06-12 - 06-21 |
| 15 | | 86984098 | | 1 | TRANSMISSION Four Wheel Drive Models, See Figures 06-12 - 06-22 |
| 16 | | 627-10030 | | 12 | SCREW M10 x 30; 10.9 |
| 17 | | 496-21041 | | 12 | WASHER 13/32 x 13/16 x 3/32 |
| 20 | | 87430618 | | 1 | DIPSTICK |
| 21 | | 86993548 | | 1 | CONVERTER Torque Converter, New |
| 22 | | 87406934 | | 1 | PLATE, RETAINING Flex Plate, With Caged Nuts |
| 23 | | 86993546 | | 2 | PLATE, RETAINING Flex Plate |
| 23A | | 87019767 | | 4 | SCREW Flange, M10 x 30 |
| 24 | | 87409201 | | 1 | PLATE, RETAINING Backing Plate |
| 25 | | 896-15010 | | 4 | WASHER 11 x 24 x 3 mm |
| 26 | | 614-10020 | | 4 | SCREW M10 x 20 |
| 27 | | 614-12035 | | 7 | SCREW M12 x 35 |
| 28 | | 896-15012 | | 7 | WASHER 13,5 x 28 x 4 mm |
| 29 | | 87416977 | | 1 | SUPPORT Right-Hand Bracket |
| 30 | | 87416978 | | 1 | SUPPORT Left-Hand Bracket |
| 31 | | 814-12080 | | 2 | SCREW M20 x 80 |
| 32 | | 85801585 | | 2 | WASHER Special |

HTTP://WWW.MINNPARBACKHOEPARTS.COM



TRANSMISSION - MOUNTING

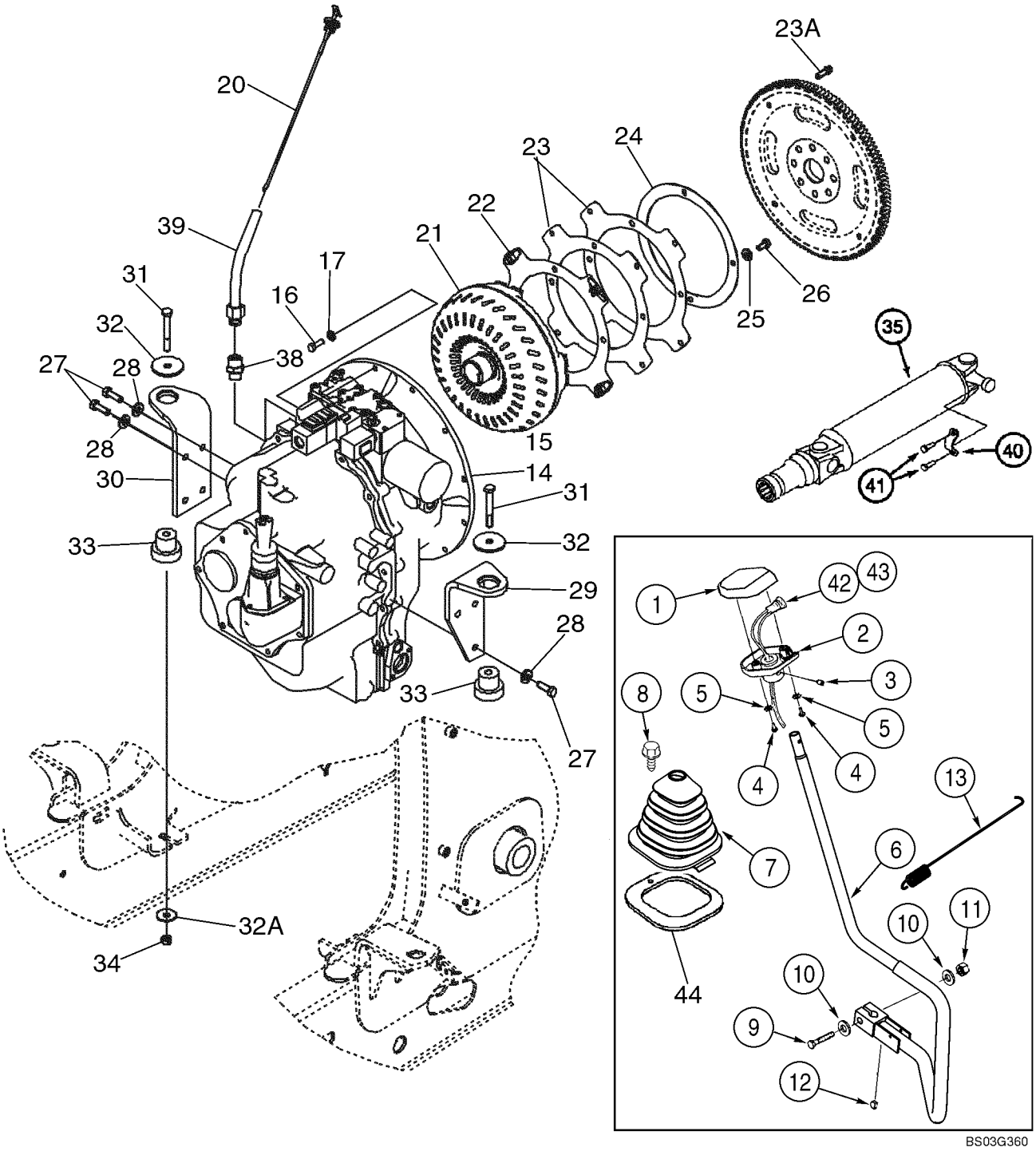

HTTP://WWW.MINNPARBACKHOEPARTS.COM



TRANSMISSION - MOUNTING

| REF | FN | PART NUMBER | YR/SN | QTY | DESCRIPTION |
|---|---|---|---|---|---|
| 32A | | 85802618 | | 2 | WASHER, SEALING |
| 33 | | 87416967 | | 2 | SUPPORT |
| 34 | | 832-10412 | | 2 | NUT Lock, M12 |
| 35 | | 367860A3 | | 1 | SHAFT, DRIVE Transmission to Rear Axle, See Figure 06-31 |
| 38 | | 218-459 | | 1 | FITTING 1-5/16 fl x 3/4 PT |
| 39 | | 395344A1 | | 1 | TUBE ASSY. Dipstick |
| 40 | | 90-6682T1 | | 2 | CLAMP |
| 41 | | D137627 | | 4 | BOLT |
| 42 | | 123097A1 | | 1 | SWITCH Push Button, Clutch Cutout |
| 43 | | 123809A2 | | 1 | HARNESS Clutch Cutout, Transmission Gear Shift Lever |
| 44 | | 410561A1 | | 1 | SEAL Shift Lever Boot, Cab Models |

HTTP://WWW.MINNPARBACKHOEPARTS.COM



TRANSMISSION ASSY - FILTER, OIL

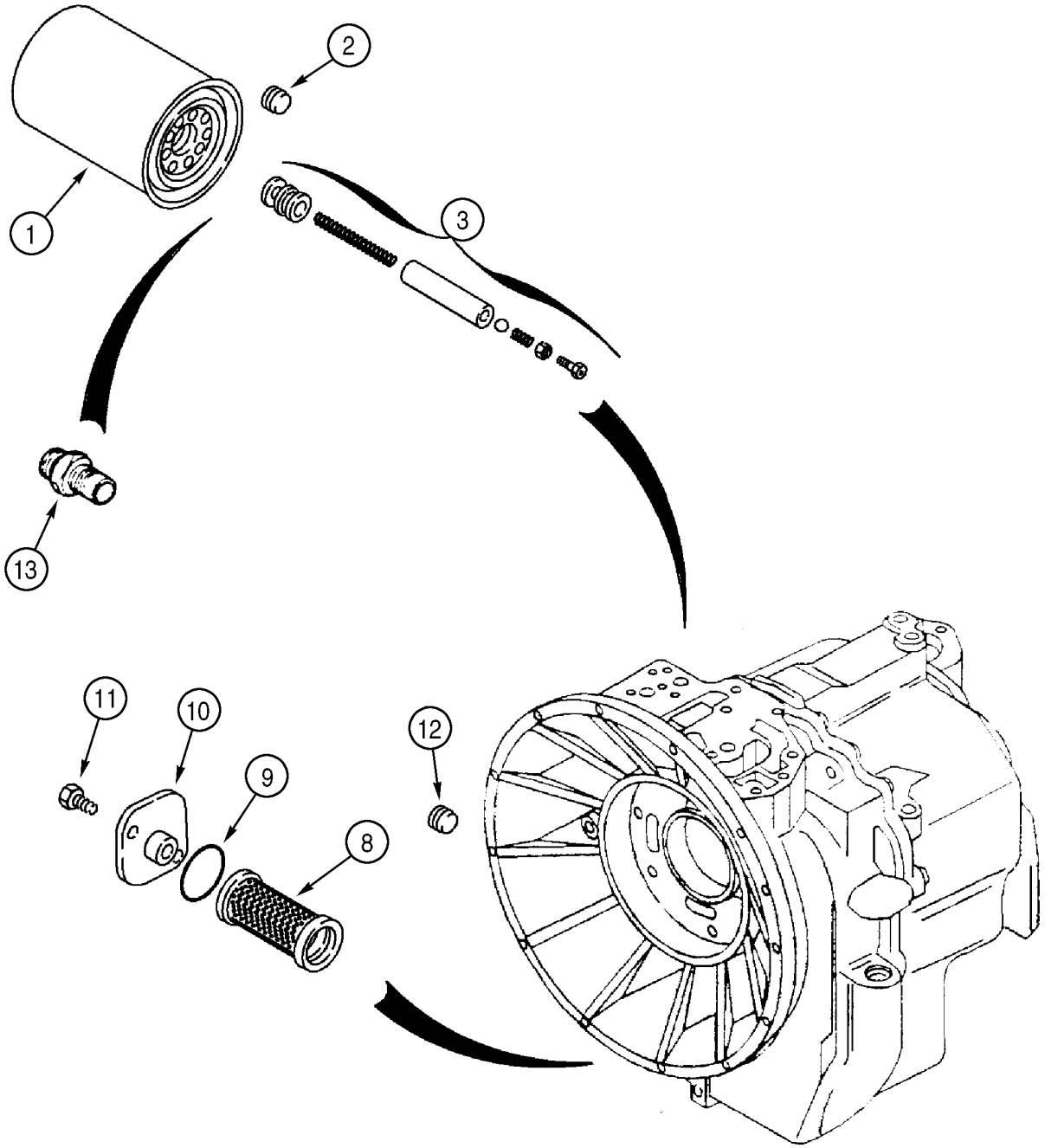

HTTP://WWW.MINNPARBACKHOEPARTS.COM



TRANSMISSION ASSY - FILTER, OIL

| REF | FN | PART NUMBER | YR/SN | QTY | DESCRIPTION |
|---|---|---|---|---|---|
| | | 86984097 | | 1 | TRANSMISSION Two Wheel Drive, Incl. Ref 1, 8 - 11, 13; Also Includes Parts On Figures 06-12 - 06-21 |
| | | 86984098 | | 1 | TRANSMISSION Four Wheel Drive, Incl. Ref 1 - 13; Also Includes Parts On Figures 06-12 - 06-22 |
| 1 | | 254686A2 | | 1 | FILTER Oil |
| 2 | | 181101A1 | | 1 | PLUG 14 - 1.5 mm; Four Wheel Drive Models Only |
| 3 | | 181274A1 | | 1 | SET OF PARTS Valve; Four Wheel Drive Models Only |
| 8 | | 278534A1 | | 1 | SCREEN, FILTER Oil |
| 9 | | 100748A1 | | 1 | O-RING |
| 10 | | 181219A1 | | 1 | COVER |
| 11 | | 614-8018 | | 2 | SCREW M8 x 18 |
| 12 | | 181102A1 | | 1 | PLUG Four Wheel Drive Models Only |
| 13 | | 181202A1 | | 1 | FITTING |

HTTP://WWW.MINNPARBACKHOEPARTS.COM



TRANSMISSION ASSY (2WD) - HOUSING

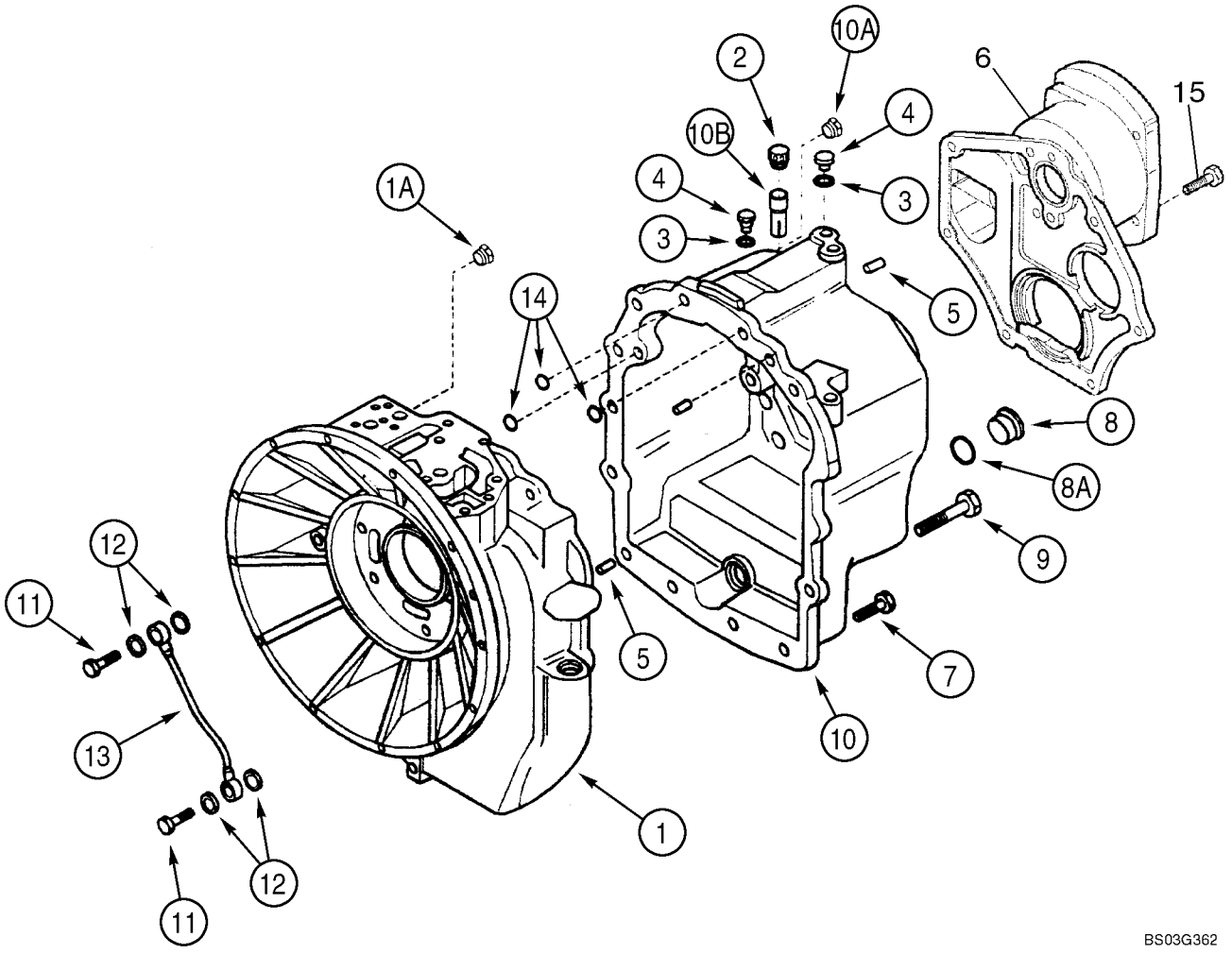

HTTP://WWW.MINNPARBACKHOEPARTS.COM



TRANSMISSION ASSY (2WD) - HOUSING

| REF | FN | PART NUMBER | YR/SN | QTY | DESCRIPTION |
|---|---|---|---|---|---|
| | | 86984097 | | 1 | TRANSMISSION Two Wheel Drive, Incl. Ref 1 - 14; Also Includes Parts On Figures 06-12 - 06-21 |
| 1 | | 87429989 | | 1 | HOUSING Housing, Front Half, Use With Loctite 510 or 518 as a Gasket Eliminator; Incl. Ref 1A |
| 1A | | E135809 | | 1 | PLUG If Used |
| 2 | | 1530028C1 | | 1 | BREATHER ASSY. |
| | | 310772A1 | | 1 | PIPE 18 OD x 42 mm lg, Breather, Not Illustrated |
| 3 | | 934667R1 | | 4 | WASHER, COPPER Copper Washer, 10 x 14 x 1.5 mm |
| 4 | | 181100A1 | | 3 | PLUG |
| 5 | | K260177 | | 3 | PIN Dowel, 10 x 25 mm |
| 6 | | 87429987 | | 1 | ADAPTER Adapter Cover, Pump, Copper |
| 7 | | 614-10030 | | 19 | SCREW M10 x 30 |
| 8 | | 100557A1 | | 1 | PLUG, DRAIN Incl. Ref 8A |
| 8A | | 238-6121 | | 1 | O-RING 1-1/16 ID x 3/32 |
| 9 | | 814-10150 | | 2 | SCREW M10 x 150 |
| 10 | | 87429988 | | 1 | HOUSING HOUSING, Rear Half, Use With Superbond 539 as a Gasket Eliminator; Incl. Ref 10A, 10B |
| 10A | | E135809 | | 1 | PLUG If Used |
| 10B | | 310772A1 | | 1 | PIPE 18 OD x 42 mm lg, Breather, Not Illustrated |
| 11 | | 181179A1 | | 2 | JACK SCREW |
| 12 | | 181105A1 | | 4 | WASHER, COPPER 14 x 20 x 1.5 mm; Sealing |
| 13 | | 181232A1 | | 1 | PIPE Lubrication Tube |
| 14 | | 181141A1 | | 3 | O-RING |
| 15 | | 814-10045 | | 2 | SCREW M10 x 45 |

HTTP://WWW.MINNPARBACKHOEPARTS.COM



TRANSMISSION ASSY (4WD) - HOUSING

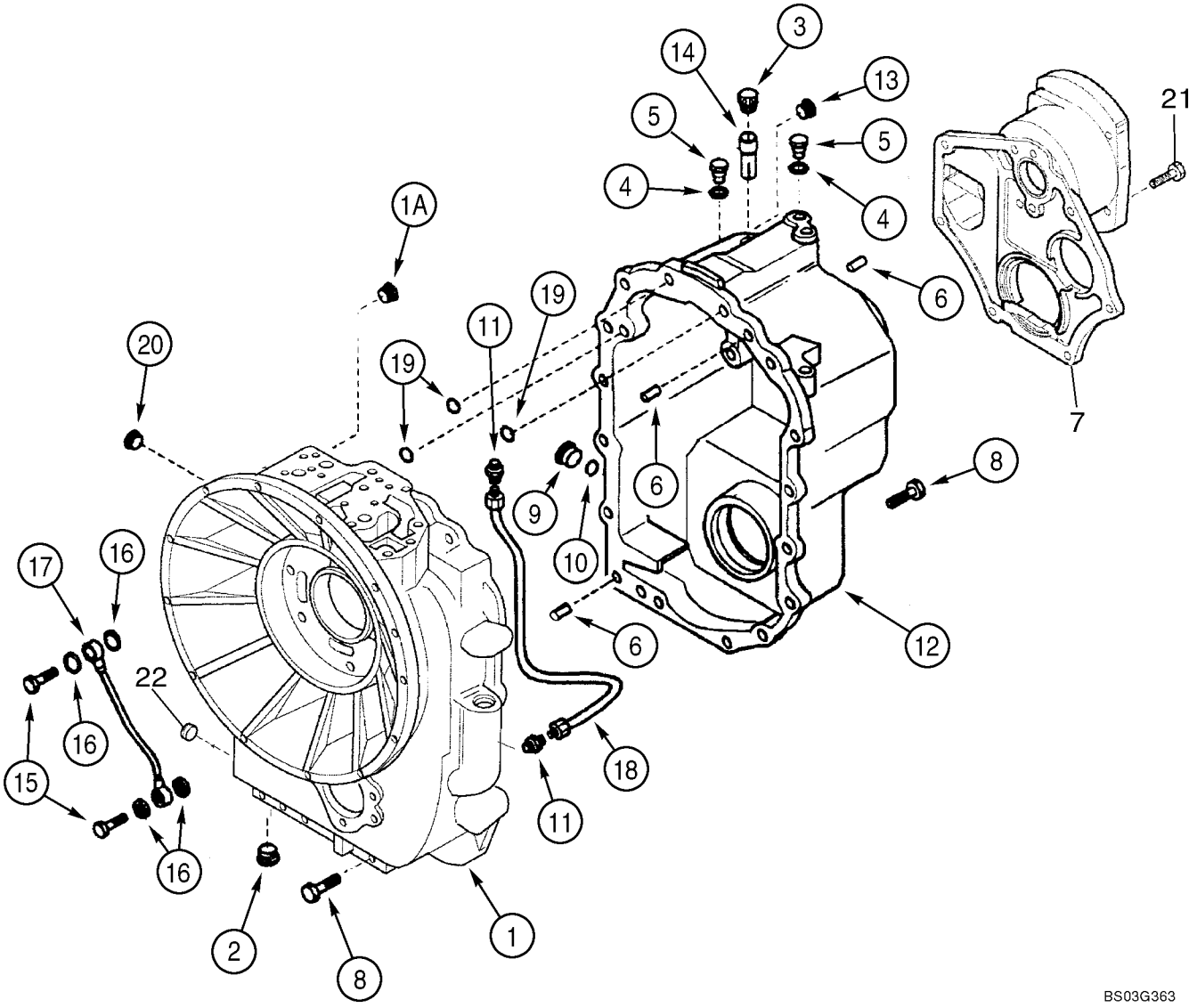

HTTP://WWW.MINNPARBACKHOEPARTS.COM



TRANSMISSION ASSY (4WD) - HOUSING

| REF | FN | PART NUMBER | YR/SN | QTY | DESCRIPTION |
|---|---|---|---|---|---|
| | | 86984098 | | 1 | TRANSMISSION Four Wheel Drive, Incl. Ref 1 - 20; Also Includes Parts On Figures 06-12 - 06-22 |
| 1 | | 87429972 | | 1 | HOUSING Housing, Front Half, Use With Loctite 510 or 518 as a Gasket Eliminator; Incl. Ref 1A |
| 1A | | E135809 | | 1 | PLUG |
| 2 | | 239606A1 | | 1 | PLUG |
| 3 | | 1530028C1 | | 1 | BREATHER ASSY. |
| | | 310772A1 | | 1 | PIPE 18 OD x 42 mm lg, Breather, Not Illustrated |
| 4 | | 934667R1 | | 3 | WASHER, COPPER Copper Washer, 10 x 14 x 1.5 mm |
| 5 | | 181100A1 | | 3 | PLUG |
| 6 | | K260177 | | 3 | PIN Dowel, 10 x 25 mm |
| 7 | | 87429987 | | 1 | ADAPTER Adapter Cover, Pump |
| 8 | | 614-10030 | | 23 | SCREW M10 x 30 |
| 9 | | 100557A1 | | 1 | PLUG, DRAIN Incl. Ref 10 |
| 10 | | 238-6121 | | 1 | O-RING 1-1/16 ID x 3/32 |
| 11 | | 218-1023 | | 2 | CONNECTOR, HYD. 1/2 fl x 1/4 PT |
| 12 | | 87429986 | | 1 | HOUSING HOUSING, Rear Half, Use With Superbond 539 as a Gasket Eliminator; Incl. Ref 13, 14 |
| 13 | | E135809 | | 1 | PLUG If Used |
| 14 | | 310772A1 | | 1 | PIPE 18 OD x 42 mm lg, Breather |
| 15 | | 181179A1 | | 2 | JACK SCREW |
| 16 | | 181105A1 | | 4 | WASHER, COPPER 14 x 20 x 1.5 mm |
| 17 | | 181232A1 | | 1 | PIPE Lubrication Tube |
| 18 | | 181176A1 | | 1 | PIPE Oil Tube |
| 19 | | 181141A1 | | 3 | O-RING |
| 20 | | 181101A1 | | 1 | PLUG 14 - 1.5 mm |
| 21 | | 814-10045 | | 2 | SCREW M10 x 45 |
| 22 | | 181102A1 | | 1 | PLUG |

HTTP://WWW.MINNPARBACKHOEPARTS.COM



TRANSMISSION ASSY - PUMP, OIL

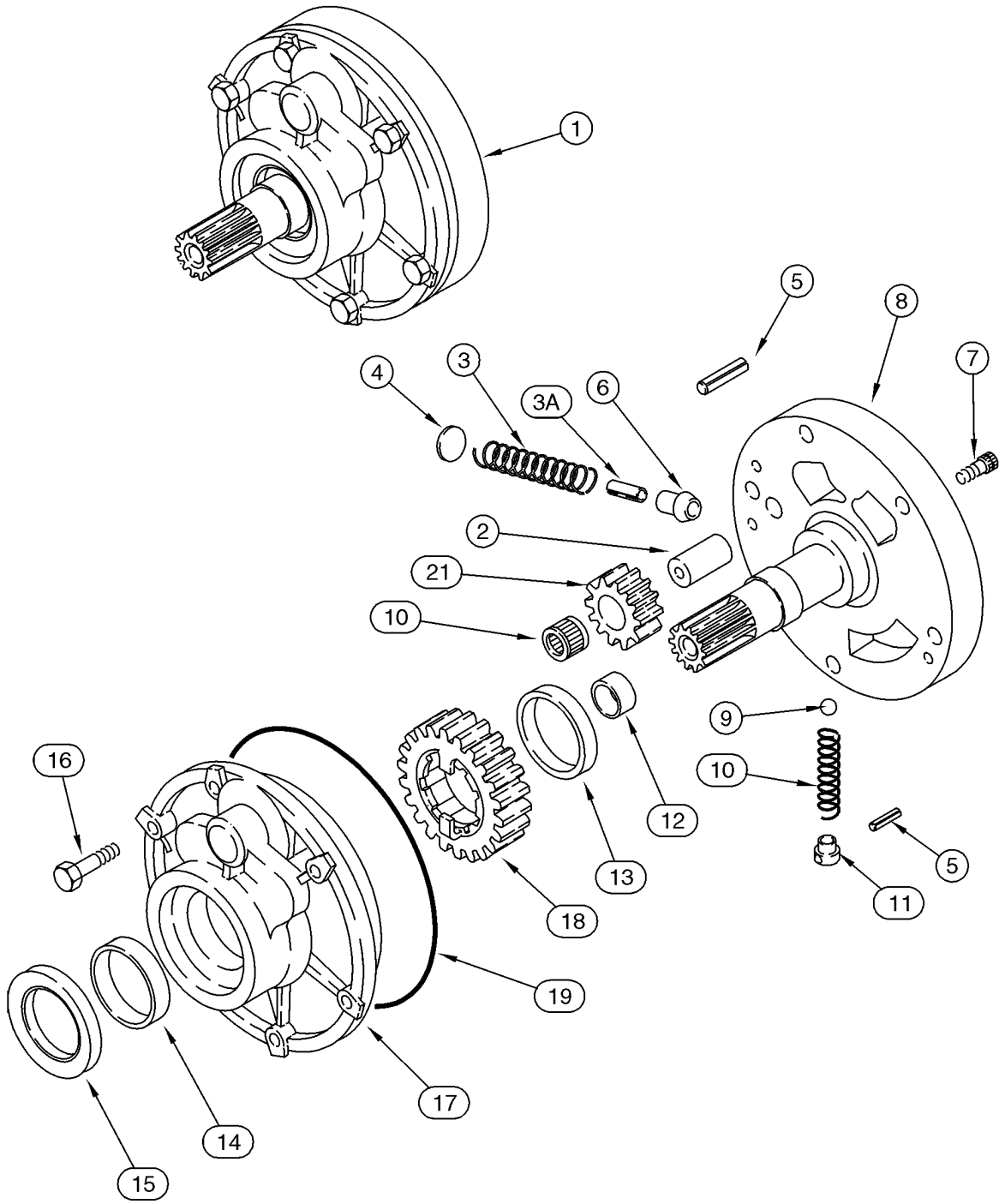

HTTP://WWW.MINNPARBACKHOEPARTS.COM



TRANSMISSION ASSY - PUMP, OIL

| REF | FN | PART NUMBER | YR/SN | QTY | DESCRIPTION |
|---|---|---|---|---|---|
| | | 86984097 | | 1 | TRANSMISSION Two Wheel Drive, Incl. Ref 1 - 21; Also Includes Parts On Figures 06-12 - 06-21 |
| | | 86984098 | | 1 | TRANSMISSION Four Wheel Drive, Incl. Ref 1 - 21; Also Includes Parts On Figures 06-12 - 06-22 |
| 1 | | 87429970 | | 1 | PUMP Charge, Incl. Ref 2 - 21 |
| 2 | | NSS | | 1 | NOT SERVICED SEPARATELY Shaft |
| 3 | | NSS | | 1 | NOT SERVICED SEPARATELY Spring |
| 3A | | NSS | | 1 | NOT SERVICED SEPARATELY Pin |
| 4 | | NSS | | 1 | NOT SERVICED SEPARATELY Stop |
| 5 | | NSS | | 2 | NOT SERVICED SEPARATELY Pin, Roll |
| 6 | | NSS | | 1 | NOT SERVICED SEPARATELY Piston |
| 7 | | NSS | | 2 | NOT SERVICED SEPARATELY Bolt |
| 8 | | NSS | | 1 | NOT SERVICED SEPARATELY Support |
| 9 | | NSS | | 1 | NOT SERVICED SEPARATELY Ball |
| 10 | | NSS | | 1 | NOT SERVICED SEPARATELY Spring |
| 11 | | NSS | | 1 | NOT SERVICED SEPARATELY Guide |
| 12 | | NSS | | 1 | NOT SERVICED SEPARATELY Bushing |
| 13 | | NSS | | 1 | NOT SERVICED SEPARATELY Bushing |
| 14 | | NSS | | 1 | NOT SERVICED SEPARATELY Bushing |
| 15 | | 87429971 | | 1 | SEAL, OIL Oil Seal |
| 16 | | 814-8060 | | 6 | SCREW M8 x 60 |
| 17 | | NSS | | 1 | NOT SERVICED SEPARATELY Housing |
| 18 | | NSS | | 1 | NOT SERVICED SEPARATELY Gear, 23T |
| 19 | | 181142A1 | | 1 | O-RING |
| 20 | | NSS | | 1 | NOT SERVICED SEPARATELY Bearing, Needle |
| 21 | | NSS | | 1 | NOT SERVICED SEPARATELY Gear, 12T |

HTTP://WWW.MINNPARBACKHOEPARTS.COM



TRANSMISSION ASSY - SHIFTER MECHANISM

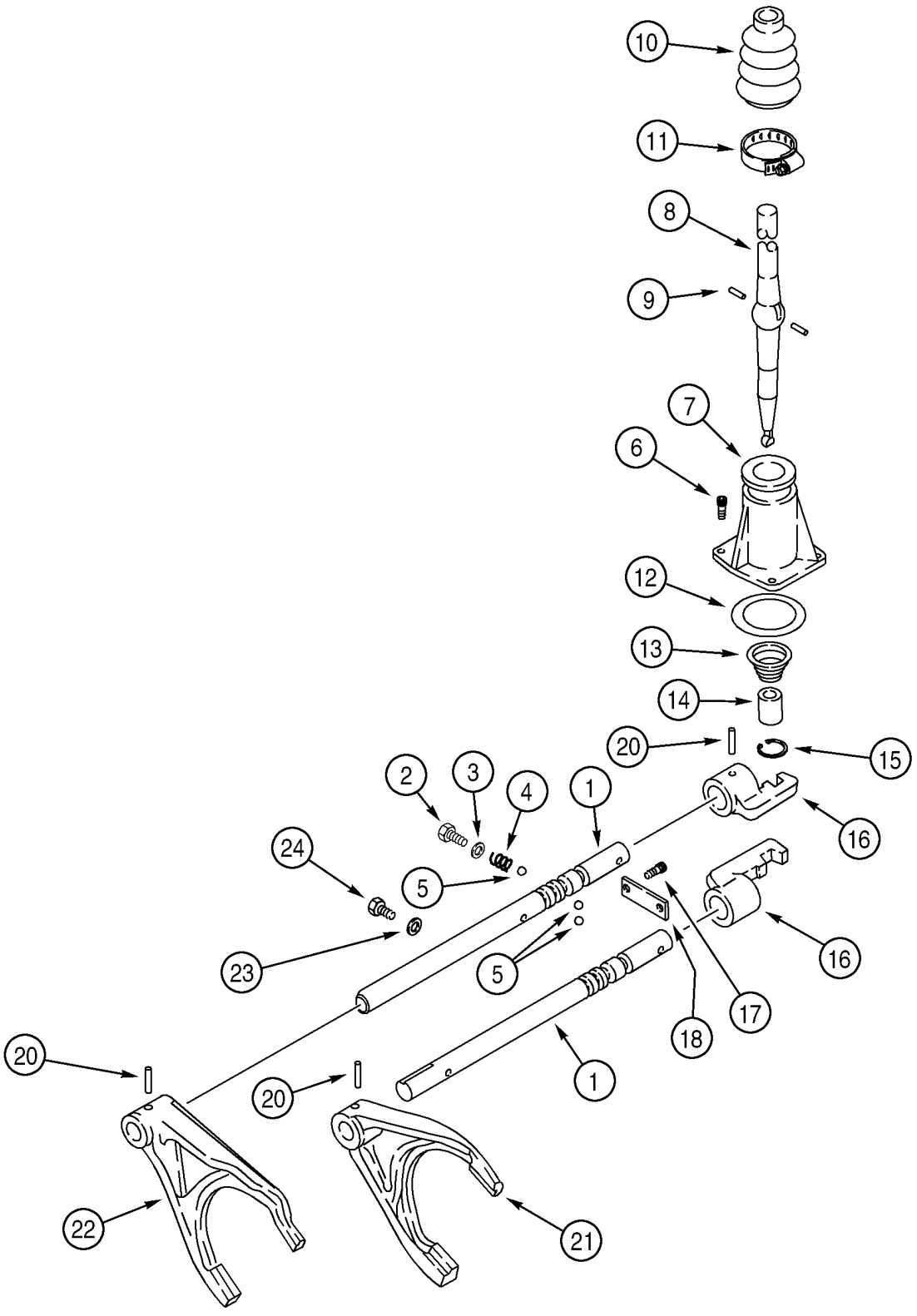

HTTP://WWW.MINNPARBACKHOEPARTS.COM



TRANSMISSION ASSY - SHIFTER MECHANISM

| REF | FN | PART NUMBER | YR/SN | QTY | DESCRIPTION |
|---|---|---|---|---|---|
| | | 86984097 | | 1 | TRANSMISSION Two Wheel Drive, Incl. Ref 1 - 24; Also Includes Parts On Figures 06-12 - 06-21 |
| | | 86984098 | | 1 | TRANSMISSION Four Wheel Drive, Incl. Ref 1 - 24; Also Includes Parts On Figures 06-12 - 06-22 |
| 1 | | 181245A2 | | 2 | ROD Shifter Fork Rail |
| 2 | | 614-12016 | | 2 | SCREW M12 x 16 |
| 3 | | 87429994 | | 2 | WASHER, SEALING 12 x 20 x 1.5 mm |
| 4 | | 1966993C1 | | 2 | SPRING |
| 5 | | 181139A1 | | 4 | BALL |
| 6 | | 864-8025 | | 3 | SCREW M8 x 25 |
| 7 | | 181171A1 | | 1 | COVER |
| 8 | | 190428A3 | | 1 | LEVER, CONTROL |
| 9 | | 1967585C1 | | 2 | PIN Pin |
| 10 | | 1967581C1 | | 1 | BOOT |
| 11 | | 181177A1 | | 1 | CLAMP |
| 12 | | 181138A1 | | 1 | O-RING |
| 13 | | 278533A1 | | 1 | SPRING |
| 14 | | 278532A1 | | 1 | BUSHING, LARGE |
| 15 | | 279039A1 | | 1 | SNAP RING |
| 16 | | 181173A1 | | 2 | SELECTOR Shifter |
| 17 | | 864-10025 | | 2 | SCREW M10 x 25 |
| 18 | | 181175A1 | | 1 | PLATE, LARGE |
| 20 | | 905794R1 | | 4 | PIN 6 x 30 mm |
| 21 | | 181203A1 | | 1 | FORK, SHIFTER First and Second |
| 22 | | 181174A2 | | 1 | FORK, SHIFTER Third and Fourth |
| 23 | | 87429985 | | 1 | WASHER, SEALING Washer |
| 24 | | 1967531C1 | | 1 | BOLT M10 x 1 x 25 |

HTTP://WWW.MINNPARBACKHOEPARTS.COM



TRANSMISSION ASSY - SHAFT, IDLER AND PRIMARY

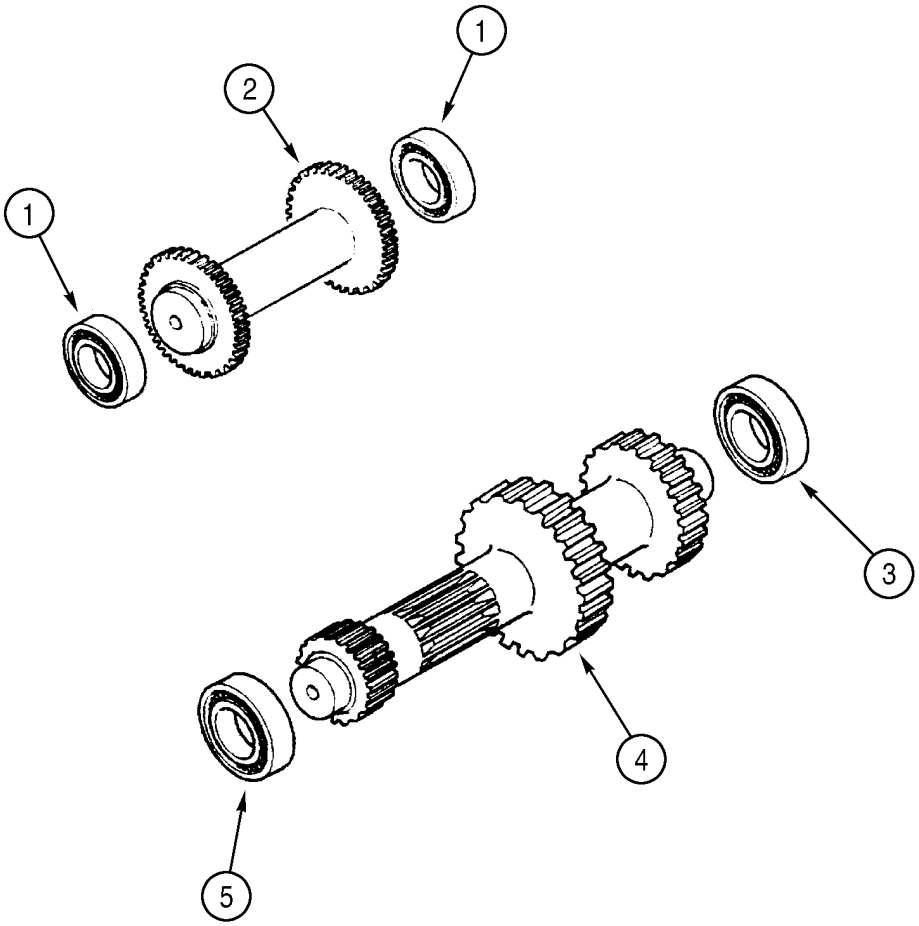


BS99H168

HTTP://WWW.MINNPARBACKHOEPARTS.COM



TRANSMISSION ASSY - SHAFT, IDLER AND PRIMARY

| REF | FN | PART NUMBER | YR/SN | QTY | DESCRIPTION |
|---|---|---|---|---|---|
| | | 86984097 | | 1 | TRANSMISSION Two Wheel Drive, Incl. Ref 1 - 6; Also Includes Parts On Figures 06-12 - 06-21 |
| | | 86984098 | | 1 | TRANSMISSION Four Wheel Drive, Incl. Ref 1 - 6; Also Includes Parts On Figures 06-12 - 06-22 |
| 1 | | ST205A | | 2 | BEARING, BALL |
| 2 | | 358636A1 | | 1 | SHAFT Idler Shaft |
| 3 | | 181126A1 | | 1 | BEARING, BALL |
| 4 | | 358646A1 | | 1 | SHAFT Primary Shaft |
| 5 | | 181132A1 | | 1 | BEARING, BALL |
| 6 | | A48041 | | 1 | CIRCLIP Not Illustrated |

HTTP://WWW.MINNPARBACKHOEPARTS.COM



TRANSMISSION ASSY - SHAFT, INPUT

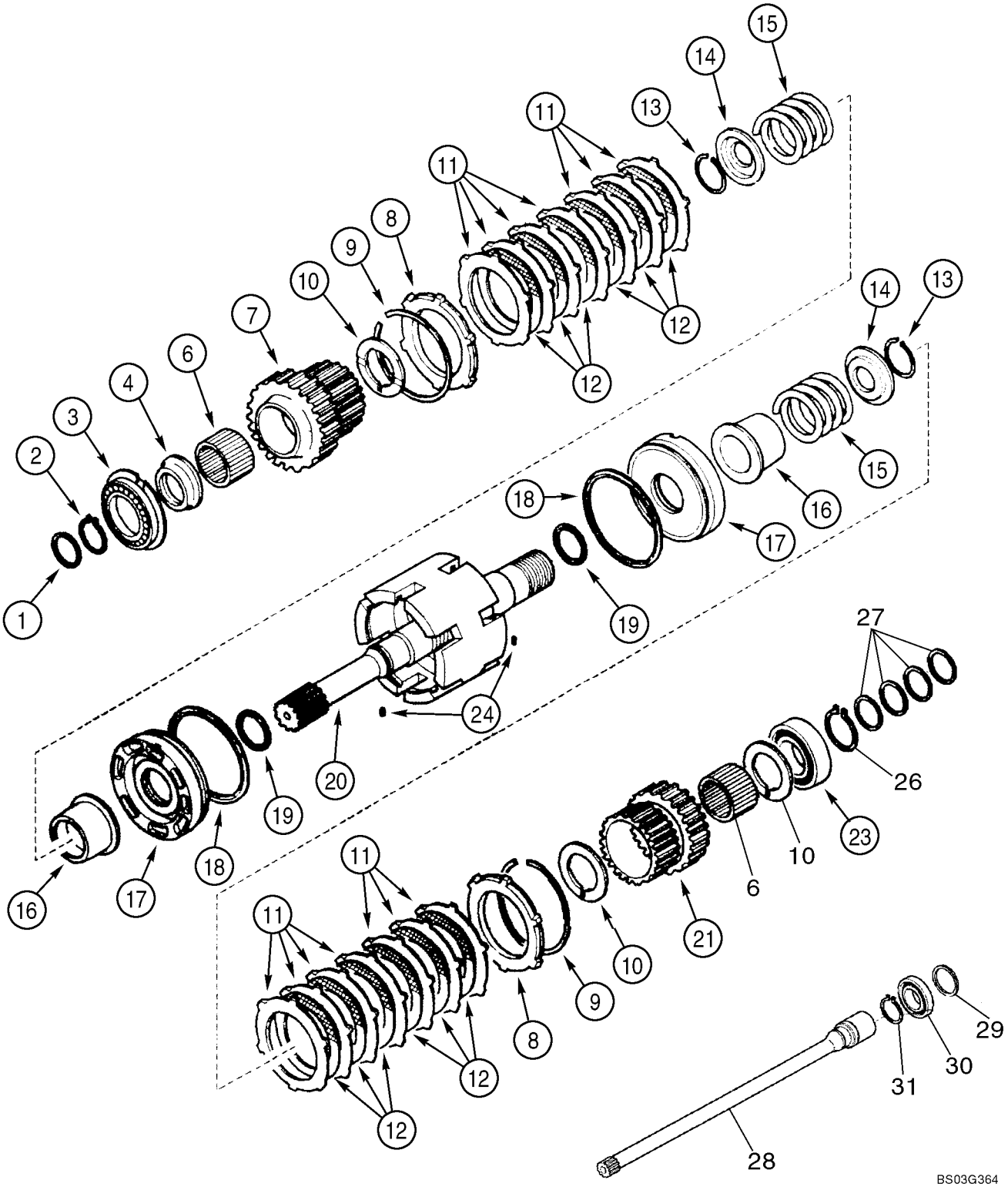

HTTP://WWW.MINNPARBACKHOEPARTS.COM



TRANSMISSION ASSY - SHAFT, INPUT

| REF | FN | PART NUMBER | YR/SN | QTY | DESCRIPTION |
|---|---|---|---|---|---|
| | | 86984097 | | 1 | TRANSMISSION Two Wheel Drive, Incl. Ref 1 - 25; Also Includes Parts On Figures 06-12 - 06-21 |
| | | 86984098 | | 1 | TRANSMISSION Four Wheel Drive, Incl. Ref 1 - 25; Also Includes Parts On Figures 06-12 - 06-22 |
| 1 | | 358645A1 | | 1 | SEAL, OIL |
| 2 | | A48041 | | 1 | CIRCLIP |
| 3 | | 181128A1 | | 1 | BEARING, BALL |
| 4 | | 358635A1 | | 1 | SPACER 68 x 45 x 105 mm |
| 6 | | 358633A1 | | 2 | BEARING, NEEDLE |
| 7 | | 358632A1 | | 1 | PINION Gear, 35T |
| 8 | | 310519A1 | | 2 | PLATE |
| 9 | | 181116A1 | | 2 | RING, LOCKING |
| 10 | | 358640A1 | | 3 | WASHER Thrust |
| 11 | | 181159A1 | | 14 | DISC Plate |
| 12 | | 181158A1 | | 12 | DISC, CLUTCH Plate |
| 13 | | 181111A1 | | 2 | RING, LOCKING |
| 14 | | 181161A1 | | 2 | PLATE, THRUST Pressure |
| 15 | | 358637A1 | | 2 | SPRING |
| 16 | | 358641A1 | | 2 | SLEEVE, TRANSMISSION |
| 17 | | 358644A1 | | 2 | PISTON |
| 18 | | 358643A1 | | 2 | SNAP RING |
| 19 | | 358642A1 | | 2 | SEALRING |
| 20 | | 87429973 | | 1 | SHAFT Input Shaft, Charge |
| 21 | | 358638A1 | | 1 | PINION Gear, 29T |
| 23 | | ST264 | | 1 | BEARING, BALL |
| 24 | | 181108A1 | | 2 | SPLIT PIN |
| 26 | | 800-1150 | | 1 | CIRCLIP |
| 27 | | 87429984 | | 4 | RING Seal Ring |
| 28 | | 87429981 | | 1 | SHAFT |
| 29 | | 87429982 | | 1 | O-RING |
| 30 | | 87429983 | | 1 | BEARING, BALL |
| 31 | | 358655A1 | | 1 | SNAP RING |

HTTP://WWW.MINNPARBACKHOEPARTS.COM



TRANSMISSION ASSY - SHAFT, SECONDARY

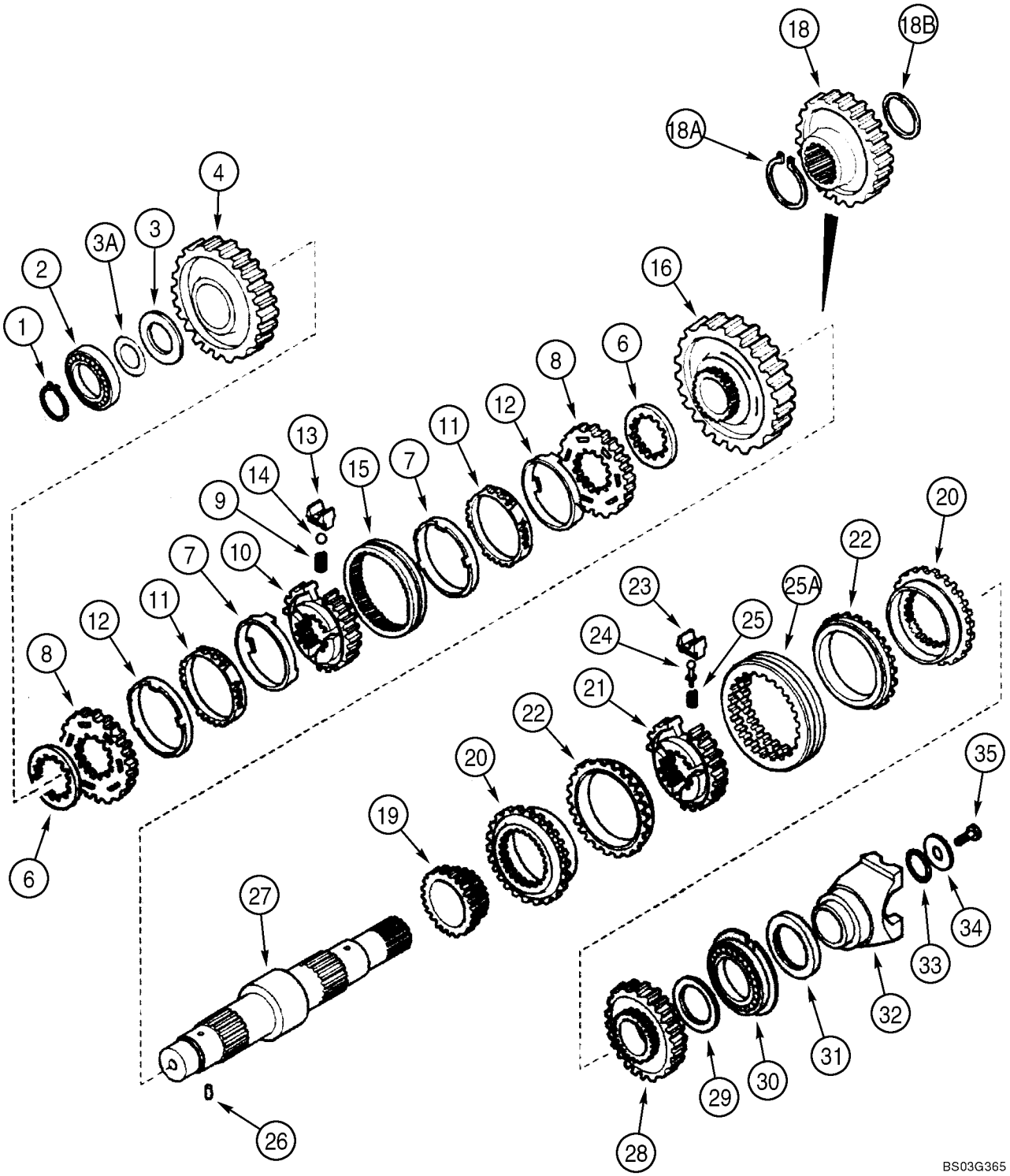

HTTP://WWW.MINNPARBACKHOEPARTS.COM



TRANSMISSION ASSY - SHAFT, SECONDARY

| REF | FN | PART NUMBER | YR/SN | QTY | DESCRIPTION |
|---|---|---|---|---|---|
| | | 86984097 | | 1 | TRANSMISSION Two Wheel Drive, Incl. Ref 1 - 35; Also Includes Parts On Figures 06-12 - 06-21 |
| | | 86984098 | | 1 | TRANSMISSION Four Wheel Drive, Incl. Ref 1 - 35; Also Includes Parts On Figures 06-12 - 06-22 |
| 1 | | 181118A1 | | 1 | RING, LOCKING |
| 2 | | 181132A1 | | 1 | BEARING, BALL |
| 3 | | 358649A1 | | 1 | WASHER Thrust |
| 3A | | 358650A1 | | X | SHIM 0,05 mm |
| 3A | | 358651A1 | | X | SHIM 0,10 mm |
| 3A | | 358652A1 | | X | SHIM 0,30 mm |
| 3A | | 196454A1 | | X | SHIM 0,50 mm |
| 4 | | 358648A1 | | 1 | PINION Gear, Driven, Second, 43T |
| 6 | | 244109A1 | | 2 | SPACER |
| | | 190427A1 | | 1 | SYNCHRONIZER Synchronizing Service Kit, Incl. Ref 7 - 15 |
| 7 | | NSS | | 2 | NOT SERVICED SEPARATELY Ring |
| 8 | | NSS | | 2 | NOT SERVICED SEPARATELY Ring |
| 9 | | 384773A1 | | 3 | SPRING, COIL |
| 10 | | NSS | | 1 | NOT SERVICED SEPARATELY Hub |
| 11 | | NSS | | 2 | NOT SERVICED SEPARATELY Ring |
| 12 | | NSS | | 2 | NOT SERVICED SEPARATELY Ring |
| 13 | | 326865A1 | | 3 | PLATE, SPACER |
| 14 | | 384769A1 | | 3 | BALL |
| 15 | | NSS | | 1 | NOT SERVICED SEPARATELY Sleeve |
| 16 | | 358647A1 | | 1 | PINION Gear, Driven, First, 49T |
| 18 | | 358656A1 | | 1 | GEAR Drive, Four Wheel Drive Models |
| 18A | | 358654A1 | | 1 | SNAP RING Four Wheel Drive Models |
| 18B | | 358655A1 | | 1 | SNAP RING Four Wheel Drive Models |
| 19 | | 358282A1 | | 1 | GEAR Driven, Fourth, 23T |
| | | 87429974 | | 1 | SYNCHRONIZER Synchronizing Service Kit, Incl. Ref 20 - 25A |
| 20 | | NSS | | 2 | NOT SERVICED SEPARATELY Ring |
| 21 | | NSS | | 1 | NOT SERVICED SEPARATELY Hub |
| 22 | | NSS | | 2 | NOT SERVICED SEPARATELY Ring |
| 23 | | NSS | | 3 | NOT SERVICED SEPARATELY Plate |
| 24 | | NSS | | 3 | NOT SERVICED SEPARATELY Pin |

HTTP://WWW.MINNPARBACKHOEPARTS.COM



TRANSMISSION ASSY - SHAFT, SECONDARY

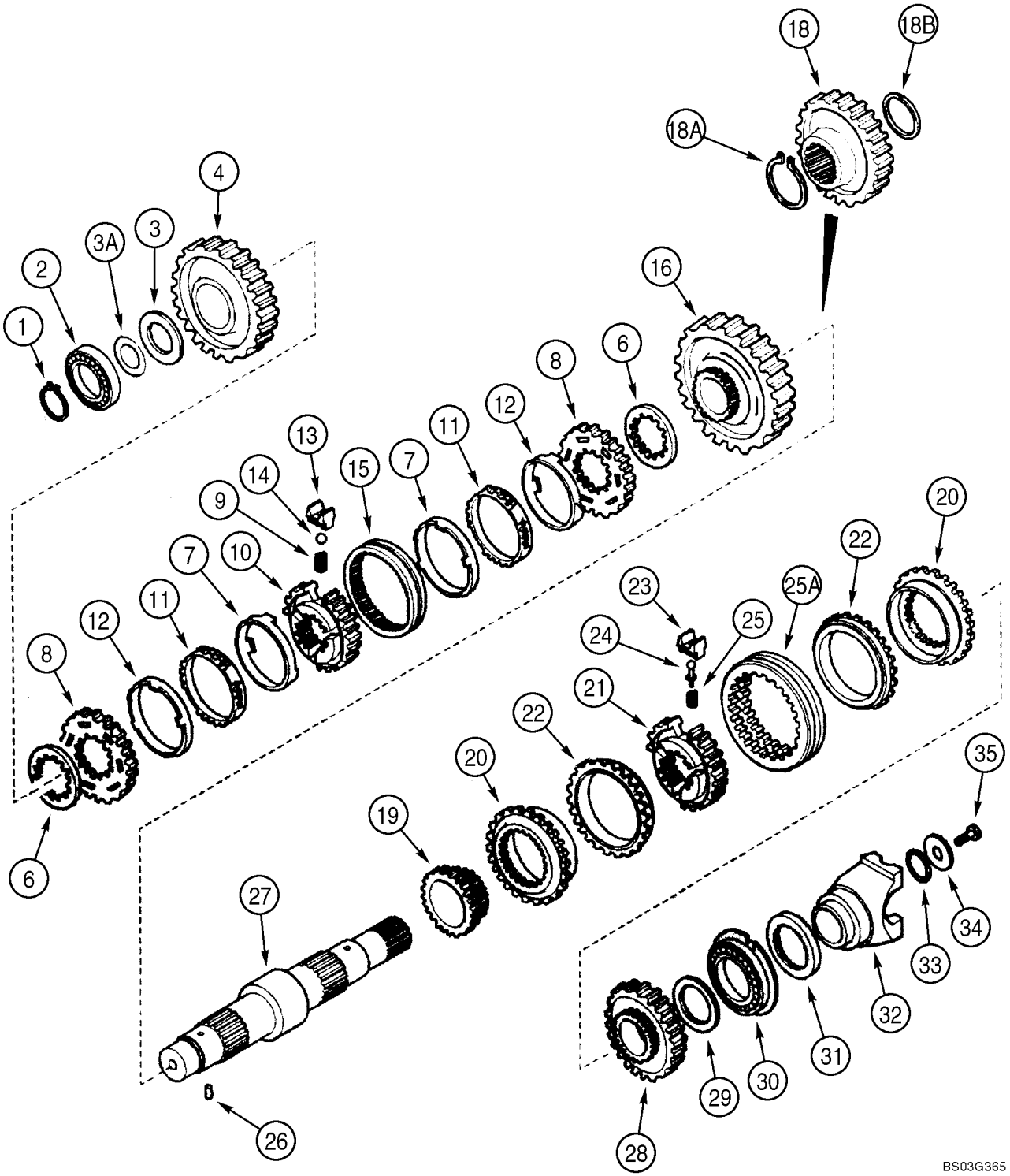

HTTP://WWW.MINNPARBACKHOEPARTS.COM



TRANSMISSION ASSY - SHAFT, SECONDARY

| REF | FN | PART NUMBER | YR/SN | QTY | DESCRIPTION |
|---|---|---|---|---|---|
| 25 | | NSS | | 3 | NOT SERVICED SEPARATELY Spring |
| 25A | | NSS | | 1 | NOT SERVICED SEPARATELY Sleeve |
| 26 | | 181108A1 | | 1 | SPLIT PIN |
| 27 | | 366366A1 | | 1 | SHAFT Secondary, Two Wheel Drive Models |
| 27 | | 358653A1 | | 1 | SHAFT Secondary, Four Wheel Drive Models |
| 28 | | 358283A1 | | 1 | PINION Gear, Driven, Third, 33T |
| 29 | | 358639A1 | | 1 | WASHER Thrust, 68 x 45 x 4 mm |
| 30 | | 181130A1 | | 1 | BEARING, BALL |
| 31 | | 181123A1 | | 1 | SEAL, OIL 60 x 75 x 8 mm; Two Wheel Drive Models |
| 32 | | 233284A1 | | 1 | FORK Yoke |
| 33 | | 181144A1 | | 1 | O-RING |
| 34 | | 181165A1 | | 1 | WASHER 52 x 12.5 x 5 mm |
| 35 | | P3533055 | | 1 | SCREW 12 x 25 mm |

HTTP://WWW.MINNPARBACKHOEPARTS.COM



TRANSMISSION ASSY (4WD) - SHAFT, OUTPUT

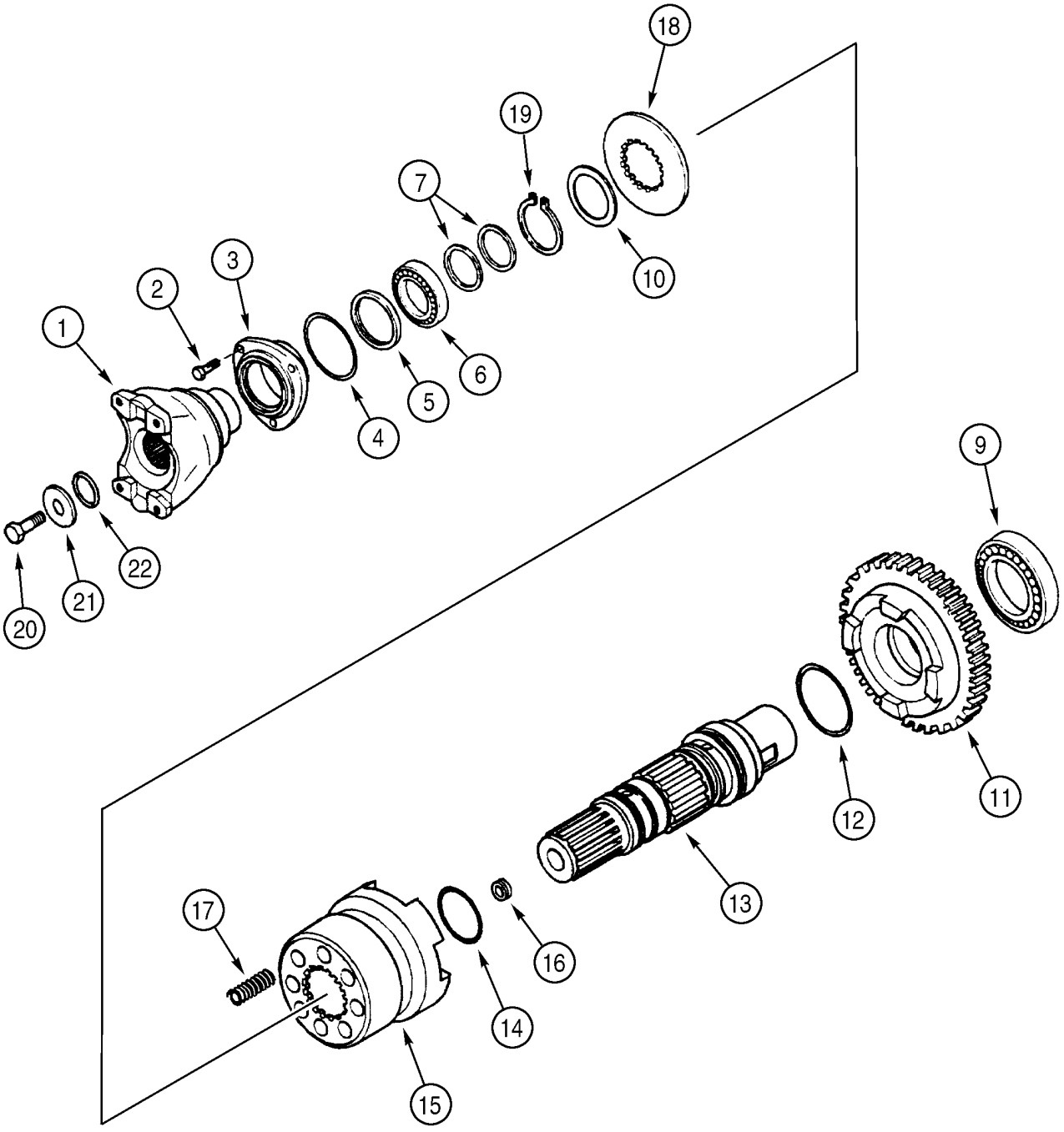


BS99H160

HTTP://WWW.MINNPARBACKHOEPARTS.COM



TRANSMISSION ASSY (4WD) - SHAFT, OUTPUT

| REF | FN | PART NUMBER | YR/SN | QTY | DESCRIPTION |
|---|---|---|---|---|---|
| | | 86984098 | | 1 | TRANSMISSION Four Wheel Drive, Incl. Ref 1 - 22; Also Includes Parts On Figures 06-12 - 06-22 |
| 1 | | 233283A1 | | 1 | FORK Yoke, Front |
| 2 | | 614-8022 | | 3 | SCREW M8 x 22 |
| 3 | | 181198A1 | | 1 | COVER |
| 4 | | 112517A1 | | 1 | O-RING |
| 5 | | 181122A1 | | 1 | SEAL, OIL 50 x 65 x 8 mm |
| 6 | | ST205A | | 1 | BEARING, BALL |
| 7 | | 358645A1 | | 2 | SEAL, OIL |
| 9 | | 181126A1 | | 1 | BEARING, BALL |
| 10 | | P2745478 | | 1 | WASHER |
| 11 | | 366234A1 | | 1 | PINION Gear, Driven, 36T |
| 12 | | 366235A1 | | 1 | O-RING |
| 13 | | 366230A1 | | 1 | SHAFT Output Shaft |
| 14 | | 366236A1 | | 2 | O-RING |
| 15 | | 366232A1 | | 1 | SLEEVE, TRANSMISSION |
| 16 | | D142898 | | 1 | PLUG 10 x 1 mm |
| 17 | | 100753A1 | | 8 | SPRING |
| 18 | | 366231A1 | | 1 | WASHER |
| 19 | | 800-5145 | | 1 | SNAP RING |
| 20 | | P3533055 | | 1 | SCREW 12 x 25 mm |
| 21 | | P2745466 | | 1 | WASHER |
| 22 | | 238-8217 | | 1 | O-RING 1-3/16 ID x 1/8 |

HTTP://WWW.MINNPARBACKHOEPARTS.COM



TRANSMISSION ASSY - VALVE, CONTROL

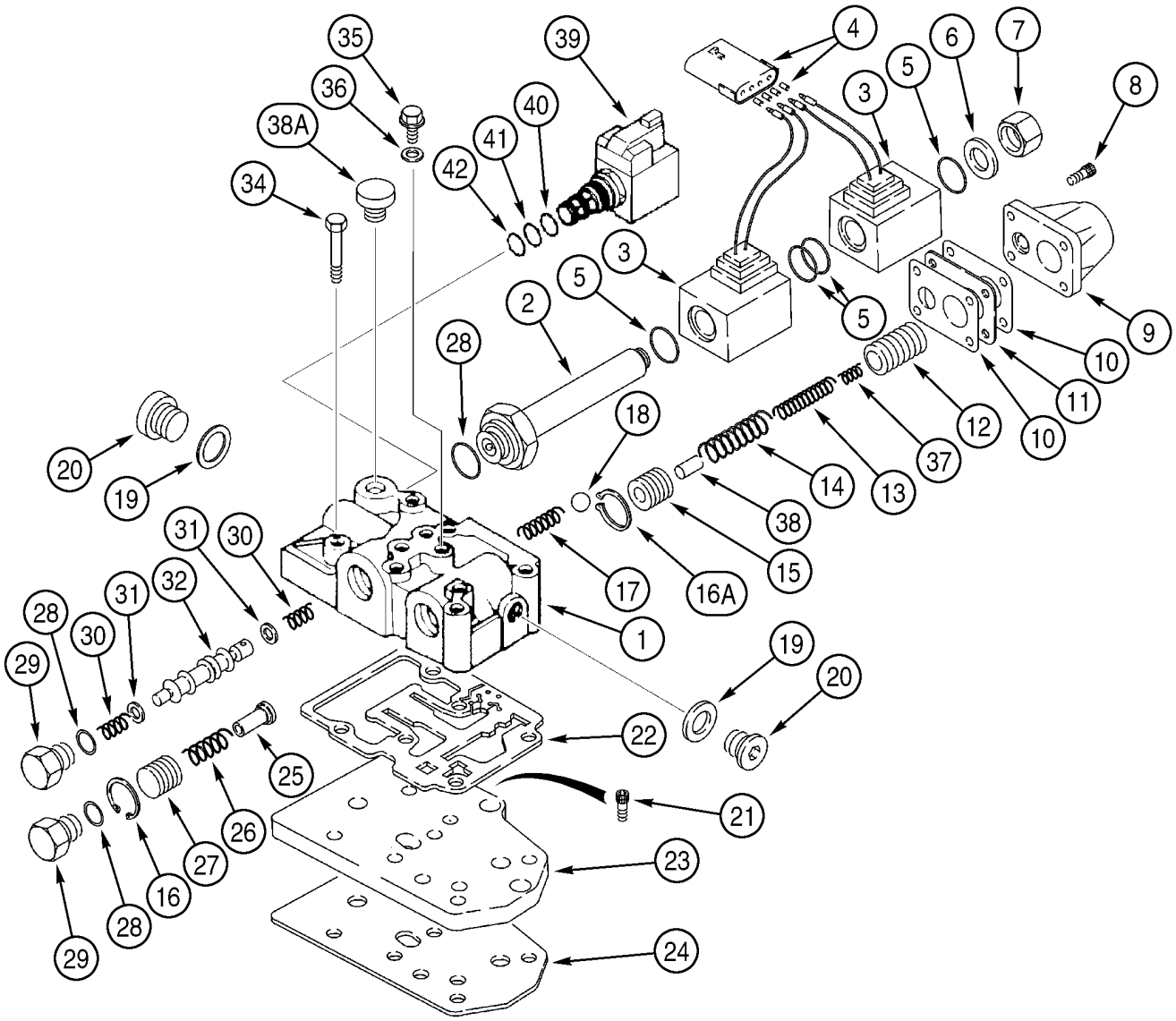


BS99J194

HTTP://WWW.MINNPARBACKHOEPARTS.COM



TRANSMISSION ASSY - VALVE, CONTROL

| REF | FN | PART NUMBER | YR/SN | QTY | DESCRIPTION |
|---|---|---|---|---|---|
| | | 86984097 | | 1 | TRANSMISSION Two Wheel Drive, Incl. Ref 1 - 45; Also Includes Parts On Figures 06-12 - 06-21 |
| | | 86984098 | | 1 | TRANSMISSION Four Wheel Drive, Incl. Ref 1 - 45; Also Includes Parts On Figures 06-12 - 06-22 |
| | | 335640A2 | | 1 | VALVE Transmission Control, Incl. Ref 1 - 45 |
| 1 | | NSS | | 1 | NOT SERVICED SEPARATELY Housing |
| 2 | | 190442A1 | | 1 | PLUNGER |
| 3 | | 190443A1 | | 2 | COIL |
| 4 | | 190437A1 | | 1 | FITTING |
| 5 | | 181136A1 | | 4 | O-RING |
| 6 | | 181273A1 | | 1 | WASHER, COPPER |
| 7 | | 181272A1 | | 1 | PLUG |
| 8 | | 864-6020 | | 4 | SCREW M6 x 20 |
| 9 | | 181251A1 | | 1 | COVER |
| 10 | | 181256A1 | | 2 | SEAL Cover Gasket |
| 11 | | 190439A2 | | 1 | SPACER |
| 12 | | 190438A2 | | 1 | PISTON |
| 13 | | 190436A1 | | 1 | SPRING |
| 14 | | 190441A1 | | 1 | SPRING |
| 15 | | 181234A2 | | 1 | PISTON |
| 16 | | 299324A1 | | 1 | CIRCLIP |
| 16A | | 368436A1 | | 1 | CIRCLIP |
| 17 | | 181261A1 | | 1 | SPRING |
| 18 | | 181146A1 | | 1 | BALL |
| 19 | | 181107A1 | | 2 | WASHER, COPPER |
| 20 | | 181103A1 | | 2 | PLUG |
| 21 | | 864-8020 | | 3 | SCREW M8 x 20, Not Included In Assembly, Purchase Separately |
| 22 | | 181166A1 | | 1 | SEAL Not Included In Assembly, Purchase Separately |
| 23 | | 181207A1 | | 1 | PLATE, LARGE Not Included In Assembly, Purchase Separately |
| 24 | | 181208A1 | | 1 | SEAL Not Included In Assembly, Purchase Separately |
| 25 | | 181254A1 | | 1 | SHAFT |
| 26 | | 181260A1 | | 1 | SPRING |

HTTP://WWW.MINNPARBACKHOEPARTS.COM



TRANSMISSION ASSY - VALVE, CONTROL

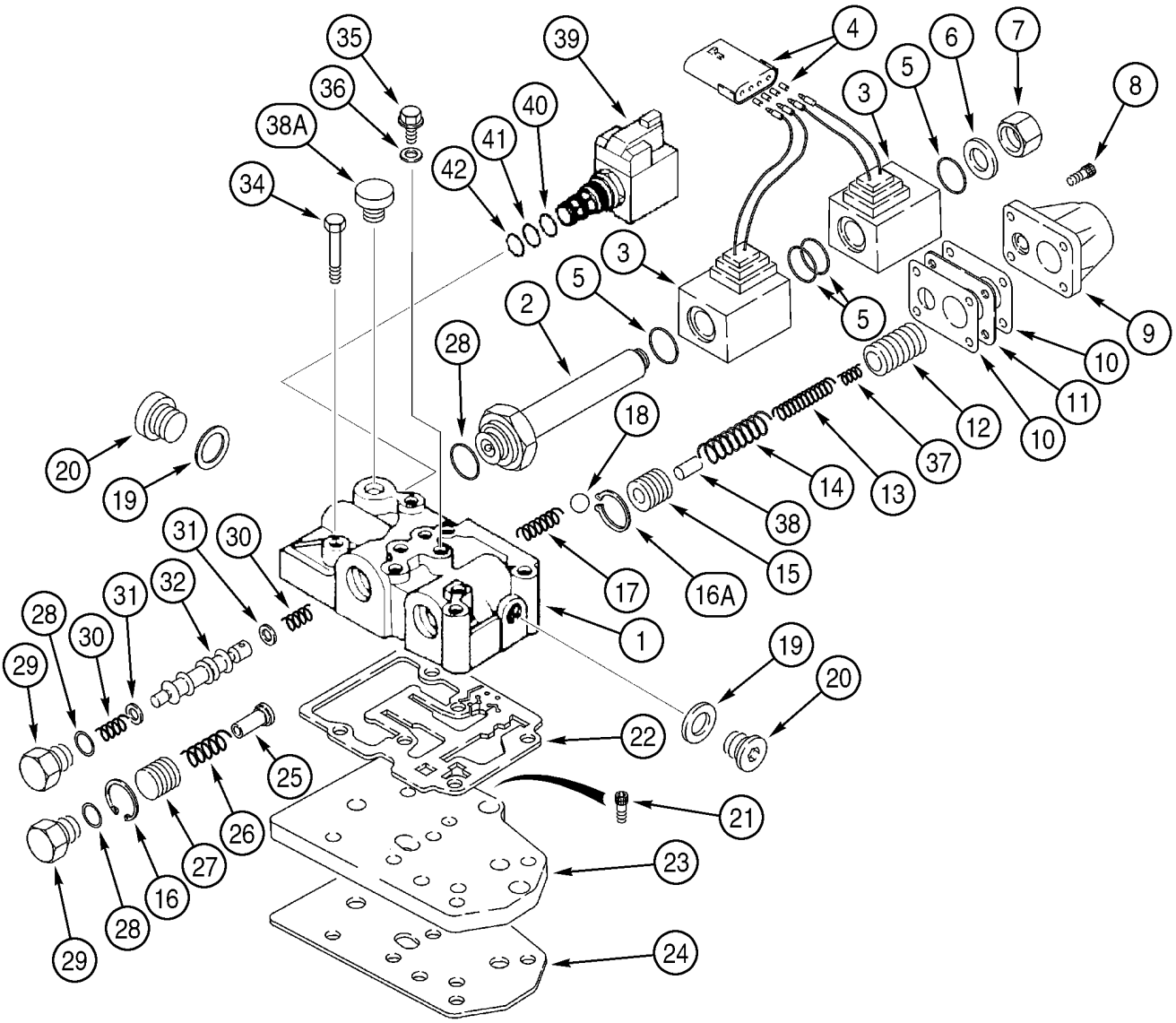


BS99J194

HTTP://WWW.MINNPARBACKHOEPARTS.COM



TRANSMISSION ASSY - VALVE, CONTROL

| REF | FN | PART NUMBER | YR/SN | QTY | DESCRIPTION |
|---|---|---|---|---|---|
| 27 | | 181255A2 | | 1 | PISTON Flow Divider |
| 28 | | 181137A1 | | 3 | O-RING |
| 29 | | 181258A1 | | 2 | PLUG PLUG |
| 30 | | 334724A1 | | 2 | SPRING |
| 31 | | 181253A1 | | 2 | SPACER |
| 32 | | 334725A1 | | 1 | PLUNGER Spool, Forward/Reverse |
| 34 | | 814-8080 | | 6 | SCREW M8 x 80, Not Included In Assembly, Purchase Separately |
| 35 | | 181100A1 | | 4 | PLUG |
| 36 | | 934667R1 | | 4 | WASHER, COPPER Copper Washer, 10 x 14 x 1.5 mm |
| 37 | | 190435A1 | | 1 | SPRING |
| 38 | | 190440A1 | | 1 | PIN |
| 38A | | NSS | | 1 | NOT SERVICED SEPARATELY Plug |
| 39 | | 349295A1 | | 1 | SOLENOID Differential Lock Solenoid Valve; Incl. Ref 40 - 45 |
| 40 | | 237-6008 | | 1 | O-RING 41/64 ID x 3/32 |
| 41 | | 238-5014 | | 1 | O-RING 1/2 ID x 1/16 |
| 42 | | 238-5013 | | 1 | O-RING 7/16 ID x 1/16 |
| 43 | | NSS | | 1 | NOT SERVICED SEPARATELY Solenoid Valve, Cartridge, Component Parts Not Serviced Separately, Not Illustrated |
| 44 | | 298614A1 | | 1 | COIL ASSY. Not Illustrated |
| 45 | | NSS | | 1 | NOT SERVICED SEPARATELY Nut, Not Illustrated |
| | | 368437A2 | | 1 | KIT Snap Ring, Without Tools, Includes 10, 15, 16A, 22, 25, Plus Instructions; Replaces 368437A1 |
| | | 368438A2 | | 1 | KIT Snap Ring, With Tools, Includes 10, 15, 16A, 22, 25, Plus 368439A1 Guide Tool and 368440A1 Pushing Tool for Snap Ring Service; Replaces 368438A1 |

HTTP://WWW.MINNPARBACKHOEPARTS.COM



TRANSMISSION ASSY (4WD) - VALVE, SOLENOID

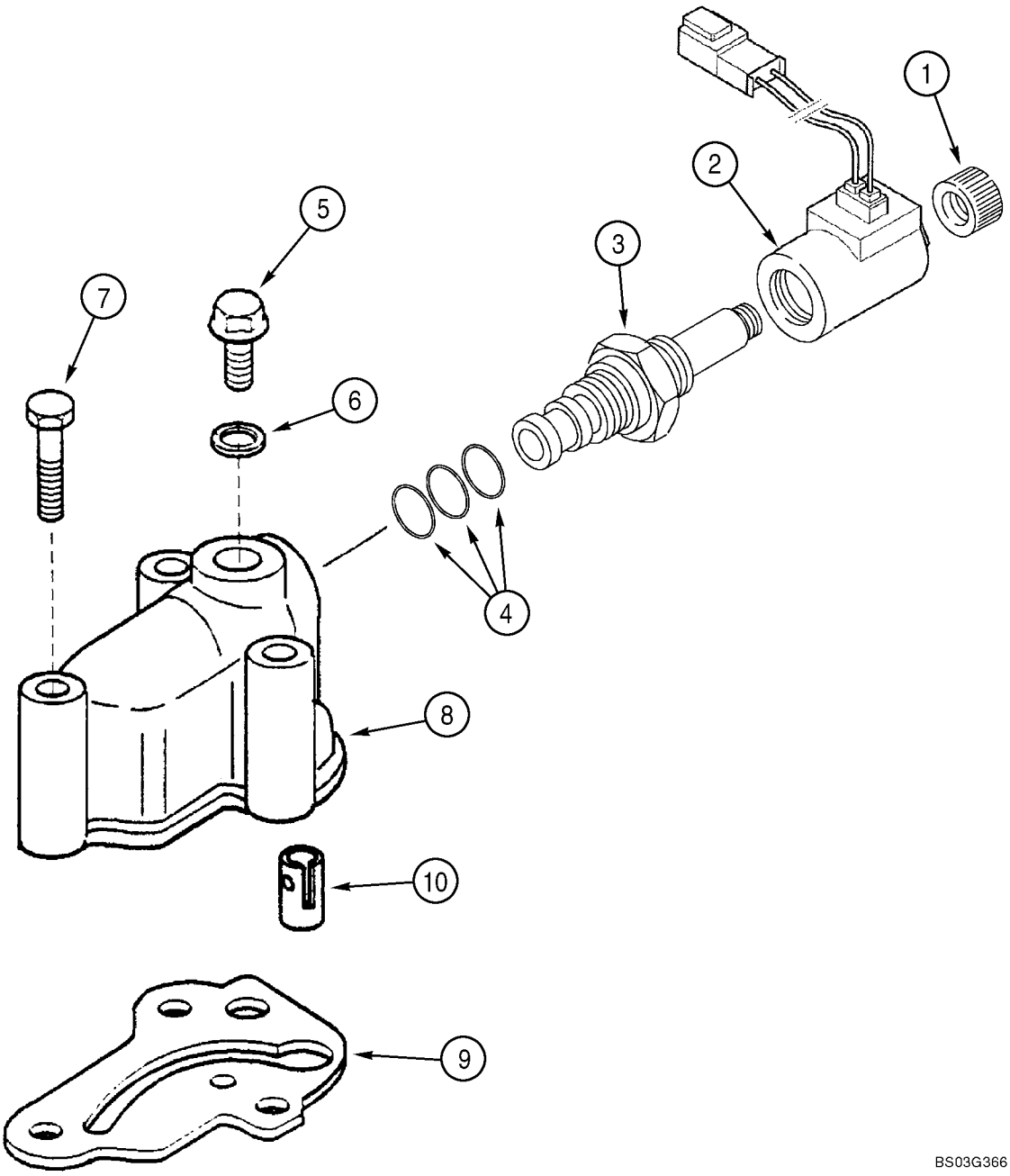

HTTP://WWW.MINNPARBACKHOEPARTS.COM



TRANSMISSION ASSY (4WD) - VALVE, SOLENOID

| REF | FN | PART NUMBER | YR/SN | QTY | DESCRIPTION |
|---|---|---|---|---|---|
| | | 86984098 | | 1 | TRANSMISSION Four Wheel Drive, Incl. Ref 1 - 10; Also Includes Parts On Figures 06-12 - 06-22 |
| | | 87429978 | | 1 | VALVE, SOLENOID Valve, Incl. Ref 1 - 4 |
| 1 | | NSS | | 1 | NOT SERVICED SEPARATELY Nut |
| 2 | | NSS | | 1 | NOT SERVICED SEPARATELY Coil |
| 3 | | NSS | | 1 | NOT SERVICED SEPARATELY Valve, Solenoid |
| 4 | | NSS | | 1 | NOT SERVICED SEPARATELY Kit, Seal, Includes 238-5014, 238-5015, 237-6010 O-Rings, Kit Not Serviced Separately, Order 190432A1 Solenoid Valve |
| 5 | | 181100A1 | | 1 | PLUG |
| 6 | | 934667R1 | | 1 | WASHER, COPPER Copper Washer, 10 x 14 x 1.5 mm |
| 7 | | 814-8060 | | 3 | SCREW M8 x 60 |
| 8 | | 321428A1 | | 1 | HOUSING |
| 9 | | 366910A1 | | 1 | SEAL |
| 10 | | 190431A1 | | 1 | VALVE Installed Between Ref 8 and 9 |

HTTP://WWW.MINNPARBACKHOEPARTS.COM



WHEELS, REAR - TIRES

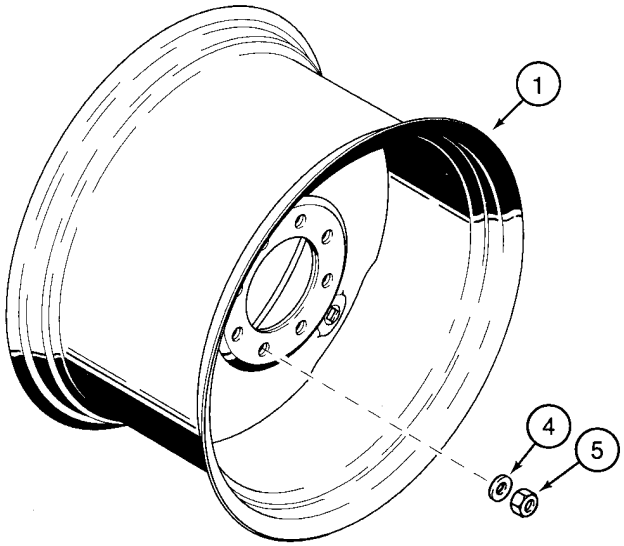


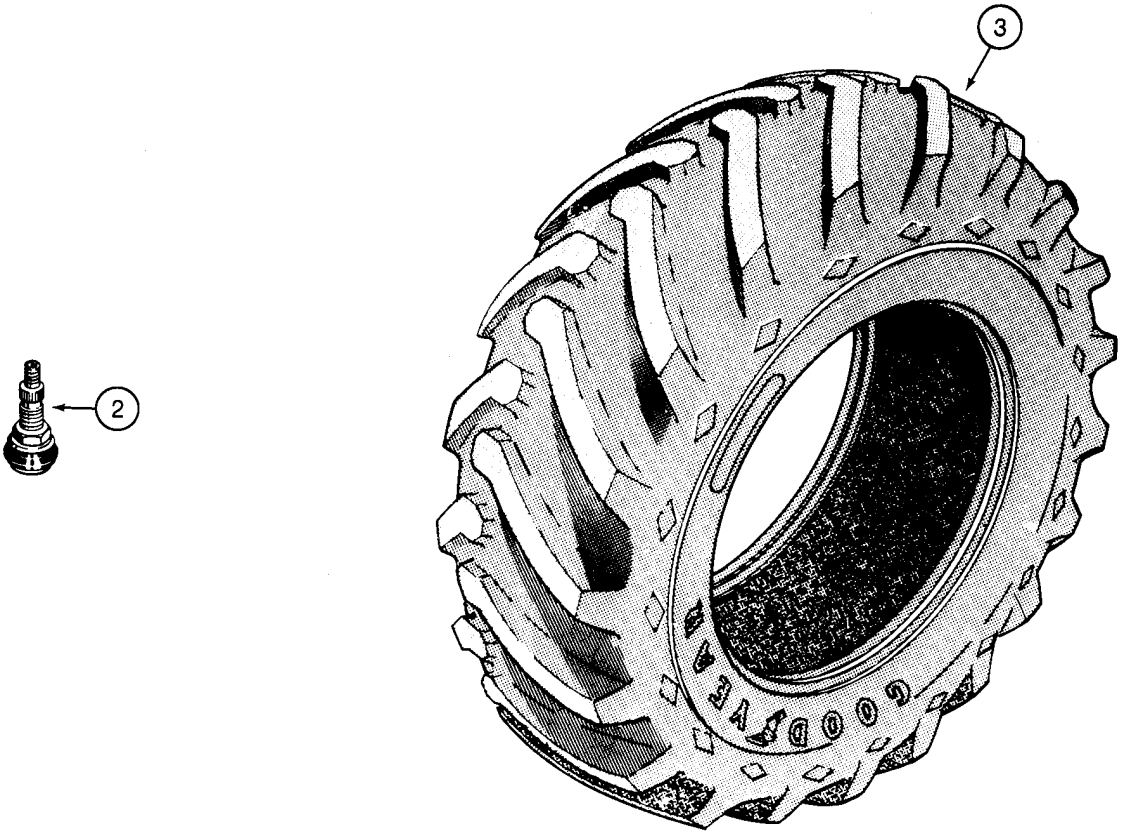


B9408129

HTTP://WWW.MINNPARBACKHOEPARTS.COM



WHEELS, REAR - TIRES

| REF | FN | PART NUMBER | YR/SN | QTY | DESCRIPTION |
|---|---|---|---|---|---|
| 1 | | 104907A1 | | 2 | RIM 19.5L x 24 Tires - 10 PR or 14 Ply; Two Wheel or Four Wheel Drive |
| 2 | | 27549R1 | | 2 | VALVE |
| 3 | | REF | | 2 | INSTRUCTION Tire, Purchase Locally |
| 1 | | 119241A1 | | 2 | RIM 17.5L x 24 Tires - 10 PR, R4; Two Wheel or Four Wheel Drive |
| 2 | | 27549R1 | | 2 | VALVE |
| 3 | | REF | | 2 | INSTRUCTION Tire, Purchase Locally |
| 4 | | D138380 | | 20 | WASHER Wheel Nuts |
| 5 | | D138492 | | 20 | NUT M22; Wheel Nuts |

HTTP://WWW.MINNPARBACKHOEPARTS.COM



AXLE, REAR DRIVE - MOUNTING

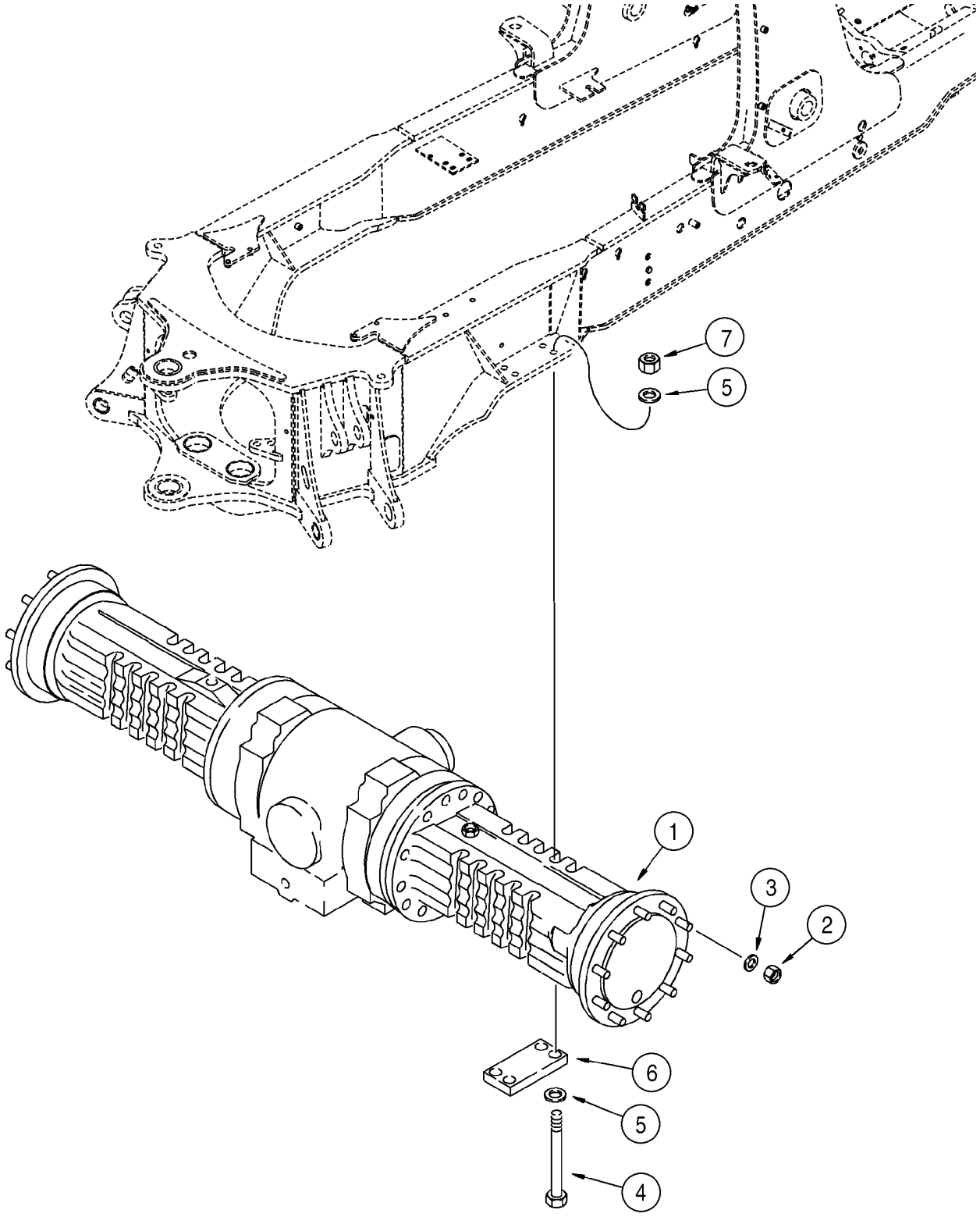

HTTP://WWW.MINNPARBACKHOEPARTS.COM



AXLE, REAR DRIVE - MOUNTING

| REF | FN | PART NUMBER | YR/SN | QTY | DESCRIPTION |
|---|---|---|---|---|---|
| 1 | | 384952A1 | | 1 | AXLE, REAR See Figures 06-26 - 06-30, 07-01, 07-02 |
| 2 | | D138492 | | 20 | NUT 22 mm |
| 3 | | D138380 | | 20 | WASHER |
| 4 | | 827-20230 | | 8 | SCREW M20 x 230; 10.9 |
| 5 | | 896-11020 | | 16 | WASHER 22 x 37 x 4 mm, Hardened |
| 6 | | 117933A1 | | 2 | PLATE, LARGE |
| 7 | | 829-1420 | | 8 | NUT M20; 10 |

HTTP://WWW.MINNPARBACKHOEPARTS.COM



AXLE, REAR - DIFFERENTIAL LOCK

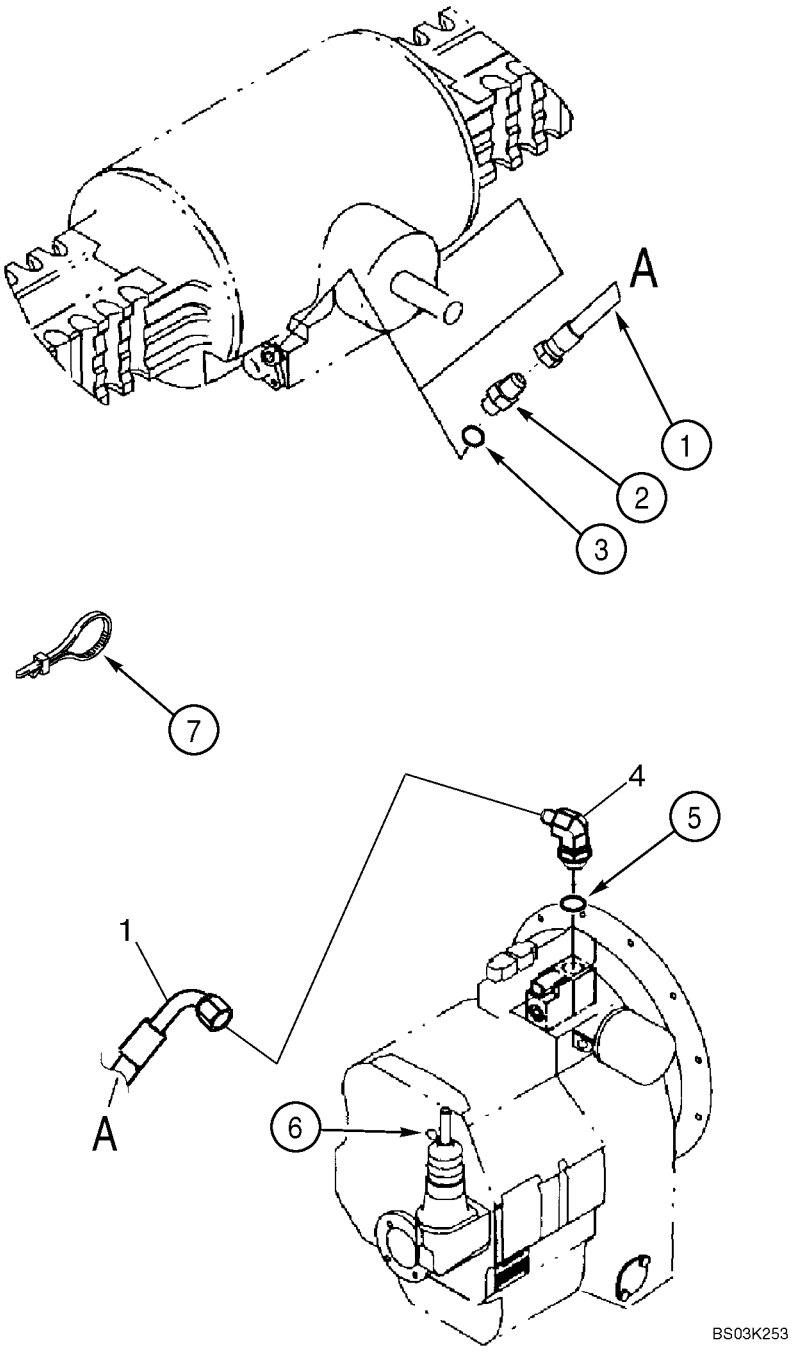

HTTP://WWW.MINNPARBACKHOEPARTS.COM



AXLE, REAR - DIFFERENTIAL LOCK

| REF | FN | PART NUMBER | YR/SN | QTY | DESCRIPTION |
|---|---|---|---|---|---|
| 1 | | 87431701 | | 1 | HOSE ASSY. 1500 mm (59-9/16 in) |
| 2 | | 218-5057 | | 1 | CONNECTOR, HYD. 9/16 fl x Or, Incl. Ref 3 |
| 3 | | 237-6006 | | 1 | O-RING 15/32 ID x 5/64 |
| 4 | | 218-5105 | | 1 | ELBOW 90 deg, 9/16 fl x Or, Incl. Ref 5 |
| 5 | | 237-6006 | | 1 | O-RING 15/32 ID x 5/64 |
| 6 | | E135809 | | 1 | PLUG If Used |
| 7 | | L18337 | | 2 | STRAP 15 in |

HTTP://WWW.MINNPARBACKHOEPARTS.COM



AXLE, REAR DRIVE - HOUSING

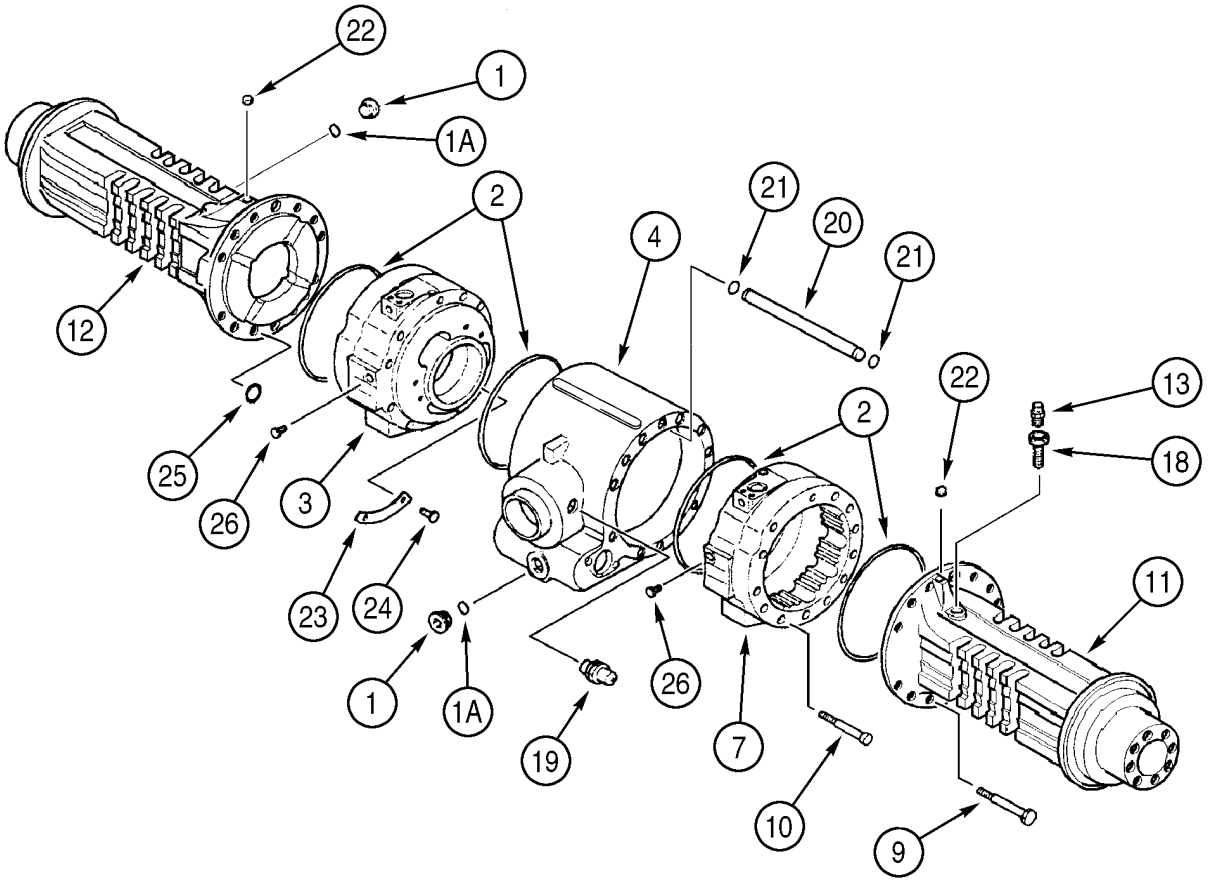

HTTP://WWW.MINNPARBACKHOEPARTS.COM



AXLE, REAR DRIVE - HOUSING

| REF | FN | PART NUMBER | YR/SN | QTY | DESCRIPTION |
|---|---|---|---|---|---|
| | | 384952A1 | | 1 | AXLE, REAR Incl. Ref 1 - 26; Also Includes Parts On Figures 06-26 - 06-30, 07-01, 07-02 |
| 1 | | 100557A1 | | 2 | PLUG, DRAIN Incl. Ref 1A |
| 1A | | 238-6121 | | 1 | O-RING 1-1/16 ID x 3/32 |
| 2 | | 238-5270 | | 4 | O-RING 1-1/16 ID x 3/32 |
| 3 | | 445267A1 | | 1 | FLANGE Brake Cylinder, Right-Hand |
| 4 | | 367175A1 | | 1 | HUB Center Housing |
| 7 | | 445266A1 | | 1 | FLANGE Brake Cylinder, Left-Hand |
| 9 | | 814-14140 | | 22 | SCREW M14 x 140 |
| 10 | | 864-12130 | | 2 | SCREW M12 x 130 |
| 11 | | 358280A1 | | 1 | HUB Left-Hand, With Breather Port |
| 12 | | 358279A1 | | 1 | HUB Right-Hand, Without Breather Port |
| 13 | | 1966149C2 | | 1 | BREATHER |
| 18 | | E135750 | | 1 | PIN, AXLE Breather Extension |
| 19 | | 393826A1 | | 1 | SENDER UNIT Oil Temperature, Includes 237-8008 O-Ring |
| | | 237-8008 | | 1 | O-RING 41/64 ID x 3/32 |
| 20 | | 346584A1 | | 1 | TUBE Internal |
| 21 | | 346583A1 | | 2 | O-RING |
| 22 | | D142898 | | 2 | PLUG 10 x 1 mm, If Used |
| 23 | | 347959A1 | | 2 | PLATE |
| 24 | | 347960A1 | | 4 | RIVET 4,8 x 6 mm |
| 25 | | P2230493 | | 8 | SEAL |
| 26 | | 294245A1 | | 2 | CAP 7/16, If Used |

HTTP://WWW.MINNPARBACKHOEPARTS.COM



AXLE, REAR DRIVE - DIFFERENTIAL

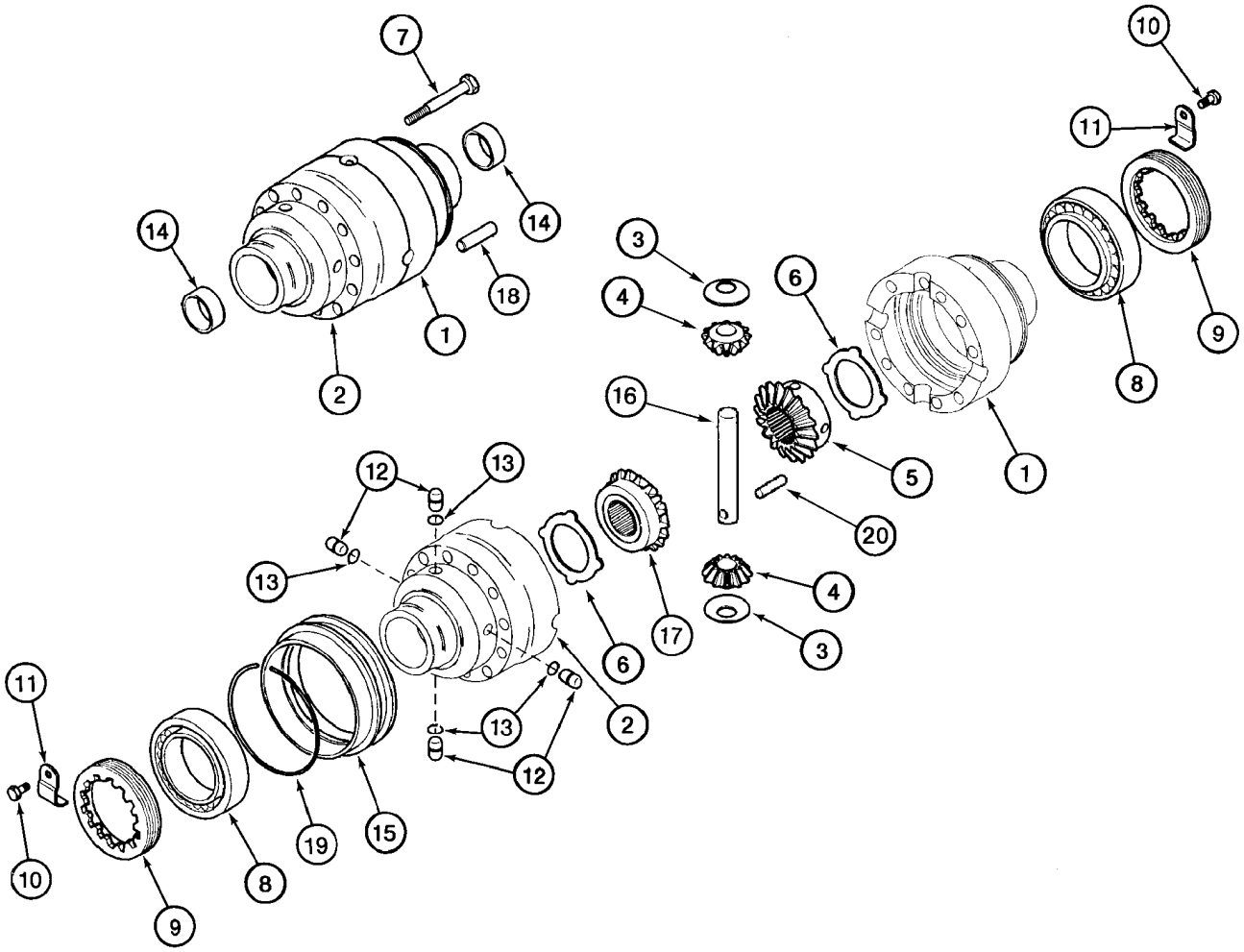


BS99H144

HTTP://WWW.MINNPARBACKHOEPARTS.COM



AXLE, REAR DRIVE - DIFFERENTIAL

| REF | FN | PART NUMBER | YR/SN | QTY | DESCRIPTION |
|---|---|---|---|---|---|
| | | 384952A1 | | 1 | AXLE, REAR Incl. Ref 1 - 20; Also Includes Parts On Figures 06-26 - 06-30, 07-01, 07-02 |
| | | 292268A1 | | 1 | HOUSING Differential, Incl. Ref 1, 2 |
| 1 | | NSS | | 1 | NOT SERVICED SEPARATELY Housing, Flange Half |
| 2 | | NSS | | 1 | NOT SERVICED SEPARATELY Housing, Plain Half |
| | | 367184A1 | | 1 | DIFFERENTIAL Gear Set Kit, Service Replacement; Incl. Ref 3 - 6, 16, 17, 20 |
| 3 | | E135777 | | 2 | WASHER Thrust |
| 4 | | 190471A1 | | 2 | PINION Sun Gear, 12T, No Longer Sold Separately, Must Be Replaced As a Set, For Service, Order 367184A1 Differential Gear Set Kit |
| 5 | | D142971 | | 1 | PINION Side Pinion Gear, No Longer Sold Separately, Must Be Replaced As a Set, For Service, Order 367184A1 Differential Gear Set Kit |
| 6 | | 190469A1 | | 2 | WASHER, THRUST |
| 7 | | S300976 | | 10 | SCREW M12 x 90; 12.9 |
| 8 | | E135785 | | 2 | BEARING |
| 9 | | P3034505 | | 2 | NUT Lock Ring |
| 10 | | 112486A1 | | 2 | SCREW M6 x 12 |
| 11 | | 175959A1 | | 2 | BRACKET |
| 12 | | 292207A1 | | 4 | PIN, LARGE |
| 13 | | 292208A1 | | 4 | O-RING |
| 14 | | 190452A1 | | 2 | BUSHING |
| 15 | | 191067A1 | | 1 | SLEEVE |
| | | 367184A1 | | 1 | DIFFERENTIAL Gear Set Kit, Service Replacement; Incl. Ref 3 - 6, 16, 17, 20 |
| 16 | | P6427894 | | 2 | PIN, LARGE Sun Gear, No Longer Sold Separately, Must Be Replaced As a Set, For Service, Order 367184A1 Differential Gear Set Kit |
| 17 | | 292890A1 | | 1 | GEAR Side Pinion Gear, No Longer Sold Separately, Must Be Replaced As a Set, For Service, Order 367184A1 Differential Gear Set Kit |
| 18 | | D143033 | | 2 | DOWEL 12 x 40 mm |
| 19 | | 175961A1 | | 1 | RING, LOCKING |
| 20 | | 838-5840 | | 1 | PIN, ROLL 8 x 40 mm |

HTTP://WWW.MINNPARBACKHOEPARTS.COM



AXLE, REAR DRIVE - RING AND PINION

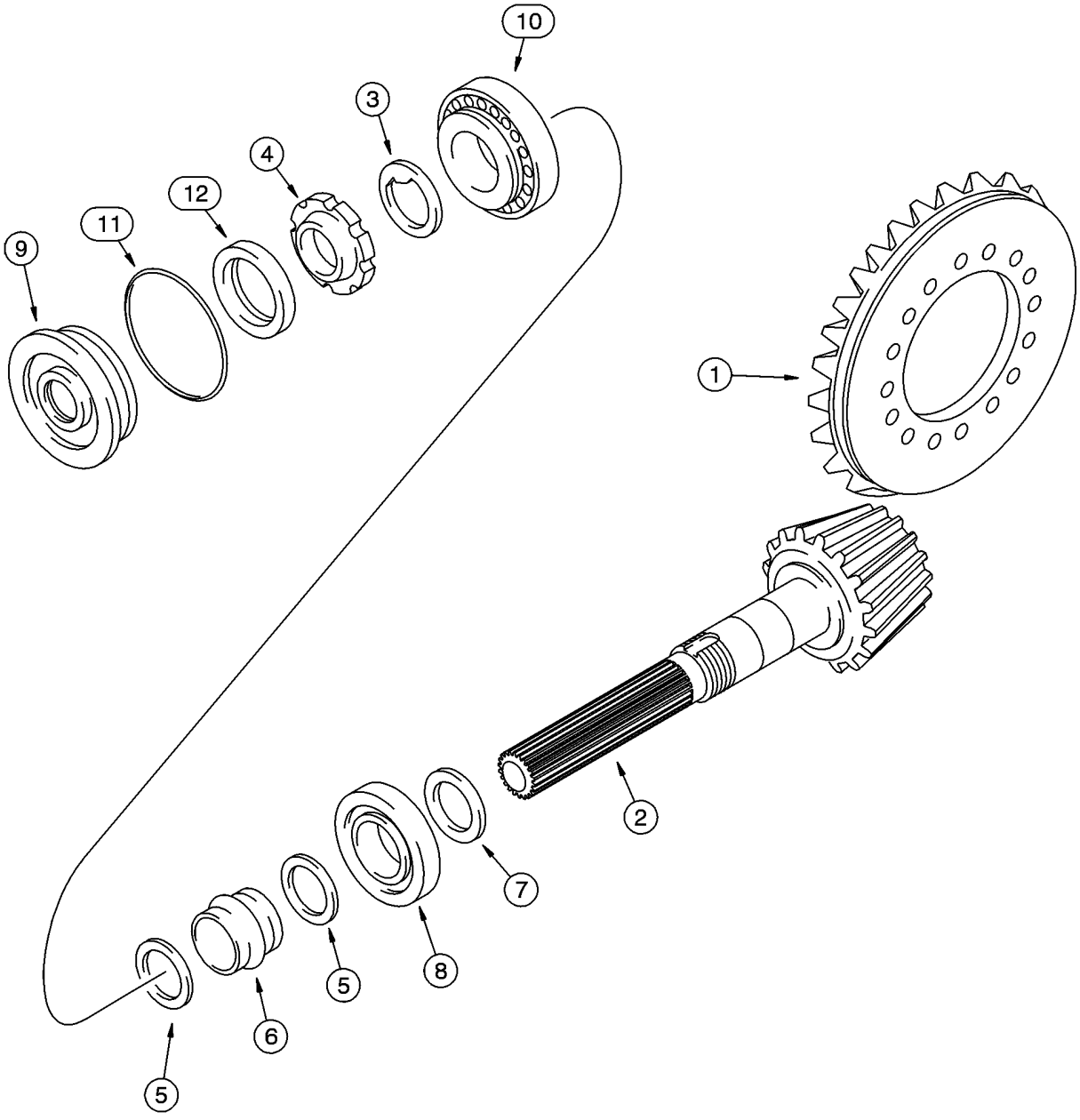


BT97M194

HTTP://WWW.MINNPARBACKHOEPARTS.COM



AXLE, REAR DRIVE - RING AND PINION

| REF | FN | PART NUMBER | YR/SN | QTY | DESCRIPTION |
|---|---|---|---|---|---|
| | | 384952A1 | | 1 | AXLE, REAR Incl. Ref 1 - 12; Also Includes Parts On Figures 06-26 - 06-30, 07-01, 07-02 |
| | | 175956A1 | | 1 | GEAR-SET Ring and Pinion, Incl. Ref 1 - 6 |
| 1 | | NSS | | 1 | NOT SERVICED SEPARATELY Gear, Ring |
| 2 | | NSS | | 1 | NOT SERVICED SEPARATELY Gear, Pinion |
| 3 | | K261065 | | 1 | WASHER |
| 4 | | K261014 | | 1 | NUT Ring |
| 5 | | 1349059C1 | | 2 | WASHER |
| 6 | | 175957A1 | | 1 | SPACER Collapsible |
| 7 | | 190506A1 | | X | SHIM 2,5 mm (0,098 in) |
| 7 | | 190508A1 | | X | SHIM 2,6 mm (0,102 in) |
| 7 | | 190509A1 | | X | SHIM 2,7 mm (0,106 in) |
| 7 | | 190510A1 | | X | SHIM 2,8 mm (0,110 in) |
| 7 | | 190511A1 | | X | SHIM 2,9 mm (0,114 in) |
| 7 | | 190512A1 | | X | SHIM 3,0 mm (0,118 in) |
| 7 | | 190513A1 | | X | SHIM 3,1 mm (0,122 in) |
| 7 | | 190514A1 | | X | SHIM 3,2 mm (0,125 in) |
| 7 | | 190515A1 | | X | SHIM 3,3 mm (0,129 in) |
| 7 | | 190516A1 | | X | SHIM 3,4 mm (0,133 in) |
| 8 | | P1139855 | | 1 | BEARING |
| 9 | | 128570A1 | | 1 | FLANGE Cover |
| 10 | | K395090 | | 1 | BEARING, BALL |
| 11 | | 238-5152 | | 1 | O-RING 3-1/4 ID x 3/32 |
| 12 | | K262143 | | 1 | SEAL Oil |

HTTP://WWW.MINNPARBACKHOEPARTS.COM



AXLE, REAR DRIVE - DIFFERENTIAL LOCK

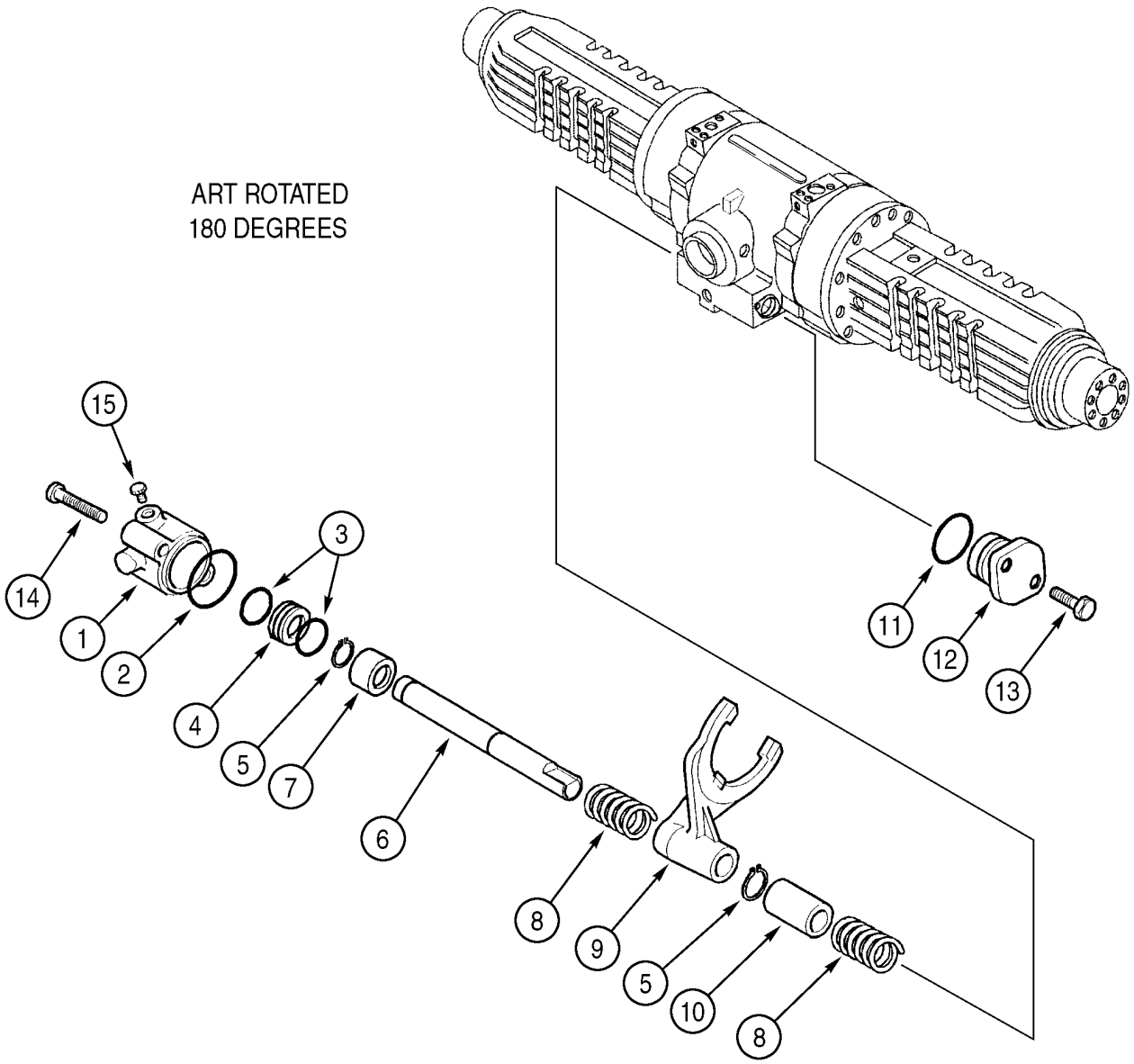

HTTP://WWW.MINNPARBACKHOEPARTS.COM



AXLE, REAR DRIVE - DIFFERENTIAL LOCK

| REF | FN | PART NUMBER | YR/SN | QTY | DESCRIPTION |
|---|---|---|---|---|---|
| | | 384952A1 | | 1 | AXLE, REAR Incl. Ref 1 - 15; Also Includes Parts On Figures 06-26 - 06-30, 07-01, 07-02 |
| 1 | | 292213A1 | | 1 | CYLINDER |
| 2 | | 305152A1 | | 1 | O-RING |
| 3 | | 292210A1 | | 2 | SEAL |
| 4 | | 292212A1 | | 1 | PISTON |
| 5 | | 800-5120 | | 2 | SNAP RING No. 20 |
| 6 | | 292214A1 | | 1 | SHAFT Rail, Shifter Fork |
| 7 | | 292902A1 | | 1 | RING Bushing |
| 8 | | 175966A1 | | 2 | SPRING |
| 9 | | 175964A2 | | 1 | FORK |
| 10 | | 175965A1 | | 1 | BUSHING, LARGE |
| 11 | | 128376A1 | | 1 | O-RING |
| 12 | | 175968A1 | | 1 | SUPPORT Cover |
| 13 | | 614-8030 | | 2 | SCREW M8 x 30 |
| 14 | | 814-8080 | | 2 | SCREW M8 x 80 |
| 15 | | NSS | | 1 | NOT SERVICED SEPARATELY Plug |

HTTP://WWW.MINNPARBACKHOEPARTS.COM



AXLE, REAR DRIVE - PLANETARY

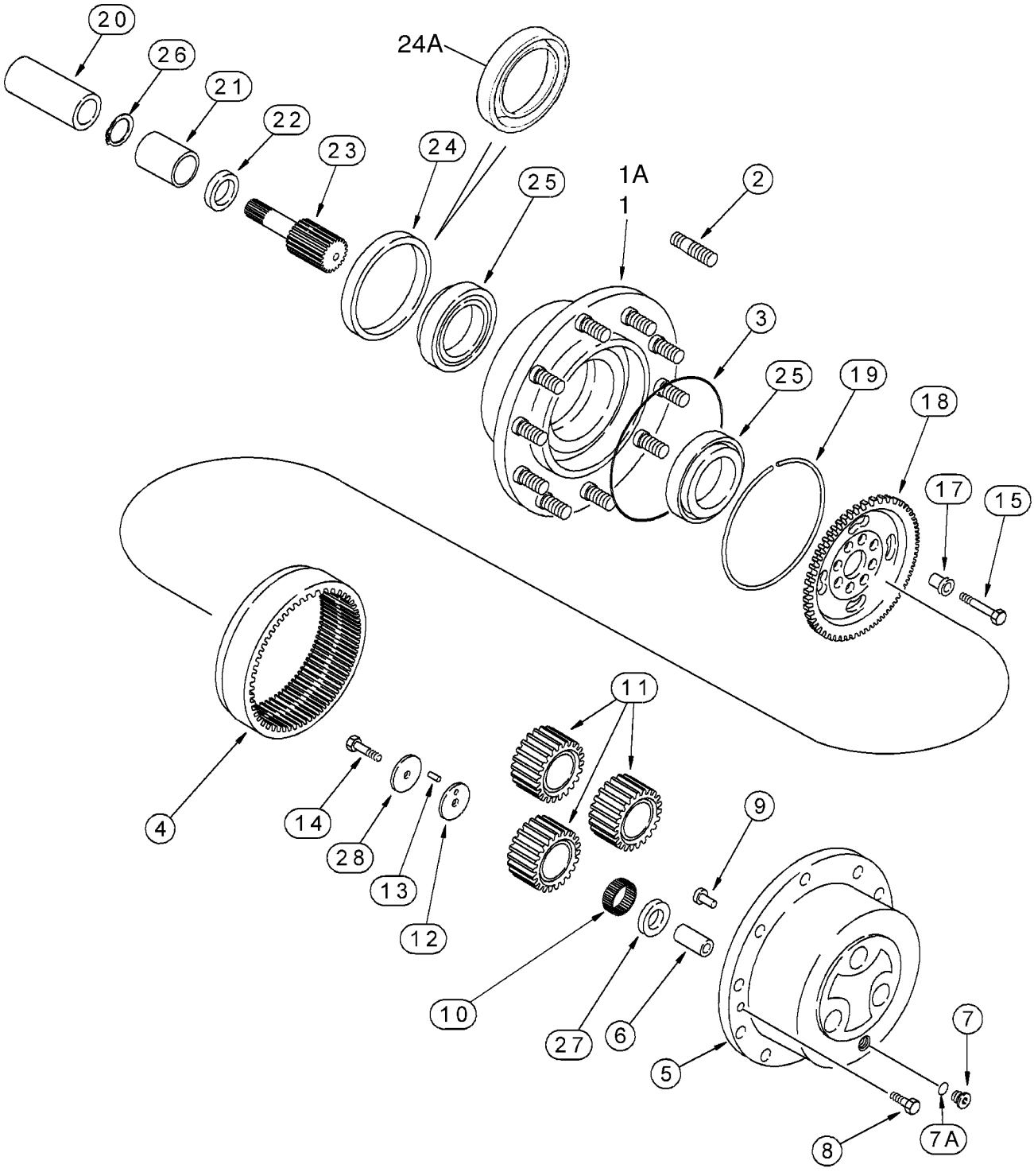

HTTP://WWW.MINNPARBACKHOEPARTS.COM



AXLE, REAR DRIVE - PLANETARY

| REF | FN | PART NUMBER | YR/SN | QTY | DESCRIPTION |
|---|---|---|---|---|---|
| | | 384952A1 | | 1 | AXLE, REAR Incl. Ref 1 - 28; Also Includes Parts On Figures 06-26 - 06-30, 07-01, 07-02 |
| 1 | | 175974A1 | | 2 | HUB Includes (20) D142986 Studs, Ref 2; Used With 1349265C1 Seal, Ref 24; If Used |
| 1A | | 87416108 | | 2 | KIT, SERVICE HUB ASSY, Includes (10) D142986 Stud, Ref 2; Used With 247546A1 Seal, Ref 24A; If Used |
| 2 | | D142986 | | 10-20 | STUD Without Flanged Collar |
| 2 | | 196090A1 | | 10 | STUD With Flanged Collar, For Recessed Bolt Holes; If Used |
| 3 | | P2930467 | | 2 | SEAL |
| 4 | | 175976A1 | | 2 | PINION Ring Gear |
| 5 | | 175977A1 | | 2 | CARRIER Planetary Carrier, Incl. Ref 6, Use With Liquid Gasket Silastic 732, Carrier to Hub |
| 6 | | NSS | | 6 | NOT SERVICED SEPARATELY Shaft |
| 7 | | 100557A1 | | 2 | PLUG, DRAIN Incl. Ref 7A |
| 7A | | 238-6121 | | 1 | O-RING 1-1/16 ID x 3/32 |
| 8 | | K395082 | | 4 | SCREW |
| 9 | | K395093 | | 2 | PIN, HEADED Lock |
| 10 | | 175978A1 | | 17 | SET Package of 10 Needles, 168 Needles Required |
| 11 | | 175979A1 | | 6 | SUN GEAR Pinion Gear |
| 12 | | 175980A1 | | 6 | WASHER, THRUST |
| 13 | | 247550A1 | | 1 | NEEDLE ROLLER Package of 10 Needles, Used As Pins, 6 Needles Required |
| 14 | | 175982A1 | | 6 | SCREW M10 x 50; 10.9 |
| 15 | | K395131 | | 16 | BOLT M14 x 65 |
| 17 | | 107071A1 | | 16 | CENTERING RING Bushing, 20 mm OD |
| 18 | | 310492A1 | | 2 | CARRIER, GEARS Hub, Ring Gear |
| 19 | | 175984A1 | | 2 | RING, LOCKING |
| 20 | | NSS | | 2 | NOT SERVICED SEPARATELY Coupling, Welded To and Included With the Differential Brake Oil Auger |
| 21 | | 196065A1 | | 2 | BUSHING, LARGE |
| 22 | | 196066A1 | | 2 | SEAL, OIL |
| 23 | | 358286A1 | | 2 | GEAR Shaft |
| 24 | | 1349265C1 | | 2 | SEAL Used With 175974A1 Hub, Ref 1; If Used |

HTTP://WWW.MINNPARBACKHOEPARTS.COM



AXLE, REAR DRIVE - PLANETARY

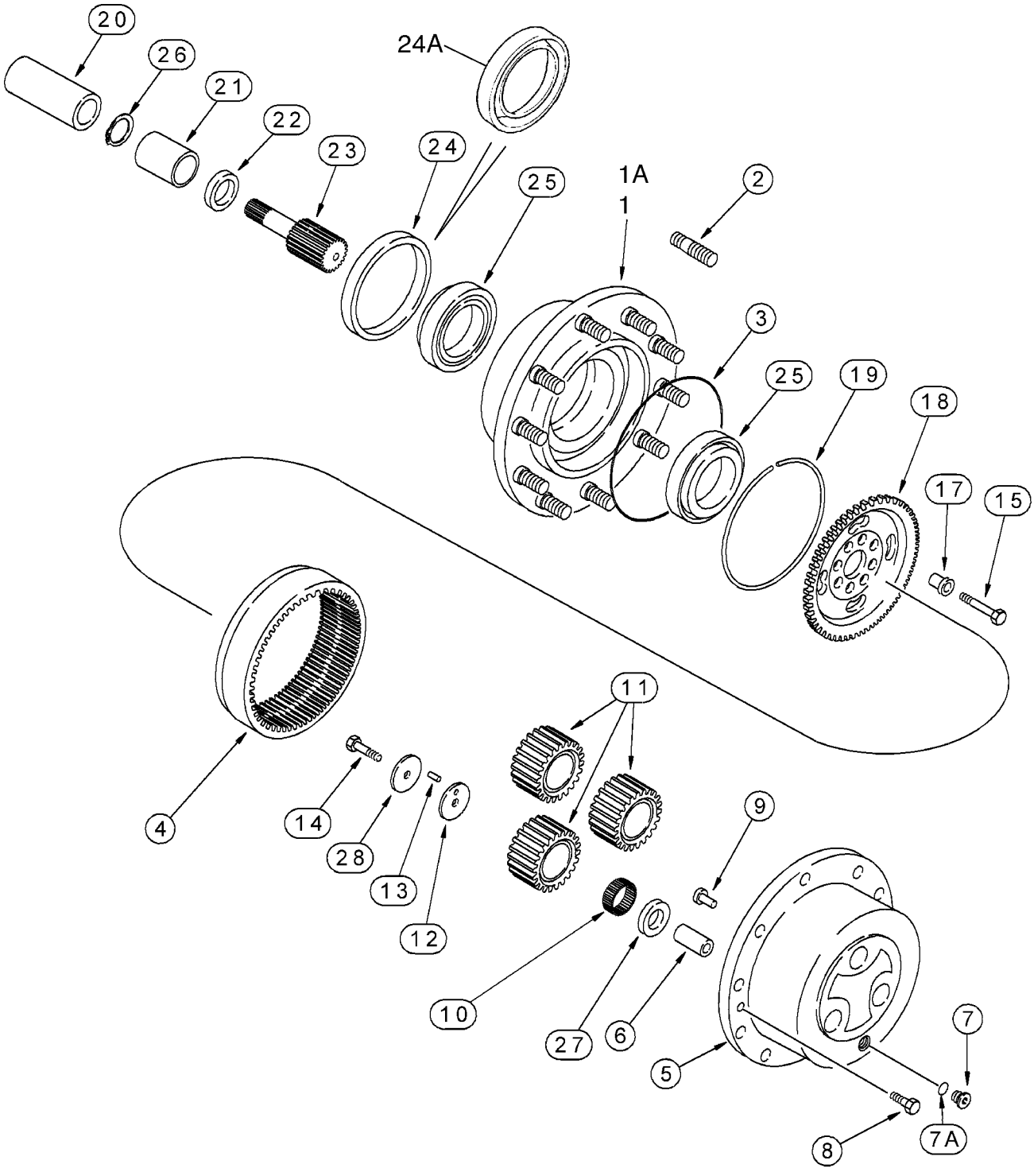

HTTP://WWW.MINNPARBACKHOEPARTS.COM



AXLE, REAR DRIVE - PLANETARY

| REF | FN | PART NUMBER | YR/SN | QTY | DESCRIPTION |
|---|---|---|---|---|---|
| 24A | | 247546A1 | | 2 | SEAL Oil, With Internal Garter Spring Seal; Used With 87416108 Hub, Ref 1A; If Used |
| 25 | | K395101 | | 4 | BEARING |
| 26 | | 800-2136 | | 2 | SNAP RING No. 36 |
| 27 | | 175989A1 | | 6 | WASHER, THRUST |
| 28 | | 175990A1 | | 6 | WASHER, THRUST |

HTTP://WWW.MINNPARBACKHOEPARTS.COM

| 06-31 | | p1 | 01/04 |
|---|---|---|---|

DRIVE SHAFT, REAR AXLE

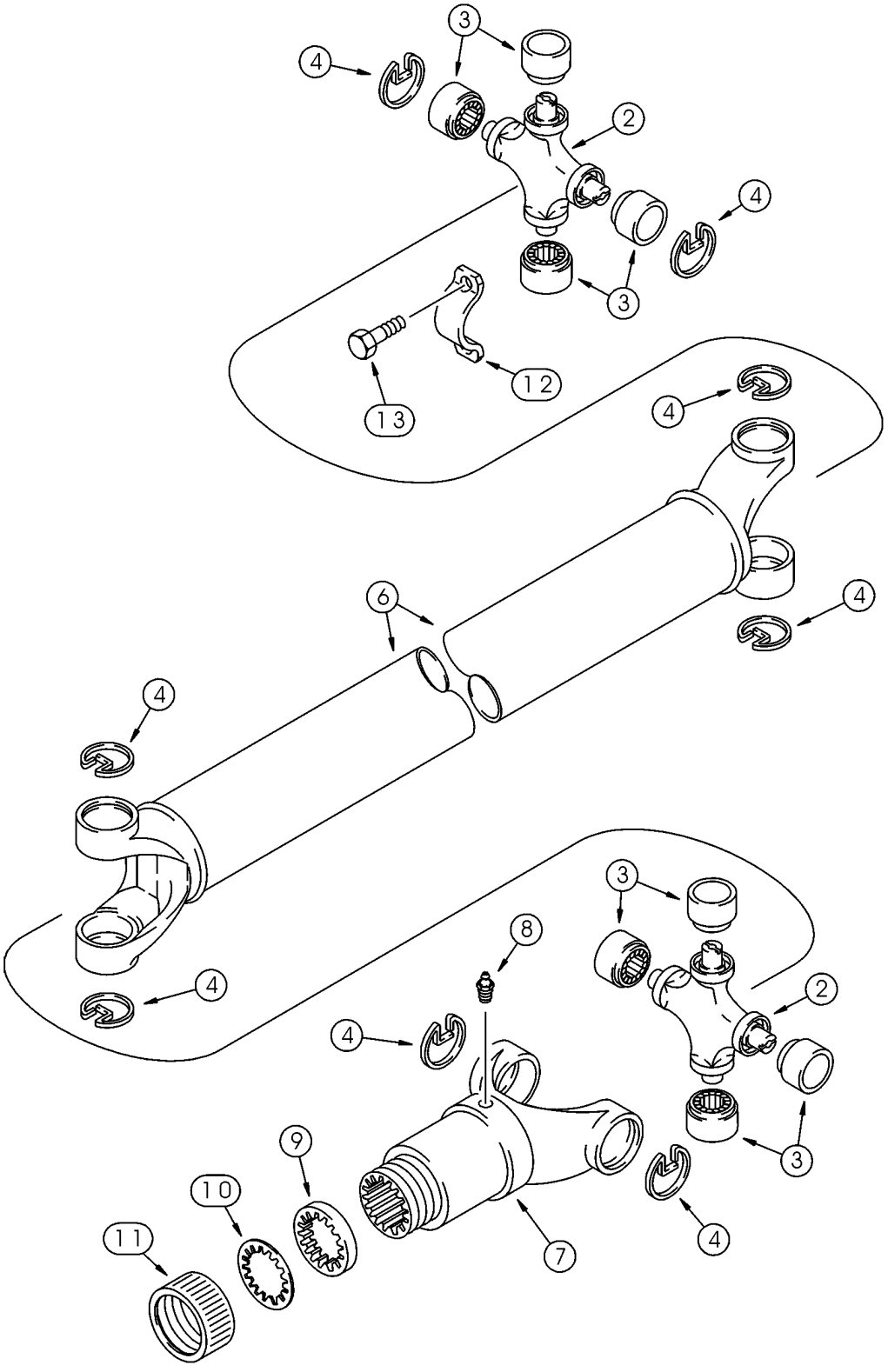

HTTP://WWW.MINNPARBACKHOEPARTS.COM



DRIVE SHAFT, REAR AXLE

| REF | FN | PART NUMBER | YR/SN | QTY | DESCRIPTION |
|---|---|---|---|---|---|
| | | 367860A3 | | 1 | SHAFT, DRIVE Incl. 393231A1, Ref 2 - 13 |
| | | 393231A1 | | 2 | KIT Universal Joint, Incl. Ref 2 - 4 |
| 2 | | NSS | | 1 | NOT SERVICED SEPARATELY Joint, Universal |
| 3 | | NSS | | 4 | NOT SERVICED SEPARATELY Bearing, Journal |
| 4 | | NSS | | 4 | NOT SERVICED SEPARATELY Ring |
| 6 | | 393233A1 | | 1 | SHAFT, DRIVE |
| 7 | | 144279A1 | | 1 | YOKE |
| 8 | | 219-10 | | 1 | NIPPLE, LUBE 1/4 tpr x 11/16 |
| | | D149860 | | 1 | PACKAGE,SERVICE Incl. Ref 9 - 11 |
| 9 | | NSS | | 1 | NOT SERVICED SEPARATELY Washer, Cork |
| 10 | | NSS | | 1 | NOT SERVICED SEPARATELY Washer, Steel |
| 11 | | NSS | | 1 | NOT SERVICED SEPARATELY Cap |
| 12 | | 90-6682T1 | | 2 | CLAMP |
| 13 | | D137627 | | 4 | BOLT |

HTTP://WWW.MINNPARBACKHOEPARTS.COM

HTTP://WWW.MINNPARBACKHOEPARTS.COM

# SECTION INDEX


| | |
|---|---|
| 07-01 | AXLE, REAR DRIVE - BRAKE, DIFFERENTIAL |
| 07-02 | AXLE, REAR DRIVE - BRAKE, PARKING |
| 07-03 | BRAKE - PEDALS |
| 07-04 | HYDRAULICS - BRAKE MASTER CYLINDER |
| 07-05 | CYLINDER ASSY - BRAKE MASTER |
| 07-06 | CONTROLS - BRAKE, PARKING |

HTTP://WWW.MINNPARBACKHOEPARTS.COM



AXLE, REAR DRIVE - BRAKE, DIFFERENTIAL

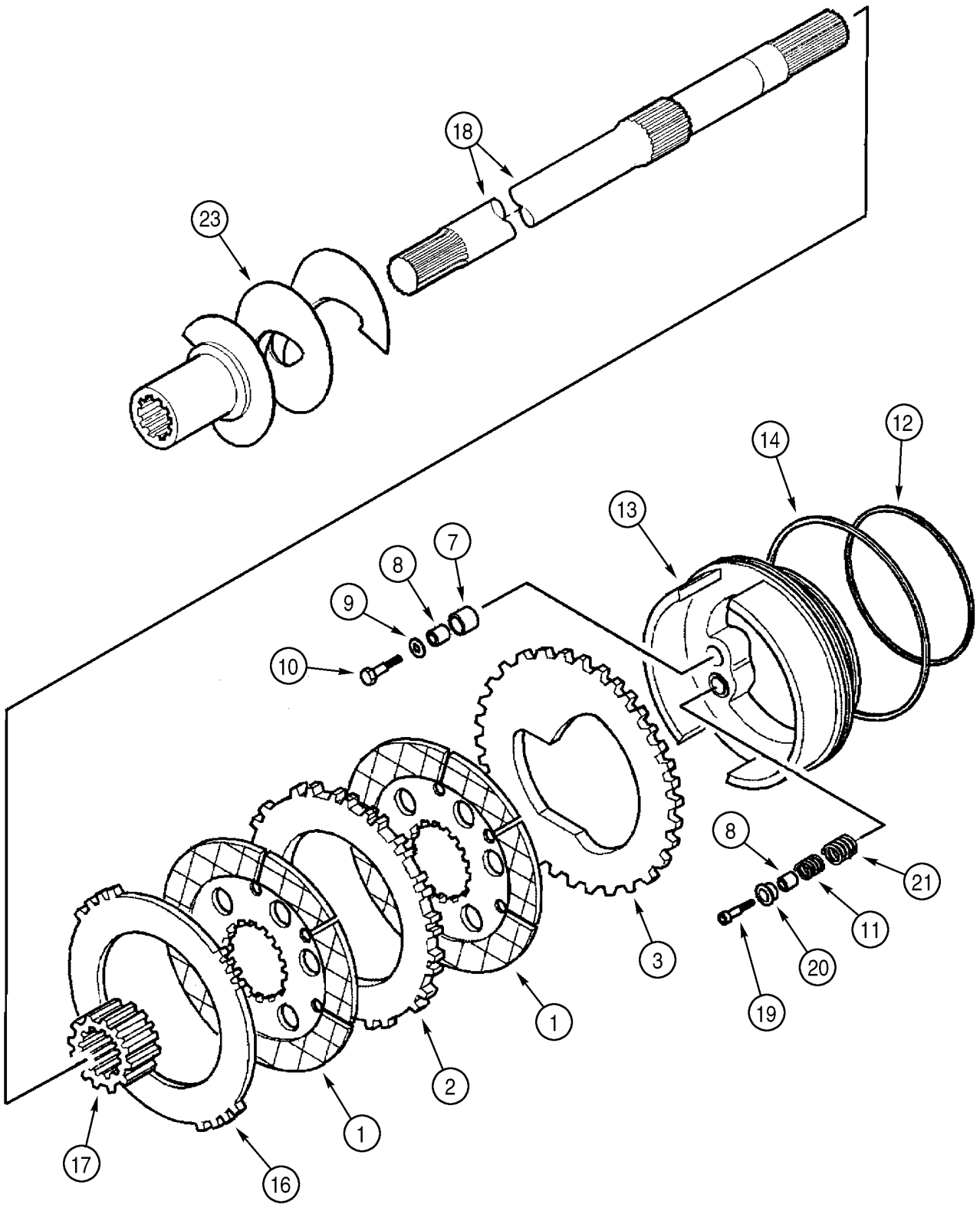

HTTP://WWW.MINNPARBACKHOEPARTS.COM



AXLE, REAR DRIVE - BRAKE, DIFFERENTIAL

| REF | FN | PART NUMBER | YR/SN | QTY | DESCRIPTION |
|---|---|---|---|---|---|
| | | 384952A1 | | 1 | AXLE, REAR Incl. Ref 1 - 25; Also Includes Parts On Figures 06-26 - 06-30, 07-01, 07-02 |
| 1 | | 237021A1 | | 4 | PLATE, LARGE Disc |
| 2 | | 237022A1 | | 2 | PLATE, LARGE Friction |
| 3 | | 308029A1 | | 2 | PLATE Piston |
| | | 358212A1 | | 1 | KIT Brake Self Adjuster, Incl. Ref 7, 8, Plus An Instruction Sheet |
| 7 | | 190449A1 | | 6 | SPLIT PIN Spacer, 18 x 20 mm, No Longer Sold Separately, Order 358212A1 Kit |
| 8 | | 190496A1 | | 12 | BUSHING, LARGE No Longer Sold Separately, Order 358212A1 Kit |
| 9 | | 190450A1 | | 6 | WASHER |
| 10 | | 814-6035 | | 6 | SCREW M6 x 35; 8,8 |
| 11 | | 237026A1 | | 6 | SPRING |
| 12 | | 308036A1 | | 2 | O-RING |
| 13 | | 359653A1 | | 2 | PISTON |
| 14 | | 190493A1 | | 2 | O-RING |
| 16 | | 308030A1 | | 2 | PLATE Friction |
| 17 | | 308042A1 | | 2 | SUPPORT Sleeve |
| 18 | | 295111A1 | | 2 | SHAFT |
| 19 | | 864-6035 | | 6 | SCREW M6 x 35 |
| 20 | | 190500A1 | | 6 | COVER |
| 21 | | 237025A1 | | 6 | SPRING |
| 23 | | 295112A1 | | 1 | AUGER Auger, Oil, Right-Hand, Includes Welded-On Clamp and Bolt, Plus Welded-On Drive Coupling, Incl. Ref 25 |
| 24 | | 295113A1 | | 1 | AUGER Auger, Oil, Left-Hand, Includes Welded-On Clamp and Bolt, Plus Welded-On Drive Coupling, Incl. Ref 25 |
| 25 | | 863-6020 | | 2 | SCREW Socket, M6 x 20; 12.9, Not Illustrated |

HTTP://WWW.MINNPARBACKHOEPARTS.COM



AXLE, REAR DRIVE - BRAKE, PARKING

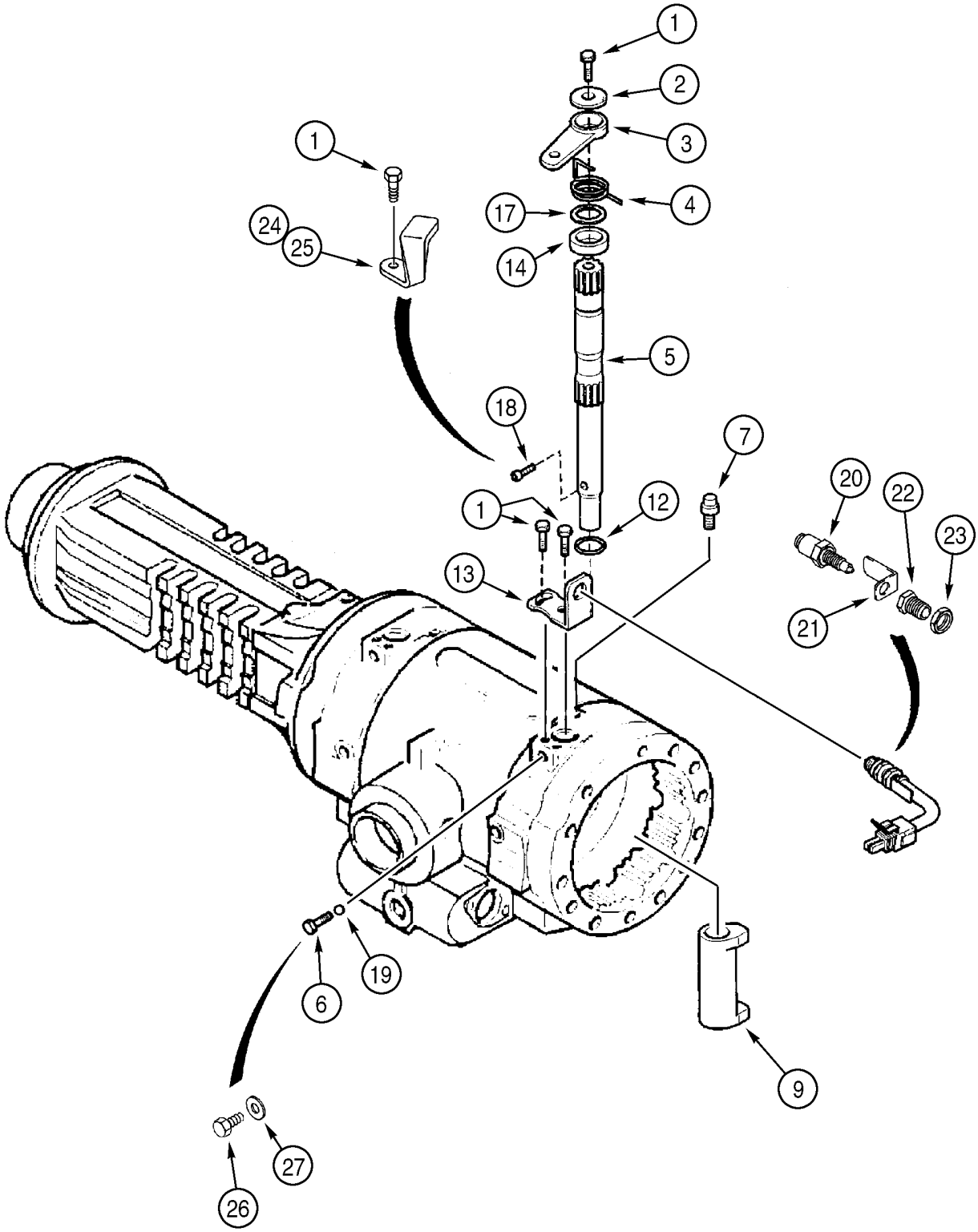

HTTP://WWW.MINNPARBACKHOEPARTS.COM



AXLE, REAR DRIVE - BRAKE, PARKING

| REF | FN | PART NUMBER | YR/SN | QTY | DESCRIPTION |
|---|---|---|---|---|---|
| | | 384952A1 | | 1 | AXLE, REAR Incl. Ref 1 - 27; Also Includes Parts On Figures 06-26 - 06-30, 07-01, 07-02 |
| 1 | | 190451A1 | | 6 | SCREW M8 x 20 |
| 2 | | 190463A1 | | 2 | WASHER |
| 3 | | 280436A1 | | 2 | LEVER |
| 4 | | 190476A2 | | 1 | SPRING Left-Hand |
| 4 | | 190477A2 | | 1 | SPRING Right-Hand, Not Illustrated |
| 5 | | 308040A1 | | 2 | SHAFT |
| 6 | | 283462A1 | | 2 | SCREW M8 x 23.5 |
| 7 | | E135810 | | 2 | SCREW, VENTING Brake Bleeder |
| 9 | | 196085A1 | | 2 | CAM |
| 12 | | 321183A1 | | 2 | O-RING |
| 13 | | 256478A1 | | 2 | SUPPORT , Stop Bracket |
| 14 | | 256481A1 | | 2 | SPACER Bushing |
| 17 | | 256482A1 | | 2 | SHIM |
| 18 | | 256485A1 | | 2 | SCREW M6 x 16 |
| 19 | | 283466A1 | | 2 | BALL |
| | | 281952A1 | | 2 | KIT Switch Kit, Incl. Ref 20 - 23 |
| 20 | | 280450A1 | | 1 | SWITCH, IGNITION |
| 21 | | 280452A1 | | 1 | BRACKET |
| 22 | | 280457A1 | | 1 | LEVER Sleeve |
| 23 | | 281960A1 | | 1 | NUT |
| | | 279645A1 | | 1 | PACKAGE, REPAIR Parking Brake, External Adjustment Parts, Includes Instructions, Incl. Ref 1, 12 - 17, 281952A1, 20 - 23, 24 - 27; If Used |
| 24 | | 259254A1 | | 1 | RETAINER Left-Hand |
| 25 | | 280443A1 | | 1 | RETAINER Right-Hand |
| 26 | | 514-634 | | 2 | SCREW M8 x 16 |
| 27 | | 181104A1 | | 2 | WASHER, COPPER Copper |

HTTP://WWW.MINNPARBACKHOEPARTS.COM

| 07-03 | | p1 | 09/03 |
|---|---|---|---|

BRAKE - PEDALS

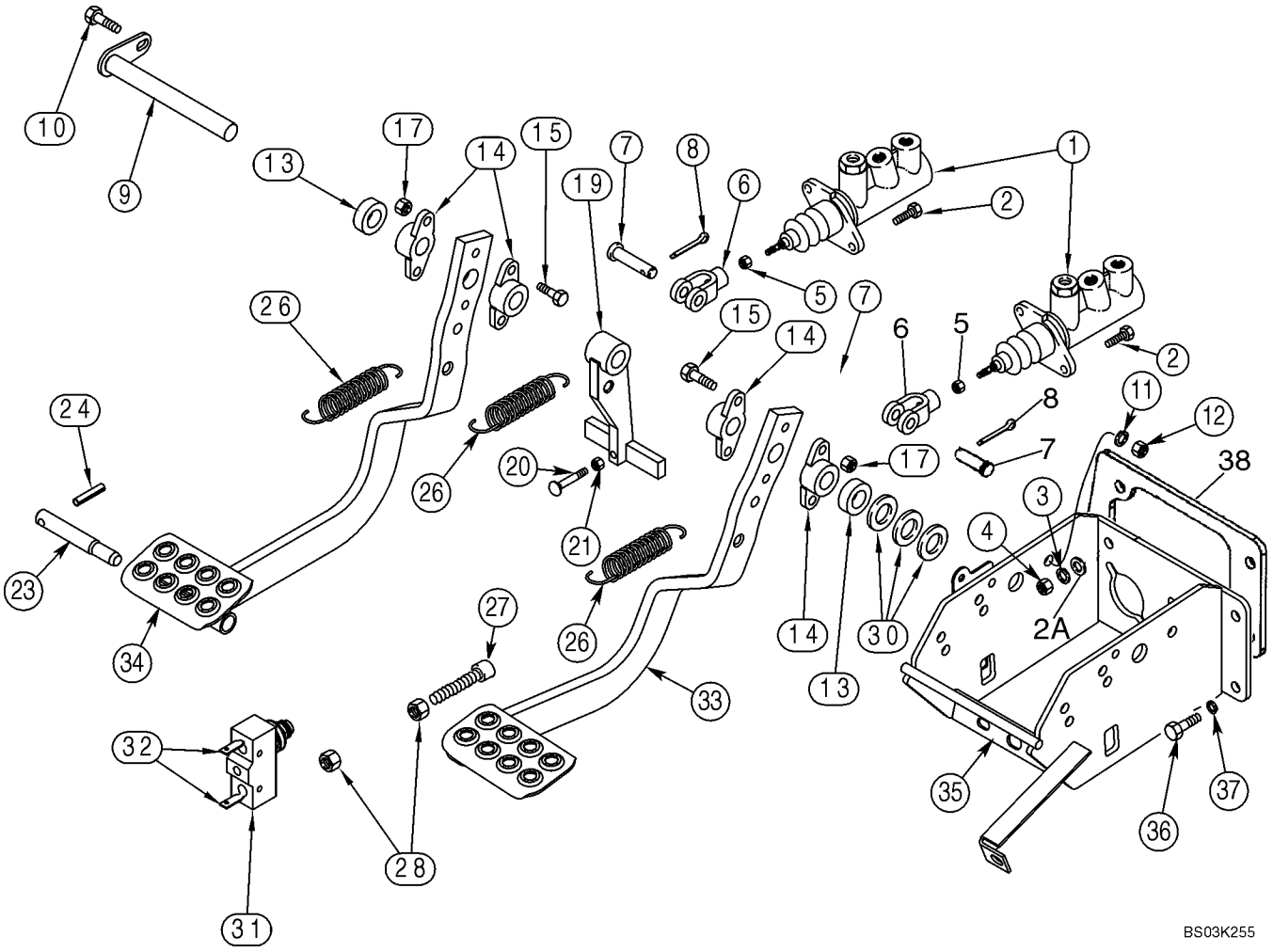

HTTP://WWW.MINNPARBACKHOEPARTS.COM



BRAKE - PEDALS

| REF | FN | PART NUMBER | YR/SN | QTY | DESCRIPTION |
|---|---|---|---|---|---|
| 1 | | 182445A1 | | 2 | CYLINDER, MASTER See Figure 07-05 |
| 2 | | 614-8030 | | 4 | SCREW M8 x 30 |
| 2A | | 895-11008 | | 4 | WASHER 9 x 17 x 1,6 mm |
| 3 | | 892-11008 | | 4 | WASHER M8 |
| 4 | | 829-1408 | | 4 | NUT M8; 10 |
| 5 | | 425-156 | | 2 | NUT 3/8 NF |
| 6 | | D137077 | | 2 | CLEVIS |
| 7 | | L26209 | | 2 | PIN 3/8 |
| 8 | | 432-612 | | 2 | PIN, SPLIT (COTTER) 3/32 x 3/4 |
| 9 | | D140035 | | 1 | PIN, LARGE |
| 10 | | 614-10025 | | 1 | BOLT M10 x 25 |
| 11 | | 892-11010 | | 1 | WASHER, LOCK M10 |
| 12 | | 829-1410 | | 1 | NUT M10; 10.9 |
| 13 | | D124529 | | 2 | SPACER |
| 14 | | A77310 | | 4 | PIVOT Bearing |
| 15 | | 814-8040 | | 4 | SCREW M8 x 40 |
| 17 | | 832-10408 | | 4 | NUT M8 |
| 19 | | D124528 | | 1 | LEVER Brake Lamp |
| 20 | | 121-145 | | 1 | SCREW 5/16 X 2-1/2, Flat Countersunk Head |
| 21 | | 425-105 | | 1 | NUT 5/16 |
| 23 | | D124530 | | 1 | PIN Brake Pedal Lock |
| 24 | | 438-12040 | | 1 | SPLIT PIN/SAFETY PIN 5/16 x 2-1/2 |
| 26 | | 230973A1 | | 3 | SPRING |
| 27 | | 413870A1 | | 2 | ISOLATOR M8 x 45, Rubber Head |
| 28 | | 829-1408 | | 4 | NUT M8; 10 |
| 30 | | 495-81261 | | X | WASHER 13/16 x 1-1/2 x 1/16; Used As A Spacer |
| 31 | | D148108 | | 1 | SWITCH Brake Lamp, Attaches To Front Console Wiring Harness |
| 32 | | A187990 | | 2 | TERMINAL CONNECTOR Male |
| 33 | | 339047A3 | | 1 | PEDAL ASSY. Right-Hand |
| 34 | | 339046A3 | | 1 | PEDAL ASSY. Left-Hand |
| 35 | | 338886A4 | | 1 | BRACKET Brake Pedal and Brake Master Cylinder Mounting |
| 36 | | 614-8020 | | 4 | SCREW M8 x 20 |
| 37 | | 892-11008 | | 4 | WASHER M8 |
| 38 | | 409370A1 | | 1 | SEAL |

HTTP://WWW.MINNPARBACKHOEPARTS.COM



HYDRAULICS - BRAKE MASTER CYLINDER

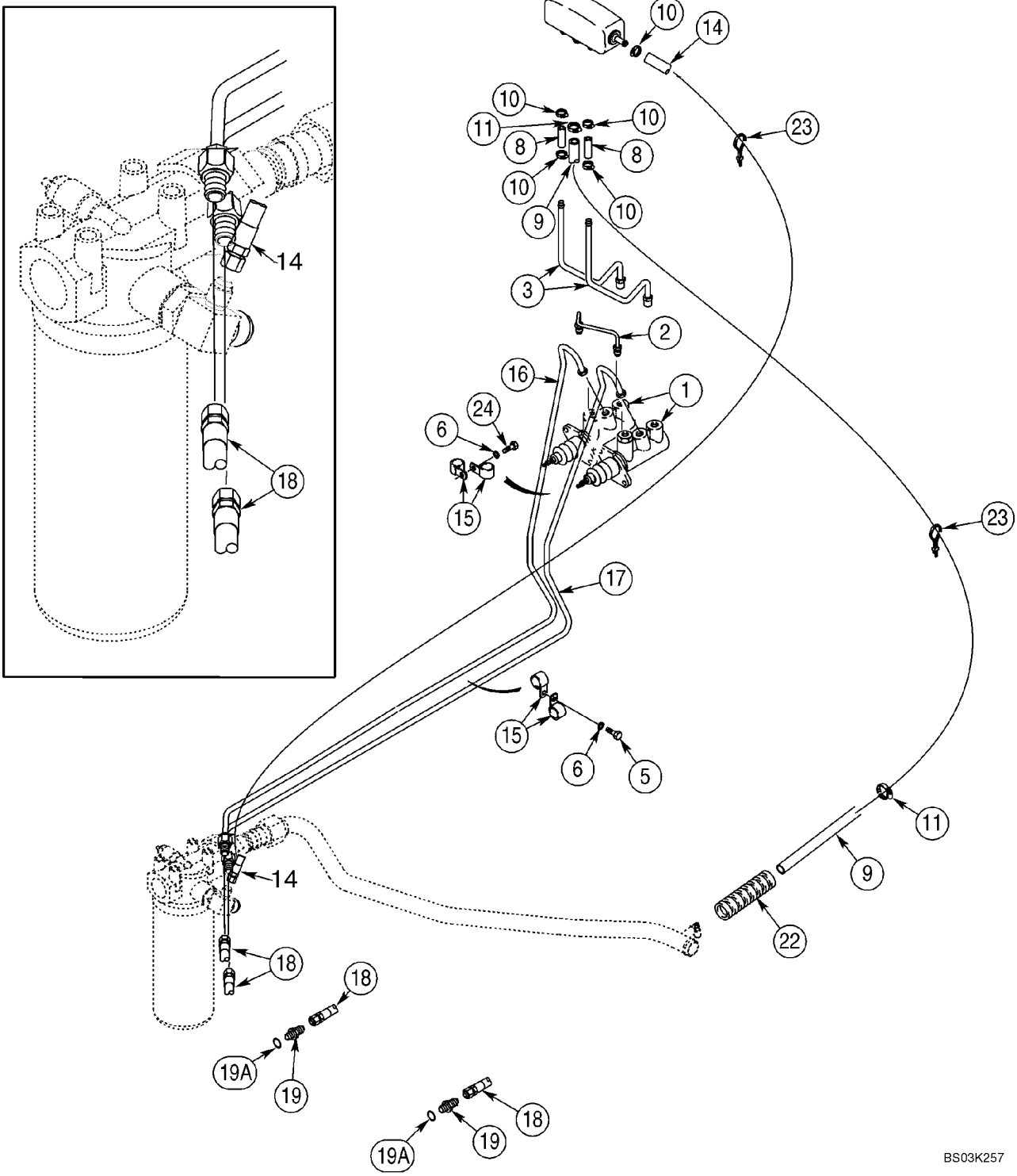

HTTP://WWW.MINNPARBACKHOEPARTS.COM



HYDRAULICS - BRAKE MASTER CYLINDER

| REF | FN | PART NUMBER | YR/SN | QTY | DESCRIPTION |
|---|---|---|---|---|---|
| 1 | | 182445A1 | | 2 | CYLINDER, MASTER See Figure 07-05 |
| 2 | | 345061A2 | | 1 | TUBE ASSY. Crossover |
| 3 | | 345325A2 | | 2 | TUBE ASSY. |
| 5 | | 614-8020 | | 1 | SCREW M8 x 20 |
| 6 | | 892-11008 | | 2 | WASHER M8 |
| 8 | | 121729A1 | | 2 | HOSE 52 mm (2-3/64 in); To Master Cylinder |
| 9 | | 397076A1 | | 1 | HOSE 1500 mm (59-1/16 in), Reservoir Outlet, Attaches To Return To Tank Tube; See Figure 08-03 |
| 10 | | 214-1704 | | 5 | CLAMP 1/4 - 5/8 |
| 11 | | 214-1706 | | 2 | CLAMP 7/16 - 3/4 |
| 13 | | 184627A2 | | 1 | RESERVOIR, BRAKE FLUID |
| 14 | | 86991496 | | 1 | HOSE ASSY. 1666 mm (65-19/32 in), Reservoir Inlet, Attaches to Tee At Hydraulic Oil Filter; See Figure 08-03 For Fitting |
| 15 | | 515-2379 | | 4 | CLAMP 7,9 mm |
| 16 | | 397177A2 | | 1 | TUBE ASSY. Left-Hand |
| 17 | | 396620A2 | | 1 | TUBE ASSY. Right-Hand |
| 18 | | 409318A1 | | 2 | HOSE ASSY. 565 mm (22-1/4 in) Brake Tube To Adapter On Rear Axle |
| 19 | | 218-5053 | | 2 | CONNECTOR, HYD. 7/16 fl x Or, Includes Ref 19A |
| 19A | | 237-6004 | | 1 | O-RING 23/64 ID x 5/64, Boss Seal |
| 22 | | D132982 | | 1 | LOOM 400 mm (15-3/4 in) |
| 23 | | L18337 | | 3 | STRAP 15 in |
| 24 | | 614-8030 | | 1 | SCREW M8 x 30 |

HTTP://WWW.MINNPARBACKHOEPARTS.COM

| 07-05 | | p1 | 09/03 |
|---|---|---|---|

CYLINDER ASSY - BRAKE MASTER

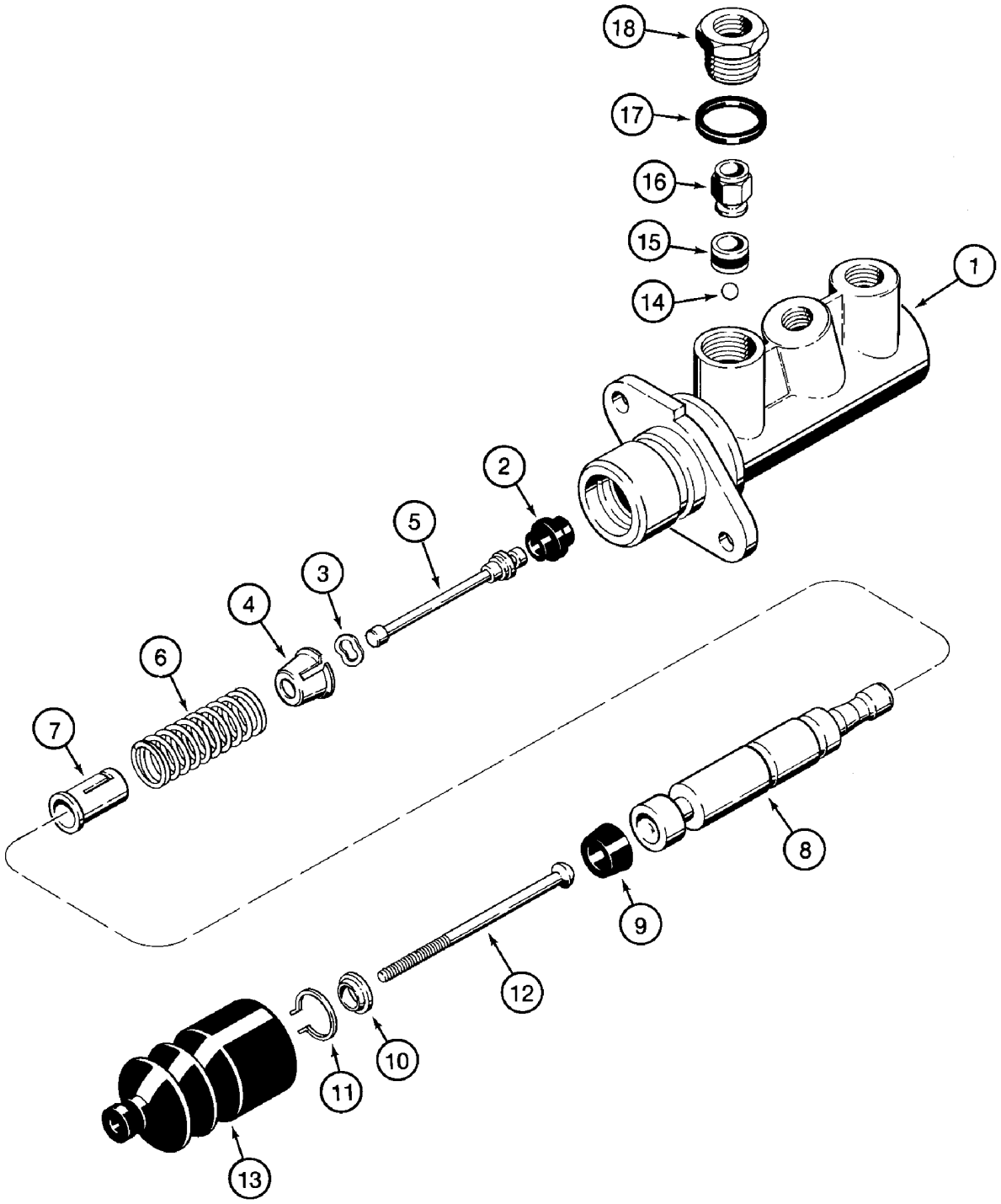

HTTP://WWW.MINNPARBACKHOEPARTS.COM



CYLINDER ASSY - BRAKE MASTER

| REF | FN | PART NUMBER | YR/SN | QTY | DESCRIPTION |
|---|---|---|---|---|---|
| | | 182445A1 | | 2 | CYLINDER, MASTER Incl. Ref 1 - 18 |
| 1 | | NSS | | 1 | NOT SERVICED SEPARATELY Housing |
| 2 | | NSS | | 1 | NOT SERVICED SEPARATELY Seal |
| 3 | | NSS | | 1 | NOT SERVICED SEPARATELY Washer |
| 4 | | NSS | | 1 | NOT SERVICED SEPARATELY Seat |
| 5 | | NSS | | 1 | NOT SERVICED SEPARATELY Plunger |
| 6 | | NSS | | 1 | NOT SERVICED SEPARATELY Spring |
| 7 | | NSS | | 1 | NOT SERVICED SEPARATELY Seat |
| 8 | | NSS | | 1 | NOT SERVICED SEPARATELY Piston |
| 9 | | NSS | | 1 | NOT SERVICED SEPARATELY Seal |
| 10 | | NSS | | 1 | NOT SERVICED SEPARATELY Washer |
| 11 | | NSS | | 1 | NOT SERVICED SEPARATELY Ring, Retaining |
| 12 | | NSS | | 1 | NOT SERVICED SEPARATELY Rod |
| 13 | | NSS | | 1 | NOT SERVICED SEPARATELY Boot |
| 14 | | NSS | | 1 | NOT SERVICED SEPARATELY Ball |
| 15 | | NSS | | 1 | NOT SERVICED SEPARATELY Seal |
| 16 | | NSS | | 1 | NOT SERVICED SEPARATELY Valve, Check |
| 17 | | NSS | | 1 | NOT SERVICED SEPARATELY Seal |
| 18 | | NSS | | 1 | NOT SERVICED SEPARATELY Adapter |
| | | N14784 | | 1 | KIT Seal; Incl. Ref 2, 3, 9, 11, 13 - 15, 17 |

HTTP://WWW.MINNPARBACKHOEPARTS.COM



CONTROLS - BRAKE, PARKING

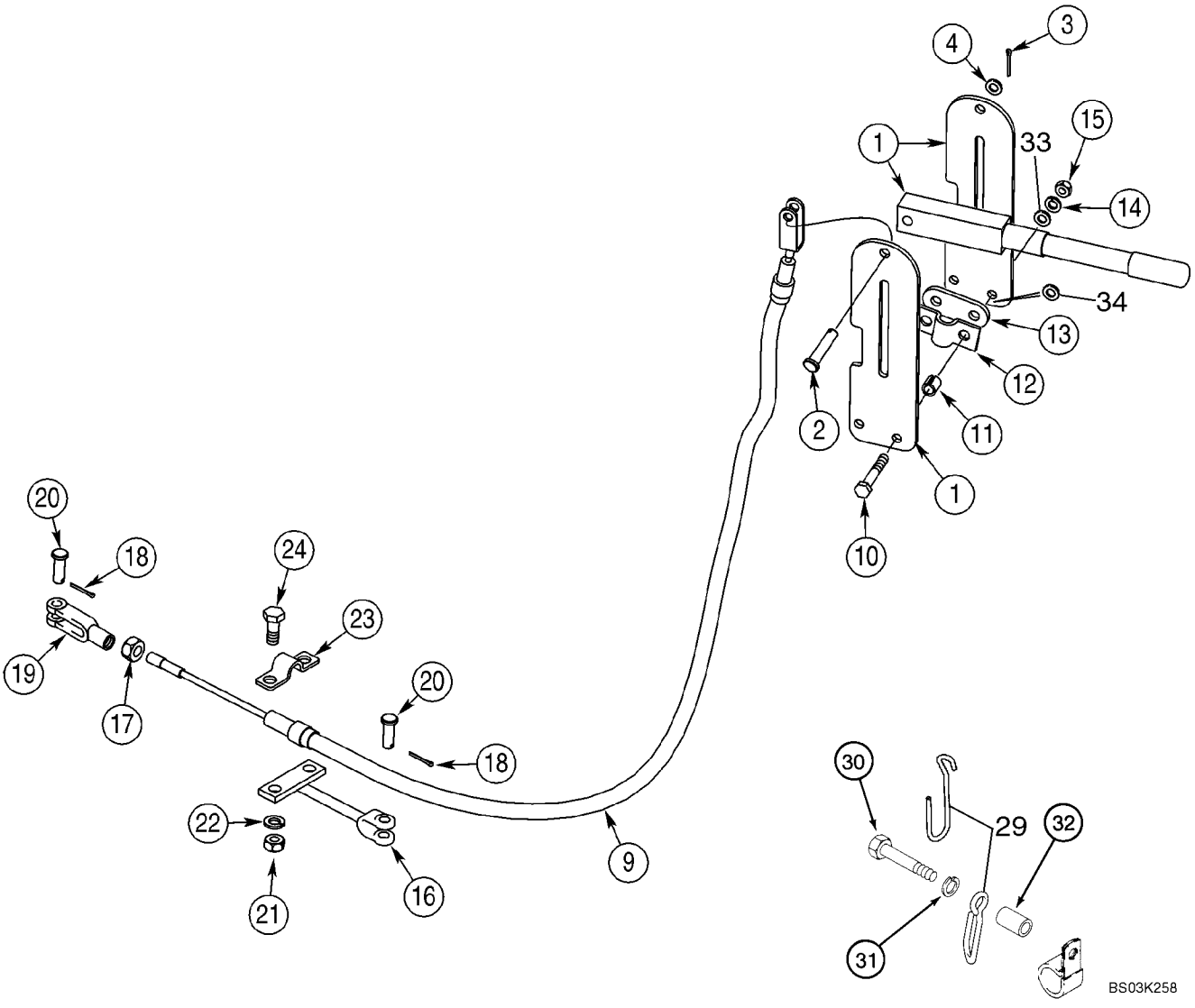

HTTP://WWW.MINNPARBACKHOEPARTS.COM



CONTROLS - BRAKE, PARKING

| REF | FN | PART NUMBER | YR/SN | QTY | DESCRIPTION |
|---|---|---|---|---|---|
| | | 367977A1 | | 1 | LEVER Incl. Ref 1 - 4 |
| 1 | | NSS | | 1 | NOT SERVICED SEPARATELY Lever |
| 2 | | NSS | | 1 | NOT SERVICED SEPARATELY Pin, Clevis |
| 3 | | 432-612 | | 1 | PIN, SPLIT (COTTER) 3/32 x 3/4 |
| 4 | | 495-21038 | | 1 | WASHER 3/8 x 7/8 x 3/32 |
| 9 | | 280681A1 | | 1 | CABLE 1325 mm (52-3/16 in) |
| 10 | | 827-8050 | | 2 | SCREW M8 x 50; 10.9 |
| 11 | | D150633 | | 2 | SPACER |
| 12 | | D121608 | | 1 | CLAMP |
| 13 | | D129747 | | 1 | PLATE |
| 14 | | 892-11008 | | 2 | WASHER M8 |
| 15 | | 829-1408 | | 2 | NUT M8; 10 |
| 16 | | 326348A1 | | 1 | SUPPORT 151 mm (6 in) |
| 17 | | 425-156 | | 1 | NUT 3/8 NF |
| 18 | | 432-612 | | 2 | PIN, SPLIT (COTTER) 3/32 x 3/4 |
| 19 | | 213-126 | | 1 | CLEVIS 3/8 NF |
| 20 | | D149288 | | 2 | PIN, LARGE |
| 21 | | 829-1410 | | 2 | NUT M10; 10.9 |
| 22 | | 892-11010 | | 2 | WASHER, LOCK M10 |
| 23 | | A188028 | | 1 | CLAMP |
| 24 | | 614-10025 | | 2 | BOLT M10 x 25 |
| 29 | | 87424794 | | 1 | SUPPORT See Figure 04-04 for Clamp |
| 30 | | 814-10060 | | 1 | SCREW M10 x 60 |
| 31 | | 895-11010 | | 1 | WASHER 11 x 21 x 2 mm |
| 32 | | 130245A1 | | 1 | SPACER |
| 33 | | 896-15008 | | 2 | WASHER 9 x 21 x 2,5 mm |
| 34 | | 895-11008 | | X | WASHER 9 x 16 x 1,6 mm |

HTTP://WWW.MINNPARBACKHOEPARTS.COM

HTTP://WWW.MINNPARBACKHOEPARTS.COM

# SECTION INDEX


| | |
|---|---|
| 08-01 | HYDRAULICS - PUMP, FILTER AND LOADER VALVE |
| 08-02 | HYDRAULICS - LOADER VALVE AND FILTER TO BACKHOE VALVE |
| 08-03 | HYDRAULICS - COOLER, RETURN LINES AND FILTER |
| 08-04 | HYDRAULICS - CYLINDER, LOADER LIFT |
| 08-05 | HYDRAULICS - CYLINDER, LOADER BUCKET |
| 08-06 | HYDRAULICS - CYLINDER, LOADER CLAM |
| 08-07 | HYDRAULICS - CYLINDER, LOADER CLAM |
| 08-08 | HYDRAULICS - CYLINDER, BACKHOE STABILIZER (WITHOUT PILOT CONTROLS) |
| 08-08A | HYDRAULICS - CYLINDER, BACKHOE STABILIZER (WITH PILOT CONTROLS) |
| 08-09 | HYDRAULICS - CYLINDER, BACKHOE SWING (WITHOUT PILOT CONTROLS) |
| 08-09A | HYDRAULICS - CYLINDER, BACKHOE SWING (WITH PILOT CONTROLS) |
| 08-10 | HYDRAULICS - CYLINDER, BACKHOE BOOM |
| 08-11 | HYDRAULICS - CYLINDER, BACKHOE DIPPER |
| 08-12 | HYDRAULICS - CYLINDER, BACKHOE BUCKET (MODELS WITHOUT EXTENDABLE DIPPER) |
| 08-13 | HYDRAULICS - CYLINDER, BACKHOE BUCKET (MODELS WITH EXTENDABLE DIPPER) |
| 08-14 | HYDRAULICS - CYLINDER, BACKHOE EXTENDABLE DIPPER |
| 08-15 | HYDRAULICS - VALVE, PILOT CONTROL AND JOYSTICKS (6 SPOOL, W/O EXT DIPPER, W/O AUX HYDS) |
| 08-16 | HYDRAULICS - VALVE, PILOT CONTROL AND JOYSTICKS (6 SPOOL, W/O EXT DIPPER, W/ AUX HYDS) |
| 08-17 | HYDRAULICS - VALVE, PILOT CONTROL AND JOYSTICKS (7 SPOOL, W/ EXT DIPPER, W/O AUX HYDS) |
| 08-18 | HYDRAULICS - VALVE, PILOT CONTROL AND JOYSTICKS (7 SPOOL, W/ EXT DIPPER, W/ AUX HYDS) |
| 08-19 | HYDRAULICS - VALVE, PILOT CONTROL AND JOYSTICKS (7 SPOOL, W/O EXT DIPPER, W/ AUX HYDS) |
| 08-20 | HYDRAULICS - VALVE, PILOT CONTROL AND JOYSTICKS (8 SPOOL, W/ EXT DIPPER, W/ AUX HYDS) |
| 08-21 | HYDRAULICS - PILOT CONTROL JOYSTICKS |
| 08-22 | HYDRAULICS - PILOT CONTROLS |
| 08-23 | HYDRAULICS - BACKHOE AUXILIARY |
| 08-24 | HYDRAULICS - BACKHOE AUXILIARY |
| 08-25 | HYDRAULICS - RIDE CONTROL (87433240 SOLENOID VALVE) |
| 08-26 | HYDRAULICS - COUPLER, LOADER TOOL QUICK |
| 08-27 | HYDRAULICS - COUPLER, LOADER TOOL QUICK |
| 08-28 | VALVE, COUPLER (87435909) - LOADER TOOL |
| 08-29 | PUMP, EQUIPMENT HYDRAULIC |
| 08-30 | VALVE ASSY - LOADER CONTROL, TWO SPOOL |
| 08-31 | VALVE ASSY - LOADER CONTROL, THREE SPOOL |
| 08-32 | VALVE ASSY - BACKHOE CONTROL, 6 SPOOL (W/O EXT DIPPER, W/O AUX HYDS, W/O PILOT CONTROLS) |
| 08-33 | VALVE ASSY - BACKHOE CONTROL, 7 SPOOL (W/O EXT DIPPER, W/ AUX HYDS, W/O PILOT CONTROLS) |
| 08-34 | VALVE ASSY - BACKHOE CONTROL, 7 SPOOL (W/ EXT DIPPER, W/O AUX HYDS, W/O PILOT CONTROLS) |
| 08-35 | VALVE ASSY - BACKHOE CONTROL, 8 SPOOL (W/ EXT DIPPER, W/ AUX HYDS, W/O PILOT CONTROLS) |
| 08-36 | VALVE ASSY - BACKHOE CONTROL, 6 SPOOL (W/O EXT DIPPER, W/ OR W/O AUX HYDS, W/ PILOT CONTROLS) |

HTTP://WWW.MINNPARBACKHOEPARTS.COM

# SECTION INDEX


| | |
|---|---|
| 08-37 | VALVE ASSY - BACKHOE CONTROL, 7 SPOOL (W/ EXT DIPPER, W/ OR W/O AUX HYDS, W/ PILOT CONTROLS) |
| 08-38 | VALVE ASSY - BACKHOE CONTROL, 7 SPOOL (W/O EXT DIPPER, W/ AUX HYDS, W/ PILOT CONTROLS) |
| 08-39 | VALVE ASSY - BACKHOE CONTROL, 8 SPOOL (W/ EXT DIPPER, W/ AUX HYDS, W/ PILOT CONTROLS) |
| 08-40 | VALVE SECTION - BACKHOE SWING (WITH PILOT CONTROLS) |
| 08-41 | VALVE SECTION - BACKHOE BOOM (WITH PILOT CONTROLS) |
| 08-42 | VALVE SECTION - BACKHOE STABILIZER (WITH PILOT CONTROLS) |
| 08-43 | VALVE SECTION - BACKHOE DIPPER (WITH PILOT CONTROLS) |
| 08-44 | VALVE SECTION - BACKHOE BUCKET (WITH PILOT CONTROLS) |
| 08-45 | VALVE SECTION - EXTENDABLE DIPPER (WITH PILOT CONTROLS) |
| 08-46 | VALVE SECTION - OPTIONS, AUXILIARY HYDRAULICS (WITH PILOT CONTROLS) |
| 08-47 | VALVE ASSY, PRESSURE REDUCING (2 SPOOL) (WITH PILOT CONTROLS) |
| 08-48 | VALVE ASSY, PRESSURE REDUCING (3 SPOOL) (WITH PILOT CONTROLS) |
| 08-49 | VALVE ASSY, PRESSURE REDUCING (4 SPOOL) (WITH PILOT CONTROLS) |
| 08-50 | VALVE, JOYSTICK (PILOT CONTROLS) (LEFT-HAND) WITH HORN BUTTON |
| 08-51 | VALVE, JOYSTICK (PILOT CONTROLS) (LEFT-HAND) WITH HORN & UNI-DIRECTIONAL BUTTONS |
| 08-52 | VALVE, JOYSTICK (PILOT CONTROLS) (LEFT-HAND) WITH HORN & BI-DIRECTIONAL BUTTONS |
| 08-53 | VALVE, JOYSTICK (PILOT CONTROLS) (RIGHT-HAND) WITHOUT EXTENDABLE DIPPER |
| 08-54 | VALVE, JOYSTICK (PILOT CONTROLS) (RIGHT-HAND) WITH EXTENDABLE DIPPER |
| 08-55 | VALVE ASSY - SWING CUSHION (DAMPENING) |
| 08-56 | ACCUMULATOR ASSY - RIDE CONTROL |
| 08-57 | FILTER ASSY, OIL |
| 08-58 | CYLINDER ASSY - LOADER LIFT |
| 08-59 | CYLINDER ASSY - LOADER BUCKET |
| 08-60 | CYLINDER ASSY - LOADER CLAM |
| 08-61 | CYLINDER ASSY - BACKHOE STABILIZER |
| 08-62 | CYLINDER ASSY - BACKHOE SWING |
| 08-63 | CYLINDER ASSY - BACKHOE BOOM |
| 08-64 | CYLINDER ASSY - BACKHOE DIPPER |
| 08-65 | CYLINDER ASSY - BACKHOE BUCKET |
| 08-66 | CYLINDER ASSY - BACKHOE EXTENDABLE DIPPER |

HTTP://WWW.MINNPARBACKHOEPARTS.COM

HTTP://WWW.MINNPARBACKHOEPARTS.COM

| 08-01 | | p1 | 01/04 |
|---|---|---|---|

HYDRAULICS - PUMP, FILTER AND LOADER VALVE

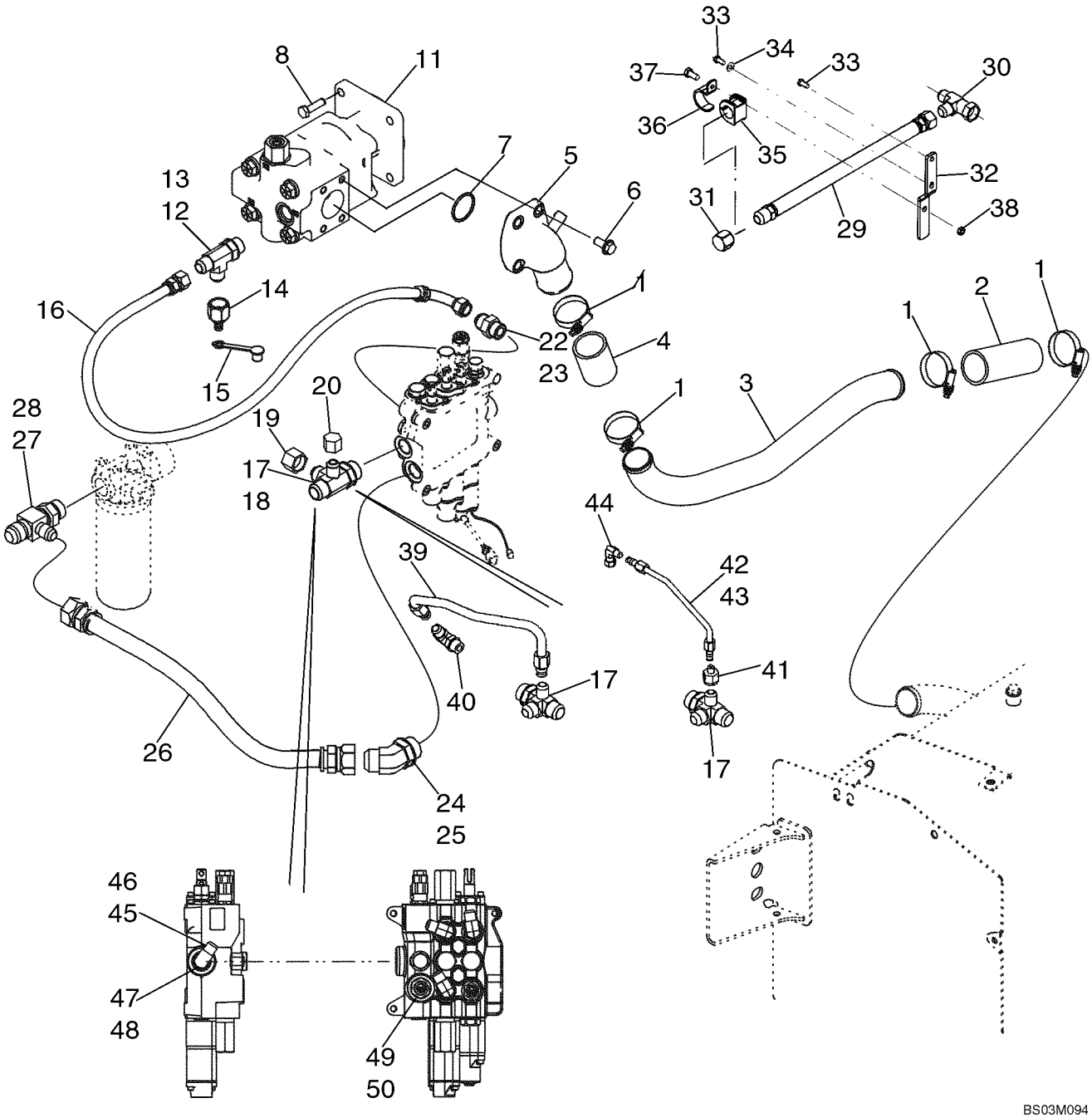

HTTP://WWW.MINNPARBACKHOEPARTS.COM



HYDRAULICS - PUMP, FILTER AND LOADER VALVE

| REF | FN | PART NUMBER | YR/SN | QTY | DESCRIPTION |
|---|---|---|---|---|---|
| 1 | | 259044A1 | | 4 | CLAMP |
| 2 | | 282496A1 | | 1 | HOSE Suction, At Hydraulic Tank |
| 3 | | 87435761 | | 1 | TUBE, HYD Suction Tube |
| 4 | | 87422554 | | 1 | HOSE |
| 5 | | 87434257 | | 1 | FLANGE ASSY Pump Flange |
| 6 | | 864-12030 | | 3 | SCREW M12 x 30 |
| 7 | | 238-5228 | | 1 | O-RING |
| 8 | | 514-832 | | 4 | SCREW M12 x 35 |
| 11 | | 87434672 | | 1 | PUMP, HYDRAULIC Equipment, See Figure 08-29 |
| 12 | | 218-5239 | | 1 | FITTING 1-1/16 fl br x fl x Or; Incl. Ref 13 |
| 13 | | 237-6012 | | 1 | O-RING 59/64 ID x 7/64 |
| 14 | | D137625 | | 1 | COUPLING, BREAK AWAY Quick Disconnect; Includes (1) 425-1120 Nut |
| 15 | | H434163 | | 1 | CAP Dust |
| 16 | | 87429895 | | 1 | HOSE ASSY. 775 mm (30-9/16 in) |
| 17 | | 87436066 | | 1 | FITTING 4-Way Special Fitting; Incl. Ref 18 |
| 18 | | 237-6016 | | 1 | O-RING 1-11/64 ID x 7/64 wide |
| 19 | | 218-335 | | 1 | CAP Hex, 1-1/16; Models Without Pilot Controls |
| 20 | | 218-756 | | 1 | CAP Hex, 7/8; Models Without Pilot Controls |
| 22 | | 218-5064 | | 1 | CONNECTOR, HYD. 1-1/16 fl x Or; Incl. Ref 23 |
| 23 | | 237-6012 | | 1 | O-RING 59/64 ID x 7/65 |
| 24 | | 218-5140 | | 1 | FITTING Elbow, 45 Degree, 1-5/16 fl x Or; Incl. Ref 25 |
| 25 | | 237-6016 | | 1 | O-RING 1-11/64 ID x 7/64 wide |
| 26 | | 87437228 | | 1 | HOSE ASSY. 635 mm (25 in), Loader Valve to Filter |
| 27 | | 218-5584 | | 1 | FITTING TEE, 1-1/16 fl branch x 1-5/16 fl x Or; Incl. Ref 28 |
| 28 | | 237-6016 | | 1 | O-RING 1-11/64 ID x 7/64 wide |
| 29 | | 397309A3 | | 1 | HOSE ASSY. 700 mm; Attenuator, To Hose At Large Pump Section Port; If Used |
| 30 | | 218-5221 | | 1 | CONNECTOR 1-1/16 fl x fl x adj; If Used |
| 31 | | 218-335 | | 1 | CAP 1-1/16; If Used |
| 32 | | 408757A1 | | 1 | BRACKET If Used |
| 33 | | 614-8020 | | 2 | SCREW M8 x 20; If Used |
| 34 | | 892-11008 | | 1 | WASHER Lock, M8; If Used |
| 35 | | D67298 | | 1 | INSULATOR If Used |

HTTP://WWW.MINNPARBACKHOEPARTS.COM

| 08-01 | | p2 | 01/04 |
|---|---|---|---|

HYDRAULICS - PUMP, FILTER AND LOADER VALVE

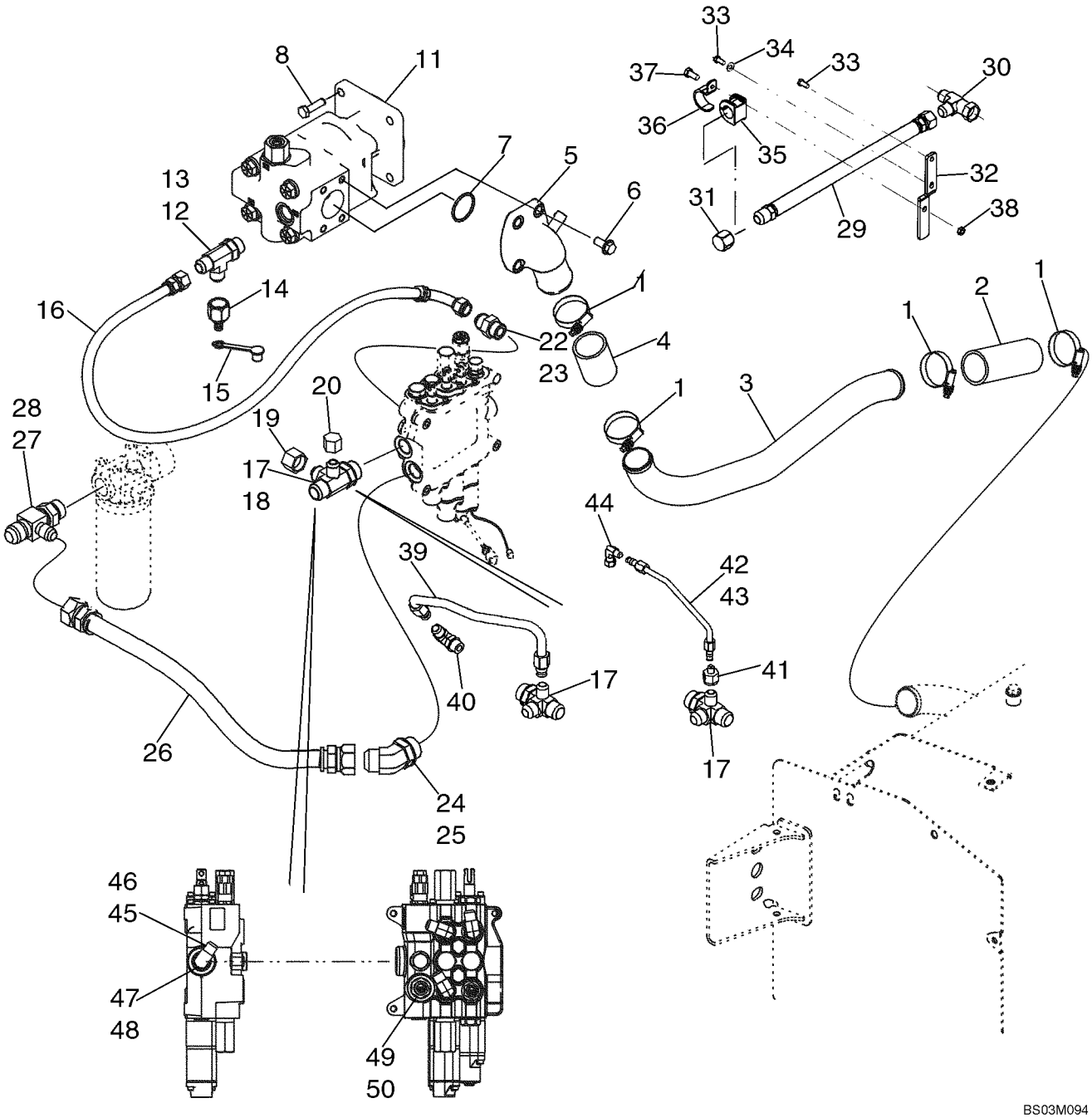

HTTP://WWW.MINNPARBACKHOEPARTS.COM



HYDRAULICS - PUMP, FILTER AND LOADER VALVE

| REF | FN | PART NUMBER | YR/SN | QTY | DESCRIPTION |
|---|---|---|---|---|---|
| 36 | | D68845 | | 1 | MOUNTING CLIP If Used |
| 37 | | 614-10025 | | 1 | BOLT M10 x 25; If Used |
| 38 | | 832-10410 | | 1 | NUT Lock, M10; If Used |
| 39 | | 87437655 | | 1 | TUBE ASSY. Two Spool Loader Valve; Models Without Pilot Controls |
| 40 | | 87437657 | | 1 | TUBE ASSY. Three Spool Loader Valve; Models Without Pilot Controls |
| 41 | | 218-765 | | 1 | REDUCER Models With Pilot Controls |
| 42 | | 87437980 | | 1 | TUBE ASSY. Two Spool Loader Valve; Models With Pilot Controls |
| 43 | | 87437982 | | 1 | TUBE ASSY. Three Spool Loader Valve; Models With Pilot Controls |
| 44 | | 218-980 | | 1 | ELBOW 90 deg, 9/16 fl x sw fl; Models With Pilot Controls |
| 45 | | 218-5107 | | 1 | ELBOW 90 deg, 7/8 fl x Or; Incl. Ref 46; Models Without Pilot Controls |
| 46 | | 237-6010 | | 1 | O-RING 3/4 ID x 3/32 |
| 47 | | 218-5157 | | 1 | PLUG Hex, 7/8 Or; Incl. Ref 48; Models With Pilot Controls |
| 48 | | 237-6010 | | 1 | O-RING 3/4 ID x 3/32 |
| 49 | | 218-5064 | | 1 | CONNECTOR, HYD. 1-1/16 fl x Or; Incl. Ref 50 |
| 50 | | 237-6012 | | 1 | O-RING 59/64 ID x 7/64 |

HTTP://WWW.MINNPARBACKHOEPARTS.COM

| 08-02 | | p1 | 12/03 |
|---|---|---|---|

HYDRAULICS - LOADER VALVE AND FILTER TO BACKHOE VALVE

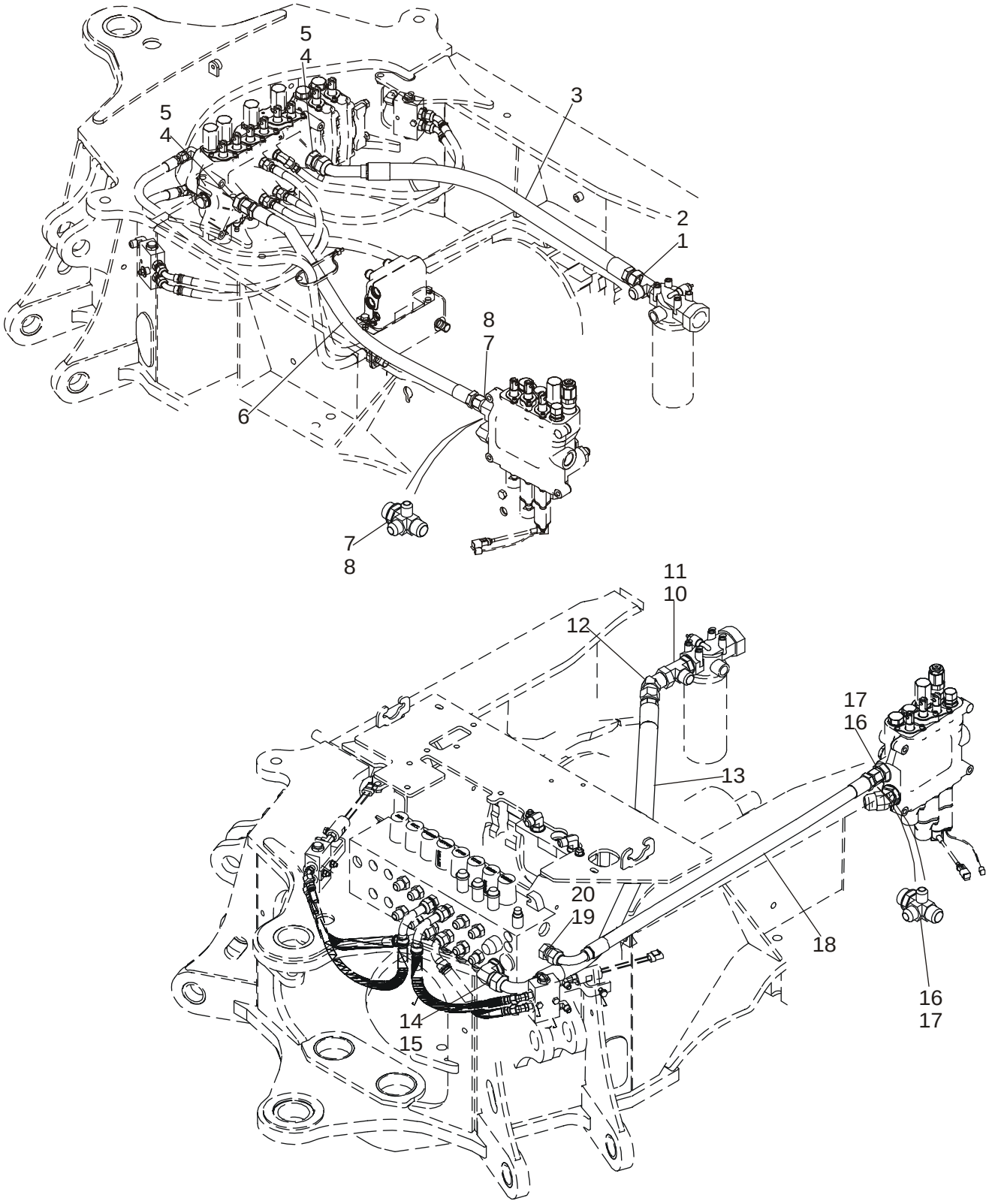

HTTP://WWW.MINNPARBACKHOEPARTS.COM



HYDRAULICS - LOADER VALVE AND FILTER TO BACKHOE VALVE

| REF | FN | PART NUMBER | YR/SN | QTY | DESCRIPTION |
|---|---|---|---|---|---|
| | | REF | | | INSTRUCTION MODELS WITHOUT PILOT CONTROLS |
| 1 | | 218-5245 | | 1 | FITTING TEE, 1-5/16 fl br x fl x Or; Incl. Ref 2 |
| 2 | | 237-6016 | | 1 | O-RING 1-11/64 ID x 7/64 |
| 3 | | 313648A1 | | 1 | HOSE 910 mm (35-7/8 in); Return; Models Without Pilot Controls |
| 4 | | 218-5069 | | 2 | CONNECTOR 1-5/16 fl x Or; Incl. Ref 5 |
| 5 | | 237-6016 | | 1 | O-RING 1-11/64 ID x 7/64 |
| 6 | | 87437441 | | 1 | HOSE ASSY. 1025 mm (40-3/8 in); 2 or 3 Spool Valve; Without Auxiliary Hydraulics, Without Pilot Controls; Loader Valve Power Beyond to Backhoe Valve |
| 6 | | 87437232 | | 1 | HOSE ASSY. 420 mm (16-9/16 in); 2 Spool Valve; With Auxiliary Hydraulics; With or Without Pilot Controls; Loader Valve Power Beyond to Backhoe Valve |
| 6 | | 87437231 | | 1 | HOSE ASSY. 370 mm (14-5/8 in); 3 Spool Valve; With Auxiliary Hydraulics; With or Without Pilot Controls; Loader Valve Power Beyond to Backhoe Valve |
| 7 | | 87436066 | | 1 | FITTING 4-Way Special Tee, Incl. Ref 8 |
| 8 | | 237-6016 | | 1 | O-RING 1-11/64 ID x 7/64 |
| | | REF | | | INSTRUCTION MODELS WITH PILOT CONTROLS |
| 10 | | 218-5245 | | 1 | FITTING TEE, 1-5/16 fl br x fl x Or; Incl. Ref 11 |
| 11 | | 237-6016 | | 1 | O-RING 1-11/64 ID x 7/64 |
| 12 | | 218-5176 | | 1 | FITTING ELBOW, 45 deg, 1-5/16 fl x sw str thrd |
| 13 | | 87437934 | | 1 | HOSE ASSY. 1230 mm (48-7/16 in); Return; Models With Pilot Controls |
| 14 | | 218-5110 | | 1 | FITTING ELBOW, 90 deg, 1-5/16 fl x adj Or; Incl. Ref 15 |
| 15 | | 237-6016 | | 1 | O-RING 1-11/64 ID x 7/64 |
| 16 | | 87436066 | | 1 | FITTING 4-Way Tee, Special, 1-5/16 fl x Or; Incl. Ref 17 |
| 17 | | 237-6016 | | 1 | O-RING 1-11/64 ID x 7/64 |

HTTP://WWW.MINNPARBACKHOEPARTS.COM



HYDRAULICS - LOADER VALVE AND FILTER TO BACKHOE VALVE

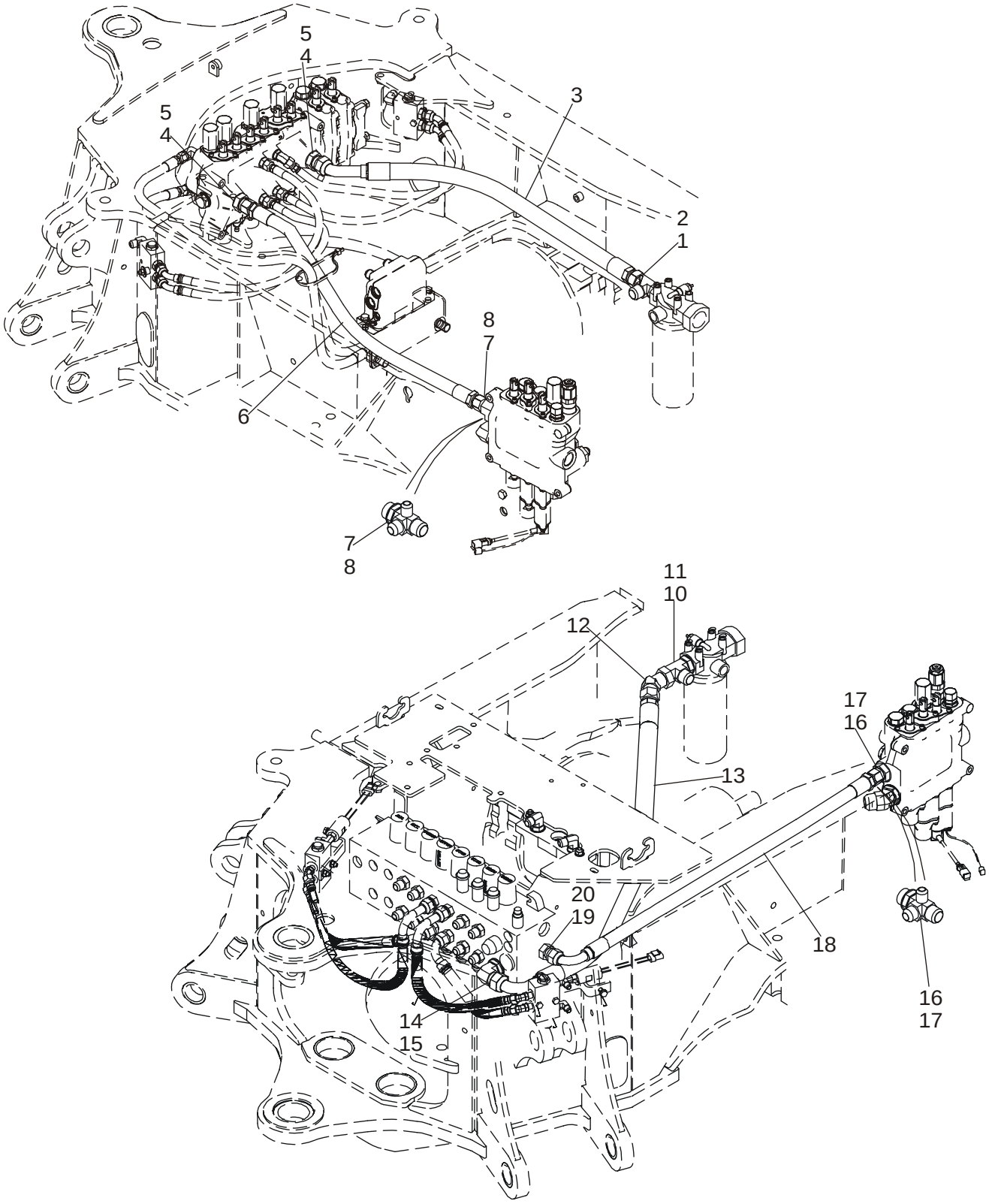

HTTP://WWW.MINNPARBACKHOEPARTS.COM



HYDRAULICS - LOADER VALVE AND FILTER TO BACKHOE VALVE

| REF | FN | PART NUMBER | YR/SN | QTY | DESCRIPTION |
|---|---|---|---|---|---|
| 18 | | 87437442 | | 1 | HOSE ASSY. 1050 mm (41-3/8 in); 2 or 3 Spool Valve; Without Auxiliary Hydraulics, With Pilot Controls; Power Beyond |
| 18 | | 87437232 | | 1 | HOSE ASSY. 420 mm (16-9/16 in); 2 Spool Valve; With Auxiliary Hydraulics; With or Without Pilot Controls; Loader Valve Power Beyond to Backhoe Valve |
| 18 | | 87437231 | | 1 | HOSE ASSY. 370 mm (14-5/8 in); 3 Spool Valve; With Auxiliary Hydraulics; With or Without Pilot Controls; Loader Valve Power Beyond to Backhoe Valve |
| 19 | | 218-5064 | | 1 | CONNECTOR, HYD. 1-1/16 fl x Or; Incl. Ref 20 |
| 20 | | 237-6012 | | 1 | O-RING 59/64 ID x 7/64 |

HTTP://WWW.MINNPARBACKHOEPARTS.COM

| 08-03 | | p1 | 01/04 |
|---|---|---|---|

HYDRAULICS - COOLER, RETURN LINES AND FILTER

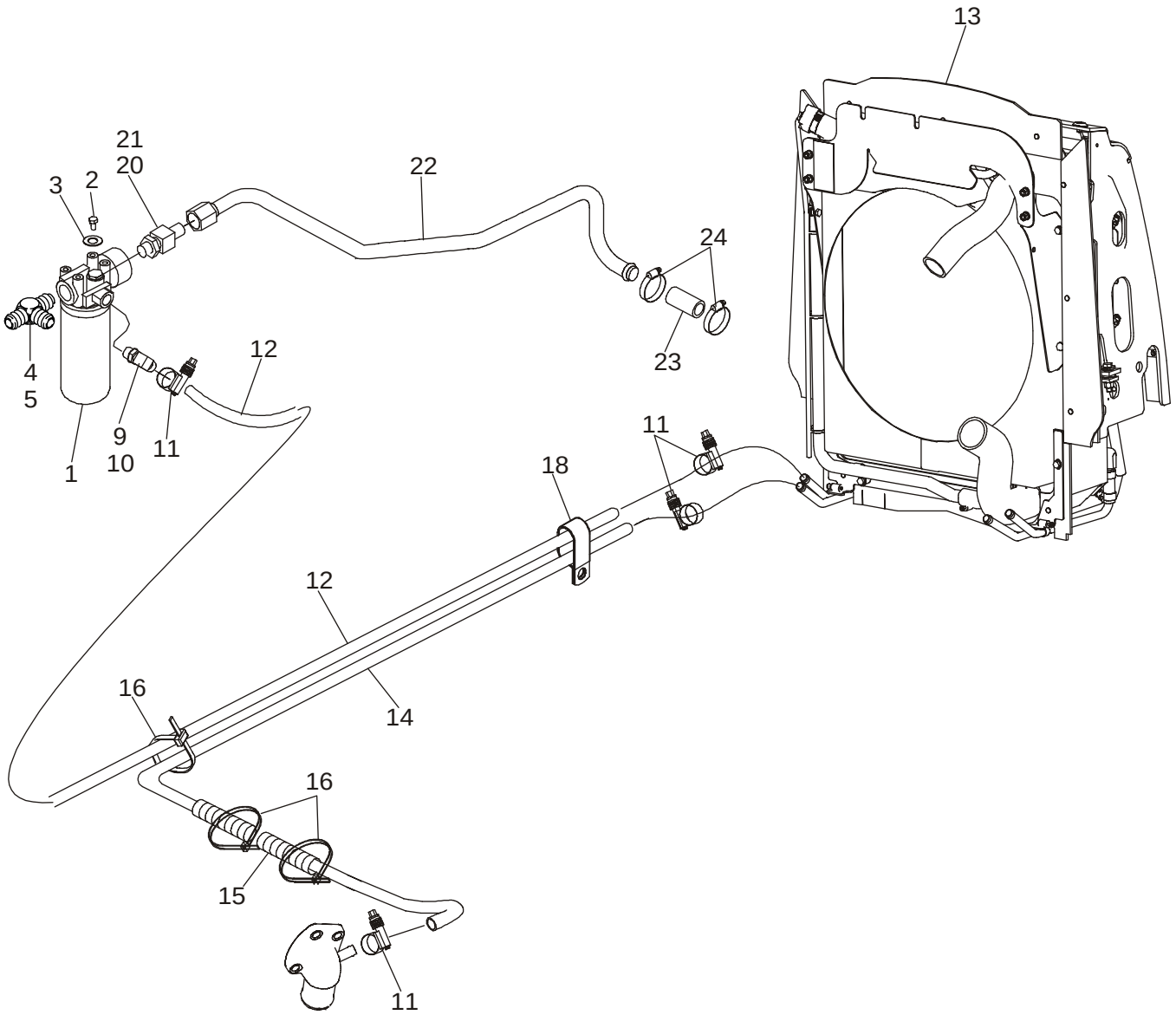


BS03M096

HTTP://WWW.MINNPARBACKHOEPARTS.COM



HYDRAULICS - COOLER, RETURN LINES AND FILTER

| REF | FN | PART NUMBER | YR/SN | QTY | DESCRIPTION |
|---|---|---|---|---|---|
| 1 | | 445674A1 | | 1 | FILTER ASSY. Hydraulic Oil; See Figure 08-57 |
| 2 | | 614-10020 | | 4 | SCREW M10 x 20 |
| 3 | | 895-11010 | | 4 | WASHER 11 x 21 x 2 mm |
| 4 | | 218-5584 | | 1 | FITTING TEE, 1-1/16 fl br x 1-5/16 fl x Or; Incl. Ref 5 |
| 5 | | 237-6016 | | 1 | O-RING 1-11/64 ID x 7/64 wide |
| 9 | | 301104A1 | | 1 | FITTING Special, Incl. Ref 10 |
| 10 | | 237-6010 | | 1 | O-RING 3/4 ID x 3/32 wide |
| 11 | | 328186A1 | | 4 | CLAMP, HOSE |
| 12 | | 87426965 | | 1 | HOSE 1785 mm (70-5/16 in) |
| 13 | | 87427158 | | 1 | COOLER, OIL Hydraulic Oil Cooler; For Attaching Parts, See Figure 06-10 |
| 14 | | 87426966 | | 1 | HOSE 1860 mm (73-1/4 in), Return |
| 15 | | D132982 | | 2 | LOOM Hose Sleeve |
| 16 | | L18337 | | 2 | STRAP |
| 18 | | D39696 | | 1 | CLAMP Double P-Type |
| 20 | | 218-5086 | | 1 | CONNECTOR 5/16-12 fl x 1-5/8; Incl. Ref 21 |
| 21 | | 237-6020 | | 1 | O-RING 1-15/32 ID x 1/8 |
| 22 | | 87421940 | | 1 | TUBE ASSY. Return To Tank |
| 23 | | D38435 | | 1 | HOSE, LARGE 89 mm (3-5/8 in); Cut From S118383X; Return To Tank; For Attaching Brake Line Clamp, See Figure 07-04 |
| 24 | | 214-1420 | | 2 | CLAMP No. 20 |

HTTP://WWW.MINNPARBACKHOEPARTS.COM

| 08-04 | | p1 | 01/04 |
|---|---|---|---|

HYDRAULICS - CYLINDER, LOADER LIFT

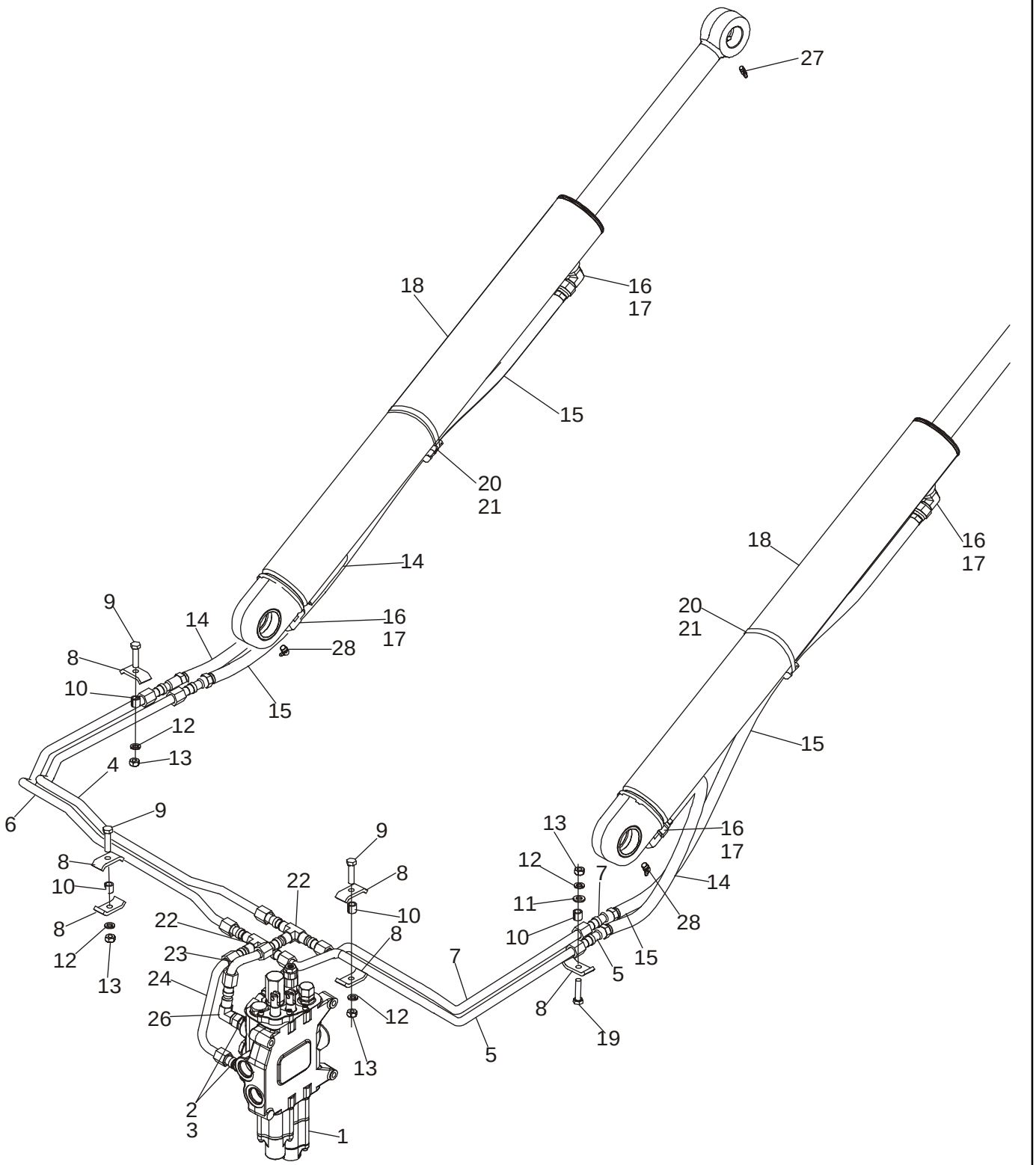


BS03M016

HTTP://WWW.MINNPARBACKHOEPARTS.COM



HYDRAULICS - CYLINDER, LOADER LIFT

| REF | FN | PART NUMBER | YR/SN | QTY | DESCRIPTION |
|---|---|---|---|---|---|
| 1 | | REF | | 1 | INSTRUCTION LOADER CONTROL VALVE; For Correct Assembly and Components, See Figures 08-30, 08-31 |
| 2 | | 218-5062 | | 2 | CONNECTOR, HYD. 7/8 fl x Or; Incl. Ref 3 |
| 3 | | 237-6010 | | 1 | O-RING 3/4 ID x 3/32 |
| 4 | | 87421930 | | 1 | TUBE ASSY. Upper Lift Port |
| 5 | | 87421932 | | 1 | TUBE ASSY. Lower Lift Port |
| 6 | | 87421934 | | 1 | TUBE ASSY. Lower Lift Port |
| 7 | | 87421928 | | 1 | TUBE ASSY. Upper Lift Port |
| 8 | | D138055 | | 6 | CLAMP |
| 9 | | 814-10040 | | 3 | SCREW M10 x 40 |
| 10 | | 120303A1 | | 4 | SPACER |
| 11 | | 895-11010 | | 1 | WASHER 11 x 21 x 2 mm |
| 12 | | 892-11010 | | 4 | WASHER, LOCK M10 |
| 13 | | 829-1410 | | 4 | NUT M10; 10.9 |
| 14 | | 87429290 | | 2 | HOSE ASSY. 780 mm (30-3/4 in) |
| 15 | | 87429293 | | 2 | HOSE ASSY. 1150 mm (45-5/16 in) |
| 16 | | 218-5107 | | 4 | ELBOW 7/8 fl x adj Or; Incl. Ref 17 |
| 17 | | 237-6010 | | 1 | O-RING 3/4 ID x 3/32 |
| 18 | | 384240A1 | | 2 | CYLINDER ASSY. 82.6 ID x 766 mm strk; Loader Lift Cylinder; See Figure 08-58 |
| 19 | | 814-10045 | | 1 | SCREW M10 x 45 |
| 20 | | D142787 | | 2 | SPACER |
| 21 | | 214-1472 | | 2 | CLAMP 4-1/16 - 5 |
| 22 | | 218-595 | | 2 | FITTING TEE, 7/8 fl |
| 23 | | 87416024 | | 1 | TUBE ASSY. Upper Lift Port |
| 24 | | 87437108 | | 1 | TUBE ASSY. Lower Lift Port |
| 26 | | 218-5232 | | 1 | ELBOW 90 Deg, 7/8 fl x sw fl |
| 27 | | 219-1 | | 2 | NIPPLE, LUBE Straight, 1/8 PT x 21/32 |
| 28 | | 219-55 | | 2 | NIPPLE, LUBE 90 Deg, 1/8 PT x 27/32 |

HTTP://WWW.MINNPARBACKHOEPARTS.COM

| 08-05 | | p1 | 01/04 |
|---|---|---|---|

HYDRAULICS - CYLINDER, LOADER BUCKET

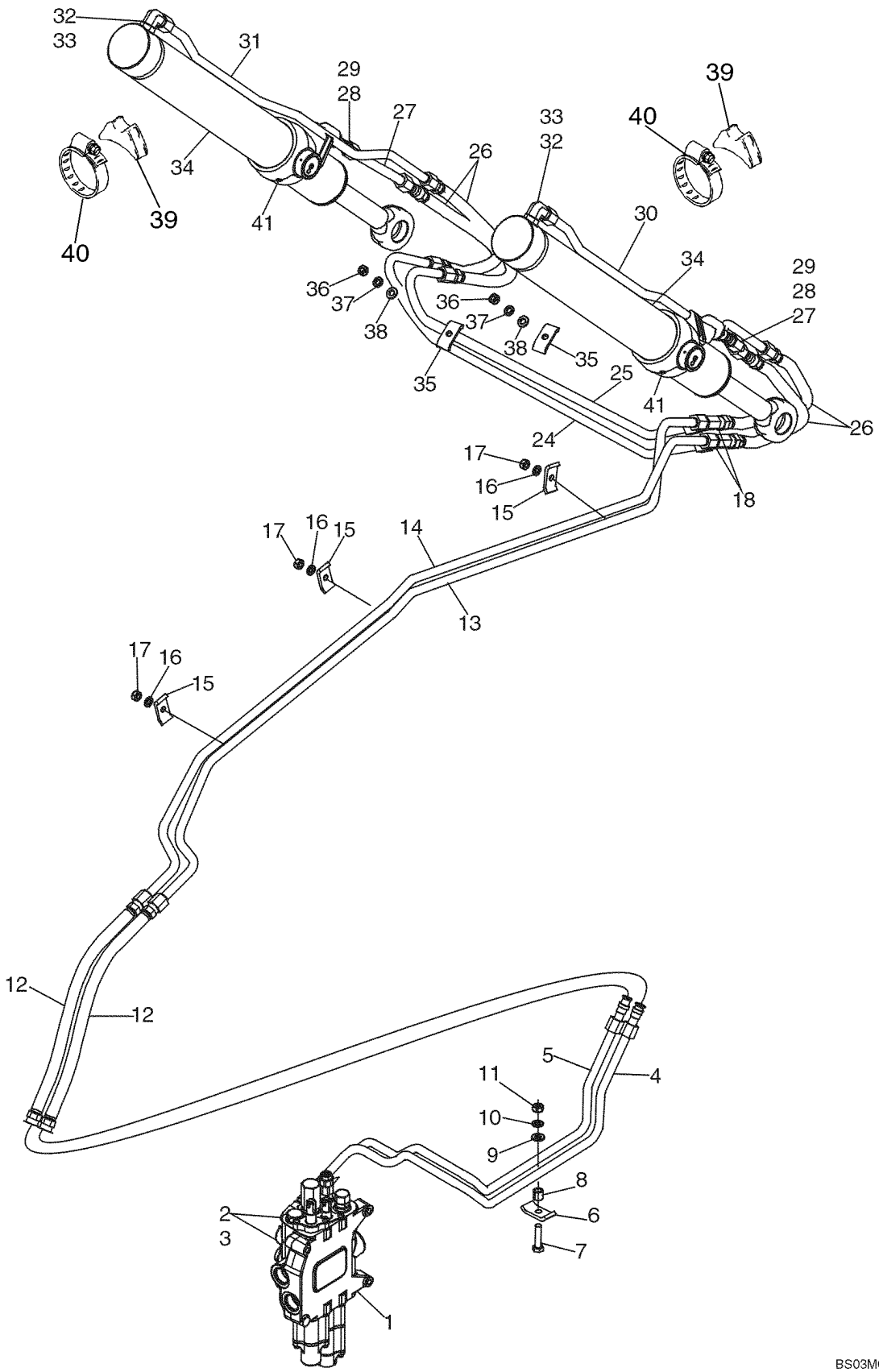

HTTP://WWW.MINNPARBACKHOEPARTS.COM



HYDRAULICS - CYLINDER, LOADER BUCKET

| REF | FN | PART NUMBER | YR/SN | QTY | DESCRIPTION |
|---|---|---|---|---|---|
| 1 | | REF | | 1 | INSTRUCTION LOADER CONTROL VALVE; For Correct Assembly and Components, See Figures 08-30, 08-31, For Mounting, See Figure 09-01 |
| 2 | | 218-5107 | | 2 | ELBOW 90 Deg, 7/8 fl x Or; Incl. Ref 3 |
| 3 | | 237-6010 | | 1 | O-RING 3/4 ID x 3/32, Boss Seal |
| 4 | | 87421918 | | 1 | TUBE ASSY. Upper Bucket Port |
| 5 | | 87421920 | | 1 | TUBE ASSY. Lower Bucket Port |
| 6 | | D138055 | | 1 | CLAMP |
| 7 | | 814-10045 | | 1 | SCREW M10 x 45 |
| 8 | | 120303A1 | | 1 | SPACER |
| 9 | | 895-11010 | | 1 | WASHER 11 x 21 x 2 mm |
| 10 | | 892-11010 | | 1 | WASHER, LOCK M10 |
| 11 | | 829-1410 | | 1 | NUT M10; 10.9 |
| 12 | | 87429287 | | 2 | HOSE ASSY. 710 mm (28 in) |
| 13 | | 418789A1 | | 1 | TUBE ASSY. To Upper Port |
| 14 | | 418791A1 | | 1 | TUBE ASSY. |
| 15 | | D138055 | | 3 | CLAMP |
| 16 | | 892-11010 | | 3 | WASHER, LOCK M10 |
| 17 | | 829-1410 | | 3 | NUT M10; 10.9 |
| 18 | | 218-5220 | | 2 | TEE 7/8 fl br x fl x sw |
| 24 | | 196815A1 | | 1 | PIPE Rear |
| 25 | | 196813A1 | | 1 | PIPE Front |
| 26 | | 371031A1 | | 4 | HOSE ASSY. 840 mm (33 in) |
| 27 | | 192152A1 | | 2 | PIPE Bucket Cylinder Rod End |
| 28 | | 218-5062 | | 2 | CONNECTOR, HYD. 7/8 fl x Or; Incl. Ref 29 |
| 29 | | 237-6010 | | 1 | O-RING 3/4 ID x 3/32, Boss Seal |
| 30 | | 192156A1 | | 1 | PIPE Right-Hand Cylinder |
| 31 | | 192154A1 | | 1 | PIPE Left-Hand Cylinder |
| 32 | | 218-5107 | | 2 | ELBOW 90 Deg, 7/8 fl x adj Or; Incl. Ref 33 |
| 33 | | 237-6010 | | 1 | O-RING 3/4 ID x 3/32, Boss Seal |
| 34 | | 113133A2 | | 2 | CYLINDER ASSY. 76 ID x 522 mm strk; Loader Bucket Cylinder; See Figure 08-59 |
| 35 | | D138055 | | 2 | CLAMP |
| 36 | | 829-1410 | | 2 | NUT M10; 10.9 |
| 37 | | 892-11010 | | 2 | WASHER, LOCK M10 |
| 38 | | 895-11010 | | 2 | WASHER 11 x 21 x 2 mm |

HTTP://WWW.MINNPARBACKHOEPARTS.COM

| 08-05 | | p2 | 01/04 |
|---|---|---|---|

HYDRAULICS - CYLINDER, LOADER BUCKET

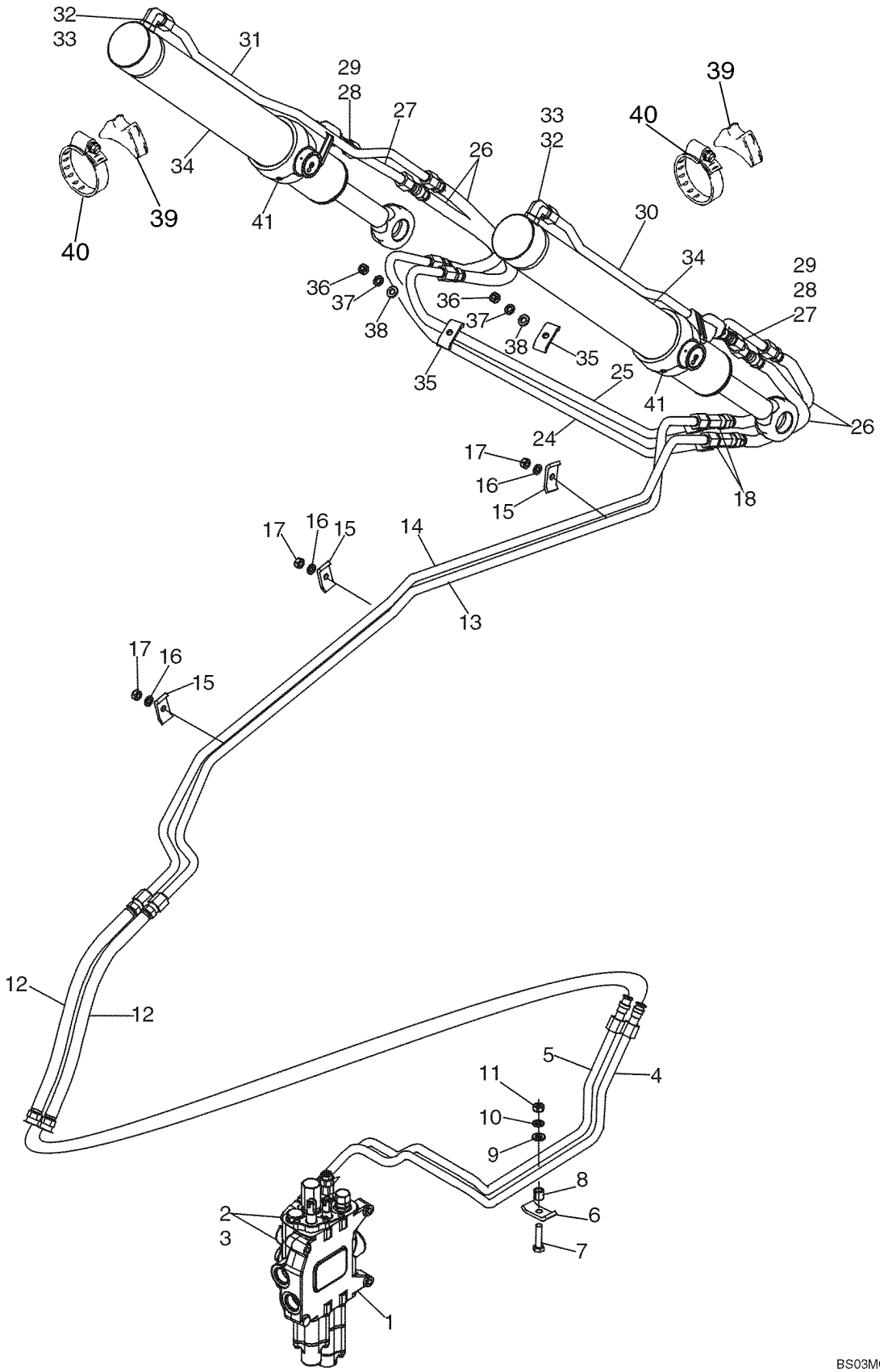

HTTP://WWW.MINNPARBACKHOEPARTS.COM



HYDRAULICS - CYLINDER, LOADER BUCKET

| REF | FN | PART NUMBER | YR/SN | QTY | DESCRIPTION |
|---|---|---|---|---|---|
| 39 | | L79937 | | 2 | SADDLE |
| 40 | | 214-1464 | | 2 | CLAMP 3-9/16 - 4-1/2 in dia |
| 41 | | 219-55 | | 2 | NIPPLE, LUBE 90 Deg, 1/8 PT x 27/32 |

HTTP://WWW.MINNPARBACKHOEPARTS.COM

| 08-06 | | p1 | 01/04 |
|---|---|---|---|

HYDRAULICS - CYLINDER, LOADER CLAM

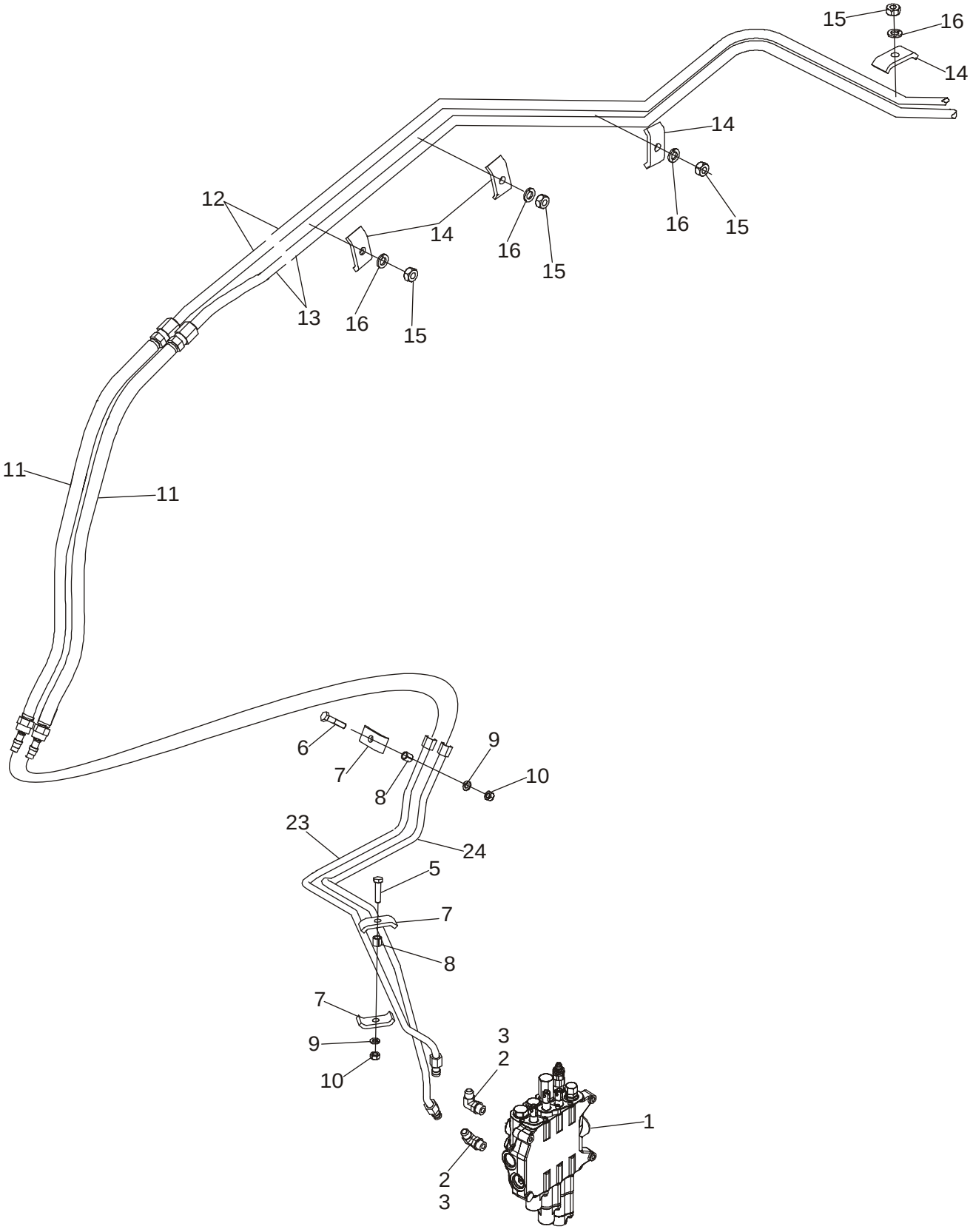

HTTP://WWW.MINNPARBACKHOEPARTS.COM



HYDRAULICS - CYLINDER, LOADER CLAM

| REF | FN | PART NUMBER | YR/SN | QTY | DESCRIPTION |
|---|---|---|---|---|---|
| 1 | | REF | | 1 | INSTRUCTION LOADER CONTROL VALVE; Three Spool; See Figure 08-31 for Valve Options; For Mounting, See Figure 09-01 |
| 2 | | 218-5107 | | 2 | ELBOW 90 deg, 7/8 fl x Or; Incl. Ref 3 |
| 3 | | 237-6010 | | 1 | O-RING 3/4 ID x 3/32, Boss Seal |
| 5 | | 814-10045 | | 1 | SCREW M10 x 45 |
| 6 | | 814-10040 | | 1 | SCREW M10 x 40 |
| 7 | | D138055 | | 3 | CLAMP |
| 8 | | 120303A1 | | 2 | SPACER |
| 9 | | 892-11010 | | 2 | WASHER, LOCK M10 |
| 10 | | 829-1410 | | 2 | NUT M10; 10.9 |
| 11 | | 87429287 | | 2 | HOSE ASSY. 710 mm (28 in) |
| 12 | | 196824A1 | | 1 | PIPE Upper Clam Port |
| 13 | | 196821A1 | | 1 | PIPE Lower Clam Port |
| 14 | | D138055 | | 4 | CLAMP |
| 15 | | 829-1410 | | 4 | NUT M10; 10.9 |
| 16 | | 892-11010 | | 4 | WASHER, LOCK M10 |
| 17 | | 218-776 | | 2 | PLUG 7/8 fl; Located on the End of Ref 13 Tube; Not Used On Models With Clam Bucket; Not Illustrated |
| 23 | | 87436908 | | 1 | TUBE ASSY. Upper Clam Port |
| 24 | | 87436910 | | 1 | TUBE ASSY. Lower Clam Port |

HTTP://WWW.MINNPARBACKHOEPARTS.COM



HYDRAULICS - CYLINDER, LOADER CLAM

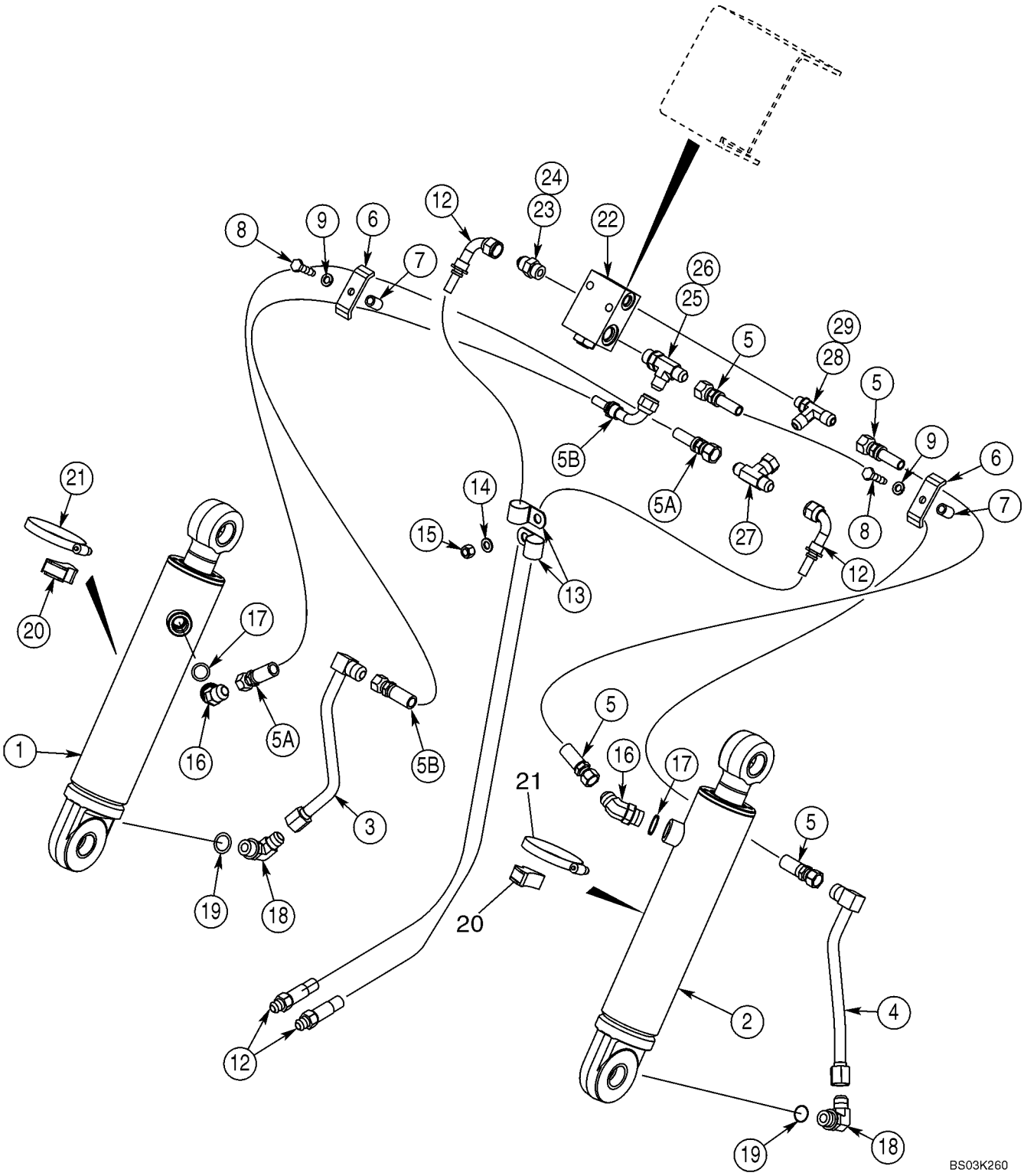

HTTP://WWW.MINNPARBACKHOEPARTS.COM



HYDRAULICS - CYLINDER, LOADER CLAM

| REF | FN | PART NUMBER | YR/SN | QTY | DESCRIPTION |
|---|---|---|---|---|---|
| 1 | | 1346190C2 | | 1 | CYLINDER ASSY. 76 ID x 231 mm strk: Loader Clam Cylinder; Left-Hand; See Figure 08-60 |
| 2 | | 1346189C2 | | 1 | CYLINDER ASSY. 76 ID x 231 mm strk; Loader Clam Cylinder; Right-Hand; See Figure 08-60 |
| 3 | | 192352A1 | | 1 | PIPE Left-Hand Cylinder |
| 4 | | 192345A1 | | 1 | PIPE Right-Hand Cylinder |
| 5 | | 353167A1 | | 2 | HOSE ASSY. 1100 mm (43-5/16 in); Right-Hand Cylinder |
| 5A | | 353103A1 | | 1 | HOSE ASSY. 1200 mm (47-1/4 in); Left-Hand Cylinder |
| 5B | | 367352A1 | | 1 | HOSE ASSY. 1200 mm (47-1/4 in); Left-Hand Cylinder |
| 6 | | D143846 | | 2 | SHIN CLAMP |
| 7 | | R46493 | | 2 | SPACER |
| 8 | | 814-10040 | | 2 | SCREW M10 x 40 |
| 9 | | 892-11010 | | 2 | WASHER, LOCK M10 |
| 12 | | 356743A1 | | 2 | HOSE ASSY. 1170 mm (46-1/16 in); Lift Frame |
| 13 | | 515-25254 | | 2 | CLAMP 1 in ID |
| 14 | | 895-11010 | | 1 | WASHER 11 x 21 x 2 mm |
| 15 | | 832-10410 | | 1 | NUT M10 |
| 16 | | 218-5137 | | 2 | FITTING 7/8 fl x Or; Incl. Ref 17 |
| 17 | | 237-6010 | | 1 | O-RING 3/4 ID x 3/32, Boss Seal |
| 18 | | 218-5107 | | 2 | ELBOW 7/8 fl x adj Or; Incl. Ref 19 |
| 19 | | 237-6010 | | 1 | O-RING 3/4 ID x 3/32, Boss Seal |
| 20 | | D38648 | | 2 | BLOCK |
| 21 | | 214-1464 | | 2 | CLAMP 3-9/16 - 4-1/2 in dia |
| 22 | | 325465A2 | | 1 | VALVE, CHECK Pilot Operated Check Valve; For Mounting, See Figure 09-08 |
| | | 399963A1 | | 1 | KIT Seal; For Use With 325465A2 Valve; Includes (1) Piston, (1) Backup Ring, (2) O-Rings and Instructions |
| 23 | | 218-5059 | | 1 | CONNECTOR, HYD. 3/4 fl x Or; Incl. Ref 24 |
| 24 | | 237-6008 | | 1 | O-RING 41/64 ID x 3/32, Boss Seal |
| 25 | | 218-5242 | | 1 | CONNECTOR, HYD. 3/4 fl br x fl x Or; Incl. Ref 26 |
| 26 | | 237-6008 | | 1 | O-RING 41/64 ID x 3/32, Boss Seal |
| 27 | | 218-840 | | 1 | TEE 3/4 NF sw x fl x fl |

HTTP://WWW.MINNPARBACKHOEPARTS.COM



HYDRAULICS - CYLINDER, LOADER CLAM

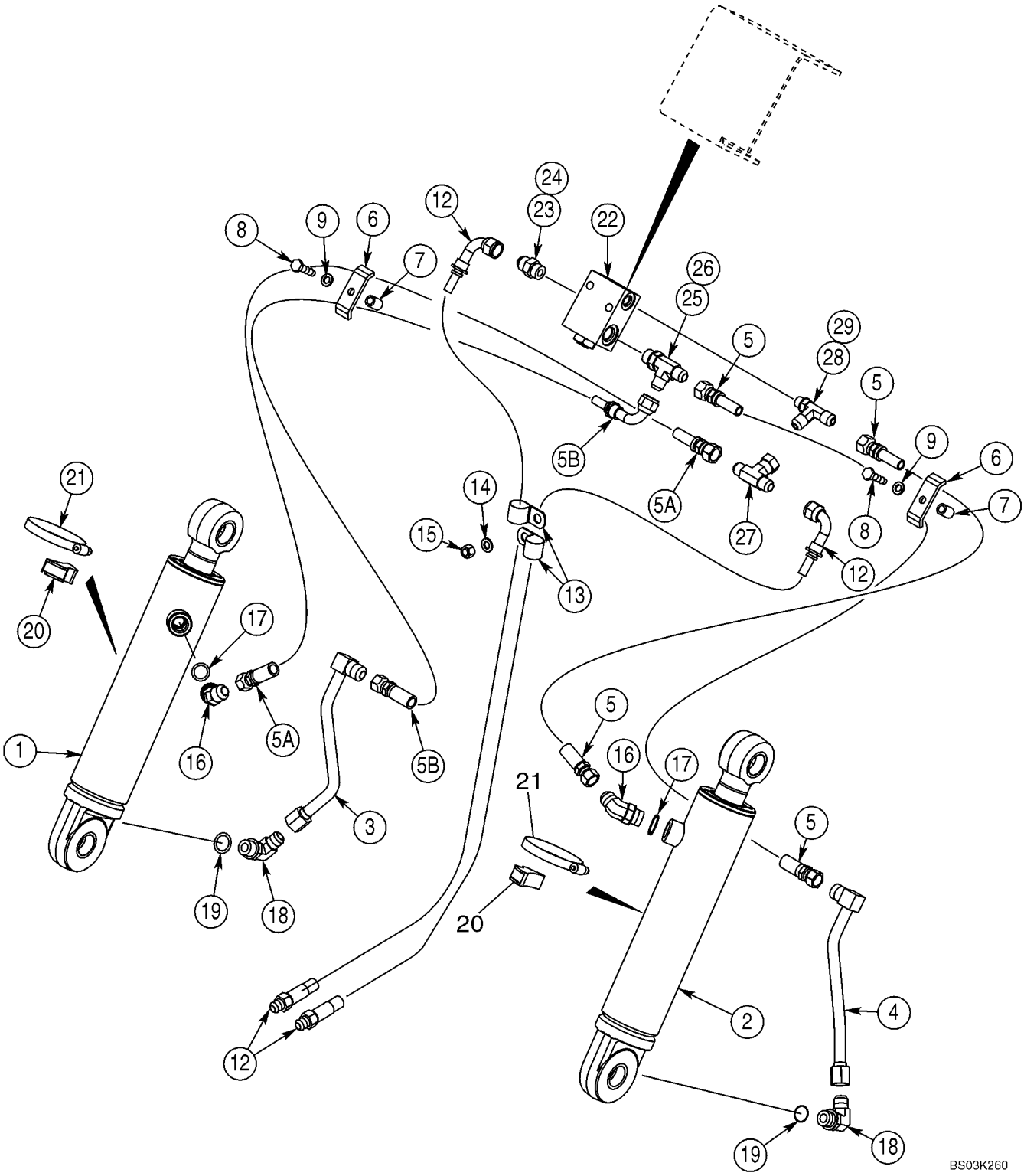

HTTP://WWW.MINNPARBACKHOEPARTS.COM



HYDRAULICS - CYLINDER, LOADER CLAM

| REF | FN | PART NUMBER | YR/SN | QTY | DESCRIPTION |
|---|---|---|---|---|---|
| 28 | | 218-5650 | | 1 | TEE 3/4 fl x fl x 9/16 Or; Incl. Ref 29 |
| 29 | | 237-6006 | | 1 | O-RING 15/32 ID x 5/64, Boss Seal |

HTTP://WWW.MINNPARBACKHOEPARTS.COM



HYDRAULICS - CYLINDER, BACKHOE STABILIZER (WITHOUT PILOT CONTROLS)

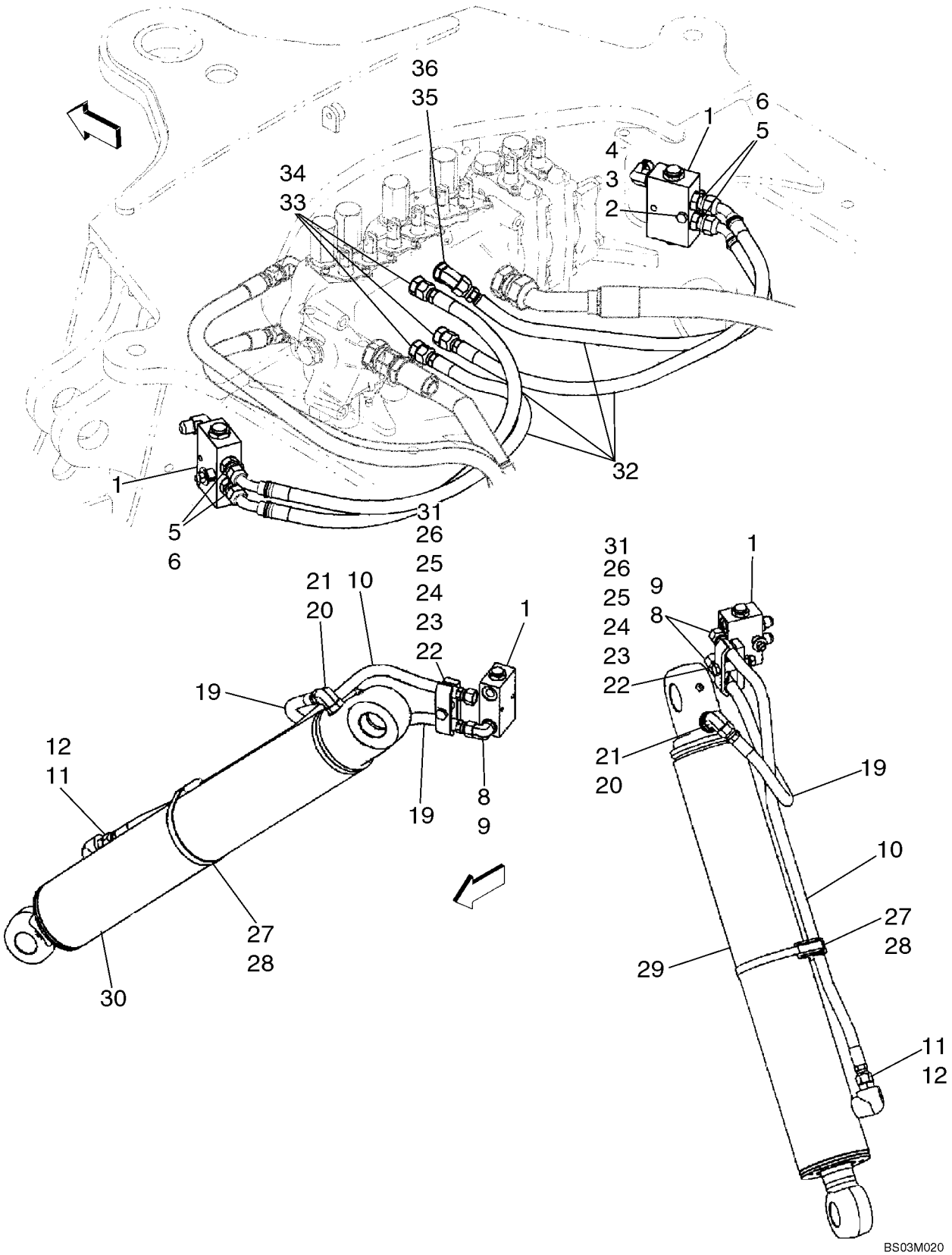

HTTP://WWW.MINNPARBACKHOEPARTS.COM



HYDRAULICS - CYLINDER, BACKHOE STABILIZER (WITHOUT PILOT CONTROLS)

| REF | FN | PART NUMBER | YR/SN | QTY | DESCRIPTION |
|---|---|---|---|---|---|
| | | REF | | | INSTRUCTION MODELS WITHOUT PILOT CONTROLS |
| 1 | | 85802820 | | 2 | VALVE, HYDRAULIC Load Check; Component Parts Not Serviced Separately |
| 2 | | 814-8060 | | 2 | SCREW M8 x 60 |
| 3 | | 895-15010 | | 2 | WASHER |
| 4 | | 829-1408 | | 2 | NUT M8 |
| 5 | | 218-5057 | | 4 | CONNECTOR, HYD. 9/16 fl x Or; Incl. Ref 6 |
| 6 | | 237-6006 | | 1 | O-RING 15/32 ID x 5/64 |
| 8 | | 218-5105 | | 4 | ELBOW 90 deg, 9/16 fl x Or; Incl. Ref 9 |
| 9 | | 237-6006 | | 1 | O-RING 15/32 ID x 5/64 |
| 10 | | {87429586} | | 2 | 790 mm (31-1/8 in) Hose |
| 11 | | 218-5059 | | 2 | CONNECTOR, HYD. 3/4 fl x Or; Incl. Ref 12 |
| 12 | | 237-6008 | | 1 | O-RING 41/64 ID x 3/32 |
| 19 | | {87429584} | | 2 | 500 mm (19-11/16 in) Hose |
| 20 | | 218-5121 | | 2 | FITTING 3/4 fl x 7/8 Or; Incl. Ref 21 |
| 21 | | 237-6008 | | 1 | O-RING 41/64 ID x 3/32 |
| 22 | | 814-10060 | | 2 | SCREW M10 x 60 |
| 23 | | {87420673} | | 2 | Clamp |
| 24 | | 131600A1 | | 2 | SPACER |
| 25 | | {87420672} | | 2 | Spacer, Clamp |
| 26 | | 829-1410 | | 2 | NUT M10; 10.9 |
| 27 | | D142787 | | 2 | SPACER |
| 28 | | 214-3188 | | 2 | CLAMP 4-3/4 - 5-5/8 |
| 29 | | 195504A1 | | 1 | CYLINDER 102 ID x 553 mm strk; Stabilizer Cylinder; Left-Hand; See Figure 08-61 |
| 30 | | 195503A1 | | 1 | CYLINDER ASSY. 102 ID x 553 mm strk; Stabilizer Cylinder; Right-Hand; See Figure 08-61 |
| 31 | | 895-11010 | | 2 | WASHER |
| 32 | | 87429654 | | 4 | HOSE ASSY. 720 mm (28-3/8 in) |
| 33 | | 218-5059 | | 3 | CONNECTOR, HYD. 3/4 fl x Or; Incl. Ref 34 |
| 34 | | 237-6008 | | 1 | O-RING 41/64 ID x 3/32 |
| 35 | | 218-5136 | | 1 | ELBOW 45 deg, 3/4 fl x adj Or; Incl. Ref 36 |
| 36 | | 237-6008 | | 1 | O-RING 41/64 ID x 3/32 |

HTTP://WWW.MINNPARBACKHOEPARTS.COM

| 08-08A | | p1 | 01/04 |
|---|---|---|---|

HYDRAULICS - CYLINDER, BACKHOE STABILIZER (WITH PILOT CONTROLS)

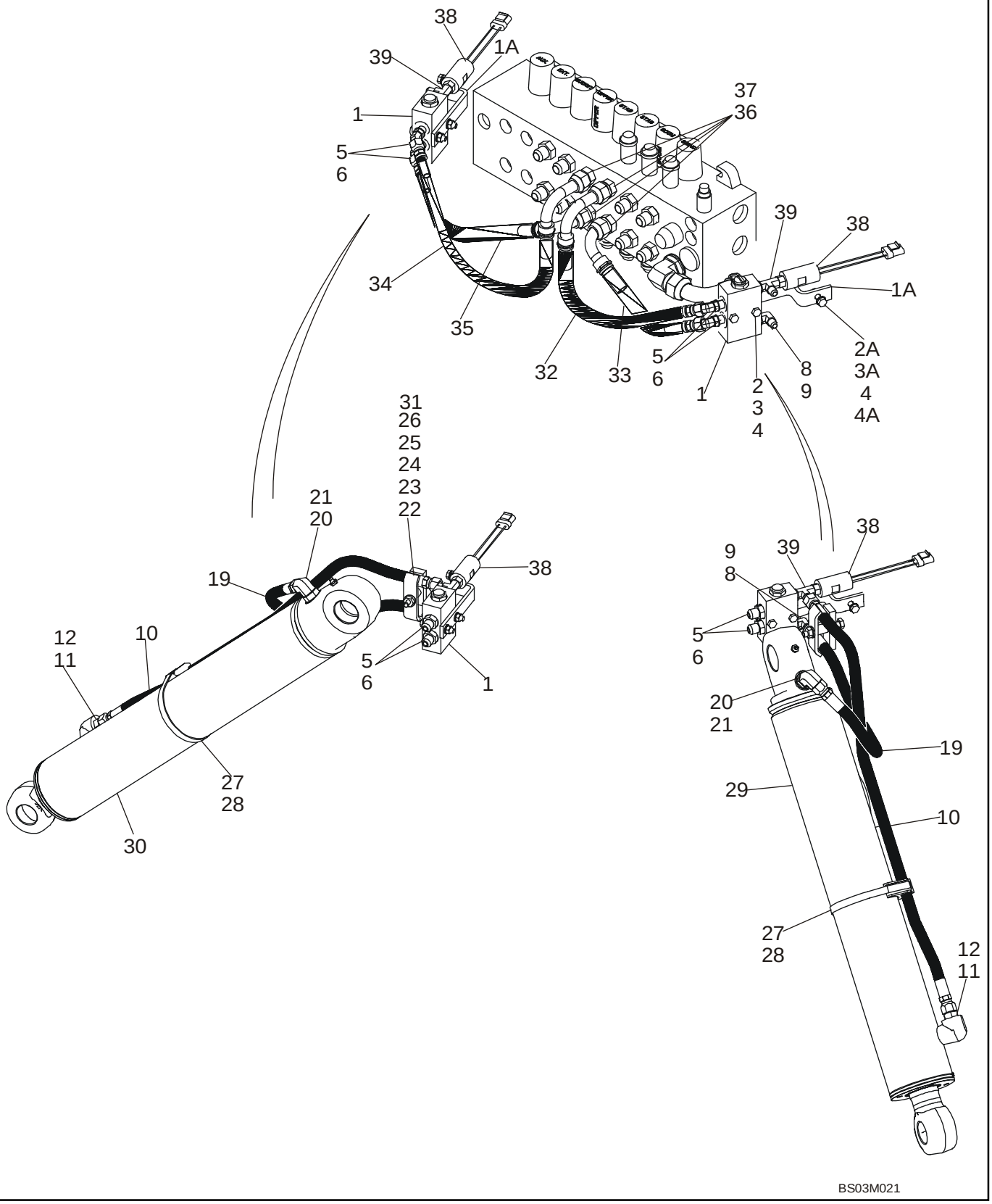

HTTP://WWW.MINNPARBACKHOEPARTS.COM



HYDRAULICS - CYLINDER, BACKHOE STABILIZER (WITH PILOT CONTROLS)

| REF | FN | PART NUMBER | YR/SN | QTY | DESCRIPTION |
|---|---|---|---|---|---|
| | | REF | | | INSTRUCTION MODELS WITH PILOT CONTROLS |
| 1 | | 85802820 | | 2 | VALVE, HYDRAULIC Load Check; Component Parts Not Serviced Separately |
| 1A | | 87423034 | | 2 | BRACKET, SUPPORTING |
| 2 | | 814-8055 | | 4 | SCREW M8 x 55 |
| 2A | | 614-8030 | | 2 | SCREW M8 x 30 |
| 3 | | 895-15010 | | 8 | WASHER |
| 3A | | 892-11008 | | 4 | WASHER Lock, M8 |
| 4 | | 829-1408 | | 6 | NUT M8 |
| 4A | | {87437840} | | 2 | Spacer |
| 5 | | 218-5135 | | 4 | ELBOW 45 deg, 9/16 fl x Or; Incl. Ref 6 |
| 6 | | 237-6006 | | 1 | O-RING 15/32 ID x 5/64 |
| 8 | | 218-5105 | | 2 | ELBOW 90 deg, 9/16 fl x Or; Incl. Ref 9 |
| 9 | | 237-6006 | | 1 | O-RING 15/32 ID x 5/64 |
| 10 | | {87429586} | | 2 | 790 mm (31-1/8 in) Hose |
| 11 | | 218-5059 | | 2 | CONNECTOR, HYD. 3/4 fl x Or; Incl. Ref 12 |
| 12 | | 237-6008 | | 1 | O-RING 41/64 ID x 3/32 |
| 19 | | {87429584} | | 2 | 500 mm (19-11/16 in) Hose |
| 20 | | 218-5121 | | 2 | FITTING 3/4 fl x 7/8 Or; Incl. Ref 21 |
| 21 | | 237-6008 | | 1 | O-RING 41/64 ID x 3/32 |
| 22 | | 814-10070 | | 2 | SCREW M10 x 70 |
| 23 | | {87420673} | | 2 | Clamp |
| 24 | | 131600A1 | | 2 | SPACER |
| 25 | | {87420672} | | 2 | Spacer, Clamp |
| 26 | | 829-1410 | | 2 | NUT M10; 10.9 |
| 27 | | D142787 | | 2 | SPACER |
| 28 | | 214-3188 | | 2 | CLAMP 4-3/4 - 5-5/8 |
| 29 | | 195504A1 | | 1 | CYLINDER 102 ID x 553 mm strk; Stabilizer Cylinder; Left-Hand; See Figure 08-61 |
| 30 | | 195503A1 | | 1 | CYLINDER ASSY. 102 ID x 553 mm strk; Stabilizer Cylinder; Right-Hand; See Figure 08-61 |
| 31 | | 895-11010 | | 2 | WASHER |
| 32 | | 87437938 | | 1 | HOSE ASSY. 350 mm (13-13/16 in) |
| 33 | | 87437939 | | 1 | HOSE ASSY. 440 mm (17-3/8 in) |
| 34 | | 87437940 | | 1 | HOSE ASSY. 400 mm (15-3/4 in) |
| 35 | | 87437941 | | 1 | HOSE ASSY. 485 mm (19-1/8 in) |

HTTP://WWW.MINNPARBACKHOEPARTS.COM



HYDRAULICS - CYLINDER, BACKHOE STABILIZER (WITH PILOT CONTROLS)

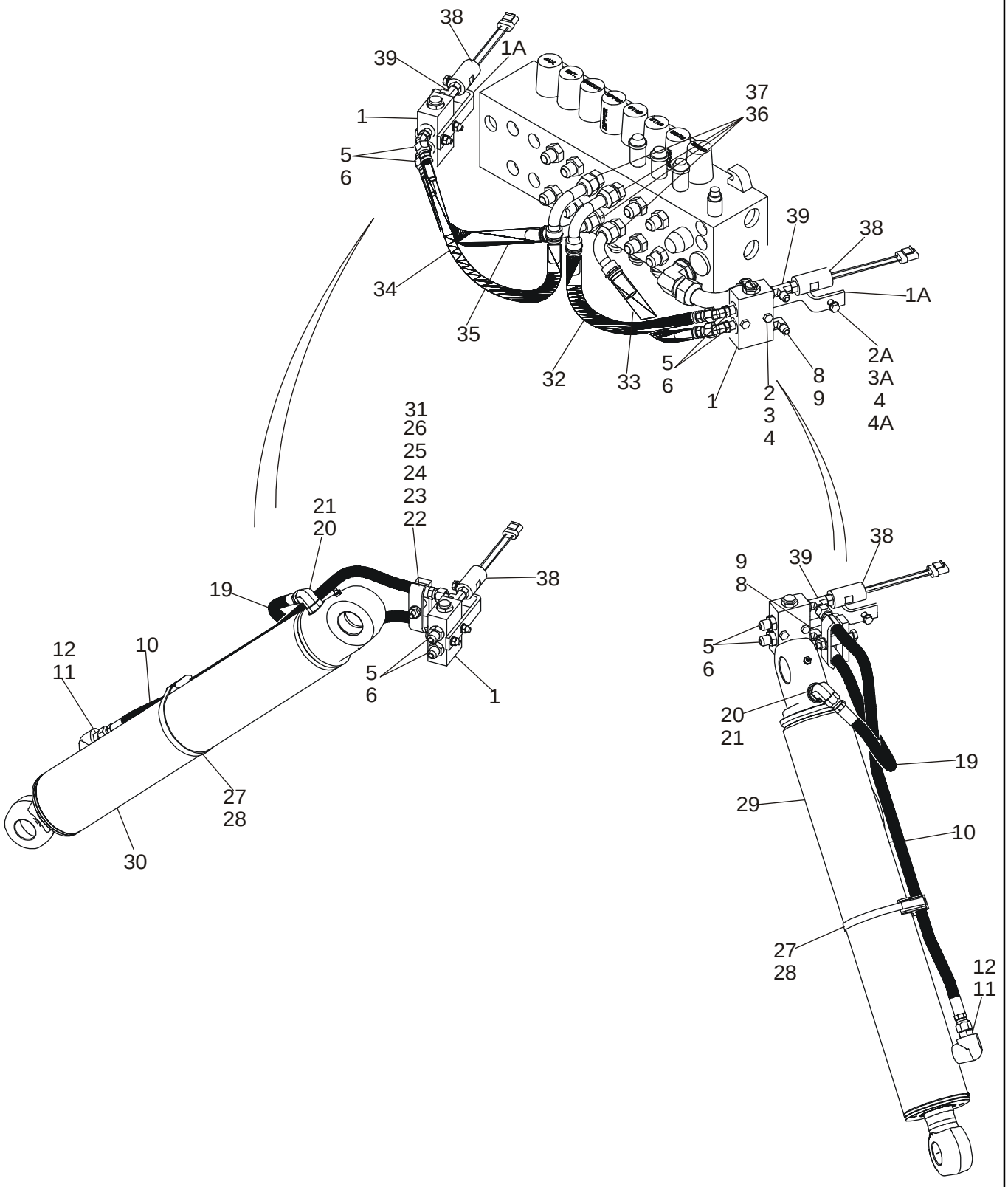

HTTP://WWW.MINNPARBACKHOEPARTS.COM



HYDRAULICS - CYLINDER, BACKHOE STABILIZER (WITH PILOT CONTROLS)

| REF | FN | PART NUMBER | YR/SN | QTY | DESCRIPTION |
|---|---|---|---|---|---|
| 36 | | 218-5070 | | 1 | CONNECTOR 3/4 fl x 1-1/16 Or; Incl. Ref 37 |
| 37 | | 237-6012 | | 1 | O-RING 59/64 ID x 7/64 |
| 38 | | 87439163 | | 2 | SWITCH, PRESSURE Pilot Control; Includes 237-6004 O-Ring |
| 39 | | 87423033 | | 2 | TEE 9/16 x 9/16 Or x 7/16 Or; Includes 237-6004, 237-6006 O-Ring |

HTTP://WWW.MINNPARBACKHOEPARTS.COM



HYDRAULICS - CYLINDER, BACKHOE SWING (WITHOUT PILOT CONTROLS)

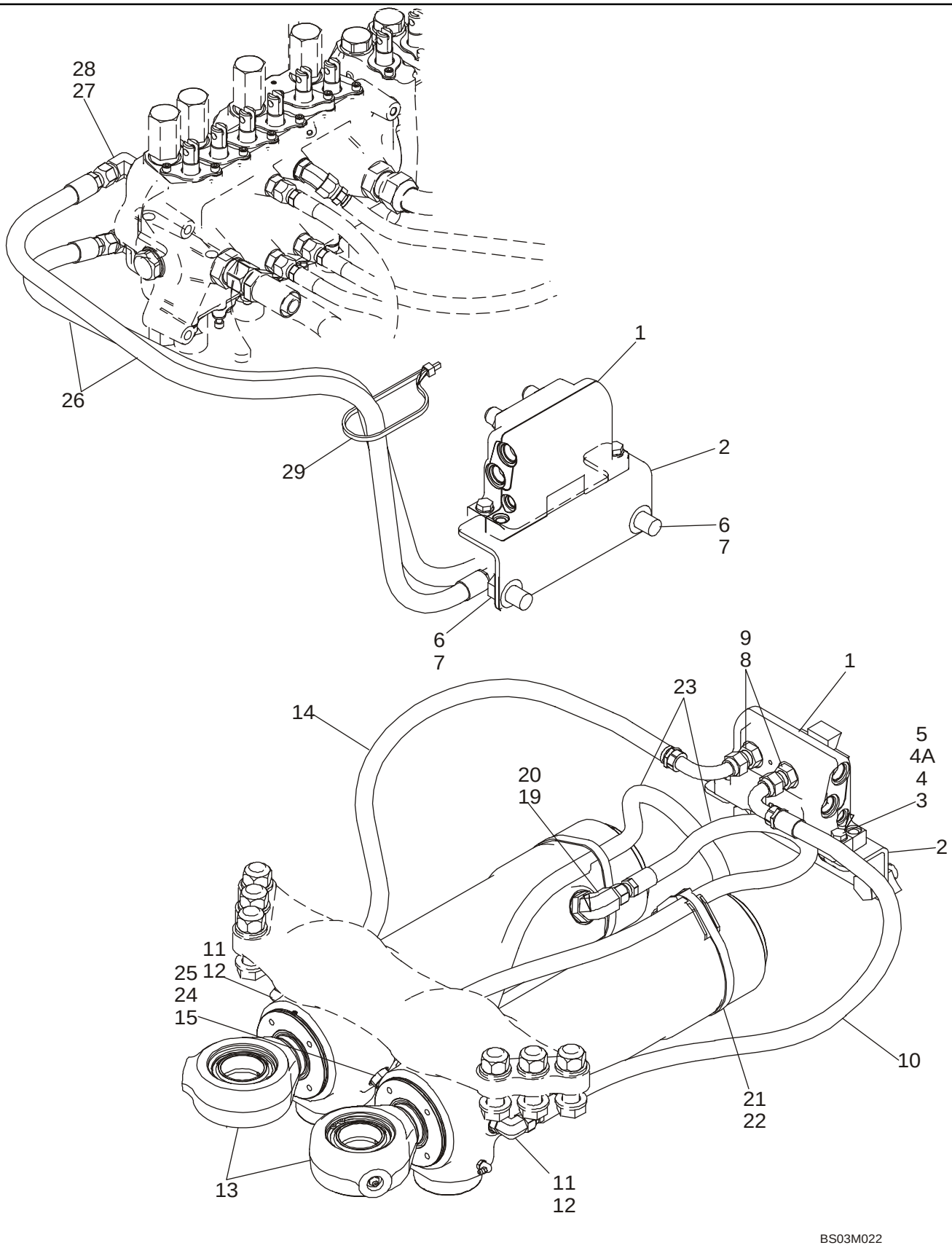

HTTP://WWW.MINNPARBACKHOEPARTS.COM



HYDRAULICS - CYLINDER, BACKHOE SWING (WITHOUT PILOT CONTROLS)

| REF | FN | PART NUMBER | YR/SN | QTY | DESCRIPTION |
|---|---|---|---|---|---|
| | | REF | | | INSTRUCTION MODELS WITHOUT PILOT CONTROLS |
| 1 | | 87416975 | | 1 | VALVE, DAMPING Swing Cushion; See Figure 08-55 |
| 2 | | {87428140} | | 1 | Valve Bracket |
| 3 | | 814-10040 | | 2 | SCREW M10 x 40 |
| 4 | | 895-11010 | | 4 | WASHER |
| 4A | | {87437840} | | 2 | Spacer |
| 5 | | 829-1410 | | 2 | NUT M10 |
| 6 | | 614-18035 | | 2 | BOLT M18 x 35 |
| 7 | | 895-11018 | | 4 | WASHER |
| 8 | | 218-5062 | | 4 | CONNECTOR, HYD. 7/8 fl x Or; Incl. Ref 9 |
| 9 | | 237-6010 | | 1 | O-RING 3/4 ID x 3/32 |
| 10 | | 87423356 | | 1 | HOSE ASSY. 850 mm (33-1/2 in) |
| 11 | | 218-5106 | | 2 | FITTING 3/4 fl x Or, Incl. Ref 12 |
| 12 | | 237-6008 | | 1 | O-RING 41/64 ID x 3/32, Boss Seal |
| 13 | | 188027A2 | | 2 | CYLINDER ASSY. 95 ID x 292 mm strk; Swing Cylinder, See Figure 08-62 |
| 14 | | 87423356 | | 1 | HOSE ASSY. 850 mm (33-1/2 in) |
| 15 | | 192971A1 | | 2 | ORIFICE Restrictor |
| 19 | | 218-5119 | | 2 | FITTING 7/8 fl x 1-1/16 Or, Incl. Ref 20 |
| 20 | | 237-6012 | | 1 | O-RING 59/64 ID x 7/64, Boss Seal |
| 21 | | D142787 | | 2 | SPACER |
| 22 | | 214-1492 | | 2 | CLAMP |
| 23 | | 255659A1 | | 2 | HOSE 815 mm (32-3/32 in) |
| 24 | | 218-5106 | | 2 | FITTING 3/4 fl x Or, Incl. Ref 25 |
| 25 | | 237-6008 | | 1 | O-RING 41/64 ID x 3/32, Boss Seal |
| 26 | | 87428158 | | 1 | HOSE ASSY. 1194 mm (47 in) |
| 27 | | 218-5107 | | 2 | ELBOW 90 deg, 7/8 fl x Or; Incl. Ref 28 |
| 28 | | 237-6010 | | 1 | O-RING |
| 29 | | L18337 | | 1 | STRAP |

HTTP://WWW.MINNPARBACKHOEPARTS.COM



HYDRAULICS - CYLINDER, BACKHOE SWING (WITH PILOT CONTROLS)

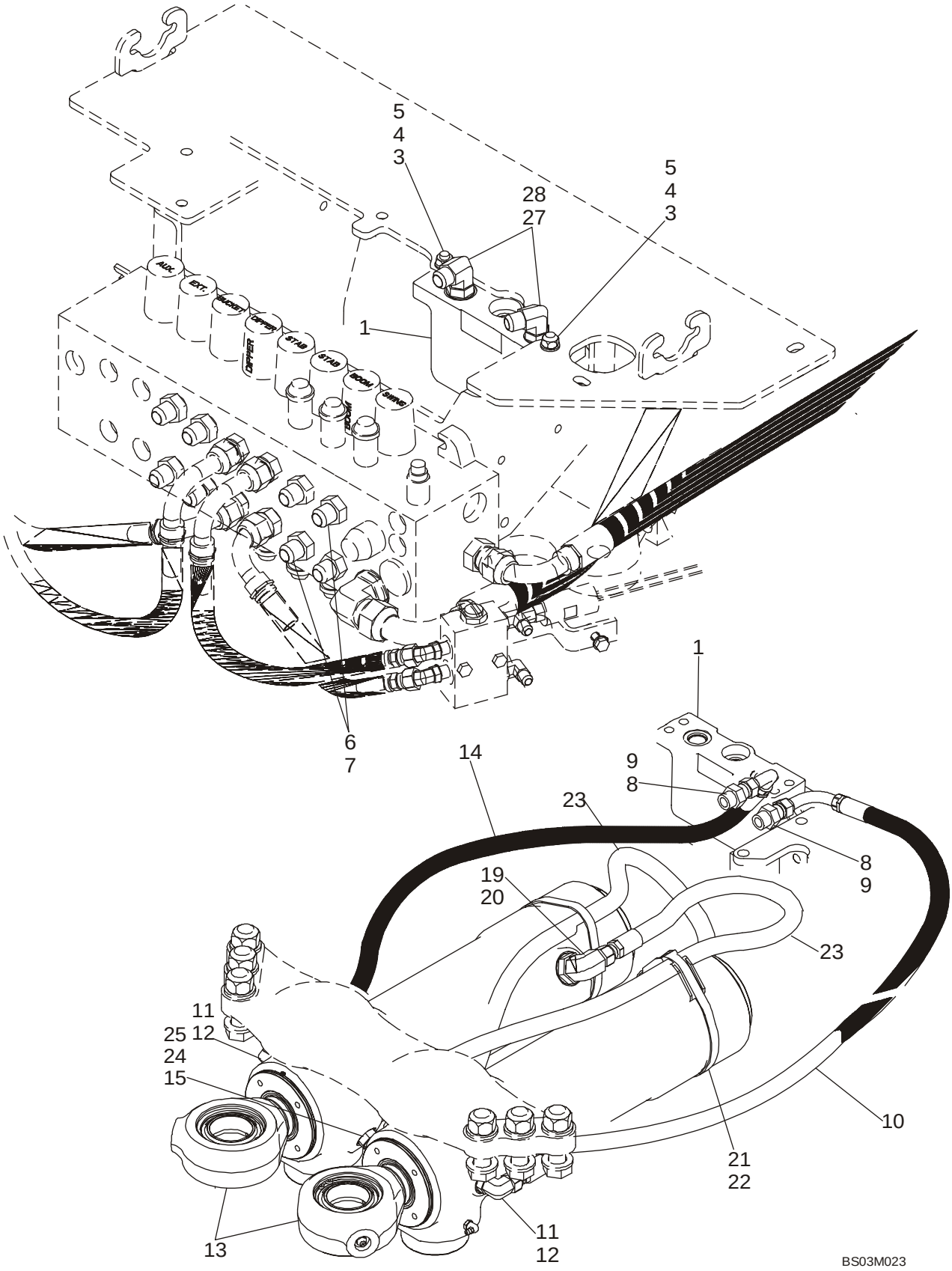

HTTP://WWW.MINNPARBACKHOEPARTS.COM



HYDRAULICS - CYLINDER, BACKHOE SWING (WITH PILOT CONTROLS)

| REF | FN | PART NUMBER | YR/SN | QTY | DESCRIPTION |
|---|---|---|---|---|---|
| | | REF | | | INSTRUCTION MODELS WITH PILOT CONTROLS |
| 1 | | 87416975 | | 1 | VALVE, DAMPING Swing Cushion; See Figure 08-55 |
| 3 | | 814-10045 | | 2 | SCREW M10 x 45 |
| 4 | | 895-11010 | | 4 | WASHER |
| 5 | | 829-1410 | | 2 | NUT M10 |
| 6 | | 218-5063 | | 2 | CONNECTOR, HYD. 7/8 fl x 1-1/16 Or; Incl. Ref 7 |
| 7 | | 237-6012 | | 1 | O-RING |
| 8 | | 218-5062 | | 2 | CONNECTOR, HYD. 7/8 fl x Or; Incl. Ref 9 |
| 9 | | 237-6010 | | 1 | O-RING 3/4 ID x 3/32 |
| 10 | | 87423356 | | 1 | HOSE ASSY. 850 mm (33-1/2 in) |
| 11 | | 218-5106 | | 2 | FITTING 3/4 fl x Or, Incl. Ref 12 |
| 12 | | 237-6008 | | 1 | O-RING 41/64 ID x 3/32, Boss Seal |
| 13 | | 188027A2 | | 2 | CYLINDER ASSY. 95 ID x 292 mm strk; Swing Cylinder, See Figure 08-62 |
| 14 | | 87437685 | | 1 | HOSE ASSY. 1310 mm (51-5/8 in) |
| 15 | | 192971A1 | | 2 | ORIFICE Restrictor |
| 19 | | 218-5119 | | 2 | FITTING 7/8 fl x 1-1/16 Or, Incl. Ref 20 |
| 20 | | 237-6012 | | 1 | O-RING 59/64 ID x 7/64, Boss Seal |
| 21 | | D142787 | | 2 | SPACER |
| 22 | | 214-1492 | | 2 | CLAMP |
| 23 | | 255659A1 | | 2 | HOSE 815 mm (32-3/32 in) |
| 24 | | 218-5106 | | 2 | FITTING 3/4 fl x Or, Incl. Ref 25 |
| 25 | | 237-6008 | | 1 | O-RING 41/64 ID x 3/32, Boss Seal |
| 27 | | 218-5107 | | 2 | ELBOW 90 deg, 7/8 fl x Or; Incl. Ref 28 |
| 28 | | 237-6010 | | 1 | O-RING |

HTTP://WWW.MINNPARBACKHOEPARTS.COM



HYDRAULICS - CYLINDER, BACKHOE BOOM

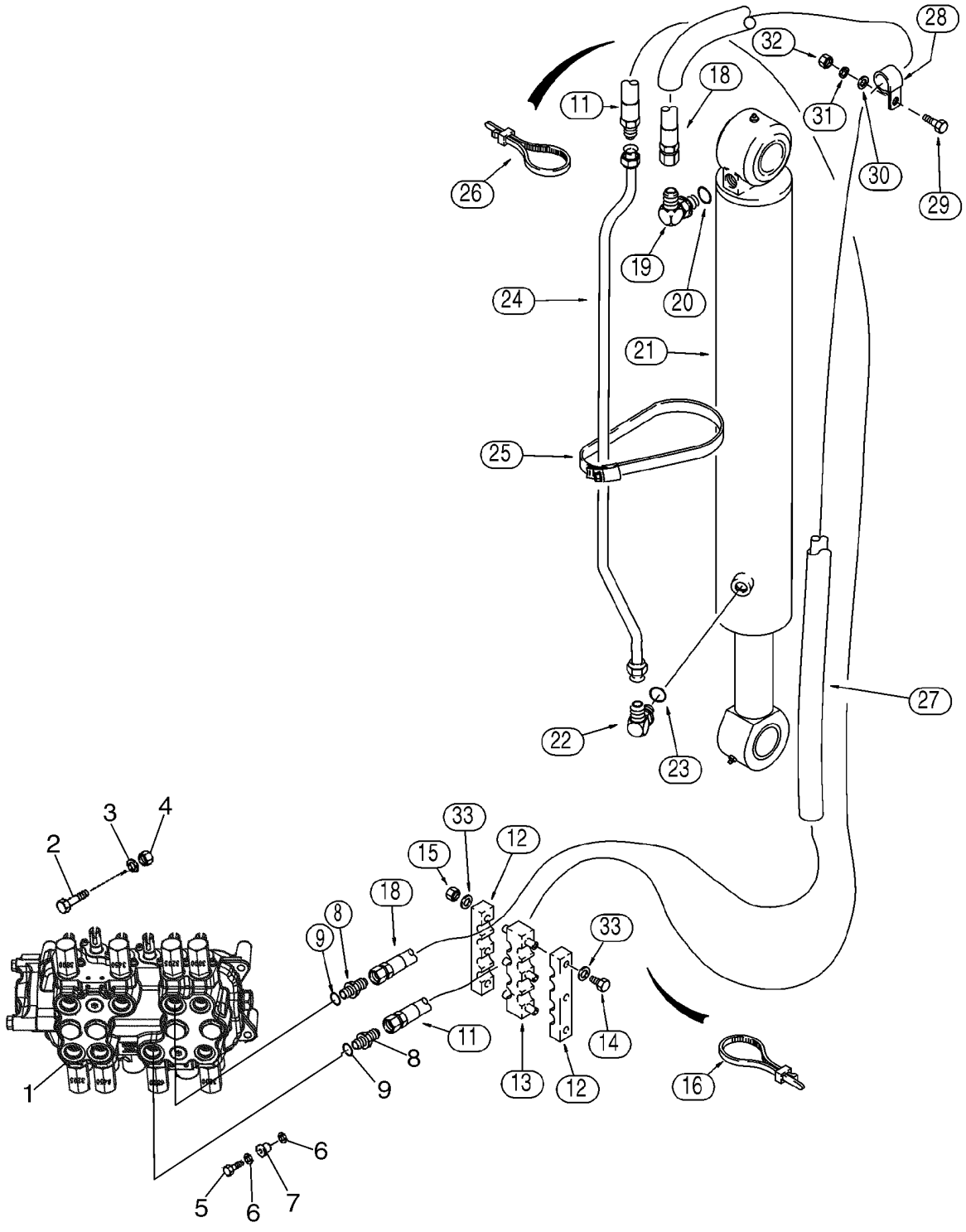


BS03M026

HTTP://WWW.MINNPARBACKHOEPARTS.COM



HYDRAULICS - CYLINDER, BACKHOE BOOM

| REF | FN | PART NUMBER | YR/SN | QTY | DESCRIPTION |
|---|---|---|---|---|---|
| 1 | | REF | | 1 | INSTRUCTION Valve Assy, Control; Backhoe Control Valve; For Correct Assembly and Components, See Figures 08-32 - 08-39 |
| 2 | | 814-12045 | | 2 | SCREW M12 x 45 |
| 3 | | 896-11012 | | 2 | WASHER 13,5 x 24 x 3 mm |
| 4 | | 829-1412 | | 2 | NUT M12; 10 |
| 5 | | 614-10035 | | 1 | SCREW M10 x 35 |
| 6 | | 496-41041 | | 2 | WASHER 13/32 x 1-1/8 x 9/64 |
| 7 | | D52276 | | 1 | ISOLATOR |
| 8 | | 218-5063 | | 2 | CONNECTOR, HYD. 7/8 fl x 1-1/16 Or, Incl. Ref 9 |
| 9 | | 237-6012 | | 1 | O-RING 59/64 ID x 7/64, Boss Seal |
| 11 | | 397786A1 | | 1 | HOSE ASSY. 3470 mm (136-5/8 in), Lower Valve Port |
| 12 | | 178951A1 | | 2 | CLAMP |
| 13 | | 178952A1 | | 1 | CLAMP |
| 14 | | 814-10120 | | 3 | SCREW M10 x 120 |
| 15 | | 832-10410 | | 3 | NUT M10 |
| 16 | | L18337 | | 4 | STRAP 15 in |
| 18 | | 393369A1 | | 1 | HOSE ASSY. 3495 mm (137-5/8 in) |
| 19 | | 218-5107 | | 1 | ELBOW 7/8 fl x adj Or, Incl. Ref 20 |
| 20 | | 237-6010 | | 1 | O-RING 3/4 ID x 3/32, Boss Seal |
| 21 | | 189653A2 | | 1 | CYLINDER ASSY. 114 ID x 982 mm strk, Boom Cylinder, See Figure 08-63 |
| 22 | | 218-5107 | | 1 | ELBOW 7/8 fl x adj Or, Incl. Ref 23 |
| 23 | | 237-6010 | | 1 | O-RING 3/4 ID x 3/32, Boss Seal |
| 24 | | 357471A1 | | 1 | TUBE ASSY. |
| 25 | | 214-1488 | | 2 | CLAMP 5-1/8 - 6 in dia |
| 26 | | L18337 | | 4 | STRAP 15 in |
| 27 | | 224057A1 | | 2 | SLEEVE 946 mm (37-15/64 in) |
| 28 | | 515-23254 | | 1 | CLAMP 1 in ID |
| 28 | | R24840 | | 1 | CLAMP 1-1/8 in ID |
| 29 | | 614-10035 | | 2 | SCREW M10 x 35 |
| 30 | | 895-11010 | | 2 | WASHER 11 x 21 x 2 mm |
| 31 | | 892-11010 | | 2 | WASHER, LOCK M10 |
| 32 | | 829-1410 | | 2 | NUT M10; 10.9 |
| 33 | | 895-11010 | | 6 | WASHER 11 x 21 x 2 mm |

HTTP://WWW.MINNPARBACKHOEPARTS.COM

| 08-11 | | p1 | 01/04 |
|---|---|---|---|

HYDRAULICS - CYLINDER, BACKHOE DIPPER

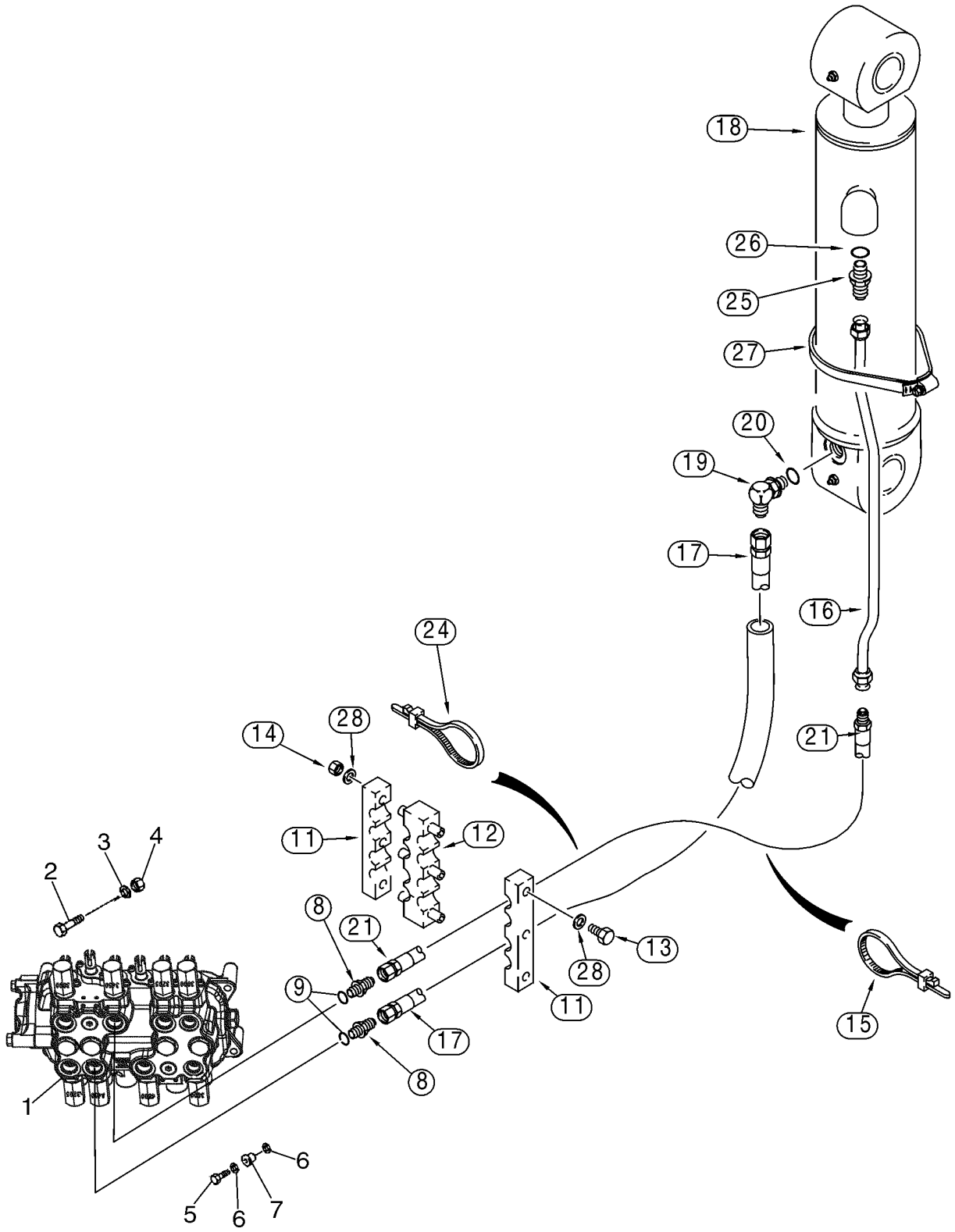

HTTP://WWW.MINNPARBACKHOEPARTS.COM



HYDRAULICS - CYLINDER, BACKHOE DIPPER

| REF | FN | PART NUMBER | YR/SN | QTY | DESCRIPTION |
|---|---|---|---|---|---|
| 1 | | REF | | 1 | INSTRUCTION Valve Assy, Control; Backhoe Control Valve; For Correct Assembly and Components, See Figures 08-32 - 08-39 |
| 2 | | 814-12045 | | 2 | SCREW M12 x 45 |
| 3 | | 896-11012 | | 2 | WASHER 13,5 x 24 x 3 mm |
| 4 | | 829-1412 | | 2 | NUT M12; 10 |
| 5 | | 614-10035 | | 1 | SCREW M10 x 35 |
| 6 | | 496-41041 | | 2 | WASHER 13/32 x 1-1/8 x 9/64 |
| 7 | | D52276 | | 1 | ISOLATOR |
| 8 | | 218-5063 | | 2 | CONNECTOR, HYD. 7/8 fl x 1-1/16 Or, Incl. Ref 9 |
| 9 | | 237-6012 | | 1 | O-RING 59/64 ID x 7/64, Boss Seal |
| 11 | | 178951A1 | | 2 | CLAMP |
| 12 | | 178952A1 | | 1 | CLAMP |
| 13 | | 814-10120 | | 3 | SCREW M10 x 120 |
| 14 | | 832-10410 | | 3 | NUT M10 |
| 15 | | L18337 | | 4 | STRAP 15 in |
| 16 | | 357469A1 | | 1 | TUBE ASSY. |
| 17 | | 393371A1 | | 1 | HOSE ASSY. 2025 mm (79-3/4 in), Lower Valve Port |
| 18 | | 233114A2 | | 1 | CYLINDER ASSY. 108 ID x 686 mm strk; Dipper Cylinder, See Figure 08-64 |
| 19 | | 218-5107 | | 1 | ELBOW 7/8 fl x adj Or, Incl. Ref 20 |
| 20 | | 237-6010 | | 1 | O-RING 3/4 ID x 3/32, Boss Seal |
| 21 | | 397787A1 | | 1 | HOSE ASSY. 2025 mm (79-3/4 in), Upper Valve Port |
| 24 | | L18337 | | 2-4 | STRAP 15 in |
| 25 | | 218-5062 | | 1 | CONNECTOR, HYD. 7/8 fl x Or, Incl. Ref 26 |
| 26 | | 237-6010 | | 1 | O-RING 3/4 ID x 3/32 |
| 27 | | 214-1488 | | 1 | CLAMP 5-1/8 - 6 in dia |
| 28 | | 895-11010 | | 6 | WASHER 11 x 21 x 2 mm |

HTTP://WWW.MINNPARBACKHOEPARTS.COM



HYDRAULICS - CYLINDER, BACKHOE BUCKET (MODELS WITHOUT EXTENDABLE DIPPER)

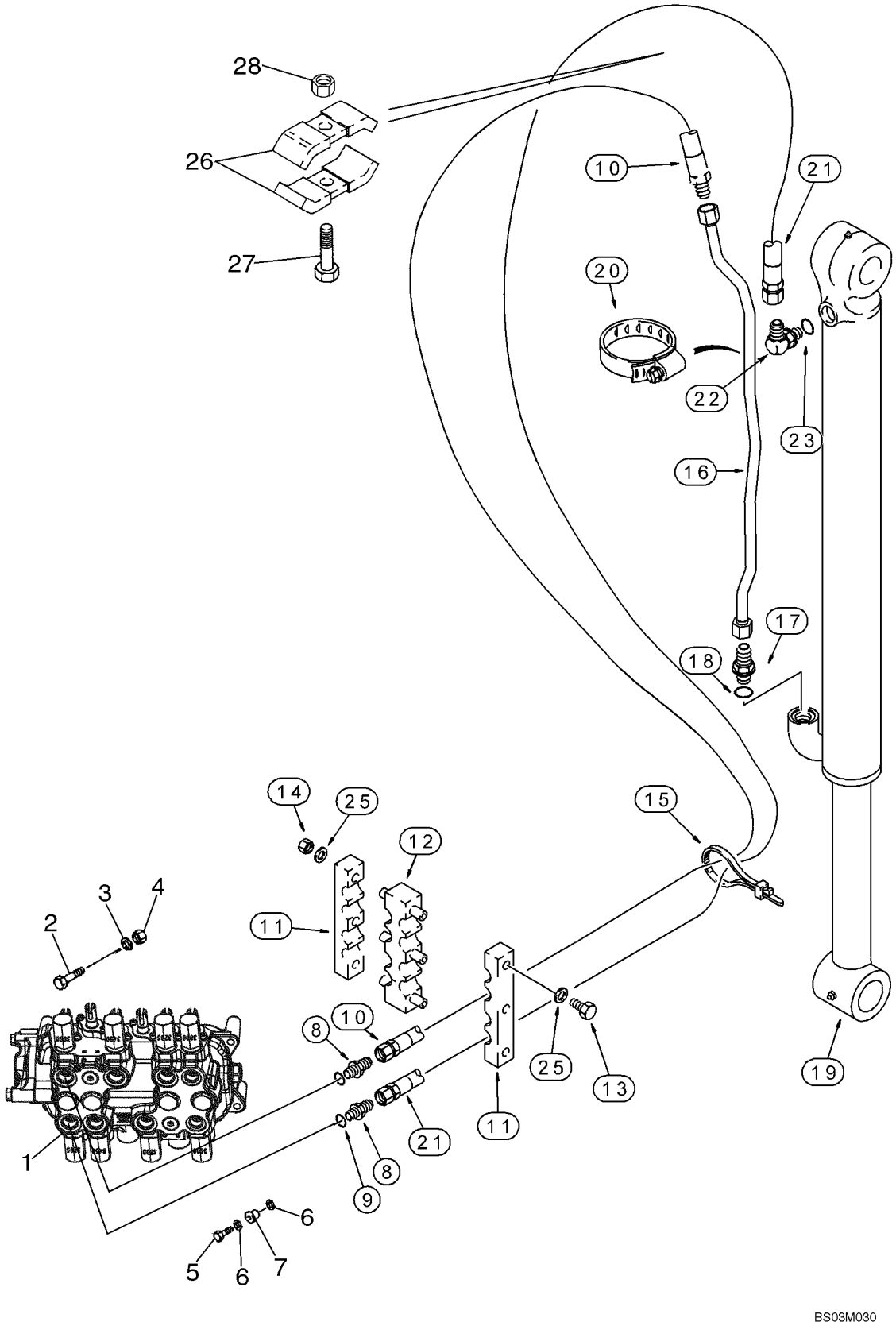

HTTP://WWW.MINNPARBACKHOEPARTS.COM



HYDRAULICS - CYLINDER, BACKHOE BUCKET (MODELS WITHOUT EXTENDABLE DIPPER)

| REF | FN | PART NUMBER | YR/SN | QTY | DESCRIPTION |
|---|---|---|---|---|---|
| 1 | | REF | | 1 | INSTRUCTION Valve Assy, Control; Backhoe Control Valve; For Correct Assembly and Components, See Figures 08-32 - 08-39 |
| 2 | | 814-12045 | | 2 | SCREW M12 x 45 |
| 3 | | 896-11012 | | 2 | WASHER 13,5 x 24 x 3 mm |
| 4 | | 829-1412 | | 2 | NUT M12; 10 |
| 5 | | 614-10035 | | 1 | SCREW M10 x 35 |
| 6 | | 496-41041 | | 2 | WASHER 13/32 x 1-1/8 x 9/64 |
| 7 | | D52276 | | 1 | ISOLATOR |
| 8 | | 218-5063 | | 2 | CONNECTOR, HYD. 7/8 fl x 1-1/16 Or, Incl. Ref 9 |
| 9 | | 237-6012 | | 1 | O-RING 59/64 ID x 7/64, Boss Seal |
| 10 | | 397788A1 | | 1 | HOSE ASSY. 3860 mm (152 in) |
| 11 | | 178951A1 | | 2 | CLAMP |
| 12 | | 178952A1 | | 1 | CLAMP |
| 13 | | 814-10120 | | 3 | SCREW M10 x 120 |
| 14 | | 832-10410 | | 3 | NUT M10 |
| 15 | | L18337 | | 2-4 | STRAP 15 in |
| 16 | | 396339A1 | | 1 | TUBE ASSY. Models Without Backhoe Auxiliary Hydraulics |
| 16 | | 357470A1 | | 1 | TUBE ASSY. Models With Backhoe Auxiliary Hydraulics |
| 17 | | 218-5062 | | 1 | CONNECTOR, HYD. 7/8 fl x Or, Incl. Ref 18 |
| 18 | | 237-6010 | | 1 | O-RING 3/4 ID x 3/32, Boss Seal |
| 19 | | 128760A1 | | 1 | CYLINDER ASSY. 83 ID x 872 mm strk; Bucket Cylinder, See Figure 08-65 |
| 20 | | 214-1464 | | 1 | CLAMP 3-9/16 - 4-1/2 in dia |
| 21 | | 393360A1 | | 1 | HOSE ASSY. 3860 mm (152 in) |
| 22 | | 218-5107 | | 1 | ELBOW 7/8 fl x adj Or, Incl. Ref 23 |
| 23 | | 237-6010 | | 1 | O-RING 3/4 ID x 3/32 |
| 25 | | 895-11010 | | 6 | WASHER 11 x 21 x 2 mm |
| 26 | | D143846 | | 2 | SHIN Clamp |
| 27 | | 814-10055 | | 1 | SCREW M10 x 55 |
| 28 | | 832-10410 | | 1 | NUT M10 |

HTTP://WWW.MINNPARBACKHOEPARTS.COM



HYDRAULICS - CYLINDER, BACKHOE BUCKET (MODELS WITH EXTENDABLE DIPPER)

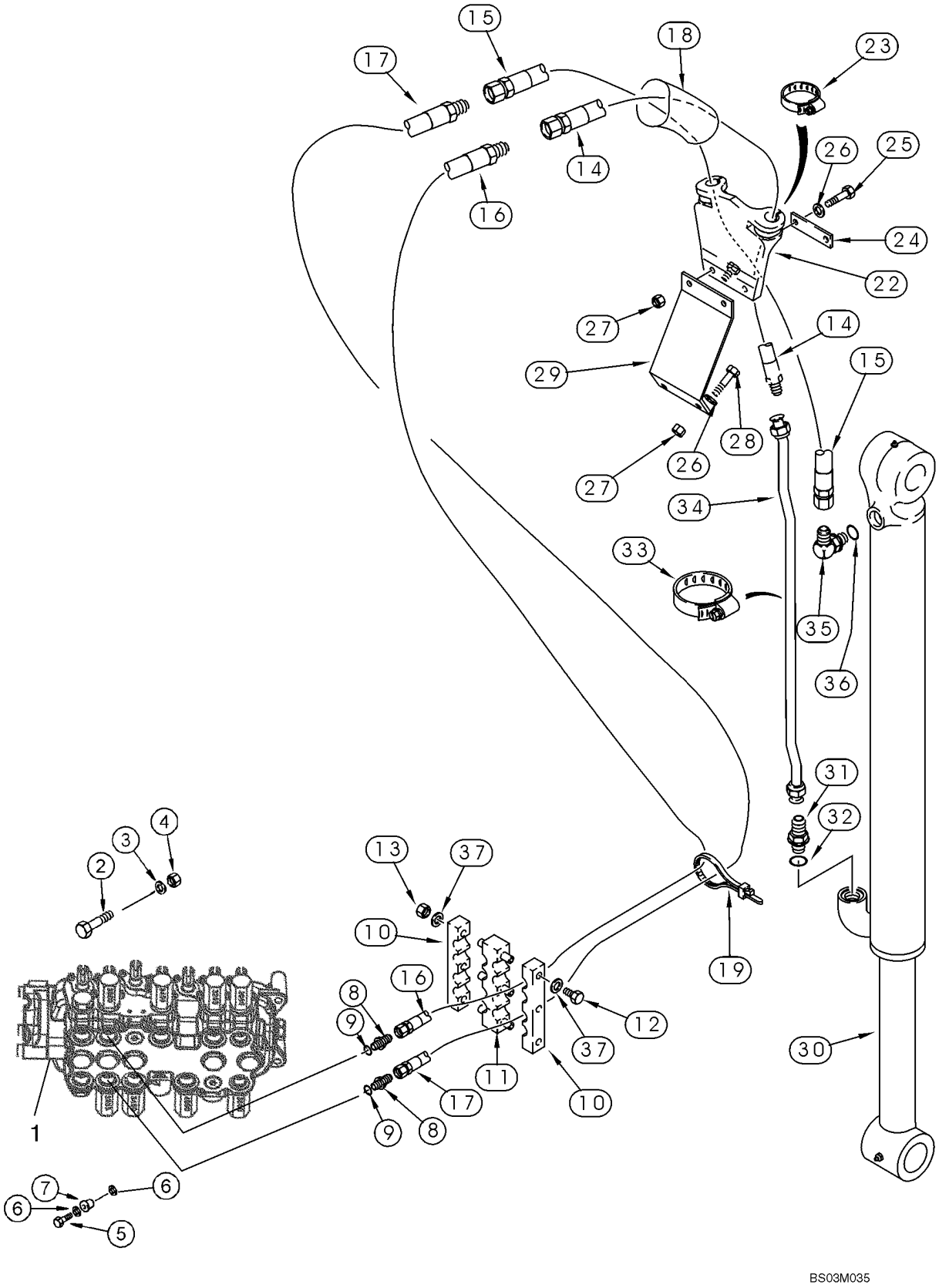

HTTP://WWW.MINNPARBACKHOEPARTS.COM



HYDRAULICS - CYLINDER, BACKHOE BUCKET (MODELS WITH EXTENDABLE DIPPER)

| REF | FN | PART NUMBER | YR/SN | QTY | DESCRIPTION |
|---|---|---|---|---|---|
| 1 | | REF | | 1 | INSTRUCTION Valve Assy, Control; Backhoe Control Valve; For Correct Assembly and Components, See Figures 08-33 - 08-39 |
| 2 | | 814-12045 | | 2 | SCREW M12 x 45 |
| 3 | | 896-11012 | | 2 | WASHER 13,5 x 24 x 3 mm |
| 4 | | 829-1412 | | 2 | NUT M12; 10 |
| 5 | | 614-10035 | | 1 | SCREW M10 x 35 |
| 6 | | 496-41041 | | 2 | WASHER 13/32 x 1-1/8 x 9/64 |
| 7 | | D52276 | | 1 | ISOLATOR |
| 8 | | 218-5063 | | 2 | CONNECTOR, HYD. 7/8 fl x 1-1/16 Or, Incl. Ref 9 |
| 9 | | 237-6012 | | 1 | O-RING 59/64 ID x 7/64 |
| 10 | | 178951A1 | | 2 | CLAMP |
| 11 | | 178952A1 | | 1 | CLAMP |
| 12 | | 814-10120 | | 3 | SCREW M10 x 120 |
| 13 | | 832-10410 | | 3 | NUT M10 |
| 14 | | 365309A1 | | 1 | HOSE ASSY. 2052 mm (80-3/4 in) |
| 15 | | 143400A1 | | 1 | HOSE 2052 mm (80-3/4 in) |
| 16 | | 393361A1 | | 1 | HOSE ASSY. 3048 mm (120 in) |
| 17 | | 393362A1 | | 1 | HOSE ASSY. 3048 mm (120 in) |
| 18 | | 183322A1 | | 1 | PROTECTOR 2000 mm (78-3/4 in) |
| 19 | | L18337 | | 2-5 | STRAP 15 in |
| 22 | | 184297A1 | | 1 | SUPPORT |
| 23 | | 214-3132 | | 2 | CLAMP |
| 24 | | 101479A1 | | 1 | SUPPORT |
| 25 | | 814-10045 | | 2 | SCREW M10 x 45 |
| 26 | | 895-11010 | | 4 | WASHER 11 x 21 x 2 mm |
| 27 | | 832-10410 | | 4 | NUT M10 |
| 28 | | 614-10030 | | 2 | SCREW M10 x 30 |
| 29 | | 183736A1 | | 1 | SUPPORT |
| 30 | | 128760A1 | | 1 | CYLINDER ASSY. 83 ID x 872 mm strk; Bucket Cylinder, See Figure 08-65 |
| 31 | | 218-5062 | | 1 | CONNECTOR, HYD. 7/8 fl x Or, Incl. Ref 32 |
| 32 | | 237-6010 | | 1 | O-RING 3/4 ID x 3/32 |
| 33 | | 214-1464 | | 2 | CLAMP 3-9/16 - 4-1/2 in dia |
| 34 | | 396339A1 | | 1 | TUBE ASSY. Models Without Auxiliary Hydraulics |
| 34 | | 357470A1 | | 1 | TUBE ASSY. Models With Auxiliary Hydraulics |

HTTP://WWW.MINNPARBACKHOEPARTS.COM



HYDRAULICS - CYLINDER, BACKHOE BUCKET (MODELS WITH EXTENDABLE DIPPER)

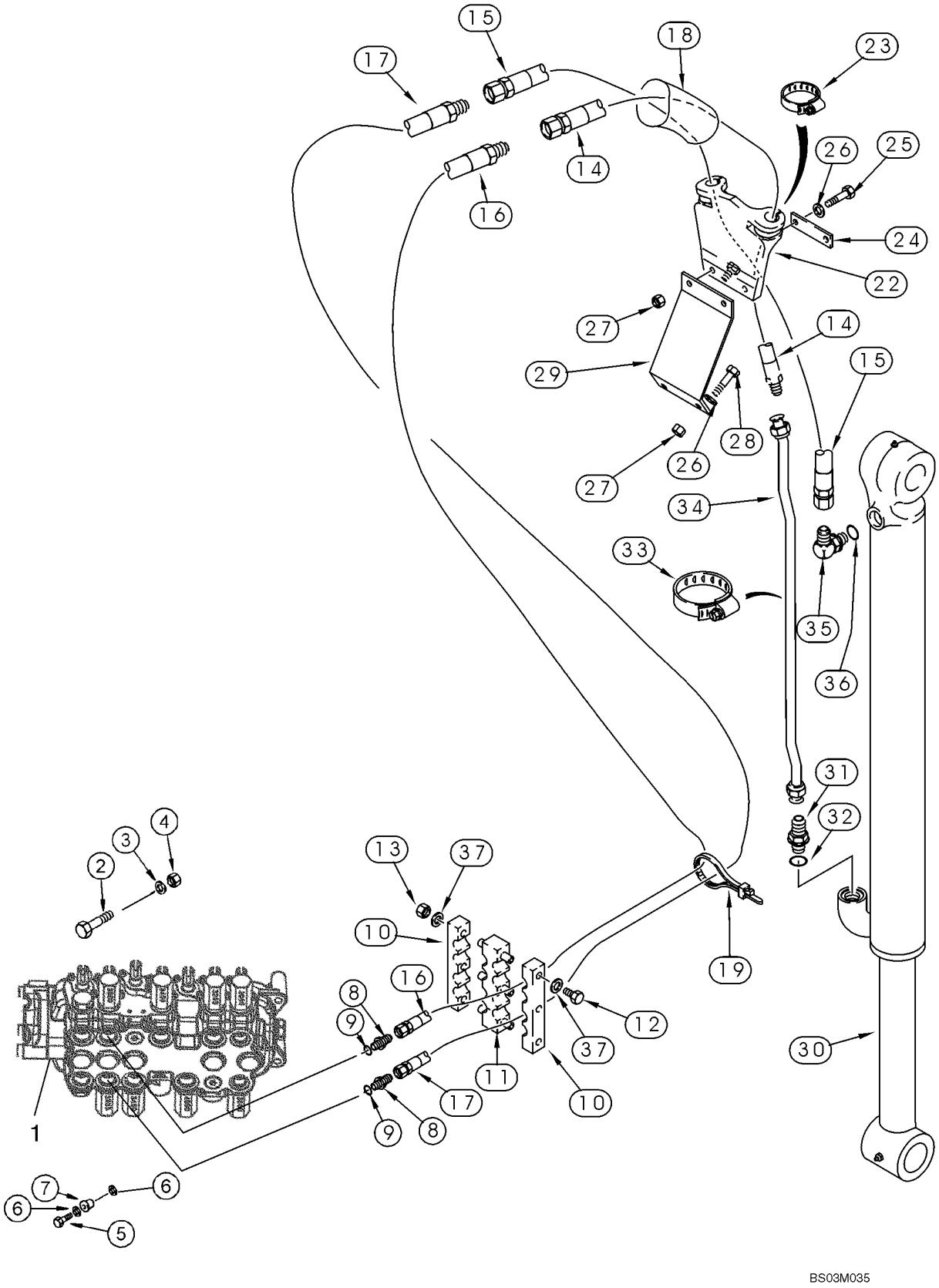

HTTP://WWW.MINNPARBACKHOEPARTS.COM



HYDRAULICS - CYLINDER, BACKHOE BUCKET (MODELS WITH EXTENDABLE DIPPER)

| REF | FN | PART NUMBER | YR/SN | QTY | DESCRIPTION |
|---|---|---|---|---|---|
| 35 | | 218-5107 | | 1 | ELBOW 7/8 fl x adj Or, Incl. Ref 36 |
| 36 | | 237-6010 | | 1 | O-RING 3/4 ID x 3/32 |
| 37 | | 895-11010 | | 6 | WASHER 11 x 21 x 2 mm |

HTTP://WWW.MINNPARBACKHOEPARTS.COM



HYDRAULICS - CYLINDER, BACKHOE EXTENDABLE DIPPER

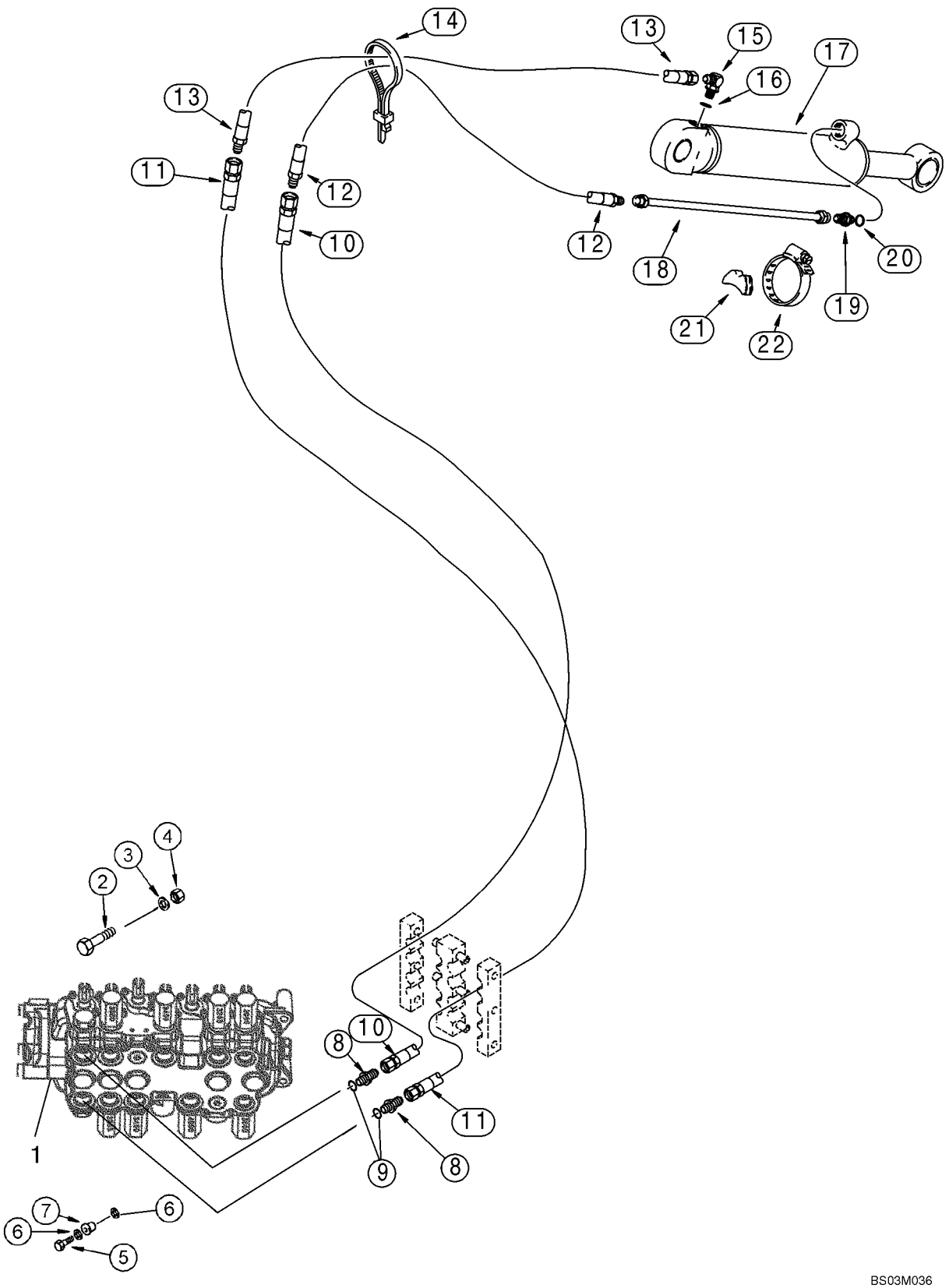

HTTP://WWW.MINNPARBACKHOEPARTS.COM



HYDRAULICS - CYLINDER, BACKHOE EXTENDABLE DIPPER

| REF | FN | PART NUMBER | YR/SN | QTY | DESCRIPTION |
|---|---|---|---|---|---|
| 1 | | REF | | 1 | INSTRUCTION Valve Assy, Control; Backhoe Control Valve; For Correct Assembly and Components, See Figures 08-34, 08-35, 08-37, 08-39 |
| 2 | | 814-12045 | | 2 | SCREW M12 x 45 |
| 3 | | 896-11012 | | 2 | WASHER 13,5 x 24 x 3 mm |
| 4 | | 829-1412 | | 2 | NUT M12; 10 |
| 5 | | 614-10035 | | 1 | SCREW M10 x 35 |
| 6 | | 496-41041 | | 2 | WASHER 13/32 x 1-1/8 x 9/64 |
| 7 | | D52276 | | 1 | ISOLATOR |
| 8 | | 218-5063 | | 2 | CONNECTOR, HYD. 7/8 fl x 1-1/16 Or, Incl. Ref 9 |
| 9 | | 237-6012 | | 1 | O-RING 59/64 ID x 7/64 |
| 10 | | 393354A1 | | 1 | HOSE ASSY. 3073 mm (121 in) |
| 11 | | 393357A1 | | 1 | HOSE ASSY. 3073 mm (121 in) |
| 12 | | 184617A1 | | 1 | HOSE 850 mm (33-1/2 in) |
| 13 | | 184616A1 | | 1 | HOSE 700 mm (27-9/16 in) |
| 14 | | L18337 | | 4 | STRAP 15 in |
| 15 | | 218-5107 | | 1 | ELBOW 7/8 fl x adj Or, Incl. Ref 16 |
| 16 | | 237-6010 | | 1 | O-RING 3/4 ID x 3/32 |
| 17 | | 1340969C2 | | 1 | CYLINDER ASSY. 76 ID x 1068 mm strk; Extendable Dipper Cylinder, See Figure 08-66 |
| 18 | | D140706 | | 1 | PIPE Tube |
| 19 | | 218-5062 | | 1 | CONNECTOR, HYD. 7/8 fl x Or, Incl. Ref 20 |
| 20 | | 237-6010 | | 1 | O-RING 3/4 ID x 3/32 |
| 21 | | D38648 | | 1 | BLOCK |
| 22 | | 214-1464 | | 1 | CLAMP 3-9/16 - 4-1/2 in dia |

HTTP://WWW.MINNPARBACKHOEPARTS.COM



HYDRAULICS - VALVE, PILOT CONTROL AND JOYSTICKS (6 SPOOL, W/O EXT DIPPER, W/O AUX HYDS)

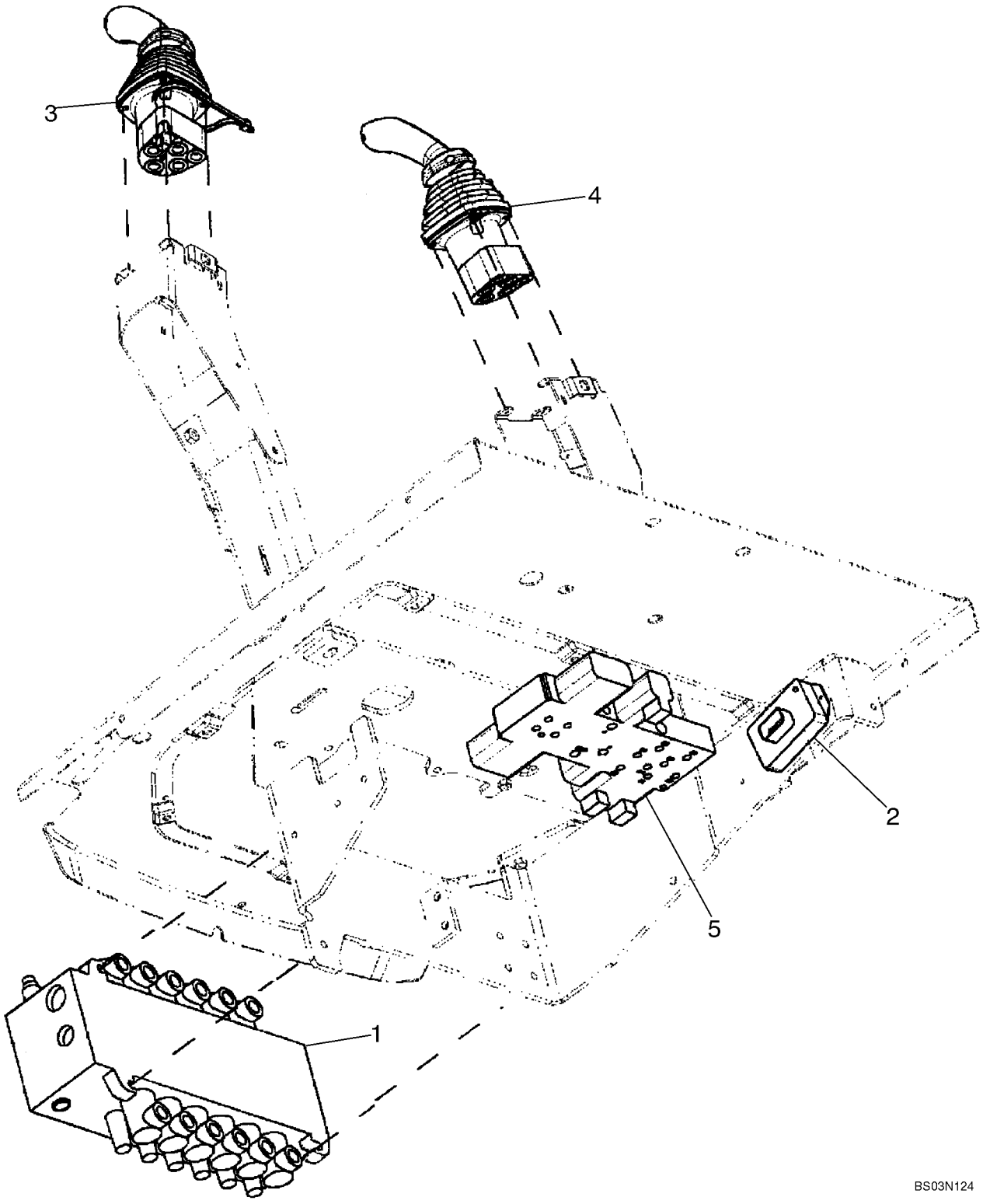

HTTP://WWW.MINNPARBACKHOEPARTS.COM



HYDRAULICS - VALVE, PILOT CONTROL AND JOYSTICKS (6 SPOOL, W/O EXT DIPPER, W/O AUX HYDS)

| REF | FN | PART NUMBER | YR/SN | QTY | DESCRIPTION |
|---|---|---|---|---|---|
| | | REF | | | INSTRUCTION SIX SPOOL VALVE WITHOUT EXTENDABLE DIPPER; WITH AUTO-UP; WITHOUT AUXILIARY HYDRAULICS, WITHOUT UNI-DIRECTIONAL OR BI-DIRECTIONAL |
| 1 | | 86987459 | | 1 | VALVE, CONTROL Backhoe, 6 Spool; See Figure 08-36; For Mounting See Figure 08-22 |
| 2 | | 87419454 | | 1 | CONTROL UNIT Box, Pilot Control Power Supply Module |
| | | 840-1416 | | 2 | SCREW M4 x 16 |
| 3 | | 87437733 | | 1 | VALVE, CONTROL Joystick; Left-Hand; With Horn Button; See Figure 08-50 |
| 4 | | 87435510 | | 1 | VALVE, CONTROL Joystick; Right-Hand; See Figure 08-53 |
| 5 | | 85827472 | | 1 | VALVE, HYDRAULIC Pressure Reducing, 2 Spool; See Figure 08-47 |

HTTP://WWW.MINNPARBACKHOEPARTS.COM



HYDRAULICS - VALVE, PILOT CONTROL AND JOYSTICKS (6 SPOOL, W/O EXT DIPPER, W/ AUX HYDS)

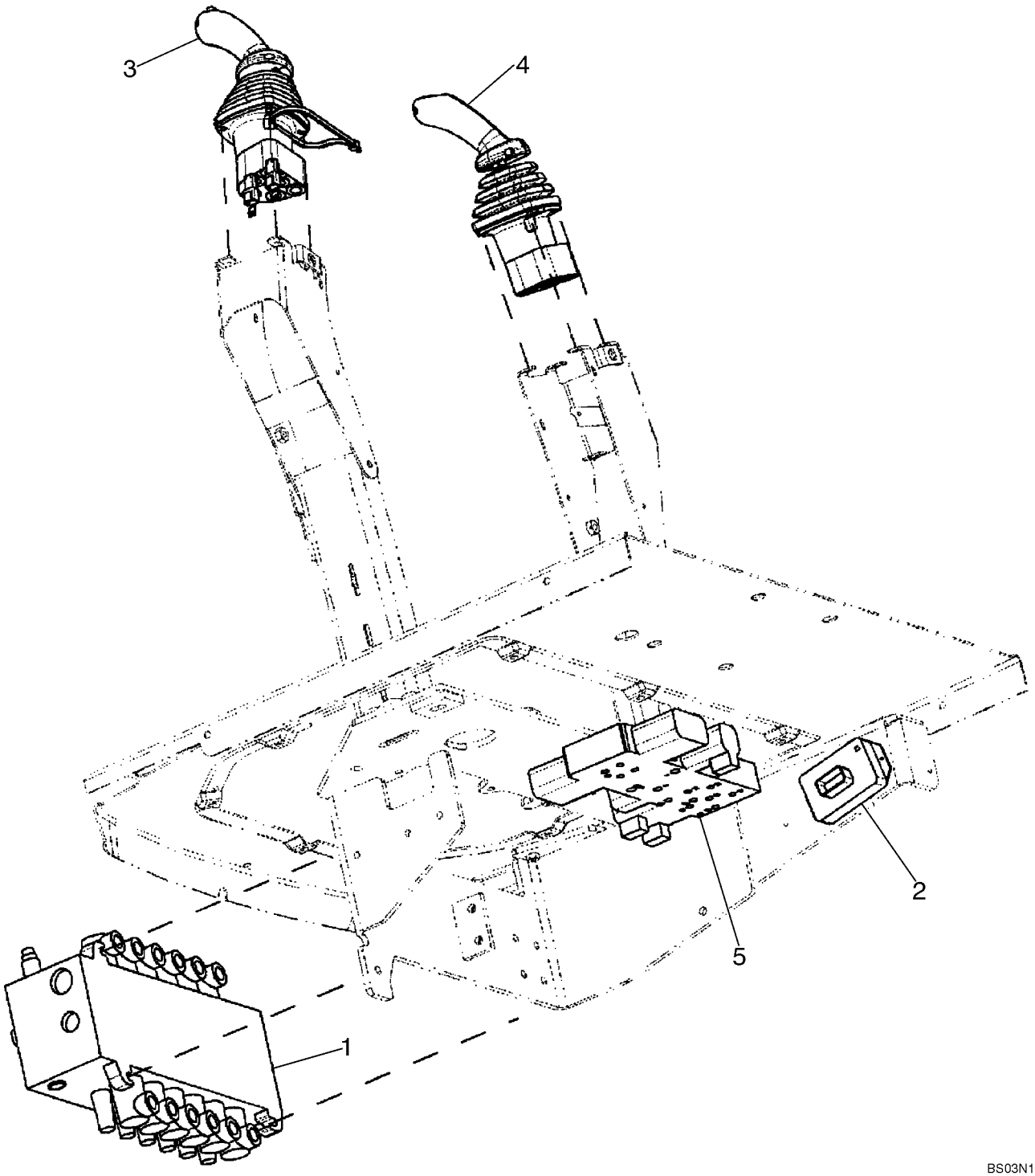

HTTP://WWW.MINNPARBACKHOEPARTS.COM



HYDRAULICS - VALVE, PILOT CONTROL AND JOYSTICKS (6 SPOOL, W/O EXT DIPPER, W/ AUX HYDS)

| REF | FN | PART NUMBER | YR/SN | QTY | DESCRIPTION |
|---|---|---|---|---|---|
| | | REF | | | INSTRUCTION SIX SPOOL VALVE WITHOUT EXTENDABLE DIPPER; WITH AUTO-UP; WITH AUXILIARY HYDRAULICS, WITH UNI-DIRECTIONAL |
| 1 | | 86987459 | | 1 | VALVE, CONTROL Backhoe, 6 Spool; See Figure 08-36; For Mounting See Figure 08-22 |
| 2 | | 87419454 | | 1 | CONTROL UNIT Box, Pilot Control Power Supply Module |
| | | 840-1416 | | 2 | SCREW M4 x 16 |
| 3 | | 87437735 | | 1 | VALVE, CONTROL Joystick; Left-Hand; With Horn and Uni-Directional Buttons; See Figure 08-51 |
| 4 | | 87435510 | | 1 | VALVE, CONTROL Joystick; Right-Hand; See Figure 08-53 |
| 5 | | 85827472 | | 1 | VALVE, HYDRAULIC Pressure Reducing, 2 Spool; See Figure 08-47 |

HTTP://WWW.MINNPARBACKHOEPARTS.COM

| 08-17 | | p1 | 01/04 |
|---|---|---|---|

HYDRAULICS - VALVE, PILOT CONTROL AND JOYSTICKS (7 SPOOL, W/ EXT DIPPER, W/O AUX HYDS)

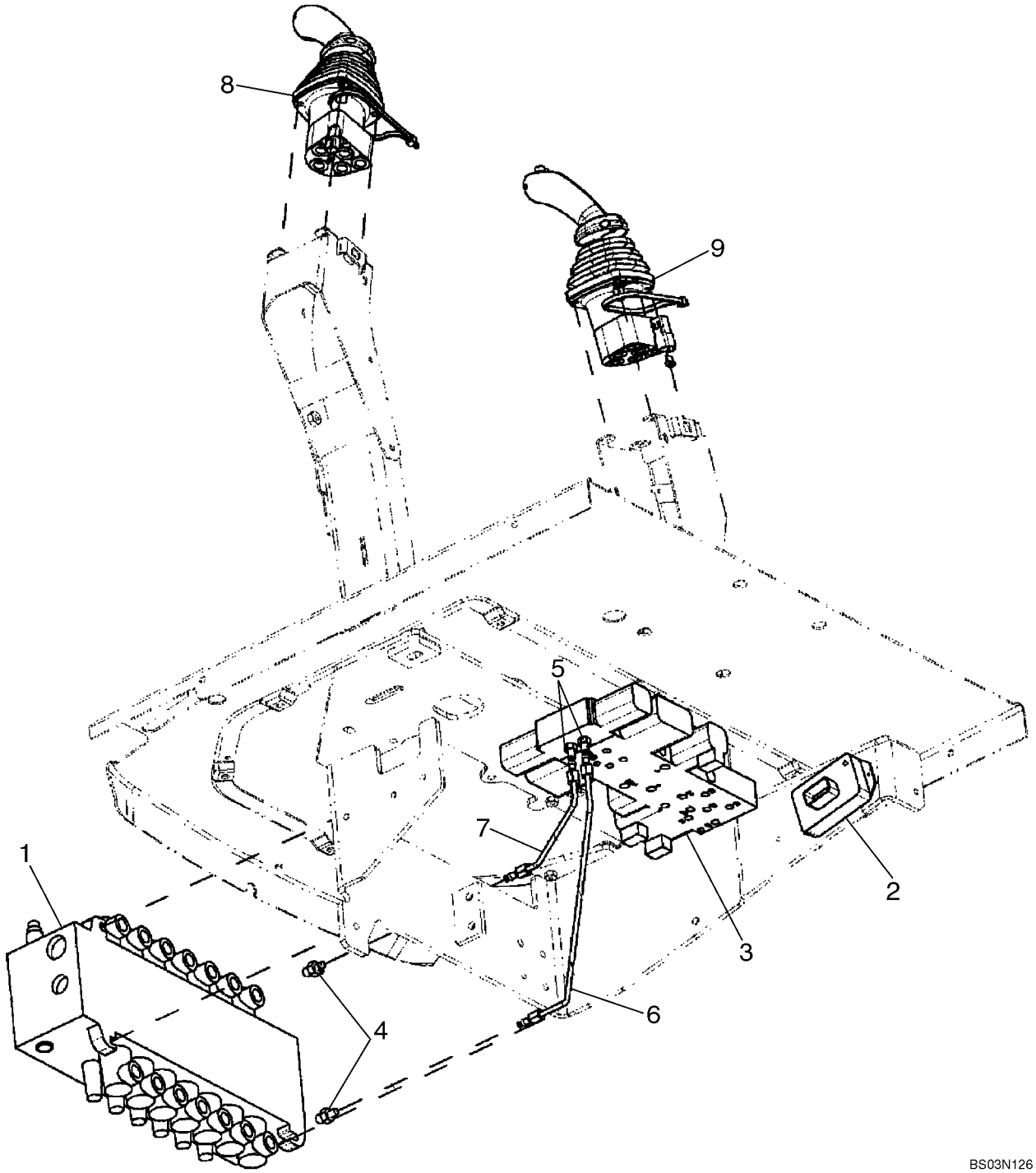

HTTP://WWW.MINNPARBACKHOEPARTS.COM



HYDRAULICS - VALVE, PILOT CONTROL AND JOYSTICKS (7 SPOOL, W/ EXT DIPPER, W/O AUX HYDS)

| REF | FN | PART NUMBER | YR/SN | QTY | DESCRIPTION |
|---|---|---|---|---|---|
| | | REF | | | INSTRUCTION SEVEN SPOOL VALVE WITH EXTENDABLE DIPPER; WITHOUT AUXILIARY HYDRAULICS; WITH AUTO-UP; WITHOUT UNI-DIRECTIONAL OR BI-DIRECTIONAL |
| 1 | | 86987460 | | 1 | VALVE, CONTROL Backhoe, 7 Spool; See Figure 08-37; For Mounting See Figure 08-22 |
| 2 | | 87419454 | | 1 | CONTROL UNIT Box, Pilot Control Power Supply Module |
| | | 840-1416 | | 2 | SCREW M4 x 16 |
| 3 | | 85827471 | | 1 | VALVE, HYDRAULIC Pressure Reducing, 3 Spool; See Figure 08-48 |
| 4 | | 218-5089 | | 2 | CONNECTOR 7/16 fl x 9/16 Or; Includes 237-6006 O-Ring |
| | | 237-6006 | | 1 | O-RING 15/32 ID x 5/64 |
| 5 | | 218-5053 | | 2 | CONNECTOR, HYD. 7/16 fl x Or; Includes 237-6004 O-Ring |
| | | 237-6004 | | 1 | O-RING 23/64 ID x 5/64 |
| 6 | | 87437633 | | 1 | TUBE ASSY. To Lower Extendable Dipper Port |
| 7 | | 87437635 | | 1 | TUBE ASSY. To Upper Extendable Dipper Port |
| 8 | | 87437733 | | 1 | VALVE, CONTROL Joystick; Left-Hand; With Horn Button; See Figure 08-50 |
| 9 | | 87437736 | | 1 | VALVE, CONTROL Joystick; Right-Hand; See Figure 08-54 |

HTTP://WWW.MINNPARBACKHOEPARTS.COM

| 08-18 | | p1 | 01/04 |
|---|---|---|---|

HYDRAULICS - VALVE, PILOT CONTROL AND JOYSTICKS (7 SPOOL, W/ EXT DIPPER, W/ AUX HYDS)

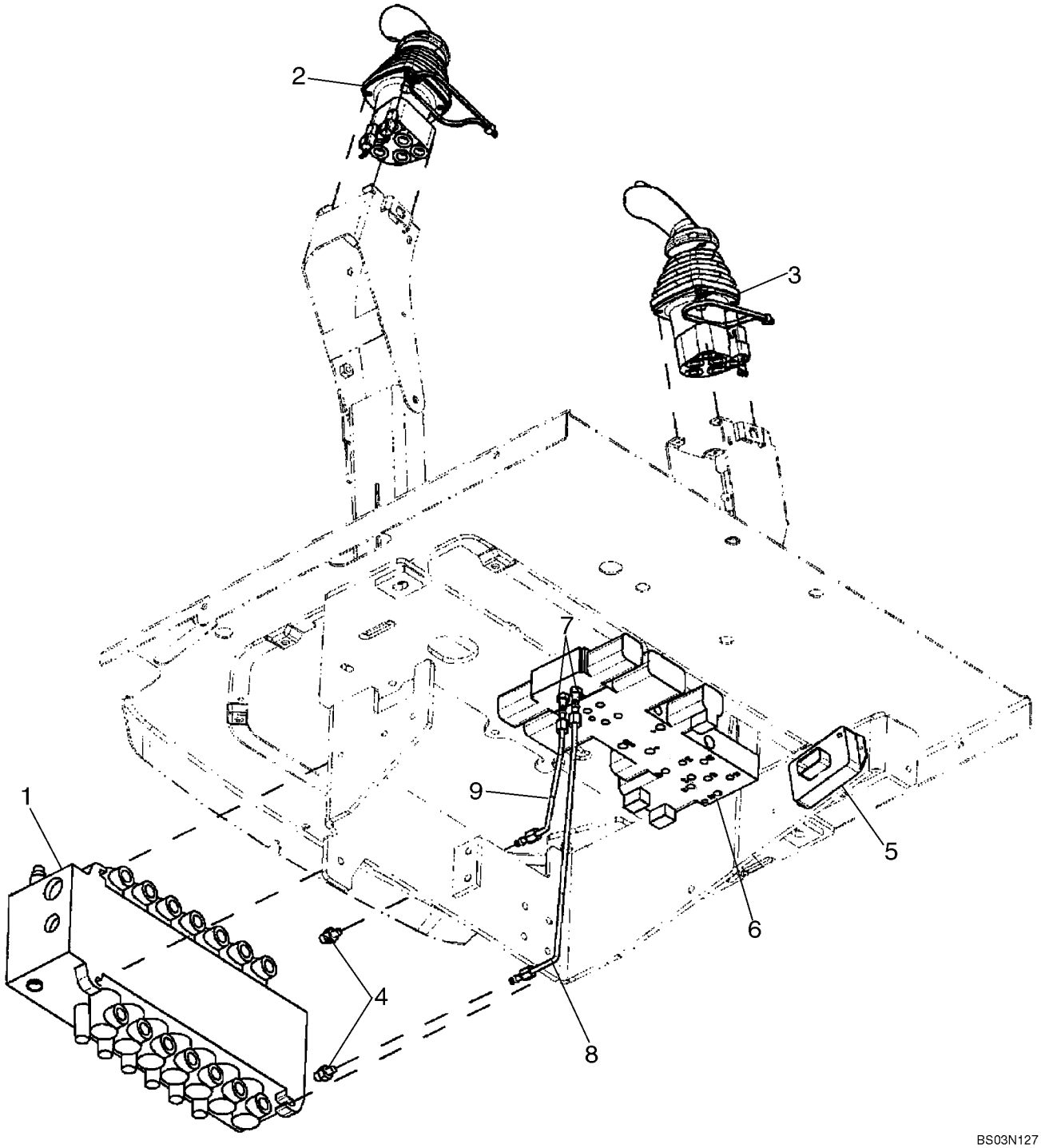

HTTP://WWW.MINNPARBACKHOEPARTS.COM



HYDRAULICS - VALVE, PILOT CONTROL AND JOYSTICKS (7 SPOOL, W/ EXT DIPPER, W/ AUX HYDS)

| REF | FN | PART NUMBER | YR/SN | QTY | DESCRIPTION |
|---|---|---|---|---|---|
| | | REF | | | INSTRUCTION SEVEN SPOOL VALVE WITH EXTENDABLE DIPPER; WITH AUXILIARY HYDRAULICS; WITH AUTO-UP; WITH UNI-DIRECTIONAL |
| 1 | | 86987460 | | 1 | VALVE, CONTROL Backhoe, 7 Spool; See Figure 08-37; For Mounting See Figure 08-22 |
| 2 | | 87437735 | | 1 | VALVE, CONTROL Joystick; Left-Hand; With Horn and Uni-Directional Buttons; See Figure 08-51 |
| 3 | | 87437736 | | 1 | VALVE, CONTROL Joystick; Right-Hand; See Figure 08-54 |
| 4 | | 218-5089 | | 2 | CONNECTOR 7/16 fl x 9/16 Or; Includes 237-6006 O-Ring |
| | | 237-6006 | | 1 | O-RING 15/32 ID x 5/64 |
| 5 | | 87419454 | | 1 | CONTROL UNIT Box, Pilot Control Power Supply Module |
| | | 840-1416 | | 2 | SCREW M4 x 16 |
| 6 | | 85827471 | | 1 | VALVE, HYDRAULIC Pressure Reducing, 3 Spool; See Figure 08-48 |
| 7 | | 218-5053 | | 2 | CONNECTOR, HYD. 7/16 fl x Or; Includes 237-6004 O-Ring |
| | | 237-6004 | | 1 | O-RING 23/64 ID x 5/64 |
| 8 | | 87437633 | | 1 | TUBE ASSY. To Lower Extendable Dipper Port |
| 9 | | 87437635 | | 1 | TUBE ASSY. To Upper Extendable Dipper Port |

HTTP://WWW.MINNPARBACKHOEPARTS.COM



HYDRAULICS - VALVE, PILOT CONTROL AND JOYSTICKS (7 SPOOL, W/O EXT DIPPER, W/ AUX HYDS)

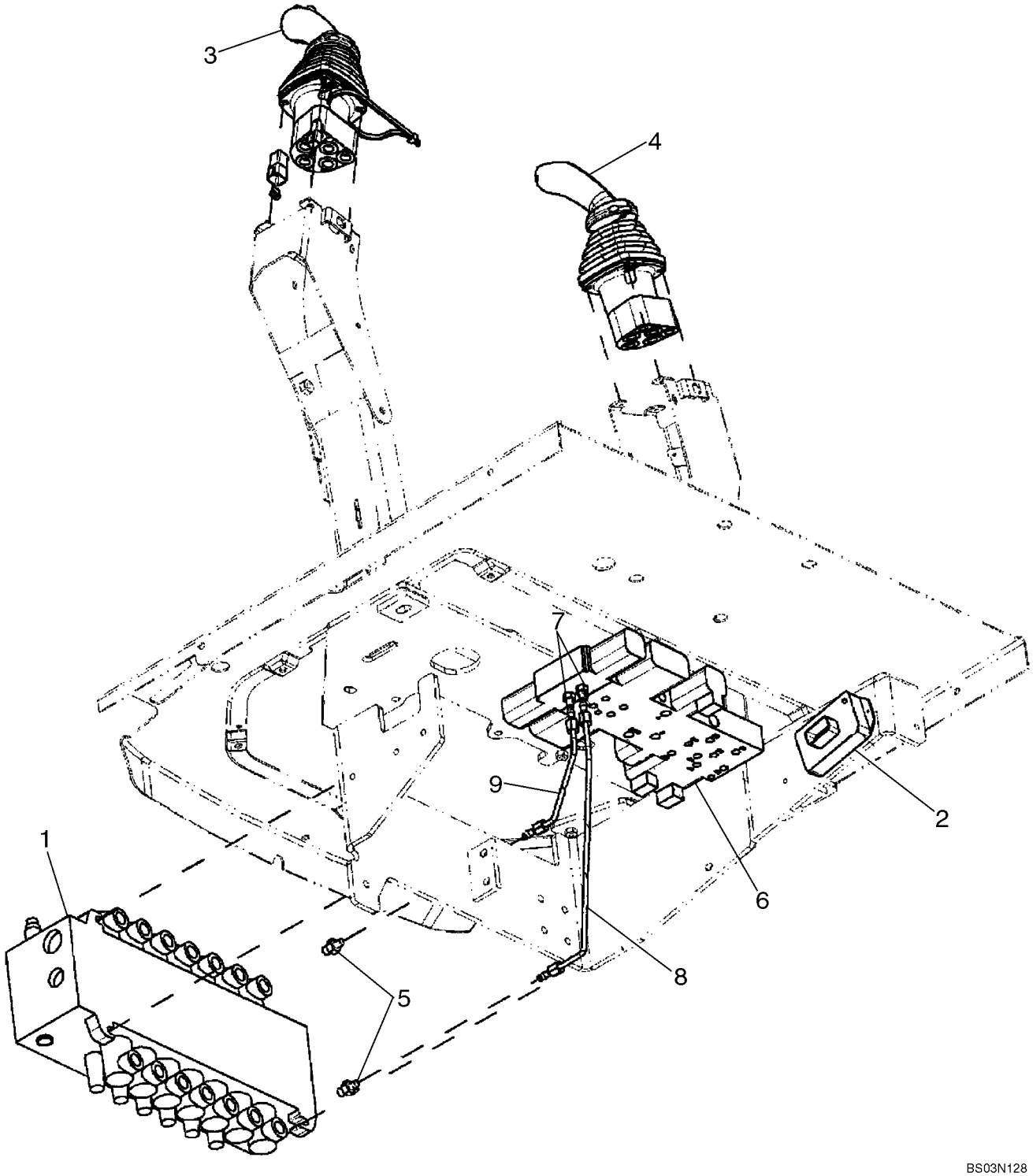

HTTP://WWW.MINNPARBACKHOEPARTS.COM



HYDRAULICS - VALVE, PILOT CONTROL AND JOYSTICKS (7 SPOOL, W/O EXT DIPPER, W/ AUX HYDS)

| REF | FN | PART NUMBER | YR/SN | QTY | DESCRIPTION |
|---|---|---|---|---|---|
| | | REF | | | INSTRUCTION SEVEN SPOOL VALVE WITHOUT EXTENDABLE DIPPER; WITH AUXILIARY HYDRAULICS; WITH AUTO-UP; WITH BI-DIRECTIONAL |
| 1 | | 87407965 | | 1 | VALVE, CONTROL Backhoe, 7 Spool; See Figure 08-38; For Mounting See Figure 08-22 |
| 2 | | 87419455 | | 1 | CONTROL UNIT Box, Pilot Control Power Supply Module |
| | | 840-1416 | | 2 | SCREW M4 x 16 |
| 3 | | 87437734 | | 1 | VALVE, CONTROL Joystick; Left-Hand; With Horn and Bi-Directional Buttons; See Figure 08-52 |
| 4 | | 87435510 | | 1 | VALVE, CONTROL Joystick; Right-Hand; See Figure 08-53 |
| 5 | | 218-5089 | | 2 | CONNECTOR 7/16 fl x 9/16 Or; Includes 237-6006 O-Ring |
| | | 237-6006 | | 1 | O-RING 15/32 ID x 5/64 |
| 6 | | 85827471 | | 1 | VALVE, HYDRAULIC Pressure Reducing, 3 Spool; See Figure 08-48 |
| 7 | | 218-5053 | | 2 | CONNECTOR, HYD. 7/16 fl x Or; Includes 237-6004 O-Ring |
| | | 237-6004 | | 1 | O-RING 23/64 ID x 5/64 |
| 8 | | 87438012 | | 1 | TUBE ASSY. To Lower Auxiliary Port |
| 9 | | 87438015 | | 1 | TUBE ASSY. To Upper Auxiliary Port |

HTTP://WWW.MINNPARBACKHOEPARTS.COM

| 08-20 | | p1 | 01/04 |
|---|---|---|---|

HYDRAULICS - VALVE, PILOT CONTROL AND JOYSTICKS (8 SPOOL, W/ EXT DIPPER, W/ AUX HYDS)

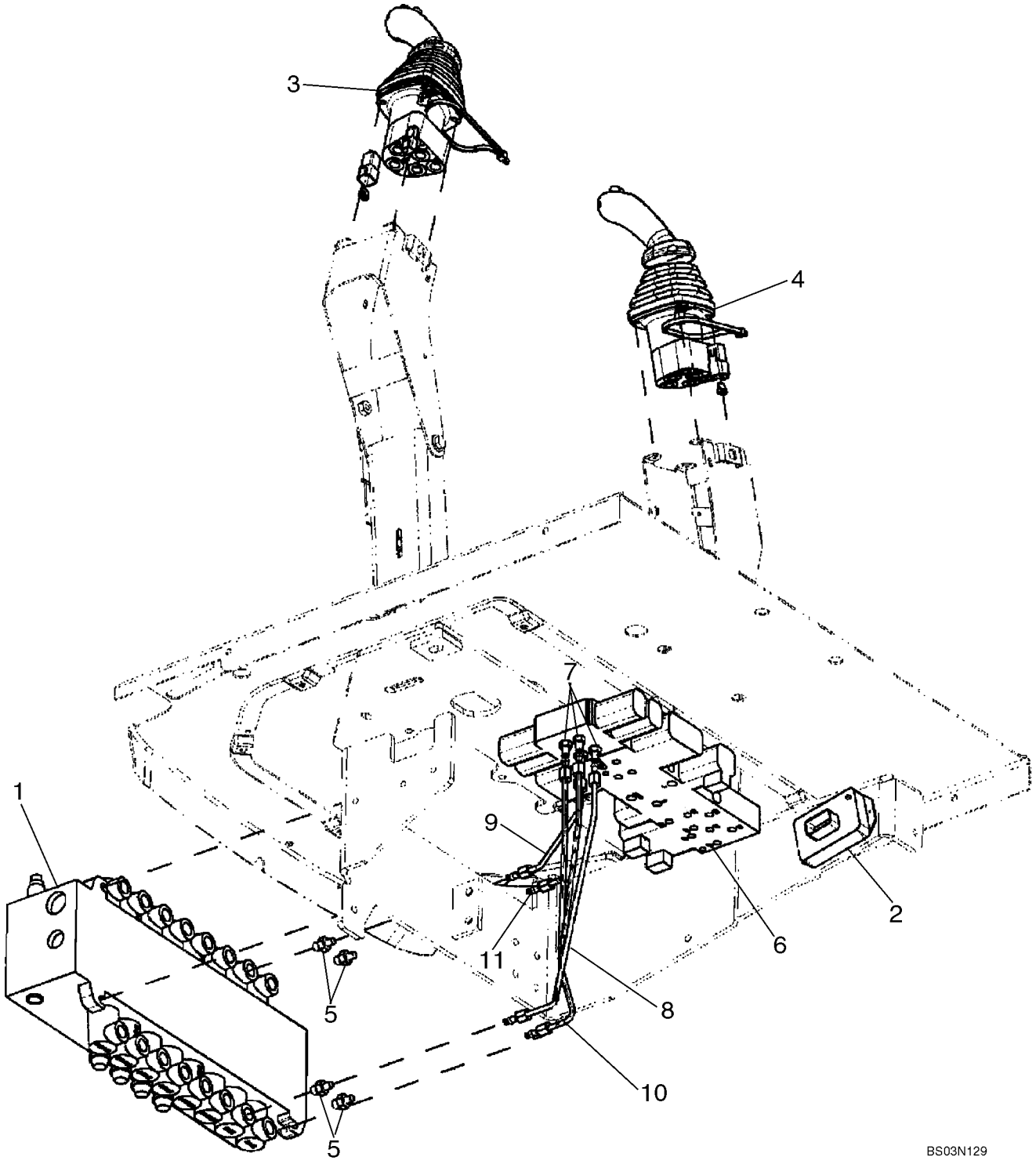

HTTP://WWW.MINNPARBACKHOEPARTS.COM



HYDRAULICS - VALVE, PILOT CONTROL AND JOYSTICKS (8 SPOOL, W/ EXT DIPPER, W/ AUX HYDS)

| REF | FN | PART NUMBER | YR/SN | QTY | DESCRIPTION |
|---|---|---|---|---|---|
| | | REF | | | INSTRUCTION EIGHT SPOOL VALVE WITH EXTENDABLE DIPPER; WITH AUXILIARY HYDRAULICS; WITH AUTO-UP; WITH BI-DIRECTIONAL |
| 1 | | 86987461 | | 1 | VALVE, HYDRAULIC Backhoe, 8 Spool; See Figure 08-39; For Mounting See Figure 08-22 |
| 2 | | 87419455 | | 1 | CONTROL UNIT Box, Pilot Control Power Supply Module |
| | | 840-1416 | | 2 | SCREW M4 x 16 |
| 3 | | 87437734 | | 1 | VALVE, CONTROL Joystick; Left-Hand; With Horn and Bi-Directional Buttons; See Figure 08-52 |
| 4 | | 87437736 | | 1 | VALVE, CONTROL Joystick; Right-Hand; See Figure 08-54 |
| 5 | | 218-5089 | | 4 | CONNECTOR 7/16 fl x 9/16 Or; Includes 237-6006 O-Ring |
| | | 237-6006 | | 1 | O-RING 15/32 ID x 5/64 |
| 6 | | 87434621 | | 1 | VALVE, CONTROL Pressure Reducing, 4 Spool; See Figure 08-49 |
| 7 | | 218-5053 | | 4 | CONNECTOR, HYD. 7/16 fl x Or; Includes 237-6004 O-Ring |
| | | 237-6004 | | 1 | O-RING 23/64 ID x 5/64 |
| 8 | | 87437633 | | 1 | TUBE ASSY. To Lower Extendable Dipper Port |
| 9 | | 87437635 | | 1 | TUBE ASSY. To Upper Extendable Dipper Port |
| 10 | | {87440835} | | 1 | Tube, To Lower Auxiliary Port |
| 11 | | {87440837} | | 1 | Tube, To Upper Auxiliary Port |

HTTP://WWW.MINNPARBACKHOEPARTS.COM



HYDRAULICS - PILOT CONTROL JOYSTICKS

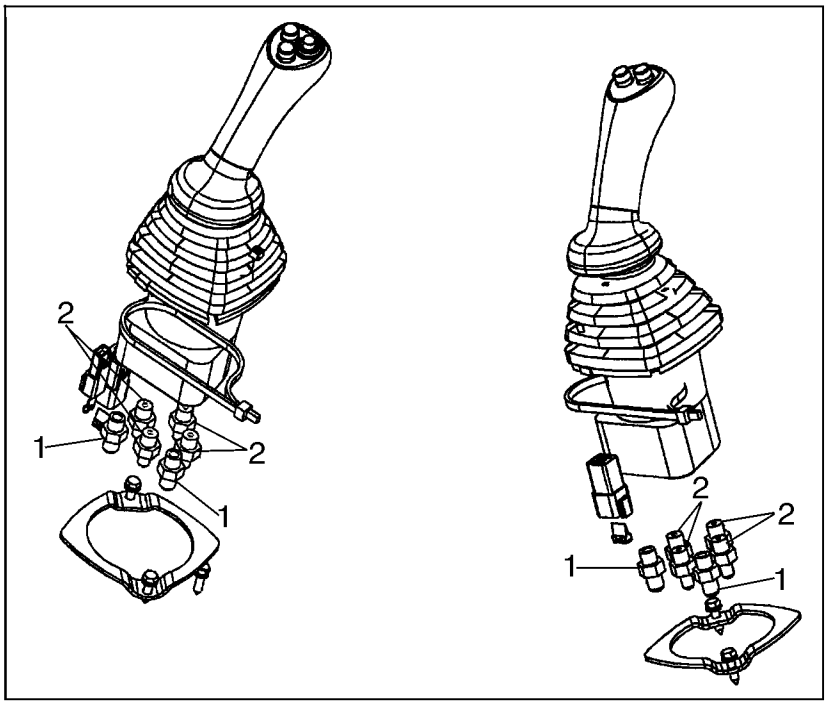


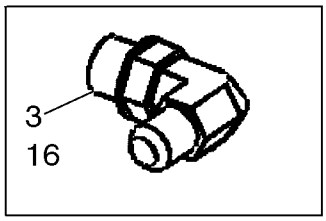


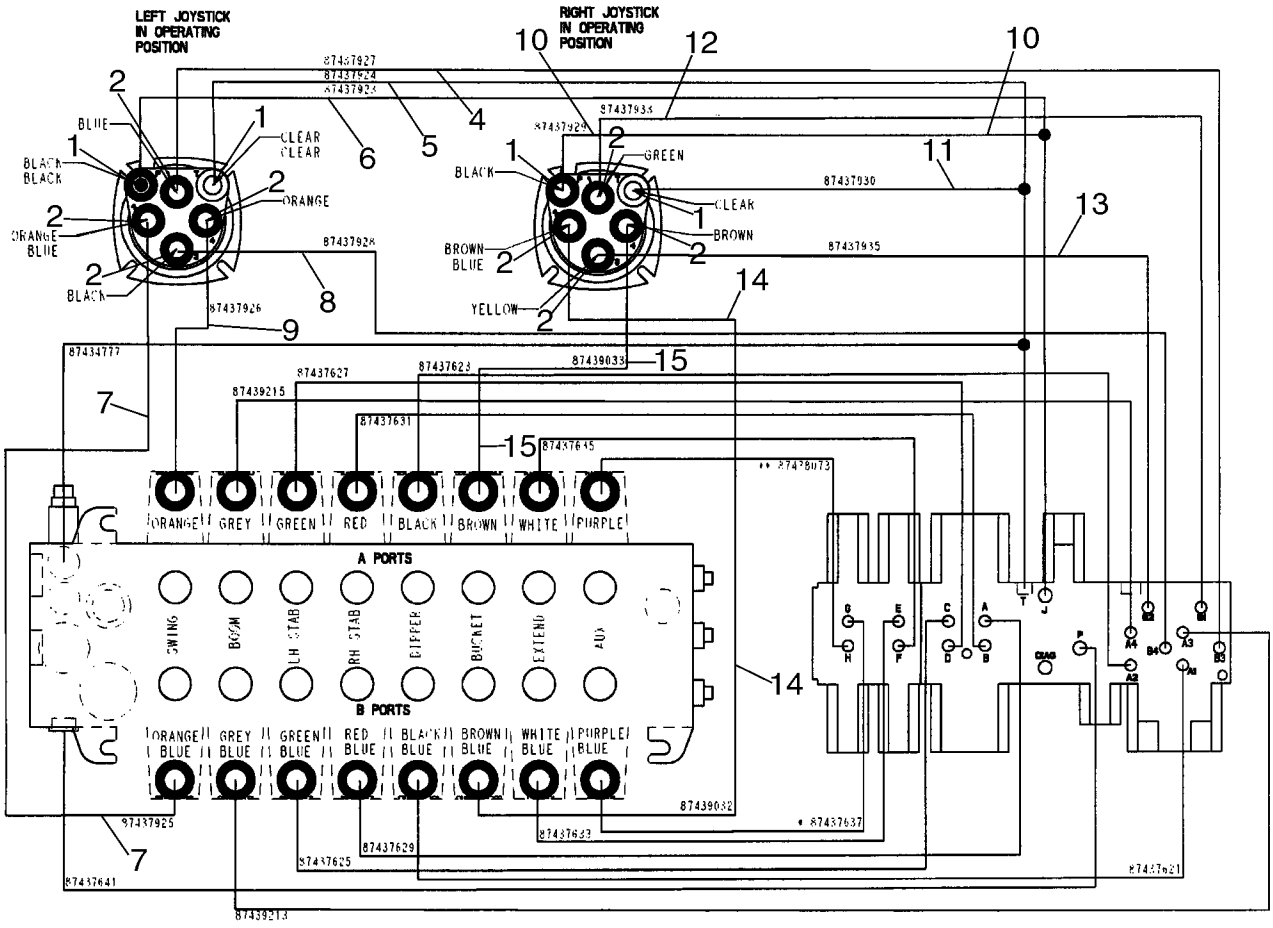


BS04A002

HTTP://WWW.MINNPARBACKHOEPARTS.COM



HYDRAULICS - PILOT CONTROL JOYSTICKS

| REF | FN | PART NUMBER | YR/SN | QTY | DESCRIPTION |
|---|---|---|---|---|---|
| 1 | | 218-5057 | | 4 | CONNECTOR, HYD. 9/16 fl x Or; Includes 237-6006 O-Ring |
| 2 | | 218-5089 | | 8 | CONNECTOR 7/16 fl x 9/16 Or; Includes 237-6006 O-Ring |
| 3 | | 218-5105 | | 1 | ELBOW 90 deg, 9/16 fl x Or; Includes 237-6006; Installs in Hydraulic Tank for Pilot Return |
| 4 | | 87437927 | | 1 | HOSE ASSY. 1295 mm (51 in); Left-Hand Joystick No. 1 to Selector Valve B3 |
| 5 | | 87437924 | | 1 | HOSE ASSY. 1000 mm (39-3/8 in); Left-Hand Joystick Tank to Pressure Reducing Valve T |
| 6 | | 87437923 | | 1 | HOSE ASSY. 1035 mm (40-3/4 in); Left-Hand Joystick Pressure to Pressure Reducing Valve J |
| 7 | | 87437925 | | 1 | HOSE ASSY. 1075 mm (42-3/8 in); Left-Hand Joystick No. 2 to Swing Port B |
| 8 | | 87437928 | | 1 | HOSE ASSY. 1270 mm (50 in); Left-Hand Joystick No. 3 to Selector Valve B4 |
| | | 399004A1 | | 1 | GUARD Hose, 38.9 ID x 270 mm long; Used With Ref 4 - 8 |
| 9 | | 87437926 | | 1 | HOSE ASSY. 825 mm (32-1/2 in); Left-Hand Joystick No. 4 to Swing Port A |
| 10 | | 87437929 | | 1 | HOSE ASSY. 1105 mm (43-1/2 in); Right-Hand Joystick Pressure to Pressure Reducing Valve J |
| 11 | | 87437930 | | 1 | HOSE ASSY. 1345 mm (53 in); Right-Hand Joystick Tank to Pressure Reducing Valve T |
| | | 191703A1 | | 1 | LOOM Hose Guard, 28 ID x 400 mm long; Used With Ref 10, 11 |
| 12 | | 87437933 | | 1 | HOSE ASSY. 1185 mm (46-11/16 in); Right-Hand Joystick No. 1 to Selector Valve B1 |
| 13 | | 87437935 | | 1 | HOSE ASSY. 1175 mm (46-5/16 in); Right-Hand Joystick No. 3 to Selector Valve B2 |
| 14 | | 87439032 | | 1 | HOSE ASSY. 1090 mm (42-15/16 in); Right-Hand Joystick No. 2 to Bucket Port B |
| 15 | | 87439033 | | 1 | HOSE ASSY. 915 mm (36-1/32 in); Right-Hand Joystick No. 4 to Bucket Port A |
| | | 191703A1 | | 1 | LOOM Hose Guard, 28 ID x 400 mm long; Used With Ref 12 - 15 |

HTTP://WWW.MINNPARBACKHOEPARTS.COM



HYDRAULICS - PILOT CONTROL JOYSTICKS

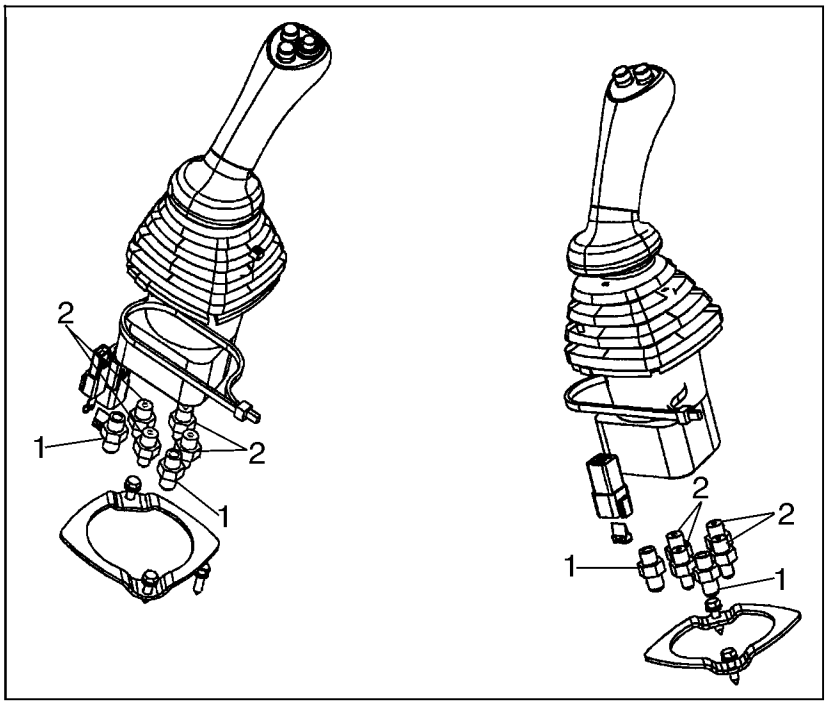


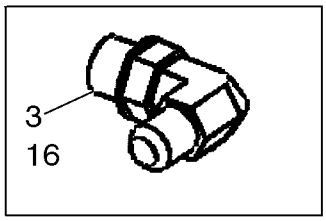


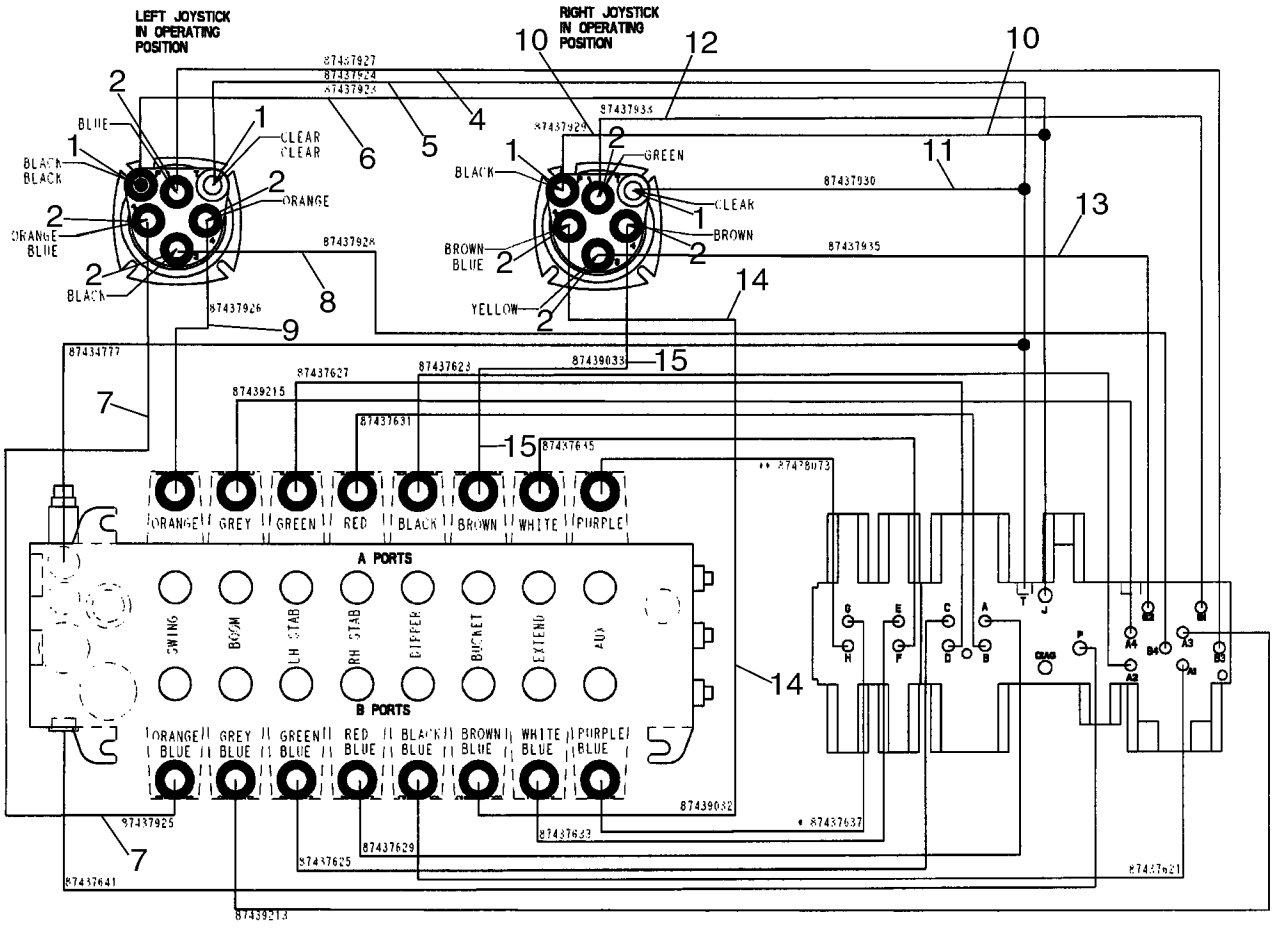


BS04A002

HTTP://WWW.MINNPARBACKHOEPARTS.COM



HYDRAULICS - PILOT CONTROL JOYSTICKS

| REF | FN | PART NUMBER | YR/SN | QTY | DESCRIPTION |
|---|---|---|---|---|---|
| 16 | | 87435073 | | 1 | HOSE ASSY. 1520 mm (59-7/8 in); Pressure Reducing Valve T to Tank |
| | | L18337 | | X | STRAP Tie |

HTTP://WWW.MINNPARBACKHOEPARTS.COM



HYDRAULICS - PILOT CONTROLS

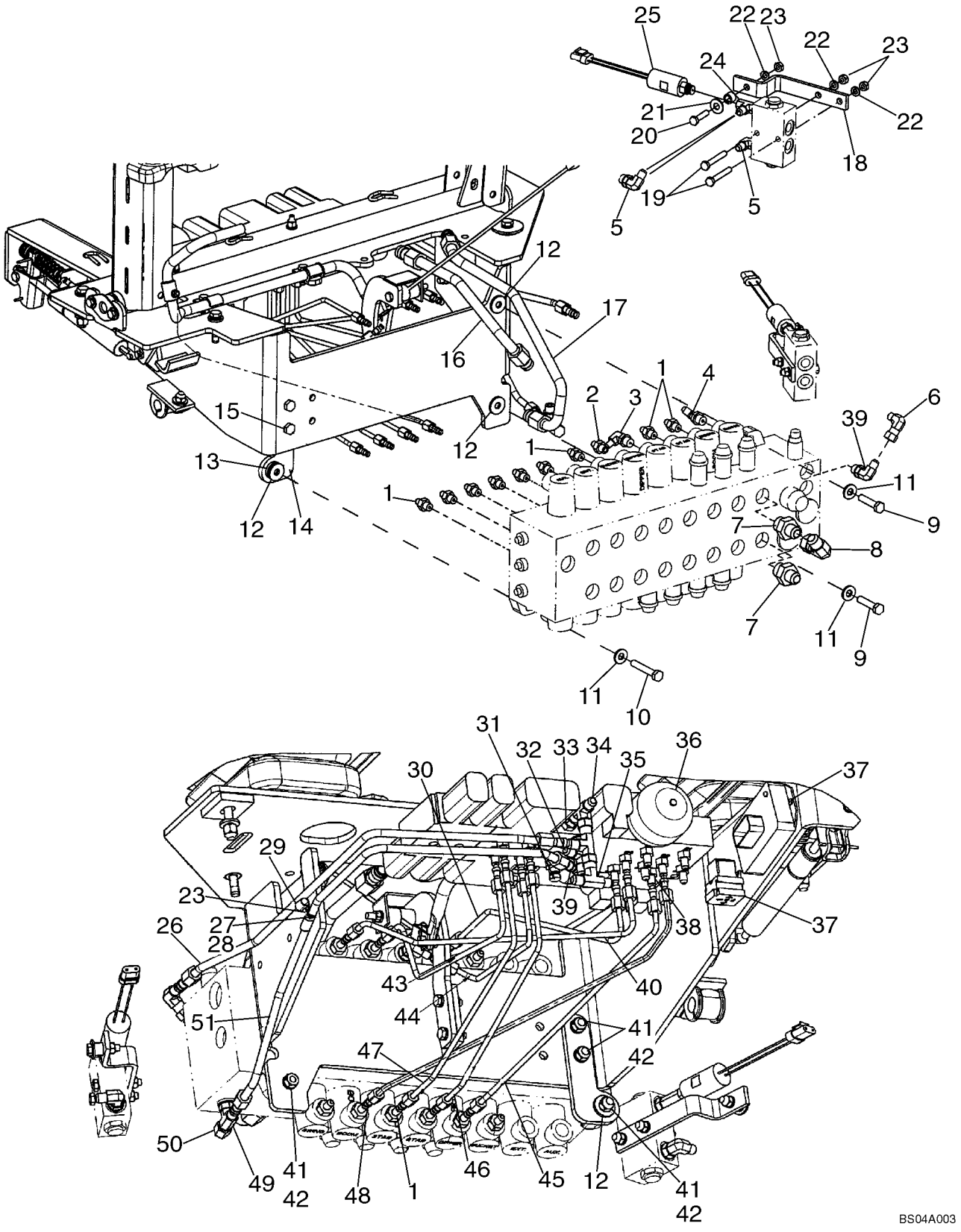

HTTP://WWW.MINNPARBACKHOEPARTS.COM



HYDRAULICS - PILOT CONTROLS

| REF | FN | PART NUMBER | YR/SN | QTY | DESCRIPTION |
|---|---|---|---|---|---|
| 1 | | 218-5089 | | 9 | CONNECTOR 7/16 fl x 9/16 Or; Includes 237-6006 O-Ring |
| 2 | | 87423401 | | 1 | FITTING Special Orifice |
| 3 | | 218-5283 | | 1 | ELBOW 90 deg, 7/16 fl x 9/16 Or; Includes 237-6006 O-Ring |
| 4 | | 218-5365 | | 1 | FITTING ELBOW, 45 deg, 7/16 fl x 9/16 Or; Includes 237-6006 O-Ring |
| 5 | | 218-5105 | | 2-4 | ELBOW 90 deg, 9/16 fl x Or; Includes 237-6006; 2 Used on Models With Auto Up; 4 Used on Models Without Auto Up |
| 6 | | 218-980 | | 1 | ELBOW 90 deg, 9/16 fl x sw fl |
| 7 | | 218-5063 | | 2 | CONNECTOR, HYD. 7/8 fl x 1-1/16 Or; Includes 237-6012 O-Ring |
| 8 | | 218-5232 | | 1 | ELBOW 90 deg, 7/8 fl x sw fl |
| 9 | | 814-10045 | | 2 | SCREW M10 x 45 |
| 10 | | 814-10060 | | 1 | SCREW M10 x 60 |
| 11 | | 896-15010 | | 3 | WASHER 11 x 24 x 3 mm |
| 12 | | 496-41041 | | 5 | WASHER 13/32 x 1-1/8 x 1/8 |
| 13 | | D52276 | | 1 | ISOLATOR Mount |
| 14 | | 87440712 | | 1 | BRACKET, SUPPORTING Valve Mounting Bracket |
| 15 | | 614-10030 | | 2 | SCREW M10 x 30 |
| 16 | | 87426488 | | 1 | TUBE ASSY. Swing Dampening Upper Port |
| 17 | | 87427948 | | 1 | TUBE ASSY. Swing Dampening Lower Port |
| 18 | | 87423034 | | 2 | BRACKET, SUPPORTING |
| 19 | | 814-8055 | | 4 | SCREW M8 x 55 |
| 20 | | 814-8035 | | 2 | SCREW M8 x 35 |
| 21 | | 895-15010 | | 2 | WASHER 11 x 24 x 2 mm |
| 22 | | 892-11008 | | 6 | WASHER Lock, M8 |
| 23 | | 829-1408 | | 7 | NUT M8 |
| 24 | | 87423033 | | 2 | TEE Includes 237-6004 O-Ring, 237-6006 O-Ring; Models With Auto Up, If Used |
| 25 | | 87439163 | | 2 | SWITCH, PRESSURE Includes 237-6004 O-Ring; Models With Auto Up, If Used |
| 26 | | 87434777 | | 1 | TUBE ASSY. Reducing Valve Tank to Backhoe Valve |
| 27 | | 895-11008 | | 1 | WASHER 9 x 16 x 1.6 mm |
| 28 | | 614-8025 | | 1 | SCREW M8 x 25 |

HTTP://WWW.MINNPARBACKHOEPARTS.COM



HYDRAULICS - PILOT CONTROLS

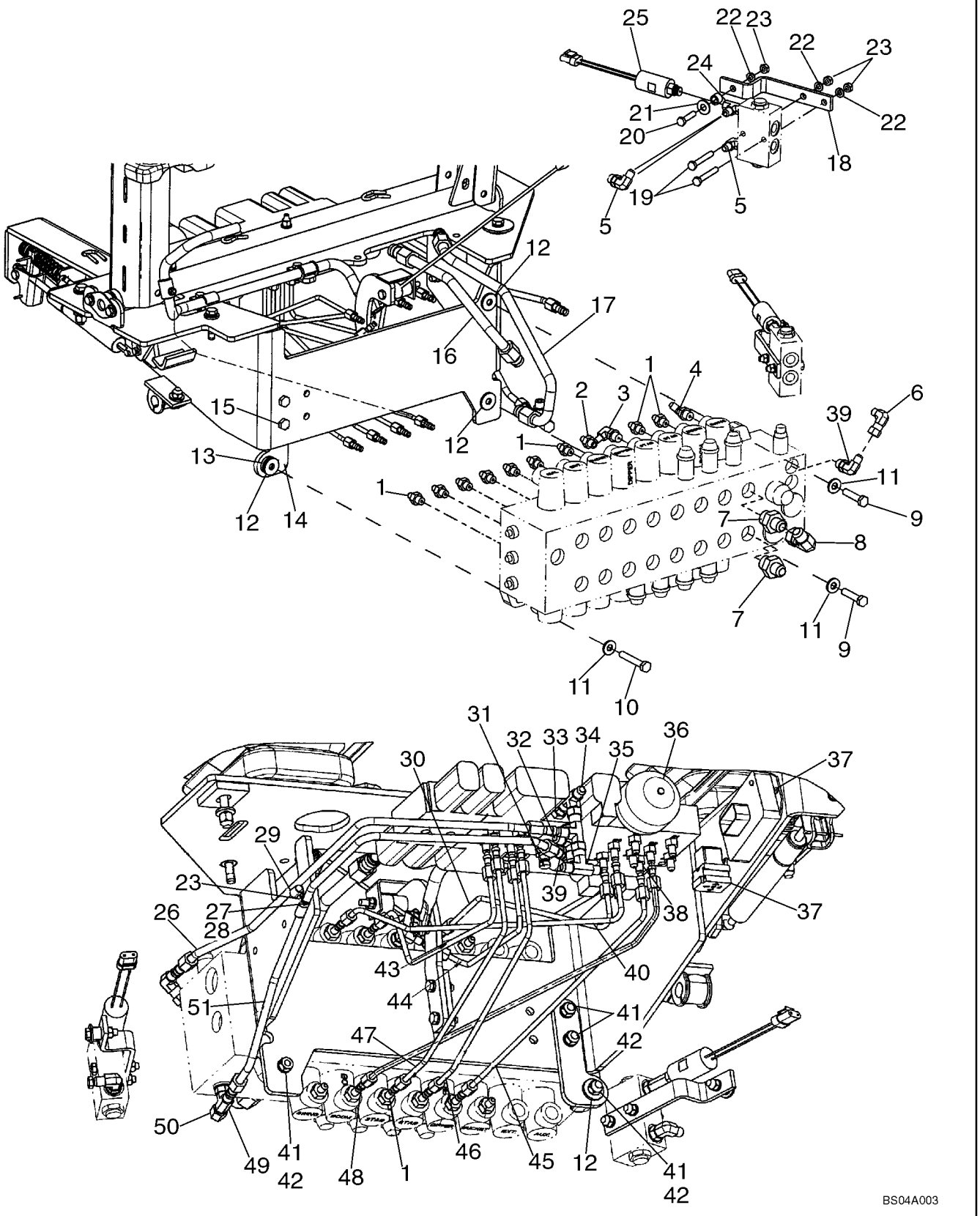

HTTP://WWW.MINNPARBACKHOEPARTS.COM



HYDRAULICS - PILOT CONTROLS

| REF | FN | PART NUMBER | YR/SN | QTY | DESCRIPTION |
|---|---|---|---|---|---|
| 29 | | 515-2295 | | 2 | CLAMP |
| 30 | | 87437623 | | 1 | TUBE ASSY. Selector A2 to Dipper Port A |
| 31 | | 86596853 | | 1 | COUPLING, QUICK, MALE Includes 9617873 O-Ring |
| 32 | | 218-5243 | | 1 | FITTING TEE; Includes 237-6006 O-Ring |
| 33 | | 218-5057 | | 1 | CONNECTOR, HYD. 9/16 fl x Or; Includes 237-6006 O-Ring |
| 34 | | 218-5222 | | 2 | FITTING TEE |
| 35 | | 218-836 | | 1 | TEE |
| 36 | | 87425225 | | 1 | ACCUMULATOR Includes 237-6008 O-Ring |
| 37 | | 840-1416 | | 3 | SCREW M4 x 16; See Figure 08-15 - 08-20 For Pilot Control Power Supply Control Unit; See Figure 04-20 For Relay |
| 38 | | 218-5053 | | 12 | CONNECTOR, HYD. 7/16 fl x Or; Includes 237-6004 O-Ring |
| 39 | | 218-5105 | | 2 | ELBOW 90 deg, 9/16 fl x Or; Includes 237-6006 O-Ring |
| 40 | | 87439215 | | 1 | TUBE ASSY. Selector A4 to Boom Port A |
| 41 | | 829-1410 | | 5 | NUT M10 |
| 42 | | 892-11010 | | 4 | WASHER, LOCK M10 |
| 43 | | 87437627 | | 1 | TUBE ASSY. Reducing Valve to Left-Hand Stabilizer Port A |
| 44 | | 87437631 | | 1 | TUBE ASSY. Reducing Valve to Right-Hand Stabilizer Port A |
| 45 | | 87437621 | | 1 | TUBE ASSY. Selector A1 to Dipper Port B |
| 46 | | 87437629 | | 1 | TUBE ASSY. Reducing Valve to Right-Hand Stabilizer Port B |
| 47 | | 87437625 | | 1 | TUBE ASSY. Reducing Valve to Left-Hand Stabilizer Port B |
| 48 | | 87439213 | | 1 | TUBE ASSY. Selector A3 to Boom Port B |
| 49 | | 218-5182 | | 1 | TEE Includes 237-6006 O-Ring |
| 50 | | 218-754 | | 1 | CAP Hex, 9/16 |
| 51 | | 87437641 | | 1 | TUBE ASSY. Reducing Valve Pressure to Backhoe Valve |

HTTP://WWW.MINNPARBACKHOEPARTS.COM



HYDRAULICS - BACKHOE AUXILIARY

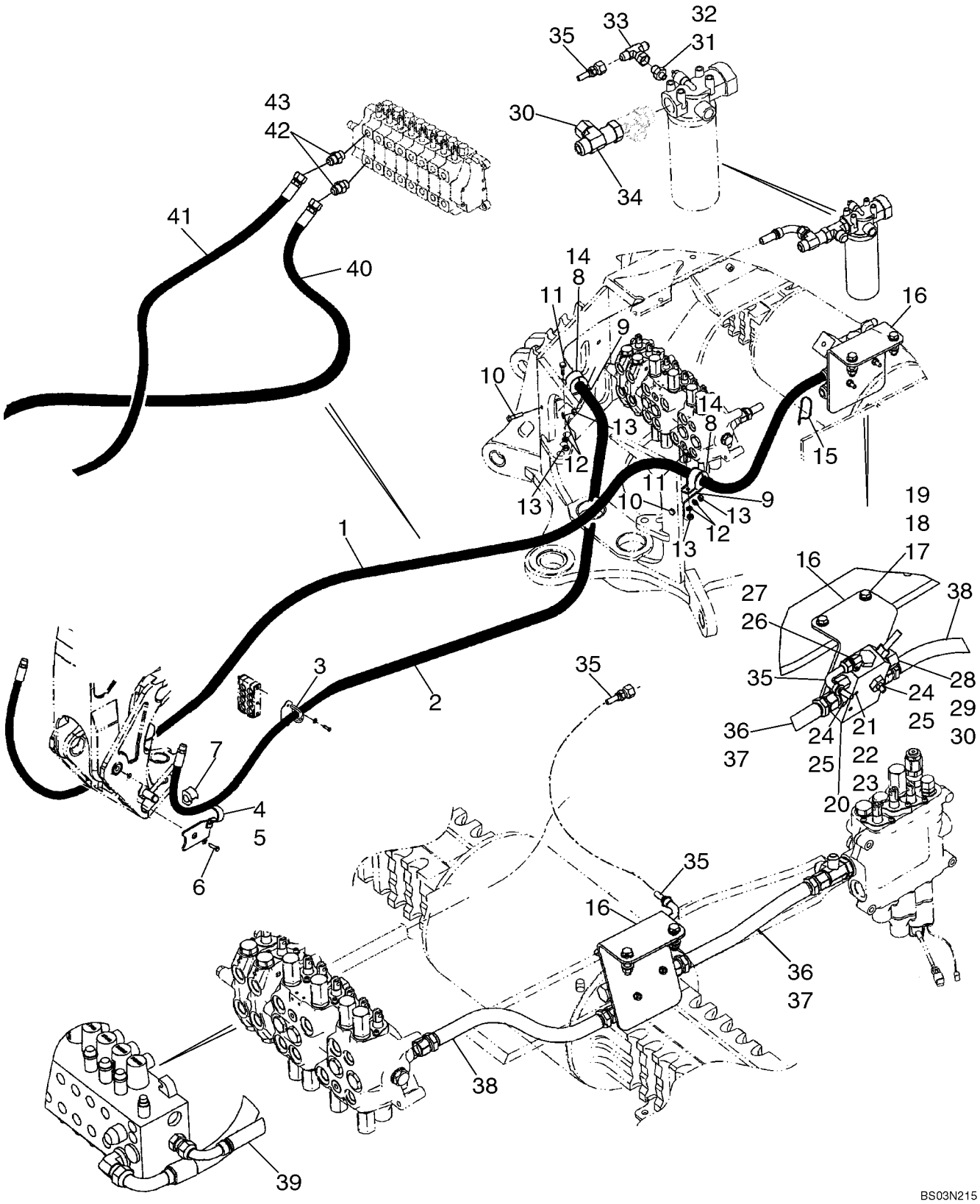

HTTP://WWW.MINNPARBACKHOEPARTS.COM



HYDRAULICS - BACKHOE AUXILIARY

| REF | FN | PART NUMBER | YR/SN | QTY | DESCRIPTION |
|---|---|---|---|---|---|
| 1 | | {87430972} | | 1 | 2467 mm (97-1/8 in) Hose; Models With Uni-Directional |
| 2 | | {87429387} | | 1 | 2890 mm (113-13/16 in) Hose; Models With Uni-Directional |
| 3 | | 87431630 | | 2 | BRACKET |
| 4 | | 329799A1 | | 1 | SUPPORT Left-Hand |
| 5 | | 329797A1 | | 1 | SUPPORT Right-Hand |
| 6 | | 604-20045 | | 2 | BOLT M20 x 45 |
| 7 | | 144477A1 | | 2 | SHOCK ABSORBER |
| 8 | | 144479A1 | | 2 | CLAMP |
| 9 | | 413778A1 | | 2 | BRACKET |
| 10 | | 814-10040 | | 2 | SCREW M10 x 40 |
| 11 | | 614-10025 | | 2 | BOLT M10 x 25 |
| 12 | | 892-11010 | | 4 | WASHER, LOCK M10 |
| 13 | | 829-1410 | | 4 | NUT M10 |
| 14 | | 144477A1 | | 2 | SHOCK ABSORBER |
| 15 | | L18337 | | 1 | STRAP |
| 16 | | {87440694} | | 1 | Bracket |
| 17 | | 814-12050 | | 2 | SCREW M12 x 50 |
| 18 | | 896-11012 | | 4 | WASHER |
| 19 | | 829-1412 | | 2 | NUT M12 |
| 20 | | {87421836} | | 1 | Auxiliary Uni-Directional Valve; Component Parts Not Available At Time Of Printing |
| 21 | | 814-8070 | | 2 | SCREW M8 x 70 |
| 22 | | 892-11008 | | 2 | WASHER Lock, M8 |
| 23 | | 829-1408 | | 2 | NUT M8 |
| 24 | | 218-5050 | | 2 | FITTING 1-5/16 fl x 1-1/16 Or; Incl. Ref 25 |
| 25 | | 237-6012 | | 1 | O-RING 59/64 ID x 7/64 |
| 26 | | 218-5280 | | 1 | FITTING ELBOW, 90 deg, 3/4 fl x 9/16 Or; Incl. Ref 27 |
| 27 | | 237-6006 | | 1 | O-RING 15/32 ID x 5/64 |
| 28 | | 218-5064 | | 1 | CONNECTOR, HYD. 1-1/16 fl x Or; Incl. Ref 29 |
| 29 | | 237-6012 | | 1 | O-RING 59/64 ID x 7/64 |
| 30 | | 218-335 | | 2 | CAP Hex, 1-1/16 |
| 31 | | 218-5351 | | 1 | CONNECTOR, HYD. 3/4 fl x 9/16 Or; Incl. Ref 32 |
| 32 | | 237-6006 | | 1 | O-RING 15/32 ID x 5/64 |

HTTP://WWW.MINNPARBACKHOEPARTS.COM



HYDRAULICS - BACKHOE AUXILIARY

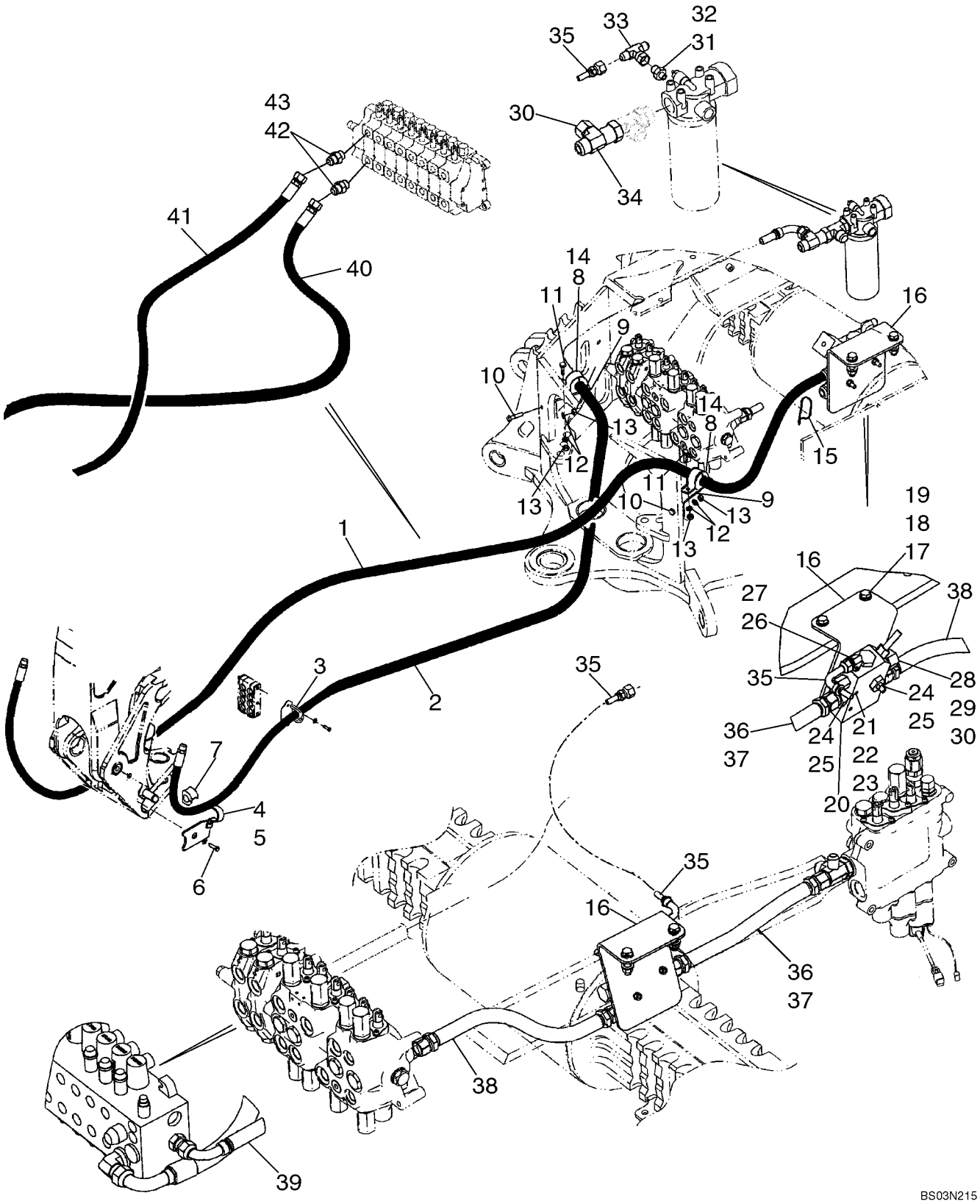

HTTP://WWW.MINNPARBACKHOEPARTS.COM



HYDRAULICS - BACKHOE AUXILIARY

| REF | FN | PART NUMBER | YR/SN | QTY | DESCRIPTION |
|---|---|---|---|---|---|
| 33 | | 218-840 | | 1 | TEE 3/4 sw str br x fl x fl |
| 34 | | 218-5216 | | 1 | FITTING Tee, 1-1/16 fl br x 15/16 fl x adj str thrd |
| 35 | | {87422948} | | 1 | 930 mm (36-5/8 in) |
| 36 | | 87437232 | | 1 | HOSE ASSY. 420 mm (16-9/16 in); Two Spool Loader Valve |
| 37 | | 87437231 | | 1 | HOSE ASSY. 370 mm (14-19/32 in); Three Spool Loader Valve |
| 38 | | 87422977 | | 1 | HOSE ASSY. 465 mm (18-5/16 in); Power Beyond; Models Without Pilot Controls |
| 39 | | {87428814} | | 1 | 458 mm (18-1/32 in); Power Beyond; Models With Pilot Controls |
| 40 | | 87423969 | | 1 | HOSE ASSY. 1500 mm (59-1/16 in); Models With Bi-Directional |
| 41 | | 87423970 | | 1 | HOSE ASSY. 1725 mm (67-15/16 in); Models With Bi Directional |
| 42 | | 218-5064 | | 2 | CONNECTOR, HYD. 1-1/16 fl x Or; Incl. Ref 43 |
| 43 | | 237-6012 | | 1 | O-RING 59/64 ID x 7/64 |

HTTP://WWW.MINNPARBACKHOEPARTS.COM



HYDRAULICS - BACKHOE AUXILIARY

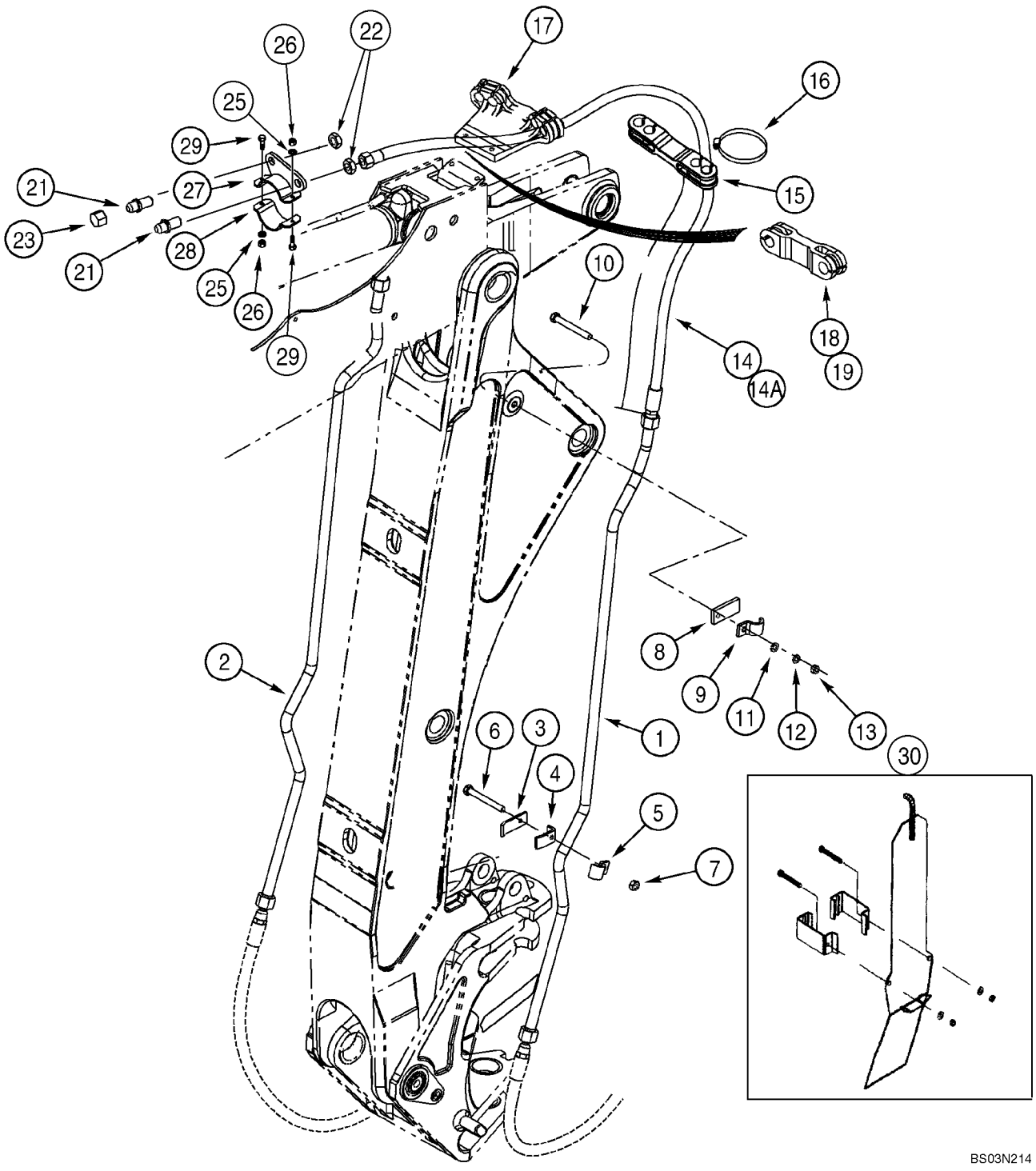

HTTP://WWW.MINNPARBACKHOEPARTS.COM



HYDRAULICS - BACKHOE AUXILIARY

| REF | FN | PART NUMBER | YR/SN | QTY | DESCRIPTION |
|---|---|---|---|---|---|
| | | REF | | | INSTRUCTION AT BOOM AND DIPPER |
| 1 | | 243300A1 | | 1 | PIPE Tube |
| 2 | | 243404A1 | | 1 | PIPE Tube |
| 3 | | D149309 | | 2 | CLAMP |
| 4 | | 243298A1 | | 2 | CLAMP |
| 5 | | 242459A1 | | 2 | SHIN Clamp |
| 6 | | 814-10060 | | 2 | SCREW M10 x 60 |
| 7 | | 829-1410 | | 2 | NUT M10; 10.9 |
| 8 | | 243398A1 | | 2 | SUPPORT |
| 9 | | 242459A1 | | 2 | SHIN Clamp |
| 10 | | 814-10040 | | 2 | SCREW M10 x 40; Not Required With Standard Dipper |
| 11 | | 895-11010 | | 2 | WASHER 11 x 21 x 2 mm |
| 12 | | 892-11010 | | 2 | WASHER, LOCK M10 |
| 13 | | 829-1410 | | 2 | NUT M10; 10.9 |
| 14 | | 243679A2 | | 2 | HOSE 2665 mm (104-15/16 in); Models With Extendable Dipper |
| 14A | | 256210A2 | | 2 | HOSE 1285 mm (50-19/32 in); Models Without Extendable Dipper |
| 15 | | 246158A1 | | 1 | SHIN Models Without Extendable Dipper; Used With (2) 214-3156 Clamps |
| 16 | | 214-3156 | | 2 | CLAMP 2-3/4 x 3-5/8 |
| 17 | | 246151A1 | | 1 | SUPPORT Models With Extendable Dipper; Used With (2) 214-3156 Clamps |
| 18 | | 103670A1 | | 2 | CLAMP, HOSE Rubber |
| 19 | | 214-3132 | | 4 | CLAMP |
| 21 | | 218-676 | | 2 | UNION 1-1/16 fl x bkhd fl |
| 22 | | 218-1256 | | 2 | NUT, LOCK 1-1/16 |
| 23 | | 218-335 | | 2 | CAP 1/16 |
| 25 | | 896-11010 | | 2 | WASHER 11 x 21 x 2,5 mm |
| 26 | | 832-10410 | | 2 | NUT M10 |
| 27 | | 314319A1 | | 1 | CLAMP, SPECIAL |
| 28 | | 314320A1 | | 1 | CLAMP, SPECIAL |
| 29 | | 614-10040 | | 2 | SCREW M10 x 40 |
| 30 | | 317988A1 | | 1 | GUARD Boom; Component Parts Not Serviced Separately |

HTTP://WWW.MINNPARBACKHOEPARTS.COM



HYDRAULICS - RIDE CONTROL (87433240 SOLENOID VALVE)

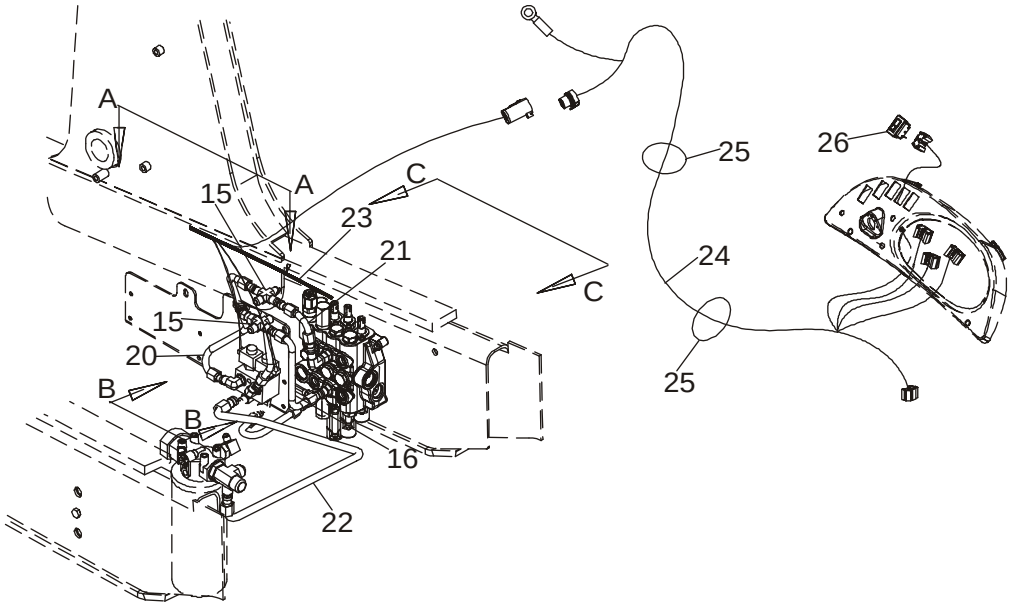


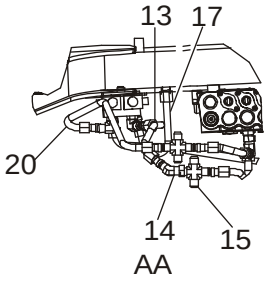


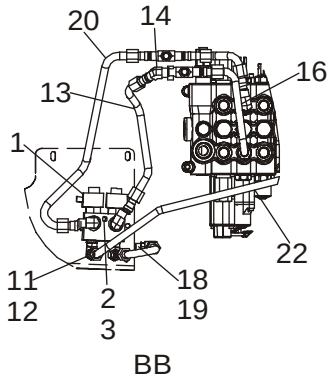


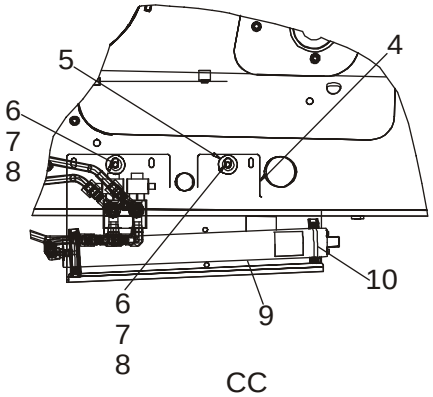


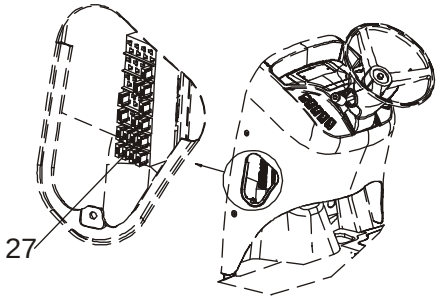


BS03M139

HTTP://WWW.MINNPARBACKHOEPARTS.COM



HYDRAULICS - RIDE CONTROL (87433240 SOLENOID VALVE)

| REF | FN | PART NUMBER | YR/SN | QTY | DESCRIPTION |
|---|---|---|---|---|---|
| | | REF | | | INSTRUCTION RIDE CONTROL HYDRAULIC AND ELECTRICAL CIRCUIT |
| 1 | | 87433240 | | 1 | VALVE, SOLENOID Ride Control; Component Parts Not Available At Time Of Printing |
| 2 | | 814-10080 | | 1 | SCREW M10 x 80 |
| 3 | | 895-11010 | | 1 | WASHER 11 x 21 x 2 mm |
| 4 | | 87421213 | | 1 | BRACKET, SUPPORTING Plate |
| 5 | | 87423067 | | 2 | SPACER |
| 6 | | 814-10040 | | 2 | SCREW M10 x 40 |
| 7 | | 895-15010 | | 2 | WASHER 11 x 24 x 2 mm |
| 8 | | 829-1410 | | 2 | NUT M10 |
| 9 | | 448284A1 | | 1 | ACCUMULATOR Ride Control; Component Parts Not Serviced Separately; Used In Production, For Service, Order 234412A1 Accumulator |
| 9 | | 234412A1 | | 1 | ACCUMULATOR Ride Control; See Figure 08-56 |
| 10 | | A13240 | | 2 | CLAMP Two Piece; Includes Hardware |
| 11 | | 218-5117 | | 4 | FITTING ELBOW, 90 deg, 7/8 fl x 3/4 adj Or; Incl. Ref 12 |
| 12 | | 237-6008 | | 1 | O-RING 41/64 ID x 3/32 |
| 13 | | 87421938 | | 1 | TUBE ASSY. Solenoid Valve to Loader Control Valve Lower Lift Section Port |
| 14 | | 218-5174 | | 1 | FITTING ELBOW, 45 deg, 7/8 fl x sw str thrd |
| 15 | | 218-655 | | 2 | FITTING TEE |
| 16 | | REF | | 1 | INSTRUCTION TUBE, For Tube and Fitting At Loader Valve, See Figure 08-04 |
| 17 | | 87420696 | | 1 | TUBE ASSY. Accumulator to Solenoid Valve |
| 18 | | 218-5600 | | 1 | FITTING ELBOW, 90 deg, 7/8 fl x 3/4 Or; Incl. Ref 19 |
| 19 | | 237-6008 | | 1 | O-RING 41/64 ID x 3/32 |
| 20 | | 87435923 | | 1 | TUBE ASSY. Solenoid Valve To Loader Control Valve Upper Lift Section Port |
| 21 | | REF | | 1 | INSTRUCTION TUBE, For Tube and Fitting At Loader Valve, See Figure 08-04 |
| 22 | | 87437265 | | 1 | TUBE ASSY. Solenoid Valve To Filter |
| 23 | | 87436675 | | 1 | HARNESS, WIRE Chassis Options Harness; Includes (4) L71879 Diodes |

HTTP://WWW.MINNPARBACKHOEPARTS.COM



HYDRAULICS - RIDE CONTROL (87433240 SOLENOID VALVE)

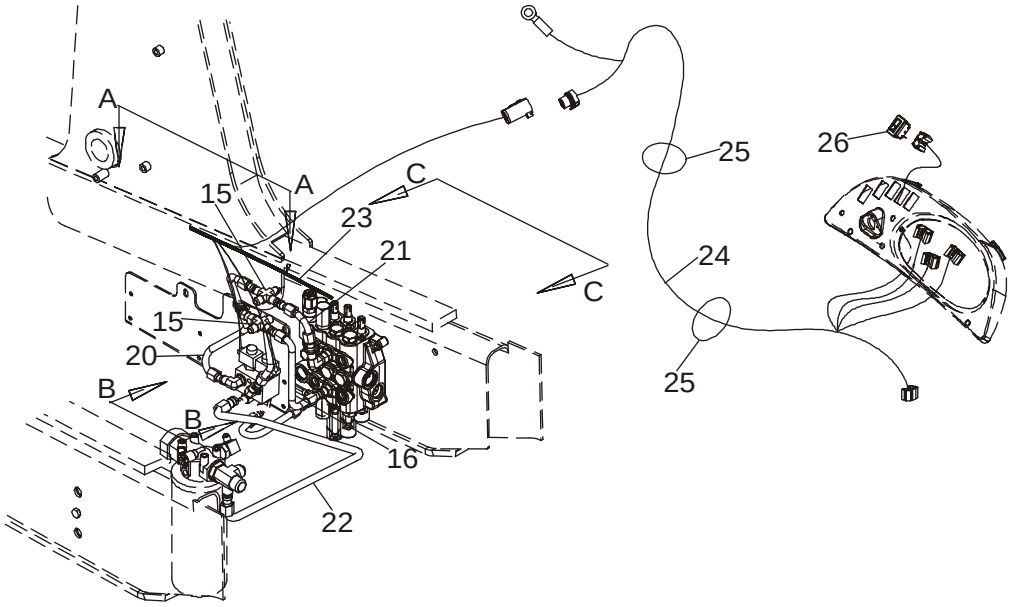


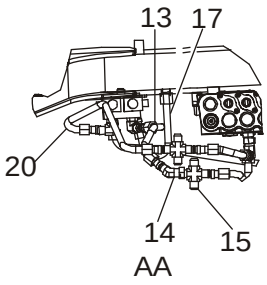


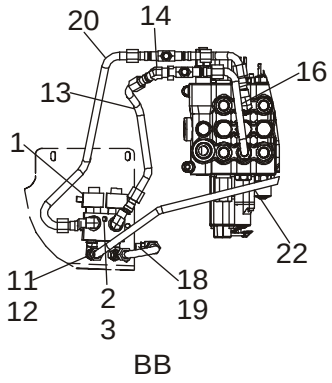


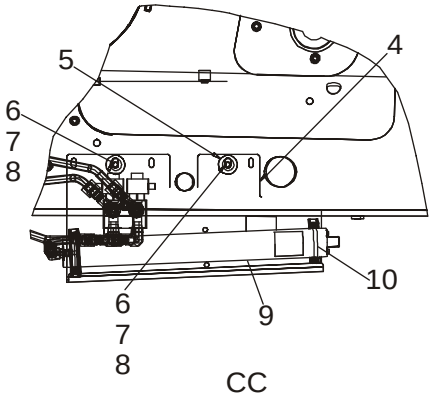


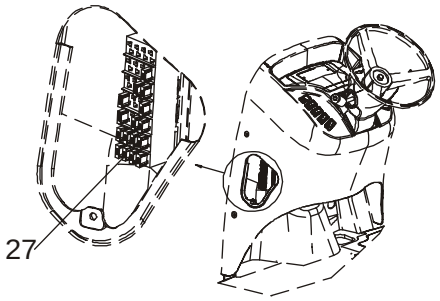


BS03M139

HTTP://WWW.MINNPARBACKHOEPARTS.COM



HYDRAULICS - RIDE CONTROL (87433240 SOLENOID VALVE)

| REF | FN | PART NUMBER | YR/SN | QTY | DESCRIPTION |
|---|---|---|---|---|---|
| 24 | | 87419256 | | 1 | HARNESS, WIRE Side Console Options Harness; Includes (1) L71879 Diode; Attaches to Side Console Harness and Main Chassis Options Harness |
| 25 | | L18337 | | 2 | STRAP Tie |
| 26 | | 235002A1 | | 1 | SWITCH Ride Control |
| 27 | | 121413A1 | | 1 | FUSE 15 amp, Mini, Blue |

HTTP://WWW.MINNPARBACKHOEPARTS.COM



HYDRAULICS - COUPLER, LOADER TOOL QUICK

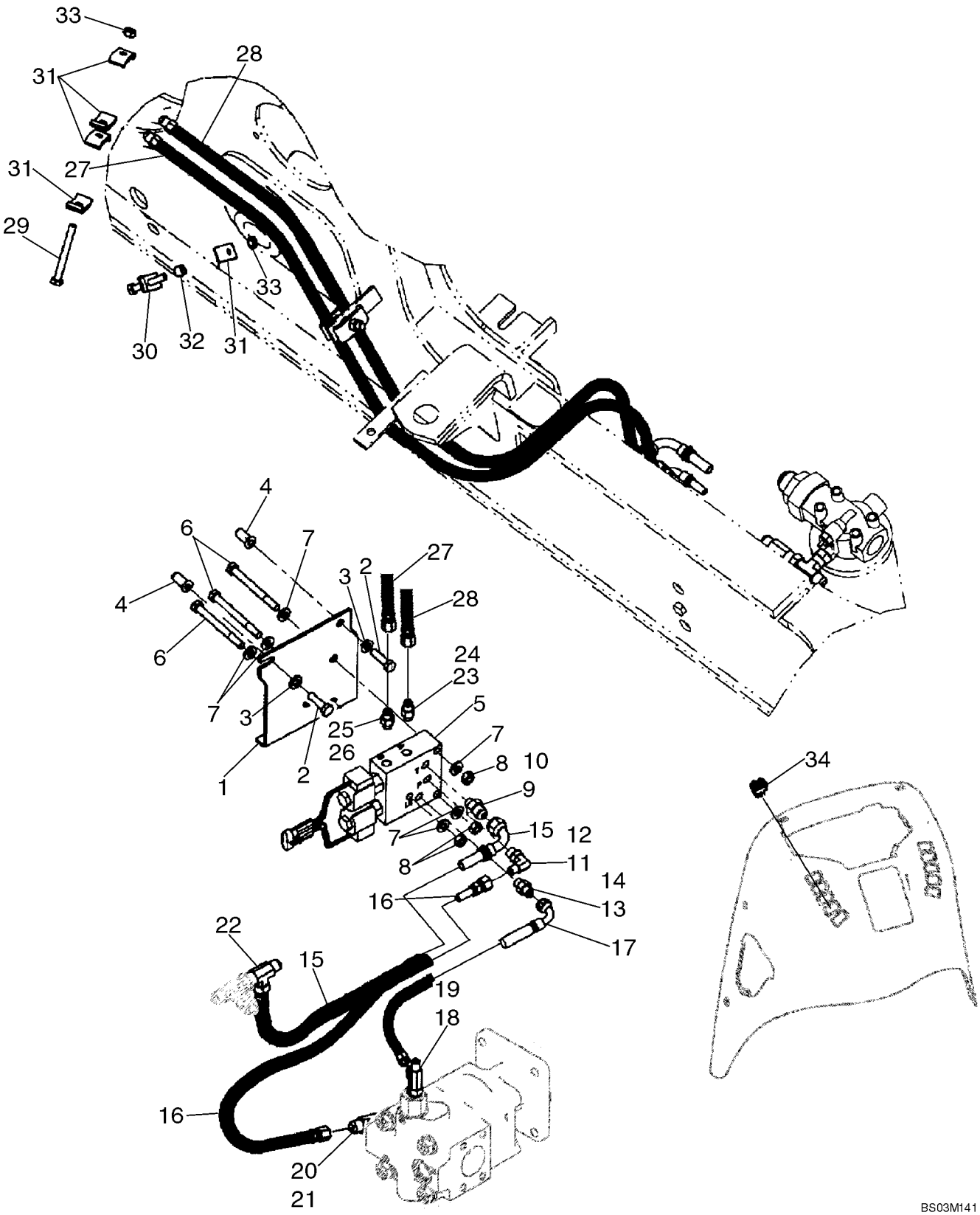

HTTP://WWW.MINNPARBACKHOEPARTS.COM



HYDRAULICS - COUPLER, LOADER TOOL QUICK

| REF | FN | PART NUMBER | YR/SN | QTY | DESCRIPTION |
|---|---|---|---|---|---|
| 1 | | 87437263 | | 1 | BRACKET, SUPPORTING Coupler Valve Mounting |
| 2 | | 614-10035 | | 2 | SCREW M10 x 35 |
| 3 | | 896-11010 | | 2 | WASHER |
| 4 | | 87417721 | | 2 | INSERT, THREADED M10 |
| 5 | | 87435909 | | 1 | VALVE, SOLENOID Coupler; Loader Tool; See Figure 08-28 |
| 6 | | 814-10060 | | 3 | SCREW M10 x 60 |
| 7 | | 896-11010 | | 6 | WASHER |
| 8 | | 829-1410 | | 3 | NUT M10 |
| 9 | | 218-5351 | | 1 | CONNECTOR, HYD. 3/4 fl x 9/16 Or; Incl. Ref 10 |
| 10 | | 237-6006 | | 1 | O-RING 15/32 ID x 5/64 |
| 11 | | 218-5105 | | 1 | ELBOW 90 deg, 9/16 fl x Or; Incl. Ref 12 |
| 12 | | 237-6006 | | 1 | O-RING 15/32 ID x 5/64 |
| 13 | | 218-5057 | | 1 | CONNECTOR, HYD. 9/16 fl x Or; Incl. Ref 14 |
| 14 | | 237-6006 | | 1 | O-RING 15/32 ID x 5/64 |
| 15 | | 87434265 | | 1 | HOSE ASSY. 500 mm (19-11/16 in); Coupler Valve to Filter |
| 16 | | 87434262 | | 1 | HOSE ASSY. 830 mm (32-11/16 in); Pump to Coupler Pressure Port |
| 17 | | 87434261 | | 1 | HOSE ASSY. 600 mm (23-5/8 in); Pump to Coupler Valve Load Sense Port |
| 18 | | 282428A1 | | 1 | POPPET, VALVE TEE, Check; Incl. Ref 19 |
| 19 | | 237-6006 | | 1 | O-RING 15/32 ID x 5/64 |
| 20 | | 218-5198 | | 1 | TEE 7/8 adj Or br x 3/4 fl x fl; Incl. Ref 21; Replaces Standard Steering Fitting |
| 21 | | 237-6010 | | 1 | O-RING 3/4 ID x 3/32 |
| 22 | | 218-845 | | 1 | TEE 3/4 fl br x fl x adj str thrd; Attaches to Tee At Back Of Filter |
| 23 | | 218-5053 | | 1 | CONNECTOR, HYD. 7/16 fl x Or; Incl. Ref 24 |
| 24 | | 237-6004 | | 1 | O-RING 23/64 ID x 5/64 |
| 25 | | 218-5056 | | 1 | CONNECTOR, HYD. 1/2 fl x Or; Incl. Ref 26 |
| 26 | | 237-6005 | | 1 | O-RING 13/32 ID x 5/64 |
| 27 | | 87427539 | | 1 | HOSE ASSY. 1815 mm (71-1/2 in); B Port |
| 28 | | 87427537 | | 1 | HOSE ASSY. 1815 mm (71-1/2 in); A Port |
| 29 | | 814-10080 | | 1 | SCREW M10 x 80 |
| 30 | | 814-10070 | | 1 | SCREW M10 x 70 |

HTTP://WWW.MINNPARBACKHOEPARTS.COM



HYDRAULICS - COUPLER, LOADER TOOL QUICK

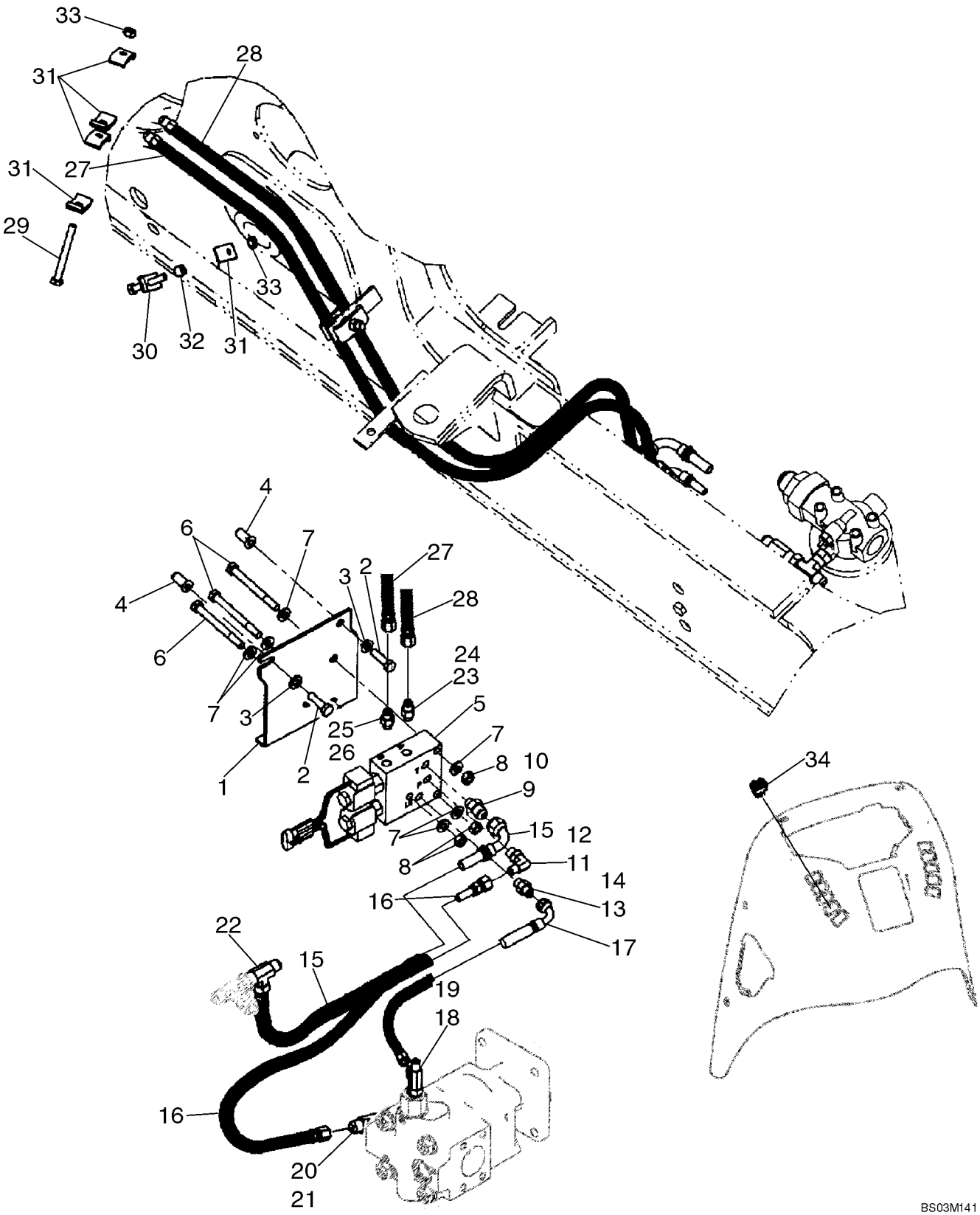

HTTP://WWW.MINNPARBACKHOEPARTS.COM



HYDRAULICS - COUPLER, LOADER TOOL QUICK

| REF | FN | PART NUMBER | YR/SN | QTY | DESCRIPTION |
|---|---|---|---|---|---|
| 31 | | D138055 | | 6 | CLAMP |
| 32 | | 120303A1 | | 1 | SPACER |
| 33 | | 832-10410 | | 2 | NUT M10 |
| 34 | | 398675A2 | | 1 | SWITCH Loader Tool Quick Coupler |

HTTP://WWW.MINNPARBACKHOEPARTS.COM



HYDRAULICS - COUPLER, LOADER TOOL QUICK

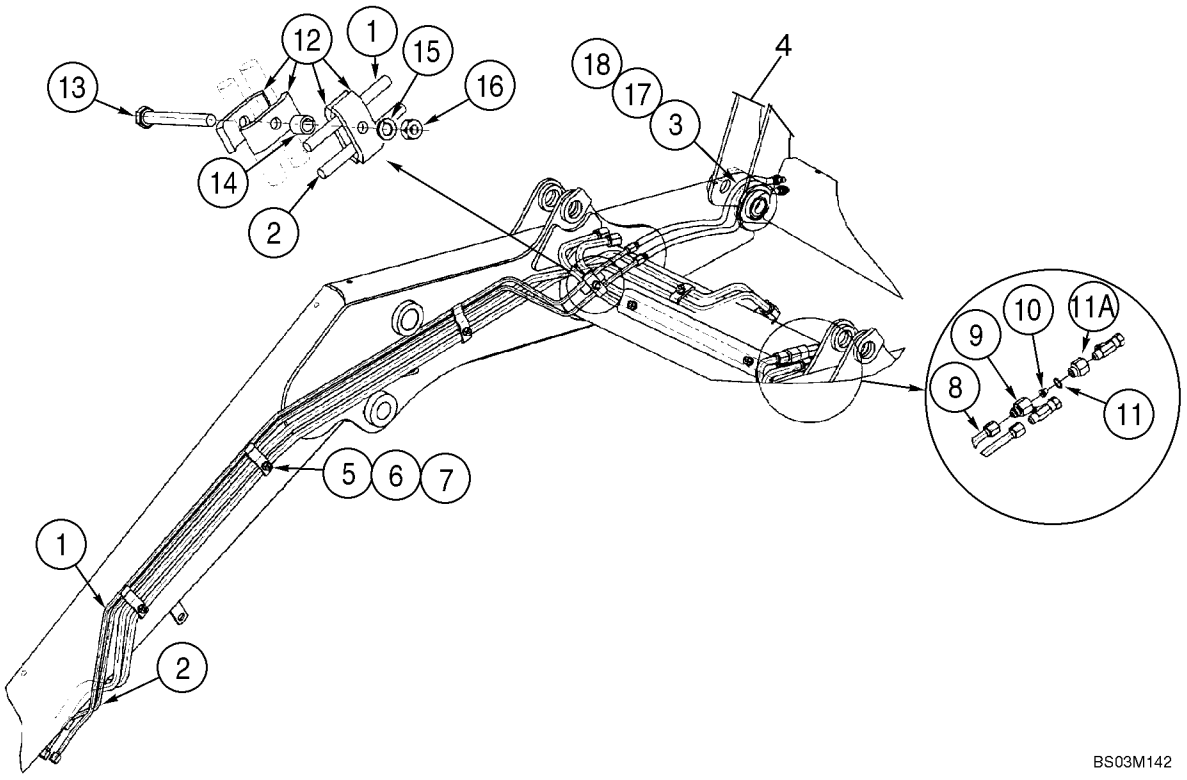

HTTP://WWW.MINNPARBACKHOEPARTS.COM



HYDRAULICS - COUPLER, LOADER TOOL QUICK

| REF | FN | PART NUMBER | YR/SN | QTY | DESCRIPTION |
|---|---|---|---|---|---|
| | | REF | | | INSTRUCTION AT LOADER LIFT FRAME |
| 1 | | 308255A1 | | 1 | TUBE ASSY. |
| 2 | | 308254A1 | | 1 | TUBE ASSY. |
| 3 | | 300996A3 | | 2 | HOSE ASSY. 772 mm (30-13/32 in) |
| 4 | | REF | | 1 | INSTRUCTION Coupler, Hydr., Loader Tool Quick Coupler; For Complete Assembly, See Figure 09-10; Order From Machinery Price List; Use Standard Loader Bucket Pins To Mount Coupler |
| 5 | | 302820A2 | | 3 | CLAMP |
| 6 | | 892-11010 | | 3 | WASHER, LOCK M10 |
| 7 | | 829-1410 | | 3 | NUT M10; 10.9 |
| 8 | | 434605A1 | | 1 | TUBE ASSY. |
| 9 | | 304424A1 | | 1 | CONNECTOR |
| 10 | | 304890A1 | | 1 | RESTRICTOR |
| 11 | | 237-6010 | | 1 | O-RING 3/4 ID x 3/32 |
| 11A | | 309674A1 | | 1 | CONNECTOR 7/8 male x 7/8 female |
| 12 | | D138055 | | 4 | CLAMP |
| 13 | | 814-10090 | | 1 | SCREW M10 x 90 |
| 14 | | 120303A1 | | 1 | SPACER |
| 15 | | 892-11010 | | 1 | WASHER, LOCK M10 |
| 16 | | 829-1410 | | 1 | NUT M10; 10.9 |
| 17 | | 307277A1 | | 1 | SLEEVE |
| 18 | | L18337 | | 2 | STRAP 15 in |

HTTP://WWW.MINNPARBACKHOEPARTS.COM



VALVE, COUPLER (87435909) - LOADER TOOL

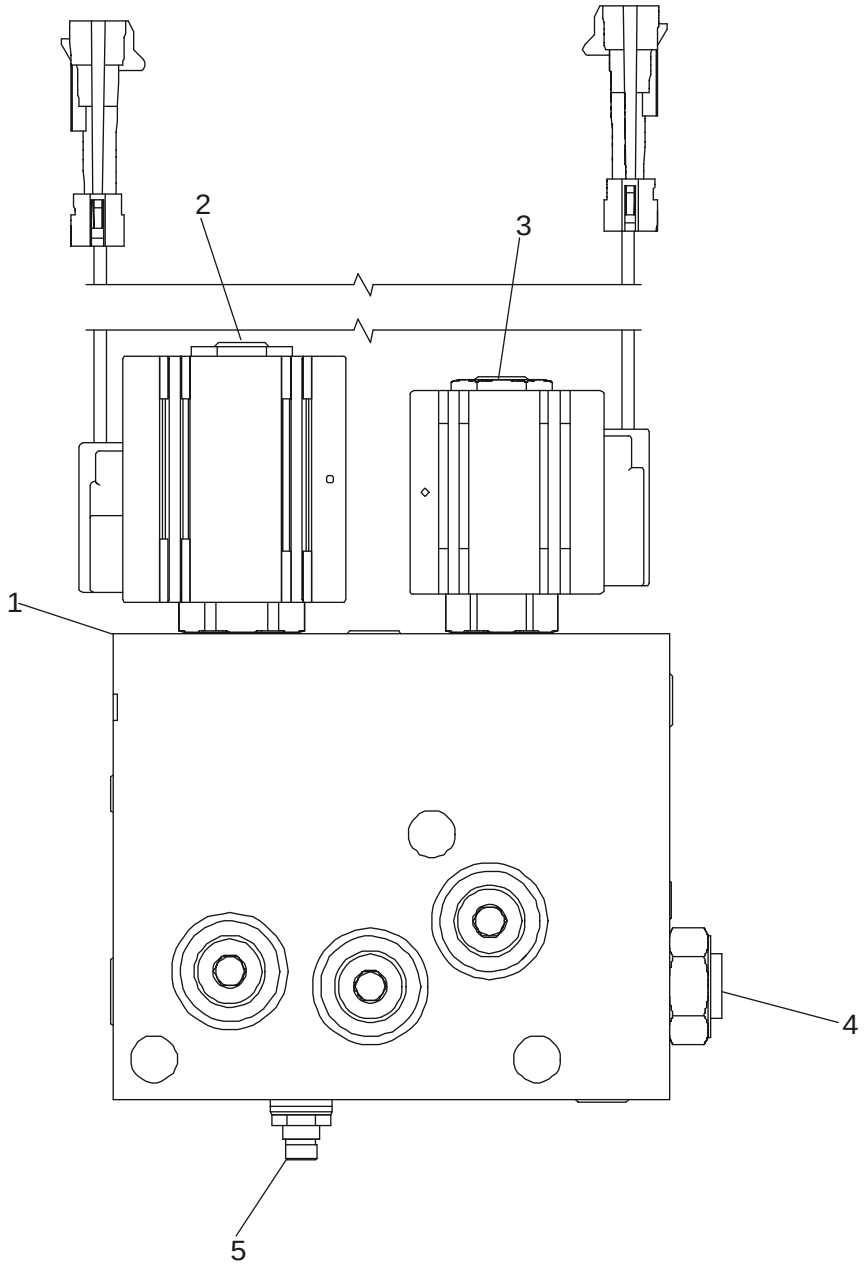


BS03M143

HTTP://WWW.MINNPARBACKHOEPARTS.COM



VALVE, COUPLER (87435909) - LOADER TOOL

| REF | FN | PART NUMBER | YR/SN | QTY | DESCRIPTION |
|---|---|---|---|---|---|
| | | 87435909 | | 1 | VALVE, SOLENOID Incl. Ref 1 - 5 |
| 1 | | NSS | | 1 | NOT SERVICED SEPARATELY Body |
| 2 | | {87438021} | | 1 | 4-Way Cartridge With Coil; Includes 87438022, 87438023, 87438024 |
| | | {87438022} | | 1 | Valve, Cartridge |
| | | {87438023} | | 1 | Coil, Solenoid |
| | | {87438024} | | 1 | Seal Kit, 4-Way Solenoid |
| 3 | | {87438025} | | 1 | 2-Way 2-Position Cartridge With Coil; Includes 87438026, 87438027, 87438028 |
| | | {87438026} | | 1 | Valve, Cartridge |
| | | {87438027} | | 1 | Coil, Solenoid |
| | | {87438028} | | 1 | Seal Kit, 2-Way Solenoid |
| 4 | | {87438029} | | 1 | Check Valve; Includes 87438028 Seal Kit |
| | | {87438028} | | 1 | Seal Kit, 2-Way Solenoid |
| 5 | | {87438031} | | 1 | Relief Valve; Includes 87438032 |
| | | {87438032} | | 1 | Seal Kit, Relief Valve |

HTTP://WWW.MINNPARBACKHOEPARTS.COM



PUMP, EQUIPMENT HYDRAULIC

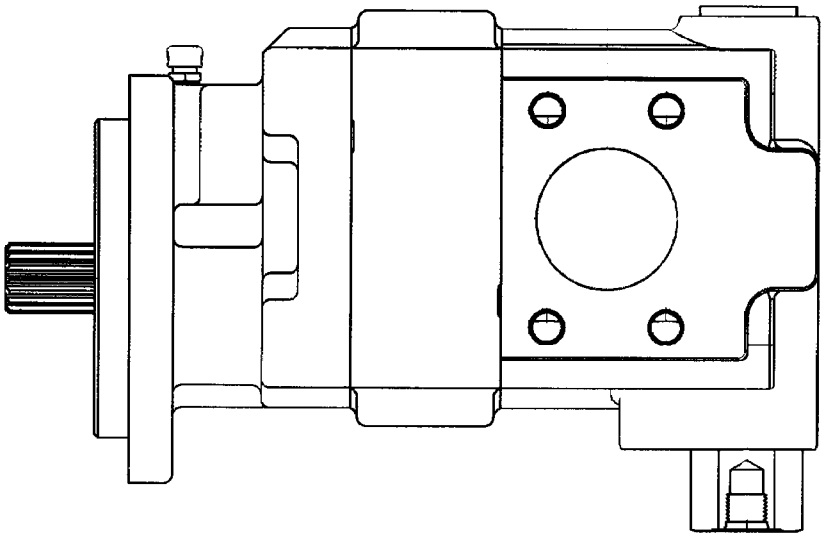

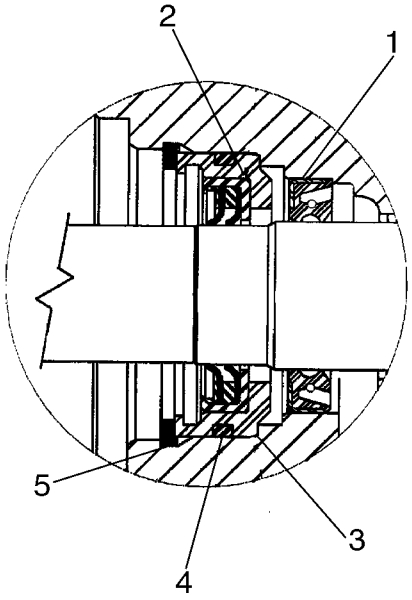


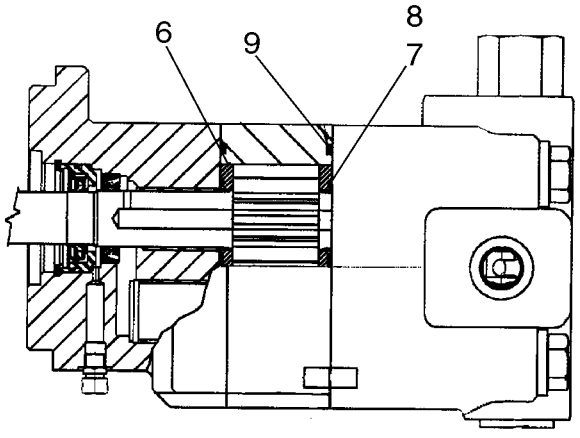


BS03M039

HTTP://WWW.MINNPARBACKHOEPARTS.COM



PUMP, EQUIPMENT HYDRAULIC

| REF | FN | PART NUMBER | YR/SN | QTY | DESCRIPTION |
|---|---|---|---|---|---|
| | | 87434672 | | 1 | PUMP, HYDRAULIC Component Parts Not Serviced Separately, Except for 87434070 and 87438045 Service Kits, Ref 1 - 17, See Below |
| | | {87434070} | | 1 | Pump Service Kit, Single Section; Incl. Ref 1 - 9 |
| 1 | | L32418 | | 1 | SEAL Double Lip |
| 2 | | {87434075} | | 1 | Lip Seal |
| 3 | | {87434076} | | 1 | Seal Retainer |
| 4 | | {87434077} | | 1 | O-Ring Seal |
| 5 | | 102-23206 | | 1 | CIRCLIP Retaining Ring |
| 6 | | N13582 | | 2 | PLATE Thrust |
| 7 | | 144173A1 | | 2 | SEAL |
| 8 | | 178051A1 | | 2 | BACK-UP RING |
| 9 | | L32100 | | 2 | SEAL Gear Housing Gasket |
| | | {87438045} | | 1 | Priority Valve Service Kit, Single; Incl. Ref 10 - 17 Which Are Not Illustrated |
| 10 | | {87437899} | | 1 | Load Sense Plug; Not Illustrated |
| 11 | | 237-6014 | | 1 | O-RING 1-3/64 ID x 7/64; Not Illustrated |
| 12 | | {87437905} | | 1 | Spool Spring, 100 psi; Not Illustrated |
| 13 | | {87437906} | | 1 | Spool Spring, 50 psi; Not Illustrated |
| 14 | | {87437914} | | 1 | Priority Valve Spool; Not Illustrated |
| 15 | | {87437917} | | 1 | Hex Socket Plug, Spool; Not Illustrated |
| 16 | | 218-5213 | | 1 | PLUG Hex Socket, 1-3/16 Or; Incl. Ref 17; Not Illustrated |
| 17 | | 237-6014 | | 1 | O-RING 1-3/64 ID x 7/64; Not Illustrated |

HTTP://WWW.MINNPARBACKHOEPARTS.COM



VALVE ASSY - LOADER CONTROL, TWO SPOOL

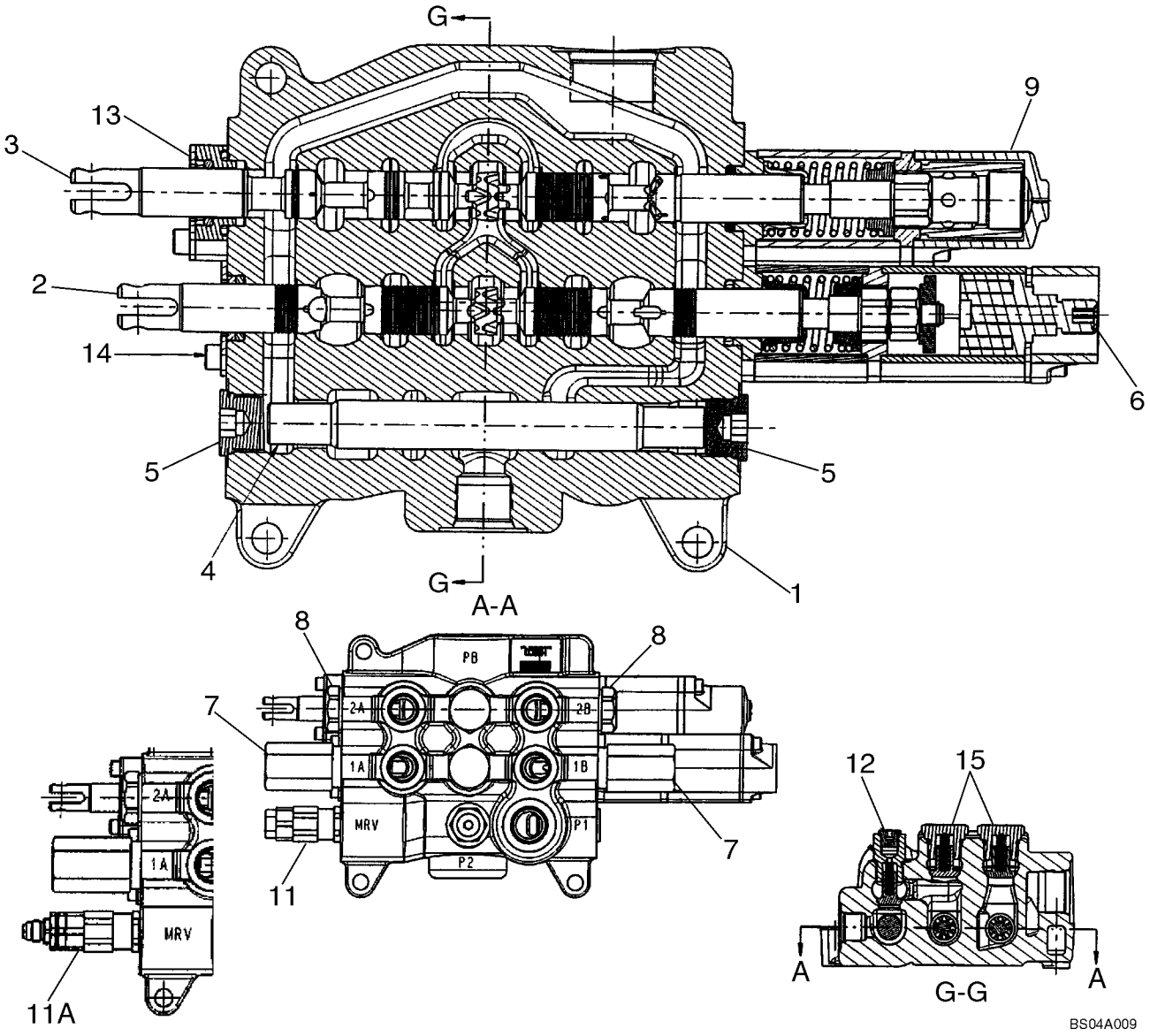

HTTP://WWW.MINNPARBACKHOEPARTS.COM



VALVE ASSY - LOADER CONTROL, TWO SPOOL

| REF | FN | PART NUMBER | YR/SN | QTY | DESCRIPTION |
|---|---|---|---|---|---|
| | | 87434766 | | 1 | VALVE, HYDRAULIC Two Spool Loader Valve, Used On Models Without Pilot Controls; Incl. Ref 1 - 11, 12 - 15 |
| | | 87434768 | | 1 | VALVE, HYDRAULIC Two Spool Loader Valve, Used On Models With Pilot Controls; Incl. Ref 1 - 9, 11A - 15 |
| 1 | | NSS | | 1 | NOT SERVICED SEPARATELY HOUSING |
| 2 | | NSS | | 1 | NOT SERVICED SEPARATELY SPOOL, Bucket |
| 3 | | NSS | | 1 | NOT SERVICED SEPARATELY SPOOL, Lift |
| 4 | | NSS | | 1 | NOT SERVICED SEPARATELY SPOOL |
| 5 | | {87426233} | | 2 | 7/8 - 14 NF Plug, Includes O-Ring; Component Parts Not Serviced Separately |
| 6 | | {87426221} | | 1 | Magnetic Detent Kit, Bucket; Component Parts Not Serviced Separately |
| 7 | | {87426232} | | 2 | Relief Valve Assembly; Component Parts Not Serviced Separately |
| 8 | | {81868381} | | 2 | Load Check Valve, Anti-Void; Component Parts Not Serviced Separately |
| 9 | | {87426227} | | 1 | Manual Detent Assembly, Lift; Component Parts Not Serviced Separately |
| 11 | | {87426717} | | 1 | Main Relief Valve Assembly, Single Stage; 87434766 Loader Valve, Models Without Pilot Controls; Component Parts Not Serviced Separately |
| 11A | | {87426235} | | 1 | Main Relief Valve Assembly, Two Stage; 87434768 Loader Valve, Models With Pilot Controls; Component Parts Not Serviced Separately |
| 12 | | {87426716} | | 1 | Check Valve; Component Parts Not Serviced Separately |
| 13 | | {87440815} | | 1 | Lift Spool Plate and Seal Assembly; Component Parts Not Serviced Separately |
| 14 | | {87440814} | | 1 | Bucket Spool Plate and Seal Assembly; Component Parts Not Serviced Separately |
| 15 | | {87426238} | | 2 | Check Valve; Component Parts Not Serviced Separately |

HTTP://WWW.MINNPARBACKHOEPARTS.COM



VALVE ASSY - LOADER CONTROL, THREE SPOOL

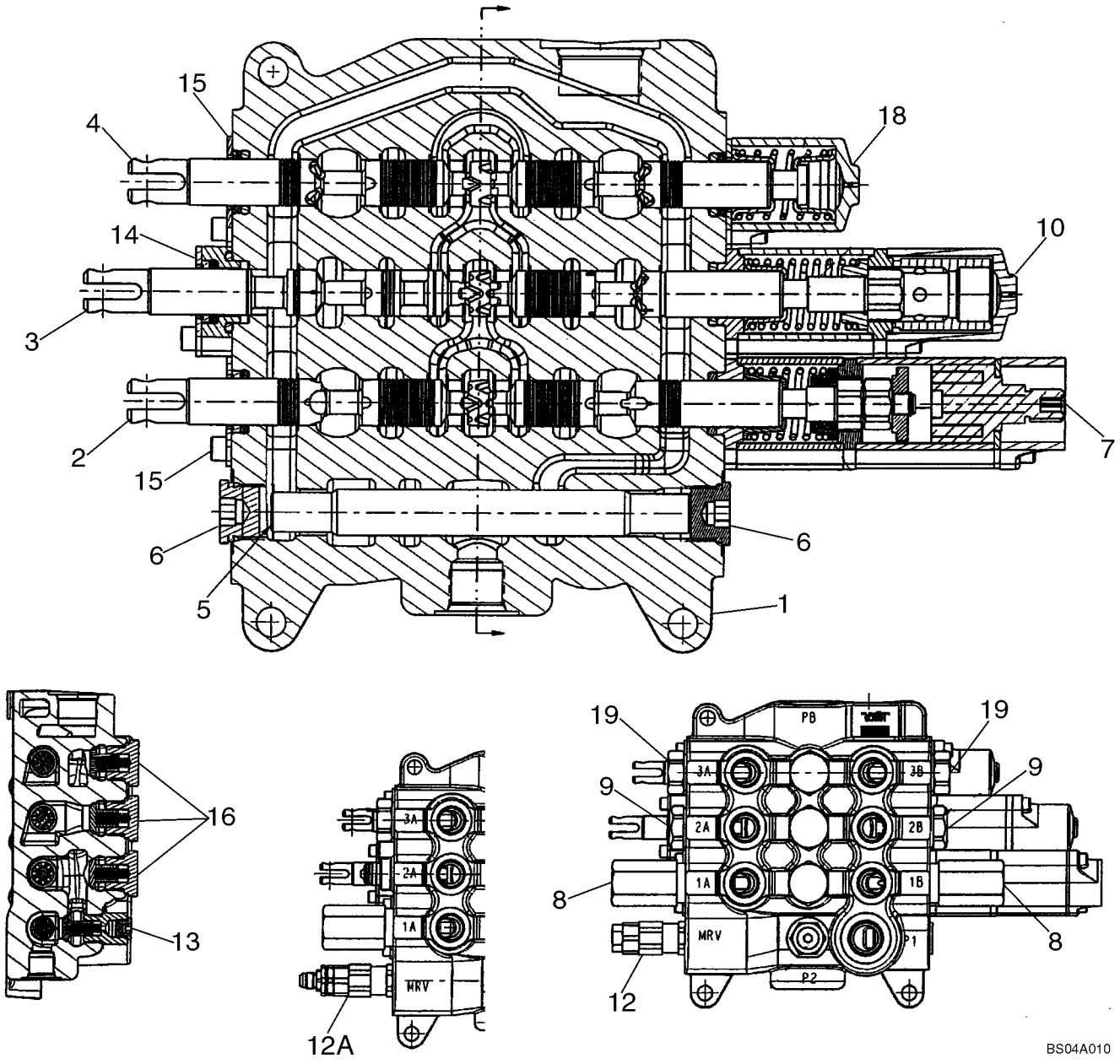

HTTP://WWW.MINNPARBACKHOEPARTS.COM



VALVE ASSY - LOADER CONTROL, THREE SPOOL

| REF | FN | PART NUMBER | YR/SN | QTY | DESCRIPTION |
|---|---|---|---|---|---|
| | | 87434767 | | 1 | VALVE, HYDRAULIC Three Spool Loader Valve, Used On Models Without Pilot Controls; Incl. Ref 1 - 12, 14 - 19 |
| | | 87434769 | | 1 | VALVE, HYDRAULIC Three Spool Loader Valve, Used On Models With Pilot Controls; Incl. Ref 1 - 10, 12A - 19 |
| 1 | | NSS | | 1 | NOT SERVICED SEPARATELY HOUSING |
| 2 | | NSS | | 1 | NOT SERVICED SEPARATELY SPOOL, Bucket |
| 3 | | NSS | | 1 | NOT SERVICED SEPARATELY SPOOL, Lift |
| 4 | | NSS | | 1 | NOT SERVICED SEPARATELY SPOOL, Clam |
| 5 | | NSS | | 1 | NOT SERVICED SEPARATELY SPOOL |
| 6 | | {87426233} | | 2 | 7/8 - 14 NF Plug, Includes O-Ring; Component Parts Not Serviced Separately |
| 7 | | {87426221} | | 1 | Magnetic Detent Kit, Bucket; Component Parts Not Serviced Separately |
| 8 | | {87426232} | | 2 | Relief Valve Assembly; Component Parts Not Serviced Separately |
| 9 | | {81868381} | | 2 | Load Check Valve, Anti-Void; Component Parts Not Serviced Separately |
| 10 | | {87426227} | | 1 | Manual Detent Assembly, Lift; Component Parts Not Serviced Separately |
| 12 | | {87426717} | | 1 | Main Relief Valve Assembly, Single Stage; 87434767 Loader Valve, Models Without Pilot Controls; Component Parts Not Serviced Separately |
| 12A | | {87426235} | | 1 | Main Relief Valve Assembly, Two Stage; 87434769 Loader Valve, Models With Pilot Controls; Component Parts Not Serviced Separately |
| 13 | | {87426716} | | 1 | Check Valve; Component Parts Not Serviced Separately |
| 14 | | {87440815} | | 1 | Lift Spool Plate and Seal Assembly; Component Parts Not Serviced Separately |
| 15 | | {87440814} | | 2 | Bucket and Clam Spool Plate and Seal Assembly; Component Parts Not Serviced Separately |
| 16 | | {87426238} | | 3 | Check Valve; Component Parts Not Serviced Separately |

HTTP://WWW.MINNPARBACKHOEPARTS.COM



VALVE ASSY - LOADER CONTROL, THREE SPOOL

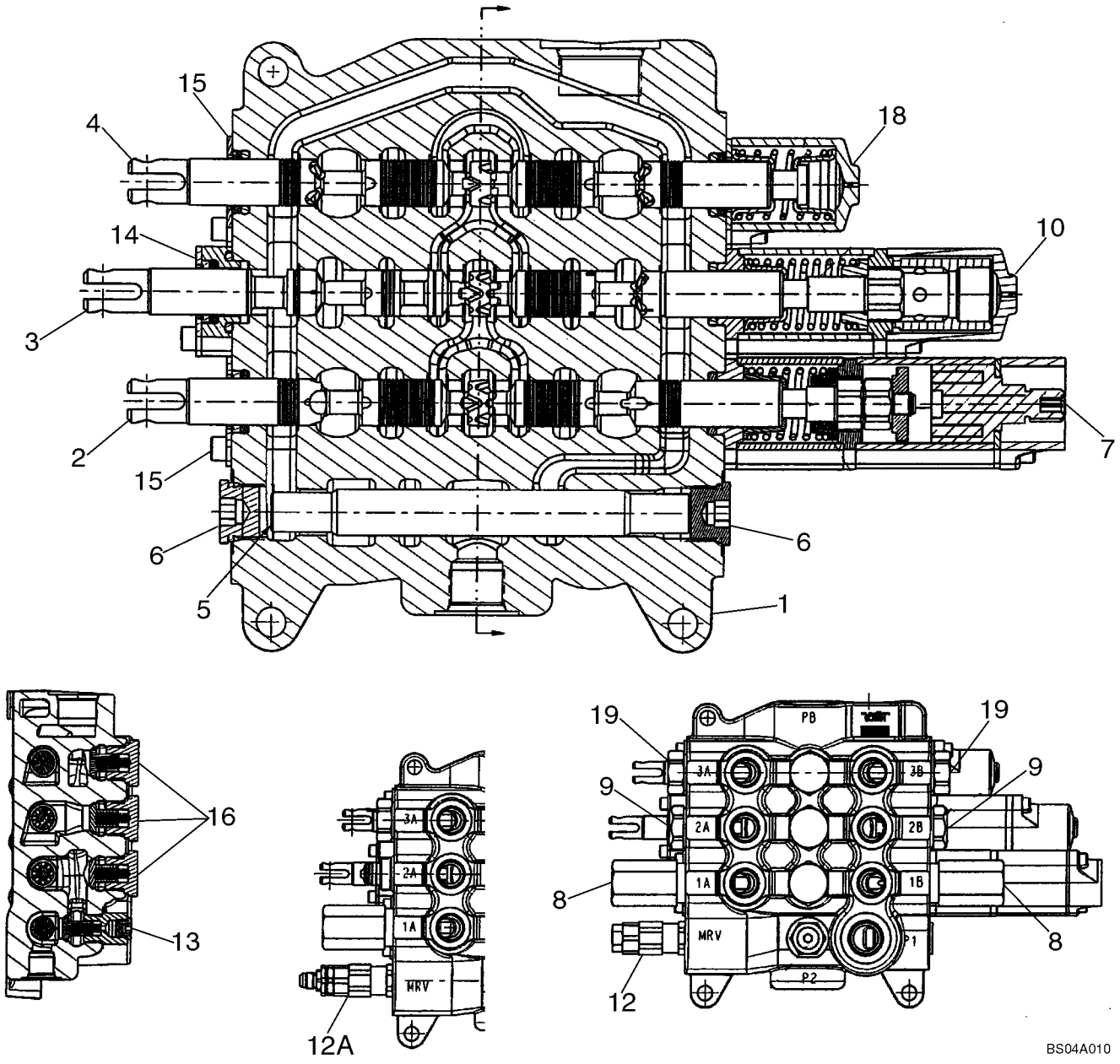

HTTP://WWW.MINNPARBACKHOEPARTS.COM



VALVE ASSY - LOADER CONTROL, THREE SPOOL

| REF | FN | PART NUMBER | YR/SN | QTY | DESCRIPTION |
|---|---|---|---|---|---|
| 18 | | {87426241} | | 1 | Clam Spool End Cap Assembly; Component Parts Not Serviced Separately |
| 19 | | {83981068} | | 2 | Shut-Off Plug Assembly Includes Seal; Component Parts Not Serviced Separately |

HTTP://WWW.MINNPARBACKHOEPARTS.COM



VALVE ASSY - BACKHOE CONTROL, 6 SPOOL (W/O EXT DIPPER, W/O AUX HYDS, W/O PILOT CONTROLS)

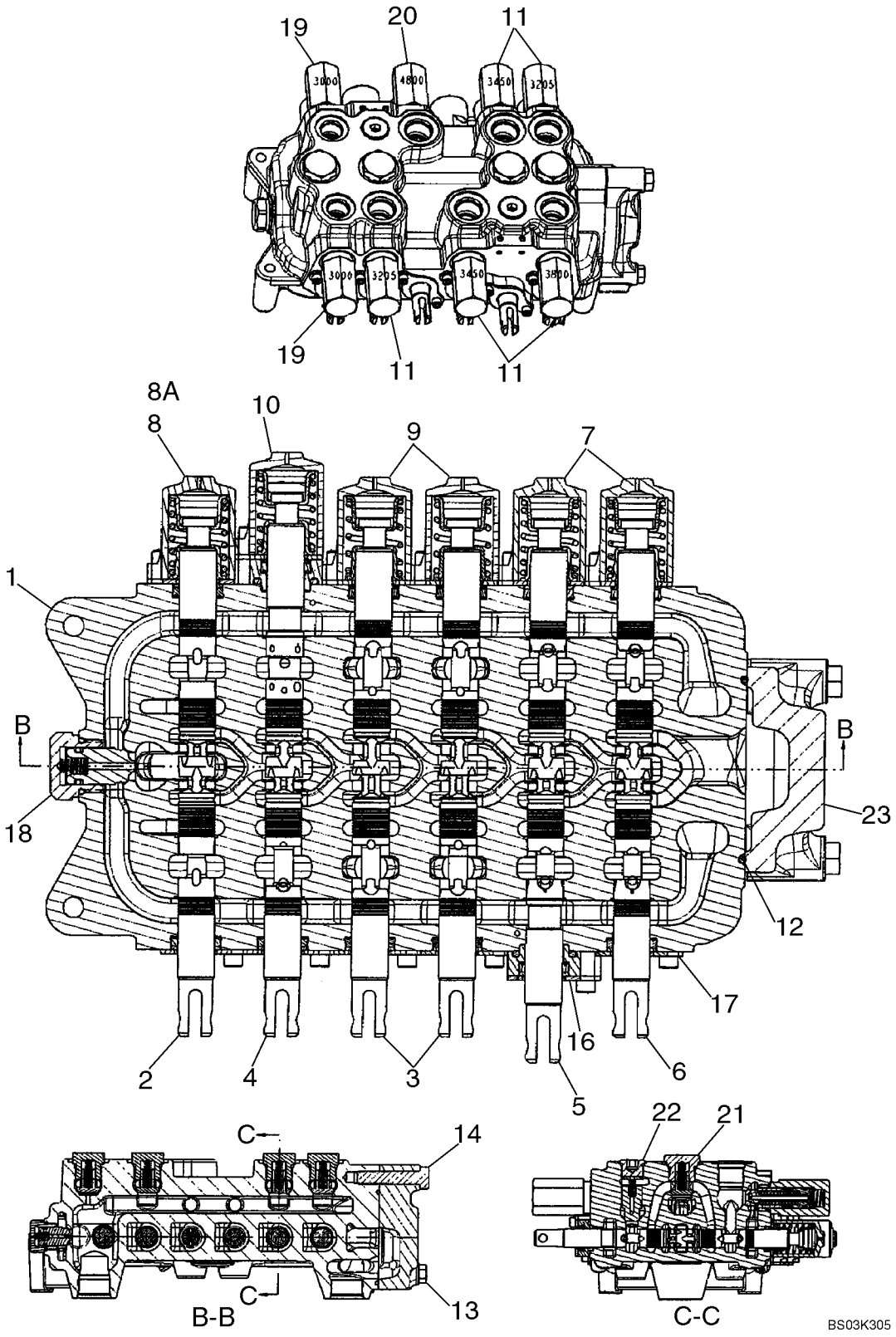

HTTP://WWW.MINNPARBACKHOEPARTS.COM



VALVE ASSY - BACKHOE CONTROL, 6 SPOOL (W/O EXT DIPPER, W/O AUX HYDS, W/O PILOT CONTROLS)

| REF | FN | PART NUMBER | YR/SN | QTY | DESCRIPTION |
|---|---|---|---|---|---|
| | | REF | | | INSTRUCTION MODELS WITHOUT EXTENDABLE DIPPER, WITHOUT AUXILIARY HYDRAULICS, WITHOUT PILOT CONTROLS |
| | | 87413144 | | 1 | VALVE, HYDRAULIC 6 Spool, Foot Swing; Incl. Ref 1 - 8, 9 - 23; If Used |
| | | 87416476 | | 1 | VALVE, HYDRAULIC 6 Spool, Hand Swing; Incl. Ref 1 - 7, 8A, 9 - 23; If Used |
| 1 | | NSS | | 1 | NOT SERVICED SEPARATELY HOUSING |
| 2 | | NSS | | 1 | NOT SERVICED SEPARATELY SPOOL, SWING |
| 3 | | NSS | | 2 | NOT SERVICED SEPARATELY SPOOL, STABILIZER, Right-hand and Left-Hand |
| 4 | | NSS | | 1 | NOT SERVICED SEPARATELY SPOOL, BOOM |
| 5 | | NSS | | 1 | NOT SERVICED SEPARATELY SPOOL, DIPPER |
| 6 | | NSS | | 1 | NOT SERVICED SEPARATELY SPOOL, BUCKET |
| 7 | | {87433028} | | 2 | Cap Assembly, Bucket and Dipper Spool End; Component Parts Not Serviced Separately |
| 8 | | {87433029} | | 1 | Cap Assembly, Swing Spool End; 87413144 Foot Swing Valve; Component Parts Not Serviced Separately |
| 8A | | {87433028} | | 1 | Cap Assembly, Swing Spool End; 87416476 Hand Swing Valve; Component Parts Not Serviced Separately |
| 9 | | {87428497} | | 2 | Cap Assembly, Stabilizer Spool Ends; Component Parts Not Serviced Separately |
| 10 | | {87433029} | | 1 | Cap Assembly, Boom Spool End; Component Parts Not Serviced Separately |
| 11 | | {87426232} | | 5 | Relief Valve Assembly; (2) 3205 psi, (2) 3450 psi, (1) 3800 psi; Component Parts Not Serviced Separately |
| 12 | | {87428495} | | 1 | O-Ring Seal, Outlet Section |
| 13 | | {87428491} | | 2 | Bolt |
| 14 | | {87428492} | | 1 | Bolt |
| 16 | | {87426240} | | 1 | Seal Plate Assembly, Dipper Spool; Component Parts Not Serviced Separately |
| 17 | | {87426239} | | 5 | Seal Plate Assembly; Component Parts Not Serviced Separately |

HTTP://WWW.MINNPARBACKHOEPARTS.COM



VALVE ASSY - BACKHOE CONTROL, 6 SPOOL (W/O EXT DIPPER, W/O AUX HYDS, W/O PILOT CONTROLS)

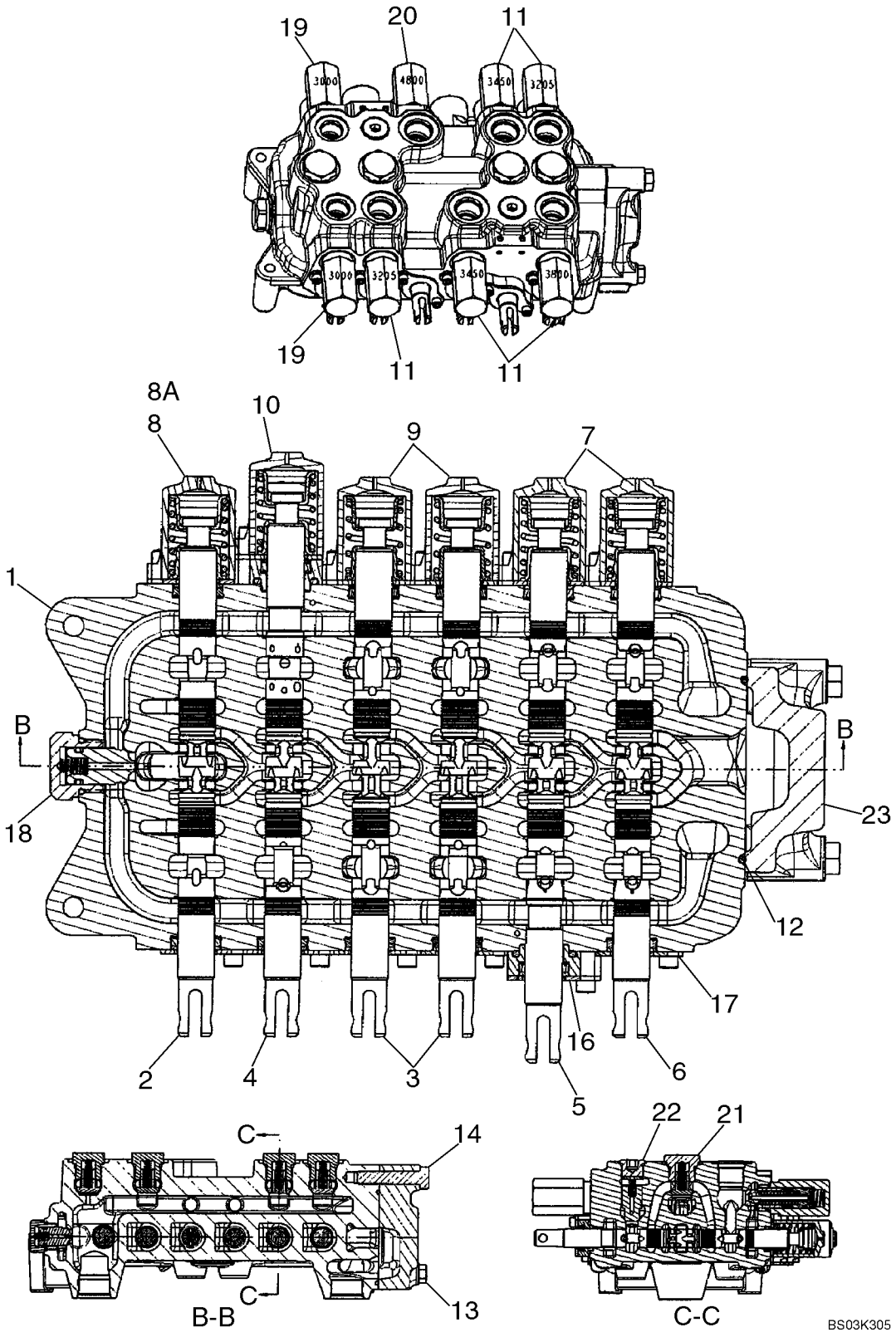

HTTP://WWW.MINNPARBACKHOEPARTS.COM



VALVE ASSY - BACKHOE CONTROL, 6 SPOOL (W/O EXT DIPPER, W/O AUX HYDS, W/O PILOT CONTROLS)

| REF | FN | PART NUMBER | YR/SN | QTY | DESCRIPTION |
|---|---|---|---|---|---|
| 18 | | {81868381} | | 1 | Anti-Void Valve; Component Parts Not Serviced Separately |
| 19 | | {87428490} | | 2 | Relief Valve Assembly; 3000 psi; Component Parts Not Serviced Separately |
| 20 | | {87428488} | | 1 | Relief Valve Assembly; 4800 psi; Component Parts Not Serviced Separately |
| 21 | | {87426238} | | 4 | Check Valve Assembly; Hex Head; Component Parts Not Serviced Separately |
| 22 | | {87428486} | | 2 | Check Valve Assembly; Hex Socket Head; Component Parts Not Serviced Separately |
| 23 | | {87433030} | | 1 | Outlet Section Assembly; Component Parts Not Serviced Separately |

HTTP://WWW.MINNPARBACKHOEPARTS.COM



VALVE ASSY - BACKHOE CONTROL, 7 SPOOL (W/O EXT DIPPER, W/ AUX HYDS, W/O PILOT CONTROLS)

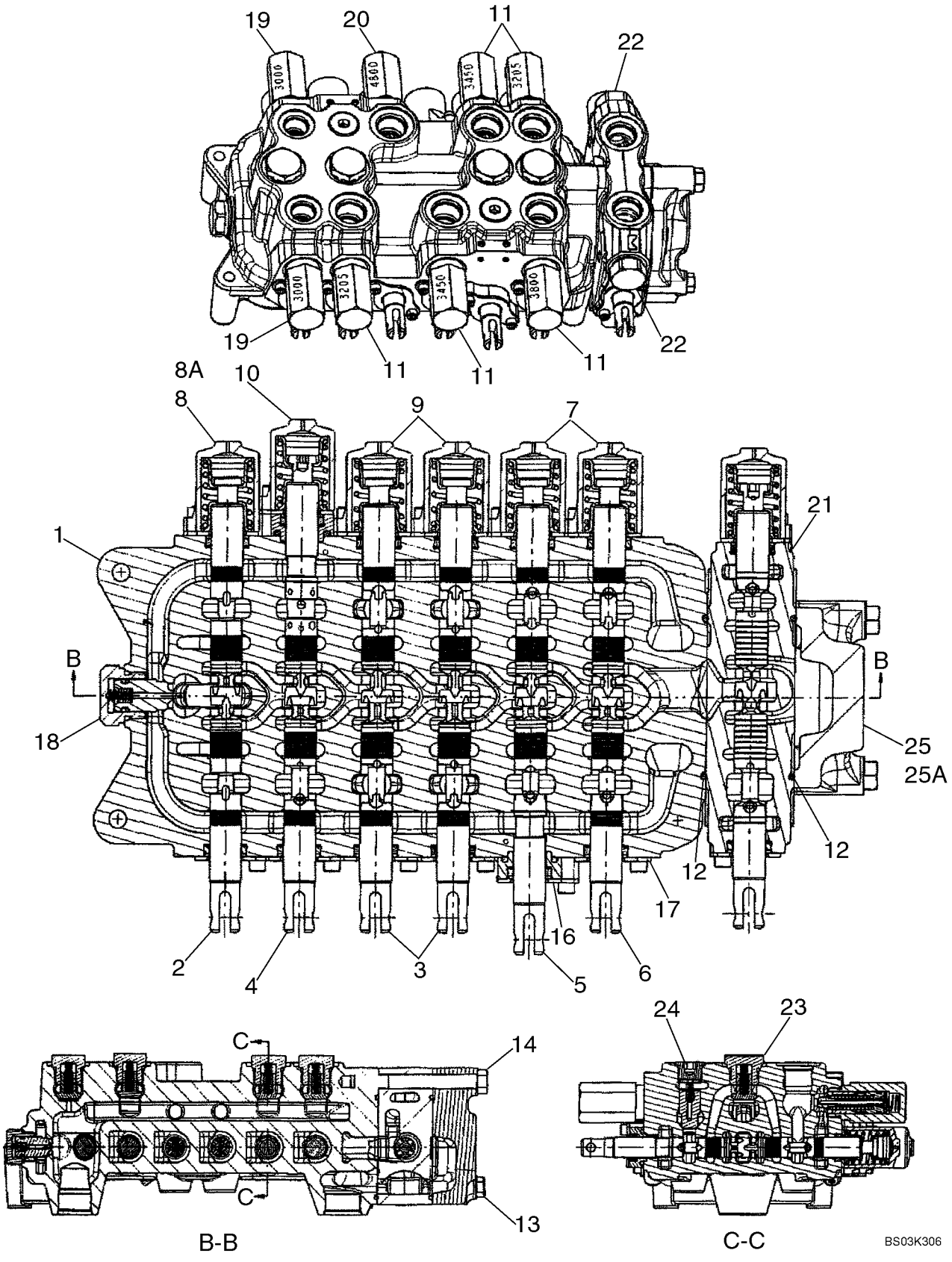

HTTP://WWW.MINNPARBACKHOEPARTS.COM



VALVE ASSY - BACKHOE CONTROL, 7 SPOOL (W/O EXT DIPPER, W/ AUX HYDS, W/O PILOT CONTROLS)

| REF | FN | PART NUMBER | YR/SN | QTY | DESCRIPTION |
|---|---|---|---|---|---|
| | | REF | | | INSTRUCTION MODELS WITHOUT EXTENDABLE DIPPER, WITH AUXILIARY HYDRAULICS, WITHOUT PILOT CONTROLS |
| | | 87414278 | | 1 | VALVE, HYDRAULIC 7 Spool, Foot Swing; Incl. Ref 1 - 8, 9 - 25; If Used |
| | | 87414277 | | 1 | VALVE, HYDRAULIC 7 Spool, Hand Swing; Incl. Ref 1 - 7, 8A, 9 - 24, 25A; If Used |
| 1 | | NSS | | 1 | NOT SERVICED SEPARATELY HOUSING |
| 2 | | NSS | | 1 | NOT SERVICED SEPARATELY SPOOL, SWING |
| 3 | | NSS | | 2 | NOT SERVICED SEPARATELY SPOOL, STABILIZER, Left-Hand and Right-Hand |
| 4 | | NSS | | 1 | NOT SERVICED SEPARATELY SPOOL, BOOM |
| 5 | | NSS | | 1 | NOT SERVICED SEPARATELY SPOOL, DIPPER |
| 6 | | NSS | | 1 | NOT SERVICED SEPARATELY SPOOL, BUCKET |
| 7 | | {87433028} | | 2 | Cap Assembly, Bucket and Dipper Spool End; Component Parts Not Serviced Separately |
| 8 | | {87433029} | | 1 | Cap Assembly, Swing Spool End; 87414278 Foot Swing Valve; Component Parts Not Serviced Separately |
| 8A | | {87433028} | | 1 | Cap Assembly, Swing Spool End; 87414277 Hand Swing Valve; Component Parts Not Serviced Separately |
| 9 | | {87428497} | | 2 | Cap Assembly, Stabilizer Spool Ends; Component Parts Not Serviced Separately |
| 10 | | {87433029} | | 1 | Cap Assembly, Boom Spool End; Component Parts Not Serviced Separately |
| 11 | | {87426232} | | 5 | Relief Valve Assembly; (2) 3205 psi, (2) 3450 psi, (1) 3800 psi; Component Parts Not Serviced Separately |
| 12 | | {87428495} | | 2 | O-Ring Seal, Auxiliary/Outlet Section |
| 13 | | {87428476} | | 2 | Bolt |
| 14 | | {87428477} | | 1 | Bolt |
| 16 | | {87426240} | | 1 | Seal Plate Assembly, Dipper Spool; Component Parts Not Serviced Separately |
| 17 | | {87426239} | | 5 | Seal Plate Assembly; Component Parts Not Serviced Separately |

HTTP://WWW.MINNPARBACKHOEPARTS.COM



VALVE ASSY - BACKHOE CONTROL, 7 SPOOL (W/O EXT DIPPER, W/ AUX HYDS, W/O PILOT CONTROLS)

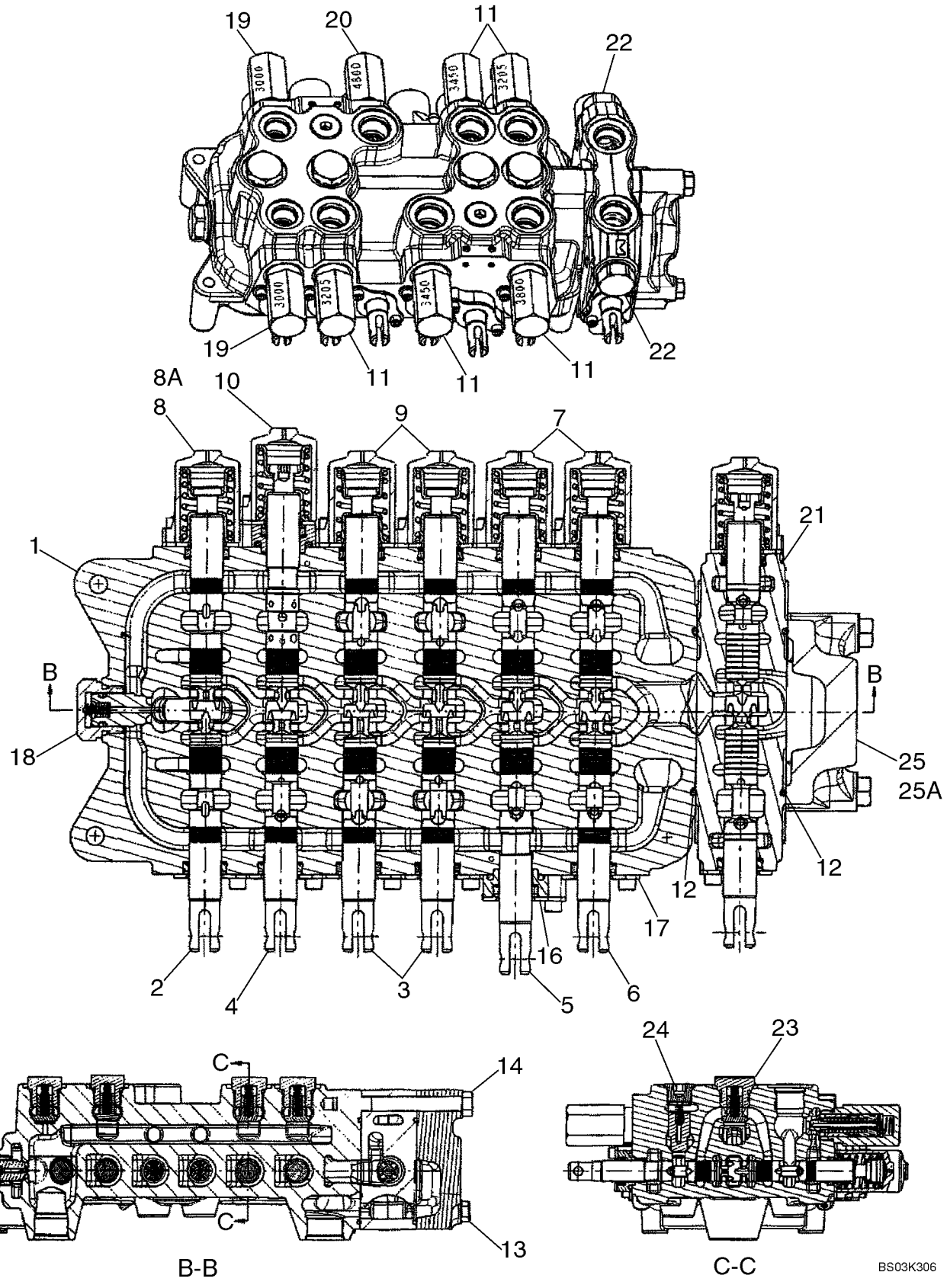

HTTP://WWW.MINNPARBACKHOEPARTS.COM



VALVE ASSY - BACKHOE CONTROL, 7 SPOOL (W/O EXT DIPPER, W/ AUX HYDS, W/O PILOT CONTROLS)

| REF | FN | PART NUMBER | YR/SN | QTY | DESCRIPTION |
|---|---|---|---|---|---|
| 18 | | {81868381} | | 1 | Anti-Void Valve; Component Parts Not Serviced Separately |
| 19 | | {87428490} | | 2 | Relief Valve Assembly; 3000 psi; Component Parts Not Serviced Separately |
| 20 | | {87428488} | | 1 | Relief Valve Assembly; 4800 psi; Component Parts Not Serviced Separately |
| 21 | | {87428501} | | 1 | Spool Section Assembly; Auxiliary Hydraulics; Component Parts Not Serviced Separately |
| 22 | | {83981068} | | 2 | Shut-Off Plug; Component Parts Not Serviced Separately |
| 23 | | {87426238} | | 4 | Check Valve Assembly; Hex Head; Component Parts Not Serviced Separately |
| 24 | | {87428486} | | 2 | Check Valve Assembly; Hex Socket Head; Component Parts Not Serviced Separately |
| 25 | | {87433030} | | 1 | Outlet Section Assembly; 87414278 Foot Swing Valve; Component Parts Not Serviced Separately |
| 25A | | {87428493} | | 1 | Outlet Section Assembly; 87414277 Hand Swing Valve; Component Parts Not Serviced Separately |

HTTP://WWW.MINNPARBACKHOEPARTS.COM



VALVE ASSY - BACKHOE CONTROL, 7 SPOOL (W/ EXT DIPPER, W/O AUX HYDS, W/O PILOT CONTROLS)

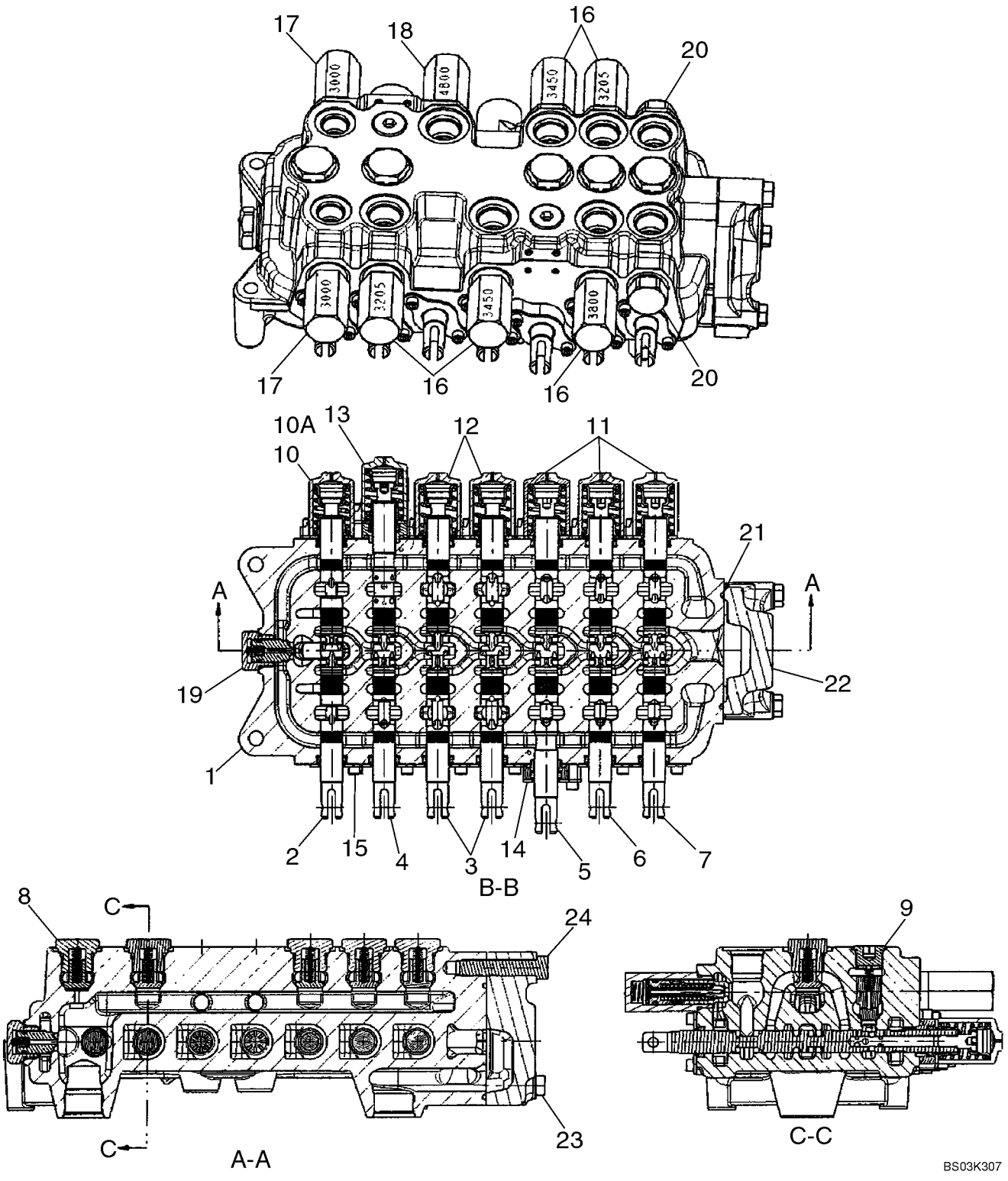

HTTP://WWW.MINNPARBACKHOEPARTS.COM



VALVE ASSY - BACKHOE CONTROL, 7 SPOOL (W/ EXT DIPPER, W/O AUX HYDS, W/O PILOT CONTROLS)

| REF | FN | PART NUMBER | YR/SN | QTY | DESCRIPTION |
|---|---|---|---|---|---|
| | | REF | | | INSTRUCTION MODELS WITH EXTENDABLE DIPPER, WITHOUT AUXILIARY HYDRAULICS, WITHOUT PILOT CONTROLS |
| | | 87413145 | | 1 | VALVE, HYDRAULIC 7 Spool, Foot Swing; Incl. Ref 1 - 10, 11 - 24; If Used |
| | | 87403386 | | 1 | VALVE, HYDRAULIC 7 Spool, Hand Swing; Incl. Ref 1 - 9, 10A, 11 - 24; If Used |
| 1 | | NSS | | 1 | NOT SERVICED SEPARATELY HOUSING |
| 2 | | NSS | | 1 | NOT SERVICED SEPARATELY SPOOL, SWING |
| 3 | | NSS | | 2 | NOT SERVICED SEPARATELY SPOOL, STABILIZER, Right-Hand and Left-Hand |
| 4 | | NSS | | 1 | NOT SERVICED SEPARATELY SPOOL, BOOM |
| 5 | | NSS | | 1 | NOT SERVICED SEPARATELY SPOOL, DIPPER |
| 6 | | NSS | | 1 | NOT SERVICED SEPARATELY SPOOL, BUCKET |
| 7 | | NSS | | 1 | NOT SERVICED SEPARATELY SPOOL, EXTENDABLE DIPPER |
| 8 | | {87426238} | | 5 | Check Valve Assembly; Hex Head; Component Parts Not Serviced Separately |
| 9 | | {87428486} | | 2 | Check Valve Assembly; Hex Socket Head; Component Parts Not Serviced Separately |
| 10 | | {87433029} | | 1 | Cap Assembly, Swing Spool End; 87413145 Foot Swing Valve; Component Parts Not Serviced Separately |
| 10A | | {87433028} | | 1 | Cap Assembly, Swing Spool End; 87403386 Hand Swing Valve; Component Parts Not Serviced Separately |
| 11 | | {87433028} | | 3 | Cap Assembly, Bucket, Dipper, and Extendahoe Spool End; Component Parts Not Serviced Separately |
| 12 | | {87428497} | | 2 | Cap Assembly, Stabilizer Spool Ends; Component Parts Not Serviced Separately |
| 13 | | {87433029} | | 1 | Cap Assembly, Boom Spool End; Component Parts Not Serviced Separately |
| 14 | | {87426240} | | 1 | Seal Plate Assembly, Dipper Spool; Component Parts Not Serviced Separately |

HTTP://WWW.MINNPARBACKHOEPARTS.COM



VALVE ASSY - BACKHOE CONTROL, 7 SPOOL (W/ EXT DIPPER, W/O AUX HYDS, W/O PILOT CONTROLS)

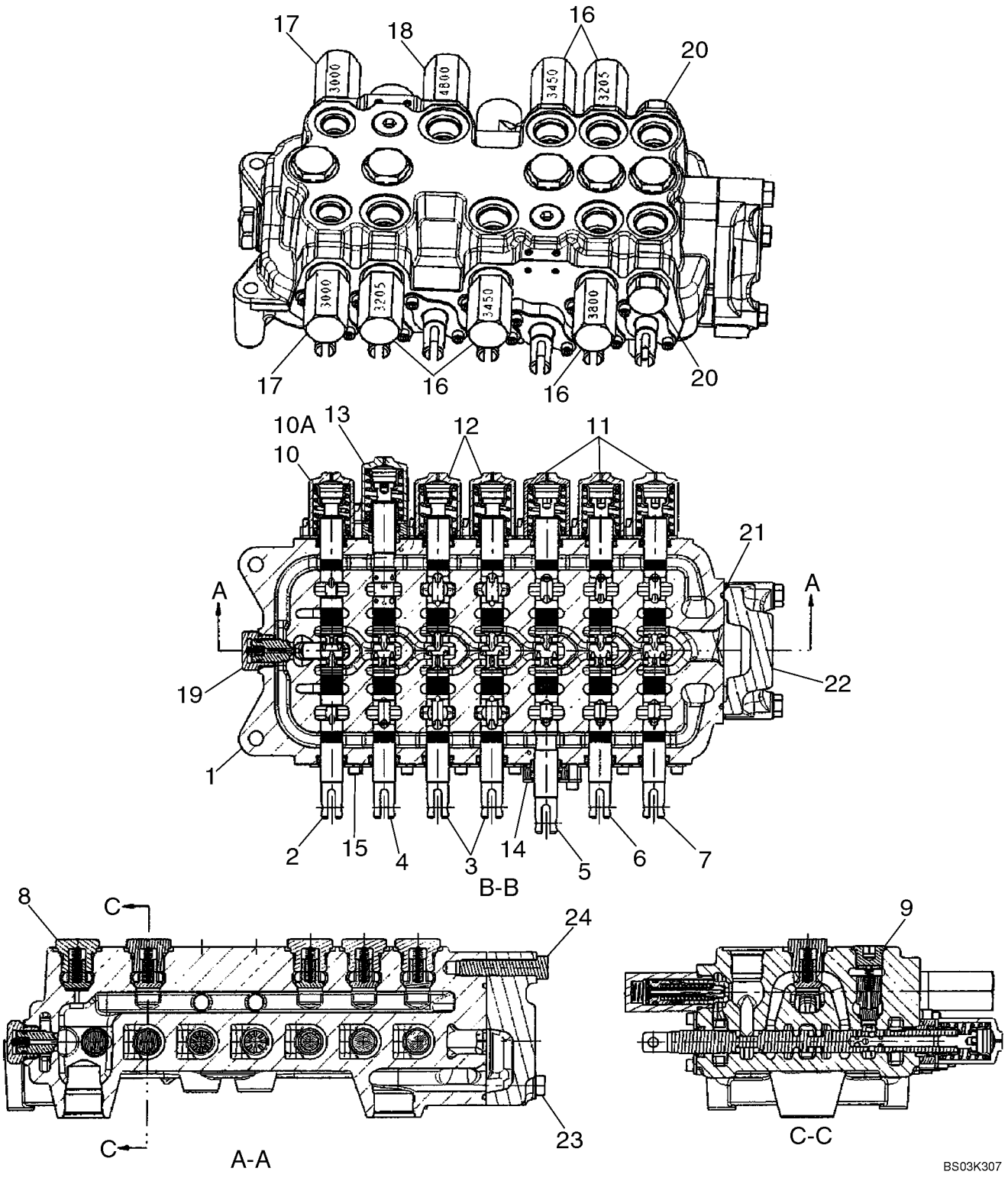

HTTP://WWW.MINNPARBACKHOEPARTS.COM



VALVE ASSY - BACKHOE CONTROL, 7 SPOOL (W/ EXT DIPPER, W/O AUX HYDS, W/O PILOT CONTROLS)

| REF | FN | PART NUMBER | YR/SN | QTY | DESCRIPTION |
|---|---|---|---|---|---|
| 15 | | {87426239} | | 6 | Seal Plate Assembly; Component Parts Not Serviced Separately |
| 16 | | {87426232} | | 5 | Relief Valve Assembly; (2) 3205 psi, (2) 3450 psi, (1) 3800 psi; Component Parts Not Serviced Separately |
| 17 | | {87428490} | | 2 | Relief Valve Assembly; 3000 psi; Component Parts Not Serviced Separately |
| 18 | | {87428488} | | 1 | Relief Valve Assembly; 4800 psi; Component Parts Not Serviced Separately |
| 19 | | {81868381} | | 1 | Anti-Void Plug; Component Parts Not Serviced Separately |
| 20 | | {83981068} | | 2 | Shut-Off Plug; Component Parts Not Serviced Separately |
| 21 | | {87428495} | | 1 | O-Ring Seal; Outlet Section |
| 22 | | {87428493} | | 1 | Outlet Section Assembly; Component Parts Not Serviced Separately |
| 23 | | {87428491} | | 2 | Bolt |
| 24 | | {87428492} | | 1 | Bolt |

HTTP://WWW.MINNPARBACKHOEPARTS.COM



VALVE ASSY - BACKHOE CONTROL, 8 SPOOL (W/ EXT DIPPER, W/ AUX HYDS, W/O PILOT CONTROLS)

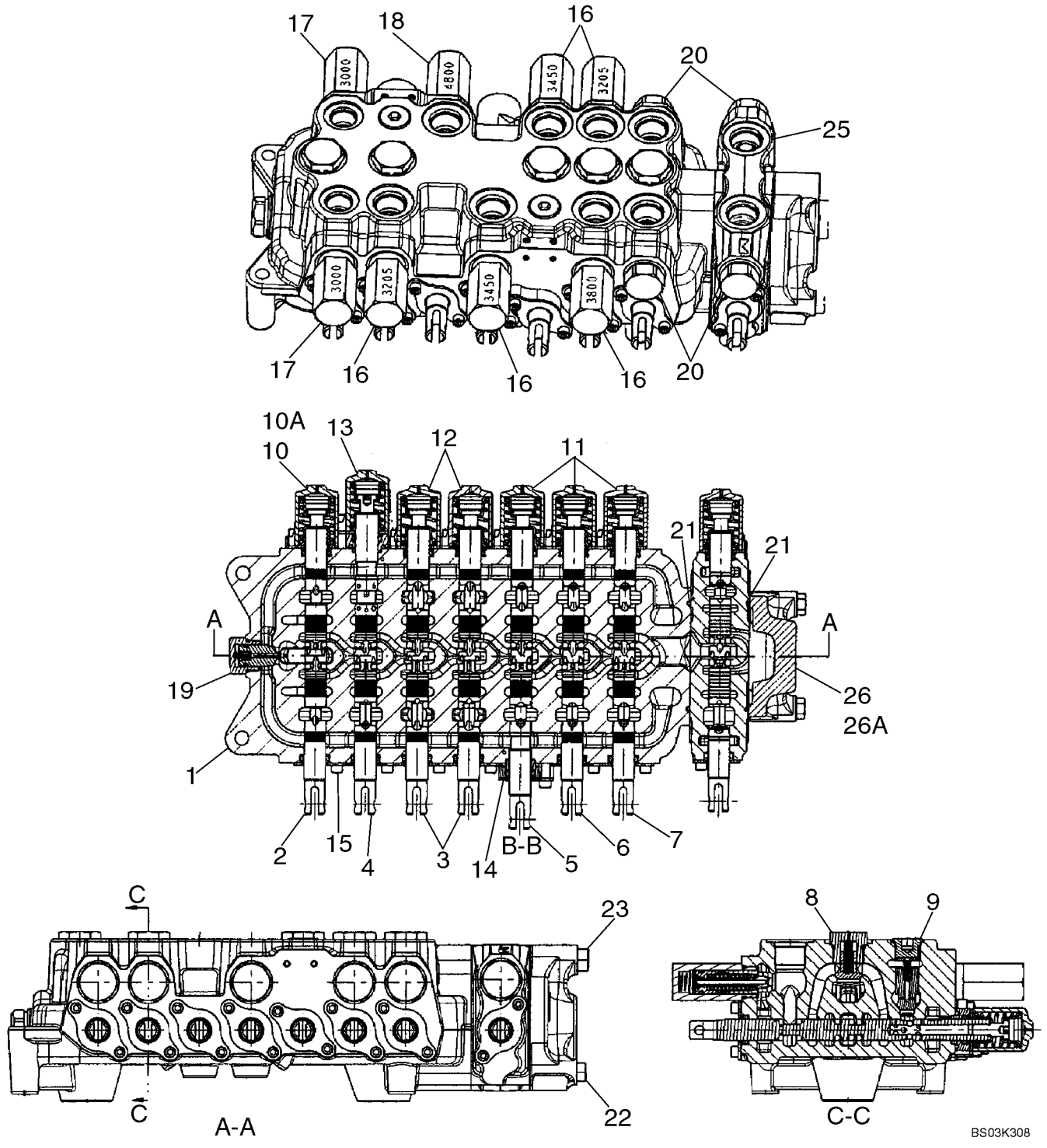

HTTP://WWW.MINNPARBACKHOEPARTS.COM



VALVE ASSY - BACKHOE CONTROL, 8 SPOOL (W/ EXT DIPPER, W/ AUX HYDS, W/O PILOT CONTROLS)

| REF | FN | PART NUMBER | YR/SN | QTY | DESCRIPTION |
|---|---|---|---|---|---|
| | | REF | | | INSTRUCTION MODELS WITH EXTENDABLE DIPPER, WITH AUXILIARY HYDRAULICS, WITHOUT PILOT CONTROLS |
| | | 87413146 | | 1 | VALVE, HYDRAULIC 8 Spool, Foot Swing; Incl. Ref 1 - 10, 12 - 26; If Used |
| | | 87403387 | | 1 | VALVE, HYDRAULIC 8 Spool, Hand Swing; Incl. Ref 1 - 9, 10A, 11 - 25, 26A; If Used |
| 1 | | NSS | | 1 | NOT SERVICED SEPARATELY HOUSING |
| 2 | | NSS | | 1 | NOT SERVICED SEPARATELY SPOOL, SWING |
| 3 | | NSS | | 2 | NOT SERVICED SEPARATELY SPOOL, STABILIZER, Right-Hand and Left-Hand |
| 4 | | NSS | | 1 | NOT SERVICED SEPARATELY SPOOL, BOOM |
| 5 | | NSS | | 1 | NOT SERVICED SEPARATELY SPOOL, DIPPER |
| 6 | | NSS | | 1 | NOT SERVICED SEPARATELY SPOOL, BUCKET |
| 7 | | NSS | | 1 | NOT SERVICED SEPARATELY SPOOL, EXTENDABLE DIPPER |
| 8 | | {87426238} | | 5 | Check Valve Assembly; Hex Head; Component Parts Not Serviced Separately |
| 9 | | {87428486} | | 2 | Check Valve Assembly; Hex Socket Head; Component Parts Not Serviced Separately |
| 10 | | {87433029} | | 1 | Cap Assembly, Swing Spool End; 87413146 Foot Swing Valve; Component Parts Not Serviced Separately |
| 10A | | {87433028} | | 1 | Cap Assembly, Swing Spool End; 87403387 Hand Swing Valve; Component Parts Not Serviced Separately |
| 11 | | {87433028} | | 3 | Cap Assembly, Bucket, Dipper and Extendahoe Spool Ends; Component Parts Not Serviced Separately |
| 12 | | {87428497} | | 2 | Cap Assembly, Stabilizer Spool Ends; Component Parts Not Serviced Separately |
| 13 | | {87433029} | | 1 | Cap Assembly, Boom Spool End; Component Parts Not Serviced Separately |
| 14 | | {87426240} | | 1 | Seal Plate Assembly, Dipper Spool; Component Parts Not Serviced Separately |

HTTP://WWW.MINNPARBACKHOEPARTS.COM



VALVE ASSY - BACKHOE CONTROL, 8 SPOOL (W/ EXT DIPPER, W/ AUX HYDS, W/O PILOT CONTROLS)

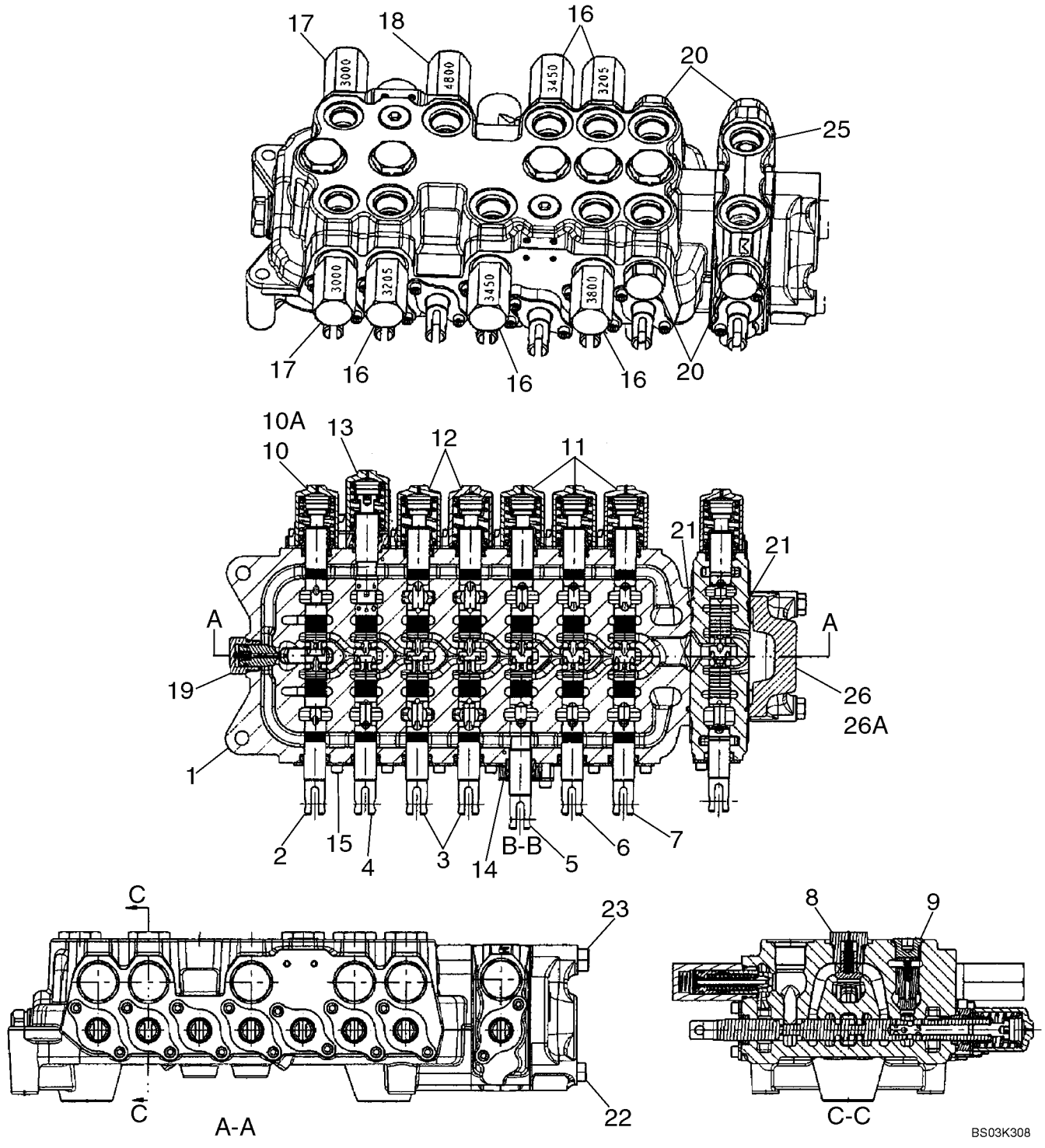

HTTP://WWW.MINNPARBACKHOEPARTS.COM



VALVE ASSY - BACKHOE CONTROL, 8 SPOOL (W/ EXT DIPPER, W/ AUX HYDS, W/O PILOT CONTROLS)

| REF | FN | PART NUMBER | YR/SN | QTY | DESCRIPTION |
|---|---|---|---|---|---|
| 15 | | {87426239} | | 6 | Seal Plate Assembly; Component Parts Not Serviced Separately |
| 16 | | {87426232} | | 5 | Relief Valve Assembly; (2) 3205 psi, (2) 3450 psi, (1) 3800 psi; Component Parts Not Serviced Separately |
| 17 | | {87428490} | | 2 | Relief Valve Assembly; 3000 psi; Component Parts Not Serviced Separately |
| 18 | | {87428488} | | 1 | Relief Valve Assembly; 4800 psi; Component Parts Not Serviced Separately |
| 19 | | {81868381} | | 1 | Anti-Void Valve; Component Parts Not Serviced Separately |
| 20 | | {83981068} | | 4 | Shut-Off Plug; Component Parts Not Serviced Separately |
| 21 | | {87428495} | | 2 | O-Ring Seal, Auxiliary/Outlet Section |
| 22 | | {87428476} | | 2 | Bolt |
| 23 | | {87428477} | | 1 | Bolt |
| 25 | | {87428501} | | 1 | Spool Section Assembly; Auxiliary Hydraulics; Component Parts Not Serviced Separately |
| 26 | | {87433030} | | 1 | Outlet Section Assembly; 87413146 Foot Swing Valve; Component Parts Not Serviced Separately |
| 26A | | {87428493} | | 1 | Outlet Section Assembly; 87403387 Hand Swing Valve; Component Parts Not Serviced Separately |

HTTP://WWW.MINNPARBACKHOEPARTS.COM



VALVE ASSY - BACKHOE CONTROL, 6 SPOOL (W/O EXT DIPPER, W/ OR W/O AUX HYDS, W/ PILOT CONTROLS)

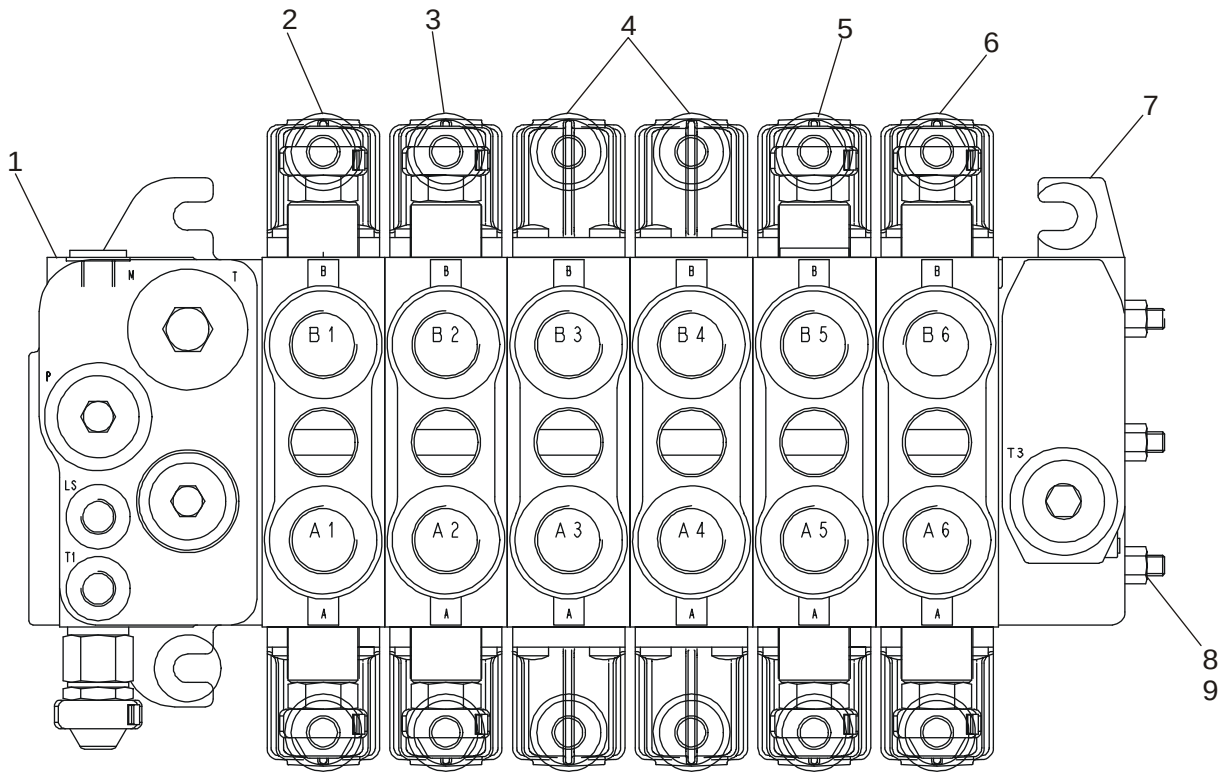


BS03N130

HTTP://WWW.MINNPARBACKHOEPARTS.COM



VALVE ASSY - BACKHOE CONTROL, 6 SPOOL (W/O EXT DIPPER, W/ OR W/O AUX HYDS, W/ PILOT CONTROLS)

| REF | FN | PART NUMBER | YR/SN | QTY | DESCRIPTION |
|---|---|---|---|---|---|
| | | 86987459 | | 1 | VALVE, CONTROL Backhoe, 6 Spool; Incl. Ref 1 - 9 |
| 1 | | {87441495} | | 1 | Inlet Section; Component Parts Not Serviced Separately |
| 2 | | 85826339 | | 1 | VALVE SECTION, HYD Swing Section; See Figure 08-40 |
| 3 | | 85826337 | | 1 | VALVE SECTION, HYD Boom Section; See Figure 08-41 |
| 4 | | 85826340 | | 2 | VALVE SECTION, HYD Stabilizer Section; See Figure 08-42 |
| 5 | | 85826338 | | 1 | VALVE SECTION, HYD Dipper Section; See Figure 08-43 |
| 6 | | 85826365 | | 1 | VALVE SECTION, HYD Bucket Section; See Figure 08-44 |
| 7 | | NSS | | 1 | NOT SERVICED SEPARATELY Outlet Section |
| 8 | | NSS | | 3 | NOT SERVICED SEPARATELY Tie Bolt |
| 9 | | NSS | | 3 | NOT SERVICED SEPARATELY Nut |

HTTP://WWW.MINNPARBACKHOEPARTS.COM



VALVE ASSY - BACKHOE CONTROL, 7 SPOOL (W/ EXT DIPPER, W/ OR W/O AUX HYDS, W/ PILOT CONTROLS)

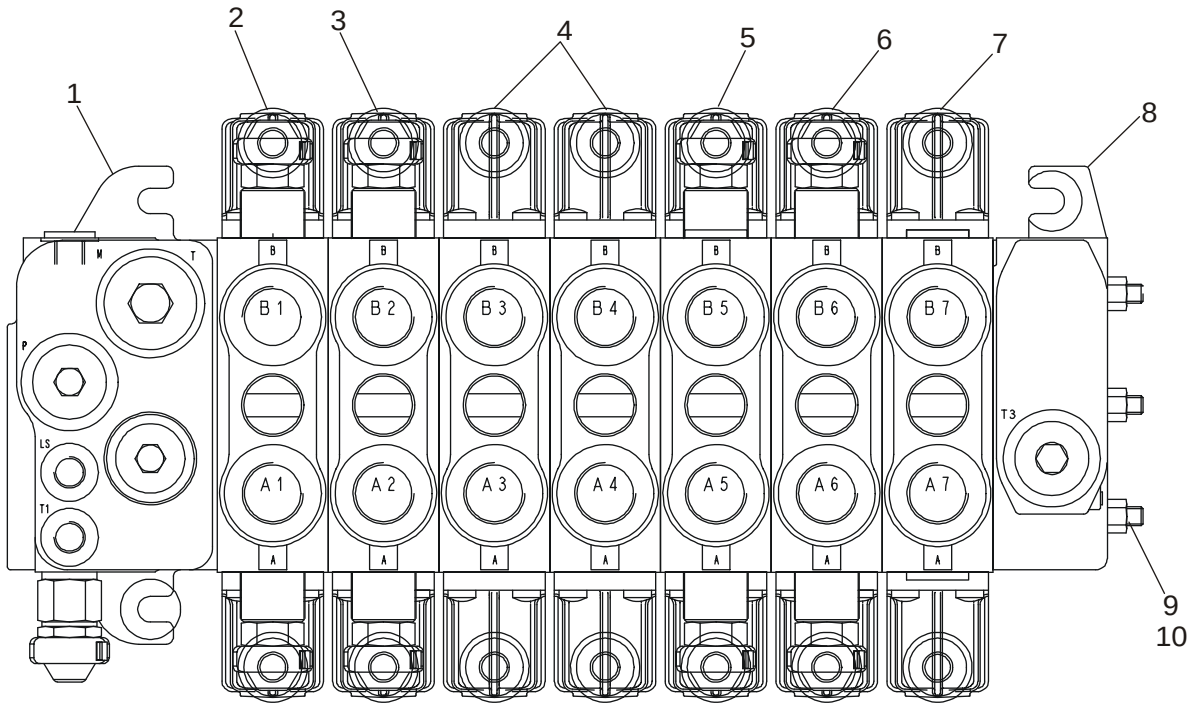


BS03N131

HTTP://WWW.MINNPARBACKHOEPARTS.COM



VALVE ASSY - BACKHOE CONTROL, 7 SPOOL (W/ EXT DIPPER, W/ OR W/O AUX HYDS, W/ PILOT CONTROLS)

| REF | FN | PART NUMBER | YR/SN | QTY | DESCRIPTION |
|---|---|---|---|---|---|
| | | 86987460 | | 1 | VALVE, CONTROL Backhoe, 7 Spool; Incl. Ref 1 - 10 |
| 1 | | {87441495} | | 1 | Inlet Section; Component Parts Not Serviced Separately |
| 2 | | 85826339 | | 1 | VALVE SECTION, HYD Swing Section; See Figure 08-40 |
| 3 | | 85826337 | | 1 | VALVE SECTION, HYD Boom Section; See Figure 08-41 |
| 4 | | 85826340 | | 2 | VALVE SECTION, HYD Stabilizer Section; See Figure 08-42 |
| 5 | | 85826338 | | 1 | VALVE SECTION, HYD Dipper Section; See Figure 08-43 |
| 6 | | 85826365 | | 1 | VALVE SECTION, HYD Bucket Section; See Figure 08-44 |
| 7 | | 85826341 | | 1 | VALVE SECTION, HYD Extendable Dipper Section; See Figure 08-45 |
| 8 | | NSS | | 1 | NOT SERVICED SEPARATELY Outlet Section |
| 9 | | NSS | | 3 | NOT SERVICED SEPARATELY Tie Bolt |
| 10 | | NSS | | 3 | NOT SERVICED SEPARATELY Nut |

HTTP://WWW.MINNPARBACKHOEPARTS.COM



VALVE ASSY - BACKHOE CONTROL, 7 SPOOL (W/O EXT DIPPER, W/ AUX HYDS, W/ PILOT CONTROLS)

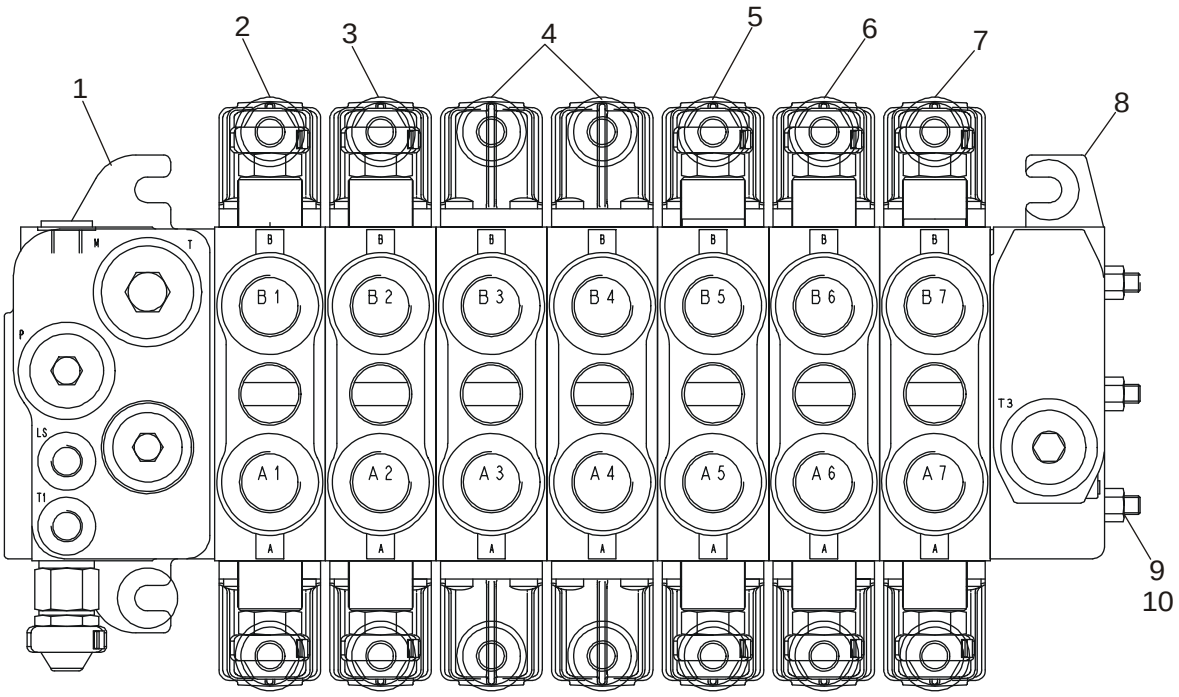


BS03N132

HTTP://WWW.MINNPARBACKHOEPARTS.COM



VALVE ASSY - BACKHOE CONTROL, 7 SPOOL (W/O EXT DIPPER, W/ AUX HYDS, W/ PILOT CONTROLS)

| REF | FN | PART NUMBER | YR/SN | QTY | DESCRIPTION |
|---|---|---|---|---|---|
| | | 87407965 | | 1 | VALVE, CONTROL Backhoe, 7 Spool; Incl. Ref 1 - 10 |
| 1 | | {87441495} | | 1 | Inlet Section; Component Parts Not Serviced Separately |
| 2 | | 85826339 | | 1 | VALVE SECTION, HYD Swing Section; See Figure 08-40 |
| 3 | | 85826337 | | 1 | VALVE SECTION, HYD Boom Section; See Figure 08-41 |
| 4 | | 85826340 | | 2 | VALVE SECTION, HYD Stabilizer Section; See Figure 08-42 |
| 5 | | 85826338 | | 1 | VALVE SECTION, HYD Dipper Section; See Figure 08-43 |
| 6 | | 85826365 | | 1 | VALVE SECTION, HYD Bucket Section; See Figure 08-44 |
| 7 | | 85826342 | | 1 | VALVE SECTION, HYD Auxiliary Section; See Figure 08-46 |
| 8 | | NSS | | 1 | NOT SERVICED SEPARATELY Outlet Section |
| 9 | | NSS | | 3 | NOT SERVICED SEPARATELY Tie Bolt |
| 10 | | NSS | | 3 | NOT SERVICED SEPARATELY Nut |

HTTP://WWW.MINNPARBACKHOEPARTS.COM



VALVE ASSY - BACKHOE CONTROL, 8 SPOOL (W/ EXT DIPPER, W/ AUX HYDS, W/ PILOT CONTROLS)

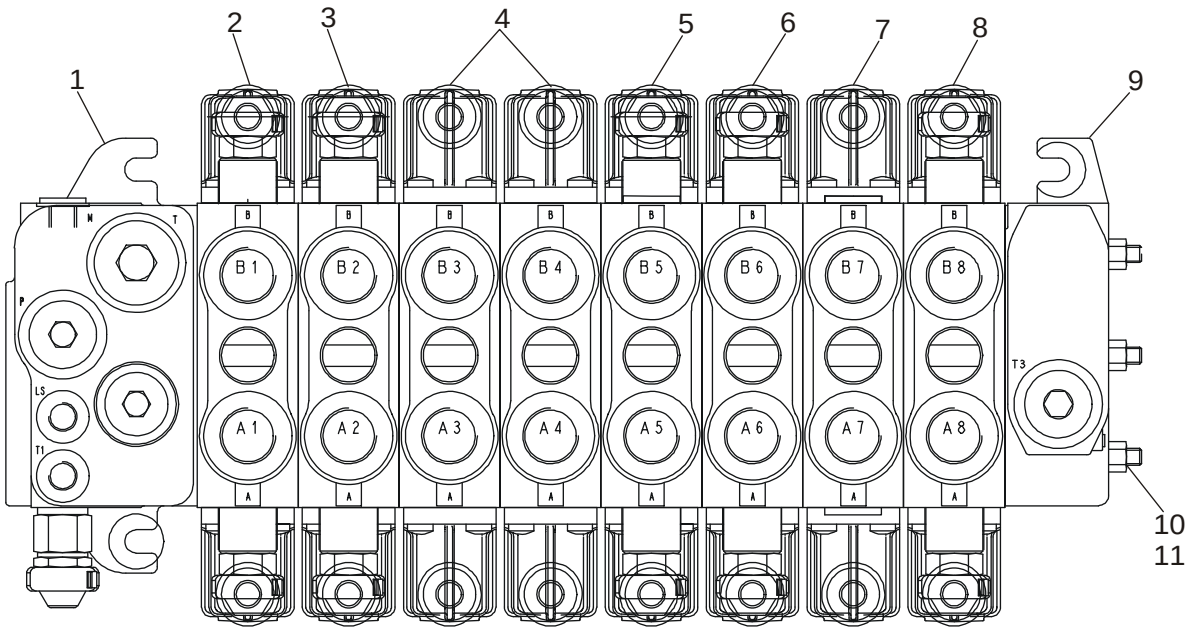


BS03N133

HTTP://WWW.MINNPARBACKHOEPARTS.COM



VALVE ASSY - BACKHOE CONTROL, 8 SPOOL (W/ EXT DIPPER, W/ AUX HYDS, W/ PILOT CONTROLS)

| REF | FN | PART NUMBER | YR/SN | QTY | DESCRIPTION |
|---|---|---|---|---|---|
| | | 86987461 | | 1 | VALVE, HYDRAULIC Backhoe, 8 Spool; Incl. Ref 1 - 11 |
| 1 | | {87441495} | | 1 | Inlet Section; Component Parts Not Serviced Separately |
| 2 | | 85826339 | | 1 | VALVE SECTION, HYD Swing Section; See Figure 08-40 |
| 3 | | 85826337 | | 1 | VALVE SECTION, HYD Boom Section; See Figure 08-41 |
| 4 | | 85826340 | | 2 | VALVE SECTION, HYD Stabilizer Section; See Figure 08-42 |
| 5 | | 85826338 | | 1 | VALVE SECTION, HYD Dipper Section; See Figure 08-43 |
| 6 | | 85826365 | | 1 | VALVE SECTION, HYD Bucket Section; See Figure 08-44 |
| 7 | | 85826341 | | 1 | VALVE SECTION, HYD Extendable Dipper Section; See Figure 08-45 |
| 8 | | 85826342 | | 1 | VALVE SECTION, HYD Auxiliary Section; See Figure 08-46 |
| 9 | | NSS | | 1 | NOT SERVICED SEPARATELY Outlet Section |
| 10 | | NSS | | 3 | NOT SERVICED SEPARATELY Tie Bolt |
| 11 | | NSS | | 3 | NOT SERVICED SEPARATELY Nut |

HTTP://WWW.MINNPARBACKHOEPARTS.COM



VALVE SECTION - BACKHOE SWING (WITH PILOT CONTROLS)

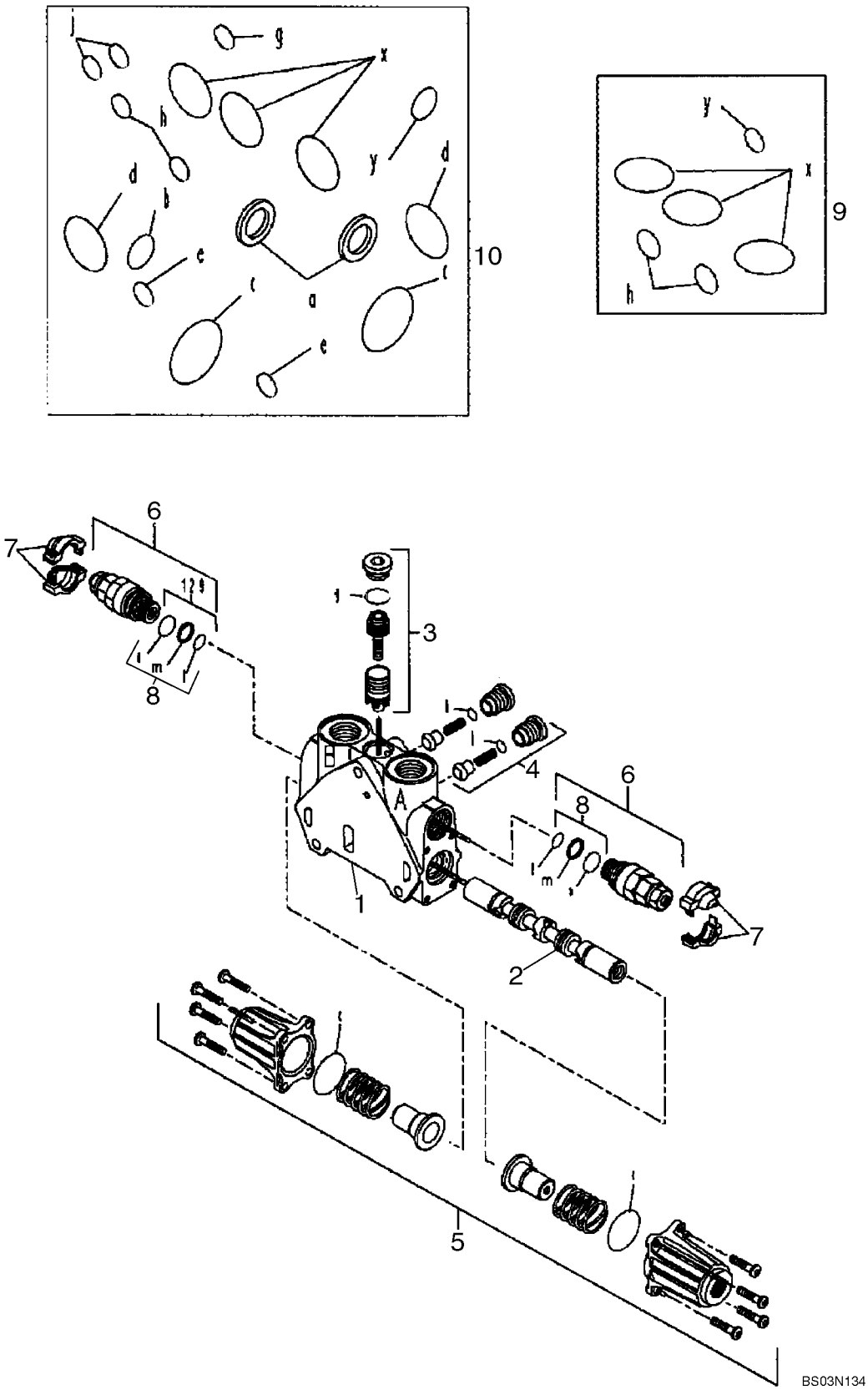

HTTP://WWW.MINNPARBACKHOEPARTS.COM



VALVE SECTION - BACKHOE SWING (WITH PILOT CONTROLS)

| REF | FN | PART NUMBER | YR/SN | QTY | DESCRIPTION |
|---|---|---|---|---|---|
| | | 85826339 | | 1 | VALVE SECTION, HYD Swing; Incl. Ref 1 - 10 |
| 1 | | NSS | | 1 | NOT SERVICED SEPARATELY HOUSING |
| 2 | | NSS | | 1 | NOT SERVICED SEPARATELY SPOOL |
| 3 | | {85826345} | | 1 | Pressure Compensator Kit; Component Parts Not Serviced Separately |
| 4 | | {85811938} | | 2 | Check Valve Kit; Component Parts Not Serviced Separately |
| 5 | | 85826344 | | 1 | KIT End Cap Kit; Component Parts Not Serviced Separately |
| 6 | | 85812114 | | 2 | VALVE, HYDRAULIC Pressure Relief Valve; Component Parts Not Serviced Separately |
| 7 | | 85811934 | | 2 | KIT Cover, Orange |
| 7 | | 85811935 | | 2 | KIT Cover, Blue |
| 8 | | 85811933 | | 2 | KIT Seal Kit Includes (2) O-Rings, (1) Thrust Ring; Component Parts Not Serviced Separately |
| 9 | | 85819148 | | 1 | KIT Seal Kit Includes (6) O-Rings; Component Parts Not Serviced Separately |
| 10 | | {85824282} | | 1 | Seal Kit Includes (15) O-Rings, (2) Lip Seals; Component Parts Not Serviced Separately |

HTTP://WWW.MINNPARBACKHOEPARTS.COM



VALVE SECTION - BACKHOE BOOM (WITH PILOT CONTROLS)

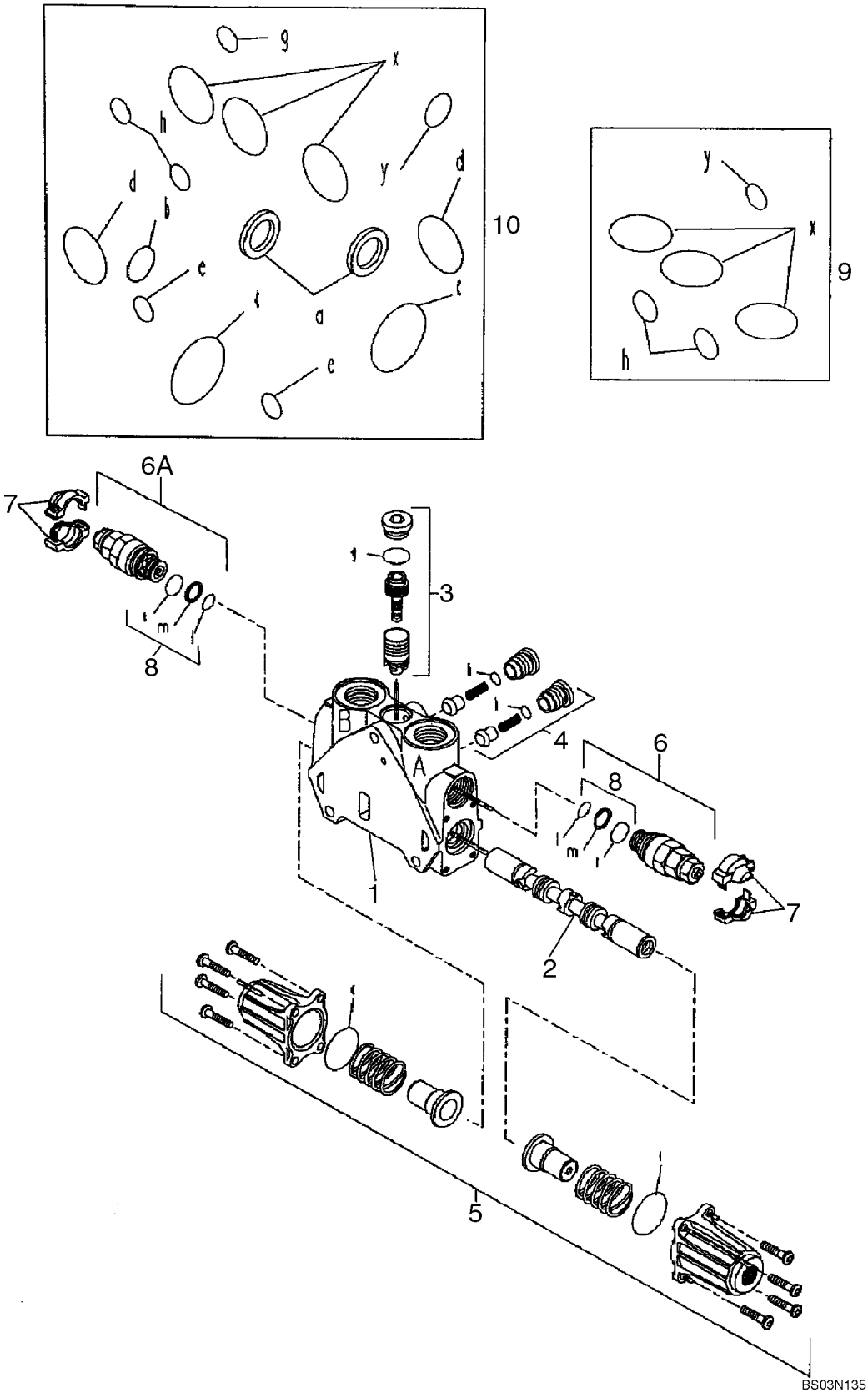

HTTP://WWW.MINNPARBACKHOEPARTS.COM



VALVE SECTION - BACKHOE BOOM (WITH PILOT CONTROLS)

| REF | FN | PART NUMBER | YR/SN | QTY | DESCRIPTION |
|---|---|---|---|---|---|
| | | 85826337 | | 1 | VALVE SECTION, HYD Boom; Incl. Ref 1 - 10 |
| 1 | | NSS | | 1 | NOT SERVICED SEPARATELY HOUSING |
| 2 | | NSS | | 1 | NOT SERVICED SEPARATELY SPOOL |
| 3 | | 85819378 | | 1 | KIT Pressure Compensator Kit; Component Parts Not Serviced Separately |
| 4 | | {85811938} | | 2 | Check Valve Kit; Component Parts Not Serviced Separately |
| 5 | | 85826344 | | 1 | KIT End Cap Kit; Component Parts Not Serviced Separately |
| 6 | | 85812115 | | 1 | VALVE, HYDRAULIC Pressure Relief Valve Kit; Side A; Component Parts Not Serviced Separately |
| 6A | | {85826346} | | 1 | Pressure Relief Valve Kit; Side B; Component Parts Not Serviced Separately |
| 7 | | 85811934 | | 2 | KIT Cover, Orange |
| 7 | | 85811935 | | 2 | KIT Cover, Blue |
| 8 | | 85811933 | | 2 | KIT Seal Kit Includes (2) O-Rings, (1) Thrust Ring; Component Parts Not Serviced Separately |
| 9 | | 85819148 | | 1 | KIT Seal Kit Includes (6) O-Rings; Component Parts Not Serviced Separately |
| 10 | | {85824281} | | 1 | Seal Kit Includes (13) O-Rings, (2) Lip Seals; Component Parts Not Serviced Separately |

HTTP://WWW.MINNPARBACKHOEPARTS.COM



VALVE SECTION - BACKHOE STABILIZER (WITH PILOT CONTROLS)

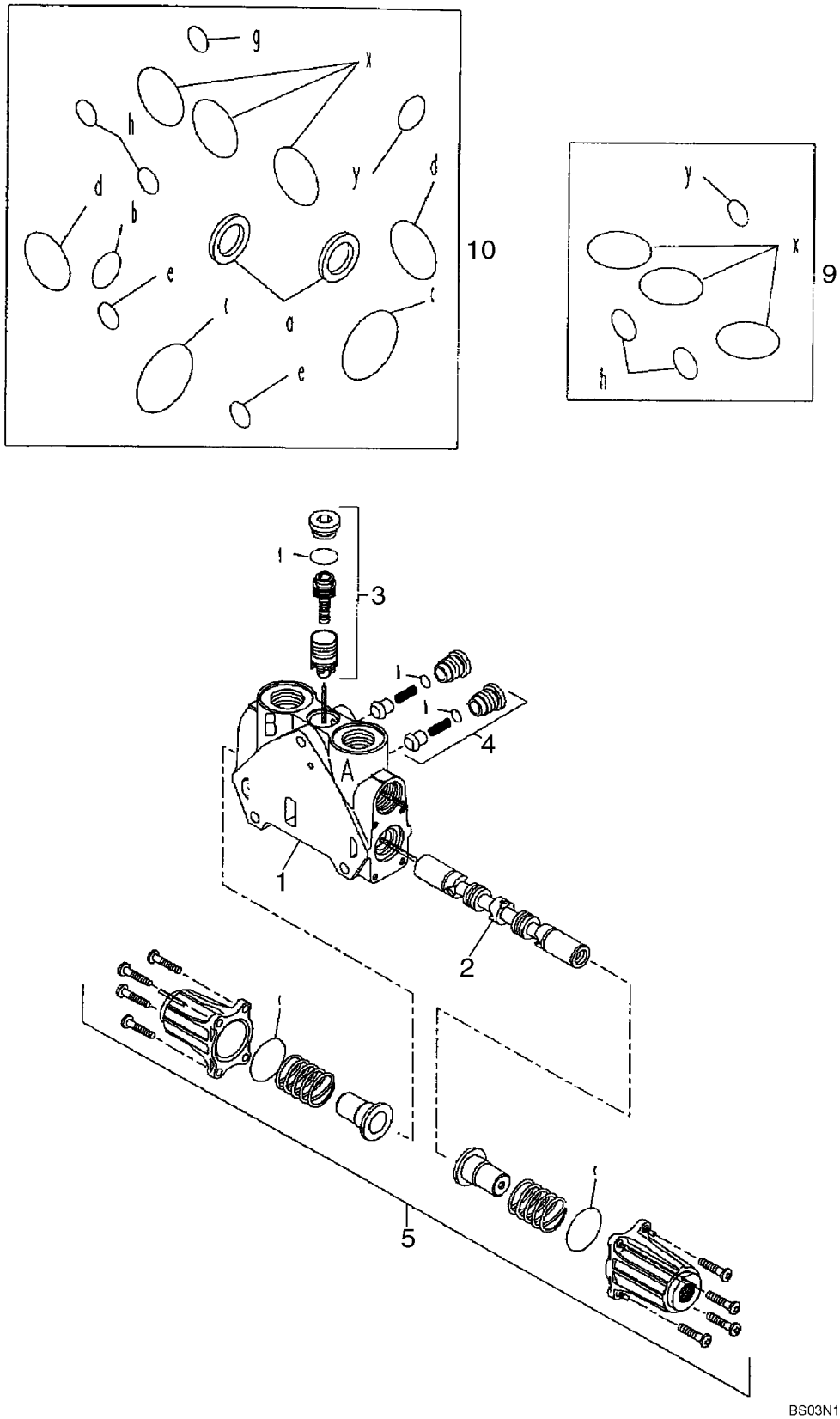

HTTP://WWW.MINNPARBACKHOEPARTS.COM



VALVE SECTION - BACKHOE STABILIZER (WITH PILOT CONTROLS)

| REF | FN | PART NUMBER | YR/SN | QTY | DESCRIPTION |
|---|---|---|---|---|---|
| | | 85826340 | | 2 | VALVE SECTION, HYD Stabilizer; Left-Hand and Right-Hand; Incl. Ref 1 - 10 |
| 1 | | NSS | | 1 | NOT SERVICED SEPARATELY HOUSING |
| 2 | | NSS | | 1 | NOT SERVICED SEPARATELY SPOOL |
| 3 | | 85819378 | | 1 | KIT Pressure Compensator Kit; Component Parts Not Serviced Separately |
| 4 | | {85811938} | | 2 | Check Valve Kit; Component Parts Not Serviced Separately |
| 5 | | 85826344 | | 1 | KIT End Cap Kit; Component Parts Not Serviced Separately |
| 9 | | 85819148 | | 1 | KIT Seal Kit Includes (6) O-Rings; Component Parts Not Serviced Separately |
| 10 | | {85824281} | | 1 | Seal Kit Includes (13) O-Rings, (2) Lip Seals; Component Parts Not Serviced Separately |

HTTP://WWW.MINNPARBACKHOEPARTS.COM



VALVE SECTION - BACKHOE DIPPER (WITH PILOT CONTROLS)

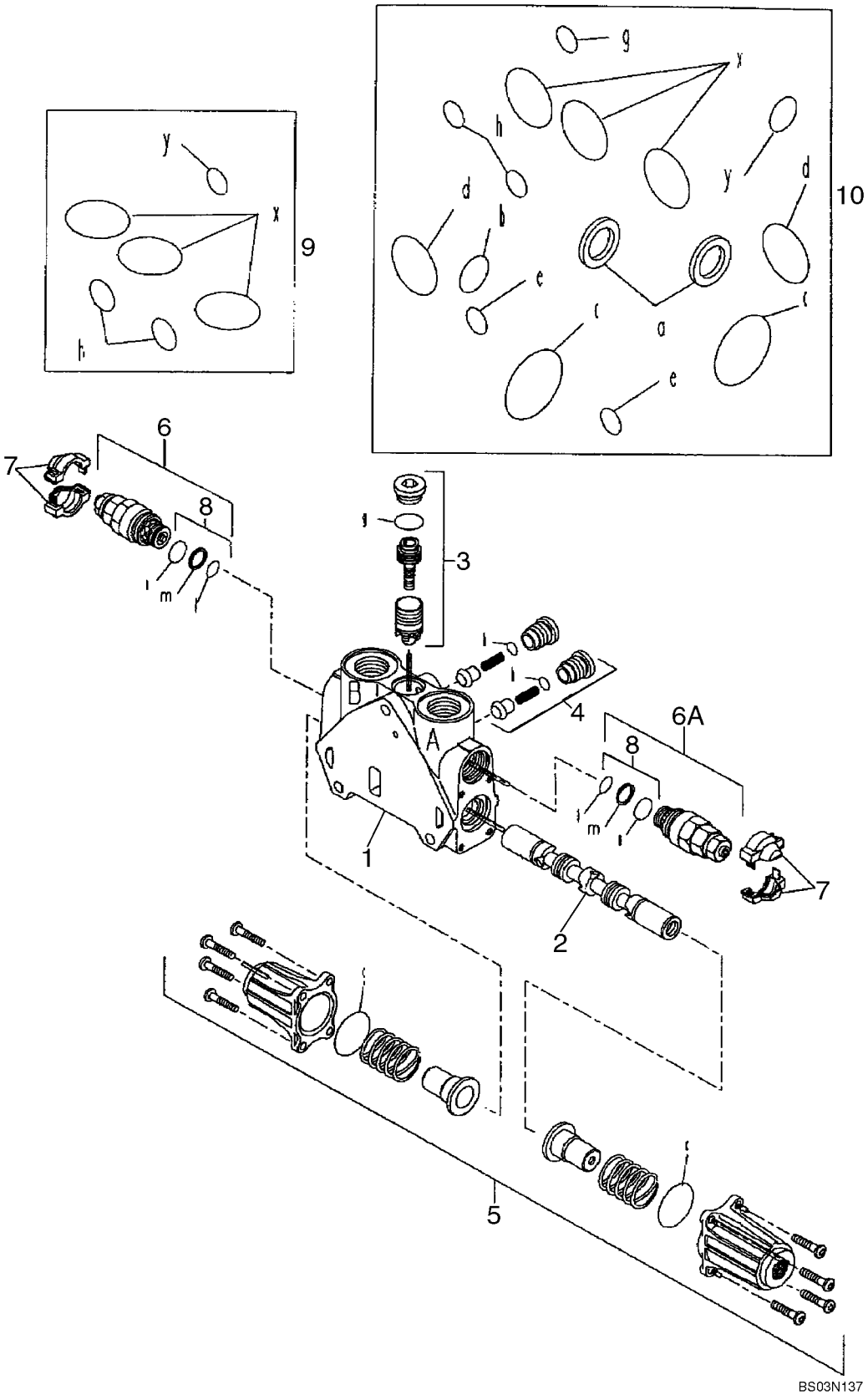

HTTP://WWW.MINNPARBACKHOEPARTS.COM



VALVE SECTION - BACKHOE DIPPER (WITH PILOT CONTROLS)

| REF | FN | PART NUMBER | YR/SN | QTY | DESCRIPTION |
|---|---|---|---|---|---|
| | | 85826338 | | 1 | VALVE SECTION, HYD Dipper; Incl. Ref 1 - 10 |
| 1 | | NSS | | 1 | NOT SERVICED SEPARATELY HOUSING |
| 2 | | NSS | | 1 | NOT SERVICED SEPARATELY SPOOL |
| 3 | | {85826345} | | 1 | Pressure Compensator Kit; Component Parts Not Serviced Separately |
| 4 | | {85811938} | | 2 | Check Valve Kit; Component Parts Not Serviced Separately |
| 5 | | 85826344 | | 1 | KIT End Cap Kit; Component Parts Not Serviced Separately |
| 6 | | 85812116 | | 1 | VALVE, HYDRAULIC Pressure Relief Valve; Side B; Component Parts Not Serviced Separately |
| 6A | | {85826343} | | 1 | Pressure Relief Valve; Side A; Component Parts Not Serviced Separately |
| 7 | | 85811934 | | 2 | KIT Cover, Orange |
| 7 | | 85811935 | | 2 | KIT Cover, Blue |
| 8 | | 85811933 | | 2 | KIT Seal Kit Includes (2) O-Rings, (1) Thrust Ring; Component Parts Not Serviced Separately |
| 9 | | 85819148 | | 1 | KIT Seal Kit Includes (6) O-Rings; Component Parts Not Serviced Separately |
| 10 | | {85824281} | | 1 | Seal Kit Includes (13) O-Rings, (2) Lip Seals; Component Parts Not Serviced Separately |

HTTP://WWW.MINNPARBACKHOEPARTS.COM



VALVE SECTION - BACKHOE BUCKET (WITH PILOT CONTROLS)

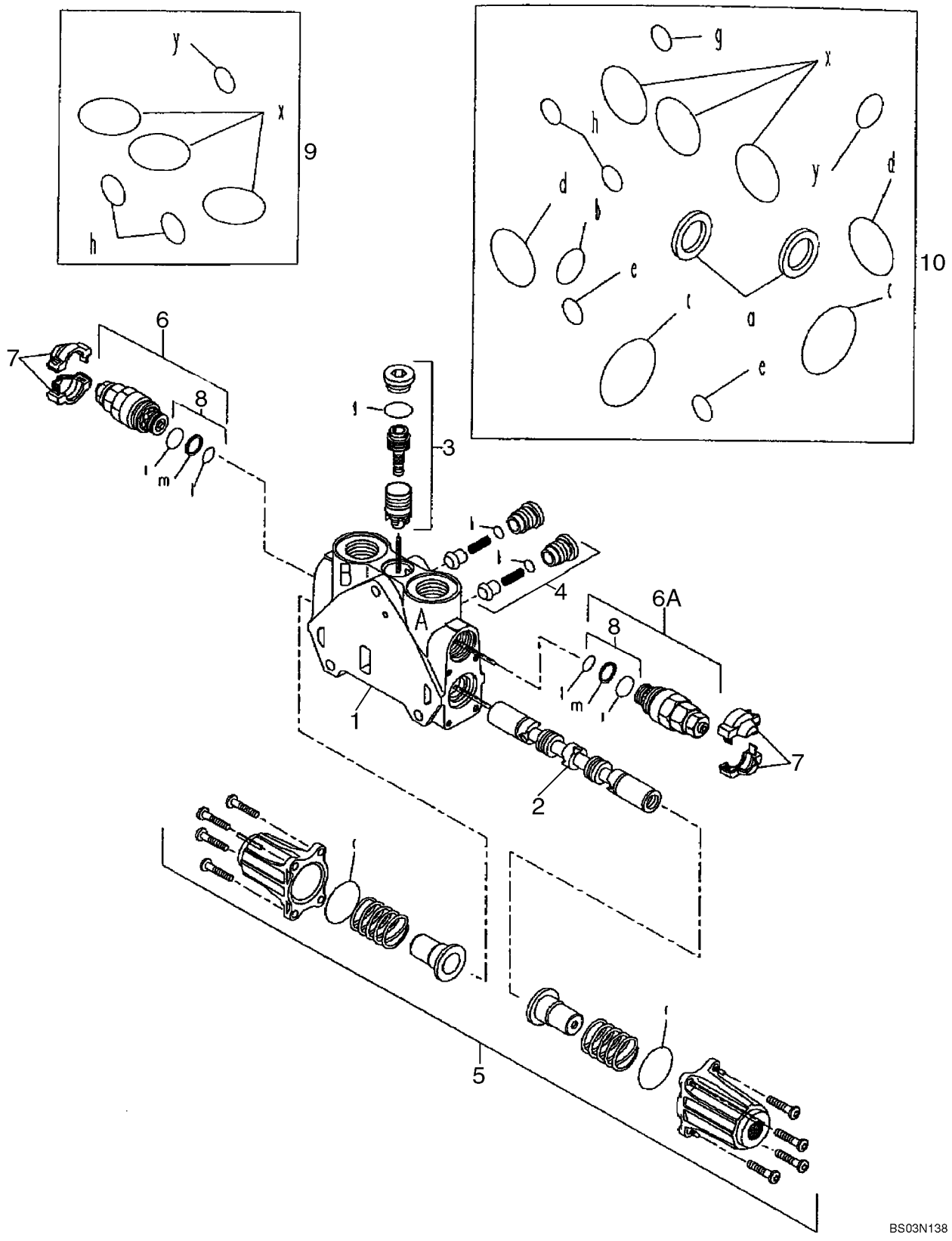

HTTP://WWW.MINNPARBACKHOEPARTS.COM



VALVE SECTION - BACKHOE BUCKET (WITH PILOT CONTROLS)

| REF | FN | PART NUMBER | YR/SN | QTY | DESCRIPTION |
|---|---|---|---|---|---|
| | | 85826365 | | 1 | VALVE SECTION, HYD Bucket; Incl. Ref 1 - 10 |
| 1 | | NSS | | 1 | NOT SERVICED SEPARATELY HOUSING |
| 2 | | NSS | | 1 | NOT SERVICED SEPARATELY SPOOL |
| 3 | | 85819378 | | 1 | KIT Pressure Compensator Kit; Component Parts Not Serviced Separately |
| 4 | | {85811938} | | 2 | Check Valve Kit; Component Parts Not Serviced Separately |
| 5 | | 85826344 | | 1 | KIT End Cap Kit; Component Parts Not Serviced Separately |
| 6 | | 85812116 | | 1 | VALVE, HYDRAULIC Pressure Relief Valve; Side B; Component Parts Not Serviced Separately |
| 6A | | {85826905} | | 1 | Pressure Relief Valve; Side A; Component Parts Not Serviced Separately |
| 7 | | 85811934 | | 2 | KIT Cover, Orange |
| 7 | | 85811935 | | 2 | KIT Cover, Blue |
| 8 | | 85811933 | | 2 | KIT Seal Kit Includes (2) O-Rings, (1) Thrust Ring; Component Parts Not Serviced Separately |
| 9 | | 85819148 | | 1 | KIT Seal Kit Includes (6) O-Rings; Component Parts Not Serviced Separately |
| 10 | | {85824281} | | 1 | Seal Kit Includes (13) O-Rings, (2) Lip Seals; Component Parts Not Serviced Separately |

HTTP://WWW.MINNPARBACKHOEPARTS.COM



VALVE SECTION - EXTENDABLE DIPPER (WITH PILOT CONTROLS)

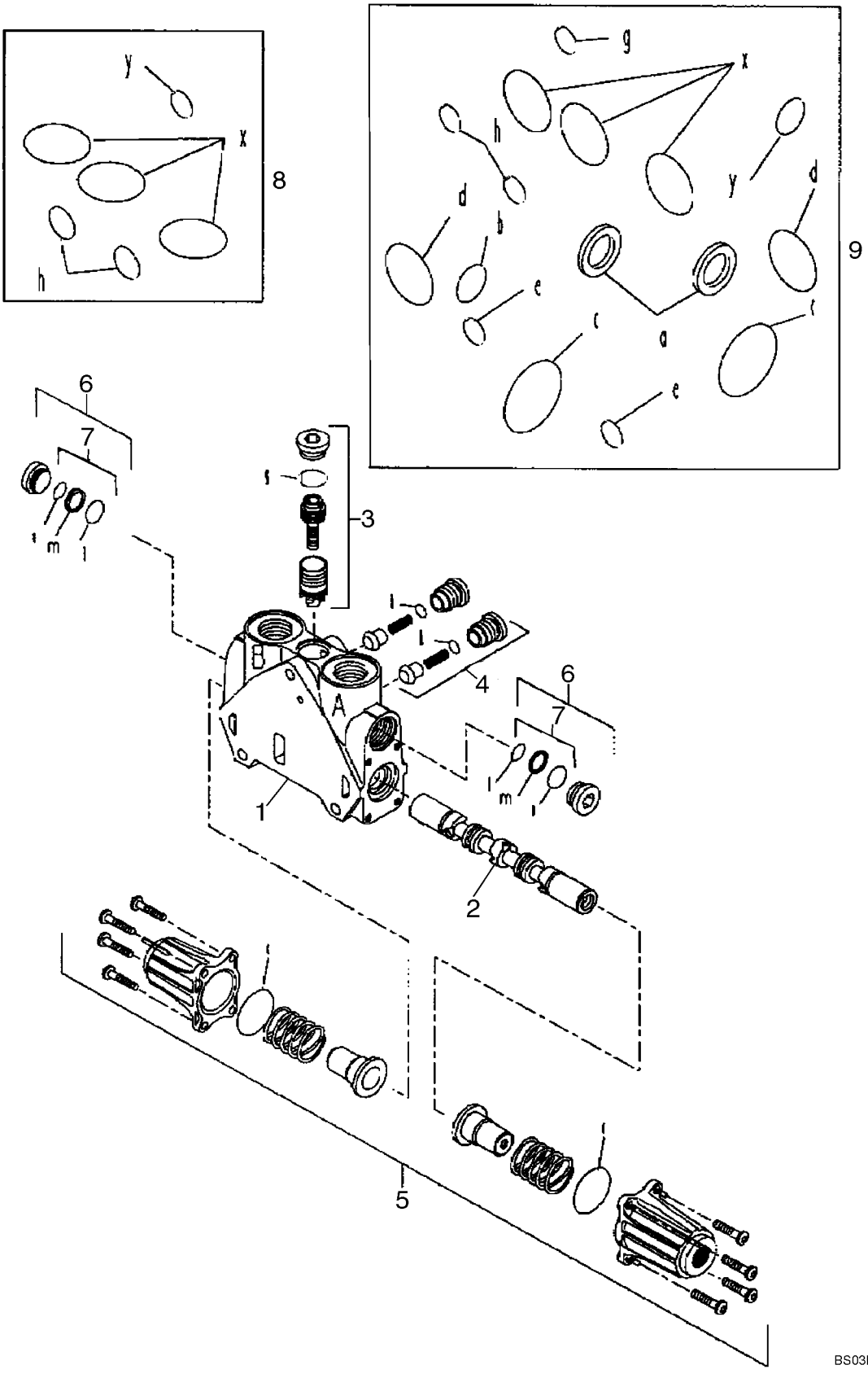

HTTP://WWW.MINNPARBACKHOEPARTS.COM



VALVE SECTION - EXTENDABLE DIPPER (WITH PILOT CONTROLS)

| REF | FN | PART NUMBER | YR/SN | QTY | DESCRIPTION |
|---|---|---|---|---|---|
| | | 85826341 | | 1 | VALVE SECTION, HYD Extendable Dipper; Incl. Ref 1 - 9 |
| 1 | | NSS | | 1 | NOT SERVICED SEPARATELY HOUSING |
| 2 | | NSS | | 1 | NOT SERVICED SEPARATELY SPOOL |
| 3 | | 85819378 | | 1 | KIT Pressure Compensator Kit; Component Parts Not Serviced Separately |
| 4 | | {85811938} | | 2 | Check Valve Kit; Component Parts Not Serviced Separately |
| 5 | | 85826344 | | 1 | KIT End Cap Kit; Component Parts Not Serviced Separately |
| 6 | | {85811937} | | 2 | Plug Assembly Kit; Component Parts Not Serviced Separately |
| 7 | | 85811933 | | 2 | KIT Seal Kit Includes (2) O-Rings, (1) Thrust Ring; Component Parts Not Serviced Separately |
| 8 | | 85819148 | | 1 | KIT Seal Kit Includes (6) O-Rings; Component Parts Not Serviced Separately |
| 9 | | {85824281} | | 1 | Seal Kit Includes (13) O-Rings, (2) Lip Seals; Component Parts Not Serviced Separately |

HTTP://WWW.MINNPARBACKHOEPARTS.COM



VALVE SECTION - OPTIONS, AUXILIARY HYDRAULICS (WITH PILOT CONTROLS)

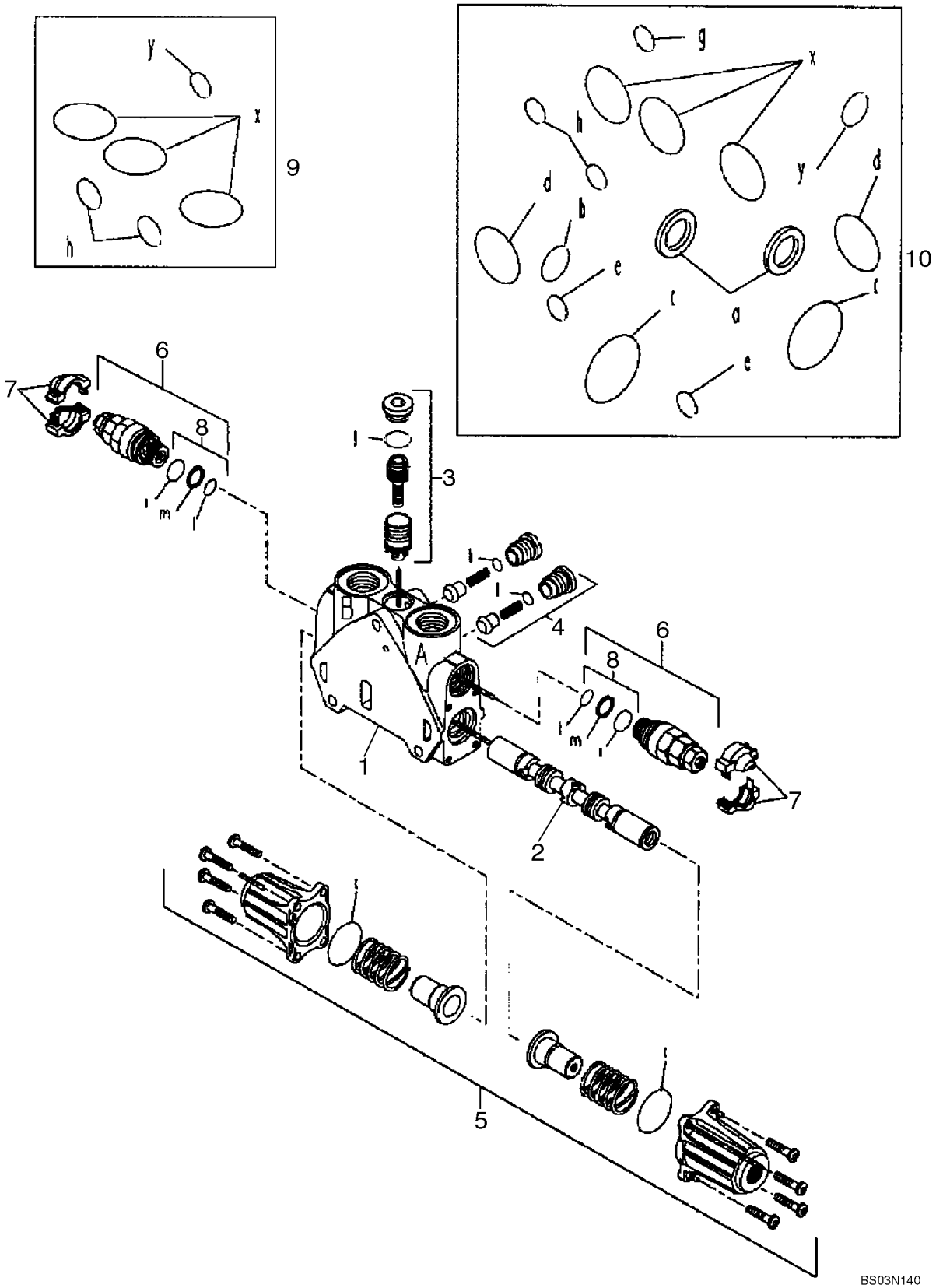

HTTP://WWW.MINNPARBACKHOEPARTS.COM



VALVE SECTION - OPTIONS, AUXILIARY HYDRAULICS (WITH PILOT CONTROLS)

| REF | FN | PART NUMBER | YR/SN | QTY | DESCRIPTION |
|---|---|---|---|---|---|
| | | 85826342 | | 1 | VALVE SECTION, HYD Options, Auxiliary Hydraulics; Incl. Ref 1 - 10 |
| 1 | | NSS | | 1 | NOT SERVICED SEPARATELY HOUSING |
| 2 | | NSS | | 1 | NOT SERVICED SEPARATELY SPOOL |
| 3 | | 85819378 | | 1 | KIT Pressure Compensator Kit; Component Parts Not Serviced Separately |
| 4 | | {85811938} | | 2 | Check Valve Kit; Component Parts Not Serviced Separately |
| 5 | | 85826344 | | 1 | KIT End Cap Kit; Component Parts Not Serviced Separately |
| 6 | | 85812115 | | 2 | VALVE, HYDRAULIC Pressure Relief Valve; Component Parts Not Serviced Separately |
| 7 | | 85811934 | | 2 | KIT Cover, Orange |
| 7 | | 85811935 | | 2 | KIT Cover, Blue |
| 8 | | 85811933 | | 2 | KIT Seal Kit Includes (2) O-Rings, (1) Thrust Ring; Component Parts Not Serviced Separately |
| 9 | | 85819148 | | 1 | KIT Seal Kit Includes (6) O-Rings; Component Parts Not Serviced Separately |
| 10 | | {85824281} | | 1 | Seal Kit Includes (13) O-Rings, (2) LIp Seals; Component Parts Not Serviced Separately |

HTTP://WWW.MINNPARBACKHOEPARTS.COM



VALVE ASSY, PRESSURE REDUCING (2 SPOOL) (WITH PILOT CONTROLS)

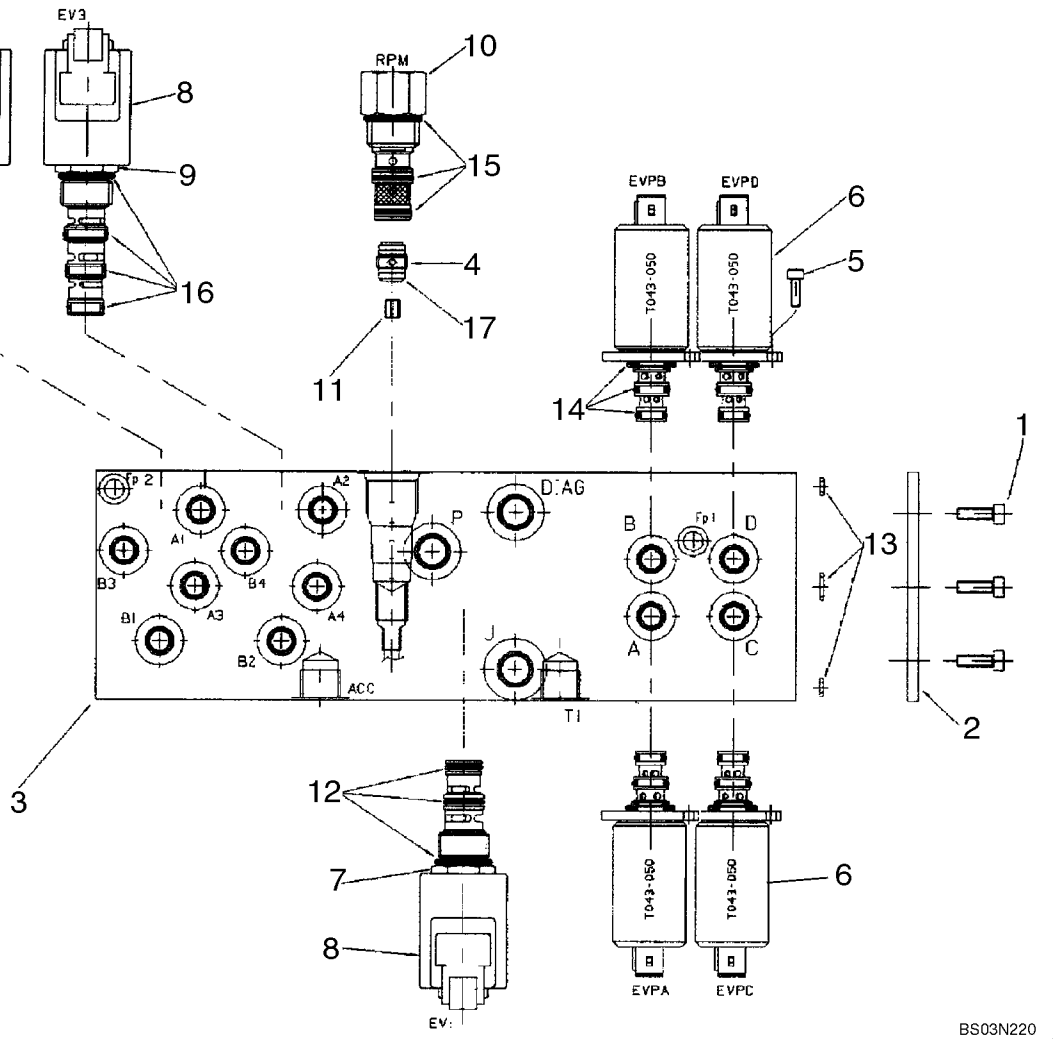

HTTP://WWW.MINNPARBACKHOEPARTS.COM



VALVE ASSY, PRESSURE REDUCING (2 SPOOL) (WITH PILOT CONTROLS)

| REF | FN | PART NUMBER | YR/SN | QTY | DESCRIPTION |
|---|---|---|---|---|---|
| | | 85827472 | | 1 | VALVE, HYDRAULIC Pressure Reducing, Two Spool, Pilot Controls; Incl. Ref 1 - 17 |
| 1 | | {14304021} | | 3 | M5 x 10 Screw |
| 2 | | {85827991} | | 1 | Sealing Plate |
| 3 | | {85828013} | | 1 | Manifold Block |
| 4 | | {85827992} | | 1 | Check Valve |
| 5 | | {14302921} | | 8 | M4 x 10 Screw |
| 6 | | {85827993} | | 4 | Pressure Reducing Valve |
| 7 | | {85827994} | | 1 | Solenoid Valve Cartridge, 3 Way, 2 Position |
| 8 | | {85827995} | | 3 | Coil With Diode |
| 9 | | {85827996} | | 2 | Solenoid Valve Cartridge, 4 Way, 2 Position |
| 10 | | {85827997} | | 1 | Mechanical Pressure Reducing Valve With Fixed Setting |
| 11 | | {85828005} | | 1 | 1.8 mm Orifice |
| 12 | | {85827998} | | 1 | O-Ring Kit |
| 13 | | {85827999} | | 1 | O-Ring Kit |
| 14 | | {85828000} | | 4 | O-Ring Kit |
| 15 | | {85828001} | | 1 | O-Ring Kit |
| 16 | | {85828002} | | 2 | O-Ring Kit |
| 17 | | {85828003} | | 1 | O-Ring, D9x1 |

HTTP://WWW.MINNPARBACKHOEPARTS.COM

| 08-48 | | p1 | 01/04 |
|---|---|---|---|

VALVE ASSY, PRESSURE REDUCING (3 SPOOL) (WITH PILOT CONTROLS)

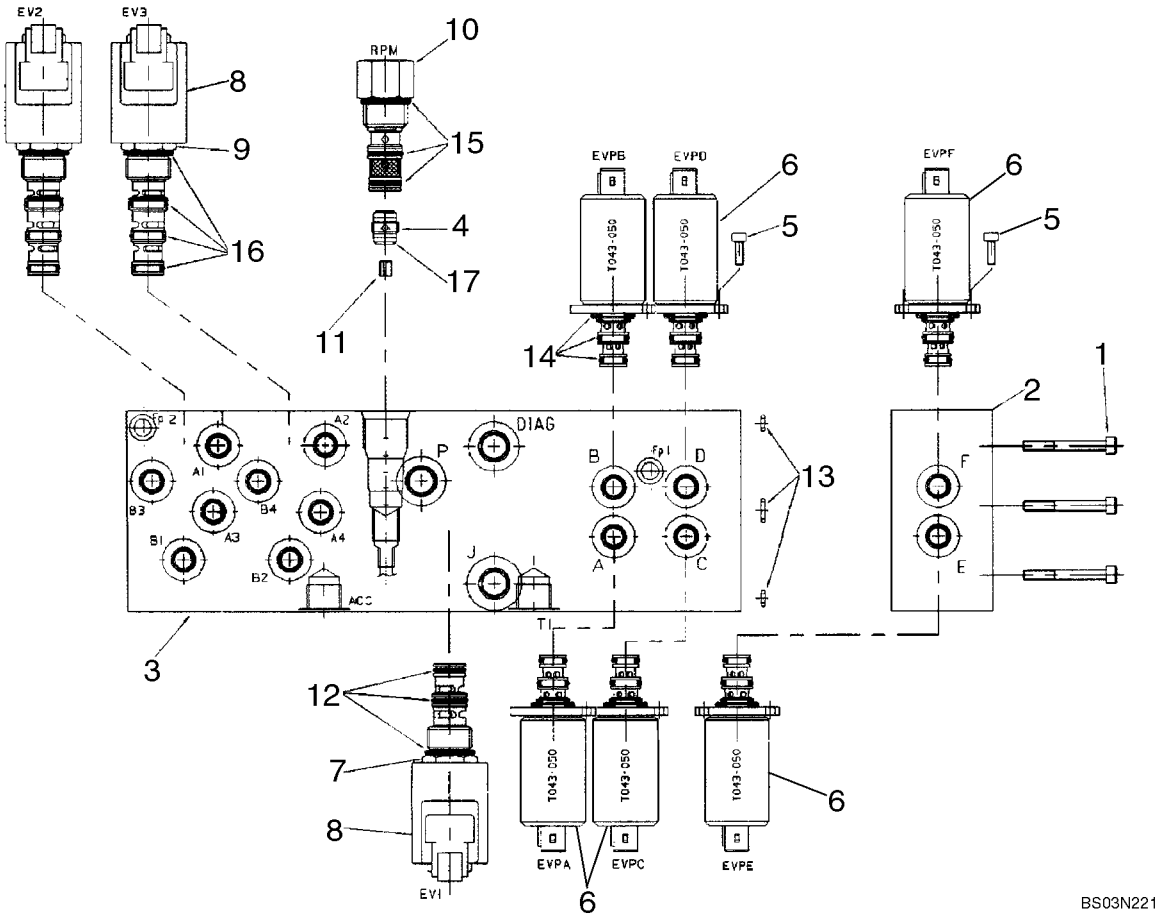

HTTP://WWW.MINNPARBACKHOEPARTS.COM



VALVE ASSY, PRESSURE REDUCING (3 SPOOL) (WITH PILOT CONTROLS)

| REF | FN | PART NUMBER | YR/SN | QTY | DESCRIPTION |
|---|---|---|---|---|---|
| | | 85827471 | | 1 | VALVE, HYDRAULIC Pressure Reducing, Three Spool, Pilot Controls; Incl. Ref 1 - 17 |
| 1 | | 14358921 | | 3 | SCREW M5 x 45 Screw |
| 2 | | {85828004} | | 1 | One Function Add-On Manifold Block |
| 3 | | {85828015} | | 1 | Manifold Block |
| 4 | | {85827992} | | 1 | Check Valve |
| 5 | | {14302921} | | 12 | M4 x 10 Screw |
| 6 | | {85827993} | | 6 | Pressure Reducing Valve |
| 7 | | {85827994} | | 1 | Solenoid Valve Cartridge, 3 Way, 2 Position |
| 8 | | {85827995} | | 3 | Coil With Diode |
| 9 | | {85827996} | | 2 | Solenoid Valve Cartridge, 4 Way, 2 Position |
| 10 | | {85827997} | | 1 | Mechanical Pressure Reducing Valve With Fixed Setting |
| 11 | | {85828005} | | 1 | 1.8 mm Orifice |
| 12 | | {85827998} | | 1 | O-Ring Kit |
| 13 | | {85827999} | | 1 | O-Ring Kit |
| 14 | | {85828000} | | 6 | O-Ring Kit |
| 15 | | {85828001} | | 1 | O-Ring Kit |
| 16 | | {85828002} | | 2 | O-Ring Kit |
| 17 | | {85828003} | | 1 | O-Ring, D9x1 |

HTTP://WWW.MINNPARBACKHOEPARTS.COM



VALVE ASSY, PRESSURE REDUCING (4 SPOOL) (WITH PILOT CONTROLS)

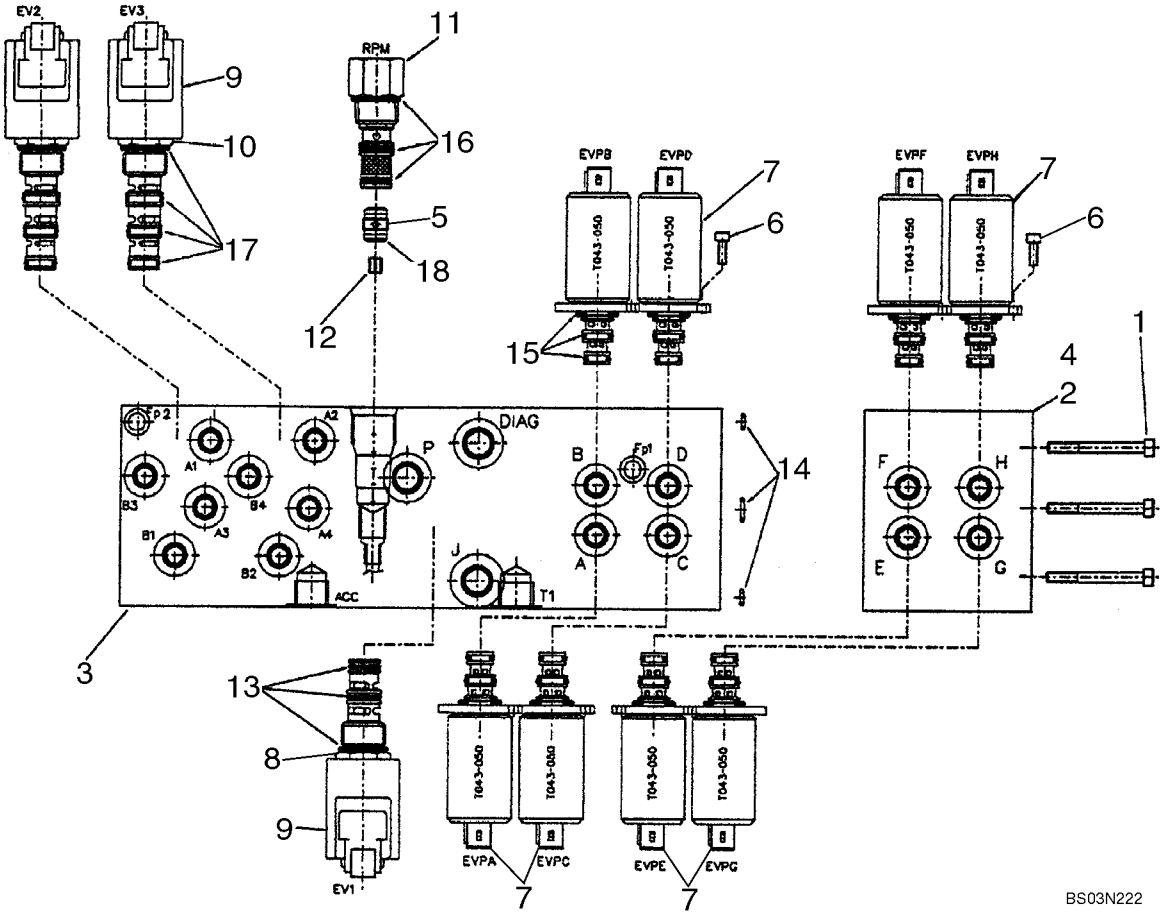

HTTP://WWW.MINNPARBACKHOEPARTS.COM



VALVE ASSY, PRESSURE REDUCING (4 SPOOL) (WITH PILOT CONTROLS)

| REF | FN | PART NUMBER | YR/SN | QTY | DESCRIPTION |
|---|---|---|---|---|---|
| | | 87434621 | | 1 | VALVE, CONTROL Pressure Reducing, Four Spool, Pilot Controls; Incl. Ref 1 - 18 |
| 1 | | {85828061} | | 3 | M5 x 80 Screw |
| 2 | | {85828048} | | 1 | Manifold Block |
| 3 | | {85828015} | | 1 | Manifold Block |
| 4 | | {85828054} | | 1 | Manifold Block |
| 5 | | {85827992} | | 1 | Check Valve |
| 6 | | {14302921} | | 16 | M4 x 10 Screw |
| 7 | | {85827993} | | 8 | Pressure Reducing Valve |
| 8 | | {85827994} | | 1 | Solenoid Valve Cartridge, 3 Way, 2 Position |
| 9 | | {85827995} | | 3 | Coil With Diode |
| 10 | | {85827996} | | 2 | Solenoid Valve Cartridge, 4 Way, 2 Position |
| 11 | | {85827997} | | 1 | Mechanical Pressure Reducing Valve With Fixed Setting |
| 12 | | {85828005} | | 1 | 1.8 mm Orifice |
| 13 | | {85827998} | | 1 | O-Ring Kit |
| 14 | | {85827999} | | 1 | O-Ring Kit |
| 15 | | {85828000} | | 8 | O-Ring Kit |
| 16 | | {85828001} | | 1 | O-Ring Kit |
| 17 | | {85828002} | | 2 | O-Ring Kit |
| 18 | | {85828003} | | 1 | O-Ring, D9x1 |

HTTP://WWW.MINNPARBACKHOEPARTS.COM

| 08-50 | | p1 | 01/04 |
|---|---|---|---|

VALVE, JOYSTICK (PILOT CONTROLS) (LEFT-HAND) WITH HORN BUTTON

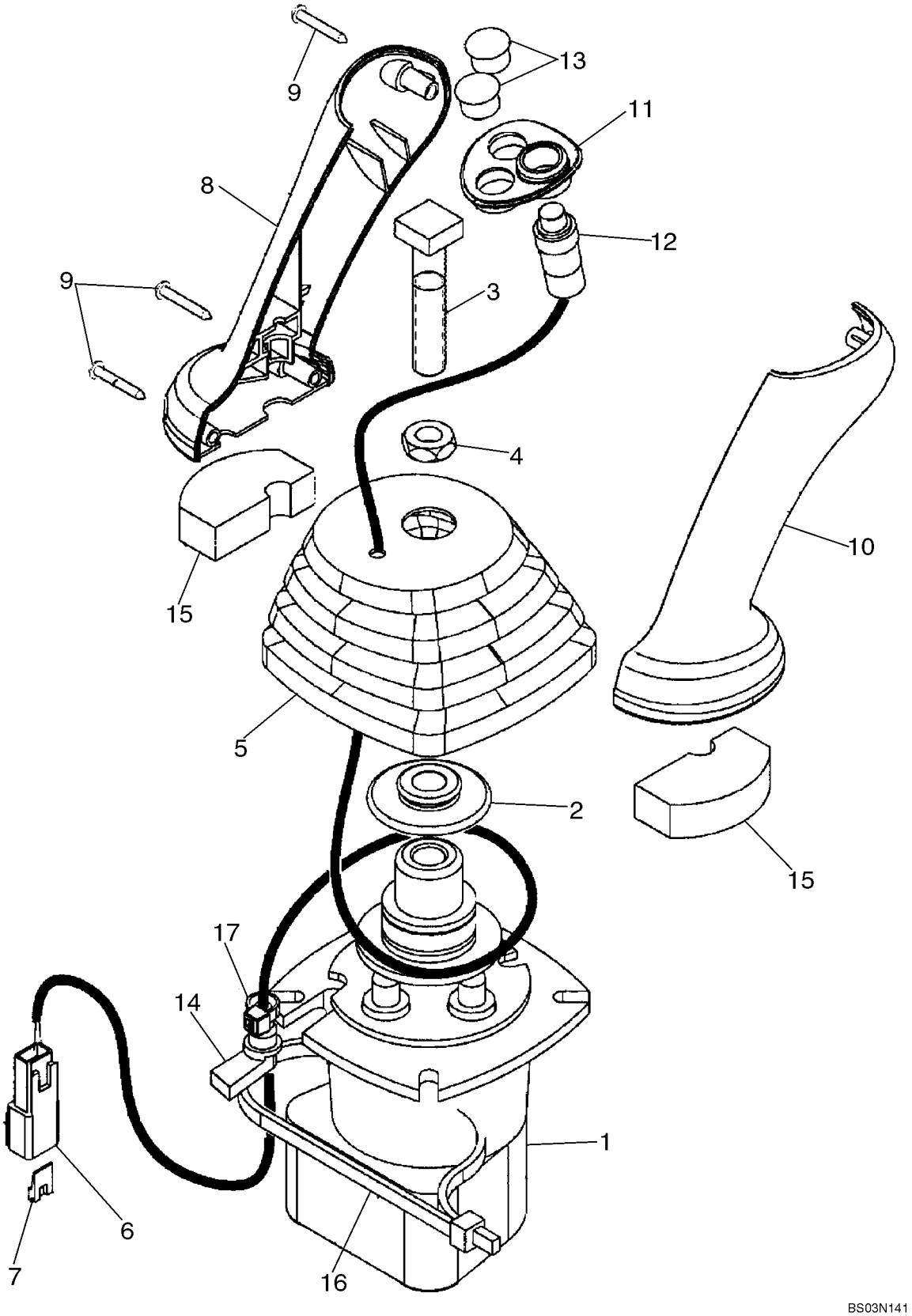

HTTP://WWW.MINNPARBACKHOEPARTS.COM



VALVE, JOYSTICK (PILOT CONTROLS) (LEFT-HAND) WITH HORN BUTTON

| REF | FN | PART NUMBER | YR/SN | QTY | DESCRIPTION |
|---|---|---|---|---|---|
| | | 87437733 | | 1 | VALVE, CONTROL Joystick, Pilot Controls, Left-Hand, With Horn Button; Incl. Ref 1 - 17 |
| 1 | | 86983311 | | 1 | VALVE, CONTROL Pilot Control Joystick Valve; Component Parts Not Serviced Separately |
| 2 | | 87436225 | | 1 | RETAINER Control Boot Retainer |
| 3 | | 87428023 | | 1 | BOLT Square Head Bolt |
| 4 | | 87037944 | | 1 | NUT Thin M12 Nut |
| 5 | | 87428134 | | 1 | BOOT Control Handle Boot |
| 6 | | 225315C1 | | 1 | CONNECTOR |
| 7 | | 225318C1 | | 1 | WEDGE Connector |
| 8 | | 87428164 | | 1 | HANDLE GRIP Joystick Control Handle |
| 9 | | 87032819 | | 3 | SCREW, SELF TAPPING Special |
| 10 | | 87428165 | | 1 | HANDLE GRIP Joystick Control Handle |
| 11 | | 87435243 | | 1 | BEZEL Switch Mounting Bezel |
| 12 | | 87437372 | | 1 | SWITCH ASSY Push Button Horn Switch |
| 13 | | 86625128 | | 2 | PLUG Dome Plug, .562 inch, Black Nylon |
| 14 | | 87424267 | | 1 | GROMMET Wire Grommet |
| 15 | | 87435506 | | 2 | SEAL PROTECTION Pilot Control Handle Seal, Lower |
| 16 | | 87438046 | | 1 | STRAP Tie Strap |
| 17 | | 87000312 | | 1 | STRAP Black Tie Strap |

HTTP://WWW.MINNPARBACKHOEPARTS.COM



VALVE, JOYSTICK (PILOT CONTROLS) (LEFT-HAND) WITH HORN & UNI-DIRECTIONAL BUTTONS

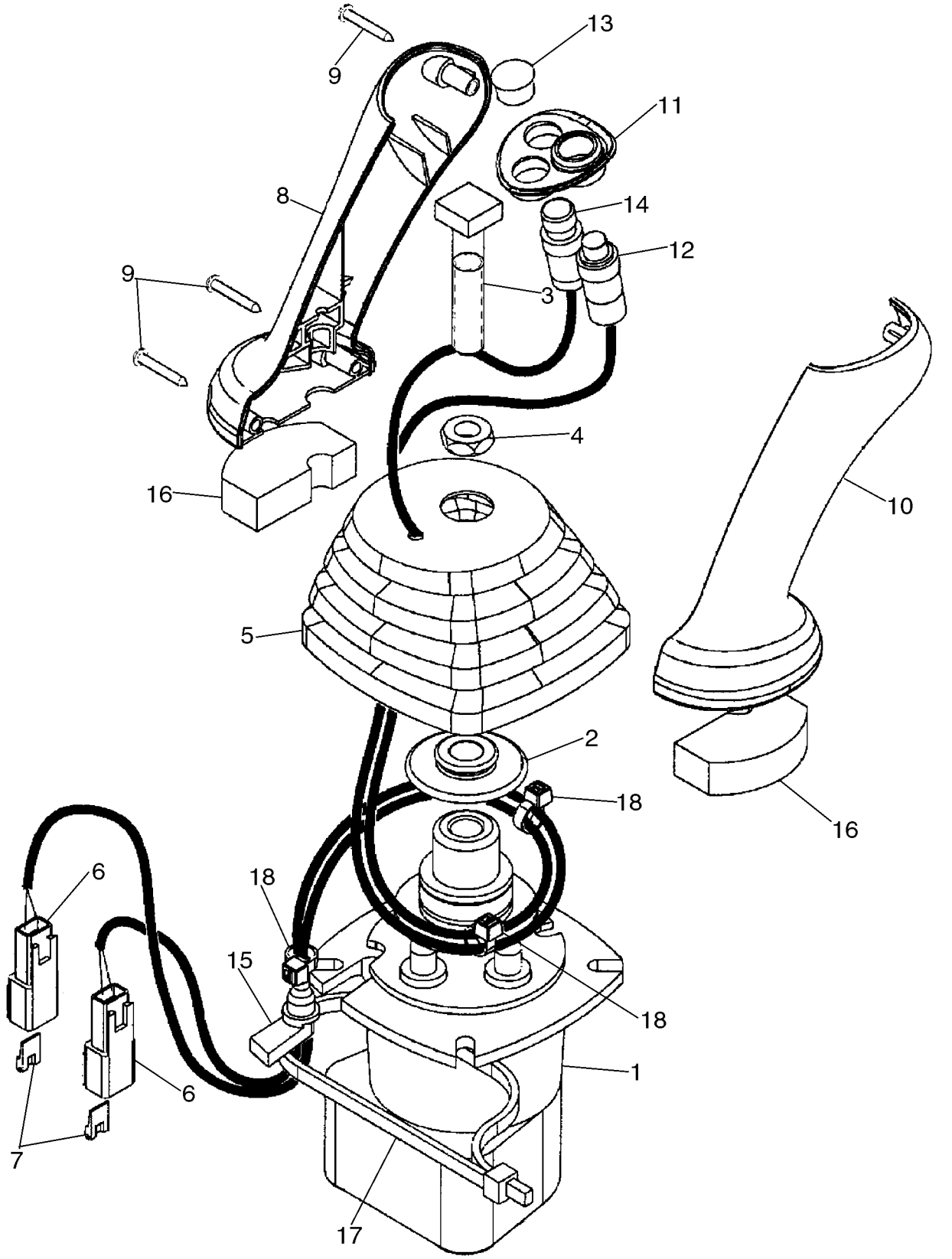

HTTP://WWW.MINNPARBACKHOEPARTS.COM



VALVE, JOYSTICK (PILOT CONTROLS) (LEFT-HAND) WITH HORN & UNI-DIRECTIONAL BUTTONS

| REF | FN | PART NUMBER | YR/SN | QTY | DESCRIPTION |
|---|---|---|---|---|---|
| | | 87437735 | | 1 | VALVE, CONTROL Joystick, Pilot Controls, Left-Hand, With Horn and Uni-Directional Buttons; Incl. Ref 1 - 18 |
| 1 | | 86983311 | | 1 | VALVE, CONTROL Pilot Control Joystick Valve; Component Parts Not Serviced Separately |
| 2 | | 87436225 | | 1 | RETAINER Control Boot Retainer |
| 3 | | 87428023 | | 1 | BOLT Square Head Bolt |
| 4 | | 87037944 | | 1 | NUT Thin M12 Nut |
| 5 | | 87428134 | | 1 | BOOT Control Handle Boot |
| 6 | | 225315C1 | | 2 | CONNECTOR |
| 7 | | 225318C1 | | 2 | WEDGE Connector |
| 8 | | 87428164 | | 1 | HANDLE GRIP Joystick Control Handle |
| 9 | | 87032819 | | 3 | SCREW, SELF TAPPING Special |
| 10 | | 87428165 | | 1 | HANDLE GRIP Joystick Control Handle |
| 11 | | 87435243 | | 1 | BEZEL Switch Mounting Bezel |
| 12 | | 87437372 | | 1 | SWITCH ASSY Push Button Horn Switch |
| 13 | | 86625128 | | 1 | PLUG Dome Plug, .562 inch, Black Nylon |
| 14 | | 87437373 | | 1 | SWITCH ASSY Push Button Uni-Directional Auxiliary Hydraulic Switch |
| 15 | | 87424267 | | 1 | GROMMET Wire Grommet |
| 16 | | 87435506 | | 2 | SEAL PROTECTION Pilot Control Handle Seal, Lower |
| 17 | | 87438046 | | 1 | STRAP Tie Strap |
| 18 | | 87000312 | | 3 | STRAP Black Tie Strap |

HTTP://WWW.MINNPARBACKHOEPARTS.COM



VALVE, JOYSTICK (PILOT CONTROLS) (LEFT-HAND) WITH HORN & BI-DIRECTIONAL BUTTONS

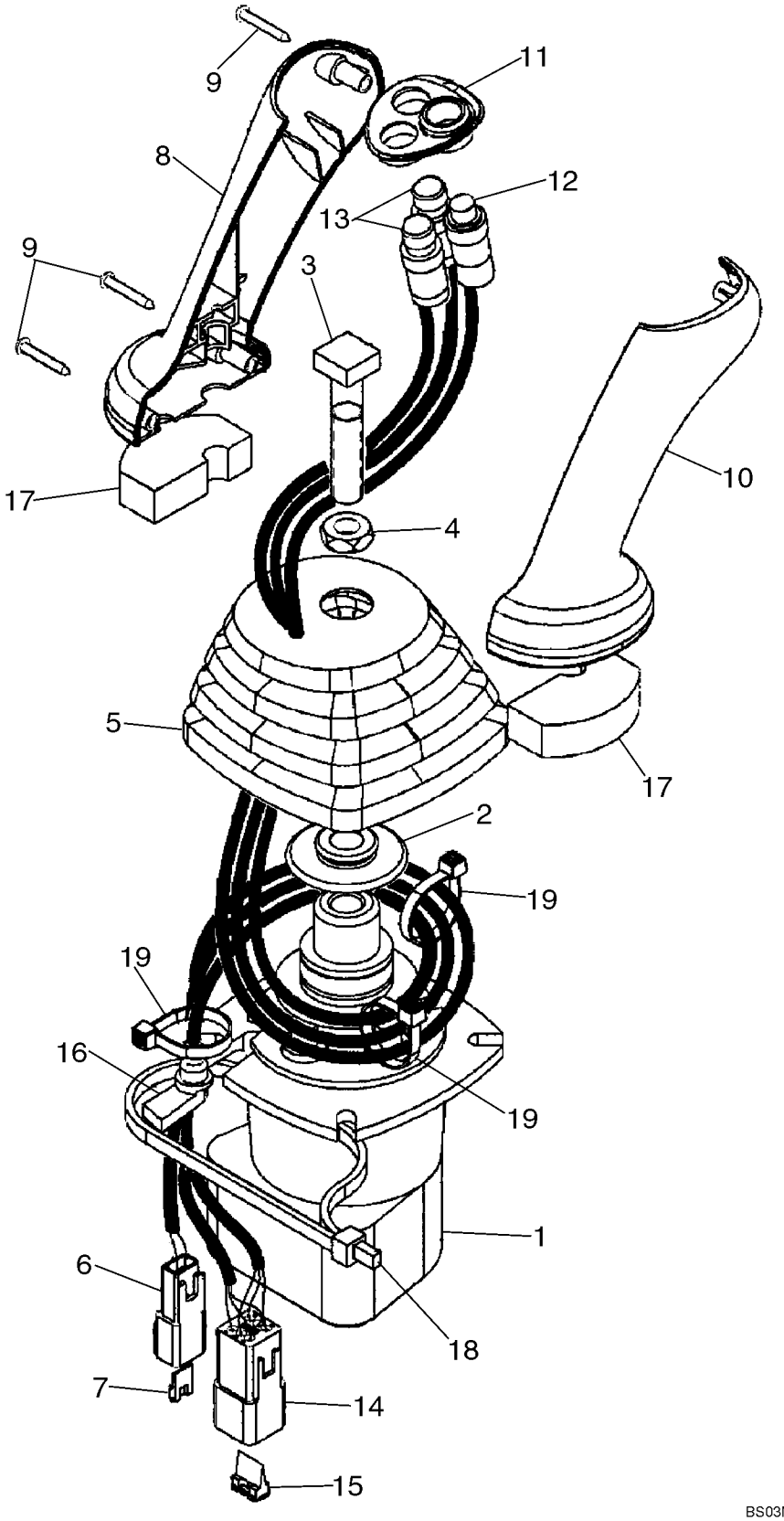

HTTP://WWW.MINNPARBACKHOEPARTS.COM



VALVE, JOYSTICK (PILOT CONTROLS) (LEFT-HAND) WITH HORN & BI-DIRECTIONAL BUTTONS

| REF | FN | PART NUMBER | YR/SN | QTY | DESCRIPTION |
|---|---|---|---|---|---|
| | | 87437734 | | 1 | VALVE, CONTROL Joystick, Pilot Controls, Left-Hand, With Horn and Bi-Directional Buttons; Incl. Ref 1 - 19 |
| 1 | | 86983311 | | 1 | VALVE, CONTROL Pilot Control Joystick Valve; Component Parts Not Serviced Separately |
| 2 | | 87436225 | | 1 | RETAINER Control Boot Retainer |
| 3 | | 87428023 | | 1 | BOLT Square Head Bolt |
| 4 | | 87037944 | | 1 | NUT Thin M12 Nut |
| 5 | | 87428134 | | 1 | BOOT Control Handle Boot |
| 6 | | 225315C1 | | 1 | CONNECTOR |
| 7 | | 225318C1 | | 1 | WEDGE Connector |
| 8 | | 87428164 | | 1 | HANDLE GRIP Joystick Control Handle |
| 9 | | 87032819 | | 3 | SCREW, SELF TAPPING Special |
| 10 | | 87428165 | | 1 | HANDLE GRIP Joystick Control Handle |
| 11 | | 87435243 | | 1 | BEZEL Switch Mounting Bezel |
| 12 | | 87437372 | | 1 | SWITCH ASSY Push Button Horn Switch |
| 13 | | 87437371 | | 2 | SWITCH ASSY Push Button Bi-Directional Auxiliary Hydraulic Switch |
| 14 | | 225350C1 | | 1 | CONNECTOR |
| 15 | | 225353C1 | | 1 | WEDGE Connector |
| 16 | | 87424267 | | 1 | GROMMET Wire Grommet |
| 17 | | 87435506 | | 2 | SEAL PROTECTION Pilot Control Handle Seal, Lower |
| 18 | | 87438046 | | 1 | STRAP Tie Strap |
| 19 | | 87000312 | | 3 | STRAP Black Tie Strap |

HTTP://WWW.MINNPARBACKHOEPARTS.COM

| 08-53 | | p1 | 01/04 |
|---|---|---|---|

VALVE, JOYSTICK (PILOT CONTROLS) (RIGHT-HAND) WITHOUT EXTENDABLE DIPPER

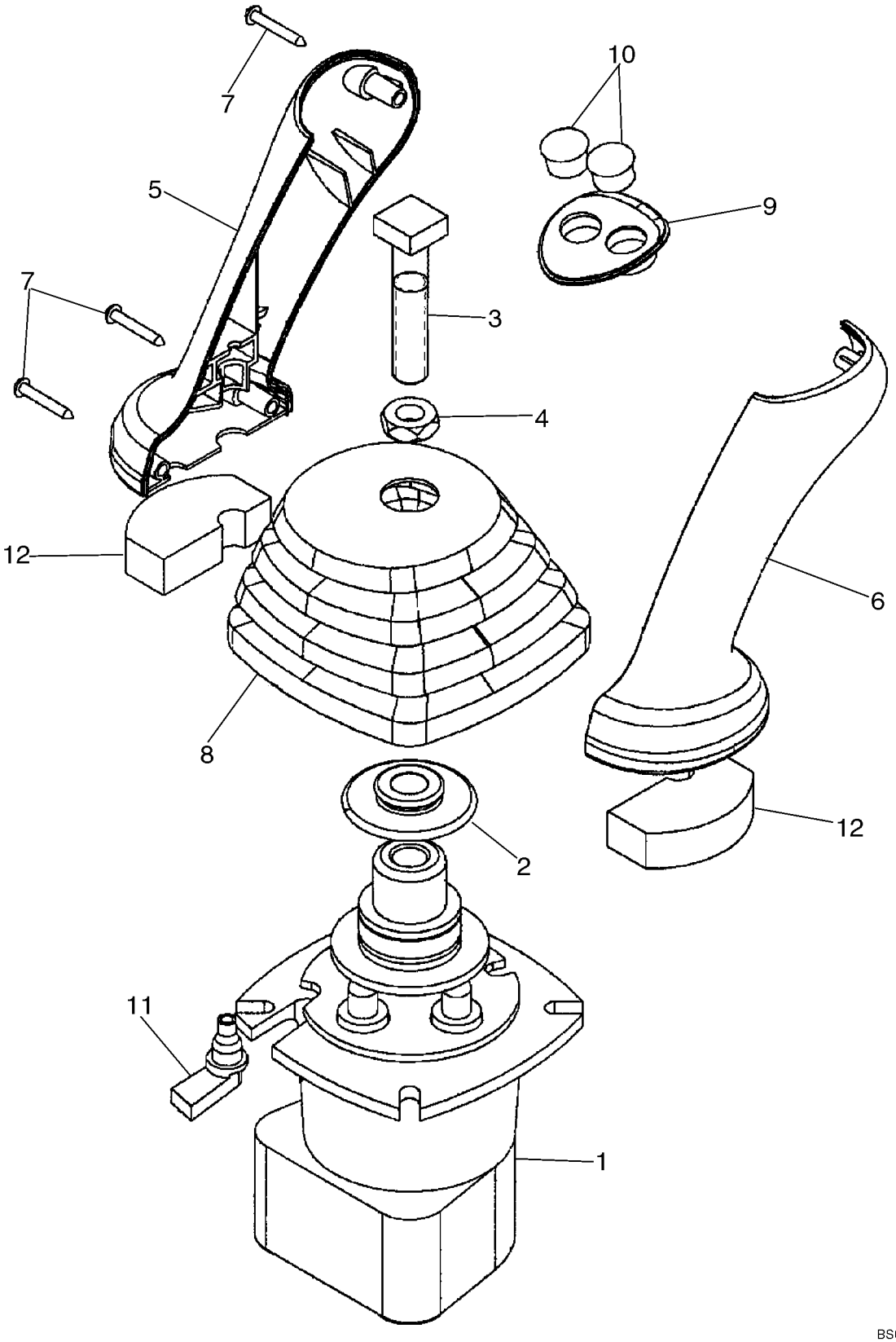

HTTP://WWW.MINNPARBACKHOEPARTS.COM



VALVE, JOYSTICK (PILOT CONTROLS) (RIGHT-HAND) WITHOUT EXTENDABLE DIPPER

| REF | FN | PART NUMBER | YR/SN | QTY | DESCRIPTION |
|---|---|---|---|---|---|
| | | 87435510 | | 1 | VALVE, CONTROL Joystick, Pilot Controls, Right-Hand; Without Extendable Dipper; Incl. Ref 1 - 12 |
| 1 | | 86983311 | | 1 | VALVE, CONTROL Pilot Control Joystick Valve; Component Parts Not Serviced Separately |
| 2 | | 87436225 | | 1 | RETAINER Control Boot Retainer |
| 3 | | 87428023 | | 1 | BOLT Square Head Bolt |
| 4 | | 87037944 | | 1 | NUT Thin M12 Nut |
| 5 | | 87428164 | | 1 | HANDLE GRIP Joystick Control Handle |
| 6 | | 87428165 | | 1 | HANDLE GRIP Joystick Control Handle |
| 7 | | 87032819 | | 3 | SCREW, SELF TAPPING Special |
| 8 | | {87435489} | | 1 | Joystick Control Boot |
| 9 | | 87435242 | | 1 | BEZEL Switch Mounting Bezel |
| 10 | | 353-405 | | 2 | PLUG Dome Plug, .562 inch, Black Nylon |
| 11 | | 87424267 | | 1 | GROMMET Wire Grommet |
| 12 | | 87435506 | | 2 | SEAL PROTECTION Pilot Control Handle Seal, Lower |

HTTP://WWW.MINNPARBACKHOEPARTS.COM



VALVE, JOYSTICK (PILOT CONTROLS) (RIGHT-HAND) WITH EXTENDABLE DIPPER

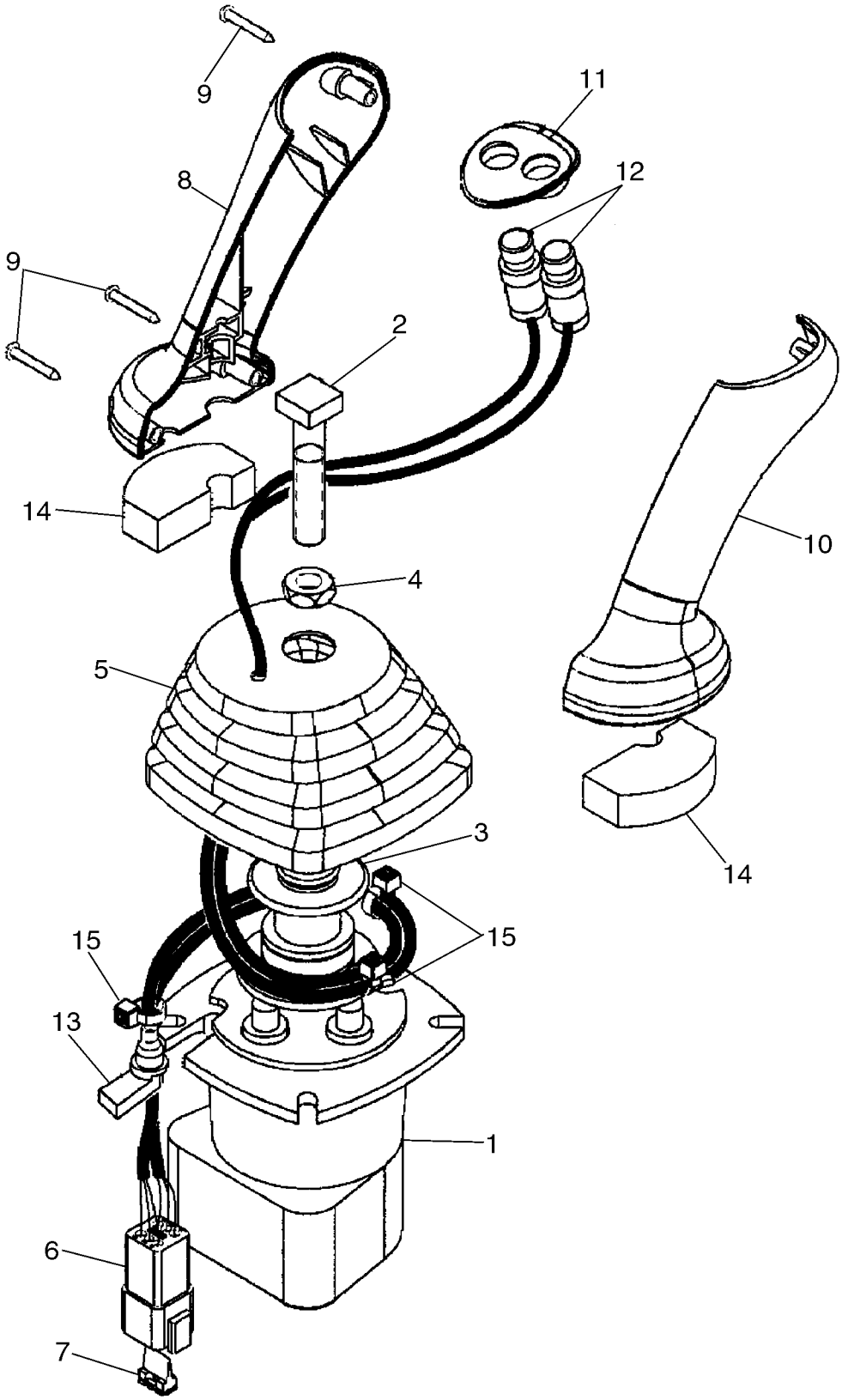

HTTP://WWW.MINNPARBACKHOEPARTS.COM



VALVE, JOYSTICK (PILOT CONTROLS) (RIGHT-HAND) WITH EXTENDABLE DIPPER

| REF | FN | PART NUMBER | YR/SN | QTY | DESCRIPTION |
|---|---|---|---|---|---|
| | | 87437736 | | 1 | VALVE, CONTROL Joystick, Pilot Controls, Right-Hand; With Extendable Dipper; Incl. Ref 1 - 15 |
| 1 | | 86983311 | | 1 | VALVE, CONTROL Pilot Control Joystick Valve; Component Parts Not Serviced Separately |
| 2 | | 87428023 | | 1 | BOLT Square Head Bolt |
| 3 | | 87436225 | | 1 | RETAINER Control Boot Retainer |
| 4 | | 87037944 | | 1 | NUT Thin M12 Nut |
| 5 | | 87428134 | | 1 | BOOT Joystick Control Boot |
| 6 | | 225350C1 | | 1 | CONNECTOR |
| 7 | | 225353C1 | | 1 | WEDGE Connector |
| 8 | | 87428164 | | 1 | HANDLE GRIP Joystick Control Handle |
| 9 | | 87032819 | | 3 | SCREW, SELF TAPPING Special |
| 10 | | 87428165 | | 1 | HANDLE GRIP Joystick Control Handle |
| 11 | | 87435242 | | 1 | BEZEL Switch Mounting Bezel |
| 12 | | 87437371 | | 2 | SWITCH ASSY Push Button Retract and Extendahoe Switches |
| 13 | | 87424267 | | 1 | GROMMET Wire Grommet |
| 14 | | 87435506 | | 2 | SEAL PROTECTION Pilot Control Handle Seal, Lower |
| 15 | | 87000312 | | 3 | STRAP Black Nylon |

HTTP://WWW.MINNPARBACKHOEPARTS.COM



VALVE ASSY - SWING CUSHION (DAMPENING)

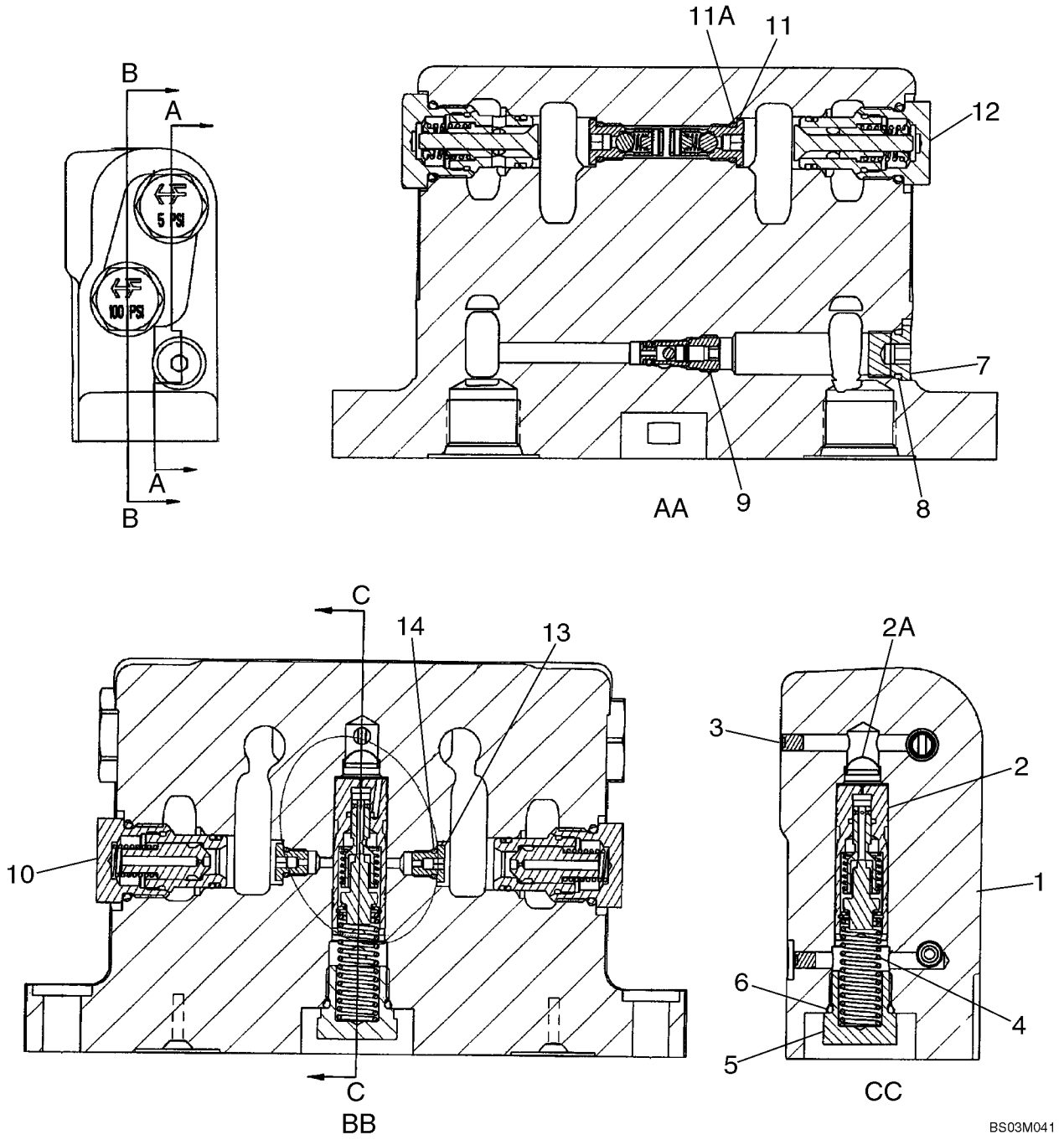

HTTP://WWW.MINNPARBACKHOEPARTS.COM



VALVE ASSY - SWING CUSHION (DAMPENING)

| REF | FN | PART NUMBER | YR/SN | QTY | DESCRIPTION |
|---|---|---|---|---|---|
| | | 87416975 | | 1 | VALVE, DAMPING Swing Cushion; Incl. Ref 1 - 14 |
| 1 | | NSS | | 1 | NOT SERVICED SEPARATELY Housing |
| 2 | | 388876A6 | | 1 | SPOOL Thermal Compensating; Component Parts Not Serviced Separately |
| 2A | | 1976955C1 | | 1 | FILTER CARTRIDGE Screen, Filter |
| 3 | | 369372A1 | | 2 | PLUG M5; Plug, Expansion |
| 4 | | 388881A1 | | 1 | SPRING, COIL |
| 5 | | 409025A1 | | 1 | PLUG Relief Check; Incl. Ref 6 |
| 6 | | 237-6008 | | 1 | O-RING 41/64 ID x 3/32, Boss Seal |
| 7 | | 218-5209 | | 1 | PLUG 9/16 Or; Incl. Ref 8 |
| 8 | | 237-6006 | | 1 | O-RING 15/32 ID x 5/64, Boss Seal |
| 9 | | 388712A2 | | 1 | VALVE Bi-Directional Check Valve; Includes 388713A1 Seal Kit |
| | | 388713A1 | | 1 | KIT Seal; Includes An O-Ring and Backup Ring; Component Parts Not Serviced Separately |
| 10 | | 396422A2 | | 2 | VALVE, CHECK 100 psi, Orifice Check Valve; Component Parts Not Serviced Separately; Order 1542830C2 Seal Kit To Service External Seals |
| | | 443432A1 | | 1 | KIT, SEALS For Servicing External Seals on Ref 9, 10, 11 or 12 Valve; If Used |
| 11 | | 400296A2 | | 2 | VALVE, CHECK In-Line Check Valve; Component Parts Not Serviced Separately; Incl. Ref 11A |
| 11A | | 237-6004 | | 1 | O-RING 23/64 ID x 5/64, Boss Seal |
| 12 | | 389541A1 | | 2 | VALVE, CHECK 5 psi; Component Parts Not Serviced Separately; Order 1542830C2 Seal Kit To Service External Seals |
| 13 | | 400657A1 | | 2 | PLUG Orifice 1.85 mm; Incl. Ref 14 |
| 14 | | 237-6002 | | 1 | O-RING 1/4 ID x 1/16 |
| | | 1542830C2 | | 1 | KIT, GASKET For Servicing External Seals on Ref 10 or 12 Valve |

HTTP://WWW.MINNPARBACKHOEPARTS.COM



ACCUMULATOR ASSY - RIDE CONTROL

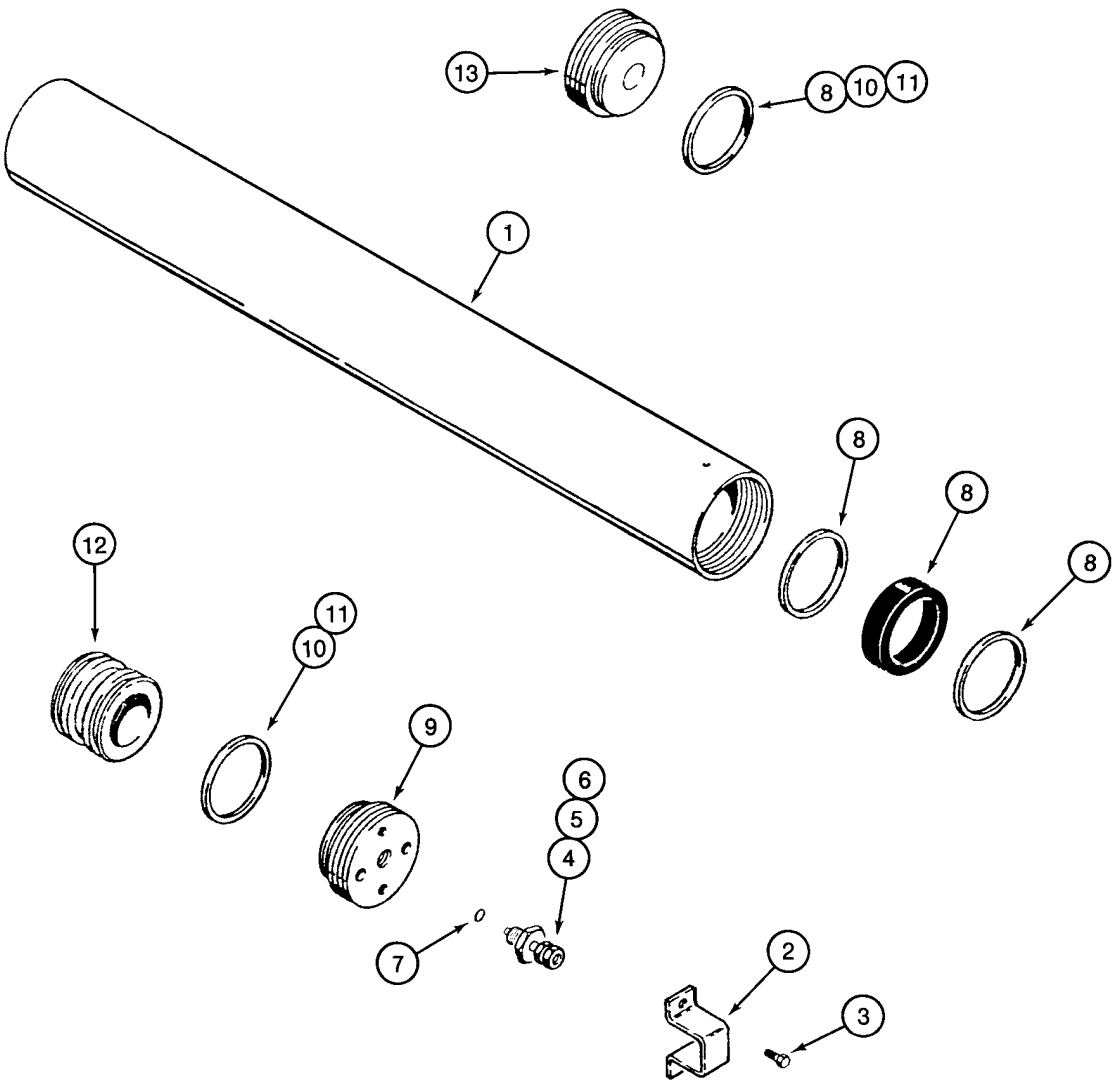


BS97C154

HTTP://WWW.MINNPARBACKHOEPARTS.COM



ACCUMULATOR ASSY - RIDE CONTROL

| REF | FN | PART NUMBER | YR/SN | QTY | DESCRIPTION |
|---|---|---|---|---|---|
| | | 234412A1 | | 1 | ACCUMULATOR Incl. Ref 1 - 13 |
| 1 | | NSS | | 1 | NOT SERVICED SEPARATELY Body |
| 2 | | 192895A1 | | 1 | PROTECTOR |
| 3 | | 276-2456 | | 2 | SCREW No. 10 x 3/8 |
| | | 1978142C1 | | 1 | VALVE Incl. Ref 4 - 6 |
| 4 | | NSS | | 1 | NOT SERVICED SEPARATELY Valve, Pressure |
| 5 | | 1978143C1 | | 1 | PISTON |
| 6 | | 1978144C1 | | 1 | CAP |
| 7 | | 1978158C1 | | 1 | GASKET |
| 8 | | 1978141C1 | | 1 | PACKAGE, SEALS Seal; Includes (1) V-Type O-Ring, (2) Teflon Bearing Rings and (1) Body End Seal Ring; Component Parts Not Serviced Separately |
| 9 | | NSS | | 1 | NOT SERVICED SEPARATELY Gland, Cylinder |
| 10 | | NSS | | 2 | NOT SERVICED SEPARATELY O-Ring |
| 11 | | NSS | | 2 | NOT SERVICED SEPARATELY Ring, Backup, If Used |
| 12 | | NSS | | 1 | NOT SERVICED SEPARATELY Piston |
| 13 | | NSS | | 1 | NOT SERVICED SEPARATELY Cap |

HTTP://WWW.MINNPARBACKHOEPARTS.COM

| 08-57 | | p1 | 01/04 |
|---|---|---|---|

FILTER ASSY, OIL

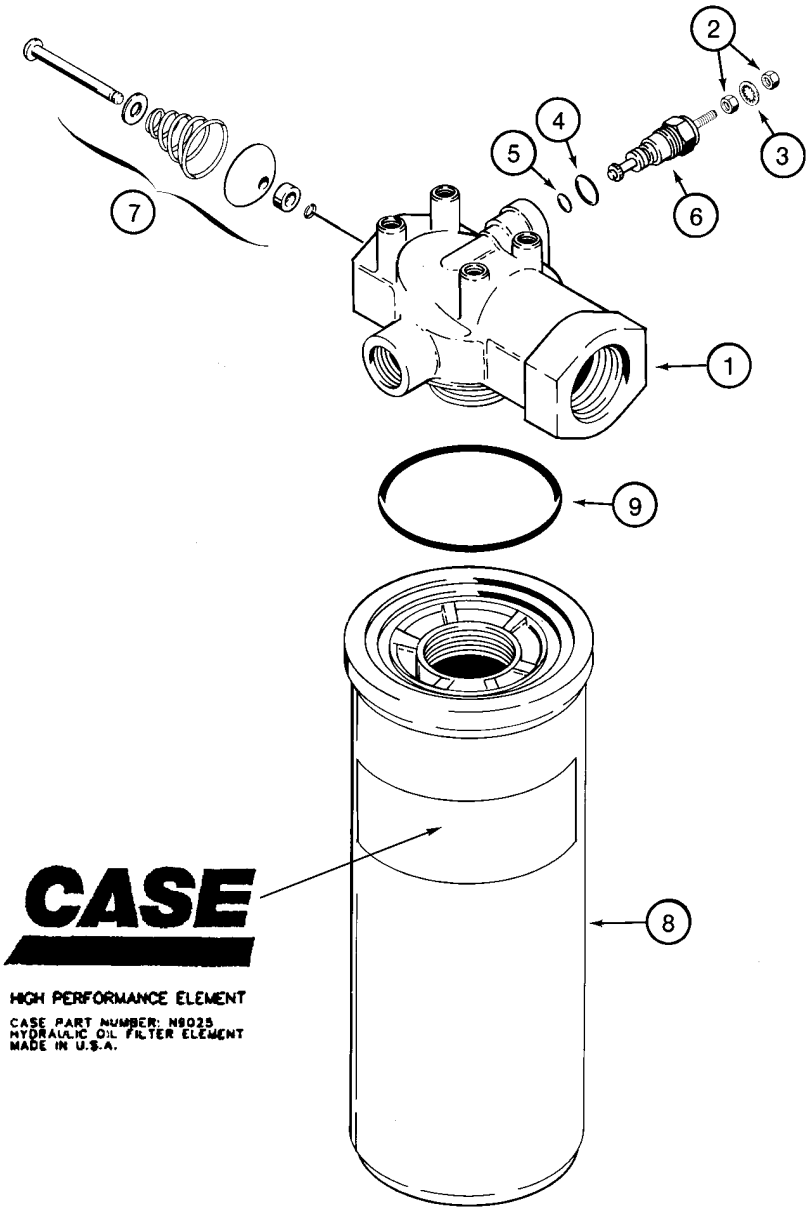


BS00D009

HTTP://WWW.MINNPARBACKHOEPARTS.COM



FILTER ASSY, OIL

| REF | FN | PART NUMBER | YR/SN | QTY | DESCRIPTION |
|---|---|---|---|---|---|
| | | 445674A1 | | 1 | FILTER ASSY. Hydraulic Oil Filter; Incl. Ref 1 - 9 |
| 1 | | NSS | | 1 | NOT SERVICED SEPARATELY Head, Filter |
| | | N6755 | | 1 | INDICATOR Restriction; Includes N6941, Ref 6 |
| | | N6941 | | 1 | KIT Restriction Indicator Repair; Incl. Ref 2 - 5; Order Ref 2 - 5 |
| 2 | | 129-667 | | 2 | NUT No. 10 NF |
| 3 | | 493-21020 | | 1 | WASHER, LOCK 3/16 |
| 4 | | 237-6006 | | 1 | O-RING 15/32 ID x 5/64, Boss Seal |
| 5 | | 238-5011 | | 1 | O-RING 5/16 ID x 1/16 |
| 6 | | NSS | | 1 | NOT SERVICED SEPARATELY Indicator |
| 7 | | NSS | | 1 | NOT SERVICED SEPARATELY Valve, By-Pass |
| | | N9025 | | 1 | FILTER, ELEMENT Incl. Ref 8, 9 |
| 8 | | NSS | | 1 | NOT SERVICED SEPARATELY Element |
| 9 | | 238-5230 | | 1 | O-RING 2-1/2 ID x 1/8 |

HTTP://WWW.MINNPARBACKHOEPARTS.COM

| 08-58 | | p1 | 01/04 |
|---|---|---|---|

CYLINDER ASSY - LOADER LIFT

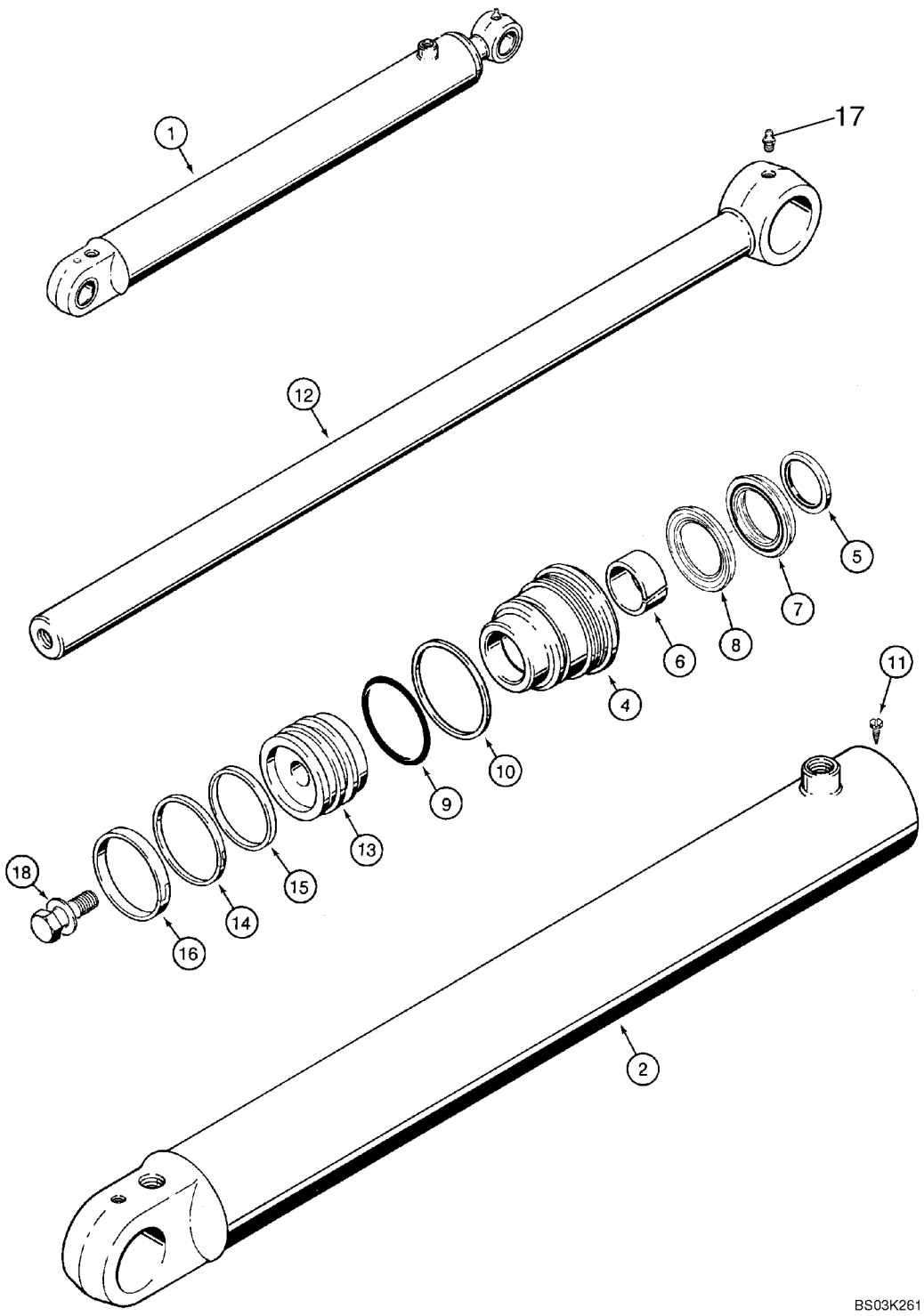

HTTP://WWW.MINNPARBACKHOEPARTS.COM



CYLINDER ASSY - LOADER LIFT

| REF | FN | PART NUMBER | YR/SN | QTY | DESCRIPTION |
|---|---|---|---|---|---|
| 1 | | 384240A1 | | 2 | CYLINDER ASSY. 82.6 ID x 766 mm strk; Loader Lift; Incl. Ref 2 - 18 |
| 2 | | 384241A1 | | 1 | SLEEVE, HYD' CYL' TUBE, Without Bushings |
| 4 | | 1980321C3 | | 1 | GLAND |
| | | 1543260C1 | | 1 | KIT, GASKET Seal Repair, Incl. Ref 5 - 10, 14 - 16 |
| 5 | | D95143 | | 1 | SEAL Wiper |
| 6 | | G102425 | | 1 | BUSHING, LARGE |
| | | 1542875C1 | | 1 | SET OF PARTS Rod and Buffer Seal Kit; Incl. Ref 7, 8; Not Serviced Separately; Order 1543260C1 Seal Kit |
| 7 | | NSS | | 1 | NOT SERVICED SEPARATELY Rod Seal; Order 1543260C1 Seal Kit |
| 8 | | NSS | | 1 | NOT SERVICED SEPARATELY Buffer Seal; Order 1543260C1 Seal Kit |
| 9 | | 238-5233 | | 1 | O-RING 2-7/8 ID x 1/8 in |
| 10 | | G32122 | | 1 | RING |
| 11 | | 276-2446 | | 1 | SCREW No. 8 x 3/8, self-tapping |
| 12 | | 133083A1 | | 1 | ROD, PISTON 44 mm (1-3/4 in) dia |
| 13 | | 135161A1 | | 1 | PISTON |
| 14 | | G102287 | | 1 | SEAL |
| 15 | | S109444 | | 1 | RING |
| 16 | | S109445 | | 1 | RING |
| 17 | | 219-1 | | 1 | NIPPLE, LUBE 1/8 PT x 21/32 |
| 18 | | 86982437 | | 1 | BOLT, SPECIAL 1 x 2,5 in; Includes Washer |

HTTP://WWW.MINNPARBACKHOEPARTS.COM

| 08-59 | | p1 | 01/04 |
|---|---|---|---|

CYLINDER ASSY - LOADER BUCKET

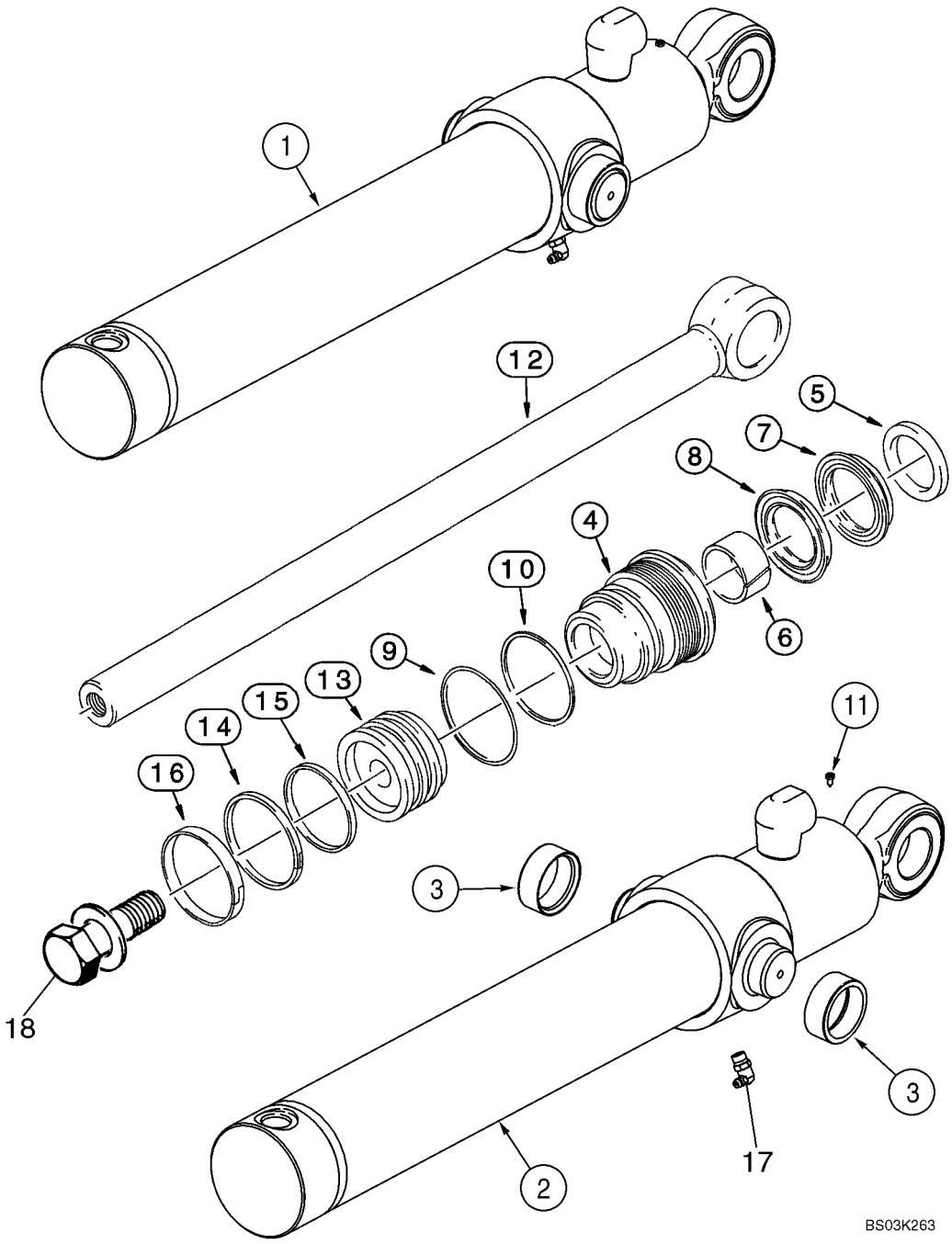

HTTP://WWW.MINNPARBACKHOEPARTS.COM



CYLINDER ASSY - LOADER BUCKET

| REF | FN | PART NUMBER | YR/SN | QTY | DESCRIPTION |
|---|---|---|---|---|---|
| 1 | | 113133A2 | | 2 | CYLINDER ASSY. 76 ID x 522 mm strk; Loader Bucket; Incl. Ref 2- 18 |
| 2 | | 113135A2 | | 1 | SLEEVE, HYD' CYL' TUBE, Incl. Ref 3 |
| 3 | | G108512 | | 2 | BUSHING |
| 4 | | 297280A1 | | 1 | GLAND |
| | | 1543256C1 | | 1 | KIT, GASKET Seal Repair; Incl. Ref 5 - 10, 14 - 16 |
| 5 | | D95142 | | 1 | SEAL Wiper |
| 6 | | G102424 | | 1 | BUSHING, LARGE |
| | | 1542874C1 | | 1 | PACKAGE Rod and Buffer Seal Kit; Incl. Ref 7, 8; Not Serviced Separately; Order 1543256C1 Seal Kit |
| 7 | | NSS | | 1 | NOT SERVICED SEPARATELY Rod Seal; Order 1543256C1 Seal Kit |
| 8 | | NSS | | 1 | NOT SERVICED SEPARATELY Buffer Seal; Order 1543256C1 Seal Kit |
| 9 | | 238-5231 | | 1 | O-RING 2-5/8 ID x 1/8 |
| 10 | | G109298 | | 1 | RING |
| 11 | | 276-2446 | | 1 | SCREW No. 8 x 3/8, self-tapping |
| 12 | | 110307A1 | | 1 | ROD, PISTON 38 mm (1-1/2 in) dia |
| 13 | | G108518 | | 1 | PISTON |
| 14 | | G102288 | | 1 | SEAL ASSY. |
| 15 | | G100444 | | 1 | SEAL |
| 16 | | G100449 | | 1 | RING, WEAR |
| 17 | | 219-55 | | 1 | NIPPLE, LUBE 90 deg, 1/8 PT x 27/32 |
| 18 | | 86982435 | | 1 | BOLT, SPECIAL 3/4 x 2,5 in, Includes Washer |

HTTP://WWW.MINNPARBACKHOEPARTS.COM

| 08-60 | | p1 | 01/04 |
|---|---|---|---|

CYLINDER ASSY - LOADER CLAM

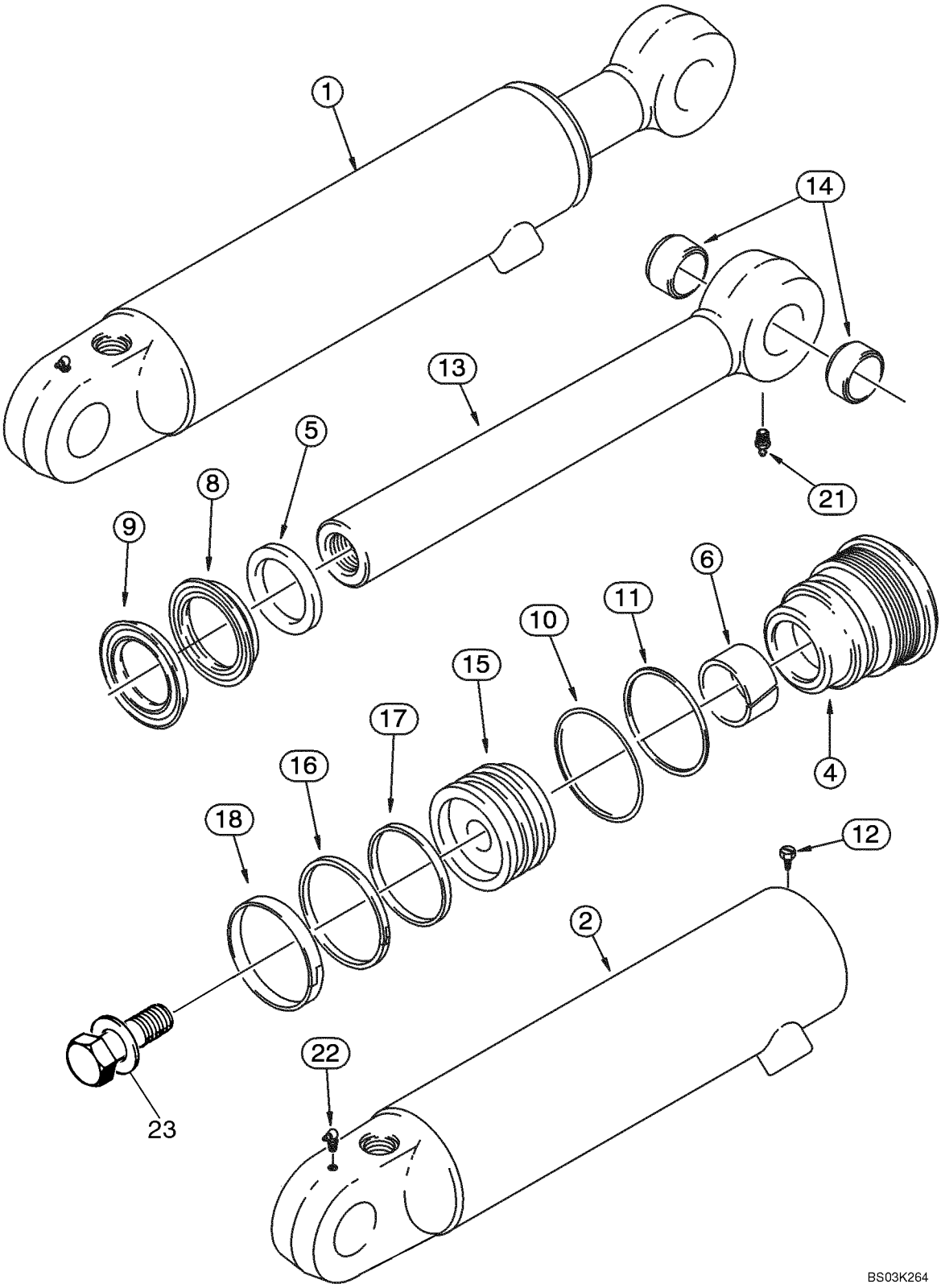

HTTP://WWW.MINNPARBACKHOEPARTS.COM



CYLINDER ASSY - LOADER CLAM

| REF | FN | PART NUMBER | YR/SN | QTY | DESCRIPTION |
|---|---|---|---|---|---|
| 1 | | 1346189C2 | | 1 | CYLINDER ASSY. 76 ID x 231 mm strk; Right-Hand; Incl. Ref 2 - 23 |
| 1 | | 1346190C2 | | 1 | CYLINDER ASSY. 76 ID x 231 mm strk; Left-Hand; Incl. Ref 2 - 23 |
| 2 | | 1346191C2 | | 1 | SLEEVE, HYD' CYL' TUBE, Right-Hand; 1346189C2 Cylinder |
| 2 | | 1346192C2 | | 1 | SLEEVE, HYD' CYL' TUBE, Left-Hand; 1346190C2 Cylinder |
| 4 | | 297281A1 | | 1 | CAP CYLINDER END Gland |
| | | 1543267C1 | | 1 | KIT, GASKET Seal Repair; Incl. Ref 5 - 11, 16 - 18 |
| 5 | | D95143 | | 1 | SEAL |
| 6 | | G102425 | | 1 | BUSHING, LARGE |
| | | 1542875C1 | | 1 | SET OF PARTS Rod and Buffer Seal; Incl. Ref 8, 9; Not Serviced Separately; Order 1543267C1 Seal Kit |
| 8 | | NSS | | 1 | NOT SERVICED SEPARATELY Rod Seal; Order 1543267C1 Seal Kit |
| 9 | | NSS | | 1 | NOT SERVICED SEPARATELY Buffer Seal; Order 1543267C1 Seal Kit |
| 10 | | 238-5231 | | 1 | O-RING 2-5/8 ID x 1/8 |
| 11 | | G109298 | | 1 | RING |
| 12 | | 276-2446 | | 1 | SCREW Self-Tapping, No. 8 x 3/8 |
| 13 | | 1346195C1 | | 1 | ROD, PISTON 44 mm (1-3/4 in) dia; Incl. Ref 14 |
| 14 | | 30634 | | 2 | BUSHING |
| 15 | | 1340798C1 | | 1 | PISTON |
| 16 | | G102288 | | 1 | SEAL ASSY. |
| 17 | | G100444 | | 1 | SEAL |
| 18 | | G100449 | | 1 | RING, WEAR |
| 21 | | 219-1 | | 1 | NIPPLE, LUBE 1/8 PT x 21/32 |
| 22 | | 219-55 | | 1 | NIPPLE, LUBE 90 deg, 1/8 PT x 27/32 |
| 23 | | 86982437 | | 1 | BOLT, SPECIAL 1,0 x 2,5 in, Includes Washer |

HTTP://WWW.MINNPARBACKHOEPARTS.COM

| 08-61 | | p1 | 01/04 |
|---|---|---|---|

CYLINDER ASSY - BACKHOE STABILIZER

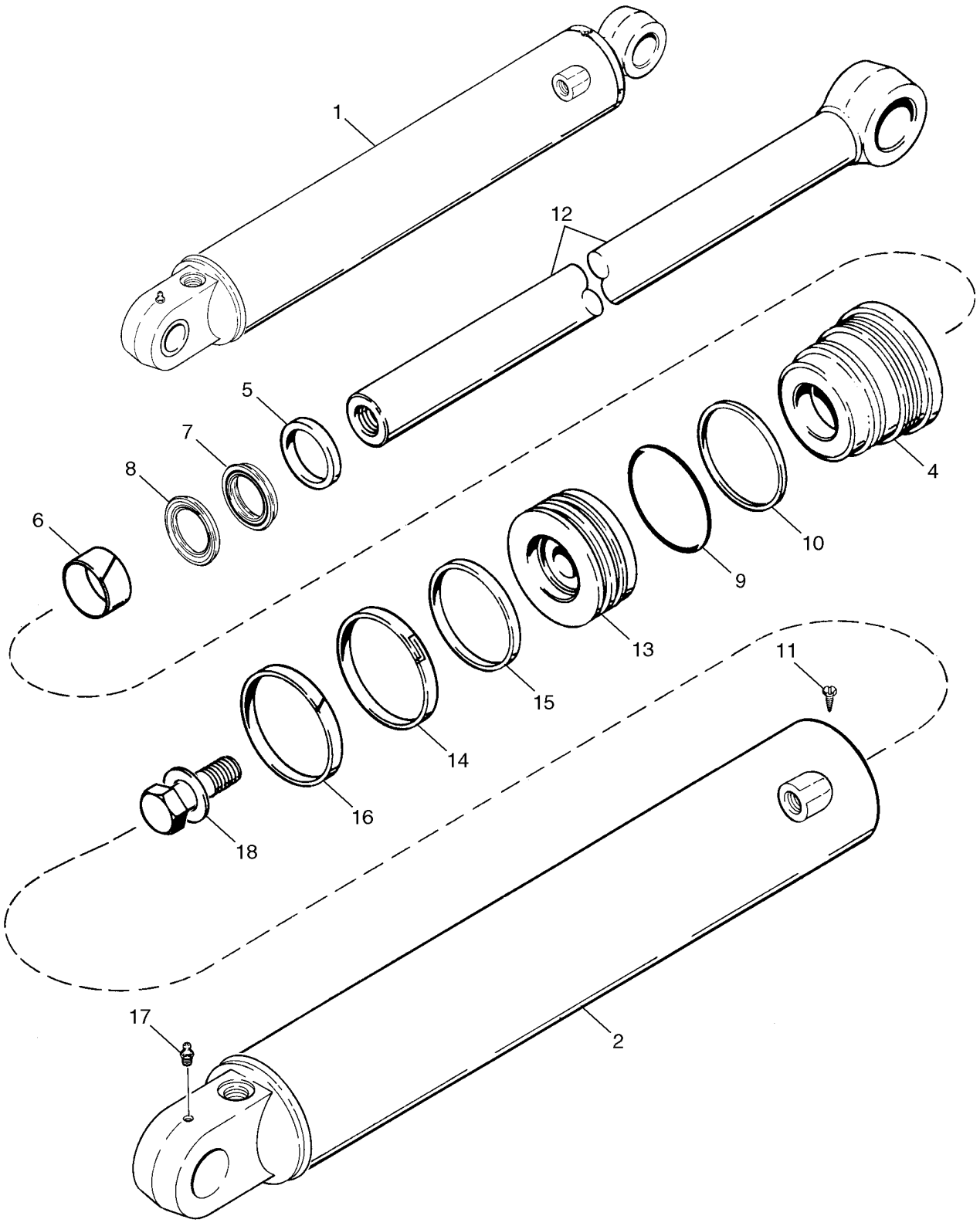

HTTP://WWW.MINNPARBACKHOEPARTS.COM



CYLINDER ASSY - BACKHOE STABILIZER

| REF | FN | PART NUMBER | YR/SN | QTY | DESCRIPTION |
|---|---|---|---|---|---|
| 1 | | 195503A1 | | 1 | CYLINDER ASSY. 102 ID x 553 mm strk, Right-Hand, Incl. Ref 2 - 18 |
| 1 | | 195504A1 | | 1 | CYLINDER 102 ID x 553 mm strk, Left-Hand, Incl. Ref 2 - 18 |
| 2 | | 195505A1 | | 1 | TUBE Right-Hand |
| 2 | | 195506A1 | | 1 | TUBE Left-Hand |
| 4 | | 128135A2 | | 1 | GLAND |
| | | 1543269C1 | | 1 | KIT, GASKET Seal, Incl. Ref 5 - 10, 14 - 16 |
| 5 | | D95144 | | 1 | SEALRING WIPER |
| 6 | | G101533 | | 1 | BUSHING, LARGE |
| | | 1542876C1 | | 1 | PACKAGE,SERVICE Rod and Buffer Seal; Incl. Ref 7, 8; Not Serviced Separately; Order 1543269C1 Seal Kit |
| 7 | | NSS | | 1 | NOT SERVICED SEPARATELY Rod Seal; Order 1543269C1 Seal Kit |
| 8 | | NSS | | 1 | NOT SERVICED SEPARATELY Buffer Seal; Order 1543269C1 Seal Kit |
| 9 | | 238-5239 | | 1 | O-RING 3-5/8 x 1/8 |
| 10 | | G109299 | | 1 | RING Backup |
| 11 | | 276-2446 | | 1 | SCREW Self-Tapping, No. 8 x 3/8 |
| 12 | | 123726A1 | | 1 | ROD, PISTON 51 mm (2 in) dia |
| 13 | | G108123 | | 1 | PISTON |
| 14 | | G102285 | | 1 | SEAL |
| 15 | | G100440 | | 1 | RING |
| 16 | | G100448 | | 1 | RING |
| 17 | | 219-1 | | 1 | NIPPLE, LUBE 1/8 PT x 21/32 |
| 18 | | 86982440 | | 1 | BOLT, SPECIAL 1,25 x 2,75; Incl. Washer |

HTTP://WWW.MINNPARBACKHOEPARTS.COM



CYLINDER ASSY - BACKHOE SWING

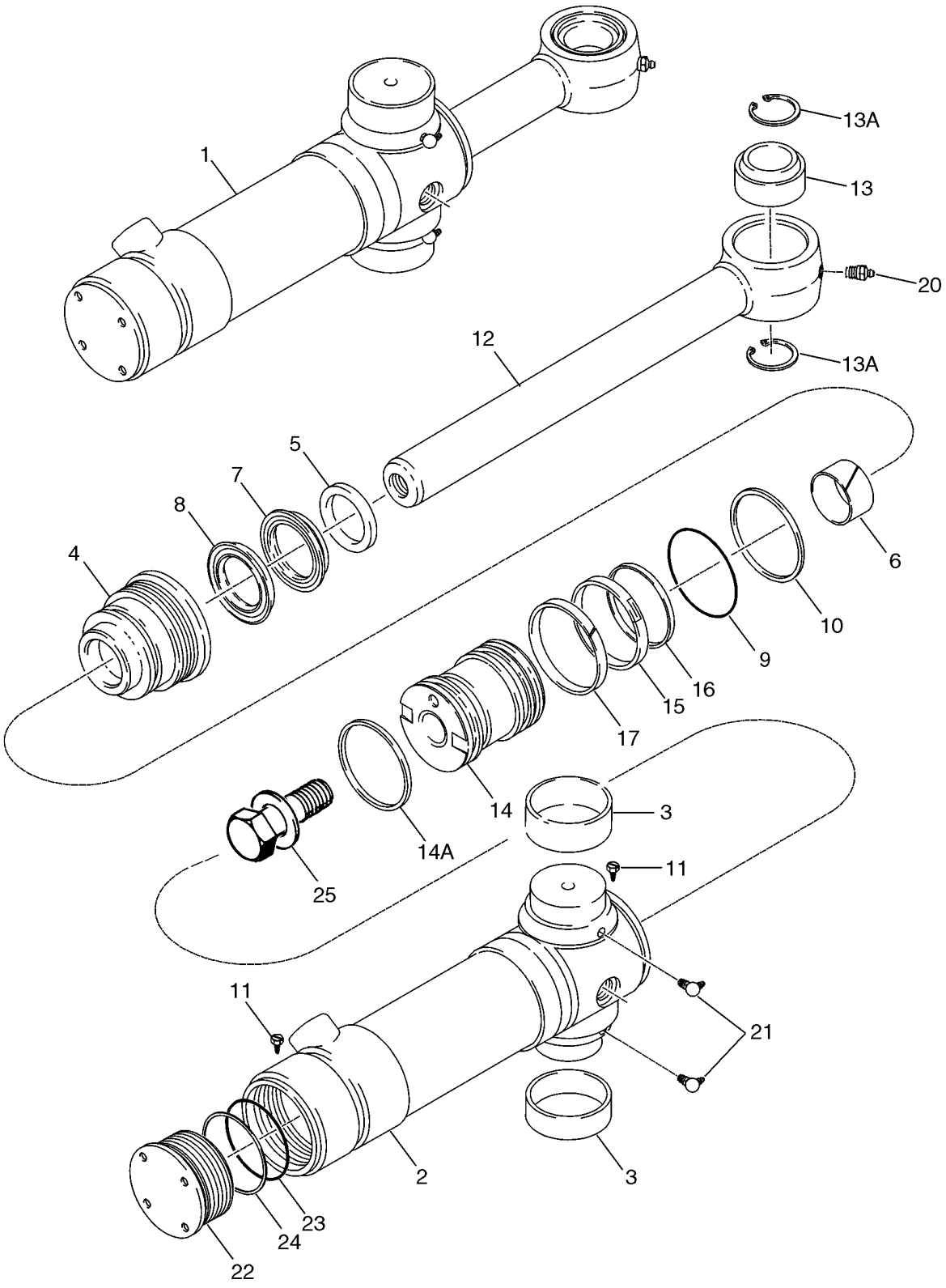

HTTP://WWW.MINNPARBACKHOEPARTS.COM



CYLINDER ASSY - BACKHOE SWING

| REF | FN | PART NUMBER | YR/SN | QTY | DESCRIPTION |
|---|---|---|---|---|---|
| 1 | | 188027A2 | | 2 | CYLINDER ASSY. 95 ID x 292 mm strk, Incl. Ref 2-25 |
| 2 | | 220165A2 | | 1 | TUBE Incl. Ref 2, 3, 11, 22 - 24; Not Available As An Assembly; Order Components |
| 2 | | 188028A2 | | 1 | TUBE ASSY. Incl. Ref 3 |
| 3 | | 124568A2 | | 2 | RING Bushing |
| 4 | | 188032A2 | | 1 | GLAND |
| | | 191747A1 | | 1 | SEAL KIT, Incl. Ref 5 - 10, 14A - 17, 23, 24 |
| 5 | | D95144 | | 1 | SEALRING WIPER |
| 6 | | G101533 | | 1 | BUSHING, LARGE |
| | | 1542876C1 | | 1 | PACKAGE,SERVICE Rod and Buffer Seal; Incl. Ref 7, 8; Not Serviced Separately; Order 191747A1 Seal Kit |
| 7 | | NSS | | 1 | NOT SERVICED SEPARATELY Rod Seal; Order 191747A1 Seal Kit |
| 8 | | NSS | | 1 | NOT SERVICED SEPARATELY Buffer Seal; Order 191747A1 Seal Kit |
| 9 | | 238-5237 | | 1 | O-RING 3-3/8 ID x 1/8 |
| 10 | | G32126 | | 1 | RING Backup |
| 11 | | 276-2446 | | 2 | SCREW Self-Tapping, No. 8 x 3/8 |
| 12 | | 87413722 | | 1 | ROD, PISTON 51 mm (2 in) dia, Incl. Ref 13, 13A |
| 13 | | 137248A1 | | 1 | RING |
| 13A | | 100-21315 | | 2 | SNAP RING No. 315 |
| 14 | | 188034A3 | | 1 | PISTON |
| 14A | | 191252A1 | | 1 | SEAL, OIL Cast Iron |
| 15 | | 1340764C1 | | 1 | SEAL ASSY. |
| 16 | | 1340763C1 | | 1 | RING |
| 17 | | 1980245C1 | | 1 | SEAL, OIL |
| 20 | | 219-1 | | 1 | NIPPLE, LUBE 1/8 PT x 21/32 |
| 21 | | 219-55 | | 2 | NIPPLE, LUBE 90 deg, 1/8 PT x 27/32 |
| | | {188035A1} | | 1 | CAP ASSEMBLY, End; Incl. Ref 22 - 24; Not Available As An Assembly, Order Components |
| 22 | | 188036A1 | | 1 | CAP End |
| 23 | | 238-5239 | | 1 | O-RING 3-5/8 x 1/8 |
| 24 | | G109299 | | 1 | RING Backup |
| 25 | | 86982439 | | 1 | BOLT, SPECIAL 1 x 4,0; Incl. Washer |

HTTP://WWW.MINNPARBACKHOEPARTS.COM



CYLINDER ASSY - BACKHOE BOOM

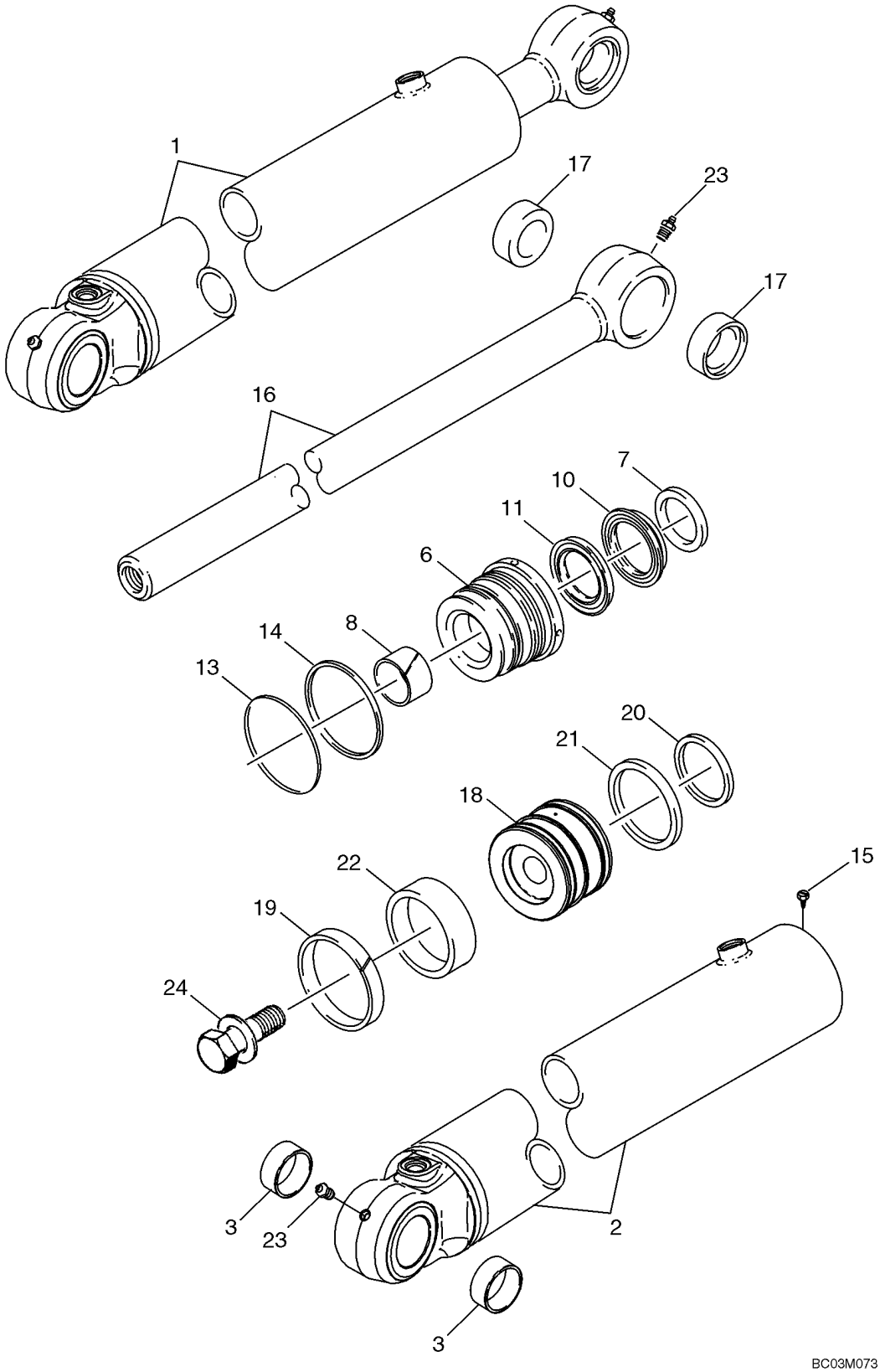

HTTP://WWW.MINNPARBACKHOEPARTS.COM



CYLINDER ASSY - BACKHOE BOOM

| REF | FN | PART NUMBER | YR/SN | QTY | DESCRIPTION |
|---|---|---|---|---|---|
| 1 | | 189653A2 | | 1 | CYLINDER ASSY. 114 ID x 982 mm strk, Incl. Ref 2 - 24 |
| 2 | | 397080A1 | | 1 | SLEEVE, HYD' CYL' TUBE, Incl. Ref 3 |
| 3 | | D149079 | | 2 | BUSHING 50 x 34 mm lg |
| 6 | | 127862A2 | | 1 | CAP CYLINDER END GLAND |
| | | 182218A1 | | 1 | PACKAGE, SEALS Incl. Ref 7 - 14, 19 - 22 |
| 7 | | D95145 | | 1 | WIPER |
| 8 | | G102426 | | 1 | BUSHING, LARGE |
| | | 1542877C1 | | 1 | KIT Rod and Buffer Seal; Incl. Ref 10, 11; Not Serviced Separately; Order 182218A1 Seal Kit |
| 10 | | NSS | | 1 | NOT SERVICED SEPARATELY Rod Seal; Order 182218A1 Seal Kit |
| 11 | | NSS | | 1 | NOT SERVICED SEPARATELY Buffer Seal; Order 182218A1 Seal Kit |
| 13 | | 238-5243 | | 1 | O-RING 4-1/8 ID x 1/8 |
| 14 | | G109300 | | 1 | RING Backup |
| 15 | | 276-2446 | | 1 | SCREW Self-Tapping, No. 8 x 3/8 |
| 16 | | 182109A1 | | 1 | ROD, PISTON 57 mm (2-1/4 in) dia, Incl. Ref 17 |
| 17 | | D149079 | | 2 | BUSHING 50 x 34 mm lg |
| 18 | | 189657A2 | | 1 | JACK PISTON |
| 19 | | 182116A1 | | 1 | BUSHING, LARGE Cast Iron |
| 20 | | G101995 | | 1 | GASKET SEAL |
| 21 | | G101994 | | 2 | SEAL |
| 22 | | G101996 | | 1 | GASKET |
| 23 | | 219-1 | | 2 | NIPPLE, LUBE 1/8 PT x 21/32 |
| 24 | | 86982442 | | 1 | BOLT, SPECIAL 1,25 x 3,25; Incl. Washer |

HTTP://WWW.MINNPARBACKHOEPARTS.COM

| 08-64 | | p1 | 01/04 |
|---|---|---|---|

CYLINDER ASSY - BACKHOE DIPPER

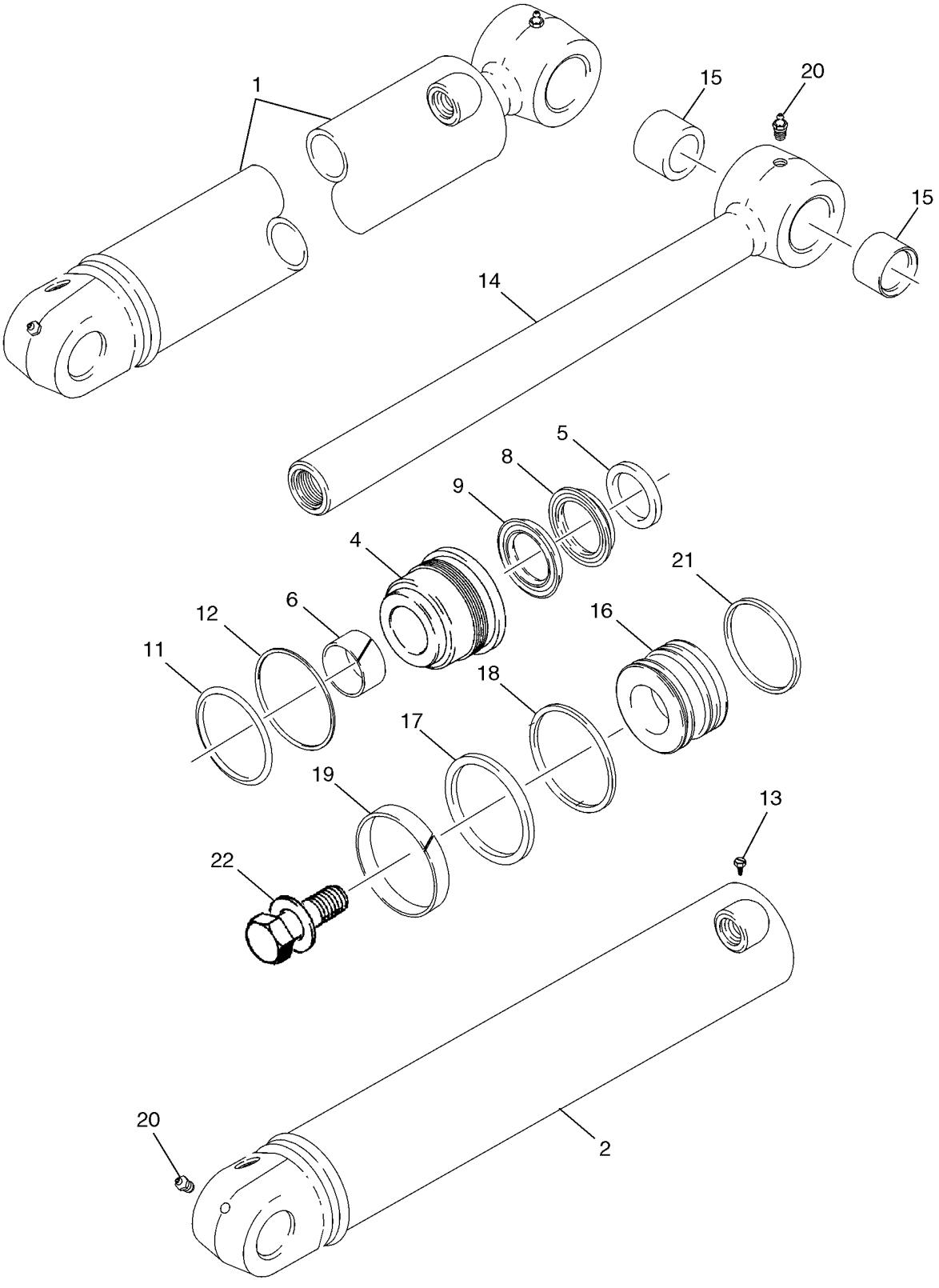

HTTP://WWW.MINNPARBACKHOEPARTS.COM



CYLINDER ASSY - BACKHOE DIPPER

| REF | FN | PART NUMBER | YR/SN | QTY | DESCRIPTION |
|---|---|---|---|---|---|
| 1 | | 233114A2 | | 1 | CYLINDER ASSY. 108 ID x 686 mm strk, Incl. Ref 2 - 22 |
| 2 | | 297952A1 | | 1 | PIPE TUBE |
| 4 | | 234141A2 | | 1 | CAP CYLINDER END GLAND |
| | | 234844A1 | | 1 | KIT, GASKET Incl. Ref 5 - 12, 17 - 19, 21 |
| 5 | | D95145 | | 1 | WIPER |
| 6 | | G102426 | | 1 | BUSHING, LARGE |
| | | 1542877C1 | | 1 | KIT Rod and Buffer Seal; Incl. Ref 8, 9; Not Serviced Separately; Order 234844A1 Seal Kit |
| 8 | | NSS | | 1 | NOT SERVICED SEPARATELY Rod Seal; Order 234844A1 Seal Kit |
| 9 | | NSS | | 1 | NOT SERVICED SEPARATELY Buffer Seal; Order 234844A1 Seal Kit |
| 11 | | 238-5241 | | 1 | O-RING 3-7/8 ID x 1/8 |
| 12 | | G32176 | | 1 | RING Backup |
| 13 | | 276-2446 | | 1 | SCREW Self-Tapping, No. 8 x 3/8 |
| 14 | | 175778A1 | | 1 | ROD, PISTON 57 mm (2-1/4 in) dia, Incl. Ref 15 |
| 15 | | D149079 | | 2 | BUSHING |
| 16 | | 233110A2 | | 1 | PISTON |
| 17 | | G110531 | | 1 | SEAL |
| 18 | | G110529 | | 1 | RING |
| 19 | | G110530 | | 1 | RING |
| 20 | | 219-1 | | 2 | NIPPLE, LUBE 1/8 PT x 21/32 |
| 21 | | 233104A1 | | 1 | RING Cast Iron |
| 22 | | 86982443 | | 1 | BOLT, SPECIAL 1-3/8 x 3,5; Incl. Washer |

HTTP://WWW.MINNPARBACKHOEPARTS.COM



CYLINDER ASSY - BACKHOE BUCKET

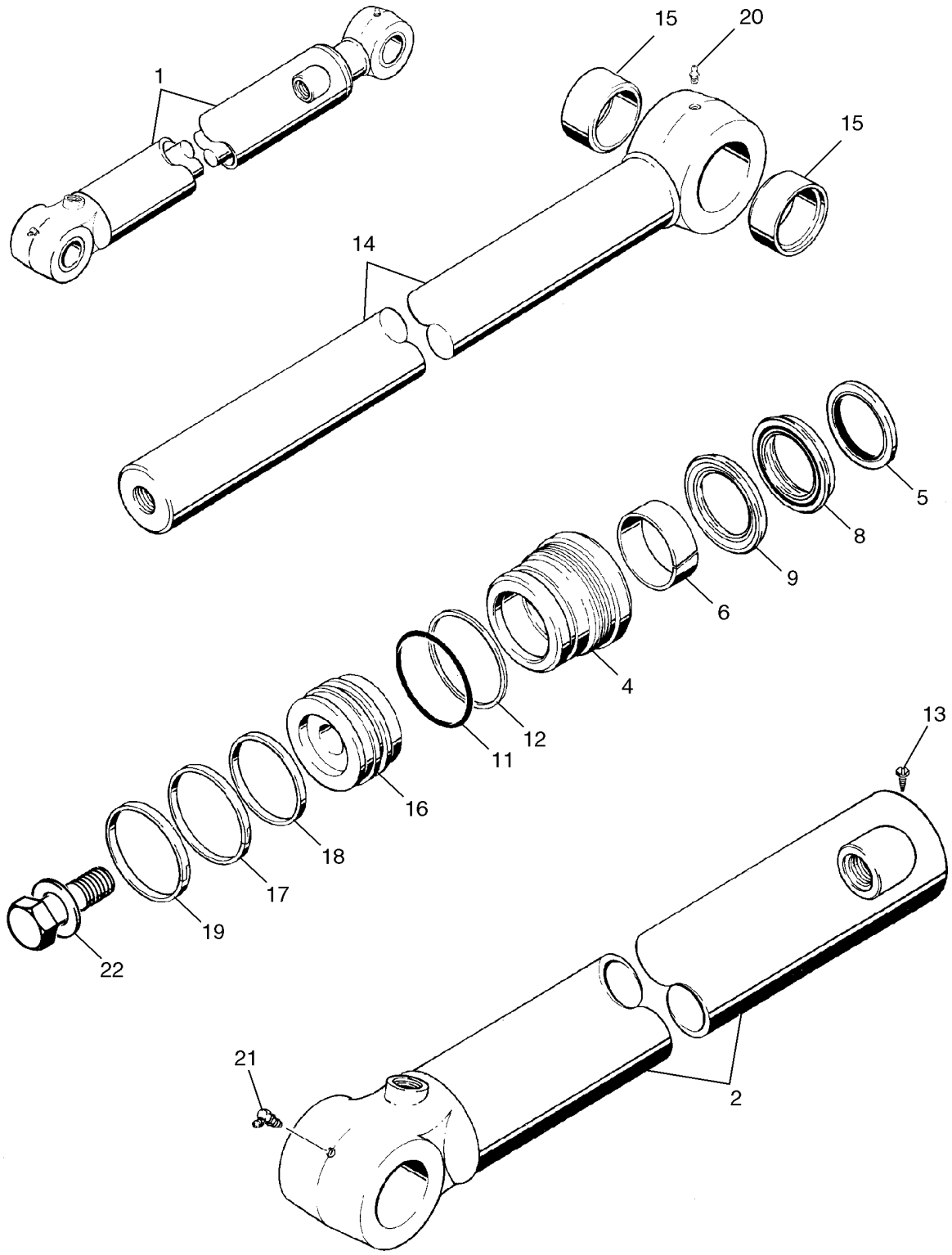

HTTP://WWW.MINNPARBACKHOEPARTS.COM



CYLINDER ASSY - BACKHOE BUCKET

| REF | FN | PART NUMBER | YR/SN | QTY | DESCRIPTION |
|---|---|---|---|---|---|
| 1 | | 128760A1 | | 1 | CYLINDER ASSY. 83 ID x 872 mm strk, Incl. Ref 2 - 22 |
| 2 | | 128761A1 | | 1 | SLEEVE, HYD' CYL' TUBE |
| 4 | | 128770A2 | | 1 | CAP CYLINDER END GLAND |
| | | 131750A2 | | 1 | KIT, GASKET Seal, Incl. Ref 5 - 12, 17 - 19 |
| 5 | | D95145 | | 1 | WIPER |
| 6 | | 1346476C1 | | 1 | RING |
| | | 1542877C1 | | 1 | KIT Rod and Buffer Seal; Incl. Ref 8, 9; Not Serviced Separately; Order 131750A2 Seal Kit |
| 8 | | NSS | | 1 | NOT SERVICED SEPARATELY Rod Seal; Order 131750A2 Seal Kit |
| 9 | | NSS | | 1 | NOT SERVICED SEPARATELY Buffer Seal; Order 131750A2 Seal Kit |
| 11 | | 238-5233 | | 1 | O-RING 2-7/8 ID x 1/8 in |
| 12 | | G32122 | | 1 | RING Backup |
| 13 | | 276-2446 | | 1 | SCREW Self-Tapping, No. 8 x 3/8 |
| 14 | | 198033A1 | | 1 | ROD, PISTON 57 mm (2-1/4 in) dia, Incl. Ref 15 |
| 15 | | D140029 | | 2 | BUSHING, LARGE |
| 16 | | 128772A1 | | 1 | PISTON |
| 17 | | G102287 | | 1 | SEAL |
| 18 | | S109444 | | 1 | RING |
| 19 | | S109445 | | 1 | RING |
| 20 | | 219-1 | | 1 | NIPPLE, LUBE 1/8 PT x 21/32 |
| 21 | | 219-36 | | 1 | NIPPLE, LUBE 45 deg, 1/8 PT x 7/8 |
| 22 | | 86982441 | | 1 | BOLT, SPECIAL 1,25 x 3,00; Incl. Washer |

HTTP://WWW.MINNPARBACKHOEPARTS.COM



CYLINDER ASSY - BACKHOE EXTENDABLE DIPPER

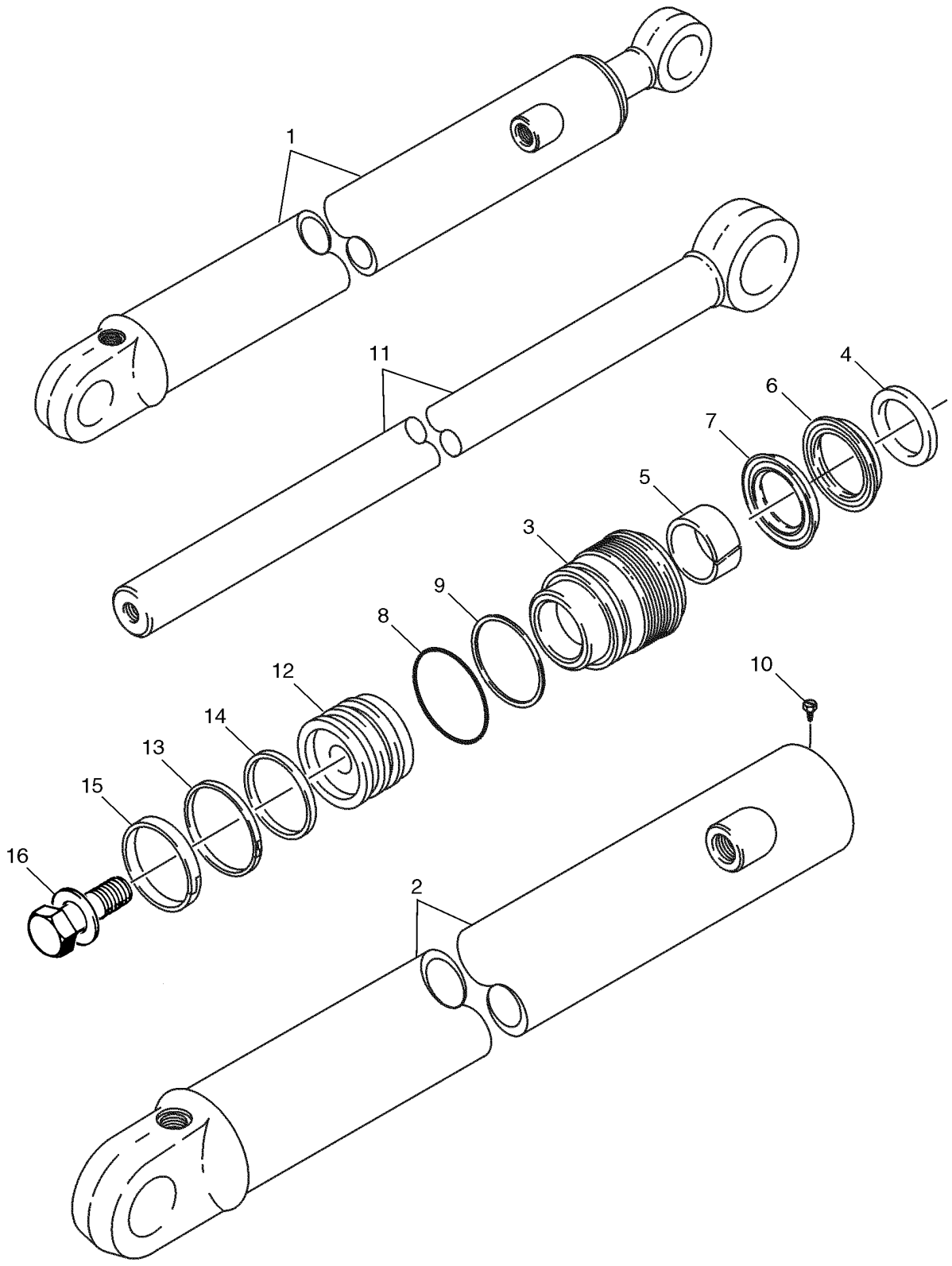

HTTP://WWW.MINNPARBACKHOEPARTS.COM



CYLINDER ASSY - BACKHOE EXTENDABLE DIPPER

| REF | FN | PART NUMBER | YR/SN | QTY | DESCRIPTION |
|---|---|---|---|---|---|
| 1 | | 1340969C2 | | 1 | CYLINDER ASSY. 76 ID x 1068 mm strk; Incl. Ref 2 - 16 |
| 2 | | 1340970C1 | | 1 | SLEEVE, HYD' CYL' TUBE |
| 3 | | 297281A1 | | 1 | CAP CYLINDER END GLAND |
| | | 1543267C1 | | 1 | KIT, GASKET Seal; Incl. Ref 4 - 9, 13 - 15 |
| 4 | | D95143 | | 1 | SEAL WIPER |
| 5 | | G102425 | | 1 | BUSHING, LARGE |
| | | 1542875C1 | | 1 | SET OF PARTS Rod and Buffer Seal; Incl. Ref 6, 7; Not Serviced Separately; Order 1543267C1 Seal Kit |
| 6 | | NSS | | 1 | NOT SERVICED SEPARATELY Rod Seal; Order 1543267C1 Seal Kit |
| 7 | | NSS | | 1 | NOT SERVICED SEPARATELY Buffer Seal; Order 1543267C1 Seal Kit |
| 8 | | 238-5231 | | 1 | O-RING 2-5/8 ID x 1/8 |
| 9 | | G109298 | | 1 | RING Backup |
| 10 | | 276-2446 | | 1 | SCREW Self-Tapping, No. 8 x 3/8 |
| 11 | | 1980296C1 | | 1 | ROD, PISTON 44 mm (1-3/4 in) dia |
| 12 | | G107277 | | 1 | PISTON |
| 13 | | G102288 | | 1 | SEAL ASSY. |
| 14 | | G100444 | | 1 | SEAL |
| 15 | | G100449 | | 1 | RING, WEAR |
| 16 | | 86982435 | | 1 | BOLT, SPECIAL 3/4 x 2,5 in, Incl. Washer |

HTTP://WWW.MINNPARBACKHOEPARTS.COM

HTTP://WWW.MINNPARBACKHOEPARTS.COM

# SECTION INDEX


| | |
|---|---|
| 09-01 | CONTROLS - LOADER LIFT AND BUCKET |
| 09-02 | CONTROLS - LOADER CLAM |
| 09-03 | CONTROLS - LOADER SELF-LEVELING |
| 09-04 | FRAME - LOADER LIFT |
| 09-05 | FRAME - LOADER LINKAGE |
| 09-06 | BUCKETS, LOADER LONG LIP (82 IN) |
| 09-07 | BUCKET, LOADER LONG LIP (93 IN) |
| 09-08 | BUCKET, LOADER CLAM |
| 09-09 | GUARD - VALVE, LOADER |
| 09-10 | COUPLER, TOOL QUICK |
| 09-11 | COVERS - BACKHOE CONTROL TOWER, WITHOUT PILOT CONTROLS |
| 09-12 | BACKHOE CONTROL TOWER SUPPORT AND SEALS, WITHOUT PILOT CONTROLS |
| 09-13 | BACKHOE CONTROL TOWER SUPPORT, WITH PILOT CONTROLS |
| 09-14 | BACKHOE CONTROL TOWER BOOTS AND SEALS, WITH PILOT CONTROLS |
| 09-15 | BACKHOE CONTROL TOWER LEVERS (BOOM LATCH), WITH PILOT CONTROLS |
| 09-16 | CONTROLS - BACKHOE, WITH FOOT SWING (MODELS WITHOUT EXTENDABLE DIPPER) |
| 09-17 | CONTROLS - BACKHOE, WITH FOOT SWING (MODELS WITH EXTENDABLE DIPPER) |
| 09-18 | CONTROLS - BACKHOE, WITH HAND SWING (MODELS WITHOUT EXTENDABLE DIPPER) |
| 09-19 | CONTROLS - BACKHOE, WITH HAND SWING (MODELS WITHOUT EXTENDABLE DIPPER) |
| 09-20 | CONTROLS - BACKHOE, WITH HAND SWING (MODELS WITH EXTENDABLE DIPPER) |
| 09-21 | CONTROLS - BACKHOE AUXILIARY HYDRAULICS, WITHOUT PILOT CONTROLS |
| 09-22 | BACKHOE - STABILIZERS, PLATES AND PADS |
| 09-23 | BACKHOE - SWING TOWER AND SWING CYLINDERS |
| 09-24 | BACKHOE - BOOM AND SWING TOWER |
| 09-25 | BOOM LATCH (WITHOUT PILOT CONTROLS) |
| 09-25A | BOOM LATCH (WITH PILOT CONTROLS) |
| 09-26 | BACKHOE - DIPPER AND BUCKET |
| 09-27 | BACKHOE - DIPPER, EXTENDABLE |
| 09-28 | BUCKET, UNIVERSAL BACKHOE (305 MM (12 INCH) WIDE) |
| 09-29 | BUCKET, UNIVERSAL BACKHOE (406 MM (16 INCH) WIDE) |
| 09-30 | BUCKET, UNIVERSAL BACKHOE (457 MM (18 INCH) WIDE) |
| 09-31 | BUCKET, BACKHOE (457 MM (18 INCH) WIDE) |
| 09-32 | BUCKET, UNIVERSAL BACKHOE (610 MM (24 INCH) / 762 MM (30 INCH) WIDE) |
| 09-33 | BUCKET, BACKHOE (610 MM (24 INCH) WIDE) |
| 09-34 | BUCKET, UNIVERSAL BACKHOE (914 MM (36 INCH) WIDE) |
| 09-35 | BUCKET, UNIVERSAL BACKHOE (610 MM (24 INCH) WIDE) |
| 09-36 | COUNTERWEIGHT, FRONT |
| 09-37 | CHASSIS / MOUNTS, POD - SCREEN, AIR INLET |
| 09-38 | TANK, OIL - BOX, BATTERY AND TOOL |
| 09-39 | RADIATOR WRAPPER |
| 09-40 | HOOD - PANELS, SIDE |
| 09-41 | HOOD - GRILLE |
| 09-42 | PLATES, FLOOR - FLOORMATS |
| 09-43 | FENDER COVER, LEFT-HAND - PANEL, REAR CLOSURE (STORAGE TRAY WITH CUP HOLDER) |
| 09-44 | FENDER EXTENSIONS |
| 09-45 | GUARD, MUD |
| 09-46 | SEAT - MOUNTING |

HTTP://WWW.MINNPARBACKHOEPARTS.COM

# SECTION INDEX


| | |
|---|---|
| 09-47 | SEAT ASSY, STANDARD |
| 09-48 | SEAT SUPPORT AND PEDESTAL, STANDARD |
| 09-49 | SEAT ASSY, MECHANICAL SUSPENSION |
| 09-50 | SEAT PEDESTAL AND SUSPENSION, MECHANICAL SUSPENSION |
| 09-51 | SEAT ASSY, AIR SUSPENSION |
| 09-52 | SEAT PEDESTAL AND SUSPENSION, AIR SUSPENSION |
| 09-53 | CAB - GLASS, MIRROR AND HOLD OPEN |
| 09-54 | CAB - FRAME AND COVERS |
| 09-55 | CAB - DOORS |
| 09-56 | CAB - DOOR MOUNTING |
| 09-57 | CAB - WINDOW, RIGHT-HAND, FOR SINGLE DOOR CAB FRAMES |
| 09-58 | CAB - WINDOW, REAR |
| 09-59 | CAB - WASHER, WINDSHIELD |
| 09-60 | CAB - WIPERS |
| 09-61 | CAB HEADLINER - FILTER, LOUVERS, DOME LAMP |
| 09-62 | CAB - FILTER, AIR |
| 09-63 | CAB - BLOWER HOUSING, VENTILATION DUCTS, DRAIN LINES |
| 09-64 | CAB - HEATER |
| 09-65 | CAB - AIR CONDITIONING LINES, EVAPORATOR CORE |
| 09-66 | CAB - AIR CONDITIONING, CONDENSER, RECEIVER-DRIER |
| 09-67 | CAB - AIR CONDITIONING COMPRESSOR |
| 09-68 | CANOPY, ROPS - FRAME, COVERS, MIRROR, VISOR |
| 09-69 | CANOPY, ROPS - GLASS |
| 09-70 | CANOPY, ROPS - WIPER, FRONT AND WINDSHIELD WASHER |
| 09-71 | MIRROR, REAR VIEW - MOUNTING, CAB MODELS |
| 09-72 | SLOW MOVING VEHICLE EMBLEM |
| 09-73 | DECALS |
| 09-74 | DECALS |
| 09-75 | DECALS |
| 09-76 | DECALS - ENGLISH |
| 09-77 | DECALS - LATIN AMERICAN SPANISH |
| 09-78 | DECALS - CANADIAN FRENCH |
| 09-79 | DECALS - ENGLISH |
| 09-80 | DECALS - LATIN AMERICAN SPANISH |
| 09-81 | DECALS - CANADIAN FRENCH |

HTTP://WWW.MINNPARBACKHOEPARTS.COM

HTTP://WWW.MINNPARBACKHOEPARTS.COM



CONTROLS - LOADER LIFT AND BUCKET

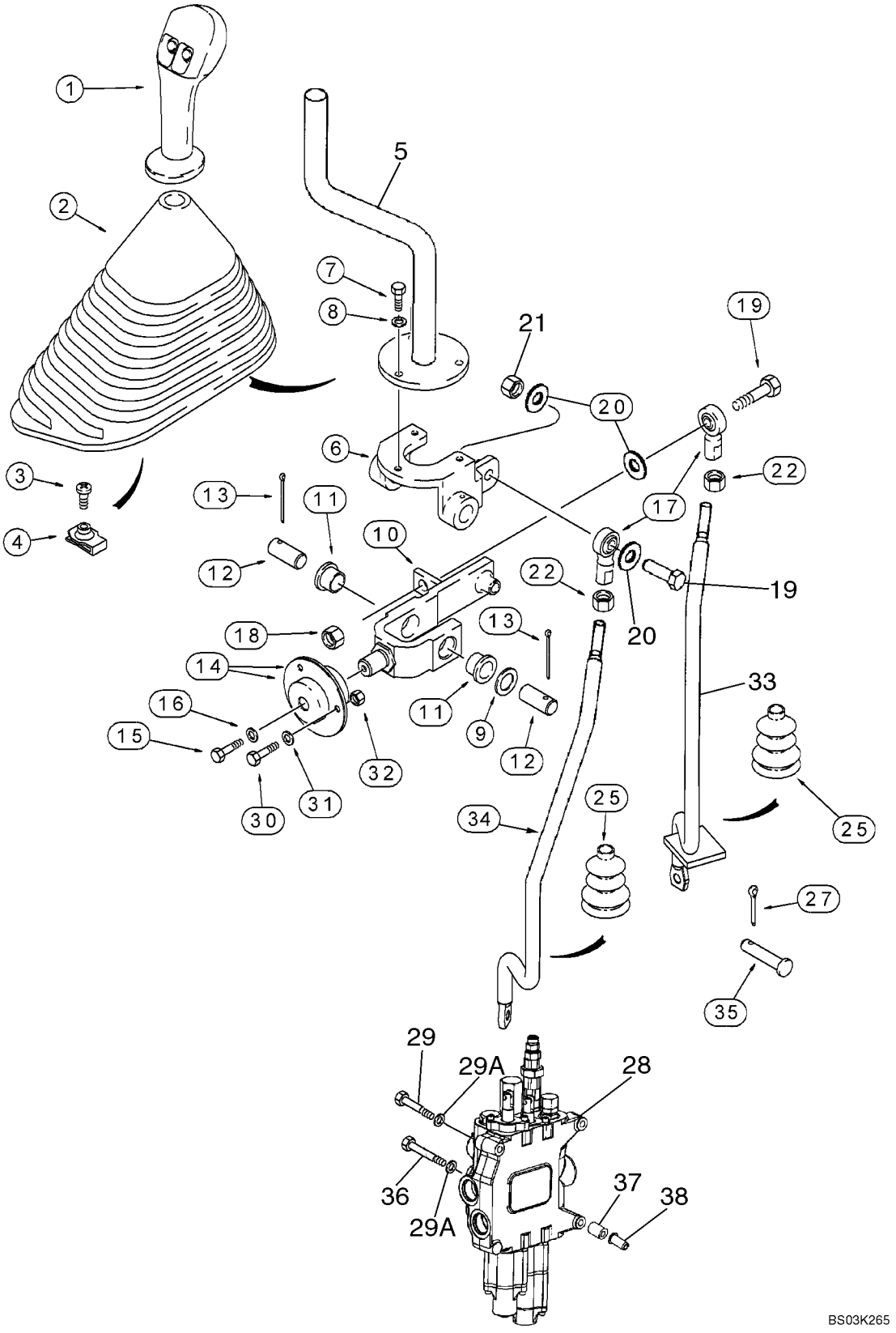

HTTP://WWW.MINNPARBACKHOEPARTS.COM



CONTROLS - LOADER LIFT AND BUCKET

| REF | FN | PART NUMBER | YR/SN | QTY | DESCRIPTION |
|---|---|---|---|---|---|
| 1 | | 87412687 | | 1 | HANDLE Loader Control Lever; Two Button, Declutch and Differential Lock Switches |
| | | 256347A1 | | 1 | CONNECTOR |
| | | 258616A1 | | 1 | LOCK |
| | | 298176A1 | | 1 | PLUG |
| | | 345-133 | | X | GLUE Superbonder 409, 1 ml |
| 2 | | 133615A1 | | 1 | BELLOWS |
| 3 | | 140-107 | | 1 | SCREW No. 10 x 3/4 |
| 4 | | 131-861 | | 1 | NUT No. 10 |
| 5 | | 132661A1 | | 1 | LEVER |
| 6 | | 195615A1 | | 1 | SUPPORT |
| 7 | | 614-6016 | | 3 | SCREW M6 x 16 |
| 8 | | 495-11028 | | 3 | WASHER 9/32 x 5/8 x 1/16 |
| 9 | | 495-81184 | | 1 | WASHER |
| 10 | | 176311A1 | | 1 | JOINT Incl. Ref 11 |
| 11 | | 108088A1 | | 2 | BUSHING |
| 12 | | 102761A1 | | 2 | PIN, LARGE |
| 13 | | 432-828 | | 2 | PIN, SPLIT (COTTER) 1/8 x 1-3/4 |
| 14 | | 112380A1 | | 2 | BEARING Incl. Ref 14A |
| 14A | | 465004R91 | | 1 | BEARING Not Illustrated |
| 15 | | 614-6016 | | 1 | SCREW M6 x 16 |
| 16 | | 396-41028 | | 1 | WASHER 9/32 x 7/8 x 3/32 |
| 17 | | D136773 | | 2 | BALL 3/8 NF |
| 18 | | 231-1446 | | 1 | NUT, LOCK 3/8 |
| 19 | | 413-628 | | 2 | BOLT 3/8 x 1-3/4 |
| 20 | | 496-21041 | | 3 | WASHER 13/32 x 13/16 x 3/32 |
| 21 | | 425-106 | | 1 | NUT 3/8 |
| 22 | | 425-116 | | 2 | NUT 3/8 NF |
| 25 | | 132931A1 | | 2 | BELLOWS Cab Models |
| | | 189109A1 | | 2 | SPRING Boot Retainer; Cab Models |
| 27 | | 432-612 | | 2 | PIN, SPLIT (COTTER) 3/32 x 3/4 |
| 28 | | REF | | 1 | INSTRUCTION LOADER CONTROL VALVE; Two Spool, See Figure 08-30 for Two Spool Valve Options |
| 29 | | 814-10090 | | 2 | SCREW M10 x 90 |
| 29A | | 896-11010 | | 3 | WASHER 11 x 21 x 2,5 mm |

HTTP://WWW.MINNPARBACKHOEPARTS.COM



CONTROLS - LOADER LIFT AND BUCKET

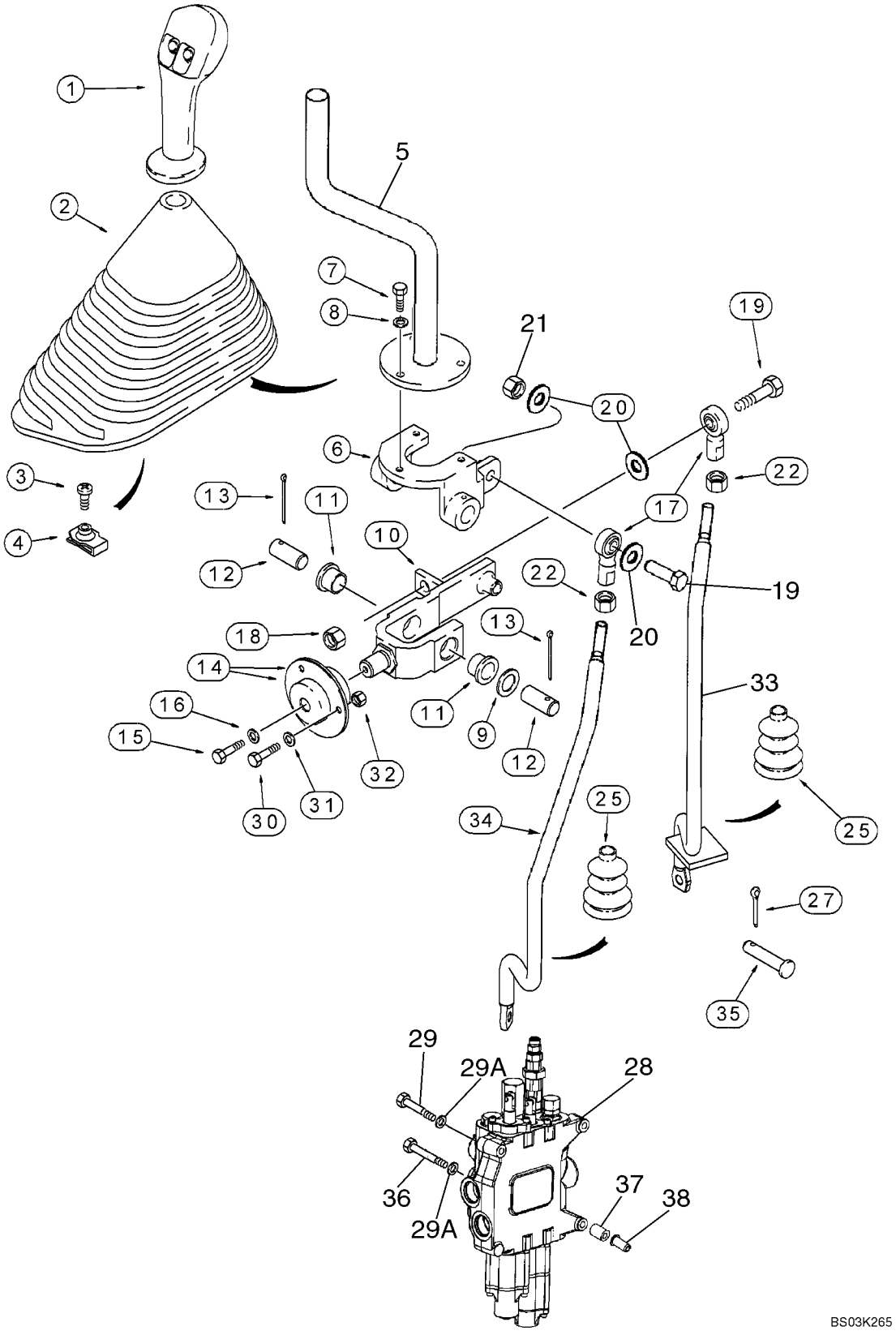

HTTP://WWW.MINNPARBACKHOEPARTS.COM



CONTROLS - LOADER LIFT AND BUCKET

| REF | FN | PART NUMBER | YR/SN | QTY | DESCRIPTION |
|---|---|---|---|---|---|
| 30 | | 614-6020 | | 3 | BOLT M6 x 20 |
| 31 | | 396-41028 | | 3 | WASHER 9/32 x 7/8 x 3/32 |
| 32 | | 829-1406 | | 3 | NUT M6; 10.9 |
| 33 | | 87428151 | | 1 | ROD, THREADED Bucket Control Rod |
| 34 | | 87428152 | | 1 | ROD, THREADED Lift Control Rod |
| 35 | | D149287 | | 2 | PIN, LARGE |
| 36 | | 814-10110 | | 1 | SCREW M10 x 110 |
| 37 | | 87417599 | | 3 | SPACER |
| 38 | | 87417721 | | 3 | INSERT, THREADED M10 |

HTTP://WWW.MINNPARBACKHOEPARTS.COM



CONTROLS - LOADER CLAM

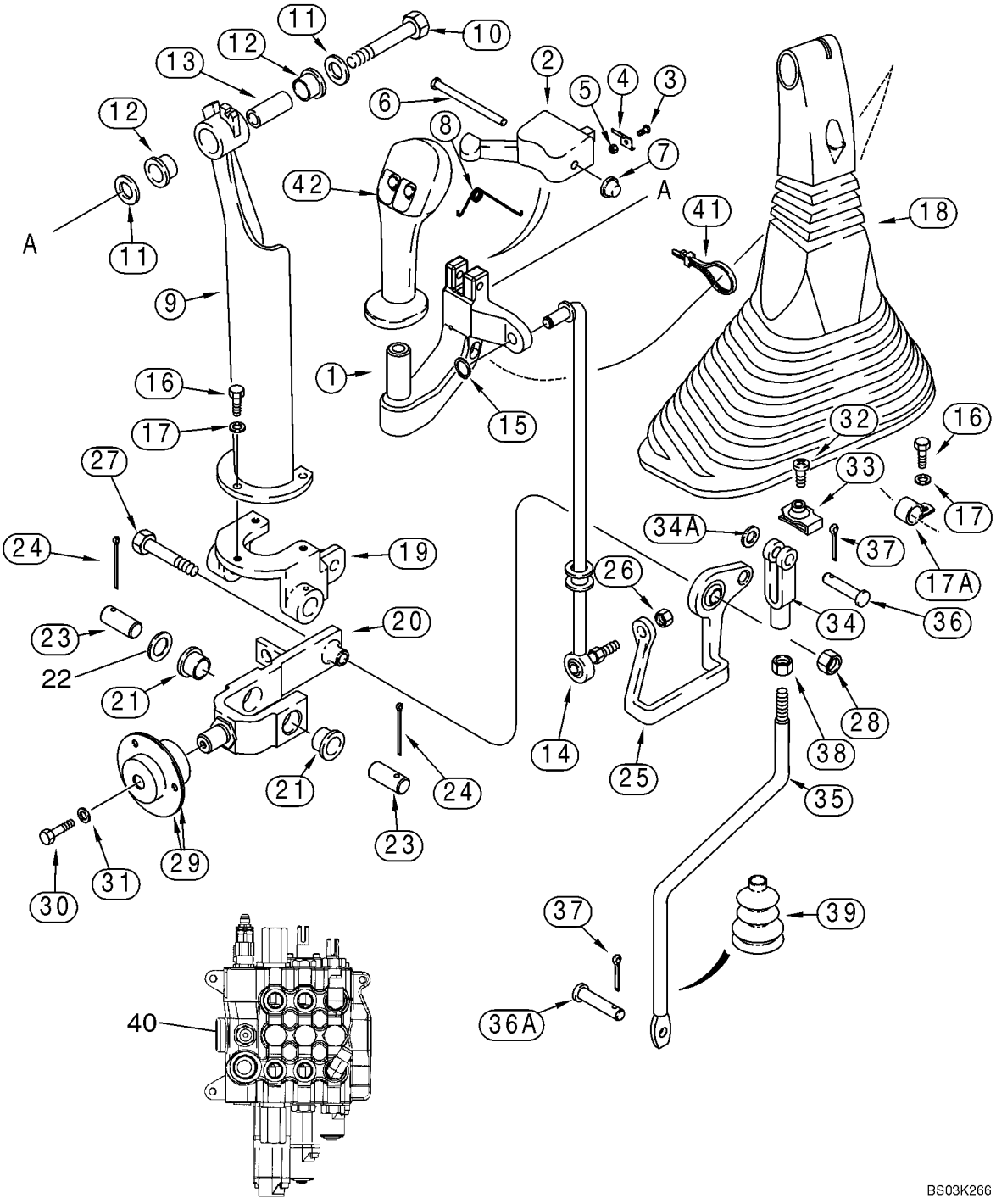

HTTP://WWW.MINNPARBACKHOEPARTS.COM



CONTROLS - LOADER CLAM

| REF | FN | PART NUMBER | YR/SN | QTY | DESCRIPTION |
|---|---|---|---|---|---|
| 1 | | 297615A1 | | 1 | HANDLE |
| 2 | | 123815A1 | | 1 | LATCH |
| 3 | | 170-104 | | 2 | SCREW No. 5 x 3/8 |
| 4 | | 129914A1 | | 2 | SPRING |
| 5 | | 225-14105 | | 2 | NUT No. 5 |
| 6 | | 439-5436 | | 1 | SPLIT PIN/SAFETY PIN 1/4 x 2-1/4 |
| 7 | | 143210A1 | | 1 | BLANK-OFF PLUG CAP |
| 8 | | 124243A1 | | 1 | SPRING |
| 9 | | 123493A1 | | 1 | SUPPORT |
| 10 | | 413-632 | | 1 | BOLT 3/8 x 2 |
| 11 | | 495-21044 | | 2 | WASHER 7/16 x 1 x 5/64 |
| 12 | | 108088A1 | | 2 | BUSHING |
| 13 | | 133989A1 | | 1 | PIN, LARGE SLEEVE |
| 14 | | 239306A1 | | 1 | THREADED ROD |
| 15 | | 103-1437 | | 1 | CLIP, ELECTRICAL Retaining Ring |
| 16 | | 614-6016 | | 3 | SCREW M6 x 16 |
| 17 | | 495-11028 | | 3 | WASHER 9/32 x 5/8 x 1/16 |
| 17A | | 515-2295 | | 1 | CLAMP 3/8 ID |
| 18 | | 133617A1 | | 1 | BELLOWS |
| 19 | | 195615A1 | | 1 | SUPPORT |
| 20 | | 176311A1 | | 1 | JOINT Incl. Ref 21 |
| 21 | | 108088A1 | | 2 | BUSHING |
| 22 | | 495-81184 | | 1 | WASHER |
| 23 | | 102761A1 | | 2 | PIN, LARGE |
| 24 | | 432-828 | | 2 | PIN, SPLIT (COTTER) 1/8 x 1-3/4 |
| 25 | | 112382A1 | | 1 | JOINT Bellcrank |
| 26 | | 425-116 | | 1 | NUT 3/8 NF |
| 27 | | 413-632 | | 1 | BOLT 3/8 x 2 |
| 28 | | 231-1446 | | 1 | NUT, LOCK 3/8 |
| 29 | | 112380A1 | | 2 | BEARING Includes (1) 465004R91 Internal Bearing |
| | | 465004R91 | | 1 | BEARING |
| 30 | | 614-6016 | | 1 | SCREW M6 x 16 |
| 31 | | 396-41028 | | 1 | WASHER 9/32 x 7/8 x 3/32 |
| 32 | | 140-107 | | 1 | SCREW No. 10 x 3/4 |
| 33 | | 131-121 | | 1 | NUT, SPECIAL No. 10 |
| 34 | | 213-126 | | 1 | CLEVIS 3/8 NF |

HTTP://WWW.MINNPARBACKHOEPARTS.COM



CONTROLS - LOADER CLAM

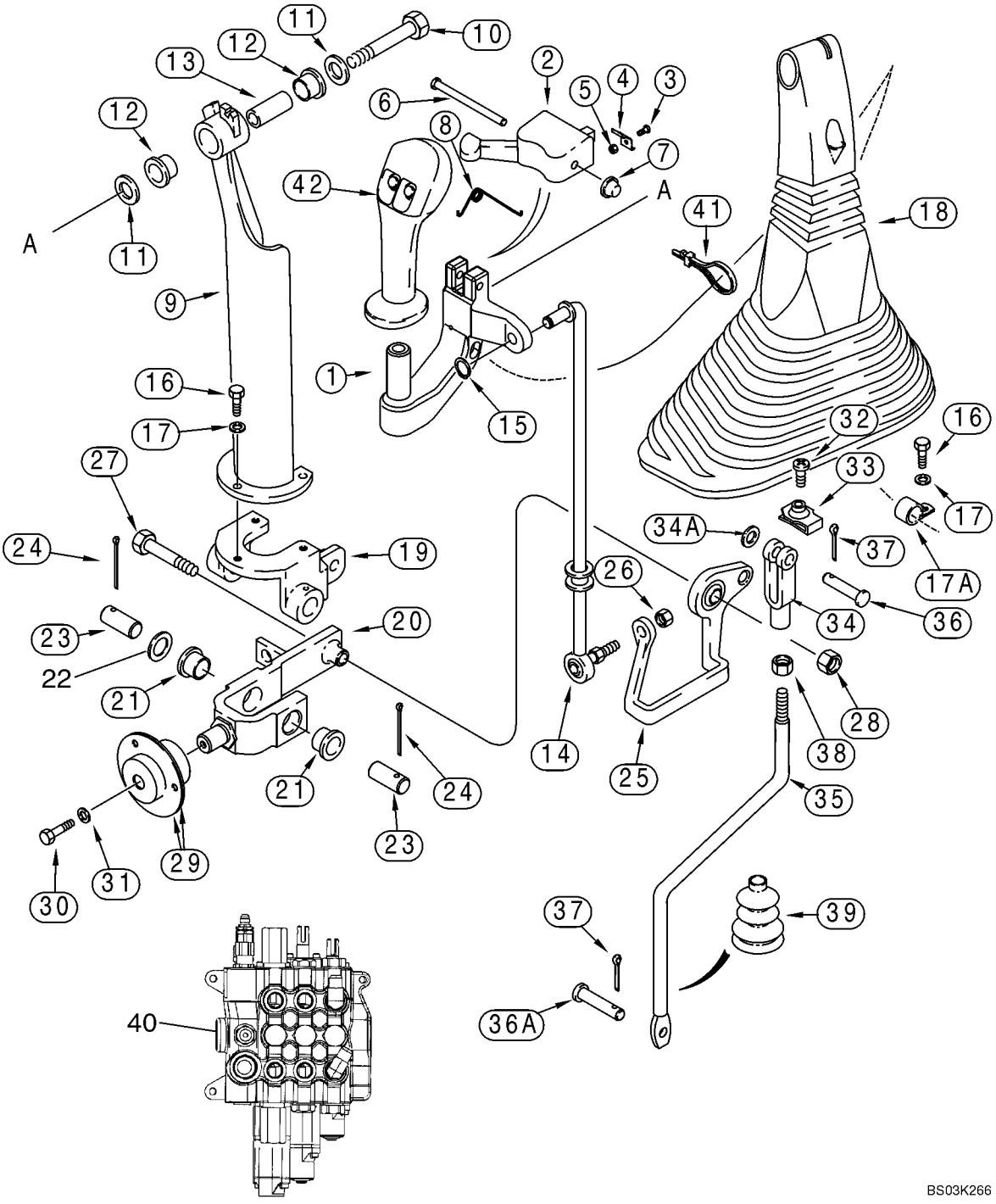

HTTP://WWW.MINNPARBACKHOEPARTS.COM



CONTROLS - LOADER CLAM

| REF | FN | PART NUMBER | YR/SN | QTY | DESCRIPTION |
|---|---|---|---|---|---|
| 34A | | 495-11041 | | 1 | WASHER 13/32 x 13/16 x 1/16 |
| 35 | | 87428153 | | 1 | ROD, THREADED Clam Control Rod |
| 36 | | D149288 | | 1 | PIN, LARGE |
| 36A | | D149287 | | 1 | PIN, LARGE |
| 37 | | 432-612 | | 2 | PIN, SPLIT (COTTER) 3/32 x 3/4 |
| 38 | | 425-116 | | 1 | NUT 3/8 NF |
| 39 | | 132873A1 | | 1 | BELLOWS |
| | | 189109A1 | | 1 | SPRING Boot Retainer |
| 40 | | REF | | 1 | INSTRUCTION LOADER CONTROL VALVE; Three Spool, See Figure 08-31 for Three Spool Valve Options |
| 41 | | L18337 | | 1 | STRAP 15 in |
| 42 | | 87412687 | | 1 | HANDLE Loader Control Lever; Two Button, Declutch and Differential Lock Switches |
| | | 256347A1 | | 1 | CONNECTOR |
| | | 258616A1 | | 1 | LOCK |
| | | 298176A1 | | 1 | PLUG |
| | | 345-133 | | X | GLUE Superbonder 409, 1 ml; For Attaching Ref 1 to Ref 42 |

HTTP://WWW.MINNPARBACKHOEPARTS.COM

| 09-03 | | p1 | 12/03 |
|---|---|---|---|

CONTROLS - LOADER SELF-LEVELING

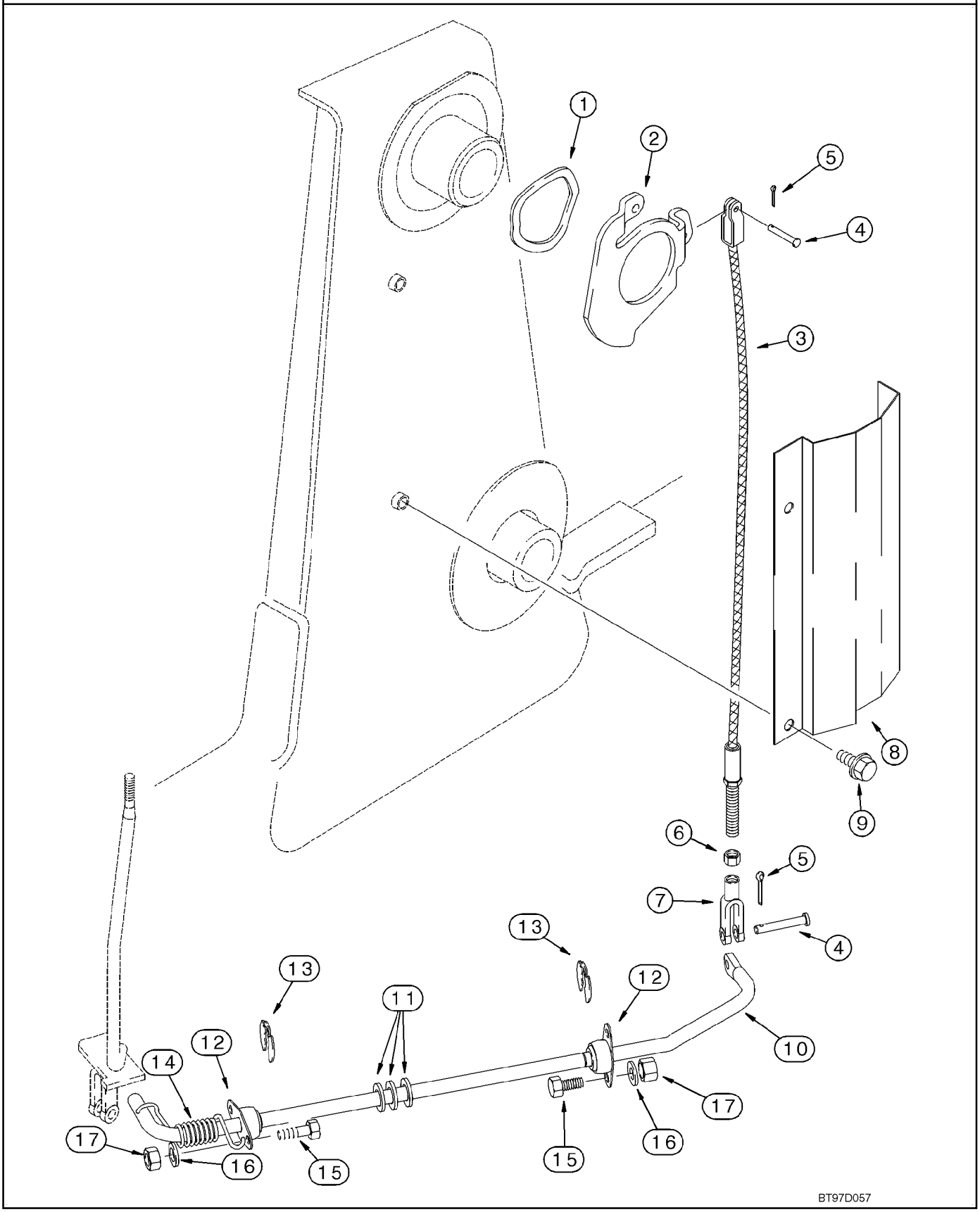

HTTP://WWW.MINNPARBACKHOEPARTS.COM



CONTROLS - LOADER SELF-LEVELING

| REF | FN | PART NUMBER | YR/SN | QTY | DESCRIPTION |
|---|---|---|---|---|---|
| 1 | | 137283A1 | | 1 | WASHER |
| 2 | | 142404A1 | | 1 | CAM |
| 3 | | 87428645 | | 1 | CABLE Self-Leveling Cable |
| 4 | | D149287 | | 2 | PIN, LARGE |
| 5 | | 432-612 | | 2 | PIN, SPLIT (COTTER) 3/32 x 3/4 |
| 6 | | 425-115 | | 1 | NUT 5/16 NF |
| 7 | | 239406A1 | | 1 | CLEVIS 5/16 |
| 8 | | 139865A1 | | 1 | PROTECTOR |
| 9 | | 844-10020 | | 2 | SCREW M10 x 20 |
| | | 87417601 | | 1 | ROD ASSY. Incl. Ref 10 - 12 |
| 10 | | NSS | | 1 | NOT SERVICED SEPARATELY Rod |
| 11 | | A30881 | | 3 | WASHER |
| 12 | | L15401 | | 2 | BEARING |
| 13 | | D95096 | | 2 | RING |
| 14 | | 124721A1 | | 1 | SPRING |
| 15 | | 614-8025 | | 4 | SCREW M8 x 25 |
| 16 | | 895-11008 | | 4 | WASHER 9 x 17 x 1,6 mm |
| 17 | | 829-1408 | | 4 | NUT M8; 10 |

HTTP://WWW.MINNPARBACKHOEPARTS.COM

| 09-04 | | p1 | 01/04 |
|---|---|---|---|

FRAME - LOADER LIFT

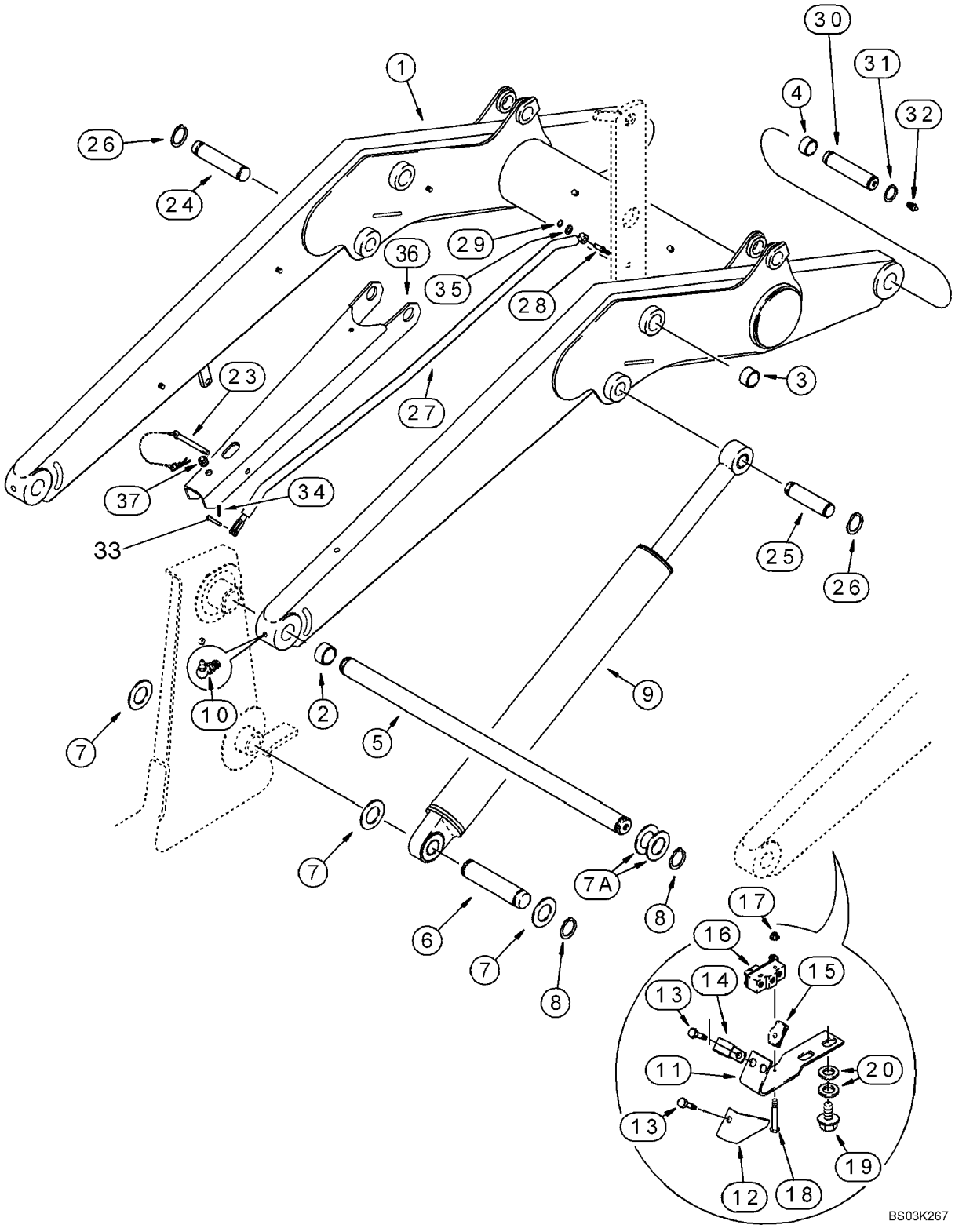

HTTP://WWW.MINNPARBACKHOEPARTS.COM



FRAME - LOADER LIFT

| REF | FN | PART NUMBER | YR/SN | QTY | DESCRIPTION |
|---|---|---|---|---|---|
| | | REF | | | INSTRUCTION LIFT CYLINDER, SUPPORT STRUT, RETURN-TO-DIG, AND ANTIROLLBACK |
| 1 | | 87426379 | | 1 | ARM ASSY. Incl. Ref 2, 4 |
| 2 | | D127542 | | 4 | BUSHING |
| 3 | | 100696A1 | | 4 | BUSHING, LARGE Bucket Cylinder Link Pivot; Not Included With Frame; Purchase Separately |
| 4 | | 109268A1 | | 4 | BUSHING |
| 5 | | 111522A1 | | 1 | PIN SHAFT |
| 6 | | 387019A1 | | 2 | PIN |
| 7 | | 495-81282 | | 6 | WASHER 2-1/16 x 3 x 3/32 |
| 7A | | 181842A1 | | X | WASHER |
| 8 | | 800-44050 | | 6 | SNAP RING No. 50 |
| 9 | | 384240A1 | | 2 | CYLINDER ASSY. 82.6 ID x 766 mm strk; Loader Lift; See Figure 08-58 |
| 10 | | 219-55 | | 2 | NIPPLE, LUBE 90 deg, 1/8 PT x 27/32 |
| 11 | | 128818A1 | | 1 | SUPPORT Return-To-Dig |
| 12 | | 142524A1 | | 1 | PROTECTOR |
| 13 | | 614-6016 | | 2 | SCREW M6 x 16 |
| 14 | | 515-2179 | | 1 | CLAMP 7,9 mm |
| 15 | | 833-40406 | | 2 | NUT M6 |
| 16 | | D137363 | | 1 | SWITCH Return-To-Dig |
| 17 | | 193-1003 | | 2 | NUT No. 6 |
| 18 | | 440-10616 | | 2 | SCREW No. 6 x 1 |
| 19 | | 128312A1 | | 2 | BOLT M10 x 15 |
| 20 | | 895-11010 | | 4 | WASHER 11 x 21 x 2 mm |
| 23 | | 104824A1 | | 1 | PIN, LARGE |
| 24 | | 118900A1 | | 1 | PIN, LARGE |
| 25 | | 113629A1 | | 1 | PIN, LARGE |
| 26 | | 800-44040 | | 4 | SNAP RING |
| 27 | | 311200A1 | | 1 | ROD ASSY. Anti-rollback |
| 28 | | 192815A1 | | 1 | PIN |
| 29 | | 103-3350 | | 1 | RING, SNAP No. 50 |
| 30 | | 118901A1 | | 2 | PIN, LARGE |
| 31 | | 800-44040 | | 4 | SNAP RING |
| 32 | | 219-1 | | 2 | NIPPLE, LUBE 1/8 PT x 21/32 |
| 33 | | 427-6100 | | 1 | PIN, CLEVIS 3/8 x 1 |

HTTP://WWW.MINNPARBACKHOEPARTS.COM

| 09-04 | | p2 | 01/04 |
|---|---|---|---|

FRAME - LOADER LIFT

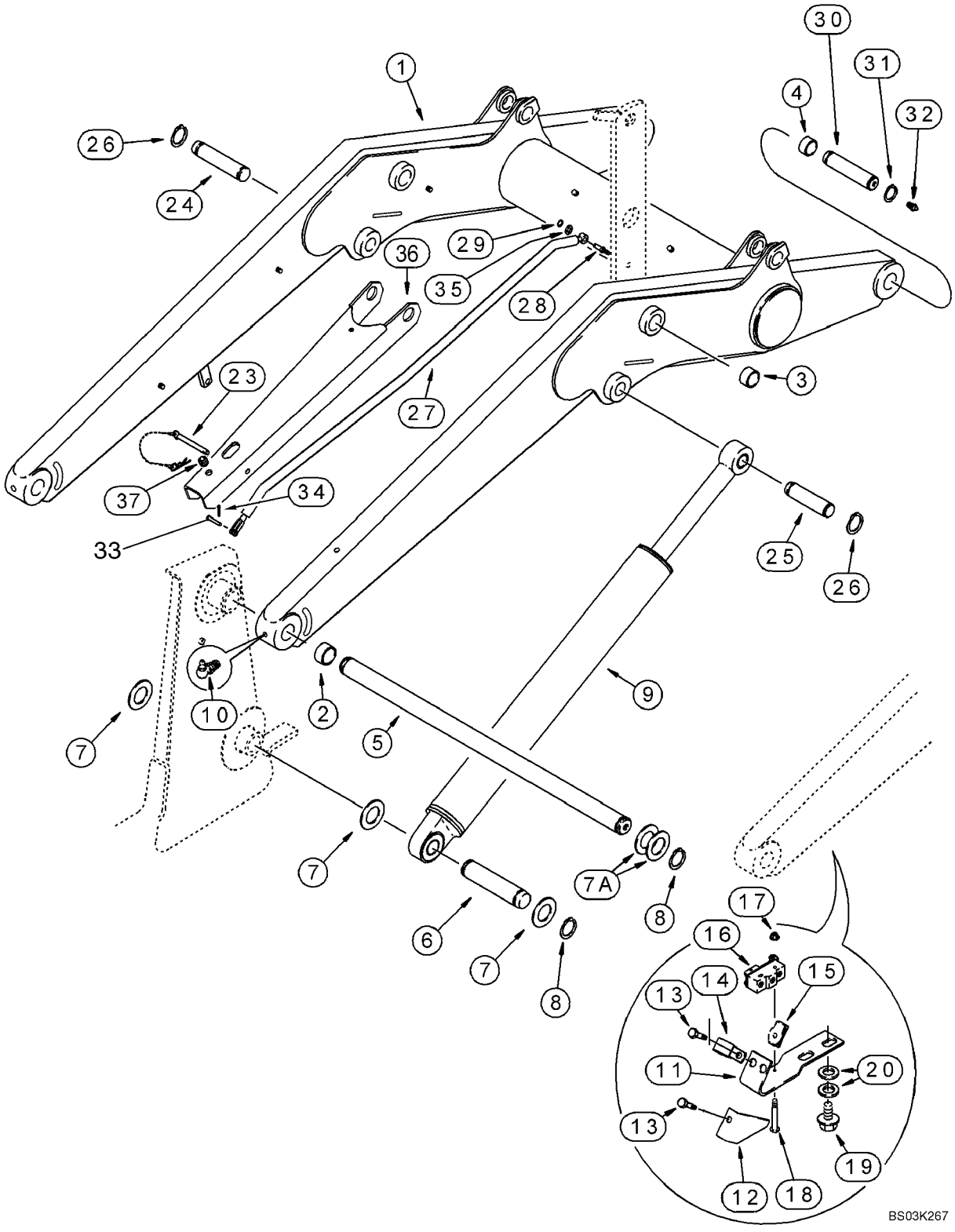

HTTP://WWW.MINNPARBACKHOEPARTS.COM



FRAME - LOADER LIFT

| REF | FN | PART NUMBER | YR/SN | QTY | DESCRIPTION |
|---|---|---|---|---|---|
| 34 | | 432-612 | | 1 | PIN, SPLIT (COTTER) 3/32 x 3/4 |
| 35 | | 495-11053 | | 1 | WASHER 17/32 x 1-1/16 x 3/32 |
| 36 | | 341564A2 | | 1 | STRUT |
| 37 | | 344892A1 | | 1 | GROMMET |

HTTP://WWW.MINNPARBACKHOEPARTS.COM

| 09-05 | | p1 | 01/04 |
|---|---|---|---|

FRAME - LOADER LINKAGE

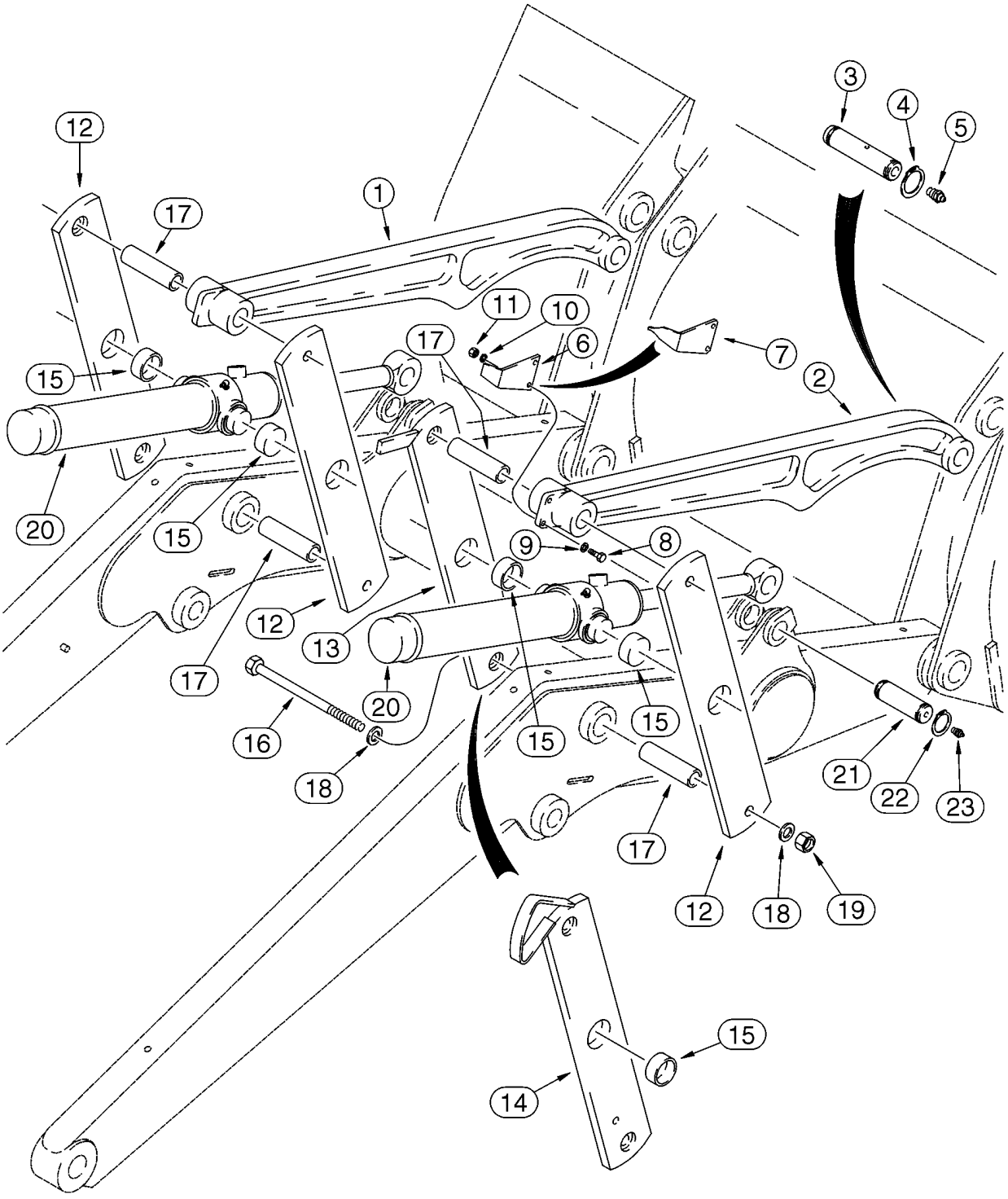

HTTP://WWW.MINNPARBACKHOEPARTS.COM



FRAME - LOADER LINKAGE

| REF | FN | PART NUMBER | YR/SN | QTY | DESCRIPTION |
|---|---|---|---|---|---|
| 1 | | 331621A1 | | 1 | PITMAN Bucket, Left-Hand; Without Mounting Holes For Bucket Position Pointer; For Service, Order 331620A1 |
| 2 | | 331620A1 | | 1-2 | PITMAN Bucket, Left-Hand or Right-Hand; With Mounting Holes For Bucket Position Pointer |
| 3 | | 118901A1 | | 2 | PIN, LARGE |
| 4 | | 800-44040 | | 4 | SNAP RING |
| 5 | | 219-1 | | 2 | NIPPLE, LUBE 1/8 PT x 21/32 |
| 6 | | D121194 | | 1 | POINTER Models Without Clam Bucket |
| 7 | | 250851A1 | | 1 | POINTER Models With Clam Bucket |
| 8 | | 614-8030 | | 2 | SCREW M8 x 30 |
| 9 | | 895-11008 | | 2 | WASHER 9 x 17 x 1,6 mm |
| 10 | | 892-11008 | | 2 | WASHER M8 |
| 11 | | 829-1408 | | 2 | NUT M8; 10 |
| 12 | | 139180A1 | | 3 | PITMAN Bucket Cylinder, Outer Right-Hand; Inner and Outer Left-Hand, Incl. Ref 15 |
| 13 | | 139235A1 | | 1 | PITMAN Bucket Cylinder, Inner Right-Hand; With Extra Hole For Antirollback Rod; Models Without Clam Bucket; Incl. Ref 15 |
| 14 | | 139195A1 | | 1 | PITMAN Bucket Cylinder, Inner Right-Hand; With Extra Hole For Antirollback Rod; Models With Clam Bucket, Incl. Ref 15 |
| 15 | | D151034 | | 1 | BUSHING, LARGE |
| 16 | | 827-20190 | | 4 | SCREW M20 x 190; 10.9 |
| 17 | | D132076 | | 4 | SPACER |
| 18 | | 896-11020 | | 8 | WASHER 22 x 37 x 4 mm |
| 19 | | 829-1420 | | 4 | NUT M20; 10 |
| 20 | | 113133A2 | | 2 | CYLINDER ASSY. 76 ID x 522 mm strk; Loader Bucket; See Figure 08-59 |
| 21 | | 116339A1 | | 2 | PIN, LARGE |
| 22 | | 800-44040 | | 4 | SNAP RING |
| 23 | | 219-1 | | 2 | NIPPLE, LUBE 1/8 PT x 21/32 |

HTTP://WWW.MINNPARBACKHOEPARTS.COM

| 09-06 | | p1 | 10/03 |
|---|---|---|---|

BUCKETS, LOADER LONG LIP (82 IN)

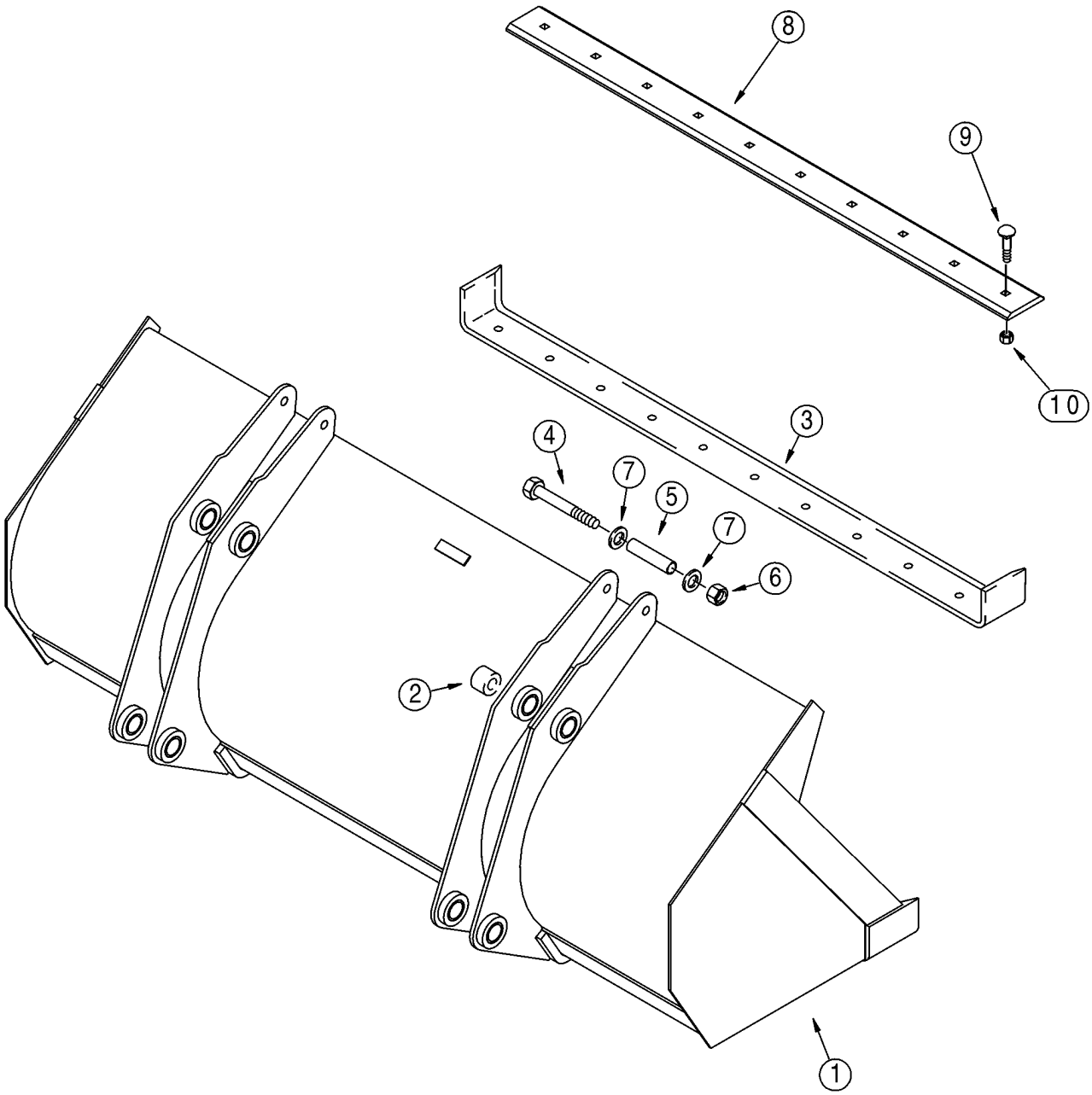

HTTP://WWW.MINNPARBACKHOEPARTS.COM



BUCKETS, LOADER LONG LIP (82 IN)

| REF | FN | PART NUMBER | YR/SN | QTY | DESCRIPTION |
|---|---|---|---|---|---|
| | | 385588A1 | | 1 | BUCKET ASSEMBLY, 2083 mm (82 in); Assembly Does Not Include Bolt-On Cutting Edge; Without Bucket Teeth; Incl. Ref 1 - 7; Order Through Parts Marketing |
| 1 | | NSS | | 1 | NOT SERVICED SEPARATELY Bucket; Incl. Ref 2, 3 |
| 2 | | D129264 | | 8 | BUSHING |
| 3 | | 132988A1 | | 1 | EDGE Welded-On |
| 4 | | 828-20160 | | 2 | SCREW M20 x 160; 10.9 |
| 5 | | 142538A1 | | 2 | SPACER |
| 6 | | 832-10420 | | 2 | NUT M20 |
| 7 | | 896-11020 | | 4 | WASHER 22 x 37 x 4 mm |
| 8 | | 112946A1 | | 1 | EDGE, CUTTING Bolt-On; Not Included In 385588A1 Bucket Assembly, Purchase Separately |
| 9 | | 420-21232 | | 10 | BOLT |
| 10 | | 429-1012 | | 10 | NUT 3/4; 8 |
| | | {385920A1} | | 1 | BUCKET ASSEMBLY, 2083 mm (82 in); Assembly Includes 385588A1 Bucket Assembly and 112946A1 Bolt-On Cutting Edge; Incl. Ref 1 - 10; Order Through Parts Marketing |
| | | 385588A1 | | 1 | BUCKET 2083 mm (82 in); Incl. Ref 1 - 7; Order Through Parts Marketing |
| 1 | | NSS | | 1 | NOT SERVICED SEPARATELY Bucket; Incl. Ref 2, 3 |
| 2 | | D129264 | | 8 | BUSHING |
| 3 | | 132988A1 | | 1 | EDGE Bolt-On |
| 4 | | 828-20160 | | 2 | SCREW M20 x 160; 10.9 |
| 5 | | 142538A1 | | 2 | SPACER |
| 6 | | 832-10420 | | 2 | NUT M20 |
| 7 | | 896-11020 | | 4 | WASHER 22 x 37 x 4 mm |
| 8 | | 112946A1 | | 1 | EDGE, CUTTING Bolt-On |
| 9 | | 420-21232 | | 10 | BOLT |
| 10 | | 429-1012 | | 10 | NUT 3/4; 8 |

HTTP://WWW.MINNPARBACKHOEPARTS.COM

| 09-07 | | p1 | 10/03 |
|---|---|---|---|

BUCKET, LOADER LONG LIP (93 IN)

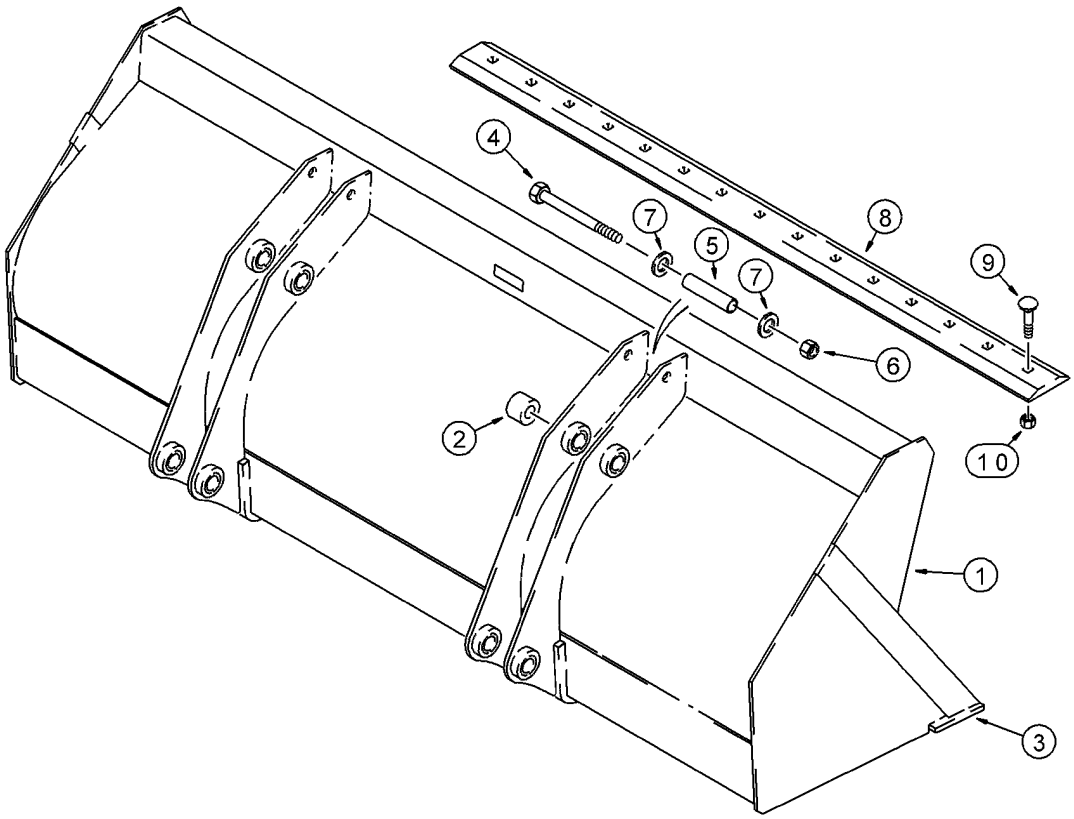


BS00C247

HTTP://WWW.MINNPARBACKHOEPARTS.COM



BUCKET, LOADER LONG LIP (93 IN)

| REF | FN | PART NUMBER | YR/SN | QTY | DESCRIPTION |
|---|---|---|---|---|---|
| | | 142687A1 | | 1 | BUCKET 2362 mm (93 in), Without Bucket Teeth; Assembly Includes Bolt-On Cutting Edge; Incl. Ref 1 - 10; Order Through Parts Marketing |
| 1 | | NSS | | 1 | NOT SERVICED SEPARATELY Bucket, Incl. Ref 2, 3 |
| 2 | | D129264 | | 8 | BUSHING |
| 3 | | 134844A1 | | 1 | PLATE, LARGE Weld-On |
| 4 | | 828-20160 | | 2 | SCREW M20 x 160; 10.9 |
| 5 | | 142538A1 | | 2 | SPACER |
| 6 | | 832-10420 | | 2 | NUT M20 |
| 7 | | 896-11020 | | 4 | WASHER 22 x 37 x 4 mm |
| 8 | | 185506A1 | | 1 | EDGE BLADE, Bolt-On |
| 9 | | 20-21232 | | 10 | SCREW |
| 10 | | 429-1012 | | 10 | NUT 3/4; 8 |

HTTP://WWW.MINNPARBACKHOEPARTS.COM

| 09-08 | | p1 | 10/03 |
|---|---|---|---|

BUCKET, LOADER CLAM

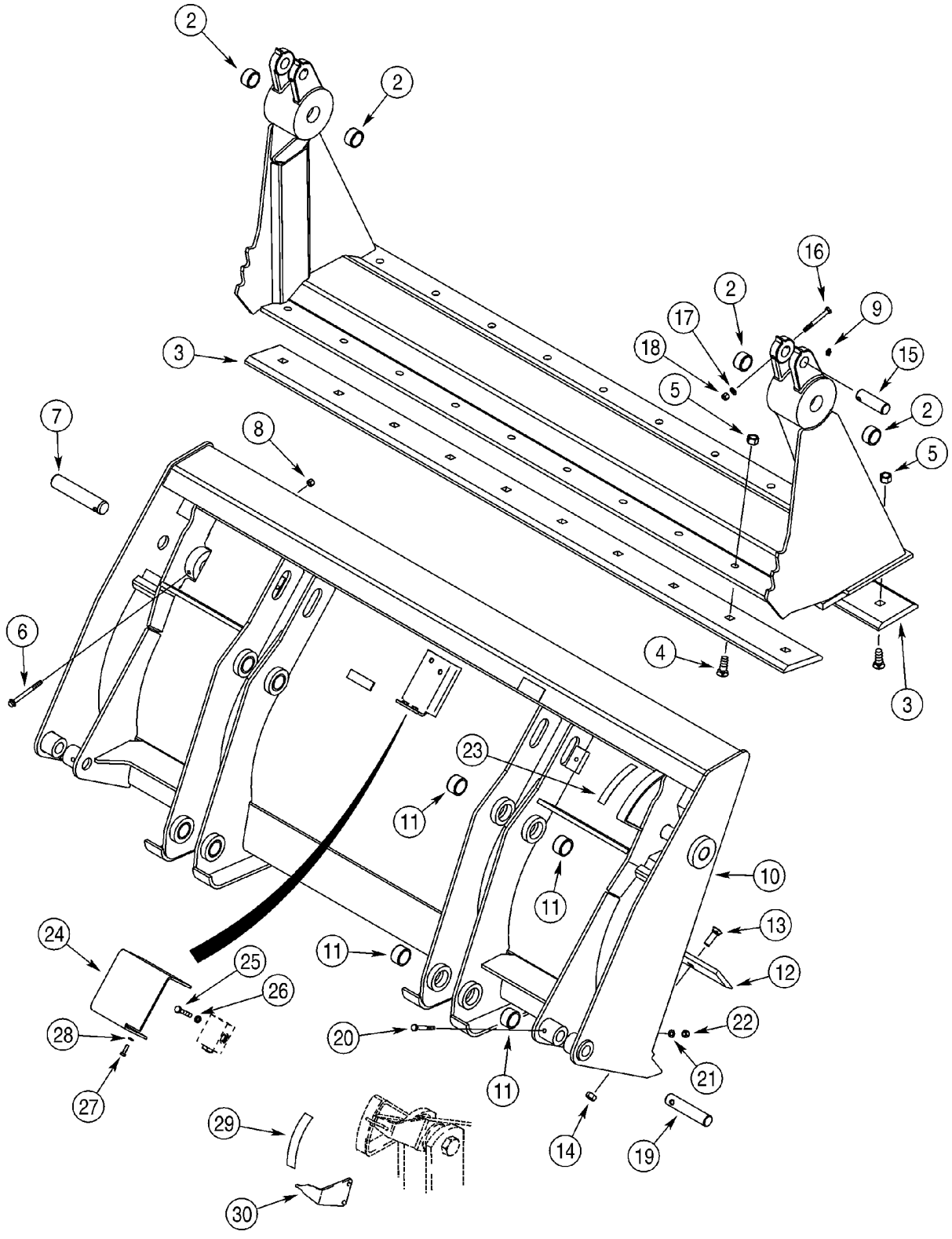

HTTP://WWW.MINNPARBACKHOEPARTS.COM



BUCKET, LOADER CLAM

| REF | FN | PART NUMBER | YR/SN | QTY | DESCRIPTION |
|---|---|---|---|---|---|
| | | 376528A4 | | 1 | BUCKET ASSEMBLY; 2083 mm (82 in); With Hydraulics; Includes 376288A2 Bucket Assembly, Ref 1 - 28; Also Includes Hydraulics on Figure 08-07, Ref 1 - 29; Order Through Parts Marketing |
| | | {376288A2} | | 1 | BUCKET ASSEMBLY; 2083 mm (82 in); Without Hydraulics; Includes 411668A1 Bucket and (2) Ref 7 Pins; Order Through Parts Marketing |
| | | 411668A1 | | 1 | BUCKET BUCKET ASSEMBLY; 2083 mm (82 in; Without Hydraulics; Incl. Ref 1 - 6, 8 - 14 |
| | | 175156A1 | | 1 | SHELL CLAM, Incl. Ref 1, 2 |
| 1 | | NSS | | 1 | NOT SERVICED SEPARATELY Clam Assy |
| 2 | | D31140 | | 4 | BUSHING |
| 3 | | 142300A1 | | 2 | BLADE, HALF |
| 4 | | 20-21232 | | 20 | SCREW 3/4 x 2 |
| 5 | | 29-1012 | | 20 | NUT 3/4; 8 |
| 6 | | 844-10110 | | 2 | SCREW Flange, M10 x 110 |
| 7 | | D51391 | | 2 | PIN, LARGE |
| 8 | | 832-10410 | | 2 | NUT M10 |
| 9 | | 219-1 | | 2 | NIPPLE, LUBE 1/8 PT x 21/32 |
| | | 376286A2 | | 1 | BUCKET BLADE, Incl. Ref 10, 11 |
| 10 | | NSS | | 1 | NOT SERVICED SEPARATELY Blade Assy, Dozer |
| 11 | | D129264 | | 8 | BUSHING |
| 12 | | 121920A1 | | 1 | EDGE Cutting |
| 13 | | 20-21032 | | 10 | BOLT 5/8 x 2 |
| 14 | | 29-1010 | | 10 | NUT 5/8 |
| 15 | | D51392 | | 2 | PIN |
| 16 | | 814-10090 | | 2 | SCREW M10 x 90 |
| 17 | | 895-11010 | | 2 | WASHER 11 x 21 x 2 mm |
| 18 | | 832-10410 | | 2 | NUT M10 |
| 19 | | D51393 | | 2 | PIN, LARGE |
| 20 | | 814-10080 | | 2 | SCREW M10 x 80 |
| 21 | | 895-11010 | | 2 | WASHER 11 x 21 x 2 mm |
| 22 | | 832-10410 | | 2 | NUT M10 |
| 23 | | 321-1708 | | 1 | DECAL |
| 24 | | 388848A1 | | 1 | GUARD Pilot Operated Check Valve |
| 25 | | 814-10060 | | 2 | SCREW M10 x 60 |

HTTP://WWW.MINNPARBACKHOEPARTS.COM

| 09-08 | | p2 | 10/03 |
|---|---|---|---|

BUCKET, LOADER CLAM

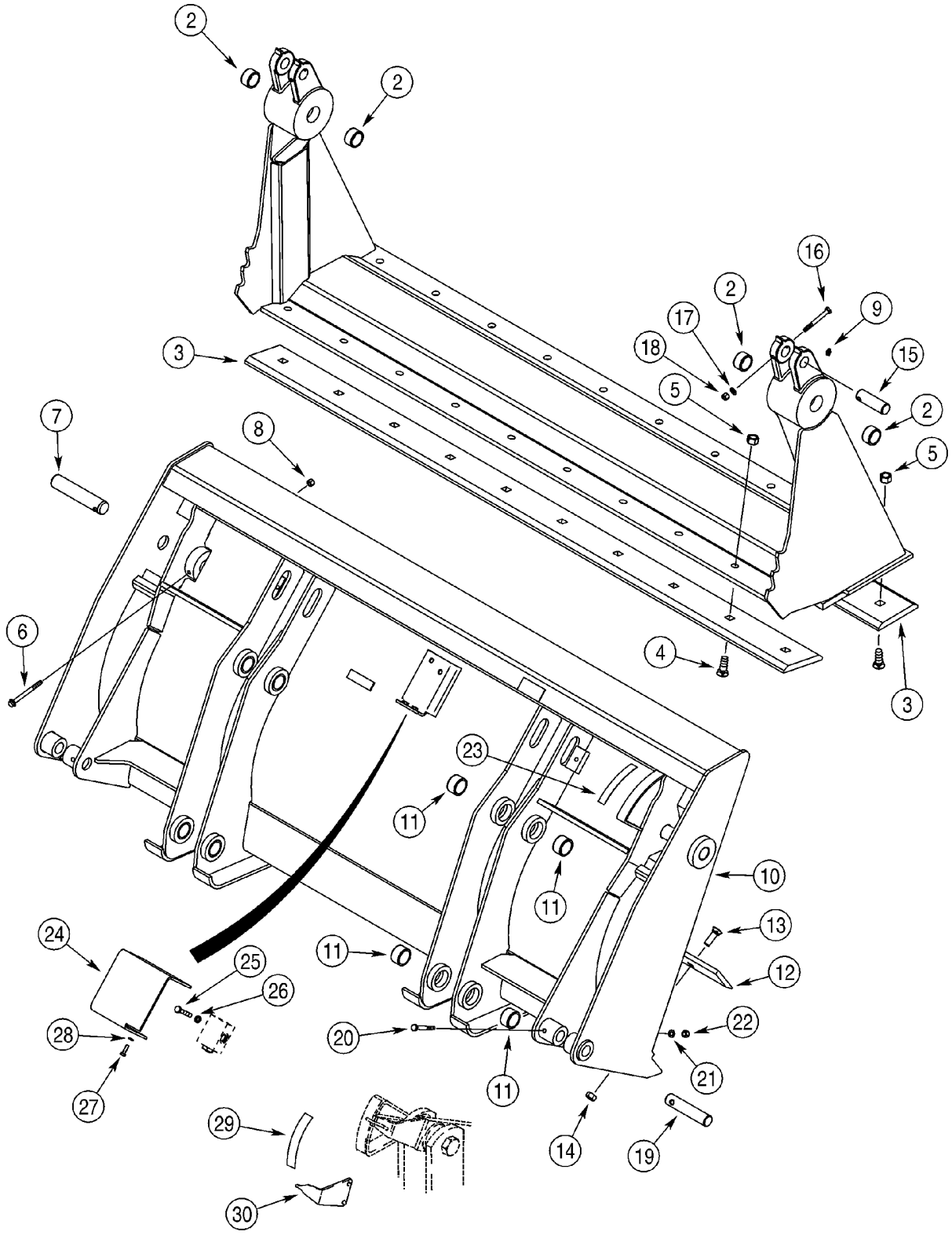

HTTP://WWW.MINNPARBACKHOEPARTS.COM



BUCKET, LOADER CLAM

| REF | FN | PART NUMBER | YR/SN | QTY | DESCRIPTION |
|---|---|---|---|---|---|
| 26 | | 892-11010 | | 2 | WASHER, LOCK M10 |
| 27 | | 614-8025 | | 2 | SCREW M8 x 25 |
| 28 | | 892-11008 | | 2 | WASHER M8 |
| 29 | | 321-1707 | | 1 | DECAL |
| 30 | | 250851A1 | | 1 | POINTER |

HTTP://WWW.MINNPARBACKHOEPARTS.COM

| 09-09 | | p1 | 09/03 |
|---|---|---|---|

GUARD - VALVE, LOADER

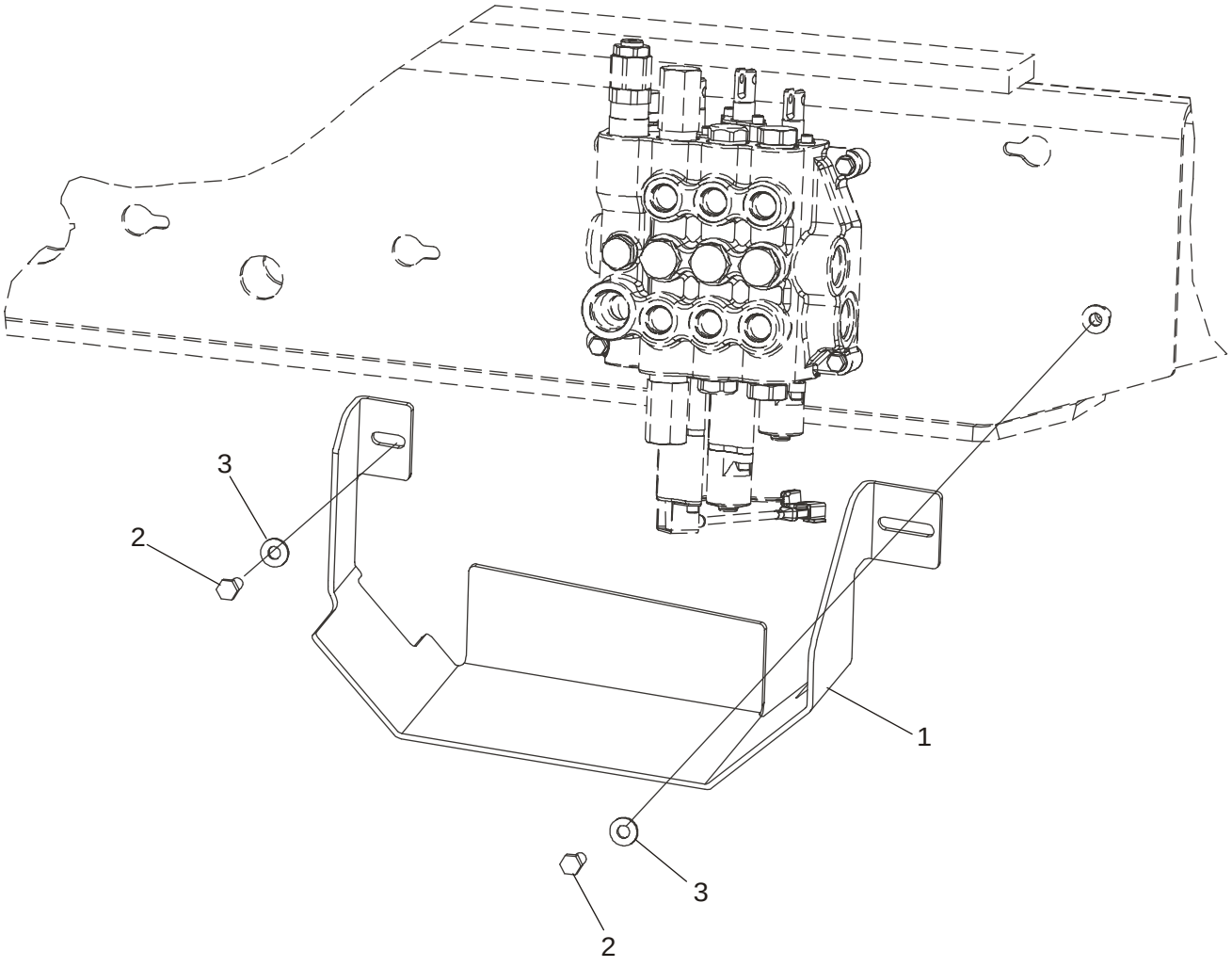


BS03K268

HTTP://WWW.MINNPARBACKHOEPARTS.COM



GUARD - VALVE, LOADER

| REF | FN | PART NUMBER | YR/SN | QTY | DESCRIPTION |
|---|---|---|---|---|---|
| 1 | | 87423463 | | 1 | SHIELD |
| 2 | | 614-10025 | | 2 | BOLT M10 x 25 |
| 3 | | 896-15010 | | 2 | WASHER 11 x 24 x 3 mm |

HTTP://WWW.MINNPARBACKHOEPARTS.COM

| 09-10 | | p1 | 01/04 |
|---|---|---|---|

COUPLER, TOOL QUICK

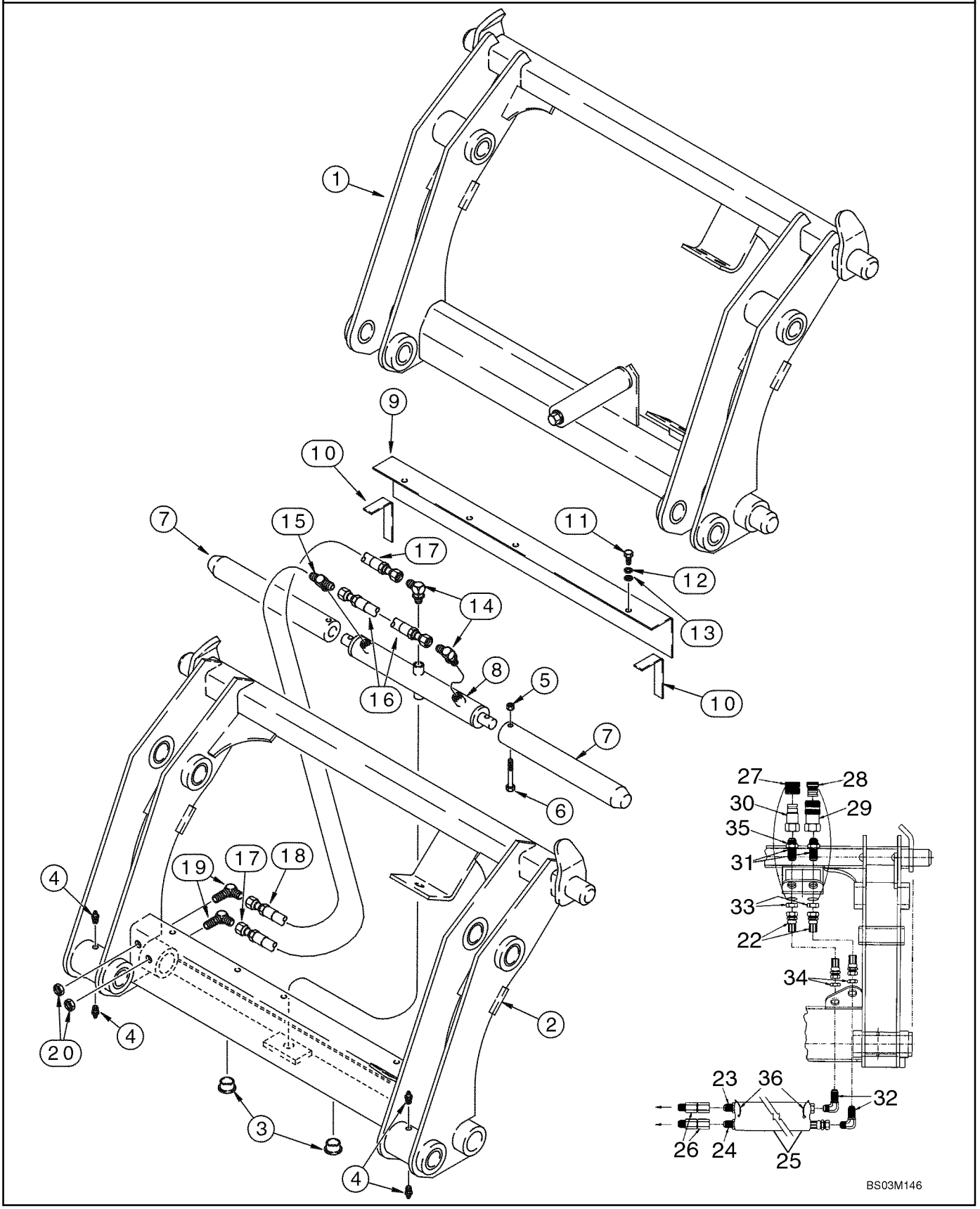

HTTP://WWW.MINNPARBACKHOEPARTS.COM



COUPLER, TOOL QUICK

| REF | FN | PART NUMBER | YR/SN | QTY | DESCRIPTION |
|---|---|---|---|---|---|
| | | REF | | | INSTRUCTION MANUAL COUPLER |
| 1 | | 191239A1 | | 1 | COUPLING Loader, Complete; Component Parts Not Serviced Separately; Used With D121194 Bucket Position Pointer and 139235A1 Bucket Cylinder Link; See Figure 09-05, Ref 6, 13 |
| | | REF | | | INSTRUCTION HYDRAULIC COUPLER |
| | | 292969A2 | | 1 | COUPLING Loader; Incl. Ref 2 - 35; With Auxiliary Hydraulics; For Complete Assembly, Order From Machinery Price List; Category III; For Hydraulic Tool Quick Coupler Hydraulics, See Figure 08-26, 08-27 |
| 2 | | NSS | | 1 | NOT SERVICED SEPARATELY Frame |
| 3 | | 305497A1 | | 2 | PLUG 1-1/4 ID x 1/2 in OD; Plastic |
| 4 | | 219-87 | | 4 | FITTING 1/4 st x 9/16 |
| 5 | | 231-4246 | | 2 | NUT 3/8 |
| 6 | | 326-640 | | 2 | SCREW 3/8 x 2-1/2; 8 |
| 7 | | 305496A1 | | 2 | PIN 1-15/16 OD x 15 in lg |
| 8 | | 305499A1 | | 1 | CYLINDER ASSY. Double Acting; Component Parts Not Serviced Separately |
| 9 | | 305495A1 | | 1 | COVER |
| 10 | | NSS | | 2 | NOT SERVICED SEPARATELY Seal; Foam |
| 11 | | 413-516 | | 3 | BOLT 5/16 x 1 |
| 12 | | 492-11031 | | 3 | WASHER, LOCK 5/16 |
| 13 | | 495-11034 | | 3 | WASHER 11/32 x 11/16 x 1/16 |
| 14 | | 218-5105 | | 2 | ELBOW 9/16 fl x Or; Includes 237-6006 O-Ring |
| | | 237-6006 | | 1 | O-RING 15/32 ID x 5/64, Boss Seal |
| 15 | | 218-5182 | | 1 | TEE 9/16 adj Or x fl x fl; Includes 237-6006 O-Ring |
| | | 237-6006 | | 1 | O-RING 15/32 ID x 5/64, Boss Seal |
| 16 | | 305492A1 | | 1 | HOSE ASSY. 260 mm (10-1/4 in) |
| 17 | | 305494A1 | | 1 | HOSE ASSY. 387 mm (15-1/4 in) |
| 18 | | 305493A1 | | 1 | HOSE ASSY. 235 mm (9-1/4 in) |
| 19 | | 218-693 | | 2 | ELBOW 9/16 fl x blkhd fl |
| 20 | | 218-1254 | | 2 | NUT, LOCK 9/16 NF |
| 21 | | 305508A1 | | 1 | KIT Decal; Includes Four Decals; Not Illustrated |
| 22 | | 307385A1 | | 2 | HOSE ASSY. 387 mm (15-1/4 in) |
| 23 | | 307386A1 | | 1 | HOSE ASSY. 629 mm (24-3/4 in) |

HTTP://WWW.MINNPARBACKHOEPARTS.COM

| 09-10 | | p2 | 01/04 |
|---|---|---|---|

COUPLER, TOOL QUICK

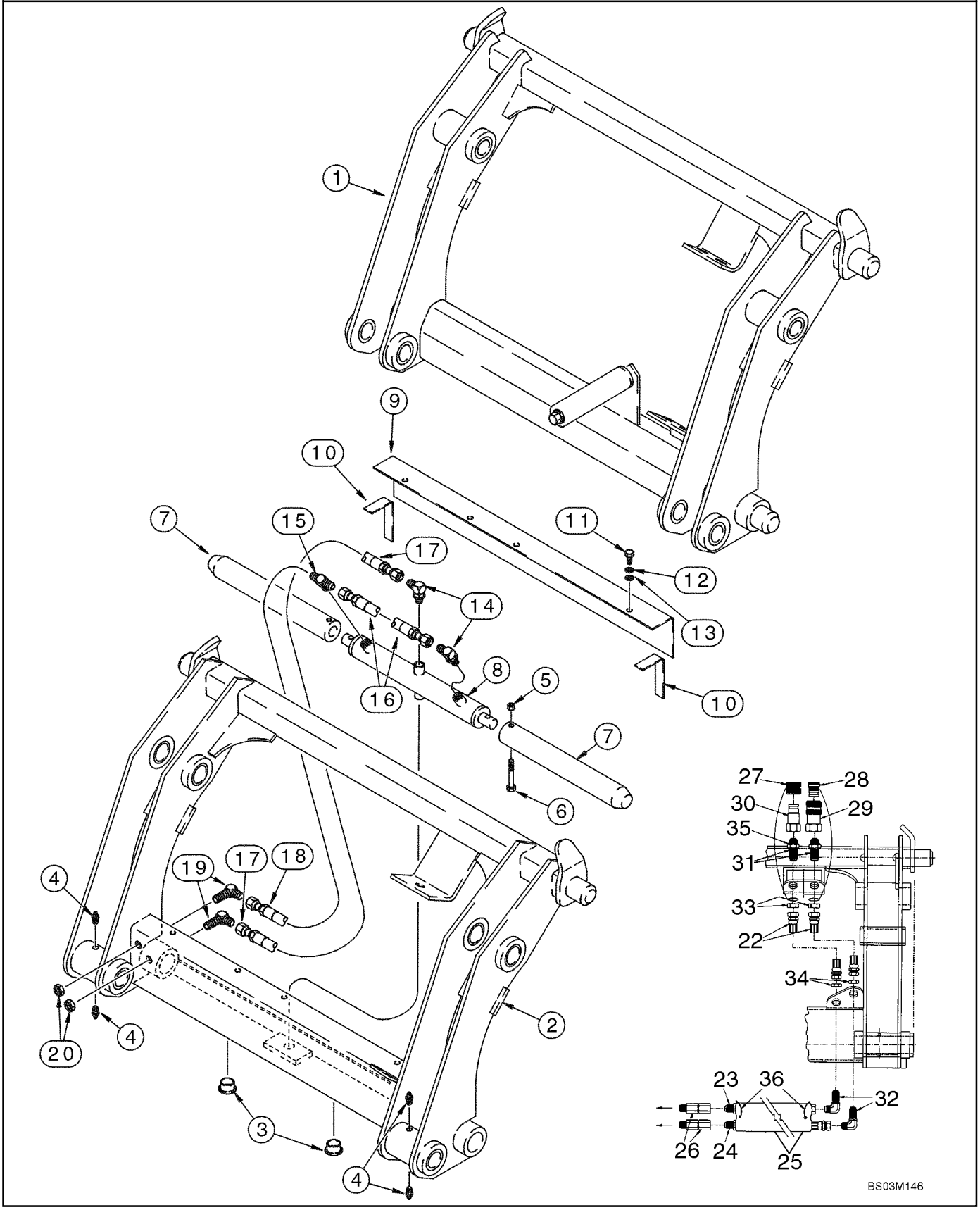

HTTP://WWW.MINNPARBACKHOEPARTS.COM



COUPLER, TOOL QUICK

| REF | FN | PART NUMBER | YR/SN | QTY | DESCRIPTION |
|---|---|---|---|---|---|
| 24 | | 307387A1 | | 1 | HOSE ASSY. 718 mm (28-1/4 in) |
| 25 | | 307388A1 | | 1 | HOSE SLEEVE, 660 mm (26 in) |
| 26 | | 307389A1 | | 2 | PIVOT Swivel |
| 27 | | 137344A1 | | 1 | PLUG Male Coupling |
| 28 | | 137343A1 | | 1 | PLUG Female Coupling |
| 29 | | 123537A1 | | 1 | FITTING Quick Disconnect; Female |
| 30 | | 245423A1 | | 1 | FITTING |
| 31 | | 126155A1 | | 2 | FITTING 1-1/16 blkhd fl x Or |
| 32 | | 218-695 | | 2 | FITTING ELBOW, 90 deg, 7/8 fl x bkhd fl |
| 33 | | 218-1256 | | 2 | NUT, LOCK 1-1/16 |
| 34 | | 218-1279 | | 2 | NUT 7/8 |
| 35 | | 237-6012 | | 2 | O-RING 59/64 ID x 7/64 |
| 36 | | L18337 | | 2 | STRAP Tie |

HTTP://WWW.MINNPARBACKHOEPARTS.COM



COVERS - BACKHOE CONTROL TOWER, WITHOUT PILOT CONTROLS

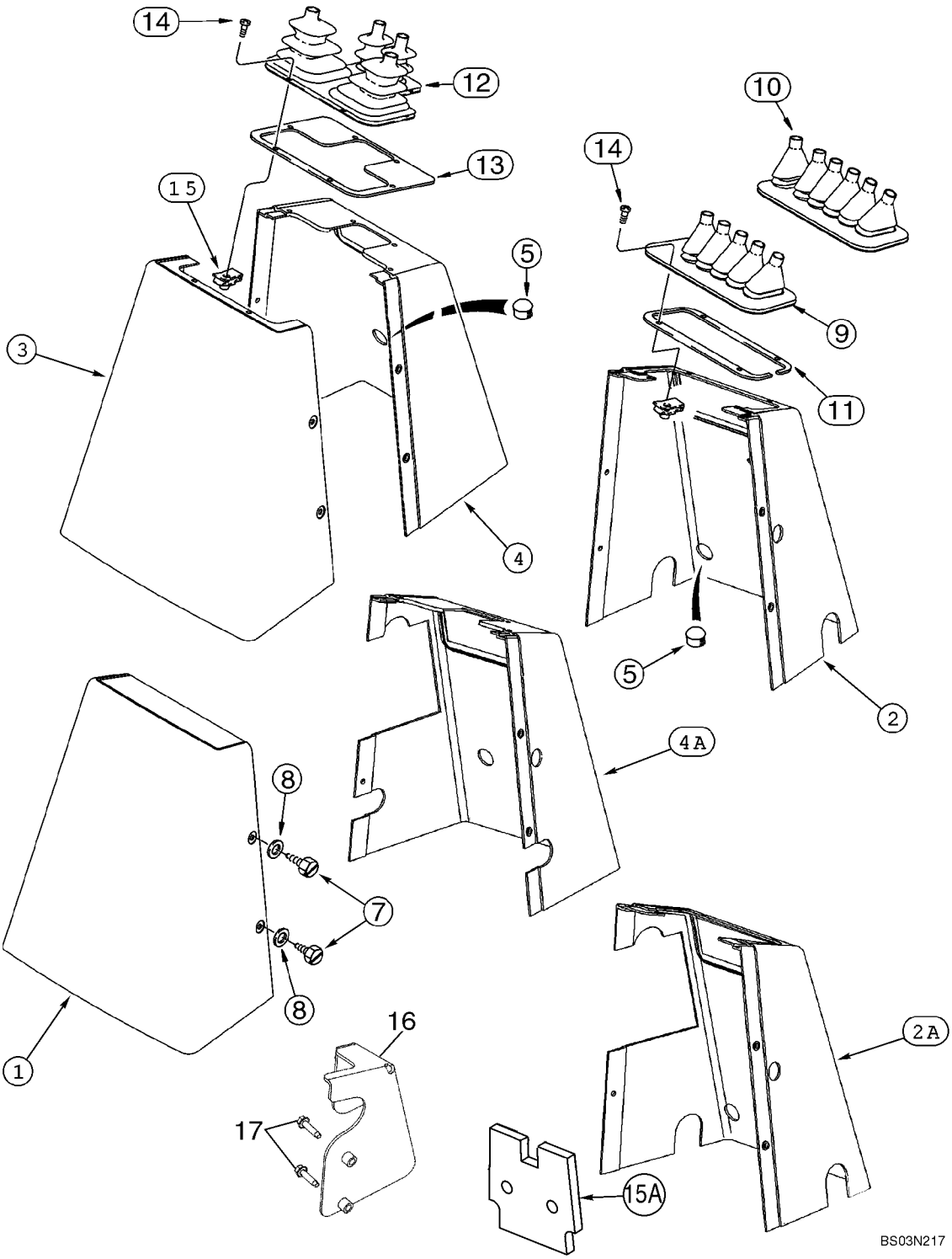

HTTP://WWW.MINNPARBACKHOEPARTS.COM



COVERS - BACKHOE CONTROL TOWER, WITHOUT PILOT CONTROLS

| REF | FN | PART NUMBER | YR/SN | QTY | DESCRIPTION |
|---|---|---|---|---|---|
| 1 | | 390759A1 | | 1 | COVER, PROTECTIVE Rear; All Models With Foot Swing |
| 2 | | 390760A1 | | 1 | COVER, PROTECTIVE Front; Foot Swing; Without Auxiliary Hydraulics |
| 2A | | 87411083 | | 1 | COVER, PROTECTIVE Front; Foot Swing; With Auxiliary Hydraulics |
| 3 | | 390758A1 | | 1 | COVER, PROTECTIVE Rear; All Models With Hand Swing |
| 4 | | 390690A1 | | 1 | COVER, PROTECTIVE Front; Hand Swing; Without Auxiliary Hydraulics |
| 4A | | 87411084 | | 1 | COVER, PROTECTIVE Front; Hand Swing; With Auxiliary Hydraulics |
| 5 | | 353-411 | | 1-2 | PLUG 1 in dia |
| 7 | | 779-37616 | | 5 | SCREW, POINTED M6.3 x 16 st |
| 8 | | 195-140 | | 5 | WASHER fLAT, 1/4 |
| 9 | | D149866 | | 1 | BOOT 5 Control Levers |
| 10 | | D149867 | | 1 | BOOT 6 Control Levers |
| 11 | | 136822A1 | | 1 | RING,SPECIAL |
| 12 | | D149868 | | 1 | BELLOWS 4 Control Levers |
| 13 | | 136824A1 | | 1 | PLATE, LARGE Used With Ref 12 Only |
| 14 | | 140-106 | | 4 | SCREW No. 10 x 1/2 |
| 14 | | 140-107 | | 6 | SCREW No. 10 x 3/4; Used With Ref 13 Retainer |
| 15 | | 131-861 | | 4-6 | NUT No. 10, 4; Used With Ref 11 Retainer; (6) Used With Ref 13 Retainer |
| 15A | | 397870A3 | | 2 | SEAL Front and Rear Console Covers; Noise Barrier; Adhesive Back |
| 16 | | 87425122 | | 1 | BRACKET Models With Backhoe Auxiliary Hydraulics |
| | | 87430677 | | 1 | DECAL Auxiliary Hydraulics |
| 17 | | 281-14716 | | 2 | SCREW |

HTTP://WWW.MINNPARBACKHOEPARTS.COM

| 09-12 | | p1 | 12/03 |
|---|---|---|---|

BACKHOE CONTROL TOWER SUPPORT AND SEALS, WITHOUT PILOT CONTROLS

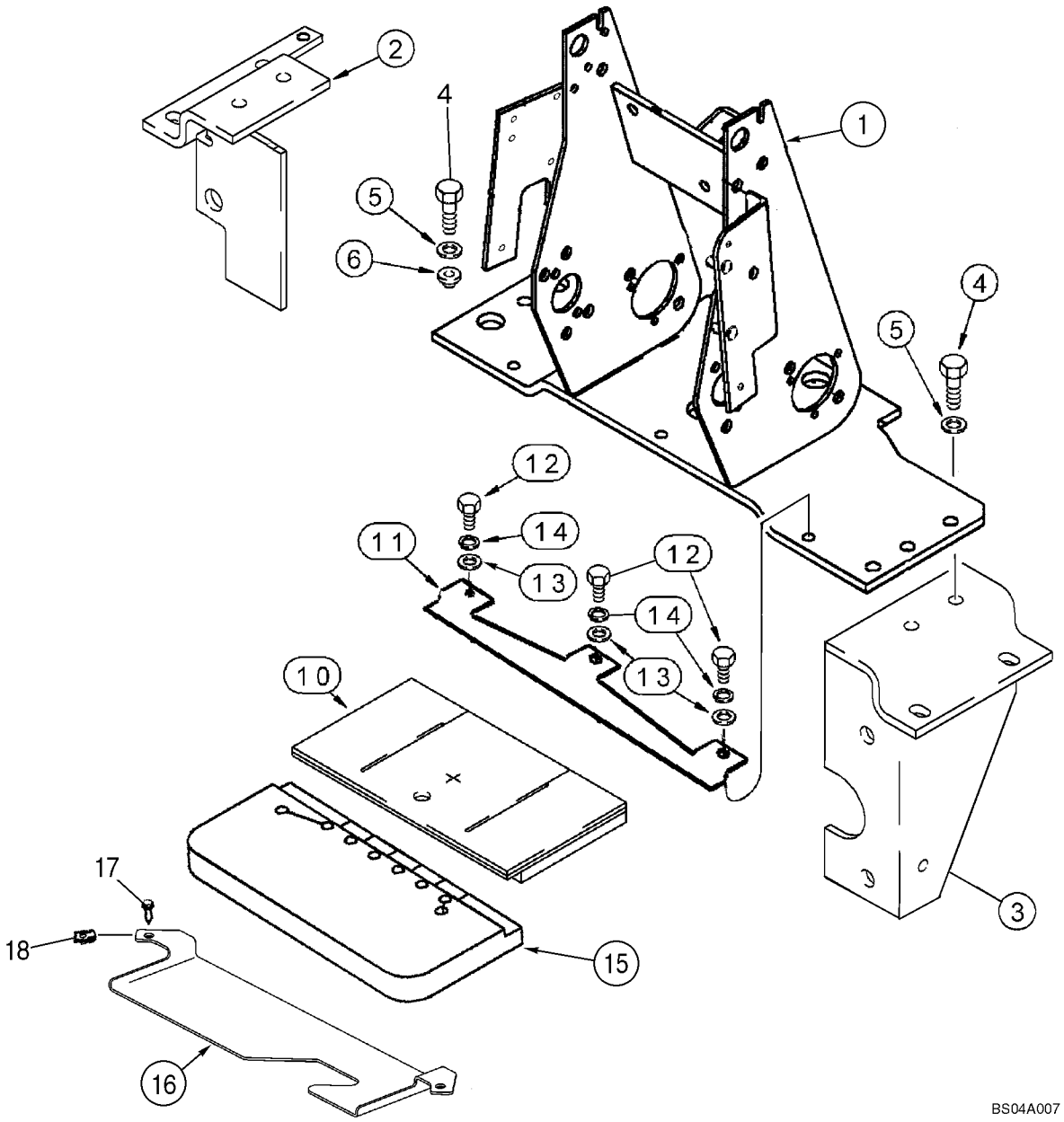

HTTP://WWW.MINNPARBACKHOEPARTS.COM



BACKHOE CONTROL TOWER SUPPORT AND SEALS, WITHOUT PILOT CONTROLS

| REF | FN | PART NUMBER | YR/SN | QTY | DESCRIPTION |
|---|---|---|---|---|---|
| 1 | | 87418516 | | 1 | BRACKET, SUPPORTING |
| 2 | | 86985341 | | 1 | BRACKET, SUPPORTING Left-Hand |
| 3 | | 86985339 | | 1 | BRACKET, SUPPORTING Right-Hand |
| 4 | | 614-10035 | | 8 | SCREW M10 x 35 |
| 5 | | 496-41041 | | 8 | WASHER 13/32 x 1-1/8 x 9/64 |
| 6 | | 179956A1 | | 2 | SHOCK ABSORBER |
| 10 | | 400069A1 | | 1 | FOAM |
| 11 | | 87418518 | | 1 | BRACKET, SUPPORTING |
| 12 | | 614-8020 | | 3 | SCREW M8 x 20 |
| 13 | | 895-11008 | | 3 | WASHER 9 x 17 x 1,6 mm |
| 14 | | 892-11008 | | 3 | WASHER M8 |
| 15 | | 87439210 | | 1 | FOAM |
| 16 | | 397911A1 | | 1 | BRACKET |
| 17 | | 233724A1 | | 2 | SCREW M6 x 25 |
| 18 | | 833-40406 | | 2 | NUT M6 |

HTTP://WWW.MINNPARBACKHOEPARTS.COM



BACKHOE CONTROL TOWER SUPPORT, WITH PILOT CONTROLS

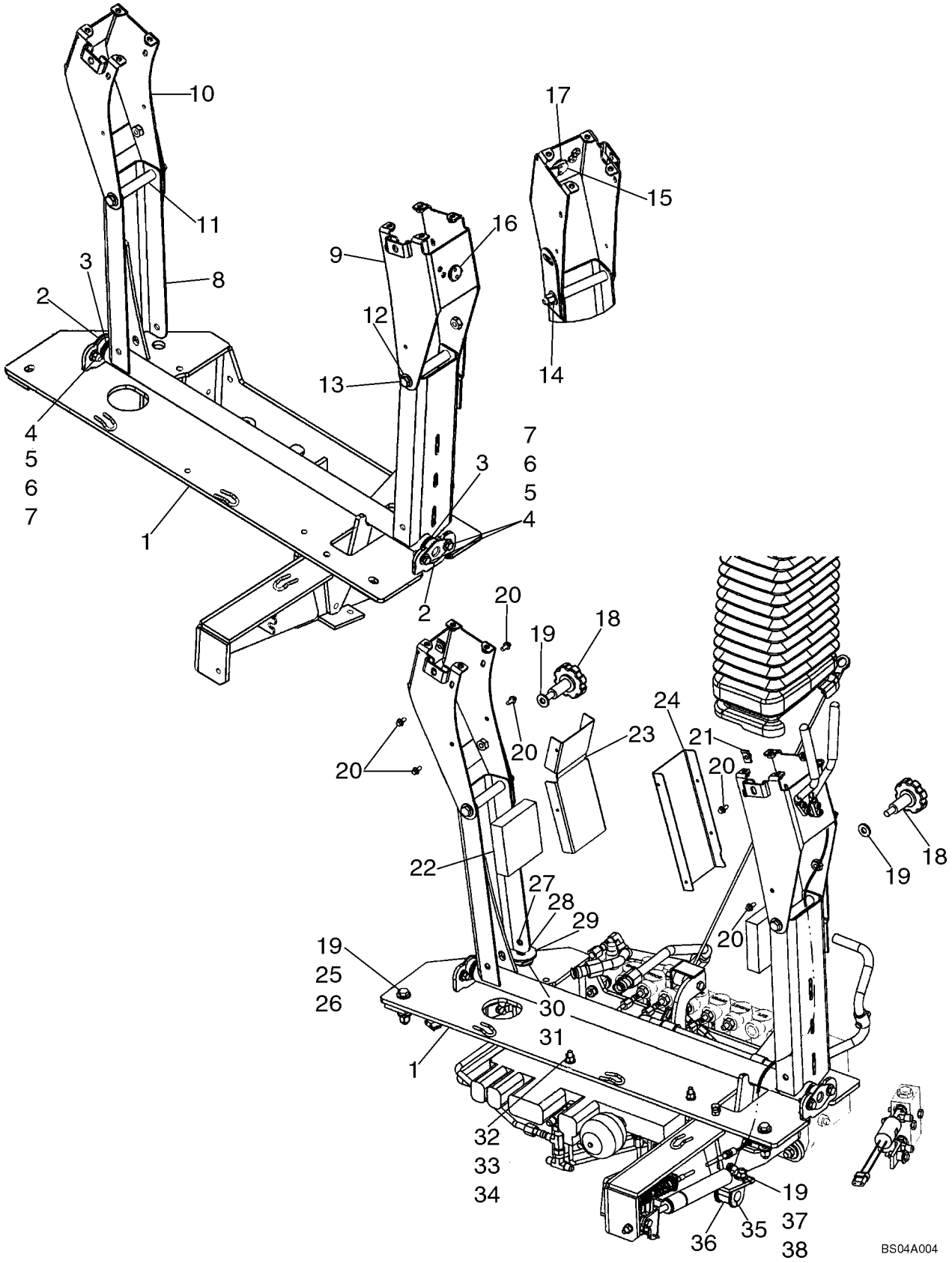

HTTP://WWW.MINNPARBACKHOEPARTS.COM



BACKHOE CONTROL TOWER SUPPORT, WITH PILOT CONTROLS

| REF | FN | PART NUMBER | YR/SN | QTY | DESCRIPTION |
|---|---|---|---|---|---|
| | | 87440711 | | 1 | TOWER Tower Assembly; Pilot Controls; Includes Ref 1 - 17 |
| 1 | | 87440710 | | 1 | BRACKET, SUPPORTING Bracket, Tower |
| 2 | | D148993 | | 2 | BEARING |
| 3 | | A30881 | | 4 | WASHER Seal |
| 4 | | 895-15008 | | 8 | WASHER 9 x 20 x 1.6 mm |
| 5 | | 614-8025 | | 4 | SCREW M8 x 25 |
| 6 | | 892-11008 | | 4 | WASHER Lock, M8 |
| 7 | | 829-1408 | | 4 | NUT M8 |
| 8 | | 87435275 | | 1 | PIVOT ASSY. |
| 9 | | 87440704 | | 1 | BRACKET, SUPPORTING Right-Hand Joystick Mounting |
| 10 | | 87440706 | | 1 | BRACKET, SUPPORTING Left-Hand Joystick Mounting |
| 11 | | 86983278 | | 2 | TUBE Spacer |
| 12 | | 895-15010 | | 4 | WASHER 11 x 24 x 2 mm |
| 13 | | 814-10130 | | 2 | SCREW M10 x 130 |
| 14 | | 832-10410 | | 2 | NUT M10 |
| 15 | | 87431529 | | 1 | LEVER ASSY. Control Tower Release |
| 16 | | 103-11100 | | 1 | RING Retaining, No. 100 |
| 17 | | 87405706 | | 1 | WASHER Wave, 1 inch |
| 18 | | 87437688 | | 2 | KNOB Lateral Adjustment Pilot Control Tower |
| 19 | | 896-15010 | | 8 | WASHER 11 x 24 x 3 mm |
| 20 | | 781-24613 | | 8 | SCREW Flange Head, M6 x 13, Self-Tapping |
| 21 | | 833-40406 | | 2 | NUT M6, Spring |
| 22 | | 87425696 | | 2 | SEAL, RUBBER |
| 23 | | 87431301 | | 1 | PLATE Shield, Left-Hand |
| 24 | | 87431300 | | 1 | PLATE Shield, Right-Hand |
| 25 | | 814-10060 | | 2 | SCREW M10 x 60 |
| 26 | | 832-10410 | | 2 | NUT M10 |
| 27 | | 87040885 | | 2 | BOLT Locking, M10 x 45 |
| 28 | | 892-11010 | | 2 | WASHER, LOCK M10 |
| 29 | | 496-81018 | | 1 | WASHER 17/32 x 2 x 1/8 |
| 30 | | D148962 | | 1 | WASHER Belleville |
| 31 | | 87440381 | | 1 | SPACER Spacer |
| 32 | | 896-11008 | | 2 | WASHER 9 x 17 x 2 mm |

HTTP://WWW.MINNPARBACKHOEPARTS.COM



BACKHOE CONTROL TOWER SUPPORT, WITH PILOT CONTROLS

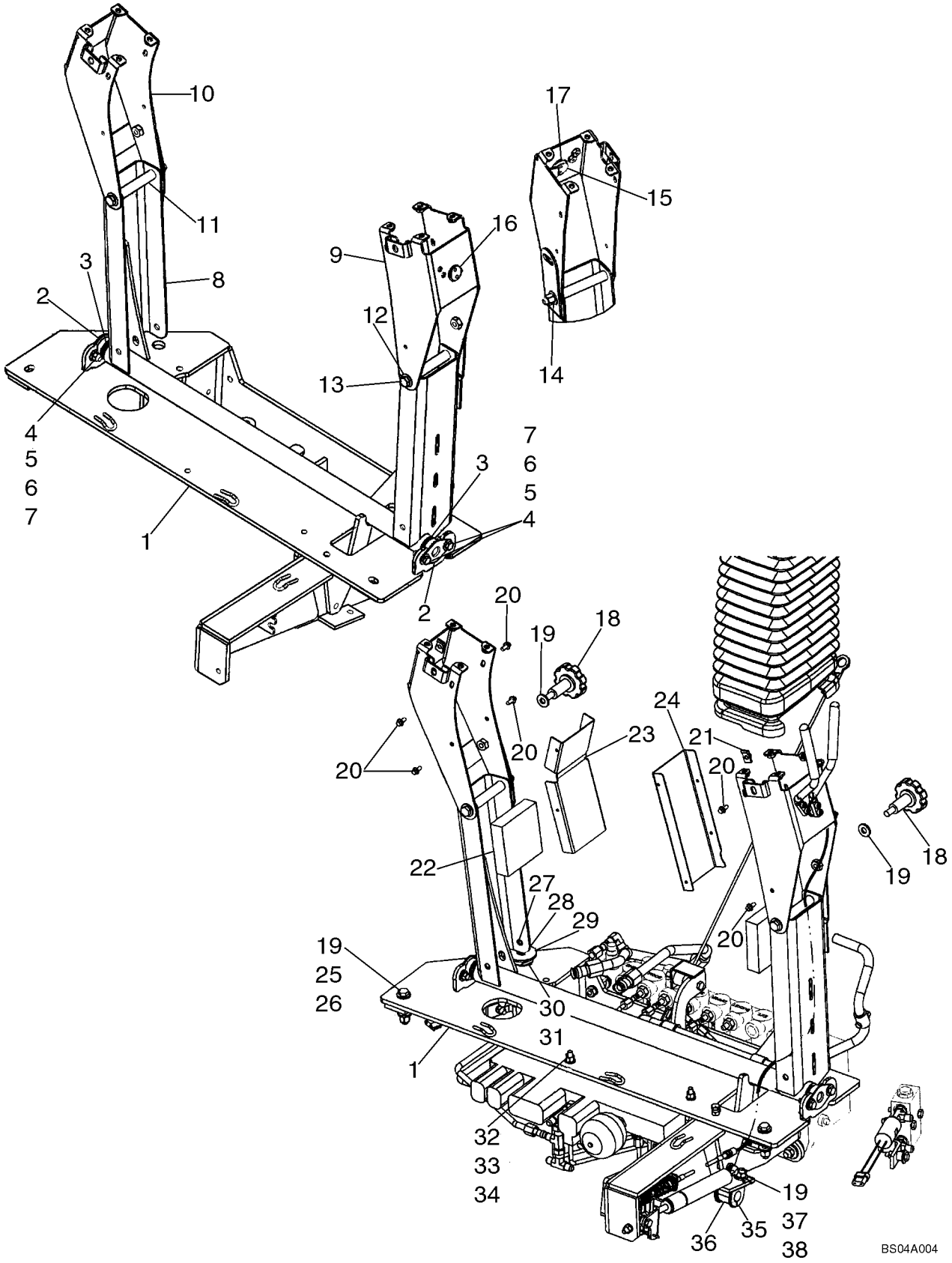

HTTP://WWW.MINNPARBACKHOEPARTS.COM



BACKHOE CONTROL TOWER SUPPORT, WITH PILOT CONTROLS

| REF | FN | PART NUMBER | YR/SN | QTY | DESCRIPTION |
|---|---|---|---|---|---|
| 33 | | 832-10408 | | 2 | NUT M8 |
| 34 | | 864-8055 | | 2 | SCREW Socket, M8 x 55 |
| 35 | | D143411 | | 1 | CLAMP |
| 36 | | D74182 | | 1 | GROMMET Isolation Block |
| 37 | | 829-1410 | | 1 | NUT M10 |
| 38 | | 614-10025 | | 1 | BOLT M10 x 25 |

HTTP://WWW.MINNPARBACKHOEPARTS.COM



BACKHOE CONTROL TOWER BOOTS AND SEALS, WITH PILOT CONTROLS

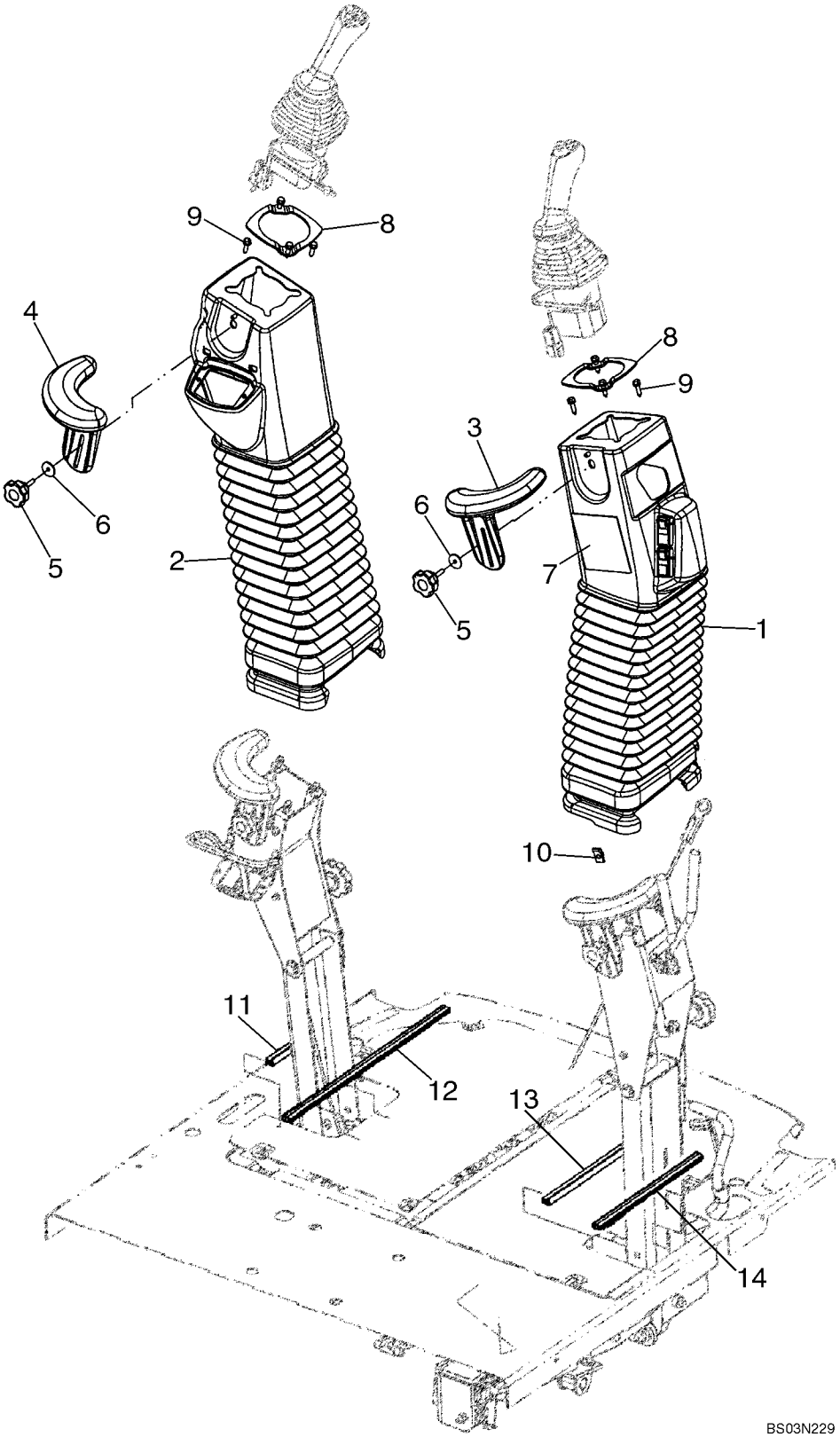

HTTP://WWW.MINNPARBACKHOEPARTS.COM



BACKHOE CONTROL TOWER BOOTS AND SEALS, WITH PILOT CONTROLS

| REF | FN | PART NUMBER | YR/SN | QTY | DESCRIPTION |
|---|---|---|---|---|---|
| 1 | | 87422678 | | 1 | BOOT Includes (1) 87422679 Boot and (1) 86992675 Pin |
| 2 | | 87422675 | | 1 | BOOT Includes (1) 87422676 Boot, (1) 86992675 Pin, (2) 87418520 No. 10 Threaded Inserts |
| 3 | | 87437366 | | 1 | SUPPORT Wrist |
| 4 | | 87437369 | | 1 | SUPPORT Wrist |
| 5 | | 87437689 | | 2 | KNOB |
| 6 | | 895-30109 | | 2 | WASHER |
| 7 | | 87414205 | | 1 | DECAL Pattern Selecting |
| 8 | | 87435372 | | 2 | PLATE, MOUNTING |
| 9 | | 233724A1 | | 8 | SCREW With Washer, M6 x 25 |
| 10 | | 833-40406 | | 2 | NUT M6 |
| 11 | | 87433008 | | 1 | SEAL, RUBBER 183 mm (7-1/4 in); Cut From 87438002 |
| 12 | | 87433006 | | 1 | SEAL, RUBBER 428 mm (16-7/8 in); Cut From 87438002 |
| 13 | | 87433005 | | 1 | SEAL, RUBBER 335 mm (13-3/16 in); Cut From 87438002 |
| 14 | | 87433007 | | 1 | SEAL, RUBBER 275 mm (10-7/8 in); Cut From 87438002 |

HTTP://WWW.MINNPARBACKHOEPARTS.COM



BACKHOE CONTROL TOWER LEVERS (BOOM LATCH), WITH PILOT CONTROLS

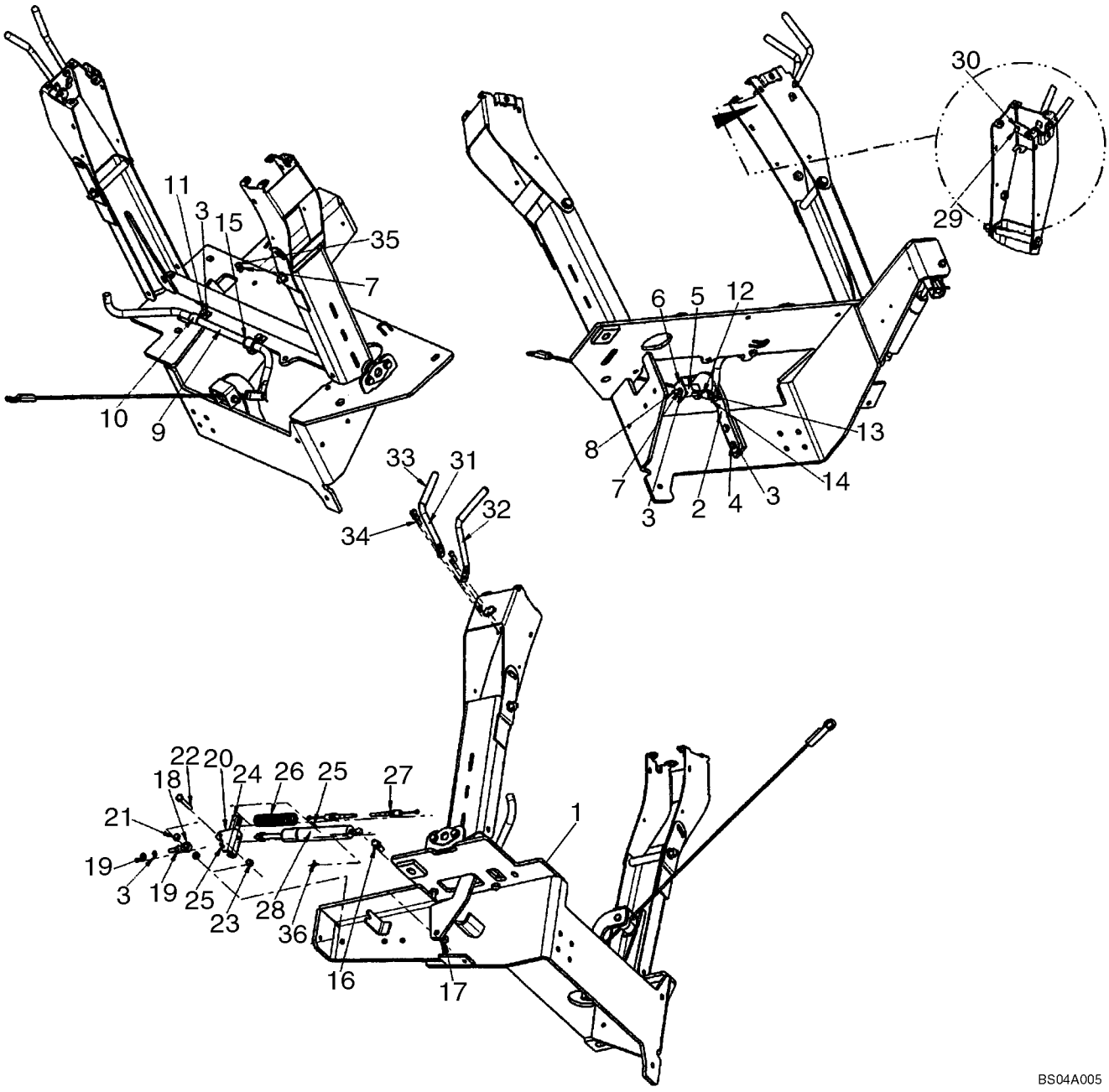

HTTP://WWW.MINNPARBACKHOEPARTS.COM



BACKHOE CONTROL TOWER LEVERS (BOOM LATCH), WITH PILOT CONTROLS

| REF | FN | PART NUMBER | YR/SN | QTY | DESCRIPTION |
|---|---|---|---|---|---|
| 1 | | 87440711 | | 1 | TOWER Pilot Control Tower Assembly; See Figure 09-13 |
| 2 | | 86984544 | | 1 | BRACKET Roller Mounting |
| 3 | | 892-11008 | | 6 | WASHER Lock, M8 |
| 4 | | 614-8030 | | 2 | SCREW M8 x 30 |
| 5 | | 86984547 | | 2 | GUIDE |
| 6 | | 86984545 | | 1 | BRACKET |
| 7 | | 829-1408 | | 2 | NUT M8 |
| 8 | | 814-8070 | | 1 | SCREW M8 x 70 |
| 9 | | 87422696 | | 1 | ROD Boom Latch Release |
| 10 | | D143723 | | 2 | SHIN Clamp |
| 11 | | 614-8025 | | 2 | SCREW M8 x 25 |
| 12 | | 87435924 | | 1 | CABLE Boom Latch |
| 13 | | 427-5094 | | 1 | PIN, CLEVIS 5/16 x 15/16 |
| 14 | | 432-612 | | 1 | PIN, SPLIT (COTTER) 3/32 x 3/4 |
| 15 | | D143591 | | 2 | SNAP RING |
| 16 | | 85824067 | | 1 | TRACK ROD END Stud |
| 17 | | 832-10410 | | 1 | NUT M10 |
| 18 | | 85824081 | | 1 | BALL JOINT |
| 19 | | 425-115 | | 2 | NUT 5/16 |
| 20 | | 85824080 | | 1 | BRACKET |
| 21 | | 85821520 | | 2 | SPACER |
| 22 | | 413-528 | | 1 | BOLT 5/16 x 1-3/4 |
| 23 | | 231-1445 | | 1 | NUT, LOCK 5/16 |
| 24 | | 86984549 | | 1 | EXTRUSION Channel |
| 25 | | 432-828 | | 2 | PIN, SPLIT (COTTER) 1/8 x 1-3/4 |
| 26 | | 87405362 | | 1 | SPRING |
| 27 | | 87437806 | | 1 | CABLE, FLEXIBLE Pilot Control Positioner |
| 28 | | 86989616 | | 1 | GAS STRUT Cylinder |
| 29 | | 140-108 | | 1 | SCREW No. 10 x 3/4 |
| 30 | | 231-14409 | | 1 | NUT, LOCK No. 10 |
| 31 | | 87418368 | | 1 | ROD Tower Stationary |
| 32 | | 87418369 | | 1 | ROD Tower Position |
| 33 | | 87421909 | | 2 | GRIP |
| 34 | | 565-104 | | 4 | SCREW Socket, M6 x 20 |
| 35 | | 614-8040 | | 1 | SCREW M8 x 40 |

HTTP://WWW.MINNPARBACKHOEPARTS.COM



BACKHOE CONTROL TOWER LEVERS (BOOM LATCH), WITH PILOT CONTROLS

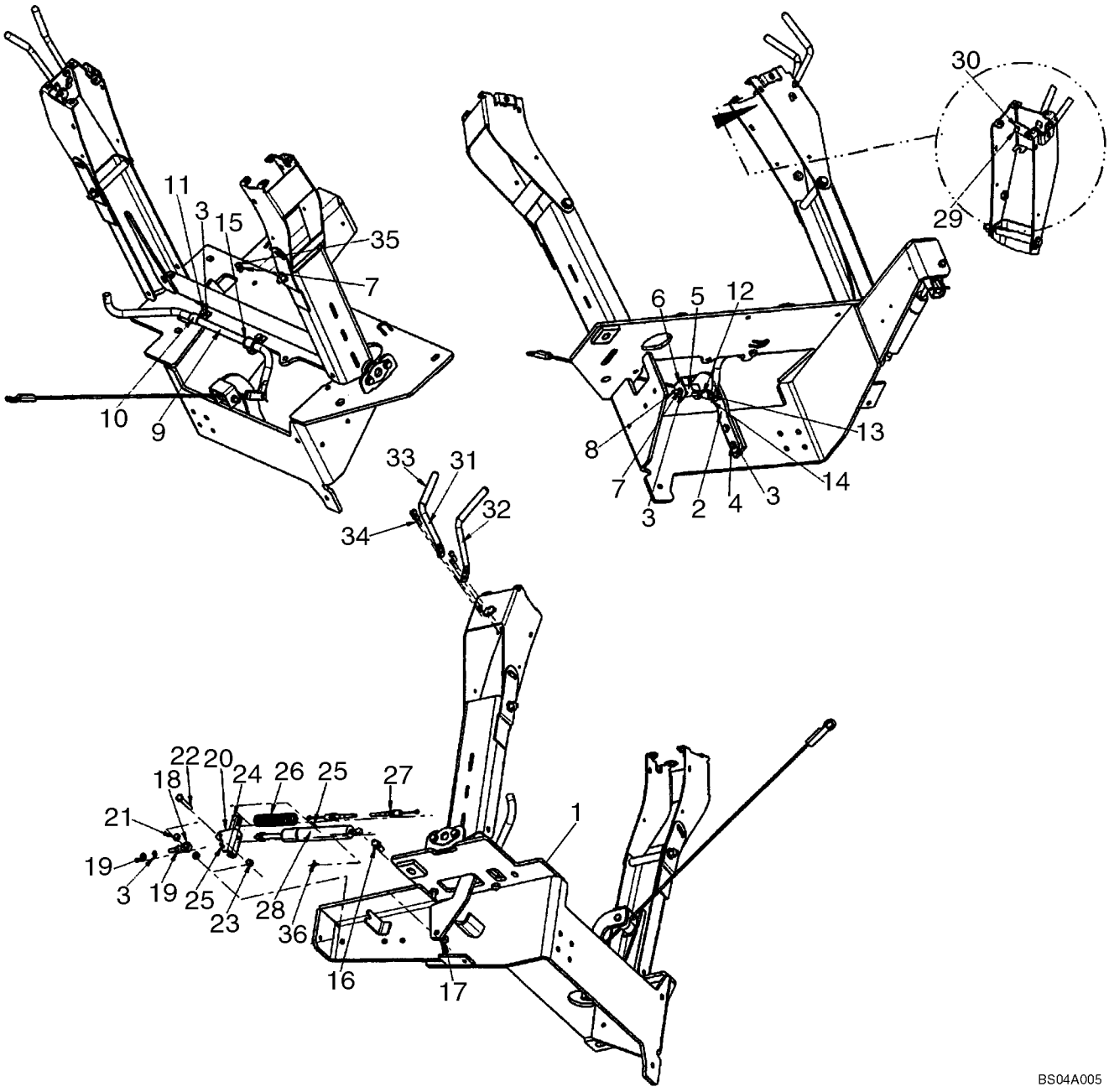

HTTP://WWW.MINNPARBACKHOEPARTS.COM



BACKHOE CONTROL TOWER LEVERS (BOOM LATCH), WITH PILOT CONTROLS

| REF | FN | PART NUMBER | YR/SN | QTY | DESCRIPTION |
|---|---|---|---|---|---|
| 36 | | 3233348R1 | | 1 | CLIP, ELECTRICAL |

HTTP://WWW.MINNPARBACKHOEPARTS.COM

| 09-16 | | p1 | 01/04 |
|---|---|---|---|

CONTROLS - BACKHOE, WITH FOOT SWING (MODELS WITHOUT EXTENDABLE DIPPER)

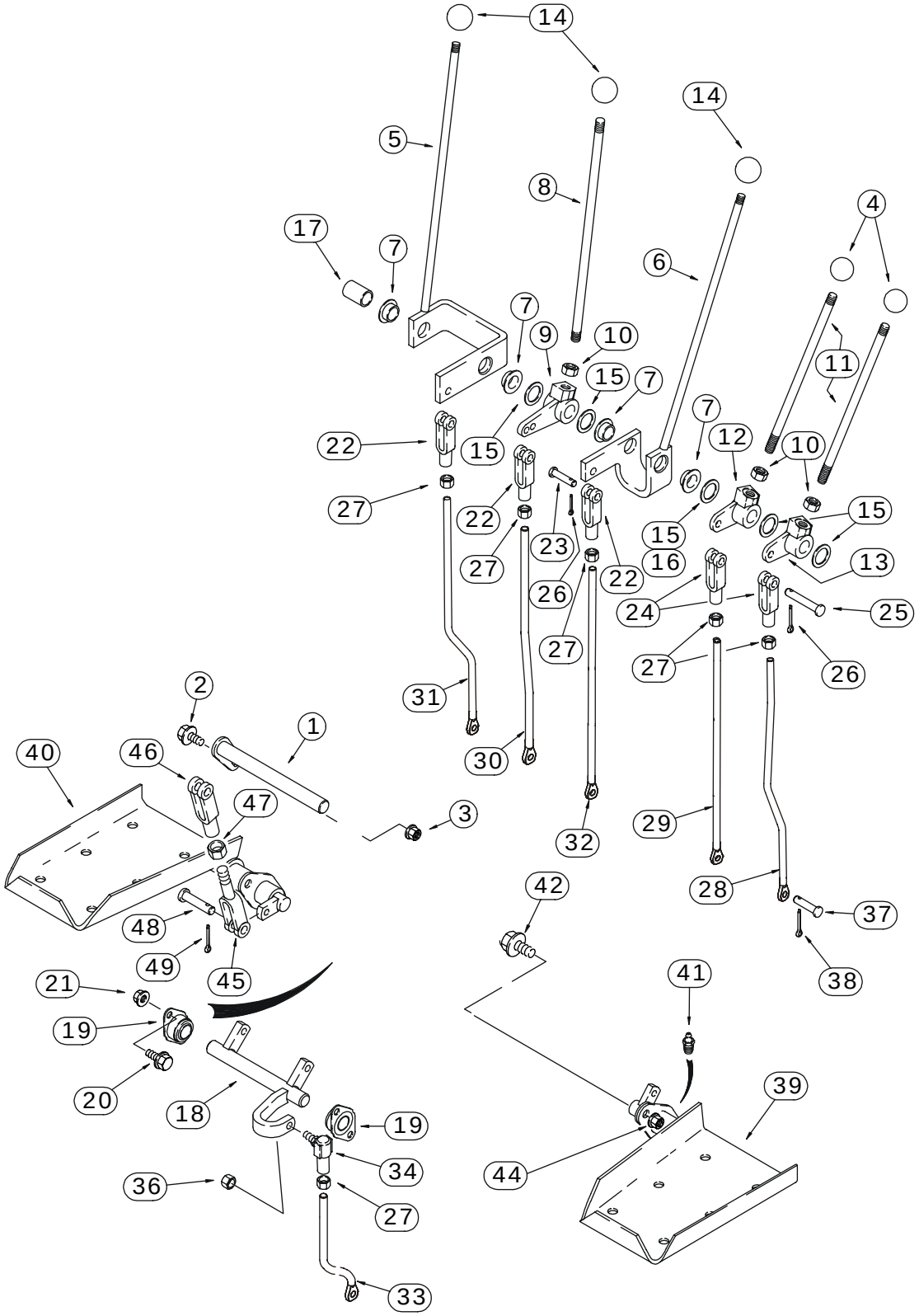


BS03M099

HTTP://WWW.MINNPARBACKHOEPARTS.COM



CONTROLS - BACKHOE, WITH FOOT SWING (MODELS WITHOUT EXTENDABLE DIPPER)

| REF | FN | PART NUMBER | YR/SN | QTY | DESCRIPTION |
|---|---|---|---|---|---|
| 1 | | 129015A1 | | 1 | SHAFT |
| 2 | | 614-8025 | | 1 | SCREW M8 x 25 |
| 3 | | 832-10408 | | 1 | NUT Lock, M8 |
| 4 | | D59912 | | 2 | KNOB Stabilizer Control Levers |
| 5 | | 136267A1 | | 1 | LEVER Boom; Incl. Ref 7 |
| 6 | | 136269A1 | | 1 | LEVER Bucket; Incl. Ref 7 |
| 7 | | D148992 | | 2 | BUSHING, LARGE |
| 8 | | 136263A1 | | 1 | ROD Dipper |
| 9 | | D150397 | | 1 | LEVER, CRANK Dipper |
| 10 | | 425-118 | | 3 | NUT 1/2 NF |
| 11 | | 136261A1 | | 2 | THREADED ROD Stabilizer |
| 12 | | D150435 | | 1 | LEVER, CRANK Right-Hand Stabilizer Control |
| 13 | | D150434 | | 1 | LEVER, CRANK Left-Hand Stabilizer Control |
| 14 | | L54563 | | 3 | KNOB Boom, Dipper, and Bucket |
| 15 | | A30881 | | X | WASHER 49/64 x 1-15/64 x 1/32; Used As A Shim |
| 16 | | D34666 | | 1 | WASHER 25/32 x 1-3/8 x 9/64; May Be Used In Place Of Ref 15 |
| 17 | | D150486 | | 1 | SPACER Not Used On Models With Extendable Dipper |
| 18 | | D148994 | | 1 | SHAFT Swing |
| 19 | | D139039 | | 2 | BEARING |
| 20 | | 614-8025 | | 4 | SCREW M8 x 25 |
| 21 | | 832-10408 | | 4 | NUT Lock, M8 |
| 22 | | 213-126 | | 3 | CLEVIS 3/8 NF |
| 23 | | D149288 | | 3 | PIN, LARGE Special |
| 24 | | D150493 | | 2 | CLEVIS |
| 25 | | 427-6088 | | 2 | PIN, LARGE 3/8 x 7/8 |
| 26 | | 432-612 | | 5 | PIN, SPLIT (COTTER) 3/32 x 3/4 |
| 27 | | 425-156 | | 6 | NUT 3/8 NF |
| 28 | | 87422243 | | 1 | ROD, THREADED Left-Hand Stabilizer Control |
| 29 | | 87422245 | | 1 | ROD, THREADED Right-Hand Stabilizer Control |
| 30 | | 87422247 | | 1 | ROD, THREADED Dipper |
| 31 | | 87422241 | | 1 | ROD, THREADED Boom |
| 32 | | 87422249 | | 1 | ROD, THREADED Bucket |
| 33 | | 87422239 | | 1 | ROD, THREADED Swing |
| 34 | | D149295 | | 1 | BALL JOINT 3/8 |

HTTP://WWW.MINNPARBACKHOEPARTS.COM



CONTROLS - BACKHOE, WITH FOOT SWING (MODELS WITHOUT EXTENDABLE DIPPER)

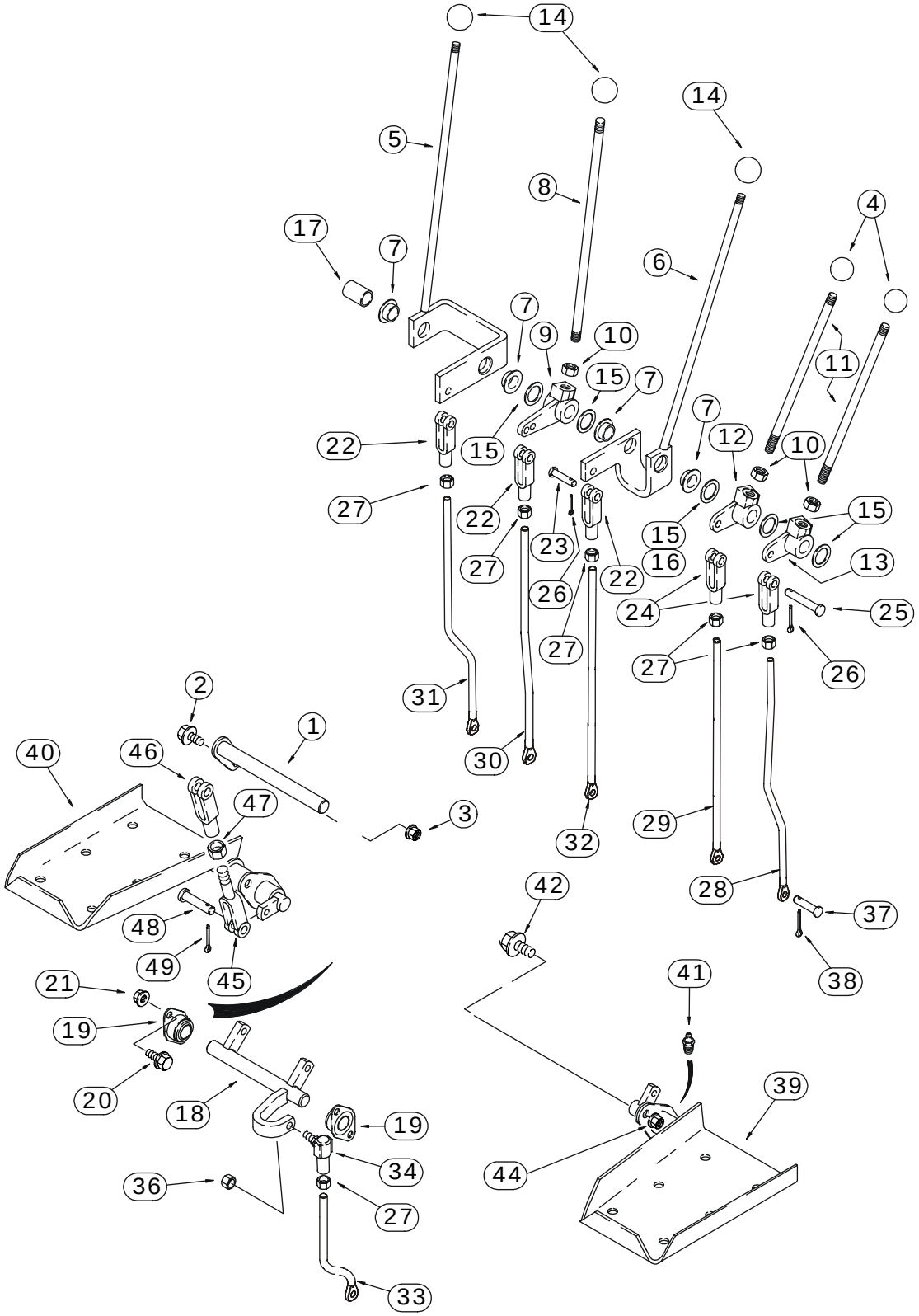


BS03M099

HTTP://WWW.MINNPARBACKHOEPARTS.COM



CONTROLS - BACKHOE, WITH FOOT SWING (MODELS WITHOUT EXTENDABLE DIPPER)

| REF | FN | PART NUMBER | YR/SN | QTY | DESCRIPTION |
|---|---|---|---|---|---|
| 36 | | 425-116 | | 1 | NUT 3/8 NF |
| 37 | | D149287 | | 6 | PIN, LARGE 5/16 |
| 38 | | 432-612 | | 6 | PIN, SPLIT (COTTER) 3/32 x 3/4 |
| 39 | | 136271A2 | | 1 | PEDAL ASSY. Left-Hand Swing; Without Pilot Controls |
| 40 | | 136270A2 | | 1 | PEDAL ASSY. Right-Hand Swing; Without Pilot Controls |
| 41 | | 219-1 | | 2 | NIPPLE, LUBE 1/8 PT x 21/32 |
| 42 | | 614-10025 | | 4 | BOLT M10 x 25 |
| 44 | | 832-10410 | | 4 | NUT Lock, M10 |
| 45 | | D150503 | | 2 | END Yoke |
| 46 | | D149262 | | 2 | CLEVIS 3/8 |
| 47 | | 425-156 | | 2 | NUT 3/8 NF |
| 48 | | D149288 | | 4 | PIN, LARGE 3/8 |
| 49 | | 432-612 | | 4 | PIN, SPLIT (COTTER) 3/32 x 3/4 |

HTTP://WWW.MINNPARBACKHOEPARTS.COM

| 09-17 | | p1 | 01/04 |
|---|---|---|---|

CONTROLS - BACKHOE, WITH FOOT SWING (MODELS WITH EXTENDABLE DIPPER)

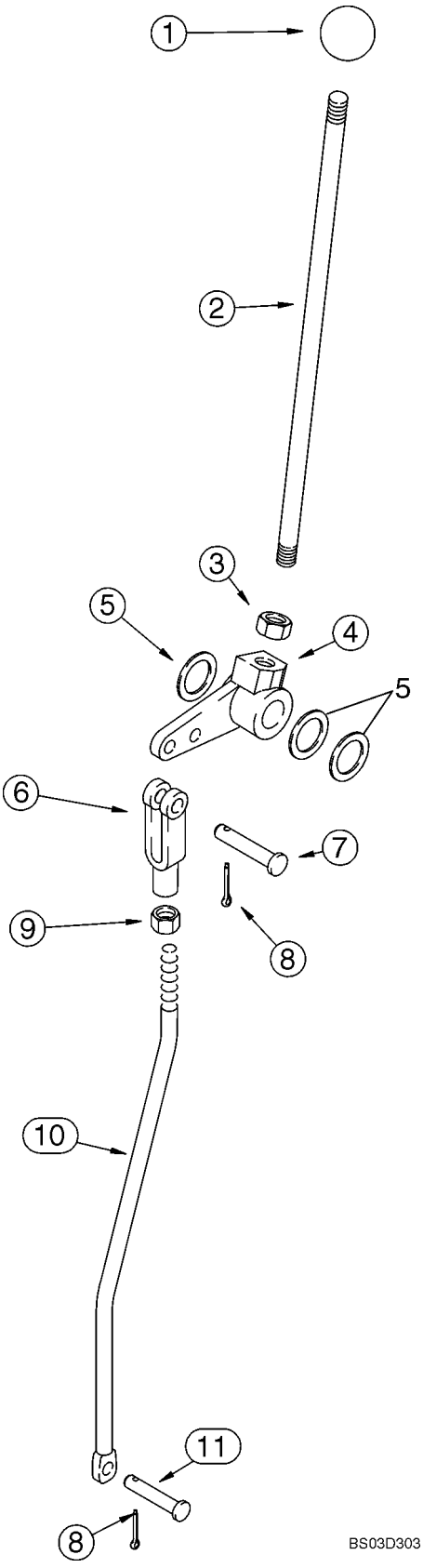

HTTP://WWW.MINNPARBACKHOEPARTS.COM



CONTROLS - BACKHOE, WITH FOOT SWING (MODELS WITH EXTENDABLE DIPPER)

| REF | FN | PART NUMBER | YR/SN | QTY | DESCRIPTION |
|---|---|---|---|---|---|
| 1 | | L54563 | | 1 | KNOB Extendahoe |
| 2 | | 136263A1 | | 1 | ROD Extendahoe |
| 3 | | 425-118 | | 1 | NUT 1/2 NF |
| 4 | | 182006A1 | | 1 | LEVER |
| 5 | | A30881 | | X | WASHER 49/64 x 1-15/64 x 1/32 |
| 6 | | 213-126 | | 1 | CLEVIS 3/8 NF |
| 7 | | 427-6088 | | 1 | PIN, LARGE 3/8 x 7/8 |
| 8 | | 432-612 | | 2 | PIN, SPLIT (COTTER) 3/32 x 3/4 |
| 9 | | 425-156 | | 1 | NUT 3/8 NF |
| 10 | | 87440076 | | 1 | ROD, THREADED Extendahoe Rod |
| 11 | | D149287 | | 1 | PIN, LARGE |

HTTP://WWW.MINNPARBACKHOEPARTS.COM



CONTROLS - BACKHOE, WITH HAND SWING (MODELS WITHOUT EXTENDABLE DIPPER)

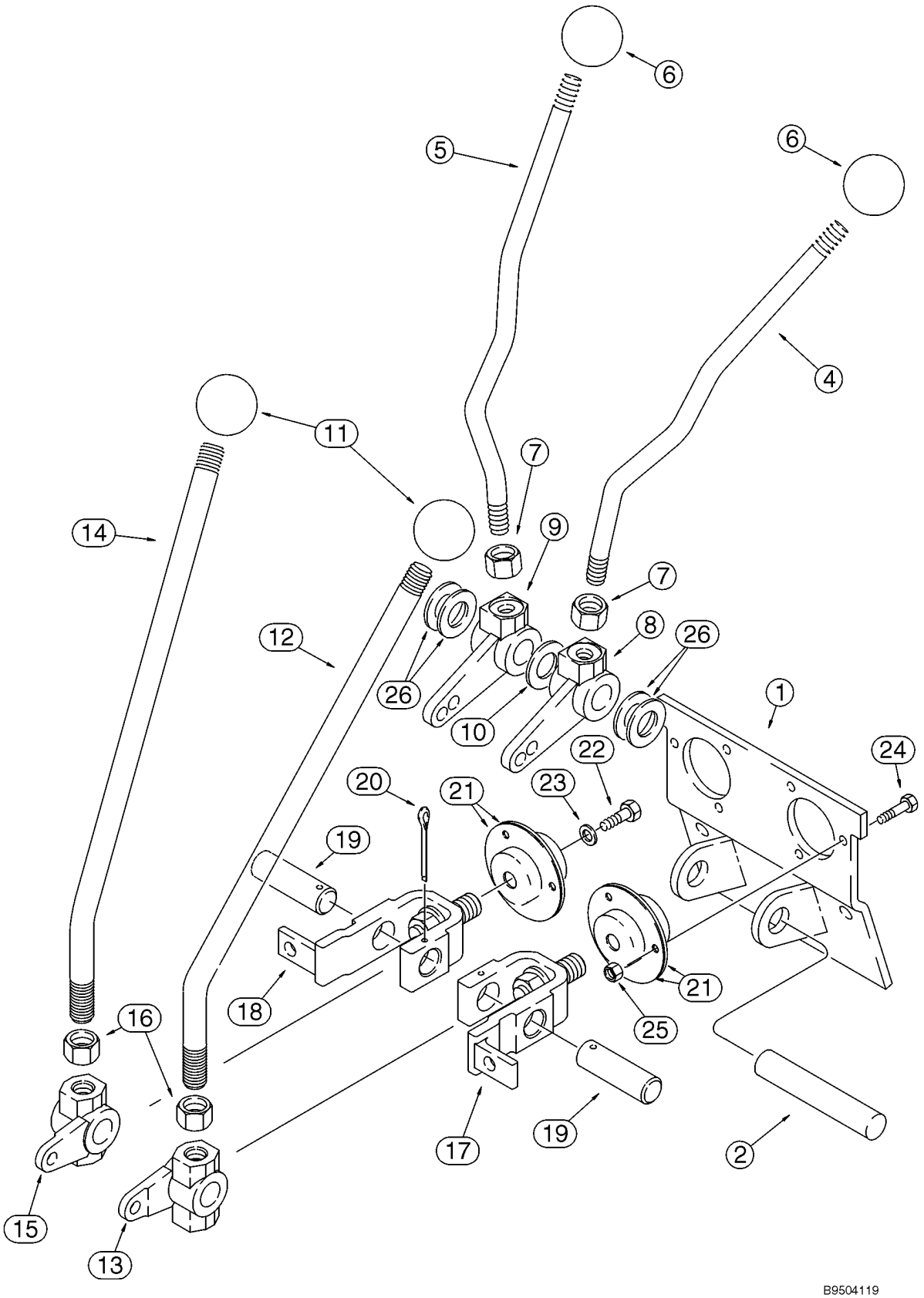

HTTP://WWW.MINNPARBACKHOEPARTS.COM



CONTROLS - BACKHOE, WITH HAND SWING (MODELS WITHOUT EXTENDABLE DIPPER)

| REF | FN | PART NUMBER | YR/SN | QTY | DESCRIPTION |
|---|---|---|---|---|---|
| | | REF | | | INSTRUCTION UPPER CONTROL LEVERS |
| 1 | | 108864A1 | | 1 | SUPPORT |
| 2 | | D148947 | | 1 | PIN, LARGE Stabilizer |
| 4 | | 409672A1 | | 1 | LEVER Left-Hand; Stabilizer |
| 5 | | 409673A1 | | 1 | LEVER Right-Hand; Stabilizer |
| 6 | | D59912 | | 2 | KNOB Stabilizer |
| 7 | | 425-118 | | 2 | NUT 1/2 NF |
| 8 | | 108924A1 | | 1 | LEVER |
| 9 | | 108923A1 | | 1 | LEVER |
| 10 | | 495-11081 | | 1 | WASHER 13/16 x 1-15/32 x 1/8 |
| 11 | | D39118 | | 2 | KNOB |
| 12 | | 125113A1 | | 1 | LEVER Boom and Swing |
| 13 | | 106989A1 | | 1 | LEVER Left-Hand Boom and Swing Lever |
| 14 | | 125113A1 | | 1 | LEVER Bucket and Dipper |
| 15 | | 106990A1 | | 1 | LEVER Right-Hand Bucket and Dipper Lever |
| 16 | | 425-1110 | | 2 | NUT 5/8 NF |
| 17 | | 178006A1 | | 1 | LEVER Boom and Swing |
| 18 | | 178004A1 | | 1 | LEVER Bucket and Dipper |
| 19 | | 102765A1 | | 2 | PIN, LARGE Bellcrank |
| 20 | | 432-828 | | 2 | PIN, SPLIT (COTTER) 1/8 x 1-3/4 |
| 21 | | 112380A1 | | 4 | BEARING |
| 22 | | 614-6016 | | 2 | SCREW M6 x 16 |
| 23 | | 396-41028 | | 2 | WASHER 9/32 x 7/8 x 3/32 |
| 24 | | 614-6020 | | 6 | BOLT M6 x 20 |
| 25 | | 829-1406 | | 6 | NUT M6; 10.9 |
| 26 | | A30881 | | X | WASHER 49/64 x 1-15/64 x 1/32 |

HTTP://WWW.MINNPARBACKHOEPARTS.COM



CONTROLS - BACKHOE, WITH HAND SWING (MODELS WITHOUT EXTENDABLE DIPPER)

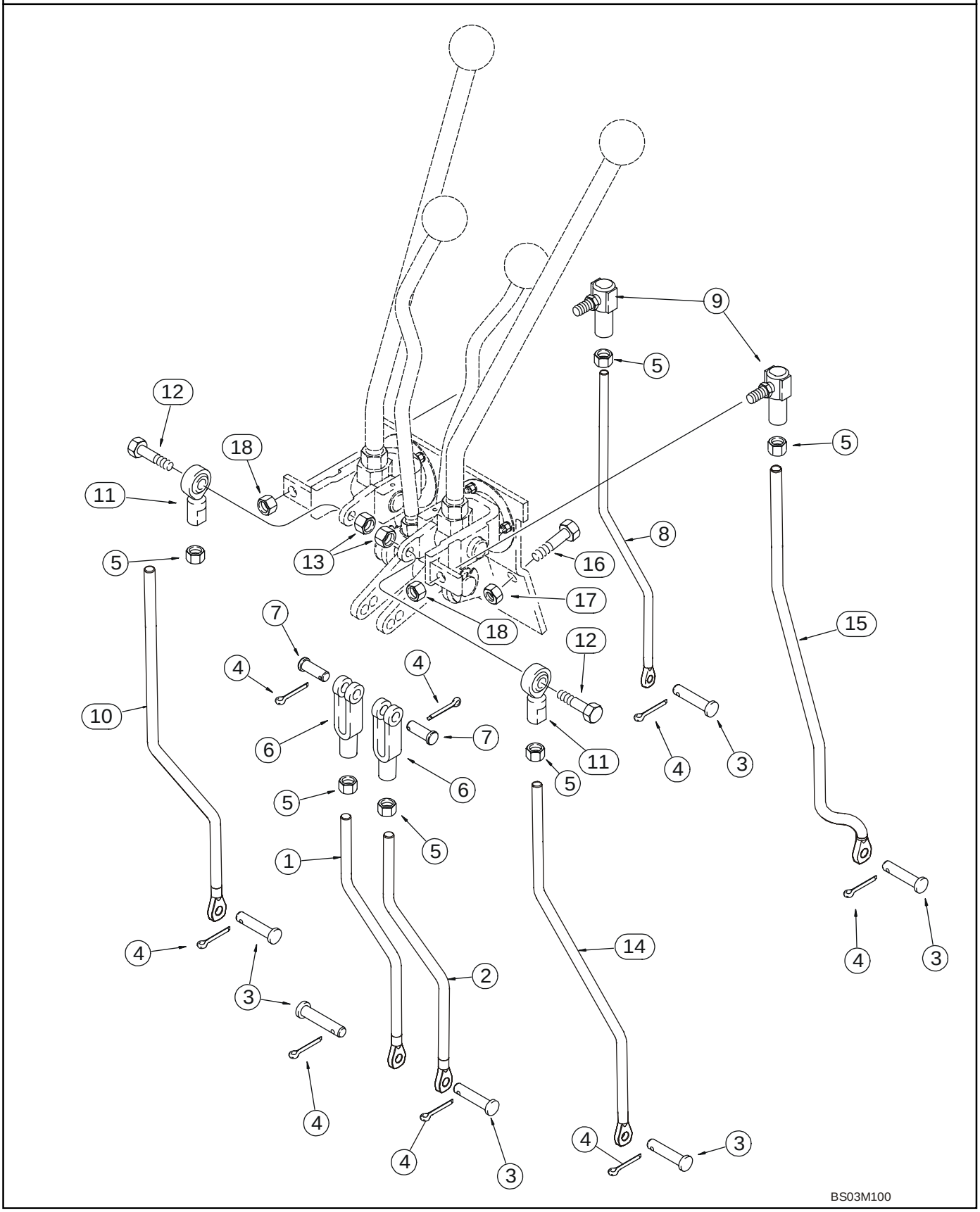

HTTP://WWW.MINNPARBACKHOEPARTS.COM



CONTROLS - BACKHOE, WITH HAND SWING (MODELS WITHOUT EXTENDABLE DIPPER)

| REF | FN | PART NUMBER | YR/SN | QTY | DESCRIPTION |
|---|---|---|---|---|---|
| | | REF | | | INSTRUCTION LOWER CONTROL LEVERS |
| 1 | | 87422260 | | 1 | ROD, THREADED Right-Hand; Stabilizer |
| 2 | | 87422258 | | 1 | ROD, THREADED Left-Hand; Stabilizer |
| 3 | | D149287 | | 6 | PIN, LARGE |
| 4 | | 432-612 | | 8 | PIN, SPLIT (COTTER) 3/32 x 3/4 |
| 5 | | 425-116 | | 6 | NUT 3/8 NF |
| 6 | | 213-126 | | 2 | CLEVIS 3/8 NF |
| 7 | | D149288 | | 2 | PIN, LARGE Special |
| 8 | | 87422264 | | 1 | ROD, THREADED Bucket |
| 9 | | D149295 | | 2 | BALL JOINT |
| 10 | | 87422262 | | 1 | ROD, THREADED Dipper |
| 11 | | D136773 | | 2 | BALL 3/8 NF |
| 12 | | 413-624 | | 2 | BOLT 3/8 x 1-1/2 |
| 13 | | 425-106 | | 2 | NUT 3/8 |
| 14 | | 87422256 | | 1 | ROD, THREADED Boom |
| 15 | | 87422253 | | 1 | ROD, THREADED Swing |
| 16 | | 614-10025 | | 2 | BOLT M10 x 25 |
| 17 | | 832-10410 | | 2 | NUT M10 |
| 18 | | 231-2446 | | 2 | NUT 3/8 NF |

HTTP://WWW.MINNPARBACKHOEPARTS.COM



CONTROLS - BACKHOE, WITH HAND SWING (MODELS WITH EXTENDABLE DIPPER)

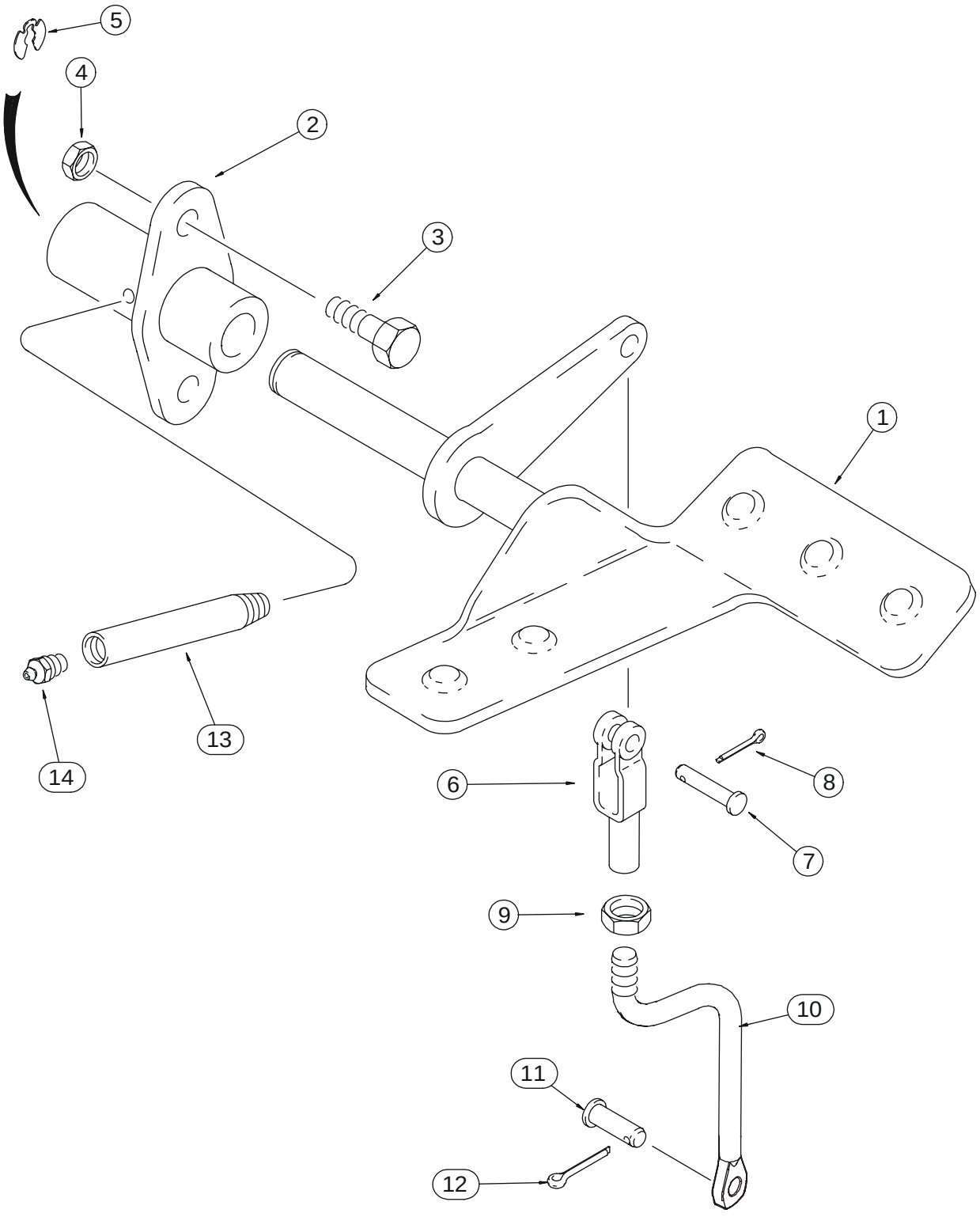


BS03M101

HTTP://WWW.MINNPARBACKHOEPARTS.COM



CONTROLS - BACKHOE, WITH HAND SWING (MODELS WITH EXTENDABLE DIPPER)

| REF | FN | PART NUMBER | YR/SN | QTY | DESCRIPTION |
|---|---|---|---|---|---|
| 1 | | 179029A1 | | 1 | PEDAL Right-Hand; Extendahoe |
| 2 | | 126918A1 | | 1 | CAP CYLINDER END |
| 3 | | 614-10025 | | 2 | BOLT M10 x 25 |
| 4 | | 832-10410 | | 2 | NUT M10 |
| 5 | | D143416 | | 1 | SNAP RING |
| 6 | | D134900 | | 1 | CLEVIS |
| 7 | | 427-6088 | | 1 | PIN, LARGE 3/8 x 7/8 |
| 8 | | 432-612 | | 1 | PIN, SPLIT (COTTER) 3/32 x 3/4 |
| 9 | | 425-156 | | 1 | NUT 3/8 NF |
| 10 | | 87440058 | | 1 | ROD, THREADED Extendahoe Rod |
| 11 | | D149287 | | 1 | PIN, LARGE |
| 12 | | 432-612 | | 1 | PIN, SPLIT (COTTER) 3/32 x 3/4 |
| 13 | | D150032 | | 1 | TUBE Lube |
| 14 | | 219-1 | | 1 | NIPPLE, LUBE 1/8 PT x 21/32 |

HTTP://WWW.MINNPARBACKHOEPARTS.COM

| 09-21 | | p1 | 01/04 |
|---|---|---|---|

CONTROLS - BACKHOE AUXILIARY HYDRAULICS, WITHOUT PILOT CONTROLS

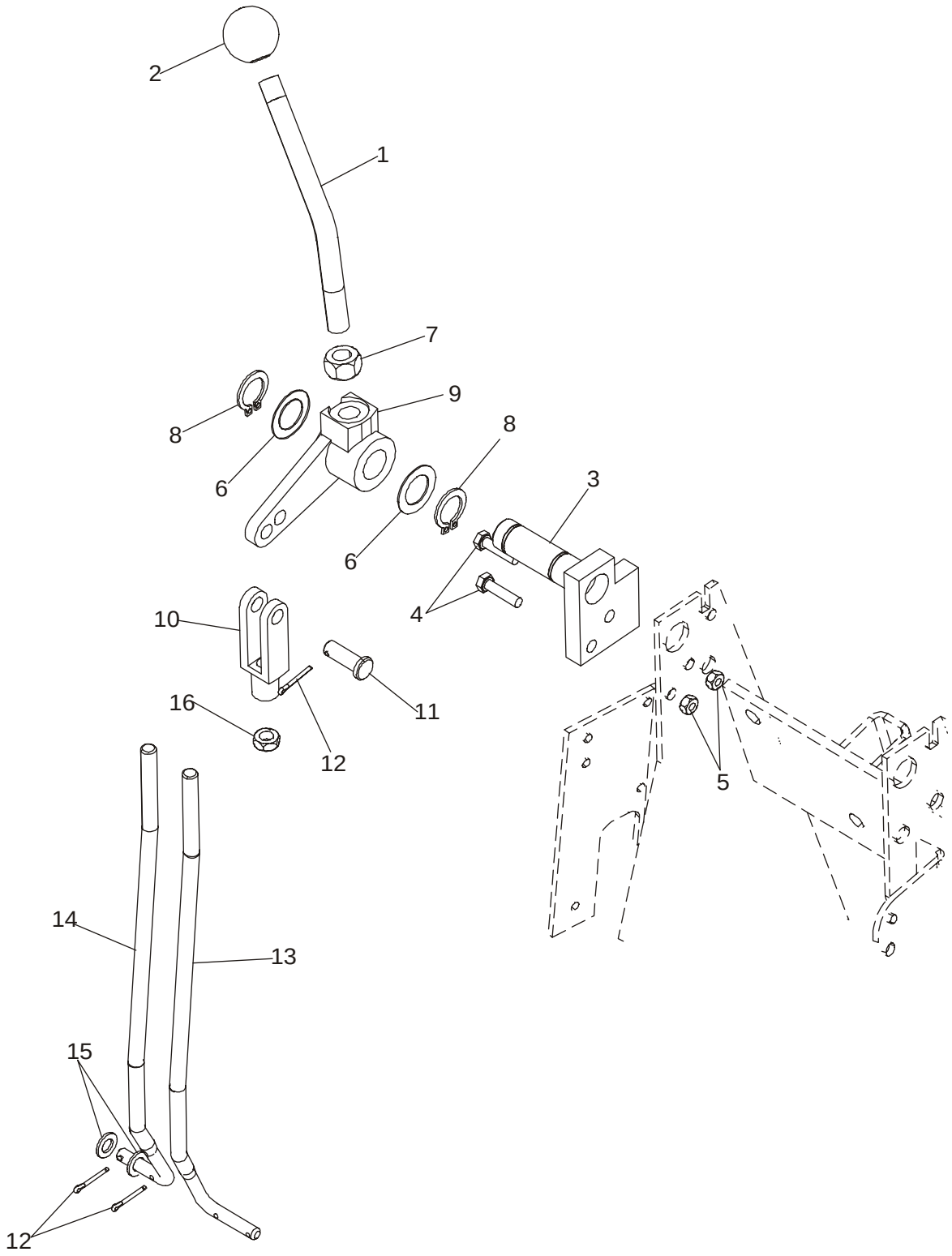

HTTP://WWW.MINNPARBACKHOEPARTS.COM



CONTROLS - BACKHOE AUXILIARY HYDRAULICS, WITHOUT PILOT CONTROLS

| REF | FN | PART NUMBER | YR/SN | QTY | DESCRIPTION |
|---|---|---|---|---|---|
| 1 | | 87425118 | | 1 | ROD, THREADED Auxiliary Control |
| 2 | | D59912 | | 1 | KNOB |
| 3 | | 87425117 | | 1 | PIVOT ASSY. 7 or 8 Spool Valve |
| 4 | | 614-6025 | | 2 | SCREW M6 x 25 |
| 5 | | 829-1406 | | 2 | NUT M6; 10.9 |
| 6 | | A30881 | | 2 | WASHER Used As A Shim |
| 7 | | 425-118 | | 1 | NUT Hex, 1/2 |
| 8 | | 103-1475 | | 2 | SNAP RING No. 75 |
| 9 | | 182006A1 | | 1 | LEVER |
| 10 | | 213-126 | | 1 | CLEVIS 3/8 |
| 11 | | D149288 | | 1 | PIN, LARGE Clevis, 3/8 |
| 12 | | 432-612 | | 3 | PIN, SPLIT (COTTER) 3/32 x 3/4 |
| 13 | | 87439135 | | 1 | ROD, THREADED 7 Spool Valve; If Used |
| 14 | | 87438157 | | 1 | ROD, THREADED 8 Spool Valve; If Used |
| 15 | | 895-11008 | | 2 | WASHER 9 x 17 x 1,6 mm |
| 16 | | 425-156 | | 1 | NUT Hex, Jam, 3/8 NF |

HTTP://WWW.MINNPARBACKHOEPARTS.COM



BACKHOE - STABILIZERS, PLATES AND PADS

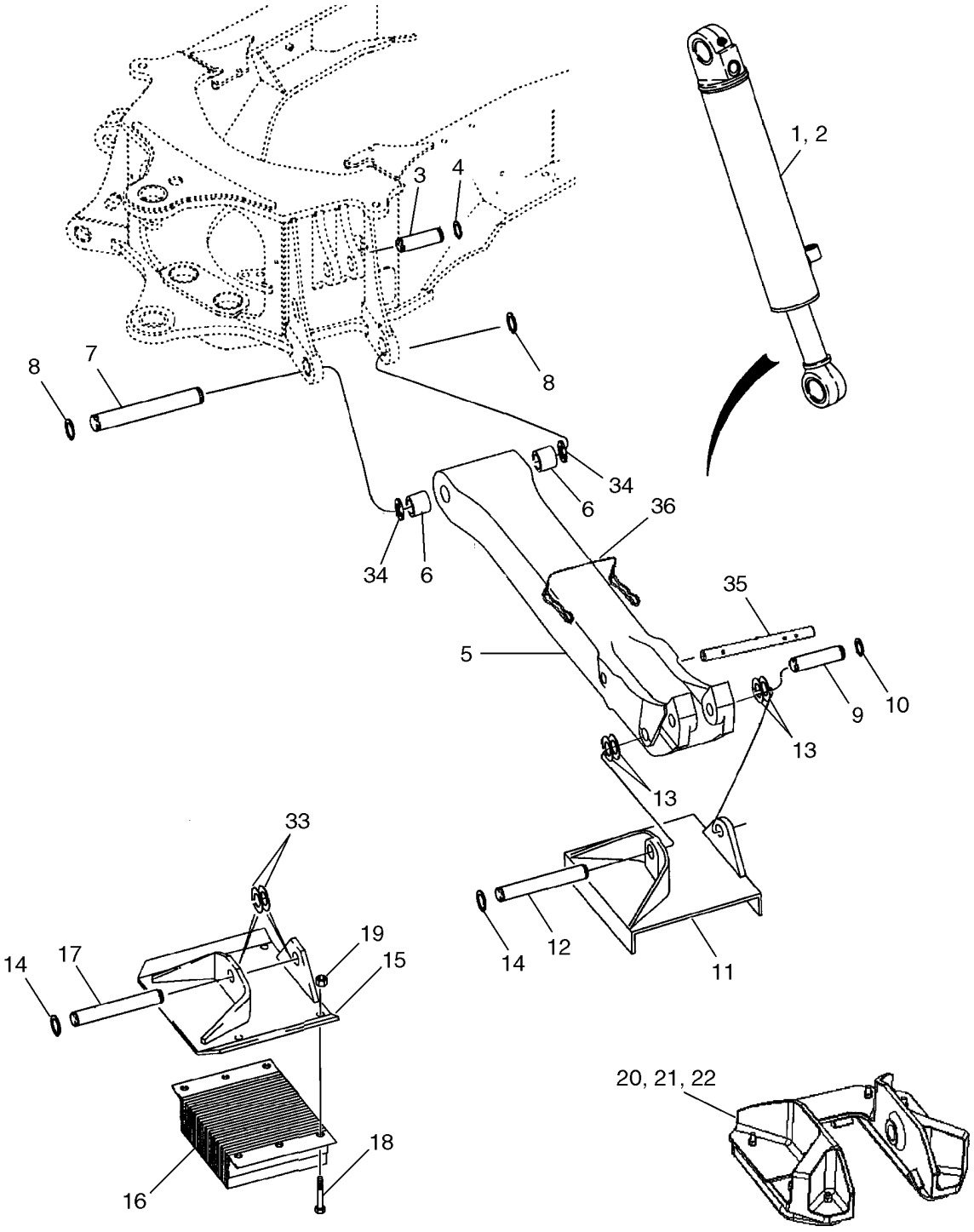

HTTP://WWW.MINNPARBACKHOEPARTS.COM



BACKHOE - STABILIZERS, PLATES AND PADS

| REF | FN | PART NUMBER | YR/SN | QTY | DESCRIPTION |
|---|---|---|---|---|---|
| 1 | | 195503A1 | | 1 | CYLINDER ASSY. 102 ID x 553 mm strk; Stabilizer; Right-Hand; See Figure 08-61 |
| 2 | | 195504A1 | | 1 | CYLINDER 102 ID x 553 mm strk; Stabilizer; Left-Hand; See Figure 08-61 |
| 3 | | D38907 | | 2 | PIN Stabilizer Cylinder to Chassis |
| 4 | | 103-16175 | | 4 | SNAP RING No. 175 |
| 5 | | 446222A1 | | 2 | STABILIZER 1135 mm (44-11/16 in), Leg; Incl. Ref 6 |
| 6 | | D50146 | | 2 | BUSHING, LARGE |
| 7 | | 121665A1 | | 2 | PIN, LARGE Stabilizer Leg to Chassis |
| 8 | | 103-16175 | | 4 | SNAP RING No. 175 |
| 9 | | D26002 | | 2 | PIN Stabilizer Cylinder |
| 10 | | D25279 | | 4 | SNAP RING |
| 11 | | D88427 | | 2 | PLATE Cleated, If Used |
| 12 | | D28648 | | 2 | PIN Plate/Pad to Leg |
| 13 | | D143406 | | X | WASHER Used as a Spacer |
| 14 | | D25279 | | 4 | SNAP RING |
| 15 | | D142519 | | 2 | SHOE (ASSY) Street or Cemetery, If Used |
| 16 | | D61368 | | 2 | SHOCK ABSORBER Rubber, If Used |
| 17 | | D39256 | | 2 | PIN, AXLE Plate to Leg |
| 18 | | 413-1228 | | 8 | SCREW 3/4 x 1-3/4 |
| 19 | | 425-1012 | | 8 | NUT 3/4 |
| 25A | | 408398A1 | | 2 | PAD PLATE, Flipover |
| 25B | | 339680A2 | | 4 | PAD, RUBBER Flipover |
| 25C | | 832-41312 | | 16 | NUT M12 |
| 33 | | D143406 | | X | WASHER Used as a Spacer |
| 34 | | 495-81282 | | X | WASHER 2-1/16 x 3 x 3/32; Used as a Spacer |
| 35 | | 408405A1 | | 2 | PIN, PIVOT Used With 408398A1 Pad |
| 36 | | 446454A1 | | 2 | PIN, LOCK Used With 408398A1 Pad |

HTTP://WWW.MINNPARBACKHOEPARTS.COM



BACKHOE - SWING TOWER AND SWING CYLINDERS

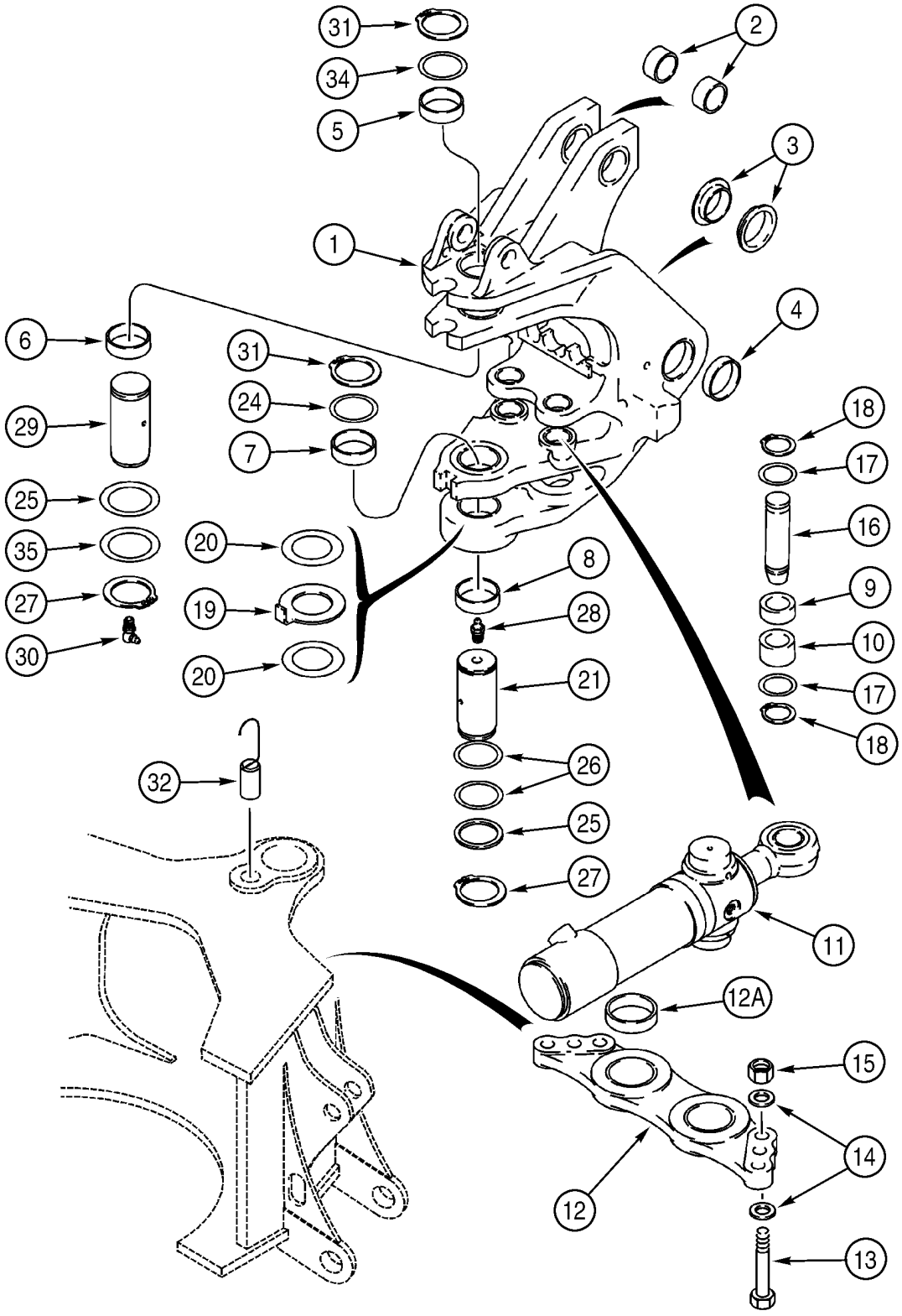

HTTP://WWW.MINNPARBACKHOEPARTS.COM



BACKHOE - SWING TOWER AND SWING CYLINDERS

| REF | FN | PART NUMBER | YR/SN | QTY | DESCRIPTION |
|---|---|---|---|---|---|
| 1 | | 326806A1 | | 1 | TOWER Swing Tower; Incl. Ref 2 - 10 |
| 2 | | D149079 | | 2 | BUSHING 50 x 34 mm lg |
| 3 | | 121778A1 | | 2 | BUSHING |
| 4 | | 329998A1 | | 2 | BUSHING |
| 5 | | D135557 | | 1 | BUSHING |
| 6 | | D135559 | | 1 | BUSHING |
| 7 | | D151073 | | 1 | BUSHING |
| 8 | | D151074 | | 1 | BUSHING 70 x 86 x 28 mm lg |
| 9 | | 135249A1 | | 2 | BUSHING 28.6 mm lg |
| 10 | | 135248A1 | | 2 | BUSHING 38.1 mm lg |
| 11 | | 188027A2 | | 2 | CYLINDER ASSY. 95 ID x 292 mm strk; Swing; See Figure 08-62 |
| 12 | | 198976A1 | | 1 | PLATE, LARGE Incl. Ref 12A |
| 12A | | 114318A1 | | 2 | BUSHING 80 x 90 x 29.3 mm |
| 13 | | 827-20075 | | 6 | SCREW M20 x 75; 10.9 |
| 14 | | 896-11020 | | 12 | WASHER 22 x 37 x 4 mm |
| 15 | | 829-1420 | | 6 | NUT M20; 10 |
| 16 | | 386092A2 | | 2 | PIN, LARGE |
| 17 | | 495-81227 | | 4 | WASHER 2-1/16 x 2-15/16 x 1/16 |
| 18 | | 103-16200 | | 4 | SNAP RING No. 200 |
| 19 | | 243084A1 | | 1 | WASHER 5 mm thk |
| 20 | | 134167A1 | | X | SHIM 2.05 mm (.08 in) thk |
| 21 | | D151065 | | 1 | PIN, LARGE |
| 24 | | D136392 | | X | SHIM 72 x 89 x 3.0 mm |
| 25 | | D136700 | | 2 | SHIM 67 x 83 x 2.0 mm |
| 26 | | D136391 | | X | SHIM 72 x 89 x 1.6 mm |
| 27 | | 800-40065 | | 2 | SNAP RING |
| 28 | | 219-1 | | 1 | NIPPLE, LUBE 1/8 PT x 21/32 |
| 29 | | 292385A1 | | 1 | PIN, LARGE |
| 30 | | 219-55 | | 1 | NIPPLE, LUBE 90 deg, 1/8 PT x 27/32 |
| 31 | | 800-40070 | | 2 | SNAP RING |
| 32 | | 384815A1 | | 1 | PIN ASSY. Swing Stop |
| 34 | | 293636A1 | | 1 | WASHER Upper |
| 35 | | D144423 | | X | WASHER 2-5/8 x 3-3/8 x 1/8; Used As A Shim |

HTTP://WWW.MINNPARBACKHOEPARTS.COM

| 09-24 | | p1 | 01/04 |
|---|---|---|---|

BACKHOE - BOOM AND SWING TOWER

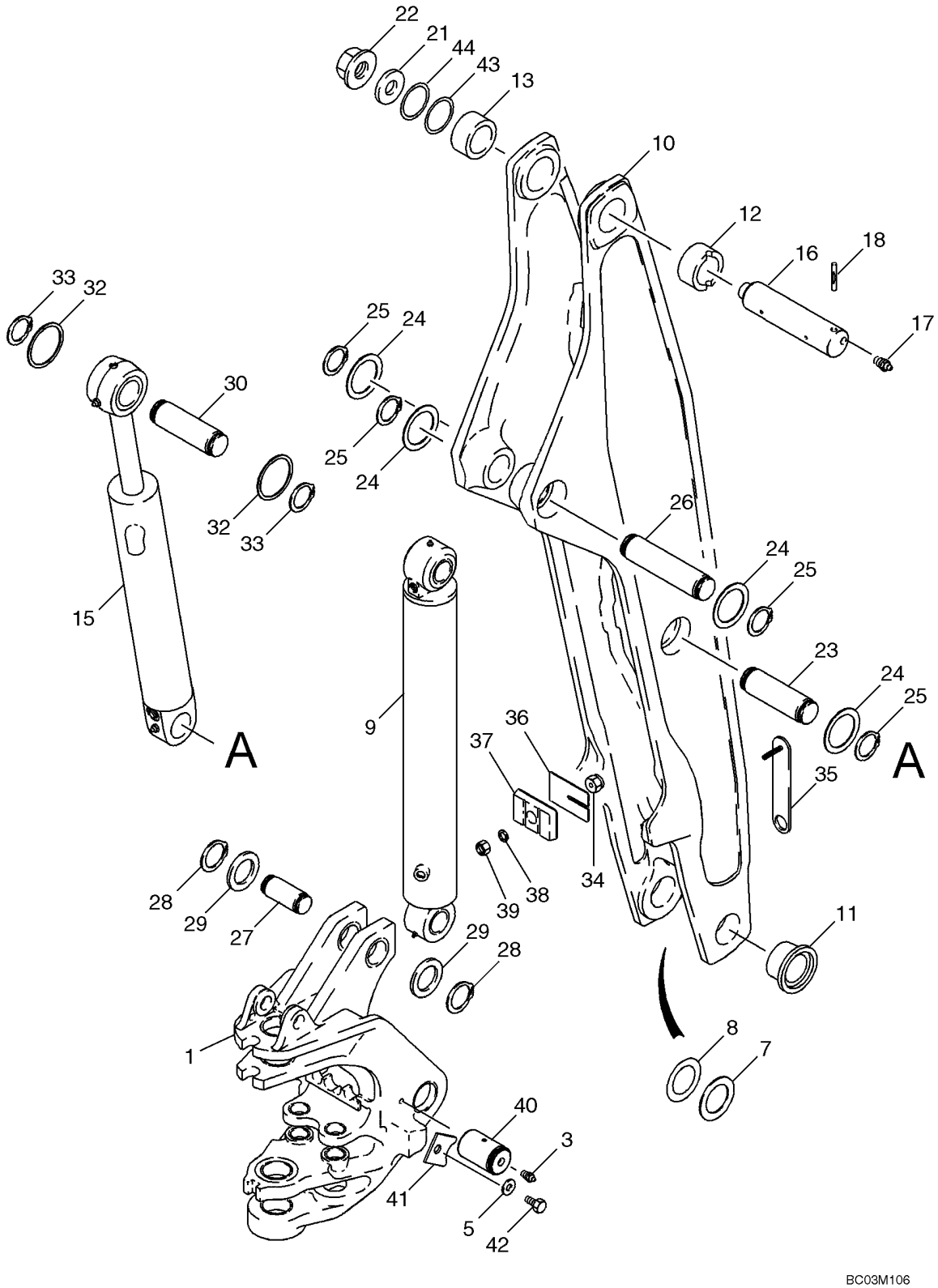

HTTP://WWW.MINNPARBACKHOEPARTS.COM



BACKHOE - BOOM AND SWING TOWER

| REF | FN | PART NUMBER | YR/SN | QTY | DESCRIPTION |
|---|---|---|---|---|---|
| 1 | | 326806A1 | | 1 | TOWER Swing Tower; See Figure 09-23 For Bushings |
| 3 | | 219-1 | | 2 | NIPPLE, LUBE 1/8 PT x 21/32 |
| 5 | | 496-41081 | | 2 | WASHER 13/16 x 1-3/4 x 7/32 in |
| 7 | | H71514 | | X | WASHER |
| 8 | | R32119 | | X | WASHER 71 ID x 114 mm |
| 9 | | 189653A2 | | 1 | CYLINDER ASSY. 114 ID x 982 mm strk; Boom; See Figure 08-63 |
| 10 | | 129883A1 | | 1 | BOOM Incl. Ref 11 - 13 |
| 11 | | D151071 | | 2 | BUSHING 70 ID x 34 mm lg |
| 12 | | D135739 | | 1 | BUSHING 70 ID x 44 mm lg; With Slot For Groove Pin; Right-Hand Side |
| 13 | | D137218 | | 1 | BUSHING 70 ID x 44 mm lg; Without Slot For Groove Pin; Left-Hand Side |
| 15 | | 233114A2 | | 1 | CYLINDER ASSY. 108 ID x 686 mm strk; Dipper; See Figure 08-64 |
| 16 | | D132494 | | 1 | PIN, LARGE |
| 17 | | 219-1 | | 2 | NIPPLE, LUBE 1/8 PT x 21/32 |
| 18 | | 135-51652 | | 1 | PIN, GROOVED 1/2 x 3-1/4 lg, Center Grooved |
| 21 | | D133632 | | 1 | WASHER |
| 22 | | 181042A1 | | 1 | NUT Flange, Special |
| 23 | | 129040A1 | | 1 | PIN, LARGE |
| 24 | | 495-81226 | | 4 | WASHER 1-13/16 x 2-1/2 x 1/8 |
| 25 | | 103-16175 | | 4 | SNAP RING No. 175 |
| 26 | | 129040A1 | | 1 | PIN, LARGE |
| 27 | | 142842A1 | | 1 | PIN, LARGE |
| 28 | | 800-44050 | | 2 | SNAP RING No. 50 |
| 29 | | 495-81227 | | X | WASHER 2-1/16 x 2-15/16 x 1/16 |
| 30 | | 129041A1 | | 1 | PIN, LARGE |
| 32 | | 495-81226 | | X | WASHER 1-13/16 x 2-1/2 x 1/8 |
| 33 | | 103-16175 | | 2 | SNAP RING No. 175 |
| 34 | | 184884A1 | | 1 | PLUG Boom Bumper |
| 35 | | 184723A1 | | 1 | SUPPORT |
| 36 | | 138624A1 | | X | BLOCK 1.5 mm thk Shim |
| 37 | | 183938A1 | | 1 | SHOCK ABSORBER Bumper |
| 38 | | 892-11010 | | 1 | WASHER, LOCK M10 |

HTTP://WWW.MINNPARBACKHOEPARTS.COM



BACKHOE - BOOM AND SWING TOWER

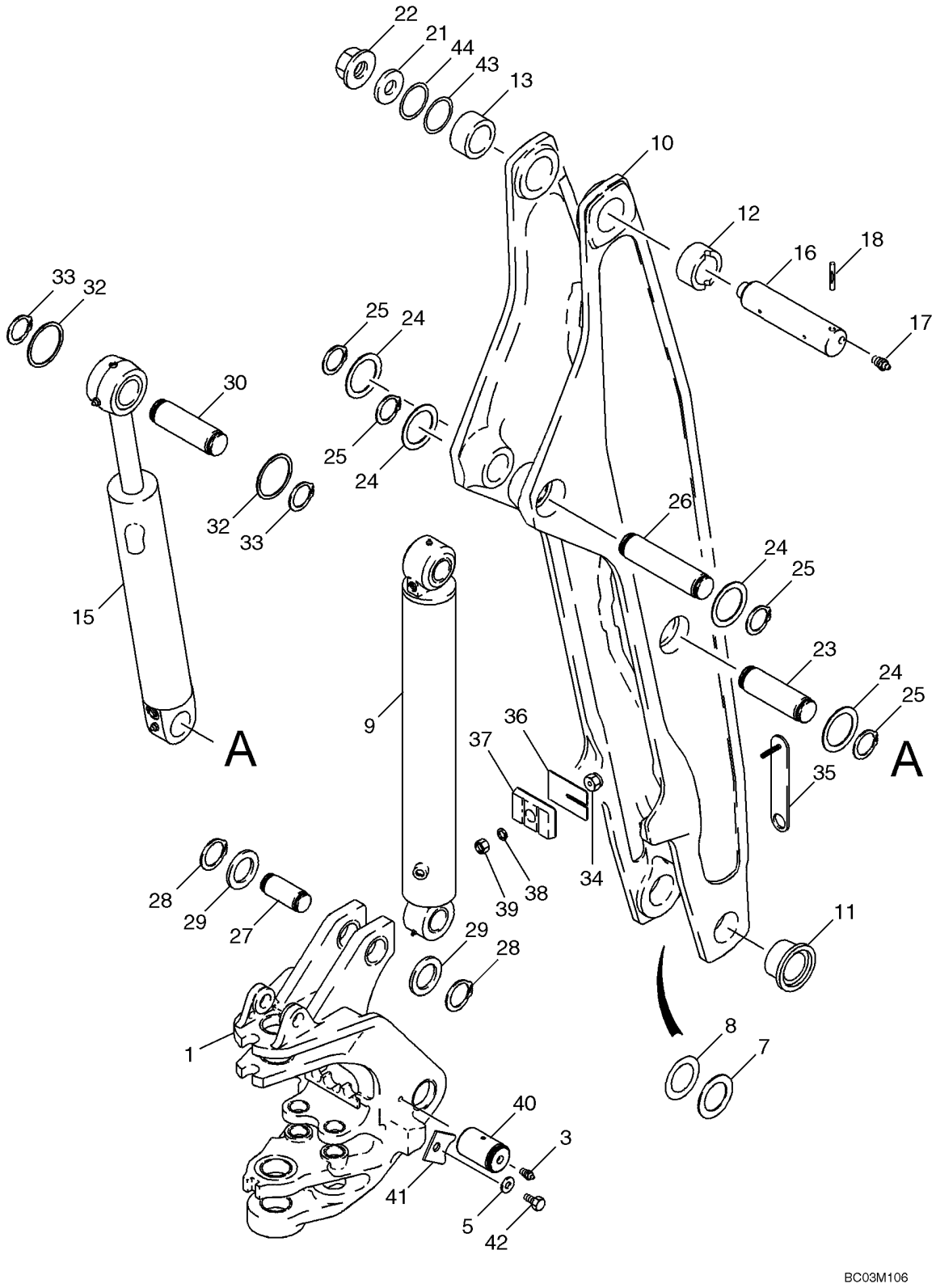

HTTP://WWW.MINNPARBACKHOEPARTS.COM



BACKHOE - BOOM AND SWING TOWER

| REF | FN | PART NUMBER | YR/SN | QTY | DESCRIPTION |
|---|---|---|---|---|---|
| 39 | | 829-1410 | | 1 | NUT M10; 10.9 |
| 40 | | 250663A1 | | 2 | PIN |
| 41 | | 303646A1 | | 2 | BRACKET |
| 42 | | 604-20035 | | 2 | BOLT M20 x 35 |
| 43 | | 404834A1 | | X | SHIM 5 mm thk, Concave |
| 44 | | 404835A1 | | X | SHIM 5 mm thk, Concave |

HTTP://WWW.MINNPARBACKHOEPARTS.COM

| 09-25 | | p1 | 01/04 |
|---|---|---|---|

BOOM LATCH (WITHOUT PILOT CONTROLS)

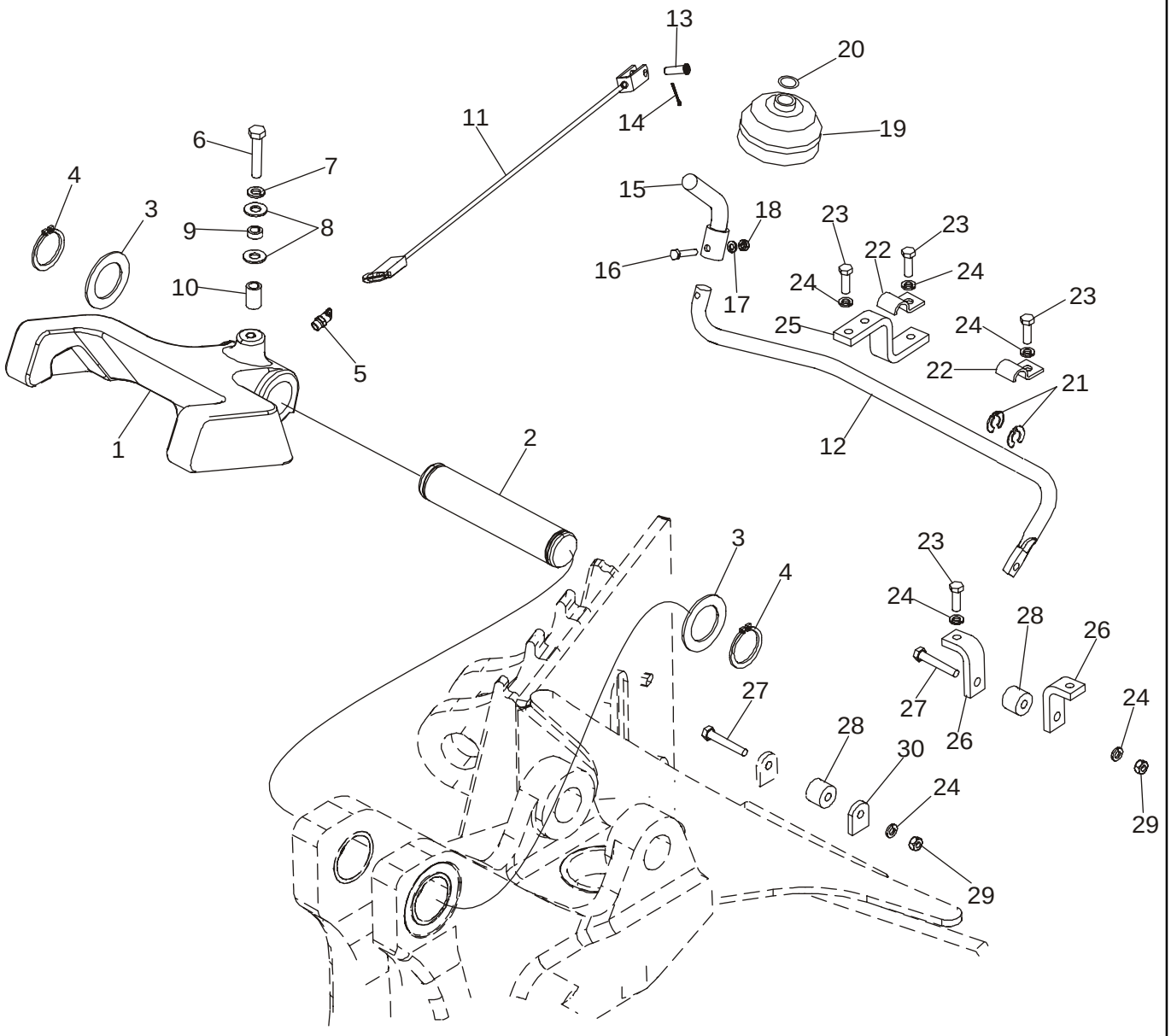

HTTP://WWW.MINNPARBACKHOEPARTS.COM



BOOM LATCH (WITHOUT PILOT CONTROLS)

| REF | FN | PART NUMBER | YR/SN | QTY | DESCRIPTION |
|---|---|---|---|---|---|
| 1 | | 379941A1 | | 1 | LATCH |
| 2 | | D129227 | | 1 | PIN, LARGE |
| 3 | | D144592 | | 2 | WASHER |
| 4 | | 800-44040 | | 2 | SNAP RING |
| 5 | | 219-55 | | 1 | NIPPLE, LUBE 90 deg, 1/8 PT x 27/32 |
| 6 | | 614-10050 | | 1 | SCREW M10 x 50 |
| 7 | | 892-11010 | | 1 | WASHER, LOCK M10 |
| 8 | | 895-15010 | | 2 | WASHER 11 x 24 x 2 mm |
| 9 | | D143417 | | 1 | SPACER |
| 10 | | 396092A1 | | 1 | SPACER |
| 11 | | 87435924 | | 1 | CABLE |
| 12 | | 87422696 | | 1 | ROD Boom Latch Release |
| 13 | | 427-5094 | | 1 | PIN, CLEVIS 5/16 x 15/16 |
| 14 | | 432-612 | | 1 | PIN, SPLIT (COTTER) 3/32 x 3/4 |
| 15 | | 87427774 | | 1 | ROD ASSY. |
| 16 | | 814-6030 | | 1 | SCREW M6 x 30 |
| 17 | | 892-11006 | | 1 | WASHER, LOCK M6 |
| 18 | | 829-1406 | | 1 | NUT M6 |
| 19 | | D86664 | | 1 | BOOT |
| 20 | | D143735 | | 1 | CLAMP Ring |
| 21 | | D143591 | | 2 | SNAP RING CLIP RING, 5/8 dia |
| 22 | | D143723 | | 2 | SHIN CLAMP, 5/8 |
| 23 | | 614-8025 | | 6 | SCREW M8 x 25 |
| 24 | | 892-11008 | | 8 | WASHER LOCK, M8 |
| 25 | | 87422701 | | 1 | BRACKET Rod |
| 26 | | 87422702 | | 2 | BRACKET Cable |
| 27 | | 814-8050 | | 2 | SCREW M8 x 50 |
| 28 | | 86984547 | | 2 | GUIDE Roller, Cable Guide |
| 29 | | 829-1408 | | 2 | NUT M8 |
| 30 | | 87432811 | | 1 | BRACKET TAB |

HTTP://WWW.MINNPARBACKHOEPARTS.COM

| 09-25A | | p1 | 01/04 |
|---|---|---|---|

BOOM LATCH (WITH PILOT CONTROLS)

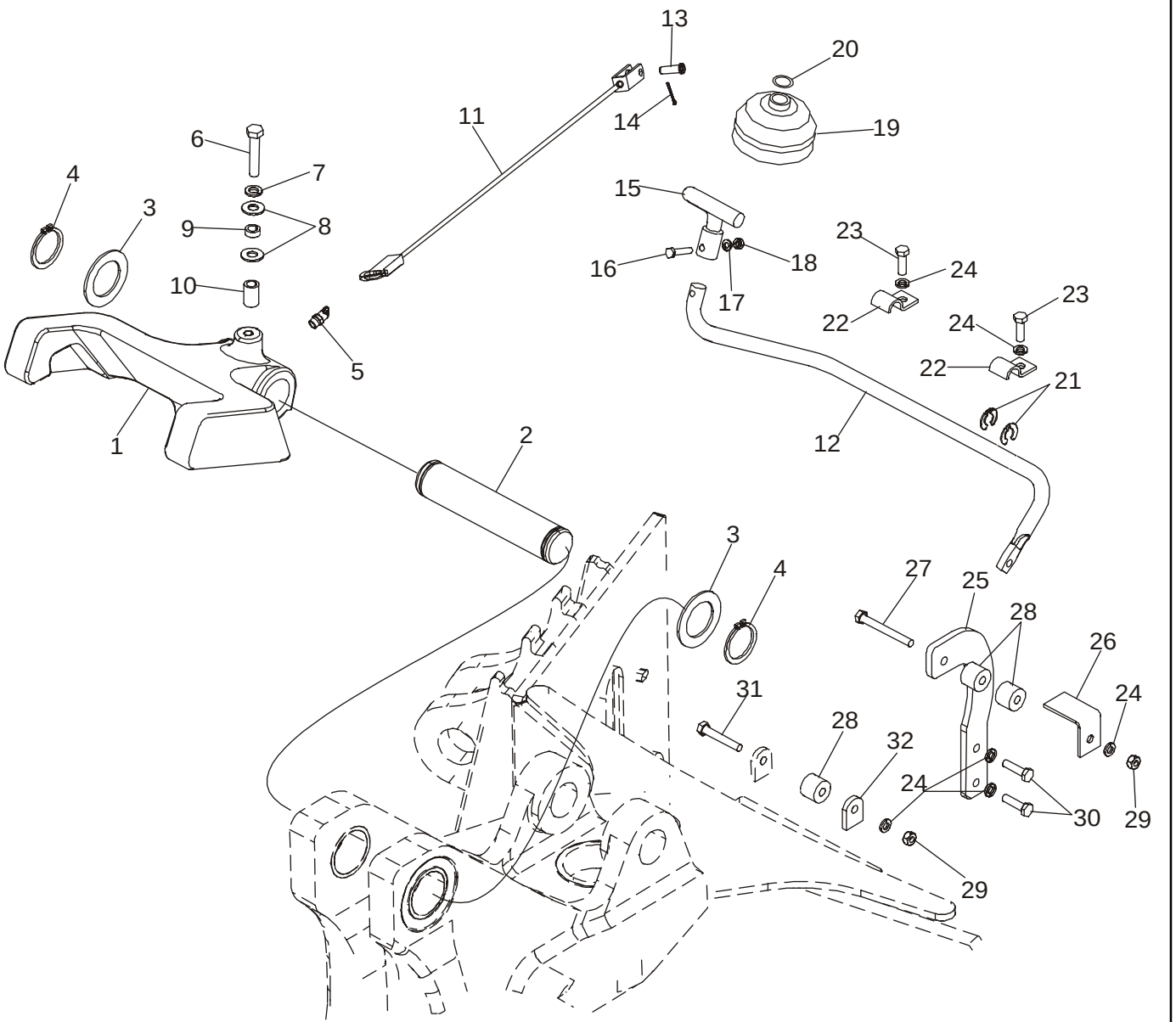

HTTP://WWW.MINNPARBACKHOEPARTS.COM



BOOM LATCH (WITH PILOT CONTROLS)

| REF | FN | PART NUMBER | YR/SN | QTY | DESCRIPTION |
|---|---|---|---|---|---|
| 1 | | 379941A1 | | 1 | LATCH |
| 2 | | D129227 | | 1 | PIN, LARGE |
| 3 | | D144592 | | 2 | WASHER |
| 4 | | 800-44040 | | 2 | SNAP RING |
| 5 | | 219-55 | | 1 | NIPPLE, LUBE 90 deg, 1/8 PT x 27/32 |
| 6 | | 614-10050 | | 1 | SCREW M10 x 50 |
| 7 | | 892-11010 | | 1 | WASHER, LOCK M10 |
| 8 | | 895-15010 | | 2 | WASHER 11 x 24 x 2 mm |
| 9 | | D143417 | | 1 | SPACER |
| 10 | | 396092A1 | | 1 | SPACER |
| 11 | | 87435924 | | 1 | CABLE |
| 12 | | 87422696 | | 1 | ROD Boom Latch Release |
| 13 | | 427-5094 | | 1 | PIN, CLEVIS 5/16 x 15/16 |
| 14 | | 432-612 | | 1 | PIN, SPLIT (COTTER) 3/32 x 3/4 |
| 15 | | 87427775 | | 1 | ROD ASSY. |
| 16 | | 814-6030 | | 1 | SCREW M6 x 30 |
| 17 | | 892-11006 | | 1 | WASHER, LOCK M6 |
| 18 | | 829-1406 | | 1 | NUT M6 |
| 19 | | D86664 | | 1 | BOOT |
| 20 | | D143735 | | 1 | CLAMP Ring |
| 21 | | D143591 | | 2 | SNAP RING CLIP RING, 5/8 dia |
| 22 | | D143723 | | 2 | SHIN CLAMP, 5/8 |
| 23 | | 614-8025 | | 2 | SCREW M8 x 25 |
| 24 | | 892-11008 | | 6 | WASHER LOCK, M8 |
| 25 | | 86984544 | | 1 | BRACKET Roller Mounting |
| 26 | | 86984545 | | 1 | BRACKET Cable |
| 27 | | 814-8070 | | 1 | SCREW M8 x 70 |
| 28 | | 86984547 | | 3 | GUIDE Roller, Cable Guide |
| 29 | | 829-1408 | | 2 | NUT M8 |
| 30 | | 614-8030 | | 2 | SCREW M8 x 30 |
| 31 | | 814-8050 | | 1 | SCREW M8 x 50 |
| 32 | | 87432811 | | 1 | BRACKET TAB |

HTTP://WWW.MINNPARBACKHOEPARTS.COM



BACKHOE - DIPPER AND BUCKET

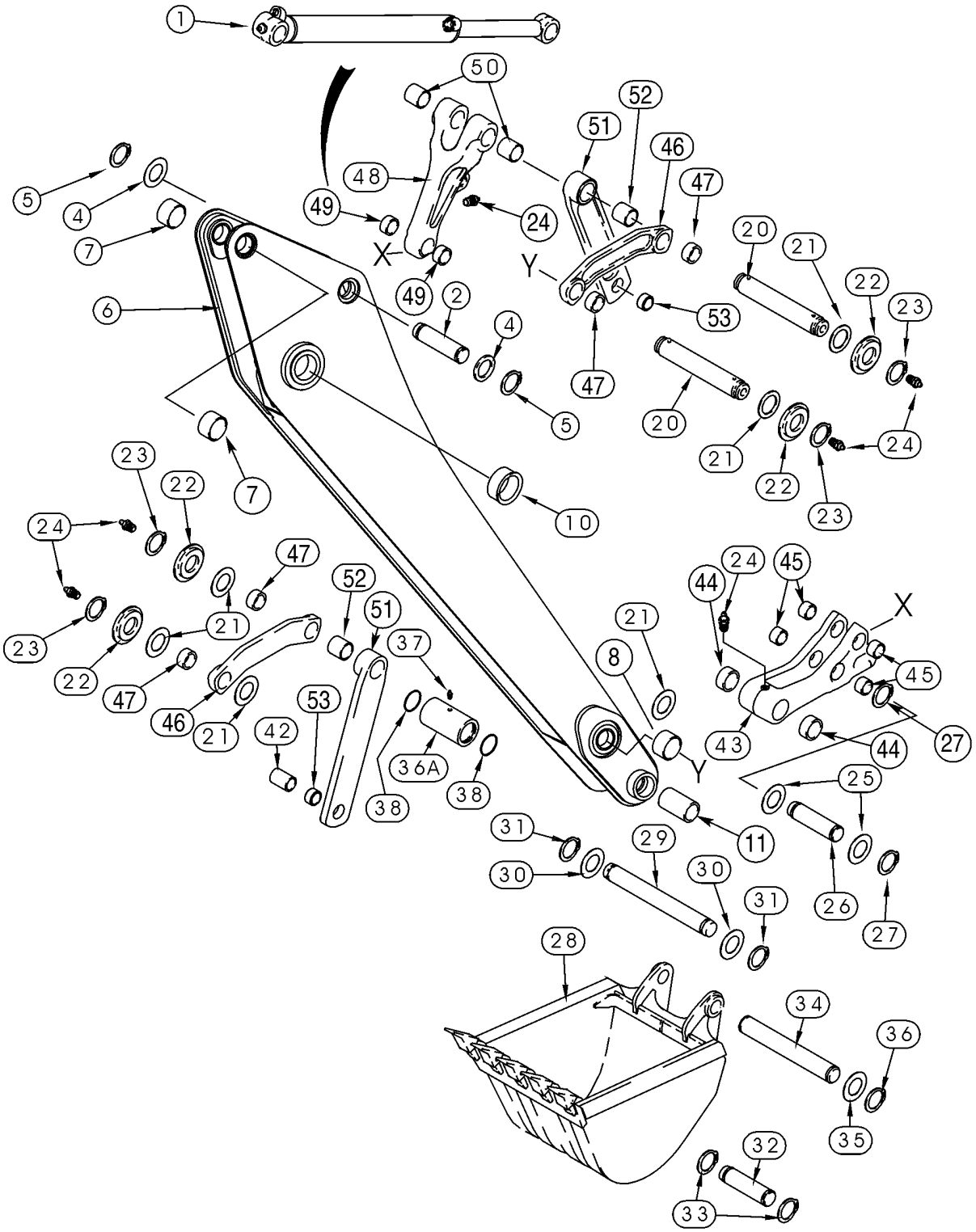

HTTP://WWW.MINNPARBACKHOEPARTS.COM



BACKHOE - DIPPER AND BUCKET

| REF | FN | PART NUMBER | YR/SN | QTY | DESCRIPTION |
|---|---|---|---|---|---|
| 1 | | 128760A1 | | 1 | CYLINDER ASSY. 83 ID x 872 mm strk; Bucket; See Figure 08-65 |
| 2 | | 129041A1 | | 1 | PIN, LARGE |
| 4 | | 495-81226 | | X | WASHER 1-13/16 x 2-1/2 x 1/8 |
| 5 | | 103-16175 | | 2 | SNAP RING No. 175 |
| | | 129884A2 | | 1 | DIPPER Incl. Ref 6 - 10 |
| 6 | | NSS | | 1 | NOT SERVICED SEPARATELY Dipper |
| 7 | | D145978 | | 2 | BUSHING, LARGE |
| 8 | | D140029 | | 2 | BUSHING, LARGE 50 x 60 x 25.5 mm lg |
| 10 | | D150121 | | 2 | BUSHING 70 ID x 36 mm lg |
| 11 | | 307186A1 | | 2 | BUSHING 104 mm lg; Not Included In Assembly; Purchase Separately |
| 20 | | D141142 | | 2 | PIN, LARGE 306 mm lg, Guide Link |
| 21 | | 495-81282 | | X | WASHER 2-1/16 x 3 x 3/32 |
| 22 | | D141164 | | 4 | SPACER |
| 23 | | 103-16175 | | 4 | SNAP RING No. 175 |
| 24 | | 219-1 | | 6 | NIPPLE, LUBE 1/8 PT x 21/32 |
| 25 | | 495-81226 | | 2 | WASHER 1-13/16 x 2-1/2 x 1/8 |
| 26 | | D146288 | | 1 | PIN, LARGE |
| 27 | | 103-16175 | | 2 | SNAP RING No. 175 |
| 28 | | REF | | 1 | INSTRUCTION Bucket; See Figure(s) 09-28 - 09-35 |
| 29 | | D37614 | | 1 | PIN, LARGE |
| 30 | | D143324 | | 2 | WASHER |
| 31 | | D25279 | | 2 | SNAP RING |
| 32 | | D149298 | | 1 | PIN 305 mm (12 inch) Universal Bucket Only |
| 33 | | 103-16175 | | 2 | SNAP RING No. 175 |
| 34 | | D150619 | | 1 | PIN, LARGE All Buckets Except 12 Inch (305 mm) Buckets |
| 35 | | 495-81226 | | X | WASHER 1-13/16 x 2-1/2 x 1/8 |
| 36 | | 103-16175 | | 2 | SNAP RING No. 175 |
| 36A | | D141076 | | 1 | SPACER |
| 37 | | 219-1 | | 1 | NIPPLE, LUBE 1/8 PT x 21/32 |
| 38 | | 238-5228 | | 2 | O-RING 2-1/4 ID x 1/8 |
| 42 | | D141075 | | 1 | SPACER |
| | | 281185A1 | | 1 | COUPLING Bucket, Incl. Ref 43 - 45 |
| 43 | | NSS | | 1 | NOT SERVICED SEPARATELY Coupler, Quick |

HTTP://WWW.MINNPARBACKHOEPARTS.COM



BACKHOE - DIPPER AND BUCKET

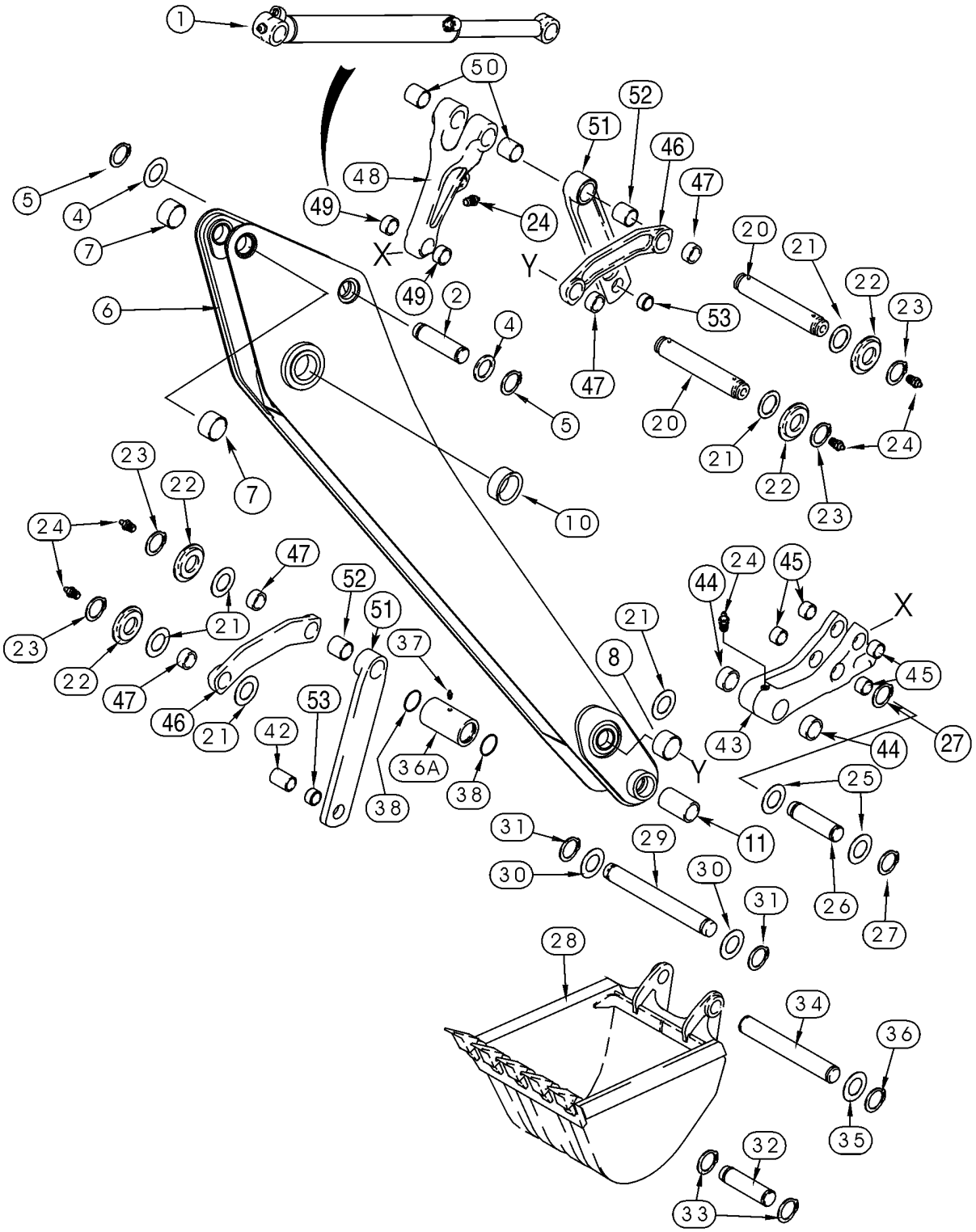

HTTP://WWW.MINNPARBACKHOEPARTS.COM



BACKHOE - DIPPER AND BUCKET

| REF | FN | PART NUMBER | YR/SN | QTY | DESCRIPTION |
|---|---|---|---|---|---|
| 44 | | D127167 | | 2 | BUSHING 30 mm lg |
| 45 | | 107124A1 | | 4 | BUSHING 29 mm lg |
| 46 | | 348706A1 | | 2 | LINK ASSY. Bucket Guide, Incl. Ref 47 |
| 47 | | D149079 | | 2 | BUSHING 50 x 34 mm lg |
| 48 | | 400398A1 | | 1 | LINK ASSY. Bucket Dump, Incl. Ref 49, 50 |
| 49 | | 107124A1 | | 2 | BUSHING |
| 50 | | D138047 | | 2 | BUSHING 54 mm (2-1/8 in) lg |
| 51 | | 244790A1 | | 2 | LINK ASSY. Standard Equipment; Bucket Dump; Incl. Ref 52, 53 |
| 52 | | D138047 | | 1 | BUSHING 54 mm (2-1/8 in) lg |
| 53 | | D31140 | | 1 | BUSHING |

HTTP://WWW.MINNPARBACKHOEPARTS.COM



BACKHOE - DIPPER, EXTENDABLE

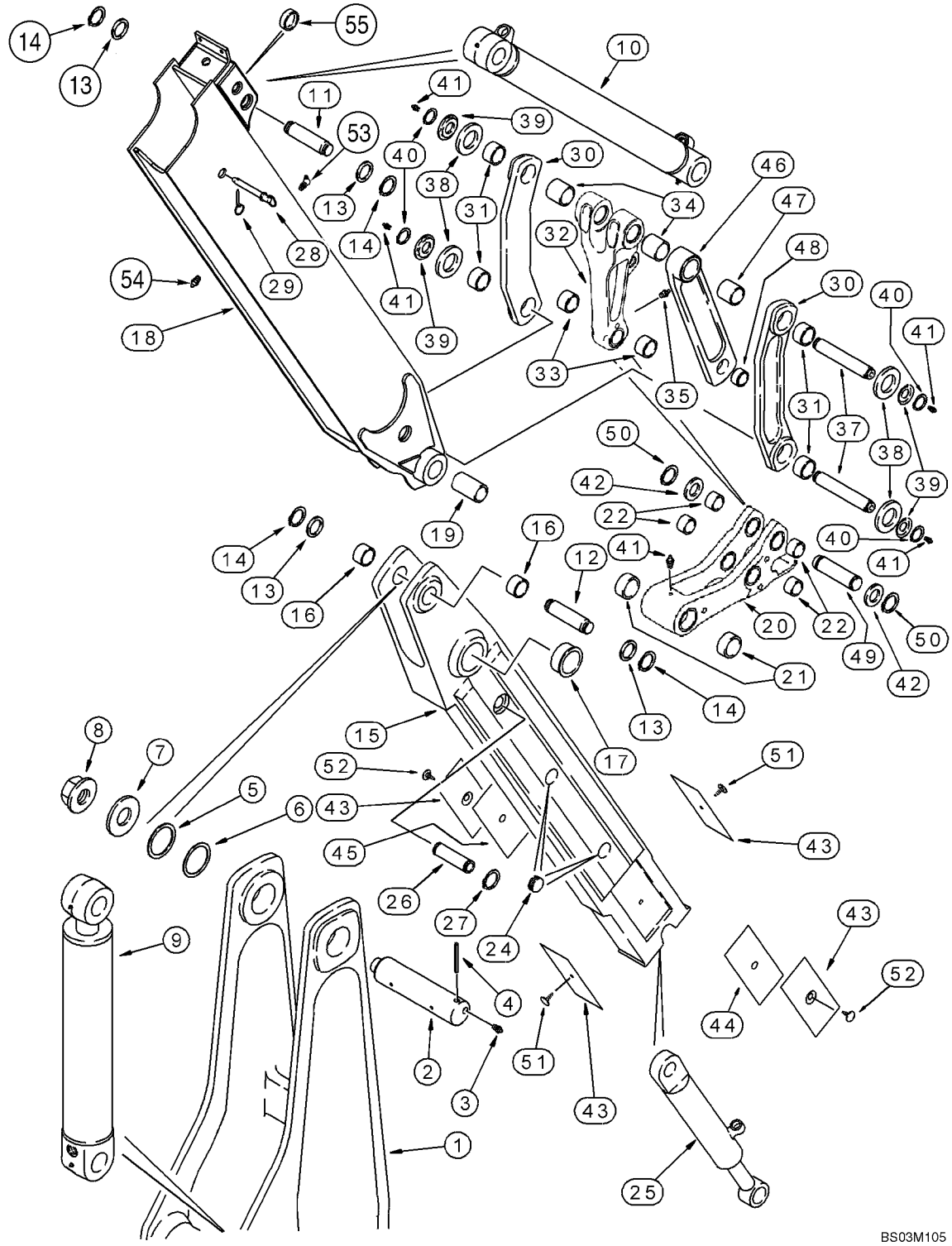

HTTP://WWW.MINNPARBACKHOEPARTS.COM



BACKHOE - DIPPER, EXTENDABLE

| REF | FN | PART NUMBER | YR/SN | QTY | DESCRIPTION |
|---|---|---|---|---|---|
| 1 | | 129883A1 | | 1 | BOOM Boom, See Figure 09-24 |
| 2 | | D132494 | | 1 | PIN, LARGE |
| 3 | | 219-1 | | 2 | NIPPLE, LUBE 1/8 PT x 21/32 |
| 4 | | 135-51652 | | 1 | PIN, GROOVED 1/2 x 3-1/4 lg |
| 5 | | 404834A1 | | X | SHIM |
| 6 | | 404835A1 | | X | SHIM |
| 7 | | D133632 | | 1 | WASHER |
| 8 | | 181042A1 | | 1 | NUT Flange, Special |
| 9 | | 233114A2 | | 1 | CYLINDER ASSY. 108 ID x 686 mm strk, Dipper; See Figure 08-64 |
| 10 | | 128760A1 | | 1 | CYLINDER ASSY. 83 ID x 872 mm strk, Bucket; See Figure 08-65 |
| 11 | | D141666 | | 1 | PIN, LARGE |
| 12 | | 129041A1 | | 1 | PIN, LARGE |
| 13 | | 495-81282 | | 2 | WASHER 2-1/16 x 3 x 3/32 |
| 14 | | 103-16175 | | 4 | SNAP RING No. 175 |
| | | 122503A1 | | 1 | DIPPER Inner; Incl. Ref 15 - 17 |
| 15 | | NSS | | 1 | NOT SERVICED SEPARATELY Dipper |
| 16 | | D145978 | | 2 | BUSHING, LARGE |
| 17 | | D150121 | | 2 | BUSHING 70 ID x 36 mm lg |
| 18 | | 87436235 | | 1 | DIPPER Outer; Incl. Ref 53, 54 |
| 19 | | 307186A1 | | 2 | BUSHING 104 mm lg |
| | | 281185A1 | | 1 | COUPLING Bucket; Incl. Ref 20 - 22 |
| 20 | | NSS | | 1 | NOT SERVICED SEPARATELY Coupler, Quick |
| 21 | | D127167 | | 2 | BUSHING 30 mm lg |
| 22 | | 107124A1 | | 4 | BUSHING 29 mm lg |
| 24 | | D133865 | | 4 | PLUG |
| 25 | | 1340969C2 | | 1 | CYLINDER ASSY. 76 ID x 1068 mm strk, Extendable Dipper; See Figure 08-66 |
| 26 | | 300588A1 | | 1 | PIN, LARGE |
| 27 | | 800-44040 | | 2 | SNAP RING |
| 28 | | D140247 | | 1 | PIN, LARGE Lock, Transport |
| 29 | | A33509 | | 1 | PIN, LARGE |
| 30 | | 348706A1 | | 2 | LINK ASSY. Bucket Guide, Incl. Ref 31 |
| 31 | | D149079 | | 2 | BUSHING 50 x 34 mm lg |
| 32 | | 400398A1 | | 1 | LINK ASSY. Bucket Dump, Incl. Ref 33, 34 |

HTTP://WWW.MINNPARBACKHOEPARTS.COM



BACKHOE - DIPPER, EXTENDABLE

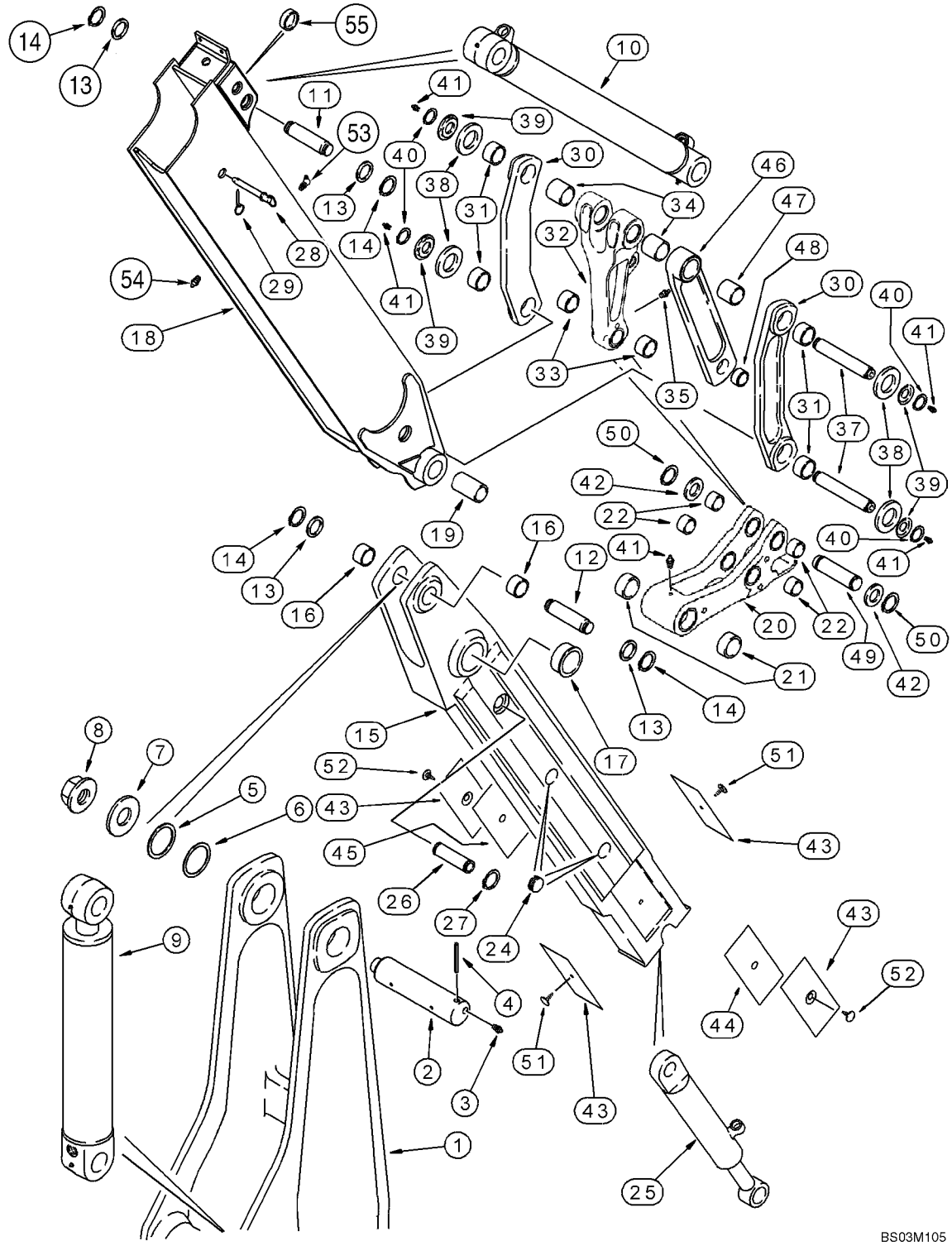

HTTP://WWW.MINNPARBACKHOEPARTS.COM



BACKHOE - DIPPER, EXTENDABLE

| REF | FN | PART NUMBER | YR/SN | QTY | DESCRIPTION |
|---|---|---|---|---|---|
| 33 | | 107124A1 | | 2 | BUSHING |
| 34 | | D138047 | | 2 | BUSHING 54 mm (2-1/8 in) lg |
| 35 | | 219-1 | | 1 | NIPPLE, LUBE 1/8 PT x 21/32 |
| 37 | | D141142 | | 2 | PIN, LARGE 306 mm lg |
| 38 | | 495-81282 | | 4 | WASHER 2-1/16 x 3 x 3/32 |
| 39 | | D141164 | | 4 | SPACER |
| 40 | | 103-16175 | | 4 | SNAP RING No. 175 |
| 41 | | 219-1 | | 5 | NIPPLE, LUBE 1/8 PT x 21/32 |
| 42 | | 495-81226 | | 2 | WASHER 1-13/16 x 2-1/2 x 1/8 |
| 43 | | 451384A1 | | 4 | PLATE, WEAR |
| 44 | | 132844A1 | | 1 | SHIM 0.8 mm thk |
| 45 | | 132842A1 | | 1 | SHIM 1.6 mm thk |
| 46 | | 244790A1 | | 2 | LINK ASSY. Bucket Dump; Standard Equipment; Incl. Ref 47, 48 |
| 47 | | D138047 | | 1 | BUSHING 54 mm (2-1/8 in) lg |
| 48 | | D31140 | | 1 | BUSHING |
| 49 | | D146288 | | 1 | PIN, LARGE |
| 50 | | 103-16175 | | 2 | SNAP RING No. 175 |
| 51 | | 183443A1 | | 2 | PIN, LARGE |
| 52 | | 183509A1 | | 2 | PIN, LARGE |
| 53 | | 219-89 | | 1 | NIPPLE, LUBE 1/8 PT x 25/32 |
| 54 | | 219-86 | | 1 | FITTING 1/8 PT x 5/8 |
| 55 | | 396483A1 | | 2 | SPACER |

HTTP://WWW.MINNPARBACKHOEPARTS.COM

| 09-28 | | p1 | 01/04 |
|---|---|---|---|

BUCKET, UNIVERSAL BACKHOE (305 MM (12 INCH) WIDE)

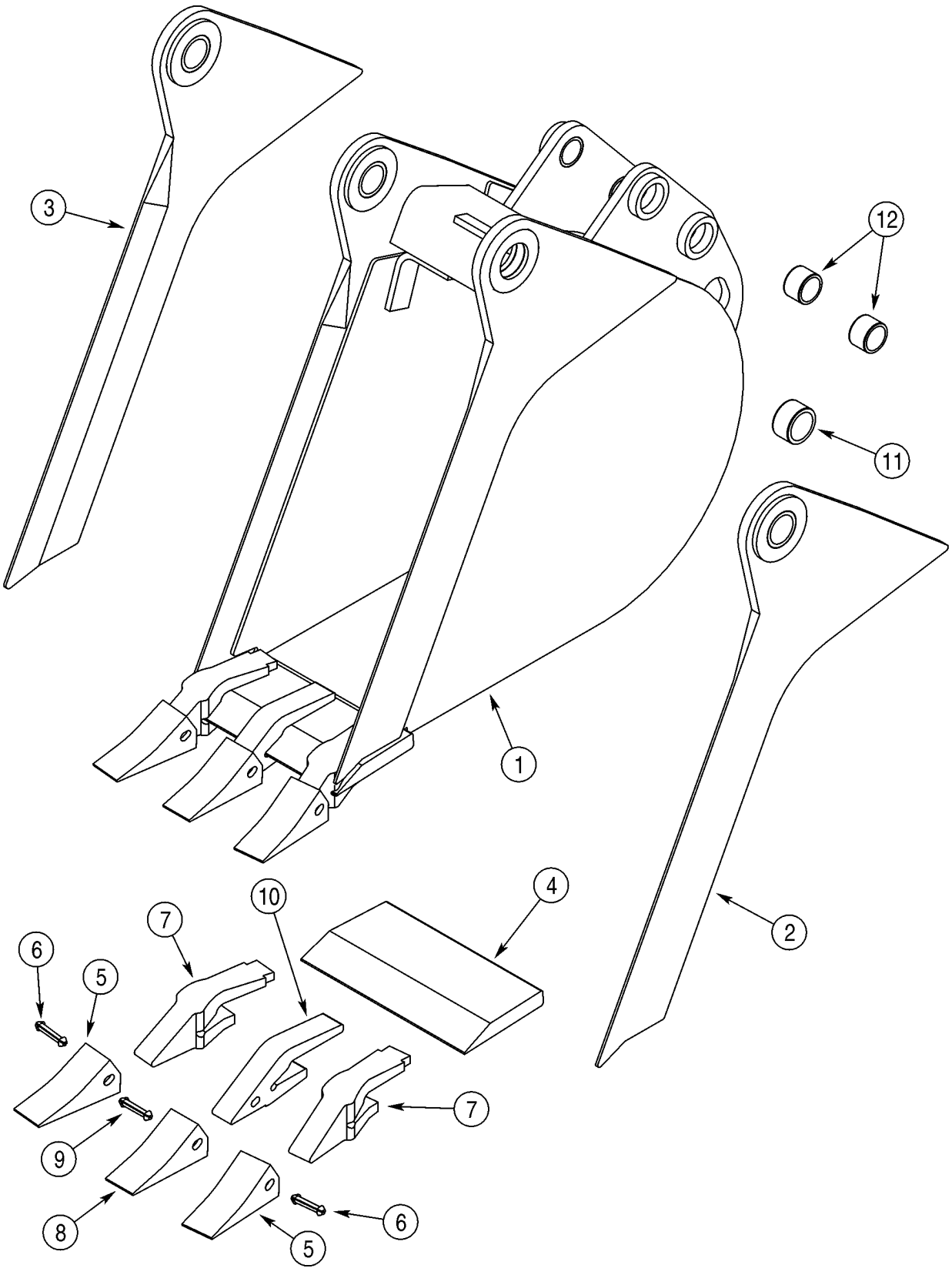

HTTP://WWW.MINNPARBACKHOEPARTS.COM



BUCKET, UNIVERSAL BACKHOE (305 MM (12 INCH) WIDE)

| REF | FN | PART NUMBER | YR/SN | QTY | DESCRIPTION |
|---|---|---|---|---|---|
| 1 | | 381488A4 | | 1 | BUCKET 305 mm (12 in); With 3 Teeth; Order Through Parts Marketing; Incl. Ref 2 - 12 |
| 2 | | NSS | | 1 | NOT SERVICED SEPARATELY Edge, Right-Hand; Incl. Ref 11 |
| 3 | | NSS | | 1 | NOT SERVICED SEPARATELY Edge, Left-Hand; Incl. Ref 11 |
| 4 | | D147409 | | 1 | EDGE, CUTTING |
| | | D139851 | | 2 | TOOTH Outer; Incl. Ref 5 - 7 |
| 5 | | D51750 | | 1 | POINT |
| 6 | | 245466A1 | | 1 | SPLIT PIN/SAFETY PIN |
| 7 | | D138157 | | 1 | SHANK |
| | | D139849 | | 1 | TOOTH Center; Incl. Ref 8 - 10; Order Ref 8 - 10 |
| 8 | | D51750 | | 1 | POINT |
| 9 | | 245466A1 | | 1 | SPLIT PIN/SAFETY PIN |
| 10 | | D48212 | | 1 | SHANK |
| 11 | | D43940 | | 2 | BUSHING 1-3/4 x 2-1/4 x 1 |
| 12 | | D30933 | | 4 | BUSHING |

HTTP://WWW.MINNPARBACKHOEPARTS.COM



BUCKET, UNIVERSAL BACKHOE (406 MM (16 INCH) WIDE)

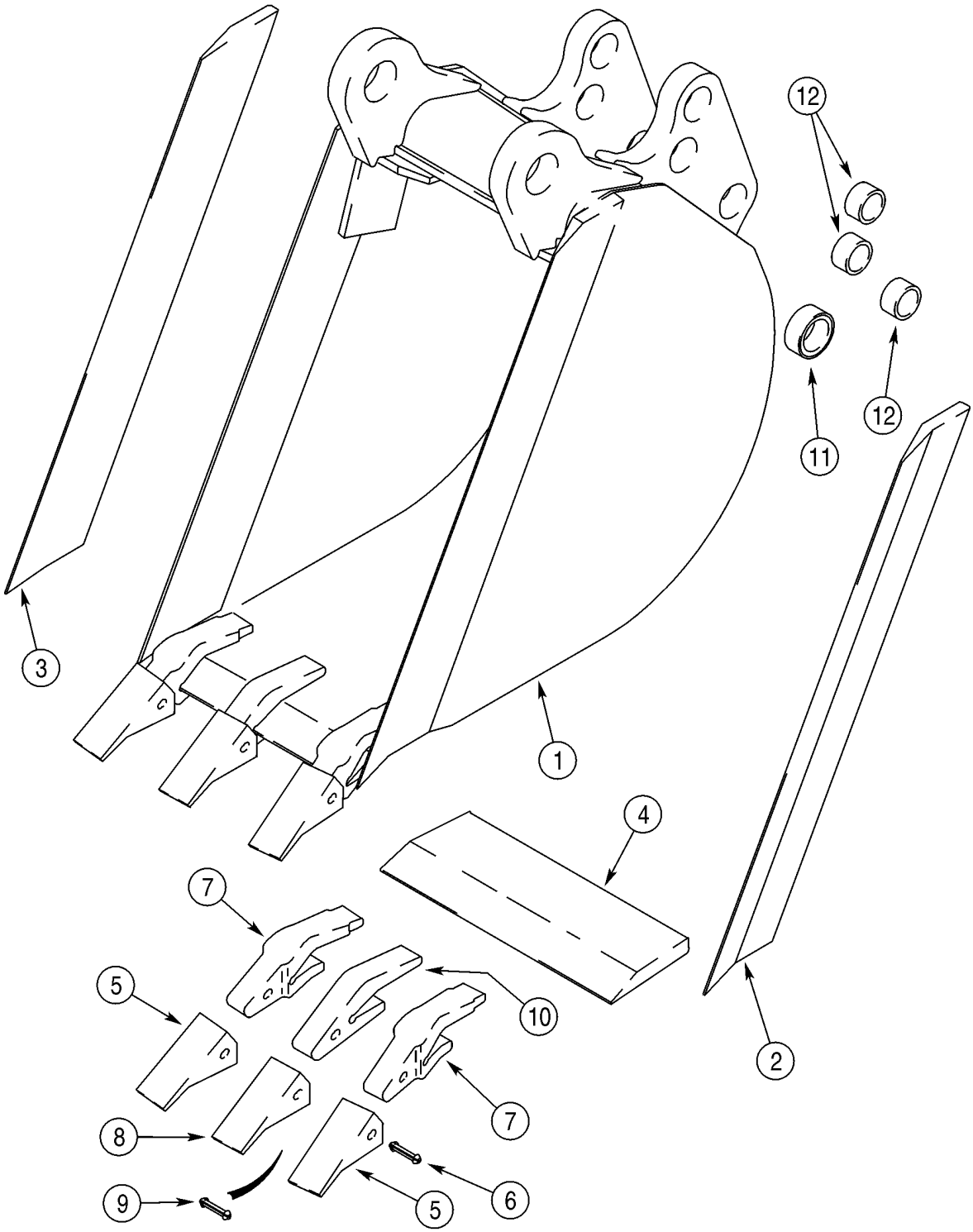

HTTP://WWW.MINNPARBACKHOEPARTS.COM



BUCKET, UNIVERSAL BACKHOE (406 MM (16 INCH) WIDE)

| REF | FN | PART NUMBER | YR/SN | QTY | DESCRIPTION |
|---|---|---|---|---|---|
| 1 | | 388843A1 | | 1 | BUCKET 406 mm (16 in); With 3 Teeth; Order Through Parts Marketing; Incl. Ref 2 - 12 |
| 2 | | D146421 | | 1 | EDGE, CUTTING Right-Hand |
| 3 | | D146420 | | 1 | EDGE, CUTTING Left-Hand |
| 4 | | D147249 | | 1 | EDGE |
| | | D139851 | | 2 | TOOTH Outer; Incl. Ref 5 - 7 |
| 5 | | D51750 | | 1 | POINT |
| 6 | | 245466A1 | | 1 | SPLIT PIN/SAFETY PIN |
| 7 | | D138157 | | 1 | SHANK |
| | | D139849 | | 1 | TOOTH Center; Incl. Ref 8 - 10; Order Ref 8 - 10 |
| 8 | | D51750 | | 1 | POINT |
| 9 | | 245466A1 | | 1 | SPLIT PIN/SAFETY PIN |
| 10 | | D48212 | | 1 | SHANK |
| 11 | | D37495 | | 2 | BUSHING |
| 12 | | D30933 | | 6 | BUSHING |

HTTP://WWW.MINNPARBACKHOEPARTS.COM



BUCKET, UNIVERSAL BACKHOE (457 MM (18 INCH) WIDE)

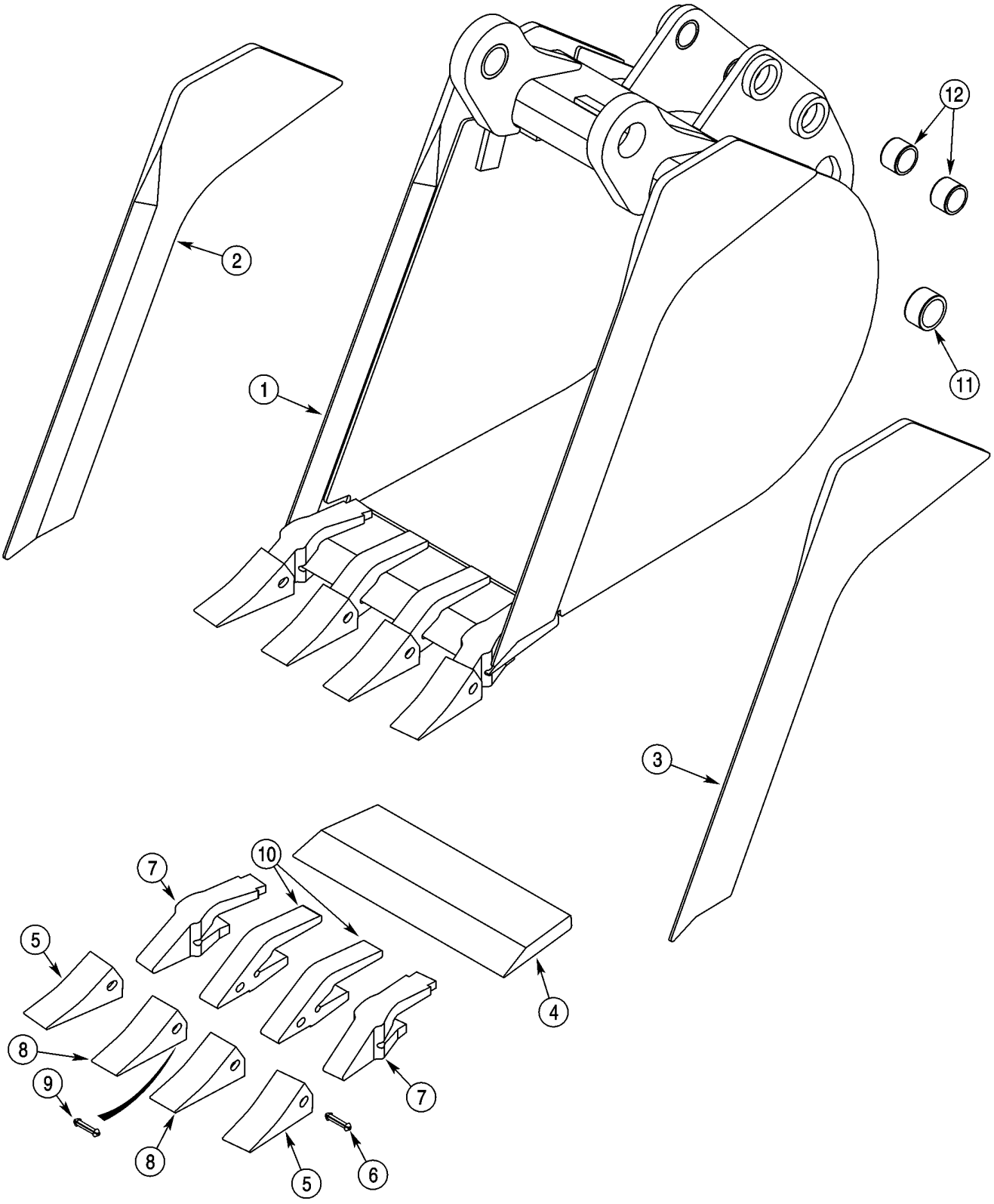

HTTP://WWW.MINNPARBACKHOEPARTS.COM



BUCKET, UNIVERSAL BACKHOE (457 MM (18 INCH) WIDE)

| REF | FN | PART NUMBER | YR/SN | QTY | DESCRIPTION |
|---|---|---|---|---|---|
| 1 | | 376384A1 | | 1 | BUCKET 457 mm (18 in); With 4 Teeth; Order Through Parts Marketing; Incl. Ref 2 - 12 |
| 2 | | NSS | | 1 | NOT SERVICED SEPARATELY Edge, Right-Hand |
| 3 | | NSS | | 1 | NOT SERVICED SEPARATELY Edge, Left-Hand |
| 4 | | NSS | | 1 | NOT SERVICED SEPARATELY Edge |
| | | D139851 | | 2 | TOOTH Outer; Incl. Ref 5 - 7 |
| 5 | | D51750 | | 1 | POINT |
| 6 | | 245466A1 | | 1 | SPLIT PIN/SAFETY PIN |
| 7 | | D138157 | | 1 | SHANK |
| | | D139849 | | 2 | TOOTH Center; Incl. Ref 8 - 10; Order Ref 8 - 10 |
| 8 | | D51750 | | 1 | POINT |
| 9 | | 245466A1 | | 1 | SPLIT PIN/SAFETY PIN |
| 10 | | D48212 | | 1 | SHANK |
| 11 | | D37495 | | 2 | BUSHING |
| 12 | | D30933 | | 4 | BUSHING |

HTTP://WWW.MINNPARBACKHOEPARTS.COM

| 09-31 | | p1 | 01/04 |
|---|---|---|---|

BUCKET, BACKHOE (457 MM (18 INCH) WIDE)

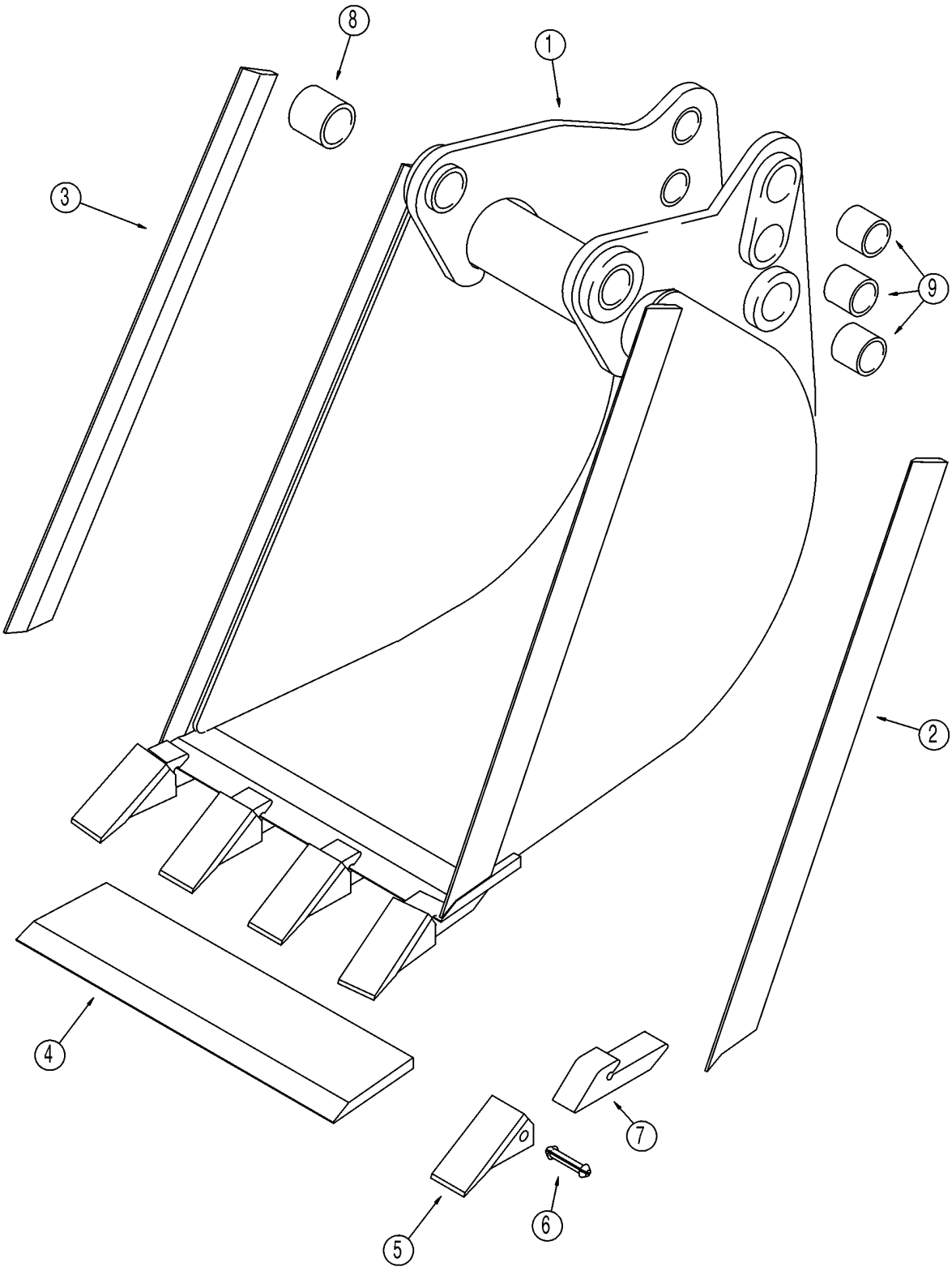

HTTP://WWW.MINNPARBACKHOEPARTS.COM



BUCKET, BACKHOE (457 MM (18 INCH) WIDE)

| REF | FN | PART NUMBER | YR/SN | QTY | DESCRIPTION |
|---|---|---|---|---|---|
| 1 | | 183808A1 | | 1 | BUCKET 457 mm (18 in); With 4 Teeth; Order Through Parts Marketing; Incl. Ref 2 - 9 |
| 2 | | 129894A1 | | 1 | EDGE Right-Hand |
| 3 | | 129893A1 | | 1 | EDGE Left-Hand |
| 4 | | 183810A1 | | 1 | EDGE |
| | | D41659 | | 4 | TOOTH Incl. Ref 5 - 7 |
| 5 | | D51750 | | 1 | POINT |
| 6 | | 245466A1 | | 1 | SPLIT PIN/SAFETY PIN |
| 7 | | NSS | | 1 | NOT SERVICED SEPARATELY Shank |
| 8 | | D37495 | | 2 | BUSHING |
| 9 | | D30933 | | 6 | BUSHING |

HTTP://WWW.MINNPARBACKHOEPARTS.COM

| 09-32 | | p1 | 01/04 |
|---|---|---|---|

BUCKET, UNIVERSAL BACKHOE (610 MM (24 INCH) / 762 MM (30 INCH) WIDE)

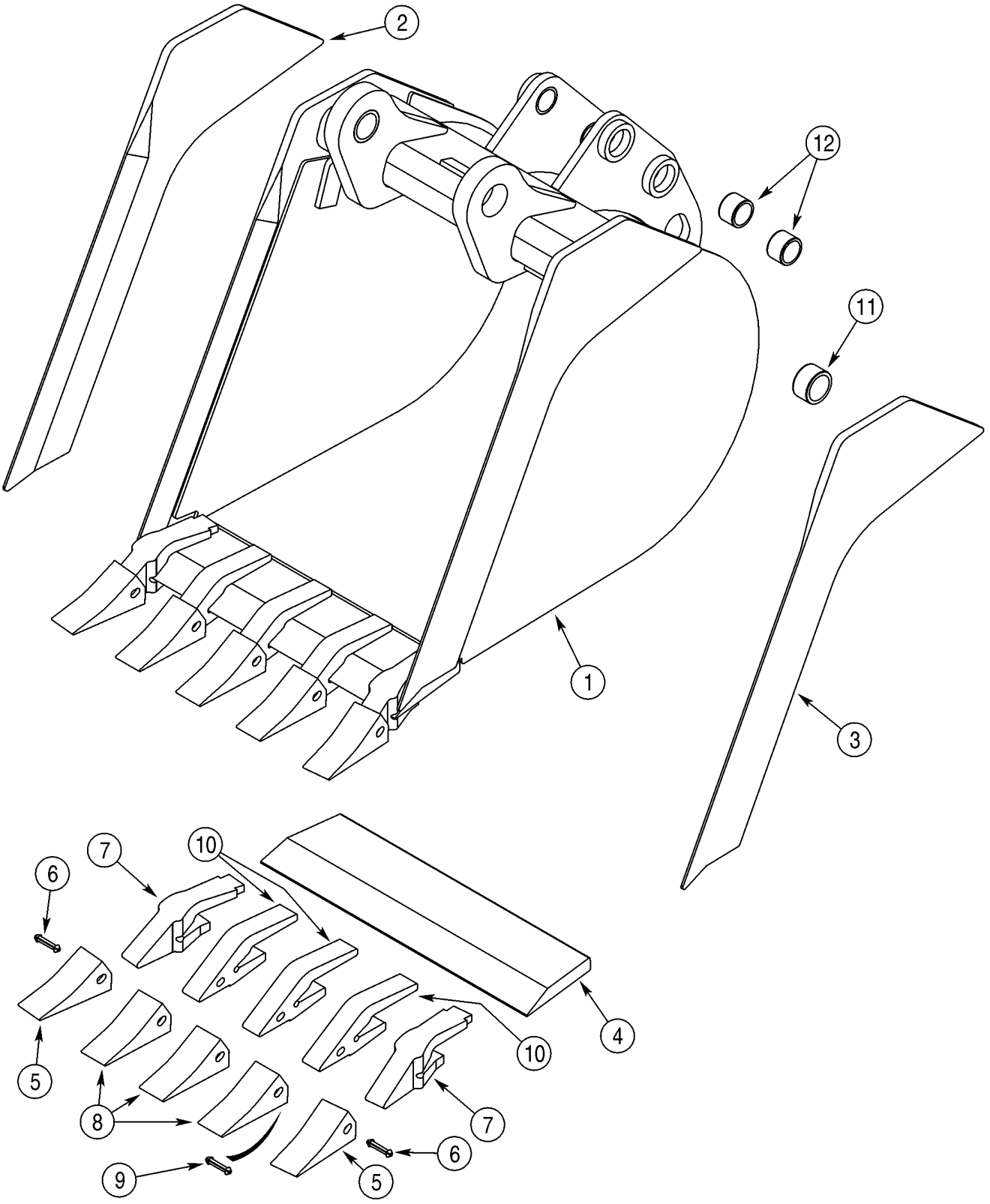

HTTP://WWW.MINNPARBACKHOEPARTS.COM



BUCKET, UNIVERSAL BACKHOE (610 MM (24 INCH) / 762 MM (30 INCH) WIDE)

| REF | FN | PART NUMBER | YR/SN | QTY | DESCRIPTION |
|---|---|---|---|---|---|
| 1 | | 365328A1 | | 1 | BUCKET 610 mm (24 in); With 5 Teeth; Order Through Parts Marketing; Incl. Ref 2 - 12 |
| 2 | | NSS | | 1 | NOT SERVICED SEPARATELY Edge, Right-Hand |
| 3 | | NSS | | 1 | NOT SERVICED SEPARATELY Edge, Left-Hand |
| 4 | | NSS | | 1 | NOT SERVICED SEPARATELY Edge |
| | | D139851 | | 2 | TOOTH Outer; Incl. Ref 5 - 7 |
| 5 | | D51750 | | 1 | POINT |
| 6 | | 245466A1 | | 1 | SPLIT PIN/SAFETY PIN |
| 7 | | D138157 | | 1 | SHANK |
| | | D139849 | | 3 | TOOTH Center; Incl. Ref 8 - 10; Order Ref 8 - 10 |
| 8 | | D51750 | | 1 | POINT |
| 9 | | 245466A1 | | 1 | SPLIT PIN/SAFETY PIN |
| 10 | | D48212 | | 1 | SHANK |
| 11 | | D37495 | | 2 | BUSHING |
| 12 | | D30933 | | 4 | BUSHING |
| 1 | | 376385A1 | | 1 | BUCKET 762 mm (30 in); With 6 Teeth; Not Illustrated; Order Through Parts Marketing; Incl. Ref 2 - 12 |
| 2 | | NSS | | 1 | NOT SERVICED SEPARATELY Edge, Right-Hand |
| 3 | | NSS | | 1 | NOT SERVICED SEPARATELY Edge, Left-Hand |
| 4 | | NSS | | 1 | NOT SERVICED SEPARATELY Edge |
| | | D139851 | | 2 | TOOTH Outer; Incl. Ref 5 - 7 |
| 5 | | D51750 | | 1 | POINT |
| 6 | | 245466A1 | | 1 | SPLIT PIN/SAFETY PIN |
| 7 | | D138157 | | 1 | SHANK |
| | | D139849 | | 4 | TOOTH Center; Incl. Ref 8 - 10; Order Ref 8 - 10 |
| 8 | | D51750 | | 1 | POINT |
| 9 | | 245466A1 | | 1 | SPLIT PIN/SAFETY PIN |
| 10 | | D48212 | | 1 | SHANK |
| 11 | | D37495 | | 2 | BUSHING |
| 12 | | D30933 | | 4 | BUSHING |

HTTP://WWW.MINNPARBACKHOEPARTS.COM

| 09-33 | | p1 | 01/04 |
|---|---|---|---|

BUCKET, BACKHOE (610 MM (24 INCH) WIDE)

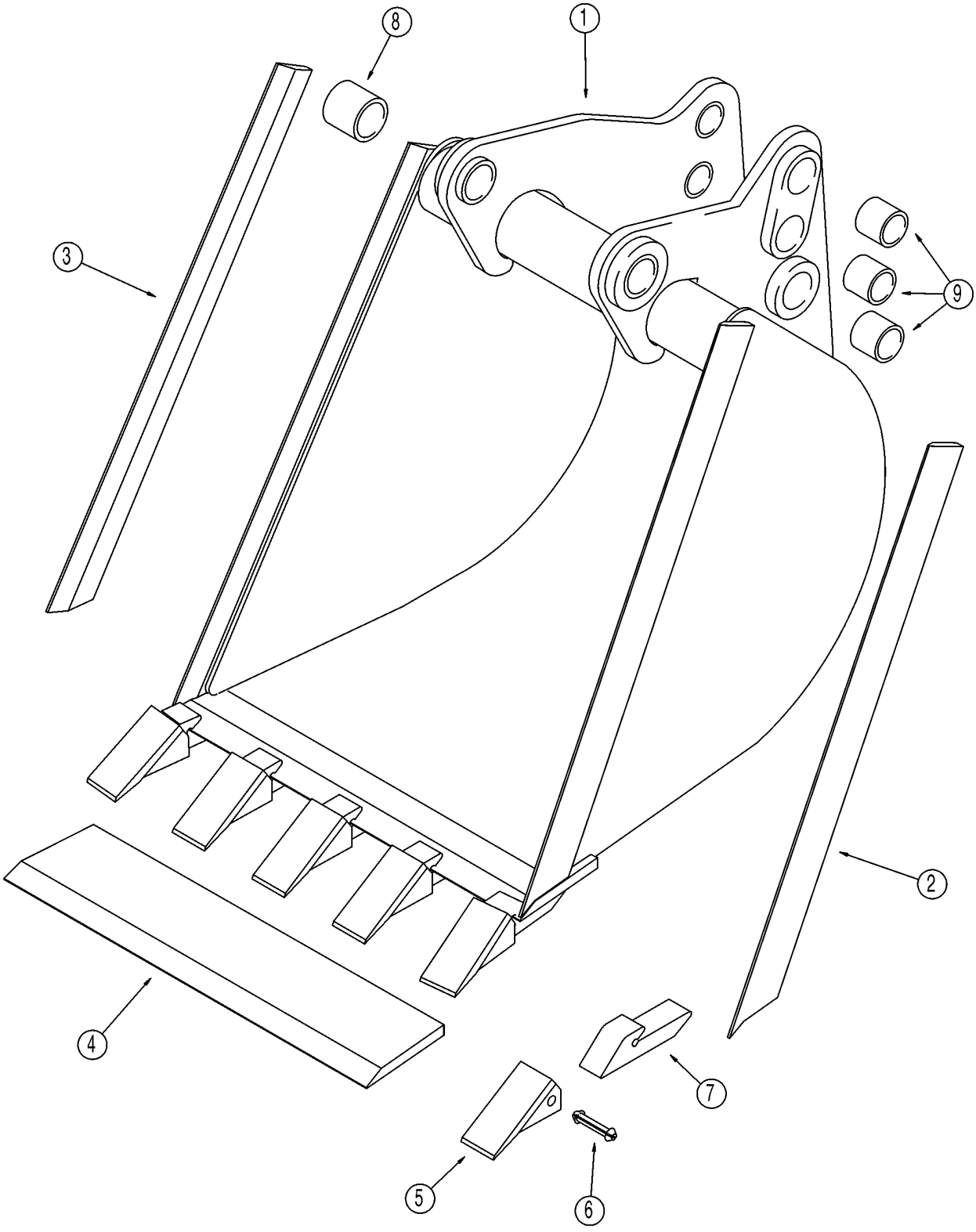

HTTP://WWW.MINNPARBACKHOEPARTS.COM



BUCKET, BACKHOE (610 MM (24 INCH) WIDE)

| REF | FN | PART NUMBER | YR/SN | QTY | DESCRIPTION |
|---|---|---|---|---|---|
| 1 | | 129885A1 | | 1 | BUCKET 610 mm (24 in); With 5 Teeth; Order Through Parts Marketing; Incl. Ref 2 - 9 |
| 2 | | 129894A1 | | 1 | EDGE Right-Hand |
| 3 | | 129893A1 | | 1 | EDGE Left-Hand |
| 4 | | 129944A1 | | 1 | SUPPORT |
| | | D41659 | | 5 | TOOTH Incl. Ref 5 - 7 |
| 5 | | D51750 | | 1 | POINT |
| 6 | | 245466A1 | | 1 | SPLIT PIN/SAFETY PIN |
| 7 | | NSS | | 1 | NOT SERVICED SEPARATELY Shank |
| 8 | | D37495 | | 2 | BUSHING |
| 9 | | D30933 | | 6 | BUSHING |

HTTP://WWW.MINNPARBACKHOEPARTS.COM

| 09-34 | | p1 | 01/04 |
|---|---|---|---|

BUCKET, UNIVERSAL BACKHOE (914 MM (36 INCH) WIDE)

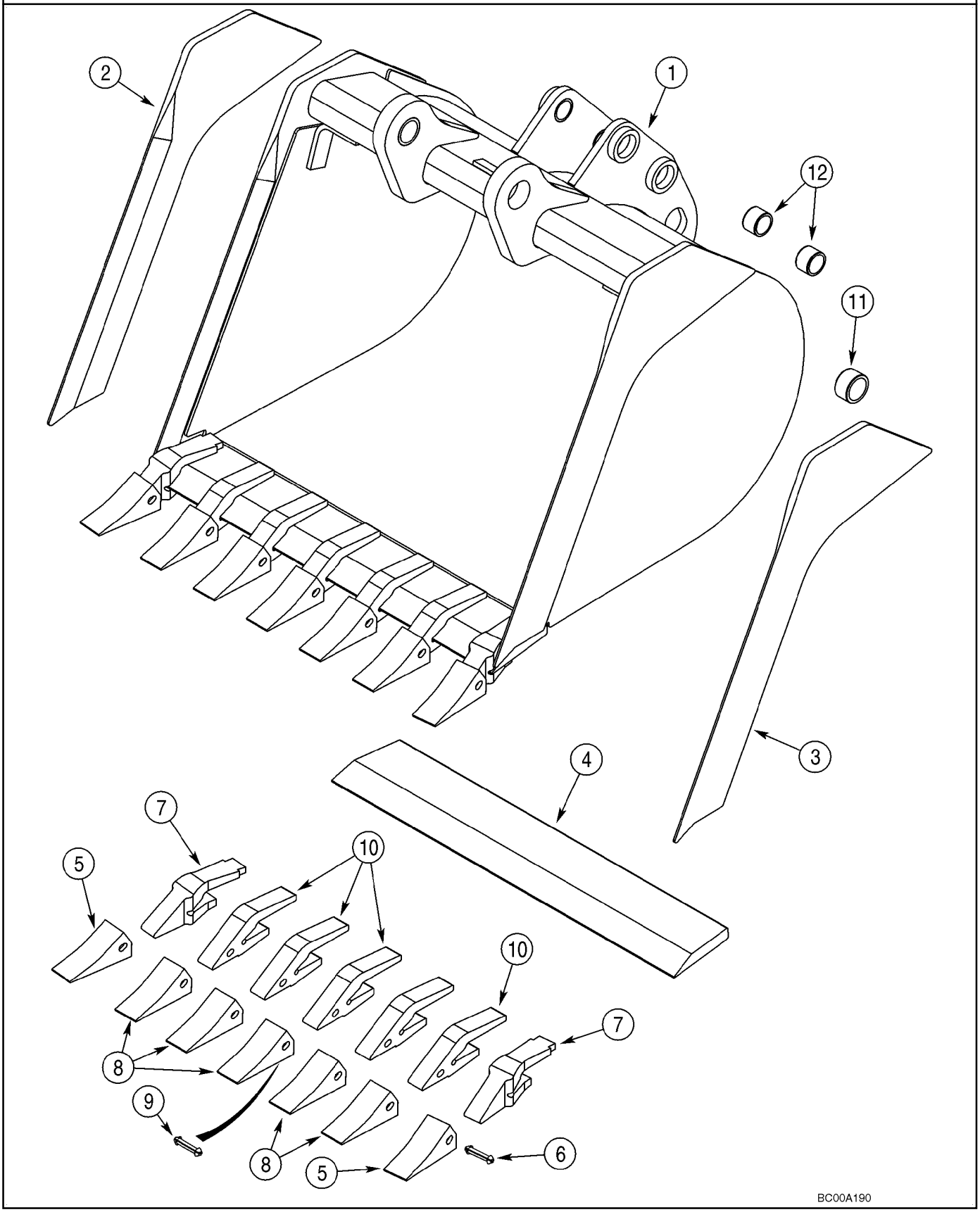

HTTP://WWW.MINNPARBACKHOEPARTS.COM



BUCKET, UNIVERSAL BACKHOE (914 MM (36 INCH) WIDE)

| REF | FN | PART NUMBER | YR/SN | QTY | DESCRIPTION |
|---|---|---|---|---|---|
| 1 | | 376386A1 | | 1 | BUCKET 914 mm (36 in); With 7 Teeth; Order Through Parts Marketing; Incl. Ref 2 - 12 |
| 2 | | NSS | | 1 | NOT SERVICED SEPARATELY Edge, Right-Hand |
| 3 | | NSS | | 1 | NOT SERVICED SEPARATELY Edge, Left-Hand |
| 4 | | NSS | | 1 | NOT SERVICED SEPARATELY Edge |
| | | D139851 | | 2 | TOOTH Outer; Incl. Ref 5 - 7 |
| 5 | | D51750 | | 1 | POINT |
| 6 | | 245466A1 | | 1 | SPLIT PIN/SAFETY PIN |
| 7 | | D138157 | | 1 | SHANK |
| | | D139849 | | 5 | TOOTH Center; Incl. Ref 8 - 10; Order Ref 8 - 10 |
| 8 | | D51750 | | 1 | POINT |
| 9 | | 245466A1 | | 1 | SPLIT PIN/SAFETY PIN |
| 10 | | D48212 | | 1 | SHANK |
| 11 | | D37495 | | 2 | BUSHING |
| 12 | | D30933 | | 4 | BUSHING |

HTTP://WWW.MINNPARBACKHOEPARTS.COM



BUCKET, UNIVERSAL BACKHOE (610 MM (24 INCH) WIDE)

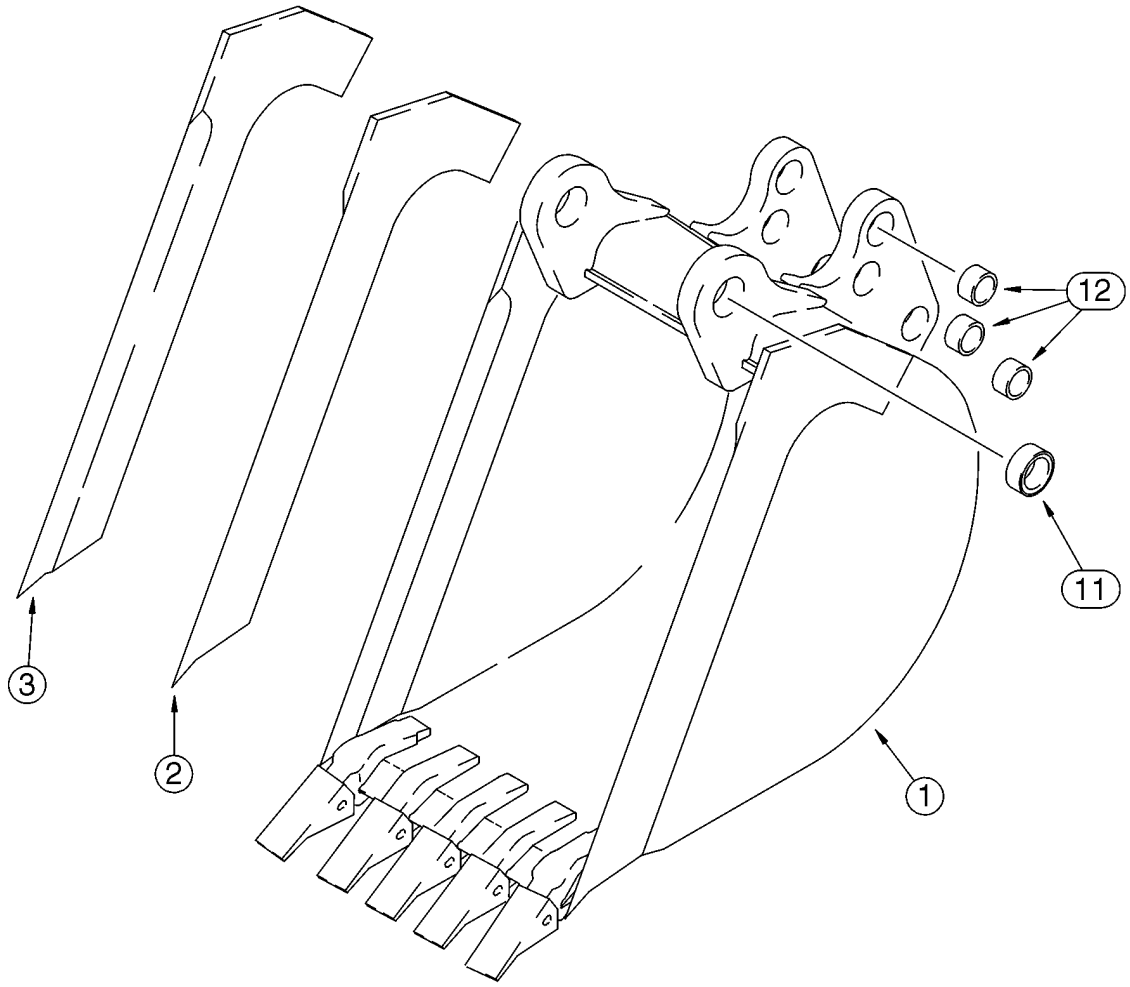


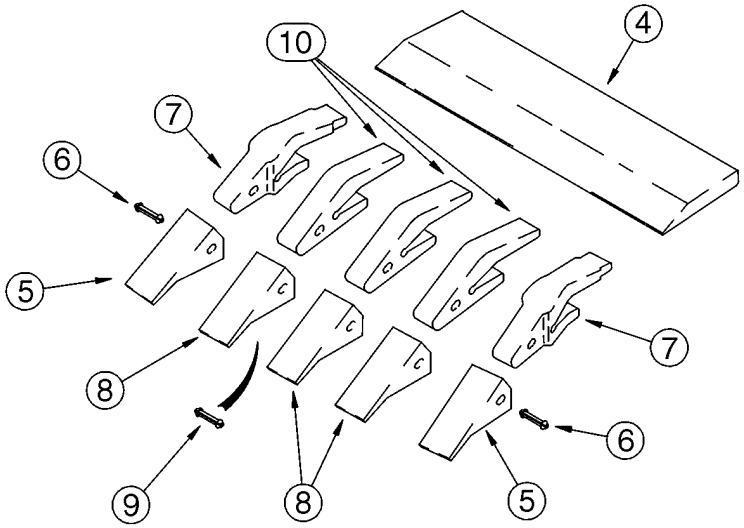


B9405159

HTTP://WWW.MINNPARBACKHOEPARTS.COM



BUCKET, UNIVERSAL BACKHOE (610 MM (24 INCH) WIDE)

| REF | FN | PART NUMBER | YR/SN | QTY | DESCRIPTION |
|---|---|---|---|---|---|
| 1 | | 141232A2 | | 1 | BUCKET 610 mm (24 in); With 5 Teeth; Order Through Parts Marketing; Incl. Ref 2 - 12 |
| 2 | | 141234A1 | | 1 | EDGE, CUTTING Right-Hand |
| 3 | | 141233A1 | | 1 | EDGE, CUTTING Left-Hand |
| 4 | | D142012 | | 1 | EDGE, CUTTING |
| | | D139851 | | 2 | TOOTH Outer; Incl. Ref 5 - 7 |
| 5 | | D51750 | | 1 | POINT |
| 6 | | 245466A1 | | 1 | SPLIT PIN/SAFETY PIN |
| 7 | | D138157 | | 1 | SHANK |
| | | D139849 | | 3 | TOOTH Center; Incl. Ref 8 - 10; Order Ref 8 - 10 |
| 8 | | D51750 | | 1 | POINT |
| 9 | | 245466A1 | | 1 | SPLIT PIN/SAFETY PIN |
| 10 | | D48212 | | 1 | SHANK |
| 11 | | D37495 | | 2 | BUSHING |
| 12 | | D30933 | | 6 | BUSHING |

HTTP://WWW.MINNPARBACKHOEPARTS.COM

| 09-36 | | p1 | 01/04 |
|---|---|---|---|

COUNTERWEIGHT, FRONT

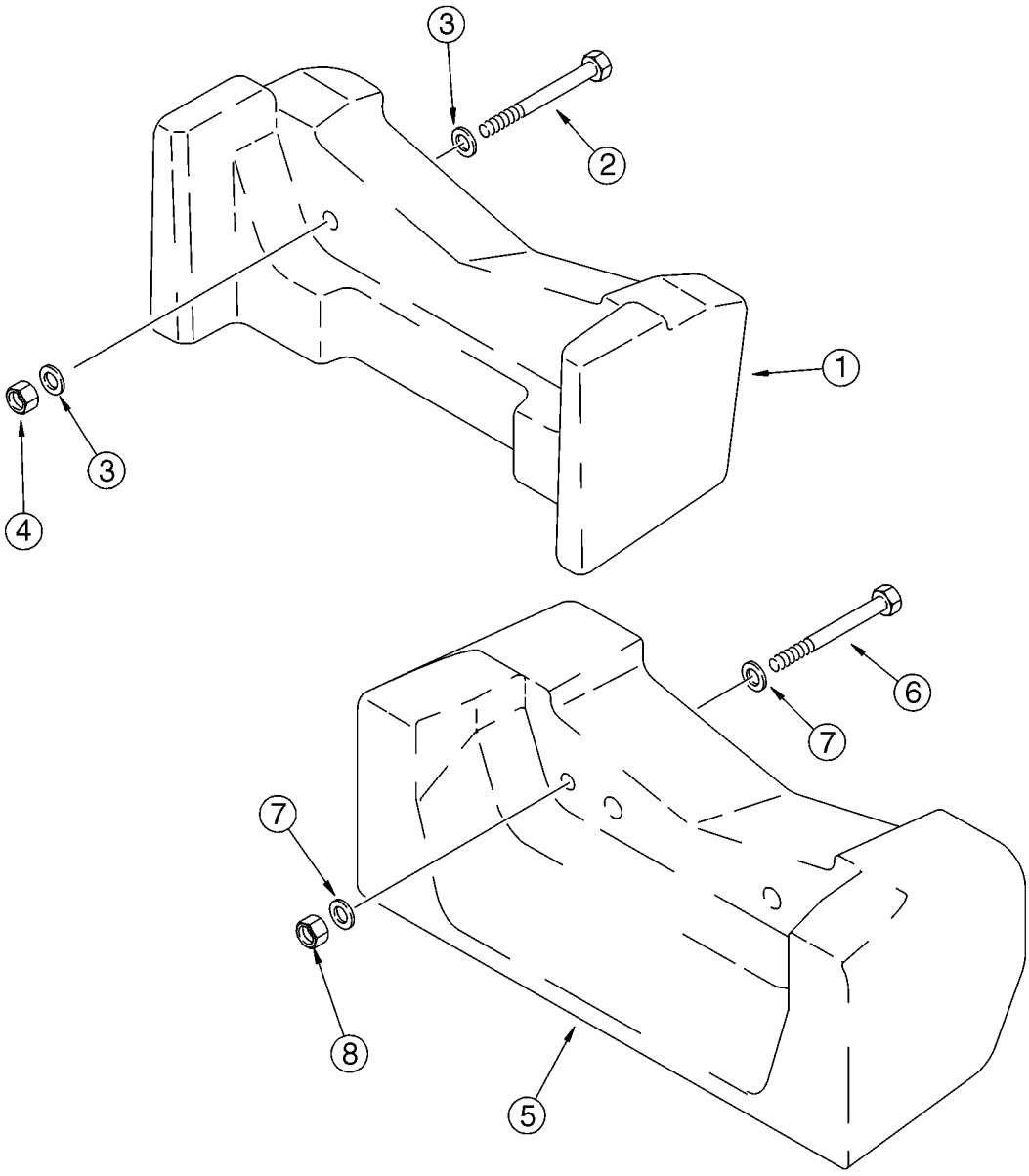


BT97N084

HTTP://WWW.MINNPARBACKHOEPARTS.COM



COUNTERWEIGHT, FRONT

| REF | FN | PART NUMBER | YR/SN | QTY | DESCRIPTION |
|---|---|---|---|---|---|
| 1 | | 360867A1 | | 1 | WEIGHT 200 kg (441 lbs); If Used |
| 2 | | 827-20170 | | 2 | SCREW |
| 3 | | 896-11020 | | 4 | WASHER 22 x 37 x 4 mm |
| 4 | | 829-1420 | | 2 | NUT M20; 10 |
| 5 | | 87425456 | | 1 | BALANCER 408 kg (900 lbs); If Used |
| 6 | | 827-20170 | | 2 | SCREW |
| 7 | | 896-11020 | | 4 | WASHER 22 x 37 x 4 mm |
| 8 | | 829-1420 | | 2 | NUT M20; 10 |

HTTP://WWW.MINNPARBACKHOEPARTS.COM

| 09-37 | | p1 | 01/04 |
|---|---|---|---|

CHASSIS / MOUNTS, POD - SCREEN, AIR INLET

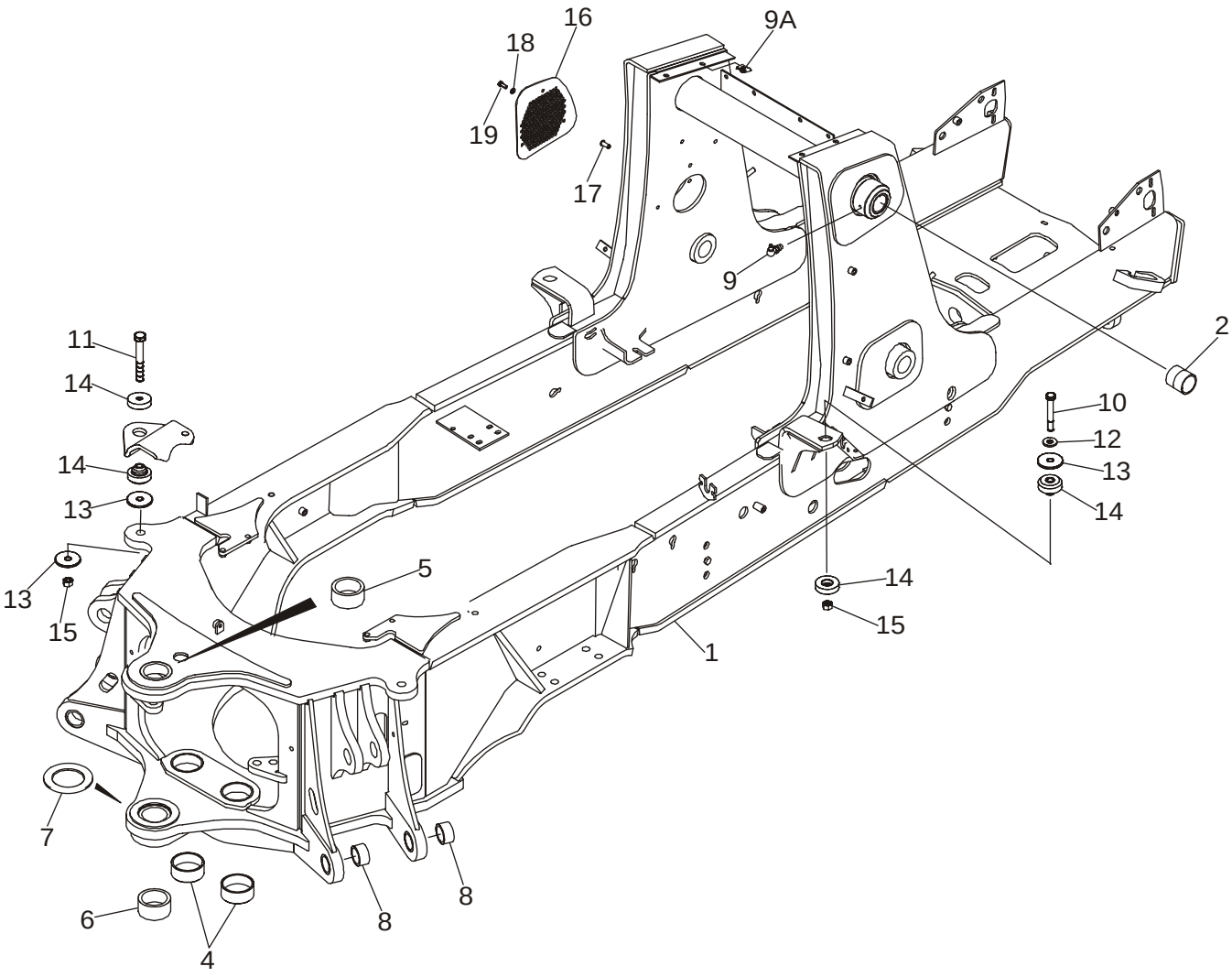


BS03J143

HTTP://WWW.MINNPARBACKHOEPARTS.COM



CHASSIS / MOUNTS, POD - SCREEN, AIR INLET

| REF | FN | PART NUMBER | YR/SN | QTY | DESCRIPTION |
|---|---|---|---|---|---|
| 1 | | 87423004 | | 1 | CHASSIS Incl. Ref 2 - 8 |
| 2 | | 180427A1 | | 2 | BUSHING |
| 4 | | 114318A1 | | 2 | BUSHING |
| 5 | | D151069 | | 1 | BUSHING 70 x 10 x 32 mm |
| 6 | | D151070 | | 1 | BUSHING 70 x 10 x 38 mm |
| 7 | | 220413A1 | | 1 | SPACER 93 x 135 x 5 mm |
| 8 | | 107124A1 | | 4 | BUSHING |
| 9 | | 219-55 | | 2 | NIPPLE, LUBE 90 deg, 1/8 PT x 27/32 |
| 9A | | 833-40310 | | 4 | NUT J-Type, M10 |
| 10 | | 827-16085 | | 2 | BOLT M16 x 85; 10.9 |
| 11 | | 827-16100 | | 2 | BOLT M16 x 100; 10.9 |
| 12 | | 896-11016 | | 2 | WASHER 17,5 x 30 x 4 mm |
| 13 | | 186977A1 | | 6 | WASHER 4,5 mm thick |
| 14 | | 411892A1 | | 4 | MOUNTING, RUBBER M16; Operator Compartment Pod Mounts |
| 15 | | 829-1416 | | 4 | NUT M16; 10 |
| 16 | | 87423668 | | 1 | SCREEN Air Inlet |
| 17 | | 87417383 | | 3 | INSERT, THREADED Nut, M8 |
| 18 | | 895-11008 | | 3 | WASHER Flat, 8 mm |
| 19 | | 614-8030 | | 3 | SCREW M8 x 30 |

HTTP://WWW.MINNPARBACKHOEPARTS.COM

| 09-38 | | p1 | 01/04 |
|---|---|---|---|

TANK, OIL - BOX, BATTERY AND TOOL

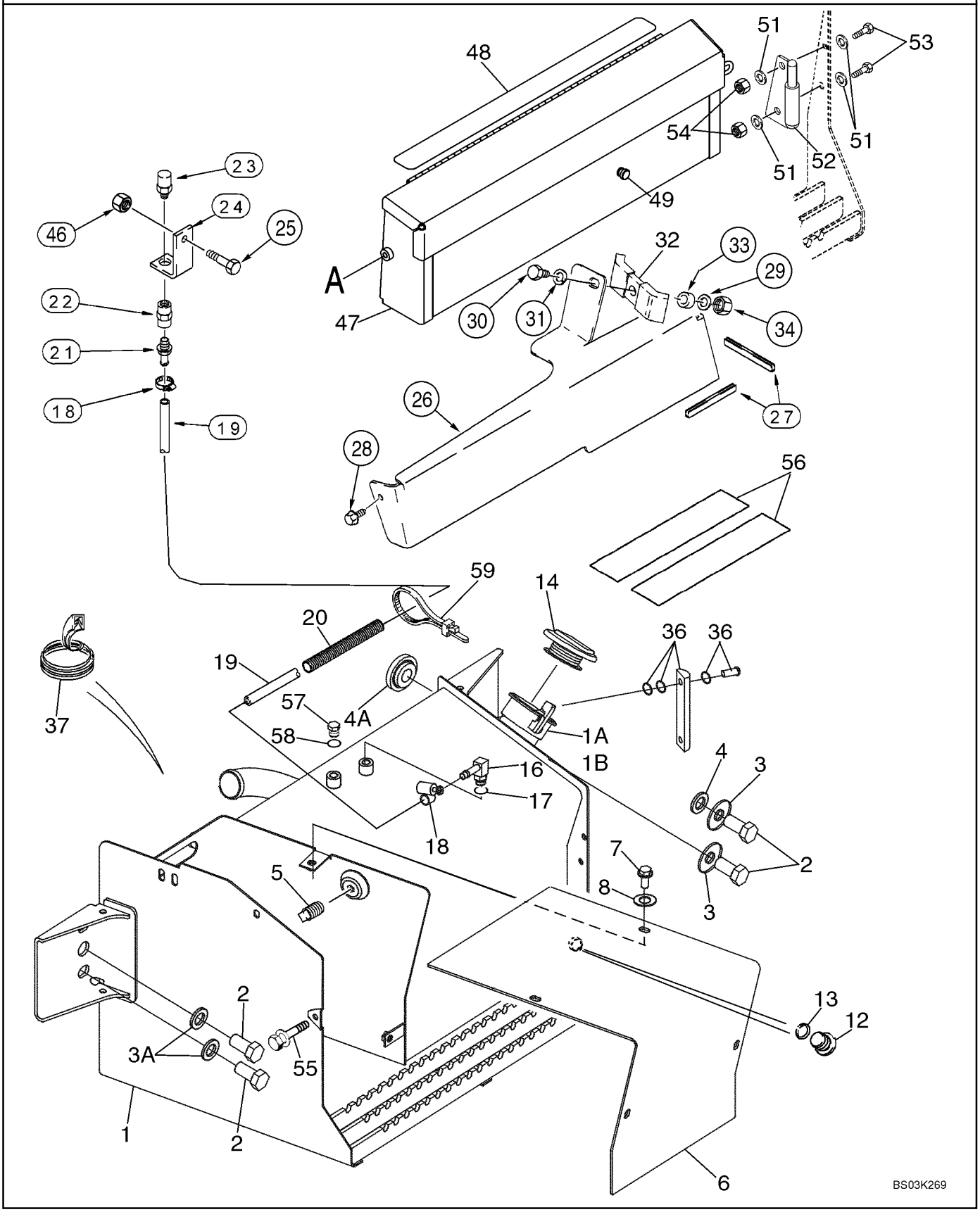

HTTP://WWW.MINNPARBACKHOEPARTS.COM



TANK, OIL - BOX, BATTERY AND TOOL

| REF | FN | PART NUMBER | YR/SN | QTY | DESCRIPTION |
|---|---|---|---|---|---|
| 1 | | 87434745 | | 1 | TANK, HYDRAULIC OIL Right-Hand Side of Chassis; Incl. Ref 1A, 1B, 12 |
| 1A | | 230857A1 | | 1 | SCREEN, FILTER Strainer; Fill Tube |
| 1B | | 440-1066 | | 2 | SCREW No. 6 x 3/8 |
| 2 | | 627-20060 | | 4 | SCREW M20 x 60; 10.9; Use With Loctite 345-49 |
| 3 | | 302358A1 | | 2 | WASHER Right-Hand |
| 3A | | 896-11020 | | 2 | WASHER 22 x 37 x 4 mm; Left-Hand |
| 4 | | 185926A1 | | 1 | SPACER Right-Hand; Upper |
| 4A | | 409472A1 | | 1 | SPACER Right-Hand; Lower |
| 5 | | 217-436 | | 1 | PLUG 3/8 PT; If Used |
| 6 | | 231656A1 | | 1 | COVER Battery |
| 7 | | 614-10020 | | 4 | SCREW M10 x 20; Use With 345-56 Loctite No. 767 |
| 8 | | 495-21044 | | 4 | WASHER 7/16 x 1 x 5/64 |
| 12 | | 218-5211 | | 1 | PLUG 7/8 Or, Drain; Incl. Ref 13 |
| 13 | | 237-6010 | | 1 | O-RING 3/4 ID x 3/32, Boss Seal |
| 14 | | 138595A1 | | 1 | PLUG CAP |
| 16 | | 217-347 | | 1 | FITTING 3/8 stem x 9/16 Or; Incl. Ref 17 |
| 17 | | 237-6006 | | 1 | O-RING 15/32 ID x 5/64, Boss Seal |
| 18 | | 214-1406 | | 2 | CLAMP 7/16 - 25/32 |
| 19 | | 393161A1 | | 1 | HOSE 912 mm (35-29/32 in); Vent |
| 20 | | 143219A1 | | 1 | PROTECTOR 380 mm Sleeve |
| 21 | | 217-380 | | 1 | FITTING 3/8 stem x PT; Use With 345-147 Sealant |
| 22 | | 217-1102 | | 1 | FITTING 3/8 in |
| 23 | | 361776A1 | | 1 | BREATHER Use With 345-147 Sealant |
| 24 | | 122603A1 | | 1 | SUPPORT |
| 25 | | 711-10030 | | 1 | SCREW M10 x 30 |
| 26 | | 399959A2 | | 1 | COVER Right-Hand Loader Lift Frame Tubing |
| 27 | | 191047A1 | | 1 | MOLDING 305 mm (12 in) lg; Apply 65 mm (2-9/16 in) Of Trim To Front Lower Edge and 240 mm (9-1/2 in) Of Trim To Outisde Lower Edge of Cover |
| 28 | | 307577A1 | | 1 | BOLT With Washer, M8 x 20 |
| 29 | | 895-11010 | | 1 | WASHER 11 x 21 x 2 mm |
| 30 | | 814-10045 | | 1 | SCREW M10 x 45 |
| 31 | | 892-11010 | | 1 | WASHER, LOCK M10 |
| 32 | | D138055 | | 1 | CLAMP |
| 33 | | 120303A1 | | 1 | SPACER |

HTTP://WWW.MINNPARBACKHOEPARTS.COM

| 09-38 | | p2 | 01/04 |
|---|---|---|---|

TANK, OIL - BOX, BATTERY AND TOOL

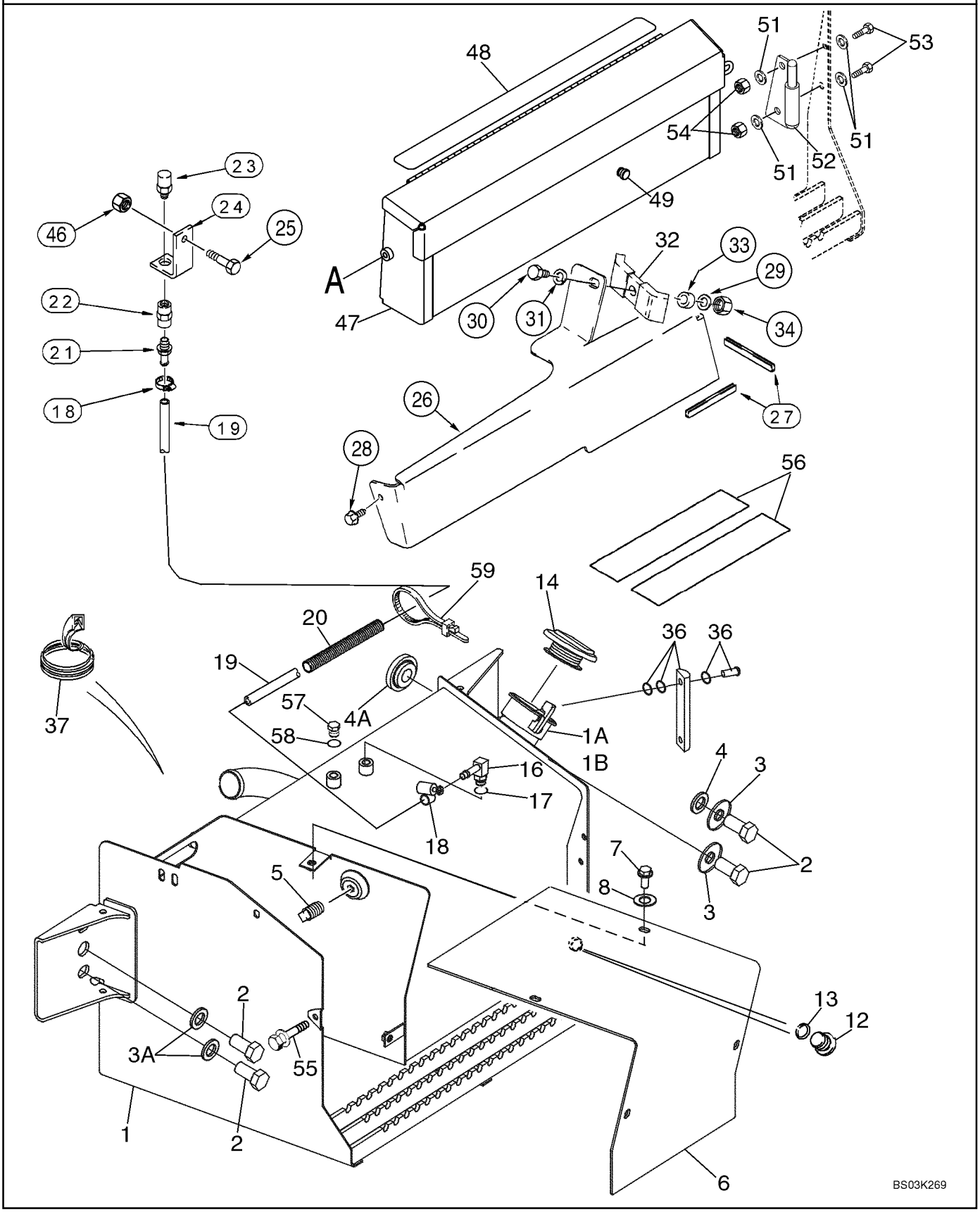

HTTP://WWW.MINNPARBACKHOEPARTS.COM



TANK, OIL - BOX, BATTERY AND TOOL

| REF | FN | PART NUMBER | YR/SN | QTY | DESCRIPTION |
|---|---|---|---|---|---|
| 34 | | 829-1410 | | 1 | NUT M10; 10.9 |
| 35 | | 345-49 | | 1 | LOCTITE 242; 1 ml |
| 36 | | 226456A1 | | 1 | GAUGE Aluminum; Includes (2) Hollow Head Bolts and (4) O-Rings; Component Parts Not Serviced Separately, Used With Ref 35 |
| 37 | | D40442 | | 1 | MOLDING 305 mm (12 in); Cut From F42827 |
| 46 | | 829-1410 | | 1 | NUT M10; 10.9 |
| 47 | | 380807A4 | | 1 | BOX, TOOL |
| 48 | | D80270 | | 1 | STRIP 635 mm (25 in) |
| 49 | | L60224 | | 1 | DAMPER, HITCH 1/2 in Hole; Bumper |
| 51 | | 895-11010 | | 4 | WASHER 11 x 21 x 2 mm |
| 52 | | 382202A2 | | 1 | HINGE |
| 53 | | 614-10025 | | 2 | BOLT M10 x 25 |
| 54 | | 829-1410 | | 2 | NUT M10; 10.9 |
| 55 | | 121856A1 | | 1 | SCREW M10 x 30; Includes Washer |
| 56 | | D55216 | | 2 | PAD Non-Slip, 2 x 9 |
| 57 | | 218-5155 | | 1 | PLUG Hex, 9/16, Incl. Ref 58; Models Without Pilot Controls |
| 58 | | 237-6006 | | 1 | O-RING |
| 59 | | L18337 | | 2 | STRAP |

HTTP://WWW.MINNPARBACKHOEPARTS.COM

| 09-39 | | p1 | 01/04 |
|---|---|---|---|

RADIATOR WRAPPER

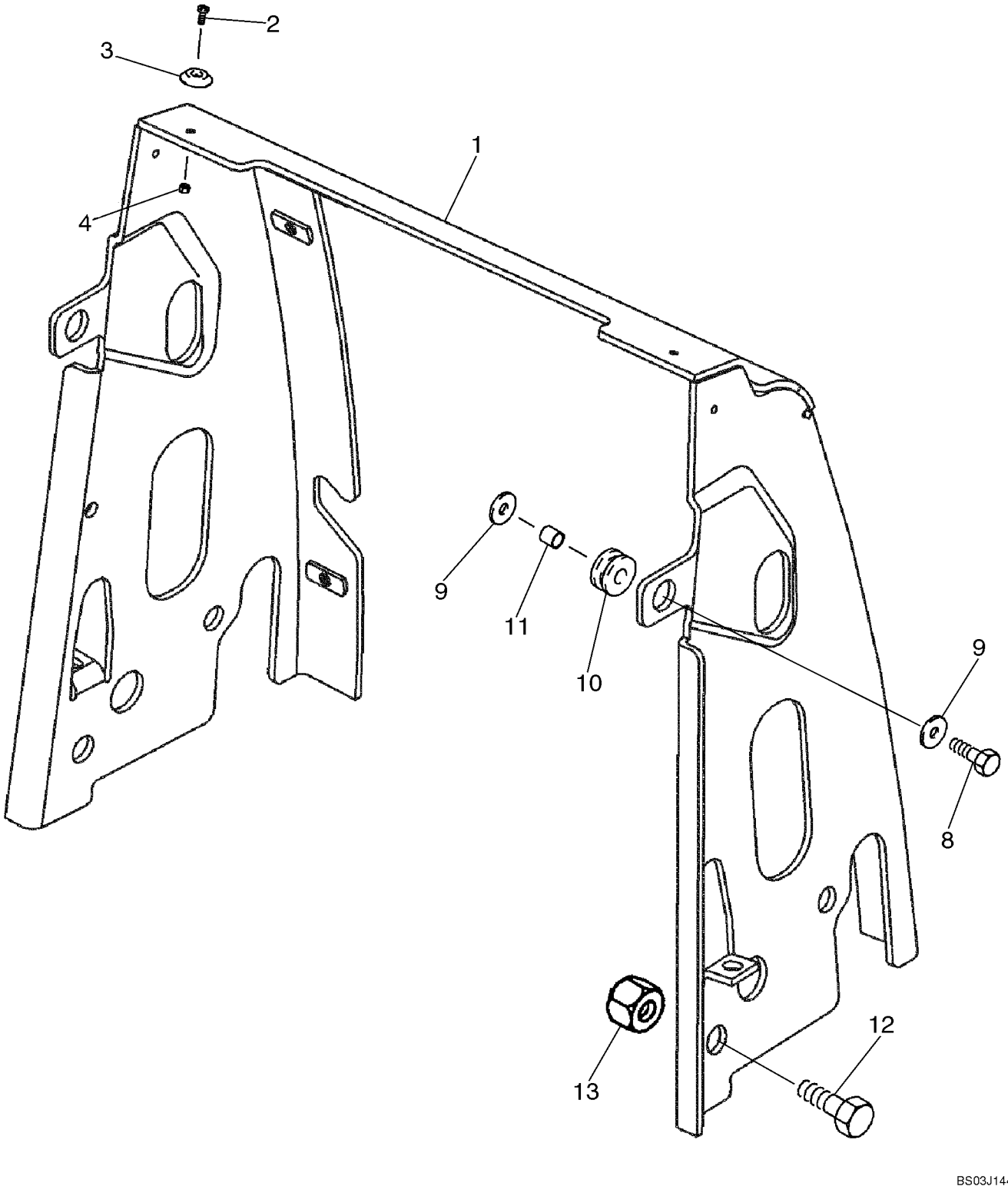

HTTP://WWW.MINNPARBACKHOEPARTS.COM



RADIATOR WRAPPER

| REF | FN | PART NUMBER | YR/SN | QTY | DESCRIPTION |
|---|---|---|---|---|---|
| 1 | | 87433659 | | 1 | PLATE ASSY. |
| 2 | | 440-11010 | | 2 | SCREW No. 10 x 5/8 |
| 3 | | 109879A1 | | 2 | SPACER Hood; Plastic |
| 4 | | 231-14109 | | 2 | NUT No. 10 |
| 8 | | 614-10035 | | 2 | SCREW M10 x 35 |
| 9 | | K691987 | | 4 | WASHER Flat, 10 mm |
| 10 | | 86982682 | | 2 | GROMMET Rubber Grommet |
| 11 | | D76209 | | 2 | SPACER |
| 12 | | 614-20030 | | 4 | SCREW M20 x 30 |
| 13 | | 829-1420 | | 4 | NUT M20; 10 |

HTTP://WWW.MINNPARBACKHOEPARTS.COM



HOOD - PANELS, SIDE

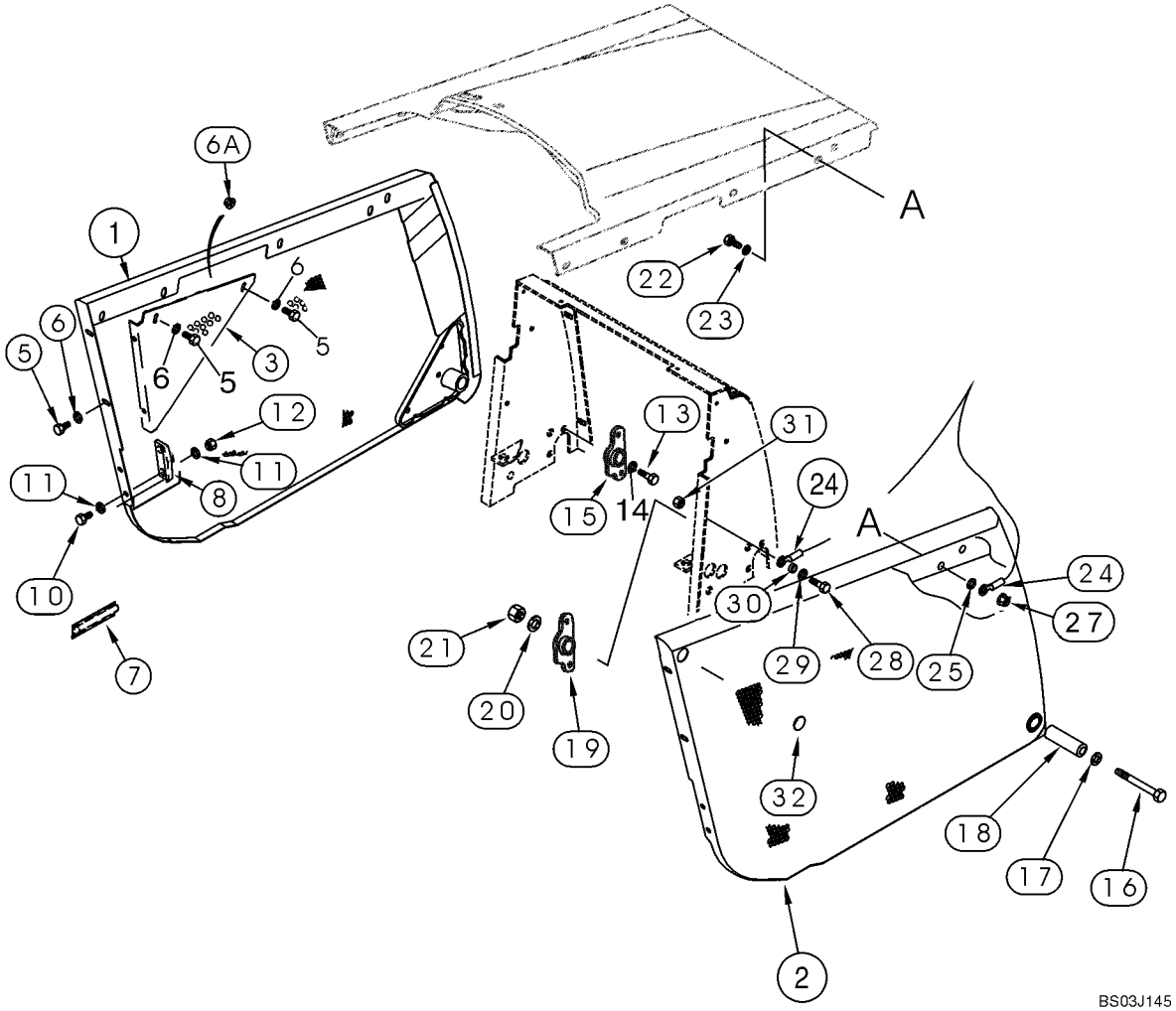

HTTP://WWW.MINNPARBACKHOEPARTS.COM



HOOD - PANELS, SIDE

| REF | FN | PART NUMBER | YR/SN | QTY | DESCRIPTION |
|---|---|---|---|---|---|
| 1 | | 339022A3 | | 1 | PANEL, SIDE Left-Hand Side |
| 2 | | 339021A2 | | 1 | PANEL, SIDE Right-Hand Side |
| 3 | | 362609A1 | | 1 | BRACE Left-Hand |
| 4 | | 362607A1 | | 1 | BRACE Right-Hand; Not Illustrated |
| 5 | | 614-10025 | | 8 | BOLT M10 x 25 |
| 6 | | 895-11010 | | 8 | WASHER 11 x 21 x 2 mm |
| 6A | | 825-2410 | | 4 | NUT M10 |
| 7 | | 183168A1 | | 1 | HANDLE Left-Hand |
| 8 | | D143715 | | 1 | SUPPORT Guide, Left-Hand |
| 9 | | D143714 | | 1 | SUPPORT Guide, Right-Hand; Not Illustrated |
| 10 | | 614-10025 | | 4 | BOLT M10 x 25 |
| 11 | | 895-11010 | | 8 | WASHER 11 x 21 x 2 mm |
| 12 | | 832-10410 | | 4 | NUT M10 |
| 13 | | 614-10020 | | 4 | SCREW M10 x 20 |
| 14 | | 895-11010 | | 4 | WASHER Flat, 10 mm |
| 15 | | 87407769 | | 1 | PIVOT Left-Hand |
| 16 | | 814-12100 | | 2 | SCREW M12 x 100 |
| 17 | | 896-15012 | | 2 | WASHER 13,5 x 28 x 4 mm |
| 18 | | 87412060 | | 2 | TUBE Spacer |
| 19 | | 87407770 | | 1 | PIVOT Right-Hand |
| 20 | | 896-15012 | | 2 | WASHER 13,5 x 28 x 4 mm |
| 21 | | 829-1412 | | 2 | NUT M12; 10 |
| 22 | | 614-10025 | | 1 | BOLT M10 x 25 |
| 23 | | 895-11010 | | 1 | WASHER 11 x 21 x 2 mm |
| 24 | | 144908A2 | | 1 | CABLE |
| 25 | | D143417 | | 1 | SPACER |
| 27 | | 825-2410 | | 1 | NUT M10 |
| 28 | | 614-10030 | | 1 | SCREW M10 x 30 |
| 29 | | 895-11010 | | 1 | WASHER 11 x 21 x 2 mm |
| 30 | | 396605A1 | | 1 | SPACER |
| 31 | | 825-2410 | | 1 | NUT M10 |
| 32 | | D140267 | | 2 | PLUG |

HTTP://WWW.MINNPARBACKHOEPARTS.COM

| 09-41 | | p1 | 01/04 |
|---|---|---|---|

HOOD - GRILLE

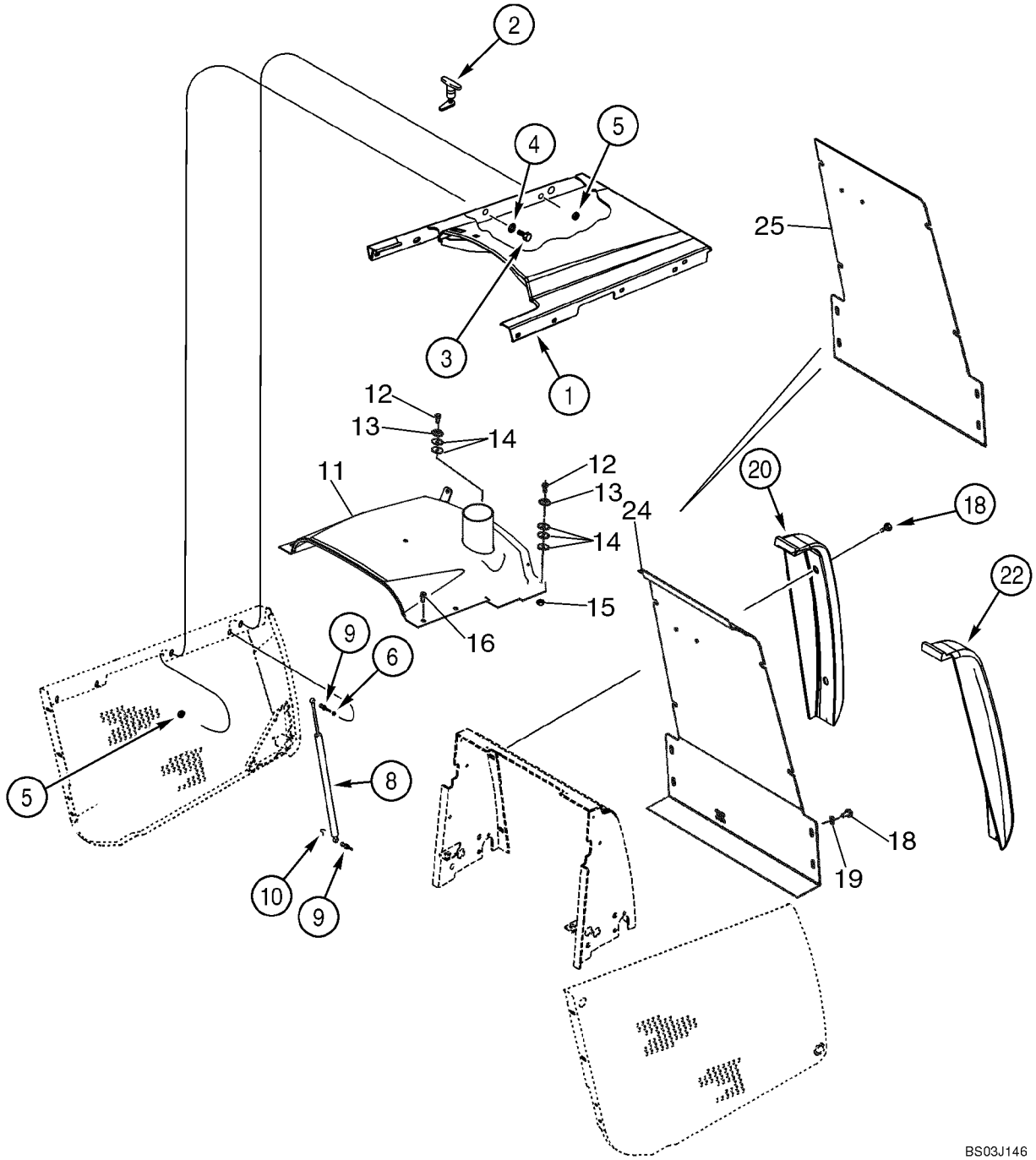

HTTP://WWW.MINNPARBACKHOEPARTS.COM



HOOD - GRILLE

| REF | FN | PART NUMBER | YR/SN | QTY | DESCRIPTION |
|---|---|---|---|---|---|
| 1 | | 362340A6 | | 1 | HOOD Engine; Tilt |
| 2 | | 175599A1 | | 1 | LATCH |
| 3 | | 614-10025 | | 3 | BOLT M10 x 25 |
| 4 | | 895-11010 | | 3 | WASHER 11 x 21 x 2 mm |
| 5 | | 825-2410 | | 5 | NUT M10 |
| 6 | | 895-11010 | | 2 | WASHER 11 x 21 x 2 mm |
| 8 | | 114980A1 | | 2 | SHOCK ABSORBER Spring; Counterbalance |
| 9 | | 139363A1 | | 4 | BALL JOINT Stud |
| 10 | | F44883 | | 4 | CLIP, ELECTRICAL |
| 11 | | 87439448 | | 1 | PLATE ASSY. Fixed Hood |
| 12 | | 440-11012 | | 3 | SCREW No. 10 x 3/4 |
| 13 | | 109879A1 | | 3 | SPACER |
| 14 | | 185325A1 | | 8 | SPACER |
| 15 | | 231-14109 | | 3 | NUT No. 10 |
| 16 | | 392828A2 | | 4 | BOLT With Washer, M10 x 40 |
| 18 | | 392828A2 | | 8 | BOLT With Washer, M10 x 40 |
| 19 | | 87423817 | | 4 | WASHER |
| 20 | | 381927A1 | | 1 | BUMPER Left-Hand |
| 22 | | 381926A1 | | 1 | BUMPER Right-Hand |
| 24 | | 87402618 | | 1 | SCREEN GRILLE |
| 25 | | 87432387 | | 1 | SCREEN Chaff Screen |

HTTP://WWW.MINNPARBACKHOEPARTS.COM

| 09-42 | | p1 | 01/04 |
|---|---|---|---|

PLATES, FLOOR - FLOORMATS

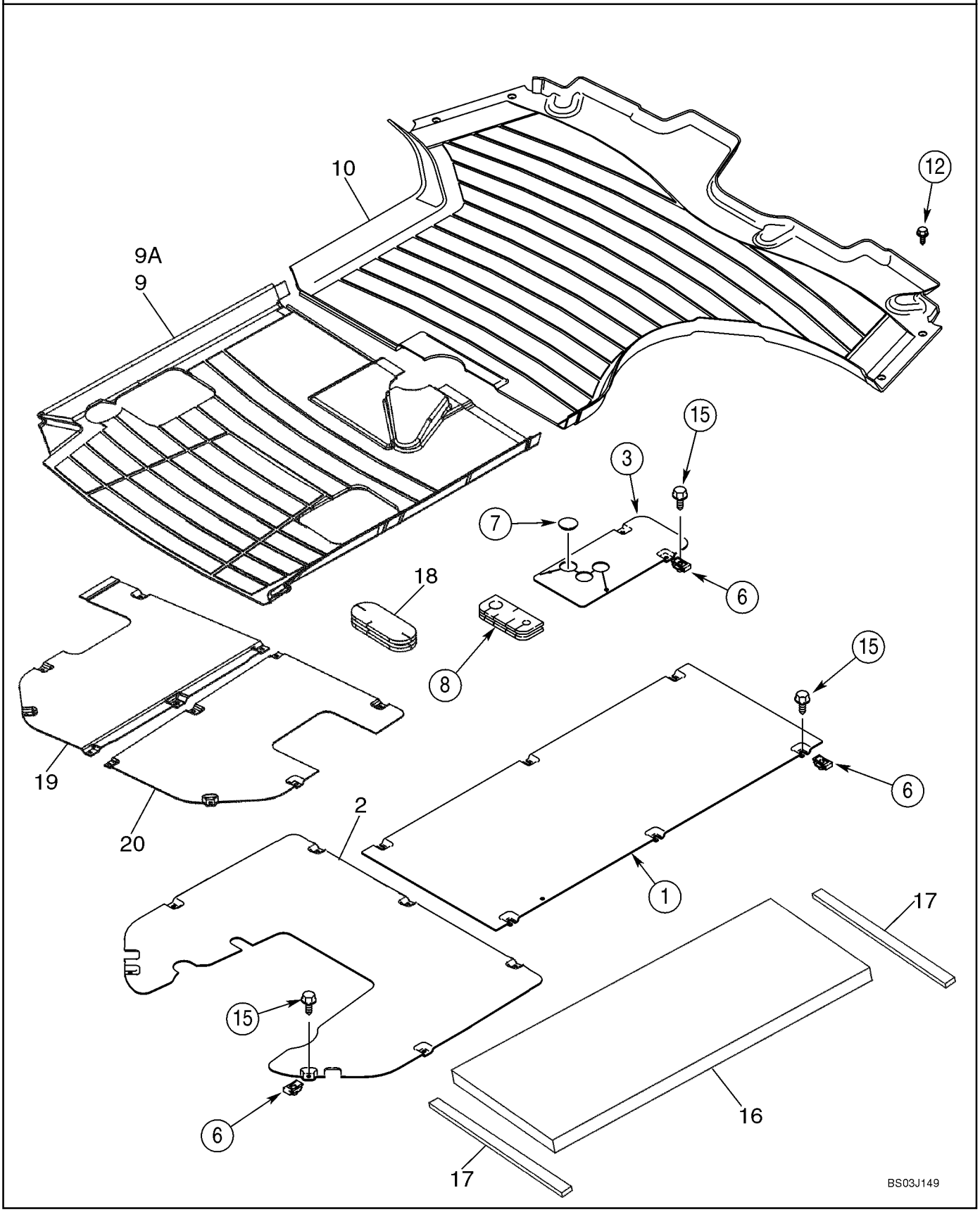

HTTP://WWW.MINNPARBACKHOEPARTS.COM



PLATES, FLOOR - FLOORMATS

| REF | FN | PART NUMBER | YR/SN | QTY | DESCRIPTION |
|---|---|---|---|---|---|
| 1 | | 355984A2 | | 1 | PLATE, LARGE Front |
| 2 | | 86983190 | | 1 | PLATE, COVER Rear; Without Pilot Controls |
| 3 | | 87436076 | | 1 | PLATE, COVER Loader Control Lever |
| 6 | | 833-40406 | | 16-17 | NUT M6 |
| 7 | | 353-422 | | 1 | PLUG Models Without Clam Bucket |
| 8 | | 393623A1 | | 1 | BLOCK Floor |
| 9 | | 86983325 | | 1 | MAT, FLOOR Rear, Canopy Models, Without Pilot Controls |
| 9A | | 86983269 | | 1 | MAT, FLOOR Rear, Canopy Models, With Pilot Controls; Not Illustrated |
| 10 | | 390551A2 | | 1 | MAT, FLOOR Front, Cab or Canopy Models |
| 12 | | 280-16516 | | 4 | SCREW Hex Washer Head, No. 10 x 1, Self-Tapping |
| 15 | | 233724A1 | | 16-17 | SCREW M6 x 25 |
| 16 | | 411074A1 | | 1 | SEAL Cab Models |
| 17 | | 181981A1 | | 2 | GASKET Foam; Adhesive Back; Cab Models |
| 18 | | 87407927 | | 1 | INSULATOR BLOCK Rubber Grommet |
| 19 | | 87434049 | | 1 | PLATE, COVER Rear, With Pilot Controls |
| 20 | | 87434050 | | 1 | PLATE, COVER Rear, With Pilot Controls |

HTTP://WWW.MINNPARBACKHOEPARTS.COM

| 09-43 | | p1 | 01/04 |
|---|---|---|---|

FENDER COVER, LEFT-HAND - PANEL, REAR CLOSURE (STORAGE TRAY WITH CUP HOLDER)

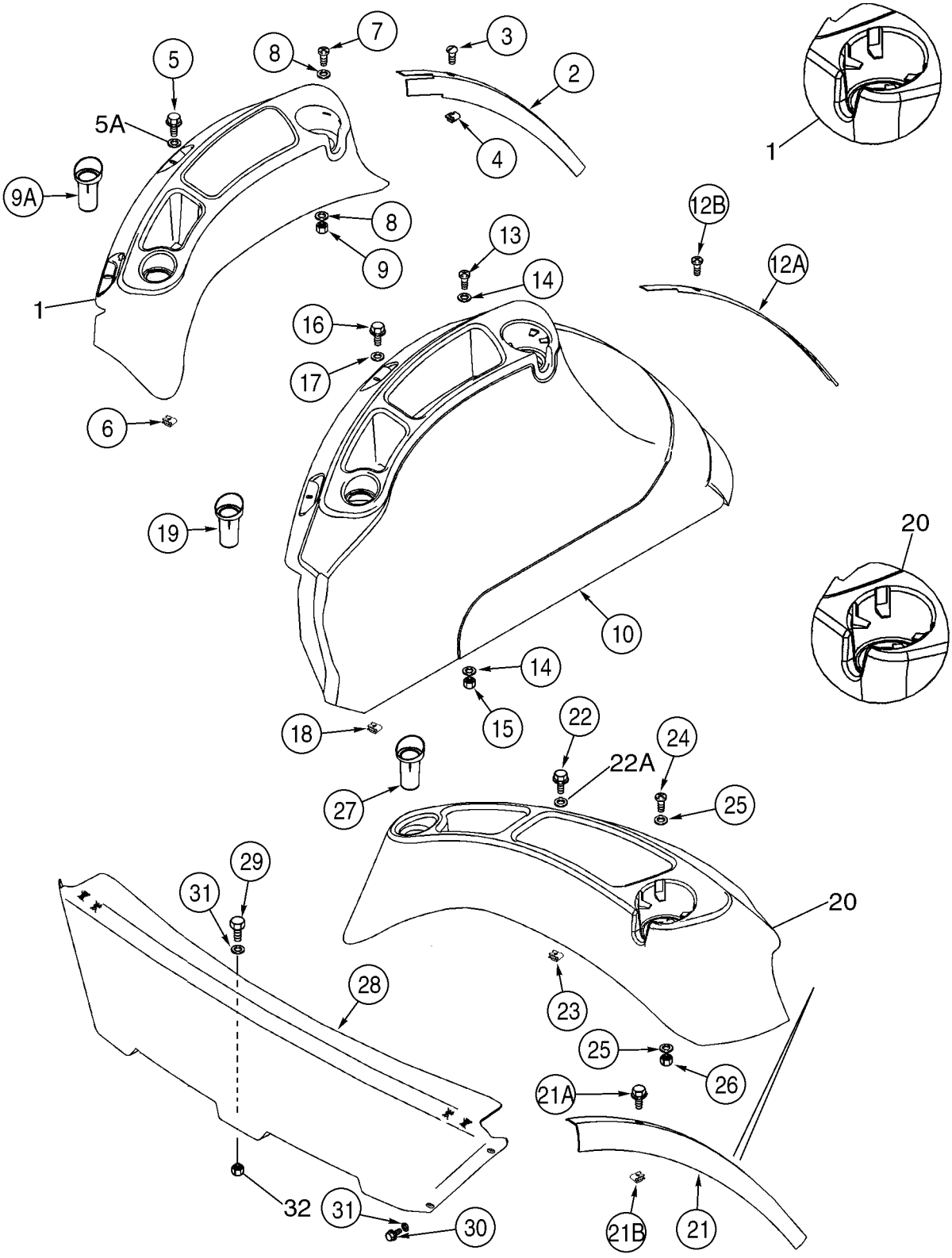

HTTP://WWW.MINNPARBACKHOEPARTS.COM



FENDER COVER, LEFT-HAND - PANEL, REAR CLOSURE (STORAGE TRAY WITH CUP HOLDER)

| REF | FN | PART NUMBER | YR/SN | QTY | DESCRIPTION |
|---|---|---|---|---|---|
| 1 | | 86992247 | | 1 | TRAY Cab Models, With Standard Interior; Includes 86992284, 400077A1 |
| | | NSS | | 1 | NOT SERVICED SEPARATELY Tray |
| | | 86992284 | | 4 | BUMPER |
| | | 400077A1 | | 1 | STRIP, METRES 1300 mm (51-3/16 in); Cut From 1977224C1 |
| 2 | | 397026A3 | | 1 | STRIP, PROTECTION Trim, Left-Hand Fender, Cab Models With Standard Interior |
| 3 | | 398113A1 | | 3 | SCREW No. 10 x 3/4 |
| 4 | | 131-869 | | 3 | NUT No. 10 |
| 5 | | 555-2 | | 2 | SCREW M6 x 20 |
| 5A | | 895-30109 | | 2 | WASHER 6,6 x 25 x 1,6 mm |
| 6 | | 833-40406 | | 2 | NUT M6 |
| 7 | | 140-117 | | 2 | SCREW No. 10 x 1 |
| 8 | | 495-61020 | | 4 | WASHER 13/64 x 3/4 x 1/16 |
| 9 | | 231-14109 | | 2 | NUT No. 10 |
| 9A | | 378742A3 | | 1 | INSERT Swing Pin Holder |
| 10 | | 86992245 | | 1 | COVER ASSY Cab Models With Deluxe Interior; Includes (4) 86992284 Bumpers |
| 12A | | 397774A3 | | 1 | STRIP Deluxe Interior |
| 12B | | 398113A1 | | 3 | SCREW No. 10 x 3/4 |
| 13 | | 140-117 | | 2 | SCREW No. 10 x 1 |
| 14 | | 495-61020 | | 4 | WASHER 13/64 x 3/4 x 1/16 |
| 15 | | 231-14109 | | 2 | NUT No. 10 |
| 16 | | 555-2 | | 2 | SCREW M6 x 20 |
| 17 | | 895-30109 | | 2 | WASHER |
| 18 | | 833-40406 | | 2 | NUT M6 |
| 19 | | 378742A3 | | 1 | INSERT Swing Pin Holder |
| 20 | | 86992243 | | 1 | TRAY ASSY. Canopy Models; Includes 86992284, 4000077A1 |
| | | NSS | | 1 | NOT SERVICED SEPARATELY Tray |
| | | 86992284 | | 4 | BUMPER |
| | | 400077A1 | | 1 | STRIP, METRES 1300 mm (51-3/16 in); Cut From 1977224C1 |
| 21 | | 397025A2 | | 1 | STRIP, PROTECTION Trim, Canopy Models |
| 21A | | 398113A1 | | 3 | SCREW No. 10 x 3/4 |

HTTP://WWW.MINNPARBACKHOEPARTS.COM



FENDER COVER, LEFT-HAND - PANEL, REAR CLOSURE (STORAGE TRAY WITH CUP HOLDER)

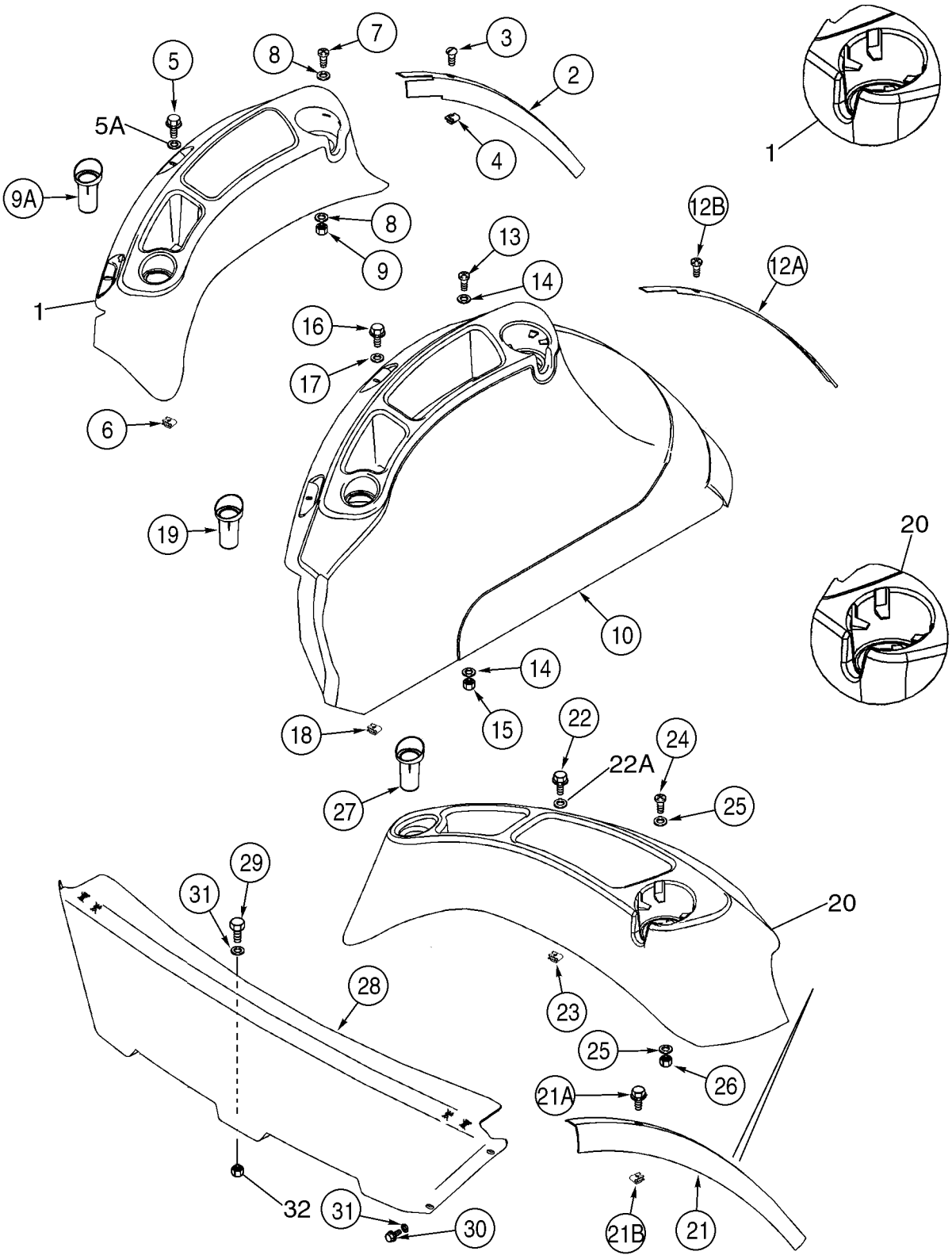

HTTP://WWW.MINNPARBACKHOEPARTS.COM



FENDER COVER, LEFT-HAND - PANEL, REAR CLOSURE (STORAGE TRAY WITH CUP HOLDER)

| REF | FN | PART NUMBER | YR/SN | QTY | DESCRIPTION |
|---|---|---|---|---|---|
| 21B | | 131-869 | | 3 | NUT No. 10 |
| 22 | | 555-2 | | 2 | SCREW M6 x 20 |
| 22A | | 895-30109 | | 2 | WASHER 6,6 x 25 x 1,6 mm |
| 23 | | 833-40406 | | 2 | NUT M6 |
| 24 | | 140-117 | | 2 | SCREW No. 10 x 1 |
| 25 | | 495-61020 | | 4 | WASHER 13/64 x 3/4 x 1/16 |
| 26 | | 231-14109 | | 2 | NUT No. 10 |
| 27 | | 378742A3 | | 1 | INSERT Swing Pin Holder |
| 28 | | 86992977 | | 1 | PANEL Rear Closure Panel; Canopy Models |
| 29 | | 614-8025 | | 1 | SCREW M8 x 25 |
| 30 | | 781-24820 | | 4 | SCREW Flange, M8 x 20 |
| 31 | | 895-15008 | | 5 | WASHER 9 x 16 x 1,6 mm |
| 32 | | 832-10408 | | 1 | NUT M8 |

HTTP://WWW.MINNPARBACKHOEPARTS.COM



FENDER EXTENSIONS

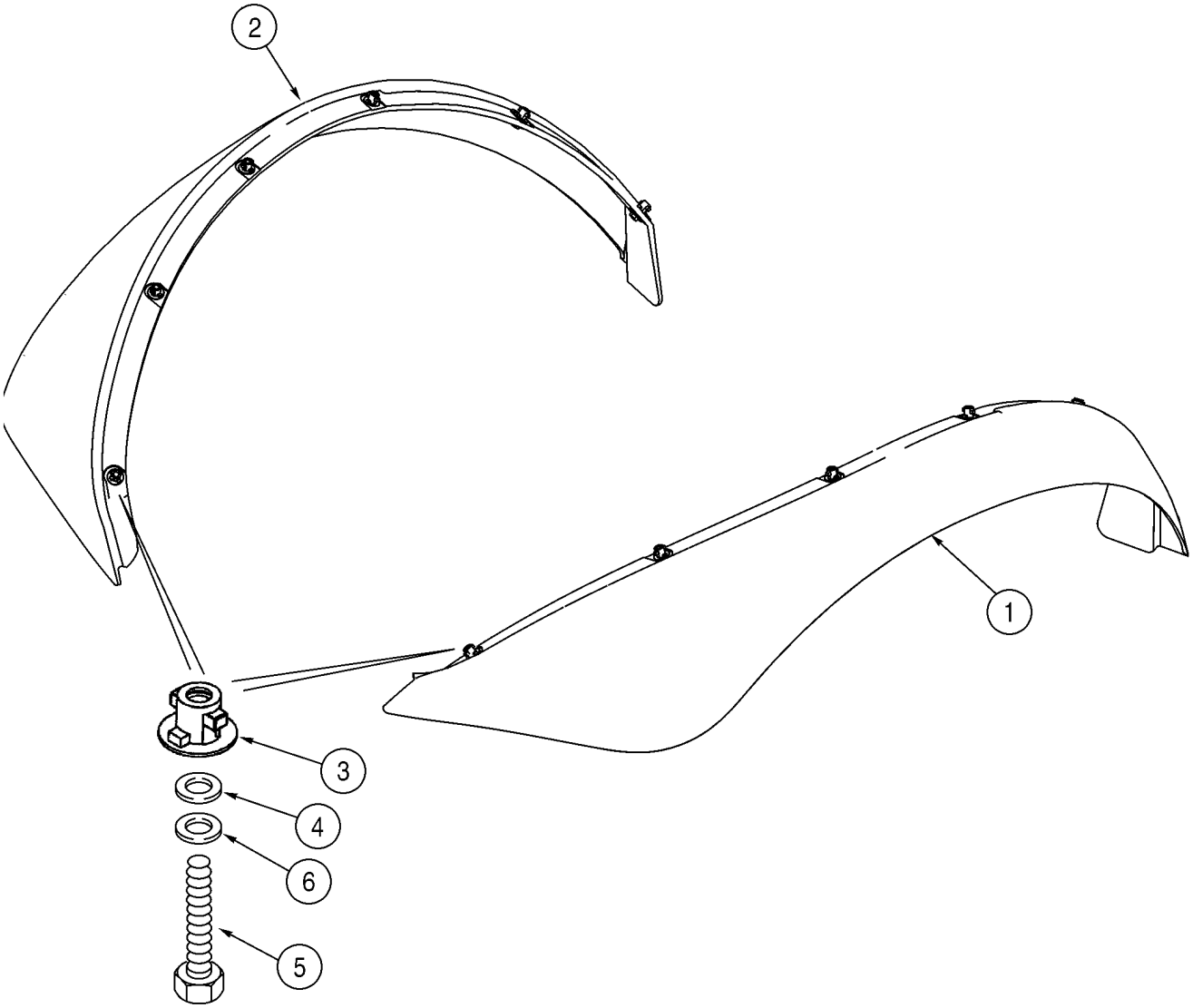


BC00F002

HTTP://WWW.MINNPARBACKHOEPARTS.COM



FENDER EXTENSIONS

| REF | FN | PART NUMBER | YR/SN | QTY | DESCRIPTION |
|---|---|---|---|---|---|
| 1 | | 340998A3 | | 1 | FENDER Right-Hand |
| 2 | | 340997A3 | | 1 | FENDER Left-Hand |
| 3 | | 345231A1 | | 12 | FASTENER |
| 4 | | 496-41041 | | 12 | WASHER 13/32 x 1-1/8 x 9/64 |
| 5 | | 614-8030 | | 12 | SCREW M8 x 30 |
| 6 | | 892-11008 | | 12 | WASHER 8 mm; Lock |

HTTP://WWW.MINNPARBACKHOEPARTS.COM

| 09-45 | | p1 | 01/04 |
|---|---|---|---|

GUARD, MUD

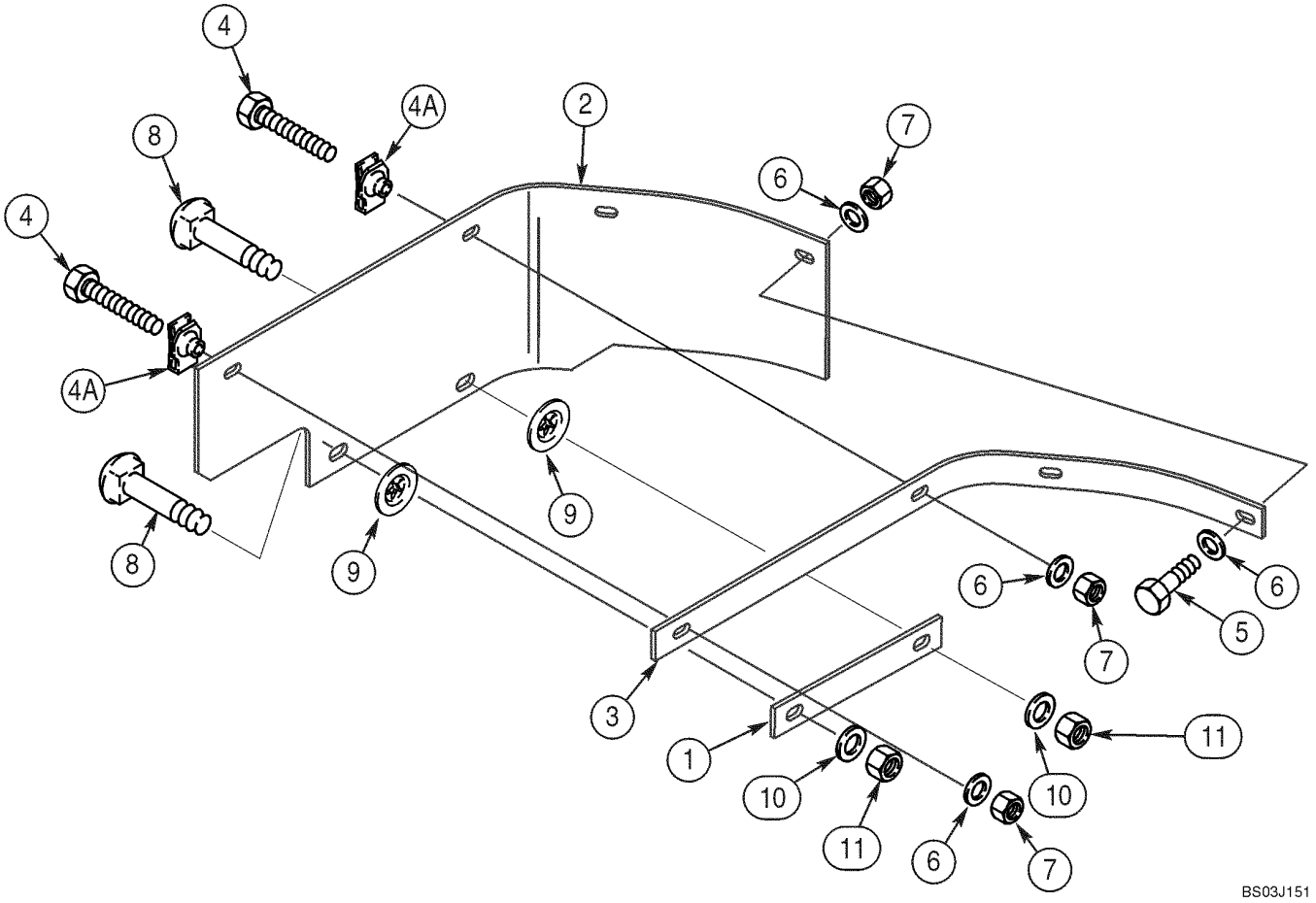

HTTP://WWW.MINNPARBACKHOEPARTS.COM



GUARD, MUD

| REF | FN | PART NUMBER | YR/SN | QTY | DESCRIPTION |
|---|---|---|---|---|---|
| 1 | | 362557A1 | | 1 | STRIP Plate |
| 2 | | 362556A2 | | 1 | GUARD Mounts At Right-Hand Fender |
| 3 | | 362558A1 | | 1 | STRIP Angle |
| 4 | | 614-8040 | | 2 | SCREW M8 x 40 |
| 4A | | 833-40408 | | 2 | NUT M8 |
| 5 | | 614-8030 | | 2 | SCREW M8 x 30 |
| 6 | | 495-21038 | | 6 | WASHER 3/8 x 7/8 x 3/32 |
| 7 | | 832-10408 | | 4 | NUT M8 |
| 8 | | 711-10040 | | 2 | BOLT M10 x 40 |
| 9 | | 368417A1 | | 2 | WASHER |
| 10 | | 895-11010 | | 2 | WASHER 11 x 21 x 2 mm |
| 11 | | 832-10410 | | 2 | NUT M10 |

HTTP://WWW.MINNPARBACKHOEPARTS.COM



SEAT - MOUNTING

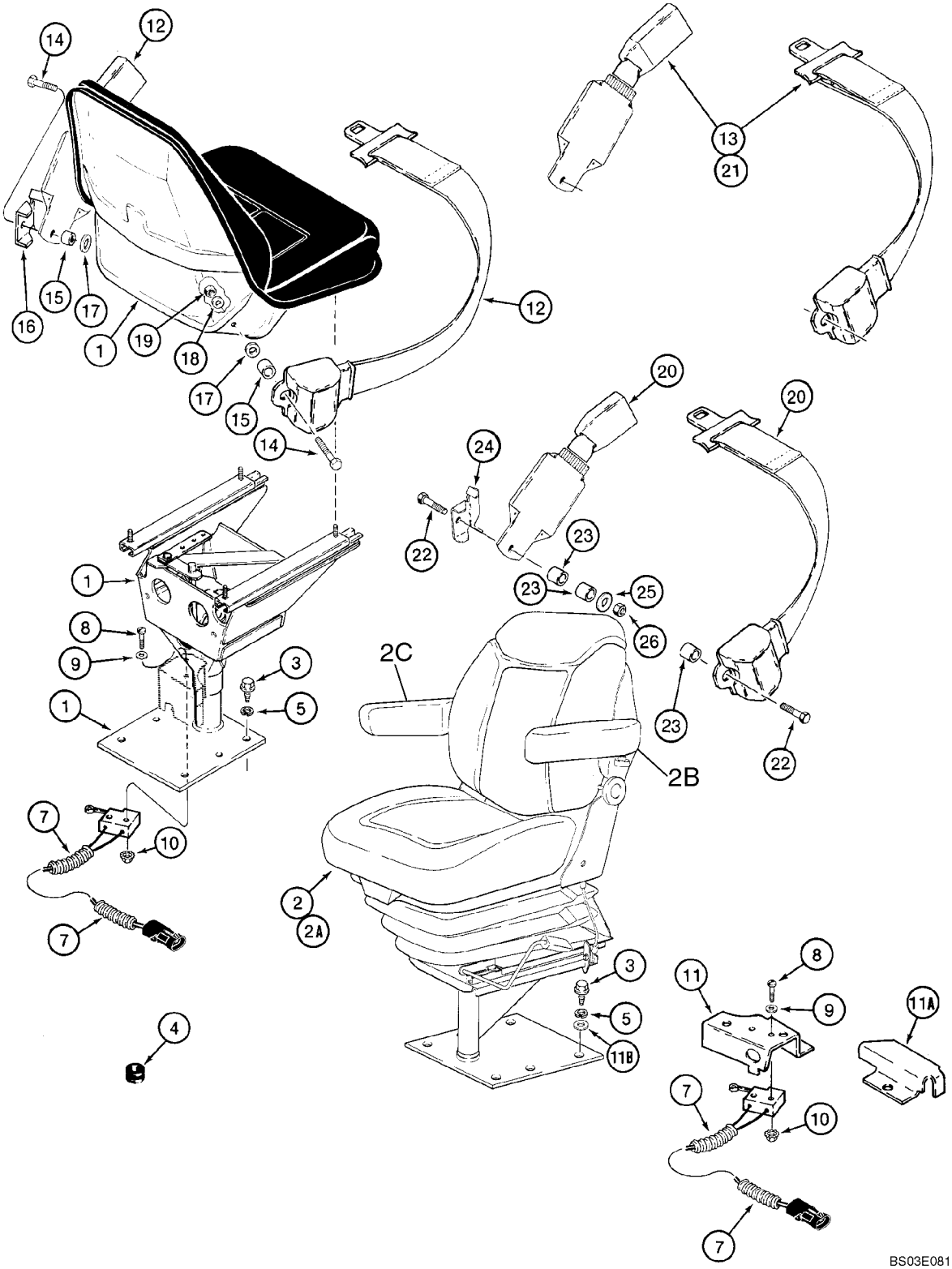

HTTP://WWW.MINNPARBACKHOEPARTS.COM



SEAT - MOUNTING

| REF | FN | PART NUMBER | YR/SN | QTY | DESCRIPTION |
|---|---|---|---|---|---|
| 1 | | 397132A1 | | 1 | SEAT ASSY. Standard, Vinyl, Without Armrest, Includes Seat, Pedestal, and Support, See Figures 09-47, 09-48 |
| 2 | | 397137A1 | | 1 | SEAT ASSY. Air Suspension, Cloth, Deluxe, With Armrests On Figure 09-51, See Figures 09-51, 09-52 |
| 2A | | 397136A2 | | 1 | SEAT ASSY. Suspension, Cloth, Without Armrests, Includes Seat, Suspension, and Pedestal, See Figures 09-49, 09-50; Order 397407A1 Service Kit For Seat Assy With Armrests |
| 2A | | 397134A2 | | 1 | SEAT ASSY. Suspension, Vinyl, Without Armrests, Includes Seat, Suspension, and Pedestal, See Figures 09-49, 09-50; Order 397408A1 Service Kit For Seat Assy With Armrests |
| 2B | | 292262A1 | | 1 | ARMREST ASSY. Kit, Left-Hand |
| 2C | | 292263A2 | | 1 | ARMREST ASSY. Kit, Right-Hand |
| 3 | | 604-12030 | | 4 | BOLT M12 x 30 |
| 4 | | 248-2373 | | 1 | GROMMET 1-1/4 |
| 5 | | 896-15012 | | 4 | WASHER 13,5 x 28 x 4 mm |
| 7 | | 118769A1 | | 1 | SWITCH Limit Switch |
| 8 | | 470-10620 | | 2 | SCREW No. 6 x 1-1/4 |
| 9 | | 495-31016 | | 2 | WASHER 5/32 x 3/8 x 3/64 |
| 10 | | 193-1003 | | 2 | NUT No. 6 |
| 11 | | 119211A1 | | 1 | BRACKET Switch Mounting, Suspension Seat |
| 11A | | 186351A1 | | 1 | GUARD Harness |
| 11B | | 896-11012 | | 1 | WASHER Flat, 13,5 x 24 x 3 mm |
| 12 | | 87408889 | | 1 | SEAT BELT 51 mm (2 in), If Used; Standard Seat Belt Mounting |
| 13 | | 87408888 | | 1 | SEAT BELT 76 mm (3 in), Retractable, If Used; Standard Seat Belt Mounting |
| 14 | | 414-724 | | 2 | SCREW 7/16 x 1-1/2; 5 |
| 15 | | D150391 | | 2 | SPACER |
| 16 | | D150392 | | 1 | BRACKET Left-Hand |
| 17 | | 495-81169 | | 2 | WASHER 17/32 x 2,5 x 1/8, Not Used On Deluxe Air Suspension Seat |
| 18 | | 496-81010 | | 4 | WASHER 15/32 x 1 x 7/64 |
| 19 | | 232-4617 | | 2 | NUT 7/16 NF; 8 |

HTTP://WWW.MINNPARBACKHOEPARTS.COM



SEAT - MOUNTING

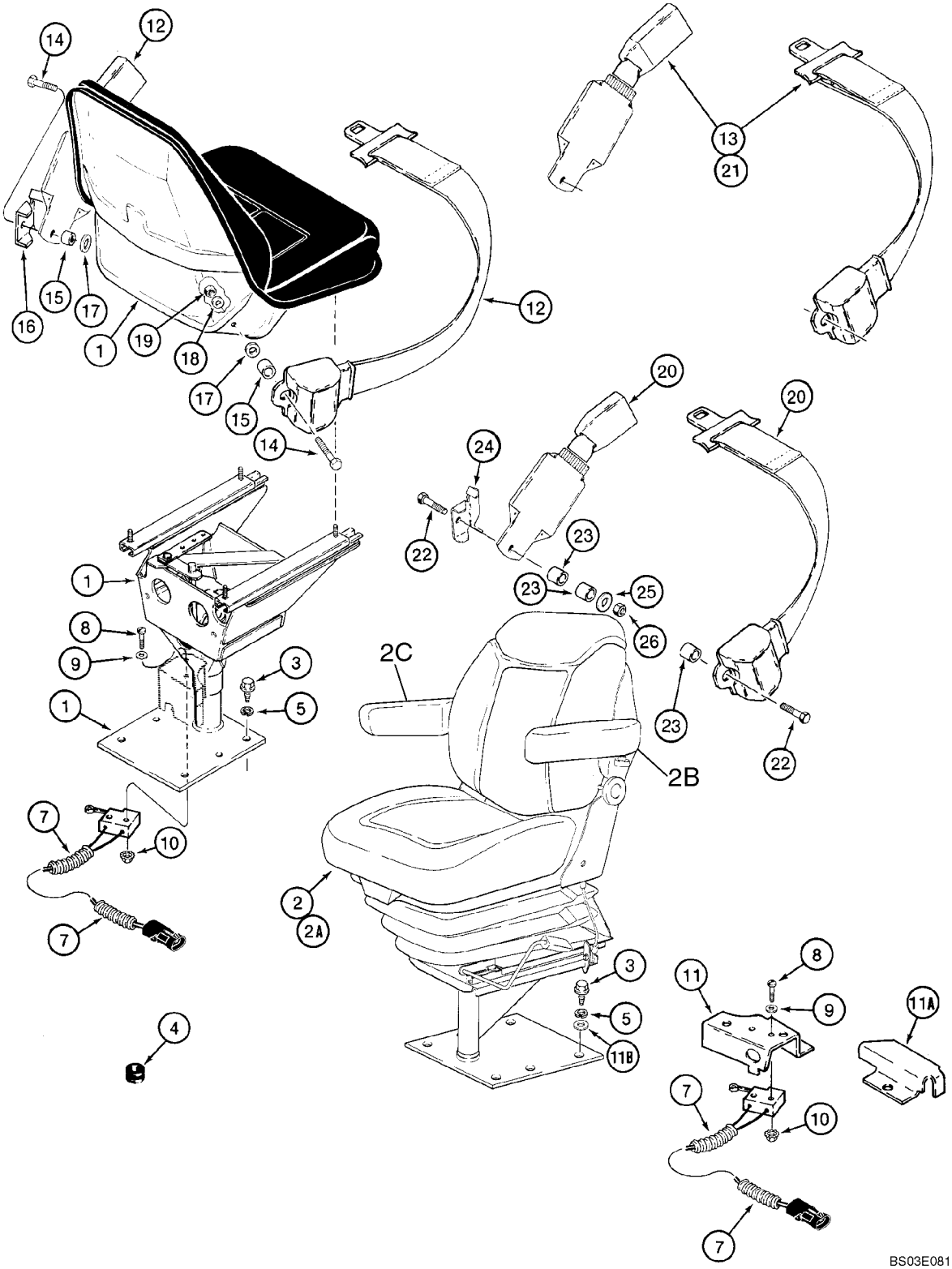

HTTP://WWW.MINNPARBACKHOEPARTS.COM



SEAT - MOUNTING

| REF | FN | PART NUMBER | YR/SN | QTY | DESCRIPTION |
|---|---|---|---|---|---|
| 20 | | 87408889 | | 1 | SEAT BELT 51 mm (2 in), If Used; Suspension Seat Belt Mounting |
| 21 | | 87408888 | | 1 | SEAT BELT 76 mm (3 in), Retractable, If Used; Suspension Seat Belt Mounting |
| 22 | | 414-724 | | 2 | SCREW 7/16 x 1-1/2; 5 |
| 23 | | D150391 | | 2 | SPACER |
| 24 | | D150392 | | 1 | BRACKET Left-Hand |
| 25 | | 496-81010 | | 2 | WASHER 15/32 x 1 x 7/64 |
| 26 | | 232-4617 | | 2 | NUT 7/16 NF; 8 |

HTTP://WWW.MINNPARBACKHOEPARTS.COM



SEAT ASSY, STANDARD

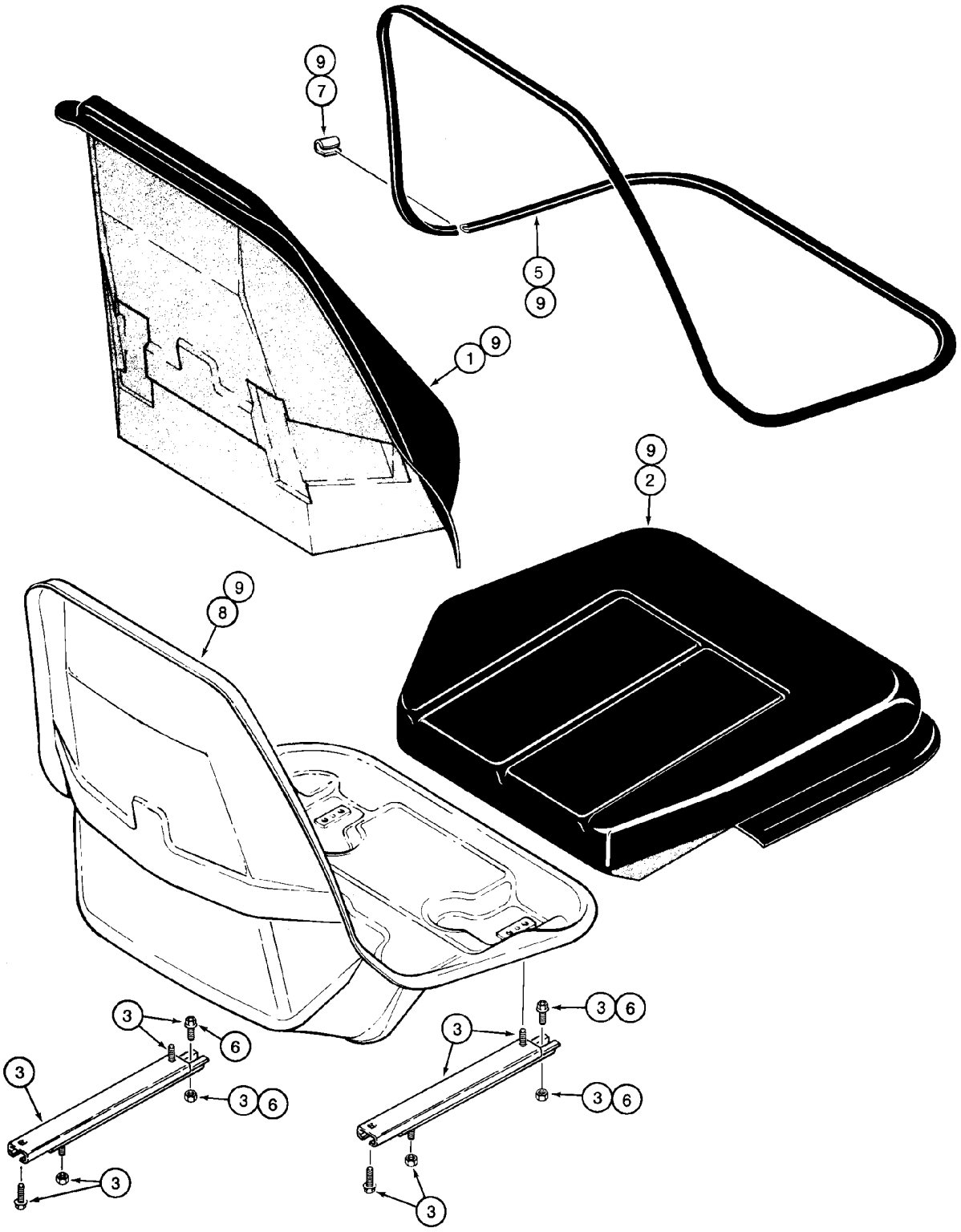


BS00J117

HTTP://WWW.MINNPARBACKHOEPARTS.COM



SEAT ASSY, STANDARD

| REF | FN | PART NUMBER | YR/SN | QTY | DESCRIPTION |
|---|---|---|---|---|---|
| | | 397132A1 | | 1 | SEAT ASSY. Vinyl, Standard Seat; Incl. Ref 1 - 9; Also Includes Parts On Figure 09-48 |
| 1 | | NSS | | 1 | NOT SERVICED SEPARATELY Cushion, Backrest; Order 406700A1 Cushion Assy, Ref 9 |
| 2 | | NSS | | 1 | NOT SERVICED SEPARATELY Cushion, Seat; Order 406700A1 Cushion Assy, Ref 9 |
| 3 | | 399777A1 | | 1 | KIT Seat Slide Adjusters |
| 5 | | 176924A1 | | 1 | SET OF PARTS Trim |
| 6 | | 181169A1 | | 1 | KIT Cable, Fore-Aft/Swivel Mechanism, For Cable, See Figure 09-48 |
| 7 | | NSS | | 1 | NOT SERVICED SEPARATELY Clip, Order N7802 Clip Kit |
| 8 | | NSS | | 1 | NOT SERVICED SEPARATELY Shell, Seat Frame, Order 406700A1 Cushion Assy, Ref 9 |
| 9 | | 406700A1 | | 1 | CUSHION ASSY. Seat Shell, Cushions, and Trim, Incl. Ref 1, 2, 5, 8 |
| | | N7802 | | 1 | CLIP Clip, Incl. Ref 7 Clip, Plus 6 Additional Narrow Clips |

HTTP://WWW.MINNPARBACKHOEPARTS.COM



SEAT SUPPORT AND PEDESTAL, STANDARD

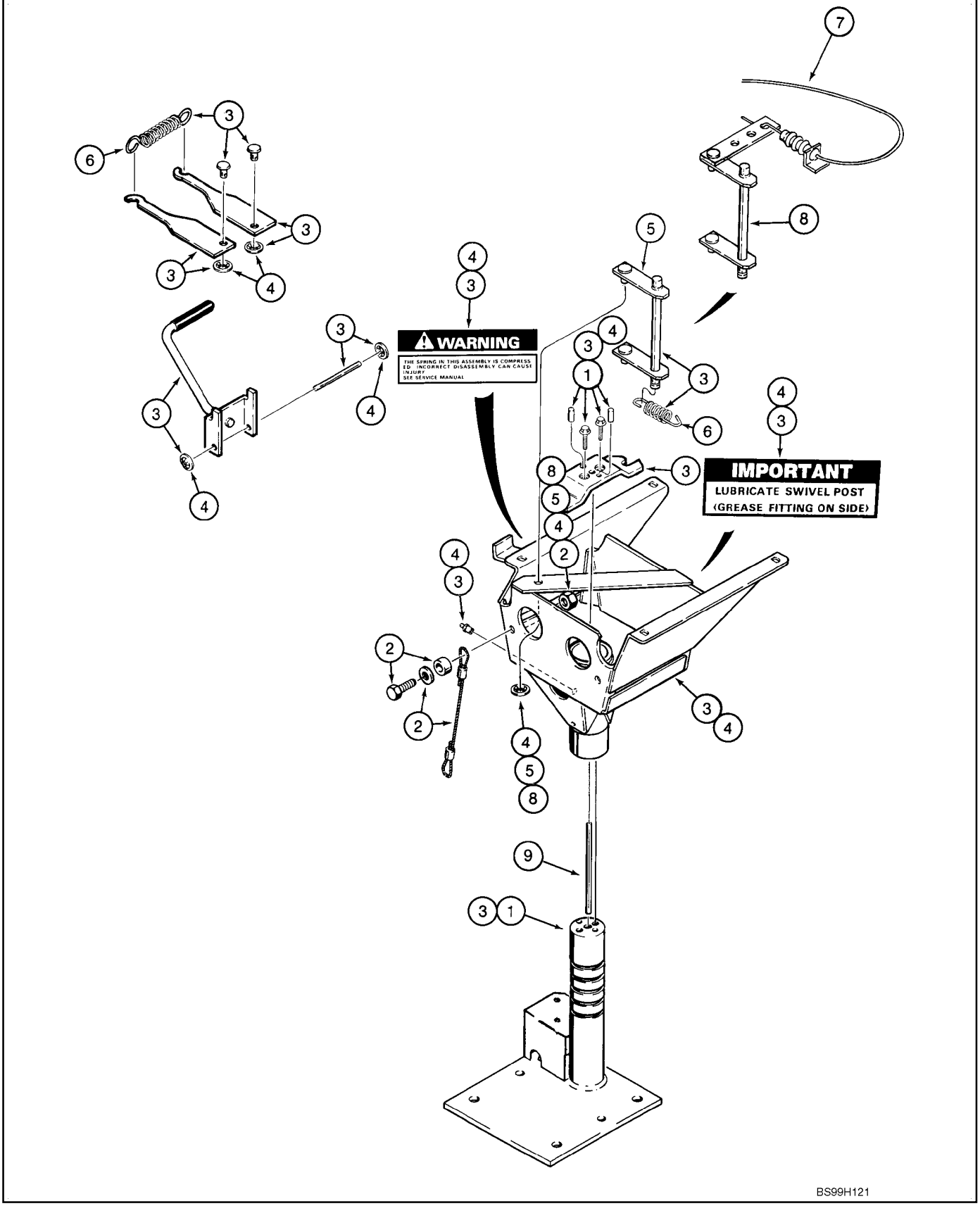

HTTP://WWW.MINNPARBACKHOEPARTS.COM



SEAT SUPPORT AND PEDESTAL, STANDARD

| REF | FN | PART NUMBER | YR/SN | QTY | DESCRIPTION |
|---|---|---|---|---|---|
| | | 397132A1 | | 1 | SEAT ASSY. Vinyl, Standard Seat, Incl. Ref 1 - 9, Also Includes Parts On Figure 09-47 |
| 1 | | 116761A3 | | 1 | KIT Support, Base, Includes (6) Lock Nuts, (2) Pins, (1) Rivet, (1) Washer, (1) Spacer, 2 Screws |
| 2 | | 116763A1 | | 1 | KIT Cable, Anchor, Includes Hardware For Both Ends |
| 3 | | 116764A3 | | 1 | KIT Pedestal, Includes (4) Lock Nuts, (1) Rivet, (1) Washer, (1) Spacer, (1) Tie, (2) Screws |
| | | 219-16 | | 1 | NIPPLE, LUBE 5/16 dr type x 19/32; If Used |
| 4 | | 116766A2 | | 1 | KIT Pedestal Box, Includes (4) Lock Nuts For Seat Adjuster Slide, Includes 219-16 |
| | | 219-16 | | 1 | NIPPLE, LUBE 5/16 dr type x 19/32 |
| 5 | | 116767A1 | | 1 | KIT Swivel Latch, Includes (6) Lock Nuts, (1) Push Nut, (1) Swivel Latch; Also Includes (4) Lock Nuts For Seat Adjuster Slide |
| 6 | | 119171A1 | | 1 | KIT Spring |
| 7 | | 181169A1 | | 1 | KIT Cable, Fore-Aft/Swivel Mechanism, Also Includes (4) Nuts |
| 8 | | 253209A1 | | 1 | KIT Swivel Latch, Includes (4) Lock Nuts, (1) Rivet, (1) Spacer, (1) Washer, (1) Push Nut, (1) Swivel Latch |
| 9 | | NSS | | 1 | NOT SERVICED SEPARATELY Pin, Seat |

HTTP://WWW.MINNPARBACKHOEPARTS.COM

| 09-49 | | p1 | 01/04 |
|---|---|---|---|

SEAT ASSY, MECHANICAL SUSPENSION

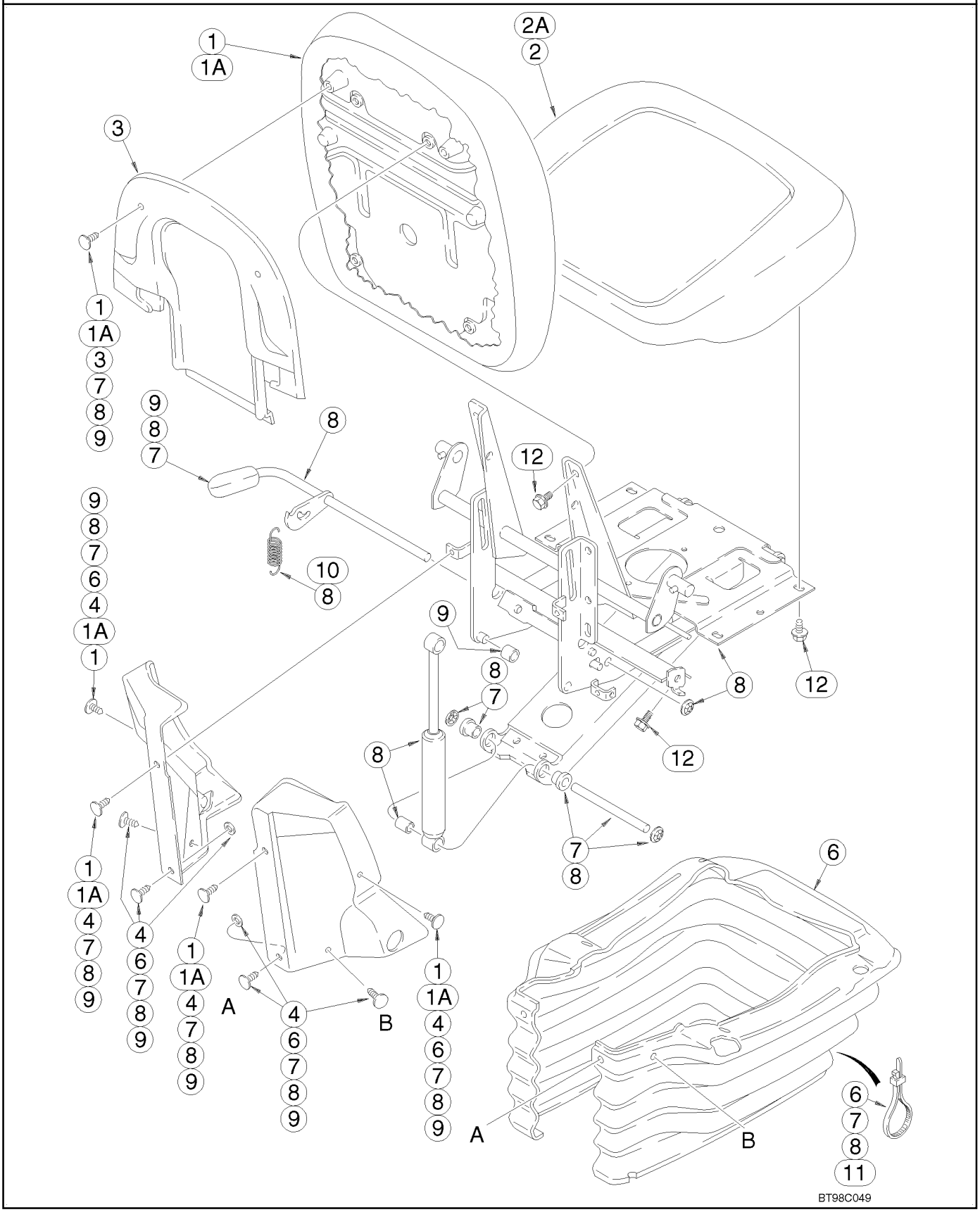

HTTP://WWW.MINNPARBACKHOEPARTS.COM



SEAT ASSY, MECHANICAL SUSPENSION

| REF | FN | PART NUMBER | YR/SN | QTY | DESCRIPTION |
|---|---|---|---|---|---|
| | | 397136A2 | | 1 | SEAT ASSY. Cloth, Includes Seat, Suspension, Pedestal and Weight Adjuster, Without Armrests, Incl. Ref 1 - 11; Also Includes Parts On Figure 09-50 |
| | | 397134A2 | | 1 | SEAT ASSY. Vinyl, Includes Seat, Suspension, Pedestal and Weight Adjuster, Without Armrests, Incl. Ref 1 - 11; Also Includes Parts On Figure 09-50 |
| 1 | | 399757A1 | | 1 | KIT Cushion, Backrest, Cloth, Includes Lumbar Knob, (6) Clips and (4) Screws |
| 1A | | 399759A1 | | 1 | KIT Cushion, Backrest, Vinyl, Includes Lumbar Knob, (6) Clips and (4) Screws |
| 2 | | 399758A1 | | 1 | KIT Cushion, Seat, Cloth, Includes (6) Screws |
| 2A | | 399760A1 | | 1 | KIT Cushion, Seat, Vinyl, Includes (6) Screws |
| 3 | | 307091A1 | | 1 | ASSEMBLY Kit, Backrest Shroud, Includes (2) Clips |
| 4 | | 307090A1 | | 1 | KIT Side Shroud, Left-Hand and Right-Hand, Includes (6) Clips, (2) Washers, (1) Height Adjustment Grip, (1) Back Angle Grip |
| 6 | | 307098A1 | | 1 | KIT Boot, Includes (2) Ties, (2) Washers, (4) Clips |
| 7 | | 176919A1 | | 1 | KIT Swing Arm Pivot Shaft, Includes (2) Flanged Bearings, (4) Push Nuts, (2) Clips, (2) Washers, (1) Grip, (2) Ties |
| 8 | | 307092A1 | | 1 | KIT Suspension, Includes Suspension, Back Angle Adjust, (2) Groove Pins, (1) Handle, (8) Screws, (2) Springs, (3) Washers, (1) Rivet; Includes Parts From Seat Frame To Adjuster Slides; For Additional Kit Parts See Figure 09-50, Ref 1 |
| 8 | | 307092A1 | | 1 | KIT 307092A1 Suspension Kit Also Includes (1) Spacer, (2) Ties, (8) Clips, (12) Nuts, (1) Height Adjust Grip, (1) Back Angle Grip, (1) Rake Grip, (1) Fore/Aft/Swivel Grip, (1) Decal |
| 9 | | 176921A1 | | 1 | KIT Plastic Components, Includes (2) Rollers, (4) Downstops, (2) Roller Guides, (2) Bearings, (1) Bumper, (4) Nuts, (10) Clips, (2) Washers, (1) Grip; For Additional Kit Parts, See Figure 09-50, Ref 2 |
| 10 | | 116547A1 | | 1 | KIT Height Adjusting Spring, Includes (10) Shroud Retainers, (2) Washers, (2) Springs, (1) Wear Strip; For Additional Kit Parts, See Figure 09-50, Ref 6 |

HTTP://WWW.MINNPARBACKHOEPARTS.COM



SEAT ASSY, MECHANICAL SUSPENSION

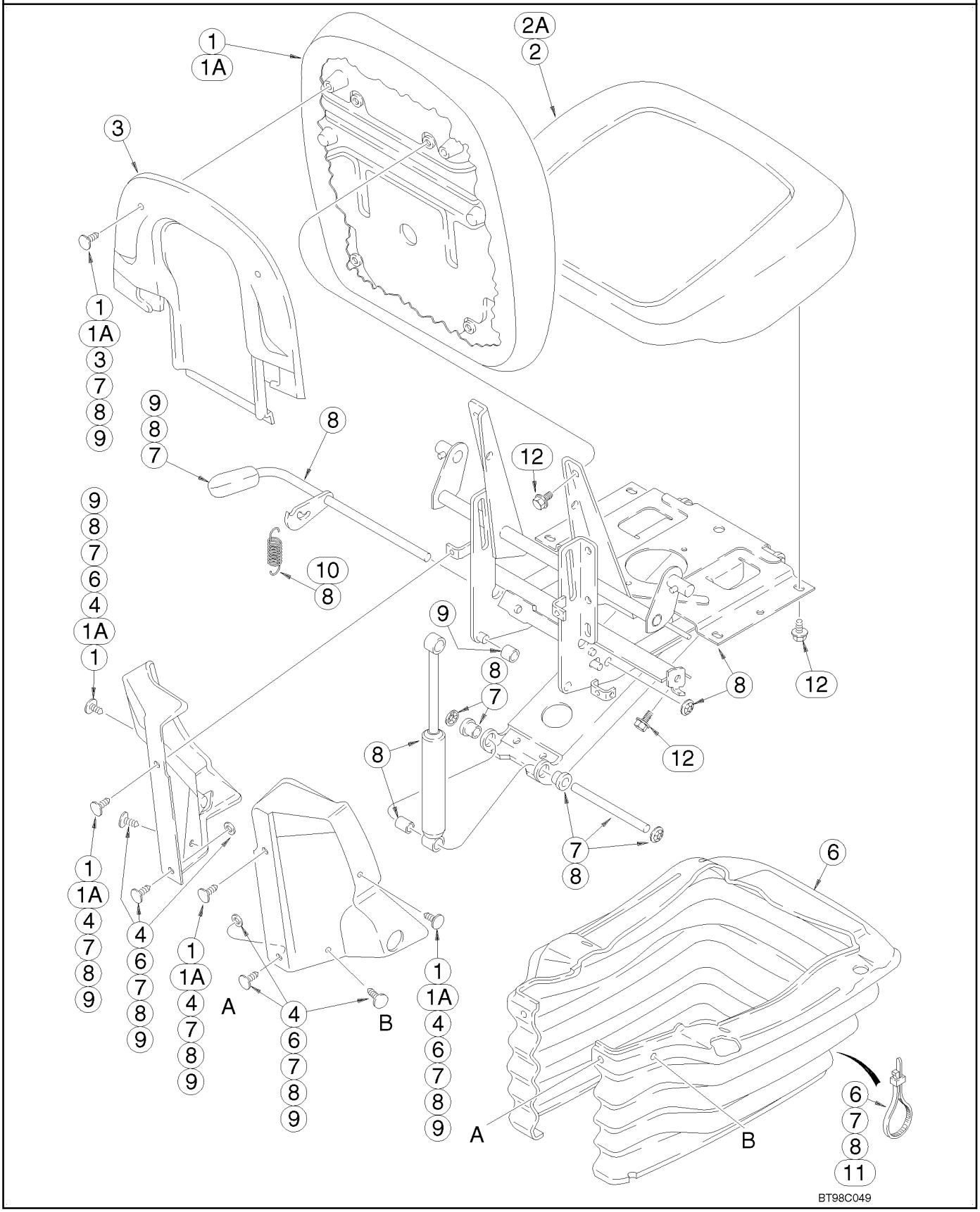

HTTP://WWW.MINNPARBACKHOEPARTS.COM



SEAT ASSY, MECHANICAL SUSPENSION

| REF | FN | PART NUMBER | YR/SN | QTY | DESCRIPTION |
|---|---|---|---|---|---|
| 11 | | 181170A1 | | 1 | KIT Cable, Fore-Aft/Swivel Mechanism, Includes (2) Screws, (2) Ties, Cable, (4) Nuts |
| 12 | | NSS | | 8 | NOT SERVICED SEPARATELY Bolt, 5/16 Inch Thread, Length As Required, Purchase Locally, Seat Cushion and Backrest |

HTTP://WWW.MINNPARBACKHOEPARTS.COM



SEAT PEDESTAL AND SUSPENSION, MECHANICAL SUSPENSION

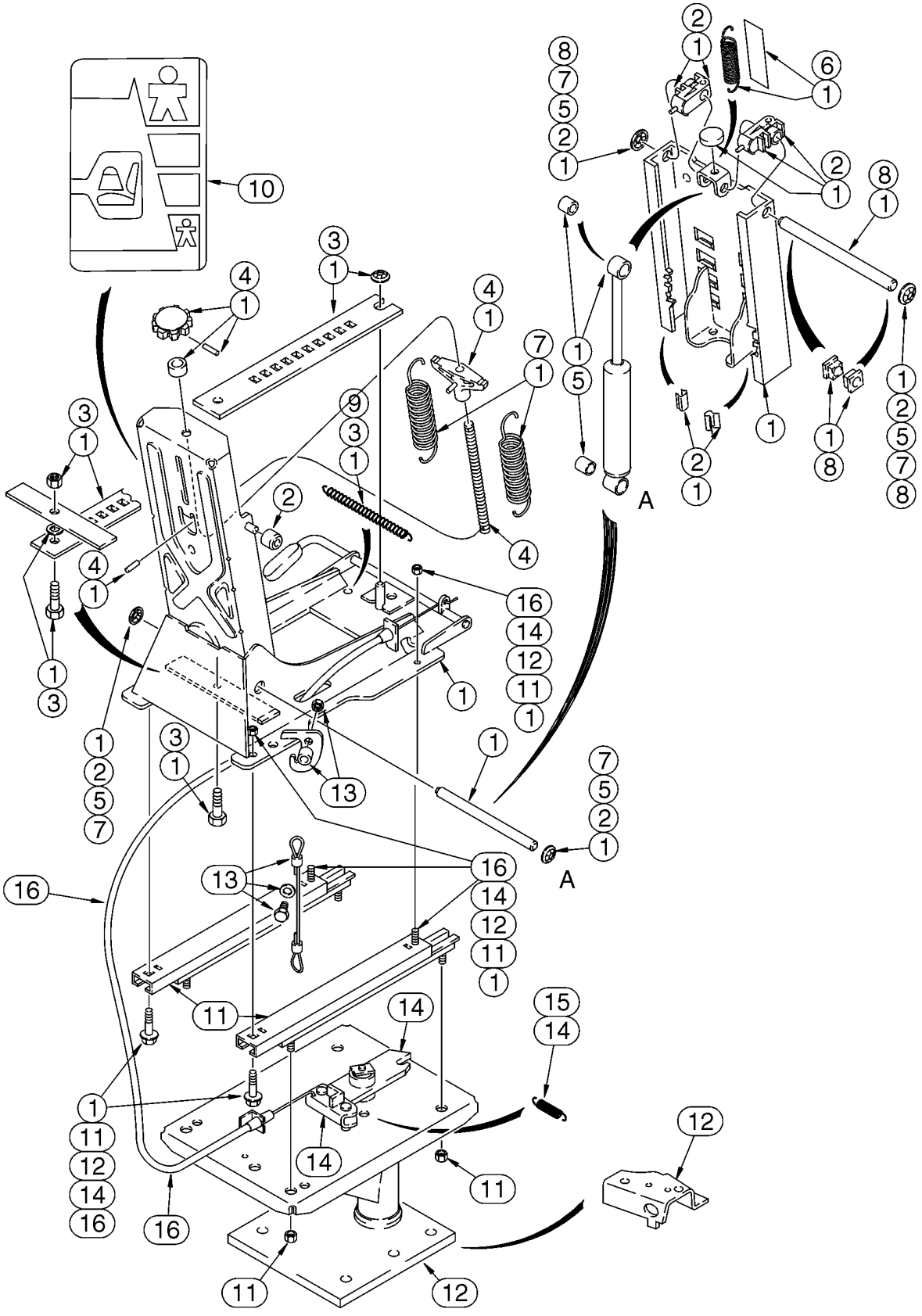

HTTP://WWW.MINNPARBACKHOEPARTS.COM



SEAT PEDESTAL AND SUSPENSION, MECHANICAL SUSPENSION

| REF | FN | PART NUMBER | YR/SN | QTY | DESCRIPTION |
|---|---|---|---|---|---|
| | | 397136A2 | | 1 | SEAT ASSY. Cloth, Includes Seat, Suspension, Pedestal and Weight Adjuster, Without Armrests; Incl. Ref 1 - 16; Also Includes Parts On Figure 09-49 |
| | | 397134A2 | | 1 | SEAT ASSY. Vinyl, Includes Seat, Suspension, Pedestal and Weight Adjuster, Without Armrests; Incl. Ref 1 - 16; Also Includes Parts On Figure 09-49 |
| 1 | | 307092A1 | | 1 | KIT Suspension, Includes Suspension, Back Angle Adjust, (2) Groove Pins, (1) Handle, (8) Screws, (2) Springs, (3) Washers and (1) Rivet; Includes Parts From Seat Frame To Adjuster Slides; For Additional Kit Parts, See Figure 09-49, Ref 8 |
| 1 | | 307092A1 | | 1 | KIT Suspension; Also Includes (1) Spacer, (2) Ties, (8) Clips, (12) Nuts, (1) Height Adjust Grip, (1) Back Angle Grip, (1) Rake Grip, (1) Fore/Aft/Swivel Grip, (1) Decal |
| 2 | | 176921A1 | | 1 | KIT Plastic Components, Includes (2) Rollers, (4) Downstops, (2) Roller Guides, (2) Bearings, (1) Bumper, (4) Nuts, (10) Clips, (2) Washers, (1) Grip; For Additional Kit Parts, See Figure 09-49, Ref 9 |
| 3 | | 116521A1 | | 1 | KIT Fore/Aft Adjuster Latch, Includes (1) Latch Bar, (1) Bolt, (1) Spacer, (2) Nuts, (1) Spring and (2) Ties, Includes 131-435 Nut |
| | | 131-435 | | X | NUT 3/8 |
| 4 | | 176916A1 | | 1 | KIT Weight Adjuster, Includes Adjusting Knob, (1) Spacer, (2) Roll Pins, (1) Shaft, (1) Spring, (10) Clips, (2) Washers, (1) Grip and (2) Ties; Also Includes (10) Shroud Retainers, (2) Washers, (2) Ties, See Figure 09-49 |
| 5 | | 176914A1 | | 1 | KIT Suspension Damper, Includes Damper, (2) Spacers, (4) Nuts, (10) Clips, (2) Washers, (1) Grip and (2) Ties; Also Includes (10) Shroud Retainers, (2) Washers, (2) Ties, See Figure 09-49 |
| 6 | | 116547A1 | | 1 | KIT Height Adjusting Spring, Includes (10) Shroud Retainers, (2) Washers, (2) Springs, (1) Wear Strip; For Additional Kit Parts, See Figure 09-49, Ref 10 |

HTTP://WWW.MINNPARBACKHOEPARTS.COM



SEAT PEDESTAL AND SUSPENSION, MECHANICAL SUSPENSION

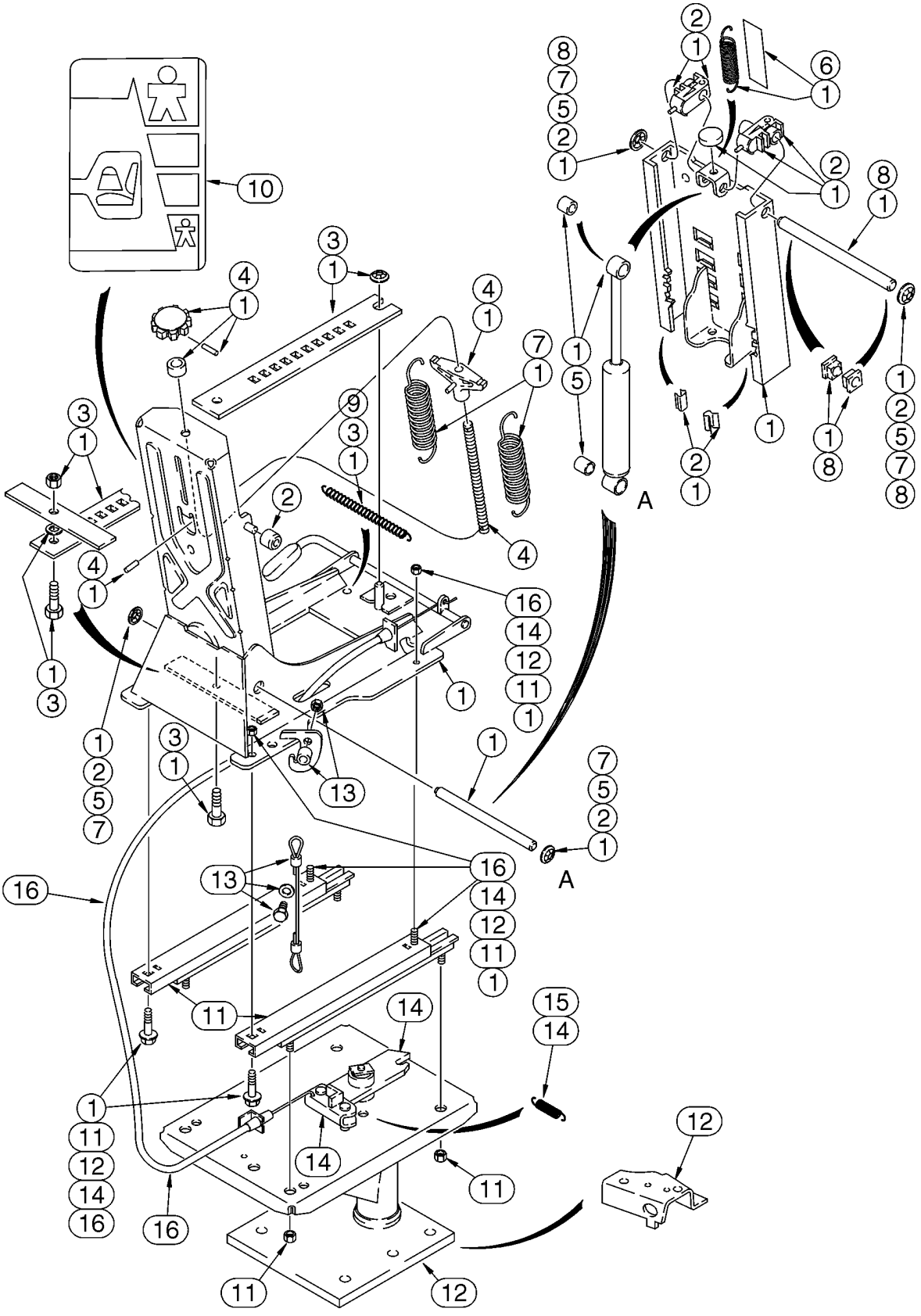

HTTP://WWW.MINNPARBACKHOEPARTS.COM



SEAT PEDESTAL AND SUSPENSION, MECHANICAL SUSPENSION

| REF | FN | PART NUMBER | YR/SN | QTY | DESCRIPTION |
|---|---|---|---|---|---|
| 7 | | 176920A1 | | 1 | KIT Main Extension Springs, Includes (2) Springs, (4) Nuts, (2) Washers, (10) Clips, (1) Grip, (2) Ties |
| 8 | | 116551A1 | | 1 | KIT Upper Suspension Tower Shaft, Includes Shaft, (2) Bearings, (2) Nuts, (10) Clips, (2) Washers |
| 9 | | 116545A1 | | 1 | KIT Fore/Aft Latch Spring, Includes (1) Spring, (2) Ties |
| 10 | | 116534A1 | | 1 | KIT Decal, Seat Weight Adjustment |
| 11 | | 399764A1 | | 1 | KIT Fore/Aft Adjuster Slides |
| 12 | | 116538A2 | | 1 | KIT Pedestal, Includes Pedestal, (4) Screws, (4) Nuts and 119211A1 Bracket |
| 13 | | 116552A1 | | 1 | KIT Cable, Includes (2) Cables, (2) Screws, (2) Spacers, (2) Washers, (2) Nuts |
| 14 | | 116550A1 | | 1 | KIT Swivel Latch Bar, Includes Latch Bar, (1) Spring, (1) Ring, (4) Screws, (4) Nuts |
| 14 | | 336375A1 | | 1 | KIT Swivel Latch Plate, Includes Latch, Swivel Plate Latch, (5) Screws, (6) Nuts, (2) Pins |
| 15 | | 116548A1 | | 1 | KIT Swivel Latch Spring Only |
| 16 | | 181170A1 | | 1 | KIT Cable, Fore-Aft/Swivel Mechanism, Includes (2) Screws, (2) Ties, Cable, (4) Nuts |

HTTP://WWW.MINNPARBACKHOEPARTS.COM

| 09-51 | | p1 | 01/04 |
|---|---|---|---|

SEAT ASSY, AIR SUSPENSION

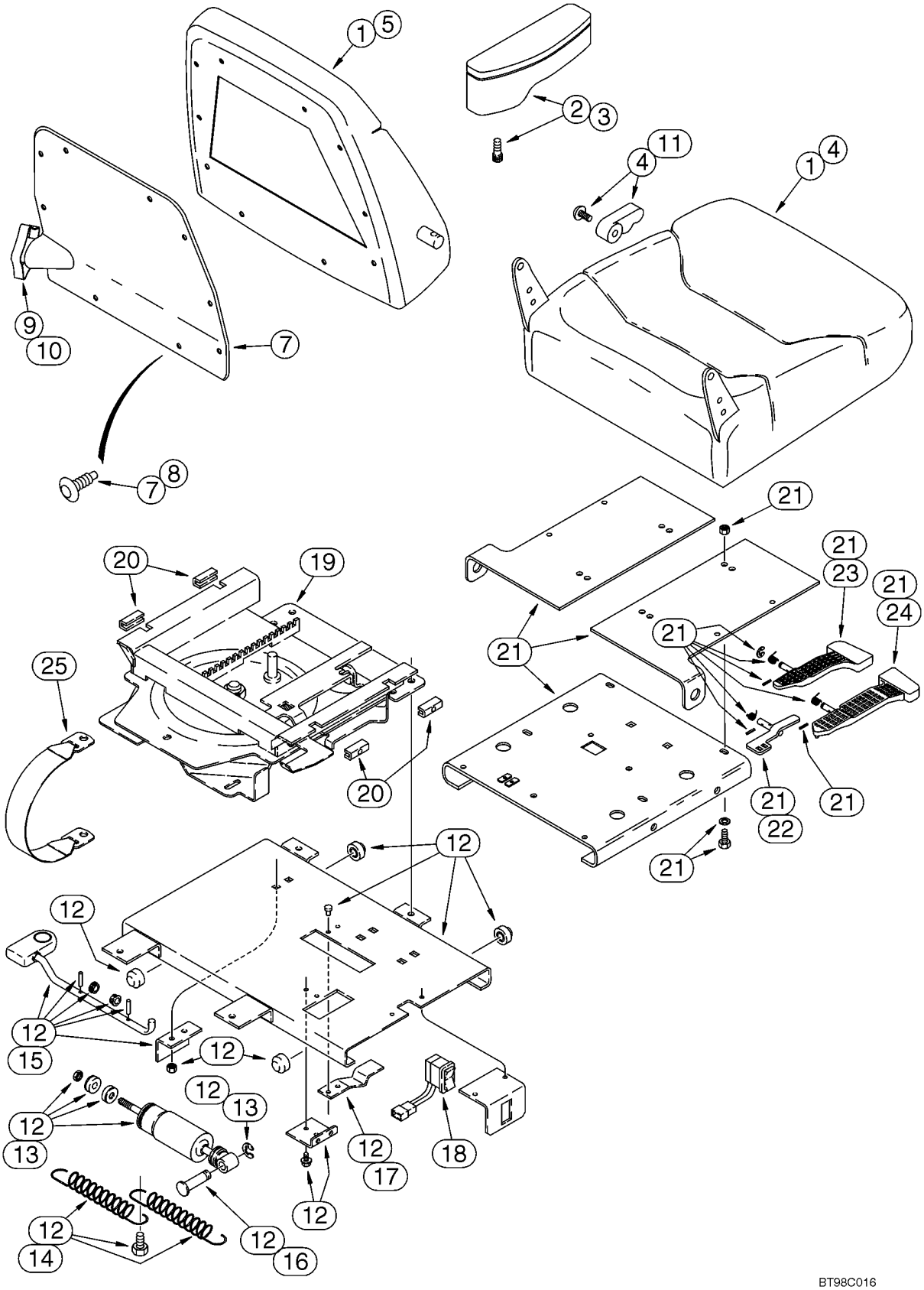

HTTP://WWW.MINNPARBACKHOEPARTS.COM



SEAT ASSY, AIR SUSPENSION

| REF | FN | PART NUMBER | YR/SN | QTY | DESCRIPTION |
|---|---|---|---|---|---|
| | | 121414A1 | | 1 | FUSE 20 amp, Not Illustrated |
| | | 604-12030 | | 4 | BOLT M12 x 30 |
| | | 896-15012 | | 4 | WASHER 13,5 x 28 x 4 mm |
| | | 397137A1 | | 1 | SEAT ASSY. Air Suspension Seat, Cloth, With Armrests, Incl. Ref 1 - 25; Also Includes Parts On Figure 09-52 |
| 1 | | 400981A1 | | 1 | KIT Seat Cushion and Backrest, Includes Seat, Backrest, Backrest Cover and Hardware |
| 2 | | 300659A1 | | 1 | KIT Armrest, Right-Hand, Includes Armrest Knob and Shaft, Groove Pin, Pivot Stud and Screw |
| 3 | | 300661A1 | | 1 | KIT Armrest, Left-Hand, Includes Armrest Knob and Shaft, Groove Pin, Pivot Stud and Screw |
| 4 | | 400837A1 | | 1 | KIT Seat Cushion, With Frame, Includes (5) Clips, (18) Rings, (1) Screw and Recliner Handle |
| 5 | | 400838A1 | | 1 | KIT Backrest Cushion, With Frame, Includes (23) Rings, Lumbar, (2) Screws and (2) Clips |
| 6 | | 176091A1 | | 1 | PACKAGE,SERVICE Package of 48 Rings For Cushions, Not Illustrated |
| 7 | | 300664A1 | | 1 | KIT Backrest Cover and Retainers, Incl. Ref 8 |
| 8 | | 1999693C1 | | 1 | KIT Clip, Package of 14 |
| 9 | | 300665A1 | | 1 | KIT Lumbar, With Knob |
| 10 | | 300667A1 | | 1 | KNOB Lumbar Knob, Includes Knob, Actuator and (2) Screws |
| 11 | | 1987212C1 | | 1 | PACKAGE Seat Cushion Back Tilt Knob, Includes Knob, Recliner Handle and (1) Screw |
| 12 | | 300670A1 | | 1 | KIT Lateral Isolator Assy, Incl. Ref 13 - 17 |
| 13 | | 1987219C2 | | 1 | SET OF PARTS Lateral Isolator Shock, Includes Shock Absorber, (1) Bearing, (2) Bushings, (1) Nut, (2) Washers, (1) Spacer, (1) Ring |
| 14 | | 1987290C1 | | 1 | SET OF PARTS Spring, Includes (2) Springs, (1) Bolt |
| 15 | | 259054A1 | | 1 | SET OF PARTS Lock, Includes Latch Rod, Bracket, (2) Bearings, Knob, (2) Roll Pins |
| 16 | | 1344025C1 | | 1 | PIN, LARGE Pivot |
| 17 | | 1344026C1 | | 1 | SPRING |
| 18 | | 300672A1 | | 1 | SWITCH Rocker, Height Adjustment |

HTTP://WWW.MINNPARBACKHOEPARTS.COM

| 09-51 | | p2 | 01/04 |
|---|---|---|---|

SEAT ASSY, AIR SUSPENSION

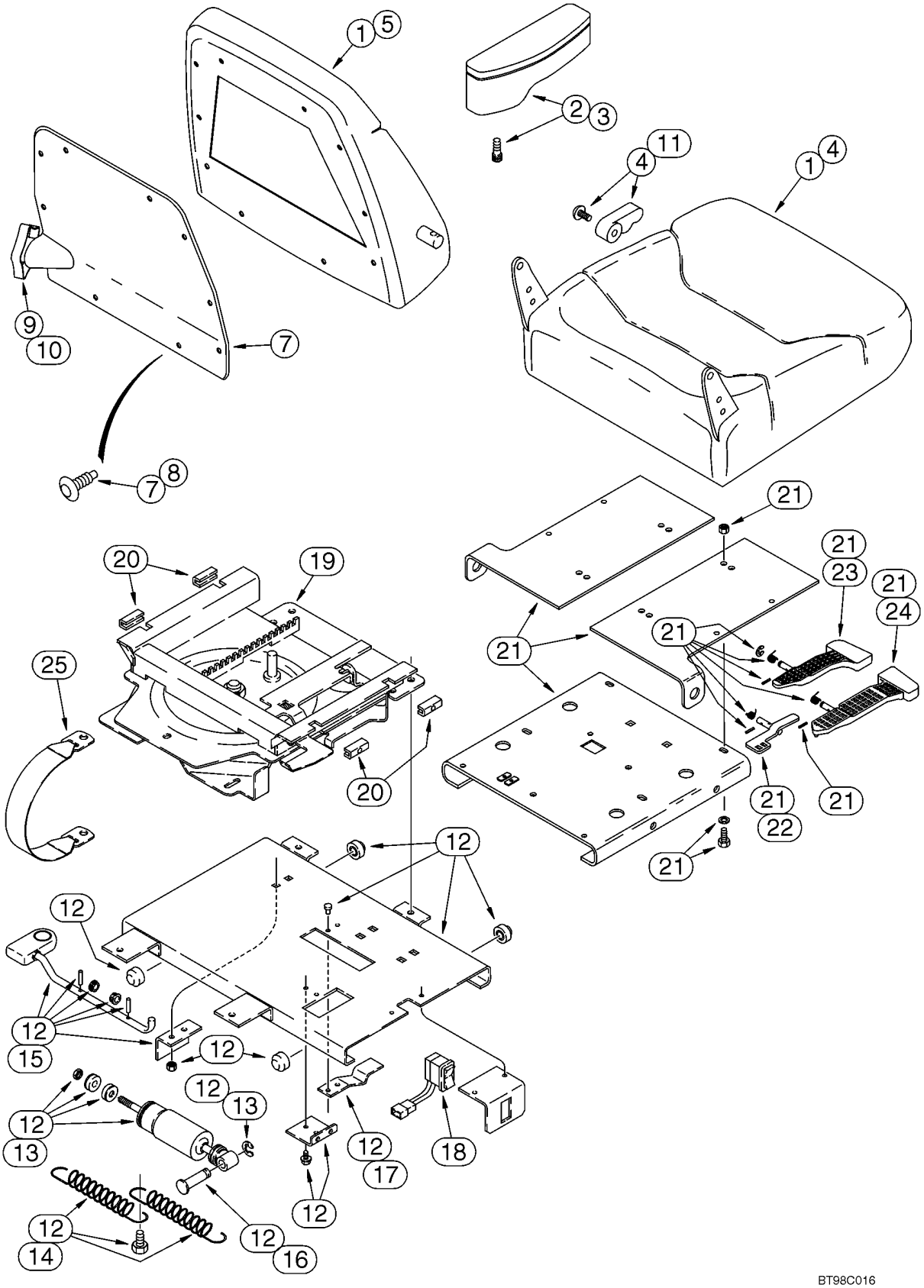

HTTP://WWW.MINNPARBACKHOEPARTS.COM



SEAT ASSY, AIR SUSPENSION

| REF | FN | PART NUMBER | YR/SN | QTY | DESCRIPTION |
|---|---|---|---|---|---|
| | | 300674A1 | | 1 | HARNESS Swivel Switch, Not Illustrated |
| 19 | | 300675A1 | | 1 | KIT Slide/Swivel Assy, Incl. Ref 21 |
| 20 | | 300680A1 | | 1 | KIT Slide Blocks, Includes (2) Adjustable Slider Blocks, (2) Stationary Slider Blocks, (2) Setscrews |
| 21 | | 300677A1 | | 1 | KIT Upper Slide Plate Assy, Includes Upper Slide Plate, Slide and Swivel Levers, (3) Springs, (3) Roll Pins, (3) E-Rings and Slide Latch, Incl. Ref 22 - 24 |
| 22 | | 300679A1 | | 1 | SLIDE Latch |
| 23 | | 300681A1 | | 1 | LEVER, CONTROL Slide |
| 24 | | 300683A1 | | 1 | LEVER Swivel |
| 25 | | 300684A1 | | 1 | BELT, SAFETY Tether |

HTTP://WWW.MINNPARBACKHOEPARTS.COM

| 09-52 | | p1 | 01/04 |
|---|---|---|---|

SEAT PEDESTAL AND SUSPENSION, AIR SUSPENSION

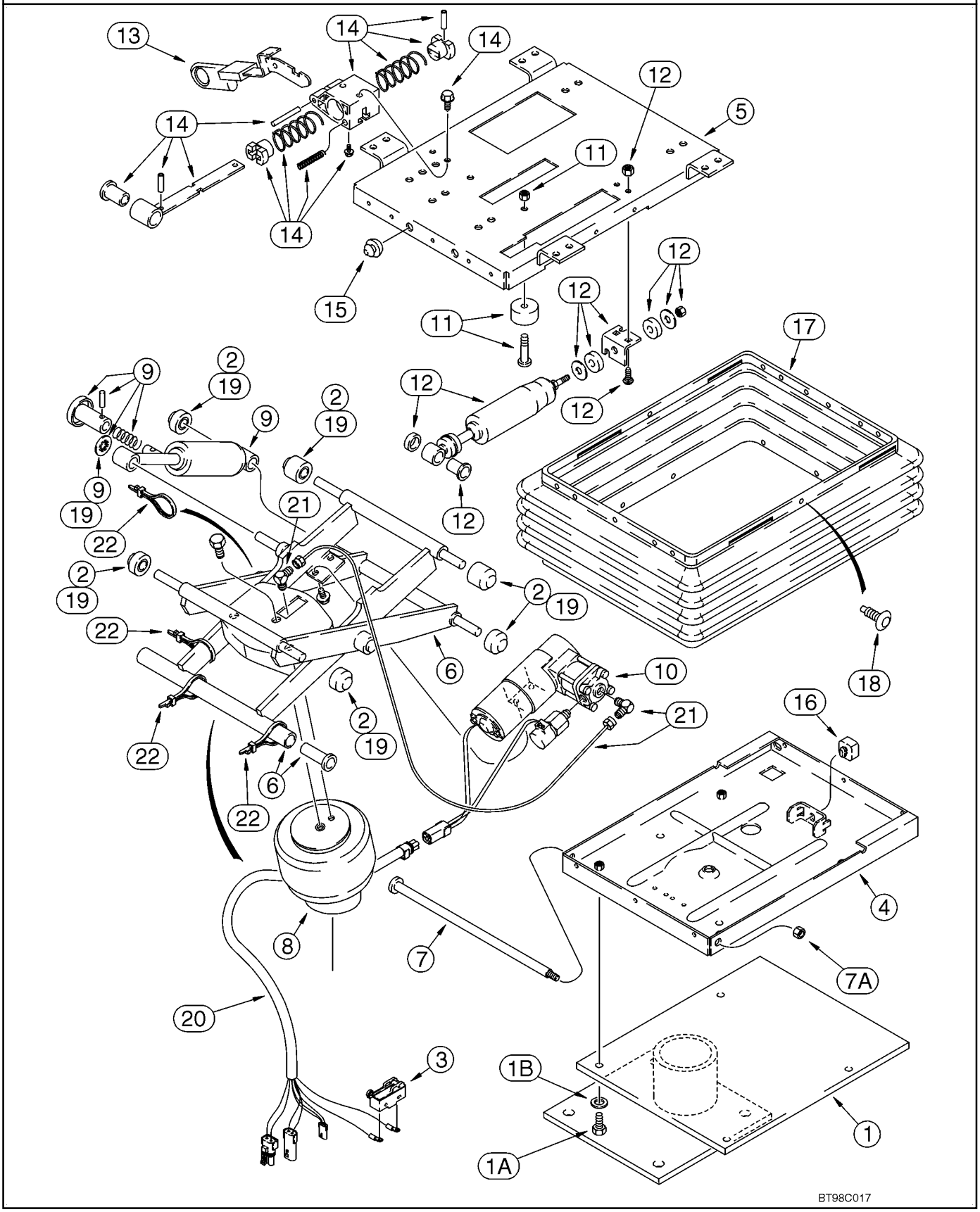

HTTP://WWW.MINNPARBACKHOEPARTS.COM



SEAT PEDESTAL AND SUSPENSION, AIR SUSPENSION

| REF | FN | PART NUMBER | YR/SN | QTY | DESCRIPTION |
|---|---|---|---|---|---|
| | | 397137A1 | | 1 | SEAT ASSY. Air Suspension Seat, Cloth, With Armrests, Incl. Ref 1 - 22; Also Includes Parts On Figure 09-51 |
| 1 | | 300669A1 | | 1 | PEDESTAL Support, Base |
| 1A | | 614-8025 | | 4 | SCREW M8 x 25 |
| 1B | | NSS | | 2 | NOT SERVICED SEPARATELY Washer |
| | | 300685A1 | | 1 | KIT Air Suspension Assembly, Includes Parts From Upper To Lower Housing Plates, Incl. Ref 2 - 16, 18 - 22, Includes all items shown except for the boot and pedestal, Ref 1 and 17 |
| 2 | | 135512A3 | | 1 | PACKAGE Roller Bearing, Isolator, Includes (4) Narrow Rollers, (2) Wide Rollers, (1) Bushing, (1) Spacer, (1) Retaining Ring, Isolator |
| 3 | | D137363 | | 1 | SWITCH Contact, Swivel Limit Switch |
| 4 | | 226560A1 | | 1 | HOUSING Lower, With Upper Stop Bracket |
| 5 | | 300688A1 | | 1 | HOUSING Upper |
| 6 | | 132862A1 | | 1 | DIPPER Arm, Suspension |
| 7 | | 143786A1 | | 1 | SHAFT |
| 7A | | 230-4216 | | 1 | NUT 3/8 |
| 8 | | 197793A1 | | 1 | SPRING Air Spring, Includes Air Spring, J-Clip and (3) Ties |
| 9 | | 132866A1 | | 1 | SHOCK ABSORBER Kit, Includes Shock, (2) Bearings, Fastener, Actuator Arm, Roll Pin, Bracket and Retaining Ring |
| | | 132864A1 | | 1 | COMPRESSOR Kit, Compressor/Valve, Includes Compressor, Valve, Mount, Air Line Tubing, (2) Screws, (2) Sleeves and (2) Nuts, Includes 300689A1, 300690A1 |
| 10 | | 300689A1 | | 1 | KIT Compressor/Valve |
| | | 300690A1 | | 1 | MOUNTING PARTS Compressor |
| 11 | | 180593A1 | | 1 | PACKAGE Bumper, Includes 231-1444, 340-12520 |
| | | 231-1444 | | 2 | NUT, LOCK 1/4 |
| | | 340-12520 | | 2 | SCREW 1/4 x 1-1/4 |
| 12 | | 300691A1 | | 1 | SPARE PART SET Fore/Aft Isolator Latch, Includes Shock Absorber, (3) Nuts, (2) Washers, (2) Grommets, (1) Bearing and (15) Clips |

HTTP://WWW.MINNPARBACKHOEPARTS.COM

| 09-52 | | p2 | 01/04 |
|---|---|---|---|

SEAT PEDESTAL AND SUSPENSION, AIR SUSPENSION

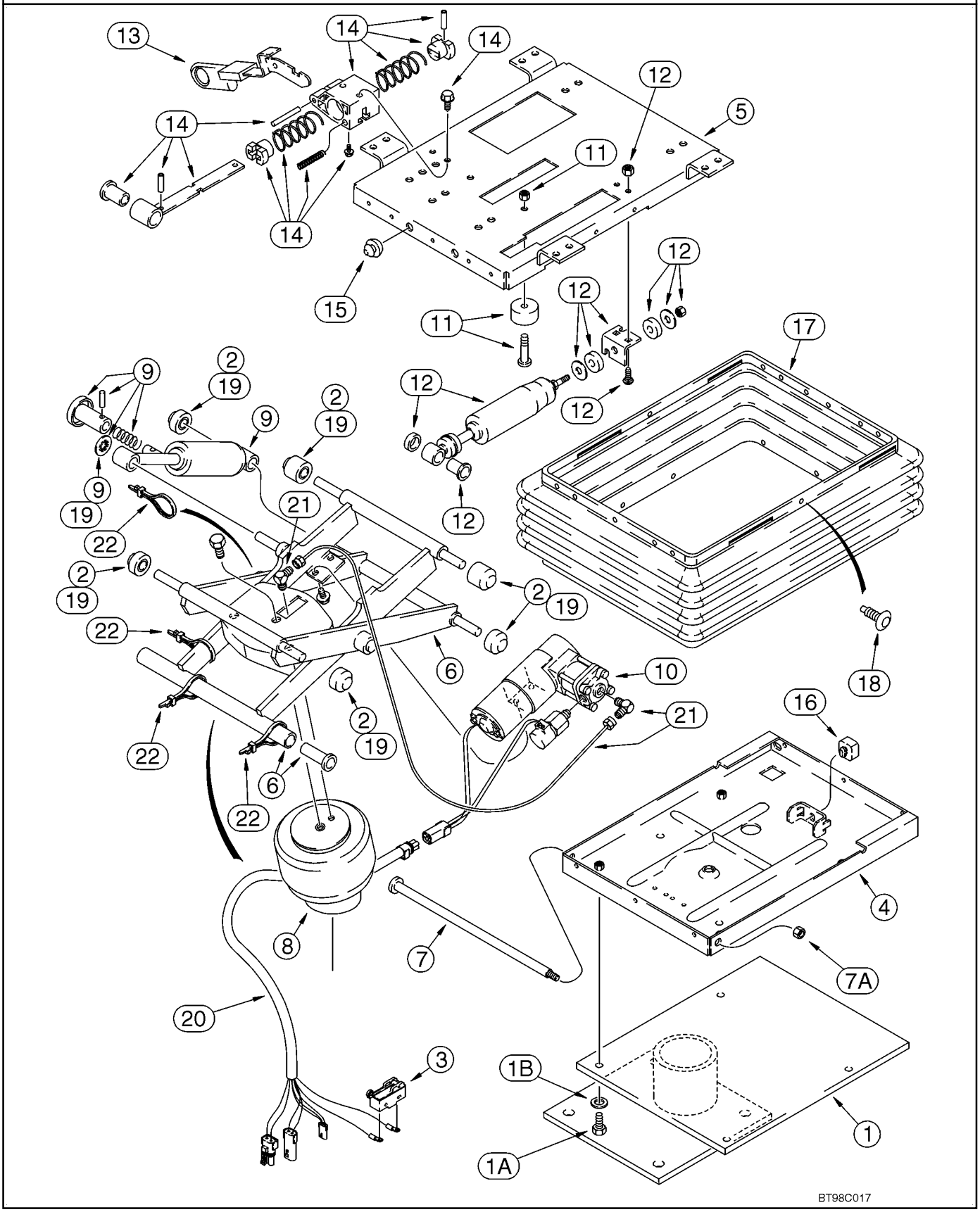

HTTP://WWW.MINNPARBACKHOEPARTS.COM



SEAT PEDESTAL AND SUSPENSION, AIR SUSPENSION

| REF | FN | PART NUMBER | YR/SN | QTY | DESCRIPTION |
|---|---|---|---|---|---|
| 13 | | 1981850C1 | | 1 | GRIP Knob, Isolator Control, Fore/Aft |
| 14 | | 300692A1 | | 1 | SPARE PART SET Fore/Aft Isolator Latch, Includes Latch Assy and (2) Screws |
| 15 | | 133422A1 | | 2 | BULB Rubber |
| 16 | | A45054 | | 1 | BUMPER Seat |
| 17 | | 133421A1 | | 1 | PACKAGE Boot, With Pins |
| 18 | | 132872A1 | | 1 | SET OF PARTS Boot Pin, Package of 23 Retainers and (3) Dome Nuts |
| 19 | | 180594A3 | | 1 | PACKAGE Rollers and Bearings, Includes (2) Bushings, (6) Rollers, (1) Push Nut, (5) Bearings and (2) Spacers, Includes 131-425 Nut |
| | | 131-425 | | 1 | NUT 1/2 |
| 20 | | 300896A1 | | 1 | HARNESS |
| 21 | | 1990548C4 | | 1 | PACKAGE Air Line and Fittings, Includes (2) Elbows, (1) Tee, (2) Adapters, 3.5 Feet Nylon Tubing, (5) Ties and (1) J-Clip, Incl. Ref 22 |
| 22 | | L18337 | | 4 | STRAP 15 in |

HTTP://WWW.MINNPARBACKHOEPARTS.COM



CAB - GLASS, MIRROR AND HOLD OPEN

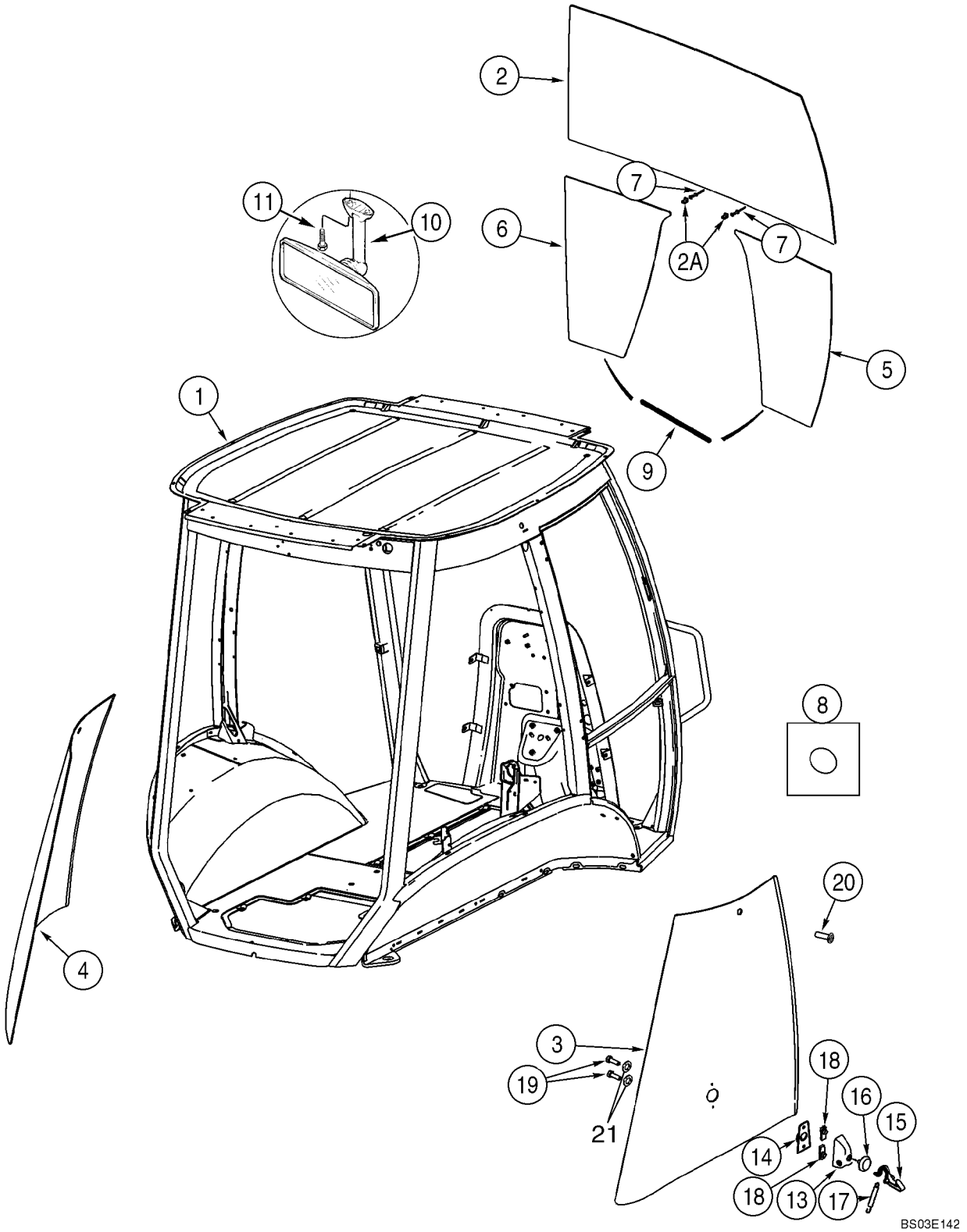

HTTP://WWW.MINNPARBACKHOEPARTS.COM



CAB - GLASS, MIRROR AND HOLD OPEN

| REF | FN | PART NUMBER | YR/SN | QTY | DESCRIPTION |
|---|---|---|---|---|---|
| 1 | | 87434979 | | 1 | CAB Single Door; Includes Frame, Left-Hand Door, Right-Hand Window, All Glass, Front and Rear Wipers and Exterior Lamps; Order From Machinery Price List |
| 1 | | 87434980 | | 1 | CAB Two Door; Includes Frame, Left-Hand and Right-Hand Doors, All Glass, Front and Rear Wipers and Exterior Lamps; Order From Machinery Price List |
| 2 | | 448607A1 | | 1 | WINDSHIELD |
| 2A | | 279482A1 | | 2 | CLAMP Windshield |
| 3 | | 338425A1 | | 1 | WINDOW Right Rear Quarter Panel |
| 4 | | 338424A1 | | 1 | WINDOW Left Rear Quarter Panel |
| 5 | | 448609A1 | | 1 | WINDSHIELD Lower Right-Hand |
| 6 | | 448608A1 | | 1 | WINDSHIELD Lower Left-Hand |
| 7 | | 151-516 | | 2 | RIVET |
| 8 | | 391827A1 | | 36 | SPACER |
| 9 | | 395793A1 | | 2 | STRIP, PROTECTION |
| 10 | | 87406924 | | 1 | MIRROR, REAR-VIEW Interior |
| 11 | | 286-56520 | | 2 | SCREW No. 10 x 1-1/4 |
| 13 | | 405740A1 | | 2 | COVER |
| 14 | | 405739A1 | | 2 | BODY |
| 15 | | 405738A1 | | 2 | LEVER Hold Open |
| 16 | | 400573A1 | | 2 | GROMMET |
| 17 | | 405741A1 | | 2 | SPRING, COIL Latch Back |
| 18 | | 405742A1 | | 4 | NUT M8 |
| 19 | | 400572A1 | | 4 | BOLT M8; Nylon |
| 20 | | 400571A2 | | 2 | BUMPER |
| 21 | | 431801A1 | | 4 | WASHER Black Nylon |

HTTP://WWW.MINNPARBACKHOEPARTS.COM



CAB - FRAME AND COVERS

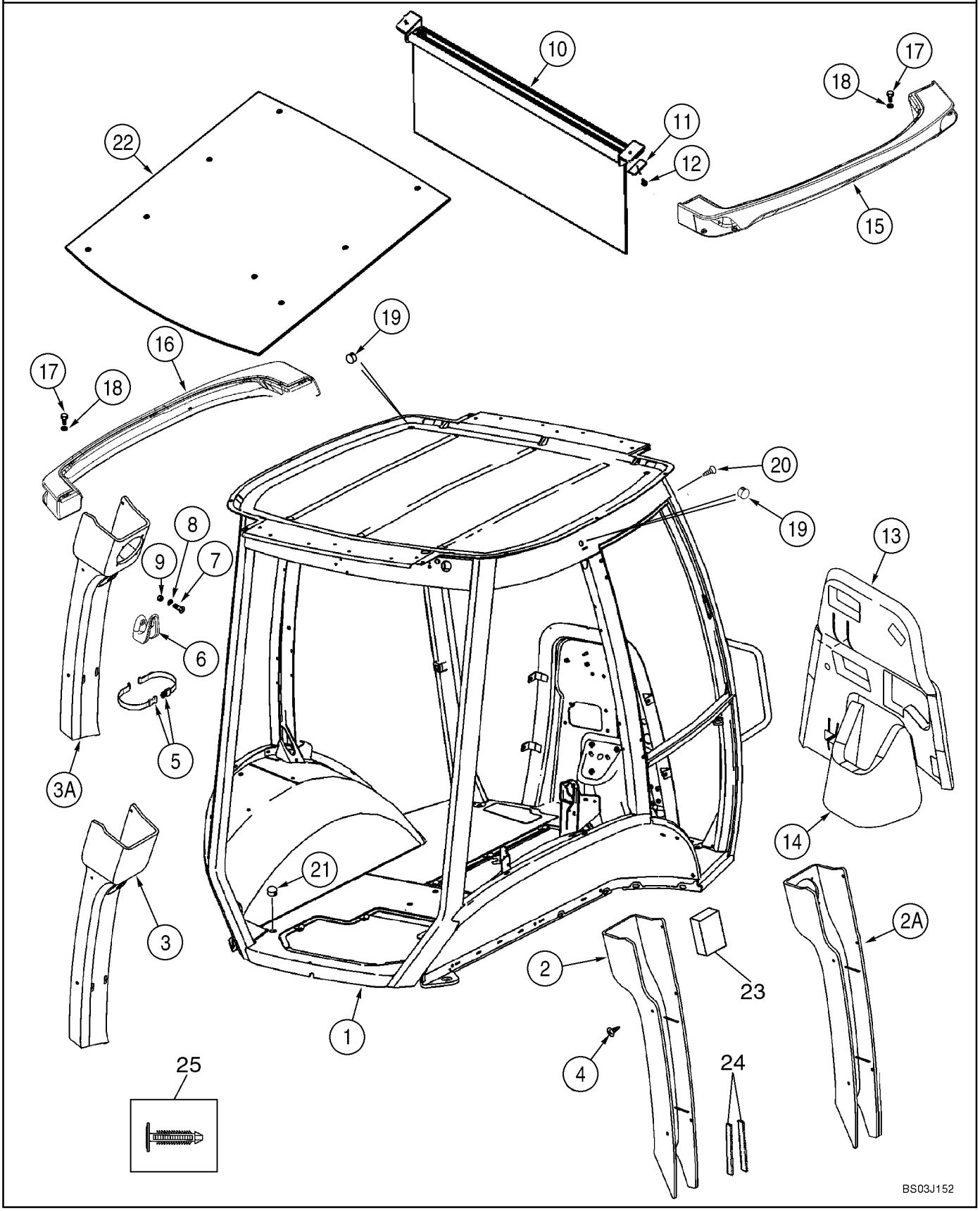

HTTP://WWW.MINNPARBACKHOEPARTS.COM



CAB - FRAME AND COVERS

| REF | FN | PART NUMBER | YR/SN | QTY | DESCRIPTION |
|---|---|---|---|---|---|
| 1 | | 87407908 | | 1 | FRAME, CAB Single Door |
| 1 | | 87407909 | | 1 | FRAME, CAB Two Door |
| 2 | | 360267A3 | | 1 | COVER Plastic; Right-Hand Post; Standard Interior |
| 2A | | 379425A3 | | 1 | COVER Vinyl; With Speaker Holes; Right-Hand Post; Deluxe Interior |
| 3 | | 360266A2 | | 1 | COVER Plastic; Left-Hand Post; Standard Interior |
| 3A | | 379424A2 | | 1 | COVER Vinyl; With Speaker Holes; Left-Hand Post; Deluxe Interior |
| 4 | | 401949A1 | | 10 | FASTENER |
| 5 | | 378227A1 | | 1 | STRAP Garment Strap |
| 6 | | 114549A1 | | 1 | COAT HOOK |
| 7 | | 540-720 | | 2 | SCREW M4 x 16 |
| 8 | | 895-11004 | | 2 | WASHER 4,3 x 9 x 0,8 mm |
| 9 | | 832-10404 | | 2 | NUT M4 |
| 10 | | 364180A1 | | 1 | VISOR, SUN |
| 11 | | 409618A1 | | 2 | PLATE 1/4 in Mounting Hole |
| 12 | | 396516A1 | | 3 | SCREW, POINTED No. 10 x 1; With Washer; Phillips |
| 13 | | 390601A5 | | 1 | COVER Firewall |
| 14 | | 390602A1 | | 1 | COVER Firewall, Lower |
| 15 | | 360247A3 | | 1 | LIGHT ASSY. Right-Hand |
| 16 | | 360246A3 | | 1 | LIGHT ASSY. Left-Hand |
| 17 | | 394863A1 | | 10 | SCREW M6 x 20 |
| 18 | | 395387A1 | | 10 | WASHER 6.4 ID; Nylon |
| 19 | | 395388A1 | | 3 | PLUG |
| | | 353-415 | | 1 | PLUG 1-1/2 in; Cab Roof; Models Without Radio Antenna |
| | | 353-410 | | 1 | PLUG 7/8; Upper Windshield Frame; Models Without Radio Antenna |
| | | 353-407 | | 1 | PLUG 11/16; Rear Filter Plate On Models Without Windshield Washer |
| | | 353-425 | | 2 | PLUG 7/16 in dia |
| | | 353-421 | | 1 | PLUG 3/16 |
| | | 353-402 | | 4 | PLUG 3/8, Dome, Black Nylon |
| | | 353-405 | | 1 | PLUG 9/16 |
| | | 353-406 | | 2 | PLUG 5/8, Dome, Black Nylon |
| | | 353-408 | | 1 | PLUG 3/4 |

HTTP://WWW.MINNPARBACKHOEPARTS.COM

| 09-54 | | p2 | 01/04 |
|---|---|---|---|

CAB - FRAME AND COVERS

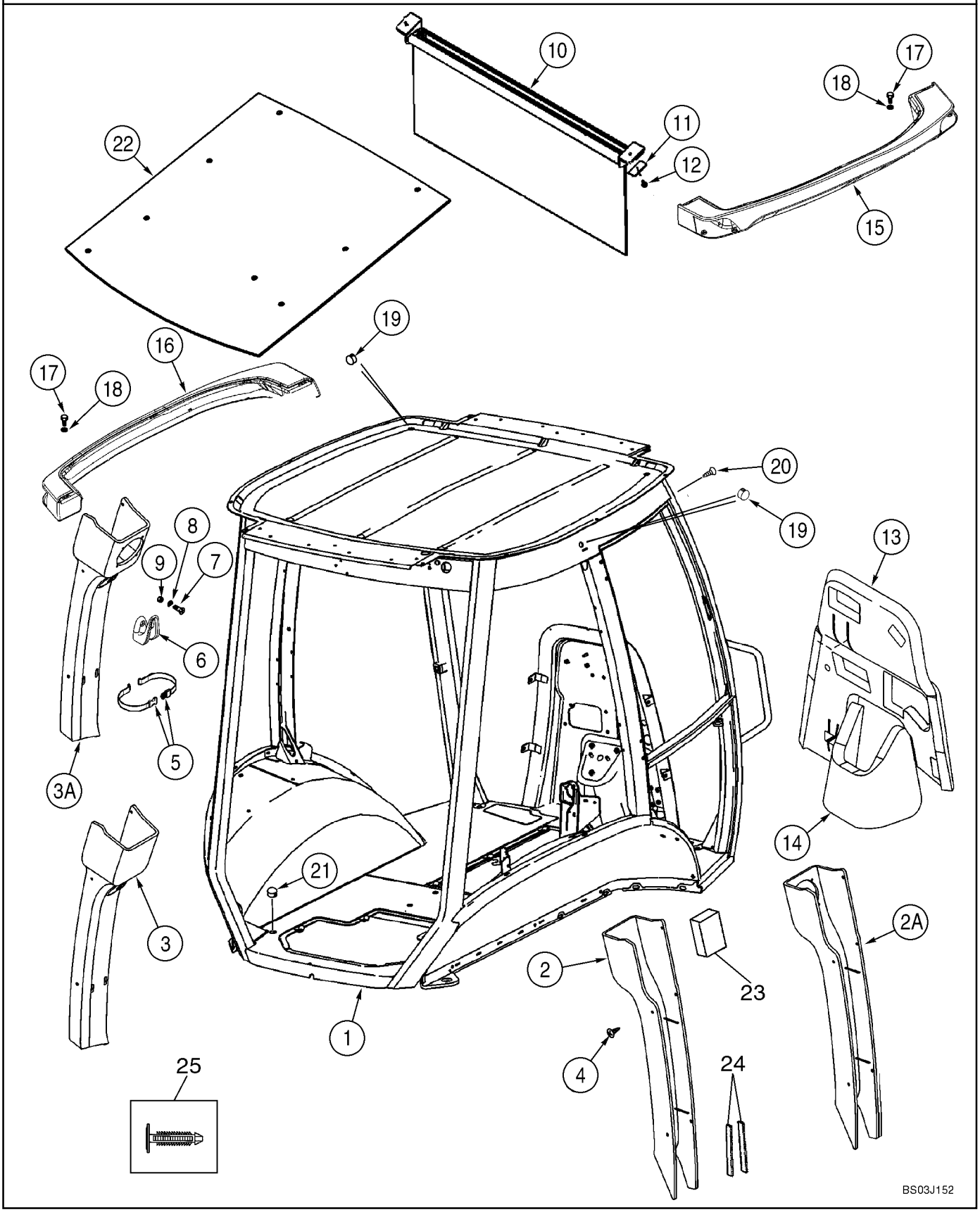

HTTP://WWW.MINNPARBACKHOEPARTS.COM



CAB - FRAME AND COVERS

| REF | FN | PART NUMBER | YR/SN | QTY | DESCRIPTION |
|---|---|---|---|---|---|
| 20 | | 402610A1 | | 8 | FASTENER Cab Frame; Models Without Exterior Mirrors |
| 21 | | 382298A1 | | 2 | PLUG |
| 22 | | 368809A1 | | 1 | INSULATOR Insulation |
| 23 | | 412285A1 | | 1 | STRIP Foam; Adhesive Back; B-Post |
| 24 | | 414939A1 | | 2 | STRIP, SEALING Adhesive Back; B Post |
| 25 | | 411399A1 | | 1 | FASTENER For 1/4 in dia Hole; Christmas Tree Clip |

HTTP://WWW.MINNPARBACKHOEPARTS.COM



CAB - DOORS

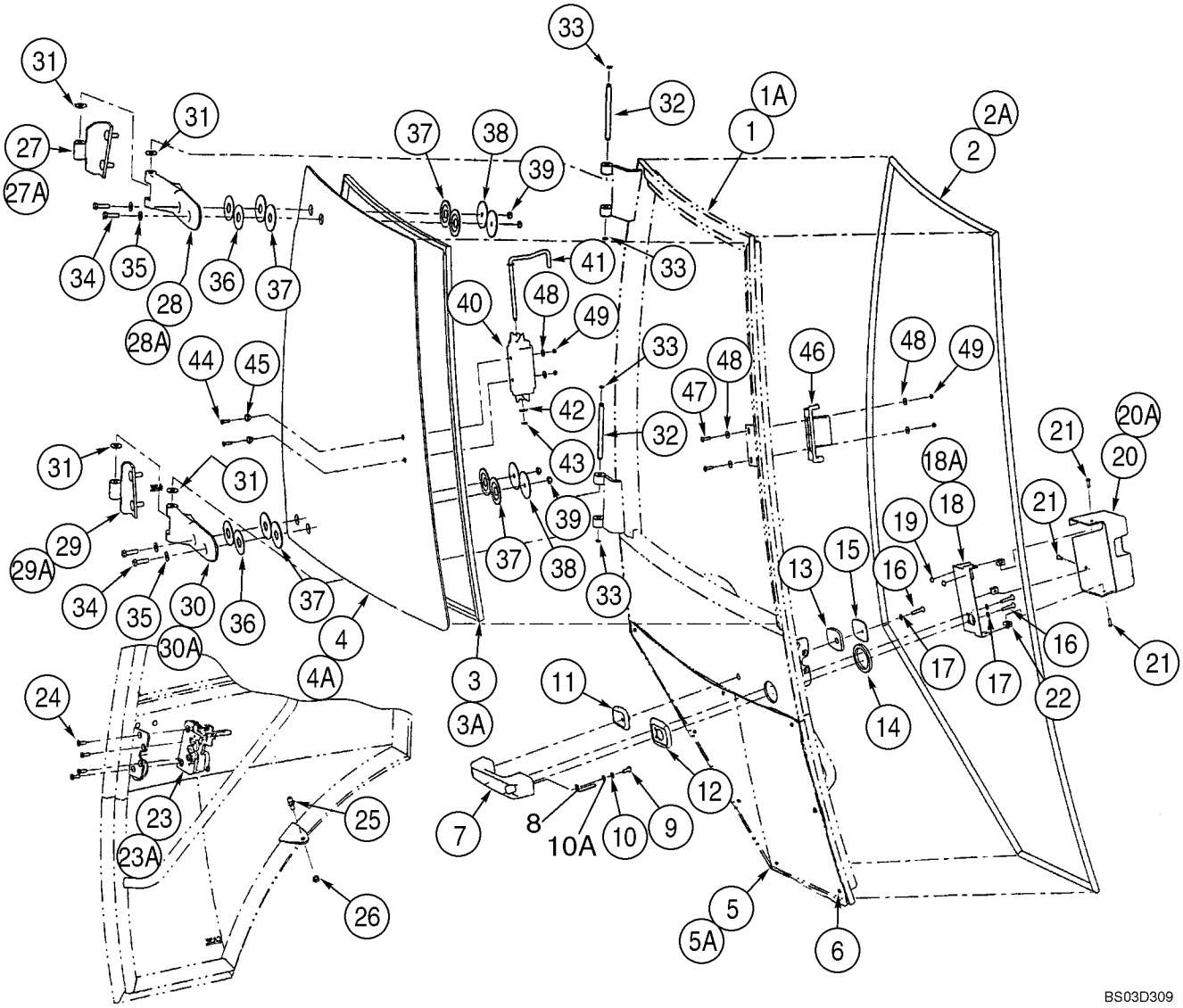

HTTP://WWW.MINNPARBACKHOEPARTS.COM



CAB - DOORS

| REF | FN | PART NUMBER | YR/SN | QTY | DESCRIPTION |
|---|---|---|---|---|---|
| | | REF | | | INSTRUCTION Left-Hand and Right-Hand Cab Doors; Left-Hand Door Not Illustrated |
| | | 394585A3 | | 1 | CAB DOOR, RH Right-Hand Door; Incl. Ref 1 - 49, Except Where Noted For Left-Hand Door |
| | | 341743A3 | | 1 | CAB DOOR, LH Left-Hand Door; Incl. Ref 1A - 49, Except Where Noted For Right-Hand Door |
| 1 | | NSS | | 1 | NOT SERVICED SEPARATELY Frame; Right-Hand Door |
| 1A | | NSS | | 1 | NOT SERVICED SEPARATELY Frame; Left-Hand Door |
| 2 | | 394707A1 | | 1 | STRIP, RUBBER Right-Hand Door |
| 2A | | 390838A1 | | 1 | STRIP, RUBBER Left-Hand Door |
| 3 | | 394708A1 | | 1 | SEAL, WINDOW Window; Upper; Right-Hand Door |
| 3A | | 391850A1 | | 1 | SEAL, WINDOW Window; Upper; Left-Hand Door |
| 4 | | 394700A1 | | 1 | GLASS Upper; Right-Hand Door |
| 4A | | 338429A1 | | 1 | GLASS Upper; Left-Hand Door |
| 5 | | 338427A1 | | 1 | GLASS, CAB Lower; Right-Hand Door |
| 5A | | 338426A1 | | 1 | GLASS, CAB Lower; Left-Hand Door |
| 6 | | 391827A1 | | 4 | SPACER 4 Per Door; Cut Bumpers In Half For 8 Locations |
| 7 | | 60-7083T1 | | 1 | HANDLE Outer |
| 8 | | 442718A1 | | 1 | BUTTON Release |
| 9 | | 440-12510 | | 1 | SCREW 1/4 x 5/8 |
| 10 | | 492-11025 | | 1 | WASHER, LOCK 1/4 |
| 10A | | 895-11006 | | 1 | WASHER 6,6 x 12,5 x 1,6 mm |
| 11 | | 315276A1 | | 1 | BEZEL Small |
| 12 | | 315273A1 | | 1 | BEZEL Large |
| 13 | | 391847A1 | | 1 | GASKET Small |
| 14 | | 391838A1 | | 1 | GASKET Large |
| 15 | | 391848A1 | | 1 | PLATE, BACK |
| 16 | | 393203A1 | | 3 | SCREW |
| 17 | | 393202A1 | | 3 | WASHER 6 mm |
| 18 | | 394704A1 | | 1 | BRACKET Cover Mounting; Right-Hand Door |
| 18A | | 391841A1 | | 1 | BRACKET Cover Mounting; Left-Hand Door |
| 19 | | 391827A1 | | 2 | SPACER |
| 20 | | 394705A1 | | 1 | COVER Latch; Right-Hand Door |

HTTP://WWW.MINNPARBACKHOEPARTS.COM



CAB - DOORS

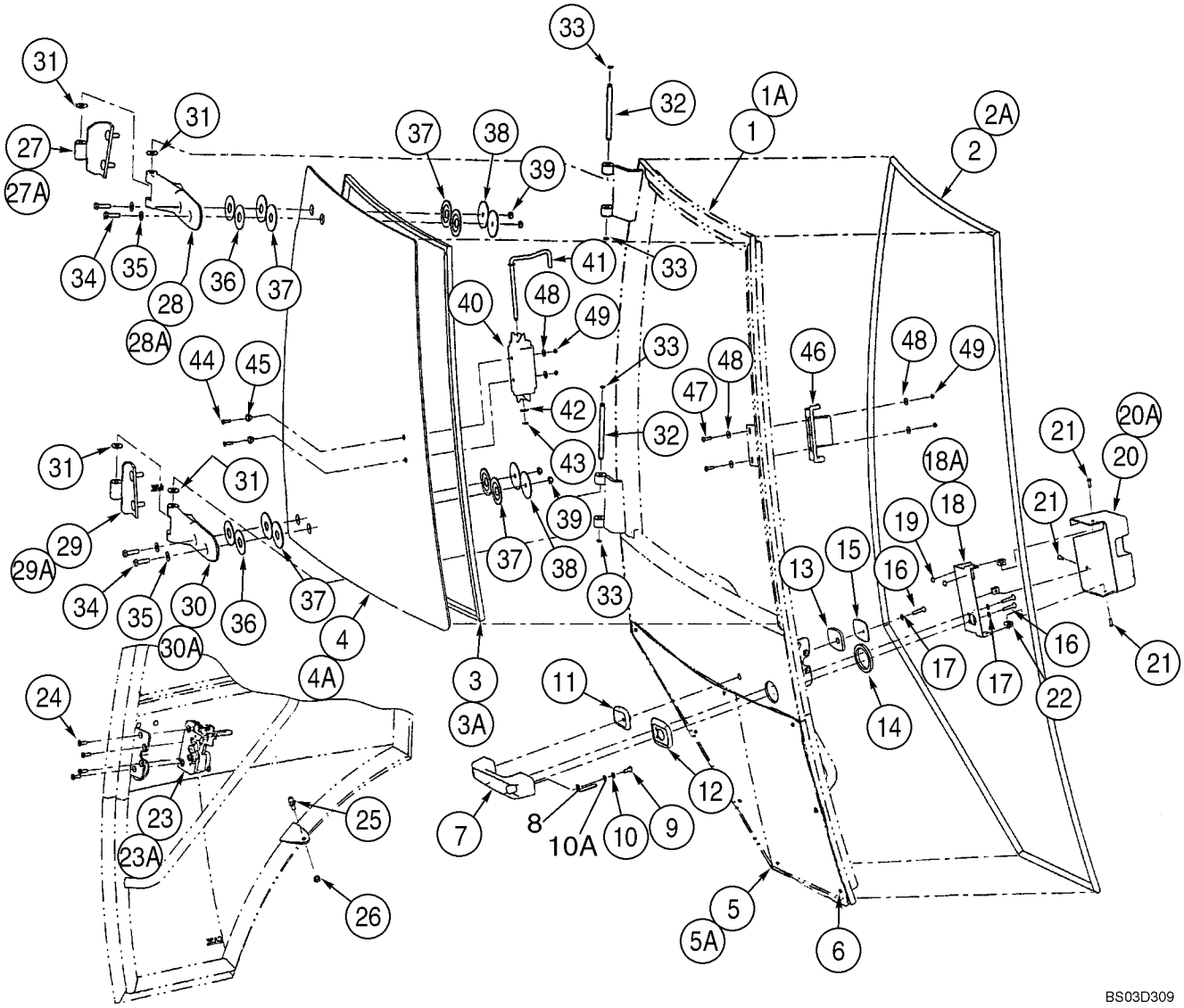

HTTP://WWW.MINNPARBACKHOEPARTS.COM



CAB - DOORS

| REF | FN | PART NUMBER | YR/SN | QTY | DESCRIPTION |
|---|---|---|---|---|---|
| 20A | | 391842A1 | | 1 | COVER Latch; Left-Hand Door |
| 21 | | 390-100 | | 3 | SCREW |
| 22 | | 393209A1 | | 3 | NUT, SPECIAL |
| 23 | | 382777A1 | | 1 | LATCH Right-Hand Door |
| 23A | | 382775A1 | | 1 | LATCH Left-Hand Door |
| 24 | | 569-4 | | 4 | SCREW |
| 25 | | 3234063R1 | | 1 | BALL JOINT |
| 26 | | 832-10408 | | 1 | NUT M8 |
| 27 | | 394701A1 | | 1 | HINGE Upper; Right-Hand Door |
| 27A | | 390840A1 | | 1 | HINGE Upper; Left-Hand Door |
| 28 | | 364134A2 | | 1 | HINGE Plastic; Upper; Right-Hand Door |
| 28A | | 364132A2 | | 1 | HINGE Plastic; Upper; Left-Hand Door |
| 29 | | 394702A1 | | 1 | HINGE Lower; Right-Hand Door |
| 29A | | 390841A1 | | 1 | HINGE Lower; Left-Hand Door |
| 30 | | 364135A2 | | 1 | HINGE Plastic; Lower; Right-Hand Door |
| 30A | | 364133A2 | | 1 | HINGE Plastic; Lower; Left-Hand Door |
| 31 | | 391845A1 | | 4 | WASHER Nylon |
| 32 | | 391843A1 | | 2 | PIN |
| 33 | | 442773A1 | | 4 | CIRCLIP |
| 34 | | 514-633 | | 4 | SCREW M8 x 30 |
| 35 | | 895-30107 | | 4 | WASHER |
| 36 | | 376334A1 | | 4 | WASHER 55 mm OD; Yellow |
| 37 | | 376336A1 | | 8 | WASHER, RUBBER Rubber |
| 38 | | 376332A1 | | 4 | WASHER 60 mm OD; Black |
| 39 | | 832-10508 | | 4 | NUT M8 |
| 40 | | 368147A1 | | 1 | HANDLE Slam Latch |
| 41 | | 391849A1 | | 1 | ROD |
| 42 | | 906086R1 | | 1 | WASHER 8.4 x 16 x 1.6 thk |
| 43 | | 100-39001 | | 1 | RING |
| 44 | | 140-104 | | 2 | SCREW No. 8 x 3/4 |
| 45 | | F64198 | | 2 | BUSHING Nylon |
| 46 | | 368146A1 | | 1 | LATCH Slam Latch |
| 47 | | 142-103 | | 2 | SCREW |
| 48 | | 195-81023 | | 6 | WASHER 1/4 x 9/16 x 3/64 |
| 49 | | F45165 | | 4 | SAFETY NUT No. 10 |

HTTP://WWW.MINNPARBACKHOEPARTS.COM

| 09-56 | | p1 | 01/04 |
|---|---|---|---|

CAB - DOOR MOUNTING

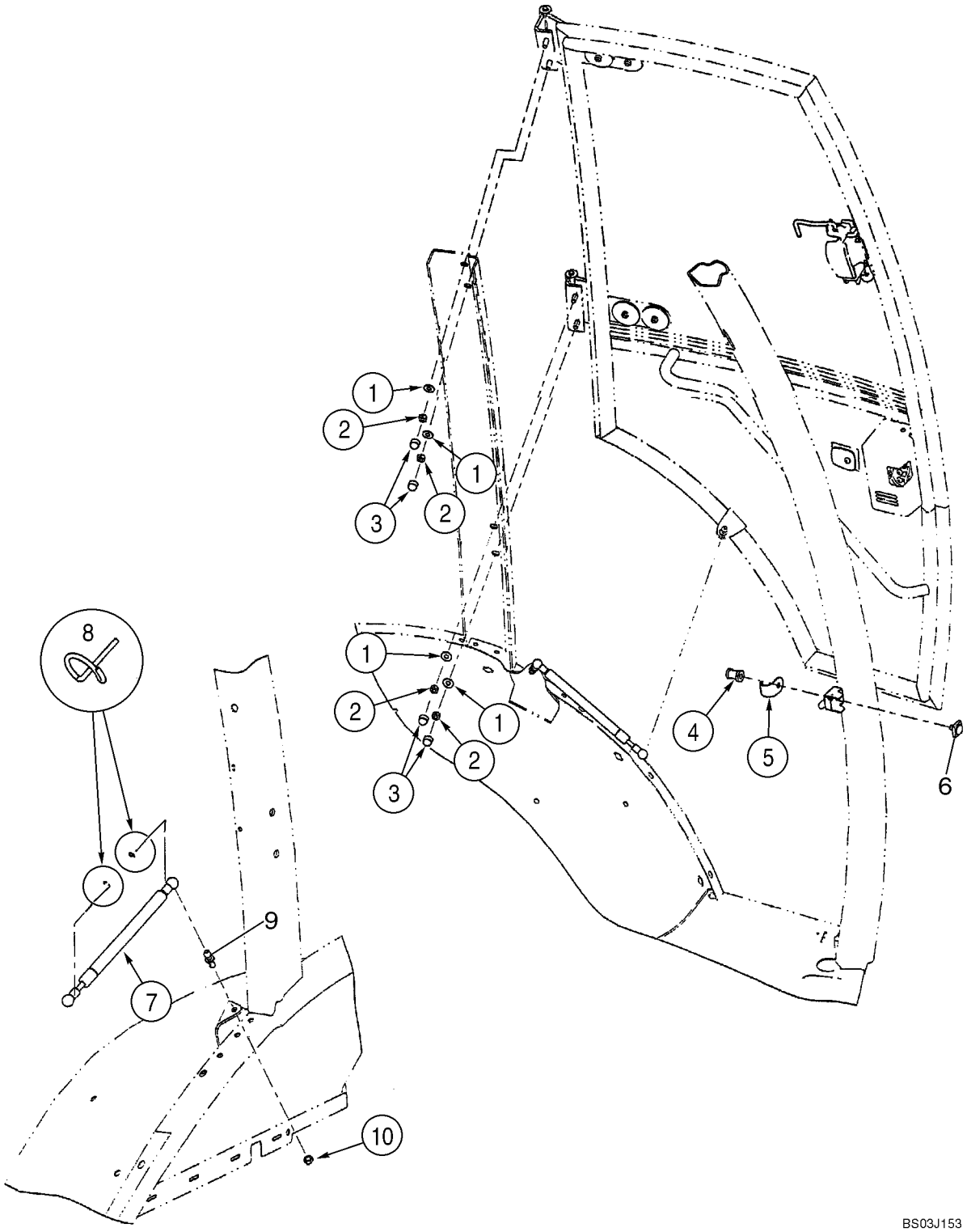

HTTP://WWW.MINNPARBACKHOEPARTS.COM



CAB - DOOR MOUNTING

| REF | FN | PART NUMBER | YR/SN | QTY | DESCRIPTION |
|---|---|---|---|---|---|
| | | REF | | | INSTRUCTION Left-Hand and Right-Hand Cab Doors; Left-Hand Cab Door Shown |
| 1 | | 397064A1 | | 4-8 | WASHER, SPECIAL 3/8 x 7/8 x 1/16 thk |
| 2 | | 232-1446 | | 4-8 | NUT 3/8 |
| 3 | | 396841A1 | | 4-8 | CAP |
| 4 | | 87411108 | | 1-2 | BOLT, SPECIAL Striker |
| 5 | | 393211A1 | | 1-2 | GUARD |
| 6 | | 442842A1 | | 1-2 | BLOCK ASSY. Striker |
| 7 | | 394800A1 | | 1-2 | SPRING Gas Spring |
| 8 | | 3233348R1 | | 2-4 | CLIP, ELECTRICAL |
| 9 | | 432431A1 | | 1-2 | STUD Ball |
| 10 | | 832-10408 | | 1-2 | NUT M8 |

HTTP://WWW.MINNPARBACKHOEPARTS.COM

| 09-57 | | p1 | 01/04 |
|---|---|---|---|

CAB - WINDOW, RIGHT-HAND, FOR SINGLE DOOR CAB FRAMES

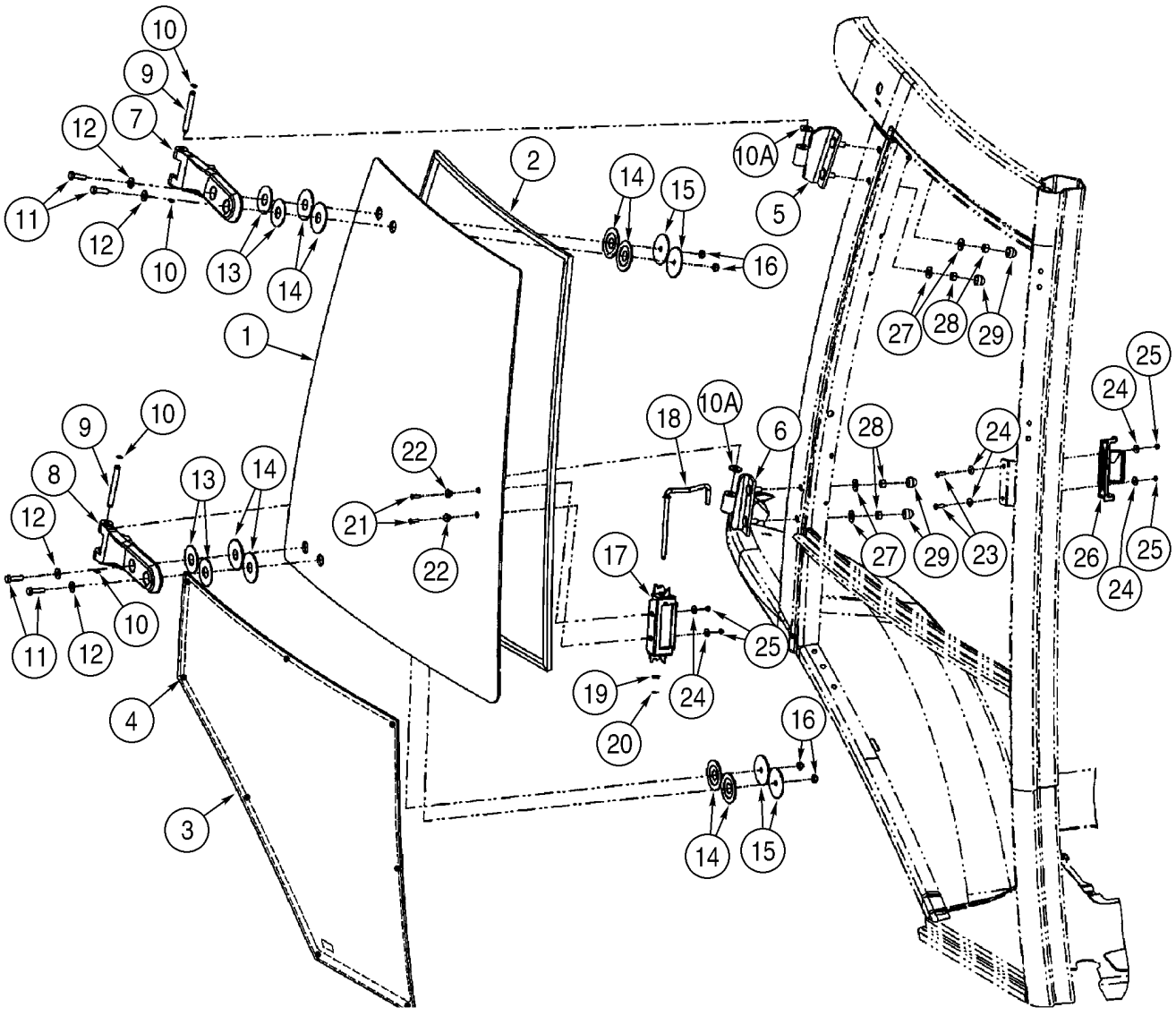

HTTP://WWW.MINNPARBACKHOEPARTS.COM



CAB - WINDOW, RIGHT-HAND, FOR SINGLE DOOR CAB FRAMES

| REF | FN | PART NUMBER | YR/SN | QTY | DESCRIPTION |
|---|---|---|---|---|---|
| | | 341746A2 | | 1 | WINDOW ASSY Right-Hand; Incl. Ref 1 - 29 |
| 1 | | 360046A1 | | 1 | GLASS, CAB Upper |
| 2 | | 394864A1 | | 1 | SEAL, WINDOW |
| 3 | | 338428A1 | | 1 | WINDOW ASSY Lower |
| 4 | | 391827A1 | | 4 | SPACER Cut Bumpers In Half For 8 Locations |
| 5 | | 394701A1 | | 1 | HINGE Upper |
| 6 | | 394702A1 | | 1 | HINGE Lower |
| 7 | | 364134A2 | | 1 | HINGE Plastic; Upper |
| 8 | | 364135A2 | | 1 | HINGE Plastic; Lower |
| 9 | | 394865A1 | | 2 | PIN |
| 10 | | 393330A1 | | 4 | RING |
| 10A | | 391845A1 | | 4 | WASHER Nylon |
| 11 | | 514-633 | | 4 | SCREW M8 x 30 |
| 12 | | 895-30107 | | 4 | WASHER |
| 13 | | 376334A1 | | 4 | WASHER 55 mm OD; Yellow |
| 14 | | 376336A1 | | 8 | WASHER, RUBBER Rubber |
| 15 | | 376332A1 | | 4 | WASHER 60 mm OD; Black |
| 16 | | 832-10508 | | 4 | NUT M8 |
| 17 | | 368147A1 | | 1 | HANDLE Slam Latch |
| 18 | | 391849A1 | | 1 | ROD |
| 19 | | 906086R1 | | 1 | WASHER 8.4 x 16 x 1.6 thk |
| 20 | | 100-39001 | | 1 | RING |
| 21 | | 140-104 | | 2 | SCREW No. 8 x 3/4 |
| 22 | | F64198 | | 2 | BUSHING Nylon |
| 23 | | 142-103 | | 2 | SCREW |
| 24 | | 195-81023 | | 6 | WASHER 1/4 x 9/16 x 3/64 |
| 25 | | F45165 | | 4 | SAFETY NUT No. 10 |
| 26 | | 368146A1 | | 1 | LATCH Slam Latch |
| 27 | | 397064A1 | | 4 | WASHER, SPECIAL 3/8 x 7/8 x 1/16 thk |
| 28 | | 232-1446 | | 4 | NUT 3/8 |
| 29 | | 396841A1 | | 4 | CAP |

HTTP://WWW.MINNPARBACKHOEPARTS.COM

| 09-58 | | p1 | 01/04 |
|---|---|---|---|

CAB - WINDOW, REAR

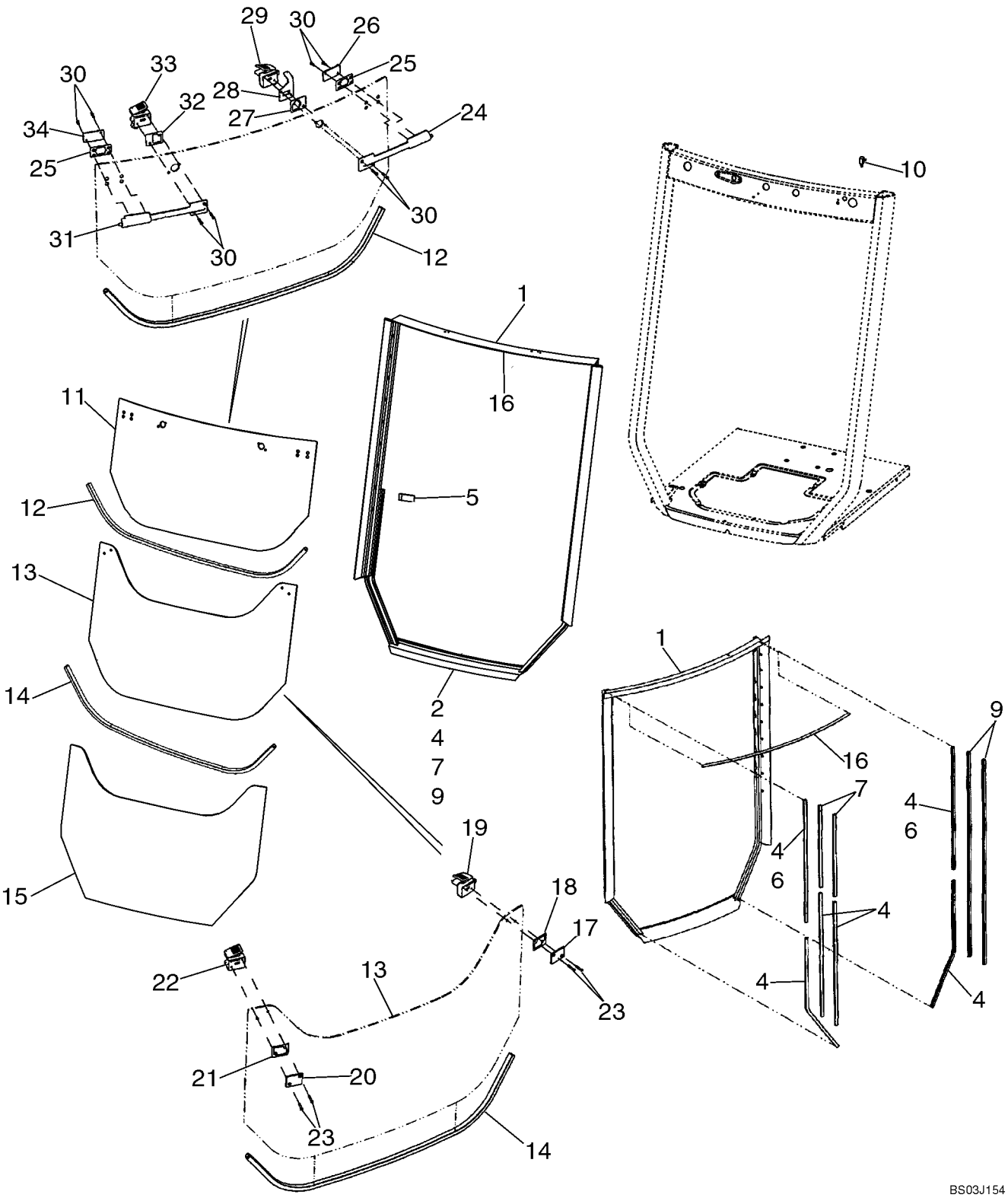

HTTP://WWW.MINNPARBACKHOEPARTS.COM



CAB - WINDOW, REAR

| REF | FN | PART NUMBER | YR/SN | QTY | DESCRIPTION |
|---|---|---|---|---|---|
| | | 411850A1 | | 1 | KIT Frame and Seal; Incl. 1, 4, 7, 9, 16 |
| 1 | | 403948A1 | | 1 | FRAME ASSY Included in 411850A1 Frame and Seal Kit |
| 2 | | 410867A1 | | 1 | GASKET Rubber Seal; Bulb Type |
| | | 411851A1 | | 1 | KIT Seal; Incl. 4, 7, 9, 16 |
| 4 | | 404228A1 | | 6 | SEAL 760 mm (29-15/16 in), Flocked Channel Seals; Cut From 402852A1; Included in 411851A1 Seal Kit and 411850A1 Frame and Seal Kit |
| 5 | | 400200A1 | | 2 | STRIP, RUBBER Stop |
| 6 | | 404226A1 | | 2 | SEAL 787 mm (31 in), Flocked Channel Seals; Cut From 402852A1 |
| 7 | | 404229A1 | | 2 | SEAL 508 mm (20 in), Flocked Channel Seals; Cut From 402852A1; Included In 411851A1 Seal Kit and 411850A1 Frame and Seal Kit |
| 9 | | 404227A1 | | 2 | SEAL 1270 mm (50 in), Flocked Channel Seals; Cut From 402852A1; Included in 411851A1 Seal Kit and 411850A1 Frame and Seal Kit |
| 10 | | A187714 | | 1 | SWITCH Rear Wiper Cutout |
| | | 495-11047 | | 2 | WASHER 15/32 x 59/64 x 1/16 |
| | | 425-147 | | 1 | NUT 7/16 |
| 11 | | 352208A1 | | 1 | GLASS, CAB Upper |
| 12 | | 395348A1 | | 1 | STRIP, ORNAMENTAL 1210 mm (47-21/32 in), Lower Glass Edge; Cut From 404426A1 |
| | | 87434783 | | 1 | WINDOW ASSY Center; Includes Ref 13, 19, 22, 23; Plus (4) Backing Plates and (4) Grommets Which Are Not Serviced Separately; Includes Instructions |
| 13 | | 352209A1 | | 1 | GLASS, CAB Center |
| 14 | | 395348A1 | | 1 | STRIP, ORNAMENTAL 1210 mm (47-21/32 in), Lower Glass Edge; Cut From 404426A1 |
| 15 | | 352210A1 | | 1 | GLASS, CAB Lower |
| 16 | | 400494A1 | | 1 | SEAL 1095 mm (43-1/8 in), Hollow Seal; Cut From 404231A1; Included in 411851A1 Seal Kit and 411850A1 Frame and Seal Kit |
| 17 | | 411917A1 | | 1 | PLATE, BACK Kit; Includes 1 Each 402849A1 Plate, 411942A1 Gasket Pad |
| 18 | | 402847A1 | | 1 | PLATE, PLASTIC Bushing |

HTTP://WWW.MINNPARBACKHOEPARTS.COM

| 09-58 | | p2 | 01/04 |
|---|---|---|---|

CAB - WINDOW, REAR

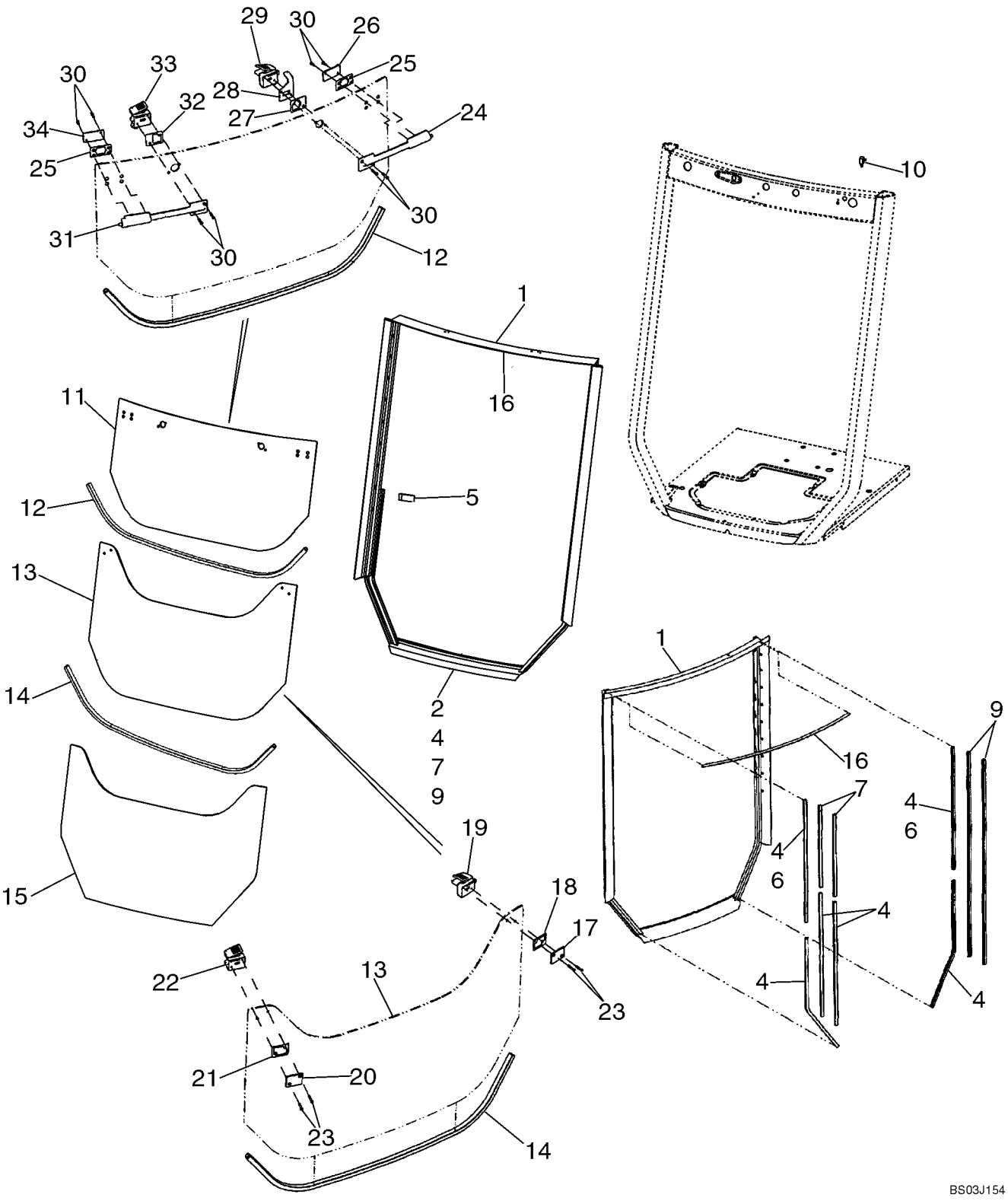

HTTP://WWW.MINNPARBACKHOEPARTS.COM



CAB - WINDOW, REAR

| REF | FN | PART NUMBER | YR/SN | QTY | DESCRIPTION |
|---|---|---|---|---|---|
| 19 | | 411909A1 | | 1 | LATCH Kit, Includes 1 Each 402868A1 Cover, 402867A1 Lever, 402833A1 Plunger, 402831A1 Housing, 402830A1 Bushing, 402870A1 Spring, 402869A1 Rivet, 402865A1 Bumper |
| 20 | | 411916A1 | | 1 | PLATE, BACK Kit; Includes 1 Each 402848A1 Plate, 411942A1 Gasket Pad |
| 21 | | 402846A1 | | 1 | PLATE, PLASTIC Bushing |
| 22 | | 411908A1 | | 1 | LATCH Kit, Includes 1 Each 402871A1 Cover, 402872A1 Lever, 402873A1 Plunger, 402832A1 Housing, 402830A1 Bushing, 402870A1 Spring, 402869A1 Rivet, 402865A1 Bumper |
| 23 | | 86989736 | | 8 | SCREW M5 x 30 Screw |
| 24 | | 411910A1 | | 1 | LATCH Kit, Bolt Assy; Includes 1 Each 402860A1 Housing, 402840A1 Gasket, 402837A1 Bolt, 402861A1 Insert, 402838A1 Rod, 402856A1 Spring |
| 25 | | 402843A1 | | 2 | PLATE, PLASTIC |
| 26 | | 87423503 | | 1 | PLATE, BACK Backing Plate |
| 27 | | 402844A1 | | 1 | PLATE, PLASTIC |
| 28 | | 402836A1 | | 1 | BRACKET Rear Wiper Cutout Switch |
| 29 | | 411914A1 | | 1 | LATCH Kit, Includes 1 Each 402831A1 Housing, 402866A1 Bumper, 402830A1 Bushing, 402833A1 Plunger, 402867A1 Lever, 402868A1 Cover |
| 30 | | 409690A1 | | 8 | SCREW M5 x 16 |
| 31 | | 411911A1 | | 1 | LATCH Kit, Bolt Assy; Includes 1 Each 402863A1 Housing, 402851A1 Gasket, 402856A1 Spring, 402841A1 Bolt, 402861A1 Insert, 402838A1 Rod |
| 32 | | 402845A1 | | 1 | PLATE, PLASTIC |
| 33 | | 411912A1 | | 1 | LATCH Kit, Includes 1 Each 402832A1 Housing, 402866A1 Bumper, 402830A1 Bushing, 402873A1 Plunger, 402872A1 Lever, 402871A1 Cover |
| 34 | | 87423502 | | 1 | PLATE, BACK Backing Plate |
| | | 411844A1 | | 1 | KIT Upper Bolt Latch; Includes 1 Each 411910A1 Bolt Assy Ref 24, 87423502 Backing Plate Ref 34, 87423503 Backing Plate Ref 26, (2) 402843A1 Bushing late Ref 25 |

HTTP://WWW.MINNPARBACKHOEPARTS.COM

| 09-58 | | p3 | 01/04 |
|---|---|---|---|

CAB - WINDOW, REAR

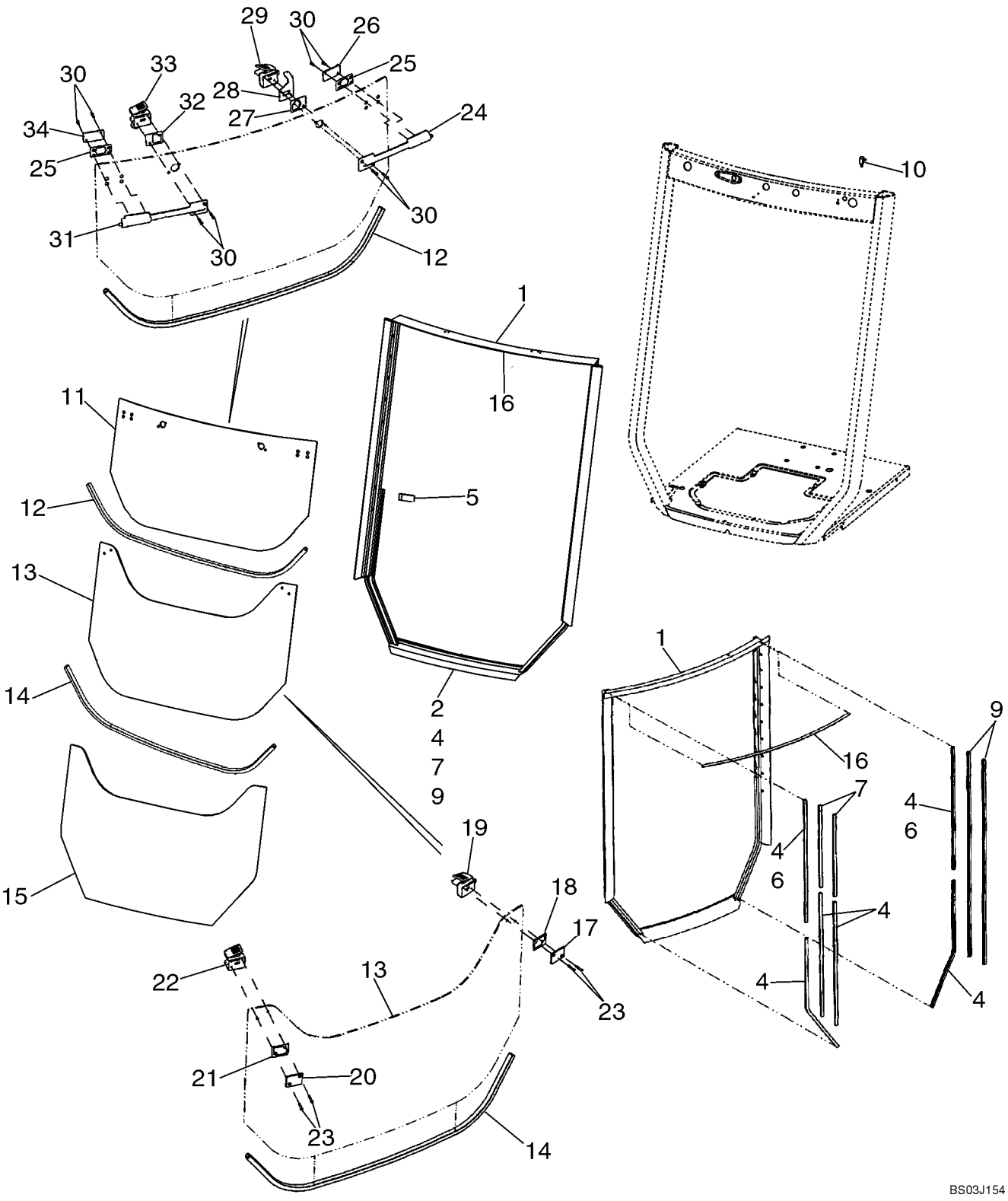

HTTP://WWW.MINNPARBACKHOEPARTS.COM



CAB - WINDOW, REAR

| REF | FN | PART NUMBER | YR/SN | QTY | DESCRIPTION |
|---|---|---|---|---|---|
| | | 411845A1 | | 1 | KIT Upper Bolt Latch; Includes 1 Each 411911A1 Bolt Assy Ref 31, 87423502 Backing Plate Ref 34, 87423503 Backing Plate Ref 26, (2) 402843A1 Bushing Plate Ref 25 |
| | | 411846A1 | | 1 | KIT Mid Catch; Includes 1 Each 411908A1 Catch Kit Ref 22, 411916A1 Backing Plate Kit Ref 20, 402846A1 Bushing Plate Ref 21 |
| | | 411847A1 | | 1 | KIT Mid Catch; Includes 1 Each 411909A1 Catch Kit Ref 19, 411917A1 Backing Plate Ref 17, 402847A1 Bushing Plate Ref 18 |
| | | 411848A1 | | 1 | KIT Upper Catch; Includes 1 Each 411912A1 Upper Catch Kit Ref 33, 402845A1 Bushing Plate Ref 32 |
| | | 411849A1 | | 1 | KIT Upper Catch; Includes 1 Each 411914A1 Upper Catch Kit Ref 29, 402844A1 Bushing Plate Ref 27 |

HTTP://WWW.MINNPARBACKHOEPARTS.COM

| 09-59 | | p1 | 01/04 |
|---|---|---|---|

CAB - WASHER, WINDSHIELD

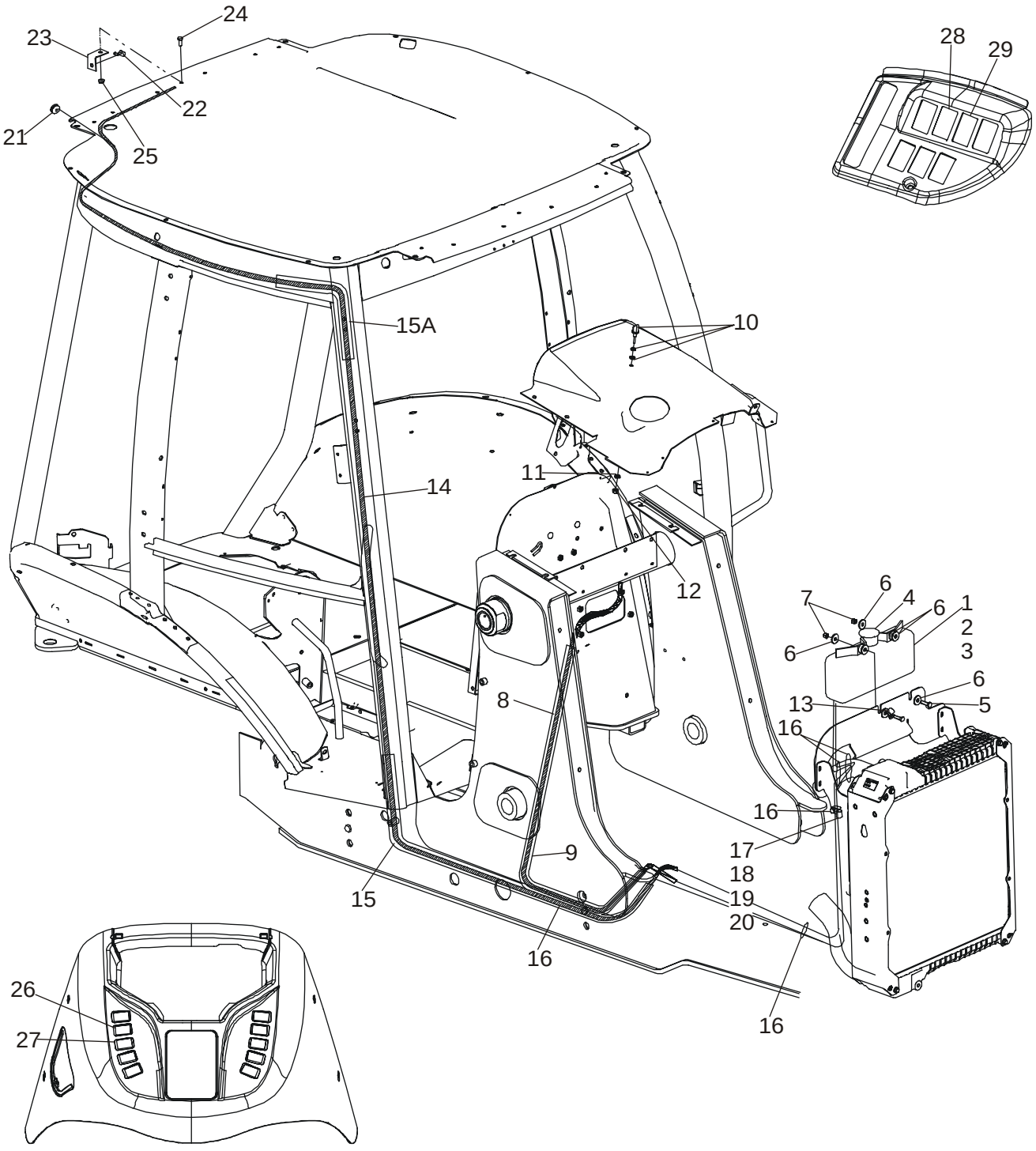

HTTP://WWW.MINNPARBACKHOEPARTS.COM



CAB - WASHER, WINDSHIELD

| REF | FN | PART NUMBER | YR/SN | QTY | DESCRIPTION |
|---|---|---|---|---|---|
| | | E46560 | | 1 | RESERVOIR Incl. Ref 1 - 4 |
| 1 | | NSS | | 1 | NOT SERVICED SEPARATELY RESERVOIR |
| 2 | | E47239 | | 2 | SEAL |
| 3 | | E47238 | | 2 | PUMP MOTOR, 12 Volt |
| 4 | | E47240 | | 1 | PLUG Cap |
| 5 | | 614-8030 | | 2 | SCREW M8 x 30 |
| 6 | | 496-41041 | | 8 | WASHER 13/32 x 1-1/8 x 1/8 |
| 7 | | 832-10408 | | 2 | NUT M8 |
| 8 | | {87428316} | | 1 | HOSE 3150 mm (124-1/64 in); Front Washer; Cut From 1968141CX |
| 9 | | 386718A3 | | 1 | GUARD 1630 mm (64-3/16 in); Cut From 397155A2 |
| 10 | | 284154A1 | | 1 | NOZZLE INJECTION Includes A Steel and Rubber Washer Which Are Not Serviced Separately |
| 11 | | 492-11038 | | 1 | WASHER, LOCK 3/8 |
| 12 | | 425-106 | | 1 | NUT 3/8 |
| 13 | | 515-22159 | | 1 | CLAMP P, 16 mm |
| 14 | | 87423346 | | 1 | HOSE 6325 mm (249-1/64 in); Rear Washer; Cut From 1968141CX |
| 15 | | 408966A1 | | 1 | GUARD 2200 mm (86-5/8 in); Rear Washer Hose; Lower; Cut From 397155A2 |
| 15A | | 408965A1 | | 1 | GUARD 550 mm (21-11/16 in); Rear Washer Hose, Upper; Cut From 397155A2 |
| 16 | | L18337 | | 6 | STRAP 15 in |
| 17 | | D147383 | | 1 | CLIP 5/8 Clamp |
| 18 | | 614-8016 | | 1 | SCREW M8 x 16 |
| 19 | | 895-11008 | | 1 | WASHER Flat |
| 20 | | 829-1408 | | 1 | NUT M8 |
| 21 | | 386722A1 | | 1 | GROMMET Washer, Hose |
| 22 | | E43769 | | 1 | SPRAY Rear Nozzle; Includes Rubber Seal Which Is Not Serviced Separately |
| 23 | | 386720A1 | | 1 | BRACKET Rear Nozzle |
| 24 | | 614-8020 | | 1 | SCREW M8 x 20 |
| 25 | | 825-2408 | | 1 | NUT M8 |
| 26 | | 386785A1 | | 1 | SWITCH Front Wiper |
| 27 | | 386787A1 | | 1 | SWITCH Front Washer |
| 28 | | 386786A1 | | 1 | SWITCH Rear Wiper |

HTTP://WWW.MINNPARBACKHOEPARTS.COM

| 09-59 | | p2 | 01/04 |
|---|---|---|---|

CAB - WASHER, WINDSHIELD

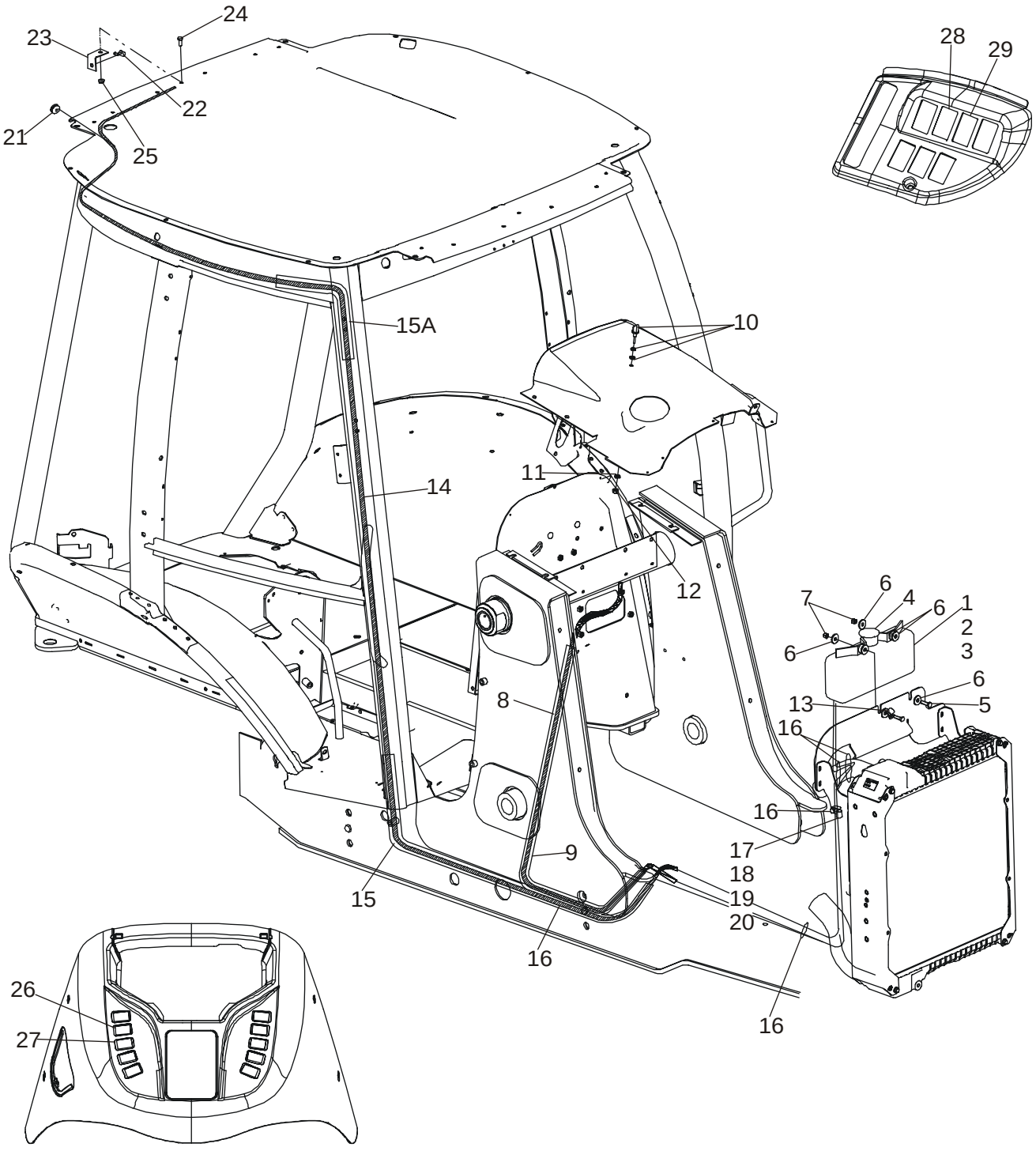

HTTP://WWW.MINNPARBACKHOEPARTS.COM



CAB - WASHER, WINDSHIELD

| REF | FN | PART NUMBER | YR/SN | QTY | DESCRIPTION |
|---|---|---|---|---|---|
| 29 | | 386788A1 | | 1 | SWITCH Rear Washer |

HTTP://WWW.MINNPARBACKHOEPARTS.COM



CAB - WIPERS

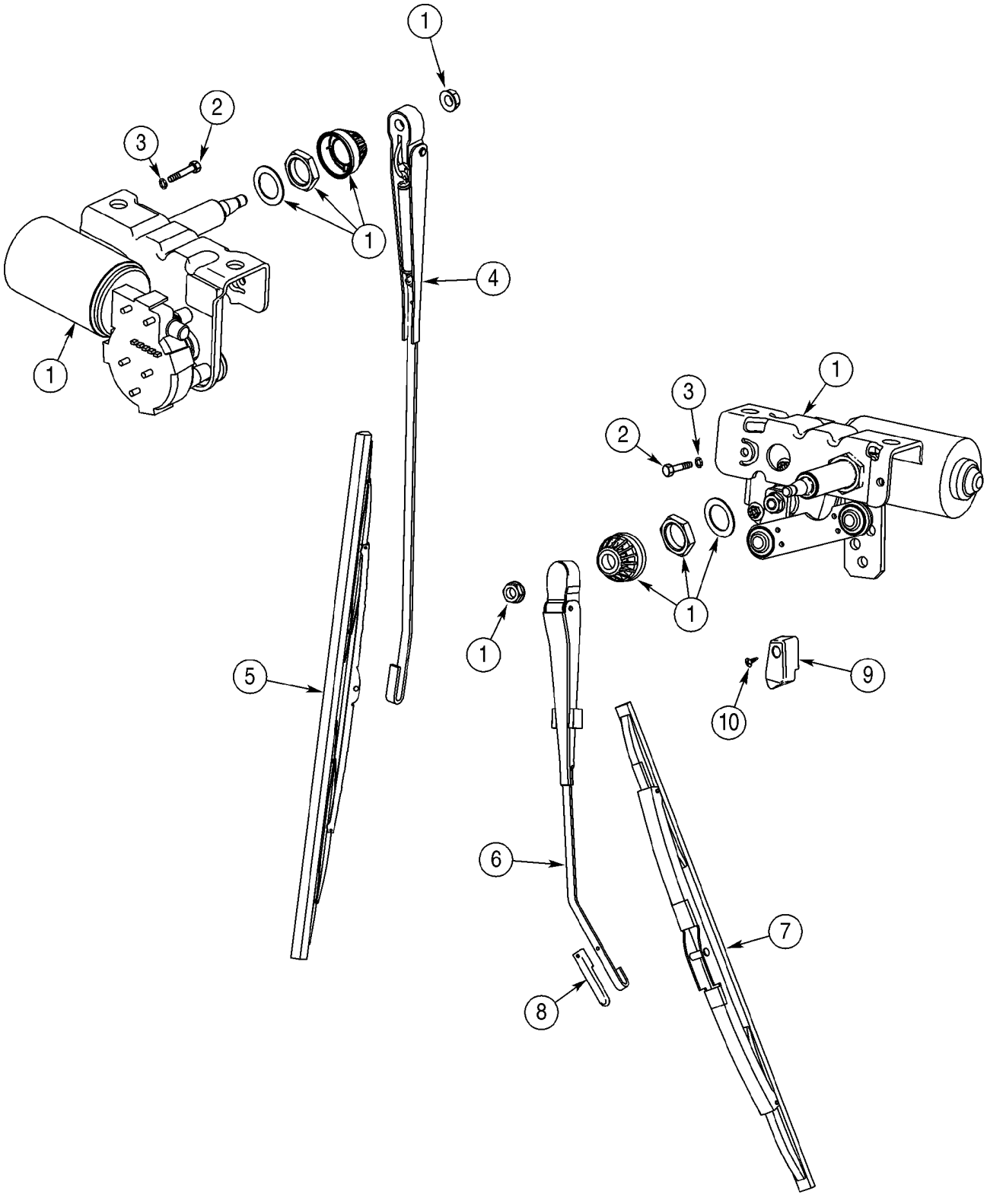

HTTP://WWW.MINNPARBACKHOEPARTS.COM



CAB - WIPERS

| REF | FN | PART NUMBER | YR/SN | QTY | DESCRIPTION |
|---|---|---|---|---|---|
| 1 | | 450037A1 | | 2 | WIPER MOTOR 12V |
| | | 404617A1 | | 1 | HARNESS Front Lamps and Wiper |
| | | 396018A2 | | 1 | HARNESS Cab, B-Post, Rear Wiper, Radio, Blower, Dome Lamp |
| | | 386786A1 | | 1 | SWITCH Rear Wiper |
| | | 386785A1 | | 1 | SWITCH Front Wiper |
| | | A187714 | | 1 | SWITCH Rear Wiper Cutout Switch |
| | | 495-11047 | | 2 | WASHER 15/32 x 59/64 x 1/16 |
| | | 425-147 | | 1 | NUT 7/16 |
| 2 | | 814-6050 | | 4 | SCREW M6 x 50 |
| 3 | | 892-11006 | | 4 | WASHER, LOCK M6 |
| 4 | | D128745 | | 1 | WIPER ARM Front Wiper |
| 5 | | 414426A1 | | 1 | BLADE, WIPER Front Wiper |
| 6 | | 395136A1 | | 1 | WIPER ARM Rear Wiper |
| 7 | | D128022 | | 1 | BLADE, WIPER Rear Wiper |
| 8 | | 395033A1 | | 1 | CLIP |
| 9 | | 395026A1 | | 1 | RAMP Block |
| 10 | | 395389A1 | | 1 | SCREW M6 |

HTTP://WWW.MINNPARBACKHOEPARTS.COM

| 09-61 | | p1 | 01/04 |
|---|---|---|---|

CAB HEADLINER - FILTER, LOUVERS, DOME LAMP

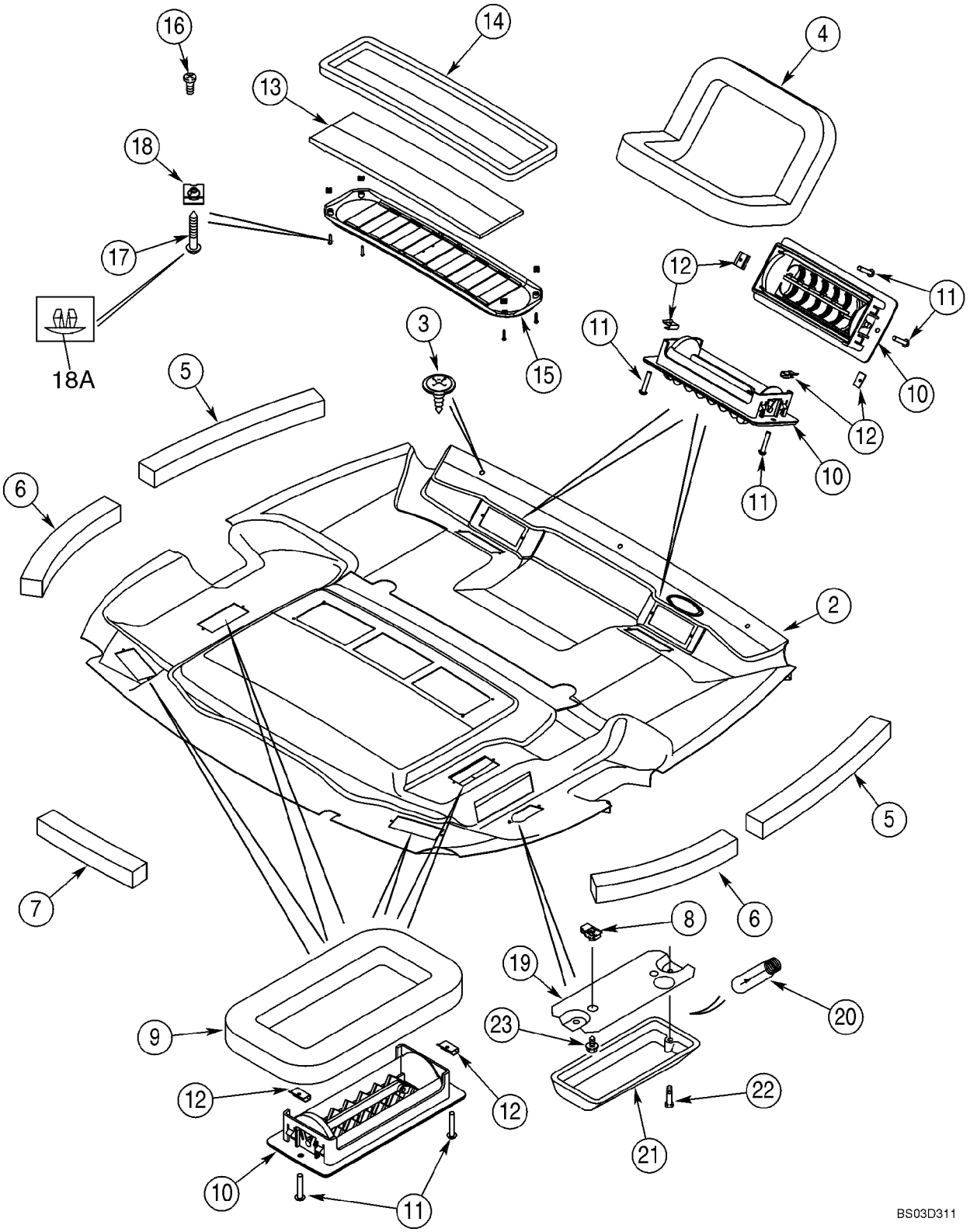

HTTP://WWW.MINNPARBACKHOEPARTS.COM



CAB HEADLINER - FILTER, LOUVERS, DOME LAMP

| REF | FN | PART NUMBER | YR/SN | QTY | DESCRIPTION |
|---|---|---|---|---|---|
| | | 367705A6 | | 1 | LINING, ROOF HEADLINER ASSY, Standard Interior; Incl. Ref 1, 4 - 18A |
| | | 360272A6 | | 1 | LINING, ROOF HEADLINER ASSY, Deluxe Interior; Incl. Ref 2, 4 - 18A |
| 1 | | 367704A4 | | 1 | LINING, ROOF Shell; Standard Interior; Not Illustrated |
| 2 | | 381696A5 | | 1 | LINING, ROOF Shell With Foam and Fabric Covering; Deluxe Interior |
| 3 | | 396516A1 | | 3 | SCREW, POINTED |
| 4 | | 368813A2 | | 2 | SEAL Defrost |
| 5 | | 379160A1 | | 2 | SEAL 494 mm; Foam; Adhesive Back; Front |
| 6 | | 379161A1 | | 2 | SEAL 379 mm; Foam; Adhesive Back; Rear |
| 7 | | 379209A1 | | 1 | SEAL 303 mm; Foam; Adhesive Back, Center, Rear |
| 8 | | 131-861 | | 2 | NUT No. 10; Dome Lamp |
| 9 | | 377194A1 | | 4 | SEAL Heat and Air |
| 10 | | 363883A1 | | 8 | GRILLE ASSY |
| 11 | | 140-103 | | 16 | SCREW No. 6 x 3/4 |
| 12 | | 125749A1 | | 16 | NUT J-Type, No. 6 |
| 13 | | 377594A5 | | 1 | FILTER Air Recirculation |
| 14 | | 381972A1 | | 1 | SEAL |
| 15 | | 369450A1 | | 1 | GRILLE Air Recirculation; Incl. Ref 16 |
| 16 | | 260-1436 | | 2 | SCREW |
| 17 | | 414600A1 | | 4 | SCREW |
| 18 | | 177269A1 | | 4 | NUT |
| 18A | | 409723A1 | | 4 | PLUG Plastic; Fits 5,5 mm Hole |
| | | 380719A2 | | 1 | LIGHT, INTERIOR Dome Lamp; Incl. Ref 19 - 21 |
| 19 | | NSS | | 1 | NOT SERVICED SEPARATELY Base |
| 20 | | N14466 | | 1 | BULB |
| 21 | | NSS | | 1 | NOT SERVICED SEPARATELY Lens; With Switch |
| 22 | | 440-1088 | | 2 | SCREW No. 8 x 1/2 in; Base To Lens |
| 23 | | 281-54512 | | 2 | SCREW No. 10 x 3/4; Lamp To Headliner |

HTTP://WWW.MINNPARBACKHOEPARTS.COM

| 09-62 | | p1 | 01/04 |
|---|---|---|---|

CAB - FILTER, AIR

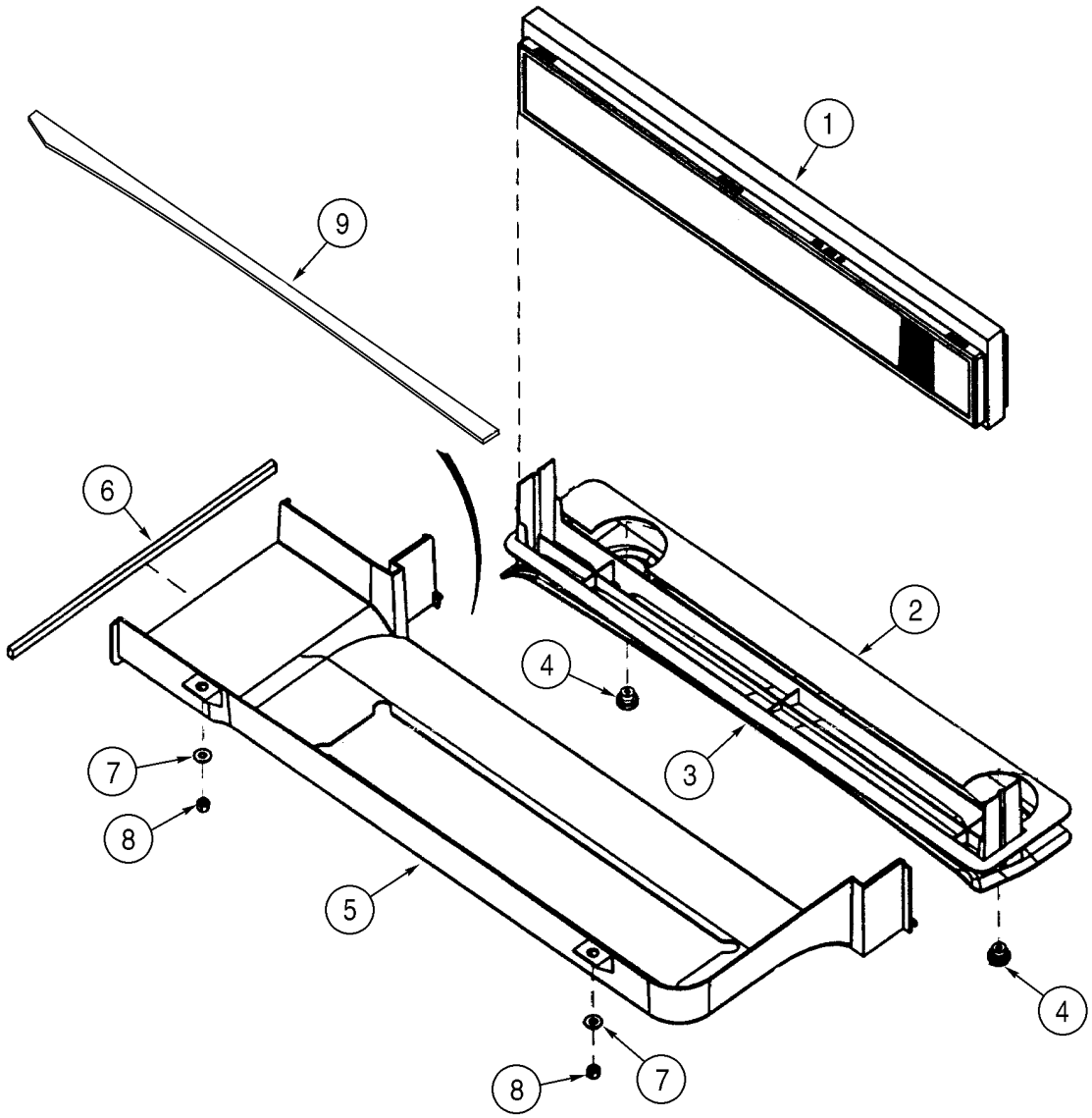


BS00F073

HTTP://WWW.MINNPARBACKHOEPARTS.COM



CAB - FILTER, AIR

| REF | FN | PART NUMBER | YR/SN | QTY | DESCRIPTION |
|---|---|---|---|---|---|
| 1 | | 360260A2 | | 1 | FILTER, ELEMENT Includes Foam Seal |
| 2 | | 382770A2 | | 1 | SEAL |
| 3 | | 360261A1 | | 1 | TRAY |
| 4 | | 398738A1 | | 2 | KNOB Fresh Air Duct Retainer |
| 5 | | 360252A2 | | 1 | DUCT Fresh Air Intake |
| 6 | | 368990A1 | | 1 | SEAL |
| 7 | | 895-15008 | | 2 | WASHER 9 x 20 x 1,6 mm |
| 8 | | 832-10408 | | 2 | NUT M8 |
| 9 | | 403271A1 | | 1 | SEAL 882 mm; Adhesive Back |

HTTP://WWW.MINNPARBACKHOEPARTS.COM

| 09-63 | | p1 | 01/04 |
|---|---|---|---|

CAB - BLOWER HOUSING, VENTILATION DUCTS, DRAIN LINES

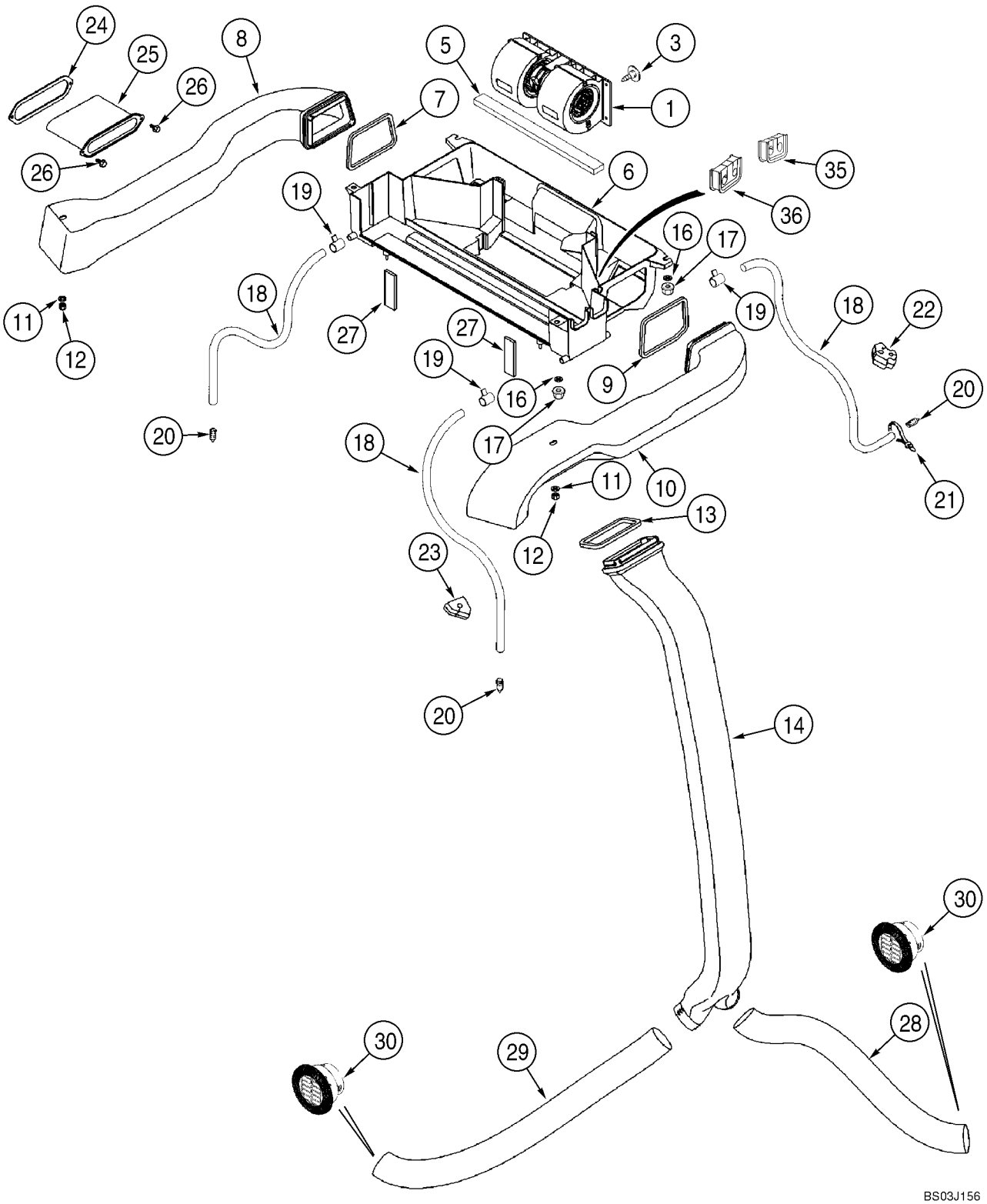

HTTP://WWW.MINNPARBACKHOEPARTS.COM



CAB - BLOWER HOUSING, VENTILATION DUCTS, DRAIN LINES

| REF | FN | PART NUMBER | YR/SN | QTY | DESCRIPTION |
|---|---|---|---|---|---|
| 1 | | {377221A2} | | 1 | BLOWER; Component Parts Not Serviced Separately; For Blower Switch, See Figure 04-09 |
| 3 | | 182697A1 | | 1 | CLASP |
| 5 | | 181981A1 | | 1 | GASKET 6 x 20 x 355 mm; Adhesive Back; Under Blower |
| 6 | | 360251A3 | | 1 | HOUSING ASSY. Heat and Air; Includes 373995A1 |
| | | 373995A1 | | 2 | INSERT |
| 7 | | 368805A1 | | 1 | SEAL Left-Hand Duct |
| 8 | | 360253A3 | | 1 | DUCT Left-Hand |
| 9 | | 369249A1 | | 1 | SEAL Right-Hand Duct |
| 10 | | 360254A3 | | 1 | DUCT Right-Hand |
| 11 | | 895-15010 | | 2 | WASHER 11 x 24 x 2 mm |
| 12 | | 832-10408 | | 2 | NUT M8 |
| 13 | | 368807A1 | | 1 | SEAL |
| 14 | | 360255A1 | | 1 | DUCT |
| 16 | | 895-15008 | | 4 | WASHER 9 x 20 x 1,6 mm |
| 17 | | 832-10408 | | 4 | NUT M8 |
| 18 | | 368821A1 | | 4 | HOSE 3050 mm; Drain |
| 19 | | 214-1406 | | 4 | CLAMP 7/16 - 25/32 |
| 20 | | 365789A1 | | 4 | VALVE, DRAIN Drain |
| 21 | | L18337 | | 2 | STRAP 15 in |
| 22 | | 383794A2 | | 2 | PLUG |
| 23 | | 383795A2 | | 2 | PLUG |
| 24 | | 381113A2 | | 1 | SEAL |
| 25 | | 381111A2 | | 1 | SLEEVE |
| 26 | | 281-18712 | | 2 | SCREW 1/4 st x 3/4 |
| 27 | | 377230A3 | | 2 | SEAL 16 mm thk; Fresh Air Duct To Ventilation Housing |
| 28 | | 375392A1 | | 1 | HOSE, LARGE 750 mm; Cut From 236559A1 |
| 29 | | 368818A1 | | 1 | HOSE, LARGE 1015 mm; Cut From 236559A1 |
| 30 | | 398986A1 | | 2 | VENT |
| 35 | | 403225A1 | | 1 | SEAL Heater Tubes At Housing |
| 36 | | 403193A1 | | 1 | SEAL Air Conditioning Tubes At Housing |

HTTP://WWW.MINNPARBACKHOEPARTS.COM

| 09-64 | | p1 | 01/04 |
|---|---|---|---|

CAB - HEATER

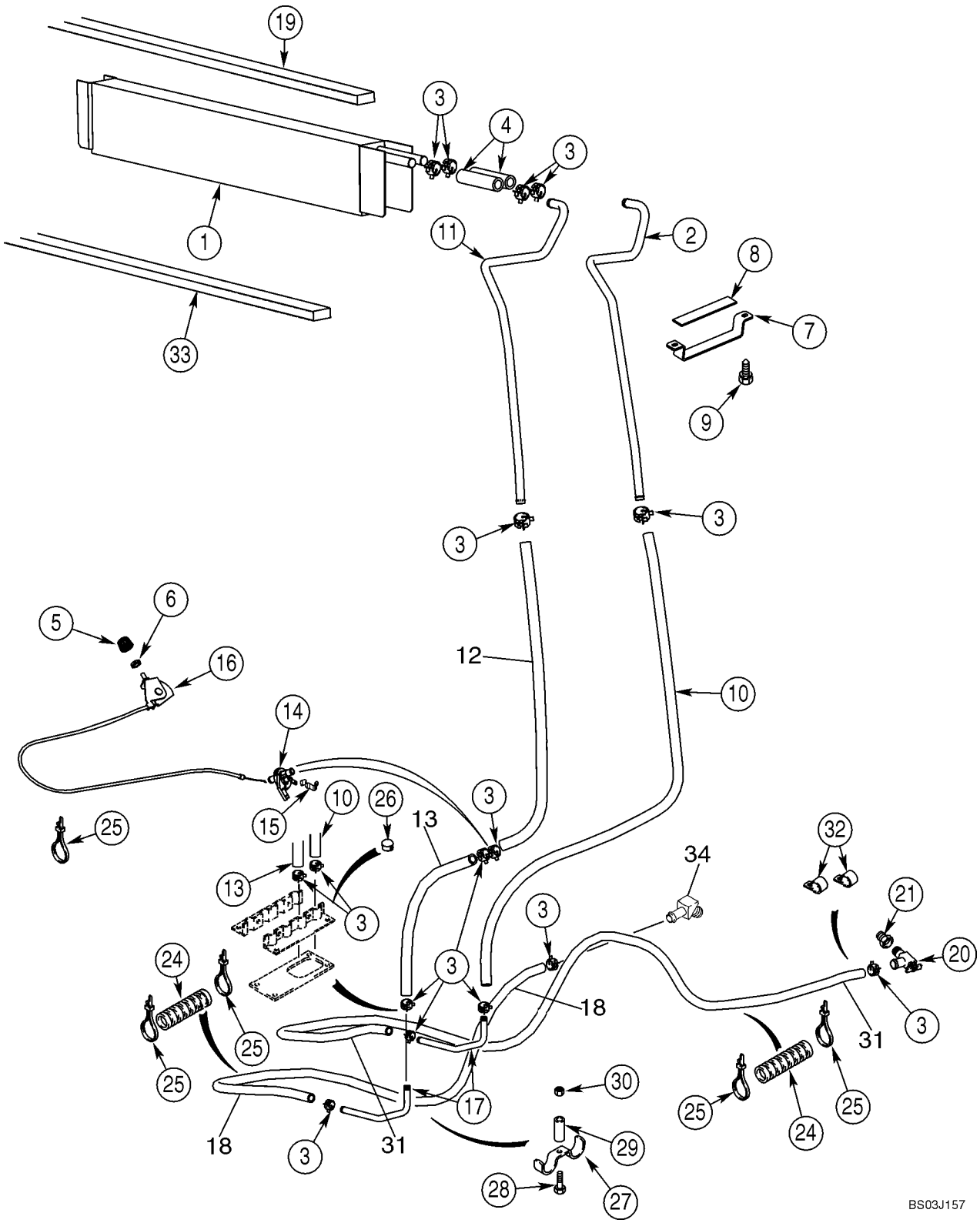

HTTP://WWW.MINNPARBACKHOEPARTS.COM



CAB - HEATER

| REF | FN | PART NUMBER | YR/SN | QTY | DESCRIPTION |
|---|---|---|---|---|---|
| 1 | | 360262A2 | | 1 | HEAT-EXCHANGER Core, Mounts In Blower Housing Box; Seal Mounts On Top Of Core On Models With Heat Only |
| 2 | | 400282A1 | | 1 | TUBE Front |
| 3 | | 1954736C1 | | 14 | CLAMP No. 24 |
| 4 | | 377222A1 | | 2 | HOSE 100 mm; Cut From 97252CX |
| 5 | | 400379A1 | | 1 | KNOB 23 mm |
| 6 | | A42561 | | 1 | NUT |
| 7 | | 388762A1 | | 1 | BRACKET |
| 8 | | 389402A1 | | 1 | SEAL |
| 9 | | 281-14520 | | 2 | SCREW, SELF TAPPING With Washer, No. 10 x 1, 25 |
| 10 | | 368801A2 | | 1 | HOSE 1361 mm; Cut From 97252CX |
| 11 | | 400280A1 | | 1 | TUBE Rear |
| 12 | | 448428A1 | | 1 | HOSE (METRES) 1175 mm (46-1/4 in); Heater Valve To Core; Cut From 97252CX |
| 13 | | 448429A1 | | 1 | HOSE (METRES) 150 mm (5-29/32 in) Floor To Valve; Cut From 97252CX |
| 14 | | 1331087C1 | | 1 | VALVE Heater Control |
| 15 | | 1954626C1 | | 1 | CLAMP |
| 16 | | 1999666C1 | | 1 | CONTROL Heater; Includes 1999667C1, 1999668C1 |
| | | 1999667C1 | | 1 | CONTROL |
| | | 1999668C1 | | 1 | CABLE |
| 17 | | 190675A1 | | 2 | PIPE |
| 18 | | {377232A2} | | 1 | HOSE 2650 mm (104-21/64 in); Heater; Return To Water Pump; Cut From 97252CX |
| 19 | | 406287A1 | | 1 | SEAL 19 x 19 x 736 mm; Location Of Seal On Models With Heat Only; On Models With Air Conditioning, Seal Is Located On Evaporator Core |
| 20 | | 301803R1 | | 1 | VALVE, SHUT-OFF |
| 21 | | 221-89 | | 1 | RESTRICTOR 1/2 x 3/8; Replaces Existing Plug |
| 24 | | D132982 | | 6 | LOOM Sleeve, 400 mm (15-3/4 in) |
| 25 | | L18337 | | 6 | STRAP 15 in |
| 26 | | 353-410 | | 2 | PLUG 7/8; Models With Heat Only |
| 27 | | D143427 | | 1 | CLAMP |
| 28 | | 614-8030 | | 1 | SCREW M8 x 30 |

HTTP://WWW.MINNPARBACKHOEPARTS.COM



CAB - HEATER

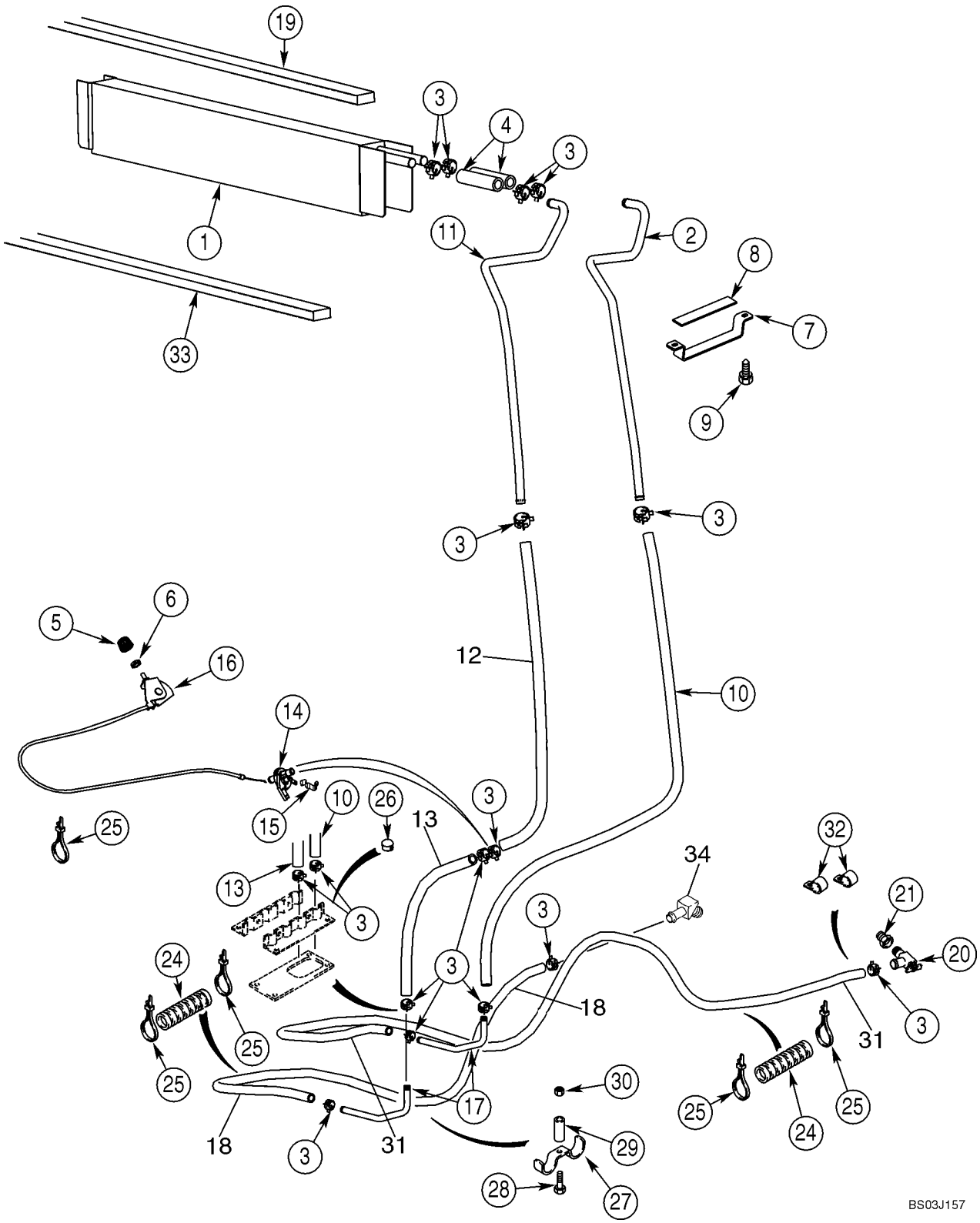

HTTP://WWW.MINNPARBACKHOEPARTS.COM



CAB - HEATER

| REF | FN | PART NUMBER | YR/SN | QTY | DESCRIPTION |
|---|---|---|---|---|---|
| 29 | | D143417 | | 1 | SPACER |
| 30 | | 825-2408 | | 1 | NUT M8 |
| 31 | | {377233A2} | | 1 | HOSE 1830 mm (72-3/64 in); Heater; Inlet From Engine; Cut From 97252CX |
| 32 | | D88052 | | 2 | CLAMP |
| 33 | | 1987096C1 | | 1 | PLATE, LARGE Seal, Below Heater Core; Location Of Seal On Models With Heat Only; On Models With Air Conditioning, Seal Is Located At Rear Of Housing |
| 34 | | 217-144 | | 1 | ELBOW 45 deg, 5/8 stm x 1/2 NPTF |

HTTP://WWW.MINNPARBACKHOEPARTS.COM

| 09-65 | | p1 | 01/04 |
|---|---|---|---|

CAB - AIR CONDITIONING LINES, EVAPORATOR CORE

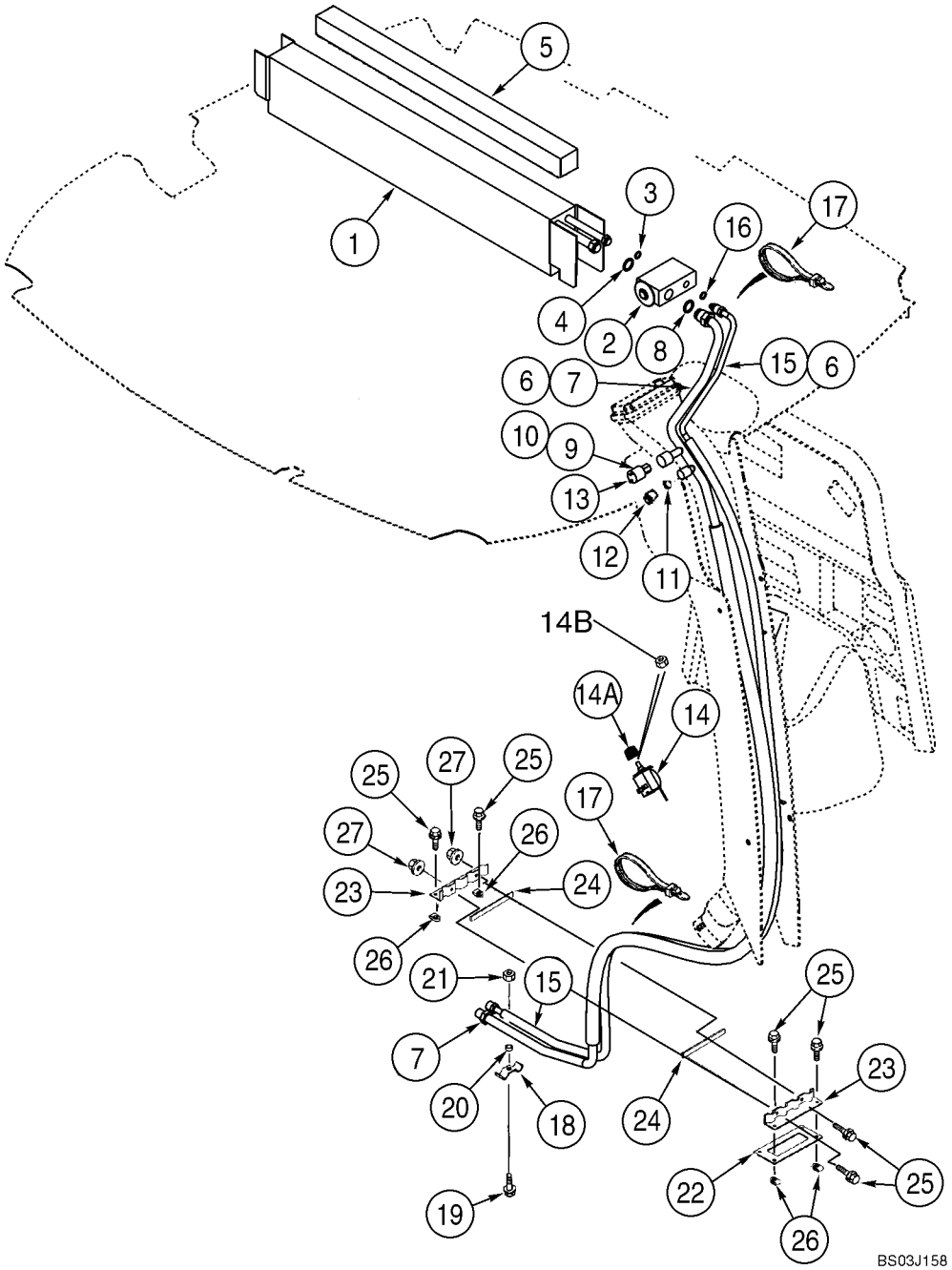

HTTP://WWW.MINNPARBACKHOEPARTS.COM



CAB - AIR CONDITIONING LINES, EVAPORATOR CORE

| REF | FN | PART NUMBER | YR/SN | QTY | DESCRIPTION |
|---|---|---|---|---|---|
| | | 363832A5 | | 1 | EVAPORATOR Incl. Ref 1 - 4; Not Available as An Assembly; Order Components |
| 1 | | 360263A4 | | 1 | EVAPORATOR Core |
| 2 | | 386535A1 | | 1 | VALVE |
| 3 | | 128484A1 | | 1 | O-RING 7/16 ID x 1/16 |
| 4 | | 128485A1 | | 1 | O-RING 9/16 ID x 1/16 |
| | | 83822C1 | | 3 | TAPE, ADHESIVE Insulation; 63,5 (2-1/2 in) x 610 mm (24-1/64 in) |
| 5 | | 406287A1 | | 1 | SEAL 19 x 19 x 736 mm; Adhesive Back; Models With Heat and Air, Locate Seal On Top Of Core |
| | | 345-621 | | 2 | TAPE, ADHESIVE 2 x 6 in |
| 7 | | 360257A1 | | 1 | TUBE, PLASTIC-RUBBER Suction; Incl. Ref 8 - 12 |
| 8 | | 128485A1 | | 1 | O-RING 9/16 ID x 1/16 |
| 9 | | 128483A1 | | 1 | O-RING 5/16 ID x 1/16; Valve Core |
| 10 | | 1250594C1 | | 1 | CORE Low Pressure Switch |
| 11 | | 1250594C1 | | 1 | CORE Low Side Service Port |
| 12 | | 122553A1 | | 1 | CAP |
| 13 | | 122579A1 | | 1 | SWITCH Low Pressure |
| 14 | | 370381A1 | | 1 | SWITCH Temperature Control; Air Conditioning |
| 14A | | 400379A1 | | 1 | KNOB 23 mm |
| 14B | | A42561 | | 1 | NUT 7/16 |
| 15 | | 360256A1 | | 1 | TUBE, PLASTIC-RUBBER Pressure; Incl. Ref 16 |
| 16 | | 128483A1 | | 1 | O-RING 5/16 ID x 1/16 |
| 17 | | L18337 | | 4 | STRAP 15 in |
| 18 | | D143427 | | 1 | CLAMP |
| 19 | | 614-8030 | | 1 | SCREW M8 x 30 |
| 20 | | D143417 | | 1 | SPACER |
| 21 | | 825-2408 | | 1 | NUT M8 |
| 22 | | 124011A1 | | 1 | GASKET |
| 23 | | 123980A1 | | 2 | SHIN CLAMP, Heater and Air Conditioning Hoses |
| 24 | | 181979A1 | | 2 | GASKET |
| 25 | | 845-6020 | | 6 | SCREW M6 x 20 |
| 26 | | 833-40406 | | 4 | NUT M6 |
| 27 | | 825-2406 | | 2 | NUT M6 |

HTTP://WWW.MINNPARBACKHOEPARTS.COM



CAB - AIR CONDITIONING, CONDENSER, RECEIVER-DRIER

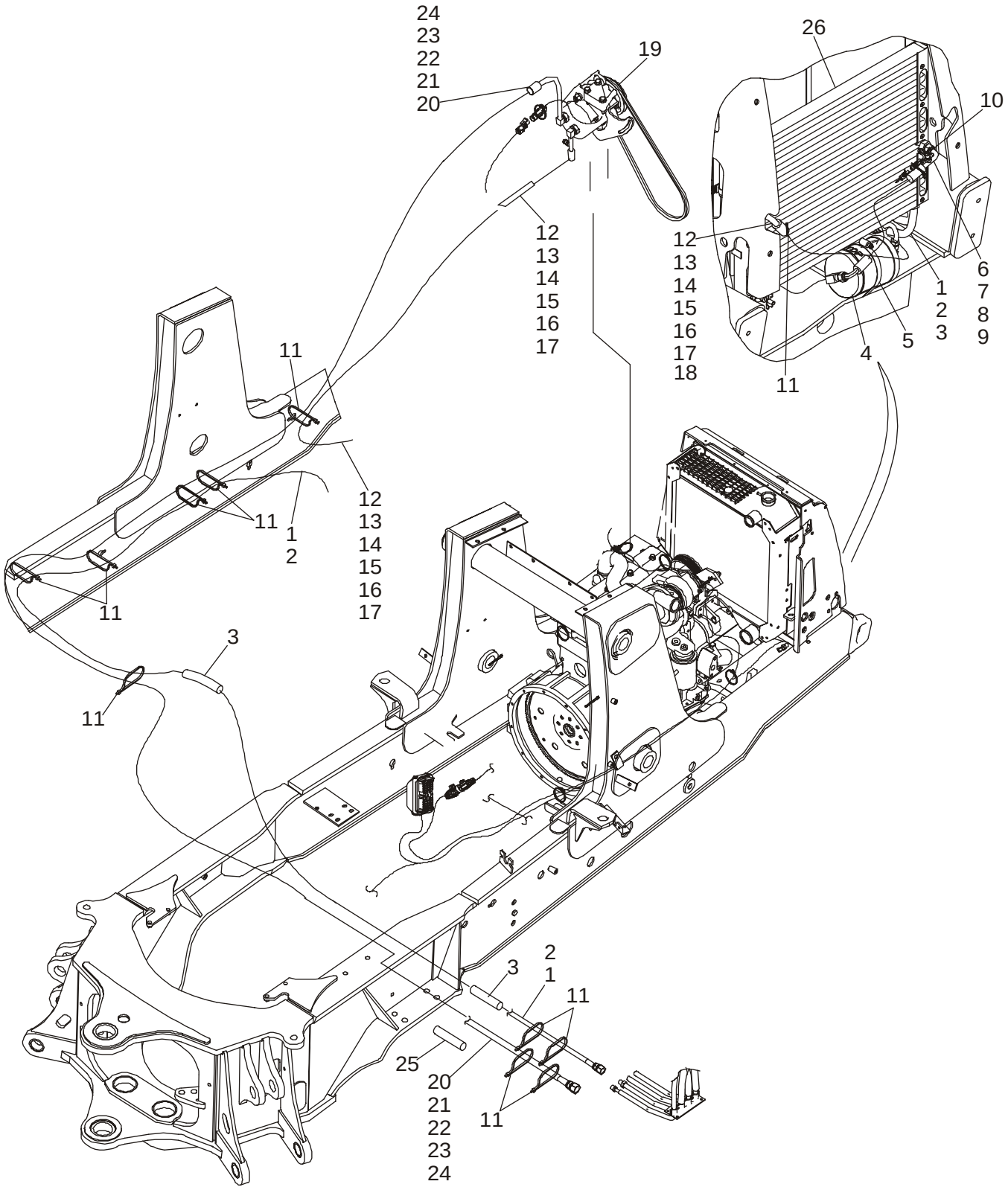

HTTP://WWW.MINNPARBACKHOEPARTS.COM



CAB - AIR CONDITIONING, CONDENSER, RECEIVER-DRIER

| REF | FN | PART NUMBER | YR/SN | QTY | DESCRIPTION |
|---|---|---|---|---|---|
| 1 | | 87421777 | | 1 | HOSE ASSY. 2730 mm (107-1/2 in), Receiver Drier to Cab; Incl. Ref 2 |
| 2 | | 128483A1 | | 2 | O-RING 5/16 ID x 1/16 |
| 3 | | 191704A1 | | 3 | LOOM 460 mm (18-1/8 in) |
| 4 | | 86984155 | | 1 | RECEIVER-DRYER Receiver-Drier |
| 5 | | 214-1464 | | 2 | CLAMP No. 64 |
| 6 | | 87421775 | | 1 | HOSE ASSY. 431 mm (17 in), Condenser to Drier; Incl. Ref 7 - 9 |
| 7 | | 128483A1 | | 3 | O-RING 5/16 ID x 1/16 |
| 8 | | 1250594C1 | | 1 | CORE Valve, High Pressure Switch |
| 9 | | 122081A1 | | 1 | FITTING Switch |
| 10 | | 232948A1 | | 1 | SWITCH, PRESSURE High Pressure |
| 11 | | L18337 | | 15 | STRAP |
| 12 | | 87421776 | | 1 | HOSE ASSY. 1542 mm (60-3/4 in), Compressor to Condenser; Incl. Ref 13 - 17 |
| 13 | | 128484A1 | | 1 | O-RING 7/16 D x 1/16 |
| 14 | | 128485A1 | | 1 | O-RING 9/16 ID x 1/16 |
| 15 | | 1999926C1 | | 1 | FITTING, PIPE |
| 16 | | 1250594C1 | | 1 | CORE Valve |
| 17 | | {122554C1} | | 1 | Sealing Cap |
| 18 | | 193913A1 | | 1 | PROTECTOR Guard, 1200 mm (47-1/4 in) |
| 19 | | 87430122 | | 1 | COMPRESSOR, AIRCOND Component Parts Not Serviced Separately, See Figure 09-67 for Mounting |
| 20 | | 87427294 | | 1 | HOSE ASSY. 2240 mm (88-3/16 in), Cab to Compressor; Incl. Ref 21 - 24 |
| 21 | | 128485A1 | | 2 | O-RING 9/16 ID x 1/16 |
| 22 | | 1999927C1 | | 1 | FITTING, PIPE |
| 23 | | 1250594C1 | | 1 | CORE Valve |
| 24 | | 122553A1 | | 1 | CAP Sealing |
| 25 | | 191703A1 | | 2 | LOOM Sleeve, 400 mm (15-3/4 in) |
| 26 | | 87417329 | | 1 | CONDENSER Condenser |
| | | 895-11008 | | 4 | WASHER 9 x 16 x 1,6 mm |
| | | 829-1408 | | 4 | NUT M8 |

HTTP://WWW.MINNPARBACKHOEPARTS.COM

| 09-67 | | p1 | 01/04 |
|---|---|---|---|

CAB - AIR CONDITIONING COMPRESSOR

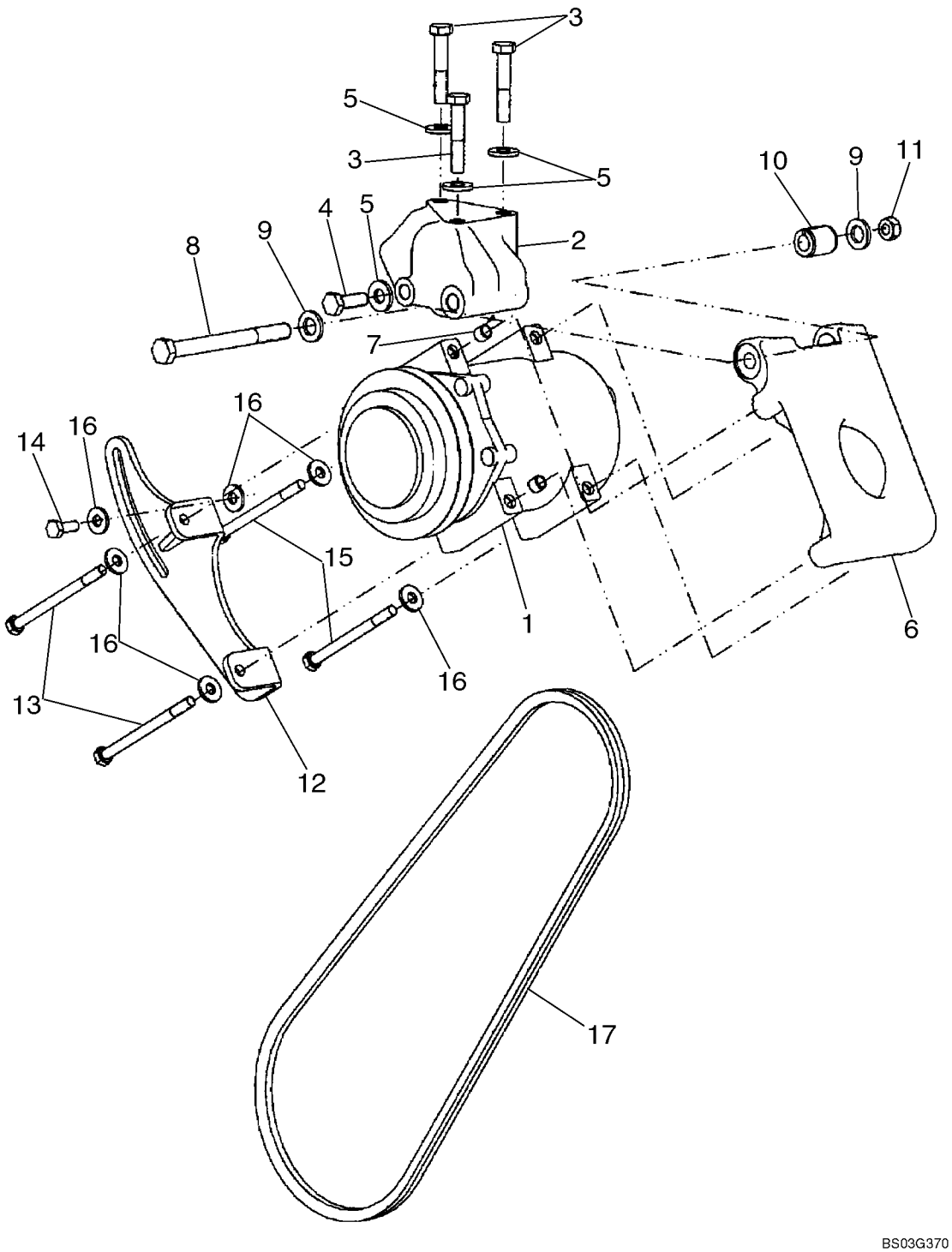

HTTP://WWW.MINNPARBACKHOEPARTS.COM



CAB - AIR CONDITIONING COMPRESSOR

| REF | FN | PART NUMBER | YR/SN | QTY | DESCRIPTION |
|---|---|---|---|---|---|
| 1 | | 87430122 | | 1 | COMPRESSOR, AIRCOND Compressor<br>Component Parts Not Serviced Separately |
| 2 | | 87429950 | | 1 | SUPPORT Mounting Support |
| 3 | | 814-10055 | | 3 | SCREW M10 x 55 |
| 4 | | 614-10030 | | 1 | SCREW M10 x 30 |
| 5 | | 896-15010 | | 4 | WASHER 11 x 24 x 3mm |
| 6 | | 87429948 | | 1 | SUPPORT |
| 7 | | 87429952 | | 2 | RING |
| 8 | | 814-12130 | | 1 | SCREW M12 x 130 |
| 9 | | 896-11012 | | 2 | WASHER 13,5 x 24 x 3 mm |
| 10 | | 87429951 | | 1 | SPACER Pivot |
| 11 | | 829-1410 | | 1 | NUT M10 |
| 12 | | 87429949 | | 1 | BRACKET, SUPPORTING |
| 13 | | 814-8110 | | 2 | SCREW M8 x 110 |
| 14 | | 614-8020 | | 1 | SCREW M8 x 20 |
| 15 | | 814-8100 | | 2 | SCREW M8 x 100 |
| 16 | | 896-15008 | | 6 | WASHER 9 x 21 x 2,5 mm |
| 17 | | 87429954 | | 1 | BELT, TRANSMISSION V-Belt |

HTTP://WWW.MINNPARBACKHOEPARTS.COM



CANOPY, ROPS - FRAME, COVERS, MIRROR, VISOR

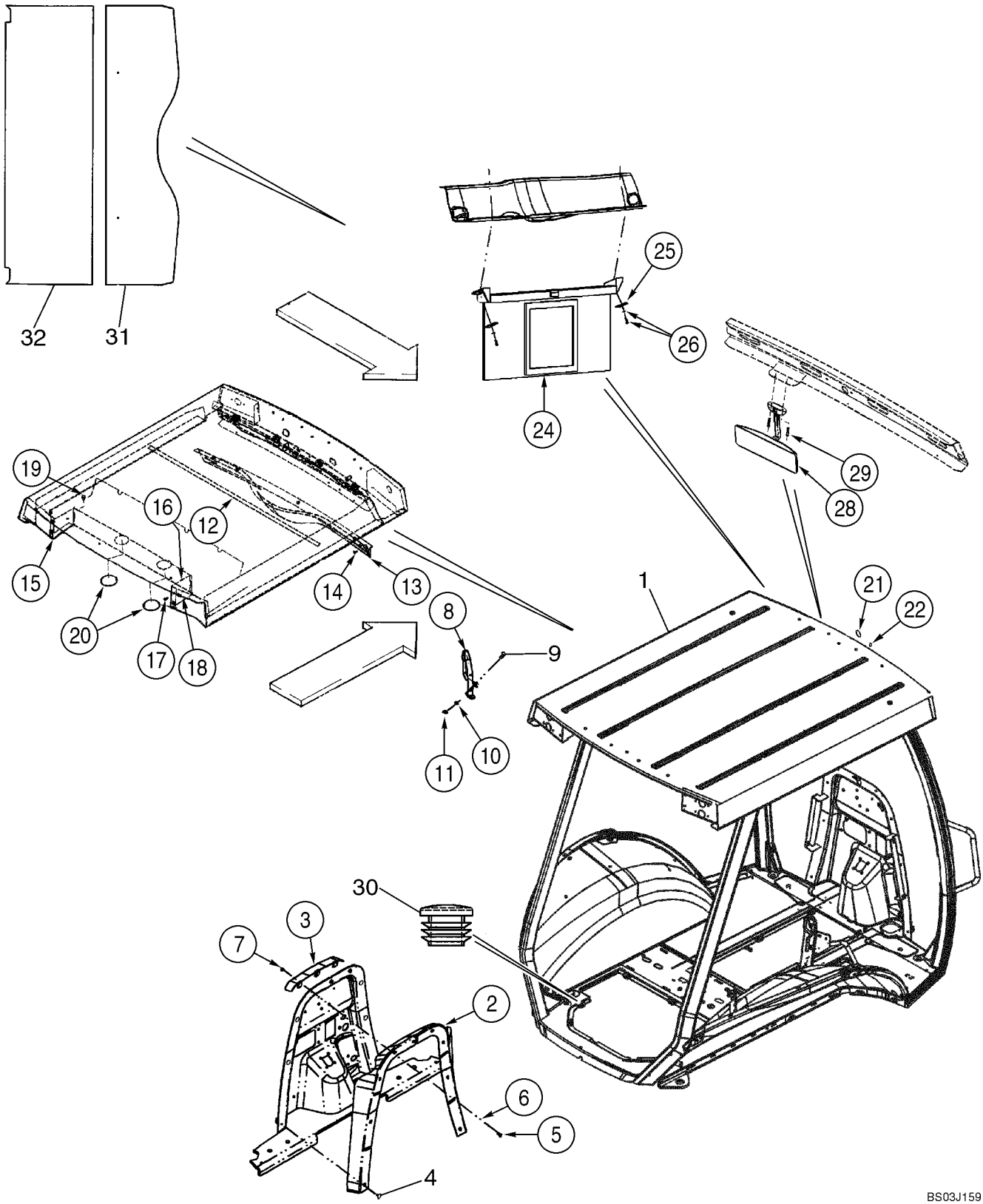

HTTP://WWW.MINNPARBACKHOEPARTS.COM



CANOPY, ROPS - FRAME, COVERS, MIRROR, VISOR

| REF | FN | PART NUMBER | YR/SN | QTY | DESCRIPTION |
|---|---|---|---|---|---|
| 1 | | 87434974 | | 1 | FRAME, CAB ROPS Canopy Frame; Order From Machinery Price List |
| 2 | | 396938A3 | | 1 | MOLDING Firewall |
| 3 | | 395478A3 | | 1 | BRACKET |
| 4 | | D143242 | | 6 | PLUG Push-In Fastener |
| 5 | | 614-8020 | | 3 | SCREW M8 x 20 |
| 6 | | 495-81001 | | 3 | WASHER ,375 x 1,125 x ,065 |
| 7 | | 832-10408 | | 3 | NUT M8 |
| 8 | | 392930A1 | | 1 | GRAB RAIL Grab Handle |
| 9 | | 811-10025 | | 2 | SCREW M10 x 25; 8.8 |
| 10 | | 495-81267 | | 2 | WASHER ,469 x 1,5 |
| 11 | | 832-10410 | | 2 | NUT M10 |
| 12 | | 385506A1 | | 1 | STRIP, PROTECTION 127 mm; Foam; Adhesive Back |
| 13 | | 367712A3 | | 1 | COVER Harness |
| 14 | | F64519 | | 5 | SCREW No. 10 x 3/4; For Service, Order 265-16512, F64315 |
| 15 | | 357099A1 | | 1 | COVER Left-Hand |
| 16 | | 357100A1 | | 1 | COVER Right-Hand |
| 17 | | 555-2 | | 4 | SCREW Flange, M6 x 20 |
| 18 | | 833-40406 | | 4 | NUT Spring, M6 |
| 19 | | 353-402 | | 4 | PLUG 3/8; Models With Four Lamps; Not Used On Models With Eight Lamps |
| 20 | | 1302758C1 | | 2 | PLUG 3 in |
| | | 353-410 | | 1 | PLUG Dome, 7/8 Black Nylon |
| 21 | | 411549A1 | | 1 | PLUG 1 in; Windshield Frame |
| 22 | | 353-421 | | 2 | PLUG 3/16; Upper Windshield Frame |
| 24 | | 364180A1 | | 1 | VISOR, SUN |
| 25 | | 409618A1 | | 2 | PLATE 1/4 in Mounting Hole |
| 26 | | 396516A1 | | 2 | SCREW, POINTED No 10 x 1 st; With Washer; Phillips |
| 28 | | 87406924 | | 1 | MIRROR, REAR-VIEW |
| 29 | | 286-56520 | | 2 | SCREW No. 10 x 1-1/4 |
| 30 | | 382298A1 | | 2 | PLUG 7/8 in |
| 31 | | 431583A1 | | 1 | PANEL Foam; Roof Front |
| 32 | | 431584A1 | | 1 | PANEL Foam: Roof Rear |

HTTP://WWW.MINNPARBACKHOEPARTS.COM

| 09-69 | | p1 | 01/04 |
|---|---|---|---|

CANOPY, ROPS - GLASS

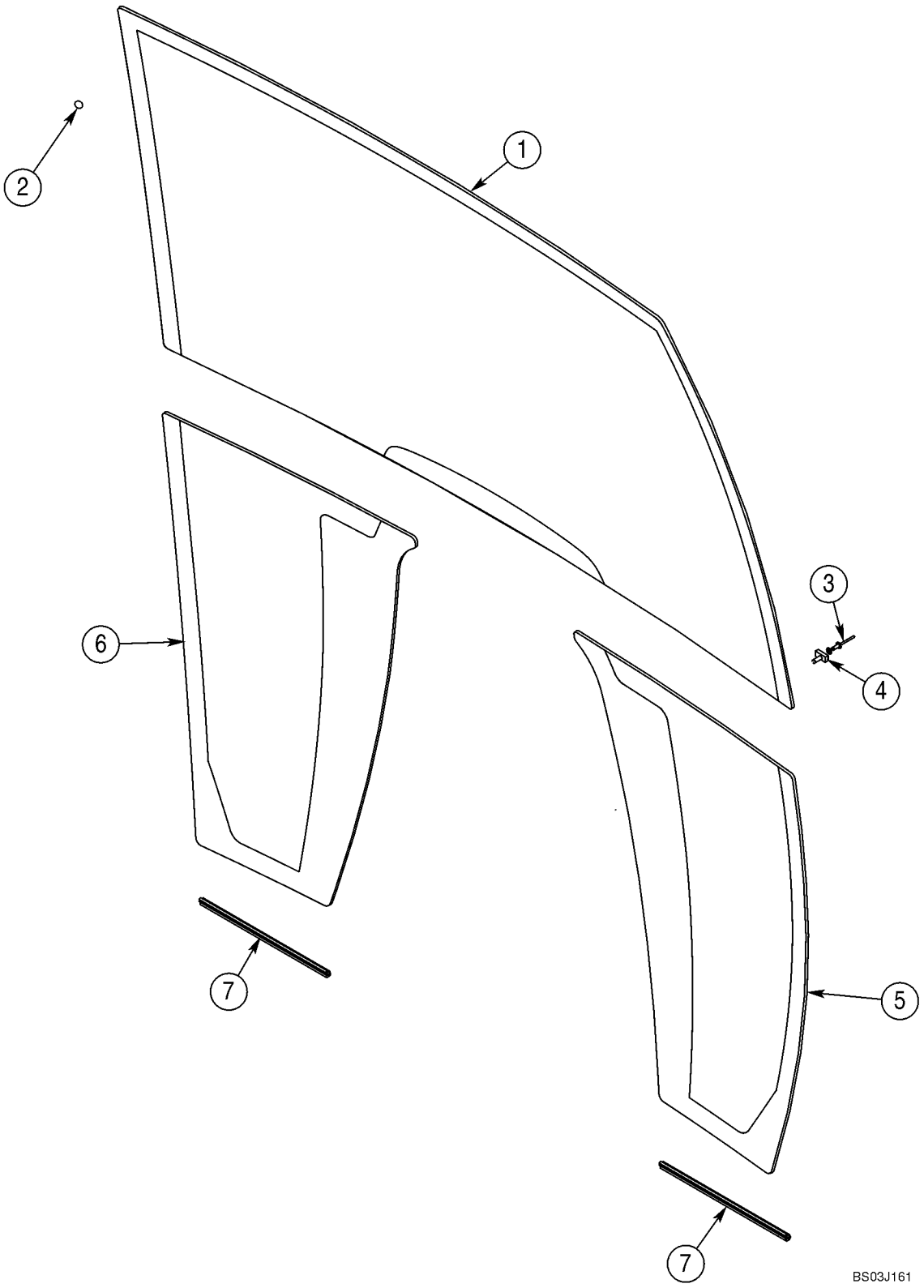

HTTP://WWW.MINNPARBACKHOEPARTS.COM



CANOPY, ROPS - GLASS

| REF | FN | PART NUMBER | YR/SN | QTY | DESCRIPTION |
|---|---|---|---|---|---|
| 1 | | 448607A1 | | 1 | WINDSHIELD |
| 2 | | 391827A1 | | 28 | SPACER |
| 3 | | 151-516 | | 2 | RIVET |
| 4 | | 279482A1 | | 2 | CLAMP |
| 5 | | 448609A1 | | 1 | WINDSHIELD Lower; Right-Hand |
| 6 | | 448608A1 | | 1 | WINDSHIELD Lower; Left-Hand |
| 7 | | 395793A1 | | 2 | STRIP, PROTECTION Lower Glass Trim |

HTTP://WWW.MINNPARBACKHOEPARTS.COM

| 09-70 | | p1 | 01/04 |
|---|---|---|---|

CANOPY, ROPS - WIPER, FRONT AND WINDSHIELD WASHER

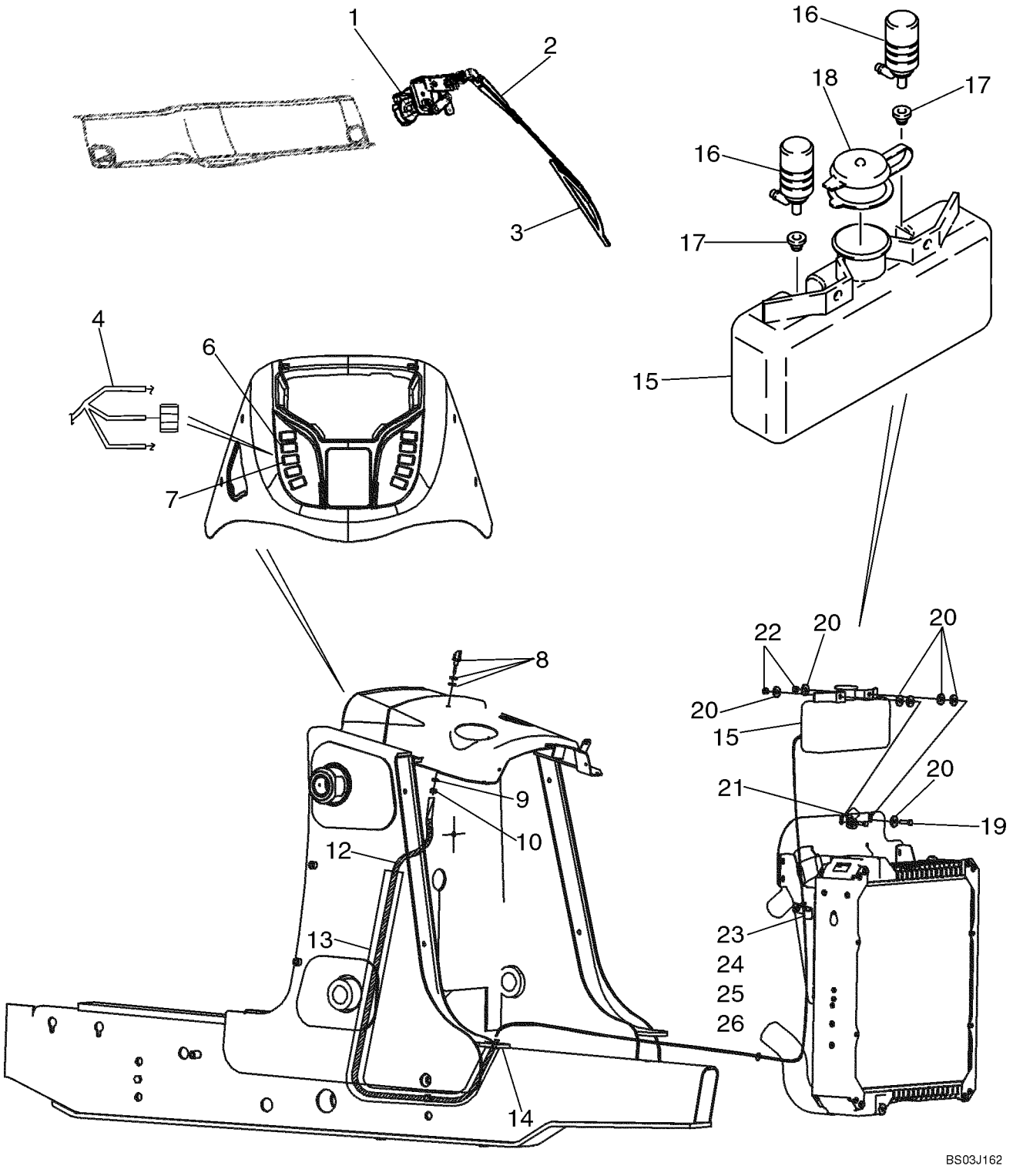

HTTP://WWW.MINNPARBACKHOEPARTS.COM



CANOPY, ROPS - WIPER, FRONT AND WINDSHIELD WASHER

| REF | FN | PART NUMBER | YR/SN | QTY | DESCRIPTION |
|---|---|---|---|---|---|
| 1 | | 450037A1 | | 1 | WIPER MOTOR 12V |
| | | 814-6050 | | 2 | SCREW M6 x 50; Wiper Motor Mounting |
| | | 892-11006 | | 2 | WASHER, LOCK M6 |
| 2 | | D128745 | | 1 | WIPER ARM |
| 3 | | 414426A1 | | 1 | BLADE, WIPER 600 mm |
| | | 404617A1 | | 1 | HARNESS Front Lamps and Wiper |
| 4 | | 87433546 | | 1 | HARNESS, WIRE Front Console Options; Includes (1) L71879 Diode |
| 5 | | 87436675 | | 1 | HARNESS, WIRE Chassis Options; Includes (4) L71879 Diodes |
| 6 | | 386785A1 | | 1 | SWITCH Front Wiper |
| 7 | | 386787A1 | | 1 | SWITCH Windshield Washer |
| 8 | | 284154A1 | | 1 | NOZZLE INJECTION Includes A Steel and Rubber Washer Which Are Not Serviced Separately |
| 9 | | 492-11038 | | 1 | WASHER, LOCK 3/8 |
| 10 | | 425-106 | | 1 | NUT 3/8 |
| 12 | | {87428316} | | 1 | 3150 mm (124-1/64 in); Cut From 1968141CX |
| 13 | | 386718A3 | | 1 | GUARD 1630 mm (64-3/16 in); Cut From 397155A2 |
| 14 | | L18337 | | 6 | STRAP 15 in |
| | | E46560 | | 1 | RESERVOIR Windshield Washer; Incl. Ref 15 - 18 |
| 15 | | NSS | | 1 | NOT SERVICED SEPARATELY Reservoir |
| 16 | | E47238 | | 2 | PUMP 12 Volt |
| 17 | | E47239 | | 2 | SEAL Pump to Reservoir |
| 18 | | E47240 | | 1 | PLUG Cap |
| 19 | | 614-8030 | | 2 | SCREW M8 x 30 |
| 20 | | 496-41041 | | 8 | WASHER 13/32 x 1-1/8 x 1/8 |
| 21 | | 515-22159 | | 1 | CLAMP P, 16 mm |
| 22 | | 832-10408 | | 2 | NUT M8 |
| 23 | | 614-8016 | | 1 | SCREW M8 x 16 |
| 24 | | 895-11008 | | 1 | WASHER Flat, 8 mm |
| 25 | | D147383 | | 1 | CLIP J-Clamp, 5/8 |
| 26 | | 829-1408 | | 1 | NUT M8 |

HTTP://WWW.MINNPARBACKHOEPARTS.COM

| 09-71 | | p1 | 01/04 |
|---|---|---|---|

MIRROR, REAR VIEW - MOUNTING, CAB MODELS

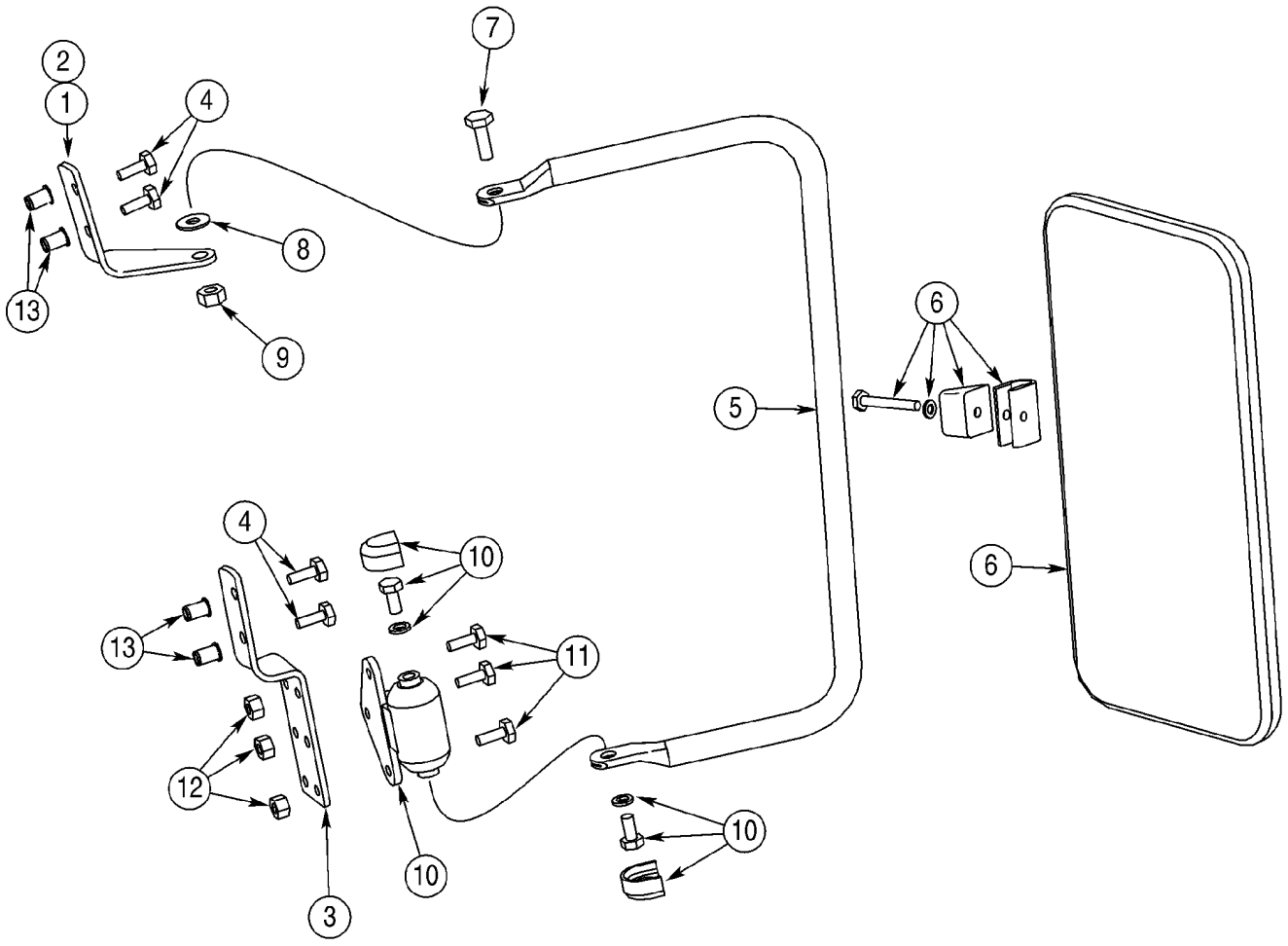

HTTP://WWW.MINNPARBACKHOEPARTS.COM



MIRROR, REAR VIEW - MOUNTING, CAB MODELS

| REF | FN | PART NUMBER | YR/SN | QTY | DESCRIPTION |
|---|---|---|---|---|---|
| 1 | | 402933A1 | | 1 | BRACKET Upper; Right-Hand |
| 2 | | 402934A1 | | 1 | BRACKET Upper; Left-Hand; Not Illustrated |
| 3 | | 402936A1 | | 2 | BRACKET Lower |
| 4 | | 281-54712 | | 8 | SCREW 1/4 st x 3/4 |
| 5 | | 402935A1 | | 2 | TUBE, SUPPORT |
| 6 | | R54682 | | 2 | MIRROR Exterior |
| 7 | | 413-516 | | 2 | BOLT 5/16 x 1 |
| 8 | | A167037 | | 2 | WASHER |
| 9 | | 231-4115 | | 2 | NUT, LOCK 5/16 |
| 10 | | D142144 | | 2 | KNUCKLE, STEERING Includes Hardware |
| 11 | | 413-412 | | 6 | BOLT 1/4 x 3/4 |
| 12 | | 231-1444 | | 6 | NUT, LOCK 1/4 |
| 13 | | 255447A1 | | 8 | RIVET Cab Front ROPS Post |

HTTP://WWW.MINNPARBACKHOEPARTS.COM



SLOW MOVING VEHICLE EMBLEM

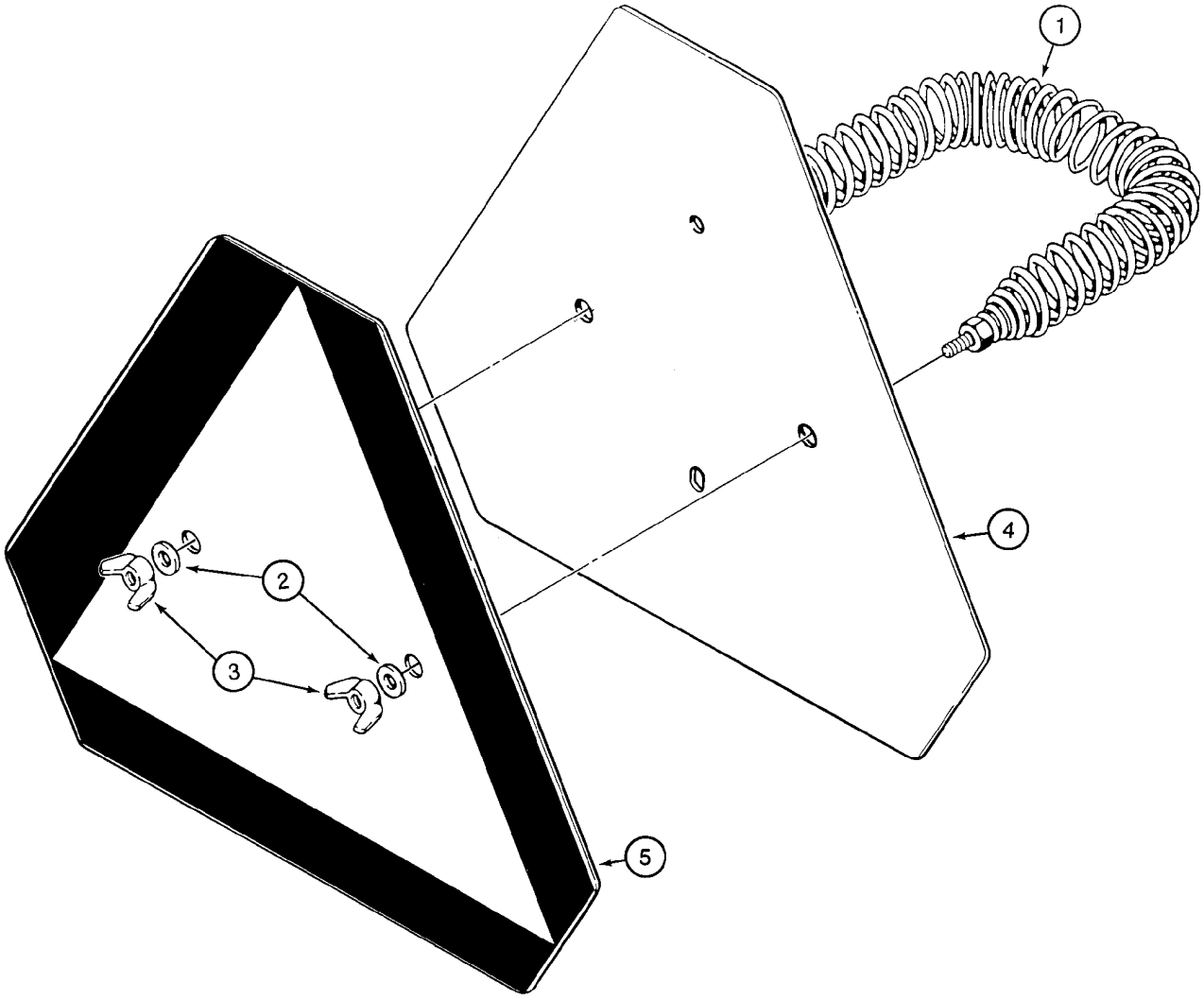


B9409034

HTTP://WWW.MINNPARBACKHOEPARTS.COM



SLOW MOVING VEHICLE EMBLEM

| REF | FN | PART NUMBER | YR/SN | QTY | DESCRIPTION |
|---|---|---|---|---|---|
| 1 | | D52564 | | 1 | SPRING |
| 2 | | 495-11028 | | 2 | WASHER 9/32 x 5/8 x 1/16 |
| 3 | | 126177 | | 2 | NUT, WING 1/4 |
| 4 | | D123347 | | 1 | SIGN, WARNING Incl. Ref 5 |
| 5 | | 321-4311 | | 1 | DECAL Slow Moving Vehicle |

HTTP://WWW.MINNPARBACKHOEPARTS.COM



DECALS

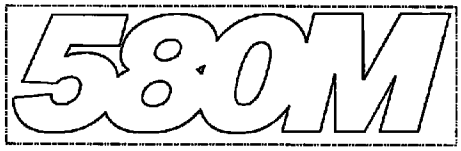


1




8




1A




1B

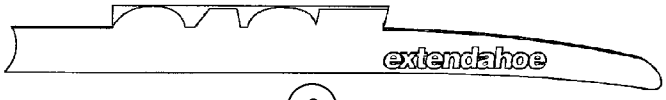


9

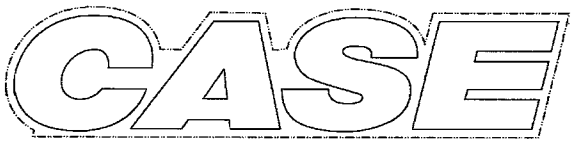


2 3

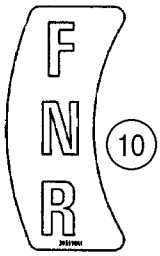


10




11

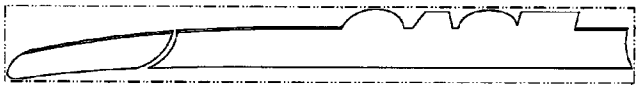

4

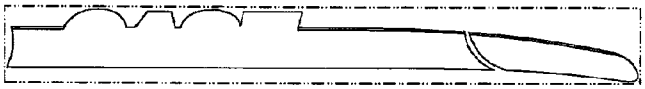

5




12



6




13



14

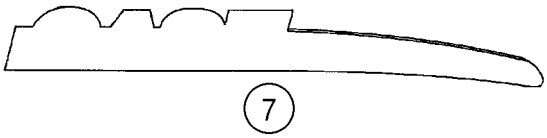

7

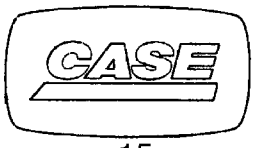


15

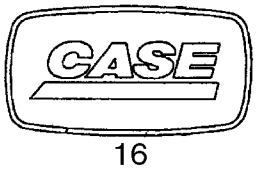


16

BS03K272

HTTP://WWW.MINNPARBACKHOEPARTS.COM



DECALS

| REF | FN | PART NUMBER | YR/SN | QTY | DESCRIPTION |
|---|---|---|---|---|---|
| 1 | | 401462A1 | | 2 | DECAL Model Designation |
| 1A | | 401466A1 | | 2 | DECAL Model Designation |
| 1B | | {87436192} | | 2 | Series 2 |
| 2 | | 401457A1 | | 2 | DECAL 525 mm (20-11/16 in) Wide; Case Logo; Loader Arm |
| 3 | | 401458A1 | | 4 | DECAL 655 mm (25-13/16 in) Wide, Case Logo; Backhoe Dipper |
| 4 | | 401459A2 | | 1 | DECAL Case, Loader Arm Pin Stripe, Left-Hand Stripe |
| 5 | | 401460A2 | | 1 | DECAL Case, Loader Arm Pin Stripe, Right-Hand Stripe |
| 6 | | 407009A2 | | 1 | DECAL Case, Standard Dipper, Left-Hand Stripe |
| 7 | | 407010A2 | | 1 | DECAL Case, Standard Dipper, Right-Hand Stripe |
| 8 | | 373698A2 | | 1 | DECAL Case, Extendahoe Dipper, Left-Hand Stripe |
| 9 | | 373699A2 | | 1 | DECAL Case, Extendahoe Dipper, Right-Hand Stripe |
| 10 | | 395910A2 | | 1 | DECAL FNR (Forward/Neutral/Reverse); Shuttle Shift Lever Control Pattern |
| 11 | | 321-1708 | | 1 | DECAL 0-2-4, Clam Bucket Opening Indicator |
| 12 | | {87435569} | | 1 | Insert, Case; Steering Wheel |
| 13 | | 186989A1 | | 1 | DECAL EMBLEM, Case |
| 14 | | 131-431 | | 2 | NUT 1/4 |
| 15 | | 87415931 | | 2 | DECAL Case, 37 x 70 mm; Located On Engine Filters |
| 16 | | 87429186 | | 1 | EMBLEM Case, 37 x 70 mm; Located On Engine |

HTTP://WWW.MINNPARBACKHOEPARTS.COM



DECALS

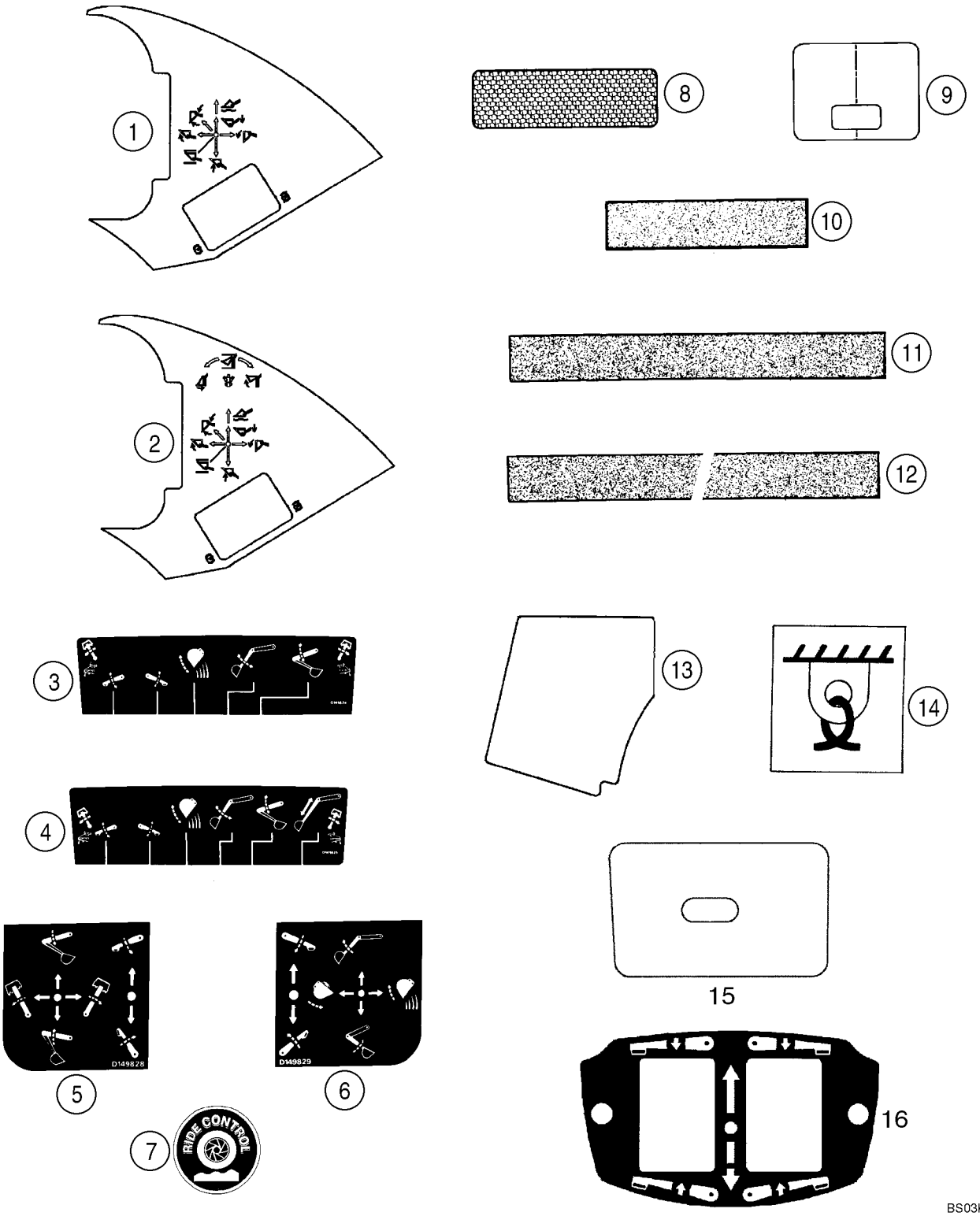

HTTP://WWW.MINNPARBACKHOEPARTS.COM



DECALS

| REF | FN | PART NUMBER | YR/SN | QTY | DESCRIPTION |
|---|---|---|---|---|---|
| 1 | | 384930A2 | | 1 | DECAL Two Function Loader Control |
| 2 | | 384931A2 | | 1 | DECAL Three Function Loader Control |
| 3 | | D149824 | | 1 | DECAL Upper; Standard Backhoe Control Pattern |
| 4 | | D149825 | | 1 | DECAL Upper; Extendahoe Control Pattern; With Foot Swing |
| 5 | | D149828 | | 1 | DECAL Upper; Standard Backhoe Control Pattern; With Hand Swing; Left-Hand Side Of Console |
| 6 | | D149829 | | 1 | DECAL Upper; Standard Backhoe Control Pattern; With Hand Swing; Right-Hand Side Of Console |
| 7 | | 304083A1 | | 2 | DECAL Ride Control |
| 8 | | 449842A1 | | 2 | DECAL 2 x 6-5/16 in; Red, Reflector |
| 9 | | 192450A1 | | 1 | DECAL Clear Vinyl; Hood |
| 10 | | D55216 | | 2-11 | PAD 2 x 9 in; Anti-Skid |
| 11 | | D80270 | | 3-4 | STRIP 635 mm (25 in); Anti-Skid |
| 12 | | 307348A1 | | 2 | STRIP 700 mm (27-9/16 in); Anti-Skid; 40 gallon fuel tank |
| 13 | | 367848A2 | | 1 | PAD Anti-Skid; Canopy Models |
| 14 | | 139728A1 | | 4 | DECAL Tie Down |
| 15 | | 406723A1 | | 1 | DECAL Poly Film; Lockup Cover; Canopy Models |
| 16 | | 87423812 | | 1 | DECAL Stabilizer Switch; Models With Pilot Controls |

HTTP://WWW.MINNPARBACKHOEPARTS.COM



DECALS




1

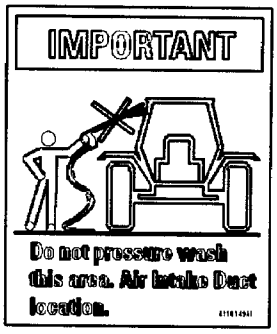


2

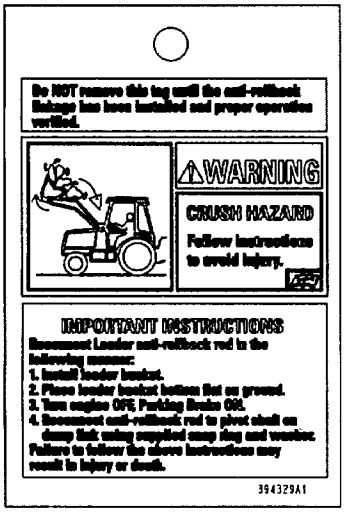


3

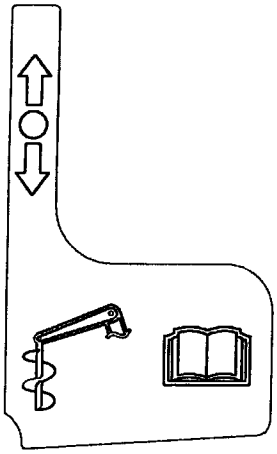

4

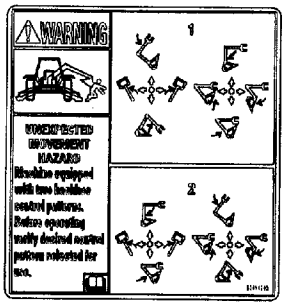


5

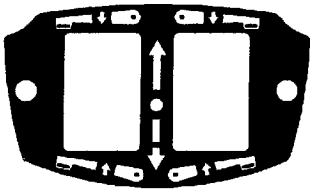

6

BS04A008

HTTP://WWW.MINNPARBACKHOEPARTS.COM



DECALS

| REF | FN | PART NUMBER | YR/SN | QTY | DESCRIPTION |
|---|---|---|---|---|---|
| 1 | | 116534A1 | | 1 | KIT Decal; Seat Weight Adjustment; Included In Seat Assy |
| 2 | | 411049A1 | | 1 | DECAL Important, Do Not Pressure Wash This Area |
| 3 | | 394329A1 | | 1 | TAG Warning; Anti-Rollback Hazard |
| 4 | | 87430677 | | 1 | DECAL Auxiliary Hydraulics |
| 5 | | 87414205 | | 1 | DECAL Warning, Unexpected Movement |
| 6 | | 87423812 | | 1 | DECAL Stabilizer Control Switch |

HTTP://WWW.MINNPARBACKHOEPARTS.COM



DECALS - ENGLISH

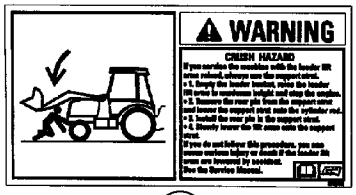


1

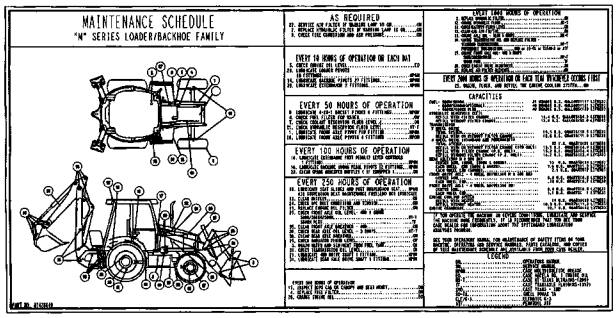


2

| FUSES | | | 87423410 |
|---|---|---|---|
| SPARE | ---- | ---- | ---- |
| SPARE | POWER OUTLET 30A | ---- | PILOT CONTROLS BH AUX (OPT.) 15AMP |
| FRONT WORK LIGHTS 20A | POWER OUTLET 30A | AIR SUSP. SEAT-AIR COMP. (OPT) 20A | RETURN TO DIG 10A |
| REAR WORK LIGHTS 20A | SPARE | SPARE | DRIVING LIGHTS 15A |
| FUEL SHUTOFF 10A | BLOWER 25A | DOME LIGHT 10A | ROTATING BEACON (OPT) 10A |
| INSTRUMENTS ALARM SYS. 10A | SIGNAL LIGHTS 15A | HORN 10A | 4WD (OPT) 10A |
| STARTING TRANSMISSION CONTROL 10A | RADIO, RIDE CONTROL, HAND AUX HYD'S 15A | RADIO (BATT) (OPT) 10A | WIPERS 15A |

8

| RELAYS | | | 87423409 |
|---|---|---|---|
| POWER RELAY #1 | POWER RELAY #4 | FLASHER RELAY | STARTER RELAY |
| POWER RELAY #2 | LDR LVR DIFF LK RELAY | SHUTTLE INTLK TIMING RELAY | NEUTRAL RELAY |
| POWER RELAY #3 | CLUTCH RELAY | SHUTTLE INTLK RELAY | FORWARD RELAY |
| ---- | ---- | ---- | REVERSE RELAY |
| ---- | ---- | AC RELAY (OPTION) | ---- |

9




3

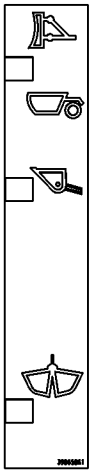

5

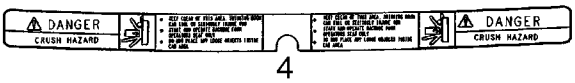


4

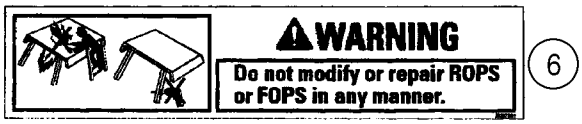


6

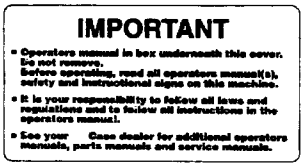


7

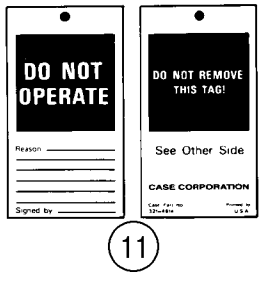


11

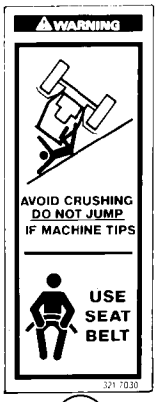


10




12

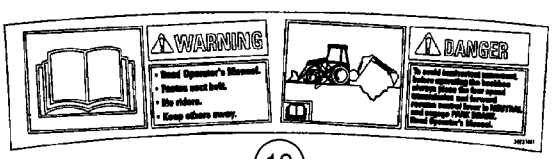


13

BS03K274

HTTP://WWW.MINNPARBACKHOEPARTS.COM



DECALS - ENGLISH

| REF | FN | PART NUMBER | YR/SN | QTY | DESCRIPTION |
|---|---|---|---|---|---|
| 1 | | 384264A1 | | 1 | DECAL Warning; Crush Hazard; Loader Arm Support Strut |
| 2 | | {87428640} | | 1 | Maintenance Schedule; Supplied by Parts and Components |
| 3 | | 8603092 | | 1 | DECAL Warning; Explosion Hazard, Do Not Use Ether |
| 4 | | 86992976 | | 1 | DECAL Danger; Crush Hazard |
| 5 | | 398658A1 | | 1 | DECAL Clam Bucket Position |
| 6 | | 383972A1 | | 1 | DECAL Warning; Do Not Modify or Repair ROPS or FOPS In Any Manner |
| 7 | | 144193A3 | | 1 | DECAL Important; Operator's Manual In Box Underneath This Cover; Glove Box Lid |
| 8 | | 87423410 | | 1 | DECAL Fuse Location |
| 9 | | 87423409 | | 1 | DECAL Relay |
| 10 | | 321-7030 | | 2 | DECAL Warning; Avoid Crushing; Do Not Jump / Use Seat Belt |
| 11 | | 321-4614 | | 1 | DECAL TAG, Do Not Operate |
| 12 | | 86992975 | | 2 | DECAL Warning; No Step/Not An Exit; Canopy |
| 13 | | 392374A1 | | 1 | DECAL Warning/Danger; Read the Operator's Manual |

HTTP://WWW.MINNPARBACKHOEPARTS.COM



DECALS - LATIN AMERICAN SPANISH

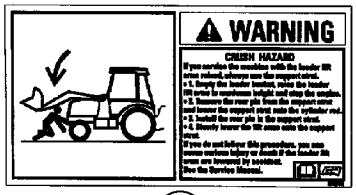


1

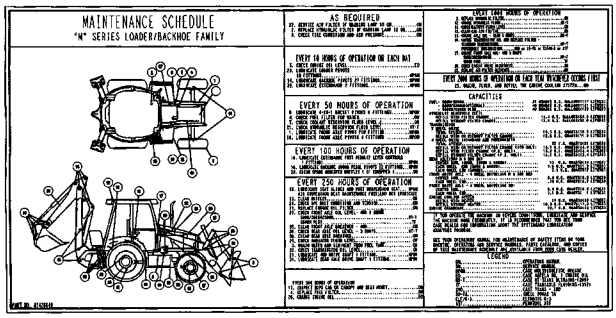


2




3

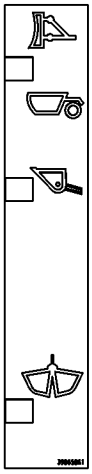

5

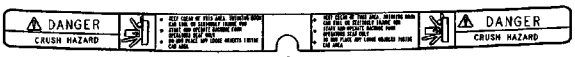


4

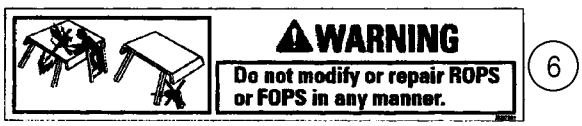


6

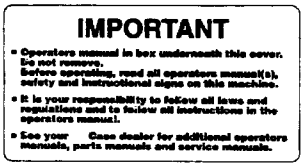


7

| FUSES | | | 87423410 |
|---|---|---|---|
| SPARE | ---- | ---- | ---- |
| SPARE | POWER OUTLET 30A | ---- | PILOT CONTROLS RH AUX (OPT.) 15AMP |
| FRONT WORK LIGHTS 20A | POWER OUTLET 30A | AIR SUSP. SEAT-AIR COMP. (OPT) 20A | RETURN TO DIG 10A |
| REAR WORK LIGHTS 20A | SPARE | SPARE | DRIVING LIGHTS 15A |
| FUEL SHUTOFF 10A | BLOWER 25A | DOME LIGHT 10A | ROTATING BEACON (OPT) 10A |
| INSTRUMENTS ALARM SYS. 10A | SIGNAL LIGHTS 15A | HORN 10A | 4WD (OPT) 10A |
| STARTING TRANSMISSION CONTROL 10A | RADIO, RIDE CONTROL, HAND AUX HYD'S 15A | RADIO (BATT) (OPT) 10A | WIPERS 15A |

8

| RELAYS | | | 87423409 |
|---|---|---|---|
| POWER RELAY #1 | POWER RELAY #4 | FLASHER RELAY | STARTER RELAY |
| POWER RELAY #2 | LDR LVR DIFF LK RELAY | SHUTTLE INTLK TIMING RELAY | NEUTRAL RELAY |
| POWER RELAY #3 | CLUTCH RELAY | SHUTTLE INTLK RELAY | FORWARD RELAY |
| ---- | ---- | ---- | REVERSE RELAY |
| ---- | ---- | AC RELAY (OPTION) | ---- |

9

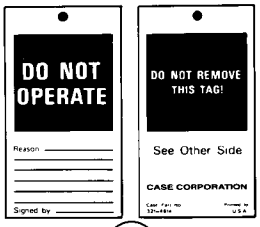


11

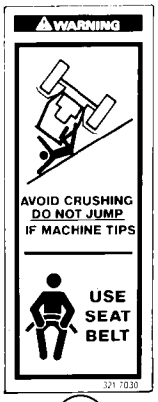


10




12

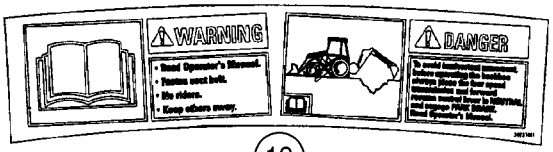


13

BS03K274

HTTP://WWW.MINNPARBACKHOEPARTS.COM



DECALS - LATIN AMERICAN SPANISH

| REF | FN | PART NUMBER | YR/SN | QTY | DESCRIPTION |
|---|---|---|---|---|---|
| 1 | | 398576A1 | | 1 | DECAL Warning; Crush Hazard; Loader Arm Support Strut |
| 2 | | {87430921} | | 1 | Maintenance Schedule; Supplied by Parts and Components |
| 3 | | 8603094 | | 1 | DECAL Warning; Explosion Hazard, Do Not Use Ether |
| 4 | | 86992981 | | 1 | DECAL Danger; Crush Hazard |
| 5 | | 398658A1 | | 1 | DECAL Clam Bucket Position |
| 6 | | 389729A1 | | 1 | DECAL Warning; Do Not Modify or Repair ROPS or FOPS In Any Manner |
| 7 | | 398662A1 | | 1 | DECAL Important; Operator's Manual In Box Underneath This Cover; Glove Box Lid |
| 8 | | {87431078} | | 1 | Fuse Location |
| 9 | | {87431081} | | 1 | Relay |
| 10 | | 398672A1 | | 2 | DECAL Warning; Avoid Crushing; Do Not Jump / Use Seat Belt |
| 11 | | 298521A1 | | 1 | TAG Do Not Operate |
| 12 | | 86992980 | | 2 | DECAL Warning; No Step/Not An Exit; Canopy |
| 13 | | 398598A1 | | 1 | DECAL Warning/Danger; Read the Operator's Manual |
| 14 | | {148093A1} | | 1 | DECAL, Important; Lubrication; Not Illustrated |
| 15 | | {148095A1} | | 1 | DECAL, Attention; Welding; Not Illustrated |

HTTP://WWW.MINNPARBACKHOEPARTS.COM



DECALS - CANADIAN FRENCH

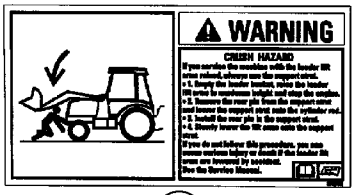


1

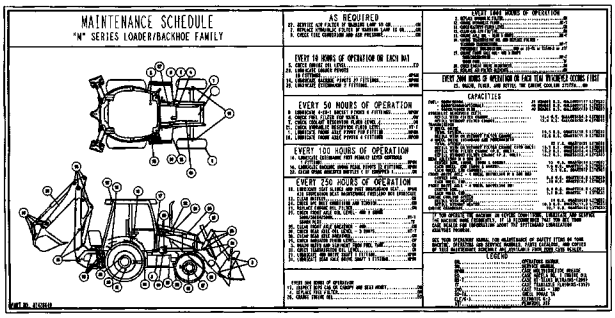


2




3

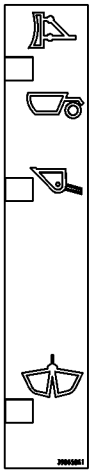

5

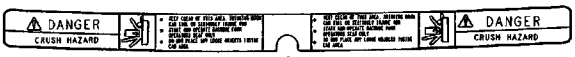


4




6

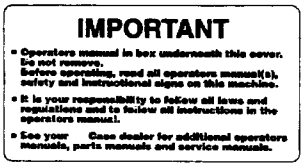


7

| FUSES | | | 87423410 |
|---|---|---|---|
| SPARE | ---- | ---- | ---- |
| SPARE | POWER OUTLET 30A | ---- | PILOT CONTROLS RH AUX (OPT.) 15AMP |
| FRONT WORK LIGHTS 20A | POWER OUTLET 30A | AIR SUSP. SEAT-AIR COMP. (OPT) 20A | RETURN TO DIG 10A |
| REAR WORK LIGHTS 20A | SPARE | SPARE | DRIVING LIGHTS 15A |
| FUEL SHUTOFF 10A | BLOWER 25A | DOME LIGHT 10A | ROTATING BEACON (OPT) 10A |
| INSTRUMENTS ALARM SYS. 10A | SIGNAL LIGHTS 15A | HORN 10A | 4WD (OPT) 10A |
| STARTING TRANSMISSION CONTROL 10A | RADIO, RIDE CONTROL, HAND AUX HYD'S 15A | RADIO (BATT) (OPT) 10A | WIPERS 15A |

8

| RELAYS | | | 87423409 |
|---|---|---|---|
| POWER RELAY #1 | POWER RELAY #4 | FLASHER RELAY | STARTER RELAY |
| POWER RELAY #2 | LDR LVR DIFF LK RELAY | SHUTTLE INTLK TIMING RELAY | NEUTRAL RELAY |
| POWER RELAY #3 | CLUTCH RELAY | SHUTTLE INTLK RELAY | FORWARD RELAY |
| ---- | ---- | ---- | REVERSE RELAY |
| ---- | ---- | AC RELAY (OPTION) | ---- |

9

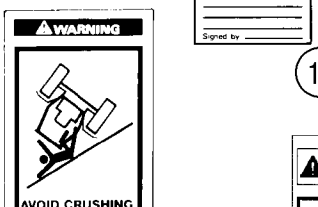


10

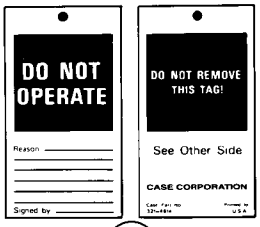


11




12

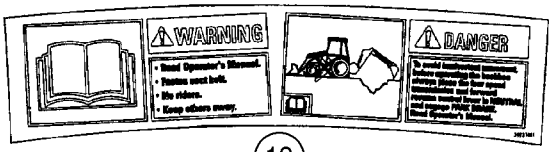


13

BS03K274

HTTP://WWW.MINNPARBACKHOEPARTS.COM



DECALS - CANADIAN FRENCH

| REF | FN | PART NUMBER | YR/SN | QTY | DESCRIPTION |
|---|---|---|---|---|---|
| 1 | | 398577A1 | | 1 | DECAL Warning; Crush Hazard; Loader Arm Support Strut |
| 2 | | {87430922} | | 1 | Maintenance Schedule; Supplied by Parts and Components |
| 3 | | 8603093 | | 1 | DECAL Warning; Explosion Hazard, Do Not Use Ether |
| 4 | | 86992979 | | 1 | DECAL Danger; Crush Hazard |
| 5 | | 398658A1 | | 1 | DECAL Clam Bucket Position |
| 6 | | 389730A1 | | 1 | DECAL Warning; Do Not Modify or Repair ROPS or FOPS In Any Manner |
| 7 | | 398663A1 | | 1 | DECAL Important; Operator's Manual In Box Underneath This Cover; Glove Box Lid |
| 8 | | {87431077} | | 1 | Fuse Location |
| 9 | | {87431080} | | 1 | Relay |
| 10 | | 398673A1 | | 2 | DECAL Warning; Avoid Crushing; Do Not Jump / Use Seat Belt |
| 11 | | 321-5675 | | 1 | DECAL Do Not Operate |
| 12 | | 86992978 | | 2 | DECAL Warning; No Step/Not An Exit; Canopy |
| 13 | | 398599A1 | | 1 | DECAL Warning/Danger; Read the Operator's Manual |

HTTP://WWW.MINNPARBACKHOEPARTS.COM



DECALS - ENGLISH

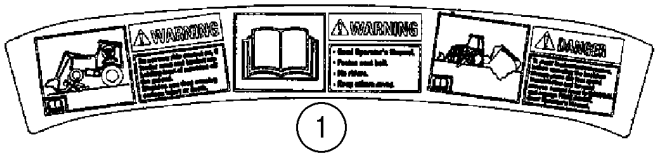


1




2




3

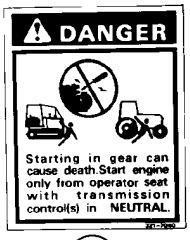


4




5

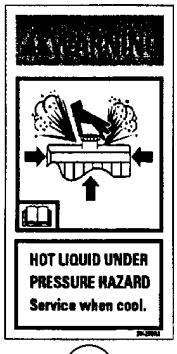


6

DIESEL FUEL

7

HYDRAULIC FLUID

8




8A

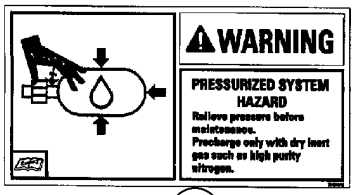


9




10




11

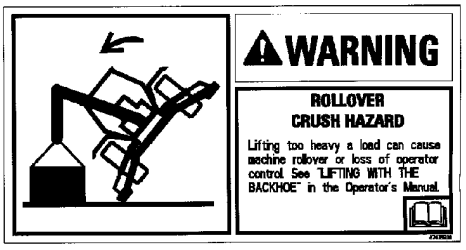


12

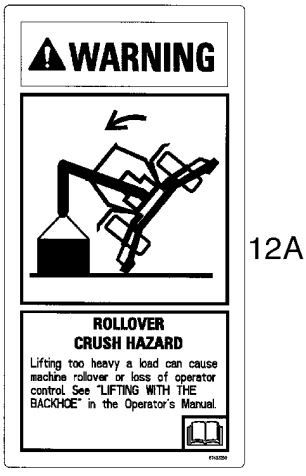


12A




14

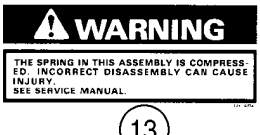


13

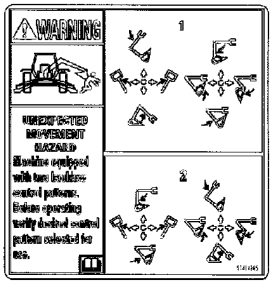


15

BS03K275

HTTP://WWW.MINNPARBACKHOEPARTS.COM



DECALS - ENGLISH

| REF | FN | PART NUMBER | YR/SN | QTY | DESCRIPTION |
|---|---|---|---|---|---|
| 1 | | 392375A1 | | 1 | DECAL Warning/Warning/Danger; Front, With Ride Control; Do Not Turn Ride Control On/Read Operator's Manual/To Avoid Inadvertent Movement |
| 2 | | 384265A1 | | 1 | DECAL Warning; Crush Hazard; Keep Clear; Support Loader Lift Arms During Maintenance |
| 3 | | 384267A1 | | 2 | DECAL Warning; Entanglement Hazard, Fan; Keep Clear or Stop Engine Before Servicing |
| 4 | | 321-7040 | | 1 | DECAL Danger; Starting In Gear |
| 5 | | 384269A1 | | 2 | DECAL Danger; Jump Start |
| 6 | | 384258A1 | | 1 | DECAL Warning; Hot Liquid Under Pressure |
| 7 | | 321-230 | | 1 | DECAL Diesel Fuel |
| 8 | | 321-229 | | 1 | DECAL Hydraulic Fluid; Used In Production; For Service, Order 321-6376, English Decal Only |
| 8A | | 321-6376 | | 1 | DECAL Hydraulic Fluid |
| 9 | | 384260A1 | | 1 | DECAL Warning; Ride Control Accumulator |
| 10 | | D149826 | | 1 | DECAL Caution/Important; For All Models With Foot Swing Backhoe Controls and Standard Backhoe Models With Hand Swing |
| 11 | | D149827 | | 1 | DECAL Caution/Important; Extendahoe Backhoe Models With Hand Swing |
| 12 | | {87435938} | | 1 | Warning; Rollover Crush Hazard; Lifting Too Heavy A Load; Models Without Pilot Controls |
| 12A | | {87433209} | | 1 | Warning; Rollover Crush Hazard; Lifting Too Heavy A Load; Models With Pilot Controls |
| 13 | | 321-6774 | | 1 | DECAL Warning; Seat Spring |
| 14 | | {87423813} | | 2 | Warning; Unexpected Movement Hazard; Before Adjusting Windows |
| 15 | | 87414205 | | 1 | DECAL Pilot Control Pattern |

HTTP://WWW.MINNPARBACKHOEPARTS.COM



DECALS - LATIN AMERICAN SPANISH

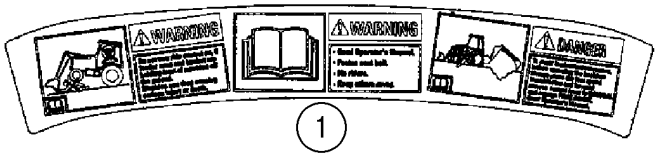


1




2




3

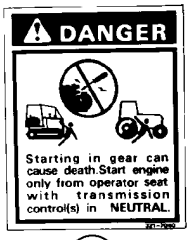


4




5

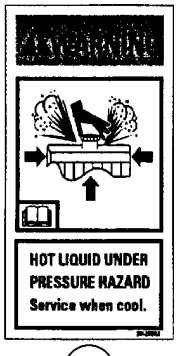


6

DIESEL FUEL

7

HYDRAULIC FLUID

8

HYDRAULIC FLUID

8A

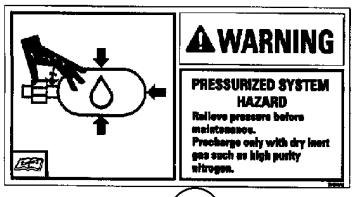


9




10




11

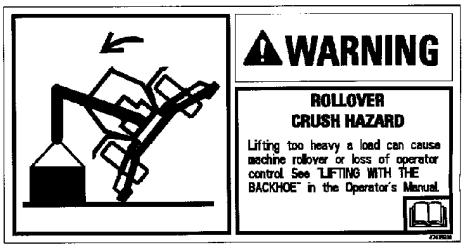


12

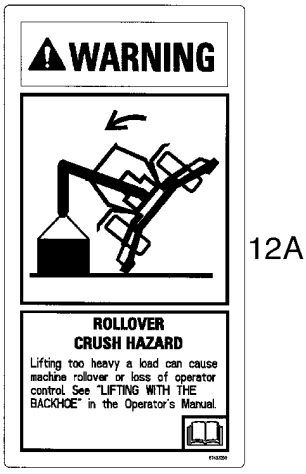


12A




14




13

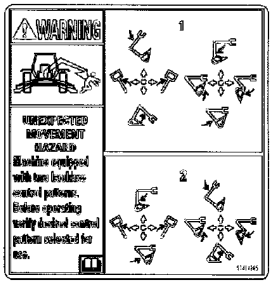


15

BS03K275

HTTP://WWW.MINNPARBACKHOEPARTS.COM



DECALS - LATIN AMERICAN SPANISH

| REF | FN | PART NUMBER | YR/SN | QTY | DESCRIPTION |
|---|---|---|---|---|---|
| 1 | | 398600A1 | | 1 | DECAL Warning/Warning/Danger; Front, With Ride Control; Do Not Turn Ride Control On/Read Operator's Manual/To Avoid Inadvertent Movement |
| 2 | | 398578A1 | | 1 | DECAL Warning; Crush Hazard; Keep Clear; Support Loader Lift Arms During Maintenance |
| 3 | | 398580A1 | | 2 | DECAL Warning; Entanglement Hazard, Fan; Keep Clear or Stop Engine Before Servicing |
| 4 | | 398674A1 | | 1 | DECAL Danger; Starting In Gear |
| 5 | | 398582A1 | | 2 | DECAL Danger; Jump Start |
| 6 | | 398570A1 | | 1 | DECAL Warning; Hot Liquid Under Pressure |
| 7 | | 398667A1 | | 1 | DECAL Diesel Fuel |
| 8 | | 398665A1 | | 1 | DECAL Hydraulic Fluid |
| 8A | | 321-6376 | | 1 | DECAL Hydraulic Fluid, English Decal Only |
| 9 | | 398572A1 | | 1 | DECAL Warning; Ride Control Accumulator |
| 10 | | 398677A1 | | 1 | DECAL Caution/Important; For All Models With Foot Swing Backhoe Controls and Standard Backhoe Models With Hand Swing |
| 11 | | 398669A1 | | 1 | DECAL Caution/Important; Extendahoe Backhoe Models With Hand Swing |
| 12 | | {87435939} | | 1 | Warning; Rollover Crush Hazard; Lifting Too Heavy A Load; Models Without Pilot Controls |
| 12A | | {87434771} | | 1 | Warning; Rollover Crush Hazard; Lifting Too Heavy A Load; Models With Pilot Controls |
| 13 | | 398670A1 | | 1 | DECAL Warning; Seat Spring |
| 14 | | {87429163} | | 2 | Warning; Unexpected Movement Hazard; Before Adjusting Windows |
| 15 | | {87429165} | | 1 | Pilot Control Pattern |

HTTP://WWW.MINNPARBACKHOEPARTS.COM



DECALS - CANADIAN FRENCH

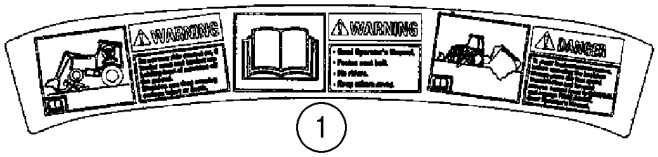


1




2




3

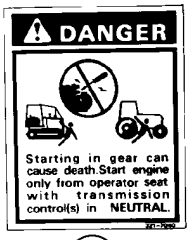


4




5

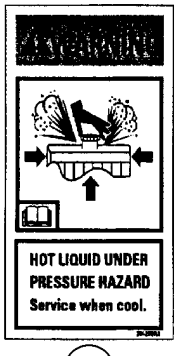


6

DIESEL FUEL

7

HYDRAULIC FLUID

8




8A

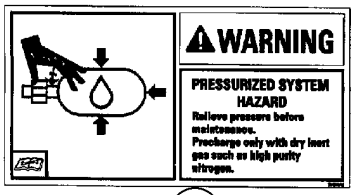


9




10




11

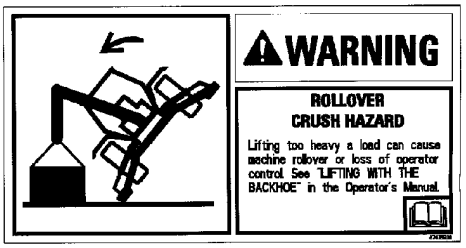


12

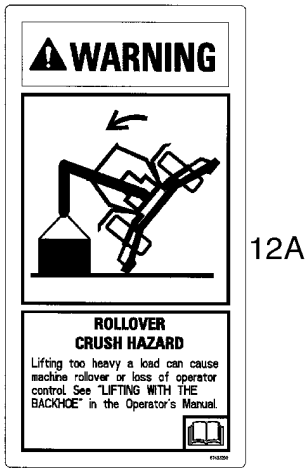


12A




14




13

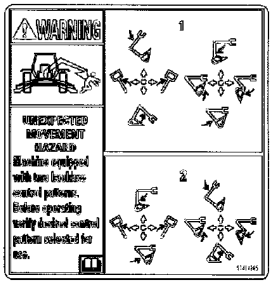


15

BS03K275

HTTP://WWW.MINNPARBACKHOEPARTS.COM



DECALS - CANADIAN FRENCH

| REF | FN | PART NUMBER | YR/SN | QTY | DESCRIPTION |
|---|---|---|---|---|---|
| 1 | | 398601A1 | | 1 | DECAL Warning/Warning/Danger; Front, With Ride Control; Do Not Turn Ride Control On/Read Operator's Manual/To Avoid Inadvertent Movement |
| 2 | | 398579A1 | | 1 | DECAL Warning; Crush Hazard; Keep Clear; Support Loader Lift Arms During Maintenance |
| 3 | | 398581A1 | | 2 | DECAL Warning; Entanglement Hazard, Fan; Keep Clear or Stop Engine Before Servicing |
| 4 | | 398676A1 | | 1 | DECAL Danger; Starting In Gear |
| 5 | | 398583A1 | | 2 | DECAL Danger; Jump Start |
| 6 | | 398571A1 | | 1 | DECAL Warning; Hot Liquid Under Pressure |
| 7 | | 398668A1 | | 1 | DECAL Diesel Fuel |
| 8 | | 398666A1 | | 1 | DECAL Hydraulic Fluid |
| 8A | | 321-6376 | | 1 | DECAL Hydraulic Fluid, English Decal Only |
| 9 | | 398573A1 | | 1 | DECAL Warning; Ride Control Accumulator |
| 10 | | 398656A1 | | 1 | DECAL Caution/Important; For All Models With Foot Swing Backhoe Controls and Standard Backhoe Models With Hand Swing |
| 11 | | 398654A1 | | 1 | DECAL Caution/Important; Extendahoe Backhoe Models With Hand Swing |
| 12 | | {87435940} | | 1 | Warning; Rollover Crush Hazard; Lifting Too Heavy A Load; Models Without Pilot Controls |
| 12A | | {87434772} | | 1 | Warning; Rollover Crush Hazard; Lifting Too Heavy A Load; Models With Pilot Controls |
| 13 | | 398671A1 | | 1 | DECAL Warning; Seat Spring |
| 14 | | {87429164} | | 2 | Warning; Unexpected Movement Hazard; Before Adjusting Windows |
| 15 | | {87429166} | | 1 | Pilot Control Pattern |

HTTP://WWW.MINNPARBACKHOEPARTS.COM

# INDEX - INDICE - INDEX - ZAHLENVERZEICHNIS - INDICE - INDICE - INDHOLD - INHOUD


| Number | Figure | Sequence | Ref. |
|---|---|---|---|
| {122554C1} | 09-66 | | 17 |
| {14302921} | 08-47 | | 5 |
| | 08-48 | | 5 |
| | 08-49 | | 6 |
| {14304021} | 08-47 | | 1 |
| {148093A1} | 09-77 | | 14 |
| {148095A1} | 09-77 | | 15 |
| {16746824} | 03-06 | | 3 |
| {188035A1} | 08-62 | | |
| {2852621} | 02-01 | | 45 |
| {376288A2} | 09-08 | | |
| {377221A2} | 09-63 | | 1 |
| {377232A2} | 09-64 | | 18 |
| {377233A2} | 09-64 | | 31 |
| {385920A1} | 09-06 | | |
| {4895273} | 02-20 | | 1 |
| {4899629} | 02-19 | | 8 |
| {500390441} | 03-05 | | 1 |
| {504036358} | 02-30 | | 10 |
| {504042165} | 02-11 | | 9 |
| {504043550} | 02-11 | | 4 |
| {504053166} | 02-33 | | 10 |
| {504061374} | 02-29 | | 3 |
| {504063450} | 03-04 | | 1 |
| {81868381} | 08-30 | | 8 |
| | 08-31 | | 9 |
| | 08-32 | | 18 |
| | 08-33 | | 18 |
| | 08-34 | | 19 |
| | 08-35 | | 19 |
| {83981068} | 08-31 | | 19 |
| | 08-33 | | 22 |
| | 08-34 | | 20 |
| | 08-35 | | 20 |
| {85811937} | 08-45 | | 6 |
| {85811938} | 08-40 | | 4 |
| | 08-41 | | 4 |
| | 08-42 | | 4 |
| | 08-43 | | 4 |
| | 08-44 | | 4 |
| | 08-45 | | 4 |
| | 08-46 | | 4 |
| {85824281} | 08-41 | | 10 |
| | 08-42 | | 10 |
| | 08-43 | | 10 |
| | 08-44 | | 10 |
| | 08-45 | | 9 |
| | 08-46 | | 10 |
| {85824282} | 08-40 | | 10 |
| {85826343} | 08-43 | | 6A |
| {85826345} | 08-40 | | 3 |
| | 08-43 | | 3 |
| {85826346} | 08-41 | | 6A |
| {85826905} | 08-44 | | 6A |
| {85827991} | 08-47 | | 2 |
| {85827992} | 08-47 | | 4 |
| | 08-48 | | 4 |
| | 08-49 | | 5 |
| {85827993} | 08-47 | | 6 |
| | 08-48 | | 6 |
| | 08-49 | | 7 |
| {85827994} | 08-47 | | 7 |
| | 08-48 | | 7 |
| | 08-49 | | 8 |
| {85827995} | 08-47 | | 8 |
| | 08-48 | | 8 |
| | 08-49 | | 9 |
| {85827996} | 08-47 | | 9 |
| | 08-48 | | 9 |
| | 08-49 | | 10 |
| {85827997} | 08-47 | | 10 |
| | 08-48 | | 10 |
| | 08-49 | | 11 |
| {85827998} | 08-47 | | 12 |
| | 08-48 | | 12 |
| | 08-49 | | 13 |
| {85827999} | 08-47 | | 13 |
| | 08-48 | | 13 |
| | 08-49 | | 14 |
| {85828000} | 08-47 | | 14 |
| | 08-48 | | 14 |
| | 08-49 | | 15 |
| {85828001} | 08-47 | | 15 |
| | 08-48 | | 15 |
| | 08-49 | | 16 |
| {85828002} | 08-47 | | 16 |
| | 08-48 | | 16 |
| | 08-49 | | 17 |
| {85828003} | 08-47 | | 17 |
| | 08-48 | | 17 |
| | 08-49 | | 18 |
| {85828004} | 08-48 | | 2 |
| {85828005} | 08-47 | | 11 |
| | 08-48 | | 11 |
| | 08-49 | | 12 |
| {85828013} | 08-47 | | 3 |
| {85828015} | 08-48 | | 3 |
| | 08-49 | | 3 |
| {85828048} | 08-49 | | 2 |
| {85828054} | 08-49 | | 4 |
| {85828061} | 08-49 | | 1 |
| {86990708} | 02-07 | | |
| | 02-08 | | 1 |
| {86990709} | 02-07 | | |
| | 02-08 | | 1 |
| {87419385} | 02-01 | | |
| {87420672} | 08-08 | | 25 |
| | 08-08A | | 25 |
| {87420673} | 08-08 | | 23 |
| | 08-08A | | 23 |
| {87421836} | 08-23 | | 20 |
| {87422948} | 08-23 | | 35 |
| {87423496} | 04-16 | | 2 |
| {87423813} | 09-79 | | 14 |
| {87425631} | 04-19 | | 2 |
| {87425869} | 04-16 | | 13 |
| {87426221} | 08-30 | | 6 |
| | 08-31 | | 7 |
| {87426227} | 08-30 | | 9 |
| | 08-31 | | 10 |
| {87426232} | 08-30 | | 7 |
| | 08-31 | | 8 |
| | 08-32 | | 11 |
| | 08-33 | | 11 |
| | 08-34 | | 16 |
| | 08-35 | | 16 |
| {87426233} | 08-30 | | 5 |
| | 08-31 | | 6 |
| {87426235} | 08-30 | | 11A |
| | 08-31 | | 12A |
| {87426238} | 08-30 | | 15 |
| | 08-31 | | 16 |
| | 08-32 | | 21 |
| | 08-33 | | 23 |
| | 08-34 | | 8 |
| | 08-35 | | 8 |
| {87426239} | 08-32 | | 17 |
| | 08-33 | | 17 |
| | 08-34 | | 15 |
| | 08-35 | | 15 |
| {87426240} | 08-32 | | 16 |
| | 08-33 | | 16 |
| | 08-34 | | 14 |
| | 08-35 | | 14 |
| {87426241} | 08-31 | | 18 |
| {87426716} | 08-30 | | 12 |
| | 08-31 | | 13 |
| {87426717} | 08-30 | | 11 |
| | 08-31 | | 12 |
| {87428140} | 08-09 | | 2 |
| {87428316} | 09-59 | | 8 |
| | 09-70 | | 12 |
| {87428476} | 08-33 | | 13 |
| | 08-35 | | 22 |
| {87428477} | 08-33 | | 14 |
| | 08-35 | | 23 |
| {87428486} | 08-32 | | 22 |
| | 08-33 | | 24 |
| | 08-34 | | 9 |
| | 08-35 | | 9 |
| {87428488} | 08-32 | | 20 |
| | 08-33 | | 20 |
| | 08-34 | | 18 |
| | 08-35 | | 18 |

HTTP://WWW.MINNPARBACKHOEPARTS.COM




| Number | Figure | Sequence | Ref. | Number | Figure | Sequence | Ref. |
|---|---|---|---|---|---|---|---|
| {87428490} | 08-32 | | 19 | {87437914} | 08-29 | | 14 |
| | 08-33 | | 19 | {87437917} | 08-29 | | 15 |
| | 08-34 | | 17 | {87438021} | 08-28 | | 2 |
| | 08-35 | | 17 | {87438022} | 08-28 | | |
| {87428491} | 08-32 | | 13 | {87438023} | 08-28 | | |
| | 08-34 | | 23 | {87438024} | 08-28 | | |
| {87428492} | 08-32 | | 14 | {87438025} | 08-28 | | 3 |
| | 08-34 | | 24 | {87438026} | 08-28 | | |
| {87428493} | 08-33 | | 25A | {87438027} | 08-28 | | |
| | 08-34 | | 22 | {87438028} | 08-28 | | |
| | 08-35 | | 26A | | 08-28 | | |
| {87428495} | 08-32 | | 12 | {87438029} | 08-28 | | 4 |
| | 08-33 | | 12 | {87438031} | 08-28 | | 5 |
| | 08-34 | | 21 | {87438032} | 08-28 | | |
| | 08-35 | | 21 | {87438045} | 08-29 | | |
| {87428497} | 08-32 | | 9 | {87438925} | 04-01 | | 3 |
| | 08-33 | | 9 | {87438926} | 04-01 | | 4 |
| | 08-34 | | 12 | {87438927} | 04-01 | | 5 |
| | 08-35 | | 12 | {87438928} | 04-01 | | 6 |
| {87428501} | 08-33 | | 21 | {87438929} | 04-01 | | 8 |
| | 08-35 | | 25 | {87438930} | 04-01 | | 9 |
| {87428640} | 09-76 | | 2 | {87438931} | 04-01 | | 10 |
| {87428814} | 08-23 | | 39 | {87438932} | 04-01 | | 11 |
| {87429163} | 09-80 | | 14 | {87438933} | 04-01 | | 12 |
| {87429164} | 09-81 | | 14 | {87438935} | 04-01 | | 13 |
| {87429165} | 09-80 | | 15 | {87438937} | 04-01 | | 14 |
| {87429166} | 09-81 | | 15 | {87438940} | 04-01 | | 15 |
| {87429387} | 08-23 | | 2 | {87438941} | 04-01 | | 16 |
| {87429584} | 08-08 | | 19 | {87438942} | 04-01 | | 17 |
| | 08-08A | | 19 | {87438944} | 04-01 | | 18 |
| {87429586} | 08-08 | | 10 | {87438946} | 04-01 | | 19 |
| | 08-08A | | 10 | {87438948} | 04-01 | | 20 |
| {87429690} | 02-03 | | 3 | {87438950} | 04-01 | | 22 |
| {87429692} | 02-03 | | 5 | {87438951} | 04-01 | | 32 |
| {87429693} | 02-03 | | 6 | {87438954} | 04-01 | | 36 |
| {87429694} | 02-03 | | 1 | {87438956} | 04-01 | | 38 |
| {87429695} | 02-03 | | 4 | {87438960} | 04-02 | | 1 |
| {87430921} | 09-77 | | 2 | {87438963} | 04-02 | | 2 |
| {87430922} | 09-78 | | 2 | {87438965} | 04-02 | | 3 |
| {87430972} | 08-23 | | 1 | {87438967} | 04-02 | | 4 |
| {87431077} | 09-78 | | 8 | {87438969} | 04-02 | | 5 |
| {87431078} | 09-77 | | 8 | {87438970} | 04-02 | | 6 |
| {87431080} | 09-78 | | 9 | {87438971} | 04-02 | | 7 |
| {87431081} | 09-77 | | 9 | {87438972} | 04-02 | | 8 |
| {87433028} | 08-32 | | 7 | {87438973} | 04-02 | | 9 |
| | 08-32 | | 8A | {87438974} | 04-02 | | 10 |
| | 08-33 | | 7 | {87438975} | 04-02 | | 11 |
| | 08-33 | | 8A | {87438976} | 04-02 | | 12 |
| | 08-34 | | 10A | {87438977} | 04-02 | | 13 |
| | 08-34 | | 11 | {87438978} | 04-02 | | 14 |
| | 08-35 | | 10A | {87438979} | 04-02 | | 15 |
| | 08-35 | | 11 | {87438980} | 04-02 | | 16 |
| {87433029} | 08-32 | | 10 | {87438981} | 04-02 | | 17 |
| | 08-32 | | 8 | {87438982} | 04-02 | | 18 |
| | 08-33 | | 10 | {87438983} | 04-02 | | 19 |
| | 08-33 | | 8 | {87438984} | 04-02 | | 20 |
| | 08-34 | | 10 | {87438985} | 04-02 | | 21 |
| | 08-34 | | 13 | {87438986} | 04-02 | | 22 |
| | 08-35 | | 10 | {87438987} | 04-02 | | 23 |
| | 08-35 | | 13 | {87438989} | 04-02 | | 24 |
| {87433030} | 08-32 | | 23 | {87438992} | 04-01 | | 1 |
| | 08-33 | | 25 | {87438993} | 04-01 | | 2 |
| | 08-35 | | 26 | {87438994} | 04-01 | | |
| {87433209} | 09-79 | | 12A | {87438995} | 04-01 | | 21 |
| {87434070} | 08-29 | | | {87438996} | 04-01 | | 23 |
| {87434075} | 08-29 | | 2 | {87438997} | 04-01 | | 24 |
| {87434076} | 08-29 | | 3 | {87438999} | 04-01 | | 25 |
| {87434077} | 08-29 | | 4 | {87439000} | 04-01 | | 26 |
| {87434771} | 09-80 | | 12A | {87439001} | 04-01 | | 27 |
| {87434772} | 09-81 | | 12A | {87439002} | 04-01 | | 28 |
| {87435489} | 08-53 | | 8 | {87439003} | 04-01 | | 29 |
| {87435569} | 05-01 | | 1 | {87439004} | 04-01 | | 30 |
| | 09-73 | | 12 | {87439005} | 04-01 | | 31 |
| {87435938} | 09-79 | | 12 | {87439006} | 04-01 | | 33 |
| {87435939} | 09-80 | | 12 | {87439007} | 04-01 | | 34 |
| {87435940} | 09-81 | | 12 | {87439008} | 04-01 | | 35 |
| {87436192} | 09-73 | | 1B | {87439009} | 04-01 | | 37 |
| {87437840} | 08-08A | | 4A | {87439010} | 04-01 | | 41 |
| | 08-09 | | 4A | {87439011} | 04-01 | | 43 |
| {87437899} | 08-29 | | 10 | {87439061} | 04-01 | | 42 |
| {87437905} | 08-29 | | 12 | {87440694} | 08-23 | | 16 |
| {87437906} | 08-29 | | 13 | {87440814} | 08-30 | | 14 |

HTTP://WWW.MINNPARBACKHOEPARTS.COM




| Number | Figure | Sequence | Ref. | Number | Figure | Sequence | Ref. |
|---|---|---|---|---|---|---|---|
| {87440814} | 08-31 | | 15 | 112380A1 | 09-01 | | 14 |
| {87440815} | 08-30 | | 13 | | 09-02 | | 29 |
| | 08-31 | | 14 | | 09-18 | | 21 |
| {87440835} | 08-20 | | 10 | 112382A1 | 09-02 | | 25 |
| {87440837} | 08-20 | | 11 | 112486A1 | 06-07 | | 10 |
| {87441495} | 08-36 | | 1 | | 06-27 | | 10 |
| | 08-37 | | 1 | 112509A1 | 05-06 | | 5 |
| | 08-38 | | 1 | | 06-04 | | 3 |
| | 08-39 | | 1 | 112517A1 | 06-20 | | 4 |
| 100-21315 | 08-62 | | 13A | 112946A1 | 09-06 | | 8 |
| 100-39001 | 09-55 | | 43 | | 09-06 | | 8 |
| | 09-57 | | 20 | 113133A2 | 08-05 | | 34 |
| 100016 | 04-01 | | 39 | | 08-59 | | 1 |
| 100520A1 | 06-02 | | 12 | | 09-05 | | 20 |
| 100532A1 | 06-03 | | 3 | 113135A2 | 08-59 | | 2 |
| 100533A1 | 05-06 | | 11 | 113629A1 | 09-04 | | 25 |
| | 06-03 | | 8 | 114295A1 | 06-06 | | 20 |
| 100552A1 | 06-06 | | 5 | 114296A1 | 06-04 | | 9 |
| 100553A1 | 06-06 | | | 114318A1 | 09-23 | | 12A |
| 100554A1 | 06-06 | | | | 09-37 | | 4 |
| 100555A1 | 06-06 | | 18 | 114549A1 | 09-54 | | 6 |
| 100556A1 | 06-06 | | 4 | 114882A2 | 05-01 | | 2 |
| 100557A1 | 06-06 | | 22 | 114980A1 | 09-41 | | 8 |
| | 06-13 | | 8 | 116339A1 | 09-05 | | 21 |
| | 06-14 | | 9 | 116425A1 | 06-06 | | 12 |
| | 06-26 | | 1 | 116426A1 | 06-06 | | 7 |
| | 06-30 | | 7 | 116427A1 | 06-06 | | 8 |
| 100559A1 | 06-06 | | 6 | 116521A1 | 09-50 | | 3 |
| 100561A1 | 06-06 | | 13 | 116534A1 | 09-50 | | 10 |
| 100562A1 | 06-06 | | 19 | | 09-75 | | 1 |
| 100696A1 | 09-04 | | 3 | 116538A2 | 09-50 | | 12 |
| 100748A1 | 06-12 | | 9 | 116545A1 | 09-50 | | 9 |
| 100753A1 | 06-20 | | 17 | 116547A1 | 09-49 | | 10 |
| 101479A1 | 08-13 | | 24 | | 09-50 | | 6 |
| 101531A1 | 04-17 | | 9 | 116548A1 | 09-50 | | 15 |
| 102-1387 | 05-03 | | 4 | 116550A1 | 09-50 | | 14 |
| 102-23206 | 08-29 | | 5 | 116551A1 | 09-50 | | 8 |
| 102761A1 | 09-01 | | 12 | 116552A1 | 09-50 | | 13 |
| | 09-02 | | 23 | 116761A3 | 09-48 | | 1 |
| 102765A1 | 09-18 | | 19 | 116763A1 | 09-48 | | 2 |
| 103-11100 | 09-13 | | 16 | 116764A3 | 09-48 | | 3 |
| 103-1437 | 09-02 | | 15 | 116766A2 | 09-48 | | 4 |
| 103-1475 | 09-21 | | 8 | 116767A1 | 09-48 | | 5 |
| 103-1518 | 03-03 | | 7 | 117933A1 | 06-24 | | 6 |
| 103-16175 | 09-22 | | 4 | 118769A1 | 09-46 | | 7 |
| | 09-22 | | 8 | 118900A1 | 09-04 | | 24 |
| | 09-24 | | 25 | 118901A1 | 09-04 | | 30 |
| | 09-24 | | 33 | | 09-05 | | 3 |
| | 09-26 | | 23 | 119171A1 | 09-48 | | 6 |
| | 09-26 | | 27 | 119211A1 | 09-46 | | 11 |
| | 09-26 | | 33 | 119241A1 | 06-23 | | 1 |
| | 09-26 | | 36 | 119243A1 | 05-09 | | 4 |
| | 09-26 | | 5 | 120303A1 | 05-02 | | 25 |
| | 09-27 | | 14 | | 08-04 | | 10 |
| | 09-27 | | 40 | | 08-05 | | 8 |
| | 09-27 | | 50 | | 08-06 | | 8 |
| 103-16200 | 09-23 | | 18 | | 08-26 | | 32 |
| 103-3350 | 09-04 | | 29 | | 08-27 | | 14 |
| 103670A1 | 08-24 | | 18 | | 09-38 | | 33 |
| 104824A1 | 09-04 | | 23 | 121-145 | 07-03 | | 20 |
| 104907A1 | 06-23 | | 1 | 121412A1 | 04-07 | | 2 |
| 106989A1 | 09-18 | | 13 | | 04-09 | | |
| 106990A1 | 09-18 | | 15 | | 04-17 | | 16 |
| 107071A1 | 06-30 | | 17 | 121413A1 | 04-07 | | 3 |
| 107124A1 | 09-26 | | 45 | | 04-19 | | 1 |
| | 09-26 | | 49 | | 04-20 | | 13 |
| | 09-27 | | 22 | | 08-25 | | 27 |
| | 09-27 | | 33 | 121414A1 | 04-07 | | 4 |
| | 09-37 | | 8 | | 09-51 | | |
| 108088A1 | 09-01 | | 11 | 121415A1 | 04-09 | | |
| | 09-02 | | 12 | 121416A1 | 04-07 | | 5 |
| | 09-02 | | 21 | 121665A1 | 09-22 | | 7 |
| 108366A1 | 04-17 | | 4 | 121729A1 | 07-04 | | 8 |
| 108864A1 | 09-18 | | 1 | 121778A1 | 09-23 | | 3 |
| 108923A1 | 09-18 | | 9 | 121856A1 | 09-38 | | 55 |
| 108924A1 | 09-18 | | 8 | 121920A1 | 09-08 | | 12 |
| 109268A1 | 09-04 | | 4 | 122081A1 | 09-66 | | 9 |
| 109511A1 | 04-16 | | 9 | 122259A1 | 05-06 | | 10 |
| 109879A1 | 09-39 | | 3 | 122261A1 | 05-05 | | 9 |
| | 09-41 | | 13 | 122264A1 | 06-03 | | 10 |
| 110307A1 | 08-59 | | 12 | 122265A1 | 05-06 | | 9 |
| 111522A1 | 09-04 | | 5 | | 06-03 | | 9 |

HTTP://WWW.MINNPARBACKHOEPARTS.COM




| Number | Figure | Sequence | Ref. |
|---|---|---|---|
| 122268A1 | 06-02 | | 13 |
| 122270A1 | 05-05 | | 5 |
| | 06-02 | | 7 |
| 122503A1 | 09-27 | | |
| 122553A1 | 09-65 | | 12 |
| | 09-66 | | 24 |
| 122579A1 | 09-65 | | 13 |
| 122603A1 | 09-38 | | 24 |
| 123097A1 | 04-04 | | 32 |
| | 04-07 | | 31 |
| | 06-11 | | 42 |
| 123493A1 | 09-02 | | 9 |
| 123537A1 | 09-10 | | 29 |
| 123726A1 | 08-61 | | 12 |
| 123809A2 | 04-04 | | 31 |
| | 04-07 | | 30 |
| | 06-11 | | 43 |
| 123815A1 | 09-02 | | 2 |
| 123980A1 | 09-65 | | 23 |
| 124011A1 | 09-65 | | 22 |
| 124243A1 | 09-02 | | 8 |
| 124568A2 | 08-62 | | 3 |
| 124721A1 | 09-03 | | 14 |
| 1250594C1 | 09-65 | | 10 |
| | 09-65 | | 11 |
| | 09-66 | | 16 |
| | 09-66 | | 23 |
| | 09-66 | | 8 |
| 125113A1 | 09-18 | | 12 |
| | 09-18 | | 14 |
| 125749A1 | 09-61 | | 12 |
| 126-116 | 06-11 | | 12 |
| 126155A1 | 09-10 | | 31 |
| 126177 | 09-72 | | 3 |
| 126844A1 | 04-07 | | 17 |
| | 04-07 | | 21 |
| | 04-09 | | 10 |
| | 04-09 | | 16 |
| | 04-09 | | 20 |
| 126918A1 | 09-20 | | 2 |
| 127009A1 | 04-10 | | 6 |
| 127158A1 | 04-17 | | 6 |
| 127181A2 | 02-01 | | 27 |
| 127862A2 | 08-63 | | 6 |
| 128135A2 | 08-61 | | 4 |
| 128312A1 | 04-08 | | 3 |
| | 04-13 | | 13 |
| | 04-14 | | 3 |
| | 09-04 | | 19 |
| 128376A1 | 06-29 | | 11 |
| 128483A1 | 09-65 | | 16 |
| | 09-65 | | 9 |
| | 09-66 | | 2 |
| | 09-66 | | 7 |
| 128484A1 | 09-65 | | 3 |
| | 09-66 | | 13 |
| 128485A1 | 09-65 | | 4 |
| | 09-65 | | 8 |
| | 09-66 | | 14 |
| | 09-66 | | 21 |
| 128570A1 | 06-08 | | 11 |
| | 06-28 | | 9 |
| 128760A1 | 08-12 | | 19 |
| | 08-13 | | 30 |
| | 08-65 | | 1 |
| | 09-26 | | 1 |
| | 09-27 | | 10 |
| 128761A1 | 08-65 | | 2 |
| 128770A2 | 08-65 | | 4 |
| 128772A1 | 08-65 | | 16 |
| 128818A1 | 09-04 | | 11 |
| 129-667 | 08-57 | | 2 |
| 129015A1 | 09-16 | | 1 |
| 129040A1 | 09-24 | | 23 |
| | 09-24 | | 26 |
| 129041A1 | 09-24 | | 30 |
| | 09-26 | | 2 |
| | 09-27 | | 12 |
| 129883A1 | 09-24 | | 10 |
| | 09-27 | | 1 |
| 129884A2 | 09-26 | | |
| 129885A1 | 09-33 | | 1 |
| 129893A1 | 09-31 | | 3 |
| | 09-33 | | 3 |
| 129894A1 | 09-31 | | 2 |
| | 09-33 | | 2 |
| 129914A1 | 09-02 | | 4 |
| 129944A1 | 09-33 | | 4 |
| 130047A1 | 03-01 | | 15 |
| 130049A1 | 03-01 | | 5 |
| 130245A1 | 07-06 | | 32 |
| 1302758C1 | 04-11 | | 35 |
| | 09-68 | | 20 |
| 131-121 | 04-10 | | 15 |
| | 09-02 | | 33 |
| 131-425 | 09-52 | | |
| 131-431 | 09-73 | | 14 |
| 131-435 | 09-50 | | |
| 131-619 | 04-11 | | 17 |
| | 04-11 | | 20 |
| 131-861 | 04-10 | | 7 |
| | 09-01 | | 4 |
| | 09-11 | | 15 |
| | 09-61 | | 8 |
| 131-869 | 09-43 | | 21B |
| | 09-43 | | 4 |
| 1312210C2 | 04-13 | | |
| | 04-13 | | |
| | 04-14 | | |
| | 04-14 | | |
| 131600A1 | 08-08 | | 24 |
| | 08-08A | | 24 |
| 131750A2 | 08-65 | | |
| 132661A1 | 09-01 | | 5 |
| 132842A1 | 09-27 | | 45 |
| 132844A1 | 09-27 | | 44 |
| 132862A1 | 09-52 | | 6 |
| 132864A1 | 09-52 | | |
| 132866A1 | 09-52 | | 9 |
| 132872A1 | 09-52 | | 18 |
| 132873A1 | 09-02 | | 39 |
| 132931A1 | 03-03 | | 2 |
| | 09-01 | | 25 |
| 132988A1 | 09-06 | | 3 |
| | 09-06 | | 3 |
| 133083A1 | 08-58 | | 12 |
| 1331087C1 | 09-64 | | 14 |
| 133421A1 | 09-52 | | 17 |
| 133422A1 | 09-52 | | 15 |
| 133615A1 | 09-01 | | 2 |
| 133617A1 | 09-02 | | 18 |
| 133715A1 | 04-09 | | 11 |
| 133716A1 | 04-09 | | 13 |
| 133989A1 | 09-02 | | 13 |
| 1340763C1 | 08-62 | | 16 |
| 1340764C1 | 08-62 | | 15 |
| 1340798C1 | 08-60 | | 15 |
| 1340969C2 | 08-14 | | 17 |
| | 08-66 | | 1 |
| | 09-27 | | 25 |
| 1340970C1 | 08-66 | | 2 |
| 134167A1 | 09-23 | | 20 |
| 1344025C1 | 09-51 | | 16 |
| 1344026C1 | 09-51 | | 17 |
| 1346189C2 | 08-07 | | 2 |
| | 08-60 | | 1 |
| 1346190C2 | 08-07 | | 1 |
| | 08-60 | | 1 |
| 1346191C2 | 08-60 | | 2 |
| 1346192C2 | 08-60 | | 2 |
| 1346195C1 | 08-60 | | 13 |
| 1346476C1 | 08-65 | | 6 |
| 1348264C1 | 02-02 | | 5 |
| 134844A1 | 09-07 | | 3 |
| 1349058C1 | 06-08 | | 5 |
| 1349059C1 | 06-08 | | 6 |
| | 06-28 | | 5 |
| 1349265C1 | 06-30 | | 24 |
| 135-51652 | 09-24 | | 18 |
| | 09-27 | | 4 |
| 135161A1 | 08-58 | | 13 |
| 135248A1 | 09-23 | | 10 |
| 135249A1 | 09-23 | | 9 |
| 135512A3 | 09-52 | | 2 |

HTTP://WWW.MINNPARBACKHOEPARTS.COM




| Number | Figure | Sequence | Ref. |
|---|---|---|---|
| 136-54 | 04-17 | | 14 |
| 136261A1 | 09-16 | | 11 |
| 136263A1 | 09-16 | | 8 |
| | 09-17 | | 2 |
| 136267A1 | 09-16 | | 5 |
| 136269A1 | 09-16 | | 6 |
| 136270A2 | 09-16 | | 40 |
| 136271A2 | 09-16 | | 39 |
| 136822A1 | 09-11 | | 11 |
| 136824A1 | 09-11 | | 13 |
| 137219A1 | 04-19 | | 3 |
| 137223A2 | 06-01 | | 13 |
| 137248A1 | 08-62 | | 13 |
| 137283A1 | 09-03 | | 1 |
| 137343A1 | 09-10 | | 28 |
| 137344A1 | 09-10 | | 27 |
| 138595A1 | 09-38 | | 14 |
| 138624A1 | 09-24 | | 36 |
| 139180A1 | 09-05 | | 12 |
| 139195A1 | 09-05 | | 14 |
| 139235A1 | 09-05 | | 13 |
| 139363A1 | 09-41 | | 9 |
| 139728A1 | 09-74 | | 14 |
| 139865A1 | 09-03 | | 8 |
| 140-103 | 09-61 | | 11 |
| 140-104 | 09-55 | | 44 |
| | 09-57 | | 21 |
| 140-106 | 04-10 | | 12 |
| | 04-10 | | 13 |
| | 04-20 | | 6 |
| | 09-11 | | 14 |
| 140-107 | 04-11 | | 16A |
| | 04-11 | | 19 |
| | 09-01 | | 3 |
| | 09-02 | | 32 |
| | 09-11 | | 14 |
| 140-108 | 09-15 | | 29 |
| 140-117 | 09-43 | | 13 |
| | 09-43 | | 24 |
| | 09-43 | | 7 |
| 140-119 | 04-09 | | 15 |
| 140-120 | 04-11 | | 16 |
| | 04-11 | | 30 |
| 140028 | 04-01 | | 40 |
| 140943A1 | 06-08 | | 7 |
| 140944A1 | 06-08 | | 7 |
| 140945A1 | 06-08 | | 7 |
| 140946A1 | 06-08 | | 7 |
| 140947A1 | 06-08 | | 7 |
| 140948A1 | 06-08 | | 7 |
| 140949A1 | 06-08 | | 7 |
| 140951A1 | 06-08 | | 7 |
| 140953A1 | 06-08 | | 7 |
| 140954A1 | 06-08 | | 7 |
| 141232A2 | 09-35 | | 1 |
| 141233A1 | 09-35 | | 3 |
| 141234A1 | 09-35 | | 2 |
| 141747A1 | 05-01 | | 12 |
| 142-103 | 09-55 | | 47 |
| | 09-57 | | 23 |
| 142300A1 | 09-08 | | 3 |
| 142404A1 | 09-03 | | 2 |
| 142524A1 | 09-04 | | 12 |
| 142538A1 | 09-06 | | 5 |
| | 09-06 | | 5 |
| | 09-07 | | 5 |
| 142687A1 | 09-07 | | |
| 142842A1 | 09-24 | | 27 |
| 143210A1 | 09-02 | | 7 |
| 143219A1 | 09-38 | | 20 |
| 143400A1 | 08-13 | | 15 |
| 14358921 | 08-48 | | 1 |
| 143786A1 | 09-52 | | 7 |
| 144173A1 | 08-29 | | 7 |
| 144193A3 | 09-76 | | 7 |
| 144279A1 | 06-09 | | 7 |
| | 06-31 | | 7 |
| 144454A1 | 06-02 | | |
| 144457A1 | 06-04 | | |
| 144458A1 | 06-04 | | 5 |
| 144459A1 | 06-04 | | 7 |
| 144460A1 | 06-08 | | |
| 144461A1 | 06-05 | | |
| 144462A1 | 06-05 | | 1 |
| 144463A1 | 06-05 | | 5 |
| 144465A1 | 06-05 | | 4 |
| 144466A1 | 06-06 | | |
| 144477A1 | 08-23 | | 14 |
| | 08-23 | | 7 |
| 144479A1 | 08-23 | | 8 |
| 144908A2 | 09-40 | | 24 |
| 151-516 | 09-53 | | 7 |
| | 09-69 | | 3 |
| 151-532 | 02-01 | | 7 |
| 1530028C1 | 06-13 | | 2 |
| | 06-14 | | 3 |
| 1537663C1 | 06-03 | | 5 |
| 1537664C1 | 06-03 | | 6 |
| 1542830C2 | 08-55 | | |
| 1542874C1 | 08-59 | | |
| 1542875C1 | 08-58 | | |
| | 08-60 | | |
| | 08-66 | | |
| 1542876C1 | 08-61 | | |
| | 08-62 | | |
| 1542877C1 | 08-63 | | |
| | 08-64 | | |
| | 08-65 | | |
| 1543256C1 | 08-59 | | |
| 1543260C1 | 08-58 | | |
| 1543267C1 | 08-60 | | |
| | 08-66 | | |
| 1543269C1 | 08-61 | | |
| 16586624 | 02-37 | | 1 |
| 16587924 | 02-30 | | 7 |
| 16592624 | 02-37 | | 1 |
| 16784504 | 02-17 | | 2 |
| 168-71 | 04-17 | | 7 |
| 16866473 | 02-26 | | 1 |
| 16979231 | 03-04 | | 4 |
| 170-104 | 09-02 | | 3 |
| 17044625 | 02-33 | | 12 |
| 17278780 | 02-12 | | 7 |
| 17283181 | 02-30 | | 8 |
| 175156A1 | 09-08 | | |
| 175599A1 | 09-41 | | 2 |
| 175778A1 | 08-64 | | 14 |
| 175956A1 | 06-28 | | |
| 175957A1 | 06-28 | | 6 |
| 175959A1 | 06-27 | | 11 |
| 175961A1 | 06-27 | | 19 |
| 175964A2 | 06-29 | | 9 |
| 175965A1 | 06-29 | | 10 |
| 175966A1 | 06-29 | | 8 |
| 175968A1 | 06-29 | | 12 |
| 175974A1 | 06-30 | | 1 |
| 175976A1 | 06-30 | | 4 |
| 175977A1 | 06-30 | | 5 |
| 175978A1 | 06-30 | | 10 |
| 175979A1 | 06-30 | | 11 |
| 175980A1 | 06-30 | | 12 |
| 175982A1 | 06-30 | | 14 |
| 175984A1 | 06-30 | | 19 |
| 175989A1 | 06-30 | | 27 |
| 175990A1 | 06-30 | | 28 |
| 176091A1 | 09-51 | | 6 |
| 176311A1 | 09-01 | | 10 |
| | 09-02 | | 20 |
| 176914A1 | 09-50 | | 5 |
| 176916A1 | 09-50 | | 4 |
| 176919A1 | 09-49 | | 7 |
| 176920A1 | 09-50 | | 7 |
| 176921A1 | 09-49 | | 9 |
| | 09-50 | | 2 |
| 176924A1 | 09-47 | | 5 |
| 177269A1 | 04-18 | | 14 |
| | 09-61 | | 18 |
| 178004A1 | 09-18 | | 18 |
| 178006A1 | 09-18 | | 17 |
| 178051A1 | 08-29 | | 8 |
| 178951A1 | 08-10 | | 12 |
| | 08-11 | | 11 |
| | 08-12 | | 11 |
| | 08-13 | | 10 |

HTTP://WWW.MINNPARBACKHOEPARTS.COM




| Number | Figure | Sequence | Ref. | Number | Figure | Sequence | Ref. |
|---|---|---|---|---|---|---|---|
| 178952A1 | 08-10 | | 13 | 181273A1 | 06-21 | | 6 |
| | 08-11 | | 12 | 181274A1 | 06-12 | | 3 |
| | 08-12 | | 12 | 18137824 | 02-33 | | 14 |
| | 08-13 | | 11 | 18138324 | 02-33 | | 13 |
| 179029A1 | 09-20 | | 1 | 181842A1 | 09-04 | | 7A |
| 179956A1 | 09-12 | | 6 | 181979A1 | 09-65 | | 24 |
| 180427A1 | 09-37 | | 2 | 181981A1 | 09-42 | | 17 |
| 180593A1 | 09-52 | | 11 | | 09-63 | | 5 |
| 180594A3 | 09-52 | | 19 | 182006A1 | 09-17 | | 4 |
| 181042A1 | 09-24 | | 22 | | 09-21 | | 9 |
| | 09-27 | | 8 | 182109A1 | 08-63 | | 16 |
| 181100A1 | 06-13 | | 4 | 182116A1 | 08-63 | | 19 |
| | 06-14 | | 5 | 182218A1 | 08-63 | | |
| | 06-21 | | 35 | 182276A1 | 04-10 | | 5 |
| | 06-22 | | 5 | 182445A1 | 07-03 | | 1 |
| 181101A1 | 06-12 | | 2 | | 07-04 | | 1 |
| | 06-14 | | 20 | | 07-05 | | |
| 181102A1 | 06-12 | | 12 | 182594A1 | 04-11 | | 11 |
| | 06-14 | | 22 | 182697A1 | 09-63 | | 3 |
| 181103A1 | 06-21 | | 20 | 182721A2 | 04-18 | | 11 |
| 181104A1 | 07-02 | | 27 | 183168A1 | 09-40 | | 7 |
| 181105A1 | 06-13 | | 12 | 183322A1 | 08-13 | | 18 |
| | 06-14 | | 16 | 183443A1 | 09-27 | | 51 |
| 181107A1 | 06-21 | | 19 | 183509A1 | 09-27 | | 52 |
| 181108A1 | 06-18 | | 24 | 183736A1 | 08-13 | | 29 |
| | 06-19 | | 26 | 183808A1 | 09-31 | | 1 |
| 181111A1 | 06-18 | | 13 | 183810A1 | 09-31 | | 4 |
| 181116A1 | 06-18 | | 9 | 183938A1 | 09-24 | | 37 |
| 181118A1 | 06-19 | | 1 | 184297A1 | 08-13 | | 22 |
| 181122A1 | 06-20 | | 5 | 184497A1 | 04-06 | | 3 |
| 181123A1 | 06-19 | | 31 | 184616A1 | 08-14 | | 13 |
| 181126A1 | 06-17 | | 3 | 184617A1 | 08-14 | | 12 |
| | 06-20 | | 9 | 184627A2 | 07-04 | | 13 |
| 181128A1 | 06-18 | | 3 | 184723A1 | 09-24 | | 35 |
| 181130A1 | 06-19 | | 30 | 184726A1 | 04-11 | | 10 |
| 181132A1 | 06-17 | | 5 | 184884A1 | 09-24 | | 34 |
| | 06-19 | | 2 | 185325A1 | 09-41 | | 14 |
| 181136A1 | 06-21 | | 5 | 185506A1 | 09-07 | | 8 |
| 181137A1 | 06-21 | | 28 | 185926A1 | 03-01 | | 4 |
| 181138A1 | 06-16 | | 12 | | 09-38 | | 4 |
| 181139A1 | 06-16 | | 5 | 186351A1 | 09-46 | | 11A |
| 181141A1 | 06-13 | | 14 | 186977A1 | 09-37 | | 13 |
| | 06-14 | | 19 | 186989A1 | 09-73 | | 13 |
| 181142A1 | 06-15 | | 19 | 187281A1 | 04-18 | | 12 |
| 181144A1 | 06-19 | | 33 | 187714A1 | 06-11 | | 1 |
| 181146A1 | 06-21 | | 18 | 187715A1 | 06-11 | | 2 |
| 181158A1 | 06-18 | | 12 | 188009A3 | 03-01 | | 29A |
| 181159A1 | 06-18 | | 11 | 188027A2 | 08-09 | | 13 |
| 181161A1 | 06-18 | | 14 | | 08-09A | | 13 |
| 181165A1 | 06-19 | | 34 | | 08-62 | | 1 |
| 181166A1 | 06-21 | | 22 | | 09-23 | | 11 |
| 181169A1 | 09-47 | | 6 | 188028A2 | 08-62 | | 2 |
| | 09-48 | | 7 | 188032A2 | 08-62 | | 4 |
| 181170A1 | 09-49 | | 11 | 188034A3 | 08-62 | | 14 |
| | 09-50 | | 16 | 188036A1 | 08-62 | | 22 |
| 181171A1 | 06-16 | | 7 | 188311A2 | 03-01 | | 11 |
| 181173A1 | 06-16 | | 16 | 189109A1 | 03-03 | | 2A |
| 181174A2 | 06-16 | | 22 | | 09-01 | | |
| 181175A1 | 06-16 | | 18 | | 09-02 | | |
| 181176A1 | 06-14 | | 18 | 189602A3 | 03-01 | | 29 |
| 181177A1 | 06-16 | | 11 | 189653A2 | 08-10 | | 21 |
| 181179A1 | 06-13 | | 11 | | 08-63 | | 1 |
| | 06-14 | | 15 | | 09-24 | | 9 |
| 181198A1 | 06-20 | | 3 | 189657A2 | 08-63 | | 18 |
| 181202A1 | 06-12 | | 13 | 190427A1 | 06-19 | | |
| 181203A1 | 06-16 | | 21 | 190428A3 | 06-16 | | 8 |
| 181207A1 | 06-21 | | 23 | 190431A1 | 06-22 | | 10 |
| 181208A1 | 06-21 | | 24 | 190435A1 | 06-21 | | 37 |
| 181219A1 | 06-12 | | 10 | 190436A1 | 06-21 | | 13 |
| 181232A1 | 06-13 | | 13 | 190437A1 | 06-21 | | 4 |
| | 06-14 | | 17 | 190438A2 | 06-21 | | 12 |
| 181234A2 | 06-21 | | 15 | 190439A2 | 06-21 | | 11 |
| 181245A2 | 06-16 | | 1 | 190440A1 | 06-21 | | 38 |
| 181251A1 | 06-21 | | 9 | 190441A1 | 06-21 | | 14 |
| 181253A1 | 06-21 | | 31 | 190442A1 | 06-21 | | 2 |
| 181254A1 | 06-21 | | 25 | 190443A1 | 06-21 | | 3 |
| 181255A2 | 06-21 | | 27 | 190449A1 | 07-01 | | 7 |
| 181256A1 | 06-21 | | 10 | 190450A1 | 07-01 | | 9 |
| 181258A1 | 06-21 | | 29 | 190451A1 | 07-02 | | 1 |
| 181260A1 | 06-21 | | 26 | 190452A1 | 06-27 | | 14 |
| 181261A1 | 06-21 | | 17 | 190463A1 | 07-02 | | 2 |
| 181272A1 | 06-21 | | 7 | 190469A1 | 06-27 | | 6 |

HTTP://WWW.MINNPARBACKHOEPARTS.COM




| Number | Figure | Sequence | Ref. |
|---|---|---|---|
| 190471A1 | 06-27 | | 4 |
| 190476A2 | 07-02 | | 4 |
| 190477A2 | 07-02 | | 4 |
| 190493A1 | 07-01 | | 14 |
| 190496A1 | 07-01 | | 8 |
| 190500A1 | 07-01 | | 20 |
| 190506A1 | 06-28 | | 7 |
| 190508A1 | 06-28 | | 7 |
| 190509A1 | 06-28 | | 7 |
| 190510A1 | 06-28 | | 7 |
| 190511A1 | 06-28 | | 7 |
| 190512A1 | 06-28 | | 7 |
| 190513A1 | 06-28 | | 7 |
| 190514A1 | 06-28 | | 7 |
| 190515A1 | 06-28 | | 7 |
| 190516A1 | 06-28 | | 7 |
| 190675A1 | 09-64 | | 17 |
| 190682A1 | 06-06 | | 10 |
| 190684A1 | 06-06 | | 9 |
| 191046A1 | 03-01 | | 30 |
| 191047A1 | 09-38 | | 27 |
| 191067A1 | 06-27 | | 15 |
| 191239A1 | 09-10 | | 1 |
| 191252A1 | 08-62 | | 14A |
| 191703A1 | 08-21 | | |
| | 08-21 | | |
| | 09-66 | | 25 |
| 191704A1 | 09-66 | | 3 |
| 191747A1 | 08-62 | | |
| 191796A1 | 05-04 | | 2 |
| | 06-01 | | 8 |
| 192152A1 | 08-05 | | 27 |
| 192154A1 | 08-05 | | 31 |
| 192156A1 | 08-05 | | 30 |
| 192345A1 | 08-07 | | 4 |
| 192352A1 | 08-07 | | 3 |
| 192450A1 | 09-74 | | 9 |
| 192815A1 | 09-04 | | 28 |
| 192895A1 | 08-56 | | 2 |
| 192971A1 | 08-09 | | 15 |
| | 08-09A | | 15 |
| 193-1000 | 04-04 | | 18 |
| | 04-04 | | 3 |
| | 04-07 | | |
| | 04-07 | | 12 |
| 193-1003 | 09-04 | | 17 |
| | 09-46 | | 10 |
| 193913A1 | 09-66 | | 18 |
| 195-140 | 09-11 | | 8 |
| 195-81023 | 09-55 | | 48 |
| | 09-57 | | 24 |
| 1954626C1 | 09-64 | | 15 |
| 1954736C1 | 09-64 | | 3 |
| 195503A1 | 08-08 | | 30 |
| | 08-08A | | 30 |
| | 08-61 | | 1 |
| | 09-22 | | 1 |
| 195504A1 | 08-08 | | 29 |
| | 08-08A | | 29 |
| | 08-61 | | 1 |
| | 09-22 | | 2 |
| 195505A1 | 08-61 | | 2 |
| 195506A1 | 08-61 | | 2 |
| 195552A1 | 04-18 | | 3 |
| 195615A1 | 09-01 | | 6 |
| | 09-02 | | 19 |
| 1959509C1 | 05-01 | | 4 |
| 196065A1 | 06-30 | | 21 |
| 196066A1 | 06-30 | | 22 |
| 196085A1 | 07-02 | | 9 |
| 196090A1 | 06-30 | | 2 |
| 196454A1 | 06-19 | | 3A |
| 1966136C1 | 06-02 | | 16 |
| 1966138C1 | 06-02 | | 17 |
| 1966149C2 | 06-02 | | 5 |
| | 06-26 | | 13 |
| 1966153C1 | 06-07 | | 9 |
| 1966169C1 | 06-06 | | 2 |
| 1966186C1 | 06-02 | | 10 |
| 1966559C1 | 06-07 | | 11 |
| 1966993C1 | 06-16 | | 4 |
| 1967003C1 | 06-07 | | 4 |
| 1967531C1 | 06-16 | | 24 |
| 1967581C1 | 06-16 | | 10 |
| 1967585C1 | 06-16 | | 9 |
| 196813A1 | 08-05 | | 25 |
| 196815A1 | 08-05 | | 24 |
| 196821A1 | 08-06 | | 13 |
| 196824A1 | 08-06 | | 12 |
| 1976955C1 | 08-55 | | 2A |
| 197745A1 | 04-18 | | 4 |
| 197793A1 | 09-52 | | 8 |
| 1978141C1 | 08-56 | | 8 |
| 1978142C1 | 08-56 | | |
| 1978143C1 | 08-56 | | 5 |
| 1978144C1 | 08-56 | | 6 |
| 1978158C1 | 08-56 | | 7 |
| 1980245C1 | 08-62 | | 17 |
| 1980296C1 | 08-66 | | 11 |
| 1980321C3 | 08-58 | | 4 |
| 198033A1 | 08-65 | | 14 |
| 1981850C1 | 09-52 | | 13 |
| 1987096C1 | 09-64 | | 33 |
| 1987212C1 | 09-51 | | 11 |
| 1987219C2 | 09-51 | | 13 |
| 1987290C1 | 09-51 | | 14 |
| 198976A1 | 09-23 | | 12 |
| 1990548C4 | 09-52 | | 21 |
| 1999666C1 | 09-64 | | 16 |
| 1999667C1 | 09-64 | | |
| 1999668C1 | 09-64 | | |
| 1999693C1 | 09-51 | | 8 |
| 1999926C1 | 09-66 | | 15 |
| 1999927C1 | 09-66 | | 22 |
| 20-21032 | 09-08 | | 13 |
| 20-21232 | 09-07 | | 9 |
| | 09-08 | | 4 |
| 213-123 | 03-02 | | 14 |
| | 03-03 | | 17 |
| 213-126 | 07-06 | | 19 |
| | 09-02 | | 34 |
| | 09-16 | | 22 |
| | 09-17 | | 6 |
| | 09-19 | | 6 |
| | 09-21 | | 10 |
| 214-1406 | 09-38 | | 18 |
| | 09-63 | | 19 |
| 214-1412 | 02-04 | | 6 |
| | 02-04A | | 6 |
| | 06-10 | | 16 |
| 214-1416 | 02-02 | | 8 |
| | 02-06A | | 15 |
| 214-1420 | 08-03 | | 24 |
| 214-1424 | 02-06A | | 18 |
| 214-1432 | 02-01 | | 15 |
| 214-1440 | 02-01 | | 17 |
| | 02-04 | | 13A |
| 214-1456 | 02-04 | | 13 |
| | 02-04A | | 12 |
| 214-1464 | 02-04A | | 11 |
| | 08-05 | | 40 |
| | 08-07 | | 21 |
| | 08-12 | | 20 |
| | 08-13 | | 33 |
| | 08-14 | | 22 |
| | 09-66 | | 5 |
| 214-1472 | 08-04 | | 21 |
| 214-1488 | 08-10 | | 25 |
| | 08-11 | | 27 |
| 214-1492 | 08-09 | | 22 |
| | 08-09A | | 22 |
| 214-1704 | 03-01 | | 7 |
| | 07-04 | | 10 |
| 214-1706 | 07-04 | | 11 |
| 214-3132 | 08-13 | | 23 |
| | 08-24 | | 19 |
| 214-3156 | 08-24 | | 16 |
| 214-3188 | 08-08 | | 28 |
| | 08-08A | | 28 |
| 217-1102 | 09-38 | | 22 |
| 217-144 | 09-64 | | 34 |
| 217-154 | 02-02 | | 4 |
| 217-314 | 06-10 | | 11 |
| 217-347 | 09-38 | | 16 |

HTTP://WWW.MINNPARBACKHOEPARTS.COM




| Number | Figure | Sequence | Ref. | Number | Figure | Sequence | Ref. |
|---|---|---|---|---|---|---|---|
| 217-349 | 06-10 | | 22 | 218-5107 | 08-05 | | 2 |
| 217-380 | 09-38 | | 21 | | 08-05 | | 32 |
| 217-436 | 09-38 | | 5 | | 08-06 | | 2 |
| 218-1023 | 06-14 | | 11 | | 08-07 | | 18 |
| 218-1254 | 09-10 | | 20 | | 08-09 | | 27 |
| 218-1256 | 08-24 | | 22 | | 08-09A | | 27 |
| | 09-10 | | 33 | | 08-10 | | 19 |
| 218-1275 | 05-04 | | 10 | | 08-10 | | 22 |
| | 06-01 | | 29 | | 08-11 | | 19 |
| 218-1279 | 09-10 | | 34 | | 08-12 | | 22 |
| 218-335 | 08-01 | | 19 | | 08-13 | | 35 |
| | 08-01 | | 31 | | 08-14 | | 15 |
| | 08-23 | | 30 | 218-5110 | 08-02 | | 14 |
| | 08-24 | | 23 | 218-5117 | 08-25 | | 11 |
| 218-459 | 06-11 | | 38 | 218-5119 | 08-09 | | 19 |
| 218-5027 | 05-02 | | 3 | | 08-09A | | 19 |
| 218-5050 | 08-23 | | 24 | 218-5121 | 08-08 | | 20 |
| 218-5053 | 05-04 | | 8 | | 08-08A | | 20 |
| | 06-01 | | 26 | 218-5135 | 08-08A | | 5 |
| | 07-04 | | 19 | 218-5136 | 05-02 | | 11 |
| | 08-17 | | 5 | | 08-08 | | 35 |
| | 08-18 | | 7 | 218-5137 | 08-07 | | 16 |
| | 08-19 | | 7 | 218-5140 | 08-01 | | 24 |
| | 08-20 | | 7 | 218-5155 | 09-38 | | 57 |
| | 08-22 | | 38 | 218-5157 | 08-01 | | 47 |
| | 08-26 | | 23 | 218-5170 | 05-02 | | 2 |
| 218-5056 | 08-26 | | 25 | 218-5174 | 08-25 | | 14 |
| 218-5057 | 05-02 | | 15 | 218-5176 | 08-02 | | 12 |
| | 06-25 | | 2 | 218-5182 | 08-22 | | 49 |
| | 08-08 | | 5 | | 09-10 | | 15 |
| | 08-21 | | 1 | 218-5198 | 08-26 | | 20 |
| | 08-22 | | 33 | 218-5209 | 08-55 | | 7 |
| | 08-26 | | 13 | 218-5211 | 03-01 | | 6 |
| 218-5059 | 05-02 | | 8 | | 09-38 | | 12 |
| | 08-07 | | 23 | 218-5213 | 08-29 | | 16 |
| | 08-08 | | 11 | 218-5216 | 08-23 | | 34 |
| | 08-08 | | 33 | 218-5220 | 08-05 | | 18 |
| | 08-08A | | 11 | 218-5221 | 08-01 | | 30 |
| 218-5062 | 08-04 | | 2 | 218-5222 | 08-22 | | 34 |
| | 08-05 | | 28 | 218-5232 | 08-04 | | 26 |
| | 08-09 | | 8 | | 08-22 | | 8 |
| | 08-09A | | 8 | 218-5239 | 08-01 | | 12 |
| | 08-11 | | 25 | 218-5242 | 08-07 | | 25 |
| | 08-12 | | 17 | 218-5243 | 08-22 | | 32 |
| | 08-13 | | 31 | 218-5245 | 08-02 | | 1 |
| | 08-14 | | 19 | | 08-02 | | 10 |
| 218-5063 | 08-09A | | 6 | 218-5280 | 05-02 | | 19 |
| | 08-10 | | 8 | | 08-23 | | 26 |
| | 08-11 | | 8 | 218-5283 | 08-22 | | 3 |
| | 08-12 | | 8 | 218-5351 | 05-04 | | 14 |
| | 08-13 | | 8 | | 06-01 | | 4 |
| | 08-14 | | 8 | | 08-23 | | 31 |
| | 08-22 | | 7 | | 08-26 | | 9 |
| 218-5064 | 08-01 | | 22 | 218-5365 | 08-22 | | 4 |
| | 08-01 | | 49 | 218-5529 | 06-01 | | 5 |
| | 08-02 | | 19 | 218-5584 | 08-01 | | 27 |
| | 08-23 | | 28 | | 08-03 | | 4 |
| | 08-23 | | 42 | 218-5600 | 08-25 | | 18 |
| 218-5069 | 08-02 | | 4 | 218-5650 | 08-07 | | 28 |
| 218-5070 | 08-08A | | 36 | 218-595 | 08-04 | | 22 |
| 218-5086 | 08-03 | | 20 | 218-655 | 08-25 | | 15 |
| 218-5089 | 08-17 | | 4 | 218-676 | 08-24 | | 21 |
| | 08-18 | | 4 | 218-693 | 09-10 | | 19 |
| | 08-19 | | 5 | 218-695 | 09-10 | | 32 |
| | 08-20 | | 5 | 218-754 | 08-22 | | 50 |
| | 08-21 | | 2 | 218-756 | 08-01 | | 20 |
| | 08-22 | | 1 | 218-765 | 08-01 | | 41 |
| 218-5105 | 06-25 | | 4 | 218-776 | 08-06 | | 17 |
| | 08-08 | | 8 | 218-836 | 08-22 | | 35 |
| | 08-08A | | 8 | 218-840 | 08-07 | | 27 |
| | 08-21 | | 3 | | 08-23 | | 33 |
| | 08-22 | | 39 | 218-845 | 08-26 | | 22 |
| | 08-22 | | 5 | 218-980 | 08-01 | | 44 |
| | 08-26 | | 11 | | 08-22 | | 6 |
| | 09-10 | | 14 | 219-1 | 05-04 | | 13 |
| 218-5106 | 05-02 | | 6 | | 06-01 | | 6 |
| | 08-09 | | 11 | | 08-04 | | 27 |
| | 08-09 | | 24 | | 08-58 | | 17 |
| | 08-09A | | 11 | | 08-60 | | 21 |
| | 08-09A | | 24 | | 08-61 | | 17 |
| 218-5107 | 08-01 | | 45 | | 08-62 | | 20 |
| | 08-04 | | 16 | | 08-63 | | 23 |

HTTP://WWW.MINNPARBACKHOEPARTS.COM




| Number | Figure | Sequence | Ref. |
|---|---|---|---|
| 219-1 | 08-64 | | 20 |
| | 08-65 | | 20 |
| | 09-04 | | 32 |
| | 09-05 | | 23 |
| | 09-05 | | 5 |
| | 09-08 | | 9 |
| | 09-16 | | 41 |
| | 09-20 | | 14 |
| | 09-23 | | 28 |
| | 09-24 | | 17 |
| | 09-24 | | 3 |
| | 09-26 | | 24 |
| | 09-26 | | 37 |
| | 09-27 | | 3 |
| | 09-27 | | 35 |
| | 09-27 | | 41 |
| 219-10 | 06-09 | | 8 |
| | 06-31 | | 8 |
| 219-16 | 09-48 | | |
| | 09-48 | | |
| 219-36 | 08-65 | | 21 |
| 219-55 | 08-04 | | 28 |
| | 08-05 | | 41 |
| | 08-59 | | 17 |
| | 08-60 | | 22 |
| | 08-62 | | 21 |
| | 09-04 | | 10 |
| | 09-23 | | 30 |
| | 09-25 | | 5 |
| | 09-25A | | 5 |
| | 09-37 | | 9 |
| 219-86 | 09-27 | | 54 |
| 219-87 | 09-10 | | 4 |
| 219-89 | 09-27 | | 53 |
| 220165A2 | 08-62 | | 2 |
| 220413A1 | 09-37 | | 7 |
| 221-89 | 09-64 | | 21 |
| 224057A1 | 08-10 | | 27 |
| 225-14105 | 09-02 | | 5 |
| 225-14210 | 03-02 | | 13 |
| | 03-03 | | 20 |
| 225315C1 | 08-50 | | 6 |
| | 08-51 | | 6 |
| | 08-52 | | 6 |
| 225318C1 | 08-50 | | 7 |
| | 08-51 | | 7 |
| | 08-52 | | 7 |
| 225350C1 | 08-52 | | 14 |
| | 08-54 | | 6 |
| 225353C1 | 08-52 | | 15 |
| | 08-54 | | 7 |
| 226456A1 | 09-38 | | 36 |
| 226560A1 | 09-52 | | 4 |
| 227389A1 | 04-18 | | 2 |
| 228133A2 | 02-01 | | 27 |
| 230-4216 | 09-52 | | 7A |
| 230857A1 | 09-38 | | 1A |
| 230973A1 | 07-03 | | 26 |
| 231-14109 | 09-39 | | 4 |
| | 09-41 | | 15 |
| | 09-43 | | 15 |
| | 09-43 | | 26 |
| | 09-43 | | 9 |
| 231-14409 | 09-15 | | 30 |
| 231-1444 | 09-52 | | |
| | 09-71 | | 12 |
| 231-1445 | 09-15 | | 23 |
| 231-1446 | 09-01 | | 18 |
| | 09-02 | | 28 |
| 231-24409 | 04-08 | | 19 |
| 231-2446 | 09-19 | | 18 |
| 231-4115 | 09-71 | | 9 |
| 231-4246 | 09-10 | | 5 |
| 231397A1 | 06-07 | | |
| 231656A1 | 09-38 | | 6 |
| 232-1446 | 09-56 | | 2 |
| | 09-57 | | 28 |
| 232-4617 | 09-46 | | 19 |
| | 09-46 | | 26 |
| 232948A1 | 09-66 | | 10 |
| 233104A1 | 08-64 | | 21 |
| 233110A2 | 08-64 | | 16 |
| 233114A2 | 08-11 | | 18 |
| | 08-64 | | 1 |
| | 09-24 | | 15 |
| | 09-27 | | 9 |
| 233283A1 | 06-20 | | 1 |
| 233284A1 | 06-19 | | 32 |
| 233724A1 | 06-11 | | 8 |
| | 09-12 | | 17 |
| | 09-14 | | 9 |
| | 09-42 | | 15 |
| 234141A2 | 08-64 | | 4 |
| 234412A1 | 08-25 | | 9 |
| | 08-56 | | |
| 234844A1 | 08-64 | | |
| 234892A1 | 03-01 | | 14 |
| 235002A1 | 04-09 | | 12 |
| | 08-25 | | 26 |
| 237-6002 | 08-55 | | 14 |
| 237-6004 | 05-02 | | 4 |
| | 05-04 | | 8A |
| | 06-01 | | 27 |
| | 07-04 | | 19A |
| | 08-17 | | |
| | 08-18 | | |
| | 08-19 | | |
| | 08-20 | | |
| | 08-26 | | 24 |
| | 08-55 | | 11A |
| 237-6005 | 08-26 | | 26 |
| 237-6006 | 05-02 | | 16 |
| | 05-02 | | 18 |
| | 05-04 | | 14A |
| | 06-01 | | 4A |
| | 06-01 | | 5A |
| | 06-25 | | 3 |
| | 06-25 | | 5 |
| | 08-07 | | 29 |
| | 08-08 | | 6 |
| | 08-08 | | 9 |
| | 08-08A | | 6 |
| | 08-08A | | 9 |
| | 08-17 | | |
| | 08-18 | | |
| | 08-19 | | |
| | 08-20 | | |
| | 08-23 | | 27 |
| | 08-23 | | 32 |
| | 08-26 | | 10 |
| | 08-26 | | 12 |
| | 08-26 | | 14 |
| | 08-26 | | 19 |
| | 08-55 | | 8 |
| | 08-57 | | 4 |
| | 09-10 | | |
| | 09-10 | | |
| | 09-38 | | 17 |
| | 09-38 | | 58 |
| 237-6008 | 05-02 | | 12 |
| | 05-02 | | 20 |
| | 05-02 | | 7 |
| | 05-02 | | 9 |
| | 06-21 | | 40 |
| | 08-07 | | 24 |
| | 08-07 | | 26 |
| | 08-08 | | 12 |
| | 08-08 | | 21 |
| | 08-08 | | 34 |
| | 08-08 | | 36 |
| | 08-08A | | 12 |
| | 08-08A | | 21 |
| | 08-09 | | 12 |
| | 08-09 | | 25 |
| | 08-09A | | 12 |
| | 08-09A | | 25 |
| | 08-25 | | 12 |
| | 08-25 | | 19 |
| | 08-55 | | 6 |
| 237-6010 | 03-01 | | 6A |
| | 06-10 | | 12 |
| | 06-10 | | 23 |
| | 08-01 | | 46 |
| | 08-01 | | 48 |

HTTP://WWW.MINNPARBACKHOEPARTS.COM




| Number | Figure | Sequence | Ref. | Number | Figure | Sequence | Ref. |
|---|---|---|---|---|---|---|---|
| 237-6010 | 08-03 | | 10 | 238-5243 | 08-63 | | 13 |
| | 08-04 | | 17 | 238-5270 | 06-26 | | 2 |
| | 08-04 | | 3 | 238-6121 | 06-06 | | 22A |
| | 08-05 | | 29 | | 06-13 | | 8A |
| | 08-05 | | 3 | | 06-14 | | 10 |
| | 08-05 | | 33 | | 06-26 | | 1A |
| | 08-06 | | 3 | | 06-30 | | 7A |
| | 08-07 | | 17 | 238-8217 | 06-20 | | 22 |
| | 08-07 | | 19 | 239306A1 | 09-02 | | 14 |
| | 08-09 | | 28 | 239406A1 | 09-03 | | 7 |
| | 08-09 | | 9 | 239606A1 | 06-14 | | 2 |
| | 08-09A | | 28 | 242459A1 | 08-24 | | 5 |
| | 08-09A | | 9 | | 08-24 | | 9 |
| | 08-10 | | 20 | 243084A1 | 09-23 | | 19 |
| | 08-10 | | 23 | 243298A1 | 08-24 | | 4 |
| | 08-11 | | 20 | 243300A1 | 08-24 | | 1 |
| | 08-11 | | 26 | 243398A1 | 08-24 | | 8 |
| | 08-12 | | 18 | 243404A1 | 08-24 | | 2 |
| | 08-12 | | 23 | 243679A2 | 08-24 | | 14 |
| | 08-13 | | 32 | 244109A1 | 06-19 | | 6 |
| | 08-13 | | 36 | 244790A1 | 09-26 | | 51 |
| | 08-14 | | 16 | | 09-27 | | 46 |
| | 08-14 | | 20 | 245258A1 | 04-09 | | 7 |
| | 08-26 | | 21 | 245423A1 | 09-10 | | 30 |
| | 08-27 | | 11 | 245466A1 | 09-28 | | 6 |
| | 09-38 | | 13 | | 09-28 | | 9 |
| 237-6012 | 08-01 | | 13 | | 09-29 | | 6 |
| | 08-01 | | 23 | | 09-29 | | 9 |
| | 08-01 | | 50 | | 09-30 | | 6 |
| | 08-02 | | 20 | | 09-30 | | 9 |
| | 08-08A | | 37 | | 09-31 | | 6 |
| | 08-09 | | 20 | | 09-32 | | 6 |
| | 08-09A | | 20 | | 09-32 | | 6 |
| | 08-09A | | 7 | | 09-32 | | 9 |
| | 08-10 | | 9 | | 09-32 | | 9 |
| | 08-11 | | 9 | | 09-33 | | 6 |
| | 08-12 | | 9 | | 09-34 | | 6 |
| | 08-13 | | 9 | | 09-34 | | 9 |
| | 08-14 | | 9 | | 09-35 | | 6 |
| | 08-23 | | 25 | | 09-35 | | 9 |
| | 08-23 | | 29 | 246151A1 | 08-24 | | 17 |
| | 08-23 | | 43 | 246158A1 | 08-24 | | 15 |
| | 09-10 | | 35 | 246526A1 | 04-04 | | 31A |
| 237-6014 | 08-29 | | 11 | 247546A1 | 06-30 | | 24A |
| | 08-29 | | 17 | 247550A1 | 06-30 | | 13 |
| 237-6016 | 08-01 | | 18 | 248-2373 | 09-46 | | 4 |
| | 08-01 | | 25 | 250663A1 | 09-24 | | 40 |
| | 08-01 | | 28 | 250851A1 | 09-05 | | 7 |
| | 08-02 | | 11 | | 09-08 | | 30 |
| | 08-02 | | 15 | 250854A1 | 04-06 | | 10 |
| | 08-02 | | 17 | 253209A1 | 09-48 | | 8 |
| | 08-02 | | 2 | 254409A1 | 02-03 | | 2 |
| | 08-02 | | 5 | 254686A2 | 06-12 | | 1 |
| | 08-02 | | 8 | 255447A1 | 09-71 | | 13 |
| | 08-03 | | 5 | 255659A1 | 08-09 | | 23 |
| 237-6020 | 08-03 | | 21 | | 08-09A | | 23 |
| 237-8008 | 06-26 | | | 256210A2 | 08-24 | | 14A |
| 237021A1 | 07-01 | | 1 | 256347A1 | 09-01 | | |
| 237022A1 | 07-01 | | 2 | | 09-02 | | |
| 237025A1 | 07-01 | | 21 | 256478A1 | 07-02 | | 13 |
| 237026A1 | 07-01 | | 11 | 256481A1 | 07-02 | | 14 |
| 237582A1 | 04-16 | | 1 | 256482A1 | 07-02 | | 17 |
| 238-5005 | 04-17 | | 8 | 256485A1 | 07-02 | | 18 |
| 238-5011 | 04-06A | | 5 | 256776A1 | 03-03 | | 5 |
| | 08-57 | | 5 | 258616A1 | 09-01 | | |
| 238-5013 | 06-21 | | 42 | | 09-02 | | |
| 238-5014 | 06-21 | | 41 | 259044A1 | 08-01 | | 1 |
| 238-5152 | 06-08 | | 10 | 259054A1 | 09-51 | | 15 |
| | 06-28 | | 11 | 259254A1 | 07-02 | | 24 |
| 238-5227 | 05-01 | | 3 | 260-1358 | 04-10 | | 14 |
| 238-5228 | 08-01 | | 7 | 260-1436 | 09-61 | | 16 |
| | 09-26 | | 38 | 261-14310 | 04-15 | | 11 |
| 238-5230 | 08-57 | | 9 | | 04-15 | | 4 |
| 238-5231 | 08-59 | | 9 | 27549R1 | 06-23 | | 2 |
| | 08-60 | | 10 | | 06-23 | | 2 |
| | 08-66 | | 8 | 276-2446 | 08-58 | | 11 |
| 238-5233 | 08-58 | | 9 | | 08-59 | | 11 |
| | 08-65 | | 11 | | 08-60 | | 12 |
| 238-5237 | 08-62 | | 9 | | 08-61 | | 11 |
| 238-5239 | 08-61 | | 9 | | 08-62 | | 11 |
| | 08-62 | | 23 | | 08-63 | | 15 |
| 238-5241 | 08-64 | | 11 | | 08-64 | | 13 |

HTTP://WWW.MINNPARBACKHOEPARTS.COM




| Number | Figure | Sequence | Ref. |
|---|---|---|---|
| 276-2446 | 08-65 | | 13 |
| | 08-66 | | 10 |
| 276-2456 | 08-56 | | 3 |
| 276-24924 | 03-01 | | 17 |
| 276-26512 | 04-18 | | 10 |
| 276498A1 | 04-13 | | |
| | 04-14 | | |
| 277800A1 | 02-01 | | 39 |
| 278316A2 | 04-10 | | 9 |
| 278328A1 | 04-07 | | 27 |
| 278532A1 | 06-16 | | 14 |
| 278533A1 | 06-16 | | 13 |
| 278534A1 | 06-12 | | 8 |
| 279039A1 | 06-16 | | 15 |
| 279223A1 | 04-14 | | 6 |
| 279224A1 | 04-14 | | 5 |
| 279265A2 | 04-14 | | 15 |
| 279482A1 | 09-53 | | 2A |
| | 09-69 | | 4 |
| 279645A1 | 07-02 | | |
| 279916A1 | 04-14 | | 16 |
| 280-16516 | 09-42 | | 12 |
| 280436A1 | 07-02 | | 3 |
| 280443A1 | 07-02 | | 25 |
| 280450A1 | 07-02 | | 20 |
| 280452A1 | 07-02 | | 21 |
| 280457A1 | 07-02 | | 22 |
| 280681A1 | 07-06 | | 9 |
| 281-14520 | 09-64 | | 9 |
| 281-14716 | 09-11 | | 17 |
| 281-18712 | 09-63 | | 26 |
| 281-54512 | 09-61 | | 23 |
| 281-54712 | 09-71 | | 4 |
| 281185A1 | 09-26 | | |
| | 09-27 | | |
| 281952A1 | 07-02 | | |
| 281960A1 | 07-02 | | 23 |
| 282-16512 | 04-18 | | 7 |
| 282033A1 | 06-01 | | 19 |
| 282038A2 | 06-01 | | 18 |
| 282242A1 | 03-03 | | 1 |
| 282428A1 | 05-02 | | 17 |
| | 08-26 | | 18 |
| 282496A1 | 08-01 | | 2 |
| 282775A1 | 04-09 | | |
| 2830082 | 02-09 | | 1 |
| 2830156 | 03-09 | | 2 |
| 2830266 | 03-09 | | 1 |
| 2830411 | 02-27 | | 8 |
| 2830433 | 02-26 | | 7 |
| 2830445 | 02-20 | | 2 |
| 2830775 | 02-17 | | 5 |
| 2830784 | 02-17 | | 7 |
| 2830905 | 02-27 | | 4 |
| 2830919 | 02-16 | | 15 |
| 2830934 | 02-27 | | 5 |
| 2830948 | 02-27 | | 3 |
| 2830952 | 02-26 | | 10 |
| | 02-27 | | |
| 2830953 | 02-26 | | 12 |
| 2831023 | 02-26 | | 9 |
| 2831031 | 02-26 | | 8 |
| 2831101 | 02-27 | | 6 |
| 283462A1 | 07-02 | | 6 |
| 283466A1 | 07-02 | | 19 |
| 283779A1 | 04-09 | | 22 |
| 283781A1 | 04-09 | | 23 |
| 284154A1 | 09-59 | | 10 |
| | 09-70 | | 8 |
| 286-56520 | 09-53 | | 11 |
| | 09-68 | | 29 |
| 29-1010 | 09-08 | | 14 |
| 29-1012 | 09-08 | | 5 |
| 291010A1 | 04-18 | | 6 |
| 292207A1 | 06-27 | | 12 |
| 292208A1 | 06-27 | | 13 |
| 292210A1 | 06-29 | | 3 |
| 292212A1 | 06-29 | | 4 |
| 292213A1 | 06-29 | | 1 |
| 292214A1 | 06-29 | | 6 |
| 292262A1 | 09-46 | | 2B |
| 292263A2 | 09-46 | | 2C |
| 292268A1 | 06-27 | | |
| 292385A1 | 09-23 | | 29 |
| 292890A1 | 06-27 | | 17 |
| 292902A1 | 06-29 | | 7 |
| 292969A2 | 09-10 | | |
| 293636A1 | 09-23 | | 34 |
| 294245A1 | 06-26 | | 26 |
| 294933A1 | 06-07 | | |
| 295111A1 | 07-01 | | 18 |
| 295112A1 | 07-01 | | 23 |
| 295113A1 | 07-01 | | 24 |
| 297280A1 | 08-59 | | 4 |
| 297281A1 | 08-60 | | 4 |
| | 08-66 | | 3 |
| 297615A1 | 09-02 | | 1 |
| 297952A1 | 08-64 | | 2 |
| 298176A1 | 09-01 | | |
| | 09-02 | | |
| 298521A1 | 09-77 | | 11 |
| 298614A1 | 06-21 | | 44 |
| 2992147 | 02-21 | | 4 |
| 2992148 | 02-21 | | 4 |
| 2992149 | 02-21 | | 4 |
| 2992153 | 02-21 | | 3 |
| 2992154 | 02-21 | | 3 |
| 2992155 | 02-21 | | 3 |
| 299324A1 | 06-21 | | 16 |
| 300030A1 | 04-19 | | 4 |
| 300588A1 | 09-27 | | 26 |
| 300659A1 | 09-51 | | 2 |
| 300661A1 | 09-51 | | 3 |
| 300664A1 | 09-51 | | 7 |
| 300665A1 | 09-51 | | 9 |
| 300667A1 | 09-51 | | 10 |
| 300669A1 | 09-52 | | 1 |
| 300670A1 | 09-51 | | 12 |
| 300672A1 | 09-51 | | 18 |
| 300674A1 | 09-51 | | |
| 300675A1 | 09-51 | | 19 |
| 300677A1 | 09-51 | | 21 |
| 300679A1 | 09-51 | | 22 |
| 300680A1 | 09-51 | | 20 |
| 300681A1 | 09-51 | | 23 |
| 300683A1 | 09-51 | | 24 |
| 300684A1 | 09-51 | | 25 |
| 300685A1 | 09-52 | | |
| 300688A1 | 09-52 | | 5 |
| 300689A1 | 09-52 | | 10 |
| 300690A1 | 09-52 | | |
| 300691A1 | 09-52 | | 12 |
| 300692A1 | 09-52 | | 14 |
| 300896A1 | 09-52 | | 20 |
| 300996A3 | 08-27 | | 3 |
| 301104A1 | 08-03 | | 9 |
| 301803R1 | 09-64 | | 20 |
| 302358A1 | 03-01 | | 3 |
| | 09-38 | | 3 |
| 302820A2 | 08-27 | | 5 |
| 303192A1 | 02-01 | | 36 |
| 303195A1 | 02-01 | | 42 |
| 303465A2 | 04-10 | | 10B |
| 303466A1 | 04-10 | | 10C |
| 303467A1 | 04-10 | | 10D |
| 303646A1 | 09-24 | | 41 |
| 304083A1 | 09-74 | | 7 |
| 304424A1 | 08-27 | | 9 |
| 304890A1 | 08-27 | | 10 |
| 305152A1 | 06-29 | | 2 |
| 305342A1 | 04-04 | | 35 |
| 305492A1 | 09-10 | | 16 |
| 305493A1 | 09-10 | | 18 |
| 305494A1 | 09-10 | | 17 |
| 305495A1 | 09-10 | | 9 |
| 305496A1 | 09-10 | | 7 |
| 305497A1 | 09-10 | | 3 |
| 305499A1 | 09-10 | | 8 |
| 305508A1 | 09-10 | | 21 |
| 30634 | 08-60 | | 14 |
| 307090A1 | 09-49 | | 4 |
| 307091A1 | 09-49 | | 3 |
| 307092A1 | 09-49 | | 8 |
| | 09-49 | | 8 |

HTTP://WWW.MINNPARBACKHOEPARTS.COM




| Number | Figure | Sequence | Ref. | Number | Figure | Sequence | Ref. |
|---|---|---|---|---|---|---|---|
| 307092A1 | 09-50 | | 1 | 336375A1 | 09-50 | | 14 |
| | 09-50 | | 1 | 338424A1 | 09-53 | | 4 |
| 307098A1 | 09-49 | | 6 | 338425A1 | 09-53 | | 3 |
| 307123A1 | 02-06A | | 16 | 338426A1 | 09-55 | | 5A |
| 307186A1 | 09-26 | | 11 | 338427A1 | 09-55 | | 5 |
| | 09-27 | | 19 | 338428A1 | 09-57 | | 3 |
| 307277A1 | 08-27 | | 17 | 338429A1 | 09-55 | | 4A |
| 307348A1 | 03-01 | | 39 | 338886A4 | 07-03 | | 35 |
| | 09-74 | | 12 | 339021A2 | 09-40 | | 2 |
| 307385A1 | 09-10 | | 22 | 339022A3 | 09-40 | | 1 |
| 307386A1 | 09-10 | | 23 | 339046A3 | 07-03 | | 34 |
| 307387A1 | 09-10 | | 24 | 339047A3 | 07-03 | | 33 |
| 307388A1 | 09-10 | | 25 | 339680A2 | 09-22 | | 25B |
| 307389A1 | 09-10 | | 26 | 340-12520 | 09-52 | | |
| 307577A1 | 03-01 | | 31 | 340997A3 | 09-44 | | 2 |
| | 09-38 | | 28 | 340998A3 | 09-44 | | 1 |
| 308029A1 | 07-01 | | 3 | 341564A2 | 09-04 | | 36 |
| 308030A1 | 07-01 | | 16 | 341743A3 | 09-55 | | |
| 308036A1 | 07-01 | | 12 | 341746A2 | 09-57 | | |
| 308040A1 | 07-02 | | 5 | 344892A1 | 09-04 | | 37 |
| 308042A1 | 07-01 | | 17 | 345-133 | 09-01 | | |
| 308254A1 | 08-27 | | 2 | | 09-02 | | |
| 308255A1 | 08-27 | | 1 | 345-49 | 09-38 | | 35 |
| 309674A1 | 08-27 | | 11A | 345-621 | 09-65 | | |
| 309747A1 | 06-11 | | | 345061A2 | 07-04 | | 2 |
| 310492A1 | 06-30 | | 18 | 345231A1 | 09-44 | | 3 |
| 310519A1 | 06-18 | | 8 | 345325A2 | 07-04 | | 3 |
| 310772A1 | 06-13 | | | 346583A1 | 06-26 | | 21 |
| | 06-13 | | 10B | 346584A1 | 06-26 | | 20 |
| | 06-14 | | | 347706A3 | 04-07 | | 7 |
| | 06-14 | | 14 | 347959A1 | 06-26 | | 23 |
| 311200A1 | 09-04 | | 27 | 347960A1 | 06-26 | | 24 |
| 311565A1 | 06-02 | | 11 | 348706A1 | 09-26 | | 46 |
| 311569A1 | 05-08 | | 1 | | 09-27 | | 30 |
| | 06-06 | | 1 | 348794A1 | 05-01 | | 18 |
| 3125705R1 | 04-17 | | 10 | | 05-03 | | |
| 313648A1 | 08-02 | | 3 | 349295A1 | 06-21 | | 39 |
| 314319A1 | 08-24 | | 27 | 350014A3 | 03-02 | | 11 |
| 314320A1 | 08-24 | | 28 | 352208A1 | 09-58 | | 11 |
| 315273A1 | 09-55 | | 12 | 352209A1 | 09-58 | | 13 |
| 315276A1 | 09-55 | | 11 | 352210A1 | 09-58 | | 15 |
| 317988A1 | 08-24 | | 30 | 352401A1 | 05-01 | | 7 |
| 321-1707 | 09-08 | | 29 | 352568A1 | 05-01 | | 6 |
| 321-1708 | 09-08 | | 23 | | 05-03 | | |
| | 09-73 | | 11 | 352569A4 | 05-01 | | 6A |
| 321-229 | 09-79 | | 8 | | 05-03 | | 10 |
| 321-230 | 09-79 | | 7 | 352727A1 | 05-01 | | 15 |
| 321-4311 | 09-72 | | 5 | | 05-01 | | 23 |
| 321-4614 | 09-76 | | 11 | 353-402 | 09-54 | | |
| 321-5675 | 09-78 | | 11 | | 09-68 | | 19 |
| 321-6376 | 09-79 | | 8A | 353-405 | 08-53 | | 10 |
| | 09-80 | | 8A | | 09-54 | | |
| | 09-81 | | 8A | 353-406 | 09-54 | | |
| 321-6774 | 09-79 | | 13 | 353-407 | 09-54 | | |
| 321-7030 | 09-76 | | 10 | 353-408 | 09-54 | | |
| 321-7040 | 09-79 | | 4 | 353-410 | 09-54 | | |
| 321183A1 | 07-02 | | 12 | | 09-64 | | 26 |
| 321428A1 | 06-22 | | 8 | | 09-68 | | |
| 322357 | 04-06A | | 19 | 353-411 | 09-11 | | 5 |
| 322860A1 | 03-03 | | 4 | 353-415 | 09-54 | | |
| 3233348R1 | 09-15 | | 36 | 353-421 | 09-54 | | |
| | 09-56 | | 8 | | 09-68 | | 22 |
| 3234063R1 | 09-55 | | 25 | 353-422 | 09-42 | | 7 |
| 324213A1 | 05-08 | | 2 | 353-425 | 09-54 | | |
| 325465A2 | 08-07 | | 22 | 353068A2 | 04-11 | | 18 |
| 326-640 | 09-10 | | 6 | 353103A1 | 08-07 | | 5A |
| 326348A1 | 07-06 | | 16 | 353167A1 | 08-07 | | 5 |
| 326806A1 | 09-23 | | 1 | 355197A2 | 04-11 | | 2 |
| | 09-24 | | 1 | 355198A2 | 04-11 | | 1A |
| 326865A1 | 06-19 | | 13 | 355827A2 | 04-10 | | 1 |
| 328186A1 | 06-10 | | 14 | 355984A2 | 09-42 | | 1 |
| | 06-10 | | 21 | 356743A1 | 08-07 | | 12 |
| | 08-03 | | 11 | 357099A1 | 09-68 | | 15 |
| 329032A1 | 04-13 | | 3 | 357100A1 | 09-68 | | 16 |
| 329797A1 | 08-23 | | 5 | 357278A1 | 04-08 | | 17 |
| 329799A1 | 08-23 | | 4 | 357469A1 | 08-11 | | 16 |
| 329998A1 | 09-23 | | 4 | 357470A1 | 08-12 | | 16 |
| 331620A1 | 09-05 | | 2 | | 08-13 | | 34 |
| 331621A1 | 09-05 | | 1 | 357471A1 | 08-10 | | 24 |
| 334724A1 | 06-21 | | 30 | 357540A1 | 04-14 | | 7 |
| 334725A1 | 06-21 | | 32 | 357541A1 | 04-14 | | 8 |
| 335640A2 | 06-21 | | | 357966A1 | 04-08 | | 16 |

HTTP://WWW.MINNPARBACKHOEPARTS.COM




| Number | Figure | Sequence | Ref. | Number | Figure | Sequence | Ref. |
|---|---|---|---|---|---|---|---|
| 358212A1 | 07-01 | | | 366235A1 | 06-20 | | 12 |
| 358279A1 | 06-26 | | 12 | 366236A1 | 06-20 | | 14 |
| 358280A1 | 06-26 | | 11 | 366366A1 | 06-19 | | 27 |
| 358282A1 | 06-19 | | 19 | 366632A2 | 04-11 | | 21 |
| 358283A1 | 06-19 | | 28 | 366633A3 | 04-11 | | 25 |
| 358286A1 | 06-30 | | 23 | 366889A2 | 04-07 | | 28 |
| 358632A1 | 06-18 | | 7 | 366910A1 | 06-22 | | 9 |
| 358633A1 | 06-18 | | 6 | 367175A1 | 06-26 | | 4 |
| 358635A1 | 06-18 | | 4 | 367184A1 | 06-27 | | |
| 358636A1 | 06-17 | | 2 | | 06-27 | | |
| 358637A1 | 06-18 | | 15 | 367352A1 | 08-07 | | 5B |
| 358638A1 | 06-18 | | 21 | 367704A4 | 09-61 | | 1 |
| 358639A1 | 06-19 | | 29 | 367705A6 | 09-61 | | |
| 358640A1 | 06-18 | | 10 | 367712A3 | 09-68 | | 13 |
| 358641A1 | 06-18 | | 16 | 367848A2 | 09-74 | | 13 |
| 358642A1 | 06-18 | | 19 | 367860A3 | 06-11 | | 35 |
| 358643A1 | 06-18 | | 18 | | 06-31 | | |
| 358644A1 | 06-18 | | 17 | 367861A2 | 06-01 | | 11 |
| 358645A1 | 06-18 | | 1 | | 06-09 | | |
| | 06-20 | | 7 | 367977A1 | 07-06 | | |
| 358646A1 | 06-17 | | 4 | 368146A1 | 09-55 | | 46 |
| 358647A1 | 06-19 | | 16 | | 09-57 | | 26 |
| 358648A1 | 06-19 | | 4 | 368147A1 | 09-55 | | 40 |
| 358649A1 | 06-19 | | 3 | | 09-57 | | 17 |
| 358650A1 | 06-19 | | 3A | 368417A1 | 09-45 | | 9 |
| 358651A1 | 06-19 | | 3A | 368436A1 | 06-21 | | 16A |
| 358652A1 | 06-19 | | 3A | 368437A2 | 06-21 | | |
| 358653A1 | 06-19 | | 27 | 368438A2 | 06-21 | | |
| 358654A1 | 06-19 | | 18A | 368801A2 | 09-64 | | 10 |
| 358655A1 | 06-18 | | 31 | 368805A1 | 09-63 | | 7 |
| | 06-19 | | 18B | 368807A1 | 09-63 | | 13 |
| 358656A1 | 06-19 | | 18 | 368809A1 | 09-54 | | 22 |
| 359653A1 | 07-01 | | 13 | 368813A2 | 09-61 | | 4 |
| 360046A1 | 09-57 | | 1 | 368818A1 | 09-63 | | 29 |
| 360242A2 | 04-10 | | 10A | 368821A1 | 09-63 | | 18 |
| 360243A2 | 04-10 | | 11 | 368990A1 | 09-62 | | 6 |
| 360244A1 | 04-10 | | 4 | 369249A1 | 09-63 | | 9 |
| 360245A2 | 04-10 | | 8 | 369372A1 | 08-55 | | 3 |
| 360246A3 | 09-54 | | 16 | 369450A1 | 09-61 | | 15 |
| 360247A3 | 09-54 | | 15 | 370381A1 | 09-65 | | 14 |
| 360250A2 | 04-11 | | 1 | 370755A1 | 04-12 | | 1 |
| 360251A3 | 09-63 | | 6 | 370756A1 | 04-12 | | 2 |
| 360252A2 | 09-62 | | 5 | 370760A1 | 04-12 | | 5 |
| 360253A3 | 09-63 | | 8 | 371031A1 | 08-05 | | 26 |
| 360254A3 | 09-63 | | 10 | 372167A3 | 04-11 | | 1B |
| 360255A1 | 09-63 | | 14 | 373689A2 | 04-10 | | 10 |
| 360256A1 | 09-65 | | 15 | 373693A1 | 04-10 | | 10E |
| 360257A1 | 09-65 | | 7 | 373698A2 | 09-73 | | 8 |
| 360260A2 | 09-62 | | 1 | 373699A2 | 09-73 | | 9 |
| 360261A1 | 09-62 | | 3 | 373995A1 | 09-63 | | |
| 360262A2 | 09-64 | | 1 | 375112A1 | 04-11 | | 26 |
| 360263A4 | 09-65 | | 1 | 375392A1 | 09-63 | | 28 |
| 360266A2 | 09-54 | | 3 | 376286A2 | 09-08 | | |
| 360267A3 | 09-54 | | 2 | 376332A1 | 09-55 | | 38 |
| 360272A6 | 09-61 | | | | 09-57 | | 15 |
| 360867A1 | 09-36 | | 1 | 376334A1 | 09-55 | | 36 |
| 361776A1 | 09-38 | | 23 | | 09-57 | | 13 |
| 361900A1 | 04-07 | | 9 | 376336A1 | 09-55 | | 37 |
| 362340A6 | 09-41 | | 1 | | 09-57 | | 14 |
| 362556A2 | 09-45 | | 2 | 376384A1 | 09-30 | | 1 |
| 362557A1 | 09-45 | | 1 | 376385A1 | 09-32 | | 1 |
| 362558A1 | 09-45 | | 3 | 376386A1 | 09-34 | | 1 |
| 362607A1 | 09-40 | | 4 | 376528A4 | 09-08 | | |
| 362609A1 | 09-40 | | 3 | 377194A1 | 09-61 | | 9 |
| 362930A2 | 04-08 | | 7 | 377222A1 | 09-64 | | 4 |
| 363832A5 | 09-65 | | | 377230A3 | 09-63 | | 27 |
| 363883A1 | 09-61 | | 10 | 377594A5 | 09-61 | | 13 |
| 364132A2 | 09-55 | | 28A | 378227A1 | 09-54 | | 5 |
| 364133A2 | 09-55 | | 30A | 378742A3 | 09-43 | | 19 |
| 364134A2 | 09-55 | | 28 | | 09-43 | | 27 |
| | 09-57 | | 7 | | 09-43 | | 9A |
| 364135A2 | 09-55 | | 30 | 378955A1 | 03-03 | | 8A |
| | 09-57 | | 8 | 378956A3 | 03-03 | | 15 |
| 364180A1 | 09-54 | | 10 | 378957A3 | 03-02 | | 17 |
| | 09-68 | | 24 | 378958A1 | 03-03 | | 13 |
| 365309A1 | 08-13 | | 14 | 378960A1 | 03-03 | | 3 |
| 365328A1 | 09-32 | | 1 | 379160A1 | 09-61 | | 5 |
| 365789A1 | 09-63 | | 20 | 379161A1 | 09-61 | | 6 |
| 366230A1 | 06-20 | | 13 | 379209A1 | 09-61 | | 7 |
| 366231A1 | 06-20 | | 18 | 379314A4 | 06-11 | | 6 |
| 366232A1 | 06-20 | | 15 | 379424A2 | 09-54 | | 3A |
| 366234A1 | 06-20 | | 11 | 379425A3 | 09-54 | | 2A |

HTTP://WWW.MINNPARBACKHOEPARTS.COM




| Number | Figure | Sequence | Ref. |
|---|---|---|---|
| 379846A1 | 05-01 | | 14 |
| | 05-01 | | 22 |
| 379941A1 | 09-25 | | 1 |
| | 09-25A | | 1 |
| 380021A1 | 03-03 | | 21 |
| 380483A2 | 03-03 | | 12 |
| 380537A2 | 06-11 | | 13 |
| 380719A2 | 09-61 | | |
| 380807A4 | 09-38 | | 47 |
| 381111A2 | 09-63 | | 25 |
| 381113A2 | 09-63 | | 24 |
| 381261A1 | 04-05 | | 13 |
| 381442A1 | 05-04 | | 12 |
| | 06-01 | | 31 |
| 381488A4 | 09-28 | | 1 |
| 381659A1 | 04-18 | | 5 |
| 381696A5 | 09-61 | | 2 |
| 381926A1 | 09-41 | | 22 |
| 381927A1 | 09-41 | | 20 |
| 381972A1 | 09-61 | | 14 |
| 382202A2 | 09-38 | | 52 |
| 382298A1 | 09-54 | | 21 |
| | 09-68 | | 30 |
| 382664A2 | 04-18 | | 1 |
| 382770A2 | 09-62 | | 2 |
| 382775A1 | 09-55 | | 23A |
| 382777A1 | 09-55 | | 23 |
| 383619R1 | 04-05 | | 5 |
| 383794A2 | 09-63 | | 22 |
| 383795A2 | 09-63 | | 23 |
| 383972A1 | 09-76 | | 6 |
| 384240A1 | 08-04 | | 18 |
| | 08-58 | | 1 |
| | 09-04 | | 9 |
| 384241A1 | 08-58 | | 2 |
| 384258A1 | 09-79 | | 6 |
| 384260A1 | 09-79 | | 9 |
| 384264A1 | 09-76 | | 1 |
| 384265A1 | 09-79 | | 2 |
| 384267A1 | 09-79 | | 3 |
| 384269A1 | 09-79 | | 5 |
| 384769A1 | 06-19 | | 14 |
| 384773A1 | 06-19 | | 9 |
| 384815A1 | 09-23 | | 32 |
| 384930A2 | 09-74 | | 1 |
| 384931A2 | 09-74 | | 2 |
| 384952A1 | 06-24 | | 1 |
| | 06-26 | | |
| | 06-27 | | |
| | 06-28 | | |
| | 06-29 | | |
| | 06-30 | | |
| | 07-01 | | |
| | 07-02 | | |
| 385506A1 | 09-68 | | 12 |
| 385588A1 | 09-06 | | |
| | 09-06 | | |
| 385614A4 | 04-11 | | 31 |
| 386092A2 | 09-23 | | 16 |
| 386368A2 | 04-11 | | 29 |
| 386369A2 | 04-11 | | 28 |
| 386502A1 | 04-11 | | |
| 386535A1 | 09-65 | | 2 |
| 386718A3 | 09-59 | | 9 |
| | 09-70 | | 13 |
| 386720A1 | 09-59 | | 23 |
| 386722A1 | 09-59 | | 21 |
| 386785A1 | 04-07 | | 22 |
| | 09-59 | | 26 |
| | 09-60 | | |
| | 09-70 | | 6 |
| 386786A1 | 04-09 | | 19 |
| | 09-59 | | 28 |
| | 09-60 | | |
| 386787A1 | 04-07 | | 23 |
| | 09-59 | | 27 |
| | 09-70 | | 7 |
| 386788A1 | 04-09 | | 18 |
| | 09-59 | | 29 |
| 386849A1 | 04-07 | | 18 |
| 386850A1 | 04-07 | | 19 |
| 386851A1 | 04-07 | | 20 |
| 386851A1 | 04-17 | | 15 |
| 386852A2 | 04-09 | | 17 |
| 386927A1 | 04-18 | | 9 |
| 387019A1 | 09-04 | | 6 |
| 387897R91 | 05-09 | | 3 |
| | 05-09 | | 6 |
| 388053A2 | 04-12 | | 6 |
| 388116A2 | 05-01 | | 8 |
| 388712A2 | 08-55 | | 9 |
| 388713A1 | 08-55 | | |
| 388762A1 | 09-64 | | 7 |
| 388843A1 | 09-29 | | 1 |
| 388848A1 | 09-08 | | 24 |
| 388876A6 | 08-55 | | 2 |
| 388881A1 | 08-55 | | 4 |
| 389402A1 | 09-64 | | 8 |
| 389487A1 | 04-07 | | 13 |
| 389541A1 | 08-55 | | 12 |
| 389729A1 | 09-77 | | 6 |
| 389730A1 | 09-78 | | 6 |
| 390-100 | 09-55 | | 21 |
| 390029A1 | 06-05 | | 2 |
| 390255A2 | 04-11 | | 15A |
| 390258A1 | 04-11 | | |
| | 04-11 | | |
| 390551A2 | 09-42 | | 10 |
| 390601A5 | 09-54 | | 13 |
| 390602A1 | 09-54 | | 14 |
| 390690A1 | 09-11 | | 4 |
| 390758A1 | 09-11 | | 3 |
| 390759A1 | 09-11 | | 1 |
| 390760A1 | 09-11 | | 2 |
| 390838A1 | 09-55 | | 2A |
| 390840A1 | 09-55 | | 27A |
| 390841A1 | 09-55 | | 29A |
| 391818A2 | 04-11 | | 15 |
| 391827A1 | 09-53 | | 8 |
| | 09-55 | | 19 |
| | 09-55 | | 6 |
| | 09-57 | | 4 |
| | 09-69 | | 2 |
| 391838A1 | 09-55 | | 14 |
| 391841A1 | 09-55 | | 18A |
| 391842A1 | 09-55 | | 20A |
| 391843A1 | 09-55 | | 32 |
| 391845A1 | 09-55 | | 31 |
| | 09-57 | | 10A |
| 391847A1 | 09-55 | | 13 |
| 391848A1 | 09-55 | | 15 |
| 391849A1 | 09-55 | | 41 |
| | 09-57 | | 18 |
| 391850A1 | 09-55 | | 3A |
| 392353A1 | 04-08 | | 8 |
| 392374A1 | 09-76 | | 13 |
| 392375A1 | 09-79 | | 1 |
| 392828A2 | 09-41 | | 16 |
| | 09-41 | | 18 |
| 392930A1 | 09-68 | | 8 |
| 393161A1 | 09-38 | | 19 |
| 393202A1 | 09-55 | | 17 |
| 393203A1 | 09-55 | | 16 |
| 393209A1 | 09-55 | | 22 |
| 393211A1 | 09-56 | | 5 |
| 393231A1 | 06-09 | | |
| | 06-31 | | |
| 393233A1 | 06-31 | | 6 |
| 393234A1 | 06-09 | | 6 |
| 393330A1 | 09-57 | | 10 |
| 393354A1 | 08-14 | | 10 |
| 393357A1 | 08-14 | | 11 |
| 393360A1 | 08-12 | | 21 |
| 393361A1 | 08-13 | | 16 |
| 393362A1 | 08-13 | | 17 |
| 393369A1 | 08-10 | | 18 |
| 393371A1 | 08-11 | | 17 |
| 393623A1 | 09-42 | | 8 |
| 393826A1 | 06-26 | | 19 |
| 394329A1 | 09-75 | | 3 |
| 394585A3 | 09-55 | | |
| 394700A1 | 09-55 | | 4 |
| 394701A1 | 09-55 | | 27 |
| | 09-57 | | 5 |

HTTP://WWW.MINNPARBACKHOEPARTS.COM




| Number | Figure | Sequence | Ref. | Number | Figure | Sequence | Ref. |
|---|---|---|---|---|---|---|---|
| 394702A1 | 09-55 | | 29 | 398113A1 | 09-43 | | 3 |
| | 09-57 | | 6 | 398380A3 | 04-14 | | 12 |
| 394704A1 | 09-55 | | 18 | 398570A1 | 09-80 | | 6 |
| 394705A1 | 09-55 | | 20 | 398571A1 | 09-81 | | 6 |
| 394707A1 | 09-55 | | 2 | 398572A1 | 09-80 | | 9 |
| 394708A1 | 09-55 | | 3 | 398573A1 | 09-81 | | 9 |
| 394800A1 | 09-56 | | 7 | 398576A1 | 09-77 | | 1 |
| 394863A1 | 04-14 | | 9 | 398577A1 | 09-78 | | 1 |
| | 09-54 | | 17 | 398578A1 | 09-80 | | 2 |
| 394864A1 | 09-57 | | 2 | 398579A1 | 09-81 | | 2 |
| 394865A1 | 09-57 | | 9 | 398580A1 | 09-80 | | 3 |
| 395026A1 | 09-60 | | 9 | 398581A1 | 09-81 | | 3 |
| 395033A1 | 09-60 | | 8 | 398582A1 | 09-80 | | 5 |
| 395136A1 | 09-60 | | 6 | 398583A1 | 09-81 | | 5 |
| 395189A2 | 03-02 | | 1 | 398598A1 | 09-77 | | 13 |
| 395344A1 | 06-11 | | 39 | 398599A1 | 09-78 | | 13 |
| 395348A1 | 09-58 | | 12 | 398600A1 | 09-80 | | 1 |
| | 09-58 | | 14 | 398601A1 | 09-81 | | 1 |
| 395387A1 | 09-54 | | 18 | 398654A1 | 09-81 | | 11 |
| 395388A1 | 09-54 | | 19 | 398656A1 | 09-81 | | 10 |
| 395389A1 | 09-60 | | 10 | 398658A1 | 09-76 | | 5 |
| 395478A3 | 09-68 | | 3 | | 09-77 | | 5 |
| 395793A1 | 09-53 | | 9 | | 09-78 | | 5 |
| | 09-69 | | 7 | 398662A1 | 09-77 | | 7 |
| 395910A2 | 09-73 | | 10 | 398663A1 | 09-78 | | 7 |
| 396-41028 | 09-01 | | 16 | 398665A1 | 09-80 | | 8 |
| | 09-01 | | 31 | 398666A1 | 09-81 | | 8 |
| | 09-02 | | 31 | 398667A1 | 09-80 | | 7 |
| | 09-18 | | 23 | 398668A1 | 09-81 | | 7 |
| 396018A2 | 04-14 | | 13 | 398669A1 | 09-80 | | 11 |
| | 09-60 | | | 398670A1 | 09-80 | | 13 |
| 396023A2 | 04-13 | | 10 | 398671A1 | 09-81 | | 13 |
| 396092A1 | 09-25 | | 10 | 398672A1 | 09-77 | | 10 |
| | 09-25A | | 10 | 398673A1 | 09-78 | | 10 |
| 396339A1 | 08-12 | | 16 | 398674A1 | 09-80 | | 4 |
| | 08-13 | | 34 | 398675A2 | 04-07 | | 24 |
| 396422A2 | 08-55 | | 10 | | 08-26 | | 34 |
| 396483A1 | 09-27 | | 55 | 398676A1 | 09-81 | | 4 |
| 396516A1 | 09-54 | | 12 | 398677A1 | 09-80 | | 10 |
| | 09-61 | | 3 | 398738A1 | 09-62 | | 4 |
| | 09-68 | | 26 | 398846A3 | 04-13 | | 5 |
| 396605A1 | 09-40 | | 30 | | 04-14 | | 1 |
| 396620A2 | 07-04 | | 17 | 398847A3 | 04-13 | | 8 |
| 396841A1 | 09-56 | | 3 | | 04-14 | | 2 |
| | 09-57 | | 29 | 398986A1 | 09-63 | | 30 |
| 396938A3 | 09-68 | | 2 | 399004A1 | 03-01 | | 21 |
| 397025A2 | 09-43 | | 21 | | 08-21 | | |
| 397026A3 | 09-43 | | 2 | 399757A1 | 09-49 | | 1 |
| 397064A1 | 09-56 | | 1 | 399758A1 | 09-49 | | 2 |
| | 09-57 | | 27 | 399759A1 | 09-49 | | 1A |
| 397065A2 | 03-03 | | 22 | 399760A1 | 09-49 | | 2A |
| 397076A1 | 07-04 | | 9 | 399764A1 | 09-50 | | 11 |
| 397080A1 | 08-63 | | 2 | 399777A1 | 09-47 | | 3 |
| 397132A1 | 09-46 | | 1 | 399959A2 | 09-38 | | 26 |
| | 09-47 | | | 399963A1 | 08-07 | | |
| | 09-48 | | | 400069A1 | 09-12 | | 10 |
| 397134A2 | 09-46 | | 2A | 400077A1 | 09-43 | | |
| | 09-49 | | | | 09-43 | | |
| | 09-50 | | | 400200A1 | 09-58 | | 5 |
| 397136A2 | 09-46 | | 2A | 400280A1 | 09-64 | | 11 |
| | 09-49 | | | 400282A1 | 09-64 | | 2 |
| | 09-50 | | | 400296A2 | 08-55 | | 11 |
| 397137A1 | 09-46 | | 2 | 400379A1 | 04-09 | | 9 |
| | 09-51 | | | | 09-64 | | 5 |
| | 09-52 | | | | 09-65 | | 14A |
| 397177A2 | 07-04 | | 16 | 400398A1 | 09-26 | | 48 |
| 397309A3 | 08-01 | | 29 | | 09-27 | | 32 |
| 397548A4 | 03-01 | | 40 | 400494A1 | 09-58 | | 16 |
| 397569A1 | 04-09 | | 5 | 400571A2 | 09-53 | | 20 |
| 397570A1 | 04-09 | | 6 | 400572A1 | 09-53 | | 19 |
| 397653A1 | 06-03 | | 1 | 400573A1 | 09-53 | | 16 |
| 397654A1 | 06-03 | | 2 | 400588A2 | 06-11 | | 7 |
| 397774A3 | 09-43 | | 12A | 400657A1 | 08-55 | | 13 |
| 397786A1 | 08-10 | | 11 | 400837A1 | 09-51 | | 4 |
| 397787A1 | 08-11 | | 21 | 400838A1 | 09-51 | | 5 |
| 397788A1 | 08-12 | | 10 | 400981A1 | 09-51 | | 1 |
| 397870A3 | 09-11 | | 15A | 401052A1 | 05-06 | | |
| 397876A1 | 04-08 | | 13 | 401054A1 | 05-06 | | 3 |
| 397911A1 | 09-12 | | 16 | 401055A1 | 05-06 | | 7 |
| 397990A1 | 04-07 | | 29 | | 05-07 | | 1 |
| 398113A1 | 09-43 | | 12B | 401059A1 | 05-06 | | 13 |
| | 09-43 | | 21A | 401060A1 | 05-06 | | 14 |

HTTP://WWW.MINNPARBACKHOEPARTS.COM




| Number | Figure | Sequence | Ref. |
|---|---|---|---|
| 401061A1 | 05-07 | | 4 |
| 401062A1 | 05-07 | | 3 |
| 401063A1 | 05-07 | | 5 |
| 401064A1 | 05-07 | | 6 |
| 401065A1 | 05-08 | | 3 |
| 401066A1 | 05-08 | | 4 |
| 401067A1 | 05-08 | | 5 |
| 401457A1 | 09-73 | | 2 |
| 401458A1 | 09-73 | | 3 |
| 401459A2 | 09-73 | | 4 |
| 401460A2 | 09-73 | | 5 |
| 401462A1 | 09-73 | | 1 |
| 401466A1 | 09-73 | | 1A |
| 401949A1 | 09-54 | | 4 |
| 402359A1 | 06-03 | | 4 |
| 402610A1 | 09-54 | | 20 |
| 402836A1 | 09-58 | | 28 |
| 402843A1 | 09-58 | | 25 |
| 402844A1 | 09-58 | | 27 |
| 402845A1 | 09-58 | | 32 |
| 402846A1 | 09-58 | | 21 |
| 402847A1 | 09-58 | | 18 |
| 402933A1 | 09-71 | | 1 |
| 402934A1 | 09-71 | | 2 |
| 402935A1 | 09-71 | | 5 |
| 402936A1 | 09-71 | | 3 |
| 403193A1 | 09-63 | | 36 |
| 403225A1 | 09-63 | | 35 |
| 403271A1 | 09-62 | | 9 |
| 403948A1 | 09-58 | | 1 |
| 404226A1 | 09-58 | | 6 |
| 404227A1 | 09-58 | | 9 |
| 404228A1 | 09-58 | | 4 |
| 404229A1 | 09-58 | | 7 |
| 404617A1 | 04-13 | | 12 |
| | 04-14 | | 10 |
| | 09-60 | | |
| | 09-70 | | |
| 404816A1 | 04-07 | | 14 |
| 404834A1 | 09-24 | | 43 |
| | 09-27 | | 5 |
| 404835A1 | 09-24 | | 44 |
| | 09-27 | | 6 |
| 405738A1 | 09-53 | | 15 |
| 405739A1 | 09-53 | | 14 |
| 405740A1 | 09-53 | | 13 |
| 405741A1 | 09-53 | | 17 |
| 405742A1 | 09-53 | | 18 |
| 406287A1 | 09-64 | | 19 |
| | 09-65 | | 5 |
| 406700A1 | 09-47 | | 9 |
| 406723A1 | 09-74 | | 15 |
| 407009A2 | 09-73 | | 6 |
| 407010A2 | 09-73 | | 7 |
| 407660A1 | 04-11 | | 8A |
| 407962A1 | 02-01 | | 11 |
| | 04-06A | | 4 |
| 408398A1 | 09-22 | | 25A |
| 408405A1 | 09-22 | | 35 |
| 408535A1 | 04-06 | | 12 |
| 408757A1 | 08-01 | | 32 |
| 408965A1 | 09-59 | | 15A |
| 408966A1 | 09-59 | | 15 |
| 409025A1 | 08-55 | | 5 |
| 409318A1 | 07-04 | | 18 |
| 409370A1 | 07-03 | | 38 |
| 409472A1 | 03-01 | | 4A |
| | 09-38 | | 4A |
| 409618A1 | 09-54 | | 11 |
| | 09-68 | | 25 |
| 409672A1 | 09-18 | | 4 |
| 409673A1 | 09-18 | | 5 |
| 409690A1 | 09-58 | | 30 |
| 409723A1 | 09-61 | | 18A |
| 410561A1 | 06-11 | | 44 |
| 410867A1 | 09-58 | | 2 |
| 411049A1 | 09-75 | | 2 |
| 411074A1 | 09-42 | | 16 |
| 411399A1 | 09-54 | | 25 |
| 411549A1 | 09-68 | | 21 |
| 411668A1 | 09-08 | | |
| 411844A1 | 09-58 | | |
| 411845A1 | 09-58 | | |
| 411846A1 | 09-58 | | |
| 411847A1 | 09-58 | | |
| 411848A1 | 09-58 | | |
| 411849A1 | 09-58 | | |
| 411850A1 | 09-58 | | |
| 411851A1 | 09-58 | | |
| 411892A1 | 09-37 | | 14 |
| 411908A1 | 09-58 | | 22 |
| 411909A1 | 09-58 | | 19 |
| 411910A1 | 09-58 | | 24 |
| 411911A1 | 09-58 | | 31 |
| 411912A1 | 09-58 | | 33 |
| 411914A1 | 09-58 | | 29 |
| 411916A1 | 09-58 | | 20 |
| 411917A1 | 09-58 | | 17 |
| 412285A1 | 09-54 | | 23 |
| 412510A1 | 04-11 | | 40 |
| 413-1228 | 09-22 | | 18 |
| 413-412 | 09-71 | | 11 |
| 413-516 | 09-10 | | 11 |
| | 09-71 | | 7 |
| 413-528 | 09-15 | | 22 |
| 413-624 | 09-19 | | 12 |
| 413-628 | 09-01 | | 19 |
| 413-632 | 09-02 | | 10 |
| | 09-02 | | 27 |
| 413054A1 | 04-11 | | 36 |
| 413778A1 | 08-23 | | 9 |
| 413870A1 | 07-03 | | 27 |
| 414-724 | 09-46 | | 14 |
| | 09-46 | | 22 |
| 414033A1 | 04-10 | | 18 |
| 414034A1 | 04-10 | | 17 |
| 414071A1 | 04-11 | | 39 |
| 414092A1 | 04-11 | | 38 |
| 414174A1 | 04-08 | | 21 |
| 414426A1 | 09-60 | | 5 |
| | 09-70 | | 3 |
| 414572A1 | 04-10 | | 16 |
| 414600A1 | 09-61 | | 17 |
| 414939A1 | 09-54 | | 24 |
| 418789A1 | 08-05 | | 13 |
| 418791A1 | 08-05 | | 14 |
| 420-21232 | 09-06 | | 9 |
| | 09-06 | | 9 |
| 425-1012 | 09-22 | | 19 |
| 425-105 | 07-03 | | 21 |
| 425-106 | 04-08 | | 2 |
| | 04-08 | | 20 |
| | 09-01 | | 21 |
| | 09-19 | | 13 |
| | 09-59 | | 12 |
| | 09-70 | | 10 |
| 425-1110 | 09-18 | | 16 |
| 425-115 | 09-03 | | 6 |
| | 09-15 | | 19 |
| 425-116 | 09-01 | | 22 |
| | 09-02 | | 26 |
| | 09-02 | | 38 |
| | 09-16 | | 36 |
| | 09-19 | | 5 |
| 425-118 | 09-16 | | 10 |
| | 09-17 | | 3 |
| | 09-18 | | 7 |
| | 09-21 | | 7 |
| 425-147 | 09-58 | | |
| | 09-60 | | |
| 425-156 | 07-03 | | 5 |
| | 07-06 | | 17 |
| | 09-16 | | 27 |
| | 09-16 | | 47 |
| | 09-17 | | 9 |
| | 09-20 | | 9 |
| | 09-21 | | 16 |
| 427-3058 | 03-02 | | 15 |
| | 03-03 | | 18 |
| 427-5094 | 09-15 | | 13 |
| | 09-25 | | 13 |
| | 09-25A | | 13 |
| 427-6088 | 09-16 | | 25 |
| | 09-17 | | 7 |

HTTP://WWW.MINNPARBACKHOEPARTS.COM




| Number | Figure | Sequence | Ref. | Number | Figure | Sequence | Ref. |
|---|---|---|---|---|---|---|---|
| 427-6088 | 09-20 | | 7 | 4890833 | 02-14 | | 8 |
| 427-6100 | 09-04 | | 33 | 4890964 | 03-09 | | 4 |
| 427107A1 | 06-02 | | 1 | 4891209 | 02-13 | | 5 |
| 429-1012 | 09-06 | | 10 | | 02-27 | | 7 |
| | 09-06 | | 10 | 4891252 | 02-35 | | 1 |
| | 09-07 | | 10 | 4891353 | 02-09 | | 6 |
| 429230A1 | 05-05 | | 1 | 4892707 | 02-22 | | 3 |
| 429231A1 | 05-06 | | 1 | 4892708 | 02-22 | | 2 |
| 429232A1 | 05-06 | | 2 | 4892712 | 02-23 | | 2 |
| 430471A1 | 04-11 | | 37 | 4892713 | 02-23 | | 3 |
| 431583A1 | 09-68 | | 31 | 4892774 | 02-34 | | 2 |
| 431584A1 | 09-68 | | 32 | 4892836 | 02-27 | | 1 |
| 431801A1 | 09-53 | | 21 | 4892859 | 02-16 | | 2 |
| 432-48 | 03-02 | | 10 | 4892860 | 02-18 | | 4 |
| | 03-02 | | 16 | 4892861 | 02-16 | | 1 |
| | 03-03 | | 19 | 4892867 | 02-25 | | 2 |
| 432-612 | 07-03 | | 8 | 4893386 | 02-21 | | 2 |
| | 07-06 | | 18 | 4893391 | 02-34 | | 8 |
| | 07-06 | | 3 | 4893518 | 03-06 | | 6 |
| | 09-01 | | 27 | 4894095 | 03-10 | | 4 |
| | 09-02 | | 37 | 4894139 | 02-11 | | 6 |
| | 09-03 | | 5 | 4894218 | 02-10 | | 1 |
| | 09-04 | | 34 | 4894641 | 02-24 | | 3 |
| | 09-15 | | 14 | 4894721 | 03-09 | | 5 |
| | 09-16 | | 26 | 4894774 | 03-06 | | 1 |
| | 09-16 | | 38 | 4895038 | 02-09 | | 4 |
| | 09-16 | | 49 | 4895039 | 02-09 | | 3 |
| | 09-17 | | 8 | 4895040 | 02-09 | | 7 |
| | 09-19 | | 4 | 4895043 | 02-34 | | 3 |
| | 09-20 | | 12 | 4895045 | 02-34 | | 5 |
| | 09-20 | | 8 | 4895049 | 02-10 | | 8 |
| | 09-21 | | 12 | 4895078 | 02-16 | | 16 |
| | 09-25 | | 14 | 4895079 | 02-14 | | 14 |
| | 09-25A | | 14 | 4895090 | 03-06 | | 2 |
| 432-828 | 09-01 | | 13 | 4895107 | 02-33 | | 2 |
| | 09-02 | | 24 | 4895121 | 02-36 | | 2 |
| | 09-15 | | 25 | 4895133 | 02-29 | | 2 |
| | 09-18 | | 20 | 4895164 | 02-33 | | 1 |
| 432431A1 | 09-56 | | 9 | 4895166 | 03-08 | | 5 |
| 434605A1 | 08-27 | | 8 | 4895174 | 02-20 | | 3 |
| 438-12040 | 07-03 | | 24 | 4895179 | 02-16 | | 12 |
| 439-5436 | 09-02 | | 6 | 4895180 | 02-10 | | 9 |
| 440-10616 | 09-04 | | 18 | 4895183 | 02-16 | | 4 |
| 440-1066 | 04-11 | | 27 | 4895184 | 02-16 | | 9 |
| | 09-38 | | 1B | 4895187 | 02-16 | | 6 |
| 440-1088 | 09-61 | | 22 | 4895188 | 02-16 | | 5 |
| 440-11010 | 09-39 | | 2 | 4895193 | 02-18 | | 3 |
| 440-11012 | 09-41 | | 12 | 4895195 | 02-18 | | 1 |
| 440-12510 | 09-55 | | 9 | 4895196 | 02-18 | | 7 |
| 440038A1 | 04-06A | | 9 | 4895198 | 02-18 | | 9 |
| 442718A1 | 09-55 | | 8 | 4895199 | 02-18 | | 10 |
| 442773A1 | 09-55 | | 33 | 4895200 | 02-18 | | 11 |
| 442842A1 | 09-56 | | 6 | 4895204 | 02-18 | | 12 |
| 443375A1 | 03-01 | | 2 | 4895214 | 02-17 | | 3 |
| 443432A1 | 08-55 | | | 4895215 | 02-16 | | 8 |
| 445266A1 | 06-26 | | 7 | 4895228 | 02-09 | | 5 |
| 445267A1 | 06-26 | | 3 | 4895244 | 03-11 | | 1 |
| 445674A1 | 05-02 | | 22 | 4895291 | 02-39 | | 2 |
| | 08-03 | | 1 | 4895294 | 02-19 | | 7 |
| | 08-57 | | | 4895297 | 03-05 | | 2 |
| 446222A1 | 09-22 | | 5 | 4895301 | 02-39 | | 4 |
| 446454A1 | 09-22 | | 36 | 4895305 | 03-11 | | 2 |
| 448284A1 | 08-25 | | 9 | 4895323 | 02-27 | | 8 |
| 448428A1 | 09-64 | | 12 | | 02-28 | | 1 |
| 448429A1 | 09-64 | | 13 | 4895327 | 02-40 | | 3 |
| 448607A1 | 09-53 | | 2 | 4895336 | 02-20 | | 4 |
| | 09-69 | | 1 | 4895347 | 02-16 | | 7 |
| 448608A1 | 09-53 | | 6 | 4895355 | 02-12 | | 8 |
| | 09-69 | | 6 | 4895358 | 02-14 | | 11 |
| 448609A1 | 09-53 | | 5 | 4895360 | 02-17 | | 1 |
| | 09-69 | | 5 | 4895361 | 02-18 | | 2 |
| 449842A1 | 09-74 | | 8 | 4895363 | 02-18 | | 5 |
| 450037A1 | 09-60 | | 1 | 4895364 | 02-18 | | 6 |
| | 09-70 | | 1 | 4895365 | 02-18 | | 8 |
| 451384A1 | 09-27 | | 43 | 4895378 | 02-14 | | 4 |
| 465004R91 | 09-01 | | 14A | 4895379 | 02-14 | | 5 |
| | 09-02 | | | 4895392 | 02-10 | | 6 |
| 470-10620 | 09-46 | | 8 | | 02-36 | | 6 |
| 484-6316 | 06-11 | | 3 | 4895393 | 02-10 | | 7 |
| 4858605 | 03-06 | | 8 | | 02-36 | | 7 |
| 4890343 | 02-01 | | 44 | 4895489 | 02-11 | | 2 |
| 4890832 | 02-13 | | 4 | 4895538 | 02-11 | | 10 |

HTTP://WWW.MINNPARBACKHOEPARTS.COM



| Number | Figure | Sequence | Ref. | Number | Figure | Sequence | Ref. |
|---|---|---|---|---|---|---|---|
| 4895576 | 02-36 | | 4 | 4899610 | 02-28 | | 5 |
| 4895584 | 02-11 | | 5 | 4899921 | 02-19 | | 5 |
| 4895586 | 02-26 | | 6 | 490-11012 | 04-08 | | 18 |
| 4895605 | 02-10 | | 2 | 490-1106 | 04-07 | | 11A |
| 4895610 | 02-30 | | 5 | 490-1108 | 04-07 | | |
| 4895623 | 02-36 | | 8 | | 04-07 | | 11 |
| 4895625 | 02-36 | | 9 | 492-11025 | 09-55 | | 10 |
| 4895648 | 02-19 | | 4 | 492-11031 | 09-10 | | 12 |
| 4895742 | 02-34 | | 10 | 492-11038 | 09-59 | | 11 |
| 4895748 | 02-22 | | 1 | | 09-70 | | 9 |
| 4895790 | 02-16 | | 3 | 493-11026 | 04-17 | | 2 |
| 4896404 | 02-34 | | 4 | 493-11039 | 04-05 | | 12 |
| 4896406 | 02-34 | | 9 | 493-21020 | 04-04 | | 9 |
| 4896409 | 02-34 | | 11 | | 08-57 | | 3 |
| 4896410 | 02-34 | | 7 | 493-21033 | 04-04 | | 7 |
| 4896770 | 03-06 | | 7 | 493-41020 | 06-11 | | 5 |
| 4896897 | 02-40 | | 2 | 495-11028 | 09-01 | | 8 |
| 4896947 | 02-26 | | 5 | | 09-02 | | 17 |
| 4897024 | 02-13 | | 1 | | 09-72 | | 2 |
| 4897048 | 02-26 | | 4 | 495-11034 | 09-10 | | 13 |
| 4897071 | 02-26 | | 3 | 495-11041 | 03-01 | | 17A |
| 4897123 | 02-26 | | 2 | | 04-05 | | 9 |
| 4897178 | 02-16 | | 13 | | 04-06 | | 8 |
| 4897179 | 02-16 | | 14 | | 09-02 | | 34A |
| 4897330 | 02-30 | | 4 | 495-11047 | 05-04 | | 11 |
| 4897457 | 02-28 | | 4 | | 06-01 | | 30 |
| 4897480 | 02-31 | | 1 | | 09-58 | | |
| 4897934 | 02-26 | | 11 | | 09-60 | | |
| 4898301 | 02-11 | | 3 | 495-11053 | 09-04 | | 35 |
| 4898482 | 02-29 | | 6 | 495-11081 | 09-18 | | 10 |
| 4899003 | 03-06 | | 4 | 495-21031 | 04-17 | | 3 |
| 4899009 | 02-10 | | 4 | 495-21038 | 07-06 | | 4 |
| | 02-16 | | 10 | | 09-45 | | 6 |
| 4899019 | 02-34 | | 1 | 495-21044 | 09-02 | | 11 |
| 4899020 | 02-11 | | 1 | | 09-38 | | 8 |
| | 02-14 | | 13 | 495-21056 | 06-01 | | 15 |
| 4899026 | 02-09 | | 2 | | 06-01 | | 20 |
| | 02-12 | | 1 | 495-31016 | 09-46 | | 9 |
| | 02-14 | | 1 | 495-31022 | 03-02 | | 9 |
| 4899027 | 02-27 | | 2 | | 04-13 | | 4 |
| 4899031 | 02-35 | | 3 | 495-61020 | 09-43 | | 14 |
| | 02-38 | | 5 | | 09-43 | | 25 |
| | 03-09 | | 3 | | 09-43 | | 8 |
| 4899035 | 02-34 | | 6 | 495-81001 | 02-04 | | 16 |
| 4899036 | 02-30 | | 3 | | 02-04A | | 17 |
| 4899039 | 02-19 | | 2 | | 09-68 | | 6 |
| 4899053 | 02-39 | | 1 | 495-81153 | 04-08 | | 6 |
| 4899058 | 02-33 | | 9 | 495-81169 | 09-46 | | 17 |
| 4899063 | 02-13 | | 3 | 495-81184 | 09-01 | | 9 |
| 4899068 | 02-28 | | 3 | | 09-02 | | 22 |
| | 03-07 | | 2 | 495-81226 | 09-24 | | 24 |
| | 03-08 | | 3 | | 09-24 | | 32 |
| 4899072 | 02-10 | | 5 | | 09-26 | | 25 |
| | 02-16 | | 11 | | 09-26 | | 35 |
| 4899073 | 02-12 | | 4 | | 09-26 | | 4 |
| | 02-41 | | 2 | | 09-27 | | 42 |
| 4899074 | 02-14 | | 7 | 495-81227 | 09-23 | | 17 |
| 4899075 | 02-14 | | 3 | | 09-24 | | 29 |
| 4899076 | 02-14 | | 6 | 495-81261 | 07-03 | | 30 |
| 4899078 | 02-13 | | 2 | 495-81267 | 09-68 | | 10 |
| 4899080 | 02-28 | | 6 | 495-81282 | 09-04 | | 7 |
| 4899090 | 02-31 | | 2 | | 09-22 | | 34 |
| 4899091 | 02-11 | | 2 | | 09-26 | | 21 |
| | 02-12 | | 2 | | 09-27 | | 13 |
| 4899093 | 02-12 | | 3 | | 09-27 | | 38 |
| | 03-08 | | 4 | 496-21041 | 02-01 | | 29 |
| 4899103 | 02-14 | | 9 | | 06-11 | | 17 |
| 4899106 | 02-33 | | 7 | | 09-01 | | 20 |
| 4899107 | 02-33 | | 3 | 496-41041 | 08-10 | | 6 |
| 4899108 | 02-33 | | 4 | | 08-11 | | 6 |
| 4899109 | 02-14 | | 2 | | 08-12 | | 6 |
| | 02-26 | | 11 | | 08-13 | | 6 |
| | 02-36 | | 1 | | 08-14 | | 6 |
| | 02-38 | | 6 | | 08-22 | | 12 |
| 4899110 | 02-15 | | 3 | | 09-12 | | 5 |
| 4899115 | 02-10 | | 3 | | 09-44 | | 4 |
| | 02-30 | | 11 | | 09-59 | | 6 |
| 4899118 | 02-29 | | 1 | | 09-70 | | 20 |
| 4899119 | 02-20 | | 5 | 496-41081 | 09-24 | | 5 |
| 4899121 | 02-33 | | 11 | 496-81000 | 05-09 | | 9 |
| 4899467 | 02-33 | | 5 | | 06-01 | | 3 |
| 4899519 | 02-33 | | 6 | | 06-06 | | 24 |

HTTP://WWW.MINNPARBACKHOEPARTS.COM




| Number | Figure | Sequence | Ref. | Number | Figure | Sequence | Ref. |
|---|---|---|---|---|---|---|---|
| 496-81010 | 09-46 | | 18 | 540-720 | 09-54 | | 7 |
| | 09-46 | | 25 | 555-10 | 04-10 | | 2 |
| 496-81018 | 03-02 | | 7 | | 04-11 | | 6 |
| | 09-13 | | 29 | 555-2 | 04-11 | | 22 |
| 496-81028 | 05-01 | | 11 | | 04-11 | | 3 |
| 500315795 | 02-15 | | 2 | | 09-43 | | 16 |
| 504001088 | 03-08 | | 2 | | 09-43 | | 22 |
| 504010786 | 02-29 | | 4 | | 09-43 | | 5 |
| 504011329 | 02-30 | | 1 | | 09-68 | | 17 |
| 504011338 | 02-30 | | 6 | 565-104 | 09-15 | | 34 |
| 504025599 | 02-37 | | 6 | 569-4 | 09-55 | | 24 |
| 504026078 | 02-41 | | 1 | 60-7083T1 | 09-55 | | 7 |
| 504028028 | 02-38 | | 2 | 604-12030 | 09-46 | | 3 |
| 504030423 | 02-14 | | 12 | | 09-51 | | |
| 504032877 | 03-04 | | 2 | 604-20035 | 09-24 | | 42 |
| 504034954 | 02-28 | | 7 | 604-20045 | 08-23 | | 6 |
| 504035087 | 02-25 | | 1 | 604-8050 | 03-03 | | 9 |
| 504035094 | 02-29 | | 5 | 614-10020 | 02-04 | | 8 |
| 504035148 | 02-39 | | 3 | | 02-04A | | 8 |
| 504038890 | 02-37 | | 5 | | 03-01 | | 38 |
| 504042116 | 03-07 | | 1 | | 03-01 | | 41 |
| 504046458 | 03-10 | | 2 | | 05-01 | | 19 |
| 504047260 | 02-10 | | 10 | | 05-01 | | 9 |
| 504048350 | 02-21 | | 1 | | 06-11 | | 26 |
| 504049033 | 02-40 | | 1 | | 08-03 | | 2 |
| 504050848 | 02-12 | | 5 | | 09-38 | | 7 |
| 504051210 | 02-37 | | 2 | | 09-40 | | 13 |
| 504051276 | 03-11 | | 3 | 614-10025 | 07-03 | | 10 |
| 504052006 | 02-19 | | 6 | | 07-06 | | 24 |
| 504052013 | 02-37 | | 3 | | 08-01 | | 37 |
| 504053173 | 02-33 | | 8 | | 08-23 | | 11 |
| 504053512 | 02-37 | | 4 | | 09-09 | | 2 |
| 504053522 | 02-17 | | 6 | | 09-13 | | 38 |
| 504053894 | 02-33 | | 15 | | 09-16 | | 42 |
| 504057288 | 03-10 | | 1 | | 09-19 | | 16 |
| 504057292 | 03-06 | | 5 | | 09-20 | | 3 |
| 504057736 | 02-24 | | 1 | | 09-38 | | 53 |
| 504060728 | 03-04 | | 3 | | 09-40 | | 10 |
| 504061622 | 02-25 | | 3 | | 09-40 | | 22 |
| 504062460 | 02-24 | | 2 | | 09-40 | | 5 |
| 504062752 | 02-28 | | 2 | | 09-41 | | 3 |
| 504062795 | 02-30 | | 2 | 614-10030 | 02-01 | | 37 |
| 504062812 | 02-11 | | 8 | | 04-09 | | 28 |
| 504062856 | 02-35 | | 2 | | 04-16 | | 6 |
| 504062964 | 02-14 | | 13 | | 06-13 | | 7 |
| 504063980 | 02-19 | | 3 | | 06-14 | | 8 |
| 504064336 | 02-36 | | 3 | | 08-13 | | 28 |
| 504064340 | 02-38 | | 1 | | 08-22 | | 15 |
| 504064865 | 02-19 | | 1 | | 09-40 | | 28 |
| 504065040 | 02-17 | | 4 | | 09-67 | | 4 |
| 504065099 | 03-06 | | 9 | 614-10035 | 03-03 | | 23 |
| 504065285 | 03-10 | | 3 | | 05-01 | | 20 |
| 504065880 | 02-38 | | 3 | | 08-10 | | 29 |
| 504066077 | 03-08 | | 1 | | 08-10 | | 5 |
| 504069558 | 02-15 | | 1 | | 08-11 | | 5 |
| 504069775 | 02-14 | | 10 | | 08-12 | | 5 |
| 504069777 | 02-11 | | 7 | | 08-13 | | 5 |
| 504074001 | 02-12 | | 6 | | 08-14 | | 5 |
| 504074178 | 02-36 | | 5 | | 08-26 | | 2 |
| 514-633 | 09-55 | | 34 | | 09-12 | | 4 |
| | 09-57 | | 11 | | 09-39 | | 8 |
| 514-634 | 07-02 | | 26 | 614-10040 | 08-24 | | 29 |
| 514-832 | 08-01 | | 8 | 614-10050 | 09-25 | | 6 |
| 514-847 | 03-02 | | 3 | | 09-25A | | 6 |
| 515-2179 | 09-04 | | 14 | 614-10080 | 02-06 | | 3 |
| 515-22159 | 09-59 | | 13 | | 02-06A | | 3 |
| | 09-70 | | 21 | | 02-06B | | 3 |
| 515-22190 | 04-06A | | 2 | 614-12016 | 06-16 | | 2 |
| 515-22254 | 02-02 | | 17 | 614-12025 | 04-06A | | 32 |
| 515-2295 | 08-22 | | 29 | | 05-04 | | 6 |
| | 09-02 | | 17A | | 06-01 | | 32 |
| 515-23127 | 03-01 | | 16 | 614-12035 | 02-07 | | 3 |
| | 04-04 | | 13 | | 06-11 | | 27 |
| | 04-04 | | 15 | 614-12040 | 02-07 | | 10 |
| 515-23159 | 05-02 | | 23 | 614-18035 | 08-09 | | 6 |
| 515-23254 | 08-10 | | 28 | 614-20030 | 09-39 | | 12 |
| 515-23444 | 04-09 | | 27 | 614-6016 | 09-01 | | 15 |
| 515-2379 | 07-04 | | 15 | | 09-01 | | 7 |
| 515-24238 | 02-04 | | 7 | | 09-02 | | 16 |
| | 02-04A | | 7 | | 09-02 | | 30 |
| 515-25190 | 04-06A | | 31 | | 09-04 | | 13 |
| 515-25254 | 08-07 | | 13 | | 09-18 | | 22 |

HTTP://WWW.MINNPARBACKHOEPARTS.COM



| Number | Figure | Sequence | Ref. |
|---|---|---|---|
| 614-6020 | 04-06A | | 13 |
| | 04-17 | | 13 |
| | 09-01 | | 30 |
| | 09-18 | | 24 |
| 614-6025 | 03-03 | | 32 |
| | 09-21 | | 4 |
| 614-6035 | 04-06A | | 11 |
| 614-8012 | 02-03 | | 7 |
| | 06-10 | | 2 |
| 614-8016 | 02-01 | | 19 |
| | 02-01 | | 40 |
| | 09-59 | | 18 |
| | 09-70 | | 23 |
| 614-8018 | 06-12 | | 11 |
| 614-8020 | 02-02 | | 12 |
| | 02-02 | | 18 |
| | 02-04 | | 2 |
| | 02-04A | | 2 |
| | 03-03 | | 9A |
| | 04-08 | | 9 |
| | 04-16 | | 3 |
| | 07-03 | | 36 |
| | 07-04 | | 5 |
| | 08-01 | | 33 |
| | 09-12 | | 12 |
| | 09-59 | | 24 |
| | 09-67 | | 14 |
| | 09-68 | | 5 |
| 614-8022 | 06-20 | | 2 |
| 614-8025 | 04-03 | | 4 |
| | 04-08 | | 10 |
| | 04-16 | | 10 |
| | 08-22 | | 28 |
| | 09-03 | | 15 |
| | 09-08 | | 27 |
| | 09-13 | | 5 |
| | 09-15 | | 11 |
| | 09-16 | | 2 |
| | 09-16 | | 20 |
| | 09-25 | | 23 |
| | 09-25A | | 23 |
| | 09-43 | | 29 |
| | 09-52 | | 1A |
| 614-8030 | 02-01 | | 9 |
| | 06-29 | | 13 |
| | 07-03 | | 2 |
| | 07-04 | | 24 |
| | 08-08A | | 2A |
| | 09-05 | | 8 |
| | 09-15 | | 4 |
| | 09-25A | | 30 |
| | 09-37 | | 19 |
| | 09-44 | | 5 |
| | 09-45 | | 5 |
| | 09-59 | | 5 |
| | 09-64 | | 28 |
| | 09-65 | | 19 |
| | 09-70 | | 19 |
| 614-8040 | 02-02 | | 21 |
| | 04-06A | | 3 |
| | 09-15 | | 35 |
| | 09-45 | | 4 |
| 627-10030 | 02-06 | | 11 |
| | 02-06A | | 11 |
| | 02-06B | | 15 |
| | 06-11 | | 16 |
| 627-12025 | 03-03 | | 26 |
| 627-20060 | 09-38 | | 2 |
| 711-10030 | 09-38 | | 25 |
| 711-10040 | 09-45 | | 8 |
| 711-10050 | 05-02 | | 24 |
| 712998R91 | 05-06 | | 12 |
| | 06-03 | | 7 |
| 761-17325 | 04-18 | | 13 |
| 76904 | 02-01 | | 13 |
| 779-37616 | 09-11 | | 7 |
| 781-24613 | 04-04 | | 34 |
| | 04-08 | | 15 |
| | 09-13 | | 20 |
| 781-24820 | 09-43 | | 30 |
| 800-1134 | 06-06 | | 17 |
| 800-1150 | 06-18 | | 26 |
| 800-2136 | 06-30 | | 26 |
| 800-40065 | 09-23 | | 27 |
| 800-40070 | 09-23 | | 31 |
| 800-44040 | 09-04 | | 26 |
| | 09-04 | | 31 |
| | 09-05 | | 22 |
| | 09-05 | | 4 |
| | 09-25 | | 4 |
| | 09-25A | | 4 |
| | 09-27 | | 27 |
| 800-44050 | 05-04 | | 5 |
| | 06-01 | | 7 |
| | 09-04 | | 8 |
| | 09-24 | | 28 |
| 800-5120 | 06-29 | | 5 |
| 800-5145 | 06-20 | | 19 |
| 806-8016 | 02-02 | | 15 |
| 806-8025 | 02-04 | | 15 |
| | 02-04A | | 16 |
| 8093880 | 02-23 | | 1 |
| 8093881 | 02-23 | | 4 |
| 8093882 | 02-22 | | 4 |
| 811-10025 | 09-68 | | 9 |
| 811-6016 | 04-06A | | 16 |
| 811-8020 | 04-11 | | 32 |
| 814-10040 | 08-04 | | 9 |
| | 08-06 | | 6 |
| | 08-07 | | 8 |
| | 08-09 | | 3 |
| | 08-23 | | 10 |
| | 08-24 | | 10 |
| | 08-25 | | 6 |
| 814-10045 | 03-01 | | 38 |
| | 06-13 | | 15 |
| | 06-14 | | 21 |
| | 08-04 | | 19 |
| | 08-05 | | 7 |
| | 08-06 | | 5 |
| | 08-09A | | 3 |
| | 08-13 | | 25 |
| | 08-22 | | 9 |
| | 09-38 | | 30 |
| 814-10050 | 02-01 | | 20 |
| | 05-01 | | 10 |
| 814-10055 | 08-12 | | 27 |
| | 09-67 | | 3 |
| 814-10060 | 04-04 | | 27 |
| | 07-06 | | 30 |
| | 08-08 | | 22 |
| | 08-22 | | 10 |
| | 08-24 | | 6 |
| | 08-26 | | 6 |
| | 09-08 | | 25 |
| | 09-13 | | 25 |
| 814-10070 | 08-08A | | 22 |
| | 08-26 | | 30 |
| 814-10080 | 08-25 | | 2 |
| | 08-26 | | 29 |
| | 09-08 | | 20 |
| 814-10090 | 02-01 | | 28 |
| | 08-27 | | 13 |
| | 09-01 | | 29 |
| | 09-08 | | 16 |
| 814-10110 | 09-01 | | 36 |
| 814-10120 | 08-10 | | 14 |
| | 08-11 | | 13 |
| | 08-12 | | 13 |
| | 08-13 | | 12 |
| 814-10130 | 09-13 | | 13 |
| 814-10150 | 06-13 | | 9 |
| 814-10220 | 04-05 | | 6 |
| 814-10245 | 04-06 | | 7 |
| 814-12045 | 08-10 | | 2 |
| | 08-11 | | 2 |
| | 08-12 | | 2 |
| | 08-13 | | 2 |
| | 08-14 | | 2 |
| 814-12050 | 08-23 | | 17 |
| 814-12080 | 02-07 | | 5 |
| | 06-11 | | 31 |
| 814-12100 | 09-40 | | 16 |
| 814-12130 | 09-67 | | 8 |

HTTP://WWW.MINNPARBACKHOEPARTS.COM




| Number | Figure | Sequence | Ref. |
|---|---|---|---|
| 814-14140 | 06-26 | | 9 |
| 814-6030 | 09-25 | | 16 |
| | 09-25A | | 16 |
| 814-6035 | 07-01 | | 10 |
| 814-6050 | 09-60 | | 2 |
| | 09-70 | | |
| 814-8035 | 08-22 | | 20 |
| 814-8040 | 07-03 | | 15 |
| 814-8050 | 09-25 | | 27 |
| | 09-25A | | 31 |
| 814-8055 | 08-08A | | 2 |
| | 08-22 | | 19 |
| 814-8060 | 06-15 | | 16 |
| | 06-22 | | 7 |
| | 08-08 | | 2 |
| 814-8070 | 08-23 | | 21 |
| | 09-15 | | 8 |
| | 09-25A | | 27 |
| 814-8080 | 06-21 | | 34 |
| | 06-29 | | 14 |
| 814-8100 | 09-67 | | 15 |
| 814-8110 | 09-67 | | 13 |
| 82017872 | 04-06A | | 26 |
| 824-1405 | 04-04 | | 10 |
| | 04-19 | | 7 |
| 825-11412 | 03-02 | | 8 |
| 825-11418 | 05-09 | | 8 |
| | 06-01 | | 2 |
| | 06-06 | | 25 |
| 825-2406 | 09-65 | | 27 |
| 825-2408 | 09-59 | | 25 |
| | 09-64 | | 30 |
| | 09-65 | | 21 |
| 825-2410 | 09-40 | | 27 |
| | 09-40 | | 31 |
| | 09-40 | | 6A |
| | 09-41 | | 5 |
| 827-10075 | 06-07 | | 3 |
| 827-12045 | 06-01 | | 14 |
| | 06-01 | | 21 |
| 827-12065 | 06-11 | | 9 |
| 827-16085 | 09-37 | | 10 |
| 827-16100 | 09-37 | | 11 |
| 827-20075 | 09-23 | | 13 |
| 827-20170 | 09-36 | | 2 |
| | 09-36 | | 6 |
| 827-20190 | 09-05 | | 16 |
| 827-20230 | 06-24 | | 4 |
| 827-8050 | 07-06 | | 10 |
| 828-20160 | 09-06 | | 4 |
| | 09-06 | | 4 |
| | 09-07 | | 4 |
| 829-1406 | 04-06A | | 20 |
| | 04-06A | | 30 |
| | 09-01 | | 32 |
| | 09-18 | | 25 |
| | 09-21 | | 5 |
| | 09-25 | | 18 |
| | 09-25A | | 18 |
| 829-1408 | 02-02 | | 20 |
| | 02-06B | | 12 |
| | 03-03 | | 11A |
| | 04-04 | | 8 |
| | 04-06A | | 18 |
| | 04-08 | | 12 |
| | 04-16 | | 5 |
| | 07-03 | | 28 |
| | 07-03 | | 4 |
| | 07-06 | | 15 |
| | 08-08 | | 4 |
| | 08-08A | | 4 |
| | 08-22 | | 23 |
| | 08-23 | | 23 |
| | 09-03 | | 17 |
| | 09-05 | | 11 |
| | 09-13 | | 7 |
| | 09-15 | | 7 |
| | 09-25 | | 29 |
| | 09-25A | | 29 |
| | 09-59 | | 20 |
| | 09-66 | | |
| | 09-70 | | 26 |
| 829-1410 | 02-04 | | 10 |
| | 02-04A | | 14 |
| | 02-06 | | 13 |
| | 02-06 | | 6 |
| | 02-06A | | 13 |
| | 02-06A | | 6 |
| | 02-06B | | 17 |
| | 02-06B | | 6 |
| | 03-01 | | 35 |
| | 03-01 | | 43 |
| | 04-09 | | 29 |
| | 05-02 | | 27 |
| | 07-03 | | 12 |
| | 07-06 | | 21 |
| | 08-04 | | 13 |
| | 08-05 | | 11 |
| | 08-05 | | 17 |
| | 08-05 | | 36 |
| | 08-06 | | 10 |
| | 08-06 | | 15 |
| | 08-08 | | 26 |
| | 08-08A | | 26 |
| | 08-09 | | 5 |
| | 08-09A | | 5 |
| | 08-10 | | 32 |
| | 08-22 | | 41 |
| | 08-23 | | 13 |
| | 08-24 | | 13 |
| | 08-24 | | 7 |
| | 08-25 | | 8 |
| | 08-26 | | 8 |
| | 08-27 | | 16 |
| | 08-27 | | 7 |
| | 09-13 | | 37 |
| | 09-24 | | 39 |
| | 09-38 | | 34 |
| | 09-38 | | 46 |
| | 09-38 | | 54 |
| | 09-67 | | 11 |
| 829-1412 | 06-01 | | 22 |
| | 08-10 | | 4 |
| | 08-11 | | 4 |
| | 08-12 | | 4 |
| | 08-13 | | 4 |
| | 08-14 | | 4 |
| | 08-23 | | 19 |
| | 09-40 | | 21 |
| 829-1416 | 09-37 | | 15 |
| 829-1420 | 06-24 | | 7 |
| | 09-05 | | 19 |
| | 09-23 | | 15 |
| | 09-36 | | 4 |
| | 09-36 | | 8 |
| | 09-39 | | 13 |
| 832-10404 | 04-11 | | 14 |
| | 09-54 | | 9 |
| 832-10406 | 04-06A | | 15 |
| | 04-07 | | 34 |
| | 04-09 | | 31 |
| | 04-11 | | 9 |
| 832-10408 | 02-02 | | 14 |
| | 04-11 | | 34 |
| | 04-16 | | 12 |
| | 05-01 | | 17 |
| | 05-01 | | 25 |
| | 07-03 | | 17 |
| | 09-13 | | 33 |
| | 09-16 | | 21 |
| | 09-16 | | 3 |
| | 09-43 | | 32 |
| | 09-45 | | 7 |
| | 09-55 | | 26 |
| | 09-56 | | 10 |
| | 09-59 | | 7 |
| | 09-62 | | 8 |
| | 09-63 | | 12 |
| | 09-63 | | 17 |
| | 09-68 | | 7 |
| | 09-70 | | 22 |
| 832-10410 | 02-01 | | 24 |
| | 05-01 | | 13 |
| | 08-01 | | 38 |

HTTP://WWW.MINNPARBACKHOEPARTS.COM



| Number | Figure | Sequence | Ref. |
|---|---|---|---|
| 832-10410 | 08-07 | | 15 |
| | 08-10 | | 15 |
| | 08-11 | | 14 |
| | 08-12 | | 14 |
| | 08-12 | | 28 |
| | 08-13 | | 13 |
| | 08-13 | | 27 |
| | 08-24 | | 26 |
| | 08-26 | | 33 |
| | 09-08 | | 18 |
| | 09-08 | | 22 |
| | 09-08 | | 8 |
| | 09-13 | | 14 |
| | 09-13 | | 26 |
| | 09-15 | | 17 |
| | 09-16 | | 44 |
| | 09-19 | | 17 |
| | 09-20 | | 4 |
| | 09-40 | | 12 |
| | 09-45 | | 11 |
| | 09-68 | | 11 |
| 832-10412 | 02-07 | | 9 |
| | 06-11 | | 11 |
| | 06-11 | | 34 |
| 832-10420 | 09-06 | | 6 |
| | 09-06 | | 6 |
| | 09-07 | | 6 |
| 832-10508 | 09-55 | | 39 |
| | 09-57 | | 16 |
| 832-41312 | 09-22 | | 25C |
| 833-40310 | 09-37 | | 9A |
| 833-40406 | 04-10 | | 3 |
| | 04-11 | | 23 |
| | 04-11 | | 4 |
| | 09-04 | | 15 |
| | 09-12 | | 18 |
| | 09-13 | | 21 |
| | 09-14 | | 10 |
| | 09-42 | | 6 |
| | 09-43 | | 18 |
| | 09-43 | | 23 |
| | 09-43 | | 6 |
| | 09-65 | | 26 |
| | 09-68 | | 18 |
| 833-40408 | 02-04 | | 17 |
| | 02-04A | | 18 |
| | 09-45 | | 4A |
| 838-3640 | 03-03 | | 16 |
| 838-5840 | 06-27 | | 20 |
| 83822C1 | 09-65 | | |
| 840-1416 | 04-20 | | 12 |
| | 08-15 | | |
| | 08-16 | | |
| | 08-17 | | |
| | 08-18 | | |
| | 08-19 | | |
| | 08-20 | | |
| | 08-22 | | 37 |
| 842-1416 | 04-11 | | 12 |
| 843-1516 | 04-19 | | 5 |
| 844-10020 | 04-04 | | 16 |
| | 04-04 | | 38 |
| | 04-05 | | 11 |
| | 04-05 | | 3 |
| | 04-06 | | 13 |
| | 04-09 | | 32 |
| | 04-14 | | 11 |
| | 09-03 | | 9 |
| 844-10035 | 04-03 | | 2 |
| 844-10110 | 09-08 | | 6 |
| 844-6025 | 04-07 | | 33 |
| | 04-09 | | 30 |
| | 04-11 | | 7 |
| 845-6020 | 09-65 | | 25 |
| 85801585 | 02-07 | | 6 |
| | 06-11 | | 32 |
| 85802618 | 02-07 | | 8 |
| | 06-11 | | 32A |
| 85802820 | 08-08 | | 1 |
| | 08-08A | | 1 |
| 85803019 | 02-02 | | |
| 85811933 | 08-40 | | 8 |
| 85811933 | 08-41 | | 8 |
| | 08-43 | | 8 |
| | 08-44 | | 8 |
| | 08-45 | | 7 |
| | 08-46 | | 8 |
| 85811934 | 08-40 | | 7 |
| | 08-41 | | 7 |
| | 08-43 | | 7 |
| | 08-44 | | 7 |
| | 08-46 | | 7 |
| 85811935 | 08-40 | | 7 |
| | 08-41 | | 7 |
| | 08-43 | | 7 |
| | 08-44 | | 7 |
| | 08-46 | | 7 |
| 85812114 | 08-40 | | 6 |
| 85812115 | 08-41 | | 6 |
| | 08-46 | | 6 |
| 85812116 | 08-43 | | 6 |
| | 08-44 | | 6 |
| 85819148 | 08-40 | | 9 |
| | 08-41 | | 9 |
| | 08-42 | | 9 |
| | 08-43 | | 9 |
| | 08-44 | | 9 |
| | 08-45 | | 8 |
| | 08-46 | | 9 |
| 85819378 | 08-41 | | 3 |
| | 08-42 | | 3 |
| | 08-44 | | 3 |
| | 08-45 | | 3 |
| | 08-46 | | 3 |
| 85821520 | 09-15 | | 21 |
| 85824067 | 09-15 | | 16 |
| 85824080 | 09-15 | | 20 |
| 85824081 | 09-15 | | 18 |
| 85826229 | 02-01 | | 30 |
| 85826230 | 02-01 | | 31 |
| 85826337 | 08-36 | | 3 |
| | 08-37 | | 3 |
| | 08-38 | | 3 |
| | 08-39 | | 3 |
| | 08-41 | | |
| 85826338 | 08-36 | | 5 |
| | 08-37 | | 5 |
| | 08-38 | | 5 |
| | 08-39 | | 5 |
| | 08-43 | | |
| 85826339 | 08-36 | | 2 |
| | 08-37 | | 2 |
| | 08-38 | | 2 |
| | 08-39 | | 2 |
| | 08-40 | | |
| 85826340 | 08-36 | | 4 |
| | 08-37 | | 4 |
| | 08-38 | | 4 |
| | 08-39 | | 4 |
| | 08-42 | | |
| 85826341 | 08-37 | | 7 |
| | 08-39 | | 7 |
| | 08-45 | | |
| 85826342 | 08-38 | | 7 |
| | 08-39 | | 8 |
| | 08-46 | | |
| 85826344 | 08-40 | | 5 |
| | 08-41 | | 5 |
| | 08-42 | | 5 |
| | 08-43 | | 5 |
| | 08-44 | | 5 |
| | 08-45 | | 5 |
| | 08-46 | | 5 |
| 85826365 | 08-36 | | 6 |
| | 08-37 | | 6 |
| | 08-38 | | 6 |
| | 08-39 | | 6 |
| | 08-44 | | |
| 85827471 | 08-17 | | 3 |
| | 08-18 | | 6 |
| | 08-19 | | 6 |
| | 08-48 | | |
| 85827472 | 08-15 | | 5 |
| | 08-16 | | 5 |

HTTP://WWW.MINNPARBACKHOEPARTS.COM




| Number | Figure | Sequence | Ref. |
|---|---|---|---|
| 85827472 | 08-47 | | |
| 86014151 | 04-06A | | 27 |
| 8603092 | 09-76 | | 3 |
| 8603093 | 09-78 | | 3 |
| 8603094 | 09-77 | | 3 |
| 863-16070 | 05-06 | | 8 |
| 863-6020 | 07-01 | | 25 |
| 864-10025 | 06-16 | | 17 |
| 864-12030 | 08-01 | | 6 |
| 864-12130 | 06-26 | | 10 |
| 864-6020 | 06-21 | | 8 |
| 864-6035 | 07-01 | | 19 |
| 864-8020 | 06-21 | | 21 |
| 864-8025 | 06-16 | | 6 |
| 864-8055 | 09-13 | | 34 |
| 86596853 | 08-22 | | 31 |
| 86619908 | 04-06A | | 7 |
| 86625128 | 08-50 | | 13 |
| | 08-51 | | 13 |
| 86982435 | 08-59 | | 18 |
| | 08-66 | | 16 |
| 86982437 | 08-58 | | 18 |
| | 08-60 | | 23 |
| 86982439 | 08-62 | | 25 |
| 86982440 | 08-61 | | 18 |
| 86982441 | 08-65 | | 22 |
| 86982442 | 08-63 | | 24 |
| 86982443 | 08-64 | | 22 |
| 86982682 | 09-39 | | 10 |
| 86983190 | 09-42 | | 2 |
| 86983269 | 09-42 | | 9A |
| 86983278 | 09-13 | | 11 |
| 86983311 | 08-50 | | 1 |
| | 08-51 | | 1 |
| | 08-52 | | 1 |
| | 08-53 | | 1 |
| | 08-54 | | 1 |
| 86983325 | 09-42 | | 9 |
| 86984097 | 06-11 | | 14 |
| | 06-12 | | |
| | 06-13 | | |
| | 06-15 | | |
| | 06-16 | | |
| | 06-17 | | |
| | 06-18 | | |
| | 06-19 | | |
| | 06-21 | | |
| 86984098 | 06-11 | | 15 |
| | 06-12 | | |
| | 06-14 | | |
| | 06-15 | | |
| | 06-16 | | |
| | 06-17 | | |
| | 06-18 | | |
| | 06-19 | | |
| | 06-20 | | |
| | 06-21 | | |
| | 06-22 | | |
| 86984155 | 09-66 | | 4 |
| 86984544 | 09-15 | | 2 |
| | 09-25A | | 25 |
| 86984545 | 09-15 | | 6 |
| | 09-25A | | 26 |
| 86984547 | 09-15 | | 5 |
| | 09-25 | | 28 |
| | 09-25A | | 28 |
| 86984549 | 09-15 | | 24 |
| 86985339 | 09-12 | | 3 |
| 86985341 | 09-12 | | 2 |
| 86987459 | 08-15 | | 1 |
| | 08-16 | | 1 |
| | 08-36 | | |
| 86987460 | 08-17 | | 1 |
| | 08-18 | | 1 |
| | 08-37 | | |
| 86987461 | 08-20 | | 1 |
| | 08-39 | | |
| 86988086 | 04-20 | | 1 |
| 86989616 | 09-15 | | 28 |
| 86989676 | 03-01 | | 10 |
| 86989736 | 09-58 | | 23 |
| 86990837 | 05-04 | | 1 |
| 86990837 | 05-05 | | |
| | 05-06 | | |
| | 05-07 | | |
| | 05-08 | | |
| 86991496 | 07-04 | | 14 |
| 86992243 | 09-43 | | 20 |
| 86992245 | 09-43 | | 10 |
| 86992247 | 09-43 | | 1 |
| 86992284 | 09-43 | | |
| | 09-43 | | |
| 86992395 | 04-01 | | |
| | 04-03 | | 1 |
| 86992975 | 09-76 | | 12 |
| 86992976 | 09-76 | | 4 |
| 86992977 | 09-43 | | 28 |
| 86992978 | 09-78 | | 12 |
| 86992979 | 09-78 | | 4 |
| 86992980 | 09-77 | | 12 |
| 86992981 | 09-77 | | 4 |
| 86993546 | 06-11 | | 23 |
| 86993548 | 06-11 | | 21 |
| 87000312 | 08-50 | | 17 |
| | 08-51 | | 18 |
| | 08-52 | | 19 |
| | 08-54 | | 15 |
| 87019767 | 06-11 | | 23A |
| 87020181 | 06-11 | | 4 |
| 87022296 | 04-20 | | 3 |
| 87032428 | 04-04 | | 26 |
| 87032819 | 08-50 | | 9 |
| | 08-51 | | 9 |
| | 08-52 | | 9 |
| | 08-53 | | 7 |
| | 08-54 | | 9 |
| 87037944 | 08-50 | | 4 |
| | 08-51 | | 4 |
| | 08-52 | | 4 |
| | 08-53 | | 4 |
| | 08-54 | | 4 |
| 87040885 | 09-13 | | 27 |
| 87400286 | 05-05 | | 7 |
| | 06-02 | | 9 |
| 87402618 | 09-41 | | 24 |
| 87403386 | 08-34 | | |
| 87403387 | 08-35 | | |
| 87403835 | 04-05 | | 1 |
| 87404197 | 05-04 | | 4 |
| | 06-01 | | 9 |
| 87405362 | 09-15 | | 26 |
| 87405661 | 02-05 | | 4 |
| | 02-05A | | 4 |
| 87405706 | 09-13 | | 17 |
| 87406924 | 09-53 | | 10 |
| | 09-68 | | 28 |
| 87406934 | 06-11 | | 22 |
| 87407206 | 04-05 | | 10 |
| 87407272 | 02-01 | | 16 |
| 87407769 | 09-40 | | 15 |
| 87407770 | 09-40 | | 19 |
| 87407771 | 02-01 | | 18 |
| 87407908 | 09-54 | | 1 |
| 87407909 | 09-54 | | 1 |
| 87407927 | 09-42 | | 18 |
| 87407965 | 08-19 | | 1 |
| | 08-38 | | |
| 87408480 | 03-01 | | 10A |
| 87408888 | 09-46 | | 13 |
| | 09-46 | | 21 |
| 87408889 | 09-46 | | 12 |
| | 09-46 | | 20 |
| 87409046 | 04-06A | | 8 |
| 87409201 | 06-11 | | 24 |
| 87410096 | 02-01 | | 1 |
| | 02-03 | | |
| 87410105 | 04-20 | | 9 |
| 87410196 | 02-06B | | 9 |
| 87410265 | 04-06A | | 21 |
| 87410602 | 04-06A | | 10 |
| 87410603 | 04-06A | | 1 |
| 87411083 | 09-11 | | 2A |
| 87411084 | 09-11 | | 4A |
| 87411108 | 09-56 | | 4 |

HTTP://WWW.MINNPARBACKHOEPARTS.COM



| Number | Figure | Sequence | Ref. | Number | Figure | Sequence | Ref. |
|---|---|---|---|---|---|---|---|
| 87411319 | 02-07 | | 1 | 87419320 | 04-12 | | |
| 87411320 | 02-07 | | 2 | 87419454 | 08-15 | | 2 |
| 87412060 | 09-40 | | 18 | | 08-16 | | 2 |
| 87412139 | 02-02 | | 1 | | 08-17 | | 2 |
| 87412489 | 02-04A | | 10 | | 08-18 | | 5 |
| 87412635 | 02-05A | | 1 | 87419455 | 08-19 | | 2 |
| 87412636 | 02-04A | | 1 | | 08-20 | | 2 |
| | 02-05A | | | 87419615 | 04-06A | | 23 |
| 87412687 | 09-01 | | 1 | 87419616 | 04-06A | | 22 |
| | 09-02 | | 42 | 87419634 | 05-02 | | 14 |
| 87413144 | 08-32 | | | 87420696 | 08-25 | | 17 |
| 87413145 | 08-34 | | | 87420834 | 02-04A | | 9 |
| 87413146 | 08-35 | | | 87421213 | 08-25 | | 4 |
| 87413162 | 04-06A | | 28 | 87421471 | 03-03 | | 29 |
| 87413237 | 02-01 | | 14 | 87421775 | 09-66 | | 6 |
| 87413722 | 08-62 | | 12 | 87421776 | 09-66 | | 12 |
| 87414205 | 09-14 | | 7 | 87421777 | 09-66 | | 1 |
| | 09-75 | | 5 | 87421807 | 03-03 | | 28 |
| | 09-79 | | 15 | 87421909 | 09-15 | | 33 |
| 87414237 | 04-06A | | 12 | 87421918 | 08-05 | | 4 |
| 87414277 | 08-33 | | | 87421920 | 08-05 | | 5 |
| 87414278 | 08-33 | | | 87421928 | 08-04 | | 7 |
| 87414560 | 03-01 | | 20 | 87421930 | 08-04 | | 4 |
| 87415774 | 02-01 | | 43 | 87421932 | 08-04 | | 5 |
| 87415781 | 04-05 | | 8 | 87421934 | 08-04 | | 6 |
| 87415931 | 09-73 | | 15 | 87421938 | 08-25 | | 13 |
| 87416024 | 08-04 | | 23 | 87421940 | 08-03 | | 22 |
| 87416108 | 06-30 | | 1A | 87422239 | 09-16 | | 33 |
| 87416476 | 08-32 | | | 87422241 | 09-16 | | 31 |
| 87416966 | 02-07 | | 7 | 87422243 | 09-16 | | 28 |
| 87416967 | 06-11 | | 33 | 87422245 | 09-16 | | 29 |
| 87416975 | 08-09 | | 1 | 87422247 | 09-16 | | 30 |
| | 08-09A | | 1 | 87422249 | 09-16 | | 32 |
| | 08-55 | | | 87422253 | 09-19 | | 15 |
| 87416977 | 06-11 | | 29 | 87422256 | 09-19 | | 14 |
| 87416978 | 06-11 | | 30 | 87422258 | 09-19 | | 2 |
| 87417223 | 02-02 | | 9 | 87422260 | 09-19 | | 1 |
| 87417224 | 02-02 | | 11 | 87422262 | 09-19 | | 10 |
| 87417225 | 02-02 | | 10 | 87422264 | 09-19 | | 8 |
| 87417238 | 06-10 | | 13 | 87422554 | 08-01 | | 4 |
| 87417299 | 02-02 | | 7 | 87422597 | 06-10 | | 5 |
| 87417300 | 02-02 | | 3 | 87422598 | 06-10 | | 6 |
| 87417329 | 09-66 | | 26 | 87422675 | 09-14 | | 2 |
| 87417383 | 03-01 | | 18 | 87422678 | 09-14 | | 1 |
| | 04-06A | | 6 | 87422696 | 09-15 | | 9 |
| | 09-37 | | 17 | | 09-25 | | 12 |
| 87417387 | 06-01 | | 1 | | 09-25A | | 12 |
| | 06-02 | | | 87422701 | 09-25 | | 25 |
| | 06-03 | | | 87422702 | 09-25 | | 26 |
| | 06-04 | | | 87422777 | 04-02 | | |
| | 06-05 | | | | 04-03 | | 3 |
| | 06-06 | | | 87422977 | 08-23 | | 38 |
| | 06-07 | | | 87423004 | 09-37 | | 1 |
| | 06-08 | | | 87423033 | 08-08A | | 39 |
| 87417599 | 09-01 | | 37 | | 08-22 | | 24 |
| 87417601 | 09-03 | | | 87423034 | 08-08A | | 1A |
| 87417721 | 04-16 | | 8 | | 08-22 | | 18 |
| | 08-26 | | 4 | 87423067 | 08-25 | | 5 |
| | 09-01 | | 38 | 87423346 | 09-59 | | 14 |
| 87418036 | 02-04 | | 12 | 87423356 | 08-09 | | 10 |
| 87418166 | 02-05 | | 1 | | 08-09 | | 14 |
| 87418359 | 02-02 | | 19 | | 08-09A | | 10 |
| 87418360 | 02-02 | | 22 | 87423396 | 04-12 | | 3 |
| 87418364 | 02-05A | | 2 | 87423397 | 04-12 | | 4 |
| 87418365 | 02-05A | | 3 | 87423401 | 08-22 | | 2 |
| 87418366 | 02-05 | | 2 | 87423409 | 09-76 | | 9 |
| 87418367 | 02-05 | | 3 | 87423410 | 09-76 | | 8 |
| 87418368 | 09-15 | | 31 | 87423457 | 02-04 | | 5 |
| 87418369 | 09-15 | | 32 | | 02-04A | | 5 |
| 87418516 | 09-12 | | 1 | 87423463 | 09-09 | | 1 |
| 87418518 | 09-12 | | 11 | 87423502 | 09-58 | | 34 |
| 87418541 | 04-07 | | 1 | 87423503 | 09-58 | | 26 |
| | 04-08 | | 1 | 87423531 | 02-06 | | 9 |
| 87418542 | 04-09 | | 1 | | 02-06A | | 9 |
| 87419133 | 02-04 | | 1 | | 02-06B | | 13 |
| | 02-05 | | | 87423668 | 09-37 | | 16 |
| 87419135 | 02-04 | | 11 | 87423675 | 04-06 | | 2 |
| 87419229 | 04-04 | | 23 | 87423676 | 04-06 | | 5 |
| 87419256 | 08-25 | | 24 | 87423677 | 04-05 | | 16 |
| 87419257 | 04-05 | | 4 | | 04-06 | | 11 |
| 87419259 | 04-05 | | 2 | 87423802 | 04-20 | | 8 |
| 87419320 | 04-09 | | 14 | 87423812 | 04-20 | | 4 |

HTTP://WWW.MINNPARBACKHOEPARTS.COM



| Number | Figure | Sequence | Ref. | Number | Figure | Sequence | Ref. |
|---|---|---|---|---|---|---|---|
| 87423812 | 09-74 | | 16 | 87429982 | 06-18 | | 29 |
| | 09-75 | | 6 | 87429983 | 06-18 | | 30 |
| 87423817 | 09-41 | | 19 | 87429984 | 06-18 | | 27 |
| 87423926 | 04-04 | | 6 | 87429985 | 06-16 | | 23 |
| 87423969 | 08-23 | | 40 | 87429986 | 06-14 | | 12 |
| 87423970 | 08-23 | | 41 | 87429987 | 06-13 | | 6 |
| 87424267 | 08-50 | | 14 | | 06-14 | | 7 |
| | 08-51 | | 15 | 87429988 | 06-13 | | 10 |
| | 08-52 | | 16 | 87429989 | 06-13 | | 1 |
| | 08-53 | | 11 | 87429994 | 06-16 | | 3 |
| | 08-54 | | 13 | 87430122 | 09-66 | | 19 |
| 87424794 | 07-06 | | 29 | | 09-67 | | 1 |
| 87425117 | 09-21 | | 3 | 87430618 | 06-11 | | 20 |
| 87425118 | 09-21 | | 1 | 87430677 | 09-11 | | |
| 87425122 | 09-11 | | 16 | | 09-75 | | 4 |
| 87425225 | 08-22 | | 36 | 87431300 | 09-13 | | 24 |
| 87425456 | 09-36 | | 5 | 87431301 | 09-13 | | 23 |
| 87425635 | 04-19 | | 8 | 87431529 | 09-13 | | 15 |
| 87425636 | 04-20 | | 10 | 87431630 | 08-23 | | 3 |
| 87425696 | 09-13 | | 22 | 87431701 | 06-25 | | 1 |
| 87426379 | 09-04 | | 1 | 87431799 | 02-07 | | 11 |
| 87426488 | 08-22 | | 16 | 87432387 | 09-41 | | 25 |
| 87426742 | 06-10 | | 17 | 87432547 | 03-03 | | 25 |
| 87426965 | 08-03 | | 12 | 87432811 | 09-25 | | 30 |
| 87426966 | 08-03 | | 14 | | 09-25A | | 32 |
| 87427158 | 06-10 | | 1 | 87433005 | 09-14 | | 13 |
| | 08-03 | | 13 | 87433006 | 09-14 | | 12 |
| 87427294 | 09-66 | | 20 | 87433007 | 09-14 | | 14 |
| 87427537 | 08-26 | | 28 | 87433008 | 09-14 | | 11 |
| 87427539 | 08-26 | | 27 | 87433240 | 08-25 | | 1 |
| 87427774 | 09-25 | | 15 | 87433401 | 04-03 | | 6 |
| 87427775 | 09-25A | | 15 | 87433503 | 02-02 | | 6 |
| 87427943 | 03-01 | | 19 | 87433543 | 04-04 | | 1 |
| 87427948 | 08-22 | | 17 | | 04-07 | | 32 |
| 87428023 | 08-50 | | 3 | | 04-08 | | 14 |
| | 08-51 | | 3 | 87433544 | 04-06A | | 24 |
| | 08-52 | | 3 | 87433546 | 04-07 | | 16 |
| | 08-53 | | 3 | | 09-70 | | 4 |
| | 08-54 | | 2 | 87433659 | 09-39 | | 1 |
| 87428134 | 08-50 | | 5 | 87433730 | 05-04 | | 9 |
| | 08-51 | | 5 | | 06-01 | | 28 |
| | 08-52 | | 5 | 87434049 | 09-42 | | 19 |
| | 08-54 | | 5 | 87434050 | 09-42 | | 20 |
| 87428151 | 09-01 | | 33 | 87434099 | 02-04 | | 14 |
| 87428152 | 09-01 | | 34 | | 02-04A | | 15 |
| 87428153 | 09-02 | | 35 | 87434257 | 08-01 | | 5 |
| 87428158 | 08-09 | | 26 | 87434261 | 08-26 | | 17 |
| 87428164 | 08-50 | | 8 | 87434262 | 08-26 | | 16 |
| | 08-51 | | 8 | 87434265 | 08-26 | | 15 |
| | 08-52 | | 8 | 87434614 | 02-01 | | 5 |
| | 08-53 | | 5 | 87434621 | 08-20 | | 6 |
| | 08-54 | | 8 | | 08-49 | | |
| 87428165 | 08-50 | | 10 | 87434649 | 02-01 | | 6 |
| | 08-51 | | 10 | 87434672 | 08-01 | | 11 |
| | 08-52 | | 10 | | 08-29 | | |
| | 08-53 | | 6 | 87434745 | 09-38 | | 1 |
| | 08-54 | | 10 | 87434766 | 08-30 | | |
| 87428645 | 09-03 | | 3 | 87434767 | 08-31 | | |
| 87428998 | 06-10 | | 18 | 87434768 | 08-30 | | |
| 87429186 | 09-73 | | 16 | 87434769 | 08-31 | | |
| 87429287 | 08-05 | | 12 | 87434777 | 08-22 | | 26 |
| | 08-06 | | 11 | 87434783 | 09-58 | | |
| 87429290 | 08-04 | | 14 | 87434793 | 02-01 | | 2 |
| 87429293 | 08-04 | | 15 | 87434974 | 09-68 | | 1 |
| 87429310 | 03-01 | | 1 | 87434978 | 02-01 | | 12 |
| 87429314 | 03-01 | | 1A | 87434979 | 09-53 | | 1 |
| 87429382 | 05-02 | | 10 | 87434980 | 09-53 | | 1 |
| 87429654 | 08-08 | | 32 | 87435073 | 08-21 | | 16 |
| 87429895 | 08-01 | | 16 | 87435242 | 08-53 | | 9 |
| 87429948 | 09-67 | | 6 | | 08-54 | | 11 |
| 87429949 | 09-67 | | 12 | 87435243 | 08-50 | | 11 |
| 87429950 | 09-67 | | 2 | | 08-51 | | 11 |
| 87429951 | 09-67 | | 10 | | 08-52 | | 11 |
| 87429952 | 09-67 | | 7 | 87435275 | 09-13 | | 8 |
| 87429954 | 09-67 | | 17 | 87435277 | 06-10 | | 15 |
| 87429970 | 06-15 | | 1 | 87435278 | 06-10 | | 19 |
| 87429971 | 06-15 | | 15 | 87435279 | 06-10 | | 20A |
| 87429972 | 06-14 | | 1 | 87435280 | 06-10 | | 20 |
| 87429973 | 06-18 | | 20 | 87435372 | 09-14 | | 8 |
| 87429974 | 06-19 | | | 87435381 | 04-20 | | 2 |
| 87429978 | 06-22 | | | 87435409 | 02-02 | | 2 |
| 87429981 | 06-18 | | 28 | 87435499 | 02-06A | | 7 |

HTTP://WWW.MINNPARBACKHOEPARTS.COM




| Number | Figure | Sequence | Ref. |
|---|---|---|---|
| 87435506 | 08-50 | | 15 |
| | 08-51 | | 16 |
| | 08-52 | | 17 |
| | 08-53 | | 12 |
| | 08-54 | | 14 |
| 87435510 | 08-15 | | 4 |
| | 08-16 | | 4 |
| | 08-19 | | 4 |
| | 08-53 | | |
| 87435761 | 08-01 | | 3 |
| 87435909 | 08-26 | | 5 |
| | 08-28 | | |
| 87435923 | 08-25 | | 20 |
| 87435924 | 09-15 | | 12 |
| | 09-25 | | 11 |
| | 09-25A | | 11 |
| 87436066 | 08-01 | | 17 |
| | 08-02 | | 16 |
| | 08-02 | | 7 |
| 87436076 | 09-42 | | 3 |
| 87436225 | 08-50 | | 2 |
| | 08-51 | | 2 |
| | 08-52 | | 2 |
| | 08-53 | | 2 |
| | 08-54 | | 3 |
| 87436235 | 09-27 | | 18 |
| 87436396 | 04-20 | | 5 |
| 87436614 | 02-06A | | 17 |
| 87436615 | 02-06A | | 14 |
| 87436675 | 04-07 | | |
| | 04-09 | | |
| | 08-25 | | 23 |
| | 09-70 | | 5 |
| 87436676 | 04-20 | | 7 |
| 87436836 | 04-07 | | 15 |
| | 04-07 | | 8 |
| | 04-20 | | 11 |
| 87436908 | 08-06 | | 23 |
| 87436910 | 08-06 | | 24 |
| 87437108 | 08-04 | | 24 |
| 87437228 | 08-01 | | 26 |
| 87437231 | 08-02 | | 18 |
| | 08-02 | | 6 |
| | 08-23 | | 37 |
| 87437232 | 08-02 | | 18 |
| | 08-02 | | 6 |
| | 08-23 | | 36 |
| 87437263 | 08-26 | | 1 |
| 87437265 | 08-25 | | 22 |
| 87437366 | 09-14 | | 3 |
| 87437369 | 09-14 | | 4 |
| 87437371 | 08-52 | | 13 |
| | 08-54 | | 12 |
| 87437372 | 08-50 | | 12 |
| | 08-51 | | 12 |
| | 08-52 | | 12 |
| 87437373 | 08-51 | | 14 |
| 87437441 | 08-02 | | 6 |
| 87437442 | 08-02 | | 18 |
| 87437621 | 08-22 | | 45 |
| 87437623 | 08-22 | | 30 |
| 87437625 | 08-22 | | 47 |
| 87437627 | 08-22 | | 43 |
| 87437629 | 08-22 | | 46 |
| 87437631 | 08-22 | | 44 |
| 87437633 | 08-17 | | 6 |
| | 08-18 | | 8 |
| | 08-20 | | 8 |
| 87437635 | 08-17 | | 7 |
| | 08-18 | | 9 |
| | 08-20 | | 9 |
| 87437641 | 08-22 | | 51 |
| 87437655 | 08-01 | | 39 |
| 87437657 | 08-01 | | 40 |
| 87437685 | 08-09A | | 14 |
| 87437688 | 09-13 | | 18 |
| 87437689 | 09-14 | | 5 |
| 87437733 | 08-15 | | 3 |
| | 08-17 | | 8 |
| | 08-50 | | |
| 87437734 | 08-19 | | 3 |
| | 08-20 | | 3 |
| 87437734 | 08-52 | | |
| 87437735 | 08-16 | | 3 |
| | 08-18 | | 2 |
| | 08-51 | | |
| 87437736 | 08-17 | | 9 |
| | 08-18 | | 3 |
| | 08-20 | | 4 |
| | 08-54 | | |
| 87437804 | 02-06 | | 2 |
| | 02-06A | | 2 |
| | 02-06B | | 2 |
| 87437805 | 02-06 | | 1 |
| | 02-06A | | 1 |
| | 02-06B | | 1 |
| 87437806 | 09-15 | | 27 |
| 87437834 | 02-06 | | 7 |
| 87437836 | 02-06B | | 7 |
| 87437923 | 08-21 | | 6 |
| 87437924 | 08-21 | | 5 |
| 87437925 | 08-21 | | 7 |
| 87437926 | 08-21 | | 9 |
| 87437927 | 08-21 | | 4 |
| 87437928 | 08-21 | | 8 |
| 87437929 | 08-21 | | 10 |
| 87437930 | 08-21 | | 11 |
| 87437933 | 08-21 | | 12 |
| 87437934 | 08-02 | | 13 |
| 87437935 | 08-21 | | 13 |
| 87437938 | 08-08A | | 32 |
| 87437939 | 08-08A | | 33 |
| 87437940 | 08-08A | | 34 |
| 87437941 | 08-08A | | 35 |
| 87437980 | 08-01 | | 42 |
| 87437982 | 08-01 | | 43 |
| 87438012 | 08-19 | | 8 |
| 87438015 | 08-19 | | 9 |
| 87438046 | 08-50 | | 16 |
| | 08-51 | | 17 |
| | 08-52 | | 18 |
| 87438157 | 09-21 | | 14 |
| 87439032 | 08-21 | | 14 |
| 87439033 | 08-21 | | 15 |
| 87439135 | 09-21 | | 13 |
| 87439136 | 05-02 | | 13 |
| 87439137 | 05-02 | | 1 |
| 87439138 | 05-02 | | 5 |
| 87439163 | 08-08A | | 38 |
| | 08-22 | | 25 |
| 87439210 | 09-12 | | 15 |
| 87439213 | 08-22 | | 48 |
| 87439215 | 08-22 | | 40 |
| 87439444 | 02-06 | | 10 |
| | 02-06A | | 10 |
| | 02-06B | | 14 |
| 87439448 | 09-41 | | 11 |
| 87440058 | 09-20 | | 10 |
| 87440076 | 09-17 | | 10 |
| 87440381 | 09-13 | | 31 |
| 87440704 | 09-13 | | 9 |
| 87440706 | 09-13 | | 10 |
| 87440710 | 09-13 | | 1 |
| 87440711 | 09-13 | | |
| | 09-15 | | 1 |
| 87440712 | 08-22 | | 14 |
| 87803194 | 03-08 | | 6 |
| 87803261 | 02-32 | | 1 |
| 892-11005 | 03-03 | | 30 |
| | 04-19 | | 6 |
| 892-11006 | 03-03 | | 31 |
| | 09-25 | | 17 |
| | 09-25A | | 17 |
| | 09-60 | | 3 |
| | 09-70 | | |
| 892-11008 | 02-01 | | 41 |
| | 03-03 | | 10 |
| | 04-03 | | 5 |
| | 04-06A | | 17 |
| | 04-08 | | 11 |
| | 04-16 | | 4 |
| | 07-03 | | 3 |
| | 07-03 | | 37 |
| | 07-04 | | 6 |

HTTP://WWW.MINNPARBACKHOEPARTS.COM




| Number | Figure | Sequence | Ref. |
|---|---|---|---|
| 892-11008 | 07-06 | | 14 |
| | 08-01 | | 34 |
| | 08-08A | | 3A |
| | 08-22 | | 22 |
| | 08-23 | | 22 |
| | 09-05 | | 10 |
| | 09-08 | | 28 |
| | 09-12 | | 14 |
| | 09-13 | | 6 |
| | 09-15 | | 3 |
| | 09-25 | | 24 |
| | 09-25A | | 24 |
| | 09-44 | | 6 |
| 892-11010 | 02-06 | | 5 |
| | 02-06A | | 5 |
| | 02-06B | | 5 |
| | 03-01 | | 32 |
| | 03-03 | | 24 |
| | 05-02 | | 26 |
| | 07-03 | | 11 |
| | 07-06 | | 22 |
| | 08-04 | | 12 |
| | 08-05 | | 10 |
| | 08-05 | | 16 |
| | 08-05 | | 37 |
| | 08-06 | | 16 |
| | 08-06 | | 9 |
| | 08-07 | | 9 |
| | 08-10 | | 31 |
| | 08-22 | | 42 |
| | 08-23 | | 12 |
| | 08-24 | | 12 |
| | 08-27 | | 15 |
| | 08-27 | | 6 |
| | 09-08 | | 26 |
| | 09-13 | | 28 |
| | 09-24 | | 38 |
| | 09-25 | | 7 |
| | 09-25A | | 7 |
| | 09-38 | | 31 |
| 893-11005 | 04-18 | | 8 |
| 895-11004 | 04-11 | | 13 |
| | 09-54 | | 8 |
| 895-11005 | 03-03 | | 6 |
| 895-11006 | 04-06A | | 14 |
| | 04-06A | | 29 |
| | 09-55 | | 10A |
| 895-11008 | 02-01 | | 10 |
| | 02-02 | | 13 |
| | 02-02 | | 16 |
| | 02-02 | | 23 |
| | 02-03 | | 8 |
| | 02-04 | | 3 |
| | 02-04A | | 3 |
| | 03-03 | | 11 |
| | 04-16 | | 11 |
| | 06-10 | | 3 |
| | 07-03 | | 2A |
| | 07-06 | | 34 |
| | 08-22 | | 27 |
| | 09-03 | | 16 |
| | 09-05 | | 9 |
| | 09-12 | | 13 |
| | 09-21 | | 15 |
| | 09-37 | | 18 |
| | 09-59 | | 19 |
| | 09-66 | | |
| | 09-70 | | 24 |
| 895-11010 | 02-01 | | 23 |
| | 03-01 | | 34 |
| | 03-01 | | 42 |
| | 04-16 | | 7 |
| | 07-06 | | 31 |
| | 08-03 | | 3 |
| | 08-04 | | 11 |
| | 08-05 | | 38 |
| | 08-05 | | 9 |
| | 08-07 | | 14 |
| | 08-08 | | 31 |
| | 08-08A | | 31 |
| | 08-09 | | 4 |
| | 08-09A | | 4 |
| 895-11010 | 08-10 | | 30 |
| | 08-10 | | 33 |
| | 08-11 | | 28 |
| | 08-12 | | 25 |
| | 08-13 | | 26 |
| | 08-13 | | 37 |
| | 08-24 | | 11 |
| | 08-25 | | 3 |
| | 09-04 | | 20 |
| | 09-08 | | 17 |
| | 09-08 | | 21 |
| | 09-38 | | 29 |
| | 09-38 | | 51 |
| | 09-40 | | 11 |
| | 09-40 | | 14 |
| | 09-40 | | 23 |
| | 09-40 | | 29 |
| | 09-40 | | 6 |
| | 09-41 | | 4 |
| | 09-41 | | 6 |
| | 09-45 | | 10 |
| 895-11018 | 08-09 | | 7 |
| 895-15006 | 04-11 | | 8 |
| 895-15008 | 04-11 | | 33 |
| | 05-01 | | 16 |
| | 05-01 | | 24 |
| | 09-13 | | 4 |
| | 09-43 | | 31 |
| | 09-62 | | 7 |
| | 09-63 | | 16 |
| 895-15010 | 05-01 | | 21 |
| | 08-08 | | 3 |
| | 08-08A | | 3 |
| | 08-22 | | 21 |
| | 08-25 | | 7 |
| | 09-13 | | 12 |
| | 09-25 | | 8 |
| | 09-25A | | 8 |
| | 09-63 | | 11 |
| 895-30107 | 09-55 | | 35 |
| | 09-57 | | 12 |
| 895-30109 | 09-14 | | 6 |
| | 09-43 | | 17 |
| | 09-43 | | 22A |
| | 09-43 | | 5A |
| 896-11008 | 09-13 | | 32 |
| 896-11010 | 02-01 | | 38 |
| | 08-24 | | 25 |
| | 08-26 | | 3 |
| | 08-26 | | 7 |
| | 09-01 | | 29A |
| 896-11012 | 04-06A | | 33 |
| | 06-11 | | 10 |
| | 08-10 | | 3 |
| | 08-11 | | 3 |
| | 08-12 | | 3 |
| | 08-13 | | 3 |
| | 08-14 | | 3 |
| | 08-23 | | 18 |
| | 09-46 | | 11B |
| | 09-67 | | 9 |
| 896-11016 | 09-37 | | 12 |
| 896-11020 | 03-01 | | 3A |
| | 06-24 | | 5 |
| | 09-05 | | 18 |
| | 09-06 | | 7 |
| | 09-06 | | 7 |
| | 09-07 | | 7 |
| | 09-23 | | 14 |
| | 09-36 | | 3 |
| | 09-36 | | 7 |
| | 09-38 | | 3A |
| 896-15008 | 02-06B | | 11 |
| | 07-06 | | 33 |
| | 09-67 | | 16 |
| 896-15010 | 02-04 | | 9 |
| | 02-04A | | 13 |
| | 02-06 | | 12 |
| | 02-06 | | 4 |
| | 02-06A | | 12 |
| | 02-06A | | 4 |
| | 02-06B | | 16 |

HTTP://WWW.MINNPARBACKHOEPARTS.COM




| Number | Figure | Sequence | Ref. |
|---|---|---|---|
| 896-15010 | 02-06B | | 4 |
| | 06-11 | | 25 |
| | 08-22 | | 11 |
| | 09-09 | | 3 |
| | 09-13 | | 19 |
| | 09-67 | | 5 |
| 896-15012 | 02-07 | | 4 |
| | 03-03 | | 27 |
| | 06-11 | | 28 |
| | 09-40 | | 17 |
| | 09-40 | | 20 |
| | 09-46 | | 5 |
| | 09-51 | | |
| 90-6682T1 | 06-01 | | 16 |
| | 06-09 | | 12 |
| | 06-11 | | 40 |
| | 06-31 | | 12 |
| 905794R1 | 06-16 | | 20 |
| 905839R1 | 05-06 | | 6 |
| | 06-04 | | 4 |
| 906086R1 | 09-55 | | 42 |
| | 09-57 | | 19 |
| 934667R1 | 06-13 | | 3 |
| | 06-14 | | 4 |
| | 06-21 | | 36 |
| | 06-22 | | 6 |
| 934727R1 | 05-06 | | 4 |
| | 06-04 | | 2 |
| 98429552 | 02-30 | | 9 |
| 98429625 | 03-11 | | 4 |
| 98442879 | 02-30 | | 12 |
| 98445111 | 02-30 | | 12 |
| A13240 | 08-25 | | 10 |
| A156873 | 06-02 | | 6 |
| A166057 | 04-04 | | 17 |
| | 04-04 | | 2 |
| A167037 | 09-71 | | 8 |
| A170467 | 02-06 | | 8 |
| | 02-06A | | 8 |
| | 02-06B | | 8 |
| A177435 | 03-02 | | 2 |
| A187542 | 04-17 | | 5 |
| A187575 | 04-17 | | 11 |
| A187714 | 09-58 | | 10 |
| | 09-60 | | |
| A187990 | 04-08 | | 5 |
| | 07-03 | | 32 |
| A188028 | 07-06 | | 23 |
| A23870 | 04-17 | | 1 |
| A30881 | 09-03 | | 11 |
| | 09-13 | | 3 |
| | 09-16 | | 15 |
| | 09-17 | | 5 |
| | 09-18 | | 26 |
| | 09-21 | | 6 |
| A33509 | 09-27 | | 29 |
| A38208 | 05-04 | | 15 |
| | 05-09 | | 7 |
| A41264 | 04-15 | | 9 |
| A42561 | 04-09 | | 8 |
| | 09-64 | | 6 |
| | 09-65 | | 14B |
| A45054 | 09-52 | | 16 |
| A48041 | 06-06 | | 11 |
| | 06-17 | | 6 |
| | 06-18 | | 2 |
| A65544 | 05-01 | | 5 |
| A77310 | 07-03 | | 14 |
| B17575 | 06-02 | | |
| | 06-02 | | |
| | 06-03 | | |
| | 06-04 | | |
| | 06-06 | | |
| | 06-06 | | |
| | 06-07 | | |
| | 06-08 | | |
| BMF28S | 04-06 | | 1 |
| D121152 | 04-13 | | 2 |
| | 04-15 | | |
| D121194 | 09-05 | | 6 |
| D121608 | 07-06 | | 12 |
| D123347 | 09-72 | | 4 |
| D123684 | 05-04 | | 3 |
| | 06-01 | | 10 |
| D124528 | 07-03 | | 19 |
| D124529 | 07-03 | | 13 |
| D124530 | 07-03 | | 23 |
| D124857 | 03-03 | | 8 |
| D125079 | 04-05 | | 7 |
| D125223 | 05-09 | | 1 |
| D126409 | 04-06 | | 4 |
| D127167 | 09-26 | | 44 |
| | 09-27 | | 21 |
| D127335 | 04-11 | | 24 |
| D127542 | 09-04 | | 2 |
| D128022 | 09-60 | | 7 |
| D128745 | 09-60 | | 4 |
| | 09-70 | | 2 |
| D129227 | 09-25 | | 2 |
| | 09-25A | | 2 |
| D129264 | 09-06 | | 2 |
| | 09-06 | | 2 |
| | 09-07 | | 2 |
| | 09-08 | | 11 |
| D129747 | 07-06 | | 13 |
| D132076 | 09-05 | | 17 |
| D132494 | 09-24 | | 16 |
| | 09-27 | | 2 |
| D132982 | 07-04 | | 22 |
| | 08-03 | | 15 |
| | 09-64 | | 24 |
| D133632 | 09-24 | | 21 |
| | 09-27 | | 7 |
| D133865 | 09-27 | | 24 |
| D134900 | 09-20 | | 6 |
| D135384 | 04-13 | | 1 |
| | 04-15 | | |
| D135557 | 09-23 | | 5 |
| D135559 | 09-23 | | 6 |
| D135739 | 09-24 | | 12 |
| D136391 | 09-23 | | 26 |
| D136392 | 09-23 | | 24 |
| D136700 | 09-23 | | 25 |
| D136773 | 09-01 | | 17 |
| | 09-19 | | 11 |
| D137077 | 07-03 | | 6 |
| D137218 | 09-24 | | 13 |
| D137363 | 04-04 | | 12 |
| | 09-04 | | 16 |
| | 09-52 | | 3 |
| D137468 | 04-09 | | 26 |
| D137625 | 08-01 | | 14 |
| D137627 | 06-01 | | 17 |
| | 06-09 | | 13 |
| | 06-11 | | 41 |
| | 06-31 | | 13 |
| D138047 | 09-26 | | 50 |
| | 09-26 | | 52 |
| | 09-27 | | 34 |
| | 09-27 | | 47 |
| D138055 | 08-04 | | 8 |
| | 08-05 | | 15 |
| | 08-05 | | 35 |
| | 08-05 | | 6 |
| | 08-06 | | 14 |
| | 08-06 | | 7 |
| | 08-26 | | 31 |
| | 08-27 | | 12 |
| | 09-38 | | 32 |
| D138157 | 09-28 | | 7 |
| | 09-29 | | 7 |
| | 09-30 | | 7 |
| | 09-32 | | 7 |
| | 09-32 | | 7 |
| | 09-34 | | 7 |
| | 09-35 | | 7 |
| D138380 | 06-23 | | 4 |
| | 06-24 | | 3 |
| D138492 | 06-23 | | 5 |
| | 06-24 | | 2 |
| D139039 | 09-16 | | 19 |
| D139849 | 09-28 | | |
| | 09-29 | | |
| | 09-30 | | |

HTTP://WWW.MINNPARBACKHOEPARTS.COM




| Number | Figure | Sequence | Ref. |
|---|---|---|---|
| D139849 | 09-32 | | |
| | 09-32 | | |
| | 09-34 | | |
| | 09-35 | | |
| D139851 | 09-28 | | |
| | 09-29 | | |
| | 09-30 | | |
| | 09-32 | | |
| | 09-32 | | |
| | 09-34 | | |
| | 09-35 | | |
| D140029 | 08-65 | | 15 |
| | 09-26 | | 8 |
| D140035 | 07-03 | | 9 |
| D140247 | 09-27 | | 28 |
| D140267 | 09-40 | | 32 |
| D140706 | 08-14 | | 18 |
| D141075 | 09-26 | | 42 |
| D141076 | 09-26 | | 36A |
| D141142 | 09-26 | | 20 |
| | 09-27 | | 37 |
| D141164 | 09-26 | | 22 |
| | 09-27 | | 39 |
| D141666 | 09-27 | | 11 |
| D142012 | 09-35 | | 4 |
| D142144 | 09-71 | | 10 |
| D142519 | 09-22 | | 15 |
| D142787 | 08-04 | | 20 |
| | 08-08 | | 27 |
| | 08-08A | | 27 |
| | 08-09 | | 21 |
| | 08-09A | | 21 |
| D142898 | 05-08 | | 6 |
| | 06-20 | | 16 |
| | 06-26 | | 22 |
| D142971 | 06-27 | | 5 |
| D142986 | 06-30 | | 2 |
| D143033 | 06-27 | | 18 |
| D143242 | 09-68 | | 4 |
| D143324 | 09-26 | | 30 |
| D143406 | 09-22 | | 13 |
| | 09-22 | | 33 |
| D143411 | 09-13 | | 35 |
| D143416 | 09-20 | | 5 |
| D143417 | 09-25 | | 9 |
| | 09-25A | | 9 |
| | 09-40 | | 25 |
| | 09-64 | | 29 |
| | 09-65 | | 20 |
| D143427 | 09-64 | | 27 |
| | 09-65 | | 18 |
| D143591 | 09-15 | | 15 |
| | 09-25 | | 21 |
| | 09-25A | | 21 |
| D143714 | 09-40 | | 9 |
| D143715 | 09-40 | | 8 |
| D143723 | 09-15 | | 10 |
| | 09-25 | | 22 |
| | 09-25A | | 22 |
| D143735 | 09-25 | | 20 |
| | 09-25A | | 20 |
| D143846 | 08-07 | | 6 |
| | 08-12 | | 26 |
| D144423 | 09-23 | | 35 |
| D144592 | 09-25 | | 3 |
| | 09-25A | | 3 |
| D145978 | 09-26 | | 7 |
| | 09-27 | | 16 |
| D146288 | 09-26 | | 26 |
| | 09-27 | | 49 |
| D146420 | 09-29 | | 3 |
| D146421 | 09-29 | | 2 |
| D147166 | 04-07 | | 6 |
| D147249 | 09-29 | | 4 |
| D147383 | 04-04 | | 33 |
| | 09-59 | | 17 |
| | 09-70 | | 25 |
| D147409 | 09-28 | | 4 |
| D148108 | 04-07 | | 35 |
| | 04-08 | | 4 |
| | 07-03 | | 31 |
| D148947 | 09-18 | | 2 |
| D148962 | 03-02 | | 6 |
| | 09-13 | | 30 |
| D148992 | 09-16 | | 7 |
| D148993 | 09-13 | | 2 |
| D148994 | 09-16 | | 18 |
| D149079 | 08-63 | | 17 |
| | 08-63 | | 3 |
| | 08-64 | | 15 |
| | 09-23 | | 2 |
| | 09-26 | | 47 |
| | 09-27 | | 31 |
| D149262 | 09-16 | | 46 |
| D149287 | 09-01 | | 35 |
| | 09-02 | | 36A |
| | 09-03 | | 4 |
| | 09-16 | | 37 |
| | 09-17 | | 11 |
| | 09-19 | | 3 |
| | 09-20 | | 11 |
| D149288 | 07-06 | | 20 |
| | 09-02 | | 36 |
| | 09-16 | | 23 |
| | 09-16 | | 48 |
| | 09-19 | | 7 |
| | 09-21 | | 11 |
| D149295 | 09-16 | | 34 |
| | 09-19 | | 9 |
| D149298 | 09-26 | | 32 |
| D149309 | 08-24 | | 3 |
| D149725 | 05-05 | | 4 |
| | 06-02 | | 2 |
| D149726 | 05-05 | | 3 |
| | 06-02 | | 4 |
| D149737 | 06-04 | | 8 |
| D149738 | 06-04 | | 6 |
| D149739 | 06-04 | | |
| D149824 | 09-74 | | 3 |
| D149825 | 09-74 | | 4 |
| D149826 | 09-79 | | 10 |
| D149827 | 09-79 | | 11 |
| D149828 | 09-74 | | 5 |
| D149829 | 09-74 | | 6 |
| D149860 | 06-09 | | |
| | 06-31 | | |
| D149866 | 09-11 | | 9 |
| D149867 | 09-11 | | 10 |
| D149868 | 09-11 | | 12 |
| D150032 | 09-20 | | 13 |
| D150121 | 09-26 | | 10 |
| | 09-27 | | 17 |
| D150214 | 05-06 | | 11A |
| D150391 | 09-46 | | 15 |
| | 09-46 | | 23 |
| D150392 | 09-46 | | 16 |
| | 09-46 | | 24 |
| D150397 | 09-16 | | 9 |
| D150434 | 09-16 | | 13 |
| D150435 | 09-16 | | 12 |
| D150486 | 09-16 | | 17 |
| D150493 | 09-16 | | 24 |
| D150503 | 09-16 | | 45 |
| D150521 | 04-06A | | 25 |
| D150619 | 09-26 | | 34 |
| D150633 | 07-06 | | 11 |
| D151034 | 09-05 | | 15 |
| D151065 | 09-23 | | 21 |
| D151069 | 09-37 | | 5 |
| D151070 | 09-37 | | 6 |
| D151071 | 09-24 | | 11 |
| D151073 | 09-23 | | 7 |
| D151074 | 09-23 | | 8 |
| D25279 | 09-22 | | 10 |
| | 09-22 | | 14 |
| | 09-26 | | 31 |
| D26002 | 09-22 | | 9 |
| D28648 | 09-22 | | 12 |
| D30933 | 09-28 | | 12 |
| | 09-29 | | 12 |
| | 09-30 | | 12 |
| | 09-31 | | 9 |
| | 09-32 | | 12 |
| | 09-32 | | 12 |

HTTP://WWW.MINNPARBACKHOEPARTS.COM



| Number | Figure | Sequence | Ref. | Number | Figure | Sequence | Ref. |
|---|---|---|---|---|---|---|---|
| D30933 | 09-33 | | 9 | D95142 | 08-59 | | 5 |
| | 09-34 | | 12 | D95143 | 08-58 | | 5 |
| | 09-35 | | 12 | | 08-60 | | 5 |
| D31140 | 09-08 | | 2 | | 08-66 | | 4 |
| | 09-26 | | 53 | D95144 | 08-61 | | 5 |
| | 09-27 | | 48 | | 08-62 | | 5 |
| D34666 | 09-16 | | 16 | D95145 | 08-63 | | 7 |
| D37495 | 09-29 | | 11 | | 08-64 | | 5 |
| | 09-30 | | 11 | | 08-65 | | 5 |
| | 09-31 | | 8 | E135750 | 06-26 | | 18 |
| | 09-32 | | 11 | E135777 | 06-27 | | 3 |
| | 09-32 | | 11 | E135785 | 06-27 | | 8 |
| | 09-33 | | 8 | E135809 | 06-13 | | 10A |
| | 09-34 | | 11 | | 06-13 | | 1A |
| | 09-35 | | 11 | | 06-14 | | 13 |
| D37614 | 09-26 | | 29 | | 06-14 | | 1A |
| D38435 | 08-03 | | 23 | | 06-25 | | 6 |
| D38648 | 08-07 | | 20 | E135810 | 07-02 | | 7 |
| | 08-14 | | 21 | E43769 | 09-59 | | 22 |
| D38907 | 09-22 | | 3 | E46560 | 09-59 | | |
| D39118 | 09-18 | | 11 | | 09-70 | | |
| D39256 | 09-22 | | 17 | E47238 | 09-59 | | 3 |
| D39696 | 08-03 | | 18 | | 09-70 | | 16 |
| D40442 | 03-01 | | 37 | E47239 | 09-59 | | 2 |
| | 09-38 | | 37 | | 09-70 | | 17 |
| D41659 | 09-31 | | | E47240 | 09-59 | | 4 |
| | 09-33 | | | | 09-70 | | 18 |
| D43940 | 09-28 | | 11 | F22426 | 04-11 | | |
| D48212 | 09-28 | | 10 | F44883 | 09-41 | | 10 |
| | 09-29 | | 10 | F45165 | 09-55 | | 49 |
| | 09-30 | | 10 | | 09-57 | | 25 |
| | 09-32 | | 10 | F64198 | 09-55 | | 45 |
| | 09-32 | | 10 | | 09-57 | | 22 |
| | 09-34 | | 10 | F64519 | 09-68 | | 14 |
| | 09-35 | | 10 | G100440 | 08-61 | | 15 |
| D50146 | 09-22 | | 6 | G100444 | 08-59 | | 15 |
| D51391 | 09-08 | | 7 | | 08-60 | | 17 |
| D51392 | 09-08 | | 15 | | 08-66 | | 14 |
| D51393 | 09-08 | | 19 | G100448 | 08-61 | | 16 |
| D51750 | 09-28 | | 5 | G100449 | 08-59 | | 16 |
| | 09-28 | | 8 | | 08-60 | | 18 |
| | 09-29 | | 5 | | 08-66 | | 15 |
| | 09-29 | | 8 | G101533 | 08-61 | | 6 |
| | 09-30 | | 5 | | 08-62 | | 6 |
| | 09-30 | | 8 | G101994 | 08-63 | | 21 |
| | 09-31 | | 5 | G101995 | 08-63 | | 20 |
| | 09-32 | | 5 | G101996 | 08-63 | | 22 |
| | 09-32 | | 5 | G102285 | 08-61 | | 14 |
| | 09-32 | | 8 | G102287 | 08-58 | | 14 |
| | 09-32 | | 8 | | 08-65 | | 17 |
| | 09-33 | | 5 | G102288 | 08-59 | | 14 |
| | 09-34 | | 5 | | 08-60 | | 16 |
| | 09-34 | | 8 | | 08-66 | | 13 |
| | 09-35 | | 5 | G102424 | 08-59 | | 6 |
| | 09-35 | | 8 | G102425 | 08-58 | | 6 |
| D52276 | 02-01 | | 22 | | 08-60 | | 6 |
| | 08-10 | | 7 | | 08-66 | | 5 |
| | 08-11 | | 7 | G102426 | 08-63 | | 8 |
| | 08-12 | | 7 | | 08-64 | | 6 |
| | 08-13 | | 7 | G107277 | 08-66 | | 12 |
| | 08-14 | | 7 | G108123 | 08-61 | | 13 |
| | 08-22 | | 13 | G108512 | 08-59 | | 3 |
| D52564 | 09-72 | | 1 | G108518 | 08-59 | | 13 |
| D55216 | 09-38 | | 56 | G109298 | 08-59 | | 10 |
| | 09-74 | | 10 | | 08-60 | | 11 |
| D59912 | 09-16 | | 4 | | 08-66 | | 9 |
| | 09-18 | | 6 | G109299 | 08-61 | | 10 |
| | 09-21 | | 2 | | 08-62 | | 24 |
| D61368 | 09-22 | | 16 | G109300 | 08-63 | | 14 |
| D67298 | 08-01 | | 35 | G110529 | 08-64 | | 18 |
| D68845 | 08-01 | | 36 | G110530 | 08-64 | | 19 |
| D74182 | 09-13 | | 36 | G110531 | 08-64 | | 17 |
| D75465 | 03-01 | | 12 | G32122 | 08-58 | | 10 |
| D76209 | 09-39 | | 11 | | 08-65 | | 12 |
| D80270 | 03-01 | | 39 | G32126 | 08-62 | | 10 |
| | 09-38 | | 48 | G32176 | 08-64 | | 12 |
| | 09-74 | | 11 | H434163 | 08-01 | | 15 |
| D86664 | 09-25 | | 19 | H71514 | 09-24 | | 7 |
| | 09-25A | | 19 | J936995 | 02-06B | | 10 |
| D88052 | 09-64 | | 32 | K260177 | 06-13 | | 5 |
| D88427 | 09-22 | | 11 | | 06-14 | | 6 |
| D95096 | 09-03 | | 13 | K261014 | 06-08 | | 4 |

HTTP://WWW.MINNPARBACKHOEPARTS.COM




| Number | Figure | Sequence | Ref. |
|---|---|---|---|
| K261014 | 06-28 | | 4 |
| K261065 | 06-08 | | 3 |
| | 06-28 | | 3 |
| K262143 | 06-08 | | 9 |
| | 06-28 | | 12 |
| K395027 | 06-07 | | 12 |
| K395075 | 06-07 | | 8 |
| K395082 | 06-06 | | 23 |
| | 06-30 | | 8 |
| K395086 | 06-07 | | 13 |
| K395087 | 06-07 | | 6 |
| K395090 | 06-08 | | 8 |
| | 06-28 | | 10 |
| K395091 | 06-06 | | 21 |
| K395093 | 06-06 | | 16 |
| | 06-30 | | 9 |
| K395101 | 06-30 | | 25 |
| K395131 | 06-30 | | 15 |
| K691987 | 02-01 | | 21 |
| | 09-39 | | 9 |
| L15401 | 09-03 | | 12 |
| L17985 | 02-04 | | 4 |
| | 02-04A | | 4 |
| L18337 | 02-02 | | 24 |
| | 02-04 | | 18 |
| | 02-04A | | 19 |
| | 02-06A | | 19 |
| | 03-01 | | 22 |
| | 03-02 | | 12 |
| | 04-04 | | 28 |
| | 04-07 | | 26 |
| | 04-13 | | 11 |
| | 04-14 | | 14 |
| | 04-20 | | 14 |
| | 06-10 | | 10 |
| | 06-25 | | 7 |
| | 07-04 | | 23 |
| | 08-03 | | 16 |
| | 08-09 | | 29 |
| | 08-10 | | 16 |
| | 08-10 | | 26 |
| | 08-11 | | 15 |
| | 08-11 | | 24 |
| | 08-12 | | 15 |
| | 08-13 | | 19 |
| | 08-14 | | 14 |
| | 08-21 | | |
| | 08-23 | | 15 |
| | 08-25 | | 25 |
| | 08-27 | | 18 |
| | 09-02 | | 41 |
| | 09-10 | | 36 |
| | 09-38 | | 59 |
| | 09-52 | | 22 |
| | 09-59 | | 16 |
| | 09-63 | | 21 |
| | 09-64 | | 25 |
| | 09-65 | | 17 |
| | 09-66 | | 11 |
| | 09-70 | | 14 |
| L26209 | 07-03 | | 7 |
| L32100 | 08-29 | | 9 |
| L32418 | 08-29 | | 1 |
| L54563 | 09-16 | | 14 |
| | 09-17 | | 1 |
| L60224 | 04-11 | | 5 |
| | 09-38 | | 49 |
| L71879 | 04-04 | | 21 |
| | 04-07 | | |
| | 04-07 | | |
| | 04-07 | | |
| | 04-07 | | 10 |
| | 04-08 | | |
| | 04-09 | | |
| L79937 | 08-05 | | 39 |
| N13505 | 05-06 | | 12A |
| | 06-03 | | 11 |
| N13582 | 08-29 | | 6 |
| N14283 | 04-15 | | 10 |
| N14367 | 05-05 | | 2 |
| | 06-02 | | 3 |
| N14373 | 05-05 | | 8 |
| N14407 | 06-07 | | 5 |
| N14408 | 06-07 | | 7 |
| N14410 | 06-05 | | 3 |
| N14466 | 09-61 | | 20 |
| N14784 | 07-05 | | |
| N6755 | 08-57 | | |
| N6836 | 04-15 | | 3 |
| N6941 | 08-57 | | |
| N7802 | 09-47 | | |
| N9025 | 08-57 | | |
| NSS | 04-04 | | 31B |
| | 04-09 | | 2 |
| | 04-09 | | 25 |
| | 04-09 | | 3 |
| | 04-09 | | 4 |
| | 04-12 | | |
| | 04-12 | | |
| | 04-12 | | |
| | 04-15 | | 1 |
| | 04-15 | | 5 |
| | 04-15 | | 6 |
| | 04-15 | | 7 |
| | 04-15 | | 8 |
| | 04-17 | | 12 |
| | 05-03 | | 1 |
| | 05-03 | | 3 |
| | 05-03 | | 5 |
| | 05-03 | | 6 |
| | 05-07 | | 2 |
| | 06-02 | | 14 |
| | 06-04 | | 1 |
| | 06-04 | | 10 |
| | 06-04 | | 11 |
| | 06-04 | | 12 |
| | 06-04 | | 13 |
| | 06-04 | | 14 |
| | 06-04 | | 15 |
| | 06-04 | | 16 |
| | 06-06 | | 14 |
| | 06-06 | | 15 |
| | 06-06 | | 3 |
| | 06-07 | | 1 |
| | 06-07 | | 2 |
| | 06-08 | | 1 |
| | 06-08 | | 2 |
| | 06-09 | | 10 |
| | 06-09 | | 11 |
| | 06-09 | | 2 |
| | 06-09 | | 3 |
| | 06-09 | | 4 |
| | 06-09 | | 9 |
| | 06-11 | | |
| | 06-15 | | 10 |
| | 06-15 | | 11 |
| | 06-15 | | 12 |
| | 06-15 | | 13 |
| | 06-15 | | 14 |
| | 06-15 | | 17 |
| | 06-15 | | 18 |
| | 06-15 | | 2 |
| | 06-15 | | 20 |
| | 06-15 | | 21 |
| | 06-15 | | 3 |
| | 06-15 | | 3A |
| | 06-15 | | 4 |
| | 06-15 | | 5 |
| | 06-15 | | 6 |
| | 06-15 | | 7 |
| | 06-15 | | 8 |
| | 06-15 | | 9 |
| | 06-19 | | 10 |
| | 06-19 | | 11 |
| | 06-19 | | 12 |
| | 06-19 | | 15 |
| | 06-19 | | 20 |
| | 06-19 | | 21 |
| | 06-19 | | 22 |
| | 06-19 | | 23 |
| | 06-19 | | 24 |
| | 06-19 | | 25 |
| | 06-19 | | 25A |
| | 06-19 | | 7 |

HTTP://WWW.MINNPARBACKHOEPARTS.COM



| Number | Figure | Sequence | Ref. | Number | Figure | Sequence | Ref. |
|---|---|---|---|---|---|---|---|
| NSS | 06-19 | | 8 | NSS | 08-37 | | 8 |
| | 06-21 | | 1 | | 08-37 | | 9 |
| | 06-21 | | 38A | | 08-38 | | 10 |
| | 06-21 | | 43 | | 08-38 | | 8 |
| | 06-21 | | 45 | | 08-38 | | 9 |
| | 06-22 | | 1 | | 08-39 | | 10 |
| | 06-22 | | 2 | | 08-39 | | 11 |
| | 06-22 | | 3 | | 08-39 | | 9 |
| | 06-22 | | 4 | | 08-40 | | 1 |
| | 06-27 | | 1 | | 08-40 | | 2 |
| | 06-27 | | 2 | | 08-41 | | 1 |
| | 06-28 | | 1 | | 08-41 | | 2 |
| | 06-28 | | 2 | | 08-42 | | 1 |
| | 06-29 | | 15 | | 08-42 | | 2 |
| | 06-30 | | 20 | | 08-43 | | 1 |
| | 06-30 | | 6 | | 08-43 | | 2 |
| | 06-31 | | 10 | | 08-44 | | 1 |
| | 06-31 | | 11 | | 08-44 | | 2 |
| | 06-31 | | 2 | | 08-45 | | 1 |
| | 06-31 | | 3 | | 08-45 | | 2 |
| | 06-31 | | 4 | | 08-46 | | 1 |
| | 06-31 | | 9 | | 08-46 | | 2 |
| | 07-05 | | 1 | | 08-55 | | 1 |
| | 07-05 | | 10 | | 08-56 | | 1 |
| | 07-05 | | 11 | | 08-56 | | 10 |
| | 07-05 | | 12 | | 08-56 | | 11 |
| | 07-05 | | 13 | | 08-56 | | 12 |
| | 07-05 | | 14 | | 08-56 | | 13 |
| | 07-05 | | 15 | | 08-56 | | 4 |
| | 07-05 | | 16 | | 08-56 | | 9 |
| | 07-05 | | 17 | | 08-57 | | 1 |
| | 07-05 | | 18 | | 08-57 | | 6 |
| | 07-05 | | 2 | | 08-57 | | 7 |
| | 07-05 | | 3 | | 08-57 | | 8 |
| | 07-05 | | 4 | | 08-58 | | 7 |
| | 07-05 | | 5 | | 08-58 | | 8 |
| | 07-05 | | 6 | | 08-59 | | 7 |
| | 07-05 | | 7 | | 08-59 | | 8 |
| | 07-05 | | 8 | | 08-60 | | 8 |
| | 07-05 | | 9 | | 08-60 | | 9 |
| | 07-06 | | 1 | | 08-61 | | 7 |
| | 07-06 | | 2 | | 08-61 | | 8 |
| | 08-28 | | 1 | | 08-62 | | 7 |
| | 08-30 | | 1 | | 08-62 | | 8 |
| | 08-30 | | 2 | | 08-63 | | 10 |
| | 08-30 | | 3 | | 08-63 | | 11 |
| | 08-30 | | 4 | | 08-64 | | 8 |
| | 08-31 | | 1 | | 08-64 | | 9 |
| | 08-31 | | 2 | | 08-65 | | 8 |
| | 08-31 | | 3 | | 08-65 | | 9 |
| | 08-31 | | 4 | | 08-66 | | 6 |
| | 08-31 | | 5 | | 08-66 | | 7 |
| | 08-32 | | 1 | | 09-03 | | 10 |
| | 08-32 | | 2 | | 09-06 | | 1 |
| | 08-32 | | 3 | | 09-06 | | 1 |
| | 08-32 | | 4 | | 09-07 | | 1 |
| | 08-32 | | 5 | | 09-08 | | 1 |
| | 08-32 | | 6 | | 09-08 | | 10 |
| | 08-33 | | 1 | | 09-10 | | 10 |
| | 08-33 | | 2 | | 09-10 | | 2 |
| | 08-33 | | 3 | | 09-26 | | 43 |
| | 08-33 | | 4 | | 09-26 | | 6 |
| | 08-33 | | 5 | | 09-27 | | 15 |
| | 08-33 | | 6 | | 09-27 | | 20 |
| | 08-34 | | 1 | | 09-28 | | 2 |
| | 08-34 | | 2 | | 09-28 | | 3 |
| | 08-34 | | 3 | | 09-30 | | 2 |
| | 08-34 | | 4 | | 09-30 | | 3 |
| | 08-34 | | 5 | | 09-30 | | 4 |
| | 08-34 | | 6 | | 09-31 | | 7 |
| | 08-34 | | 7 | | 09-32 | | 2 |
| | 08-35 | | 1 | | 09-32 | | 2 |
| | 08-35 | | 2 | | 09-32 | | 3 |
| | 08-35 | | 3 | | 09-32 | | 3 |
| | 08-35 | | 4 | | 09-32 | | 4 |
| | 08-35 | | 5 | | 09-32 | | 4 |
| | 08-35 | | 6 | | 09-33 | | 7 |
| | 08-35 | | 7 | | 09-34 | | 2 |
| | 08-36 | | 7 | | 09-34 | | 3 |
| | 08-36 | | 8 | | 09-34 | | 4 |
| | 08-36 | | 9 | | 09-43 | | |
| | 08-37 | | 10 | | 09-43 | | |

HTTP://WWW.MINNPARBACKHOEPARTS.COM




| Number | Figure | Sequence | Ref. | Number | Figure | Sequence | Ref. |
|---|---|---|---|---|---|---|---|
| NSS | 09-47 | | 1 | REF | 09-10 | | |
| | 09-47 | | 2 | | 09-18 | | |
| | 09-47 | | 7 | | 09-19 | | |
| | 09-47 | | 8 | | 09-26 | | 28 |
| | 09-48 | | 9 | | 09-55 | | |
| | 09-49 | | 12 | | 09-56 | | |
| | 09-52 | | 1B | S109444 | 08-58 | | 15 |
| | 09-55 | | 1 | | 08-65 | | 18 |
| | 09-55 | | 1A | S109445 | 08-58 | | 16 |
| | 09-59 | | 1 | | 08-65 | | 19 |
| | 09-61 | | 19 | S115351 | 05-03 | | 2 |
| | 09-61 | | 21 | S300976 | 06-27 | | 7 |
| | 09-70 | | 15 | S301064 | 06-02 | | 18 |
| P1139855 | 06-28 | | 8 | S301065 | 06-02 | | 15 |
| P2230493 | 06-26 | | 25 | ST205A | 06-17 | | 1 |
| P2745466 | 06-20 | | 21 | | 06-20 | | 6 |
| P2745478 | 06-20 | | 10 | ST264 | 06-18 | | 23 |
| P2930467 | 06-30 | | 3 | T34857 | 04-15 | | 2 |
| P3034505 | 06-27 | | 9 | | | | |
| P3533055 | 06-19 | | 35 | | | | |
| | 06-20 | | 20 | | | | |
| P6427894 | 06-27 | | 16 | | | | |
| R24840 | 08-10 | | 28 | | | | |
| R32119 | 09-24 | | 8 | | | | |
| R46493 | 08-07 | | 7 | | | | |
| R54682 | 09-71 | | 6 | | | | |
| REF | 02-10 | | 11 | | | | |
| | 02-10 | | 12 | | | | |
| | 02-14 | | 15 | | | | |
| | 02-15 | | 4 | | | | |
| | 02-20 | | 6 | | | | |
| | 02-22 | | 5 | | | | |
| | 02-22 | | 6 | | | | |
| | 02-29 | | 7 | | | | |
| | 02-34 | | 12 | | | | |
| | 02-38 | | 10 | | | | |
| | 02-38 | | 4 | | | | |
| | 02-38 | | 7 | | | | |
| | 02-38 | | 8 | | | | |
| | 02-38 | | 9 | | | | |
| | 02-39 | | 5 | | | | |
| | 02-41 | | 3 | | | | |
| | 03-04 | | 5 | | | | |
| | 03-06 | | 10 | | | | |
| | 05-09 | | 2 | | | | |
| | 05-09 | | 5 | | | | |
| | 06-23 | | 3 | | | | |
| | 06-23 | | 3 | | | | |
| | 08-02 | | | | | | |
| | 08-02 | | | | | | |
| | 08-04 | | 1 | | | | |
| | 08-05 | | 1 | | | | |
| | 08-06 | | 1 | | | | |
| | 08-08 | | | | | | |
| | 08-08A | | | | | | |
| | 08-09 | | | | | | |
| | 08-09A | | | | | | |
| | 08-10 | | 1 | | | | |
| | 08-11 | | 1 | | | | |
| | 08-12 | | 1 | | | | |
| | 08-13 | | 1 | | | | |
| | 08-14 | | 1 | | | | |
| | 08-15 | | | | | | |
| | 08-16 | | | | | | |
| | 08-17 | | | | | | |
| | 08-18 | | | | | | |
| | 08-19 | | | | | | |
| | 08-20 | | | | | | |
| | 08-24 | | | | | | |
| | 08-25 | | | | | | |
| | 08-25 | | 16 | | | | |
| | 08-25 | | 21 | | | | |
| | 08-27 | | | | | | |
| | 08-27 | | 4 | | | | |
| | 08-32 | | | | | | |
| | 08-33 | | | | | | |
| | 08-34 | | | | | | |
| | 08-35 | | | | | | |
| | 09-01 | | 28 | | | | |
| | 09-02 | | 40 | | | | |
| | 09-04 | | | | | | |
| | 09-10 | | | | | | |

HTTP://WWW.MINNPARBACKHOEPARTS.COM

# 580M SERIES 2 CHARGEUSE-PELLETEUSE

## CATALOGUE DES PIÈCES

Référence de publication: 7-9030FC




BD04A005

L'illustration peut montrer l'installation de l'équipement en option.

L'unité sera disponible en fevier, 2004.

TABLE DES MATIÈRES
GÉNÉRALITÉS
SECTION 2 – MOTEUR
SECTION 3 – CIRCUIT DE CARBURANT
SECTION 4 – CIRCUIT ÉLECTRIQUE
SECTION 5 – VOIE/DIRECTION
SECTION 6 – GROUPE MOTO-PROPULSEUR
SECTION 7 – FREINS
SECTION 8 – SYSTEME HYDRAULIQUE
SECTION 9 – CHÂSSIS/OUTILS
INDEX

HTTP://WWW.MINNPARBACKHOEPARTS.COM

Issued fevier 2004 (revised November, 2003) • 7-9030FC • Bur
Copyright © 2004 CNH America LLC. All Rights Reserved.

HTTP://WWW.MINNPARBACKHOEPARTS.COM

# TABLE OF CONTENTS


| | |
|---|---|
| 02-01 | RADIATEUR - SUPPORT |
| 02-02 | SYSTEME DE PURGE D AIR - SUPPORT |
| 02-03 | RADIATEUR (AVEC/SANS AIR CONDITIONNE) |
| 02-04 | FILTRE A AIR - PIÈCES DE LA PRISE D"AIR (SANS TURBOCOMPRESSEUR) |
| 02-04A | FILTRE A AIR - PIÈCES DE LA PRISE D"AIR (AVEC TURBOCOMPRESSEUR) |
| 02-05 | FILTRE A AIR (SANS TURBOCOMPRESSEUR) |
| 02-05A | FILTRE A AIR (AVEC TURBOCOMPRESSEUR) |
| 02-06 | SILENCIEUX - ÉCHAPPEMENT (AVEC TURBOCOMPRESSEUR) |
| 02-06A | SILENCIEUX, ASPIRATEUR - ÉCHAPPEMENT |
| 02-06B | SILENCIEUX - ÉCHAPPEMENT (SANS TURBOCOMPRESSEUR) |
| 02-07 | MOTEUR - SUPPORT |
| 02-08 | MOTEUR |
| 02-09 | BLOC CYLINDRES |
| 02-10 | BLOC CYLINDRES |
| 02-11 | POMPE À HUILE, CARTER |
| 02-12 | BLOC CYLINDRES - COUVERCLES |
| 02-13 | BLOC CYLINDRES - COUVERCLES |
| 02-14 | BLOC CYLINDRES - COUVERCLES |
| 02-15 | RENIFLARD - MOTEUR |
| 02-16 | CULASSE DE CYLINDRE |
| 02-17 | CACHE CULBUTEUR |
| 02-18 | CULASSE DE CYLINDRE - MÉCANISME DU DISTRIBUTEUR |
| 02-19 | COLLECTEURS |
| 02-20 | COLLECTEURS |
| 02-21 | VILEBREQUIN |
| 02-22 | PISTONS - BIELLES |
| 02-23 | PISTONS - BIELLES |
| 02-24 | VOLANT - MOTEUR |
| 02-25 | POULIE - VILEBREQUIN |
| 02-26 | MASSELOTTE, ENGRENAGES ET ARBRES |
| 02-27 | MASSELOTTE, ENGRENAGES ET ARBRES (2830952) |
| 02-28 | ARBRE À CAMES |
| 02-29 | TURBOCOMPRESSEUR |
| 02-30 | MOTEUR, HUILE |
| 02-31 | POMPE A HUILE - MOTEUR |
| 02-32 | FILTRE A HUILE - MOTEUR |
| 02-33 | TUYAUTERIES - HUILE DU MOTEUR |
| 02-34 | FILTRE ET REFROIDISSEUR D"HUILE |
| 02-35 | POMPE A EAU |
| 02-36 | CIRCUIT DE REFROIDISSEMENT - MOTEUR |
| 02-37 | THERMOSTAT - REFROIDISSEMENT MOTEUR |
| 02-38 | POMPE A EAU - COMMANDE |
| 02-39 | COMMANDE DE VENTILATEUR |
| 02-40 | PRISE DE FORCE |
| 02-41 | MOTEUR - CROCHET DE LEVAGE |
| 03-01 | TUYAUTERIE D"ESSENCE, RESERVOIR - FILTRE À CARBURANT EN LIGNE |
| 03-02 | COMMANDES - MANETTE DES GAZ |
| 03-03 | COMMANDES - PÉDALE D"ACCÉLÉRATION |
| 03-04 | POMPE DINJECTION |
| 03-05 | SYSTÈME D"INJECTION |
| 03-06 | SYSTÈME D"INJECTION |

HTTP://WWW.MINNPARBACKHOEPARTS.COM

# TABLE OF CONTENTS


| | |
|---|---|
| 03-07 | SYSTÈME D"INJECTION |
| 03-08 | FILTRE COMBUSTIBLE |
| 03-09 | POMPE D"ALIMENTATION |
| 03-10 | SYSTÈME D"INJECTION |
| 03-11 | SYSTÈME D"INJECTION |
| 04-01 | DÉMARREUR |
| 04-02 | ALTERNATEUR |
| 04-03 | SUPPORT DU DÉMARREUR - MONTAGE DE L"ALTERNATEUR |
| 04-04 | FAISCEAU, MOTEUR - MONTAGE ET CONNEXIONS |
| 04-05 | BATTERIE CABLES (MODÈLES SANS DÉMARRAGE PAR TEMPS FROID) |
| 04-06 | BATTERIE DOUBLE - DEMARRAGE PAR TEMPS FROID |
| 04-06A | ÉLÉMENT CHAUFFANT DE CALANDRE POUR DÉMARRAGE À FROID |
| 04-07 | FAISCEAU, TABLEAU DE BORD AVANT - CONTACTEURS |
| 04-08 | FAISCEAU, TABLEAU DE BORD AVANT - SUPPORT |
| 04-09 | FAISCEAU, TABLEAU DE BORD LATÉRAL - CONTACTEURS |
| 04-10 | TABLEAU DE BORD, AVANT - COUVERCLES |
| 04-11 | TABLEAU DE BORD, LATÉRAL - COUVERCLES (CÔTÉ DROIT) |
| 04-12 | APPAREILS DE CONTROLE |
| 04-13 | SYSTÈME ÉLECTRIQUE - ECLAIRAGE, TOIT ROPS |
| 04-14 | SYSTÈME ÉLECTRIQUE - ECLAIRAGE, CABINE ROPS |
| 04-15 | ÉCLAIRAGE (MODÈLES AVEC STRUCTURE ROPS) |
| 04-16 | AVERTISSEUR SONORE - ALARME DE RECUL |
| 04-17 | GYROPHARE (MODÈLES DE CABINES OU DE TOIT) |
| 04-18 | ANTENNE, RADIO - FAISCEAU, RADIO |
| 04-19 | SYSTÈME ÉLECTRIQUE - CIRCUIT HYDRAULIQUE AUXILIAIRE POUR LA PELLE RETRO |
| 04-20 | SYSTÈME ÉLECTRIQUE - CIRCUIT HYDRAULIQUE AUXILIAIRE POUR LA PELLE RETRO, AVEC DE COMMANDE PILOTE |
| 05-01 | VOLANT - COLONNE |
| 05-02 | SYSTEME HYDRAULIQUE - DIRECTION |
| 05-03 | COLONNE DE DIRECTION |
| 05-04 | ESSIEU, AVANT (86990837) - SUPPORT |
| 05-05 | ESSIEU, AVANT (86990837) - BOÎTIER |
| 05-06 | ESSIEU, AVANT (86990837) - LOGEMENT DU PIVOT |
| 05-07 | ESSIEU, AVANT (86990837) - VERIN DE DIRECTION |
| 05-08 | ESSIEU, AVANT (86990837) - MOYEU ET ROULEMENTS |
| 05-09 | ROUES AVANT - NEUS |
| 06-01 | ESSIEU, TRACTION AVANT - SUPPORT |
| 06-02 | ESSIEU, TRACTION AVANT - BOÎTIER |
| 06-03 | ESSIEU, TRACTION AVANT - LOGEMENT DU PIVOT |
| 06-04 | ESSIEU, TRACTION AVANT - VERIN DE DIRECTION |
| 06-05 | ESSIEU, TRACTION AVANT - ARBRES, ESSIEU |
| 06-06 | ESSIEU, TRACTION AVANT - SATELLITE |
| 06-07 | ESSIEU, TRACTION AVANT - DIFFERENTIEL |
| 06-08 | ESSIEU, TRACTION AVANT - COURONNE ET PIGNON |
| 06-09 | ARBRE DE TRANSMISSION, ESSIEU AVANT |
| 06-10 | SYSTÈME DE REFROIDISSEMENT - TRANSMISSION |
| 06-11 | TRANSMISSION - SUPPORT |
| 06-12 | TRANSMISSION - FILTRE À HUILE |
| 06-13 | TRANSMISSION (2WD) - BOÎTIER |
| 06-14 | TRANSMISSION (4WD) - BOÎTIER |

HTTP://WWW.MINNPARBACKHOEPARTS.COM

# TABLE OF CONTENTS


| | |
|---|---|
| 06-15 | TRANSMISSION - POMPE A HUILE |
| 06-16 | TRANSMISSION - MÉCANISME DU CHANGEMENT DE VITESSE |
| 06-17 | TRANSMISSION - AXE, TENDEUR ET PRIMAIRE |
| 06-18 | TRANSMISSION - ARBRE, ENTRÉE |
| 06-19 | TRANSMISSION - ARBRE, SECONDAIRE |
| 06-20 | TRANSMISSION (4WD) - ARBRE DE SORTIE |
| 06-21 | TRANSMISSION - DISTRIBUTEUR |
| 06-22 | TRANSMISSION (4WD) - ELECTROVANNE |
| 06-23 | ROUES, ARRIÈRE - PNEUS |
| 06-24 | ESSIEU, PROPULSION ARRIÈRE - SUPPORT |
| 06-25 | ESSIEU ARRIÈRE - BLOCAGE DU DIFFERENTIEL |
| 06-26 | ESSIEU, PROPULSION ARRIÈRE - BOÎTIER |
| 06-27 | ESSIEU, PROPULSION ARRIÈRE - DIFFERENTIEL |
| 06-28 | ESSIEU, PROPULSION ARRIÈRE - COURONNE ET PIGNON |
| 06-29 | ESSIEU, PROPULSION ARRIÈRE - BLOCAGE DU DIFFERENTIEL |
| 06-30 | ESSIEU, PROPULSION ARRIÈRE - SATELLITE |
| 06-31 | ARBRE DE TRANSMISSION, ESSIEU ARRIÈRE |
| 07-01 | ESSIEU, PROPULSION ARRIÈRE - FREIN, DIFFERENTIEL |
| 07-02 | ESSIEU, PROPULSION ARRIÈRE - FREIN DE STATIONNEMENT |
| 07-03 | FREINS - PÉDALES |
| 07-04 | SYSTEME HYDRAULIQUE - MAITRE-CYLINDRE DE FREIN |
| 07-05 | VERIN - MAITRE FREIN |
| 07-06 | COMMANDES - FREIN DE STATIONNEMENT |
| 08-01 | SYSTEME HYDRAULIQUE - POMPE, FILTRE ET DISTRIBUTEUR DE CHARGEUSE |
| 08-02 | SYSTEME HYDRAULIQUE - DU DISTRIBUTEUR DU CHARGEUR AU FILTRE AU DISTRIBUTEUR DE LA PELLE RETRO |
| 08-03 | SYSTEME HYDRAULIQUE - REFROIDISSEUR, CONDUITES DE RETOUR ET FILTRE |
| 08-04 | SYSTEME HYDRAULIQUE - VERIN DE RELEVAGE DES BRAS DE RELEVAGE |
| 08-05 | SYSTEME HYDRAULIQUE - VERIN, GODET DE LA CHARGEUSE |
| 08-06 | SYSTEME HYDRAULIQUE - VERIN, BENNE DE LA CHARGEUSE |
| 08-07 | SYSTEME HYDRAULIQUE - VERIN, BENNE DE LA CHARGEUSE |
| 08-08 | SYSTEME HYDRAULIQUE - VERIN, STABILISATEUR DE LA PELLE RETRO EUROPA (SANS DE COMMANDE PILOTE) |
| 08-08A | SYSTEME HYDRAULIQUE - VERIN, STABILISATEUR DE LA PELLE RETRO EUROPA (AVEC DE COMMANDE PILOTE) |
| 08-09 | SYSTEME HYDRAULIQUE - VERIN, DEBATTEMENT DE LA PELLE RETRO (SANS DE COMMANDE PILOTE) |
| 08-09A | SYSTEME HYDRAULIQUE - VERIN, DEBATTEMENT DE LA PELLE RETRO (AVEC DE COMMANDE PILOTE) |
| 08-10 | SYSTEME HYDRAULIQUE - VERIN, FLECHE DE LA PELLE RETRO |
| 08-11 | SYSTEME HYDRAULIQUE - VERIN, BALANCIER DE LA PELLE RETRO |
| 08-12 | SYSTEME HYDRAULIQUE - VERIN, GODET DE LA PELLE RETRO (MODÈLES SANS BALANCIER EXTENSIBLE) |
| 08-13 | SYSTEME HYDRAULIQUE - VERIN, GODET DE LA PELLE RETRO (MODÈLES AVEC BALANCIER EXTENSIBLE) |
| 08-14 | SYSTEME HYDRAULIQUE - VERIN, BALANCIER EXTENSIBLE DE LA PELLE RETRO |
| 08-15 | SYSTEME HYDRAULIQUE - DISTRIBUTEUR, COMMANDE PILOTE DE LEVIER DE COMMANDE (6 SPOOL, W/O EXT DIPPER, |
| 08-16 | SYSTEME HYDRAULIQUE - DISTRIBUTEUR, COMMANDE PILOTE DE LEVIER DE COMMANDE (6 SPOOL, W/O EXT DIPPER, |

HTTP://WWW.MINNPARBACKHOEPARTS.COM

# TABLE OF CONTENTS


| | |
|---|---|
| 08-17 | SYSTEME HYDRAULIQUE - DISTRIBUTEUR, COMMANDE PILOTE DE LEVIER DE COMMANDE (7 SPOOL, W/ EXT DIPPER, |
| 08-18 | SYSTEME HYDRAULIQUE - DISTRIBUTEUR, COMMANDE PILOTE DE LEVIER DE COMMANDE (7 SPOOL, W/ EXT DIPPER, |
| 08-19 | SYSTEME HYDRAULIQUE - DISTRIBUTEUR, COMMANDE PILOTE DE LEVIER DE COMMANDE (7 SPOOL, W/O EXT DIPPER, |
| 08-20 | SYSTEME HYDRAULIQUE - DISTRIBUTEUR, COMMANDE PILOTE DE LEVIER DE COMMANDE (8 SPOOL, W/ EXT DIPPER, |
| 08-21 | SYSTEME HYDRAULIQUE - COMMANDE PILOTE DE LEVIER DE COMMANDE |
| 08-22 | SYSTEME HYDRAULIQUE - COMMANDE PILOTE |
| 08-23 | SYSTEME HYDRAULIQUE - CIRCUIT AUXILIAIRE DE LA PELLE RETRO |
| 08-24 | SYSTEME HYDRAULIQUE - CIRCUIT AUXILIAIRE DE LA PELLE RETRO |
| 08-25 | SYSTEME HYDRAULIQUE - SYSTEME ANTI-TANGAGE |
| 08-26 | SYSTEME HYDRAULIQUE - COUPLEUR, OUTIL DE CHARGEUSE, DE SÉCURITÉ |
| 08-27 | SYSTEME HYDRAULIQUE - COUPLEUR, OUTIL DE CHARGEUSE, DE SÉCURITÉ |
| 08-28 | DISTRIBUTEUR DU COUPLEUR - OUTIL DE CHARGEUSE, DE SÉCURITÉ |
| 08-29 | POMPE, ÉQUIPEMENT HYDRAULIQUE |
| 08-30 | DISTRIBUTEUR - COMMANDE DU CHARGEUR, DEUX TIROIRS |
| 08-31 | DISTRIBUTEUR - COMMANDE DU CHARGEUR, TROIS TIROIRS |
| 08-32 | DISTRIBUTEUR - COMMANDE DE LA PELLE RETRO, 6 TIROIRS (SANS BALANCIER EXTENSIBLE ET SANS CIRCUIT HYD) |
| 08-33 | DISTRIBUTEUR - COMMANDE DE LA PELLE RETRO, 7 TIROIRS (SANS BALANCIER EXTENSIBLE ET AVEC CIRCUIT HYD) |
| 08-34 | DISTRIBUTEUR - COMMANDE DE LA PELLE RETRO, 7 TIROIRS (AVEC BALANCIER EXTENSIBLE ET SANS CIRCUIT HYD) |
| 08-35 | DISTRIBUTEUR - COMMANDE DE LA PELLE RETRO, 8 TIROIRS (AVEC BALANCIER EXTENSIBLE ET SANS CIRCUIT HYD) |
| 08-36 | DISTRIBUTEUR - COMMANDE DE LA PELLE RETRO, 6 TIROIRS |
| 08-37 | DISTRIBUTEUR - COMMANDE DE LA PELLE RETRO, 7 TIROIRS |
| 08-38 | DISTRIBUTEUR - COMMANDE DE LA PELLE RETRO, 7 TIROIRS |
| 08-39 | DISTRIBUTEUR - COMMANDE DE LA PELLE RETRO, 8 TIROIRS |
| 08-40 | CIRCUIT - DEBATTEMENT DE LA RETROPELLE (AVEC DE COMMANDE PILOTE) |
| 08-41 | CIRCUIT - FLECHE DE LA RETROPELLE (AVEC DE COMMANDE PILOTE) |
| 08-42 | CIRCUIT - STABILISATEUR DE LA PELLE RETRO (AVEC DE COMMANDE PILOTE) |
| 08-43 | CIRCUIT - BRAS DE LA RETROPELLE (AVEC DE COMMANDE PILOTE) |
| 08-44 | CIRCUIT - GODET DE LA RETROPELLE (AVEC DE COMMANDE PILOTE) |
| 08-45 | CIRCUIT - BALANCIER EXTENSIBLE (AVEC DE COMMANDE PILOTE) |
| 08-46 | CIRCUIT - OPTIONS, CIRCUIT HYDRAULIQUE AUXILIAIRE (AVEC DE COMMANDE PILOTE) |
| 08-47 | DISTRIBUTEUR, SOUPAPE DE REDUCTION PRESSION (2 SPOOL) (AVEC DE COMMANDE PILOTE) |
| 08-48 | DISTRIBUTEUR, SOUPAPE DE REDUCTION PRESSION (3 SPOOL) (AVEC DE COMMANDE PILOTE) |
| 08-49 | DISTRIBUTEUR, SOUPAPE DE REDUCTION PRESSION (4 SPOOL) (AVEC DE COMMANDE PILOTE) |
| 08-50 | DISTRIBUTEUR, LEVIER DE COMMANDE (COMMANDE PILOTE) (GAUCHE) AVERTISSEUR SONORE |
| 08-51 | DISTRIBUTEUR, LEVIER DE COMMANDE (COMMANDE PILOTE) (GAUCHE) AVERTISSEUR SONORE & UNI-DIR |
| 08-52 | DISTRIBUTEUR, LEVIER DE COMMANDE (COMMANDE PILOTE) (GAUCHE) AVERTISSEUR SONORE & BI-DIR |

HTTP://WWW.MINNPARBACKHOEPARTS.COM

# TABLE OF CONTENTS


| | |
|---|---|
| 08-53 | DISTRIBUTEUR, LEVIER DE COMMANDE (COMMANDE PILOTE) (DROIT) SANS BALANCIER EXTENSIBLE |
| 08-54 | DISTRIBUTEUR, LEVIER DE COMMANDE (COMMANDE PILOTE) (DROIT) AVEC BALANCIER EXTENSIBLE |
| 08-55 | DISTRIBUTEUR - AMORTISSEUR DE DEBATTEMENT |
| 08-56 | ACCUMULATEUR ASS. - SYSTEME ANTI-TANGAGE |
| 08-57 | FILTRE A HUILE |
| 08-58 | VERIN - RELEVAGE DE LA CHARGEUSE |
| 08-59 | VERIN - GODET DE LA CHARGEUSE |
| 08-60 | VERIN - BENNE DE CHARGEUSE |
| 08-61 | VERIN - STABILISATEUR DE LA PELLE RETRO |
| 08-62 | VERIN - DEBATTEMENT DE LA RETROPELLE |
| 08-63 | VERIN - FLECHE DE LA RETROPELLE |
| 08-64 | VERIN - BRAS DE LA RETROPELLE |
| 08-65 | VERIN - GODET DE LA RETROPELLE |
| 08-66 | VERIN - BALANCIER EXTENSIBLE DE LA PELLE RETRO |
| 09-01 | COMMANDES - RELEVAGE ET GODET DES BRAS DE RELEVAGE |
| 09-02 | COMMANDES - BENNE DE CHARGEUSE |
| 09-03 | COMMANDES - ASSIETTE AUTOMATIQUE DES BRAS DE RELEVAGE |
| 09-04 | CADRE - RELEVAGE DE LA CHARGEUSE |
| 09-05 | CADRE - TRINGLERIE DES BRAS DE RELEVAGE |
| 09-06 | GODETS, CHARGEUSE À LONGUE LÈVRE (82 IN) |
| 09-07 | GODET, CHARGEUSE À LONGUE LÈVRE (93 IN) |
| 09-08 | GODET, BENNE DE CHARGEUSE |
| 09-09 | GARANT - DISTRIBUTEUR, BRAS DE RELEVAGE |
| 09-10 | COUPLEUR, OUTIL, DE SÉCURITÉ |
| 09-11 | COUVERCLES - TOURELLE DE LA PELLE RETRO, SANS DE COMMANDE PILOTE |
| 09-12 | SUPPORT DE TOUR DE CONTRÔLE ET JOINTS DE PELLE RÉTRO, SANS DE COMMANDE PILOTE |
| 09-13 | TOURELLE DE LA PELLE RETRO SUPPORT, AVEC DE COMMANDE PILOTE |
| 09-14 | TOURELLE DE LA PELLE RETRO SOUFFLET DE JOINT, AVEC DE COMMANDE PILOTE |
| 09-15 | TOURELLE DE LA PELLE RETRO LEVIER (VERROU DE MAINTIEN DE BRAS DE RELEVAGE), AVEC DE COMMANDE PILOTE |
| 09-16 | COMMANDES - PELLE RETRO, AVEC DÉBATTEMENT AU PIED (MODÈLES SANS BALANCIER EXTENSIBLE) |
| 09-17 | COMMANDES - PELLE RETRO, AVEC DÉBATTEMENT AU PIED (MODÈLES AVEC BALANCIER EXTENSIBLE) |
| 09-18 | COMMANDES - PELLE RETRO, AVEC DÉBATTEMENT A LA MAIN (MODÈLES SANS BALANCIER EXTENSIBLE) |
| 09-19 | COMMANDES - PELLE RETRO, AVEC DÉBATTEMENT A LA MAIN (MODÈLES SANS BALANCIER EXTENSIBLE) |
| 09-20 | COMMANDES - PELLE RETRO, AVEC DÉBATTEMENT A LA MAIN (MODÈLES AVEC BALANCIER EXTENSIBLE) |
| 09-21 | COMMANDES - CIRCUIT HYDRAULIQUE AUXILIAIRE POUR LA PELLE RETRO, SANS DE COMMANDE PILOTE |
| 09-22 | RETROPELLE - STABILISATEURS, PLAQUES ET PATINS |
| 09-23 | RETROPELLE - TOURELLE ET VERINS DE DEBATTEMENT |
| 09-24 | RETROPELLE - FLECHE ET TOURELLE DE DEBATTEMENT |
| 09-25 | VERROU DE MAINTIEN DE BRAS DE RELEVAGE (SANS DE COMMANDE PILOTE) |
| 09-25A | VERROU DE MAINTIEN DE BRAS DE RELEVAGE (AVEC DE COMMANDE PILOTE) |

HTTP://WWW.MINNPARBACKHOEPARTS.COM

# TABLE OF CONTENTS


| | |
|---|---|
| 09-26 | RETROPELLE - BALANCIER ET GODET |
| 09-27 | RETROPELLE - BALANCIER EXTENSIBLE |
| 09-28 | GODET, PELLE RÉTRO UNIVERSELLE (305 MM (12 INCH) WIDE) |
| 09-29 | GODET, PELLE RÉTRO UNIVERSELLE (406 MM (16 INCH) WIDE) |
| 09-30 | GODET, PELLE RÉTRO UNIVERSELLE (457 MM (18 INCH) WIDE) |
| 09-31 | GODET, PELLE RÉTRO (457 MM (18 INCH) WIDE) |
| 09-32 | GODET, PELLE RÉTRO UNIVERSELLE (610 MM (24 INCH) / 762 MM (30 INCH) WIDE) |
| 09-33 | GODET, PELLE RÉTRO (610 MM (24 INCH) WIDE) |
| 09-34 | GODET, PELLE RÉTRO UNIVERSELLE (914 MM (36 INCH) WIDE) |
| 09-35 | GODET, PELLE RÉTRO UNIVERSELLE (610 MM (24 INCH) WIDE) |
| 09-36 | CONTREPOIDS AVANT |
| 09-37 | CHASSIS / MONTAGES, COSSE - GRILLE, ADMISSION D"AIR |
| 09-38 | RÉSERVOIR, HUILE - COMPARTIMENT DE BATTERIES ET BOITE A OUTILS |
| 09-39 | BOÎTIER DE RADIATEUR |
| 09-40 | CAPOT - PANNEAUX LATERAUX |
| 09-41 | CAPOT - CALANDRE |
| 09-42 | PLAQUES, PLANCHER - TAPIS DE SOL |
| 09-43 | GARDE-BOUE, GAUCHE - PANNEAU, FERMETURE ARRIERE (VIDE-POCHES AVEC PORTE-GOBELET) |
| 09-44 | EXTENSION DE GARDE BOUE |
| 09-45 | GARDE-BOUE |
| 09-46 | SIEGE - SUPPORT |
| 09-47 | SIÈGE, STANDARD |
| 09-48 | SUPPORT DE SIÈGE ET BASE, STANDARD |
| 09-49 | SIÈGE, SUSPENSION MÉCANIQUE |
| 09-50 | BASE DE SIÈGE ET SUSPENSION, SUSPENSION MÉCANIQUE |
| 09-51 | SIÈGE, SUSPENSION PNEUMATIQUE |
| 09-52 | BASE DE SIÈGE ET SUSPENSION, SUSPENSION PNEUMATIQUE |
| 09-53 | CABINE - FENETRE, RETROVISEUR ET OUVERTURE |
| 09-54 | CABINE - CHASSIS ET COUVERCLES |
| 09-55 | CABINE - PORTES |
| 09-56 | CABINE - MONTAGE DE PORTIÈRE |
| 09-57 | CABINE - FENÊTRE DROITE, POUR CADRES DE CABINE À UNE SEULE PORTIÈRE |
| 09-58 | CABINE - VITRE, ARRIÈRE |
| 09-59 | CABINE - LAVE-GLACE |
| 09-60 | CABINE - ESSUIE-GLACE |
| 09-61 | GARNITURE DE LA CABINE - FILTRE, DEFLECTEUR, PLAFONNIER |
| 09-62 | CABINE - FILTRE A AIR |
| 09-63 | CABINE - CARTER DE LA SOUFFLANTE, DURITS DE VENTILATION, CONDUITES DE PURGE |
| 09-64 | CABINE - CHAUFFAGE |
| 09-65 | CABINE - CONDUITES DE LA CLIMATISATION, RADIATEUR D"EVAPORATION |
| 09-66 | CABINE - CLIMATISATION, CONDENSATEUR, DESSICCATEUR |
| 09-67 | CABINE - COMPRESSEUR DE LA CLIMATISATION |
| 09-68 | STRUCTURE ROPS - CADRE, COUVERCLES, RETROVISEUR, VISIERE-ECRAN |
| 09-69 | STRUCTURE ROPS - VITRE |
| 09-70 | STRUCTURE ROPS - ESSUIE-GLACE AVANT ET LAVE-GLACE |
| 09-71 | RÉTROVISSEUR - SUPPORT, MODÈLE DE CABINE |
| 09-72 | TRIANGLE VÉHICULE LENT |
| 09-73 | AUTOCOLLANTS |
| 09-74 | AUTOCOLLANTS |

HTTP://WWW.MINNPARBACKHOEPARTS.COM

# TABLE OF CONTENTS


| | |
|---|---|
| 09-75 | AUTOCOLLANTS |
| 09-76 | AUTOCOLLANTS - ANGLAIS |
| 09-77 | AUTOCOLLANTS - ESPAGNOL D"AMÉRIQUE LATINE |
| 09-78 | AUTOCOLLANTS - FRANÇAIS CANADIEN |
| 09-79 | AUTOCOLLANTS - ANGLAIS |
| 09-80 | AUTOCOLLANTS - ESPAGNOL D"AMÉRIQUE LATINE |
| 09-81 | AUTOCOLLANTS - FRANÇAIS CANADIEN |

## NOTES

HTTP://WWW.MINNPARBACKHOEPARTS.COM

# GÉNÉRALITÉS

## AVIS DE PROPRIÉTÉ

Les données contenues dans ce manuel constituent la propriété de cette société. Toute reproduction ou utilisation de toute partie de ce manuel à d'autres fins que l'utilisation et l'entretien de notre matériel ne sont permises que si elles sont expressément autorisées par écrit.

Des copies supplémentaires peuvent être obtenues auprès du concessionnaire. Pour obtenir des exemplaires supplémentaires, s'adresser au concessionnaire et donner en référence le numéro de publication imprimé au bas de la couverture arrière de ce manuel ou sur la page de titre.

## POLITIQUE DE LA SOCIÉTÉ

L'entreprise, dont la politique est fondée sur le progrès constant, se réserve le droit de changer ses prix et d'apporter des modifications à la conception et aux caractéristiques du matériel à tout moment, sans préavis et sans obligation de modifier les machines précédemment fabriquées.

Toutes les données qui apparaissent dans le présent manuel peuvent faire l'objet de variations dues aux contraintes de production. Les dimensions et les mesures de poids ne sont qu'approximatives et les machines illustrées ne sont pas nécessairement en état standard. Pour des données précises au sujet d'un modèle de machine en particulier, consulter un concessionnaire agréé.

## PIÈCES ET ACCESSOIRES

Des pièces et des accessoires d'origine ont été conçus spécifiquement pour ces machines.

New Holland souhaite préciser que les pièces et accessoires « non originaux » n'ont PAS été examinés et mis en vente par la société. La pose et l'utilisation de ces produits pourraient s'avérer néfaste pour la conception de la machine et donc altérer ses caractéristiques de sécurité. La compagnie ne peut être tenue responsable des dégâts résultant de l'utilisation de pièces et d'accessoires « non originaux ».

## AMÉLIORATIONS

Nous nous efforçons de sans cesse continuer à améliorer nos produits. Nous nous réservons le droit d'apporter des améliorations ou modifications dès qu'elles s'avèrent pratiques et possibles, sans engagement ni obligation d'apporter des modifications ou des ajouts sur les équipements vendus auparavant.

## CODES DE MODÈLES

Les machines énumérées ne sont peut-être pas toutes disponibles dans tous les pays ou sur tous les marchés ; en conséquence, pour obtenir les informations les plus récentes, consulter le concessionnaire.

## ASSISTANCE AU PROPRIÉTAIRE

Nous souhaitons que vous soyez entièrement satisfait de votre investissement. Tous les problèmes rencontrés lors de l'utilisation de l'équipement sont normalement gérés par le service Entretien des concessionnaires, mais il est possible que des malentendus aient lieu. Si le problème n'a pas été géré de façon satisfaisante, procéder comme suit.

1. Contacter le propriétaire ou le directeur de la concession, expliquer le problème et demander de l'aide. En cas de besoin d'assistance supplémentaire, le concessionnaire peut contacter directement nos bureaux.
2. Fournir au concessionnaire les renseignements suivants :
   - Nom, adresse et numéro de téléphone
   - Modèle de la machine et numéro de série
   - Nom et adresse du concessionnaire
   - Date d'achat et nombre d'heures d'utilisation
   - Nature du problème

Garder à l'esprit le fait que le problème sera très certainement réglé au sein de la concession, à l'aide des infrastructures, des équipements et du personnel du concessionnaire. C'est pourquoi il est important que le premier contact se situe au niveau du concessionnaire.

## PIÈCES DÉTACHÉES

Pour maintenir un fonctionnement efficace, utiliser des pièces détachées d'origine.

Lors de la commande de pièces, fournir les informations suivantes.

- Modèle de la machine
- Numéros de série de la machine et du moteur
- Référence de la pièce du catalogue de pièces détachées

HTTP://WWW.MINNPARBACKHOEPARTS.COM

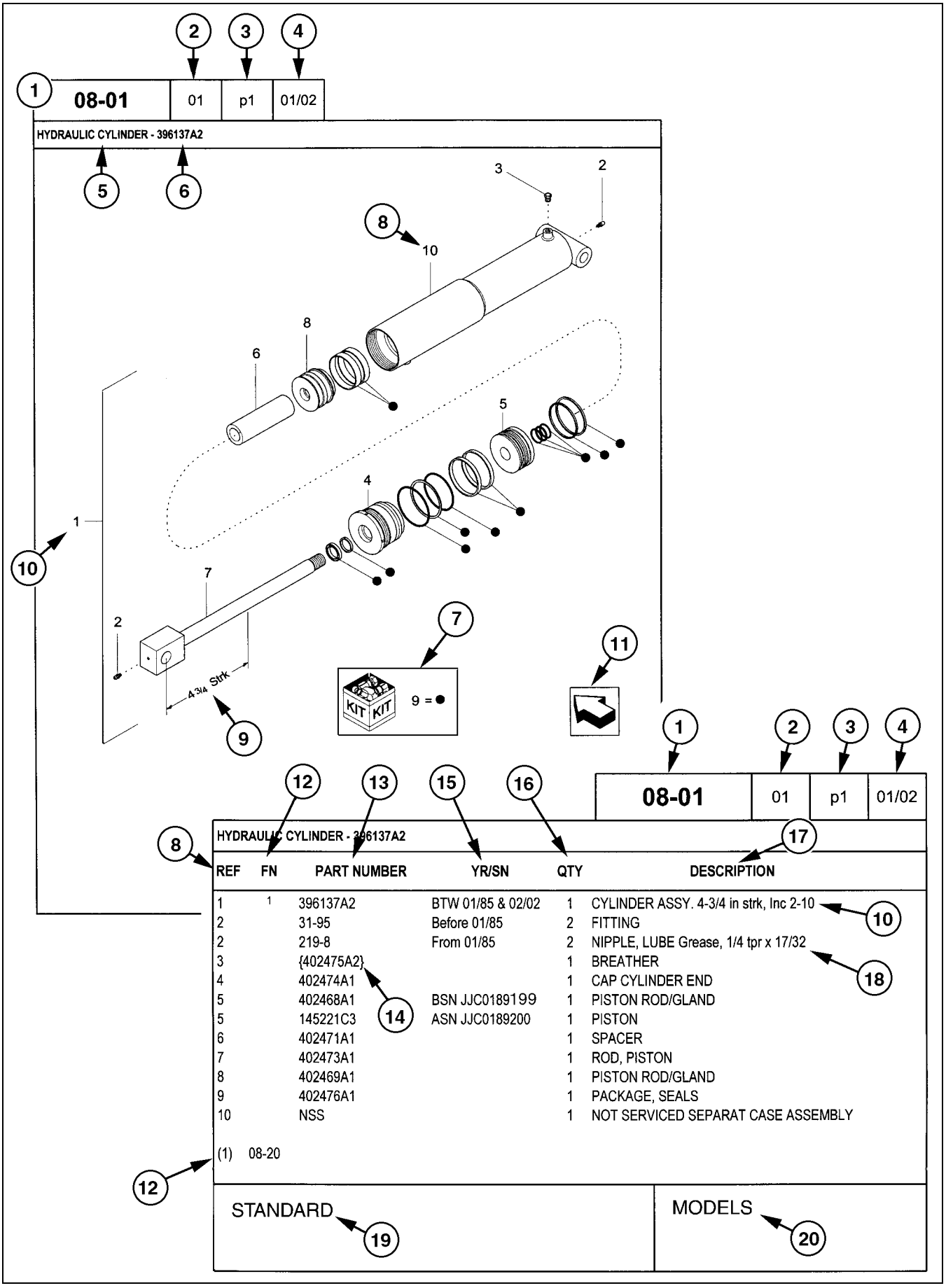


| REF | FN | PART NUMBER | YR/SN | QTY | DESCRIPTION |
|---|---|---|---|---|---|
| 1 | 1 | 396137A2 | BTW 01/85 & 02/02 | 1 | CYLINDER ASSY. 4-3/4 in strk, Inc 2-10 |
| 2 | | 31-95 | Before 01/85 | 2 | FITTING |
| 2 | | 219-8 | From 01/85 | 2 | NIPPLE, LUBE Grease, 1/4 tpr x 17/32 |
| 3 | | {402475A2} | | 1 | BREATHER |
| 4 | | 402474A1 | | 1 | CAP CYLINDER END |
| 5 | | 402468A1 | BSN JJC0189199 | 1 | PISTON ROD/GLAND |
| 5 | | 145221C3 | ASN JJC0189200 | 1 | PISTON |
| 6 | | 402471A1 | | 1 | SPACER |
| 7 | | 402473A1 | | 1 | ROD, PISTON |
| 8 | | 402469A1 | | 1 | PISTON ROD/GLAND |
| 9 | | 402476A1 | | 1 | PACKAGE, SEALS |
| 10 | | NSS | | 1 | NOT SERVICED SEPARAT CASE ASSEMBLY |

(1) 08-20

STANDARD

MODELS

HTTP://WWW.MINNPARBACKHOEPARTS.COM

# UTILISATION DU CATALOGUE DE PIÈCES

1. Numéro de la figure
2. Code de séquence dans le numéro de la figure
3. Numéro de la page dans le code de séquence
4. Date d'impression (mois/année)
5. Description de la figure
6. Informations générales relatives à la figure
7. Pièces fournies dans les kits de réparation selon référence de symbole
8. Chiffre-référence de la référence
9. Caractéristiques techniques relatives à la pièce indiquée
10. Le chiffre-référence de la figure inclut des articles entre crochets, les articles inclus peuvent aussi être énumérés dans la zone de description additionnelle
11. Orientation – La flèche indique l'avant de la machine
12. Note de pied de page – Informations supplémentaires relatives à la référence. Dans cet exemple, 08-20 correspond à une autre figure où cette pièce est illustrée
13. Référence
    NSS = pièces sans entretien
    Numéros entre parenthèses = localement non disponibles comme pièces détachées
14. Localement non disponible comme pièce détachée
15. Année/N° de série

    Année
    Avant 01/85 = pièce valable pour la production de janvier 1985 et antérieure
    À partir de 01/85 = pièce valable pour la production de janvier 1985 et postérieure
    Entre 01/85 et 02/02 = pièce valable pour les machines produites entre janvier 1985 et février 2002

    Numéro de série (P.I.N.)
    BSN JJC0268800 = pièce valable pour les numéros de série JJC0268800 et inférieurs
    ASN JJC0268800 = pièce valable pour les numéros de série JJC0268800 et supérieurs
    Entre JJC0178000 et JJC0179000 = pièce valable pour les numéros de série compris entre JJC0178000 et JJC0179000
16. La quantité totale de pièces auxquelles il est fait référence dans cette page. La quantité peut être remplacée par les indications suivantes :
    AR = Selon besoin
    X = Selon le besoin
17. Description
18. Description complémentaire de la pièce pour faciliter la confirmation de l'identification
19. Notes de la figure
20. Numéro(s) de modèle

## GAUCHE ET DROIT

La référence aux côtés gauche et droit dans ce catalogue est identifiée par l'opérateur debout à l'arrière de l'unité de base (sans outil arrière), regardant vers l'avant de la machine (en marche avant normale).

Pour les pages concernant les outils de la machine, les côtés droit et gauche sont définis par l'opérateur assis en position correcte de commande de l'outil.

## DIMENSIONS

Les dimensions impériales et métriques ne montrent pas les désignations numériques du filetage standard. Un chiffre suivant un point virgule (;) est la classe ou le grade de la visserie. Une virgule (,) représente le point séparateur décimal (.) du système impérial.

HTTP://WWW.MINNPARBACKHOEPARTS.COM

# SIGNIFICATION DES ABRÉVIATIONS

| | |
|---|---|
| AC | courant alternatif |
| adj | réglable |
| amp | ampère |
| AR | selon le besoin |
| ASN | numéro de série et supérieur<br>P.I.N. et supérieur |

| | |
|---|---|
| blkhd | cloison |
| br | branche |
| BSN | avant numéro de série<br>avant P.I.N. |
| BTW | entre |

| | |
|---|---|
| cc | centimètre cube |
| cl | classe |
| cmprsn | compression |
| cn pt | bout pointu |
| cp pt | bout cuvette |
| CRS | acier en alliage de chrome |
| CST | acier au carbone |
| cu yd | verge cube |

| | |
|---|---|
| DC | courant continu |
| deg | degré |
| dg pt | bout cylindrique long |
| dia | diamètre |
| dr type | type de transmission |

| | |
|---|---|
| fc | face |
| fc sl | joint à face |
| fem | femelle |
| fem PT | filetage de tube femelle |
| fl | évasement |
| flat pt | bout plat |
| ft | pied(s) |

| | |
|---|---|
| ga | jauge |
| gal | gallon(s) |
| gpm | gallons par minute |
| gr | grade |

| | |
|---|---|
| hd | tête |
| hdg pt | bout cylindrique court |
| hp | chevaux |
| ID | diamètre intérieur |
| in | pouce(s) |
| Incl. | comprend |
| inv fl | évasement inversé |

| | |
|---|---|
| K | kilo |
| kg | kilogramme |
| km/h | kilomètres/heure |

| | |
|---|---|
| L | litre |
| lb | livre |
| lb-ft | livre/pied |
| lg | long |
| LH | côté gauche |
| LH thd | filetage à gauche |

| | |
|---|---|
| M | (préfixe) taille métrique du filetage |
| m | mètre |
| ml | millilitre |
| mm | millimètre |

| | |
|---|---|
| NF | National Fine |
| No. | n° |
| NPT | pas de tuyauterie |
| NS | National Super Fine |

| | |
|---|---|
| OD | diamètre extérieur |
| ohm | ohm |
| Or | joint torique |
| ORB | bossage de joint torique |
| ORFS | joint torique à face |
| ov cntr | hypercentrique |
| ov pt | bout ovale |
| oz | once |

| | |
|---|---|
| P | pas |
| psi | livre par pouce carré |
| pt | pinte |
| PT | filetage de tuyau |

| | |
|---|---|
| rd | rond |
| rd holes | trous ronds |
| RH | droit |
| RH thd | filetage à droite |
| rpm | tr/mn |

| | |
|---|---|
| sl | autobloquant |
| sq | carré |
| SST | acier inoxydable |
| st | à auto-taraudage |
| strk | course |
| sw | pivot |

| | |
|---|---|
| T | dent |
| thk | épais |
| tpr | conique |
| tube OD | diamètre extérieur de tube |

| | |
|---|---|
| V | volt(s) |
| W | watt(s) |
| X | selon le besoin |
| yd | yard |

HTTP://WWW.MINNPARBACKHOEPARTS.COM

# SECTION INDEX


| | |
|---|---|
| 02-01 | RADIATEUR - SUPPORT |
| 02-02 | SYSTEME DE PURGE D AIR - SUPPORT |
| 02-03 | RADIATEUR (AVEC/SANS AIR CONDITIONNE) |
| 02-04 | FILTRE A AIR - PIÈCES DE LA PRISE D''AIR (SANS TURBOCOMPRESSEUR) |
| 02-04A | FILTRE A AIR - PIÈCES DE LA PRISE D''AIR (AVEC TURBOCOMPRESSEUR) |
| 02-05 | FILTRE A AIR (SANS TURBOCOMPRESSEUR) |
| 02-05A | FILTRE A AIR (AVEC TURBOCOMPRESSEUR) |
| 02-06 | SILENCIEUX - ÉCHAPPEMENT (AVEC TURBOCOMPRESSEUR) |
| 02-06A | SILENCIEUX, ASPIRATEUR - ÉCHAPPEMENT |
| 02-06B | SILENCIEUX - ÉCHAPPEMENT (SANS TURBOCOMPRESSEUR) |
| 02-07 | MOTEUR - SUPPORT |
| 02-08 | MOTEUR |
| 02-09 | BLOC CYLINDRES |
| 02-10 | BLOC CYLINDRES |
| 02-11 | POMPE À HUILE, CARTER |
| 02-12 | BLOC CYLINDRES - COUVERCLES |
| 02-13 | BLOC CYLINDRES - COUVERCLES |
| 02-14 | BLOC CYLINDRES - COUVERCLES |
| 02-15 | RENIFLARD - MOTEUR |
| 02-16 | CULASSE DE CYLINDRE |
| 02-17 | CACHE CULBUTEUR |
| 02-18 | CULASSE DE CYLINDRE - MÉCANISME DU DISTRIBUTEUR |
| 02-19 | COLLECTEURS |
| 02-20 | COLLECTEURS |
| 02-21 | VILEBREQUIN |
| 02-22 | PISTONS - BIELLES |
| 02-23 | PISTONS - BIELLES |
| 02-24 | VOLANT - MOTEUR |
| 02-25 | POULIE - VILEBREQUIN |
| 02-26 | MASSELOTTE, ENGRENAGES ET ARBRES |
| 02-27 | MASSELOTTE, ENGRENAGES ET ARBRES (2830952) |
| 02-28 | ARBRE À CAMES |
| 02-29 | TURBOCOMPRESSEUR |
| 02-30 | MOTEUR, HUILE |
| 02-31 | POMPE A HUILE - MOTEUR |
| 02-32 | FILTRE A HUILE - MOTEUR |
| 02-33 | TUYAUTERIES - HUILE DU MOTEUR |
| 02-34 | FILTRE ET REFROIDISSEUR D''HUILE |
| 02-35 | POMPE A EAU |
| 02-36 | CIRCUIT DE REFROIDISSEMENT - MOTEUR |
| 02-37 | THERMOSTAT - REFROIDISSEMENT MOTEUR |
| 02-38 | POMPE A EAU - COMMANDE |
| 02-39 | COMMANDE DE VENTILATEUR |
| 02-40 | PRISE DE FORCE |
| 02-41 | MOTEUR - CROCHET DE LEVAGE |

HTTP://WWW.MINNPARBACKHOEPARTS.COM

| 02-01 | | p1 | 10/03 |
|---|---|---|---|

RADIATEUR - SUPPORT

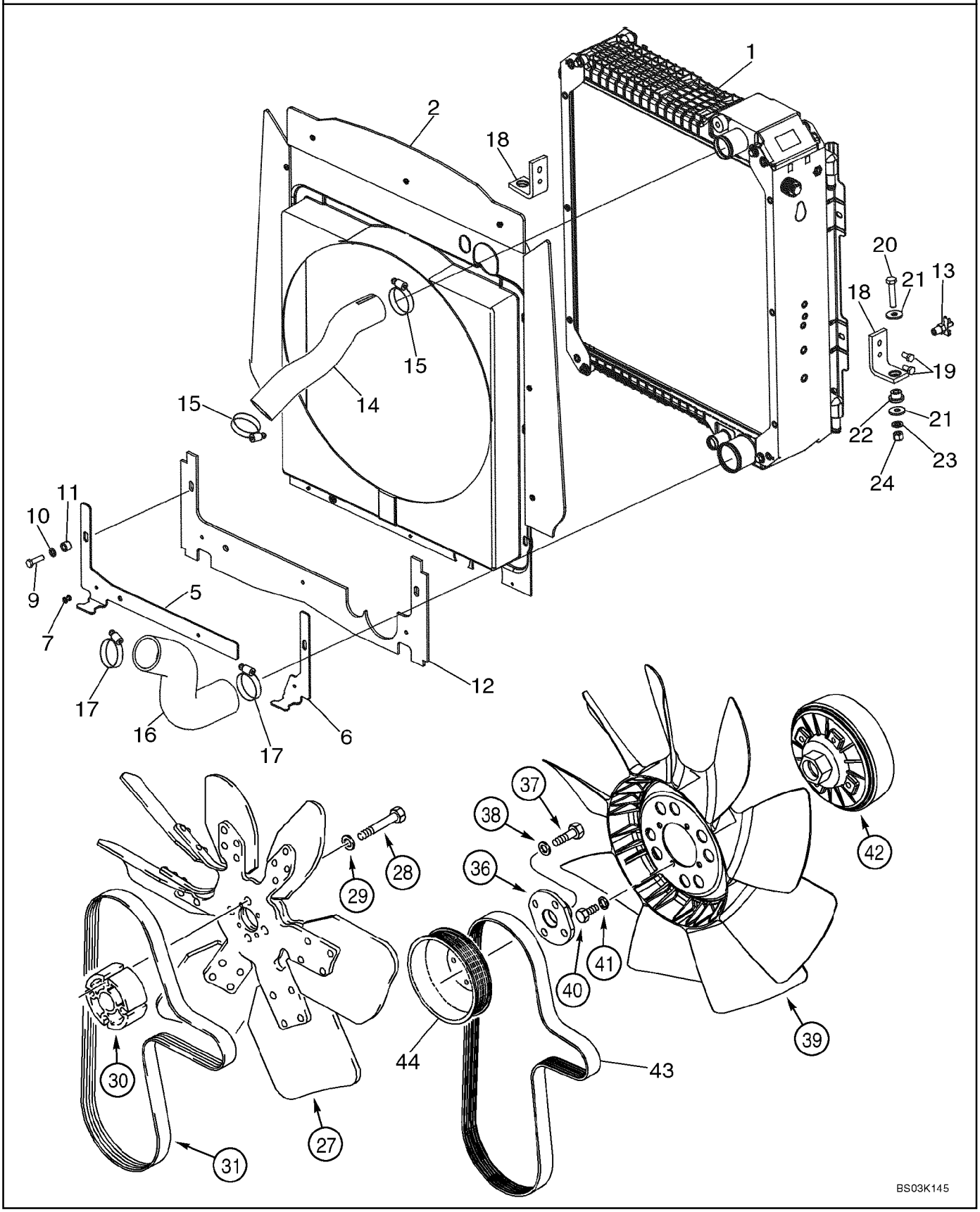

HTTP://WWW.MINNPARBACKHOEPARTS.COM



RADIATEUR - SUPPORT

| REF | FN | PART NUMBER | YR/SN | QTY | DESCRIPTION |
|---|---|---|---|---|---|
| 1 | | 87410096 | | 1 | RADIATEUR 3 Row Radiator, Models With Or Without Air Conditioning; See Figure 02-03 |
| 2 | | 87434793 | | 1 | BUSE Shroud; Includes Seals |
| 5 | | 87434614 | | 1 | PLAQUE DE SERRAGE Plate, Lower Left-Hand Shroud |
| 6 | | 87434649 | | 1 | PLAQUE DE SERRAGE Plate, Lower Right-Hand Shroud |
| 7 | | 151-532 | | 3 | RIVET 3/16 x 11/16 |
| 9 | | 614-8030 | | 2 | VIS M8 x 30 |
| 10 | | 895-11008 | | 2 | RONDELLE 9 x 16 x 1,6 mm |
| 11 | | 407962A1 | | 2 | ENTRETOISE |
| 12 | | 87434978 | | 1 | JOINT, CAOUTCHOUC Lower Seal |
| 13 | | 76904 | | 1 | SOUPAPE Drain, 1/4 |
| 14 | | 87413237 | | 1 | TUYAU RIGIDE Upper Hose |
| 15 | | 214-1432 | | 2 | COLLIER 1-9/16 x 2-1/2 |
| 16 | | 87407272 | | 1 | TUYAU RIGIDE Lower Hose |
| 17 | | 214-1440 | | 2 | COLLIER 2-1/16 - 3 |
| 18 | | 87407771 | | 2 | EQUERRE Radiator Mounting Support |
| 19 | | 614-8016 | | 4 | VIS M8 x 16 |
| 20 | | 814-10050 | | 2 | VIS M10 x 50 |
| 21 | | K691987 | | 4 | RONDELLE Flat, 10 mm |
| 22 | | D52276 | | 2 | ISOLATEUR Rubber |
| 23 | | 895-11010 | | 2 | RONDELLE 11 x 20 x 2 mm |
| 24 | | 832-10410 | | 2 | ECROU M10 |
| 27 | | 228133A2 | | 1 | VENTILATEUR 39 Degrees; With White Identification Dot; Standard Fan Drive; With Air Conditioning; With Turbo |
| 27 | | 127181A2 | | 1 | VENTILATEUR 27 Degrees; Standard Fan Drive; Without Air Conditioning; With Or Without Turbo |
| 28 | | 814-10090 | | 4 | VIS M10 x 90 |
| 29 | | 496-21041 | | 4 | RONDELLE 13/32 x 13/16 x 3/32 |
| 30 | | 85826229 | | 1 | ENTRETOISE 59 mm Long, Standard Fan Drive; With Or Without Air Conditioning; With Or Without Turbo |
| 31 | | 85826230 | | 1 | COURROIE V-Type, Standard Fan Drive; With Or Without Air Conditioning; With Or Without Turbo |

HTTP://WWW.MINNPARBACKHOEPARTS.COM



RADIATEUR - SUPPORT

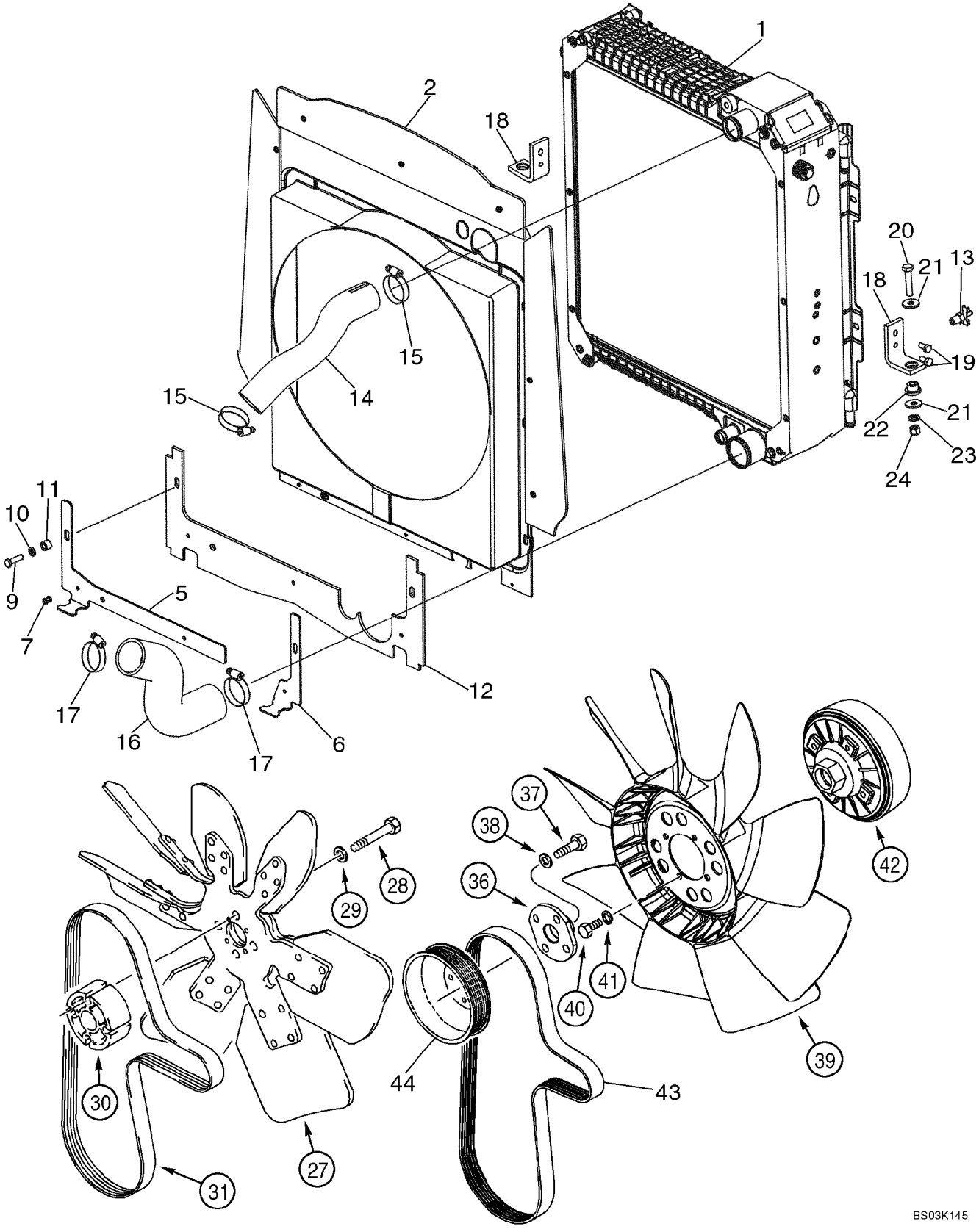

HTTP://WWW.MINNPARBACKHOEPARTS.COM



RADIATEUR - SUPPORT

| REF | FN | PART NUMBER | YR/SN | QTY | DESCRIPTION |
|---|---|---|---|---|---|
| 36 | | 303192A1 | | 1 | ADAPTEUR Viscous Fan Drive, With Air Conditioning; With Turbo |
| 37 | | 614-10030 | | 4 | VIS M10 x 30 |
| 38 | | 896-11010 | | 4 | RONDELLE 11 x 21 x 2,5 mm |
| 39 | | 277800A1 | | 1 | VENTILATEUR 9 Blade, Viscous Fan Drive; With Air Conditioning; With Turbo |
| 40 | | 614-8016 | | 4 | VIS M8 x 16 |
| 41 | | 892-11008 | | 4 | RONDELLE M8 |
| 42 | | 303195A1 | | 1 | ENSEMBLE Fan Drive; Component Parts Not Serviced Separately; Viscous Fan Drive; With Air Conditioning; With Turbo |
| 43 | | 87415774 | | 1 | COURROIE DE TRANSMISS. V-Type; Viscous Fan Drive, With Air Conditioning; With Turbo |
| | | {87419385} | | 1 | Fan 1:4 Ratio Pulley Kit; Includes Ref 44, 45; Viscous Fan Drive; With Air Conditioning |
| 44 | | 4890343 | | 1 | POULIE |
| 45 | | {2852621} | | 1 | Pulley Tensioner Support, Not Illustrated |

HTTP://WWW.MINNPARBACKHOEPARTS.COM

| 02-02 | | p1 | 10/03 |
|---|---|---|---|

SYSTEME DE PURGE D AIR - SUPPORT

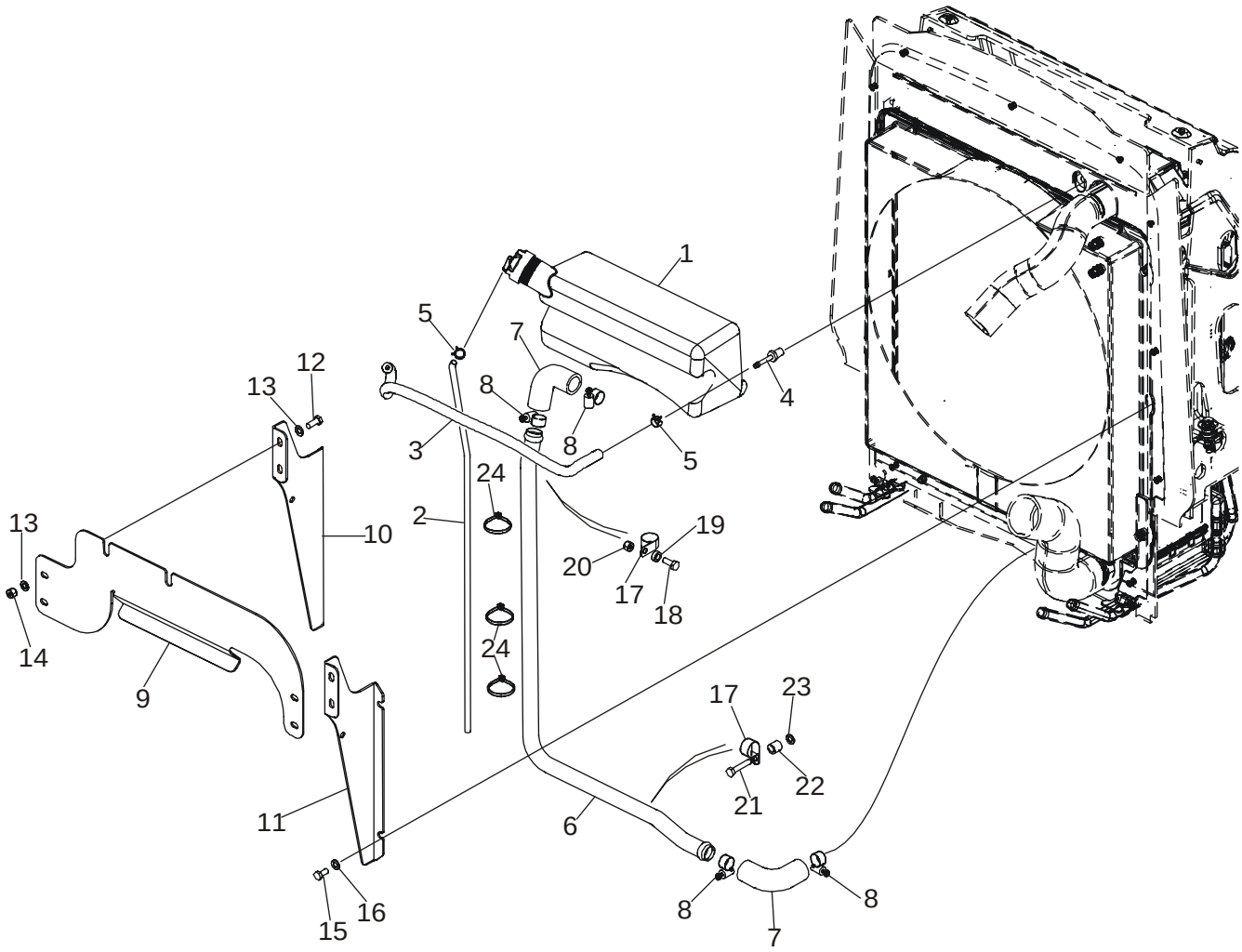


BS03G352

HTTP://WWW.MINNPARBACKHOEPARTS.COM



SYSTEME DE PURGE D AIR - SUPPORT

| REF | FN | PART NUMBER | YR/SN | QTY | DESCRIPTION |
|---|---|---|---|---|---|
| 1 | | 87412139 | | 1 | RESERVOIR DEPRESSEUR Deaeration Reservoir, 3.5 Liters; Includes 85803019 Cap |
| | | 85803019 | | 1 | CACHE ASSEMBLE Cap, 13 psi |
| 2 | | 87435409 | | 1 | FLEXIBLE Overflow Hose |
| 3 | | 87417300 | | 1 | FLEXIBLE Recovery, 5/16 ID x 19/32 OD x 22-11/64; Reservoir to Radiator |
| 4 | | 217-154 | | 1 | RACCORD 1/4 Stem x 1/4 NPTF |
| 5 | | 1348264C1 | | 2 | BRIDE, FLEXIBLE |
| 6 | | 87433503 | | 1 | TUBE |
| 7 | | 87417299 | | 2 | FLEXIBLE |
| 8 | | 214-1416 | | 4 | COLLIER Type F, No. 16 |
| 9 | | 87417223 | | 1 | PATTE FIXATION |
| 10 | | 87417225 | | 1 | PATTE FIXATION Left-Hand Bracket |
| 11 | | 87417224 | | 1 | PATTE FIXATION Right-Hand Bracket |
| 12 | | 614-8020 | | 4 | VIS M8 x 20 |
| 13 | | 895-11008 | | 8 | RONDELLE 9 x 16 x 1,6 mm |
| 14 | | 832-10408 | | 4 | ECROU M8 |
| 15 | | 806-8016 | | 4 | VIS M8 x 16 |
| 16 | | 895-11008 | | 4 | RONDELLE 9 x 16 x 1,6 mm |
| 17 | | 515-22254 | | 2 | COLLIER |
| 18 | | 614-8020 | | 1 | VIS M8 x 20 |
| 19 | | 87418359 | | 1 | ENTRETOISE 8 x 6 mm Spacer |
| 20 | | 829-1408 | | 2 | ECROU M8 |
| 21 | | 614-8040 | | 1 | VIS M8 x 40 |
| 22 | | 87418360 | | 1 | ENTRETOISE 8 x 16 mm Spacer |
| 23 | | 895-11008 | | 1 | RONDELLE 9 x 16 x 1,6 mm |
| 24 | | L18337 | | 3 | SANGLE Tie |

HTTP://WWW.MINNPARBACKHOEPARTS.COM

| 02-03 | | p1 | 09/03 |
|---|---|---|---|

RADIATEUR (AVEC/SANS AIR CONDITIONNE)

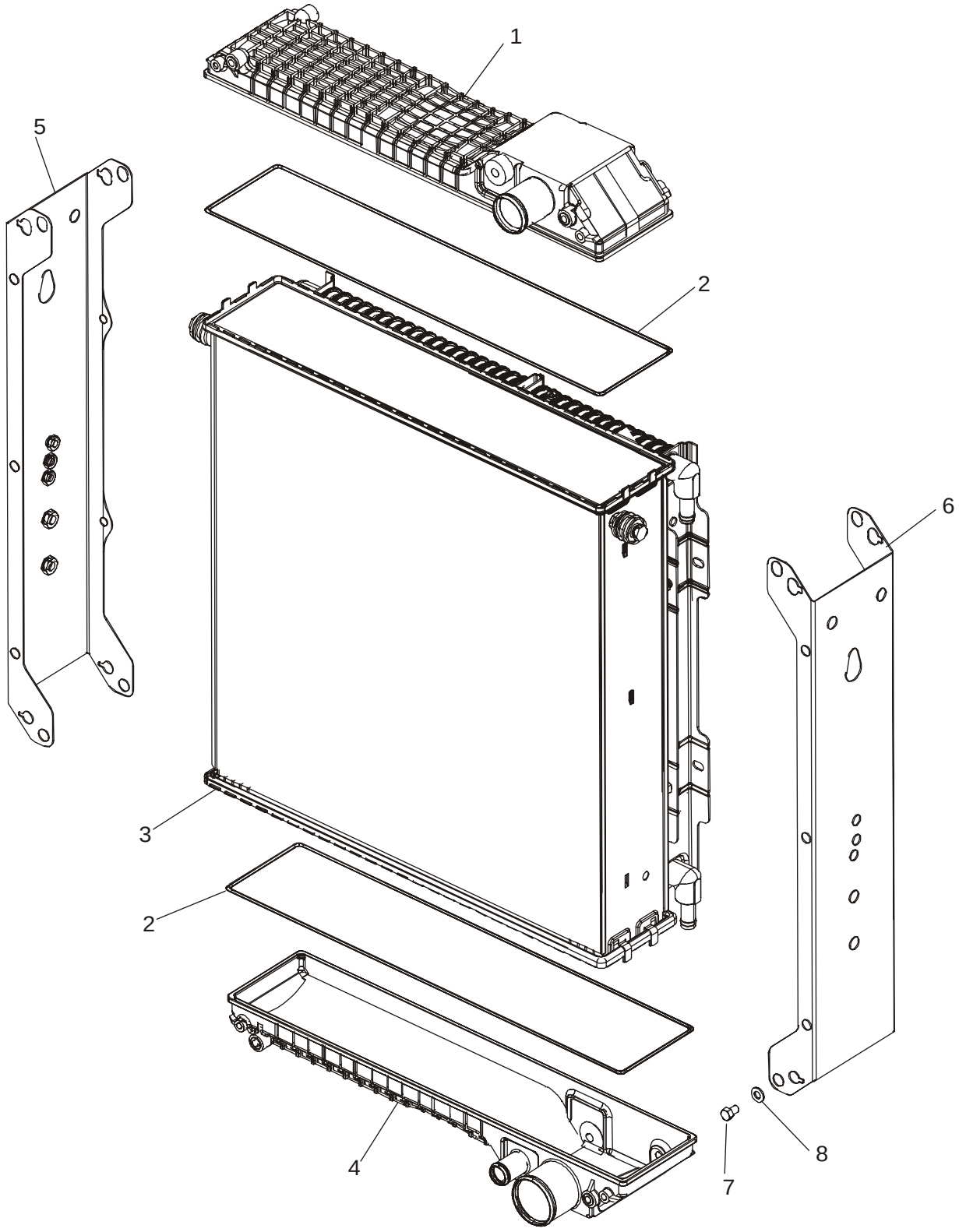

HTTP://WWW.MINNPARBACKHOEPARTS.COM



RADIATEUR (AVEC/SANS AIR CONDITIONNE)

| REF | FN | PART NUMBER | YR/SN | QTY | DESCRIPTION |
|---|---|---|---|---|---|
| | | 87410096 | | 1 | RADIATEUR 3 Row Radiator, Models With or Without Air Conditioning; Incl. Ref 1 - 8 |
| 1 | | {87429694} | | 1 | Upper Reservoir |
| 2 | | 254409A1 | | 2 | JOINT |
| 3 | | {87429690} | | 1 | Core |
| 4 | | {87429695} | | 1 | Lower Reservoir |
| 5 | | {87429692} | | 1 | Left-Hand |
| 6 | | {87429693} | | 1 | Right-Hand |
| 7 | | 614-8012 | | 8 | VIS M8 x 12 |
| 8 | | 895-11008 | | 8 | RONDELLE 9 x 17 x 1,6 mm |

HTTP://WWW.MINNPARBACKHOEPARTS.COM

| 02-04 | | p1 | 09/03 |
|---|---|---|---|

FILTRE A AIR - PIÈCES DE LA PRISE D'AIR (SANS TURBOCOMPRESSEUR)

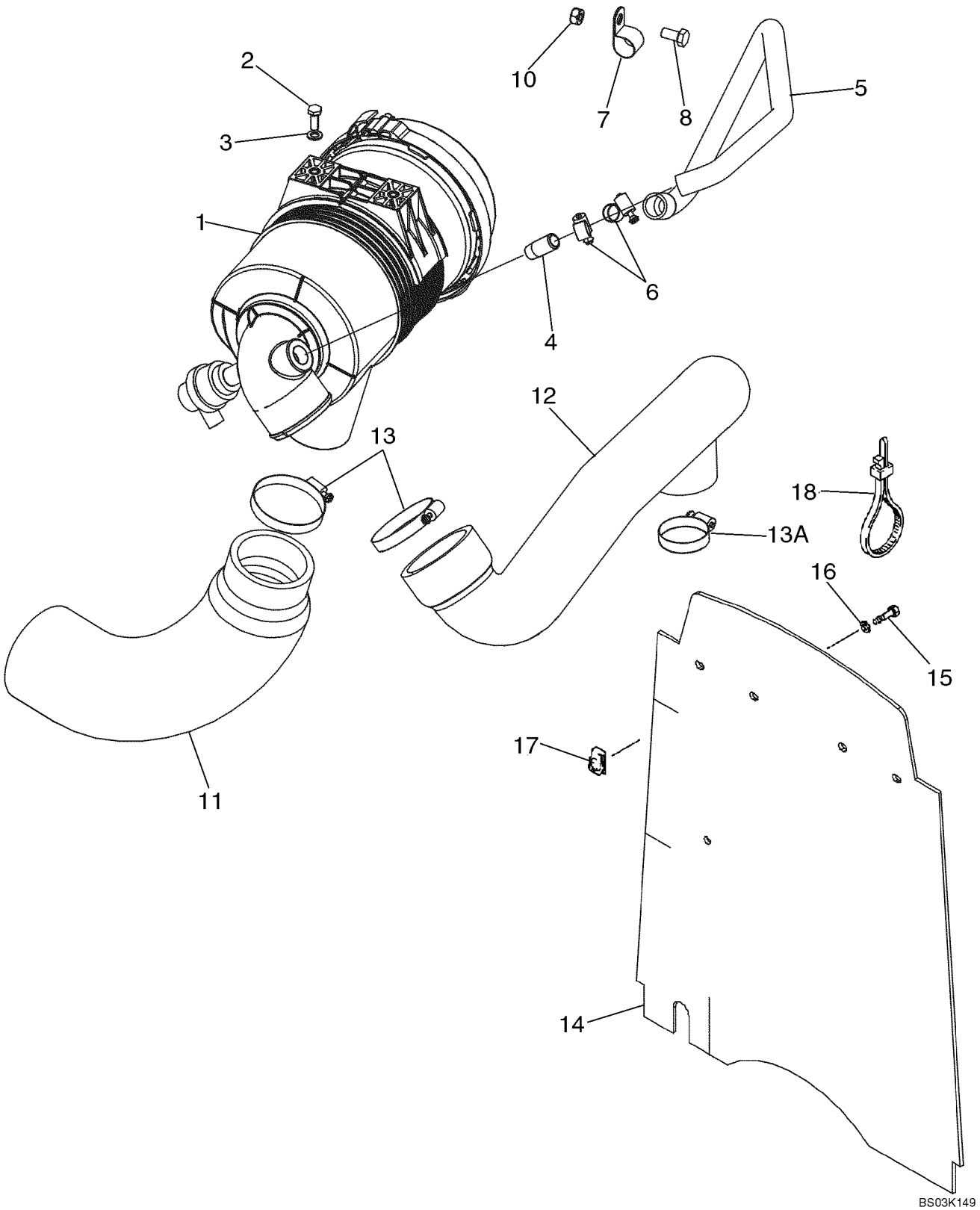

HTTP://WWW.MINNPARBACKHOEPARTS.COM



FILTRE A AIR - PIÈCES DE LA PRISE D'AIR (SANS TURBOCOMPRESSEUR)

| REF | FN | PART NUMBER | YR/SN | QTY | DESCRIPTION |
|---|---|---|---|---|---|
| 1 | | 87419133 | | 1 | FILTER A AIR Air Cleaner, Models Without Turbocharged Engines, See Figure 02-05 |
| 2 | | 614-8020 | | 2 | VIS M8 x 20 |
| 3 | | 895-11008 | | 2 | RONDELLE 9 x 16 x 1,6 mm |
| 4 | | L17985 | | 1 | RACCORD |
| 5 | | 87423457 | | 1 | FLEXIBLE |
| 6 | | 214-1412 | | 2 | COLLIER Type F, No. 12 |
| 7 | | 515-24238 | | 1 | COLLIER P |
| 8 | | 614-10020 | | 1 | VIS M10 x 20 |
| 9 | | 896-15010 | | 1 | RONDELLE 11 x 24 x 3 mm |
| 10 | | 829-1410 | | 1 | ECROU M10 |
| 11 | | 87419135 | | 1 | DURITE Inlet |
| 12 | | 87418036 | | 1 | DURITE To Turbocharger |
| 13 | | 214-1456 | | 2 | COLLIER Type F, No. 56 |
| 13A | | 214-1440 | | 1 | COLLIER Type F, No. 40 |
| 14 | | 87434099 | | 1 | RIDEAU Barrier, Heat and Noise Reduction |
| 15 | | 806-8025 | | 4 | VIS M8 x 25; 10.9 |
| 16 | | 495-81001 | | 4 | RONDELLE 9,5 x 29 x 1,6 mm |
| 17 | | 833-40408 | | 4 | ECROU U-Type, M8 |
| 18 | | L18337 | | 2 | SANGLE 15 in |

HTTP://WWW.MINNPARBACKHOEPARTS.COM

| 02-04A | | p1 | 09/03 |
|---|---|---|---|

FILTRE A AIR - PIÈCES DE LA PRISE D'AIR (AVEC TURBOCOMPRESSEUR)

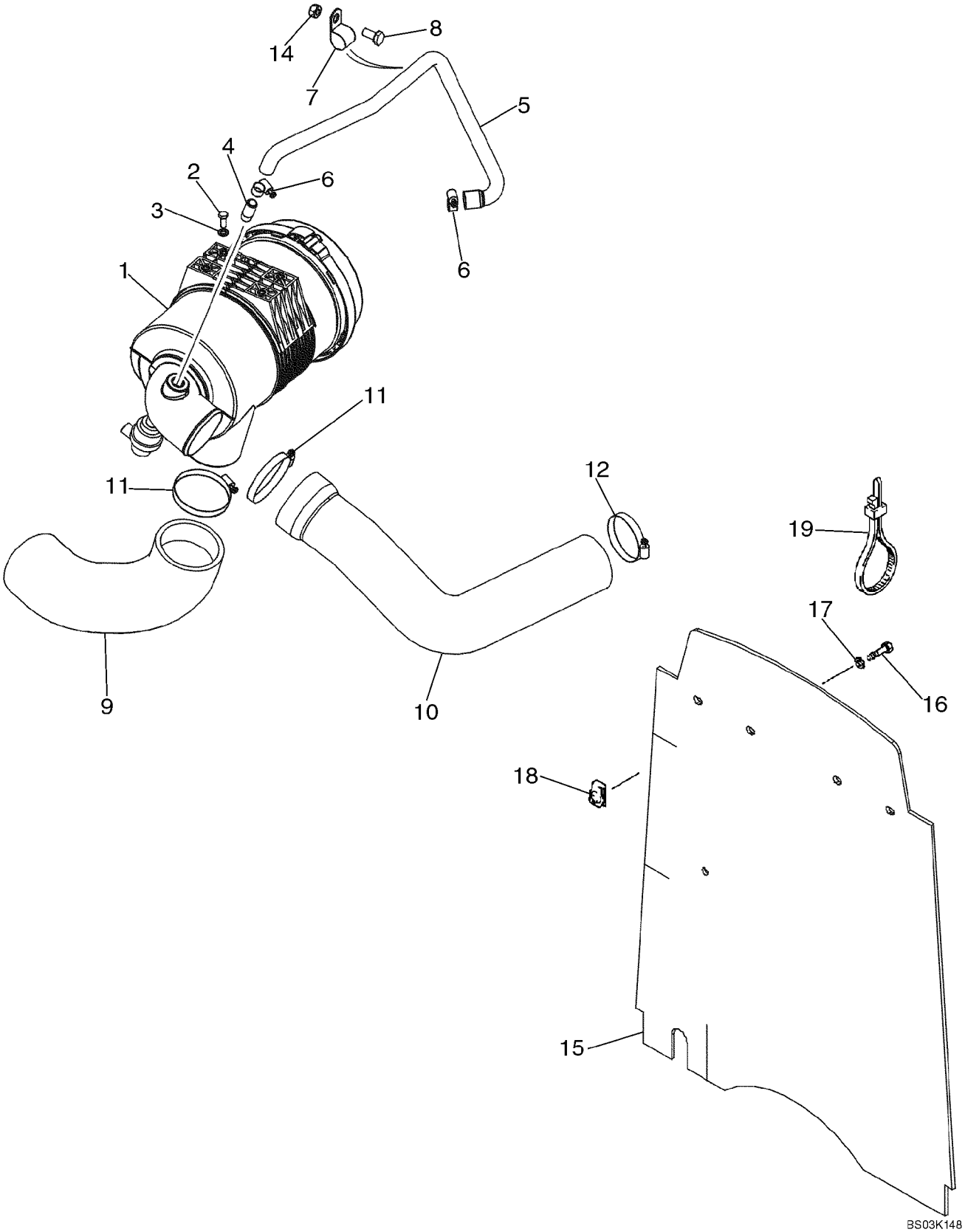

HTTP://WWW.MINNPARBACKHOEPARTS.COM



FILTRE A AIR - PIÈCES DE LA PRISE D'AIR (AVEC TURBOCOMPRESSEUR)

| REF | FN | PART NUMBER | YR/SN | QTY | DESCRIPTION |
|---|---|---|---|---|---|
| 1 | | 87412636 | | 1 | FILTER A AIR Air Cleaner; Models With Turbocharged Engine; See Figure 02-05A |
| 2 | | 614-8020 | | 4 | VIS M8 x 20 |
| 3 | | 895-11008 | | 4 | RONDELLE 9 x 16 x 1,6 mm |
| 4 | | L17985 | | 1 | RACCORD |
| 5 | | 87423457 | | 1 | FLEXIBLE |
| 6 | | 214-1412 | | 2 | COLLIER Type F, No. 12 |
| 7 | | 515-24238 | | 1 | COLLIER P |
| 8 | | 614-10020 | | 1 | VIS M10 x 20 |
| 9 | | 87420834 | | 1 | DURITE Inlet |
| 10 | | 87412489 | | 1 | DURITE To Turbocharger |
| 11 | | 214-1464 | | 2 | COLLIER Type F, No. 64, 3-9/16 - 4-1/2 |
| 12 | | 214-1456 | | 1 | COLLIER Type F, No. 56 |
| 13 | | 896-15010 | | 1 | RONDELLE 11 x 24 x 3 mm |
| 14 | | 829-1410 | | 1 | ECROU M10 |
| 15 | | 87434099 | | 1 | RIDEAU Barrier, Heat and Noise Reduction |
| 16 | | 806-8025 | | 4 | VIS M8 x 25; 10.9 |
| 17 | | 495-81001 | | 4 | RONDELLE 9,5 x 29 x 1,6 mm |
| 18 | | 833-40408 | | 4 | ECROU U-Type, M8 |
| 19 | | L18337 | | 2 | SANGLE 15 in |

HTTP://WWW.MINNPARBACKHOEPARTS.COM



FILTRE A AIR (SANS TURBOCOMPRESSEUR)

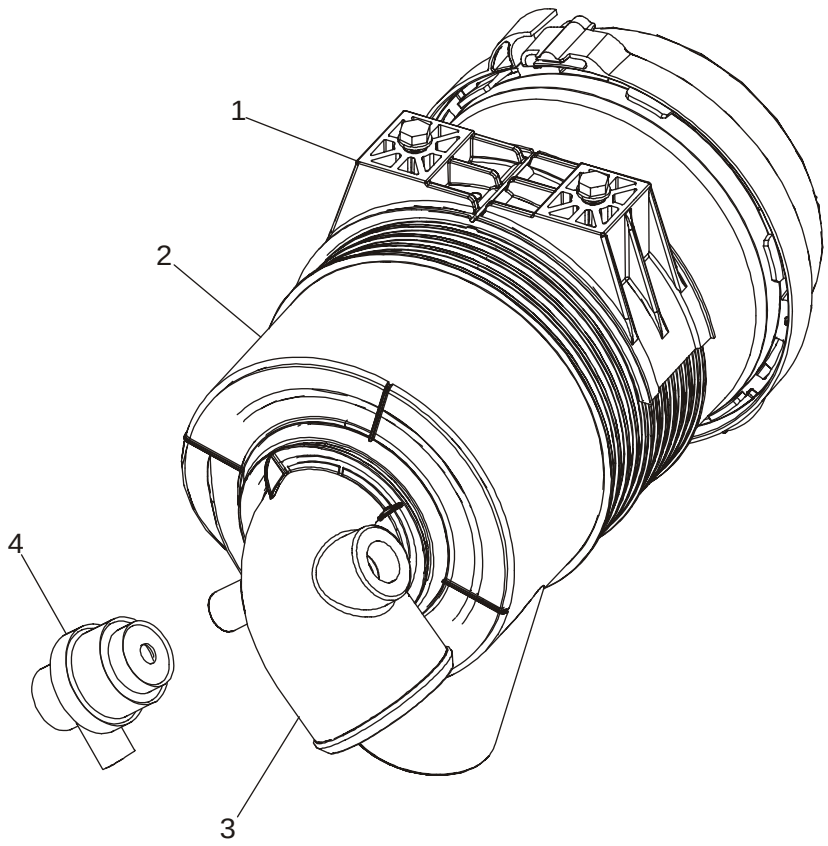


BS03K150

HTTP://WWW.MINNPARBACKHOEPARTS.COM



FILTRE A AIR (SANS TURBOCOMPRESSEUR)

| REF | FN | PART NUMBER | YR/SN | QTY | DESCRIPTION |
|---|---|---|---|---|---|
| | | 87419133 | | 1 | FILTER A AIR Air Cleaner; Models Without Turbocharged Engines; Incl. Ref 1 - 4 |
| 1 | | 87418166 | | 1 | FILTER A AIR Includes Rear Cover |
| 2 | | 87418366 | | 1 | ELÉMENT FILTRANT Primary |
| 3 | | 87418367 | | 1 | ELÉMENT FILTRANT Secondary |
| 4 | | 87405661 | | 1 | CONTACTEUR Air Restriction Switch |

HTTP://WWW.MINNPARBACKHOEPARTS.COM



FILTRE A AIR (AVEC TURBOCOMPRESSEUR)

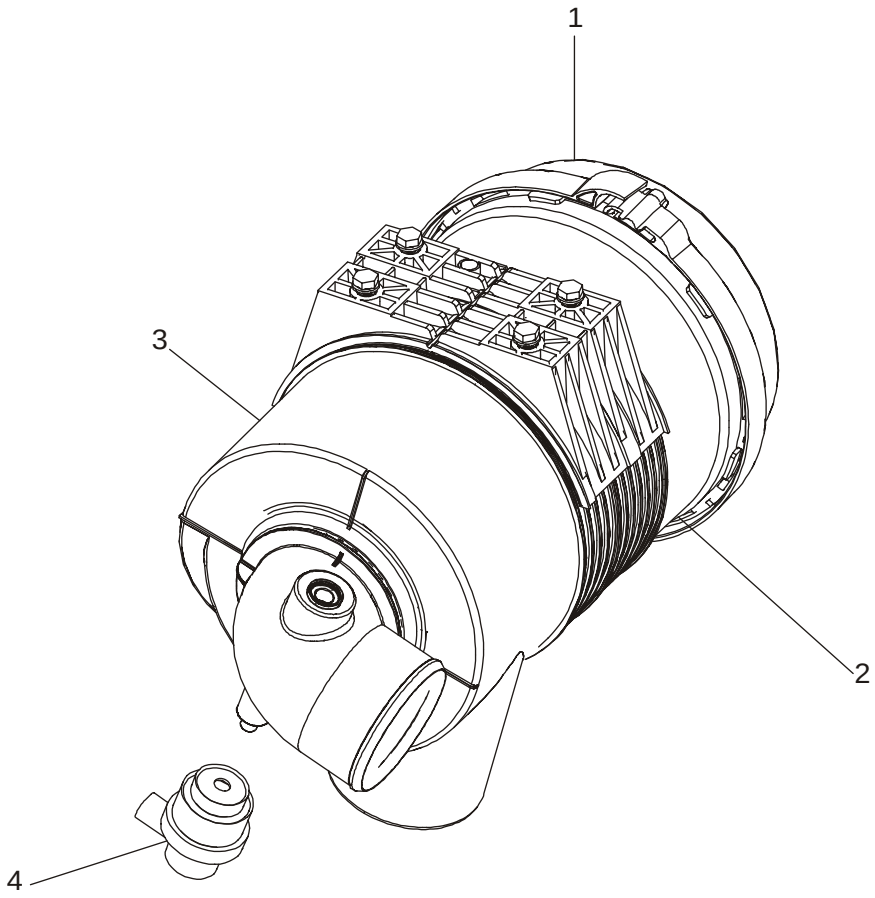


BS03K151

HTTP://WWW.MINNPARBACKHOEPARTS.COM



FILTRE A AIR (AVEC TURBOCOMPRESSEUR)

| REF | FN | PART NUMBER | YR/SN | QTY | DESCRIPTION |
|---|---|---|---|---|---|
| | | 87412636 | | 1 | FILTER A AIR Air Cleaner; Models With Turbocharged Engines; Incl. Ref 1 - 4 |
| 1 | | 87412635 | | 1 | FILTER A AIR Includes Rear Cover |
| 2 | | 87418364 | | 1 | ELÉMENT FILTRANT Primary |
| 3 | | 87418365 | | 1 | ELÉMENT FILTRANT Secondary |
| 4 | | 87405661 | | 1 | CONTACTEUR Air Restriction Switch |

HTTP://WWW.MINNPARBACKHOEPARTS.COM

| 02-06 | | p1 | 12/03 |
|---|---|---|---|

SILENCIEUX - ÉCHAPPEMENT (AVEC TURBOCOMPRESSEUR)

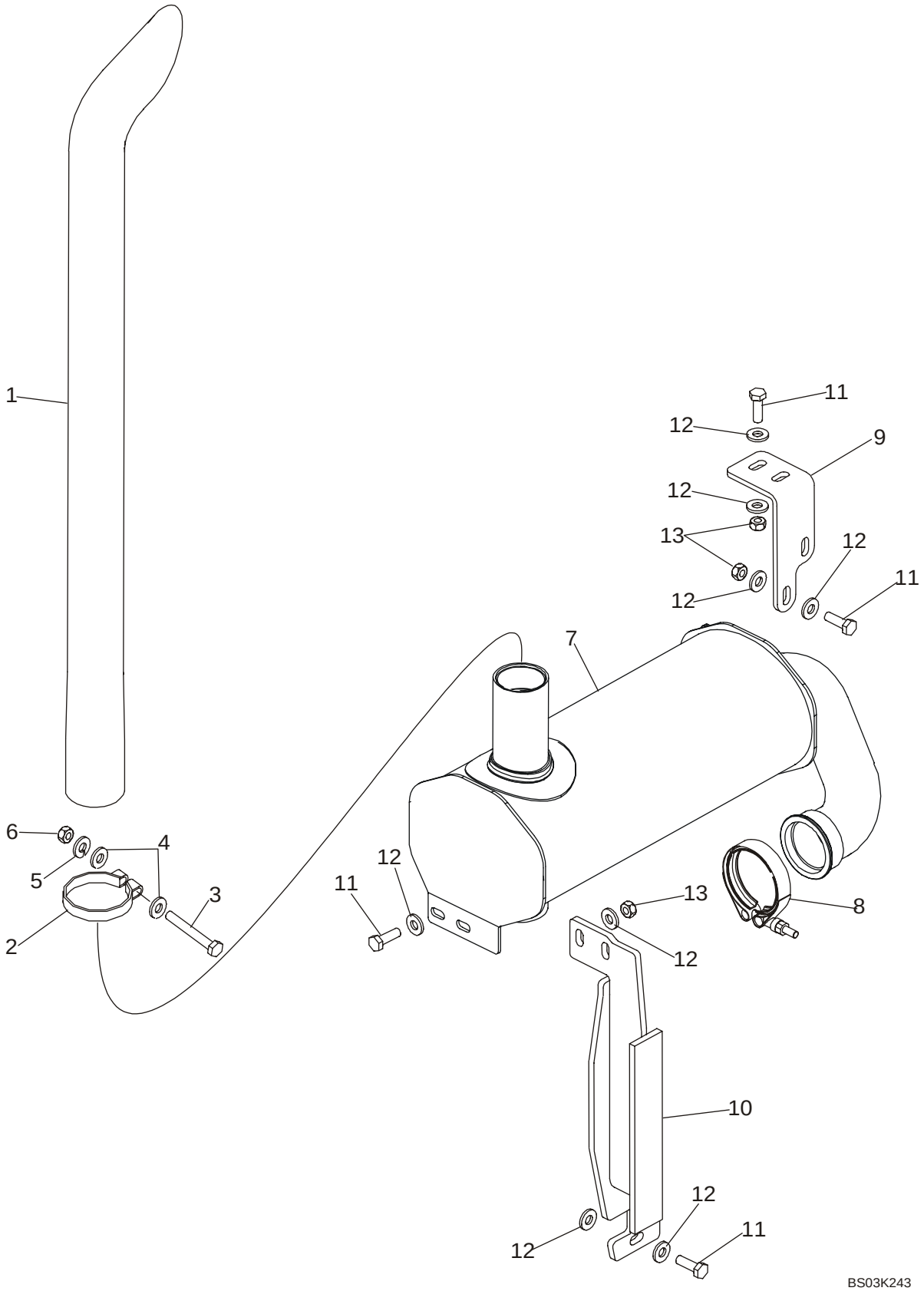

HTTP://WWW.MINNPARBACKHOEPARTS.COM



SILENCIEUX - ÉCHAPPEMENT (AVEC TURBOCOMPRESSEUR)

| REF | FN | PART NUMBER | YR/SN | QTY | DESCRIPTION |
|---|---|---|---|---|---|
| 1 | | 87437805 | | 1 | TUBE ECHAPPEMENT Exhaust Stack |
| 2 | | 87437804 | | 1 | CAVALIER-SERRE-TUBE Stack Clamp |
| 3 | | 614-10080 | | 1 | VIS M10 x 80 |
| 4 | | 896-15010 | | 2 | RONDELLE Flat |
| 5 | | 892-11010 | | 1 | RONDELLE FREIN M10 |
| 6 | | 829-1410 | | 1 | ECROU M10 |
| 7 | | 87437834 | | 1 | SILENCIEUX Turbo Engine |
| 8 | | A170467 | | 1 | COLLIER Includes Hardware |
| 9 | | 87423531 | | 1 | EQUERRE Front Support Bracket |
| 10 | | 87439444 | | 1 | EQUERRE Rear Support Bracket |
| 11 | | 627-10030 | | 8 | VIS M10 x 30 |
| 12 | | 896-15010 | | 16 | RONDELLE 11 x 24 x 3 mm |
| 13 | | 829-1410 | | 7 | ECROU M10 |

HTTP://WWW.MINNPARBACKHOEPARTS.COM

| 02-06A | | p1 | 12/03 |
|---|---|---|---|

SILENCIEUX, ASPIRATEUR - ÉCHAPPEMENT

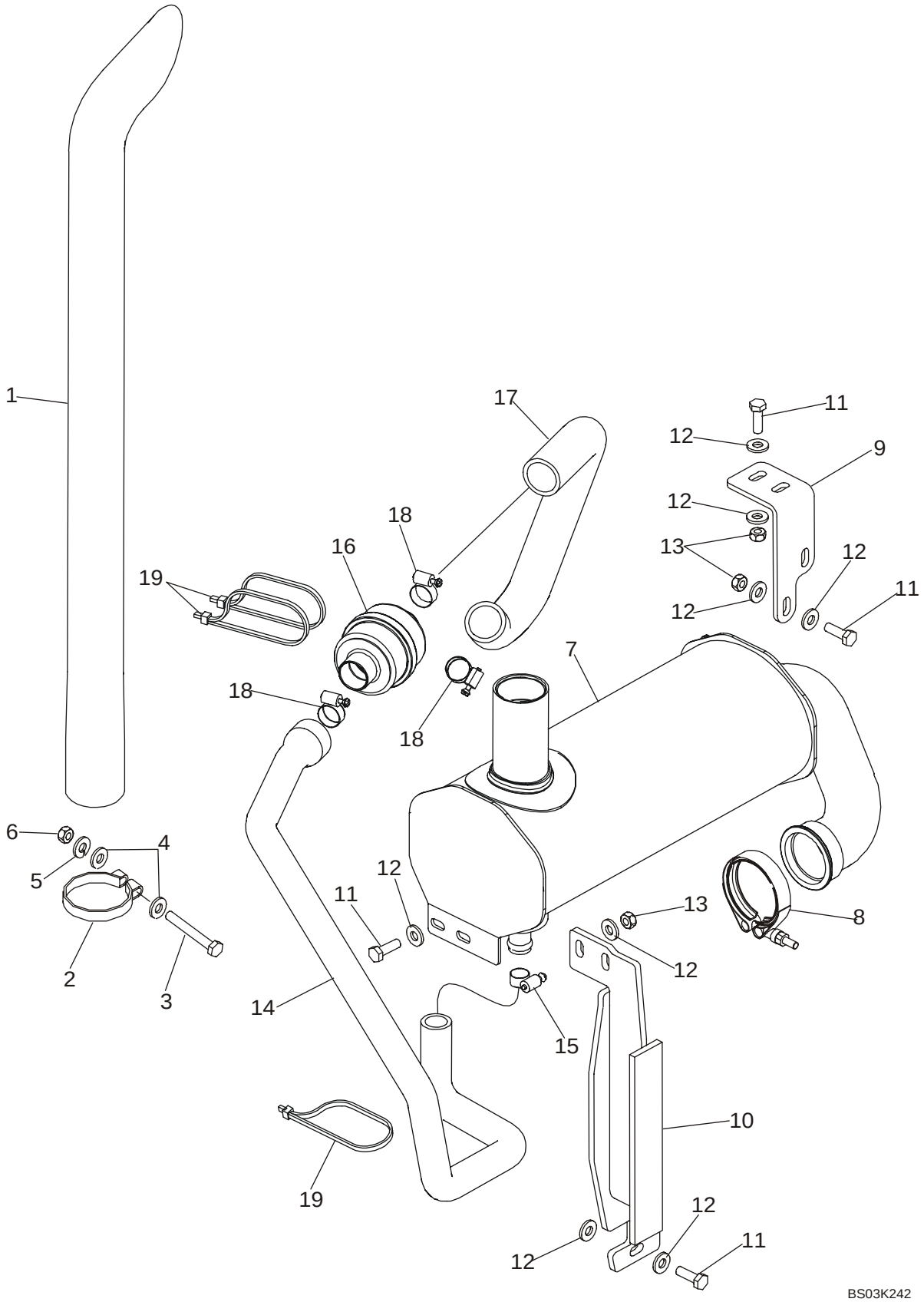

HTTP://WWW.MINNPARBACKHOEPARTS.COM



SILENCIEUX, ASPIRATEUR - ÉCHAPPEMENT

| REF | FN | PART NUMBER | YR/SN | QTY | DESCRIPTION |
|---|---|---|---|---|---|
| 1 | | 87437805 | | 1 | TUBE ECHAPPEMENT Exhaust Stack |
| 2 | | 87437804 | | 1 | CAVALIER-SERRE-TUBE Stack Clamp |
| 3 | | 614-10080 | | 1 | VIS M10 x 80 |
| 4 | | 896-15010 | | 2 | RONDELLE Flat |
| 5 | | 892-11010 | | 1 | RONDELLE FREIN M10 |
| 6 | | 829-1410 | | 1 | ECROU M10 |
| 7 | | 87435499 | | 1 | SILENCIEUX Aspirated and Spark Arrestor; For Gasket, Elbow and Attaching Hardware, See Figure 02-06B, Ref 9 - 12 |
| 8 | | A170467 | | 1 | COLLIER Includes Hardware |
| 9 | | 87423531 | | 1 | EQUERRE Front Support Bracket |
| 10 | | 87439444 | | 1 | EQUERRE Rear Support Bracket |
| 11 | | 627-10030 | | 8 | VIS M10 x 30 |
| 12 | | 896-15010 | | 16 | RONDELLE 11 x 24 x 3 mm |
| 13 | | 829-1410 | | 7 | ECROU M10 |
| 14 | | 87436615 | | 1 | FLEXIBLE Aspiration Hose, Check Valve to Muffler |
| 15 | | 214-1416 | | 1 | COLLIER #16, Type F |
| 16 | | 307123A1 | | 1 | VALVE Aspirator Check |
| 17 | | 87436614 | | 1 | FLEXIBLE Aspiration Hose, Air Cleaner to Valve |
| 18 | | 214-1424 | | 3 | COLLIER #24, Type F |
| 19 | | L18337 | | 3 | SANGLE Tie |

HTTP://WWW.MINNPARBACKHOEPARTS.COM

| 02-06B | | p1 | 12/03 |
|---|---|---|---|

SILENCIEUX - ÉCHAPPEMENT (SANS TURBOCOMPRESSEUR)

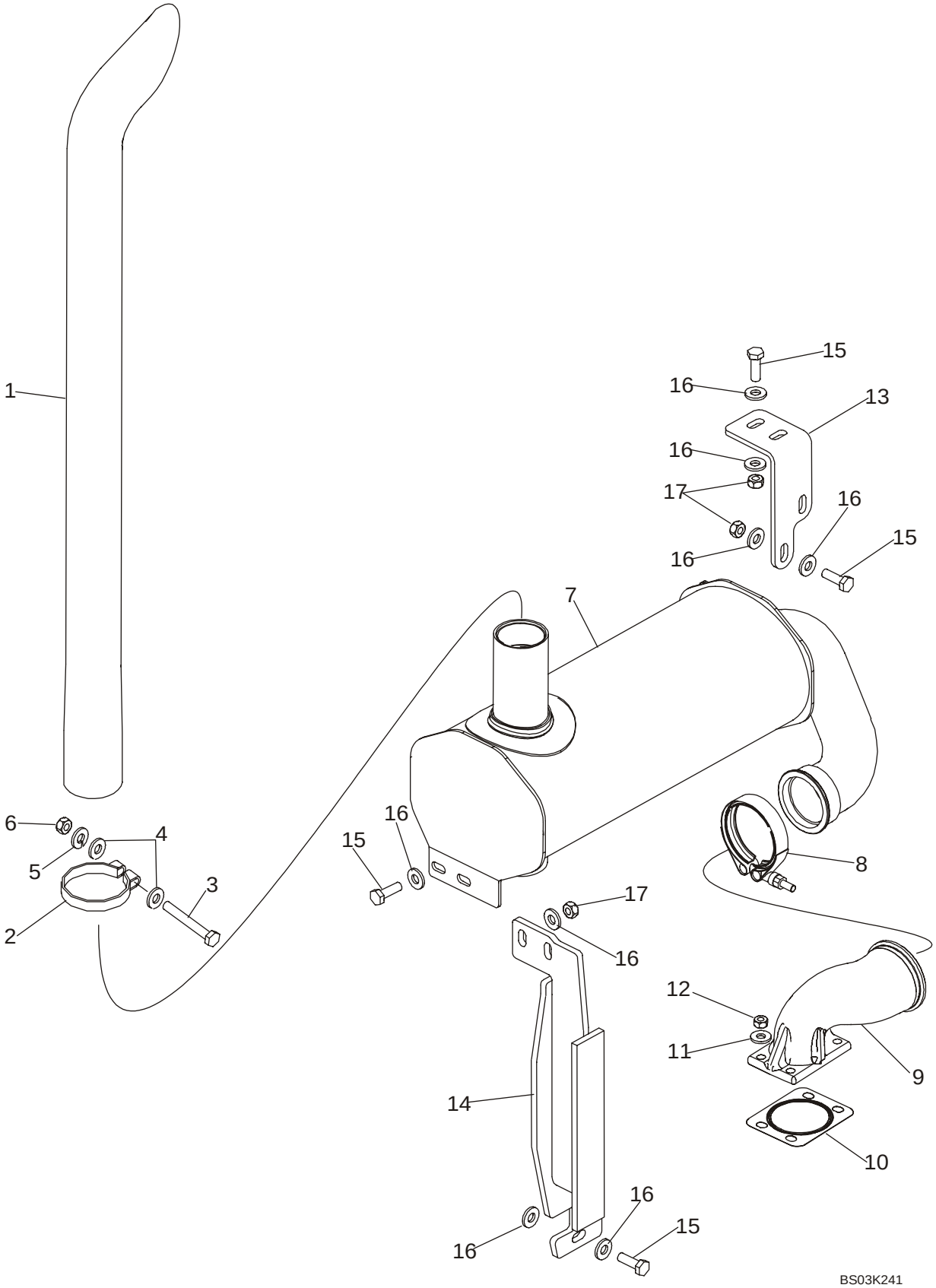

HTTP://WWW.MINNPARBACKHOEPARTS.COM



SILENCIEUX - ÉCHAPPEMENT (SANS TURBOCOMPRESSEUR)

| REF | FN | PART NUMBER | YR/SN | QTY | DESCRIPTION |
|---|---|---|---|---|---|
| 1 | | 87437805 | | 1 | TUBE ECHAPPEMENT Exhaust Stack |
| 2 | | 87437804 | | 1 | CAVALIER-SERRE-TUBE Stack Clamp |
| 3 | | 614-10080 | | 1 | VIS M10 x 80 |
| 4 | | 896-15010 | | 2 | RONDELLE Flat |
| 5 | | 892-11010 | | 1 | RONDELLE FREIN M10 |
| 6 | | 829-1410 | | 1 | ECROU M10 |
| 7 | | 87437836 | | 1 | SILENCIEUX Naturally Aspirated Engine |
| 8 | | A170467 | | 1 | COLLIER Includes Hardware |
| 9 | | 87410196 | | 1 | COUDE |
| 10 | | J936995 | | 1 | JOINT |
| 11 | | 896-15008 | | 4 | RONDELLE 9 x 21 x 2,5 mm |
| 12 | | 829-1408 | | 4 | ECROU M8 |
| 13 | | 87423531 | | 1 | EQUERRE Front Support Bracket |
| 14 | | 87439444 | | 1 | EQUERRE Rear Support Bracket |
| 15 | | 627-10030 | | 8 | VIS M10 x 30 |
| 16 | | 896-15010 | | 16 | RONDELLE 11 x 24 x 3 mm |
| 17 | | 829-1410 | | 7 | ECROU M10 |

HTTP://WWW.MINNPARBACKHOEPARTS.COM



MOTEUR - SUPPORT

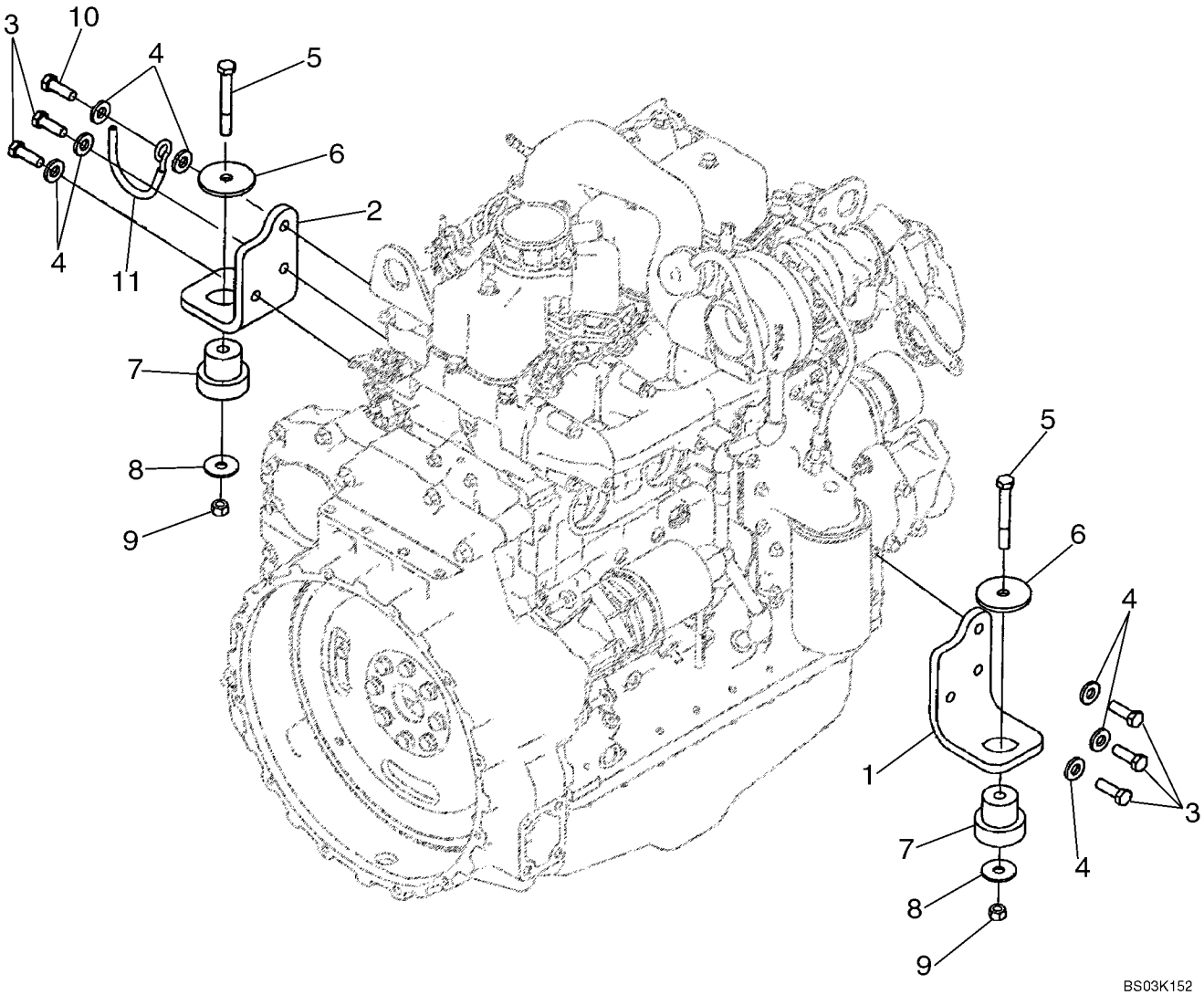

HTTP://WWW.MINNPARBACKHOEPARTS.COM



MOTEUR - SUPPORT

| REF | FN | PART NUMBER | YR/SN | QTY | DESCRIPTION |
|---|---|---|---|---|---|
| | | {86990708} | | 1 | 80 hp Engine, Models Without Turbocharged Engine; Includes Parts On Figures 02-08 - 02-41, 03-4 - 03-11 |
| | | {86990709} | | 1 | 85 hp Engine, Models With Turbocharged Engine; Includes Parts On Figures 02-08 - 02-41, 03-4 - 03-11 |
| 1 | | 87411319 | | 1 | PATTE FIXATION Right-Hand |
| 2 | | 87411320 | | 1 | PATTE FIXATION Left-Hand |
| 3 | | 614-12035 | | 5 | VIS M12 x 35 |
| 4 | | 896-15012 | | 7 | RONDELLE 13,5 x 28 x 4 mm |
| 5 | | 814-12080 | | 2 | VIS M12 x 80 |
| 6 | | 85801585 | | 2 | RONDELLE |
| 7 | | 87416966 | | 2 | SUPPORT Insulator, Rubber Mount |
| 8 | | 85802618 | | 2 | RONDELLE D'ETANCHEITE |
| 9 | | 832-10412 | | 2 | ECROU M12 |
| 10 | | 614-12040 | | 1 | VIS M12 x 40 |
| 11 | | 87431799 | | 1 | SUPPORT Hose Support |

HTTP://WWW.MINNPARBACKHOEPARTS.COM



MOTEUR

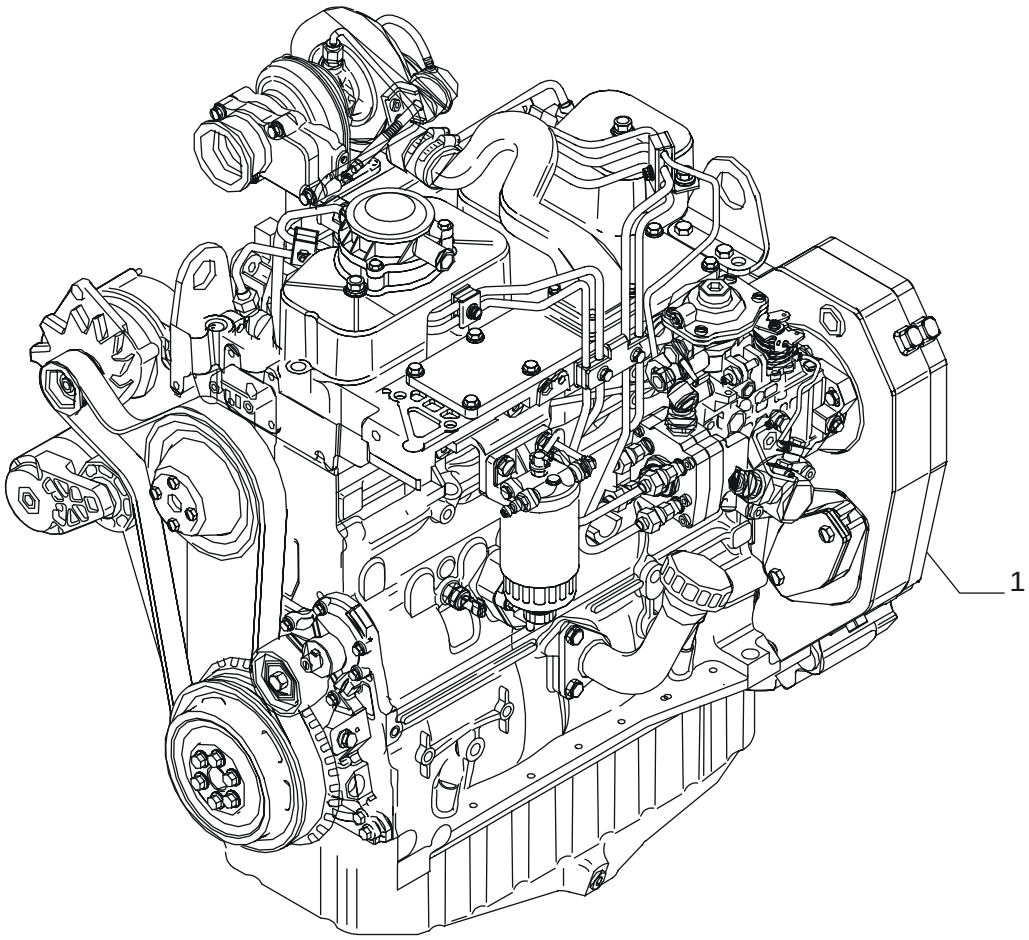


BS04A023

HTTP://WWW.MINNPARBACKHOEPARTS.COM



MOTEUR

| REF | FN | PART NUMBER | YR/SN | QTY | DESCRIPTION |
|---|---|---|---|---|---|
| 1 | | {86990708} | | 1 | 80hp Engine, Models Without Turbocharged Engine; Includes Parts On Figures 02-08 - 02-41, 03-04 - 03-11 |
| 1 | | {86990709} | | 1 | 85hp Engine, Models With Turbocharged Engine; Includes Parts On Figures 02-08 - 02-41, 03-04 - 03-11 |

HTTP://WWW.MINNPARBACKHOEPARTS.COM



BLOC CYLINDRES

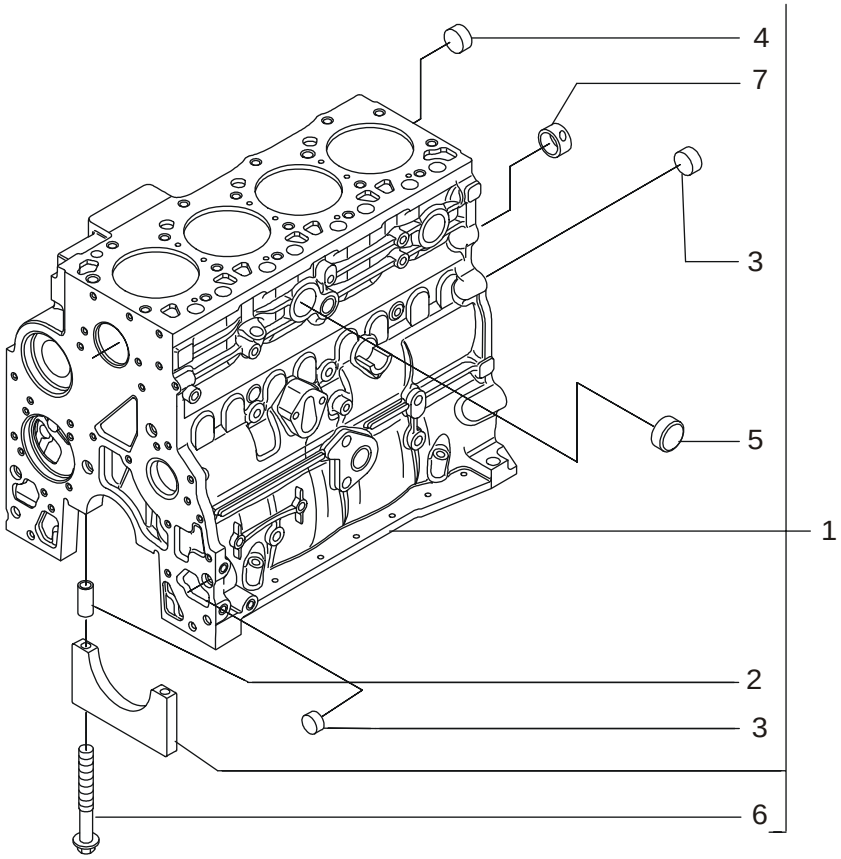


BS04A024

HTTP://WWW.MINNPARBACKHOEPARTS.COM



BLOC CYLINDRES

| REF | FN | PART NUMBER | YR/SN | QTY | DESCRIPTION |
|---|---|---|---|---|---|
| 1 | | 2830082 | | 1 | BLOC MOTEUR - ASSY |
| 2 | | 4899026 | | 10 | PION |
| 3 | | 4895039 | | 3 | BOUCHON |
| 4 | | 4895038 | | 4 | BOUCHON |
| 5 | | 4895228 | | 2 | BOUCHON |
| 6 | | 4891353 | | 10 | VIS 12X120 |
| 7 | | 4895040 | | 1 | BAGUE |

HTTP://WWW.MINNPARBACKHOEPARTS.COM



BLOC CYLINDRES

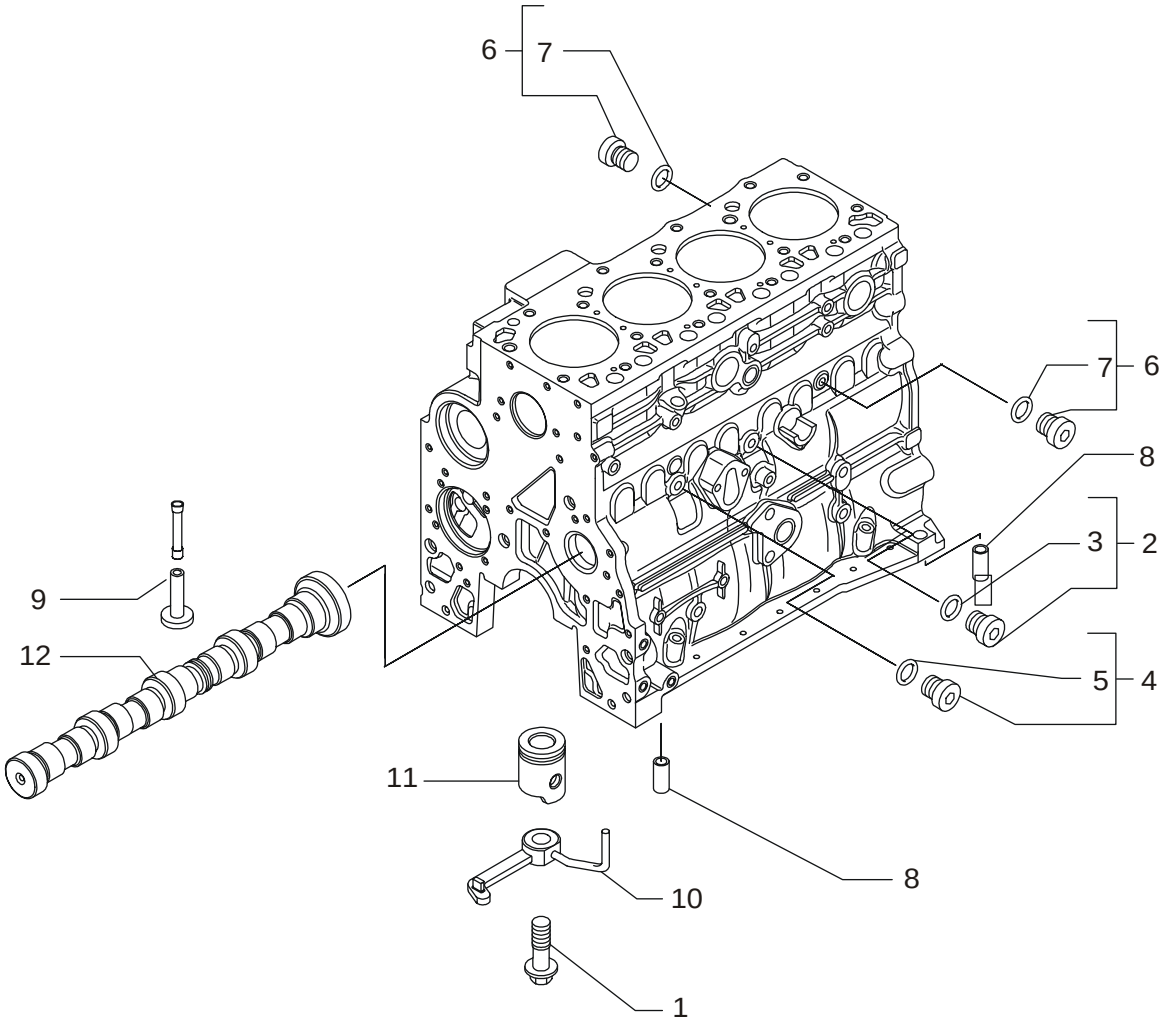

HTTP://WWW.MINNPARBACKHOEPARTS.COM



BLOC CYLINDRES

| REF | FN | PART NUMBER | YR/SN | QTY | DESCRIPTION |
|---|---|---|---|---|---|
| 1 | | 4894218 | | 4 | VIS |
| 2 | | 4895605 | | 1 | BOUCHON 14X1.5 - ASSY |
| 3 | | 4899115 | | 1 | JOINT THORIQUE |
| 4 | | 4899009 | | 1 | BOUCHON 10X1.5 - ASSY |
| 5 | | 4899072 | | 1 | JOINT THORIQUE |
| 6 | | 4895392 | | 2 | BOUCHON 18X1.5 - ASSY |
| 7 | | 4895393 | | 1 | JOINT THORIQUE |
| 8 | | 4895049 | | 2 | PION |
| 9 | | 4895180 | | 8 | POUSSOIR |
| 10 | | 504047260 | | 4 | GICLEUR |
| 11 | | REF | | 1 | NOTICE PISTON; See Figure 02-23 |
| 12 | | REF | | 1 | NOTICE CAMSHAFT; See Figure 02-28 |

HTTP://WWW.MINNPARBACKHOEPARTS.COM



POMPE À HUILE, CARTER

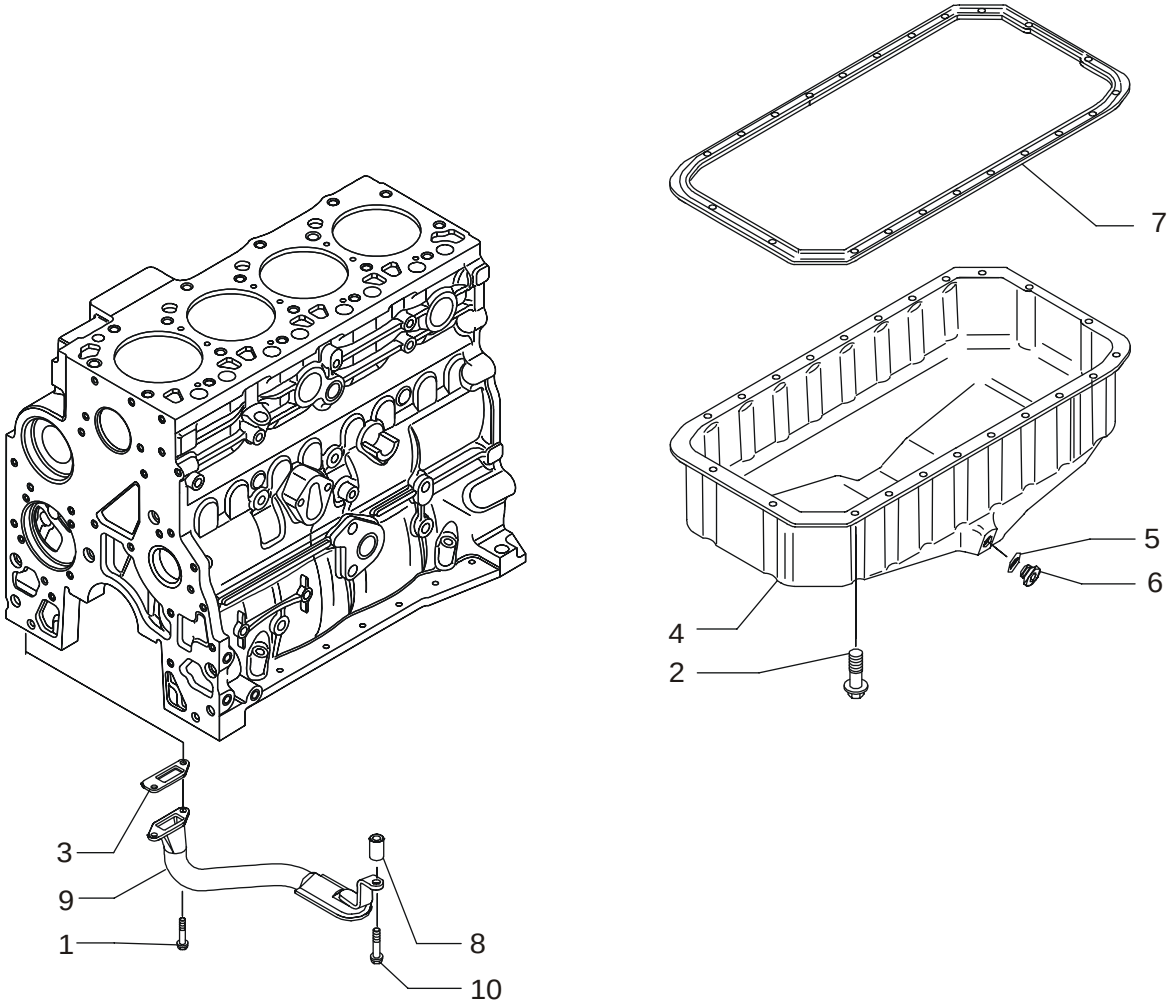


BS04A026

HTTP://WWW.MINNPARBACKHOEPARTS.COM



POMPE À HUILE, CARTER

| REF | FN | PART NUMBER | YR/SN | QTY | DESCRIPTION |
|---|---|---|---|---|---|
| 1 | | 4899020 | | 2 | VIS 8X20 |
| 2 | | 4899091 | | 22 | VIS |
| 2 | | 4895489 | | 2 | VIS |
| 3 | | 4898301 | | 1 | JOINT |
| 4 | | {504043550} | | 1 | Oil Pan |
| 5 | | 4895584 | | 1 | JOINT |
| 6 | | 4894139 | | 1 | BOUCHON 22X1.5 |
| 7 | | 504069777 | | 1 | JOINT |
| 8 | | 504062812 | | 1 | ENTRETOISE |
| 9 | | {504042165} | | 1 | Tube |
| 10 | | 4895538 | | 1 | VIS |

HTTP://WWW.MINNPARBACKHOEPARTS.COM



BLOC CYLINDRES - COUVERCLES

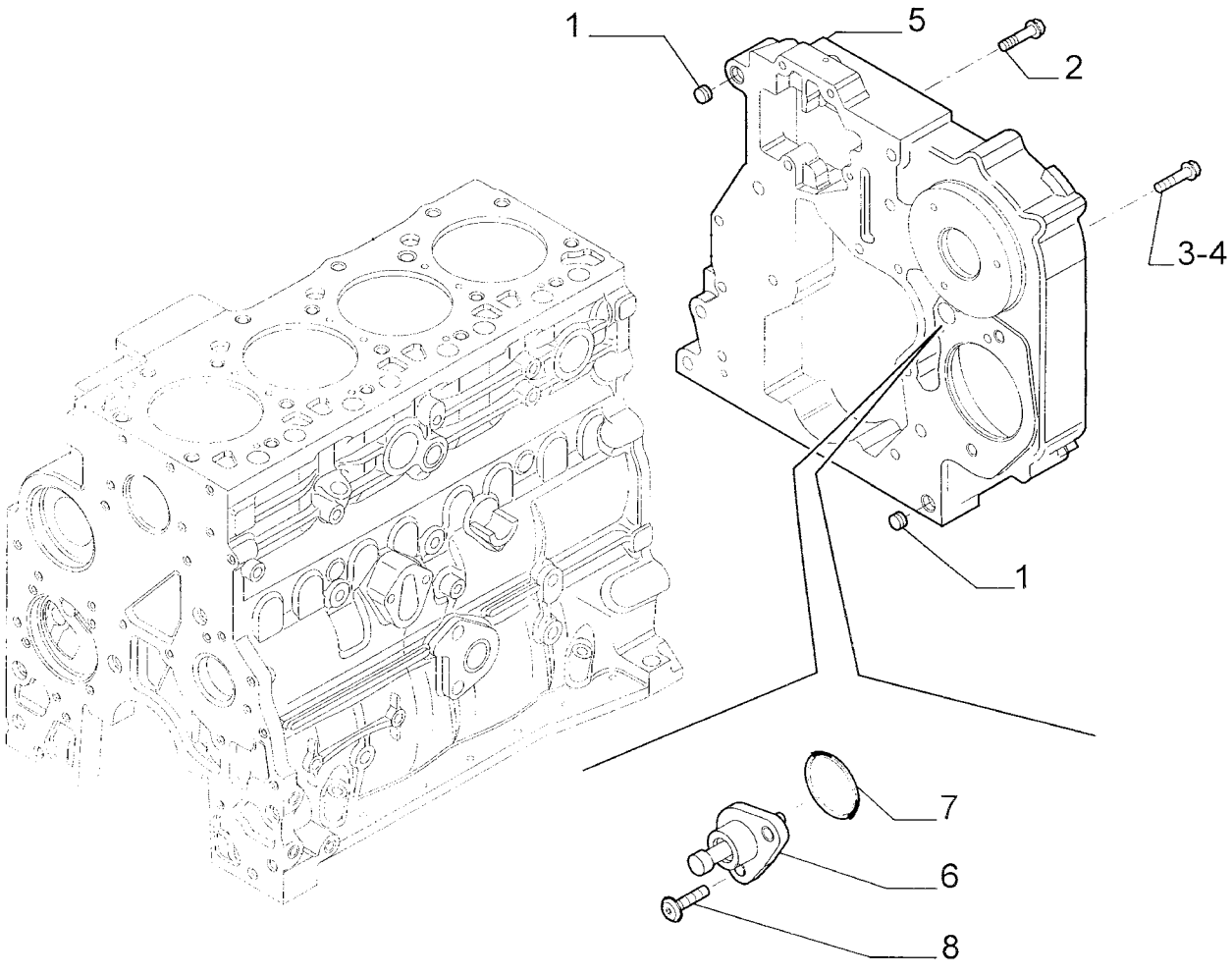

HTTP://WWW.MINNPARBACKHOEPARTS.COM



BLOC CYLINDRES - COUVERCLES

| REF | FN | PART NUMBER | YR/SN | QTY | DESCRIPTION |
|---|---|---|---|---|---|
| 1 | | 4899026 | | 2 | PION |
| 2 | | 4899091 | | 4 | VIS |
| 3 | | 4899093 | | 5 | VIS |
| 4 | | 4899073 | | 2 | VIS |
| 5 | | 504050848 | | 1 | COUVERCLE |
| 6 | | 504074001 | | 1 | COUVERCLE |
| 7 | | 17278780 | | 1 | JOINT THORIQUE |
| 8 | | 4895355 | | 2 | VIS 5X17 |

HTTP://WWW.MINNPARBACKHOEPARTS.COM



BLOC CYLINDRES - COUVERCLES

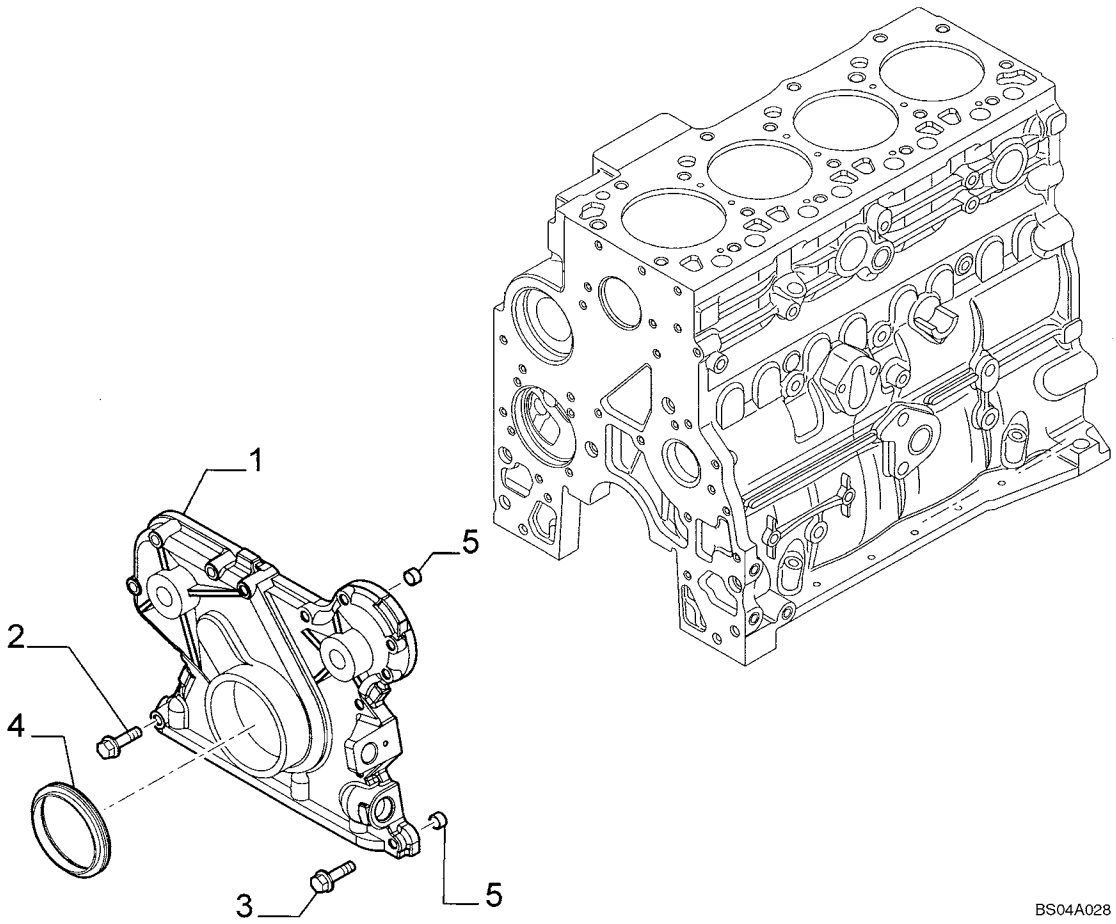

HTTP://WWW.MINNPARBACKHOEPARTS.COM



BLOC CYLINDRES - COUVERCLES

| REF | FN | PART NUMBER | YR/SN | QTY | DESCRIPTION |
|---|---|---|---|---|---|
| 1 | | 4897024 | | 1 | COUVERCLE |
| 2 | | 4899078 | | 5 | VIS |
| 3 | | 4899063 | | 8 | VIS M8X30 |
| 4 | | 4890832 | | 1 | JOINT |
| 5 | | 4891209 | | 2 | PION |

HTTP://WWW.MINNPARBACKHOEPARTS.COM



BLOC CYLINDRES - COUVERCLES

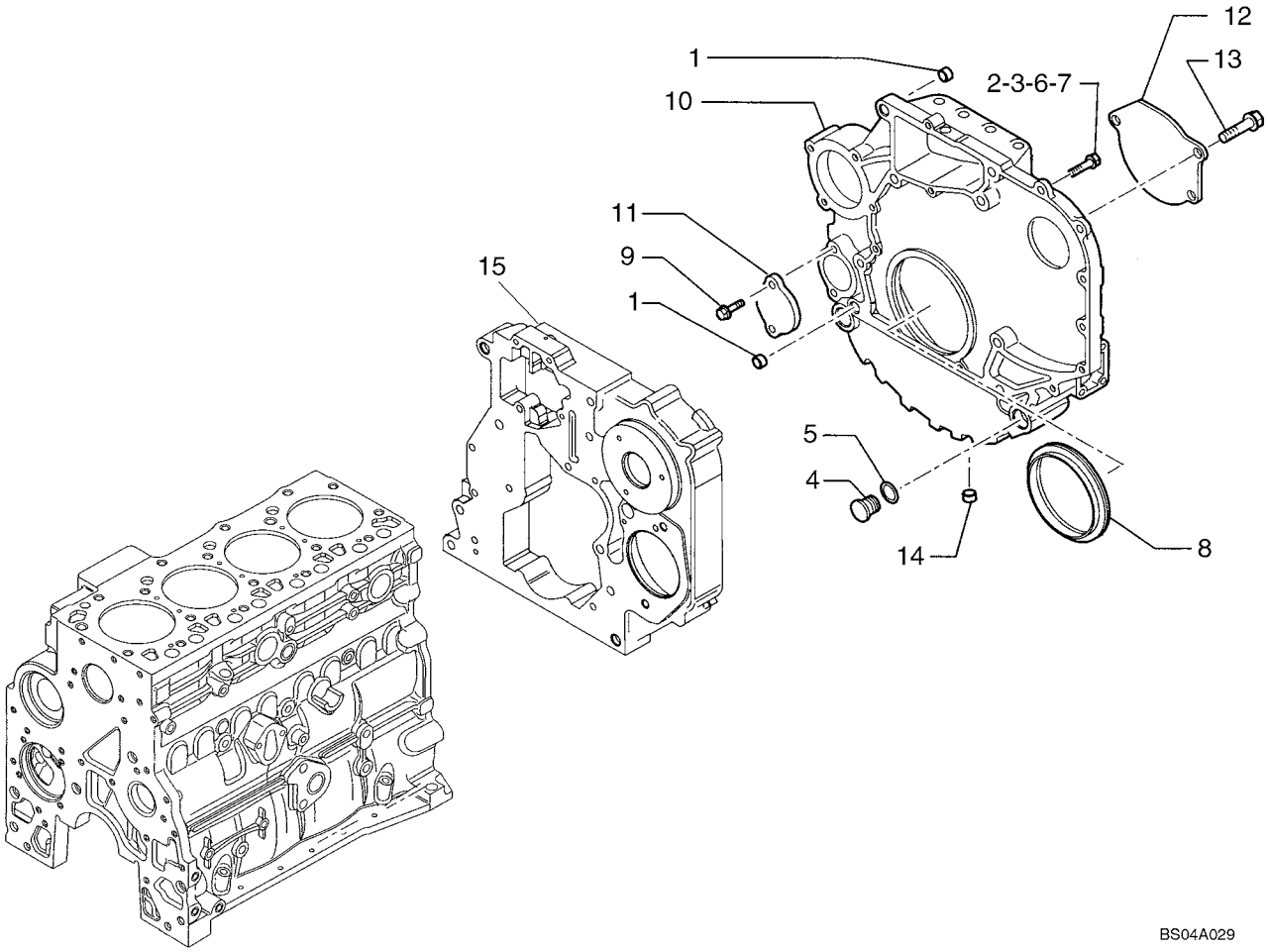

HTTP://WWW.MINNPARBACKHOEPARTS.COM



BLOC CYLINDRES - COUVERCLES

| REF | FN | PART NUMBER | YR/SN | QTY | DESCRIPTION |
|---|---|---|---|---|---|
| 1 | | 4899026 | | 2 | PION |
| 2 | | 4899109 | | 3 | VIS M10X1.5X80 |
| 3 | | 4899075 | | 8 | VIS M10X1.5X40 |
| 4 | | 4895378 | | 2 | BOUCHON |
| 5 | | 4895379 | | 2 | JOINT THORIQUE |
| 6 | | 4899076 | | 5 | VIS M12X80 |
| 7 | | 4899074 | | 2 | VIS |
| 8 | | 4890833 | | 1 | JOINT |
| 9 | | 4899103 | | 2 | VIS |
| 10 | | 504069775 | | 1 | COUVERCLE |
| 11 | | 4895358 | | 1 | COUVERCLE |
| 12 | | 504030423 | | 1 | COUVERCLE |
| 13 | | 4899020 | | 1 | VIS M8X20 |
| 13 | | 504062964 | | 2 | VIS |
| 14 | | 4895079 | | 1 | BOUCHON |
| 15 | | REF | | 1 | NOTICE COVER; See Figure 02-12 |

HTTP://WWW.MINNPARBACKHOEPARTS.COM



RENIFLARD - MOTEUR

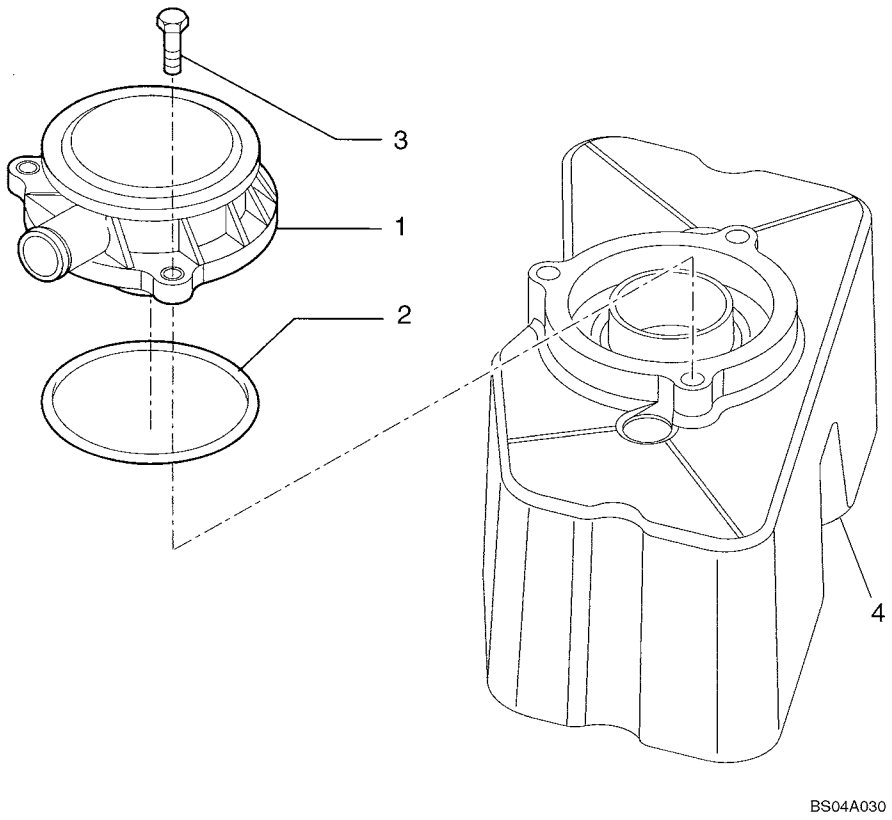

HTTP://WWW.MINNPARBACKHOEPARTS.COM



RENIFLARD - MOTEUR

| REF | FN | PART NUMBER | YR/SN | QTY | DESCRIPTION |
|---|---|---|---|---|---|
| 1 | | 504069558 | | 1 | RENIFLARD |
| 2 | | 500315795 | | 1 | JOINT |
| 3 | | 4899110 | | 3 | VIS |
| 4 | | REF | | 1 | NOTICE COVER; See Figure 02-17 |

HTTP://WWW.MINNPARBACKHOEPARTS.COM

| 02-16 | | p1 | 01/04 |
|---|---|---|---|

CULASSE DE CYLINDRE

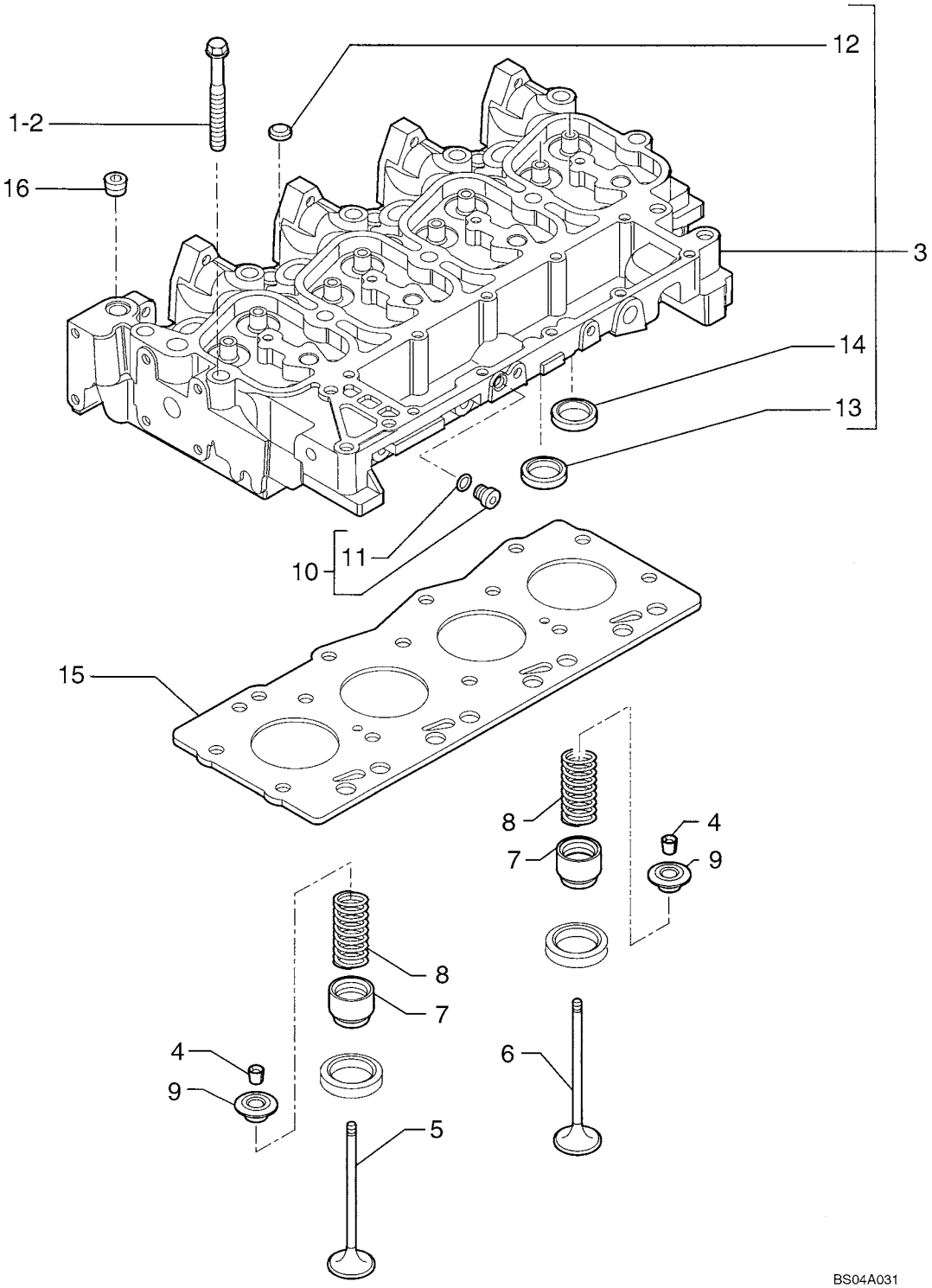

HTTP://WWW.MINNPARBACKHOEPARTS.COM



CULASSE DE CYLINDRE

| REF | FN | PART NUMBER | YR/SN | QTY | DESCRIPTION |
|---|---|---|---|---|---|
| 1 | | 4892861 | | 4 | VIS |
| 2 | | 4892859 | | 10 | VIS |
| 3 | | 4895790 | | 1 | CULASSE - ASSY |
| 4 | | 4895183 | | 16 | DEMI-CONE DE POUSSOIR |
| 5 | | 4895188 | | 4 | SOUPAPE D'ECHAPPEMENT |
| 6 | | 4895187 | | 4 | SOUPAPE D'ADMISSION |
| 7 | | 4895347 | | 8 | CUVE |
| 8 | | 4895215 | | 8 | RESSORT |
| 9 | | 4895184 | | 8 | CUVE |
| 10 | | 4899009 | | 1 | BOUCHON - ASSY 10X1.5 |
| 11 | | 4899072 | | 1 | JOINT THORIQUE |
| 12 | | 4895179 | | 3 | BOUCHON |
| 13 | | 4897178 | | 4 | SIEGE DE SOUPAPE |
| 14 | | 4897179 | | 4 | SIEGE DE SOUPAPE |
| 15 | | 2830919 | | 1 | JOINT DE CULASSE SP= 1.25 |
| 16 | | 4895078 | | 5 | BOUCHON |

HTTP://WWW.MINNPARBACKHOEPARTS.COM



CACHE CULBUTEUR

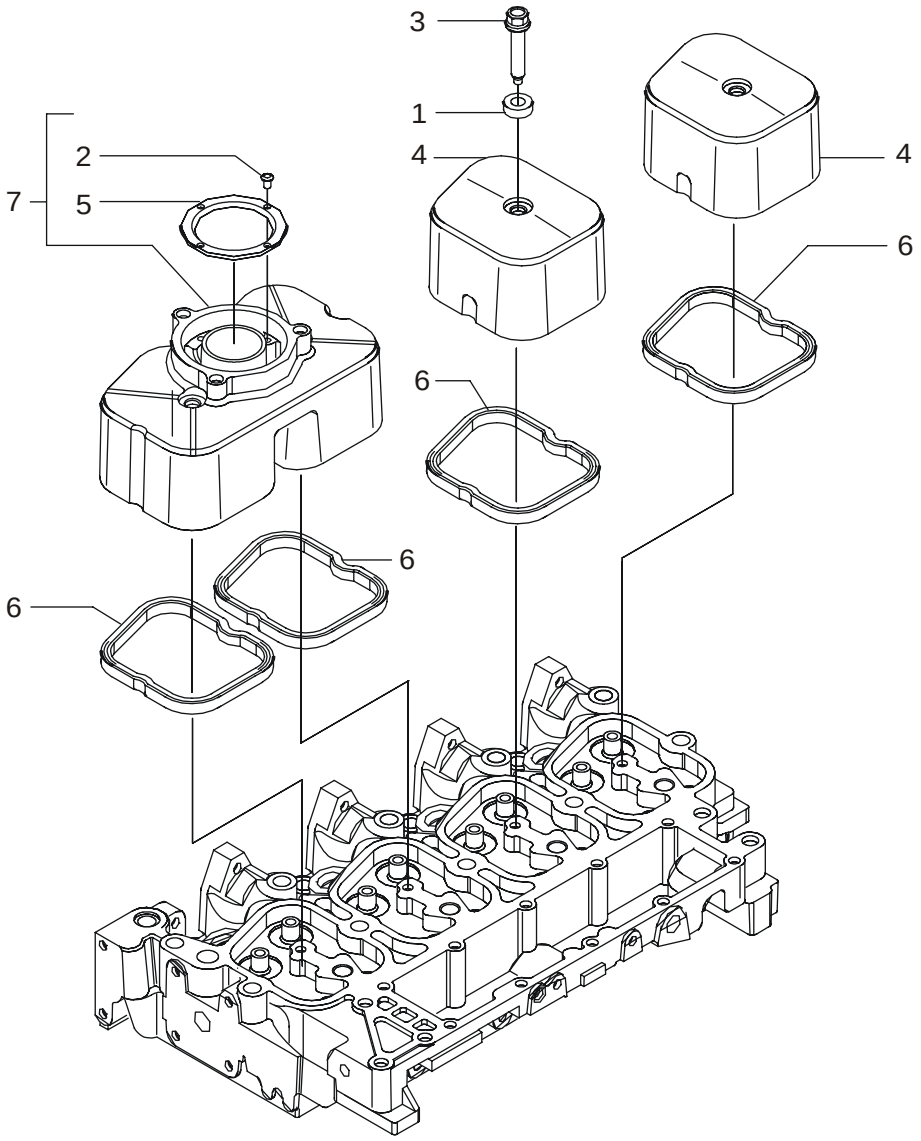


BS04A032

HTTP://WWW.MINNPARBACKHOEPARTS.COM



CACHE CULBUTEUR

| REF | FN | PART NUMBER | YR/SN | QTY | DESCRIPTION |
|---|---|---|---|---|---|
| 1 | | 4895360 | | 4 | BAGUE |
| 2 | | 16784504 | | 4 | VIS |
| 3 | | 4895214 | | 4 | VIS |
| 4 | | 504065040 | | 2 | COUVERCLE |
| 5 | | 2830775 | | 1 | COLLERETTE |
| 6 | | 504053522 | | 4 | JOINT |
| 7 | | 2830784 | | 1 | COUVERCLE - ASSY |

HTTP://WWW.MINNPARBACKHOEPARTS.COM

| 02-18 | | p1 | 01/04 |
|---|---|---|---|

CULASSE DE CYLINDRE - MÉCANISME DU DISTRIBUTEUR

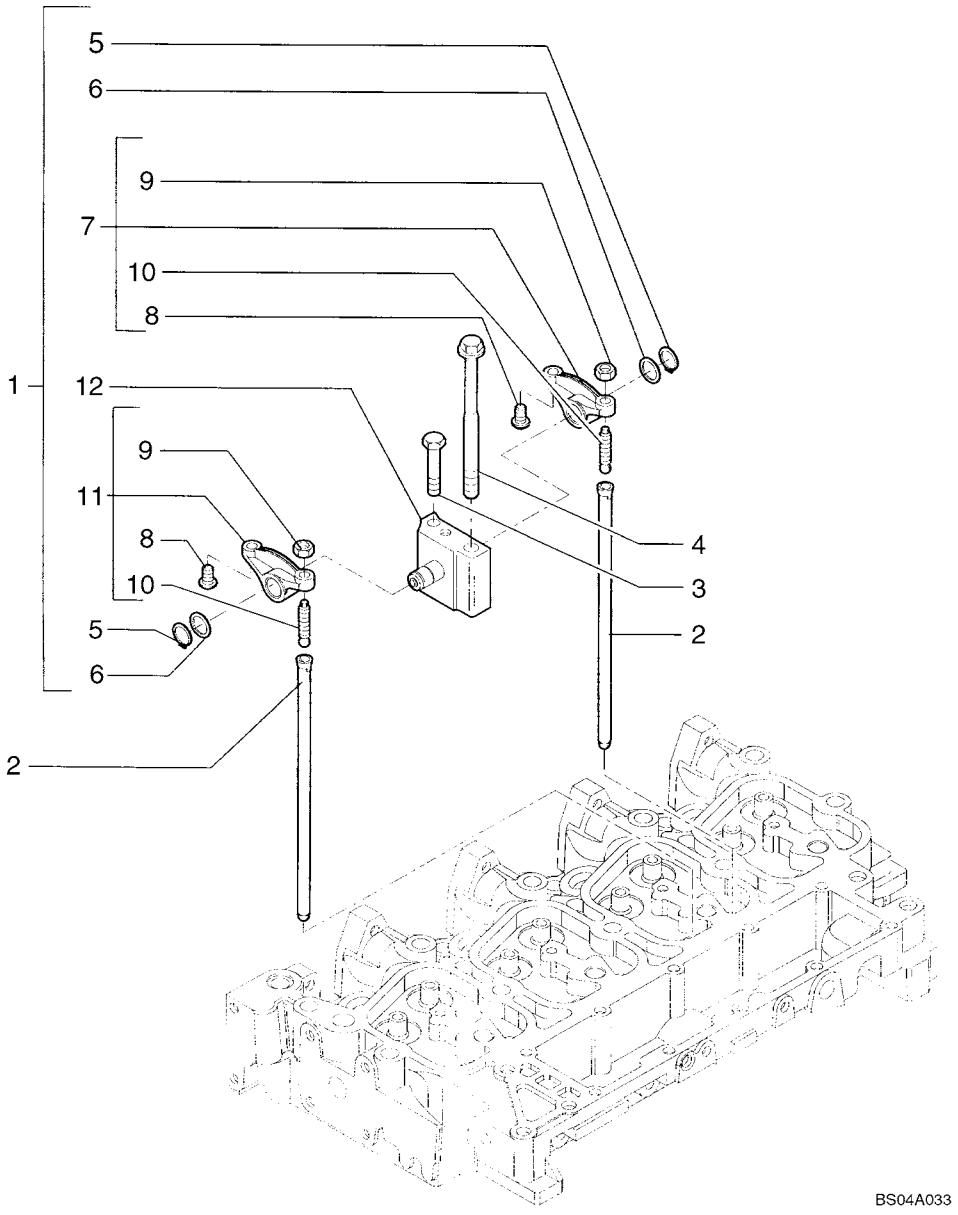

HTTP://WWW.MINNPARBACKHOEPARTS.COM



CULASSE DE CYLINDRE - MÉCANISME DU DISTRIBUTEUR

| REF | FN | PART NUMBER | YR/SN | QTY | DESCRIPTION |
|---|---|---|---|---|---|
| 1 | | 4895195 | | 4 | CULBUTEUR - ASSY |
| 2 | | 4895361 | | 8 | TIGE DE CULBUTEUR |
| 3 | | 4895193 | | 4 | VIS |
| 4 | | 4892860 | | 4 | VIS |
| 5 | | 4895363 | | 2 | ANNEAU |
| 6 | | 4895364 | | 2 | RONDELLE |
| 7 | | 4895196 | | 1 | CULBUTEUR - ASSY |
| 8 | | 4895365 | | 2 | ENTRETOISE |
| 9 | | 4895198 | | 2 | ECROU |
| 10 | | 4895199 | | 2 | VIS |
| 11 | | 4895200 | | 1 | CULBUTEUR - ASSY |
| 12 | | 4895204 | | 1 | SUPPORT |

HTTP://WWW.MINNPARBACKHOEPARTS.COM

| 02-19 | | p1 | 01/04 |
|---|---|---|---|

COLLECTEURS

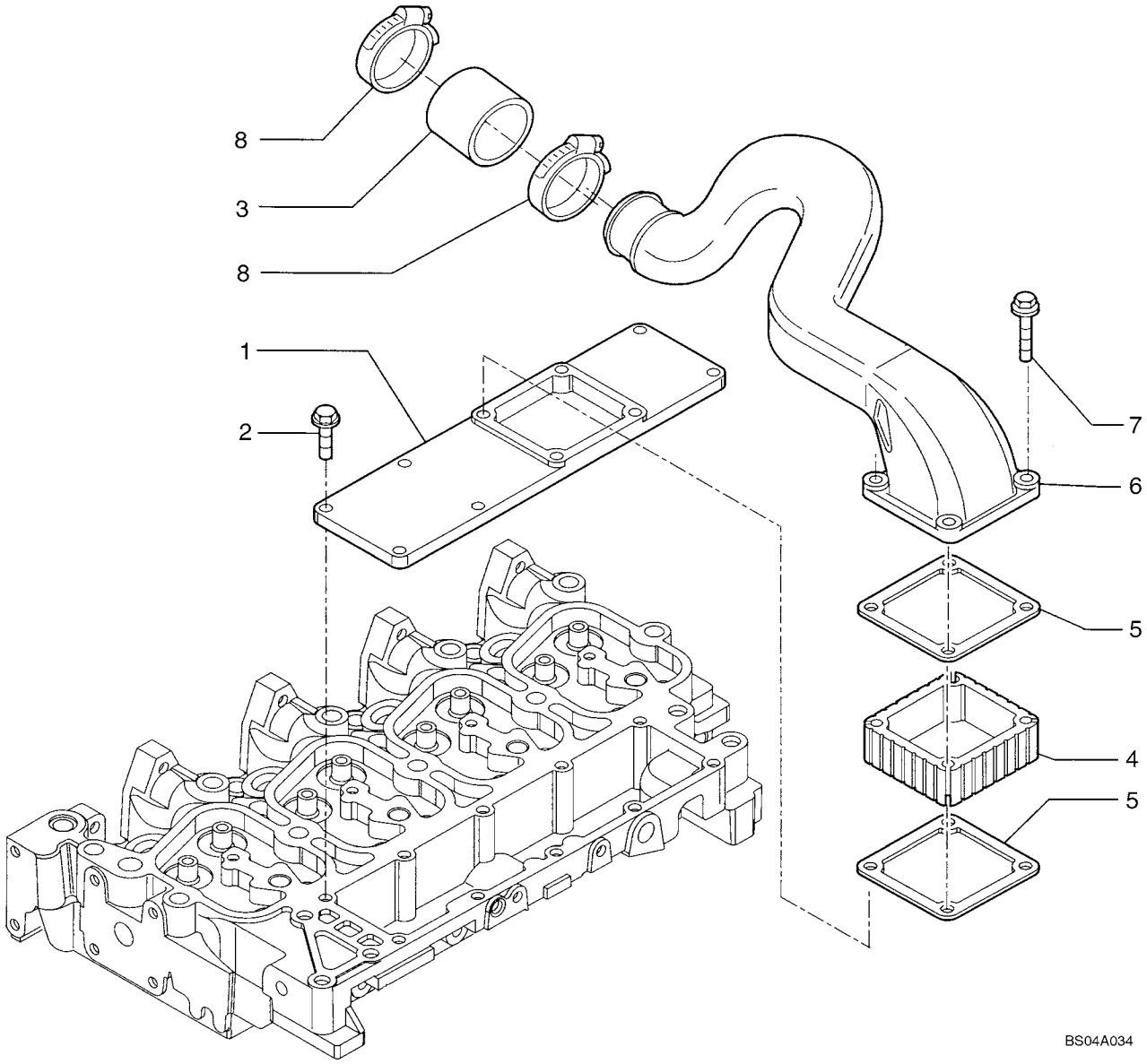

HTTP://WWW.MINNPARBACKHOEPARTS.COM



COLLECTEURS

| REF | FN | PART NUMBER | YR/SN | QTY | DESCRIPTION |
|---|---|---|---|---|---|
| 1 | | 504064865 | | 1 | COUVERCLE |
| 2 | | 4899039 | | 6 | VIS 8X1.25X25 |
| 3 | | 504063980 | | 1 | MANCHON |
| 4 | | 4895648 | | 1 | ENTRETOISE |
| 5 | | 4899921 | | 2 | JOINT |
| 6 | | 504052006 | | 1 | FLEXIBLE (ASSEMBLE) |
| 7 | | 4895294 | | 4 | VIS 8X140 |
| 8 | | {4899629} | | 2 | Clamp |

HTTP://WWW.MINNPARBACKHOEPARTS.COM



COLLECTEURS

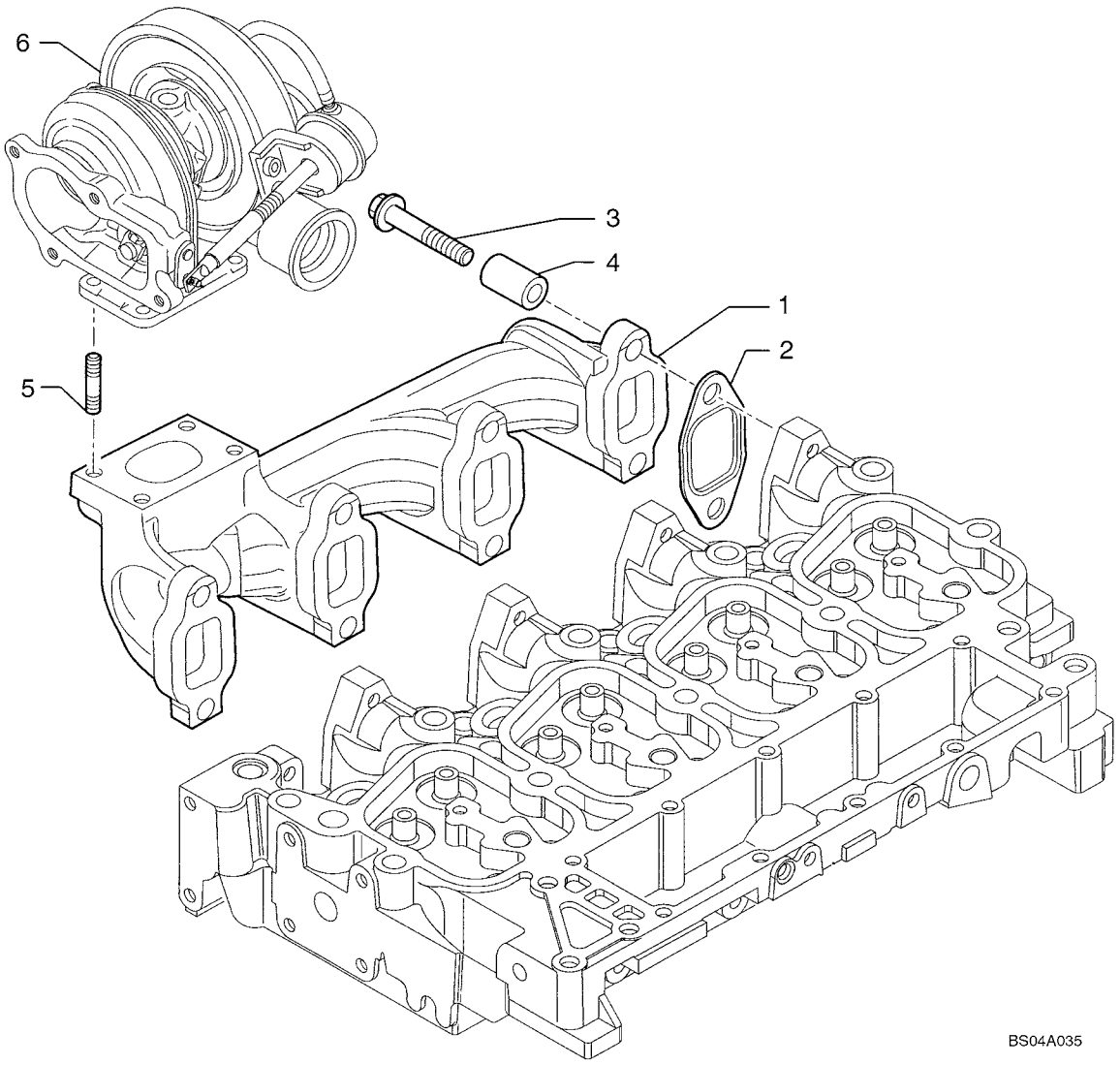

HTTP://WWW.MINNPARBACKHOEPARTS.COM



COLLECTEURS

| REF | FN | PART NUMBER | YR/SN | QTY | DESCRIPTION |
|---|---|---|---|---|---|
| 1 | | {4895273} | | 1 | Manifold, Exhaust |
| 2 | | 2830445 | | 4 | JOINT |
| 3 | | 4895174 | | 8 | VIS |
| 4 | | 4895336 | | 8 | ENTRETOISE |
| 5 | | 4899119 | | 4 | GOUJON |
| 6 | | REF | | 1 | NOTICE TURBOCHARGER; See Figure 2-29 |

HTTP://WWW.MINNPARBACKHOEPARTS.COM



VILEBREQUIN

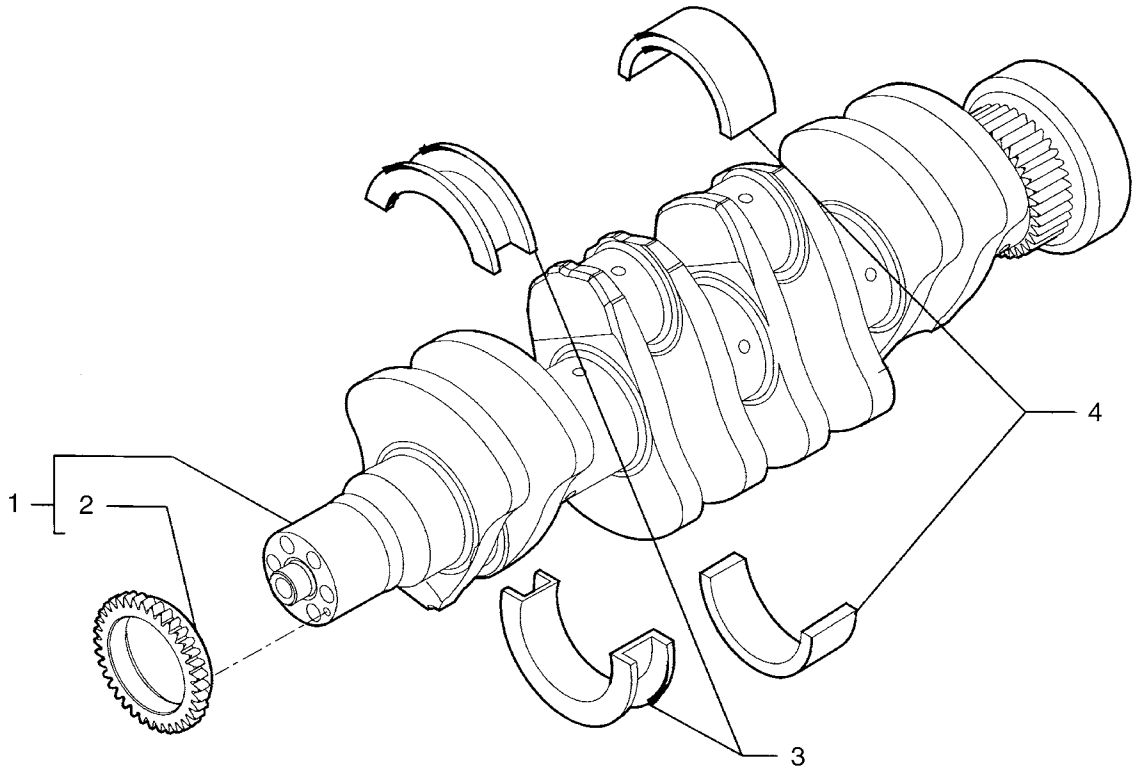


BS04A036

HTTP://WWW.MINNPARBACKHOEPARTS.COM



VILEBREQUIN

| REF | FN | PART NUMBER | YR/SN | QTY | DESCRIPTION |
|---|---|---|---|---|---|
| 1 | | 504048350 | | 1 | VILEBREQUIN - ASSY |
| 2 | | 4893386 | | 1 | PIGNON |
| 4 | | 2992147 | | 4 | POCHET.DEMI-COUSS.DE BAN ( - 0.000) (- 0.000) |
| 4 | | 2992148 | | 4 | POCHET.DEMI-COUSS.DE BAN ( - 0.254) ( - 0.250) |
| 4 | | 2992149 | | 4 | POCHET.DEMI-COUSS.DE BAN ( - 0.508) ( - 0.500) |
| 3 | | 2992153 | | 1 | POCHET.DEMI-COUSS.DE BAN (+ 0.000) ( + 0.000) |
| 3 | | 2992154 | | 1 | POCHET.DEMI-COUSS.DE BAN ( + 0.254) ( + 0.250) |
| 3 | | 2992155 | | 1 | POCHET.DEMI-COUSS.DE BAN ( + 0.508) ( + 0.500) |

HTTP://WWW.MINNPARBACKHOEPARTS.COM



PISTONS - BIELLES

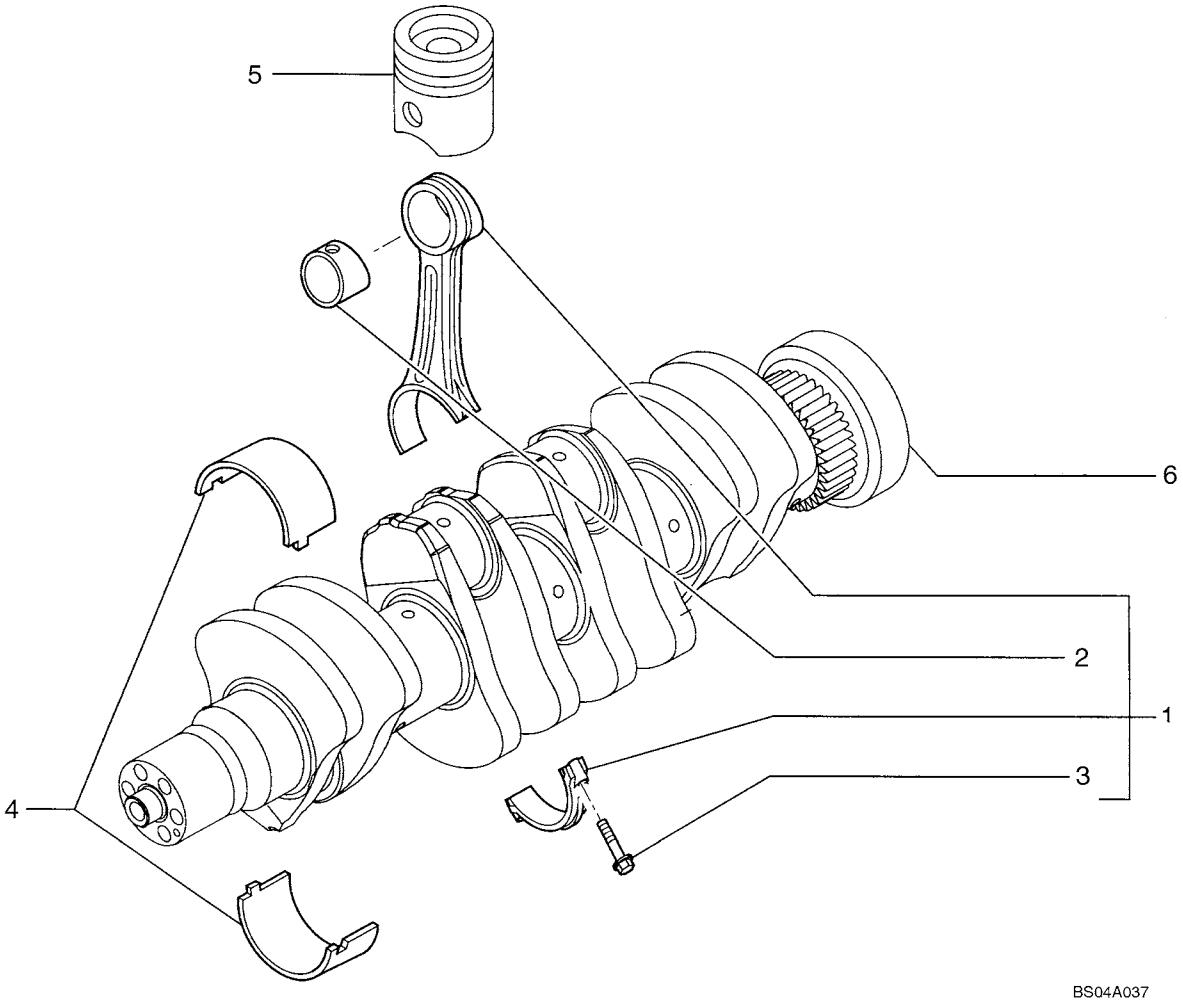

HTTP://WWW.MINNPARBACKHOEPARTS.COM



PISTONS - BIELLES

| REF | FN | PART NUMBER | YR/SN | QTY | DESCRIPTION |
|---|---|---|---|---|---|
| 1 | | 4895748 | | 4 | BIELLE - ASSY |
| 2 | | 4892708 | | 1 | BAGUE |
| 3 | | 4892707 | | 2 | VIS |
| 4 | | 8093882 | | 4 | POCHET.DEMI-COUSS.DE BAN |
| 5 | | REF | | 1 | NOTICE PISTON; See Figure 02-23 |
| 6 | | REF | | 1 | NOTICE CRANKSHAFT; See Figure 02-21 |

HTTP://WWW.MINNPARBACKHOEPARTS.COM



PISTONS - BIELLES

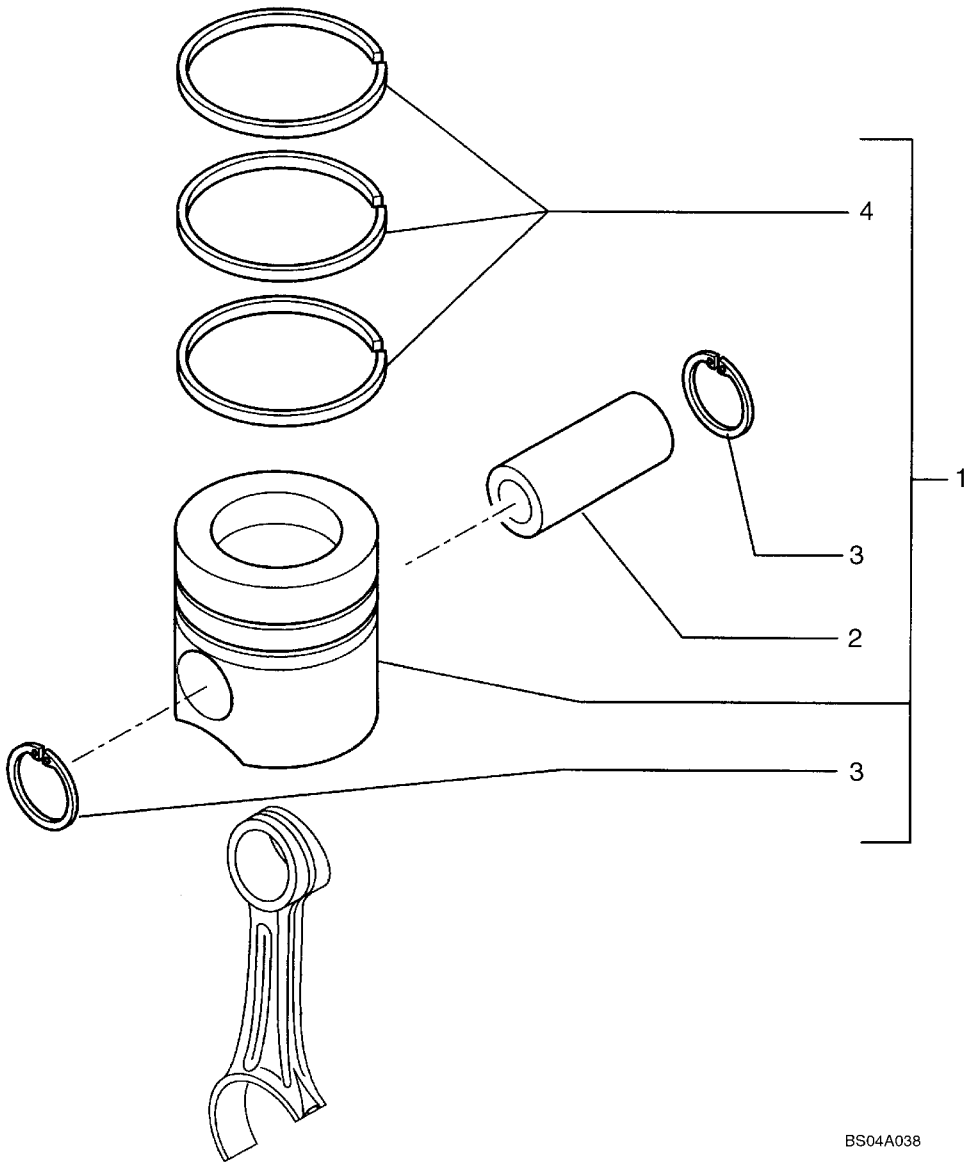

HTTP://WWW.MINNPARBACKHOEPARTS.COM



PISTONS - BIELLES

| REF | FN | PART NUMBER | YR/SN | QTY | DESCRIPTION |
|---|---|---|---|---|---|
| 1 | | 8093880 | | 4 | KIT DE PISTONS & SEGMENT |
| 2 | | 4892712 | | 1 | AXE DE PISTON |
| 3 | | 4892713 | | 2 | JONC D'ARRET |
| 4 | | 8093881 | | 1 | KIT SEGMENTS DE PISTON |

HTTP://WWW.MINNPARBACKHOEPARTS.COM



VOLANT - MOTEUR

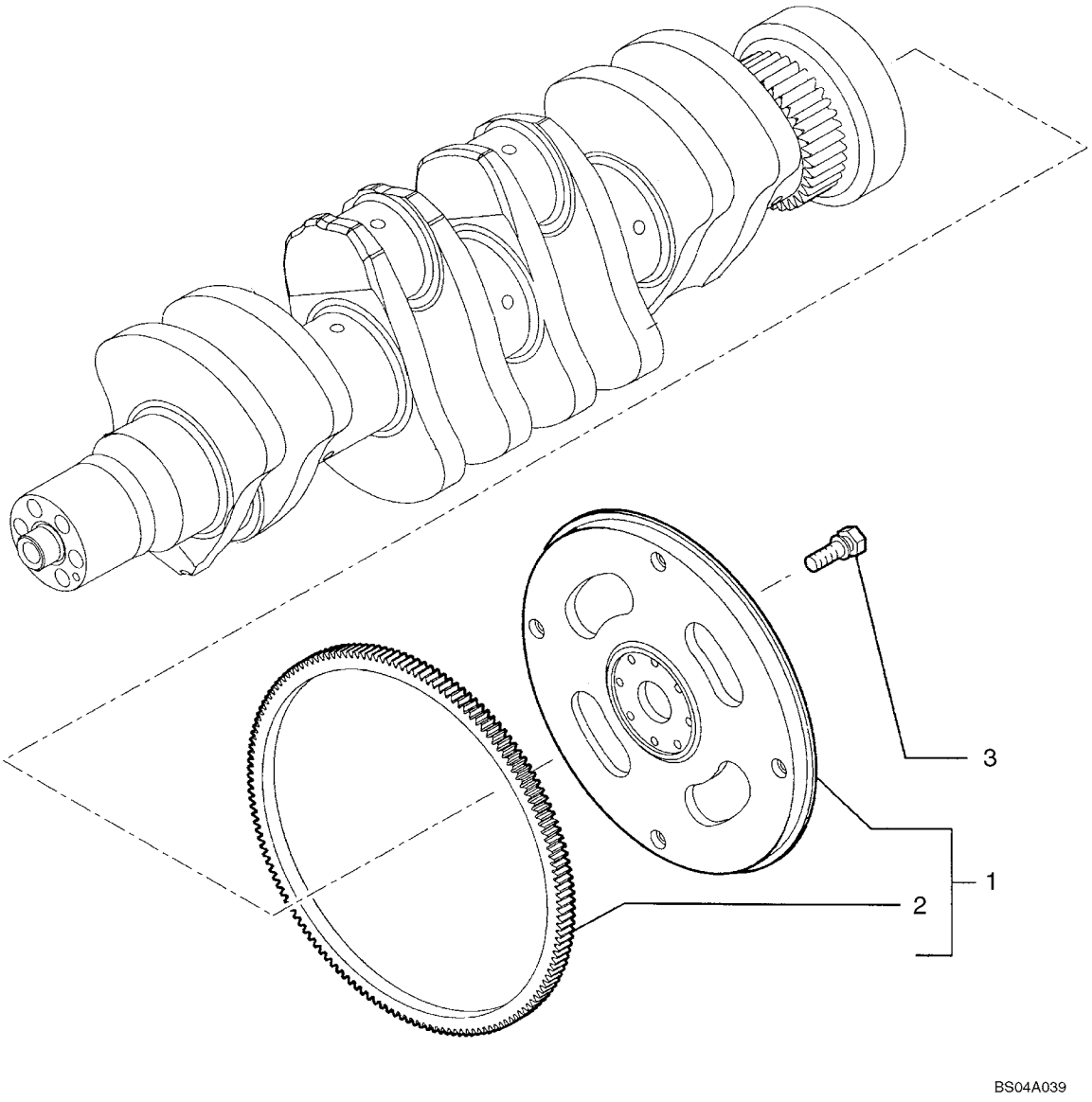

HTTP://WWW.MINNPARBACKHOEPARTS.COM



VOLANT - MOTEUR

| REF | FN | PART NUMBER | YR/SN | QTY | DESCRIPTION |
|---|---|---|---|---|---|
| 1 | | 504057736 | | 1 | VOLANT MOTEUR - ASSY |
| 2 | | 504062460 | | 1 | COURONNE DENTÉE |
| 3 | | 4894641 | | 8 | VIS |

HTTP://WWW.MINNPARBACKHOEPARTS.COM



POULIE - VILEBREQUIN

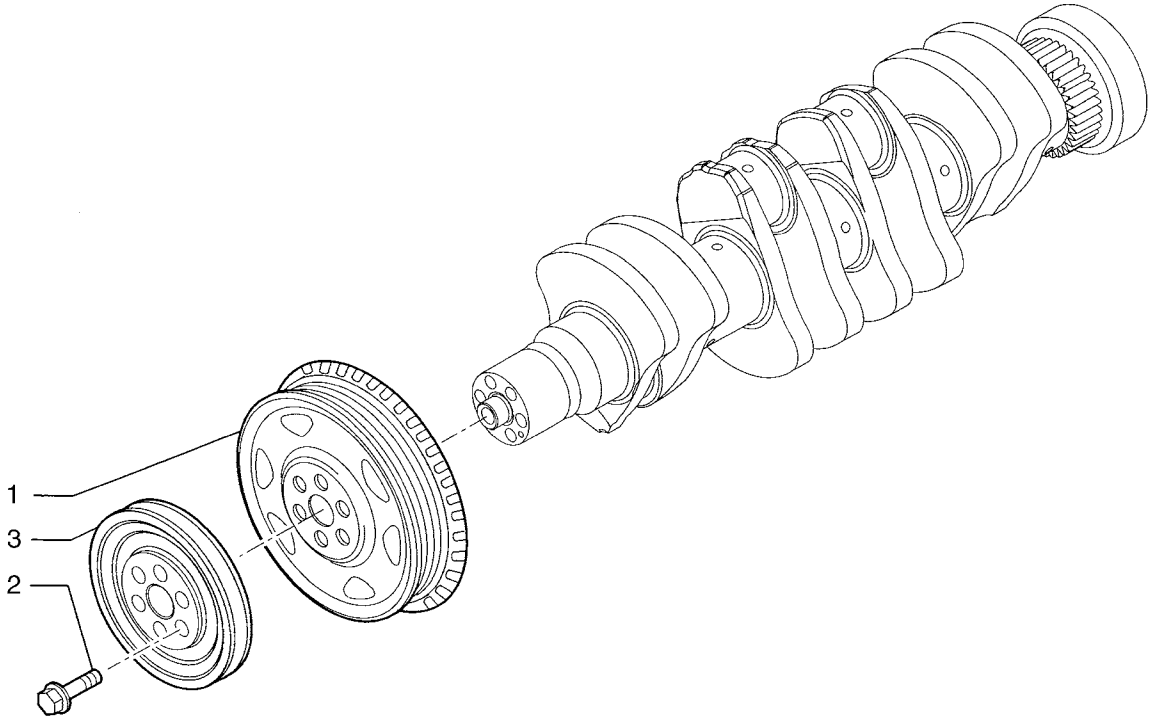


BS04A040

HTTP://WWW.MINNPARBACKHOEPARTS.COM



POULIE - VILEBREQUIN

| REF | FN | PART NUMBER | YR/SN | QTY | DESCRIPTION |
|---|---|---|---|---|---|
| 1 | | 504035087 | | 1 | POULIE |
| 2 | | 4892867 | | 6 | VIS |
| 3 | | 504061622 | | 1 | POULIE |

HTTP://WWW.MINNPARBACKHOEPARTS.COM



MASSELOTTE, ENGRENAGES ET ARBRES

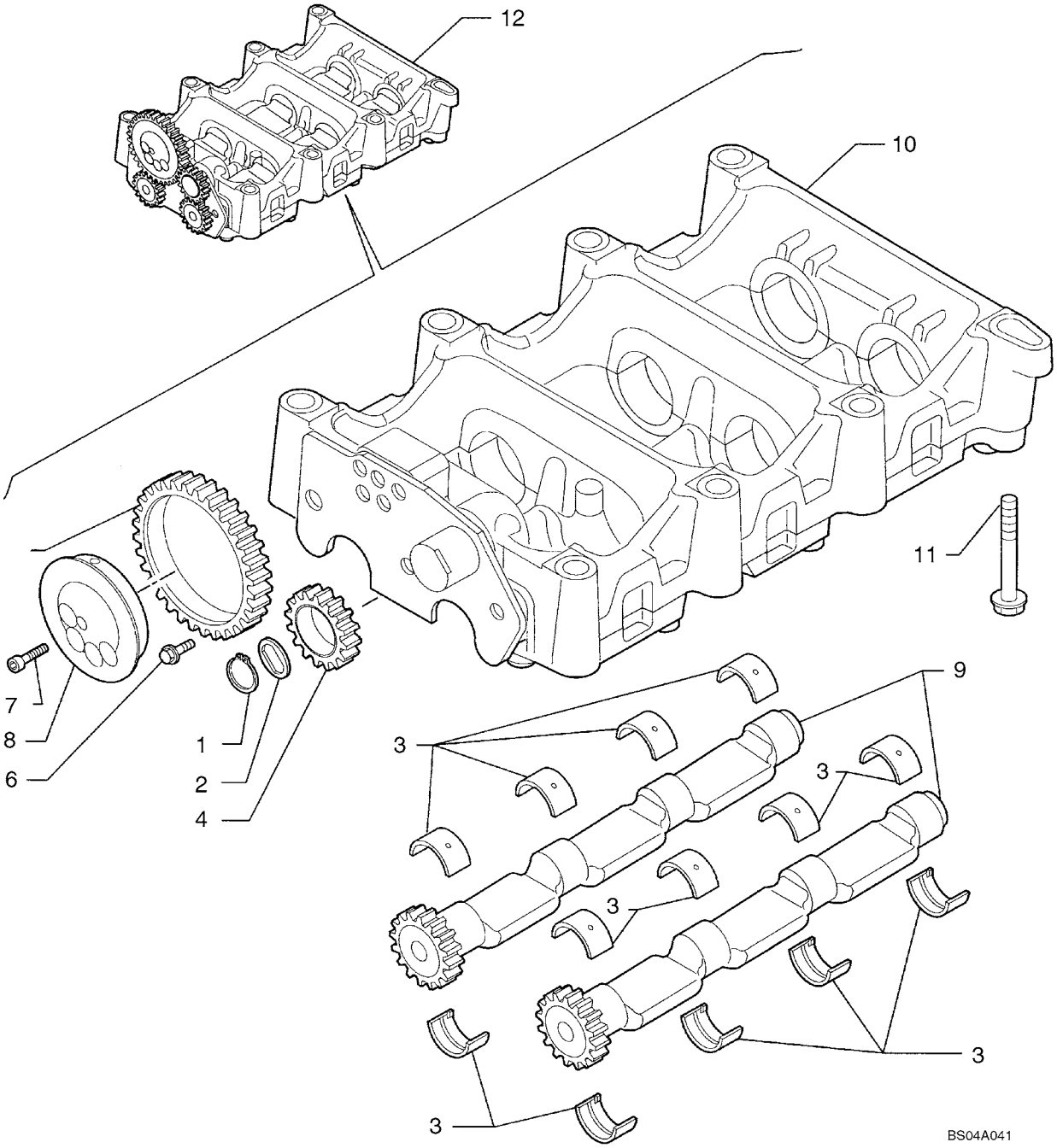

HTTP://WWW.MINNPARBACKHOEPARTS.COM



MASSELOTTE, ENGRENAGES ET ARBRES

| REF | FN | PART NUMBER | YR/SN | QTY | DESCRIPTION |
|---|---|---|---|---|---|
| 1 | | 16866473 | | 1 | CIRCLIP |
| 2 | | 4897123 | | 1 | PLATEAU DE PRESSION |
| 3 | | 4897071 | | 16 | BAGUE |
| 4 | | 4897048 | | 1 | PIGNON CONDUIT |
| 5 | | 4896947 | | 1 | PIGNON CONDUIT |
| 6 | | 4895586 | | 3 | VIS |
| 7 | | 2830433 | | 4 | VIS |
| 8 | | 2831031 | | 1 | ARBRE DE RENVOI |
| 9 | | 2831023 | | 2 | ARBRE |
| 10 | | 2830952 | | 1 | CARTER - ASSY; See Figure 02-27 |
| 11 | | 4899109 | | 7 | VIS |
| 11 | | 4897934 | | 1 | VIS |
| 12 | | 2830953 | | 1 | MASSELOTTE - ASSY |

HTTP://WWW.MINNPARBACKHOEPARTS.COM



MASSELOTTE, ENGRENAGES ET ARBRES (2830952)

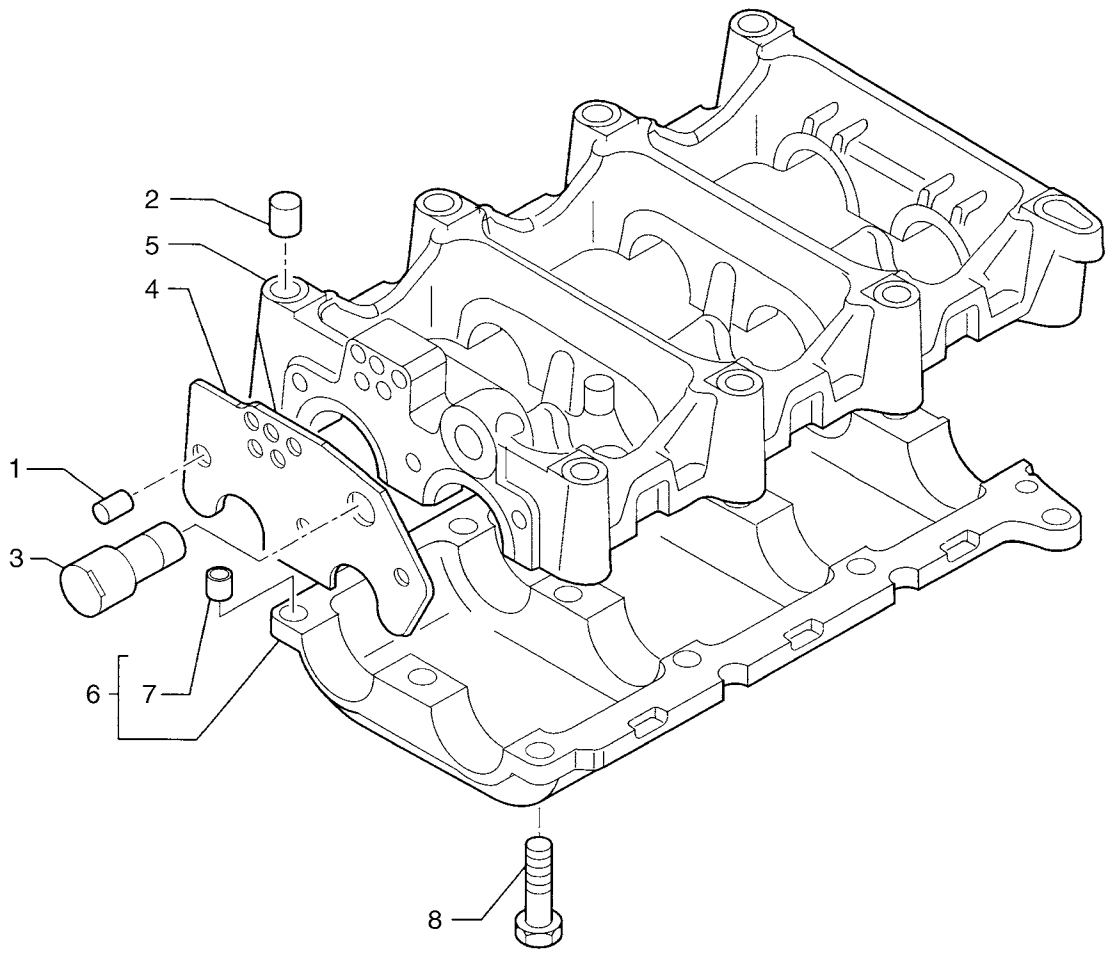

HTTP://WWW.MINNPARBACKHOEPARTS.COM



MASSELOTTE, ENGRENAGES ET ARBRES (2830952)

| REF | FN | PART NUMBER | YR/SN | QTY | DESCRIPTION |
|---|---|---|---|---|---|
| | | 2830952 | | 1 | CARTER Assy; Incl. Ref 1 - 8 |
| 1 | | 4892836 | | 1 | PION |
| 2 | | 4899027 | | 2 | PION |
| 3 | | 2830948 | | 1 | ARBRE DE RENVOI |
| 4 | | 2830905 | | 1 | PLATEAU DE PRESSION |
| 5 | | 2830934 | | 1 | CARTER |
| 6 | | 2831101 | | 1 | CARTER - ASSY |
| 7 | | 4891209 | | 2 | PION |
| 8 | | 2830411 | | 3 | VIS |
| 8 | | 4895323 | | 9 | VIS |

HTTP://WWW.MINNPARBACKHOEPARTS.COM



ARBRE À CAMES

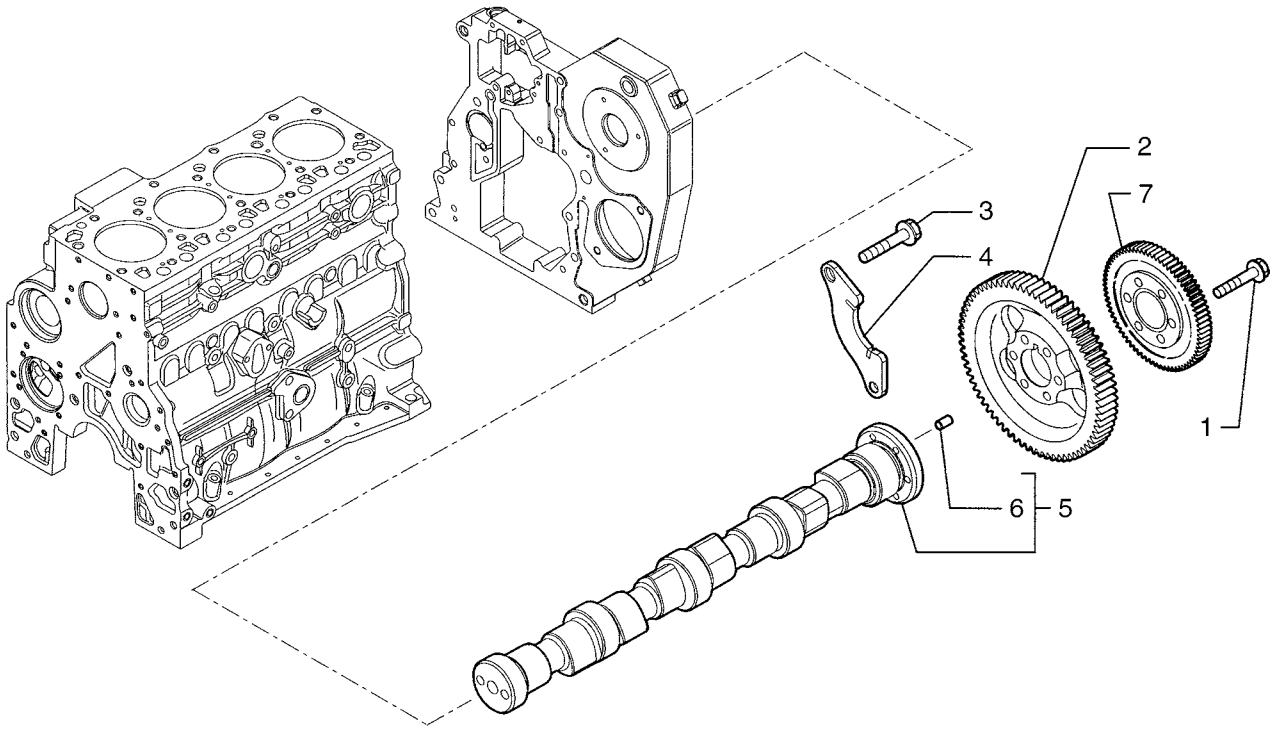


BS04A043

HTTP://WWW.MINNPARBACKHOEPARTS.COM



ARBRE À CAMES

| REF | FN | PART NUMBER | YR/SN | QTY | DESCRIPTION |
|---|---|---|---|---|---|
| 1 | | 4895323 | | 6 | VIS |
| 2 | | 504062752 | | 1 | PIGNON |
| 3 | | 4899068 | | 2 | VIS 8X17 |
| 4 | | 4897457 | | 1 | FLASQUE |
| 5 | | 4899610 | | 1 | ARBRE A CAMES - ASSY |
| 6 | | 4899080 | | 1 | PION |
| 7 | | 504034954 | | 1 | PIGNON CONDUIT |

HTTP://WWW.MINNPARBACKHOEPARTS.COM



TURBOCOMPRESSEUR

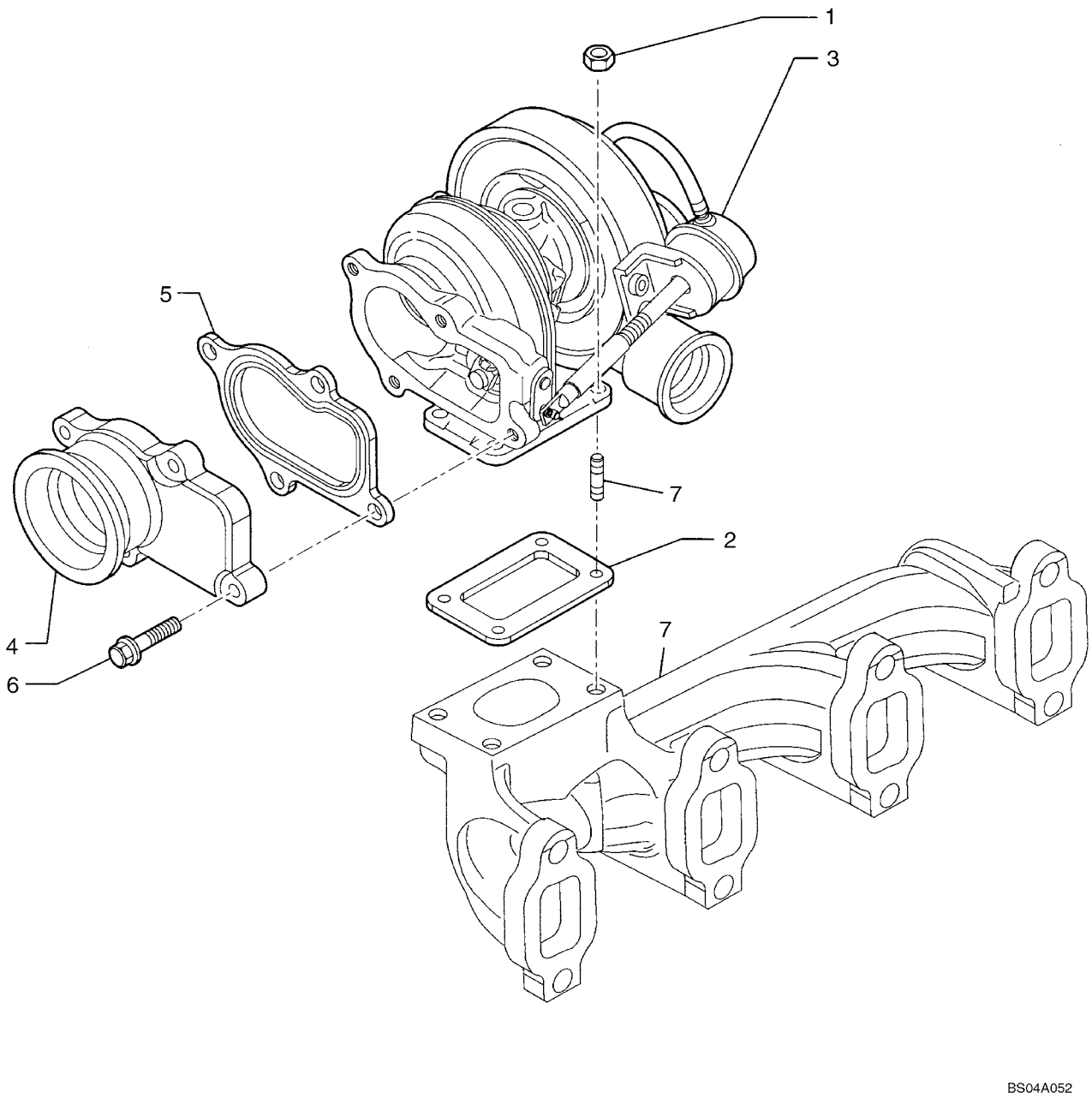

HTTP://WWW.MINNPARBACKHOEPARTS.COM



TURBOCOMPRESSEUR

| REF | FN | PART NUMBER | YR/SN | QTY | DESCRIPTION |
|---|---|---|---|---|---|
| 1 | | 4899118 | | 4 | ECROU |
| 2 | | 4895133 | | 1 | JOINT |
| 3 | | {504061374} | | 1 | Turbocharger Assembly |
| 4 | | 504010786 | | 1 | CONDUIT D'ECHAPPEMENT |
| 5 | | 504035094 | | 1 | JOINT |
| 6 | | 4898482 | | 4 | VIS |
| 7 | | REF | | 1 | NOTICE EXHAUST MANIFOLD; See Figure 02-20 |

HTTP://WWW.MINNPARBACKHOEPARTS.COM



MOTEUR, HUILE

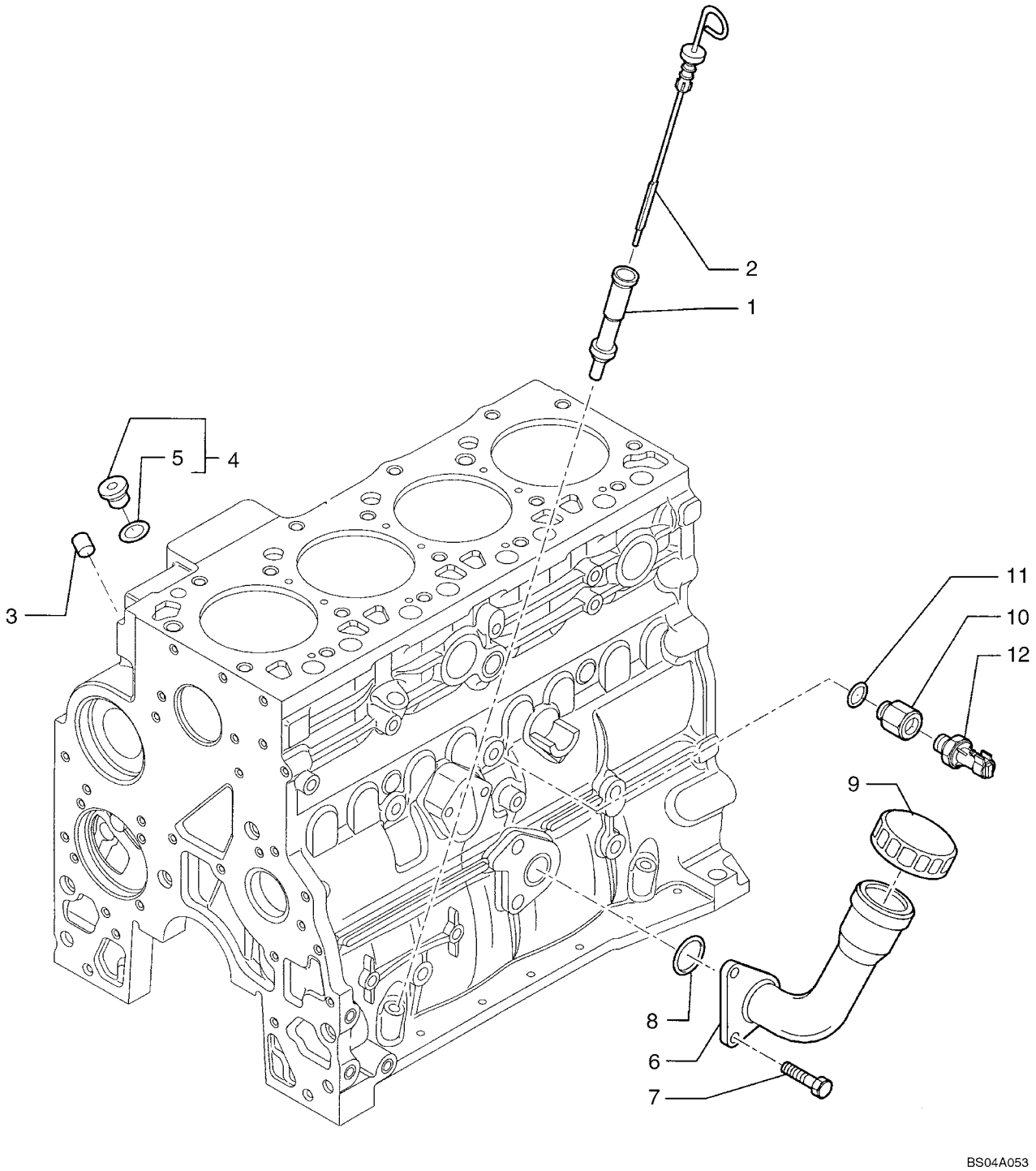

HTTP://WWW.MINNPARBACKHOEPARTS.COM



MOTEUR, HUILE

| REF | FN | PART NUMBER | YR/SN | QTY | DESCRIPTION |
|---|---|---|---|---|---|
| 1 | | 504011329 | | 1 | TUYAU RIGIDE |
| 2 | | 504062795 | | 1 | JAUGE DE NIVEAU |
| 3 | | 4899036 | | 1 | BOUCHON |
| 4 | | 4897330 | | 2 | BOUCHON - ASSY |
| 5 | | 4895610 | | 1 | JOINT THORIQUE |
| 6 | | 504011338 | | 1 | TUYAU RIGIDE |
| 7 | | 16587924 | | 2 | VIS |
| 8 | | 17283181 | | 1 | JOINT THORIQUE |
| 9 | | 98429552 | | 1 | BOUCHON DE REMPLISSAGE |
| 10 | | {504036358} | | 1 | Reducer |
| 11 | | 4899115 | | 1 | JOINT THORIQUE |
| 12 | | 98442879 | | 1 | CONTACTEUR Sipea version |
| 12 | | 98445111 | | 1 | CONTACTEUR Borletti version |

HTTP://WWW.MINNPARBACKHOEPARTS.COM



POMPE A HUILE - MOTEUR

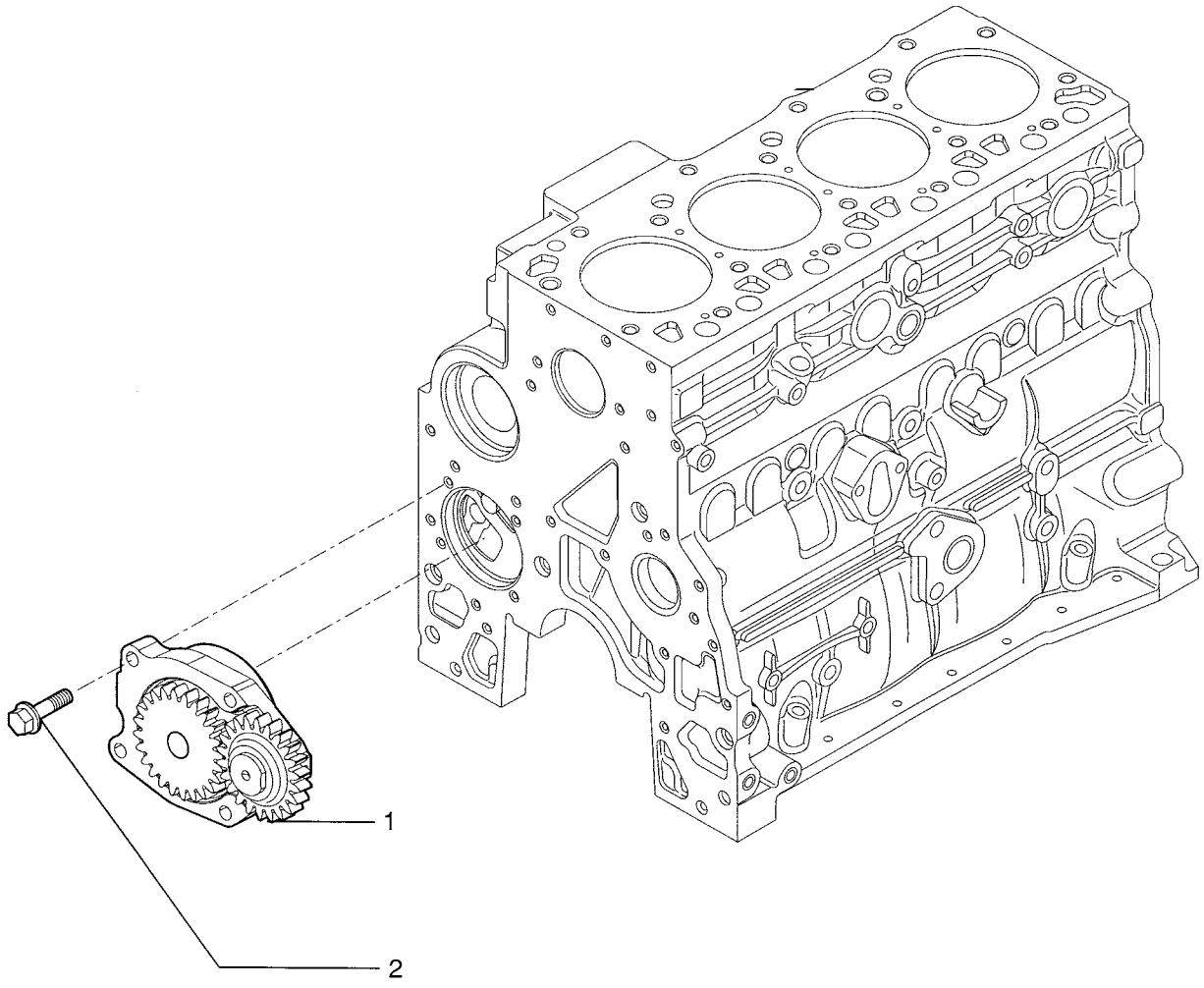

HTTP://WWW.MINNPARBACKHOEPARTS.COM



POMPE A HUILE - MOTEUR

| REF | FN | PART NUMBER | YR/SN | QTY | DESCRIPTION |
|---|---|---|---|---|---|
| 1 | | 4897480 | | 1 | POMPE A HUILE |
| 2 | | 4899090 | | 4 | VIS |

HTTP://WWW.MINNPARBACKHOEPARTS.COM

| 02-32 | | p1 | 01/04 |
|---|---|---|---|

FILTRE A HUILE - MOTEUR

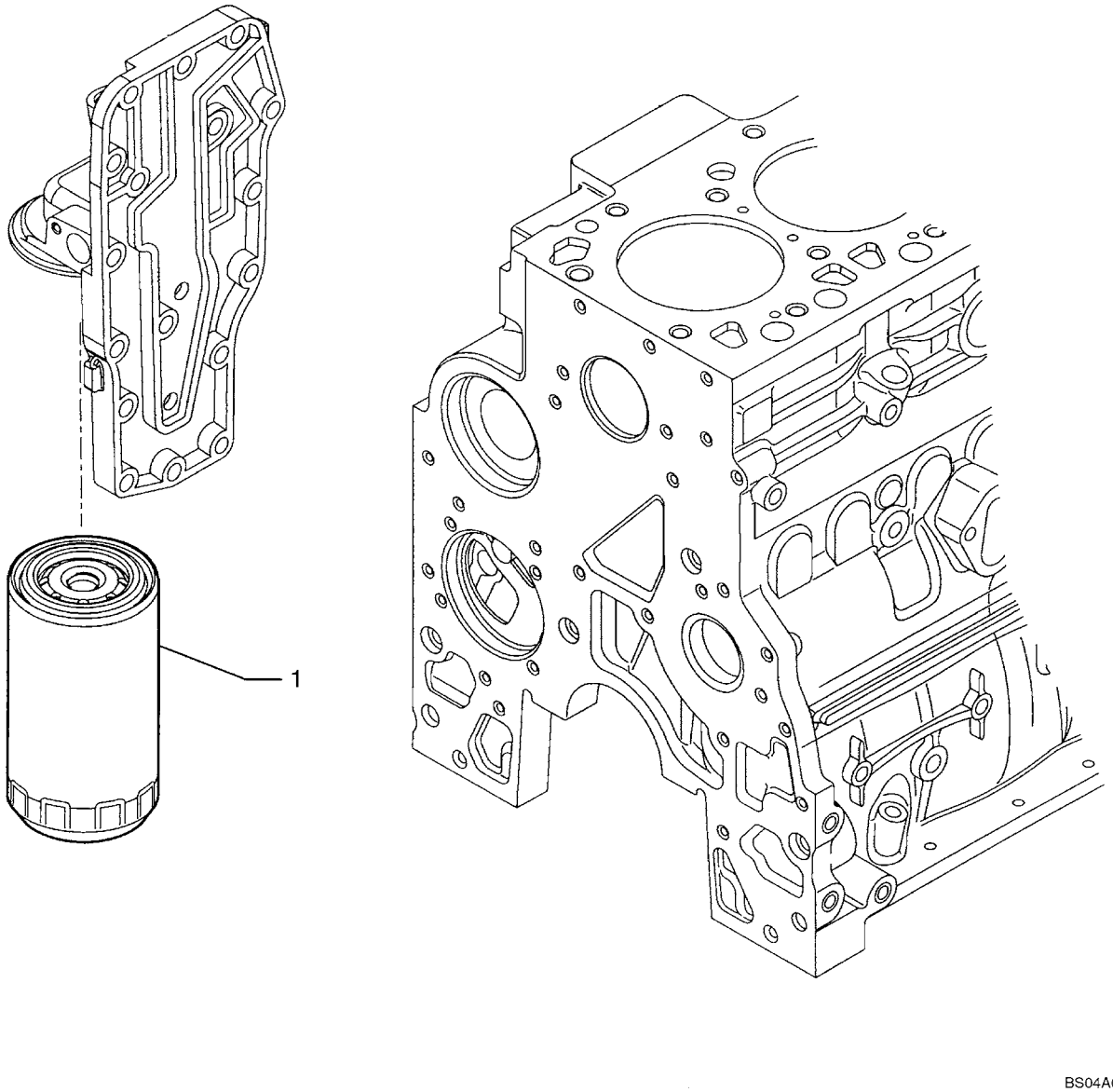

HTTP://WWW.MINNPARBACKHOEPARTS.COM



FILTRE A HUILE - MOTEUR

| REF | FN | PART NUMBER | YR/SN | QTY | DESCRIPTION |
|---|---|---|---|---|---|
| 1 | | 87803261 | | 1 | FILTRE A HUILE MOTEUR |

HTTP://WWW.MINNPARBACKHOEPARTS.COM

| 02-33 | | p1 | 01/04 |
|---|---|---|---|

TUYAUTERIES - HUILE DU MOTEUR

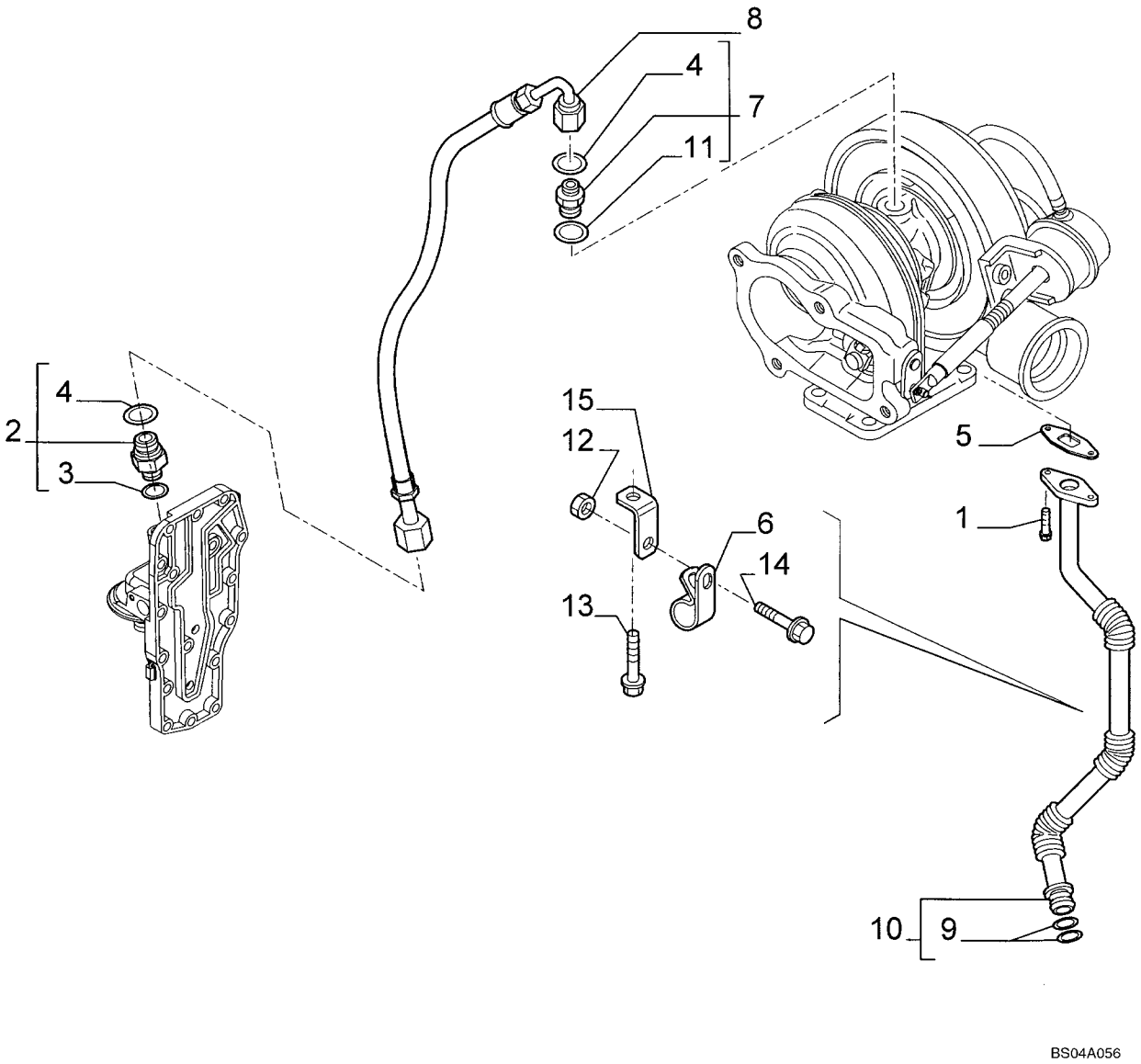

HTTP://WWW.MINNPARBACKHOEPARTS.COM



TUYAUTERIES - HUILE DU MOTEUR

| REF | FN | PART NUMBER | YR/SN | QTY | DESCRIPTION |
|---|---|---|---|---|---|
| 1 | | 4895164 | | 2 | VIS |
| 2 | | 4895107 | | 1 | RACCORD - ASSY |
| 3 | | 4899107 | | 1 | JOINT THORIQUE |
| 4 | | 4899108 | | 2 | JOINT THORIQUE |
| 5 | | 4899467 | | 1 | JOINT |
| 6 | | 4899519 | | 1 | PATTE FIXATION |
| 7 | | 4899106 | | 1 | RACCORD |
| 8 | | 504053173 | | 1 | FLEXIBLE (ASSEMBLE) |
| 9 | | 4899058 | | 2 | JOINT THORIQUE |
| 10 | | {504053166} | | 1 | - ASSY; Tube |
| 11 | | 4899121 | | 1 | JOINT |
| 12 | | 17044625 | | 1 | ECROU M6 |
| 13 | | 18138324 | | 1 | VIS M8X1.25X16 |
| 14 | | 18137824 | | 1 | VIS M8X16 |
| 15 | | 504053894 | | 1 | PATTE FIXATION |

HTTP://WWW.MINNPARBACKHOEPARTS.COM

| 02-34 | | p1 | 01/04 |
|---|---|---|---|

FILTRE ET REFROIDISSEUR D'HUILE

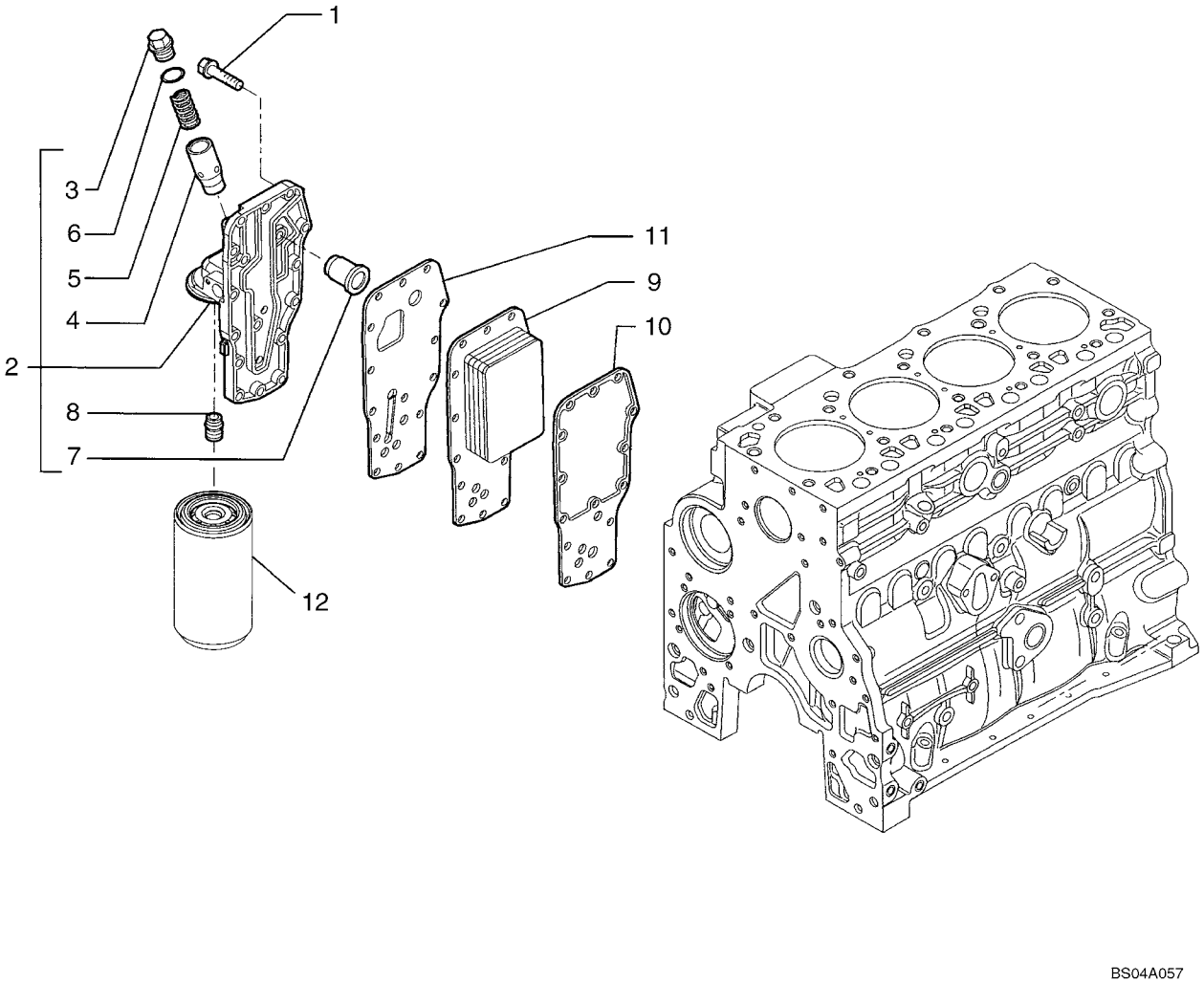

HTTP://WWW.MINNPARBACKHOEPARTS.COM



FILTRE ET REFROIDISSEUR D'HUILE

| REF | FN | PART NUMBER | YR/SN | QTY | DESCRIPTION |
|---|---|---|---|---|---|
| 1 | | 4899019 | | 15 | VIS 8X35 |
| 2 | | 4892774 | | 1 | ECHANGEUR DE CHALEUR - ASSY |
| 3 | | 4895043 | | 1 | BOUCHON |
| 4 | | 4896404 | | 1 | CARTER |
| 5 | | 4895045 | | 1 | RESSORT, SOUPAPE |
| 6 | | 4899035 | | 1 | JOINT THORIQUE |
| 7 | | 4896410 | | 1 | SOUPAPE HYDRAULIQUE |
| 8 | | 4893391 | | 1 | RACCORD |
| 9 | | 4896406 | | 1 | RADIATEUR |
| 10 | | 4895742 | | 1 | JOINT |
| 11 | | 4896409 | | 1 | JOINT |
| 12 | | REF | | 1 | NOTICE FILTER, ENGINE OIL; See Figure 02-32 |

HTTP://WWW.MINNPARBACKHOEPARTS.COM

| 02-35 | | p1 | 01/04 |
|---|---|---|---|

POMPE A EAU

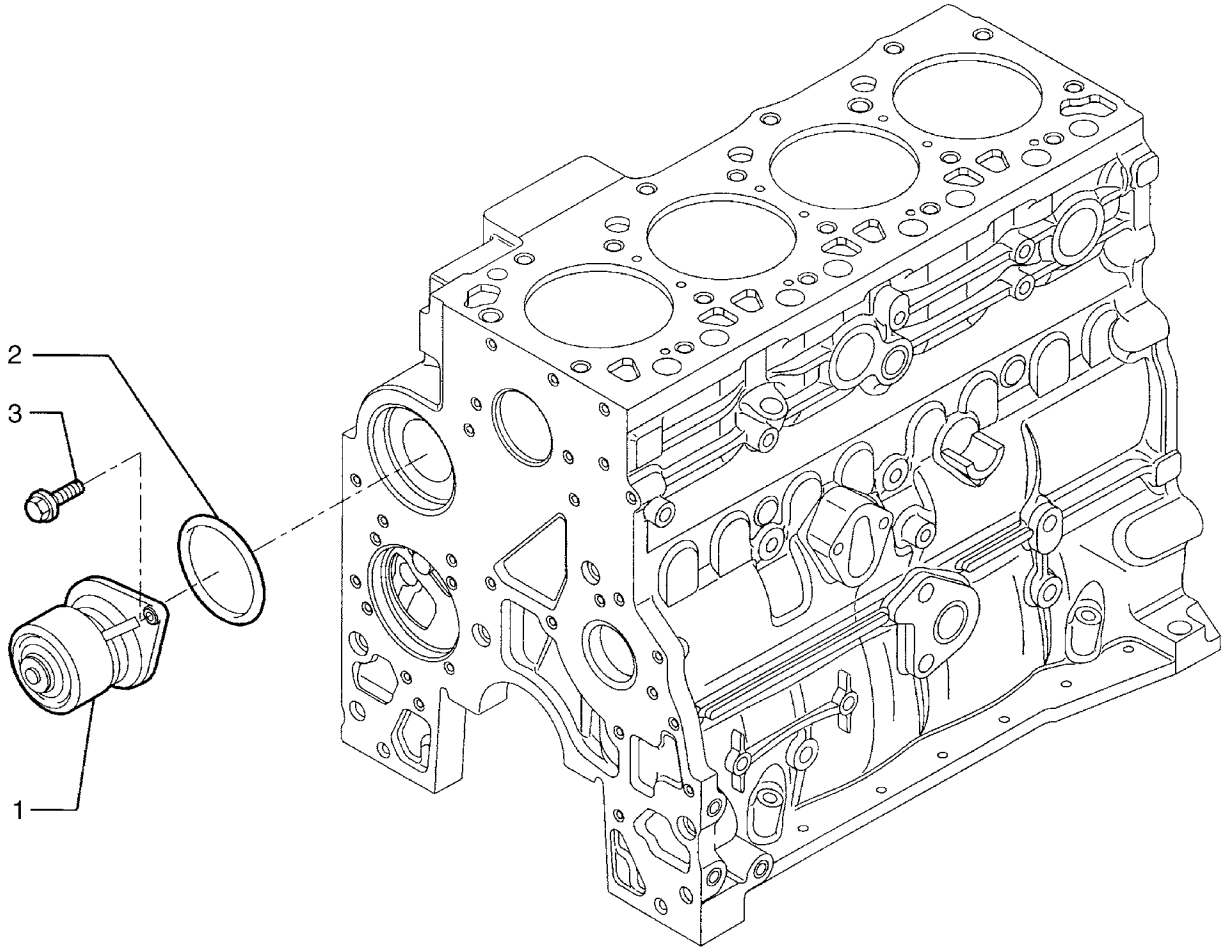


BS04A058

HTTP://WWW.MINNPARBACKHOEPARTS.COM



POMPE A EAU

| REF | FN | PART NUMBER | YR/SN | QTY | DESCRIPTION |
|---|---|---|---|---|---|
| 1 | | 4891252 | | 1 | POMPE A EAU |
| 2 | | 504062856 | | 1 | JOINT |
| 3 | | 4899031 | | 2 | VIS 8X25 |

HTTP://WWW.MINNPARBACKHOEPARTS.COM



CIRCUIT DE REFROIDISSEMENT - MOTEUR

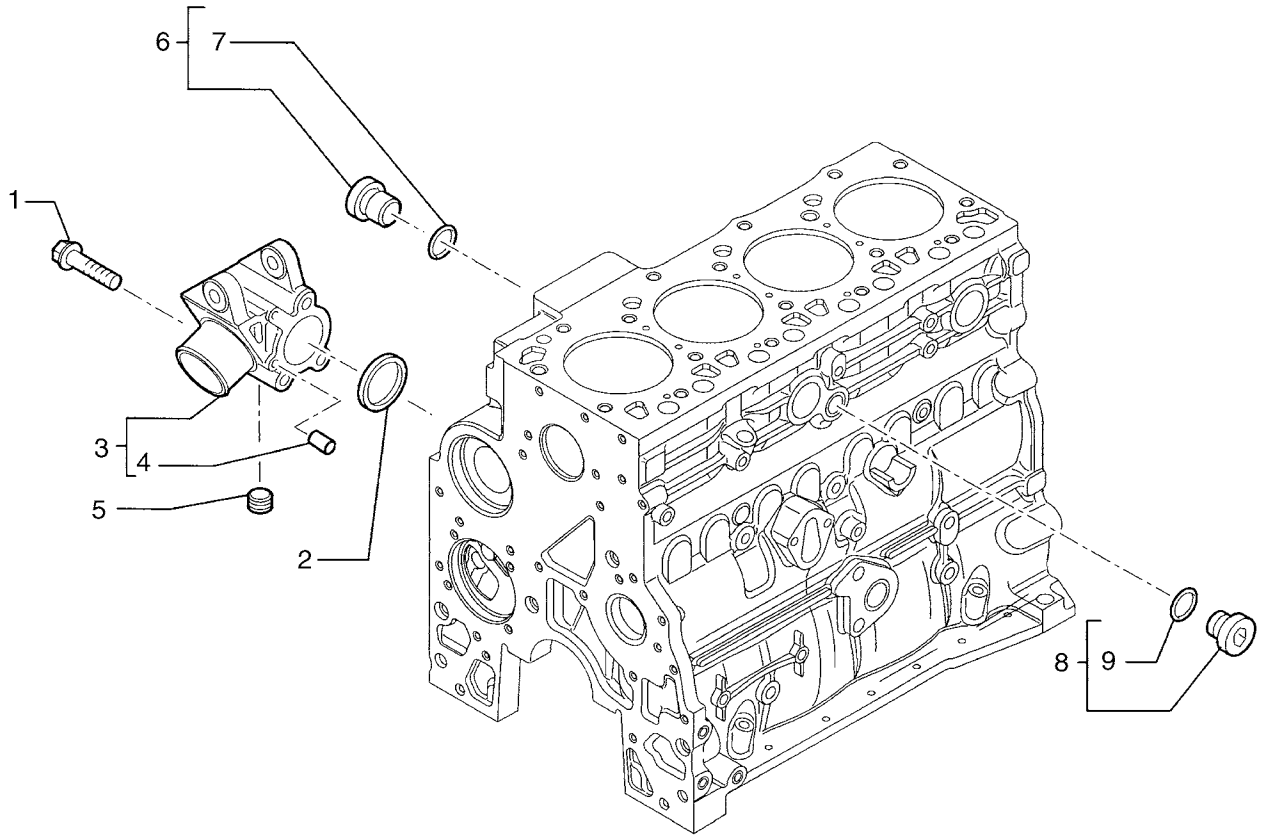

HTTP://WWW.MINNPARBACKHOEPARTS.COM



CIRCUIT DE REFROIDISSEMENT - MOTEUR

| REF | FN | PART NUMBER | YR/SN | QTY | DESCRIPTION |
|---|---|---|---|---|---|
| 1 | | 4899109 | | 3 | VIS |
| 2 | | 4895121 | | 1 | JOINT |
| 3 | | 504064336 | | 1 | SUPPORT - ASSY |
| 4 | | 4895576 | | 2 | PION |
| 5 | | 504074178 | | 1 | BOUCHON |
| 6 | | 4895392 | | 1 | BOUCHON - ASSY M18X1.5 |
| 7 | | 4895393 | | 1 | JOINT THORIQUE |
| 8 | | 4895623 | | 1 | BOUCHON - ASSY |
| 9 | | 4895625 | | 1 | JOINT THORIQUE |

HTTP://WWW.MINNPARBACKHOEPARTS.COM



THERMOSTAT - REFROIDISSEMENT MOTEUR

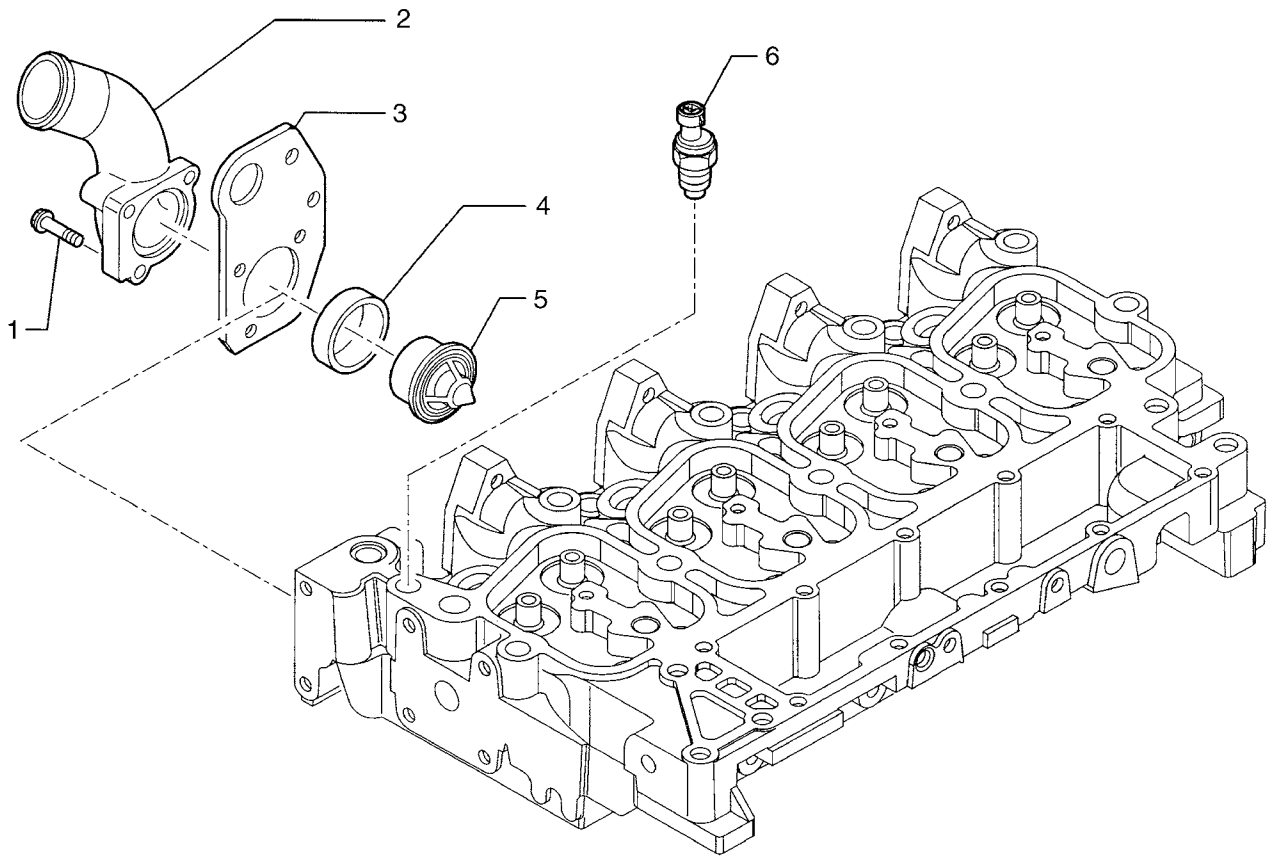


BS04A060

HTTP://WWW.MINNPARBACKHOEPARTS.COM



THERMOSTAT - REFROIDISSEMENT MOTEUR

| REF | FN | PART NUMBER | YR/SN | QTY | DESCRIPTION |
|---|---|---|---|---|---|
| 1 | | 16586624 | | 1 | VIS 8X35 |
| 1 | | 16592624 | | 2 | VIS |
| 2 | | 504051210 | | 1 | COUDE |
| 3 | | 504052013 | | 1 | ANNEAU DE LEVAGE |
| 4 | | 504053512 | | 1 | JOINT |
| 5 | | 504038890 | | 1 | THERMOSTAT |
| 6 | | 504025599 | | 1 | THERMO SONDE |

HTTP://WWW.MINNPARBACKHOEPARTS.COM



POMPE A EAU - COMMANDE

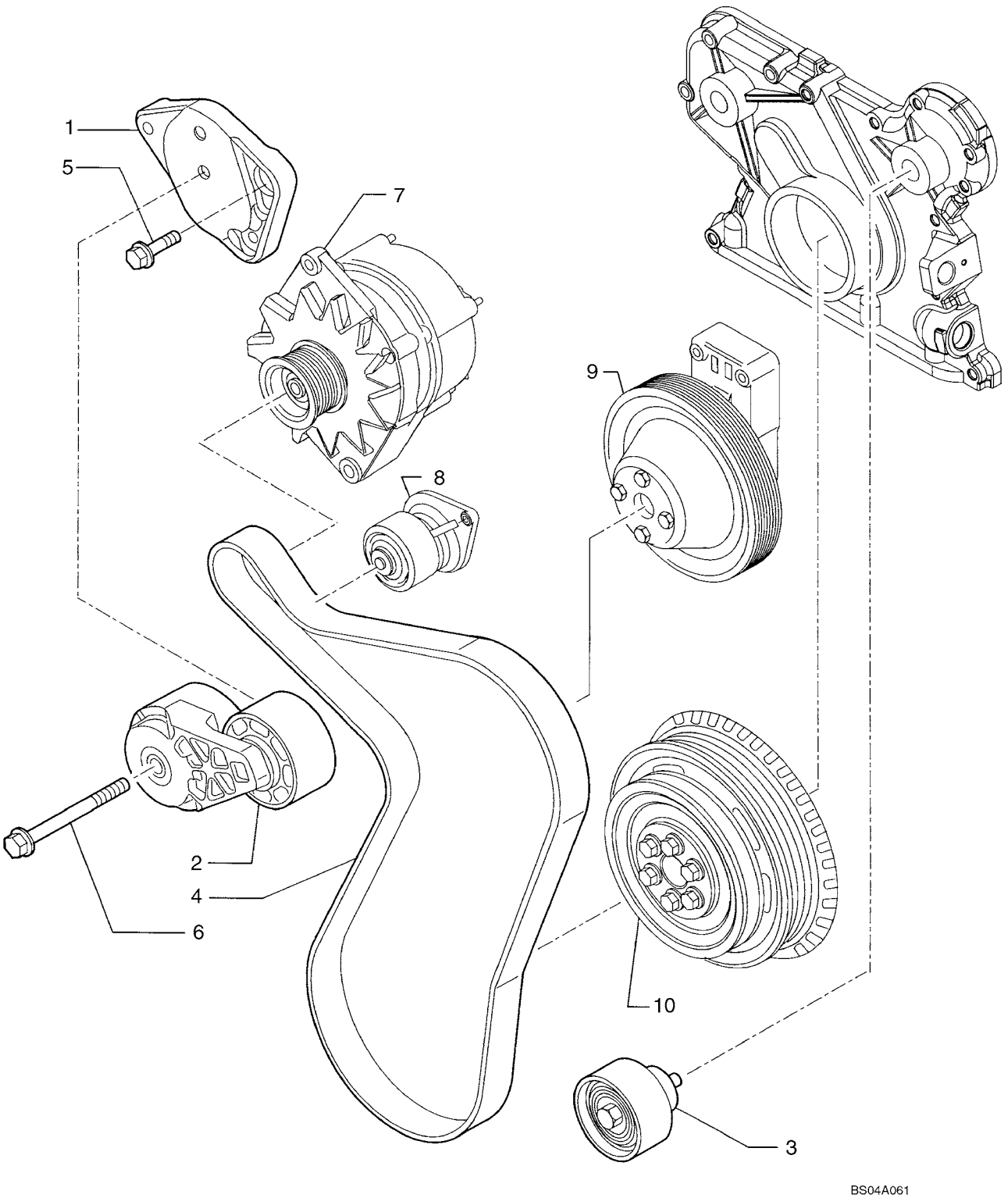

HTTP://WWW.MINNPARBACKHOEPARTS.COM



POMPE A EAU - COMMANDE

| REF | FN | PART NUMBER | YR/SN | QTY | DESCRIPTION |
|---|---|---|---|---|---|
| 1 | | 504064340 | | 1 | PATTE FIXATION |
| 2 | | 504028028 | | 1 | TENDEUR DE COURROIE |
| 3 | | 504065880 | | 1 | POULIE |
| 4 | | REF | | 1 | NOTICE BELT; See Figure 02-01 |
| 5 | | 4899031 | | 1 | VIS |
| 6 | | 4899109 | | 1 | VIS |
| 7 | | REF | | 1 | NOTICE ALTERNATOR; See Figure 04-02 |
| 8 | | REF | | 1 | NOTICE WATER PUMP; See Figure 02-35 |
| 9 | | REF | | 1 | NOTICE FAN DRIVE; See Figure 02-39 |
| 10 | | REF | | 1 | NOTICE CRANKSHAFT PULLEY; See Figure 02-25 |

HTTP://WWW.MINNPARBACKHOEPARTS.COM



COMMANDE DE VENTILATEUR

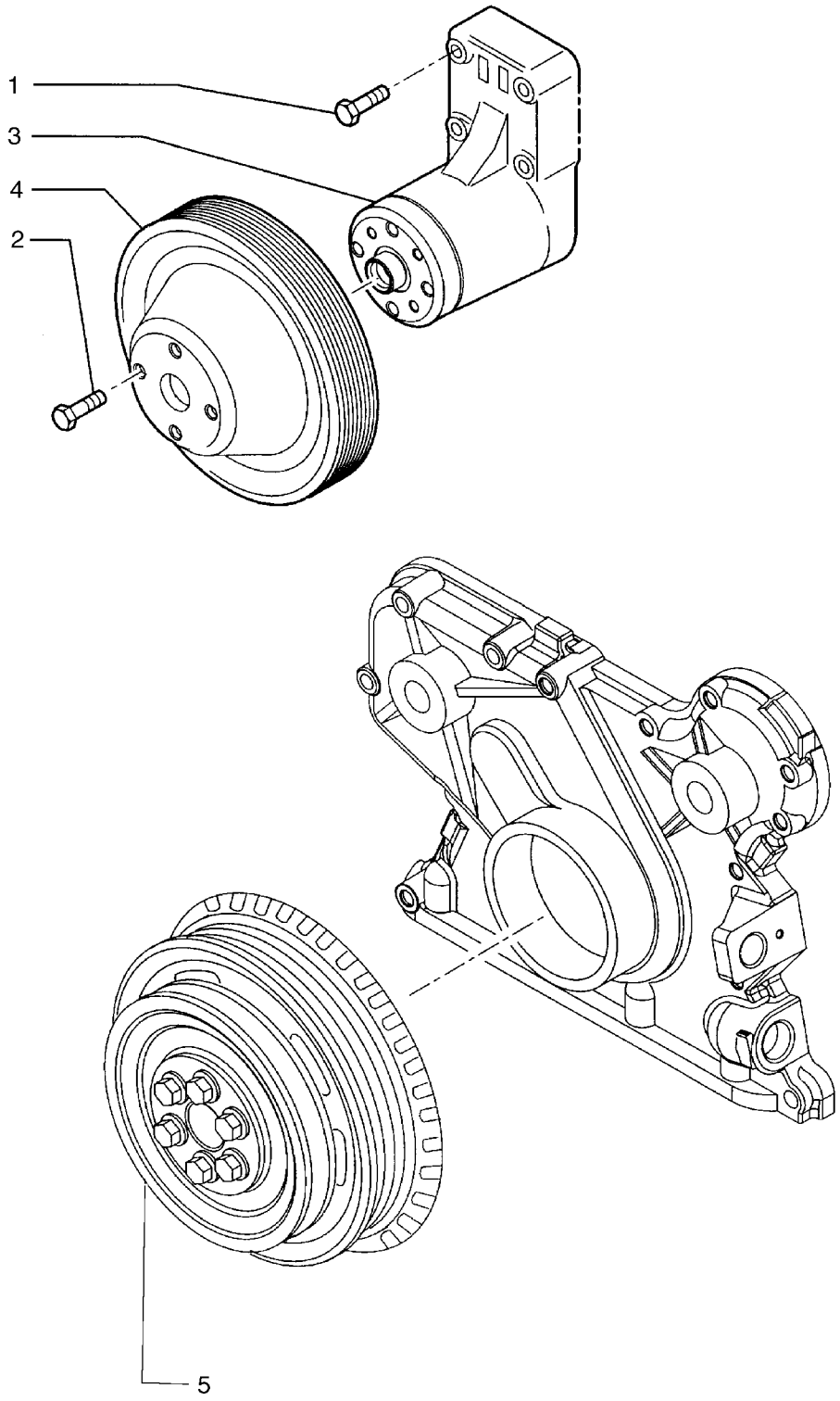

HTTP://WWW.MINNPARBACKHOEPARTS.COM



COMMANDE DE VENTILATEUR

| REF | FN | PART NUMBER | YR/SN | QTY | DESCRIPTION |
|---|---|---|---|---|---|
| 1 | | 4899053 | | 4 | VIS |
| 2 | | 4895291 | | 4 | VIS |
| 3 | | 504035148 | | 1 | SUPPORT M10X1.5X80 |
| 4 | | 4895301 | | 1 | POULIE |
| 5 | | REF | | 1 | NOTICE CRANKSHAFT PULLEY; See Figure 02-25 |

HTTP://WWW.MINNPARBACKHOEPARTS.COM



PRISE DE FORCE

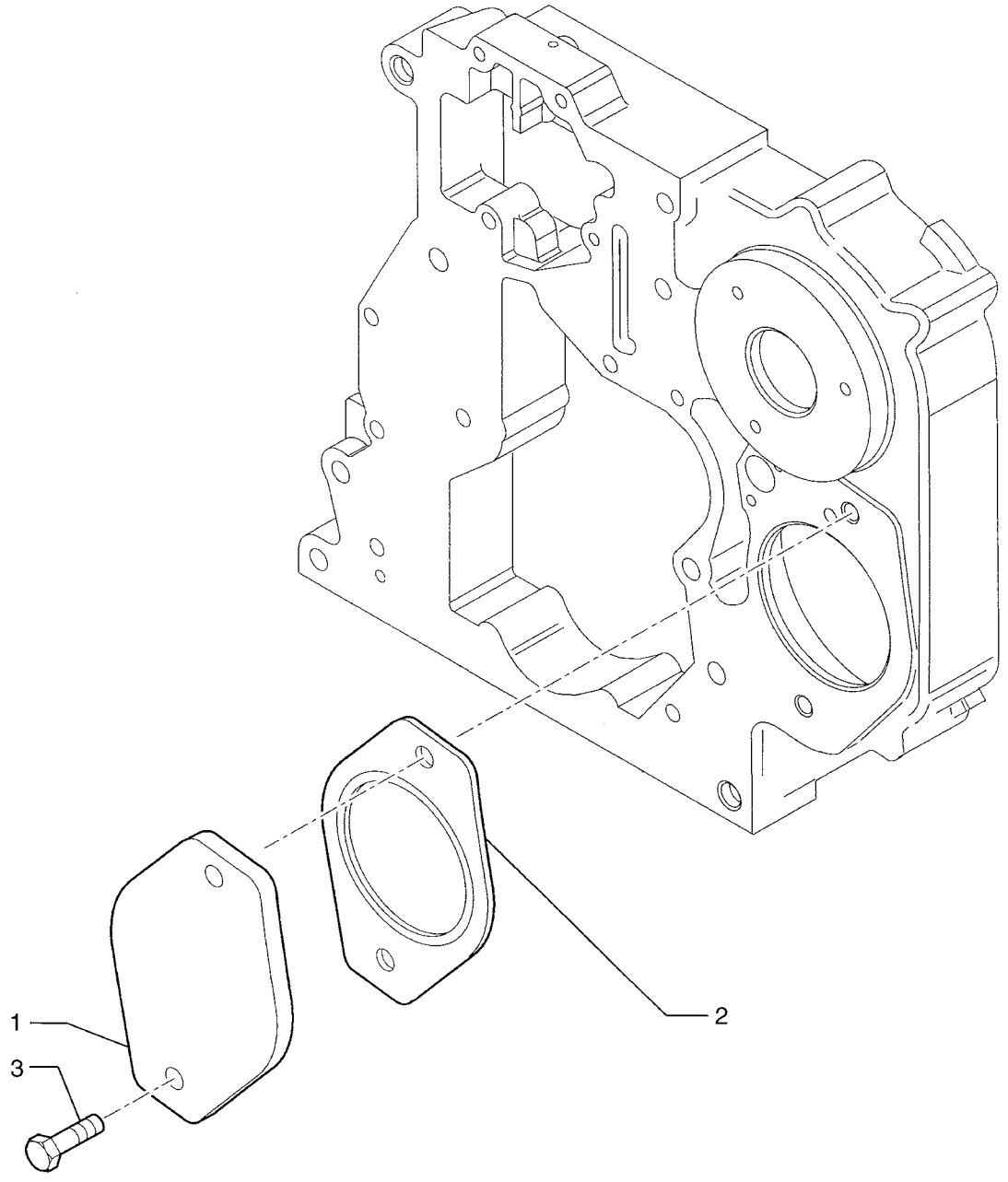

HTTP://WWW.MINNPARBACKHOEPARTS.COM



PRISE DE FORCE

| REF | FN | PART NUMBER | YR/SN | QTY | DESCRIPTION |
|---|---|---|---|---|---|
| 1 | | 504049033 | | 1 | COUVERCLE |
| 2 | | 4896897 | | 1 | JOINT |
| 3 | | 4895327 | | 2 | VIS |

HTTP://WWW.MINNPARBACKHOEPARTS.COM



MOTEUR - CROCHET DE LEVAGE

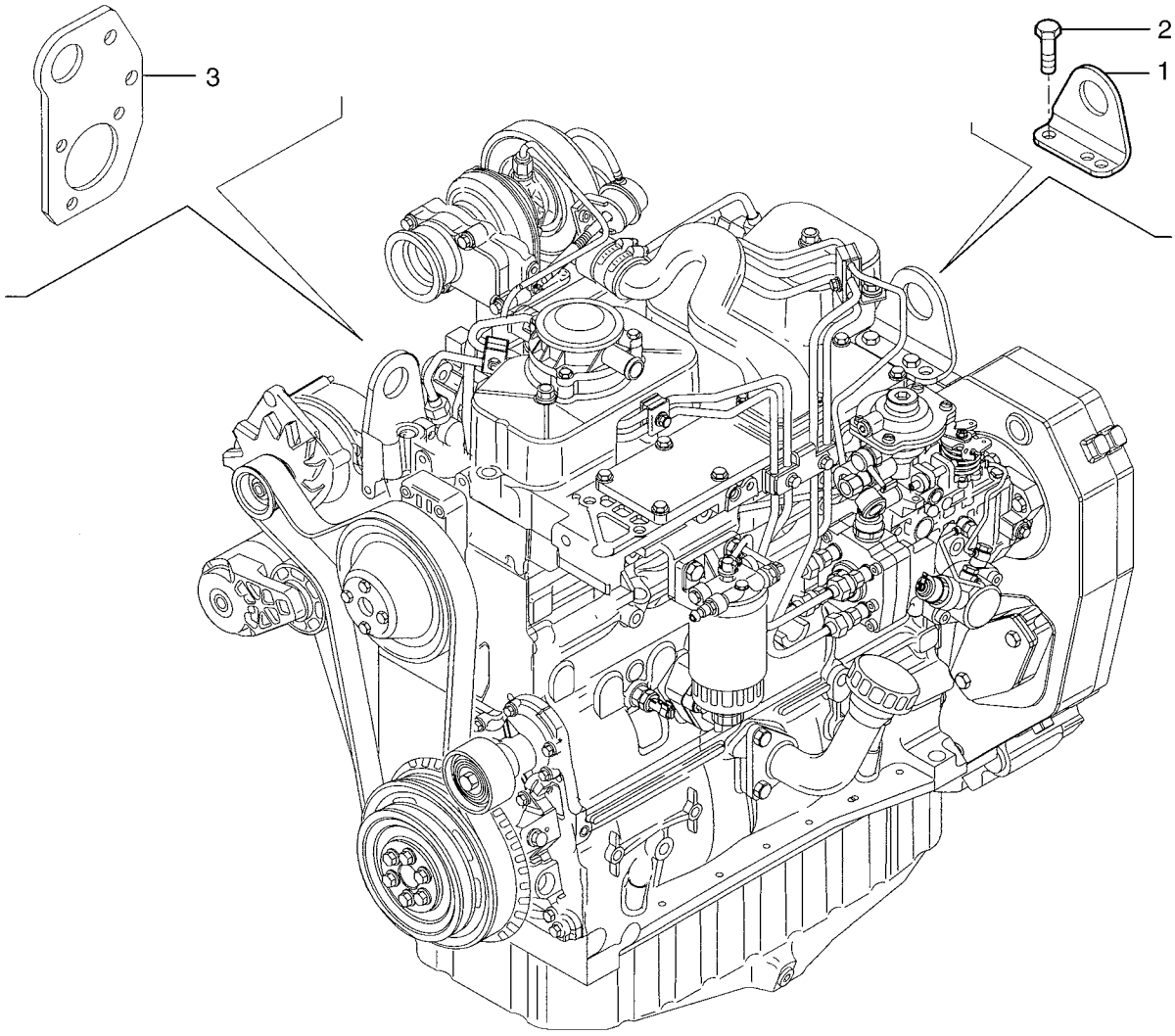

HTTP://WWW.MINNPARBACKHOEPARTS.COM



MOTEUR - CROCHET DE LEVAGE

| REF | FN | PART NUMBER | YR/SN | QTY | DESCRIPTION |
|---|---|---|---|---|---|
| 1 | | 504026078 | | 1 | ANNEAU DE LEVAGE |
| 2 | | 4899073 | | 2 | VIS |
| 3 | | REF | | 1 | NOTICE LIFT RING; See Figure 02-37 |

HTTP://WWW.MINNPARBACKHOEPARTS.COM

HTTP://WWW.MINNPARBACKHOEPARTS.COM

# SECTION INDEX


| | |
|---|---|
| 03-01 | TUYAUTERIE D"ESSENCE, RESERVOIR - FILTRE À CARBURANT EN LIGNE |
| 03-02 | COMMANDES - MANETTE DES GAZ |
| 03-03 | COMMANDES - PÉDALE D"ACCÉLÉRATION |
| 03-04 | POMPE DINJECTION |
| 03-05 | SYSTÈME D"INJECTION |
| 03-06 | SYSTÈME D"INJECTION |
| 03-07 | SYSTÈME D"INJECTION |
| 03-08 | FILTRE COMBUSTIBLE |
| 03-09 | POMPE D"ALIMENTATION |
| 03-10 | SYSTÈME D"INJECTION |
| 03-11 | SYSTÈME D"INJECTION |

HTTP://WWW.MINNPARBACKHOEPARTS.COM

| 03-01 | | p1 | 09/03 |
|---|---|---|---|

TUYAUTERIE D'ESSENCE, RESERVOIR - FILTRE À CARBURANT EN LIGNE

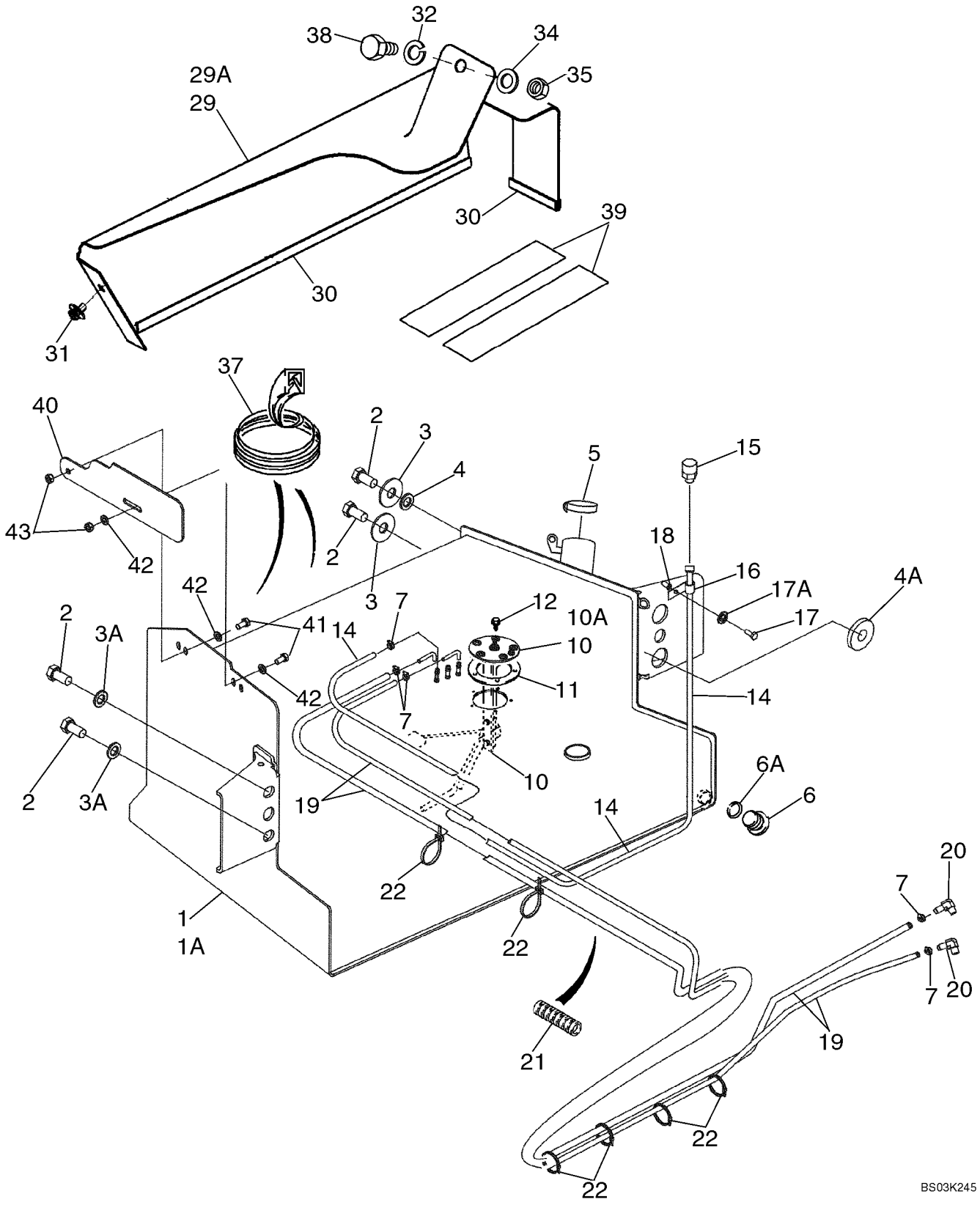

HTTP://WWW.MINNPARBACKHOEPARTS.COM



TUYAUTERIE D'ESSENCE, RESERVOIR - FILTRE À CARBURANT EN LIGNE

| REF | FN | PART NUMBER | YR/SN | QTY | DESCRIPTION |
|---|---|---|---|---|---|
| 1 | | 87429310 | | 1 | RESERVOIR DE COMBUSTIBLE 31 gal; Incl. Ref 6; With Welded Fuel Sender Tubes; Includes Left Hand Steps, Mounts to Left Hand Side of Chassis |
| 1A | | 87429314 | | 1 | RESERVOIR DE COMBUSTIBLE 40 gal; Incl. Ref 6; Optional; With Welded Fuel Sender Tubes; Includes Left Hand Steps, Mounts to Left Hand Side of Chassis; If Used |
| 2 | | 443375A1 | | 4 | BOULON M20 x 60; With Loctite |
| 3 | | 302358A1 | | 2 | RONDELLE |
| 3A | | 896-11020 | | 2 | RONDELLE 22 x 37 x 4 mm |
| 4 | | 185926A1 | | 1 | ENTRETOISE Upper Left Hand Side of Tank |
| 4A | | 409472A1 | | 1 | ENTRETOISE Lower Left Hand Side of Tank |
| 5 | | 130049A1 | | 1 | BOUCHON DE REMPL. Cap; Non-Vented |
| 6 | | 218-5211 | | 1 | BOUCHON Hex Socket, 7/8 Or, Drain, Incl. Ref 6A; Included With Ref 1, 1A |
| 6A | | 237-6010 | | 1 | JOINT TORIQUE 3/4 ID x 3/32 |
| 7 | | 214-1704 | | 5 | COLLIER 1/4 - 5/8 |
| 10 | | 86989676 | | 1 | TRANSMETTEUR ASSY Fuel Level, 31 Gallon Tank, Without Tubes, If Used |
| 10A | | 87408480 | | 1 | TRANSMETTEUR ASSY Fuel Level, 40 Gallon Tank, Without Tubes, If Used |
| 11 | | 188311A2 | | 1 | JOINT |
| 12 | | D75465 | | 5 | VIS No. 10 NF x 5/8 |
| 14 | | 234892A1 | | 1 | DURITE 1/4 ID x 1100 mm (43-5/16 in), Vent |
| 15 | | 130047A1 | | 1 | CREPINE Vent |
| 16 | | 515-23127 | | 1 | COLLIER 1/2 ID |
| 17 | | 276-24924 | | 1 | VIS 3/8 x 1-1/2 |
| 17A | | 495-11041 | | 1 | RONDELLE 13/32 x 13/16 x 1/16 |
| 18 | | 87417383 | | 1 | INSERT FILETE M8 Nut |
| 19 | | 87427943 | | 2 | FLEXIBLE 3/8 ID x 1800 mm (70-7/8 in); To Fuel Lift Pump and Injector Pump |
| 20 | | 87414560 | | 2 | RACCORD ELBOW, 90 deg, Includes O-Ring |
| 21 | | 399004A1 | | 1 | GARANT 270 mm (10-5/8 in) |
| 22 | | L18337 | | X | SANGLE 15 in |
| 29 | | 189602A3 | | 1 | COUVERCLE Mounted Above Fuel Reservoir; Models With Two Spool Loader Valve |

HTTP://WWW.MINNPARBACKHOEPARTS.COM

| 03-01 | | p2 | 09/03 |
|---|---|---|---|

TUYAUTERIE D'ESSENCE, RESERVOIR - FILTRE À CARBURANT EN LIGNE

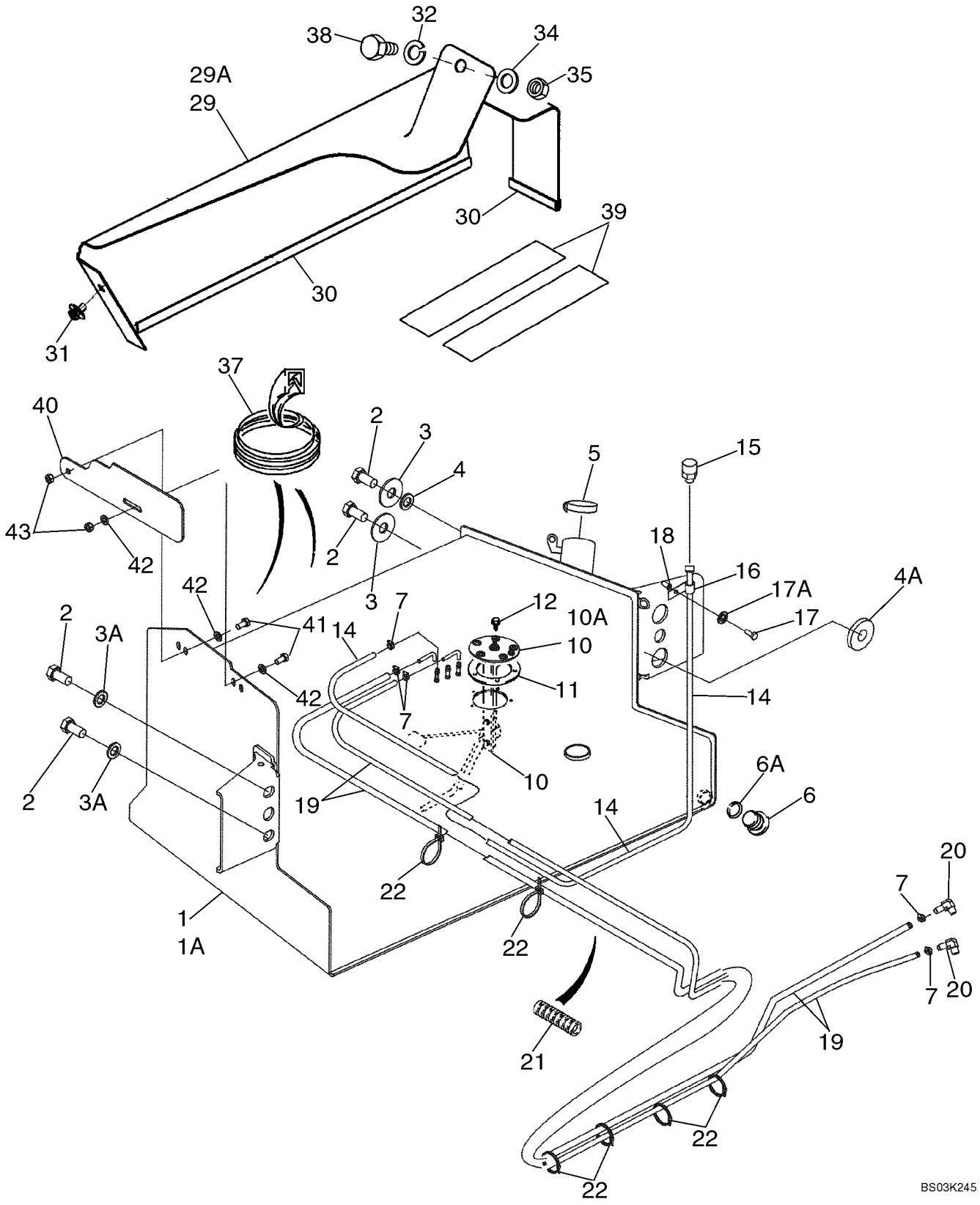

HTTP://WWW.MINNPARBACKHOEPARTS.COM



TUYAUTERIE D'ESSENCE, RESERVOIR - FILTRE À CARBURANT EN LIGNE

| REF | FN | PART NUMBER | YR/SN | QTY | DESCRIPTION |
|---|---|---|---|---|---|
| 29A | | 188009A3 | | 1 | COUVERCLE Mounted Above Fuel Reservoir, Models With Three Spool Loader Valve |
| 30 | | 191046A1 | | 1 | BANDE, ENJOLIVEUR Trim, 650 mm (25-5/8 in), Cut From A165860; Apply 65 mm (2-9/16 in) of Trim to Front Lower Edge and 575 mm (22-11/16 in) of Trim to Outside Lower Edge of Cover |
| 31 | | 307577A1 | | 1 | BOULON Special, M8 x 20 |
| 32 | | 892-11010 | | 1 | RONDELLE FREIN M10 |
| 34 | | 895-11010 | | 1 | RONDELLE 11 x 21 x 2 mm |
| 35 | | 829-1410 | | 1 | ECROU M10; 10.9 |
| 37 | | D40442 | | 1 | MOULURE Trim, 305 mm (12 in), Cut From F42827; If Used |
| 38 | | 814-10045 | | 1 | VIS M10 x 45; Models With Three Spool Loader Valve |
| 38 | | 614-10020 | | 1 | VIS M10 x 20; Models With Two Spool Loader Valve |
| 39 | | D80270 | | 2 | RUBAN 635 mm (25 in), 31 Gallon Tank |
| 39 | | 307348A1 | | 2 | RUBAN 700 mm (27-9/16 in), 40 Gallon Tank |
| 40 | | 397548A4 | | 1 | PLAQUE Mud |
| 41 | | 614-10020 | | 2 | VIS M10 x 20 |
| 42 | | 895-11010 | | 3 | RONDELLE 11 x 21 x 2 mm |
| 43 | | 829-1410 | | 2 | ECROU M10; 10.9 |

HTTP://WWW.MINNPARBACKHOEPARTS.COM



COMMANDES - MANETTE DES GAZ

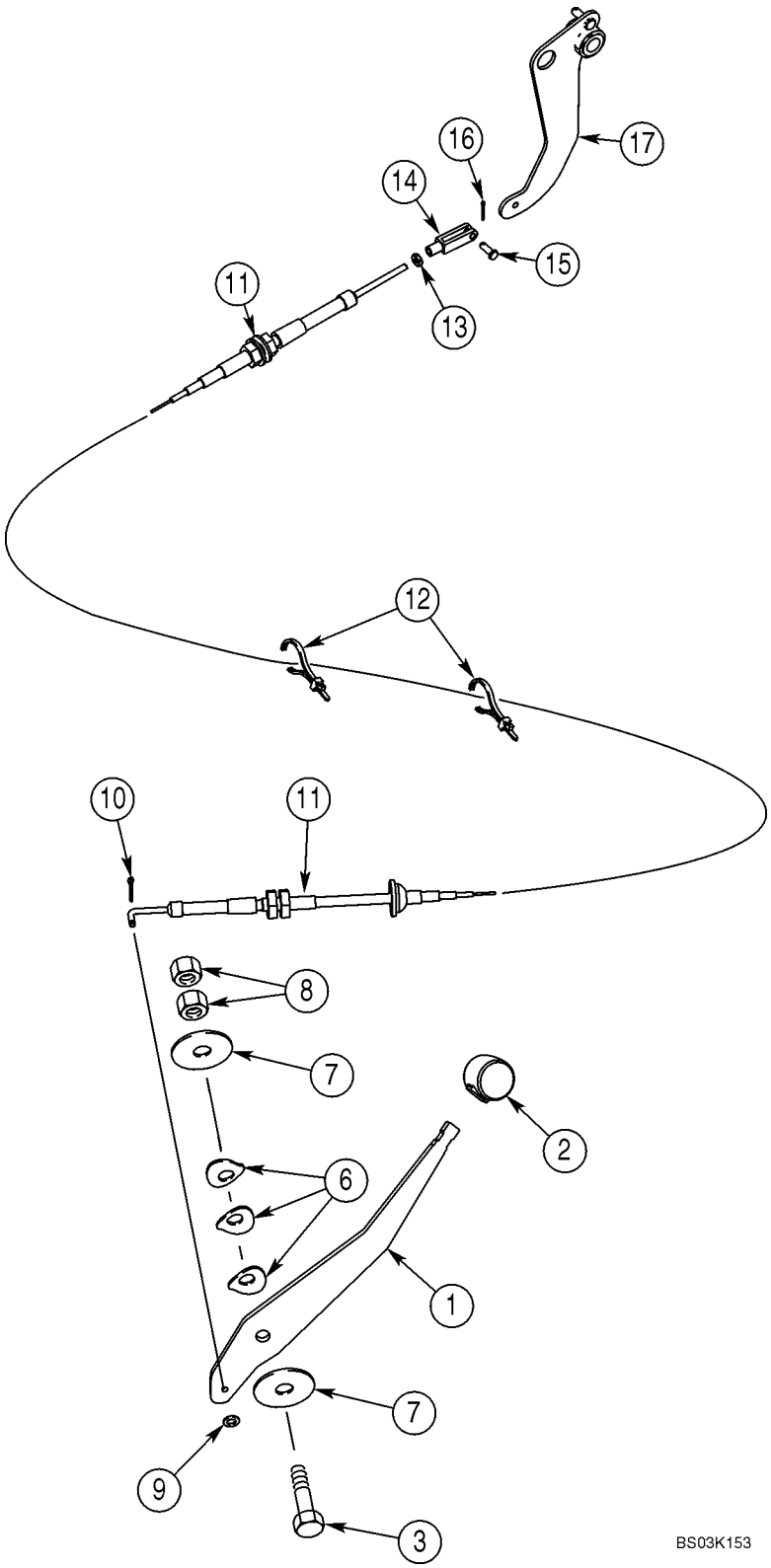

HTTP://WWW.MINNPARBACKHOEPARTS.COM



COMMANDES - MANETTE DES GAZ

| REF | FN | PART NUMBER | YR/SN | QTY | DESCRIPTION |
|---|---|---|---|---|---|
| 1 | | 395189A2 | | 1 | LEVIER |
| 2 | | A177435 | | 1 | BOULE Lever |
| 3 | | 514-847 | | 1 | BOULON M12 x 50 |
| 6 | | D148962 | | 3 | RONDELLE |
| 7 | | 496-81018 | | 2 | RONDELLE 33/64 x 2 x 1/8 |
| 8 | | 825-11412 | | 2 | ECROU M12 |
| 9 | | 495-31022 | | 1 | RONDELLE 7/32 x 1/2 x 3/64 |
| 10 | | 432-48 | | 1 | GOUPILLE 1/16 x 1/2 |
| 11 | | 350014A3 | | 1 | CABLE |
| 12 | | L18337 | | 4 | SANGLE 15 in, Nylon, Retaining |
| 13 | | 225-14210 | | 1 | ECROU No. 10 NF |
| 14 | | 213-123 | | 1 | FOURCHETTE No. 10 NF |
| 15 | | 427-3058 | | 1 | AXE DE CHAPE 3/16 x 9/16 |
| 16 | | 432-48 | | 1 | GOUPILLE 1/16 x 1/2 |
| 17 | | 378957A3 | | 1 | LEVIER (ASSEMBLE) |

HTTP://WWW.MINNPARBACKHOEPARTS.COM



COMMANDES - PÉDALE D'ACCÉLÉRATION

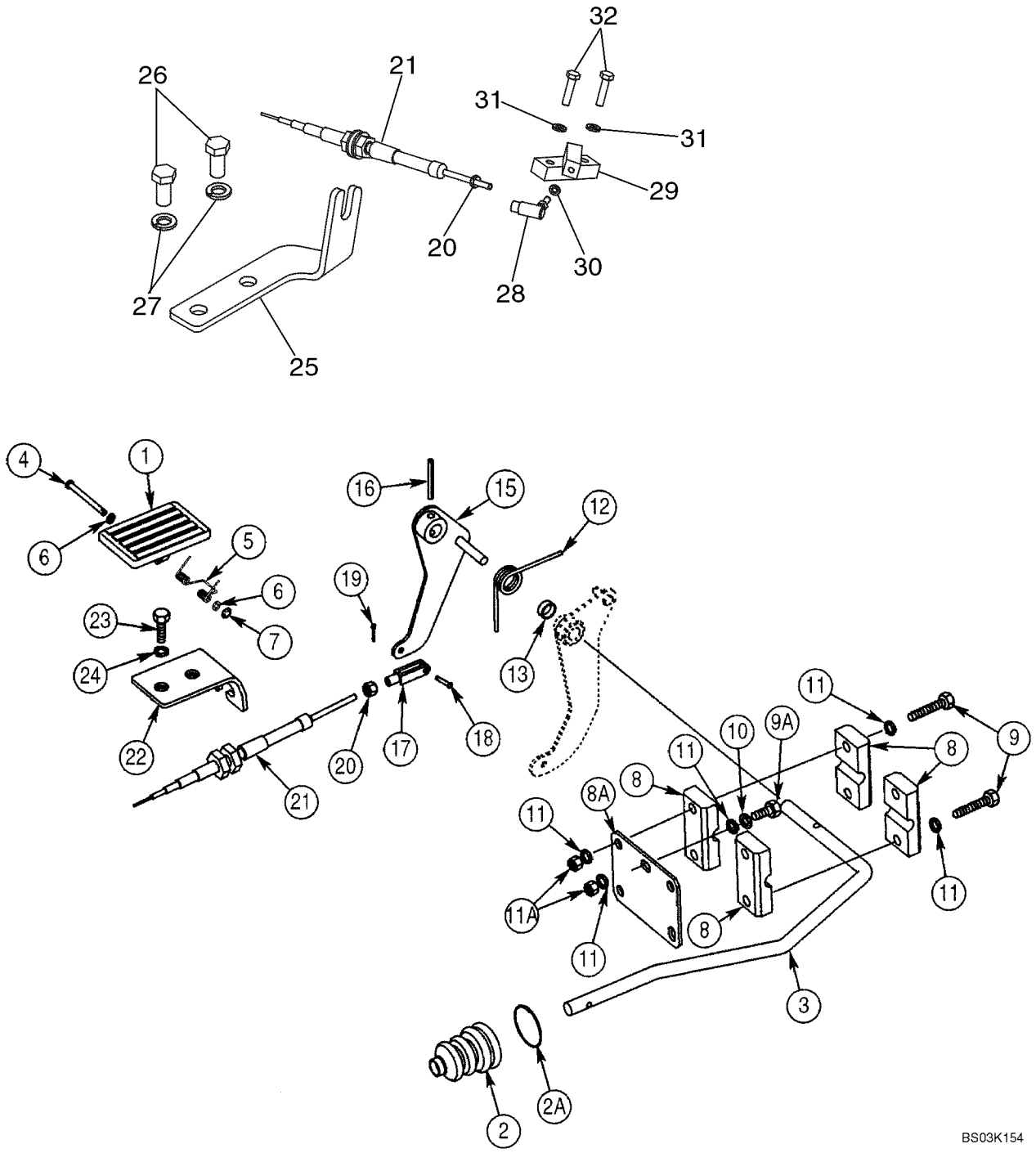

HTTP://WWW.MINNPARBACKHOEPARTS.COM



COMMANDES - PÉDALE D'ACCÉLÉRATION

| REF | FN | PART NUMBER | YR/SN | QTY | DESCRIPTION |
|---|---|---|---|---|---|
| 1 | | 282242A1 | | 1 | PEDALE Plastic |
| 2 | | 132931A1 | | 1 | SOUFFLET Boot, Accelerator Pedal Rod |
| 2A | | 189109A1 | | 1 | RESSORT Retainer |
| 3 | | 378960A1 | | 1 | TRINGLE |
| 4 | | 322860A1 | | 1 | AXE, GROS |
| 5 | | 256776A1 | | 1 | PILIER, SOUTIEN |
| 6 | | 895-11005 | | 2 | RONDELLE 5,5 x 10 x 1 mm |
| 7 | | 103-1518 | | 1 | ANNEAU-D'ARRET No. 18 |
| 8 | | D124857 | | 4 | COLLIER |
| 8A | | 378955A1 | | 1 | PLAQUE |
| 9 | | 604-8050 | | 4 | BOULON Locking, M8 x 50 |
| 9A | | 614-8020 | | 1 | VIS M8 x 20 |
| 10 | | 892-11008 | | 1 | RONDELLE M8 |
| 11 | | 895-11008 | | 7 | RONDELLE 9 x 17 x 1,6 mm |
| 11A | | 829-1408 | | 2 | ECROU M8; 10 |
| 12 | | 380483A2 | | 1 | RESSORT |
| 13 | | 378958A1 | | 1 | BAGUE D'EPAISSEUR |
| 15 | | 378956A3 | | 1 | LEVIER (ASSEMBLE) |
| 16 | | 838-3640 | | 1 | AXE 6 x 40 mm |
| 17 | | 213-123 | | 1 | FOURCHETTE No. 10 NF |
| 18 | | 427-3058 | | 1 | AXE DE CHAPE 3/16 x 9/16 |
| 19 | | 432-48 | | 1 | GOUPILLE 1/16 x 1/2 |
| 20 | | 225-14210 | | 2 | ECROU No. 10 NF |
| 21 | | 380021A1 | | 1 | CABLE To Injection Pump |
| 22 | | 397065A2 | | 1 | PATTE FIXATION |
| 23 | | 614-10035 | | 2 | VIS M10 x 35 |
| 24 | | 892-11010 | | 2 | RONDELLE FREIN M10 |
| 25 | | 87432547 | | 1 | PATTE FIXATION |
| 26 | | 627-12025 | | 2 | VIS M12 x 25 |
| 27 | | 896-15012 | | 2 | RONDELLE 13,5 x 28 x 4 mm |
| 28 | | 87421807 | | 1 | JOINT-CARDAN ASS. |
| 29 | | 87421471 | | 1 | BLOC (ASSEMBLE) |
| 30 | | 892-11005 | | 1 | RONDELLE FREIN M5 |
| 31 | | 892-11006 | | 2 | RONDELLE FREIN M6 |
| 32 | | 614-6025 | | 2 | VIS M6 x 25 |

HTTP://WWW.MINNPARBACKHOEPARTS.COM



POMPE DINJECTION

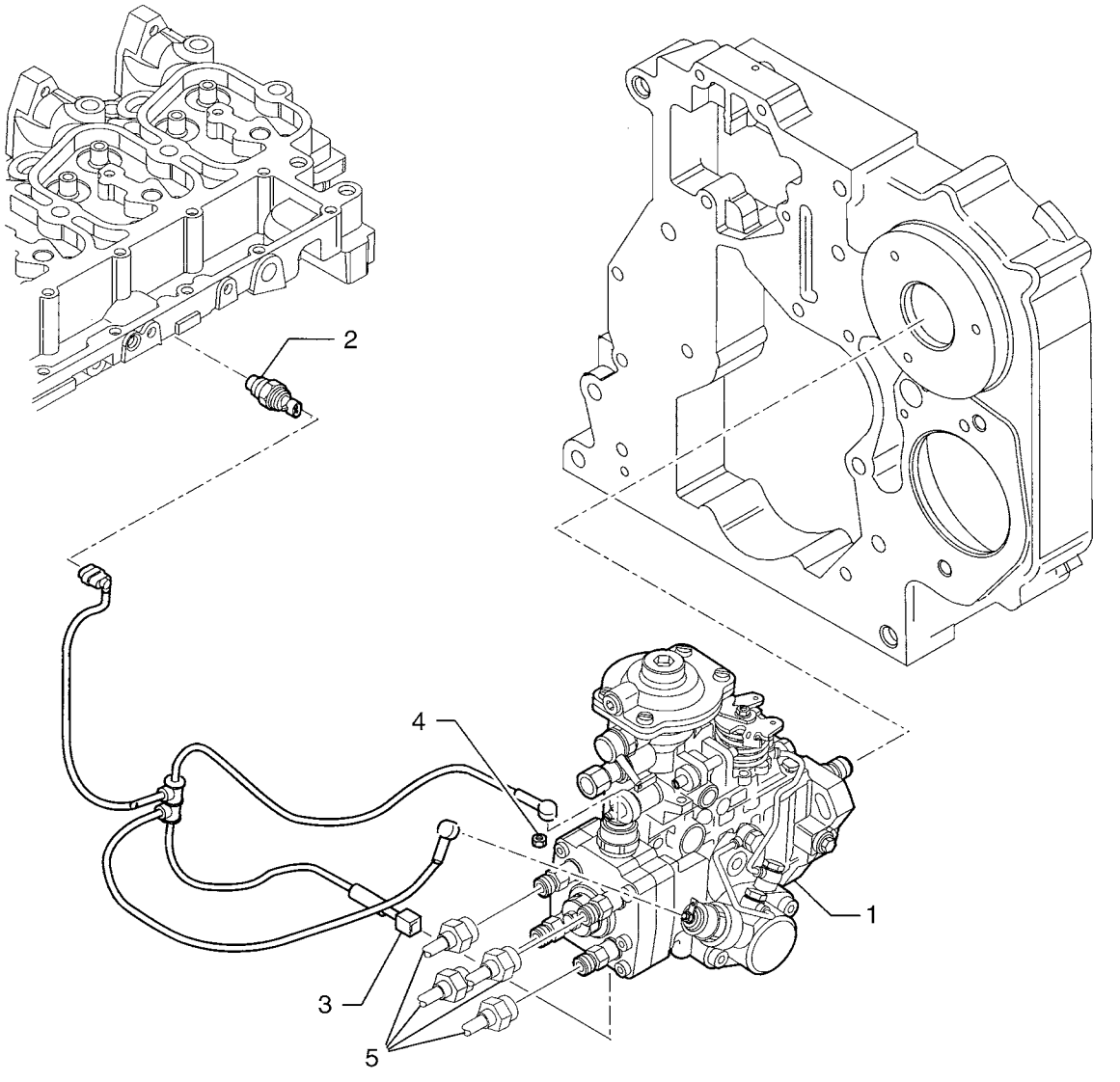

HTTP://WWW.MINNPARBACKHOEPARTS.COM



POMPE DINJECTION

| REF | FN | PART NUMBER | YR/SN | QTY | DESCRIPTION |
|---|---|---|---|---|---|
| 1 | | {504063450} | | 1 | - ASSY; Injection Pump |
| 2 | | 504032877 | | 1 | TRANSMETTEUR ASSY |
| 3 | | 504060728 | | 1 | FIL DE CONNECTION |
| 4 | | 16979231 | | 2 | ECROU |
| 5 | | REF | | 1 | NOTICE TUBE; See Figure 03-07 for Tube Kit |

HTTP://WWW.MINNPARBACKHOEPARTS.COM



SYSTÈME D'INJECTION

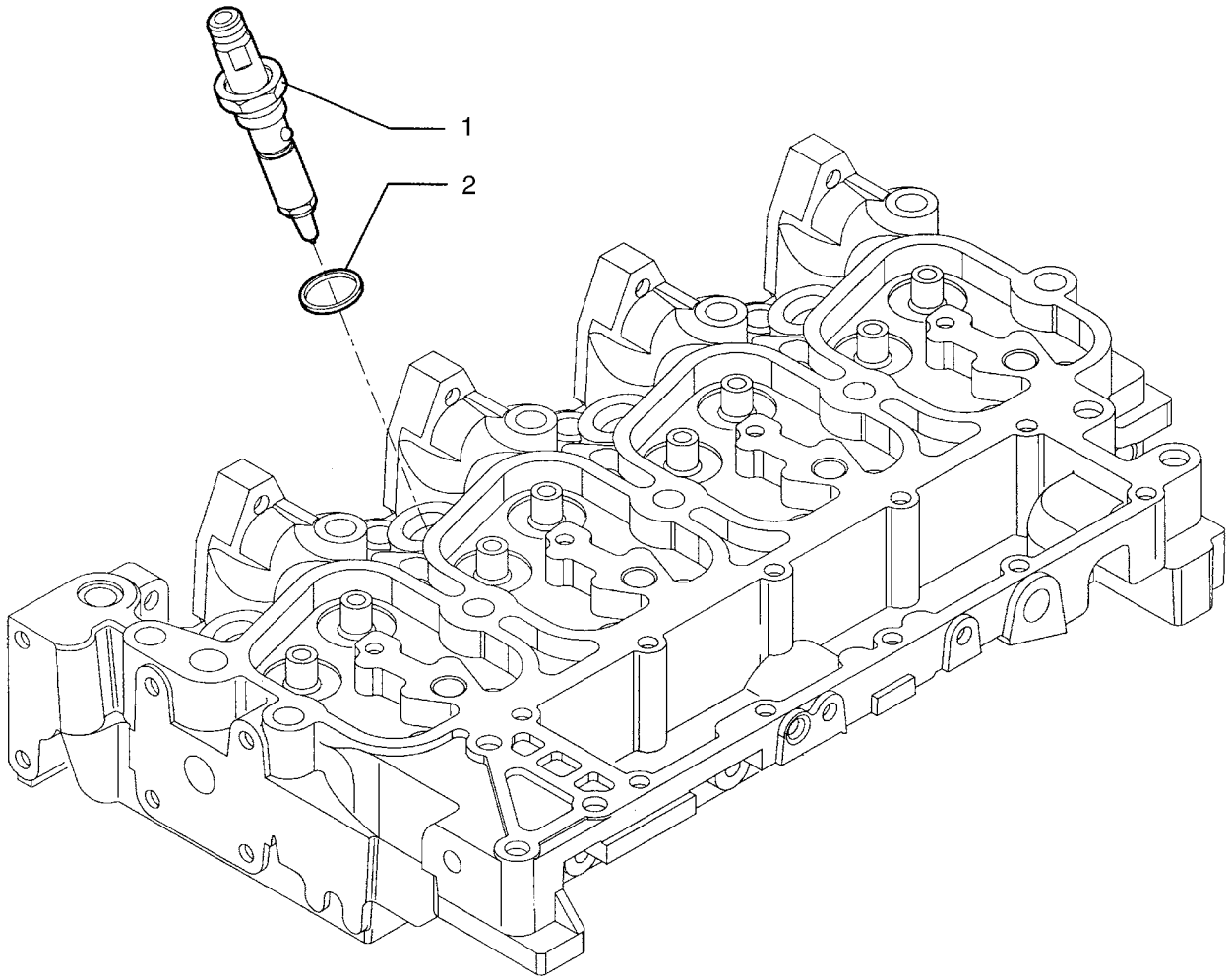


BS04A045

HTTP://WWW.MINNPARBACKHOEPARTS.COM



SYSTÈME D'INJECTION

| REF | FN | PART NUMBER | YR/SN | QTY | DESCRIPTION |
|---|---|---|---|---|---|
| 1 | | {500390441} | | 4 | Injector |
| 2 | | 4895297 | | 4 | JOINT |

HTTP://WWW.MINNPARBACKHOEPARTS.COM



SYSTÈME D'INJECTION

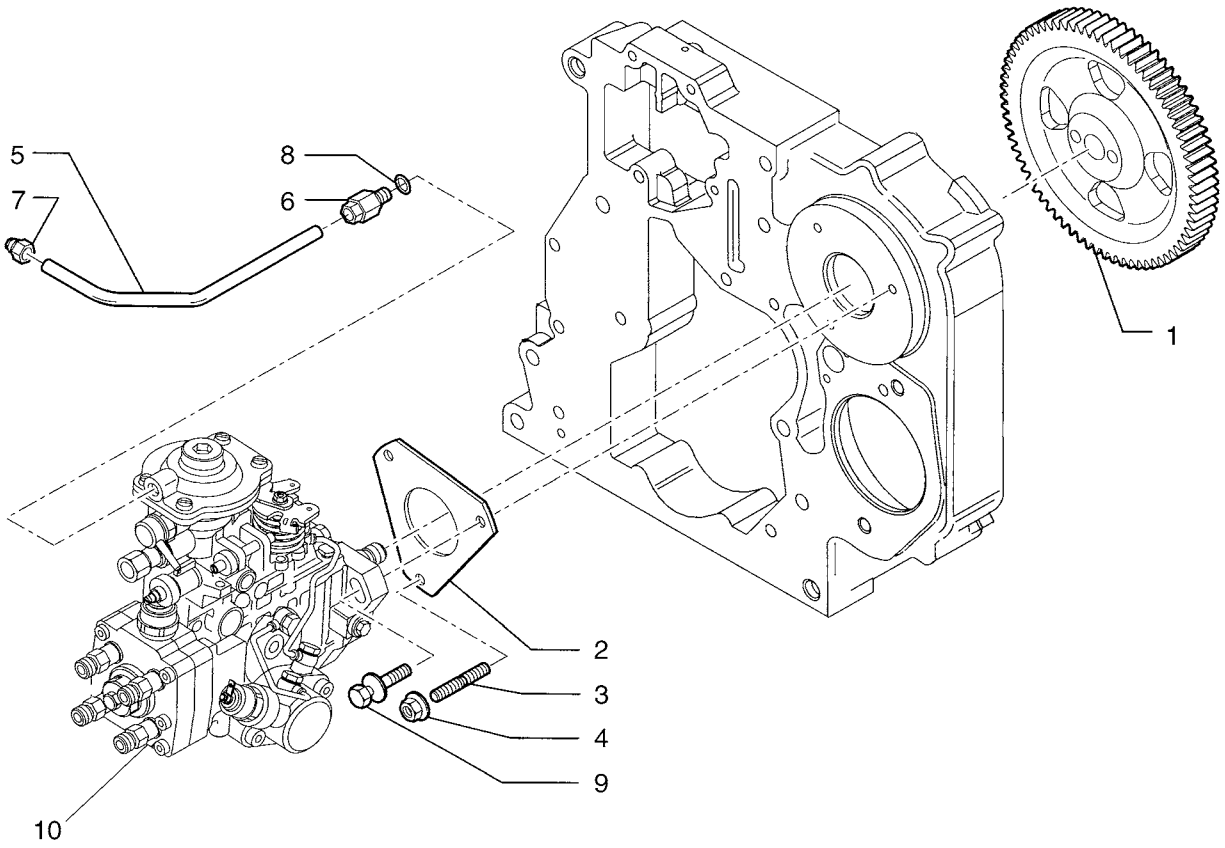


BS04A046

HTTP://WWW.MINNPARBACKHOEPARTS.COM



SYSTÈME D'INJECTION

| REF | FN | PART NUMBER | YR/SN | QTY | DESCRIPTION |
|---|---|---|---|---|---|
| 1 | | 4894774 | | 1 | PIGNON CONDUIT |
| 2 | | 4895090 | | 1 | JOINT |
| 3 | | {16746824} | | 2 | Stud |
| 4 | | 4899003 | | 2 | ECROU 8X1.25 |
| 5 | | 504057292 | | 1 | TUYAU RIGIDE |
| 6 | | 4893518 | | 1 | RACCORD 8X1 |
| 7 | | 4896770 | | 1 | RACCORD 10X1 |
| 8 | | 4858605 | | 1 | JOINT |
| 9 | | 504065099 | | 1 | VIS |
| 10 | | REF | | 1 | NOTICE INJECTION PUMP; See Figure 03-04 |

HTTP://WWW.MINNPARBACKHOEPARTS.COM



SYSTÈME D'INJECTION

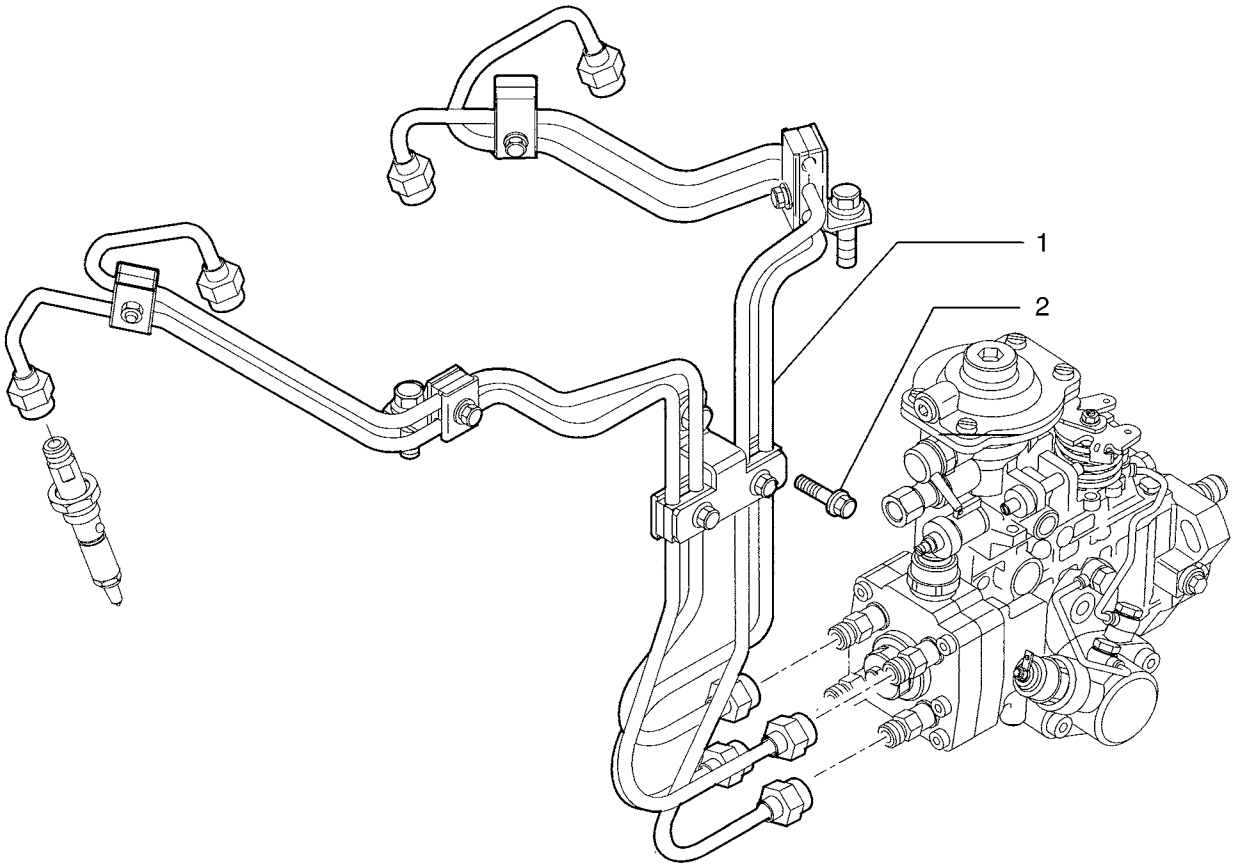


BS04A047

HTTP://WWW.MINNPARBACKHOEPARTS.COM



SYSTÈME D'INJECTION

| REF | FN | PART NUMBER | YR/SN | QTY | DESCRIPTION |
|---|---|---|---|---|---|
| 1 | | 504042116 | | 1 | KIT - ASSY |
| 2 | | 4899068 | | 1 | VIS |

HTTP://WWW.MINNPARBACKHOEPARTS.COM

| 03-08 | | p1 | 01/04 |
|---|---|---|---|

FILTRE COMBUSTIBLE

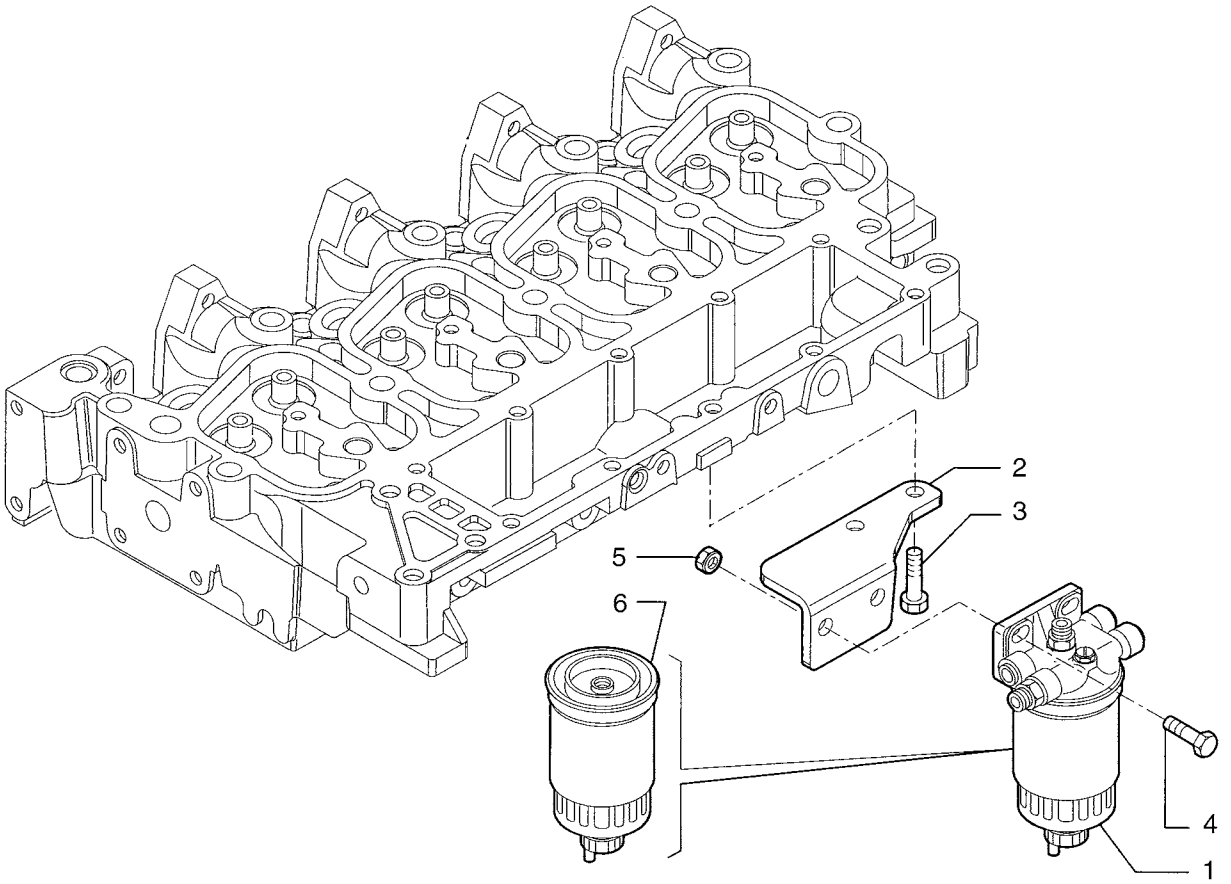


BS04A048

HTTP://WWW.MINNPARBACKHOEPARTS.COM



FILTRE COMBUSTIBLE

| REF | FN | PART NUMBER | YR/SN | QTY | DESCRIPTION |
|---|---|---|---|---|---|
| 1 | | 504066077 | | 1 | FILTRE ASSY - ASSY |
| 2 | | 504001088 | | 1 | SUPPORT |
| 3 | | 4899068 | | 2 | VIS 8X17 |
| 4 | | 4899093 | | 2 | VIS |
| 5 | | 4895166 | | 2 | ECROU 10X1.5 |
| 6 | | 87803194 | | 1 | FILTRE A COMBUSTIBLE |

HTTP://WWW.MINNPARBACKHOEPARTS.COM



POMPE D'ALIMENTATION

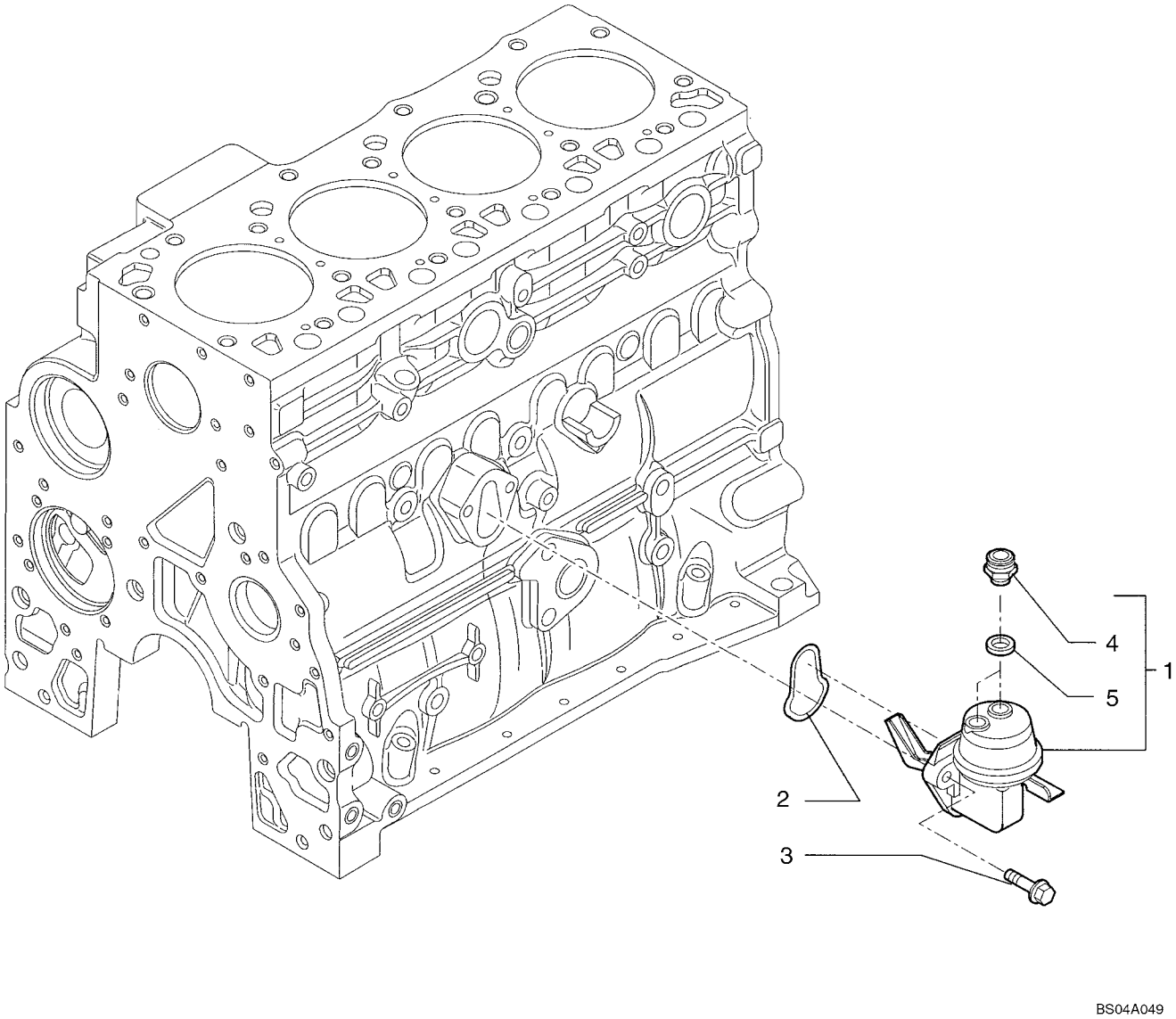

HTTP://WWW.MINNPARBACKHOEPARTS.COM



POMPE D'ALIMENTATION

| REF | FN | PART NUMBER | YR/SN | QTY | DESCRIPTION |
|---|---|---|---|---|---|
| 1 | | 2830266 | | 1 | POMPE D'ALIMENTATION - ASSY |
| 2 | | 2830156 | | 1 | JOINT THORIQUE |
| 3 | | 4899031 | | 2 | VIS 8X25 |
| 4 | | 4890964 | | 2 | RACCORD |
| 5 | | 4894721 | | 2 | JOINT |

HTTP://WWW.MINNPARBACKHOEPARTS.COM



SYSTÈME D'INJECTION

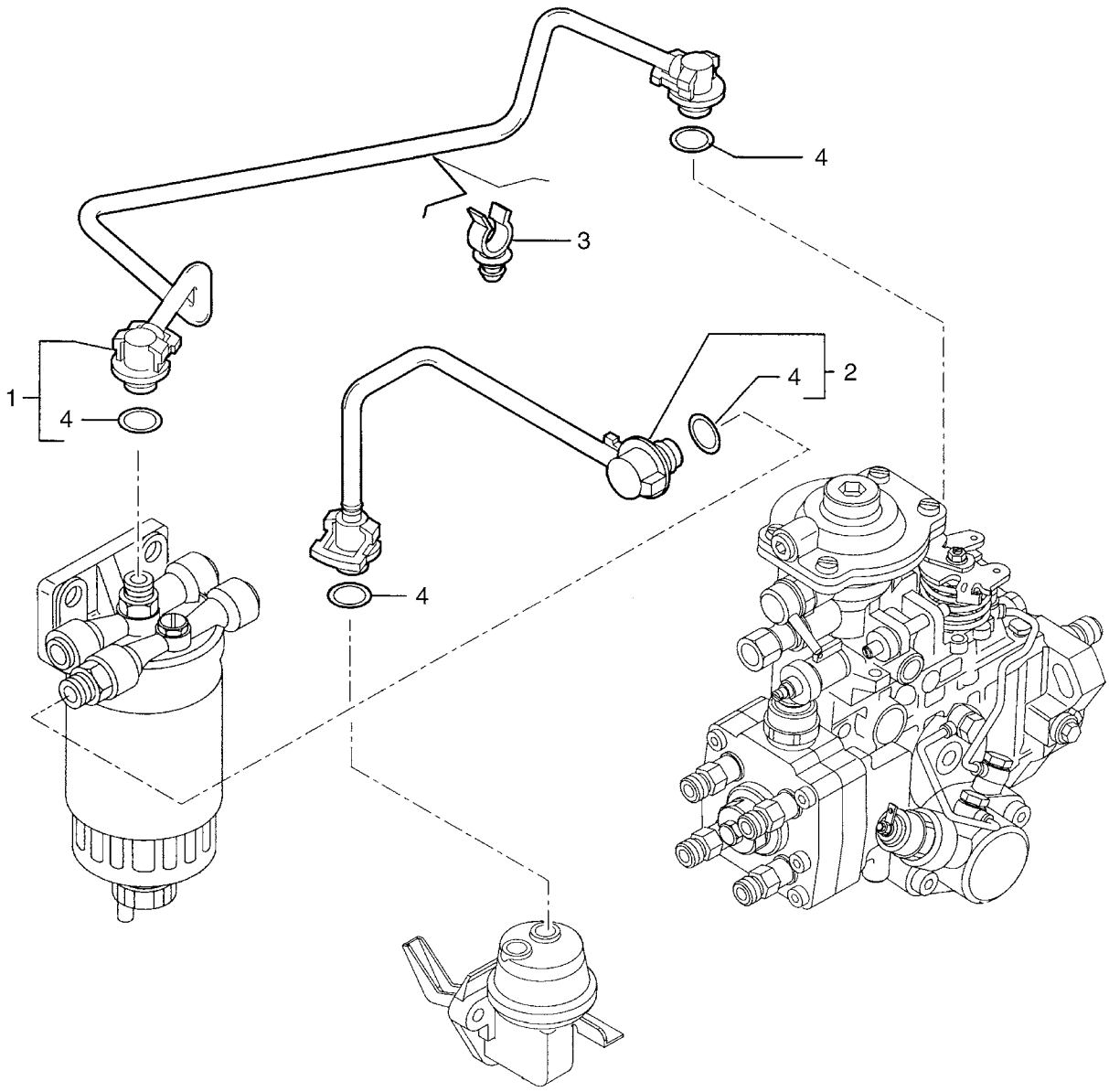

HTTP://WWW.MINNPARBACKHOEPARTS.COM



SYSTÈME D'INJECTION

| REF | FN | PART NUMBER | YR/SN | QTY | DESCRIPTION |
|---|---|---|---|---|---|
| 1 | | 504057288 | | 1 | TUBE - ASSY; Tube |
| 2 | | 504046458 | | 1 | TUYAU RIGIDE - ASSY |
| 3 | | 504065285 | | 1 | BRIDE |
| 4 | | 4894095 | | 2 | JOINT THORIQUE |

HTTP://WWW.MINNPARBACKHOEPARTS.COM



SYSTÈME D'INJECTION

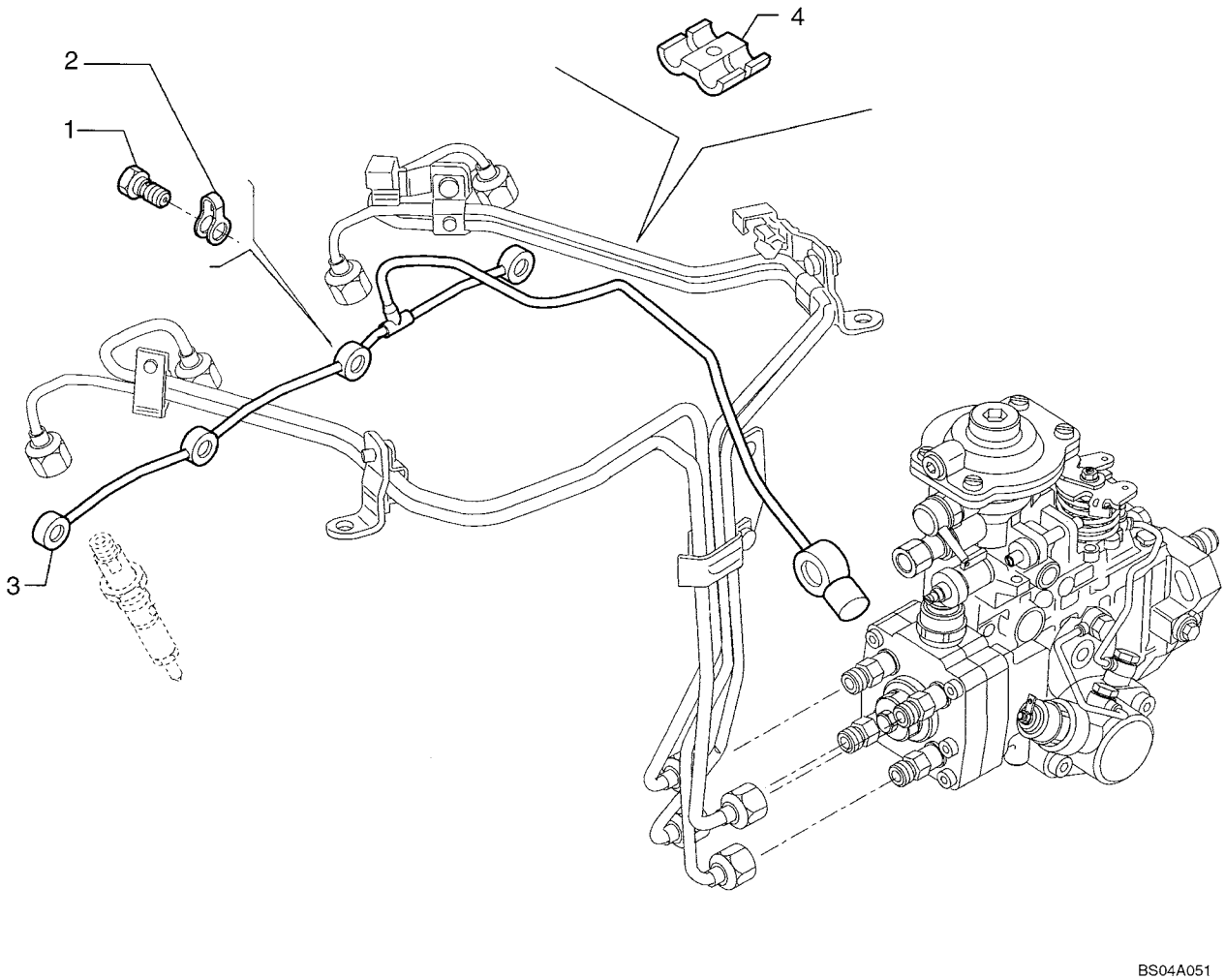

HTTP://WWW.MINNPARBACKHOEPARTS.COM



SYSTÈME D'INJECTION

| REF | FN | PART NUMBER | YR/SN | QTY | DESCRIPTION |
|---|---|---|---|---|---|
| 1 | | 4895244 | | 4 | VIS CREUSE |
| 2 | | 4895305 | | 4 | JOINT |
| 3 | | 504051276 | | 1 | TUYAU RIGIDE |
| 4 | | 98429625 | | 1 | ATTACHE A RESSORT |

HTTP://WWW.MINNPARBACKHOEPARTS.COM

HTTP://WWW.MINNPARBACKHOEPARTS.COM

# SECTION INDEX


| | |
|---|---|
| 04-01 | DÉMARREUR |
| 04-02 | ALTERNATEUR |
| 04-03 | SUPPORT DU DÉMARREUR - MONTAGE DE L"ALTERNATEUR |
| 04-04 | FAISCEAU, MOTEUR - MONTAGE ET CONNEXIONS |
| 04-05 | BATTERIE CABLES (MODÈLES SANS DÉMARRAGE PAR TEMPS FROID) |
| 04-06 | BATTERIE DOUBLE - DEMARRAGE PAR TEMPS FROID |
| 04-06A | ÉLÉMENT CHAUFFANT DE CALANDRE POUR DÉMARRAGE À FROID |
| 04-07 | FAISCEAU, TABLEAU DE BORD AVANT - CONTACTEURS |
| 04-08 | FAISCEAU, TABLEAU DE BORD AVANT - SUPPORT |
| 04-09 | FAISCEAU, TABLEAU DE BORD LATÉRAL - CONTACTEURS |
| 04-10 | TABLEAU DE BORD, AVANT - COUVERCLES |
| 04-11 | TABLEAU DE BORD, LATÉRAL - COUVERCLES (CÔTÉ DROIT) |
| 04-12 | APPAREILS DE CONTROLE |
| 04-13 | SYSTÈME ÉLECTRIQUE - ECLAIRAGE, TOIT ROPS |
| 04-14 | SYSTÈME ÉLECTRIQUE - ECLAIRAGE, CABINE ROPS |
| 04-15 | ÉCLAIRAGE (MODÈLES AVEC STRUCTURE ROPS) |
| 04-16 | AVERTISSEUR SONORE - ALARME DE RECUL |
| 04-17 | GYROPHARE (MODÈLES DE CABINES OU DE TOIT) |
| 04-18 | ANTENNE, RADIO - FAISCEAU, RADIO |
| 04-19 | SYSTÈME ÉLECTRIQUE - CIRCUIT HYDRAULIQUE AUXILIAIRE POUR LA PELLE RETRO |
| 04-20 | SYSTÈME ÉLECTRIQUE - CIRCUIT HYDRAULIQUE AUXILIAIRE POUR LA PELLE RETRO, AVEC DE COMMANDE PILOTE |

HTTP://WWW.MINNPARBACKHOEPARTS.COM

| 04-01 | | p1 | 10/03 |
|---|---|---|---|

DÉMARREUR

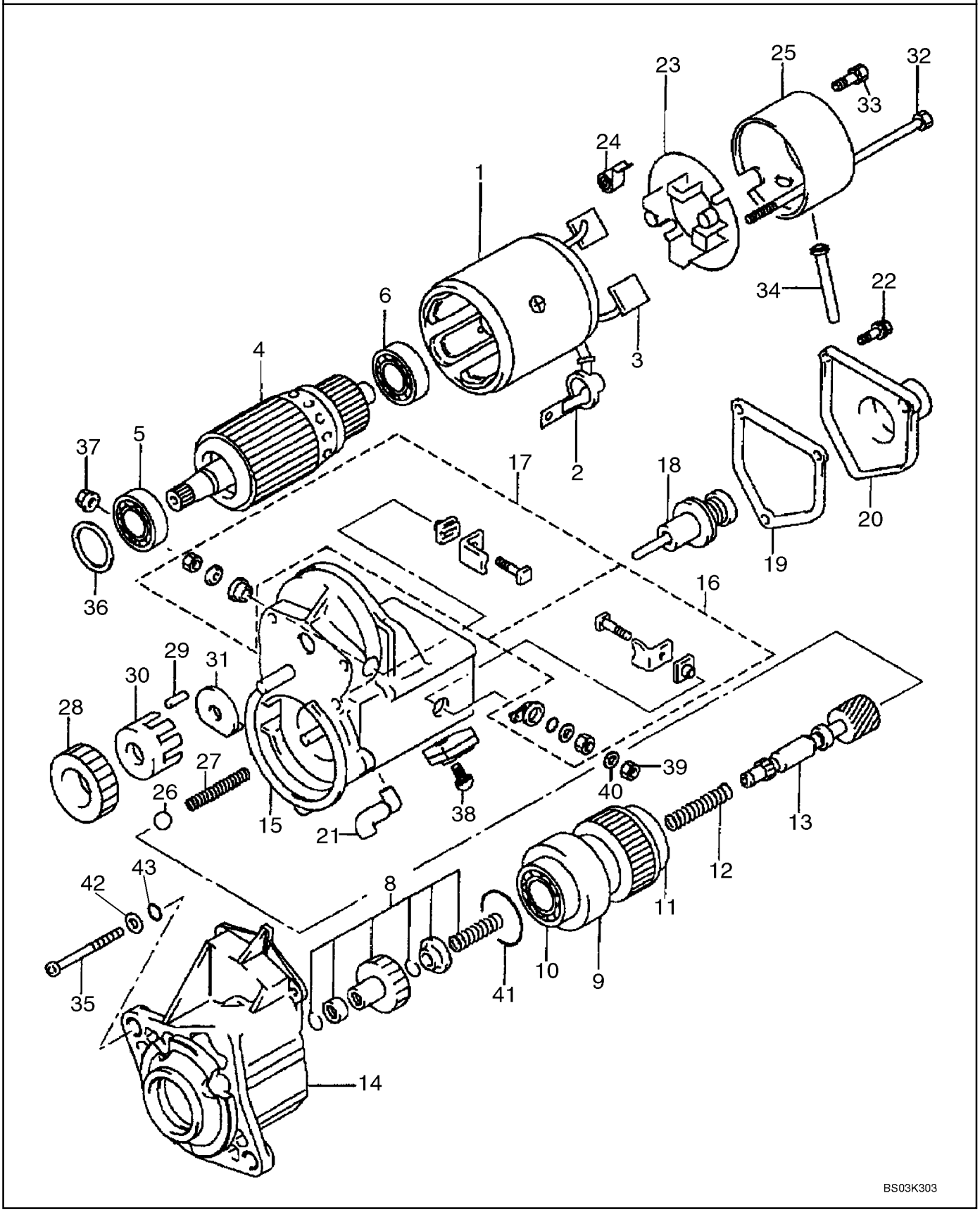

HTTP://WWW.MINNPARBACKHOEPARTS.COM



DÉMARREUR

| REF | FN | PART NUMBER | YR/SN | QTY | DESCRIPTION |
|---|---|---|---|---|---|
| | | 86992395 | | 1 | DEMARREUR 12 V, 2.7 kw; Incl. Ref 1 - 43 |
| 1 | | {87438992} | | 1 | Housing, Yoke; Incl. Ref 2, 3 |
| 2 | | {87438993} | | 1 | Cover/Ring |
| 3 | | {87438925} | | 2 | Brush Kit |
| 4 | | {87438926} | | 1 | Armature; Incl. Ref 5, 6 |
| 5 | | {87438927} | | 1 | Ball Bearing, 35 mm OD |
| 6 | | {87438928} | | 1 | Ball Bearing, 30 mm OD |
| | | {87438994} | | 1 | Clutch; Incl. Ref 8 - 13 |
| 8 | | {87438929} | | 1 | Clutch Pinion Kit |
| 9 | | {87438930} | | 1 | Clutch Assembly; Incl. Ref 10, 11 |
| 10 | | {87438931} | | 1 | Ball Bearing, 47 mm OD |
| 11 | | {87438932} | | 1 | Ball Bearing, 47 mm OD |
| 12 | | {87438933} | | 1 | Compression Spring |
| 13 | | {87438935} | | 1 | Clutch Shaft |
| 14 | | {87438937} | | 1 | Housing |
| 15 | | {87438940} | | 1 | Magnetic Switch Assembly; Incl. Ref 16 - 22 |
| 16 | | {87438941} | | 1 | Kit, Terminal M |
| 17 | | {87438942} | | 1 | Kit, Terminal C |
| 18 | | {87438944} | | 1 | Plunger |
| 19 | | {87438946} | | 1 | Solenoid Switch Gasket |
| 20 | | {87438948} | | 1 | Solenoid Cover |
| 21 | | {87438995} | | 1 | Bushing, Drain |
| 22 | | {87438950} | | 3 | Bolt With Washer; M5 x 14 |
| 23 | | {87438996} | | 1 | Brush Holder; Incl. Ref 24 |
| 24 | | {87438997} | | 4 | Brush Tension Spring |
| 25 | | {87438999} | | 1 | Housing |
| 26 | | {87439000} | | 1 | Ball |
| 27 | | {87439001} | | 1 | Compression Spring |
| 28 | | {87439002} | | 1 | Pinion Gear |
| 29 | | {87439003} | | 5 | Roller, Clutch |
| 30 | | {87439004} | | 1 | Retainer |
| 31 | | {87439005} | | 1 | Snap Retainer |
| 32 | | {87438951} | | 2 | M6 x 182 Bolt |
| 33 | | {87439006} | | 2 | Bolt With Washer; M5 x 9.4 |
| 34 | | {87439007} | | 1 | Bushing, Drain |
| 35 | | {87439008} | | 3 | Adapter Screw, M6 x 70 |

HTTP://WWW.MINNPARBACKHOEPARTS.COM

| 04-01 | | p2 | 10/03 |
|---|---|---|---|

DÉMARREUR

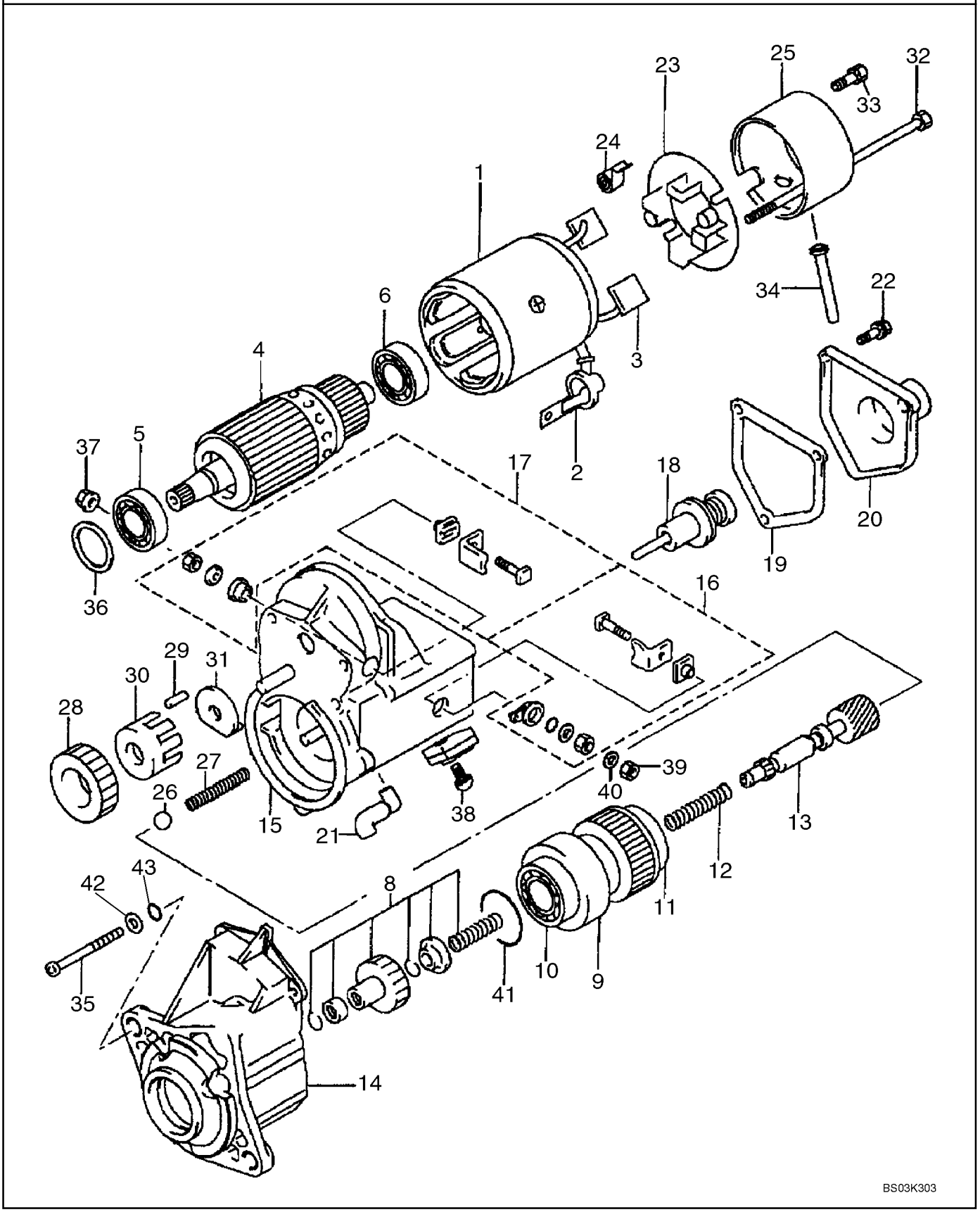

HTTP://WWW.MINNPARBACKHOEPARTS.COM



DÉMARREUR

| REF | FN | PART NUMBER | YR/SN | QTY | DESCRIPTION |
|---|---|---|---|---|---|
| 36 | | {87438954} | | 1 | Felt Washer |
| 37 | | {87439009} | | 1 | M10 Nut |
| 38 | | {87438956} | | 1 | M5 x 10 Bolt |
| 39 | | 100016 | | 1 | ECROU M10 |
| 40 | | 140028 | | 1 | RONDELLE Lock, M10 |
| 41 | | {87439010} | | 1 | Seal |
| 42 | | {87439061} | | 3 | Washer, 9/32 x 1/2 x 3/64 |
| 43 | | {87439011} | | 3 | O-Ring, 4.8 ID |

HTTP://WWW.MINNPARBACKHOEPARTS.COM



ALTERNATEUR

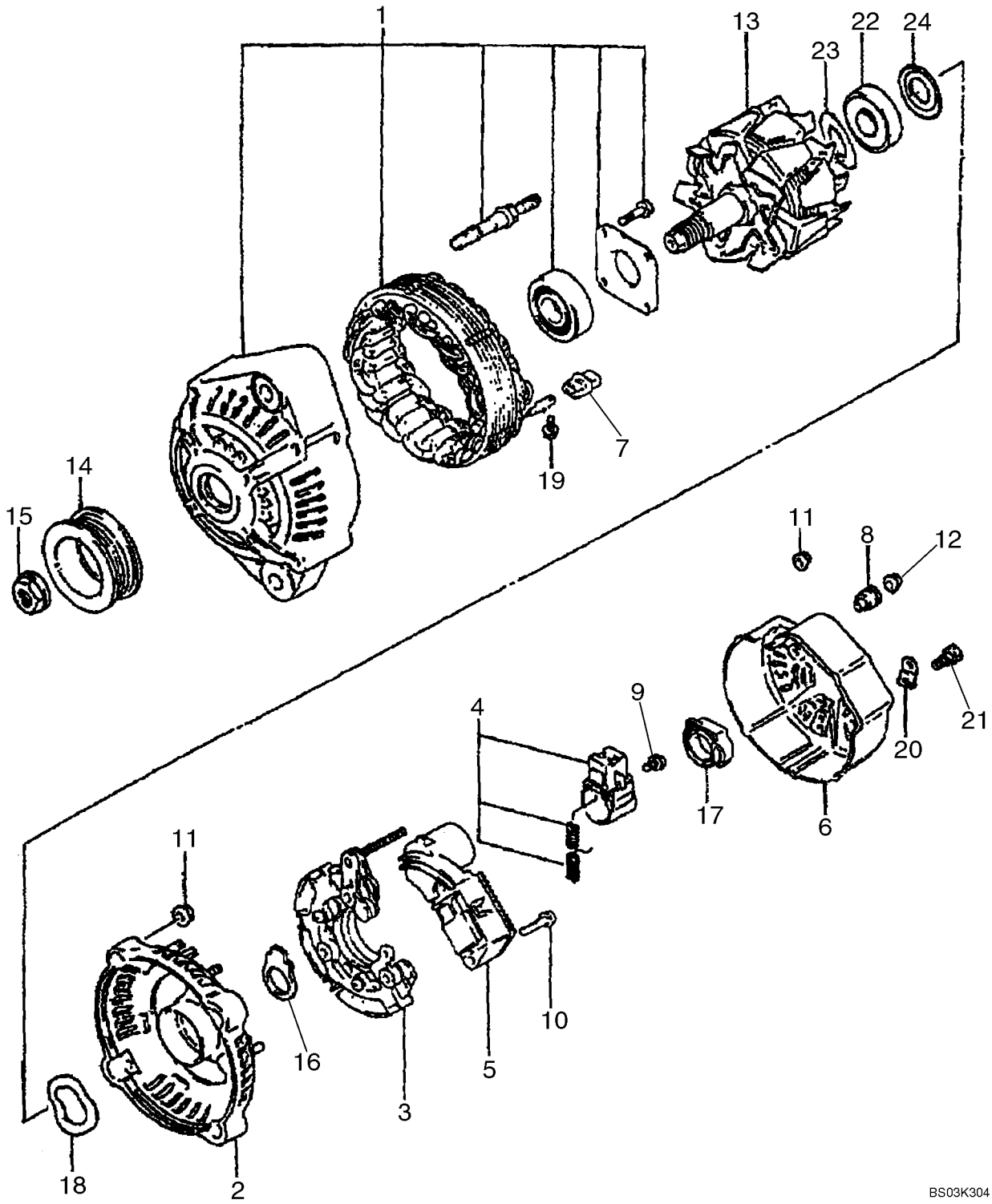

HTTP://WWW.MINNPARBACKHOEPARTS.COM



ALTERNATEUR

| REF | FN | PART NUMBER | YR/SN | QTY | DESCRIPTION |
|---|---|---|---|---|---|
| | | 87422777 | | 1 | ALTERNATEUR 12V, 90 amp; Incl. Ref 1 - 24 |
| 1 | | {87438960} | | 1 | Housing; Drive End, Includes Stator |
| 2 | | {87438963} | | 1 | Housing |
| 3 | | {87438965} | | 1 | Rectifier |
| 4 | | {87438967} | | 1 | Brush and Holder |
| 5 | | {87438969} | | 1 | Regulator |
| 6 | | {87438970} | | 1 | Cover |
| 7 | | {87438971} | | 4 | Insulation Bushing |
| 8 | | {87438972} | | 1 | Insulation Bushing |
| 9 | | {87438973} | | 3 | Screw |
| 10 | | {87438974} | | 2 | Bolt With Washer |
| 11 | | {87438975} | | 7 | Nut |
| 12 | | {87438976} | | 1 | Nut |
| 13 | | {87438977} | | 1 | Rotor |
| 14 | | {87438978} | | 1 | Pulley |
| 15 | | {87438979} | | 1 | Nut |
| 16 | | {87438980} | | 1 | Seal |
| 17 | | {87438981} | | 1 | Seal |
| 18 | | {87438982} | | 1 | Wave Washer |
| 19 | | {87438983} | | 4 | Bolt With Washer |
| 20 | | {87438984} | | 1 | Terminal Plate |
| 21 | | {87438985} | | 1 | Screw |
| 22 | | {87438986} | | 1 | Ball Bearing |
| 23 | | {87438987} | | 1 | Cover, Bearing |
| 24 | | {87438989} | | 1 | Cover, Bearing |

HTTP://WWW.MINNPARBACKHOEPARTS.COM

| 04-03 | | p1 | 10/03 |
|---|---|---|---|

SUPPORT DU DÉMARREUR - MONTAGE DE L'ALTERNATEUR

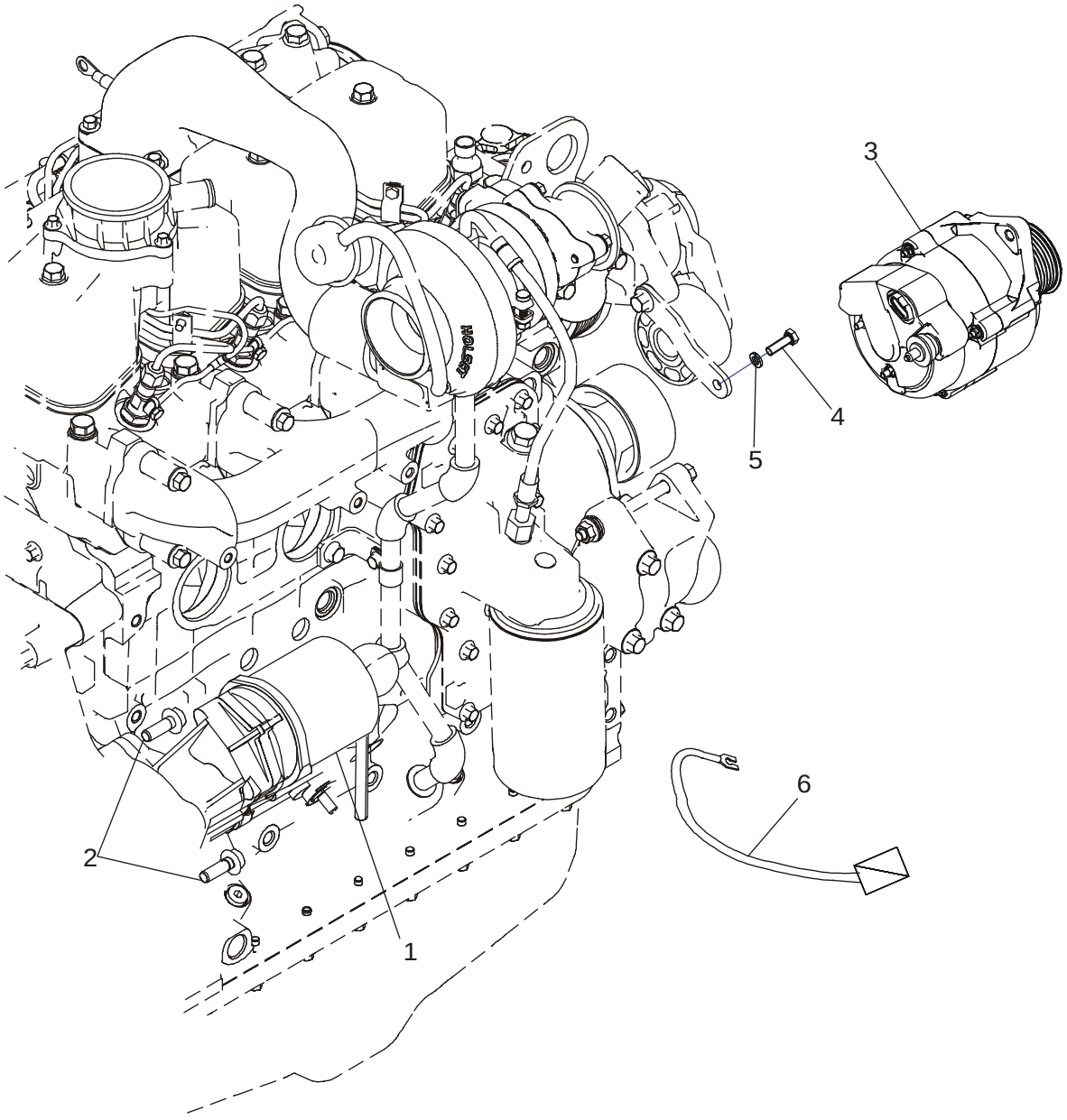

HTTP://WWW.MINNPARBACKHOEPARTS.COM



SUPPORT DU DÉMARREUR - MONTAGE DE L'ALTERNATEUR

| REF | FN | PART NUMBER | YR/SN | QTY | DESCRIPTION |
|---|---|---|---|---|---|
| 1 | | 86992395 | | 1 | DEMARREUR See Figure 04-01 |
| 2 | | 844-10035 | | 2 | VIS M10 x 35 |
| 3 | | 87422777 | | 1 | ALTERNATEUR See Figure 04-02; Mounting Hardware Included With Engine Assembly |
| 4 | | 614-8025 | | 1 | VIS M8 x 25 |
| 5 | | 892-11008 | | 1 | RONDELLE Lock, M8 |
| 6 | | 87433401 | | 1 | CABLE ELECTRIQUE Starter Solenoid Jumper Cable |

HTTP://WWW.MINNPARBACKHOEPARTS.COM



FAISCEAU, MOTEUR - MONTAGE ET CONNEXIONS

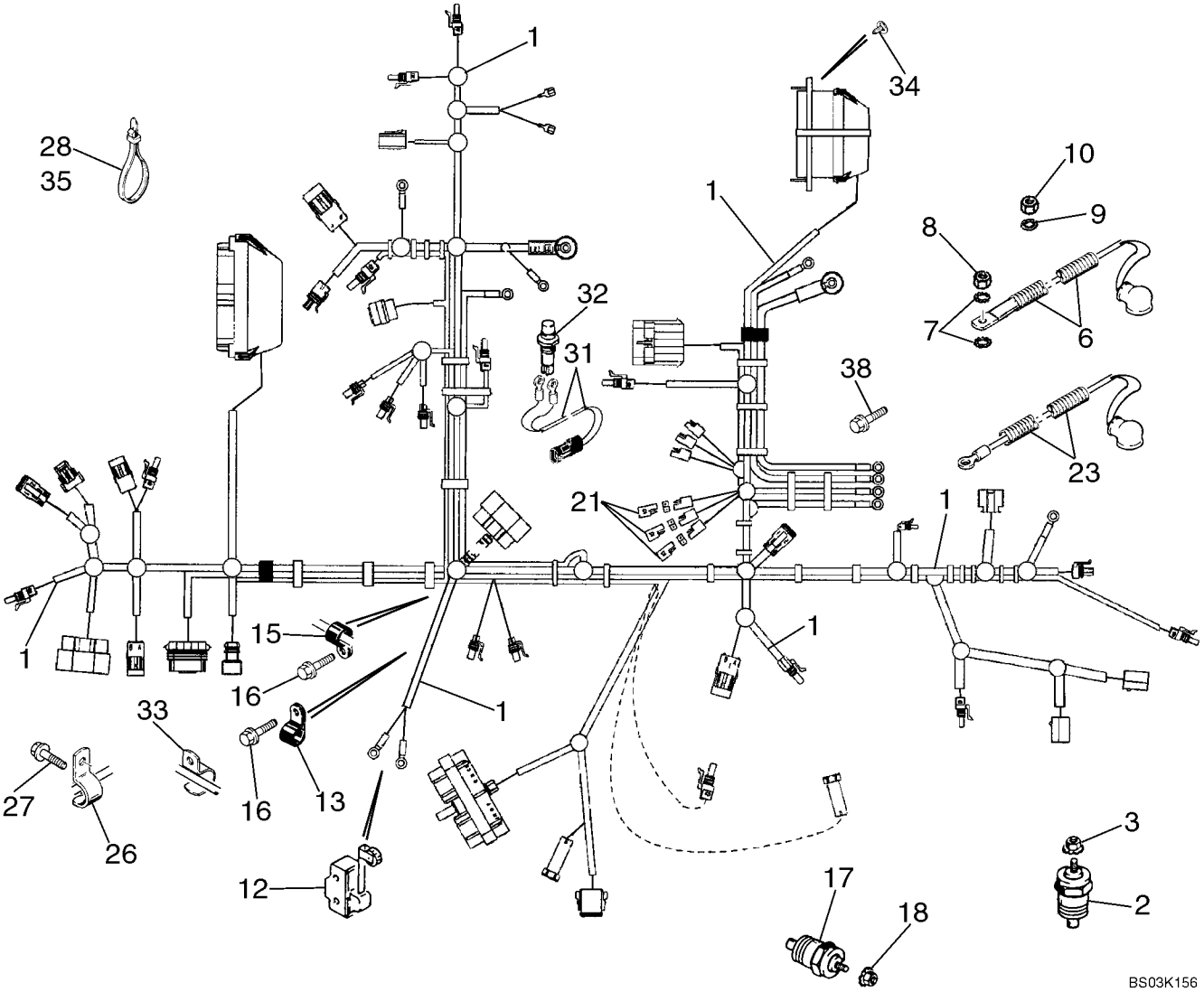

HTTP://WWW.MINNPARBACKHOEPARTS.COM



FAISCEAU, MOTEUR - MONTAGE ET CONNEXIONS

| REF | FN | PART NUMBER | YR/SN | QTY | DESCRIPTION |
|---|---|---|---|---|---|
| 1 | | 87433543 | | 1 | FAISCEAU COMPLET Engine, Main Chassis, Includes (3) L71879 Diodes |
| 2 | | A166057 | | 1 | SONDE Engine Water Coolant Temperature |
| 3 | | 193-1000 | | 1 | ECROU No. 10 NF; With External Tooth Lock Washer |
| 6 | | 87423926 | | 1 | FAISCEAU COMPLET Alternator Cable |
| 7 | | 493-21033 | | 2 | RONDELLE GROWER 5/16 |
| 8 | | 829-1408 | | 1 | ECROU M8; 10 |
| 9 | | 493-21020 | | 1 | RONDELLE FREIN 3/16 |
| 10 | | 824-1405 | | 1 | ECROU M5 |
| 12 | | D137363 | | 1 | CONTACTEUR Return To Dig; For Mounting; See Figure 09-04 |
| 13 | | 515-23127 | | 1 | COLLIER 1/2 ID |
| 15 | | 515-23127 | | 1 | COLLIER 1/2 ID |
| 16 | | 844-10020 | | 2 | VIS M10 x 20 |
| 17 | | A166057 | | 1 | SONDE Transmission Temperature |
| 18 | | 193-1000 | | 1 | ECROU No. 10 NF; With External Tooth Lock Washer |
| 21 | | L71879 | | 3 | DIODE |
| 23 | | 87419229 | | 1 | FAISCEAU COMPLET Power Wire |
| 26 | | 87032428 | | 1 | SERRE-FILS J-Clip For Brake Cable Bracket, See Figure 07-06 |
| 27 | | 814-10060 | | 1 | VIS M10 x 60 |
| 28 | | L18337 | | 32 | SANGLE 15 in |
| 31 | | 123809A2 | | 1 | FAISCEAU Clutch Cutout; Transmission Gear Shift Lever; Incl. Ref 31A, 31B |
| 31A | | 246526A1 | | 1 | CONNECTEUR Not Illustrated |
| 31B | | NSS | | 2 | NON FOURNI SEPAREMENT Eye; Not Illustrated |
| 32 | | 123097A1 | | 1 | CONTACTEUR Push Button; Clutch Cutout; Transmission Gear Shift Lever; For Lever and Knob, See Figure 06-11 |
| 33 | | D147383 | | 1 | CLIP Use Existing Hardware |
| 34 | | 781-24613 | | 4 | VIS M6 x 13 |
| 35 | | 305342A1 | | 1 | SANGLE 450 mm (18 in); Air Filter Restriction Branch to Air Filter Inlet Tube |
| 38 | | 844-10020 | | 1 | VIS M10 x 20; Ground to Firewall |

HTTP://WWW.MINNPARBACKHOEPARTS.COM

| 04-05 | | p1 | 12/03 |
|---|---|---|---|

BATTERIE CABLES (MODÈLES SANS DÉMARRAGE PAR TEMPS FROID)

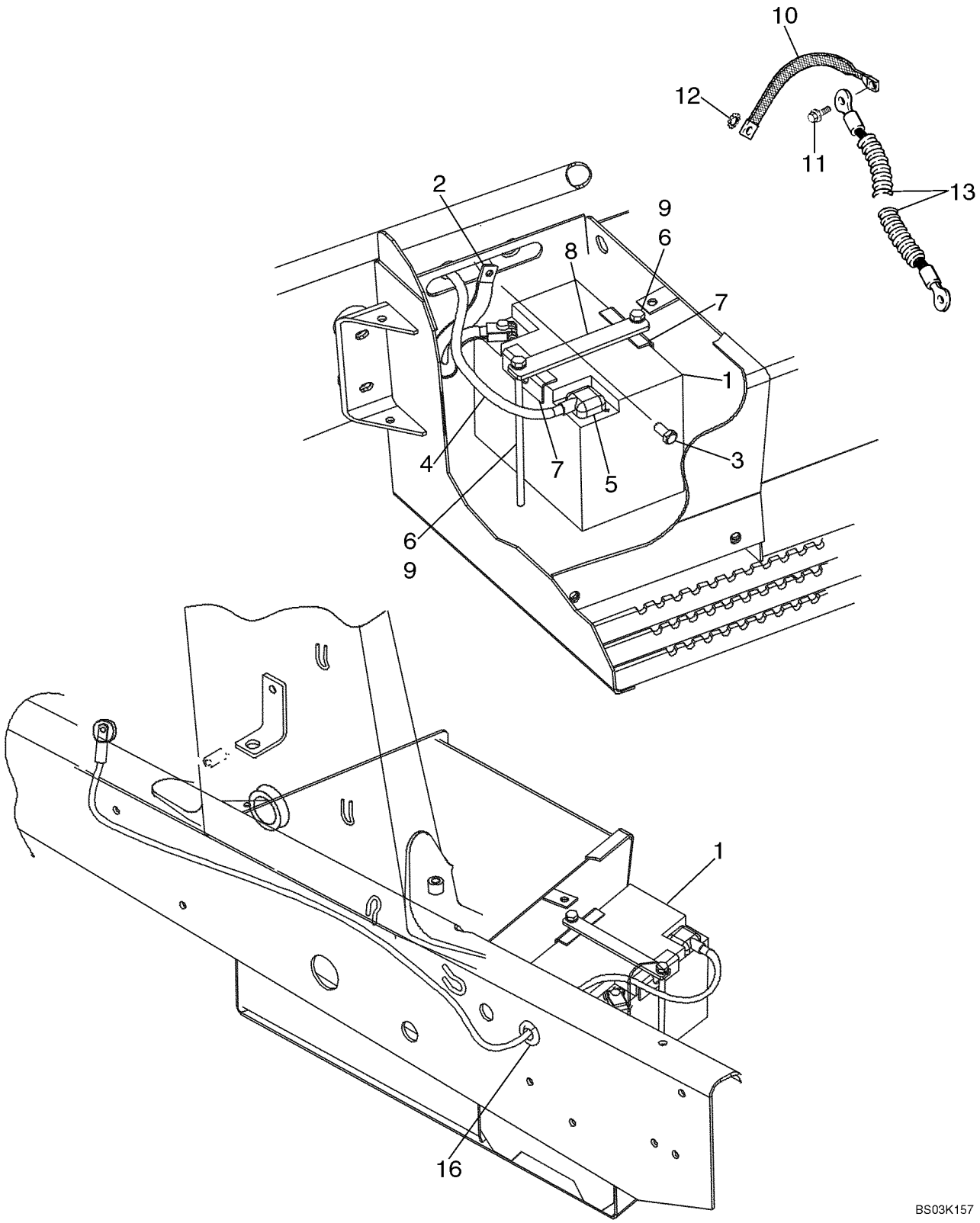

HTTP://WWW.MINNPARBACKHOEPARTS.COM



BATTERIE CABLES (MODÈLES SANS DÉMARRAGE PAR TEMPS FROID)

| REF | FN | PART NUMBER | YR/SN | QTY | DESCRIPTION |
|---|---|---|---|---|---|
| 1 | | 87403835 | | 1 | BATTERIE HUMIDE 12V; Models Without Cold Start; Used In Production, For Service Order B4960W Through Ship Direct |
| 2 | | 87419259 | | 1 | JARRETIERE 350 mm; Negative Ground |
| 3 | | 844-10020 | | 1 | VIS M10 x 20; Negative Battery Cable Ground; Bolt To Chassis |
| 4 | | 87419257 | | 1 | CABLE ELECTRIQUE 1550 mm; Positive; Incl. Ref 5; Battery to Starter |
| 5 | | 383619R1 | | 1 | COUVERCLE |
| 6 | | 814-10220 | | 2 | VIS M10 x 220 mm |
| 7 | | D125079 | | 2 | PATTE FIXATION Battery Hold-Down |
| 8 | | 87415781 | | 1 | PATTE FIXATION Plate |
| 9 | | 495-11041 | | 2 | RONDELLE 13/32 x 13/16 x 1/16 |
| 10 | | 87407206 | | 2 | CABLE 330 mm; Ground Strap to Chassis |
| 11 | | 844-10020 | | 1 | VIS M10 x 20 |
| 12 | | 493-11039 | | 1 | RONDELLE 3/8; Internal External Tooth Lock Washer |
| 13 | | 381261A1 | | 1 | FIL Ground; Cab to Chassis |
| 16 | | 87423677 | | 2 | PASSE-FIL Battery Cable Grommet; Mounts In Chassis Side Channel |

HTTP://WWW.MINNPARBACKHOEPARTS.COM

| 04-06 | | p1 | 10/03 |
|---|---|---|---|

BATTERIE DOUBLE - DEMARRAGE PAR TEMPS FROID

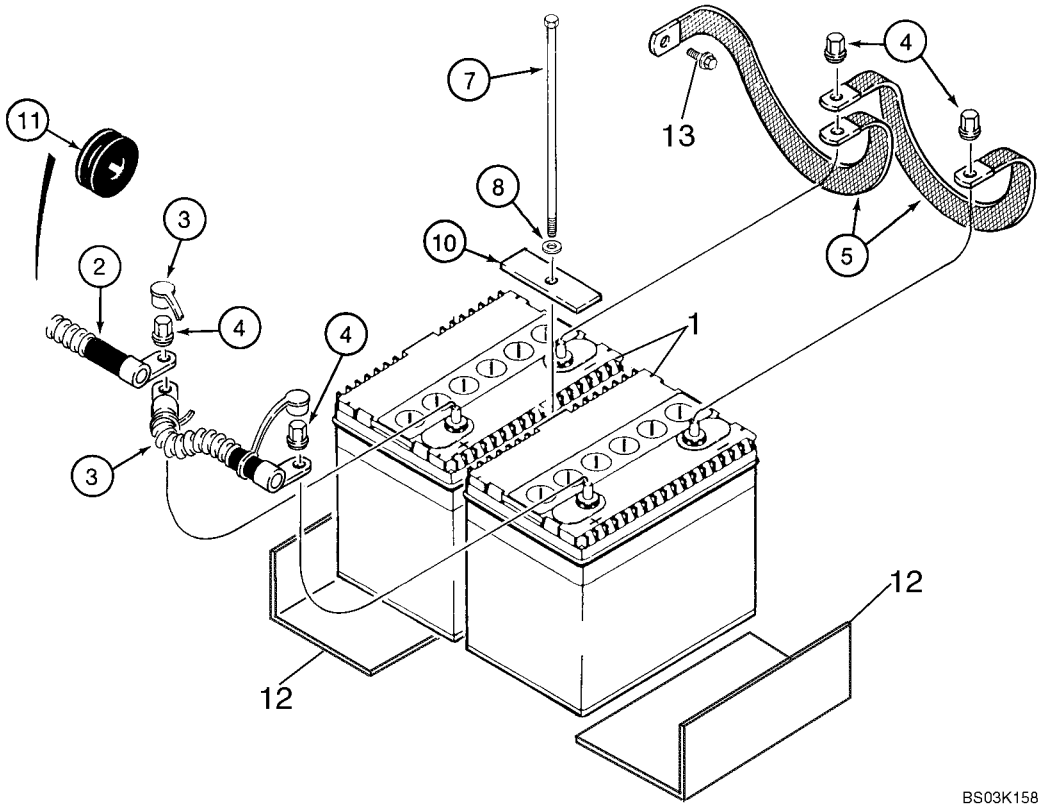

HTTP://WWW.MINNPARBACKHOEPARTS.COM



BATTERIE DOUBLE - DEMARRAGE PAR TEMPS FROID

| REF | FN | PART NUMBER | YR/SN | QTY | DESCRIPTION |
|---|---|---|---|---|---|
| 1 | | BMF28S | | 2 | BATTERIE SÈCHE 12V |
| 2 | | 87423675 | | 1 | CABLE ELECTRIQUE 1460 mm, Positive Cable; Chassis |
| 3 | | 184497A1 | | 1 | CABLE 227 mm, Positive Jumper |
| 4 | | D126409 | | 4 | ECROU 3/8 |
| 5 | | 87423676 | | 2 | JARRETIERE 324 mm Flat Ground Strap |
| 7 | | 814-10245 | | 1 | BOULON M10 x 245 mm |
| 8 | | 495-11041 | | 1 | RONDELLE 13/32 x 13/16 x 1/16 |
| 10 | | 250854A1 | | 1 | SANGLE |
| 11 | | 87423677 | | 2 | PASSE-FIL Battery Cable Grommet; Mounts In Chassis Side Channel |
| 12 | | 408535A1 | | 2 | PLAQUE 255 mm (10-1/32 in); Battery Support |
| 13 | | 844-10020 | | 1 | VIS Flange, M10 x 20 |

HTTP://WWW.MINNPARBACKHOEPARTS.COM

| 04-06A | | p1 | 10/03 |
|---|---|---|---|

ÉLÉMENT CHAUFFANT DE CALANDRE POUR DÉMARRAGE À FROID

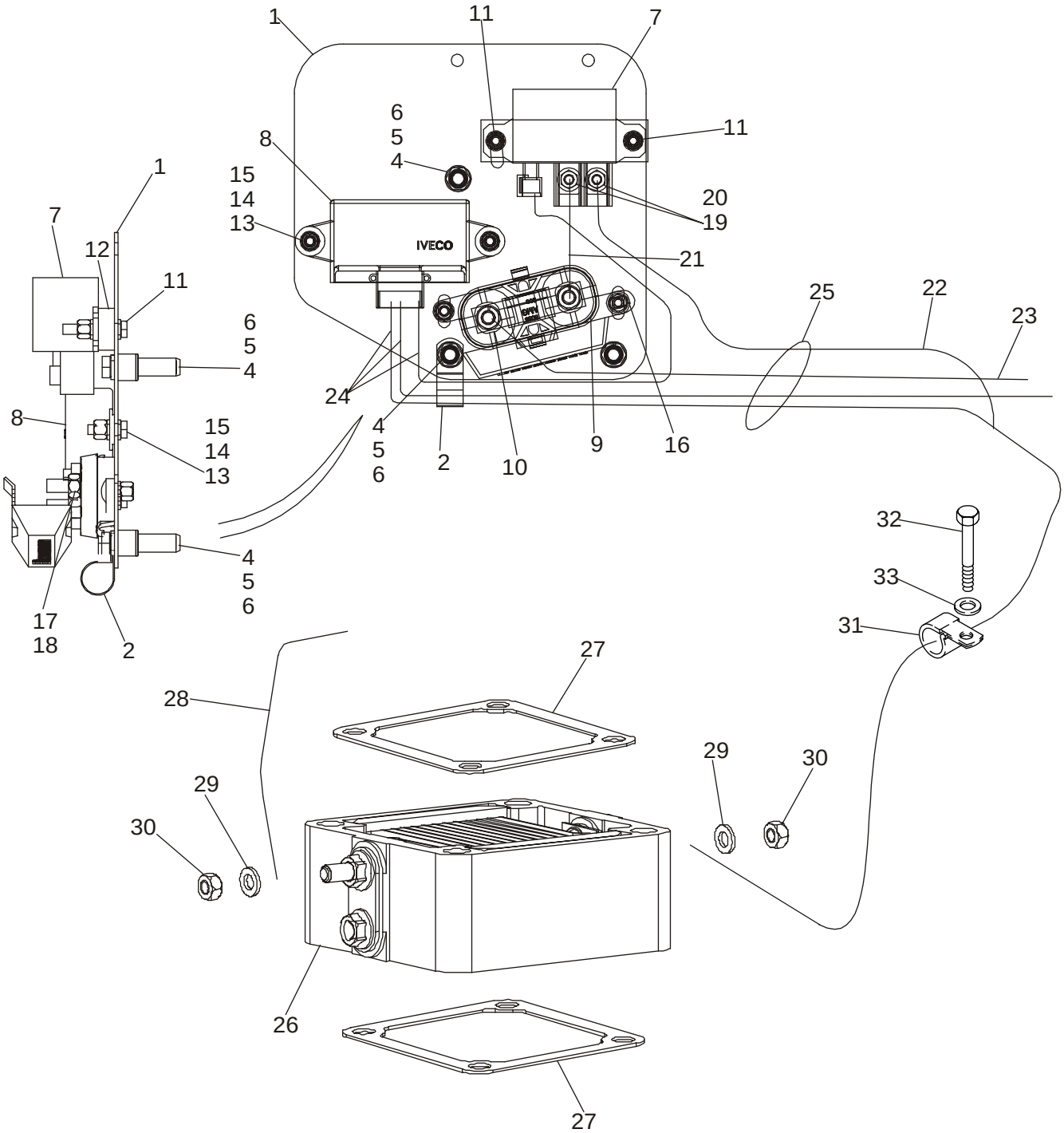


BS03K159

HTTP://WWW.MINNPARBACKHOEPARTS.COM



ÉLÉMENT CHAUFFANT DE CALANDRE POUR DÉMARRAGE À FROID

| REF | FN | PART NUMBER | YR/SN | QTY | DESCRIPTION |
|---|---|---|---|---|---|
| 1 | | 87410603 | | 1 | PLAQUE Cold Start Plate |
| 2 | | 515-22190 | | 1 | COLLIER |
| 3 | | 614-8040 | | 3 | VIS M8 x 40 |
| 4 | | 407962A1 | | 3 | ENTRETOISE |
| 5 | | 238-5011 | | 3 | JOINT TORIQUE 1/16 x 5/16 |
| 6 | | 87417383 | | 3 | INSERT FILETE M8 x 1-1/4 |
| 7 | | 86619908 | | 1 | RELAIS Cold Start Relay |
| 8 | | 87409046 | | 1 | BOITIER ELECTRONIQUE Controller, Grid Heater |
| 9 | | 440038A1 | | 1 | JONCTION Fuse Block |
| 10 | | 87410602 | | 1 | FUSIBLE 300 amp Fuse |
| 11 | | 614-6035 | | 2 | VIS M6 x 35 |
| 12 | | 87414237 | | 1 | PLAQUE 10 mm Thick Spacer Bar |
| 13 | | 614-6020 | | 3 | BOULON M6 x 20 |
| 14 | | 895-11006 | | 11 | RONDELLE Flat, 6,6 x 12 x 1,6 mm |
| 15 | | 832-10406 | | 6 | ECROU M6 |
| 16 | | 811-6016 | | 1 | VIS Round Head, M6 x 16 |
| 17 | | 892-11008 | | 5 | RONDELLE Lock, M8 |
| 18 | | 829-1408 | | 2 | ECROU M8 |
| 19 | | 322357 | | 2 | RONDELLE FREIN |
| 20 | | 829-1406 | | 2 | ECROU M6 |
| 21 | | 87410265 | | 1 | CABLE, MASSE 90 mm Jumper Wire; Fuse to Relay |
| 22 | | 87419616 | | 1 | CABLE (ASSEMBLE) 500 mm Wire; Relay to Grid Heater |
| 23 | | 87419615 | | 1 | CABLE (ASSEMBLE) 1250 mm Wire; Starter to Fuse Block |
| 24 | | 87433544 | | 1 | FAISCEAU COMPLET Controller Harness, Cold Start Control; Attaches to Engine Harness |
| 25 | | D150521 | | 1 | COLLIER 292 mm Long Nylon Tie Strap |
| 26 | | 82017872 | | 1 | RECHAUFFEUR Grid |
| 27 | | 86014151 | | 2 | JOINT |
| 28 | | 87413162 | | 1 | CABLE, MASSE 150 mm Ground Wire |
| 29 | | 895-11006 | | 2 | RONDELLE Flat, 6,6 x 12 x 1,6 mm |
| 30 | | 829-1406 | | 2 | ECROU M6 |
| 31 | | 515-25190 | | 1 | COLLIER |
| 32 | | 614-12025 | | 1 | VIS M12 x 25 |
| 33 | | 896-11012 | | 1 | RONDELLE |

HTTP://WWW.MINNPARBACKHOEPARTS.COM



FAISCEAU, TABLEAU DE BORD AVANT - CONTACTEURS

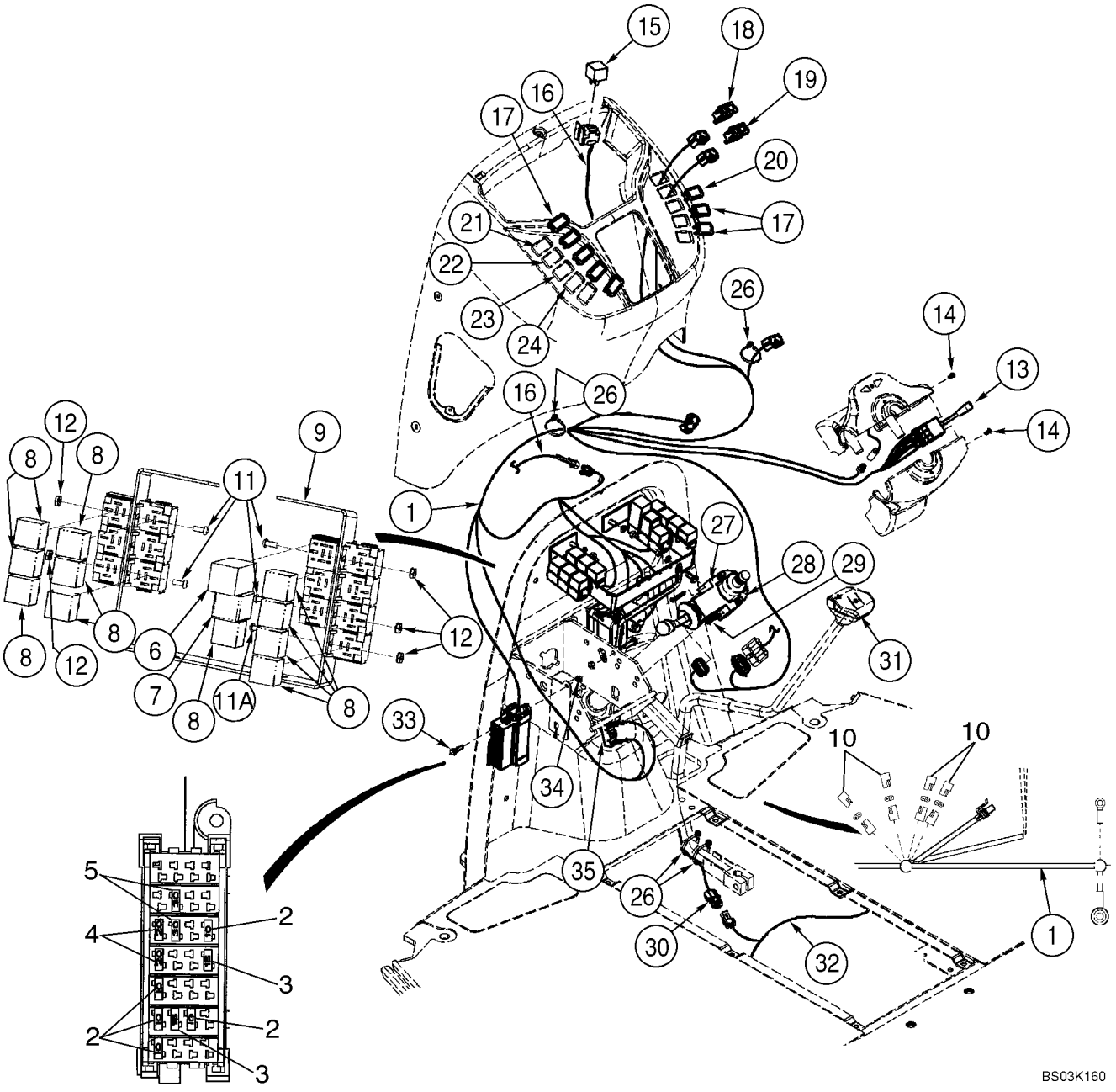

HTTP://WWW.MINNPARBACKHOEPARTS.COM



FAISCEAU, TABLEAU DE BORD AVANT - CONTACTEURS

| REF | FN | PART NUMBER | YR/SN | QTY | DESCRIPTION |
|---|---|---|---|---|---|
| 1 | | 87418541 | | 1 | FAISCEAU COMPLET Front Console Harness, Incl. Ref 13 |
| 2 | | 121412A1 | | 5-6 | FUSIBLE 10 amp; Mini, Red |
| 3 | | 121413A1 | | 2-3 | FUSIBLE 15 amp; Mini, Blue |
| 4 | | 121414A1 | | 2 | FUSIBLE 20 amp; Mini, Yellow |
| 5 | | 121416A1 | | 2 | FUSIBLE 30 amp; Mini, Green |
| 6 | | D147166 | | 1 | CENTRALE CLIGNOTANTE Relay, Flasher, Hazard; Turn Signal |
| 7 | | 347706A3 | | 1 | RELAIS Sealed Time Delay, Shuttle Interlock Timing Relay, Forward Reverse Control |
| 8 | | 87436836 | | 11 | RELAIS 40 amp, 12V |
| 9 | | 361900A1 | | 1 | PATTE FIXATION Relay Mounting |
| 10 | | L71879 | | 4 | DIODE |
| 11 | | 490-1108 | | 6 | VIS No. 10 NF x 1/2 |
| 11A | | 490-1106 | | 1 | VIS No 10 x 3/8 |
| 12 | | 193-1000 | | 7 | ECROU No. 10 NF; With External Tooth Lock Washer |
| 13 | | 389487A1 | | 1 | INT. FEUX CROISEMENT Turn Signal/Driving Lamp High/Low Beam |
| 14 | | 404816A1 | | 2 | VIS M4 x 12 |
| 15 | | 87436836 | | 1 | RELAIS 40 amp, 12V; Air Conditioning; Attaches To Front Console Options Harness |
| 16 | | 87433546 | | 1 | FAISCEAU COMPLET Front Console Options; Includes (1) L71879 Diode |
| | | L71879 | | 1 | DIODE |
| | | 490-1108 | | 1 | VIS No. 10 NF x 1/2; Mounts Relay Recepticle |
| | | 193-1000 | | 1 | ECROU No. 10 NF; Mounts Relay Recepticle |
| 17 | | 126844A1 | | 2-8 | BOUCHON Accessory; If Used |
| 18 | | 386849A1 | | 1 | CONTACTEUR Front Work Lamps |
| 19 | | 386850A1 | | 1 | CONTACTEUR Hazard Lamps |
| 20 | | 386851A1 | | 1 | CONTACTEUR Rotating Beacon; If Used |
| 21 | | 126844A1 | | 1 | BOUCHON If Used |
| 22 | | 386785A1 | | 1 | CONTACTEUR Front Wiper; If Used |
| 23 | | 386787A1 | | 1 | CONTACTEUR Front Windshield Washer; If Used |
| 24 | | 398675A2 | | 1 | CONTACTEUR Loader Tool Quick Coupler; If Used |
| 26 | | L18337 | | 4 | SANGLE 15 in |

HTTP://WWW.MINNPARBACKHOEPARTS.COM



FAISCEAU, TABLEAU DE BORD AVANT - CONTACTEURS

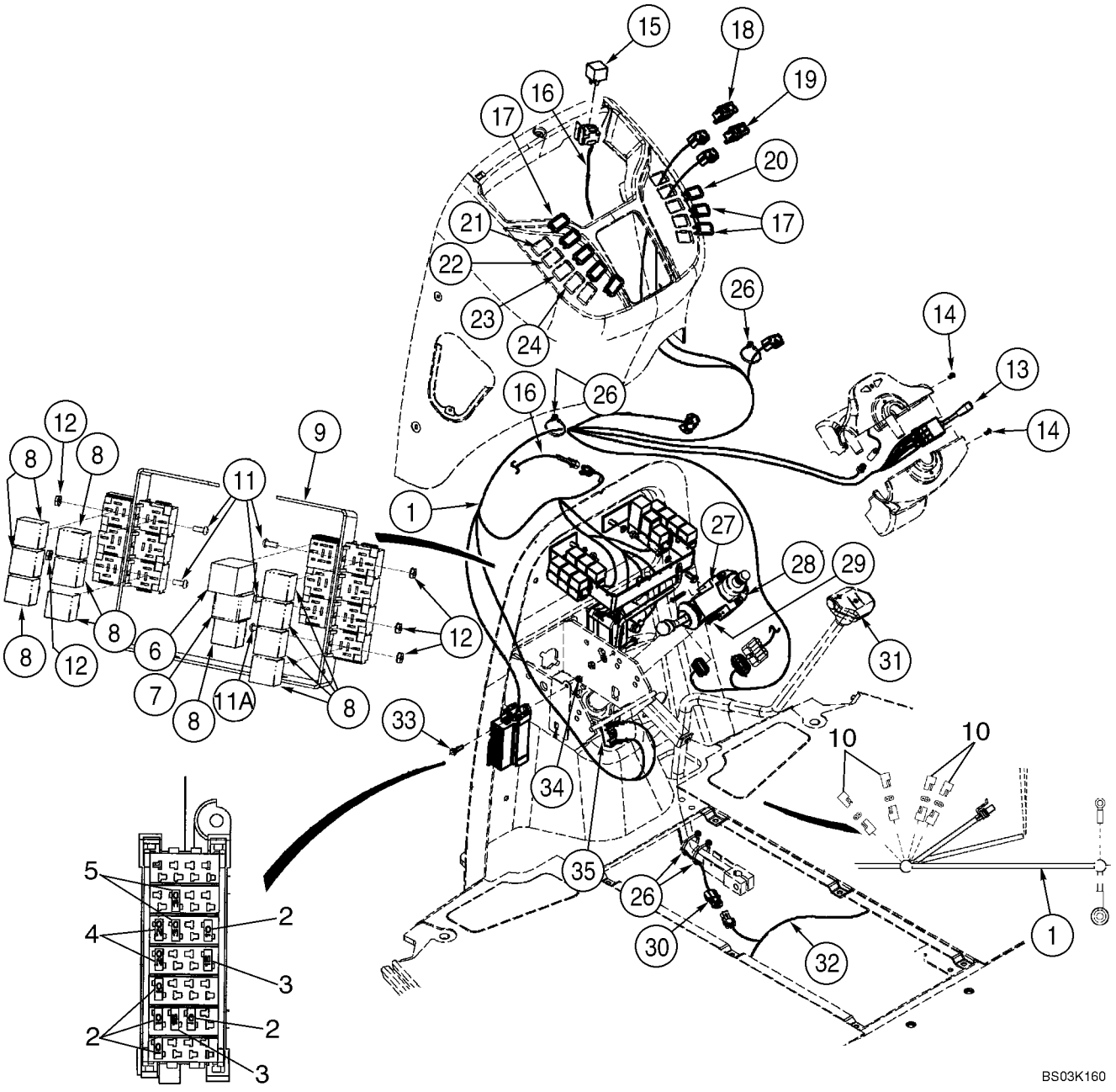

HTTP://WWW.MINNPARBACKHOEPARTS.COM



FAISCEAU, TABLEAU DE BORD AVANT - CONTACTEURS

| REF | FN | PART NUMBER | YR/SN | QTY | DESCRIPTION |
|---|---|---|---|---|---|
| 27 | | 278328A1 | | 1 | CONTACTEUR Shuttle Shift; Transmission Forward/Neutral/Reverse Switch |
| 28 | | 366889A2 | | 1 | DEMI-COLLIER Shuttle Lever; Includes Threaded Insert |
| 29 | | 397990A1 | | 2 | VIS M5 x 35 |
| 30 | | 123809A2 | | 1 | FAISCEAU Clutch Cutout; Transmission Gear Shift Lever; For Lever, See Figure 06-11 |
| 31 | | 123097A1 | | 1 | CONTACTEUR Clutch Cutout; For Lever and Knob, See Figure 06-11 |
| 32 | | 87433543 | | 1 | FAISCEAU COMPLET Engine Harness, Main Chassis, Includes (3) L71879 Diodes |
| | | L71879 | | 3 | DIODE |
| 33 | | 844-6025 | | 1 | VIS M6 x 25 |
| 34 | | 832-10406 | | 1 | ECROU M6 |
| 35 | | D148108 | | 1 | CONTACTEUR Brake Lamp; Includes Hardware; For Mounting, See Figure 07-03 |
| | | 87436675 | | 1 | FAISCEAU COMPLET Chassis Options; Includes (4) L71879 Diodes |
| | | L71879 | | 4 | DIODE |

HTTP://WWW.MINNPARBACKHOEPARTS.COM

| 04-08 | | p1 | 10/03 |
|---|---|---|---|

FAISCEAU, TABLEAU DE BORD AVANT - SUPPORT

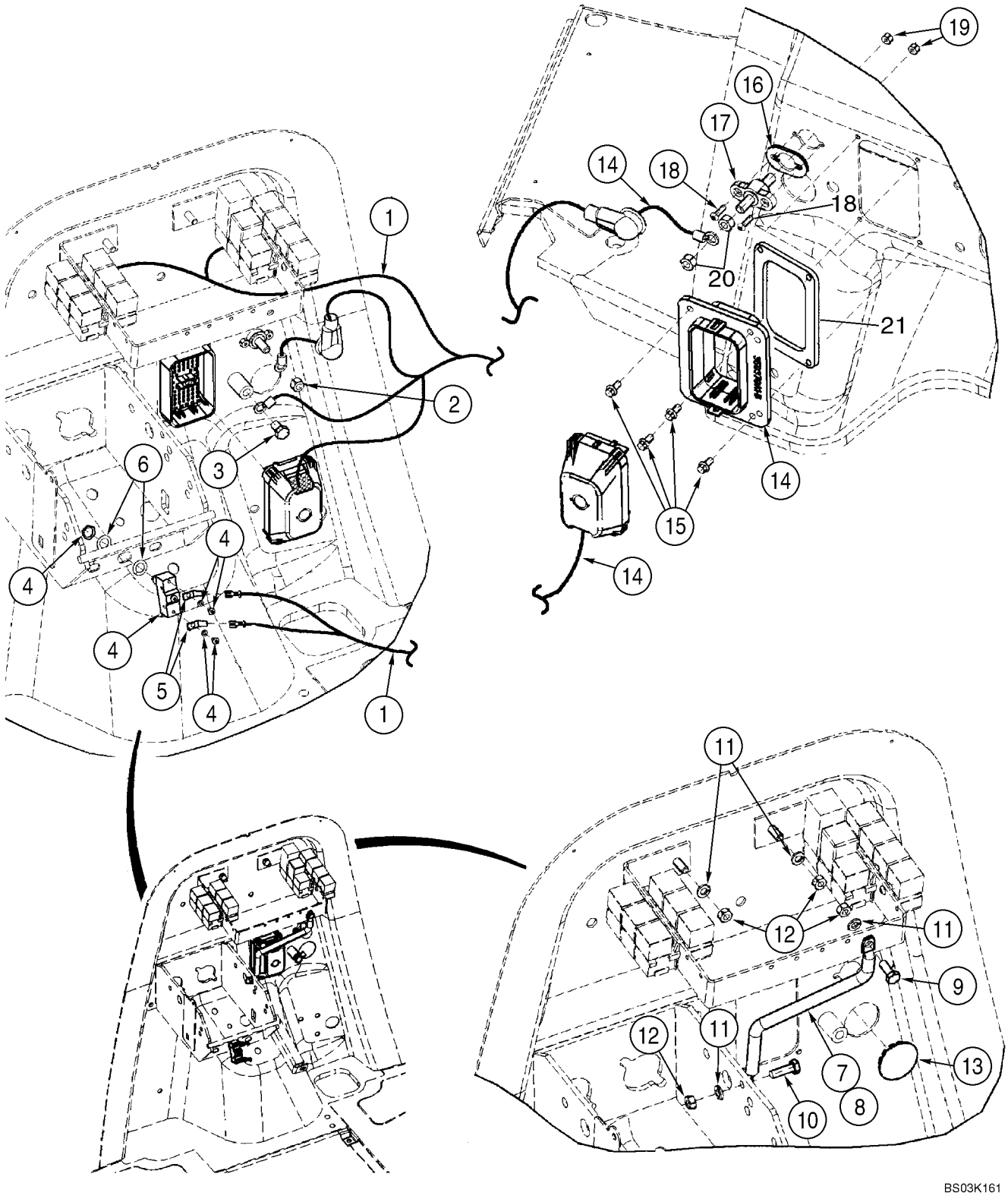

HTTP://WWW.MINNPARBACKHOEPARTS.COM



FAISCEAU, TABLEAU DE BORD AVANT - SUPPORT

| REF | FN | PART NUMBER | YR/SN | QTY | DESCRIPTION |
|---|---|---|---|---|---|
| 1 | | 87418541 | | 1 | FAISCEAU COMPLET Front Console Harness; Mounts To Front Firewall |
| 2 | | 425-106 | | 1 | ECROU 3/8 |
| 3 | | 128312A1 | | 1 | BOULON M10 x 15; Mounts To Front Firewall |
| 4 | | D148108 | | 1 | CONTACTEUR Brake Lamp; Includes Hardware |
| 5 | | A187990 | | 2 | COSSE Male |
| 6 | | 495-81153 | | 2 | RONDELLE 15/32 x 3/4 x 1/32 |
| 7 | | 362930A2 | | 1 | JAMBE-DE-FORCE Relay Mounting |
| 8 | | 392353A1 | | 1 | CONDUIT |
| 9 | | 614-8020 | | 1 | VIS M8 x 20 |
| 10 | | 614-8025 | | 1 | VIS M8 x 25 |
| 11 | | 892-11008 | | 4 | RONDELLE M8 |
| 12 | | 829-1408 | | 4 | ECROU M8; 10 |
| 13 | | 397876A1 | | 1 | BOUCHON 1-5/8 in, Button |
| 14 | | 87433543 | | 1 | FAISCEAU COMPLET Engine Harness, Main Chassis; Mounts Behind Front Firewall; Includes (3) L71879 Diodes |
| | | L71879 | | 3 | DIODE |
| 15 | | 781-24613 | | 4 | VIS Flange, M6 x 13 |
| 16 | | 357966A1 | | 1 | JOINT |
| 17 | | 357278A1 | | 1 | BLOC-CROIX Positive Battery |
| 18 | | 490-11012 | | 2 | VIS No. 10 NF x 3/4 |
| 19 | | 231-24409 | | 2 | CONTRE-ECROU No. 10 |
| 20 | | 425-106 | | 2 | ECROU 3/8 |
| 21 | | 414174A1 | | 1 | JOINT |

HTTP://WWW.MINNPARBACKHOEPARTS.COM



FAISCEAU, TABLEAU DE BORD LATÉRAL - CONTACTEURS

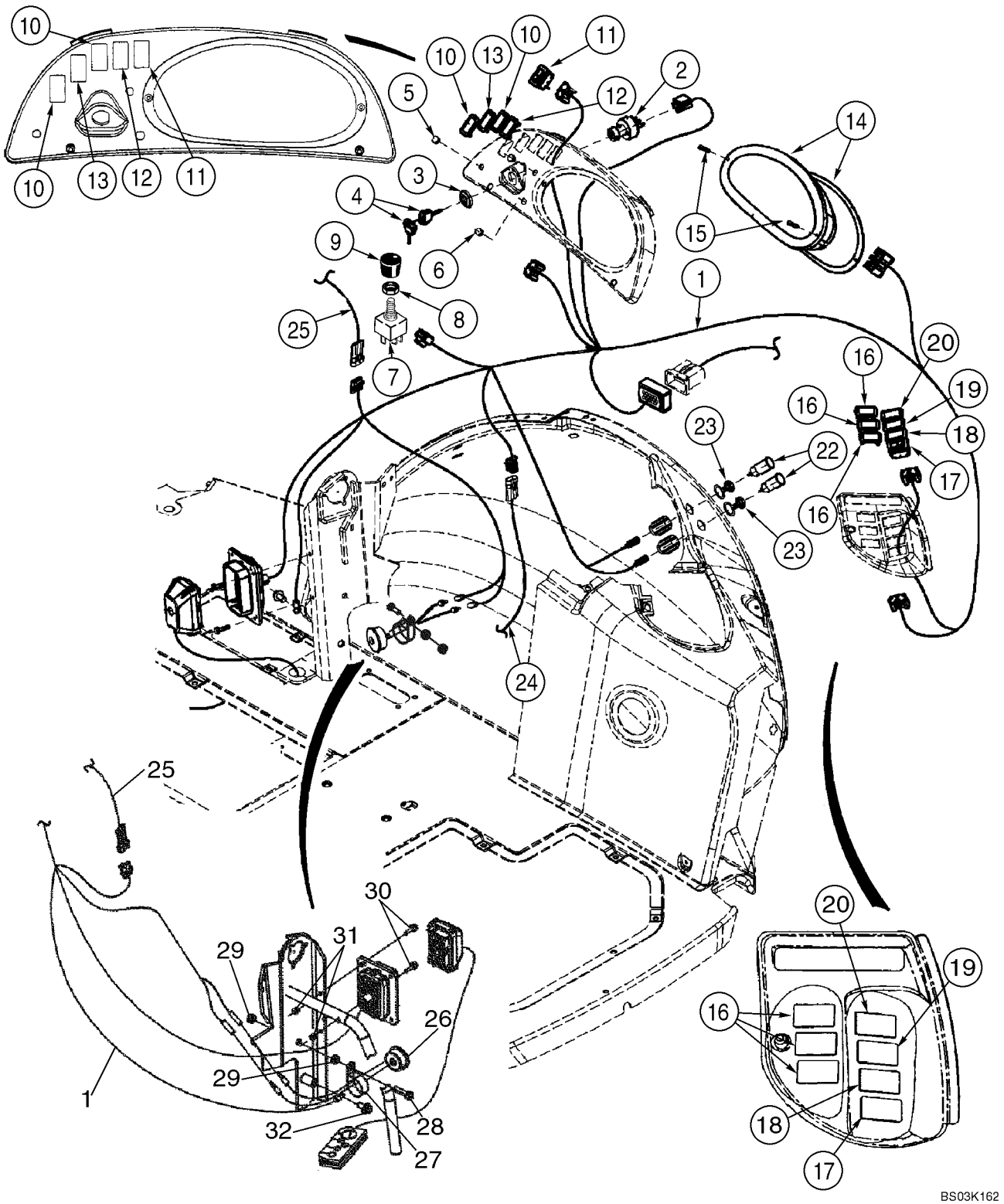

HTTP://WWW.MINNPARBACKHOEPARTS.COM



FAISCEAU, TABLEAU DE BORD LATÉRAL - CONTACTEURS

| REF | FN | PART NUMBER | YR/SN | QTY | DESCRIPTION |
|---|---|---|---|---|---|
| 1 | | 87418542 | | 1 | FAISCEAU COMPLET Side Console Harness |
| | | 282775A1 | | 1 | COMMUTATEUR, DEM. Incl. Ref 2 - 4 |
| 2 | | NSS | | 1 | NON FOURNI SEPAREMENT Switch, Without Keys |
| 3 | | NSS | | 1 | NON FOURNI SEPAREMENT Nut |
| 4 | | NSS | | 1 | NON FOURNI SEPAREMENT Key, Ignition; Set Of Two; Padded |
| 5 | | 397569A1 | | 2 | BOUCHON 7/16 in, Dome, If Used; For Air Conditioning Switch and Knob; See Figure 09-65 |
| 6 | | 397570A1 | | 1 | BOUCHON 1/2 in, Dome, If Used; For Heater Switch and Knob; See Figure 09-64 |
| 7 | | 245258A1 | | 1 | CONTACTEUR Blower |
| | | 121415A1 | | 1 | FUSIBLE 25 amp, Blower And Wiper |
| 8 | | A42561 | | 1 | ECROU |
| 9 | | 400379A1 | | 1 | PLAQUE |
| 10 | | 126844A1 | | 1-4 | BOUCHON If Used |
| 11 | | 133715A1 | | 1 | CONTACTEUR Rear Work Lamps |
| 12 | | 235002A1 | | 1 | CONTACTEUR Ride Control, If Used |
| 13 | | 133716A1 | | 1 | CONTACTEUR Four Wheel Drive, If Used |
| | | 121412A1 | | 1 | FUSIBLE 10 amp; Four Wheel Drive |
| 14 | | 87419320 | | 1 | TABLEAU DES INSTRUMENTS See Figure 04-12 |
| 15 | | 140-119 | | 2 | VIS No. 10 x 1-1/4 |
| 16 | | 126844A1 | | 1-6 | BOUCHON If Used |
| 17 | | 386852A2 | | 1 | CONTACTEUR Horn |
| 18 | | 386788A1 | | 1 | CONTACTEUR Rear Window Washer, If Used |
| 19 | | 386786A1 | | 1 | CONTACTEUR Rear Wiper, If Used |
| 20 | | 126844A1 | | 1 | BOUCHON If Used |
| 22 | | 283779A1 | | 2 | SORTIE Power Plug Outlet, 30 amp Maximum |
| 23 | | 283781A1 | | 2 | CHAPEAU Power Plug Outlet |
| 25 | | NSS | | 1 | NON FOURNI SEPAREMENT Harness, Loader Control Lever; Included In Loader Control Lever Handle |
| 26 | | D137468 | | 1 | AVERTISSEUR Engine Water Temperature, Engine Oil Pressure and Parking Brake |
| 27 | | 515-23444 | | 1 | COLLIER 1-3/4 |
| 28 | | 614-10030 | | 1 | VIS M10 x 30 |
| 29 | | 829-1410 | | 2 | ECROU M10 |

HTTP://WWW.MINNPARBACKHOEPARTS.COM



FAISCEAU, TABLEAU DE BORD LATÉRAL - CONTACTEURS

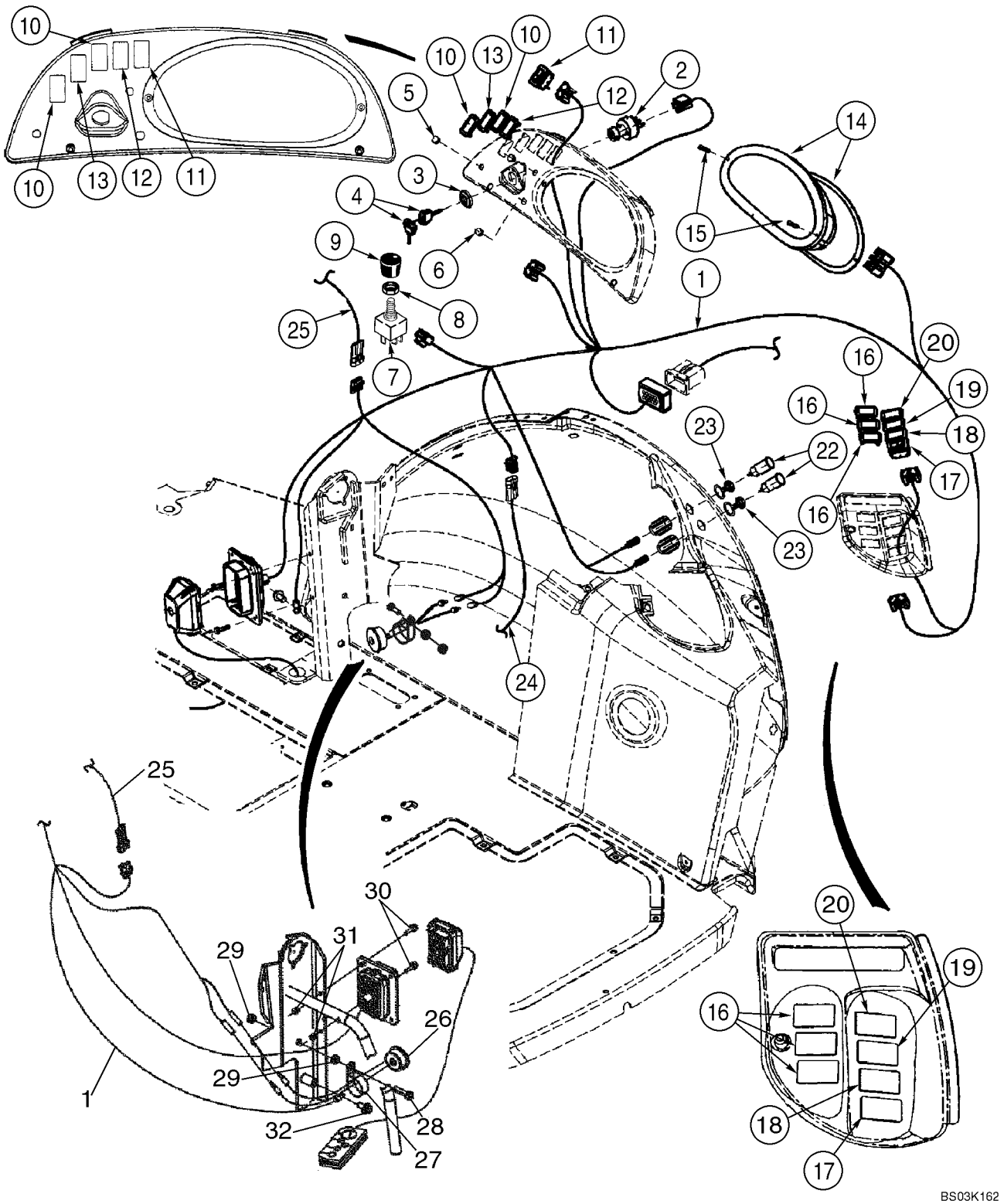

HTTP://WWW.MINNPARBACKHOEPARTS.COM



FAISCEAU, TABLEAU DE BORD LATÉRAL - CONTACTEURS

| REF | FN | PART NUMBER | YR/SN | QTY | DESCRIPTION |
|---|---|---|---|---|---|
| 30 | | 844-6025 | | 2 | VIS M6 x 25 |
| 31 | | 832-10406 | | 2 | ECROU M6 |
| 32 | | 844-10020 | | 1 | VIS M10 x 20 |
| | | 87436675 | | 1 | FAISCEAU COMPLET Chassis Options Harness; Includes (4) L71879 Diodes |
| | | L71879 | | 4 | DIODE |

HTTP://WWW.MINNPARBACKHOEPARTS.COM

| 04-10 | | p1 | 08/03 |
|---|---|---|---|

TABLEAU DE BORD, AVANT - COUVERCLES

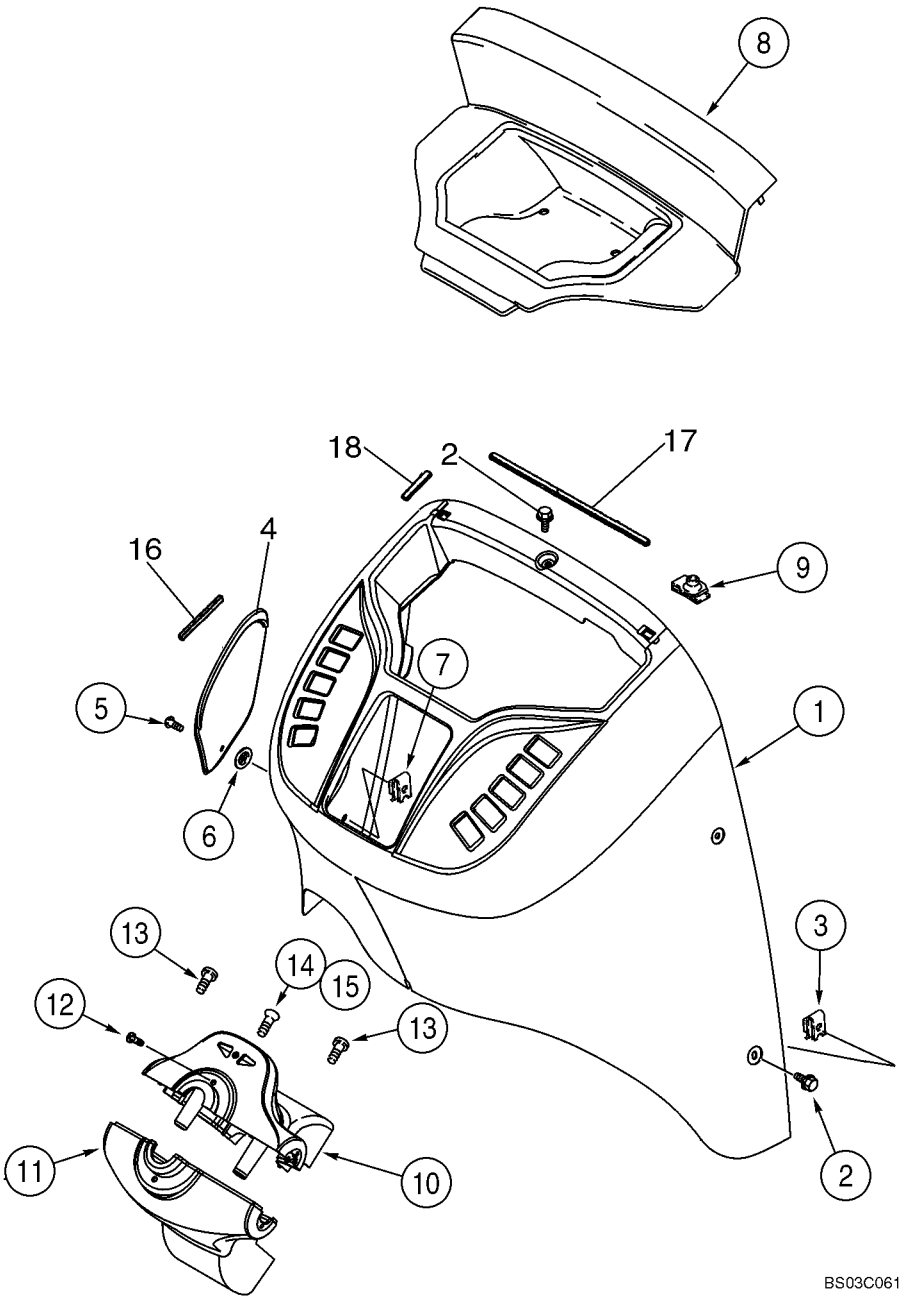

HTTP://WWW.MINNPARBACKHOEPARTS.COM



TABLEAU DE BORD, AVANT - COUVERCLES

| REF | FN | PART NUMBER | YR/SN | QTY | DESCRIPTION |
|---|---|---|---|---|---|
| 1 | | 355827A2 | | 1 | COUVERCLE Front |
| 2 | | 555-10 | | 6 | BOULON |
| 3 | | 833-40406 | | 6 | ECROU M6 |
| 4 | | 360244A1 | | 1 | COUVERCLE Fuse Access |
| 5 | | 182276A1 | | 1 | VIS |
| 6 | | 127009A1 | | 1 | CLIP |
| 7 | | 131-861 | | 1 | ECROU No. 10 |
| 8 | | 360245A2 | | 1 | COUVERCLE Relay Access |
| 9 | | 278316A2 | | 2 | CLIP |
| 10 | | 373689A2 | | 1 | COUVERCLE (ASSEMBLE) Steering Column, Upper; Incl. Ref 10A - 10E; Components Not Illustrated |
| 10A | | 360242A2 | | 1 | COUVERCLE |
| 10B | | 303465A2 | | 1 | LAMPE Blinker |
| 10C | | 303466A1 | | 1 | SYMBOLE Right Flasher |
| 10D | | 303467A1 | | 1 | SYMBOLE Left Flasher |
| 10E | | 373693A1 | | 1 | VIS Flat Head, No. 8 x 7/16 |
| 11 | | 360243A2 | | 1 | COUVERCLE Steering Column, Lower |
| 12 | | 140-106 | | 2 | VIS No. 10 x 1/2 |
| 13 | | 140-106 | | 2 | VIS No. 10 x 1/2 |
| 14 | | 260-1358 | | 1 | VIS No. 10-16 x 1/2 |
| 15 | | 131-121 | | 1 | DOUILLE DE CENTRAGE No. 10 |
| 16 | | 414572A1 | | 1 | RUBAN 100 mm, Adhesive Back |
| 17 | | 414034A1 | | 1 | RUBAN 330 mm, Adhesive Back |
| 18 | | 414033A1 | | 4 | RUBAN 60 mm, Adhesive Back |

HTTP://WWW.MINNPARBACKHOEPARTS.COM

| 04-11 | | p1 | 01/04 |
|---|---|---|---|

TABLEAU DE BORD, LATÉRAL - COUVERCLES (CÔTÉ DROIT)

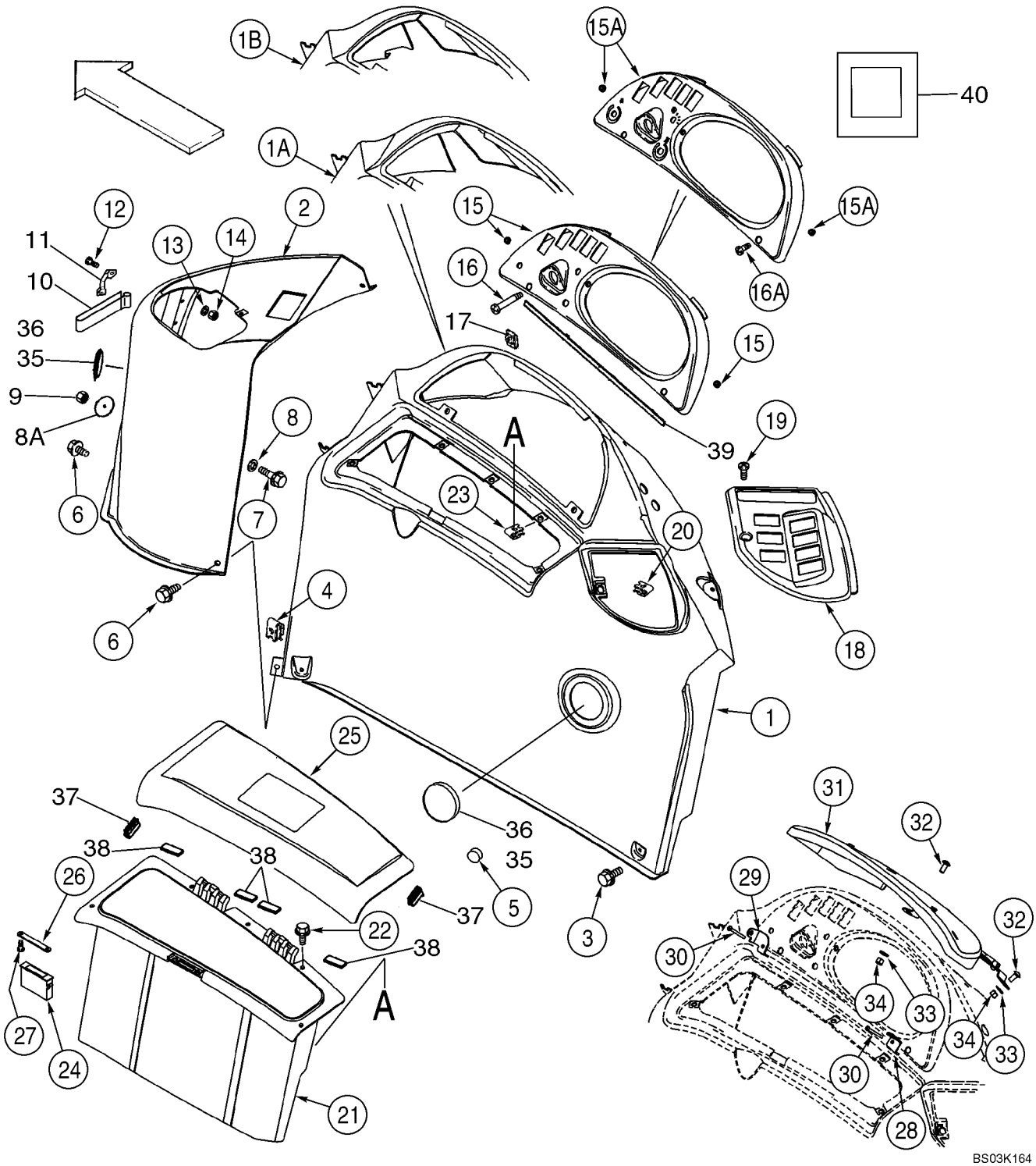

HTTP://WWW.MINNPARBACKHOEPARTS.COM



TABLEAU DE BORD, LATÉRAL - COUVERCLES (CÔTÉ DROIT)

| REF | FN | PART NUMBER | YR/SN | QTY | DESCRIPTION |
|---|---|---|---|---|---|
| 1 | | 360250A2 | | 1 | CONSOLE Canopy Models |
| 1A | | 355198A2 | | 1 | CONSOLE Cab, Single Door |
| 1B | | 372167A3 | | 1 | CONSOLE Cab, Two Door |
| 2 | | 355197A2 | | 1 | CONSOLE Loader Control |
| 3 | | 555-2 | | 6 | VIS Flange, M6 x 20 |
| 4 | | 833-40406 | | 5 | ECROU M6 |
| 5 | | L60224 | | 1 | AMORTISSEUR CAOUTCH. Rubber |
| 6 | | 555-10 | | 2 | BOULON Flange, M6 x 16 |
| 7 | | 844-6025 | | 1 | VIS Flange, M6 x 25 |
| 8 | | 895-15006 | | 1 | RONDELLE 6,6 x 25 x 1,6 mm |
| 8A | | 407660A1 | | 1 | RONDELLE 7 mm ID x 50 mm OD |
| 9 | | 832-10406 | | 1 | ECROU M6 |
| 10 | | 184726A1 | | 1 | BANDE DE FIXATION Velcro |
| 11 | | 182594A1 | | 2 | POIGNÉE Velcro Retainer |
| 12 | | 842-1416 | | 4 | VIS M4 x 16; 4.8 |
| 13 | | 895-11004 | | 4 | RONDELLE 4,3 x 9 x 0,8 mm |
| 14 | | 832-10404 | | 4 | ECROU M4 |
| 15 | | 391818A2 | | 1 | ENCADREMENT Instrument Cluster Mounting; Canopy Models; Includes 390258A1 |
| | | 390258A1 | | 2 | INSERT No. 10, Threaded Insert |
| 15A | | 390255A2 | | 1 | ENCADREMENT Instrument Cluster Mounting; Cab Models; Includes 390258A1 |
| | | 390258A1 | | 2 | INSERT No. 10, Threaded Insert |
| 16 | | 140-120 | | 2 | VIS No. 10 x 2-1/4, Canopy Models |
| 16A | | 140-107 | | 2 | VIS No. 10 x 3/4, Cab Models |
| 17 | | 131-619 | | 2 | ECROU No. 10, Cab or Canopy |
| 18 | | 353068A2 | | 1 | ENCADREMENT Rear Switches |
| 19 | | 140-107 | | 1 | VIS No. 10 x 3/4 |
| 20 | | 131-619 | | 1 | ECROU No. 10 |
| 21 | | 366632A2 | | 1 | CAISSE A OUTILS Right-Hand |
| 22 | | 555-2 | | 5 | VIS M6 x 20 |
| 23 | | 833-40406 | | 5 | ECROU M6 |
| 24 | | D127335 | | 1 | RETENEUR Magnetic Catch |
| 25 | | 366633A3 | | 1 | VOLET Storage Box |
| 26 | | 375112A1 | | 1 | GÂCHE Striker |
| 27 | | 440-1066 | | 2 | VIS No. 6 x 3/8 |

HTTP://WWW.MINNPARBACKHOEPARTS.COM

| 04-11 | | p2 | 01/04 |
|---|---|---|---|

TABLEAU DE BORD, LATÉRAL - COUVERCLES (CÔTÉ DROIT)

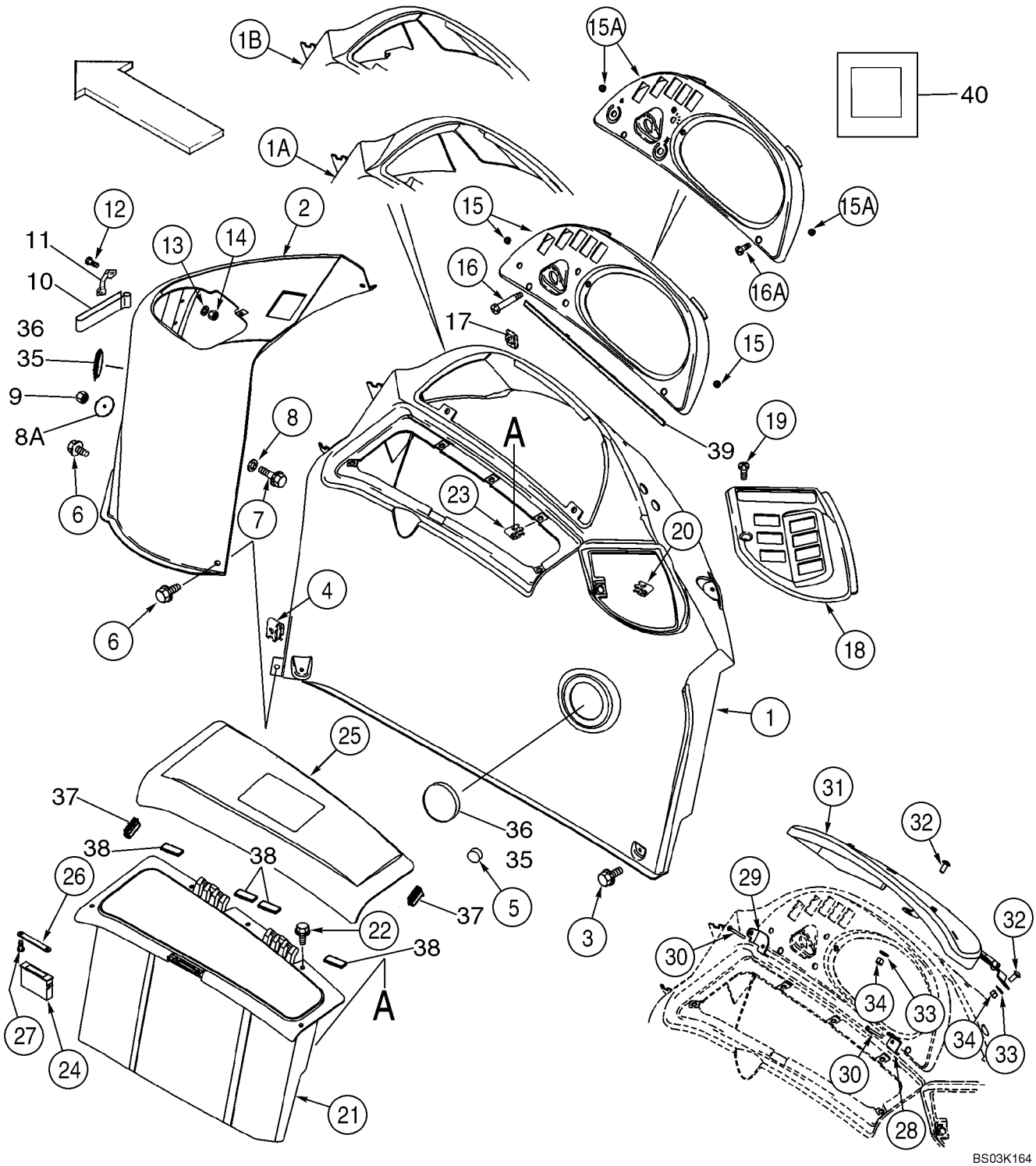

HTTP://WWW.MINNPARBACKHOEPARTS.COM



TABLEAU DE BORD, LATÉRAL - COUVERCLES (CÔTÉ DROIT)

| REF | FN | PART NUMBER | YR/SN | QTY | DESCRIPTION |
|---|---|---|---|---|---|
| 28 | | 386369A2 | | 1 | PATTE FIXATION |
| 29 | | 386368A2 | | 1 | PATTE FIXATION |
| 30 | | 140-120 | | 2 | VIS No. 10 x 2-1/4 |
| 31 | | 385614A4 | | 1 | COUVERCLE (ASSEMBLE) Instrument Cluster; Anti-Vandalism, Canopy Models; Includes 386502A1, F22426 |
| | | 386502A1 | | 2 | PARE-CHOCS |
| | | F22426 | | 3 | BUTÉE |
| 32 | | 811-8020 | | 2 | VIS Round Head, M8 x 20 |
| 33 | | 895-15008 | | 2 | RONDELLE 9 x 20 x 1,6 mm |
| 34 | | 832-10408 | | 2 | ECROU M8 |
| 35 | | 1302758C1 | | 2 | BOUCHON 3 inch |
| 36 | | 413054A1 | | 4 | VIS No. 6 x 1/2 |
| 37 | | 430471A1 | | 2 | JOINT Bulb, 40 mm; Storage Lid Bumper |
| 38 | | 414092A1 | | 4 | RUBAN 50 mm, Adhesive Back; Storage Box |
| 39 | | 414071A1 | | 1 | BANDE D'ETANCHEITE 480 mm, Adhesive Back |
| 40 | | 412510A1 | | 1 | JOINT 25 x 25 x 3 mm, Adhesive Back; Console To Fender |

HTTP://WWW.MINNPARBACKHOEPARTS.COM



APPAREILS DE CONTROLE

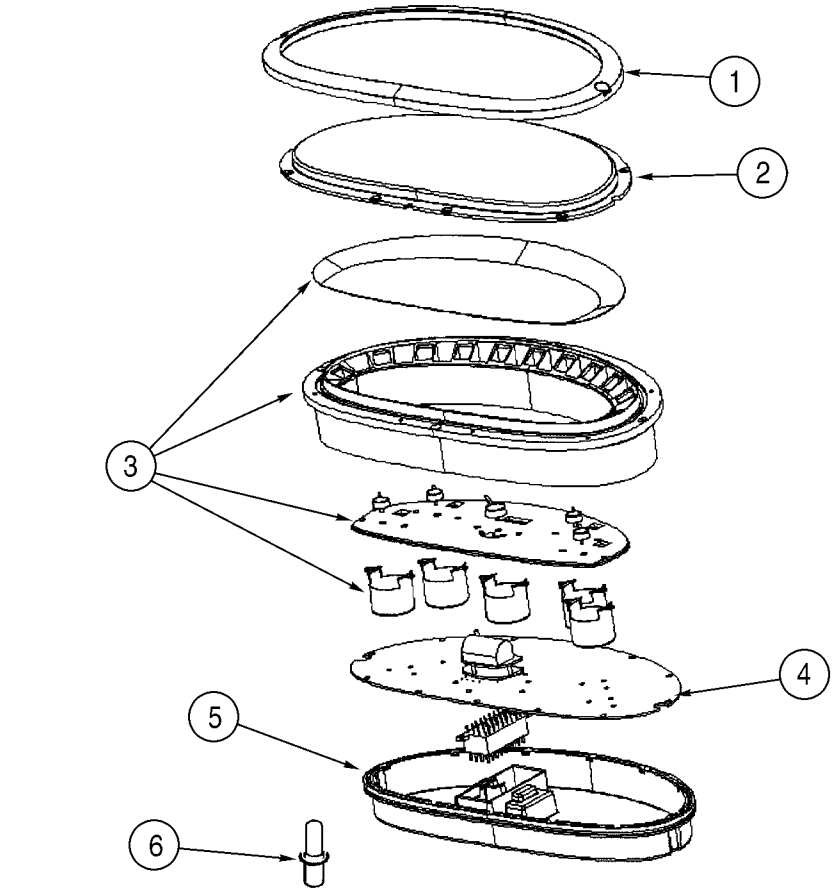


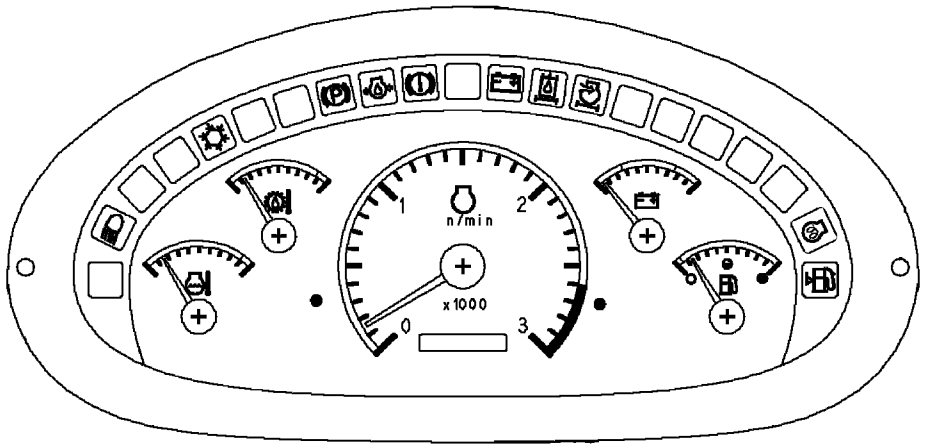


BS03K165

HTTP://WWW.MINNPARBACKHOEPARTS.COM



APPAREILS DE CONTROLE

| REF | FN | PART NUMBER | YR/SN | QTY | DESCRIPTION |
|---|---|---|---|---|---|
| | | 87419320 | | 1 | TABLEAU DES INSTRUMENTS Incl. Ref 1 - 6 |
| 1 | | 370755A1 | | 1 | ENCADREMENT Black |
| | | NSS | | 2 | NON FOURNI SEPAREMENT No. 6 x 1/4, Screw; Trim |
| 2 | | 370756A1 | | 1 | CABOCHON Clear; Includes O-Ring Which Is Not Serviced Separately |
| 3 | | 87423396 | | 1 | CALIBRE JAUGE Gauge Includes Overlay, Seal and Gauges Which Are Not Serviced Separately |
| 4 | | 87423397 | | 1 | HORAMETRE Hourmeter, Circuit Board; Includes Seal and Hourmeter Which Are Not Serviced Separately |
| | | NSS | | 25 | NON FOURNI SEPAREMENT No. 6 x 3/8, Screw |
| 5 | | 370760A1 | | 1 | COUVERCLE ARRIERE Rear; Includes O-Ring Which Is Not Serviced Separately |
| | | NSS | | 2 | NON FOURNI SEPAREMENT No. 6 x 3/4, Screw; Rear Cover |
| 6 | | 388053A2 | | 1 | AMPOULE 1W, 14V; Includes Socket |

HTTP://WWW.MINNPARBACKHOEPARTS.COM



SYSTÈME ÉLECTRIQUE - ECLAIRAGE, TOIT ROPS

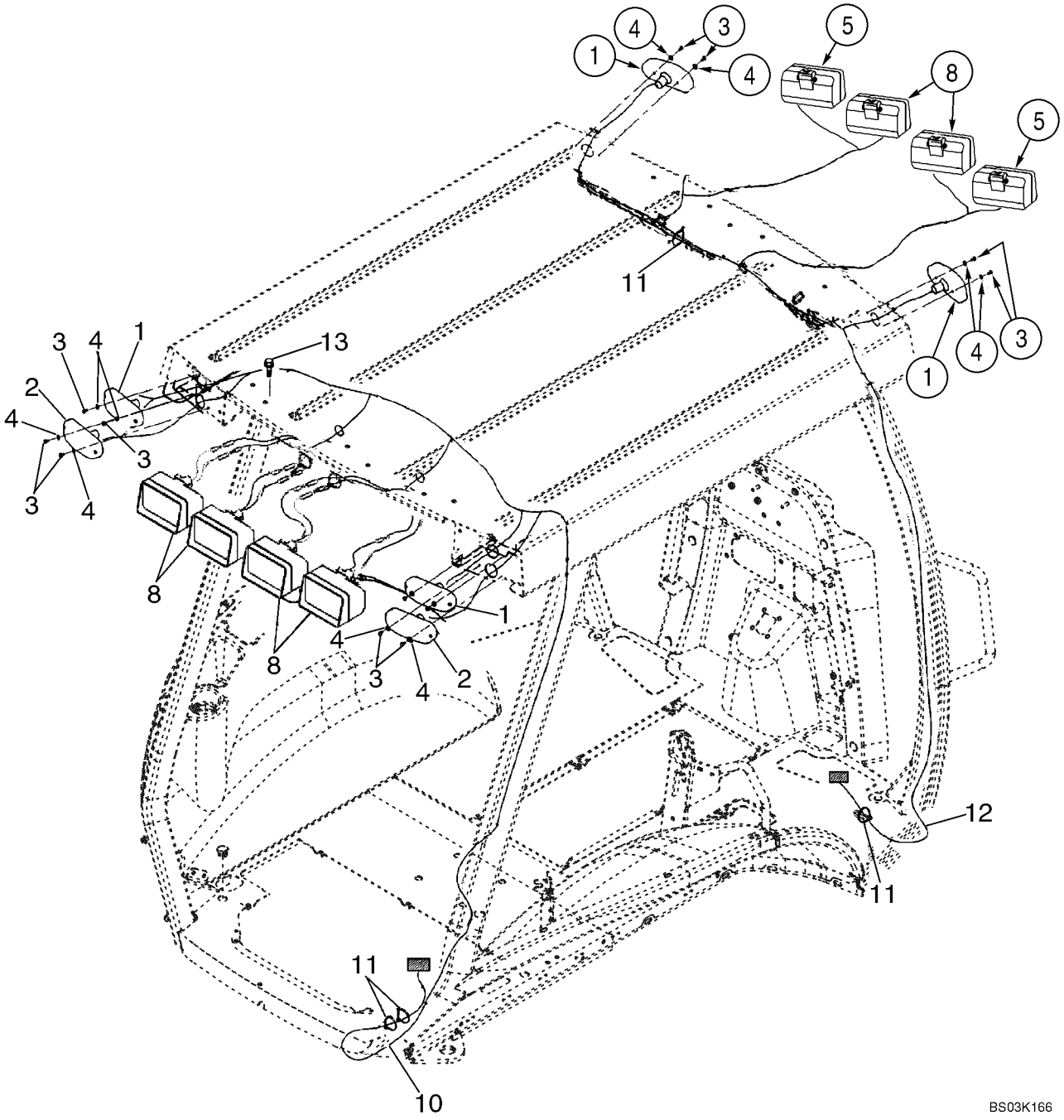

HTTP://WWW.MINNPARBACKHOEPARTS.COM



SYSTÈME ÉLECTRIQUE - ECLAIRAGE, TOIT ROPS

| REF | FN | PART NUMBER | YR/SN | QTY | DESCRIPTION |
|---|---|---|---|---|---|
| 1 | | D135384 | | 4 | LANTERNE Turn Signal and Flasher; See Figure 04-15 |
| 2 | | D121152 | | 2 | LAMPE Stop And Tail; See Figure 04-15 |
| 3 | | 329032A1 | | 12 | VIS No. 10 x 3/8 |
| 4 | | 495-31022 | | 12 | RONDELLE 7/32 x 1/2 x 3/64 |
| 5 | | 398846A3 | | 2 | FEU (ASSEMBLE) Front Driving; Incl. 1312210C2 |
| | | 1312210C2 | | 1 | AMPOULE 12V, 55W |
| 8 | | 398847A3 | | 2-6 | FEU (ASSEMBLE) Front and Rear Flood and Work Lamps, Incl. 1312210C2, 276498A1 |
| | | 1312210C2 | | 1 | AMPOULE 12V, 55W |
| | | 276498A1 | | 1 | CABOCHON With Hardened Glass; Replaces 1964801C1 Non-Hardened Lens Used In Production |
| 10 | | 396023A2 | | 1 | FAISCEAU Canopy Lamps, Rear |
| 11 | | L18337 | | X | SANGLE 15 in |
| 12 | | 404617A1 | | 1 | FAISCEAU Canopy Lamps and Wiper, Front |
| 13 | | 128312A1 | | 4-8 | BOULON Flange, M10 x 15 |

HTTP://WWW.MINNPARBACKHOEPARTS.COM

| 04-14 | | p1 | 08/03 |
|---|---|---|---|

SYSTÈME ÉLECTRIQUE - ECLAIRAGE, CABINE ROPS

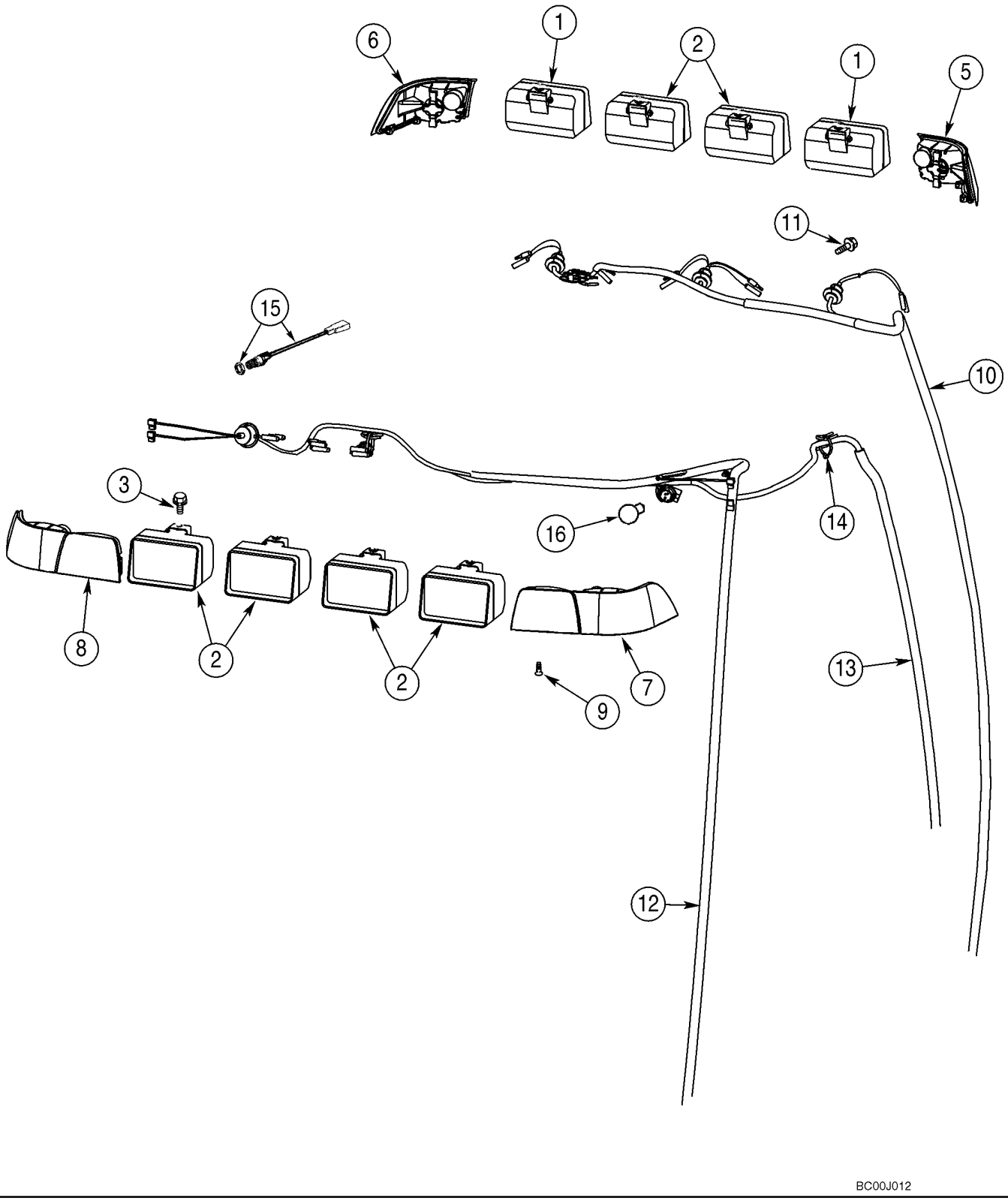

HTTP://WWW.MINNPARBACKHOEPARTS.COM



SYSTÈME ÉLECTRIQUE - ECLAIRAGE, CABINE ROPS

| REF | FN | PART NUMBER | YR/SN | QTY | DESCRIPTION |
|---|---|---|---|---|---|
| 1 | | 398846A3 | | 2 | FEU (ASSEMBLE) Front Driving, 1312210C2 |
| | | 1312210C2 | | 1 | AMPOULE 12V, 55W |
| 2 | | 398847A3 | | 6 | FEU (ASSEMBLE) Front and Rear Flood and Work Lamps, Incl. 1312210C2, 276498A1 |
| | | 1312210C2 | | 1 | AMPOULE 12V, 55W |
| | | 276498A1 | | 1 | CABOCHON With Hardened Glass; Replaces 1964801C1 Non-Hardened Lens Used In Production |
| 3 | | 128312A1 | | 8 | BOULON M10 x 15 |
| 5 | | 279224A1 | | 1 | FEU ARRIERE Amber; Right Front Corner |
| 6 | | 279223A1 | | 1 | FEU ARRIERE Amber; Left Front Corner |
| 7 | | 357540A1 | | 1 | FEU (ASSEMBLE) Amber and Red; Right Rear Corner |
| 8 | | 357541A1 | | 1 | FEU (ASSEMBLE) Amber and Red; Left Rear Corner |
| 9 | | 394863A1 | | 10 | VIS M6 x 20 |
| 10 | | 404617A1 | | 1 | FAISCEAU Front |
| 11 | | 844-10020 | | 2 | VIS M10 x 20 |
| 12 | | 398380A3 | | 1 | FAISCEAU Rear |
| 13 | | 396018A2 | | 1 | FAISCEAU B-Post, Dome Lamp, Radio, Rear Wiper |
| 14 | | L18337 | | 5 | SANGLE 15 in |
| 15 | | 279265A2 | | 1 | CONTACTEUR Dome Lamp |
| 16 | | 279916A1 | | 2 | AMPOULE |

HTTP://WWW.MINNPARBACKHOEPARTS.COM



ÉCLAIRAGE (MODÈLES AVEC STRUCTURE ROPS)

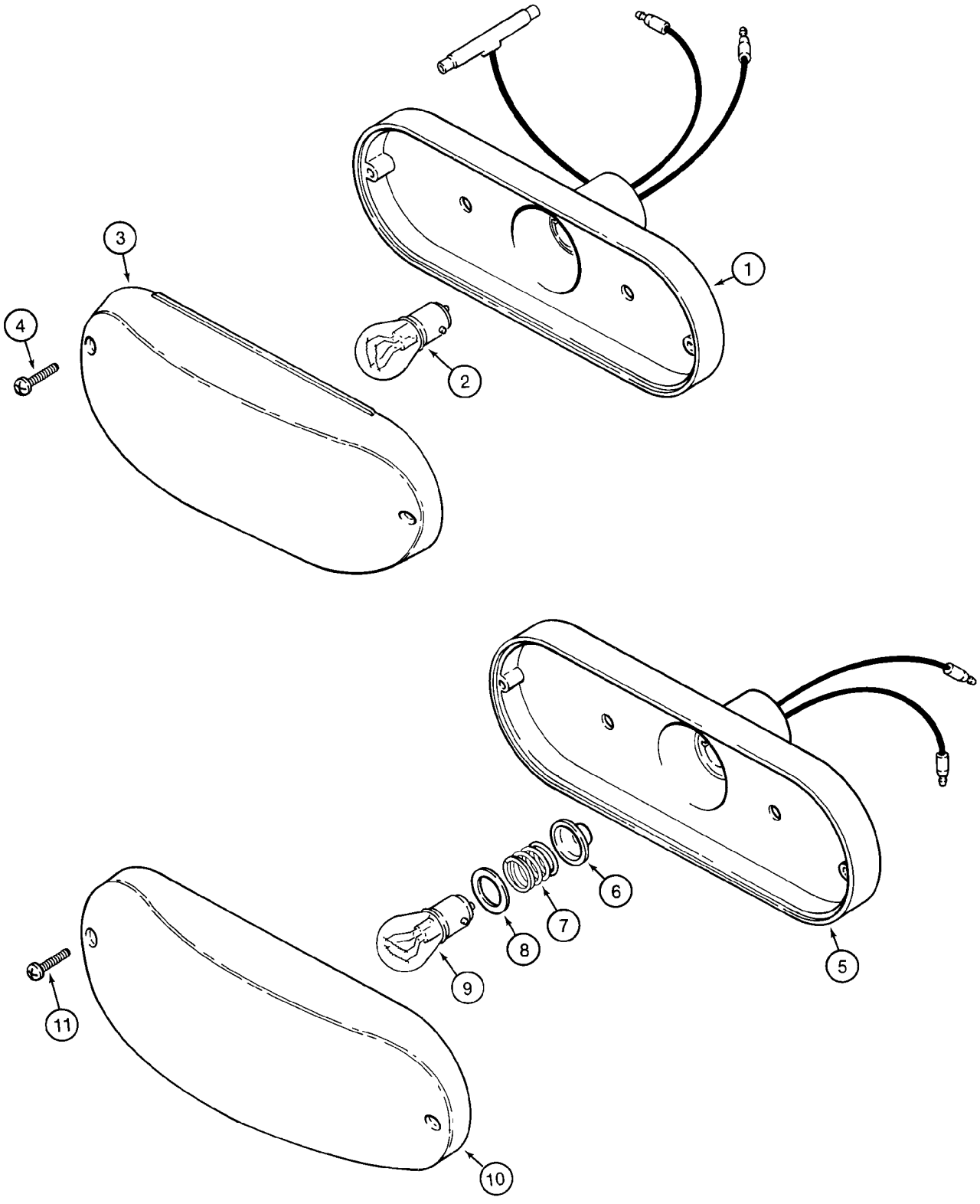

HTTP://WWW.MINNPARBACKHOEPARTS.COM



ÉCLAIRAGE (MODÈLES AVEC STRUCTURE ROPS)

| REF | FN | PART NUMBER | YR/SN | QTY | DESCRIPTION |
|---|---|---|---|---|---|
| | | D121152 | | 2 | LAMPE Stop And Tail Lamp; Red; Incl. Ref 1 - 4 |
| 1 | | NSS | | 1 | NON FOURNI SEPAREMENT Housing |
| 2 | | T34857 | | 1 | AMPOULE No. 1157 |
| 3 | | N6836 | | 1 | CABOCHON Red |
| 4 | | 261-14310 | | 2 | VIS No. 6 st x 5/8 |
| | | D135384 | | 4 | LANTERNE Turn Signal and Flasher; Amber; Incl. Ref 5 - 11 |
| 5 | | NSS | | 1 | NON FOURNI SEPAREMENT Housing |
| 6 | | NSS | | 1 | NON FOURNI SEPAREMENT Seal |
| 7 | | NSS | | 1 | NON FOURNI SEPAREMENT Spring |
| 8 | | NSS | | 1 | NON FOURNI SEPAREMENT Insulator |
| 9 | | A41264 | | 1 | AMPOULE 12V, No. 1156 |
| 10 | | N14283 | | 1 | CABOCHON Amber |
| 11 | | 261-14310 | | 2 | VIS No. 6 st x 5/8 |

HTTP://WWW.MINNPARBACKHOEPARTS.COM

| 04-16 | | p1 | 01/04 |
|---|---|---|---|

AVERTISSEUR SONORE - ALARME DE RECUL

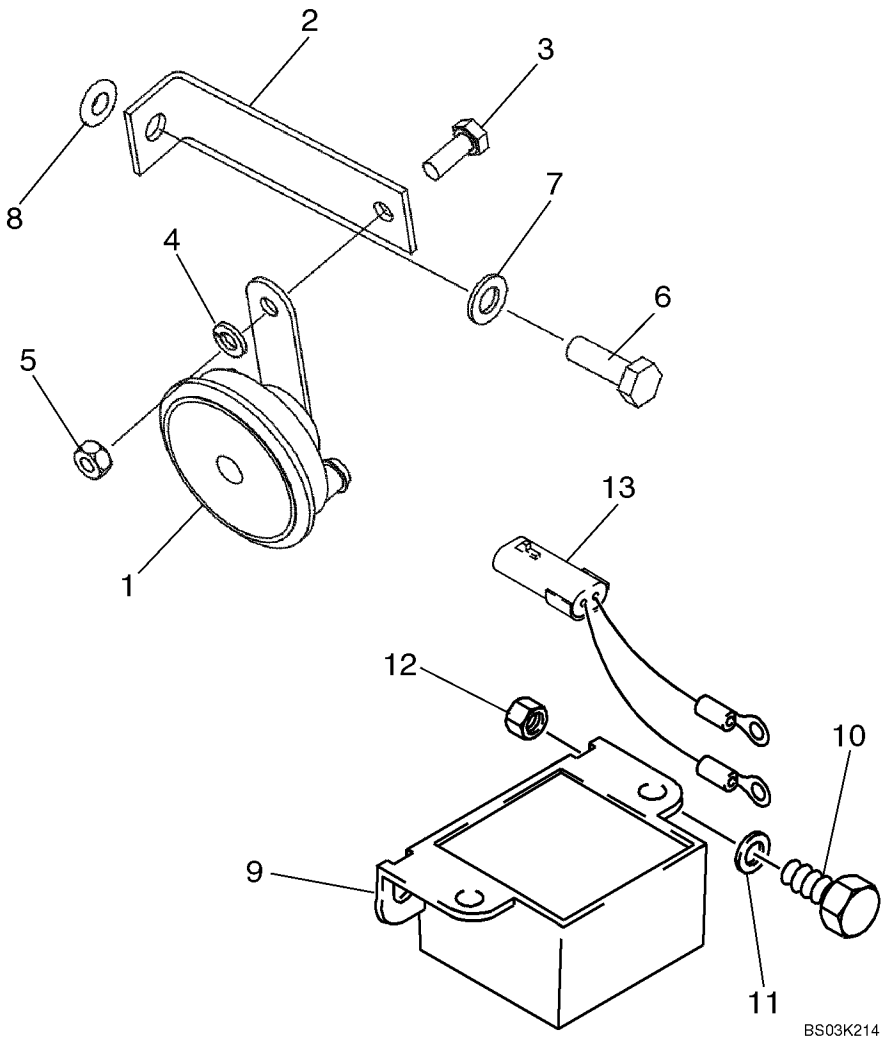

HTTP://WWW.MINNPARBACKHOEPARTS.COM



AVERTISSEUR SONORE - ALARME DE RECUL

| REF | FN | PART NUMBER | YR/SN | QTY | DESCRIPTION |
|---|---|---|---|---|---|
| 1 | | 237582A1 | | 1 | AVERTISSEUR Black |
| 2 | | {87423496} | | 1 | Bracket |
| 3 | | 614-8020 | | 1 | VIS M8 x 20 |
| 4 | | 892-11008 | | 1 | RONDELLE M8 |
| 5 | | 829-1408 | | 1 | ECROU M8; 10 |
| 6 | | 614-10030 | | 1 | VIS M10 x 30 |
| 7 | | 895-11010 | | 1 | RONDELLE |
| 8 | | 87417721 | | 1 | INSERT FILETE M10 Rivnut |
| 9 | | 109511A1 | | 1 | AVERTISSEUR Backup Alarm; Includes Nuts |
| 10 | | 614-8025 | | 2 | VIS M8 x 25 |
| 11 | | 895-11008 | | 2 | RONDELLE 9 x 17 x 1,6 mm |
| 12 | | 832-10408 | | 2 | ECROU M8 |
| 13 | | {87425869} | | 1 | Pigtail Wire; Backup Alarm |

HTTP://WWW.MINNPARBACKHOEPARTS.COM

| 04-17 | | p1 | 08/03 |
|---|---|---|---|

GYROPHARE (MODÈLES DE CABINES OU DE TOIT)

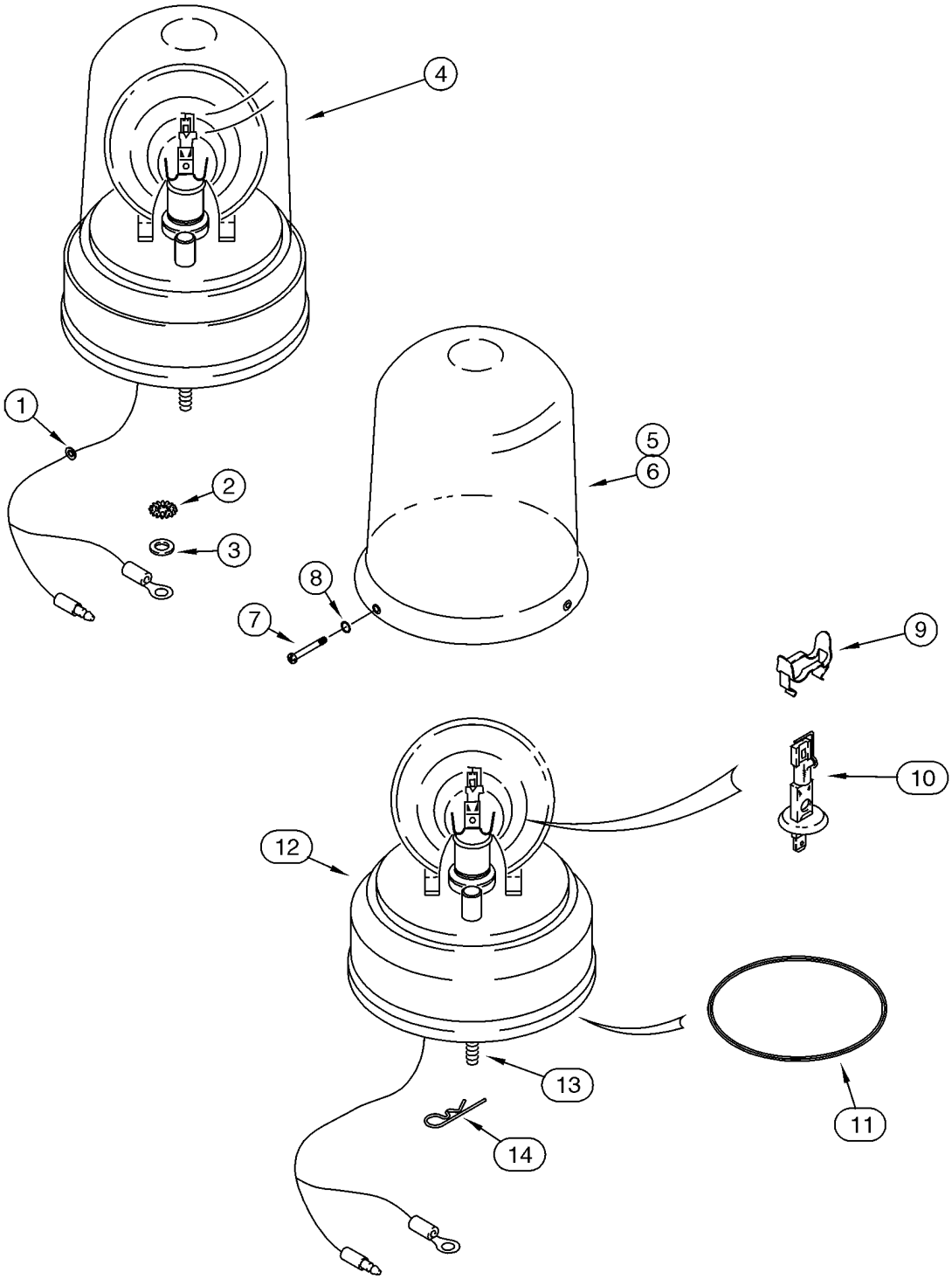

HTTP://WWW.MINNPARBACKHOEPARTS.COM



GYROPHARE (MODÈLES DE CABINES OU DE TOIT)

| REF | FN | PART NUMBER | YR/SN | QTY | DESCRIPTION |
|---|---|---|---|---|---|
| 1 | | A23870 | | 1 | PASSE-FIL |
| 2 | | 493-11026 | | 1 | RONDELLE 1/4; Internal External Tooth Lock Washer; Ground |
| 3 | | 495-21031 | | 1 | RONDELLE 5/16 x 3/4 x 1/16 |
| 4 | | 108366A1 | | 1 | FEU DE SIGNALISATION Incl. Ref 5 - 14 |
| 5 | | A187542 | | 1 | CABOCHON Amber; If Used |
| 6 | | 127158A1 | | 1 | CABOCHON Blue; If Used |
| 7 | | 168-71 | | 3 | VIS No. 8 x 1/2 |
| 8 | | 238-5005 | | 3 | JOINT TORIQUE 3/32 ID x 1/16 |
| 9 | | 101531A1 | | 1 | CLIP |
| 10 | | 3125705R1 | | 1 | AMPOULE 12V, 55W |
| 11 | | A187575 | | 1 | COURROIE Drive Motor |
| 12 | | NSS | | 1 | NON FOURNI SEPAREMENT Base; With Drive Motor |
| 13 | | 614-6020 | | 3 | BOULON M6 x 20 |
| 14 | | 136-54 | | 3 | AXE 1/4 x 11/16 |
| 15 | | 386851A1 | | 1 | CONTACTEUR Rotating Beacon; Not Illustrated |
| 16 | | 121412A1 | | 1 | FUSIBLE 10 amp; Not Illustrated |

HTTP://WWW.MINNPARBACKHOEPARTS.COM

| 04-18 | | p1 | 08/03 |
|---|---|---|---|

ANTENNE, RADIO - FAISCEAU, RADIO

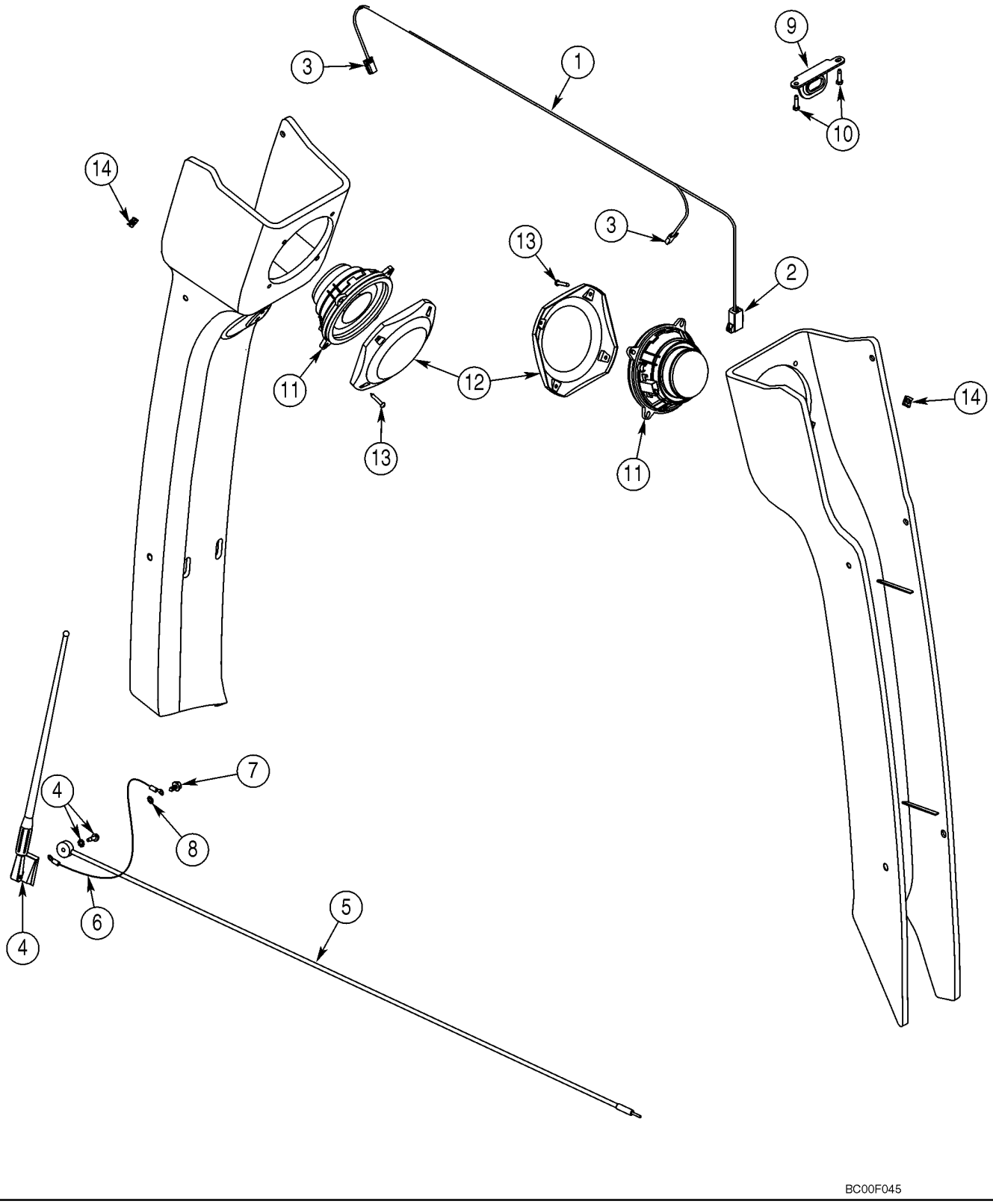

HTTP://WWW.MINNPARBACKHOEPARTS.COM



ANTENNE, RADIO - FAISCEAU, RADIO

| REF | FN | PART NUMBER | YR/SN | QTY | DESCRIPTION |
|---|---|---|---|---|---|
| 1 | | 382664A2 | | 1 | FAISCEAU Speaker; Incl. Ref 2, 3 |
| 2 | | 227389A1 | | 1 | CONNECTEUR To Cab Harness |
| 3 | | 195552A1 | | 2 | RACCORD Speaker |
| 4 | | 197745A1 | | 1 | ANTENNE Radio; Includes Flat Washer and Nut Which Are Not Serviced Separately |
| 5 | | 381659A1 | | 1 | CABLE (ASSEMBLE) |
| 6 | | 291010A1 | | 1 | FIL Ground |
| 7 | | 282-16512 | | 1 | VIS No. 10 x 3/4 |
| 8 | | 893-11005 | | 1 | RONDELLE M5 |
| 9 | | 386927A1 | | 1 | PATTE FIXATION Radio Mounting |
| 10 | | 276-26512 | | 2 | VIS No. 10 x 3/4 |
| 11 | | 182721A2 | | 2 | HAUT-PARLEUR |
| 12 | | 187281A1 | | 2 | COUVERCLE |
| 13 | | 761-17325 | | 8 | VIS M4,2 x 25 |
| 14 | | 177269A1 | | 8 | ECROU |

HTTP://WWW.MINNPARBACKHOEPARTS.COM



SYSTÈME ÉLECTRIQUE - CIRCUIT HYDRAULIQUE AUXILIAIRE POUR LA PELLE RETRO

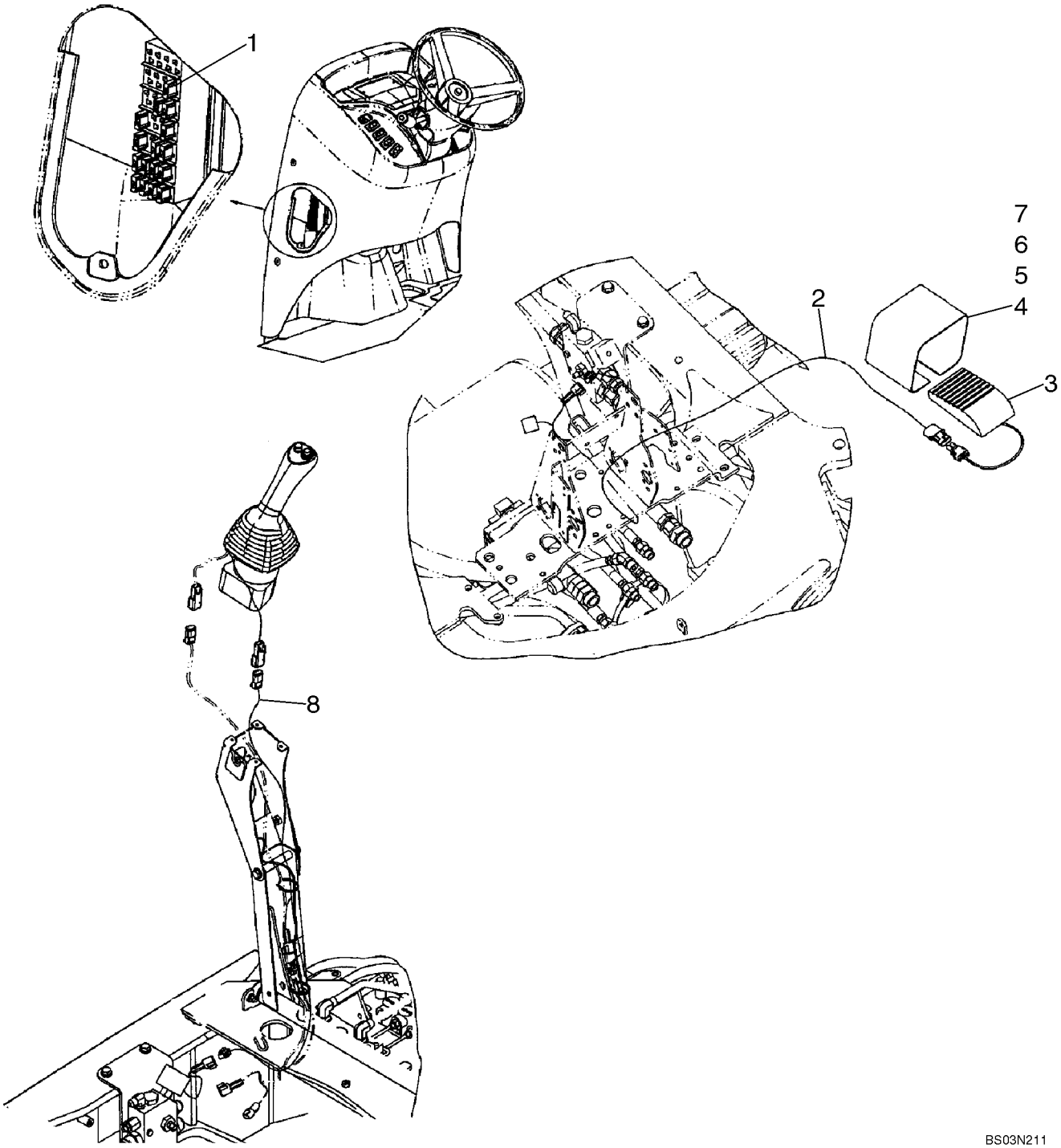

HTTP://WWW.MINNPARBACKHOEPARTS.COM



SYSTÈME ÉLECTRIQUE - CIRCUIT HYDRAULIQUE AUXILIAIRE POUR LA PELLE RETRO

| REF | FN | PART NUMBER | YR/SN | QTY | DESCRIPTION |
|---|---|---|---|---|---|
| 1 | | 121413A1 | | 1 | FUSIBLE 15 amp |
| 2 | | {87425631} | | 1 | Auxiliary Hydraulic Harness, Uni-Directional; Models Without Pilot Controls |
| 3 | | 137219A1 | | 1 | CONTACTEUR Foot; Without Pilot Controls |
| 4 | | 300030A1 | | 1 | COUVERCLE Without Pilot Controls |
| 5 | | 843-1516 | | 2 | VIS M5 x 16 |
| 6 | | 892-11005 | | 2 | RONDELLE FREIN M5 |
| 7 | | 824-1405 | | 2 | ECROU M5 |
| 8 | | 87425635 | | 1 | FAISCEAU COMPLET Auxiliary Hydraulic; Uni-Directional; Models With Pilot Controls |

HTTP://WWW.MINNPARBACKHOEPARTS.COM

| 04-20 | | p1 | 12/03 |
|---|---|---|---|

SYSTÈME ÉLECTRIQUE - CIRCUIT HYDRAULIQUE AUXILIAIRE POUR LA PELLE RETRO, AVEC DE COMMANDE PILOTE

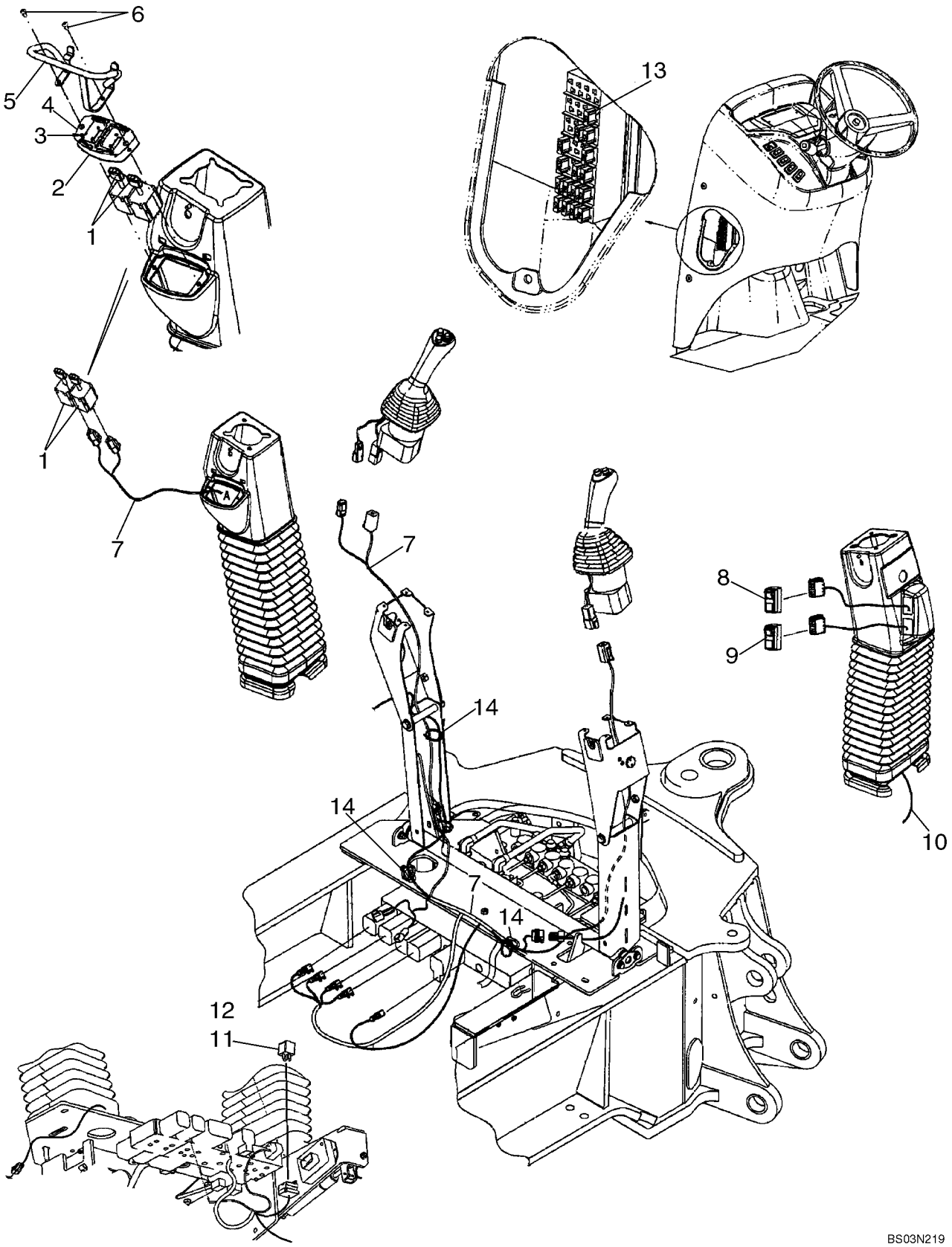

HTTP://WWW.MINNPARBACKHOEPARTS.COM



SYSTÈME ÉLECTRIQUE - CIRCUIT HYDRAULIQUE AUXILIAIRE POUR LA PELLE RETRO, AVEC DE COMMANDE PILOTE

| REF | FN | PART NUMBER | YR/SN | QTY | DESCRIPTION |
|---|---|---|---|---|---|
| 1 | | 86988086 | | 2 | COMMUTATER A LEVIER Stabilizer |
| 2 | | 87435381 | | 1 | PANOPLIE |
| 3 | | 87022296 | | 8 | VIS |
| 4 | | 87423812 | | 1 | DECALCOMANIE Stabilizer Switch |
| 5 | | 87436396 | | 1 | PATTE FIXATION Stabilizer Switch Guard |
| 6 | | 140-106 | | 2 | VIS |
| 7 | | 87436676 | | 1 | FAISCEAU COMPLET Pilot Control Joystick, Left-Hand |
| 8 | | 87423802 | | 1 | CONTACTEUR Pilot Control, On/Off |
| 9 | | 87410105 | | 1 | CONTACTEUR Pilot Control Pattern Selection |
| 10 | | 87425636 | | 1 | FAISCEAU COMPLET Pilot Control Joystick, Right-Hand |
| 11 | | 87436836 | | 1 | RELAIS Mini, 12V |
| 12 | | 840-1416 | | 3 | VIS M4 x 16 |
| 13 | | 121413A1 | | 1 | FUSIBLE Mini, 15 amp |
| 14 | | L18337 | | 6 | SANGLE |

HTTP://WWW.MINNPARBACKHOEPARTS.COM

HTTP://WWW.MINNPARBACKHOEPARTS.COM

# SECTION INDEX


| | |
|---|---|
| 05-01 | VOLANT - COLONNE |
| 05-02 | SYSTEME HYDRAULIQUE - DIRECTION |
| 05-03 | COLONNE DE DIRECTION |
| 05-04 | ESSIEU, AVANT (86990837) - SUPPORT |
| 05-05 | ESSIEU, AVANT (86990837) - BOÎTIER |
| 05-06 | ESSIEU, AVANT (86990837) - LOGEMENT DU PIVOT |
| 05-07 | ESSIEU, AVANT (86990837) - VERIN DE DIRECTION |
| 05-08 | ESSIEU, AVANT (86990837) - MOYEU ET ROULEMENTS |
| 05-09 | ROUES AVANT - NEUS |

HTTP://WWW.MINNPARBACKHOEPARTS.COM

| 05-01 | | p1 | 10/03 |
|---|---|---|---|

VOLANT - COLONNE

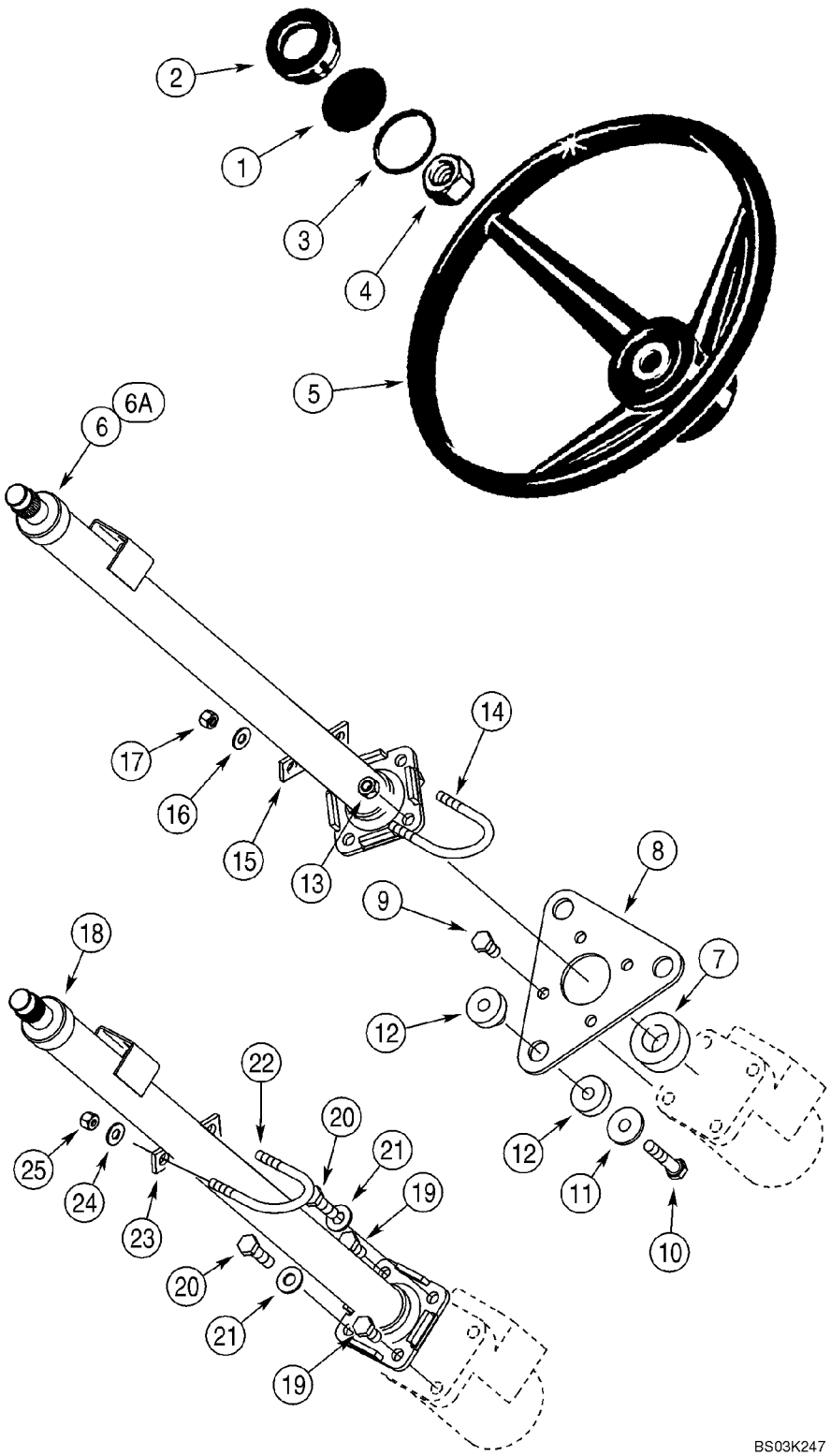

HTTP://WWW.MINNPARBACKHOEPARTS.COM



VOLANT - COLONNE

| REF | FN | PART NUMBER | YR/SN | QTY | DESCRIPTION |
|---|---|---|---|---|---|
| 1 | | {87435569} | | 1 | Insert, Case |
| 2 | | 114882A2 | | 1 | CHAPEAU |
| 3 | | 238-5227 | | 1 | JOINT TORIQUE 2-1/8 ID x 2-3/8 |
| 4 | | 1959509C1 | | 1 | ECROU |
| 5 | | A65544 | | 1 | VOLANT-DE-DIRECTION |
| 6 | | 352568A1 | | 1 | COLONNE DE DIRECTION Cab Models, Without Tilt Steering, See Figure 05-03 |
| 6A | | 352569A4 | | 1 | COLONNE DE DIRECTION Cab Models, With Tilt Steering, 712 mm Long, See Figure 05-03 |
| 7 | | 352401A1 | | 1 | JOINT 25 x 40 x 19 mm, Sound Insulation |
| 8 | | 388116A2 | | 1 | PLAQUE |
| 9 | | 614-10020 | | 4 | VIS M10 x 20 |
| 10 | | 814-10050 | | 3 | VIS M10 x 50 |
| 11 | | 496-81028 | | 3 | RONDELLE 13/32 x 1-1/4 x 1/8 in |
| 12 | | 141747A1 | | 3 | ISOLATEUR |
| 13 | | 832-10410 | | 2 | ECROU Lock, M10 |
| 14 | | 379846A1 | | 1 | CAVALIER |
| 15 | | 352727A1 | | 1 | ENTRETOISE |
| 16 | | 895-15008 | | 2 | RONDELLE 9 x 20 x 1,6 mm |
| 17 | | 832-10408 | | 2 | ECROU Lock, M8 |
| 18 | | 348794A1 | | 1 | COLONNE DE DIRECTION Canopy Models, See Figure 05-03 |
| 19 | | 614-10020 | | 2 | VIS M10 x 20 |
| 20 | | 614-10035 | | 2 | VIS M10 x 35 |
| 21 | | 895-15010 | | 2 | RONDELLE 11 x 24 x 2 mm |
| 22 | | 379846A1 | | 1 | CAVALIER |
| 23 | | 352727A1 | | 1 | ENTRETOISE |
| 24 | | 895-15008 | | 2 | RONDELLE 9 x 20 x 1,6 mm |
| 25 | | 832-10408 | | 2 | ECROU Lock, M8 |

HTTP://WWW.MINNPARBACKHOEPARTS.COM

| 05-02 | | p1 | 01/04 |
|---|---|---|---|

SYSTEME HYDRAULIQUE - DIRECTION

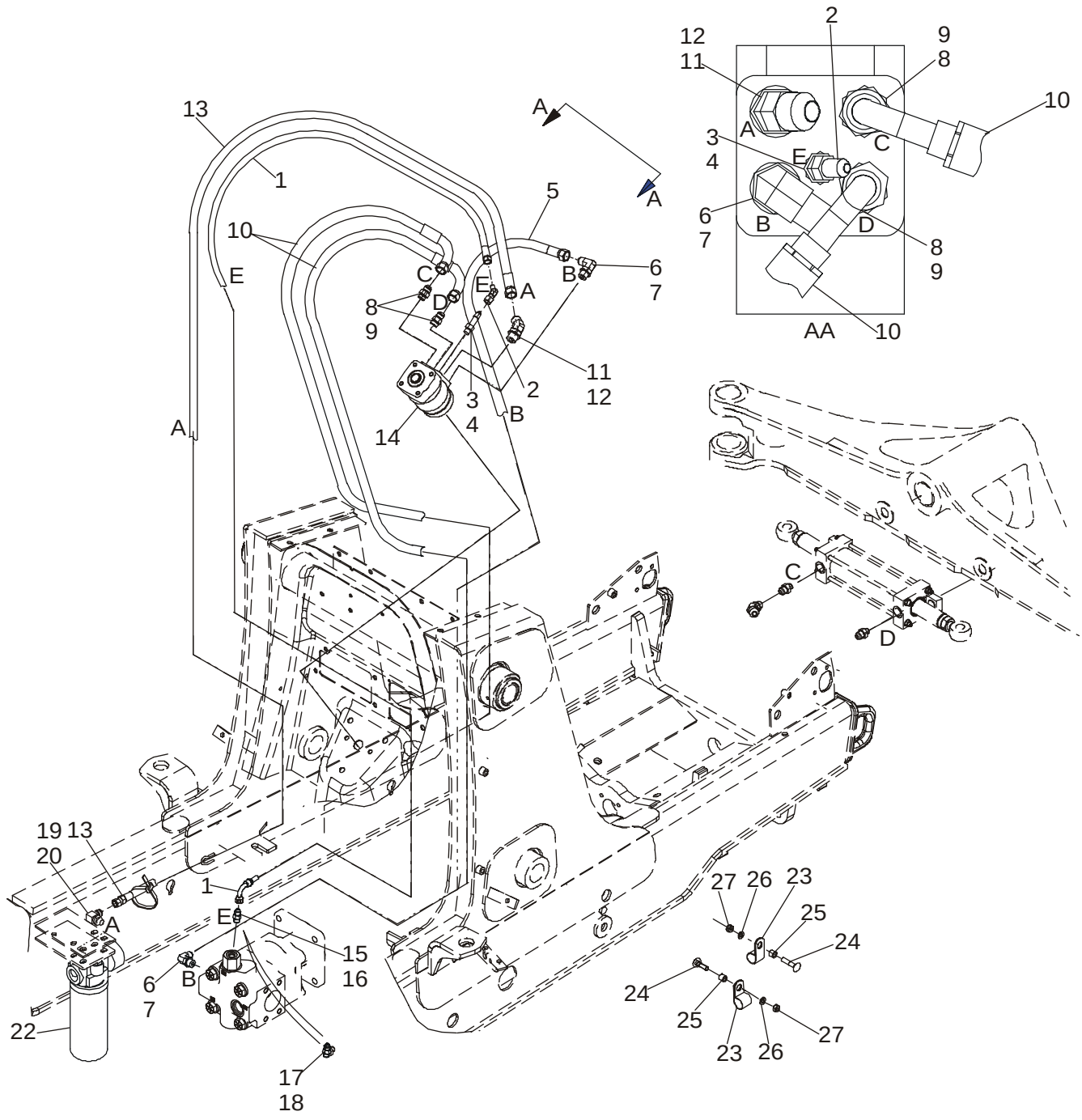

HTTP://WWW.MINNPARBACKHOEPARTS.COM



SYSTEME HYDRAULIQUE - DIRECTION

| REF | FN | PART NUMBER | YR/SN | QTY | DESCRIPTION |
|---|---|---|---|---|---|
| 1 | | 87439137 | | 1 | FLEXIBLE (ASSEMBLE) 1675 mm (66 in), Steering Pilot Hose |
| 2 | | 218-5170 | | 1 | RACCORD Elbow, 45 deg, 7/16 fl x fem |
| 3 | | 218-5027 | | 1 | CONNECTEUR 7/16 fl x Or, Incl. Ref 4 |
| 4 | | 237-6004 | | 1 | JOINT TORIQUE 23/64 ID x 5/64 |
| 5 | | 87439138 | | 1 | FLEXIBLE (ASSEMBLE) 1600 mm (63 in), Steering Pressure |
| 6 | | 218-5106 | | 2 | RACCORD Elbow, 90 deg, 3/4 Or, Incl. Ref 7 |
| 7 | | 237-6008 | | 1 | JOINT TORIQUE |
| 8 | | 218-5059 | | 2 | RACCORD 3/4 fl x Or, Incl. Ref 9 |
| 9 | | 237-6008 | | 1 | JOINT TORIQUE 41/64 ID x 3/32 |
| 10 | | 87429382 | | 2 | FLEXIBLE (ASSEMBLE) 1520 mm (59-7/8 in), To Steering Cylinder |
| 11 | | 218-5136 | | 1 | COUDE 45 deg, 3/4 Or; Incl. Ref 12 |
| 12 | | 237-6008 | | 1 | JOINT TORIQUE |
| 13 | | 87439136 | | 1 | FLEXIBLE (ASSEMBLE) 1550 mm (61-1/16 in), Return |
| 14 | | 87419634 | | 1 | POMPE Steering Control Valve; Includes 396591A1 Seal Kit, 396592A1 Anti-Cavitation Valve Kit, 396593A1 Bolt Kit |
| 15 | | 218-5057 | | 1 | RACCORD 9/16 fl x Or, Incl. Ref 16, Standard Equipment, Models Without Auxiliary Hydraulics |
| 16 | | 237-6006 | | 1 | JOINT TORIQUE |
| 17 | | 282428A1 | | 1 | CLAPET CHECK, Tee, 9/16; Incl. Ref 18; Models With Auxiliary Hydraulics |
| 18 | | 237-6006 | | 1 | JOINT TORIQUE |
| 19 | | 218-5280 | | 1 | RACCORD ELBOW, 90 deg, 3/4 fl x 9/16 Or; Incl. Ref 20 |
| 20 | | 237-6008 | | 1 | JOINT TORIQUE 41/64 ID x 3/32 |
| 22 | | 445674A1 | | 1 | FILTRE ASSY Hydraulic Oil, See Figure 08-57 |
| 23 | | 515-23159 | | 2 | COLLIER P-Type |
| 24 | | 711-10050 | | 2 | BOULON M10 x 50 |
| 25 | | 120303A1 | | 2 | ENTRETOISE |
| 26 | | 892-11010 | | 2 | RONDELLE FREIN M10 |
| 27 | | 829-1410 | | 2 | ECROU M10; 10.9 |

HTTP://WWW.MINNPARBACKHOEPARTS.COM

| 05-03 | | p1 | 09/03 |
|---|---|---|---|

COLONNE DE DIRECTION

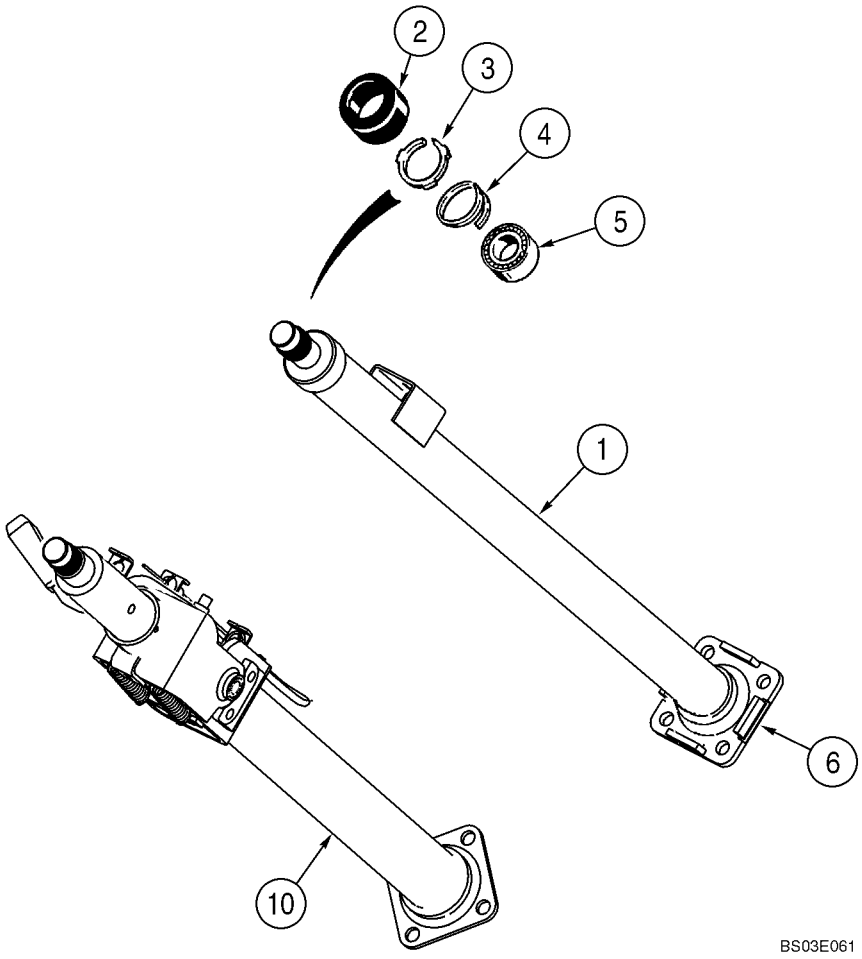

HTTP://WWW.MINNPARBACKHOEPARTS.COM



COLONNE DE DIRECTION

| REF | FN | PART NUMBER | YR/SN | QTY | DESCRIPTION |
|---|---|---|---|---|---|
| | | 348794A1 | | 1 | COLONNE DE DIRECTION Canopy Models, Incl. Ref 1 - 6 |
| | | 352568A1 | | 1 | COLONNE DE DIRECTION Cab Models, Without Tilt Steering, Incl. Ref 1 - 6 |
| 1 | | NSS | | 1 | NON FOURNI SEPAREMENT Column |
| 2 | | S115351 | | 1 | CHAPEAU |
| 3 | | NSS | | 1 | NON FOURNI SEPAREMENT Retainer |
| 4 | | 102-1387 | | 1 | ANNEAU-D'ARRET No. 87 |
| 5 | | NSS | | 1 | NON FOURNI SEPAREMENT Bearing |
| 6 | | NSS | | 1 | NON FOURNI SEPAREMENT Flange |
| 10 | | 352569A4 | | 1 | COLONNE DE DIRECTION 712 mm Long, Cab Models, With Tilt Steering, Component Parts Not Serviced Separately |

HTTP://WWW.MINNPARBACKHOEPARTS.COM

| 05-04 | | p1 | 01/04 |
|---|---|---|---|

ESSIEU, AVANT (86990837) - SUPPORT

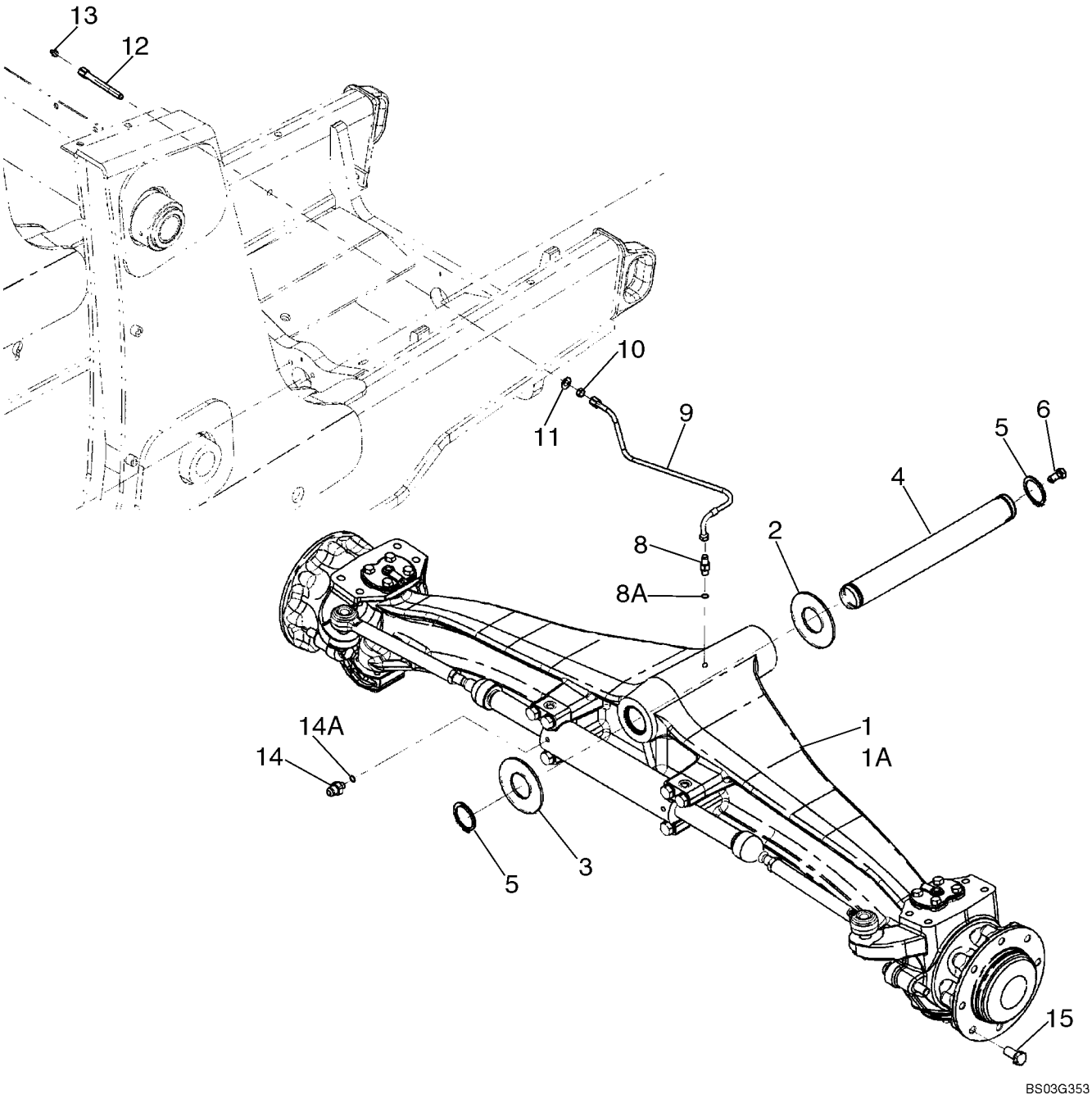

HTTP://WWW.MINNPARBACKHOEPARTS.COM



ESSIEU, AVANT (86990837) - SUPPORT

| REF | FN | PART NUMBER | YR/SN | QTY | DESCRIPTION |
|---|---|---|---|---|---|
| 1 | | 86990837 | | 1 | ESSIEU DIRECTEUR Front, Two Wheel Drive, See Figures 05-05 - 05-08 |
| 2 | | 191796A1 | | X | RONDELLE 2 x 4 x 1/16 |
| 3 | | D123684 | | 1 | RONDELLE Thrust, 2-1/2 x 4-1/2 x 3/16 |
| 4 | | 87404197 | | 1 | CHEVILLE PIVOT |
| 5 | | 800-44050 | | 2 | ANNEAU-D'ARRET No. 50 |
| 6 | | 614-12025 | | 1 | VIS M12 x 25 |
| 8 | | 218-5053 | | 1 | RACCORD 7/16 fl x adj Or; Incl. Ref 8A |
| 8A | | 237-6004 | | 1 | JOINT TORIQUE 23/64 ID x 5/64 |
| 9 | | 87433730 | | 1 | FLEXIBLE (ASSEMBLE) 500 mm (19-11/16 in), Lubrication Line |
| 10 | | 218-1275 | | 1 | CONTRE-ECROU 7/16 |
| 11 | | 495-11047 | | 1 | RONDELLE 15/32 x 59/64 x 1/16 |
| 12 | | 381442A1 | | 1 | CONNEXION |
| 13 | | 219-1 | | 1 | GRAISSEUR 1/8 PT x 21/32 Grease Fitting |
| 14 | | 218-5351 | | 2 | RACCORD 3/4 fl x 9/16 Or, Incl. Ref 14A |
| 14A | | 237-6006 | | 1 | JOINT TORIQUE 15/32 ID x 5/64 |
| 15 | | A38208 | | 16 | BOULON Wheel Bolt |

HTTP://WWW.MINNPARBACKHOEPARTS.COM

| 05-05 | | p1 | 01/04 |
|---|---|---|---|

ESSIEU, AVANT (86990837) - BOÎTIER

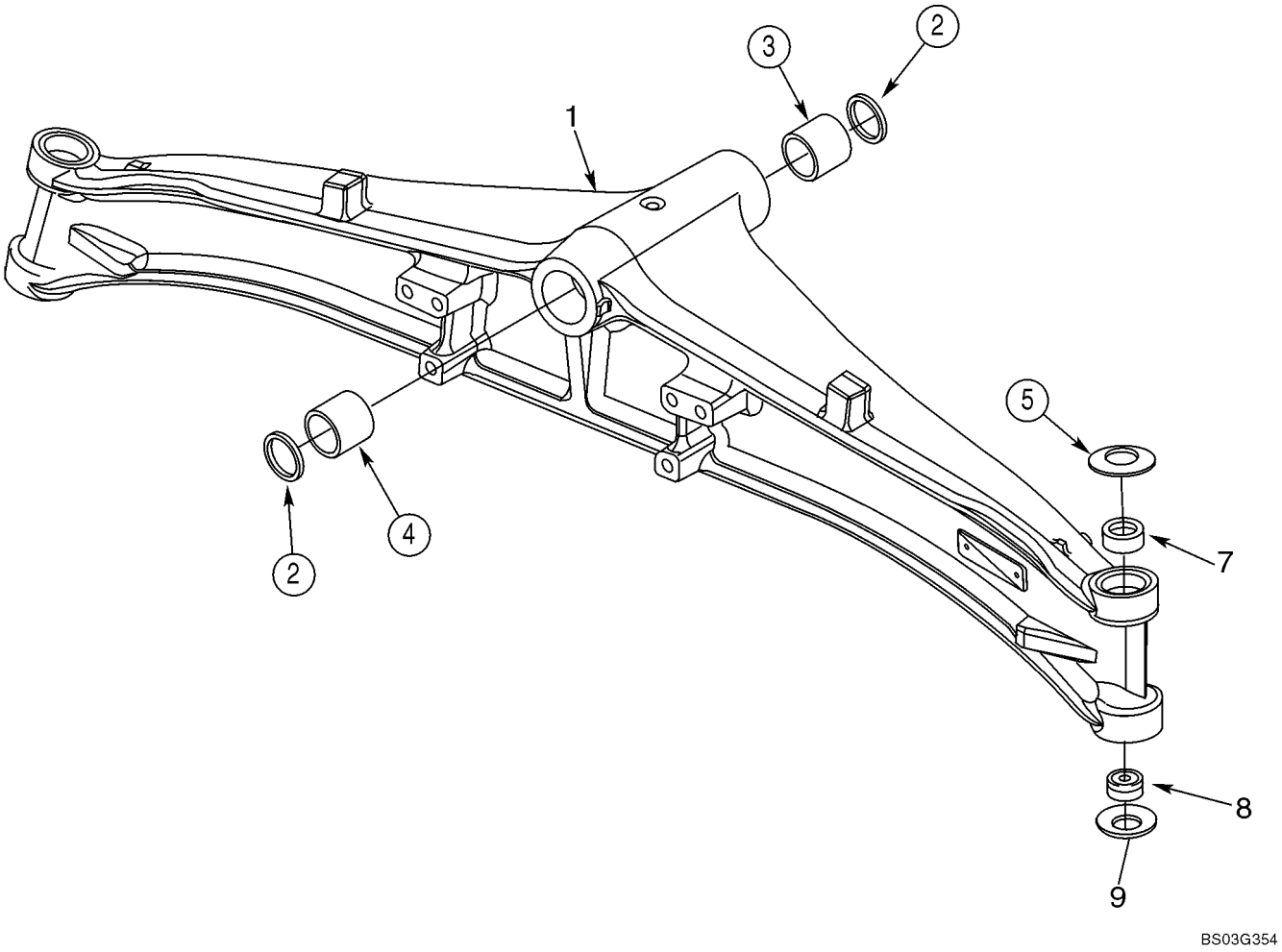

HTTP://WWW.MINNPARBACKHOEPARTS.COM



ESSIEU, AVANT (86990837) - BOÎTIER

| REF | FN | PART NUMBER | YR/SN | QTY | DESCRIPTION |
|---|---|---|---|---|---|
| | | 86990837 | | 1 | ESSIEU DIRECTEUR Front, Two Wheel Drive, Incl. Figures 05-05 - 05-08 |
| 1 | | 429230A1 | | 1 | CARTER DE PONT |
| 2 | | N14367 | | 2 | JOINT |
| 3 | | D149726 | | 1 | BAGUE Front |
| 4 | | D149725 | | 1 | BAGUE Rear |
| 5 | | 122270A1 | | 2 | RONDELLE Belleville |
| 7 | | 87400286 | | 2 | BAGUE |
| 8 | | N14373 | | 2 | ROULEMENT Bushing; Two Piece; 28 ID x 50 OD x 16 |
| 9 | | 122261A1 | | 2 | RONDELLE Belleville |

HTTP://WWW.MINNPARBACKHOEPARTS.COM



ESSIEU, AVANT (86990837) - LOGEMENT DU PIVOT

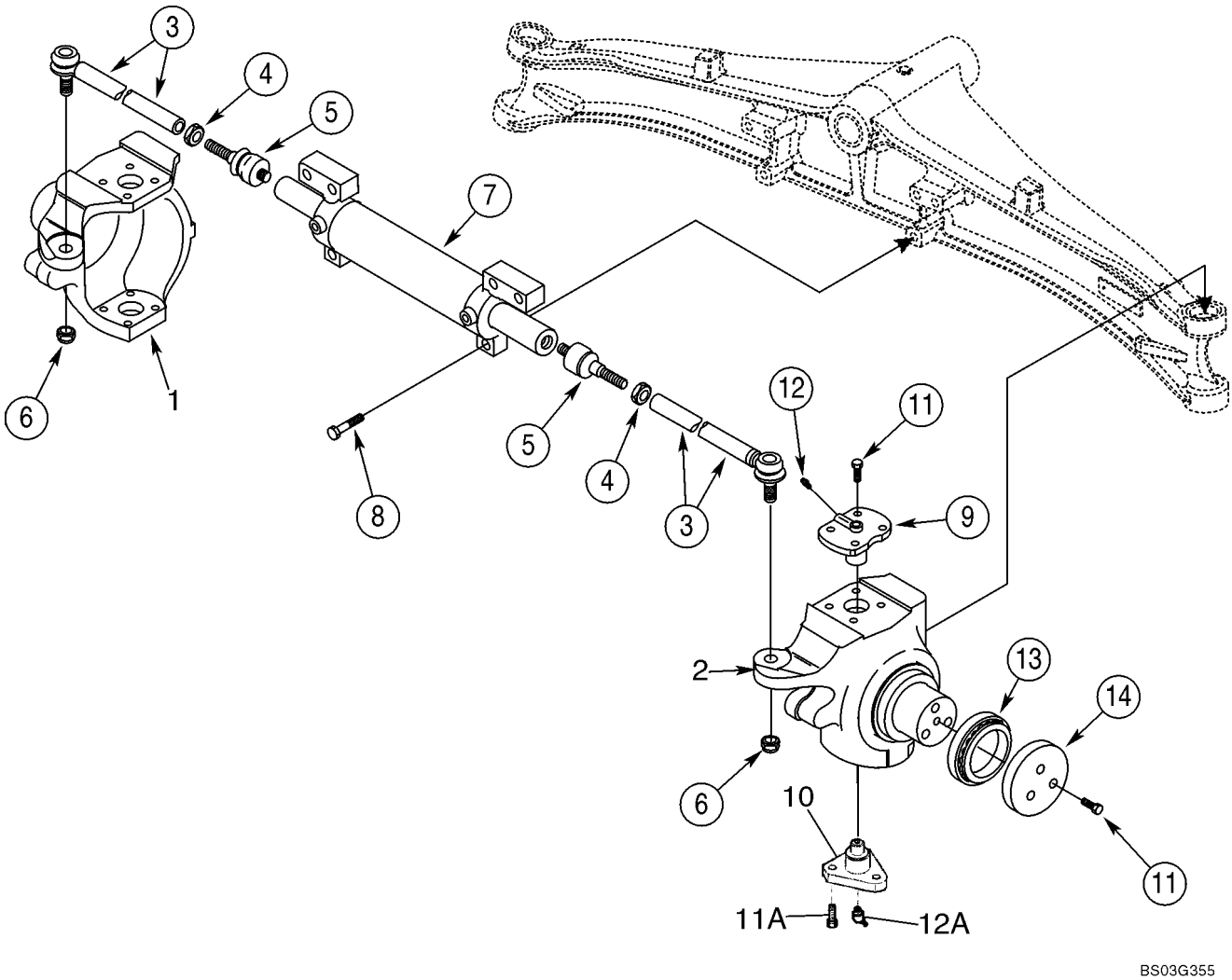

HTTP://WWW.MINNPARBACKHOEPARTS.COM



ESSIEU, AVANT (86990837) - LOGEMENT DU PIVOT

| REF | FN | PART NUMBER | YR/SN | QTY | DESCRIPTION |
|---|---|---|---|---|---|
| | | 86990837 | | 1 | ESSIEU DIRECTEUR Front, Two Wheel Drive, Incl. Figures 05-05 - 05-08 |
| 1 | | 429231A1 | | 1 | CARTER Swivel, Left-Hand |
| 2 | | 429232A1 | | 1 | CARTER Swivel, Right-Hand |
| | | 401052A1 | | 2 | DIRECTION (ASSY) Arm, Incl. Ref 3 - 5 |
| 3 | | 401054A1 | | 1 | TIRANT |
| 4 | | 934727R1 | | 1 | ECROU M18 |
| 5 | | 112509A1 | | 1 | ROTULE |
| 6 | | 905839R1 | | 2 | ECROU M18 |
| 7 | | 401055A1 | | 1 | VÉRIN DE DIRECTION See Figure 05-07 |
| 8 | | 863-16070 | | 6 | BOULON Socket Head, M16 x 70; 12.9 |
| 9 | | 122265A1 | | 2 | AXE, GROS King Pin, Upper |
| 10 | | 122259A1 | | 2 | PIVOT King Pin, Lower; Triangular Shape |
| 11 | | 100533A1 | | 14 | BOULON Lock, M12 x 30 |
| 11A | | D150214 | | 6 | VIS Lock, M14 x 35; Lower King Pin |
| 12 | | 712998R91 | | 2 | GRAISSEUR M6x1, Grease Fitting |
| 12A | | N13505 | | 2 | GRAISSEUR M6x1, 45 deg Grease Fitting; Lower King Pin |
| 13 | | 401059A1 | | 2 | ROULEMENT A ROULEAU Thrust |
| 14 | | 401060A1 | | 2 | RONDELLE DE BUTEE |

HTTP://WWW.MINNPARBACKHOEPARTS.COM



ESSIEU, AVANT (86990837) - VERIN DE DIRECTION

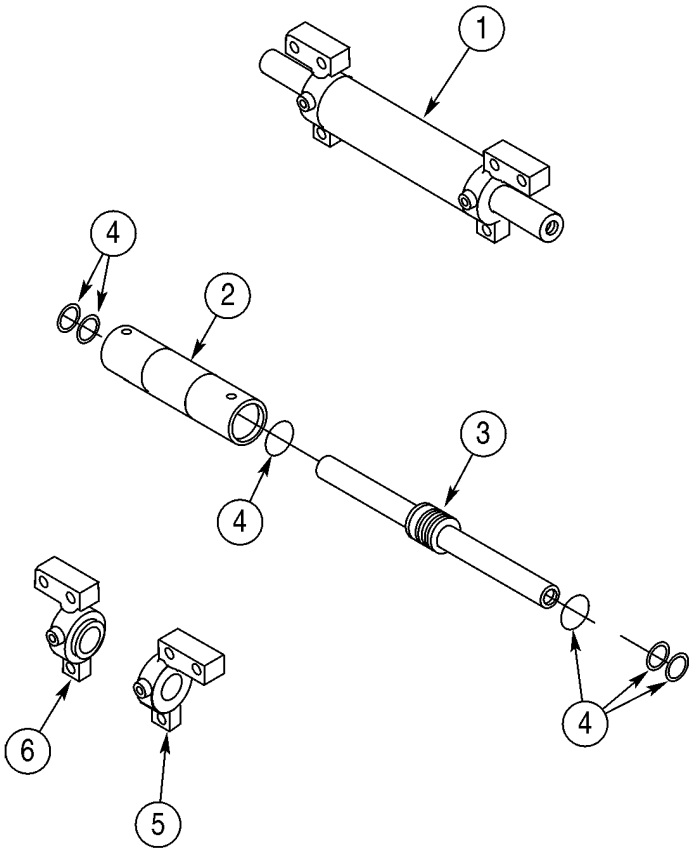


BC00G065

HTTP://WWW.MINNPARBACKHOEPARTS.COM



ESSIEU, AVANT (86990837) - VERIN DE DIRECTION

| REF | FN | PART NUMBER | YR/SN | QTY | DESCRIPTION |
|---|---|---|---|---|---|
| | | 86990837 | | 1 | ESSIEU DIRECTEUR Front, Two Wheel Drive, Incl. Figures 05-05 - 05-08 |
| 1 | | 401055A1 | | 1 | VÉRIN DE DIRECTION Incl. Ref 2 - 6 |
| 2 | | NSS | | 1 | NON FOURNI SEPAREMENT Tube, Cylinder |
| 3 | | 401062A1 | | 1 | TIGE DE VERIN |
| 4 | | 401061A1 | | 1 | POCHETTE-JOINTS Seal, Component Parts Not Serviced Separately |
| 5 | | 401063A1 | | 1 | TETE (ASSEMBLEE) Right-Hand |
| 6 | | 401064A1 | | 1 | TETE (ASSEMBLEE) Left-Hand |

HTTP://WWW.MINNPARBACKHOEPARTS.COM



ESSIEU, AVANT (86990837) - MOYEU ET ROULEMENTS

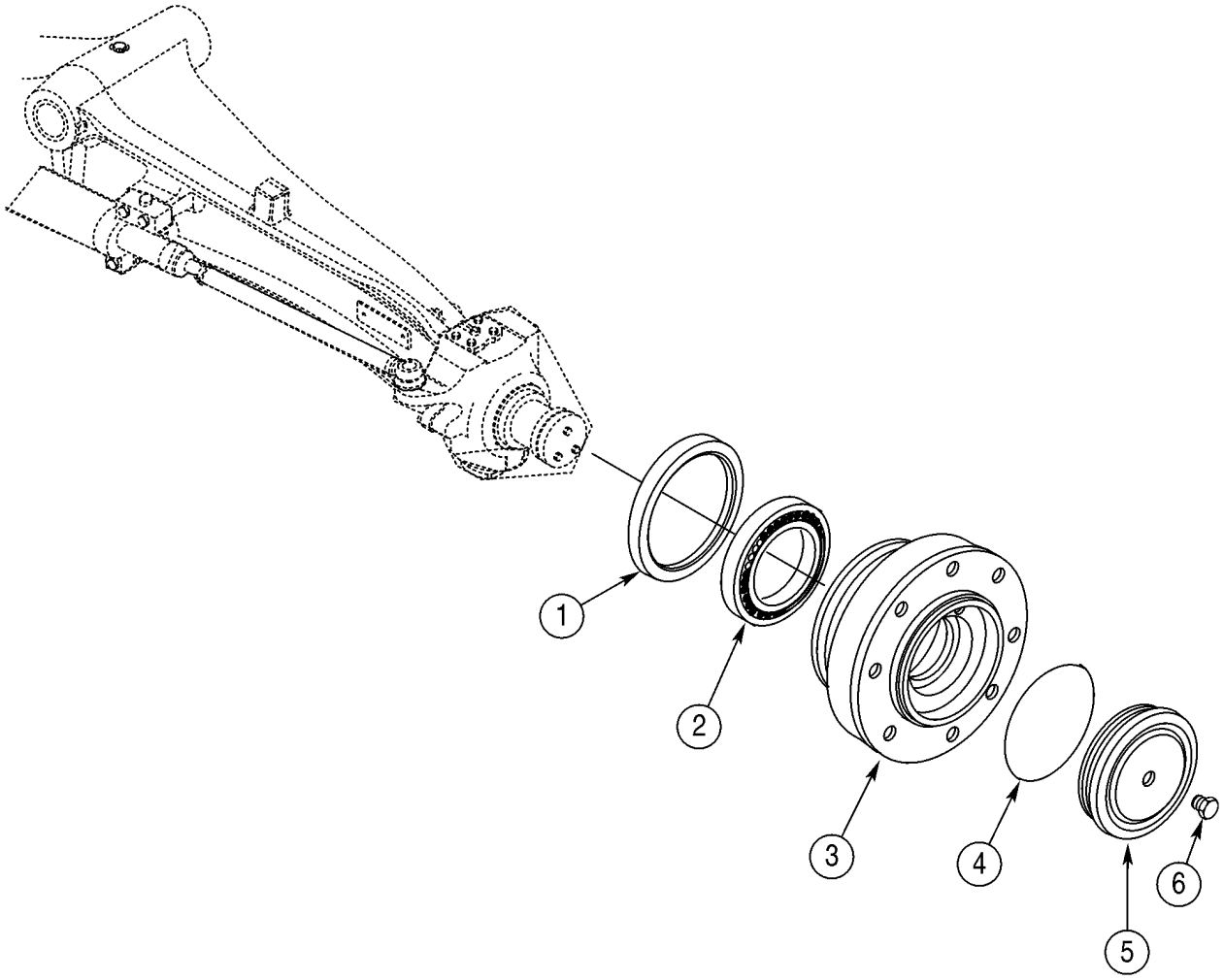

HTTP://WWW.MINNPARBACKHOEPARTS.COM



ESSIEU, AVANT (86990837) - MOYEU ET ROULEMENTS

| REF | FN | PART NUMBER | YR/SN | QTY | DESCRIPTION |
|---|---|---|---|---|---|
| | | 86990837 | | 1 | ESSIEU DIRECTEUR Front, Two Wheel Drive; Incl. Figures 05-05 - 05-08 |
| 1 | | 311569A1 | | 2 | JOINT D'HUILE |
| 2 | | 324213A1 | | 2 | ROULEMENT |
| 3 | | 401065A1 | | 2 | MOYEU |
| 4 | | 401066A1 | | 2 | JOINT TORIQUE |
| 5 | | 401067A1 | | 2 | COUVERCLE |
| 6 | | D142898 | | 2 | BOUCHON 10 x 1 mm |

HTTP://WWW.MINNPARBACKHOEPARTS.COM



ROUES AVANT - NEUS

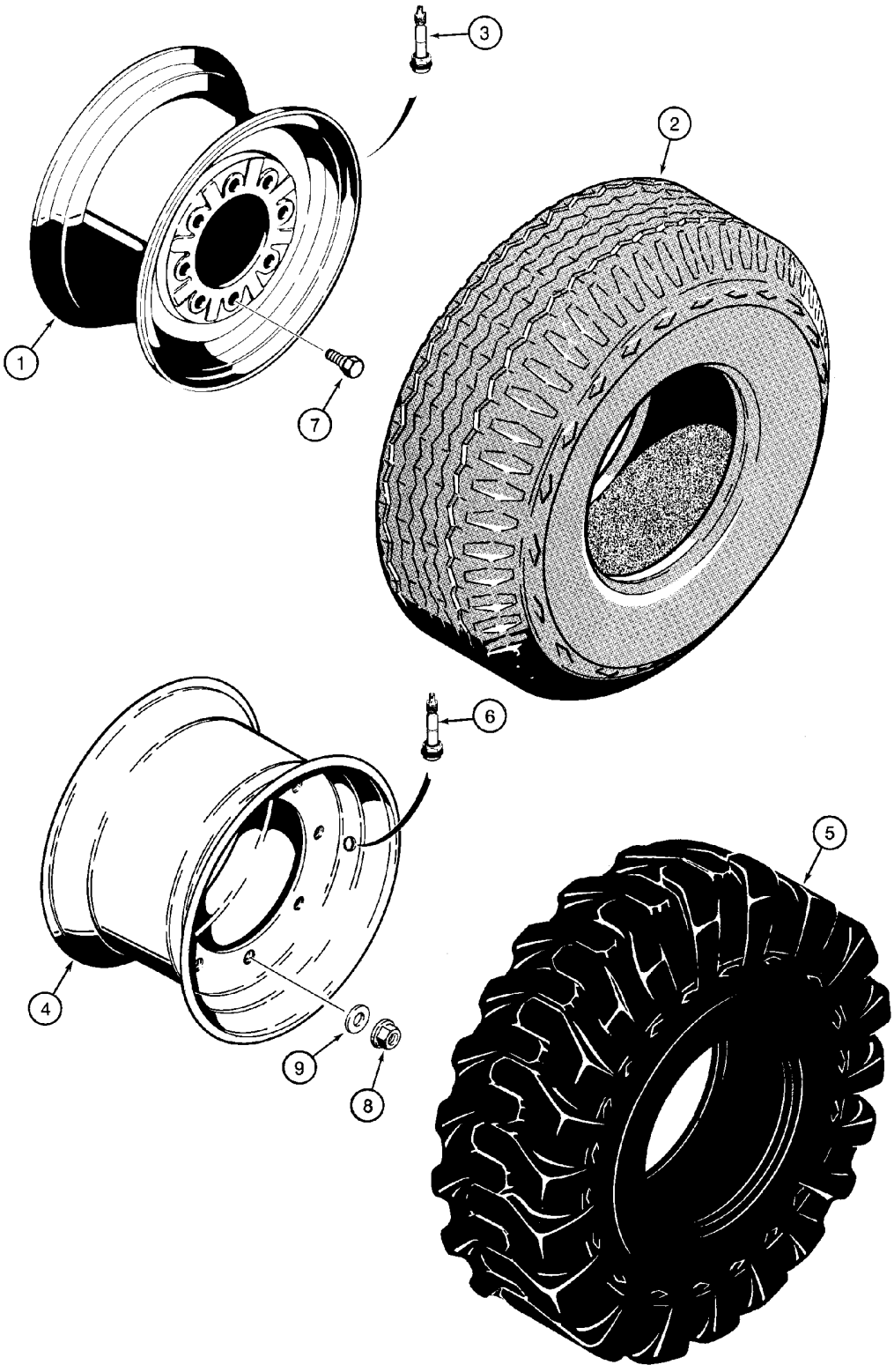

HTTP://WWW.MINNPARBACKHOEPARTS.COM



ROUES AVANT - NEUS

| REF | FN | PART NUMBER | YR/SN | QTY | DESCRIPTION |
|---|---|---|---|---|---|
| 1 | | D125223 | | 2 | JANTE For 11L x 16 - 10 PR F3 Tires; Two Wheel or Four Wheel Drive Models |
| 2 | | REF | | 2 | NOTICE Tire, Purchase Locally |
| 3 | | 387897R91 | | 2 | VALVE |
| 4 | | 119243A1 | | 2 | JANTE For 12 x 16.5 - 8 or 10 Ply Tires; Two Wheel or Four Wheel Drive Models |
| 5 | | REF | | 2 | NOTICE Tire, Purchase Locally |
| 6 | | 387897R91 | | 2 | VALVE |
| 7 | | A38208 | | 16 | BOULON Wheel Bolts; Two Wheel Drive Models |
| 8 | | 825-11418 | | 16 | ECROU M18; Wheel Nuts; Four Wheel Drive Models |
| 9 | | 496-81000 | | 16 | RONDELLE 25/32 x 1-3/8 x 1/8; Wheel Nuts; Four Wheel Drive Models |

HTTP://WWW.MINNPARBACKHOEPARTS.COM

HTTP://WWW.MINNPARBACKHOEPARTS.COM

# SECTION INDEX


| | |
|---|---|
| 06-01 | ESSIEU, TRACTION AVANT - SUPPORT |
| 06-02 | ESSIEU, TRACTION AVANT - BOÎTIER |
| 06-03 | ESSIEU, TRACTION AVANT - LOGEMENT DU PIVOT |
| 06-04 | ESSIEU, TRACTION AVANT - VERIN DE DIRECTION |
| 06-05 | ESSIEU, TRACTION AVANT - ARBRES, ESSIEU |
| 06-06 | ESSIEU, TRACTION AVANT - SATELLITE |
| 06-07 | ESSIEU, TRACTION AVANT - DIFFERENTIEL |
| 06-08 | ESSIEU, TRACTION AVANT - COURONNE ET PIGNON |
| 06-09 | ARBRE DE TRANSMISSION, ESSIEU AVANT |
| 06-10 | SYSTÈME DE REFROIDISSEMENT - TRANSMISSION |
| 06-11 | TRANSMISSION - SUPPORT |
| 06-12 | TRANSMISSION - FILTRE À HUILE |
| 06-13 | TRANSMISSION (2WD) - BOÎTIER |
| 06-14 | TRANSMISSION (4WD) - BOÎTIER |
| 06-15 | TRANSMISSION - POMPE A HUILE |
| 06-16 | TRANSMISSION - MÉCANISME DU CHANGEMENT DE VITESSE |
| 06-17 | TRANSMISSION - AXE, TENDEUR ET PRIMAIRE |
| 06-18 | TRANSMISSION - ARBRE, ENTRÉE |
| 06-19 | TRANSMISSION - ARBRE, SECONDAIRE |
| 06-20 | TRANSMISSION (4WD) - ARBRE DE SORTIE |
| 06-21 | TRANSMISSION - DISTRIBUTEUR |
| 06-22 | TRANSMISSION (4WD) - ELECTROVANNE |
| 06-23 | ROUES, ARRIÈRE - PNEUS |
| 06-24 | ESSIEU, PROPULSION ARRIÈRE - SUPPORT |
| 06-25 | ESSIEU ARRIÈRE - BLOCAGE DU DIFFERENTIEL |
| 06-26 | ESSIEU, PROPULSION ARRIÈRE - BOÎTIER |
| 06-27 | ESSIEU, PROPULSION ARRIÈRE - DIFFERENTIEL |
| 06-28 | ESSIEU, PROPULSION ARRIÈRE - COURONNE ET PIGNON |
| 06-29 | ESSIEU, PROPULSION ARRIÈRE - BLOCAGE DU DIFFERENTIEL |
| 06-30 | ESSIEU, PROPULSION ARRIÈRE - SATELLITE |
| 06-31 | ARBRE DE TRANSMISSION, ESSIEU ARRIÈRE |

HTTP://WWW.MINNPARBACKHOEPARTS.COM

| 06-01 | | p1 | 08/03 |
|---|---|---|---|

ESSIEU, TRACTION AVANT - SUPPORT

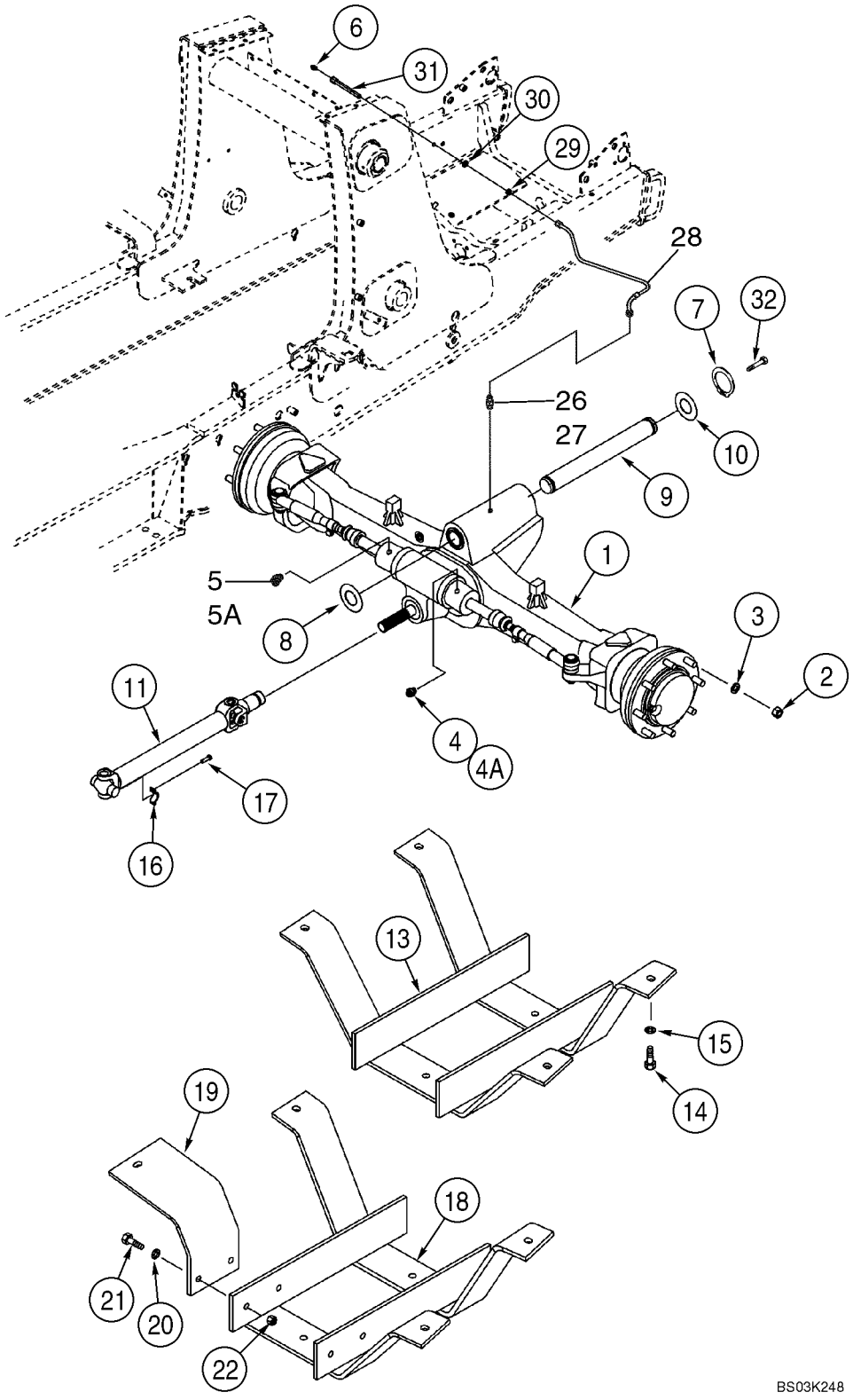

HTTP://WWW.MINNPARBACKHOEPARTS.COM



ESSIEU, TRACTION AVANT - SUPPORT

| REF | FN | PART NUMBER | YR/SN | QTY | DESCRIPTION |
|---|---|---|---|---|---|
| 1 | | 87417387 | | 1 | PONT AVANT Front, See Figure 06-02 - 06-08 |
| 2 | | 825-11418 | | 16 | ECROU M18 |
| 3 | | 496-81000 | | 16 | RONDELLE 25/32 x 1-3/8 x 1/8 |
| 4 | | 218-5351 | | 1 | RACCORD 3/4 fl x 9/16 Or; Incl. Ref 4A |
| 4A | | 237-6006 | | 1 | JOINT TORIQUE 15/32 ID x 5/64 |
| 5 | | 218-5529 | | 1 | COUDE 45 deg, 3/4 fl x 9/16 Or; Incl. Ref 5A |
| 5A | | 237-6006 | | 1 | JOINT TORIQUE 15/32 ID x 5/64 |
| 6 | | 219-1 | | 1 | GRAISSEUR 1/8 PT x 21/32 |
| 7 | | 800-44050 | | 2 | ANNEAU-D'ARRET No. 50 |
| 8 | | 191796A1 | | X | RONDELLE 2 x 4 x 1/16 |
| 9 | | 87404197 | | 1 | CHEVILLE PIVOT Pivot Pin |
| 10 | | D123684 | | 1 | RONDELLE Thrust, 2-1/2 x 4-1/2 x 3/16 |
| 11 | | 367861A2 | | 1 | ARBRE D'ENTRAINEMENT See Figure 06-09 |
| 13 | | 137223A2 | | 1 | GARANT Drive Shaft, Used On Models With 31 Gallon Fuel Tank |
| 14 | | 827-12045 | | 4 | VIS M12 x 45; 10.9 |
| 15 | | 495-21056 | | 4 | RONDELLE 9/16 x 1-3/8 x 7/64 |
| 16 | | 90-6682T1 | | 2 | COLLIER |
| 17 | | D137627 | | 4 | BOULON |
| 18 | | 282038A2 | | 1 | GARANT (ASSEMBLE) Drive Shaft, Used On Models With 40 Gallon Fuel Tank |
| 19 | | 282033A1 | | 1 | PATTE FIXATION |
| 20 | | 495-21056 | | 8 | RONDELLE 9/16 x 1-3/8 x 7/64 |
| 21 | | 827-12045 | | 6 | VIS M12 x 45; 10.9 |
| 22 | | 829-1412 | | 2 | ECROU M12; 10 |
| 26 | | 218-5053 | | 1 | RACCORD 7/16 fl x adj Or; Incl. Ref 27 |
| 27 | | 237-6004 | | 1 | JOINT TORIQUE 23/64 ID x 5/64 |
| 28 | | 87433730 | | 1 | FLEXIBLE (ASSEMBLE) 500 mm (19-11/16 in), Lubrication Line |
| 29 | | 218-1275 | | 1 | CONTRE-ECROU 7/16 |
| 30 | | 495-11047 | | 1 | RONDELLE 15/32 x 59/64 x 1/16 |
| 31 | | 381442A1 | | 1 | CONNEXION Lubrication Line |
| 32 | | 614-12025 | | 1 | VIS M12 x 25 |

HTTP://WWW.MINNPARBACKHOEPARTS.COM



ESSIEU, TRACTION AVANT - BOÎTIER

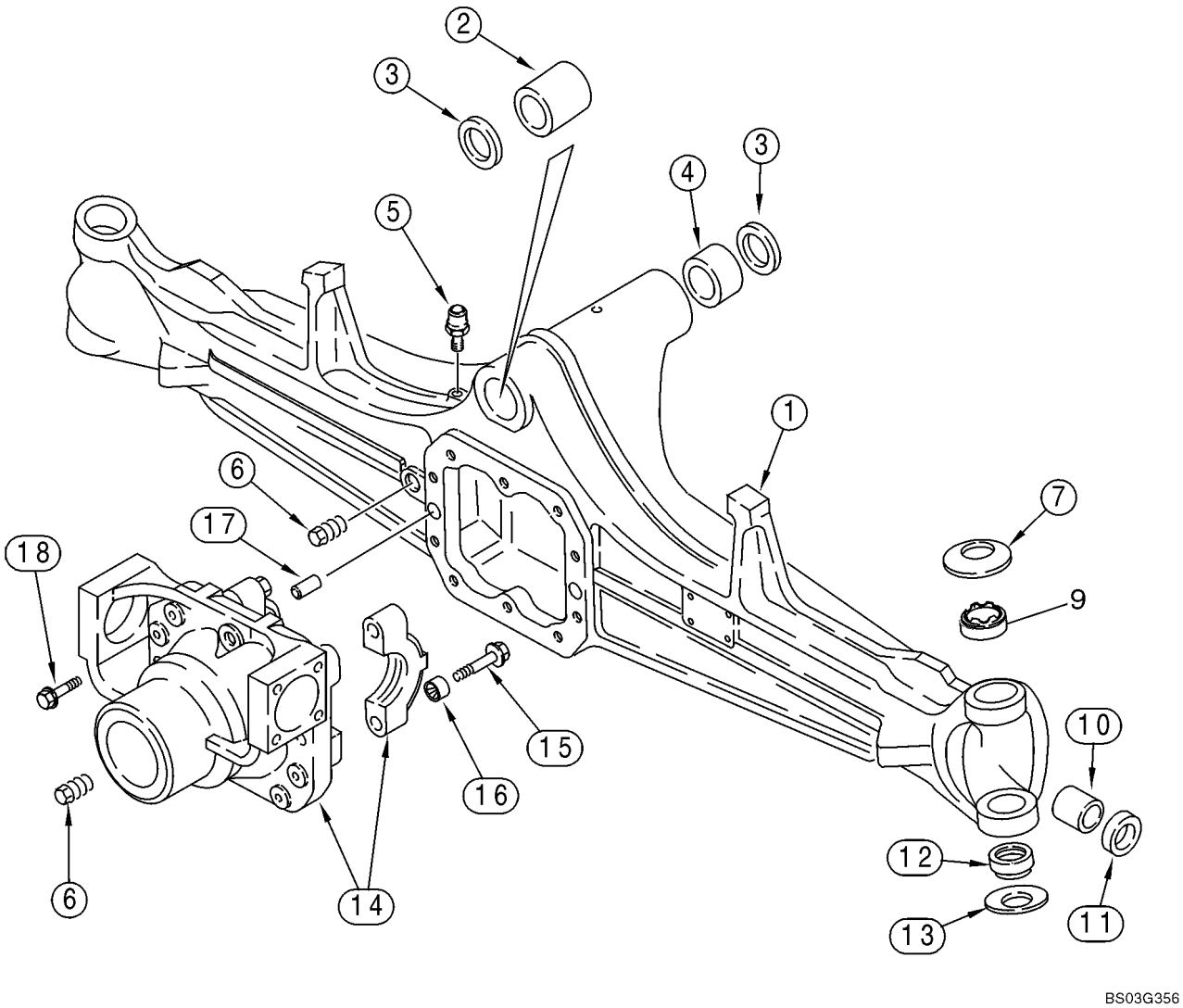

HTTP://WWW.MINNPARBACKHOEPARTS.COM



ESSIEU, TRACTION AVANT - BOÎTIER

| REF | FN | PART NUMBER | YR/SN | QTY | DESCRIPTION |
|---|---|---|---|---|---|
| | | 87417387 | | 1 | PONT AVANT Front; Incl. Ref 1 - 18; Also Includes Parts On Figures 06-02 - 06-08 |
| 1 | | 427107A1 | | 1 | CARTER DE PONT |
| | | B17575 | | X | FLUIDE 89 ml, Black RTV Silicone; Differential Carrier to Axle Housing |
| 2 | | D149725 | | 1 | BAGUE |
| 3 | | N14367 | | 2 | JOINT |
| 4 | | D149726 | | 1 | BAGUE |
| 5 | | 1966149C2 | | 1 | RENIFLARD |
| 6 | | A156873 | | 2 | BOUCHON DE VIDANGE 22 mm |
| 7 | | 122270A1 | | 2 | RONDELLE Belleville |
| 9 | | 87400286 | | 2 | BAGUE |
| 10 | | 1966186C1 | | 2 | BAGUE |
| 11 | | 311565A1 | | 2 | JOINT Oil, 30 x 44 x 14 mm thk, Triple Lip, Used In 15 mm Deep Counterbore |
| 12 | | 100520A1 | | 2 | ROTULE Bushing, Two Piece |
| 13 | | 122268A1 | | 2 | RONDELLE Belleville |
| | | 144454A1 | | 1 | SUPPORT (ASSEMBLE) Differential Carrier; Incl. Ref 14 - 16 |
| 14 | | NSS | | 1 | NON FOURNI SEPAREMENT Carrier |
| 15 | | S301065 | | 4 | VIS 14 x 75 mm |
| 16 | | 1966136C1 | | 4 | DOUILLE DE CENTRAGE Bushing |
| 17 | | 1966138C1 | | 2 | AXE, GROS Dowel |
| 18 | | S301064 | | 10 | VIS Flange, M12 x 33; 12.9 |
| | | B17575 | | X | FLUIDE 89 ml, Black RTV Silicone, Differential Carrier to Axle Housing |

HTTP://WWW.MINNPARBACKHOEPARTS.COM



ESSIEU, TRACTION AVANT - LOGEMENT DU PIVOT

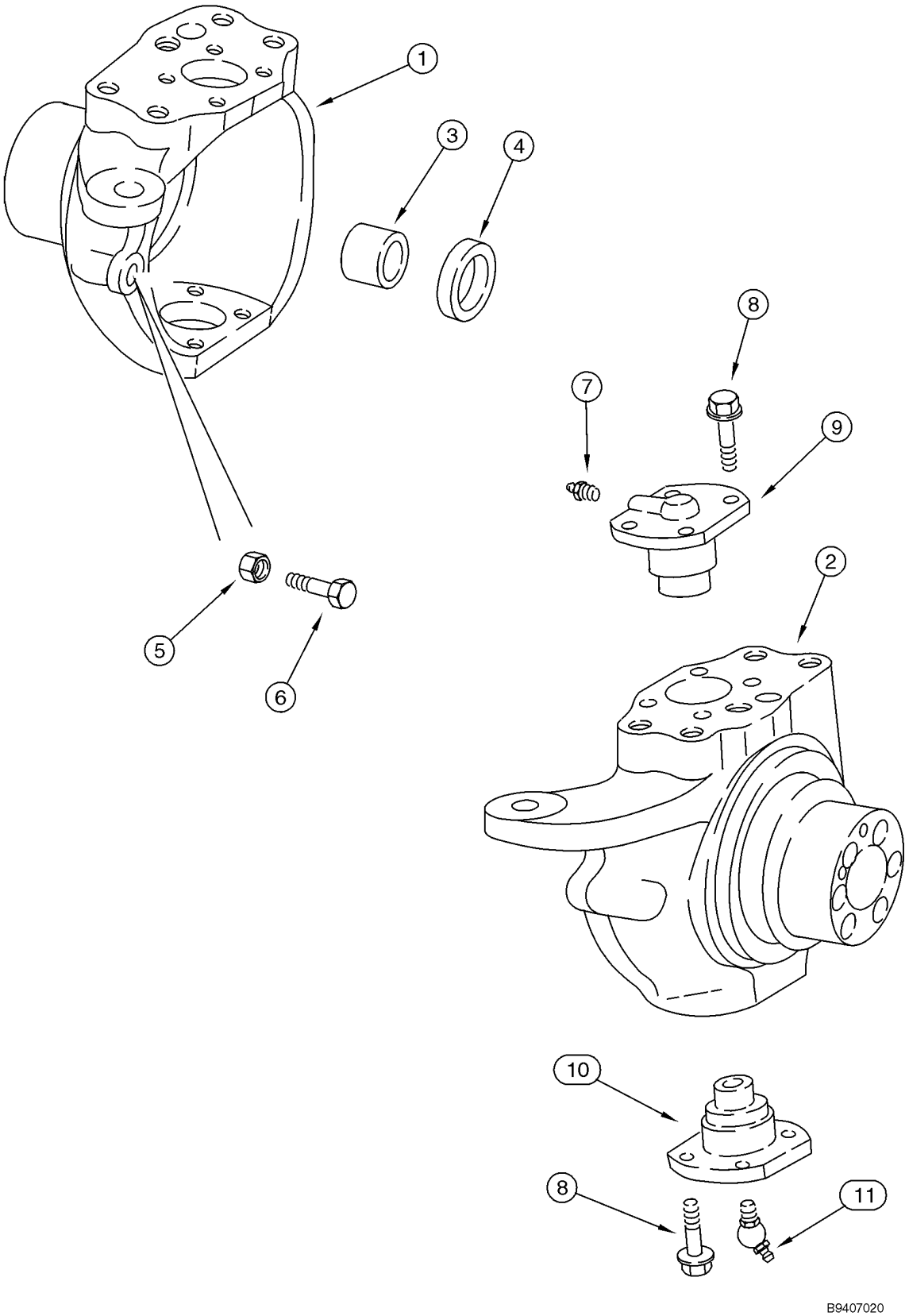

HTTP://WWW.MINNPARBACKHOEPARTS.COM



ESSIEU, TRACTION AVANT - LOGEMENT DU PIVOT

| REF | FN | PART NUMBER | YR/SN | QTY | DESCRIPTION |
|---|---|---|---|---|---|
| | | 87417387 | | 1 | PONT AVANT Front; Incl. Ref 1 - 11; Also Includes Parts On Figures 06-02 - 06-08 |
| 1 | | 397653A1 | | 1 | CARTER DE PONT Left-Hand, 60 mm Diameter Axle Shaft Seal Counterbore |
| | | B17575 | | X | FLUIDE 89 ml, Black RTV Silicone, Wear Ring to Swivel Housing |
| 2 | | 397654A1 | | 1 | CARTER DE PONT Right-Hand, 60 mm Diameter Axle Shaft Seal Counterbore |
| 3 | | 100532A1 | | 2 | BAGUE Used With Right-Hand or Left-Hand Swivel Housing, Not Included With Housing, Purchase Separately |
| 4 | | 402359A1 | | 2 | JOINT 45 x 60 x 16 mm thk, Triple Lip |
| 5 | | 1537663C1 | | 2 | ECROU M16 |
| 6 | | 1537664C1 | | 2 | VIS |
| 7 | | 712998R91 | | 2 | GRAISSEUR M6 x 1 |
| 8 | | 100533A1 | | 16 | BOULON M12 x 30 |
| 9 | | 122265A1 | | 2 | AXE, GROS King Pin |
| 10 | | 122264A1 | | 2 | AXE, GROS King Pin |
| 11 | | N13505 | | 2 | GRAISSEUR 45 deg, M6x1 |

HTTP://WWW.MINNPARBACKHOEPARTS.COM



ESSIEU, TRACTION AVANT - VERIN DE DIRECTION

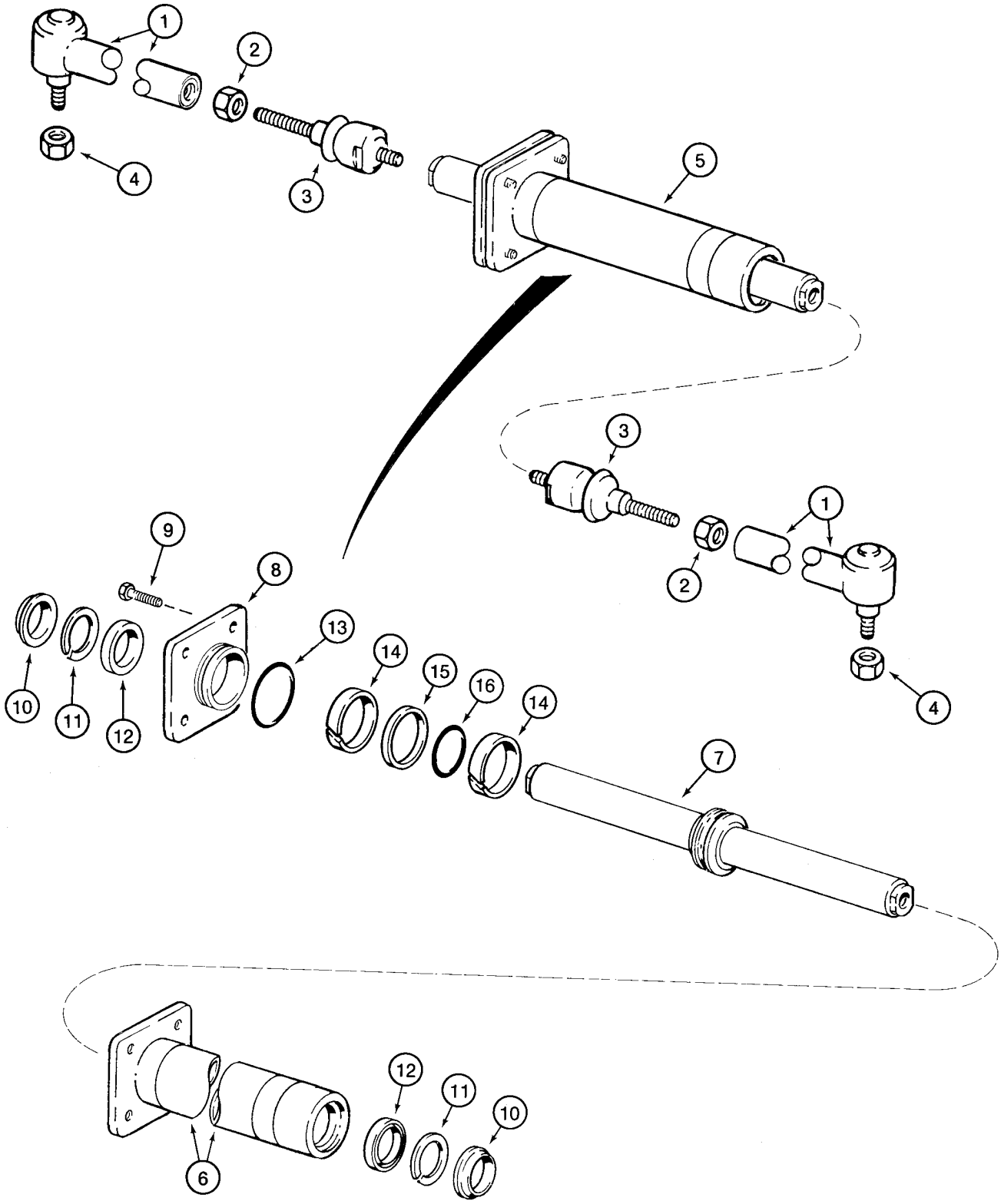

HTTP://WWW.MINNPARBACKHOEPARTS.COM



ESSIEU, TRACTION AVANT - VERIN DE DIRECTION

| REF | FN | PART NUMBER | YR/SN | QTY | DESCRIPTION |
|---|---|---|---|---|---|
| | | 87417387 | | 1 | PONT AVANT Front; Incl. Ref 1 - 16; Also Includes Parts On Figures 06-02 - 06-08 |
| | | 144457A1 | | 2 | BRAS Incl. Ref 1 - 3 |
| 1 | | NSS | | 1 | NON FOURNI SEPAREMENT Ball Joint |
| 2 | | 934727R1 | | 1 | ECROU M18 |
| 3 | | 112509A1 | | 1 | ROTULE |
| 4 | | 905839R1 | | 2 | ECROU M18 |
| 5 | | 144458A1 | | 1 | VERIN Steering, Incl. Ref 6 - 16, Order D149739 Kit to Service Seals |
| 6 | | D149738 | | 1 | VÉRIN DE DIRECTION TUBE |
| 7 | | 144459A1 | | 1 | TRINGLE Piston |
| 8 | | D149737 | | 1 | PRESSE-ETOUPE GLAND |
| | | B17575 | | X | FLUIDE 89 ml, Black RTV Silicone, Cylinder Flange to Cylinder |
| 9 | | 114296A1 | | 4 | VIS For Service Order 100524A1 Bolt and 892-11012 Washer |
| 10 | | NSS | | 2 | NON FOURNI SEPAREMENT Seal, Wiper |
| 11 | | NSS | | 2 | NON FOURNI SEPAREMENT Ring, Backup |
| 12 | | NSS | | 2 | NON FOURNI SEPAREMENT Seal |
| 13 | | NSS | | 1 | NON FOURNI SEPAREMENT O-Ring |
| 14 | | NSS | | 2 | NON FOURNI SEPAREMENT Ring, Wear |
| 15 | | NSS | | 1 | NON FOURNI SEPAREMENT Seal |
| 16 | | NSS | | 1 | NON FOURNI SEPAREMENT O-Ring |
| | | D149739 | | 1 | POCHETTE-JOINTS Incl. Ref 10 - 16 |

HTTP://WWW.MINNPARBACKHOEPARTS.COM



ESSIEU, TRACTION AVANT - ARBRES, ESSIEU

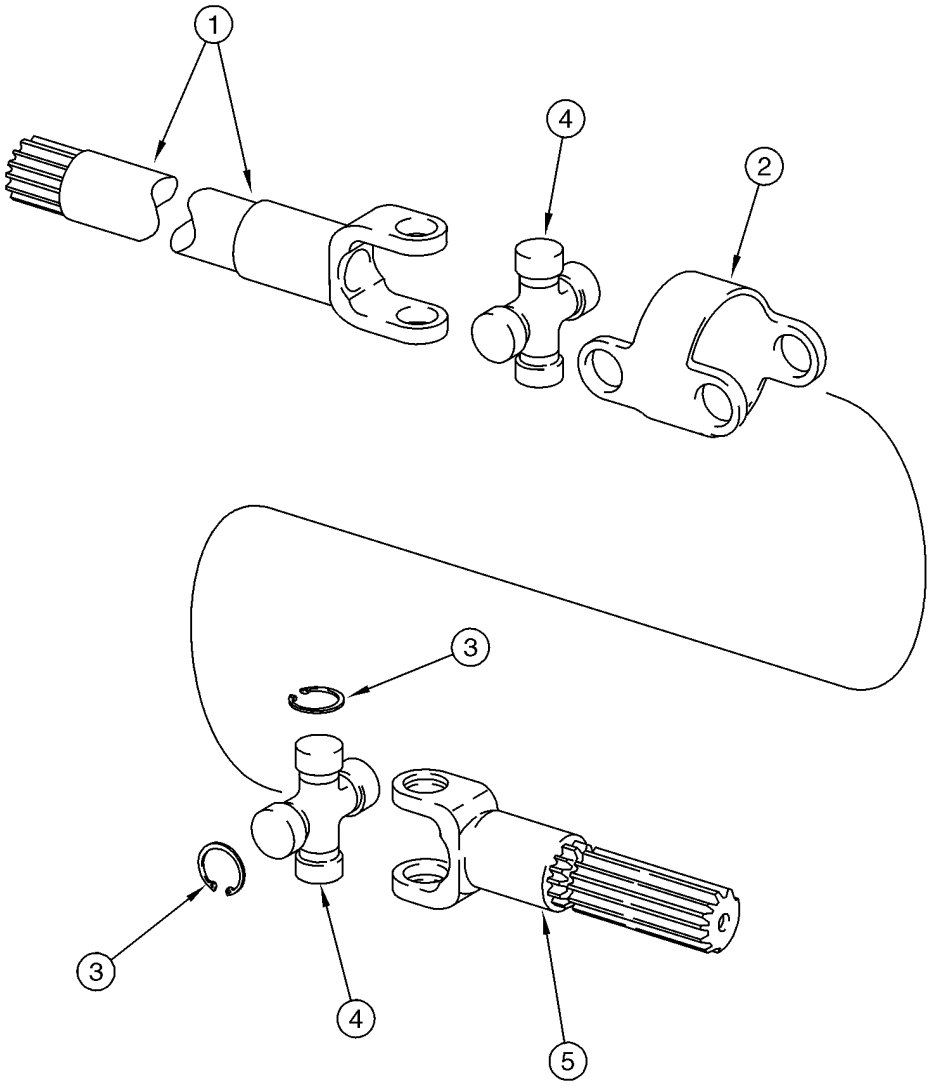


B9407022

HTTP://WWW.MINNPARBACKHOEPARTS.COM



ESSIEU, TRACTION AVANT - ARBRES, ESSIEU

| REF | FN | PART NUMBER | YR/SN | QTY | DESCRIPTION |
|---|---|---|---|---|---|
| | | 87417387 | | 1 | PONT AVANT Front; Incl. Ref 1 - 5; Also Includes Parts On Figures 06-02 - 06-08 |
| | | 144461A1 | | 2 | DEMI-ARBRE Incl. Ref 1 - 5; Not Available As An Assembly, Order Components |
| 1 | | 144462A1 | | 2 | FOURCHE Shaft, Long, Differential Side |
| 2 | | 390029A1 | | 2 | CORPS |
| 3 | | N14410 | | 16 | ANNEAU |
| 4 | | 144465A1 | | 4 | CROISILLON DE CARDAN Incl. Ref 3 |
| 5 | | 144463A1 | | 2 | ARBRE Short, Wheel Side |

HTTP://WWW.MINNPARBACKHOEPARTS.COM



ESSIEU, TRACTION AVANT - SATELLITE

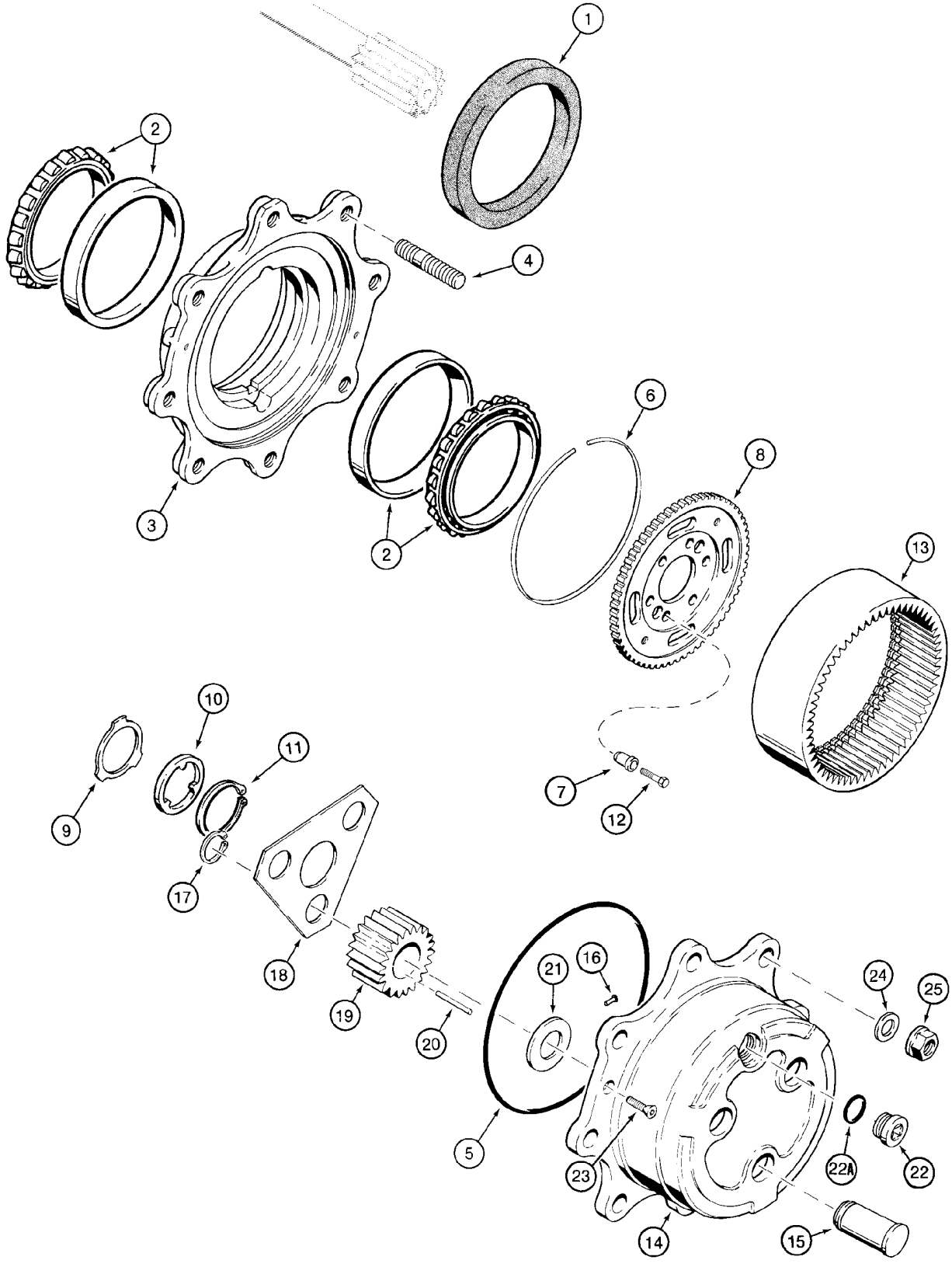

HTTP://WWW.MINNPARBACKHOEPARTS.COM



ESSIEU, TRACTION AVANT - SATELLITE

| REF | FN | PART NUMBER | YR/SN | QTY | DESCRIPTION |
|---|---|---|---|---|---|
| | | 87417387 | | 1 | PONT AVANT Front; Incl. Ref 1 - 25; Also Includes Parts On Figures 06-02 - 06-08 |
| 1 | | 311569A1 | | 2 | JOINT D'HUILE Triple Lip |
| 2 | | 1966169C1 | | 4 | ROULEMENT |
| | | 144466A1 | | 2 | MOYEU Incl. Ref 3, 4 |
| 3 | | NSS | | 1 | NON FOURNI SEPAREMENT Hub |
| 4 | | 100556A1 | | 8 | GOUJON |
| | | B17575 | | X | FLUIDE 89 ml, RTV Silicone, Planetary Cover to Hub |
| 5 | | 100552A1 | | 2 | JOINT TORIQUE |
| 6 | | 100559A1 | | 2 | JONC |
| 7 | | 116426A1 | | 12 | BAGUE-DE-CENTRAGE Bushing |
| 8 | | 116427A1 | | 2 | PIGNON CARRIER, Ring Gear |
| 9 | | 190684A1 | | 2 | RONDELLE Thrust |
| 10 | | 190682A1 | | 2 | RONDELLE Thrust |
| 11 | | A48041 | | 2 | CIRCLIP |
| 12 | | 116425A1 | | 12 | VIS |
| 13 | | 100561A1 | | 2 | PIGNON Ring |
| | | 100554A1 | | 2 | PILIER, SOUTIEN PLANETARY, Includes 100553A1, Ref 14 - 22A |
| | | 100553A1 | | 2 | CARTER (ASSEMBLE) Carrier, Incl. Ref 14 - 16 |
| 14 | | NSS | | 1 | NON FOURNI SEPAREMENT Carrier |
| 15 | | NSS | | 3 | NON FOURNI SEPAREMENT Shaft, Pinion |
| 16 | | K395093 | | 1 | AXE A TÊTE Lock |
| 17 | | 800-1134 | | 6 | ANNEAU-D'ARRET No. 34 |
| 18 | | 100555A1 | | 2 | PLAQUE, GRANDE Retainer |
| 19 | | 100562A1 | | 6 | PLANETAIRE Pinion Gear |
| | | B17575 | | X | FLUIDE , 89 ml, Black RTV Silicone, Planetary Cover to Hub |
| 20 | | 114295A1 | | 9 | JEU DE 10 AIGUILLES |
| 21 | | K395091 | | 6 | RONDELLE Thrust |
| 22 | | 100557A1 | | 2 | BOUCHON DE VIDANGE Incl. Ref 22A |
| 22A | | 238-6121 | | 1 | JOINT TORIQUE 1-1/16 ID x 3/32 |
| 23 | | K395082 | | 4 | VIS M8 x 20 |
| 24 | | 496-81000 | | 16 | RONDELLE 25/32 x 1-3/8 x 1/8, Not Included In Assembly, Purchase Separately |

HTTP://WWW.MINNPARBACKHOEPARTS.COM



ESSIEU, TRACTION AVANT - SATELLITE

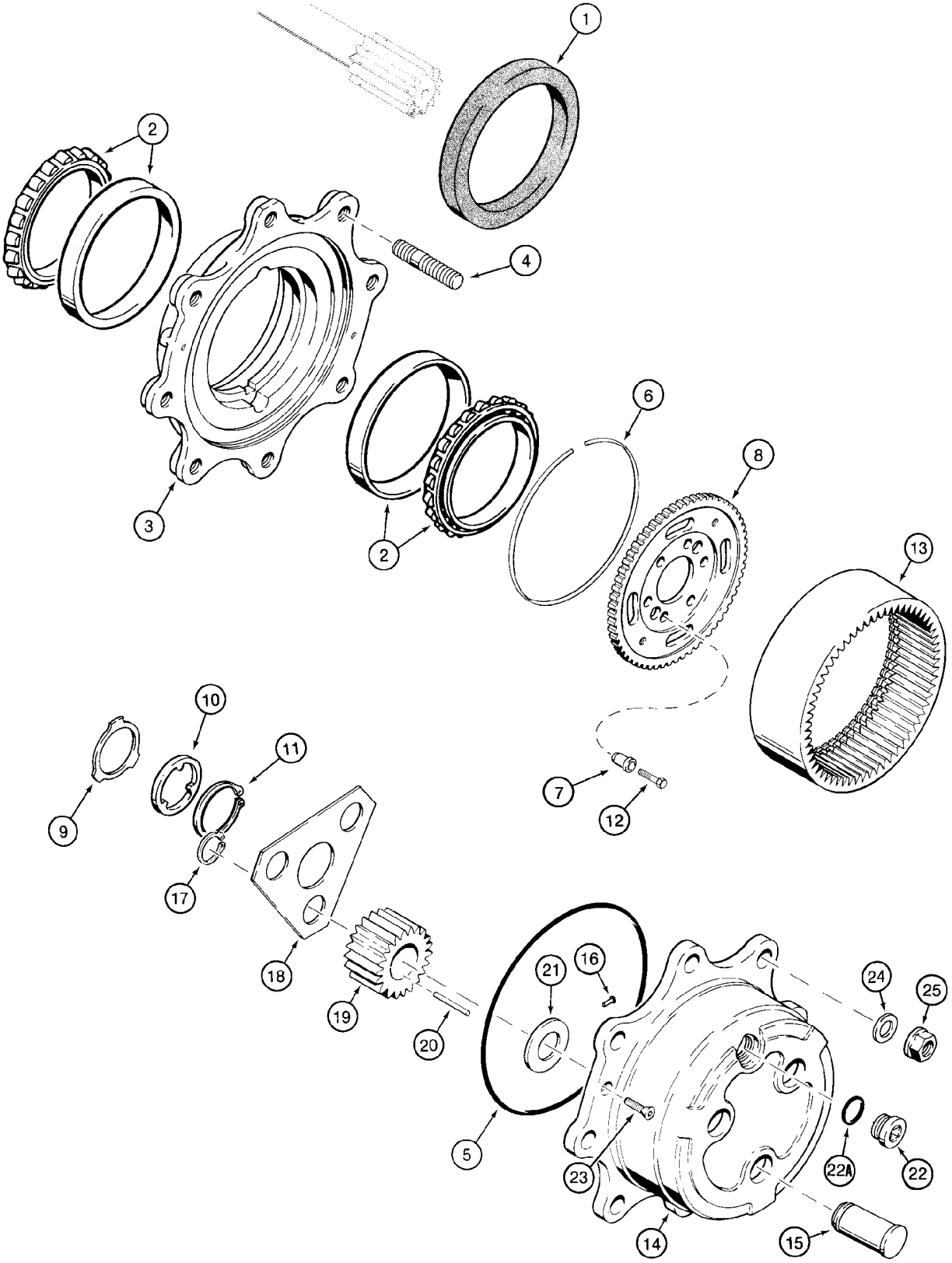

HTTP://WWW.MINNPARBACKHOEPARTS.COM



ESSIEU, TRACTION AVANT - SATELLITE

| REF | FN | PART NUMBER | YR/SN | QTY | DESCRIPTION |
|---|---|---|---|---|---|
| 25 | | 825-11418 | | 16 | ECROU M18, Not Included In Assembly, Purchase Separately |

HTTP://WWW.MINNPARBACKHOEPARTS.COM



ESSIEU, TRACTION AVANT - DIFFERENTIEL

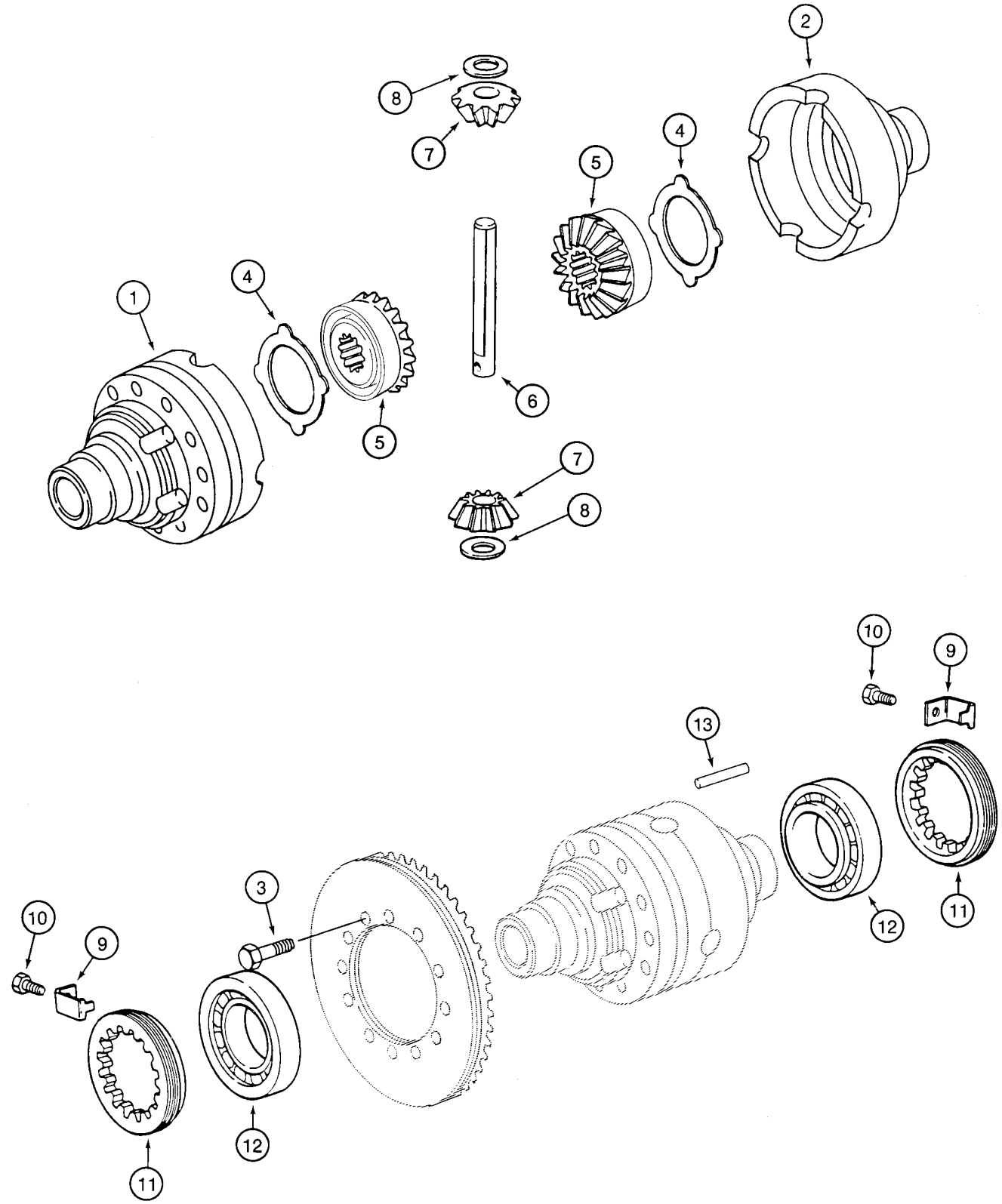

HTTP://WWW.MINNPARBACKHOEPARTS.COM



ESSIEU, TRACTION AVANT - DIFFERENTIEL

| REF | FN | PART NUMBER | YR/SN | QTY | DESCRIPTION |
|---|---|---|---|---|---|
| | | 87417387 | | 1 | PONT AVANT Front; Incl. Ref 1 - 13; Also Includes Parts On Figures 06-02 - 06-08 |
| | | 294933A1 | | 1 | SUPPORT (ASSEMBLE) Differential Housing, Incl. Ref 1, 2 |
| 1 | | NSS | | 1 | NON FOURNI SEPAREMENT Housing, Flange Half |
| 2 | | NSS | | 1 | NON FOURNI SEPAREMENT Housing, Plain Half |
| | | B17575 | | X | FLUIDE 89 ml, Black RTV Silicone, Bolt to Differential Housing |
| 3 | | 827-10075 | | 12 | VIS M10 x 75; 10.9 |
| 4 | | 1967003C1 | | 2 | RONDELLE DE BUTEE |
| | | 231397A1 | | 1 | LOT DE PIECES Differential Gear Set, Service Replacement, Incl. Ref 5 - 8, 13 |
| 5 | | N14407 | | 2 | PIGNON Side, No Longer Available, Order 231397A1 Differential Gear Set Kit |
| 6 | | K395087 | | 1 | AXE, GROS Shaft, Pinion Gear, No Longer Available, Order 231397A1 Differential Gear Set Kit |
| 7 | | N14408 | | 2 | PIGNON SOLAIRE Pinion Gear, No Longer Available, Order 231397A1 Differential Gear Set Kit |
| 8 | | K395075 | | 2 | RONDELLE Thrust, No Longer Available, Order 231397A1 Differential Gear Set Kit |
| 9 | | 1966153C1 | | 2 | PLAQUE D'ARRÊT Bracket |
| 10 | | 112486A1 | | 2 | VIS M6 x 12 |
| 11 | | 1966559C1 | | 2 | ECROU Locking Ring |
| 12 | | K395027 | | 2 | ROULEMENT |
| 13 | | K395086 | | 1 | AXE, GROS Dowel, No Longer Available, Order 231397A1 Differential Gear Set Kit |

HTTP://WWW.MINNPARBACKHOEPARTS.COM



ESSIEU, TRACTION AVANT - COURONNE ET PIGNON

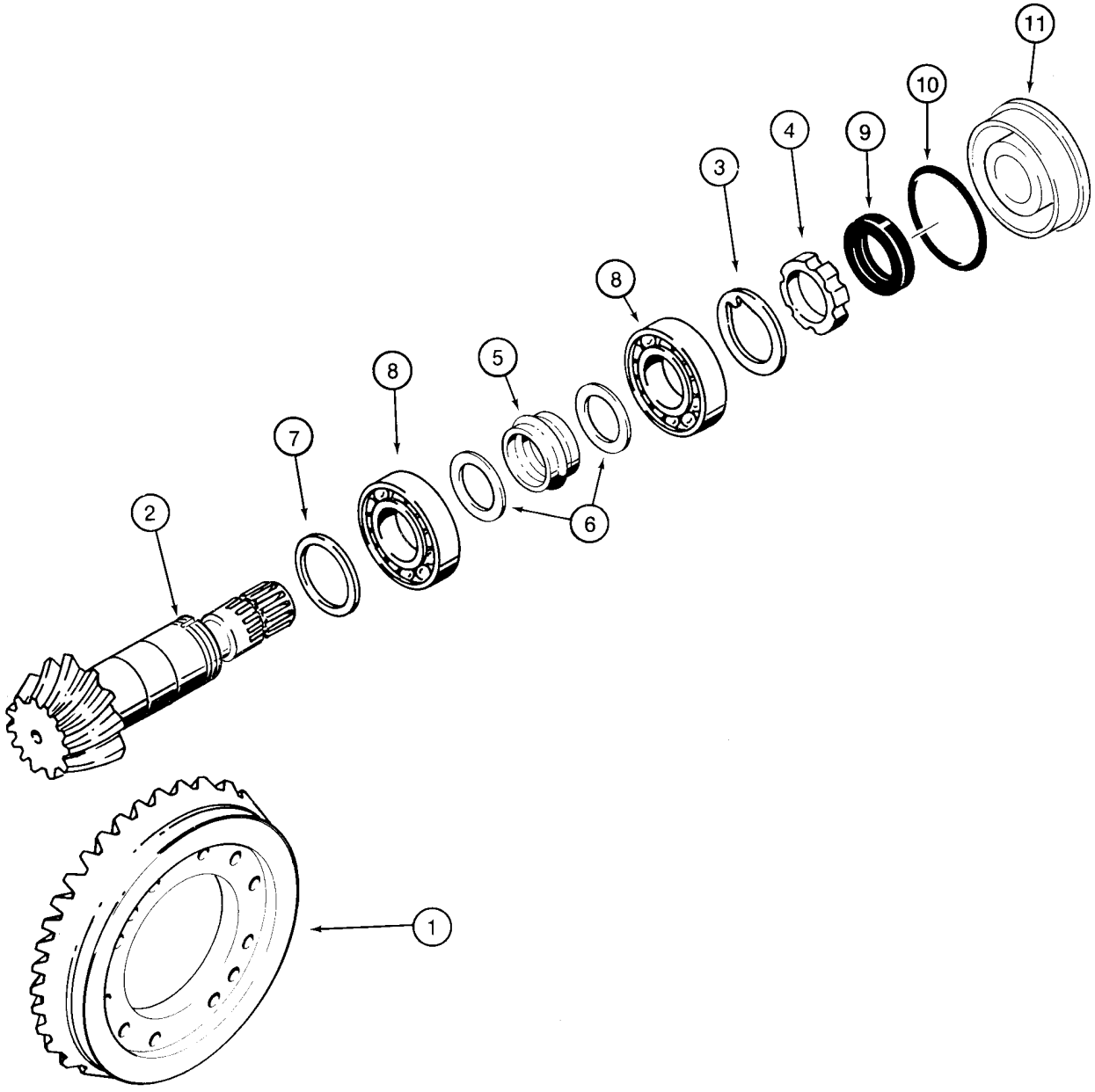


B9407025

HTTP://WWW.MINNPARBACKHOEPARTS.COM



ESSIEU, TRACTION AVANT - COURONNE ET PIGNON

| REF | FN | PART NUMBER | YR/SN | QTY | DESCRIPTION |
|---|---|---|---|---|---|
| | | 87417387 | | 1 | PONT AVANT Front; Incl. Ref 1 - 11; Also Includes Parts On Figures 06-02 - 06-08 |
| | | 144460A1 | | 1 | POCHETTE Ring and Pinion Gear Set, Incl. Ref 1 - 6 |
| 1 | | NSS | | 1 | NON FOURNI SEPAREMENT Ring, Gear |
| 2 | | NSS | | 1 | NON FOURNI SEPAREMENT Gear, Pinion Gear |
| 3 | | K261065 | | 1 | RONDELLE |
| 4 | | K261014 | | 1 | ECROU Ring |
| 5 | | 1349058C1 | | 1 | ENTRETOISE Collapsible |
| 6 | | 1349059C1 | | 2 | RONDELLE |
| 7 | | 140954A1 | | X | CALE D'EPAISSEUR 2,5 mm (0,098 in) |
| 7 | | 140953A1 | | X | CALE D'EPAISSEUR 2,6 mm (0,102 in) |
| 7 | | 140951A1 | | X | CALE D'EPAISSEUR 2,7 mm (0,106 in) |
| 7 | | 140949A1 | | X | CALE D'EPAISSEUR 2,8 mm (0,110 in) |
| 7 | | 140948A1 | | X | CALE D'EPAISSEUR 2,9 mm (0,114 in) |
| 7 | | 140943A1 | | X | CALE D'EPAISSEUR 3,0 mm (0,118 in) |
| 7 | | 140944A1 | | X | CALE D'EPAISSEUR 3,1 mm (0,122 in) |
| 7 | | 140945A1 | | X | CALE D'EPAISSEUR 3,2 mm (0,125 in) |
| 7 | | 140946A1 | | X | CALE D'EPAISSEUR 3,3 mm (0,129 in) |
| 7 | | 140947A1 | | X | CALE D'EPAISSEUR 3,4 mm (0,133 in) |
| 8 | | K395090 | | 2 | ROULEMENT A BILLES |
| 9 | | K262143 | | 1 | JOINT Oil |
| 10 | | 238-5152 | | 1 | JOINT TORIQUE 3-1/4 ID x 3/32 |
| 11 | | 128570A1 | | 1 | FLASQUE Cover, Differential |
| | | B17575 | | X | FLUIDE 89 ml, Black RTV Silicone, Differential Cover to Differential Carrier |

HTTP://WWW.MINNPARBACKHOEPARTS.COM



ARBRE DE TRANSMISSION, ESSIEU AVANT

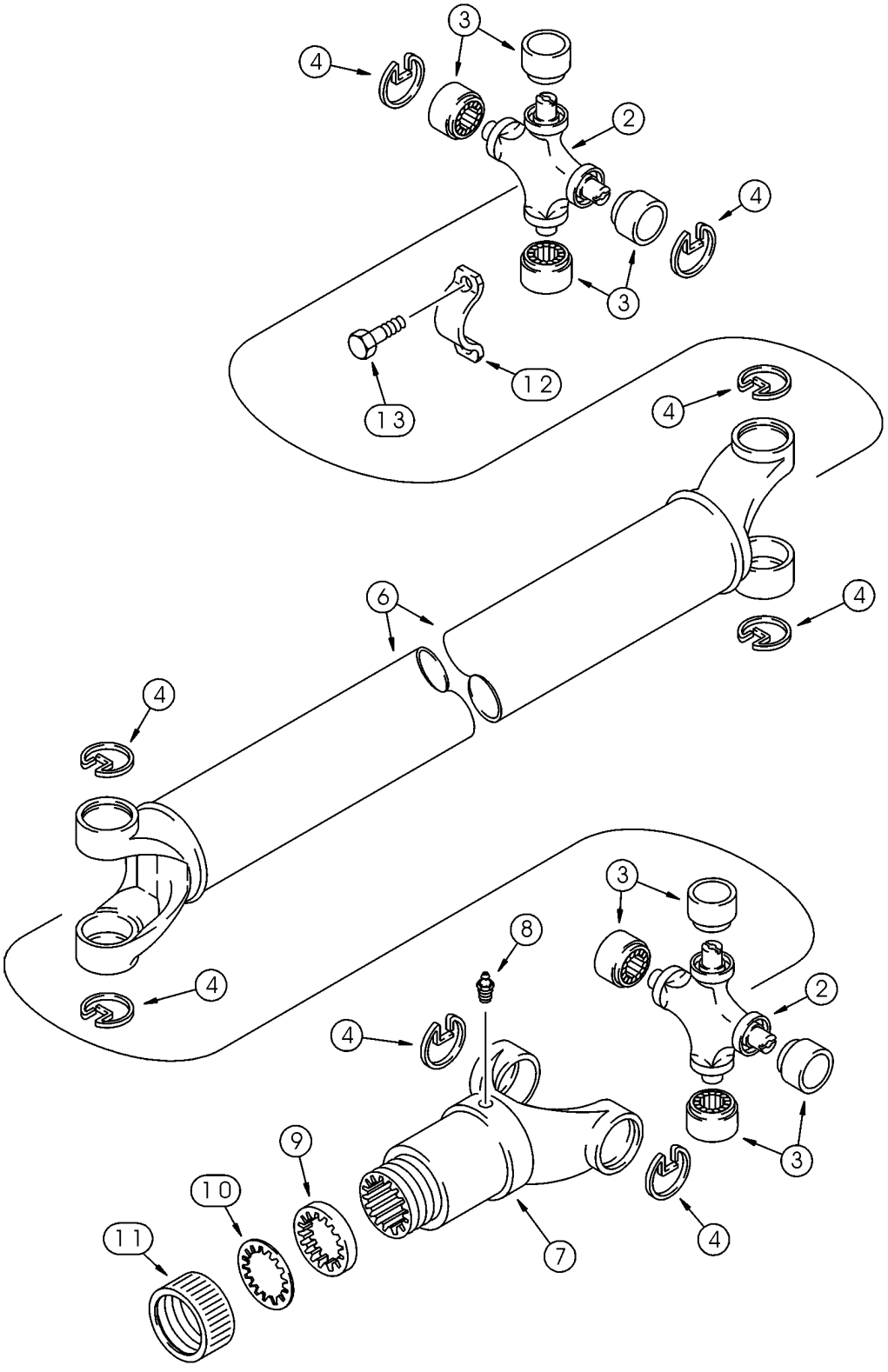

HTTP://WWW.MINNPARBACKHOEPARTS.COM



ARBRE DE TRANSMISSION, ESSIEU AVANT

| REF | FN | PART NUMBER | YR/SN | QTY | DESCRIPTION |
|---|---|---|---|---|---|
| | | 367861A2 | | 1 | ARBRE D'ENTRAINEMENT Incl. 393231A1, Ref 2 - 13 |
| | | 393231A1 | | 2 | POCHETTE Universal Joint, Incl. Ref 2 - 4 |
| 2 | | NSS | | 1 | NON FOURNI SEPAREMENT Joint, Universal |
| 3 | | NSS | | 4 | NON FOURNI SEPAREMENT Bearing, Journal |
| 4 | | NSS | | 4 | NON FOURNI SEPAREMENT Ring, Retaining |
| 6 | | 393234A1 | | 1 | ARBRE D'ENTRAINEMENT |
| 7 | | 144279A1 | | 1 | MACHOIRE |
| 8 | | 219-10 | | 1 | GRAISSEUR 1/4 tpr x 11/16 |
| | | D149860 | | 1 | COLIS POUR RECHANGE Incl. Ref 9 - 11 |
| 9 | | NSS | | 1 | NON FOURNI SEPAREMENT Washer, Cork |
| 10 | | NSS | | 1 | NON FOURNI SEPAREMENT Washer, Steel |
| 11 | | NSS | | 1 | NON FOURNI SEPAREMENT Cap |
| 12 | | 90-6682T1 | | 2 | COLLIER |
| 13 | | D137627 | | 4 | BOULON |

HTTP://WWW.MINNPARBACKHOEPARTS.COM



SYSTÈME DE REFROIDISSEMENT - TRANSMISSION

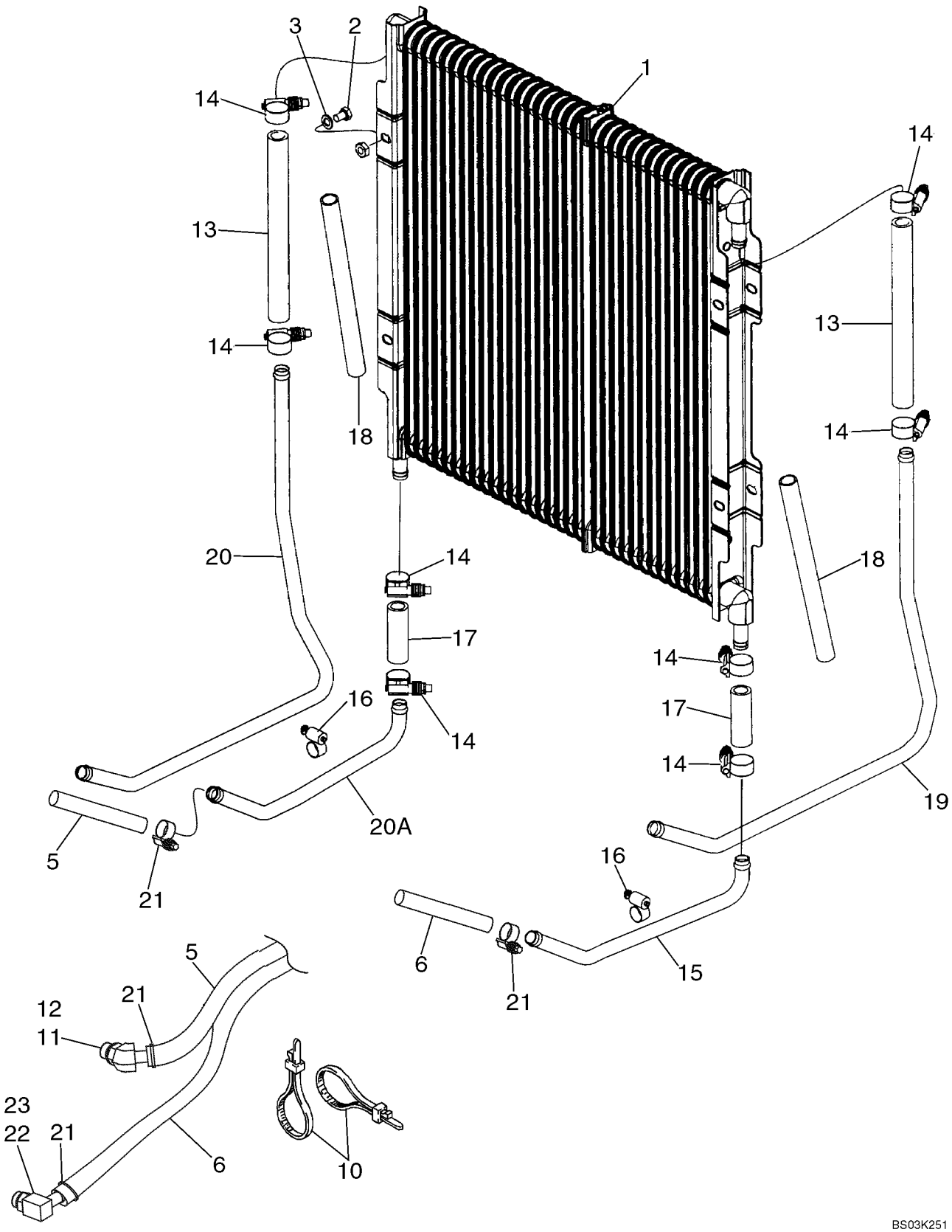

HTTP://WWW.MINNPARBACKHOEPARTS.COM



SYSTÈME DE REFROIDISSEMENT - TRANSMISSION

| REF | FN | PART NUMBER | YR/SN | QTY | DESCRIPTION |
|---|---|---|---|---|---|
| 1 | | 87427158 | | 1 | REFROIDISSEUR D'HUILE Hydraulic Oil Cooler |
| 2 | | 614-8012 | | 4 | VIS M8 x 12 |
| 3 | | 895-11008 | | 4 | RONDELLE 9 x 16 x 1,6 mm |
| 5 | | 87422597 | | 1 | FLEXIBLE (ASSEMBLE) 975 mm (38-13/32 in), Transmission to Cooler Inlet |
| 6 | | 87422598 | | 1 | FLEXIBLE (ASSEMBLE) 1225 mm (48-1/4 in), Cooler Outlet to Transmission |
| 10 | | L18337 | | 3 | SANGLE 15 in |
| 11 | | 217-314 | | 1 | COUDE 45 deg, 5/8 stem x 7/8 Or, Incl. Ref 12 |
| 12 | | 237-6010 | | 1 | JOINT TORIQUE 3/4 ID x 3/32 |
| 13 | | 87417238 | | 2 | FLEXIBLE 235 mm (9-9/32 in) |
| 14 | | 328186A1 | | 8 | BRIDE, FLEXIBLE |
| 15 | | 87435277 | | 1 | TUBE Lower |
| 16 | | 214-1412 | | 2 | COLLIER No. 12 |
| 17 | | 87426742 | | 2 | FLEXIBLE 68 mm (2-11/16 in) |
| 18 | | 87428998 | | 2 | GAINE PLASTIQUE 250 mm (9-7/8 in) Sleeve |
| 19 | | 87435278 | | 1 | TUBE Right-Hand Upper Cooler |
| 20 | | 87435280 | | 1 | TUBE Left-Hand Upper Cooler |
| 20A | | 87435279 | | 1 | TUBE Lower |
| 21 | | 328186A1 | | 4 | BRIDE, FLEXIBLE |
| 22 | | 217-349 | | 1 | COUDE 90 deg, Incl. Ref 23 |
| 23 | | 237-6010 | | 1 | JOINT TORIQUE |

HTTP://WWW.MINNPARBACKHOEPARTS.COM



TRANSMISSION - SUPPORT

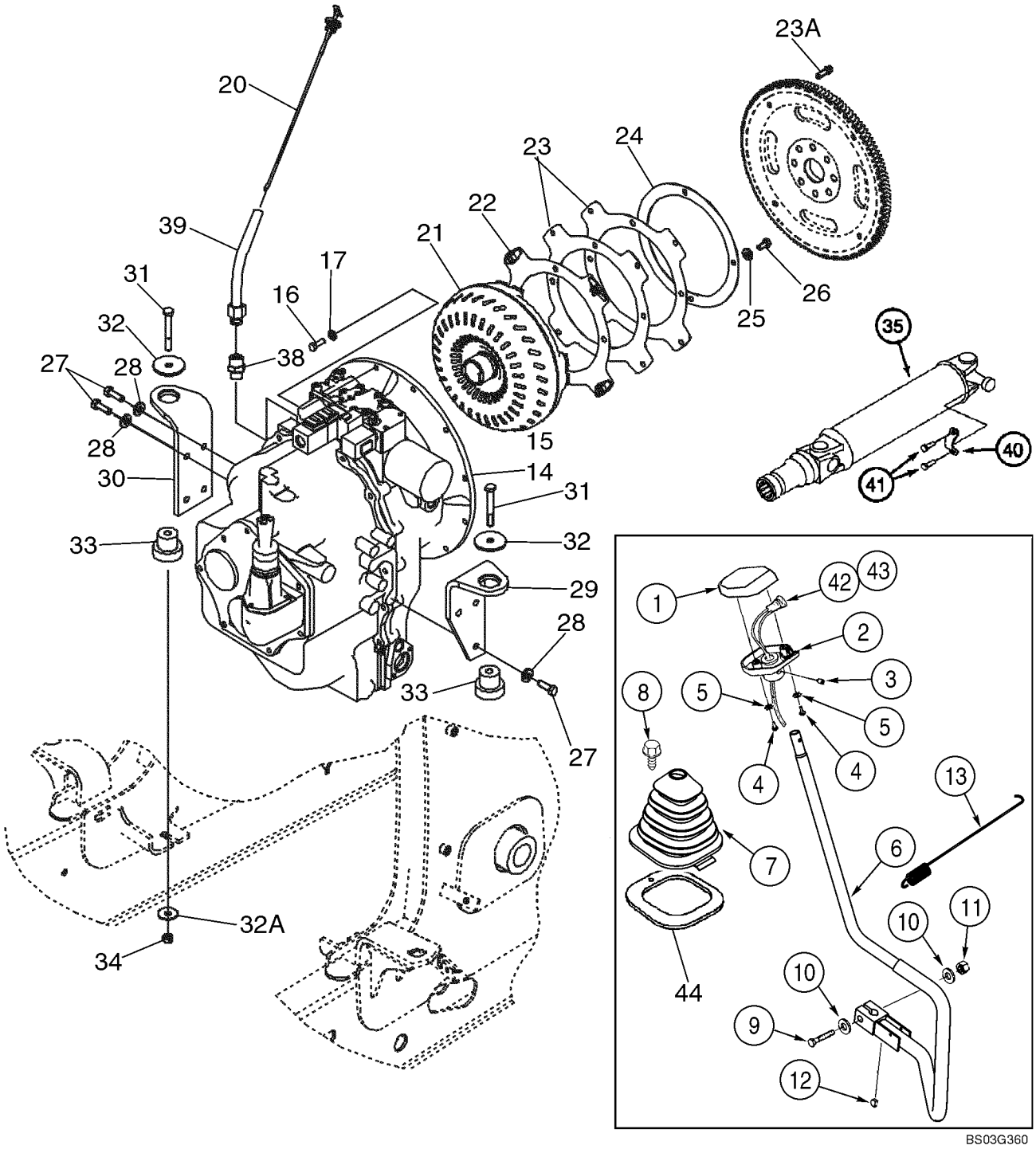

HTTP://WWW.MINNPARBACKHOEPARTS.COM



TRANSMISSION - SUPPORT

| REF | FN | PART NUMBER | YR/SN | QTY | DESCRIPTION |
|---|---|---|---|---|---|
| | | 309747A1 | | 1 | PLAQUE Gear Shift Lever, Includes NSS Gasket, Incl. Ref 1, 2, 4, 5 |
| | | NSS | | 2 | NON FOURNI SEPAREMENT GASKET, Knob |
| 1 | | 187714A1 | | 1 | BOUTON Knob, Upper |
| 2 | | 187715A1 | | 1 | BOUTON Knob, Lower |
| 3 | | 484-6316 | | 1 | VIS Setscrew, 5/16 NF x 3/8; hdg pt |
| 4 | | 87020181 | | 2 | VIS No. 10 NF x 7/8 |
| 5 | | 493-41020 | | 2 | RONDELLE FREIN 3/16 |
| 6 | | 379314A4 | | 1 | LEVIER (ASSEMBLE) Gear Shift Lever |
| 7 | | 400588A2 | | 1 | MANCHETTE |
| 8 | | 233724A1 | | 1 | VIS M6 x 25 |
| 9 | | 827-12065 | | 1 | BOULON M12 x 65; 10.9 |
| 10 | | 896-11012 | | 2 | RONDELLE 13,5 x 24 x 3 mm |
| 11 | | 832-10412 | | 1 | ECROU M12 |
| 12 | | 126-116 | | 1 | CLAVETTE 3/16 x 3/4 Woodruff Key |
| 13 | | 380537A2 | | 1 | RESSORT |
| 14 | | 86984097 | | 1 | TRANSMISSION Two Wheel Drive Models, See Figures 06-12 - 06-21 |
| 15 | | 86984098 | | 1 | TRANSMISSION Four Wheel Drive Models, See Figures 06-12 - 06-22 |
| 16 | | 627-10030 | | 12 | VIS M10 x 30; 10.9 |
| 17 | | 496-21041 | | 12 | RONDELLE 13/32 x 13/16 x 3/32 |
| 20 | | 87430618 | | 1 | JAUGE DE NIVEAU |
| 21 | | 86993548 | | 1 | CONVERTISSEUR Torque Converter, New |
| 22 | | 87406934 | | 1 | PLAQUE DE SERRAGE Flex Plate, With Caged Nuts |
| 23 | | 86993546 | | 2 | PLAQUE DE SERRAGE Flex Plate |
| 23A | | 87019767 | | 4 | VIS Flange, M10 x 30 |
| 24 | | 87409201 | | 1 | PLAQUE DE SERRAGE Backing Plate |
| 25 | | 896-15010 | | 4 | RONDELLE 11 x 24 x 3 mm |
| 26 | | 614-10020 | | 4 | VIS M10 x 20 |
| 27 | | 614-12035 | | 7 | VIS M12 x 35 |
| 28 | | 896-15012 | | 7 | RONDELLE 13,5 x 28 x 4 mm |
| 29 | | 87416977 | | 1 | SUPPORT Right-Hand Bracket |
| 30 | | 87416978 | | 1 | SUPPORT Left-Hand Bracket |
| 31 | | 814-12080 | | 2 | VIS M20 x 80 |
| 32 | | 85801585 | | 2 | RONDELLE Special |

HTTP://WWW.MINNPARBACKHOEPARTS.COM



TRANSMISSION - SUPPORT

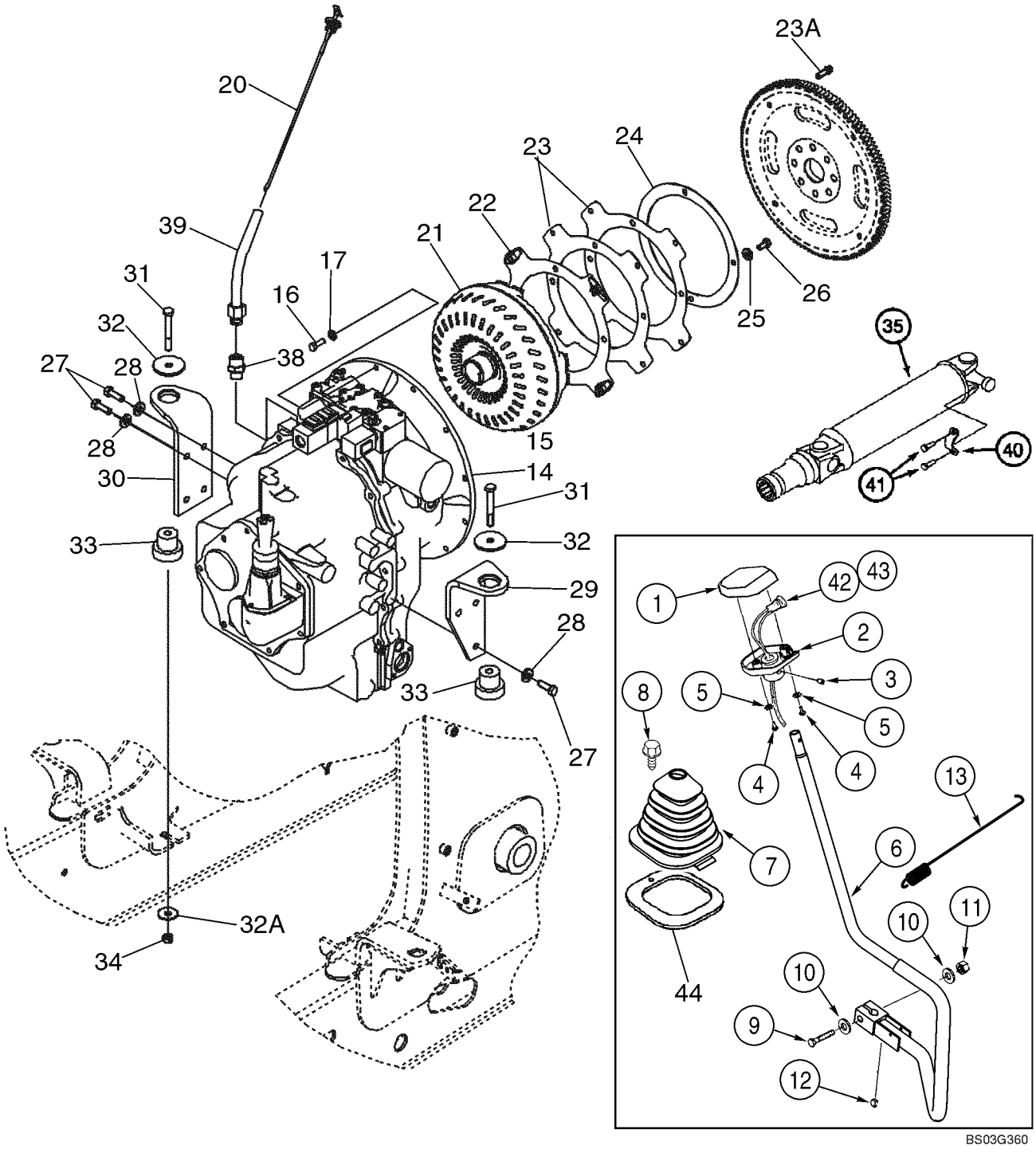

HTTP://WWW.MINNPARBACKHOEPARTS.COM



TRANSMISSION - SUPPORT

| REF | FN | PART NUMBER | YR/SN | QTY | DESCRIPTION |
|---|---|---|---|---|---|
| 32A | | 85802618 | | 2 | RONDELLE D'ETANCHEITE |
| 33 | | 87416967 | | 2 | SUPPORT |
| 34 | | 832-10412 | | 2 | ECROU Lock, M12 |
| 35 | | 367860A3 | | 1 | ARBRE D'ENTRAINEMENT Transmission to Rear Axle, See Figure 06-31 |
| 38 | | 218-459 | | 1 | RACCORD 1-5/16 fl x 3/4 PT |
| 39 | | 395344A1 | | 1 | TUYAUTERIE Dipstick |
| 40 | | 90-6682T1 | | 2 | COLLIER |
| 41 | | D137627 | | 4 | BOULON |
| 42 | | 123097A1 | | 1 | CONTACTEUR Push Button, Clutch Cutout |
| 43 | | 123809A2 | | 1 | FAISCEAU Clutch Cutout, Transmission Gear Shift Lever |
| 44 | | 410561A1 | | 1 | JOINT Shift Lever Boot, Cab Models |

HTTP://WWW.MINNPARBACKHOEPARTS.COM



TRANSMISSION - FILTRE À HUILE

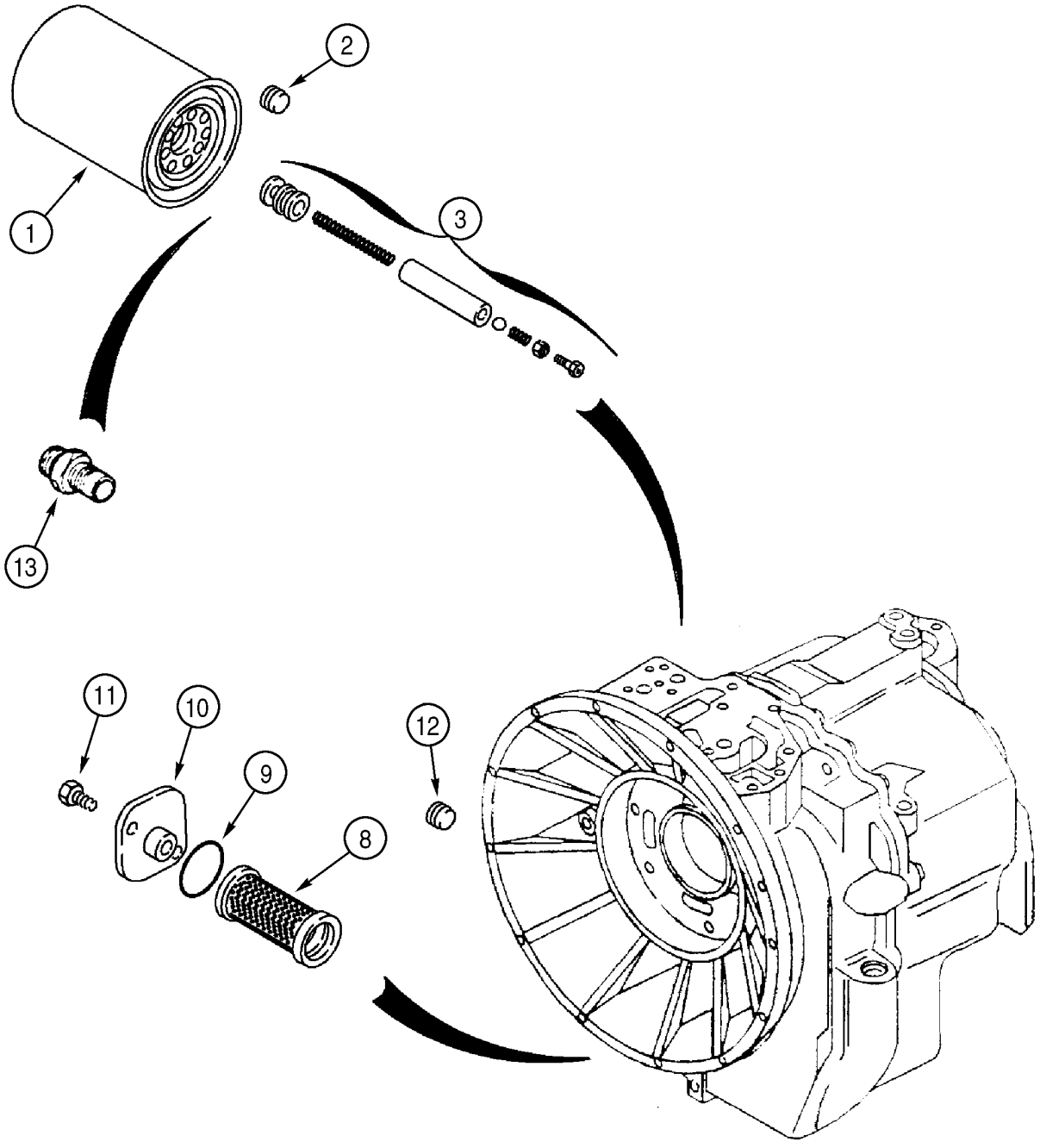

HTTP://WWW.MINNPARBACKHOEPARTS.COM



TRANSMISSION - FILTRE À HUILE

| REF | FN | PART NUMBER | YR/SN | QTY | DESCRIPTION |
|---|---|---|---|---|---|
| | | 86984097 | | 1 | TRANSMISSION Two Wheel Drive, Incl. Ref 1, 8 - 11, 13; Also Includes Parts On Figures 06-12 - 06-21 |
| | | 86984098 | | 1 | TRANSMISSION Four Wheel Drive, Incl. Ref 1 - 13; Also Includes Parts On Figures 06-12 - 06-22 |
| 1 | | 254686A2 | | 1 | FILTRE Oil |
| 2 | | 181101A1 | | 1 | BOUCHON 14 - 1.5 mm; Four Wheel Drive Models Only |
| 3 | | 181274A1 | | 1 | LOT DE PIECES Valve; Four Wheel Drive Models Only |
| 8 | | 278534A1 | | 1 | TAMIS-FILTRE Oil |
| 9 | | 100748A1 | | 1 | JOINT TORIQUE |
| 10 | | 181219A1 | | 1 | COUVERCLE |
| 11 | | 614-8018 | | 2 | VIS M8 x 18 |
| 12 | | 181102A1 | | 1 | BOUCHON Four Wheel Drive Models Only |
| 13 | | 181202A1 | | 1 | RACCORD |

HTTP://WWW.MINNPARBACKHOEPARTS.COM



TRANSMISSION (2WD) - BOÎTIER

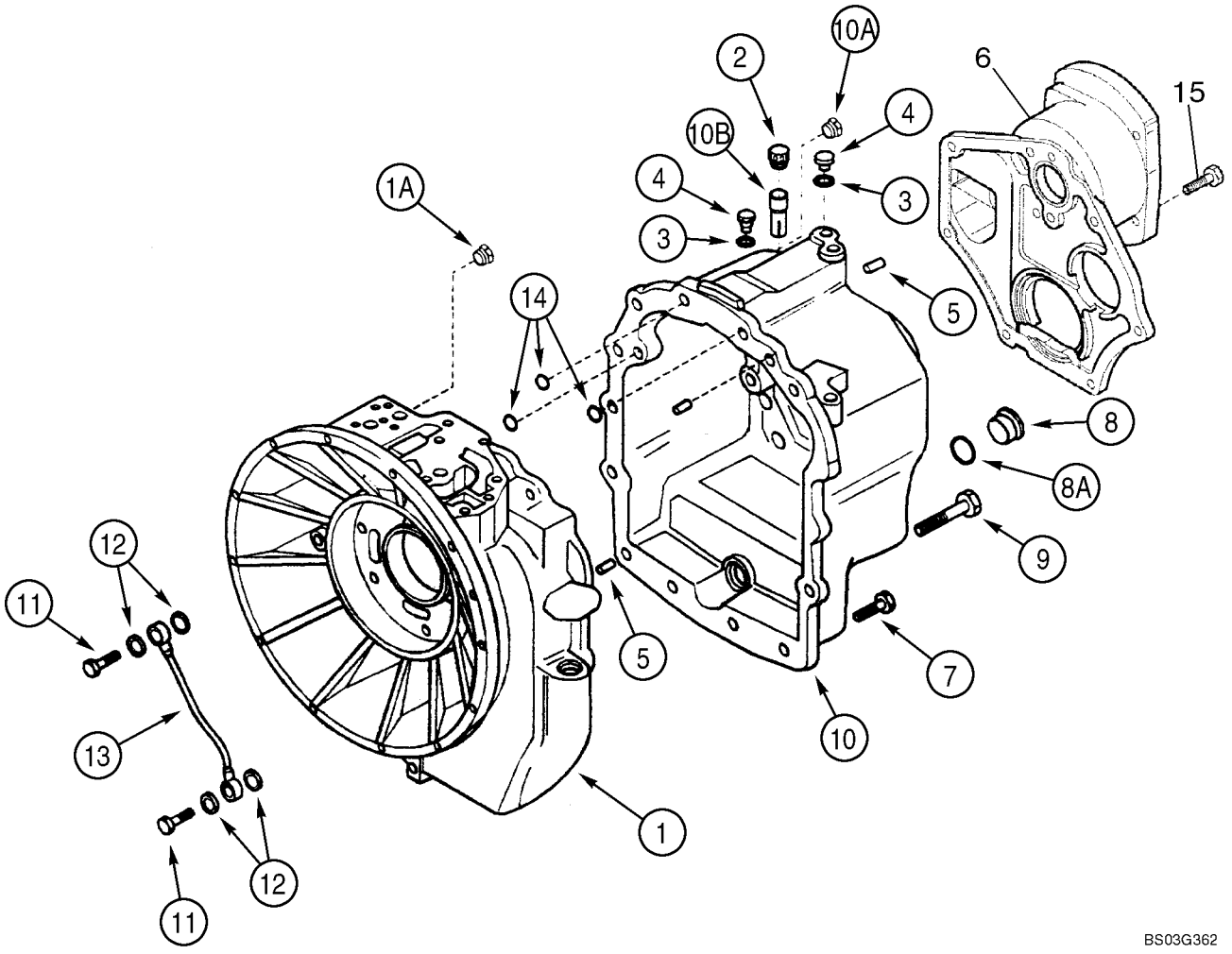

HTTP://WWW.MINNPARBACKHOEPARTS.COM



TRANSMISSION (2WD) - BOÎTIER

| REF | FN | PART NUMBER | YR/SN | QTY | DESCRIPTION |
|---|---|---|---|---|---|
| | | 86984097 | | 1 | TRANSMISSION Two Wheel Drive, Incl. Ref 1 - 14; Also Includes Parts On Figures 06-12 - 06-21 |
| 1 | | 87429989 | | 1 | CARTER Housing, Front Half, Use With Loctite 510 or 518 as a Gasket Eliminator; Incl. Ref 1A |
| 1A | | E135809 | | 1 | BOUCHON If Used |
| 2 | | 1530028C1 | | 1 | RENIFLARD (ASSEMBLE) |
| | | 310772A1 | | 1 | TUYAU 18 OD x 42 mm lg, Breather, Not Illustrated |
| 3 | | 934667R1 | | 4 | RONDELLE CUIVRE Copper Washer, 10 x 14 x 1.5 mm |
| 4 | | 181100A1 | | 3 | BOUCHON |
| 5 | | K260177 | | 3 | AXE Dowel, 10 x 25 mm |
| 6 | | 87429987 | | 1 | ADAPTEUR Adapter Cover, Pump, Copper |
| 7 | | 614-10030 | | 19 | VIS M10 x 30 |
| 8 | | 100557A1 | | 1 | BOUCHON DE VIDANGE Incl. Ref 8A |
| 8A | | 238-6121 | | 1 | JOINT TORIQUE 1-1/16 ID x 3/32 |
| 9 | | 814-10150 | | 2 | VIS M10 x 150 |
| 10 | | 87429988 | | 1 | CARTER HOUSING, Rear Half, Use With Superbond 539 as a Gasket Eliminator; Incl. Ref 10A, 10B |
| 10A | | E135809 | | 1 | BOUCHON If Used |
| 10B | | 310772A1 | | 1 | TUYAU 18 OD x 42 mm lg, Breather, Not Illustrated |
| 11 | | 181179A1 | | 2 | VIS CREUSE |
| 12 | | 181105A1 | | 4 | RONDELLE CUIVRE 14 x 20 x 1.5 mm; Sealing |
| 13 | | 181232A1 | | 1 | TUYAU Lubrication Tube |
| 14 | | 181141A1 | | 3 | JOINT TORIQUE |
| 15 | | 814-10045 | | 2 | VIS M10 x 45 |

HTTP://WWW.MINNPARBACKHOEPARTS.COM



TRANSMISSION (4WD) - BOÎTIER

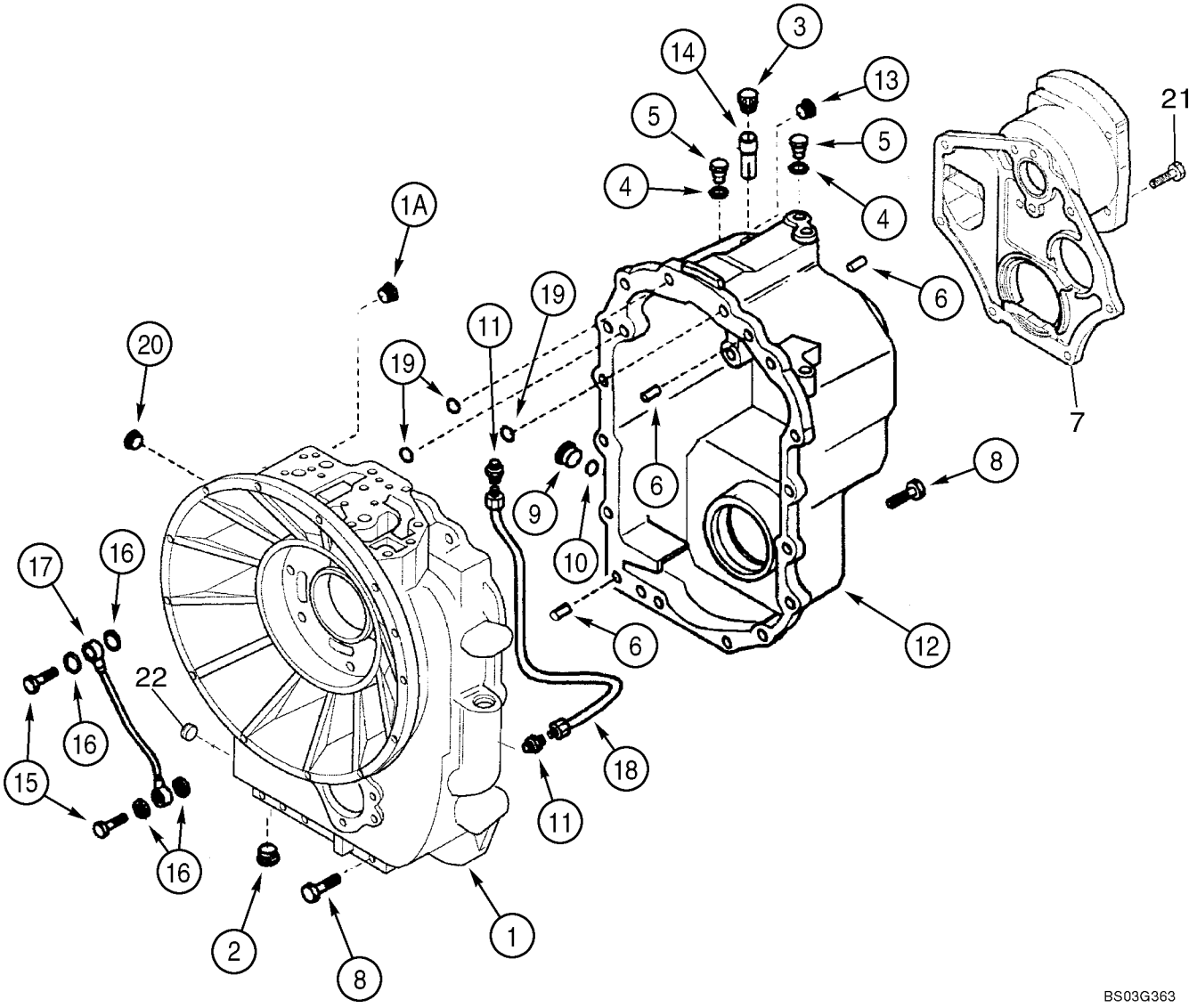

HTTP://WWW.MINNPARBACKHOEPARTS.COM



TRANSMISSION (4WD) - BOÎTIER

| REF | FN | PART NUMBER | YR/SN | QTY | DESCRIPTION |
|---|---|---|---|---|---|
| | | 86984098 | | 1 | TRANSMISSION Four Wheel Drive, Incl. Ref 1 - 20; Also Includes Parts On Figures 06-12 - 06-22 |
| 1 | | 87429972 | | 1 | CARTER Housing, Front Half, Use With Loctite 510 or 518 as a Gasket Eliminator; Incl. Ref 1A |
| 1A | | E135809 | | 1 | BOUCHON |
| 2 | | 239606A1 | | 1 | BOUCHON |
| 3 | | 1530028C1 | | 1 | RENIFLARD (ASSEMBLE) |
| | | 310772A1 | | 1 | TUYAU 18 OD x 42 mm lg, Breather, Not Illustrated |
| 4 | | 934667R1 | | 3 | RONDELLE CUIVRE Copper Washer, 10 x 14 x 1.5 mm |
| 5 | | 181100A1 | | 3 | BOUCHON |
| 6 | | K260177 | | 3 | AXE Dowel, 10 x 25 mm |
| 7 | | 87429987 | | 1 | ADAPTEUR Adapter Cover, Pump |
| 8 | | 614-10030 | | 23 | VIS M10 x 30 |
| 9 | | 100557A1 | | 1 | BOUCHON DE VIDANGE Incl. Ref 10 |
| 10 | | 238-6121 | | 1 | JOINT TORIQUE 1-1/16 ID x 3/32 |
| 11 | | 218-1023 | | 2 | RACCORD 1/2 fl x 1/4 PT |
| 12 | | 87429986 | | 1 | CARTER HOUSING, Rear Half, Use With Superbond 539 as a Gasket Eliminator; Incl. Ref 13, 14 |
| 13 | | E135809 | | 1 | BOUCHON If Used |
| 14 | | 310772A1 | | 1 | TUYAU 18 OD x 42 mm lg, Breather |
| 15 | | 181179A1 | | 2 | VIS CREUSE |
| 16 | | 181105A1 | | 4 | RONDELLE CUIVRE 14 x 20 x 1.5 mm |
| 17 | | 181232A1 | | 1 | TUYAU Lubrication Tube |
| 18 | | 181176A1 | | 1 | TUYAU Oil Tube |
| 19 | | 181141A1 | | 3 | JOINT TORIQUE |
| 20 | | 181101A1 | | 1 | BOUCHON 14 - 1.5 mm |
| 21 | | 814-10045 | | 2 | VIS M10 x 45 |
| 22 | | 181102A1 | | 1 | BOUCHON |

HTTP://WWW.MINNPARBACKHOEPARTS.COM

| 06-15 | | p1 | 01/04 |
|---|---|---|---|

TRANSMISSION - POMPE A HUILE

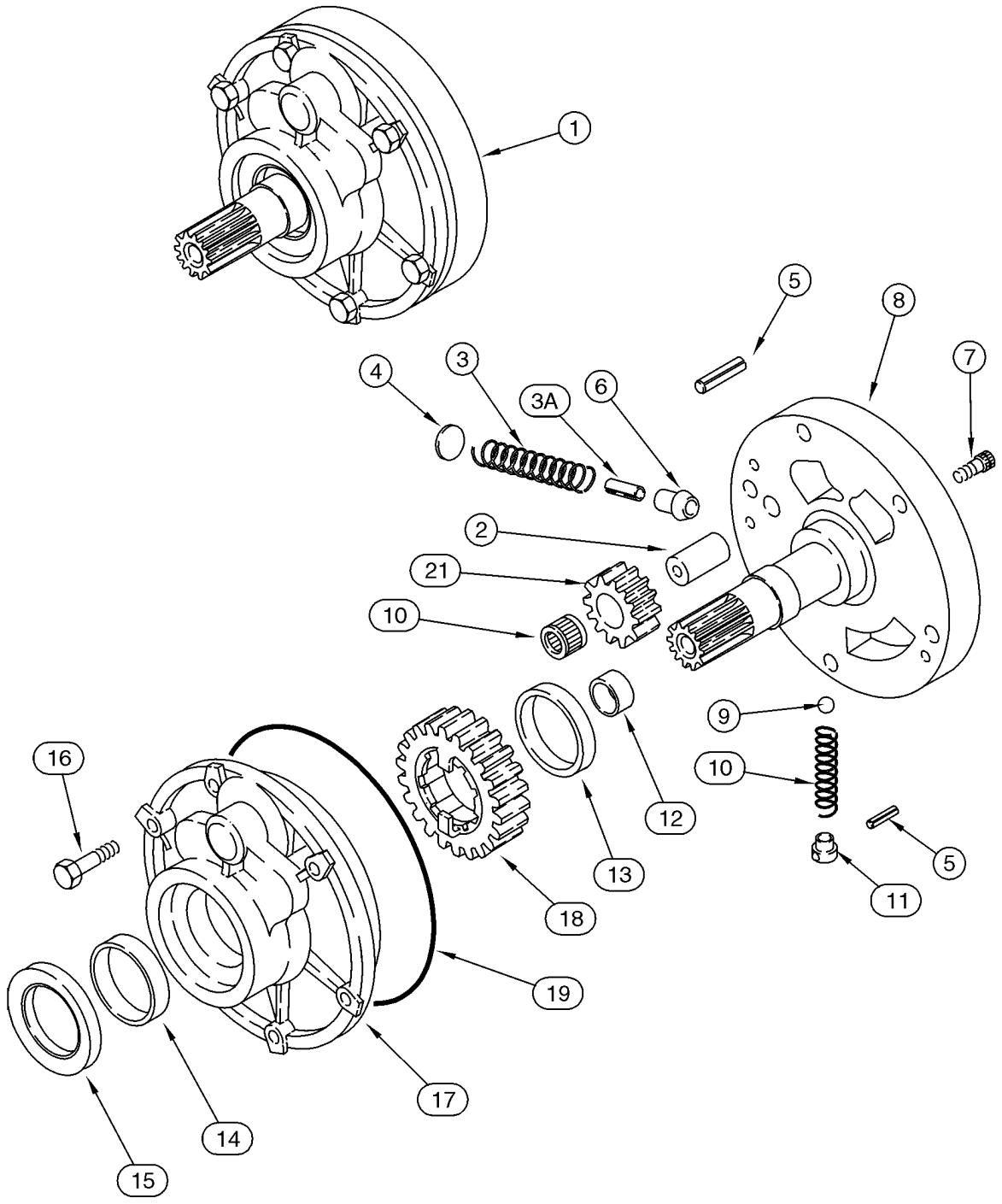

HTTP://WWW.MINNPARBACKHOEPARTS.COM



TRANSMISSION - POMPE A HUILE

| REF | FN | PART NUMBER | YR/SN | QTY | DESCRIPTION |
|---|---|---|---|---|---|
| | | 86984097 | | 1 | TRANSMISSION Two Wheel Drive, Incl. Ref 1 - 21; Also Includes Parts On Figures 06-12 - 06-21 |
| | | 86984098 | | 1 | TRANSMISSION Four Wheel Drive, Incl. Ref 1 - 21; Also Includes Parts On Figures 06-12 - 06-22 |
| 1 | | 87429970 | | 1 | POMPE Charge, Incl. Ref 2 - 21 |
| 2 | | NSS | | 1 | NON FOURNI SEPAREMENT Shaft |
| 3 | | NSS | | 1 | NON FOURNI SEPAREMENT Spring |
| 3A | | NSS | | 1 | NON FOURNI SEPAREMENT Pin |
| 4 | | NSS | | 1 | NON FOURNI SEPAREMENT Stop |
| 5 | | NSS | | 2 | NON FOURNI SEPAREMENT Pin, Roll |
| 6 | | NSS | | 1 | NON FOURNI SEPAREMENT Piston |
| 7 | | NSS | | 2 | NON FOURNI SEPAREMENT Bolt |
| 8 | | NSS | | 1 | NON FOURNI SEPAREMENT Support |
| 9 | | NSS | | 1 | NON FOURNI SEPAREMENT Ball |
| 10 | | NSS | | 1 | NON FOURNI SEPAREMENT Spring |
| 11 | | NSS | | 1 | NON FOURNI SEPAREMENT Guide |
| 12 | | NSS | | 1 | NON FOURNI SEPAREMENT Bushing |
| 13 | | NSS | | 1 | NON FOURNI SEPAREMENT Bushing |
| 14 | | NSS | | 1 | NON FOURNI SEPAREMENT Bushing |
| 15 | | 87429971 | | 1 | JOINT D'HUILE Oil Seal |
| 16 | | 814-8060 | | 6 | VIS M8 x 60 |
| 17 | | NSS | | 1 | NON FOURNI SEPAREMENT Housing |
| 18 | | NSS | | 1 | NON FOURNI SEPAREMENT Gear, 23T |
| 19 | | 181142A1 | | 1 | JOINT TORIQUE |
| 20 | | NSS | | 1 | NON FOURNI SEPAREMENT Bearing, Needle |
| 21 | | NSS | | 1 | NON FOURNI SEPAREMENT Gear, 12T |

HTTP://WWW.MINNPARBACKHOEPARTS.COM



TRANSMISSION - MÉCANISME DU CHANGEMENT DE VITESSE

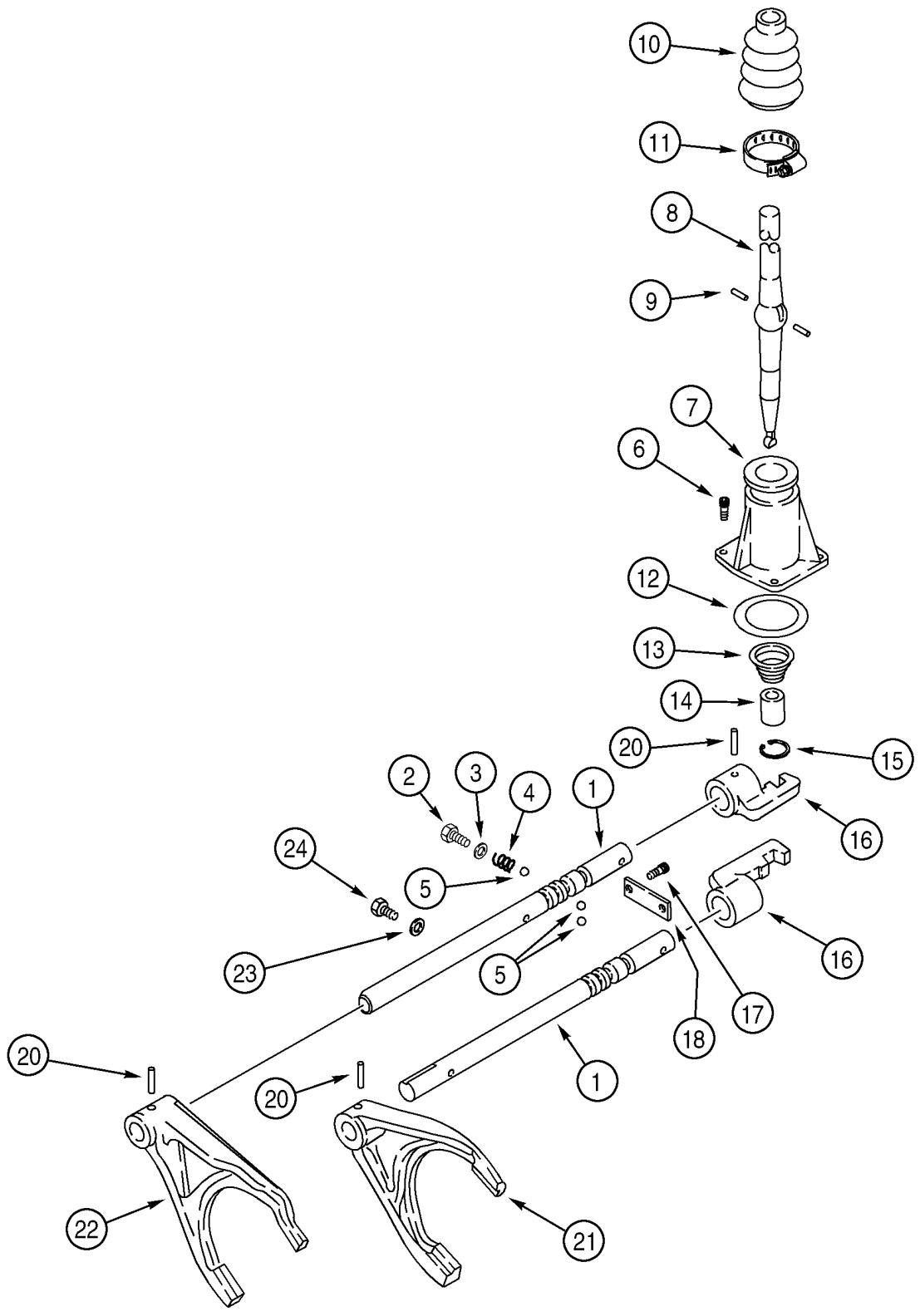

HTTP://WWW.MINNPARBACKHOEPARTS.COM



TRANSMISSION - MÉCANISME DU CHANGEMENT DE VITESSE

| REF | FN | PART NUMBER | YR/SN | QTY | DESCRIPTION |
|---|---|---|---|---|---|
| | | 86984097 | | 1 | TRANSMISSION Two Wheel Drive, Incl. Ref 1 - 24; Also Includes Parts On Figures 06-12 - 06-21 |
| | | 86984098 | | 1 | TRANSMISSION Four Wheel Drive, Incl. Ref 1 - 24; Also Includes Parts On Figures 06-12 - 06-22 |
| 1 | | 181245A2 | | 2 | TRINGLE Shifter Fork Rail |
| 2 | | 614-12016 | | 2 | VIS M12 x 16 |
| 3 | | 87429994 | | 2 | RONDELLE D'ETANCHEITE 12 x 20 x 1.5 mm |
| 4 | | 1966993C1 | | 2 | RESSORT |
| 5 | | 181139A1 | | 4 | BILLE |
| 6 | | 864-8025 | | 3 | VIS M8 x 25 |
| 7 | | 181171A1 | | 1 | COUVERCLE |
| 8 | | 190428A3 | | 1 | LEVIER DE COMMANDE |
| 9 | | 1967585C1 | | 2 | AXE Pin |
| 10 | | 1967581C1 | | 1 | COIFFE |
| 11 | | 181177A1 | | 1 | COLLIER |
| 12 | | 181138A1 | | 1 | JOINT TORIQUE |
| 13 | | 278533A1 | | 1 | RESSORT |
| 14 | | 278532A1 | | 1 | BAGUE |
| 15 | | 279039A1 | | 1 | ANNEAU-D'ARRET |
| 16 | | 181173A1 | | 2 | SÉLECTEUR Shifter |
| 17 | | 864-10025 | | 2 | VIS M10 x 25 |
| 18 | | 181175A1 | | 1 | PLAQUE, GRANDE |
| 20 | | 905794R1 | | 4 | AXE 6 x 30 mm |
| 21 | | 181203A1 | | 1 | FOURCHETTE First and Second |
| 22 | | 181174A2 | | 1 | FOURCHETTE Third and Fourth |
| 23 | | 87429985 | | 1 | RONDELLE D'ETANCHEITE Washer |
| 24 | | 1967531C1 | | 1 | BOULON M10 x 1 x 25 |

HTTP://WWW.MINNPARBACKHOEPARTS.COM



TRANSMISSION - AXE, TENDEUR ET PRIMAIRE

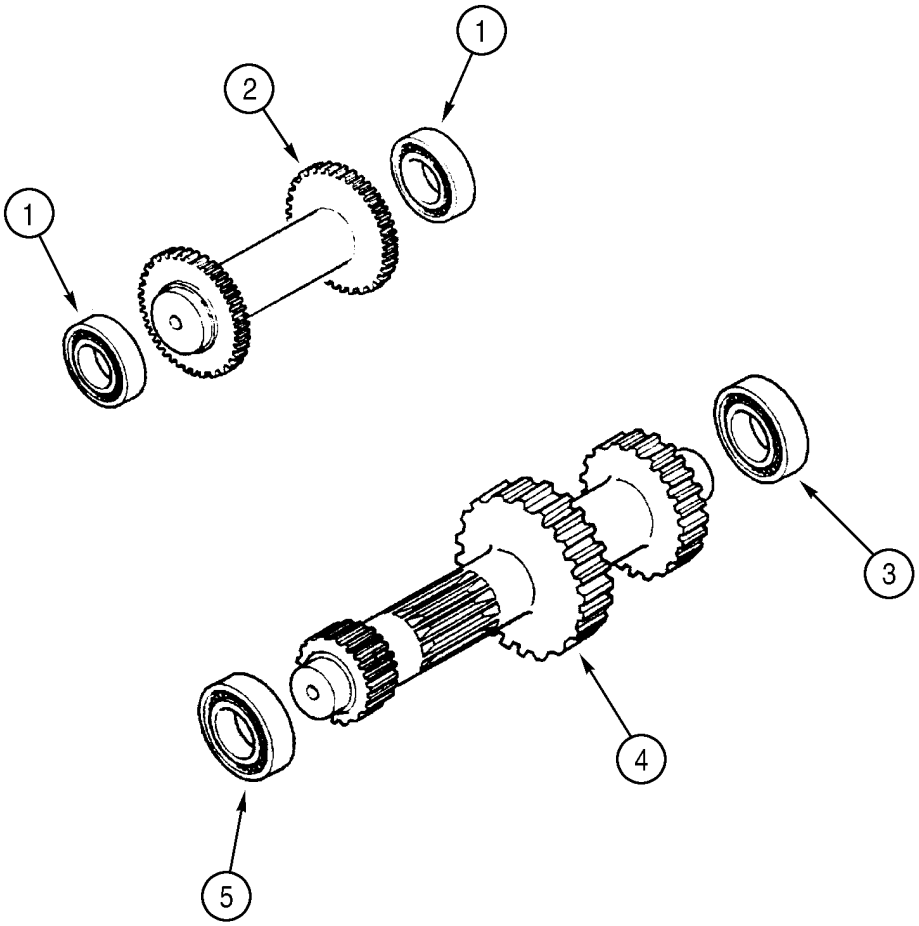


BS99H168

HTTP://WWW.MINNPARBACKHOEPARTS.COM



TRANSMISSION - AXE, TENDEUR ET PRIMAIRE

| REF | FN | PART NUMBER | YR/SN | QTY | DESCRIPTION |
|---|---|---|---|---|---|
| | | 86984097 | | 1 | TRANSMISSION Two Wheel Drive, Incl. Ref 1 - 6; Also Includes Parts On Figures 06-12 - 06-21 |
| | | 86984098 | | 1 | TRANSMISSION Four Wheel Drive, Incl. Ref 1 - 6; Also Includes Parts On Figures 06-12 - 06-22 |
| 1 | | ST205A | | 2 | ROULEMENT A BILLES |
| 2 | | 358636A1 | | 1 | ARBRE Idler Shaft |
| 3 | | 181126A1 | | 1 | ROULEMENT A BILLES |
| 4 | | 358646A1 | | 1 | ARBRE Primary Shaft |
| 5 | | 181132A1 | | 1 | ROULEMENT A BILLES |
| 6 | | A48041 | | 1 | CIRCLIP Not Illustrated |

HTTP://WWW.MINNPARBACKHOEPARTS.COM



TRANSMISSION - ARBRE, ENTRÉE

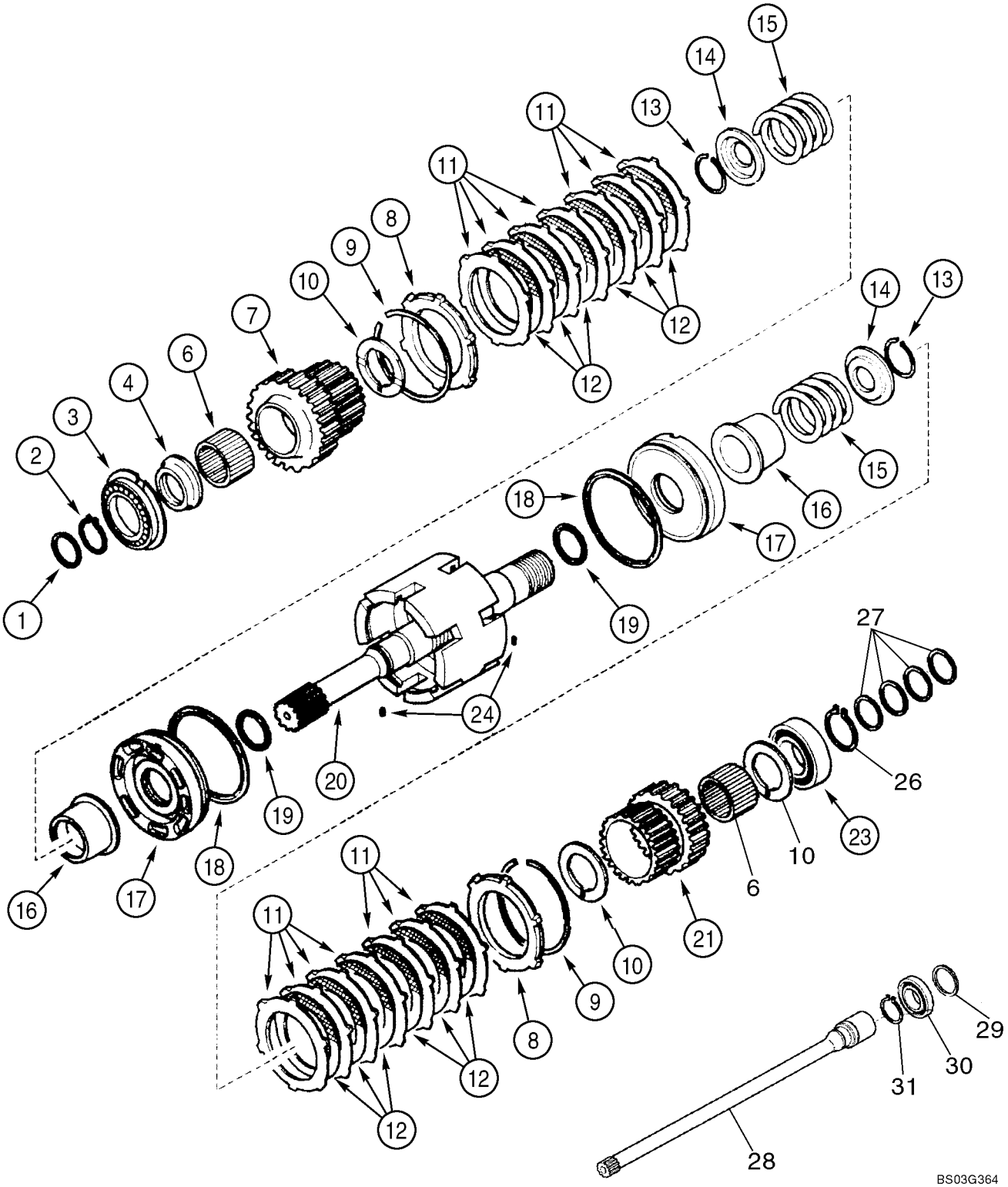

HTTP://WWW.MINNPARBACKHOEPARTS.COM



TRANSMISSION - ARBRE, ENTRÉE

| REF | FN | PART NUMBER | YR/SN | QTY | DESCRIPTION |
|---|---|---|---|---|---|
| | | 86984097 | | 1 | TRANSMISSION Two Wheel Drive, Incl. Ref 1 - 25; Also Includes Parts On Figures 06-12 - 06-21 |
| | | 86984098 | | 1 | TRANSMISSION Four Wheel Drive, Incl. Ref 1 - 25; Also Includes Parts On Figures 06-12 - 06-22 |
| 1 | | 358645A1 | | 1 | JOINT D'HUILE |
| 2 | | A48041 | | 1 | CIRCLIP |
| 3 | | 181128A1 | | 1 | ROULEMENT A BILLES |
| 4 | | 358635A1 | | 1 | ENTRETOISE 68 x 45 x 105 mm |
| 6 | | 358633A1 | | 2 | ROULEMENT A AIGUILLES |
| 7 | | 358632A1 | | 1 | PIGNON Gear, 35T |
| 8 | | 310519A1 | | 2 | PLAQUE |
| 9 | | 181116A1 | | 2 | JONC D'ARRET |
| 10 | | 358640A1 | | 3 | RONDELLE Thrust |
| 11 | | 181159A1 | | 14 | DISQUE Plate |
| 12 | | 181158A1 | | 12 | DISQUE-D'EMBRAYAGE Plate |
| 13 | | 181111A1 | | 2 | JONC D'ARRET |
| 14 | | 181161A1 | | 2 | PLATEAU DE PRESSION Pressure |
| 15 | | 358637A1 | | 2 | RESSORT |
| 16 | | 358641A1 | | 2 | MANCHON |
| 17 | | 358644A1 | | 2 | PISTON |
| 18 | | 358643A1 | | 2 | ANNEAU-D'ARRET |
| 19 | | 358642A1 | | 2 | JOINT ANNULAIRE |
| 20 | | 87429973 | | 1 | ARBRE Input Shaft, Charge |
| 21 | | 358638A1 | | 1 | PIGNON Gear, 29T |
| 23 | | ST264 | | 1 | ROULEMENT A BILLES |
| 24 | | 181108A1 | | 2 | GOUPILLE-V |
| 26 | | 800-1150 | | 1 | CIRCLIP |
| 27 | | 87429984 | | 4 | ANNEAU Seal Ring |
| 28 | | 87429981 | | 1 | ARBRE |
| 29 | | 87429982 | | 1 | JOINT THORIQUE |
| 30 | | 87429983 | | 1 | ROULEMENT A BILLES |
| 31 | | 358655A1 | | 1 | ANNEAU-D'ARRET |

HTTP://WWW.MINNPARBACKHOEPARTS.COM



TRANSMISSION - ARBRE, SECONDAIRE

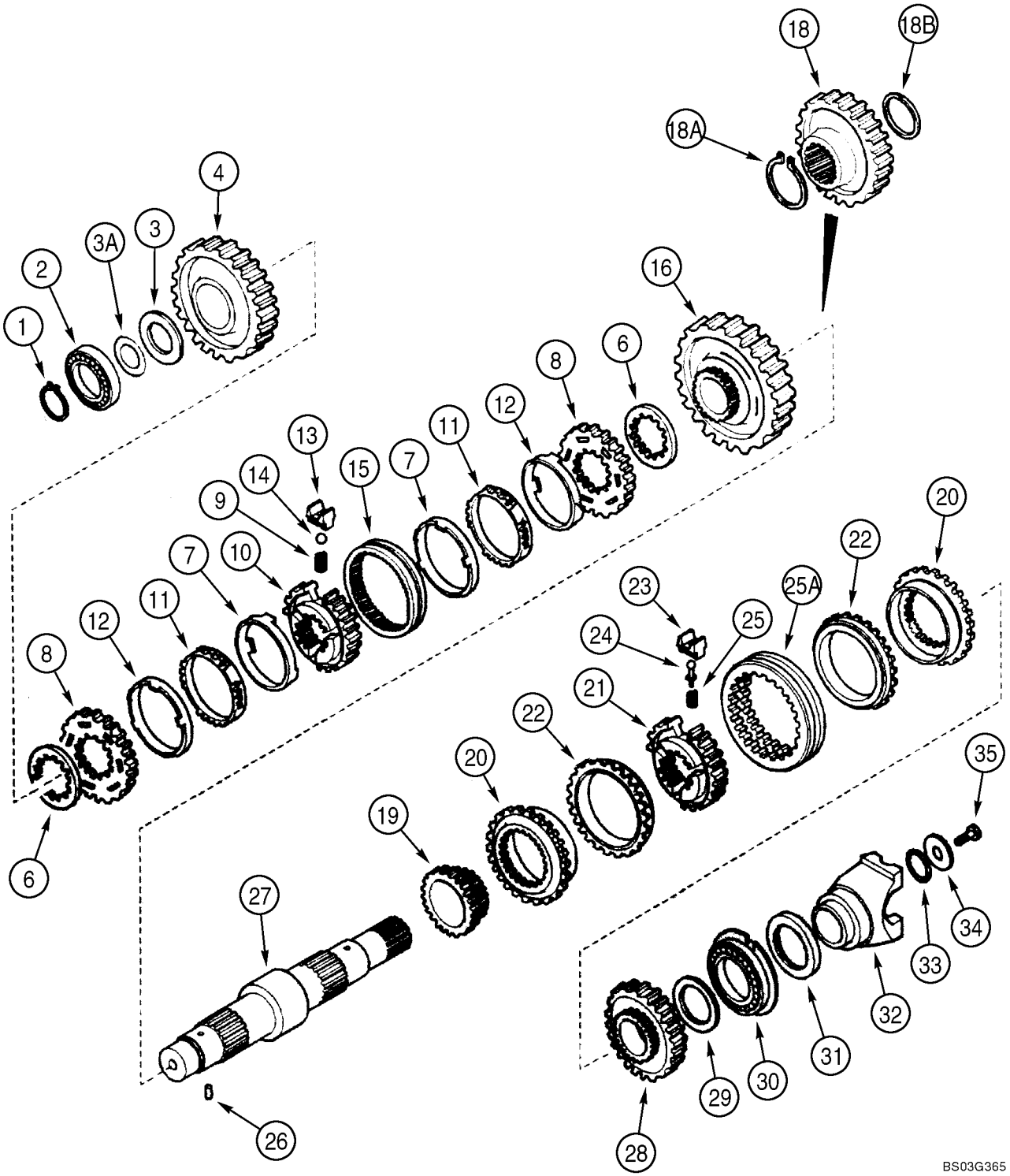

HTTP://WWW.MINNPARBACKHOEPARTS.COM



TRANSMISSION - ARBRE, SECONDAIRE

| REF | FN | PART NUMBER | YR/SN | QTY | DESCRIPTION |
|---|---|---|---|---|---|
| | | 86984097 | | 1 | TRANSMISSION Two Wheel Drive, Incl. Ref 1 - 35; Also Includes Parts On Figures 06-12 - 06-21 |
| | | 86984098 | | 1 | TRANSMISSION Four Wheel Drive, Incl. Ref 1 - 35; Also Includes Parts On Figures 06-12 - 06-22 |
| 1 | | 181118A1 | | 1 | JONC D'ARRET |
| 2 | | 181132A1 | | 1 | ROULEMENT A BILLES |
| 3 | | 358649A1 | | 1 | RONDELLE Thrust |
| 3A | | 358650A1 | | X | CALE D'EPAISSEUR 0,05 mm |
| 3A | | 358651A1 | | X | CALE D'EPAISSEUR 0,10 mm |
| 3A | | 358652A1 | | X | CALE D'EPAISSEUR 0,30 mm |
| 3A | | 196454A1 | | X | CALE D'EPAISSEUR 0,50 mm |
| 4 | | 358648A1 | | 1 | PIGNON Gear, Driven, Second, 43T |
| 6 | | 244109A1 | | 2 | ENTRETOISE |
| | | 190427A1 | | 1 | SYNCHRO Synchronizing Service Kit, Incl. Ref 7 - 15 |
| 7 | | NSS | | 2 | NON FOURNI SEPAREMENT Ring |
| 8 | | NSS | | 2 | NON FOURNI SEPAREMENT Ring |
| 9 | | 384773A1 | | 3 | RESSORT HÉLICOÏDAL |
| 10 | | NSS | | 1 | NON FOURNI SEPAREMENT Hub |
| 11 | | NSS | | 2 | NON FOURNI SEPAREMENT Ring |
| 12 | | NSS | | 2 | NON FOURNI SEPAREMENT Ring |
| 13 | | 326865A1 | | 3 | PLAQUETTE |
| 14 | | 384769A1 | | 3 | BILLE |
| 15 | | NSS | | 1 | NON FOURNI SEPAREMENT Sleeve |
| 16 | | 358647A1 | | 1 | PIGNON Gear, Driven, First, 49T |
| 18 | | 358656A1 | | 1 | PIGNON Drive, Four Wheel Drive Models |
| 18A | | 358654A1 | | 1 | ANNEAU-D'ARRET Four Wheel Drive Models |
| 18B | | 358655A1 | | 1 | ANNEAU-D'ARRET Four Wheel Drive Models |
| 19 | | 358282A1 | | 1 | PIGNON Driven, Fourth, 23T |
| | | 87429974 | | 1 | SYNCHRONISEUR Synchronizing Service Kit, Incl. Ref 20 - 25A |
| 20 | | NSS | | 2 | NON FOURNI SEPAREMENT Ring |
| 21 | | NSS | | 1 | NON FOURNI SEPAREMENT Hub |
| 22 | | NSS | | 2 | NON FOURNI SEPAREMENT Ring |
| 23 | | NSS | | 3 | NON FOURNI SEPAREMENT Plate |
| 24 | | NSS | | 3 | NON FOURNI SEPAREMENT Pin |
| 25 | | NSS | | 3 | NON FOURNI SEPAREMENT Spring |

HTTP://WWW.MINNPARBACKHOEPARTS.COM



TRANSMISSION - ARBRE, SECONDAIRE

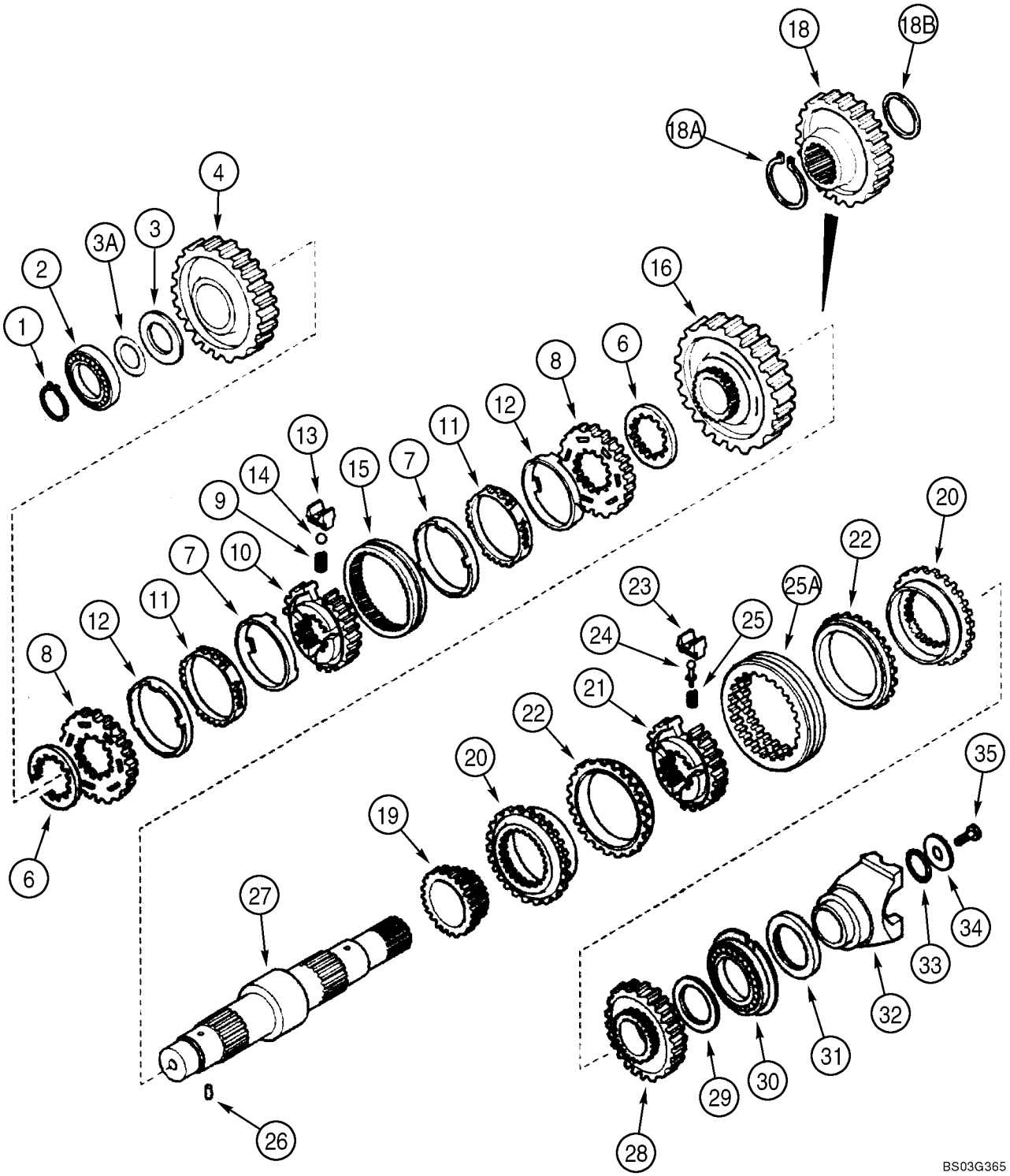

HTTP://WWW.MINNPARBACKHOEPARTS.COM



TRANSMISSION - ARBRE, SECONDAIRE

| REF | FN | PART NUMBER | YR/SN | QTY | DESCRIPTION |
|---|---|---|---|---|---|
| 25A | | NSS | | 1 | NON FOURNI SEPAREMENT Sleeve |
| 26 | | 181108A1 | | 1 | GOUPILLE-V |
| 27 | | 366366A1 | | 1 | ARBRE Secondary, Two Wheel Drive Models |
| 27 | | 358653A1 | | 1 | ARBRE Secondary, Four Wheel Drive Models |
| 28 | | 358283A1 | | 1 | PIGNON Gear, Driven, Third, 33T |
| 29 | | 358639A1 | | 1 | RONDELLE Thrust, 68 x 45 x 4 mm |
| 30 | | 181130A1 | | 1 | ROULEMENT A BILLES |
| 31 | | 181123A1 | | 1 | JOINT D'HUILE 60 x 75 x 8 mm; Two Wheel Drive Models |
| 32 | | 233284A1 | | 1 | FOURCHE Yoke |
| 33 | | 181144A1 | | 1 | JOINT TORIQUE |
| 34 | | 181165A1 | | 1 | RONDELLE 52 x 12.5 x 5 mm |
| 35 | | P3533055 | | 1 | VIS 12 x 25 mm |

HTTP://WWW.MINNPARBACKHOEPARTS.COM



TRANSMISSION (4WD) - ARBRE DE SORTIE

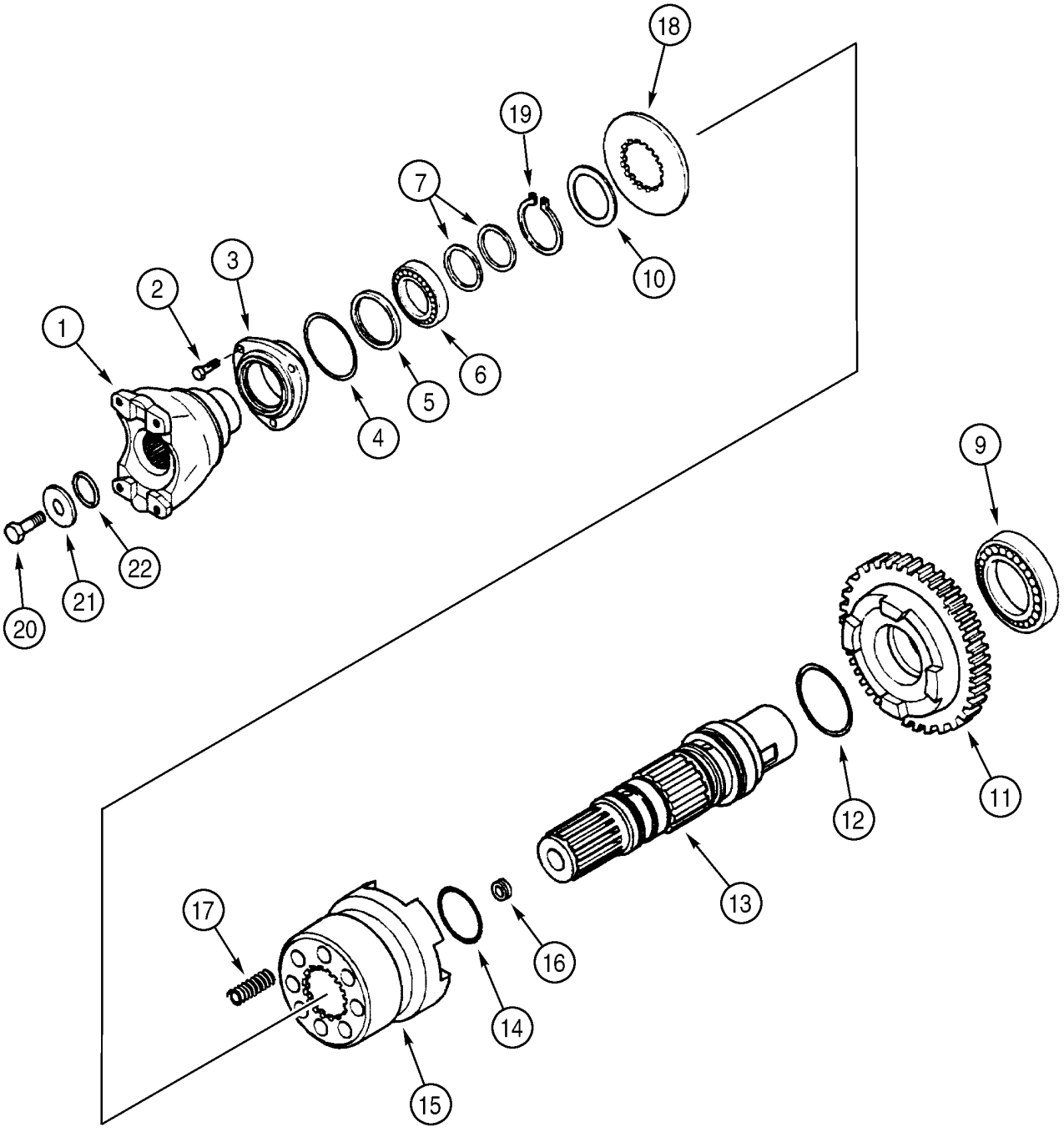


BS99H160

HTTP://WWW.MINNPARBACKHOEPARTS.COM



TRANSMISSION (4WD) - ARBRE DE SORTIE

| REF | FN | PART NUMBER | YR/SN | QTY | DESCRIPTION |
|---|---|---|---|---|---|
| | | 86984098 | | 1 | TRANSMISSION Four Wheel Drive, Incl. Ref 1 - 22; Also Includes Parts On Figures 06-12 - 06-22 |
| 1 | | 233283A1 | | 1 | FOURCHE Yoke, Front |
| 2 | | 614-8022 | | 3 | VIS M8 x 22 |
| 3 | | 181198A1 | | 1 | COUVERCLE |
| 4 | | 112517A1 | | 1 | JOINT TORIQUE |
| 5 | | 181122A1 | | 1 | JOINT D'HUILE 50 x 65 x 8 mm |
| 6 | | ST205A | | 1 | ROULEMENT A BILLES |
| 7 | | 358645A1 | | 2 | JOINT D'HUILE |
| 9 | | 181126A1 | | 1 | ROULEMENT A BILLES |
| 10 | | P2745478 | | 1 | RONDELLE |
| 11 | | 366234A1 | | 1 | PIGNON Gear, Driven, 36T |
| 12 | | 366235A1 | | 1 | JOINT TORIQUE |
| 13 | | 366230A1 | | 1 | ARBRE Output Shaft |
| 14 | | 366236A1 | | 2 | JOINT TORIQUE |
| 15 | | 366232A1 | | 1 | MANCHON |
| 16 | | D142898 | | 1 | BOUCHON 10 x 1 mm |
| 17 | | 100753A1 | | 8 | RESSORT |
| 18 | | 366231A1 | | 1 | RONDELLE |
| 19 | | 800-5145 | | 1 | ANNEAU-D'ARRET |
| 20 | | P3533055 | | 1 | VIS 12 x 25 mm |
| 21 | | P2745466 | | 1 | RONDELLE |
| 22 | | 238-8217 | | 1 | JOINT TORIQUE 1-3/16 ID x 1/8 |

HTTP://WWW.MINNPARBACKHOEPARTS.COM

| 06-21 | | p1 | 01/04 |
|---|---|---|---|

TRANSMISSION - DISTRIBUTEUR

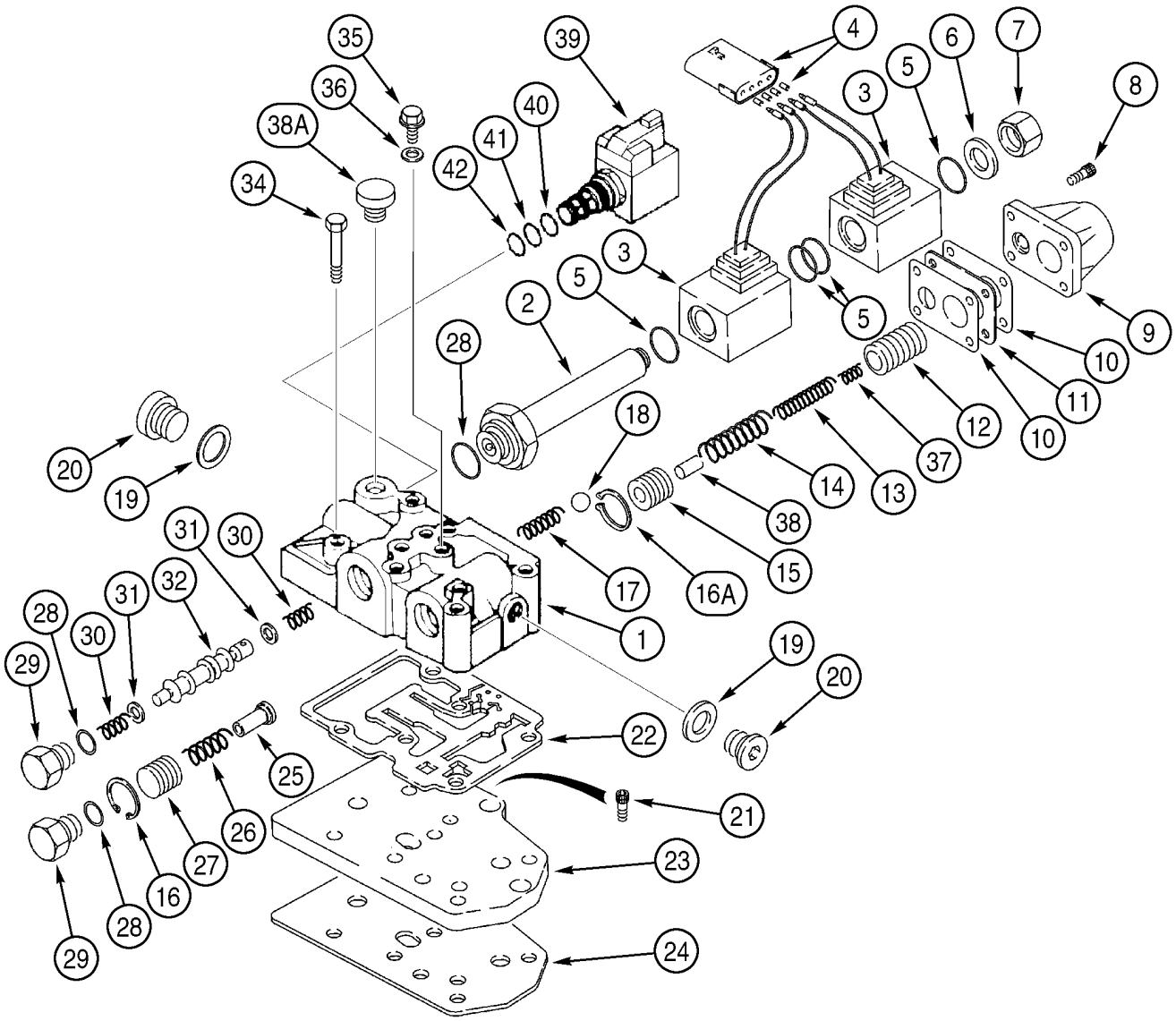


BS99J194

HTTP://WWW.MINNPARBACKHOEPARTS.COM



TRANSMISSION - DISTRIBUTEUR

| REF | FN | PART NUMBER | YR/SN | QTY | DESCRIPTION |
|---|---|---|---|---|---|
| | | 86984097 | | 1 | TRANSMISSION Two Wheel Drive, Incl. Ref 1 - 45; Also Includes Parts On Figures 06-12 - 06-21 |
| | | 86984098 | | 1 | TRANSMISSION Four Wheel Drive, Incl. Ref 1 - 45; Also Includes Parts On Figures 06-12 - 06-22 |
| | | 335640A2 | | 1 | VALVE Transmission Control, Incl. Ref 1 - 45 |
| 1 | | NSS | | 1 | NON FOURNI SEPAREMENT Housing |
| 2 | | 190442A1 | | 1 | PLONGEUR |
| 3 | | 190443A1 | | 2 | BOBINE |
| 4 | | 190437A1 | | 1 | RACCORD |
| 5 | | 181136A1 | | 4 | JOINT TORIQUE |
| 6 | | 181273A1 | | 1 | RONDELLE CUIVRE |
| 7 | | 181272A1 | | 1 | BOUCHON |
| 8 | | 864-6020 | | 4 | VIS M6 x 20 |
| 9 | | 181251A1 | | 1 | COUVERCLE |
| 10 | | 181256A1 | | 2 | JOINT Cover Gasket |
| 11 | | 190439A2 | | 1 | ENTRETOISE |
| 12 | | 190438A2 | | 1 | PISTON |
| 13 | | 190436A1 | | 1 | RESSORT |
| 14 | | 190441A1 | | 1 | RESSORT |
| 15 | | 181234A2 | | 1 | PISTON |
| 16 | | 299324A1 | | 1 | CIRCLIP |
| 16A | | 368436A1 | | 1 | CIRCLIP |
| 17 | | 181261A1 | | 1 | RESSORT |
| 18 | | 181146A1 | | 1 | BILLE |
| 19 | | 181107A1 | | 2 | RONDELLE CUIVRE |
| 20 | | 181103A1 | | 2 | BOUCHON |
| 21 | | 864-8020 | | 3 | VIS M8 x 20, Not Included In Assembly, Purchase Separately |
| 22 | | 181166A1 | | 1 | JOINT Not Included In Assembly, Purchase Separately |
| 23 | | 181207A1 | | 1 | PLAQUE, GRANDE Not Included In Assembly, Purchase Separately |
| 24 | | 181208A1 | | 1 | JOINT Not Included In Assembly, Purchase Separately |
| 25 | | 181254A1 | | 1 | ARBRE |
| 26 | | 181260A1 | | 1 | RESSORT |

HTTP://WWW.MINNPARBACKHOEPARTS.COM



TRANSMISSION - DISTRIBUTEUR

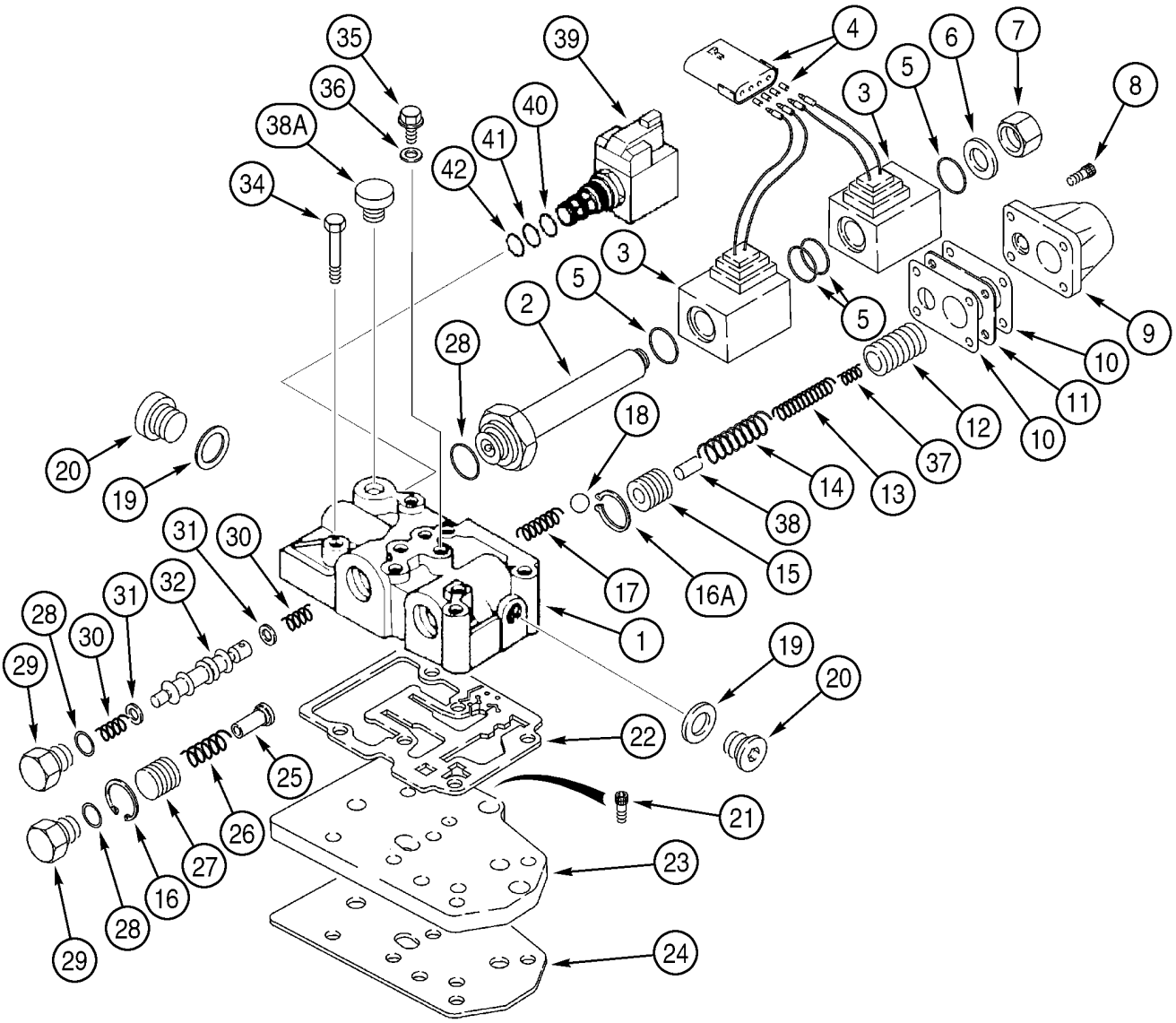


BS99J194

HTTP://WWW.MINNPARBACKHOEPARTS.COM



TRANSMISSION - DISTRIBUTEUR

| REF | FN | PART NUMBER | YR/SN | QTY | DESCRIPTION |
|---|---|---|---|---|---|
| 27 | | 181255A2 | | 1 | PISTON Flow Divider |
| 28 | | 181137A1 | | 3 | JOINT TORIQUE |
| 29 | | 181258A1 | | 2 | BOUCHON PLUG |
| 30 | | 334724A1 | | 2 | RESSORT |
| 31 | | 181253A1 | | 2 | ENTRETOISE |
| 32 | | 334725A1 | | 1 | PLONGEUR Spool, Forward/Reverse |
| 34 | | 814-8080 | | 6 | VIS M8 x 80, Not Included In Assembly, Purchase Separately |
| 35 | | 181100A1 | | 4 | BOUCHON |
| 36 | | 934667R1 | | 4 | RONDELLE CUIVRE Copper Washer, 10 x 14 x 1.5 mm |
| 37 | | 190435A1 | | 1 | RESSORT |
| 38 | | 190440A1 | | 1 | AXE |
| 38A | | NSS | | 1 | NON FOURNI SEPAREMENT Plug |
| 39 | | 349295A1 | | 1 | SOLENOIDE Differential Lock Solenoid Valve; Incl. Ref 40 - 45 |
| 40 | | 237-6008 | | 1 | JOINT TORIQUE 41/64 ID x 3/32 |
| 41 | | 238-5014 | | 1 | JOINT TORIQUE 1/2 ID x 1/16 |
| 42 | | 238-5013 | | 1 | JOINT TORIQUE 7/16 ID x 1/16 |
| 43 | | NSS | | 1 | NON FOURNI SEPAREMENT Solenoid Valve, Cartridge, Component Parts Not Serviced Separately, Not Illustrated |
| 44 | | 298614A1 | | 1 | BOBINE (ASSEMBLEE) Not Illustrated |
| 45 | | NSS | | 1 | NON FOURNI SEPAREMENT Nut, Not Illustrated |
| | | 368437A2 | | 1 | POCHETTE Snap Ring, Without Tools, Includes 10, 15, 16A, 22, 25, Plus Instructions; Replaces 368437A1 |
| | | 368438A2 | | 1 | POCHETTE Snap Ring, With Tools, Includes 10, 15, 16A, 22, 25, Plus 368439A1 Guide Tool and 368440A1 Pushing Tool for Snap Ring Service; Replaces 368438A1 |

HTTP://WWW.MINNPARBACKHOEPARTS.COM



TRANSMISSION (4WD) - ELECTROVANNE

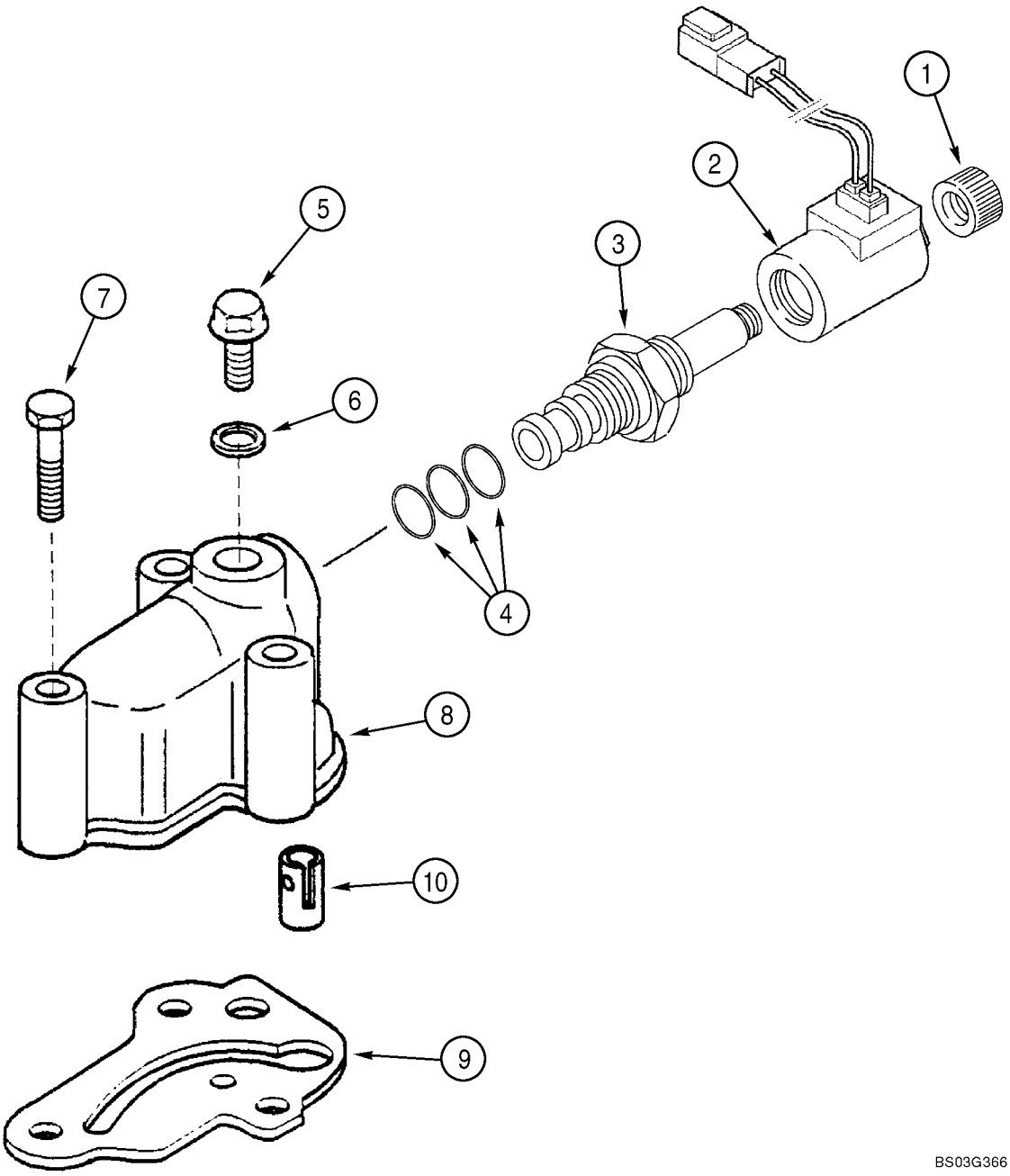

HTTP://WWW.MINNPARBACKHOEPARTS.COM



TRANSMISSION (4WD) - ELECTROVANNE

| REF | FN | PART NUMBER | YR/SN | QTY | DESCRIPTION |
|---|---|---|---|---|---|
| | | 86984098 | | 1 | TRANSMISSION Four Wheel Drive, Incl. Ref 1 - 10; Also Includes Parts On Figures 06-12 - 06-22 |
| | | 87429978 | | 1 | ELECTRO-VALVE Valve, Incl. Ref 1 - 4 |
| 1 | | NSS | | 1 | NON FOURNI SEPAREMENT Nut |
| 2 | | NSS | | 1 | NON FOURNI SEPAREMENT Coil |
| 3 | | NSS | | 1 | NON FOURNI SEPAREMENT Valve, Solenoid |
| 4 | | NSS | | 1 | NON FOURNI SEPAREMENT Kit, Seal, Includes 238-5014, 238-5015, 237-6010 O-Rings, Kit Not Serviced Separately, Order 190432A1 Solenoid Valve |
| 5 | | 181100A1 | | 1 | BOUCHON |
| 6 | | 934667R1 | | 1 | RONDELLE CUIVRE Copper Washer, 10 x 14 x 1.5 mm |
| 7 | | 814-8060 | | 3 | VIS M8 x 60 |
| 8 | | 321428A1 | | 1 | CARTER |
| 9 | | 366910A1 | | 1 | JOINT |
| 10 | | 190431A1 | | 1 | VALVE Installed Between Ref 8 and 9 |

HTTP://WWW.MINNPARBACKHOEPARTS.COM



ROUES, ARRIÈRE - PNEUS

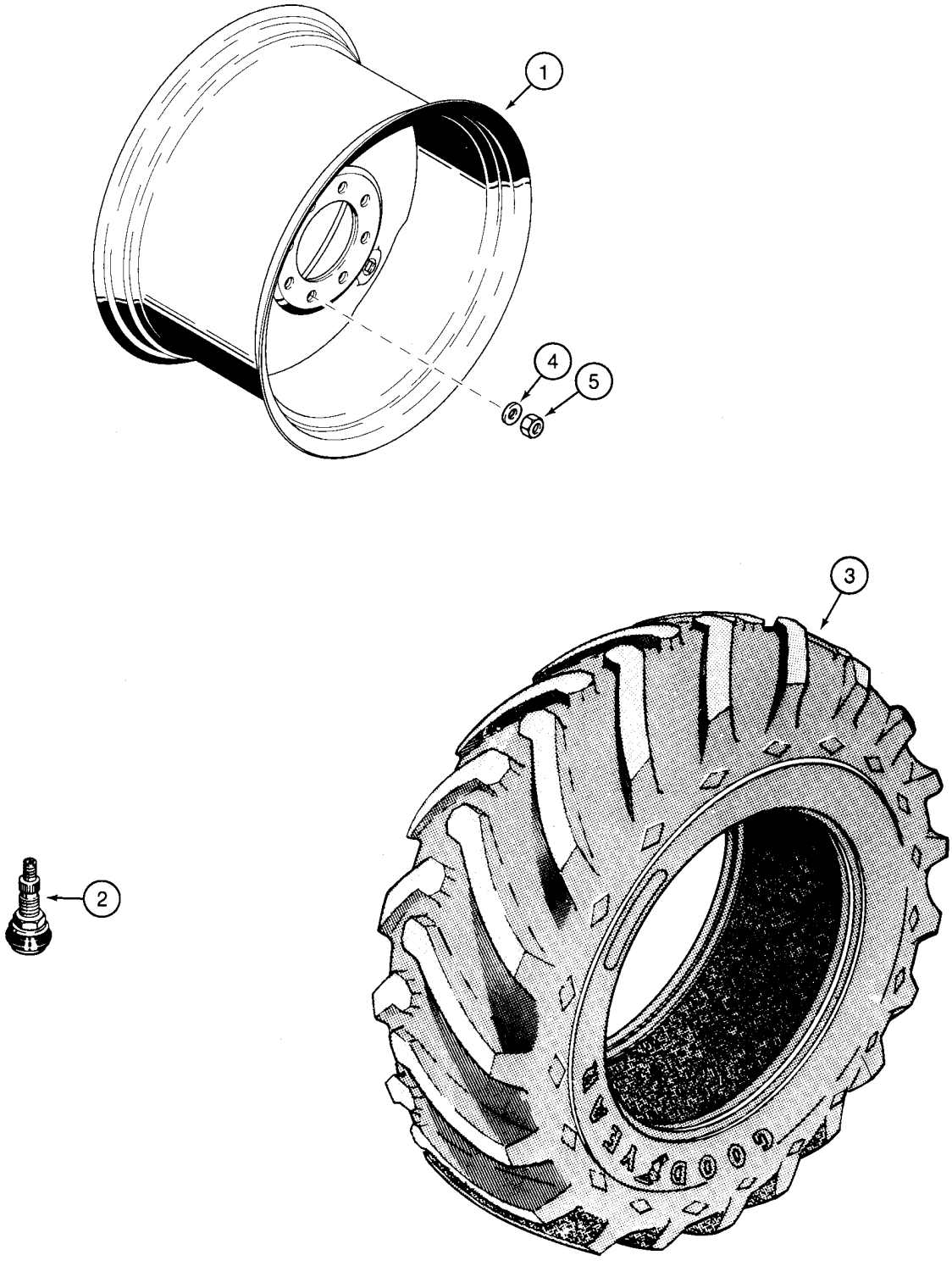

HTTP://WWW.MINNPARBACKHOEPARTS.COM



ROUES, ARRIÈRE - PNEUS

| REF | FN | PART NUMBER | YR/SN | QTY | DESCRIPTION |
|---|---|---|---|---|---|
| 1 | | 104907A1 | | 2 | JANTE 19.5L x 24 Tires - 10 PR or 14 Ply; Two Wheel or Four Wheel Drive |
| 2 | | 27549R1 | | 2 | VALVE |
| 3 | | REF | | 2 | NOTICE Tire, Purchase Locally |
| 1 | | 119241A1 | | 2 | JANTE 17.5L x 24 Tires - 10 PR, R4; Two Wheel or Four Wheel Drive |
| 2 | | 27549R1 | | 2 | VALVE |
| 3 | | REF | | 2 | NOTICE Tire, Purchase Locally |
| 4 | | D138380 | | 20 | RONDELLE Wheel Nuts |
| 5 | | D138492 | | 20 | ECROU M22; Wheel Nuts |

HTTP://WWW.MINNPARBACKHOEPARTS.COM



ESSIEU, PROPULSION ARRIÈRE - SUPPORT

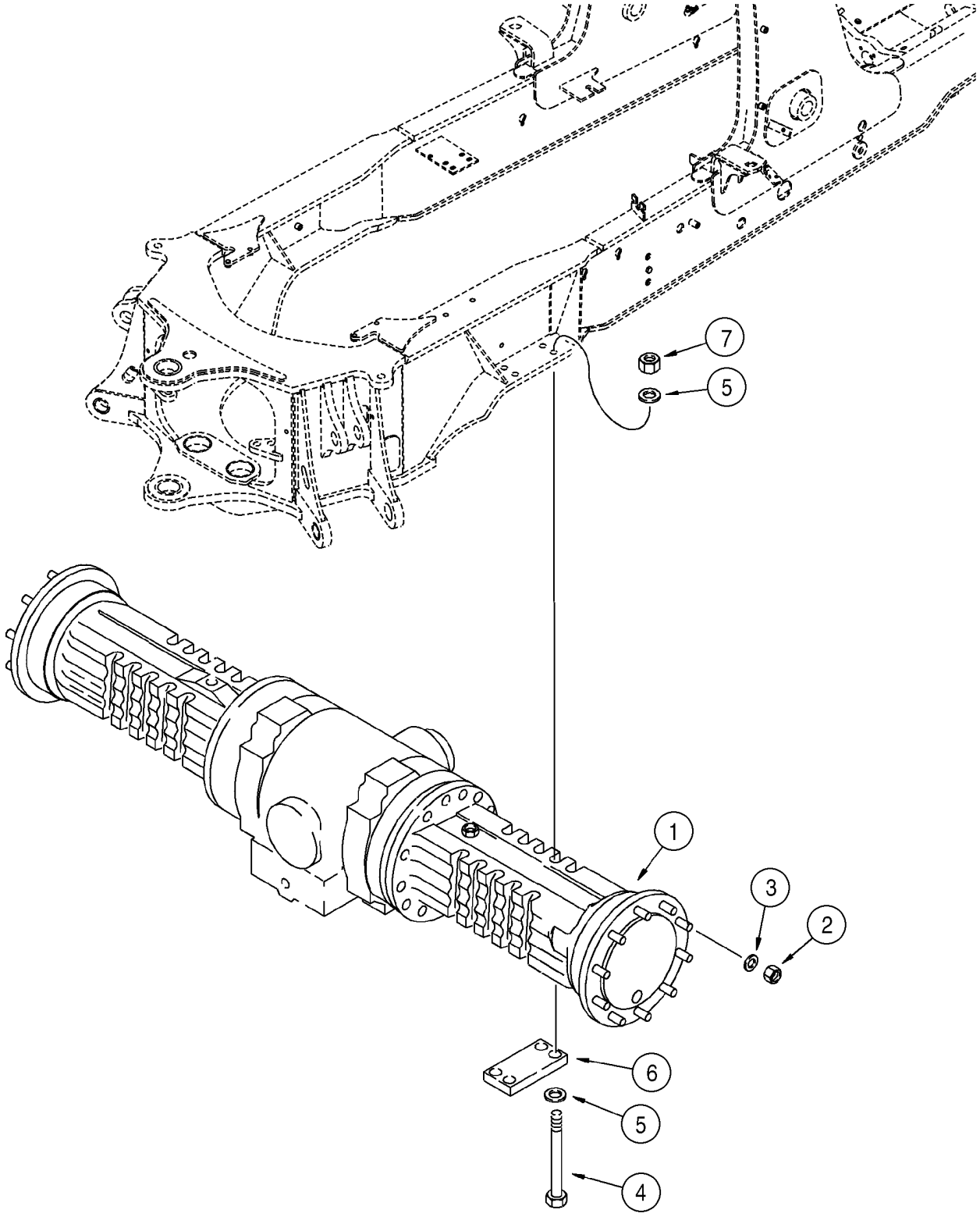

HTTP://WWW.MINNPARBACKHOEPARTS.COM



ESSIEU, PROPULSION ARRIÈRE - SUPPORT

| REF | FN | PART NUMBER | YR/SN | QTY | DESCRIPTION |
|---|---|---|---|---|---|
| 1 | | 384952A1 | | 1 | PONT ARRIERE See Figures 06-26 - 06-30, 07-01, 07-02 |
| 2 | | D138492 | | 20 | ECROU 22 mm |
| 3 | | D138380 | | 20 | RONDELLE |
| 4 | | 827-20230 | | 8 | VIS M20 x 230; 10.9 |
| 5 | | 896-11020 | | 16 | RONDELLE 22 x 37 x 4 mm, Hardened |
| 6 | | 117933A1 | | 2 | PLAQUE, GRANDE |
| 7 | | 829-1420 | | 8 | ECROU M20; 10 |

HTTP://WWW.MINNPARBACKHOEPARTS.COM



ESSIEU ARRIÈRE - BLOCAGE DU DIFFERENTIEL

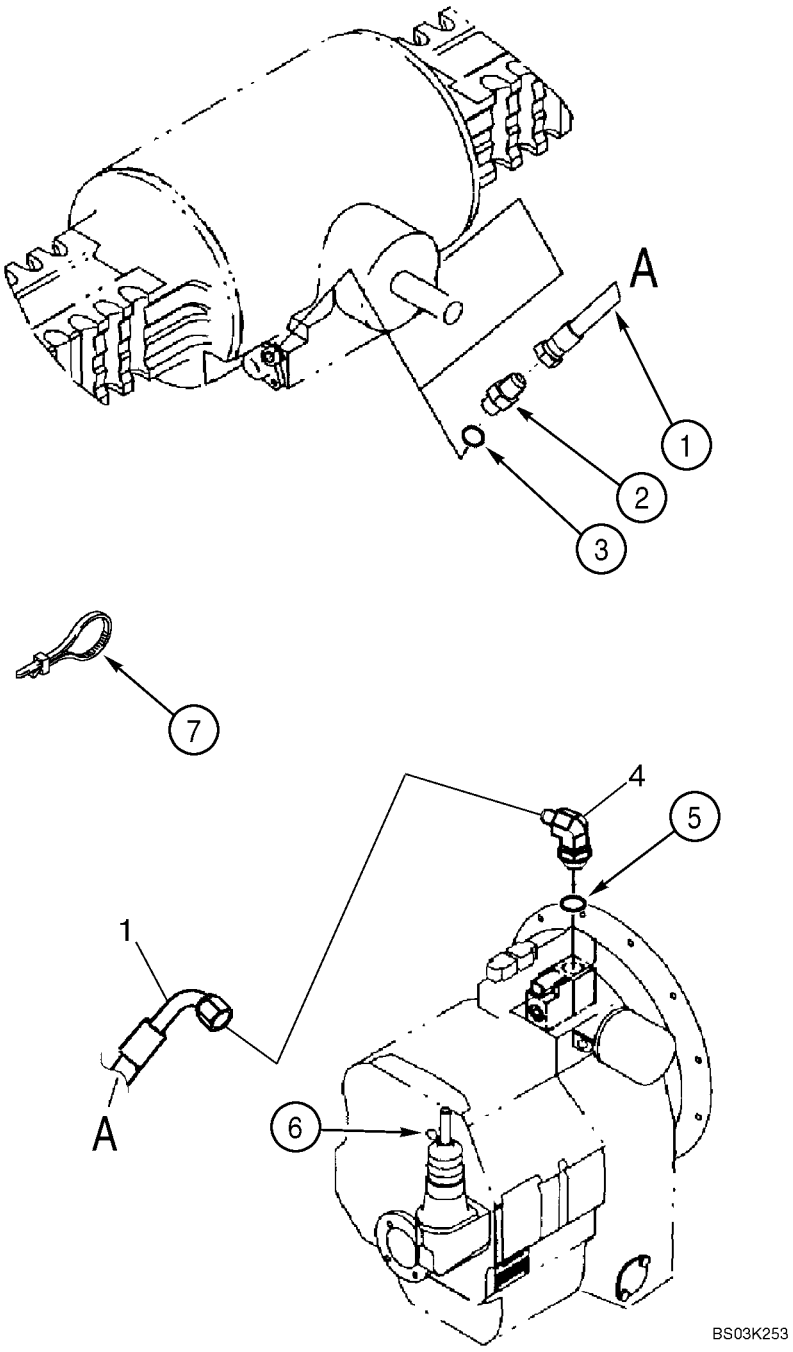

HTTP://WWW.MINNPARBACKHOEPARTS.COM



ESSIEU ARRIÈRE - BLOCAGE DU DIFFERENTIEL

| REF | FN | PART NUMBER | YR/SN | QTY | DESCRIPTION |
|---|---|---|---|---|---|
| 1 | | 87431701 | | 1 | FLEXIBLE (ASSEMBLE) 1500 mm (59-9/16 in) |
| 2 | | 218-5057 | | 1 | RACCORD 9/16 fl x Or, Incl. Ref 3 |
| 3 | | 237-6006 | | 1 | JOINT TORIQUE 15/32 ID x 5/64 |
| 4 | | 218-5105 | | 1 | COUDE 90 deg, 9/16 fl x Or, Incl. Ref 5 |
| 5 | | 237-6006 | | 1 | JOINT TORIQUE 15/32 ID x 5/64 |
| 6 | | E135809 | | 1 | BOUCHON If Used |
| 7 | | L18337 | | 2 | SANGLE 15 in |

HTTP://WWW.MINNPARBACKHOEPARTS.COM



ESSIEU, PROPULSION ARRIÈRE - BOÎTIER

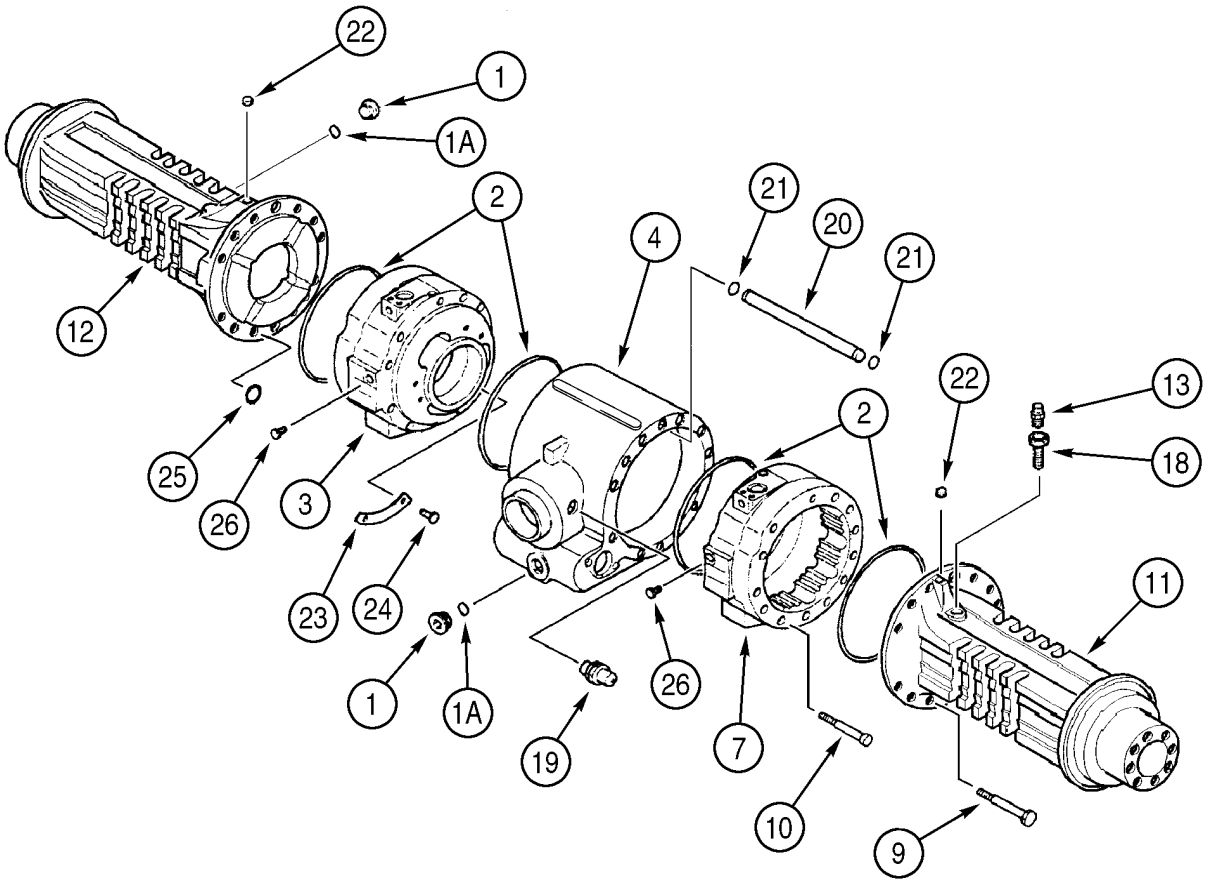


BS00C245

HTTP://WWW.MINNPARBACKHOEPARTS.COM



ESSIEU, PROPULSION ARRIÈRE - BOÎTIER

| REF | FN | PART NUMBER | YR/SN | QTY | DESCRIPTION |
|---|---|---|---|---|---|
| | | 384952A1 | | 1 | PONT ARRIERE Incl. Ref 1 - 26; Also Includes Parts On Figures 06-26 - 06-30, 07-01, 07-02 |
| 1 | | 100557A1 | | 2 | BOUCHON DE VIDANGE Incl. Ref 1A |
| 1A | | 238-6121 | | 1 | JOINT TORIQUE 1-1/16 ID x 3/32 |
| 2 | | 238-5270 | | 4 | JOINT TORIQUE 1-1/16 ID x 3/32 |
| 3 | | 445267A1 | | 1 | FLASQUE Brake Cylinder, Right-Hand |
| 4 | | 367175A1 | | 1 | MOYEU Center Housing |
| 7 | | 445266A1 | | 1 | FLASQUE Brake Cylinder, Left-Hand |
| 9 | | 814-14140 | | 22 | VIS M14 x 140 |
| 10 | | 864-12130 | | 2 | VIS M12 x 130 |
| 11 | | 358280A1 | | 1 | MOYEU Left-Hand, With Breather Port |
| 12 | | 358279A1 | | 1 | MOYEU Right-Hand, Without Breather Port |
| 13 | | 1966149C2 | | 1 | RENIFLARD |
| 18 | | E135750 | | 1 | PIVOT D'ESSIEU Breather Extension |
| 19 | | 393826A1 | | 1 | TRANSMETTEUR ASSY Oil Temperature, Includes 237-8008 O-Ring |
| | | 237-8008 | | 1 | JOINT THORIQUE 41/64 ID x 3/32 |
| 20 | | 346584A1 | | 1 | TUBE Internal |
| 21 | | 346583A1 | | 2 | JOINT TORIQUE |
| 22 | | D142898 | | 2 | BOUCHON 10 x 1 mm, If Used |
| 23 | | 347959A1 | | 2 | PLAQUE |
| 24 | | 347960A1 | | 4 | RIVET 4,8 x 6 mm |
| 25 | | P2230493 | | 8 | JOINT |
| 26 | | 294245A1 | | 2 | CHAPEAU 7/16, If Used |

HTTP://WWW.MINNPARBACKHOEPARTS.COM



ESSIEU, PROPULSION ARRIÈRE - DIFFERENTIEL

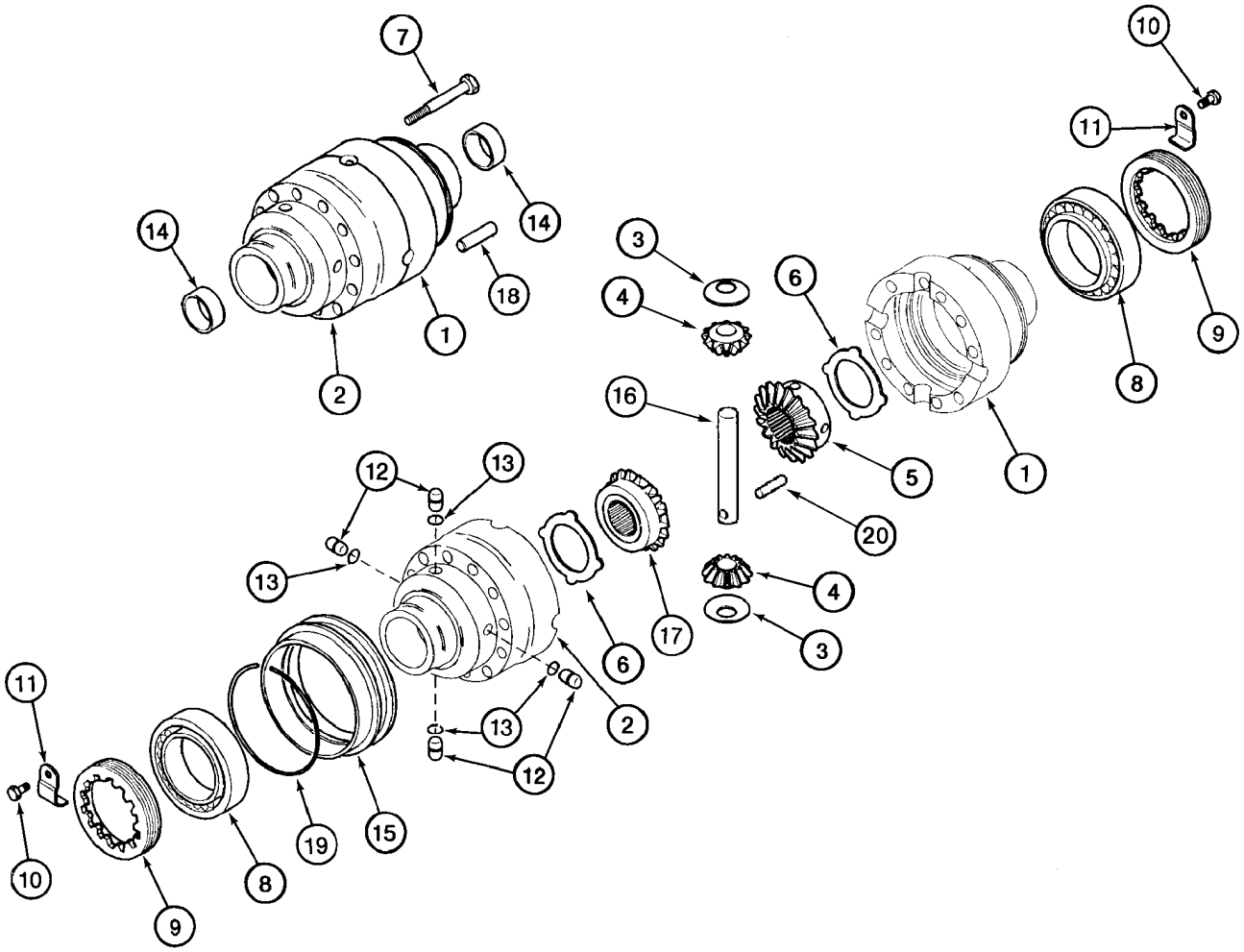

HTTP://WWW.MINNPARBACKHOEPARTS.COM



ESSIEU, PROPULSION ARRIÈRE - DIFFERENTIEL

| REF | FN | PART NUMBER | YR/SN | QTY | DESCRIPTION |
|---|---|---|---|---|---|
| | | 384952A1 | | 1 | PONT ARRIERE Incl. Ref 1 - 20; Also Includes Parts On Figures 06-26 - 06-30, 07-01, 07-02 |
| | | 292268A1 | | 1 | CARTER Differential, Incl. Ref 1, 2 |
| 1 | | NSS | | 1 | NON FOURNI SEPAREMENT Housing, Flange Half |
| 2 | | NSS | | 1 | NON FOURNI SEPAREMENT Housing, Plain Half |
| | | 367184A1 | | 1 | DIFFÉRENTIEL Gear Set Kit, Service Replacement; Incl. Ref 3 - 6, 16, 17, 20 |
| 3 | | E135777 | | 2 | RONDELLE Thrust |
| 4 | | 190471A1 | | 2 | PIGNON Sun Gear, 12T, No Longer Sold Separately, Must Be Replaced As a Set, For Service, Order 367184A1 Differential Gear Set Kit |
| 5 | | D142971 | | 1 | PIGNON Side Pinion Gear, No Longer Sold Separately, Must Be Replaced As a Set, For Service, Order 367184A1 Differential Gear Set Kit |
| 6 | | 190469A1 | | 2 | RONDELLE DE BUTEE |
| 7 | | S300976 | | 10 | VIS M12 x 90; 12.9 |
| 8 | | E135785 | | 2 | ROULEMENT |
| 9 | | P3034505 | | 2 | ECROU Lock Ring |
| 10 | | 112486A1 | | 2 | VIS M6 x 12 |
| 11 | | 175959A1 | | 2 | PATTE FIXATION |
| 12 | | 292207A1 | | 4 | AXE, GROS |
| 13 | | 292208A1 | | 4 | JOINT TORIQUE |
| 14 | | 190452A1 | | 2 | BAGUE |
| 15 | | 191067A1 | | 1 | MANCHON |
| | | 367184A1 | | 1 | DIFFÉRENTIEL Gear Set Kit, Service Replacement; Incl. Ref 3 - 6, 16, 17, 20 |
| 16 | | P6427894 | | 2 | AXE, GROS Sun Gear, No Longer Sold Separately, Must Be Replaced As a Set, For Service, Order 367184A1 Differential Gear Set Kit |
| 17 | | 292890A1 | | 1 | PIGNON Side Pinion Gear, No Longer Sold Separately, Must Be Replaced As a Set, For Service, Order 367184A1 Differential Gear Set Kit |
| 18 | | D143033 | | 2 | PION 12 x 40 mm |
| 19 | | 175961A1 | | 1 | JONC D'ARRET |
| 20 | | 838-5840 | | 1 | GOUPILLE ELASTIQUE 8 x 40 mm |

HTTP://WWW.MINNPARBACKHOEPARTS.COM



ESSIEU, PROPULSION ARRIÈRE - COURONNE ET PIGNON

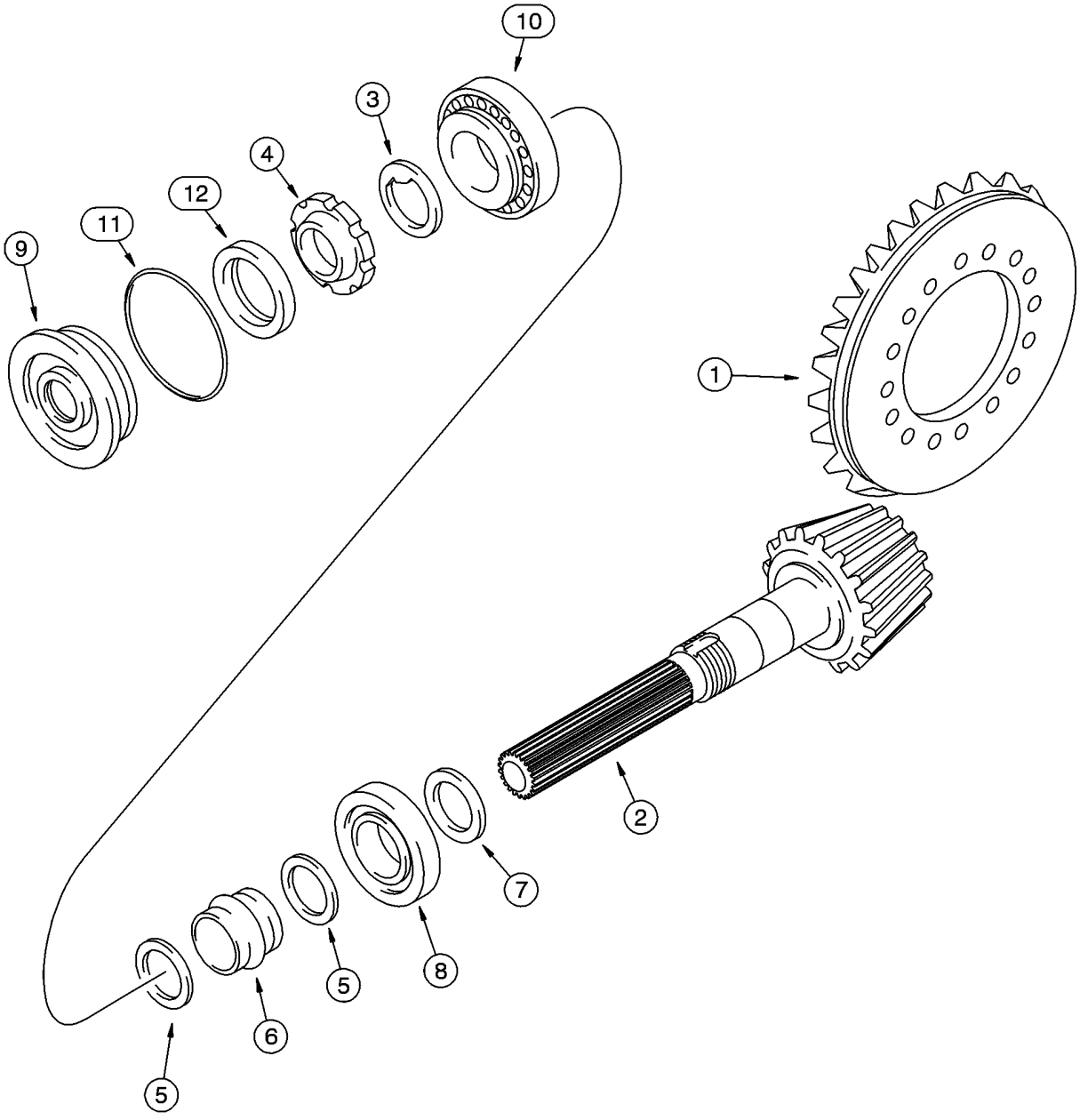


BT97M194

HTTP://WWW.MINNPARBACKHOEPARTS.COM



ESSIEU, PROPULSION ARRIÈRE - COURONNE ET PIGNON

| REF | FN | PART NUMBER | YR/SN | QTY | DESCRIPTION |
|---|---|---|---|---|---|
| | | 384952A1 | | 1 | PONT ARRIERE Incl. Ref 1 - 12; Also Includes Parts On Figures 06-26 - 06-30, 07-01, 07-02 |
| | | 175956A1 | | 1 | JEU-DE-PIGNONS Ring and Pinion, Incl. Ref 1 - 6 |
| 1 | | NSS | | 1 | NON FOURNI SEPAREMENT Gear, Ring |
| 2 | | NSS | | 1 | NON FOURNI SEPAREMENT Gear, Pinion |
| 3 | | K261065 | | 1 | RONDELLE |
| 4 | | K261014 | | 1 | ECROU Ring |
| 5 | | 1349059C1 | | 2 | RONDELLE |
| 6 | | 175957A1 | | 1 | ENTRETOISE Collapsible |
| 7 | | 190506A1 | | X | CALE D'EPAISSEUR 2,5 mm (0,098 in) |
| 7 | | 190508A1 | | X | CALE D'EPAISSEUR 2,6 mm (0,102 in) |
| 7 | | 190509A1 | | X | CALE D'EPAISSEUR 2,7 mm (0,106 in) |
| 7 | | 190510A1 | | X | CALE D'EPAISSEUR 2,8 mm (0,110 in) |
| 7 | | 190511A1 | | X | CALE D'EPAISSEUR 2,9 mm (0,114 in) |
| 7 | | 190512A1 | | X | CALE D'EPAISSEUR 3,0 mm (0,118 in) |
| 7 | | 190513A1 | | X | CALE D'EPAISSEUR 3,1 mm (0,122 in) |
| 7 | | 190514A1 | | X | CALE D'EPAISSEUR 3,2 mm (0,125 in) |
| 7 | | 190515A1 | | X | CALE D'EPAISSEUR 3,3 mm (0,129 in) |
| 7 | | 190516A1 | | X | CALE D'EPAISSEUR 3,4 mm (0,133 in) |
| 8 | | P1139855 | | 1 | ROULEMENT |
| 9 | | 128570A1 | | 1 | FLASQUE Cover |
| 10 | | K395090 | | 1 | ROULEMENT A BILLES |
| 11 | | 238-5152 | | 1 | JOINT TORIQUE 3-1/4 ID x 3/32 |
| 12 | | K262143 | | 1 | JOINT Oil |

HTTP://WWW.MINNPARBACKHOEPARTS.COM



ESSIEU, PROPULSION ARRIÈRE - BLOCAGE DU DIFFERENTIEL

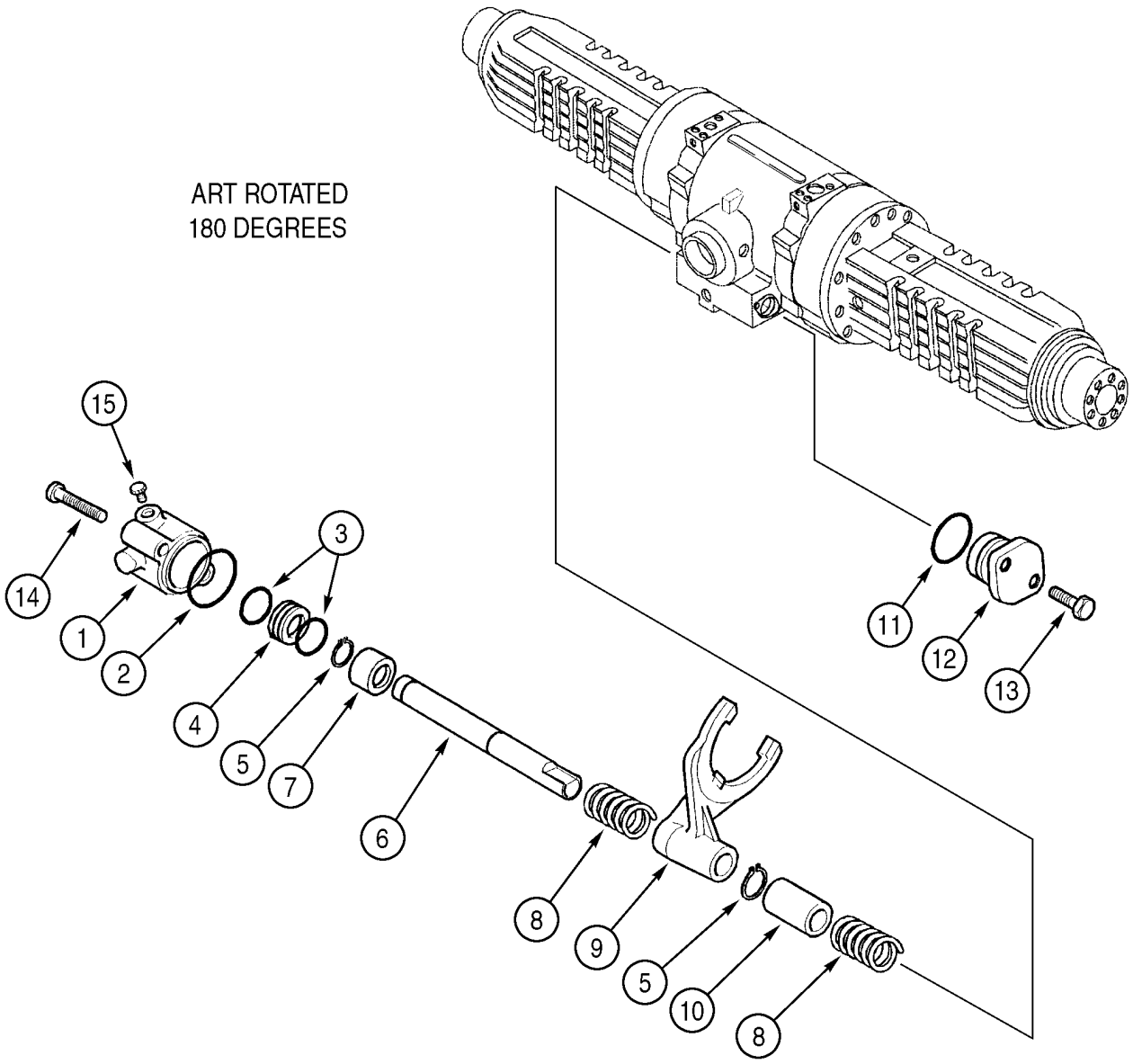

HTTP://WWW.MINNPARBACKHOEPARTS.COM



ESSIEU, PROPULSION ARRIÈRE - BLOCAGE DU DIFFERENTIEL

| REF | FN | PART NUMBER | YR/SN | QTY | DESCRIPTION |
|---|---|---|---|---|---|
| | | 384952A1 | | 1 | PONT ARRIERE Incl. Ref 1 - 15; Also Includes Parts On Figures 06-26 - 06-30, 07-01, 07-02 |
| 1 | | 292213A1 | | 1 | VERIN |
| 2 | | 305152A1 | | 1 | JOINT TORIQUE |
| 3 | | 292210A1 | | 2 | JOINT |
| 4 | | 292212A1 | | 1 | PISTON |
| 5 | | 800-5120 | | 2 | ANNEAU-D'ARRET No. 20 |
| 6 | | 292214A1 | | 1 | ARBRE Rail, Shifter Fork |
| 7 | | 292902A1 | | 1 | ANNEAU Bushing |
| 8 | | 175966A1 | | 2 | RESSORT |
| 9 | | 175964A2 | | 1 | FOURCHE |
| 10 | | 175965A1 | | 1 | BAGUE |
| 11 | | 128376A1 | | 1 | JOINT TORIQUE |
| 12 | | 175968A1 | | 1 | SUPPORT Cover |
| 13 | | 614-8030 | | 2 | VIS M8 x 30 |
| 14 | | 814-8080 | | 2 | VIS M8 x 80 |
| 15 | | NSS | | 1 | NON FOURNI SEPAREMENT Plug |

HTTP://WWW.MINNPARBACKHOEPARTS.COM



ESSIEU, PROPULSION ARRIÈRE - SATELLITE

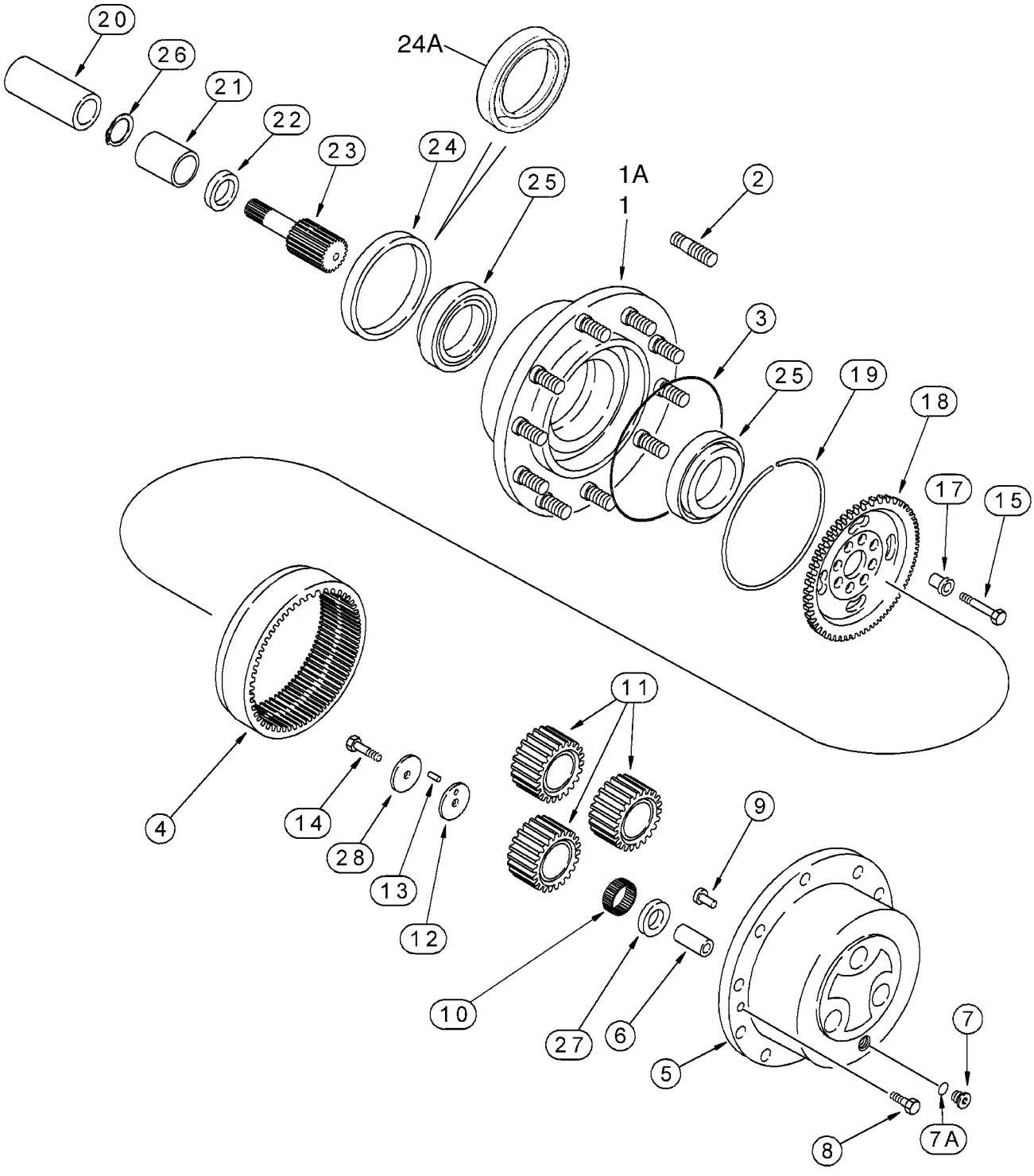

HTTP://WWW.MINNPARBACKHOEPARTS.COM



ESSIEU, PROPULSION ARRIÈRE - SATELLITE

| REF | FN | PART NUMBER | YR/SN | QTY | DESCRIPTION |
|---|---|---|---|---|---|
| | | 384952A1 | | 1 | PONT ARRIERE Incl. Ref 1 - 28; Also Includes Parts On Figures 06-26 - 06-30, 07-01, 07-02 |
| 1 | | 175974A1 | | 2 | MOYEU Includes (20) D142986 Studs, Ref 2; Used With 1349265C1 Seal, Ref 24; If Used |
| 1A | | 87416108 | | 2 | KIT ASSISTANCE HUB ASSY, Includes (10) D142986 Stud, Ref 2; Used With 247546A1 Seal, Ref 24A; If Used |
| 2 | | D142986 | | 10-20 | GOUJON Without Flanged Collar |
| 2 | | 196090A1 | | 10 | GOUJON With Flanged Collar, For Recessed Bolt Holes; If Used |
| 3 | | P2930467 | | 2 | JOINT |
| 4 | | 175976A1 | | 2 | PIGNON Ring Gear |
| 5 | | 175977A1 | | 2 | PILIER, SOUTIEN Planetary Carrier, Incl. Ref 6, Use With Liquid Gasket Silastic 732, Carrier to Hub |
| 6 | | NSS | | 6 | NON FOURNI SEPAREMENT Shaft |
| 7 | | 100557A1 | | 2 | BOUCHON DE VIDANGE Incl. Ref 7A |
| 7A | | 238-6121 | | 1 | JOINT TORIQUE 1-1/16 ID x 3/32 |
| 8 | | K395082 | | 4 | VIS |
| 9 | | K395093 | | 2 | AXE A TÊTE Lock |
| 10 | | 175978A1 | | 17 | JEU Package of 10 Needles, 168 Needles Required |
| 11 | | 175979A1 | | 6 | PIGNON SOLAIRE Pinion Gear |
| 12 | | 175980A1 | | 6 | RONDELLE DE BUTEE |
| 13 | | 247550A1 | | 1 | AIGUILLE DE ROULEMENT Package of 10 Needles, Used As Pins, 6 Needles Required |
| 14 | | 175982A1 | | 6 | VIS M10 x 50; 10.9 |
| 15 | | K395131 | | 16 | BOULON M14 x 65 |
| 17 | | 107071A1 | | 16 | BAGUE-DE-CENTRAGE Bushing, 20 mm OD |
| 18 | | 310492A1 | | 2 | PORTE-PLANETAIRE Hub, Ring Gear |
| 19 | | 175984A1 | | 2 | JONC D'ARRET |
| 20 | | NSS | | 2 | NON FOURNI SEPAREMENT Coupling, Welded To and Included With the Differential Brake Oil Auger |
| 21 | | 196065A1 | | 2 | BAGUE |
| 22 | | 196066A1 | | 2 | JOINT D'HUILE |
| 23 | | 358286A1 | | 2 | PIGNON Shaft |
| 24 | | 1349265C1 | | 2 | JOINT Used With 175974A1 Hub, Ref 1; If Used |

HTTP://WWW.MINNPARBACKHOEPARTS.COM



ESSIEU, PROPULSION ARRIÈRE - SATELLITE

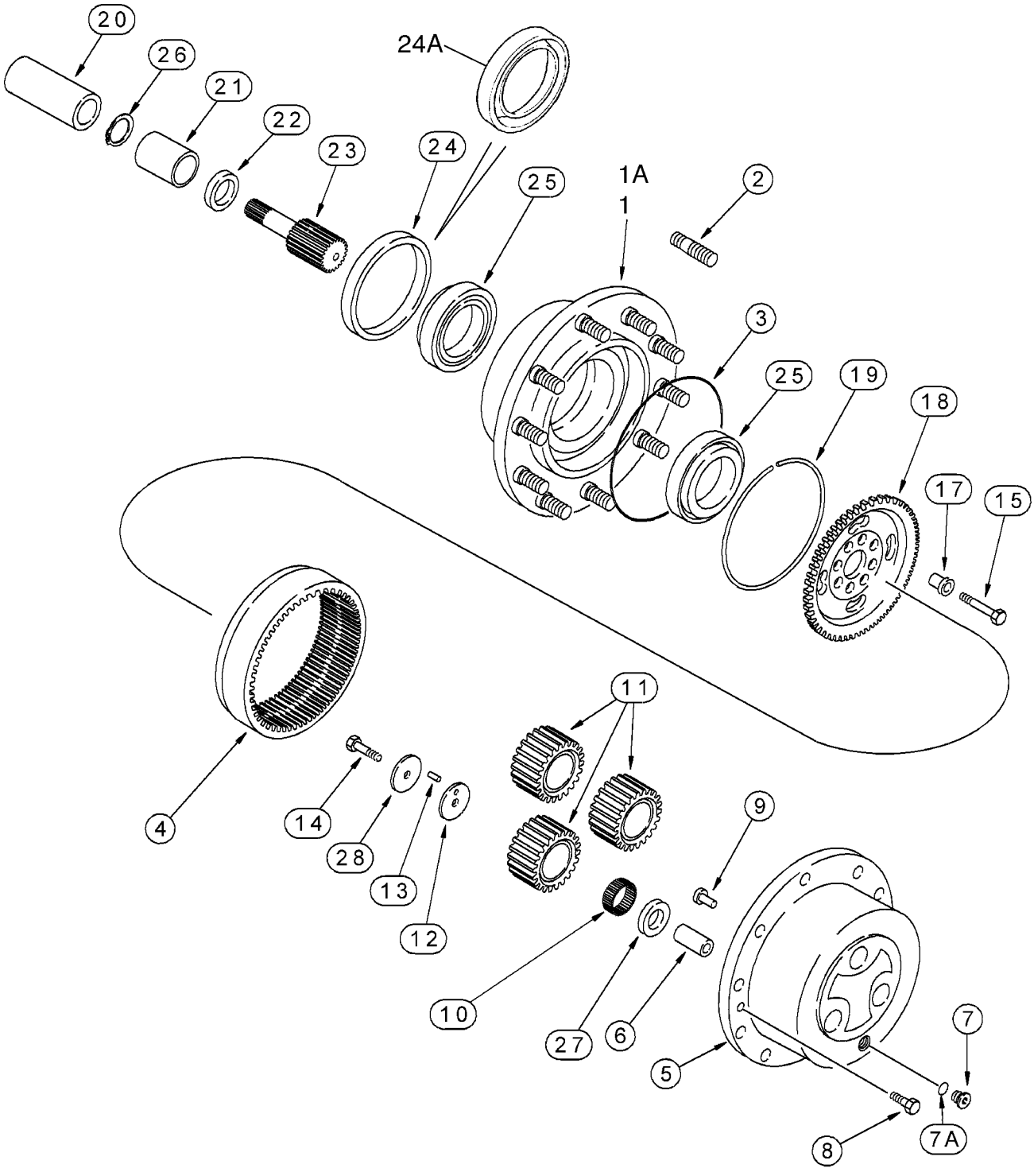

HTTP://WWW.MINNPARBACKHOEPARTS.COM



ESSIEU, PROPULSION ARRIÈRE - SATELLITE

| REF | FN | PART NUMBER | YR/SN | QTY | DESCRIPTION |
|---|---|---|---|---|---|
| 24A | | 247546A1 | | 2 | JOINT Oil, With Internal Garter Spring Seal; Used With 87416108 Hub, Ref 1A; If Used |
| 25 | | K395101 | | 4 | ROULEMENT |
| 26 | | 800-2136 | | 2 | ANNEAU-D'ARRET No. 36 |
| 27 | | 175989A1 | | 6 | RONDELLE DE BUTEE |
| 28 | | 175990A1 | | 6 | RONDELLE DE BUTEE |

HTTP://WWW.MINNPARBACKHOEPARTS.COM



ARBRE DE TRANSMISSION, ESSIEU ARRIÈRE

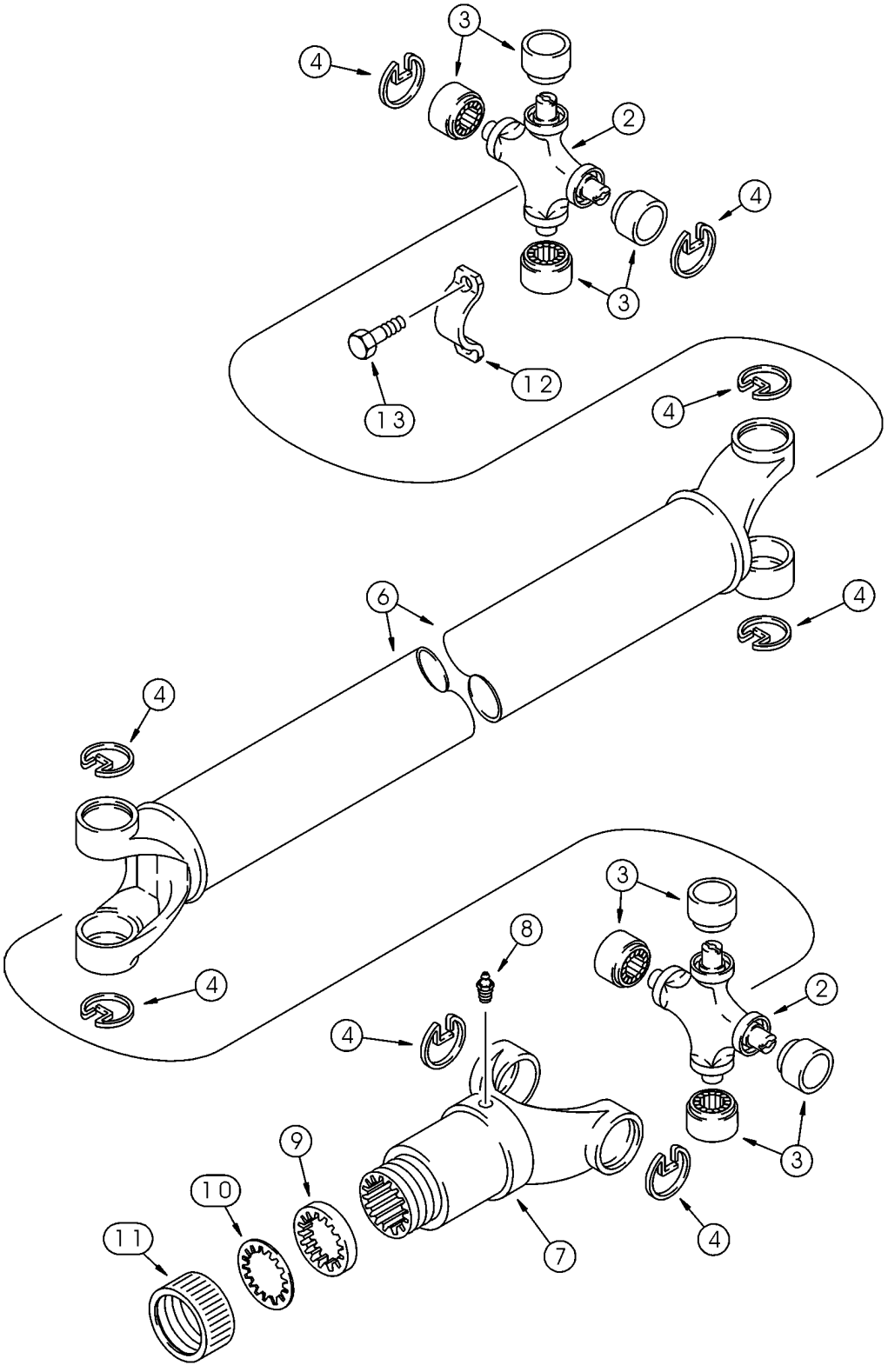

HTTP://WWW.MINNPARBACKHOEPARTS.COM



ARBRE DE TRANSMISSION, ESSIEU ARRIÈRE

| REF | FN | PART NUMBER | YR/SN | QTY | DESCRIPTION |
|---|---|---|---|---|---|
| | | 367860A3 | | 1 | ARBRE D'ENTRAINEMENT Incl. 393231A1, Ref 2 - 13 |
| | | 393231A1 | | 2 | POCHETTE Universal Joint, Incl. Ref 2 - 4 |
| 2 | | NSS | | 1 | NON FOURNI SEPAREMENT Joint, Universal |
| 3 | | NSS | | 4 | NON FOURNI SEPAREMENT Bearing, Journal |
| 4 | | NSS | | 4 | NON FOURNI SEPAREMENT Ring |
| 6 | | 393233A1 | | 1 | ARBRE D'ENTRAINEMENT |
| 7 | | 144279A1 | | 1 | MACHOIRE |
| 8 | | 219-10 | | 1 | GRAISSEUR 1/4 tpr x 11/16 |
| | | D149860 | | 1 | COLIS POUR RECHANGE Incl. Ref 9 - 11 |
| 9 | | NSS | | 1 | NON FOURNI SEPAREMENT Washer, Cork |
| 10 | | NSS | | 1 | NON FOURNI SEPAREMENT Washer, Steel |
| 11 | | NSS | | 1 | NON FOURNI SEPAREMENT Cap |
| 12 | | 90-6682T1 | | 2 | COLLIER |
| 13 | | D137627 | | 4 | BOULON |

HTTP://WWW.MINNPARBACKHOEPARTS.COM

HTTP://WWW.MINNPARBACKHOEPARTS.COM

# SECTION INDEX


| | |
|---|---|
| 07-01 | ESSIEU, PROPULSION ARRIÈRE - FREIN, DIFFERENTIEL |
| 07-02 | ESSIEU, PROPULSION ARRIÈRE - FREIN DE STATIONNEMENT |
| 07-03 | FREINS - PÉDALES |
| 07-04 | SYSTEME HYDRAULIQUE - MAITRE-CYLINDRE DE FREIN |
| 07-05 | VERIN - MAITRE FREIN |
| 07-06 | COMMANDES - FREIN DE STATIONNEMENT |

HTTP://WWW.MINNPARBACKHOEPARTS.COM



ESSIEU, PROPULSION ARRIÈRE - FREIN, DIFFERENTIEL

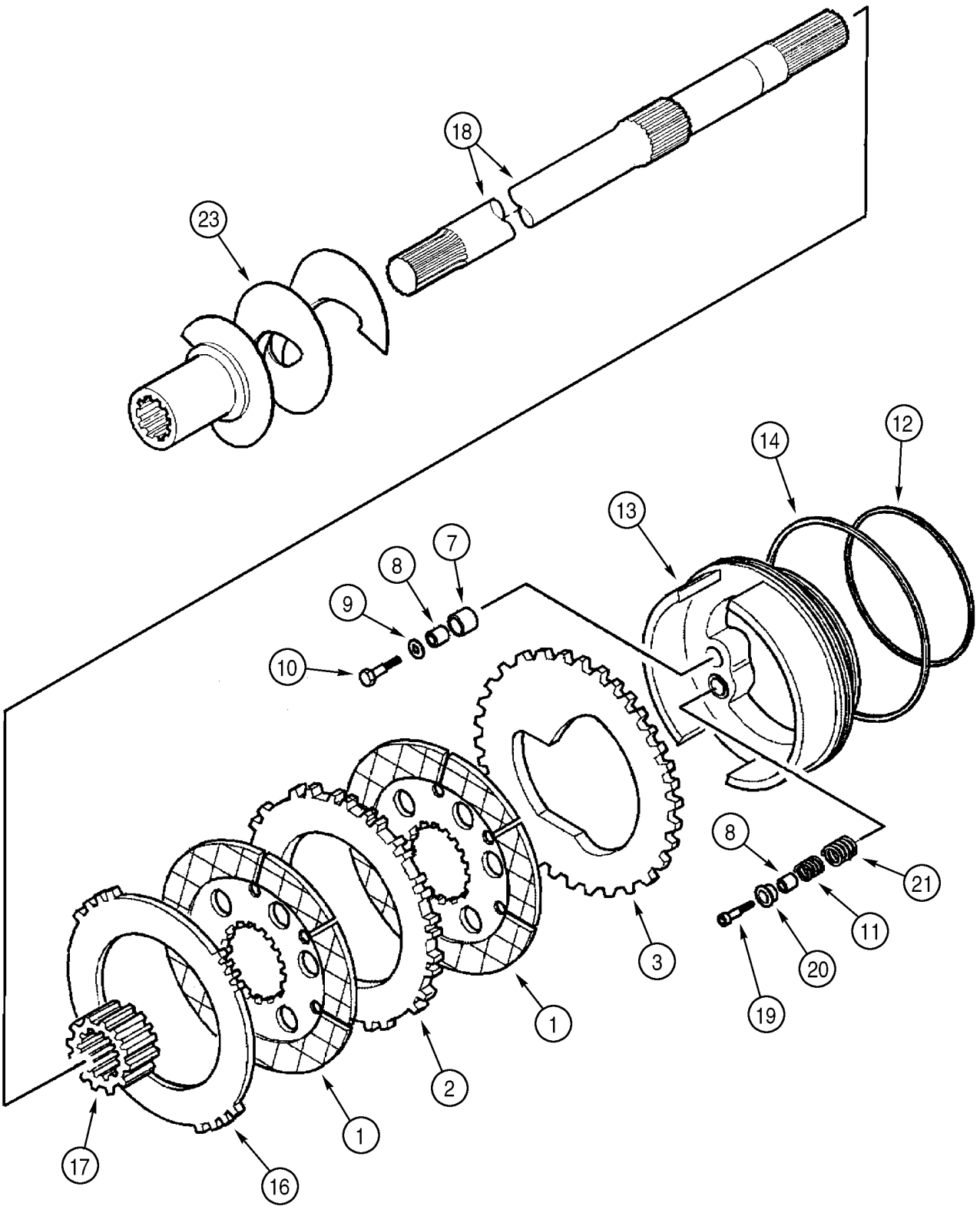

HTTP://WWW.MINNPARBACKHOEPARTS.COM



ESSIEU, PROPULSION ARRIÈRE - FREIN, DIFFERENTIEL

| REF | FN | PART NUMBER | YR/SN | QTY | DESCRIPTION |
|---|---|---|---|---|---|
| | | 384952A1 | | 1 | PONT ARRIERE Incl. Ref 1 - 25; Also Includes Parts On Figures 06-26 - 06-30, 07-01, 07-02 |
| 1 | | 237021A1 | | 4 | PLAQUE, GRANDE Disc |
| 2 | | 237022A1 | | 2 | PLAQUE, GRANDE Friction |
| 3 | | 308029A1 | | 2 | PLAQUE Piston |
| | | 358212A1 | | 1 | POCHETTE Brake Self Adjuster, Incl. Ref 7, 8, Plus An Instruction Sheet |
| 7 | | 190449A1 | | 6 | GOUPILLE-V Spacer, 18 x 20 mm, No Longer Sold Separately, Order 358212A1 Kit |
| 8 | | 190496A1 | | 12 | BAGUE No Longer Sold Separately, Order 358212A1 Kit |
| 9 | | 190450A1 | | 6 | RONDELLE |
| 10 | | 814-6035 | | 6 | VIS M6 x 35; 8,8 |
| 11 | | 237026A1 | | 6 | RESSORT |
| 12 | | 308036A1 | | 2 | JOINT TORIQUE |
| 13 | | 359653A1 | | 2 | PISTON |
| 14 | | 190493A1 | | 2 | JOINT TORIQUE |
| 16 | | 308030A1 | | 2 | PLAQUE Friction |
| 17 | | 308042A1 | | 2 | SUPPORT Sleeve |
| 18 | | 295111A1 | | 2 | ARBRE |
| 19 | | 864-6035 | | 6 | VIS M6 x 35 |
| 20 | | 190500A1 | | 6 | COUVERCLE |
| 21 | | 237025A1 | | 6 | RESSORT |
| 23 | | 295112A1 | | 1 | VIS SANS FIN-ALIMENTATIO Auger, Oil, Right-Hand, Includes Welded-On Clamp and Bolt, Plus Welded-On Drive Coupling, Incl. Ref 25 |
| 24 | | 295113A1 | | 1 | VIS SANS FIN-ALIMENTATIO Auger, Oil, Left-Hand, Includes Welded-On Clamp and Bolt, Plus Welded-On Drive Coupling, Incl. Ref 25 |
| 25 | | 863-6020 | | 2 | VIS Socket, M6 x 20; 12.9, Not Illustrated |

HTTP://WWW.MINNPARBACKHOEPARTS.COM



ESSIEU, PROPULSION ARRIÈRE - FREIN DE STATIONNEMENT

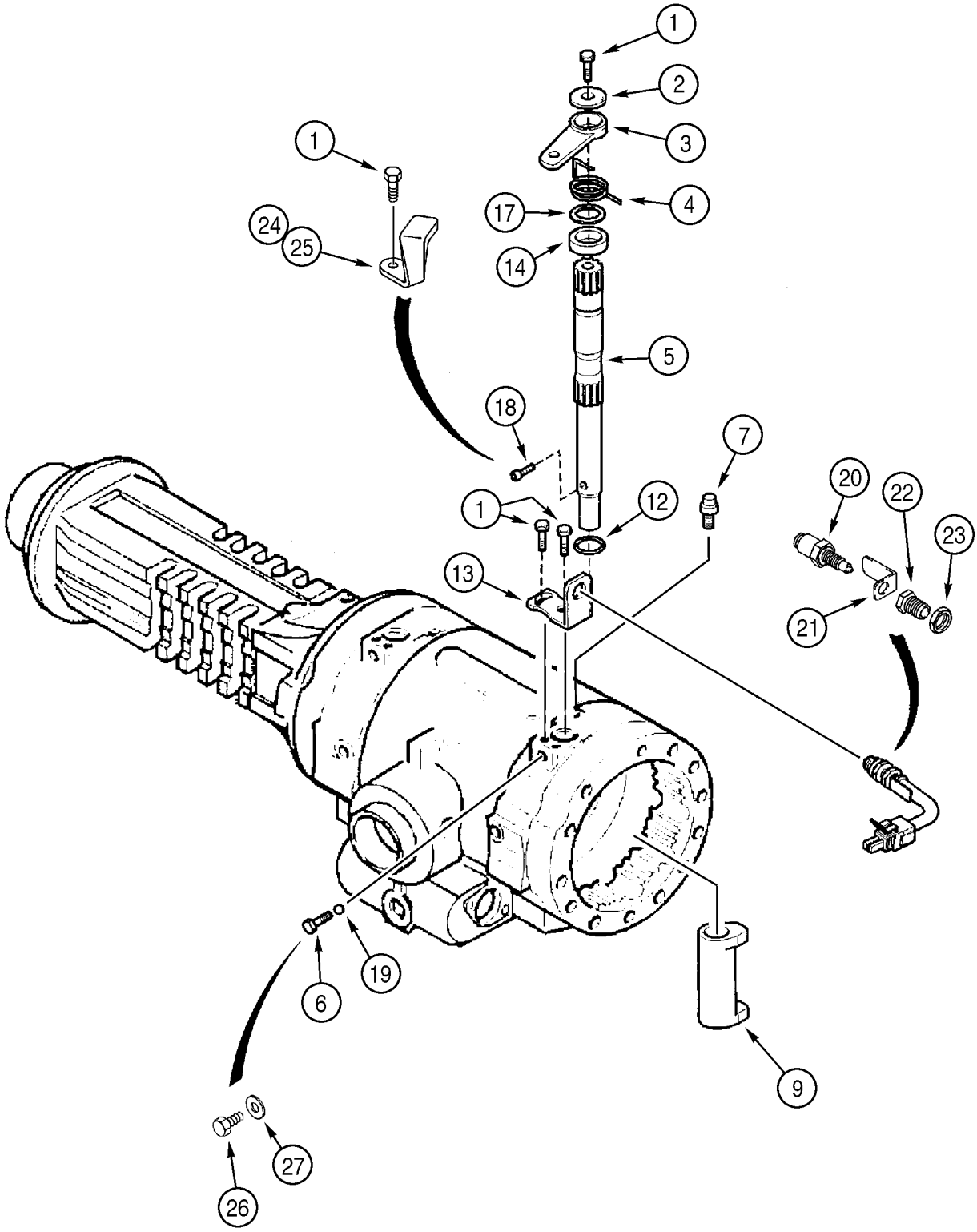

HTTP://WWW.MINNPARBACKHOEPARTS.COM



ESSIEU, PROPULSION ARRIÈRE - FREIN DE STATIONNEMENT

| REF | FN | PART NUMBER | YR/SN | QTY | DESCRIPTION |
|---|---|---|---|---|---|
| | | 384952A1 | | 1 | PONT ARRIERE Incl. Ref 1 - 27; Also Includes Parts On Figures 06-26 - 06-30, 07-01, 07-02 |
| 1 | | 190451A1 | | 6 | VIS M8 x 20 |
| 2 | | 190463A1 | | 2 | RONDELLE |
| 3 | | 280436A1 | | 2 | LEVIER |
| 4 | | 190476A2 | | 1 | RESSORT Left-Hand |
| 4 | | 190477A2 | | 1 | RESSORT Right-Hand, Not Illustrated |
| 5 | | 308040A1 | | 2 | ARBRE |
| 6 | | 283462A1 | | 2 | VIS M8 x 23.5 |
| 7 | | E135810 | | 2 | VIS D'EVENT Brake Bleeder |
| 9 | | 196085A1 | | 2 | CAME |
| 12 | | 321183A1 | | 2 | JOINT TORIQUE |
| 13 | | 256478A1 | | 2 | SUPPORT , Stop Bracket |
| 14 | | 256481A1 | | 2 | ENTRETOISE Bushing |
| 17 | | 256482A1 | | 2 | CALE D'EPAISSEUR |
| 18 | | 256485A1 | | 2 | VIS M6 x 16 |
| 19 | | 283466A1 | | 2 | BILLE |
| | | 281952A1 | | 2 | KIT Switch Kit, Incl. Ref 20 - 23 |
| 20 | | 280450A1 | | 1 | COMMUTATEUR, DEM. |
| 21 | | 280452A1 | | 1 | PATTE FIXATION |
| 22 | | 280457A1 | | 1 | LEVIER Sleeve |
| 23 | | 281960A1 | | 1 | ECROU |
| | | 279645A1 | | 1 | COLIS DE REPARATION Parking Brake, External Adjustment Parts, Includes Instructions, Incl. Ref 1, 12 - 17, 281952A1, 20 - 23, 24 - 27; If Used |
| 24 | | 259254A1 | | 1 | RETENEUR Left-Hand |
| 25 | | 280443A1 | | 1 | RETENEUR Right-Hand |
| 26 | | 514-634 | | 2 | VIS M8 x 16 |
| 27 | | 181104A1 | | 2 | RONDELLE CUIVRE Copper |

HTTP://WWW.MINNPARBACKHOEPARTS.COM

| 07-03 | | p1 | 09/03 |
|---|---|---|---|

FREINS - PÉDALES

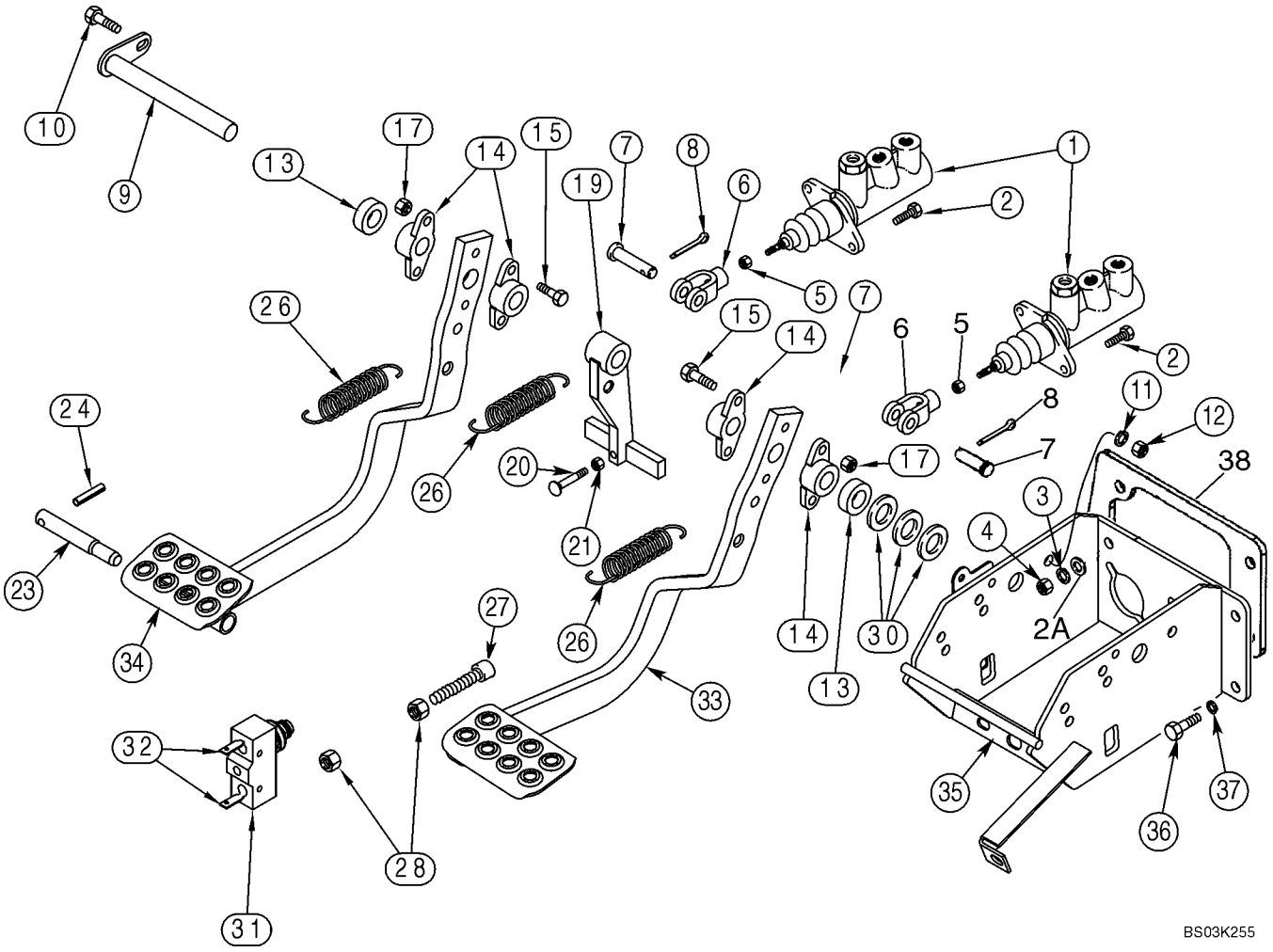

HTTP://WWW.MINNPARBACKHOEPARTS.COM



FREINS - PÉDALES

| REF | FN | PART NUMBER | YR/SN | QTY | DESCRIPTION |
|---|---|---|---|---|---|
| 1 | | 182445A1 | | 2 | MAITRE-CYLINDRE See Figure 07-05 |
| 2 | | 614-8030 | | 4 | VIS M8 x 30 |
| 2A | | 895-11008 | | 4 | RONDELLE 9 x 17 x 1,6 mm |
| 3 | | 892-11008 | | 4 | RONDELLE M8 |
| 4 | | 829-1408 | | 4 | ECROU M8; 10 |
| 5 | | 425-156 | | 2 | ECROU 3/8 NF |
| 6 | | D137077 | | 2 | FOURCHETTE |
| 7 | | L26209 | | 2 | AXE 3/8 |
| 8 | | 432-612 | | 2 | GOUPILLE 3/32 x 3/4 |
| 9 | | D140035 | | 1 | AXE, GROS |
| 10 | | 614-10025 | | 1 | BOULON M10 x 25 |
| 11 | | 892-11010 | | 1 | RONDELLE FREIN M10 |
| 12 | | 829-1410 | | 1 | ECROU M10; 10.9 |
| 13 | | D124529 | | 2 | ENTRETOISE |
| 14 | | A77310 | | 4 | PIVOT Bearing |
| 15 | | 814-8040 | | 4 | VIS M8 x 40 |
| 17 | | 832-10408 | | 4 | ECROU M8 |
| 19 | | D124528 | | 1 | LEVIER Brake Lamp |
| 20 | | 121-145 | | 1 | VIS 5/16 X 2-1/2, Flat Countersunk Head |
| 21 | | 425-105 | | 1 | ECROU 5/16 |
| 23 | | D124530 | | 1 | AXE Brake Pedal Lock |
| 24 | | 438-12040 | | 1 | GOUPILLE 5/16 x 2-1/2 |
| 26 | | 230973A1 | | 3 | RESSORT |
| 27 | | 413870A1 | | 2 | ISOLATEUR M8 x 45, Rubber Head |
| 28 | | 829-1408 | | 4 | ECROU M8; 10 |
| 30 | | 495-81261 | | X | RONDELLE 13/16 x 1-1/2 x 1/16; Used As A Spacer |
| 31 | | D148108 | | 1 | CONTACTEUR Brake Lamp, Attaches To Front Console Wiring Harness |
| 32 | | A187990 | | 2 | COSSE Male |
| 33 | | 339047A3 | | 1 | PEDALE (ASSEMBLEE) Right-Hand |
| 34 | | 339046A3 | | 1 | PEDALE (ASSEMBLEE) Left-Hand |
| 35 | | 338886A4 | | 1 | PATTE FIXATION Brake Pedal and Brake Master Cylinder Mounting |
| 36 | | 614-8020 | | 4 | VIS M8 x 20 |
| 37 | | 892-11008 | | 4 | RONDELLE M8 |
| 38 | | 409370A1 | | 1 | JOINT |

HTTP://WWW.MINNPARBACKHOEPARTS.COM



SYSTEME HYDRAULIQUE - MAITRE-CYLINDRE DE FREIN

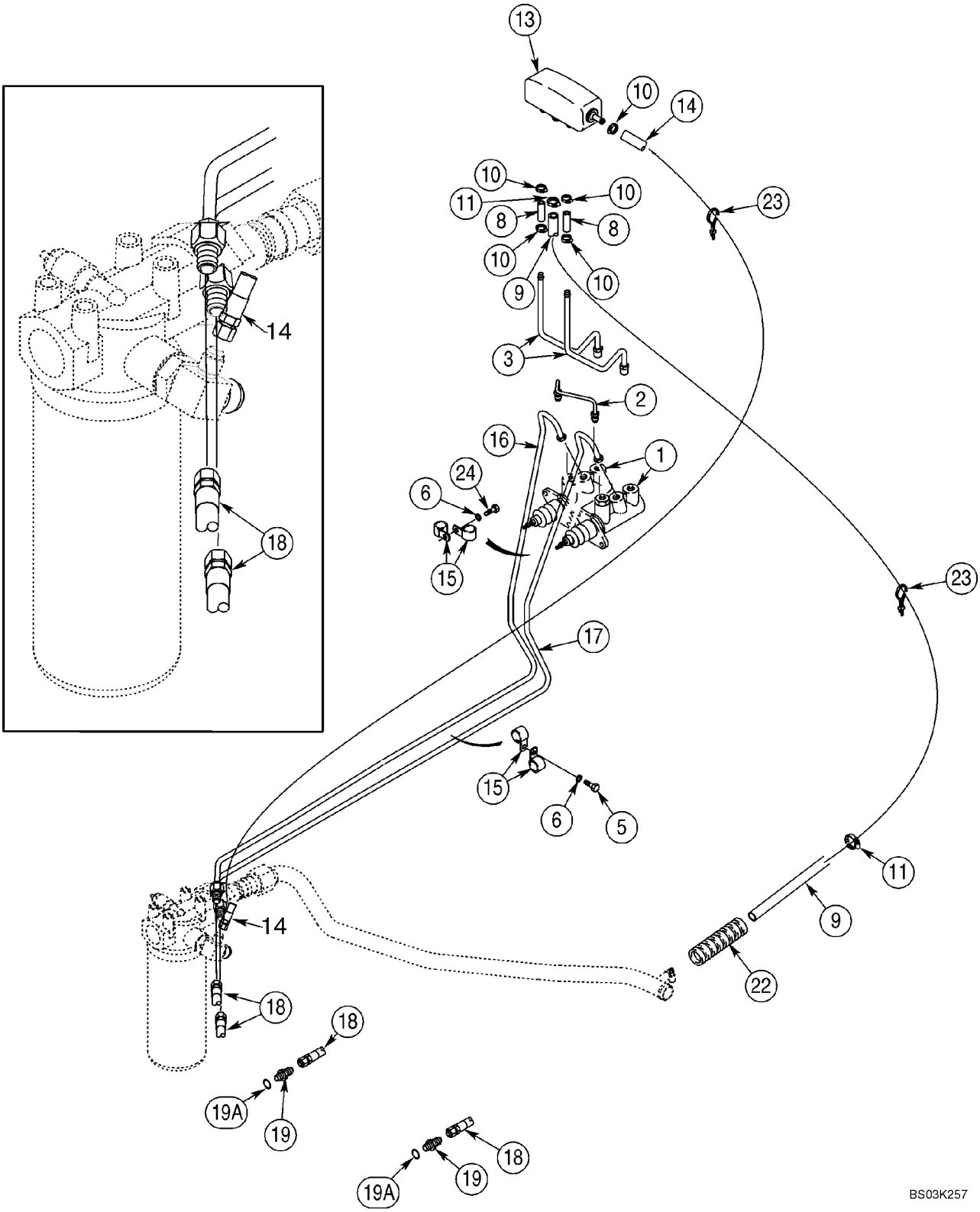

HTTP://WWW.MINNPARBACKHOEPARTS.COM



SYSTEME HYDRAULIQUE - MAITRE-CYLINDRE DE FREIN

| REF | FN | PART NUMBER | YR/SN | QTY | DESCRIPTION |
|---|---|---|---|---|---|
| 1 | | 182445A1 | | 2 | MAITRE-CYLINDRE See Figure 07-05 |
| 2 | | 345061A2 | | 1 | TUYAUTERIE Crossover |
| 3 | | 345325A2 | | 2 | TUYAUTERIE |
| 5 | | 614-8020 | | 1 | VIS M8 x 20 |
| 6 | | 892-11008 | | 2 | RONDELLE M8 |
| 8 | | 121729A1 | | 2 | FLEXIBLE 52 mm (2-3/64 in); To Master Cylinder |
| 9 | | 397076A1 | | 1 | FLEXIBLE 1500 mm (59-1/16 in), Reservoir Outlet, Attaches To Return To Tank Tube; See Figure 08-03 |
| 10 | | 214-1704 | | 5 | COLLIER 1/4 - 5/8 |
| 11 | | 214-1706 | | 2 | COLLIER 7/16 - 3/4 |
| 13 | | 184627A2 | | 1 | RESERVOIR, LIQUIDE FREIN |
| 14 | | 86991496 | | 1 | FLEXIBLE (ASSEMBLE) 1666 mm (65-19/32 in), Reservoir Inlet, Attaches to Tee At Hydraulic Oil Filter; See Figure 08-03 For Fitting |
| 15 | | 515-2379 | | 4 | COLLIER 7,9 mm |
| 16 | | 397177A2 | | 1 | TUYAUTERIE Left-Hand |
| 17 | | 396620A2 | | 1 | TUYAUTERIE Right-Hand |
| 18 | | 409318A1 | | 2 | FLEXIBLE (ASSEMBLE) 565 mm (22-1/4 in) Brake Tube To Adapter On Rear Axle |
| 19 | | 218-5053 | | 2 | RACCORD 7/16 fl x Or, Includes Ref 19A |
| 19A | | 237-6004 | | 1 | JOINT TORIQUE 23/64 ID x 5/64, Boss Seal |
| 22 | | D132982 | | 1 | GAINE 400 mm (15-3/4 in) |
| 23 | | L18337 | | 3 | SANGLE 15 in |
| 24 | | 614-8030 | | 1 | VIS M8 x 30 |

HTTP://WWW.MINNPARBACKHOEPARTS.COM

| 07-05 | | p1 | 09/03 |
|---|---|---|---|

VERIN - MAITRE FREIN

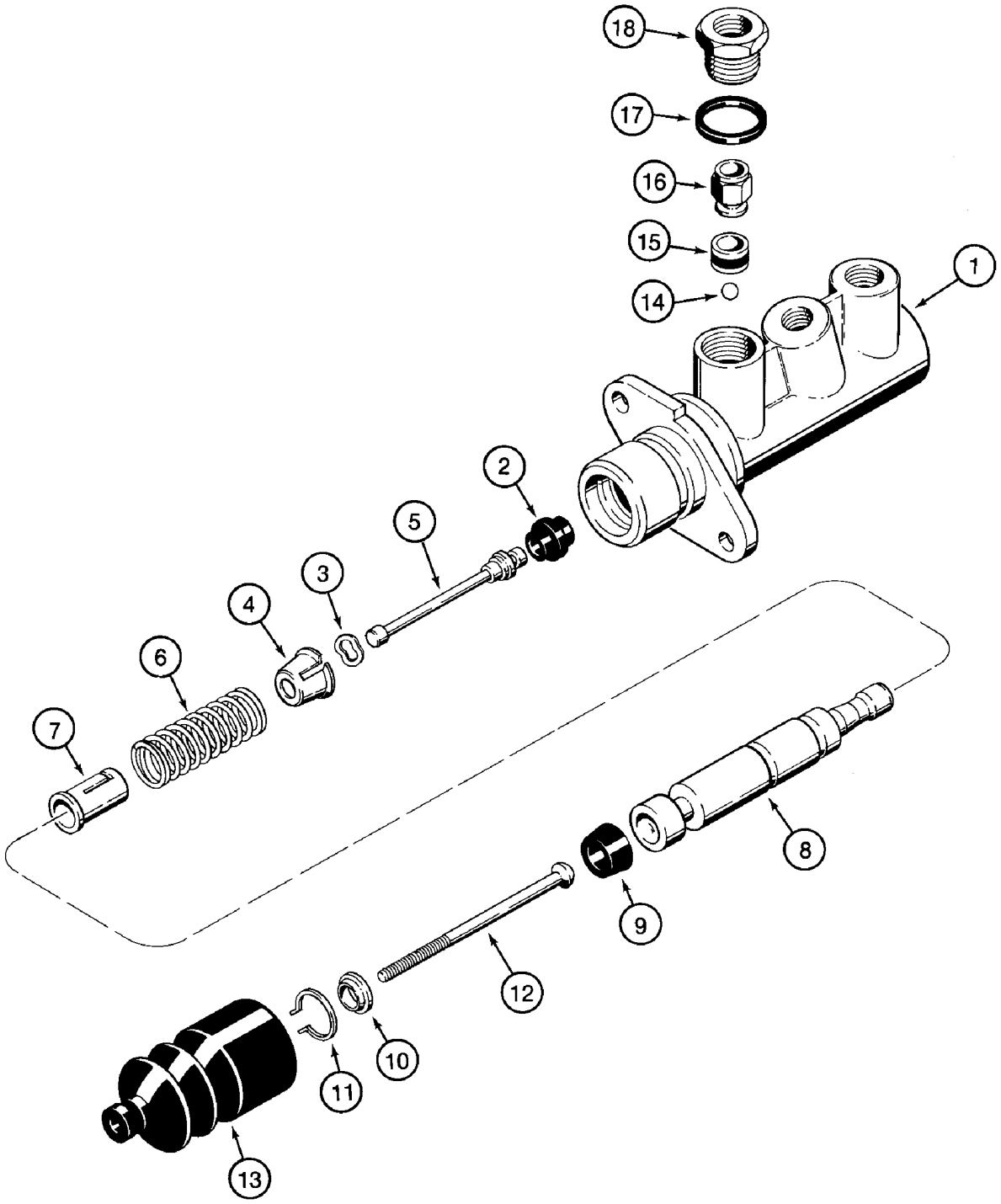

HTTP://WWW.MINNPARBACKHOEPARTS.COM



VERIN - MAITRE FREIN

| REF | FN | PART NUMBER | YR/SN | QTY | DESCRIPTION |
|---|---|---|---|---|---|
| | | 182445A1 | | 2 | MAITRE-CYLINDRE Incl. Ref 1 - 18 |
| 1 | | NSS | | 1 | NON FOURNI SEPAREMENT Housing |
| 2 | | NSS | | 1 | NON FOURNI SEPAREMENT Seal |
| 3 | | NSS | | 1 | NON FOURNI SEPAREMENT Washer |
| 4 | | NSS | | 1 | NON FOURNI SEPAREMENT Seat |
| 5 | | NSS | | 1 | NON FOURNI SEPAREMENT Plunger |
| 6 | | NSS | | 1 | NON FOURNI SEPAREMENT Spring |
| 7 | | NSS | | 1 | NON FOURNI SEPAREMENT Seat |
| 8 | | NSS | | 1 | NON FOURNI SEPAREMENT Piston |
| 9 | | NSS | | 1 | NON FOURNI SEPAREMENT Seal |
| 10 | | NSS | | 1 | NON FOURNI SEPAREMENT Washer |
| 11 | | NSS | | 1 | NON FOURNI SEPAREMENT Ring, Retaining |
| 12 | | NSS | | 1 | NON FOURNI SEPAREMENT Rod |
| 13 | | NSS | | 1 | NON FOURNI SEPAREMENT Boot |
| 14 | | NSS | | 1 | NON FOURNI SEPAREMENT Ball |
| 15 | | NSS | | 1 | NON FOURNI SEPAREMENT Seal |
| 16 | | NSS | | 1 | NON FOURNI SEPAREMENT Valve, Check |
| 17 | | NSS | | 1 | NON FOURNI SEPAREMENT Seal |
| 18 | | NSS | | 1 | NON FOURNI SEPAREMENT Adapter |
| | | N14784 | | 1 | POCHETTE Seal; Incl. Ref 2, 3, 9, 11, 13 - 15, 17 |

HTTP://WWW.MINNPARBACKHOEPARTS.COM

| 07-06 | | p1 | 01/04 |
|---|---|---|---|

COMMANDES - FREIN DE STATIONNEMENT

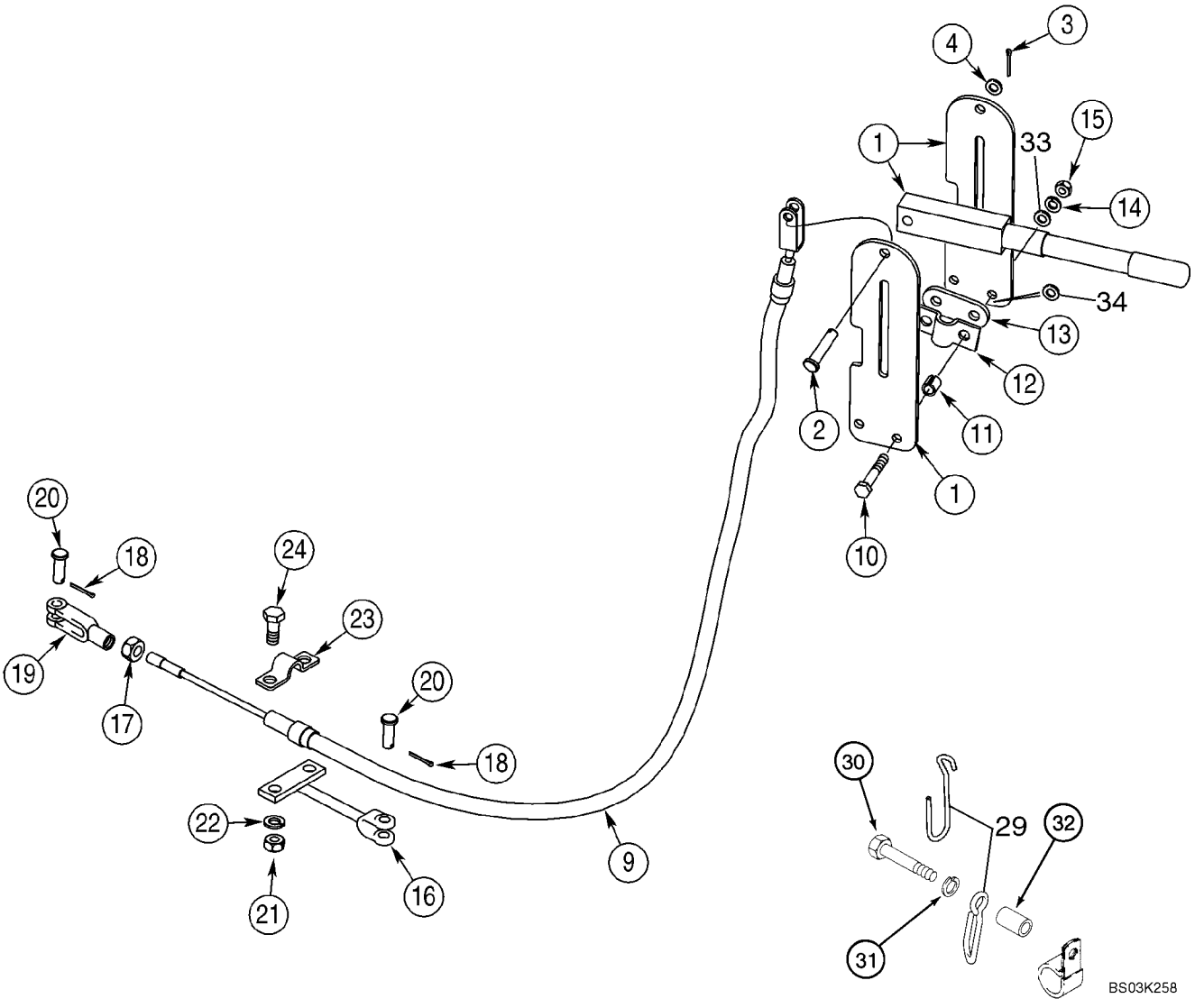

HTTP://WWW.MINNPARBACKHOEPARTS.COM



COMMANDES - FREIN DE STATIONNEMENT

| REF | FN | PART NUMBER | YR/SN | QTY | DESCRIPTION |
|---|---|---|---|---|---|
| | | 367977A1 | | 1 | LEVIER Incl. Ref 1 - 4 |
| 1 | | NSS | | 1 | NON FOURNI SEPAREMENT Lever |
| 2 | | NSS | | 1 | NON FOURNI SEPAREMENT Pin, Clevis |
| 3 | | 432-612 | | 1 | GOUPILLE 3/32 x 3/4 |
| 4 | | 495-21038 | | 1 | RONDELLE 3/8 x 7/8 x 3/32 |
| 9 | | 280681A1 | | 1 | CABLE 1325 mm (52-3/16 in) |
| 10 | | 827-8050 | | 2 | VIS M8 x 50; 10.9 |
| 11 | | D150633 | | 2 | ENTRETOISE |
| 12 | | D121608 | | 1 | COLLIER |
| 13 | | D129747 | | 1 | PLAQUE |
| 14 | | 892-11008 | | 2 | RONDELLE M8 |
| 15 | | 829-1408 | | 2 | ECROU M8; 10 |
| 16 | | 326348A1 | | 1 | SUPPORT 151 mm (6 in) |
| 17 | | 425-156 | | 1 | ECROU 3/8 NF |
| 18 | | 432-612 | | 2 | GOUPILLE 3/32 x 3/4 |
| 19 | | 213-126 | | 1 | FOURCHETTE 3/8 NF |
| 20 | | D149288 | | 2 | AXE, GROS |
| 21 | | 829-1410 | | 2 | ECROU M10; 10.9 |
| 22 | | 892-11010 | | 2 | RONDELLE FREIN M10 |
| 23 | | A188028 | | 1 | COLLIER |
| 24 | | 614-10025 | | 2 | BOULON M10 x 25 |
| 29 | | 87424794 | | 1 | SUPPORT See Figure 04-04 for Clamp |
| 30 | | 814-10060 | | 1 | VIS M10 x 60 |
| 31 | | 895-11010 | | 1 | RONDELLE 11 x 21 x 2 mm |
| 32 | | 130245A1 | | 1 | ENTRETOISE |
| 33 | | 896-15008 | | 2 | RONDELLE 9 x 21 x 2,5 mm |
| 34 | | 895-11008 | | X | RONDELLE 9 x 16 x 1,6 mm |

HTTP://WWW.MINNPARBACKHOEPARTS.COM

HTTP://WWW.MINNPARBACKHOEPARTS.COM

# SECTION INDEX


| | |
|---|---|
| 08-01 | SYSTEME HYDRAULIQUE - POMPE, FILTRE ET DISTRIBUTEUR DE CHARGEUSE |
| 08-02 | SYSTEME HYDRAULIQUE - DU DISTRIBUTEUR DU CHARGEUR AU FILTRE AU DISTRIBUTEUR DE LA PELLE RETRO |
| 08-03 | SYSTEME HYDRAULIQUE - REFROIDISSEUR, CONDUITES DE RETOUR ET FILTRE |
| 08-04 | SYSTEME HYDRAULIQUE - VERIN DE RELEVAGE DES BRAS DE RELEVAGE |
| 08-05 | SYSTEME HYDRAULIQUE - VERIN, GODET DE LA CHARGEUSE |
| 08-06 | SYSTEME HYDRAULIQUE - VERIN, BENNE DE LA CHARGEUSE |
| 08-07 | SYSTEME HYDRAULIQUE - VERIN, BENNE DE LA CHARGEUSE |
| 08-08 | SYSTEME HYDRAULIQUE - VERIN, STABILISATEUR DE LA PELLE RETRO EUROPA (SANS DE COMMANDE PILOTE) |
| 08-08A | SYSTEME HYDRAULIQUE - VERIN, STABILISATEUR DE LA PELLE RETRO EUROPA (AVEC DE COMMANDE PILOTE) |
| 08-09 | SYSTEME HYDRAULIQUE - VERIN, DEBATTEMENT DE LA PELLE RETRO (SANS DE COMMANDE PILOTE) |
| 08-09A | SYSTEME HYDRAULIQUE - VERIN, DEBATTEMENT DE LA PELLE RETRO (AVEC DE COMMANDE PILOTE) |
| 08-10 | SYSTEME HYDRAULIQUE - VERIN, FLECHE DE LA PELLE RETRO |
| 08-11 | SYSTEME HYDRAULIQUE - VERIN, BALANCIER DE LA PELLE RETRO |
| 08-12 | SYSTEME HYDRAULIQUE - VERIN, GODET DE LA PELLE RETRO (MODÈLES SANS BALANCIER EXTENSIBLE) |
| 08-13 | SYSTEME HYDRAULIQUE - VERIN, GODET DE LA PELLE RETRO (MODÈLES AVEC BALANCIER EXTENSIBLE) |
| 08-14 | SYSTEME HYDRAULIQUE - VERIN, BALANCIER EXTENSIBLE DE LA PELLE RETRO |
| 08-15 | SYSTEME HYDRAULIQUE - DISTRIBUTEUR, COMMANDE PILOTE DE LEVIER DE COMMANDE (6 SPOOL, W/O EXT DIPPER, |
| 08-16 | SYSTEME HYDRAULIQUE - DISTRIBUTEUR, COMMANDE PILOTE DE LEVIER DE COMMANDE (6 SPOOL, W/O EXT DIPPER, |
| 08-17 | SYSTEME HYDRAULIQUE - DISTRIBUTEUR, COMMANDE PILOTE DE LEVIER DE COMMANDE (7 SPOOL, W/ EXT DIPPER, |
| 08-18 | SYSTEME HYDRAULIQUE - DISTRIBUTEUR, COMMANDE PILOTE DE LEVIER DE COMMANDE (7 SPOOL, W/ EXT DIPPER, |
| 08-19 | SYSTEME HYDRAULIQUE - DISTRIBUTEUR, COMMANDE PILOTE DE LEVIER DE COMMANDE (7 SPOOL, W/O EXT DIPPER, |
| 08-20 | SYSTEME HYDRAULIQUE - DISTRIBUTEUR, COMMANDE PILOTE DE LEVIER DE COMMANDE (8 SPOOL, W/ EXT DIPPER, |
| 08-21 | SYSTEME HYDRAULIQUE - COMMANDE PILOTE DE LEVIER DE COMMANDE |
| 08-22 | SYSTEME HYDRAULIQUE - COMMANDE PILOTE |
| 08-23 | SYSTEME HYDRAULIQUE - CIRCUIT AUXILIAIRE DE LA PELLE RETRO |
| 08-24 | SYSTEME HYDRAULIQUE - CIRCUIT AUXILIAIRE DE LA PELLE RETRO |
| 08-25 | SYSTEME HYDRAULIQUE - SYSTEME ANTI-TANGAGE |
| 08-26 | SYSTEME HYDRAULIQUE - COUPLEUR, OUTIL DE CHARGEUSE, DE SÉCURITÉ |
| 08-27 | SYSTEME HYDRAULIQUE - COUPLEUR, OUTIL DE CHARGEUSE, DE SÉCURITÉ |
| 08-28 | DISTRIBUTEUR DU COUPLEUR - OUTIL DE CHARGEUSE, DE SÉCURITÉ |
| 08-29 | POMPE, ÉQUIPEMENT HYDRAULIQUE |
| 08-30 | DISTRIBUTEUR - COMMANDE DU CHARGEUR, DEUX TIROIRS |
| 08-31 | DISTRIBUTEUR - COMMANDE DU CHARGEUR, TROIS TIROIRS |
| 08-32 | DISTRIBUTEUR - COMMANDE DE LA PELLE RETRO, 6 TIROIRS (SANS BALANCIER EXTENSIBLE ET SANS CIRCUIT HYD) |
| 08-33 | DISTRIBUTEUR - COMMANDE DE LA PELLE RETRO, 7 TIROIRS (SANS BALANCIER EXTENSIBLE ET AVEC CIRCUIT HYD) |

HTTP://WWW.MINNPARBACKHOEPARTS.COM

# SECTION INDEX


| | |
|---|---|
| 08-34 | DISTRIBUTEUR - COMMANDE DE LA PELLE RETRO, 7 TIROIRS (AVEC BALANCIER EXTENSIBLE ET SANS CIRCUIT HYD) |
| 08-35 | DISTRIBUTEUR - COMMANDE DE LA PELLE RETRO, 8 TIROIRS (AVEC BALANCIER EXTENSIBLE ET SANS CIRCUIT HYD) |
| 08-36 | DISTRIBUTEUR - COMMANDE DE LA PELLE RETRO, 6 TIROIRS |
| 08-37 | DISTRIBUTEUR - COMMANDE DE LA PELLE RETRO, 7 TIROIRS |
| 08-38 | DISTRIBUTEUR - COMMANDE DE LA PELLE RETRO, 7 TIROIRS |
| 08-39 | DISTRIBUTEUR - COMMANDE DE LA PELLE RETRO, 8 TIROIRS |
| 08-40 | CIRCUIT - DEBATTEMENT DE LA RETROPELLE (AVEC DE COMMANDE PILOTE) |
| 08-41 | CIRCUIT - FLECHE DE LA RETROPELLE (AVEC DE COMMANDE PILOTE) |
| 08-42 | CIRCUIT - STABILISATEUR DE LA PELLE RETRO (AVEC DE COMMANDE PILOTE) |
| 08-43 | CIRCUIT - BRAS DE LA RETROPELLE (AVEC DE COMMANDE PILOTE) |
| 08-44 | CIRCUIT - GODET DE LA RETROPELLE (AVEC DE COMMANDE PILOTE) |
| 08-45 | CIRCUIT - BALANCIER EXTENSIBLE (AVEC DE COMMANDE PILOTE) |
| 08-46 | CIRCUIT - OPTIONS, CIRCUIT HYDRAULIQUE AUXILIAIRE (AVEC DE COMMANDE PILOTE) |
| 08-47 | DISTRIBUTEUR, SOUPAPE DE REDUCTION PRESSION (2 SPOOL) (AVEC DE COMMANDE PILOTE) |
| 08-48 | DISTRIBUTEUR, SOUPAPE DE REDUCTION PRESSION (3 SPOOL) (AVEC DE COMMANDE PILOTE) |
| 08-49 | DISTRIBUTEUR, SOUPAPE DE REDUCTION PRESSION (4 SPOOL) (AVEC DE COMMANDE PILOTE) |
| 08-50 | DISTRIBUTEUR, LEVIER DE COMMANDE (COMMANDE PILOTE) (GAUCHE) AVERTISSEUR SONORE |
| 08-51 | DISTRIBUTEUR, LEVIER DE COMMANDE (COMMANDE PILOTE) (GAUCHE) AVERTISSEUR SONORE & UNI-DIR |
| 08-52 | DISTRIBUTEUR, LEVIER DE COMMANDE (COMMANDE PILOTE) (GAUCHE) AVERTISSEUR SONORE & BI-DIR |
| 08-53 | DISTRIBUTEUR, LEVIER DE COMMANDE (COMMANDE PILOTE) (DROIT) SANS BALANCIER EXTENSIBLE |
| 08-54 | DISTRIBUTEUR, LEVIER DE COMMANDE (COMMANDE PILOTE) (DROIT) AVEC BALANCIER EXTENSIBLE |
| 08-55 | DISTRIBUTEUR - AMORTISSEUR DE DEBATTEMENT |
| 08-56 | ACCUMULATEUR ASS. - SYSTEME ANTI-TANGAGE |
| 08-57 | FILTRE A HUILE |
| 08-58 | VERIN - RELEVAGE DE LA CHARGEUSE |
| 08-59 | VERIN - GODET DE LA CHARGEUSE |
| 08-60 | VERIN - BENNE DE CHARGEUSE |
| 08-61 | VERIN - STABILISATEUR DE LA PELLE RETRO |
| 08-62 | VERIN - DEBATTEMENT DE LA RETROPELLE |
| 08-63 | VERIN - FLECHE DE LA RETROPELLE |
| 08-64 | VERIN - BRAS DE LA RETROPELLE |
| 08-65 | VERIN - GODET DE LA RETROPELLE |
| 08-66 | VERIN - BALANCIER EXTENSIBLE DE LA PELLE RETRO |

HTTP://WWW.MINNPARBACKHOEPARTS.COM

HTTP://WWW.MINNPARBACKHOEPARTS.COM

| 08-01 | | p1 | 01/04 |
|---|---|---|---|

SYSTEME HYDRAULIQUE - POMPE, FILTRE ET DISTRIBUTEUR DE CHARGEUSE

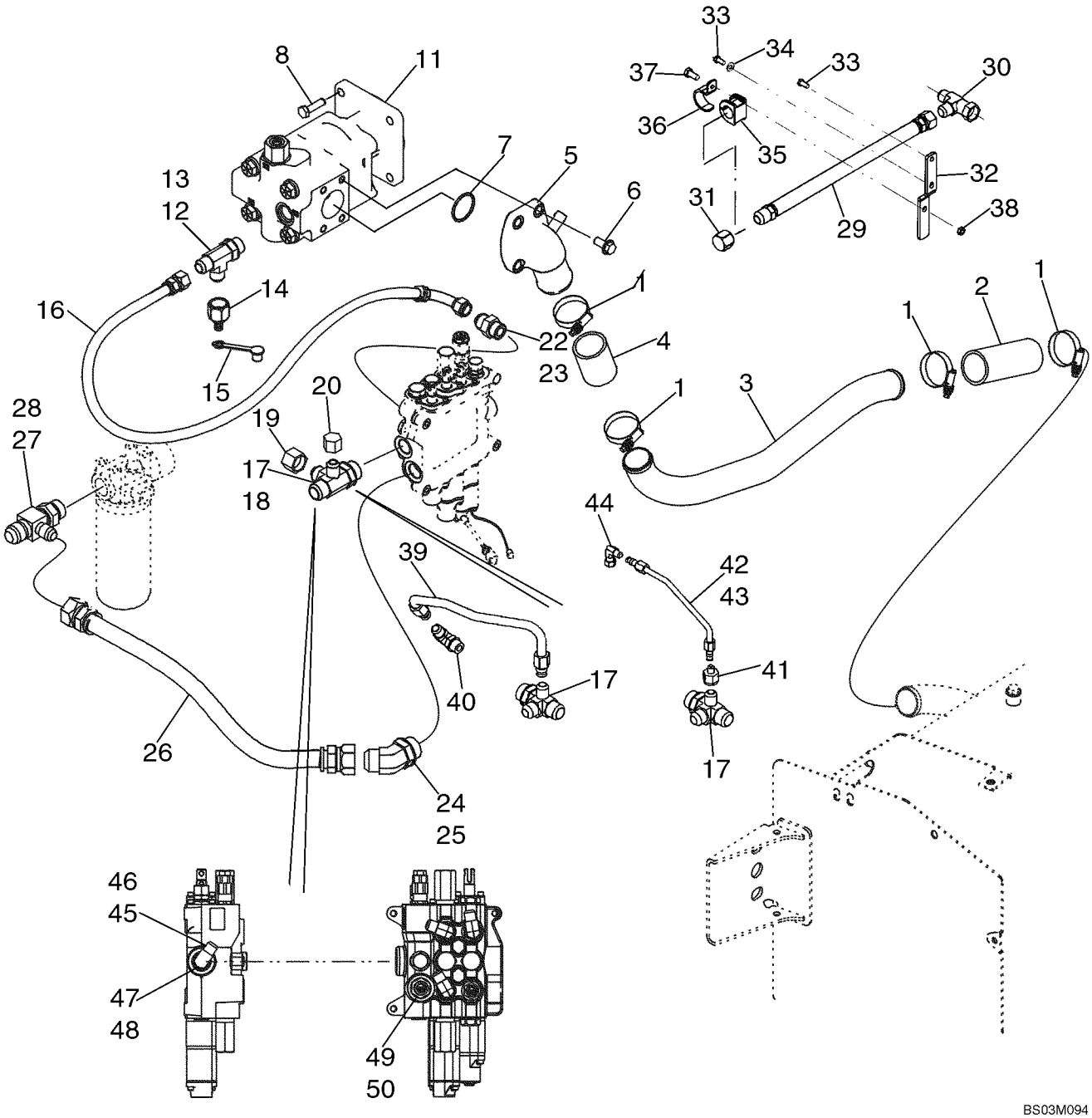

HTTP://WWW.MINNPARBACKHOEPARTS.COM



SYSTEME HYDRAULIQUE - POMPE, FILTRE ET DISTRIBUTEUR DE CHARGEUSE

| REF | FN | PART NUMBER | YR/SN | QTY | DESCRIPTION |
|---|---|---|---|---|---|
| 1 | | 259044A1 | | 4 | COLLIER |
| 2 | | 282496A1 | | 1 | FLEXIBLE Suction, At Hydraulic Tank |
| 3 | | 87435761 | | 1 | TUYAU HYDRAULIQUE RIGIDE Suction Tube |
| 4 | | 87422554 | | 1 | FLEXIBLE |
| 5 | | 87434257 | | 1 | BRIDE, FLASQUE ASS. Pump Flange |
| 6 | | 864-12030 | | 3 | VIS M12 x 30 |
| 7 | | 238-5228 | | 1 | JOINT TORIQUE |
| 8 | | 514-832 | | 4 | VIS M12 x 35 |
| 11 | | 87434672 | | 1 | POMPE HYDRAULIQUE Equipment, See Figure 08-29 |
| 12 | | 218-5239 | | 1 | RACCORD 1-1/16 fl br x fl x Or; Incl. Ref 13 |
| 13 | | 237-6012 | | 1 | JOINT TORIQUE 59/64 ID x 7/64 |
| 14 | | D137625 | | 1 | ACCOUPLEMENT HYDR. Quick Disconnect; Includes (1) 425-1120 Nut |
| 15 | | H434163 | | 1 | CHAPEAU Dust |
| 16 | | 87429895 | | 1 | FLEXIBLE (ASSEMBLE) 775 mm (30-9/16 in) |
| 17 | | 87436066 | | 1 | RACCORD 4-Way Special Fitting; Incl. Ref 18 |
| 18 | | 237-6016 | | 1 | JOINT TORIQUE 1-11/64 ID x 7/64 wide |
| 19 | | 218-335 | | 1 | CHAPEAU Hex, 1-1/16; Models Without Pilot Controls |
| 20 | | 218-756 | | 1 | CHAPEAU Hex, 7/8; Models Without Pilot Controls |
| 22 | | 218-5064 | | 1 | RACCORD 1-1/16 fl x Or; Incl. Ref 23 |
| 23 | | 237-6012 | | 1 | JOINT TORIQUE 59/64 ID x 7/65 |
| 24 | | 218-5140 | | 1 | RACCORD Elbow, 45 Degree, 1-5/16 fl x Or; Incl. Ref 25 |
| 25 | | 237-6016 | | 1 | JOINT TORIQUE 1-11/64 ID x 7/64 wide |
| 26 | | 87437228 | | 1 | FLEXIBLE (ASSEMBLE) 635 mm (25 in), Loader Valve to Filter |
| 27 | | 218-5584 | | 1 | RACCORD TEE, 1-1/16 fl branch x 1-5/16 fl x Or; Incl. Ref 28 |
| 28 | | 237-6016 | | 1 | JOINT TORIQUE 1-11/64 ID x 7/64 wide |
| 29 | | 397309A3 | | 1 | FLEXIBLE (ASSEMBLE) 700 mm; Attenuator, To Hose At Large Pump Section Port; If Used |
| 30 | | 218-5221 | | 1 | CONNECTEUR 1-1/16 fl x fl x adj; If Used |
| 31 | | 218-335 | | 1 | CHAPEAU 1-1/16; If Used |
| 32 | | 408757A1 | | 1 | PATTE FIXATION If Used |

HTTP://WWW.MINNPARBACKHOEPARTS.COM



SYSTEME HYDRAULIQUE - POMPE, FILTRE ET DISTRIBUTEUR DE CHARGEUSE

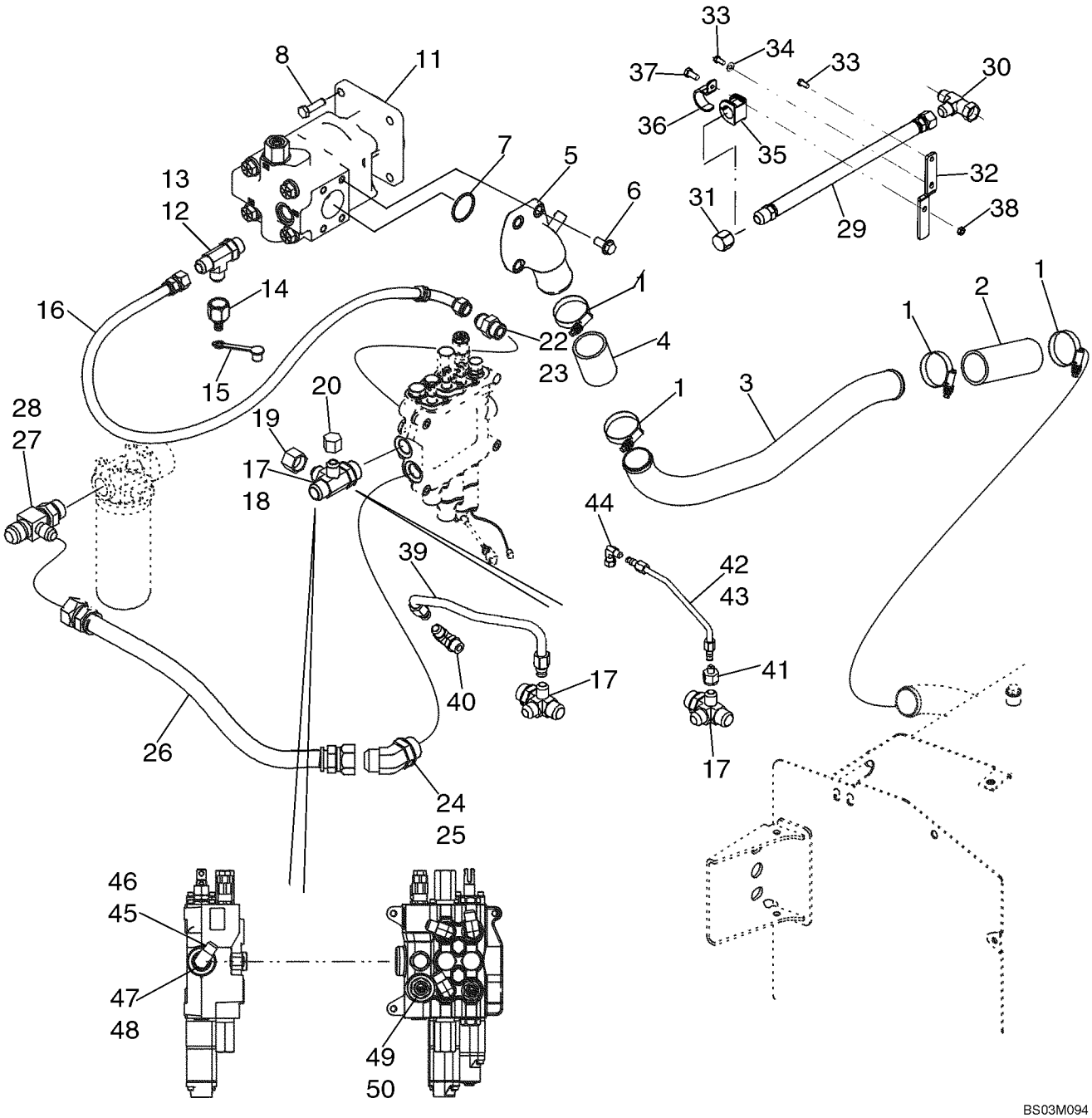

HTTP://WWW.MINNPARBACKHOEPARTS.COM



SYSTEME HYDRAULIQUE - POMPE, FILTRE ET DISTRIBUTEUR DE CHARGEUSE

| REF | FN | PART NUMBER | YR/SN | QTY | DESCRIPTION |
|---|---|---|---|---|---|
| 33 | | 614-8020 | | 2 | VIS M8 x 20; If Used |
| 34 | | 892-11008 | | 1 | RONDELLE Lock, M8; If Used |
| 35 | | D67298 | | 1 | ISOLANT If Used |
| 36 | | D68845 | | 1 | COLLIER-DE-FIXATION If Used |
| 37 | | 614-10025 | | 1 | BOULON M10 x 25; If Used |
| 38 | | 832-10410 | | 1 | ECROU Lock, M10; If Used |
| 39 | | 87437655 | | 1 | TUYAUTERIE Two Spool Loader Valve; Models Without Pilot Controls |
| 40 | | 87437657 | | 1 | TUYAUTERIE Three Spool Loader Valve; Models Without Pilot Controls |
| 41 | | 218-765 | | 1 | REDUCTEUR Models With Pilot Controls |
| 42 | | 87437980 | | 1 | TUYAUTERIE Two Spool Loader Valve; Models With Pilot Controls |
| 43 | | 87437982 | | 1 | TUYAUTERIE Three Spool Loader Valve; Models With Pilot Controls |
| 44 | | 218-980 | | 1 | COUDE 90 deg, 9/16 fl x sw fl; Models With Pilot Controls |
| 45 | | 218-5107 | | 1 | COUDE 90 deg, 7/8 fl x Or; Incl. Ref 46; Models Without Pilot Controls |
| 46 | | 237-6010 | | 1 | JOINT TORIQUE 3/4 ID x 3/32 |
| 47 | | 218-5157 | | 1 | BOUCHON Hex, 7/8 Or; Incl. Ref 48; Models With Pilot Controls |
| 48 | | 237-6010 | | 1 | JOINT TORIQUE 3/4 ID x 3/32 |
| 49 | | 218-5064 | | 1 | RACCORD 1-1/16 fl x Or; Incl. Ref 50 |
| 50 | | 237-6012 | | 1 | JOINT TORIQUE 59/64 ID x 7/64 |

HTTP://WWW.MINNPARBACKHOEPARTS.COM

| 08-02 | | p1 | 12/03 |
|---|---|---|---|

SYSTEME HYDRAULIQUE - DU DISTRIBUTEUR DU CHARGEUR AU FILTRE AU DISTRIBUTEUR DE LA PELLE RETRO

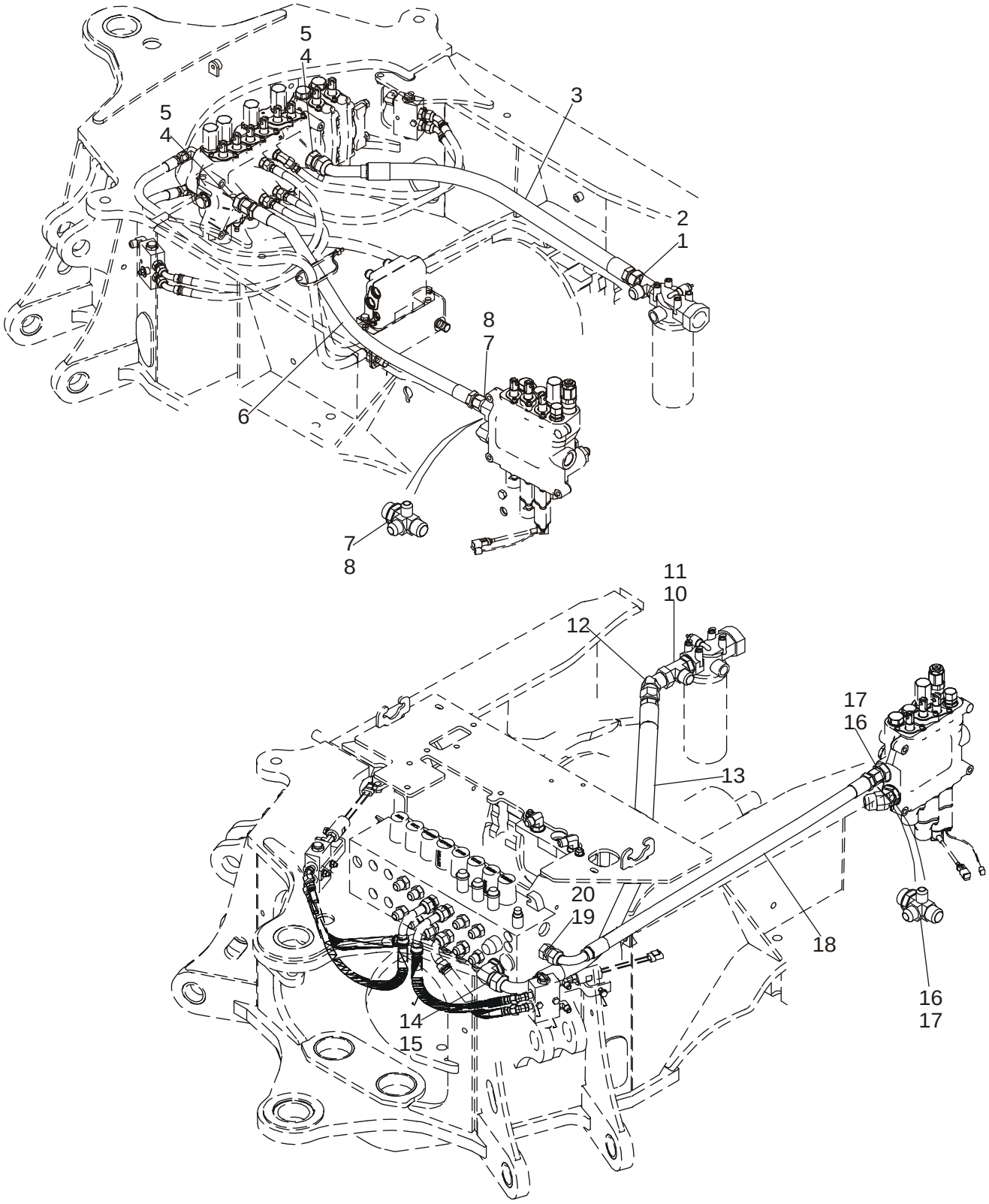

HTTP://WWW.MINNPARBACKHOEPARTS.COM



SYSTEME HYDRAULIQUE - DU DISTRIBUTEUR DU CHARGEUR AU FILTRE AU DISTRIBUTEUR DE LA PELLE RETRO

| REF | FN | PART NUMBER | YR/SN | QTY | DESCRIPTION |
|---|---|---|---|---|---|
| | | REF | | | NOTICE MODELS WITHOUT PILOT CONTROLS |
| 1 | | 218-5245 | | 1 | RACCORD TEE, 1-5/16 fl br x fl x Or; Incl. Ref 2 |
| 2 | | 237-6016 | | 1 | JOINT TORIQUE 1-11/64 ID x 7/64 |
| 3 | | 313648A1 | | 1 | FLEXIBLE 910 mm (35-7/8 in); Return; Models Without Pilot Controls |
| 4 | | 218-5069 | | 2 | CONNECTEUR 1-5/16 fl x Or; Incl. Ref 5 |
| 5 | | 237-6016 | | 1 | JOINT TORIQUE 1-11/64 ID x 7/64 |
| 6 | | 87437441 | | 1 | FLEXIBLE (ASSEMBLE) 1025 mm (40-3/8 in); 2 or 3 Spool Valve; Without Auxiliary Hydraulics, Without Pilot Controls; Loader Valve Power Beyond to Backhoe Valve |
| 6 | | 87437232 | | 1 | FLEXIBLE (ASSEMBLE) 420 mm (16-9/16 in); 2 Spool Valve; With Auxiliary Hydraulics; With or Without Pilot Controls; Loader Valve Power Beyond to Backhoe Valve |
| 6 | | 87437231 | | 1 | FLEXIBLE (ASSEMBLE) 370 mm (14-5/8 in); 3 Spool Valve; With Auxiliary Hydraulics; With or Without Pilot Controls; Loader Valve Power Beyond to Backhoe Valve |
| 7 | | 87436066 | | 1 | RACCORD 4-Way Special Tee, Incl. Ref 8 |
| 8 | | 237-6016 | | 1 | JOINT TORIQUE 1-11/64 ID x 7/64 |
| | | REF | | | NOTICE MODELS WITH PILOT CONTROLS |
| 10 | | 218-5245 | | 1 | RACCORD TEE, 1-5/16 fl br x fl x Or; Incl. Ref 11 |
| 11 | | 237-6016 | | 1 | JOINT TORIQUE 1-11/64 ID x 7/64 |
| 12 | | 218-5176 | | 1 | RACCORD ELBOW, 45 deg, 1-5/16 fl x sw str thrd |
| 13 | | 87437934 | | 1 | FLEXIBLE (ASSEMBLE) 1230 mm (48-7/16 in); Return; Models With Pilot Controls |
| 14 | | 218-5110 | | 1 | RACCORD ELBOW, 90 deg, 1-5/16 fl x adj Or; Incl. Ref 15 |
| 15 | | 237-6016 | | 1 | JOINT TORIQUE 1-11/64 ID x 7/64 |
| 16 | | 87436066 | | 1 | RACCORD 4-Way Tee, Special, 1-5/16 fl x Or; Incl. Ref 17 |
| 17 | | 237-6016 | | 1 | JOINT TORIQUE 1-11/64 ID x 7/64 |
| 18 | | 87437442 | | 1 | FLEXIBLE (ASSEMBLE) 1050 mm (41-3/8 in); 2 or 3 Spool Valve; Without Auxiliary Hydraulics, With Pilot Controls; Power Beyond |

HTTP://WWW.MINNPARBACKHOEPARTS.COM



SYSTEME HYDRAULIQUE - DU DISTRIBUTEUR DU CHARGEUR AU FILTRE AU DISTRIBUTEUR DE LA PELLE RETRO

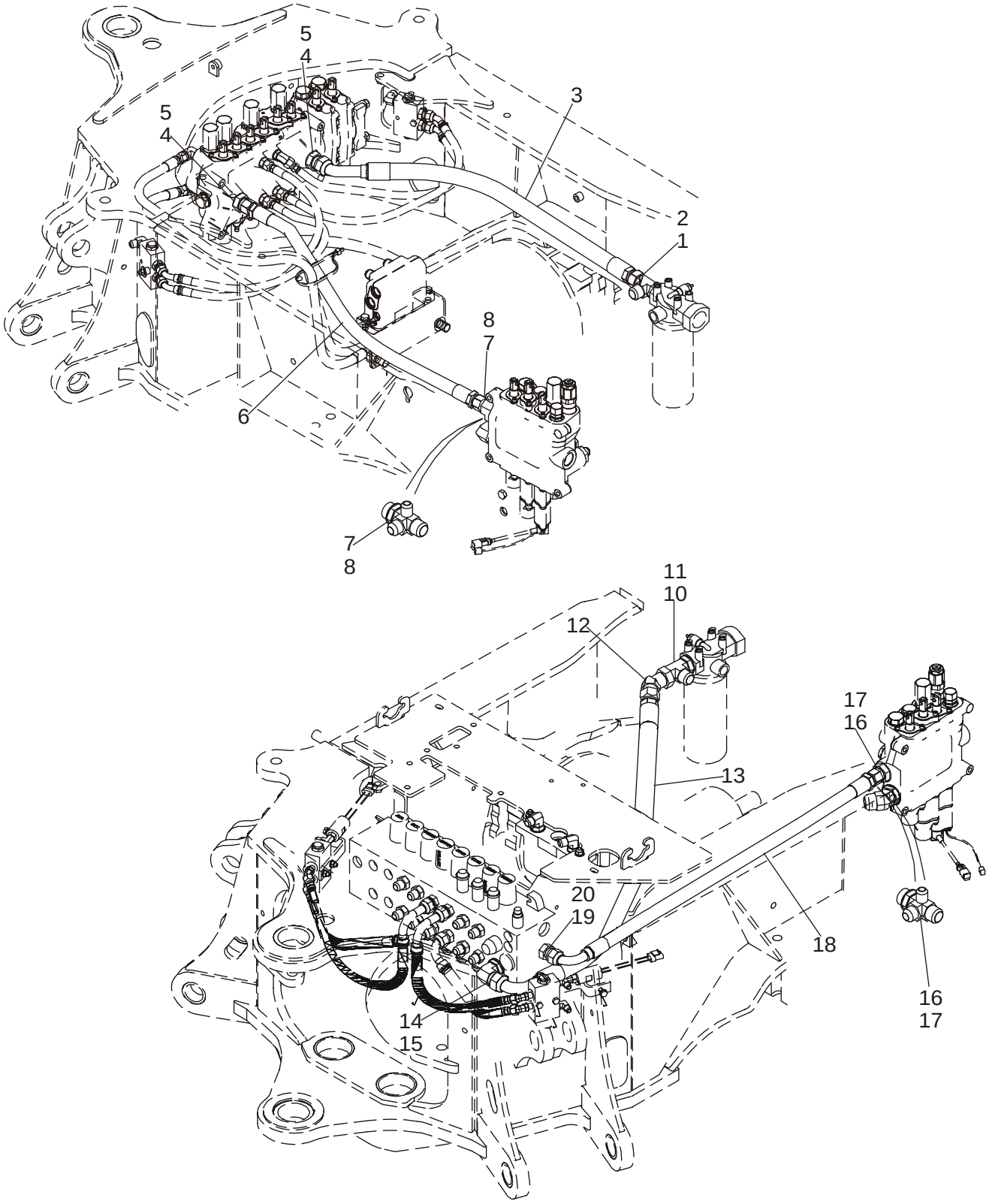

HTTP://WWW.MINNPARBACKHOEPARTS.COM



SYSTEME HYDRAULIQUE - DU DISTRIBUTEUR DU CHARGEUR AU FILTRE AU DISTRIBUTEUR DE LA PELLE RETRO

| REF | FN | PART NUMBER | YR/SN | QTY | DESCRIPTION |
|---|---|---|---|---|---|
| 18 | | 87437232 | | 1 | FLEXIBLE (ASSEMBLE) 420 mm (16-9/16 in); 2 Spool Valve; With Auxiliary Hydraulics; With or Without Pilot Controls; Loader Valve Power Beyond to Backhoe Valve |
| 18 | | 87437231 | | 1 | FLEXIBLE (ASSEMBLE) 370 mm (14-5/8 in); 3 Spool Valve; With Auxiliary Hydraulics; With or Without Pilot Controls; Loader Valve Power Beyond to Backhoe Valve |
| 19 | | 218-5064 | | 1 | RACCORD 1-1/16 fl x Or; Incl. Ref 20 |
| 20 | | 237-6012 | | 1 | JOINT TORIQUE 59/64 ID x 7/64 |

HTTP://WWW.MINNPARBACKHOEPARTS.COM

| 08-03 | | p1 | 01/04 |
|---|---|---|---|

SYSTEME HYDRAULIQUE - REFROIDISSEUR, CONDUITES DE RETOUR ET FILTRE

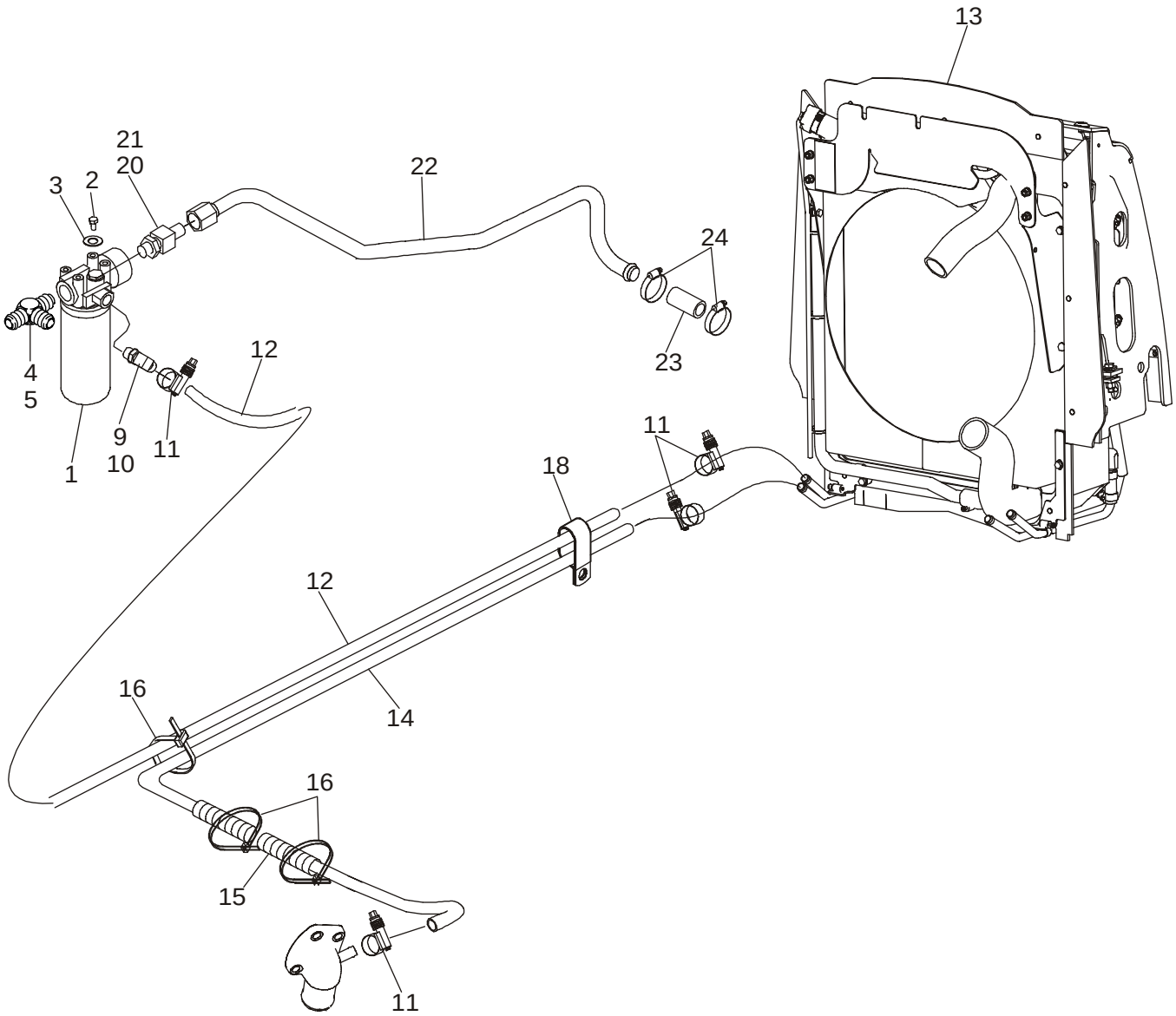


BS03M096

HTTP://WWW.MINNPARBACKHOEPARTS.COM



SYSTEME HYDRAULIQUE - REFROIDISSEUR, CONDUITES DE RETOUR ET FILTRE

| REF | FN | PART NUMBER | YR/SN | QTY | DESCRIPTION |
|---|---|---|---|---|---|
| 1 | | 445674A1 | | 1 | FILTRE ASSY Hydraulic Oil; See Figure 08-57 |
| 2 | | 614-10020 | | 4 | VIS M10 x 20 |
| 3 | | 895-11010 | | 4 | RONDELLE 11 x 21 x 2 mm |
| 4 | | 218-5584 | | 1 | RACCORD TEE, 1-1/16 fl br x 1-5/16 fl x Or; Incl. Ref 5 |
| 5 | | 237-6016 | | 1 | JOINT TORIQUE 1-11/64 ID x 7/64 wide |
| 9 | | 301104A1 | | 1 | RACCORD Special, Incl. Ref 10 |
| 10 | | 237-6010 | | 1 | JOINT TORIQUE 3/4 ID x 3/32 wide |
| 11 | | 328186A1 | | 4 | BRIDE, FLEXIBLE |
| 12 | | 87426965 | | 1 | FLEXIBLE 1785 mm (70-5/16 in) |
| 13 | | 87427158 | | 1 | REFROIDISSEUR D'HUILE Hydraulic Oil Cooler; For Attaching Parts, See Figure 06-10 |
| 14 | | 87426966 | | 1 | FLEXIBLE 1860 mm (73-1/4 in), Return |
| 15 | | D132982 | | 2 | GAINE Hose Sleeve |
| 16 | | L18337 | | 2 | SANGLE |
| 18 | | D39696 | | 1 | COLLIER Double P-Type |
| 20 | | 218-5086 | | 1 | CONNECTEUR 5/16-12 fl x 1-5/8; Incl. Ref 21 |
| 21 | | 237-6020 | | 1 | JOINT TORIQUE 1-15/32 ID x 1/8 |
| 22 | | 87421940 | | 1 | TUYAUTERIE Return To Tank |
| 23 | | D38435 | | 1 | DURITE 89 mm (3-5/8 in); Cut From S118383X; Return To Tank; For Attaching Brake Line Clamp, See Figure 07-04 |
| 24 | | 214-1420 | | 2 | COLLIER No. 20 |

HTTP://WWW.MINNPARBACKHOEPARTS.COM

| 08-04 | | p1 | 01/04 |
|---|---|---|---|

SYSTEME HYDRAULIQUE - VERIN DE RELEVAGE DES BRAS DE RELEVAGE

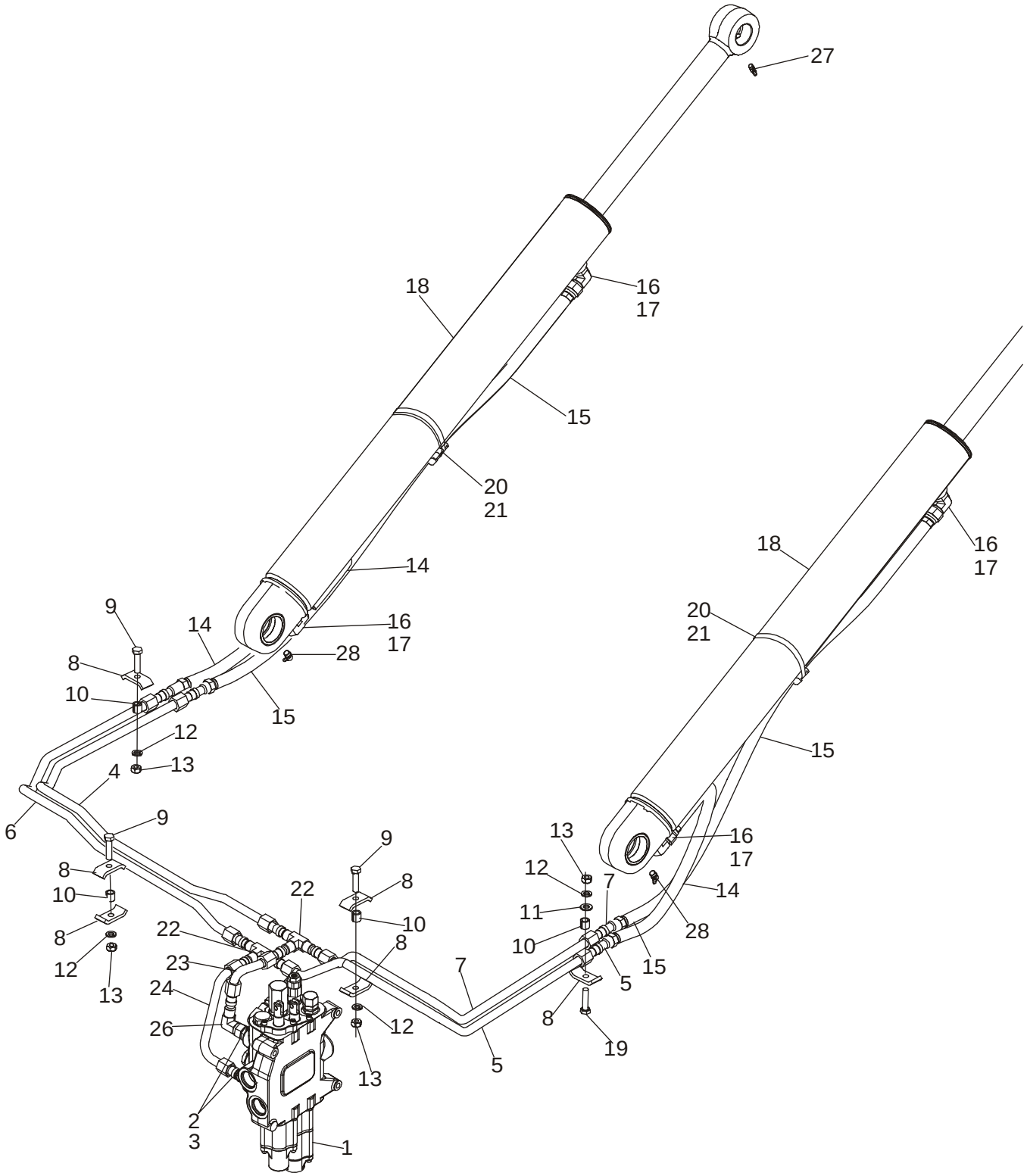


BS03M016

HTTP://WWW.MINNPARBACKHOEPARTS.COM



SYSTEME HYDRAULIQUE - VERIN DE RELEVAGE DES BRAS DE RELEVAGE

| REF | FN | PART NUMBER | YR/SN | QTY | DESCRIPTION |
|---|---|---|---|---|---|
| 1 | | REF | | 1 | NOTICE LOADER CONTROL VALVE; For Correct Assembly and Components, See Figures 08-30, 08-31 |
| 2 | | 218-5062 | | 2 | RACCORD 7/8 fl x Or; Incl. Ref 3 |
| 3 | | 237-6010 | | 1 | JOINT TORIQUE 3/4 ID x 3/32 |
| 4 | | 87421930 | | 1 | TUYAUTERIE Upper Lift Port |
| 5 | | 87421932 | | 1 | TUYAUTERIE Lower Lift Port |
| 6 | | 87421934 | | 1 | TUYAUTERIE Lower Lift Port |
| 7 | | 87421928 | | 1 | TUYAUTERIE Upper Lift Port |
| 8 | | D138055 | | 6 | COLLIER |
| 9 | | 814-10040 | | 3 | VIS M10 x 40 |
| 10 | | 120303A1 | | 4 | ENTRETOISE |
| 11 | | 895-11010 | | 1 | RONDELLE 11 x 21 x 2 mm |
| 12 | | 892-11010 | | 4 | RONDELLE FREIN M10 |
| 13 | | 829-1410 | | 4 | ECROU M10; 10.9 |
| 14 | | 87429290 | | 2 | FLEXIBLE (ASSEMBLE) 780 mm (30-3/4 in) |
| 15 | | 87429293 | | 2 | FLEXIBLE (ASSEMBLE) 1150 mm (45-5/16 in) |
| 16 | | 218-5107 | | 4 | COUDE 7/8 fl x adj Or; Incl. Ref 17 |
| 17 | | 237-6010 | | 1 | JOINT TORIQUE 3/4 ID x 3/32 |
| 18 | | 384240A1 | | 2 | VERIN 82.6 ID x 766 mm strk; Loader Lift Cylinder; See Figure 08-58 |
| 19 | | 814-10045 | | 1 | VIS M10 x 45 |
| 20 | | D142787 | | 2 | ENTRETOISE |
| 21 | | 214-1472 | | 2 | COLLIER 4-1/16 - 5 |
| 22 | | 218-595 | | 2 | RACCORD TEE, 7/8 fl |
| 23 | | 87416024 | | 1 | TUYAUTERIE Upper Lift Port |
| 24 | | 87437108 | | 1 | TUYAUTERIE Lower Lift Port |
| 26 | | 218-5232 | | 1 | COUDE 90 Deg, 7/8 fl x sw fl |
| 27 | | 219-1 | | 2 | GRAISSEUR Straight, 1/8 PT x 21/32 |
| 28 | | 219-55 | | 2 | GRAISSEUR 90 Deg, 1/8 PT x 27/32 |

HTTP://WWW.MINNPARBACKHOEPARTS.COM

| 08-05 | | p1 | 01/04 |
|---|---|---|---|

SYSTEME HYDRAULIQUE - VERIN, GODET DE LA CHARGEUSE

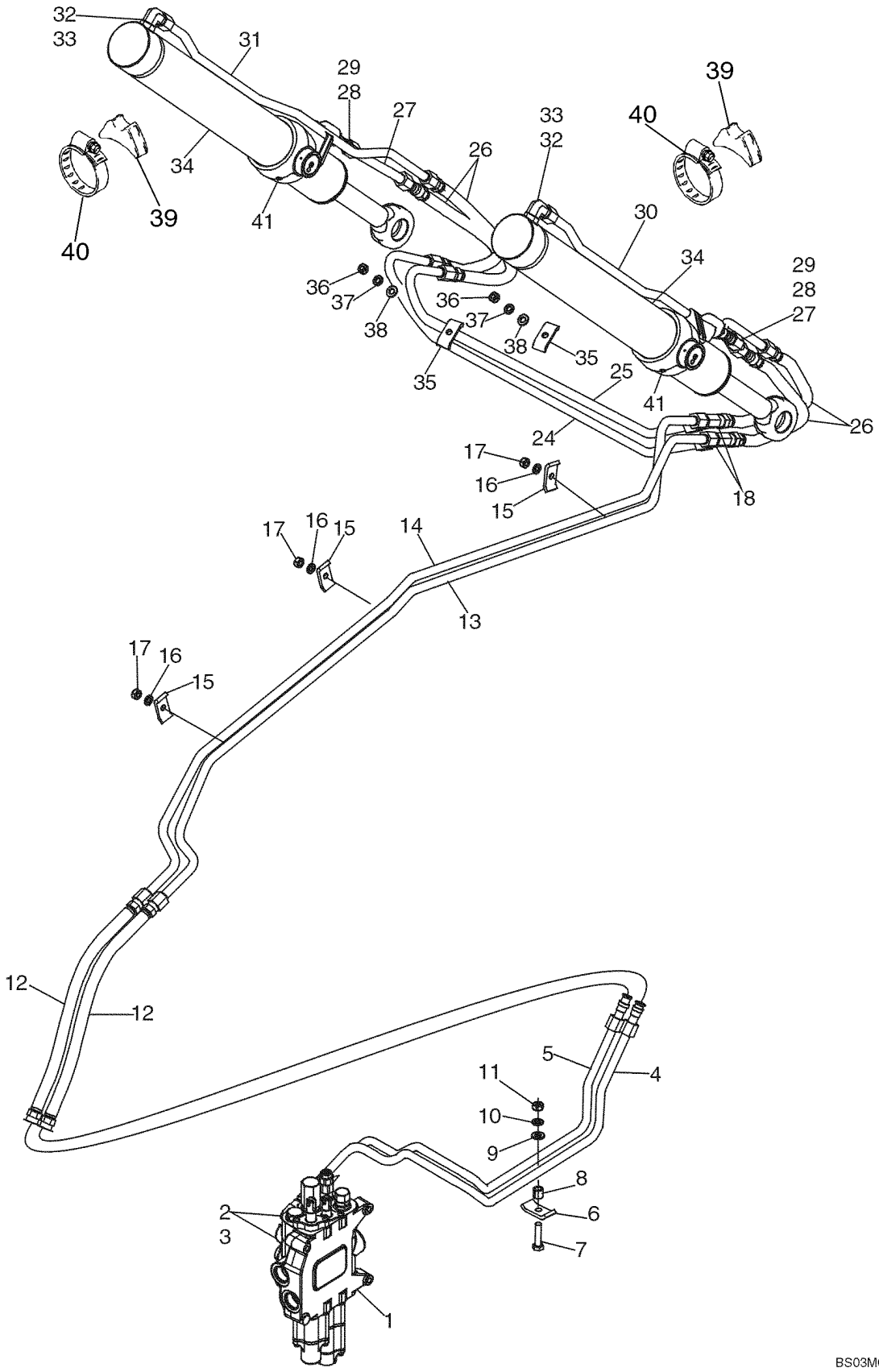

HTTP://WWW.MINNPARBACKHOEPARTS.COM



SYSTEME HYDRAULIQUE - VERIN, GODET DE LA CHARGEUSE

| REF | FN | PART NUMBER | YR/SN | QTY | DESCRIPTION |
|---|---|---|---|---|---|
| 1 | | REF | | 1 | NOTICE LOADER CONTROL VALVE; For Correct Assembly and Components, See Figures 08-30, 08-31, For Mounting, See Figure 09-01 |
| 2 | | 218-5107 | | 2 | COUDE 90 Deg, 7/8 fl x Or; Incl. Ref 3 |
| 3 | | 237-6010 | | 1 | JOINT TORIQUE 3/4 ID x 3/32, Boss Seal |
| 4 | | 87421918 | | 1 | TUYAUTERIE Upper Bucket Port |
| 5 | | 87421920 | | 1 | TUYAUTERIE Lower Bucket Port |
| 6 | | D138055 | | 1 | COLLIER |
| 7 | | 814-10045 | | 1 | VIS M10 x 45 |
| 8 | | 120303A1 | | 1 | ENTRETOISE |
| 9 | | 895-11010 | | 1 | RONDELLE 11 x 21 x 2 mm |
| 10 | | 892-11010 | | 1 | RONDELLE FREIN M10 |
| 11 | | 829-1410 | | 1 | ECROU M10; 10.9 |
| 12 | | 87429287 | | 2 | FLEXIBLE (ASSEMBLE) 710 mm (28 in) |
| 13 | | 418789A1 | | 1 | TUYAUTERIE To Upper Port |
| 14 | | 418791A1 | | 1 | TUYAUTERIE |
| 15 | | D138055 | | 3 | COLLIER |
| 16 | | 892-11010 | | 3 | RONDELLE FREIN M10 |
| 17 | | 829-1410 | | 3 | ECROU M10; 10.9 |
| 18 | | 218-5220 | | 2 | TE 7/8 fl br x fl x sw |
| 24 | | 196815A1 | | 1 | TUYAU Rear |
| 25 | | 196813A1 | | 1 | TUYAU Front |
| 26 | | 371031A1 | | 4 | FLEXIBLE (ASSEMBLE) 840 mm (33 in) |
| 27 | | 192152A1 | | 2 | TUYAU Bucket Cylinder Rod End |
| 28 | | 218-5062 | | 2 | RACCORD 7/8 fl x Or; Incl. Ref 29 |
| 29 | | 237-6010 | | 1 | JOINT TORIQUE 3/4 ID x 3/32, Boss Seal |
| 30 | | 192156A1 | | 1 | TUYAU Right-Hand Cylinder |
| 31 | | 192154A1 | | 1 | TUYAU Left-Hand Cylinder |
| 32 | | 218-5107 | | 2 | COUDE 90 Deg, 7/8 fl x adj Or; Incl. Ref 33 |
| 33 | | 237-6010 | | 1 | JOINT TORIQUE 3/4 ID x 3/32, Boss Seal |
| 34 | | 113133A2 | | 2 | VERIN 76 ID x 522 mm strk; Loader Bucket Cylinder; See Figure 08-59 |
| 35 | | D138055 | | 2 | COLLIER |
| 36 | | 829-1410 | | 2 | ECROU M10; 10.9 |
| 37 | | 892-11010 | | 2 | RONDELLE FREIN M10 |
| 38 | | 895-11010 | | 2 | RONDELLE 11 x 21 x 2 mm |

HTTP://WWW.MINNPARBACKHOEPARTS.COM

| 08-05 | | p2 | 01/04 |
|---|---|---|---|

SYSTEME HYDRAULIQUE - VERIN, GODET DE LA CHARGEUSE

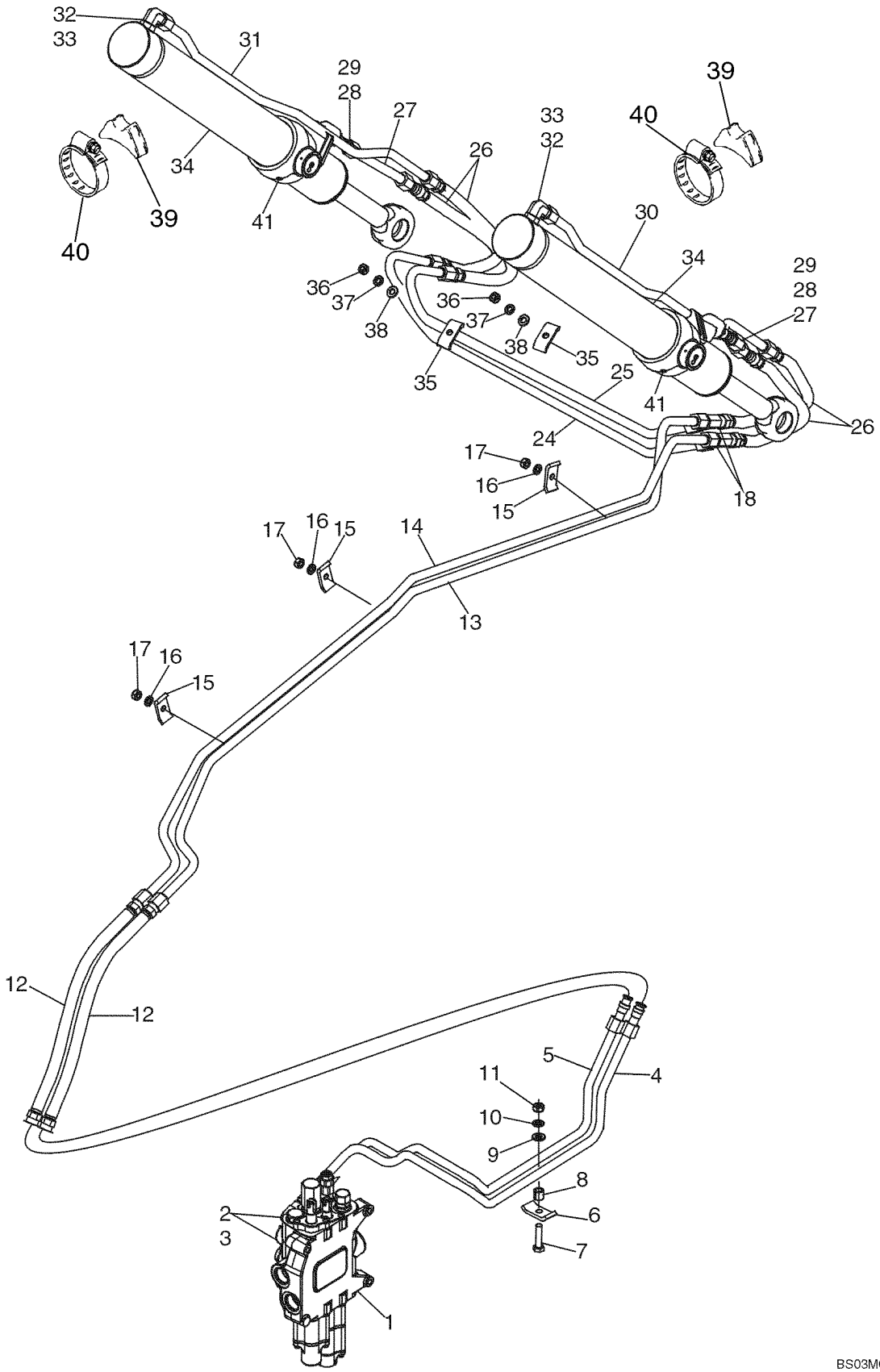

HTTP://WWW.MINNPARBACKHOEPARTS.COM



SYSTEME HYDRAULIQUE - VERIN, GODET DE LA CHARGEUSE

| REF | FN | PART NUMBER | YR/SN | QTY | DESCRIPTION |
|---|---|---|---|---|---|
| 39 | | L79937 | | 2 | SELLE |
| 40 | | 214-1464 | | 2 | COLLIER 3-9/16 - 4-1/2 in dia |
| 41 | | 219-55 | | 2 | GRAISSEUR 90 Deg, 1/8 PT x 27/32 |

HTTP://WWW.MINNPARBACKHOEPARTS.COM

| 08-06 | | p1 | 01/04 |
|---|---|---|---|

SYSTEME HYDRAULIQUE - VERIN, BENNE DE LA CHARGEUSE

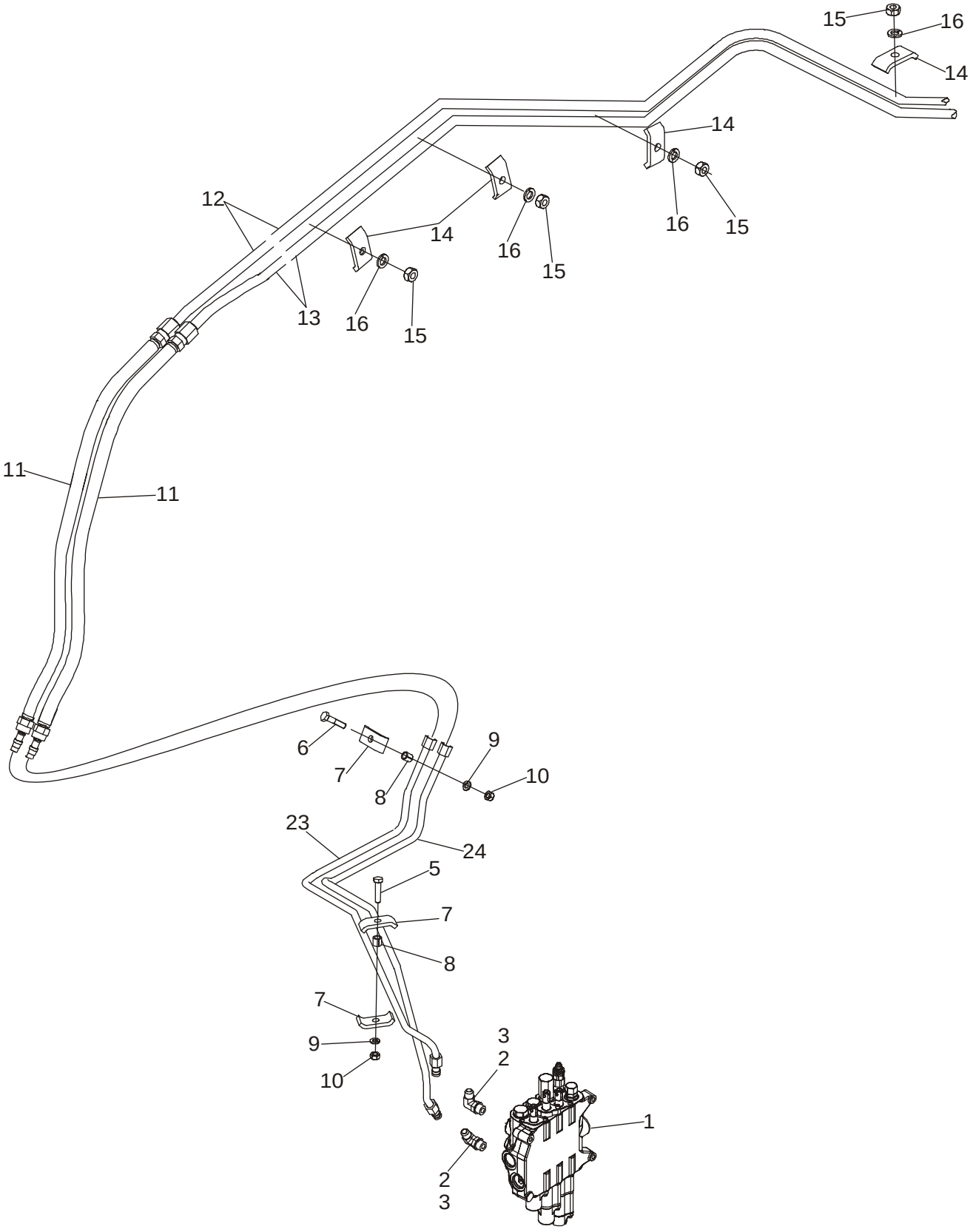

HTTP://WWW.MINNPARBACKHOEPARTS.COM



SYSTEME HYDRAULIQUE - VERIN, BENNE DE LA CHARGEUSE

| REF | FN | PART NUMBER | YR/SN | QTY | DESCRIPTION |
|---|---|---|---|---|---|
| 1 | | REF | | 1 | NOTICE LOADER CONTROL VALVE; Three Spool; See Figure 08-31 for Valve Options; For Mounting, See Figure 09-01 |
| 2 | | 218-5107 | | 2 | COUDE 90 deg, 7/8 fl x Or; Incl. Ref 3 |
| 3 | | 237-6010 | | 1 | JOINT TORIQUE 3/4 ID x 3/32, Boss Seal |
| 5 | | 814-10045 | | 1 | VIS M10 x 45 |
| 6 | | 814-10040 | | 1 | VIS M10 x 40 |
| 7 | | D138055 | | 3 | COLLIER |
| 8 | | 120303A1 | | 2 | ENTRETOISE |
| 9 | | 892-11010 | | 2 | RONDELLE FREIN M10 |
| 10 | | 829-1410 | | 2 | ECROU M10; 10.9 |
| 11 | | 87429287 | | 2 | FLEXIBLE (ASSEMBLE) 710 mm (28 in) |
| 12 | | 196824A1 | | 1 | TUYAU Upper Clam Port |
| 13 | | 196821A1 | | 1 | TUYAU Lower Clam Port |
| 14 | | D138055 | | 4 | COLLIER |
| 15 | | 829-1410 | | 4 | ECROU M10; 10.9 |
| 16 | | 892-11010 | | 4 | RONDELLE FREIN M10 |
| 17 | | 218-776 | | 2 | BOUCHON 7/8 fl; Located on the End of Ref 13 Tube; Not Used On Models With Clam Bucket; Not Illustrated |
| 23 | | 87436908 | | 1 | TUYAUTERIE Upper Clam Port |
| 24 | | 87436910 | | 1 | TUYAUTERIE Lower Clam Port |

HTTP://WWW.MINNPARBACKHOEPARTS.COM

| 08-07 | | p1 | 01/04 |
|---|---|---|---|

SYSTEME HYDRAULIQUE - VERIN, BENNE DE LA CHARGEUSE

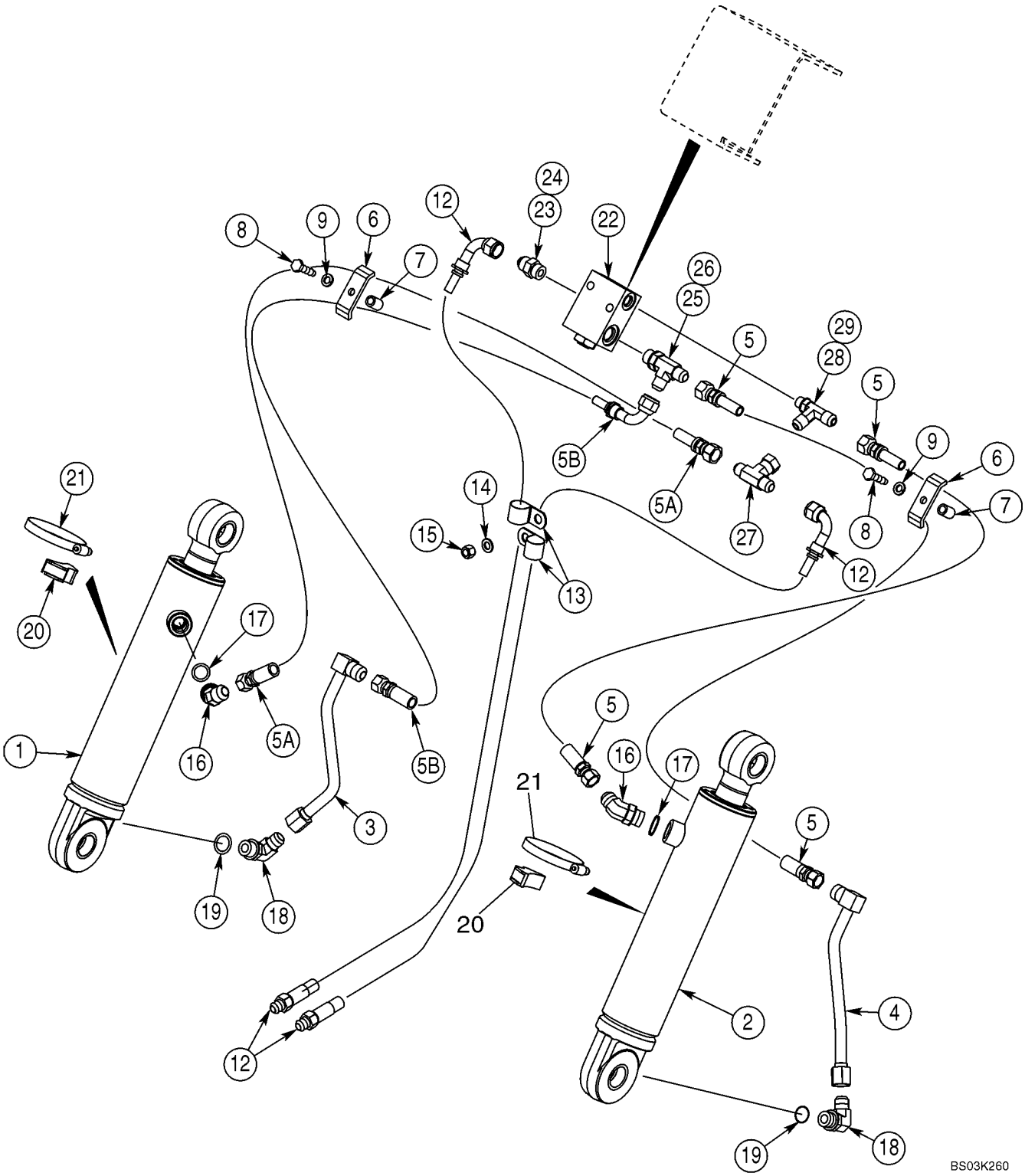

HTTP://WWW.MINNPARBACKHOEPARTS.COM



SYSTEME HYDRAULIQUE - VERIN, BENNE DE LA CHARGEUSE

| REF | FN | PART NUMBER | YR/SN | QTY | DESCRIPTION |
|---|---|---|---|---|---|
| 1 | | 1346190C2 | | 1 | VERIN 76 ID x 231 mm strk: Loader Clam Cylinder; Left-Hand; See Figure 08-60 |
| 2 | | 1346189C2 | | 1 | VERIN 76 ID x 231 mm strk; Loader Clam Cylinder; Right-Hand; See Figure 08-60 |
| 3 | | 192352A1 | | 1 | TUYAU Left-Hand Cylinder |
| 4 | | 192345A1 | | 1 | TUYAU Right-Hand Cylinder |
| 5 | | 353167A1 | | 2 | FLEXIBLE (ASSEMBLE) 1100 mm (43-5/16 in); Right-Hand Cylinder |
| 5A | | 353103A1 | | 1 | FLEXIBLE (ASSEMBLE) 1200 mm (47-1/4 in); Left-Hand Cylinder |
| 5B | | 367352A1 | | 1 | FLEXIBLE (ASSEMBLE) 1200 mm (47-1/4 in); Left-Hand Cylinder |
| 6 | | D143846 | | 2 | BRIDE CLAMP |
| 7 | | R46493 | | 2 | ENTRETOISE |
| 8 | | 814-10040 | | 2 | VIS M10 x 40 |
| 9 | | 892-11010 | | 2 | RONDELLE FREIN M10 |
| 12 | | 356743A1 | | 2 | FLEXIBLE (ASSEMBLE) 1170 mm (46-1/16 in); Lift Frame |
| 13 | | 515-25254 | | 2 | COLLIER 1 in ID |
| 14 | | 895-11010 | | 1 | RONDELLE 11 x 21 x 2 mm |
| 15 | | 832-10410 | | 1 | ECROU M10 |
| 16 | | 218-5137 | | 2 | RACCORD 7/8 fl x Or; Incl. Ref 17 |
| 17 | | 237-6010 | | 1 | JOINT TORIQUE 3/4 ID x 3/32, Boss Seal |
| 18 | | 218-5107 | | 2 | COUDE 7/8 fl x adj Or; Incl. Ref 19 |
| 19 | | 237-6010 | | 1 | JOINT TORIQUE 3/4 ID x 3/32, Boss Seal |
| 20 | | D38648 | | 2 | BLOC |
| 21 | | 214-1464 | | 2 | COLLIER 3-9/16 - 4-1/2 in dia |
| 22 | | 325465A2 | | 1 | SOUPAPE ANTI RETOUR Pilot Operated Check Valve; For Mounting, See Figure 09-08 |
| | | 399963A1 | | 1 | POCHETTE Seal; For Use With 325465A2 Valve; Includes (1) Piston, (1) Backup Ring, (2) O-Rings and Instructions |
| 23 | | 218-5059 | | 1 | RACCORD 3/4 fl x Or; Incl. Ref 24 |
| 24 | | 237-6008 | | 1 | JOINT TORIQUE 41/64 ID x 3/32, Boss Seal |
| 25 | | 218-5242 | | 1 | RACCORD 3/4 fl br x fl x Or; Incl. Ref 26 |
| 26 | | 237-6008 | | 1 | JOINT TORIQUE 41/64 ID x 3/32, Boss Seal |

HTTP://WWW.MINNPARBACKHOEPARTS.COM



SYSTEME HYDRAULIQUE - VERIN, BENNE DE LA CHARGEUSE

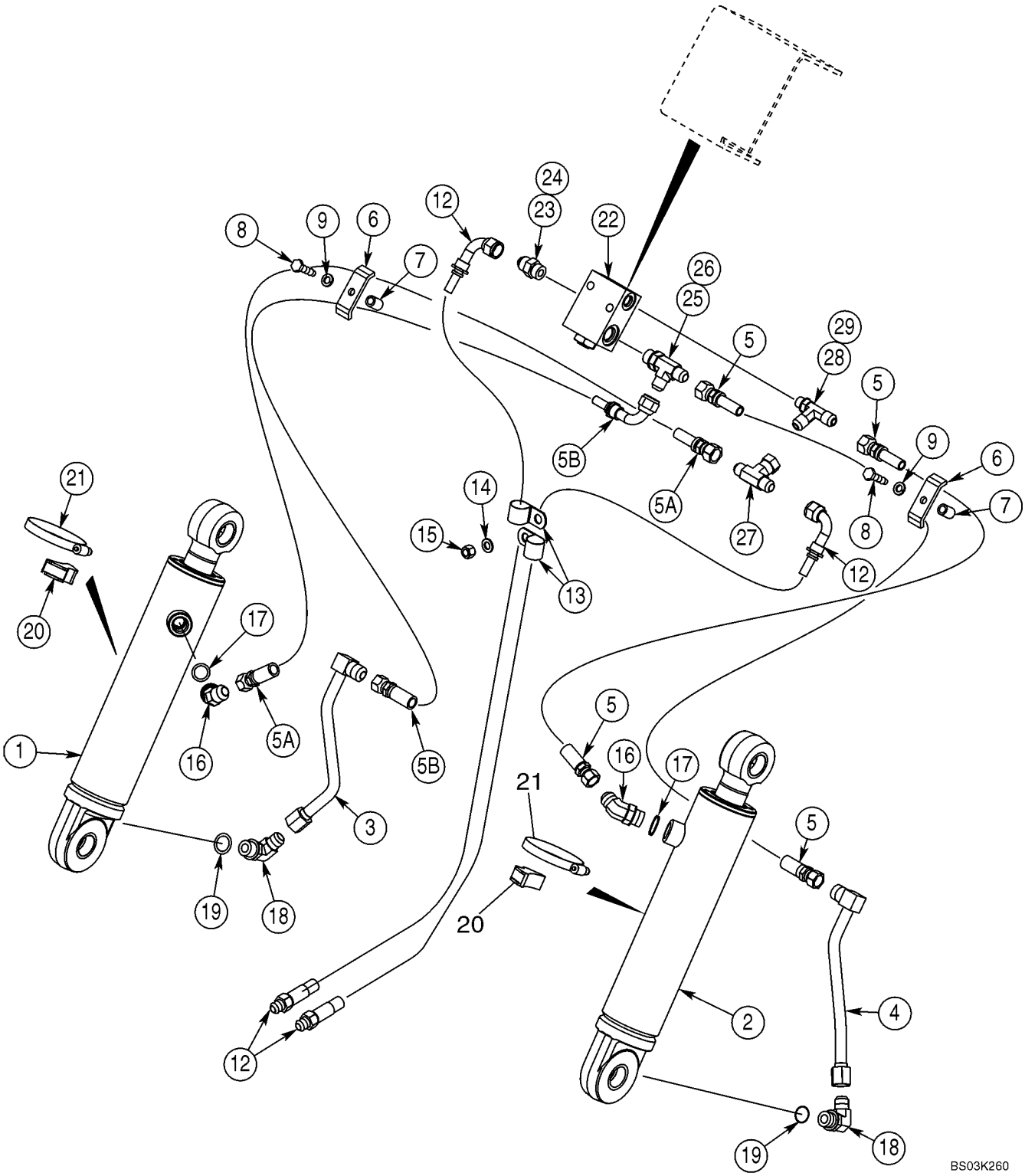

HTTP://WWW.MINNPARBACKHOEPARTS.COM



SYSTEME HYDRAULIQUE - VERIN, BENNE DE LA CHARGEUSE

| REF | FN | PART NUMBER | YR/SN | QTY | DESCRIPTION |
|---|---|---|---|---|---|
| 27 | | 218-840 | | 1 | TE 3/4 NF sw x fl x fl |
| 28 | | 218-5650 | | 1 | TE 3/4 fl x fl x 9/16 Or; Incl. Ref 29 |
| 29 | | 237-6006 | | 1 | JOINT TORIQUE 15/32 ID x 5/64, Boss Seal |

HTTP://WWW.MINNPARBACKHOEPARTS.COM

| 08-08 | | p1 | 01/04 |
|---|---|---|---|

SYSTEME HYDRAULIQUE - VERIN, STABILISATEUR DE LA PELLE RETRO EUROPA (SANS DE COMMANDE PILOTE)

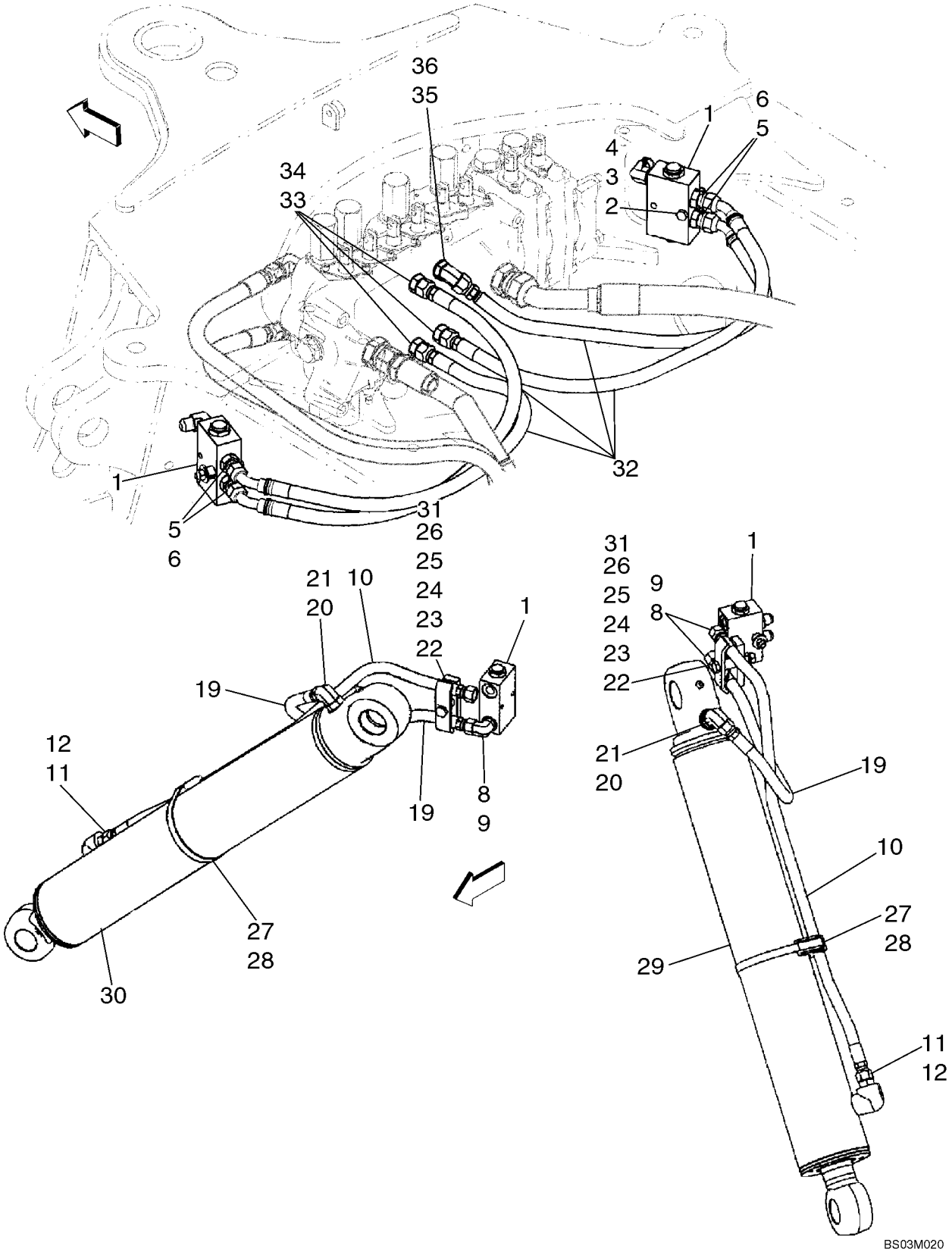

HTTP://WWW.MINNPARBACKHOEPARTS.COM



SYSTEME HYDRAULIQUE - VERIN, STABILISATEUR DE LA PELLE RETRO EUROPA (SANS DE COMMANDE PILOTE)

| REF | FN | PART NUMBER | YR/SN | QTY | DESCRIPTION |
|---|---|---|---|---|---|
| | | REF | | | NOTICE MODELS WITHOUT PILOT CONTROLS |
| 1 | | 85802820 | | 2 | SOUPAPE HYDRAULIQUE Load Check; Component Parts Not Serviced Separately |
| 2 | | 814-8060 | | 2 | VIS M8 x 60 |
| 3 | | 895-15010 | | 2 | RONDELLE |
| 4 | | 829-1408 | | 2 | ECROU M8 |
| 5 | | 218-5057 | | 4 | RACCORD 9/16 fl x Or; Incl. Ref 6 |
| 6 | | 237-6006 | | 1 | JOINT TORIQUE 15/32 ID x 5/64 |
| 8 | | 218-5105 | | 4 | COUDE 90 deg, 9/16 fl x Or; Incl. Ref 9 |
| 9 | | 237-6006 | | 1 | JOINT TORIQUE 15/32 ID x 5/64 |
| 10 | | {87429586} | | 2 | 790 mm (31-1/8 in) Hose |
| 11 | | 218-5059 | | 2 | RACCORD 3/4 fl x Or; Incl. Ref 12 |
| 12 | | 237-6008 | | 1 | JOINT TORIQUE 41/64 ID x 3/32 |
| 19 | | {87429584} | | 2 | 500 mm (19-11/16 in) Hose |
| 20 | | 218-5121 | | 2 | RACCORD 3/4 fl x 7/8 Or; Incl. Ref 21 |
| 21 | | 237-6008 | | 1 | JOINT TORIQUE 41/64 ID x 3/32 |
| 22 | | 814-10060 | | 2 | VIS M10 x 60 |
| 23 | | {87420673} | | 2 | Clamp |
| 24 | | 131600A1 | | 2 | ENTRETOISE |
| 25 | | {87420672} | | 2 | Spacer, Clamp |
| 26 | | 829-1410 | | 2 | ECROU M10; 10.9 |
| 27 | | D142787 | | 2 | ENTRETOISE |
| 28 | | 214-3188 | | 2 | COLLIER 4-3/4 - 5-5/8 |
| 29 | | 195504A1 | | 1 | VERIN 102 ID x 553 mm strk; Stabilizer Cylinder; Left-Hand; See Figure 08-61 |
| 30 | | 195503A1 | | 1 | VERIN 102 ID x 553 mm strk; Stabilizer Cylinder; Right-Hand; See Figure 08-61 |
| 31 | | 895-11010 | | 2 | RONDELLE |
| 32 | | 87429654 | | 4 | FLEXIBLE (ASSEMBLE) 720 mm (28-3/8 in) |
| 33 | | 218-5059 | | 3 | RACCORD 3/4 fl x Or; Incl. Ref 34 |
| 34 | | 237-6008 | | 1 | JOINT TORIQUE 41/64 ID x 3/32 |
| 35 | | 218-5136 | | 1 | COUDE 45 deg, 3/4 fl x adj Or; Incl. Ref 36 |
| 36 | | 237-6008 | | 1 | JOINT TORIQUE 41/64 ID x 3/32 |

HTTP://WWW.MINNPARBACKHOEPARTS.COM

| 08-08A | | p1 | 01/04 |
|---|---|---|---|

SYSTEME HYDRAULIQUE - VERIN, STABILISATEUR DE LA PELLE RETRO EUROPA (AVEC DE COMMANDE PILOTE)

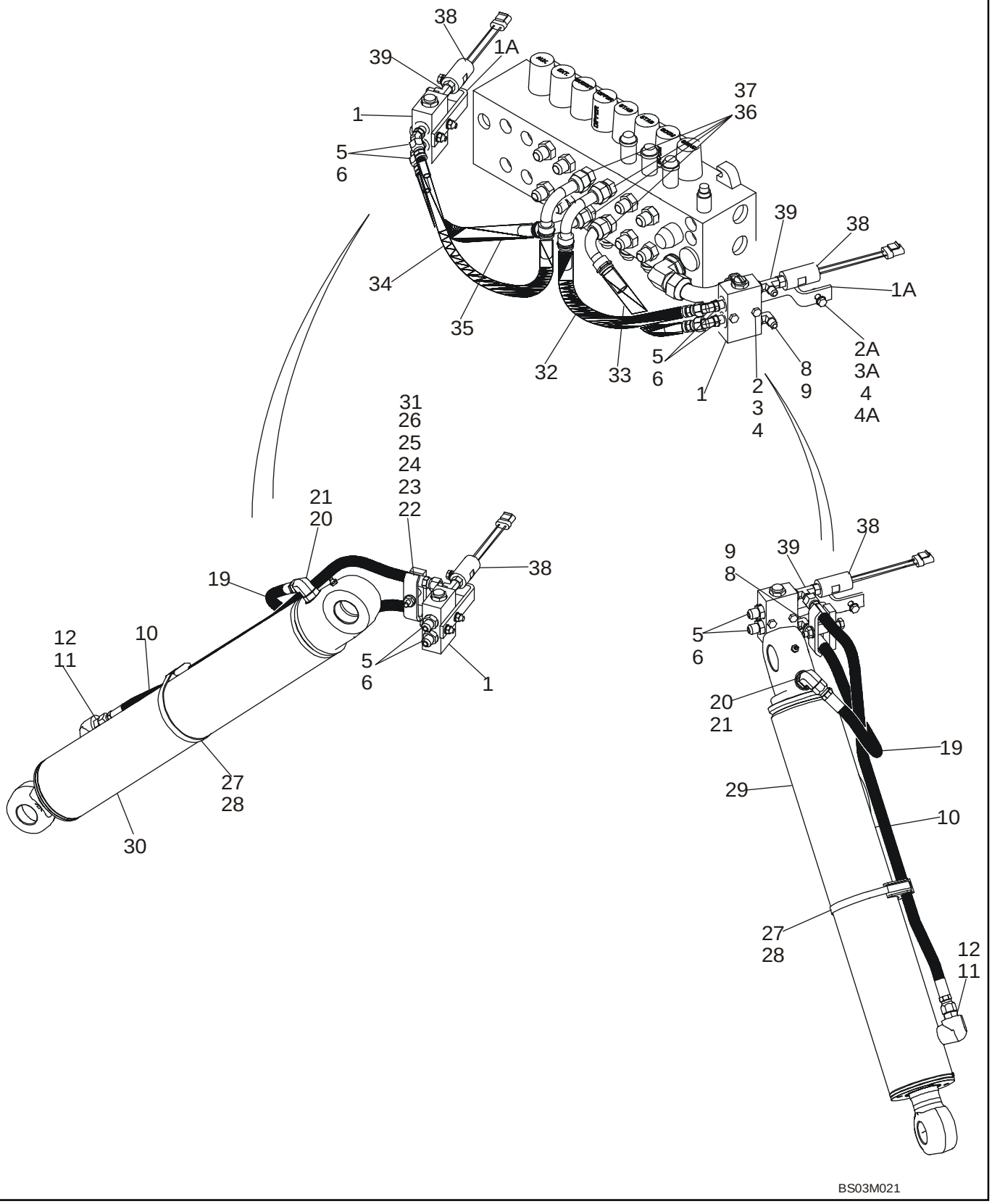


BS03M021

HTTP://WWW.MINNPARBACKHOEPARTS.COM



SYSTEME HYDRAULIQUE - VERIN, STABILISATEUR DE LA PELLE RETRO EUROPA (AVEC DE COMMANDE PILOTE)

| REF | FN | PART NUMBER | YR/SN | QTY | DESCRIPTION |
|---|---|---|---|---|---|
| | | REF | | | NOTICE MODELS WITH PILOT CONTROLS |
| 1 | | 85802820 | | 2 | SOUPAPE HYDRAULIQUE Load Check; Component Parts Not Serviced Separately |
| 1A | | 87423034 | | 2 | EQUERRE |
| 2 | | 814-8055 | | 4 | VIS M8 x 55 |
| 2A | | 614-8030 | | 2 | VIS M8 x 30 |
| 3 | | 895-15010 | | 8 | RONDELLE |
| 3A | | 892-11008 | | 4 | RONDELLE Lock, M8 |
| 4 | | 829-1408 | | 6 | ECROU M8 |
| 4A | | {87437840} | | 2 | Spacer |
| 5 | | 218-5135 | | 4 | COUDE 45 deg, 9/16 fl x Or; Incl. Ref 6 |
| 6 | | 237-6006 | | 1 | JOINT TORIQUE 15/32 ID x 5/64 |
| 8 | | 218-5105 | | 2 | COUDE 90 deg, 9/16 fl x Or; Incl. Ref 9 |
| 9 | | 237-6006 | | 1 | JOINT TORIQUE 15/32 ID x 5/64 |
| 10 | | {87429586} | | 2 | 790 mm (31-1/8 in) Hose |
| 11 | | 218-5059 | | 2 | RACCORD 3/4 fl x Or; Incl. Ref 12 |
| 12 | | 237-6008 | | 1 | JOINT TORIQUE 41/64 ID x 3/32 |
| 19 | | {87429584} | | 2 | 500 mm (19-11/16 in) Hose |
| 20 | | 218-5121 | | 2 | RACCORD 3/4 fl x 7/8 Or; Incl. Ref 21 |
| 21 | | 237-6008 | | 1 | JOINT TORIQUE 41/64 ID x 3/32 |
| 22 | | 814-10070 | | 2 | VIS M10 x 70 |
| 23 | | {87420673} | | 2 | Clamp |
| 24 | | 131600A1 | | 2 | ENTRETOISE |
| 25 | | {87420672} | | 2 | Spacer, Clamp |
| 26 | | 829-1410 | | 2 | ECROU M10; 10.9 |
| 27 | | D142787 | | 2 | ENTRETOISE |
| 28 | | 214-3188 | | 2 | COLLIER 4-3/4 - 5-5/8 |
| 29 | | 195504A1 | | 1 | VERIN 102 ID x 553 mm strk; Stabilizer Cylinder; Left-Hand; See Figure 08-61 |
| 30 | | 195503A1 | | 1 | VERIN 102 ID x 553 mm strk; Stabilizer Cylinder; Right-Hand; See Figure 08-61 |
| 31 | | 895-11010 | | 2 | RONDELLE |
| 32 | | 87437938 | | 1 | FLEXIBLE (ASSEMBLE) 350 mm (13-13/16 in) |
| 33 | | 87437939 | | 1 | FLEXIBLE (ASSEMBLE) 440 mm (17-3/8 in) |
| 34 | | 87437940 | | 1 | FLEXIBLE (ASSEMBLE) 400 mm (15-3/4 in) |
| 35 | | 87437941 | | 1 | FLEXIBLE (ASSEMBLE) 485 mm (19-1/8 in) |

HTTP://WWW.MINNPARBACKHOEPARTS.COM

| 08-08A | | p2 | 01/04 |
|---|---|---|---|

SYSTEME HYDRAULIQUE - VERIN, STABILISATEUR DE LA PELLE RETRO EUROPA (AVEC DE COMMANDE PILOTE)

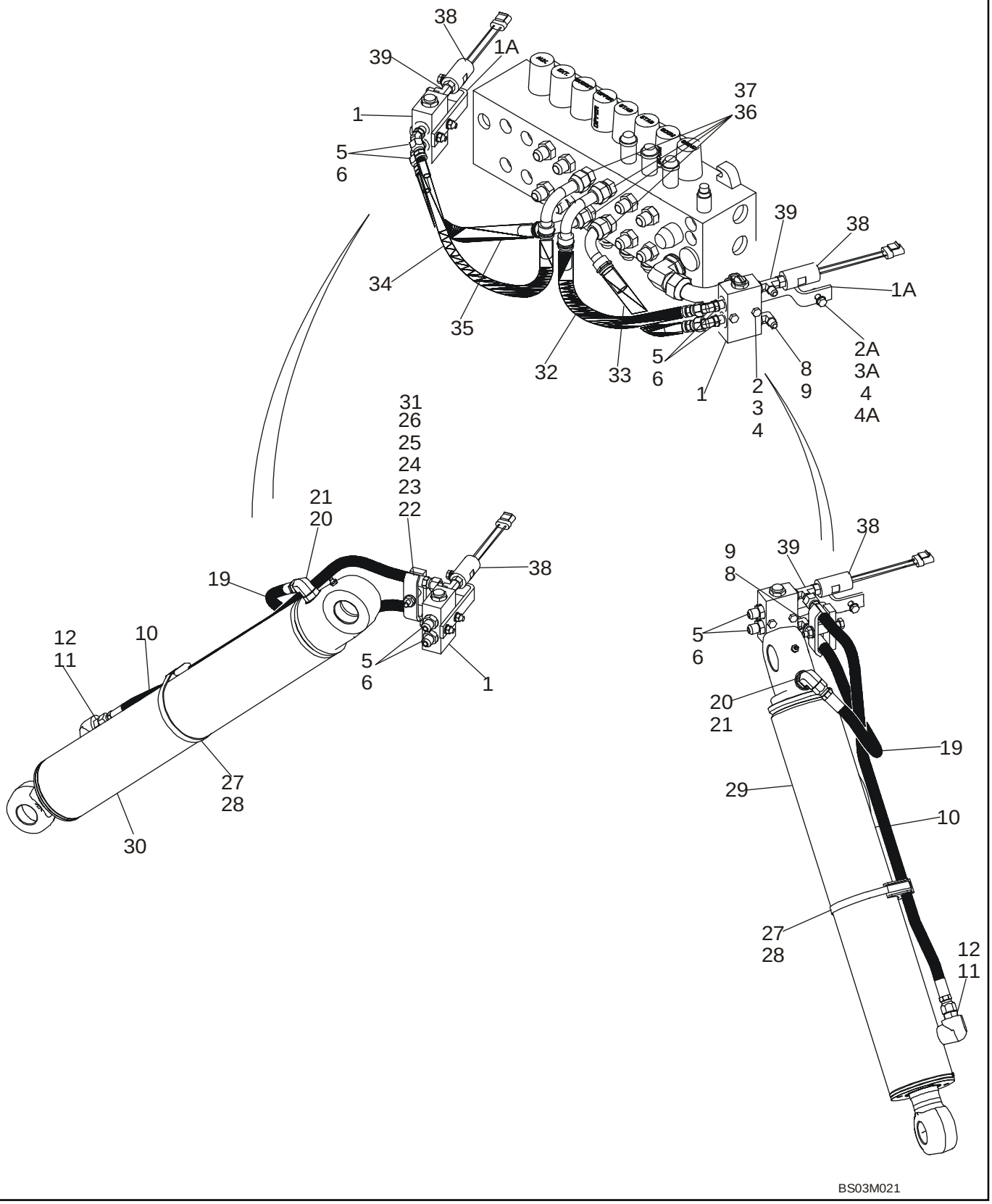


BS03M021

HTTP://WWW.MINNPARBACKHOEPARTS.COM



SYSTEME HYDRAULIQUE - VERIN, STABILISATEUR DE LA PELLE RETRO EUROPA (AVEC DE COMMANDE PILOTE)

| REF | FN | PART NUMBER | YR/SN | QTY | DESCRIPTION |
|---|---|---|---|---|---|
| 36 | | 218-5070 | | 1 | CONNECTEUR 3/4 fl x 1-1/16 Or; Incl. Ref 37 |
| 37 | | 237-6012 | | 1 | JOINT TORIQUE 59/64 ID x 7/64 |
| 38 | | 87439163 | | 2 | PRESSOSTAT Pilot Control; Includes 237-6004 O-Ring |
| 39 | | 87423033 | | 2 | TE 9/16 x 9/16 Or x 7/16 Or; Includes 237-6004, 237-6006 O-Ring |

HTTP://WWW.MINNPARBACKHOEPARTS.COM

| 08-09 | | p1 | 01/04 |
|---|---|---|---|

SYSTEME HYDRAULIQUE - VERIN, DEBATTEMENT DE LA PELLE RETRO (SANS DE COMMANDE PILOTE)

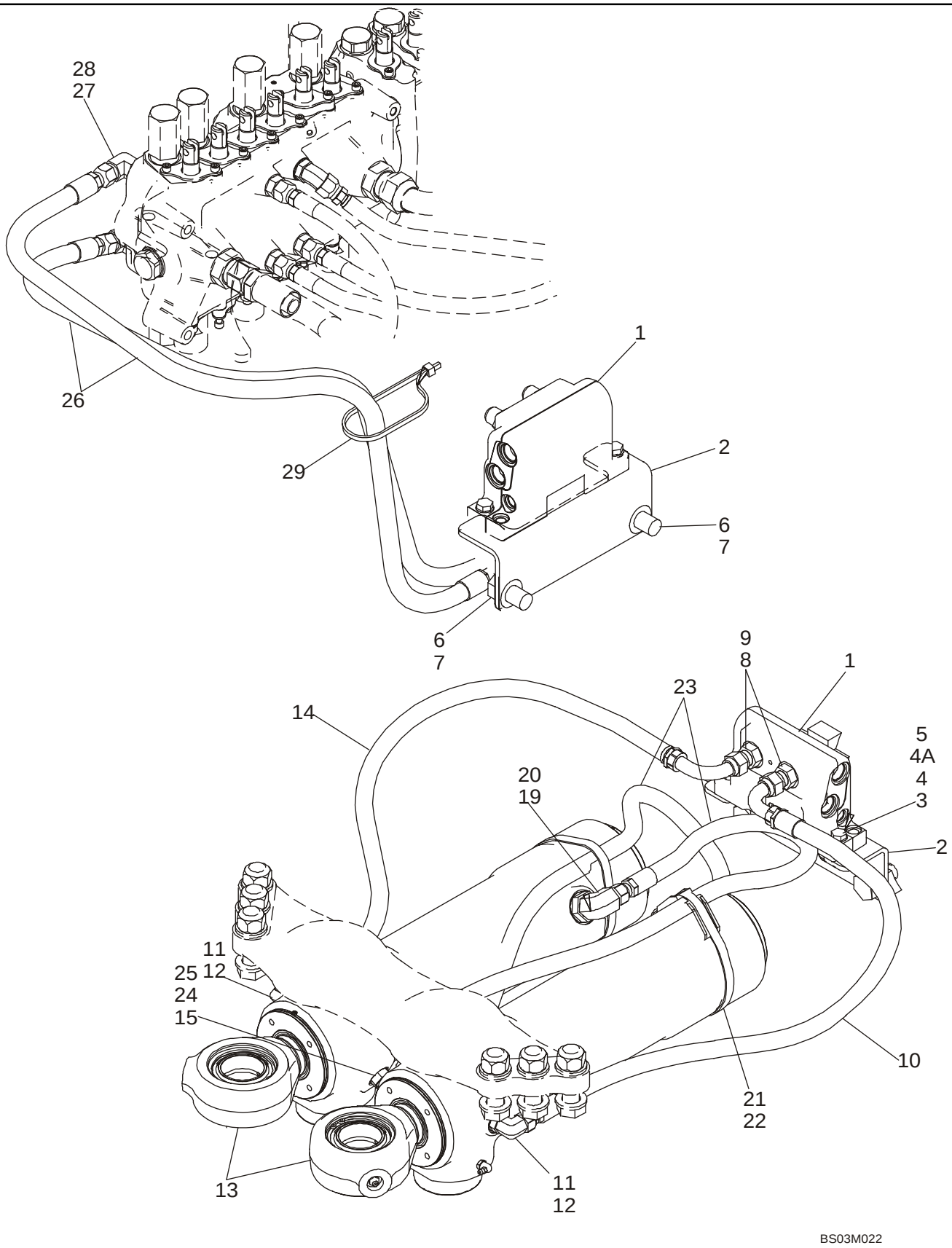

HTTP://WWW.MINNPARBACKHOEPARTS.COM



SYSTEME HYDRAULIQUE - VERIN, DEBATTEMENT DE LA PELLE RETRO (SANS DE COMMANDE PILOTE)

| REF | FN | PART NUMBER | YR/SN | QTY | DESCRIPTION |
|---|---|---|---|---|---|
| | | REF | | | NOTICE MODELS WITHOUT PILOT CONTROLS |
| 1 | | 87416975 | | 1 | SOUPAPE, AMORTISSEMENT Swing Cushion; See Figure 08-55 |
| 2 | | {87428140} | | 1 | Valve Bracket |
| 3 | | 814-10040 | | 2 | VIS M10 x 40 |
| 4 | | 895-11010 | | 4 | RONDELLE |
| 4A | | {87437840} | | 2 | Spacer |
| 5 | | 829-1410 | | 2 | ECROU M10 |
| 6 | | 614-18035 | | 2 | BOULON M18 x 35 |
| 7 | | 895-11018 | | 4 | RONDELLE |
| 8 | | 218-5062 | | 4 | RACCORD 7/8 fl x Or; Incl. Ref 9 |
| 9 | | 237-6010 | | 1 | JOINT TORIQUE 3/4 ID x 3/32 |
| 10 | | 87423356 | | 1 | FLEXIBLE (ASSEMBLE) 850 mm (33-1/2 in) |
| 11 | | 218-5106 | | 2 | RACCORD 3/4 fl x Or, Incl. Ref 12 |
| 12 | | 237-6008 | | 1 | JOINT TORIQUE 41/64 ID x 3/32, Boss Seal |
| 13 | | 188027A2 | | 2 | VERIN 95 ID x 292 mm strk; Swing Cylinder, See Figure 08-62 |
| 14 | | 87423356 | | 1 | FLEXIBLE (ASSEMBLE) 850 mm (33-1/2 in) |
| 15 | | 192971A1 | | 2 | ORIFICE Restrictor |
| 19 | | 218-5119 | | 2 | RACCORD 7/8 fl x 1-1/16 Or, Incl. Ref 20 |
| 20 | | 237-6012 | | 1 | JOINT TORIQUE 59/64 ID x 7/64, Boss Seal |
| 21 | | D142787 | | 2 | ENTRETOISE |
| 22 | | 214-1492 | | 2 | COLLIER |
| 23 | | 255659A1 | | 2 | FLEXIBLE 815 mm (32-3/32 in) |
| 24 | | 218-5106 | | 2 | RACCORD 3/4 fl x Or, Incl. Ref 25 |
| 25 | | 237-6008 | | 1 | JOINT TORIQUE 41/64 ID x 3/32, Boss Seal |
| 26 | | 87428158 | | 1 | FLEXIBLE (ASSEMBLE) 1194 mm (47 in) |
| 27 | | 218-5107 | | 2 | COUDE 90 deg, 7/8 fl x Or; Incl. Ref 28 |
| 28 | | 237-6010 | | 1 | JOINT TORIQUE |
| 29 | | L18337 | | 1 | SANGLE |

HTTP://WWW.MINNPARBACKHOEPARTS.COM



SYSTEME HYDRAULIQUE - VERIN, DEBATTEMENT DE LA PELLE RETRO (AVEC DE COMMANDE PILOTE)

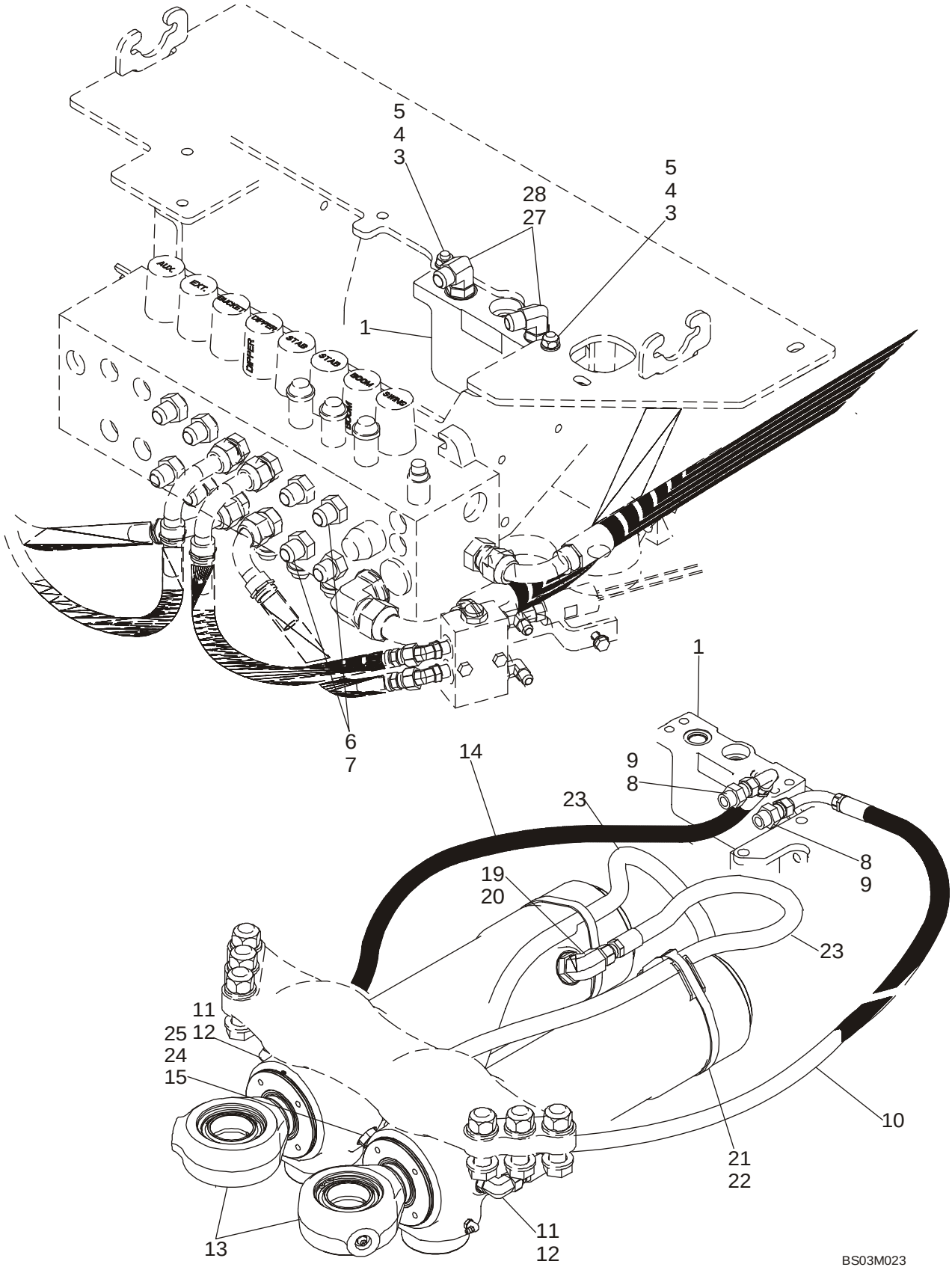

HTTP://WWW.MINNPARBACKHOEPARTS.COM



SYSTEME HYDRAULIQUE - VERIN, DEBATTEMENT DE LA PELLE RETRO (AVEC DE COMMANDE PILOTE)

| REF | FN | PART NUMBER | YR/SN | QTY | DESCRIPTION |
|---|---|---|---|---|---|
| | | REF | | | NOTICE MODELS WITH PILOT CONTROLS |
| 1 | | 87416975 | | 1 | SOUPAPE, AMORTISSEMENT Swing Cushion; See Figure 08-55 |
| 3 | | 814-10045 | | 2 | VIS M10 x 45 |
| 4 | | 895-11010 | | 4 | RONDELLE |
| 5 | | 829-1410 | | 2 | ECROU M10 |
| 6 | | 218-5063 | | 2 | RACCORD 7/8 fl x 1-1/16 Or; Incl. Ref 7 |
| 7 | | 237-6012 | | 1 | JOINT TORIQUE |
| 8 | | 218-5062 | | 2 | RACCORD 7/8 fl x Or; Incl. Ref 9 |
| 9 | | 237-6010 | | 1 | JOINT TORIQUE 3/4 ID x 3/32 |
| 10 | | 87423356 | | 1 | FLEXIBLE (ASSEMBLE) 850 mm (33-1/2 in) |
| 11 | | 218-5106 | | 2 | RACCORD 3/4 fl x Or, Incl. Ref 12 |
| 12 | | 237-6008 | | 1 | JOINT TORIQUE 41/64 ID x 3/32, Boss Seal |
| 13 | | 188027A2 | | 2 | VERIN 95 ID x 292 mm strk; Swing Cylinder, See Figure 08-62 |
| 14 | | 87437685 | | 1 | FLEXIBLE (ASSEMBLE) 1310 mm (51-5/8 in) |
| 15 | | 192971A1 | | 2 | ORIFICE Restrictor |
| 19 | | 218-5119 | | 2 | RACCORD 7/8 fl x 1-1/16 Or, Incl. Ref 20 |
| 20 | | 237-6012 | | 1 | JOINT TORIQUE 59/64 ID x 7/64, Boss Seal |
| 21 | | D142787 | | 2 | ENTRETOISE |
| 22 | | 214-1492 | | 2 | COLLIER |
| 23 | | 255659A1 | | 2 | FLEXIBLE 815 mm (32-3/32 in) |
| 24 | | 218-5106 | | 2 | RACCORD 3/4 fl x Or, Incl. Ref 25 |
| 25 | | 237-6008 | | 1 | JOINT TORIQUE 41/64 ID x 3/32, Boss Seal |
| 27 | | 218-5107 | | 2 | COUDE 90 deg, 7/8 fl x Or; Incl. Ref 28 |
| 28 | | 237-6010 | | 1 | JOINT TORIQUE |

HTTP://WWW.MINNPARBACKHOEPARTS.COM

| 08-10 | | p1 | 01/04 |
|---|---|---|---|

SYSTEME HYDRAULIQUE - VERIN, FLECHE DE LA PELLE RETRO

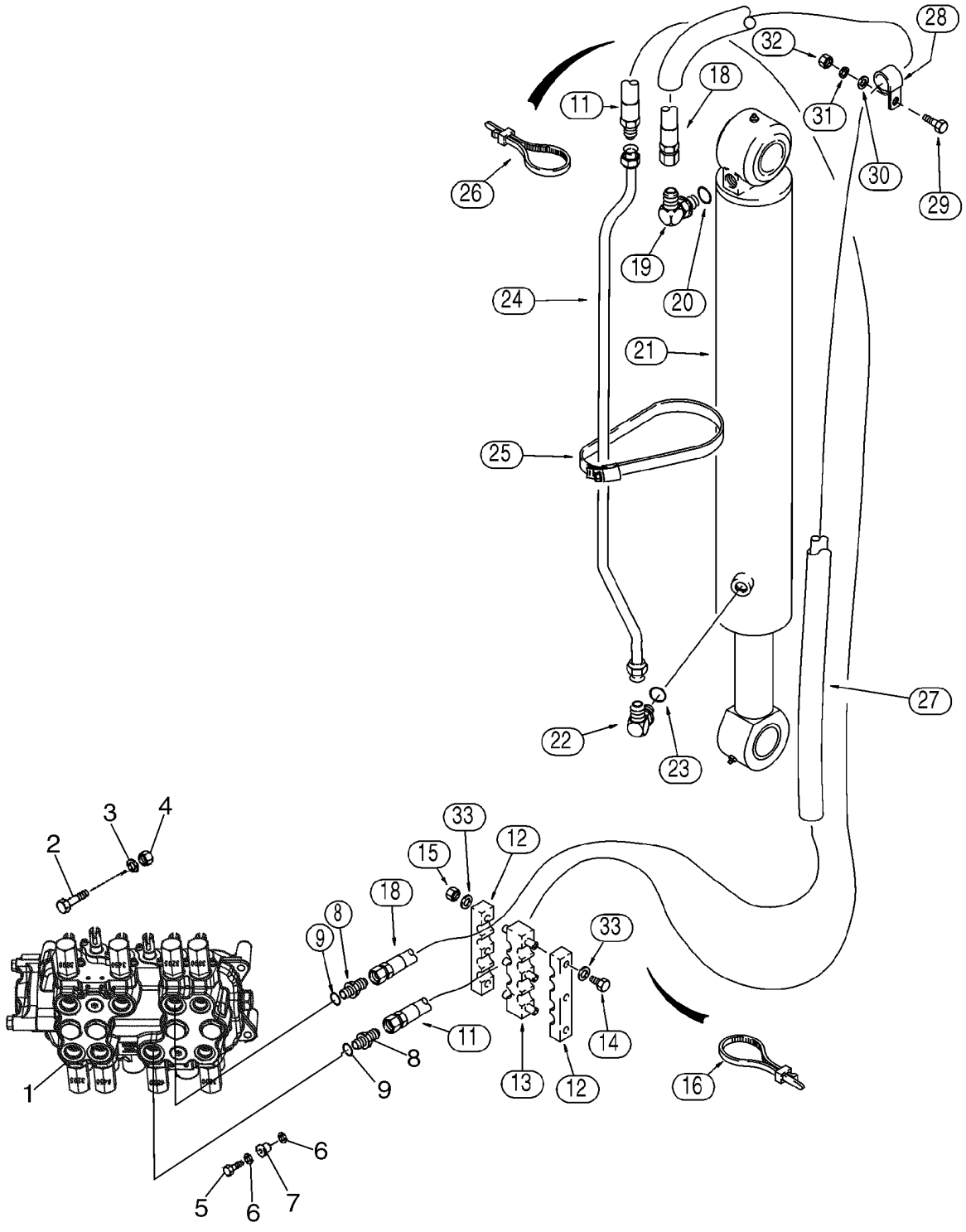


BS03M026

HTTP://WWW.MINNPARBACKHOEPARTS.COM



SYSTEME HYDRAULIQUE - VERIN, FLECHE DE LA PELLE RETRO

| REF | FN | PART NUMBER | YR/SN | QTY | DESCRIPTION |
|---|---|---|---|---|---|
| 1 | | REF | | 1 | NOTICE Valve Assy, Control; Backhoe Control Valve; For Correct Assembly and Components, See Figures 08-32 - 08-39 |
| 2 | | 814-12045 | | 2 | VIS M12 x 45 |
| 3 | | 896-11012 | | 2 | RONDELLE 13,5 x 24 x 3 mm |
| 4 | | 829-1412 | | 2 | ECROU M12; 10 |
| 5 | | 614-10035 | | 1 | VIS M10 x 35 |
| 6 | | 496-41041 | | 2 | RONDELLE 13/32 x 1-1/8 x 9/64 |
| 7 | | D52276 | | 1 | ISOLATEUR |
| 8 | | 218-5063 | | 2 | RACCORD 7/8 fl x 1-1/16 Or, Incl. Ref 9 |
| 9 | | 237-6012 | | 1 | JOINT TORIQUE 59/64 ID x 7/64, Boss Seal |
| 11 | | 397786A1 | | 1 | FLEXIBLE (ASSEMBLE) 3470 mm (136-5/8 in), Lower Valve Port |
| 12 | | 178951A1 | | 2 | ATTACHE ASSEMBLEE |
| 13 | | 178952A1 | | 1 | ATTACHE ASSEMBLEE |
| 14 | | 814-10120 | | 3 | VIS M10 x 120 |
| 15 | | 832-10410 | | 3 | ECROU M10 |
| 16 | | L18337 | | 4 | SANGLE 15 in |
| 18 | | 393369A1 | | 1 | FLEXIBLE (ASSEMBLE) 3495 mm (137-5/8 in) |
| 19 | | 218-5107 | | 1 | COUDE 7/8 fl x adj Or, Incl. Ref 20 |
| 20 | | 237-6010 | | 1 | JOINT TORIQUE 3/4 ID x 3/32, Boss Seal |
| 21 | | 189653A2 | | 1 | VERIN 114 ID x 982 mm strk, Boom Cylinder, See Figure 08-63 |
| 22 | | 218-5107 | | 1 | COUDE 7/8 fl x adj Or, Incl. Ref 23 |
| 23 | | 237-6010 | | 1 | JOINT TORIQUE 3/4 ID x 3/32, Boss Seal |
| 24 | | 357471A1 | | 1 | TUYAUTERIE |
| 25 | | 214-1488 | | 2 | COLLIER 5-1/8 - 6 in dia |
| 26 | | L18337 | | 4 | SANGLE 15 in |
| 27 | | 224057A1 | | 2 | MANCHON 946 mm (37-15/64 in) |
| 28 | | 515-23254 | | 1 | COLLIER 1 in ID |
| 28 | | R24840 | | 1 | COLLIER 1-1/8 in ID |
| 29 | | 614-10035 | | 2 | VIS M10 x 35 |
| 30 | | 895-11010 | | 2 | RONDELLE 11 x 21 x 2 mm |
| 31 | | 892-11010 | | 2 | RONDELLE FREIN M10 |
| 32 | | 829-1410 | | 2 | ECROU M10; 10.9 |
| 33 | | 895-11010 | | 6 | RONDELLE 11 x 21 x 2 mm |

HTTP://WWW.MINNPARBACKHOEPARTS.COM

| 08-11 | | p1 | 01/04 |
|---|---|---|---|

SYSTEME HYDRAULIQUE - VERIN, BALANCIER DE LA PELLE RETRO

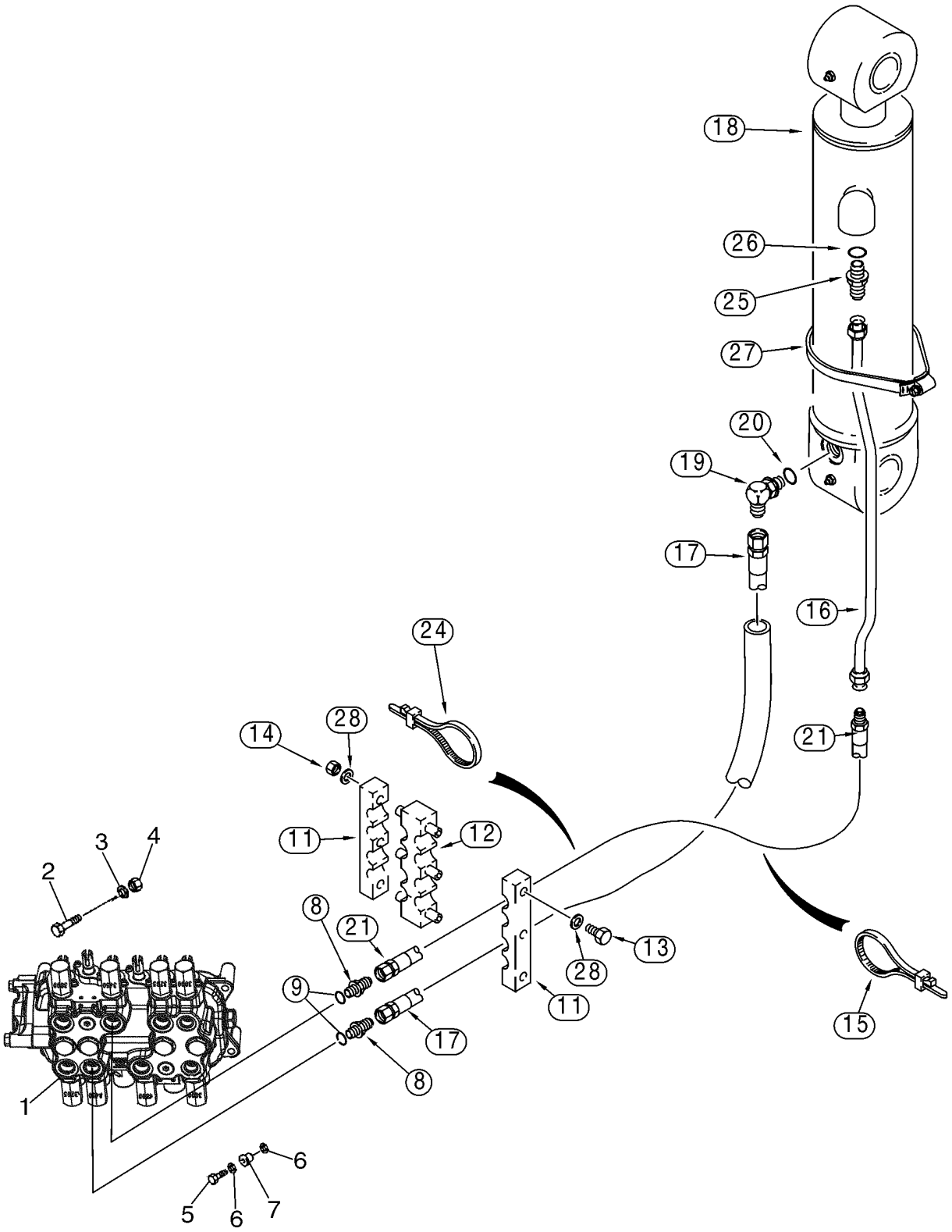

HTTP://WWW.MINNPARBACKHOEPARTS.COM



SYSTEME HYDRAULIQUE - VERIN, BALANCIER DE LA PELLE RETRO

| REF | FN | PART NUMBER | YR/SN | QTY | DESCRIPTION |
|---|---|---|---|---|---|
| 1 | | REF | | 1 | NOTICE Valve Assy, Control; Backhoe Control Valve; For Correct Assembly and Components, See Figures 08-32 - 08-39 |
| 2 | | 814-12045 | | 2 | VIS M12 x 45 |
| 3 | | 896-11012 | | 2 | RONDELLE 13,5 x 24 x 3 mm |
| 4 | | 829-1412 | | 2 | ECROU M12; 10 |
| 5 | | 614-10035 | | 1 | VIS M10 x 35 |
| 6 | | 496-41041 | | 2 | RONDELLE 13/32 x 1-1/8 x 9/64 |
| 7 | | D52276 | | 1 | ISOLATEUR |
| 8 | | 218-5063 | | 2 | RACCORD 7/8 fl x 1-1/16 Or, Incl. Ref 9 |
| 9 | | 237-6012 | | 1 | JOINT TORIQUE 59/64 ID x 7/64, Boss Seal |
| 11 | | 178951A1 | | 2 | ATTACHE ASSEMBLEE |
| 12 | | 178952A1 | | 1 | ATTACHE ASSEMBLEE |
| 13 | | 814-10120 | | 3 | VIS M10 x 120 |
| 14 | | 832-10410 | | 3 | ECROU M10 |
| 15 | | L18337 | | 4 | SANGLE 15 in |
| 16 | | 357469A1 | | 1 | TUYAUTERIE |
| 17 | | 393371A1 | | 1 | FLEXIBLE (ASSEMBLE) 2025 mm (79-3/4 in), Lower Valve Port |
| 18 | | 233114A2 | | 1 | VERIN 108 ID x 686 mm strk; Dipper Cylinder, See Figure 08-64 |
| 19 | | 218-5107 | | 1 | COUDE 7/8 fl x adj Or, Incl. Ref 20 |
| 20 | | 237-6010 | | 1 | JOINT TORIQUE 3/4 ID x 3/32, Boss Seal |
| 21 | | 397787A1 | | 1 | FLEXIBLE (ASSEMBLE) 2025 mm (79-3/4 in), Upper Valve Port |
| 24 | | L18337 | | 2-4 | SANGLE 15 in |
| 25 | | 218-5062 | | 1 | RACCORD 7/8 fl x Or, Incl. Ref 26 |
| 26 | | 237-6010 | | 1 | JOINT TORIQUE 3/4 ID x 3/32 |
| 27 | | 214-1488 | | 1 | COLLIER 5-1/8 - 6 in dia |
| 28 | | 895-11010 | | 6 | RONDELLE 11 x 21 x 2 mm |

HTTP://WWW.MINNPARBACKHOEPARTS.COM



SYSTEME HYDRAULIQUE - VERIN, GODET DE LA PELLE RETRO (MODÈLES SANS BALANCIER EXTENSIBLE)

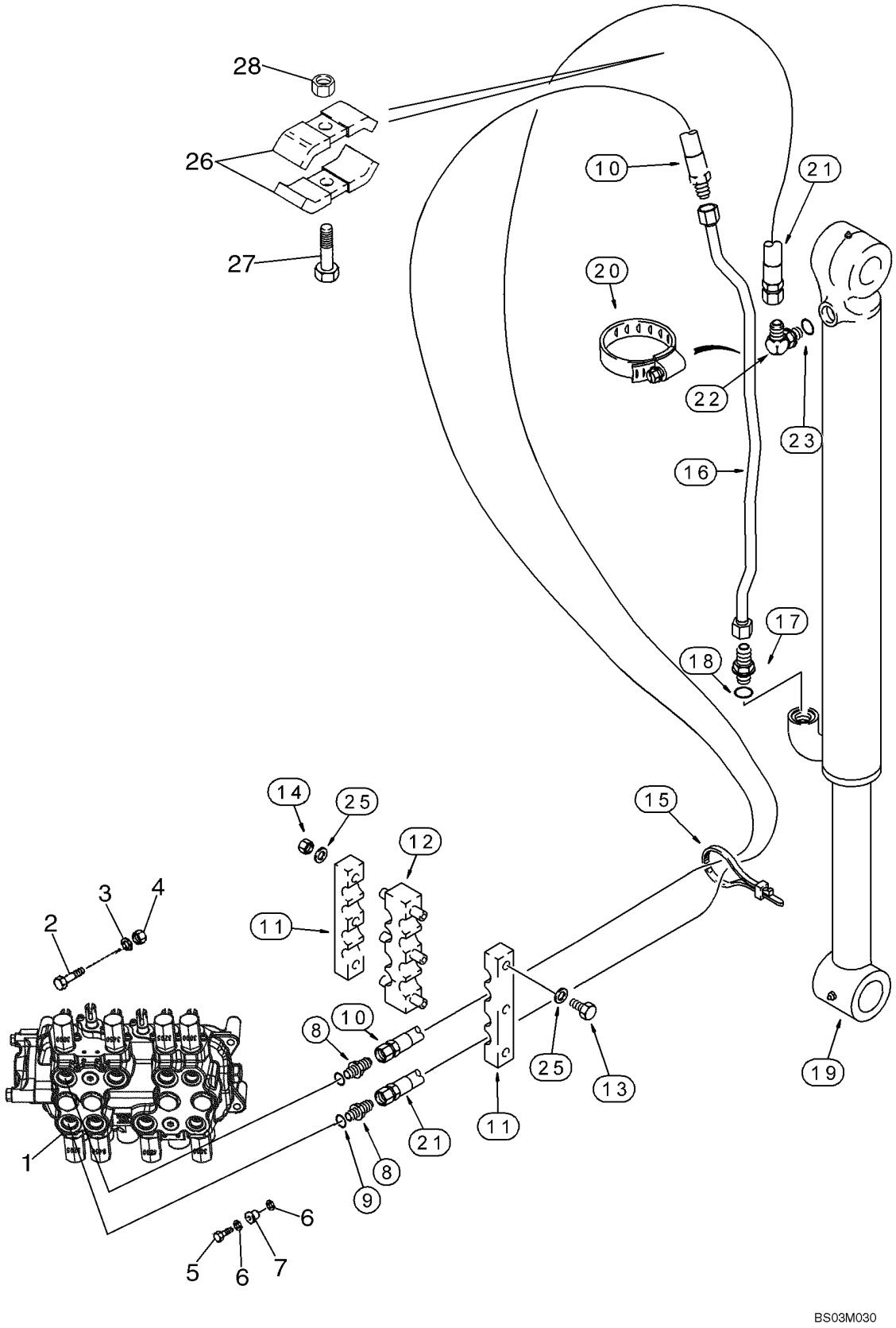

HTTP://WWW.MINNPARBACKHOEPARTS.COM



SYSTEME HYDRAULIQUE - VERIN, GODET DE LA PELLE RETRO (MODÈLES SANS BALANCIER EXTENSIBLE)

| REF | FN | PART NUMBER | YR/SN | QTY | DESCRIPTION |
|---|---|---|---|---|---|
| 1 | | REF | | 1 | NOTICE Valve Assy, Control; Backhoe Control Valve; For Correct Assembly and Components, See Figures 08-32 - 08-39 |
| 2 | | 814-12045 | | 2 | VIS M12 x 45 |
| 3 | | 896-11012 | | 2 | RONDELLE 13,5 x 24 x 3 mm |
| 4 | | 829-1412 | | 2 | ECROU M12; 10 |
| 5 | | 614-10035 | | 1 | VIS M10 x 35 |
| 6 | | 496-41041 | | 2 | RONDELLE 13/32 x 1-1/8 x 9/64 |
| 7 | | D52276 | | 1 | ISOLATEUR |
| 8 | | 218-5063 | | 2 | RACCORD 7/8 fl x 1-1/16 Or, Incl. Ref 9 |
| 9 | | 237-6012 | | 1 | JOINT TORIQUE 59/64 ID x 7/64, Boss Seal |
| 10 | | 397788A1 | | 1 | FLEXIBLE (ASSEMBLE) 3860 mm (152 in) |
| 11 | | 178951A1 | | 2 | ATTACHE ASSEMBLEE |
| 12 | | 178952A1 | | 1 | ATTACHE ASSEMBLEE |
| 13 | | 814-10120 | | 3 | VIS M10 x 120 |
| 14 | | 832-10410 | | 3 | ECROU M10 |
| 15 | | L18337 | | 2-4 | SANGLE 15 in |
| 16 | | 396339A1 | | 1 | TUYAUTERIE Models Without Backhoe Auxiliary Hydraulics |
| 16 | | 357470A1 | | 1 | TUYAUTERIE Models With Backhoe Auxiliary Hydraulics |
| 17 | | 218-5062 | | 1 | RACCORD 7/8 fl x Or, Incl. Ref 18 |
| 18 | | 237-6010 | | 1 | JOINT TORIQUE 3/4 ID x 3/32, Boss Seal |
| 19 | | 128760A1 | | 1 | VERIN 83 ID x 872 mm strk; Bucket Cylinder, See Figure 08-65 |
| 20 | | 214-1464 | | 1 | COLLIER 3-9/16 - 4-1/2 in dia |
| 21 | | 393360A1 | | 1 | FLEXIBLE (ASSEMBLE) 3860 mm (152 in) |
| 22 | | 218-5107 | | 1 | COUDE 7/8 fl x adj Or, Incl. Ref 23 |
| 23 | | 237-6010 | | 1 | JOINT TORIQUE 3/4 ID x 3/32 |
| 25 | | 895-11010 | | 6 | RONDELLE 11 x 21 x 2 mm |
| 26 | | D143846 | | 2 | BRIDE Clamp |
| 27 | | 814-10055 | | 1 | VIS M10 x 55 |
| 28 | | 832-10410 | | 1 | ECROU M10 |

HTTP://WWW.MINNPARBACKHOEPARTS.COM

| 08-13 | | p1 | 01/04 |
|---|---|---|---|

SYSTEME HYDRAULIQUE - VERIN, GODET DE LA PELLE RETRO (MODÈLES AVEC BALANCIER EXTENSIBLE)

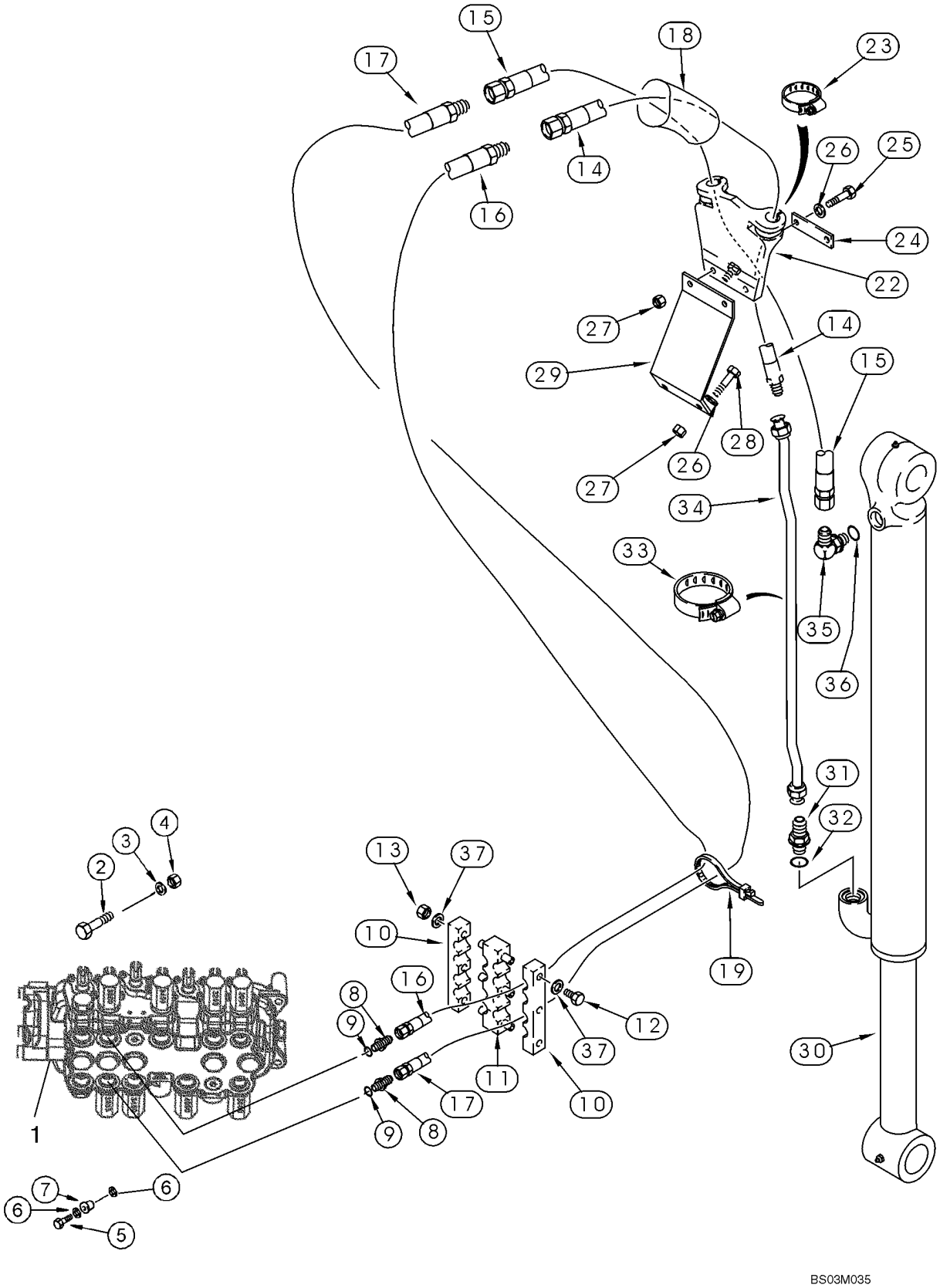

HTTP://WWW.MINNPARBACKHOEPARTS.COM



SYSTEME HYDRAULIQUE - VERIN, GODET DE LA PELLE RETRO (MODÈLES AVEC BALANCIER EXTENSIBLE)

| REF | FN | PART NUMBER | YR/SN | QTY | DESCRIPTION |
|---|---|---|---|---|---|
| 1 | | REF | | 1 | NOTICE Valve Assy, Control; Backhoe Control Valve; For Correct Assembly and Components, See Figures 08-33 - 08-39 |
| 2 | | 814-12045 | | 2 | VIS M12 x 45 |
| 3 | | 896-11012 | | 2 | RONDELLE 13,5 x 24 x 3 mm |
| 4 | | 829-1412 | | 2 | ECROU M12; 10 |
| 5 | | 614-10035 | | 1 | VIS M10 x 35 |
| 6 | | 496-41041 | | 2 | RONDELLE 13/32 x 1-1/8 x 9/64 |
| 7 | | D52276 | | 1 | ISOLATEUR |
| 8 | | 218-5063 | | 2 | RACCORD 7/8 fl x 1-1/16 Or, Incl. Ref 9 |
| 9 | | 237-6012 | | 1 | JOINT TORIQUE 59/64 ID x 7/64 |
| 10 | | 178951A1 | | 2 | ATTACHE ASSEMBLEE |
| 11 | | 178952A1 | | 1 | ATTACHE ASSEMBLEE |
| 12 | | 814-10120 | | 3 | VIS M10 x 120 |
| 13 | | 832-10410 | | 3 | ECROU M10 |
| 14 | | 365309A1 | | 1 | FLEXIBLE (ASSEMBLE) 2052 mm (80-3/4 in) |
| 15 | | 143400A1 | | 1 | FLEXIBLE 2052 mm (80-3/4 in) |
| 16 | | 393361A1 | | 1 | FLEXIBLE (ASSEMBLE) 3048 mm (120 in) |
| 17 | | 393362A1 | | 1 | FLEXIBLE (ASSEMBLE) 3048 mm (120 in) |
| 18 | | 183322A1 | | 1 | PROTECTEUR 2000 mm (78-3/4 in) |
| 19 | | L18337 | | 2-5 | SANGLE 15 in |
| 22 | | 184297A1 | | 1 | SUPPORT |
| 23 | | 214-3132 | | 2 | COLLIER |
| 24 | | 101479A1 | | 1 | SUPPORT |
| 25 | | 814-10045 | | 2 | VIS M10 x 45 |
| 26 | | 895-11010 | | 4 | RONDELLE 11 x 21 x 2 mm |
| 27 | | 832-10410 | | 4 | ECROU M10 |
| 28 | | 614-10030 | | 2 | VIS M10 x 30 |
| 29 | | 183736A1 | | 1 | SUPPORT |
| 30 | | 128760A1 | | 1 | VERIN 83 ID x 872 mm strk; Bucket Cylinder, See Figure 08-65 |
| 31 | | 218-5062 | | 1 | RACCORD 7/8 fl x Or, Incl. Ref 32 |
| 32 | | 237-6010 | | 1 | JOINT TORIQUE 3/4 ID x 3/32 |
| 33 | | 214-1464 | | 2 | COLLIER 3-9/16 - 4-1/2 in dia |
| 34 | | 396339A1 | | 1 | TUYAUTERIE Models Without Auxiliary Hydraulics |
| 34 | | 357470A1 | | 1 | TUYAUTERIE Models With Auxiliary Hydraulics |

HTTP://WWW.MINNPARBACKHOEPARTS.COM



SYSTEME HYDRAULIQUE - VERIN, GODET DE LA PELLE RETRO (MODÈLES AVEC BALANCIER EXTENSIBLE)

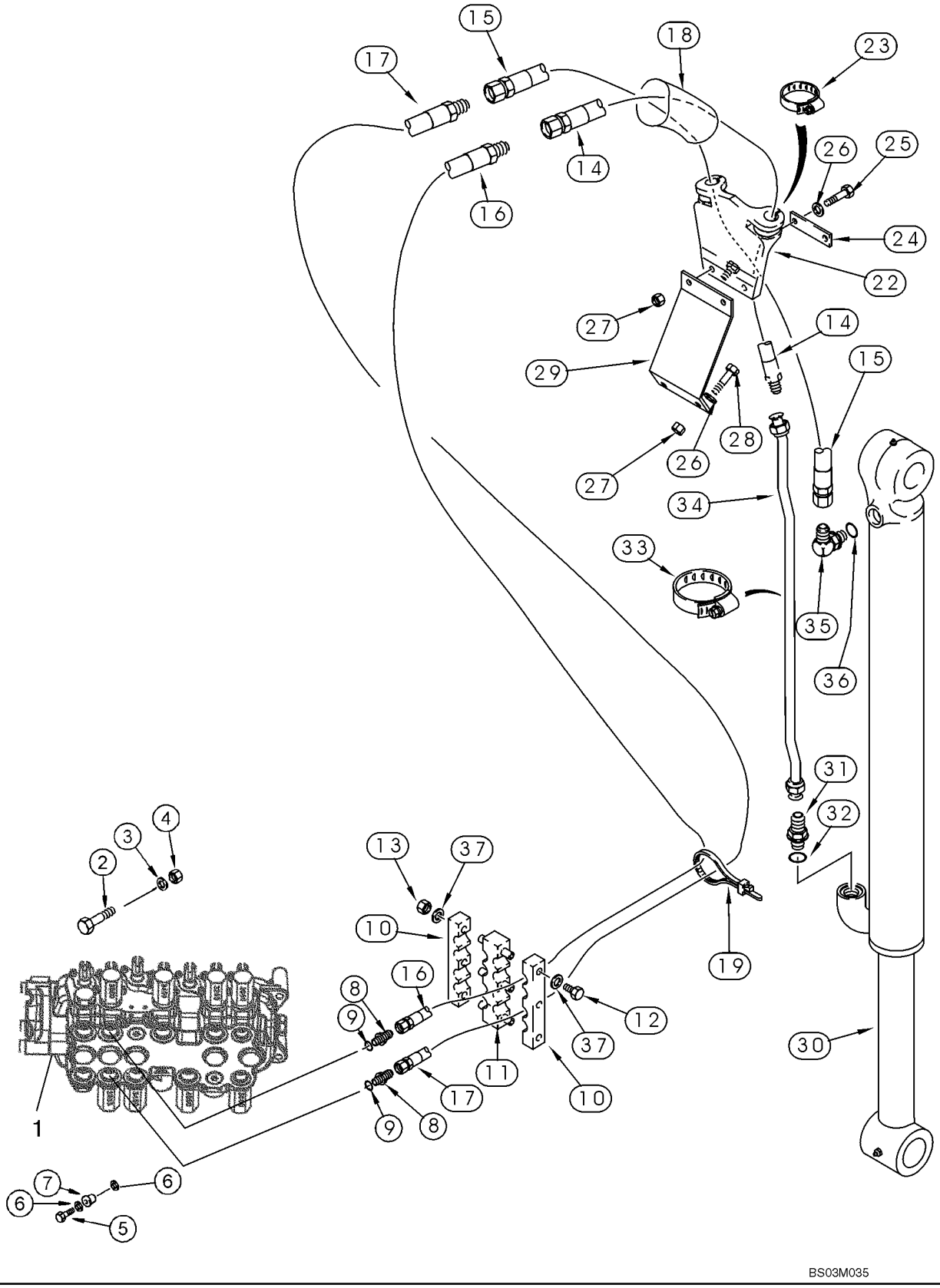

HTTP://WWW.MINNPARBACKHOEPARTS.COM



SYSTEME HYDRAULIQUE - VERIN, GODET DE LA PELLE RETRO (MODÈLES AVEC BALANCIER EXTENSIBLE)

| REF | FN | PART NUMBER | YR/SN | QTY | DESCRIPTION |
|---|---|---|---|---|---|
| 35 | | 218-5107 | | 1 | COUDE 7/8 fl x adj Or, Incl. Ref 36 |
| 36 | | 237-6010 | | 1 | JOINT TORIQUE 3/4 ID x 3/32 |
| 37 | | 895-11010 | | 6 | RONDELLE 11 x 21 x 2 mm |

HTTP://WWW.MINNPARBACKHOEPARTS.COM

| 08-14 | | p1 | 01/04 |
|---|---|---|---|

SYSTEME HYDRAULIQUE - VERIN, BALANCIER EXTENSIBLE DE LA PELLE RETRO

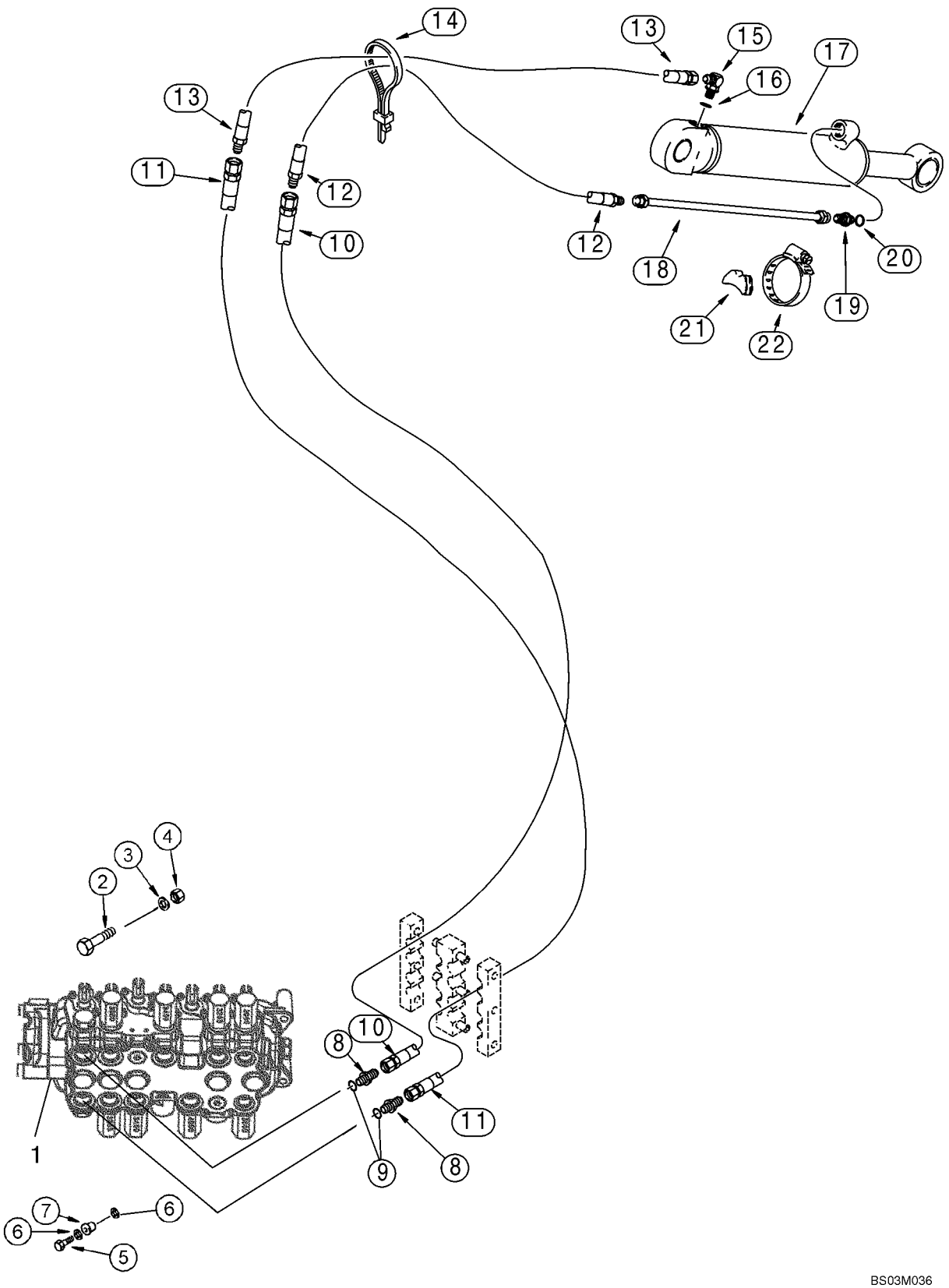

HTTP://WWW.MINNPARBACKHOEPARTS.COM



SYSTEME HYDRAULIQUE - VERIN, BALANCIER EXTENSIBLE DE LA PELLE RETRO

| REF | FN | PART NUMBER | YR/SN | QTY | DESCRIPTION |
|---|---|---|---|---|---|
| 1 | | REF | | 1 | NOTICE Valve Assy, Control; Backhoe Control Valve; For Correct Assembly and Components, See Figures 08-34, 08-35, 08-37, 08-39 |
| 2 | | 814-12045 | | 2 | VIS M12 x 45 |
| 3 | | 896-11012 | | 2 | RONDELLE 13,5 x 24 x 3 mm |
| 4 | | 829-1412 | | 2 | ECROU M12; 10 |
| 5 | | 614-10035 | | 1 | VIS M10 x 35 |
| 6 | | 496-41041 | | 2 | RONDELLE 13/32 x 1-1/8 x 9/64 |
| 7 | | D52276 | | 1 | ISOLATEUR |
| 8 | | 218-5063 | | 2 | RACCORD 7/8 fl x 1-1/16 Or, Incl. Ref 9 |
| 9 | | 237-6012 | | 1 | JOINT TORIQUE 59/64 ID x 7/64 |
| 10 | | 393354A1 | | 1 | FLEXIBLE (ASSEMBLE) 3073 mm (121 in) |
| 11 | | 393357A1 | | 1 | FLEXIBLE (ASSEMBLE) 3073 mm (121 in) |
| 12 | | 184617A1 | | 1 | FLEXIBLE 850 mm (33-1/2 in) |
| 13 | | 184616A1 | | 1 | FLEXIBLE 700 mm (27-9/16 in) |
| 14 | | L18337 | | 4 | SANGLE 15 in |
| 15 | | 218-5107 | | 1 | COUDE 7/8 fl x adj Or, Incl. Ref 16 |
| 16 | | 237-6010 | | 1 | JOINT TORIQUE 3/4 ID x 3/32 |
| 17 | | 1340969C2 | | 1 | VERIN 76 ID x 1068 mm strk; Extendable Dipper Cylinder, See Figure 08-66 |
| 18 | | D140706 | | 1 | TUYAU Tube |
| 19 | | 218-5062 | | 1 | RACCORD 7/8 fl x Or, Incl. Ref 20 |
| 20 | | 237-6010 | | 1 | JOINT TORIQUE 3/4 ID x 3/32 |
| 21 | | D38648 | | 1 | BLOC |
| 22 | | 214-1464 | | 1 | COLLIER 3-9/16 - 4-1/2 in dia |

HTTP://WWW.MINNPARBACKHOEPARTS.COM



SYSTEME HYDRAULIQUE - DISTRIBUTEUR, COMMANDE PILOTE DE LEVIER DE COMMANDE (6 SPOOL, W/O EXT DIPPER,

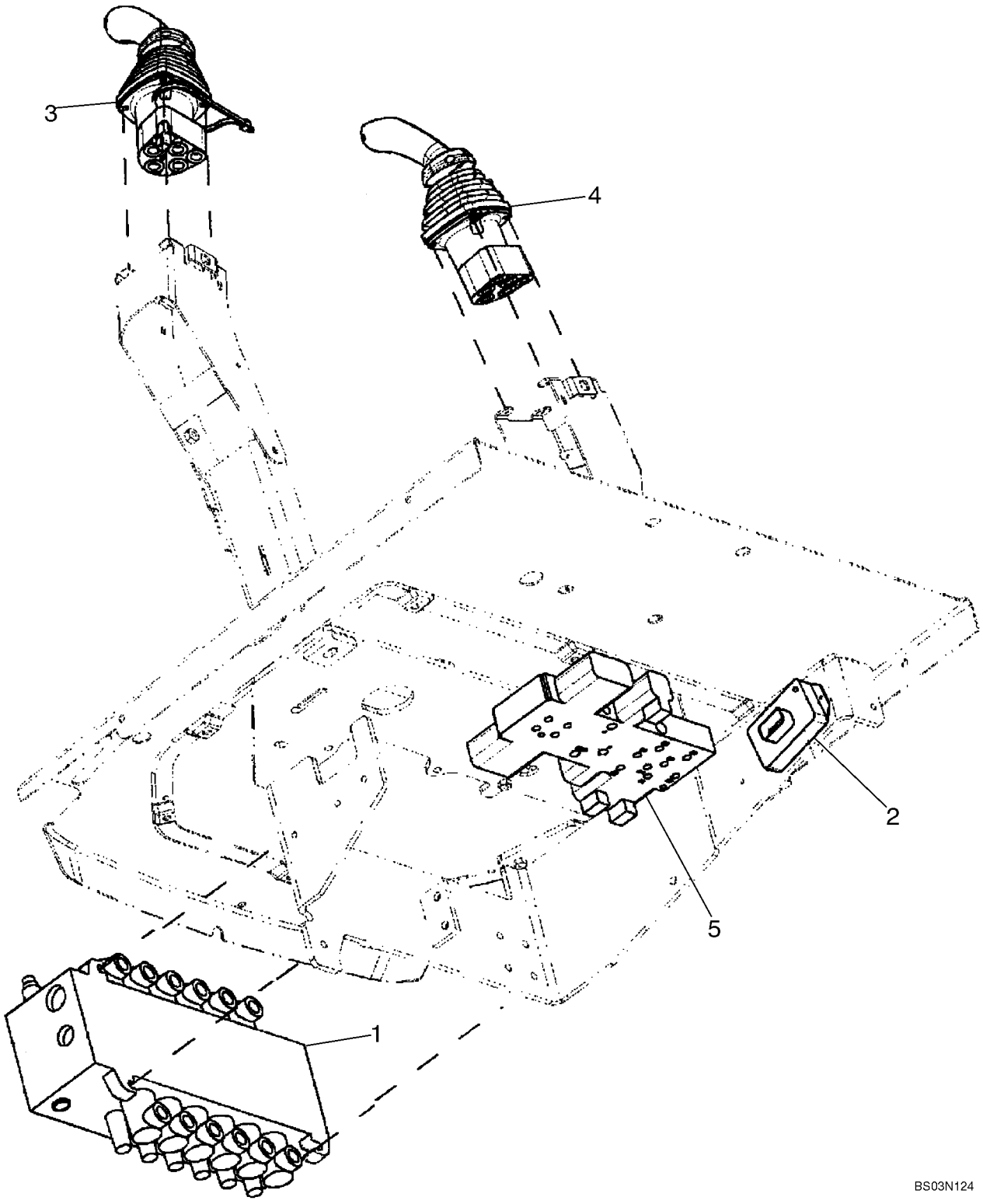

HTTP://WWW.MINNPARBACKHOEPARTS.COM



SYSTEME HYDRAULIQUE - DISTRIBUTEUR, COMMANDE PILOTE DE LEVIER DE COMMANDE (6 SPOOL, W/O EXT DIPPER,

| REF | FN | PART NUMBER | YR/SN | QTY | DESCRIPTION |
|---|---|---|---|---|---|
| | | REF | | | NOTICE SIX SPOOL VALVE WITHOUT EXTENDABLE DIPPER; WITH AUTO-UP; WITHOUT AUXILIARY HYDRAULICS, WITHOUT UNI-DIRECTIONAL OR BI-DIRECTIONAL |
| 1 | | 86987459 | | 1 | DISTRIBUTEUR Backhoe, 6 Spool; See Figure 08-36; For Mounting See Figure 08-22 |
| 2 | | 87419454 | | 1 | GROUPE REGULATEUR Box, Pilot Control Power Supply Module |
| | | 840-1416 | | 2 | VIS M4 x 16 |
| 3 | | 87437733 | | 1 | DISTRIBUTEUR Joystick; Left-Hand; With Horn Button; See Figure 08-50 |
| 4 | | 87435510 | | 1 | DISTRIBUTEUR Joystick; Right-Hand; See Figure 08-53 |
| 5 | | 85827472 | | 1 | SOUPAPE HYDRAULIQUE Pressure Reducing, 2 Spool; See Figure 08-47 |

HTTP://WWW.MINNPARBACKHOEPARTS.COM

| 08-16 | | p1 | 01/04 |
|---|---|---|---|

SYSTEME HYDRAULIQUE - DISTRIBUTEUR, COMMANDE PILOTE DE LEVIER DE COMMANDE (6 SPOOL, W/O EXT DIPPER,

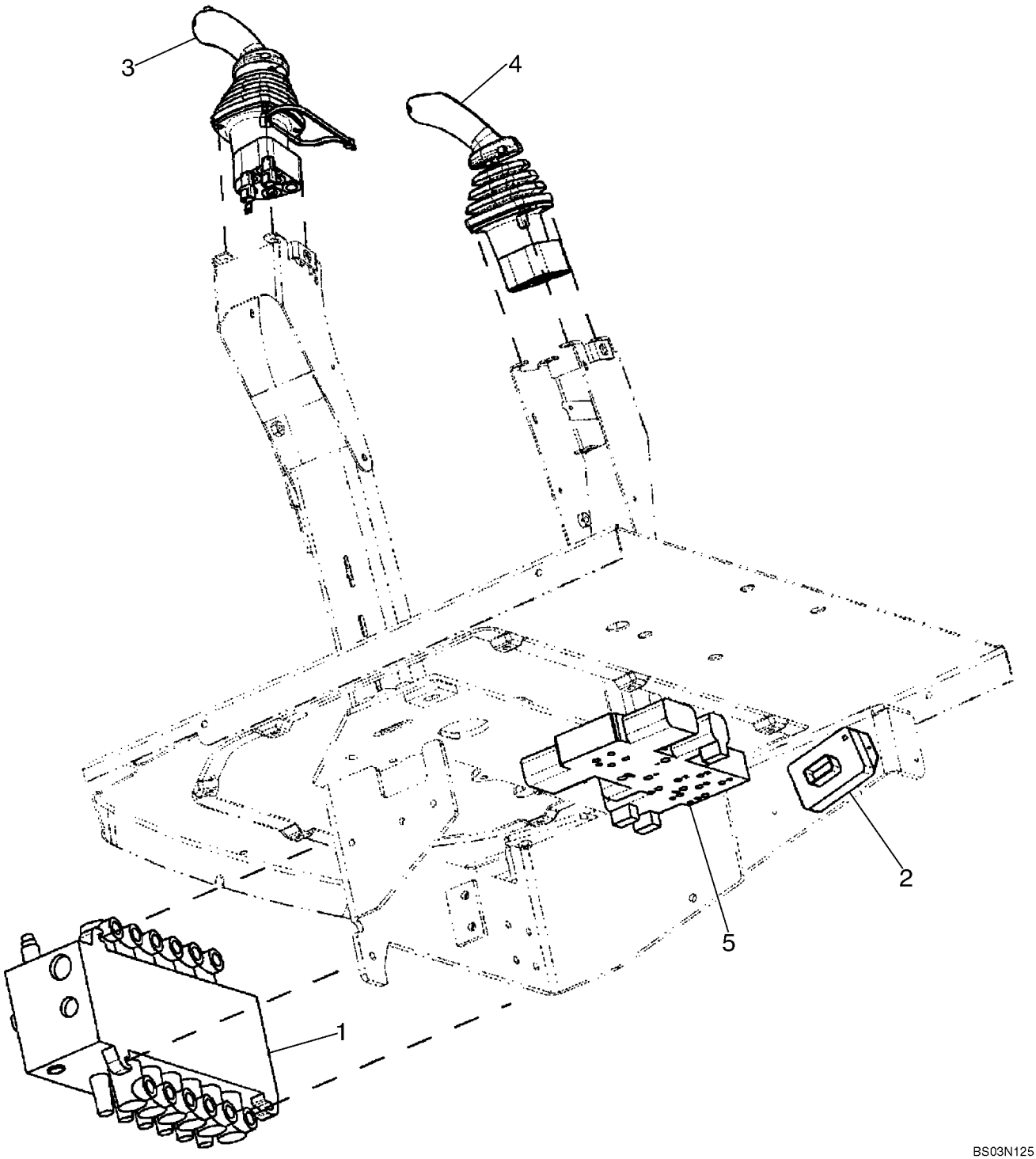

HTTP://WWW.MINNPARBACKHOEPARTS.COM



SYSTEME HYDRAULIQUE - DISTRIBUTEUR, COMMANDE PILOTE DE LEVIER DE COMMANDE (6 SPOOL, W/O EXT DIPPER,

| REF | FN | PART NUMBER | YR/SN | QTY | DESCRIPTION |
|---|---|---|---|---|---|
| | | REF | | | NOTICE SIX SPOOL VALVE WITHOUT EXTENDABLE DIPPER; WITH AUTO-UP; WITH AUXILIARY HYDRAULICS, WITH UNI-DIRECTIONAL |
| 1 | | 86987459 | | 1 | DISTRIBUTEUR Backhoe, 6 Spool; See Figure 08-36; For Mounting See Figure 08-22 |
| 2 | | 87419454 | | 1 | GROUPE REGULATEUR Box, Pilot Control Power Supply Module |
| | | 840-1416 | | 2 | VIS M4 x 16 |
| 3 | | 87437735 | | 1 | DISTRIBUTEUR Joystick; Left-Hand; With Horn and Uni-Directional Buttons; See Figure 08-51 |
| 4 | | 87435510 | | 1 | DISTRIBUTEUR Joystick; Right-Hand; See Figure 08-53 |
| 5 | | 85827472 | | 1 | SOUPAPE HYDRAULIQUE Pressure Reducing, 2 Spool; See Figure 08-47 |

HTTP://WWW.MINNPARBACKHOEPARTS.COM

| 08-17 | | p1 | 01/04 |
|---|---|---|---|

SYSTEME HYDRAULIQUE - DISTRIBUTEUR, COMMANDE PILOTE DE LEVIER DE COMMANDE (7 SPOOL, W/ EXT DIPPER,

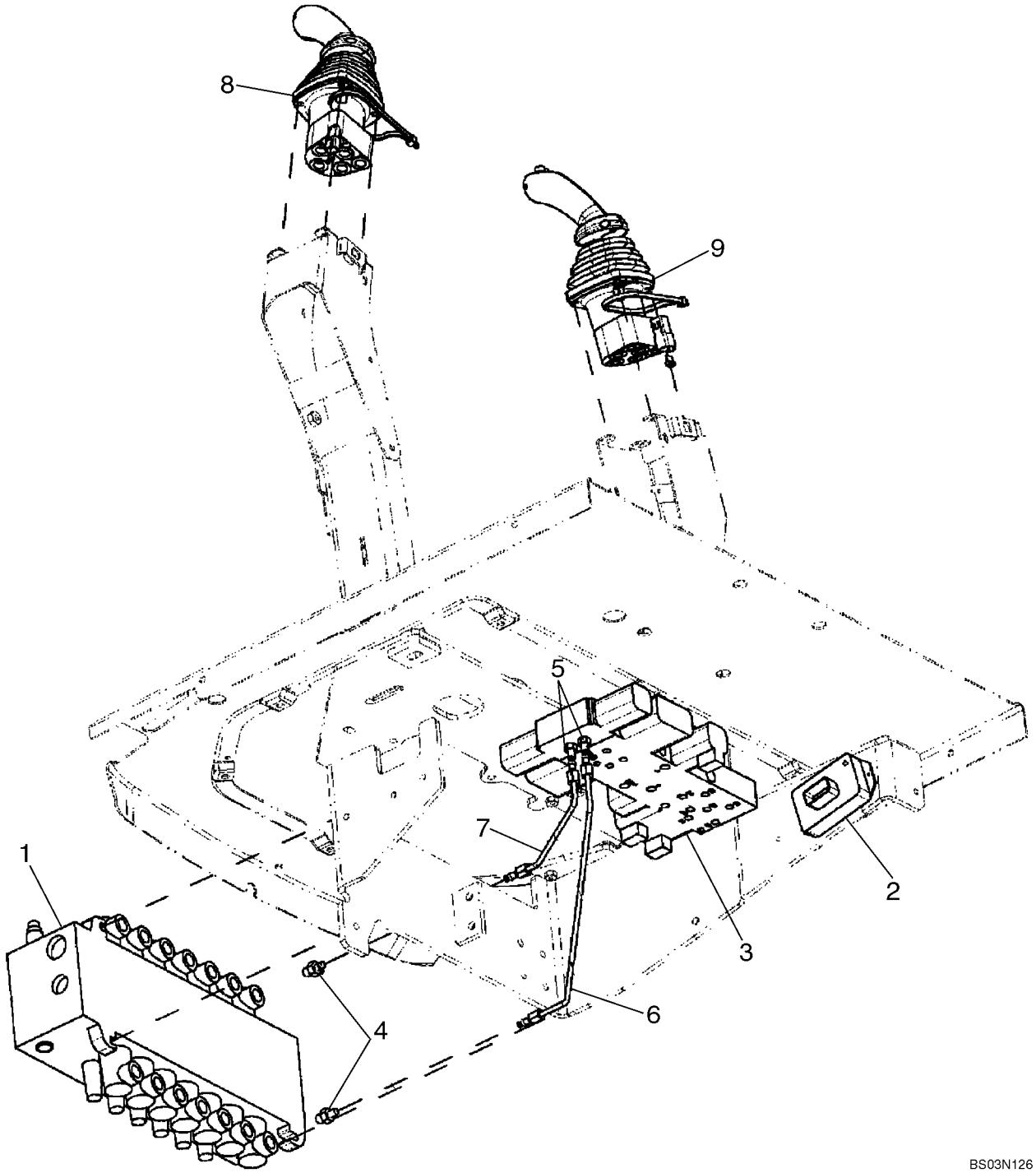

HTTP://WWW.MINNPARBACKHOEPARTS.COM



SYSTEME HYDRAULIQUE - DISTRIBUTEUR, COMMANDE PILOTE DE LEVIER DE COMMANDE (7 SPOOL, W/ EXT DIPPER,

| REF | FN | PART NUMBER | YR/SN | QTY | DESCRIPTION |
|---|---|---|---|---|---|
| | | REF | | | NOTICE SEVEN SPOOL VALVE WITH EXTENDABLE DIPPER; WITHOUT AUXILIARY HYDRAULICS; WITH AUTO-UP; WITHOUT UNI-DIRECTIONAL OR BI-DIRECTIONAL |
| 1 | | 86987460 | | 1 | DISTRIBUTEUR Backhoe, 7 Spool; See Figure 08-37; For Mounting See Figure 08-22 |
| 2 | | 87419454 | | 1 | GROUPE REGULATEUR Box, Pilot Control Power Supply Module |
| | | 840-1416 | | 2 | VIS M4 x 16 |
| 3 | | 85827471 | | 1 | SOUPAPE HYDRAULIQUE Pressure Reducing, 3 Spool; See Figure 08-48 |
| 4 | | 218-5089 | | 2 | CONNECTEUR 7/16 fl x 9/16 Or; Includes 237-6006 O-Ring |
| | | 237-6006 | | 1 | JOINT TORIQUE 15/32 ID x 5/64 |
| 5 | | 218-5053 | | 2 | RACCORD 7/16 fl x Or; Includes 237-6004 O-Ring |
| | | 237-6004 | | 1 | JOINT TORIQUE 23/64 ID x 5/64 |
| 6 | | 87437633 | | 1 | TUYAUTERIE To Lower Extendable Dipper Port |
| 7 | | 87437635 | | 1 | TUYAUTERIE To Upper Extendable Dipper Port |
| 8 | | 87437733 | | 1 | DISTRIBUTEUR Joystick; Left-Hand; With Horn Button; See Figure 08-50 |
| 9 | | 87437736 | | 1 | DISTRIBUTEUR Joystick; Right-Hand; See Figure 08-54 |

HTTP://WWW.MINNPARBACKHOEPARTS.COM

| 08-18 | | p1 | 01/04 |
|---|---|---|---|

SYSTEME HYDRAULIQUE - DISTRIBUTEUR, COMMANDE PILOTE DE LEVIER DE COMMANDE (7 SPOOL, W/ EXT DIPPER,

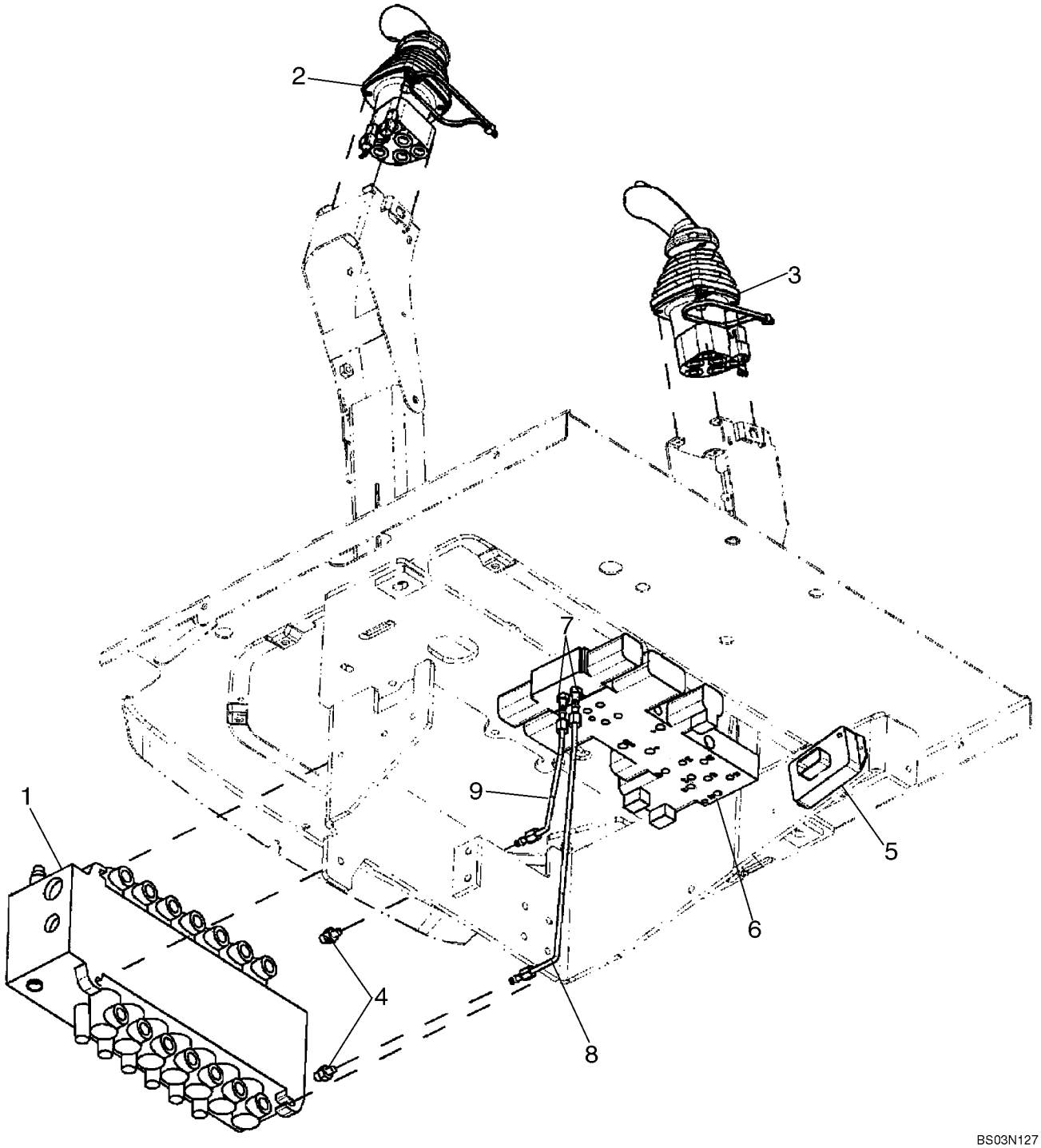

HTTP://WWW.MINNPARBACKHOEPARTS.COM



SYSTEME HYDRAULIQUE - DISTRIBUTEUR, COMMANDE PILOTE DE LEVIER DE COMMANDE (7 SPOOL, W/ EXT DIPPER,

| REF | FN | PART NUMBER | YR/SN | QTY | DESCRIPTION |
|---|---|---|---|---|---|
| | | REF | | | NOTICE SEVEN SPOOL VALVE WITH EXTENDABLE DIPPER; WITH AUXILIARY HYDRAULICS; WITH AUTO-UP; WITH UNI-DIRECTIONAL |
| 1 | | 86987460 | | 1 | DISTRIBUTEUR Backhoe, 7 Spool; See Figure 08-37; For Mounting See Figure 08-22 |
| 2 | | 87437735 | | 1 | DISTRIBUTEUR Joystick; Left-Hand; With Horn and Uni-Directional Buttons; See Figure 08-51 |
| 3 | | 87437736 | | 1 | DISTRIBUTEUR Joystick; Right-Hand; See Figure 08-54 |
| 4 | | 218-5089 | | 2 | CONNECTEUR 7/16 fl x 9/16 Or; Includes 237-6006 O-Ring |
| | | 237-6006 | | 1 | JOINT TORIQUE 15/32 ID x 5/64 |
| 5 | | 87419454 | | 1 | GROUPE REGULATEUR Box, Pilot Control Power Supply Module |
| | | 840-1416 | | 2 | VIS M4 x 16 |
| 6 | | 85827471 | | 1 | SOUPAPE HYDRAULIQUE Pressure Reducing, 3 Spool; See Figure 08-48 |
| 7 | | 218-5053 | | 2 | RACCORD 7/16 fl x Or; Includes 237-6004 O-Ring |
| | | 237-6004 | | 1 | JOINT TORIQUE 23/64 ID x 5/64 |
| 8 | | 87437633 | | 1 | TUYAUTERIE To Lower Extendable Dipper Port |
| 9 | | 87437635 | | 1 | TUYAUTERIE To Upper Extendable Dipper Port |

HTTP://WWW.MINNPARBACKHOEPARTS.COM

| 08-19 | | p1 | 01/04 |
|---|---|---|---|

SYSTEME HYDRAULIQUE - DISTRIBUTEUR, COMMANDE PILOTE DE LEVIER DE COMMANDE (7 SPOOL, W/O EXT DIPPER,

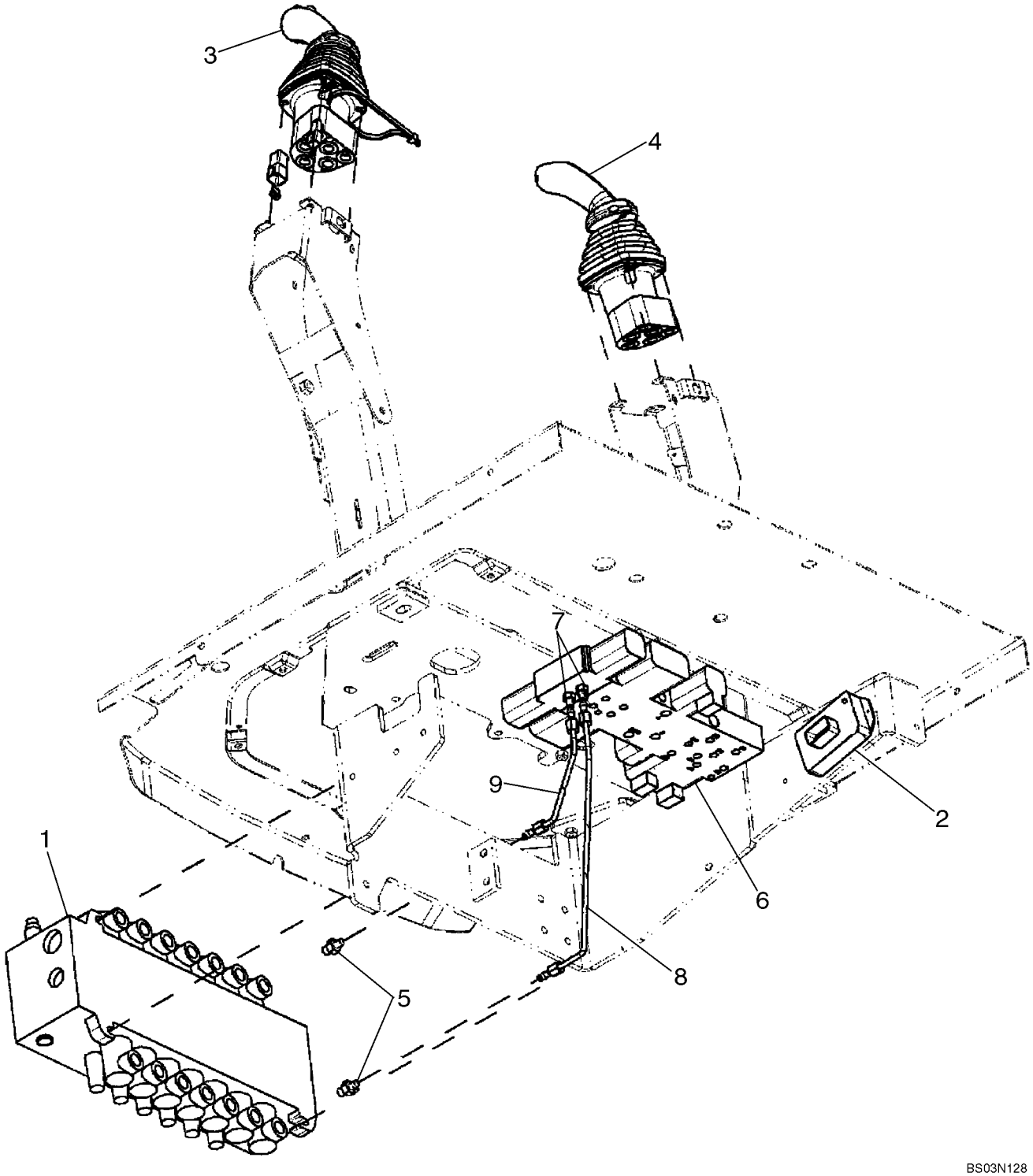

HTTP://WWW.MINNPARBACKHOEPARTS.COM



SYSTEME HYDRAULIQUE - DISTRIBUTEUR, COMMANDE PILOTE DE LEVIER DE COMMANDE (7 SPOOL, W/O EXT DIPPER,

| REF | FN | PART NUMBER | YR/SN | QTY | DESCRIPTION |
|---|---|---|---|---|---|
| | | REF | | | NOTICE SEVEN SPOOL VALVE WITHOUT EXTENDABLE DIPPER; WITH AUXILIARY HYDRAULICS; WITH AUTO-UP; WITH BI-DIRECTIONAL |
| 1 | | 87407965 | | 1 | DISTRIBUTEUR Backhoe, 7 Spool; See Figure 08-38; For Mounting See Figure 08-22 |
| 2 | | 87419455 | | 1 | GROUPE REGULATEUR Box, Pilot Control Power Supply Module |
| | | 840-1416 | | 2 | VIS M4 x 16 |
| 3 | | 87437734 | | 1 | DISTRIBUTEUR Joystick; Left-Hand; With Horn and Bi-Directional Buttons; See Figure 08-52 |
| 4 | | 87435510 | | 1 | DISTRIBUTEUR Joystick; Right-Hand; See Figure 08-53 |
| 5 | | 218-5089 | | 2 | CONNECTEUR 7/16 fl x 9/16 Or; Includes 237-6006 O-Ring |
| | | 237-6006 | | 1 | JOINT TORIQUE 15/32 ID x 5/64 |
| 6 | | 85827471 | | 1 | SOUPAPE HYDRAULIQUE Pressure Reducing, 3 Spool; See Figure 08-48 |
| 7 | | 218-5053 | | 2 | RACCORD 7/16 fl x Or; Includes 237-6004 O-Ring |
| | | 237-6004 | | 1 | JOINT TORIQUE 23/64 ID x 5/64 |
| 8 | | 87438012 | | 1 | TUYAUTERIE To Lower Auxiliary Port |
| 9 | | 87438015 | | 1 | TUYAUTERIE To Upper Auxiliary Port |

HTTP://WWW.MINNPARBACKHOEPARTS.COM

| 08-20 | | p1 | 01/04 |
|---|---|---|---|

SYSTEME HYDRAULIQUE - DISTRIBUTEUR, COMMANDE PILOTE DE LEVIER DE COMMANDE (8 SPOOL, W/ EXT DIPPER,

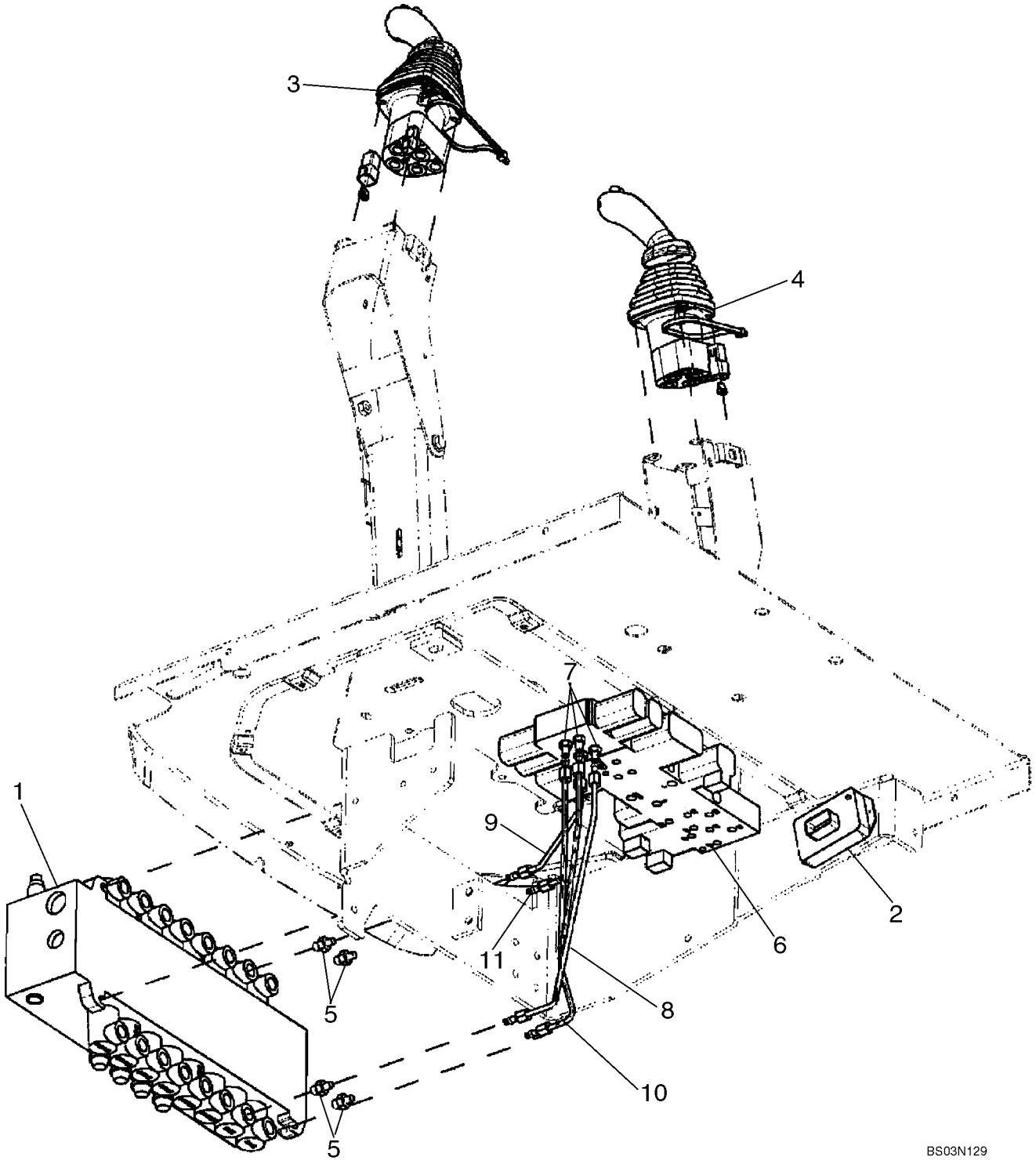

HTTP://WWW.MINNPARBACKHOEPARTS.COM



SYSTEME HYDRAULIQUE - DISTRIBUTEUR, COMMANDE PILOTE DE LEVIER DE COMMANDE (8 SPOOL, W/ EXT DIPPER,

| REF | FN | PART NUMBER | YR/SN | QTY | DESCRIPTION |
|---|---|---|---|---|---|
| | | REF | | | NOTICE EIGHT SPOOL VALVE WITH EXTENDABLE DIPPER; WITH AUXILIARY HYDRAULICS; WITH AUTO-UP; WITH BI-DIRECTIONAL |
| 1 | | 86987461 | | 1 | SOUPAPE HYDRAULIQUE Backhoe, 8 Spool; See Figure 08-39; For Mounting See Figure 08-22 |
| 2 | | 87419455 | | 1 | GROUPE REGULATEUR Box, Pilot Control Power Supply Module |
| | | 840-1416 | | 2 | VIS M4 x 16 |
| 3 | | 87437734 | | 1 | DISTRIBUTEUR Joystick; Left-Hand; With Horn and Bi-Directional Buttons; See Figure 08-52 |
| 4 | | 87437736 | | 1 | DISTRIBUTEUR Joystick; Right-Hand; See Figure 08-54 |
| 5 | | 218-5089 | | 4 | CONNECTEUR 7/16 fl x 9/16 Or; Includes 237-6006 O-Ring |
| | | 237-6006 | | 1 | JOINT TORIQUE 15/32 ID x 5/64 |
| 6 | | 87434621 | | 1 | DISTRIBUTEUR Pressure Reducing, 4 Spool; See Figure 08-49 |
| 7 | | 218-5053 | | 4 | RACCORD 7/16 fl x Or; Includes 237-6004 O-Ring |
| | | 237-6004 | | 1 | JOINT TORIQUE 23/64 ID x 5/64 |
| 8 | | 87437633 | | 1 | TUYAUTERIE To Lower Extendable Dipper Port |
| 9 | | 87437635 | | 1 | TUYAUTERIE To Upper Extendable Dipper Port |
| 10 | | {87440835} | | 1 | Tube, To Lower Auxiliary Port |
| 11 | | {87440837} | | 1 | Tube, To Upper Auxiliary Port |

HTTP://WWW.MINNPARBACKHOEPARTS.COM



SYSTEME HYDRAULIQUE - COMMANDE PILOTE DE LEVIER DE COMMANDE

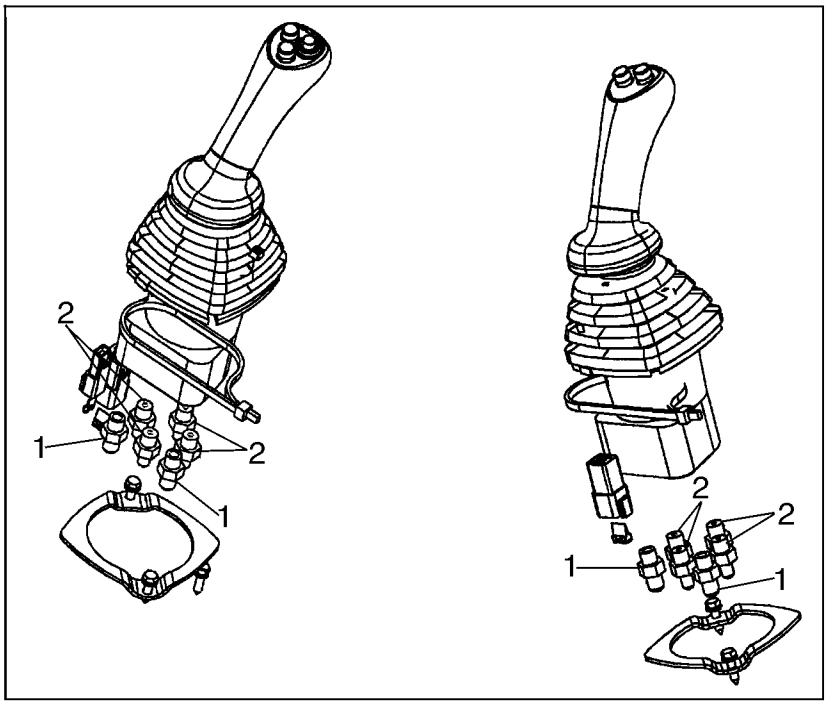


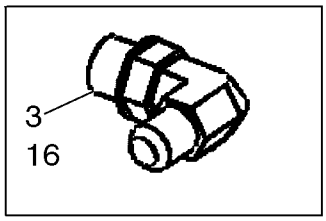


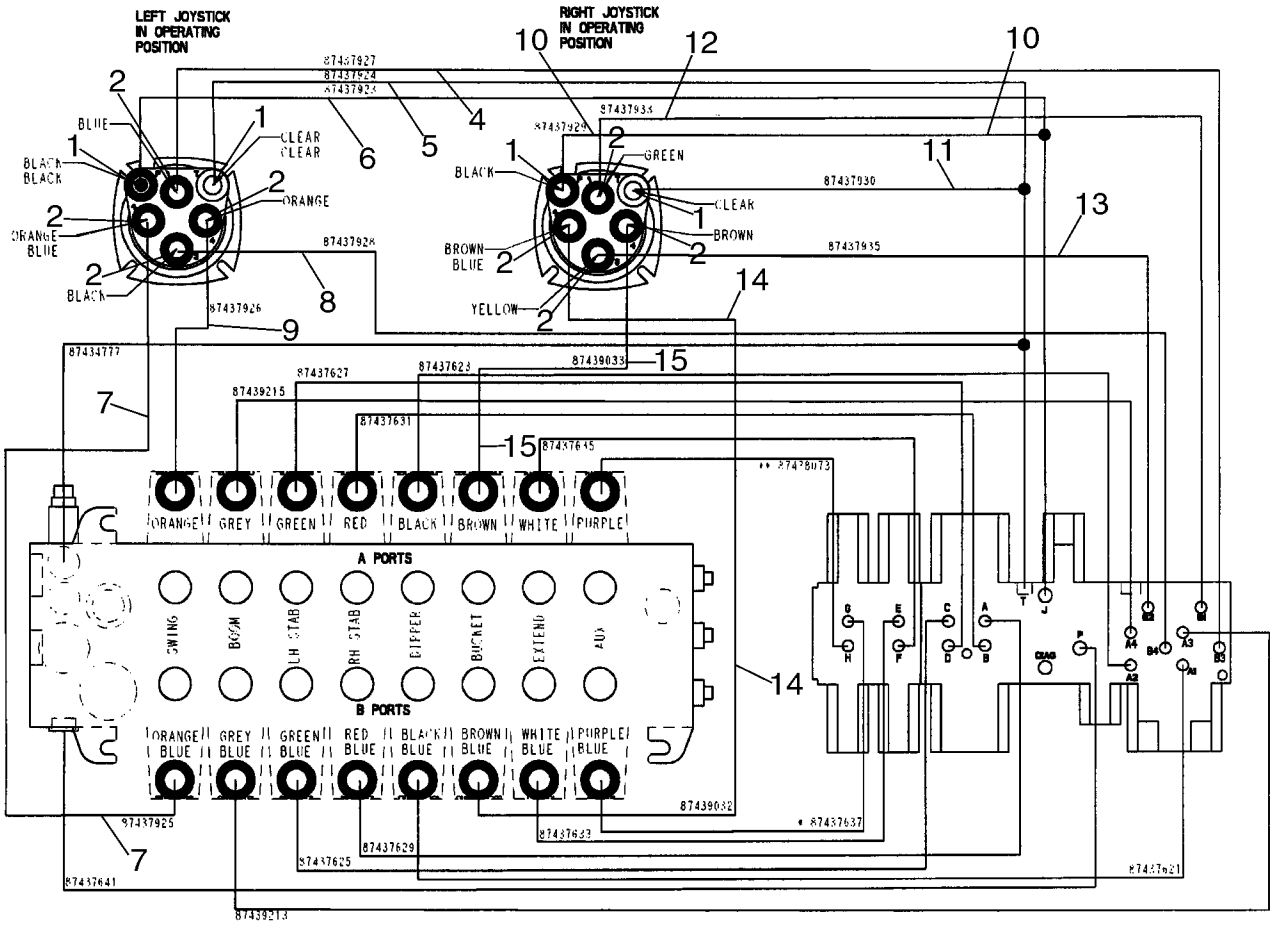


BS04A002

HTTP://WWW.MINNPARBACKHOEPARTS.COM



SYSTEME HYDRAULIQUE - COMMANDE PILOTE DE LEVIER DE COMMANDE

| REF | FN | PART NUMBER | YR/SN | QTY | DESCRIPTION |
|---|---|---|---|---|---|
| 1 | | 218-5057 | | 4 | RACCORD 9/16 fl x Or; Includes 237-6006 O-Ring |
| 2 | | 218-5089 | | 8 | CONNECTEUR 7/16 fl x 9/16 Or; Includes 237-6006 O-Ring |
| 3 | | 218-5105 | | 1 | COUDE 90 deg, 9/16 fl x Or; Includes 237-6006; Installs in Hydraulic Tank for Pilot Return |
| 4 | | 87437927 | | 1 | FLEXIBLE (ASSEMBLE) 1295 mm (51 in); Left-Hand Joystick No. 1 to Selector Valve B3 |
| 5 | | 87437924 | | 1 | FLEXIBLE (ASSEMBLE) 1000 mm (39-3/8 in); Left-Hand Joystick Tank to Pressure Reducing Valve T |
| 6 | | 87437923 | | 1 | FLEXIBLE (ASSEMBLE) 1035 mm (40-3/4 in); Left-Hand Joystick Pressure to Pressure Reducing Valve J |
| 7 | | 87437925 | | 1 | FLEXIBLE (ASSEMBLE) 1075 mm (42-3/8 in); Left-Hand Joystick No. 2 to Swing Port B |
| 8 | | 87437928 | | 1 | FLEXIBLE (ASSEMBLE) 1270 mm (50 in); Left-Hand Joystick No. 3 to Selector Valve B4 |
| | | 399004A1 | | 1 | GARANT Hose, 38.9 ID x 270 mm long; Used With Ref 4 - 8 |
| 9 | | 87437926 | | 1 | FLEXIBLE (ASSEMBLE) 825 mm (32-1/2 in); Left-Hand Joystick No. 4 to Swing Port A |
| 10 | | 87437929 | | 1 | FLEXIBLE (ASSEMBLE) 1105 mm (43-1/2 in); Right-Hand Joystick Pressure to Pressure Reducing Valve J |
| 11 | | 87437930 | | 1 | FLEXIBLE (ASSEMBLE) 1345 mm (53 in); Right-Hand Joystick Tank to Pressure Reducing Valve T |
| | | 191703A1 | | 1 | GAINE Hose Guard, 28 ID x 400 mm long; Used With Ref 10, 11 |
| 12 | | 87437933 | | 1 | FLEXIBLE (ASSEMBLE) 1185 mm (46-11/16 in); Right-Hand Joystick No. 1 to Selector Valve B1 |
| 13 | | 87437935 | | 1 | FLEXIBLE (ASSEMBLE) 1175 mm (46-5/16 in); Right-Hand Joystick No. 3 to Selector Valve B2 |
| 14 | | 87439032 | | 1 | FLEXIBLE (ASSEMBLE) 1090 mm (42-15/16 in); Right-Hand Joystick No. 2 to Bucket Port B |

HTTP://WWW.MINNPARBACKHOEPARTS.COM



SYSTEME HYDRAULIQUE - COMMANDE PILOTE DE LEVIER DE COMMANDE

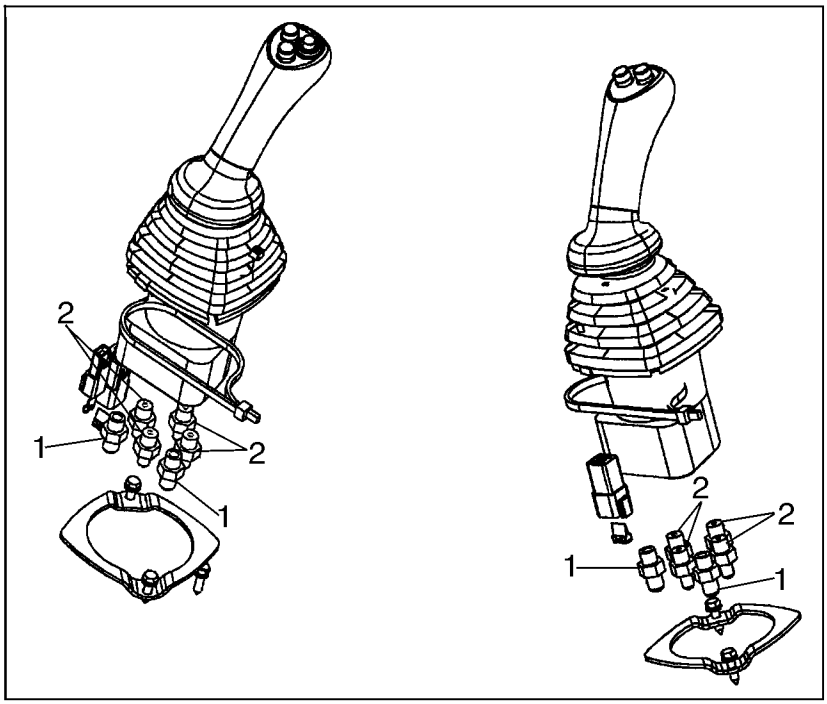


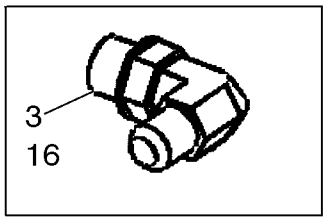


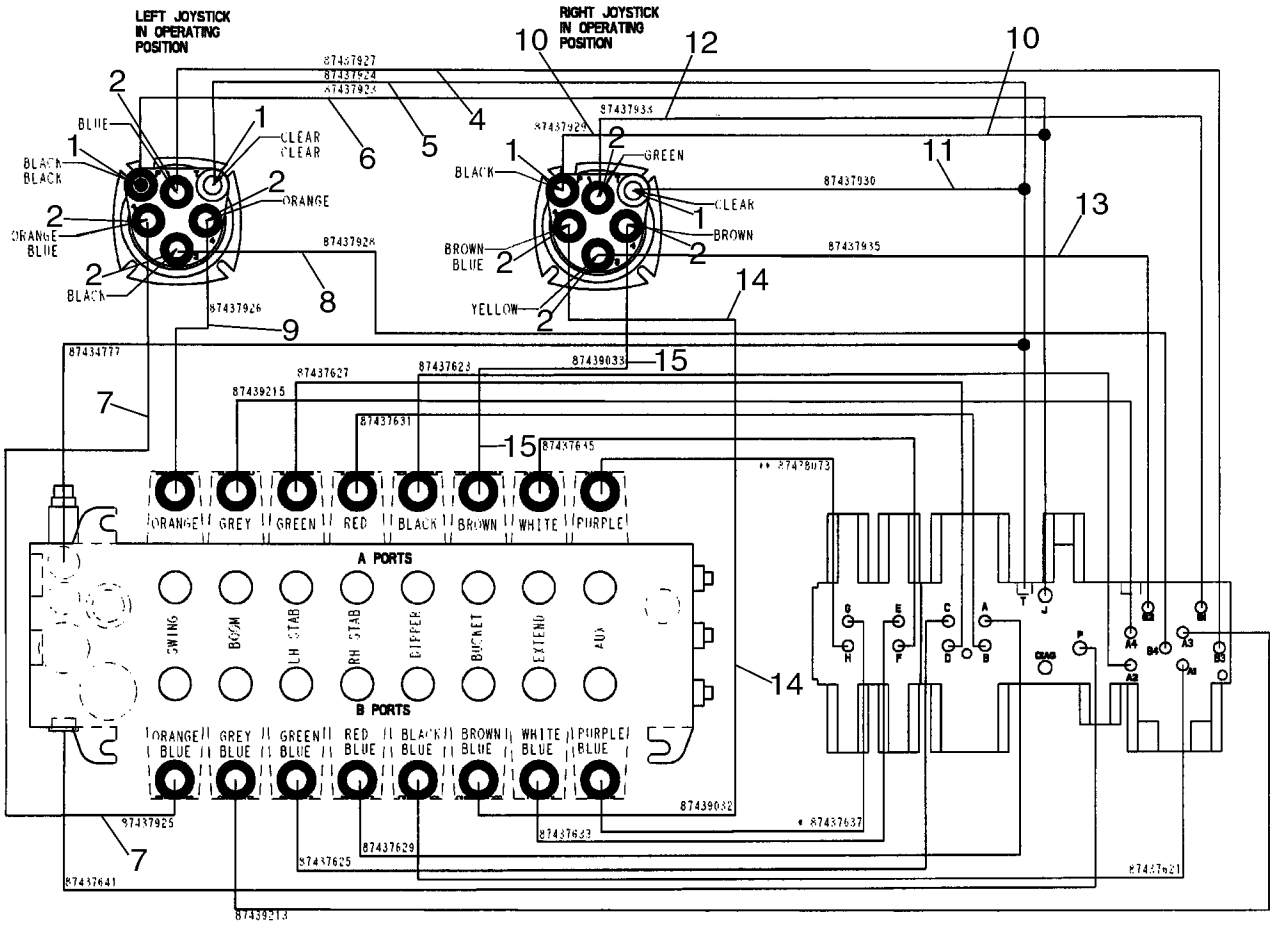


BS04A002

HTTP://WWW.MINNPARBACKHOEPARTS.COM



SYSTEME HYDRAULIQUE - COMMANDE PILOTE DE LEVIER DE COMMANDE

| REF | FN | PART NUMBER | YR/SN | QTY | DESCRIPTION |
|---|---|---|---|---|---|
| 15 | | 87439033 | | 1 | FLEXIBLE (ASSEMBLE) 915 mm (36-1/32 in); Right-Hand Joystick No. 4 to Bucket Port A |
| | | 191703A1 | | 1 | GAINE Hose Guard, 28 ID x 400 mm long; Used With Ref 12 - 15 |
| 16 | | 87435073 | | 1 | FLEXIBLE (ASSEMBLE) 1520 mm (59-7/8 in); Pressure Reducing Valve T to Tank |
| | | L18337 | | X | SANGLE Tie |

HTTP://WWW.MINNPARBACKHOEPARTS.COM



SYSTEME HYDRAULIQUE - COMMANDE PILOTE

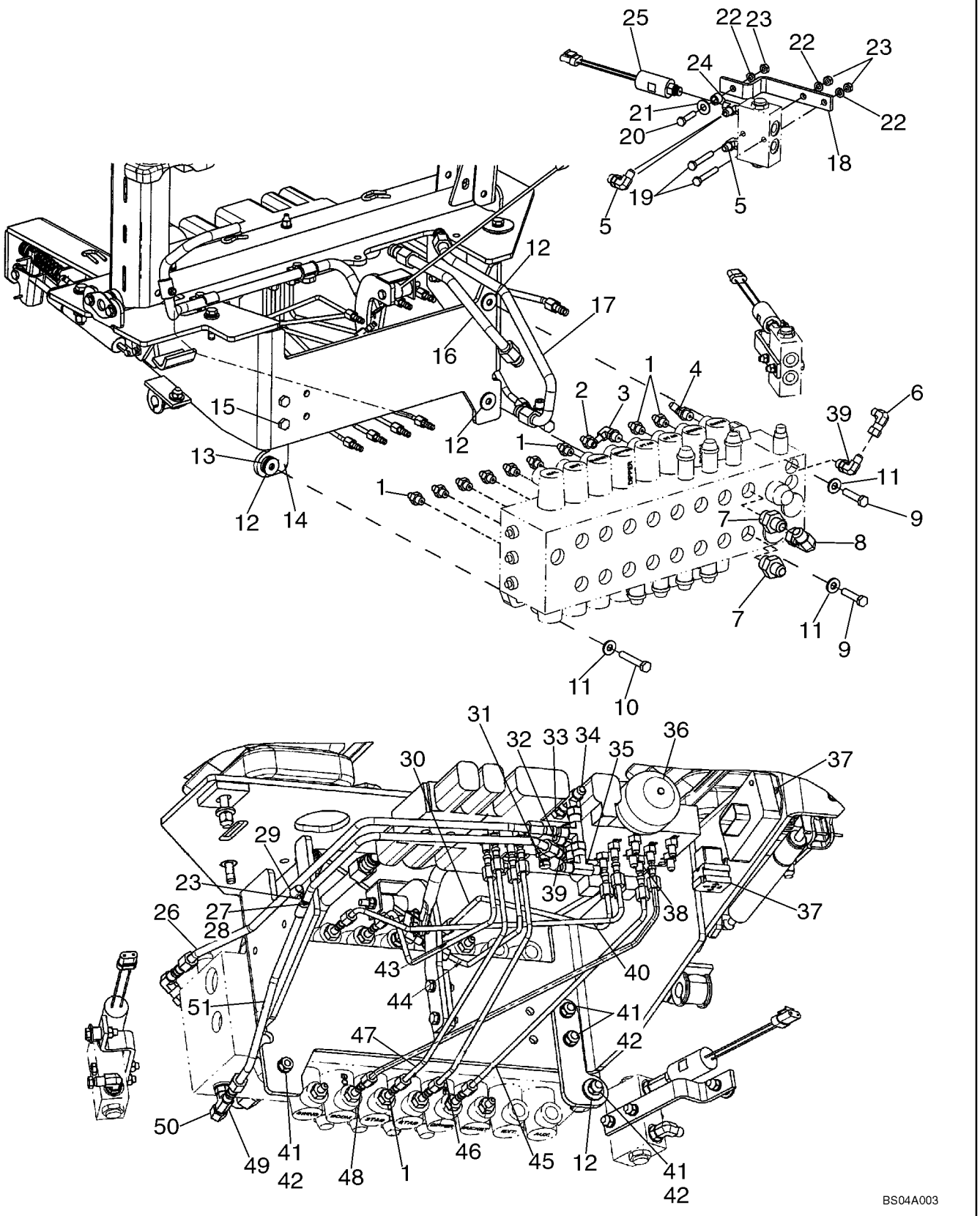

HTTP://WWW.MINNPARBACKHOEPARTS.COM



SYSTEME HYDRAULIQUE - COMMANDE PILOTE

| REF | FN | PART NUMBER | YR/SN | QTY | DESCRIPTION |
|---|---|---|---|---|---|
| 1 | | 218-5089 | | 9 | CONNECTEUR 7/16 fl x 9/16 Or; Includes 237-6006 O-Ring |
| 2 | | 87423401 | | 1 | RACCORD Special Orifice |
| 3 | | 218-5283 | | 1 | COUDE 90 deg, 7/16 fl x 9/16 Or; Includes 237-6006 O-Ring |
| 4 | | 218-5365 | | 1 | RACCORD ELBOW, 45 deg, 7/16 fl x 9/16 Or; Includes 237-6006 O-Ring |
| 5 | | 218-5105 | | 2-4 | COUDE 90 deg, 9/16 fl x Or; Includes 237-6006; 2 Used on Models With Auto Up; 4 Used on Models Without Auto Up |
| 6 | | 218-980 | | 1 | COUDE 90 deg, 9/16 fl x sw fl |
| 7 | | 218-5063 | | 2 | RACCORD 7/8 fl x 1-1/16 Or; Includes 237-6012 O-Ring |
| 8 | | 218-5232 | | 1 | COUDE 90 deg, 7/8 fl x sw fl |
| 9 | | 814-10045 | | 2 | VIS M10 x 45 |
| 10 | | 814-10060 | | 1 | VIS M10 x 60 |
| 11 | | 896-15010 | | 3 | RONDELLE 11 x 24 x 3 mm |
| 12 | | 496-41041 | | 5 | RONDELLE 13/32 x 1-1/8 x 1/8 |
| 13 | | D52276 | | 1 | ISOLATEUR Mount |
| 14 | | 87440712 | | 1 | EQUERRE Valve Mounting Bracket |
| 15 | | 614-10030 | | 2 | VIS M10 x 30 |
| 16 | | 87426488 | | 1 | TUYAUTERIE Swing Dampening Upper Port |
| 17 | | 87427948 | | 1 | TUYAUTERIE Swing Dampening Lower Port |
| 18 | | 87423034 | | 2 | EQUERRE |
| 19 | | 814-8055 | | 4 | VIS M8 x 55 |
| 20 | | 814-8035 | | 2 | VIS M8 x 35 |
| 21 | | 895-15010 | | 2 | RONDELLE 11 x 24 x 2 mm |
| 22 | | 892-11008 | | 6 | RONDELLE Lock, M8 |
| 23 | | 829-1408 | | 7 | ECROU M8 |
| 24 | | 87423033 | | 2 | TE Includes 237-6004 O-Ring, 237-6006 O-Ring; Models With Auto Up, If Used |
| 25 | | 87439163 | | 2 | PRESSOSTAT Includes 237-6004 O-Ring; Models With Auto Up, If Used |
| 26 | | 87434777 | | 1 | TUYAUTERIE Reducing Valve Tank to Backhoe Valve |
| 27 | | 895-11008 | | 1 | RONDELLE 9 x 16 x 1.6 mm |

HTTP://WWW.MINNPARBACKHOEPARTS.COM



SYSTEME HYDRAULIQUE - COMMANDE PILOTE

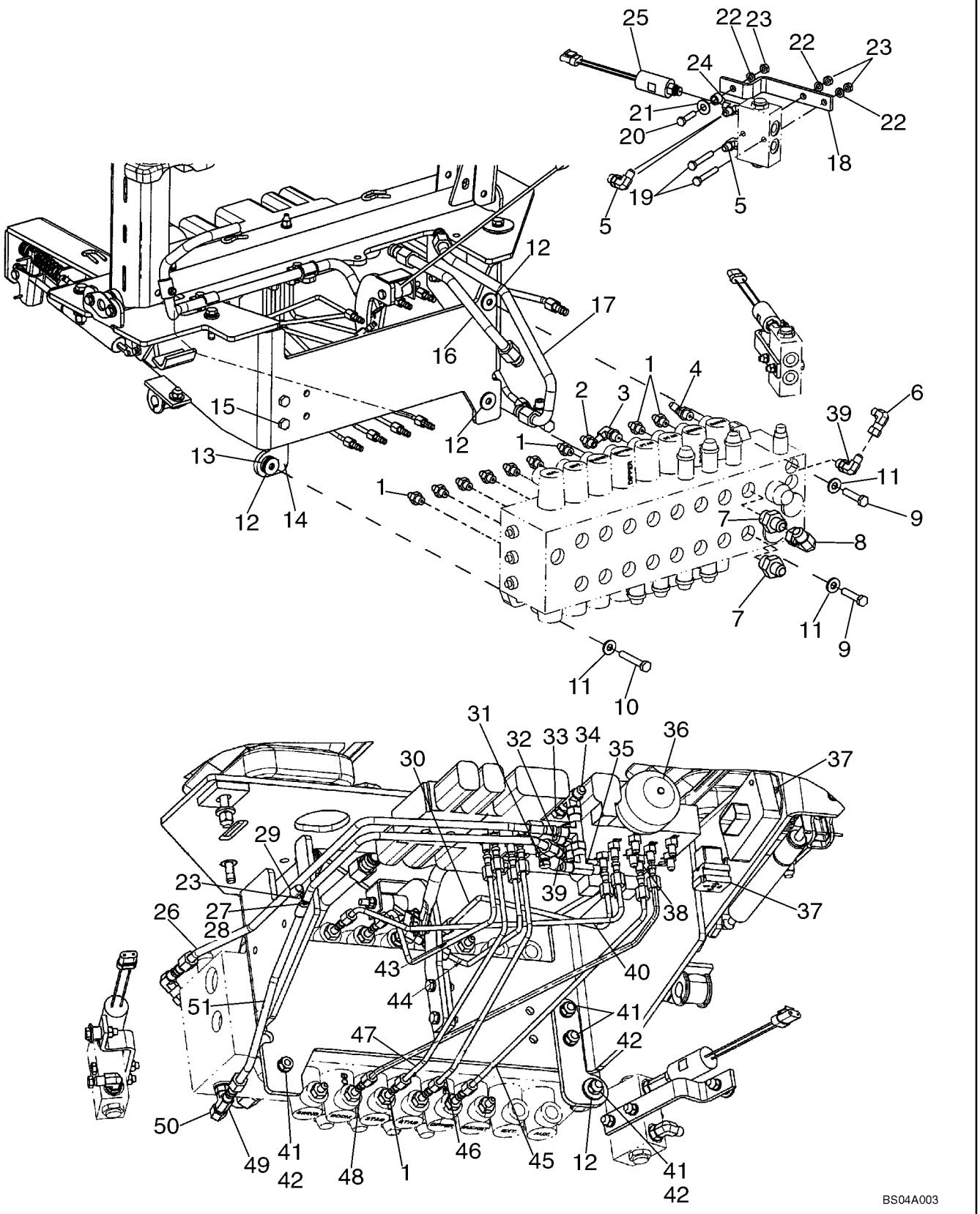

HTTP://WWW.MINNPARBACKHOEPARTS.COM



SYSTEME HYDRAULIQUE - COMMANDE PILOTE

| REF | FN | PART NUMBER | YR/SN | QTY | DESCRIPTION |
|---|---|---|---|---|---|
| 28 | | 614-8025 | | 1 | VIS M8 x 25 |
| 29 | | 515-2295 | | 2 | COLLIER |
| 30 | | 87437623 | | 1 | TUYAUTERIE Selector A2 to Dipper Port A |
| 31 | | 86596853 | | 1 | ACCOUPLEMANT RAP MALE Includes 9617873 O-Ring |
| 32 | | 218-5243 | | 1 | RACCORD TEE; Includes 237-6006 O-Ring |
| 33 | | 218-5057 | | 1 | RACCORD 9/16 fl x Or; Includes 237-6006 O-Ring |
| 34 | | 218-5222 | | 2 | RACCORD TEE |
| 35 | | 218-836 | | 1 | TE |
| 36 | | 87425225 | | 1 | ACCUMULATEUR Includes 237-6008 O-Ring |
| 37 | | 840-1416 | | 3 | VIS M4 x 16; See Figure 08-15 - 08-20 For Pilot Control Power Supply Control Unit; See Figure 04-20 For Relay |
| 38 | | 218-5053 | | 12 | RACCORD 7/16 fl x Or; Includes 237-6004 O-Ring |
| 39 | | 218-5105 | | 2 | COUDE 90 deg, 9/16 fl x Or; Includes 237-6006 O-Ring |
| 40 | | 87439215 | | 1 | TUYAUTERIE Selector A4 to Boom Port A |
| 41 | | 829-1410 | | 5 | ECROU M10 |
| 42 | | 892-11010 | | 4 | RONDELLE FREIN M10 |
| 43 | | 87437627 | | 1 | TUYAUTERIE Reducing Valve to Left-Hand Stabilizer Port A |
| 44 | | 87437631 | | 1 | TUYAUTERIE Reducing Valve to Right-Hand Stabilizer Port A |
| 45 | | 87437621 | | 1 | TUYAUTERIE Selector A1 to Dipper Port B |
| 46 | | 87437629 | | 1 | TUYAUTERIE Reducing Valve to Right-Hand Stabilizer Port B |
| 47 | | 87437625 | | 1 | TUYAUTERIE Reducing Valve to Left-Hand Stabilizer Port B |
| 48 | | 87439213 | | 1 | TUYAUTERIE Selector A3 to Boom Port B |
| 49 | | 218-5182 | | 1 | TE Includes 237-6006 O-Ring |
| 50 | | 218-754 | | 1 | CHAPEAU Hex, 9/16 |
| 51 | | 87437641 | | 1 | TUYAUTERIE Reducing Valve Pressure to Backhoe Valve |

HTTP://WWW.MINNPARBACKHOEPARTS.COM

| 08-23 | | p1 | 01/04 |
|---|---|---|---|

SYSTEME HYDRAULIQUE - CIRCUIT AUXILIAIRE DE LA PELLE RETRO

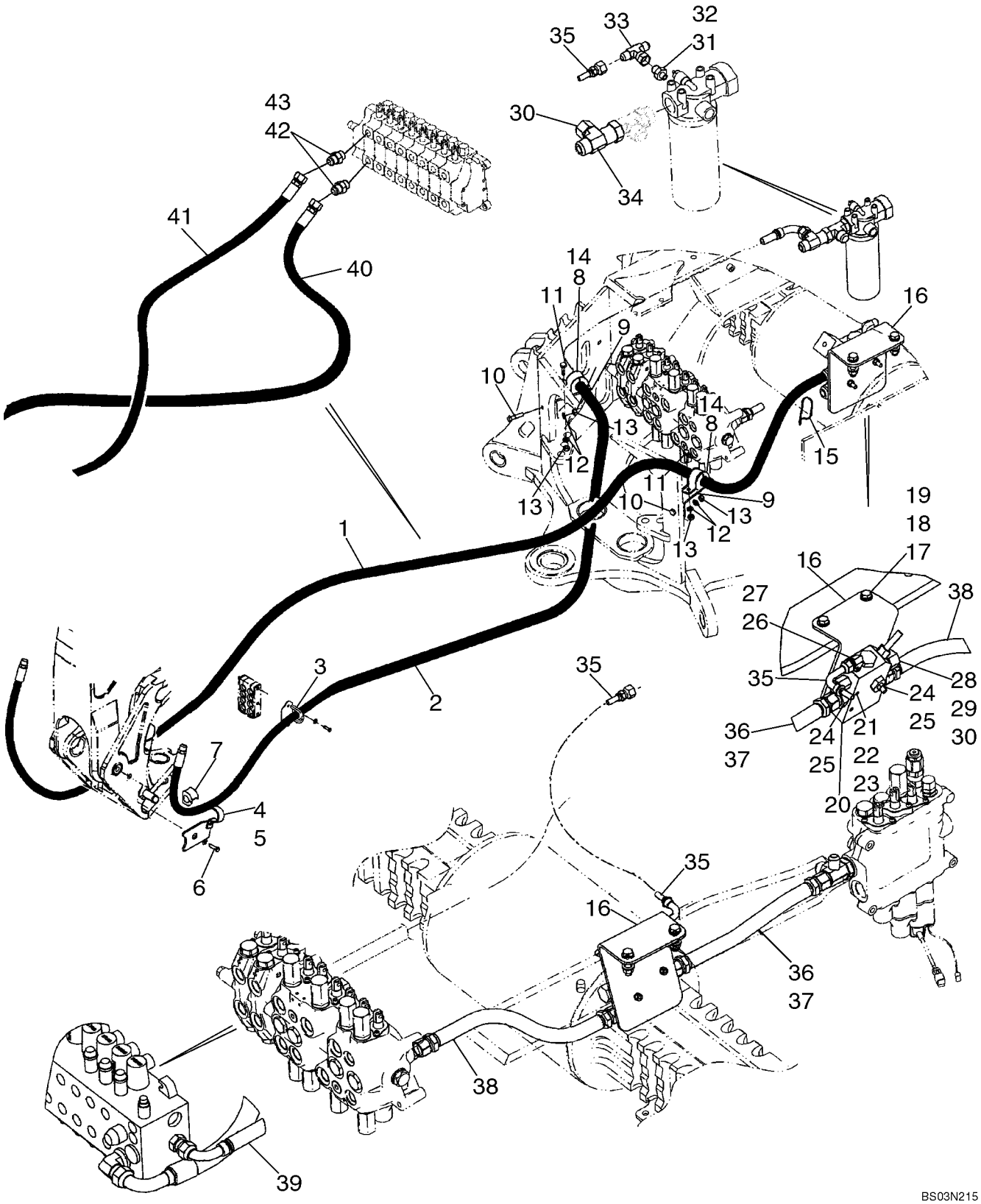

HTTP://WWW.MINNPARBACKHOEPARTS.COM



SYSTEME HYDRAULIQUE - CIRCUIT AUXILIAIRE DE LA PELLE RETRO

| REF | FN | PART NUMBER | YR/SN | QTY | DESCRIPTION |
|---|---|---|---|---|---|
| 1 | | {87430972} | | 1 | 2467 mm (97-1/8 in) Hose; Models With Uni-Directional |
| 2 | | {87429387} | | 1 | 2890 mm (113-13/16 in) Hose; Models With Uni-Directional |
| 3 | | 87431630 | | 2 | PATTE FIXATION |
| 4 | | 329799A1 | | 1 | SUPPORT Left-Hand |
| 5 | | 329797A1 | | 1 | SUPPORT Right-Hand |
| 6 | | 604-20045 | | 2 | BOULON M20 x 45 |
| 7 | | 144477A1 | | 2 | SILENTBLOC |
| 8 | | 144479A1 | | 2 | COLLIER |
| 9 | | 413778A1 | | 2 | PATTE FIXATION |
| 10 | | 814-10040 | | 2 | VIS M10 x 40 |
| 11 | | 614-10025 | | 2 | BOULON M10 x 25 |
| 12 | | 892-11010 | | 4 | RONDELLE FREIN M10 |
| 13 | | 829-1410 | | 4 | ECROU M10 |
| 14 | | 144477A1 | | 2 | SILENTBLOC |
| 15 | | L18337 | | 1 | SANGLE |
| 16 | | {87440694} | | 1 | Bracket |
| 17 | | 814-12050 | | 2 | VIS M12 x 50 |
| 18 | | 896-11012 | | 4 | RONDELLE |
| 19 | | 829-1412 | | 2 | ECROU M12 |
| 20 | | {87421836} | | 1 | Auxiliary Uni-Directional Valve; Component Parts Not Available At Time Of Printing |
| 21 | | 814-8070 | | 2 | VIS M8 x 70 |
| 22 | | 892-11008 | | 2 | RONDELLE Lock, M8 |
| 23 | | 829-1408 | | 2 | ECROU M8 |
| 24 | | 218-5050 | | 2 | RACCORD 1-5/16 fl x 1-1/16 Or; Incl. Ref 25 |
| 25 | | 237-6012 | | 1 | JOINT TORIQUE 59/64 ID x 7/64 |
| 26 | | 218-5280 | | 1 | RACCORD ELBOW, 90 deg, 3/4 fl x 9/16 Or; Incl. Ref 27 |
| 27 | | 237-6006 | | 1 | JOINT TORIQUE 15/32 ID x 5/64 |
| 28 | | 218-5064 | | 1 | RACCORD 1-1/16 fl x Or; Incl. Ref 29 |
| 29 | | 237-6012 | | 1 | JOINT TORIQUE 59/64 ID x 7/64 |
| 30 | | 218-335 | | 2 | CHAPEAU Hex, 1-1/16 |
| 31 | | 218-5351 | | 1 | RACCORD 3/4 fl x 9/16 Or; Incl. Ref 32 |
| 32 | | 237-6006 | | 1 | JOINT TORIQUE 15/32 ID x 5/64 |

HTTP://WWW.MINNPARBACKHOEPARTS.COM



SYSTEME HYDRAULIQUE - CIRCUIT AUXILIAIRE DE LA PELLE RETRO

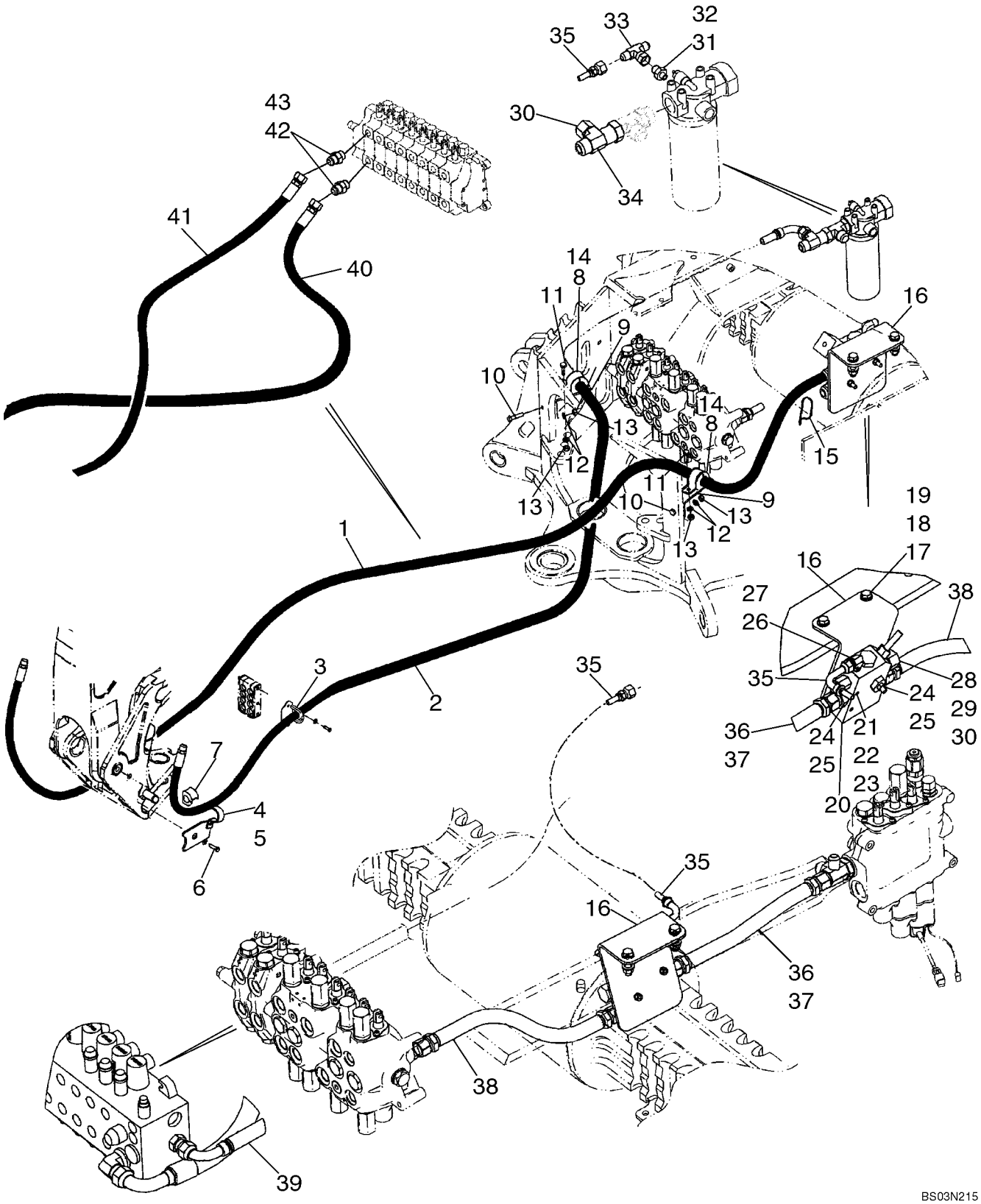

HTTP://WWW.MINNPARBACKHOEPARTS.COM



SYSTEME HYDRAULIQUE - CIRCUIT AUXILIAIRE DE LA PELLE RETRO

| REF | FN | PART NUMBER | YR/SN | QTY | DESCRIPTION |
|---|---|---|---|---|---|
| 33 | | 218-840 | | 1 | TE 3/4 sw str br x fl x fl |
| 34 | | 218-5216 | | 1 | RACCORD Tee, 1-1/16 fl br x 15/16 fl x adj str thrd |
| 35 | | {87422948} | | 1 | 930 mm (36-5/8 in) |
| 36 | | 87437232 | | 1 | FLEXIBLE (ASSEMBLE) 420 mm (16-9/16 in); Two Spool Loader Valve |
| 37 | | 87437231 | | 1 | FLEXIBLE (ASSEMBLE) 370 mm (14-19/32 in); Three Spool Loader Valve |
| 38 | | 87422977 | | 1 | FLEXIBLE (ASSEMBLE) 465 mm (18-5/16 in); Power Beyond; Models Without Pilot Controls |
| 39 | | {87428814} | | 1 | 458 mm (18-1/32 in); Power Beyond; Models With Pilot Controls |
| 40 | | 87423969 | | 1 | FLEXIBLE (ASSEMBLE) 1500 mm (59-1/16 in); Models With Bi-Directional |
| 41 | | 87423970 | | 1 | FLEXIBLE (ASSEMBLE) 1725 mm (67-15/16 in); Models With Bi Directional |
| 42 | | 218-5064 | | 2 | RACCORD 1-1/16 fl x Or; Incl. Ref 43 |
| 43 | | 237-6012 | | 1 | JOINT TORIQUE 59/64 ID x 7/64 |

HTTP://WWW.MINNPARBACKHOEPARTS.COM



SYSTEME HYDRAULIQUE - CIRCUIT AUXILIAIRE DE LA PELLE RETRO

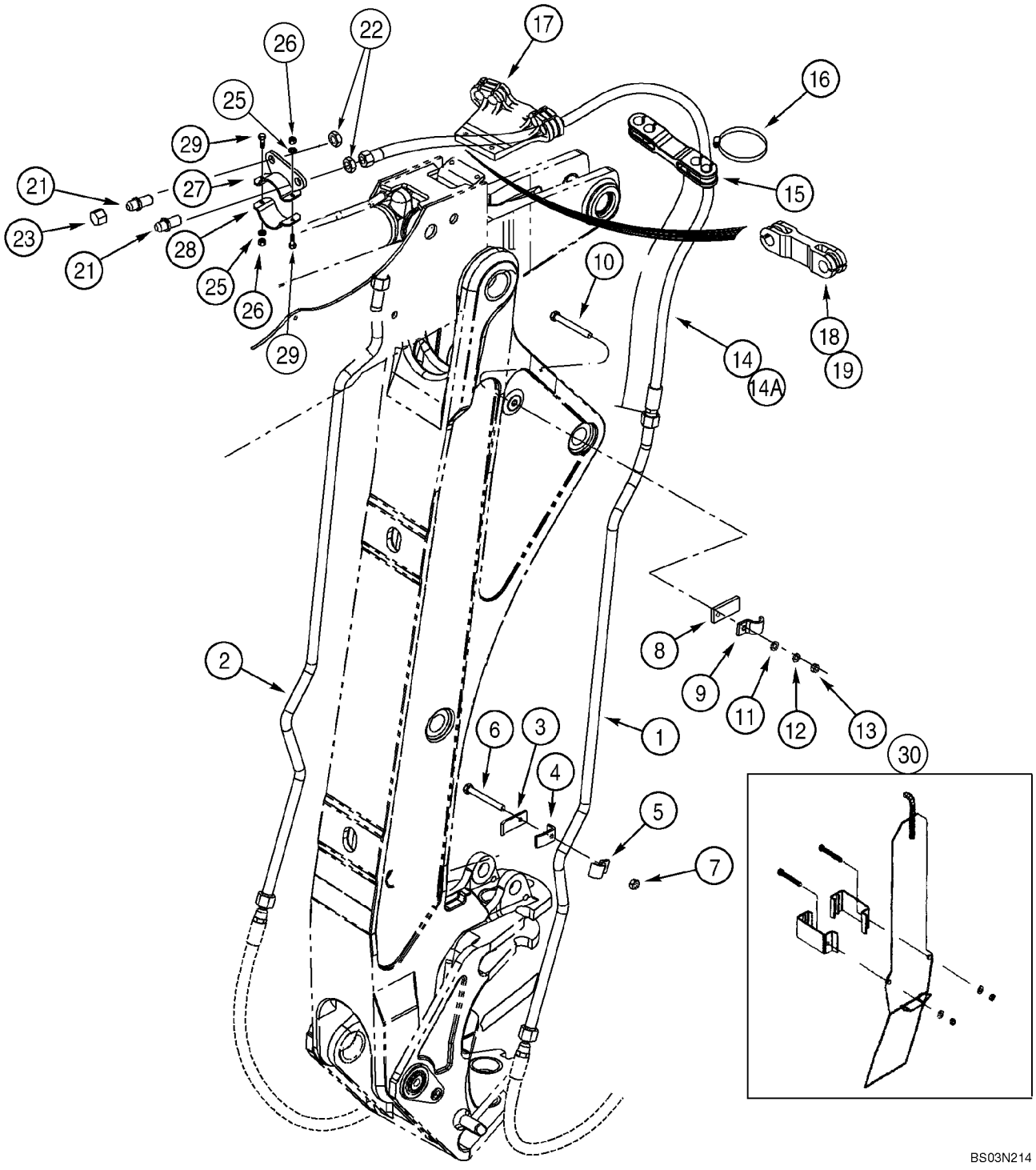

HTTP://WWW.MINNPARBACKHOEPARTS.COM



SYSTEME HYDRAULIQUE - CIRCUIT AUXILIAIRE DE LA PELLE RETRO

| REF | FN | PART NUMBER | YR/SN | QTY | DESCRIPTION |
|---|---|---|---|---|---|
| | | REF | | | NOTICE AT BOOM AND DIPPER |
| 1 | | 243300A1 | | 1 | TUYAU Tube |
| 2 | | 243404A1 | | 1 | TUYAU Tube |
| 3 | | D149309 | | 2 | COLLIER |
| 4 | | 243298A1 | | 2 | COLLIER |
| 5 | | 242459A1 | | 2 | BRIDE Clamp |
| 6 | | 814-10060 | | 2 | VIS M10 x 60 |
| 7 | | 829-1410 | | 2 | ECROU M10; 10.9 |
| 8 | | 243398A1 | | 2 | SUPPORT |
| 9 | | 242459A1 | | 2 | BRIDE Clamp |
| 10 | | 814-10040 | | 2 | VIS M10 x 40; Not Required With Standard Dipper |
| 11 | | 895-11010 | | 2 | RONDELLE 11 x 21 x 2 mm |
| 12 | | 892-11010 | | 2 | RONDELLE FREIN M10 |
| 13 | | 829-1410 | | 2 | ECROU M10; 10.9 |
| 14 | | 243679A2 | | 2 | FLEXIBLE 2665 mm (104-15/16 in); Models With Extendable Dipper |
| 14A | | 256210A2 | | 2 | FLEXIBLE 1285 mm (50-19/32 in); Models Without Extendable Dipper |
| 15 | | 246158A1 | | 1 | BRIDE Models Without Extendable Dipper; Used With (2) 214-3156 Clamps |
| 16 | | 214-3156 | | 2 | COLLIER 2-3/4 x 3-5/8 |
| 17 | | 246151A1 | | 1 | SUPPORT Models With Extendable Dipper; Used With (2) 214-3156 Clamps |
| 18 | | 103670A1 | | 2 | BRIDE, FLEXIBLE Rubber |
| 19 | | 214-3132 | | 4 | COLLIER |
| 21 | | 218-676 | | 2 | UNION 1-1/16 fl x bkhd fl |
| 22 | | 218-1256 | | 2 | CONTRE-ECROU 1-1/16 |
| 23 | | 218-335 | | 2 | CHAPEAU 1/16 |
| 25 | | 896-11010 | | 2 | RONDELLE 11 x 21 x 2,5 mm |
| 26 | | 832-10410 | | 2 | ECROU M10 |
| 27 | | 314319A1 | | 1 | PONTET |
| 28 | | 314320A1 | | 1 | PONTET |
| 29 | | 614-10040 | | 2 | VIS M10 x 40 |
| 30 | | 317988A1 | | 1 | GARANT Boom; Component Parts Not Serviced Separately |

HTTP://WWW.MINNPARBACKHOEPARTS.COM



SYSTEME HYDRAULIQUE - SYSTEME ANTI-TANGAGE

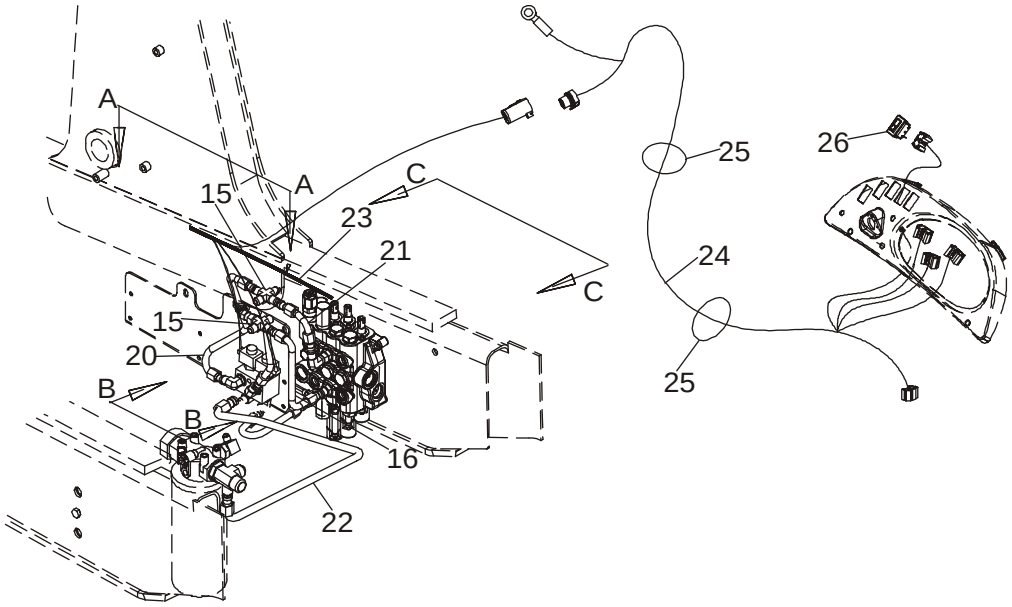


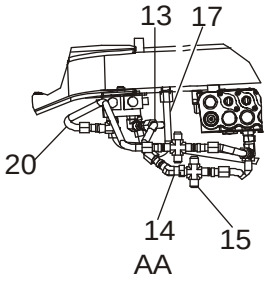


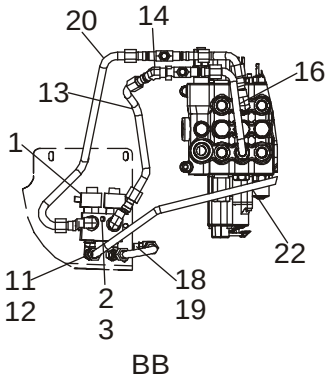


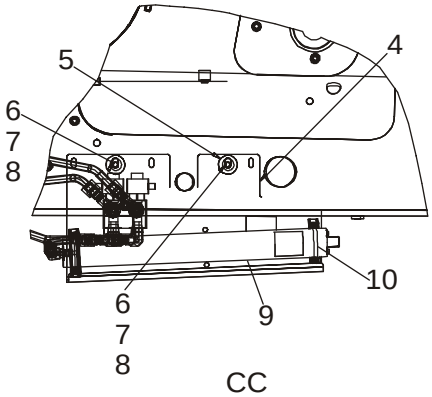


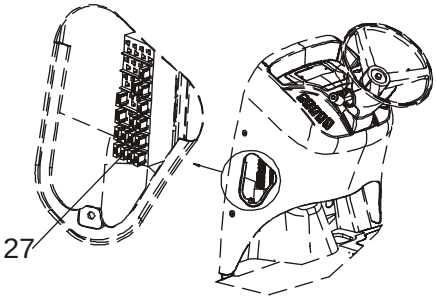


BS03M139

HTTP://WWW.MINNPARBACKHOEPARTS.COM



SYSTEME HYDRAULIQUE - SYSTEME ANTI-TANGAGE

| REF | FN | PART NUMBER | YR/SN | QTY | DESCRIPTION |
|---|---|---|---|---|---|
| | | REF | | | NOTICE RIDE CONTROL HYDRAULIC AND ELECTRICAL CIRCUIT |
| 1 | | 87433240 | | 1 | ELECTRO-VALVE Ride Control; Component Parts Not Available At Time Of Printing |
| 2 | | 814-10080 | | 1 | VIS M10 x 80 |
| 3 | | 895-11010 | | 1 | RONDELLE 11 x 21 x 2 mm |
| 4 | | 87421213 | | 1 | EQUERRE Plate |
| 5 | | 87423067 | | 2 | ENTRETOISE |
| 6 | | 814-10040 | | 2 | VIS M10 x 40 |
| 7 | | 895-15010 | | 2 | RONDELLE 11 x 24 x 2 mm |
| 8 | | 829-1410 | | 2 | ECROU M10 |
| 9 | | 448284A1 | | 1 | ACCUMULATEUR Ride Control; Component Parts Not Serviced Separately; Used In Production, For Service, Order 234412A1 Accumulator |
| 9 | | 234412A1 | | 1 | ACCUMULATEUR Ride Control; See Figure 08-56 |
| 10 | | A13240 | | 2 | COLLIER Two Piece; Includes Hardware |
| 11 | | 218-5117 | | 4 | RACCORD ELBOW, 90 deg, 7/8 fl x 3/4 adj Or; Incl. Ref 12 |
| 12 | | 237-6008 | | 1 | JOINT TORIQUE 41/64 ID x 3/32 |
| 13 | | 87421938 | | 1 | TUYAUTERIE Solenoid Valve to Loader Control Valve Lower Lift Section Port |
| 14 | | 218-5174 | | 1 | RACCORD ELBOW, 45 deg, 7/8 fl x sw str thrd |
| 15 | | 218-655 | | 2 | RACCORD TEE |
| 16 | | REF | | 1 | NOTICE TUBE, For Tube and Fitting At Loader Valve, See Figure 08-04 |
| 17 | | 87420696 | | 1 | TUYAUTERIE Accumulator to Solenoid Valve |
| 18 | | 218-5600 | | 1 | RACCORD ELBOW, 90 deg, 7/8 fl x 3/4 Or; Incl. Ref 19 |
| 19 | | 237-6008 | | 1 | JOINT TORIQUE 41/64 ID x 3/32 |
| 20 | | 87435923 | | 1 | TUYAUTERIE Solenoid Valve To Loader Control Valve Upper Lift Section Port |
| 21 | | REF | | 1 | NOTICE TUBE, For Tube and Fitting At Loader Valve, See Figure 08-04 |
| 22 | | 87437265 | | 1 | TUYAUTERIE Solenoid Valve To Filter |
| 23 | | 87436675 | | 1 | FAISCEAU COMPLET Chassis Options Harness; Includes (4) L71879 Diodes |

HTTP://WWW.MINNPARBACKHOEPARTS.COM



SYSTEME HYDRAULIQUE - SYSTEME ANTI-TANGAGE

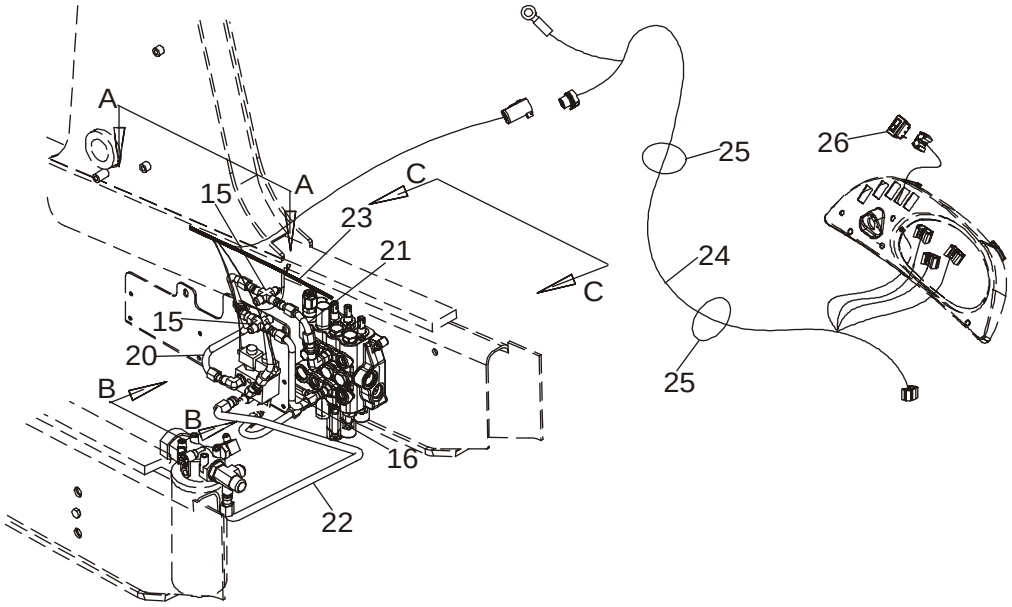


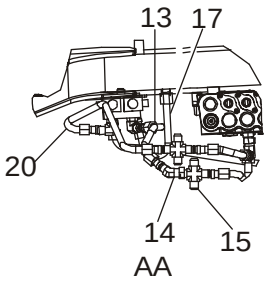


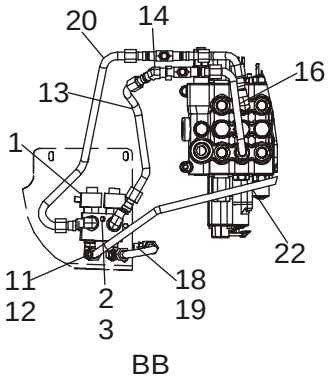


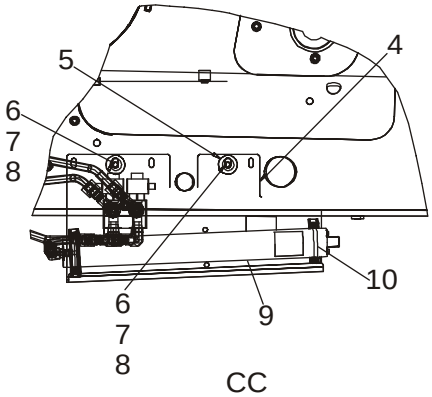


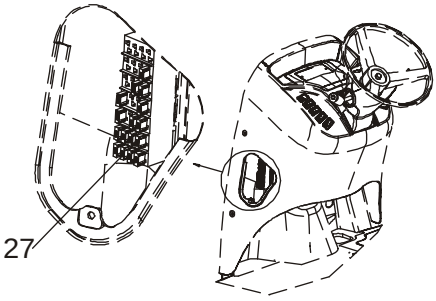


BS03M139

HTTP://WWW.MINNPARBACKHOEPARTS.COM



SYSTEME HYDRAULIQUE - SYSTEME ANTI-TANGAGE

| REF | FN | PART NUMBER | YR/SN | QTY | DESCRIPTION |
|---|---|---|---|---|---|
| 24 | | 87419256 | | 1 | FAISCEAU COMPLET Side Console Options Harness; Includes (1) L71879 Diode; Attaches to Side Console Harness and Main Chassis Options Harness |
| 25 | | L18337 | | 2 | SANGLE Tie |
| 26 | | 235002A1 | | 1 | CONTACTEUR Ride Control |
| 27 | | 121413A1 | | 1 | FUSIBLE 15 amp, Mini, Blue |

HTTP://WWW.MINNPARBACKHOEPARTS.COM



SYSTEME HYDRAULIQUE - COUPLEUR, OUTIL DE CHARGEUSE, DE SÉCURITÉ

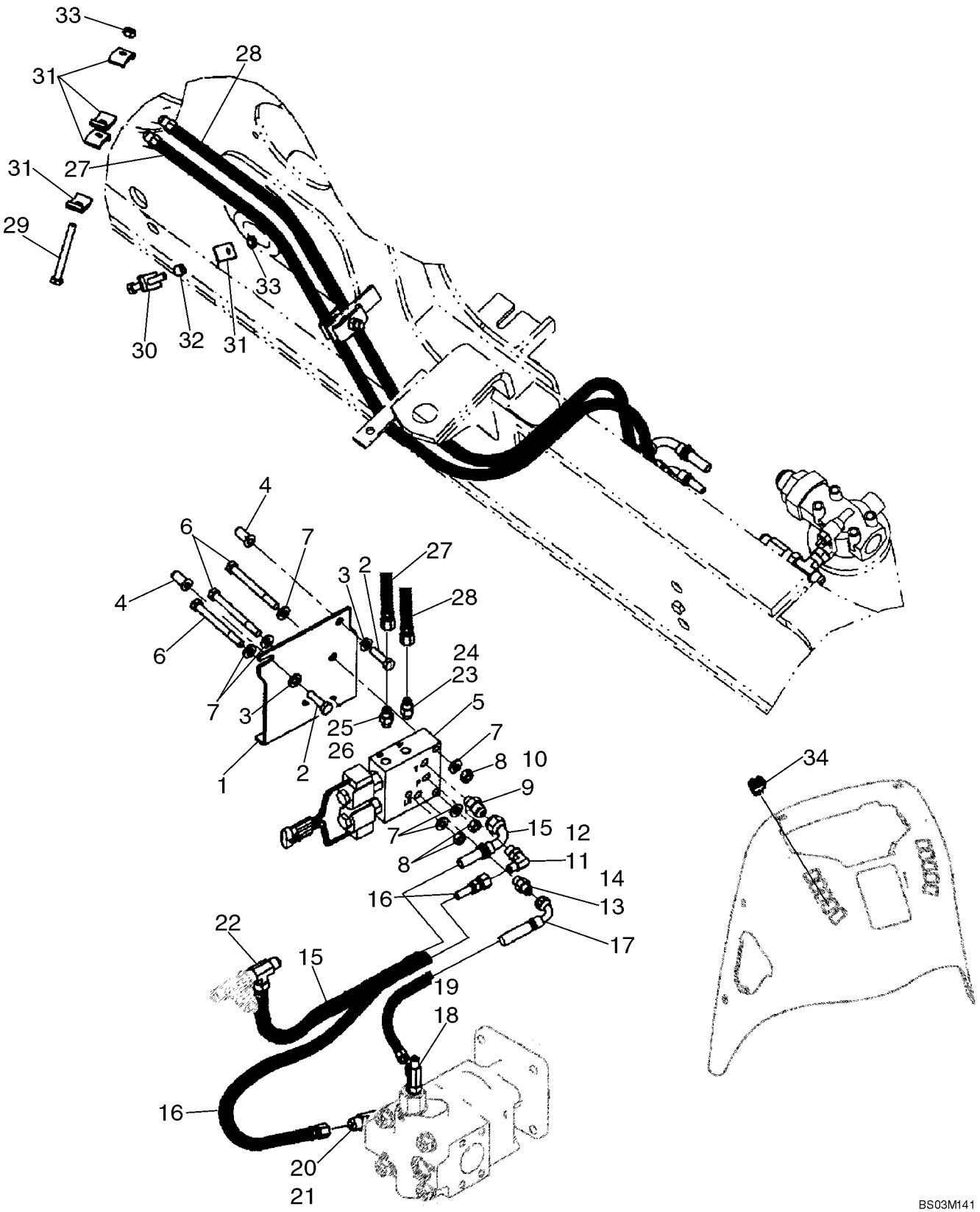

HTTP://WWW.MINNPARBACKHOEPARTS.COM



SYSTEME HYDRAULIQUE - COUPLEUR, OUTIL DE CHARGEUSE, DE SÉCURITÉ

| REF | FN | PART NUMBER | YR/SN | QTY | DESCRIPTION |
|---|---|---|---|---|---|
| 1 | | 87437263 | | 1 | EQUERRE Coupler Valve Mounting |
| 2 | | 614-10035 | | 2 | VIS M10 x 35 |
| 3 | | 896-11010 | | 2 | RONDELLE |
| 4 | | 87417721 | | 2 | INSERT FILETE M10 |
| 5 | | 87435909 | | 1 | ELECTRO-VALVE Coupler; Loader Tool; See Figure 08-28 |
| 6 | | 814-10060 | | 3 | VIS M10 x 60 |
| 7 | | 896-11010 | | 6 | RONDELLE |
| 8 | | 829-1410 | | 3 | ECROU M10 |
| 9 | | 218-5351 | | 1 | RACCORD 3/4 fl x 9/16 Or; Incl. Ref 10 |
| 10 | | 237-6006 | | 1 | JOINT TORIQUE 15/32 ID x 5/64 |
| 11 | | 218-5105 | | 1 | COUDE 90 deg, 9/16 fl x Or; Incl. Ref 12 |
| 12 | | 237-6006 | | 1 | JOINT TORIQUE 15/32 ID x 5/64 |
| 13 | | 218-5057 | | 1 | RACCORD 9/16 fl x Or; Incl. Ref 14 |
| 14 | | 237-6006 | | 1 | JOINT TORIQUE 15/32 ID x 5/64 |
| 15 | | 87434265 | | 1 | FLEXIBLE (ASSEMBLE) 500 mm (19-11/16 in); Coupler Valve to Filter |
| 16 | | 87434262 | | 1 | FLEXIBLE (ASSEMBLE) 830 mm (32-11/16 in); Pump to Coupler Pressure Port |
| 17 | | 87434261 | | 1 | FLEXIBLE (ASSEMBLE) 600 mm (23-5/8 in); Pump to Coupler Valve Load Sense Port |
| 18 | | 282428A1 | | 1 | CLAPET TEE, Check; Incl. Ref 19 |
| 19 | | 237-6006 | | 1 | JOINT TORIQUE 15/32 ID x 5/64 |
| 20 | | 218-5198 | | 1 | TE 7/8 adj Or br x 3/4 fl x fl; Incl. Ref 21; Replaces Standard Steering Fitting |
| 21 | | 237-6010 | | 1 | JOINT TORIQUE 3/4 ID x 3/32 |
| 22 | | 218-845 | | 1 | TE 3/4 fl br x fl x adj str thrd; Attaches to Tee At Back Of Filter |
| 23 | | 218-5053 | | 1 | RACCORD 7/16 fl x Or; Incl. Ref 24 |
| 24 | | 237-6004 | | 1 | JOINT TORIQUE 23/64 ID x 5/64 |
| 25 | | 218-5056 | | 1 | RACCORD 1/2 fl x Or; Incl. Ref 26 |
| 26 | | 237-6005 | | 1 | JOINT TORIQUE 13/32 ID x 5/64 |
| 27 | | 87427539 | | 1 | FLEXIBLE (ASSEMBLE) 1815 mm (71-1/2 in); B Port |
| 28 | | 87427537 | | 1 | FLEXIBLE (ASSEMBLE) 1815 mm (71-1/2 in); A Port |

HTTP://WWW.MINNPARBACKHOEPARTS.COM



SYSTEME HYDRAULIQUE - COUPLEUR, OUTIL DE CHARGEUSE, DE SÉCURITÉ

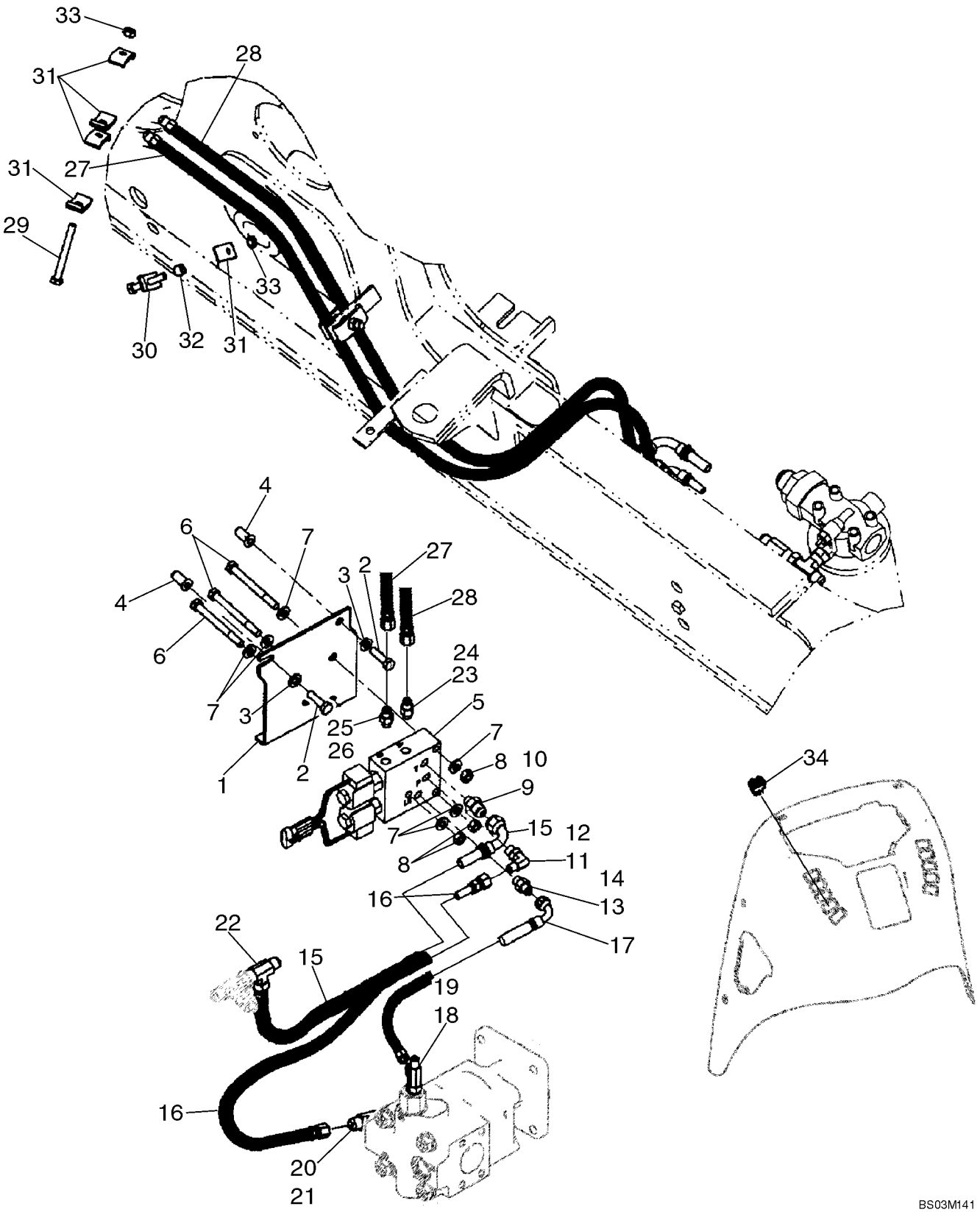

HTTP://WWW.MINNPARBACKHOEPARTS.COM



SYSTEME HYDRAULIQUE - COUPLEUR, OUTIL DE CHARGEUSE, DE SÉCURITÉ

| REF | FN | PART NUMBER | YR/SN | QTY | DESCRIPTION |
|---|---|---|---|---|---|
| 29 | | 814-10080 | | 1 | VIS M10 x 80 |
| 30 | | 814-10070 | | 1 | VIS M10 x 70 |
| 31 | | D138055 | | 6 | COLLIER |
| 32 | | 120303A1 | | 1 | ENTRETOISE |
| 33 | | 832-10410 | | 2 | ECROU M10 |
| 34 | | 398675A2 | | 1 | CONTACTEUR Loader Tool Quick Coupler |

HTTP://WWW.MINNPARBACKHOEPARTS.COM



SYSTEME HYDRAULIQUE - COUPLEUR, OUTIL DE CHARGEUSE, DE SÉCURITÉ

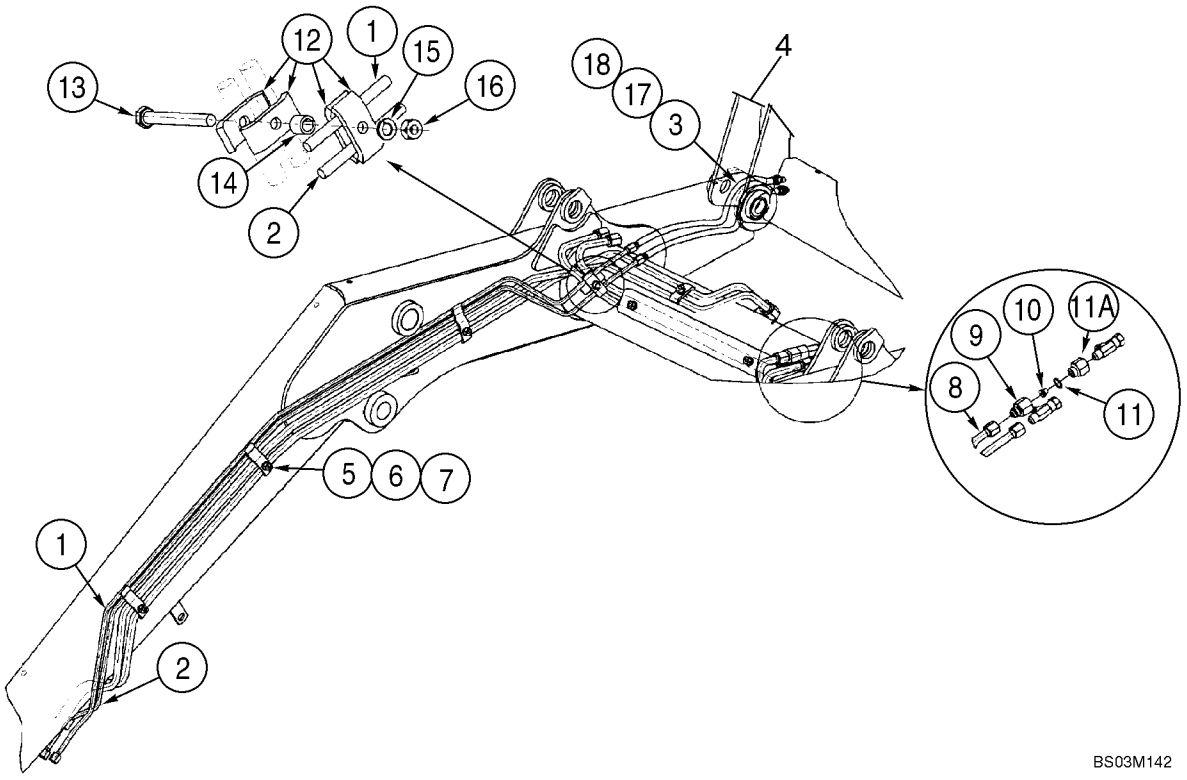

HTTP://WWW.MINNPARBACKHOEPARTS.COM



SYSTEME HYDRAULIQUE - COUPLEUR, OUTIL DE CHARGEUSE, DE SÉCURITÉ

| REF | FN | PART NUMBER | YR/SN | QTY | DESCRIPTION |
|---|---|---|---|---|---|
| | | REF | | | NOTICE AT LOADER LIFT FRAME |
| 1 | | 308255A1 | | 1 | TUYAUTERIE |
| 2 | | 308254A1 | | 1 | TUYAUTERIE |
| 3 | | 300996A3 | | 2 | FLEXIBLE (ASSEMBLE) 772 mm (30-13/32 in) |
| 4 | | REF | | 1 | NOTICE Coupler, Hydr., Loader Tool Quick Coupler; For Complete Assembly, See Figure 09-10; Order From Machinery Price List; Use Standard Loader Bucket Pins To Mount Coupler |
| 5 | | 302820A2 | | 3 | COLLIER |
| 6 | | 892-11010 | | 3 | RONDELLE FREIN M10 |
| 7 | | 829-1410 | | 3 | ECROU M10; 10.9 |
| 8 | | 434605A1 | | 1 | TUYAUTERIE |
| 9 | | 304424A1 | | 1 | CONNECTEUR |
| 10 | | 304890A1 | | 1 | RÉDUCTION |
| 11 | | 237-6010 | | 1 | JOINT TORIQUE 3/4 ID x 3/32 |
| 11A | | 309674A1 | | 1 | CONNECTEUR 7/8 male x 7/8 female |
| 12 | | D138055 | | 4 | COLLIER |
| 13 | | 814-10090 | | 1 | VIS M10 x 90 |
| 14 | | 120303A1 | | 1 | ENTRETOISE |
| 15 | | 892-11010 | | 1 | RONDELLE FREIN M10 |
| 16 | | 829-1410 | | 1 | ECROU M10; 10.9 |
| 17 | | 307277A1 | | 1 | MANCHON |
| 18 | | L18337 | | 2 | SANGLE 15 in |

HTTP://WWW.MINNPARBACKHOEPARTS.COM



DISTRIBUTEUR DU COUPLEUR - OUTIL DE CHARGEUSE, DE SÉCURITÉ

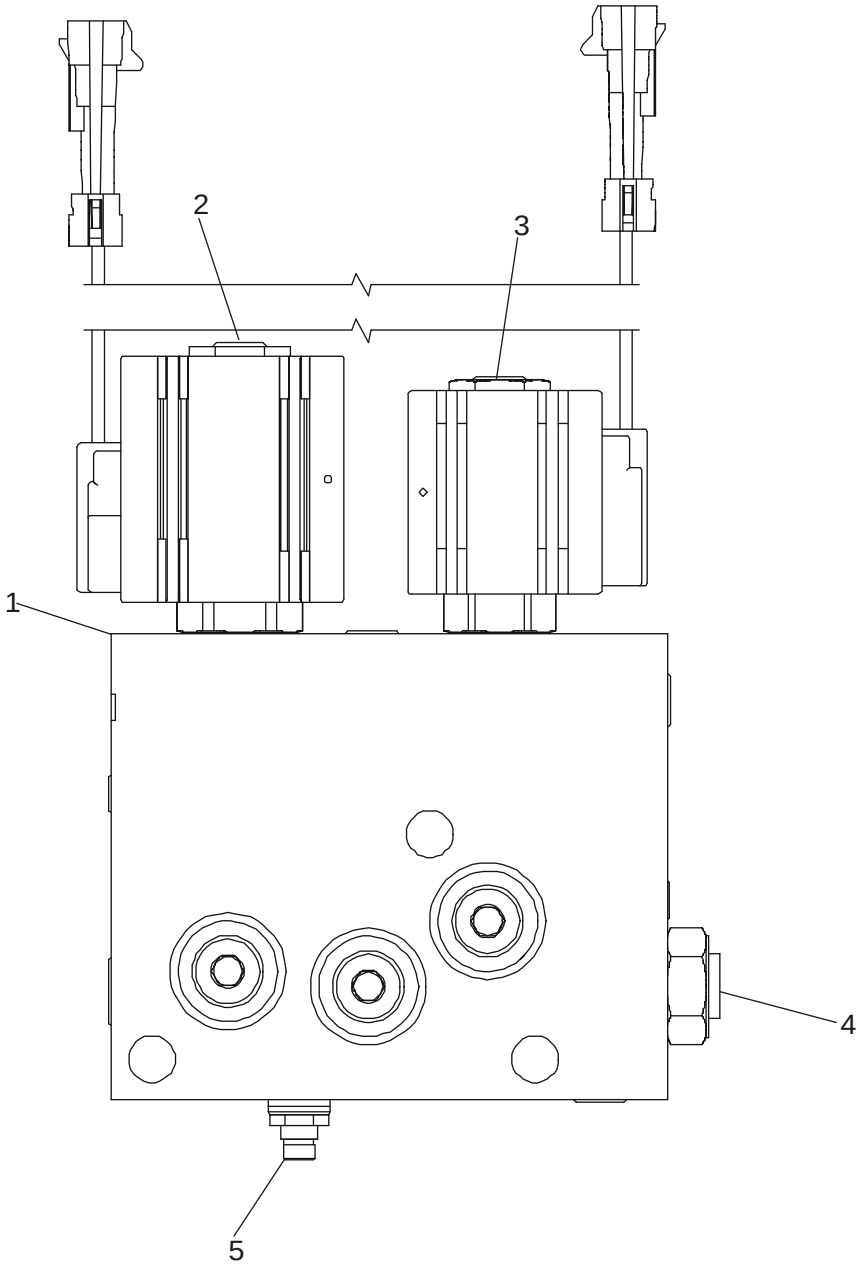


BS03M143

HTTP://WWW.MINNPARBACKHOEPARTS.COM



DISTRIBUTEUR DU COUPLEUR - OUTIL DE CHARGEUSE, DE SÉCURITÉ

| REF | FN | PART NUMBER | YR/SN | QTY | DESCRIPTION |
|---|---|---|---|---|---|
| | | 87435909 | | 1 | ELECTRO-VALVE Incl. Ref 1 - 5 |
| 1 | | NSS | | 1 | NON FOURNI SEPAREMENT Body |
| 2 | | {87438021} | | 1 | 4-Way Cartridge With Coil; Includes 87438022, 87438023, 87438024 |
| | | {87438022} | | 1 | Valve, Cartridge |
| | | {87438023} | | 1 | Coil, Solenoid |
| | | {87438024} | | 1 | Seal Kit, 4-Way Solenoid |
| 3 | | {87438025} | | 1 | 2-Way 2-Position Cartridge With Coil; Includes 87438026, 87438027, 87438028 |
| | | {87438026} | | 1 | Valve, Cartridge |
| | | {87438027} | | 1 | Coil, Solenoid |
| | | {87438028} | | 1 | Seal Kit, 2-Way Solenoid |
| 4 | | {87438029} | | 1 | Check Valve; Includes 87438028 Seal Kit |
| | | {87438028} | | 1 | Seal Kit, 2-Way Solenoid |
| 5 | | {87438031} | | 1 | Relief Valve; Includes 87438032 |
| | | {87438032} | | 1 | Seal Kit, Relief Valve |

HTTP://WWW.MINNPARBACKHOEPARTS.COM



POMPE, ÉQUIPEMENT HYDRAULIQUE

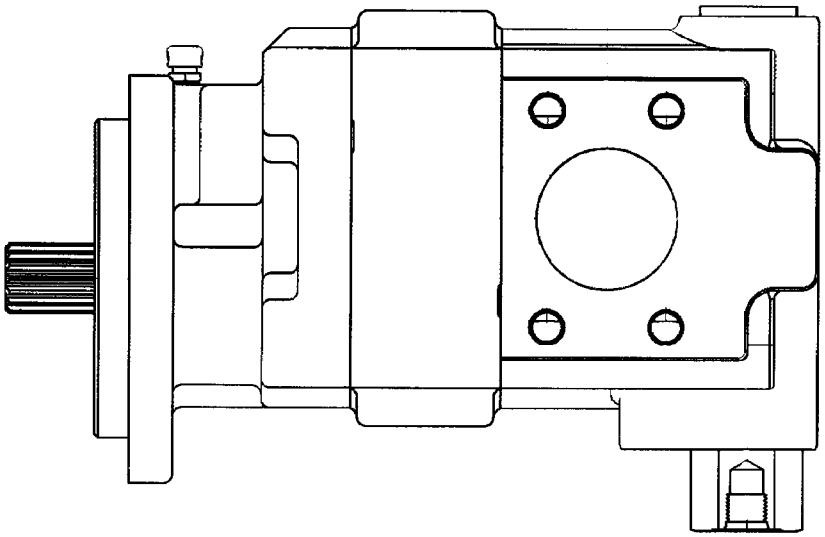

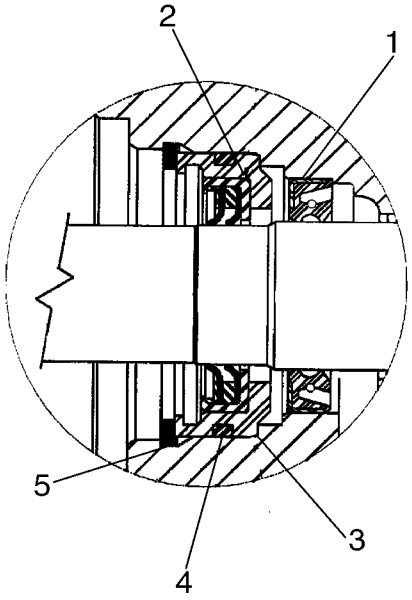


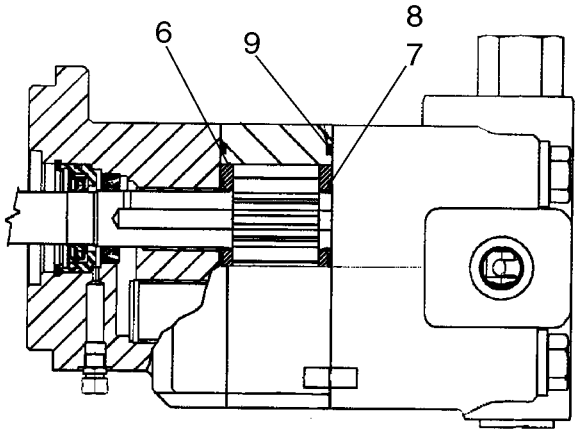


BS03M039

HTTP://WWW.MINNPARBACKHOEPARTS.COM



POMPE, ÉQUIPEMENT HYDRAULIQUE

| REF | FN | PART NUMBER | YR/SN | QTY | DESCRIPTION |
|---|---|---|---|---|---|
| | | 87434672 | | 1 | POMPE HYDRAULIQUE Component Parts Not Serviced Separately, Except for 87434070 and 87438045 Service Kits, Ref 1 - 17, See Below |
| | | {87434070} | | 1 | Pump Service Kit, Single Section; Incl. Ref 1 - 9 |
| 1 | | L32418 | | 1 | JOINT Double Lip |
| 2 | | {87434075} | | 1 | Lip Seal |
| 3 | | {87434076} | | 1 | Seal Retainer |
| 4 | | {87434077} | | 1 | O-Ring Seal |
| 5 | | 102-23206 | | 1 | CIRCLIP Retaining Ring |
| 6 | | N13582 | | 2 | PLAQUE Thrust |
| 7 | | 144173A1 | | 2 | JOINT |
| 8 | | 178051A1 | | 2 | CONTRE-JOINT |
| 9 | | L32100 | | 2 | JOINT Gear Housing Gasket |
| | | {87438045} | | 1 | Priority Valve Service Kit, Single; Incl. Ref 10 - 17 Which Are Not Illustrated |
| 10 | | {87437899} | | 1 | Load Sense Plug; Not Illustrated |
| 11 | | 237-6014 | | 1 | JOINT TORIQUE 1-3/64 ID x 7/64; Not Illustrated |
| 12 | | {87437905} | | 1 | Spool Spring, 100 psi; Not Illustrated |
| 13 | | {87437906} | | 1 | Spool Spring, 50 psi; Not Illustrated |
| 14 | | {87437914} | | 1 | Priority Valve Spool; Not Illustrated |
| 15 | | {87437917} | | 1 | Hex Socket Plug, Spool; Not Illustrated |
| 16 | | 218-5213 | | 1 | BOUCHON Hex Socket, 1-3/16 Or; Incl. Ref 17; Not Illustrated |
| 17 | | 237-6014 | | 1 | JOINT TORIQUE 1-3/64 ID x 7/64; Not Illustrated |

HTTP://WWW.MINNPARBACKHOEPARTS.COM



DISTRIBUTEUR - COMMANDE DU CHARGEUR, DEUX TIROIRS

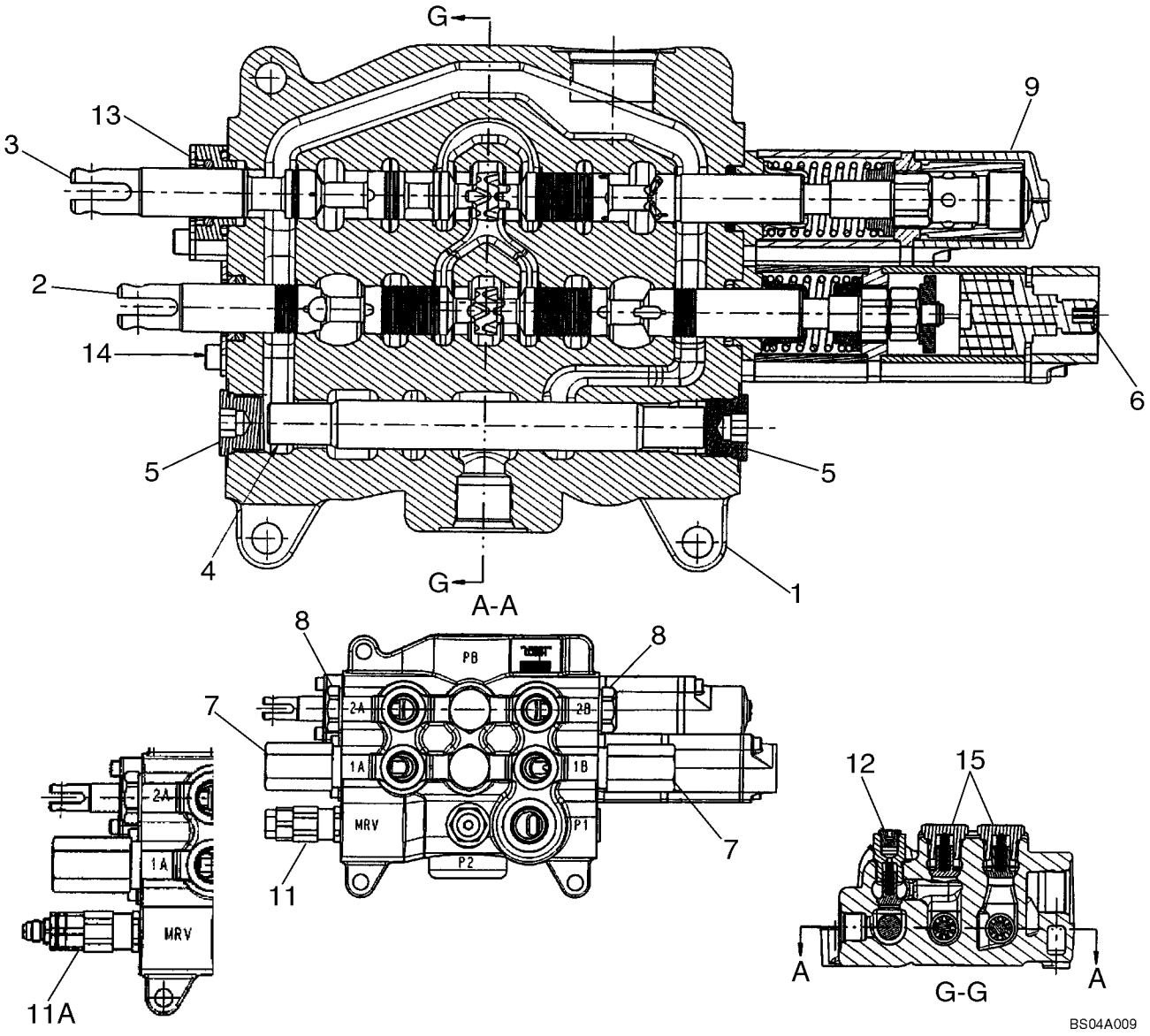

HTTP://WWW.MINNPARBACKHOEPARTS.COM



DISTRIBUTEUR - COMMANDE DU CHARGEUR, DEUX TIROIRS

| REF | FN | PART NUMBER | YR/SN | QTY | DESCRIPTION |
|---|---|---|---|---|---|
| | | 87434766 | | 1 | SOUPAPE HYDRAULIQUE Two Spool Loader Valve, Used On Models Without Pilot Controls; Incl. Ref 1 - 11, 12 - 15 |
| | | 87434768 | | 1 | SOUPAPE HYDRAULIQUE Two Spool Loader Valve, Used On Models With Pilot Controls; Incl. Ref 1 - 9, 11A - 15 |
| 1 | | NSS | | 1 | NON FOURNI SEPAREMENT HOUSING |
| 2 | | NSS | | 1 | NON FOURNI SEPAREMENT SPOOL, Bucket |
| 3 | | NSS | | 1 | NON FOURNI SEPAREMENT SPOOL, Lift |
| 4 | | NSS | | 1 | NON FOURNI SEPAREMENT SPOOL |
| 5 | | {87426233} | | 2 | 7/8 - 14 NF Plug, Includes O-Ring; Component Parts Not Serviced Separately |
| 6 | | {87426221} | | 1 | Magnetic Detent Kit, Bucket; Component Parts Not Serviced Separately |
| 7 | | {87426232} | | 2 | Relief Valve Assembly; Component Parts Not Serviced Separately |
| 8 | | {81868381} | | 2 | Load Check Valve, Anti-Void; Component Parts Not Serviced Separately |
| 9 | | {87426227} | | 1 | Manual Detent Assembly, Lift; Component Parts Not Serviced Separately |
| 11 | | {87426717} | | 1 | Main Relief Valve Assembly, Single Stage; 87434766 Loader Valve, Models Without Pilot Controls; Component Parts Not Serviced Separately |
| 11A | | {87426235} | | 1 | Main Relief Valve Assembly, Two Stage; 87434768 Loader Valve, Models With Pilot Controls; Component Parts Not Serviced Separately |
| 12 | | {87426716} | | 1 | Check Valve; Component Parts Not Serviced Separately |
| 13 | | {87440815} | | 1 | Lift Spool Plate and Seal Assembly; Component Parts Not Serviced Separately |
| 14 | | {87440814} | | 1 | Bucket Spool Plate and Seal Assembly; Component Parts Not Serviced Separately |
| 15 | | {87426238} | | 2 | Check Valve; Component Parts Not Serviced Separately |

HTTP://WWW.MINNPARBACKHOEPARTS.COM



DISTRIBUTEUR - COMMANDE DU CHARGEUR, TROIS TIROIRS

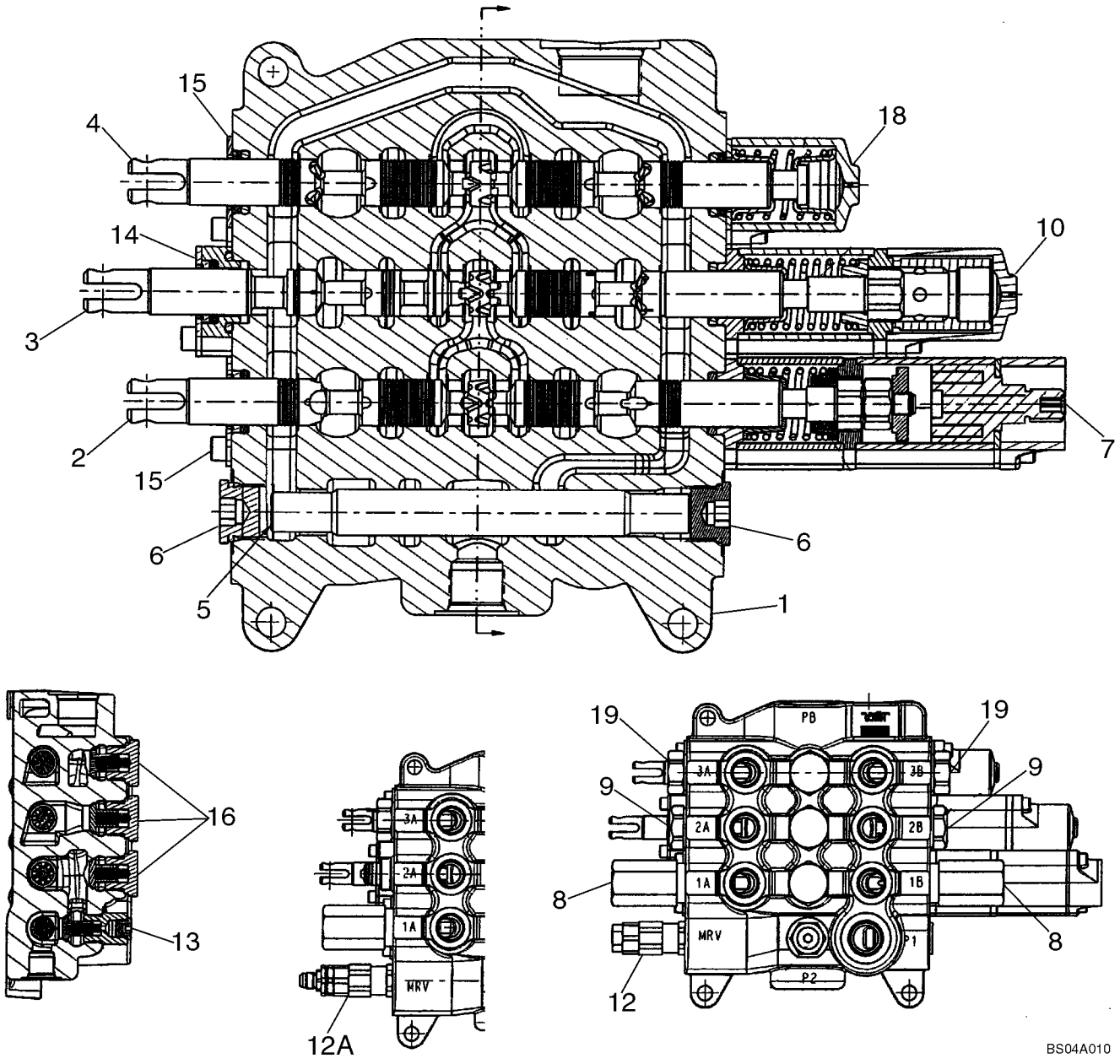

HTTP://WWW.MINNPARBACKHOEPARTS.COM



DISTRIBUTEUR - COMMANDE DU CHARGEUR, TROIS TIROIRS

| REF | FN | PART NUMBER | YR/SN | QTY | DESCRIPTION |
|---|---|---|---|---|---|
| | | 87434767 | | 1 | SOUPAPE HYDRAULIQUE Three Spool Loader Valve, Used On Models Without Pilot Controls; Incl. Ref 1 - 12, 14 - 19 |
| | | 87434769 | | 1 | SOUPAPE HYDRAULIQUE Three Spool Loader Valve, Used On Models With Pilot Controls; Incl. Ref 1 - 10, 12A - 19 |
| 1 | | NSS | | 1 | NON FOURNI SEPAREMENT HOUSING |
| 2 | | NSS | | 1 | NON FOURNI SEPAREMENT SPOOL, Bucket |
| 3 | | NSS | | 1 | NON FOURNI SEPAREMENT SPOOL, Lift |
| 4 | | NSS | | 1 | NON FOURNI SEPAREMENT SPOOL, Clam |
| 5 | | NSS | | 1 | NON FOURNI SEPAREMENT SPOOL |
| 6 | | {87426233} | | 2 | 7/8 - 14 NF Plug, Includes O-Ring; Component Parts Not Serviced Separately |
| 7 | | {87426221} | | 1 | Magnetic Detent Kit, Bucket; Component Parts Not Serviced Separately |
| 8 | | {87426232} | | 2 | Relief Valve Assembly; Component Parts Not Serviced Separately |
| 9 | | {81868381} | | 2 | Load Check Valve, Anti-Void; Component Parts Not Serviced Separately |
| 10 | | {87426227} | | 1 | Manual Detent Assembly, Lift; Component Parts Not Serviced Separately |
| 12 | | {87426717} | | 1 | Main Relief Valve Assembly, Single Stage; 87434767 Loader Valve, Models Without Pilot Controls; Component Parts Not Serviced Separately |
| 12A | | {87426235} | | 1 | Main Relief Valve Assembly, Two Stage; 87434769 Loader Valve, Models With Pilot Controls; Component Parts Not Serviced Separately |
| 13 | | {87426716} | | 1 | Check Valve; Component Parts Not Serviced Separately |
| 14 | | {87440815} | | 1 | Lift Spool Plate and Seal Assembly; Component Parts Not Serviced Separately |
| 15 | | {87440814} | | 2 | Bucket and Clam Spool Plate and Seal Assembly; Component Parts Not Serviced Separately |
| 16 | | {87426238} | | 3 | Check Valve; Component Parts Not Serviced Separately |

HTTP://WWW.MINNPARBACKHOEPARTS.COM



DISTRIBUTEUR - COMMANDE DU CHARGEUR, TROIS TIROIRS

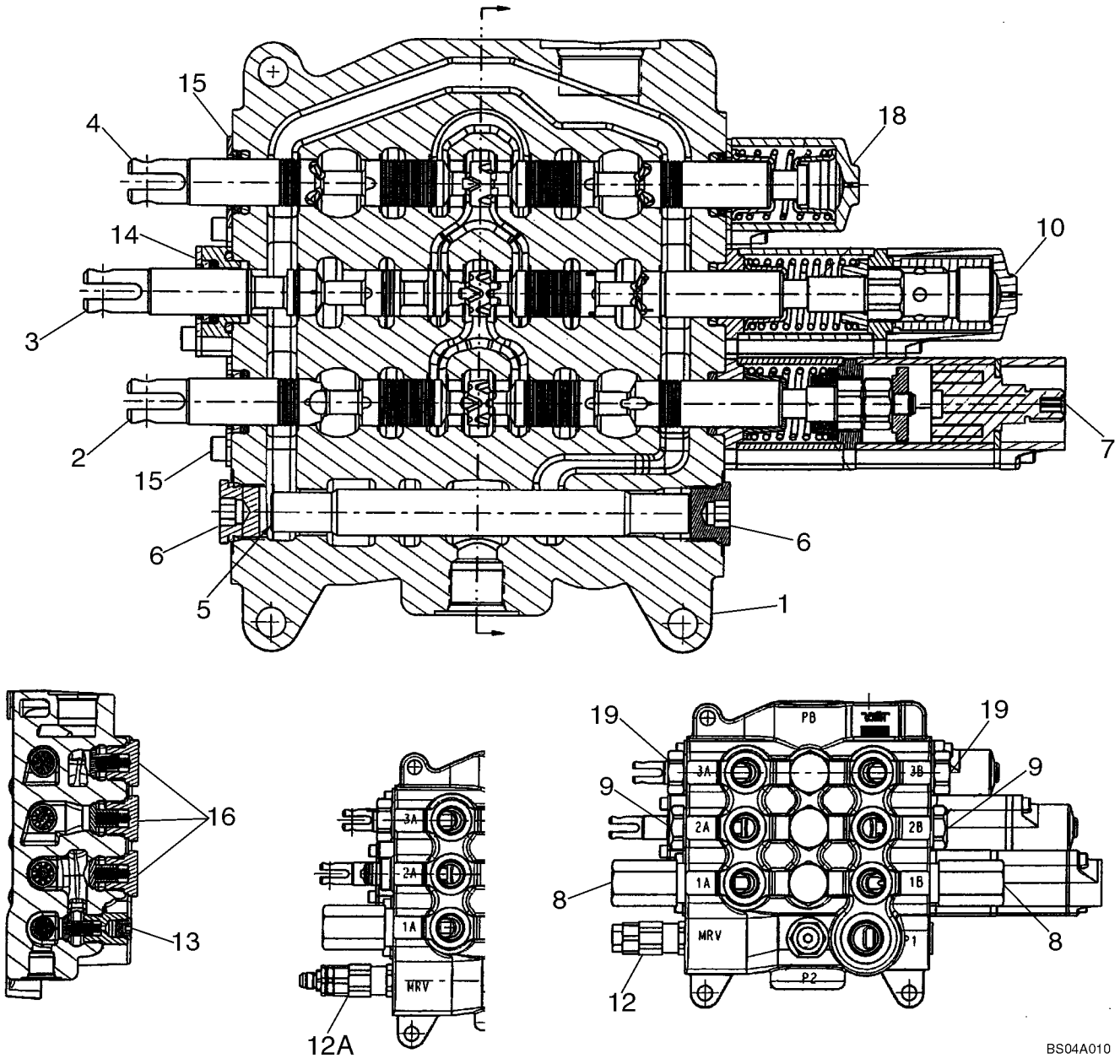

HTTP://WWW.MINNPARBACKHOEPARTS.COM



DISTRIBUTEUR - COMMANDE DU CHARGEUR, TROIS TIROIRS

| REF | FN | PART NUMBER | YR/SN | QTY | DESCRIPTION |
|---|---|---|---|---|---|
| 18 | | {87426241} | | 1 | Clam Spool End Cap Assembly; Component Parts Not Serviced Separately |
| 19 | | {83981068} | | 2 | Shut-Off Plug Assembly Includes Seal; Component Parts Not Serviced Separately |

HTTP://WWW.MINNPARBACKHOEPARTS.COM



DISTRIBUTEUR - COMMANDE DE LA PELLE RETRO, 6 TIROIRS (SANS BALANCIER EXTENSIBLE ET SANS CIRCUIT HYD)

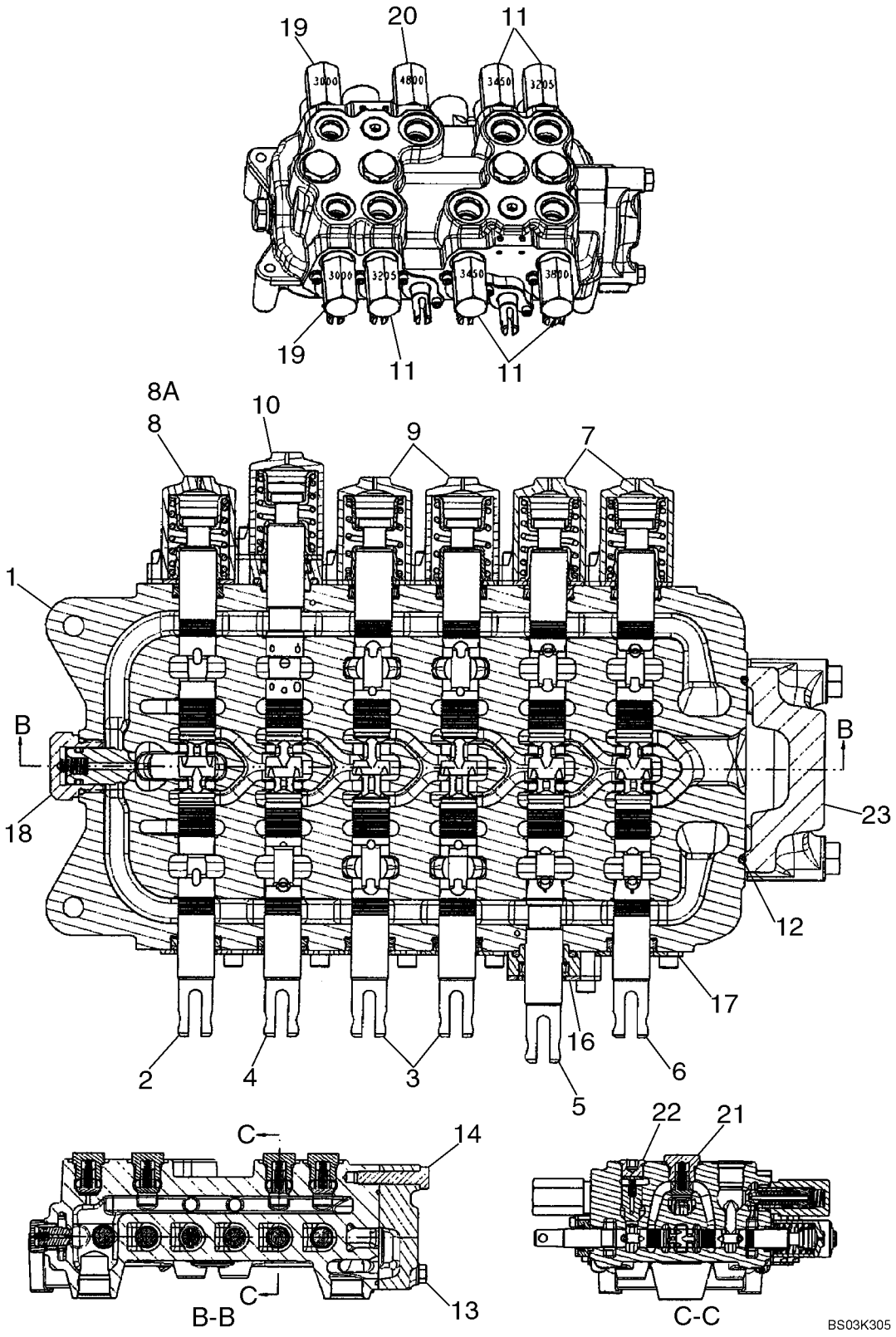

HTTP://WWW.MINNPARBACKHOEPARTS.COM



DISTRIBUTEUR - COMMANDE DE LA PELLE RETRO, 6 TIROIRS (SANS BALANCIER EXTENSIBLE ET SANS CIRCUIT HYD)

| REF | FN | PART NUMBER | YR/SN | QTY | DESCRIPTION |
|---|---|---|---|---|---|
| | | REF | | | NOTICE MODELS WITHOUT EXTENDABLE DIPPER, WITHOUT AUXILIARY HYDRAULICS, WITHOUT PILOT CONTROLS |
| | | 87413144 | | 1 | SOUPAPE HYDRAULIQUE 6 Spool, Foot Swing; Incl. Ref 1 - 8, 9 - 23; If Used |
| | | 87416476 | | 1 | SOUPAPE HYDRAULIQUE 6 Spool, Hand Swing; Incl. Ref 1 - 7, 8A, 9 - 23; If Used |
| 1 | | NSS | | 1 | NON FOURNI SEPAREMENT HOUSING |
| 2 | | NSS | | 1 | NON FOURNI SEPAREMENT SPOOL, SWING |
| 3 | | NSS | | 2 | NON FOURNI SEPAREMENT SPOOL, STABILIZER, Right-hand and Left-Hand |
| 4 | | NSS | | 1 | NON FOURNI SEPAREMENT SPOOL, BOOM |
| 5 | | NSS | | 1 | NON FOURNI SEPAREMENT SPOOL, DIPPER |
| 6 | | NSS | | 1 | NON FOURNI SEPAREMENT SPOOL, BUCKET |
| 7 | | {87433028} | | 2 | Cap Assembly, Bucket and Dipper Spool End; Component Parts Not Serviced Separately |
| 8 | | {87433029} | | 1 | Cap Assembly, Swing Spool End; 87413144 Foot Swing Valve; Component Parts Not Serviced Separately |
| 8A | | {87433028} | | 1 | Cap Assembly, Swing Spool End; 87416476 Hand Swing Valve; Component Parts Not Serviced Separately |
| 9 | | {87428497} | | 2 | Cap Assembly, Stabilizer Spool Ends; Component Parts Not Serviced Separately |
| 10 | | {87433029} | | 1 | Cap Assembly, Boom Spool End; Component Parts Not Serviced Separately |
| 11 | | {87426232} | | 5 | Relief Valve Assembly; (2) 3205 psi, (2) 3450 psi, (1) 3800 psi; Component Parts Not Serviced Separately |
| 12 | | {87428495} | | 1 | O-Ring Seal, Outlet Section |
| 13 | | {87428491} | | 2 | Bolt |
| 14 | | {87428492} | | 1 | Bolt |
| 16 | | {87426240} | | 1 | Seal Plate Assembly, Dipper Spool; Component Parts Not Serviced Separately |
| 17 | | {87426239} | | 5 | Seal Plate Assembly; Component Parts Not Serviced Separately |

HTTP://WWW.MINNPARBACKHOEPARTS.COM



DISTRIBUTEUR - COMMANDE DE LA PELLE RETRO, 6 TIROIRS (SANS BALANCIER EXTENSIBLE ET SANS CIRCUIT HYD)

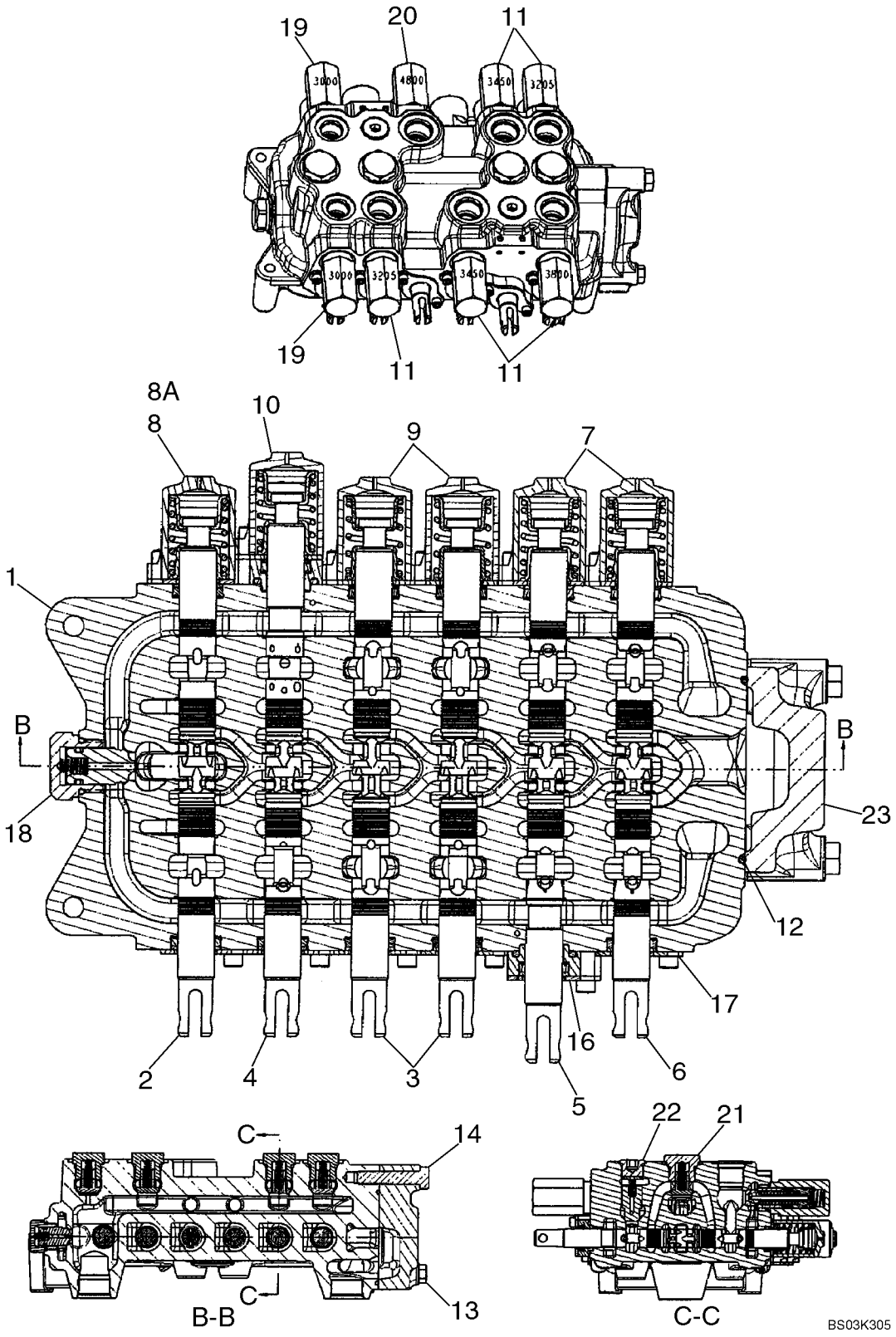

HTTP://WWW.MINNPARBACKHOEPARTS.COM



DISTRIBUTEUR - COMMANDE DE LA PELLE RETRO, 6 TIROIRS (SANS BALANCIER EXTENSIBLE ET SANS CIRCUIT HYD)

| REF | FN | PART NUMBER | YR/SN | QTY | DESCRIPTION |
|---|---|---|---|---|---|
| 18 | | {81868381} | | 1 | Anti-Void Valve; Component Parts Not Serviced Separately |
| 19 | | {87428490} | | 2 | Relief Valve Assembly; 3000 psi; Component Parts Not Serviced Separately |
| 20 | | {87428488} | | 1 | Relief Valve Assembly; 4800 psi; Component Parts Not Serviced Separately |
| 21 | | {87426238} | | 4 | Check Valve Assembly; Hex Head; Component Parts Not Serviced Separately |
| 22 | | {87428486} | | 2 | Check Valve Assembly; Hex Socket Head; Component Parts Not Serviced Separately |
| 23 | | {87433030} | | 1 | Outlet Section Assembly; Component Parts Not Serviced Separately |

HTTP://WWW.MINNPARBACKHOEPARTS.COM



DISTRIBUTEUR - COMMANDE DE LA PELLE RETRO, 7 TIROIRS (SANS BALANCIER EXTENSIBLE ET AVEC CIRCUIT HYD)

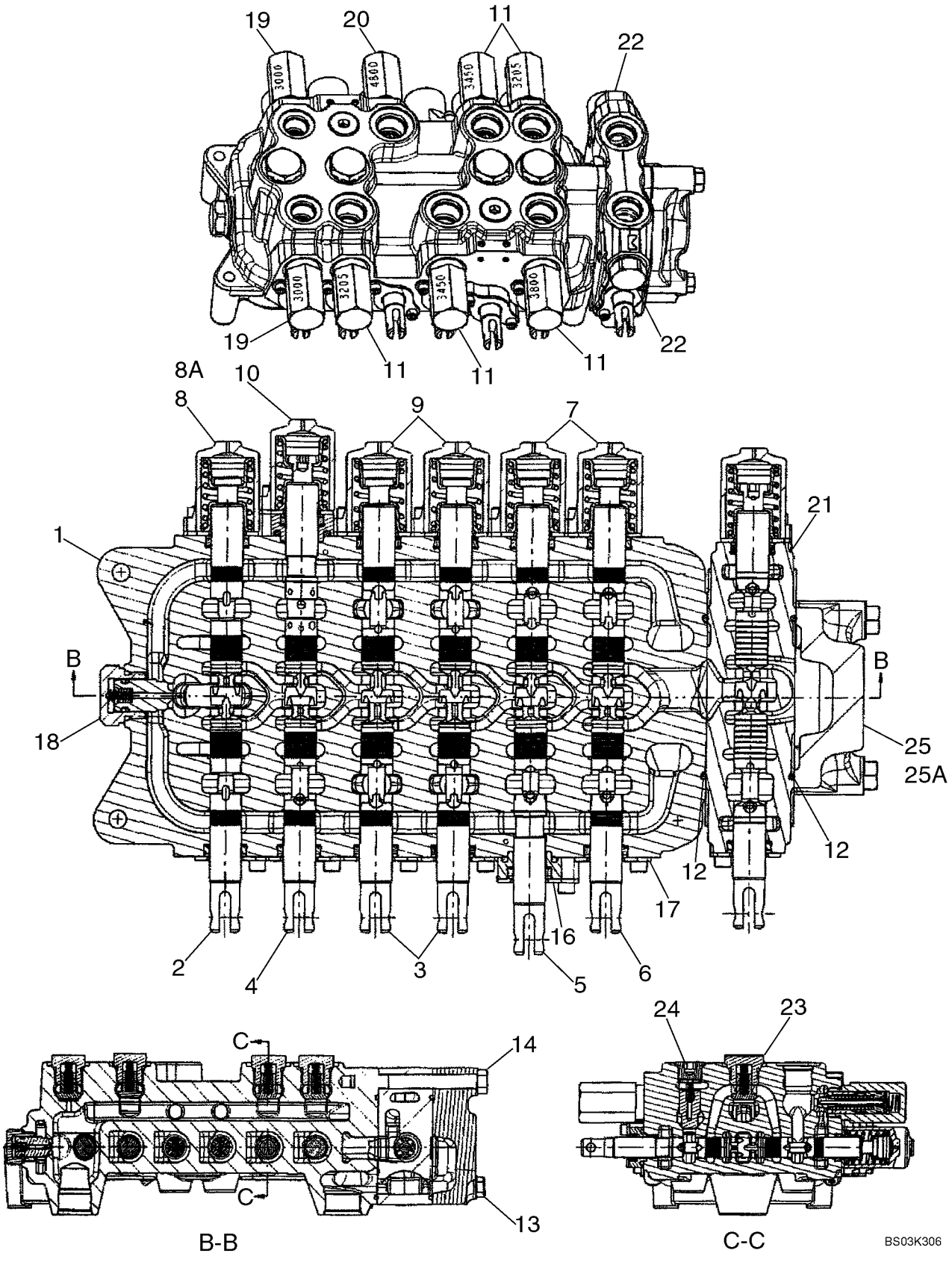

HTTP://WWW.MINNPARBACKHOEPARTS.COM



DISTRIBUTEUR - COMMANDE DE LA PELLE RETRO, 7 TIROIRS (SANS BALANCIER EXTENSIBLE ET AVEC CIRCUIT HYD)

| REF | FN | PART NUMBER | YR/SN | QTY | DESCRIPTION |
|---|---|---|---|---|---|
| | | REF | | | NOTICE MODELS WITHOUT EXTENDABLE DIPPER, WITH AUXILIARY HYDRAULICS, WITHOUT PILOT CONTROLS |
| | | 87414278 | | 1 | SOUPAPE HYDRAULIQUE 7 Spool, Foot Swing; Incl. Ref 1 - 8, 9 - 25; If Used |
| | | 87414277 | | 1 | SOUPAPE HYDRAULIQUE 7 Spool, Hand Swing; Incl. Ref 1 - 7, 8A, 9 - 24, 25A; If Used |
| 1 | | NSS | | 1 | NON FOURNI SEPAREMENT HOUSING |
| 2 | | NSS | | 1 | NON FOURNI SEPAREMENT SPOOL, SWING |
| 3 | | NSS | | 2 | NON FOURNI SEPAREMENT SPOOL, STABILIZER, Left-Hand and Right-Hand |
| 4 | | NSS | | 1 | NON FOURNI SEPAREMENT SPOOL, BOOM |
| 5 | | NSS | | 1 | NON FOURNI SEPAREMENT SPOOL, DIPPER |
| 6 | | NSS | | 1 | NON FOURNI SEPAREMENT SPOOL, BUCKET |
| 7 | | {87433028} | | 2 | Cap Assembly, Bucket and Dipper Spool End; Component Parts Not Serviced Separately |
| 8 | | {87433029} | | 1 | Cap Assembly, Swing Spool End; 87414278 Foot Swing Valve; Component Parts Not Serviced Separately |
| 8A | | {87433028} | | 1 | Cap Assembly, Swing Spool End; 87414277 Hand Swing Valve; Component Parts Not Serviced Separately |
| 9 | | {87428497} | | 2 | Cap Assembly, Stabilizer Spool Ends; Component Parts Not Serviced Separately |
| 10 | | {87433029} | | 1 | Cap Assembly, Boom Spool End; Component Parts Not Serviced Separately |
| 11 | | {87426232} | | 5 | Relief Valve Assembly; (2) 3205 psi, (2) 3450 psi, (1) 3800 psi; Component Parts Not Serviced Separately |
| 12 | | {87428495} | | 2 | O-Ring Seal, Auxiliary/Outlet Section |
| 13 | | {87428476} | | 2 | Bolt |
| 14 | | {87428477} | | 1 | Bolt |
| 16 | | {87426240} | | 1 | Seal Plate Assembly, Dipper Spool; Component Parts Not Serviced Separately |
| 17 | | {87426239} | | 5 | Seal Plate Assembly; Component Parts Not Serviced Separately |

HTTP://WWW.MINNPARBACKHOEPARTS.COM



DISTRIBUTEUR - COMMANDE DE LA PELLE RETRO, 7 TIROIRS (SANS BALANCIER EXTENSIBLE ET AVEC CIRCUIT HYD)

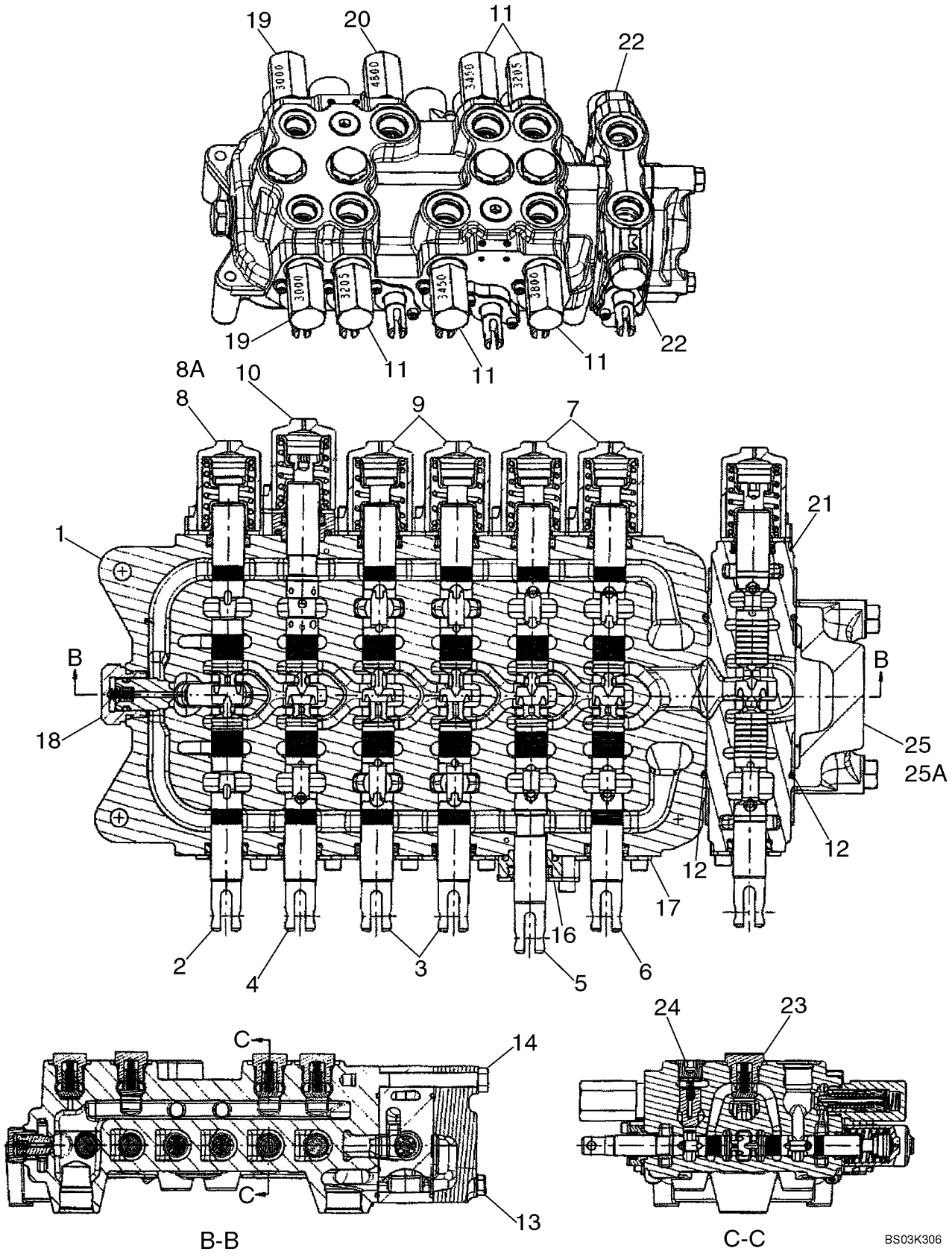

HTTP://WWW.MINNPARBACKHOEPARTS.COM



DISTRIBUTEUR - COMMANDE DE LA PELLE RETRO, 7 TIROIRS (SANS BALANCIER EXTENSIBLE ET AVEC CIRCUIT HYD)

| REF | FN | PART NUMBER | YR/SN | QTY | DESCRIPTION |
|---|---|---|---|---|---|
| 18 | | {81868381} | | 1 | Anti-Void Valve; Component Parts Not Serviced Separately |
| 19 | | {87428490} | | 2 | Relief Valve Assembly; 3000 psi; Component Parts Not Serviced Separately |
| 20 | | {87428488} | | 1 | Relief Valve Assembly; 4800 psi; Component Parts Not Serviced Separately |
| 21 | | {87428501} | | 1 | Spool Section Assembly; Auxiliary Hydraulics; Component Parts Not Serviced Separately |
| 22 | | {83981068} | | 2 | Shut-Off Plug; Component Parts Not Serviced Separately |
| 23 | | {87426238} | | 4 | Check Valve Assembly; Hex Head; Component Parts Not Serviced Separately |
| 24 | | {87428486} | | 2 | Check Valve Assembly; Hex Socket Head; Component Parts Not Serviced Separately |
| 25 | | {87433030} | | 1 | Outlet Section Assembly; 87414278 Foot Swing Valve; Component Parts Not Serviced Separately |
| 25A | | {87428493} | | 1 | Outlet Section Assembly; 87414277 Hand Swing Valve; Component Parts Not Serviced Separately |

HTTP://WWW.MINNPARBACKHOEPARTS.COM



DISTRIBUTEUR - COMMANDE DE LA PELLE RETRO, 7 TIROIRS (AVEC BALANCIER EXTENSIBLE ET SANS CIRCUIT HYD)

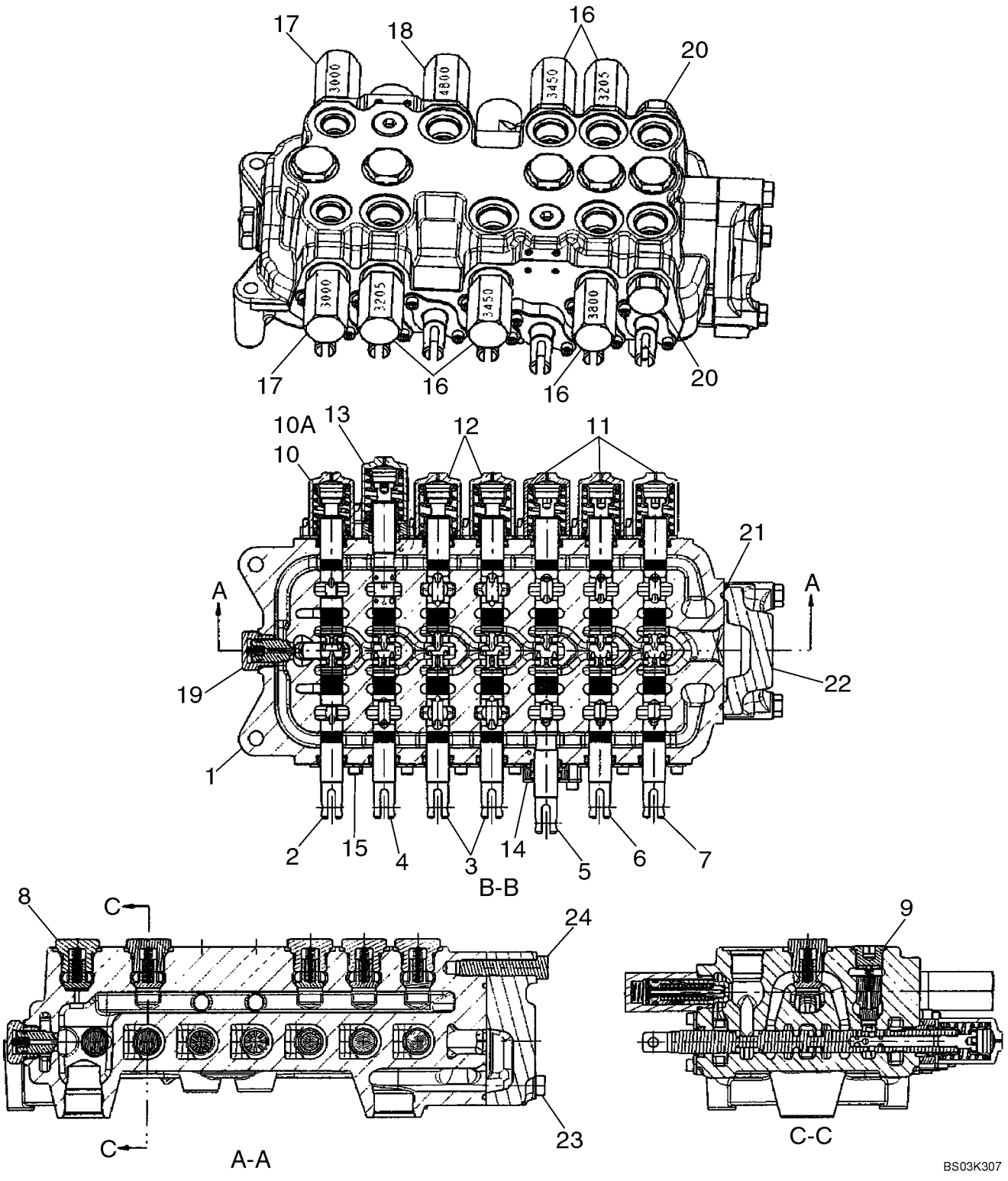

HTTP://WWW.MINNPARBACKHOEPARTS.COM



DISTRIBUTEUR - COMMANDE DE LA PELLE RETRO, 7 TIROIRS (AVEC BALANCIER EXTENSIBLE ET SANS CIRCUIT HYD)

| REF | FN | PART NUMBER | YR/SN | QTY | DESCRIPTION |
|---|---|---|---|---|---|
| | | REF | | | NOTICE MODELS WITH EXTENDABLE DIPPER, WITHOUT AUXILIARY HYDRAULICS, WITHOUT PILOT CONTROLS |
| | | 87413145 | | 1 | SOUPAPE HYDRAULIQUE 7 Spool, Foot Swing; Incl. Ref 1 - 10, 11 - 24; If Used |
| | | 87403386 | | 1 | SOUPAPE HYDRAULIQUE 7 Spool, Hand Swing; Incl. Ref 1 - 9, 10A, 11 - 24; If Used |
| 1 | | NSS | | 1 | NON FOURNI SEPAREMENT HOUSING |
| 2 | | NSS | | 1 | NON FOURNI SEPAREMENT SPOOL, SWING |
| 3 | | NSS | | 2 | NON FOURNI SEPAREMENT SPOOL, STABILIZER, Right-Hand and Left-Hand |
| 4 | | NSS | | 1 | NON FOURNI SEPAREMENT SPOOL, BOOM |
| 5 | | NSS | | 1 | NON FOURNI SEPAREMENT SPOOL, DIPPER |
| 6 | | NSS | | 1 | NON FOURNI SEPAREMENT SPOOL, BUCKET |
| 7 | | NSS | | 1 | NON FOURNI SEPAREMENT SPOOL, EXTENDABLE DIPPER |
| 8 | | {87426238} | | 5 | Check Valve Assembly; Hex Head; Component Parts Not Serviced Separately |
| 9 | | {87428486} | | 2 | Check Valve Assembly; Hex Socket Head; Component Parts Not Serviced Separately |
| 10 | | {87433029} | | 1 | Cap Assembly, Swing Spool End; 87413145 Foot Swing Valve; Component Parts Not Serviced Separately |
| 10A | | {87433028} | | 1 | Cap Assembly, Swing Spool End; 87403386 Hand Swing Valve; Component Parts Not Serviced Separately |
| 11 | | {87433028} | | 3 | Cap Assembly, Bucket, Dipper, and Extendahoe Spool End; Component Parts Not Serviced Separately |
| 12 | | {87428497} | | 2 | Cap Assembly, Stabilizer Spool Ends; Component Parts Not Serviced Separately |
| 13 | | {87433029} | | 1 | Cap Assembly, Boom Spool End; Component Parts Not Serviced Separately |
| 14 | | {87426240} | | 1 | Seal Plate Assembly, Dipper Spool; Component Parts Not Serviced Separately |

HTTP://WWW.MINNPARBACKHOEPARTS.COM



DISTRIBUTEUR - COMMANDE DE LA PELLE RETRO, 7 TIROIRS (AVEC BALANCIER EXTENSIBLE ET SANS CIRCUIT HYD)

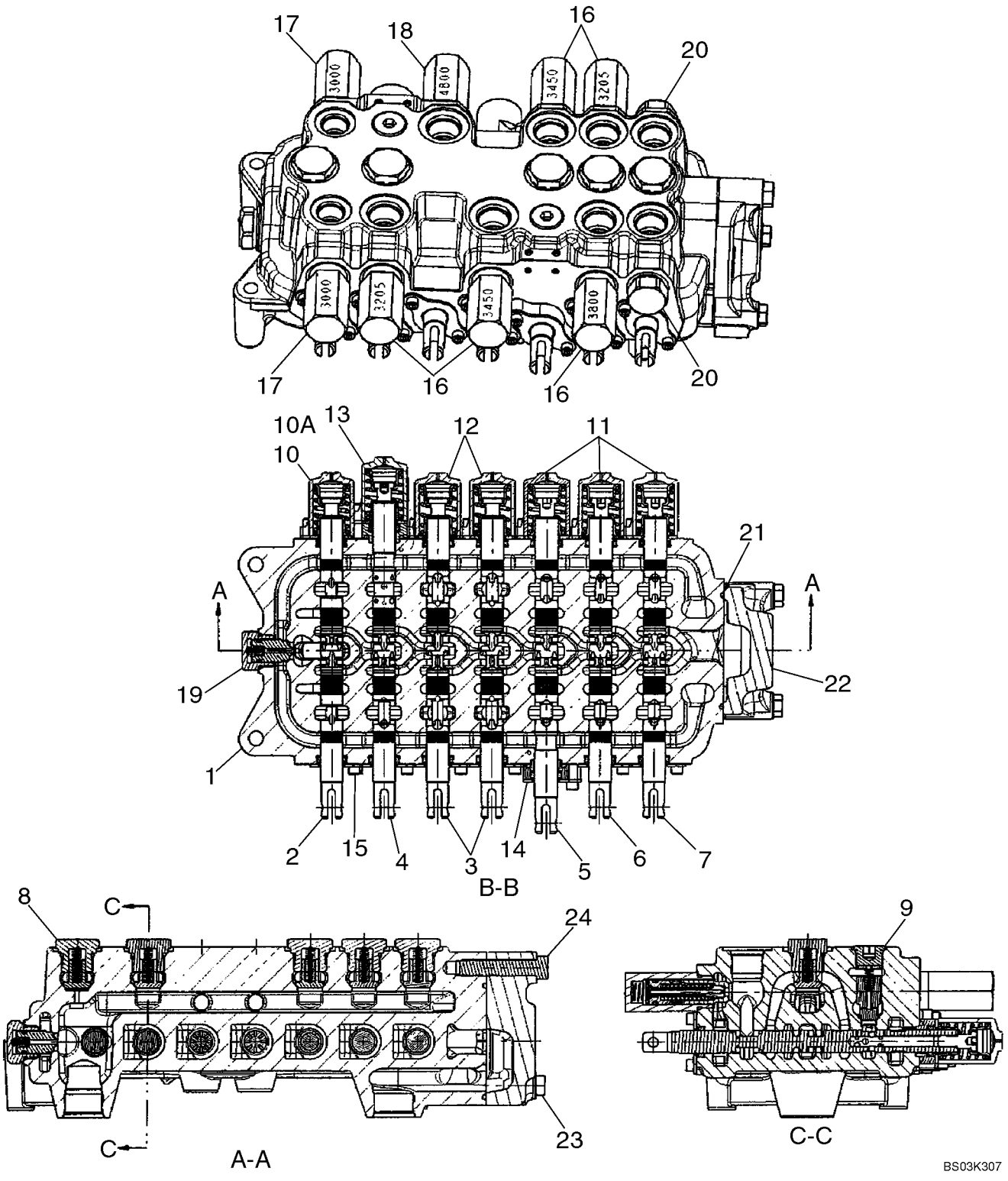

HTTP://WWW.MINNPARBACKHOEPARTS.COM



DISTRIBUTEUR - COMMANDE DE LA PELLE RETRO, 7 TIROIRS (AVEC BALANCIER EXTENSIBLE ET SANS CIRCUIT HYD)

| REF | FN | PART NUMBER | YR/SN | QTY | DESCRIPTION |
|---|---|---|---|---|---|
| 15 | | {87426239} | | 6 | Seal Plate Assembly; Component Parts Not Serviced Separately |
| 16 | | {87426232} | | 5 | Relief Valve Assembly; (2) 3205 psi, (2) 3450 psi, (1) 3800 psi; Component Parts Not Serviced Separately |
| 17 | | {87428490} | | 2 | Relief Valve Assembly; 3000 psi; Component Parts Not Serviced Separately |
| 18 | | {87428488} | | 1 | Relief Valve Assembly; 4800 psi; Component Parts Not Serviced Separately |
| 19 | | {81868381} | | 1 | Anti-Void Plug; Component Parts Not Serviced Separately |
| 20 | | {83981068} | | 2 | Shut-Off Plug; Component Parts Not Serviced Separately |
| 21 | | {87428495} | | 1 | O-Ring Seal; Outlet Section |
| 22 | | {87428493} | | 1 | Outlet Section Assembly; Component Parts Not Serviced Separately |
| 23 | | {87428491} | | 2 | Bolt |
| 24 | | {87428492} | | 1 | Bolt |

HTTP://WWW.MINNPARBACKHOEPARTS.COM



DISTRIBUTEUR - COMMANDE DE LA PELLE RETRO, 8 TIROIRS (AVEC BALANCIER EXTENSIBLE ET SANS CIRCUIT HYD)

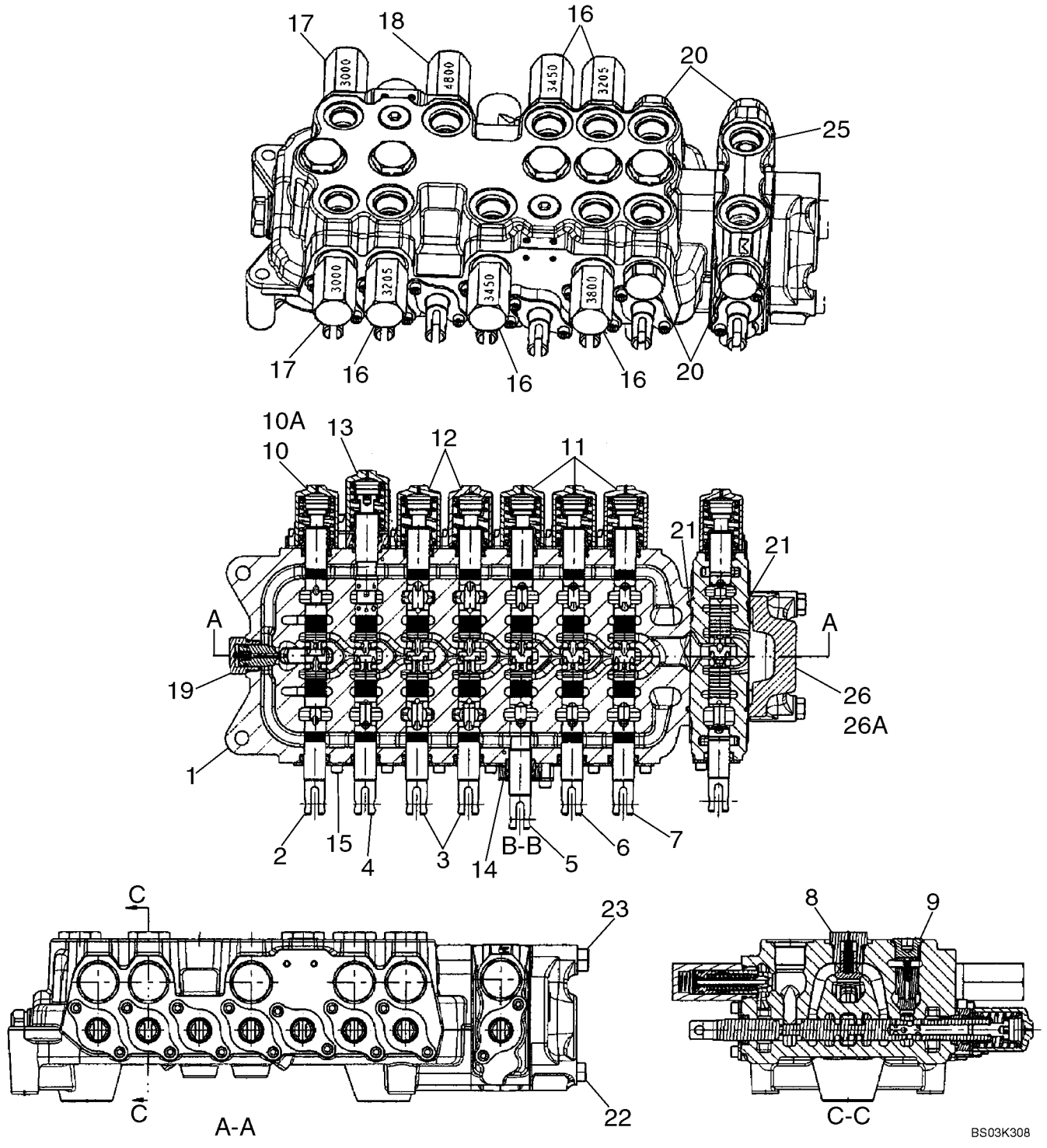

HTTP://WWW.MINNPARBACKHOEPARTS.COM



DISTRIBUTEUR - COMMANDE DE LA PELLE RETRO, 8 TIROIRS (AVEC BALANCIER EXTENSIBLE ET SANS CIRCUIT HYD)

| REF | FN | PART NUMBER | YR/SN | QTY | DESCRIPTION |
|---|---|---|---|---|---|
| | | REF | | | NOTICE MODELS WITH EXTENDABLE DIPPER, WITH AUXILIARY HYDRAULICS, WITHOUT PILOT CONTROLS |
| | | 87413146 | | 1 | SOUPAPE HYDRAULIQUE 8 Spool, Foot Swing; Incl. Ref 1 - 10, 12 - 26; If Used |
| | | 87403387 | | 1 | SOUPAPE HYDRAULIQUE 8 Spool, Hand Swing; Incl. Ref 1 - 9, 10A, 11 - 25, 26A; If Used |
| 1 | | NSS | | 1 | NON FOURNI SEPAREMENT HOUSING |
| 2 | | NSS | | 1 | NON FOURNI SEPAREMENT SPOOL, SWING |
| 3 | | NSS | | 2 | NON FOURNI SEPAREMENT SPOOL, STABILIZER, Right-Hand and Left-Hand |
| 4 | | NSS | | 1 | NON FOURNI SEPAREMENT SPOOL, BOOM |
| 5 | | NSS | | 1 | NON FOURNI SEPAREMENT SPOOL, DIPPER |
| 6 | | NSS | | 1 | NON FOURNI SEPAREMENT SPOOL, BUCKET |
| 7 | | NSS | | 1 | NON FOURNI SEPAREMENT SPOOL, EXTENDABLE DIPPER |
| 8 | | {87426238} | | 5 | Check Valve Assembly; Hex Head; Component Parts Not Serviced Separately |
| 9 | | {87428486} | | 2 | Check Valve Assembly; Hex Socket Head; Component Parts Not Serviced Separately |
| 10 | | {87433029} | | 1 | Cap Assembly, Swing Spool End; 87413146 Foot Swing Valve; Component Parts Not Serviced Separately |
| 10A | | {87433028} | | 1 | Cap Assembly, Swing Spool End; 87403387 Hand Swing Valve; Component Parts Not Serviced Separately |
| 11 | | {87433028} | | 3 | Cap Assembly, Bucket, Dipper and Extendahoe Spool Ends; Component Parts Not Serviced Separately |
| 12 | | {87428497} | | 2 | Cap Assembly, Stabilizer Spool Ends; Component Parts Not Serviced Separately |
| 13 | | {87433029} | | 1 | Cap Assembly, Boom Spool End; Component Parts Not Serviced Separately |
| 14 | | {87426240} | | 1 | Seal Plate Assembly, Dipper Spool; Component Parts Not Serviced Separately |

HTTP://WWW.MINNPARBACKHOEPARTS.COM



DISTRIBUTEUR - COMMANDE DE LA PELLE RETRO, 8 TIROIRS (AVEC BALANCIER EXTENSIBLE ET SANS CIRCUIT HYD)

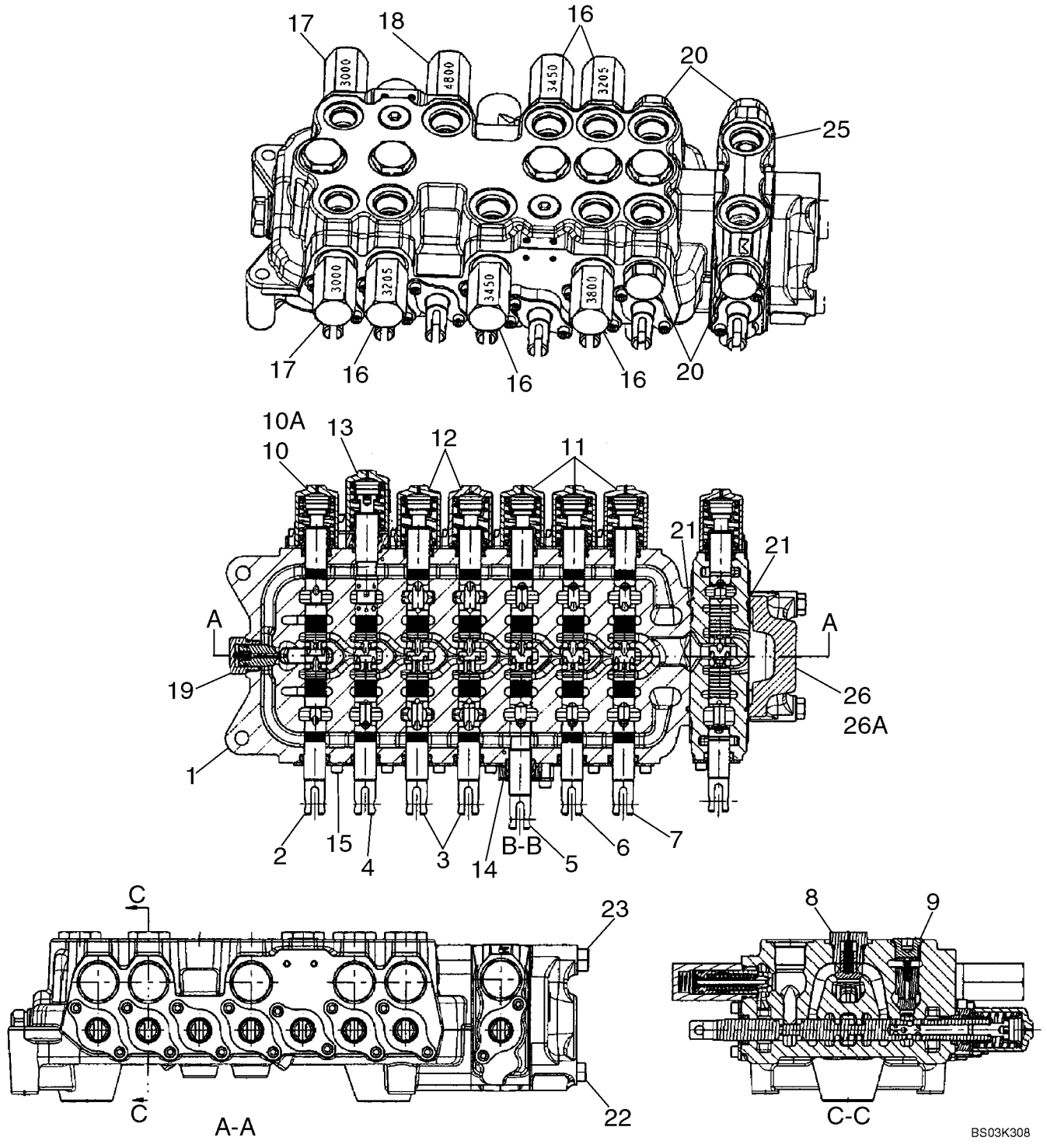

HTTP://WWW.MINNPARBACKHOEPARTS.COM



DISTRIBUTEUR - COMMANDE DE LA PELLE RETRO, 8 TIROIRS (AVEC BALANCIER EXTENSIBLE ET SANS CIRCUIT HYD)

| REF | FN | PART NUMBER | YR/SN | QTY | DESCRIPTION |
|---|---|---|---|---|---|
| 15 | | {87426239} | | 6 | Seal Plate Assembly; Component Parts Not Serviced Separately |
| 16 | | {87426232} | | 5 | Relief Valve Assembly; (2) 3205 psi, (2) 3450 psi, (1) 3800 psi; Component Parts Not Serviced Separately |
| 17 | | {87428490} | | 2 | Relief Valve Assembly; 3000 psi; Component Parts Not Serviced Separately |
| 18 | | {87428488} | | 1 | Relief Valve Assembly; 4800 psi; Component Parts Not Serviced Separately |
| 19 | | {81868381} | | 1 | Anti-Void Valve; Component Parts Not Serviced Separately |
| 20 | | {83981068} | | 4 | Shut-Off Plug; Component Parts Not Serviced Separately |
| 21 | | {87428495} | | 2 | O-Ring Seal, Auxiliary/Outlet Section |
| 22 | | {87428476} | | 2 | Bolt |
| 23 | | {87428477} | | 1 | Bolt |
| 25 | | {87428501} | | 1 | Spool Section Assembly; Auxiliary Hydraulics; Component Parts Not Serviced Separately |
| 26 | | {87433030} | | 1 | Outlet Section Assembly; 87413146 Foot Swing Valve; Component Parts Not Serviced Separately |
| 26A | | {87428493} | | 1 | Outlet Section Assembly; 87403387 Hand Swing Valve; Component Parts Not Serviced Separately |

HTTP://WWW.MINNPARBACKHOEPARTS.COM



DISTRIBUTEUR - COMMANDE DE LA PELLE RETRO, 6 TIROIRS

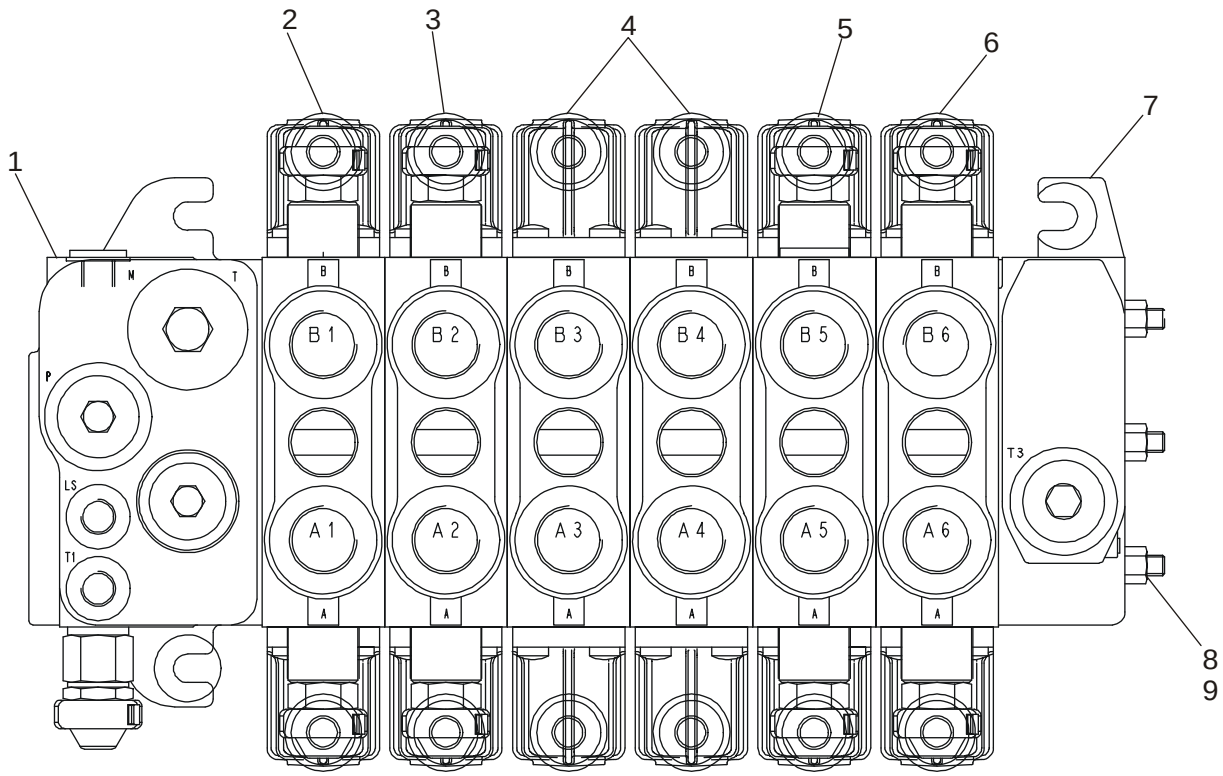


BS03N130

HTTP://WWW.MINNPARBACKHOEPARTS.COM



DISTRIBUTEUR - COMMANDE DE LA PELLE RETRO, 6 TIROIRS

| REF | FN | PART NUMBER | YR/SN | QTY | DESCRIPTION |
|---|---|---|---|---|---|
| | | 86987459 | | 1 | DISTRIBUTEUR Backhoe, 6 Spool; Incl. Ref 1 - 9 |
| 1 | | {87441495} | | 1 | Inlet Section; Component Parts Not Serviced Separately |
| 2 | | 85826339 | | 1 | ELEMENT DISTR HYDR Swing Section; See Figure 08-40 |
| 3 | | 85826337 | | 1 | ELEMENT DISTR HYDR Boom Section; See Figure 08-41 |
| 4 | | 85826340 | | 2 | ELEMENT DISTR HYDR Stabilizer Section; See Figure 08-42 |
| 5 | | 85826338 | | 1 | ELEMENT DISTR HYDR Dipper Section; See Figure 08-43 |
| 6 | | 85826365 | | 1 | ELEMENT DISTR HYDR Bucket Section; See Figure 08-44 |
| 7 | | NSS | | 1 | NON FOURNI SEPAREMENT Outlet Section |
| 8 | | NSS | | 3 | NON FOURNI SEPAREMENT Tie Bolt |
| 9 | | NSS | | 3 | NON FOURNI SEPAREMENT Nut |

HTTP://WWW.MINNPARBACKHOEPARTS.COM



DISTRIBUTEUR - COMMANDE DE LA PELLE RETRO, 7 TIROIRS

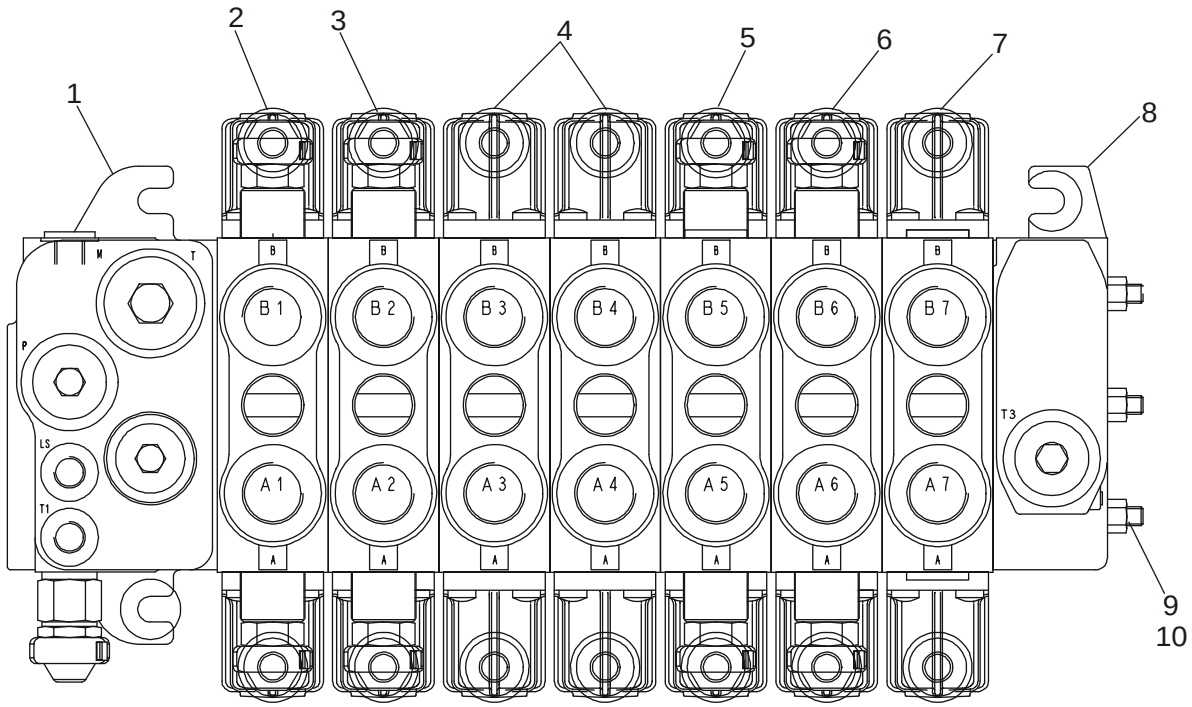


BS03N131

HTTP://WWW.MINNPARBACKHOEPARTS.COM



DISTRIBUTEUR - COMMANDE DE LA PELLE RETRO, 7 TIROIRS

| REF | FN | PART NUMBER | YR/SN | QTY | DESCRIPTION |
|---|---|---|---|---|---|
| | | 86987460 | | 1 | DISTRIBUTEUR Backhoe, 7 Spool; Incl. Ref 1 - 10 |
| 1 | | {87441495} | | 1 | Inlet Section; Component Parts Not Serviced Separately |
| 2 | | 85826339 | | 1 | ELEMENT DISTR HYDR Swing Section; See Figure 08-40 |
| 3 | | 85826337 | | 1 | ELEMENT DISTR HYDR Boom Section; See Figure 08-41 |
| 4 | | 85826340 | | 2 | ELEMENT DISTR HYDR Stabilizer Section; See Figure 08-42 |
| 5 | | 85826338 | | 1 | ELEMENT DISTR HYDR Dipper Section; See Figure 08-43 |
| 6 | | 85826365 | | 1 | ELEMENT DISTR HYDR Bucket Section; See Figure 08-44 |
| 7 | | 85826341 | | 1 | ELEMENT DISTR HYDR Extendable Dipper Section; See Figure 08-45 |
| 8 | | NSS | | 1 | NON FOURNI SEPAREMENT Outlet Section |
| 9 | | NSS | | 3 | NON FOURNI SEPAREMENT Tie Bolt |
| 10 | | NSS | | 3 | NON FOURNI SEPAREMENT Nut |

HTTP://WWW.MINNPARBACKHOEPARTS.COM



DISTRIBUTEUR - COMMANDE DE LA PELLE RETRO, 7 TIROIRS

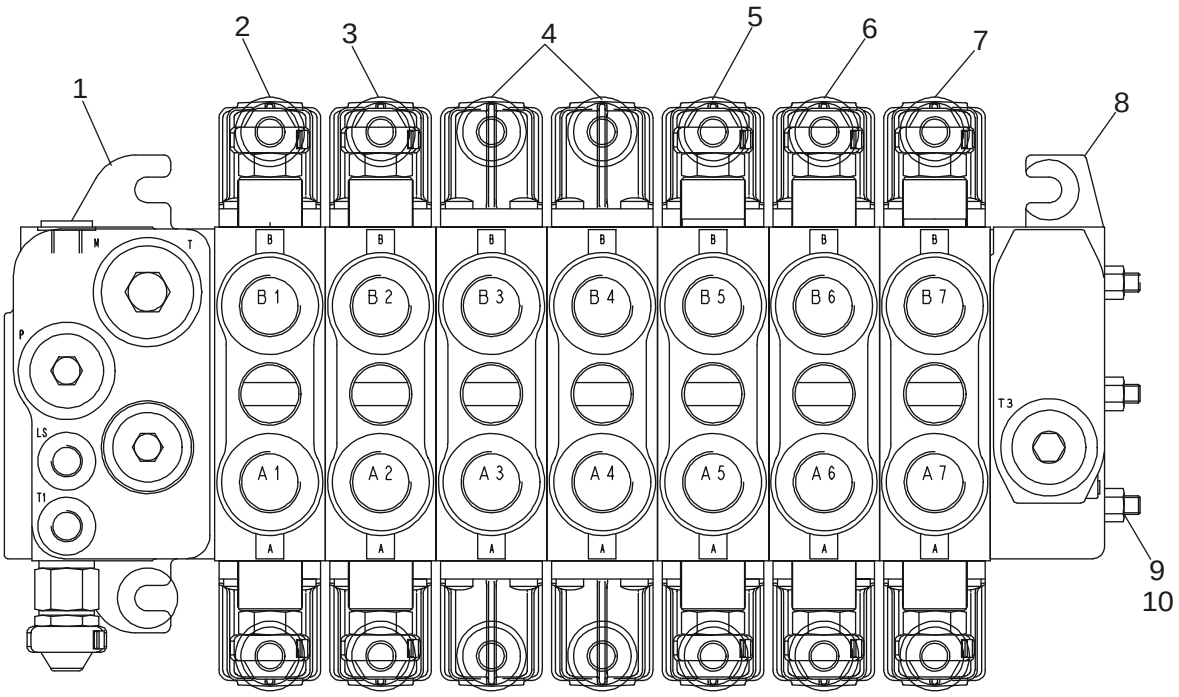


BS03N132

HTTP://WWW.MINNPARBACKHOEPARTS.COM



DISTRIBUTEUR - COMMANDE DE LA PELLE RETRO, 7 TIROIRS

| REF | FN | PART NUMBER | YR/SN | QTY | DESCRIPTION |
|---|---|---|---|---|---|
| | | 87407965 | | 1 | DISTRIBUTEUR Backhoe, 7 Spool; Incl. Ref 1 - 10 |
| 1 | | {87441495} | | 1 | Inlet Section; Component Parts Not Serviced Separately |
| 2 | | 85826339 | | 1 | ELEMENT DISTR HYDR Swing Section; See Figure 08-40 |
| 3 | | 85826337 | | 1 | ELEMENT DISTR HYDR Boom Section; See Figure 08-41 |
| 4 | | 85826340 | | 2 | ELEMENT DISTR HYDR Stabilizer Section; See Figure 08-42 |
| 5 | | 85826338 | | 1 | ELEMENT DISTR HYDR Dipper Section; See Figure 08-43 |
| 6 | | 85826365 | | 1 | ELEMENT DISTR HYDR Bucket Section; See Figure 08-44 |
| 7 | | 85826342 | | 1 | ELEMENT DISTR HYDR Auxiliary Section; See Figure 08-46 |
| 8 | | NSS | | 1 | NON FOURNI SEPAREMENT Outlet Section |
| 9 | | NSS | | 3 | NON FOURNI SEPAREMENT Tie Bolt |
| 10 | | NSS | | 3 | NON FOURNI SEPAREMENT Nut |

HTTP://WWW.MINNPARBACKHOEPARTS.COM



DISTRIBUTEUR - COMMANDE DE LA PELLE RETRO, 8 TIROIRS

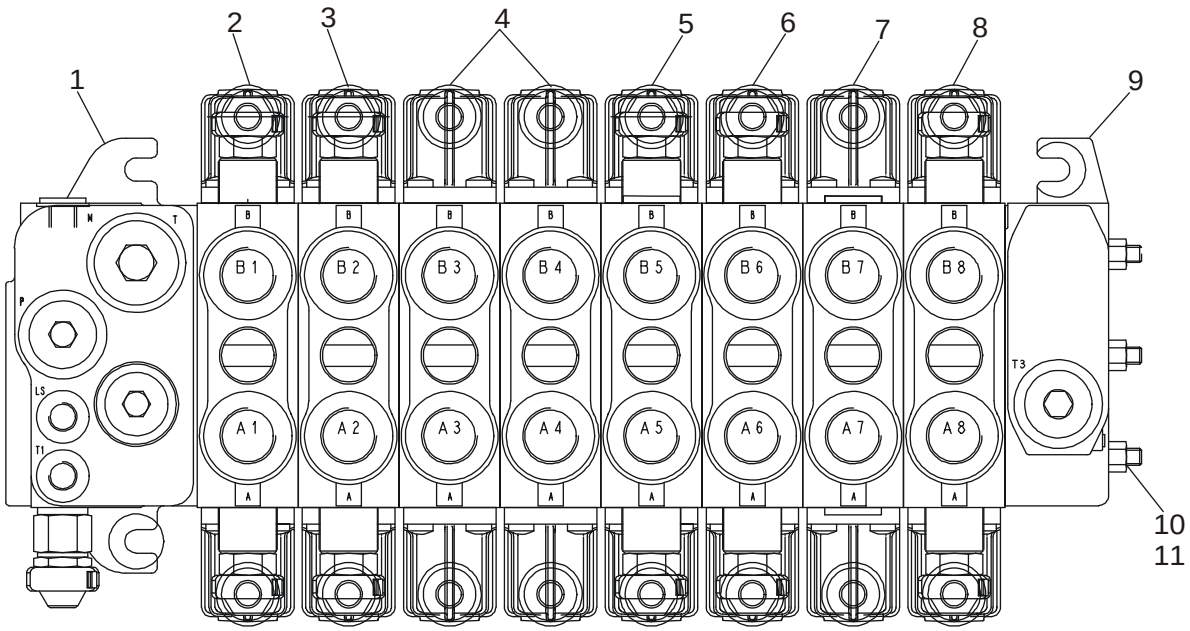


BS03N133

HTTP://WWW.MINNPARBACKHOEPARTS.COM



DISTRIBUTEUR - COMMANDE DE LA PELLE RETRO, 8 TIROIRS

| REF | FN | PART NUMBER | YR/SN | QTY | DESCRIPTION |
|---|---|---|---|---|---|
| | | 86987461 | | 1 | SOUPAPE HYDRAULIQUE Backhoe, 8 Spool; Incl. Ref 1 - 11 |
| 1 | | {87441495} | | 1 | Inlet Section; Component Parts Not Serviced Separately |
| 2 | | 85826339 | | 1 | ELEMENT DISTR HYDR Swing Section; See Figure 08-40 |
| 3 | | 85826337 | | 1 | ELEMENT DISTR HYDR Boom Section; See Figure 08-41 |
| 4 | | 85826340 | | 2 | ELEMENT DISTR HYDR Stabilizer Section; See Figure 08-42 |
| 5 | | 85826338 | | 1 | ELEMENT DISTR HYDR Dipper Section; See Figure 08-43 |
| 6 | | 85826365 | | 1 | ELEMENT DISTR HYDR Bucket Section; See Figure 08-44 |
| 7 | | 85826341 | | 1 | ELEMENT DISTR HYDR Extendable Dipper Section; See Figure 08-45 |
| 8 | | 85826342 | | 1 | ELEMENT DISTR HYDR Auxiliary Section; See Figure 08-46 |
| 9 | | NSS | | 1 | NON FOURNI SEPAREMENT Outlet Section |
| 10 | | NSS | | 3 | NON FOURNI SEPAREMENT Tie Bolt |
| 11 | | NSS | | 3 | NON FOURNI SEPAREMENT Nut |

HTTP://WWW.MINNPARBACKHOEPARTS.COM



CIRCUIT - DEBATTEMENT DE LA RETROPELLE (AVEC DE COMMANDE PILOTE)

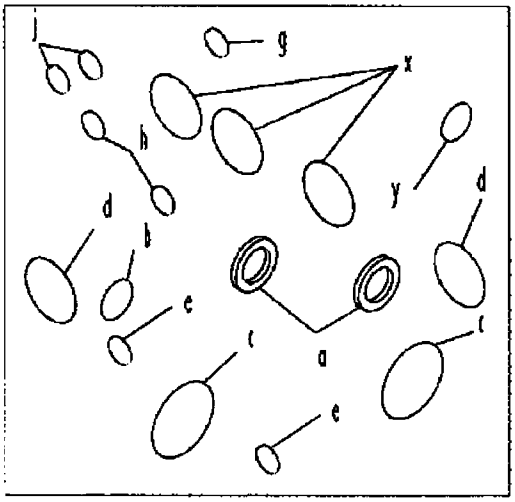


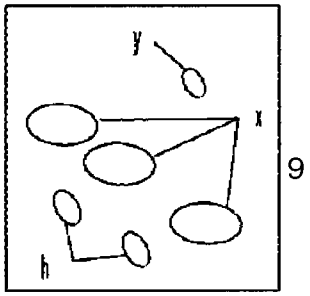


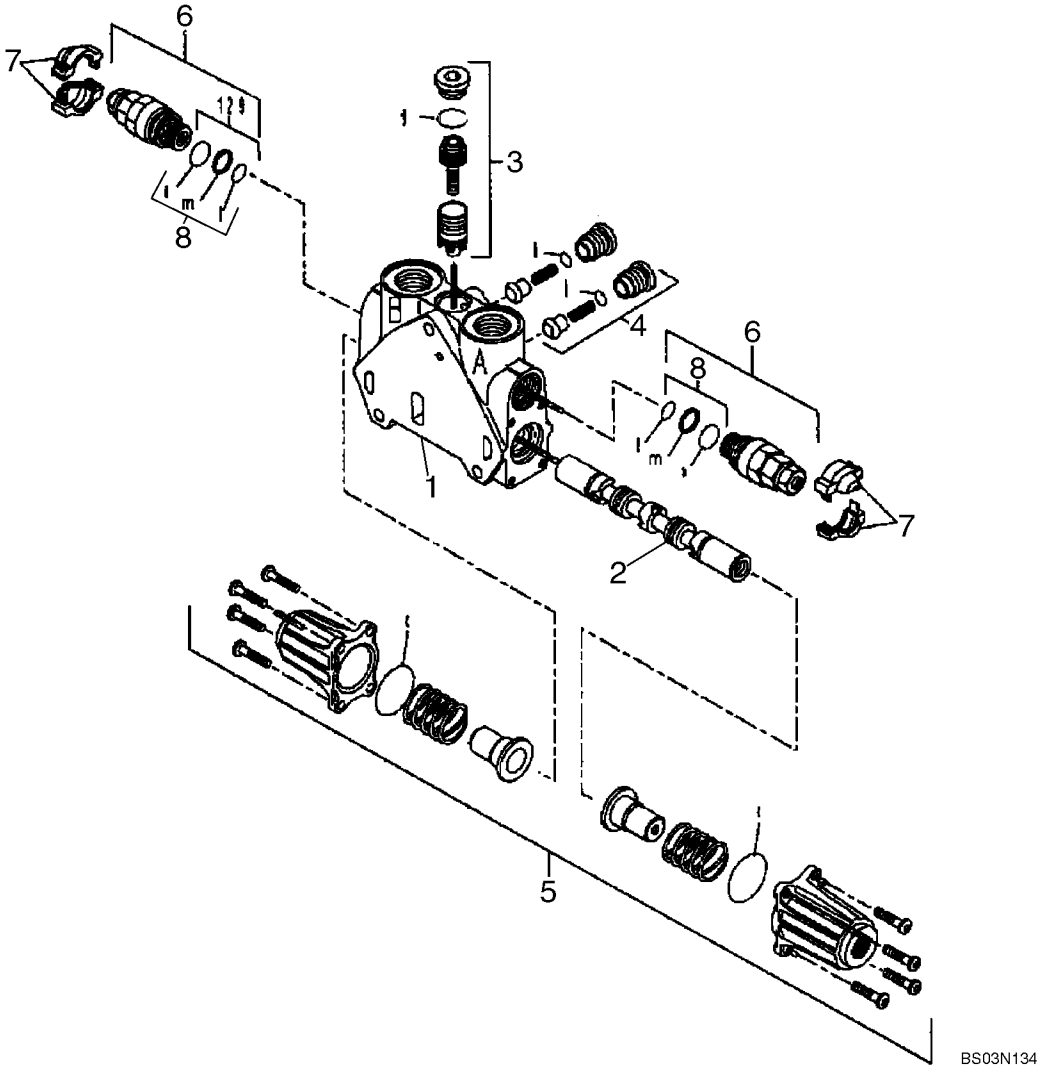

HTTP://WWW.MINNPARBACKHOEPARTS.COM



CIRCUIT - DEBATTEMENT DE LA RETROPELLE (AVEC DE COMMANDE PILOTE)

| REF | FN | PART NUMBER | YR/SN | QTY | DESCRIPTION |
|---|---|---|---|---|---|
| | | 85826339 | | 1 | ELEMENT DISTR HYDR Swing; Incl. Ref 1 - 10 |
| 1 | | NSS | | 1 | NON FOURNI SEPAREMENT HOUSING |
| 2 | | NSS | | 1 | NON FOURNI SEPAREMENT SPOOL |
| 3 | | {85826345} | | 1 | Pressure Compensator Kit; Component Parts Not Serviced Separately |
| 4 | | {85811938} | | 2 | Check Valve Kit; Component Parts Not Serviced Separately |
| 5 | | 85826344 | | 1 | KIT End Cap Kit; Component Parts Not Serviced Separately |
| 6 | | 85812114 | | 2 | SOUPAPE HYDRAULIQUE Pressure Relief Valve; Component Parts Not Serviced Separately |
| 7 | | 85811934 | | 2 | KIT Cover, Orange |
| 7 | | 85811935 | | 2 | KIT Cover, Blue |
| 8 | | 85811933 | | 2 | KIT Seal Kit Includes (2) O-Rings, (1) Thrust Ring; Component Parts Not Serviced Separately |
| 9 | | 85819148 | | 1 | KIT Seal Kit Includes (6) O-Rings; Component Parts Not Serviced Separately |
| 10 | | {85824282} | | 1 | Seal Kit Includes (15) O-Rings, (2) Lip Seals; Component Parts Not Serviced Separately |

HTTP://WWW.MINNPARBACKHOEPARTS.COM



CIRCUIT - FLECHE DE LA RETROPELLE (AVEC DE COMMANDE PILOTE)

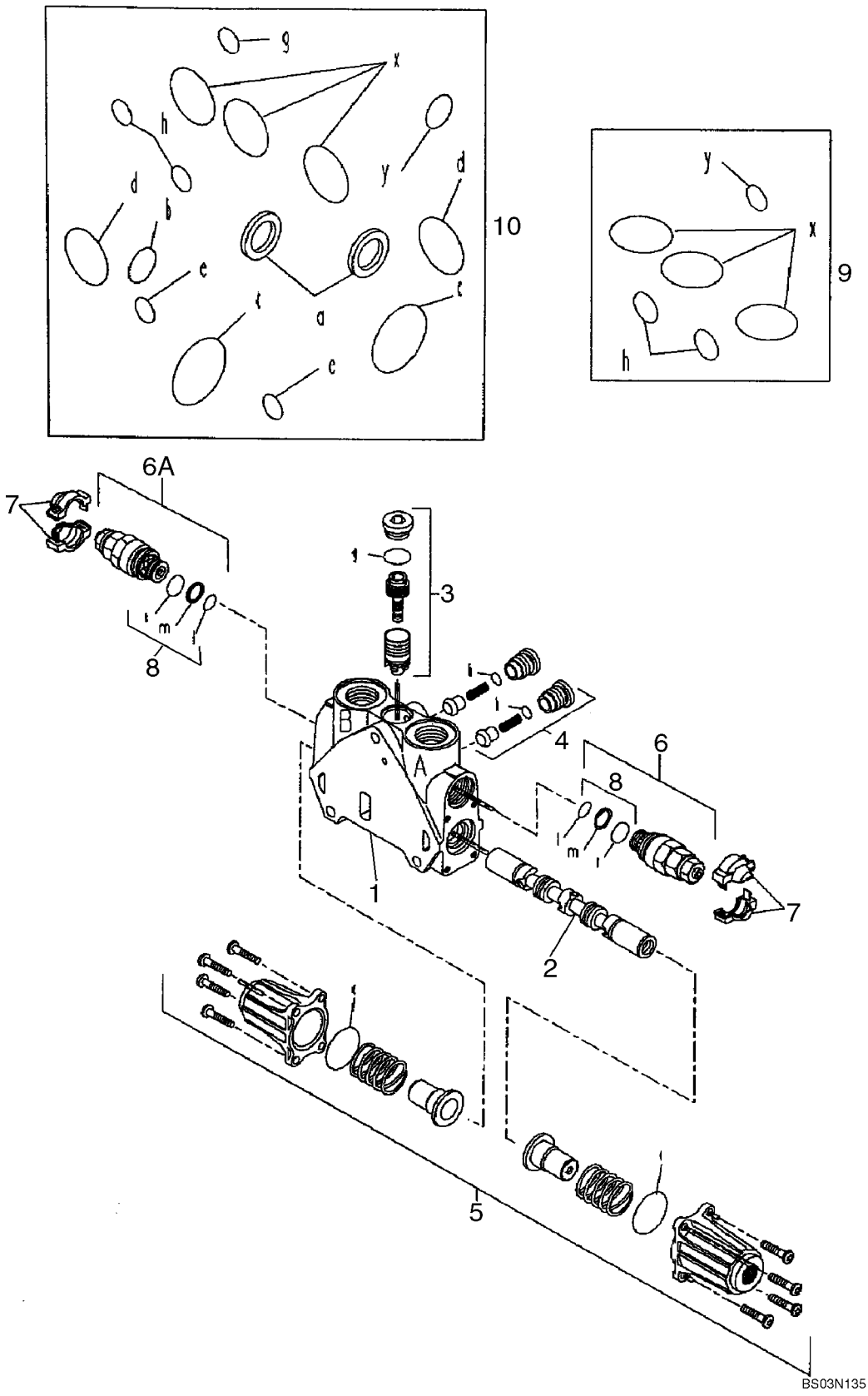

HTTP://WWW.MINNPARBACKHOEPARTS.COM



CIRCUIT - FLECHE DE LA RETROPELLE (AVEC DE COMMANDE PILOTE)

| REF | FN | PART NUMBER | YR/SN | QTY | DESCRIPTION |
|---|---|---|---|---|---|
| | | 85826337 | | 1 | ELEMENT DISTR HYDR Boom; Incl. Ref 1 - 10 |
| 1 | | NSS | | 1 | NON FOURNI SEPAREMENT HOUSING |
| 2 | | NSS | | 1 | NON FOURNI SEPAREMENT SPOOL |
| 3 | | 85819378 | | 1 | KIT Pressure Compensator Kit; Component Parts Not Serviced Separately |
| 4 | | {85811938} | | 2 | Check Valve Kit; Component Parts Not Serviced Separately |
| 5 | | 85826344 | | 1 | KIT End Cap Kit; Component Parts Not Serviced Separately |
| 6 | | 85812115 | | 1 | SOUPAPE HYDRAULIQUE Pressure Relief Valve Kit; Side A; Component Parts Not Serviced Separately |
| 6A | | {85826346} | | 1 | Pressure Relief Valve Kit; Side B; Component Parts Not Serviced Separately |
| 7 | | 85811934 | | 2 | KIT Cover, Orange |
| 7 | | 85811935 | | 2 | KIT Cover, Blue |
| 8 | | 85811933 | | 2 | KIT Seal Kit Includes (2) O-Rings, (1) Thrust Ring; Component Parts Not Serviced Separately |
| 9 | | 85819148 | | 1 | KIT Seal Kit Includes (6) O-Rings; Component Parts Not Serviced Separately |
| 10 | | {85824281} | | 1 | Seal Kit Includes (13) O-Rings, (2) Lip Seals; Component Parts Not Serviced Separately |

HTTP://WWW.MINNPARBACKHOEPARTS.COM



CIRCUIT - STABILISATEUR DE LA PELLE RETRO (AVEC DE COMMANDE PILOTE)

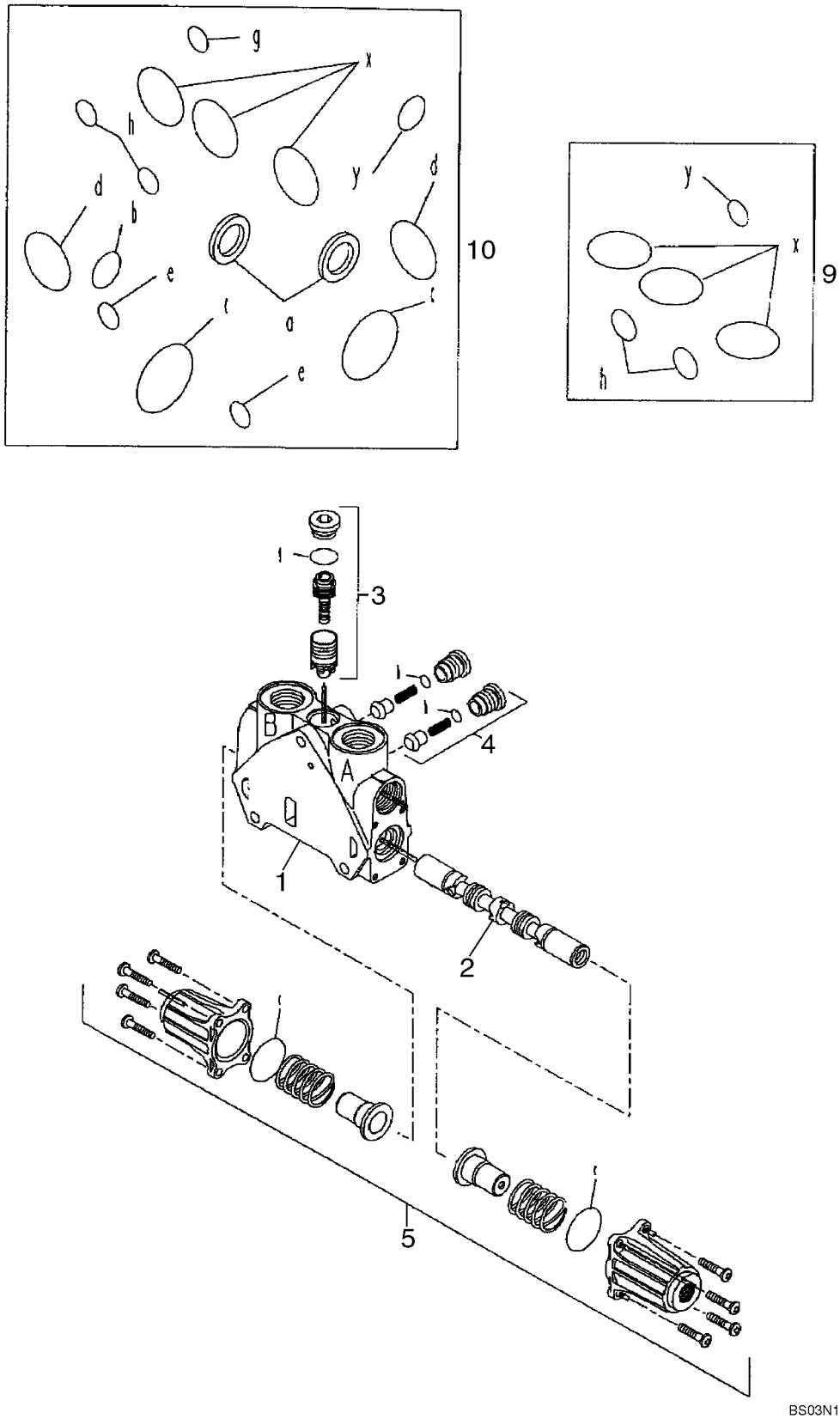

HTTP://WWW.MINNPARBACKHOEPARTS.COM



CIRCUIT - STABILISATEUR DE LA PELLE RETRO (AVEC DE COMMANDE PILOTE)

| REF | FN | PART NUMBER | YR/SN | QTY | DESCRIPTION |
|---|---|---|---|---|---|
| | | 85826340 | | 2 | ELEMENT DISTR HYDR Stabilizer; Left-Hand and Right-Hand; Incl. Ref 1 - 10 |
| 1 | | NSS | | 1 | NON FOURNI SEPAREMENT HOUSING |
| 2 | | NSS | | 1 | NON FOURNI SEPAREMENT SPOOL |
| 3 | | 85819378 | | 1 | KIT Pressure Compensator Kit; Component Parts Not Serviced Separately |
| 4 | | {85811938} | | 2 | Check Valve Kit; Component Parts Not Serviced Separately |
| 5 | | 85826344 | | 1 | KIT End Cap Kit; Component Parts Not Serviced Separately |
| 9 | | 85819148 | | 1 | KIT Seal Kit Includes (6) O-Rings; Component Parts Not Serviced Separately |
| 10 | | {85824281} | | 1 | Seal Kit Includes (13) O-Rings, (2) Lip Seals; Component Parts Not Serviced Separately |

HTTP://WWW.MINNPARBACKHOEPARTS.COM



CIRCUIT - BRAS DE LA RETROPELLE (AVEC DE COMMANDE PILOTE)

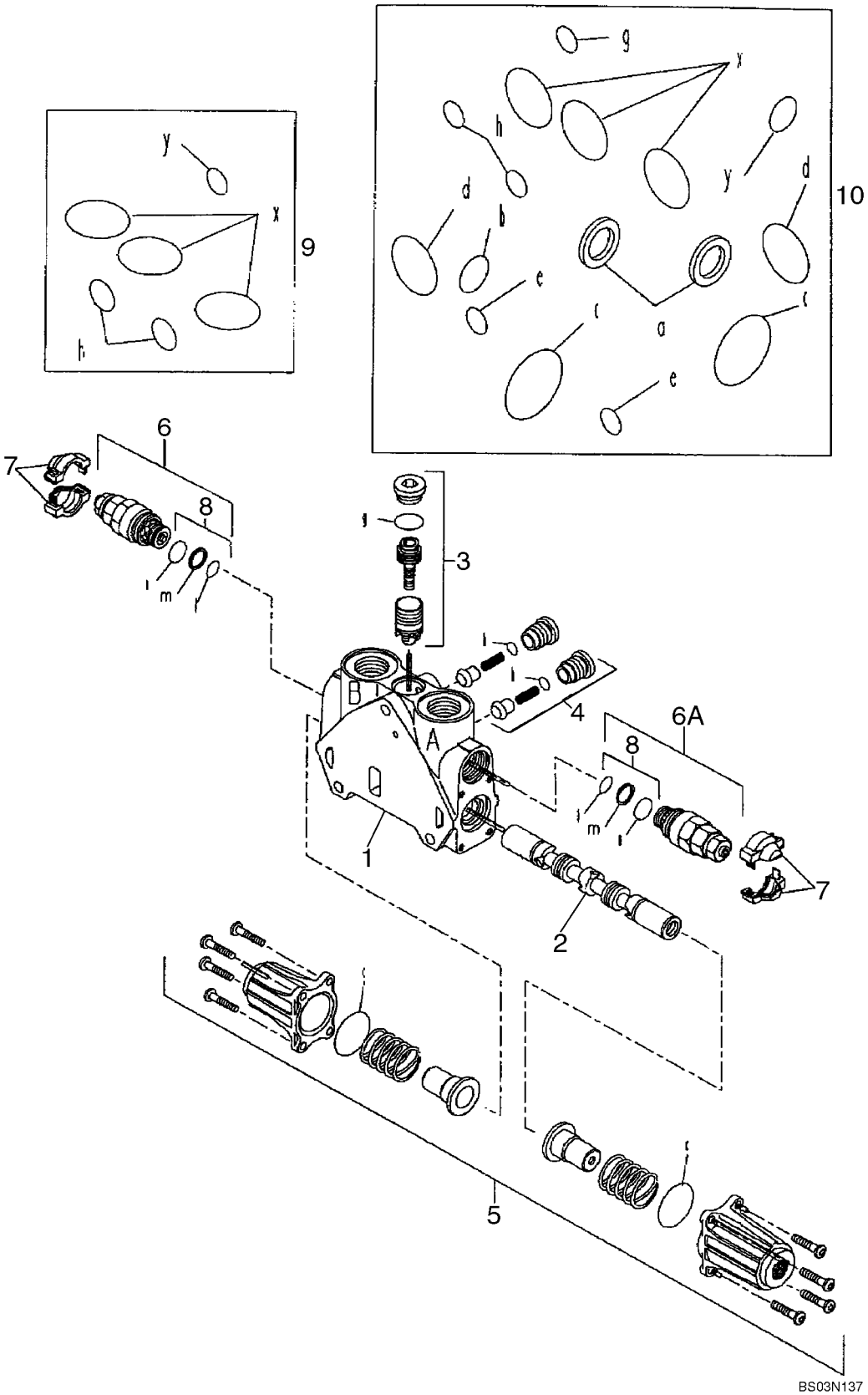

HTTP://WWW.MINNPARBACKHOEPARTS.COM



CIRCUIT - BRAS DE LA RETROPELLE (AVEC DE COMMANDE PILOTE)

| REF | FN | PART NUMBER | YR/SN | QTY | DESCRIPTION |
|---|---|---|---|---|---|
| | | 85826338 | | 1 | ELEMENT DISTR HYDR Dipper; Incl. Ref 1 - 10 |
| 1 | | NSS | | 1 | NON FOURNI SEPAREMENT HOUSING |
| 2 | | NSS | | 1 | NON FOURNI SEPAREMENT SPOOL |
| 3 | | {85826345} | | 1 | Pressure Compensator Kit; Component Parts Not Serviced Separately |
| 4 | | {85811938} | | 2 | Check Valve Kit; Component Parts Not Serviced Separately |
| 5 | | 85826344 | | 1 | KIT End Cap Kit; Component Parts Not Serviced Separately |
| 6 | | 85812116 | | 1 | SOUPAPE HYDRAULIQUE Pressure Relief Valve; Side B; Component Parts Not Serviced Separately |
| 6A | | {85826343} | | 1 | Pressure Relief Valve; Side A; Component Parts Not Serviced Separately |
| 7 | | 85811934 | | 2 | KIT Cover, Orange |
| 7 | | 85811935 | | 2 | KIT Cover, Blue |
| 8 | | 85811933 | | 2 | KIT Seal Kit Includes (2) O-Rings, (1) Thrust Ring; Component Parts Not Serviced Separately |
| 9 | | 85819148 | | 1 | KIT Seal Kit Includes (6) O-Rings; Component Parts Not Serviced Separately |
| 10 | | {85824281} | | 1 | Seal Kit Includes (13) O-Rings, (2) Lip Seals; Component Parts Not Serviced Separately |

HTTP://WWW.MINNPARBACKHOEPARTS.COM



CIRCUIT - GODET DE LA RETROPELLE (AVEC DE COMMANDE PILOTE)

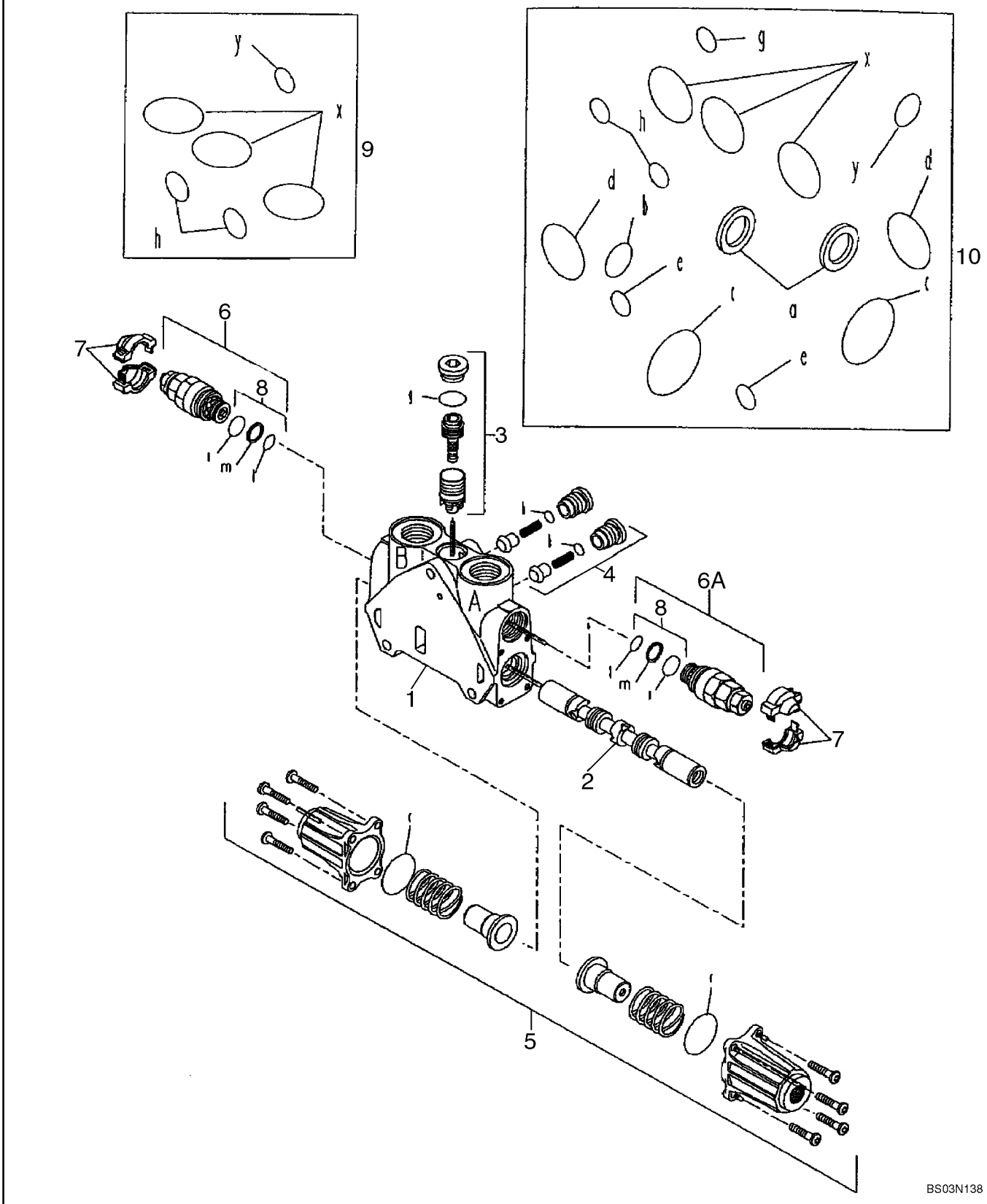

HTTP://WWW.MINNPARBACKHOEPARTS.COM



CIRCUIT - GODET DE LA RETROPELLE (AVEC DE COMMANDE PILOTE)

| REF | FN | PART NUMBER | YR/SN | QTY | DESCRIPTION |
|---|---|---|---|---|---|
| | | 85826365 | | 1 | ELEMENT DISTR HYDR Bucket; Incl. Ref 1 - 10 |
| 1 | | NSS | | 1 | NON FOURNI SEPAREMENT HOUSING |
| 2 | | NSS | | 1 | NON FOURNI SEPAREMENT SPOOL |
| 3 | | 85819378 | | 1 | KIT Pressure Compensator Kit; Component Parts Not Serviced Separately |
| 4 | | {85811938} | | 2 | Check Valve Kit; Component Parts Not Serviced Separately |
| 5 | | 85826344 | | 1 | KIT End Cap Kit; Component Parts Not Serviced Separately |
| 6 | | 85812116 | | 1 | SOUPAPE HYDRAULIQUE Pressure Relief Valve; Side B; Component Parts Not Serviced Separately |
| 6A | | {85826905} | | 1 | Pressure Relief Valve; Side A; Component Parts Not Serviced Separately |
| 7 | | 85811934 | | 2 | KIT Cover, Orange |
| 7 | | 85811935 | | 2 | KIT Cover, Blue |
| 8 | | 85811933 | | 2 | KIT Seal Kit Includes (2) O-Rings, (1) Thrust Ring; Component Parts Not Serviced Separately |
| 9 | | 85819148 | | 1 | KIT Seal Kit Includes (6) O-Rings; Component Parts Not Serviced Separately |
| 10 | | {85824281} | | 1 | Seal Kit Includes (13) O-Rings, (2) Lip Seals; Component Parts Not Serviced Separately |

HTTP://WWW.MINNPARBACKHOEPARTS.COM



CIRCUIT - BALANCIER EXTENSIBLE (AVEC DE COMMANDE PILOTE)

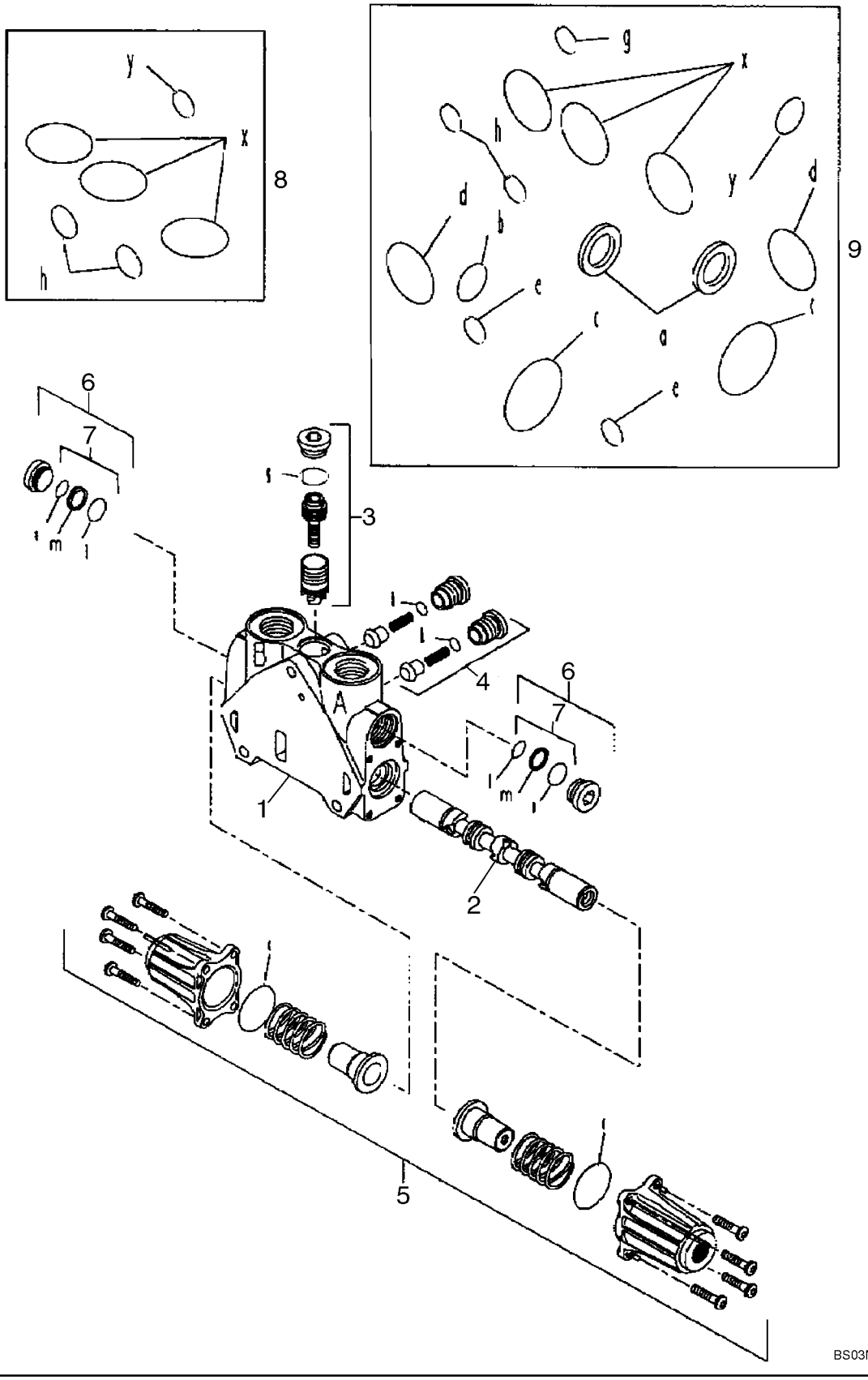

HTTP://WWW.MINNPARBACKHOEPARTS.COM



CIRCUIT - BALANCIER EXTENSIBLE (AVEC DE COMMANDE PILOTE)

| REF | FN | PART NUMBER | YR/SN | QTY | DESCRIPTION |
|---|---|---|---|---|---|
| | | 85826341 | | 1 | ELEMENT DISTR HYDR Extendable Dipper; Incl. Ref 1 - 9 |
| 1 | | NSS | | 1 | NON FOURNI SEPAREMENT HOUSING |
| 2 | | NSS | | 1 | NON FOURNI SEPAREMENT SPOOL |
| 3 | | 85819378 | | 1 | KIT Pressure Compensator Kit; Component Parts Not Serviced Separately |
| 4 | | {85811938} | | 2 | Check Valve Kit; Component Parts Not Serviced Separately |
| 5 | | 85826344 | | 1 | KIT End Cap Kit; Component Parts Not Serviced Separately |
| 6 | | {85811937} | | 2 | Plug Assembly Kit; Component Parts Not Serviced Separately |
| 7 | | 85811933 | | 2 | KIT Seal Kit Includes (2) O-Rings, (1) Thrust Ring; Component Parts Not Serviced Separately |
| 8 | | 85819148 | | 1 | KIT Seal Kit Includes (6) O-Rings; Component Parts Not Serviced Separately |
| 9 | | {85824281} | | 1 | Seal Kit Includes (13) O-Rings, (2) Lip Seals; Component Parts Not Serviced Separately |

HTTP://WWW.MINNPARBACKHOEPARTS.COM



CIRCUIT - OPTIONS, CIRCUIT HYDRAULIQUE AUXILIAIRE (AVEC DE COMMANDE PILOTE)

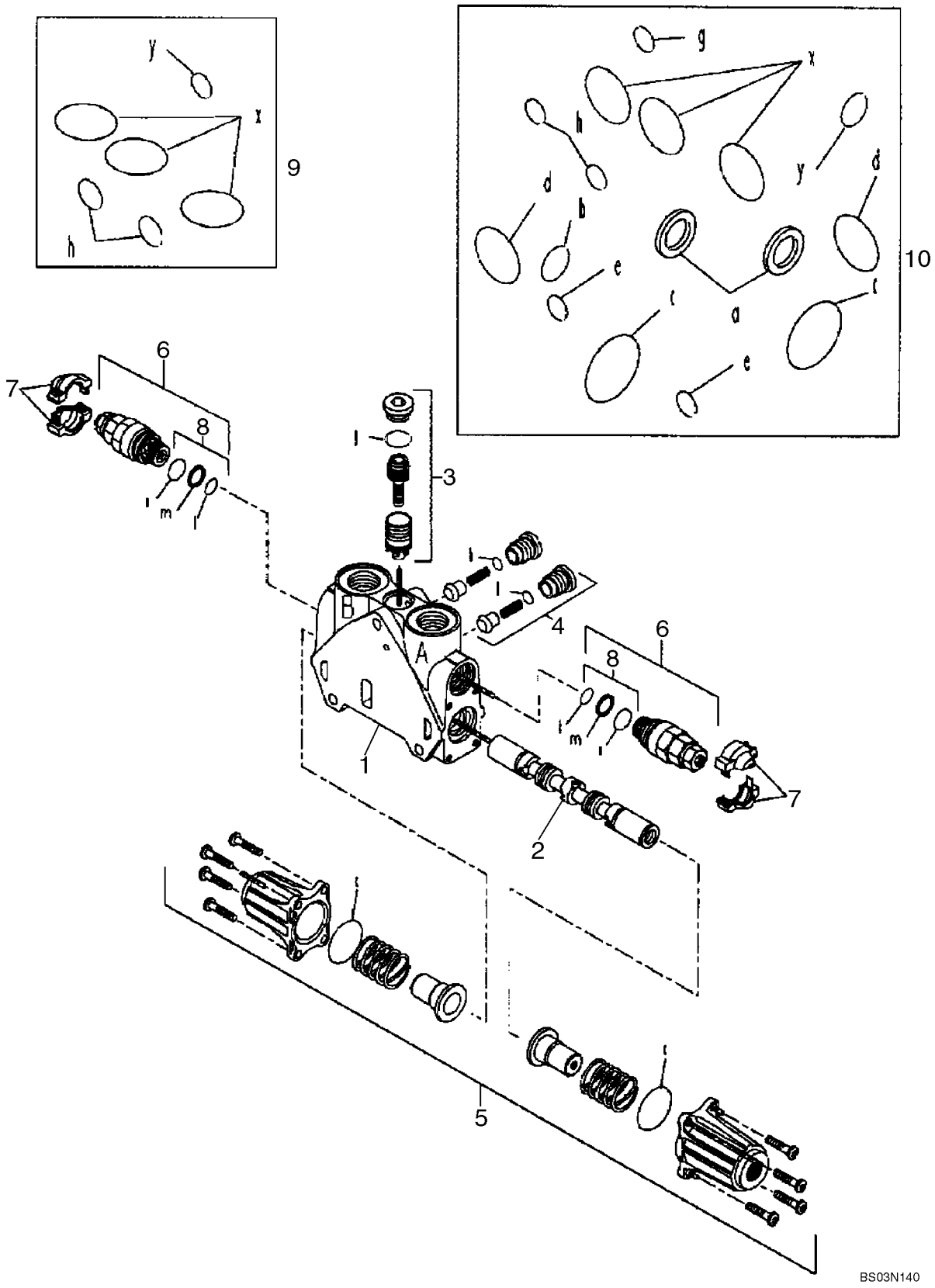

HTTP://WWW.MINNPARBACKHOEPARTS.COM



CIRCUIT - OPTIONS, CIRCUIT HYDRAULIQUE AUXILIAIRE (AVEC DE COMMANDE PILOTE)

| REF | FN | PART NUMBER | YR/SN | QTY | DESCRIPTION |
|---|---|---|---|---|---|
| | | 85826342 | | 1 | ELEMENT DISTR HYDR Options, Auxiliary Hydraulics; Incl. Ref 1 - 10 |
| 1 | | NSS | | 1 | NON FOURNI SEPAREMENT HOUSING |
| 2 | | NSS | | 1 | NON FOURNI SEPAREMENT SPOOL |
| 3 | | 85819378 | | 1 | KIT Pressure Compensator Kit; Component Parts Not Serviced Separately |
| 4 | | {85811938} | | 2 | Check Valve Kit; Component Parts Not Serviced Separately |
| 5 | | 85826344 | | 1 | KIT End Cap Kit; Component Parts Not Serviced Separately |
| 6 | | 85812115 | | 2 | SOUPAPE HYDRAULIQUE Pressure Relief Valve; Component Parts Not Serviced Separately |
| 7 | | 85811934 | | 2 | KIT Cover, Orange |
| 7 | | 85811935 | | 2 | KIT Cover, Blue |
| 8 | | 85811933 | | 2 | KIT Seal Kit Includes (2) O-Rings, (1) Thrust Ring; Component Parts Not Serviced Separately |
| 9 | | 85819148 | | 1 | KIT Seal Kit Includes (6) O-Rings; Component Parts Not Serviced Separately |
| 10 | | {85824281} | | 1 | Seal Kit Includes (13) O-Rings, (2) LIp Seals; Component Parts Not Serviced Separately |

HTTP://WWW.MINNPARBACKHOEPARTS.COM

| 08-47 | | p1 | 01/04 |
|---|---|---|---|

DISTRIBUTEUR, SOUPAPE DE REDUCTION PRESSION (2 SPOOL) (AVEC DE COMMANDE PILOTE)

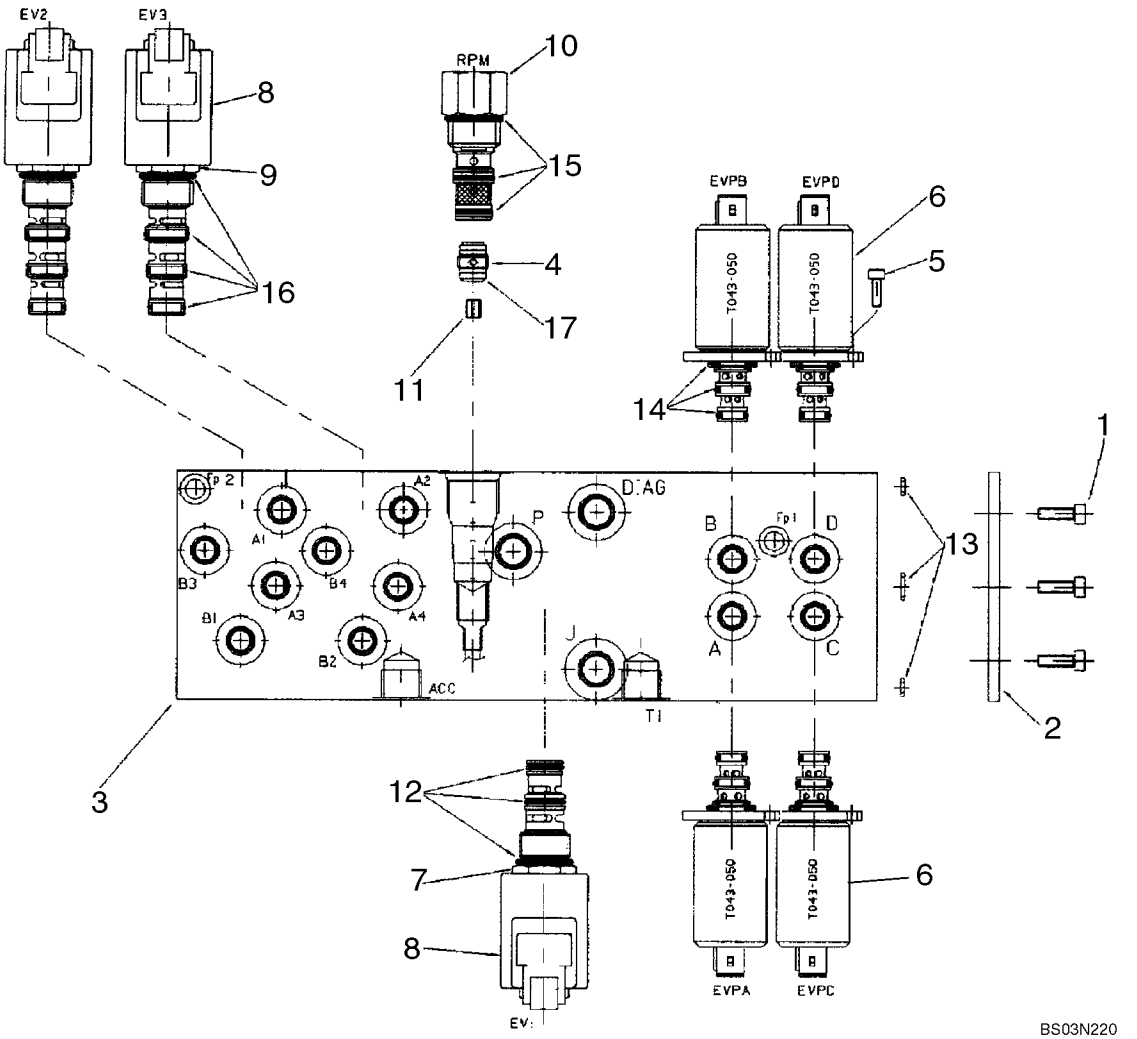

HTTP://WWW.MINNPARBACKHOEPARTS.COM



DISTRIBUTEUR, SOUPAPE DE REDUCTION PRESSION (2 SPOOL) (AVEC DE COMMANDE PILOTE)

| REF | FN | PART NUMBER | YR/SN | QTY | DESCRIPTION |
|---|---|---|---|---|---|
| | | 85827472 | | 1 | SOUPAPE HYDRAULIQUE Pressure Reducing, Two Spool, Pilot Controls; Incl. Ref 1 - 17 |
| 1 | | {14304021} | | 3 | M5 x 10 Screw |
| 2 | | {85827991} | | 1 | Sealing Plate |
| 3 | | {85828013} | | 1 | Manifold Block |
| 4 | | {85827992} | | 1 | Check Valve |
| 5 | | {14302921} | | 8 | M4 x 10 Screw |
| 6 | | {85827993} | | 4 | Pressure Reducing Valve |
| 7 | | {85827994} | | 1 | Solenoid Valve Cartridge, 3 Way, 2 Position |
| 8 | | {85827995} | | 3 | Coil With Diode |
| 9 | | {85827996} | | 2 | Solenoid Valve Cartridge, 4 Way, 2 Position |
| 10 | | {85827997} | | 1 | Mechanical Pressure Reducing Valve With Fixed Setting |
| 11 | | {85828005} | | 1 | 1.8 mm Orifice |
| 12 | | {85827998} | | 1 | O-Ring Kit |
| 13 | | {85827999} | | 1 | O-Ring Kit |
| 14 | | {85828000} | | 4 | O-Ring Kit |
| 15 | | {85828001} | | 1 | O-Ring Kit |
| 16 | | {85828002} | | 2 | O-Ring Kit |
| 17 | | {85828003} | | 1 | O-Ring, D9x1 |

HTTP://WWW.MINNPARBACKHOEPARTS.COM



DISTRIBUTEUR, SOUPAPE DE REDUCTION PRESSION (3 SPOOL) (AVEC DE COMMANDE PILOTE)

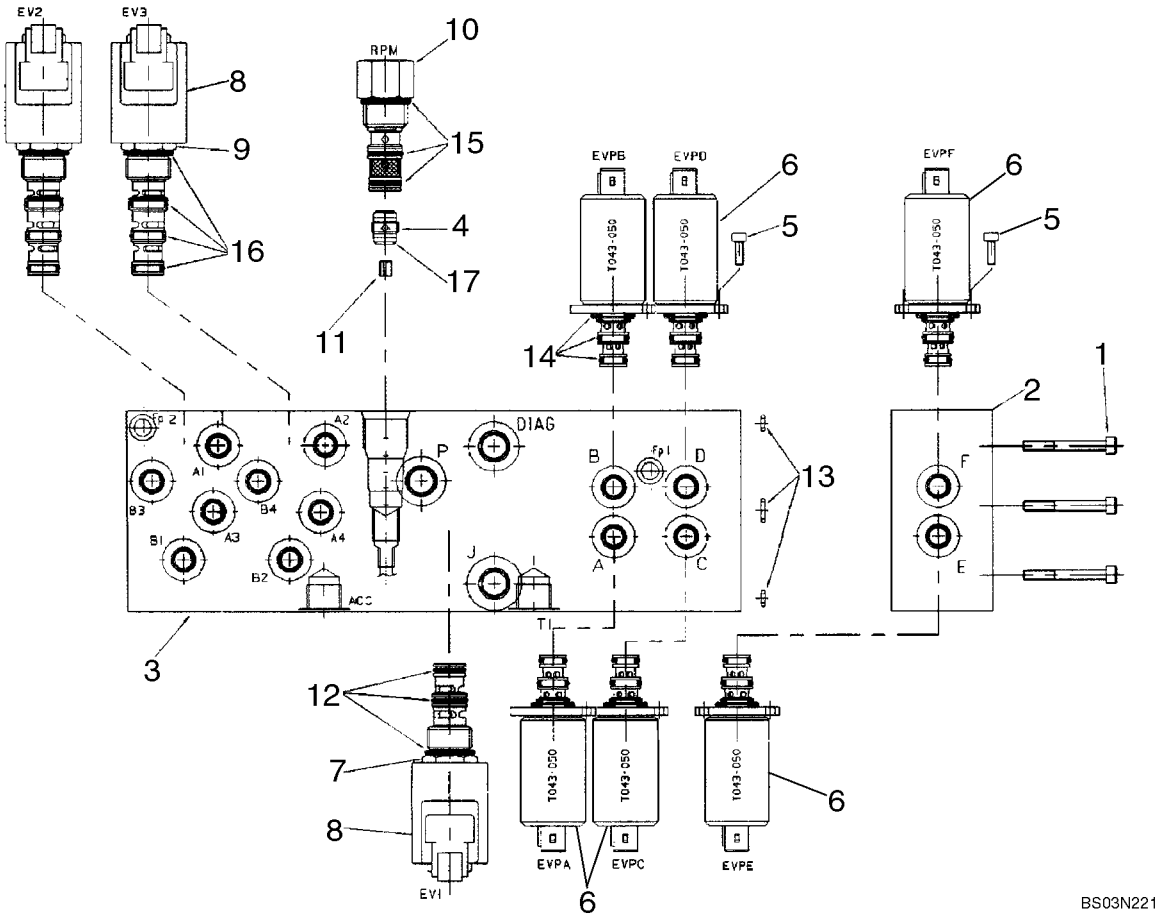

HTTP://WWW.MINNPARBACKHOEPARTS.COM



DISTRIBUTEUR, SOUPAPE DE REDUCTION PRESSION (3 SPOOL) (AVEC DE COMMANDE PILOTE)

| REF | FN | PART NUMBER | YR/SN | QTY | DESCRIPTION |
|---|---|---|---|---|---|
| | | 85827471 | | 1 | SOUPAPE HYDRAULIQUE Pressure Reducing, Three Spool, Pilot Controls; Incl. Ref 1 - 17 |
| 1 | | 14358921 | | 3 | VIS M5 x 45 Screw |
| 2 | | {85828004} | | 1 | One Function Add-On Manifold Block |
| 3 | | {85828015} | | 1 | Manifold Block |
| 4 | | {85827992} | | 1 | Check Valve |
| 5 | | {14302921} | | 12 | M4 x 10 Screw |
| 6 | | {85827993} | | 6 | Pressure Reducing Valve |
| 7 | | {85827994} | | 1 | Solenoid Valve Cartridge, 3 Way, 2 Position |
| 8 | | {85827995} | | 3 | Coil With Diode |
| 9 | | {85827996} | | 2 | Solenoid Valve Cartridge, 4 Way, 2 Position |
| 10 | | {85827997} | | 1 | Mechanical Pressure Reducing Valve With Fixed Setting |
| 11 | | {85828005} | | 1 | 1.8 mm Orifice |
| 12 | | {85827998} | | 1 | O-Ring Kit |
| 13 | | {85827999} | | 1 | O-Ring Kit |
| 14 | | {85828000} | | 6 | O-Ring Kit |
| 15 | | {85828001} | | 1 | O-Ring Kit |
| 16 | | {85828002} | | 2 | O-Ring Kit |
| 17 | | {85828003} | | 1 | O-Ring, D9x1 |

HTTP://WWW.MINNPARBACKHOEPARTS.COM



DISTRIBUTEUR, SOUPAPE DE REDUCTION PRESSION (4 SPOOL) (AVEC DE COMMANDE PILOTE)

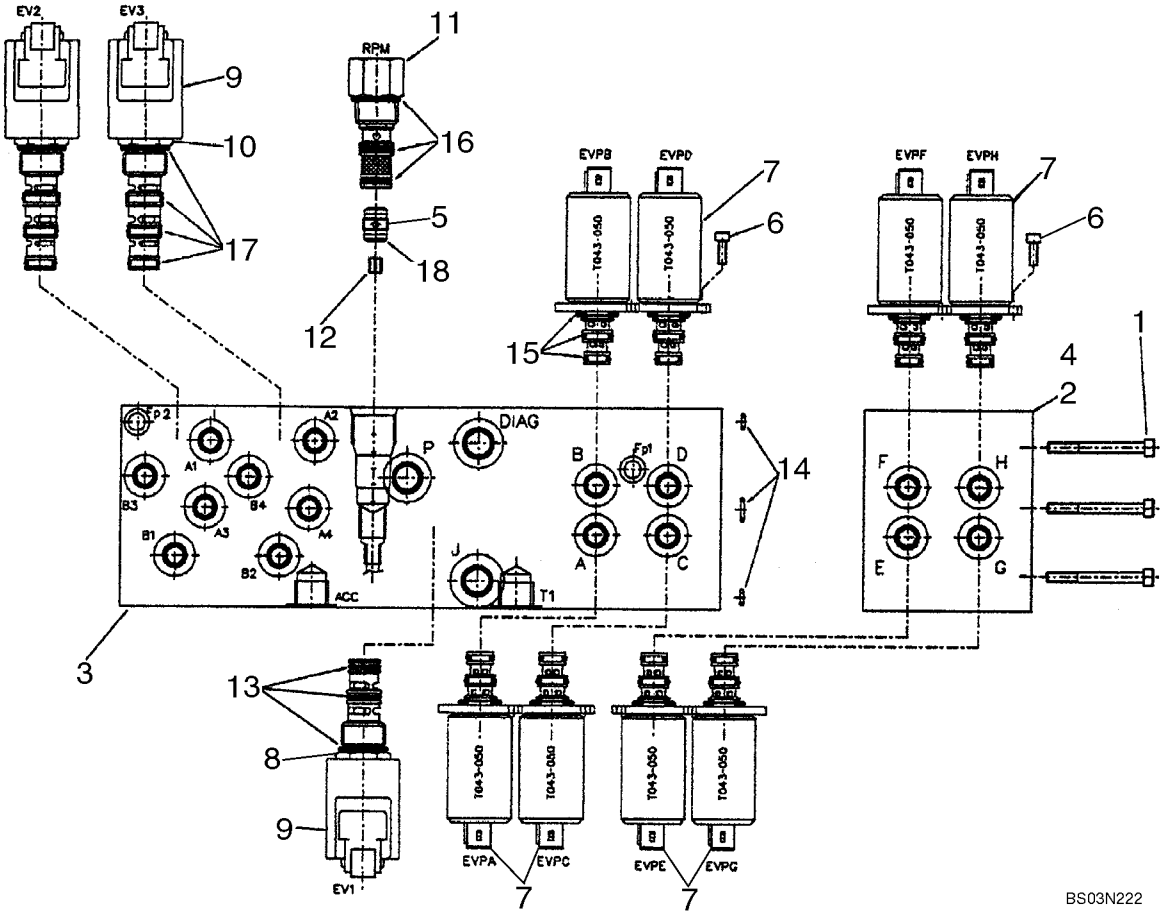

HTTP://WWW.MINNPARBACKHOEPARTS.COM



DISTRIBUTEUR, SOUPAPE DE REDUCTION PRESSION (4 SPOOL) (AVEC DE COMMANDE PILOTE)

| REF | FN | PART NUMBER | YR/SN | QTY | DESCRIPTION |
|---|---|---|---|---|---|
| | | 87434621 | | 1 | DISTRIBUTEUR Pressure Reducing, Four Spool, Pilot Controls; Incl. Ref 1 - 18 |
| 1 | | {85828061} | | 3 | M5 x 80 Screw |
| 2 | | {85828048} | | 1 | Manifold Block |
| 3 | | {85828015} | | 1 | Manifold Block |
| 4 | | {85828054} | | 1 | Manifold Block |
| 5 | | {85827992} | | 1 | Check Valve |
| 6 | | {14302921} | | 16 | M4 x 10 Screw |
| 7 | | {85827993} | | 8 | Pressure Reducing Valve |
| 8 | | {85827994} | | 1 | Solenoid Valve Cartridge, 3 Way, 2 Position |
| 9 | | {85827995} | | 3 | Coil With Diode |
| 10 | | {85827996} | | 2 | Solenoid Valve Cartridge, 4 Way, 2 Position |
| 11 | | {85827997} | | 1 | Mechanical Pressure Reducing Valve With Fixed Setting |
| 12 | | {85828005} | | 1 | 1.8 mm Orifice |
| 13 | | {85827998} | | 1 | O-Ring Kit |
| 14 | | {85827999} | | 1 | O-Ring Kit |
| 15 | | {85828000} | | 8 | O-Ring Kit |
| 16 | | {85828001} | | 1 | O-Ring Kit |
| 17 | | {85828002} | | 2 | O-Ring Kit |
| 18 | | {85828003} | | 1 | O-Ring, D9x1 |

HTTP://WWW.MINNPARBACKHOEPARTS.COM



DISTRIBUTEUR, LEVIER DE COMMANDE (COMMANDE PILOTE) (GAUCHE) AVERTISSEUR SONORE

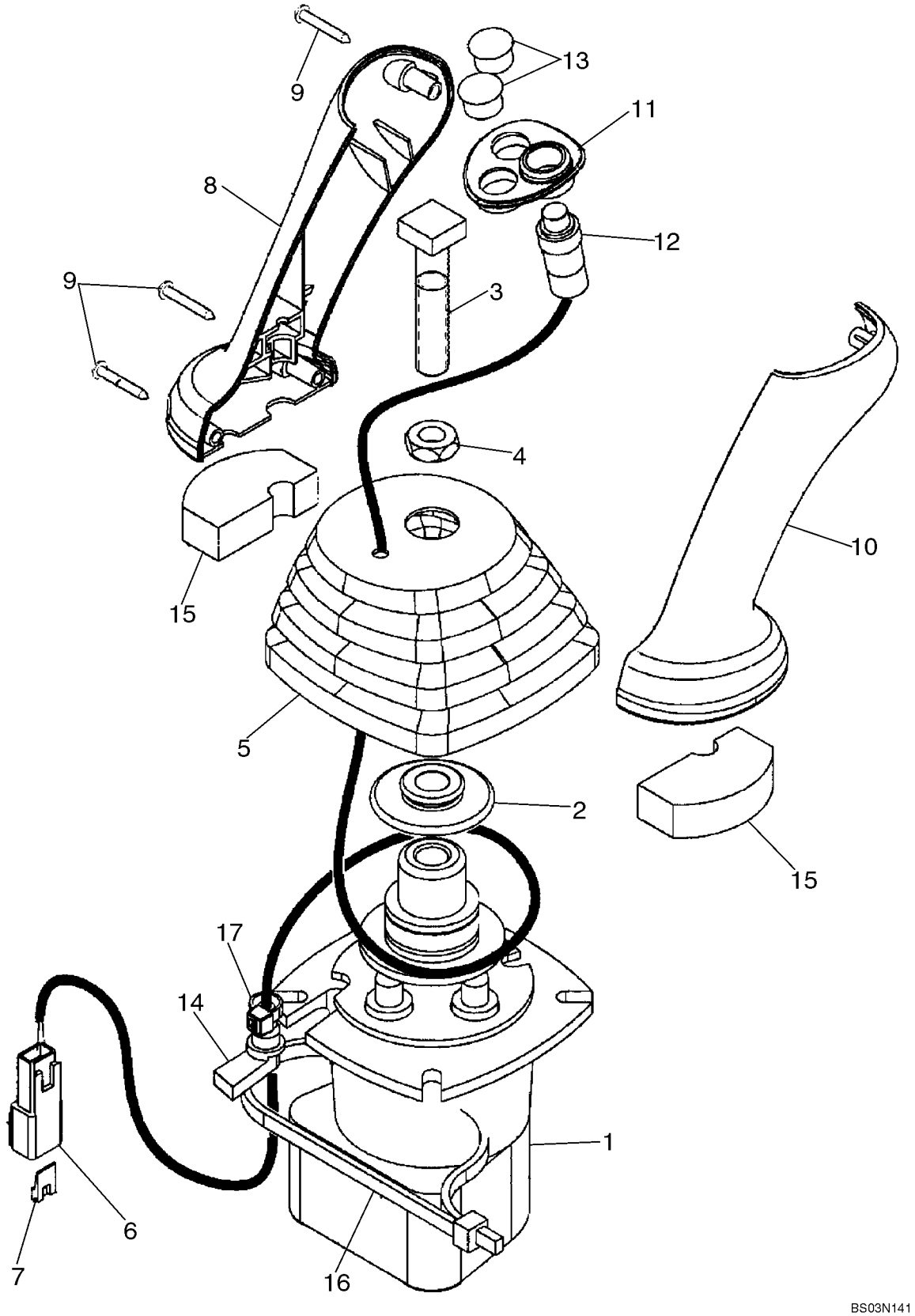

HTTP://WWW.MINNPARBACKHOEPARTS.COM



DISTRIBUTEUR, LEVIER DE COMMANDE (COMMANDE PILOTE) (GAUCHE) AVERTISSEUR SONORE

| REF | FN | PART NUMBER | YR/SN | QTY | DESCRIPTION |
|---|---|---|---|---|---|
| | | 87437733 | | 1 | DISTRIBUTEUR Joystick, Pilot Controls, Left-Hand, With Horn Button; Incl. Ref 1 - 17 |
| 1 | | 86983311 | | 1 | DISTRIBUTEUR Pilot Control Joystick Valve; Component Parts Not Serviced Separately |
| 2 | | 87436225 | | 1 | RETENEUR Control Boot Retainer |
| 3 | | 87428023 | | 1 | BOULON Square Head Bolt |
| 4 | | 87037944 | | 1 | ECROU Thin M12 Nut |
| 5 | | 87428134 | | 1 | MANCHETTE Control Handle Boot |
| 6 | | 225315C1 | | 1 | CONNECTEUR |
| 7 | | 225318C1 | | 1 | CALE DE BLOCAGE Connector |
| 8 | | 87428164 | | 1 | POMMEAU Joystick Control Handle |
| 9 | | 87032819 | | 3 | VIS AUTO-TARAUDEUSE Special |
| 10 | | 87428165 | | 1 | POMMEAU Joystick Control Handle |
| 11 | | 87435243 | | 1 | ENCADREMENT Switch Mounting Bezel |
| 12 | | 87437372 | | 1 | INTERRUPTEUR COMPLET Push Button Horn Switch |
| 13 | | 86625128 | | 2 | BOUCHON Dome Plug, .562 inch, Black Nylon |
| 14 | | 87424267 | | 1 | PASSE-FIL Wire Grommet |
| 15 | | 87435506 | | 2 | PROTECTION DE JOINT Pilot Control Handle Seal, Lower |
| 16 | | 87438046 | | 1 | SANGLE Tie Strap |
| 17 | | 87000312 | | 1 | SANGLE Black Tie Strap |

HTTP://WWW.MINNPARBACKHOEPARTS.COM



DISTRIBUTEUR, LEVIER DE COMMANDE (COMMANDE PILOTE) (GAUCHE) AVERTISSEUR SONORE & UNI-DIR

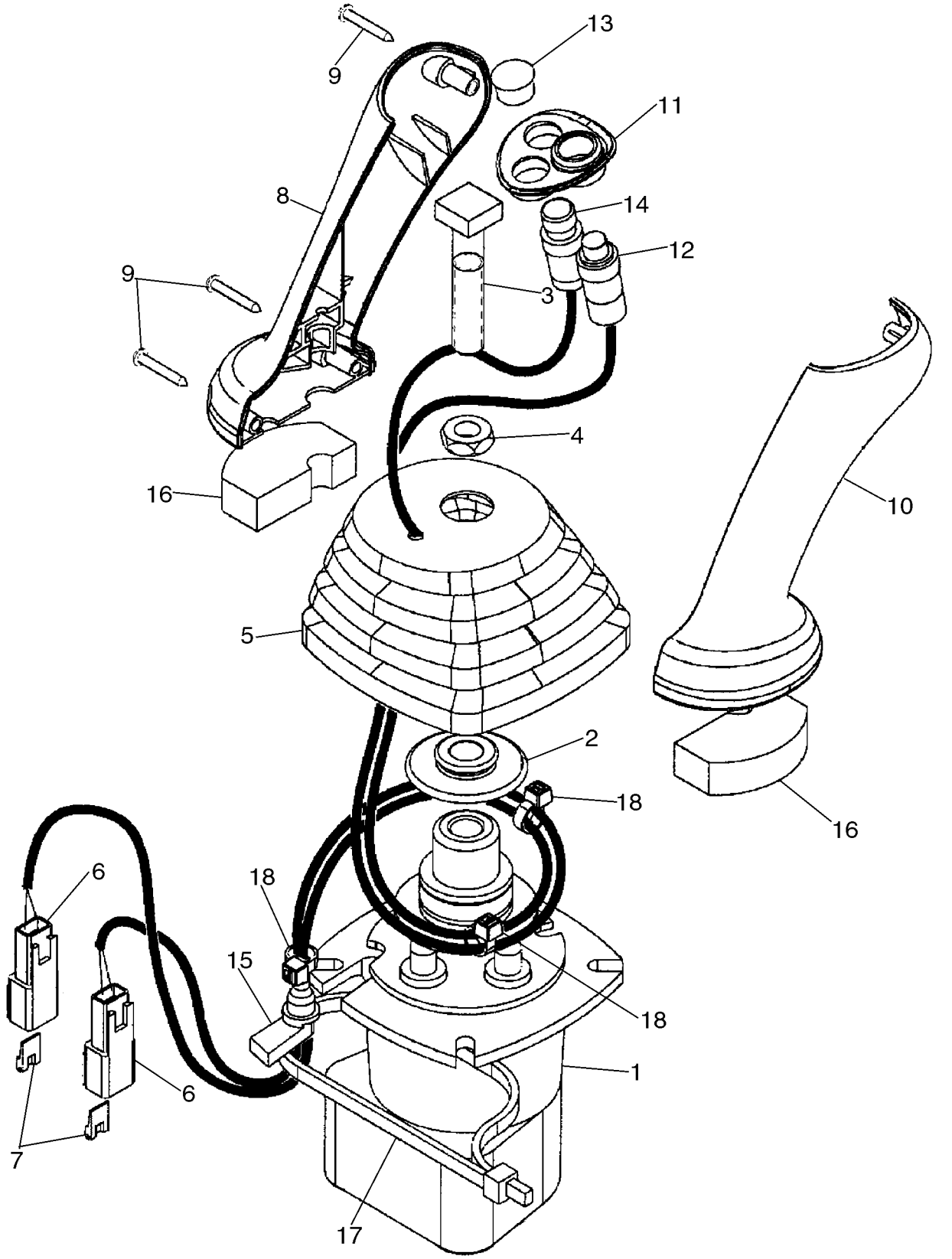

HTTP://WWW.MINNPARBACKHOEPARTS.COM



DISTRIBUTEUR, LEVIER DE COMMANDE (COMMANDE PILOTE) (GAUCHE) AVERTISSEUR SONORE & UNI-DIR

| REF | FN | PART NUMBER | YR/SN | QTY | DESCRIPTION |
|---|---|---|---|---|---|
| | | 87437735 | | 1 | DISTRIBUTEUR Joystick, Pilot Controls, Left-Hand, With Horn and Uni-Directional Buttons; Incl. Ref 1 - 18 |
| 1 | | 86983311 | | 1 | DISTRIBUTEUR Pilot Control Joystick Valve; Component Parts Not Serviced Separately |
| 2 | | 87436225 | | 1 | RETENEUR Control Boot Retainer |
| 3 | | 87428023 | | 1 | BOULON Square Head Bolt |
| 4 | | 87037944 | | 1 | ECROU Thin M12 Nut |
| 5 | | 87428134 | | 1 | MANCHETTE Control Handle Boot |
| 6 | | 225315C1 | | 2 | CONNECTEUR |
| 7 | | 225318C1 | | 2 | CALE DE BLOCAGE Connector |
| 8 | | 87428164 | | 1 | POMMEAU Joystick Control Handle |
| 9 | | 87032819 | | 3 | VIS AUTO-TARAUDEUSE Special |
| 10 | | 87428165 | | 1 | POMMEAU Joystick Control Handle |
| 11 | | 87435243 | | 1 | ENCADREMENT Switch Mounting Bezel |
| 12 | | 87437372 | | 1 | INTERRUPTEUR COMPLET Push Button Horn Switch |
| 13 | | 86625128 | | 1 | BOUCHON Dome Plug, .562 inch, Black Nylon |
| 14 | | 87437373 | | 1 | INTERRUPTEUR COMPLET Push Button Uni-Directional Auxiliary Hydraulic Switch |
| 15 | | 87424267 | | 1 | PASSE-FIL Wire Grommet |
| 16 | | 87435506 | | 2 | PROTECTION DE JOINT Pilot Control Handle Seal, Lower |
| 17 | | 87438046 | | 1 | SANGLE Tie Strap |
| 18 | | 87000312 | | 3 | SANGLE Black Tie Strap |

HTTP://WWW.MINNPARBACKHOEPARTS.COM

| 08-52 | | p1 | 01/04 |
|---|---|---|---|

DISTRIBUTEUR, LEVIER DE COMMANDE (COMMANDE PILOTE) (GAUCHE) AVERTISSEUR SONORE & BI-DIR

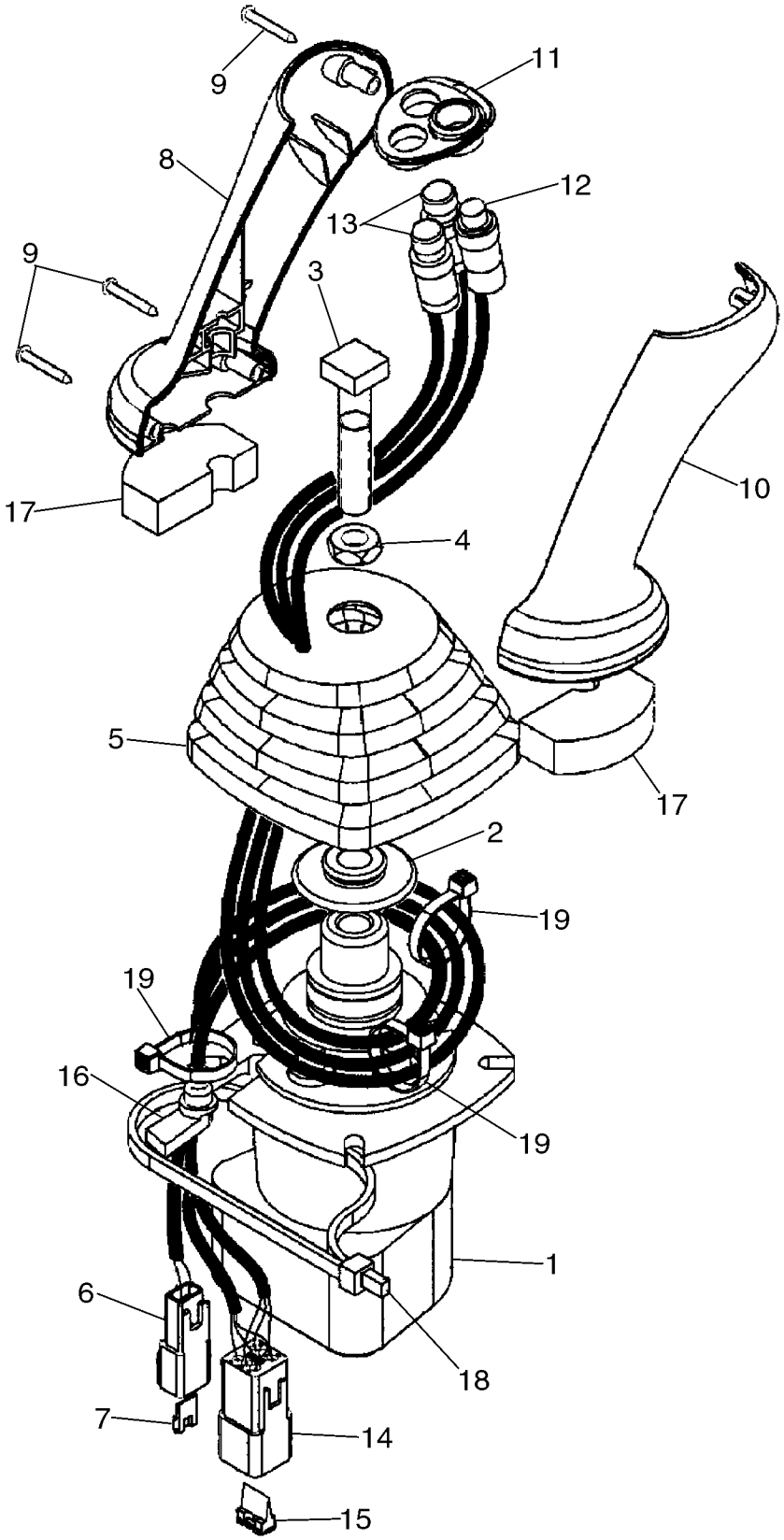

HTTP://WWW.MINNPARBACKHOEPARTS.COM



DISTRIBUTEUR, LEVIER DE COMMANDE (COMMANDE PILOTE) (GAUCHE) AVERTISSEUR SONORE & BI-DIR

| REF | FN | PART NUMBER | YR/SN | QTY | DESCRIPTION |
|---|---|---|---|---|---|
| | | 87437734 | | 1 | DISTRIBUTEUR Joystick, Pilot Controls, Left-Hand, With Horn and Bi-Directional Buttons; Incl. Ref 1 - 19 |
| 1 | | 86983311 | | 1 | DISTRIBUTEUR Pilot Control Joystick Valve; Component Parts Not Serviced Separately |
| 2 | | 87436225 | | 1 | RETENEUR Control Boot Retainer |
| 3 | | 87428023 | | 1 | BOULON Square Head Bolt |
| 4 | | 87037944 | | 1 | ECROU Thin M12 Nut |
| 5 | | 87428134 | | 1 | MANCHETTE Control Handle Boot |
| 6 | | 225315C1 | | 1 | CONNECTEUR |
| 7 | | 225318C1 | | 1 | CALE DE BLOCAGE Connector |
| 8 | | 87428164 | | 1 | POMMEAU Joystick Control Handle |
| 9 | | 87032819 | | 3 | VIS AUTO-TARAUDEUSE Special |
| 10 | | 87428165 | | 1 | POMMEAU Joystick Control Handle |
| 11 | | 87435243 | | 1 | ENCADREMENT Switch Mounting Bezel |
| 12 | | 87437372 | | 1 | INTERRUPTEUR COMPLET Push Button Horn Switch |
| 13 | | 87437371 | | 2 | INTERRUPTEUR COMPLET Push Button Bi-Directional Auxiliary Hydraulic Switch |
| 14 | | 225350C1 | | 1 | CONNECTEUR |
| 15 | | 225353C1 | | 1 | CALE DE BLOCAGE Connector |
| 16 | | 87424267 | | 1 | PASSE-FIL Wire Grommet |
| 17 | | 87435506 | | 2 | PROTECTION DE JOINT Pilot Control Handle Seal, Lower |
| 18 | | 87438046 | | 1 | SANGLE Tie Strap |
| 19 | | 87000312 | | 3 | SANGLE Black Tie Strap |

HTTP://WWW.MINNPARBACKHOEPARTS.COM



DISTRIBUTEUR, LEVIER DE COMMANDE (COMMANDE PILOTE) (DROIT) SANS BALANCIER EXTENSIBLE

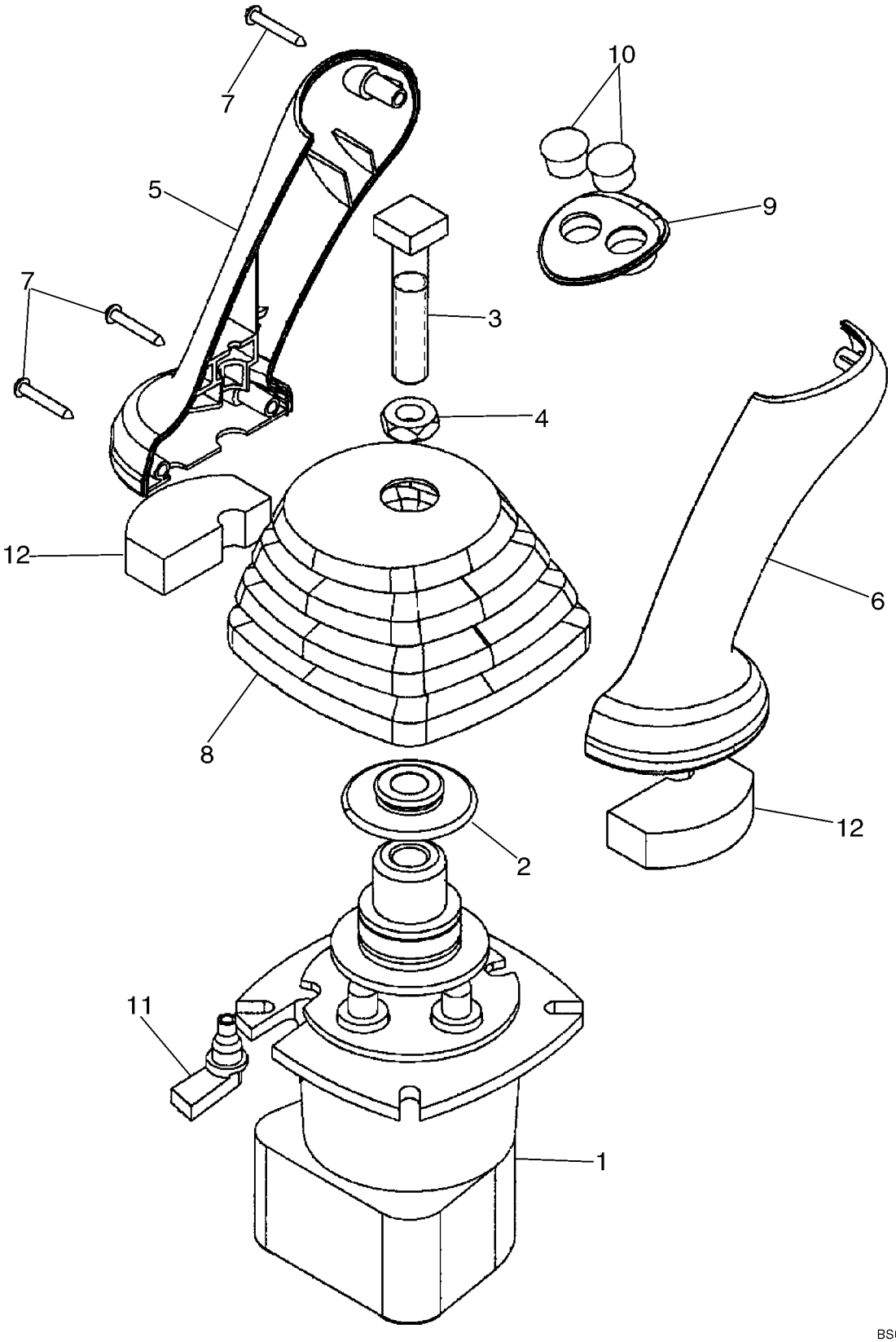

HTTP://WWW.MINNPARBACKHOEPARTS.COM



DISTRIBUTEUR, LEVIER DE COMMANDE (COMMANDE PILOTE) (DROIT) SANS BALANCIER EXTENSIBLE

| REF | FN | PART NUMBER | YR/SN | QTY | DESCRIPTION |
|---|---|---|---|---|---|
| | | 87435510 | | 1 | DISTRIBUTEUR Joystick, Pilot Controls, Right-Hand; Without Extendable Dipper; Incl. Ref 1 - 12 |
| 1 | | 86983311 | | 1 | DISTRIBUTEUR Pilot Control Joystick Valve; Component Parts Not Serviced Separately |
| 2 | | 87436225 | | 1 | RETENEUR Control Boot Retainer |
| 3 | | 87428023 | | 1 | BOULON Square Head Bolt |
| 4 | | 87037944 | | 1 | ECROU Thin M12 Nut |
| 5 | | 87428164 | | 1 | POMMEAU Joystick Control Handle |
| 6 | | 87428165 | | 1 | POMMEAU Joystick Control Handle |
| 7 | | 87032819 | | 3 | VIS AUTO-TARAUDEUSE Special |
| 8 | | {87435489} | | 1 | Joystick Control Boot |
| 9 | | 87435242 | | 1 | ENCADREMENT Switch Mounting Bezel |
| 10 | | 353-405 | | 2 | BOUCHON Dome Plug, .562 inch, Black Nylon |
| 11 | | 87424267 | | 1 | PASSE-FIL Wire Grommet |
| 12 | | 87435506 | | 2 | PROTECTION DE JOINT Pilot Control Handle Seal, Lower |

HTTP://WWW.MINNPARBACKHOEPARTS.COM

| 08-54 | | p1 | 01/04 |
|---|---|---|---|

DISTRIBUTEUR, LEVIER DE COMMANDE (COMMANDE PILOTE) (DROIT) AVEC BALANCIER EXTENSIBLE

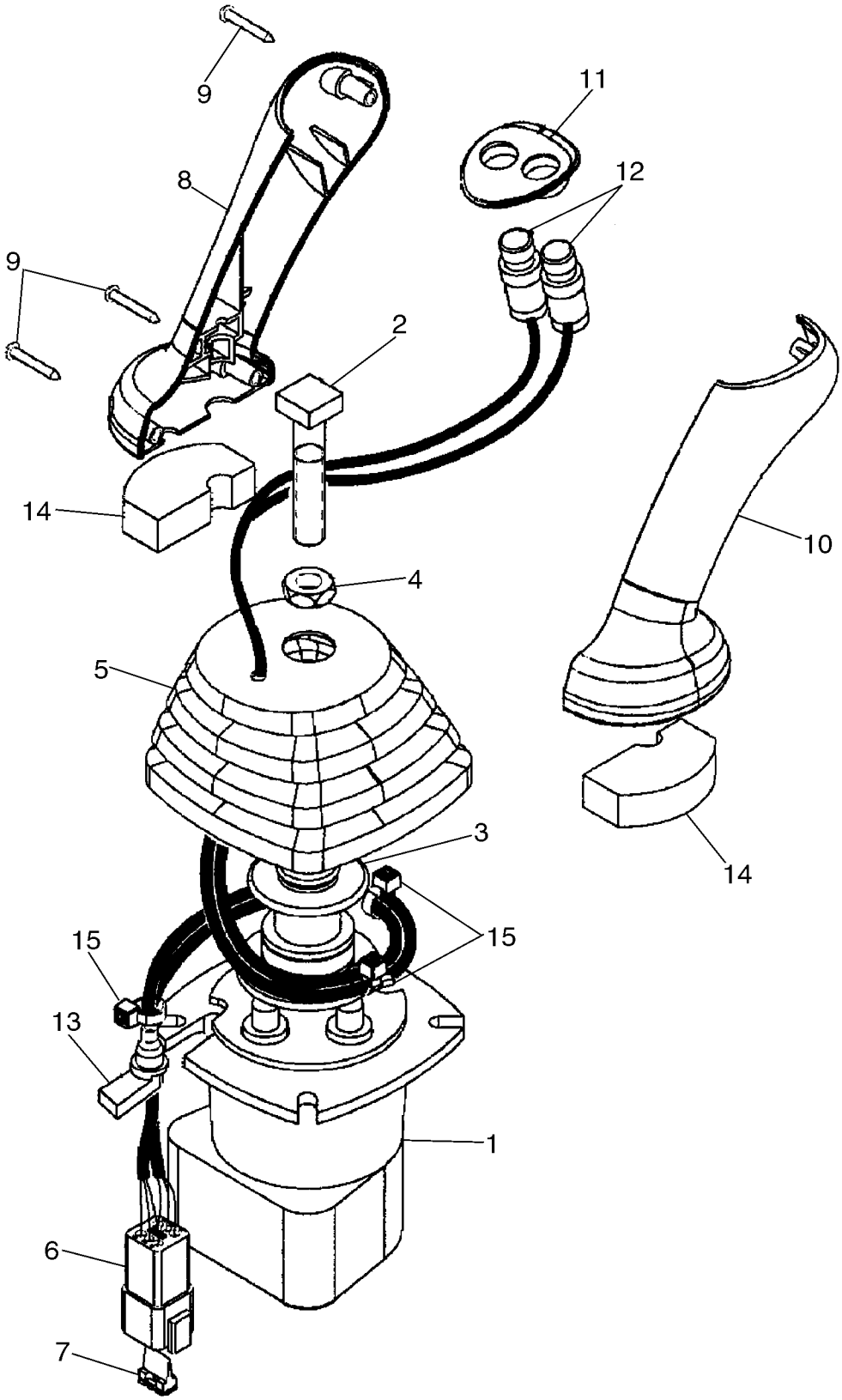

HTTP://WWW.MINNPARBACKHOEPARTS.COM



DISTRIBUTEUR, LEVIER DE COMMANDE (COMMANDE PILOTE) (DROIT) AVEC BALANCIER EXTENSIBLE

| REF | FN | PART NUMBER | YR/SN | QTY | DESCRIPTION |
|---|---|---|---|---|---|
| | | 87437736 | | 1 | DISTRIBUTEUR Joystick, Pilot Controls, Right-Hand; With Extendable Dipper; Incl. Ref 1 - 15 |
| 1 | | 86983311 | | 1 | DISTRIBUTEUR Pilot Control Joystick Valve; Component Parts Not Serviced Separately |
| 2 | | 87428023 | | 1 | BOULON Square Head Bolt |
| 3 | | 87436225 | | 1 | RETENEUR Control Boot Retainer |
| 4 | | 87037944 | | 1 | ECROU Thin M12 Nut |
| 5 | | 87428134 | | 1 | MANCHETTE Joystick Control Boot |
| 6 | | 225350C1 | | 1 | CONNECTEUR |
| 7 | | 225353C1 | | 1 | CALE DE BLOCAGE Connector |
| 8 | | 87428164 | | 1 | POMMEAU Joystick Control Handle |
| 9 | | 87032819 | | 3 | VIS AUTO-TARAUDEUSE Special |
| 10 | | 87428165 | | 1 | POMMEAU Joystick Control Handle |
| 11 | | 87435242 | | 1 | ENCADREMENT Switch Mounting Bezel |
| 12 | | 87437371 | | 2 | INTERRUPTEUR COMPLET Push Button Retract and Extendahoe Switches |
| 13 | | 87424267 | | 1 | PASSE-FIL Wire Grommet |
| 14 | | 87435506 | | 2 | PROTECTION DE JOINT Pilot Control Handle Seal, Lower |
| 15 | | 87000312 | | 3 | SANGLE Black Nylon |

HTTP://WWW.MINNPARBACKHOEPARTS.COM



DISTRIBUTEUR - AMORTISSEUR DE DEBATTEMENT

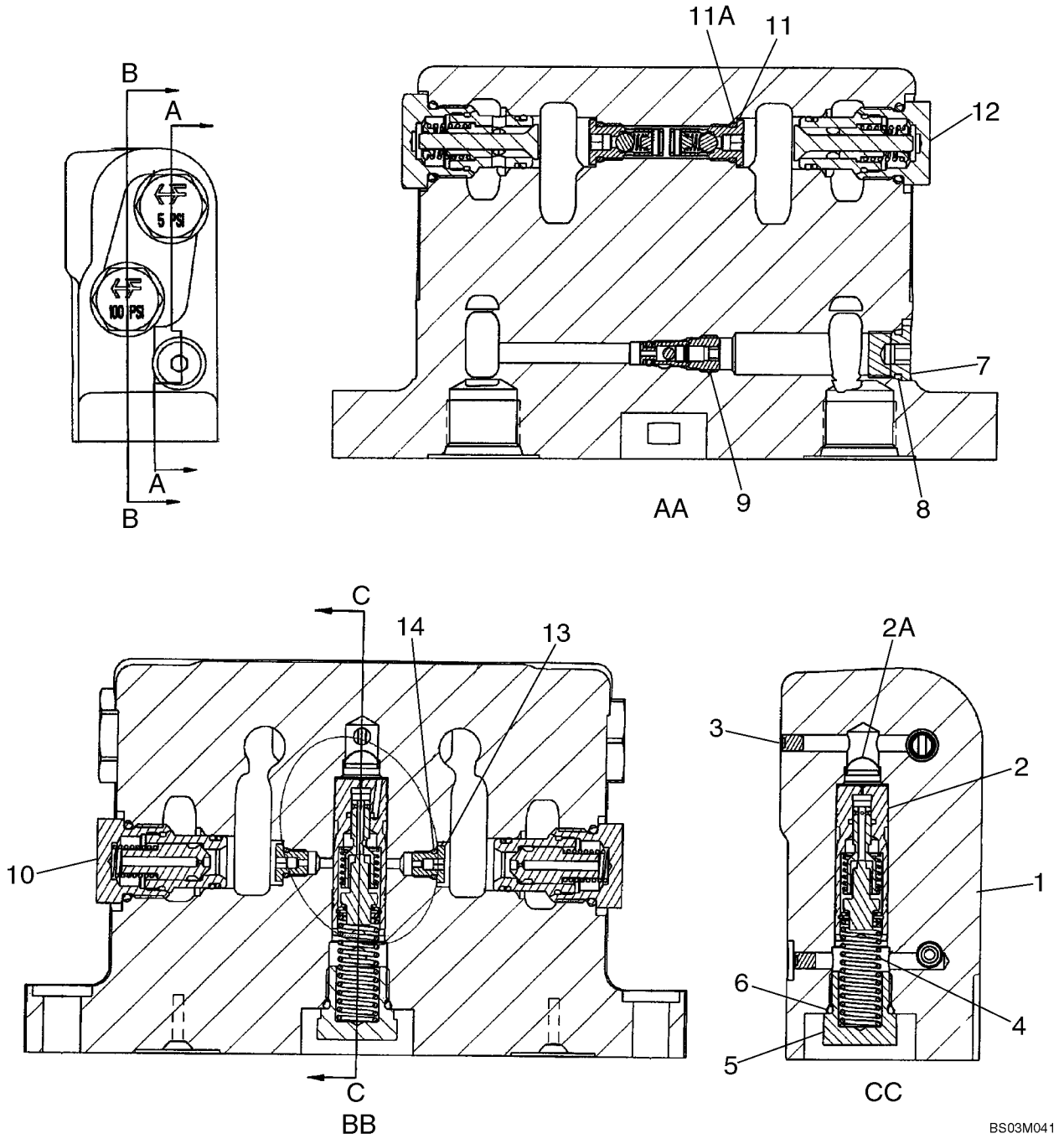

HTTP://WWW.MINNPARBACKHOEPARTS.COM



DISTRIBUTEUR - AMORTISSEUR DE DEBATTEMENT

| REF | FN | PART NUMBER | YR/SN | QTY | DESCRIPTION |
|---|---|---|---|---|---|
| | | 87416975 | | 1 | SOUPAPE, AMORTISSEMENT Swing Cushion; Incl. Ref 1 - 14 |
| 1 | | NSS | | 1 | NON FOURNI SEPAREMENT Housing |
| 2 | | 388876A6 | | 1 | TIROIR Thermal Compensating; Component Parts Not Serviced Separately |
| 2A | | 1976955C1 | | 1 | CARTOUCHE-FILTRE Screen, Filter |
| 3 | | 369372A1 | | 2 | BOUCHON M5; Plug, Expansion |
| 4 | | 388881A1 | | 1 | RESSORT HÉLICOÏDAL |
| 5 | | 409025A1 | | 1 | BOUCHON Relief Check; Incl. Ref 6 |
| 6 | | 237-6008 | | 1 | JOINT TORIQUE 41/64 ID x 3/32, Boss Seal |
| 7 | | 218-5209 | | 1 | BOUCHON 9/16 Or; Incl. Ref 8 |
| 8 | | 237-6006 | | 1 | JOINT TORIQUE 15/32 ID x 5/64, Boss Seal |
| 9 | | 388712A2 | | 1 | VALVE Bi-Directional Check Valve; Includes 388713A1 Seal Kit |
| | | 388713A1 | | 1 | POCHETTE Seal; Includes An O-Ring and Backup Ring; Component Parts Not Serviced Separately |
| 10 | | 396422A2 | | 2 | SOUPAPE ANTI RETOUR 100 psi, Orifice Check Valve; Component Parts Not Serviced Separately; Order 1542830C2 Seal Kit To Service External Seals |
| | | 443432A1 | | 1 | POCHETTE DE JOINTS For Servicing External Seals on Ref 9, 10, 11 or 12 Valve; If Used |
| 11 | | 400296A2 | | 2 | SOUPAPE ANTI RETOUR In-Line Check Valve; Component Parts Not Serviced Separately; Incl. Ref 11A |
| 11A | | 237-6004 | | 1 | JOINT TORIQUE 23/64 ID x 5/64, Boss Seal |
| 12 | | 389541A1 | | 2 | SOUPAPE ANTI RETOUR 5 psi; Component Parts Not Serviced Separately; Order 1542830C2 Seal Kit To Service External Seals |
| 13 | | 400657A1 | | 2 | BOUCHON Orifice 1.85 mm; Incl. Ref 14 |
| 14 | | 237-6002 | | 1 | JOINT TORIQUE 1/4 ID x 1/16 |
| | | 1542830C2 | | 1 | JEU JOINTS ETANCHEITE For Servicing External Seals on Ref 10 or 12 Valve |

HTTP://WWW.MINNPARBACKHOEPARTS.COM



ACCUMULATEUR ASS. - SYSTEME ANTI-TANGAGE

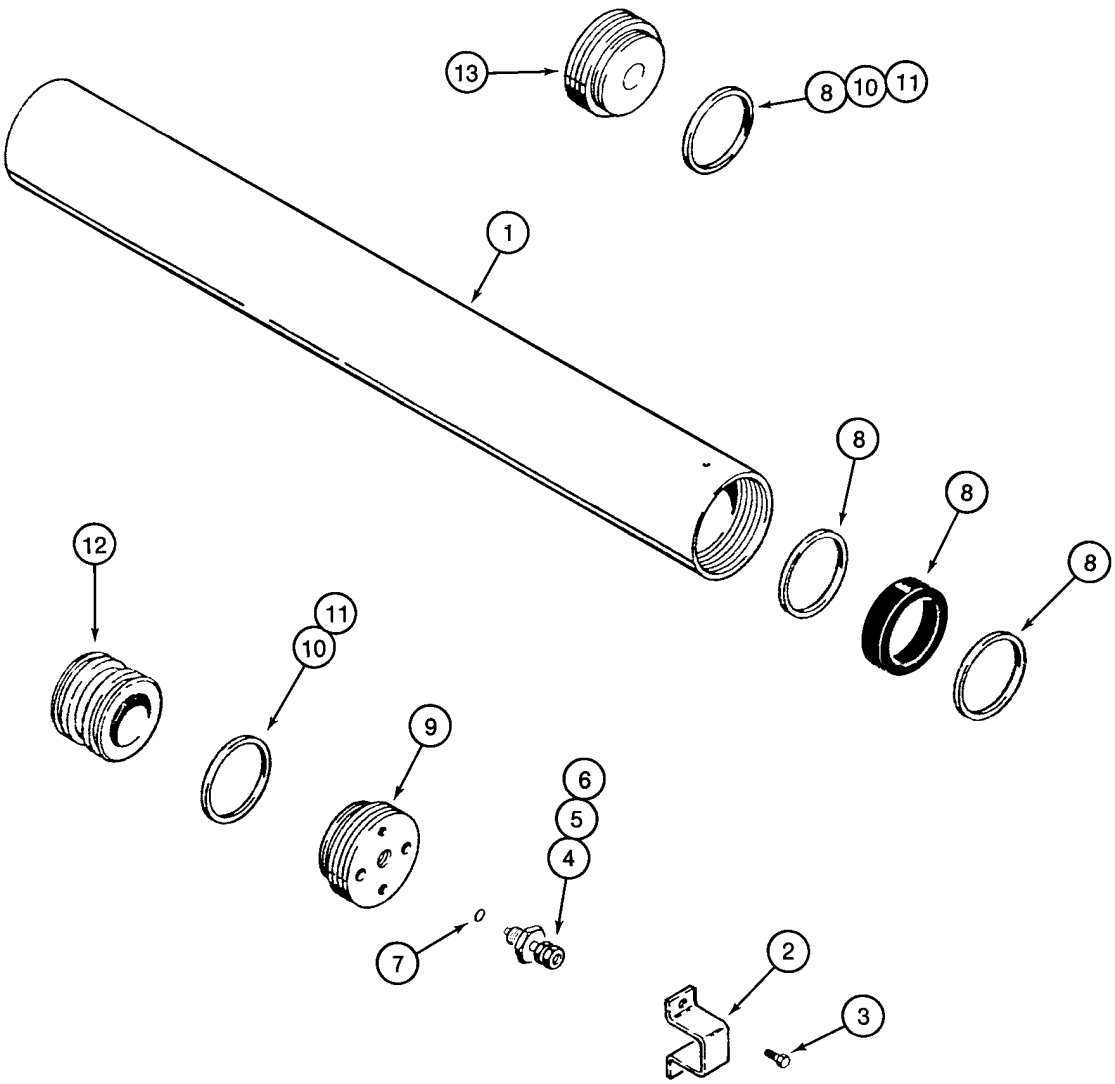


BS97C154

HTTP://WWW.MINNPARBACKHOEPARTS.COM



ACCUMULATEUR ASS. - SYSTEME ANTI-TANGAGE

| REF | FN | PART NUMBER | YR/SN | QTY | DESCRIPTION |
|---|---|---|---|---|---|
| | | 234412A1 | | 1 | ACCUMULATEUR Incl. Ref 1 - 13 |
| 1 | | NSS | | 1 | NON FOURNI SEPAREMENT Body |
| 2 | | 192895A1 | | 1 | PROTECTEUR |
| 3 | | 276-2456 | | 2 | VIS No. 10 x 3/8 |
| | | 1978142C1 | | 1 | VALVE Incl. Ref 4 - 6 |
| 4 | | NSS | | 1 | NON FOURNI SEPAREMENT Valve, Pressure |
| 5 | | 1978143C1 | | 1 | PISTON |
| 6 | | 1978144C1 | | 1 | CHAPEAU |
| 7 | | 1978158C1 | | 1 | JOINT |
| 8 | | 1978141C1 | | 1 | POCHETTE-JOINTS Seal; Includes (1) V-Type O-Ring, (2) Teflon Bearing Rings and (1) Body End Seal Ring; Component Parts Not Serviced Separately |
| 9 | | NSS | | 1 | NON FOURNI SEPAREMENT Gland, Cylinder |
| 10 | | NSS | | 2 | NON FOURNI SEPAREMENT O-Ring |
| 11 | | NSS | | 2 | NON FOURNI SEPAREMENT Ring, Backup, If Used |
| 12 | | NSS | | 1 | NON FOURNI SEPAREMENT Piston |
| 13 | | NSS | | 1 | NON FOURNI SEPAREMENT Cap |

HTTP://WWW.MINNPARBACKHOEPARTS.COM

| 08-57 | | p1 | 01/04 |
|---|---|---|---|

FILTRE A HUILE

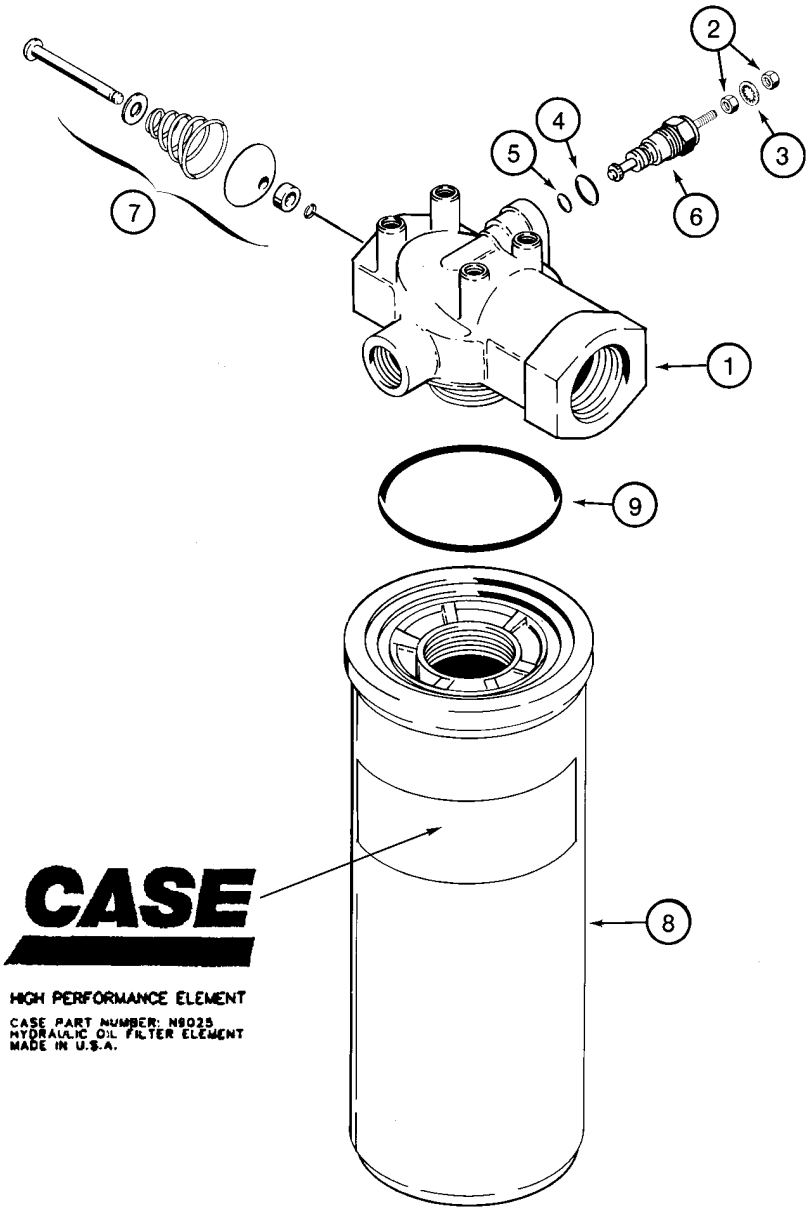


BS00D009

HTTP://WWW.MINNPARBACKHOEPARTS.COM



FILTRE A HUILE

| REF | FN | PART NUMBER | YR/SN | QTY | DESCRIPTION |
|---|---|---|---|---|---|
| | | 445674A1 | | 1 | FILTRE ASSY Hydraulic Oil Filter; Incl. Ref 1 - 9 |
| 1 | | NSS | | 1 | NON FOURNI SEPAREMENT Head, Filter |
| | | N6755 | | 1 | INDICATEUR Restriction; Includes N6941, Ref 6 |
| | | N6941 | | 1 | POCHETTE Restriction Indicator Repair; Incl. Ref 2 - 5; Order Ref 2 - 5 |
| 2 | | 129-667 | | 2 | ECROU No. 10 NF |
| 3 | | 493-21020 | | 1 | RONDELLE FREIN 3/16 |
| 4 | | 237-6006 | | 1 | JOINT TORIQUE 15/32 ID x 5/64, Boss Seal |
| 5 | | 238-5011 | | 1 | JOINT TORIQUE 5/16 ID x 1/16 |
| 6 | | NSS | | 1 | NON FOURNI SEPAREMENT Indicator |
| 7 | | NSS | | 1 | NON FOURNI SEPAREMENT Valve, By-Pass |
| | | N9025 | | 1 | ELÉMENT FILTRANT Incl. Ref 8, 9 |
| 8 | | NSS | | 1 | NON FOURNI SEPAREMENT Element |
| 9 | | 238-5230 | | 1 | JOINT TORIQUE 2-1/2 ID x 1/8 |

HTTP://WWW.MINNPARBACKHOEPARTS.COM

| 08-58 | | p1 | 01/04 |
|---|---|---|---|

VERIN - RELEVAGE DE LA CHARGEUSE

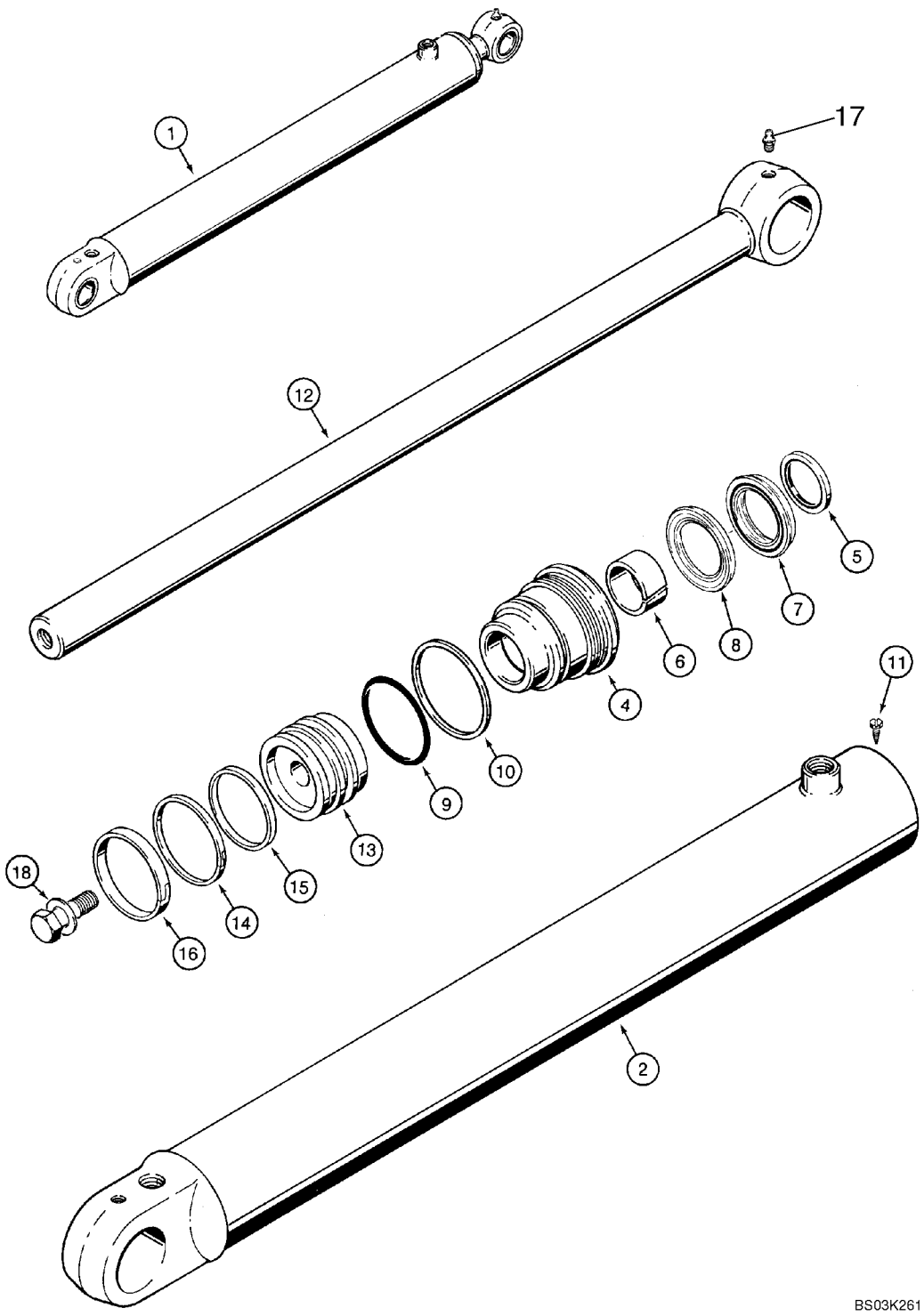

HTTP://WWW.MINNPARBACKHOEPARTS.COM



VERIN - RELEVAGE DE LA CHARGEUSE

| REF | FN | PART NUMBER | YR/SN | QTY | DESCRIPTION |
|---|---|---|---|---|---|
| 1 | | 384240A1 | | 2 | VERIN 82.6 ID x 766 mm strk; Loader Lift; Incl. Ref 2 - 18 |
| 2 | | 384241A1 | | 1 | TUBE DE VERIN TUBE, Without Bushings |
| 4 | | 1980321C3 | | 1 | PRESSE-ETOUPE |
| | | 1543260C1 | | 1 | JEU JOINTS ETANCHEITE Seal Repair, Incl. Ref 5 - 10, 14 - 16 |
| 5 | | D95143 | | 1 | JOINT Wiper |
| 6 | | G102425 | | 1 | BAGUE |
| | | 1542875C1 | | 1 | LOT DE PIECES Rod and Buffer Seal Kit; Incl. Ref 7, 8; Not Serviced Separately; Order 1543260C1 Seal Kit |
| 7 | | NSS | | 1 | NON FOURNI SEPAREMENT Rod Seal; Order 1543260C1 Seal Kit |
| 8 | | NSS | | 1 | NON FOURNI SEPAREMENT Buffer Seal; Order 1543260C1 Seal Kit |
| 9 | | 238-5233 | | 1 | JOINT TORIQUE 2-7/8 ID x 1/8 in |
| 10 | | G32122 | | 1 | ANNEAU |
| 11 | | 276-2446 | | 1 | VIS No. 8 x 3/8, self-tapping |
| 12 | | 133083A1 | | 1 | TIGE DE VERIN 44 mm (1-3/4 in) dia |
| 13 | | 135161A1 | | 1 | PISTON |
| 14 | | G102287 | | 1 | JOINT |
| 15 | | S109444 | | 1 | ANNEAU |
| 16 | | S109445 | | 1 | ANNEAU |
| 17 | | 219-1 | | 1 | GRAISSEUR 1/8 PT x 21/32 |
| 18 | | 86982437 | | 1 | BOULON SPECIAL 1 x 2,5 in; Includes Washer |

HTTP://WWW.MINNPARBACKHOEPARTS.COM

| 08-59 | | p1 | 01/04 |
|---|---|---|---|

VERIN - GODET DE LA CHARGEUSE

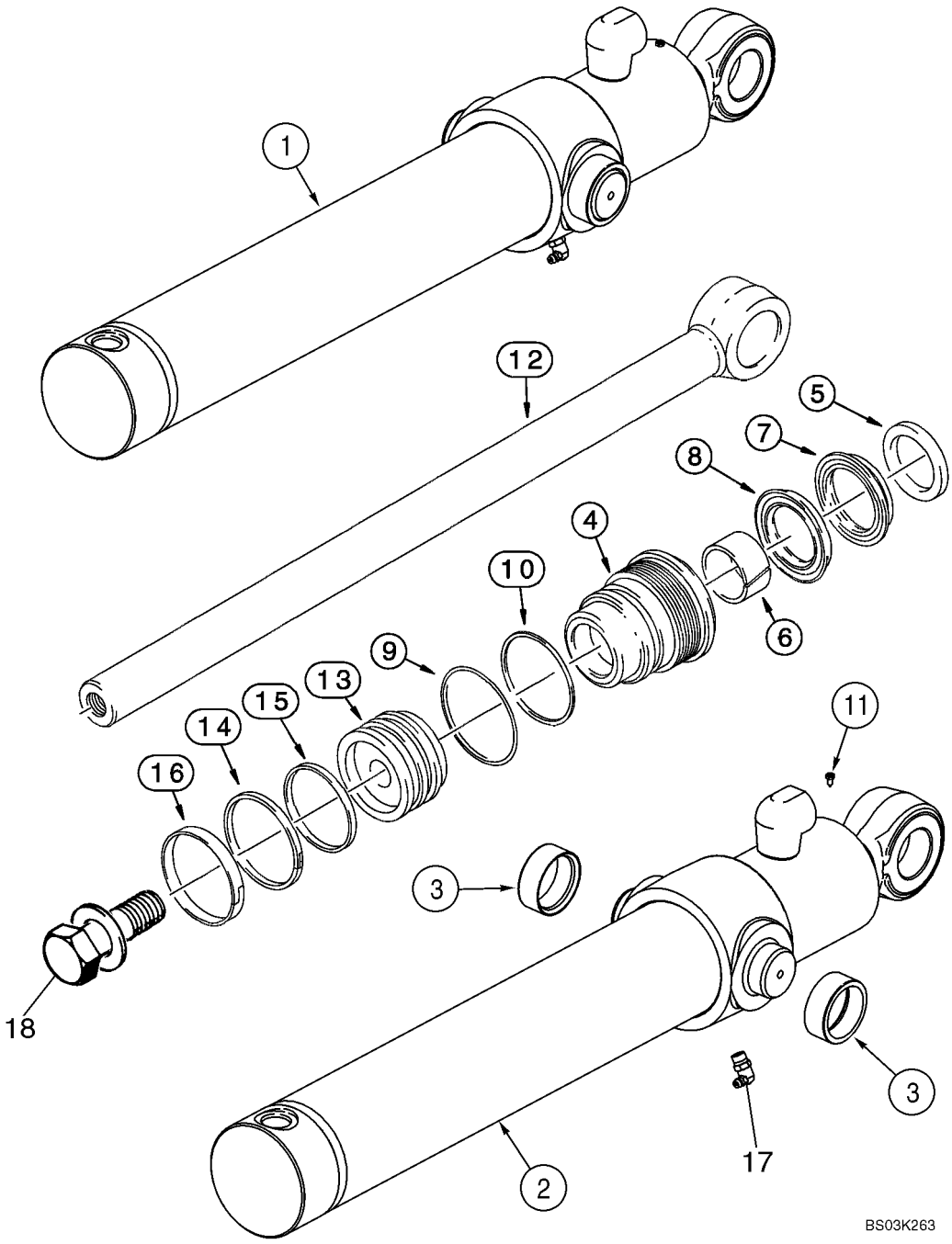

HTTP://WWW.MINNPARBACKHOEPARTS.COM



VERIN - GODET DE LA CHARGEUSE

| REF | FN | PART NUMBER | YR/SN | QTY | DESCRIPTION |
|---|---|---|---|---|---|
| 1 | | 113133A2 | | 2 | VERIN 76 ID x 522 mm strk; Loader Bucket; Incl. Ref 2- 18 |
| 2 | | 113135A2 | | 1 | TUBE DE VERIN TUBE, Incl. Ref 3 |
| 3 | | G108512 | | 2 | BAGUE |
| 4 | | 297280A1 | | 1 | PRESSE-ETOUPE |
| | | 1543256C1 | | 1 | JEU JOINTS ETANCHEITE Seal Repair; Incl. Ref 5 - 10, 14 - 16 |
| 5 | | D95142 | | 1 | JOINT Wiper |
| 6 | | G102424 | | 1 | BAGUE |
| | | 1542874C1 | | 1 | COLIS Rod and Buffer Seal Kit; Incl. Ref 7, 8; Not Serviced Separately; Order 1543256C1 Seal Kit |
| 7 | | NSS | | 1 | NON FOURNI SEPAREMENT Rod Seal; Order 1543256C1 Seal Kit |
| 8 | | NSS | | 1 | NON FOURNI SEPAREMENT Buffer Seal; Order 1543256C1 Seal Kit |
| 9 | | 238-5231 | | 1 | JOINT THORIQUE 2-5/8 ID x 1/8 |
| 10 | | G109298 | | 1 | ANNEAU |
| 11 | | 276-2446 | | 1 | VIS No. 8 x 3/8, self-tapping |
| 12 | | 110307A1 | | 1 | TIGE DE VERIN 38 mm (1-1/2 in) dia |
| 13 | | G108518 | | 1 | PISTON |
| 14 | | G102288 | | 1 | JOINT-D'ETANCH. ASS. |
| 15 | | G100444 | | 1 | JOINT |
| 16 | | G100449 | | 1 | BAGUE D"USURE |
| 17 | | 219-55 | | 1 | GRAISSEUR 90 deg, 1/8 PT x 27/32 |
| 18 | | 86982435 | | 1 | BOULON SPECIAL 3/4 x 2,5 in, Includes Washer |

HTTP://WWW.MINNPARBACKHOEPARTS.COM

| 08-60 | | p1 | 01/04 |
|---|---|---|---|

VERIN - BENNE DE CHARGEUSE

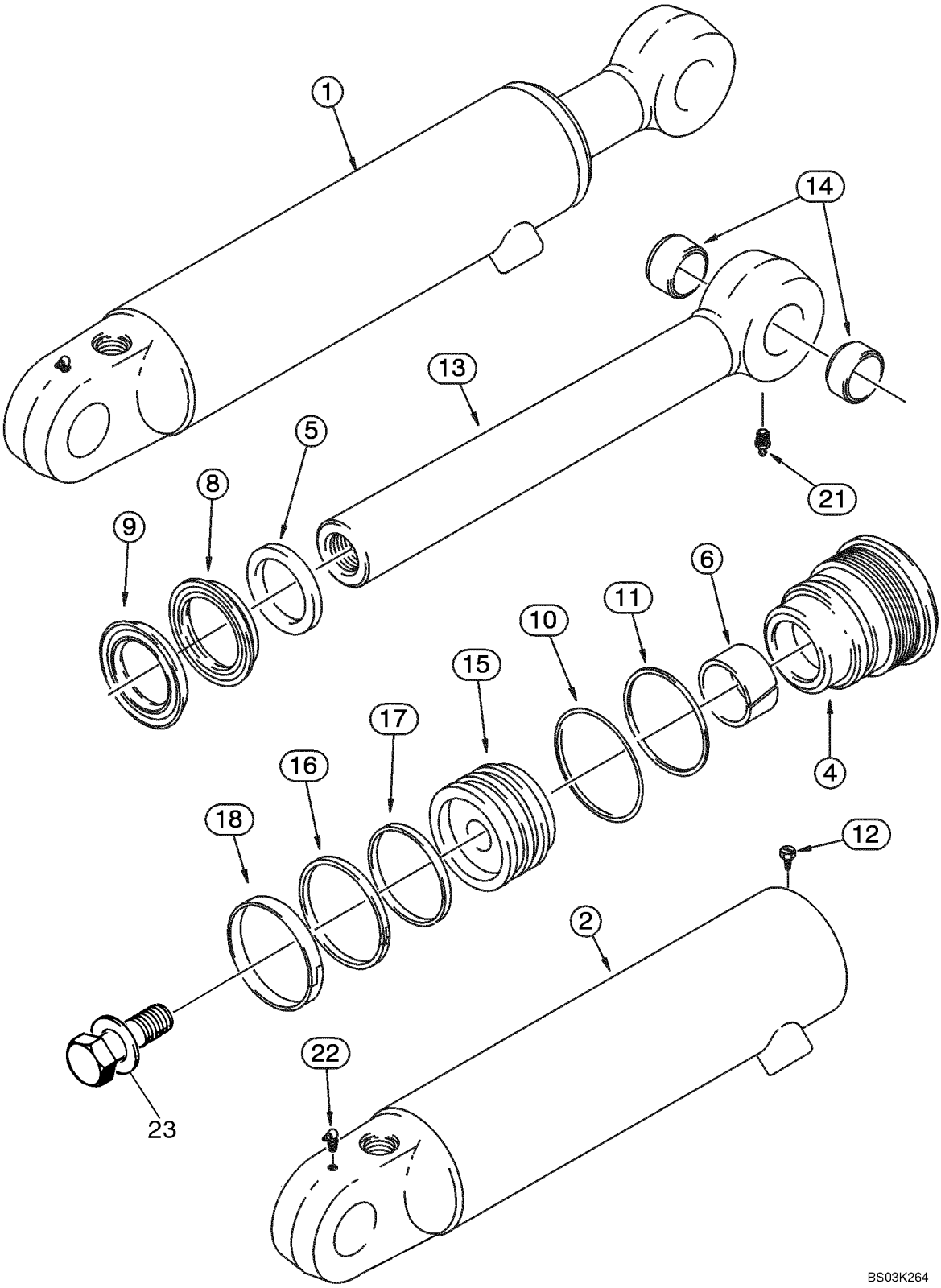

HTTP://WWW.MINNPARBACKHOEPARTS.COM



VERIN - BENNE DE CHARGEUSE

| REF | FN | PART NUMBER | YR/SN | QTY | DESCRIPTION |
|---|---|---|---|---|---|
| 1 | | 1346189C2 | | 1 | VERIN 76 ID x 231 mm strk; Right-Hand; Incl. Ref 2 - 23 |
| 1 | | 1346190C2 | | 1 | VERIN 76 ID x 231 mm strk; Left-Hand; Incl. Ref 2 - 23 |
| 2 | | 1346191C2 | | 1 | TUBE DE VERIN TUBE, Right-Hand; 1346189C2 Cylinder |
| 2 | | 1346192C2 | | 1 | TUBE DE VERIN TUBE, Left-Hand; 1346190C2 Cylinder |
| 4 | | 297281A1 | | 1 | PALIER DE VERIN Gland |
| | | 1543267C1 | | 1 | JEU JOINTS ETANCHEITE Seal Repair; Incl. Ref 5 - 11, 16 - 18 |
| 5 | | D95143 | | 1 | JOINT |
| 6 | | G102425 | | 1 | BAGUE |
| | | 1542875C1 | | 1 | LOT DE PIECES Rod and Buffer Seal; Incl. Ref 8, 9; Not Serviced Separately; Order 1543267C1 Seal Kit |
| 8 | | NSS | | 1 | NON FOURNI SEPAREMENT Rod Seal; Order 1543267C1 Seal Kit |
| 9 | | NSS | | 1 | NON FOURNI SEPAREMENT Buffer Seal; Order 1543267C1 Seal Kit |
| 10 | | 238-5231 | | 1 | JOINT THORIQUE 2-5/8 ID x 1/8 |
| 11 | | G109298 | | 1 | ANNEAU |
| 12 | | 276-2446 | | 1 | VIS Self-Tapping, No. 8 x 3/8 |
| 13 | | 1346195C1 | | 1 | TIGE DE VERIN 44 mm (1-3/4 in) dia; Incl. Ref 14 |
| 14 | | 30634 | | 2 | BAGUE |
| 15 | | 1340798C1 | | 1 | PISTON |
| 16 | | G102288 | | 1 | JOINT-D'ETANCH. ASS. |
| 17 | | G100444 | | 1 | JOINT |
| 18 | | G100449 | | 1 | BAGUE D"USURE |
| 21 | | 219-1 | | 1 | GRAISSEUR 1/8 PT x 21/32 |
| 22 | | 219-55 | | 1 | GRAISSEUR 90 deg, 1/8 PT x 27/32 |
| 23 | | 86982437 | | 1 | BOULON SPECIAL 1,0 x 2,5 in, Includes Washer |

HTTP://WWW.MINNPARBACKHOEPARTS.COM

| 08-61 | | p1 | 01/04 |
|---|---|---|---|

VERIN - STABILISATEUR DE LA PELLE RETRO

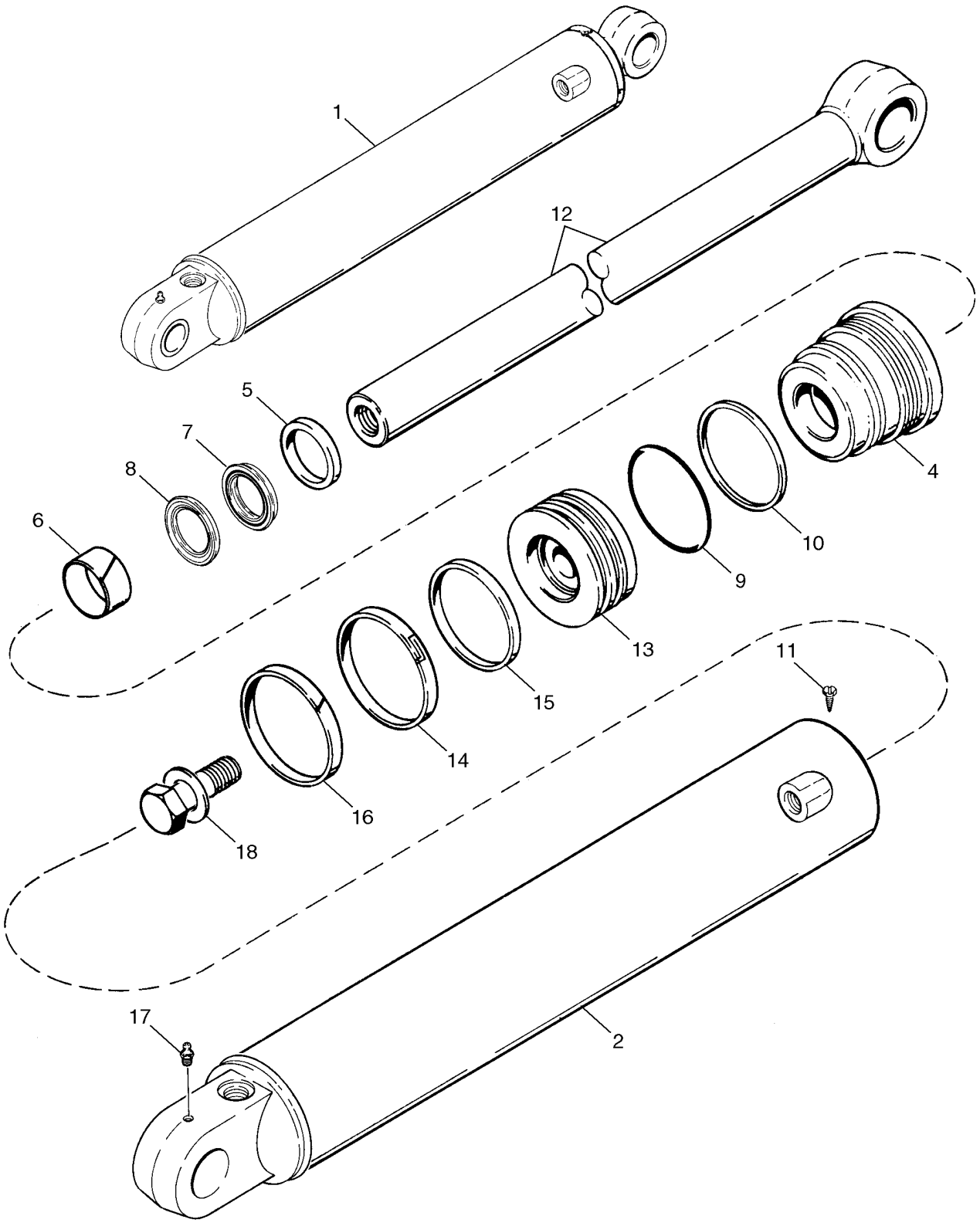

HTTP://WWW.MINNPARBACKHOEPARTS.COM



VERIN - STABILISATEUR DE LA PELLE RETRO

| REF | FN | PART NUMBER | YR/SN | QTY | DESCRIPTION |
|---|---|---|---|---|---|
| 1 | | 195503A1 | | 1 | VERIN 102 ID x 553 mm strk, Right-Hand, Incl. Ref 2 - 18 |
| 1 | | 195504A1 | | 1 | VERIN 102 ID x 553 mm strk, Left-Hand, Incl. Ref 2 - 18 |
| 2 | | 195505A1 | | 1 | TUBE Right-Hand |
| 2 | | 195506A1 | | 1 | TUBE Left-Hand |
| 4 | | 128135A2 | | 1 | PRESSE-ETOUPE |
| | | 1543269C1 | | 1 | JEU JOINTS ETANCHEITE Seal, Incl. Ref 5 - 10, 14 - 16 |
| 5 | | D95144 | | 1 | JOINT ANNULAIRE WIPER |
| 6 | | G101533 | | 1 | BAGUE |
| | | 1542876C1 | | 1 | COLIS POUR RECHANGE Rod and Buffer Seal; Incl. Ref 7, 8; Not Serviced Separately; Order 1543269C1 Seal Kit |
| 7 | | NSS | | 1 | NON FOURNI SEPAREMENT Rod Seal; Order 1543269C1 Seal Kit |
| 8 | | NSS | | 1 | NON FOURNI SEPAREMENT Buffer Seal; Order 1543269C1 Seal Kit |
| 9 | | 238-5239 | | 1 | JOINT TORIQUE 3-5/8 x 1/8 |
| 10 | | G109299 | | 1 | ANNEAU Backup |
| 11 | | 276-2446 | | 1 | VIS Self-Tapping, No. 8 x 3/8 |
| 12 | | 123726A1 | | 1 | TIGE DE VERIN 51 mm (2 in) dia |
| 13 | | G108123 | | 1 | PISTON |
| 14 | | G102285 | | 1 | JOINT |
| 15 | | G100440 | | 1 | ANNEAU |
| 16 | | G100448 | | 1 | ANNEAU |
| 17 | | 219-1 | | 1 | GRAISSEUR 1/8 PT x 21/32 |
| 18 | | 86982440 | | 1 | BOULON SPECIAL 1,25 x 2,75; Incl. Washer |

HTTP://WWW.MINNPARBACKHOEPARTS.COM



VERIN - DEBATTEMENT DE LA RETROPELLE

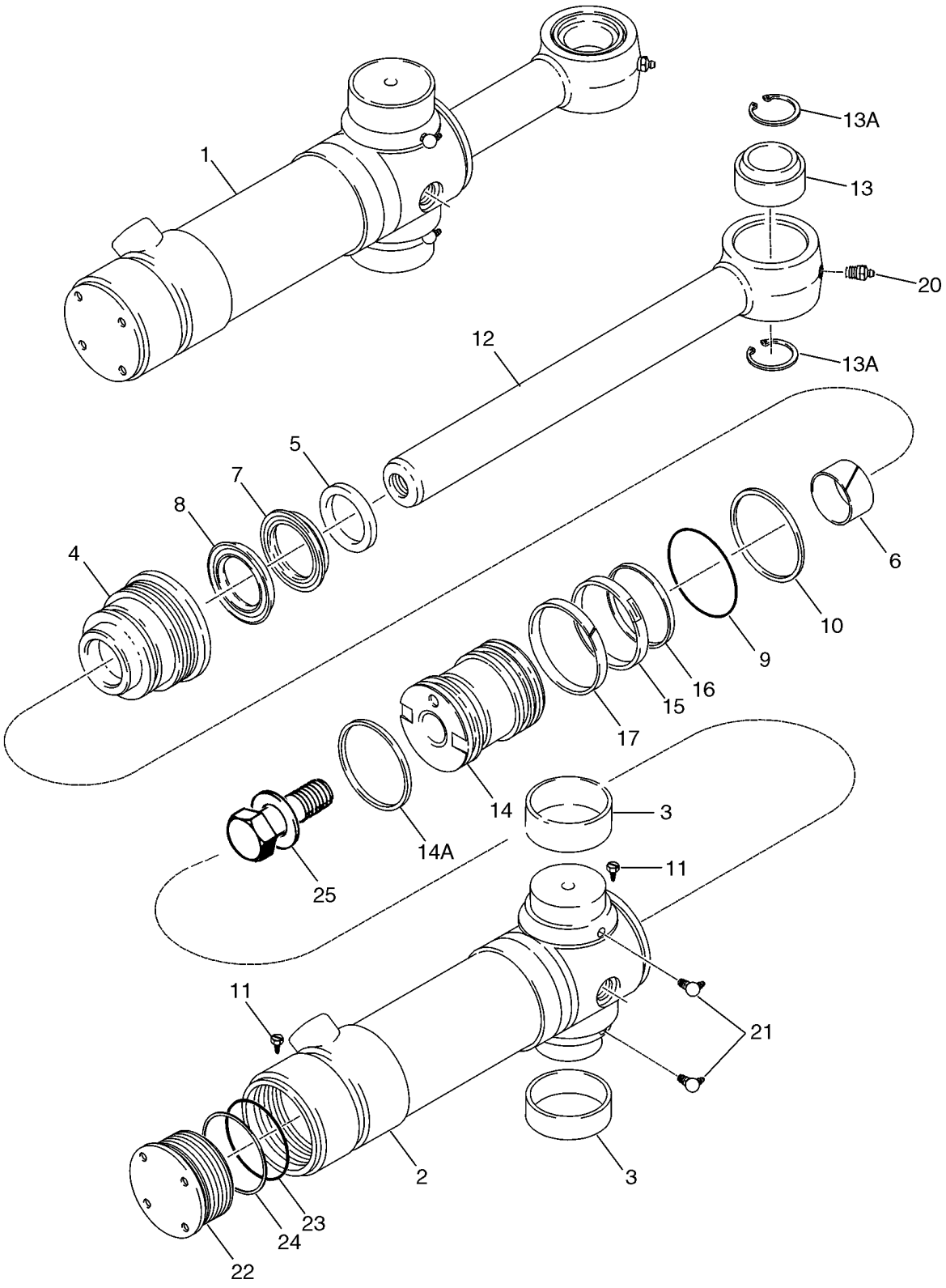

HTTP://WWW.MINNPARBACKHOEPARTS.COM



VERIN - DEBATTEMENT DE LA RETROPELLE

| REF | FN | PART NUMBER | YR/SN | QTY | DESCRIPTION |
|---|---|---|---|---|---|
| 1 | | 188027A2 | | 2 | VERIN 95 ID x 292 mm strk, Incl. Ref 2- 25 |
| 2 | | 220165A2 | | 1 | TUBE Incl. Ref 2, 3, 11, 22 - 24; Not Available As An Assembly; Order Components |
| 2 | | 188028A2 | | 1 | TUYAUTERIE Incl. Ref 3 |
| 3 | | 124568A2 | | 2 | ANNEAU Bushing |
| 4 | | 188032A2 | | 1 | PRESSE-ETOUPE |
| | | 191747A1 | | 1 | JOINT KIT, Incl. Ref 5 - 10, 14A - 17, 23, 24 |
| 5 | | D95144 | | 1 | JOINT ANNULAIRE WIPER |
| 6 | | G101533 | | 1 | BAGUE |
| | | 1542876C1 | | 1 | COLIS POUR RECHANGE Rod and Buffer Seal; Incl. Ref 7, 8; Not Serviced Separately; Order 191747A1 Seal Kit |
| 7 | | NSS | | 1 | NON FOURNI SEPAREMENT Rod Seal; Order 191747A1 Seal Kit |
| 8 | | NSS | | 1 | NON FOURNI SEPAREMENT Buffer Seal; Order 191747A1 Seal Kit |
| 9 | | 238-5237 | | 1 | JOINT TORIQUE 3-3/8 ID x 1/8 |
| 10 | | G32126 | | 1 | ANNEAU Backup |
| 11 | | 276-2446 | | 2 | VIS Self-Tapping, No. 8 x 3/8 |
| 12 | | 87413722 | | 1 | TIGE DE VERIN 51 mm (2 in) dia, Incl. Ref 13, 13A |
| 13 | | 137248A1 | | 1 | ANNEAU |
| 13A | | 100-21315 | | 2 | ANNEAU-D'ARRET No. 315 |
| 14 | | 188034A3 | | 1 | PISTON |
| 14A | | 191252A1 | | 1 | JOINT D'HUILE Cast Iron |
| 15 | | 1340764C1 | | 1 | JOINT-D'ETANCH. ASS. |
| 16 | | 1340763C1 | | 1 | ANNEAU |
| 17 | | 1980245C1 | | 1 | JOINT D'HUILE |
| 20 | | 219-1 | | 1 | GRAISSEUR 1/8 PT x 21/32 |
| 21 | | 219-55 | | 2 | GRAISSEUR 90 deg, 1/8 PT x 27/32 |
| | | {188035A1} | | 1 | CAP ASSEMBLY, End; Incl. Ref 22 - 24; Not Available As An Assembly, Order Components |
| 22 | | 188036A1 | | 1 | CHAPEAU End |
| 23 | | 238-5239 | | 1 | JOINT TORIQUE 3-5/8 x 1/8 |
| 24 | | G109299 | | 1 | ANNEAU Backup |
| 25 | | 86982439 | | 1 | BOULON SPECIAL 1 x 4,0; Incl. Washer |

HTTP://WWW.MINNPARBACKHOEPARTS.COM



VERIN - FLECHE DE LA RETROPELLE

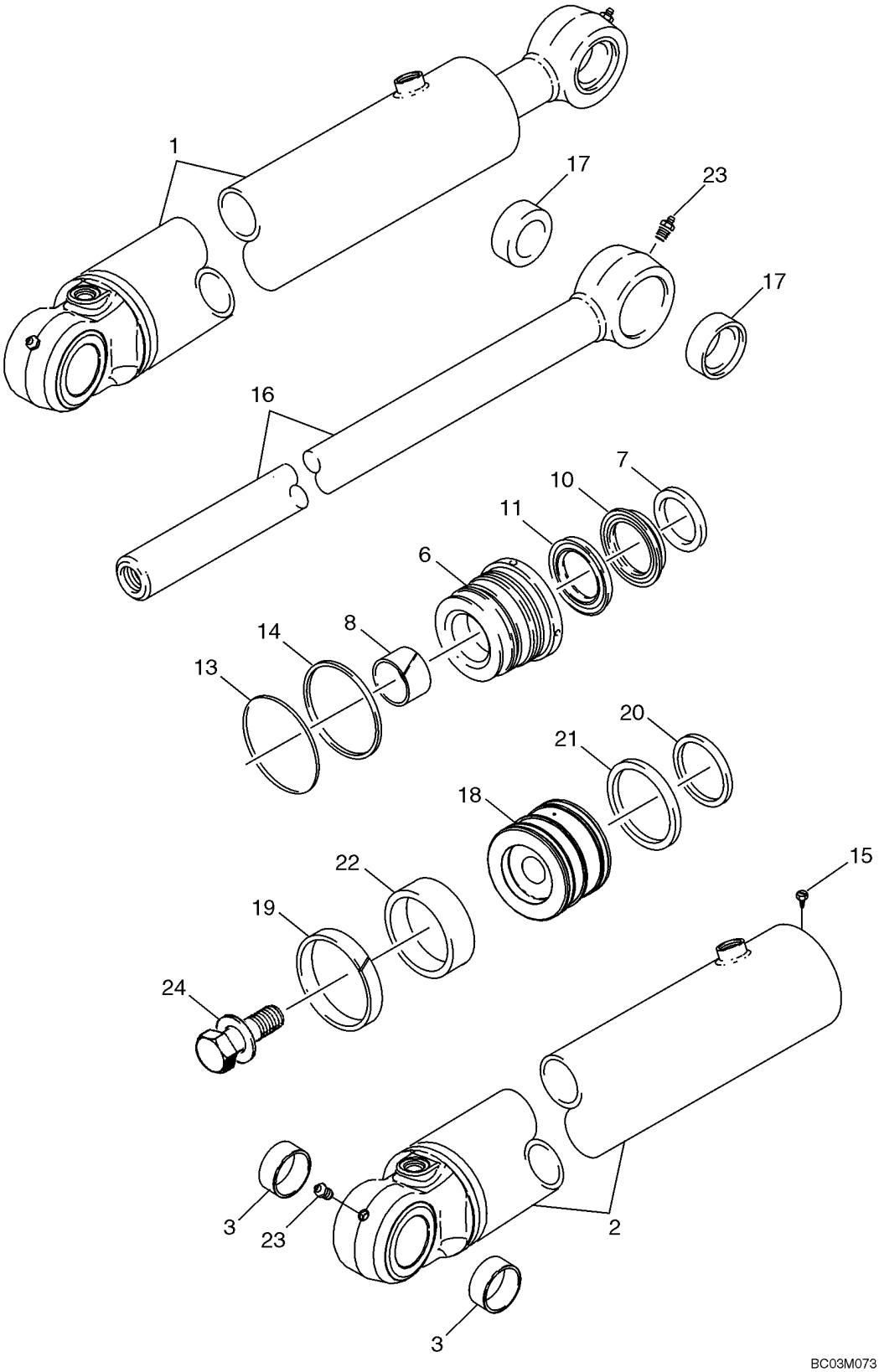

HTTP://WWW.MINNPARBACKHOEPARTS.COM



VERIN - FLECHE DE LA RETROPELLE

| REF | FN | PART NUMBER | YR/SN | QTY | DESCRIPTION |
|---|---|---|---|---|---|
| 1 | | 189653A2 | | 1 | VERIN 114 ID x 982 mm strk, Incl. Ref 2 - 24 |
| 2 | | 397080A1 | | 1 | TUBE DE VERIN TUBE, Incl. Ref 3 |
| 3 | | D149079 | | 2 | BAGUE 50 x 34 mm lg |
| 6 | | 127862A2 | | 1 | PALIER DE VERIN GLAND |
| | | 182218A1 | | 1 | POCHETTE-JOINTS Incl. Ref 7 - 14, 19 - 22 |
| 7 | | D95145 | | 1 | RACLEUR BALAIS |
| 8 | | G102426 | | 1 | BAGUE |
| | | 1542877C1 | | 1 | POCHETTE Rod and Buffer Seal; Incl. Ref 10, 11; Not Serviced Separately; Order 182218A1 Seal Kit |
| 10 | | NSS | | 1 | NON FOURNI SEPAREMENT Rod Seal; Order 182218A1 Seal Kit |
| 11 | | NSS | | 1 | NON FOURNI SEPAREMENT Buffer Seal; Order 182218A1 Seal Kit |
| 13 | | 238-5243 | | 1 | JOINT TORIQUE 4-1/8 ID x 1/8 |
| 14 | | G109300 | | 1 | ANNEAU Backup |
| 15 | | 276-2446 | | 1 | VIS Self-Tapping, No. 8 x 3/8 |
| 16 | | 182109A1 | | 1 | TIGE DE VERIN 57 mm (2-1/4 in) dia, Incl. Ref 17 |
| 17 | | D149079 | | 2 | BAGUE 50 x 34 mm lg |
| 18 | | 189657A2 | | 1 | PISTON-DE-VERIN |
| 19 | | 182116A1 | | 1 | BAGUE Cast Iron |
| 20 | | G101995 | | 1 | JOINT SEAL |
| 21 | | G101994 | | 2 | JOINT |
| 22 | | G101996 | | 1 | JOINT |
| 23 | | 219-1 | | 2 | GRAISSEUR 1/8 PT x 21/32 |
| 24 | | 86982442 | | 1 | BOULON SPECIAL 1,25 x 3,25; Incl. Washer |

HTTP://WWW.MINNPARBACKHOEPARTS.COM

| 08-64 | | p1 | 01/04 |
|---|---|---|---|

VERIN - BRAS DE LA RETROPELLE

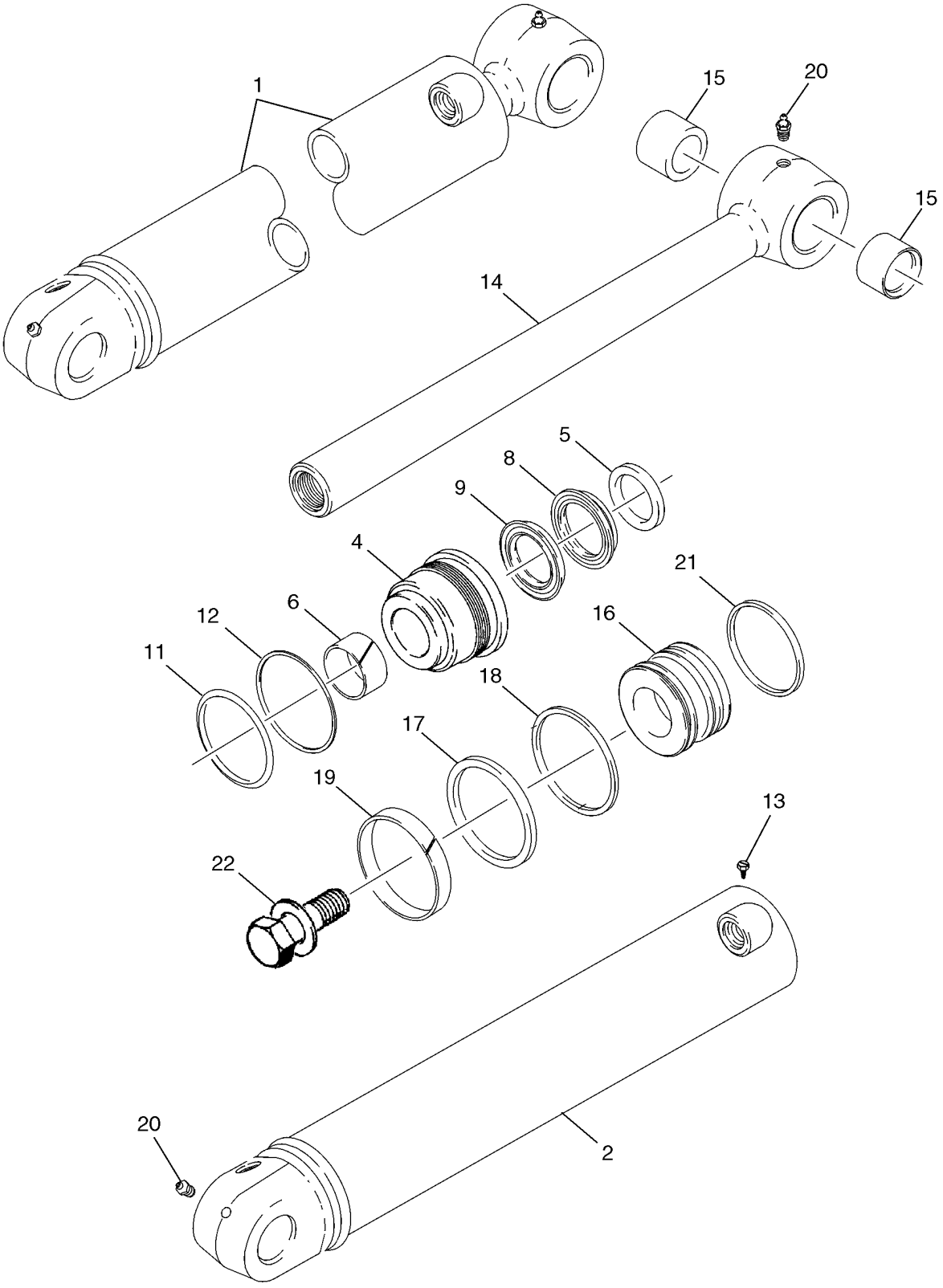

HTTP://WWW.MINNPARBACKHOEPARTS.COM



VERIN - BRAS DE LA RETROPELLE

| REF | FN | PART NUMBER | YR/SN | QTY | DESCRIPTION |
|---|---|---|---|---|---|
| 1 | | 233114A2 | | 1 | VERIN 108 ID x 686 mm strk, Incl. Ref 2 - 22 |
| 2 | | 297952A1 | | 1 | TUYAU TUBE |
| 4 | | 234141A2 | | 1 | PALIER DE VERIN GLAND |
| | | 234844A1 | | 1 | JEU JOINTS ETANCHEITE Incl. Ref 5 - 12, 17 - 19, 21 |
| 5 | | D95145 | | 1 | RACLEUR BALAIS |
| 6 | | G102426 | | 1 | BAGUE |
| | | 1542877C1 | | 1 | POCHETTE Rod and Buffer Seal; Incl. Ref 8, 9; Not Serviced Separately; Order 234844A1 Seal Kit |
| 8 | | NSS | | 1 | NON FOURNI SEPAREMENT Rod Seal; Order 234844A1 Seal Kit |
| 9 | | NSS | | 1 | NON FOURNI SEPAREMENT Buffer Seal; Order 234844A1 Seal Kit |
| 11 | | 238-5241 | | 1 | JOINT TORIQUE 3-7/8 ID x 1/8 |
| 12 | | G32176 | | 1 | ANNEAU Backup |
| 13 | | 276-2446 | | 1 | VIS Self-Tapping, No. 8 x 3/8 |
| 14 | | 175778A1 | | 1 | TIGE DE VERIN 57 mm (2-1/4 in) dia, Incl. Ref 15 |
| 15 | | D149079 | | 2 | BAGUE |
| 16 | | 233110A2 | | 1 | PISTON |
| 17 | | G110531 | | 1 | JOINT |
| 18 | | G110529 | | 1 | ANNEAU |
| 19 | | G110530 | | 1 | ANNEAU |
| 20 | | 219-1 | | 2 | GRAISSEUR 1/8 PT x 21/32 |
| 21 | | 233104A1 | | 1 | ANNEAU Cast Iron |
| 22 | | 86982443 | | 1 | BOULON SPECIAL 1-3/8 x 3,5; Incl. Washer |

HTTP://WWW.MINNPARBACKHOEPARTS.COM



VERIN - GODET DE LA RETROPELLE

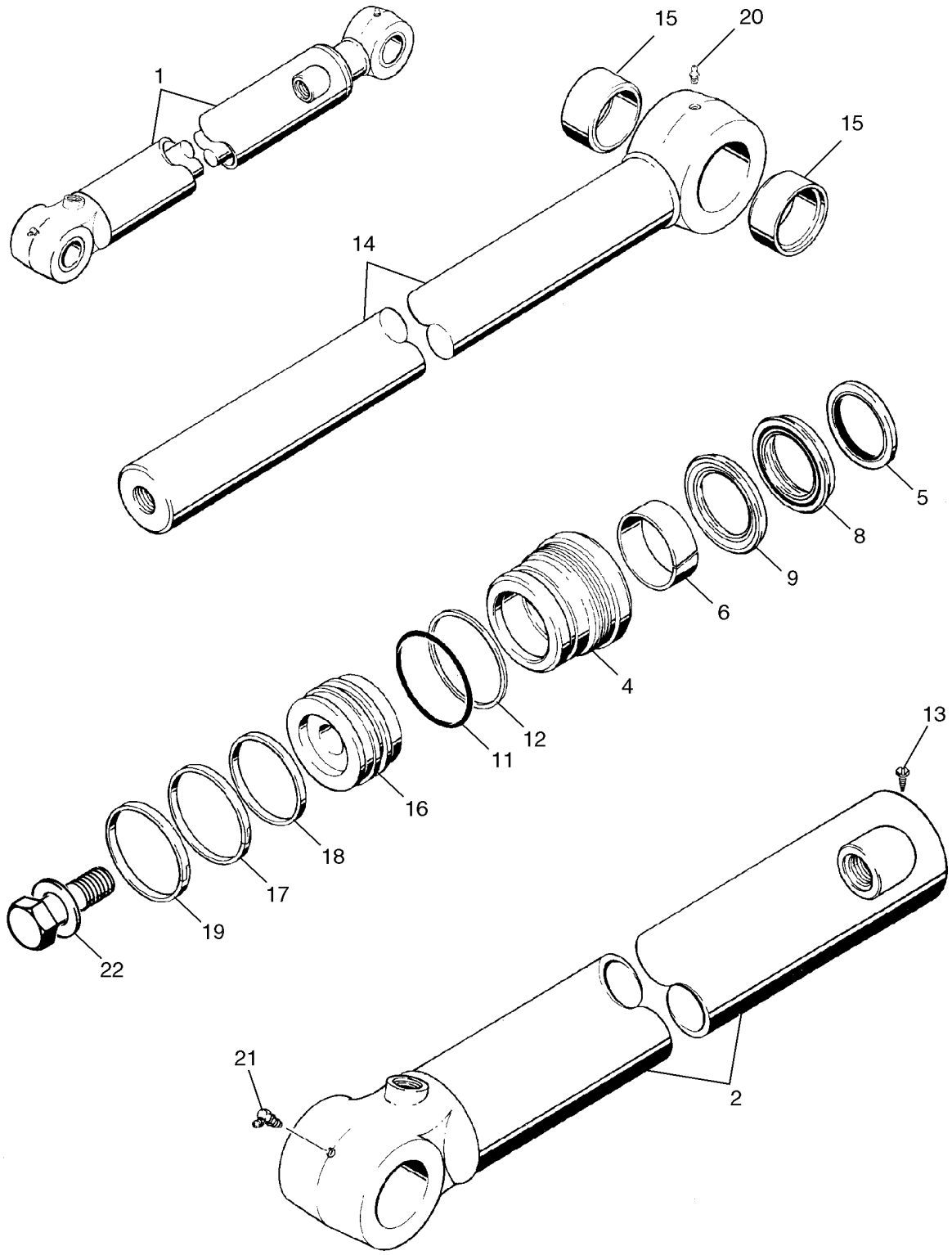

HTTP://WWW.MINNPARBACKHOEPARTS.COM



VERIN - GODET DE LA RETROPELLE

| REF | FN | PART NUMBER | YR/SN | QTY | DESCRIPTION |
|---|---|---|---|---|---|
| 1 | | 128760A1 | | 1 | VERIN 83 ID x 872 mm strk, Incl. Ref 2 - 22 |
| 2 | | 128761A1 | | 1 | TUBE DE VERIN TUBE |
| 4 | | 128770A2 | | 1 | PALIER DE VERIN GLAND |
| | | 131750A2 | | 1 | JEU JOINTS ETANCHEITE Seal, Incl. Ref 5 - 12, 17 - 19 |
| 5 | | D95145 | | 1 | RACLEUR BALAIS |
| 6 | | 1346476C1 | | 1 | ANNEAU |
| | | 1542877C1 | | 1 | POCHETTE Rod and Buffer Seal; Incl. Ref 8, 9; Not Serviced Separately; Order 131750A2 Seal Kit |
| 8 | | NSS | | 1 | NON FOURNI SEPAREMENT Rod Seal; Order 131750A2 Seal Kit |
| 9 | | NSS | | 1 | NON FOURNI SEPAREMENT Buffer Seal; Order 131750A2 Seal Kit |
| 11 | | 238-5233 | | 1 | JOINT TORIQUE 2-7/8 ID x 1/8 in |
| 12 | | G32122 | | 1 | ANNEAU Backup |
| 13 | | 276-2446 | | 1 | VIS Self-Tapping, No. 8 x 3/8 |
| 14 | | 198033A1 | | 1 | TIGE DE VERIN 57 mm (2-1/4 in) dia, Incl. Ref 15 |
| 15 | | D140029 | | 2 | BAGUE |
| 16 | | 128772A1 | | 1 | PISTON |
| 17 | | G102287 | | 1 | JOINT |
| 18 | | S109444 | | 1 | ANNEAU |
| 19 | | S109445 | | 1 | ANNEAU |
| 20 | | 219-1 | | 1 | GRAISSEUR 1/8 PT x 21/32 |
| 21 | | 219-36 | | 1 | GRAISSEUR 45 deg, 1/8 PT x 7/8 |
| 22 | | 86982441 | | 1 | BOULON SPECIAL 1,25 x 3,00; Incl. Washer |

HTTP://WWW.MINNPARBACKHOEPARTS.COM

| 08-66 | | p1 | 01/04 |
|---|---|---|---|

VERIN - BALANCIER EXTENSIBLE DE LA PELLE RETRO

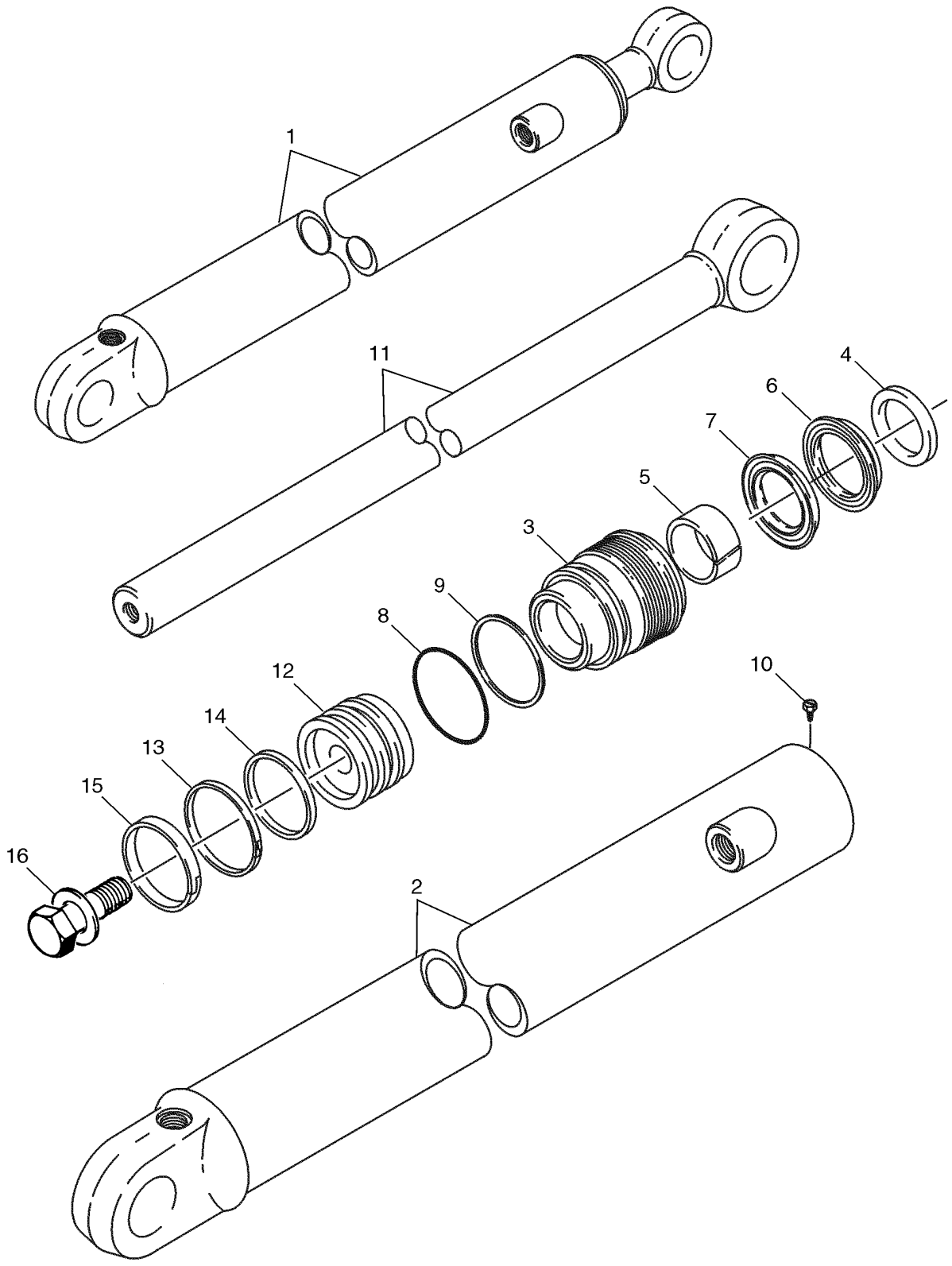

HTTP://WWW.MINNPARBACKHOEPARTS.COM



VERIN - BALANCIER EXTENSIBLE DE LA PELLE RETRO

| REF | FN | PART NUMBER | YR/SN | QTY | DESCRIPTION |
|---|---|---|---|---|---|
| 1 | | 1340969C2 | | 1 | VERIN 76 ID x 1068 mm strk; Incl. Ref 2 - 16 |
| 2 | | 1340970C1 | | 1 | TUBE DE VERIN TUBE |
| 3 | | 297281A1 | | 1 | PALIER DE VERIN GLAND |
| | | 1543267C1 | | 1 | JEU JOINTS ETANCHEITE Seal; Incl. Ref 4 - 9, 13 - 15 |
| 4 | | D95143 | | 1 | JOINT WIPER |
| 5 | | G102425 | | 1 | BAGUE |
| | | 1542875C1 | | 1 | LOT DE PIECES Rod and Buffer Seal; Incl. Ref 6, 7; Not Serviced Separately; Order 1543267C1 Seal Kit |
| 6 | | NSS | | 1 | NON FOURNI SEPAREMENT Rod Seal; Order 1543267C1 Seal Kit |
| 7 | | NSS | | 1 | NON FOURNI SEPAREMENT Buffer Seal; Order 1543267C1 Seal Kit |
| 8 | | 238-5231 | | 1 | JOINT THORIQUE 2-5/8 ID x 1/8 |
| 9 | | G109298 | | 1 | ANNEAU Backup |
| 10 | | 276-2446 | | 1 | VIS Self-Tapping, No. 8 x 3/8 |
| 11 | | 1980296C1 | | 1 | TIGE DE VERIN 44 mm (1-3/4 in) dia |
| 12 | | G107277 | | 1 | PISTON |
| 13 | | G102288 | | 1 | JOINT-D'ETANCH. ASS. |
| 14 | | G100444 | | 1 | JOINT |
| 15 | | G100449 | | 1 | BAGUE D"USURE |
| 16 | | 86982435 | | 1 | BOULON SPECIAL 3/4 x 2,5 in, Incl. Washer |

HTTP://WWW.MINNPARBACKHOEPARTS.COM

HTTP://WWW.MINNPARBACKHOEPARTS.COM

# SECTION INDEX


| | |
|---|---|
| 09-01 | COMMANDES - RELEVAGE ET GODET DES BRAS DE RELEVAGE |
| 09-02 | COMMANDES - BENNE DE CHARGEUSE |
| 09-03 | COMMANDES - ASSIETTE AUTOMATIQUE DES BRAS DE RELEVAGE |
| 09-04 | CADRE - RELEVAGE DE LA CHARGEUSE |
| 09-05 | CADRE - TRINGLERIE DES BRAS DE RELEVAGE |
| 09-06 | GODETS, CHARGEUSE À LONGUE LÈVRE (82 IN) |
| 09-07 | GODET, CHARGEUSE À LONGUE LÈVRE (93 IN) |
| 09-08 | GODET, BENNE DE CHARGEUSE |
| 09-09 | GARANT - DISTRIBUTEUR, BRAS DE RELEVAGE |
| 09-10 | COUPLEUR, OUTIL, DE SÉCURITÉ |
| 09-11 | COUVERCLES - TOURELLE DE LA PELLE RETRO, SANS DE COMMANDE PILOTE |
| 09-12 | SUPPORT DE TOUR DE CONTRÔLE ET JOINTS DE PELLE RÉTRO, SANS DE COMMANDE PILOTE |
| 09-13 | TOURELLE DE LA PELLE RETRO SUPPORT, AVEC DE COMMANDE PILOTE |
| 09-14 | TOURELLE DE LA PELLE RETRO SOUFFLET DE JOINT, AVEC DE COMMANDE PILOTE |
| 09-15 | TOURELLE DE LA PELLE RETRO LEVIER (VERROU DE MAINTIEN DE BRAS DE RELEVAGE), AVEC DE COMMANDE PILOTE |
| 09-16 | COMMANDES - PELLE RETRO, AVEC DÉBATTEMENT AU PIED (MODÈLES SANS BALANCIER EXTENSIBLE) |
| 09-17 | COMMANDES - PELLE RETRO, AVEC DÉBATTEMENT AU PIED (MODÈLES AVEC BALANCIER EXTENSIBLE) |
| 09-18 | COMMANDES - PELLE RETRO, AVEC DÉBATTEMENT A LA MAIN (MODÈLES SANS BALANCIER EXTENSIBLE) |
| 09-19 | COMMANDES - PELLE RETRO, AVEC DÉBATTEMENT A LA MAIN (MODÈLES SANS BALANCIER EXTENSIBLE) |
| 09-20 | COMMANDES - PELLE RETRO, AVEC DÉBATTEMENT A LA MAIN (MODÈLES AVEC BALANCIER EXTENSIBLE) |
| 09-21 | COMMANDES - CIRCUIT HYDRAULIQUE AUXILIAIRE POUR LA PELLE RETRO, SANS DE COMMANDE PILOTE |
| 09-22 | RETROPELLE - STABILISATEURS, PLAQUES ET PATINS |
| 09-23 | RETROPELLE - TOURELLE ET VERINS DE DEBATTEMENT |
| 09-24 | RETROPELLE - FLECHE ET TOURELLE DE DEBATTEMENT |
| 09-25 | VERROU DE MAINTIEN DE BRAS DE RELEVAGE (SANS DE COMMANDE PILOTE) |
| 09-25A | VERROU DE MAINTIEN DE BRAS DE RELEVAGE (AVEC DE COMMANDE PILOTE) |
| 09-26 | RETROPELLE - BALANCIER ET GODET |
| 09-27 | RETROPELLE - BALANCIER EXTENSIBLE |
| 09-28 | GODET, PELLE RÉTRO UNIVERSELLE (305 MM (12 INCH) WIDE) |
| 09-29 | GODET, PELLE RÉTRO UNIVERSELLE (406 MM (16 INCH) WIDE) |
| 09-30 | GODET, PELLE RÉTRO UNIVERSELLE (457 MM (18 INCH) WIDE) |
| 09-31 | GODET, PELLE RÉTRO (457 MM (18 INCH) WIDE) |
| 09-32 | GODET, PELLE RÉTRO UNIVERSELLE (610 MM (24 INCH) / 762 MM (30 INCH) WIDE) |
| 09-33 | GODET, PELLE RÉTRO (610 MM (24 INCH) WIDE) |
| 09-34 | GODET, PELLE RÉTRO UNIVERSELLE (914 MM (36 INCH) WIDE) |
| 09-35 | GODET, PELLE RÉTRO UNIVERSELLE (610 MM (24 INCH) WIDE) |
| 09-36 | CONTREPOIDS AVANT |
| 09-37 | CHASSIS / MONTAGES, COSSE - GRILLE, ADMISSION D"AIR |
| 09-38 | RÉSERVOIR, HUILE - COMPARTIMENT DE BATTERIES ET BOITE A OUTILS |
| 09-39 | BOÎTIER DE RADIATEUR |
| 09-40 | CAPOT - PANNEAUX LATERAUX |
| 09-41 | CAPOT - CALANDRE |

HTTP://WWW.MINNPARBACKHOEPARTS.COM

# SECTION INDEX


| | |
|---|---|
| 09-42 | PLAQUES, PLANCHER - TAPIS DE SOL |
| 09-43 | GARDE-BOUE, GAUCHE - PANNEAU, FERMETURE ARRIERE (VIDE-POCHES AVEC PORTE-GOBELET) |
| 09-44 | EXTENSION DE GARDE BOUE |
| 09-45 | GARDE-BOUE |
| 09-46 | SIEGE - SUPPORT |
| 09-47 | SIÈGE, STANDARD |
| 09-48 | SUPPORT DE SIÈGE ET BASE, STANDARD |
| 09-49 | SIÈGE, SUSPENSION MÉCANIQUE |
| 09-50 | BASE DE SIÈGE ET SUSPENSION, SUSPENSION MÉCANIQUE |
| 09-51 | SIÈGE, SUSPENSION PNEUMATIQUE |
| 09-52 | BASE DE SIÈGE ET SUSPENSION, SUSPENSION PNEUMATIQUE |
| 09-53 | CABINE - FENETRE, RETROVISEUR ET OUVERTURE |
| 09-54 | CABINE - CHASSIS ET COUVERCLES |
| 09-55 | CABINE - PORTES |
| 09-56 | CABINE - MONTAGE DE PORTIÈRE |
| 09-57 | CABINE - FENÊTRE DROITE, POUR CADRES DE CABINE À UNE SEULE PORTIÈRE |
| 09-58 | CABINE - VITRE, ARRIÈRE |
| 09-59 | CABINE - LAVE-GLACE |
| 09-60 | CABINE - ESSUIE-GLACE |
| 09-61 | GARNITURE DE LA CABINE - FILTRE, DEFLECTEUR, PLAFONNIER |
| 09-62 | CABINE - FILTRE A AIR |
| 09-63 | CABINE - CARTER DE LA SOUFFLANTE, DURITS DE VENTILATION, CONDUITES DE PURGE |
| 09-64 | CABINE - CHAUFFAGE |
| 09-65 | CABINE - CONDUITES DE LA CLIMATISATION, RADIATEUR D"EVAPORATION |
| 09-66 | CABINE - CLIMATISATION, CONDENSATEUR, DESSICCATEUR |
| 09-67 | CABINE - COMPRESSEUR DE LA CLIMATISATION |
| 09-68 | STRUCTURE ROPS - CADRE, COUVERCLES, RETROVISEUR, VISIERE-ECRAN |
| 09-69 | STRUCTURE ROPS - VITRE |
| 09-70 | STRUCTURE ROPS - ESSUIE-GLACE AVANT ET LAVE-GLACE |
| 09-71 | RÉTROVISSEUR - SUPPORT, MODÈLE DE CABINE |
| 09-72 | TRIANGLE VÉHICULE LENT |
| 09-73 | AUTOCOLLANTS |
| 09-74 | AUTOCOLLANTS |
| 09-75 | AUTOCOLLANTS |
| 09-76 | AUTOCOLLANTS - ANGLAIS |
| 09-77 | AUTOCOLLANTS - ESPAGNOL D"AMÉRIQUE LATINE |
| 09-78 | AUTOCOLLANTS - FRANÇAIS CANADIEN |
| 09-79 | AUTOCOLLANTS - ANGLAIS |
| 09-80 | AUTOCOLLANTS - ESPAGNOL D"AMÉRIQUE LATINE |
| 09-81 | AUTOCOLLANTS - FRANÇAIS CANADIEN |

HTTP://WWW.MINNPARBACKHOEPARTS.COM

HTTP://WWW.MINNPARBACKHOEPARTS.COM

| 09-01 | | p1 | 01/04 |
|---|---|---|---|

COMMANDES - RELEVAGE ET GODET DES BRAS DE RELEVAGE

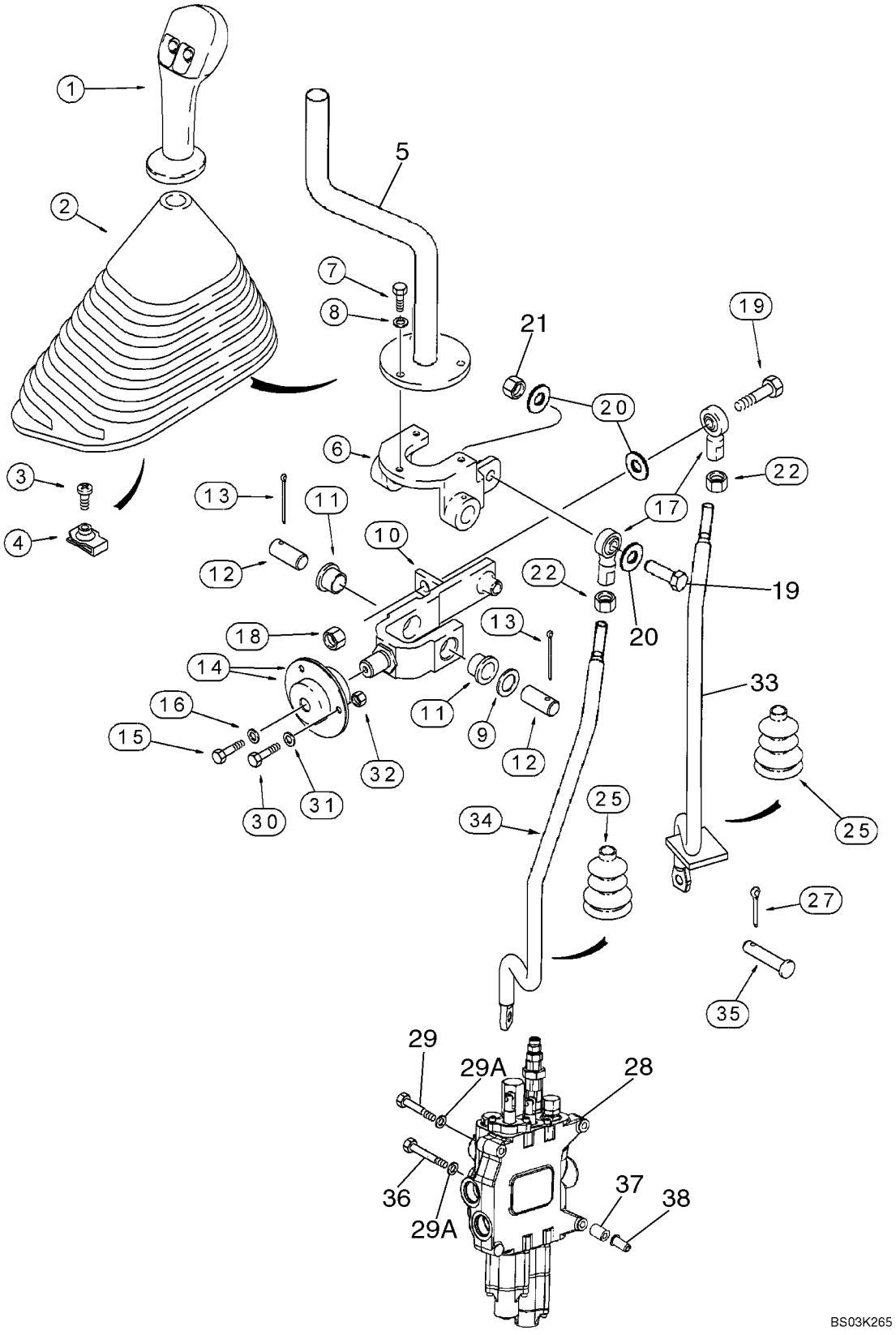

HTTP://WWW.MINNPARBACKHOEPARTS.COM



COMMANDES - RELEVAGE ET GODET DES BRAS DE RELEVAGE

| REF | FN | PART NUMBER | YR/SN | QTY | DESCRIPTION |
|---|---|---|---|---|---|
| 1 | | 87412687 | | 1 | POIGNÉE Loader Control Lever; Two Button, Declutch and Differential Lock Switches |
| | | 256347A1 | | 1 | CONNECTEUR |
| | | 258616A1 | | 1 | SERRURE |
| | | 298176A1 | | 1 | BOUCHON |
| | | 345-133 | | X | COLLE Superbonder 409, 1 ml |
| 2 | | 133615A1 | | 1 | SOUFFLET |
| 3 | | 140-107 | | 1 | VIS No. 10 x 3/4 |
| 4 | | 131-861 | | 1 | ECROU No. 10 |
| 5 | | 132661A1 | | 1 | LEVIER |
| 6 | | 195615A1 | | 1 | SUPPORT |
| 7 | | 614-6016 | | 3 | VIS M6 x 16 |
| 8 | | 495-11028 | | 3 | RONDELLE 9/32 x 5/8 x 1/16 |
| 9 | | 495-81184 | | 1 | RONDELLE |
| 10 | | 176311A1 | | 1 | ARTICULATION Incl. Ref 11 |
| 11 | | 108088A1 | | 2 | BAGUE |
| 12 | | 102761A1 | | 2 | AXE, GROS |
| 13 | | 432-828 | | 2 | GOUPILLE 1/8 x 1-3/4 |
| 14 | | 112380A1 | | 2 | PALIER Incl. Ref 14A |
| 14A | | 465004R91 | | 1 | ROULEMENT Not Illustrated |
| 15 | | 614-6016 | | 1 | VIS M6 x 16 |
| 16 | | 396-41028 | | 1 | RONDELLE 9/32 x 7/8 x 3/32 |
| 17 | | D136773 | | 2 | BILLE 3/8 NF |
| 18 | | 231-1446 | | 1 | CONTRE-ECROU 3/8 |
| 19 | | 413-628 | | 2 | BOULON 3/8 x 1-3/4 |
| 20 | | 496-21041 | | 3 | RONDELLE 13/32 x 13/16 x 3/32 |
| 21 | | 425-106 | | 1 | ECROU 3/8 |
| 22 | | 425-116 | | 2 | ECROU 3/8 NF |
| 25 | | 132931A1 | | 2 | SOUFFLET Cab Models |
| | | 189109A1 | | 2 | RESSORT Boot Retainer; Cab Models |
| 27 | | 432-612 | | 2 | GOUPILLE 3/32 x 3/4 |
| 28 | | REF | | 1 | NOTICE LOADER CONTROL VALVE; Two Spool, See Figure 08-30 for Two Spool Valve Options |
| 29 | | 814-10090 | | 2 | VIS M10 x 90 |
| 29A | | 896-11010 | | 3 | RONDELLE 11 x 21 x 2,5 mm |
| 30 | | 614-6020 | | 3 | BOULON M6 x 20 |

HTTP://WWW.MINNPARBACKHOEPARTS.COM

| 09-01 | | p2 | 01/04 |
|---|---|---|---|

COMMANDES - RELEVAGE ET GODET DES BRAS DE RELEVAGE

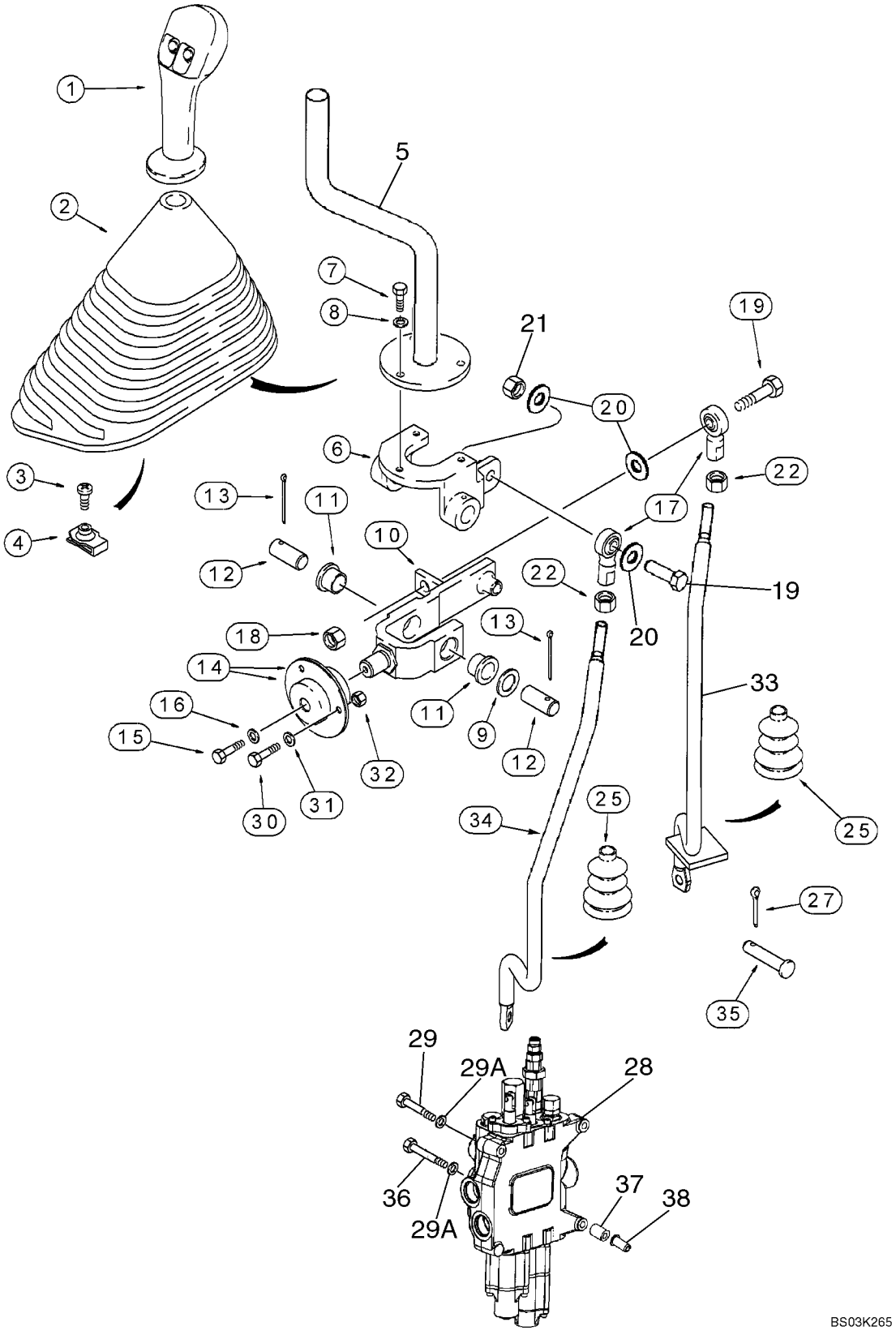

HTTP://WWW.MINNPARBACKHOEPARTS.COM



COMMANDES - RELEVAGE ET GODET DES BRAS DE RELEVAGE

| REF | FN | PART NUMBER | YR/SN | QTY | DESCRIPTION |
|---|---|---|---|---|---|
| 31 | | 396-41028 | | 3 | RONDELLE 9/32 x 7/8 x 3/32 |
| 32 | | 829-1406 | | 3 | ECROU M6; 10.9 |
| 33 | | 87428151 | | 1 | TIGE FILETÉE Bucket Control Rod |
| 34 | | 87428152 | | 1 | TIGE FILETÉE Lift Control Rod |
| 35 | | D149287 | | 2 | AXE, GROS |
| 36 | | 814-10110 | | 1 | VIS M10 x 110 |
| 37 | | 87417599 | | 3 | ENTRETOISE |
| 38 | | 87417721 | | 3 | INSERT FILETE M10 |

HTTP://WWW.MINNPARBACKHOEPARTS.COM



COMMANDES - BENNE DE CHARGEUSE

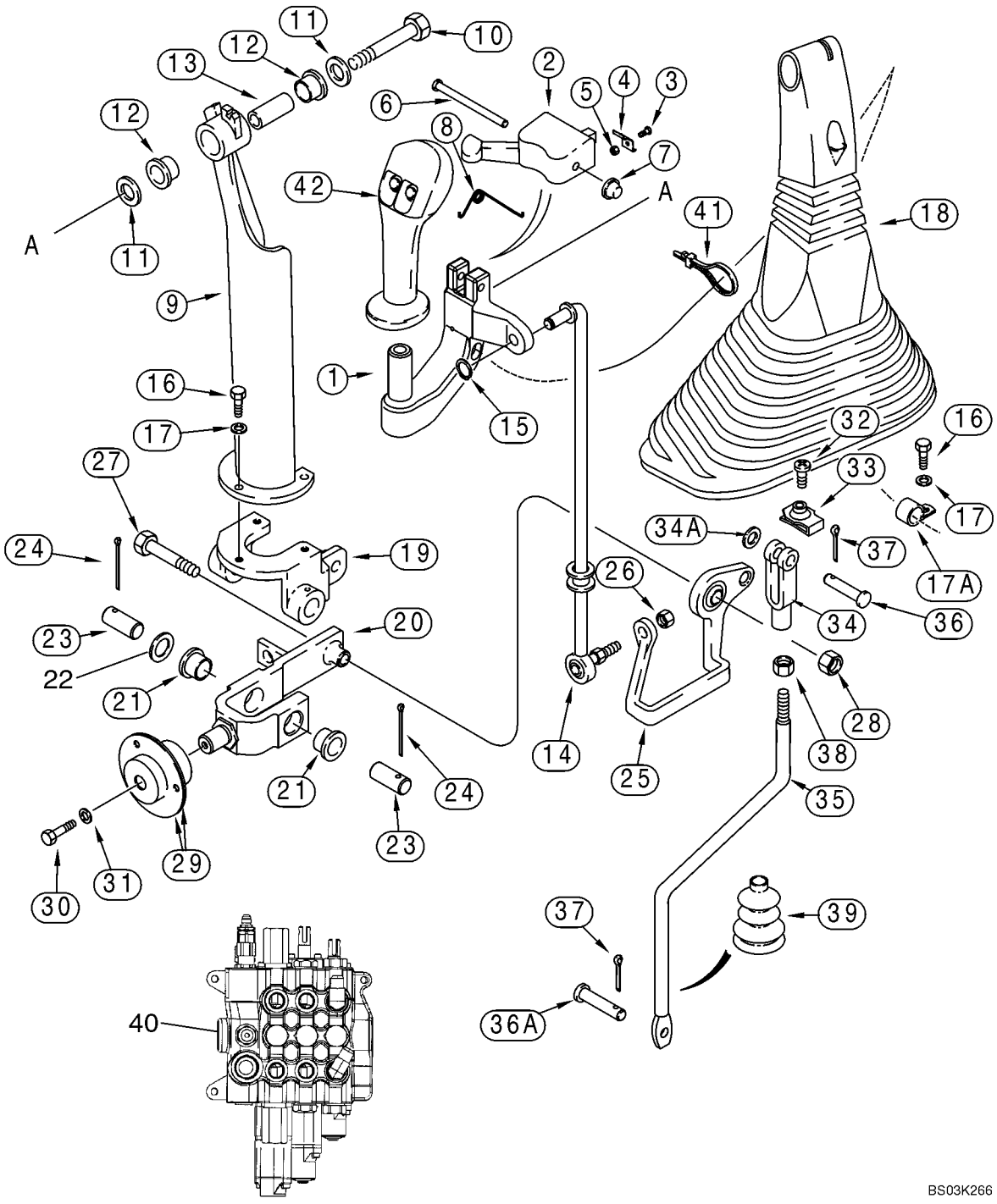

HTTP://WWW.MINNPARBACKHOEPARTS.COM



COMMANDES - BENNE DE CHARGEUSE

| REF | FN | PART NUMBER | YR/SN | QTY | DESCRIPTION |
|---|---|---|---|---|---|
| 1 | | 297615A1 | | 1 | POIGNÉE |
| 2 | | 123815A1 | | 1 | LOQUET |
| 3 | | 170-104 | | 2 | VIS No. 5 x 3/8 |
| 4 | | 129914A1 | | 2 | RESSORT |
| 5 | | 225-14105 | | 2 | ECROU No. 5 |
| 6 | | 439-5436 | | 1 | GOUPILLE 1/4 x 2-1/4 |
| 7 | | 143210A1 | | 1 | OBTURATEUR CAP |
| 8 | | 124243A1 | | 1 | RESSORT |
| 9 | | 123493A1 | | 1 | SUPPORT |
| 10 | | 413-632 | | 1 | BOULON 3/8 x 2 |
| 11 | | 495-21044 | | 2 | RONDELLE 7/16 x 1 x 5/64 |
| 12 | | 108088A1 | | 2 | BAGUE |
| 13 | | 133989A1 | | 1 | AXE, GROS SLEEVE |
| 14 | | 239306A1 | | 1 | TIGE-DE-COMMANDE |
| 15 | | 103-1437 | | 1 | CLIP Retaining Ring |
| 16 | | 614-6016 | | 3 | VIS M6 x 16 |
| 17 | | 495-11028 | | 3 | RONDELLE 9/32 x 5/8 x 1/16 |
| 17A | | 515-2295 | | 1 | COLLIER 3/8 ID |
| 18 | | 133617A1 | | 1 | SOUFFLET |
| 19 | | 195615A1 | | 1 | SUPPORT |
| 20 | | 176311A1 | | 1 | ARTICULATION Incl. Ref 21 |
| 21 | | 108088A1 | | 2 | BAGUE |
| 22 | | 495-81184 | | 1 | RONDELLE |
| 23 | | 102761A1 | | 2 | AXE, GROS |
| 24 | | 432-828 | | 2 | GOUPILLE 1/8 x 1-3/4 |
| 25 | | 112382A1 | | 1 | ARTICULATION Bellcrank |
| 26 | | 425-116 | | 1 | ECROU 3/8 NF |
| 27 | | 413-632 | | 1 | BOULON 3/8 x 2 |
| 28 | | 231-1446 | | 1 | CONTRE-ECROU 3/8 |
| 29 | | 112380A1 | | 2 | PALIER Includes (1) 465004R91 Internal Bearing |
| | | 465004R91 | | 1 | ROULEMENT |
| 30 | | 614-6016 | | 1 | VIS M6 x 16 |
| 31 | | 396-41028 | | 1 | RONDELLE 9/32 x 7/8 x 3/32 |
| 32 | | 140-107 | | 1 | VIS No. 10 x 3/4 |
| 33 | | 131-121 | | 1 | DOUILLE DE CENTRAGE No. 10 |
| 34 | | 213-126 | | 1 | FOURCHETTE 3/8 NF |

HTTP://WWW.MINNPARBACKHOEPARTS.COM



COMMANDES - BENNE DE CHARGEUSE

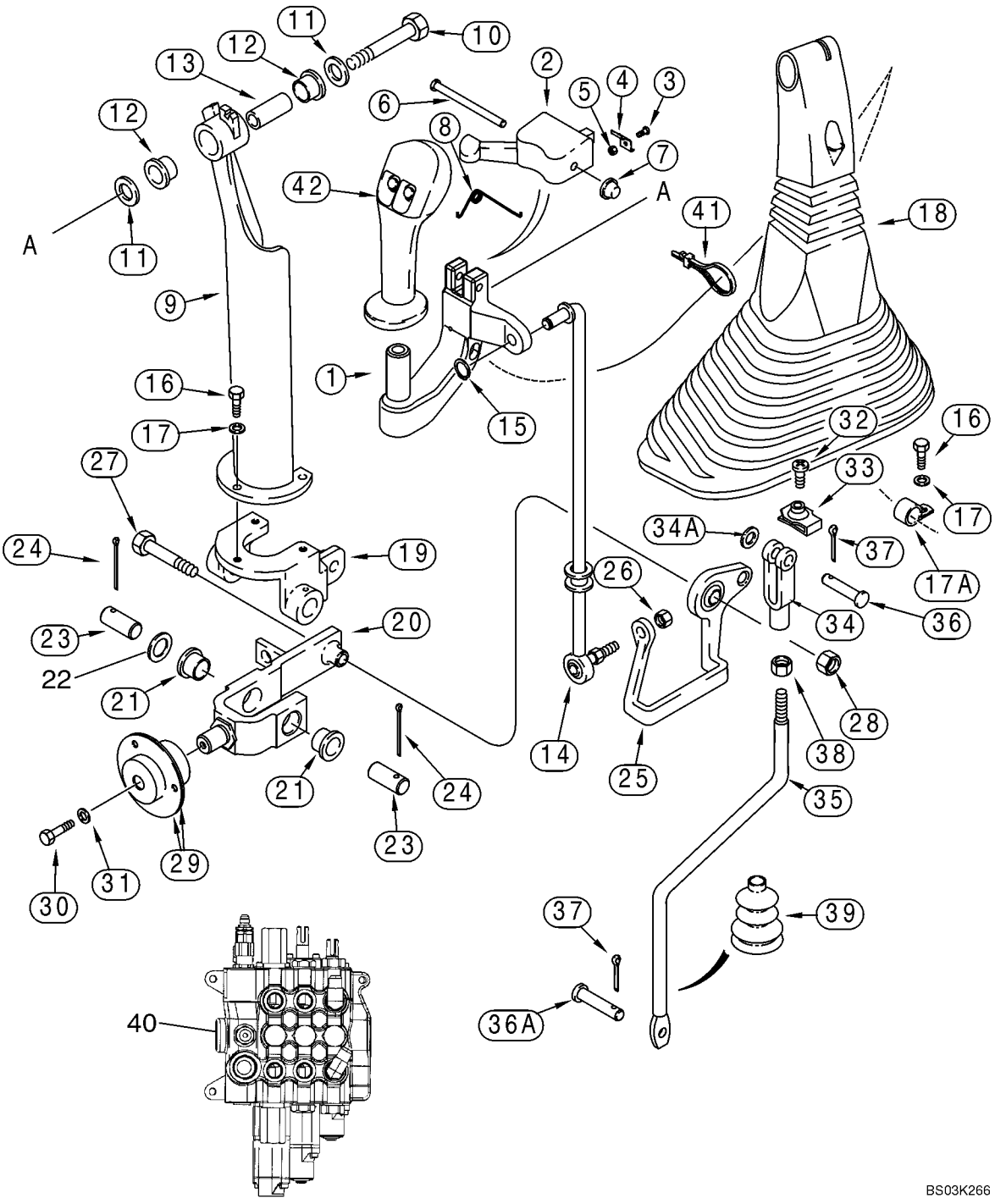

HTTP://WWW.MINNPARBACKHOEPARTS.COM



COMMANDES - BENNE DE CHARGEUSE

| REF | FN | PART NUMBER | YR/SN | QTY | DESCRIPTION |
|---|---|---|---|---|---|
| 34A | | 495-11041 | | 1 | RONDELLE 13/32 x 13/16 x 1/16 |
| 35 | | 87428153 | | 1 | TIGE FILETÉE Clam Control Rod |
| 36 | | D149288 | | 1 | AXE, GROS |
| 36A | | D149287 | | 1 | AXE, GROS |
| 37 | | 432-612 | | 2 | GOUPILLE 3/32 x 3/4 |
| 38 | | 425-116 | | 1 | ECROU 3/8 NF |
| 39 | | 132873A1 | | 1 | SOUFFLET |
| | | 189109A1 | | 1 | RESSORT Boot Retainer |
| 40 | | REF | | 1 | NOTICE LOADER CONTROL VALVE; Three Spool, See Figure 08-31 for Three Spool Valve Options |
| 41 | | L18337 | | 1 | SANGLE 15 in |
| 42 | | 87412687 | | 1 | POIGNÉE Loader Control Lever; Two Button, Declutch and Differential Lock Switches |
| | | 256347A1 | | 1 | CONNECTEUR |
| | | 258616A1 | | 1 | SERRURE |
| | | 298176A1 | | 1 | BOUCHON |
| | | 345-133 | | X | COLLE Superbonder 409, 1 ml; For Attaching Ref 1 to Ref 42 |

HTTP://WWW.MINNPARBACKHOEPARTS.COM

| 09-03 | | p1 | 12/03 |
|---|---|---|---|

COMMANDES - ASSIETTE AUTOMATIQUE DES BRAS DE RELEVAGE

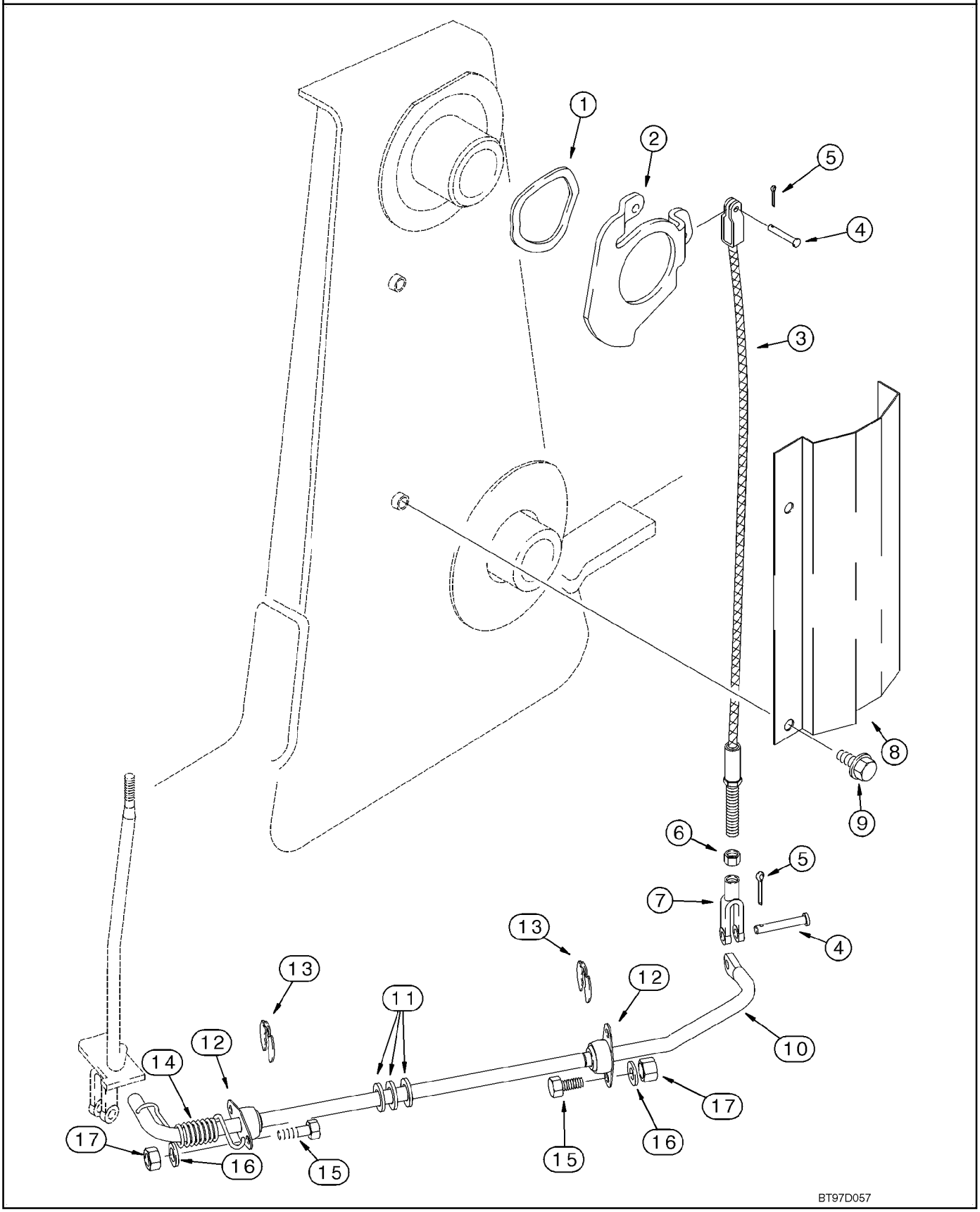

HTTP://WWW.MINNPARBACKHOEPARTS.COM



COMMANDES - ASSIETTE AUTOMATIQUE DES BRAS DE RELEVAGE

| REF | FN | PART NUMBER | YR/SN | QTY | DESCRIPTION |
|---|---|---|---|---|---|
| 1 | | 137283A1 | | 1 | RONDELLE |
| 2 | | 142404A1 | | 1 | CAME |
| 3 | | 87428645 | | 1 | CABLE Self-Leveling Cable |
| 4 | | D149287 | | 2 | AXE, GROS |
| 5 | | 432-612 | | 2 | GOUPILLE 3/32 x 3/4 |
| 6 | | 425-115 | | 1 | ECROU 5/16 NF |
| 7 | | 239406A1 | | 1 | FOURCHETTE 5/16 |
| 8 | | 139865A1 | | 1 | PROTECTEUR |
| 9 | | 844-10020 | | 2 | VIS M10 x 20 |
| | | 87417601 | | 1 | TRINGLE (ASSEMBLEE) Incl. Ref 10 - 12 |
| 10 | | NSS | | 1 | NON FOURNI SEPAREMENT Rod |
| 11 | | A30881 | | 3 | RONDELLE |
| 12 | | L15401 | | 2 | ROULEMENT |
| 13 | | D95096 | | 2 | ANNEAU |
| 14 | | 124721A1 | | 1 | RESSORT |
| 15 | | 614-8025 | | 4 | VIS M8 x 25 |
| 16 | | 895-11008 | | 4 | RONDELLE 9 x 17 x 1,6 mm |
| 17 | | 829-1408 | | 4 | ECROU M8; 10 |

HTTP://WWW.MINNPARBACKHOEPARTS.COM

| 09-04 | | p1 | 01/04 |
|---|---|---|---|

CADRE - RELEVAGE DE LA CHARGEUSE

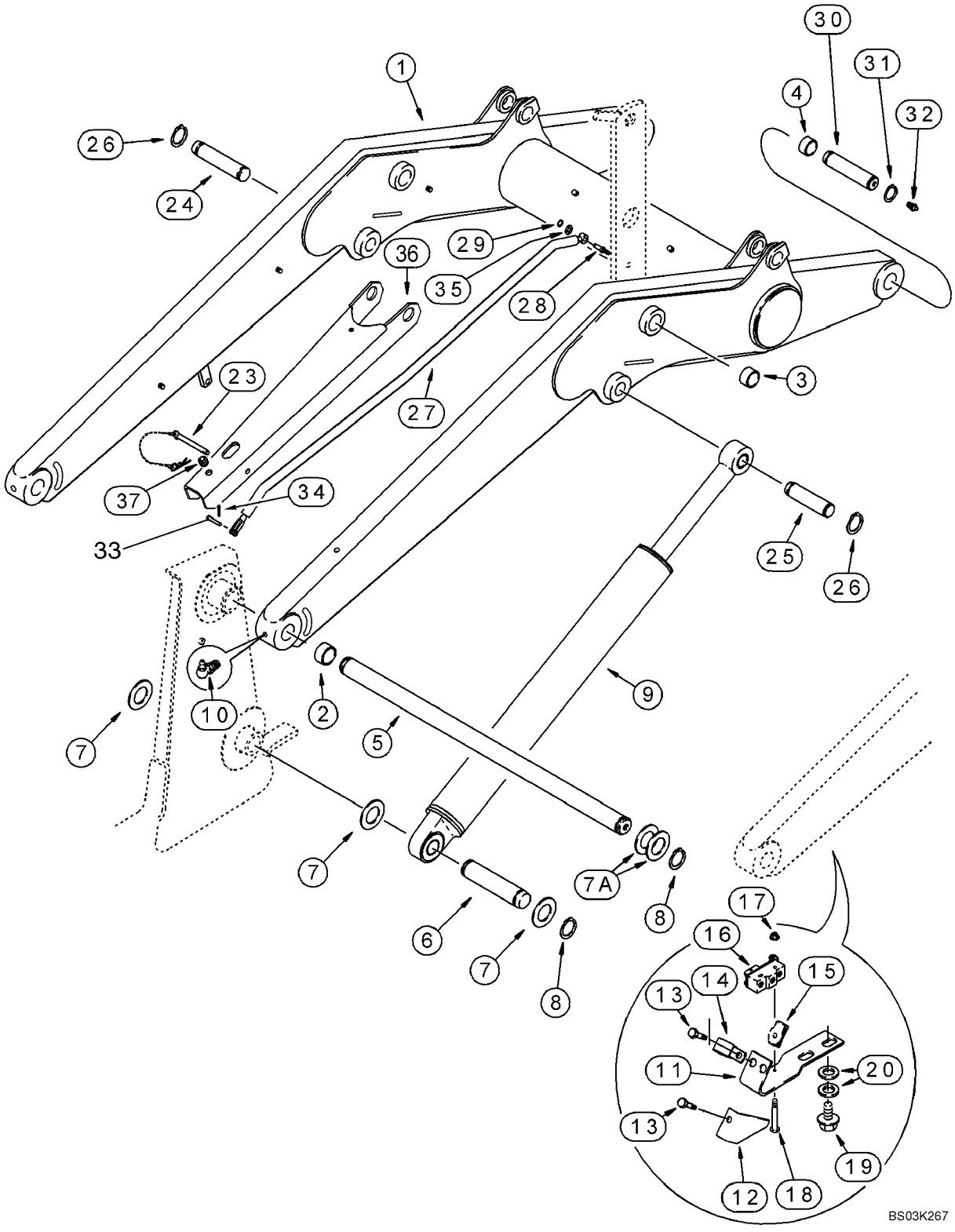

HTTP://WWW.MINNPARBACKHOEPARTS.COM



CADRE - RELEVAGE DE LA CHARGEUSE

| REF | FN | PART NUMBER | YR/SN | QTY | DESCRIPTION |
|---|---|---|---|---|---|
| | | REF | | | NOTICE LIFT CYLINDER, SUPPORT STRUT, RETURN-TO-DIG, AND ANTIROLLBACK |
| 1 | | 87426379 | | 1 | BRAS (ASSEMBLE) Incl. Ref 2, 4 |
| 2 | | D127542 | | 4 | BAGUE |
| 3 | | 100696A1 | | 4 | BAGUE Bucket Cylinder Link Pivot; Not Included With Frame; Purchase Separately |
| 4 | | 109268A1 | | 4 | BAGUE |
| 5 | | 111522A1 | | 1 | AXE SHAFT |
| 6 | | 387019A1 | | 2 | AXE |
| 7 | | 495-81282 | | 6 | RONDELLE 2-1/16 x 3 x 3/32 |
| 7A | | 181842A1 | | X | RONDELLE |
| 8 | | 800-44050 | | 6 | ANNEAU-D'ARRET No. 50 |
| 9 | | 384240A1 | | 2 | VERIN 82.6 ID x 766 mm strk; Loader Lift; See Figure 08-58 |
| 10 | | 219-55 | | 2 | GRAISSEUR 90 deg, 1/8 PT x 27/32 |
| 11 | | 128818A1 | | 1 | SUPPORT Return-To-Dig |
| 12 | | 142524A1 | | 1 | PROTECTEUR |
| 13 | | 614-6016 | | 2 | VIS M6 x 16 |
| 14 | | 515-2179 | | 1 | COLLIER 7,9 mm |
| 15 | | 833-40406 | | 2 | ECROU M6 |
| 16 | | D137363 | | 1 | CONTACTEUR Return-To-Dig |
| 17 | | 193-1003 | | 2 | ECROU No. 6 |
| 18 | | 440-10616 | | 2 | VIS No. 6 x 1 |
| 19 | | 128312A1 | | 2 | BOULON M10 x 15 |
| 20 | | 895-11010 | | 4 | RONDELLE 11 x 21 x 2 mm |
| 23 | | 104824A1 | | 1 | AXE, GROS |
| 24 | | 118900A1 | | 1 | AXE, GROS |
| 25 | | 113629A1 | | 1 | AXE, GROS |
| 26 | | 800-44040 | | 4 | ANNEAU-D'ARRET |
| 27 | | 311200A1 | | 1 | TRINGLE (ASSEMBLEE) Anti-rollback |
| 28 | | 192815A1 | | 1 | AXE |
| 29 | | 103-3350 | | 1 | ANNEAU D'ARRÊT No. 50 |
| 30 | | 118901A1 | | 2 | AXE, GROS |
| 31 | | 800-44040 | | 4 | ANNEAU-D'ARRET |
| 32 | | 219-1 | | 2 | GRAISSEUR 1/8 PT x 21/32 |
| 33 | | 427-6100 | | 1 | AXE DE CHAPE 3/8 x 1 |

HTTP://WWW.MINNPARBACKHOEPARTS.COM



CADRE - RELEVAGE DE LA CHARGEUSE

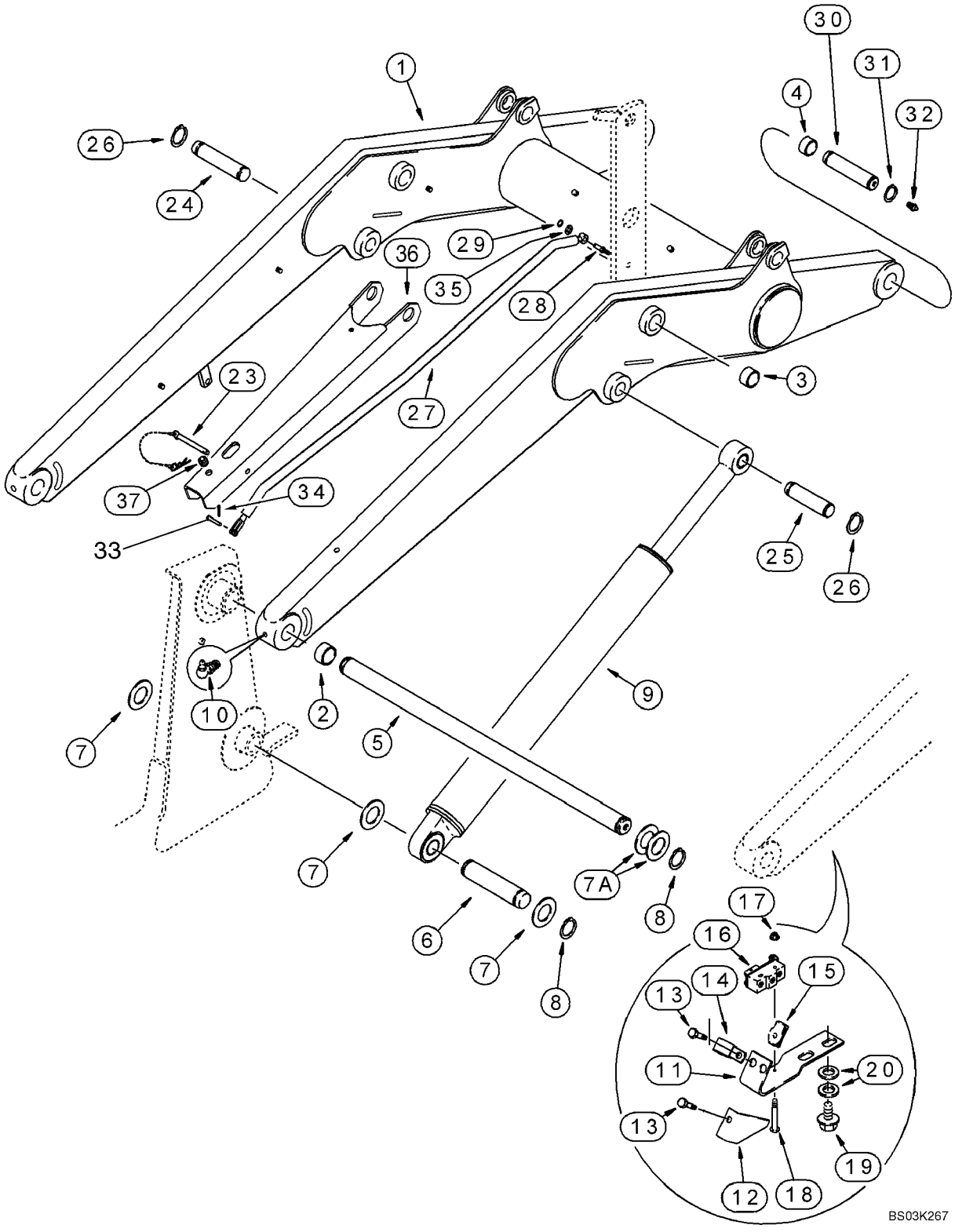

HTTP://WWW.MINNPARBACKHOEPARTS.COM



CADRE - RELEVAGE DE LA CHARGEUSE

| REF | FN | PART NUMBER | YR/SN | QTY | DESCRIPTION |
|---|---|---|---|---|---|
| 34 | | 432-612 | | 1 | GOUPILLE 3/32 x 3/4 |
| 35 | | 495-11053 | | 1 | RONDELLE 17/32 x 1-1/16 x 3/32 |
| 36 | | 341564A2 | | 1 | PILIER-SUPPORT |
| 37 | | 344892A1 | | 1 | PASSE-FIL |

HTTP://WWW.MINNPARBACKHOEPARTS.COM



CADRE - TRINGLERIE DES BRAS DE RELEVAGE

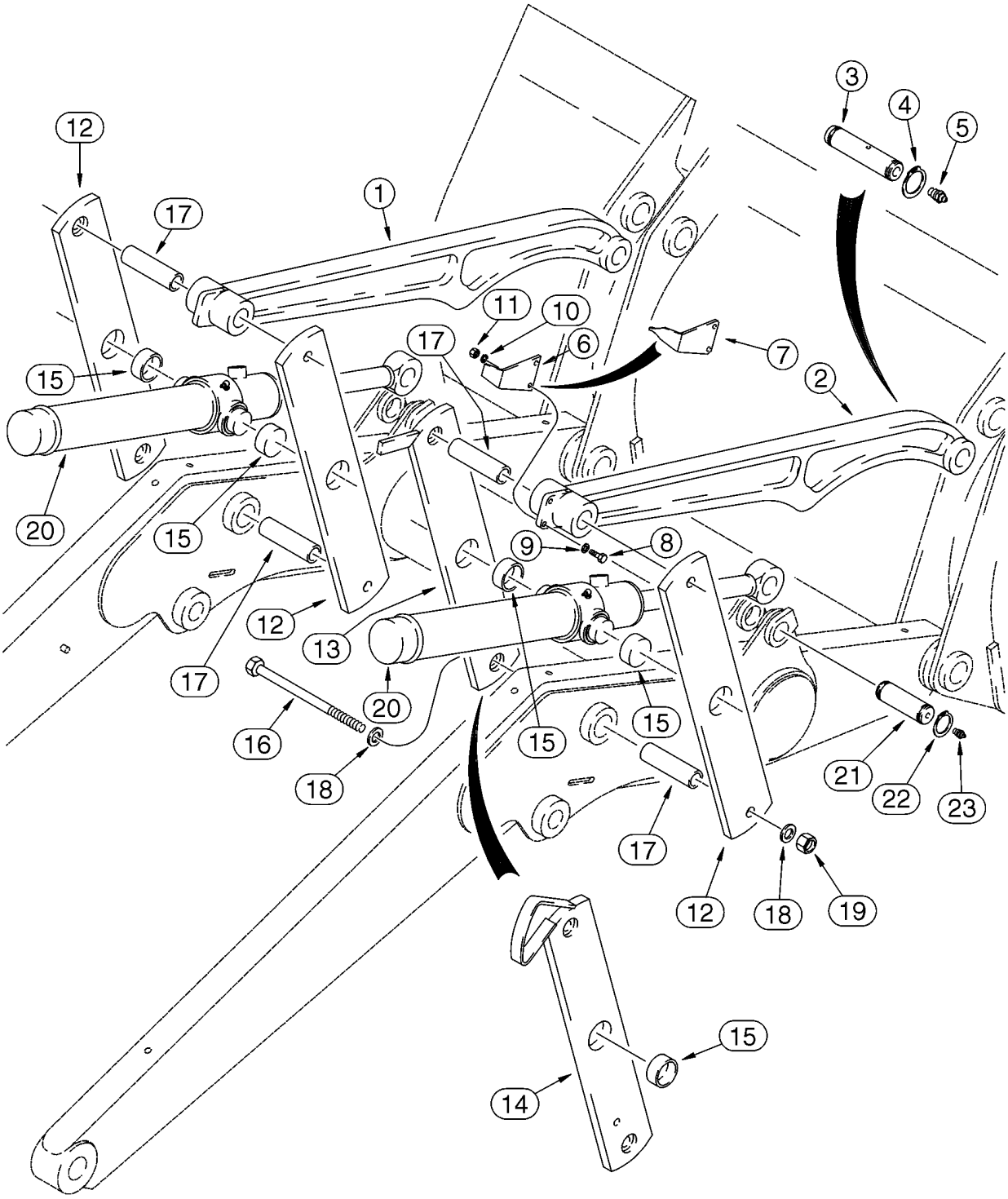


BT97N070

HTTP://WWW.MINNPARBACKHOEPARTS.COM



CADRE - TRINGLERIE DES BRAS DE RELEVAGE

| REF | FN | PART NUMBER | YR/SN | QTY | DESCRIPTION |
|---|---|---|---|---|---|
| 1 | | 331621A1 | | 1 | BIELLETTE Bucket, Left-Hand; Without Mounting Holes For Bucket Position Pointer; For Service, Order 331620A1 |
| 2 | | 331620A1 | | 1-2 | BIELLETTE Bucket, Left-Hand or Right-Hand; With Mounting Holes For Bucket Position Pointer |
| 3 | | 118901A1 | | 2 | AXE, GROS |
| 4 | | 800-44040 | | 4 | ANNEAU-D'ARRET |
| 5 | | 219-1 | | 2 | GRAISSEUR 1/8 PT x 21/32 |
| 6 | | D121194 | | 1 | PALPEUR Models Without Clam Bucket |
| 7 | | 250851A1 | | 1 | PALPEUR Models With Clam Bucket |
| 8 | | 614-8030 | | 2 | VIS M8 x 30 |
| 9 | | 895-11008 | | 2 | RONDELLE 9 x 17 x 1,6 mm |
| 10 | | 892-11008 | | 2 | RONDELLE M8 |
| 11 | | 829-1408 | | 2 | ECROU M8; 10 |
| 12 | | 139180A1 | | 3 | BIELLETTE Bucket Cylinder, Outer Right-Hand; Inner and Outer Left-Hand, Incl. Ref 15 |
| 13 | | 139235A1 | | 1 | BIELLETTE Bucket Cylinder, Inner Right-Hand; With Extra Hole For Antirollback Rod; Models Without Clam Bucket; Incl. Ref 15 |
| 14 | | 139195A1 | | 1 | BIELLETTE Bucket Cylinder, Inner Right-Hand; With Extra Hole For Antirollback Rod; Models With Clam Bucket, Incl. Ref 15 |
| 15 | | D151034 | | 1 | BAGUE |
| 16 | | 827-20190 | | 4 | VIS M20 x 190; 10.9 |
| 17 | | D132076 | | 4 | ENTRETOISE |
| 18 | | 896-11020 | | 8 | RONDELLE 22 x 37 x 4 mm |
| 19 | | 829-1420 | | 4 | ECROU M20; 10 |
| 20 | | 113133A2 | | 2 | VERIN 76 ID x 522 mm strk; Loader Bucket; See Figure 08-59 |
| 21 | | 116339A1 | | 2 | AXE, GROS |
| 22 | | 800-44040 | | 4 | ANNEAU-D'ARRET |
| 23 | | 219-1 | | 2 | GRAISSEUR 1/8 PT x 21/32 |

HTTP://WWW.MINNPARBACKHOEPARTS.COM

| 09-06 | | p1 | 10/03 |
|---|---|---|---|

GODETS, CHARGEUSE À LONGUE LÈVRE (82 IN)

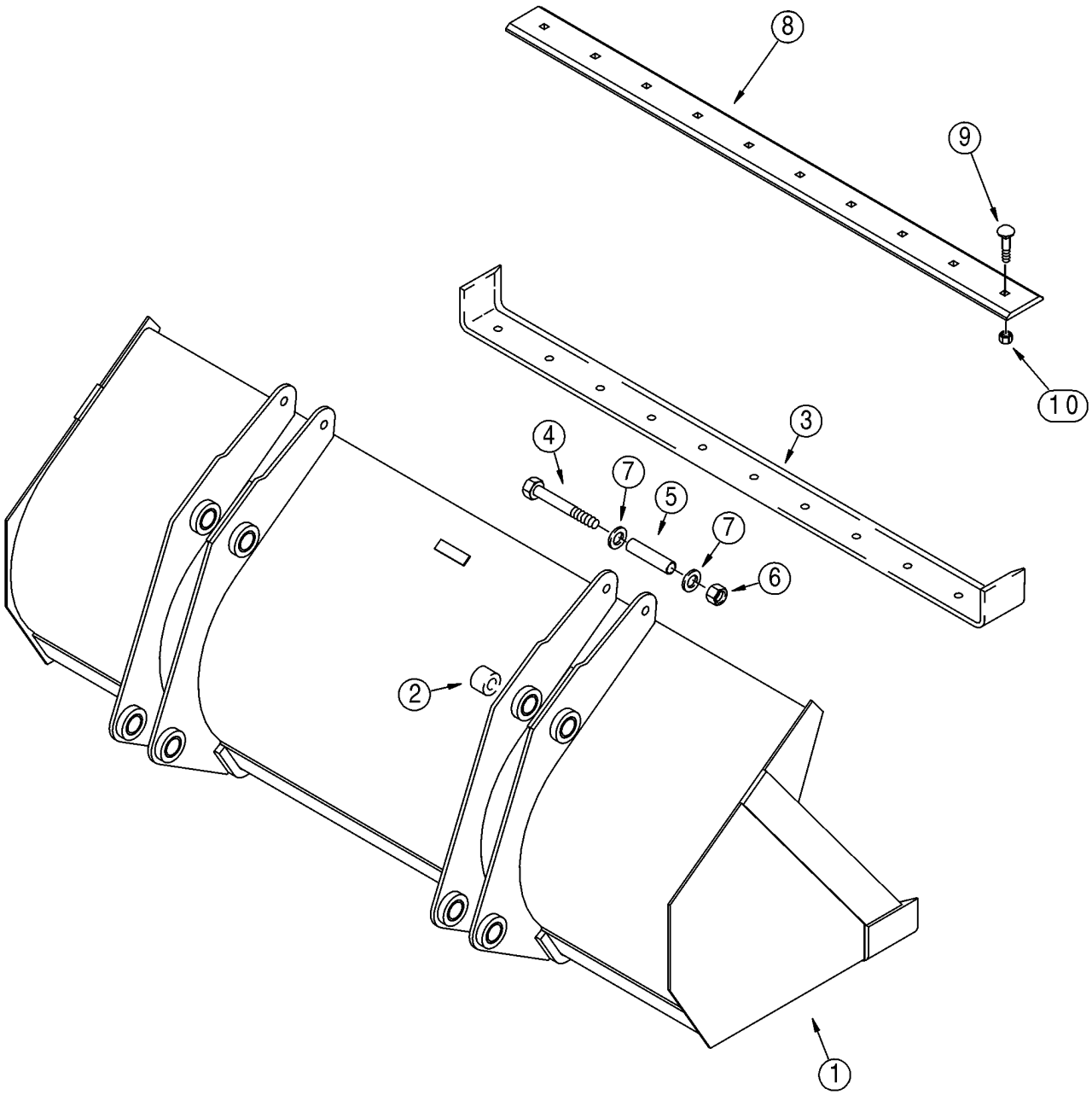

HTTP://WWW.MINNPARBACKHOEPARTS.COM



GODETS, CHARGEUSE À LONGUE LÈVRE (82 IN)

| REF | FN | PART NUMBER | YR/SN | QTY | DESCRIPTION |
|---|---|---|---|---|---|
| | | 385588A1 | | 1 | GODET ASSEMBLY, 2083 mm (82 in); Assembly Does Not Include Bolt-On Cutting Edge; Without Bucket Teeth; Incl. Ref 1 - 7; Order Through Parts Marketing |
| 1 | | NSS | | 1 | NON FOURNI SEPAREMENT Bucket; Incl. Ref 2, 3 |
| 2 | | D129264 | | 8 | BAGUE |
| 3 | | 132988A1 | | 1 | BORD Welded-On |
| 4 | | 828-20160 | | 2 | VIS M20 x 160; 10.9 |
| 5 | | 142538A1 | | 2 | ENTRETOISE |
| 6 | | 832-10420 | | 2 | ECROU M20 |
| 7 | | 896-11020 | | 4 | RONDELLE 22 x 37 x 4 mm |
| 8 | | 112946A1 | | 1 | LAME D'ATTAQUE Bolt-On; Not Included In 385588A1 Bucket Assembly, Purchase Separately |
| 9 | | 420-21232 | | 10 | BOULON |
| 10 | | 429-1012 | | 10 | ECROU 3/4; 8 |
| | | {385920A1} | | 1 | BUCKET ASSEMBLY, 2083 mm (82 in); Assembly Includes 385588A1 Bucket Assembly and 112946A1 Bolt-On Cutting Edge; Incl. Ref 1 - 10; Order Through Parts Marketing |
| | | 385588A1 | | 1 | GODET 2083 mm (82 in); Incl. Ref 1 - 7; Order Through Parts Marketing |
| 1 | | NSS | | 1 | NON FOURNI SEPAREMENT Bucket; Incl. Ref 2, 3 |
| 2 | | D129264 | | 8 | BAGUE |
| 3 | | 132988A1 | | 1 | BORD Bolt-On |
| 4 | | 828-20160 | | 2 | VIS M20 x 160; 10.9 |
| 5 | | 142538A1 | | 2 | ENTRETOISE |
| 6 | | 832-10420 | | 2 | ECROU M20 |
| 7 | | 896-11020 | | 4 | RONDELLE 22 x 37 x 4 mm |
| 8 | | 112946A1 | | 1 | LAME D'ATTAQUE Bolt-On |
| 9 | | 420-21232 | | 10 | BOULON |
| 10 | | 429-1012 | | 10 | ECROU 3/4; 8 |

HTTP://WWW.MINNPARBACKHOEPARTS.COM

| 09-07 | | p1 | 10/03 |
|---|---|---|---|

GODET, CHARGEUSE À LONGUE LÈVRE (93 IN)

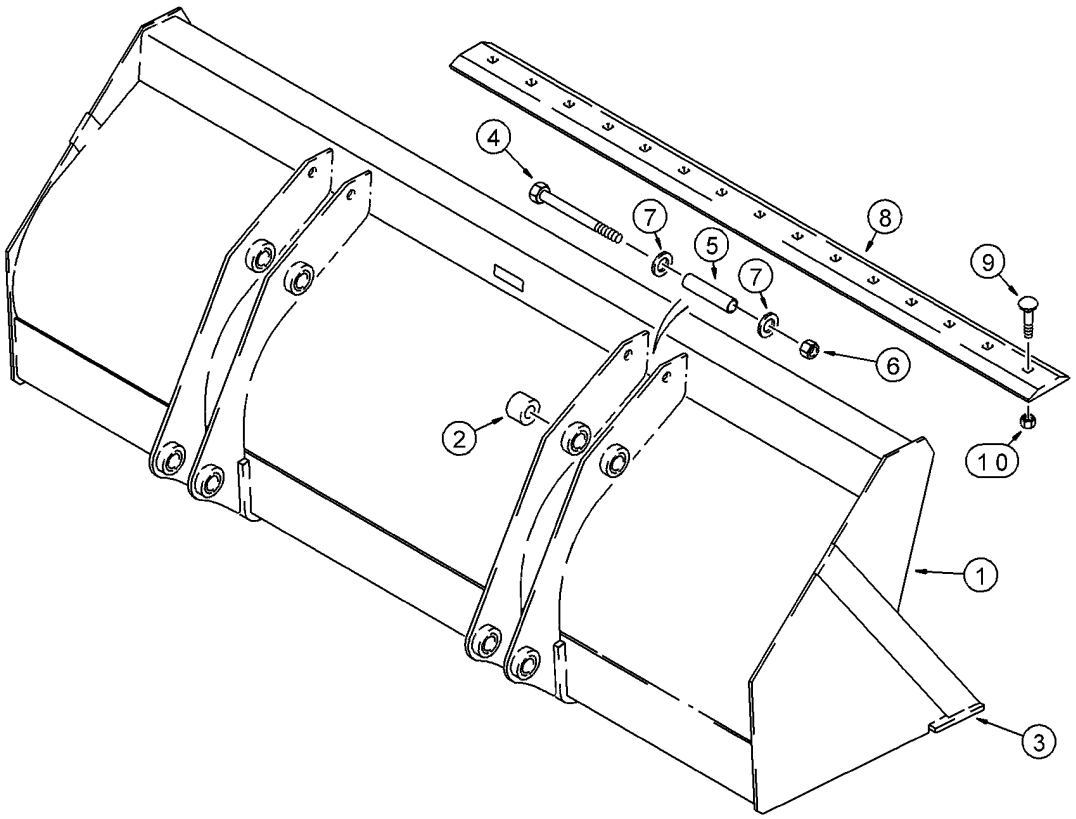


BS00C247

HTTP://WWW.MINNPARBACKHOEPARTS.COM



GODET, CHARGEUSE À LONGUE LÈVRE (93 IN)

| REF | FN | PART NUMBER | YR/SN | QTY | DESCRIPTION |
|---|---|---|---|---|---|
| | | 142687A1 | | 1 | GODET 2362 mm (93 in), Without Bucket Teeth; Assembly Includes Bolt-On Cutting Edge; Incl. Ref 1 - 10; Order Through Parts Marketing |
| 1 | | NSS | | 1 | NON FOURNI SEPAREMENT Bucket, Incl. Ref 2, 3 |
| 2 | | D129264 | | 8 | BAGUE |
| 3 | | 134844A1 | | 1 | PLAQUE, GRANDE Weld-On |
| 4 | | 828-20160 | | 2 | VIS M20 x 160; 10.9 |
| 5 | | 142538A1 | | 2 | ENTRETOISE |
| 6 | | 832-10420 | | 2 | ECROU M20 |
| 7 | | 896-11020 | | 4 | RONDELLE 22 x 37 x 4 mm |
| 8 | | 185506A1 | | 1 | BORD BLADE, Bolt-On |
| 9 | | 20-21232 | | 10 | VIS |
| 10 | | 429-1012 | | 10 | ECROU 3/4; 8 |

HTTP://WWW.MINNPARBACKHOEPARTS.COM

| 09-08 | | p1 | 10/03 |
|---|---|---|---|

GODET, BENNE DE CHARGEUSE

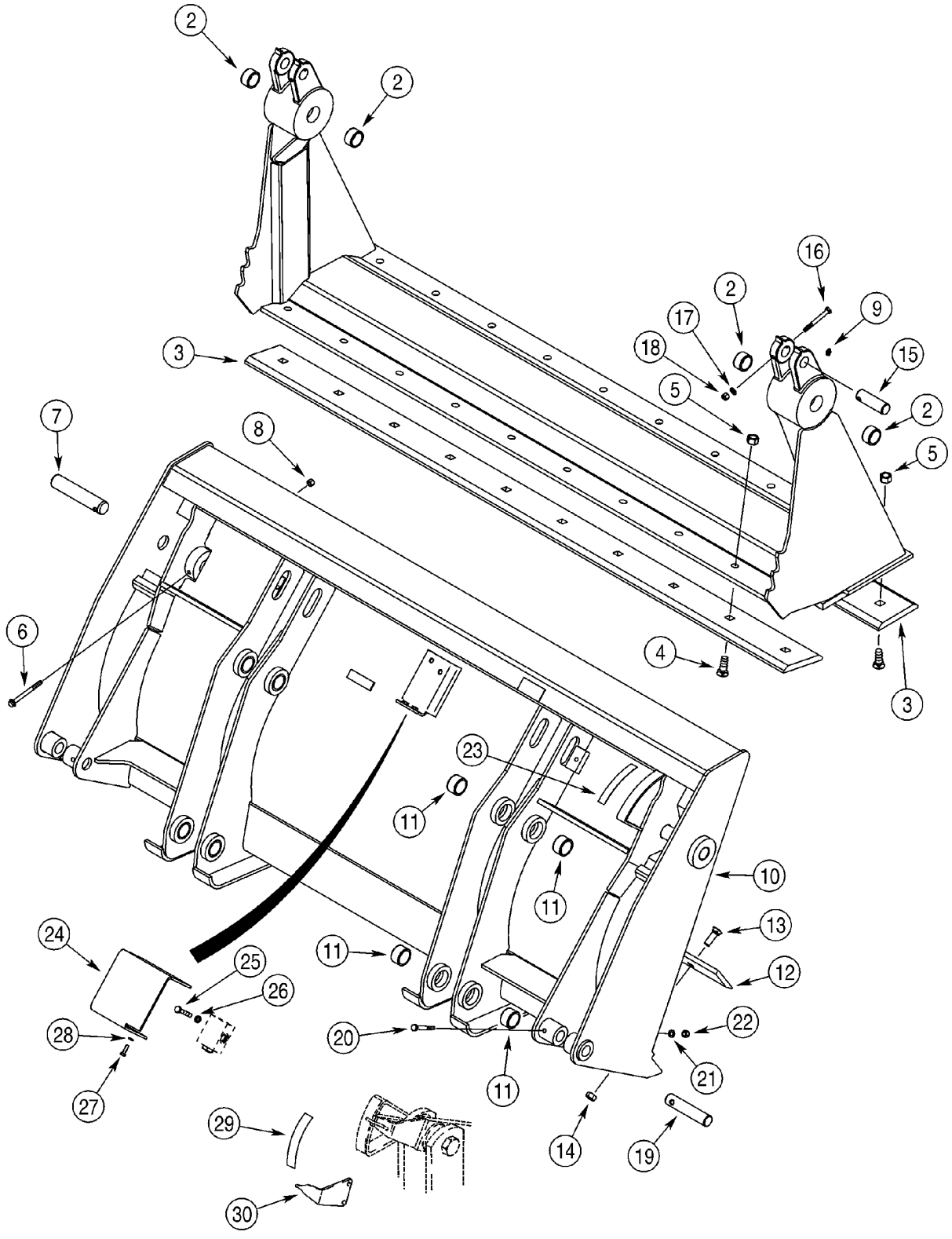

HTTP://WWW.MINNPARBACKHOEPARTS.COM



GODET, BENNE DE CHARGEUSE

| REF | FN | PART NUMBER | YR/SN | QTY | DESCRIPTION |
|---|---|---|---|---|---|
| | | 376528A4 | | 1 | GODET ASSEMBLY; 2083 mm (82 in); With Hydraulics; Includes 376288A2 Bucket Assembly, Ref 1 - 28; Also Includes Hydraulics on Figure 08-07, Ref 1 - 29; Order Through Parts Marketing |
| | | {376288A2} | | 1 | BUCKET ASSEMBLY; 2083 mm (82 in); Without Hydraulics; Includes 411668A1 Bucket and (2) Ref 7 Pins; Order Through Parts Marketing |
| | | 411668A1 | | 1 | GODET BUCKET ASSEMBLY; 2083 mm (82 in; Without Hydraulics; Incl. Ref 1 - 6, 8 - 14 |
| | | 175156A1 | | 1 | COQUILLE CLAM, Incl. Ref 1, 2 |
| 1 | | NSS | | 1 | NON FOURNI SEPAREMENT Clam Assy |
| 2 | | D31140 | | 4 | BAGUE |
| 3 | | 142300A1 | | 2 | DEMI-LAME |
| 4 | | 20-21232 | | 20 | VIS 3/4 x 2 |
| 5 | | 29-1012 | | 20 | ECROU 3/4; 8 |
| 6 | | 844-10110 | | 2 | VIS Flange, M10 x 110 |
| 7 | | D51391 | | 2 | AXE, GROS |
| 8 | | 832-10410 | | 2 | ECROU M10 |
| 9 | | 219-1 | | 2 | GRAISSEUR 1/8 PT x 21/32 |
| | | 376286A2 | | 1 | GODET BLADE, Incl. Ref 10, 11 |
| 10 | | NSS | | 1 | NON FOURNI SEPAREMENT Blade Assy, Dozer |
| 11 | | D129264 | | 8 | BAGUE |
| 12 | | 121920A1 | | 1 | BORD Cutting |
| 13 | | 20-21032 | | 10 | BOULON 5/8 x 2 |
| 14 | | 29-1010 | | 10 | ECROU 5/8 |
| 15 | | D51392 | | 2 | AXE |
| 16 | | 814-10090 | | 2 | VIS M10 x 90 |
| 17 | | 895-11010 | | 2 | RONDELLE 11 x 21 x 2 mm |
| 18 | | 832-10410 | | 2 | ECROU M10 |
| 19 | | D51393 | | 2 | AXE, GROS |
| 20 | | 814-10080 | | 2 | VIS M10 x 80 |
| 21 | | 895-11010 | | 2 | RONDELLE 11 x 21 x 2 mm |
| 22 | | 832-10410 | | 2 | ECROU M10 |
| 23 | | 321-1708 | | 1 | DECALCOMANIE |
| 24 | | 388848A1 | | 1 | GARANT Pilot Operated Check Valve |
| 25 | | 814-10060 | | 2 | VIS M10 x 60 |

HTTP://WWW.MINNPARBACKHOEPARTS.COM

| 09-08 | | p2 | 10/03 |
|---|---|---|---|

GODET, BENNE DE CHARGEUSE

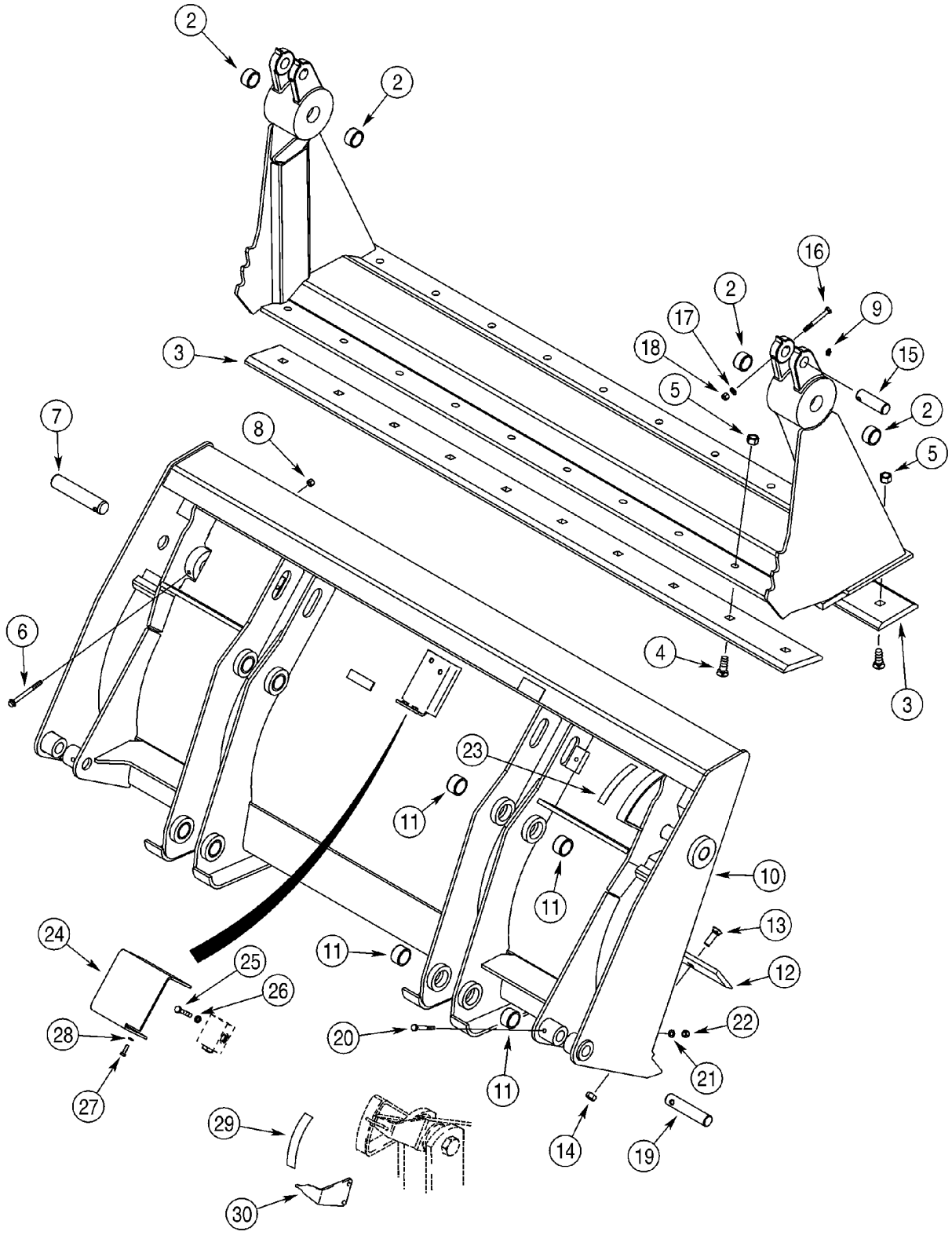

HTTP://WWW.MINNPARBACKHOEPARTS.COM



GODET, BENNE DE CHARGEUSE

| REF | FN | PART NUMBER | YR/SN | QTY | DESCRIPTION |
|---|---|---|---|---|---|
| 26 | | 892-11010 | | 2 | RONDELLE FREIN M10 |
| 27 | | 614-8025 | | 2 | VIS M8 x 25 |
| 28 | | 892-11008 | | 2 | RONDELLE M8 |
| 29 | | 321-1707 | | 1 | DECALCOMANIE |
| 30 | | 250851A1 | | 1 | PALPEUR |

HTTP://WWW.MINNPARBACKHOEPARTS.COM

| 09-09 | | p1 | 09/03 |
|---|---|---|---|

GARANT - DISTRIBUTEUR, BRAS DE RELEVAGE

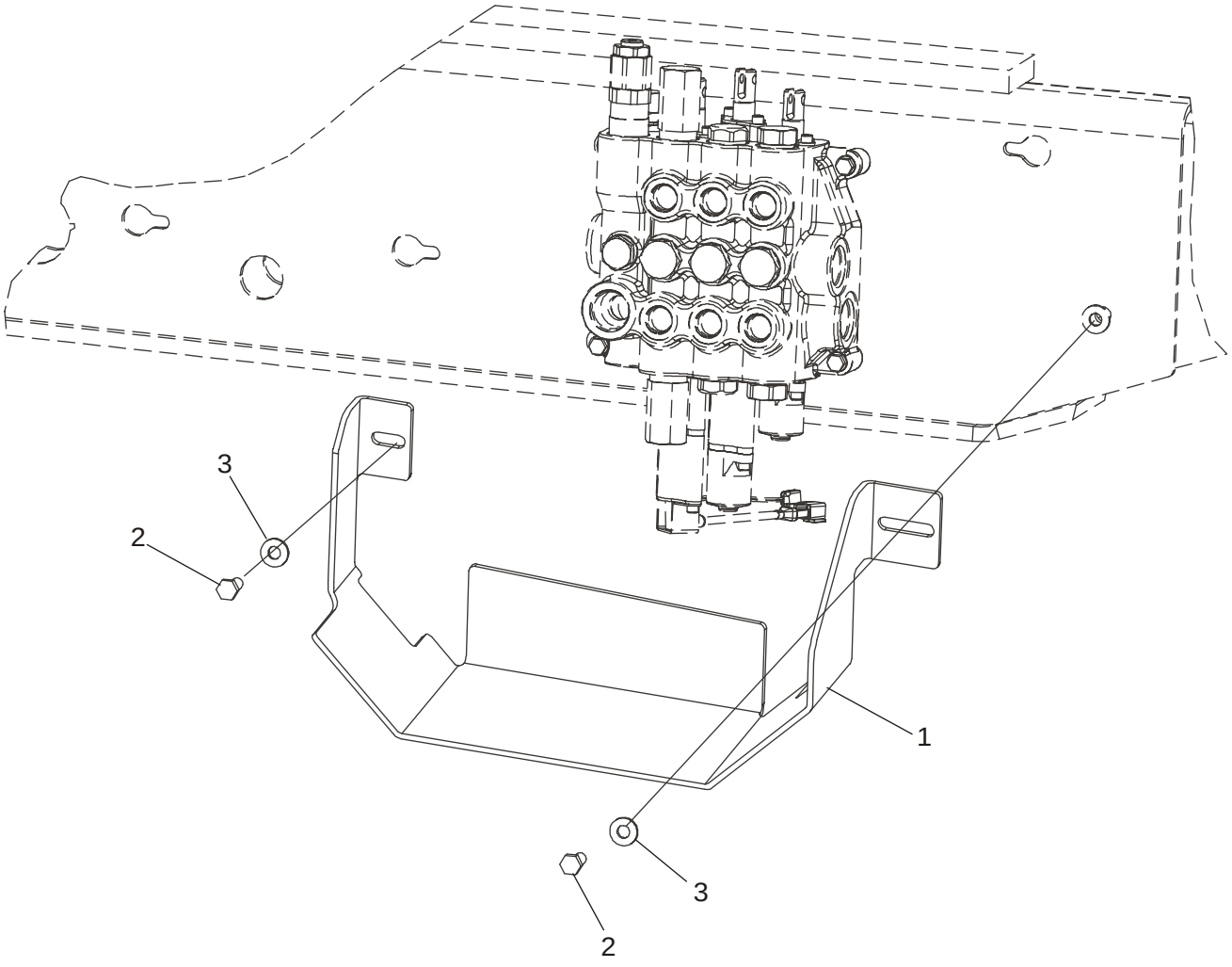


BS03K268

HTTP://WWW.MINNPARBACKHOEPARTS.COM



GARANT - DISTRIBUTEUR, BRAS DE RELEVAGE

| REF | FN | PART NUMBER | YR/SN | QTY | DESCRIPTION |
|---|---|---|---|---|---|
| 1 | | 87423463 | | 1 | PROTECTION |
| 2 | | 614-10025 | | 2 | BOULON M10 x 25 |
| 3 | | 896-15010 | | 2 | RONDELLE 11 x 24 x 3 mm |

HTTP://WWW.MINNPARBACKHOEPARTS.COM

| 09-10 | | p1 | 01/04 |
|---|---|---|---|

COUPLEUR, OUTIL, DE SÉCURITÉ

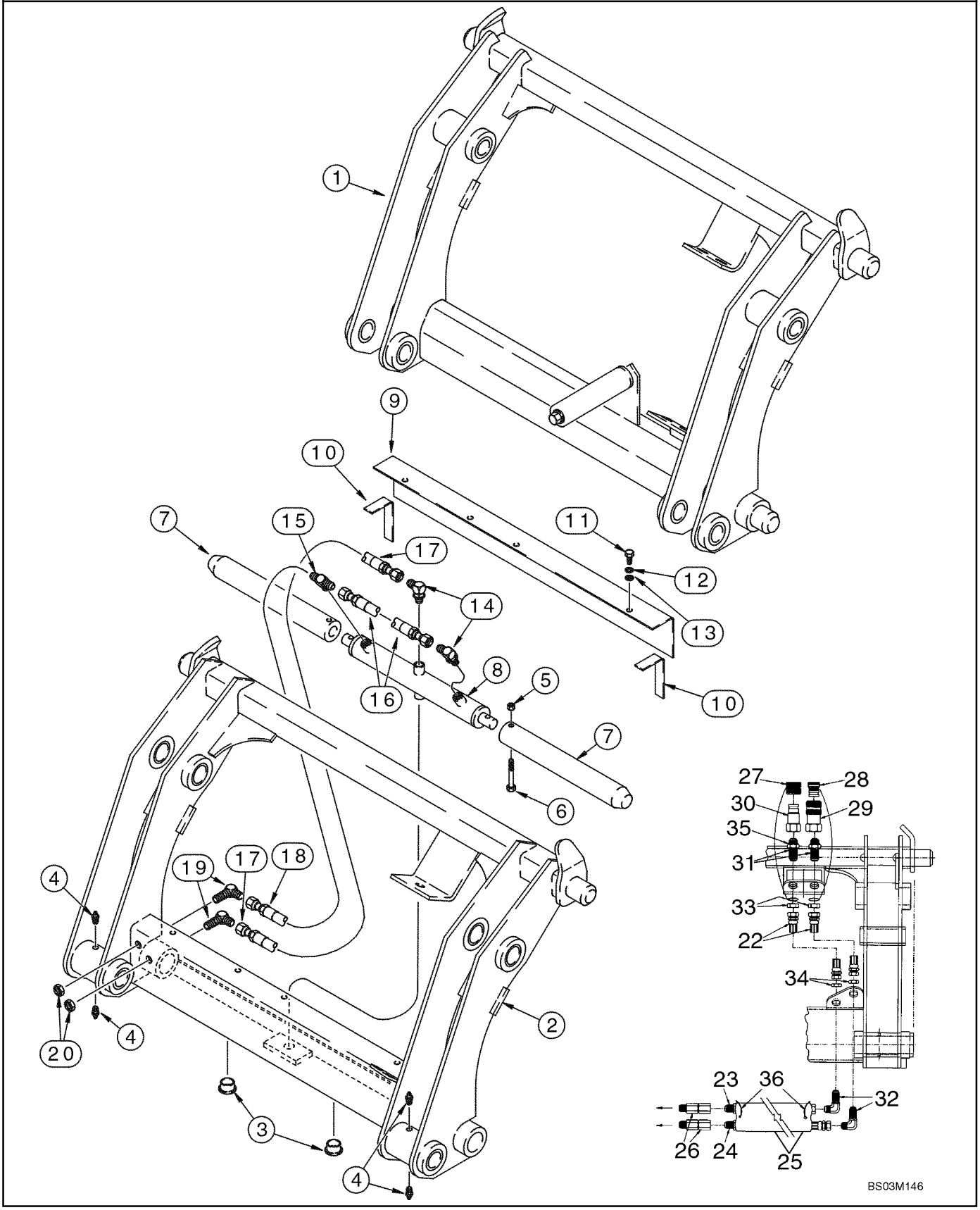

HTTP://WWW.MINNPARBACKHOEPARTS.COM



COUPLEUR, OUTIL, DE SÉCURITÉ

| REF | FN | PART NUMBER | YR/SN | QTY | DESCRIPTION |
|---|---|---|---|---|---|
| | | REF | | | NOTICE MANUAL COUPLER |
| 1 | | 191239A1 | | 1 | CHAPE Loader, Complete; Component Parts Not Serviced Separately; Used With D121194 Bucket Position Pointer and 139235A1 Bucket Cylinder Link; See Figure 09-05, Ref 6, 13 |
| | | REF | | | NOTICE HYDRAULIC COUPLER |
| | | 292969A2 | | 1 | CHAPE Loader; Incl. Ref 2 - 35; With Auxiliary Hydraulics; For Complete Assembly, Order From Machinery Price List; Category III; For Hydraulic Tool Quick Coupler Hydraulics, See Figure 08-26, 08-27 |
| 2 | | NSS | | 1 | NON FOURNI SEPAREMENT Frame |
| 3 | | 305497A1 | | 2 | BOUCHON 1-1/4 ID x 1/2 in OD; Plastic |
| 4 | | 219-87 | | 4 | RACCORD 1/4 st x 9/16 |
| 5 | | 231-4246 | | 2 | ECROU 3/8 |
| 6 | | 326-640 | | 2 | VIS 3/8 x 2-1/2; 8 |
| 7 | | 305496A1 | | 2 | AXE 1-15/16 OD x 15 in lg |
| 8 | | 305499A1 | | 1 | VERIN Double Acting; Component Parts Not Serviced Separately |
| 9 | | 305495A1 | | 1 | COUVERCLE |
| 10 | | NSS | | 2 | NON FOURNI SEPAREMENT Seal; Foam |
| 11 | | 413-516 | | 3 | BOULON 5/16 x 1 |
| 12 | | 492-11031 | | 3 | RONDELLE FREIN 5/16 |
| 13 | | 495-11034 | | 3 | RONDELLE 11/32 x 11/16 x 1/16 |
| 14 | | 218-5105 | | 2 | COUDE 9/16 fl x Or; Includes 237-6006 O-Ring |
| | | 237-6006 | | 1 | JOINT TORIQUE 15/32 ID x 5/64, Boss Seal |
| 15 | | 218-5182 | | 1 | TE 9/16 adj Or x fl x fl; Includes 237-6006 O-Ring |
| | | 237-6006 | | 1 | JOINT TORIQUE 15/32 ID x 5/64, Boss Seal |
| 16 | | 305492A1 | | 1 | FLEXIBLE (ASSEMBLE) 260 mm (10-1/4 in) |
| 17 | | 305494A1 | | 1 | FLEXIBLE (ASSEMBLE) 387 mm (15-1/4 in) |
| 18 | | 305493A1 | | 1 | FLEXIBLE (ASSEMBLE) 235 mm (9-1/4 in) |
| 19 | | 218-693 | | 2 | COUDE 9/16 fl x blkhd fl |
| 20 | | 218-1254 | | 2 | CONTRE-ECROU 9/16 NF |
| 21 | | 305508A1 | | 1 | POCHETTE Decal; Includes Four Decals; Not Illustrated |
| 22 | | 307385A1 | | 2 | FLEXIBLE (ASSEMBLE) 387 mm (15-1/4 in) |

HTTP://WWW.MINNPARBACKHOEPARTS.COM

| 09-10 | | p2 | 01/04 |
|---|---|---|---|

COUPLEUR, OUTIL, DE SÉCURITÉ

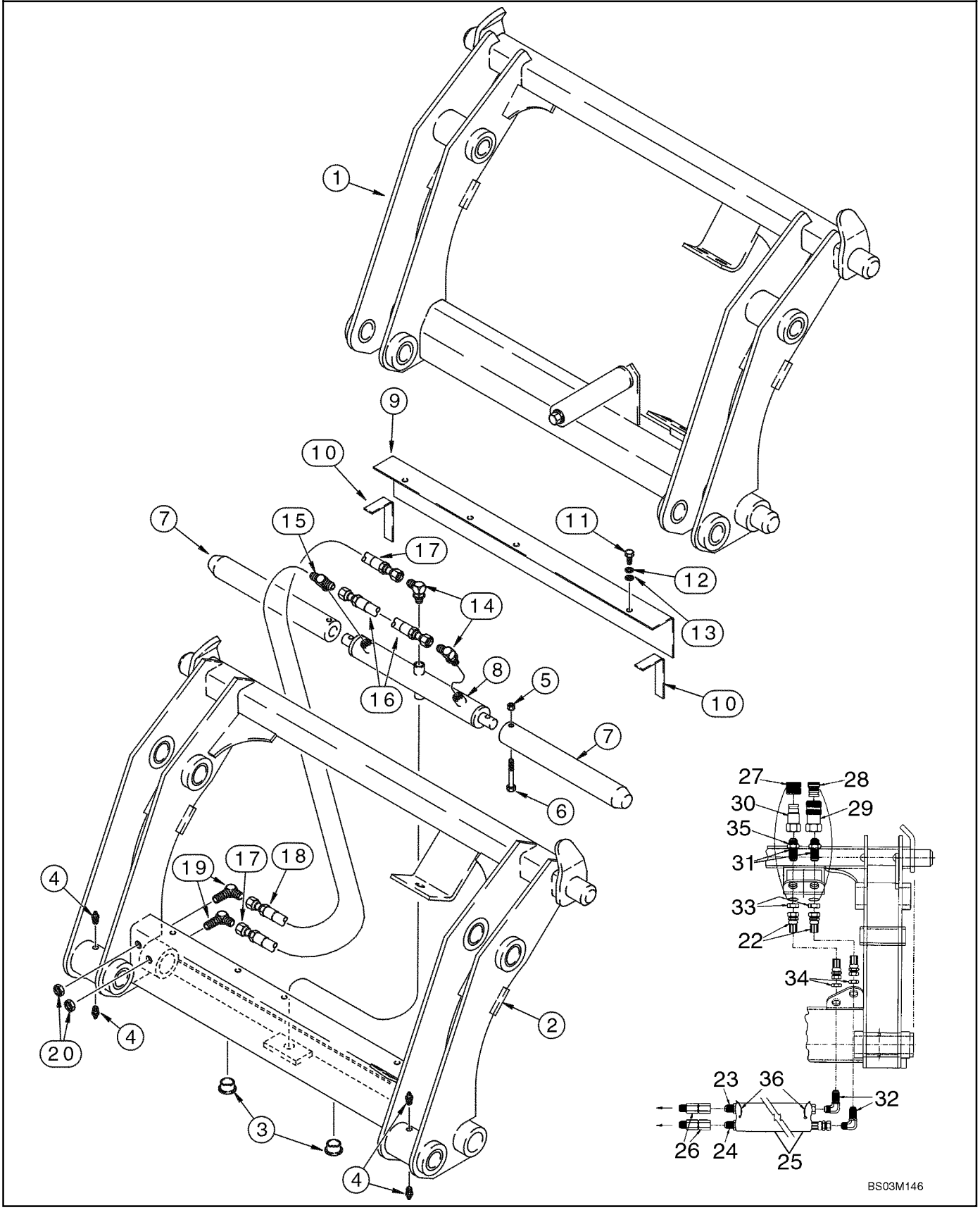

HTTP://WWW.MINNPARBACKHOEPARTS.COM



COUPLEUR, OUTIL, DE SÉCURITÉ

| REF | FN | PART NUMBER | YR/SN | QTY | DESCRIPTION |
|---|---|---|---|---|---|
| 23 | | 307386A1 | | 1 | FLEXIBLE (ASSEMBLE) 629 mm (24-3/4 in) |
| 24 | | 307387A1 | | 1 | FLEXIBLE (ASSEMBLE) 718 mm (28-1/4 in) |
| 25 | | 307388A1 | | 1 | FLEXIBLE SLEEVE, 660 mm (26 in) |
| 26 | | 307389A1 | | 2 | PIVOT Swivel |
| 27 | | 137344A1 | | 1 | BOUCHON Male Coupling |
| 28 | | 137343A1 | | 1 | BOUCHON Female Coupling |
| 29 | | 123537A1 | | 1 | RACCORD Quick Disconnect; Female |
| 30 | | 245423A1 | | 1 | RACCORD |
| 31 | | 126155A1 | | 2 | RACCORD 1-1/16 blkhd fl x Or |
| 32 | | 218-695 | | 2 | RACCORD ELBOW, 90 deg, 7/8 fl x bkhd fl |
| 33 | | 218-1256 | | 2 | CONTRE-ECROU 1-1/16 |
| 34 | | 218-1279 | | 2 | ECROU 7/8 |
| 35 | | 237-6012 | | 2 | JOINT TORIQUE 59/64 ID x 7/64 |
| 36 | | L18337 | | 2 | SANGLE Tie |

HTTP://WWW.MINNPARBACKHOEPARTS.COM



COUVERCLES - TOURELLE DE LA PELLE RETRO, SANS DE COMMANDE PILOTE

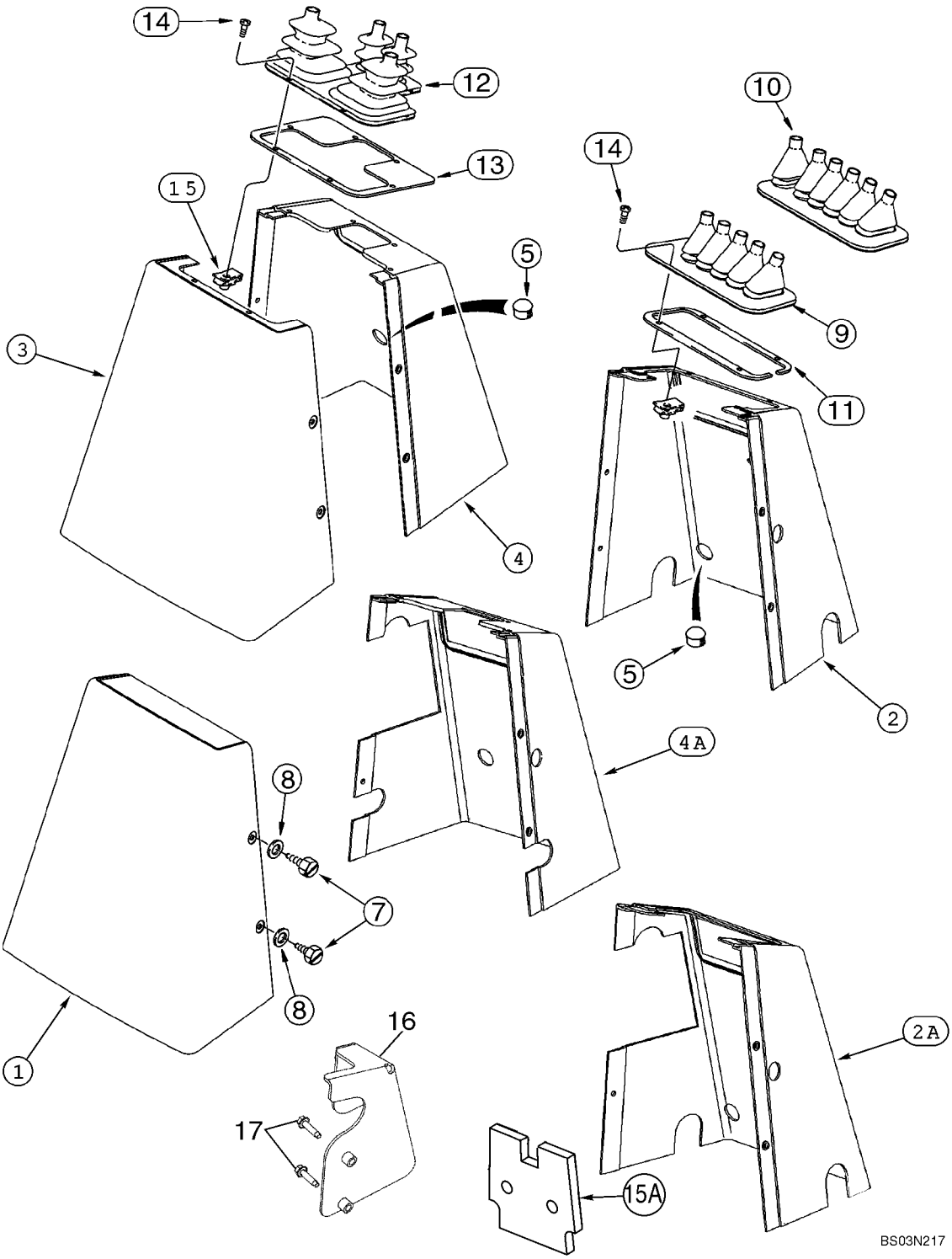

HTTP://WWW.MINNPARBACKHOEPARTS.COM



COUVERCLES - TOURELLE DE LA PELLE RETRO, SANS DE COMMANDE PILOTE

| REF | FN | PART NUMBER | YR/SN | QTY | DESCRIPTION |
|---|---|---|---|---|---|
| 1 | | 390759A1 | | 1 | RECOUVREMENT Rear; All Models With Foot Swing |
| 2 | | 390760A1 | | 1 | RECOUVREMENT Front; Foot Swing; Without Auxiliary Hydraulics |
| 2A | | 87411083 | | 1 | RECOUVREMENT Front; Foot Swing; With Auxiliary Hydraulics |
| 3 | | 390758A1 | | 1 | RECOUVREMENT Rear; All Models With Hand Swing |
| 4 | | 390690A1 | | 1 | RECOUVREMENT Front; Hand Swing; Without Auxiliary Hydraulics |
| 4A | | 87411084 | | 1 | RECOUVREMENT Front; Hand Swing; With Auxiliary Hydraulics |
| 5 | | 353-411 | | 1-2 | BOUCHON 1 in dia |
| 7 | | 779-37616 | | 5 | POINTEAU M6.3 x 16 st |
| 8 | | 195-140 | | 5 | RONDELLE fLAT, 1/4 |
| 9 | | D149866 | | 1 | MANCHETTE 5 Control Levers |
| 10 | | D149867 | | 1 | MANCHETTE 6 Control Levers |
| 11 | | 136822A1 | | 1 | JONC |
| 12 | | D149868 | | 1 | SOUFFLET 4 Control Levers |
| 13 | | 136824A1 | | 1 | PLAQUE, GRANDE Used With Ref 12 Only |
| 14 | | 140-106 | | 4 | VIS No. 10 x 1/2 |
| 14 | | 140-107 | | 6 | VIS No. 10 x 3/4; Used With Ref 13 Retainer |
| 15 | | 131-861 | | 4-6 | ECROU No. 10, 4; Used With Ref 11 Retainer; (6) Used With Ref 13 Retainer |
| 15A | | 397870A3 | | 2 | JOINT Front and Rear Console Covers; Noise Barrier; Adhesive Back |
| 16 | | 87425122 | | 1 | PATTE FIXATION Models With Backhoe Auxiliary Hydraulics |
| | | 87430677 | | 1 | DECALCOMANIE Auxiliary Hydraulics |
| 17 | | 281-14716 | | 2 | VIS |

HTTP://WWW.MINNPARBACKHOEPARTS.COM

| 09-12 | | p1 | 12/03 |
|---|---|---|---|

SUPPORT DE TOUR DE CONTRÔLE ET JOINTS DE PELLE RÉTRO, SANS DE COMMANDE PILOTE

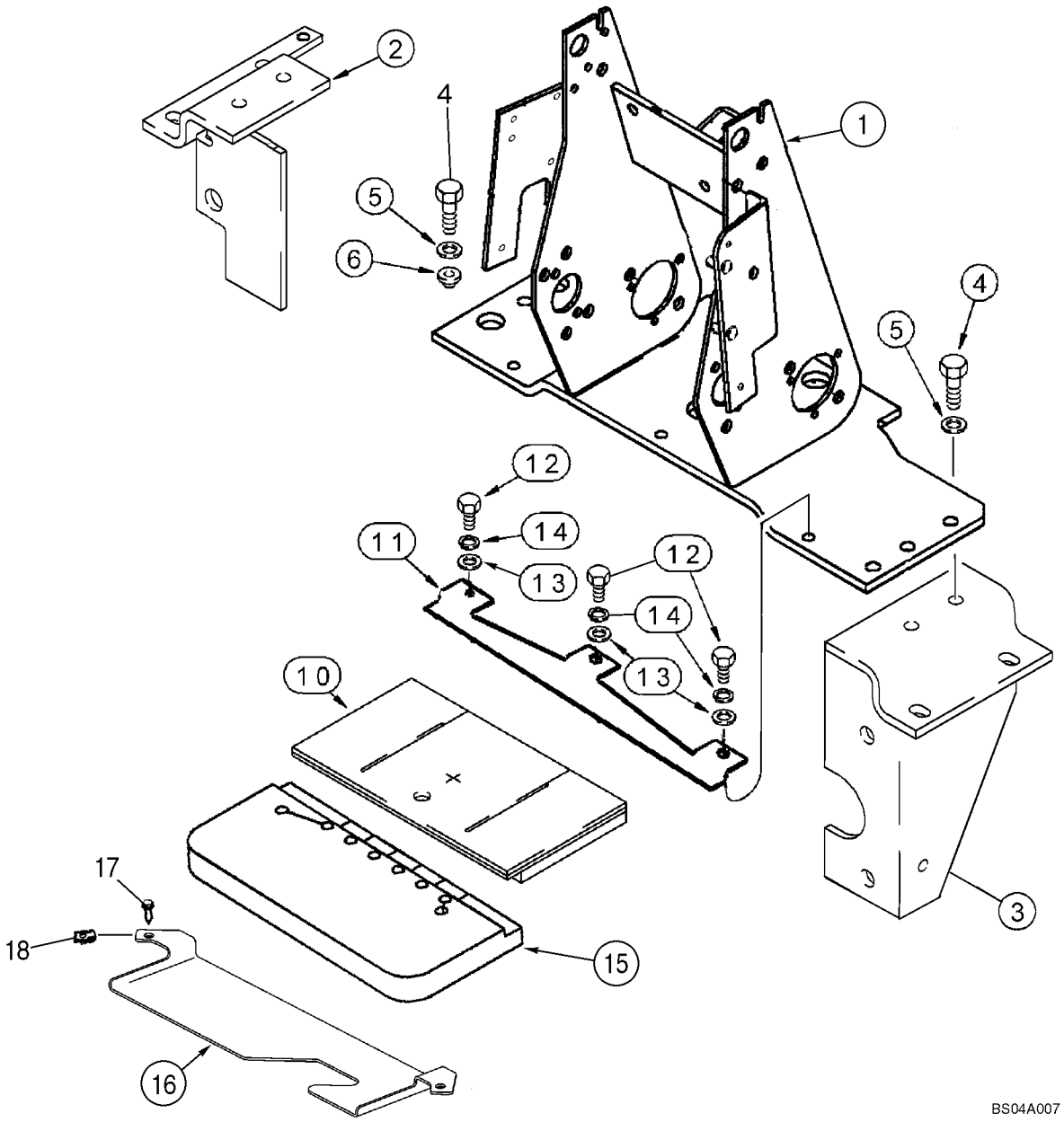

HTTP://WWW.MINNPARBACKHOEPARTS.COM



SUPPORT DE TOUR DE CONTRÔLE ET JOINTS DE PELLE RÉTRO, SANS DE COMMANDE PILOTE

| REF | FN | PART NUMBER | YR/SN | QTY | DESCRIPTION |
|---|---|---|---|---|---|
| 1 | | 87418516 | | 1 | EQUERRE |
| 2 | | 86985341 | | 1 | EQUERRE Left-Hand |
| 3 | | 86985339 | | 1 | EQUERRE Right-Hand |
| 4 | | 614-10035 | | 8 | VIS M10 x 35 |
| 5 | | 496-41041 | | 8 | RONDELLE 13/32 x 1-1/8 x 9/64 |
| 6 | | 179956A1 | | 2 | SILENTBLOC |
| 10 | | 400069A1 | | 1 | MOUSSE |
| 11 | | 87418518 | | 1 | EQUERRE |
| 12 | | 614-8020 | | 3 | VIS M8 x 20 |
| 13 | | 895-11008 | | 3 | RONDELLE 9 x 17 x 1,6 mm |
| 14 | | 892-11008 | | 3 | RONDELLE M8 |
| 15 | | 87439210 | | 1 | MOUSSE |
| 16 | | 397911A1 | | 1 | PATTE FIXATION |
| 17 | | 233724A1 | | 2 | VIS M6 x 25 |
| 18 | | 833-40406 | | 2 | ECROU M6 |

HTTP://WWW.MINNPARBACKHOEPARTS.COM

| 09-13 | | p1 | 01/04 |
|---|---|---|---|

TOURELLE DE LA PELLE RETRO SUPPORT, AVEC DE COMMANDE PILOTE

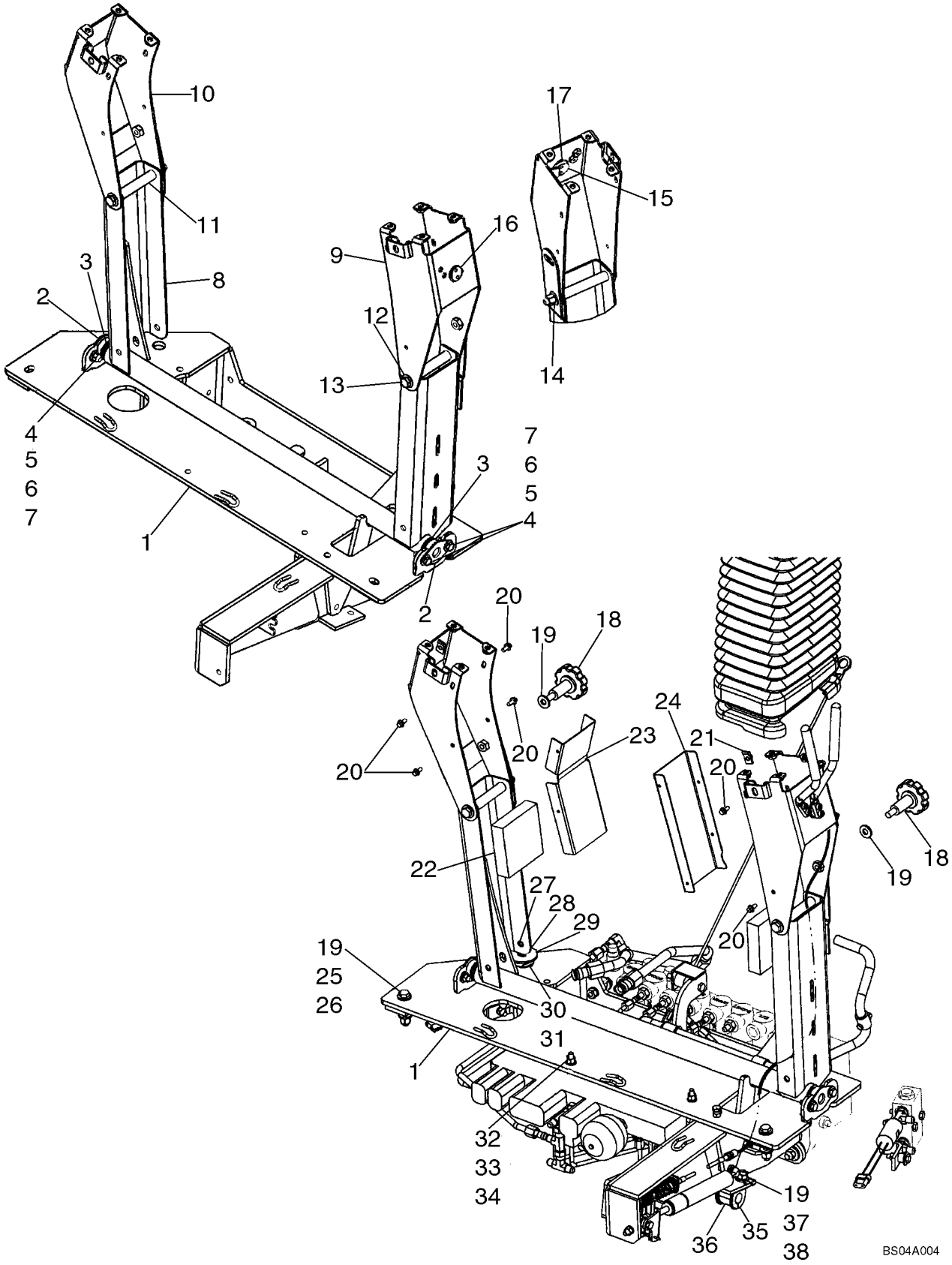

HTTP://WWW.MINNPARBACKHOEPARTS.COM



TOURELLE DE LA PELLE RETRO SUPPORT, AVEC DE COMMANDE PILOTE

| REF | FN | PART NUMBER | YR/SN | QTY | DESCRIPTION |
|---|---|---|---|---|---|
| | | 87440711 | | 1 | TOURELLE Tower Assembly; Pilot Controls; Includes Ref 1 - 17 |
| 1 | | 87440710 | | 1 | EQUERRE Bracket, Tower |
| 2 | | D148993 | | 2 | ROULEMENT |
| 3 | | A30881 | | 4 | RONDELLE Seal |
| 4 | | 895-15008 | | 8 | RONDELLE 9 x 20 x 1.6 mm |
| 5 | | 614-8025 | | 4 | VIS M8 x 25 |
| 6 | | 892-11008 | | 4 | RONDELLE Lock, M8 |
| 7 | | 829-1408 | | 4 | ECROU M8 |
| 8 | | 87435275 | | 1 | PIVOT (ASSEMBLE) |
| 9 | | 87440704 | | 1 | EQUERRE Right-Hand Joystick Mounting |
| 10 | | 87440706 | | 1 | EQUERRE Left-Hand Joystick Mounting |
| 11 | | 86983278 | | 2 | TUBE Spacer |
| 12 | | 895-15010 | | 4 | RONDELLE 11 x 24 x 2 mm |
| 13 | | 814-10130 | | 2 | VIS M10 x 130 |
| 14 | | 832-10410 | | 2 | ECROU M10 |
| 15 | | 87431529 | | 1 | LEVIER (ASSEMBLE) Control Tower Release |
| 16 | | 103-11100 | | 1 | ANNEAU Retaining, No. 100 |
| 17 | | 87405706 | | 1 | RONDELLE Wave, 1 inch |
| 18 | | 87437688 | | 2 | POMMEAU Lateral Adjustment Pilot Control Tower |
| 19 | | 896-15010 | | 8 | RONDELLE 11 x 24 x 3 mm |
| 20 | | 781-24613 | | 8 | VIS Flange Head, M6 x 13, Self-Tapping |
| 21 | | 833-40406 | | 2 | ECROU M6, Spring |
| 22 | | 87425696 | | 2 | JOINT, CAOUTCHOUC |
| 23 | | 87431301 | | 1 | PLAQUE Shield, Left-Hand |
| 24 | | 87431300 | | 1 | PLAQUE Shield, Right-Hand |
| 25 | | 814-10060 | | 2 | VIS M10 x 60 |
| 26 | | 832-10410 | | 2 | ECROU M10 |
| 27 | | 87040885 | | 2 | BOULON Locking, M10 x 45 |
| 28 | | 892-11010 | | 2 | RONDELLE FREIN M10 |
| 29 | | 496-81018 | | 1 | RONDELLE 17/32 x 2 x 1/8 |
| 30 | | D148962 | | 1 | RONDELLE Belleville |
| 31 | | 87440381 | | 1 | ENTRETOISE Spacer |
| 32 | | 896-11008 | | 2 | RONDELLE 9 x 17 x 2 mm |
| 33 | | 832-10408 | | 2 | ECROU M8 |
| 34 | | 864-8055 | | 2 | VIS Socket, M8 x 55 |

HTTP://WWW.MINNPARBACKHOEPARTS.COM

| 09-13 | | p2 | 01/04 |
|---|---|---|---|

TOURELLE DE LA PELLE RETRO SUPPORT, AVEC DE COMMANDE PILOTE

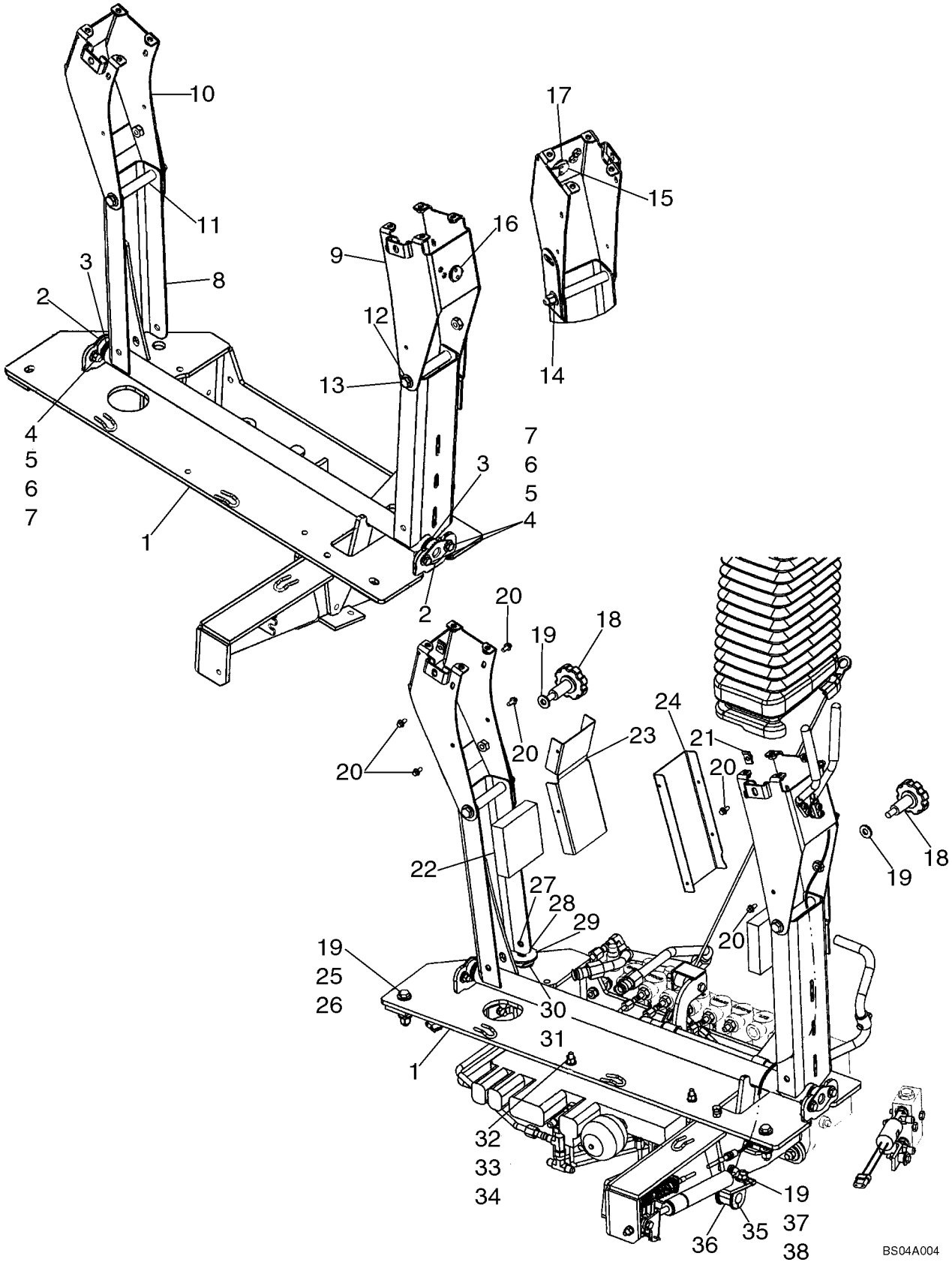

HTTP://WWW.MINNPARBACKHOEPARTS.COM



TOURELLE DE LA PELLE RETRO SUPPORT, AVEC DE COMMANDE PILOTE

| REF | FN | PART NUMBER | YR/SN | QTY | DESCRIPTION |
|---|---|---|---|---|---|
| 35 | | D143411 | | 1 | COLLIER |
| 36 | | D74182 | | 1 | PASSE-FIL Isolation Block |
| 37 | | 829-1410 | | 1 | ECROU M10 |
| 38 | | 614-10025 | | 1 | BOULON M10 x 25 |

HTTP://WWW.MINNPARBACKHOEPARTS.COM

| 09-14 | | p1 | 01/04 |
|---|---|---|---|

TOURELLE DE LA PELLE RETRO SOUFFLET DE JOINT, AVEC DE COMMANDE PILOTE

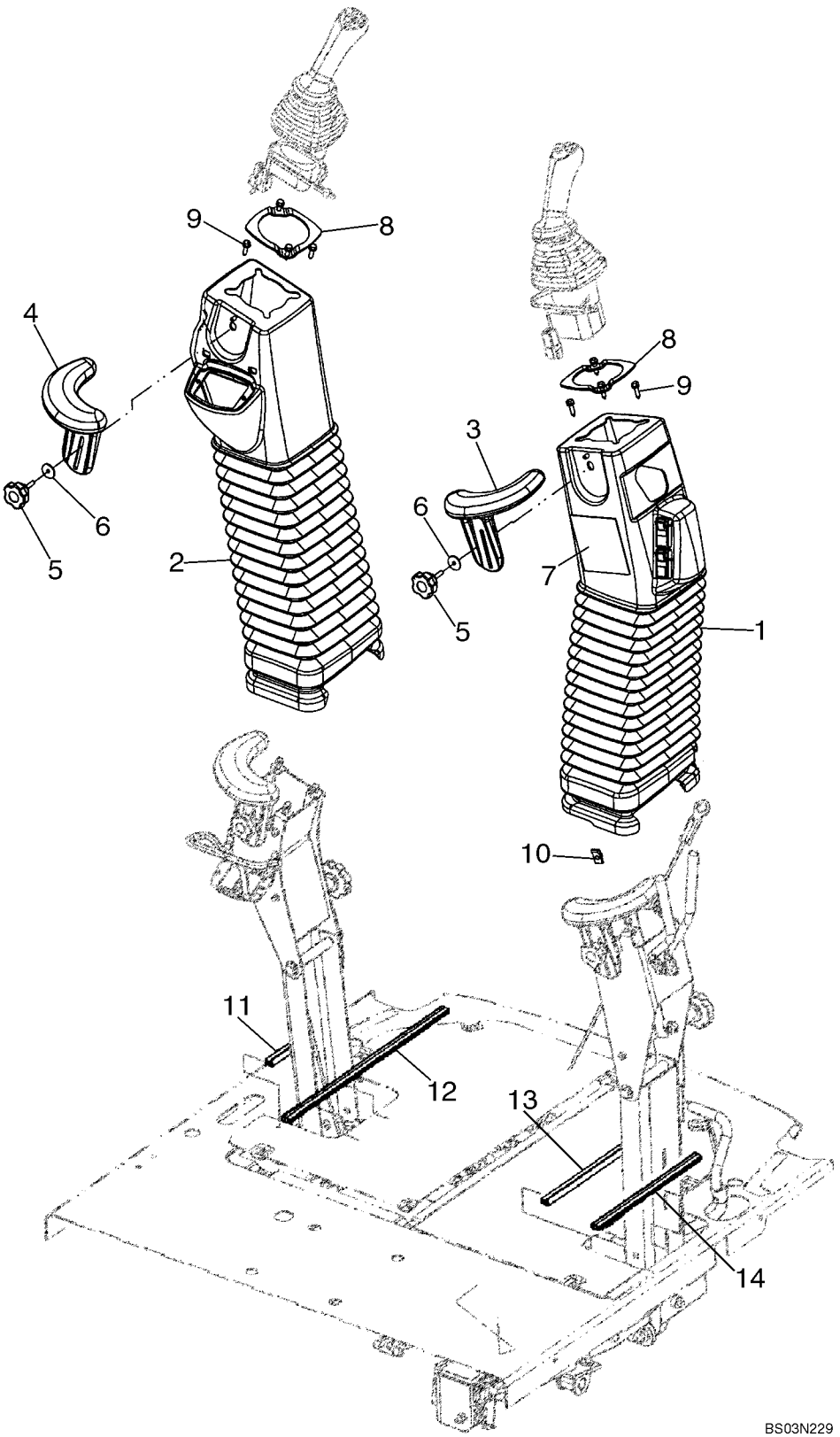

HTTP://WWW.MINNPARBACKHOEPARTS.COM



TOURELLE DE LA PELLE RETRO SOUFFLET DE JOINT, AVEC DE COMMANDE PILOTE

| REF | FN | PART NUMBER | YR/SN | QTY | DESCRIPTION |
|---|---|---|---|---|---|
| 1 | | 87422678 | | 1 | MANCHETTE Includes (1) 87422679 Boot and (1) 86992675 Pin |
| 2 | | 87422675 | | 1 | MANCHETTE Includes (1) 87422676 Boot, (1) 86992675 Pin, (2) 87418520 No. 10 Threaded Inserts |
| 3 | | 87437366 | | 1 | SUPPORT Wrist |
| 4 | | 87437369 | | 1 | SUPPORT Wrist |
| 5 | | 87437689 | | 2 | POMMEAU |
| 6 | | 895-30109 | | 2 | RONDELLE |
| 7 | | 87414205 | | 1 | DECALCOMANIE Pattern Selecting |
| 8 | | 87435372 | | 2 | PANOPLIE |
| 9 | | 233724A1 | | 8 | VIS With Washer, M6 x 25 |
| 10 | | 833-40406 | | 2 | ECROU M6 |
| 11 | | 87433008 | | 1 | JOINT, CAOUTCHOUC 183 mm (7-1/4 in); Cut From 87438002 |
| 12 | | 87433006 | | 1 | JOINT, CAOUTCHOUC 428 mm (16-7/8 in); Cut From 87438002 |
| 13 | | 87433005 | | 1 | JOINT, CAOUTCHOUC 335 mm (13-3/16 in); Cut From 87438002 |
| 14 | | 87433007 | | 1 | JOINT, CAOUTCHOUC 275 mm (10-7/8 in); Cut From 87438002 |

HTTP://WWW.MINNPARBACKHOEPARTS.COM

| 09-15 | | p1 | 01/04 |
|---|---|---|---|

TOURELLE DE LA PELLE RETRO LEVIER (VERROU DE MAINTIEN DE BRAS DE RELEVAGE), AVEC DE COMMANDE PILOTE

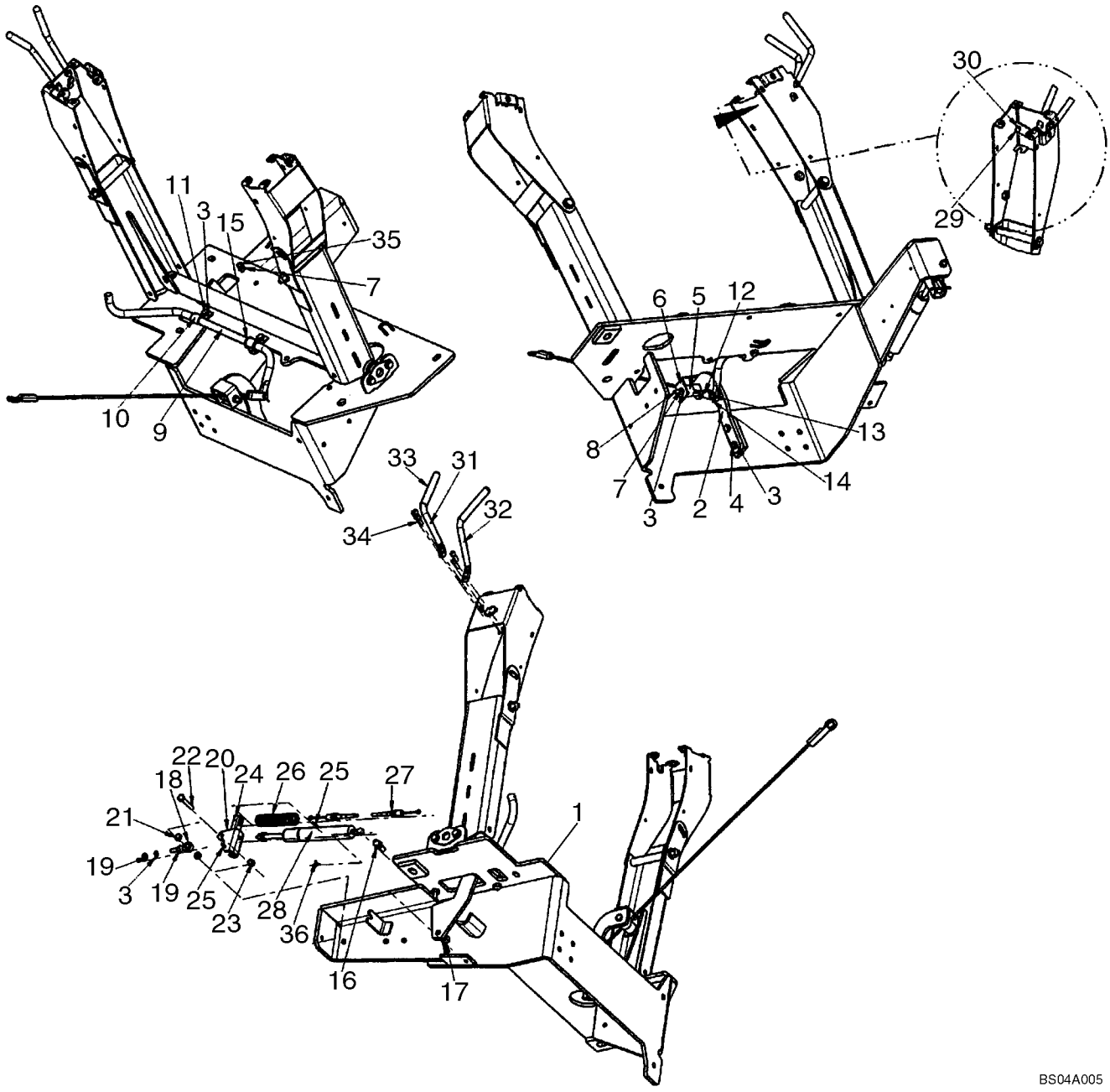

HTTP://WWW.MINNPARBACKHOEPARTS.COM



TOURELLE DE LA PELLE RETRO LEVIER (VERROU DE MAINTIEN DE BRAS DE RELEVAGE), AVEC DE COMMANDE PILOTE

| REF | FN | PART NUMBER | YR/SN | QTY | DESCRIPTION |
|---|---|---|---|---|---|
| 1 | | 87440711 | | 1 | TOURELLE Pilot Control Tower Assembly; See Figure 09-13 |
| 2 | | 86984544 | | 1 | PATTE FIXATION Roller Mounting |
| 3 | | 892-11008 | | 6 | RONDELLE Lock, M8 |
| 4 | | 614-8030 | | 2 | VIS M8 x 30 |
| 5 | | 86984547 | | 2 | GUIDE |
| 6 | | 86984545 | | 1 | PATTE FIXATION |
| 7 | | 829-1408 | | 2 | ECROU M8 |
| 8 | | 814-8070 | | 1 | VIS M8 x 70 |
| 9 | | 87422696 | | 1 | TRINGLE Boom Latch Release |
| 10 | | D143723 | | 2 | BRIDE Clamp |
| 11 | | 614-8025 | | 2 | VIS M8 x 25 |
| 12 | | 87435924 | | 1 | CABLE Boom Latch |
| 13 | | 427-5094 | | 1 | AXE DE CHAPE 5/16 x 15/16 |
| 14 | | 432-612 | | 1 | GOUPILLE 3/32 x 3/4 |
| 15 | | D143591 | | 2 | ANNEAU-D'ARRET |
| 16 | | 85824067 | | 1 | JOINT ARTICULE Stud |
| 17 | | 832-10410 | | 1 | ECROU M10 |
| 18 | | 85824081 | | 1 | ROTULE |
| 19 | | 425-115 | | 2 | ECROU 5/16 |
| 20 | | 85824080 | | 1 | PATTE FIXATION |
| 21 | | 85821520 | | 2 | ENTRETOISE |
| 22 | | 413-528 | | 1 | BOULON 5/16 x 1-3/4 |
| 23 | | 231-1445 | | 1 | CONTRE-ECROU 5/16 |
| 24 | | 86984549 | | 1 | PROFILE Channel |
| 25 | | 432-828 | | 2 | GOUPILLE 1/8 x 1-3/4 |
| 26 | | 87405362 | | 1 | RESSORT |
| 27 | | 87437806 | | 1 | CABLE FLEXIBLE Pilot Control Positioner |
| 28 | | 86989616 | | 1 | COMPAS Cylinder |
| 29 | | 140-108 | | 1 | VIS No. 10 x 3/4 |
| 30 | | 231-14409 | | 1 | CONTRE-ECROU No. 10 |
| 31 | | 87418368 | | 1 | TRINGLE Tower Stationary |
| 32 | | 87418369 | | 1 | TRINGLE Tower Position |
| 33 | | 87421909 | | 2 | POIGNEE DE MANETTE |
| 34 | | 565-104 | | 4 | VIS Socket, M6 x 20 |
| 35 | | 614-8040 | | 1 | VIS M8 x 40 |

HTTP://WWW.MINNPARBACKHOEPARTS.COM

| 09-15 | | p2 | 01/04 |
|---|---|---|---|

TOURELLE DE LA PELLE RETRO LEVIER (VERROU DE MAINTIEN DE BRAS DE RELEVAGE), AVEC DE COMMANDE PILOTE

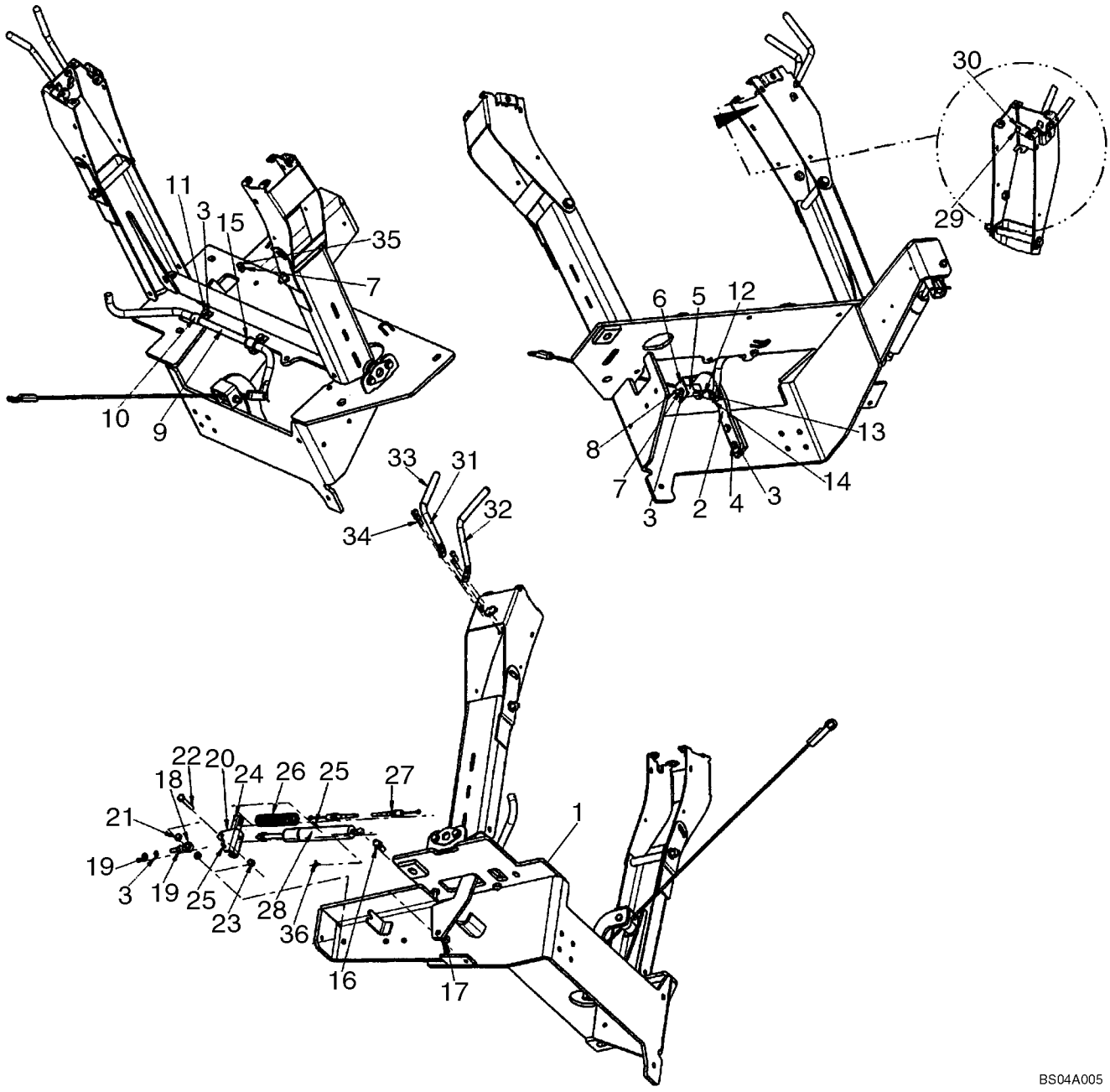

HTTP://WWW.MINNPARBACKHOEPARTS.COM



TOURELLE DE LA PELLE RETRO LEVIER (VERROU DE MAINTIEN DE BRAS DE RELEVAGE), AVEC DE COMMANDE PILOTE

| REF | FN | PART NUMBER | YR/SN | QTY | DESCRIPTION |
|---|---|---|---|---|---|
| 36 | | 3233348R1 | | 1 | CLIP |

HTTP://WWW.MINNPARBACKHOEPARTS.COM

| 09-16 | | p1 | 01/04 |
|---|---|---|---|

COMMANDES - PELLE RETRO, AVEC DÉBATTEMENT AU PIED (MODÈLES SANS BALANCIER EXTENSIBLE)

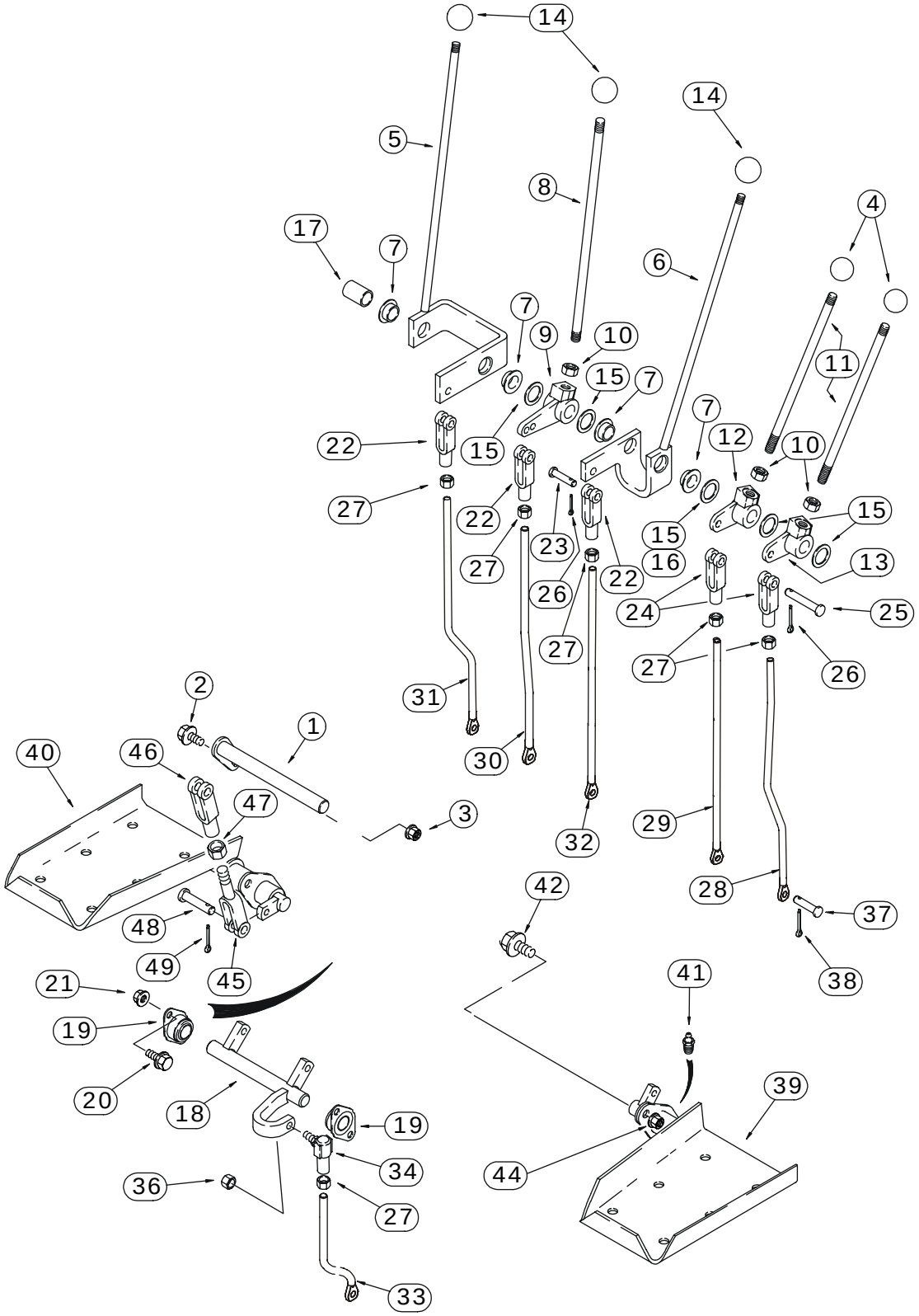


BS03M099

HTTP://WWW.MINNPARBACKHOEPARTS.COM



COMMANDES - PELLE RETRO, AVEC DÉBATTEMENT AU PIED (MODÈLES SANS BALANCIER EXTENSIBLE)

| REF | FN | PART NUMBER | YR/SN | QTY | DESCRIPTION |
|---|---|---|---|---|---|
| 1 | | 129015A1 | | 1 | ARBRE |
| 2 | | 614-8025 | | 1 | VIS M8 x 25 |
| 3 | | 832-10408 | | 1 | ECROU Lock, M8 |
| 4 | | D59912 | | 2 | PLAQUE Stabilizer Control Levers |
| 5 | | 136267A1 | | 1 | LEVIER Boom; Incl. Ref 7 |
| 6 | | 136269A1 | | 1 | LEVIER Bucket; Incl. Ref 7 |
| 7 | | D148992 | | 2 | BAGUE |
| 8 | | 136263A1 | | 1 | TRINGLE Dipper |
| 9 | | D150397 | | 1 | RENVOI Dipper |
| 10 | | 425-118 | | 3 | ECROU 1/2 NF |
| 11 | | 136261A1 | | 2 | TIGE-DE-COMMANDE Stabilizer |
| 12 | | D150435 | | 1 | RENVOI Right-Hand Stabilizer Control |
| 13 | | D150434 | | 1 | RENVOI Left-Hand Stabilizer Control |
| 14 | | L54563 | | 3 | PLAQUE Boom, Dipper, and Bucket |
| 15 | | A30881 | | X | RONDELLE 49/64 x 1-15/64 x 1/32; Used As A Shim |
| 16 | | D34666 | | 1 | RONDELLE 25/32 x 1-3/8 x 9/64; May Be Used In Place Of Ref 15 |
| 17 | | D150486 | | 1 | ENTRETOISE Not Used On Models With Extendable Dipper |
| 18 | | D148994 | | 1 | ARBRE Swing |
| 19 | | D139039 | | 2 | ROULEMENT |
| 20 | | 614-8025 | | 4 | VIS M8 x 25 |
| 21 | | 832-10408 | | 4 | ECROU Lock, M8 |
| 22 | | 213-126 | | 3 | FOURCHETTE 3/8 NF |
| 23 | | D149288 | | 3 | AXE, GROS Special |
| 24 | | D150493 | | 2 | FOURCHETTE |
| 25 | | 427-6088 | | 2 | AXE, GROS 3/8 x 7/8 |
| 26 | | 432-612 | | 5 | GOUPILLE 3/32 x 3/4 |
| 27 | | 425-156 | | 6 | ECROU 3/8 NF |
| 28 | | 87422243 | | 1 | TIGE FILETÉE Left-Hand Stabilizer Control |
| 29 | | 87422245 | | 1 | TIGE FILETÉE Right-Hand Stabilizer Control |
| 30 | | 87422247 | | 1 | TIGE FILETÉE Dipper |
| 31 | | 87422241 | | 1 | TIGE FILETÉE Boom |
| 32 | | 87422249 | | 1 | TIGE FILETÉE Bucket |
| 33 | | 87422239 | | 1 | TIGE FILETÉE Swing |
| 34 | | D149295 | | 1 | ROTULE 3/8 |

HTTP://WWW.MINNPARBACKHOEPARTS.COM

| 09-16 | | p2 | 01/04 |
|---|---|---|---|

COMMANDES - PELLE RETRO, AVEC DÉBATTEMENT AU PIED (MODÈLES SANS BALANCIER EXTENSIBLE)

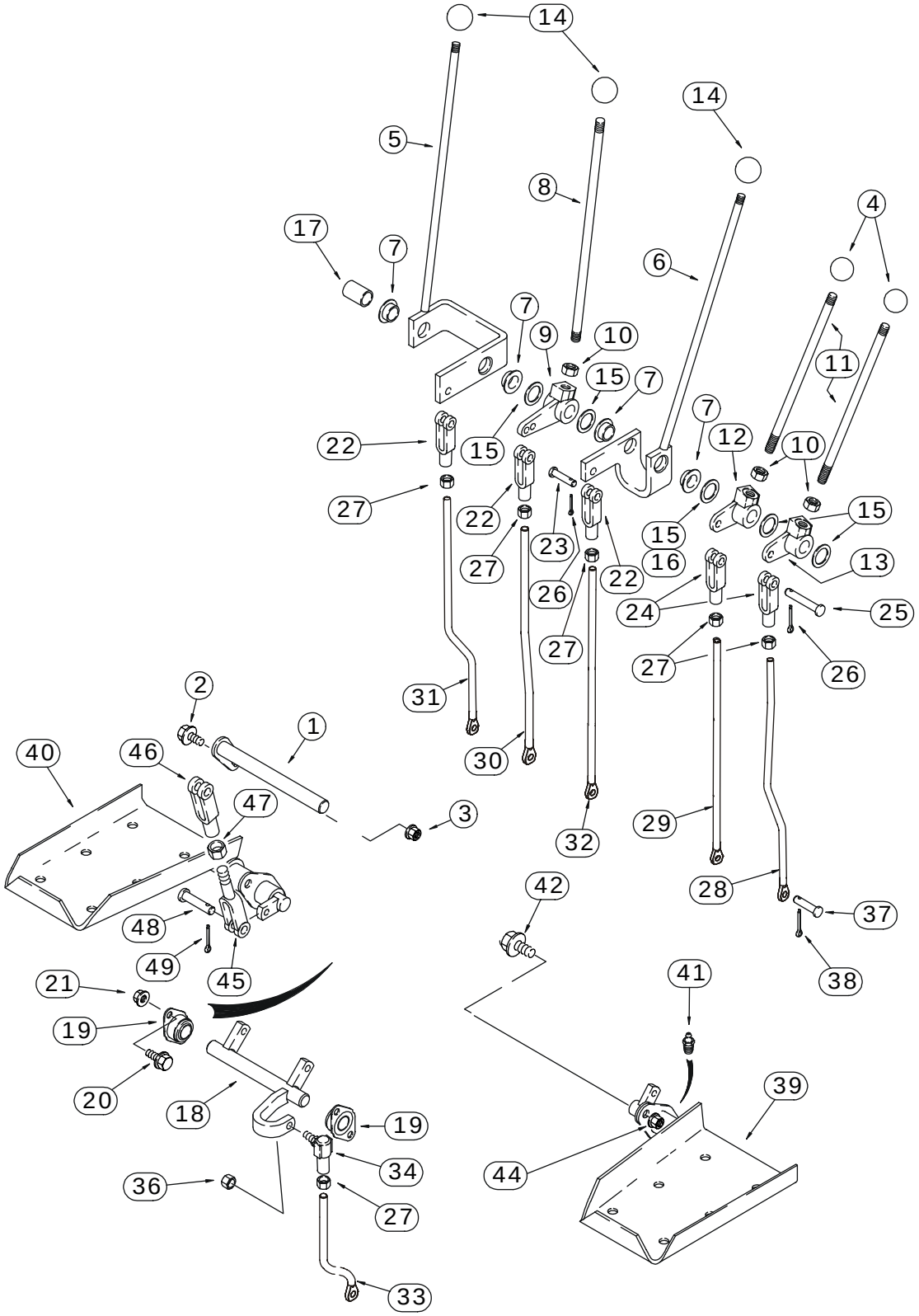


BS03M099

HTTP://WWW.MINNPARBACKHOEPARTS.COM



COMMANDES - PELLE RETRO, AVEC DÉBATTEMENT AU PIED (MODÈLES SANS BALANCIER EXTENSIBLE)

| REF | FN | PART NUMBER | YR/SN | QTY | DESCRIPTION |
|---|---|---|---|---|---|
| 36 | | 425-116 | | 1 | ECROU 3/8 NF |
| 37 | | D149287 | | 6 | AXE, GROS 5/16 |
| 38 | | 432-612 | | 6 | GOUPILLE 3/32 x 3/4 |
| 39 | | 136271A2 | | 1 | PEDALE (ASSEMBLEE) Left-Hand Swing; Without Pilot Controls |
| 40 | | 136270A2 | | 1 | PEDALE (ASSEMBLEE) Right-Hand Swing; Without Pilot Controls |
| 41 | | 219-1 | | 2 | GRAISSEUR 1/8 PT x 21/32 |
| 42 | | 614-10025 | | 4 | BOULON M10 x 25 |
| 44 | | 832-10410 | | 4 | ECROU Lock, M10 |
| 45 | | D150503 | | 2 | EXTRÉMITÉ Yoke |
| 46 | | D149262 | | 2 | FOURCHETTE 3/8 |
| 47 | | 425-156 | | 2 | ECROU 3/8 NF |
| 48 | | D149288 | | 4 | AXE, GROS 3/8 |
| 49 | | 432-612 | | 4 | GOUPILLE 3/32 x 3/4 |

HTTP://WWW.MINNPARBACKHOEPARTS.COM

| 09-17 | | p1 | 01/04 |
|---|---|---|---|

COMMANDES - PELLE RETRO, AVEC DÉBATTEMENT AU PIED (MODÈLES AVEC BALANCIER EXTENSIBLE)

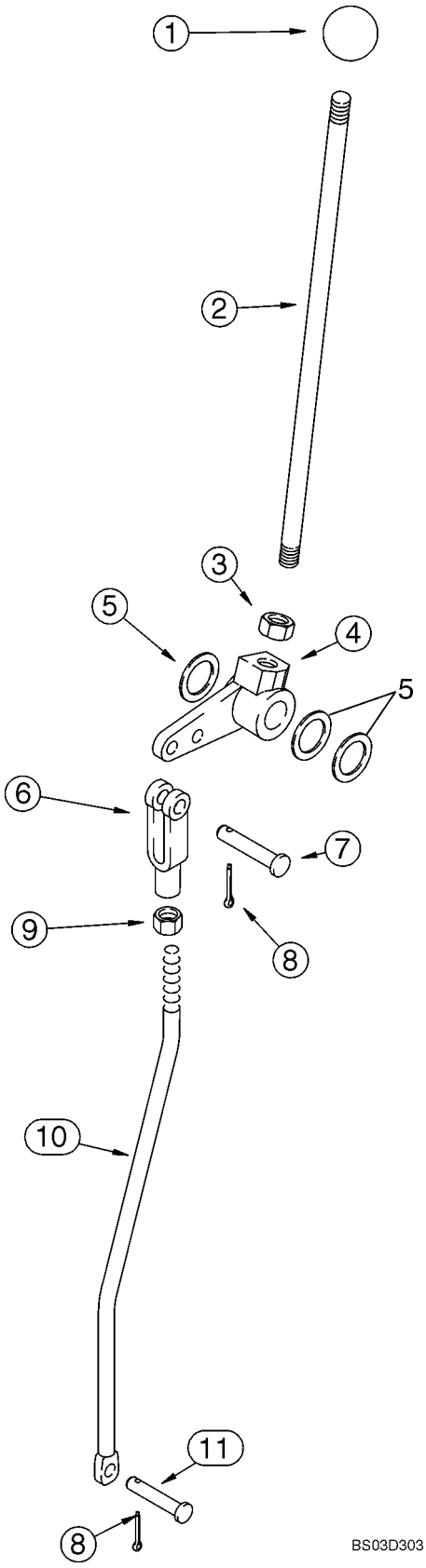

HTTP://WWW.MINNPARBACKHOEPARTS.COM



COMMANDES - PELLE RETRO, AVEC DÉBATTEMENT AU PIED (MODÈLES AVEC BALANCIER EXTENSIBLE)

| REF | FN | PART NUMBER | YR/SN | QTY | DESCRIPTION |
|---|---|---|---|---|---|
| 1 | | L54563 | | 1 | PLAQUE Extendahoe |
| 2 | | 136263A1 | | 1 | TRINGLE Extendahoe |
| 3 | | 425-118 | | 1 | ECROU 1/2 NF |
| 4 | | 182006A1 | | 1 | LEVIER |
| 5 | | A30881 | | X | RONDELLE 49/64 x 1-15/64 x 1/32 |
| 6 | | 213-126 | | 1 | FOURCHETTE 3/8 NF |
| 7 | | 427-6088 | | 1 | AXE, GROS 3/8 x 7/8 |
| 8 | | 432-612 | | 2 | GOUPILLE 3/32 x 3/4 |
| 9 | | 425-156 | | 1 | ECROU 3/8 NF |
| 10 | | 87440076 | | 1 | TIGE FILETÉE Extendahoe Rod |
| 11 | | D149287 | | 1 | AXE, GROS |

HTTP://WWW.MINNPARBACKHOEPARTS.COM

| 09-18 | | p1 | 01/04 |
|---|---|---|---|

COMMANDES - PELLE RETRO, AVEC DÉBATTEMENT A LA MAIN (MODÈLES SANS BALANCIER EXTENSIBLE)

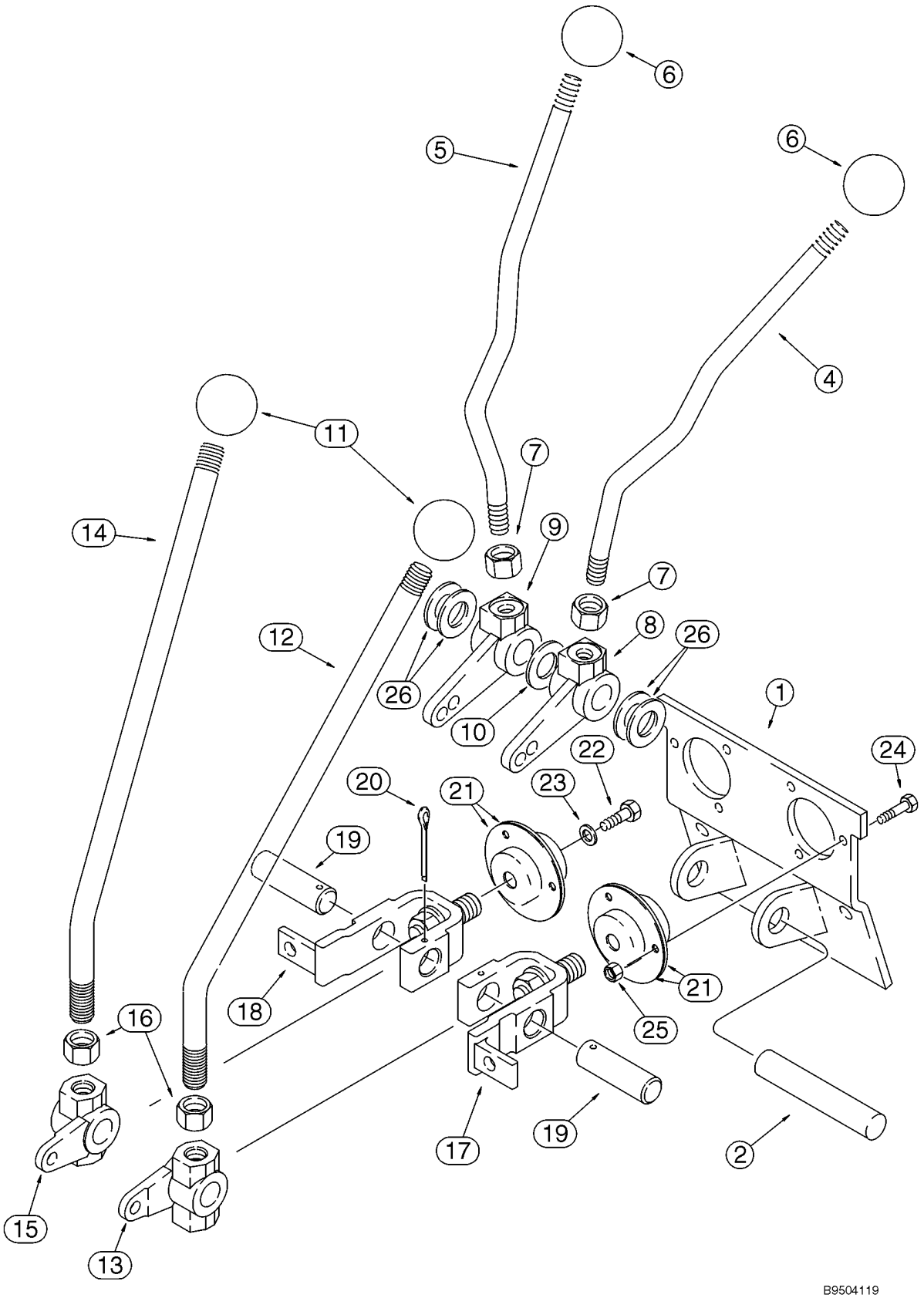

HTTP://WWW.MINNPARBACKHOEPARTS.COM



COMMANDES - PELLE RETRO, AVEC DÉBATTEMENT A LA MAIN (MODÈLES SANS BALANCIER EXTENSIBLE)

| REF | FN | PART NUMBER | YR/SN | QTY | DESCRIPTION |
|---|---|---|---|---|---|
| | | REF | | | NOTICE UPPER CONTROL LEVERS |
| 1 | | 108864A1 | | 1 | SUPPORT |
| 2 | | D148947 | | 1 | AXE, GROS Stabilizer |
| 4 | | 409672A1 | | 1 | LEVIER Left-Hand; Stabilizer |
| 5 | | 409673A1 | | 1 | LEVIER Right-Hand; Stabilizer |
| 6 | | D59912 | | 2 | PLAQUE Stabilizer |
| 7 | | 425-118 | | 2 | ECROU 1/2 NF |
| 8 | | 108924A1 | | 1 | LEVIER |
| 9 | | 108923A1 | | 1 | LEVIER |
| 10 | | 495-11081 | | 1 | RONDELLE 13/16 x 1-15/32 x 1/8 |
| 11 | | D39118 | | 2 | PLAQUE |
| 12 | | 125113A1 | | 1 | LEVIER Boom and Swing |
| 13 | | 106989A1 | | 1 | LEVIER Left-Hand Boom and Swing Lever |
| 14 | | 125113A1 | | 1 | LEVIER Bucket and Dipper |
| 15 | | 106990A1 | | 1 | LEVIER Right-Hand Bucket and Dipper Lever |
| 16 | | 425-1110 | | 2 | ECROU 5/8 NF |
| 17 | | 178006A1 | | 1 | LEVIER Boom and Swing |
| 18 | | 178004A1 | | 1 | LEVIER Bucket and Dipper |
| 19 | | 102765A1 | | 2 | AXE, GROS Bellcrank |
| 20 | | 432-828 | | 2 | GOUPILLE 1/8 x 1-3/4 |
| 21 | | 112380A1 | | 4 | PALIER |
| 22 | | 614-6016 | | 2 | VIS M6 x 16 |
| 23 | | 396-41028 | | 2 | RONDELLE 9/32 x 7/8 x 3/32 |
| 24 | | 614-6020 | | 6 | BOULON M6 x 20 |
| 25 | | 829-1406 | | 6 | ECROU M6; 10.9 |
| 26 | | A30881 | | X | RONDELLE 49/64 x 1-15/64 x 1/32 |

HTTP://WWW.MINNPARBACKHOEPARTS.COM

| 09-19 | | p1 | 01/04 |
|---|---|---|---|

COMMANDES - PELLE RETRO, AVEC DÉBATTEMENT A LA MAIN (MODÈLES SANS BALANCIER EXTENSIBLE)

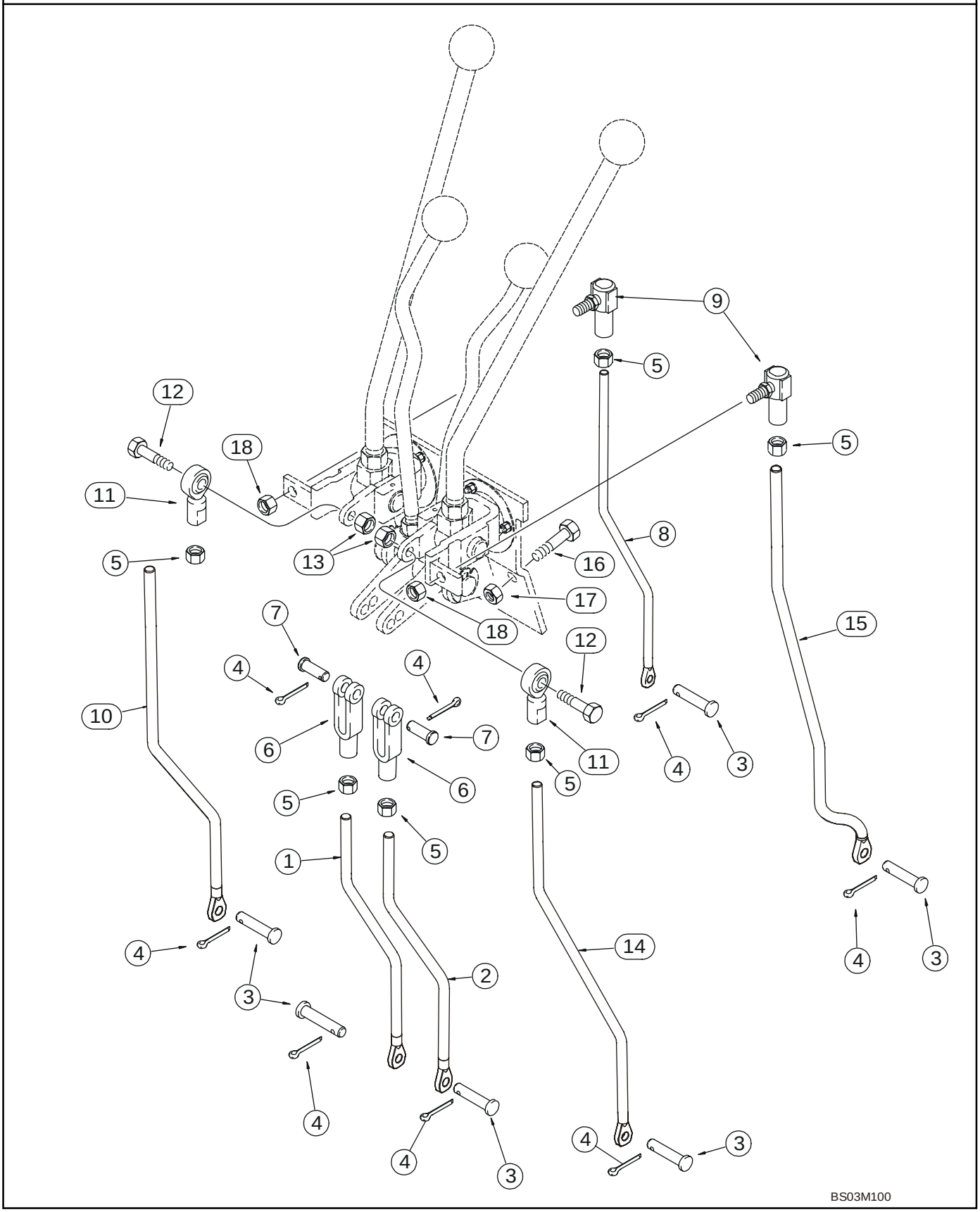

HTTP://WWW.MINNPARBACKHOEPARTS.COM



COMMANDES - PELLE RETRO, AVEC DÉBATTEMENT A LA MAIN (MODÈLES SANS BALANCIER EXTENSIBLE)

| REF | FN | PART NUMBER | YR/SN | QTY | DESCRIPTION |
|---|---|---|---|---|---|
| | | REF | | | NOTICE LOWER CONTROL LEVERS |
| 1 | | 87422260 | | 1 | TIGE FILETÉE Right-Hand; Stabilizer |
| 2 | | 87422258 | | 1 | TIGE FILETÉE Left-Hand; Stabilizer |
| 3 | | D149287 | | 6 | AXE, GROS |
| 4 | | 432-612 | | 8 | GOUPILLE 3/32 x 3/4 |
| 5 | | 425-116 | | 6 | ECROU 3/8 NF |
| 6 | | 213-126 | | 2 | FOURCHETTE 3/8 NF |
| 7 | | D149288 | | 2 | AXE, GROS Special |
| 8 | | 87422264 | | 1 | TIGE FILETÉE Bucket |
| 9 | | D149295 | | 2 | ROTULE |
| 10 | | 87422262 | | 1 | TIGE FILETÉE Dipper |
| 11 | | D136773 | | 2 | BILLE 3/8 NF |
| 12 | | 413-624 | | 2 | BOULON 3/8 x 1-1/2 |
| 13 | | 425-106 | | 2 | ECROU 3/8 |
| 14 | | 87422256 | | 1 | TIGE FILETÉE Boom |
| 15 | | 87422253 | | 1 | TIGE FILETÉE Swing |
| 16 | | 614-10025 | | 2 | BOULON M10 x 25 |
| 17 | | 832-10410 | | 2 | ECROU M10 |
| 18 | | 231-2446 | | 2 | ECROU 3/8 NF |

HTTP://WWW.MINNPARBACKHOEPARTS.COM

| 09-20 | | p1 | 01/04 |
|---|---|---|---|

COMMANDES - PELLE RETRO, AVEC DÉBATTEMENT A LA MAIN (MODÈLES AVEC BALANCIER EXTENSIBLE)

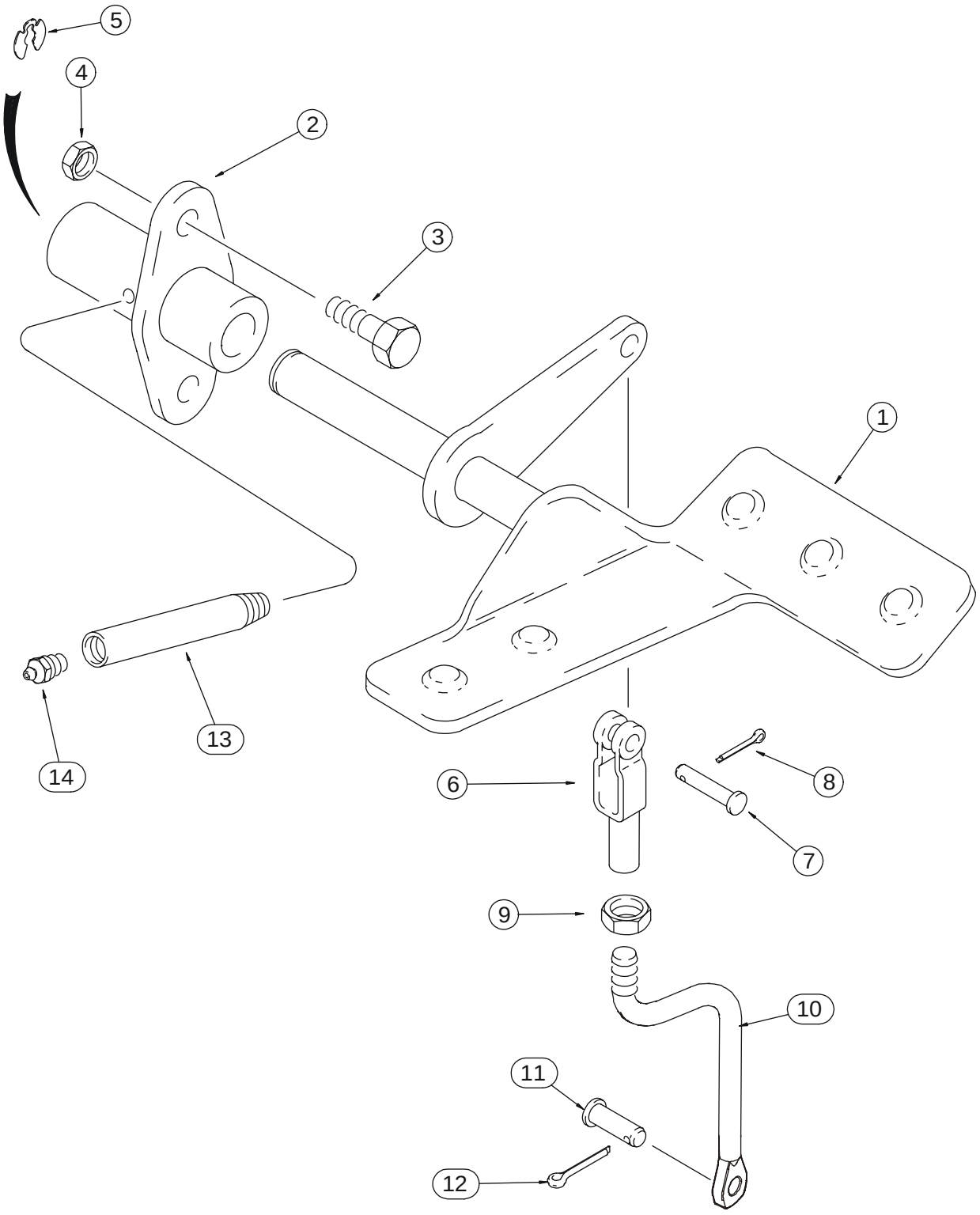


BS03M101

HTTP://WWW.MINNPARBACKHOEPARTS.COM



COMMANDES - PELLE RETRO, AVEC DÉBATTEMENT A LA MAIN (MODÈLES AVEC BALANCIER EXTENSIBLE)

| REF | FN | PART NUMBER | YR/SN | QTY | DESCRIPTION |
|---|---|---|---|---|---|
| 1 | | 179029A1 | | 1 | PEDALE Right-Hand; Extendahoe |
| 2 | | 126918A1 | | 1 | PALIER DE VERIN |
| 3 | | 614-10025 | | 2 | BOULON M10 x 25 |
| 4 | | 832-10410 | | 2 | ECROU M10 |
| 5 | | D143416 | | 1 | ANNEAU-D'ARRET |
| 6 | | D134900 | | 1 | FOURCHETTE |
| 7 | | 427-6088 | | 1 | AXE, GROS 3/8 x 7/8 |
| 8 | | 432-612 | | 1 | GOUPILLE 3/32 x 3/4 |
| 9 | | 425-156 | | 1 | ECROU 3/8 NF |
| 10 | | 87440058 | | 1 | TIGE FILETÉE Extendahoe Rod |
| 11 | | D149287 | | 1 | AXE, GROS |
| 12 | | 432-612 | | 1 | GOUPILLE 3/32 x 3/4 |
| 13 | | D150032 | | 1 | TUBE Lube |
| 14 | | 219-1 | | 1 | GRAISSEUR 1/8 PT x 21/32 |

HTTP://WWW.MINNPARBACKHOEPARTS.COM

| 09-21 | | p1 | 01/04 |
|---|---|---|---|

COMMANDES - CIRCUIT HYDRAULIQUE AUXILIAIRE POUR LA PELLE RETRO, SANS DE COMMANDE PILOTE

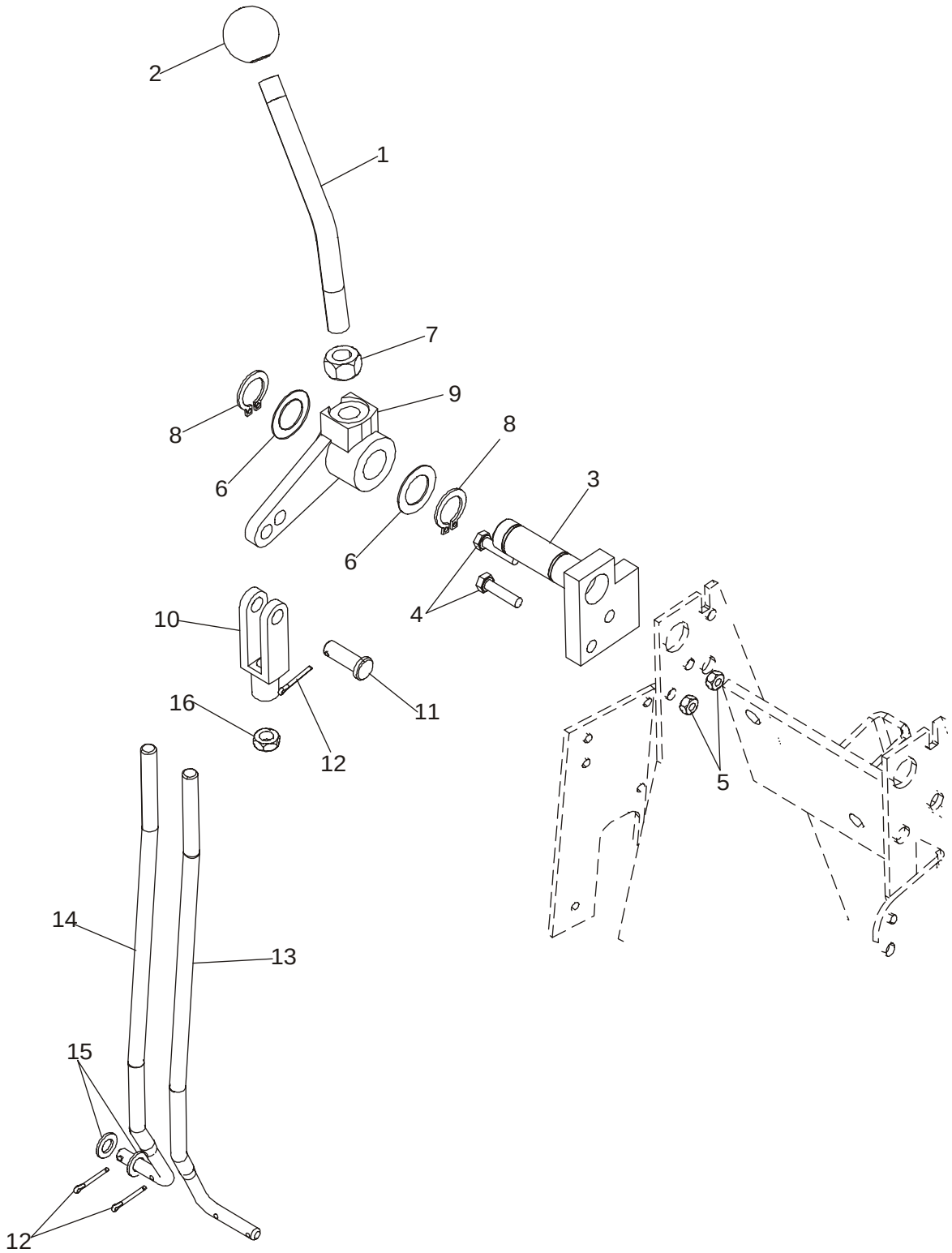

HTTP://WWW.MINNPARBACKHOEPARTS.COM



COMMANDES - CIRCUIT HYDRAULIQUE AUXILIAIRE POUR LA PELLE RETRO, SANS DE COMMANDE PILOTE

| REF | FN | PART NUMBER | YR/SN | QTY | DESCRIPTION |
|---|---|---|---|---|---|
| 1 | | 87425118 | | 1 | TIGE FILETÉE Auxiliary Control |
| 2 | | D59912 | | 1 | PLAQUE |
| 3 | | 87425117 | | 1 | PIVOT (ASSEMBLE) 7 or 8 Spool Valve |
| 4 | | 614-6025 | | 2 | VIS M6 x 25 |
| 5 | | 829-1406 | | 2 | ECROU M6; 10.9 |
| 6 | | A30881 | | 2 | RONDELLE Used As A Shim |
| 7 | | 425-118 | | 1 | ECROU Hex, 1/2 |
| 8 | | 103-1475 | | 2 | ANNEAU-D'ARRET No. 75 |
| 9 | | 182006A1 | | 1 | LEVIER |
| 10 | | 213-126 | | 1 | FOURCHETTE 3/8 |
| 11 | | D149288 | | 1 | AXE, GROS Clevis, 3/8 |
| 12 | | 432-612 | | 3 | GOUPILLE 3/32 x 3/4 |
| 13 | | 87439135 | | 1 | TIGE FILETÉE 7 Spool Valve; If Used |
| 14 | | 87438157 | | 1 | TIGE FILETÉE 8 Spool Valve; If Used |
| 15 | | 895-11008 | | 2 | RONDELLE 9 x 17 x 1,6 mm |
| 16 | | 425-156 | | 1 | ECROU Hex, Jam, 3/8 NF |

HTTP://WWW.MINNPARBACKHOEPARTS.COM



RETROPELLE - STABILISATEURS, PLAQUES ET PATINS

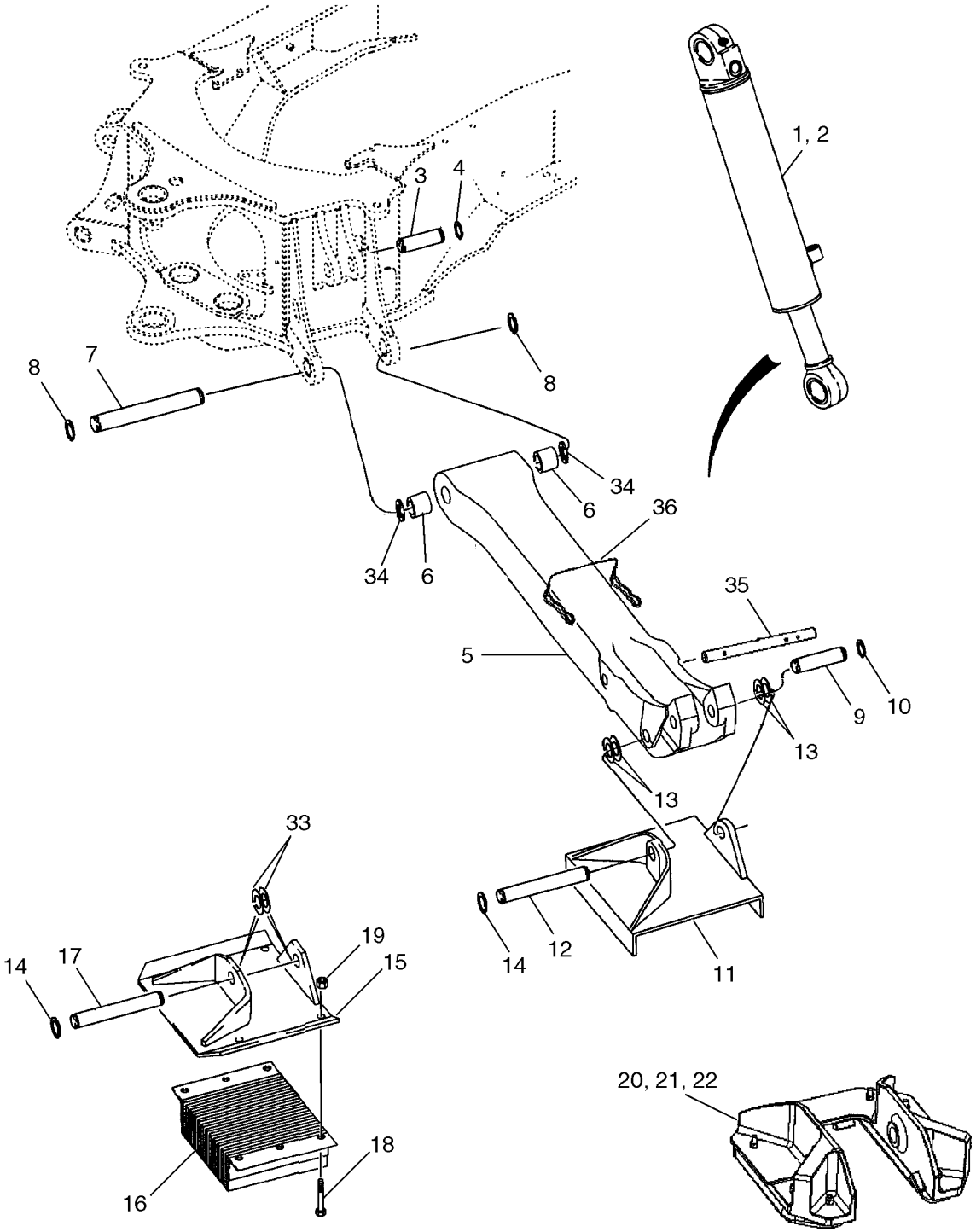

HTTP://WWW.MINNPARBACKHOEPARTS.COM



RETROPELLE - STABILISATEURS, PLAQUES ET PATINS

| REF | FN | PART NUMBER | YR/SN | QTY | DESCRIPTION |
|---|---|---|---|---|---|
| 1 | | 195503A1 | | 1 | VERIN 102 ID x 553 mm strk; Stabilizer; Right-Hand; See Figure 08-61 |
| 2 | | 195504A1 | | 1 | VERIN 102 ID x 553 mm strk; Stabilizer; Left-Hand; See Figure 08-61 |
| 3 | | D38907 | | 2 | AXE Stabilizer Cylinder to Chassis |
| 4 | | 103-16175 | | 4 | ANNEAU-D'ARRET No. 175 |
| 5 | | 446222A1 | | 2 | STABILISATEUR 1135 mm (44-11/16 in), Leg; Incl. Ref 6 |
| 6 | | D50146 | | 2 | BAGUE |
| 7 | | 121665A1 | | 2 | AXE, GROS Stabilizer Leg to Chassis |
| 8 | | 103-16175 | | 4 | ANNEAU-D'ARRET No. 175 |
| 9 | | D26002 | | 2 | AXE Stabilizer Cylinder |
| 10 | | D25279 | | 4 | ANNEAU-D'ARRET |
| 11 | | D88427 | | 2 | PLAQUE Cleated, If Used |
| 12 | | D28648 | | 2 | AXE Plate/Pad to Leg |
| 13 | | D143406 | | X | RONDELLE Used as a Spacer |
| 14 | | D25279 | | 4 | ANNEAU-D'ARRET |
| 15 | | D142519 | | 2 | SABOT (ASSEMBLE) Street or Cemetery, If Used |
| 16 | | D61368 | | 2 | SILENTBLOC Rubber, If Used |
| 17 | | D39256 | | 2 | PIVOT D'ESSIEU Plate to Leg |
| 18 | | 413-1228 | | 8 | VIS 3/4 x 1-3/4 |
| 19 | | 425-1012 | | 8 | ECROU 3/4 |
| 25A | | 408398A1 | | 2 | TAMPON PLATE, Flipover |
| 25B | | 339680A2 | | 4 | PLAQUE CAOUTCHOUC Flipover |
| 25C | | 832-41312 | | 16 | ECROU M12 |
| 33 | | D143406 | | X | RONDELLE Used as a Spacer |
| 34 | | 495-81282 | | X | RONDELLE 2-1/16 x 3 x 3/32; Used as a Spacer |
| 35 | | 408405A1 | | 2 | CHEVILLE PIVOT Used With 408398A1 Pad |
| 36 | | 446454A1 | | 2 | CHEVILLE Used With 408398A1 Pad |

HTTP://WWW.MINNPARBACKHOEPARTS.COM



RETROPELLE - TOURELLE ET VERINS DE DEBATTEMENT

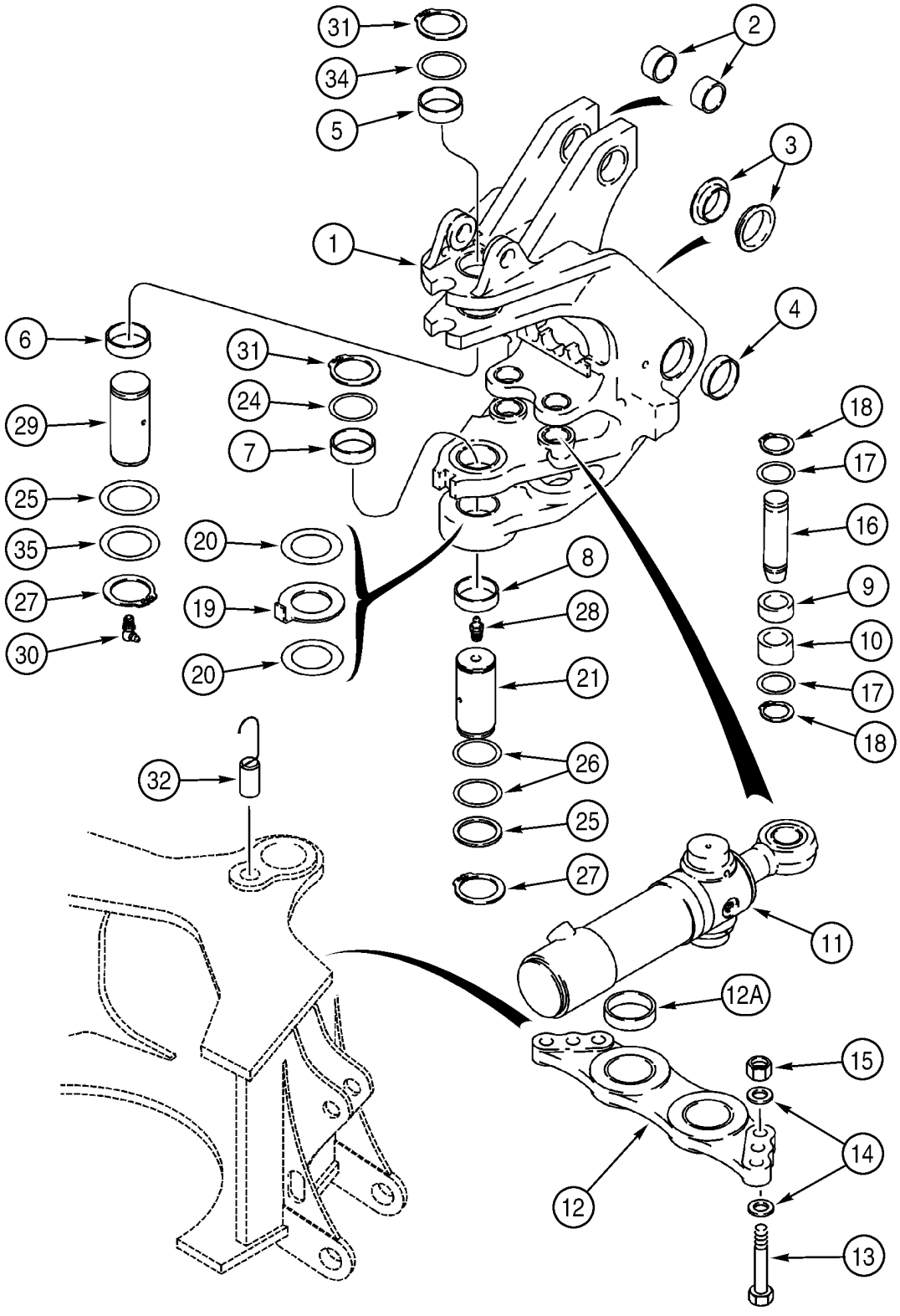

HTTP://WWW.MINNPARBACKHOEPARTS.COM



RETROPELLE - TOURELLE ET VERINS DE DEBATTEMENT

| REF | FN | PART NUMBER | YR/SN | QTY | DESCRIPTION |
|---|---|---|---|---|---|
| 1 | | 326806A1 | | 1 | TOURELLE Swing Tower; Incl. Ref 2 - 10 |
| 2 | | D149079 | | 2 | BAGUE 50 x 34 mm lg |
| 3 | | 121778A1 | | 2 | BAGUE |
| 4 | | 329998A1 | | 2 | BAGUE |
| 5 | | D135557 | | 1 | BAGUE |
| 6 | | D135559 | | 1 | BAGUE |
| 7 | | D151073 | | 1 | BAGUE |
| 8 | | D151074 | | 1 | BAGUE 70 x 86 x 28 mm lg |
| 9 | | 135249A1 | | 2 | BAGUE 28.6 mm lg |
| 10 | | 135248A1 | | 2 | BAGUE 38.1 mm lg |
| 11 | | 188027A2 | | 2 | VERIN 95 ID x 292 mm strk; Swing; See Figure 08-62 |
| 12 | | 198976A1 | | 1 | PLAQUE, GRANDE Incl. Ref 12A |
| 12A | | 114318A1 | | 2 | BAGUE 80 x 90 x 29.3 mm |
| 13 | | 827-20075 | | 6 | VIS M20 x 75; 10.9 |
| 14 | | 896-11020 | | 12 | RONDELLE 22 x 37 x 4 mm |
| 15 | | 829-1420 | | 6 | ECROU M20; 10 |
| 16 | | 386092A2 | | 2 | AXE, GROS |
| 17 | | 495-81227 | | 4 | RONDELLE 2-1/16 x 2-15/16 x 1/16 |
| 18 | | 103-16200 | | 4 | ANNEAU-D'ARRET No. 200 |
| 19 | | 243084A1 | | 1 | RONDELLE 5 mm thk |
| 20 | | 134167A1 | | X | CALE D'EPAISSEUR 2.05 mm (.08 in) thk |
| 21 | | D151065 | | 1 | AXE, GROS |
| 24 | | D136392 | | X | CALE D'EPAISSEUR 72 x 89 x 3.0 mm |
| 25 | | D136700 | | 2 | CALE D'EPAISSEUR 67 x 83 x 2.0 mm |
| 26 | | D136391 | | X | CALE D'EPAISSEUR 72 x 89 x 1.6 mm |
| 27 | | 800-40065 | | 2 | ANNEAU-D'ARRET |
| 28 | | 219-1 | | 1 | GRAISSEUR 1/8 PT x 21/32 |
| 29 | | 292385A1 | | 1 | AXE, GROS |
| 30 | | 219-55 | | 1 | GRAISSEUR 90 deg, 1/8 PT x 27/32 |
| 31 | | 800-40070 | | 2 | ANNEAU-D'ARRET |
| 32 | | 384815A1 | | 1 | CHEVILLE (ASSEMBLEE) Swing Stop |
| 34 | | 293636A1 | | 1 | RONDELLE Upper |
| 35 | | D144423 | | X | RONDELLE 2-5/8 x 3-3/8 x 1/8; Used As A Shim |

HTTP://WWW.MINNPARBACKHOEPARTS.COM

| 09-24 | | p1 | 01/04 |
|---|---|---|---|

RETROPELLE - FLECHE ET TOURELLE DE DEBATTEMENT

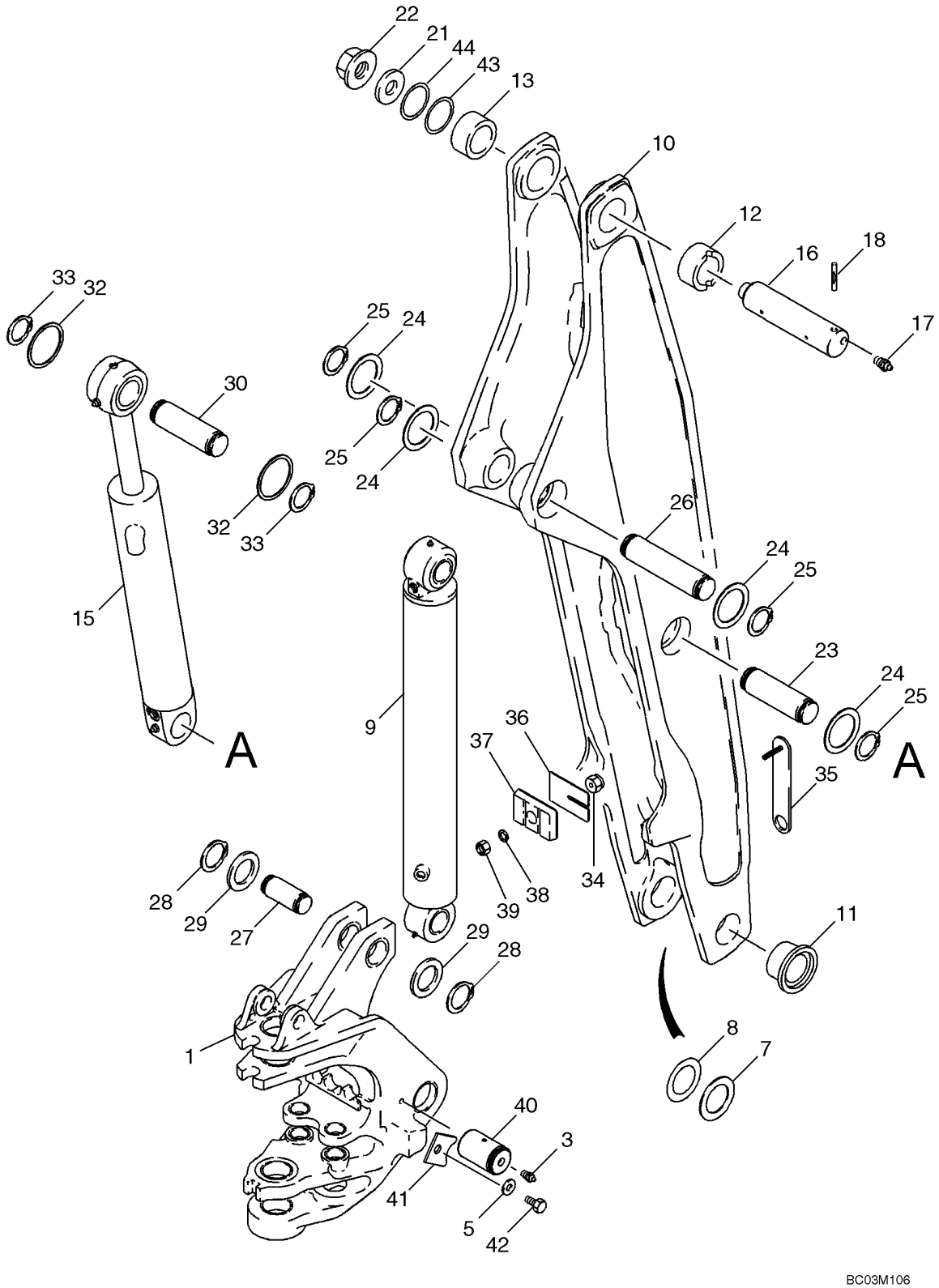

HTTP://WWW.MINNPARBACKHOEPARTS.COM



RETROPELLE - FLECHE ET TOURELLE DE DEBATTEMENT

| REF | FN | PART NUMBER | YR/SN | QTY | DESCRIPTION |
|---|---|---|---|---|---|
| 1 | | 326806A1 | | 1 | TOURELLE Swing Tower; See Figure 09-23 For Bushings |
| 3 | | 219-1 | | 2 | GRAISSEUR 1/8 PT x 21/32 |
| 5 | | 496-41081 | | 2 | RONDELLE 13/16 x 1-3/4 x 7/32 in |
| 7 | | H71514 | | X | RONDELLE |
| 8 | | R32119 | | X | RONDELLE 71 ID x 114 mm |
| 9 | | 189653A2 | | 1 | VERIN 114 ID x 982 mm strk; Boom; See Figure 08-63 |
| 10 | | 129883A1 | | 1 | FLECHE Incl. Ref 11 - 13 |
| 11 | | D151071 | | 2 | BAGUE 70 ID x 34 mm lg |
| 12 | | D135739 | | 1 | BAGUE 70 ID x 44 mm lg; With Slot For Groove Pin; Right-Hand Side |
| 13 | | D137218 | | 1 | BAGUE 70 ID x 44 mm lg; Without Slot For Groove Pin; Left-Hand Side |
| 15 | | 233114A2 | | 1 | VERIN 108 ID x 686 mm strk; Dipper; See Figure 08-64 |
| 16 | | D132494 | | 1 | AXE, GROS |
| 17 | | 219-1 | | 2 | GRAISSEUR 1/8 PT x 21/32 |
| 18 | | 135-51652 | | 1 | GOUPILLE CANNELÉES 1/2 x 3-1/4 lg, Center Grooved |
| 21 | | D133632 | | 1 | RONDELLE |
| 22 | | 181042A1 | | 1 | ECROU Flange, Special |
| 23 | | 129040A1 | | 1 | AXE, GROS |
| 24 | | 495-81226 | | 4 | RONDELLE 1-13/16 x 2-1/2 x 1/8 |
| 25 | | 103-16175 | | 4 | ANNEAU-D'ARRET No. 175 |
| 26 | | 129040A1 | | 1 | AXE, GROS |
| 27 | | 142842A1 | | 1 | AXE, GROS |
| 28 | | 800-44050 | | 2 | ANNEAU-D'ARRET No. 50 |
| 29 | | 495-81227 | | X | RONDELLE 2-1/16 x 2-15/16 x 1/16 |
| 30 | | 129041A1 | | 1 | AXE, GROS |
| 32 | | 495-81226 | | X | RONDELLE 1-13/16 x 2-1/2 x 1/8 |
| 33 | | 103-16175 | | 2 | ANNEAU-D'ARRET No. 175 |
| 34 | | 184884A1 | | 1 | BOUCHON Boom Bumper |
| 35 | | 184723A1 | | 1 | SUPPORT |
| 36 | | 138624A1 | | X | BLOC 1.5 mm thk Shim |
| 37 | | 183938A1 | | 1 | SILENTBLOC Bumper |

HTTP://WWW.MINNPARBACKHOEPARTS.COM

| 09-24 | | p2 | 01/04 |
|---|---|---|---|

RETROPELLE - FLECHE ET TOURELLE DE DEBATTEMENT

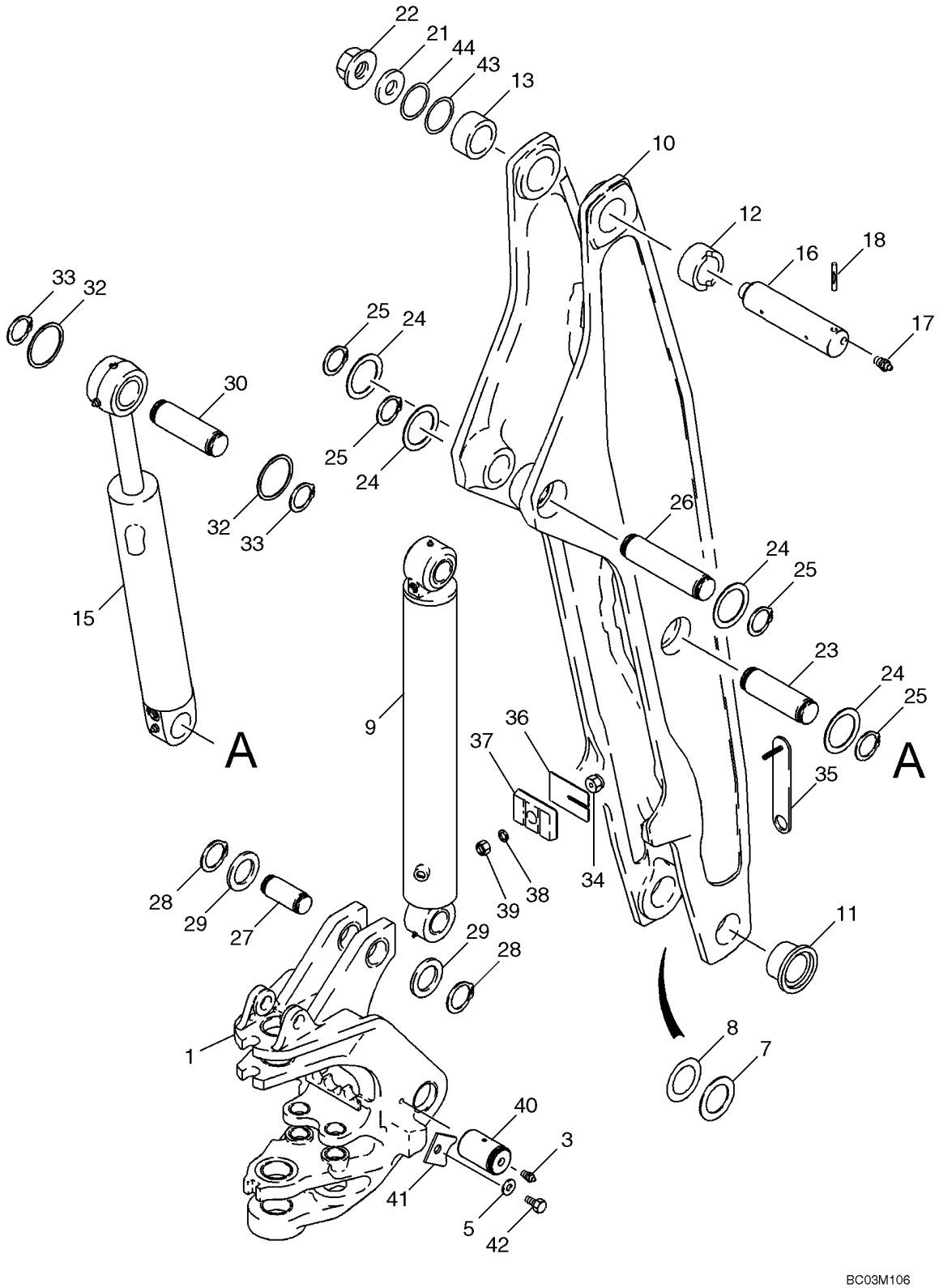

HTTP://WWW.MINNPARBACKHOEPARTS.COM



RETROPELLE - FLECHE ET TOURELLE DE DEBATTEMENT

| REF | FN | PART NUMBER | YR/SN | QTY | DESCRIPTION |
|---|---|---|---|---|---|
| 38 | | 892-11010 | | 1 | RONDELLE FREIN M10 |
| 39 | | 829-1410 | | 1 | ECROU M10; 10.9 |
| 40 | | 250663A1 | | 2 | AXE |
| 41 | | 303646A1 | | 2 | PATTE FIXATION |
| 42 | | 604-20035 | | 2 | BOULON M20 x 35 |
| 43 | | 404834A1 | | X | CALE D'EPAISSEUR 5 mm thk, Concave |
| 44 | | 404835A1 | | X | CALE D'EPAISSEUR 5 mm thk, Concave |

HTTP://WWW.MINNPARBACKHOEPARTS.COM

| 09-25 | | p1 | 01/04 |
|---|---|---|---|

VERROU DE MAINTIEN DE BRAS DE RELEVAGE (SANS DE COMMANDE PILOTE)

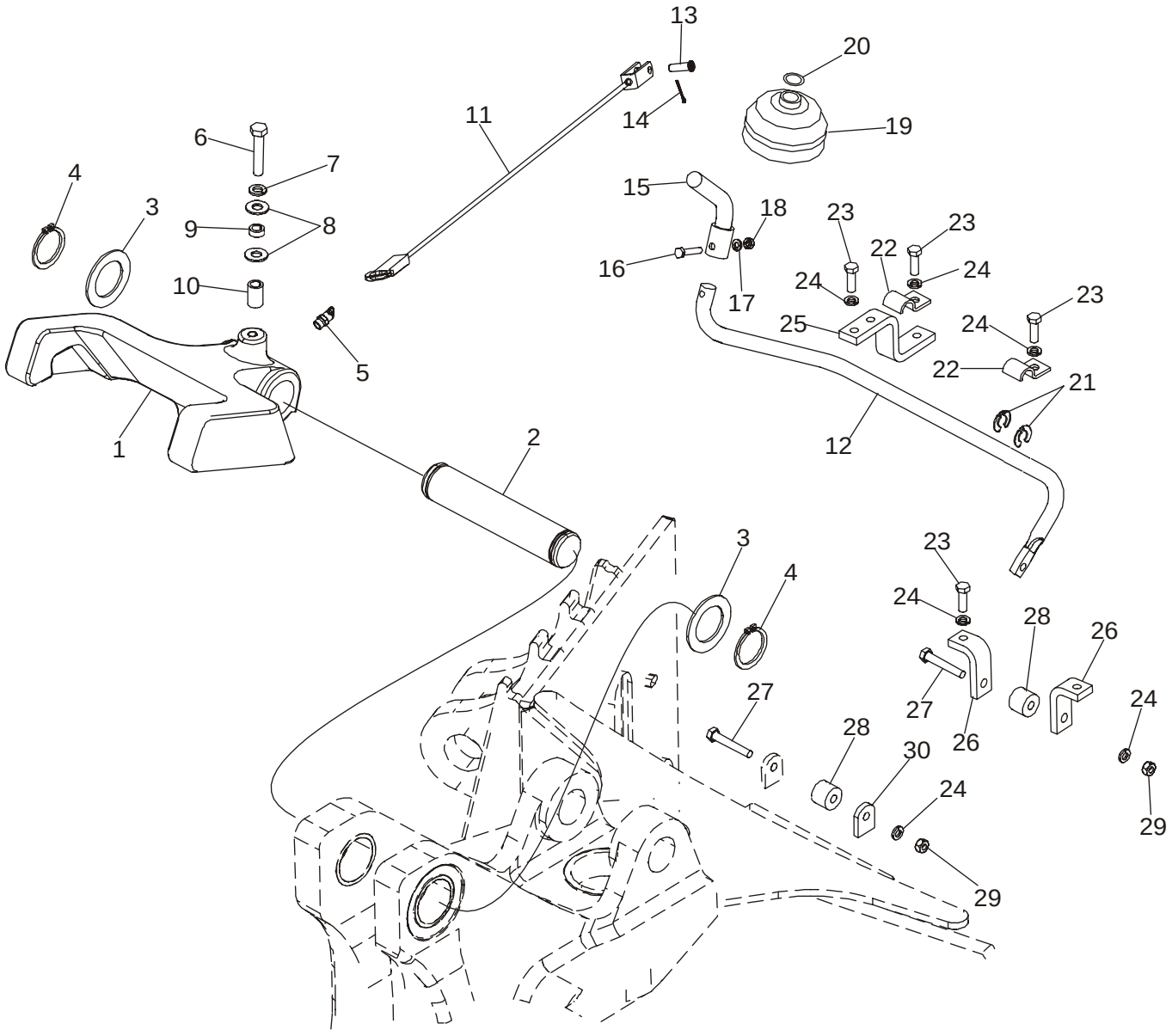

HTTP://WWW.MINNPARBACKHOEPARTS.COM



VERROU DE MAINTIEN DE BRAS DE RELEVAGE (SANS DE COMMANDE PILOTE)

| REF | FN | PART NUMBER | YR/SN | QTY | DESCRIPTION |
|---|---|---|---|---|---|
| 1 | | 379941A1 | | 1 | LOQUET |
| 2 | | D129227 | | 1 | AXE, GROS |
| 3 | | D144592 | | 2 | RONDELLE |
| 4 | | 800-44040 | | 2 | ANNEAU-D'ARRET |
| 5 | | 219-55 | | 1 | GRAISSEUR 90 deg, 1/8 PT x 27/32 |
| 6 | | 614-10050 | | 1 | VIS M10 x 50 |
| 7 | | 892-11010 | | 1 | RONDELLE FREIN M10 |
| 8 | | 895-15010 | | 2 | RONDELLE 11 x 24 x 2 mm |
| 9 | | D143417 | | 1 | ENTRETOISE |
| 10 | | 396092A1 | | 1 | ENTRETOISE |
| 11 | | 87435924 | | 1 | CABLE |
| 12 | | 87422696 | | 1 | TRINGLE Boom Latch Release |
| 13 | | 427-5094 | | 1 | AXE DE CHAPE 5/16 x 15/16 |
| 14 | | 432-612 | | 1 | GOUPILLE 3/32 x 3/4 |
| 15 | | 87427774 | | 1 | TRINGLE (ASSEMBLEE) |
| 16 | | 814-6030 | | 1 | VIS M6 x 30 |
| 17 | | 892-11006 | | 1 | RONDELLE FREIN M6 |
| 18 | | 829-1406 | | 1 | ECROU M6 |
| 19 | | D86664 | | 1 | MANCHETTE |
| 20 | | D143735 | | 1 | COLLIER Ring |
| 21 | | D143591 | | 2 | ANNEAU-D'ARRET CLIP RING, 5/8 dia |
| 22 | | D143723 | | 2 | BRIDE CLAMP, 5/8 |
| 23 | | 614-8025 | | 6 | VIS M8 x 25 |
| 24 | | 892-11008 | | 8 | RONDELLE LOCK, M8 |
| 25 | | 87422701 | | 1 | PATTE FIXATION Rod |
| 26 | | 87422702 | | 2 | PATTE FIXATION Cable |
| 27 | | 814-8050 | | 2 | VIS M8 x 50 |
| 28 | | 86984547 | | 2 | GUIDE Roller, Cable Guide |
| 29 | | 829-1408 | | 2 | ECROU M8 |
| 30 | | 87432811 | | 1 | PATTE FIXATION TAB |

HTTP://WWW.MINNPARBACKHOEPARTS.COM

| 09-25A | | p1 | 01/04 |
|---|---|---|---|

VERROU DE MAINTIEN DE BRAS DE RELEVAGE (AVEC DE COMMANDE PILOTE)

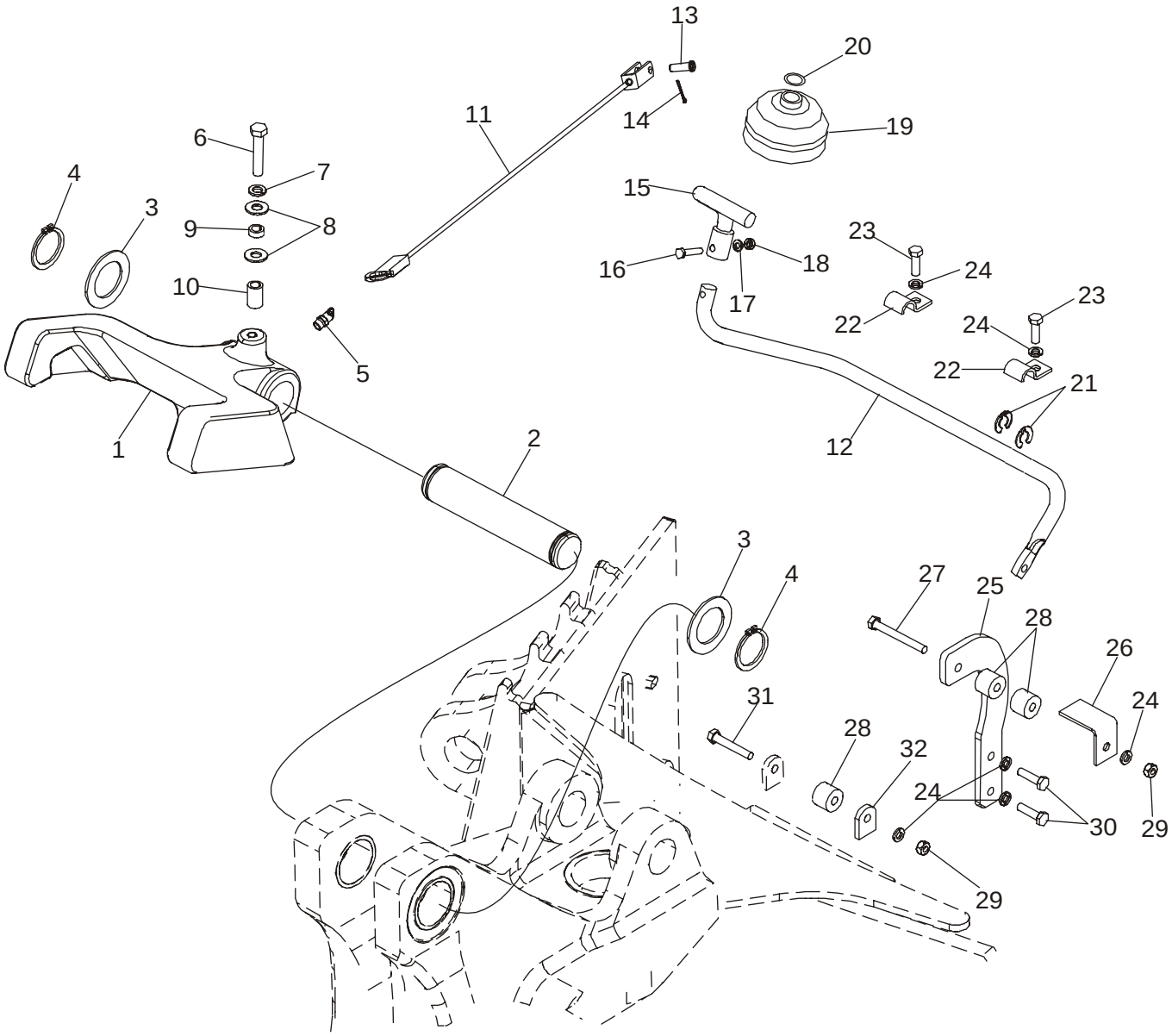

HTTP://WWW.MINNPARBACKHOEPARTS.COM



VERROU DE MAINTIEN DE BRAS DE RELEVAGE (AVEC DE COMMANDE PILOTE)

| REF | FN | PART NUMBER | YR/SN | QTY | DESCRIPTION |
|---|---|---|---|---|---|
| 1 | | 379941A1 | | 1 | LOQUET |
| 2 | | D129227 | | 1 | AXE, GROS |
| 3 | | D144592 | | 2 | RONDELLE |
| 4 | | 800-44040 | | 2 | ANNEAU-D'ARRET |
| 5 | | 219-55 | | 1 | GRAISSEUR 90 deg, 1/8 PT x 27/32 |
| 6 | | 614-10050 | | 1 | VIS M10 x 50 |
| 7 | | 892-11010 | | 1 | RONDELLE FREIN M10 |
| 8 | | 895-15010 | | 2 | RONDELLE 11 x 24 x 2 mm |
| 9 | | D143417 | | 1 | ENTRETOISE |
| 10 | | 396092A1 | | 1 | ENTRETOISE |
| 11 | | 87435924 | | 1 | CABLE |
| 12 | | 87422696 | | 1 | TRINGLE Boom Latch Release |
| 13 | | 427-5094 | | 1 | AXE DE CHAPE 5/16 x 15/16 |
| 14 | | 432-612 | | 1 | GOUPILLE 3/32 x 3/4 |
| 15 | | 87427775 | | 1 | TRINGLE (ASSEMBLEE) |
| 16 | | 814-6030 | | 1 | VIS M6 x 30 |
| 17 | | 892-11006 | | 1 | RONDELLE FREIN M6 |
| 18 | | 829-1406 | | 1 | ECROU M6 |
| 19 | | D86664 | | 1 | MANCHETTE |
| 20 | | D143735 | | 1 | COLLIER Ring |
| 21 | | D143591 | | 2 | ANNEAU-D'ARRET CLIP RING, 5/8 dia |
| 22 | | D143723 | | 2 | BRIDE CLAMP, 5/8 |
| 23 | | 614-8025 | | 2 | VIS M8 x 25 |
| 24 | | 892-11008 | | 6 | RONDELLE LOCK, M8 |
| 25 | | 86984544 | | 1 | PATTE FIXATION Roller Mounting |
| 26 | | 86984545 | | 1 | PATTE FIXATION Cable |
| 27 | | 814-8070 | | 1 | VIS M8 x 70 |
| 28 | | 86984547 | | 3 | GUIDE Roller, Cable Guide |
| 29 | | 829-1408 | | 2 | ECROU M8 |
| 30 | | 614-8030 | | 2 | VIS M8 x 30 |
| 31 | | 814-8050 | | 1 | VIS M8 x 50 |
| 32 | | 87432811 | | 1 | PATTE FIXATION TAB |

HTTP://WWW.MINNPARBACKHOEPARTS.COM



RETROPELLE - BALANCIER ET GODET

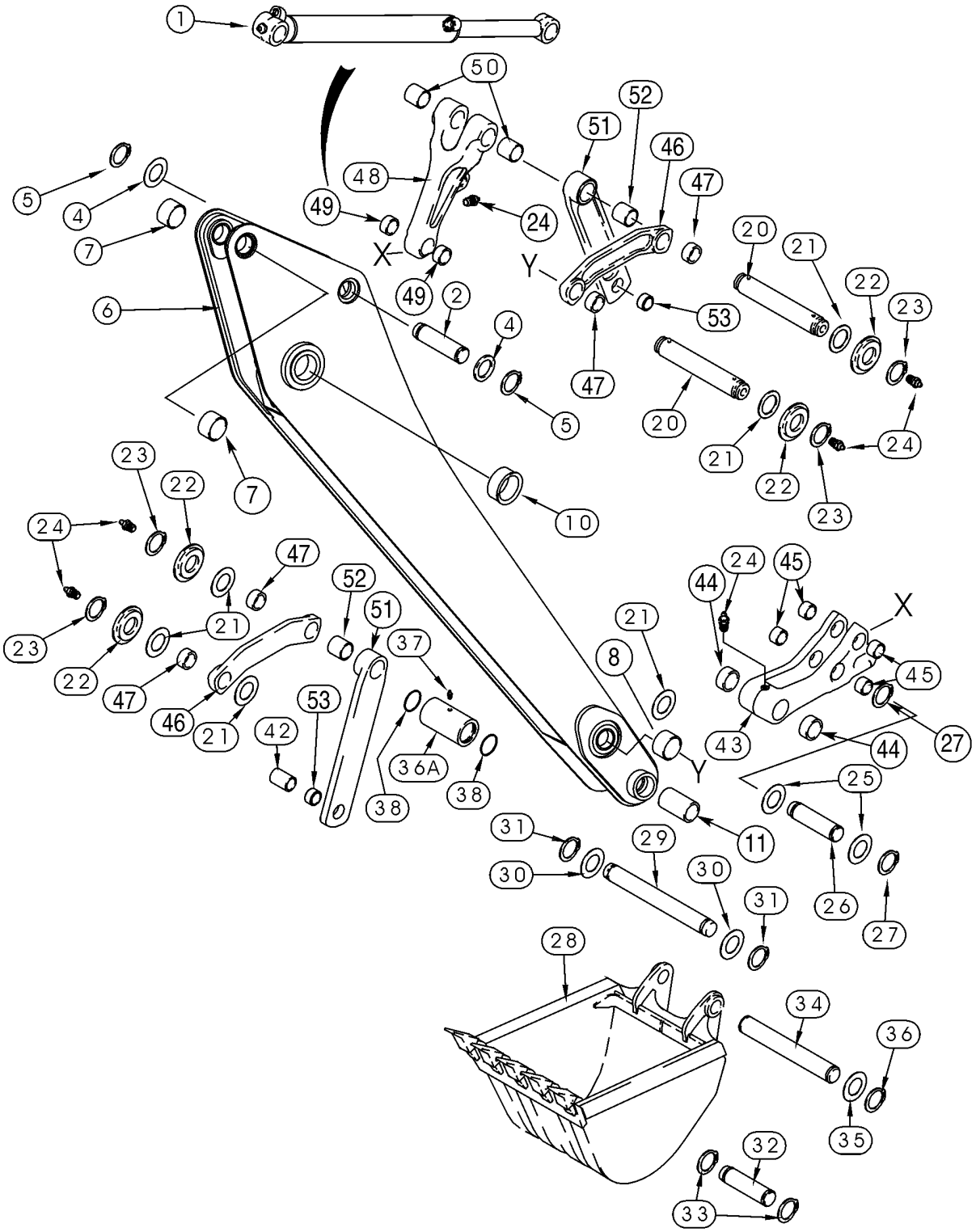

HTTP://WWW.MINNPARBACKHOEPARTS.COM



RETROPELLE - BALANCIER ET GODET

| REF | FN | PART NUMBER | YR/SN | QTY | DESCRIPTION |
|---|---|---|---|---|---|
| 1 | | 128760A1 | | 1 | VERIN 83 ID x 872 mm strk; Bucket; See Figure 08-65 |
| 2 | | 129041A1 | | 1 | AXE, GROS |
| 4 | | 495-81226 | | X | RONDELLE 1-13/16 x 2-1/2 x 1/8 |
| 5 | | 103-16175 | | 2 | ANNEAU-D'ARRET No. 175 |
| | | 129884A2 | | 1 | BALANCÍN Incl. Ref 6 - 10 |
| 6 | | NSS | | 1 | NON FOURNI SEPAREMENT Dipper |
| 7 | | D145978 | | 2 | BAGUE |
| 8 | | D140029 | | 2 | BAGUE 50 x 60 x 25.5 mm lg |
| 10 | | D150121 | | 2 | BAGUE 70 ID x 36 mm lg |
| 11 | | 307186A1 | | 2 | BAGUE 104 mm lg; Not Included In Assembly; Purchase Separately |
| 20 | | D141142 | | 2 | AXE, GROS 306 mm lg, Guide Link |
| 21 | | 495-81282 | | X | RONDELLE 2-1/16 x 3 x 3/32 |
| 22 | | D141164 | | 4 | ENTRETOISE |
| 23 | | 103-16175 | | 4 | ANNEAU-D'ARRET No. 175 |
| 24 | | 219-1 | | 6 | GRAISSEUR 1/8 PT x 21/32 |
| 25 | | 495-81226 | | 2 | RONDELLE 1-13/16 x 2-1/2 x 1/8 |
| 26 | | D146288 | | 1 | AXE, GROS |
| 27 | | 103-16175 | | 2 | ANNEAU-D'ARRET No. 175 |
| 28 | | REF | | 1 | NOTICE Bucket; See Figure(s) 09-28 - 09-35 |
| 29 | | D37614 | | 1 | AXE, GROS |
| 30 | | D143324 | | 2 | RONDELLE |
| 31 | | D25279 | | 2 | ANNEAU-D'ARRET |
| 32 | | D149298 | | 1 | AXE 305 mm (12 inch) Universal Bucket Only |
| 33 | | 103-16175 | | 2 | ANNEAU-D'ARRET No. 175 |
| 34 | | D150619 | | 1 | AXE, GROS All Buckets Except 12 Inch (305 mm) Buckets |
| 35 | | 495-81226 | | X | RONDELLE 1-13/16 x 2-1/2 x 1/8 |
| 36 | | 103-16175 | | 2 | ANNEAU-D'ARRET No. 175 |
| 36A | | D141076 | | 1 | ENTRETOISE |
| 37 | | 219-1 | | 1 | GRAISSEUR 1/8 PT x 21/32 |
| 38 | | 238-5228 | | 2 | JOINT TORIQUE 2-1/4 ID x 1/8 |
| 42 | | D141075 | | 1 | ENTRETOISE |
| | | 281185A1 | | 1 | CHAPE Bucket, Incl. Ref 43 - 45 |
| 43 | | NSS | | 1 | NON FOURNI SEPAREMENT Coupler, Quick |

HTTP://WWW.MINNPARBACKHOEPARTS.COM

| 09-26 | | p2 | 01/04 |
|---|---|---|---|

RETROPELLE - BALANCIER ET GODET

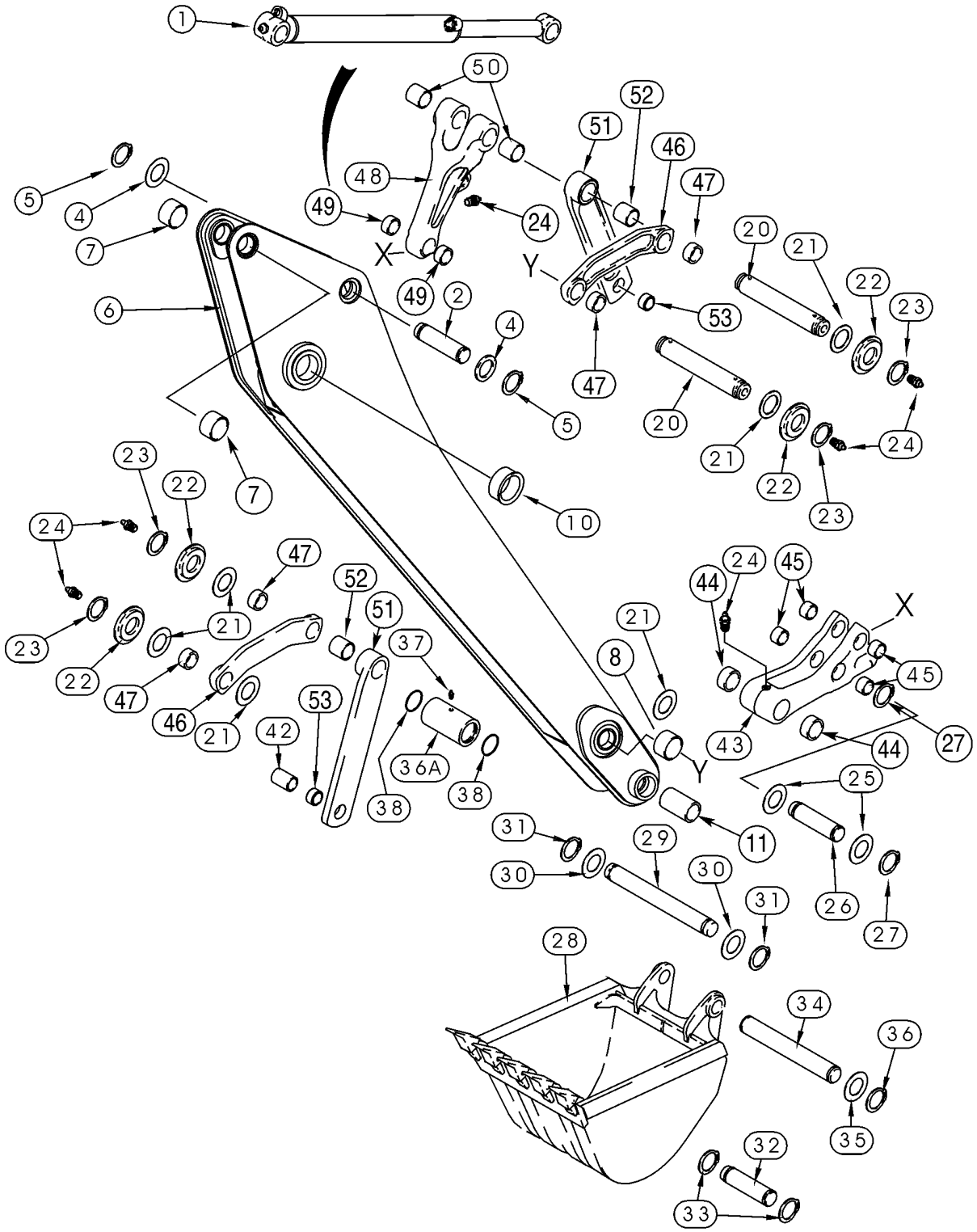


BC00G037

HTTP://WWW.MINNPARBACKHOEPARTS.COM



RETROPELLE - BALANCIER ET GODET

| REF | FN | PART NUMBER | YR/SN | QTY | DESCRIPTION |
|---|---|---|---|---|---|
| 44 | | D127167 | | 2 | BAGUE 30 mm lg |
| 45 | | 107124A1 | | 4 | BAGUE 29 mm lg |
| 46 | | 348706A1 | | 2 | MAILLON (ASSEMBLE) Bucket Guide, Incl. Ref 47 |
| 47 | | D149079 | | 2 | BAGUE 50 x 34 mm lg |
| 48 | | 400398A1 | | 1 | MAILLON (ASSEMBLE) Bucket Dump, Incl. Ref 49, 50 |
| 49 | | 107124A1 | | 2 | BAGUE |
| 50 | | D138047 | | 2 | BAGUE 54 mm (2-1/8 in) lg |
| 51 | | 244790A1 | | 2 | MAILLON (ASSEMBLE) Standard Equipment; Bucket Dump; Incl. Ref 52, 53 |
| 52 | | D138047 | | 1 | BAGUE 54 mm (2-1/8 in) lg |
| 53 | | D31140 | | 1 | BAGUE |

HTTP://WWW.MINNPARBACKHOEPARTS.COM



RETROPELLE - BALANCIER EXTENSIBLE

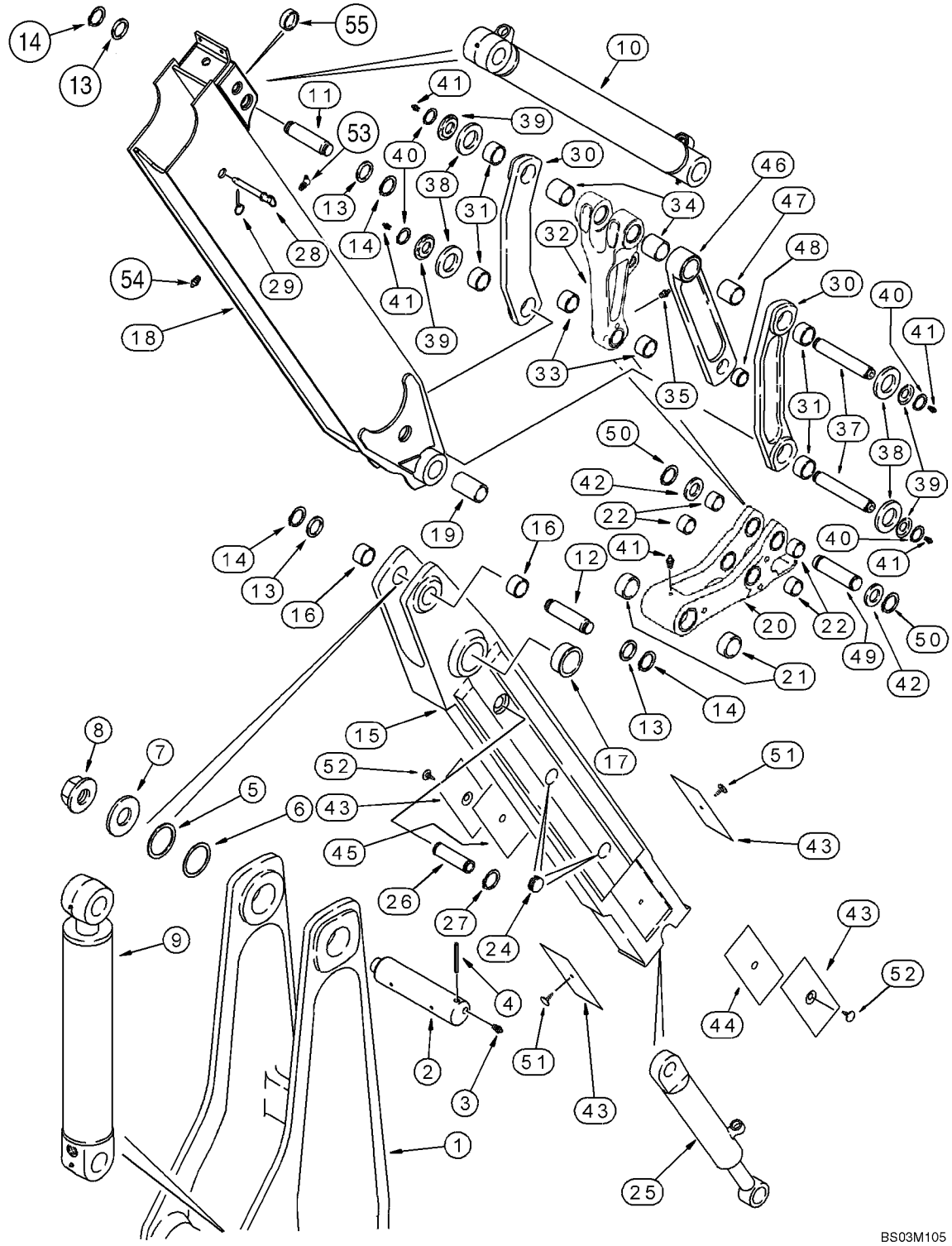

HTTP://WWW.MINNPARBACKHOEPARTS.COM



RETROPELLE - BALANCIER EXTENSIBLE

| REF | FN | PART NUMBER | YR/SN | QTY | DESCRIPTION |
|---|---|---|---|---|---|
| 1 | | 129883A1 | | 1 | FLECHE Boom, See Figure 09-24 |
| 2 | | D132494 | | 1 | AXE, GROS |
| 3 | | 219-1 | | 2 | GRAISSEUR 1/8 PT x 21/32 |
| 4 | | 135-51652 | | 1 | GOUPILLE CANNELÉES 1/2 x 3-1/4 lg |
| 5 | | 404834A1 | | X | CALE D'EPAISSEUR |
| 6 | | 404835A1 | | X | CALE D'EPAISSEUR |
| 7 | | D133632 | | 1 | RONDELLE |
| 8 | | 181042A1 | | 1 | ECROU Flange, Special |
| 9 | | 233114A2 | | 1 | VERIN 108 ID x 686 mm strk, Dipper; See Figure 08-64 |
| 10 | | 128760A1 | | 1 | VERIN 83 ID x 872 mm strk, Bucket; See Figure 08-65 |
| 11 | | D141666 | | 1 | AXE, GROS |
| 12 | | 129041A1 | | 1 | AXE, GROS |
| 13 | | 495-81282 | | 2 | RONDELLE 2-1/16 x 3 x 3/32 |
| 14 | | 103-16175 | | 4 | ANNEAU-D'ARRET No. 175 |
| | | 122503A1 | | 1 | BALANCÍN Inner; Incl. Ref 15 - 17 |
| 15 | | NSS | | 1 | NON FOURNI SEPAREMENT Dipper |
| 16 | | D145978 | | 2 | BAGUE |
| 17 | | D150121 | | 2 | BAGUE 70 ID x 36 mm lg |
| 18 | | 87436235 | | 1 | BALANCÍN Outer; Incl. Ref 53, 54 |
| 19 | | 307186A1 | | 2 | BAGUE 104 mm lg |
| | | 281185A1 | | 1 | CHAPE Bucket; Incl. Ref 20 - 22 |
| 20 | | NSS | | 1 | NON FOURNI SEPAREMENT Coupler, Quick |
| 21 | | D127167 | | 2 | BAGUE 30 mm lg |
| 22 | | 107124A1 | | 4 | BAGUE 29 mm lg |
| 24 | | D133865 | | 4 | BOUCHON |
| 25 | | 1340969C2 | | 1 | VERIN 76 ID x 1068 mm strk, Extendable Dipper; See Figure 08-66 |
| 26 | | 300588A1 | | 1 | AXE, GROS |
| 27 | | 800-44040 | | 2 | ANNEAU-D'ARRET |
| 28 | | D140247 | | 1 | AXE, GROS Lock, Transport |
| 29 | | A33509 | | 1 | AXE, GROS |
| 30 | | 348706A1 | | 2 | MAILLON (ASSEMBLE) Bucket Guide, Incl. Ref 31 |
| 31 | | D149079 | | 2 | BAGUE 50 x 34 mm lg |

HTTP://WWW.MINNPARBACKHOEPARTS.COM



RETROPELLE - BALANCIER EXTENSIBLE

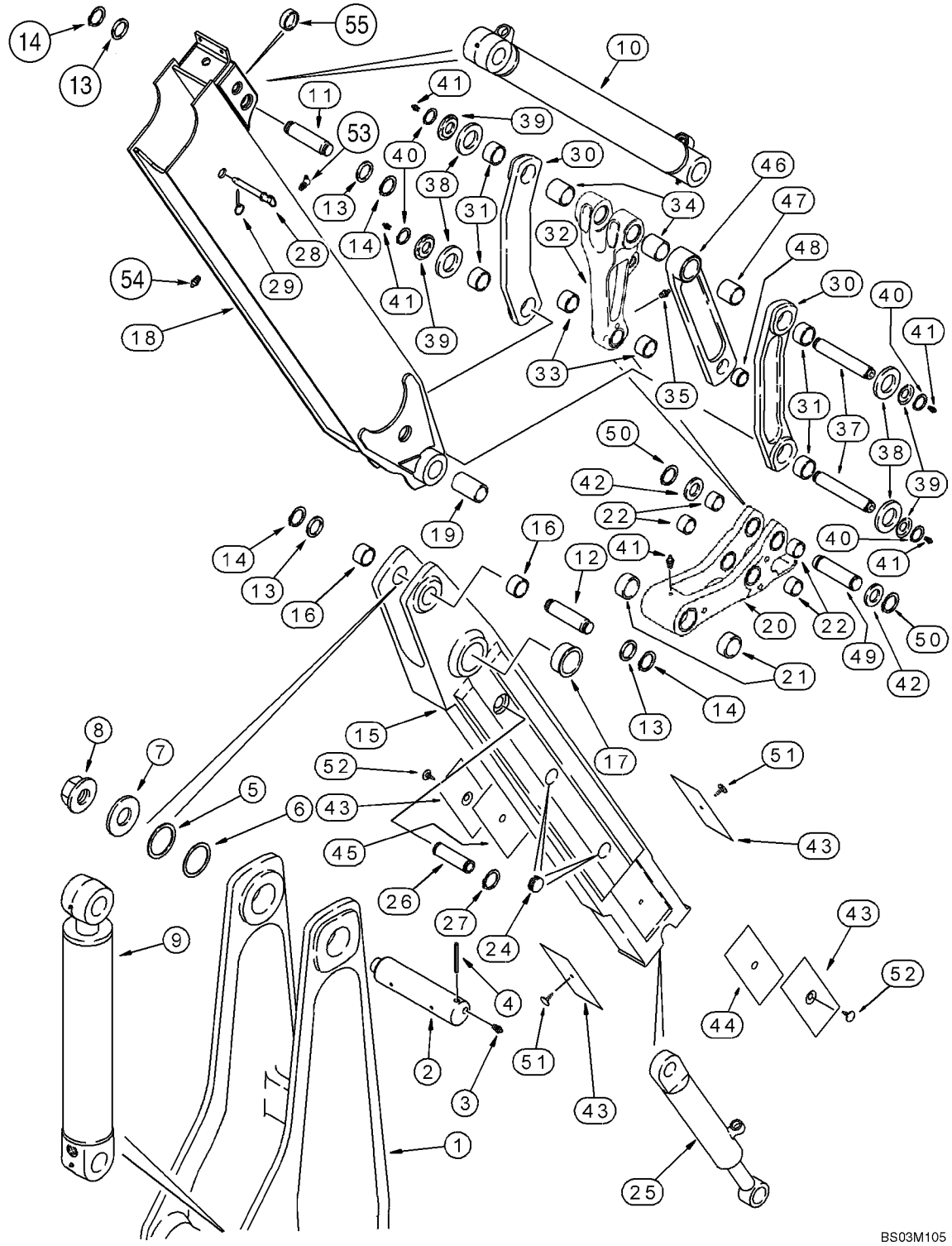

HTTP://WWW.MINNPARBACKHOEPARTS.COM



RETROPELLE - BALANCIER EXTENSIBLE

| REF | FN | PART NUMBER | YR/SN | QTY | DESCRIPTION |
|---|---|---|---|---|---|
| 32 | | 400398A1 | | 1 | MAILLON (ASSEMBLE) Bucket Dump, Incl. Ref 33, 34 |
| 33 | | 107124A1 | | 2 | BAGUE |
| 34 | | D138047 | | 2 | BAGUE 54 mm (2-1/8 in) lg |
| 35 | | 219-1 | | 1 | GRAISSEUR 1/8 PT x 21/32 |
| 37 | | D141142 | | 2 | AXE, GROS 306 mm lg |
| 38 | | 495-81282 | | 4 | RONDELLE 2-1/16 x 3 x 3/32 |
| 39 | | D141164 | | 4 | ENTRETOISE |
| 40 | | 103-16175 | | 4 | ANNEAU-D'ARRET No. 175 |
| 41 | | 219-1 | | 5 | GRAISSEUR 1/8 PT x 21/32 |
| 42 | | 495-81226 | | 2 | RONDELLE 1-13/16 x 2-1/2 x 1/8 |
| 43 | | 451384A1 | | 4 | PLAQUE D'USURE |
| 44 | | 132844A1 | | 1 | CALE D'EPAISSEUR 0.8 mm thk |
| 45 | | 132842A1 | | 1 | CALE D'EPAISSEUR 1.6 mm thk |
| 46 | | 244790A1 | | 2 | MAILLON (ASSEMBLE) Bucket Dump; Standard Equipment; Incl. Ref 47, 48 |
| 47 | | D138047 | | 1 | BAGUE 54 mm (2-1/8 in) lg |
| 48 | | D31140 | | 1 | BAGUE |
| 49 | | D146288 | | 1 | AXE, GROS |
| 50 | | 103-16175 | | 2 | ANNEAU-D'ARRET No. 175 |
| 51 | | 183443A1 | | 2 | AXE, GROS |
| 52 | | 183509A1 | | 2 | AXE, GROS |
| 53 | | 219-89 | | 1 | GRAISSEUR 1/8 PT x 25/32 |
| 54 | | 219-86 | | 1 | RACCORD 1/8 PT x 5/8 |
| 55 | | 396483A1 | | 2 | ENTRETOISE |

HTTP://WWW.MINNPARBACKHOEPARTS.COM

| 09-28 | | p1 | 01/04 |
|---|---|---|---|

GODET, PELLE RÉTRO UNIVERSELLE (305 MM (12 INCH) WIDE)

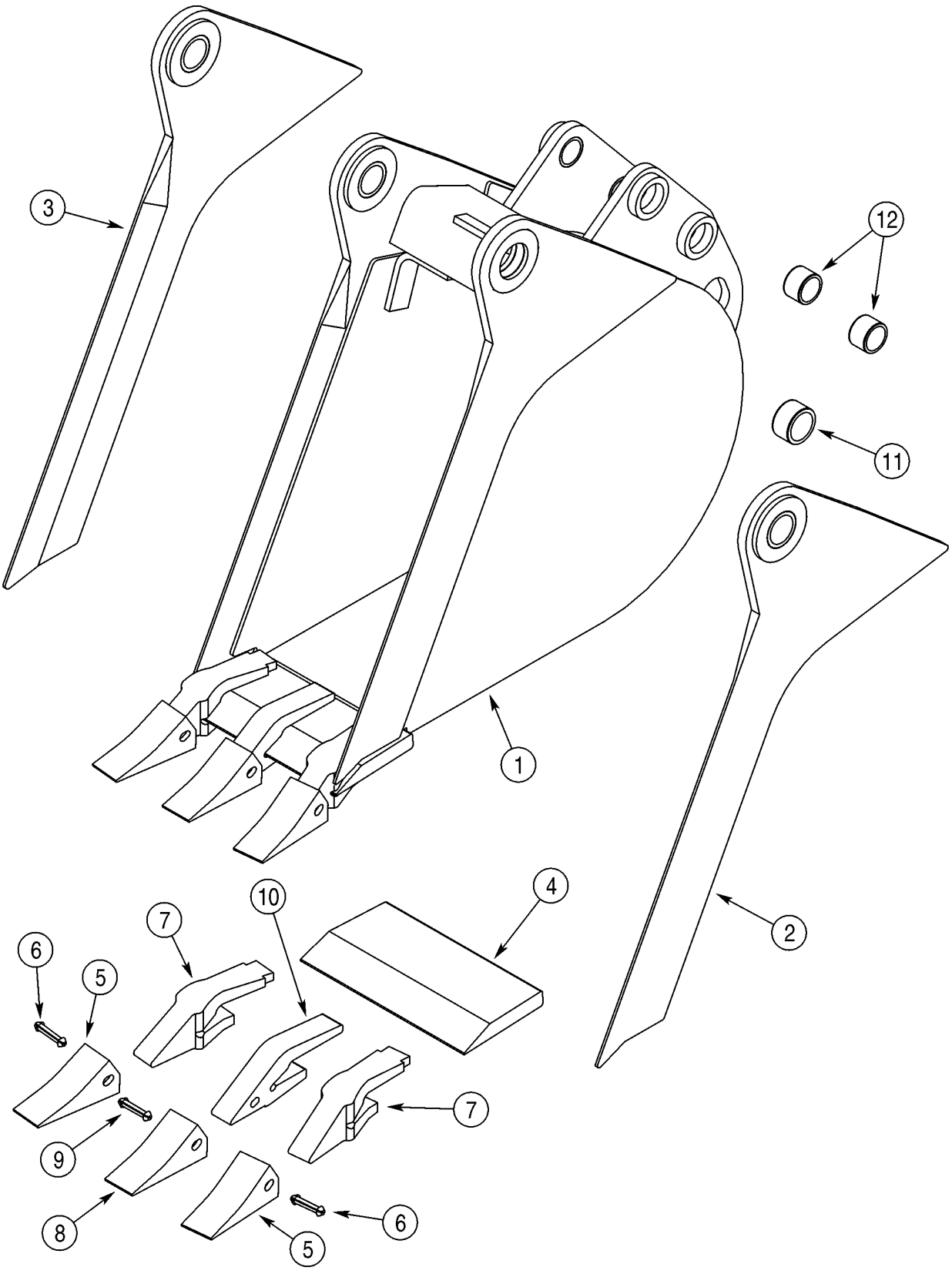

HTTP://WWW.MINNPARBACKHOEPARTS.COM



GODET, PELLE RÉTRO UNIVERSELLE (305 MM (12 INCH) WIDE)

| REF | FN | PART NUMBER | YR/SN | QTY | DESCRIPTION |
|---|---|---|---|---|---|
| 1 | | 381488A4 | | 1 | GODET 305 mm (12 in); With 3 Teeth; Order Through Parts Marketing; Incl. Ref 2 - 12 |
| 2 | | NSS | | 1 | NON FOURNI SEPAREMENT Edge, Right-Hand; Incl. Ref 11 |
| 3 | | NSS | | 1 | NON FOURNI SEPAREMENT Edge, Left-Hand; Incl. Ref 11 |
| 4 | | D147409 | | 1 | LAME D'ATTAQUE |
| | | D139851 | | 2 | DENT Outer; Incl. Ref 5 - 7 |
| 5 | | D51750 | | 1 | POINTE |
| 6 | | 245466A1 | | 1 | GOUPILLE |
| 7 | | D138157 | | 1 | JAMBE |
| | | D139849 | | 1 | DENT Center; Incl. Ref 8 - 10; Order Ref 8 - 10 |
| 8 | | D51750 | | 1 | POINTE |
| 9 | | 245466A1 | | 1 | GOUPILLE |
| 10 | | D48212 | | 1 | JAMBE |
| 11 | | D43940 | | 2 | BAGUE 1-3/4 x 2-1/4 x 1 |
| 12 | | D30933 | | 4 | BAGUE |

HTTP://WWW.MINNPARBACKHOEPARTS.COM

| 09-29 | | p1 | 01/04 |
|---|---|---|---|

GODET, PELLE RÉTRO UNIVERSELLE (406 MM (16 INCH) WIDE)

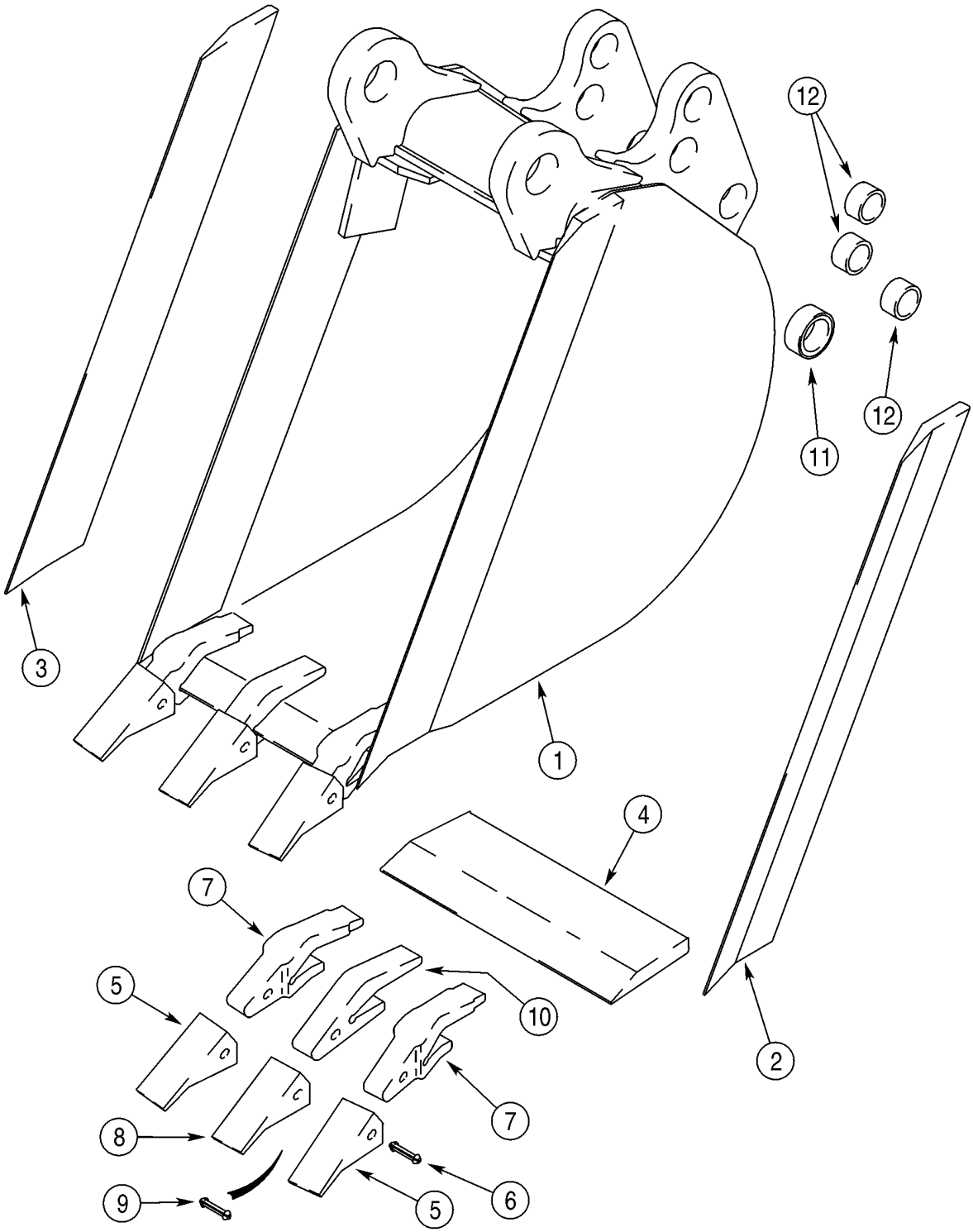

HTTP://WWW.MINNPARBACKHOEPARTS.COM



GODET, PELLE RÉTRO UNIVERSELLE (406 MM (16 INCH) WIDE)

| REF | FN | PART NUMBER | YR/SN | QTY | DESCRIPTION |
|---|---|---|---|---|---|
| 1 | | 388843A1 | | 1 | GODET 406 mm (16 in); With 3 Teeth; Order Through Parts Marketing; Incl. Ref 2 - 12 |
| 2 | | D146421 | | 1 | LAME D'ATTAQUE Right-Hand |
| 3 | | D146420 | | 1 | LAME D'ATTAQUE Left-Hand |
| 4 | | D147249 | | 1 | BORD |
| | | D139851 | | 2 | DENT Outer; Incl. Ref 5 - 7 |
| 5 | | D51750 | | 1 | POINTE |
| 6 | | 245466A1 | | 1 | GOUPILLE |
| 7 | | D138157 | | 1 | JAMBE |
| | | D139849 | | 1 | DENT Center; Incl. Ref 8 - 10; Order Ref 8 - 10 |
| 8 | | D51750 | | 1 | POINTE |
| 9 | | 245466A1 | | 1 | GOUPILLE |
| 10 | | D48212 | | 1 | JAMBE |
| 11 | | D37495 | | 2 | BAGUE |
| 12 | | D30933 | | 6 | BAGUE |

HTTP://WWW.MINNPARBACKHOEPARTS.COM



GODET, PELLE RÉTRO UNIVERSELLE (457 MM (18 INCH) WIDE)

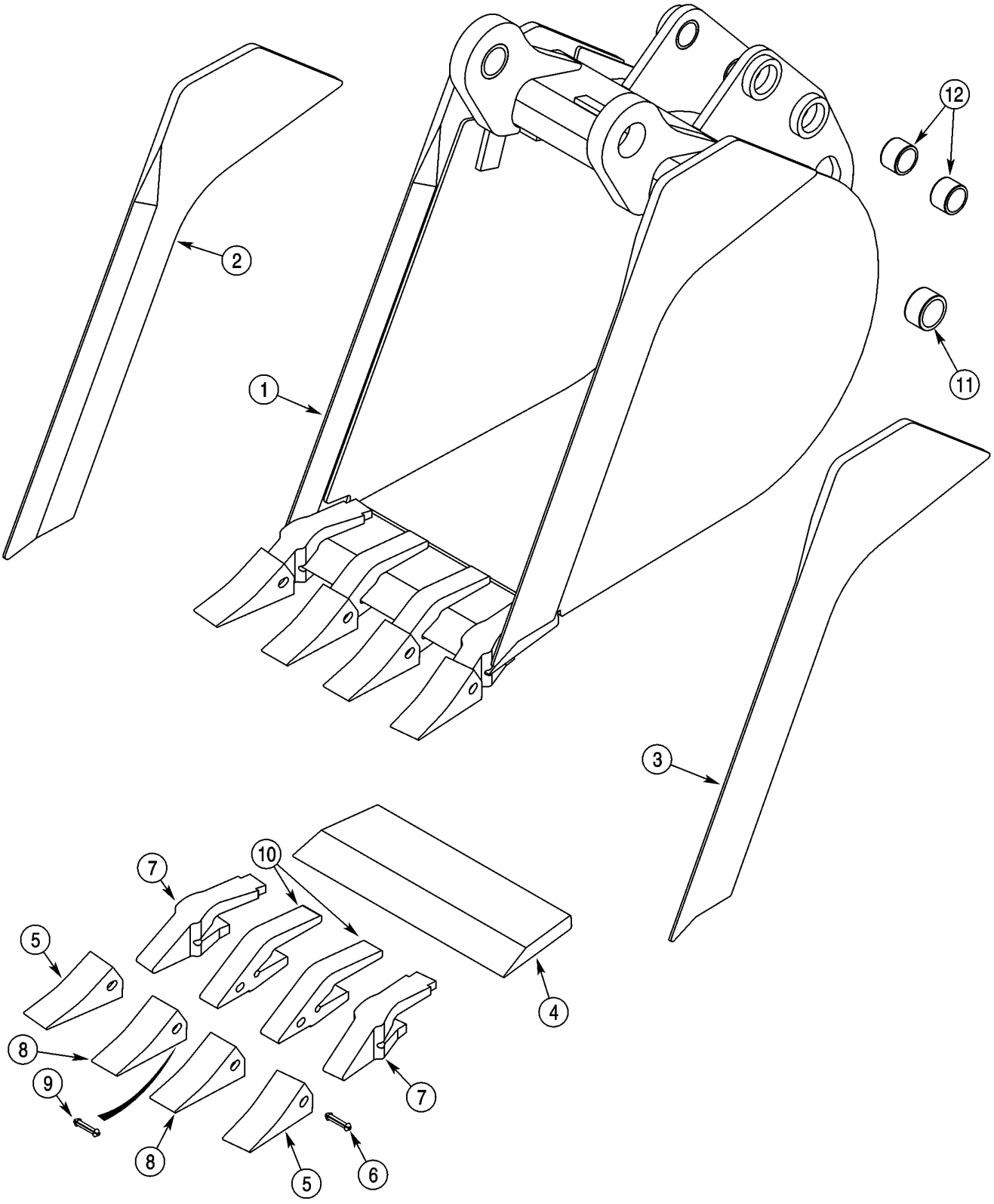

HTTP://WWW.MINNPARBACKHOEPARTS.COM



GODET, PELLE RÉTRO UNIVERSELLE (457 MM (18 INCH) WIDE)

| REF | FN | PART NUMBER | YR/SN | QTY | DESCRIPTION |
|---|---|---|---|---|---|
| 1 | | 376384A1 | | 1 | GODET 457 mm (18 in); With 4 Teeth; Order Through Parts Marketing; Incl. Ref 2 - 12 |
| 2 | | NSS | | 1 | NON FOURNI SEPAREMENT Edge, Right-Hand |
| 3 | | NSS | | 1 | NON FOURNI SEPAREMENT Edge, Left-Hand |
| 4 | | NSS | | 1 | NON FOURNI SEPAREMENT Edge |
| | | D139851 | | 2 | DENT Outer; Incl. Ref 5 - 7 |
| 5 | | D51750 | | 1 | POINTE |
| 6 | | 245466A1 | | 1 | GOUPILLE |
| 7 | | D138157 | | 1 | JAMBE |
| | | D139849 | | 2 | DENT Center; Incl. Ref 8 - 10; Order Ref 8 - 10 |
| 8 | | D51750 | | 1 | POINTE |
| 9 | | 245466A1 | | 1 | GOUPILLE |
| 10 | | D48212 | | 1 | JAMBE |
| 11 | | D37495 | | 2 | BAGUE |
| 12 | | D30933 | | 4 | BAGUE |

HTTP://WWW.MINNPARBACKHOEPARTS.COM

| 09-31 | | p1 | 01/04 |
|---|---|---|---|

GODET, PELLE RÉTRO (457 MM (18 INCH) WIDE)

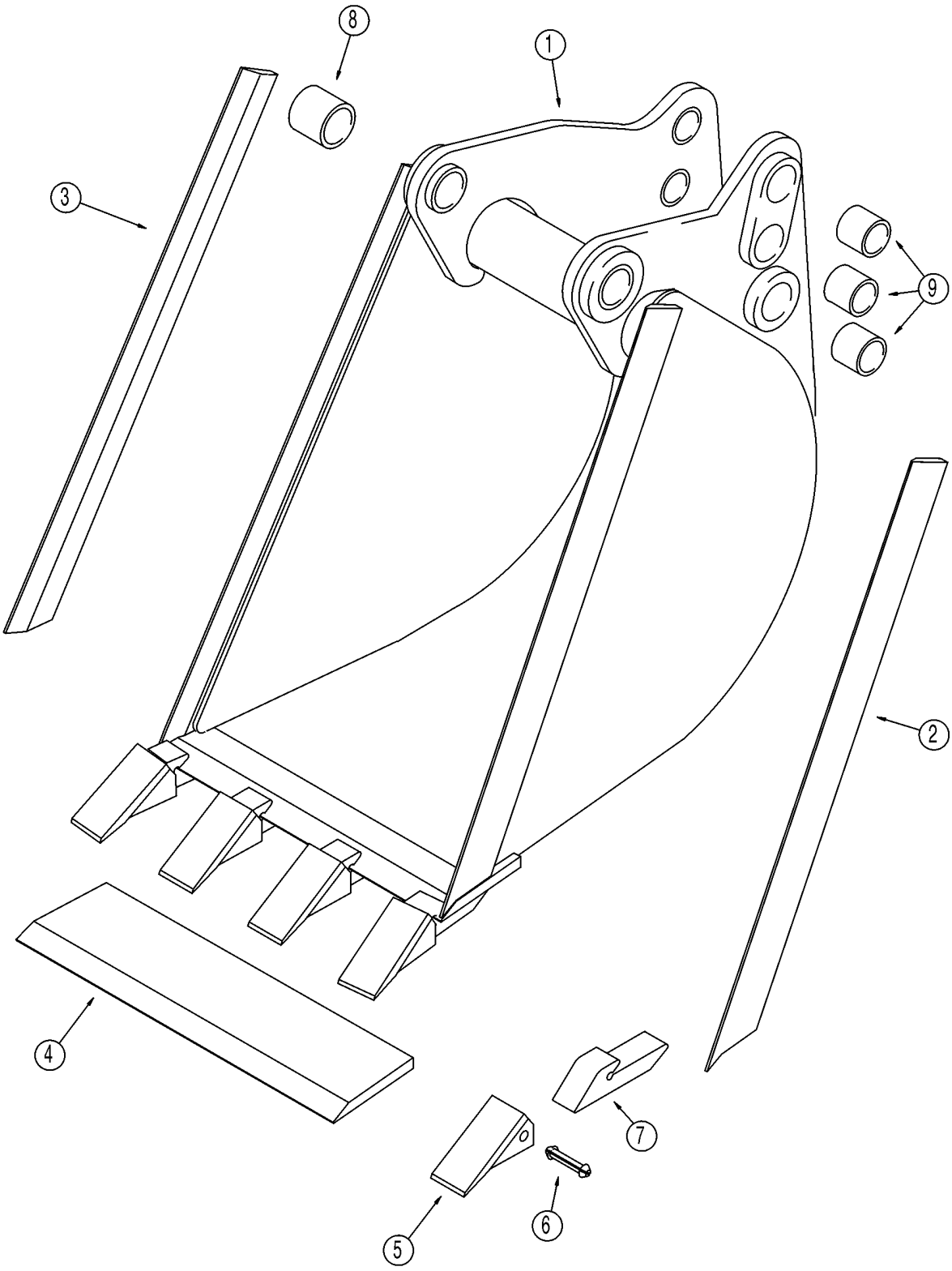

HTTP://WWW.MINNPARBACKHOEPARTS.COM



GODET, PELLE RÉTRO (457 MM (18 INCH) WIDE)

| REF | FN | PART NUMBER | YR/SN | QTY | DESCRIPTION |
|---|---|---|---|---|---|
| 1 | | 183808A1 | | 1 | GODET 457 mm (18 in); With 4 Teeth; Order Through Parts Marketing; Incl. Ref 2 - 9 |
| 2 | | 129894A1 | | 1 | BORD Right-Hand |
| 3 | | 129893A1 | | 1 | BORD Left-Hand |
| 4 | | 183810A1 | | 1 | BORD |
| | | D41659 | | 4 | DENT Incl. Ref 5 - 7 |
| 5 | | D51750 | | 1 | POINTE |
| 6 | | 245466A1 | | 1 | GOUPILLE |
| 7 | | NSS | | 1 | NON FOURNI SEPAREMENT Shank |
| 8 | | D37495 | | 2 | BAGUE |
| 9 | | D30933 | | 6 | BAGUE |

HTTP://WWW.MINNPARBACKHOEPARTS.COM

| 09-32 | | p1 | 01/04 |
|---|---|---|---|

GODET, PELLE RÉTRO UNIVERSELLE (610 MM (24 INCH) / 762 MM (30 INCH) WIDE)

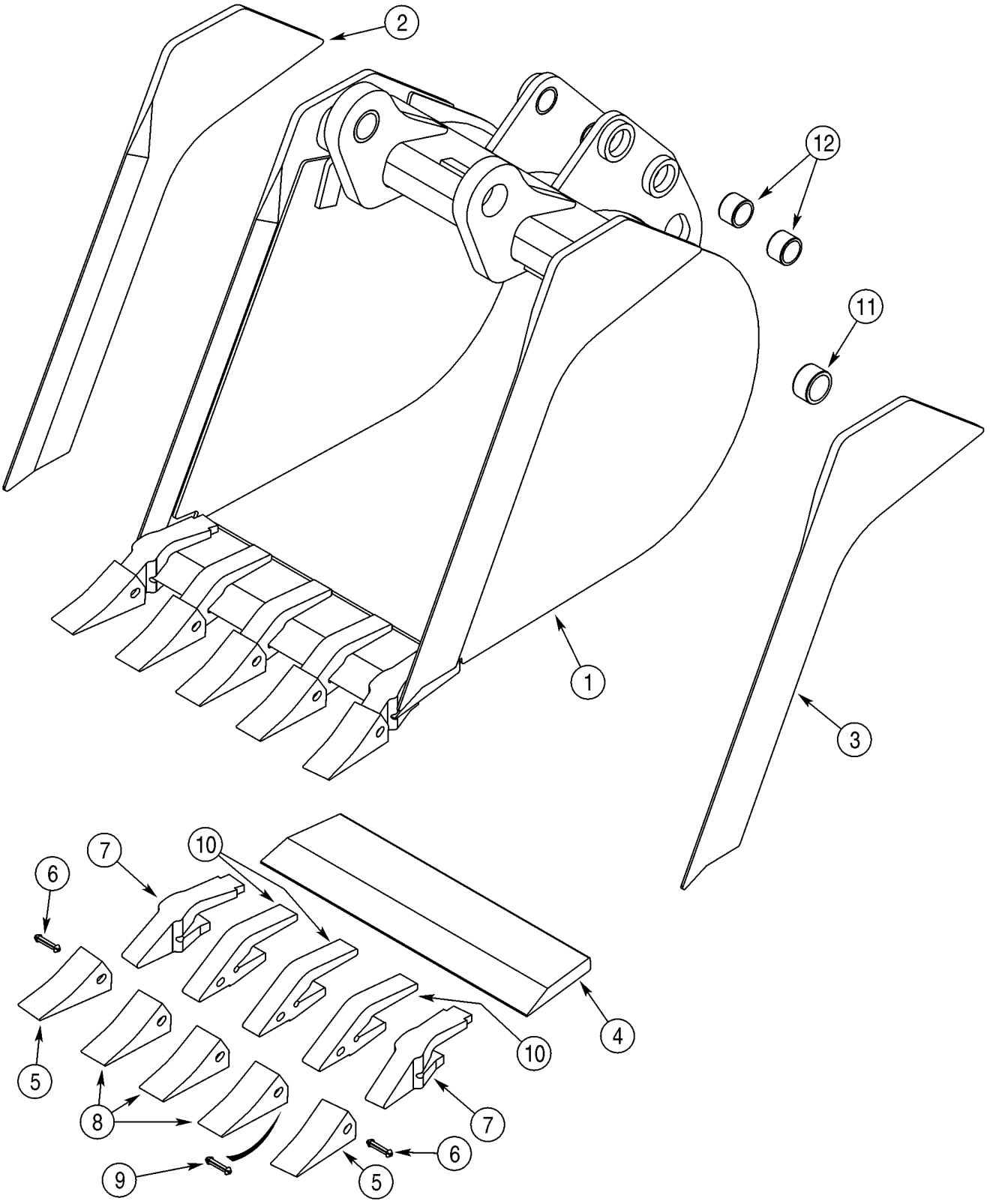

HTTP://WWW.MINNPARBACKHOEPARTS.COM



GODET, PELLE RÉTRO UNIVERSELLE (610 MM (24 INCH) / 762 MM (30 INCH) WIDE)

| REF | FN | PART NUMBER | YR/SN | QTY | DESCRIPTION |
|---|---|---|---|---|---|
| 1 | | 365328A1 | | 1 | GODET 610 mm (24 in); With 5 Teeth; Order Through Parts Marketing; Incl. Ref 2 - 12 |
| 2 | | NSS | | 1 | NON FOURNI SEPAREMENT Edge, Right-Hand |
| 3 | | NSS | | 1 | NON FOURNI SEPAREMENT Edge, Left-Hand |
| 4 | | NSS | | 1 | NON FOURNI SEPAREMENT Edge |
| | | D139851 | | 2 | DENT Outer; Incl. Ref 5 - 7 |
| 5 | | D51750 | | 1 | POINTE |
| 6 | | 245466A1 | | 1 | GOUPILLE |
| 7 | | D138157 | | 1 | JAMBE |
| | | D139849 | | 3 | DENT Center; Incl. Ref 8 - 10; Order Ref 8 - 10 |
| 8 | | D51750 | | 1 | POINTE |
| 9 | | 245466A1 | | 1 | GOUPILLE |
| 10 | | D48212 | | 1 | JAMBE |
| 11 | | D37495 | | 2 | BAGUE |
| 12 | | D30933 | | 4 | BAGUE |
| 1 | | 376385A1 | | 1 | GODET 762 mm (30 in); With 6 Teeth; Not Illustrated; Order Through Parts Marketing; Incl. Ref 2 - 12 |
| 2 | | NSS | | 1 | NON FOURNI SEPAREMENT Edge, Right-Hand |
| 3 | | NSS | | 1 | NON FOURNI SEPAREMENT Edge, Left-Hand |
| 4 | | NSS | | 1 | NON FOURNI SEPAREMENT Edge |
| | | D139851 | | 2 | DENT Outer; Incl. Ref 5 - 7 |
| 5 | | D51750 | | 1 | POINTE |
| 6 | | 245466A1 | | 1 | GOUPILLE |
| 7 | | D138157 | | 1 | JAMBE |
| | | D139849 | | 4 | DENT Center; Incl. Ref 8 - 10; Order Ref 8 - 10 |
| 8 | | D51750 | | 1 | POINTE |
| 9 | | 245466A1 | | 1 | GOUPILLE |
| 10 | | D48212 | | 1 | JAMBE |
| 11 | | D37495 | | 2 | BAGUE |
| 12 | | D30933 | | 4 | BAGUE |

HTTP://WWW.MINNPARBACKHOEPARTS.COM

| 09-33 | | p1 | 01/04 |
|---|---|---|---|

GODET, PELLE RÉTRO (610 MM (24 INCH) WIDE)

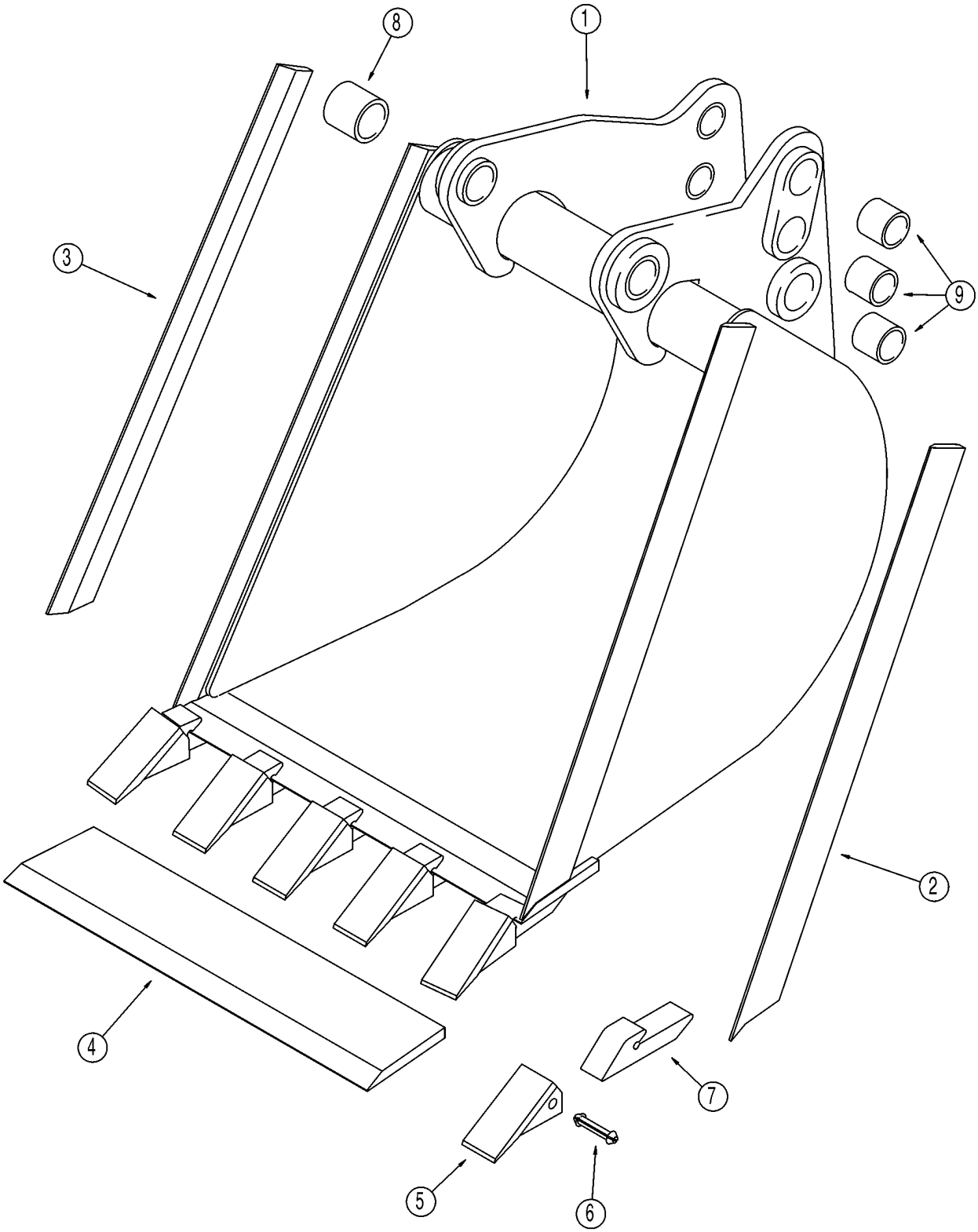

HTTP://WWW.MINNPARBACKHOEPARTS.COM



GODET, PELLE RÉTRO (610 MM (24 INCH) WIDE)

| REF | FN | PART NUMBER | YR/SN | QTY | DESCRIPTION |
|---|---|---|---|---|---|
| 1 | | 129885A1 | | 1 | GODET 610 mm (24 in); With 5 Teeth; Order Through Parts Marketing; Incl. Ref 2 - 9 |
| 2 | | 129894A1 | | 1 | BORD Right-Hand |
| 3 | | 129893A1 | | 1 | BORD Left-Hand |
| 4 | | 129944A1 | | 1 | SUPPORT |
| | | D41659 | | 5 | DENT Incl. Ref 5 - 7 |
| 5 | | D51750 | | 1 | POINTE |
| 6 | | 245466A1 | | 1 | GOUPILLE |
| 7 | | NSS | | 1 | NON FOURNI SEPAREMENT Shank |
| 8 | | D37495 | | 2 | BAGUE |
| 9 | | D30933 | | 6 | BAGUE |

HTTP://WWW.MINNPARBACKHOEPARTS.COM

| 09-34 | | p1 | 01/04 |
|---|---|---|---|

GODET, PELLE RÉTRO UNIVERSELLE (914 MM (36 INCH) WIDE)

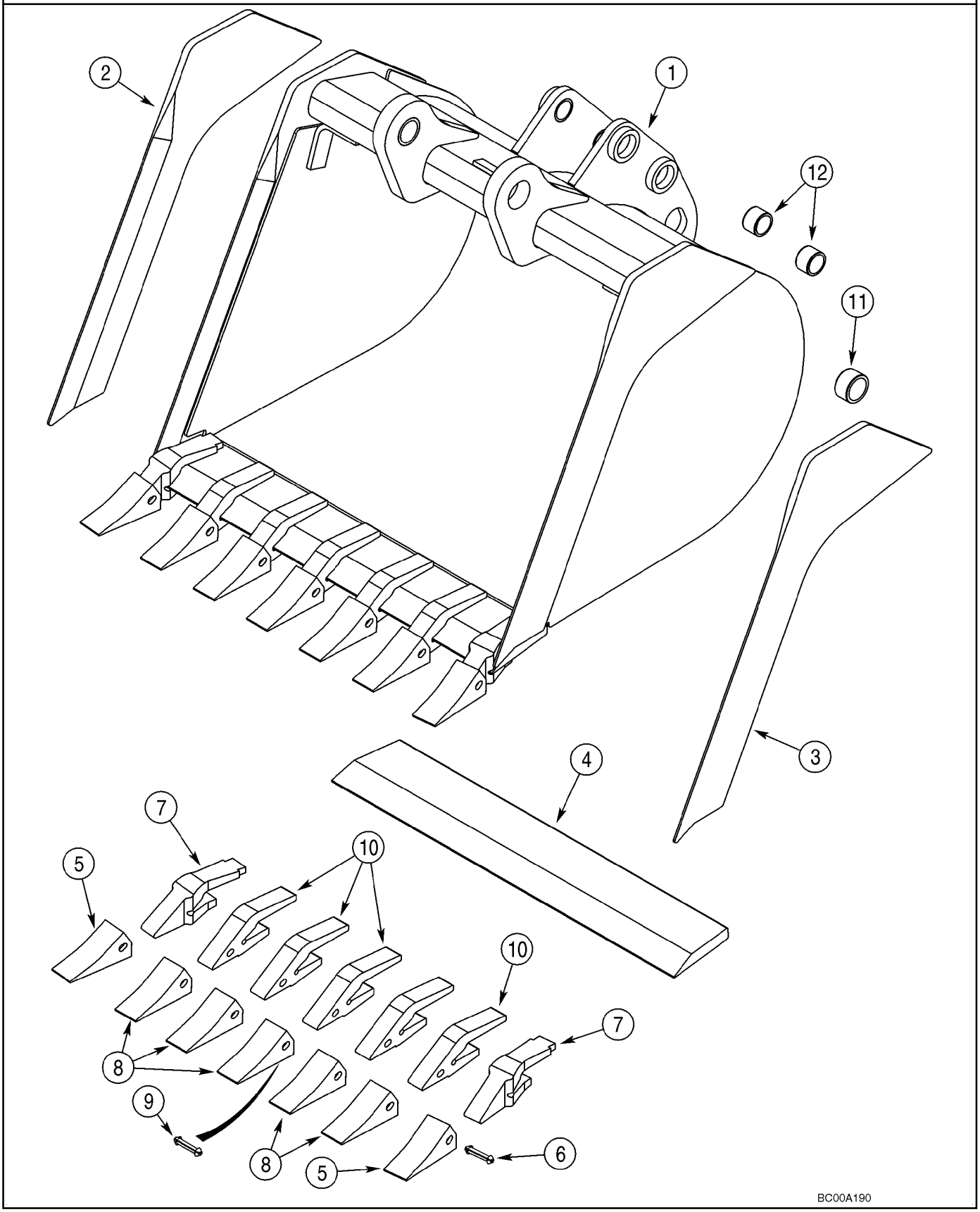

HTTP://WWW.MINNPARBACKHOEPARTS.COM



GODET, PELLE RÉTRO UNIVERSELLE (914 MM (36 INCH) WIDE)

| REF | FN | PART NUMBER | YR/SN | QTY | DESCRIPTION |
|---|---|---|---|---|---|
| 1 | | 376386A1 | | 1 | GODET 914 mm (36 in); With 7 Teeth; Order Through Parts Marketing; Incl. Ref 2 - 12 |
| 2 | | NSS | | 1 | NON FOURNI SEPAREMENT Edge, Right-Hand |
| 3 | | NSS | | 1 | NON FOURNI SEPAREMENT Edge, Left-Hand |
| 4 | | NSS | | 1 | NON FOURNI SEPAREMENT Edge |
| | | D139851 | | 2 | DENT Outer; Incl. Ref 5 - 7 |
| 5 | | D51750 | | 1 | POINTE |
| 6 | | 245466A1 | | 1 | GOUPILLE |
| 7 | | D138157 | | 1 | JAMBE |
| | | D139849 | | 5 | DENT Center; Incl. Ref 8 - 10; Order Ref 8 - 10 |
| 8 | | D51750 | | 1 | POINTE |
| 9 | | 245466A1 | | 1 | GOUPILLE |
| 10 | | D48212 | | 1 | JAMBE |
| 11 | | D37495 | | 2 | BAGUE |
| 12 | | D30933 | | 4 | BAGUE |

HTTP://WWW.MINNPARBACKHOEPARTS.COM



GODET, PELLE RÉTRO UNIVERSELLE (610 MM (24 INCH) WIDE)

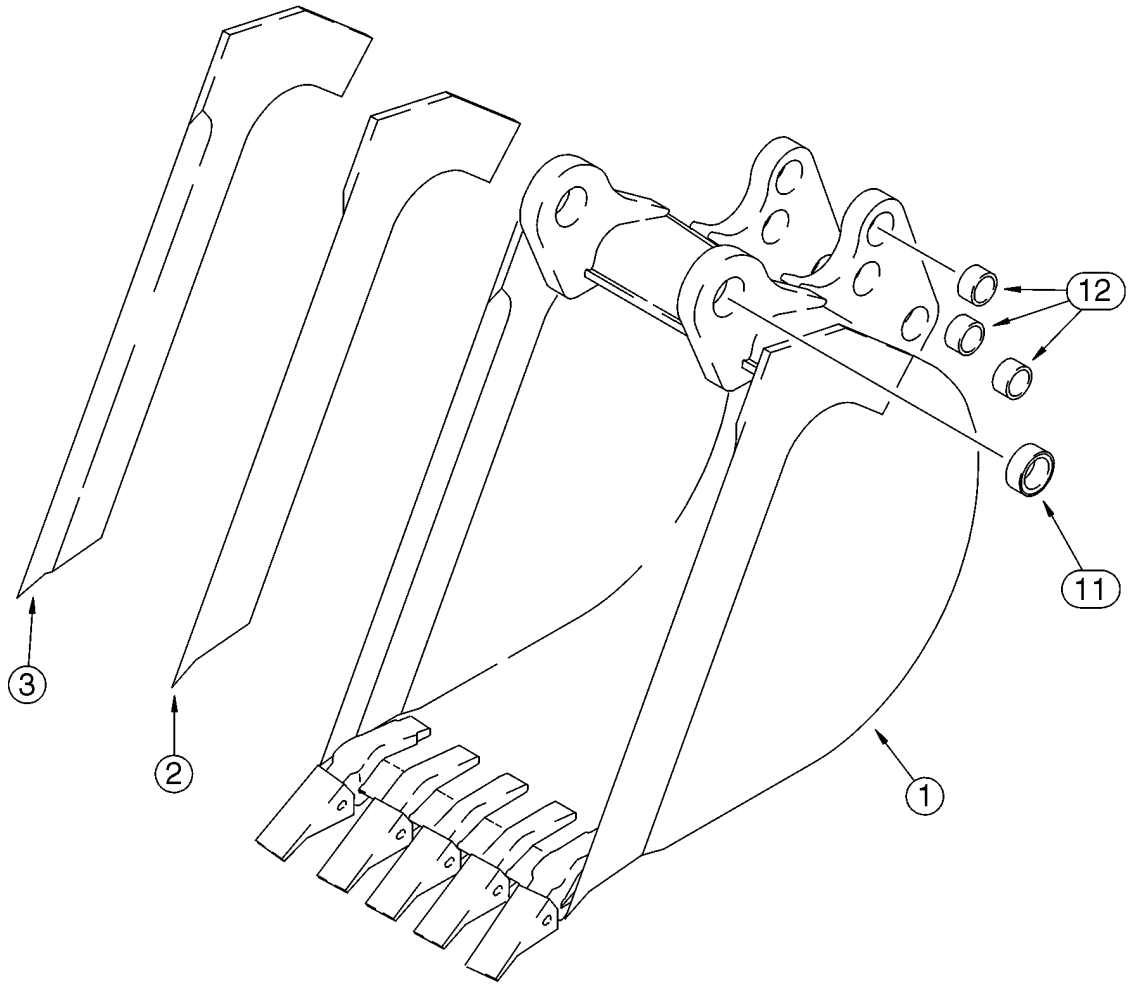


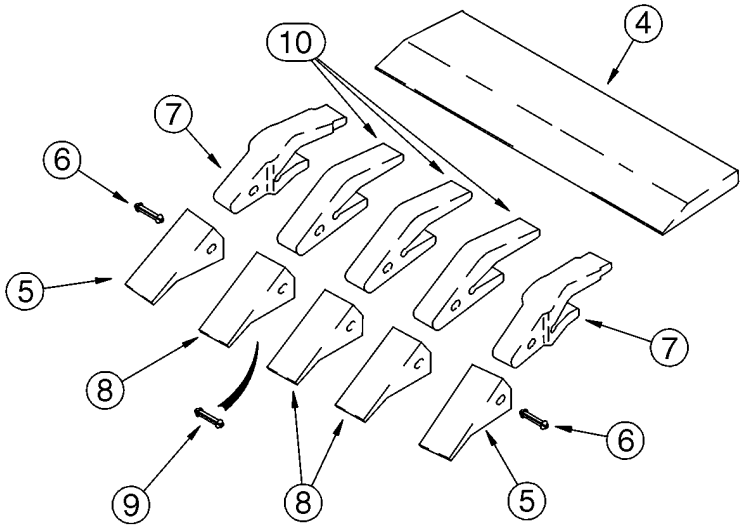


B9405159

HTTP://WWW.MINNPARBACKHOEPARTS.COM



GODET, PELLE RÉTRO UNIVERSELLE (610 MM (24 INCH) WIDE)

| REF | FN | PART NUMBER | YR/SN | QTY | DESCRIPTION |
|---|---|---|---|---|---|
| 1 | | 141232A2 | | 1 | GODET 610 mm (24 in); With 5 Teeth; Order Through Parts Marketing; Incl. Ref 2 - 12 |
| 2 | | 141234A1 | | 1 | LAME D'ATTAQUE Right-Hand |
| 3 | | 141233A1 | | 1 | LAME D'ATTAQUE Left-Hand |
| 4 | | D142012 | | 1 | LAME D'ATTAQUE |
| | | D139851 | | 2 | DENT Outer; Incl. Ref 5 - 7 |
| 5 | | D51750 | | 1 | POINTE |
| 6 | | 245466A1 | | 1 | GOUPILLE |
| 7 | | D138157 | | 1 | JAMBE |
| | | D139849 | | 3 | DENT Center; Incl. Ref 8 - 10; Order Ref 8 - 10 |
| 8 | | D51750 | | 1 | POINTE |
| 9 | | 245466A1 | | 1 | GOUPILLE |
| 10 | | D48212 | | 1 | JAMBE |
| 11 | | D37495 | | 2 | BAGUE |
| 12 | | D30933 | | 6 | BAGUE |

HTTP://WWW.MINNPARBACKHOEPARTS.COM

| 09-36 | | p1 | 01/04 |
|---|---|---|---|

CONTREPOIDS AVANT

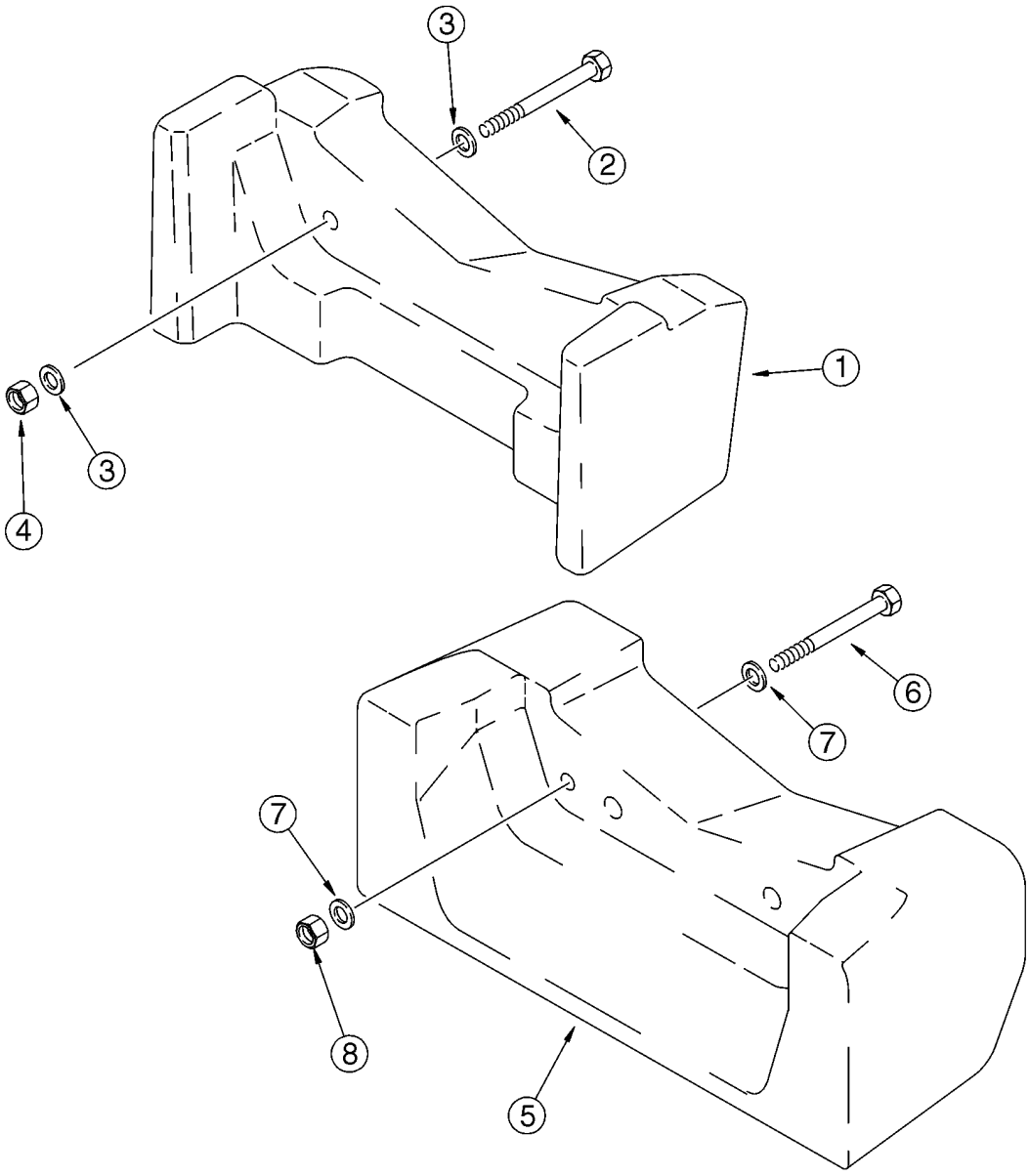


BT97N084

HTTP://WWW.MINNPARBACKHOEPARTS.COM



CONTREPOIDS AVANT

| REF | FN | PART NUMBER | YR/SN | QTY | DESCRIPTION |
|---|---|---|---|---|---|
| 1 | | 360867A1 | | 1 | POIDS 200 kg (441 lbs); If Used |
| 2 | | 827-20170 | | 2 | VIS |
| 3 | | 896-11020 | | 4 | RONDELLE 22 x 37 x 4 mm |
| 4 | | 829-1420 | | 2 | ECROU M20; 10 |
| 5 | | 87425456 | | 1 | MASSELOTTE 408 kg (900 lbs); If Used |
| 6 | | 827-20170 | | 2 | VIS |
| 7 | | 896-11020 | | 4 | RONDELLE 22 x 37 x 4 mm |
| 8 | | 829-1420 | | 2 | ECROU M20; 10 |

HTTP://WWW.MINNPARBACKHOEPARTS.COM

| 09-37 | | p1 | 01/04 |
|---|---|---|---|

CHASSIS / MONTAGES, COSSE - GRILLE, ADMISSION D'AIR

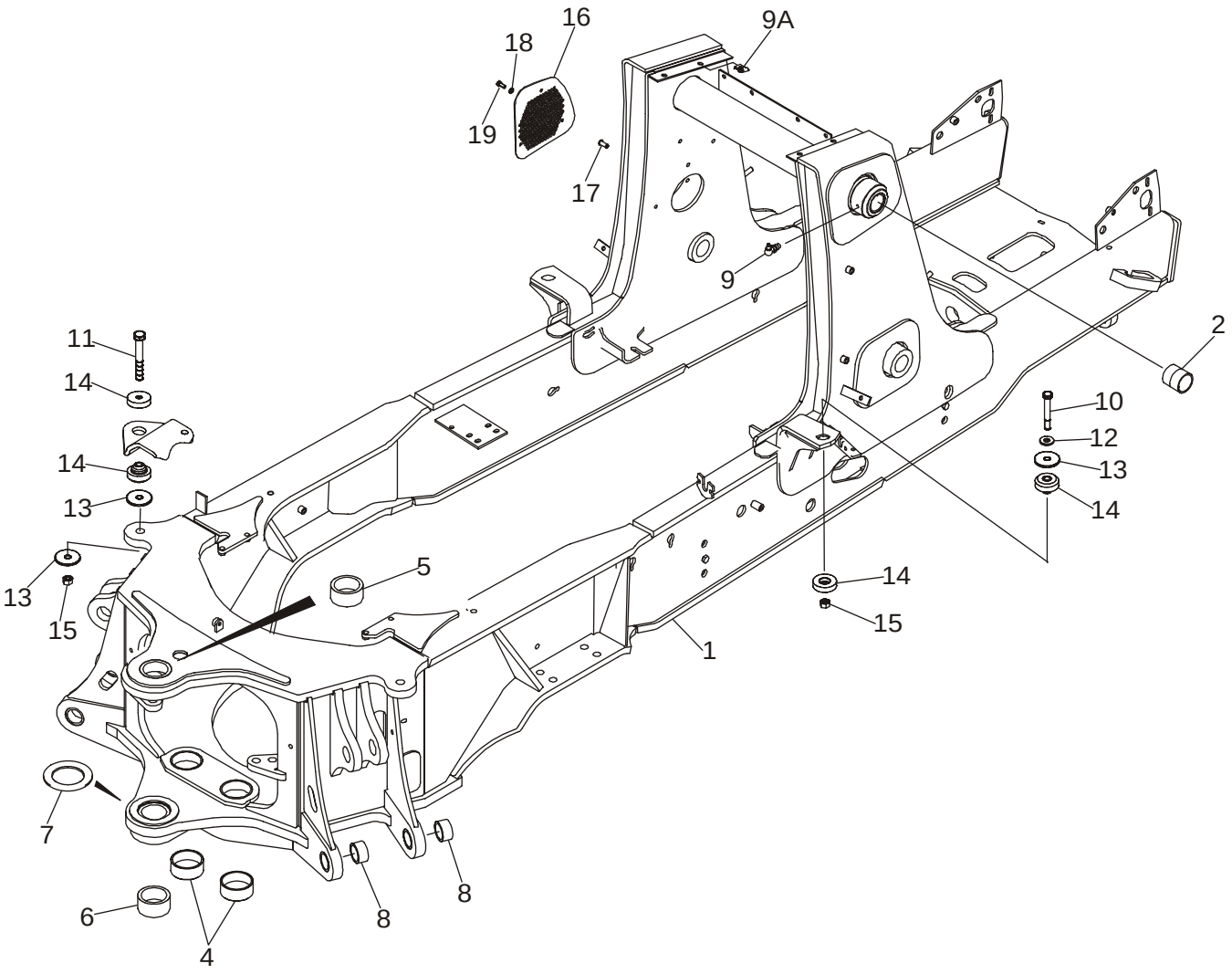


BS03J143

HTTP://WWW.MINNPARBACKHOEPARTS.COM



CHASSIS / MONTAGES, COSSE - GRILLE, ADMISSION D'AIR

| REF | FN | PART NUMBER | YR/SN | QTY | DESCRIPTION |
|---|---|---|---|---|---|
| 1 | | 87423004 | | 1 | CHASSIS Incl. Ref 2 - 8 |
| 2 | | 180427A1 | | 2 | BAGUE |
| 4 | | 114318A1 | | 2 | BAGUE |
| 5 | | D151069 | | 1 | BAGUE 70 x 10 x 32 mm |
| 6 | | D151070 | | 1 | BAGUE 70 x 10 x 38 mm |
| 7 | | 220413A1 | | 1 | ENTRETOISE 93 x 135 x 5 mm |
| 8 | | 107124A1 | | 4 | BAGUE |
| 9 | | 219-55 | | 2 | GRAISSEUR 90 deg, 1/8 PT x 27/32 |
| 9A | | 833-40310 | | 4 | ECROU J-Type, M10 |
| 10 | | 827-16085 | | 2 | BOULON M16 x 85; 10.9 |
| 11 | | 827-16100 | | 2 | BOULON M16 x 100; 10.9 |
| 12 | | 896-11016 | | 2 | RONDELLE 17,5 x 30 x 4 mm |
| 13 | | 186977A1 | | 6 | RONDELLE 4,5 mm thick |
| 14 | | 411892A1 | | 4 | PALIER CAOUTCHOUC M16; Operator Compartment Pod Mounts |
| 15 | | 829-1416 | | 4 | ECROU M16; 10 |
| 16 | | 87423668 | | 1 | ECRAN Air Inlet |
| 17 | | 87417383 | | 3 | INSERT FILETE Nut, M8 |
| 18 | | 895-11008 | | 3 | RONDELLE Flat, 8 mm |
| 19 | | 614-8030 | | 3 | VIS M8 x 30 |

HTTP://WWW.MINNPARBACKHOEPARTS.COM

| 09-38 | | p1 | 01/04 |
|---|---|---|---|

RÉSERVOIR, HUILE - COMPARTIMENT DE BATTERIES ET BOITE A OUTILS

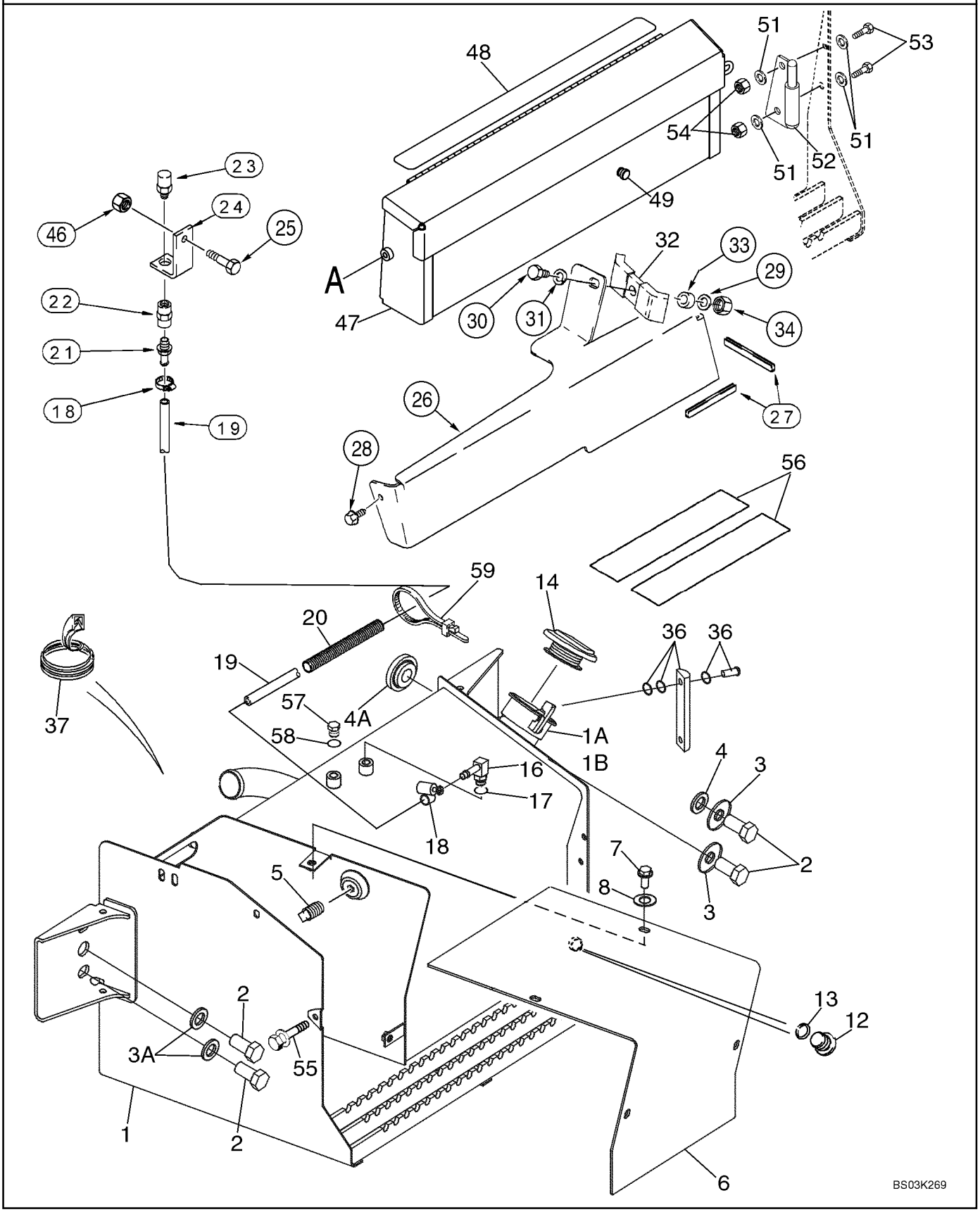

HTTP://WWW.MINNPARBACKHOEPARTS.COM



RÉSERVOIR, HUILE - COMPARTIMENT DE BATTERIES ET BOITE A OUTILS

| REF | FN | PART NUMBER | YR/SN | QTY | DESCRIPTION |
|---|---|---|---|---|---|
| 1 | | 87434745 | | 1 | RESERVOIR HUILE HYD. Right-Hand Side of Chassis; Incl. Ref 1A, 1B, 12 |
| 1A | | 230857A1 | | 1 | TAMIS-FILTRE Strainer; Fill Tube |
| 1B | | 440-1066 | | 2 | VIS No. 6 x 3/8 |
| 2 | | 627-20060 | | 4 | VIS M20 x 60; 10.9; Use With Loctite 345-49 |
| 3 | | 302358A1 | | 2 | RONDELLE Right-Hand |
| 3A | | 896-11020 | | 2 | RONDELLE 22 x 37 x 4 mm; Left-Hand |
| 4 | | 185926A1 | | 1 | ENTRETOISE Right-Hand; Upper |
| 4A | | 409472A1 | | 1 | ENTRETOISE Right-Hand; Lower |
| 5 | | 217-436 | | 1 | BOUCHON 3/8 PT; If Used |
| 6 | | 231656A1 | | 1 | COUVERCLE Battery |
| 7 | | 614-10020 | | 4 | VIS M10 x 20; Use With 345-56 Loctite No. 767 |
| 8 | | 495-21044 | | 4 | RONDELLE 7/16 x 1 x 5/64 |
| 12 | | 218-5211 | | 1 | BOUCHON 7/8 Or, Drain; Incl. Ref 13 |
| 13 | | 237-6010 | | 1 | JOINT TORIQUE 3/4 ID x 3/32, Boss Seal |
| 14 | | 138595A1 | | 1 | BOUCHON CAP |
| 16 | | 217-347 | | 1 | RACCORD 3/8 stem x 9/16 Or; Incl. Ref 17 |
| 17 | | 237-6006 | | 1 | JOINT TORIQUE 15/32 ID x 5/64, Boss Seal |
| 18 | | 214-1406 | | 2 | COLLIER 7/16 - 25/32 |
| 19 | | 393161A1 | | 1 | FLEXIBLE 912 mm (35-29/32 in); Vent |
| 20 | | 143219A1 | | 1 | PROTECTEUR 380 mm Sleeve |
| 21 | | 217-380 | | 1 | RACCORD 3/8 stem x PT; Use With 345-147 Sealant |
| 22 | | 217-1102 | | 1 | RACCORD 3/8 in |
| 23 | | 361776A1 | | 1 | RENIFLARD Use With 345-147 Sealant |
| 24 | | 122603A1 | | 1 | SUPPORT |
| 25 | | 711-10030 | | 1 | VIS M10 x 30 |
| 26 | | 399959A2 | | 1 | COUVERCLE Right-Hand Loader Lift Frame Tubing |
| 27 | | 191047A1 | | 1 | MOULURE 305 mm (12 in) lg; Apply 65 mm (2-9/16 in) Of Trim To Front Lower Edge and 240 mm (9-1/2 in) Of Trim To Outisde Lower Edge of Cover |
| 28 | | 307577A1 | | 1 | BOULON With Washer, M8 x 20 |
| 29 | | 895-11010 | | 1 | RONDELLE 11 x 21 x 2 mm |
| 30 | | 814-10045 | | 1 | VIS M10 x 45 |
| 31 | | 892-11010 | | 1 | RONDELLE FREIN M10 |
| 32 | | D138055 | | 1 | COLLIER |

HTTP://WWW.MINNPARBACKHOEPARTS.COM

| 09-38 | | p2 | 01/04 |
|---|---|---|---|

RÉSERVOIR, HUILE - COMPARTIMENT DE BATTERIES ET BOITE A OUTILS

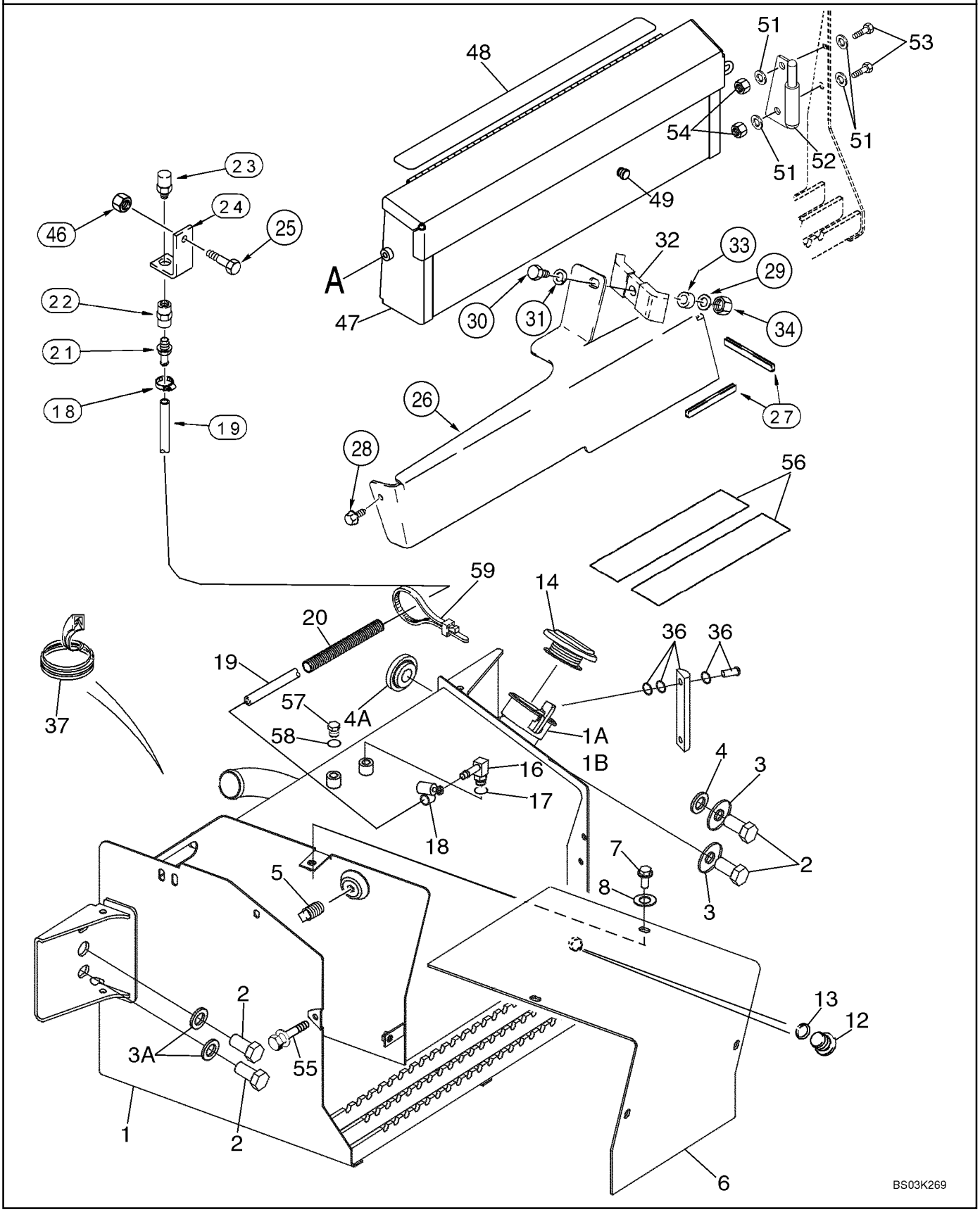

HTTP://WWW.MINNPARBACKHOEPARTS.COM



RÉSERVOIR, HUILE - COMPARTIMENT DE BATTERIES ET BOITE A OUTILS

| REF | FN | PART NUMBER | YR/SN | QTY | DESCRIPTION |
|---|---|---|---|---|---|
| 33 | | 120303A1 | | 1 | ENTRETOISE |
| 34 | | 829-1410 | | 1 | ECROU M10; 10.9 |
| 35 | | 345-49 | | 1 | LOCTITE 242; 1 ml |
| 36 | | 226456A1 | | 1 | JAUGE Aluminum; Includes (2) Hollow Head Bolts and (4) O-Rings; Component Parts Not Serviced Separately, Used With Ref 35 |
| 37 | | D40442 | | 1 | MOULURE 305 mm (12 in); Cut From F42827 |
| 46 | | 829-1410 | | 1 | ECROU M10; 10.9 |
| 47 | | 380807A4 | | 1 | CAISSE A OUTILS |
| 48 | | D80270 | | 1 | RUBAN 635 mm (25 in) |
| 49 | | L60224 | | 1 | AMORTISSEUR CAOUTCH. 1/2 in Hole; Bumper |
| 51 | | 895-11010 | | 4 | RONDELLE 11 x 21 x 2 mm |
| 52 | | 382202A2 | | 1 | CHARNIERE |
| 53 | | 614-10025 | | 2 | BOULON M10 x 25 |
| 54 | | 829-1410 | | 2 | ECROU M10; 10.9 |
| 55 | | 121856A1 | | 1 | VIS M10 x 30; Includes Washer |
| 56 | | D55216 | | 2 | TAMPON Non-Slip, 2 x 9 |
| 57 | | 218-5155 | | 1 | BOUCHON Hex, 9/16, Incl. Ref 58; Models Without Pilot Controls |
| 58 | | 237-6006 | | 1 | JOINT TORIQUE |
| 59 | | L18337 | | 2 | SANGLE |

HTTP://WWW.MINNPARBACKHOEPARTS.COM

| 09-39 | | p1 | 01/04 |
|---|---|---|---|

BOÎTIER DE RADIATEUR

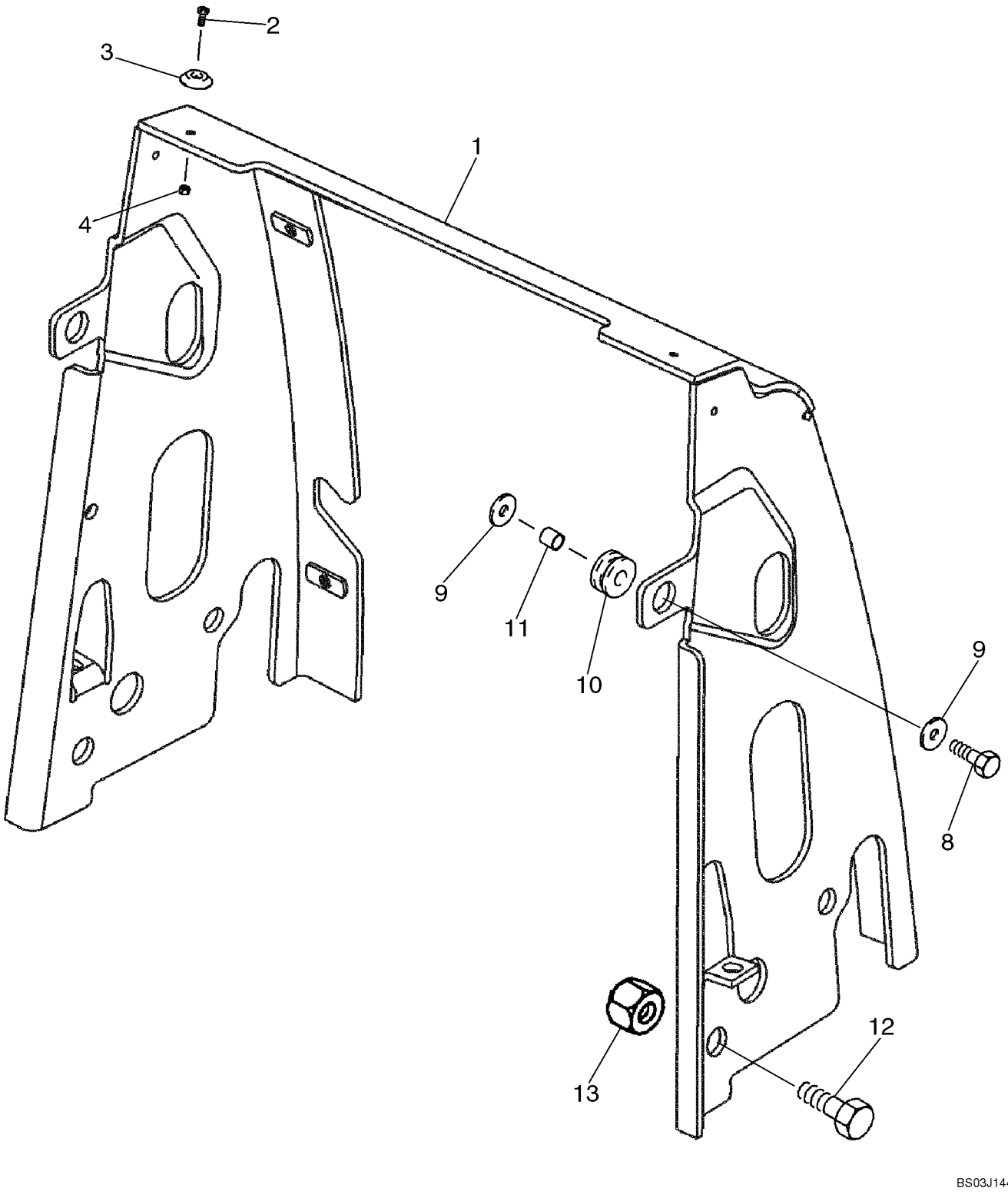

HTTP://WWW.MINNPARBACKHOEPARTS.COM



BOÎTIER DE RADIATEUR

| REF | FN | PART NUMBER | YR/SN | QTY | DESCRIPTION |
|---|---|---|---|---|---|
| 1 | | 87433659 | | 1 | PLAQUE (ASSEMBLEE) |
| 2 | | 440-11010 | | 2 | VIS No. 10 x 5/8 |
| 3 | | 109879A1 | | 2 | ENTRETOISE Hood; Plastic |
| 4 | | 231-14109 | | 2 | ECROU No. 10 |
| 8 | | 614-10035 | | 2 | VIS M10 x 35 |
| 9 | | K691987 | | 4 | RONDELLE Flat, 10 mm |
| 10 | | 86982682 | | 2 | PASSE-FIL Rubber Grommet |
| 11 | | D76209 | | 2 | ENTRETOISE |
| 12 | | 614-20030 | | 4 | VIS M20 x 30 |
| 13 | | 829-1420 | | 4 | ECROU M20; 10 |

HTTP://WWW.MINNPARBACKHOEPARTS.COM

| 09-40 | | p1 | 01/04 |
|---|---|---|---|

CAPOT - PANNEAUX LATERAUX

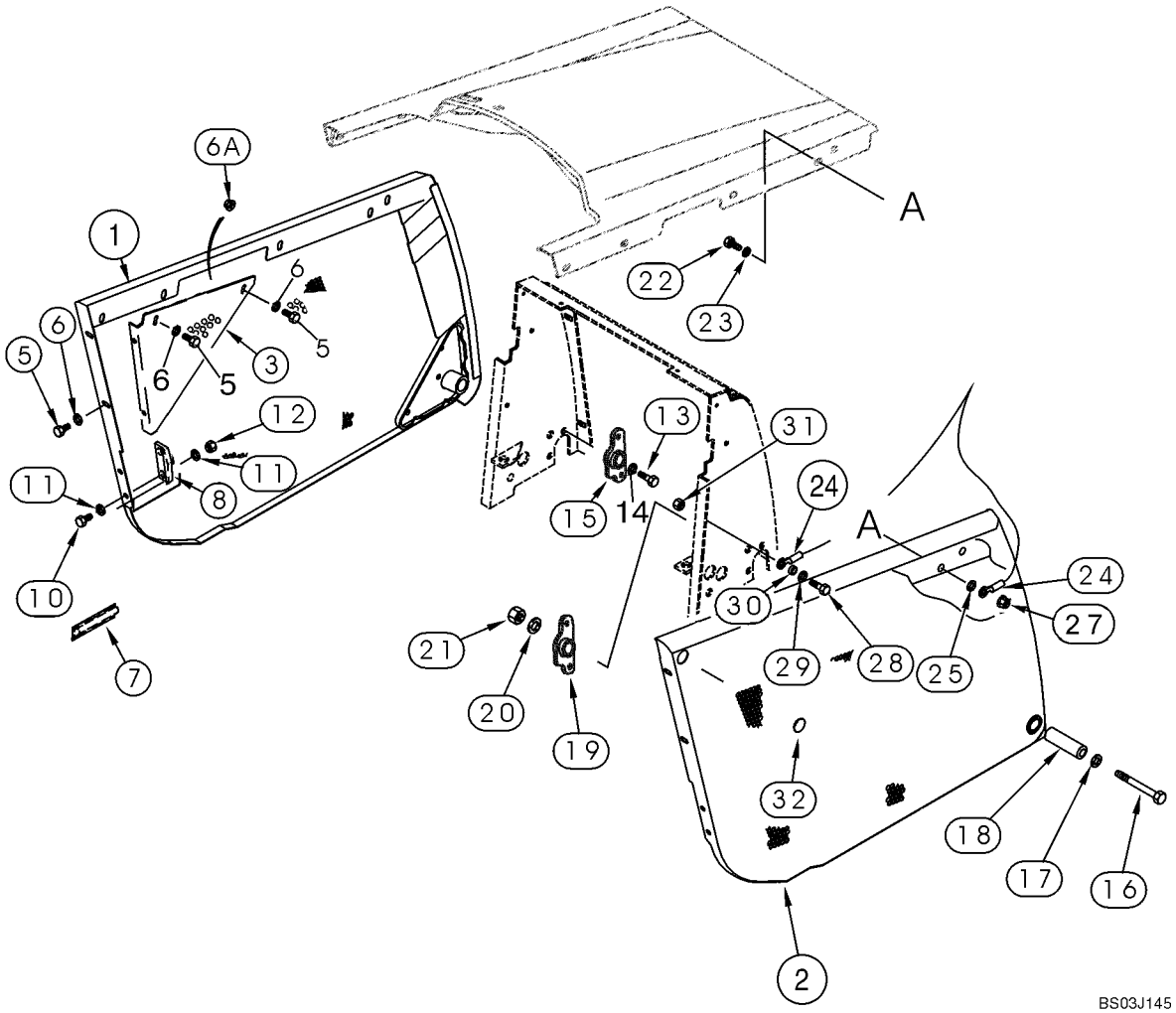

HTTP://WWW.MINNPARBACKHOEPARTS.COM



CAPOT - PANNEAUX LATERAUX

| REF | FN | PART NUMBER | YR/SN | QTY | DESCRIPTION |
|---|---|---|---|---|---|
| 1 | | 339022A3 | | 1 | PANNEAU LATÉRAL Left-Hand Side |
| 2 | | 339021A2 | | 1 | PANNEAU LATÉRAL Right-Hand Side |
| 3 | | 362609A1 | | 1 | JAMBE-DE-FORCE Left-Hand |
| 4 | | 362607A1 | | 1 | JAMBE-DE-FORCE Right-Hand; Not Illustrated |
| 5 | | 614-10025 | | 8 | BOULON M10 x 25 |
| 6 | | 895-11010 | | 8 | RONDELLE 11 x 21 x 2 mm |
| 6A | | 825-2410 | | 4 | ECROU M10 |
| 7 | | 183168A1 | | 1 | POIGNÉE Left-Hand |
| 8 | | D143715 | | 1 | SUPPORT Guide, Left-Hand |
| 9 | | D143714 | | 1 | SUPPORT Guide, Right-Hand; Not Illustrated |
| 10 | | 614-10025 | | 4 | BOULON M10 x 25 |
| 11 | | 895-11010 | | 8 | RONDELLE 11 x 21 x 2 mm |
| 12 | | 832-10410 | | 4 | ECROU M10 |
| 13 | | 614-10020 | | 4 | VIS M10 x 20 |
| 14 | | 895-11010 | | 4 | RONDELLE Flat, 10 mm |
| 15 | | 87407769 | | 1 | PIVOT Left-Hand |
| 16 | | 814-12100 | | 2 | VIS M12 x 100 |
| 17 | | 896-15012 | | 2 | RONDELLE 13,5 x 28 x 4 mm |
| 18 | | 87412060 | | 2 | TUBE Spacer |
| 19 | | 87407770 | | 1 | PIVOT Right-Hand |
| 20 | | 896-15012 | | 2 | RONDELLE 13,5 x 28 x 4 mm |
| 21 | | 829-1412 | | 2 | ECROU M12; 10 |
| 22 | | 614-10025 | | 1 | BOULON M10 x 25 |
| 23 | | 895-11010 | | 1 | RONDELLE 11 x 21 x 2 mm |
| 24 | | 144908A2 | | 1 | CABLE |
| 25 | | D143417 | | 1 | ENTRETOISE |
| 27 | | 825-2410 | | 1 | ECROU M10 |
| 28 | | 614-10030 | | 1 | VIS M10 x 30 |
| 29 | | 895-11010 | | 1 | RONDELLE 11 x 21 x 2 mm |
| 30 | | 396605A1 | | 1 | ENTRETOISE |
| 31 | | 825-2410 | | 1 | ECROU M10 |
| 32 | | D140267 | | 2 | BOUCHON |

HTTP://WWW.MINNPARBACKHOEPARTS.COM

| 09-41 | | p1 | 01/04 |
|---|---|---|---|

CAPOT - CALANDRE

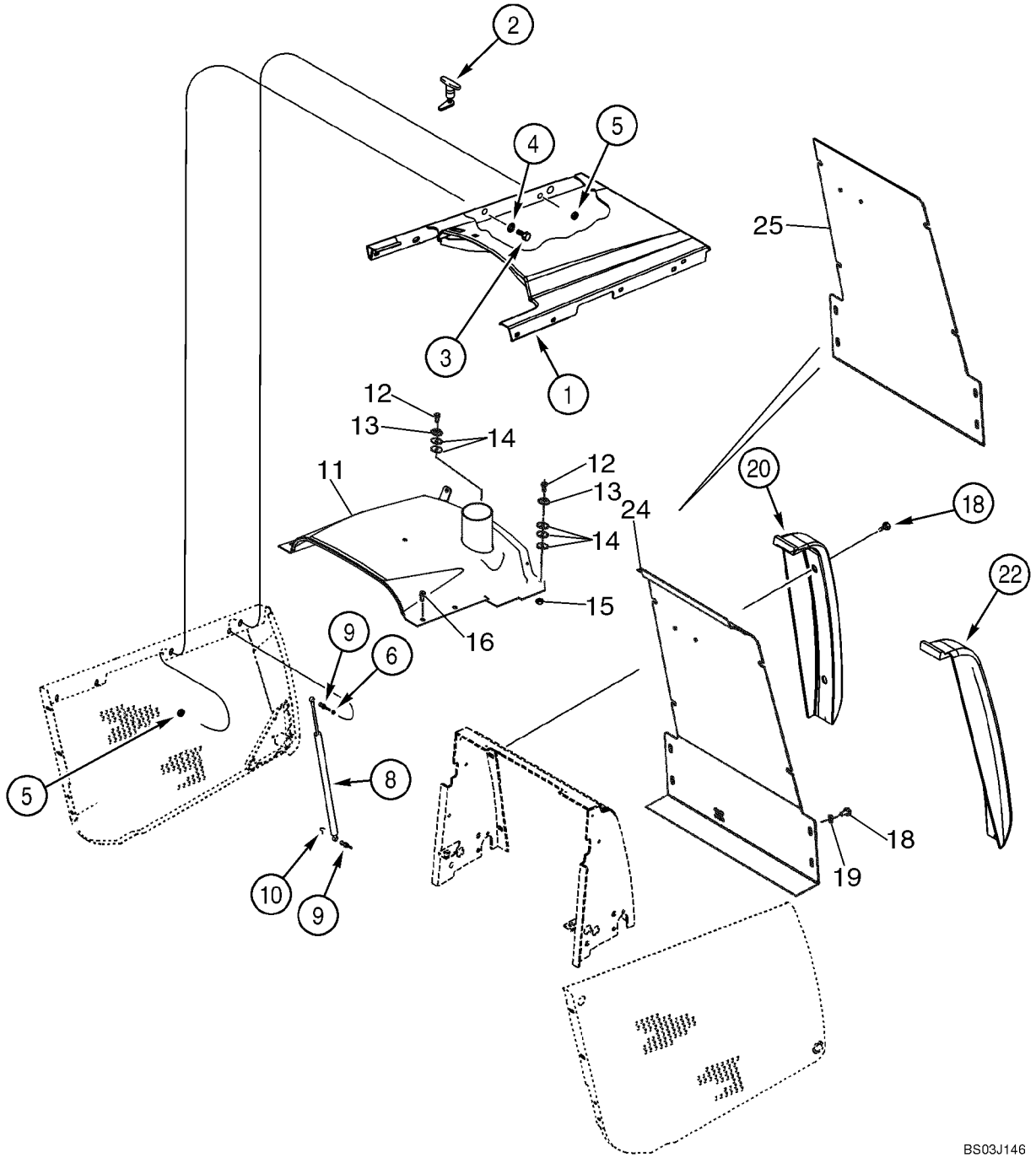

HTTP://WWW.MINNPARBACKHOEPARTS.COM



CAPOT - CALANDRE

| REF | FN | PART NUMBER | YR/SN | QTY | DESCRIPTION |
|---|---|---|---|---|---|
| 1 | | 362340A6 | | 1 | TÔLE DE FERMETURE Engine; Tilt |
| 2 | | 175599A1 | | 1 | LOQUET |
| 3 | | 614-10025 | | 3 | BOULON M10 x 25 |
| 4 | | 895-11010 | | 3 | RONDELLE 11 x 21 x 2 mm |
| 5 | | 825-2410 | | 5 | ECROU M10 |
| 6 | | 895-11010 | | 2 | RONDELLE 11 x 21 x 2 mm |
| 8 | | 114980A1 | | 2 | AMORTISSEUR Spring; Counterbalance |
| 9 | | 139363A1 | | 4 | ROTULE Stud |
| 10 | | F44883 | | 4 | CLIP |
| 11 | | 87439448 | | 1 | PLAQUE (ASSEMBLEE) Fixed Hood |
| 12 | | 440-11012 | | 3 | VIS No. 10 x 3/4 |
| 13 | | 109879A1 | | 3 | ENTRETOISE |
| 14 | | 185325A1 | | 8 | ENTRETOISE |
| 15 | | 231-14109 | | 3 | ECROU No. 10 |
| 16 | | 392828A2 | | 4 | BOULON With Washer, M10 x 40 |
| 18 | | 392828A2 | | 8 | BOULON With Washer, M10 x 40 |
| 19 | | 87423817 | | 4 | RONDELLE |
| 20 | | 381927A1 | | 1 | PARE-CHOCS Left-Hand |
| 22 | | 381926A1 | | 1 | PARE-CHOCS Right-Hand |
| 24 | | 87402618 | | 1 | ECRAN GRILLE |
| 25 | | 87432387 | | 1 | ECRAN Chaff Screen |

HTTP://WWW.MINNPARBACKHOEPARTS.COM

| 09-42 | | p1 | 01/04 |
|---|---|---|---|

PLAQUES, PLANCHER - TAPIS DE SOL

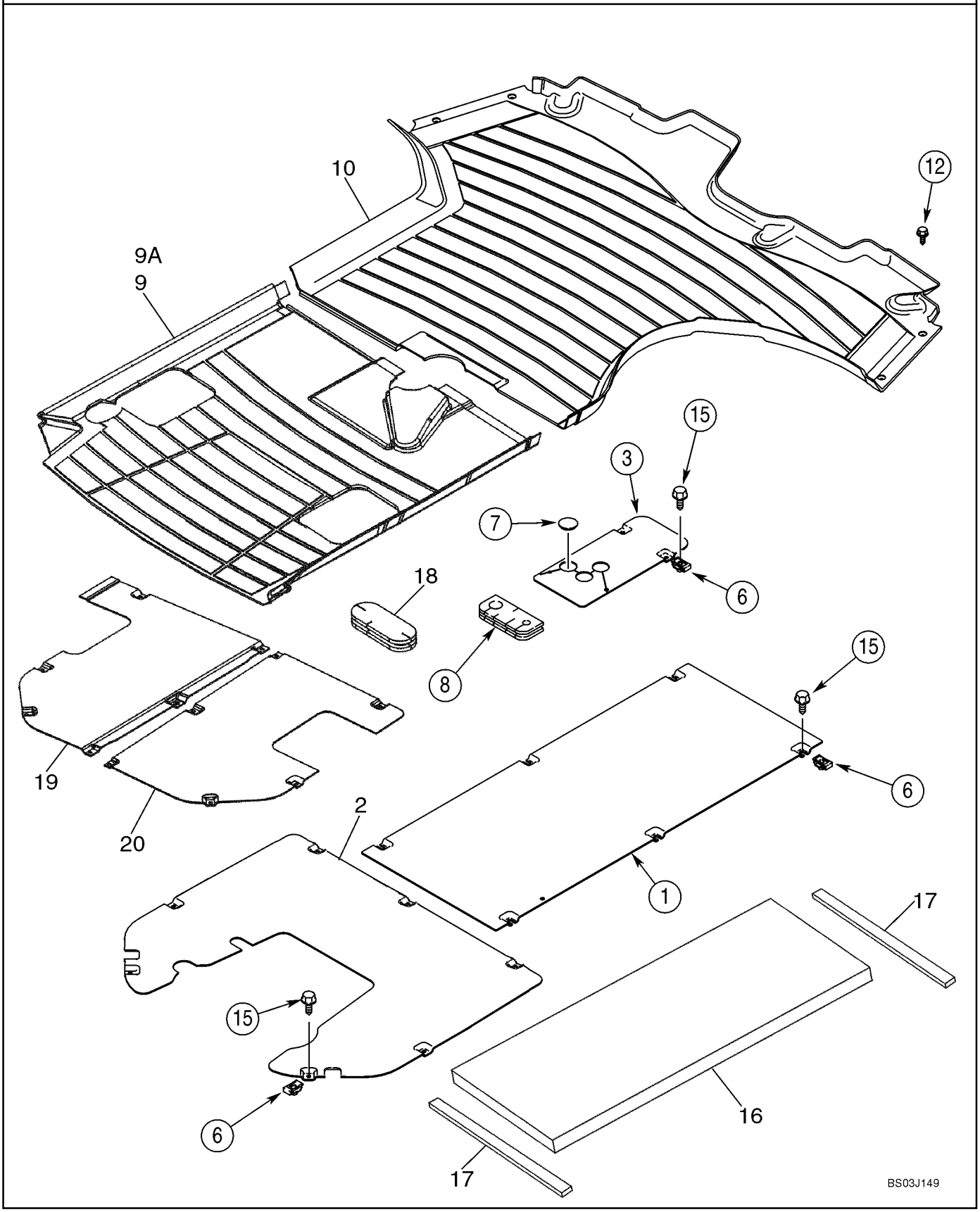

HTTP://WWW.MINNPARBACKHOEPARTS.COM



PLAQUES, PLANCHER - TAPIS DE SOL

| REF | FN | PART NUMBER | YR/SN | QTY | DESCRIPTION |
|---|---|---|---|---|---|
| 1 | | 355984A2 | | 1 | PLAQUE, GRANDE Front |
| 2 | | 86983190 | | 1 | PLAQUETTE Rear; Without Pilot Controls |
| 3 | | 87436076 | | 1 | PLAQUETTE Loader Control Lever |
| 6 | | 833-40406 | | 16-17 | ECROU M6 |
| 7 | | 353-422 | | 1 | BOUCHON Models Without Clam Bucket |
| 8 | | 393623A1 | | 1 | BLOC Floor |
| 9 | | 86983325 | | 1 | TAPIS DE PLANCHER Rear, Canopy Models, Without Pilot Controls |
| 9A | | 86983269 | | 1 | TAPIS DE PLANCHER Rear, Canopy Models, With Pilot Controls; Not Illustrated |
| 10 | | 390551A2 | | 1 | TAPIS DE PLANCHER Front, Cab or Canopy Models |
| 12 | | 280-16516 | | 4 | VIS Hex Washer Head, No. 10 x 1, Self-Tapping |
| 15 | | 233724A1 | | 16-17 | VIS M6 x 25 |
| 16 | | 411074A1 | | 1 | JOINT Cab Models |
| 17 | | 181981A1 | | 2 | JOINT Foam; Adhesive Back; Cab Models |
| 18 | | 87407927 | | 1 | PLOT SUSPENSION Rubber Grommet |
| 19 | | 87434049 | | 1 | PLAQUETTE Rear, With Pilot Controls |
| 20 | | 87434050 | | 1 | PLAQUETTE Rear, With Pilot Controls |

HTTP://WWW.MINNPARBACKHOEPARTS.COM



GARDE-BOUE, GAUCHE - PANNEAU, FERMETURE ARRIERE (VIDE-POCHES AVEC PORTE-GOBELET)

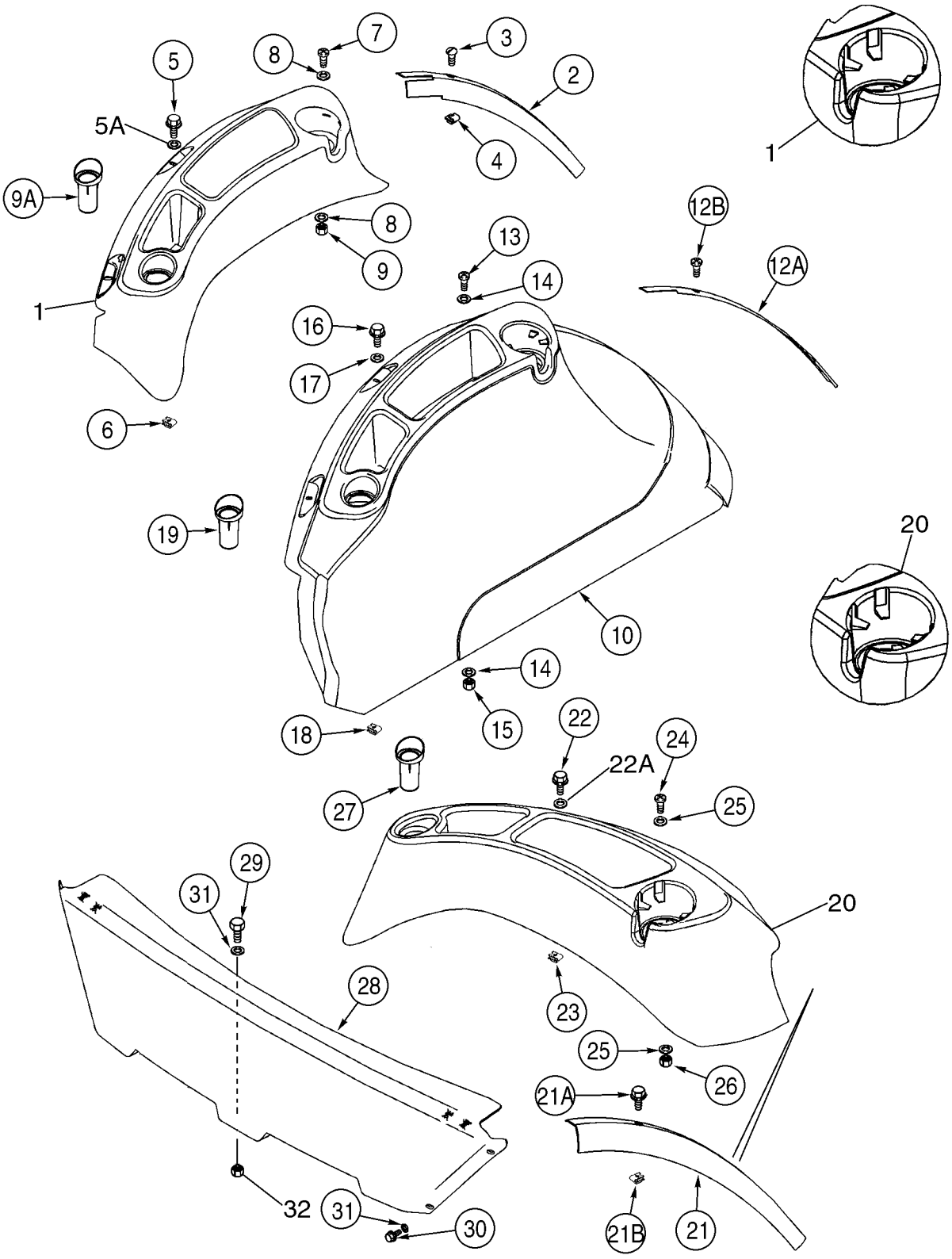

HTTP://WWW.MINNPARBACKHOEPARTS.COM



GARDE-BOUE, GAUCHE - PANNEAU, FERMETURE ARRIERE (VIDE-POCHES AVEC PORTE-GOBELET)

| REF | FN | PART NUMBER | YR/SN | QTY | DESCRIPTION |
|---|---|---|---|---|---|
| 1 | | 86992247 | | 1 | PLATEAU Cab Models, With Standard Interior; Includes 86992284, 400077A1 |
| | | NSS | | 1 | NON FOURNI SEPAREMENT Tray |
| | | 86992284 | | 4 | PARE-CHOCS |
| | | 400077A1 | | 1 | MARCHANDISE AU METRE 1300 mm (51-3/16 in); Cut From 1977224C1 |
| 2 | | 397026A3 | | 1 | PROFIL PROTECTEUR Trim, Left-Hand Fender, Cab Models With Standard Interior |
| 3 | | 398113A1 | | 3 | VIS No. 10 x 3/4 |
| 4 | | 131-869 | | 3 | ECROU No. 10 |
| 5 | | 555-2 | | 2 | VIS M6 x 20 |
| 5A | | 895-30109 | | 2 | RONDELLE 6,6 x 25 x 1,6 mm |
| 6 | | 833-40406 | | 2 | ECROU M6 |
| 7 | | 140-117 | | 2 | VIS No. 10 x 1 |
| 8 | | 495-61020 | | 4 | RONDELLE 13/64 x 3/4 x 1/16 |
| 9 | | 231-14109 | | 2 | ECROU No. 10 |
| 9A | | 378742A3 | | 1 | INSERT Swing Pin Holder |
| 10 | | 86992245 | | 1 | COUVERCLE (ASSEMBLE) Cab Models With Deluxe Interior; Includes (4) 86992284 Bumpers |
| 12A | | 397774A3 | | 1 | RUBAN Deluxe Interior |
| 12B | | 398113A1 | | 3 | VIS No. 10 x 3/4 |
| 13 | | 140-117 | | 2 | VIS No. 10 x 1 |
| 14 | | 495-61020 | | 4 | RONDELLE 13/64 x 3/4 x 1/16 |
| 15 | | 231-14109 | | 2 | ECROU No. 10 |
| 16 | | 555-2 | | 2 | VIS M6 x 20 |
| 17 | | 895-30109 | | 2 | RONDELLE |
| 18 | | 833-40406 | | 2 | ECROU M6 |
| 19 | | 378742A3 | | 1 | INSERT Swing Pin Holder |
| 20 | | 86992243 | | 1 | PLATEAU (ASSEMBLE) Canopy Models; Includes 86992284, 4000077A1 |
| | | NSS | | 1 | NON FOURNI SEPAREMENT Tray |
| | | 86992284 | | 4 | PARE-CHOCS |
| | | 400077A1 | | 1 | MARCHANDISE AU METRE 1300 mm (51-3/16 in); Cut From 1977224C1 |
| 21 | | 397025A2 | | 1 | PROFIL PROTECTEUR Trim, Canopy Models |
| 21A | | 398113A1 | | 3 | VIS No. 10 x 3/4 |

HTTP://WWW.MINNPARBACKHOEPARTS.COM



GARDE-BOUE, GAUCHE - PANNEAU, FERMETURE ARRIERE (VIDE-POCHES AVEC PORTE-GOBELET)

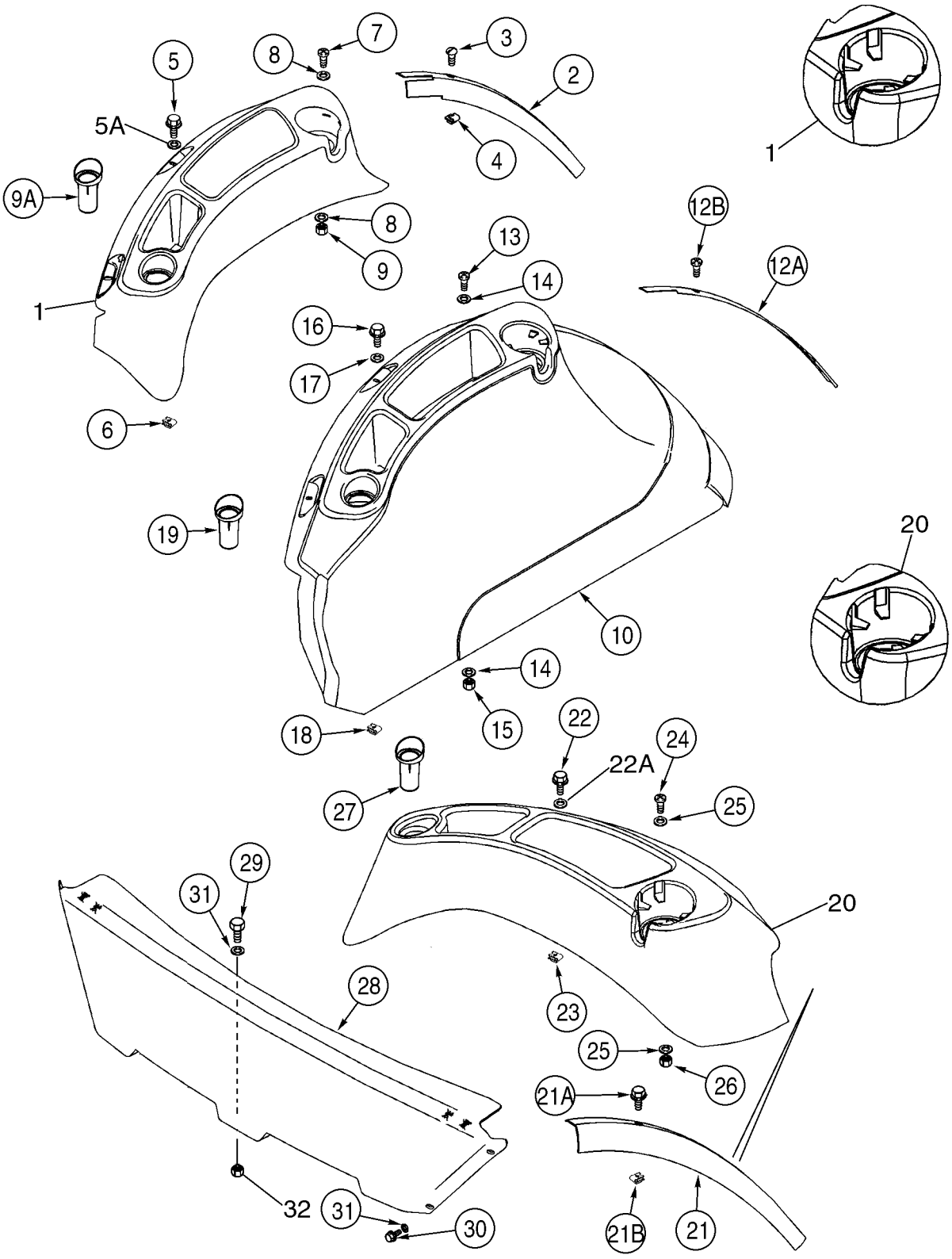

HTTP://WWW.MINNPARBACKHOEPARTS.COM



GARDE-BOUE, GAUCHE - PANNEAU, FERMETURE ARRIERE (VIDE-POCHES AVEC PORTE-GOBELET)

| REF | FN | PART NUMBER | YR/SN | QTY | DESCRIPTION |
|---|---|---|---|---|---|
| 21B | | 131-869 | | 3 | ECROU No. 10 |
| 22 | | 555-2 | | 2 | VIS M6 x 20 |
| 22A | | 895-30109 | | 2 | RONDELLE 6,6 x 25 x 1,6 mm |
| 23 | | 833-40406 | | 2 | ECROU M6 |
| 24 | | 140-117 | | 2 | VIS No. 10 x 1 |
| 25 | | 495-61020 | | 4 | RONDELLE 13/64 x 3/4 x 1/16 |
| 26 | | 231-14109 | | 2 | ECROU No. 10 |
| 27 | | 378742A3 | | 1 | INSERT Swing Pin Holder |
| 28 | | 86992977 | | 1 | PANNEAU Rear Closure Panel; Canopy Models |
| 29 | | 614-8025 | | 1 | VIS M8 x 25 |
| 30 | | 781-24820 | | 4 | VIS Flange, M8 x 20 |
| 31 | | 895-15008 | | 5 | RONDELLE 9 x 16 x 1,6 mm |
| 32 | | 832-10408 | | 1 | ECROU M8 |

HTTP://WWW.MINNPARBACKHOEPARTS.COM

| 09-44 | | p1 | 01/04 |
|---|---|---|---|

EXTENSION DE GARDE BOUE

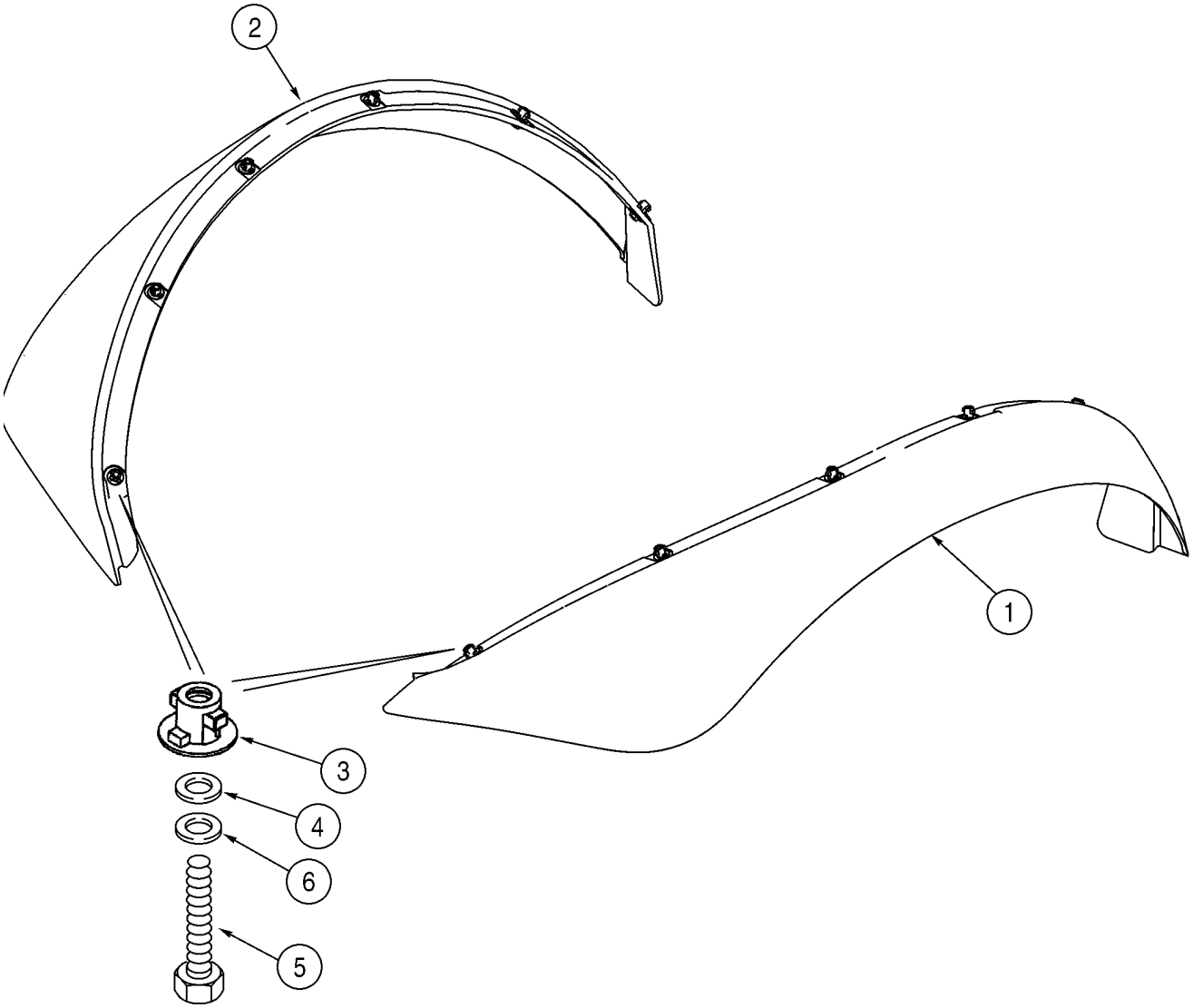


BC00F002

HTTP://WWW.MINNPARBACKHOEPARTS.COM



EXTENSION DE GARDE BOUE

| REF | FN | PART NUMBER | YR/SN | QTY | DESCRIPTION |
|---|---|---|---|---|---|
| 1 | | 340998A3 | | 1 | GARDE-BOUE Right-Hand |
| 2 | | 340997A3 | | 1 | GARDE-BOUE Left-Hand |
| 3 | | 345231A1 | | 12 | ATTACHE |
| 4 | | 496-41041 | | 12 | RONDELLE 13/32 x 1-1/8 x 9/64 |
| 5 | | 614-8030 | | 12 | VIS M8 x 30 |
| 6 | | 892-11008 | | 12 | RONDELLE 8 mm; Lock |

HTTP://WWW.MINNPARBACKHOEPARTS.COM

| 09-45 | | p1 | 01/04 |
|---|---|---|---|

GARDE-BOUE

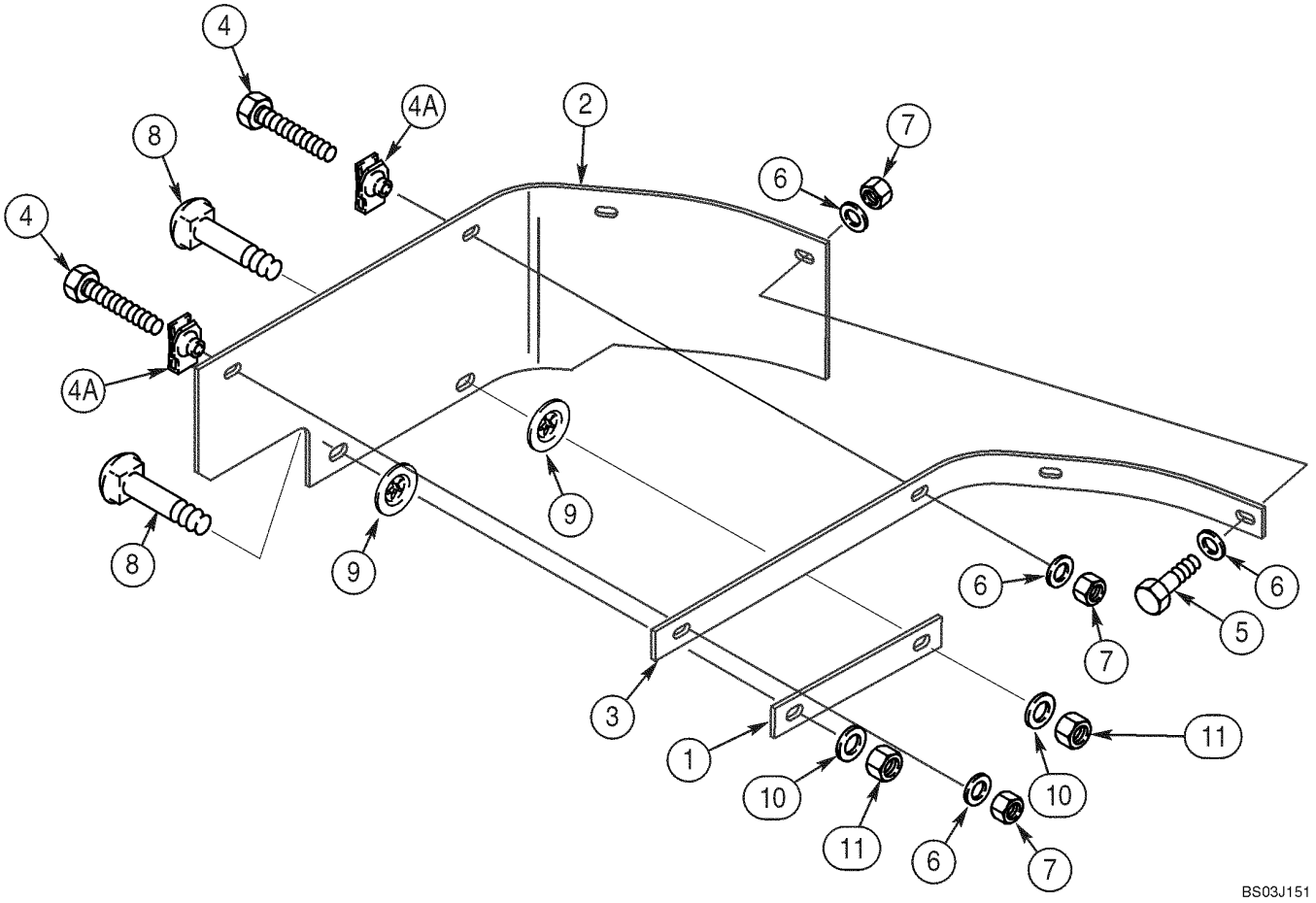

HTTP://WWW.MINNPARBACKHOEPARTS.COM



GARDE-BOUE

| REF | FN | PART NUMBER | YR/SN | QTY | DESCRIPTION |
|---|---|---|---|---|---|
| 1 | | 362557A1 | | 1 | RUBAN Plate |
| 2 | | 362556A2 | | 1 | GARANT Mounts At Right-Hand Fender |
| 3 | | 362558A1 | | 1 | RUBAN Angle |
| 4 | | 614-8040 | | 2 | VIS M8 x 40 |
| 4A | | 833-40408 | | 2 | ECROU M8 |
| 5 | | 614-8030 | | 2 | VIS M8 x 30 |
| 6 | | 495-21038 | | 6 | RONDELLE 3/8 x 7/8 x 3/32 |
| 7 | | 832-10408 | | 4 | ECROU M8 |
| 8 | | 711-10040 | | 2 | BOULON M10 x 40 |
| 9 | | 368417A1 | | 2 | RONDELLE |
| 10 | | 895-11010 | | 2 | RONDELLE 11 x 21 x 2 mm |
| 11 | | 832-10410 | | 2 | ECROU M10 |

HTTP://WWW.MINNPARBACKHOEPARTS.COM



SIEGE - SUPPORT

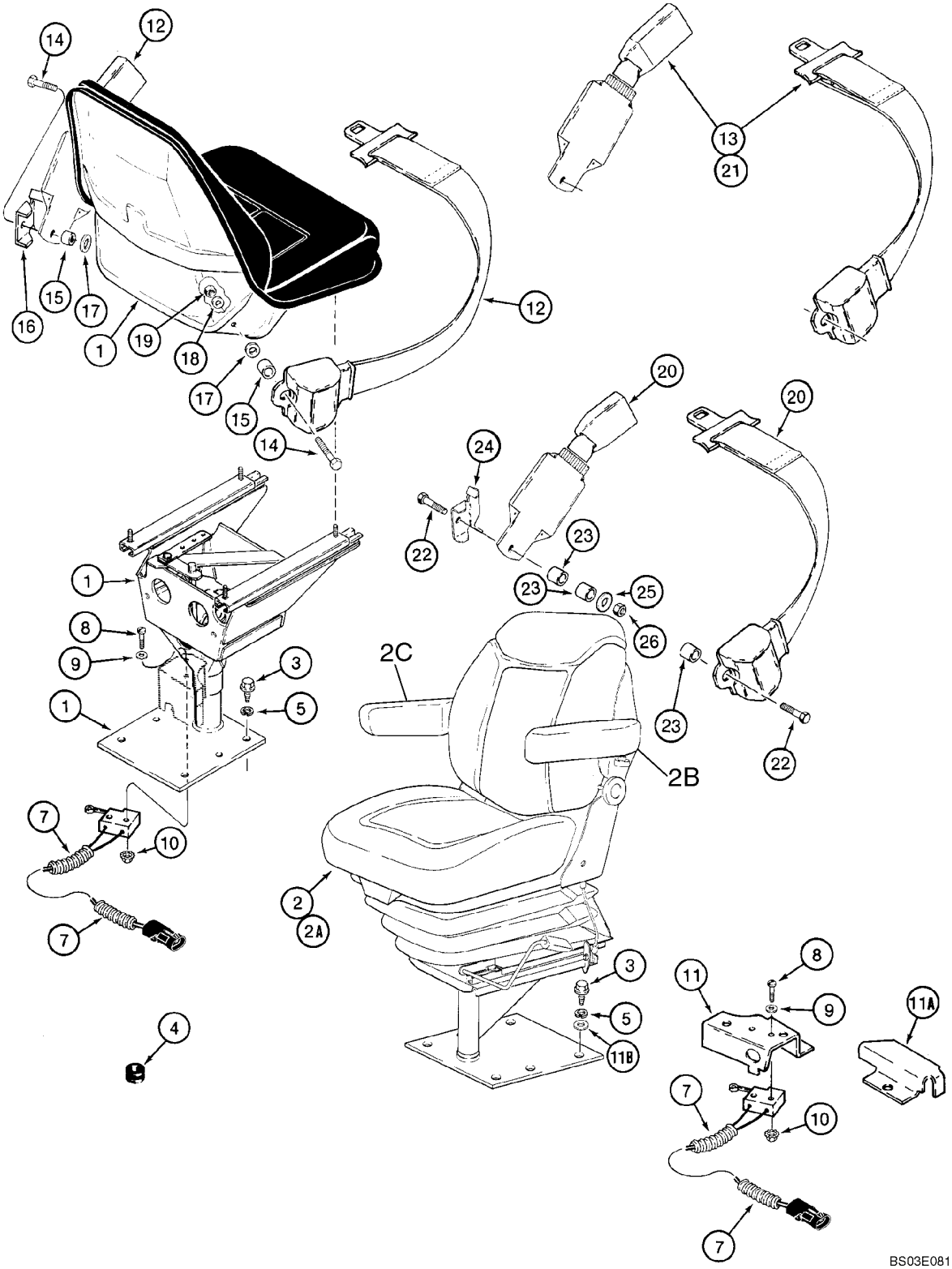

HTTP://WWW.MINNPARBACKHOEPARTS.COM



SIEGE - SUPPORT

| REF | FN | PART NUMBER | YR/SN | QTY | DESCRIPTION |
|---|---|---|---|---|---|
| 1 | | 397132A1 | | 1 | SIEGE (ASSEMBLE) Standard, Vinyl, Without Armrest, Includes Seat, Pedestal, and Support, See Figures 09-47, 09-48 |
| 2 | | 397137A1 | | 1 | SIEGE (ASSEMBLE) Air Suspension, Cloth, Deluxe, With Armrests On Figure 09-51, See Figures 09-51, 09-52 |
| 2A | | 397136A2 | | 1 | SIEGE (ASSEMBLE) Suspension, Cloth, Without Armrests, Includes Seat, Suspension, and Pedestal, See Figures 09-49, 09-50; Order 397407A1 Service Kit For Seat Assy With Armrests |
| 2A | | 397134A2 | | 1 | SIEGE (ASSEMBLE) Suspension, Vinyl, Without Armrests, Includes Seat, Suspension, and Pedestal, See Figures 09-49, 09-50; Order 397408A1 Service Kit For Seat Assy With Armrests |
| 2B | | 292262A1 | | 1 | ACCOUDOIR (ASSEMBLE) Kit, Left-Hand |
| 2C | | 292263A2 | | 1 | ACCOUDOIR (ASSEMBLE) Kit, Right-Hand |
| 3 | | 604-12030 | | 4 | BOULON M12 x 30 |
| 4 | | 248-2373 | | 1 | PASSE-FIL 1-1/4 |
| 5 | | 896-15012 | | 4 | RONDELLE 13,5 x 28 x 4 mm |
| 7 | | 118769A1 | | 1 | CONTACTEUR Limit Switch |
| 8 | | 470-10620 | | 2 | VIS No. 6 x 1-1/4 |
| 9 | | 495-31016 | | 2 | RONDELLE 5/32 x 3/8 x 3/64 |
| 10 | | 193-1003 | | 2 | ECROU No. 6 |
| 11 | | 119211A1 | | 1 | PATTE FIXATION Switch Mounting, Suspension Seat |
| 11A | | 186351A1 | | 1 | GARANT Harness |
| 11B | | 896-11012 | | 1 | RONDELLE Flat, 13,5 x 24 x 3 mm |
| 12 | | 87408889 | | 1 | CEINTURE DE SÉCURITÉ 51 mm (2 in), If Used; Standard Seat Belt Mounting |
| 13 | | 87408888 | | 1 | CEINTURE DE SÉCURITÉ 76 mm (3 in), Retractable, If Used; Standard Seat Belt Mounting |
| 14 | | 414-724 | | 2 | VIS 7/16 x 1-1/2; 5 |
| 15 | | D150391 | | 2 | ENTRETOISE |
| 16 | | D150392 | | 1 | PATTE FIXATION Left-Hand |
| 17 | | 495-81169 | | 2 | RONDELLE 17/32 x 2,5 x 1/8, Not Used On Deluxe Air Suspension Seat |

HTTP://WWW.MINNPARBACKHOEPARTS.COM



SIEGE - SUPPORT

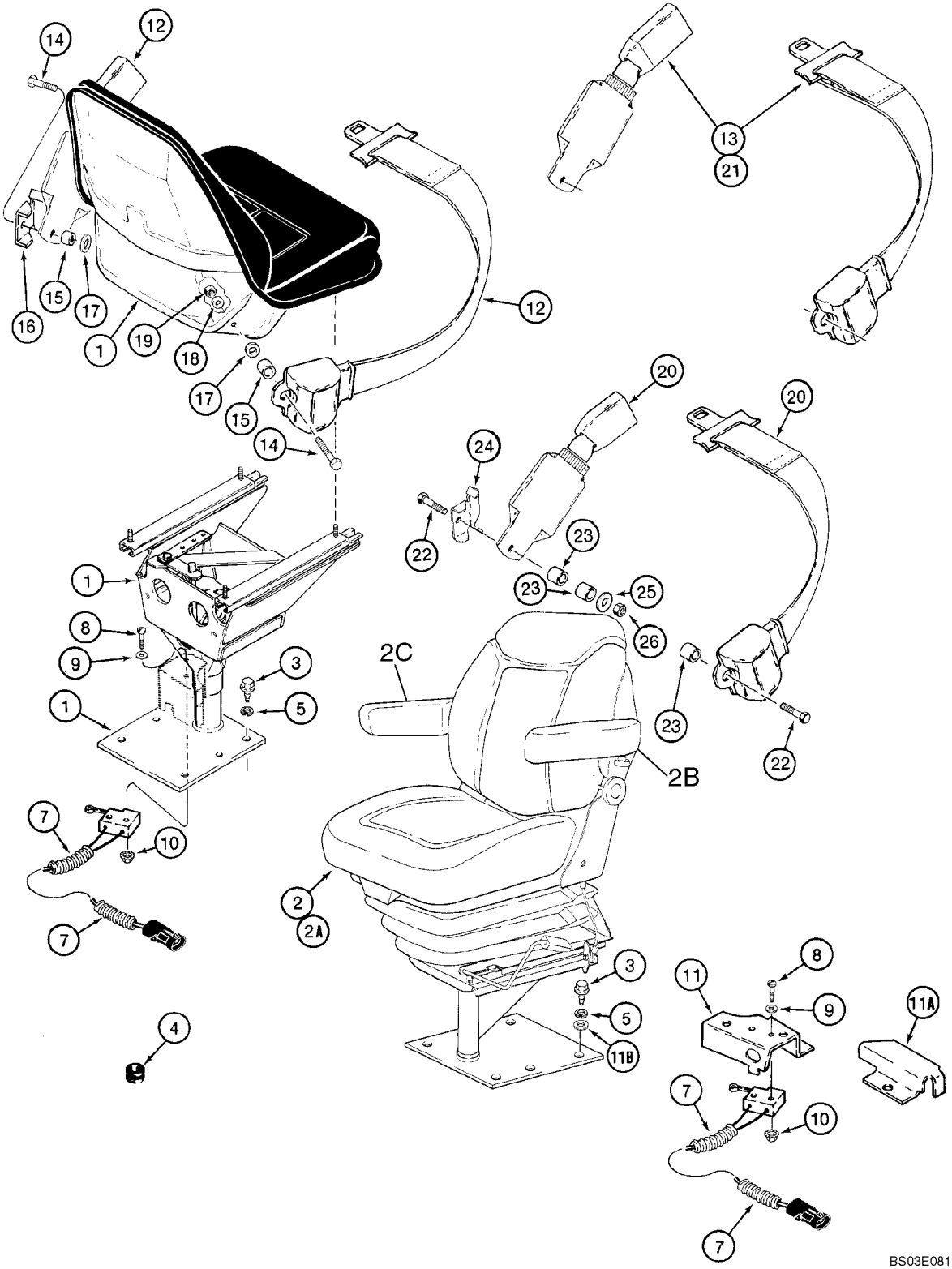

HTTP://WWW.MINNPARBACKHOEPARTS.COM



SIEGE - SUPPORT

| REF | FN | PART NUMBER | YR/SN | QTY | DESCRIPTION |
|---|---|---|---|---|---|
| 18 | | 496-81010 | | 4 | RONDELLE 15/32 x 1 x 7/64 |
| 19 | | 232-4617 | | 2 | ECROU 7/16 NF; 8 |
| 20 | | 87408889 | | 1 | CEINTURE DE SÉCURITÉ 51 mm (2 in), If Used; Suspension Seat Belt Mounting |
| 21 | | 87408888 | | 1 | CEINTURE DE SÉCURITÉ 76 mm (3 in), Retractable, If Used; Suspension Seat Belt Mounting |
| 22 | | 414-724 | | 2 | VIS 7/16 x 1-1/2; 5 |
| 23 | | D150391 | | 2 | ENTRETOISE |
| 24 | | D150392 | | 1 | PATTE FIXATION Left-Hand |
| 25 | | 496-81010 | | 2 | RONDELLE 15/32 x 1 x 7/64 |
| 26 | | 232-4617 | | 2 | ECROU 7/16 NF; 8 |

HTTP://WWW.MINNPARBACKHOEPARTS.COM



SIÈGE, STANDARD

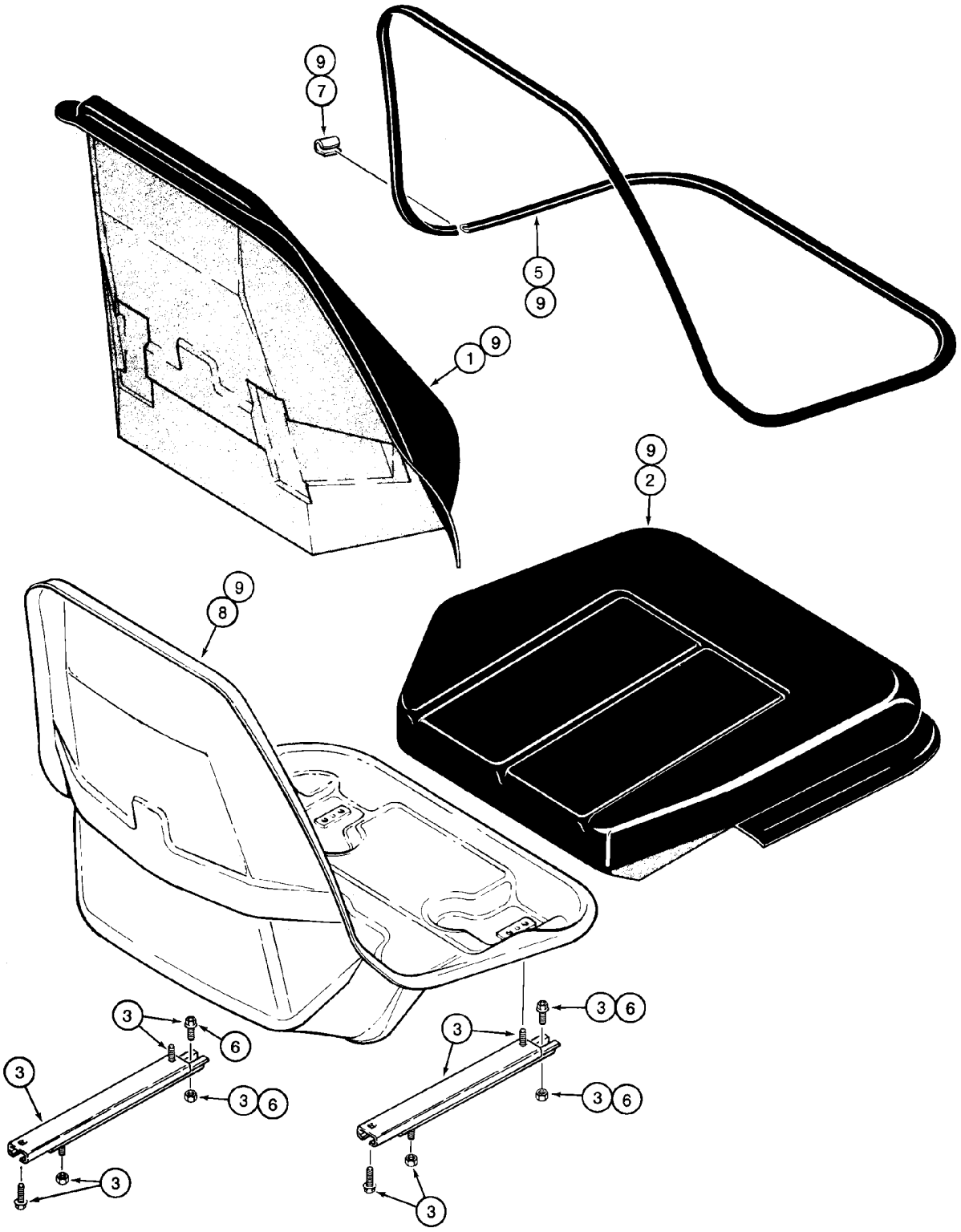


BS00J117

HTTP://WWW.MINNPARBACKHOEPARTS.COM



SIÈGE, STANDARD

| REF | FN | PART NUMBER | YR/SN | QTY | DESCRIPTION |
|---|---|---|---|---|---|
| | | 397132A1 | | 1 | SIEGE (ASSEMBLE) Vinyl, Standard Seat; Incl. Ref 1 - 9; Also Includes Parts On Figure 09-48 |
| 1 | | NSS | | 1 | NON FOURNI SEPAREMENT Cushion, Backrest; Order 406700A1 Cushion Assy, Ref 9 |
| 2 | | NSS | | 1 | NON FOURNI SEPAREMENT Cushion, Seat; Order 406700A1 Cushion Assy, Ref 9 |
| 3 | | 399777A1 | | 1 | POCHETTE Seat Slide Adjusters |
| 5 | | 176924A1 | | 1 | LOT DE PIECES Trim |
| 6 | | 181169A1 | | 1 | POCHETTE Cable, Fore-Aft/Swivel Mechanism, For Cable, See Figure 09-48 |
| 7 | | NSS | | 1 | NON FOURNI SEPAREMENT Clip, Order N7802 Clip Kit |
| 8 | | NSS | | 1 | NON FOURNI SEPAREMENT Shell, Seat Frame, Order 406700A1 Cushion Assy, Ref 9 |
| 9 | | 406700A1 | | 1 | COUSSIN (ASSEMBLE) Seat Shell, Cushions, and Trim, Incl. Ref 1, 2, 5, 8 |
| | | N7802 | | 1 | CLIP Clip, Incl. Ref 7 Clip, Plus 6 Additional Narrow Clips |

HTTP://WWW.MINNPARBACKHOEPARTS.COM



SUPPORT DE SIÈGE ET BASE, STANDARD

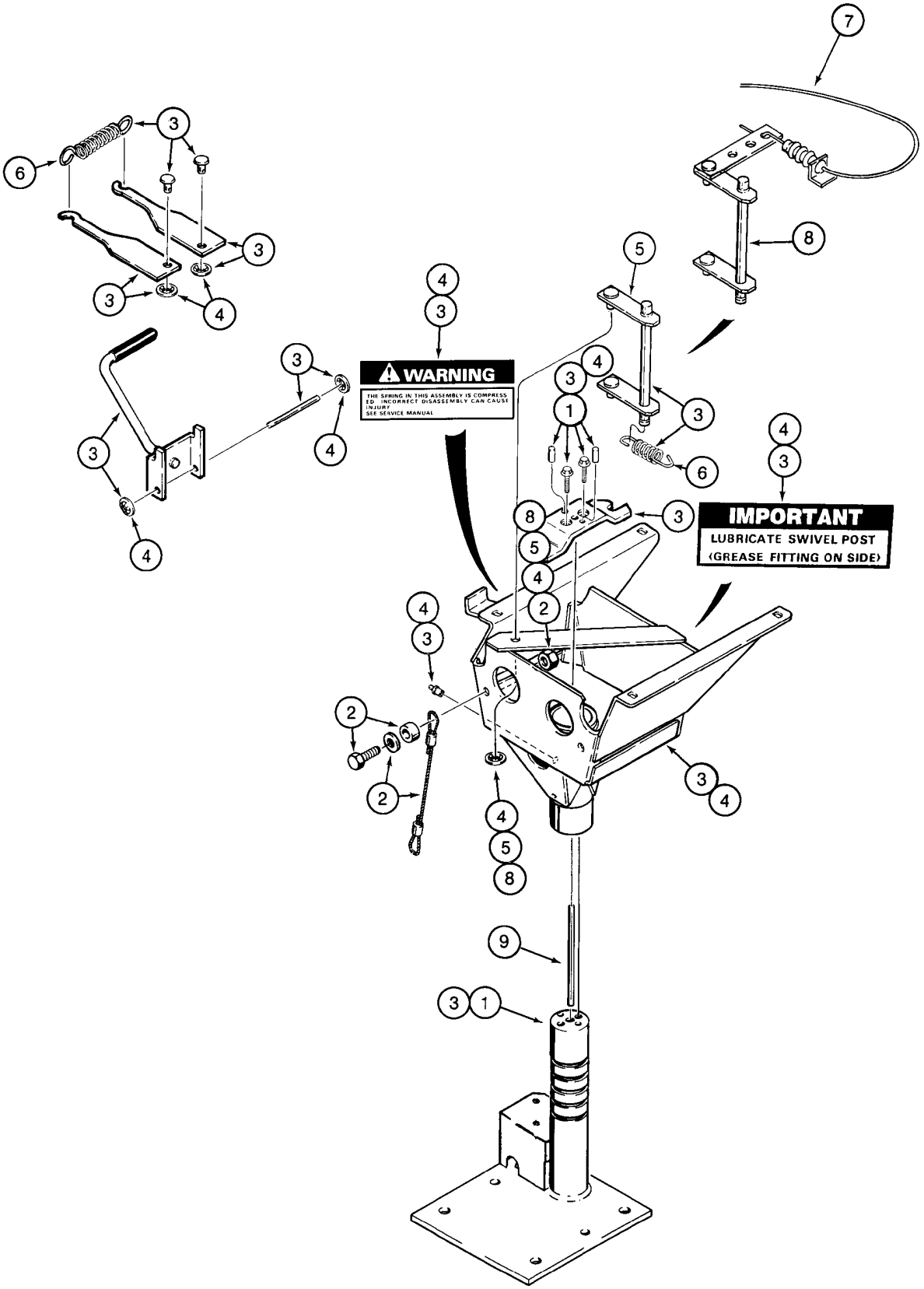

HTTP://WWW.MINNPARBACKHOEPARTS.COM



SUPPORT DE SIÈGE ET BASE, STANDARD

| REF | FN | PART NUMBER | YR/SN | QTY | DESCRIPTION |
|---|---|---|---|---|---|
| | | 397132A1 | | 1 | SIEGE (ASSEMBLE) Vinyl, Standard Seat, Incl. Ref 1 - 9, Also Includes Parts On Figure 09-47 |
| 1 | | 116761A3 | | 1 | POCHETTE Support, Base, Includes (6) Lock Nuts, (2) Pins, (1) Rivet, (1) Washer, (1) Spacer, 2 Screws |
| 2 | | 116763A1 | | 1 | POCHETTE Cable, Anchor, Includes Hardware For Both Ends |
| 3 | | 116764A3 | | 1 | POCHETTE Pedestal, Includes (4) Lock Nuts, (1) Rivet, (1) Washer, (1) Spacer, (1) Tie, (2) Screws |
| | | 219-16 | | 1 | GRAISSEUR 5/16 dr type x 19/32; If Used |
| 4 | | 116766A2 | | 1 | POCHETTE Pedestal Box, Includes (4) Lock Nuts For Seat Adjuster Slide, Includes 219-16 |
| | | 219-16 | | 1 | GRAISSEUR 5/16 dr type x 19/32 |
| 5 | | 116767A1 | | 1 | POCHETTE Swivel Latch, Includes (6) Lock Nuts, (1) Push Nut, (1) Swivel Latch; Also Includes (4) Lock Nuts For Seat Adjuster Slide |
| 6 | | 119171A1 | | 1 | POCHETTE Spring |
| 7 | | 181169A1 | | 1 | POCHETTE Cable, Fore-Aft/Swivel Mechanism, Also Includes (4) Nuts |
| 8 | | 253209A1 | | 1 | POCHETTE Swivel Latch, Includes (4) Lock Nuts, (1) Rivet, (1) Spacer, (1) Washer, (1) Push Nut, (1) Swivel Latch |
| 9 | | NSS | | 1 | NON FOURNI SEPAREMENT Pin, Seat |

HTTP://WWW.MINNPARBACKHOEPARTS.COM

| 09-49 | | p1 | 01/04 |
|---|---|---|---|

SIÈGE, SUSPENSION MÉCANIQUE

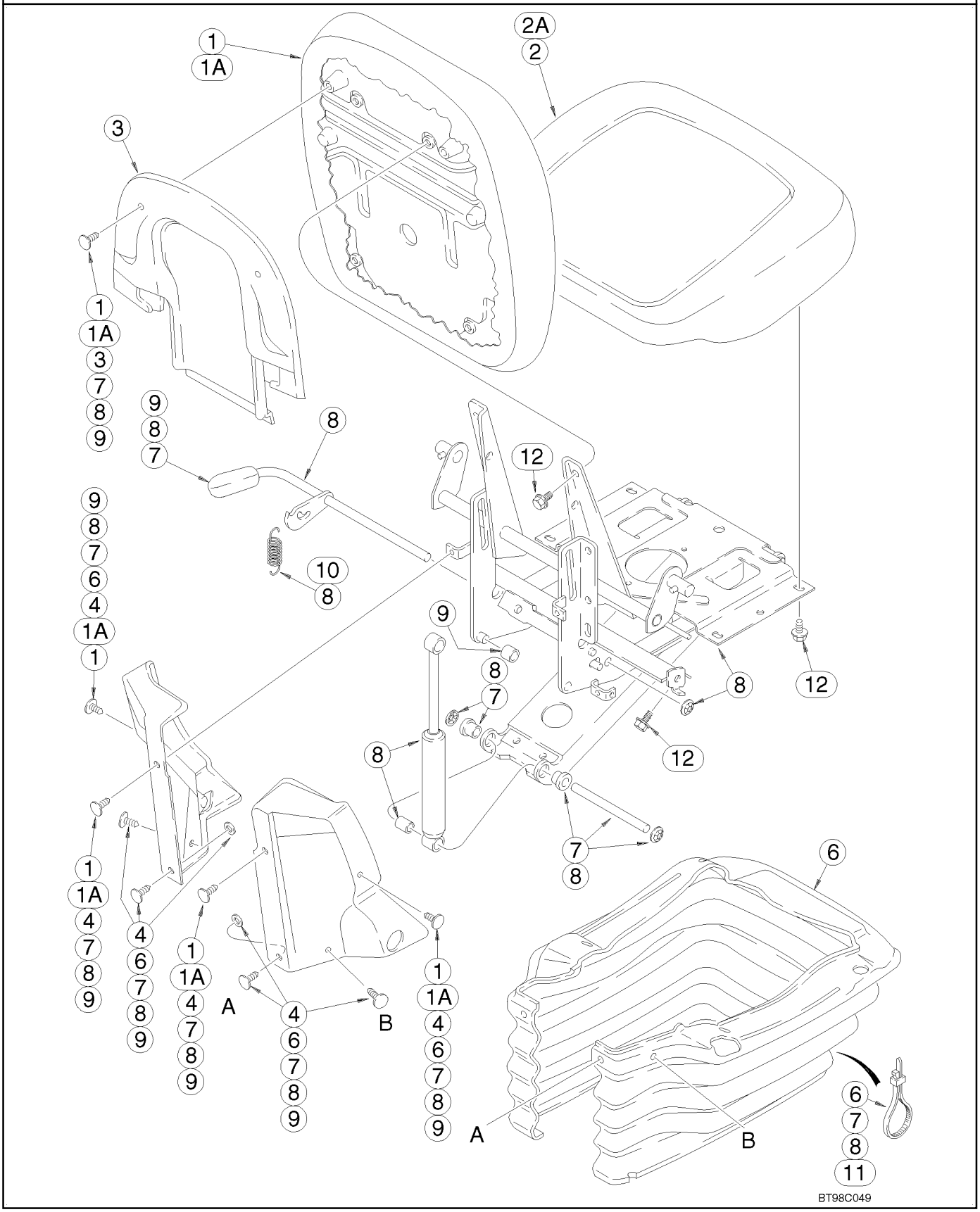

HTTP://WWW.MINNPARBACKHOEPARTS.COM



SIÈGE, SUSPENSION MÉCANIQUE

| REF | FN | PART NUMBER | YR/SN | QTY | DESCRIPTION |
|---|---|---|---|---|---|
| | | 397136A2 | | 1 | SIEGE (ASSEMBLE) Cloth, Includes Seat, Suspension, Pedestal and Weight Adjuster, Without Armrests, Incl. Ref 1 - 11; Also Includes Parts On Figure 09-50 |
| | | 397134A2 | | 1 | SIEGE (ASSEMBLE) Vinyl, Includes Seat, Suspension, Pedestal and Weight Adjuster, Without Armrests, Incl. Ref 1 - 11; Also Includes Parts On Figure 09-50 |
| 1 | | 399757A1 | | 1 | POCHETTE Cushion, Backrest, Cloth, Includes Lumbar Knob, (6) Clips and (4) Screws |
| 1A | | 399759A1 | | 1 | POCHETTE Cushion, Backrest, Vinyl, Includes Lumbar Knob, (6) Clips and (4) Screws |
| 2 | | 399758A1 | | 1 | POCHETTE Cushion, Seat, Cloth, Includes (6) Screws |
| 2A | | 399760A1 | | 1 | POCHETTE Cushion, Seat, Vinyl, Includes (6) Screws |
| 3 | | 307091A1 | | 1 | ENSEMBLE Kit, Backrest Shroud, Includes (2) Clips |
| 4 | | 307090A1 | | 1 | POCHETTE Side Shroud, Left-Hand and Right-Hand, Includes (6) Clips, (2) Washers, (1) Height Adjustment Grip, (1) Back Angle Grip |
| 6 | | 307098A1 | | 1 | POCHETTE Boot, Includes (2) Ties, (2) Washers, (4) Clips |
| 7 | | 176919A1 | | 1 | POCHETTE Swing Arm Pivot Shaft, Includes (2) Flanged Bearings, (4) Push Nuts, (2) Clips, (2) Washers, (1) Grip, (2) Ties |
| 8 | | 307092A1 | | 1 | POCHETTE Suspension, Includes Suspension, Back Angle Adjust, (2) Groove Pins, (1) Handle, (8) Screws, (2) Springs, (3) Washers, (1) Rivet; Includes Parts From Seat Frame To Adjuster Slides; For Additional Kit Parts See Figure 09-50, Ref 1 |
| 8 | | 307092A1 | | 1 | POCHETTE 307092A1 Suspension Kit Also Includes (1) Spacer, (2) Ties, (8) Clips, (12) Nuts, (1) Height Adjust Grip, (1) Back Angle Grip, (1) Rake Grip, (1) Fore/Aft/Swivel Grip, (1) Decal |

HTTP://WWW.MINNPARBACKHOEPARTS.COM



SIÈGE, SUSPENSION MÉCANIQUE

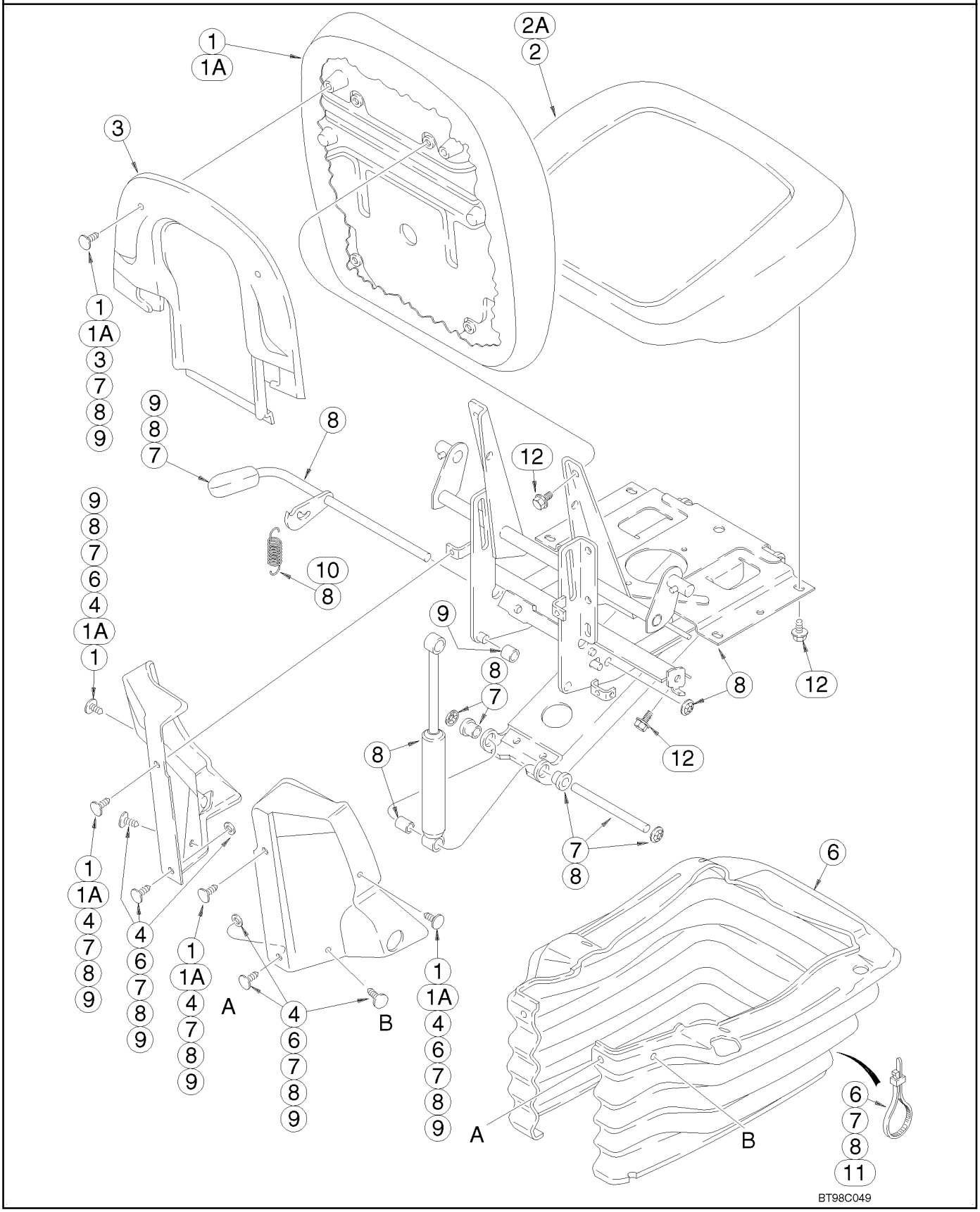

HTTP://WWW.MINNPARBACKHOEPARTS.COM



SIÈGE, SUSPENSION MÉCANIQUE

| REF | FN | PART NUMBER | YR/SN | QTY | DESCRIPTION |
|---|---|---|---|---|---|
| 9 | | 176921A1 | | 1 | POCHETTE Plastic Components, Includes (2) Rollers, (4) Downstops, (2) Roller Guides, (2) Bearings, (1) Bumper, (4) Nuts, (10) Clips, (2) Washers, (1) Grip; For Additional Kit Parts, See Figure 09-50, Ref 2 |
| 10 | | 116547A1 | | 1 | POCHETTE Height Adjusting Spring, Includes (10) Shroud Retainers, (2) Washers, (2) Springs, (1) Wear Strip; For Additional Kit Parts, See Figure 09-50, Ref 6 |
| 11 | | 181170A1 | | 1 | POCHETTE Cable, Fore-Aft/Swivel Mechanism, Includes (2) Screws, (2) Ties, Cable, (4) Nuts |
| 12 | | NSS | | 8 | NON FOURNI SEPAREMENT Bolt, 5/16 Inch Thread, Length As Required, Purchase Locally, Seat Cushion and Backrest |

HTTP://WWW.MINNPARBACKHOEPARTS.COM



BASE DE SIÈGE ET SUSPENSION, SUSPENSION MÉCANIQUE

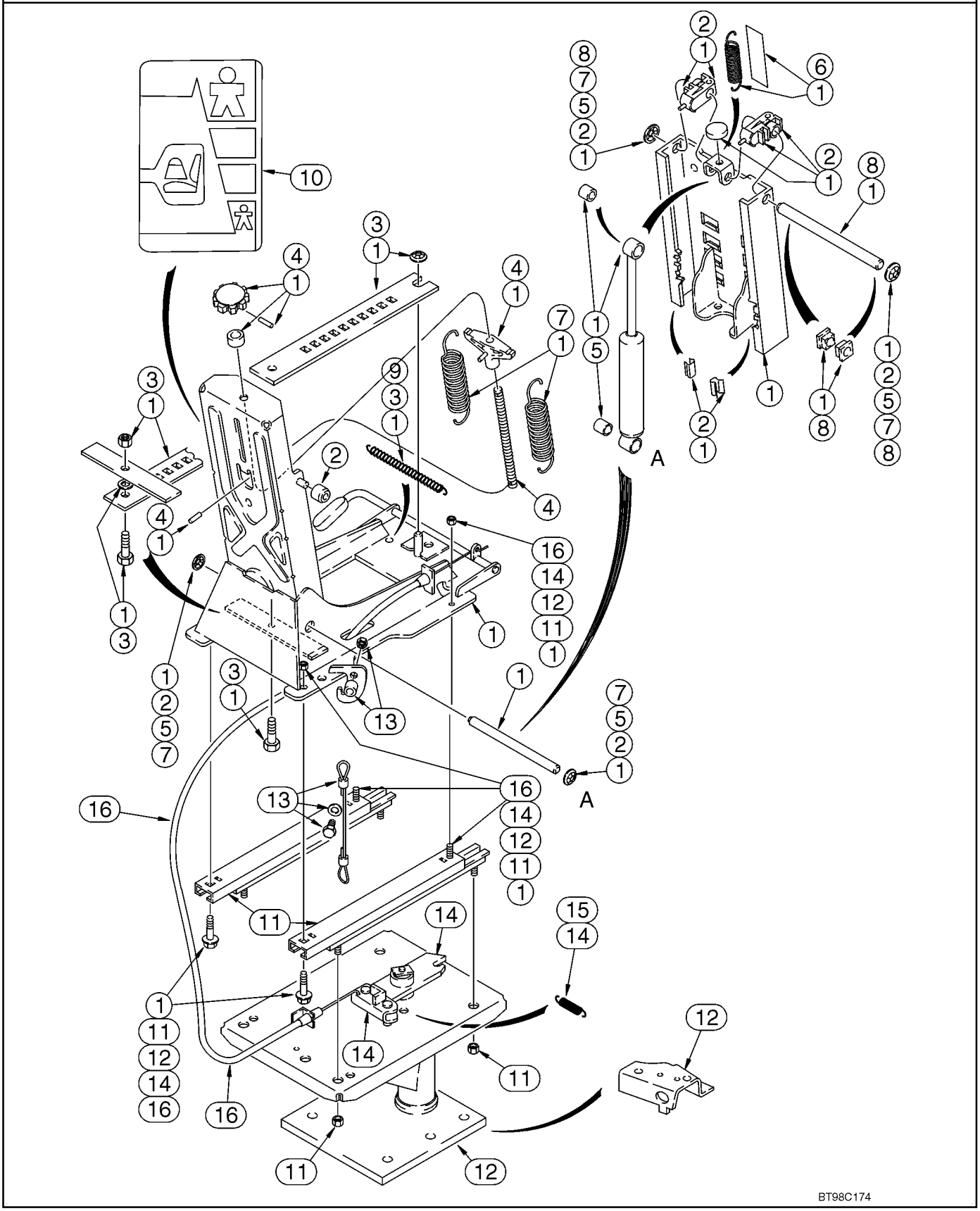

HTTP://WWW.MINNPARBACKHOEPARTS.COM



BASE DE SIÈGE ET SUSPENSION, SUSPENSION MÉCANIQUE

| REF | FN | PART NUMBER | YR/SN | QTY | DESCRIPTION |
|---|---|---|---|---|---|
| | | 397136A2 | | 1 | SIEGE (ASSEMBLE) Cloth, Includes Seat, Suspension, Pedestal and Weight Adjuster, Without Armrests; Incl. Ref 1 - 16; Also Includes Parts On Figure 09-49 |
| | | 397134A2 | | 1 | SIEGE (ASSEMBLE) Vinyl, Includes Seat, Suspension, Pedestal and Weight Adjuster, Without Armrests; Incl. Ref 1 - 16; Also Includes Parts On Figure 09-49 |
| 1 | | 307092A1 | | 1 | POCHETTE Suspension, Includes Suspension, Back Angle Adjust, (2) Groove Pins, (1) Handle, (8) Screws, (2) Springs, (3) Washers and (1) Rivet; Includes Parts From Seat Frame To Adjuster Slides; For Additional Kit Parts, See Figure 09-49, Ref 8 |
| 1 | | 307092A1 | | 1 | POCHETTE Suspension; Also Includes (1) Spacer, (2) Ties, (8) Clips, (12) Nuts, (1) Height Adjust Grip, (1) Back Angle Grip, (1) Rake Grip, (1) Fore/Aft/Swivel Grip, (1) Decal |
| 2 | | 176921A1 | | 1 | POCHETTE Plastic Components, Includes (2) Rollers, (4) Downstops, (2) Roller Guides, (2) Bearings, (1) Bumper, (4) Nuts, (10) Clips, (2) Washers, (1) Grip; For Additional Kit Parts, See Figure 09-49, Ref 9 |
| 3 | | 116521A1 | | 1 | POCHETTE Fore/Aft Adjuster Latch, Includes (1) Latch Bar, (1) Bolt, (1) Spacer, (2) Nuts, (1) Spring and (2) Ties, Includes 131-435 Nut |
| | | 131-435 | | X | ECROU 3/8 |
| 4 | | 176916A1 | | 1 | POCHETTE Weight Adjuster, Includes Adjusting Knob, (1) Spacer, (2) Roll Pins, (1) Shaft, (1) Spring, (10) Clips, (2) Washers, (1) Grip and (2) Ties; Also Includes (10) Shroud Retainers, (2) Washers, (2) Ties, See Figure 09-49 |
| 5 | | 176914A1 | | 1 | POCHETTE Suspension Damper, Includes Damper, (2) Spacers, (4) Nuts, (10) Clips, (2) Washers, (1) Grip and (2) Ties; Also Includes (10) Shroud Retainers, (2) Washers, (2) Ties, See Figure 09-49 |

HTTP://WWW.MINNPARBACKHOEPARTS.COM



BASE DE SIÈGE ET SUSPENSION, SUSPENSION MÉCANIQUE

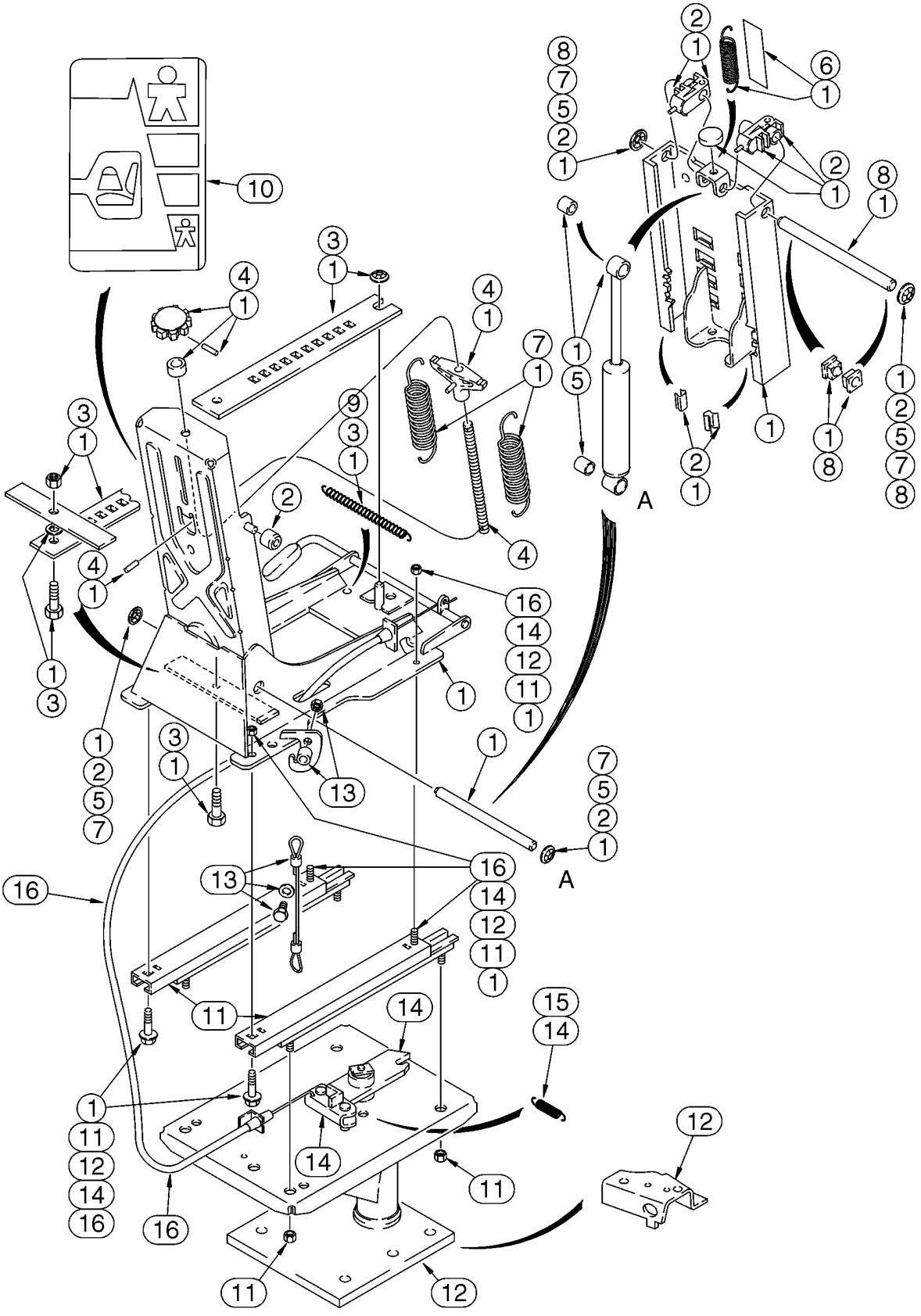

HTTP://WWW.MINNPARBACKHOEPARTS.COM



BASE DE SIÈGE ET SUSPENSION, SUSPENSION MÉCANIQUE

| REF | FN | PART NUMBER | YR/SN | QTY | DESCRIPTION |
|---|---|---|---|---|---|
| 6 | | 116547A1 | | 1 | POCHETTE Height Adjusting Spring, Includes (10) Shroud Retainers, (2) Washers, (2) Springs, (1) Wear Strip; For Additional Kit Parts, See Figure 09-49, Ref 10 |
| 7 | | 176920A1 | | 1 | POCHETTE Main Extension Springs, Includes (2) Springs, (4) Nuts, (2) Washers, (10) Clips, (1) Grip, (2) Ties |
| 8 | | 116551A1 | | 1 | POCHETTE Upper Suspension Tower Shaft, Includes Shaft, (2) Bearings, (2) Nuts, (10) Clips, (2) Washers |
| 9 | | 116545A1 | | 1 | POCHETTE Fore/Aft Latch Spring, Includes (1) Spring, (2) Ties |
| 10 | | 116534A1 | | 1 | POCHETTE Decal, Seat Weight Adjustment |
| 11 | | 399764A1 | | 1 | POCHETTE Fore/Aft Adjuster Slides |
| 12 | | 116538A2 | | 1 | POCHETTE Pedestal, Includes Pedestal, (4) Screws, (4) Nuts and 119211A1 Bracket |
| 13 | | 116552A1 | | 1 | POCHETTE Cable, Includes (2) Cables, (2) Screws, (2) Spacers, (2) Washers, (2) Nuts |
| 14 | | 116550A1 | | 1 | POCHETTE Swivel Latch Bar, Includes Latch Bar, (1) Spring, (1) Ring, (4) Screws, (4) Nuts |
| 14 | | 336375A1 | | 1 | POCHETTE Swivel Latch Plate, Includes Latch, Swivel Plate Latch, (5) Screws, (6) Nuts, (2) Pins |
| 15 | | 116548A1 | | 1 | POCHETTE Swivel Latch Spring Only |
| 16 | | 181170A1 | | 1 | POCHETTE Cable, Fore-Aft/Swivel Mechanism, Includes (2) Screws, (2) Ties, Cable, (4) Nuts |

HTTP://WWW.MINNPARBACKHOEPARTS.COM

| 09-51 | | p1 | 01/04 |
|---|---|---|---|

SIÈGE, SUSPENSION PNEUMATIQUE

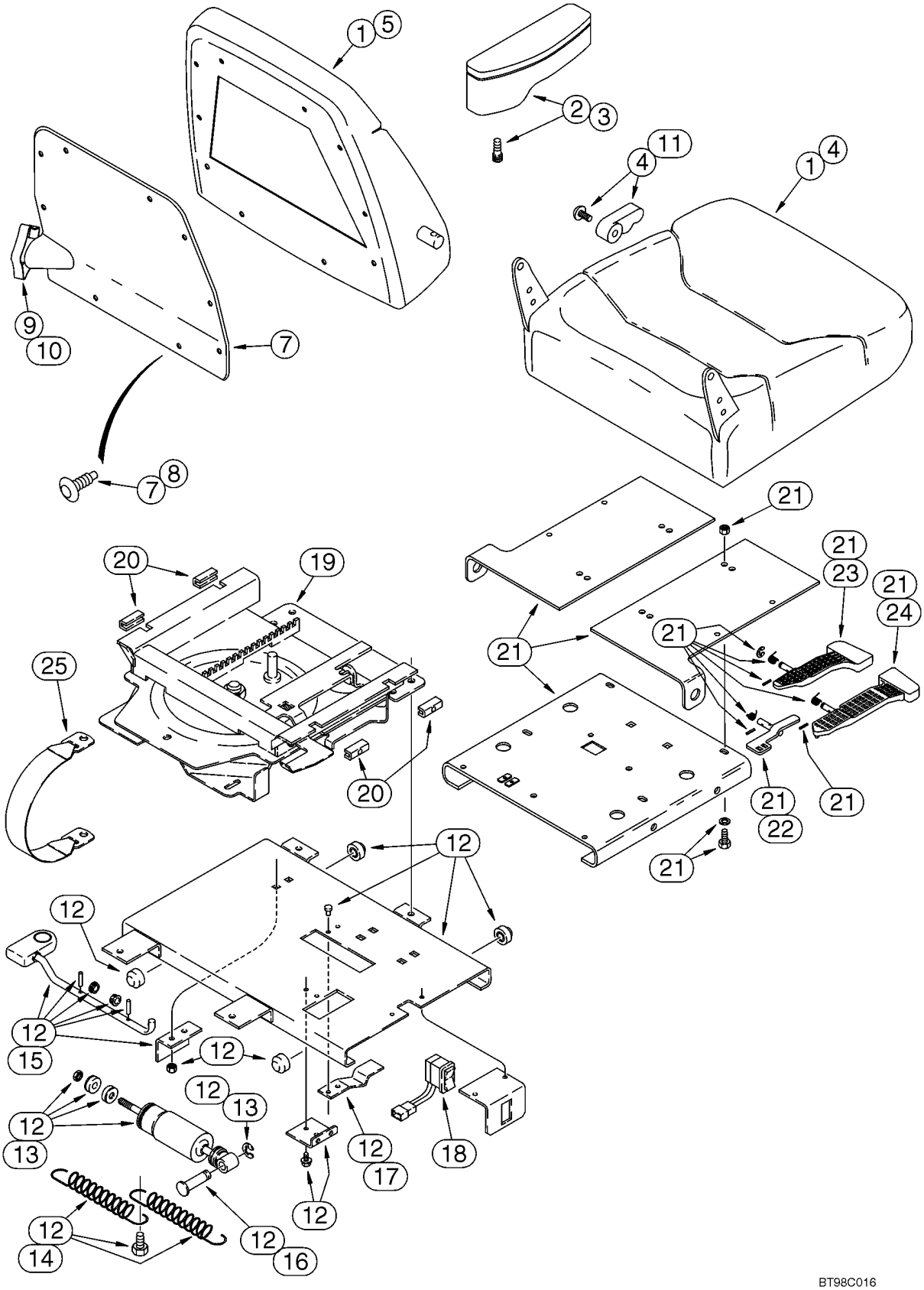

HTTP://WWW.MINNPARBACKHOEPARTS.COM



SIÈGE, SUSPENSION PNEUMATIQUE

| REF | FN | PART NUMBER | YR/SN | QTY | DESCRIPTION |
|---|---|---|---|---|---|
| | | 121414A1 | | 1 | FUSIBLE 20 amp, Not Illustrated |
| | | 604-12030 | | 4 | BOULON M12 x 30 |
| | | 896-15012 | | 4 | RONDELLE 13,5 x 28 x 4 mm |
| | | 397137A1 | | 1 | SIEGE (ASSEMBLE) Air Suspension Seat, Cloth, With Armrests, Incl. Ref 1 - 25; Also Includes Parts On Figure 09-52 |
| 1 | | 400981A1 | | 1 | POCHETTE Seat Cushion and Backrest, Includes Seat, Backrest, Backrest Cover and Hardware |
| 2 | | 300659A1 | | 1 | POCHETTE Armrest, Right-Hand, Includes Armrest Knob and Shaft, Groove Pin, Pivot Stud and Screw |
| 3 | | 300661A1 | | 1 | POCHETTE Armrest, Left-Hand, Includes Armrest Knob and Shaft, Groove Pin, Pivot Stud and Screw |
| 4 | | 400837A1 | | 1 | POCHETTE Seat Cushion, With Frame, Includes (5) Clips, (18) Rings, (1) Screw and Recliner Handle |
| 5 | | 400838A1 | | 1 | POCHETTE Backrest Cushion, With Frame, Includes (23) Rings, Lumbar, (2) Screws and (2) Clips |
| 6 | | 176091A1 | | 1 | COLIS POUR RECHANGE Package of 48 Rings For Cushions, Not Illustrated |
| 7 | | 300664A1 | | 1 | POCHETTE Backrest Cover and Retainers, Incl. Ref 8 |
| 8 | | 1999693C1 | | 1 | POCHETTE Clip, Package of 14 |
| 9 | | 300665A1 | | 1 | POCHETTE Lumbar, With Knob |
| 10 | | 300667A1 | | 1 | PLAQUE Lumbar Knob, Includes Knob, Actuator and (2) Screws |
| 11 | | 1987212C1 | | 1 | COLIS Seat Cushion Back Tilt Knob, Includes Knob, Recliner Handle and (1) Screw |
| 12 | | 300670A1 | | 1 | POCHETTE Lateral Isolator Assy, Incl. Ref 13 - 17 |
| 13 | | 1987219C2 | | 1 | LOT DE PIECES Lateral Isolator Shock, Includes Shock Absorber, (1) Bearing, (2) Bushings, (1) Nut, (2) Washers, (1) Spacer, (1) Ring |
| 14 | | 1987290C1 | | 1 | LOT DE PIECES Spring, Includes (2) Springs, (1) Bolt |
| 15 | | 259054A1 | | 1 | LOT DE PIECES Lock, Includes Latch Rod, Bracket, (2) Bearings, Knob, (2) Roll Pins |
| 16 | | 1344025C1 | | 1 | AXE, GROS Pivot |

HTTP://WWW.MINNPARBACKHOEPARTS.COM

| 09-51 | | p2 | 01/04 |
|---|---|---|---|

SIÈGE, SUSPENSION PNEUMATIQUE

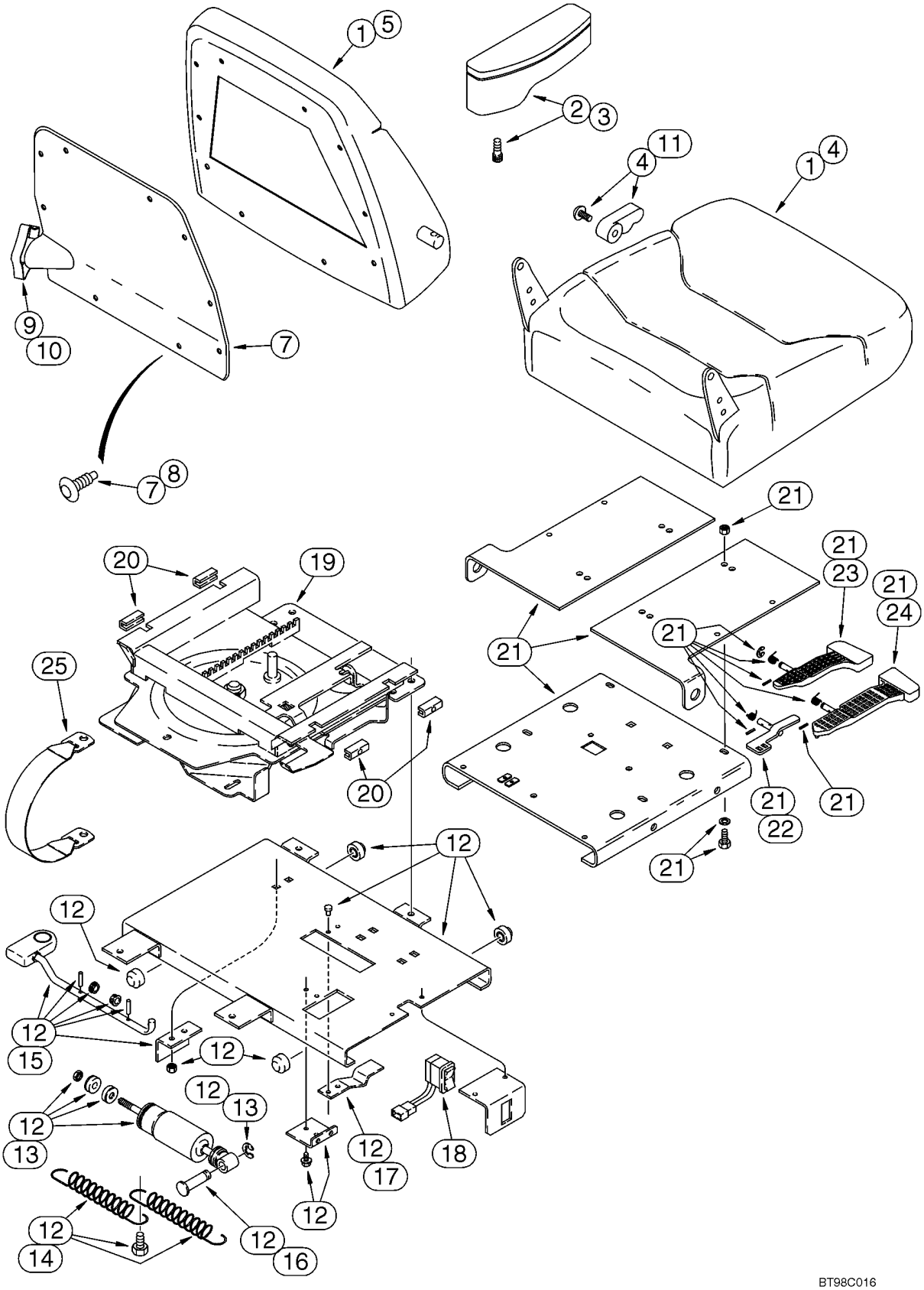

HTTP://WWW.MINNPARBACKHOEPARTS.COM



SIÈGE, SUSPENSION PNEUMATIQUE

| REF | FN | PART NUMBER | YR/SN | QTY | DESCRIPTION |
|---|---|---|---|---|---|
| 17 | | 1344026C1 | | 1 | RESSORT |
| 18 | | 300672A1 | | 1 | CONTACTEUR Rocker, Height Adjustment |
| | | 300674A1 | | 1 | FAISCEAU Swivel Switch, Not Illustrated |
| 19 | | 300675A1 | | 1 | POCHETTE Slide/Swivel Assy, Incl. Ref 21 |
| 20 | | 300680A1 | | 1 | POCHETTE Slide Blocks, Includes (2) Adjustable Slider Blocks, (2) Stationary Slider Blocks, (2) Setscrews |
| 21 | | 300677A1 | | 1 | POCHETTE Upper Slide Plate Assy, Includes Upper Slide Plate, Slide and Swivel Levers, (3) Springs, (3) Roll Pins, (3) E-Rings and Slide Latch, Incl. Ref 22 - 24 |
| 22 | | 300679A1 | | 1 | GLISSIÈRE Latch |
| 23 | | 300681A1 | | 1 | LEVIER DE COMMANDE Slide |
| 24 | | 300683A1 | | 1 | LEVIER Swivel |
| 25 | | 300684A1 | | 1 | CEINTURE DE SECURITE Tether |

HTTP://WWW.MINNPARBACKHOEPARTS.COM

| 09-52 | | p1 | 01/04 |
|---|---|---|---|

BASE DE SIÈGE ET SUSPENSION, SUSPENSION PNEUMATIQUE

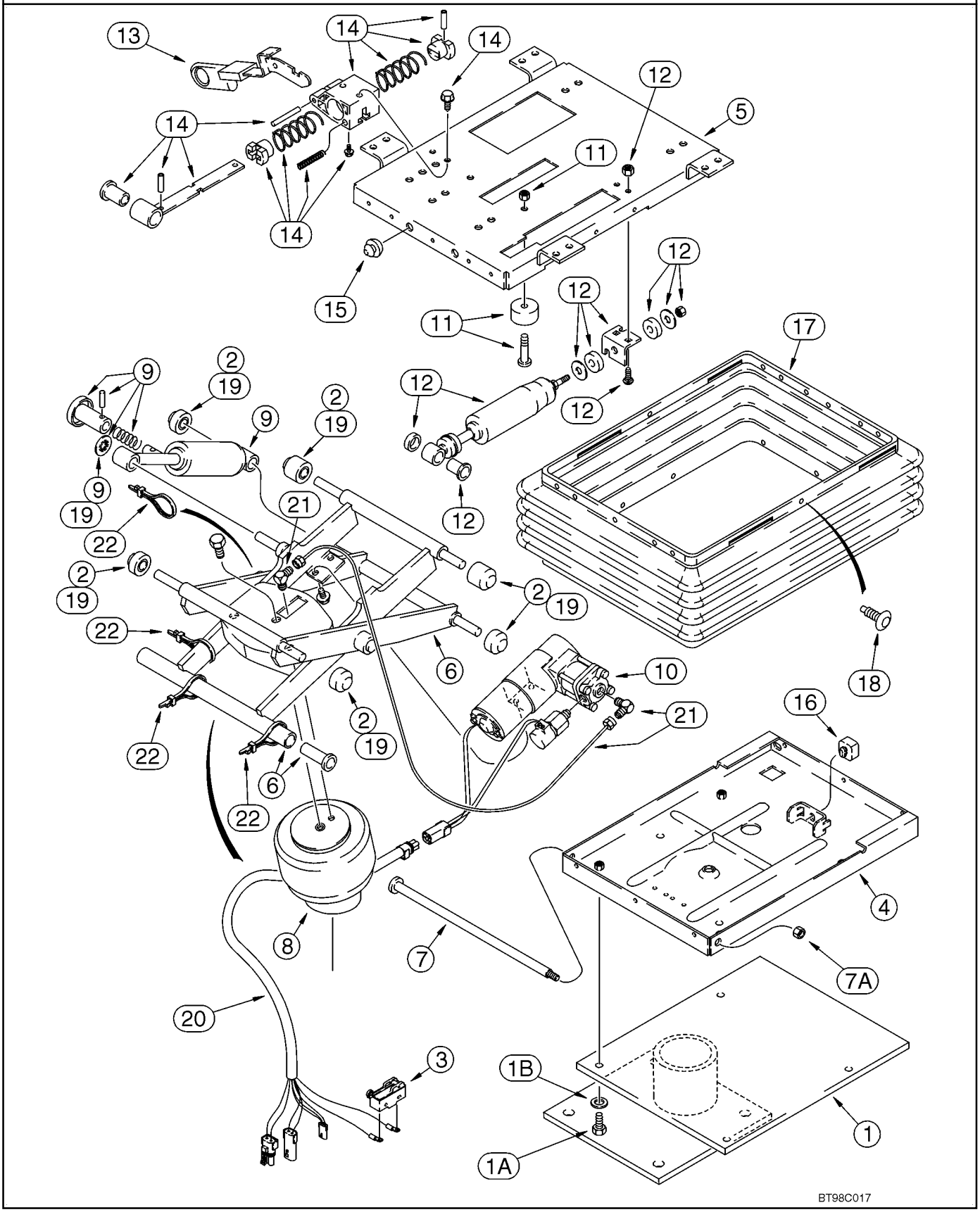

HTTP://WWW.MINNPARBACKHOEPARTS.COM



BASE DE SIÈGE ET SUSPENSION, SUSPENSION PNEUMATIQUE

| REF | FN | PART NUMBER | YR/SN | QTY | DESCRIPTION |
|---|---|---|---|---|---|
| | | 397137A1 | | 1 | SIEGE (ASSEMBLE) Air Suspension Seat, Cloth, With Armrests, Incl. Ref 1 - 22; Also Includes Parts On Figure 09-51 |
| 1 | | 300669A1 | | 1 | SOCLE Support, Base |
| 1A | | 614-8025 | | 4 | VIS M8 x 25 |
| 1B | | NSS | | 2 | NON FOURNI SEPAREMENT Washer |
| | | 300685A1 | | 1 | POCHETTE Air Suspension Assembly, Includes Parts From Upper To Lower Housing Plates, Incl. Ref 2 - 16, 18 - 22, Includes all items shown except for the boot and pedestal, Ref 1 and 17 |
| 2 | | 135512A3 | | 1 | COLIS Roller Bearing, Isolator, Includes (4) Narrow Rollers, (2) Wide Rollers, (1) Bushing, (1) Spacer, (1) Retaining Ring, Isolator |
| 3 | | D137363 | | 1 | CONTACTEUR Contact, Swivel Limit Switch |
| 4 | | 226560A1 | | 1 | CARTER Lower, With Upper Stop Bracket |
| 5 | | 300688A1 | | 1 | CARTER Upper |
| 6 | | 132862A1 | | 1 | BALANCÍN Arm, Suspension |
| 7 | | 143786A1 | | 1 | ARBRE |
| 7A | | 230-4216 | | 1 | ECROU 3/8 |
| 8 | | 197793A1 | | 1 | RESSORT Air Spring, Includes Air Spring, J-Clip and (3) Ties |
| 9 | | 132866A1 | | 1 | SILENTBLOC Kit, Includes Shock, (2) Bearings, Fastener, Actuator Arm, Roll Pin, Bracket and Retaining Ring |
| | | 132864A1 | | 1 | COMPRESSEUR Kit, Compressor/Valve, Includes Compressor, Valve, Mount, Air Line Tubing, (2) Screws, (2) Sleeves and (2) Nuts, Includes 300689A1, 300690A1 |
| 10 | | 300689A1 | | 1 | POCHETTE Compressor/Valve |
| | | 300690A1 | | 1 | PIÈCES DE FIXATION Compressor |
| 11 | | 180593A1 | | 1 | COLIS Bumper, Includes 231-1444, 340-12520 |
| | | 231-1444 | | 2 | CONTRE-ECROU 1/4 |
| | | 340-12520 | | 2 | VIS 1/4 x 1-1/4 |
| 12 | | 300691A1 | | 1 | LOT-PR Fore/Aft Isolator Latch, Includes Shock Absorber, (3) Nuts, (2) Washers, (2) Grommets, (1) Bearing and (15) Clips |

HTTP://WWW.MINNPARBACKHOEPARTS.COM

| 09-52 | | p2 | 01/04 |
|---|---|---|---|

BASE DE SIÈGE ET SUSPENSION, SUSPENSION PNEUMATIQUE

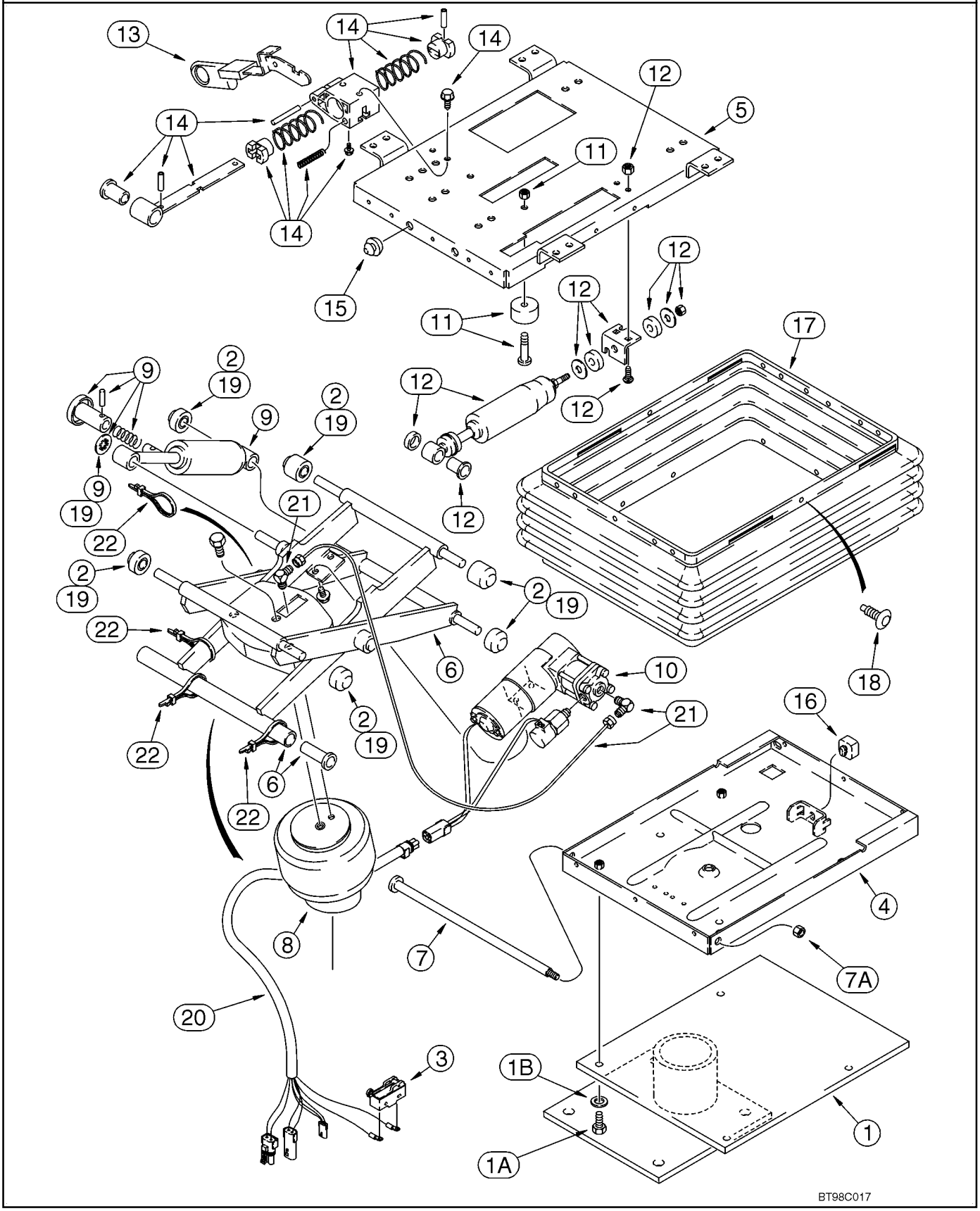

HTTP://WWW.MINNPARBACKHOEPARTS.COM



BASE DE SIÈGE ET SUSPENSION, SUSPENSION PNEUMATIQUE

| REF | FN | PART NUMBER | YR/SN | QTY | DESCRIPTION |
|---|---|---|---|---|---|
| 13 | | 1981850C1 | | 1 | POIGNEE DE MANETTE Knob, Isolator Control, Fore/Aft |
| 14 | | 300692A1 | | 1 | LOT-PR Fore/Aft Isolator Latch, Includes Latch Assy and (2) Screws |
| 15 | | 133422A1 | | 2 | AMPOULE Rubber |
| 16 | | A45054 | | 1 | PARE-CHOCS Seat |
| 17 | | 133421A1 | | 1 | COLIS Boot, With Pins |
| 18 | | 132872A1 | | 1 | LOT DE PIECES Boot Pin, Package of 23 Retainers and (3) Dome Nuts |
| 19 | | 180594A3 | | 1 | COLIS Rollers and Bearings, Includes (2) Bushings, (6) Rollers, (1) Push Nut, (5) Bearings and (2) Spacers, Includes 131-425 Nut |
| | | 131-425 | | 1 | ECROU 1/2 |
| 20 | | 300896A1 | | 1 | FAISCEAU |
| 21 | | 1990548C4 | | 1 | COLIS Air Line and Fittings, Includes (2) Elbows, (1) Tee, (2) Adapters, 3.5 Feet Nylon Tubing, (5) Ties and (1) J-Clip, Incl. Ref 22 |
| 22 | | L18337 | | 4 | SANGLE 15 in |

HTTP://WWW.MINNPARBACKHOEPARTS.COM



CABINE - FENETRE, RETROVISEUR ET OUVERTURE

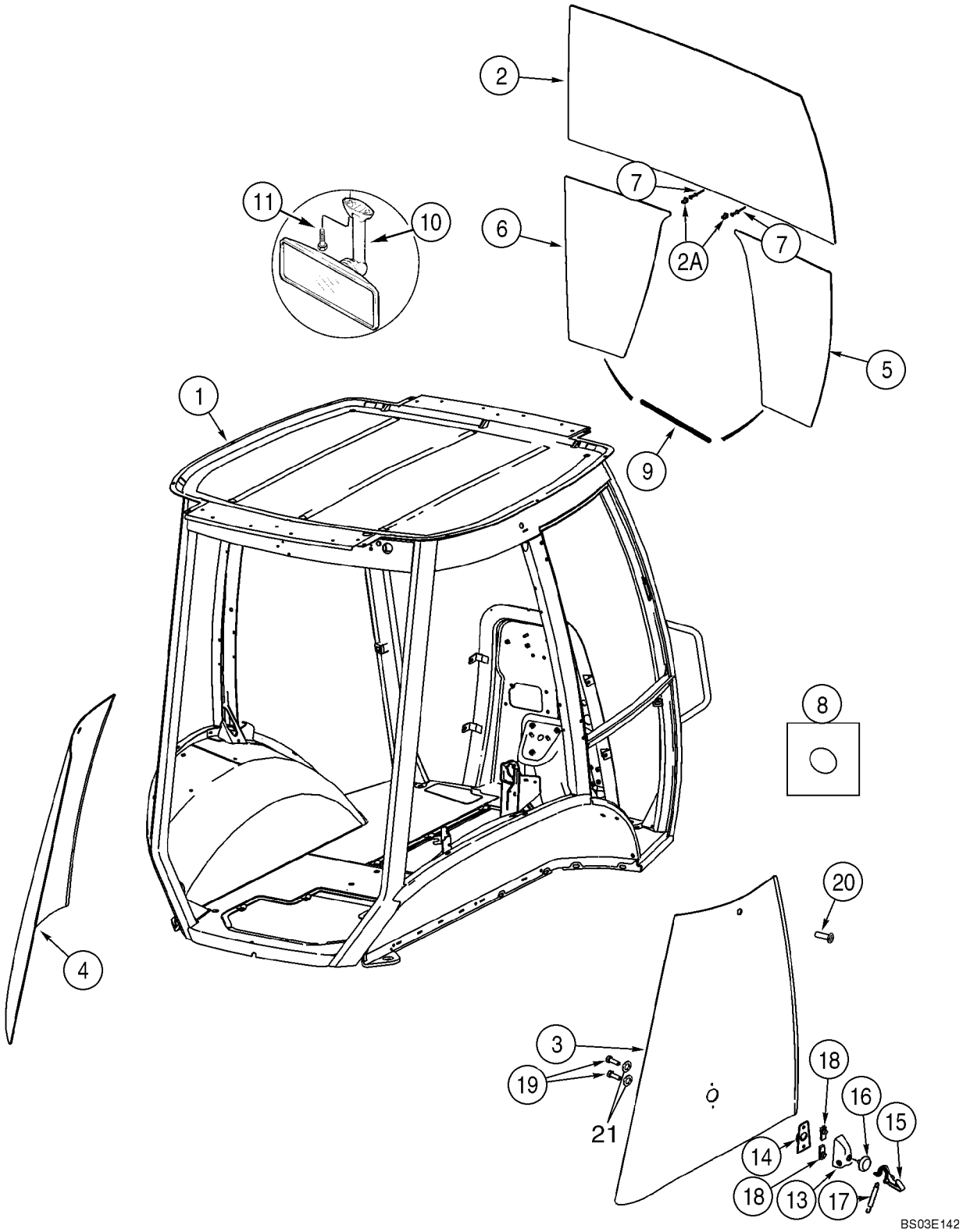

HTTP://WWW.MINNPARBACKHOEPARTS.COM



CABINE - FENETRE, RETROVISEUR ET OUVERTURE

| REF | FN | PART NUMBER | YR/SN | QTY | DESCRIPTION |
|---|---|---|---|---|---|
| 1 | | 87434979 | | 1 | CABINE Single Door; Includes Frame, Left-Hand Door, Right-Hand Window, All Glass, Front and Rear Wipers and Exterior Lamps; Order From Machinery Price List |
| 1 | | 87434980 | | 1 | CABINE Two Door; Includes Frame, Left-Hand and Right-Hand Doors, All Glass, Front and Rear Wipers and Exterior Lamps; Order From Machinery Price List |
| 2 | | 448607A1 | | 1 | PARE-BRISE |
| 2A | | 279482A1 | | 2 | ATTACHE ASSEMBLEE Windshield |
| 3 | | 338425A1 | | 1 | FENETRE Right Rear Quarter Panel |
| 4 | | 338424A1 | | 1 | FENETRE Left Rear Quarter Panel |
| 5 | | 448609A1 | | 1 | PARE-BRISE Lower Right-Hand |
| 6 | | 448608A1 | | 1 | PARE-BRISE Lower Left-Hand |
| 7 | | 151-516 | | 2 | RIVET |
| 8 | | 391827A1 | | 36 | ENTRETOISE |
| 9 | | 395793A1 | | 2 | PROFIL PROTECTEUR |
| 10 | | 87406924 | | 1 | RÉTROVISEUR Interior |
| 11 | | 286-56520 | | 2 | VIS No. 10 x 1-1/4 |
| 13 | | 405740A1 | | 2 | COUVERCLE |
| 14 | | 405739A1 | | 2 | CORPS |
| 15 | | 405738A1 | | 2 | LEVIER Hold Open |
| 16 | | 400573A1 | | 2 | PASSE-FIL |
| 17 | | 405741A1 | | 2 | RESSORT HÉLICOÏDAL Latch Back |
| 18 | | 405742A1 | | 4 | ECROU M8 |
| 19 | | 400572A1 | | 4 | BOULON M8; Nylon |
| 20 | | 400571A2 | | 2 | PARE-CHOCS |
| 21 | | 431801A1 | | 4 | RONDELLE Black Nylon |

HTTP://WWW.MINNPARBACKHOEPARTS.COM

| 09-54 | | p1 | 01/04 |
|---|---|---|---|

CABINE - CHASSIS ET COUVERCLES

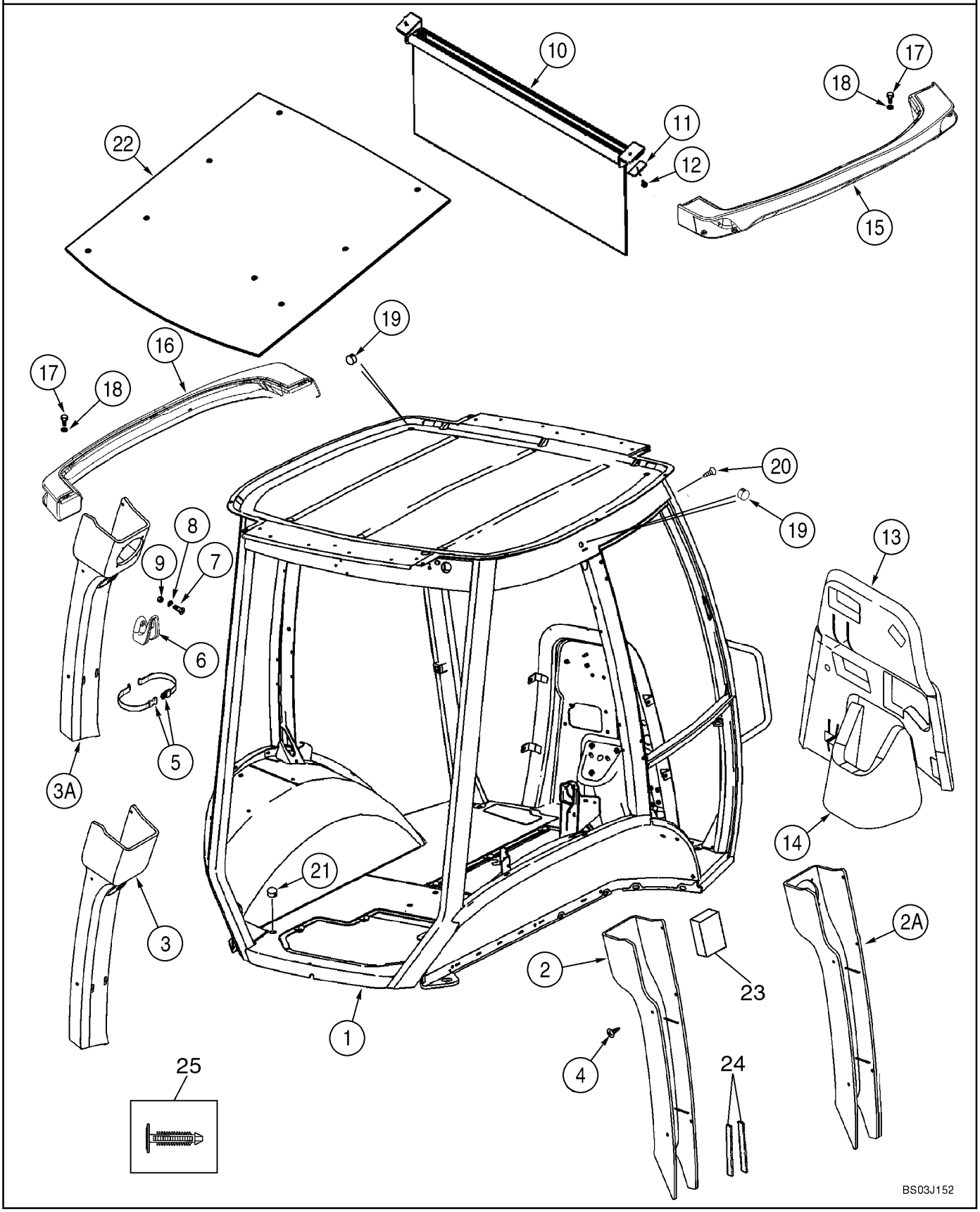

HTTP://WWW.MINNPARBACKHOEPARTS.COM



CABINE - CHASSIS ET COUVERCLES

| REF | FN | PART NUMBER | YR/SN | QTY | DESCRIPTION |
|---|---|---|---|---|---|
| 1 | | 87407908 | | 1 | CABINE-CHASSIS Single Door |
| 1 | | 87407909 | | 1 | CABINE-CHASSIS Two Door |
| 2 | | 360267A3 | | 1 | COUVERCLE Plastic; Right-Hand Post; Standard Interior |
| 2A | | 379425A3 | | 1 | COUVERCLE Vinyl; With Speaker Holes; Right-Hand Post; Deluxe Interior |
| 3 | | 360266A2 | | 1 | COUVERCLE Plastic; Left-Hand Post; Standard Interior |
| 3A | | 379424A2 | | 1 | COUVERCLE Vinyl; With Speaker Holes; Left-Hand Post; Deluxe Interior |
| 4 | | 401949A1 | | 10 | ATTACHE |
| 5 | | 378227A1 | | 1 | SANGLE Garment Strap |
| 6 | | 114549A1 | | 1 | PORTE-MANTEAU |
| 7 | | 540-720 | | 2 | VIS M4 x 16 |
| 8 | | 895-11004 | | 2 | RONDELLE 4,3 x 9 x 0,8 mm |
| 9 | | 832-10404 | | 2 | ECROU M4 |
| 10 | | 364180A1 | | 1 | PARE-SOLEIL |
| 11 | | 409618A1 | | 2 | PLAQUE 1/4 in Mounting Hole |
| 12 | | 396516A1 | | 3 | POINTEAU No. 10 x 1; With Washer; Phillips |
| 13 | | 390601A5 | | 1 | COUVERCLE Firewall |
| 14 | | 390602A1 | | 1 | COUVERCLE Firewall, Lower |
| 15 | | 360247A3 | | 1 | FEU (ASSEMBLE) Right-Hand |
| 16 | | 360246A3 | | 1 | FEU (ASSEMBLE) Left-Hand |
| 17 | | 394863A1 | | 10 | VIS M6 x 20 |
| 18 | | 395387A1 | | 10 | RONDELLE 6.4 ID; Nylon |
| 19 | | 395388A1 | | 3 | BOUCHON |
| | | 353-415 | | 1 | BOUCHON 1-1/2 in; Cab Roof; Models Without Radio Antenna |
| | | 353-410 | | 1 | BOUCHON 7/8; Upper Windshield Frame; Models Without Radio Antenna |
| | | 353-407 | | 1 | BOUCHON 11/16; Rear Filter Plate On Models Without Windshield Washer |
| | | 353-425 | | 2 | BOUCHON 7/16 in dia |
| | | 353-421 | | 1 | BOUCHON 3/16 |
| | | 353-402 | | 4 | BOUCHON 3/8, Dome, Black Nylon |
| | | 353-405 | | 1 | BOUCHON 9/16 |

HTTP://WWW.MINNPARBACKHOEPARTS.COM

| 09-54 | | p2 | 01/04 |
|---|---|---|---|

CABINE - CHASSIS ET COUVERCLES

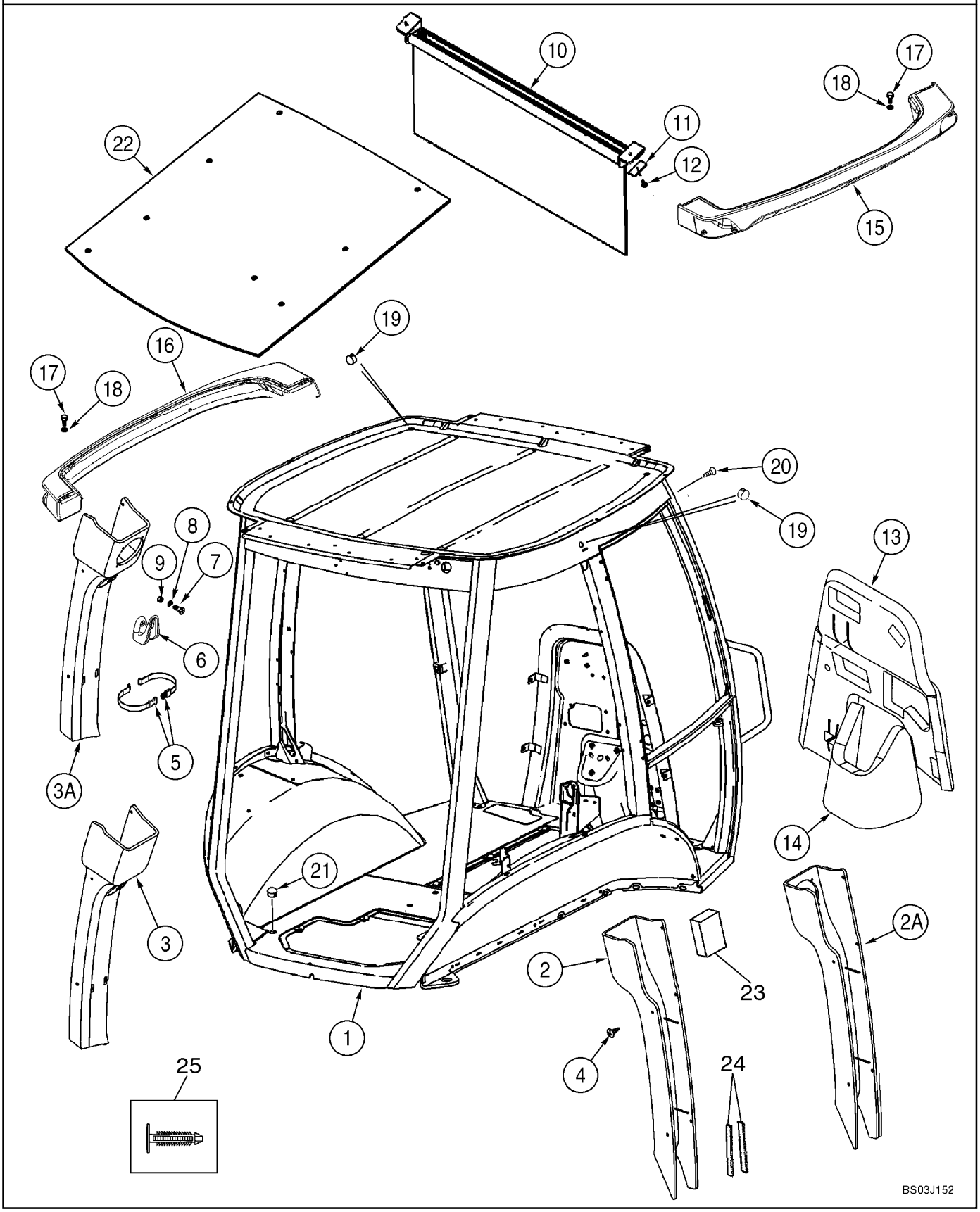

HTTP://WWW.MINNPARBACKHOEPARTS.COM



CABINE - CHASSIS ET COUVERCLES

| REF | FN | PART NUMBER | YR/SN | QTY | DESCRIPTION |
|---|---|---|---|---|---|
| | | 353-406 | | 2 | BOUCHON 5/8, Dome, Black Nylon |
| | | 353-408 | | 1 | BOUCHON 3/4 |
| 20 | | 402610A1 | | 8 | ATTACHE Cab Frame; Models Without Exterior Mirrors |
| 21 | | 382298A1 | | 2 | BOUCHON |
| 22 | | 368809A1 | | 1 | ISOLANT Insulation |
| 23 | | 412285A1 | | 1 | RUBAN Foam; Adhesive Back; B-Post |
| 24 | | 414939A1 | | 2 | BANDE D'ETANCHEITE Adhesive Back; B Post |
| 25 | | 411399A1 | | 1 | ATTACHE For 1/4 in dia Hole; Christmas Tree Clip |

HTTP://WWW.MINNPARBACKHOEPARTS.COM



CABINE - PORTES

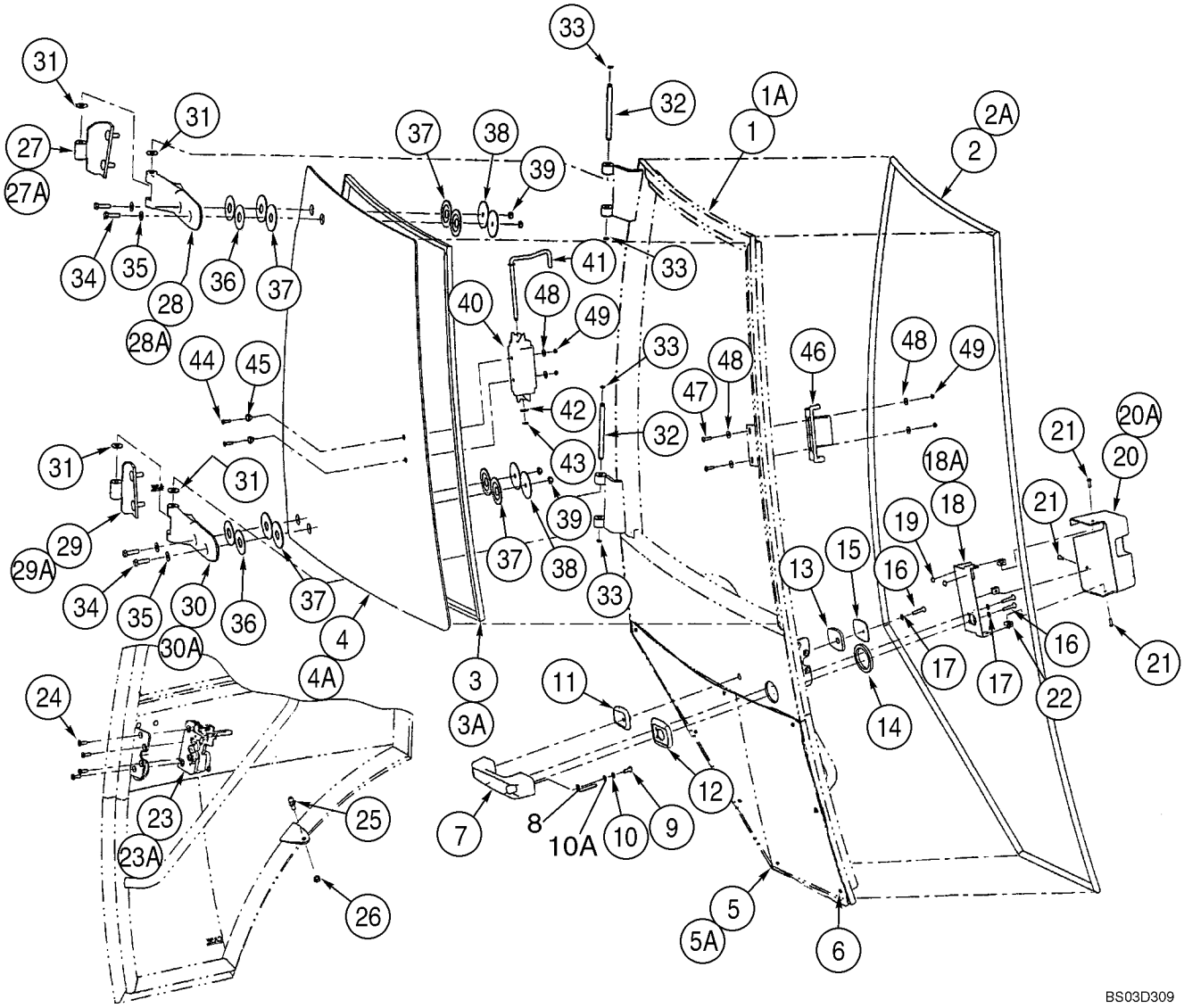

HTTP://WWW.MINNPARBACKHOEPARTS.COM



CABINE - PORTES

| REF | FN | PART NUMBER | YR/SN | QTY | DESCRIPTION |
|---|---|---|---|---|---|
| | | REF | | | NOTICE Left-Hand and Right-Hand Cab Doors; Left-Hand Door Not Illustrated |
| | | 394585A3 | | 1 | PORTE CABINE, DROITE Right-Hand Door; Incl. Ref 1 - 49, Except Where Noted For Left-Hand Door |
| | | 341743A3 | | 1 | PORTE CABINE, GAUCHE Left-Hand Door; Incl. Ref 1A - 49, Except Where Noted For Right-Hand Door |
| 1 | | NSS | | 1 | NON FOURNI SEPAREMENT Frame; Right-Hand Door |
| 1A | | NSS | | 1 | NON FOURNI SEPAREMENT Frame; Left-Hand Door |
| 2 | | 394707A1 | | 1 | PROFILE CAOUTCHOUC Right-Hand Door |
| 2A | | 390838A1 | | 1 | PROFILE CAOUTCHOUC Left-Hand Door |
| 3 | | 394708A1 | | 1 | JOINT-DE-GLACE Window; Upper; Right-Hand Door |
| 3A | | 391850A1 | | 1 | JOINT-DE-GLACE Window; Upper; Left-Hand Door |
| 4 | | 394700A1 | | 1 | VITRE Upper; Right-Hand Door |
| 4A | | 338429A1 | | 1 | VITRE Upper; Left-Hand Door |
| 5 | | 338427A1 | | 1 | VITRE DE CABINE Lower; Right-Hand Door |
| 5A | | 338426A1 | | 1 | VITRE DE CABINE Lower; Left-Hand Door |
| 6 | | 391827A1 | | 4 | ENTRETOISE 4 Per Door; Cut Bumpers In Half For 8 Locations |
| 7 | | 60-7083T1 | | 1 | POIGNÉE Outer |
| 8 | | 442718A1 | | 1 | BOUTON Release |
| 9 | | 440-12510 | | 1 | VIS 1/4 x 5/8 |
| 10 | | 492-11025 | | 1 | RONDELLE FREIN 1/4 |
| 10A | | 895-11006 | | 1 | RONDELLE 6,6 x 12,5 x 1,6 mm |
| 11 | | 315276A1 | | 1 | ENCADREMENT Small |
| 12 | | 315273A1 | | 1 | ENCADREMENT Large |
| 13 | | 391847A1 | | 1 | JOINT Small |
| 14 | | 391838A1 | | 1 | JOINT Large |
| 15 | | 391848A1 | | 1 | PLAQUE DORSALE |
| 16 | | 393203A1 | | 3 | VIS |
| 17 | | 393202A1 | | 3 | RONDELLE 6 mm |
| 18 | | 394704A1 | | 1 | PATTE FIXATION Cover Mounting; Right-Hand Door |
| 18A | | 391841A1 | | 1 | PATTE FIXATION Cover Mounting; Left-Hand Door |
| 19 | | 391827A1 | | 2 | ENTRETOISE |

HTTP://WWW.MINNPARBACKHOEPARTS.COM



CABINE - PORTES

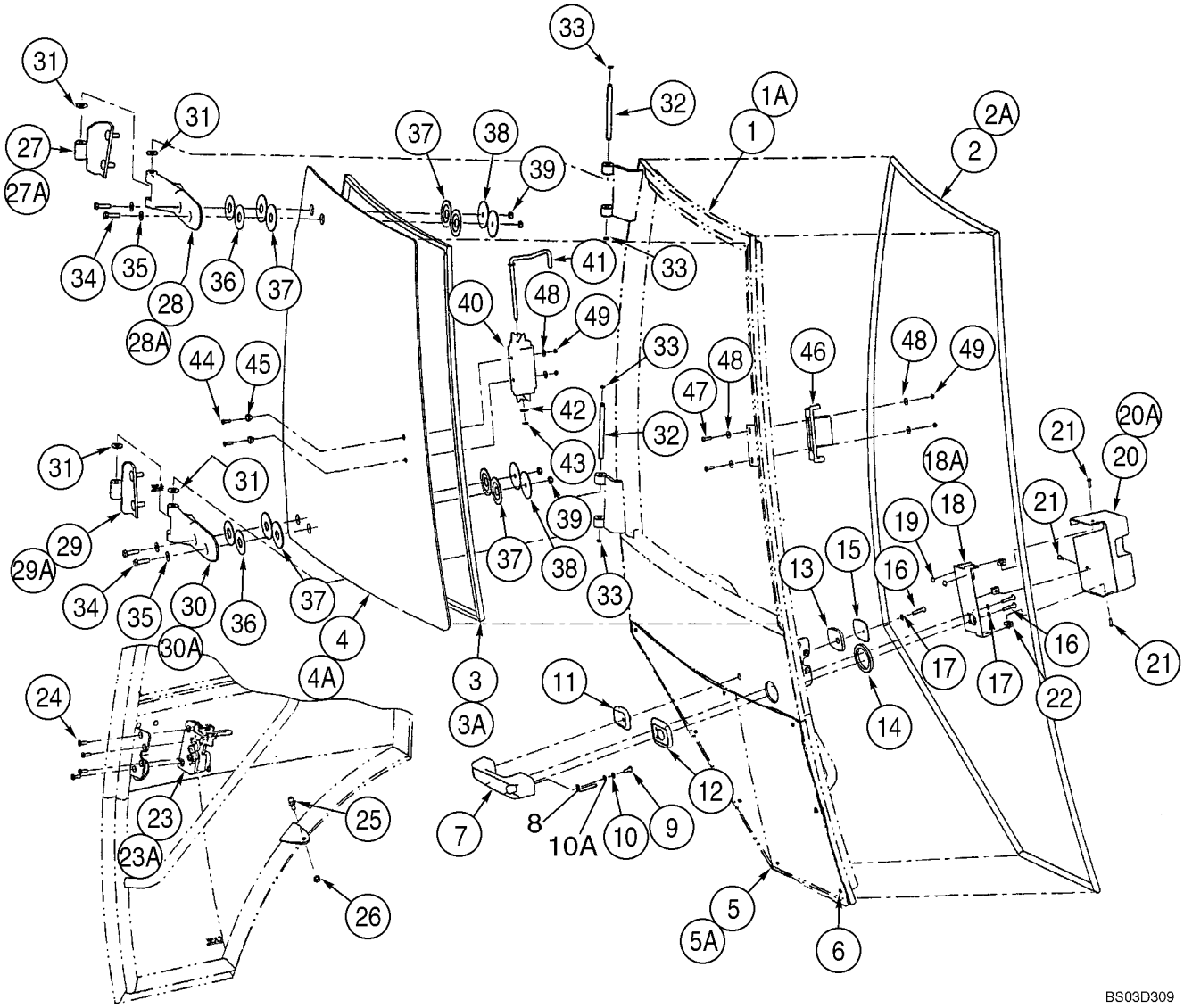

HTTP://WWW.MINNPARBACKHOEPARTS.COM



CABINE - PORTES

| REF | FN | PART NUMBER | YR/SN | QTY | DESCRIPTION |
|---|---|---|---|---|---|
| 20 | | 394705A1 | | 1 | COUVERCLE Latch; Right-Hand Door |
| 20A | | 391842A1 | | 1 | COUVERCLE Latch; Left-Hand Door |
| 21 | | 390-100 | | 3 | VIS |
| 22 | | 393209A1 | | 3 | DOUILLE DE CENTRAGE |
| 23 | | 382777A1 | | 1 | LOQUET Right-Hand Door |
| 23A | | 382775A1 | | 1 | LOQUET Left-Hand Door |
| 24 | | 569-4 | | 4 | VIS |
| 25 | | 3234063R1 | | 1 | ROTULE |
| 26 | | 832-10408 | | 1 | ECROU M8 |
| 27 | | 394701A1 | | 1 | CHARNIERE Upper; Right-Hand Door |
| 27A | | 390840A1 | | 1 | CHARNIERE Upper; Left-Hand Door |
| 28 | | 364134A2 | | 1 | CHARNIERE Plastic; Upper; Right-Hand Door |
| 28A | | 364132A2 | | 1 | CHARNIERE Plastic; Upper; Left-Hand Door |
| 29 | | 394702A1 | | 1 | CHARNIERE Lower; Right-Hand Door |
| 29A | | 390841A1 | | 1 | CHARNIERE Lower; Left-Hand Door |
| 30 | | 364135A2 | | 1 | CHARNIERE Plastic; Lower; Right-Hand Door |
| 30A | | 364133A2 | | 1 | CHARNIERE Plastic; Lower; Left-Hand Door |
| 31 | | 391845A1 | | 4 | RONDELLE Nylon |
| 32 | | 391843A1 | | 2 | AXE |
| 33 | | 442773A1 | | 4 | CIRCLIP |
| 34 | | 514-633 | | 4 | VIS M8 x 30 |
| 35 | | 895-30107 | | 4 | RONDELLE |
| 36 | | 376334A1 | | 4 | RONDELLE 55 mm OD; Yellow |
| 37 | | 376336A1 | | 8 | RONDELLE ELASTIQUE Rubber |
| 38 | | 376332A1 | | 4 | RONDELLE 60 mm OD; Black |
| 39 | | 832-10508 | | 4 | ECROU M8 |
| 40 | | 368147A1 | | 1 | POIGNÉE Slam Latch |
| 41 | | 391849A1 | | 1 | TRINGLE |
| 42 | | 906086R1 | | 1 | RONDELLE 8.4 x 16 x 1.6 thk |
| 43 | | 100-39001 | | 1 | ANNEAU |
| 44 | | 140-104 | | 2 | VIS No. 8 x 3/4 |
| 45 | | F64198 | | 2 | BAGUE Nylon |
| 46 | | 368146A1 | | 1 | LOQUET Slam Latch |
| 47 | | 142-103 | | 2 | VIS |
| 48 | | 195-81023 | | 6 | RONDELLE 1/4 x 9/16 x 3/64 |
| 49 | | F45165 | | 4 | ECROU-DE-SECURITE No. 10 |

HTTP://WWW.MINNPARBACKHOEPARTS.COM

| 09-56 | | p1 | 01/04 |
|---|---|---|---|

CABINE - MONTAGE DE PORTIÈRE

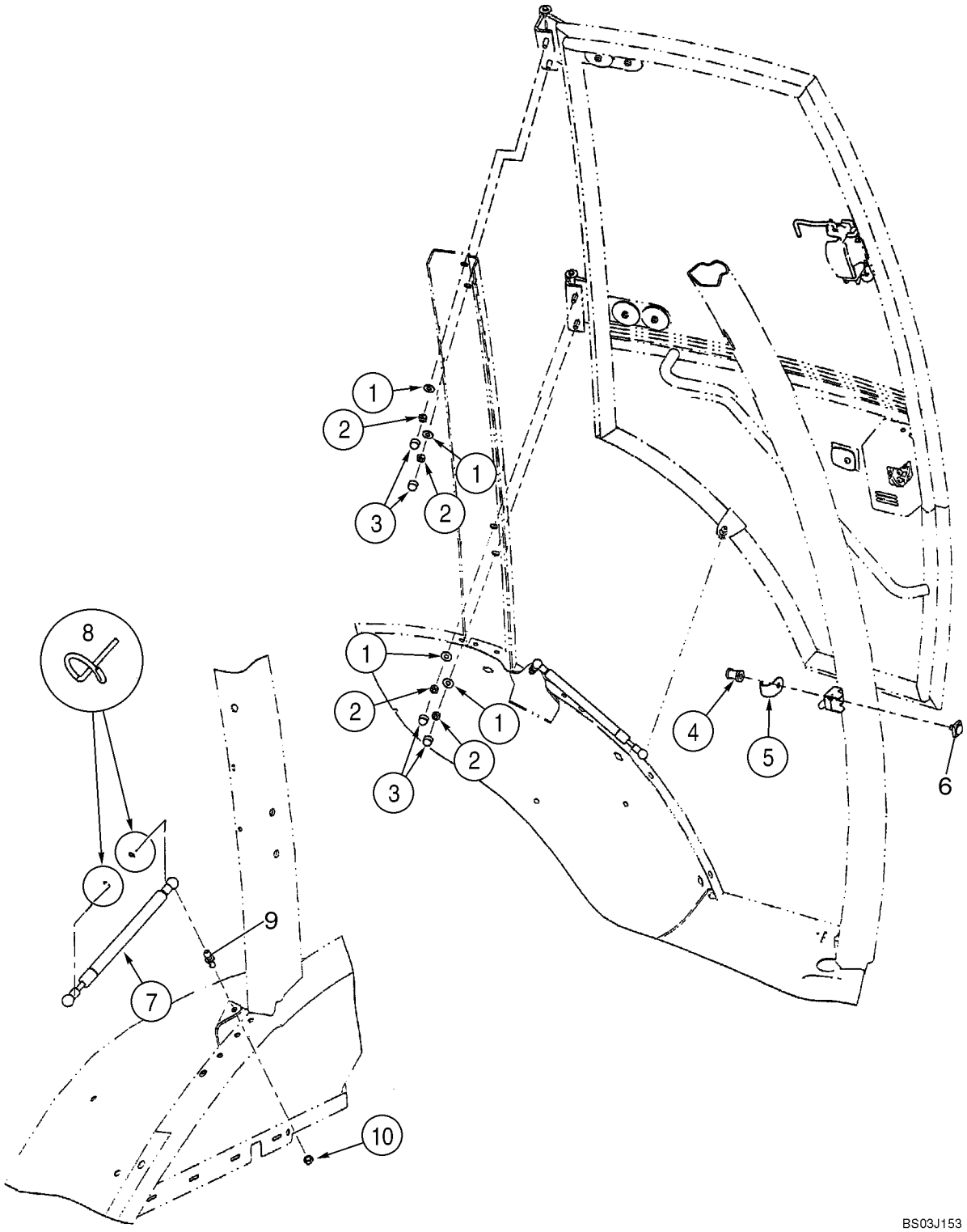

HTTP://WWW.MINNPARBACKHOEPARTS.COM



CABINE - MONTAGE DE PORTIÈRE

| REF | FN | PART NUMBER | YR/SN | QTY | DESCRIPTION |
|---|---|---|---|---|---|
| | | REF | | | NOTICE Left-Hand and Right-Hand Cab Doors; Left-Hand Cab Door Shown |
| 1 | | 397064A1 | | 4-8 | RONDELLE SPÉCIALE 3/8 x 7/8 x 1/16 thk |
| 2 | | 232-1446 | | 4-8 | ECROU 3/8 |
| 3 | | 396841A1 | | 4-8 | CHAPEAU |
| 4 | | 87411108 | | 1-2 | BOULON SPECIAL Striker |
| 5 | | 393211A1 | | 1-2 | GARANT |
| 6 | | 442842A1 | | 1-2 | BLOC (ASSEMBLE) Striker |
| 7 | | 394800A1 | | 1-2 | RESSORT Gas Spring |
| 8 | | 3233348R1 | | 2-4 | CLIP |
| 9 | | 432431A1 | | 1-2 | GOUJON Ball |
| 10 | | 832-10408 | | 1-2 | ECROU M8 |

HTTP://WWW.MINNPARBACKHOEPARTS.COM

| 09-57 | | p1 | 01/04 |
|---|---|---|---|

CABINE - FENÊTRE DROITE, POUR CADRES DE CABINE À UNE SEULE PORTIÈRE

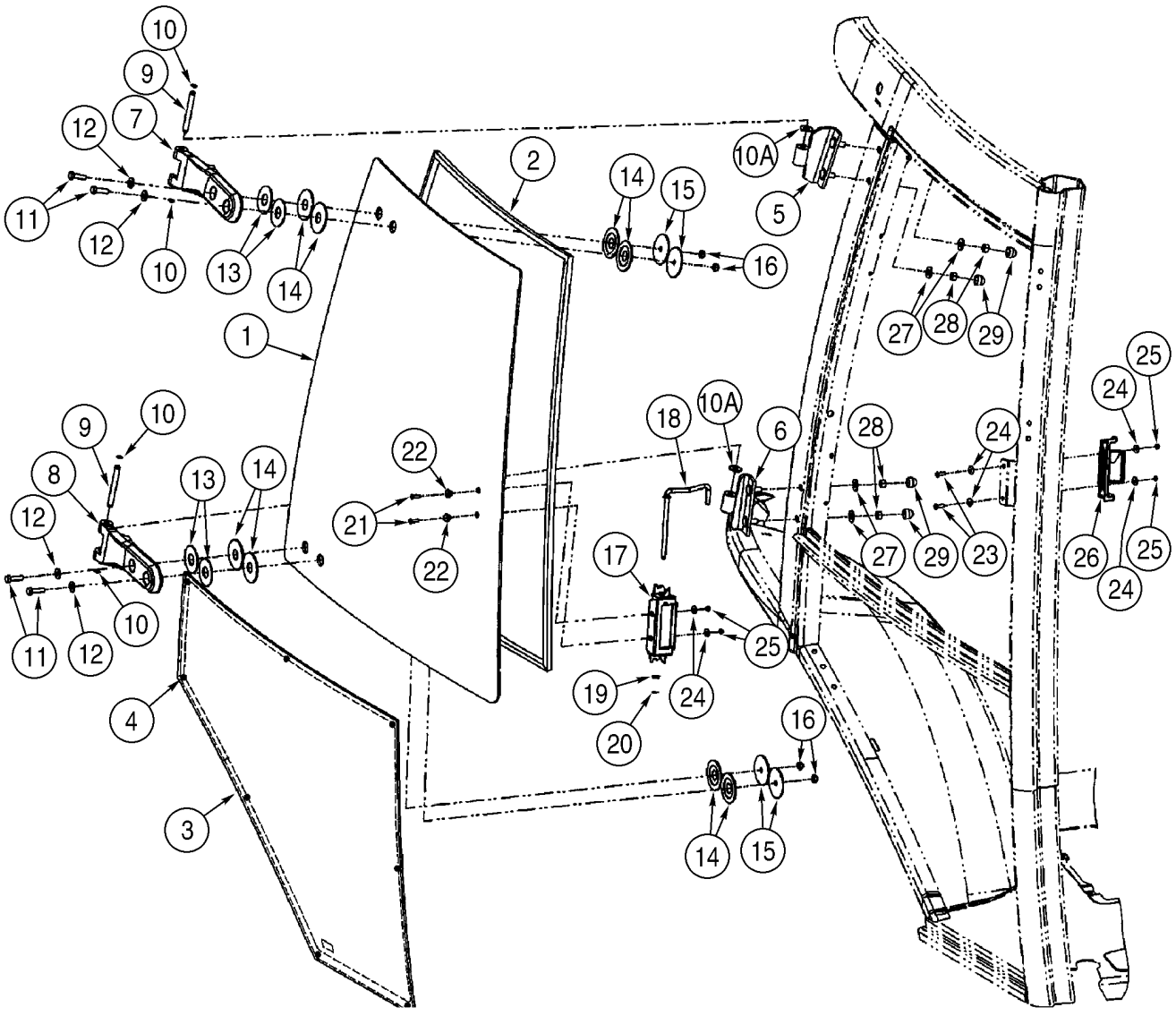

HTTP://WWW.MINNPARBACKHOEPARTS.COM



CABINE - FENÊTRE DROITE, POUR CADRES DE CABINE À UNE SEULE PORTIÈRE

| REF | FN | PART NUMBER | YR/SN | QTY | DESCRIPTION |
|---|---|---|---|---|---|
| | | 341746A2 | | 1 | FENETRE (ASSEMBLEE) Right-Hand; Incl. Ref 1 - 29 |
| 1 | | 360046A1 | | 1 | VITRE DE CABINE Upper |
| 2 | | 394864A1 | | 1 | JOINT-DE-GLACE |
| 3 | | 338428A1 | | 1 | FENETRE (ASSEMBLEE) Lower |
| 4 | | 391827A1 | | 4 | ENTRETOISE Cut Bumpers In Half For 8 Locations |
| 5 | | 394701A1 | | 1 | CHARNIERE Upper |
| 6 | | 394702A1 | | 1 | CHARNIERE Lower |
| 7 | | 364134A2 | | 1 | CHARNIERE Plastic; Upper |
| 8 | | 364135A2 | | 1 | CHARNIERE Plastic; Lower |
| 9 | | 394865A1 | | 2 | AXE |
| 10 | | 393330A1 | | 4 | ANNEAU |
| 10A | | 391845A1 | | 4 | RONDELLE Nylon |
| 11 | | 514-633 | | 4 | VIS M8 x 30 |
| 12 | | 895-30107 | | 4 | RONDELLE |
| 13 | | 376334A1 | | 4 | RONDELLE 55 mm OD; Yellow |
| 14 | | 376336A1 | | 8 | RONDELLE ELASTIQUE Rubber |
| 15 | | 376332A1 | | 4 | RONDELLE 60 mm OD; Black |
| 16 | | 832-10508 | | 4 | ECROU M8 |
| 17 | | 368147A1 | | 1 | POIGNÉE Slam Latch |
| 18 | | 391849A1 | | 1 | TRINGLE |
| 19 | | 906086R1 | | 1 | RONDELLE 8.4 x 16 x 1.6 thk |
| 20 | | 100-39001 | | 1 | ANNEAU |
| 21 | | 140-104 | | 2 | VIS No. 8 x 3/4 |
| 22 | | F64198 | | 2 | BAGUE Nylon |
| 23 | | 142-103 | | 2 | VIS |
| 24 | | 195-81023 | | 6 | RONDELLE 1/4 x 9/16 x 3/64 |
| 25 | | F45165 | | 4 | ECROU-DE-SECURITE No. 10 |
| 26 | | 368146A1 | | 1 | LOQUET Slam Latch |
| 27 | | 397064A1 | | 4 | RONDELLE SPÉCIALE 3/8 x 7/8 x 1/16 thk |
| 28 | | 232-1446 | | 4 | ECROU 3/8 |
| 29 | | 396841A1 | | 4 | CHAPEAU |

HTTP://WWW.MINNPARBACKHOEPARTS.COM

| 09-58 | | p1 | 01/04 |
|---|---|---|---|

CABINE - VITRE, ARRIÈRE

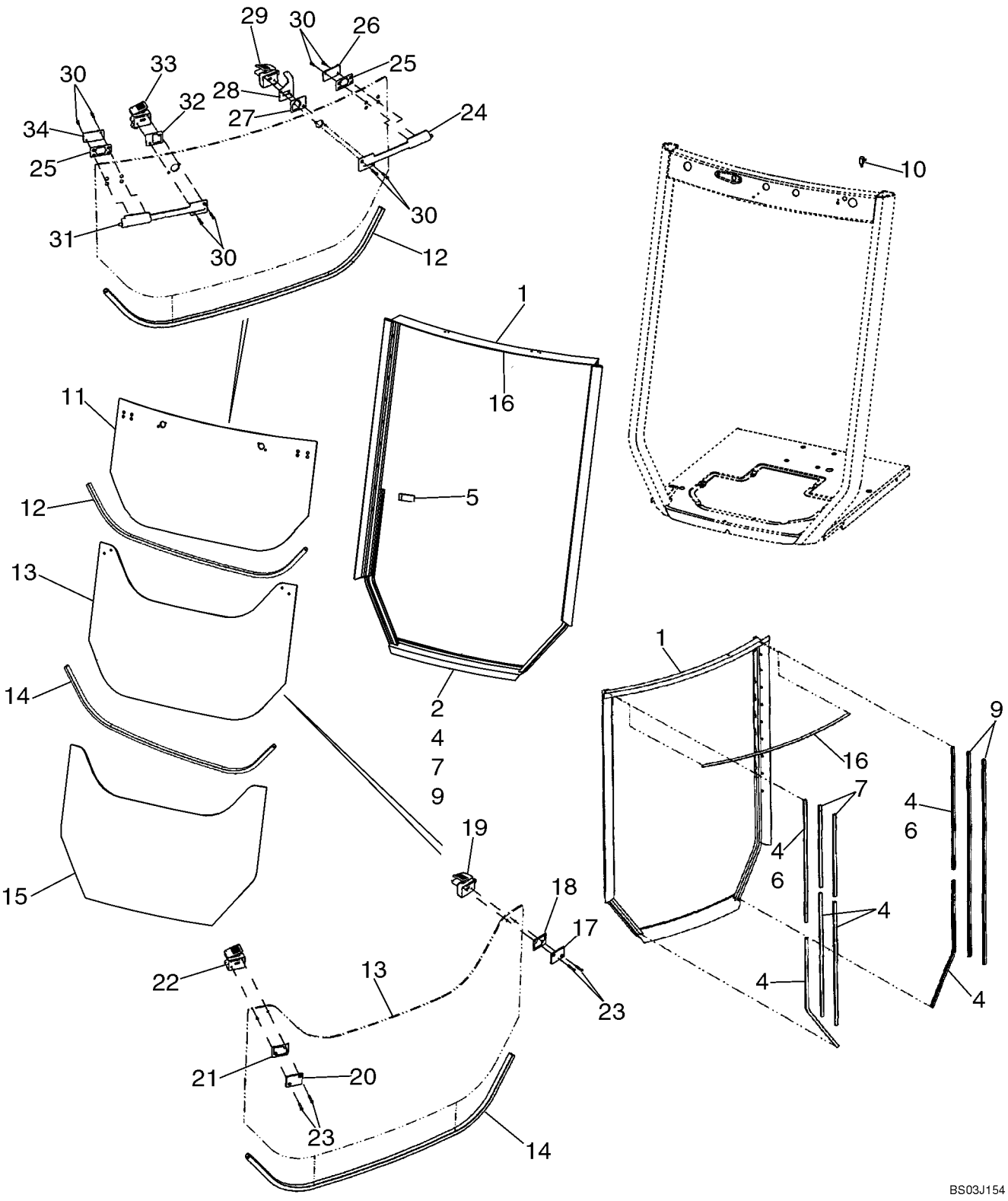

HTTP://WWW.MINNPARBACKHOEPARTS.COM



CABINE - VITRE, ARRIÈRE

| REF | FN | PART NUMBER | YR/SN | QTY | DESCRIPTION |
|---|---|---|---|---|---|
| | | 411850A1 | | 1 | POCHETTE Frame and Seal; Incl. 1, 4, 7, 9, 16 |
| 1 | | 403948A1 | | 1 | BATI (ASSEMBLE) Included in 411850A1 Frame and Seal Kit |
| 2 | | 410867A1 | | 1 | JOINT Rubber Seal; Bulb Type |
| | | 411851A1 | | 1 | POCHETTE Seal; Incl. 4, 7, 9, 16 |
| 4 | | 404228A1 | | 6 | JOINT 760 mm (29-15/16 in), Flocked Channel Seals; Cut From 402852A1; Included in 411851A1 Seal Kit and 411850A1 Frame and Seal Kit |
| 5 | | 400200A1 | | 2 | PROFILE CAOUTCHOUC Stop |
| 6 | | 404226A1 | | 2 | JOINT 787 mm (31 in), Flocked Channel Seals; Cut From 402852A1 |
| 7 | | 404229A1 | | 2 | JOINT 508 mm (20 in), Flocked Channel Seals; Cut From 402852A1; Included In 411851A1 Seal Kit and 411850A1 Frame and Seal Kit |
| 9 | | 404227A1 | | 2 | JOINT 1270 mm (50 in), Flocked Channel Seals; Cut From 402852A1; Included in 411851A1 Seal Kit and 411850A1 Frame and Seal Kit |
| 10 | | A187714 | | 1 | CONTACTEUR Rear Wiper Cutout |
| | | 495-11047 | | 2 | RONDELLE 15/32 x 59/64 x 1/16 |
| | | 425-147 | | 1 | ECROU 7/16 |
| 11 | | 352208A1 | | 1 | VITRE DE CABINE Upper |
| 12 | | 395348A1 | | 1 | BANDE, ENJOLIVEUR 1210 mm (47-21/32 in), Lower Glass Edge; Cut From 404426A1 |
| | | 87434783 | | 1 | FENETRE (ASSEMBLEE) Center; Includes Ref 13, 19, 22, 23; Plus (4) Backing Plates and (4) Grommets Which Are Not Serviced Separately; Includes Instructions |
| 13 | | 352209A1 | | 1 | VITRE DE CABINE Center |
| 14 | | 395348A1 | | 1 | BANDE, ENJOLIVEUR 1210 mm (47-21/32 in), Lower Glass Edge; Cut From 404426A1 |
| 15 | | 352210A1 | | 1 | VITRE DE CABINE Lower |
| 16 | | 400494A1 | | 1 | JOINT 1095 mm (43-1/8 in), Hollow Seal; Cut From 404231A1; Included in 411851A1 Seal Kit and 411850A1 Frame and Seal Kit |
| 17 | | 411917A1 | | 1 | PLAQUE DORSALE Kit; Includes 1 Each 402849A1 Plate, 411942A1 Gasket Pad |

HTTP://WWW.MINNPARBACKHOEPARTS.COM

| 09-58 | | p2 | 01/04 |
|---|---|---|---|

CABINE - VITRE, ARRIÈRE

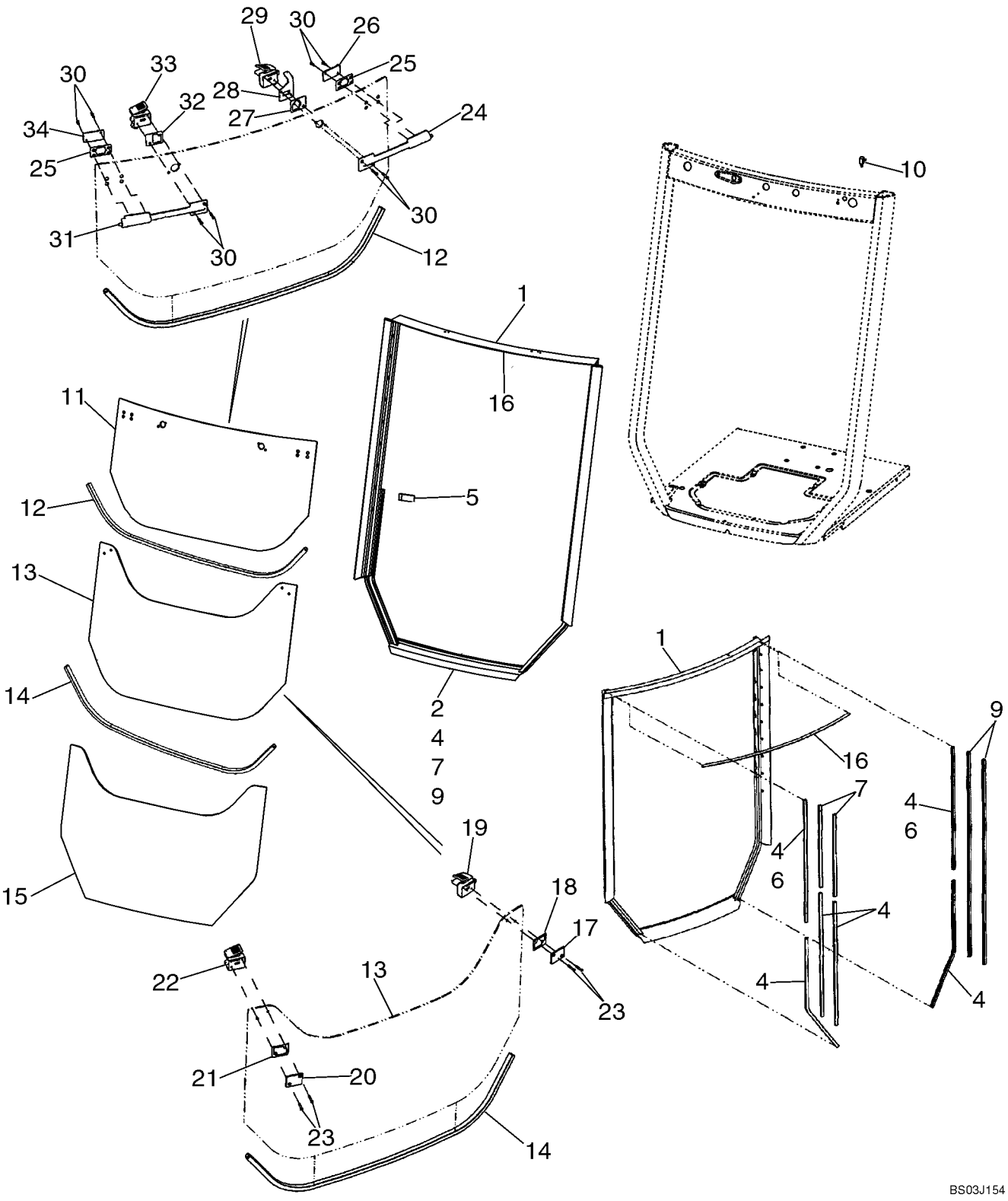

HTTP://WWW.MINNPARBACKHOEPARTS.COM



CABINE - VITRE, ARRIÈRE

| REF | FN | PART NUMBER | YR/SN | QTY | DESCRIPTION |
|---|---|---|---|---|---|
| 18 | | 402847A1 | | 1 | PLAQUE PLASTIQUE Bushing |
| 19 | | 411909A1 | | 1 | LOQUET Kit, Includes 1 Each 402868A1 Cover, 402867A1 Lever, 402833A1 Plunger, 402831A1 Housing, 402830A1 Bushing, 402870A1 Spring, 402869A1 Rivet, 402865A1 Bumper |
| 20 | | 411916A1 | | 1 | PLAQUE DORSALE Kit; Includes 1 Each 402848A1 Plate, 411942A1 Gasket Pad |
| 21 | | 402846A1 | | 1 | PLAQUE PLASTIQUE Bushing |
| 22 | | 411908A1 | | 1 | LOQUET Kit, Includes 1 Each 402871A1 Cover, 402872A1 Lever, 402873A1 Plunger, 402832A1 Housing, 402830A1 Bushing, 402870A1 Spring, 402869A1 Rivet, 402865A1 Bumper |
| 23 | | 86989736 | | 8 | VIS M5 x 30 Screw |
| 24 | | 411910A1 | | 1 | LOQUET Kit, Bolt Assy; Includes 1 Each 402860A1 Housing, 402840A1 Gasket, 402837A1 Bolt, 402861A1 Insert, 402838A1 Rod, 402856A1 Spring |
| 25 | | 402843A1 | | 2 | PLAQUE PLASTIQUE |
| 26 | | 87423503 | | 1 | PLAQUE DORSALE Backing Plate |
| 27 | | 402844A1 | | 1 | PLAQUE PLASTIQUE |
| 28 | | 402836A1 | | 1 | PATTE FIXATION Rear Wiper Cutout Switch |
| 29 | | 411914A1 | | 1 | LOQUET Kit, Includes 1 Each 402831A1 Housing, 402866A1 Bumper, 402830A1 Bushing, 402833A1 Plunger, 402867A1 Lever, 402868A1 Cover |
| 30 | | 409690A1 | | 8 | VIS M5 x 16 |
| 31 | | 411911A1 | | 1 | LOQUET Kit, Bolt Assy; Includes 1 Each 402863A1 Housing, 402851A1 Gasket, 402856A1 Spring, 402841A1 Bolt, 402861A1 Insert, 402838A1 Rod |
| 32 | | 402845A1 | | 1 | PLAQUE PLASTIQUE |
| 33 | | 411912A1 | | 1 | LOQUET Kit, Includes 1 Each 402832A1 Housing, 402866A1 Bumper, 402830A1 Bushing, 402873A1 Plunger, 402872A1 Lever, 402871A1 Cover |
| 34 | | 87423502 | | 1 | PLAQUE DORSALE Backing Plate |
| | | 411844A1 | | 1 | POCHETTE Upper Bolt Latch; Includes 1 Each 411910A1 Bolt Assy Ref 24, 87423502 Backing Plate Ref 34, 87423503 Backing Plate Ref 26, (2) 402843A1 Bushing late Ref 25 |

HTTP://WWW.MINNPARBACKHOEPARTS.COM

| 09-58 | | p3 | 01/04 |
|---|---|---|---|

CABINE - VITRE, ARRIÈRE

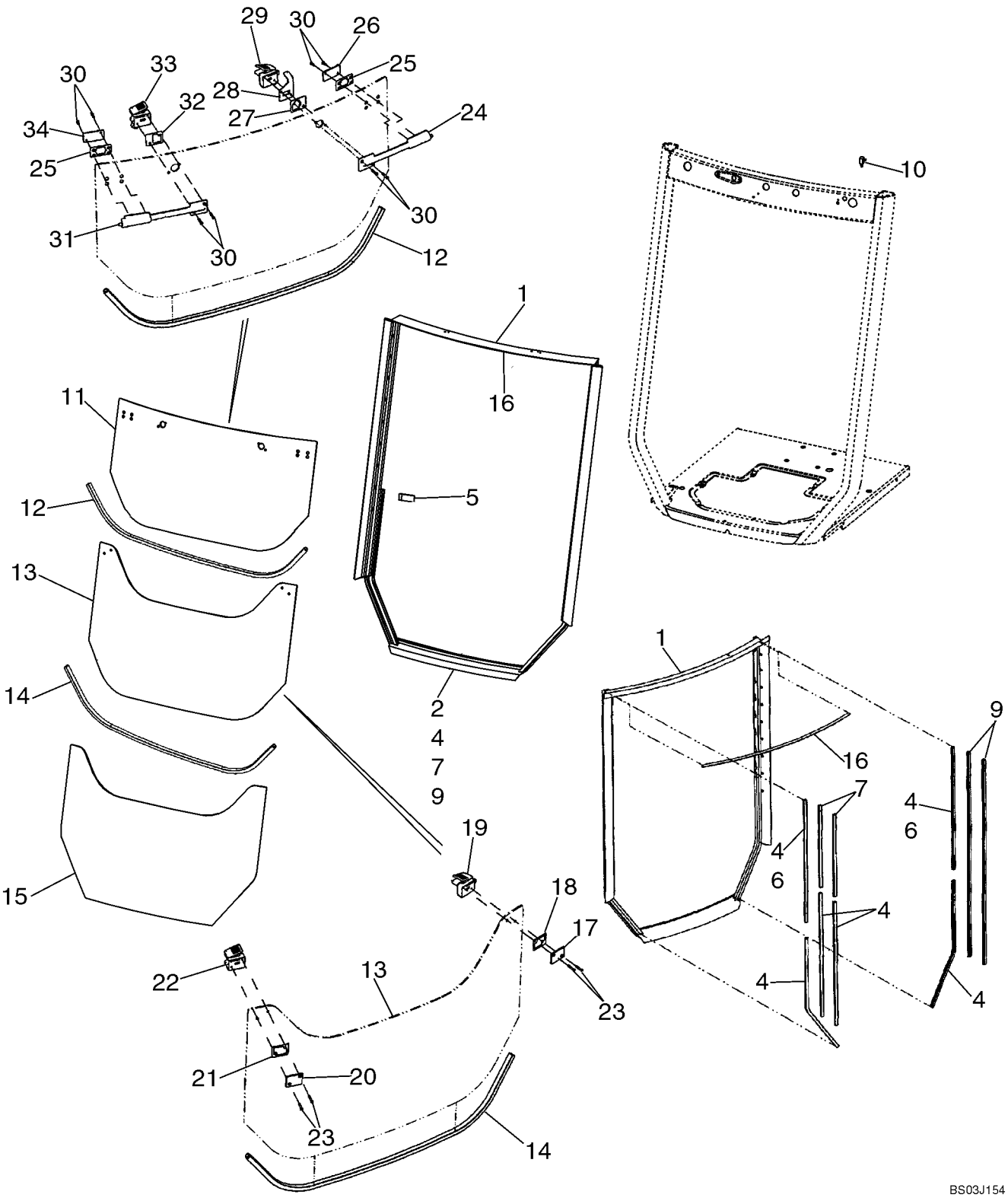

HTTP://WWW.MINNPARBACKHOEPARTS.COM



CABINE - VITRE, ARRIÈRE

| REF | FN | PART NUMBER | YR/SN | QTY | DESCRIPTION |
|---|---|---|---|---|---|
| | | 411845A1 | | 1 | POCHETTE Upper Bolt Latch; Includes 1 Each 411911A1 Bolt Assy Ref 31, 87423502 Backing Plate Ref 34, 87423503 Backing Plate Ref 26, (2) 402843A1 Bushing Plate Ref 25 |
| | | 411846A1 | | 1 | POCHETTE Mid Catch; Includes 1 Each 411908A1 Catch Kit Ref 22, 411916A1 Backing Plate Kit Ref 20, 402846A1 Bushing Plate Ref 21 |
| | | 411847A1 | | 1 | POCHETTE Mid Catch; Includes 1 Each 411909A1 Catch Kit Ref 19, 411917A1 Backing Plate Ref 17, 402847A1 Bushing Plate Ref 18 |
| | | 411848A1 | | 1 | POCHETTE Upper Catch; Includes 1 Each 411912A1 Upper Catch Kit Ref 33, 402845A1 Bushing Plate Ref 32 |
| | | 411849A1 | | 1 | POCHETTE Upper Catch; Includes 1 Each 411914A1 Upper Catch Kit Ref 29, 402844A1 Bushing Plate Ref 27 |

HTTP://WWW.MINNPARBACKHOEPARTS.COM

| 09-59 | | p1 | 01/04 |
|---|---|---|---|

CABINE - LAVE-GLACE

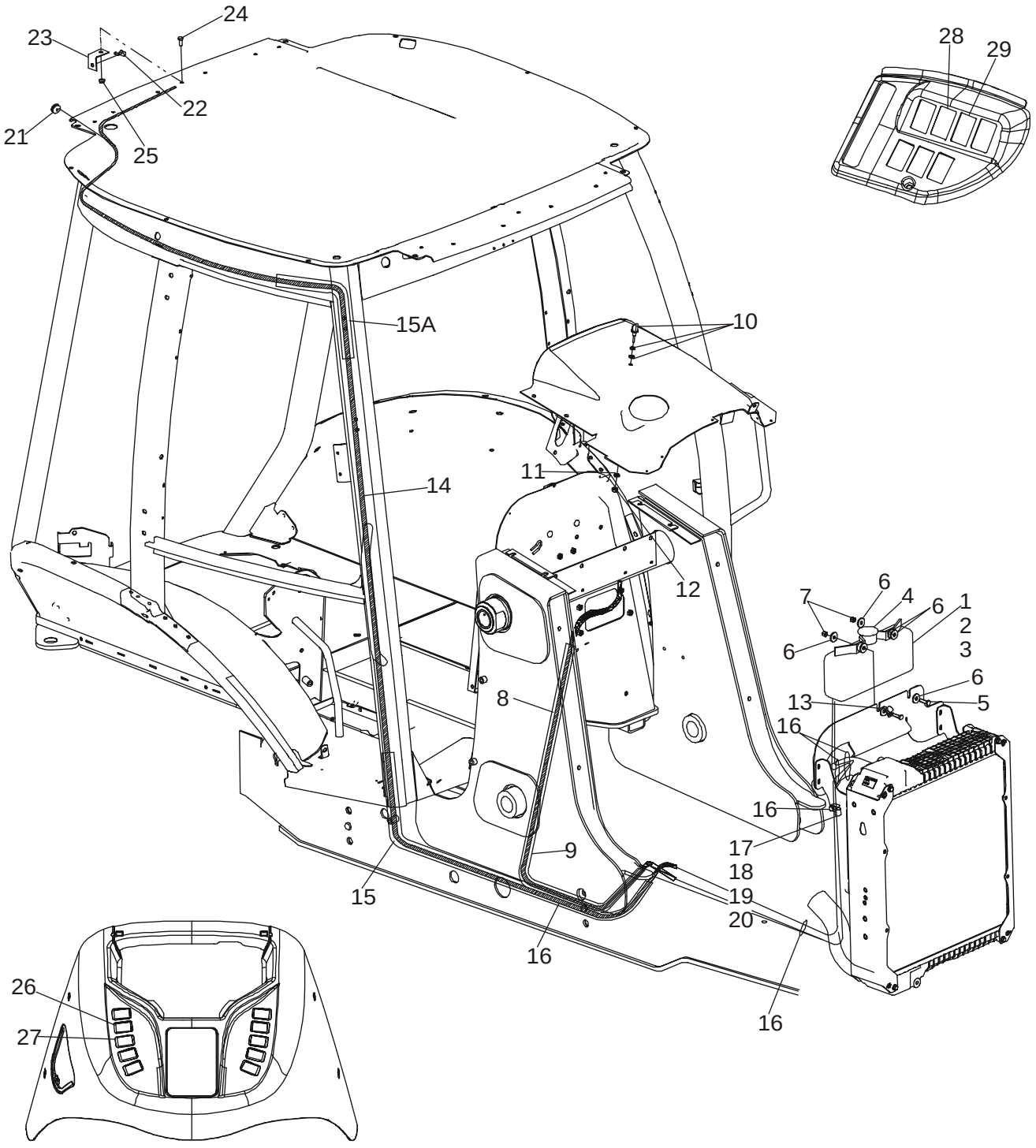

HTTP://WWW.MINNPARBACKHOEPARTS.COM



CABINE - LAVE-GLACE

| REF | FN | PART NUMBER | YR/SN | QTY | DESCRIPTION |
|---|---|---|---|---|---|
| | | E46560 | | 1 | RÉSERVOIR Incl. Ref 1 - 4 |
| 1 | | NSS | | 1 | NON FOURNI SEPAREMENT RESERVOIR |
| 2 | | E47239 | | 2 | JOINT |
| 3 | | E47238 | | 2 | POMPE MOTOR, 12 Volt |
| 4 | | E47240 | | 1 | BOUCHON Cap |
| 5 | | 614-8030 | | 2 | VIS M8 x 30 |
| 6 | | 496-41041 | | 8 | RONDELLE 13/32 x 1-1/8 x 1/8 |
| 7 | | 832-10408 | | 2 | ECROU M8 |
| 8 | | {87428316} | | 1 | HOSE 3150 mm (124-1/64 in); Front Washer; Cut From 1968141CX |
| 9 | | 386718A3 | | 1 | GARANT 1630 mm (64-3/16 in); Cut From 397155A2 |
| 10 | | 284154A1 | | 1 | INJECTEUR Includes A Steel and Rubber Washer Which Are Not Serviced Separately |
| 11 | | 492-11038 | | 1 | RONDELLE FREIN 3/8 |
| 12 | | 425-106 | | 1 | ECROU 3/8 |
| 13 | | 515-22159 | | 1 | COLLIER P, 16 mm |
| 14 | | 87423346 | | 1 | FLEXIBLE 6325 mm (249-1/64 in); Rear Washer; Cut From 1968141CX |
| 15 | | 408966A1 | | 1 | GARANT 2200 mm (86-5/8 in); Rear Washer Hose; Lower; Cut From 397155A2 |
| 15A | | 408965A1 | | 1 | GARANT 550 mm (21-11/16 in); Rear Washer Hose, Upper; Cut From 397155A2 |
| 16 | | L18337 | | 6 | SANGLE 15 in |
| 17 | | D147383 | | 1 | CLIP 5/8 Clamp |
| 18 | | 614-8016 | | 1 | VIS M8 x 16 |
| 19 | | 895-11008 | | 1 | RONDELLE Flat |
| 20 | | 829-1408 | | 1 | ECROU M8 |
| 21 | | 386722A1 | | 1 | PASSE-FIL Washer, Hose |
| 22 | | E43769 | | 1 | VAPORISATEUR Rear Nozzle; Includes Rubber Seal Which Is Not Serviced Separately |
| 23 | | 386720A1 | | 1 | PATTE FIXATION Rear Nozzle |
| 24 | | 614-8020 | | 1 | VIS M8 x 20 |
| 25 | | 825-2408 | | 1 | ECROU M8 |
| 26 | | 386785A1 | | 1 | CONTACTEUR Front Wiper |
| 27 | | 386787A1 | | 1 | CONTACTEUR Front Washer |
| 28 | | 386786A1 | | 1 | CONTACTEUR Rear Wiper |

HTTP://WWW.MINNPARBACKHOEPARTS.COM

| 09-59 | | p2 | 01/04 |
|---|---|---|---|

CABINE - LAVE-GLACE

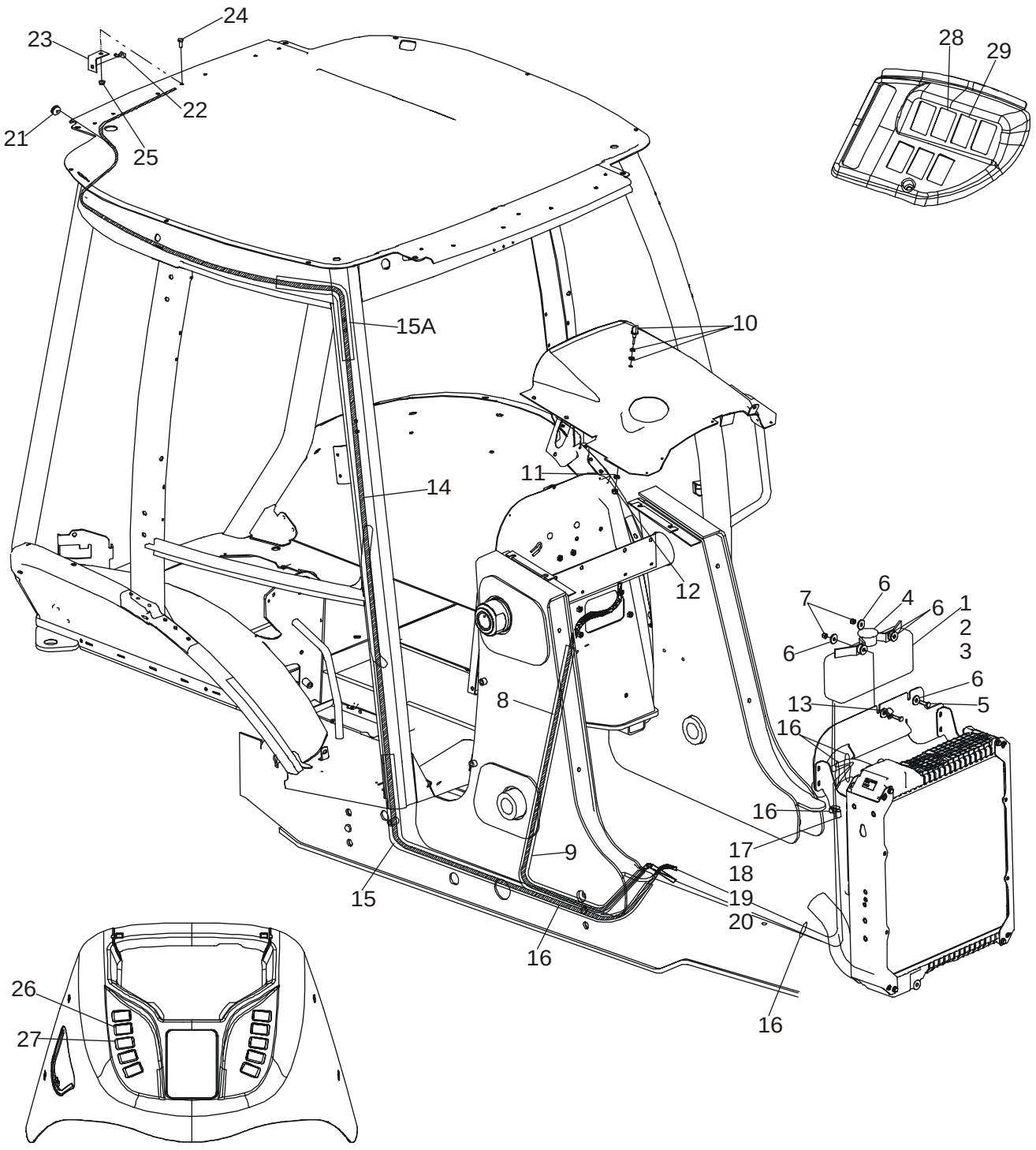

HTTP://WWW.MINNPARBACKHOEPARTS.COM



CABINE - LAVE-GLACE

| REF | FN | PART NUMBER | YR/SN | QTY | DESCRIPTION |
|---|---|---|---|---|---|
| 29 | | 386788A1 | | 1 | CONTACTEUR Rear Washer |

HTTP://WWW.MINNPARBACKHOEPARTS.COM

| 09-60 | | p1 | 01/04 |
|---|---|---|---|

CABINE - ESSUIE-GLACE

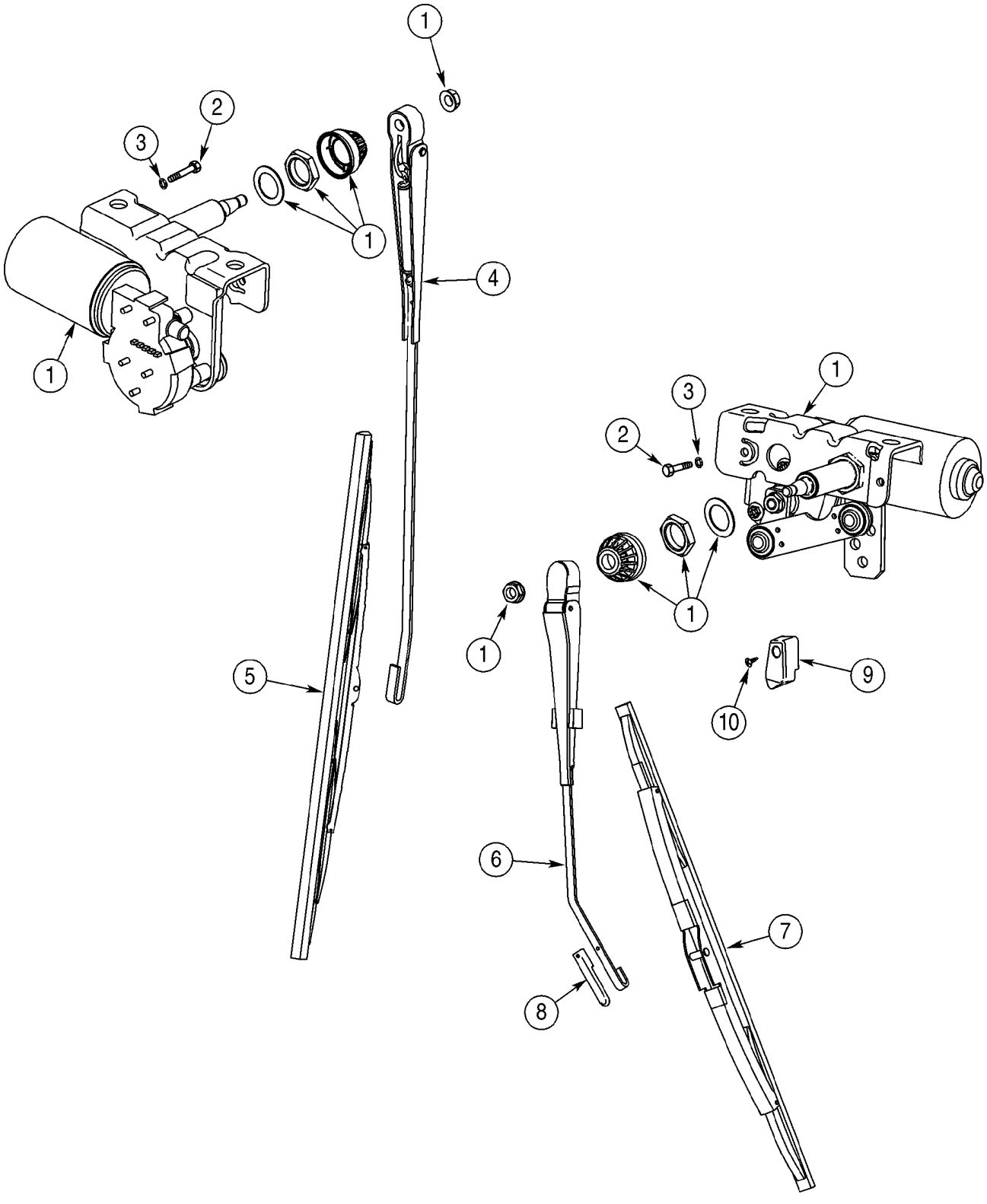

HTTP://WWW.MINNPARBACKHOEPARTS.COM



CABINE - ESSUIE-GLACE

| REF | FN | PART NUMBER | YR/SN | QTY | DESCRIPTION |
|---|---|---|---|---|---|
| 1 | | 450037A1 | | 2 | MOTEUR ESSUIE-GLACE 12V |
| | | 404617A1 | | 1 | FAISCEAU Front Lamps and Wiper |
| | | 396018A2 | | 1 | FAISCEAU Cab, B-Post, Rear Wiper, Radio, Blower, Dome Lamp |
| | | 386786A1 | | 1 | CONTACTEUR Rear Wiper |
| | | 386785A1 | | 1 | CONTACTEUR Front Wiper |
| | | A187714 | | 1 | CONTACTEUR Rear Wiper Cutout Switch |
| | | 495-11047 | | 2 | RONDELLE 15/32 x 59/64 x 1/16 |
| | | 425-147 | | 1 | ECROU 7/16 |
| 2 | | 814-6050 | | 4 | VIS M6 x 50 |
| 3 | | 892-11006 | | 4 | RONDELLE FREIN M6 |
| 4 | | D128745 | | 1 | BRAS D'ESSUIE-GLACE Front Wiper |
| 5 | | 414426A1 | | 1 | BALAI D'ESSUIE-GLACE Front Wiper |
| 6 | | 395136A1 | | 1 | BRAS D'ESSUIE-GLACE Rear Wiper |
| 7 | | D128022 | | 1 | BALAI D'ESSUIE-GLACE Rear Wiper |
| 8 | | 395033A1 | | 1 | CLIP |
| 9 | | 395026A1 | | 1 | RAMPE Block |
| 10 | | 395389A1 | | 1 | VIS M6 |

HTTP://WWW.MINNPARBACKHOEPARTS.COM

| 09-61 | | p1 | 01/04 |
|---|---|---|---|

GARNITURE DE LA CABINE - FILTRE, DEFLECTEUR, PLAFONNIER

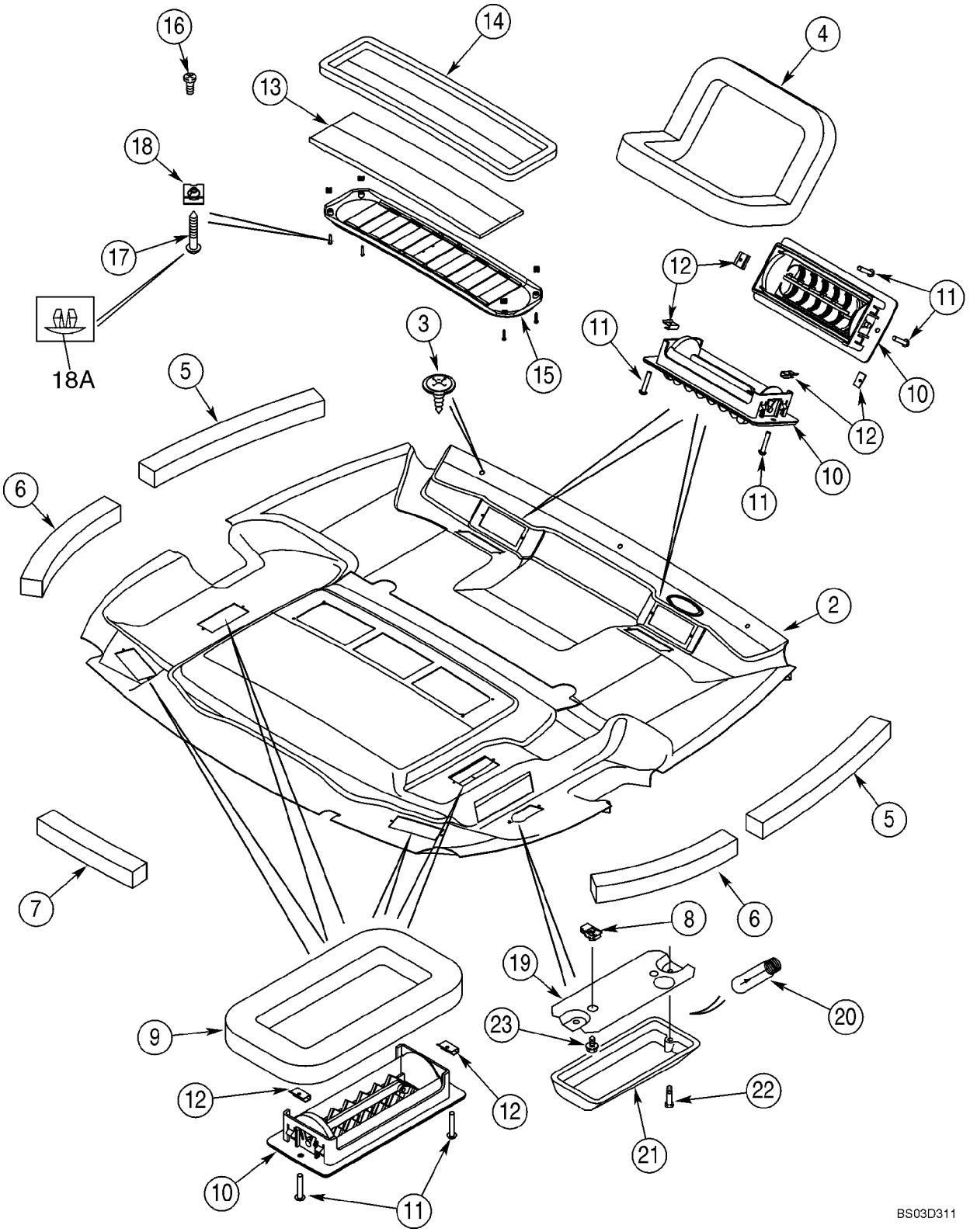

HTTP://WWW.MINNPARBACKHOEPARTS.COM



GARNITURE DE LA CABINE - FILTRE, DEFLECTEUR, PLAFONNIER

| REF | FN | PART NUMBER | YR/SN | QTY | DESCRIPTION |
|---|---|---|---|---|---|
| | | 367705A6 | | 1 | HABILLEMENT DE TOIT HEADLINER ASSY, Standard Interior; Incl. Ref 1, 4 - 18A |
| | | 360272A6 | | 1 | HABILLEMENT DE TOIT HEADLINER ASSY, Deluxe Interior; Incl. Ref 2, 4 - 18A |
| 1 | | 367704A4 | | 1 | HABILLEMENT DE TOIT Shell; Standard Interior; Not Illustrated |
| 2 | | 381696A5 | | 1 | HABILLEMENT DE TOIT Shell With Foam and Fabric Covering; Deluxe Interior |
| 3 | | 396516A1 | | 3 | POINTEAU |
| 4 | | 368813A2 | | 2 | JOINT Defrost |
| 5 | | 379160A1 | | 2 | JOINT 494 mm; Foam; Adhesive Back; Front |
| 6 | | 379161A1 | | 2 | JOINT 379 mm; Foam; Adhesive Back; Rear |
| 7 | | 379209A1 | | 1 | JOINT 303 mm; Foam; Adhesive Back, Center, Rear |
| 8 | | 131-861 | | 2 | ECROU No. 10; Dome Lamp |
| 9 | | 377194A1 | | 4 | JOINT Heat and Air |
| 10 | | 363883A1 | | 8 | GRILLE (ASSEMBLEE) |
| 11 | | 140-103 | | 16 | VIS No. 6 x 3/4 |
| 12 | | 125749A1 | | 16 | ECROU J-Type, No. 6 |
| 13 | | 377594A5 | | 1 | FILTRE Air Recirculation |
| 14 | | 381972A1 | | 1 | JOINT |
| 15 | | 369450A1 | | 1 | CALANDRE Air Recirculation; Incl. Ref 16 |
| 16 | | 260-1436 | | 2 | VIS |
| 17 | | 414600A1 | | 4 | VIS |
| 18 | | 177269A1 | | 4 | ECROU |
| 18A | | 409723A1 | | 4 | BOUCHON Plastic; Fits 5,5 mm Hole |
| | | 380719A2 | | 1 | ECLAIRAGE INTERIEUR Dome Lamp; Incl. Ref 19 - 21 |
| 19 | | NSS | | 1 | NON FOURNI SEPAREMENT Base |
| 20 | | N14466 | | 1 | AMPOULE |
| 21 | | NSS | | 1 | NON FOURNI SEPAREMENT Lens; With Switch |
| 22 | | 440-1088 | | 2 | VIS No. 8 x 1/2 in; Base To Lens |
| 23 | | 281-54512 | | 2 | VIS No. 10 x 3/4; Lamp To Headliner |

HTTP://WWW.MINNPARBACKHOEPARTS.COM

| 09-62 | | p1 | 01/04 |
|---|---|---|---|

CABINE - FILTRE A AIR

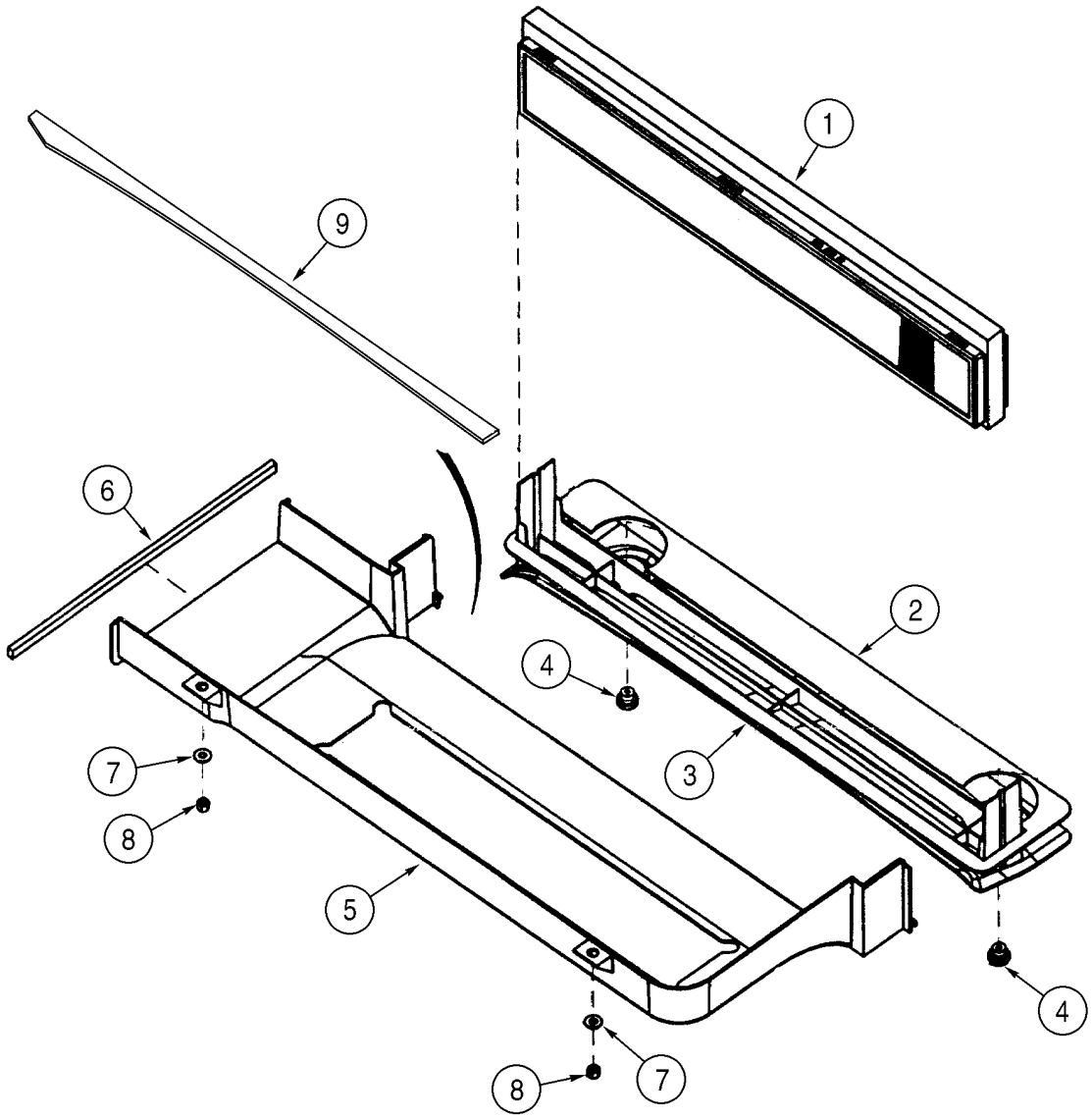


BS00F073

HTTP://WWW.MINNPARBACKHOEPARTS.COM



CABINE - FILTRE A AIR

| REF | FN | PART NUMBER | YR/SN | QTY | DESCRIPTION |
|---|---|---|---|---|---|
| 1 | | 360260A2 | | 1 | ELÉMENT FILTRANT Includes Foam Seal |
| 2 | | 382770A2 | | 1 | JOINT |
| 3 | | 360261A1 | | 1 | PLATEAU |
| 4 | | 398738A1 | | 2 | PLAQUE Fresh Air Duct Retainer |
| 5 | | 360252A2 | | 1 | CONDUIT Fresh Air Intake |
| 6 | | 368990A1 | | 1 | JOINT |
| 7 | | 895-15008 | | 2 | RONDELLE 9 x 20 x 1,6 mm |
| 8 | | 832-10408 | | 2 | ECROU M8 |
| 9 | | 403271A1 | | 1 | JOINT 882 mm; Adhesive Back |

HTTP://WWW.MINNPARBACKHOEPARTS.COM

| 09-63 | | p1 | 01/04 |
|---|---|---|---|

CABINE - CARTER DE LA SOUFFLANTE, DURITS DE VENTILATION, CONDUITES DE PURGE

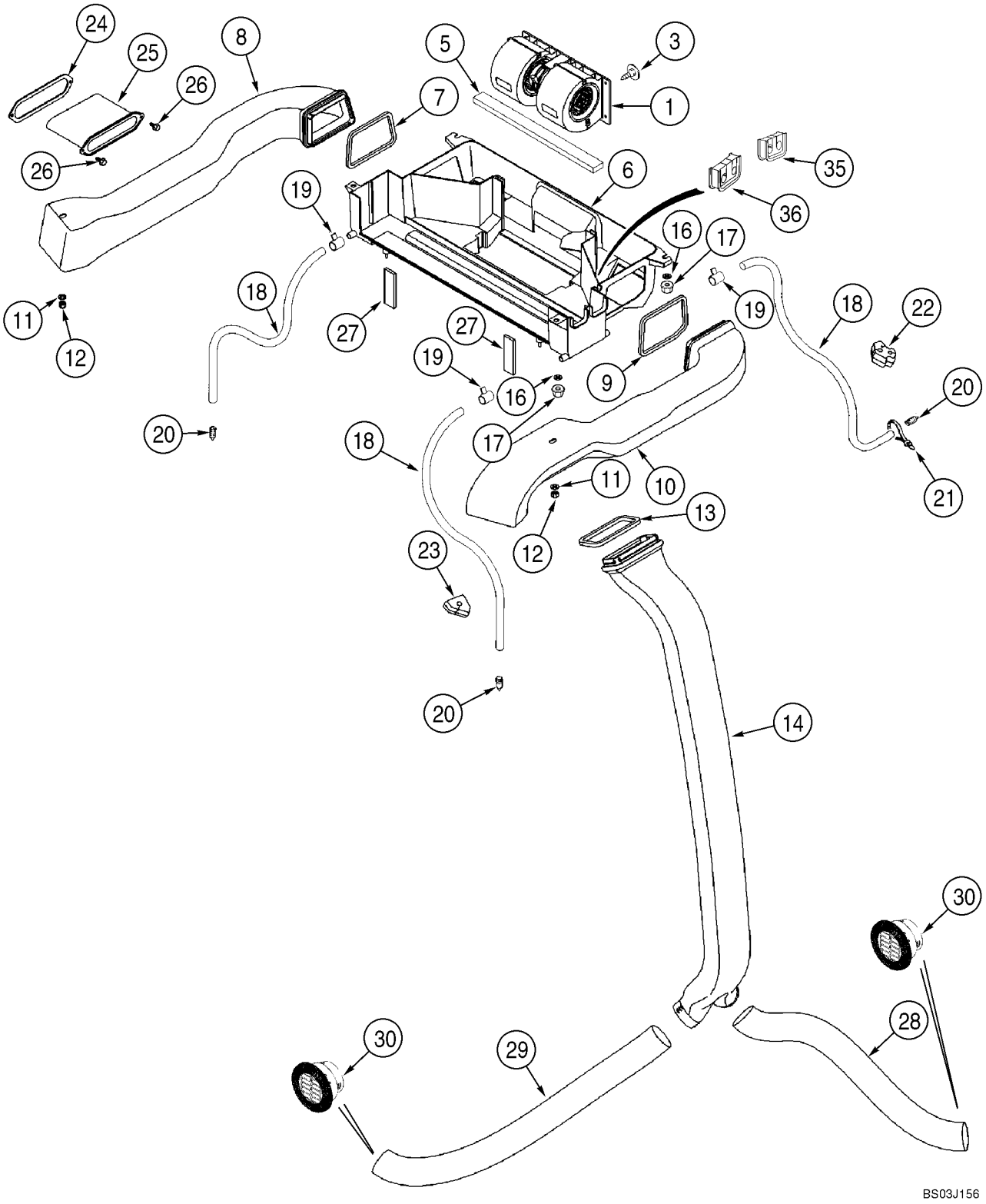

HTTP://WWW.MINNPARBACKHOEPARTS.COM



CABINE - CARTER DE LA SOUFFLANTE, DURITS DE VENTILATION, CONDUITES DE PURGE

| REF | FN | PART NUMBER | YR/SN | QTY | DESCRIPTION |
|---|---|---|---|---|---|
| 1 | | {377221A2} | | 1 | BLOWER; Component Parts Not Serviced Separately; For Blower Switch, See Figure 04-09 |
| 3 | | 182697A1 | | 1 | AGRAFE |
| 5 | | 181981A1 | | 1 | JOINT 6 x 20 x 355 mm; Adhesive Back; Under Blower |
| 6 | | 360251A3 | | 1 | CARTER (ASSEMBLE) Heat and Air; Includes 373995A1 |
| | | 373995A1 | | 2 | INSERT |
| 7 | | 368805A1 | | 1 | JOINT Left-Hand Duct |
| 8 | | 360253A3 | | 1 | CONDUIT Left-Hand |
| 9 | | 369249A1 | | 1 | JOINT Right-Hand Duct |
| 10 | | 360254A3 | | 1 | CONDUIT Right-Hand |
| 11 | | 895-15010 | | 2 | RONDELLE 11 x 24 x 2 mm |
| 12 | | 832-10408 | | 2 | ECROU M8 |
| 13 | | 368807A1 | | 1 | JOINT |
| 14 | | 360255A1 | | 1 | CONDUIT |
| 16 | | 895-15008 | | 4 | RONDELLE 9 x 20 x 1,6 mm |
| 17 | | 832-10408 | | 4 | ECROU M8 |
| 18 | | 368821A1 | | 4 | FLEXIBLE 3050 mm; Drain |
| 19 | | 214-1406 | | 4 | COLLIER 7/16 - 25/32 |
| 20 | | 365789A1 | | 4 | SOUPAPE DE VIDANGE Drain |
| 21 | | L18337 | | 2 | SANGLE 15 in |
| 22 | | 383794A2 | | 2 | BOUCHON |
| 23 | | 383795A2 | | 2 | BOUCHON |
| 24 | | 381113A2 | | 1 | JOINT |
| 25 | | 381111A2 | | 1 | MANCHON |
| 26 | | 281-18712 | | 2 | VIS 1/4 st x 3/4 |
| 27 | | 377230A3 | | 2 | JOINT 16 mm thk; Fresh Air Duct To Ventilation Housing |
| 28 | | 375392A1 | | 1 | DURITE 750 mm; Cut From 236559A1 |
| 29 | | 368818A1 | | 1 | DURITE 1015 mm; Cut From 236559A1 |
| 30 | | 398986A1 | | 2 | BUSE D'AÉRATION |
| 35 | | 403225A1 | | 1 | JOINT Heater Tubes At Housing |
| 36 | | 403193A1 | | 1 | JOINT Air Conditioning Tubes At Housing |

HTTP://WWW.MINNPARBACKHOEPARTS.COM

| 09-64 | | p1 | 01/04 |
|---|---|---|---|

CABINE - CHAUFFAGE

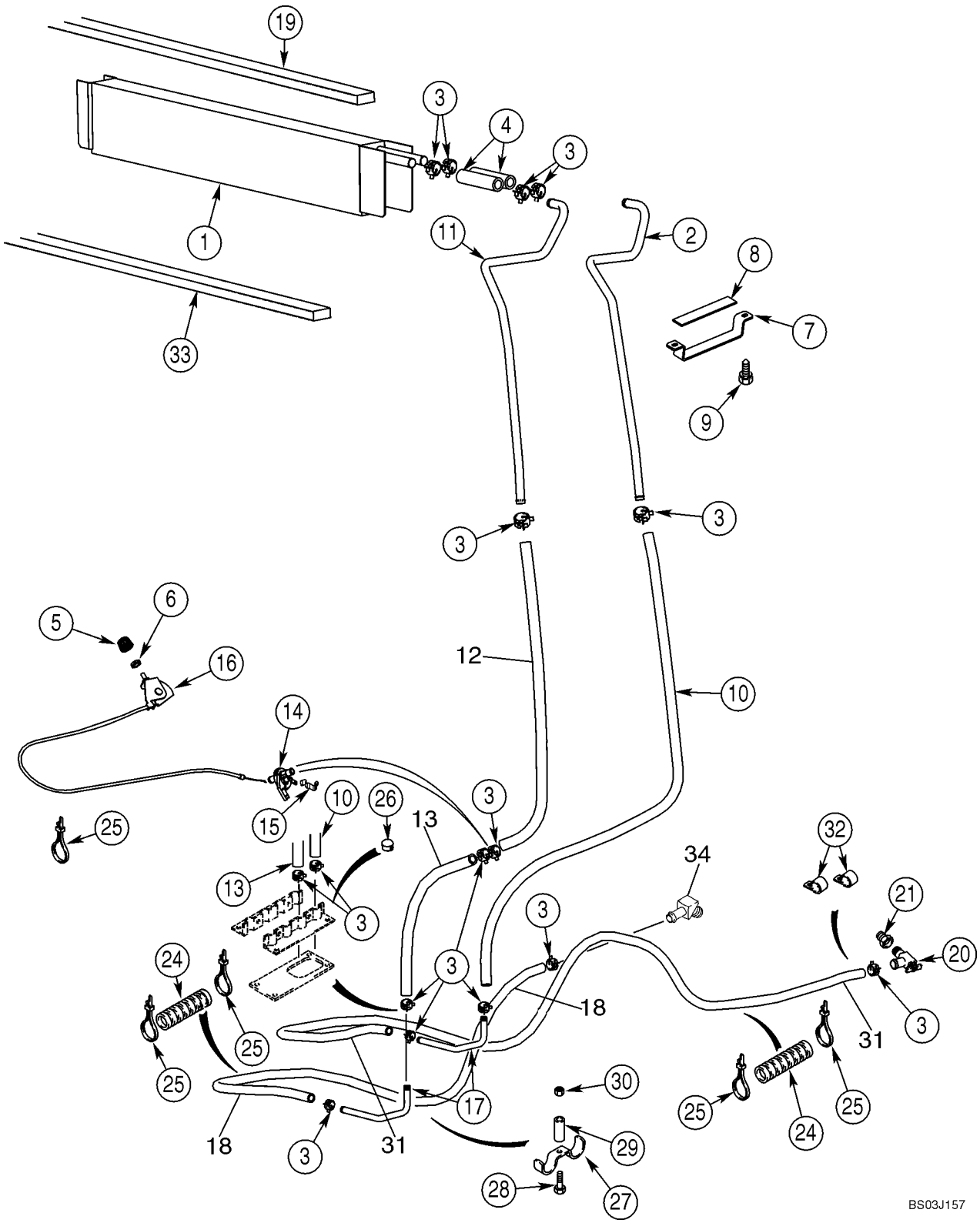

HTTP://WWW.MINNPARBACKHOEPARTS.COM



CABINE - CHAUFFAGE

| REF | FN | PART NUMBER | YR/SN | QTY | DESCRIPTION |
|---|---|---|---|---|---|
| 1 | | 360262A2 | | 1 | ECHANGEUR DE CHALEUR Core, Mounts In Blower Housing Box; Seal Mounts On Top Of Core On Models With Heat Only |
| 2 | | 400282A1 | | 1 | TUBE Front |
| 3 | | 1954736C1 | | 14 | COLLIER No. 24 |
| 4 | | 377222A1 | | 2 | FLEXIBLE 100 mm; Cut From 97252CX |
| 5 | | 400379A1 | | 1 | PLAQUE 23 mm |
| 6 | | A42561 | | 1 | ECROU |
| 7 | | 388762A1 | | 1 | PATTE FIXATION |
| 8 | | 389402A1 | | 1 | JOINT |
| 9 | | 281-14520 | | 2 | VIS AUTO-TARAUDEUSE With Washer, No. 10 x 1, 25 |
| 10 | | 368801A2 | | 1 | FLEXIBLE 1361 mm; Cut From 97252CX |
| 11 | | 400280A1 | | 1 | TUBE Rear |
| 12 | | 448428A1 | | 1 | FLEXIBLE AU METRE 1175 mm (46-1/4 in); Heater Valve To Core; Cut From 97252CX |
| 13 | | 448429A1 | | 1 | FLEXIBLE AU METRE 150 mm (5-29/32 in) Floor To Valve; Cut From 97252CX |
| 14 | | 1331087C1 | | 1 | SOUPAPE Heater Control |
| 15 | | 1954626C1 | | 1 | COLLIER |
| 16 | | 1999666C1 | | 1 | COMMANDE Heater; Includes 1999667C1, 1999668C1 |
| | | 1999667C1 | | 1 | COMMANDE |
| | | 1999668C1 | | 1 | CABLE |
| 17 | | 190675A1 | | 2 | TUYAU |
| 18 | | {377232A2} | | 1 | HOSE 2650 mm (104-21/64 in); Heater; Return To Water Pump; Cut From 97252CX |
| 19 | | 406287A1 | | 1 | JOINT 19 x 19 x 736 mm; Location Of Seal On Models With Heat Only; On Models With Air Conditioning, Seal Is Located On Evaporator Core |
| 20 | | 301803R1 | | 1 | VALVE D'ARRET |
| 21 | | 221-89 | | 1 | RÉDUCTION 1/2 x 3/8; Replaces Existing Plug |
| 24 | | D132982 | | 6 | GAINE Sleeve, 400 mm (15-3/4 in) |
| 25 | | L18337 | | 6 | SANGLE 15 in |
| 26 | | 353-410 | | 2 | BOUCHON 7/8; Models With Heat Only |
| 27 | | D143427 | | 1 | COLLIER |

HTTP://WWW.MINNPARBACKHOEPARTS.COM



CABINE - CHAUFFAGE

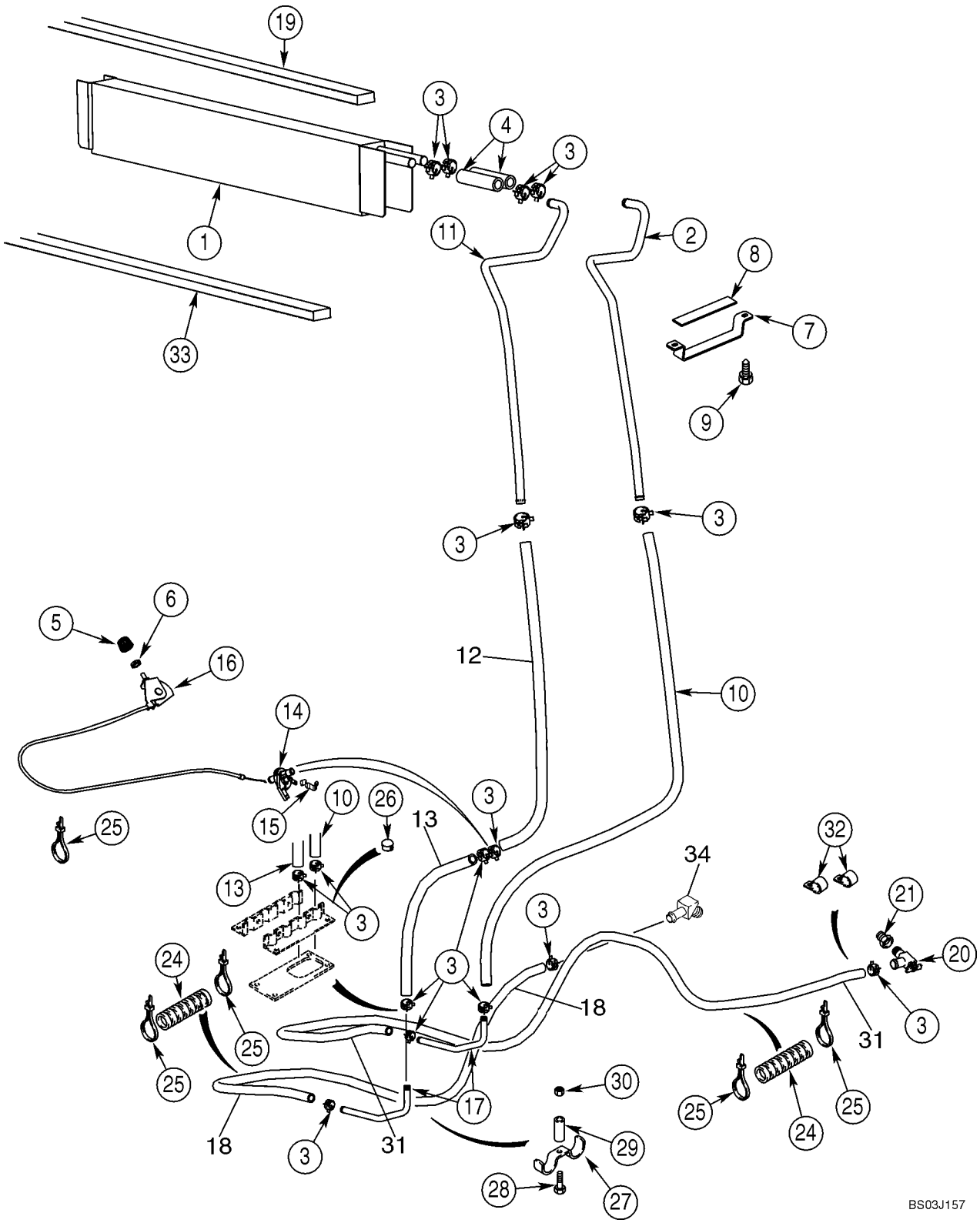

HTTP://WWW.MINNPARBACKHOEPARTS.COM



CABINE - CHAUFFAGE

| REF | FN | PART NUMBER | YR/SN | QTY | DESCRIPTION |
|---|---|---|---|---|---|
| 28 | | 614-8030 | | 1 | VIS M8 x 30 |
| 29 | | D143417 | | 1 | ENTRETOISE |
| 30 | | 825-2408 | | 1 | ECROU M8 |
| 31 | | {377233A2} | | 1 | HOSE 1830 mm (72-3/64 in); Heater; Inlet From Engine; Cut From 97252CX |
| 32 | | D88052 | | 2 | COLLIER |
| 33 | | 1987096C1 | | 1 | PLAQUE, GRANDE Seal, Below Heater Core; Location Of Seal On Models With Heat Only; On Models With Air Conditioning, Seal Is Located At Rear Of Housing |
| 34 | | 217-144 | | 1 | COUDE 45 deg, 5/8 stm x 1/2 NPTF |

HTTP://WWW.MINNPARBACKHOEPARTS.COM

| 09-65 | | p1 | 01/04 |
|---|---|---|---|

CABINE - CONDUITES DE LA CLIMATISATION, RADIATEUR D'EVAPORATION

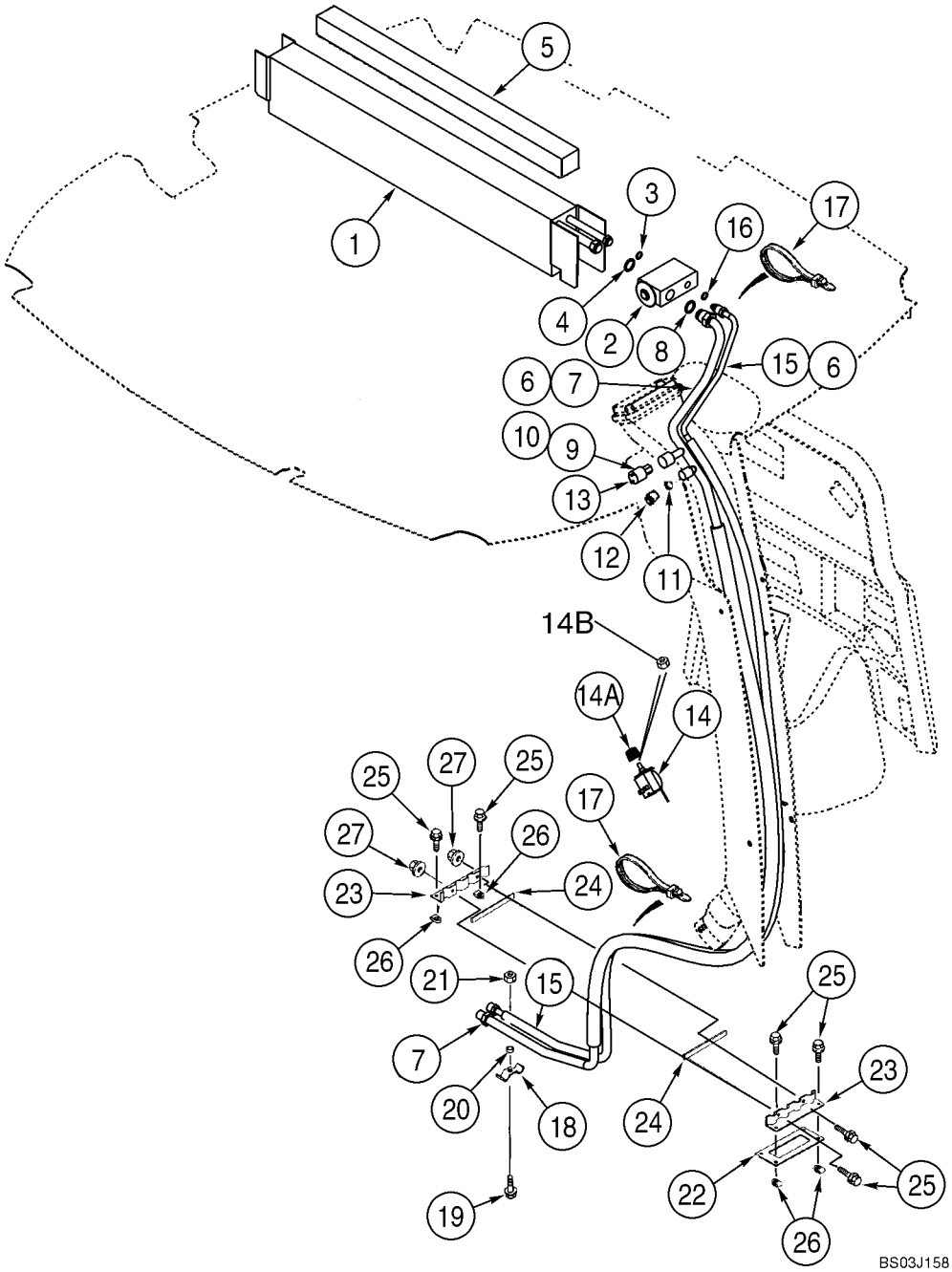

HTTP://WWW.MINNPARBACKHOEPARTS.COM



CABINE - CONDUITES DE LA CLIMATISATION, RADIATEUR D'EVAPORATION

| REF | FN | PART NUMBER | YR/SN | QTY | DESCRIPTION |
|---|---|---|---|---|---|
| | | 363832A5 | | 1 | EVAPORATEUR Incl. Ref 1 - 4; Not Available as An Assembly; Order Components |
| 1 | | 360263A4 | | 1 | EVAPORATEUR Core |
| 2 | | 386535A1 | | 1 | SOUPAPE |
| 3 | | 128484A1 | | 1 | JOINT TORIQUE 7/16 ID x 1/16 |
| 4 | | 128485A1 | | 1 | JOINT THORIQUE 9/16 ID x 1/16 |
| | | 83822C1 | | 3 | RUBAN ADHESIF Insulation; 63,5 (2-1/2 in) x 610 mm (24-1/64 in) |
| 5 | | 406287A1 | | 1 | JOINT 19 x 19 x 736 mm; Adhesive Back; Models With Heat and Air, Locate Seal On Top Of Core |
| | | 345-621 | | 2 | RUBAN ADHESIF 2 x 6 in |
| 7 | | 360257A1 | | 1 | GAINE PLASTIQUE Suction; Incl. Ref 8 - 12 |
| 8 | | 128485A1 | | 1 | JOINT THORIQUE 9/16 ID x 1/16 |
| 9 | | 128483A1 | | 1 | JOINT TORIQUE 5/16 ID x 1/16; Valve Core |
| 10 | | 1250594C1 | | 1 | NOYAU Low Pressure Switch |
| 11 | | 1250594C1 | | 1 | NOYAU Low Side Service Port |
| 12 | | 122553A1 | | 1 | CHAPEAU |
| 13 | | 122579A1 | | 1 | CONTACTEUR Low Pressure |
| 14 | | 370381A1 | | 1 | CONTACTEUR Temperature Control; Air Conditioning |
| 14A | | 400379A1 | | 1 | PLAQUE 23 mm |
| 14B | | A42561 | | 1 | ECROU 7/16 |
| 15 | | 360256A1 | | 1 | GAINE PLASTIQUE Pressure; Incl. Ref 16 |
| 16 | | 128483A1 | | 1 | JOINT TORIQUE 5/16 ID x 1/16 |
| 17 | | L18337 | | 4 | SANGLE 15 in |
| 18 | | D143427 | | 1 | COLLIER |
| 19 | | 614-8030 | | 1 | VIS M8 x 30 |
| 20 | | D143417 | | 1 | ENTRETOISE |
| 21 | | 825-2408 | | 1 | ECROU M8 |
| 22 | | 124011A1 | | 1 | JOINT |
| 23 | | 123980A1 | | 2 | BRIDE CLAMP, Heater and Air Conditioning Hoses |
| 24 | | 181979A1 | | 2 | JOINT |
| 25 | | 845-6020 | | 6 | VIS M6 x 20 |
| 26 | | 833-40406 | | 4 | ECROU M6 |
| 27 | | 825-2406 | | 2 | ECROU M6 |

HTTP://WWW.MINNPARBACKHOEPARTS.COM

| 09-66 | | p1 | 01/04 |
|---|---|---|---|

CABINE - CLIMATISATION, CONDENSATEUR, DESSICCATEUR

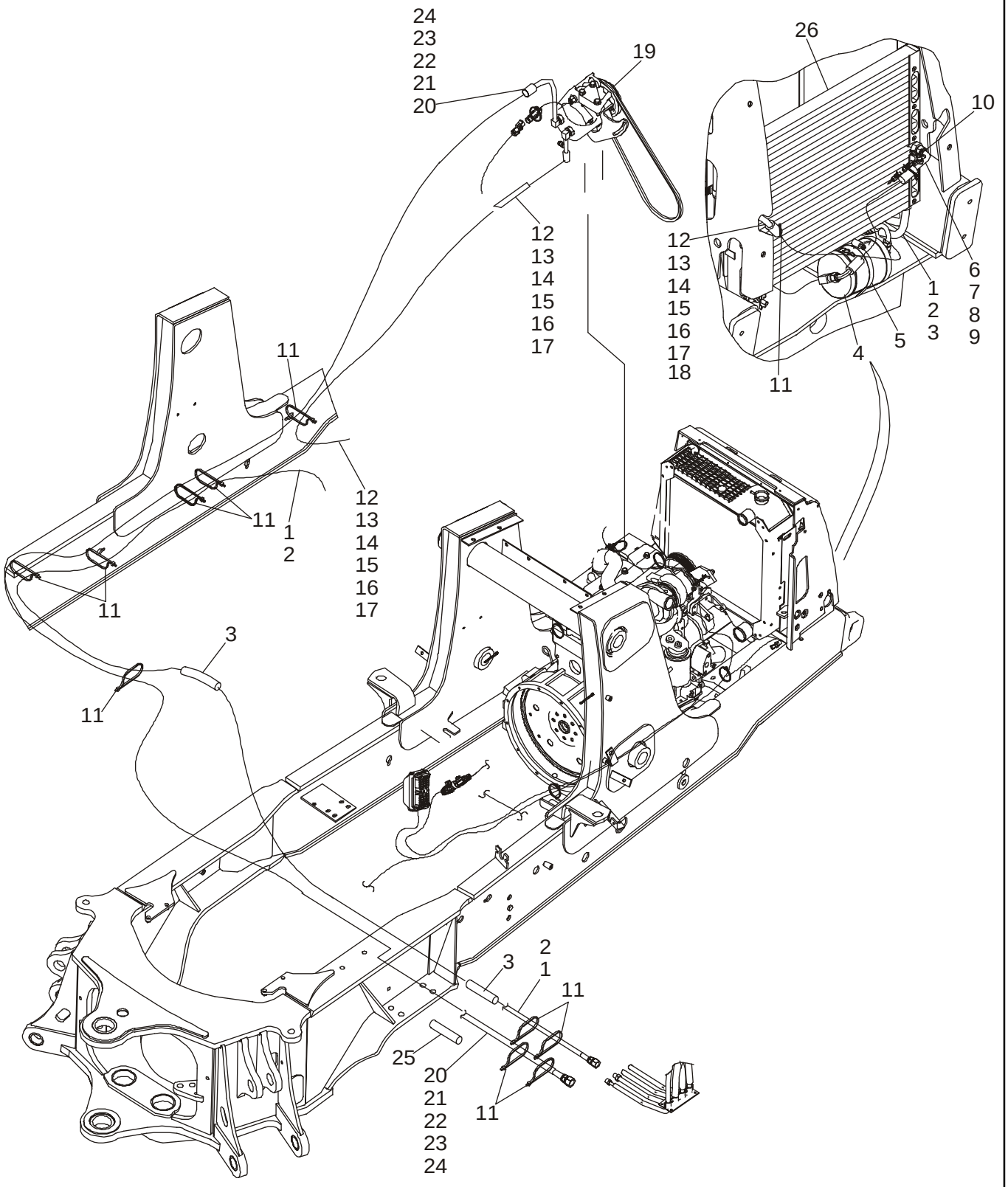

HTTP://WWW.MINNPARBACKHOEPARTS.COM



CABINE - CLIMATISATION, CONDENSATEUR, DESSICCATEUR

| REF | FN | PART NUMBER | YR/SN | QTY | DESCRIPTION |
|---|---|---|---|---|---|
| 1 | | 87421777 | | 1 | FLEXIBLE (ASSEMBLE) 2730 mm (107-1/2 in), Receiver Drier to Cab; Incl. Ref 2 |
| 2 | | 128483A1 | | 2 | JOINT TORIQUE 5/16 ID x 1/16 |
| 3 | | 191704A1 | | 3 | GAINE 460 mm (18-1/8 in) |
| 4 | | 86984155 | | 1 | RECEVEUR-DÉSHYDRAT. Receiver-Drier |
| 5 | | 214-1464 | | 2 | COLLIER No. 64 |
| 6 | | 87421775 | | 1 | FLEXIBLE (ASSEMBLE) 431 mm (17 in), Condenser to Drier; Incl. Ref 7 - 9 |
| 7 | | 128483A1 | | 3 | JOINT TORIQUE 5/16 ID x 1/16 |
| 8 | | 1250594C1 | | 1 | NOYAU Valve, High Pressure Switch |
| 9 | | 122081A1 | | 1 | RACCORD Switch |
| 10 | | 232948A1 | | 1 | PRESSOSTAT High Pressure |
| 11 | | L18337 | | 15 | SANGLE |
| 12 | | 87421776 | | 1 | FLEXIBLE (ASSEMBLE) 1542 mm (60-3/4 in), Compressor to Condenser; Incl. Ref 13 - 17 |
| 13 | | 128484A1 | | 1 | JOINT TORIQUE 7/16 D x 1/16 |
| 14 | | 128485A1 | | 1 | JOINT THORIQUE 9/16 ID x 1/16 |
| 15 | | 1999926C1 | | 1 | EMBOUT DE TUYAUTERIE |
| 16 | | 1250594C1 | | 1 | NOYAU Valve |
| 17 | | {122554C1} | | 1 | Sealing Cap |
| 18 | | 193913A1 | | 1 | PROTECTEUR Guard, 1200 mm (47-1/4 in) |
| 19 | | 87430122 | | 1 | COMPRESSEUR CLIMATIS. Component Parts Not Serviced Separately, See Figure 09-67 for Mounting |
| 20 | | 87427294 | | 1 | FLEXIBLE (ASSEMBLE) 2240 mm (88-3/16 in), Cab to Compressor; Incl. Ref 21 - 24 |
| 21 | | 128485A1 | | 2 | JOINT THORIQUE 9/16 ID x 1/16 |
| 22 | | 1999927C1 | | 1 | EMBOUT DE TUYAUTERIE |
| 23 | | 1250594C1 | | 1 | NOYAU Valve |
| 24 | | 122553A1 | | 1 | CHAPEAU Sealing |
| 25 | | 191703A1 | | 2 | GAINE Sleeve, 400 mm (15-3/4 in) |
| 26 | | 87417329 | | 1 | CONDENSATEUR Condenser |
| | | 895-11008 | | 4 | RONDELLE 9 x 16 x 1,6 mm |
| | | 829-1408 | | 4 | ECROU M8 |

HTTP://WWW.MINNPARBACKHOEPARTS.COM

| 09-67 | | p1 | 01/04 |
|---|---|---|---|

CABINE - COMPRESSEUR DE LA CLIMATISATION

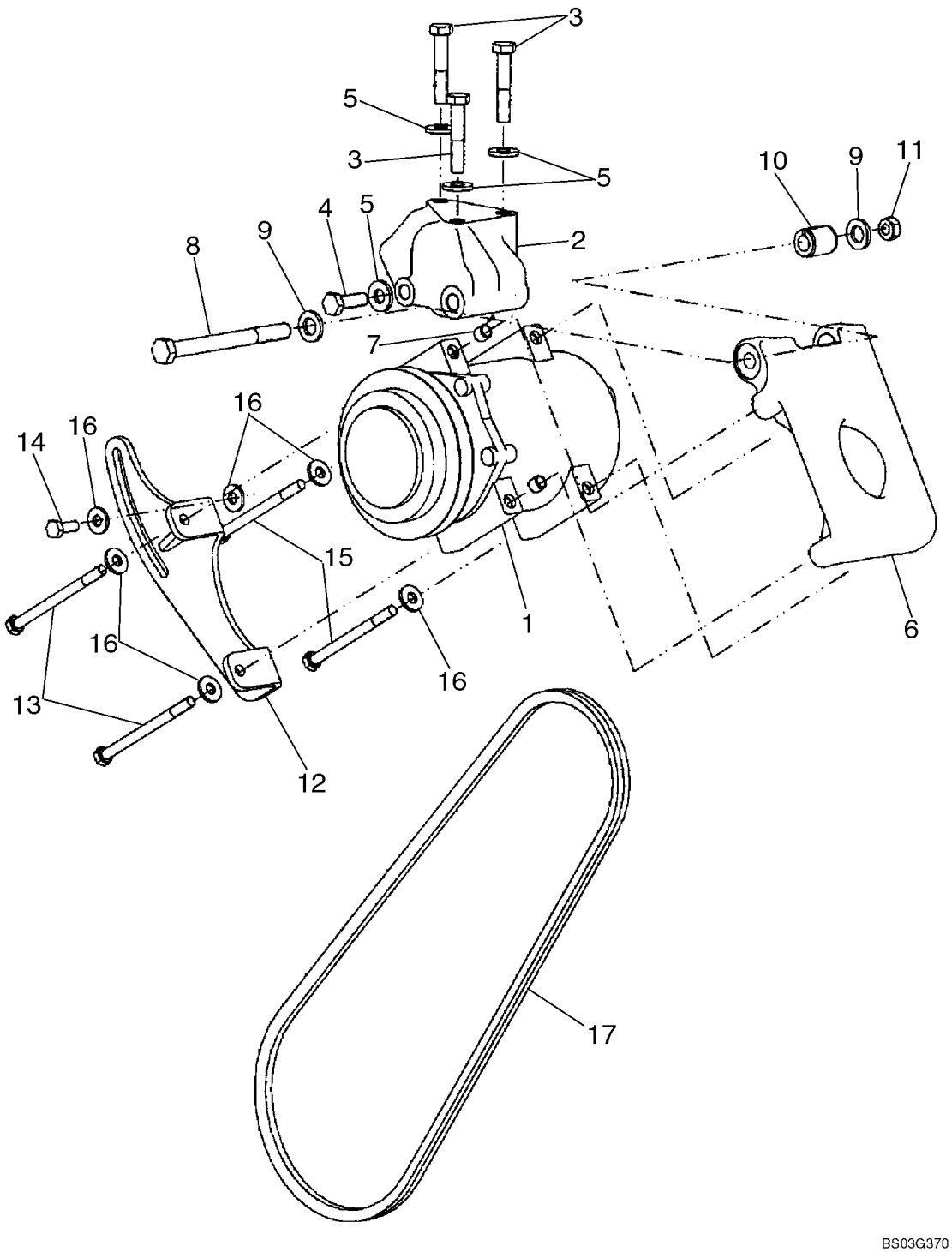

HTTP://WWW.MINNPARBACKHOEPARTS.COM



CABINE - COMPRESSEUR DE LA CLIMATISATION

| REF | FN | PART NUMBER | YR/SN | QTY | DESCRIPTION |
|---|---|---|---|---|---|
| 1 | | 87430122 | | 1 | COMPRESSEUR CLIMATIS. Compressor Component Parts Not Serviced Separately |
| 2 | | 87429950 | | 1 | SUPPORT Mounting Support |
| 3 | | 814-10055 | | 3 | VIS M10 x 55 |
| 4 | | 614-10030 | | 1 | VIS M10 x 30 |
| 5 | | 896-15010 | | 4 | RONDELLE 11 x 24 x 3mm |
| 6 | | 87429948 | | 1 | SUPPORT |
| 7 | | 87429952 | | 2 | ANNEAU |
| 8 | | 814-12130 | | 1 | VIS M12 x 130 |
| 9 | | 896-11012 | | 2 | RONDELLE 13,5 x 24 x 3 mm |
| 10 | | 87429951 | | 1 | ENTRETOISE Pivot |
| 11 | | 829-1410 | | 1 | ECROU M10 |
| 12 | | 87429949 | | 1 | EQUERRE |
| 13 | | 814-8110 | | 2 | VIS M8 x 110 |
| 14 | | 614-8020 | | 1 | VIS M8 x 20 |
| 15 | | 814-8100 | | 2 | VIS M8 x 100 |
| 16 | | 896-15008 | | 6 | RONDELLE 9 x 21 x 2,5 mm |
| 17 | | 87429954 | | 1 | COURROIE DE TRANSMISS. V-Belt |

HTTP://WWW.MINNPARBACKHOEPARTS.COM

| 09-68 | | p1 | 01/04 |
|---|---|---|---|

STRUCTURE ROPS - CADRE, COUVERCLES, RETROVISEUR, VISIERE-ECRAN

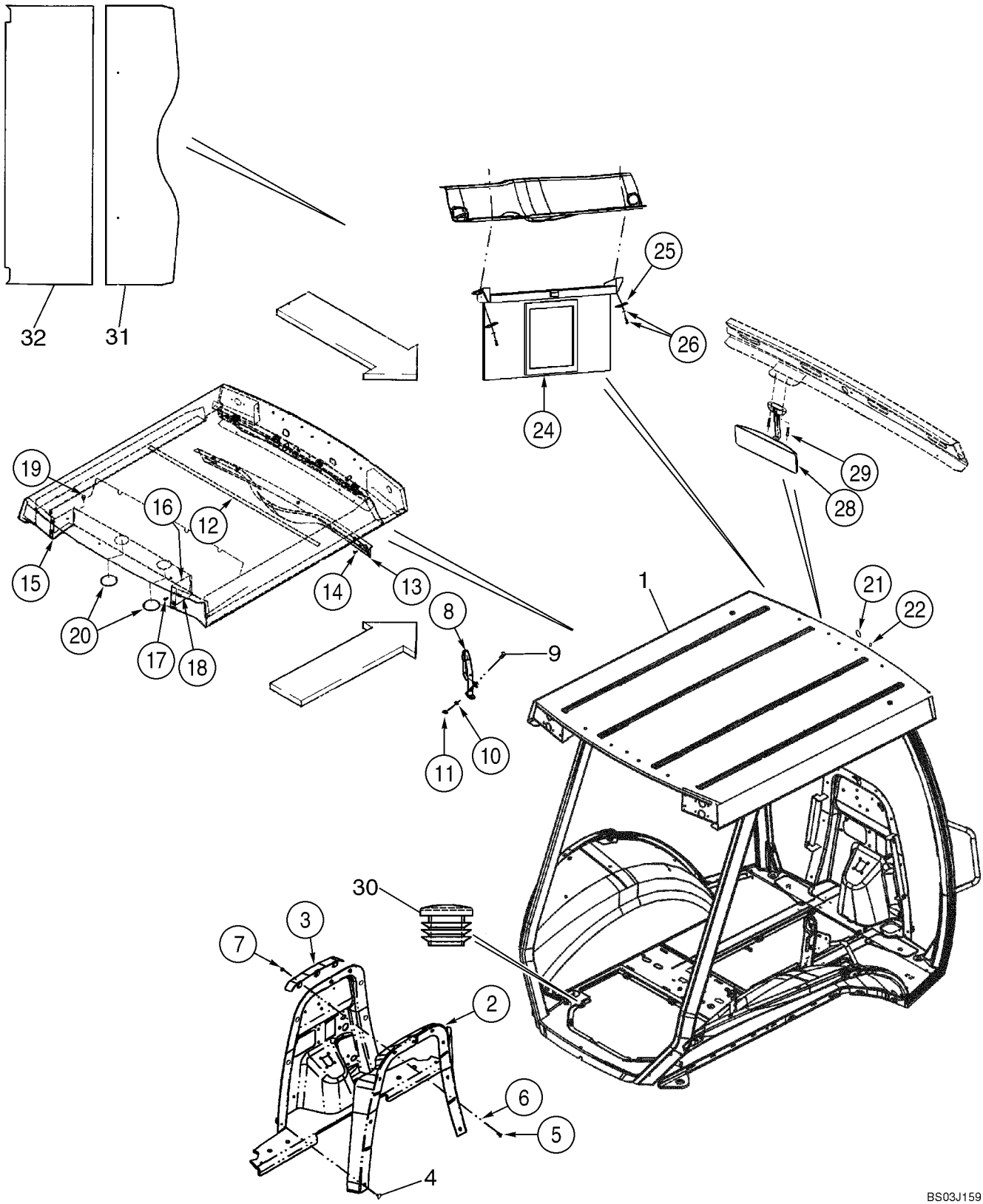

HTTP://WWW.MINNPARBACKHOEPARTS.COM



STRUCTURE ROPS - CADRE, COUVERCLES, RETROVISEUR, VISIERE-ECRAN

| REF | FN | PART NUMBER | YR/SN | QTY | DESCRIPTION |
|---|---|---|---|---|---|
| 1 | | 87434974 | | 1 | CABINE-CHASSIS ROPS Canopy Frame; Order From Machinery Price List |
| 2 | | 396938A3 | | 1 | MOULURE Firewall |
| 3 | | 395478A3 | | 1 | PATTE FIXATION |
| 4 | | D143242 | | 6 | BOUCHON Push-In Fastener |
| 5 | | 614-8020 | | 3 | VIS M8 x 20 |
| 6 | | 495-81001 | | 3 | RONDELLE ,375 x 1,125 x ,065 |
| 7 | | 832-10408 | | 3 | ECROU M8 |
| 8 | | 392930A1 | | 1 | RAMBARDE Grab Handle |
| 9 | | 811-10025 | | 2 | VIS M10 x 25; 8.8 |
| 10 | | 495-81267 | | 2 | RONDELLE ,469 x 1,5 |
| 11 | | 832-10410 | | 2 | ECROU M10 |
| 12 | | 385506A1 | | 1 | PROFIL PROTECTEUR 127 mm; Foam; Adhesive Back |
| 13 | | 367712A3 | | 1 | COUVERCLE Harness |
| 14 | | F64519 | | 5 | VIS No. 10 x 3/4; For Service, Order 265-16512, F64315 |
| 15 | | 357099A1 | | 1 | COUVERCLE Left-Hand |
| 16 | | 357100A1 | | 1 | COUVERCLE Right-Hand |
| 17 | | 555-2 | | 4 | VIS Flange, M6 x 20 |
| 18 | | 833-40406 | | 4 | ECROU Spring, M6 |
| 19 | | 353-402 | | 4 | BOUCHON 3/8; Models With Four Lamps; Not Used On Models With Eight Lamps |
| 20 | | 1302758C1 | | 2 | BOUCHON 3 in |
| | | 353-410 | | 1 | BOUCHON Dome, 7/8 Black Nylon |
| 21 | | 411549A1 | | 1 | BOUCHON 1 in; Windshield Frame |
| 22 | | 353-421 | | 2 | BOUCHON 3/16; Upper Windshield Frame |
| 24 | | 364180A1 | | 1 | PARE-SOLEIL |
| 25 | | 409618A1 | | 2 | PLAQUE 1/4 in Mounting Hole |
| 26 | | 396516A1 | | 2 | POINTEAU No 10 x 1 st; With Washer; Phillips |
| 28 | | 87406924 | | 1 | RÉTROVISEUR |
| 29 | | 286-56520 | | 2 | VIS No. 10 x 1-1/4 |
| 30 | | 382298A1 | | 2 | BOUCHON 7/8 in |
| 31 | | 431583A1 | | 1 | PANNEAU Foam; Roof Front |
| 32 | | 431584A1 | | 1 | PANNEAU Foam: Roof Rear |

HTTP://WWW.MINNPARBACKHOEPARTS.COM



STRUCTURE ROPS - VITRE

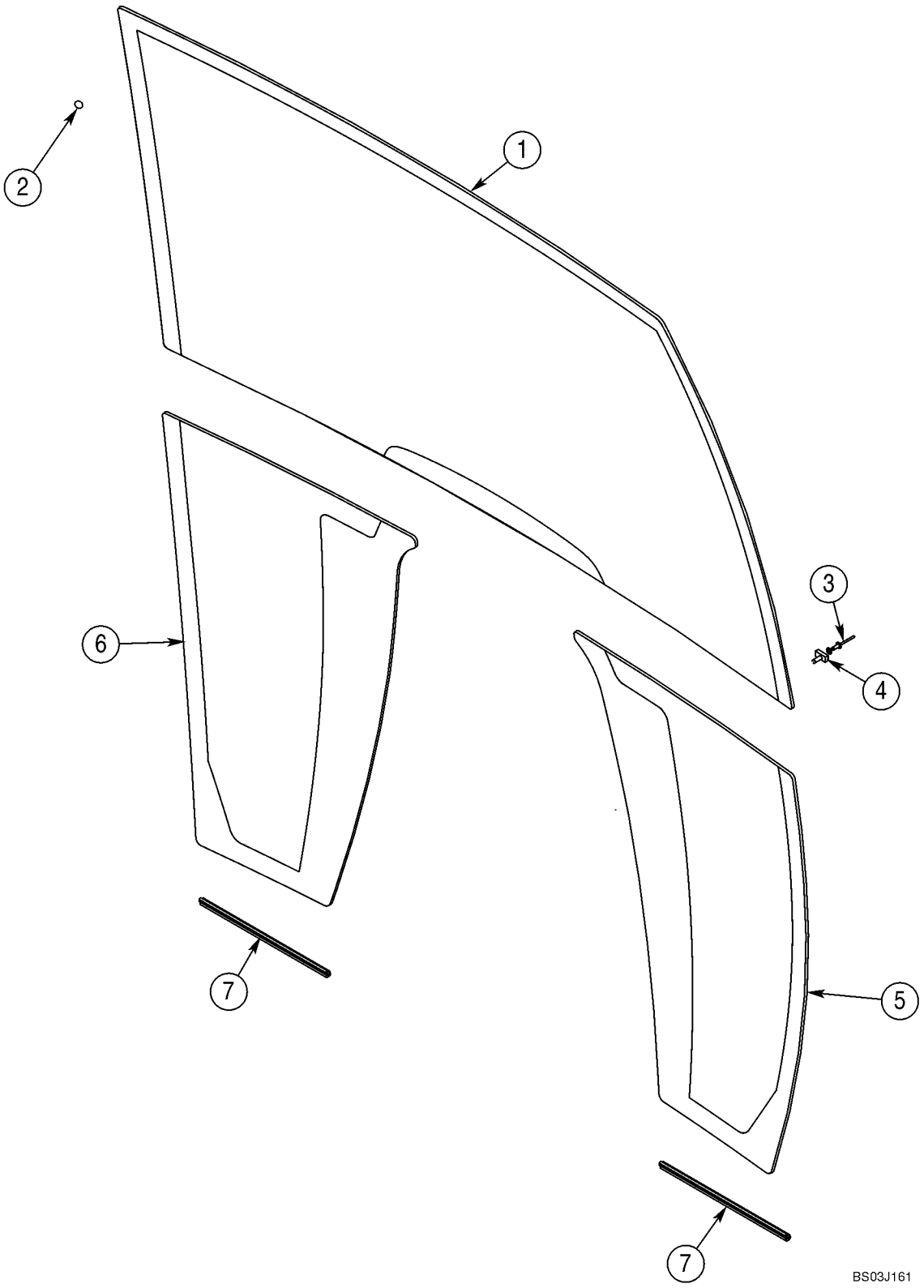

HTTP://WWW.MINNPARBACKHOEPARTS.COM



STRUCTURE ROPS - VITRE

| REF | FN | PART NUMBER | YR/SN | QTY | DESCRIPTION |
|---|---|---|---|---|---|
| 1 | | 448607A1 | | 1 | PARE-BRISE |
| 2 | | 391827A1 | | 28 | ENTRETOISE |
| 3 | | 151-516 | | 2 | RIVET |
| 4 | | 279482A1 | | 2 | ATTACHE ASSEMBLEE |
| 5 | | 448609A1 | | 1 | PARE-BRISE Lower; Right-Hand |
| 6 | | 448608A1 | | 1 | PARE-BRISE Lower; Left-Hand |
| 7 | | 395793A1 | | 2 | PROFIL PROTECTEUR Lower Glass Trim |

HTTP://WWW.MINNPARBACKHOEPARTS.COM



STRUCTURE ROPS - ESSUIE-GLACE AVANT ET LAVE-GLACE

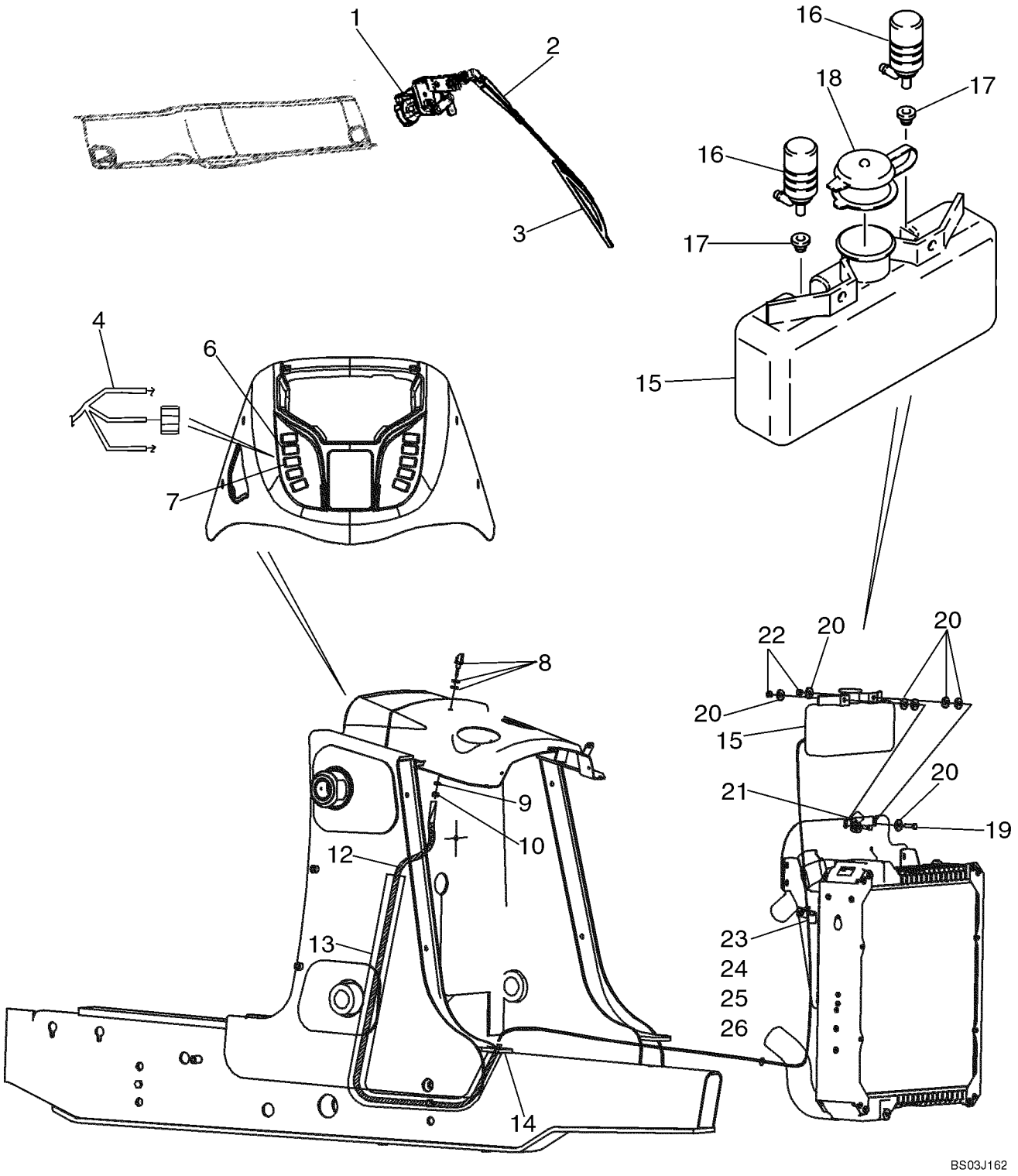

HTTP://WWW.MINNPARBACKHOEPARTS.COM



STRUCTURE ROPS - ESSUIE-GLACE AVANT ET LAVE-GLACE

| REF | FN | PART NUMBER | YR/SN | QTY | DESCRIPTION |
|---|---|---|---|---|---|
| 1 | | 450037A1 | | 1 | MOTEUR ESSUIE-GLACE 12V |
| | | 814-6050 | | 2 | VIS M6 x 50; Wiper Motor Mounting |
| | | 892-11006 | | 2 | RONDELLE FREIN M6 |
| 2 | | D128745 | | 1 | BRAS D'ESSUIE-GLACE |
| 3 | | 414426A1 | | 1 | BALAI D'ESSUIE-GLACE 600 mm |
| | | 404617A1 | | 1 | FAISCEAU Front Lamps and Wiper |
| 4 | | 87433546 | | 1 | FAISCEAU COMPLET Front Console Options; Includes (1) L71879 Diode |
| 5 | | 87436675 | | 1 | FAISCEAU COMPLET Chassis Options; Includes (4) L71879 Diodes |
| 6 | | 386785A1 | | 1 | CONTACTEUR Front Wiper |
| 7 | | 386787A1 | | 1 | CONTACTEUR Windshield Washer |
| 8 | | 284154A1 | | 1 | INJECTEUR Includes A Steel and Rubber Washer Which Are Not Serviced Separately |
| 9 | | 492-11038 | | 1 | RONDELLE FREIN 3/8 |
| 10 | | 425-106 | | 1 | ECROU 3/8 |
| 12 | | {87428316} | | 1 | 3150 mm (124-1/64 in); Cut From 1968141CX |
| 13 | | 386718A3 | | 1 | GARANT 1630 mm (64-3/16 in); Cut From 397155A2 |
| 14 | | L18337 | | 6 | SANGLE 15 in |
| | | E46560 | | 1 | RÉSERVOIR Windshield Washer; Incl. Ref 15 - 18 |
| 15 | | NSS | | 1 | NON FOURNI SEPAREMENT Reservoir |
| 16 | | E47238 | | 2 | POMPE 12 Volt |
| 17 | | E47239 | | 2 | JOINT Pump to Reservoir |
| 18 | | E47240 | | 1 | BOUCHON Cap |
| 19 | | 614-8030 | | 2 | VIS M8 x 30 |
| 20 | | 496-41041 | | 8 | RONDELLE 13/32 x 1-1/8 x 1/8 |
| 21 | | 515-22159 | | 1 | COLLIER P, 16 mm |
| 22 | | 832-10408 | | 2 | ECROU M8 |
| 23 | | 614-8016 | | 1 | VIS M8 x 16 |
| 24 | | 895-11008 | | 1 | RONDELLE Flat, 8 mm |
| 25 | | D147383 | | 1 | CLIP J-Clamp, 5/8 |
| 26 | | 829-1408 | | 1 | ECROU M8 |

HTTP://WWW.MINNPARBACKHOEPARTS.COM

| 09-71 | | p1 | 01/04 |
|---|---|---|---|

RÉTROVISSEUR - SUPPORT, MODÈLE DE CABINE

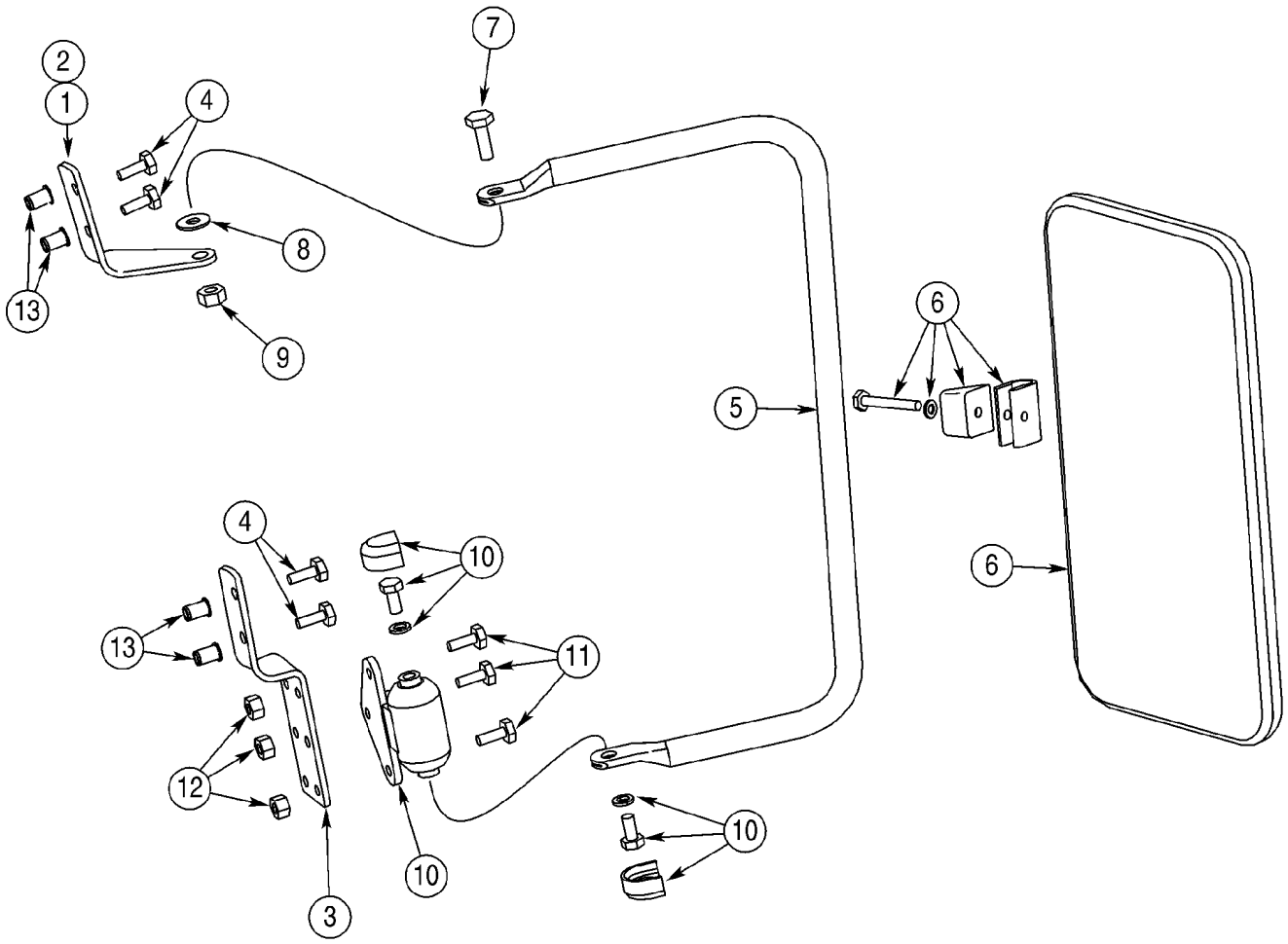

HTTP://WWW.MINNPARBACKHOEPARTS.COM



RÉTROVISSEUR - SUPPORT, MODÈLE DE CABINE

| REF | FN | PART NUMBER | YR/SN | QTY | DESCRIPTION |
|---|---|---|---|---|---|
| 1 | | 402933A1 | | 1 | PATTE FIXATION Upper; Right-Hand |
| 2 | | 402934A1 | | 1 | PATTE FIXATION Upper; Left-Hand; Not Illustrated |
| 3 | | 402936A1 | | 2 | PATTE FIXATION Lower |
| 4 | | 281-54712 | | 8 | VIS 1/4 st x 3/4 |
| 5 | | 402935A1 | | 2 | TUBE PORTEUR |
| 6 | | R54682 | | 2 | RETROVISEUR Exterior |
| 7 | | 413-516 | | 2 | BOULON 5/16 x 1 |
| 8 | | A167037 | | 2 | RONDELLE |
| 9 | | 231-4115 | | 2 | CONTRE-ECROU 5/16 |
| 10 | | D142144 | | 2 | FUSEE Includes Hardware |
| 11 | | 413-412 | | 6 | BOULON 1/4 x 3/4 |
| 12 | | 231-1444 | | 6 | CONTRE-ECROU 1/4 |
| 13 | | 255447A1 | | 8 | RIVET Cab Front ROPS Post |

HTTP://WWW.MINNPARBACKHOEPARTS.COM



TRIANGLE VÉHICULE LENT

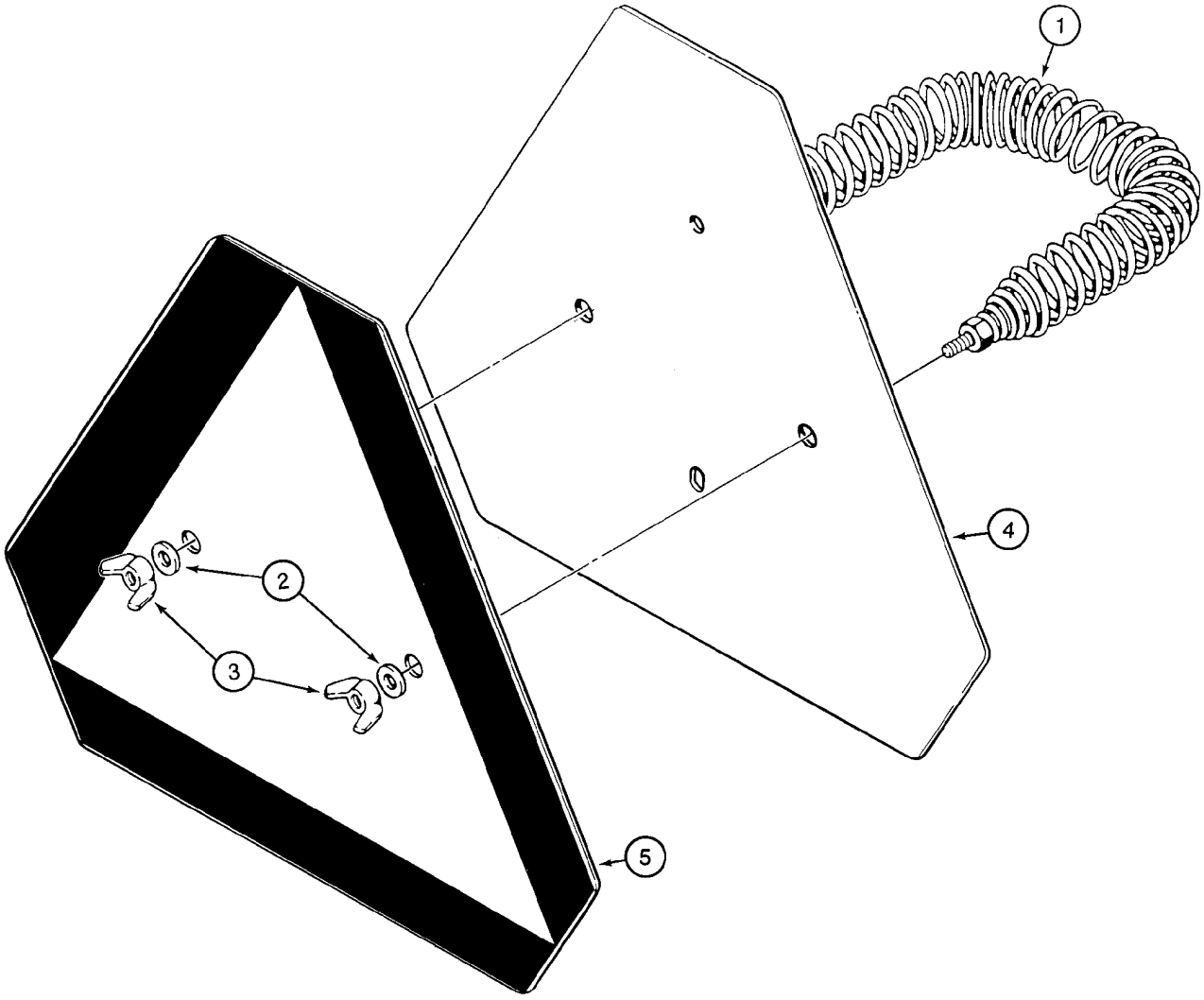


B9409034

HTTP://WWW.MINNPARBACKHOEPARTS.COM



TRIANGLE VÉHICULE LENT

| REF | FN | PART NUMBER | YR/SN | QTY | DESCRIPTION |
|---|---|---|---|---|---|
| 1 | | D52564 | | 1 | RESSORT |
| 2 | | 495-11028 | | 2 | RONDELLE 9/32 x 5/8 x 1/16 |
| 3 | | 126177 | | 2 | ECROU A OREILLES 1/4 |
| 4 | | D123347 | | 1 | SIGNAL D'AVERTISSEME Incl. Ref 5 |
| 5 | | 321-4311 | | 1 | DECALCOMANIE Slow Moving Vehicle |

HTTP://WWW.MINNPARBACKHOEPARTS.COM



AUTOCOLLANTS

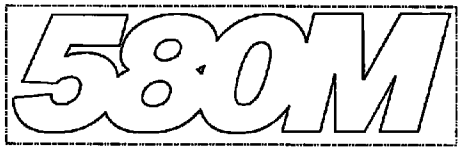


1




8




1A




1B

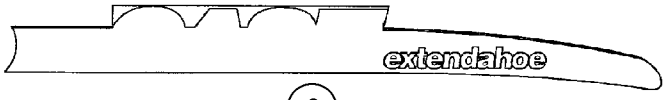


9

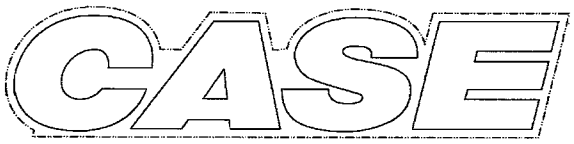


2 3

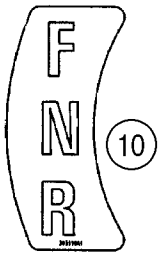


10




11

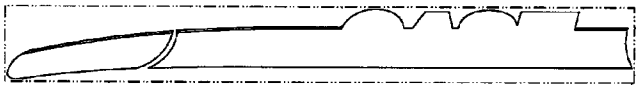

4

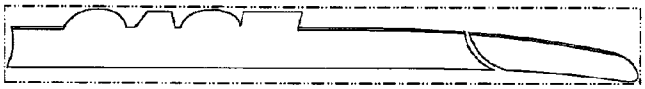

5




12



6




13



14

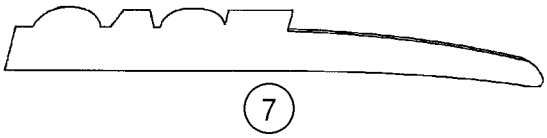

7




15

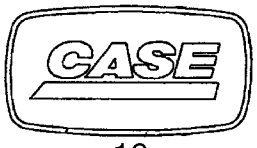


16

BS03K272

HTTP://WWW.MINNPARBACKHOEPARTS.COM



AUTOCOLLANTS

| REF | FN | PART NUMBER | YR/SN | QTY | DESCRIPTION |
|---|---|---|---|---|---|
| 1 | | 401462A1 | | 2 | DECALCOMANIE Model Designation |
| 1A | | 401466A1 | | 2 | DECALCOMANIE Model Designation |
| 1B | | {87436192} | | 2 | Series 2 |
| 2 | | 401457A1 | | 2 | DECALCOMANIE 525 mm (20-11/16 in) Wide; Case Logo; Loader Arm |
| 3 | | 401458A1 | | 4 | DECALCOMANIE 655 mm (25-13/16 in) Wide, Case Logo; Backhoe Dipper |
| 4 | | 401459A2 | | 1 | DECALCOMANIE Case, Loader Arm Pin Stripe, Left-Hand Stripe |
| 5 | | 401460A2 | | 1 | DECALCOMANIE Case, Loader Arm Pin Stripe, Right-Hand Stripe |
| 6 | | 407009A2 | | 1 | DECALCOMANIE Case, Standard Dipper, Left-Hand Stripe |
| 7 | | 407010A2 | | 1 | DECALCOMANIE Case, Standard Dipper, Right-Hand Stripe |
| 8 | | 373698A2 | | 1 | DECALCOMANIE Case, Extendahoe Dipper, Left-Hand Stripe |
| 9 | | 373699A2 | | 1 | DECALCOMANIE Case, Extendahoe Dipper, Right-Hand Stripe |
| 10 | | 395910A2 | | 1 | DECALCOMANIE FNR (Forward/Neutral/Reverse); Shuttle Shift Lever Control Pattern |
| 11 | | 321-1708 | | 1 | DECALCOMANIE 0-2-4, Clam Bucket Opening Indicator |
| 12 | | {87435569} | | 1 | Insert, Case; Steering Wheel |
| 13 | | 186989A1 | | 1 | DECALCOMANIE EMBLEM, Case |
| 14 | | 131-431 | | 2 | ECROU 1/4 |
| 15 | | 87415931 | | 2 | DECALCOMANIE Case, 37 x 70 mm; Located On Engine Filters |
| 16 | | 87429186 | | 1 | EMBLÈME Case, 37 x 70 mm; Located On Engine |

HTTP://WWW.MINNPARBACKHOEPARTS.COM



AUTOCOLLANTS

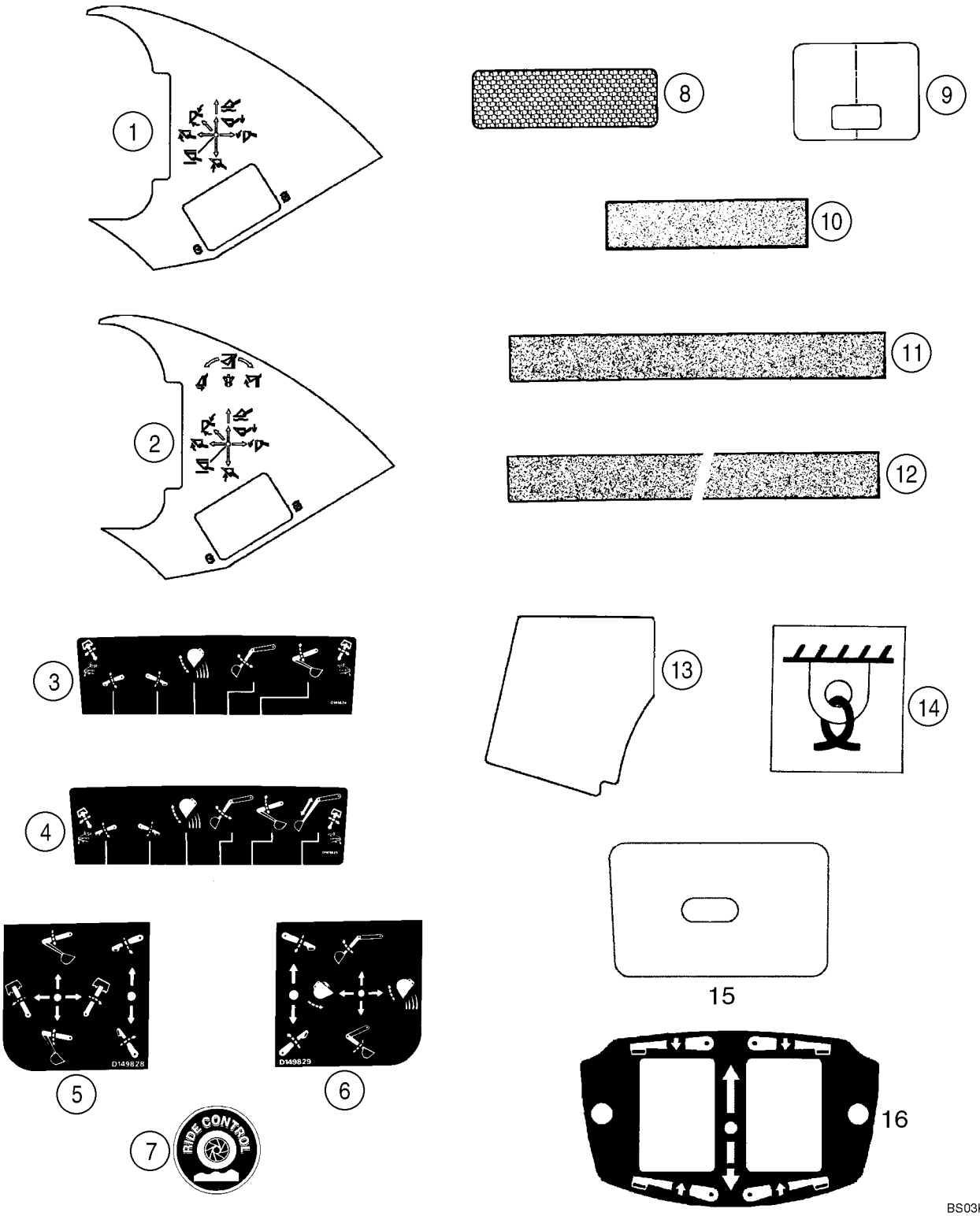

HTTP://WWW.MINNPARBACKHOEPARTS.COM



AUTOCOLLANTS

| REF | FN | PART NUMBER | YR/SN | QTY | DESCRIPTION |
|---|---|---|---|---|---|
| 1 | | 384930A2 | | 1 | DECALCOMANIE Two Function Loader Control |
| 2 | | 384931A2 | | 1 | DECALCOMANIE Three Function Loader Control |
| 3 | | D149824 | | 1 | DECALCOMANIE Upper; Standard Backhoe Control Pattern |
| 4 | | D149825 | | 1 | DECALCOMANIE Upper; Extendahoe Control Pattern; With Foot Swing |
| 5 | | D149828 | | 1 | DECALCOMANIE Upper; Standard Backhoe Control Pattern; With Hand Swing; Left-Hand Side Of Console |
| 6 | | D149829 | | 1 | DECALCOMANIE Upper; Standard Backhoe Control Pattern; With Hand Swing; Right-Hand Side Of Console |
| 7 | | 304083A1 | | 2 | DECALCOMANIE Ride Control |
| 8 | | 449842A1 | | 2 | DECALCOMANIE 2 x 6-5/16 in; Red, Reflector |
| 9 | | 192450A1 | | 1 | DECALCOMANIE Clear Vinyl; Hood |
| 10 | | D55216 | | 2-11 | TAMPON 2 x 9 in; Anti-Skid |
| 11 | | D80270 | | 3-4 | RUBAN 635 mm (25 in); Anti-Skid |
| 12 | | 307348A1 | | 2 | RUBAN 700 mm (27-9/16 in); Anti-Skid; 40 gallon fuel tank |
| 13 | | 367848A2 | | 1 | PLAQUE DE GARNISSAGE Anti-Skid; Canopy Models |
| 14 | | 139728A1 | | 4 | DECALCOMANIE Tie Down |
| 15 | | 406723A1 | | 1 | DECALCOMANIE Poly Film; Lockup Cover; Canopy Models |
| 16 | | 87423812 | | 1 | DECALCOMANIE Stabilizer Switch; Models With Pilot Controls |

HTTP://WWW.MINNPARBACKHOEPARTS.COM



AUTOCOLLANTS




1

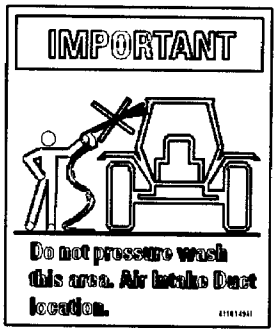


2

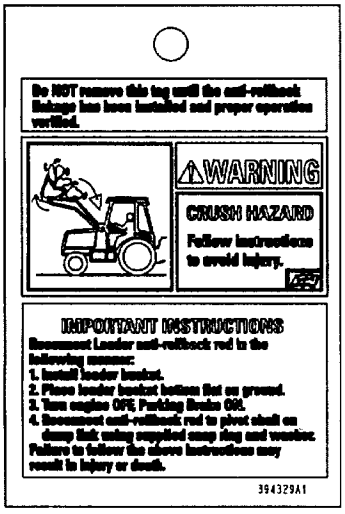


3

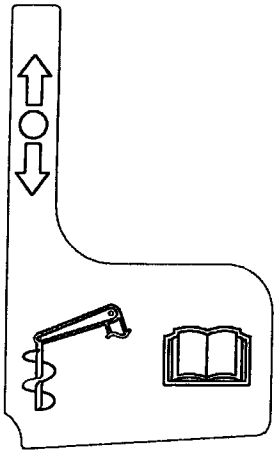

4

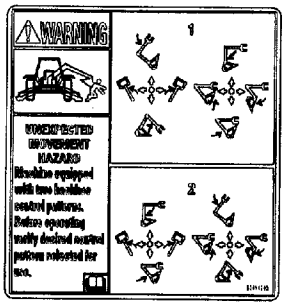


5

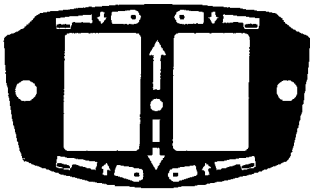

6

BS04A008

HTTP://WWW.MINNPARBACKHOEPARTS.COM



AUTOCOLLANTS

| REF | FN | PART NUMBER | YR/SN | QTY | DESCRIPTION |
|---|---|---|---|---|---|
| 1 | | 116534A1 | | 1 | POCHETTE Decal; Seat Weight Adjustment; Included In Seat Assy |
| 2 | | 411049A1 | | 1 | DECALCOMANIE Important, Do Not Pressure Wash This Area |
| 3 | | 394329A1 | | 1 | ETIQUETTE Warning; Anti-Rollback Hazard |
| 4 | | 87430677 | | 1 | DECALCOMANIE Auxiliary Hydraulics |
| 5 | | 87414205 | | 1 | DECALCOMANIE Warning, Unexpected Movement |
| 6 | | 87423812 | | 1 | DECALCOMANIE Stabilizer Control Switch |

HTTP://WWW.MINNPARBACKHOEPARTS.COM



AUTOCOLLANTS - ANGLAIS

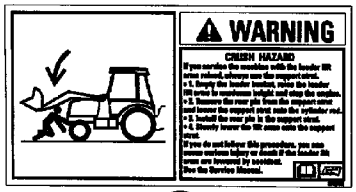


1

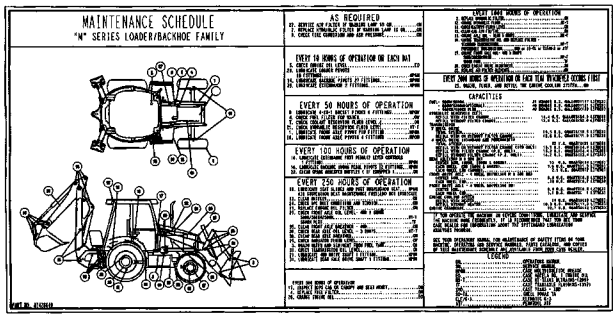


2

| FUSES 87423410 | | | |
|---|---|---|---|
| SPARE | ---- | ---- | ---- |
| SPARE | POWER OUTLET 30A | ---- | PILOT CONTROLS BH AUX (OPT.) 15AMP |
| FRONT WORK LIGHTS 20A | POWER OUTLET 30A | AIR SUSP. SEAT-AIR COMP. (OPT) 20A | RETURN TO DIG 10A |
| REAR WORK LIGHTS 20A | SPARE | SPARE | DRIVING LIGHTS 15A |
| FUEL SHUTOFF 10A | BLOWER 25A | DOME LIGHT 10A | ROTATING BEACON (OPT) 10A |
| INSTRUMENTS ALARM SYS. 10A | SIGNAL LIGHTS 15A | HORN 10A | 4WD (OPT) 10A |
| STARTING TRANSMISSION CONTROL 10A | RADIO, RIDE CONTROL, HAND AUX HYD'S 15A | RADIO (BATT) (OPT) 10A | WIPERS 15A |

8

| RELAYS 87423409 | | | |
|---|---|---|---|
| POWER RELAY #1 | POWER RELAY #4 | FLASHER RELAY | STARTER RELAY |
| POWER RELAY #2 | LDR LVR DIFF LK RELAY | SHUTTLE INTLK TIMING RELAY | NEUTRAL RELAY |
| POWER RELAY #3 | CLUTCH RELAY | SHUTTLE INTLK RELAY | FORWARD RELAY |
| ---- | ---- | ---- | REVERSE RELAY |
| ---- | ---- | AC RELAY (OPTION) | ---- |

9




3

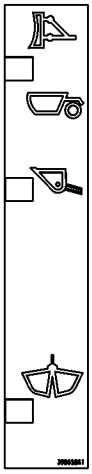

5

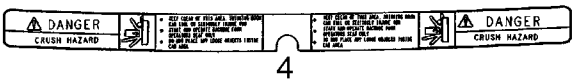


4

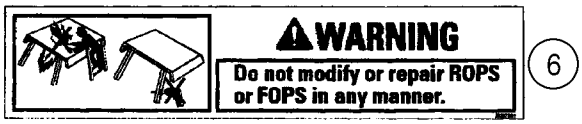


6

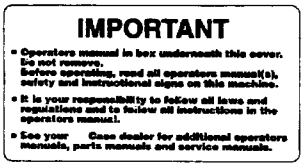


7

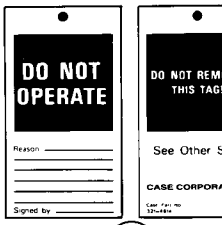


11

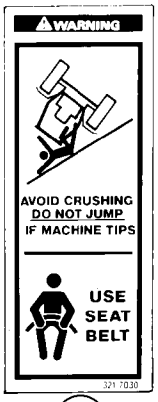


10




12

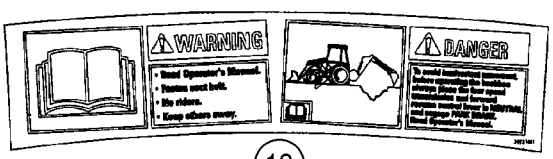


13

BS03K274

HTTP://WWW.MINNPARBACKHOEPARTS.COM



AUTOCOLLANTS - ANGLAIS

| REF | FN | PART NUMBER | YR/SN | QTY | DESCRIPTION |
|---|---|---|---|---|---|
| 1 | | 384264A1 | | 1 | DECALCOMANIE Warning; Crush Hazard; Loader Arm Support Strut |
| 2 | | {87428640} | | 1 | Maintenance Schedule; Supplied by Parts and Components |
| 3 | | 8603092 | | 1 | DECALCOMANIE Warning; Explosion Hazard, Do Not Use Ether |
| 4 | | 86992976 | | 1 | DECALCOMANIE Danger; Crush Hazard |
| 5 | | 398658A1 | | 1 | DECALCOMANIE Clam Bucket Position |
| 6 | | 383972A1 | | 1 | DECALCOMANIE Warning; Do Not Modify or Repair ROPS or FOPS In Any Manner |
| 7 | | 144193A3 | | 1 | DECALCOMANIE Important; Operator's Manual In Box Underneath This Cover; Glove Box Lid |
| 8 | | 87423410 | | 1 | DECALCOMANIE Fuse Location |
| 9 | | 87423409 | | 1 | DECALCOMANIE Relay |
| 10 | | 321-7030 | | 2 | DECALCOMANIE Warning; Avoid Crushing; Do Not Jump / Use Seat Belt |
| 11 | | 321-4614 | | 1 | DECALCOMANIE TAG, Do Not Operate |
| 12 | | 86992975 | | 2 | DECALCOMANIE Warning; No Step/Not An Exit; Canopy |
| 13 | | 392374A1 | | 1 | DECALCOMANIE Warning/Danger; Read the Operator's Manual |

HTTP://WWW.MINNPARBACKHOEPARTS.COM



AUTOCOLLANTS - ESPAGNOL D'AMÉRIQUE LATINE

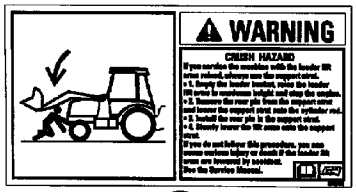


1

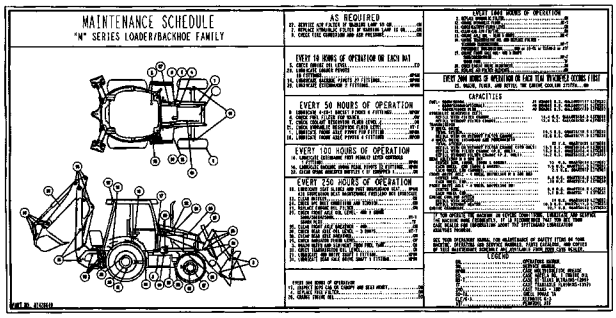


2




3

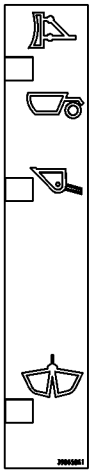

5




4

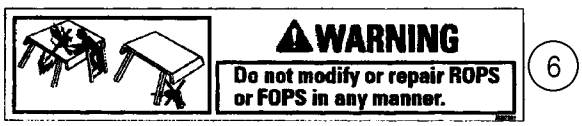


6

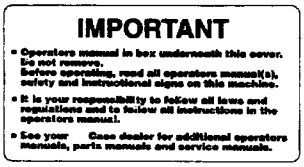


7

| FUSES | | | 87423410 |
|---|---|---|---|
| SPARE | ---- | ---- | ---- |
| SPARE | POWER OUTLET 30A | ---- | PILOT CONTROLS RH AUX (OPT.) 15AMP |
| FRONT WORK LIGHTS 20A | POWER OUTLET 30A | AIR SUSP. SEAT-AIR COMP. (OPT) 20A | RETURN TO DIG 10A |
| REAR WORK LIGHTS 20A | SPARE | SPARE | DRIVING LIGHTS 15A |
| FUEL SHUTOFF 10A | BLOWER 25A | DOME LIGHT 10A | ROTATING BEACON (OPT) 10A |
| INSTRUMENTS ALARM SYS. 10A | SIGNAL LIGHTS 15A | HORN 10A | 4WD (OPT) 10A |
| STARTING TRANSMISSION CONTROL 10A | RADIO, RIDE CONTROL, HAND AUX HYD'S 15A | RADIO (BATT) (OPT) 10A | WIPERS 15A |

8

| RELAYS | | | 87423409 |
|---|---|---|---|
| POWER RELAY #1 | POWER RELAY #4 | FLASHER RELAY | STARTER RELAY |
| POWER RELAY #2 | LDR LVR DIFF LK RELAY | SHUTTLE INTLK TIMING RELAY | NEUTRAL RELAY |
| POWER RELAY #3 | CLUTCH RELAY | SHUTTLE INTLK RELAY | FORWARD RELAY |
| ---- | ---- | ---- | REVERSE RELAY |
| ---- | ---- | AC RELAY (OPTION) | ---- |

9

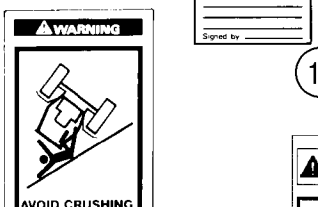


10

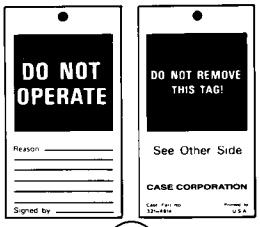


11




12

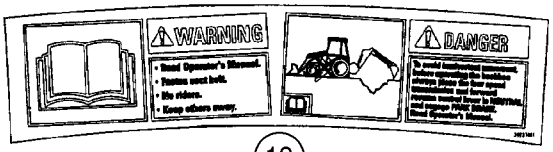


13

BS03K274

HTTP://WWW.MINNPARBACKHOEPARTS.COM



AUTOCOLLANTS - ESPAGNOL D'AMÉRIQUE LATINE

| REF | FN | PART NUMBER | YR/SN | QTY | DESCRIPTION |
|---|---|---|---|---|---|
| 1 | | 398576A1 | | 1 | DECALCOMANIE Warning; Crush Hazard; Loader Arm Support Strut |
| 2 | | {87430921} | | 1 | Maintenance Schedule; Supplied by Parts and Components |
| 3 | | 8603094 | | 1 | DECALCOMANIE Warning; Explosion Hazard, Do Not Use Ether |
| 4 | | 86992981 | | 1 | DECALCOMANIE Danger; Crush Hazard |
| 5 | | 398658A1 | | 1 | DECALCOMANIE Clam Bucket Position |
| 6 | | 389729A1 | | 1 | DECALCOMANIE Warning; Do Not Modify or Repair ROPS or FOPS In Any Manner |
| 7 | | 398662A1 | | 1 | DECALCOMANIE Important; Operator's Manual In Box Underneath This Cover; Glove Box Lid |
| 8 | | {87431078} | | 1 | Fuse Location |
| 9 | | {87431081} | | 1 | Relay |
| 10 | | 398672A1 | | 2 | DECALCOMANIE Warning; Avoid Crushing; Do Not Jump / Use Seat Belt |
| 11 | | 298521A1 | | 1 | ETIQUETTE Do Not Operate |
| 12 | | 86992980 | | 2 | DECALCOMANIE Warning; No Step/Not An Exit; Canopy |
| 13 | | 398598A1 | | 1 | DECALCOMANIE Warning/Danger; Read the Operator's Manual |
| 14 | | {148093A1} | | 1 | DECAL, Important; Lubrication; Not Illustrated |
| 15 | | {148095A1} | | 1 | DECAL, Attention; Welding; Not Illustrated |

HTTP://WWW.MINNPARBACKHOEPARTS.COM



AUTOCOLLANTS - FRANÇAIS CANADIEN

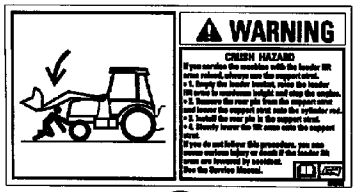


1

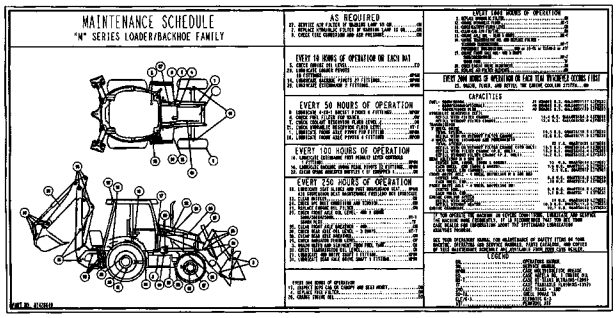


2




3

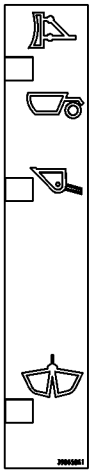

5

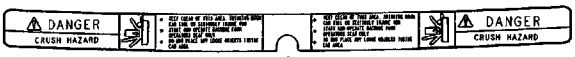


4

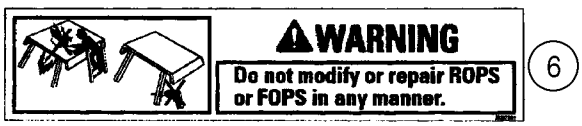


6

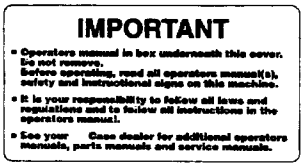


7

| FUSES | | | 87423410 |
|---|---|---|---|
| SPARE | ---- | ---- | ---- |
| SPARE | POWER OUTLET 30A | ---- | PILOT CONTROLS BH AUX (OPT.) 15AMP |
| FRONT WORK LIGHTS 20A | POWER OUTLET 30A | AIR SUSP. SEAT-AIR COMP. (OPT) 20A | RETURN TO DIG 10A |
| REAR WORK LIGHTS 20A | SPARE | SPARE | DRIVING LIGHTS 15A |
| FUEL SHUTOFF 10A | BLOWER 25A | DOME LIGHT 10A | ROTATING BEACON (OPT) 10A |
| INSTRUMENTS ALARM SYS. 10A | SIGNAL LIGHTS 15A | HORN 10A | 4WD (OPT) 10A |
| STARTING TRANSMISSION CONTROL 10A | RADIO, RIDE CONTROL, HAND AUX HYD'S 15A | RADIO (BATT) (OPT) 10A | WIPERS 15A |

8

| RELAYS | | | 87423409 |
|---|---|---|---|
| POWER RELAY #1 | POWER RELAY #4 | FLASHER RELAY | STARTER RELAY |
| POWER RELAY #2 | LDR LVR DIFF LK RELAY | SHUTTLE INTLK TIMING RELAY | NEUTRAL RELAY |
| POWER RELAY #3 | CLUTCH RELAY | SHUTTLE INTLK RELAY | FORWARD RELAY |
| ---- | ---- | ---- | REVERSE RELAY |
| ---- | ---- | AC RELAY (OPTION) | ---- |

9

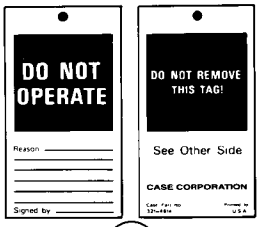


11

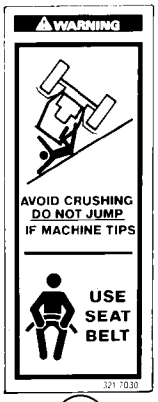


10




12

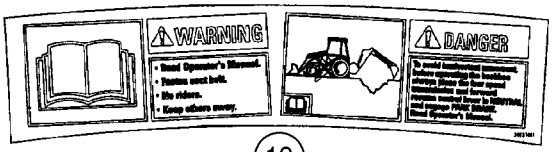


13

BS03K274

HTTP://WWW.MINNPARBACKHOEPARTS.COM



AUTOCOLLANTS - FRANÇAIS CANADIEN

| REF | FN | PART NUMBER | YR/SN | QTY | DESCRIPTION |
|---|---|---|---|---|---|
| 1 | | 398577A1 | | 1 | DECALCOMANIE Warning; Crush Hazard; Loader Arm Support Strut |
| 2 | | {87430922} | | 1 | Maintenance Schedule; Supplied by Parts and Components |
| 3 | | 8603093 | | 1 | DECALCOMANIE Warning; Explosion Hazard, Do Not Use Ether |
| 4 | | 86992979 | | 1 | DECALCOMANIE Danger; Crush Hazard |
| 5 | | 398658A1 | | 1 | DECALCOMANIE Clam Bucket Position |
| 6 | | 389730A1 | | 1 | DECALCOMANIE Warning; Do Not Modify or Repair ROPS or FOPS In Any Manner |
| 7 | | 398663A1 | | 1 | DECALCOMANIE Important; Operator's Manual In Box Underneath This Cover; Glove Box Lid |
| 8 | | {87431077} | | 1 | Fuse Location |
| 9 | | {87431080} | | 1 | Relay |
| 10 | | 398673A1 | | 2 | DECALCOMANIE Warning; Avoid Crushing; Do Not Jump / Use Seat Belt |
| 11 | | 321-5675 | | 1 | DECALCOMANIE Do Not Operate |
| 12 | | 86992978 | | 2 | DECALCOMANIE Warning; No Step/Not An Exit; Canopy |
| 13 | | 398599A1 | | 1 | DECALCOMANIE Warning/Danger; Read the Operator's Manual |

HTTP://WWW.MINNPARBACKHOEPARTS.COM



AUTOCOLLANTS - ANGLAIS

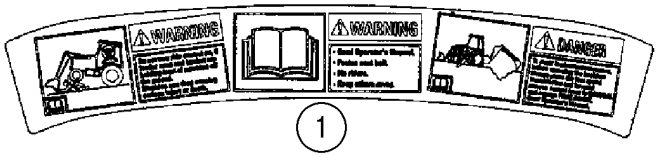


1




2




3

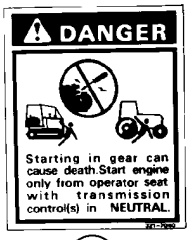


4




5

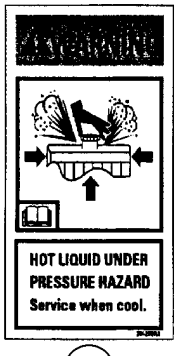


6

DIESEL FUEL

7

HYDRAULIC FLUID

8




8A

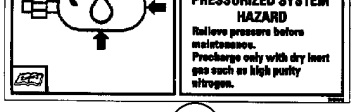


9




10




11

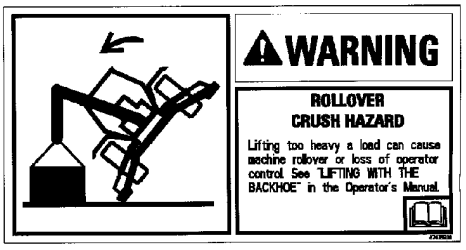


12

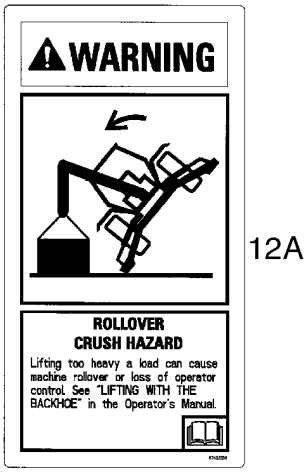


12A




14




13

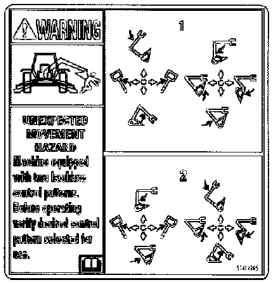


15

BS03K275

HTTP://WWW.MINNPARBACKHOEPARTS.COM



AUTOCOLLANTS - ANGLAIS

| REF | FN | PART NUMBER | YR/SN | QTY | DESCRIPTION |
|---|---|---|---|---|---|
| 1 | | 392375A1 | | 1 | DECALCOMANIE Warning/Warning/Danger; Front, With Ride Control; Do Not Turn Ride Control On/Read Operator's Manual/To Avoid Inadvertent Movement |
| 2 | | 384265A1 | | 1 | DECALCOMANIE Warning; Crush Hazard; Keep Clear; Support Loader Lift Arms During Maintenance |
| 3 | | 384267A1 | | 2 | DECALCOMANIE Warning; Entanglement Hazard, Fan; Keep Clear or Stop Engine Before Servicing |
| 4 | | 321-7040 | | 1 | DECALCOMANIE Danger; Starting In Gear |
| 5 | | 384269A1 | | 2 | DECALCOMANIE Danger; Jump Start |
| 6 | | 384258A1 | | 1 | DECALCOMANIE Warning; Hot Liquid Under Pressure |
| 7 | | 321-230 | | 1 | DECALCOMANIE Diesel Fuel |
| 8 | | 321-229 | | 1 | DECALCOMANIE Hydraulic Fluid; Used In Production; For Service, Order 321-6376, English Decal Only |
| 8A | | 321-6376 | | 1 | DECALCOMANIE Hydraulic Fluid |
| 9 | | 384260A1 | | 1 | DECALCOMANIE Warning; Ride Control Accumulator |
| 10 | | D149826 | | 1 | DECALCOMANIE Caution/Important; For All Models With Foot Swing Backhoe Controls and Standard Backhoe Models With Hand Swing |
| 11 | | D149827 | | 1 | DECALCOMANIE Caution/Important; Extendahoe Backhoe Models With Hand Swing |
| 12 | | {87435938} | | 1 | Warning; Rollover Crush Hazard; Lifting Too Heavy A Load; Models Without Pilot Controls |
| 12A | | {87433209} | | 1 | Warning; Rollover Crush Hazard; Lifting Too Heavy A Load; Models With Pilot Controls |
| 13 | | 321-6774 | | 1 | DECALCOMANIE Warning; Seat Spring |
| 14 | | {87423813} | | 2 | Warning; Unexpected Movement Hazard; Before Adjusting Windows |
| 15 | | 87414205 | | 1 | DECALCOMANIE Pilot Control Pattern |

HTTP://WWW.MINNPARBACKHOEPARTS.COM



AUTOCOLLANTS - ESPAGNOL D'AMÉRIQUE LATINE

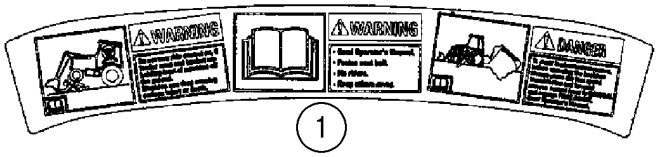


1




2

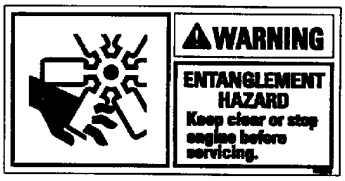


3

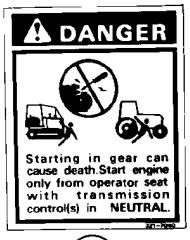


4




5

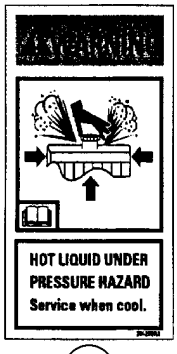


6

DIESEL FUEL

7

HYDRAULIC FLUID

8




8A

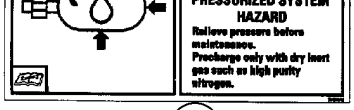


9




10




11

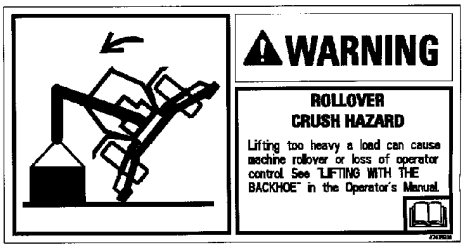


12

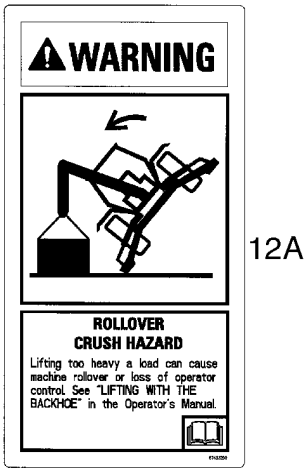


12A




14




13

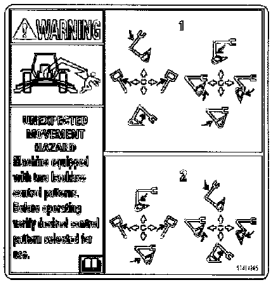


15

BS03K275

HTTP://WWW.MINNPARBACKHOEPARTS.COM



AUTOCOLLANTS - ESPAGNOL D'AMÉRIQUE LATINE

| REF | FN | PART NUMBER | YR/SN | QTY | DESCRIPTION |
|---|---|---|---|---|---|
| 1 | | 398600A1 | | 1 | DECALCOMANIE Warning/Warning/Danger; Front, With Ride Control; Do Not Turn Ride Control On/Read Operator's Manual/To Avoid Inadvertent Movement |
| 2 | | 398578A1 | | 1 | DECALCOMANIE Warning; Crush Hazard; Keep Clear; Support Loader Lift Arms During Maintenance |
| 3 | | 398580A1 | | 2 | DECALCOMANIE Warning; Entanglement Hazard, Fan; Keep Clear or Stop Engine Before Servicing |
| 4 | | 398674A1 | | 1 | DECALCOMANIE Danger; Starting In Gear |
| 5 | | 398582A1 | | 2 | DECALCOMANIE Danger; Jump Start |
| 6 | | 398570A1 | | 1 | DECALCOMANIE Warning; Hot Liquid Under Pressure |
| 7 | | 398667A1 | | 1 | DECALCOMANIE Diesel Fuel |
| 8 | | 398665A1 | | 1 | DECALCOMANIE Hydraulic Fluid |
| 8A | | 321-6376 | | 1 | DECALCOMANIE Hydraulic Fluid, English Decal Only |
| 9 | | 398572A1 | | 1 | DECALCOMANIE Warning; Ride Control Accumulator |
| 10 | | 398677A1 | | 1 | DECALCOMANIE Caution/Important; For All Models With Foot Swing Backhoe Controls and Standard Backhoe Models With Hand Swing |
| 11 | | 398669A1 | | 1 | DECALCOMANIE Caution/Important; Extendahoe Backhoe Models With Hand Swing |
| 12 | | {87435939} | | 1 | Warning; Rollover Crush Hazard; Lifting Too Heavy A Load; Models Without Pilot Controls |
| 12A | | {87434771} | | 1 | Warning; Rollover Crush Hazard; Lifting Too Heavy A Load; Models With Pilot Controls |
| 13 | | 398670A1 | | 1 | DECALCOMANIE Warning; Seat Spring |
| 14 | | {87429163} | | 2 | Warning; Unexpected Movement Hazard; Before Adjusting Windows |
| 15 | | {87429165} | | 1 | Pilot Control Pattern |

HTTP://WWW.MINNPARBACKHOEPARTS.COM



AUTOCOLLANTS - FRANÇAIS CANADIEN

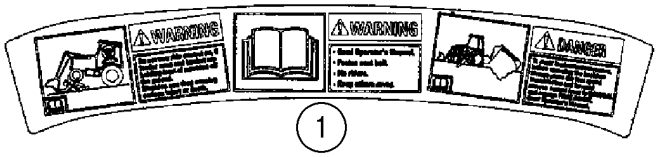


1




2




3

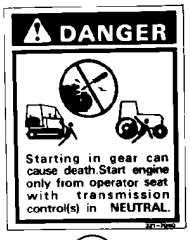


4




5

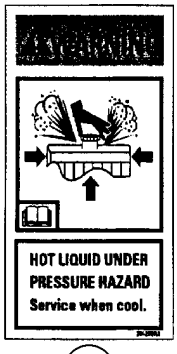


6

DIESEL FUEL

7

HYDRAULIC FLUID

8

HYDRAULIC FLUID

8A

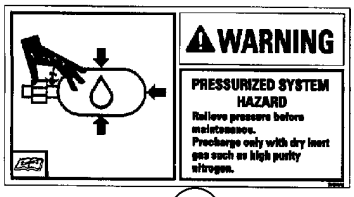


9




10




11

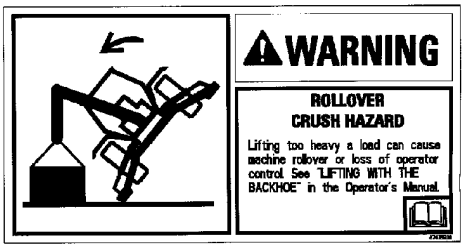


12

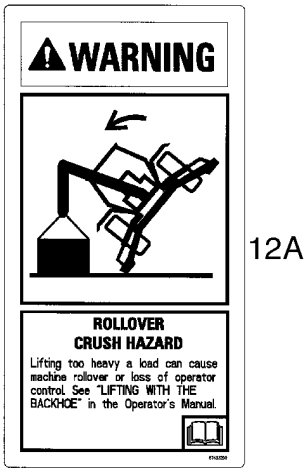


12A




14




13

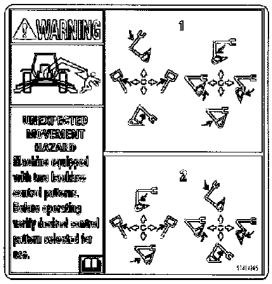


15

BS03K275

HTTP://WWW.MINNPARBACKHOEPARTS.COM



AUTOCOLLANTS - FRANÇAIS CANADIEN

| REF | FN | PART NUMBER | YR/SN | QTY | DESCRIPTION |
|---|---|---|---|---|---|
| 1 | | 398601A1 | | 1 | DECALCOMANIE Warning/Warning/Danger; Front, With Ride Control; Do Not Turn Ride Control On/Read Operator's Manual/To Avoid Inadvertent Movement |
| 2 | | 398579A1 | | 1 | DECALCOMANIE Warning; Crush Hazard; Keep Clear; Support Loader Lift Arms During Maintenance |
| 3 | | 398581A1 | | 2 | DECALCOMANIE Warning; Entanglement Hazard, Fan; Keep Clear or Stop Engine Before Servicing |
| 4 | | 398676A1 | | 1 | DECALCOMANIE Danger; Starting In Gear |
| 5 | | 398583A1 | | 2 | DECALCOMANIE Danger; Jump Start |
| 6 | | 398571A1 | | 1 | DECALCOMANIE Warning; Hot Liquid Under Pressure |
| 7 | | 398668A1 | | 1 | DECALCOMANIE Diesel Fuel |
| 8 | | 398666A1 | | 1 | DECALCOMANIE Hydraulic Fluid |
| 8A | | 321-6376 | | 1 | DECALCOMANIE Hydraulic Fluid, English Decal Only |
| 9 | | 398573A1 | | 1 | DECALCOMANIE Warning; Ride Control Accumulator |
| 10 | | 398656A1 | | 1 | DECALCOMANIE Caution/Important; For All Models With Foot Swing Backhoe Controls and Standard Backhoe Models With Hand Swing |
| 11 | | 398654A1 | | 1 | DECALCOMANIE Caution/Important; Extendahoe Backhoe Models With Hand Swing |
| 12 | | {87435940} | | 1 | Warning; Rollover Crush Hazard; Lifting Too Heavy A Load; Models Without Pilot Controls |
| 12A | | {87434772} | | 1 | Warning; Rollover Crush Hazard; Lifting Too Heavy A Load; Models With Pilot Controls |
| 13 | | 398671A1 | | 1 | DECALCOMANIE Warning; Seat Spring |
| 14 | | {87429164} | | 2 | Warning; Unexpected Movement Hazard; Before Adjusting Windows |
| 15 | | {87429166} | | 1 | Pilot Control Pattern |

HTTP://WWW.MINNPARBACKHOEPARTS.COM

# INDEX - INDICE - INDEX - ZAHLENVERZEICHNIS - INDICE - INDICE - INDHOLD - INHOUD


| Number | Figure | Sequence | Ref. |
|---|---|---|---|
| {122554C1} | 09-66 | | 17 |
| {14302921} | 08-47 | | 5 |
| | 08-48 | | 5 |
| | 08-49 | | 6 |
| {14304021} | 08-47 | | 1 |
| {148093A1} | 09-77 | | 14 |
| {148095A1} | 09-77 | | 15 |
| {16746824} | 03-06 | | 3 |
| {188035A1} | 08-62 | | |
| {2852621} | 02-01 | | 45 |
| {376288A2} | 09-08 | | |
| {377221A2} | 09-63 | | 1 |
| {377232A2} | 09-64 | | 18 |
| {377233A2} | 09-64 | | 31 |
| {385920A1} | 09-06 | | |
| {4895273} | 02-20 | | 1 |
| {4899629} | 02-19 | | 8 |
| {500390441} | 03-05 | | 1 |
| {504036358} | 02-30 | | 10 |
| {504042165} | 02-11 | | 9 |
| {504043550} | 02-11 | | 4 |
| {504053166} | 02-33 | | 10 |
| {504061374} | 02-29 | | 3 |
| {504063450} | 03-04 | | 1 |
| {81868381} | 08-30 | | 8 |
| | 08-31 | | 9 |
| | 08-32 | | 18 |
| | 08-33 | | 18 |
| | 08-34 | | 19 |
| | 08-35 | | 19 |
| {83981068} | 08-31 | | 19 |
| | 08-33 | | 22 |
| | 08-34 | | 20 |
| | 08-35 | | 20 |
| {85811937} | 08-45 | | 6 |
| {85811938} | 08-40 | | 4 |
| | 08-41 | | 4 |
| | 08-42 | | 4 |
| | 08-43 | | 4 |
| | 08-44 | | 4 |
| | 08-45 | | 4 |
| | 08-46 | | 4 |
| {85824281} | 08-41 | | 10 |
| | 08-42 | | 10 |
| | 08-43 | | 10 |
| | 08-44 | | 10 |
| | 08-45 | | 9 |
| | 08-46 | | 10 |
| {85824282} | 08-40 | | 10 |
| {85826343} | 08-43 | | 6A |
| {85826345} | 08-40 | | 3 |
| | 08-43 | | 3 |
| {85826346} | 08-41 | | 6A |
| {85826905} | 08-44 | | 6A |
| {85827991} | 08-47 | | 2 |
| {85827992} | 08-47 | | 4 |
| | 08-48 | | 4 |
| | 08-49 | | 5 |
| {85827993} | 08-47 | | 6 |
| | 08-48 | | 6 |
| | 08-49 | | 7 |
| {85827994} | 08-47 | | 7 |
| | 08-48 | | 7 |
| | 08-49 | | 8 |
| {85827995} | 08-47 | | 8 |
| | 08-48 | | 8 |
| | 08-49 | | 9 |
| {85827996} | 08-47 | | 9 |
| | 08-48 | | 9 |
| | 08-49 | | 10 |
| {85827997} | 08-47 | | 10 |
| | 08-48 | | 10 |
| | 08-49 | | 11 |
| {85827998} | 08-47 | | 12 |
| | 08-48 | | 12 |
| | 08-49 | | 13 |
| {85827999} | 08-47 | | 13 |
| | 08-48 | | 13 |
| | 08-49 | | 14 |
| {85828000} | 08-47 | | 14 |
| | 08-48 | | 14 |
| | 08-49 | | 15 |
| {85828001} | 08-47 | | 15 |
| | 08-48 | | 15 |
| | 08-49 | | 16 |
| {85828002} | 08-47 | | 16 |
| | 08-48 | | 16 |
| | 08-49 | | 17 |
| {85828003} | 08-47 | | 17 |
| | 08-48 | | 17 |
| | 08-49 | | 18 |
| {85828004} | 08-48 | | 2 |
| {85828005} | 08-47 | | 11 |
| | 08-48 | | 11 |
| | 08-49 | | 12 |
| {85828013} | 08-47 | | 3 |
| {85828015} | 08-48 | | 3 |
| | 08-49 | | 3 |
| {85828048} | 08-49 | | 2 |
| {85828054} | 08-49 | | 4 |
| {85828061} | 08-49 | | 1 |
| {86990708} | 02-07 | | |
| | 02-08 | | 1 |
| {86990709} | 02-07 | | |
| | 02-08 | | 1 |
| {87419385} | 02-01 | | |
| {87420672} | 08-08 | | 25 |
| | 08-08A | | 25 |
| {87420673} | 08-08 | | 23 |
| | 08-08A | | 23 |
| {87421836} | 08-23 | | 20 |
| {87422948} | 08-23 | | 35 |
| {87423496} | 04-16 | | 2 |
| {87423813} | 09-79 | | 14 |
| {87425631} | 04-19 | | 2 |
| {87425869} | 04-16 | | 13 |
| {87426221} | 08-30 | | 6 |
| | 08-31 | | 7 |
| {87426227} | 08-30 | | 9 |
| | 08-31 | | 10 |
| {87426232} | 08-30 | | 7 |
| | 08-31 | | 8 |
| | 08-32 | | 11 |
| | 08-33 | | 11 |
| | 08-34 | | 16 |
| | 08-35 | | 16 |
| {87426233} | 08-30 | | 5 |
| | 08-31 | | 6 |
| {87426235} | 08-30 | | 11A |
| | 08-31 | | 12A |
| {87426238} | 08-30 | | 15 |
| | 08-31 | | 16 |
| | 08-32 | | 21 |
| | 08-33 | | 23 |
| | 08-34 | | 8 |
| | 08-35 | | 8 |
| {87426239} | 08-32 | | 17 |
| | 08-33 | | 17 |
| | 08-34 | | 15 |
| | 08-35 | | 15 |
| {87426240} | 08-32 | | 16 |
| | 08-33 | | 16 |
| | 08-34 | | 14 |
| | 08-35 | | 14 |
| {87426241} | 08-31 | | 18 |
| {87426716} | 08-30 | | 12 |
| | 08-31 | | 13 |
| {87426717} | 08-30 | | 11 |
| | 08-31 | | 12 |
| {87428140} | 08-09 | | 2 |
| {87428316} | 09-59 | | 8 |
| | 09-70 | | 12 |
| {87428476} | 08-33 | | 13 |
| | 08-35 | | 22 |
| {87428477} | 08-33 | | 14 |
| | 08-35 | | 23 |
| {87428486} | 08-32 | | 22 |
| | 08-33 | | 24 |
| | 08-34 | | 9 |
| | 08-35 | | 9 |
| {87428488} | 08-32 | | 20 |
| | 08-33 | | 20 |
| | 08-34 | | 18 |
| | 08-35 | | 18 |

HTTP://WWW.MINNPARBACKHOEPARTS.COM




| Number | Figure | Sequence | Ref. | Number | Figure | Sequence | Ref. |
|---|---|---|---|---|---|---|---|
| {87428490} | 08-32 | | 19 | {87437914} | 08-29 | | 14 |
| | 08-33 | | 19 | {87437917} | 08-29 | | 15 |
| | 08-34 | | 17 | {87438021} | 08-28 | | 2 |
| | 08-35 | | 17 | {87438022} | 08-28 | | |
| {87428491} | 08-32 | | 13 | {87438023} | 08-28 | | |
| | 08-34 | | 23 | {87438024} | 08-28 | | |
| {87428492} | 08-32 | | 14 | {87438025} | 08-28 | | 3 |
| | 08-34 | | 24 | {87438026} | 08-28 | | |
| {87428493} | 08-33 | | 25A | {87438027} | 08-28 | | |
| | 08-34 | | 22 | {87438028} | 08-28 | | |
| | 08-35 | | 26A | | 08-28 | | |
| {87428495} | 08-32 | | 12 | {87438029} | 08-28 | | 4 |
| | 08-33 | | 12 | {87438031} | 08-28 | | 5 |
| | 08-34 | | 21 | {87438032} | 08-28 | | |
| | 08-35 | | 21 | {87438045} | 08-29 | | |
| {87428497} | 08-32 | | 9 | {87438925} | 04-01 | | 3 |
| | 08-33 | | 9 | {87438926} | 04-01 | | 4 |
| | 08-34 | | 12 | {87438927} | 04-01 | | 5 |
| | 08-35 | | 12 | {87438928} | 04-01 | | 6 |
| {87428501} | 08-33 | | 21 | {87438929} | 04-01 | | 8 |
| | 08-35 | | 25 | {87438930} | 04-01 | | 9 |
| {87428640} | 09-76 | | 2 | {87438931} | 04-01 | | 10 |
| {87428814} | 08-23 | | 39 | {87438932} | 04-01 | | 11 |
| {87429163} | 09-80 | | 14 | {87438933} | 04-01 | | 12 |
| {87429164} | 09-81 | | 14 | {87438935} | 04-01 | | 13 |
| {87429165} | 09-80 | | 15 | {87438937} | 04-01 | | 14 |
| {87429166} | 09-81 | | 15 | {87438940} | 04-01 | | 15 |
| {87429387} | 08-23 | | 2 | {87438941} | 04-01 | | 16 |
| {87429584} | 08-08 | | 19 | {87438942} | 04-01 | | 17 |
| | 08-08A | | 19 | {87438944} | 04-01 | | 18 |
| {87429586} | 08-08 | | 10 | {87438946} | 04-01 | | 19 |
| | 08-08A | | 10 | {87438948} | 04-01 | | 20 |
| {87429690} | 02-03 | | 3 | {87438950} | 04-01 | | 22 |
| {87429692} | 02-03 | | 5 | {87438951} | 04-01 | | 32 |
| {87429693} | 02-03 | | 6 | {87438954} | 04-01 | | 36 |
| {87429694} | 02-03 | | 1 | {87438956} | 04-01 | | 38 |
| {87429695} | 02-03 | | 4 | {87438960} | 04-02 | | 1 |
| {87430921} | 09-77 | | 2 | {87438963} | 04-02 | | 2 |
| {87430922} | 09-78 | | 2 | {87438965} | 04-02 | | 3 |
| {87430972} | 08-23 | | 1 | {87438967} | 04-02 | | 4 |
| {87431077} | 09-78 | | 8 | {87438969} | 04-02 | | 5 |
| {87431078} | 09-77 | | 8 | {87438970} | 04-02 | | 6 |
| {87431080} | 09-78 | | 9 | {87438971} | 04-02 | | 7 |
| {87431081} | 09-77 | | 9 | {87438972} | 04-02 | | 8 |
| {87433028} | 08-32 | | 7 | {87438973} | 04-02 | | 9 |
| | 08-32 | | 8A | {87438974} | 04-02 | | 10 |
| | 08-33 | | 7 | {87438975} | 04-02 | | 11 |
| | 08-33 | | 8A | {87438976} | 04-02 | | 12 |
| | 08-34 | | 10A | {87438977} | 04-02 | | 13 |
| | 08-34 | | 11 | {87438978} | 04-02 | | 14 |
| | 08-35 | | 10A | {87438979} | 04-02 | | 15 |
| | 08-35 | | 11 | {87438980} | 04-02 | | 16 |
| {87433029} | 08-32 | | 10 | {87438981} | 04-02 | | 17 |
| | 08-32 | | 8 | {87438982} | 04-02 | | 18 |
| | 08-33 | | 10 | {87438983} | 04-02 | | 19 |
| | 08-33 | | 8 | {87438984} | 04-02 | | 20 |
| | 08-34 | | 10 | {87438985} | 04-02 | | 21 |
| | 08-34 | | 13 | {87438986} | 04-02 | | 22 |
| | 08-35 | | 10 | {87438987} | 04-02 | | 23 |
| | 08-35 | | 13 | {87438989} | 04-02 | | 24 |
| {87433030} | 08-32 | | 23 | {87438992} | 04-01 | | 1 |
| | 08-33 | | 25 | {87438993} | 04-01 | | 2 |
| | 08-35 | | 26 | {87438994} | 04-01 | | |
| {87433209} | 09-79 | | 12A | {87438995} | 04-01 | | 21 |
| {87434070} | 08-29 | | | {87438996} | 04-01 | | 23 |
| {87434075} | 08-29 | | 2 | {87438997} | 04-01 | | 24 |
| {87434076} | 08-29 | | 3 | {87438999} | 04-01 | | 25 |
| {87434077} | 08-29 | | 4 | {87439000} | 04-01 | | 26 |
| {87434771} | 09-80 | | 12A | {87439001} | 04-01 | | 27 |
| {87434772} | 09-81 | | 12A | {87439002} | 04-01 | | 28 |
| {87435489} | 08-53 | | 8 | {87439003} | 04-01 | | 29 |
| {87435569} | 05-01 | | 1 | {87439004} | 04-01 | | 30 |
| | 09-73 | | 12 | {87439005} | 04-01 | | 31 |
| {87435938} | 09-79 | | 12 | {87439006} | 04-01 | | 33 |
| {87435939} | 09-80 | | 12 | {87439007} | 04-01 | | 34 |
| {87435940} | 09-81 | | 12 | {87439008} | 04-01 | | 35 |
| {87436192} | 09-73 | | 1B | {87439009} | 04-01 | | 37 |
| {87437840} | 08-08A | | 4A | {87439010} | 04-01 | | 41 |
| | 08-09 | | 4A | {87439011} | 04-01 | | 43 |
| {87437899} | 08-29 | | 10 | {87439061} | 04-01 | | 42 |
| {87437905} | 08-29 | | 12 | {87440694} | 08-23 | | 16 |
| {87437906} | 08-29 | | 13 | {87440814} | 08-30 | | 14 |

HTTP://WWW.MINNPARBACKHOEPARTS.COM




| Number | Figure | Sequence | Ref. | Number | Figure | Sequence | Ref. |
|---|---|---|---|---|---|---|---|
| {87440814} | 08-31 | | 15 | 112380A1 | 09-01 | | 14 |
| {87440815} | 08-30 | | 13 | | 09-02 | | 29 |
| | 08-31 | | 14 | | 09-18 | | 21 |
| {87440835} | 08-20 | | 10 | 112382A1 | 09-02 | | 25 |
| {87440837} | 08-20 | | 11 | 112486A1 | 06-07 | | 10 |
| {87441495} | 08-36 | | 1 | | 06-27 | | 10 |
| | 08-37 | | 1 | 112509A1 | 05-06 | | 5 |
| | 08-38 | | 1 | | 06-04 | | 3 |
| | 08-39 | | 1 | 112517A1 | 06-20 | | 4 |
| 100-21315 | 08-62 | | 13A | 112946A1 | 09-06 | | 8 |
| 100-39001 | 09-55 | | 43 | | 09-06 | | 8 |
| | 09-57 | | 20 | 113133A2 | 08-05 | | 34 |
| 100016 | 04-01 | | 39 | | 08-59 | | 1 |
| 100520A1 | 06-02 | | 12 | | 09-05 | | 20 |
| 100532A1 | 06-03 | | 3 | 113135A2 | 08-59 | | 2 |
| 100533A1 | 05-06 | | 11 | 113629A1 | 09-04 | | 25 |
| | 06-03 | | 8 | 114295A1 | 06-06 | | 20 |
| 100552A1 | 06-06 | | 5 | 114296A1 | 06-04 | | 9 |
| 100553A1 | 06-06 | | | 114318A1 | 09-23 | | 12A |
| 100554A1 | 06-06 | | | | 09-37 | | 4 |
| 100555A1 | 06-06 | | 18 | 114549A1 | 09-54 | | 6 |
| 100556A1 | 06-06 | | 4 | 114882A2 | 05-01 | | 2 |
| 100557A1 | 06-06 | | 22 | 114980A1 | 09-41 | | 8 |
| | 06-13 | | 8 | 116339A1 | 09-05 | | 21 |
| | 06-14 | | 9 | 116425A1 | 06-06 | | 12 |
| | 06-26 | | 1 | 116426A1 | 06-06 | | 7 |
| | 06-30 | | 7 | 116427A1 | 06-06 | | 8 |
| 100559A1 | 06-06 | | 6 | 116521A1 | 09-50 | | 3 |
| 100561A1 | 06-06 | | 13 | 116534A1 | 09-50 | | 10 |
| 100562A1 | 06-06 | | 19 | | 09-75 | | 1 |
| 100696A1 | 09-04 | | 3 | 116538A2 | 09-50 | | 12 |
| 100748A1 | 06-12 | | 9 | 116545A1 | 09-50 | | 9 |
| 100753A1 | 06-20 | | 17 | 116547A1 | 09-49 | | 10 |
| 101479A1 | 08-13 | | 24 | | 09-50 | | 6 |
| 101531A1 | 04-17 | | 9 | 116548A1 | 09-50 | | 15 |
| 102-1387 | 05-03 | | 4 | 116550A1 | 09-50 | | 14 |
| 102-23206 | 08-29 | | 5 | 116551A1 | 09-50 | | 8 |
| 102761A1 | 09-01 | | 12 | 116552A1 | 09-50 | | 13 |
| | 09-02 | | 23 | 116761A3 | 09-48 | | 1 |
| 102765A1 | 09-18 | | 19 | 116763A1 | 09-48 | | 2 |
| 103-11100 | 09-13 | | 16 | 116764A3 | 09-48 | | 3 |
| 103-1437 | 09-02 | | 15 | 116766A2 | 09-48 | | 4 |
| 103-1475 | 09-21 | | 8 | 116767A1 | 09-48 | | 5 |
| 103-1518 | 03-03 | | 7 | 117933A1 | 06-24 | | 6 |
| 103-16175 | 09-22 | | 4 | 118769A1 | 09-46 | | 7 |
| | 09-22 | | 8 | 118900A1 | 09-04 | | 24 |
| | 09-24 | | 25 | 118901A1 | 09-04 | | 30 |
| | 09-24 | | 33 | | 09-05 | | 3 |
| | 09-26 | | 23 | 119171A1 | 09-48 | | 6 |
| | 09-26 | | 27 | 119211A1 | 09-46 | | 11 |
| | 09-26 | | 33 | 119241A1 | 06-23 | | 1 |
| | 09-26 | | 36 | 119243A1 | 05-09 | | 4 |
| | 09-26 | | 5 | 120303A1 | 05-02 | | 25 |
| | 09-27 | | 14 | | 08-04 | | 10 |
| | 09-27 | | 40 | | 08-05 | | 8 |
| | 09-27 | | 50 | | 08-06 | | 8 |
| 103-16200 | 09-23 | | 18 | | 08-26 | | 32 |
| 103-3350 | 09-04 | | 29 | | 08-27 | | 14 |
| 103670A1 | 08-24 | | 18 | | 09-38 | | 33 |
| 104824A1 | 09-04 | | 23 | 121-145 | 07-03 | | 20 |
| 104907A1 | 06-23 | | 1 | 121412A1 | 04-07 | | 2 |
| 106989A1 | 09-18 | | 13 | | 04-09 | | |
| 106990A1 | 09-18 | | 15 | | 04-17 | | 16 |
| 107071A1 | 06-30 | | 17 | 121413A1 | 04-07 | | 3 |
| 107124A1 | 09-26 | | 45 | | 04-19 | | 1 |
| | 09-26 | | 49 | | 04-20 | | 13 |
| | 09-27 | | 22 | | 08-25 | | 27 |
| | 09-27 | | 33 | 121414A1 | 04-07 | | 4 |
| | 09-37 | | 8 | | 09-51 | | |
| 108088A1 | 09-01 | | 11 | 121415A1 | 04-09 | | |
| | 09-02 | | 12 | 121416A1 | 04-07 | | 5 |
| | 09-02 | | 21 | 121665A1 | 09-22 | | 7 |
| 108366A1 | 04-17 | | 4 | 121729A1 | 07-04 | | 8 |
| 108864A1 | 09-18 | | 1 | 121778A1 | 09-23 | | 3 |
| 108923A1 | 09-18 | | 9 | 121856A1 | 09-38 | | 55 |
| 108924A1 | 09-18 | | 8 | 121920A1 | 09-08 | | 12 |
| 109268A1 | 09-04 | | 4 | 122081A1 | 09-66 | | 9 |
| 109511A1 | 04-16 | | 9 | 122259A1 | 05-06 | | 10 |
| 109879A1 | 09-39 | | 3 | 122261A1 | 05-05 | | 9 |
| | 09-41 | | 13 | 122264A1 | 06-03 | | 10 |
| 110307A1 | 08-59 | | 12 | 122265A1 | 05-06 | | 9 |
| 111522A1 | 09-04 | | 5 | | 06-03 | | 9 |

HTTP://WWW.MINNPARBACKHOEPARTS.COM




| Number | Figure | Sequence | Ref. |
|---|---|---|---|
| 122268A1 | 06-02 | | 13 |
| 122270A1 | 05-05 | | 5 |
| | 06-02 | | 7 |
| 122503A1 | 09-27 | | |
| 122553A1 | 09-65 | | 12 |
| | 09-66 | | 24 |
| 122579A1 | 09-65 | | 13 |
| 122603A1 | 09-38 | | 24 |
| 123097A1 | 04-04 | | 32 |
| | 04-07 | | 31 |
| | 06-11 | | 42 |
| 123493A1 | 09-02 | | 9 |
| 123537A1 | 09-10 | | 29 |
| 123726A1 | 08-61 | | 12 |
| 123809A2 | 04-04 | | 31 |
| | 04-07 | | 30 |
| | 06-11 | | 43 |
| 123815A1 | 09-02 | | 2 |
| 123980A1 | 09-65 | | 23 |
| 124011A1 | 09-65 | | 22 |
| 124243A1 | 09-02 | | 8 |
| 124568A2 | 08-62 | | 3 |
| 124721A1 | 09-03 | | 14 |
| 1250594C1 | 09-65 | | 10 |
| | 09-65 | | 11 |
| | 09-66 | | 16 |
| | 09-66 | | 23 |
| | 09-66 | | 8 |
| 125113A1 | 09-18 | | 12 |
| | 09-18 | | 14 |
| 125749A1 | 09-61 | | 12 |
| 126-116 | 06-11 | | 12 |
| 126155A1 | 09-10 | | 31 |
| 126177 | 09-72 | | 3 |
| 126844A1 | 04-07 | | 17 |
| | 04-07 | | 21 |
| | 04-09 | | 10 |
| | 04-09 | | 16 |
| | 04-09 | | 20 |
| 126918A1 | 09-20 | | 2 |
| 127009A1 | 04-10 | | 6 |
| 127158A1 | 04-17 | | 6 |
| 127181A2 | 02-01 | | 27 |
| 127862A2 | 08-63 | | 6 |
| 128135A2 | 08-61 | | 4 |
| 128312A1 | 04-08 | | 3 |
| | 04-13 | | 13 |
| | 04-14 | | 3 |
| | 09-04 | | 19 |
| 128376A1 | 06-29 | | 11 |
| 128483A1 | 09-65 | | 16 |
| | 09-65 | | 9 |
| | 09-66 | | 2 |
| | 09-66 | | 7 |
| 128484A1 | 09-65 | | 3 |
| | 09-66 | | 13 |
| 128485A1 | 09-65 | | 4 |
| | 09-65 | | 8 |
| | 09-66 | | 14 |
| | 09-66 | | 21 |
| 128570A1 | 06-08 | | 11 |
| | 06-28 | | 9 |
| 128760A1 | 08-12 | | 19 |
| | 08-13 | | 30 |
| | 08-65 | | 1 |
| | 09-26 | | 1 |
| | 09-27 | | 10 |
| 128761A1 | 08-65 | | 2 |
| 128770A2 | 08-65 | | 4 |
| 128772A1 | 08-65 | | 16 |
| 128818A1 | 09-04 | | 11 |
| 129-667 | 08-57 | | 2 |
| 129015A1 | 09-16 | | 1 |
| 129040A1 | 09-24 | | 23 |
| | 09-24 | | 26 |
| 129041A1 | 09-24 | | 30 |
| | 09-26 | | 2 |
| | 09-27 | | 12 |
| 129883A1 | 09-24 | | 10 |
| | 09-27 | | 1 |
| 129884A2 | 09-26 | | |
| 129885A1 | 09-33 | | 1 |
| 129893A1 | 09-31 | | 3 |
| | 09-33 | | 3 |
| 129894A1 | 09-31 | | 2 |
| | 09-33 | | 2 |
| 129914A1 | 09-02 | | 4 |
| 129944A1 | 09-33 | | 4 |
| 130047A1 | 03-01 | | 15 |
| 130049A1 | 03-01 | | 5 |
| 130245A1 | 07-06 | | 32 |
| 1302758C1 | 04-11 | | 35 |
| | 09-68 | | 20 |
| 131-121 | 04-10 | | 15 |
| | 09-02 | | 33 |
| 131-425 | 09-52 | | |
| 131-431 | 09-73 | | 14 |
| 131-435 | 09-50 | | |
| 131-619 | 04-11 | | 17 |
| | 04-11 | | 20 |
| 131-861 | 04-10 | | 7 |
| | 09-01 | | 4 |
| | 09-11 | | 15 |
| | 09-61 | | 8 |
| 131-869 | 09-43 | | 21B |
| | 09-43 | | 4 |
| 1312210C2 | 04-13 | | |
| | 04-13 | | |
| | 04-14 | | |
| | 04-14 | | |
| 131600A1 | 08-08 | | 24 |
| | 08-08A | | 24 |
| 131750A2 | 08-65 | | |
| 132661A1 | 09-01 | | 5 |
| 132842A1 | 09-27 | | 45 |
| 132844A1 | 09-27 | | 44 |
| 132862A1 | 09-52 | | 6 |
| 132864A1 | 09-52 | | |
| 132866A1 | 09-52 | | 9 |
| 132872A1 | 09-52 | | 18 |
| 132873A1 | 09-02 | | 39 |
| 132931A1 | 03-03 | | 2 |
| | 09-01 | | 25 |
| 132988A1 | 09-06 | | 3 |
| | 09-06 | | 3 |
| 133083A1 | 08-58 | | 12 |
| 1331087C1 | 09-64 | | 14 |
| 133421A1 | 09-52 | | 17 |
| 133422A1 | 09-52 | | 15 |
| 133615A1 | 09-01 | | 2 |
| 133617A1 | 09-02 | | 18 |
| 133715A1 | 04-09 | | 11 |
| 133716A1 | 04-09 | | 13 |
| 133989A1 | 09-02 | | 13 |
| 1340763C1 | 08-62 | | 16 |
| 1340764C1 | 08-62 | | 15 |
| 1340798C1 | 08-60 | | 15 |
| 1340969C2 | 08-14 | | 17 |
| | 08-66 | | 1 |
| | 09-27 | | 25 |
| 1340970C1 | 08-66 | | 2 |
| 134167A1 | 09-23 | | 20 |
| 1344025C1 | 09-51 | | 16 |
| 1344026C1 | 09-51 | | 17 |
| 1346189C2 | 08-07 | | 2 |
| | 08-60 | | 1 |
| 1346190C2 | 08-07 | | 1 |
| | 08-60 | | 1 |
| 1346191C2 | 08-60 | | 2 |
| 1346192C2 | 08-60 | | 2 |
| 1346195C1 | 08-60 | | 13 |
| 1346476C1 | 08-65 | | 6 |
| 1348264C1 | 02-02 | | 5 |
| 134844A1 | 09-07 | | 3 |
| 1349058C1 | 06-08 | | 5 |
| 1349059C1 | 06-08 | | 6 |
| | 06-28 | | 5 |
| 1349265C1 | 06-30 | | 24 |
| 135-51652 | 09-24 | | 18 |
| | 09-27 | | 4 |
| 135161A1 | 08-58 | | 13 |
| 135248A1 | 09-23 | | 10 |
| 135249A1 | 09-23 | | 9 |
| 135512A3 | 09-52 | | 2 |

HTTP://WWW.MINNPARBACKHOEPARTS.COM




| Number | Figure | Sequence | Ref. |
|---|---|---|---|
| 136-54 | 04-17 | | 14 |
| 136261A1 | 09-16 | | 11 |
| 136263A1 | 09-16 | | 8 |
| | 09-17 | | 2 |
| 136267A1 | 09-16 | | 5 |
| 136269A1 | 09-16 | | 6 |
| 136270A2 | 09-16 | | 40 |
| 136271A2 | 09-16 | | 39 |
| 136822A1 | 09-11 | | 11 |
| 136824A1 | 09-11 | | 13 |
| 137219A1 | 04-19 | | 3 |
| 137223A2 | 06-01 | | 13 |
| 137248A1 | 08-62 | | 13 |
| 137283A1 | 09-03 | | 1 |
| 137343A1 | 09-10 | | 28 |
| 137344A1 | 09-10 | | 27 |
| 138595A1 | 09-38 | | 14 |
| 138624A1 | 09-24 | | 36 |
| 139180A1 | 09-05 | | 12 |
| 139195A1 | 09-05 | | 14 |
| 139235A1 | 09-05 | | 13 |
| 139363A1 | 09-41 | | 9 |
| 139728A1 | 09-74 | | 14 |
| 139865A1 | 09-03 | | 8 |
| 140-103 | 09-61 | | 11 |
| 140-104 | 09-55 | | 44 |
| | 09-57 | | 21 |
| 140-106 | 04-10 | | 12 |
| | 04-10 | | 13 |
| | 04-20 | | 6 |
| | 09-11 | | 14 |
| 140-107 | 04-11 | | 16A |
| | 04-11 | | 19 |
| | 09-01 | | 3 |
| | 09-02 | | 32 |
| | 09-11 | | 14 |
| 140-108 | 09-15 | | 29 |
| 140-117 | 09-43 | | 13 |
| | 09-43 | | 24 |
| | 09-43 | | 7 |
| 140-119 | 04-09 | | 15 |
| 140-120 | 04-11 | | 16 |
| | 04-11 | | 30 |
| 140028 | 04-01 | | 40 |
| 140943A1 | 06-08 | | 7 |
| 140944A1 | 06-08 | | 7 |
| 140945A1 | 06-08 | | 7 |
| 140946A1 | 06-08 | | 7 |
| 140947A1 | 06-08 | | 7 |
| 140948A1 | 06-08 | | 7 |
| 140949A1 | 06-08 | | 7 |
| 140951A1 | 06-08 | | 7 |
| 140953A1 | 06-08 | | 7 |
| 140954A1 | 06-08 | | 7 |
| 141232A2 | 09-35 | | 1 |
| 141233A1 | 09-35 | | 3 |
| 141234A1 | 09-35 | | 2 |
| 141747A1 | 05-01 | | 12 |
| 142-103 | 09-55 | | 47 |
| | 09-57 | | 23 |
| 142300A1 | 09-08 | | 3 |
| 142404A1 | 09-03 | | 2 |
| 142524A1 | 09-04 | | 12 |
| 142538A1 | 09-06 | | 5 |
| | 09-06 | | 5 |
| | 09-07 | | 5 |
| 142687A1 | 09-07 | | |
| 142842A1 | 09-24 | | 27 |
| 143210A1 | 09-02 | | 7 |
| 143219A1 | 09-38 | | 20 |
| 143400A1 | 08-13 | | 15 |
| 14358921 | 08-48 | | 1 |
| 143786A1 | 09-52 | | 7 |
| 144173A1 | 08-29 | | 7 |
| 144193A3 | 09-76 | | 7 |
| 144279A1 | 06-09 | | 7 |
| | 06-31 | | 7 |
| 144454A1 | 06-02 | | |
| 144457A1 | 06-04 | | |
| 144458A1 | 06-04 | | 5 |
| 144459A1 | 06-04 | | 7 |
| 144460A1 | 06-08 | | |
| 144461A1 | 06-05 | | |
| 144462A1 | 06-05 | | 1 |
| 144463A1 | 06-05 | | 5 |
| 144465A1 | 06-05 | | 4 |
| 144466A1 | 06-06 | | |
| 144477A1 | 08-23 | | 14 |
| | 08-23 | | 7 |
| 144479A1 | 08-23 | | 8 |
| 144908A2 | 09-40 | | 24 |
| 151-516 | 09-53 | | 7 |
| | 09-69 | | 3 |
| 151-532 | 02-01 | | 7 |
| 1530028C1 | 06-13 | | 2 |
| | 06-14 | | 3 |
| 1537663C1 | 06-03 | | 5 |
| 1537664C1 | 06-03 | | 6 |
| 1542830C2 | 08-55 | | |
| 1542874C1 | 08-59 | | |
| 1542875C1 | 08-58 | | |
| | 08-60 | | |
| | 08-66 | | |
| 1542876C1 | 08-61 | | |
| | 08-62 | | |
| 1542877C1 | 08-63 | | |
| | 08-64 | | |
| | 08-65 | | |
| 1543256C1 | 08-59 | | |
| 1543260C1 | 08-58 | | |
| 1543267C1 | 08-60 | | |
| | 08-66 | | |
| 1543269C1 | 08-61 | | |
| 16586624 | 02-37 | | 1 |
| 16587924 | 02-30 | | 7 |
| 16592624 | 02-37 | | 1 |
| 16784504 | 02-17 | | 2 |
| 168-71 | 04-17 | | 7 |
| 16866473 | 02-26 | | 1 |
| 16979231 | 03-04 | | 4 |
| 170-104 | 09-02 | | 3 |
| 17044625 | 02-33 | | 12 |
| 17278780 | 02-12 | | 7 |
| 17283181 | 02-30 | | 8 |
| 175156A1 | 09-08 | | |
| 175599A1 | 09-41 | | 2 |
| 175778A1 | 08-64 | | 14 |
| 175956A1 | 06-28 | | |
| 175957A1 | 06-28 | | 6 |
| 175959A1 | 06-27 | | 11 |
| 175961A1 | 06-27 | | 19 |
| 175964A2 | 06-29 | | 9 |
| 175965A1 | 06-29 | | 10 |
| 175966A1 | 06-29 | | 8 |
| 175968A1 | 06-29 | | 12 |
| 175974A1 | 06-30 | | 1 |
| 175976A1 | 06-30 | | 4 |
| 175977A1 | 06-30 | | 5 |
| 175978A1 | 06-30 | | 10 |
| 175979A1 | 06-30 | | 11 |
| 175980A1 | 06-30 | | 12 |
| 175982A1 | 06-30 | | 14 |
| 175984A1 | 06-30 | | 19 |
| 175989A1 | 06-30 | | 27 |
| 175990A1 | 06-30 | | 28 |
| 176091A1 | 09-51 | | 6 |
| 176311A1 | 09-01 | | 10 |
| | 09-02 | | 20 |
| 176914A1 | 09-50 | | 5 |
| 176916A1 | 09-50 | | 4 |
| 176919A1 | 09-49 | | 7 |
| 176920A1 | 09-50 | | 7 |
| 176921A1 | 09-49 | | 9 |
| | 09-50 | | 2 |
| 176924A1 | 09-47 | | 5 |
| 177269A1 | 04-18 | | 14 |
| | 09-61 | | 18 |
| 178004A1 | 09-18 | | 18 |
| 178006A1 | 09-18 | | 17 |
| 178051A1 | 08-29 | | 8 |
| 178951A1 | 08-10 | | 12 |
| | 08-11 | | 11 |
| | 08-12 | | 11 |
| | 08-13 | | 10 |

HTTP://WWW.MINNPARBACKHOEPARTS.COM




| Number | Figure | Sequence | Ref. | Number | Figure | Sequence | Ref. |
|---|---|---|---|---|---|---|---|
| 178952A1 | 08-10 | | 13 | 181273A1 | 06-21 | | 6 |
| | 08-11 | | 12 | 181274A1 | 06-12 | | 3 |
| | 08-12 | | 12 | 18137824 | 02-33 | | 14 |
| | 08-13 | | 11 | 18138324 | 02-33 | | 13 |
| 179029A1 | 09-20 | | 1 | 181842A1 | 09-04 | | 7A |
| 179956A1 | 09-12 | | 6 | 181979A1 | 09-65 | | 24 |
| 180427A1 | 09-37 | | 2 | 181981A1 | 09-42 | | 17 |
| 180593A1 | 09-52 | | 11 | | 09-63 | | 5 |
| 180594A3 | 09-52 | | 19 | 182006A1 | 09-17 | | 4 |
| 181042A1 | 09-24 | | 22 | | 09-21 | | 9 |
| | 09-27 | | 8 | 182109A1 | 08-63 | | 16 |
| 181100A1 | 06-13 | | 4 | 182116A1 | 08-63 | | 19 |
| | 06-14 | | 5 | 182218A1 | 08-63 | | |
| | 06-21 | | 35 | 182276A1 | 04-10 | | 5 |
| | 06-22 | | 5 | 182445A1 | 07-03 | | 1 |
| 181101A1 | 06-12 | | 2 | | 07-04 | | 1 |
| | 06-14 | | 20 | | 07-05 | | |
| 181102A1 | 06-12 | | 12 | 182594A1 | 04-11 | | 11 |
| | 06-14 | | 22 | 182697A1 | 09-63 | | 3 |
| 181103A1 | 06-21 | | 20 | 182721A2 | 04-18 | | 11 |
| 181104A1 | 07-02 | | 27 | 183168A1 | 09-40 | | 7 |
| 181105A1 | 06-13 | | 12 | 183322A1 | 08-13 | | 18 |
| | 06-14 | | 16 | 183443A1 | 09-27 | | 51 |
| 181107A1 | 06-21 | | 19 | 183509A1 | 09-27 | | 52 |
| 181108A1 | 06-18 | | 24 | 183736A1 | 08-13 | | 29 |
| | 06-19 | | 26 | 183808A1 | 09-31 | | 1 |
| 181111A1 | 06-18 | | 13 | 183810A1 | 09-31 | | 4 |
| 181116A1 | 06-18 | | 9 | 183938A1 | 09-24 | | 37 |
| 181118A1 | 06-19 | | 1 | 184297A1 | 08-13 | | 22 |
| 181122A1 | 06-20 | | 5 | 184497A1 | 04-06 | | 3 |
| 181123A1 | 06-19 | | 31 | 184616A1 | 08-14 | | 13 |
| 181126A1 | 06-17 | | 3 | 184617A1 | 08-14 | | 12 |
| | 06-20 | | 9 | 184627A2 | 07-04 | | 13 |
| 181128A1 | 06-18 | | 3 | 184723A1 | 09-24 | | 35 |
| 181130A1 | 06-19 | | 30 | 184726A1 | 04-11 | | 10 |
| 181132A1 | 06-17 | | 5 | 184884A1 | 09-24 | | 34 |
| | 06-19 | | 2 | 185325A1 | 09-41 | | 14 |
| 181136A1 | 06-21 | | 5 | 185506A1 | 09-07 | | 8 |
| 181137A1 | 06-21 | | 28 | 185926A1 | 03-01 | | 4 |
| 181138A1 | 06-16 | | 12 | | 09-38 | | 4 |
| 181139A1 | 06-16 | | 5 | 186351A1 | 09-46 | | 11A |
| 181141A1 | 06-13 | | 14 | 186977A1 | 09-37 | | 13 |
| | 06-14 | | 19 | 186989A1 | 09-73 | | 13 |
| 181142A1 | 06-15 | | 19 | 187281A1 | 04-18 | | 12 |
| 181144A1 | 06-19 | | 33 | 187714A1 | 06-11 | | 1 |
| 181146A1 | 06-21 | | 18 | 187715A1 | 06-11 | | 2 |
| 181158A1 | 06-18 | | 12 | 188009A3 | 03-01 | | 29A |
| 181159A1 | 06-18 | | 11 | 188027A2 | 08-09 | | 13 |
| 181161A1 | 06-18 | | 14 | | 08-09A | | 13 |
| 181165A1 | 06-19 | | 34 | | 08-62 | | 1 |
| 181166A1 | 06-21 | | 22 | | 09-23 | | 11 |
| 181169A1 | 09-47 | | 6 | 188028A2 | 08-62 | | 2 |
| | 09-48 | | 7 | 188032A2 | 08-62 | | 4 |
| 181170A1 | 09-49 | | 11 | 188034A3 | 08-62 | | 14 |
| | 09-50 | | 16 | 188036A1 | 08-62 | | 22 |
| 181171A1 | 06-16 | | 7 | 188311A2 | 03-01 | | 11 |
| 181173A1 | 06-16 | | 16 | 189109A1 | 03-03 | | 2A |
| 181174A2 | 06-16 | | 22 | | 09-01 | | |
| 181175A1 | 06-16 | | 18 | | 09-02 | | |
| 181176A1 | 06-14 | | 18 | 189602A3 | 03-01 | | 29 |
| 181177A1 | 06-16 | | 11 | 189653A2 | 08-10 | | 21 |
| 181179A1 | 06-13 | | 11 | | 08-63 | | 1 |
| | 06-14 | | 15 | | 09-24 | | 9 |
| 181198A1 | 06-20 | | 3 | 189657A2 | 08-63 | | 18 |
| 181202A1 | 06-12 | | 13 | 190427A1 | 06-19 | | |
| 181203A1 | 06-16 | | 21 | 190428A3 | 06-16 | | 8 |
| 181207A1 | 06-21 | | 23 | 190431A1 | 06-22 | | 10 |
| 181208A1 | 06-21 | | 24 | 190435A1 | 06-21 | | 37 |
| 181219A1 | 06-12 | | 10 | 190436A1 | 06-21 | | 13 |
| 181232A1 | 06-13 | | 13 | 190437A1 | 06-21 | | 4 |
| | 06-14 | | 17 | 190438A2 | 06-21 | | 12 |
| 181234A2 | 06-21 | | 15 | 190439A2 | 06-21 | | 11 |
| 181245A2 | 06-16 | | 1 | 190440A1 | 06-21 | | 38 |
| 181251A1 | 06-21 | | 9 | 190441A1 | 06-21 | | 14 |
| 181253A1 | 06-21 | | 31 | 190442A1 | 06-21 | | 2 |
| 181254A1 | 06-21 | | 25 | 190443A1 | 06-21 | | 3 |
| 181255A2 | 06-21 | | 27 | 190449A1 | 07-01 | | 7 |
| 181256A1 | 06-21 | | 10 | 190450A1 | 07-01 | | 9 |
| 181258A1 | 06-21 | | 29 | 190451A1 | 07-02 | | 1 |
| 181260A1 | 06-21 | | 26 | 190452A1 | 06-27 | | 14 |
| 181261A1 | 06-21 | | 17 | 190463A1 | 07-02 | | 2 |
| 181272A1 | 06-21 | | 7 | 190469A1 | 06-27 | | 6 |

HTTP://WWW.MINNPARBACKHOEPARTS.COM




| Number | Figure | Sequence | Ref. |
|---|---|---|---|
| 190471A1 | 06-27 | | 4 |
| 190476A2 | 07-02 | | 4 |
| 190477A2 | 07-02 | | 4 |
| 190493A1 | 07-01 | | 14 |
| 190496A1 | 07-01 | | 8 |
| 190500A1 | 07-01 | | 20 |
| 190506A1 | 06-28 | | 7 |
| 190508A1 | 06-28 | | 7 |
| 190509A1 | 06-28 | | 7 |
| 190510A1 | 06-28 | | 7 |
| 190511A1 | 06-28 | | 7 |
| 190512A1 | 06-28 | | 7 |
| 190513A1 | 06-28 | | 7 |
| 190514A1 | 06-28 | | 7 |
| 190515A1 | 06-28 | | 7 |
| 190516A1 | 06-28 | | 7 |
| 190675A1 | 09-64 | | 17 |
| 190682A1 | 06-06 | | 10 |
| 190684A1 | 06-06 | | 9 |
| 191046A1 | 03-01 | | 30 |
| 191047A1 | 09-38 | | 27 |
| 191067A1 | 06-27 | | 15 |
| 191239A1 | 09-10 | | 1 |
| 191252A1 | 08-62 | | 14A |
| 191703A1 | 08-21 | | |
| | 08-21 | | |
| | 09-66 | | 25 |
| 191704A1 | 09-66 | | 3 |
| 191747A1 | 08-62 | | |
| 191796A1 | 05-04 | | 2 |
| | 06-01 | | 8 |
| 192152A1 | 08-05 | | 27 |
| 192154A1 | 08-05 | | 31 |
| 192156A1 | 08-05 | | 30 |
| 192345A1 | 08-07 | | 4 |
| 192352A1 | 08-07 | | 3 |
| 192450A1 | 09-74 | | 9 |
| 192815A1 | 09-04 | | 28 |
| 192895A1 | 08-56 | | 2 |
| 192971A1 | 08-09 | | 15 |
| | 08-09A | | 15 |
| 193-1000 | 04-04 | | 18 |
| | 04-04 | | 3 |
| | 04-07 | | |
| | 04-07 | | 12 |
| 193-1003 | 09-04 | | 17 |
| | 09-46 | | 10 |
| 193913A1 | 09-66 | | 18 |
| 195-140 | 09-11 | | 8 |
| 195-81023 | 09-55 | | 48 |
| | 09-57 | | 24 |
| 1954626C1 | 09-64 | | 15 |
| 1954736C1 | 09-64 | | 3 |
| 195503A1 | 08-08 | | 30 |
| | 08-08A | | 30 |
| | 08-61 | | 1 |
| | 09-22 | | 1 |
| 195504A1 | 08-08 | | 29 |
| | 08-08A | | 29 |
| | 08-61 | | 1 |
| | 09-22 | | 2 |
| 195505A1 | 08-61 | | 2 |
| 195506A1 | 08-61 | | 2 |
| 195552A1 | 04-18 | | 3 |
| 195615A1 | 09-01 | | 6 |
| | 09-02 | | 19 |
| 1959509C1 | 05-01 | | 4 |
| 196065A1 | 06-30 | | 21 |
| 196066A1 | 06-30 | | 22 |
| 196085A1 | 07-02 | | 9 |
| 196090A1 | 06-30 | | 2 |
| 196454A1 | 06-19 | | 3A |
| 1966136C1 | 06-02 | | 16 |
| 1966138C1 | 06-02 | | 17 |
| 1966149C2 | 06-02 | | 5 |
| | 06-26 | | 13 |
| 1966153C1 | 06-07 | | 9 |
| 1966169C1 | 06-06 | | 2 |
| 1966186C1 | 06-02 | | 10 |
| 1966559C1 | 06-07 | | 11 |
| 1966993C1 | 06-16 | | 4 |
| 1967003C1 | 06-07 | | 4 |
| 1967531C1 | 06-16 | | 24 |
| 1967581C1 | 06-16 | | 10 |
| 1967585C1 | 06-16 | | 9 |
| 196813A1 | 08-05 | | 25 |
| 196815A1 | 08-05 | | 24 |
| 196821A1 | 08-06 | | 13 |
| 196824A1 | 08-06 | | 12 |
| 1976955C1 | 08-55 | | 2A |
| 197745A1 | 04-18 | | 4 |
| 197793A1 | 09-52 | | 8 |
| 1978141C1 | 08-56 | | 8 |
| 1978142C1 | 08-56 | | |
| 1978143C1 | 08-56 | | 5 |
| 1978144C1 | 08-56 | | 6 |
| 1978158C1 | 08-56 | | 7 |
| 1980245C1 | 08-62 | | 17 |
| 1980296C1 | 08-66 | | 11 |
| 1980321C3 | 08-58 | | 4 |
| 198033A1 | 08-65 | | 14 |
| 1981850C1 | 09-52 | | 13 |
| 1987096C1 | 09-64 | | 33 |
| 1987212C1 | 09-51 | | 11 |
| 1987219C2 | 09-51 | | 13 |
| 1987290C1 | 09-51 | | 14 |
| 198976A1 | 09-23 | | 12 |
| 1990548C4 | 09-52 | | 21 |
| 1999666C1 | 09-64 | | 16 |
| 1999667C1 | 09-64 | | |
| 1999668C1 | 09-64 | | |
| 1999693C1 | 09-51 | | 8 |
| 1999926C1 | 09-66 | | 15 |
| 1999927C1 | 09-66 | | 22 |
| 20-21032 | 09-08 | | 13 |
| 20-21232 | 09-07 | | 9 |
| | 09-08 | | 4 |
| 213-123 | 03-02 | | 14 |
| | 03-03 | | 17 |
| 213-126 | 07-06 | | 19 |
| | 09-02 | | 34 |
| | 09-16 | | 22 |
| | 09-17 | | 6 |
| | 09-19 | | 6 |
| | 09-21 | | 10 |
| 214-1406 | 09-38 | | 18 |
| | 09-63 | | 19 |
| 214-1412 | 02-04 | | 6 |
| | 02-04A | | 6 |
| | 06-10 | | 16 |
| 214-1416 | 02-02 | | 8 |
| | 02-06A | | 15 |
| 214-1420 | 08-03 | | 24 |
| 214-1424 | 02-06A | | 18 |
| 214-1432 | 02-01 | | 15 |
| 214-1440 | 02-01 | | 17 |
| | 02-04 | | 13A |
| 214-1456 | 02-04 | | 13 |
| | 02-04A | | 12 |
| 214-1464 | 02-04A | | 11 |
| | 08-05 | | 40 |
| | 08-07 | | 21 |
| | 08-12 | | 20 |
| | 08-13 | | 33 |
| | 08-14 | | 22 |
| | 09-66 | | 5 |
| 214-1472 | 08-04 | | 21 |
| 214-1488 | 08-10 | | 25 |
| | 08-11 | | 27 |
| 214-1492 | 08-09 | | 22 |
| | 08-09A | | 22 |
| 214-1704 | 03-01 | | 7 |
| | 07-04 | | 10 |
| 214-1706 | 07-04 | | 11 |
| 214-3132 | 08-13 | | 23 |
| | 08-24 | | 19 |
| 214-3156 | 08-24 | | 16 |
| 214-3188 | 08-08 | | 28 |
| | 08-08A | | 28 |
| 217-1102 | 09-38 | | 22 |
| 217-144 | 09-64 | | 34 |
| 217-154 | 02-02 | | 4 |
| 217-314 | 06-10 | | 11 |
| 217-347 | 09-38 | | 16 |

HTTP://WWW.MINNPARBACKHOEPARTS.COM




| Number | Figure | Sequence | Ref. | Number | Figure | Sequence | Ref. |
|---|---|---|---|---|---|---|---|
| 217-349 | 06-10 | | 22 | 218-5107 | 08-05 | | 2 |
| 217-380 | 09-38 | | 21 | | 08-05 | | 32 |
| 217-436 | 09-38 | | 5 | | 08-06 | | 2 |
| 218-1023 | 06-14 | | 11 | | 08-07 | | 18 |
| 218-1254 | 09-10 | | 20 | | 08-09 | | 27 |
| 218-1256 | 08-24 | | 22 | | 08-09A | | 27 |
| | 09-10 | | 33 | | 08-10 | | 19 |
| 218-1275 | 05-04 | | 10 | | 08-10 | | 22 |
| | 06-01 | | 29 | | 08-11 | | 19 |
| 218-1279 | 09-10 | | 34 | | 08-12 | | 22 |
| 218-335 | 08-01 | | 19 | | 08-13 | | 35 |
| | 08-01 | | 31 | | 08-14 | | 15 |
| | 08-23 | | 30 | 218-5110 | 08-02 | | 14 |
| | 08-24 | | 23 | 218-5117 | 08-25 | | 11 |
| 218-459 | 06-11 | | 38 | 218-5119 | 08-09 | | 19 |
| 218-5027 | 05-02 | | 3 | | 08-09A | | 19 |
| 218-5050 | 08-23 | | 24 | 218-5121 | 08-08 | | 20 |
| 218-5053 | 05-04 | | 8 | | 08-08A | | 20 |
| | 06-01 | | 26 | 218-5135 | 08-08A | | 5 |
| | 07-04 | | 19 | 218-5136 | 05-02 | | 11 |
| | 08-17 | | 5 | | 08-08 | | 35 |
| | 08-18 | | 7 | 218-5137 | 08-07 | | 16 |
| | 08-19 | | 7 | 218-5140 | 08-01 | | 24 |
| | 08-20 | | 7 | 218-5155 | 09-38 | | 57 |
| | 08-22 | | 38 | 218-5157 | 08-01 | | 47 |
| | 08-26 | | 23 | 218-5170 | 05-02 | | 2 |
| 218-5056 | 08-26 | | 25 | 218-5174 | 08-25 | | 14 |
| 218-5057 | 05-02 | | 15 | 218-5176 | 08-02 | | 12 |
| | 06-25 | | 2 | 218-5182 | 08-22 | | 49 |
| | 08-08 | | 5 | | 09-10 | | 15 |
| | 08-21 | | 1 | 218-5198 | 08-26 | | 20 |
| | 08-22 | | 33 | 218-5209 | 08-55 | | 7 |
| | 08-26 | | 13 | 218-5211 | 03-01 | | 6 |
| 218-5059 | 05-02 | | 8 | | 09-38 | | 12 |
| | 08-07 | | 23 | 218-5213 | 08-29 | | 16 |
| | 08-08 | | 11 | 218-5216 | 08-23 | | 34 |
| | 08-08 | | 33 | 218-5220 | 08-05 | | 18 |
| | 08-08A | | 11 | 218-5221 | 08-01 | | 30 |
| 218-5062 | 08-04 | | 2 | 218-5222 | 08-22 | | 34 |
| | 08-05 | | 28 | 218-5232 | 08-04 | | 26 |
| | 08-09 | | 8 | | 08-22 | | 8 |
| | 08-09A | | 8 | 218-5239 | 08-01 | | 12 |
| | 08-11 | | 25 | 218-5242 | 08-07 | | 25 |
| | 08-12 | | 17 | 218-5243 | 08-22 | | 32 |
| | 08-13 | | 31 | 218-5245 | 08-02 | | 1 |
| | 08-14 | | 19 | | 08-02 | | 10 |
| 218-5063 | 08-09A | | 6 | 218-5280 | 05-02 | | 19 |
| | 08-10 | | 8 | | 08-23 | | 26 |
| | 08-11 | | 8 | 218-5283 | 08-22 | | 3 |
| | 08-12 | | 8 | 218-5351 | 05-04 | | 14 |
| | 08-13 | | 8 | | 06-01 | | 4 |
| | 08-14 | | 8 | | 08-23 | | 31 |
| | 08-22 | | 7 | | 08-26 | | 9 |
| 218-5064 | 08-01 | | 22 | 218-5365 | 08-22 | | 4 |
| | 08-01 | | 49 | 218-5529 | 06-01 | | 5 |
| | 08-02 | | 19 | 218-5584 | 08-01 | | 27 |
| | 08-23 | | 28 | | 08-03 | | 4 |
| | 08-23 | | 42 | 218-5600 | 08-25 | | 18 |
| 218-5069 | 08-02 | | 4 | 218-5650 | 08-07 | | 28 |
| 218-5070 | 08-08A | | 36 | 218-595 | 08-04 | | 22 |
| 218-5086 | 08-03 | | 20 | 218-655 | 08-25 | | 15 |
| 218-5089 | 08-17 | | 4 | 218-676 | 08-24 | | 21 |
| | 08-18 | | 4 | 218-693 | 09-10 | | 19 |
| | 08-19 | | 5 | 218-695 | 09-10 | | 32 |
| | 08-20 | | 5 | 218-754 | 08-22 | | 50 |
| | 08-21 | | 2 | 218-756 | 08-01 | | 20 |
| | 08-22 | | 1 | 218-765 | 08-01 | | 41 |
| 218-5105 | 06-25 | | 4 | 218-776 | 08-06 | | 17 |
| | 08-08 | | 8 | 218-836 | 08-22 | | 35 |
| | 08-08A | | 8 | 218-840 | 08-07 | | 27 |
| | 08-21 | | 3 | | 08-23 | | 33 |
| | 08-22 | | 39 | 218-845 | 08-26 | | 22 |
| | 08-22 | | 5 | 218-980 | 08-01 | | 44 |
| | 08-26 | | 11 | | 08-22 | | 6 |
| | 09-10 | | 14 | 219-1 | 05-04 | | 13 |
| 218-5106 | 05-02 | | 6 | | 06-01 | | 6 |
| | 08-09 | | 11 | | 08-04 | | 27 |
| | 08-09 | | 24 | | 08-58 | | 17 |
| | 08-09A | | 11 | | 08-60 | | 21 |
| | 08-09A | | 24 | | 08-61 | | 17 |
| 218-5107 | 08-01 | | 45 | | 08-62 | | 20 |
| | 08-04 | | 16 | | 08-63 | | 23 |

HTTP://WWW.MINNPARBACKHOEPARTS.COM




| Number | Figure | Sequence | Ref. |
|---|---|---|---|
| 219-1 | 08-64 | | 20 |
| | 08-65 | | 20 |
| | 09-04 | | 32 |
| | 09-05 | | 23 |
| | 09-05 | | 5 |
| | 09-08 | | 9 |
| | 09-16 | | 41 |
| | 09-20 | | 14 |
| | 09-23 | | 28 |
| | 09-24 | | 17 |
| | 09-24 | | 3 |
| | 09-26 | | 24 |
| | 09-26 | | 37 |
| | 09-27 | | 3 |
| | 09-27 | | 35 |
| | 09-27 | | 41 |
| 219-10 | 06-09 | | 8 |
| | 06-31 | | 8 |
| 219-16 | 09-48 | | |
| | 09-48 | | |
| 219-36 | 08-65 | | 21 |
| 219-55 | 08-04 | | 28 |
| | 08-05 | | 41 |
| | 08-59 | | 17 |
| | 08-60 | | 22 |
| | 08-62 | | 21 |
| | 09-04 | | 10 |
| | 09-23 | | 30 |
| | 09-25 | | 5 |
| | 09-25A | | 5 |
| | 09-37 | | 9 |
| 219-86 | 09-27 | | 54 |
| 219-87 | 09-10 | | 4 |
| 219-89 | 09-27 | | 53 |
| 220165A2 | 08-62 | | 2 |
| 220413A1 | 09-37 | | 7 |
| 221-89 | 09-64 | | 21 |
| 224057A1 | 08-10 | | 27 |
| 225-14105 | 09-02 | | 5 |
| 225-14210 | 03-02 | | 13 |
| | 03-03 | | 20 |
| 225315C1 | 08-50 | | 6 |
| | 08-51 | | 6 |
| | 08-52 | | 6 |
| 225318C1 | 08-50 | | 7 |
| | 08-51 | | 7 |
| | 08-52 | | 7 |
| 225350C1 | 08-52 | | 14 |
| | 08-54 | | 6 |
| 225353C1 | 08-52 | | 15 |
| | 08-54 | | 7 |
| 226456A1 | 09-38 | | 36 |
| 226560A1 | 09-52 | | 4 |
| 227389A1 | 04-18 | | 2 |
| 228133A2 | 02-01 | | 27 |
| 230-4216 | 09-52 | | 7A |
| 230857A1 | 09-38 | | 1A |
| 230973A1 | 07-03 | | 26 |
| 231-14109 | 09-39 | | 4 |
| | 09-41 | | 15 |
| | 09-43 | | 15 |
| | 09-43 | | 26 |
| | 09-43 | | 9 |
| 231-14409 | 09-15 | | 30 |
| 231-1444 | 09-52 | | |
| | 09-71 | | 12 |
| 231-1445 | 09-15 | | 23 |
| 231-1446 | 09-01 | | 18 |
| | 09-02 | | 28 |
| 231-24409 | 04-08 | | 19 |
| 231-2446 | 09-19 | | 18 |
| 231-4115 | 09-71 | | 9 |
| 231-4246 | 09-10 | | 5 |
| 231397A1 | 06-07 | | |
| 231656A1 | 09-38 | | 6 |
| 232-1446 | 09-56 | | 2 |
| | 09-57 | | 28 |
| 232-4617 | 09-46 | | 19 |
| | 09-46 | | 26 |
| 232948A1 | 09-66 | | 10 |
| 233104A1 | 08-64 | | 21 |
| 233110A2 | 08-64 | | 16 |
| 233114A2 | 08-11 | | 18 |
| | 08-64 | | 1 |
| | 09-24 | | 15 |
| | 09-27 | | 9 |
| 233283A1 | 06-20 | | 1 |
| 233284A1 | 06-19 | | 32 |
| 233724A1 | 06-11 | | 8 |
| | 09-12 | | 17 |
| | 09-14 | | 9 |
| | 09-42 | | 15 |
| 234141A2 | 08-64 | | 4 |
| 234412A1 | 08-25 | | 9 |
| | 08-56 | | |
| 234844A1 | 08-64 | | |
| 234892A1 | 03-01 | | 14 |
| 235002A1 | 04-09 | | 12 |
| | 08-25 | | 26 |
| 237-6002 | 08-55 | | 14 |
| 237-6004 | 05-02 | | 4 |
| | 05-04 | | 8A |
| | 06-01 | | 27 |
| | 07-04 | | 19A |
| | 08-17 | | |
| | 08-18 | | |
| | 08-19 | | |
| | 08-20 | | |
| | 08-26 | | 24 |
| | 08-55 | | 11A |
| 237-6005 | 08-26 | | 26 |
| 237-6006 | 05-02 | | 16 |
| | 05-02 | | 18 |
| | 05-04 | | 14A |
| | 06-01 | | 4A |
| | 06-01 | | 5A |
| | 06-25 | | 3 |
| | 06-25 | | 5 |
| | 08-07 | | 29 |
| | 08-08 | | 6 |
| | 08-08 | | 9 |
| | 08-08A | | 6 |
| | 08-08A | | 9 |
| | 08-17 | | |
| | 08-18 | | |
| | 08-19 | | |
| | 08-20 | | |
| | 08-23 | | 27 |
| | 08-23 | | 32 |
| | 08-26 | | 10 |
| | 08-26 | | 12 |
| | 08-26 | | 14 |
| | 08-26 | | 19 |
| | 08-55 | | 8 |
| | 08-57 | | 4 |
| | 09-10 | | |
| | 09-10 | | |
| | 09-38 | | 17 |
| | 09-38 | | 58 |
| 237-6008 | 05-02 | | 12 |
| | 05-02 | | 20 |
| | 05-02 | | 7 |
| | 05-02 | | 9 |
| | 06-21 | | 40 |
| | 08-07 | | 24 |
| | 08-07 | | 26 |
| | 08-08 | | 12 |
| | 08-08 | | 21 |
| | 08-08 | | 34 |
| | 08-08 | | 36 |
| | 08-08A | | 12 |
| | 08-08A | | 21 |
| | 08-09 | | 12 |
| | 08-09 | | 25 |
| | 08-09A | | 12 |
| | 08-09A | | 25 |
| | 08-25 | | 12 |
| | 08-25 | | 19 |
| | 08-55 | | 6 |
| 237-6010 | 03-01 | | 6A |
| | 06-10 | | 12 |
| | 06-10 | | 23 |
| | 08-01 | | 46 |
| | 08-01 | | 48 |

HTTP://WWW.MINNPARBACKHOEPARTS.COM




| Number | Figure | Sequence | Ref. | Number | Figure | Sequence | Ref. |
|---|---|---|---|---|---|---|---|
| 237-6010 | 08-03 | | 10 | 238-5243 | 08-63 | | 13 |
| | 08-04 | | 17 | 238-5270 | 06-26 | | 2 |
| | 08-04 | | 3 | 238-6121 | 06-06 | | 22A |
| | 08-05 | | 29 | | 06-13 | | 8A |
| | 08-05 | | 3 | | 06-14 | | 10 |
| | 08-05 | | 33 | | 06-26 | | 1A |
| | 08-06 | | 3 | | 06-30 | | 7A |
| | 08-07 | | 17 | 238-8217 | 06-20 | | 22 |
| | 08-07 | | 19 | 239306A1 | 09-02 | | 14 |
| | 08-09 | | 28 | 239406A1 | 09-03 | | 7 |
| | 08-09 | | 9 | 239606A1 | 06-14 | | 2 |
| | 08-09A | | 28 | 242459A1 | 08-24 | | 5 |
| | 08-09A | | 9 | | 08-24 | | 9 |
| | 08-10 | | 20 | 243084A1 | 09-23 | | 19 |
| | 08-10 | | 23 | 243298A1 | 08-24 | | 4 |
| | 08-11 | | 20 | 243300A1 | 08-24 | | 1 |
| | 08-11 | | 26 | 243398A1 | 08-24 | | 8 |
| | 08-12 | | 18 | 243404A1 | 08-24 | | 2 |
| | 08-12 | | 23 | 243679A2 | 08-24 | | 14 |
| | 08-13 | | 32 | 244109A1 | 06-19 | | 6 |
| | 08-13 | | 36 | 244790A1 | 09-26 | | 51 |
| | 08-14 | | 16 | | 09-27 | | 46 |
| | 08-14 | | 20 | 245258A1 | 04-09 | | 7 |
| | 08-26 | | 21 | 245423A1 | 09-10 | | 30 |
| | 08-27 | | 11 | 245466A1 | 09-28 | | 6 |
| | 09-38 | | 13 | | 09-28 | | 9 |
| 237-6012 | 08-01 | | 13 | | 09-29 | | 6 |
| | 08-01 | | 23 | | 09-29 | | 9 |
| | 08-01 | | 50 | | 09-30 | | 6 |
| | 08-02 | | 20 | | 09-30 | | 9 |
| | 08-08A | | 37 | | 09-31 | | 6 |
| | 08-09 | | 20 | | 09-32 | | 6 |
| | 08-09A | | 20 | | 09-32 | | 6 |
| | 08-09A | | 7 | | 09-32 | | 9 |
| | 08-10 | | 9 | | 09-32 | | 9 |
| | 08-11 | | 9 | | 09-33 | | 6 |
| | 08-12 | | 9 | | 09-34 | | 6 |
| | 08-13 | | 9 | | 09-34 | | 9 |
| | 08-14 | | 9 | | 09-35 | | 6 |
| | 08-23 | | 25 | | 09-35 | | 9 |
| | 08-23 | | 29 | 246151A1 | 08-24 | | 17 |
| | 08-23 | | 43 | 246158A1 | 08-24 | | 15 |
| | 09-10 | | 35 | 246526A1 | 04-04 | | 31A |
| 237-6014 | 08-29 | | 11 | 247546A1 | 06-30 | | 24A |
| | 08-29 | | 17 | 247550A1 | 06-30 | | 13 |
| 237-6016 | 08-01 | | 18 | 248-2373 | 09-46 | | 4 |
| | 08-01 | | 25 | 250663A1 | 09-24 | | 40 |
| | 08-01 | | 28 | 250851A1 | 09-05 | | 7 |
| | 08-02 | | 11 | | 09-08 | | 30 |
| | 08-02 | | 15 | 250854A1 | 04-06 | | 10 |
| | 08-02 | | 17 | 253209A1 | 09-48 | | 8 |
| | 08-02 | | 2 | 254409A1 | 02-03 | | 2 |
| | 08-02 | | 5 | 254686A2 | 06-12 | | 1 |
| | 08-02 | | 8 | 255447A1 | 09-71 | | 13 |
| | 08-03 | | 5 | 255659A1 | 08-09 | | 23 |
| 237-6020 | 08-03 | | 21 | | 08-09A | | 23 |
| 237-8008 | 06-26 | | | 256210A2 | 08-24 | | 14A |
| 237021A1 | 07-01 | | 1 | 256347A1 | 09-01 | | |
| 237022A1 | 07-01 | | 2 | | 09-02 | | |
| 237025A1 | 07-01 | | 21 | 256478A1 | 07-02 | | 13 |
| 237026A1 | 07-01 | | 11 | 256481A1 | 07-02 | | 14 |
| 237582A1 | 04-16 | | 1 | 256482A1 | 07-02 | | 17 |
| 238-5005 | 04-17 | | 8 | 256485A1 | 07-02 | | 18 |
| 238-5011 | 04-06A | | 5 | 256776A1 | 03-03 | | 5 |
| | 08-57 | | 5 | 258616A1 | 09-01 | | |
| 238-5013 | 06-21 | | 42 | | 09-02 | | |
| 238-5014 | 06-21 | | 41 | 259044A1 | 08-01 | | 1 |
| 238-5152 | 06-08 | | 10 | 259054A1 | 09-51 | | 15 |
| | 06-28 | | 11 | 259254A1 | 07-02 | | 24 |
| 238-5227 | 05-01 | | 3 | 260-1358 | 04-10 | | 14 |
| 238-5228 | 08-01 | | 7 | 260-1436 | 09-61 | | 16 |
| | 09-26 | | 38 | 261-14310 | 04-15 | | 11 |
| 238-5230 | 08-57 | | 9 | | 04-15 | | 4 |
| 238-5231 | 08-59 | | 9 | 27549R1 | 06-23 | | 2 |
| | 08-60 | | 10 | | 06-23 | | 2 |
| | 08-66 | | 8 | 276-2446 | 08-58 | | 11 |
| 238-5233 | 08-58 | | 9 | | 08-59 | | 11 |
| | 08-65 | | 11 | | 08-60 | | 12 |
| 238-5237 | 08-62 | | 9 | | 08-61 | | 11 |
| 238-5239 | 08-61 | | 9 | | 08-62 | | 11 |
| | 08-62 | | 23 | | 08-63 | | 15 |
| 238-5241 | 08-64 | | 11 | | 08-64 | | 13 |

HTTP://WWW.MINNPARBACKHOEPARTS.COM




| Number | Figure | Sequence | Ref. |
|---|---|---|---|
| 276-2446 | 08-65 | | 13 |
| | 08-66 | | 10 |
| 276-2456 | 08-56 | | 3 |
| 276-24924 | 03-01 | | 17 |
| 276-26512 | 04-18 | | 10 |
| 276498A1 | 04-13 | | |
| | 04-14 | | |
| 277800A1 | 02-01 | | 39 |
| 278316A2 | 04-10 | | 9 |
| 278328A1 | 04-07 | | 27 |
| 278532A1 | 06-16 | | 14 |
| 278533A1 | 06-16 | | 13 |
| 278534A1 | 06-12 | | 8 |
| 279039A1 | 06-16 | | 15 |
| 279223A1 | 04-14 | | 6 |
| 279224A1 | 04-14 | | 5 |
| 279265A2 | 04-14 | | 15 |
| 279482A1 | 09-53 | | 2A |
| | 09-69 | | 4 |
| 279645A1 | 07-02 | | |
| 279916A1 | 04-14 | | 16 |
| 280-16516 | 09-42 | | 12 |
| 280436A1 | 07-02 | | 3 |
| 280443A1 | 07-02 | | 25 |
| 280450A1 | 07-02 | | 20 |
| 280452A1 | 07-02 | | 21 |
| 280457A1 | 07-02 | | 22 |
| 280681A1 | 07-06 | | 9 |
| 281-14520 | 09-64 | | 9 |
| 281-14716 | 09-11 | | 17 |
| 281-18712 | 09-63 | | 26 |
| 281-54512 | 09-61 | | 23 |
| 281-54712 | 09-71 | | 4 |
| 281185A1 | 09-26 | | |
| | 09-27 | | |
| 281952A1 | 07-02 | | |
| 281960A1 | 07-02 | | 23 |
| 282-16512 | 04-18 | | 7 |
| 282033A1 | 06-01 | | 19 |
| 282038A2 | 06-01 | | 18 |
| 282242A1 | 03-03 | | 1 |
| 282428A1 | 05-02 | | 17 |
| | 08-26 | | 18 |
| 282496A1 | 08-01 | | 2 |
| 282775A1 | 04-09 | | |
| 2830082 | 02-09 | | 1 |
| 2830156 | 03-09 | | 2 |
| 2830266 | 03-09 | | 1 |
| 2830411 | 02-27 | | 8 |
| 2830433 | 02-26 | | 7 |
| 2830445 | 02-20 | | 2 |
| 2830775 | 02-17 | | 5 |
| 2830784 | 02-17 | | 7 |
| 2830905 | 02-27 | | 4 |
| 2830919 | 02-16 | | 15 |
| 2830934 | 02-27 | | 5 |
| 2830948 | 02-27 | | 3 |
| 2830952 | 02-26 | | 10 |
| | 02-27 | | |
| 2830953 | 02-26 | | 12 |
| 2831023 | 02-26 | | 9 |
| 2831031 | 02-26 | | 8 |
| 2831101 | 02-27 | | 6 |
| 283462A1 | 07-02 | | 6 |
| 283466A1 | 07-02 | | 19 |
| 283779A1 | 04-09 | | 22 |
| 283781A1 | 04-09 | | 23 |
| 284154A1 | 09-59 | | 10 |
| | 09-70 | | 8 |
| 286-56520 | 09-53 | | 11 |
| | 09-68 | | 29 |
| 29-1010 | 09-08 | | 14 |
| 29-1012 | 09-08 | | 5 |
| 291010A1 | 04-18 | | 6 |
| 292207A1 | 06-27 | | 12 |
| 292208A1 | 06-27 | | 13 |
| 292210A1 | 06-29 | | 3 |
| 292212A1 | 06-29 | | 4 |
| 292213A1 | 06-29 | | 1 |
| 292214A1 | 06-29 | | 6 |
| 292262A1 | 09-46 | | 2B |
| 292263A2 | 09-46 | | 2C |
| 292268A1 | 06-27 | | |
| 292385A1 | 09-23 | | 29 |
| 292890A1 | 06-27 | | 17 |
| 292902A1 | 06-29 | | 7 |
| 292969A2 | 09-10 | | |
| 293636A1 | 09-23 | | 34 |
| 294245A1 | 06-26 | | 26 |
| 294933A1 | 06-07 | | |
| 295111A1 | 07-01 | | 18 |
| 295112A1 | 07-01 | | 23 |
| 295113A1 | 07-01 | | 24 |
| 297280A1 | 08-59 | | 4 |
| 297281A1 | 08-60 | | 4 |
| | 08-66 | | 3 |
| 297615A1 | 09-02 | | 1 |
| 297952A1 | 08-64 | | 2 |
| 298176A1 | 09-01 | | |
| | 09-02 | | |
| 298521A1 | 09-77 | | 11 |
| 298614A1 | 06-21 | | 44 |
| 2992147 | 02-21 | | 4 |
| 2992148 | 02-21 | | 4 |
| 2992149 | 02-21 | | 4 |
| 2992153 | 02-21 | | 3 |
| 2992154 | 02-21 | | 3 |
| 2992155 | 02-21 | | 3 |
| 299324A1 | 06-21 | | 16 |
| 300030A1 | 04-19 | | 4 |
| 300588A1 | 09-27 | | 26 |
| 300659A1 | 09-51 | | 2 |
| 300661A1 | 09-51 | | 3 |
| 300664A1 | 09-51 | | 7 |
| 300665A1 | 09-51 | | 9 |
| 300667A1 | 09-51 | | 10 |
| 300669A1 | 09-52 | | 1 |
| 300670A1 | 09-51 | | 12 |
| 300672A1 | 09-51 | | 18 |
| 300674A1 | 09-51 | | |
| 300675A1 | 09-51 | | 19 |
| 300677A1 | 09-51 | | 21 |
| 300679A1 | 09-51 | | 22 |
| 300680A1 | 09-51 | | 20 |
| 300681A1 | 09-51 | | 23 |
| 300683A1 | 09-51 | | 24 |
| 300684A1 | 09-51 | | 25 |
| 300685A1 | 09-52 | | |
| 300688A1 | 09-52 | | 5 |
| 300689A1 | 09-52 | | 10 |
| 300690A1 | 09-52 | | |
| 300691A1 | 09-52 | | 12 |
| 300692A1 | 09-52 | | 14 |
| 300896A1 | 09-52 | | 20 |
| 300996A3 | 08-27 | | 3 |
| 301104A1 | 08-03 | | 9 |
| 301803R1 | 09-64 | | 20 |
| 302358A1 | 03-01 | | 3 |
| | 09-38 | | 3 |
| 302820A2 | 08-27 | | 5 |
| 303192A1 | 02-01 | | 36 |
| 303195A1 | 02-01 | | 42 |
| 303465A2 | 04-10 | | 10B |
| 303466A1 | 04-10 | | 10C |
| 303467A1 | 04-10 | | 10D |
| 303646A1 | 09-24 | | 41 |
| 304083A1 | 09-74 | | 7 |
| 304424A1 | 08-27 | | 9 |
| 304890A1 | 08-27 | | 10 |
| 305152A1 | 06-29 | | 2 |
| 305342A1 | 04-04 | | 35 |
| 305492A1 | 09-10 | | 16 |
| 305493A1 | 09-10 | | 18 |
| 305494A1 | 09-10 | | 17 |
| 305495A1 | 09-10 | | 9 |
| 305496A1 | 09-10 | | 7 |
| 305497A1 | 09-10 | | 3 |
| 305499A1 | 09-10 | | 8 |
| 305508A1 | 09-10 | | 21 |
| 30634 | 08-60 | | 14 |
| 307090A1 | 09-49 | | 4 |
| 307091A1 | 09-49 | | 3 |
| 307092A1 | 09-49 | | 8 |
| | 09-49 | | 8 |

HTTP://WWW.MINNPARBACKHOEPARTS.COM




| Number | Figure | Sequence | Ref. | Number | Figure | Sequence | Ref. |
|---|---|---|---|---|---|---|---|
| 307092A1 | 09-50 | | 1 | 336375A1 | 09-50 | | 14 |
| | 09-50 | | 1 | 338424A1 | 09-53 | | 4 |
| 307098A1 | 09-49 | | 6 | 338425A1 | 09-53 | | 3 |
| 307123A1 | 02-06A | | 16 | 338426A1 | 09-55 | | 5A |
| 307186A1 | 09-26 | | 11 | 338427A1 | 09-55 | | 5 |
| | 09-27 | | 19 | 338428A1 | 09-57 | | 3 |
| 307277A1 | 08-27 | | 17 | 338429A1 | 09-55 | | 4A |
| 307348A1 | 03-01 | | 39 | 338886A4 | 07-03 | | 35 |
| | 09-74 | | 12 | 339021A2 | 09-40 | | 2 |
| 307385A1 | 09-10 | | 22 | 339022A3 | 09-40 | | 1 |
| 307386A1 | 09-10 | | 23 | 339046A3 | 07-03 | | 34 |
| 307387A1 | 09-10 | | 24 | 339047A3 | 07-03 | | 33 |
| 307388A1 | 09-10 | | 25 | 339680A2 | 09-22 | | 25B |
| 307389A1 | 09-10 | | 26 | 340-12520 | 09-52 | | |
| 307577A1 | 03-01 | | 31 | 340997A3 | 09-44 | | 2 |
| | 09-38 | | 28 | 340998A3 | 09-44 | | 1 |
| 308029A1 | 07-01 | | 3 | 341564A2 | 09-04 | | 36 |
| 308030A1 | 07-01 | | 16 | 341743A3 | 09-55 | | |
| 308036A1 | 07-01 | | 12 | 341746A2 | 09-57 | | |
| 308040A1 | 07-02 | | 5 | 344892A1 | 09-04 | | 37 |
| 308042A1 | 07-01 | | 17 | 345-133 | 09-01 | | |
| 308254A1 | 08-27 | | 2 | | 09-02 | | |
| 308255A1 | 08-27 | | 1 | 345-49 | 09-38 | | 35 |
| 309674A1 | 08-27 | | 11A | 345-621 | 09-65 | | |
| 309747A1 | 06-11 | | | 345061A2 | 07-04 | | 2 |
| 310492A1 | 06-30 | | 18 | 345231A1 | 09-44 | | 3 |
| 310519A1 | 06-18 | | 8 | 345325A2 | 07-04 | | 3 |
| 310772A1 | 06-13 | | | 346583A1 | 06-26 | | 21 |
| | 06-13 | | 10B | 346584A1 | 06-26 | | 20 |
| | 06-14 | | | 347706A3 | 04-07 | | 7 |
| | 06-14 | | 14 | 347959A1 | 06-26 | | 23 |
| 311200A1 | 09-04 | | 27 | 347960A1 | 06-26 | | 24 |
| 311565A1 | 06-02 | | 11 | 348706A1 | 09-26 | | 46 |
| 311569A1 | 05-08 | | 1 | | 09-27 | | 30 |
| | 06-06 | | 1 | 348794A1 | 05-01 | | 18 |
| 3125705R1 | 04-17 | | 10 | | 05-03 | | |
| 313648A1 | 08-02 | | 3 | 349295A1 | 06-21 | | 39 |
| 314319A1 | 08-24 | | 27 | 350014A3 | 03-02 | | 11 |
| 314320A1 | 08-24 | | 28 | 352208A1 | 09-58 | | 11 |
| 315273A1 | 09-55 | | 12 | 352209A1 | 09-58 | | 13 |
| 315276A1 | 09-55 | | 11 | 352210A1 | 09-58 | | 15 |
| 317988A1 | 08-24 | | 30 | 352401A1 | 05-01 | | 7 |
| 321-1707 | 09-08 | | 29 | 352568A1 | 05-01 | | 6 |
| 321-1708 | 09-08 | | 23 | | 05-03 | | |
| | 09-73 | | 11 | 352569A4 | 05-01 | | 6A |
| 321-229 | 09-79 | | 8 | | 05-03 | | 10 |
| 321-230 | 09-79 | | 7 | 352727A1 | 05-01 | | 15 |
| 321-4311 | 09-72 | | 5 | | 05-01 | | 23 |
| 321-4614 | 09-76 | | 11 | 353-402 | 09-54 | | |
| 321-5675 | 09-78 | | 11 | | 09-68 | | 19 |
| 321-6376 | 09-79 | | 8A | 353-405 | 08-53 | | 10 |
| | 09-80 | | 8A | | 09-54 | | |
| | 09-81 | | 8A | 353-406 | 09-54 | | |
| 321-6774 | 09-79 | | 13 | 353-407 | 09-54 | | |
| 321-7030 | 09-76 | | 10 | 353-408 | 09-54 | | |
| 321-7040 | 09-79 | | 4 | 353-410 | 09-54 | | |
| 321183A1 | 07-02 | | 12 | | 09-64 | | 26 |
| 321428A1 | 06-22 | | 8 | | 09-68 | | |
| 322357 | 04-06A | | 19 | 353-411 | 09-11 | | 5 |
| 322860A1 | 03-03 | | 4 | 353-415 | 09-54 | | |
| 3233348R1 | 09-15 | | 36 | 353-421 | 09-54 | | |
| | 09-56 | | 8 | | 09-68 | | 22 |
| 3234063R1 | 09-55 | | 25 | 353-422 | 09-42 | | 7 |
| 324213A1 | 05-08 | | 2 | 353-425 | 09-54 | | |
| 325465A2 | 08-07 | | 22 | 353068A2 | 04-11 | | 18 |
| 326-640 | 09-10 | | 6 | 353103A1 | 08-07 | | 5A |
| 326348A1 | 07-06 | | 16 | 353167A1 | 08-07 | | 5 |
| 326806A1 | 09-23 | | 1 | 355197A2 | 04-11 | | 2 |
| | 09-24 | | 1 | 355198A2 | 04-11 | | 1A |
| 326865A1 | 06-19 | | 13 | 355827A2 | 04-10 | | 1 |
| 328186A1 | 06-10 | | 14 | 355984A2 | 09-42 | | 1 |
| | 06-10 | | 21 | 356743A1 | 08-07 | | 12 |
| | 08-03 | | 11 | 357099A1 | 09-68 | | 15 |
| 329032A1 | 04-13 | | 3 | 357100A1 | 09-68 | | 16 |
| 329797A1 | 08-23 | | 5 | 357278A1 | 04-08 | | 17 |
| 329799A1 | 08-23 | | 4 | 357469A1 | 08-11 | | 16 |
| 329998A1 | 09-23 | | 4 | 357470A1 | 08-12 | | 16 |
| 331620A1 | 09-05 | | 2 | | 08-13 | | 34 |
| 331621A1 | 09-05 | | 1 | 357471A1 | 08-10 | | 24 |
| 334724A1 | 06-21 | | 30 | 357540A1 | 04-14 | | 7 |
| 334725A1 | 06-21 | | 32 | 357541A1 | 04-14 | | 8 |
| 335640A2 | 06-21 | | | 357966A1 | 04-08 | | 16 |

HTTP://WWW.MINNPARBACKHOEPARTS.COM




| Number | Figure | Sequence | Ref. | Number | Figure | Sequence | Ref. |
|---|---|---|---|---|---|---|---|
| 358212A1 | 07-01 | | | 366235A1 | 06-20 | | 12 |
| 358279A1 | 06-26 | | 12 | 366236A1 | 06-20 | | 14 |
| 358280A1 | 06-26 | | 11 | 366366A1 | 06-19 | | 27 |
| 358282A1 | 06-19 | | 19 | 366632A2 | 04-11 | | 21 |
| 358283A1 | 06-19 | | 28 | 366633A3 | 04-11 | | 25 |
| 358286A1 | 06-30 | | 23 | 366889A2 | 04-07 | | 28 |
| 358632A1 | 06-18 | | 7 | 366910A1 | 06-22 | | 9 |
| 358633A1 | 06-18 | | 6 | 367175A1 | 06-26 | | 4 |
| 358635A1 | 06-18 | | 4 | 367184A1 | 06-27 | | |
| 358636A1 | 06-17 | | 2 | | 06-27 | | |
| 358637A1 | 06-18 | | 15 | 367352A1 | 08-07 | | 5B |
| 358638A1 | 06-18 | | 21 | 367704A4 | 09-61 | | 1 |
| 358639A1 | 06-19 | | 29 | 367705A6 | 09-61 | | |
| 358640A1 | 06-18 | | 10 | 367712A3 | 09-68 | | 13 |
| 358641A1 | 06-18 | | 16 | 367848A2 | 09-74 | | 13 |
| 358642A1 | 06-18 | | 19 | 367860A3 | 06-11 | | 35 |
| 358643A1 | 06-18 | | 18 | | 06-31 | | |
| 358644A1 | 06-18 | | 17 | 367861A2 | 06-01 | | 11 |
| 358645A1 | 06-18 | | 1 | | 06-09 | | |
| | 06-20 | | 7 | 367977A1 | 07-06 | | |
| 358646A1 | 06-17 | | 4 | 368146A1 | 09-55 | | 46 |
| 358647A1 | 06-19 | | 16 | | 09-57 | | 26 |
| 358648A1 | 06-19 | | 4 | 368147A1 | 09-55 | | 40 |
| 358649A1 | 06-19 | | 3 | | 09-57 | | 17 |
| 358650A1 | 06-19 | | 3A | 368417A1 | 09-45 | | 9 |
| 358651A1 | 06-19 | | 3A | 368436A1 | 06-21 | | 16A |
| 358652A1 | 06-19 | | 3A | 368437A2 | 06-21 | | |
| 358653A1 | 06-19 | | 27 | 368438A2 | 06-21 | | |
| 358654A1 | 06-19 | | 18A | 368801A2 | 09-64 | | 10 |
| 358655A1 | 06-18 | | 31 | 368805A1 | 09-63 | | 7 |
| | 06-19 | | 18B | 368807A1 | 09-63 | | 13 |
| 358656A1 | 06-19 | | 18 | 368809A1 | 09-54 | | 22 |
| 359653A1 | 07-01 | | 13 | 368813A2 | 09-61 | | 4 |
| 360046A1 | 09-57 | | 1 | 368818A1 | 09-63 | | 29 |
| 360242A2 | 04-10 | | 10A | 368821A1 | 09-63 | | 18 |
| 360243A2 | 04-10 | | 11 | 368990A1 | 09-62 | | 6 |
| 360244A1 | 04-10 | | 4 | 369249A1 | 09-63 | | 9 |
| 360245A2 | 04-10 | | 8 | 369372A1 | 08-55 | | 3 |
| 360246A3 | 09-54 | | 16 | 369450A1 | 09-61 | | 15 |
| 360247A3 | 09-54 | | 15 | 370381A1 | 09-65 | | 14 |
| 360250A2 | 04-11 | | 1 | 370755A1 | 04-12 | | 1 |
| 360251A3 | 09-63 | | 6 | 370756A1 | 04-12 | | 2 |
| 360252A2 | 09-62 | | 5 | 370760A1 | 04-12 | | 5 |
| 360253A3 | 09-63 | | 8 | 371031A1 | 08-05 | | 26 |
| 360254A3 | 09-63 | | 10 | 372167A3 | 04-11 | | 1B |
| 360255A1 | 09-63 | | 14 | 373689A2 | 04-10 | | 10 |
| 360256A1 | 09-65 | | 15 | 373693A1 | 04-10 | | 10E |
| 360257A1 | 09-65 | | 7 | 373698A2 | 09-73 | | 8 |
| 360260A2 | 09-62 | | 1 | 373699A2 | 09-73 | | 9 |
| 360261A1 | 09-62 | | 3 | 373995A1 | 09-63 | | |
| 360262A2 | 09-64 | | 1 | 375112A1 | 04-11 | | 26 |
| 360263A4 | 09-65 | | 1 | 375392A1 | 09-63 | | 28 |
| 360266A2 | 09-54 | | 3 | 376286A2 | 09-08 | | |
| 360267A3 | 09-54 | | 2 | 376332A1 | 09-55 | | 38 |
| 360272A6 | 09-61 | | | | 09-57 | | 15 |
| 360867A1 | 09-36 | | 1 | 376334A1 | 09-55 | | 36 |
| 361776A1 | 09-38 | | 23 | | 09-57 | | 13 |
| 361900A1 | 04-07 | | 9 | 376336A1 | 09-55 | | 37 |
| 362340A6 | 09-41 | | 1 | | 09-57 | | 14 |
| 362556A2 | 09-45 | | 2 | 376384A1 | 09-30 | | 1 |
| 362557A1 | 09-45 | | 1 | 376385A1 | 09-32 | | 1 |
| 362558A1 | 09-45 | | 3 | 376386A1 | 09-34 | | 1 |
| 362607A1 | 09-40 | | 4 | 376528A4 | 09-08 | | |
| 362609A1 | 09-40 | | 3 | 377194A1 | 09-61 | | 9 |
| 362930A2 | 04-08 | | 7 | 377222A1 | 09-64 | | 4 |
| 363832A5 | 09-65 | | | 377230A3 | 09-63 | | 27 |
| 363883A1 | 09-61 | | 10 | 377594A5 | 09-61 | | 13 |
| 364132A2 | 09-55 | | 28A | 378227A1 | 09-54 | | 5 |
| 364133A2 | 09-55 | | 30A | 378742A3 | 09-43 | | 19 |
| 364134A2 | 09-55 | | 28 | | 09-43 | | 27 |
| | 09-57 | | 7 | | 09-43 | | 9A |
| 364135A2 | 09-55 | | 30 | 378955A1 | 03-03 | | 8A |
| | 09-57 | | 8 | 378956A3 | 03-03 | | 15 |
| 364180A1 | 09-54 | | 10 | 378957A3 | 03-02 | | 17 |
| | 09-68 | | 24 | 378958A1 | 03-03 | | 13 |
| 365309A1 | 08-13 | | 14 | 378960A1 | 03-03 | | 3 |
| 365328A1 | 09-32 | | 1 | 379160A1 | 09-61 | | 5 |
| 365789A1 | 09-63 | | 20 | 379161A1 | 09-61 | | 6 |
| 366230A1 | 06-20 | | 13 | 379209A1 | 09-61 | | 7 |
| 366231A1 | 06-20 | | 18 | 379314A4 | 06-11 | | 6 |
| 366232A1 | 06-20 | | 15 | 379424A2 | 09-54 | | 3A |
| 366234A1 | 06-20 | | 11 | 379425A3 | 09-54 | | 2A |

HTTP://WWW.MINNPARBACKHOEPARTS.COM




| Number | Figure | Sequence | Ref. |
|---|---|---|---|
| 379846A1 | 05-01 | | 14 |
| | 05-01 | | 22 |
| 379941A1 | 09-25 | | 1 |
| | 09-25A | | 1 |
| 380021A1 | 03-03 | | 21 |
| 380483A2 | 03-03 | | 12 |
| 380537A2 | 06-11 | | 13 |
| 380719A2 | 09-61 | | |
| 380807A4 | 09-38 | | 47 |
| 381111A2 | 09-63 | | 25 |
| 381113A2 | 09-63 | | 24 |
| 381261A1 | 04-05 | | 13 |
| 381442A1 | 05-04 | | 12 |
| | 06-01 | | 31 |
| 381488A4 | 09-28 | | 1 |
| 381659A1 | 04-18 | | 5 |
| 381696A5 | 09-61 | | 2 |
| 381926A1 | 09-41 | | 22 |
| 381927A1 | 09-41 | | 20 |
| 381972A1 | 09-61 | | 14 |
| 382202A2 | 09-38 | | 52 |
| 382298A1 | 09-54 | | 21 |
| | 09-68 | | 30 |
| 382664A2 | 04-18 | | 1 |
| 382770A2 | 09-62 | | 2 |
| 382775A1 | 09-55 | | 23A |
| 382777A1 | 09-55 | | 23 |
| 383619R1 | 04-05 | | 5 |
| 383794A2 | 09-63 | | 22 |
| 383795A2 | 09-63 | | 23 |
| 383972A1 | 09-76 | | 6 |
| 384240A1 | 08-04 | | 18 |
| | 08-58 | | 1 |
| | 09-04 | | 9 |
| 384241A1 | 08-58 | | 2 |
| 384258A1 | 09-79 | | 6 |
| 384260A1 | 09-79 | | 9 |
| 384264A1 | 09-76 | | 1 |
| 384265A1 | 09-79 | | 2 |
| 384267A1 | 09-79 | | 3 |
| 384269A1 | 09-79 | | 5 |
| 384769A1 | 06-19 | | 14 |
| 384773A1 | 06-19 | | 9 |
| 384815A1 | 09-23 | | 32 |
| 384930A2 | 09-74 | | 1 |
| 384931A2 | 09-74 | | 2 |
| 384952A1 | 06-24 | | 1 |
| | 06-26 | | |
| | 06-27 | | |
| | 06-28 | | |
| | 06-29 | | |
| | 06-30 | | |
| | 07-01 | | |
| | 07-02 | | |
| 385506A1 | 09-68 | | 12 |
| 385588A1 | 09-06 | | |
| | 09-06 | | |
| 385614A4 | 04-11 | | 31 |
| 386092A2 | 09-23 | | 16 |
| 386368A2 | 04-11 | | 29 |
| 386369A2 | 04-11 | | 28 |
| 386502A1 | 04-11 | | |
| 386535A1 | 09-65 | | 2 |
| 386718A3 | 09-59 | | 9 |
| | 09-70 | | 13 |
| 386720A1 | 09-59 | | 23 |
| 386722A1 | 09-59 | | 21 |
| 386785A1 | 04-07 | | 22 |
| | 09-59 | | 26 |
| | 09-60 | | |
| | 09-70 | | 6 |
| 386786A1 | 04-09 | | 19 |
| | 09-59 | | 28 |
| | 09-60 | | |
| 386787A1 | 04-07 | | 23 |
| | 09-59 | | 27 |
| | 09-70 | | 7 |
| 386788A1 | 04-09 | | 18 |
| | 09-59 | | 29 |
| 386849A1 | 04-07 | | 18 |
| 386850A1 | 04-07 | | 19 |
| 386851A1 | 04-07 | | 20 |
| 386851A1 | 04-17 | | 15 |
| 386852A2 | 04-09 | | 17 |
| 386927A1 | 04-18 | | 9 |
| 387019A1 | 09-04 | | 6 |
| 387897R91 | 05-09 | | 3 |
| | 05-09 | | 6 |
| 388053A2 | 04-12 | | 6 |
| 388116A2 | 05-01 | | 8 |
| 388712A2 | 08-55 | | 9 |
| 388713A1 | 08-55 | | |
| 388762A1 | 09-64 | | 7 |
| 388843A1 | 09-29 | | 1 |
| 388848A1 | 09-08 | | 24 |
| 388876A6 | 08-55 | | 2 |
| 388881A1 | 08-55 | | 4 |
| 389402A1 | 09-64 | | 8 |
| 389487A1 | 04-07 | | 13 |
| 389541A1 | 08-55 | | 12 |
| 389729A1 | 09-77 | | 6 |
| 389730A1 | 09-78 | | 6 |
| 390-100 | 09-55 | | 21 |
| 390029A1 | 06-05 | | 2 |
| 390255A2 | 04-11 | | 15A |
| 390258A1 | 04-11 | | |
| | 04-11 | | |
| 390551A2 | 09-42 | | 10 |
| 390601A5 | 09-54 | | 13 |
| 390602A1 | 09-54 | | 14 |
| 390690A1 | 09-11 | | 4 |
| 390758A1 | 09-11 | | 3 |
| 390759A1 | 09-11 | | 1 |
| 390760A1 | 09-11 | | 2 |
| 390838A1 | 09-55 | | 2A |
| 390840A1 | 09-55 | | 27A |
| 390841A1 | 09-55 | | 29A |
| 391818A2 | 04-11 | | 15 |
| 391827A1 | 09-53 | | 8 |
| | 09-55 | | 19 |
| | 09-55 | | 6 |
| | 09-57 | | 4 |
| | 09-69 | | 2 |
| 391838A1 | 09-55 | | 14 |
| 391841A1 | 09-55 | | 18A |
| 391842A1 | 09-55 | | 20A |
| 391843A1 | 09-55 | | 32 |
| 391845A1 | 09-55 | | 31 |
| | 09-57 | | 10A |
| 391847A1 | 09-55 | | 13 |
| 391848A1 | 09-55 | | 15 |
| 391849A1 | 09-55 | | 41 |
| | 09-57 | | 18 |
| 391850A1 | 09-55 | | 3A |
| 392353A1 | 04-08 | | 8 |
| 392374A1 | 09-76 | | 13 |
| 392375A1 | 09-79 | | 1 |
| 392828A2 | 09-41 | | 16 |
| | 09-41 | | 18 |
| 392930A1 | 09-68 | | 8 |
| 393161A1 | 09-38 | | 19 |
| 393202A1 | 09-55 | | 17 |
| 393203A1 | 09-55 | | 16 |
| 393209A1 | 09-55 | | 22 |
| 393211A1 | 09-56 | | 5 |
| 393231A1 | 06-09 | | |
| | 06-31 | | |
| 393233A1 | 06-31 | | 6 |
| 393234A1 | 06-09 | | 6 |
| 393330A1 | 09-57 | | 10 |
| 393354A1 | 08-14 | | 10 |
| 393357A1 | 08-14 | | 11 |
| 393360A1 | 08-12 | | 21 |
| 393361A1 | 08-13 | | 16 |
| 393362A1 | 08-13 | | 17 |
| 393369A1 | 08-10 | | 18 |
| 393371A1 | 08-11 | | 17 |
| 393623A1 | 09-42 | | 8 |
| 393826A1 | 06-26 | | 19 |
| 394329A1 | 09-75 | | 3 |
| 394585A3 | 09-55 | | |
| 394700A1 | 09-55 | | 4 |
| 394701A1 | 09-55 | | 27 |
| | 09-57 | | 5 |

HTTP://WWW.MINNPARBACKHOEPARTS.COM




| Number | Figure | Sequence | Ref. | Number | Figure | Sequence | Ref. |
|---|---|---|---|---|---|---|---|
| 394702A1 | 09-55 | | 29 | 398113A1 | 09-43 | | 3 |
| | 09-57 | | 6 | 398380A3 | 04-14 | | 12 |
| 394704A1 | 09-55 | | 18 | 398570A1 | 09-80 | | 6 |
| 394705A1 | 09-55 | | 20 | 398571A1 | 09-81 | | 6 |
| 394707A1 | 09-55 | | 2 | 398572A1 | 09-80 | | 9 |
| 394708A1 | 09-55 | | 3 | 398573A1 | 09-81 | | 9 |
| 394800A1 | 09-56 | | 7 | 398576A1 | 09-77 | | 1 |
| 394863A1 | 04-14 | | 9 | 398577A1 | 09-78 | | 1 |
| | 09-54 | | 17 | 398578A1 | 09-80 | | 2 |
| 394864A1 | 09-57 | | 2 | 398579A1 | 09-81 | | 2 |
| 394865A1 | 09-57 | | 9 | 398580A1 | 09-80 | | 3 |
| 395026A1 | 09-60 | | 9 | 398581A1 | 09-81 | | 3 |
| 395033A1 | 09-60 | | 8 | 398582A1 | 09-80 | | 5 |
| 395136A1 | 09-60 | | 6 | 398583A1 | 09-81 | | 5 |
| 395189A2 | 03-02 | | 1 | 398598A1 | 09-77 | | 13 |
| 395344A1 | 06-11 | | 39 | 398599A1 | 09-78 | | 13 |
| 395348A1 | 09-58 | | 12 | 398600A1 | 09-80 | | 1 |
| | 09-58 | | 14 | 398601A1 | 09-81 | | 1 |
| 395387A1 | 09-54 | | 18 | 398654A1 | 09-81 | | 11 |
| 395388A1 | 09-54 | | 19 | 398656A1 | 09-81 | | 10 |
| 395389A1 | 09-60 | | 10 | 398658A1 | 09-76 | | 5 |
| 395478A3 | 09-68 | | 3 | | 09-77 | | 5 |
| 395793A1 | 09-53 | | 9 | | 09-78 | | 5 |
| | 09-69 | | 7 | 398662A1 | 09-77 | | 7 |
| 395910A2 | 09-73 | | 10 | 398663A1 | 09-78 | | 7 |
| 396-41028 | 09-01 | | 16 | 398665A1 | 09-80 | | 8 |
| | 09-01 | | 31 | 398666A1 | 09-81 | | 8 |
| | 09-02 | | 31 | 398667A1 | 09-80 | | 7 |
| | 09-18 | | 23 | 398668A1 | 09-81 | | 7 |
| 396018A2 | 04-14 | | 13 | 398669A1 | 09-80 | | 11 |
| | 09-60 | | | 398670A1 | 09-80 | | 13 |
| 396023A2 | 04-13 | | 10 | 398671A1 | 09-81 | | 13 |
| 396092A1 | 09-25 | | 10 | 398672A1 | 09-77 | | 10 |
| | 09-25A | | 10 | 398673A1 | 09-78 | | 10 |
| 396339A1 | 08-12 | | 16 | 398674A1 | 09-80 | | 4 |
| | 08-13 | | 34 | 398675A2 | 04-07 | | 24 |
| 396422A2 | 08-55 | | 10 | | 08-26 | | 34 |
| 396483A1 | 09-27 | | 55 | 398676A1 | 09-81 | | 4 |
| 396516A1 | 09-54 | | 12 | 398677A1 | 09-80 | | 10 |
| | 09-61 | | 3 | 398738A1 | 09-62 | | 4 |
| | 09-68 | | 26 | 398846A3 | 04-13 | | 5 |
| 396605A1 | 09-40 | | 30 | | 04-14 | | 1 |
| 396620A2 | 07-04 | | 17 | 398847A3 | 04-13 | | 8 |
| 396841A1 | 09-56 | | 3 | | 04-14 | | 2 |
| | 09-57 | | 29 | 398986A1 | 09-63 | | 30 |
| 396938A3 | 09-68 | | 2 | 399004A1 | 03-01 | | 21 |
| 397025A2 | 09-43 | | 21 | | 08-21 | | |
| 397026A3 | 09-43 | | 2 | 399757A1 | 09-49 | | 1 |
| 397064A1 | 09-56 | | 1 | 399758A1 | 09-49 | | 2 |
| | 09-57 | | 27 | 399759A1 | 09-49 | | 1A |
| 397065A2 | 03-03 | | 22 | 399760A1 | 09-49 | | 2A |
| 397076A1 | 07-04 | | 9 | 399764A1 | 09-50 | | 11 |
| 397080A1 | 08-63 | | 2 | 399777A1 | 09-47 | | 3 |
| 397132A1 | 09-46 | | 1 | 399959A2 | 09-38 | | 26 |
| | 09-47 | | | 399963A1 | 08-07 | | |
| | 09-48 | | | 400069A1 | 09-12 | | 10 |
| 397134A2 | 09-46 | | 2A | 400077A1 | 09-43 | | |
| | 09-49 | | | | 09-43 | | |
| | 09-50 | | | 400200A1 | 09-58 | | 5 |
| 397136A2 | 09-46 | | 2A | 400280A1 | 09-64 | | 11 |
| | 09-49 | | | 400282A1 | 09-64 | | 2 |
| | 09-50 | | | 400296A2 | 08-55 | | 11 |
| 397137A1 | 09-46 | | 2 | 400379A1 | 04-09 | | 9 |
| | 09-51 | | | | 09-64 | | 5 |
| | 09-52 | | | | 09-65 | | 14A |
| 397177A2 | 07-04 | | 16 | 400398A1 | 09-26 | | 48 |
| 397309A3 | 08-01 | | 29 | | 09-27 | | 32 |
| 397548A4 | 03-01 | | 40 | 400494A1 | 09-58 | | 16 |
| 397569A1 | 04-09 | | 5 | 400571A2 | 09-53 | | 20 |
| 397570A1 | 04-09 | | 6 | 400572A1 | 09-53 | | 19 |
| 397653A1 | 06-03 | | 1 | 400573A1 | 09-53 | | 16 |
| 397654A1 | 06-03 | | 2 | 400588A2 | 06-11 | | 7 |
| 397774A3 | 09-43 | | 12A | 400657A1 | 08-55 | | 13 |
| 397786A1 | 08-10 | | 11 | 400837A1 | 09-51 | | 4 |
| 397787A1 | 08-11 | | 21 | 400838A1 | 09-51 | | 5 |
| 397788A1 | 08-12 | | 10 | 400981A1 | 09-51 | | 1 |
| 397870A3 | 09-11 | | 15A | 401052A1 | 05-06 | | |
| 397876A1 | 04-08 | | 13 | 401054A1 | 05-06 | | 3 |
| 397911A1 | 09-12 | | 16 | 401055A1 | 05-06 | | 7 |
| 397990A1 | 04-07 | | 29 | | 05-07 | | 1 |
| 398113A1 | 09-43 | | 12B | 401059A1 | 05-06 | | 13 |
| | 09-43 | | 21A | 401060A1 | 05-06 | | 14 |

HTTP://WWW.MINNPARBACKHOEPARTS.COM




| Number | Figure | Sequence | Ref. |
|---|---|---|---|
| 401061A1 | 05-07 | | 4 |
| 401062A1 | 05-07 | | 3 |
| 401063A1 | 05-07 | | 5 |
| 401064A1 | 05-07 | | 6 |
| 401065A1 | 05-08 | | 3 |
| 401066A1 | 05-08 | | 4 |
| 401067A1 | 05-08 | | 5 |
| 401457A1 | 09-73 | | 2 |
| 401458A1 | 09-73 | | 3 |
| 401459A2 | 09-73 | | 4 |
| 401460A2 | 09-73 | | 5 |
| 401462A1 | 09-73 | | 1 |
| 401466A1 | 09-73 | | 1A |
| 401949A1 | 09-54 | | 4 |
| 402359A1 | 06-03 | | 4 |
| 402610A1 | 09-54 | | 20 |
| 402836A1 | 09-58 | | 28 |
| 402843A1 | 09-58 | | 25 |
| 402844A1 | 09-58 | | 27 |
| 402845A1 | 09-58 | | 32 |
| 402846A1 | 09-58 | | 21 |
| 402847A1 | 09-58 | | 18 |
| 402933A1 | 09-71 | | 1 |
| 402934A1 | 09-71 | | 2 |
| 402935A1 | 09-71 | | 5 |
| 402936A1 | 09-71 | | 3 |
| 403193A1 | 09-63 | | 36 |
| 403225A1 | 09-63 | | 35 |
| 403271A1 | 09-62 | | 9 |
| 403948A1 | 09-58 | | 1 |
| 404226A1 | 09-58 | | 6 |
| 404227A1 | 09-58 | | 9 |
| 404228A1 | 09-58 | | 4 |
| 404229A1 | 09-58 | | 7 |
| 404617A1 | 04-13 | | 12 |
| | 04-14 | | 10 |
| | 09-60 | | |
| | 09-70 | | |
| 404816A1 | 04-07 | | 14 |
| 404834A1 | 09-24 | | 43 |
| | 09-27 | | 5 |
| 404835A1 | 09-24 | | 44 |
| | 09-27 | | 6 |
| 405738A1 | 09-53 | | 15 |
| 405739A1 | 09-53 | | 14 |
| 405740A1 | 09-53 | | 13 |
| 405741A1 | 09-53 | | 17 |
| 405742A1 | 09-53 | | 18 |
| 406287A1 | 09-64 | | 19 |
| | 09-65 | | 5 |
| 406700A1 | 09-47 | | 9 |
| 406723A1 | 09-74 | | 15 |
| 407009A2 | 09-73 | | 6 |
| 407010A2 | 09-73 | | 7 |
| 407660A1 | 04-11 | | 8A |
| 407962A1 | 02-01 | | 11 |
| | 04-06A | | 4 |
| 408398A1 | 09-22 | | 25A |
| 408405A1 | 09-22 | | 35 |
| 408535A1 | 04-06 | | 12 |
| 408757A1 | 08-01 | | 32 |
| 408965A1 | 09-59 | | 15A |
| 408966A1 | 09-59 | | 15 |
| 409025A1 | 08-55 | | 5 |
| 409318A1 | 07-04 | | 18 |
| 409370A1 | 07-03 | | 38 |
| 409472A1 | 03-01 | | 4A |
| | 09-38 | | 4A |
| 409618A1 | 09-54 | | 11 |
| | 09-68 | | 25 |
| 409672A1 | 09-18 | | 4 |
| 409673A1 | 09-18 | | 5 |
| 409690A1 | 09-58 | | 30 |
| 409723A1 | 09-61 | | 18A |
| 410561A1 | 06-11 | | 44 |
| 410867A1 | 09-58 | | 2 |
| 411049A1 | 09-75 | | 2 |
| 411074A1 | 09-42 | | 16 |
| 411399A1 | 09-54 | | 25 |
| 411549A1 | 09-68 | | 21 |
| 411668A1 | 09-08 | | |
| 411844A1 | 09-58 | | |
| 411845A1 | 09-58 | | |
| 411846A1 | 09-58 | | |
| 411847A1 | 09-58 | | |
| 411848A1 | 09-58 | | |
| 411849A1 | 09-58 | | |
| 411850A1 | 09-58 | | |
| 411851A1 | 09-58 | | |
| 411892A1 | 09-37 | | 14 |
| 411908A1 | 09-58 | | 22 |
| 411909A1 | 09-58 | | 19 |
| 411910A1 | 09-58 | | 24 |
| 411911A1 | 09-58 | | 31 |
| 411912A1 | 09-58 | | 33 |
| 411914A1 | 09-58 | | 29 |
| 411916A1 | 09-58 | | 20 |
| 411917A1 | 09-58 | | 17 |
| 412285A1 | 09-54 | | 23 |
| 412510A1 | 04-11 | | 40 |
| 413-1228 | 09-22 | | 18 |
| 413-412 | 09-71 | | 11 |
| 413-516 | 09-10 | | 11 |
| | 09-71 | | 7 |
| 413-528 | 09-15 | | 22 |
| 413-624 | 09-19 | | 12 |
| 413-628 | 09-01 | | 19 |
| 413-632 | 09-02 | | 10 |
| | 09-02 | | 27 |
| 413054A1 | 04-11 | | 36 |
| 413778A1 | 08-23 | | 9 |
| 413870A1 | 07-03 | | 27 |
| 414-724 | 09-46 | | 14 |
| | 09-46 | | 22 |
| 414033A1 | 04-10 | | 18 |
| 414034A1 | 04-10 | | 17 |
| 414071A1 | 04-11 | | 39 |
| 414092A1 | 04-11 | | 38 |
| 414174A1 | 04-08 | | 21 |
| 414426A1 | 09-60 | | 5 |
| | 09-70 | | 3 |
| 414572A1 | 04-10 | | 16 |
| 414600A1 | 09-61 | | 17 |
| 414939A1 | 09-54 | | 24 |
| 418789A1 | 08-05 | | 13 |
| 418791A1 | 08-05 | | 14 |
| 420-21232 | 09-06 | | 9 |
| | 09-06 | | 9 |
| 425-1012 | 09-22 | | 19 |
| 425-105 | 07-03 | | 21 |
| 425-106 | 04-08 | | 2 |
| | 04-08 | | 20 |
| | 09-01 | | 21 |
| | 09-19 | | 13 |
| | 09-59 | | 12 |
| | 09-70 | | 10 |
| 425-1110 | 09-18 | | 16 |
| 425-115 | 09-03 | | 6 |
| | 09-15 | | 19 |
| 425-116 | 09-01 | | 22 |
| | 09-02 | | 26 |
| | 09-02 | | 38 |
| | 09-16 | | 36 |
| | 09-19 | | 5 |
| 425-118 | 09-16 | | 10 |
| | 09-17 | | 3 |
| | 09-18 | | 7 |
| | 09-21 | | 7 |
| 425-147 | 09-58 | | |
| | 09-60 | | |
| 425-156 | 07-03 | | 5 |
| | 07-06 | | 17 |
| | 09-16 | | 27 |
| | 09-16 | | 47 |
| | 09-17 | | 9 |
| | 09-20 | | 9 |
| | 09-21 | | 16 |
| 427-3058 | 03-02 | | 15 |
| | 03-03 | | 18 |
| 427-5094 | 09-15 | | 13 |
| | 09-25 | | 13 |
| | 09-25A | | 13 |
| 427-6088 | 09-16 | | 25 |
| | 09-17 | | 7 |

HTTP://WWW.MINNPARBACKHOEPARTS.COM




| Number | Figure | Sequence | Ref. | Number | Figure | Sequence | Ref. |
|---|---|---|---|---|---|---|---|
| 427-6088 | 09-20 | | 7 | 4890833 | 02-14 | | 8 |
| 427-6100 | 09-04 | | 33 | 4890964 | 03-09 | | 4 |
| 427107A1 | 06-02 | | 1 | 4891209 | 02-13 | | 5 |
| 429-1012 | 09-06 | | 10 | | 02-27 | | 7 |
| | 09-06 | | 10 | 4891252 | 02-35 | | 1 |
| | 09-07 | | 10 | 4891353 | 02-09 | | 6 |
| 429230A1 | 05-05 | | 1 | 4892707 | 02-22 | | 3 |
| 429231A1 | 05-06 | | 1 | 4892708 | 02-22 | | 2 |
| 429232A1 | 05-06 | | 2 | 4892712 | 02-23 | | 2 |
| 430471A1 | 04-11 | | 37 | 4892713 | 02-23 | | 3 |
| 431583A1 | 09-68 | | 31 | 4892774 | 02-34 | | 2 |
| 431584A1 | 09-68 | | 32 | 4892836 | 02-27 | | 1 |
| 431801A1 | 09-53 | | 21 | 4892859 | 02-16 | | 2 |
| 432-48 | 03-02 | | 10 | 4892860 | 02-18 | | 4 |
| | 03-02 | | 16 | 4892861 | 02-16 | | 1 |
| | 03-03 | | 19 | 4892867 | 02-25 | | 2 |
| 432-612 | 07-03 | | 8 | 4893386 | 02-21 | | 2 |
| | 07-06 | | 18 | 4893391 | 02-34 | | 8 |
| | 07-06 | | 3 | 4893518 | 03-06 | | 6 |
| | 09-01 | | 27 | 4894095 | 03-10 | | 4 |
| | 09-02 | | 37 | 4894139 | 02-11 | | 6 |
| | 09-03 | | 5 | 4894218 | 02-10 | | 1 |
| | 09-04 | | 34 | 4894641 | 02-24 | | 3 |
| | 09-15 | | 14 | 4894721 | 03-09 | | 5 |
| | 09-16 | | 26 | 4894774 | 03-06 | | 1 |
| | 09-16 | | 38 | 4895038 | 02-09 | | 4 |
| | 09-16 | | 49 | 4895039 | 02-09 | | 3 |
| | 09-17 | | 8 | 4895040 | 02-09 | | 7 |
| | 09-19 | | 4 | 4895043 | 02-34 | | 3 |
| | 09-20 | | 12 | 4895045 | 02-34 | | 5 |
| | 09-20 | | 8 | 4895049 | 02-10 | | 8 |
| | 09-21 | | 12 | 4895078 | 02-16 | | 16 |
| | 09-25 | | 14 | 4895079 | 02-14 | | 14 |
| | 09-25A | | 14 | 4895090 | 03-06 | | 2 |
| 432-828 | 09-01 | | 13 | 4895107 | 02-33 | | 2 |
| | 09-02 | | 24 | 4895121 | 02-36 | | 2 |
| | 09-15 | | 25 | 4895133 | 02-29 | | 2 |
| | 09-18 | | 20 | 4895164 | 02-33 | | 1 |
| 432431A1 | 09-56 | | 9 | 4895166 | 03-08 | | 5 |
| 434605A1 | 08-27 | | 8 | 4895174 | 02-20 | | 3 |
| 438-12040 | 07-03 | | 24 | 4895179 | 02-16 | | 12 |
| 439-5436 | 09-02 | | 6 | 4895180 | 02-10 | | 9 |
| 440-10616 | 09-04 | | 18 | 4895183 | 02-16 | | 4 |
| 440-1066 | 04-11 | | 27 | 4895184 | 02-16 | | 9 |
| | 09-38 | | 1B | 4895187 | 02-16 | | 6 |
| 440-1088 | 09-61 | | 22 | 4895188 | 02-16 | | 5 |
| 440-11010 | 09-39 | | 2 | 4895193 | 02-18 | | 3 |
| 440-11012 | 09-41 | | 12 | 4895195 | 02-18 | | 1 |
| 440-12510 | 09-55 | | 9 | 4895196 | 02-18 | | 7 |
| 440038A1 | 04-06A | | 9 | 4895198 | 02-18 | | 9 |
| 442718A1 | 09-55 | | 8 | 4895199 | 02-18 | | 10 |
| 442773A1 | 09-55 | | 33 | 4895200 | 02-18 | | 11 |
| 442842A1 | 09-56 | | 6 | 4895204 | 02-18 | | 12 |
| 443375A1 | 03-01 | | 2 | 4895214 | 02-17 | | 3 |
| 443432A1 | 08-55 | | | 4895215 | 02-16 | | 8 |
| 445266A1 | 06-26 | | 7 | 4895228 | 02-09 | | 5 |
| 445267A1 | 06-26 | | 3 | 4895244 | 03-11 | | 1 |
| 445674A1 | 05-02 | | 22 | 4895291 | 02-39 | | 2 |
| | 08-03 | | 1 | 4895294 | 02-19 | | 7 |
| | 08-57 | | | 4895297 | 03-05 | | 2 |
| 446222A1 | 09-22 | | 5 | 4895301 | 02-39 | | 4 |
| 446454A1 | 09-22 | | 36 | 4895305 | 03-11 | | 2 |
| 448284A1 | 08-25 | | 9 | 4895323 | 02-27 | | 8 |
| 448428A1 | 09-64 | | 12 | | 02-28 | | 1 |
| 448429A1 | 09-64 | | 13 | 4895327 | 02-40 | | 3 |
| 448607A1 | 09-53 | | 2 | 4895336 | 02-20 | | 4 |
| | 09-69 | | 1 | 4895347 | 02-16 | | 7 |
| 448608A1 | 09-53 | | 6 | 4895355 | 02-12 | | 8 |
| | 09-69 | | 6 | 4895358 | 02-14 | | 11 |
| 448609A1 | 09-53 | | 5 | 4895360 | 02-17 | | 1 |
| | 09-69 | | 5 | 4895361 | 02-18 | | 2 |
| 449842A1 | 09-74 | | 8 | 4895363 | 02-18 | | 5 |
| 450037A1 | 09-60 | | 1 | 4895364 | 02-18 | | 6 |
| | 09-70 | | 1 | 4895365 | 02-18 | | 8 |
| 451384A1 | 09-27 | | 43 | 4895378 | 02-14 | | 4 |
| 465004R91 | 09-01 | | 14A | 4895379 | 02-14 | | 5 |
| | 09-02 | | | 4895392 | 02-10 | | 6 |
| 470-10620 | 09-46 | | 8 | | 02-36 | | 6 |
| 484-6316 | 06-11 | | 3 | 4895393 | 02-10 | | 7 |
| 4858605 | 03-06 | | 8 | | 02-36 | | 7 |
| 4890343 | 02-01 | | 44 | 4895489 | 02-11 | | 2 |
| 4890832 | 02-13 | | 4 | 4895538 | 02-11 | | 10 |

HTTP://WWW.MINNPARBACKHOEPARTS.COM



| Number | Figure | Sequence | Ref. | Number | Figure | Sequence | Ref. |
|---|---|---|---|---|---|---|---|
| 4895576 | 02-36 | | 4 | 4899610 | 02-28 | | 5 |
| 4895584 | 02-11 | | 5 | 4899921 | 02-19 | | 5 |
| 4895586 | 02-26 | | 6 | 490-11012 | 04-08 | | 18 |
| 4895605 | 02-10 | | 2 | 490-1106 | 04-07 | | 11A |
| 4895610 | 02-30 | | 5 | 490-1108 | 04-07 | | |
| 4895623 | 02-36 | | 8 | | 04-07 | | 11 |
| 4895625 | 02-36 | | 9 | 492-11025 | 09-55 | | 10 |
| 4895648 | 02-19 | | 4 | 492-11031 | 09-10 | | 12 |
| 4895742 | 02-34 | | 10 | 492-11038 | 09-59 | | 11 |
| 4895748 | 02-22 | | 1 | | 09-70 | | 9 |
| 4895790 | 02-16 | | 3 | 493-11026 | 04-17 | | 2 |
| 4896404 | 02-34 | | 4 | 493-11039 | 04-05 | | 12 |
| 4896406 | 02-34 | | 9 | 493-21020 | 04-04 | | 9 |
| 4896409 | 02-34 | | 11 | | 08-57 | | 3 |
| 4896410 | 02-34 | | 7 | 493-21033 | 04-04 | | 7 |
| 4896770 | 03-06 | | 7 | 493-41020 | 06-11 | | 5 |
| 4896897 | 02-40 | | 2 | 495-11028 | 09-01 | | 8 |
| 4896947 | 02-26 | | 5 | | 09-02 | | 17 |
| 4897024 | 02-13 | | 1 | | 09-72 | | 2 |
| 4897048 | 02-26 | | 4 | 495-11034 | 09-10 | | 13 |
| 4897071 | 02-26 | | 3 | 495-11041 | 03-01 | | 17A |
| 4897123 | 02-26 | | 2 | | 04-05 | | 9 |
| 4897178 | 02-16 | | 13 | | 04-06 | | 8 |
| 4897179 | 02-16 | | 14 | | 09-02 | | 34A |
| 4897330 | 02-30 | | 4 | 495-11047 | 05-04 | | 11 |
| 4897457 | 02-28 | | 4 | | 06-01 | | 30 |
| 4897480 | 02-31 | | 1 | | 09-58 | | |
| 4897934 | 02-26 | | 11 | | 09-60 | | |
| 4898301 | 02-11 | | 3 | 495-11053 | 09-04 | | 35 |
| 4898482 | 02-29 | | 6 | 495-11081 | 09-18 | | 10 |
| 4899003 | 03-06 | | 4 | 495-21031 | 04-17 | | 3 |
| 4899009 | 02-10 | | 4 | 495-21038 | 07-06 | | 4 |
| | 02-16 | | 10 | | 09-45 | | 6 |
| 4899019 | 02-34 | | 1 | 495-21044 | 09-02 | | 11 |
| 4899020 | 02-11 | | 1 | | 09-38 | | 8 |
| | 02-14 | | 13 | 495-21056 | 06-01 | | 15 |
| 4899026 | 02-09 | | 2 | | 06-01 | | 20 |
| | 02-12 | | 1 | 495-31016 | 09-46 | | 9 |
| | 02-14 | | 1 | 495-31022 | 03-02 | | 9 |
| 4899027 | 02-27 | | 2 | | 04-13 | | 4 |
| 4899031 | 02-35 | | 3 | 495-61020 | 09-43 | | 14 |
| | 02-38 | | 5 | | 09-43 | | 25 |
| | 03-09 | | 3 | | 09-43 | | 8 |
| 4899035 | 02-34 | | 6 | 495-81001 | 02-04 | | 16 |
| 4899036 | 02-30 | | 3 | | 02-04A | | 17 |
| 4899039 | 02-19 | | 2 | | 09-68 | | 6 |
| 4899053 | 02-39 | | 1 | 495-81153 | 04-08 | | 6 |
| 4899058 | 02-33 | | 9 | 495-81169 | 09-46 | | 17 |
| 4899063 | 02-13 | | 3 | 495-81184 | 09-01 | | 9 |
| 4899068 | 02-28 | | 3 | | 09-02 | | 22 |
| | 03-07 | | 2 | 495-81226 | 09-24 | | 24 |
| | 03-08 | | 3 | | 09-24 | | 32 |
| 4899072 | 02-10 | | 5 | | 09-26 | | 25 |
| | 02-16 | | 11 | | 09-26 | | 35 |
| 4899073 | 02-12 | | 4 | | 09-26 | | 4 |
| | 02-41 | | 2 | | 09-27 | | 42 |
| 4899074 | 02-14 | | 7 | 495-81227 | 09-23 | | 17 |
| 4899075 | 02-14 | | 3 | | 09-24 | | 29 |
| 4899076 | 02-14 | | 6 | 495-81261 | 07-03 | | 30 |
| 4899078 | 02-13 | | 2 | 495-81267 | 09-68 | | 10 |
| 4899080 | 02-28 | | 6 | 495-81282 | 09-04 | | 7 |
| 4899090 | 02-31 | | 2 | | 09-22 | | 34 |
| 4899091 | 02-11 | | 2 | | 09-26 | | 21 |
| | 02-12 | | 2 | | 09-27 | | 13 |
| 4899093 | 02-12 | | 3 | | 09-27 | | 38 |
| | 03-08 | | 4 | 496-21041 | 02-01 | | 29 |
| 4899103 | 02-14 | | 9 | | 06-11 | | 17 |
| 4899106 | 02-33 | | 7 | | 09-01 | | 20 |
| 4899107 | 02-33 | | 3 | 496-41041 | 08-10 | | 6 |
| 4899108 | 02-33 | | 4 | | 08-11 | | 6 |
| 4899109 | 02-14 | | 2 | | 08-12 | | 6 |
| | 02-26 | | 11 | | 08-13 | | 6 |
| | 02-36 | | 1 | | 08-14 | | 6 |
| | 02-38 | | 6 | | 08-22 | | 12 |
| 4899110 | 02-15 | | 3 | | 09-12 | | 5 |
| 4899115 | 02-10 | | 3 | | 09-44 | | 4 |
| | 02-30 | | 11 | | 09-59 | | 6 |
| 4899118 | 02-29 | | 1 | | 09-70 | | 20 |
| 4899119 | 02-20 | | 5 | 496-41081 | 09-24 | | 5 |
| 4899121 | 02-33 | | 11 | 496-81000 | 05-09 | | 9 |
| 4899467 | 02-33 | | 5 | | 06-01 | | 3 |
| 4899519 | 02-33 | | 6 | | 06-06 | | 24 |

HTTP://WWW.MINNPARBACKHOEPARTS.COM




| Number | Figure | Sequence | Ref. | Number | Figure | Sequence | Ref. |
|---|---|---|---|---|---|---|---|
| 496-81010 | 09-46 | | 18 | 540-720 | 09-54 | | 7 |
| | 09-46 | | 25 | 555-10 | 04-10 | | 2 |
| 496-81018 | 03-02 | | 7 | | 04-11 | | 6 |
| | 09-13 | | 29 | 555-2 | 04-11 | | 22 |
| 496-81028 | 05-01 | | 11 | | 04-11 | | 3 |
| 500315795 | 02-15 | | 2 | | 09-43 | | 16 |
| 504001088 | 03-08 | | 2 | | 09-43 | | 22 |
| 504010786 | 02-29 | | 4 | | 09-43 | | 5 |
| 504011329 | 02-30 | | 1 | | 09-68 | | 17 |
| 504011338 | 02-30 | | 6 | 565-104 | 09-15 | | 34 |
| 504025599 | 02-37 | | 6 | 569-4 | 09-55 | | 24 |
| 504026078 | 02-41 | | 1 | 60-7083T1 | 09-55 | | 7 |
| 504028028 | 02-38 | | 2 | 604-12030 | 09-46 | | 3 |
| 504030423 | 02-14 | | 12 | | 09-51 | | |
| 504032877 | 03-04 | | 2 | 604-20035 | 09-24 | | 42 |
| 504034954 | 02-28 | | 7 | 604-20045 | 08-23 | | 6 |
| 504035087 | 02-25 | | 1 | 604-8050 | 03-03 | | 9 |
| 504035094 | 02-29 | | 5 | 614-10020 | 02-04 | | 8 |
| 504035148 | 02-39 | | 3 | | 02-04A | | 8 |
| 504038890 | 02-37 | | 5 | | 03-01 | | 38 |
| 504042116 | 03-07 | | 1 | | 03-01 | | 41 |
| 504046458 | 03-10 | | 2 | | 05-01 | | 19 |
| 504047260 | 02-10 | | 10 | | 05-01 | | 9 |
| 504048350 | 02-21 | | 1 | | 06-11 | | 26 |
| 504049033 | 02-40 | | 1 | | 08-03 | | 2 |
| 504050848 | 02-12 | | 5 | | 09-38 | | 7 |
| 504051210 | 02-37 | | 2 | | 09-40 | | 13 |
| 504051276 | 03-11 | | 3 | 614-10025 | 07-03 | | 10 |
| 504052006 | 02-19 | | 6 | | 07-06 | | 24 |
| 504052013 | 02-37 | | 3 | | 08-01 | | 37 |
| 504053173 | 02-33 | | 8 | | 08-23 | | 11 |
| 504053512 | 02-37 | | 4 | | 09-09 | | 2 |
| 504053522 | 02-17 | | 6 | | 09-13 | | 38 |
| 504053894 | 02-33 | | 15 | | 09-16 | | 42 |
| 504057288 | 03-10 | | 1 | | 09-19 | | 16 |
| 504057292 | 03-06 | | 5 | | 09-20 | | 3 |
| 504057736 | 02-24 | | 1 | | 09-38 | | 53 |
| 504060728 | 03-04 | | 3 | | 09-40 | | 10 |
| 504061622 | 02-25 | | 3 | | 09-40 | | 22 |
| 504062460 | 02-24 | | 2 | | 09-40 | | 5 |
| 504062752 | 02-28 | | 2 | | 09-41 | | 3 |
| 504062795 | 02-30 | | 2 | 614-10030 | 02-01 | | 37 |
| 504062812 | 02-11 | | 8 | | 04-09 | | 28 |
| 504062856 | 02-35 | | 2 | | 04-16 | | 6 |
| 504062964 | 02-14 | | 13 | | 06-13 | | 7 |
| 504063980 | 02-19 | | 3 | | 06-14 | | 8 |
| 504064336 | 02-36 | | 3 | | 08-13 | | 28 |
| 504064340 | 02-38 | | 1 | | 08-22 | | 15 |
| 504064865 | 02-19 | | 1 | | 09-40 | | 28 |
| 504065040 | 02-17 | | 4 | | 09-67 | | 4 |
| 504065099 | 03-06 | | 9 | 614-10035 | 03-03 | | 23 |
| 504065285 | 03-10 | | 3 | | 05-01 | | 20 |
| 504065880 | 02-38 | | 3 | | 08-10 | | 29 |
| 504066077 | 03-08 | | 1 | | 08-10 | | 5 |
| 504069558 | 02-15 | | 1 | | 08-11 | | 5 |
| 504069775 | 02-14 | | 10 | | 08-12 | | 5 |
| 504069777 | 02-11 | | 7 | | 08-13 | | 5 |
| 504074001 | 02-12 | | 6 | | 08-14 | | 5 |
| 504074178 | 02-36 | | 5 | | 08-26 | | 2 |
| 514-633 | 09-55 | | 34 | | 09-12 | | 4 |
| | 09-57 | | 11 | | 09-39 | | 8 |
| 514-634 | 07-02 | | 26 | 614-10040 | 08-24 | | 29 |
| 514-832 | 08-01 | | 8 | 614-10050 | 09-25 | | 6 |
| 514-847 | 03-02 | | 3 | | 09-25A | | 6 |
| 515-2179 | 09-04 | | 14 | 614-10080 | 02-06 | | 3 |
| 515-22159 | 09-59 | | 13 | | 02-06A | | 3 |
| | 09-70 | | 21 | | 02-06B | | 3 |
| 515-22190 | 04-06A | | 2 | 614-12016 | 06-16 | | 2 |
| 515-22254 | 02-02 | | 17 | 614-12025 | 04-06A | | 32 |
| 515-2295 | 08-22 | | 29 | | 05-04 | | 6 |
| | 09-02 | | 17A | | 06-01 | | 32 |
| 515-23127 | 03-01 | | 16 | 614-12035 | 02-07 | | 3 |
| | 04-04 | | 13 | | 06-11 | | 27 |
| | 04-04 | | 15 | 614-12040 | 02-07 | | 10 |
| 515-23159 | 05-02 | | 23 | 614-18035 | 08-09 | | 6 |
| 515-23254 | 08-10 | | 28 | 614-20030 | 09-39 | | 12 |
| 515-23444 | 04-09 | | 27 | 614-6016 | 09-01 | | 15 |
| 515-2379 | 07-04 | | 15 | | 09-01 | | 7 |
| 515-24238 | 02-04 | | 7 | | 09-02 | | 16 |
| | 02-04A | | 7 | | 09-02 | | 30 |
| 515-25190 | 04-06A | | 31 | | 09-04 | | 13 |
| 515-25254 | 08-07 | | 13 | | 09-18 | | 22 |

HTTP://WWW.MINNPARBACKHOEPARTS.COM



| Number | Figure | Sequence | Ref. |
|---|---|---|---|
| 614-6020 | 04-06A | | 13 |
| | 04-17 | | 13 |
| | 09-01 | | 30 |
| | 09-18 | | 24 |
| 614-6025 | 03-03 | | 32 |
| | 09-21 | | 4 |
| 614-6035 | 04-06A | | 11 |
| 614-8012 | 02-03 | | 7 |
| | 06-10 | | 2 |
| 614-8016 | 02-01 | | 19 |
| | 02-01 | | 40 |
| | 09-59 | | 18 |
| | 09-70 | | 23 |
| 614-8018 | 06-12 | | 11 |
| 614-8020 | 02-02 | | 12 |
| | 02-02 | | 18 |
| | 02-04 | | 2 |
| | 02-04A | | 2 |
| | 03-03 | | 9A |
| | 04-08 | | 9 |
| | 04-16 | | 3 |
| | 07-03 | | 36 |
| | 07-04 | | 5 |
| | 08-01 | | 33 |
| | 09-12 | | 12 |
| | 09-59 | | 24 |
| | 09-67 | | 14 |
| | 09-68 | | 5 |
| 614-8022 | 06-20 | | 2 |
| 614-8025 | 04-03 | | 4 |
| | 04-08 | | 10 |
| | 04-16 | | 10 |
| | 08-22 | | 28 |
| | 09-03 | | 15 |
| | 09-08 | | 27 |
| | 09-13 | | 5 |
| | 09-15 | | 11 |
| | 09-16 | | 2 |
| | 09-16 | | 20 |
| | 09-25 | | 23 |
| | 09-25A | | 23 |
| | 09-43 | | 29 |
| | 09-52 | | 1A |
| 614-8030 | 02-01 | | 9 |
| | 06-29 | | 13 |
| | 07-03 | | 2 |
| | 07-04 | | 24 |
| | 08-08A | | 2A |
| | 09-05 | | 8 |
| | 09-15 | | 4 |
| | 09-25A | | 30 |
| | 09-37 | | 19 |
| | 09-44 | | 5 |
| | 09-45 | | 5 |
| | 09-59 | | 5 |
| | 09-64 | | 28 |
| | 09-65 | | 19 |
| | 09-70 | | 19 |
| 614-8040 | 02-02 | | 21 |
| | 04-06A | | 3 |
| | 09-15 | | 35 |
| | 09-45 | | 4 |
| 627-10030 | 02-06 | | 11 |
| | 02-06A | | 11 |
| | 02-06B | | 15 |
| | 06-11 | | 16 |
| 627-12025 | 03-03 | | 26 |
| 627-20060 | 09-38 | | 2 |
| 711-10030 | 09-38 | | 25 |
| 711-10040 | 09-45 | | 8 |
| 711-10050 | 05-02 | | 24 |
| 712998R91 | 05-06 | | 12 |
| | 06-03 | | 7 |
| 761-17325 | 04-18 | | 13 |
| 76904 | 02-01 | | 13 |
| 779-37616 | 09-11 | | 7 |
| 781-24613 | 04-04 | | 34 |
| | 04-08 | | 15 |
| | 09-13 | | 20 |
| 781-24820 | 09-43 | | 30 |
| 800-1134 | 06-06 | | 17 |
| 800-1150 | 06-18 | | 26 |
| 800-2136 | 06-30 | | 26 |
| 800-40065 | 09-23 | | 27 |
| 800-40070 | 09-23 | | 31 |
| 800-44040 | 09-04 | | 26 |
| | 09-04 | | 31 |
| | 09-05 | | 22 |
| | 09-05 | | 4 |
| | 09-25 | | 4 |
| | 09-25A | | 4 |
| | 09-27 | | 27 |
| 800-44050 | 05-04 | | 5 |
| | 06-01 | | 7 |
| | 09-04 | | 8 |
| | 09-24 | | 28 |
| 800-5120 | 06-29 | | 5 |
| 800-5145 | 06-20 | | 19 |
| 806-8016 | 02-02 | | 15 |
| 806-8025 | 02-04 | | 15 |
| | 02-04A | | 16 |
| 8093880 | 02-23 | | 1 |
| 8093881 | 02-23 | | 4 |
| 8093882 | 02-22 | | 4 |
| 811-10025 | 09-68 | | 9 |
| 811-6016 | 04-06A | | 16 |
| 811-8020 | 04-11 | | 32 |
| 814-10040 | 08-04 | | 9 |
| | 08-06 | | 6 |
| | 08-07 | | 8 |
| | 08-09 | | 3 |
| | 08-23 | | 10 |
| | 08-24 | | 10 |
| | 08-25 | | 6 |
| 814-10045 | 03-01 | | 38 |
| | 06-13 | | 15 |
| | 06-14 | | 21 |
| | 08-04 | | 19 |
| | 08-05 | | 7 |
| | 08-06 | | 5 |
| | 08-09A | | 3 |
| | 08-13 | | 25 |
| | 08-22 | | 9 |
| | 09-38 | | 30 |
| 814-10050 | 02-01 | | 20 |
| | 05-01 | | 10 |
| 814-10055 | 08-12 | | 27 |
| | 09-67 | | 3 |
| 814-10060 | 04-04 | | 27 |
| | 07-06 | | 30 |
| | 08-08 | | 22 |
| | 08-22 | | 10 |
| | 08-24 | | 6 |
| | 08-26 | | 6 |
| | 09-08 | | 25 |
| | 09-13 | | 25 |
| 814-10070 | 08-08A | | 22 |
| | 08-26 | | 30 |
| 814-10080 | 08-25 | | 2 |
| | 08-26 | | 29 |
| | 09-08 | | 20 |
| 814-10090 | 02-01 | | 28 |
| | 08-27 | | 13 |
| | 09-01 | | 29 |
| | 09-08 | | 16 |
| 814-10110 | 09-01 | | 36 |
| 814-10120 | 08-10 | | 14 |
| | 08-11 | | 13 |
| | 08-12 | | 13 |
| | 08-13 | | 12 |
| 814-10130 | 09-13 | | 13 |
| 814-10150 | 06-13 | | 9 |
| 814-10220 | 04-05 | | 6 |
| 814-10245 | 04-06 | | 7 |
| 814-12045 | 08-10 | | 2 |
| | 08-11 | | 2 |
| | 08-12 | | 2 |
| | 08-13 | | 2 |
| | 08-14 | | 2 |
| 814-12050 | 08-23 | | 17 |
| 814-12080 | 02-07 | | 5 |
| | 06-11 | | 31 |
| 814-12100 | 09-40 | | 16 |
| 814-12130 | 09-67 | | 8 |

HTTP://WWW.MINNPARBACKHOEPARTS.COM




| Number | Figure | Sequence | Ref. |
|---|---|---|---|
| 814-14140 | 06-26 | | 9 |
| 814-6030 | 09-25 | | 16 |
| | 09-25A | | 16 |
| 814-6035 | 07-01 | | 10 |
| 814-6050 | 09-60 | | 2 |
| | 09-70 | | |
| 814-8035 | 08-22 | | 20 |
| 814-8040 | 07-03 | | 15 |
| 814-8050 | 09-25 | | 27 |
| | 09-25A | | 31 |
| 814-8055 | 08-08A | | 2 |
| | 08-22 | | 19 |
| 814-8060 | 06-15 | | 16 |
| | 06-22 | | 7 |
| | 08-08 | | 2 |
| 814-8070 | 08-23 | | 21 |
| | 09-15 | | 8 |
| | 09-25A | | 27 |
| 814-8080 | 06-21 | | 34 |
| | 06-29 | | 14 |
| 814-8100 | 09-67 | | 15 |
| 814-8110 | 09-67 | | 13 |
| 82017872 | 04-06A | | 26 |
| 824-1405 | 04-04 | | 10 |
| | 04-19 | | 7 |
| 825-11412 | 03-02 | | 8 |
| 825-11418 | 05-09 | | 8 |
| | 06-01 | | 2 |
| | 06-06 | | 25 |
| 825-2406 | 09-65 | | 27 |
| 825-2408 | 09-59 | | 25 |
| | 09-64 | | 30 |
| | 09-65 | | 21 |
| 825-2410 | 09-40 | | 27 |
| | 09-40 | | 31 |
| | 09-40 | | 6A |
| | 09-41 | | 5 |
| 827-10075 | 06-07 | | 3 |
| 827-12045 | 06-01 | | 14 |
| | 06-01 | | 21 |
| 827-12065 | 06-11 | | 9 |
| 827-16085 | 09-37 | | 10 |
| 827-16100 | 09-37 | | 11 |
| 827-20075 | 09-23 | | 13 |
| 827-20170 | 09-36 | | 2 |
| | 09-36 | | 6 |
| 827-20190 | 09-05 | | 16 |
| 827-20230 | 06-24 | | 4 |
| 827-8050 | 07-06 | | 10 |
| 828-20160 | 09-06 | | 4 |
| | 09-06 | | 4 |
| | 09-07 | | 4 |
| 829-1406 | 04-06A | | 20 |
| | 04-06A | | 30 |
| | 09-01 | | 32 |
| | 09-18 | | 25 |
| | 09-21 | | 5 |
| | 09-25 | | 18 |
| | 09-25A | | 18 |
| 829-1408 | 02-02 | | 20 |
| | 02-06B | | 12 |
| | 03-03 | | 11A |
| | 04-04 | | 8 |
| | 04-06A | | 18 |
| | 04-08 | | 12 |
| | 04-16 | | 5 |
| | 07-03 | | 28 |
| | 07-03 | | 4 |
| | 07-06 | | 15 |
| | 08-08 | | 4 |
| | 08-08A | | 4 |
| | 08-22 | | 23 |
| | 08-23 | | 23 |
| | 09-03 | | 17 |
| | 09-05 | | 11 |
| | 09-13 | | 7 |
| | 09-15 | | 7 |
| | 09-25 | | 29 |
| | 09-25A | | 29 |
| | 09-59 | | 20 |
| | 09-66 | | |
| | 09-70 | | 26 |
| 829-1410 | 02-04 | | 10 |
| | 02-04A | | 14 |
| | 02-06 | | 13 |
| | 02-06 | | 6 |
| | 02-06A | | 13 |
| | 02-06A | | 6 |
| | 02-06B | | 17 |
| | 02-06B | | 6 |
| | 03-01 | | 35 |
| | 03-01 | | 43 |
| | 04-09 | | 29 |
| | 05-02 | | 27 |
| | 07-03 | | 12 |
| | 07-06 | | 21 |
| | 08-04 | | 13 |
| | 08-05 | | 11 |
| | 08-05 | | 17 |
| | 08-05 | | 36 |
| | 08-06 | | 10 |
| | 08-06 | | 15 |
| | 08-08 | | 26 |
| | 08-08A | | 26 |
| | 08-09 | | 5 |
| | 08-09A | | 5 |
| | 08-10 | | 32 |
| | 08-22 | | 41 |
| | 08-23 | | 13 |
| | 08-24 | | 13 |
| | 08-24 | | 7 |
| | 08-25 | | 8 |
| | 08-26 | | 8 |
| | 08-27 | | 16 |
| | 08-27 | | 7 |
| | 09-13 | | 37 |
| | 09-24 | | 39 |
| | 09-38 | | 34 |
| | 09-38 | | 46 |
| | 09-38 | | 54 |
| | 09-67 | | 11 |
| 829-1412 | 06-01 | | 22 |
| | 08-10 | | 4 |
| | 08-11 | | 4 |
| | 08-12 | | 4 |
| | 08-13 | | 4 |
| | 08-14 | | 4 |
| | 08-23 | | 19 |
| | 09-40 | | 21 |
| 829-1416 | 09-37 | | 15 |
| 829-1420 | 06-24 | | 7 |
| | 09-05 | | 19 |
| | 09-23 | | 15 |
| | 09-36 | | 4 |
| | 09-36 | | 8 |
| | 09-39 | | 13 |
| 832-10404 | 04-11 | | 14 |
| | 09-54 | | 9 |
| 832-10406 | 04-06A | | 15 |
| | 04-07 | | 34 |
| | 04-09 | | 31 |
| | 04-11 | | 9 |
| 832-10408 | 02-02 | | 14 |
| | 04-11 | | 34 |
| | 04-16 | | 12 |
| | 05-01 | | 17 |
| | 05-01 | | 25 |
| | 07-03 | | 17 |
| | 09-13 | | 33 |
| | 09-16 | | 21 |
| | 09-16 | | 3 |
| | 09-43 | | 32 |
| | 09-45 | | 7 |
| | 09-55 | | 26 |
| | 09-56 | | 10 |
| | 09-59 | | 7 |
| | 09-62 | | 8 |
| | 09-63 | | 12 |
| | 09-63 | | 17 |
| | 09-68 | | 7 |
| | 09-70 | | 22 |
| 832-10410 | 02-01 | | 24 |
| | 05-01 | | 13 |
| | 08-01 | | 38 |

HTTP://WWW.MINNPARBACKHOEPARTS.COM



| Number | Figure | Sequence | Ref. |
|---|---|---|---|
| 832-10410 | 08-07 | | 15 |
| | 08-10 | | 15 |
| | 08-11 | | 14 |
| | 08-12 | | 14 |
| | 08-12 | | 28 |
| | 08-13 | | 13 |
| | 08-13 | | 27 |
| | 08-24 | | 26 |
| | 08-26 | | 33 |
| | 09-08 | | 18 |
| | 09-08 | | 22 |
| | 09-08 | | 8 |
| | 09-13 | | 14 |
| | 09-13 | | 26 |
| | 09-15 | | 17 |
| | 09-16 | | 44 |
| | 09-19 | | 17 |
| | 09-20 | | 4 |
| | 09-40 | | 12 |
| | 09-45 | | 11 |
| | 09-68 | | 11 |
| 832-10412 | 02-07 | | 9 |
| | 06-11 | | 11 |
| | 06-11 | | 34 |
| 832-10420 | 09-06 | | 6 |
| | 09-06 | | 6 |
| | 09-07 | | 6 |
| 832-10508 | 09-55 | | 39 |
| | 09-57 | | 16 |
| 832-41312 | 09-22 | | 25C |
| 833-40310 | 09-37 | | 9A |
| 833-40406 | 04-10 | | 3 |
| | 04-11 | | 23 |
| | 04-11 | | 4 |
| | 09-04 | | 15 |
| | 09-12 | | 18 |
| | 09-13 | | 21 |
| | 09-14 | | 10 |
| | 09-42 | | 6 |
| | 09-43 | | 18 |
| | 09-43 | | 23 |
| | 09-43 | | 6 |
| | 09-65 | | 26 |
| | 09-68 | | 18 |
| 833-40408 | 02-04 | | 17 |
| | 02-04A | | 18 |
| | 09-45 | | 4A |
| 838-3640 | 03-03 | | 16 |
| 838-5840 | 06-27 | | 20 |
| 83822C1 | 09-65 | | |
| 840-1416 | 04-20 | | 12 |
| | 08-15 | | |
| | 08-16 | | |
| | 08-17 | | |
| | 08-18 | | |
| | 08-19 | | |
| | 08-20 | | |
| | 08-22 | | 37 |
| 842-1416 | 04-11 | | 12 |
| 843-1516 | 04-19 | | 5 |
| 844-10020 | 04-04 | | 16 |
| | 04-04 | | 38 |
| | 04-05 | | 11 |
| | 04-05 | | 3 |
| | 04-06 | | 13 |
| | 04-09 | | 32 |
| | 04-14 | | 11 |
| | 09-03 | | 9 |
| 844-10035 | 04-03 | | 2 |
| 844-10110 | 09-08 | | 6 |
| 844-6025 | 04-07 | | 33 |
| | 04-09 | | 30 |
| | 04-11 | | 7 |
| 845-6020 | 09-65 | | 25 |
| 85801585 | 02-07 | | 6 |
| | 06-11 | | 32 |
| 85802618 | 02-07 | | 8 |
| | 06-11 | | 32A |
| 85802820 | 08-08 | | 1 |
| | 08-08A | | 1 |
| 85803019 | 02-02 | | |
| 85811933 | 08-40 | | 8 |
| 85811933 | 08-41 | | 8 |
| | 08-43 | | 8 |
| | 08-44 | | 8 |
| | 08-45 | | 7 |
| | 08-46 | | 8 |
| 85811934 | 08-40 | | 7 |
| | 08-41 | | 7 |
| | 08-43 | | 7 |
| | 08-44 | | 7 |
| | 08-46 | | 7 |
| 85811935 | 08-40 | | 7 |
| | 08-41 | | 7 |
| | 08-43 | | 7 |
| | 08-44 | | 7 |
| | 08-46 | | 7 |
| 85812114 | 08-40 | | 6 |
| 85812115 | 08-41 | | 6 |
| | 08-46 | | 6 |
| 85812116 | 08-43 | | 6 |
| | 08-44 | | 6 |
| 85819148 | 08-40 | | 9 |
| | 08-41 | | 9 |
| | 08-42 | | 9 |
| | 08-43 | | 9 |
| | 08-44 | | 9 |
| | 08-45 | | 8 |
| | 08-46 | | 9 |
| 85819378 | 08-41 | | 3 |
| | 08-42 | | 3 |
| | 08-44 | | 3 |
| | 08-45 | | 3 |
| | 08-46 | | 3 |
| 85821520 | 09-15 | | 21 |
| 85824067 | 09-15 | | 16 |
| 85824080 | 09-15 | | 20 |
| 85824081 | 09-15 | | 18 |
| 85826229 | 02-01 | | 30 |
| 85826230 | 02-01 | | 31 |
| 85826337 | 08-36 | | 3 |
| | 08-37 | | 3 |
| | 08-38 | | 3 |
| | 08-39 | | 3 |
| | 08-41 | | |
| 85826338 | 08-36 | | 5 |
| | 08-37 | | 5 |
| | 08-38 | | 5 |
| | 08-39 | | 5 |
| | 08-43 | | |
| 85826339 | 08-36 | | 2 |
| | 08-37 | | 2 |
| | 08-38 | | 2 |
| | 08-39 | | 2 |
| | 08-40 | | |
| 85826340 | 08-36 | | 4 |
| | 08-37 | | 4 |
| | 08-38 | | 4 |
| | 08-39 | | 4 |
| | 08-42 | | |
| 85826341 | 08-37 | | 7 |
| | 08-39 | | 7 |
| | 08-45 | | |
| 85826342 | 08-38 | | 7 |
| | 08-39 | | 8 |
| | 08-46 | | |
| 85826344 | 08-40 | | 5 |
| | 08-41 | | 5 |
| | 08-42 | | 5 |
| | 08-43 | | 5 |
| | 08-44 | | 5 |
| | 08-45 | | 5 |
| | 08-46 | | 5 |
| 85826365 | 08-36 | | 6 |
| | 08-37 | | 6 |
| | 08-38 | | 6 |
| | 08-39 | | 6 |
| | 08-44 | | |
| 85827471 | 08-17 | | 3 |
| | 08-18 | | 6 |
| | 08-19 | | 6 |
| | 08-48 | | |
| 85827472 | 08-15 | | 5 |
| | 08-16 | | 5 |

HTTP://WWW.MINNPARBACKHOEPARTS.COM




| Number | Figure | Sequence | Ref. |
|---|---|---|---|
| 85827472 | 08-47 | | |
| 86014151 | 04-06A | | 27 |
| 8603092 | 09-76 | | 3 |
| 8603093 | 09-78 | | 3 |
| 8603094 | 09-77 | | 3 |
| 863-16070 | 05-06 | | 8 |
| 863-6020 | 07-01 | | 25 |
| 864-10025 | 06-16 | | 17 |
| 864-12030 | 08-01 | | 6 |
| 864-12130 | 06-26 | | 10 |
| 864-6020 | 06-21 | | 8 |
| 864-6035 | 07-01 | | 19 |
| 864-8020 | 06-21 | | 21 |
| 864-8025 | 06-16 | | 6 |
| 864-8055 | 09-13 | | 34 |
| 86596853 | 08-22 | | 31 |
| 86619908 | 04-06A | | 7 |
| 86625128 | 08-50 | | 13 |
| | 08-51 | | 13 |
| 86982435 | 08-59 | | 18 |
| | 08-66 | | 16 |
| 86982437 | 08-58 | | 18 |
| | 08-60 | | 23 |
| 86982439 | 08-62 | | 25 |
| 86982440 | 08-61 | | 18 |
| 86982441 | 08-65 | | 22 |
| 86982442 | 08-63 | | 24 |
| 86982443 | 08-64 | | 22 |
| 86982682 | 09-39 | | 10 |
| 86983190 | 09-42 | | 2 |
| 86983269 | 09-42 | | 9A |
| 86983278 | 09-13 | | 11 |
| 86983311 | 08-50 | | 1 |
| | 08-51 | | 1 |
| | 08-52 | | 1 |
| | 08-53 | | 1 |
| | 08-54 | | 1 |
| 86983325 | 09-42 | | 9 |
| 86984097 | 06-11 | | 14 |
| | 06-12 | | |
| | 06-13 | | |
| | 06-15 | | |
| | 06-16 | | |
| | 06-17 | | |
| | 06-18 | | |
| | 06-19 | | |
| | 06-21 | | |
| 86984098 | 06-11 | | 15 |
| | 06-12 | | |
| | 06-14 | | |
| | 06-15 | | |
| | 06-16 | | |
| | 06-17 | | |
| | 06-18 | | |
| | 06-19 | | |
| | 06-20 | | |
| | 06-21 | | |
| | 06-22 | | |
| 86984155 | 09-66 | | 4 |
| 86984544 | 09-15 | | 2 |
| | 09-25A | | 25 |
| 86984545 | 09-15 | | 6 |
| | 09-25A | | 26 |
| 86984547 | 09-15 | | 5 |
| | 09-25 | | 28 |
| | 09-25A | | 28 |
| 86984549 | 09-15 | | 24 |
| 86985339 | 09-12 | | 3 |
| 86985341 | 09-12 | | 2 |
| 86987459 | 08-15 | | 1 |
| | 08-16 | | 1 |
| | 08-36 | | |
| 86987460 | 08-17 | | 1 |
| | 08-18 | | 1 |
| | 08-37 | | |
| 86987461 | 08-20 | | 1 |
| | 08-39 | | |
| 86988086 | 04-20 | | 1 |
| 86989616 | 09-15 | | 28 |
| 86989676 | 03-01 | | 10 |
| 86989736 | 09-58 | | 23 |
| 86990837 | 05-04 | | 1 |
| 86990837 | 05-05 | | |
| | 05-06 | | |
| | 05-07 | | |
| | 05-08 | | |
| 86991496 | 07-04 | | 14 |
| 86992243 | 09-43 | | 20 |
| 86992245 | 09-43 | | 10 |
| 86992247 | 09-43 | | 1 |
| 86992284 | 09-43 | | |
| | 09-43 | | |
| 86992395 | 04-01 | | |
| | 04-03 | | 1 |
| 86992975 | 09-76 | | 12 |
| 86992976 | 09-76 | | 4 |
| 86992977 | 09-43 | | 28 |
| 86992978 | 09-78 | | 12 |
| 86992979 | 09-78 | | 4 |
| 86992980 | 09-77 | | 12 |
| 86992981 | 09-77 | | 4 |
| 86993546 | 06-11 | | 23 |
| 86993548 | 06-11 | | 21 |
| 87000312 | 08-50 | | 17 |
| | 08-51 | | 18 |
| | 08-52 | | 19 |
| | 08-54 | | 15 |
| 87019767 | 06-11 | | 23A |
| 87020181 | 06-11 | | 4 |
| 87022296 | 04-20 | | 3 |
| 87032428 | 04-04 | | 26 |
| 87032819 | 08-50 | | 9 |
| | 08-51 | | 9 |
| | 08-52 | | 9 |
| | 08-53 | | 7 |
| | 08-54 | | 9 |
| 87037944 | 08-50 | | 4 |
| | 08-51 | | 4 |
| | 08-52 | | 4 |
| | 08-53 | | 4 |
| | 08-54 | | 4 |
| 87040885 | 09-13 | | 27 |
| 87400286 | 05-05 | | 7 |
| | 06-02 | | 9 |
| 87402618 | 09-41 | | 24 |
| 87403386 | 08-34 | | |
| 87403387 | 08-35 | | |
| 87403835 | 04-05 | | 1 |
| 87404197 | 05-04 | | 4 |
| | 06-01 | | 9 |
| 87405362 | 09-15 | | 26 |
| 87405661 | 02-05 | | 4 |
| | 02-05A | | 4 |
| 87405706 | 09-13 | | 17 |
| 87406924 | 09-53 | | 10 |
| | 09-68 | | 28 |
| 87406934 | 06-11 | | 22 |
| 87407206 | 04-05 | | 10 |
| 87407272 | 02-01 | | 16 |
| 87407769 | 09-40 | | 15 |
| 87407770 | 09-40 | | 19 |
| 87407771 | 02-01 | | 18 |
| 87407908 | 09-54 | | 1 |
| 87407909 | 09-54 | | 1 |
| 87407927 | 09-42 | | 18 |
| 87407965 | 08-19 | | 1 |
| | 08-38 | | |
| 87408480 | 03-01 | | 10A |
| 87408888 | 09-46 | | 13 |
| | 09-46 | | 21 |
| 87408889 | 09-46 | | 12 |
| | 09-46 | | 20 |
| 87409046 | 04-06A | | 8 |
| 87409201 | 06-11 | | 24 |
| 87410096 | 02-01 | | 1 |
| | 02-03 | | |
| 87410105 | 04-20 | | 9 |
| 87410196 | 02-06B | | 9 |
| 87410265 | 04-06A | | 21 |
| 87410602 | 04-06A | | 10 |
| 87410603 | 04-06A | | 1 |
| 87411083 | 09-11 | | 2A |
| 87411084 | 09-11 | | 4A |
| 87411108 | 09-56 | | 4 |

HTTP://WWW.MINNPARBACKHOEPARTS.COM



| Number | Figure | Sequence | Ref. | Number | Figure | Sequence | Ref. |
|---|---|---|---|---|---|---|---|
| 87411319 | 02-07 | | 1 | 87419320 | 04-12 | | |
| 87411320 | 02-07 | | 2 | 87419454 | 08-15 | | 2 |
| 87412060 | 09-40 | | 18 | | 08-16 | | 2 |
| 87412139 | 02-02 | | 1 | | 08-17 | | 2 |
| 87412489 | 02-04A | | 10 | | 08-18 | | 5 |
| 87412635 | 02-05A | | 1 | 87419455 | 08-19 | | 2 |
| 87412636 | 02-04A | | 1 | | 08-20 | | 2 |
| | 02-05A | | | 87419615 | 04-06A | | 23 |
| 87412687 | 09-01 | | 1 | 87419616 | 04-06A | | 22 |
| | 09-02 | | 42 | 87419634 | 05-02 | | 14 |
| 87413144 | 08-32 | | | 87420696 | 08-25 | | 17 |
| 87413145 | 08-34 | | | 87420834 | 02-04A | | 9 |
| 87413146 | 08-35 | | | 87421213 | 08-25 | | 4 |
| 87413162 | 04-06A | | 28 | 87421471 | 03-03 | | 29 |
| 87413237 | 02-01 | | 14 | 87421775 | 09-66 | | 6 |
| 87413722 | 08-62 | | 12 | 87421776 | 09-66 | | 12 |
| 87414205 | 09-14 | | 7 | 87421777 | 09-66 | | 1 |
| | 09-75 | | 5 | 87421807 | 03-03 | | 28 |
| | 09-79 | | 15 | 87421909 | 09-15 | | 33 |
| 87414237 | 04-06A | | 12 | 87421918 | 08-05 | | 4 |
| 87414277 | 08-33 | | | 87421920 | 08-05 | | 5 |
| 87414278 | 08-33 | | | 87421928 | 08-04 | | 7 |
| 87414560 | 03-01 | | 20 | 87421930 | 08-04 | | 4 |
| 87415774 | 02-01 | | 43 | 87421932 | 08-04 | | 5 |
| 87415781 | 04-05 | | 8 | 87421934 | 08-04 | | 6 |
| 87415931 | 09-73 | | 15 | 87421938 | 08-25 | | 13 |
| 87416024 | 08-04 | | 23 | 87421940 | 08-03 | | 22 |
| 87416108 | 06-30 | | 1A | 87422239 | 09-16 | | 33 |
| 87416476 | 08-32 | | | 87422241 | 09-16 | | 31 |
| 87416966 | 02-07 | | 7 | 87422243 | 09-16 | | 28 |
| 87416967 | 06-11 | | 33 | 87422245 | 09-16 | | 29 |
| 87416975 | 08-09 | | 1 | 87422247 | 09-16 | | 30 |
| | 08-09A | | 1 | 87422249 | 09-16 | | 32 |
| | 08-55 | | | 87422253 | 09-19 | | 15 |
| 87416977 | 06-11 | | 29 | 87422256 | 09-19 | | 14 |
| 87416978 | 06-11 | | 30 | 87422258 | 09-19 | | 2 |
| 87417223 | 02-02 | | 9 | 87422260 | 09-19 | | 1 |
| 87417224 | 02-02 | | 11 | 87422262 | 09-19 | | 10 |
| 87417225 | 02-02 | | 10 | 87422264 | 09-19 | | 8 |
| 87417238 | 06-10 | | 13 | 87422554 | 08-01 | | 4 |
| 87417299 | 02-02 | | 7 | 87422597 | 06-10 | | 5 |
| 87417300 | 02-02 | | 3 | 87422598 | 06-10 | | 6 |
| 87417329 | 09-66 | | 26 | 87422675 | 09-14 | | 2 |
| 87417383 | 03-01 | | 18 | 87422678 | 09-14 | | 1 |
| | 04-06A | | 6 | 87422696 | 09-15 | | 9 |
| | 09-37 | | 17 | | 09-25 | | 12 |
| 87417387 | 06-01 | | 1 | | 09-25A | | 12 |
| | 06-02 | | | 87422701 | 09-25 | | 25 |
| | 06-03 | | | 87422702 | 09-25 | | 26 |
| | 06-04 | | | 87422777 | 04-02 | | |
| | 06-05 | | | | 04-03 | | 3 |
| | 06-06 | | | 87422977 | 08-23 | | 38 |
| | 06-07 | | | 87423004 | 09-37 | | 1 |
| | 06-08 | | | 87423033 | 08-08A | | 39 |
| 87417599 | 09-01 | | 37 | | 08-22 | | 24 |
| 87417601 | 09-03 | | | 87423034 | 08-08A | | 1A |
| 87417721 | 04-16 | | 8 | | 08-22 | | 18 |
| | 08-26 | | 4 | 87423067 | 08-25 | | 5 |
| | 09-01 | | 38 | 87423346 | 09-59 | | 14 |
| 87418036 | 02-04 | | 12 | 87423356 | 08-09 | | 10 |
| 87418166 | 02-05 | | 1 | | 08-09 | | 14 |
| 87418359 | 02-02 | | 19 | | 08-09A | | 10 |
| 87418360 | 02-02 | | 22 | 87423396 | 04-12 | | 3 |
| 87418364 | 02-05A | | 2 | 87423397 | 04-12 | | 4 |
| 87418365 | 02-05A | | 3 | 87423401 | 08-22 | | 2 |
| 87418366 | 02-05 | | 2 | 87423409 | 09-76 | | 9 |
| 87418367 | 02-05 | | 3 | 87423410 | 09-76 | | 8 |
| 87418368 | 09-15 | | 31 | 87423457 | 02-04 | | 5 |
| 87418369 | 09-15 | | 32 | | 02-04A | | 5 |
| 87418516 | 09-12 | | 1 | 87423463 | 09-09 | | 1 |
| 87418518 | 09-12 | | 11 | 87423502 | 09-58 | | 34 |
| 87418541 | 04-07 | | 1 | 87423503 | 09-58 | | 26 |
| | 04-08 | | 1 | 87423531 | 02-06 | | 9 |
| 87418542 | 04-09 | | 1 | | 02-06A | | 9 |
| 87419133 | 02-04 | | 1 | | 02-06B | | 13 |
| | 02-05 | | | 87423668 | 09-37 | | 16 |
| 87419135 | 02-04 | | 11 | 87423675 | 04-06 | | 2 |
| 87419229 | 04-04 | | 23 | 87423676 | 04-06 | | 5 |
| 87419256 | 08-25 | | 24 | 87423677 | 04-05 | | 16 |
| 87419257 | 04-05 | | 4 | | 04-06 | | 11 |
| 87419259 | 04-05 | | 2 | 87423802 | 04-20 | | 8 |
| 87419320 | 04-09 | | 14 | 87423812 | 04-20 | | 4 |

HTTP://WWW.MINNPARBACKHOEPARTS.COM



| Number | Figure | Sequence | Ref. | Number | Figure | Sequence | Ref. |
|---|---|---|---|---|---|---|---|
| 87423812 | 09-74 | | 16 | 87429982 | 06-18 | | 29 |
| | 09-75 | | 6 | 87429983 | 06-18 | | 30 |
| 87423817 | 09-41 | | 19 | 87429984 | 06-18 | | 27 |
| 87423926 | 04-04 | | 6 | 87429985 | 06-16 | | 23 |
| 87423969 | 08-23 | | 40 | 87429986 | 06-14 | | 12 |
| 87423970 | 08-23 | | 41 | 87429987 | 06-13 | | 6 |
| 87424267 | 08-50 | | 14 | | 06-14 | | 7 |
| | 08-51 | | 15 | 87429988 | 06-13 | | 10 |
| | 08-52 | | 16 | 87429989 | 06-13 | | 1 |
| | 08-53 | | 11 | 87429994 | 06-16 | | 3 |
| | 08-54 | | 13 | 87430122 | 09-66 | | 19 |
| 87424794 | 07-06 | | 29 | | 09-67 | | 1 |
| 87425117 | 09-21 | | 3 | 87430618 | 06-11 | | 20 |
| 87425118 | 09-21 | | 1 | 87430677 | 09-11 | | |
| 87425122 | 09-11 | | 16 | | 09-75 | | 4 |
| 87425225 | 08-22 | | 36 | 87431300 | 09-13 | | 24 |
| 87425456 | 09-36 | | 5 | 87431301 | 09-13 | | 23 |
| 87425635 | 04-19 | | 8 | 87431529 | 09-13 | | 15 |
| 87425636 | 04-20 | | 10 | 87431630 | 08-23 | | 3 |
| 87425696 | 09-13 | | 22 | 87431701 | 06-25 | | 1 |
| 87426379 | 09-04 | | 1 | 87431799 | 02-07 | | 11 |
| 87426488 | 08-22 | | 16 | 87432387 | 09-41 | | 25 |
| 87426742 | 06-10 | | 17 | 87432547 | 03-03 | | 25 |
| 87426965 | 08-03 | | 12 | 87432811 | 09-25 | | 30 |
| 87426966 | 08-03 | | 14 | | 09-25A | | 32 |
| 87427158 | 06-10 | | 1 | 87433005 | 09-14 | | 13 |
| | 08-03 | | 13 | 87433006 | 09-14 | | 12 |
| 87427294 | 09-66 | | 20 | 87433007 | 09-14 | | 14 |
| 87427537 | 08-26 | | 28 | 87433008 | 09-14 | | 11 |
| 87427539 | 08-26 | | 27 | 87433240 | 08-25 | | 1 |
| 87427774 | 09-25 | | 15 | 87433401 | 04-03 | | 6 |
| 87427775 | 09-25A | | 15 | 87433503 | 02-02 | | 6 |
| 87427943 | 03-01 | | 19 | 87433543 | 04-04 | | 1 |
| 87427948 | 08-22 | | 17 | | 04-07 | | 32 |
| 87428023 | 08-50 | | 3 | | 04-08 | | 14 |
| | 08-51 | | 3 | 87433544 | 04-06A | | 24 |
| | 08-52 | | 3 | 87433546 | 04-07 | | 16 |
| | 08-53 | | 3 | | 09-70 | | 4 |
| | 08-54 | | 2 | 87433659 | 09-39 | | 1 |
| 87428134 | 08-50 | | 5 | 87433730 | 05-04 | | 9 |
| | 08-51 | | 5 | | 06-01 | | 28 |
| | 08-52 | | 5 | 87434049 | 09-42 | | 19 |
| | 08-54 | | 5 | 87434050 | 09-42 | | 20 |
| 87428151 | 09-01 | | 33 | 87434099 | 02-04 | | 14 |
| 87428152 | 09-01 | | 34 | | 02-04A | | 15 |
| 87428153 | 09-02 | | 35 | 87434257 | 08-01 | | 5 |
| 87428158 | 08-09 | | 26 | 87434261 | 08-26 | | 17 |
| 87428164 | 08-50 | | 8 | 87434262 | 08-26 | | 16 |
| | 08-51 | | 8 | 87434265 | 08-26 | | 15 |
| | 08-52 | | 8 | 87434614 | 02-01 | | 5 |
| | 08-53 | | 5 | 87434621 | 08-20 | | 6 |
| | 08-54 | | 8 | | 08-49 | | |
| 87428165 | 08-50 | | 10 | 87434649 | 02-01 | | 6 |
| | 08-51 | | 10 | 87434672 | 08-01 | | 11 |
| | 08-52 | | 10 | | 08-29 | | |
| | 08-53 | | 6 | 87434745 | 09-38 | | 1 |
| | 08-54 | | 10 | 87434766 | 08-30 | | |
| 87428645 | 09-03 | | 3 | 87434767 | 08-31 | | |
| 87428998 | 06-10 | | 18 | 87434768 | 08-30 | | |
| 87429186 | 09-73 | | 16 | 87434769 | 08-31 | | |
| 87429287 | 08-05 | | 12 | 87434777 | 08-22 | | 26 |
| | 08-06 | | 11 | 87434783 | 09-58 | | |
| 87429290 | 08-04 | | 14 | 87434793 | 02-01 | | 2 |
| 87429293 | 08-04 | | 15 | 87434974 | 09-68 | | 1 |
| 87429310 | 03-01 | | 1 | 87434978 | 02-01 | | 12 |
| 87429314 | 03-01 | | 1A | 87434979 | 09-53 | | 1 |
| 87429382 | 05-02 | | 10 | 87434980 | 09-53 | | 1 |
| 87429654 | 08-08 | | 32 | 87435073 | 08-21 | | 16 |
| 87429895 | 08-01 | | 16 | 87435242 | 08-53 | | 9 |
| 87429948 | 09-67 | | 6 | | 08-54 | | 11 |
| 87429949 | 09-67 | | 12 | 87435243 | 08-50 | | 11 |
| 87429950 | 09-67 | | 2 | | 08-51 | | 11 |
| 87429951 | 09-67 | | 10 | | 08-52 | | 11 |
| 87429952 | 09-67 | | 7 | 87435275 | 09-13 | | 8 |
| 87429954 | 09-67 | | 17 | 87435277 | 06-10 | | 15 |
| 87429970 | 06-15 | | 1 | 87435278 | 06-10 | | 19 |
| 87429971 | 06-15 | | 15 | 87435279 | 06-10 | | 20A |
| 87429972 | 06-14 | | 1 | 87435280 | 06-10 | | 20 |
| 87429973 | 06-18 | | 20 | 87435372 | 09-14 | | 8 |
| 87429974 | 06-19 | | | 87435381 | 04-20 | | 2 |
| 87429978 | 06-22 | | | 87435409 | 02-02 | | 2 |
| 87429981 | 06-18 | | 28 | 87435499 | 02-06A | | 7 |

HTTP://WWW.MINNPARBACKHOEPARTS.COM




| Number | Figure | Sequence | Ref. |
|---|---|---|---|
| 87435506 | 08-50 | | 15 |
| | 08-51 | | 16 |
| | 08-52 | | 17 |
| | 08-53 | | 12 |
| | 08-54 | | 14 |
| 87435510 | 08-15 | | 4 |
| | 08-16 | | 4 |
| | 08-19 | | 4 |
| | 08-53 | | |
| 87435761 | 08-01 | | 3 |
| 87435909 | 08-26 | | 5 |
| | 08-28 | | |
| 87435923 | 08-25 | | 20 |
| 87435924 | 09-15 | | 12 |
| | 09-25 | | 11 |
| | 09-25A | | 11 |
| 87436066 | 08-01 | | 17 |
| | 08-02 | | 16 |
| | 08-02 | | 7 |
| 87436076 | 09-42 | | 3 |
| 87436225 | 08-50 | | 2 |
| | 08-51 | | 2 |
| | 08-52 | | 2 |
| | 08-53 | | 2 |
| | 08-54 | | 3 |
| 87436235 | 09-27 | | 18 |
| 87436396 | 04-20 | | 5 |
| 87436614 | 02-06A | | 17 |
| 87436615 | 02-06A | | 14 |
| 87436675 | 04-07 | | |
| | 04-09 | | |
| | 08-25 | | 23 |
| | 09-70 | | 5 |
| 87436676 | 04-20 | | 7 |
| 87436836 | 04-07 | | 15 |
| | 04-07 | | 8 |
| | 04-20 | | 11 |
| 87436908 | 08-06 | | 23 |
| 87436910 | 08-06 | | 24 |
| 87437108 | 08-04 | | 24 |
| 87437228 | 08-01 | | 26 |
| 87437231 | 08-02 | | 18 |
| | 08-02 | | 6 |
| | 08-23 | | 37 |
| 87437232 | 08-02 | | 18 |
| | 08-02 | | 6 |
| | 08-23 | | 36 |
| 87437263 | 08-26 | | 1 |
| 87437265 | 08-25 | | 22 |
| 87437366 | 09-14 | | 3 |
| 87437369 | 09-14 | | 4 |
| 87437371 | 08-52 | | 13 |
| | 08-54 | | 12 |
| 87437372 | 08-50 | | 12 |
| | 08-51 | | 12 |
| | 08-52 | | 12 |
| 87437373 | 08-51 | | 14 |
| 87437441 | 08-02 | | 6 |
| 87437442 | 08-02 | | 18 |
| 87437621 | 08-22 | | 45 |
| 87437623 | 08-22 | | 30 |
| 87437625 | 08-22 | | 47 |
| 87437627 | 08-22 | | 43 |
| 87437629 | 08-22 | | 46 |
| 87437631 | 08-22 | | 44 |
| 87437633 | 08-17 | | 6 |
| | 08-18 | | 8 |
| | 08-20 | | 8 |
| 87437635 | 08-17 | | 7 |
| | 08-18 | | 9 |
| | 08-20 | | 9 |
| 87437641 | 08-22 | | 51 |
| 87437655 | 08-01 | | 39 |
| 87437657 | 08-01 | | 40 |
| 87437685 | 08-09A | | 14 |
| 87437688 | 09-13 | | 18 |
| 87437689 | 09-14 | | 5 |
| 87437733 | 08-15 | | 3 |
| | 08-17 | | 8 |
| | 08-50 | | |
| 87437734 | 08-19 | | 3 |
| | 08-20 | | 3 |
| 87437734 | 08-52 | | |
| 87437735 | 08-16 | | 3 |
| | 08-18 | | 2 |
| | 08-51 | | |
| 87437736 | 08-17 | | 9 |
| | 08-18 | | 3 |
| | 08-20 | | 4 |
| | 08-54 | | |
| 87437804 | 02-06 | | 2 |
| | 02-06A | | 2 |
| | 02-06B | | 2 |
| 87437805 | 02-06 | | 1 |
| | 02-06A | | 1 |
| | 02-06B | | 1 |
| 87437806 | 09-15 | | 27 |
| 87437834 | 02-06 | | 7 |
| 87437836 | 02-06B | | 7 |
| 87437923 | 08-21 | | 6 |
| 87437924 | 08-21 | | 5 |
| 87437925 | 08-21 | | 7 |
| 87437926 | 08-21 | | 9 |
| 87437927 | 08-21 | | 4 |
| 87437928 | 08-21 | | 8 |
| 87437929 | 08-21 | | 10 |
| 87437930 | 08-21 | | 11 |
| 87437933 | 08-21 | | 12 |
| 87437934 | 08-02 | | 13 |
| 87437935 | 08-21 | | 13 |
| 87437938 | 08-08A | | 32 |
| 87437939 | 08-08A | | 33 |
| 87437940 | 08-08A | | 34 |
| 87437941 | 08-08A | | 35 |
| 87437980 | 08-01 | | 42 |
| 87437982 | 08-01 | | 43 |
| 87438012 | 08-19 | | 8 |
| 87438015 | 08-19 | | 9 |
| 87438046 | 08-50 | | 16 |
| | 08-51 | | 17 |
| | 08-52 | | 18 |
| 87438157 | 09-21 | | 14 |
| 87439032 | 08-21 | | 14 |
| 87439033 | 08-21 | | 15 |
| 87439135 | 09-21 | | 13 |
| 87439136 | 05-02 | | 13 |
| 87439137 | 05-02 | | 1 |
| 87439138 | 05-02 | | 5 |
| 87439163 | 08-08A | | 38 |
| | 08-22 | | 25 |
| 87439210 | 09-12 | | 15 |
| 87439213 | 08-22 | | 48 |
| 87439215 | 08-22 | | 40 |
| 87439444 | 02-06 | | 10 |
| | 02-06A | | 10 |
| | 02-06B | | 14 |
| 87439448 | 09-41 | | 11 |
| 87440058 | 09-20 | | 10 |
| 87440076 | 09-17 | | 10 |
| 87440381 | 09-13 | | 31 |
| 87440704 | 09-13 | | 9 |
| 87440706 | 09-13 | | 10 |
| 87440710 | 09-13 | | 1 |
| 87440711 | 09-13 | | |
| | 09-15 | | 1 |
| 87440712 | 08-22 | | 14 |
| 87803194 | 03-08 | | 6 |
| 87803261 | 02-32 | | 1 |
| 892-11005 | 03-03 | | 30 |
| | 04-19 | | 6 |
| 892-11006 | 03-03 | | 31 |
| | 09-25 | | 17 |
| | 09-25A | | 17 |
| | 09-60 | | 3 |
| | 09-70 | | |
| 892-11008 | 02-01 | | 41 |
| | 03-03 | | 10 |
| | 04-03 | | 5 |
| | 04-06A | | 17 |
| | 04-08 | | 11 |
| | 04-16 | | 4 |
| | 07-03 | | 3 |
| | 07-03 | | 37 |
| | 07-04 | | 6 |

HTTP://WWW.MINNPARBACKHOEPARTS.COM




| Number | Figure | Sequence | Ref. |
|---|---|---|---|
| 892-11008 | 07-06 | | 14 |
| | 08-01 | | 34 |
| | 08-08A | | 3A |
| | 08-22 | | 22 |
| | 08-23 | | 22 |
| | 09-05 | | 10 |
| | 09-08 | | 28 |
| | 09-12 | | 14 |
| | 09-13 | | 6 |
| | 09-15 | | 3 |
| | 09-25 | | 24 |
| | 09-25A | | 24 |
| | 09-44 | | 6 |
| 892-11010 | 02-06 | | 5 |
| | 02-06A | | 5 |
| | 02-06B | | 5 |
| | 03-01 | | 32 |
| | 03-03 | | 24 |
| | 05-02 | | 26 |
| | 07-03 | | 11 |
| | 07-06 | | 22 |
| | 08-04 | | 12 |
| | 08-05 | | 10 |
| | 08-05 | | 16 |
| | 08-05 | | 37 |
| | 08-06 | | 16 |
| | 08-06 | | 9 |
| | 08-07 | | 9 |
| | 08-10 | | 31 |
| | 08-22 | | 42 |
| | 08-23 | | 12 |
| | 08-24 | | 12 |
| | 08-27 | | 15 |
| | 08-27 | | 6 |
| | 09-08 | | 26 |
| | 09-13 | | 28 |
| | 09-24 | | 38 |
| | 09-25 | | 7 |
| | 09-25A | | 7 |
| | 09-38 | | 31 |
| 893-11005 | 04-18 | | 8 |
| 895-11004 | 04-11 | | 13 |
| | 09-54 | | 8 |
| 895-11005 | 03-03 | | 6 |
| 895-11006 | 04-06A | | 14 |
| | 04-06A | | 29 |
| | 09-55 | | 10A |
| 895-11008 | 02-01 | | 10 |
| | 02-02 | | 13 |
| | 02-02 | | 16 |
| | 02-02 | | 23 |
| | 02-03 | | 8 |
| | 02-04 | | 3 |
| | 02-04A | | 3 |
| | 03-03 | | 11 |
| | 04-16 | | 11 |
| | 06-10 | | 3 |
| | 07-03 | | 2A |
| | 07-06 | | 34 |
| | 08-22 | | 27 |
| | 09-03 | | 16 |
| | 09-05 | | 9 |
| | 09-12 | | 13 |
| | 09-21 | | 15 |
| | 09-37 | | 18 |
| | 09-59 | | 19 |
| | 09-66 | | |
| | 09-70 | | 24 |
| 895-11010 | 02-01 | | 23 |
| | 03-01 | | 34 |
| | 03-01 | | 42 |
| | 04-16 | | 7 |
| | 07-06 | | 31 |
| | 08-03 | | 3 |
| | 08-04 | | 11 |
| | 08-05 | | 38 |
| | 08-05 | | 9 |
| | 08-07 | | 14 |
| | 08-08 | | 31 |
| | 08-08A | | 31 |
| | 08-09 | | 4 |
| | 08-09A | | 4 |
| 895-11010 | 08-10 | | 30 |
| | 08-10 | | 33 |
| | 08-11 | | 28 |
| | 08-12 | | 25 |
| | 08-13 | | 26 |
| | 08-13 | | 37 |
| | 08-24 | | 11 |
| | 08-25 | | 3 |
| | 09-04 | | 20 |
| | 09-08 | | 17 |
| | 09-08 | | 21 |
| | 09-38 | | 29 |
| | 09-38 | | 51 |
| | 09-40 | | 11 |
| | 09-40 | | 14 |
| | 09-40 | | 23 |
| | 09-40 | | 29 |
| | 09-40 | | 6 |
| | 09-41 | | 4 |
| | 09-41 | | 6 |
| | 09-45 | | 10 |
| 895-11018 | 08-09 | | 7 |
| 895-15006 | 04-11 | | 8 |
| 895-15008 | 04-11 | | 33 |
| | 05-01 | | 16 |
| | 05-01 | | 24 |
| | 09-13 | | 4 |
| | 09-43 | | 31 |
| | 09-62 | | 7 |
| | 09-63 | | 16 |
| 895-15010 | 05-01 | | 21 |
| | 08-08 | | 3 |
| | 08-08A | | 3 |
| | 08-22 | | 21 |
| | 08-25 | | 7 |
| | 09-13 | | 12 |
| | 09-25 | | 8 |
| | 09-25A | | 8 |
| | 09-63 | | 11 |
| 895-30107 | 09-55 | | 35 |
| | 09-57 | | 12 |
| 895-30109 | 09-14 | | 6 |
| | 09-43 | | 17 |
| | 09-43 | | 22A |
| | 09-43 | | 5A |
| 896-11008 | 09-13 | | 32 |
| 896-11010 | 02-01 | | 38 |
| | 08-24 | | 25 |
| | 08-26 | | 3 |
| | 08-26 | | 7 |
| | 09-01 | | 29A |
| 896-11012 | 04-06A | | 33 |
| | 06-11 | | 10 |
| | 08-10 | | 3 |
| | 08-11 | | 3 |
| | 08-12 | | 3 |
| | 08-13 | | 3 |
| | 08-14 | | 3 |
| | 08-23 | | 18 |
| | 09-46 | | 11B |
| | 09-67 | | 9 |
| 896-11016 | 09-37 | | 12 |
| 896-11020 | 03-01 | | 3A |
| | 06-24 | | 5 |
| | 09-05 | | 18 |
| | 09-06 | | 7 |
| | 09-06 | | 7 |
| | 09-07 | | 7 |
| | 09-23 | | 14 |
| | 09-36 | | 3 |
| | 09-36 | | 7 |
| | 09-38 | | 3A |
| 896-15008 | 02-06B | | 11 |
| | 07-06 | | 33 |
| | 09-67 | | 16 |
| 896-15010 | 02-04 | | 9 |
| | 02-04A | | 13 |
| | 02-06 | | 12 |
| | 02-06 | | 4 |
| | 02-06A | | 12 |
| | 02-06A | | 4 |
| | 02-06B | | 16 |

HTTP://WWW.MINNPARBACKHOEPARTS.COM




| Number | Figure | Sequence | Ref. |
|---|---|---|---|
| 896-15010 | 02-06B | | 4 |
| | 06-11 | | 25 |
| | 08-22 | | 11 |
| | 09-09 | | 3 |
| | 09-13 | | 19 |
| | 09-67 | | 5 |
| 896-15012 | 02-07 | | 4 |
| | 03-03 | | 27 |
| | 06-11 | | 28 |
| | 09-40 | | 17 |
| | 09-40 | | 20 |
| | 09-46 | | 5 |
| | 09-51 | | |
| 90-6682T1 | 06-01 | | 16 |
| | 06-09 | | 12 |
| | 06-11 | | 40 |
| | 06-31 | | 12 |
| 905794R1 | 06-16 | | 20 |
| 905839R1 | 05-06 | | 6 |
| | 06-04 | | 4 |
| 906086R1 | 09-55 | | 42 |
| | 09-57 | | 19 |
| 934667R1 | 06-13 | | 3 |
| | 06-14 | | 4 |
| | 06-21 | | 36 |
| | 06-22 | | 6 |
| 934727R1 | 05-06 | | 4 |
| | 06-04 | | 2 |
| 98429552 | 02-30 | | 9 |
| 98429625 | 03-11 | | 4 |
| 98442879 | 02-30 | | 12 |
| 98445111 | 02-30 | | 12 |
| A13240 | 08-25 | | 10 |
| A156873 | 06-02 | | 6 |
| A166057 | 04-04 | | 17 |
| | 04-04 | | 2 |
| A167037 | 09-71 | | 8 |
| A170467 | 02-06 | | 8 |
| | 02-06A | | 8 |
| | 02-06B | | 8 |
| A177435 | 03-02 | | 2 |
| A187542 | 04-17 | | 5 |
| A187575 | 04-17 | | 11 |
| A187714 | 09-58 | | 10 |
| | 09-60 | | |
| A187990 | 04-08 | | 5 |
| | 07-03 | | 32 |
| A188028 | 07-06 | | 23 |
| A23870 | 04-17 | | 1 |
| A30881 | 09-03 | | 11 |
| | 09-13 | | 3 |
| | 09-16 | | 15 |
| | 09-17 | | 5 |
| | 09-18 | | 26 |
| | 09-21 | | 6 |
| A33509 | 09-27 | | 29 |
| A38208 | 05-04 | | 15 |
| | 05-09 | | 7 |
| A41264 | 04-15 | | 9 |
| A42561 | 04-09 | | 8 |
| | 09-64 | | 6 |
| | 09-65 | | 14B |
| A45054 | 09-52 | | 16 |
| A48041 | 06-06 | | 11 |
| | 06-17 | | 6 |
| | 06-18 | | 2 |
| A65544 | 05-01 | | 5 |
| A77310 | 07-03 | | 14 |
| B17575 | 06-02 | | |
| | 06-02 | | |
| | 06-03 | | |
| | 06-04 | | |
| | 06-06 | | |
| | 06-06 | | |
| | 06-07 | | |
| | 06-08 | | |
| BMF28S | 04-06 | | 1 |
| D121152 | 04-13 | | 2 |
| | 04-15 | | |
| D121194 | 09-05 | | 6 |
| D121608 | 07-06 | | 12 |
| D123347 | 09-72 | | 4 |
| D123684 | 05-04 | | 3 |
| | 06-01 | | 10 |
| D124528 | 07-03 | | 19 |
| D124529 | 07-03 | | 13 |
| D124530 | 07-03 | | 23 |
| D124857 | 03-03 | | 8 |
| D125079 | 04-05 | | 7 |
| D125223 | 05-09 | | 1 |
| D126409 | 04-06 | | 4 |
| D127167 | 09-26 | | 44 |
| | 09-27 | | 21 |
| D127335 | 04-11 | | 24 |
| D127542 | 09-04 | | 2 |
| D128022 | 09-60 | | 7 |
| D128745 | 09-60 | | 4 |
| | 09-70 | | 2 |
| D129227 | 09-25 | | 2 |
| | 09-25A | | 2 |
| D129264 | 09-06 | | 2 |
| | 09-06 | | 2 |
| | 09-07 | | 2 |
| | 09-08 | | 11 |
| D129747 | 07-06 | | 13 |
| D132076 | 09-05 | | 17 |
| D132494 | 09-24 | | 16 |
| | 09-27 | | 2 |
| D132982 | 07-04 | | 22 |
| | 08-03 | | 15 |
| | 09-64 | | 24 |
| D133632 | 09-24 | | 21 |
| | 09-27 | | 7 |
| D133865 | 09-27 | | 24 |
| D134900 | 09-20 | | 6 |
| D135384 | 04-13 | | 1 |
| | 04-15 | | |
| D135557 | 09-23 | | 5 |
| D135559 | 09-23 | | 6 |
| D135739 | 09-24 | | 12 |
| D136391 | 09-23 | | 26 |
| D136392 | 09-23 | | 24 |
| D136700 | 09-23 | | 25 |
| D136773 | 09-01 | | 17 |
| | 09-19 | | 11 |
| D137077 | 07-03 | | 6 |
| D137218 | 09-24 | | 13 |
| D137363 | 04-04 | | 12 |
| | 09-04 | | 16 |
| | 09-52 | | 3 |
| D137468 | 04-09 | | 26 |
| D137625 | 08-01 | | 14 |
| D137627 | 06-01 | | 17 |
| | 06-09 | | 13 |
| | 06-11 | | 41 |
| | 06-31 | | 13 |
| D138047 | 09-26 | | 50 |
| | 09-26 | | 52 |
| | 09-27 | | 34 |
| | 09-27 | | 47 |
| D138055 | 08-04 | | 8 |
| | 08-05 | | 15 |
| | 08-05 | | 35 |
| | 08-05 | | 6 |
| | 08-06 | | 14 |
| | 08-06 | | 7 |
| | 08-26 | | 31 |
| | 08-27 | | 12 |
| | 09-38 | | 32 |
| D138157 | 09-28 | | 7 |
| | 09-29 | | 7 |
| | 09-30 | | 7 |
| | 09-32 | | 7 |
| | 09-32 | | 7 |
| | 09-34 | | 7 |
| | 09-35 | | 7 |
| D138380 | 06-23 | | 4 |
| | 06-24 | | 3 |
| D138492 | 06-23 | | 5 |
| | 06-24 | | 2 |
| D139039 | 09-16 | | 19 |
| D139849 | 09-28 | | |
| | 09-29 | | |
| | 09-30 | | |

HTTP://WWW.MINNPARBACKHOEPARTS.COM




| Number | Figure | Sequence | Ref. |
|---|---|---|---|
| D139849 | 09-32 | | |
| | 09-32 | | |
| | 09-34 | | |
| | 09-35 | | |
| D139851 | 09-28 | | |
| | 09-29 | | |
| | 09-30 | | |
| | 09-32 | | |
| | 09-32 | | |
| | 09-34 | | |
| | 09-35 | | |
| D140029 | 08-65 | | 15 |
| | 09-26 | | 8 |
| D140035 | 07-03 | | 9 |
| D140247 | 09-27 | | 28 |
| D140267 | 09-40 | | 32 |
| D140706 | 08-14 | | 18 |
| D141075 | 09-26 | | 42 |
| D141076 | 09-26 | | 36A |
| D141142 | 09-26 | | 20 |
| | 09-27 | | 37 |
| D141164 | 09-26 | | 22 |
| | 09-27 | | 39 |
| D141666 | 09-27 | | 11 |
| D142012 | 09-35 | | 4 |
| D142144 | 09-71 | | 10 |
| D142519 | 09-22 | | 15 |
| D142787 | 08-04 | | 20 |
| | 08-08 | | 27 |
| | 08-08A | | 27 |
| | 08-09 | | 21 |
| | 08-09A | | 21 |
| D142898 | 05-08 | | 6 |
| | 06-20 | | 16 |
| | 06-26 | | 22 |
| D142971 | 06-27 | | 5 |
| D142986 | 06-30 | | 2 |
| D143033 | 06-27 | | 18 |
| D143242 | 09-68 | | 4 |
| D143324 | 09-26 | | 30 |
| D143406 | 09-22 | | 13 |
| | 09-22 | | 33 |
| D143411 | 09-13 | | 35 |
| D143416 | 09-20 | | 5 |
| D143417 | 09-25 | | 9 |
| | 09-25A | | 9 |
| | 09-40 | | 25 |
| | 09-64 | | 29 |
| | 09-65 | | 20 |
| D143427 | 09-64 | | 27 |
| | 09-65 | | 18 |
| D143591 | 09-15 | | 15 |
| | 09-25 | | 21 |
| | 09-25A | | 21 |
| D143714 | 09-40 | | 9 |
| D143715 | 09-40 | | 8 |
| D143723 | 09-15 | | 10 |
| | 09-25 | | 22 |
| | 09-25A | | 22 |
| D143735 | 09-25 | | 20 |
| | 09-25A | | 20 |
| D143846 | 08-07 | | 6 |
| | 08-12 | | 26 |
| D144423 | 09-23 | | 35 |
| D144592 | 09-25 | | 3 |
| | 09-25A | | 3 |
| D145978 | 09-26 | | 7 |
| | 09-27 | | 16 |
| D146288 | 09-26 | | 26 |
| | 09-27 | | 49 |
| D146420 | 09-29 | | 3 |
| D146421 | 09-29 | | 2 |
| D147166 | 04-07 | | 6 |
| D147249 | 09-29 | | 4 |
| D147383 | 04-04 | | 33 |
| | 09-59 | | 17 |
| | 09-70 | | 25 |
| D147409 | 09-28 | | 4 |
| D148108 | 04-07 | | 35 |
| | 04-08 | | 4 |
| | 07-03 | | 31 |
| D148947 | 09-18 | | 2 |
| D148962 | 03-02 | | 6 |
| | 09-13 | | 30 |
| D148992 | 09-16 | | 7 |
| D148993 | 09-13 | | 2 |
| D148994 | 09-16 | | 18 |
| D149079 | 08-63 | | 17 |
| | 08-63 | | 3 |
| | 08-64 | | 15 |
| | 09-23 | | 2 |
| | 09-26 | | 47 |
| | 09-27 | | 31 |
| D149262 | 09-16 | | 46 |
| D149287 | 09-01 | | 35 |
| | 09-02 | | 36A |
| | 09-03 | | 4 |
| | 09-16 | | 37 |
| | 09-17 | | 11 |
| | 09-19 | | 3 |
| | 09-20 | | 11 |
| D149288 | 07-06 | | 20 |
| | 09-02 | | 36 |
| | 09-16 | | 23 |
| | 09-16 | | 48 |
| | 09-19 | | 7 |
| | 09-21 | | 11 |
| D149295 | 09-16 | | 34 |
| | 09-19 | | 9 |
| D149298 | 09-26 | | 32 |
| D149309 | 08-24 | | 3 |
| D149725 | 05-05 | | 4 |
| | 06-02 | | 2 |
| D149726 | 05-05 | | 3 |
| | 06-02 | | 4 |
| D149737 | 06-04 | | 8 |
| D149738 | 06-04 | | 6 |
| D149739 | 06-04 | | |
| D149824 | 09-74 | | 3 |
| D149825 | 09-74 | | 4 |
| D149826 | 09-79 | | 10 |
| D149827 | 09-79 | | 11 |
| D149828 | 09-74 | | 5 |
| D149829 | 09-74 | | 6 |
| D149860 | 06-09 | | |
| | 06-31 | | |
| D149866 | 09-11 | | 9 |
| D149867 | 09-11 | | 10 |
| D149868 | 09-11 | | 12 |
| D150032 | 09-20 | | 13 |
| D150121 | 09-26 | | 10 |
| | 09-27 | | 17 |
| D150214 | 05-06 | | 11A |
| D150391 | 09-46 | | 15 |
| | 09-46 | | 23 |
| D150392 | 09-46 | | 16 |
| | 09-46 | | 24 |
| D150397 | 09-16 | | 9 |
| D150434 | 09-16 | | 13 |
| D150435 | 09-16 | | 12 |
| D150486 | 09-16 | | 17 |
| D150493 | 09-16 | | 24 |
| D150503 | 09-16 | | 45 |
| D150521 | 04-06A | | 25 |
| D150619 | 09-26 | | 34 |
| D150633 | 07-06 | | 11 |
| D151034 | 09-05 | | 15 |
| D151065 | 09-23 | | 21 |
| D151069 | 09-37 | | 5 |
| D151070 | 09-37 | | 6 |
| D151071 | 09-24 | | 11 |
| D151073 | 09-23 | | 7 |
| D151074 | 09-23 | | 8 |
| D25279 | 09-22 | | 10 |
| | 09-22 | | 14 |
| | 09-26 | | 31 |
| D26002 | 09-22 | | 9 |
| D28648 | 09-22 | | 12 |
| D30933 | 09-28 | | 12 |
| | 09-29 | | 12 |
| | 09-30 | | 12 |
| | 09-31 | | 9 |
| | 09-32 | | 12 |
| | 09-32 | | 12 |

HTTP://WWW.MINNPARBACKHOEPARTS.COM



| Number | Figure | Sequence | Ref. | Number | Figure | Sequence | Ref. |
|---|---|---|---|---|---|---|---|
| D30933 | 09-33 | | 9 | D95142 | 08-59 | | 5 |
| | 09-34 | | 12 | D95143 | 08-58 | | 5 |
| | 09-35 | | 12 | | 08-60 | | 5 |
| D31140 | 09-08 | | 2 | | 08-66 | | 4 |
| | 09-26 | | 53 | D95144 | 08-61 | | 5 |
| | 09-27 | | 48 | | 08-62 | | 5 |
| D34666 | 09-16 | | 16 | D95145 | 08-63 | | 7 |
| D37495 | 09-29 | | 11 | | 08-64 | | 5 |
| | 09-30 | | 11 | | 08-65 | | 5 |
| | 09-31 | | 8 | E135750 | 06-26 | | 18 |
| | 09-32 | | 11 | E135777 | 06-27 | | 3 |
| | 09-32 | | 11 | E135785 | 06-27 | | 8 |
| | 09-33 | | 8 | E135809 | 06-13 | | 10A |
| | 09-34 | | 11 | | 06-13 | | 1A |
| | 09-35 | | 11 | | 06-14 | | 13 |
| D37614 | 09-26 | | 29 | | 06-14 | | 1A |
| D38435 | 08-03 | | 23 | | 06-25 | | 6 |
| D38648 | 08-07 | | 20 | E135810 | 07-02 | | 7 |
| | 08-14 | | 21 | E43769 | 09-59 | | 22 |
| D38907 | 09-22 | | 3 | E46560 | 09-59 | | |
| D39118 | 09-18 | | 11 | | 09-70 | | |
| D39256 | 09-22 | | 17 | E47238 | 09-59 | | 3 |
| D39696 | 08-03 | | 18 | | 09-70 | | 16 |
| D40442 | 03-01 | | 37 | E47239 | 09-59 | | 2 |
| | 09-38 | | 37 | | 09-70 | | 17 |
| D41659 | 09-31 | | | E47240 | 09-59 | | 4 |
| | 09-33 | | | | 09-70 | | 18 |
| D43940 | 09-28 | | 11 | F22426 | 04-11 | | |
| D48212 | 09-28 | | 10 | F44883 | 09-41 | | 10 |
| | 09-29 | | 10 | F45165 | 09-55 | | 49 |
| | 09-30 | | 10 | | 09-57 | | 25 |
| | 09-32 | | 10 | F64198 | 09-55 | | 45 |
| | 09-32 | | 10 | | 09-57 | | 22 |
| | 09-34 | | 10 | F64519 | 09-68 | | 14 |
| | 09-35 | | 10 | G100440 | 08-61 | | 15 |
| D50146 | 09-22 | | 6 | G100444 | 08-59 | | 15 |
| D51391 | 09-08 | | 7 | | 08-60 | | 17 |
| D51392 | 09-08 | | 15 | | 08-66 | | 14 |
| D51393 | 09-08 | | 19 | G100448 | 08-61 | | 16 |
| D51750 | 09-28 | | 5 | G100449 | 08-59 | | 16 |
| | 09-28 | | 8 | | 08-60 | | 18 |
| | 09-29 | | 5 | | 08-66 | | 15 |
| | 09-29 | | 8 | G101533 | 08-61 | | 6 |
| | 09-30 | | 5 | | 08-62 | | 6 |
| | 09-30 | | 8 | G101994 | 08-63 | | 21 |
| | 09-31 | | 5 | G101995 | 08-63 | | 20 |
| | 09-32 | | 5 | G101996 | 08-63 | | 22 |
| | 09-32 | | 5 | G102285 | 08-61 | | 14 |
| | 09-32 | | 8 | G102287 | 08-58 | | 14 |
| | 09-32 | | 8 | | 08-65 | | 17 |
| | 09-33 | | 5 | G102288 | 08-59 | | 14 |
| | 09-34 | | 5 | | 08-60 | | 16 |
| | 09-34 | | 8 | | 08-66 | | 13 |
| | 09-35 | | 5 | G102424 | 08-59 | | 6 |
| | 09-35 | | 8 | G102425 | 08-58 | | 6 |
| D52276 | 02-01 | | 22 | | 08-60 | | 6 |
| | 08-10 | | 7 | | 08-66 | | 5 |
| | 08-11 | | 7 | G102426 | 08-63 | | 8 |
| | 08-12 | | 7 | | 08-64 | | 6 |
| | 08-13 | | 7 | G107277 | 08-66 | | 12 |
| | 08-14 | | 7 | G108123 | 08-61 | | 13 |
| | 08-22 | | 13 | G108512 | 08-59 | | 3 |
| D52564 | 09-72 | | 1 | G108518 | 08-59 | | 13 |
| D55216 | 09-38 | | 56 | G109298 | 08-59 | | 10 |
| | 09-74 | | 10 | | 08-60 | | 11 |
| D59912 | 09-16 | | 4 | | 08-66 | | 9 |
| | 09-18 | | 6 | G109299 | 08-61 | | 10 |
| | 09-21 | | 2 | | 08-62 | | 24 |
| D61368 | 09-22 | | 16 | G109300 | 08-63 | | 14 |
| D67298 | 08-01 | | 35 | G110529 | 08-64 | | 18 |
| D68845 | 08-01 | | 36 | G110530 | 08-64 | | 19 |
| D74182 | 09-13 | | 36 | G110531 | 08-64 | | 17 |
| D75465 | 03-01 | | 12 | G32122 | 08-58 | | 10 |
| D76209 | 09-39 | | 11 | | 08-65 | | 12 |
| D80270 | 03-01 | | 39 | G32126 | 08-62 | | 10 |
| | 09-38 | | 48 | G32176 | 08-64 | | 12 |
| | 09-74 | | 11 | H434163 | 08-01 | | 15 |
| D86664 | 09-25 | | 19 | H71514 | 09-24 | | 7 |
| | 09-25A | | 19 | J936995 | 02-06B | | 10 |
| D88052 | 09-64 | | 32 | K260177 | 06-13 | | 5 |
| D88427 | 09-22 | | 11 | | 06-14 | | 6 |
| D95096 | 09-03 | | 13 | K261014 | 06-08 | | 4 |

HTTP://WWW.MINNPARBACKHOEPARTS.COM




| Number | Figure | Sequence | Ref. |
|---|---|---|---|
| K261014 | 06-28 | | 4 |
| K261065 | 06-08 | | 3 |
| | 06-28 | | 3 |
| K262143 | 06-08 | | 9 |
| | 06-28 | | 12 |
| K395027 | 06-07 | | 12 |
| K395075 | 06-07 | | 8 |
| K395082 | 06-06 | | 23 |
| | 06-30 | | 8 |
| K395086 | 06-07 | | 13 |
| K395087 | 06-07 | | 6 |
| K395090 | 06-08 | | 8 |
| | 06-28 | | 10 |
| K395091 | 06-06 | | 21 |
| K395093 | 06-06 | | 16 |
| | 06-30 | | 9 |
| K395101 | 06-30 | | 25 |
| K395131 | 06-30 | | 15 |
| K691987 | 02-01 | | 21 |
| | 09-39 | | 9 |
| L15401 | 09-03 | | 12 |
| L17985 | 02-04 | | 4 |
| | 02-04A | | 4 |
| L18337 | 02-02 | | 24 |
| | 02-04 | | 18 |
| | 02-04A | | 19 |
| | 02-06A | | 19 |
| | 03-01 | | 22 |
| | 03-02 | | 12 |
| | 04-04 | | 28 |
| | 04-07 | | 26 |
| | 04-13 | | 11 |
| | 04-14 | | 14 |
| | 04-20 | | 14 |
| | 06-10 | | 10 |
| | 06-25 | | 7 |
| | 07-04 | | 23 |
| | 08-03 | | 16 |
| | 08-09 | | 29 |
| | 08-10 | | 16 |
| | 08-10 | | 26 |
| | 08-11 | | 15 |
| | 08-11 | | 24 |
| | 08-12 | | 15 |
| | 08-13 | | 19 |
| | 08-14 | | 14 |
| | 08-21 | | |
| | 08-23 | | 15 |
| | 08-25 | | 25 |
| | 08-27 | | 18 |
| | 09-02 | | 41 |
| | 09-10 | | 36 |
| | 09-38 | | 59 |
| | 09-52 | | 22 |
| | 09-59 | | 16 |
| | 09-63 | | 21 |
| | 09-64 | | 25 |
| | 09-65 | | 17 |
| | 09-66 | | 11 |
| | 09-70 | | 14 |
| L26209 | 07-03 | | 7 |
| L32100 | 08-29 | | 9 |
| L32418 | 08-29 | | 1 |
| L54563 | 09-16 | | 14 |
| | 09-17 | | 1 |
| L60224 | 04-11 | | 5 |
| | 09-38 | | 49 |
| L71879 | 04-04 | | 21 |
| | 04-07 | | |
| | 04-07 | | |
| | 04-07 | | |
| | 04-07 | | 10 |
| | 04-08 | | |
| | 04-09 | | |
| L79937 | 08-05 | | 39 |
| N13505 | 05-06 | | 12A |
| | 06-03 | | 11 |
| N13582 | 08-29 | | 6 |
| N14283 | 04-15 | | 10 |
| N14367 | 05-05 | | 2 |
| | 06-02 | | 3 |
| N14373 | 05-05 | | 8 |
| N14407 | 06-07 | | 5 |
| N14408 | 06-07 | | 7 |
| N14410 | 06-05 | | 3 |
| N14466 | 09-61 | | 20 |
| N14784 | 07-05 | | |
| N6755 | 08-57 | | |
| N6836 | 04-15 | | 3 |
| N6941 | 08-57 | | |
| N7802 | 09-47 | | |
| N9025 | 08-57 | | |
| NSS | 04-04 | | 31B |
| | 04-09 | | 2 |
| | 04-09 | | 25 |
| | 04-09 | | 3 |
| | 04-09 | | 4 |
| | 04-12 | | |
| | 04-12 | | |
| | 04-12 | | |
| | 04-15 | | 1 |
| | 04-15 | | 5 |
| | 04-15 | | 6 |
| | 04-15 | | 7 |
| | 04-15 | | 8 |
| | 04-17 | | 12 |
| | 05-03 | | 1 |
| | 05-03 | | 3 |
| | 05-03 | | 5 |
| | 05-03 | | 6 |
| | 05-07 | | 2 |
| | 06-02 | | 14 |
| | 06-04 | | 1 |
| | 06-04 | | 10 |
| | 06-04 | | 11 |
| | 06-04 | | 12 |
| | 06-04 | | 13 |
| | 06-04 | | 14 |
| | 06-04 | | 15 |
| | 06-04 | | 16 |
| | 06-06 | | 14 |
| | 06-06 | | 15 |
| | 06-06 | | 3 |
| | 06-07 | | 1 |
| | 06-07 | | 2 |
| | 06-08 | | 1 |
| | 06-08 | | 2 |
| | 06-09 | | 10 |
| | 06-09 | | 11 |
| | 06-09 | | 2 |
| | 06-09 | | 3 |
| | 06-09 | | 4 |
| | 06-09 | | 9 |
| | 06-11 | | |
| | 06-15 | | 10 |
| | 06-15 | | 11 |
| | 06-15 | | 12 |
| | 06-15 | | 13 |
| | 06-15 | | 14 |
| | 06-15 | | 17 |
| | 06-15 | | 18 |
| | 06-15 | | 2 |
| | 06-15 | | 20 |
| | 06-15 | | 21 |
| | 06-15 | | 3 |
| | 06-15 | | 3A |
| | 06-15 | | 4 |
| | 06-15 | | 5 |
| | 06-15 | | 6 |
| | 06-15 | | 7 |
| | 06-15 | | 8 |
| | 06-15 | | 9 |
| | 06-19 | | 10 |
| | 06-19 | | 11 |
| | 06-19 | | 12 |
| | 06-19 | | 15 |
| | 06-19 | | 20 |
| | 06-19 | | 21 |
| | 06-19 | | 22 |
| | 06-19 | | 23 |
| | 06-19 | | 24 |
| | 06-19 | | 25 |
| | 06-19 | | 25A |
| | 06-19 | | 7 |

HTTP://WWW.MINNPARBACKHOEPARTS.COM



| Number | Figure | Sequence | Ref. | Number | Figure | Sequence | Ref. |
|---|---|---|---|---|---|---|---|
| NSS | 06-19 | | 8 | NSS | 08-37 | | 8 |
| | 06-21 | | 1 | | 08-37 | | 9 |
| | 06-21 | | 38A | | 08-38 | | 10 |
| | 06-21 | | 43 | | 08-38 | | 8 |
| | 06-21 | | 45 | | 08-38 | | 9 |
| | 06-22 | | 1 | | 08-39 | | 10 |
| | 06-22 | | 2 | | 08-39 | | 11 |
| | 06-22 | | 3 | | 08-39 | | 9 |
| | 06-22 | | 4 | | 08-40 | | 1 |
| | 06-27 | | 1 | | 08-40 | | 2 |
| | 06-27 | | 2 | | 08-41 | | 1 |
| | 06-28 | | 1 | | 08-41 | | 2 |
| | 06-28 | | 2 | | 08-42 | | 1 |
| | 06-29 | | 15 | | 08-42 | | 2 |
| | 06-30 | | 20 | | 08-43 | | 1 |
| | 06-30 | | 6 | | 08-43 | | 2 |
| | 06-31 | | 10 | | 08-44 | | 1 |
| | 06-31 | | 11 | | 08-44 | | 2 |
| | 06-31 | | 2 | | 08-45 | | 1 |
| | 06-31 | | 3 | | 08-45 | | 2 |
| | 06-31 | | 4 | | 08-46 | | 1 |
| | 06-31 | | 9 | | 08-46 | | 2 |
| | 07-05 | | 1 | | 08-55 | | 1 |
| | 07-05 | | 10 | | 08-56 | | 1 |
| | 07-05 | | 11 | | 08-56 | | 10 |
| | 07-05 | | 12 | | 08-56 | | 11 |
| | 07-05 | | 13 | | 08-56 | | 12 |
| | 07-05 | | 14 | | 08-56 | | 13 |
| | 07-05 | | 15 | | 08-56 | | 4 |
| | 07-05 | | 16 | | 08-56 | | 9 |
| | 07-05 | | 17 | | 08-57 | | 1 |
| | 07-05 | | 18 | | 08-57 | | 6 |
| | 07-05 | | 2 | | 08-57 | | 7 |
| | 07-05 | | 3 | | 08-57 | | 8 |
| | 07-05 | | 4 | | 08-58 | | 7 |
| | 07-05 | | 5 | | 08-58 | | 8 |
| | 07-05 | | 6 | | 08-59 | | 7 |
| | 07-05 | | 7 | | 08-59 | | 8 |
| | 07-05 | | 8 | | 08-60 | | 8 |
| | 07-05 | | 9 | | 08-60 | | 9 |
| | 07-06 | | 1 | | 08-61 | | 7 |
| | 07-06 | | 2 | | 08-61 | | 8 |
| | 08-28 | | 1 | | 08-62 | | 7 |
| | 08-30 | | 1 | | 08-62 | | 8 |
| | 08-30 | | 2 | | 08-63 | | 10 |
| | 08-30 | | 3 | | 08-63 | | 11 |
| | 08-30 | | 4 | | 08-64 | | 8 |
| | 08-31 | | 1 | | 08-64 | | 9 |
| | 08-31 | | 2 | | 08-65 | | 8 |
| | 08-31 | | 3 | | 08-65 | | 9 |
| | 08-31 | | 4 | | 08-66 | | 6 |
| | 08-31 | | 5 | | 08-66 | | 7 |
| | 08-32 | | 1 | | 09-03 | | 10 |
| | 08-32 | | 2 | | 09-06 | | 1 |
| | 08-32 | | 3 | | 09-06 | | 1 |
| | 08-32 | | 4 | | 09-07 | | 1 |
| | 08-32 | | 5 | | 09-08 | | 1 |
| | 08-32 | | 6 | | 09-08 | | 10 |
| | 08-33 | | 1 | | 09-10 | | 10 |
| | 08-33 | | 2 | | 09-10 | | 2 |
| | 08-33 | | 3 | | 09-26 | | 43 |
| | 08-33 | | 4 | | 09-26 | | 6 |
| | 08-33 | | 5 | | 09-27 | | 15 |
| | 08-33 | | 6 | | 09-27 | | 20 |
| | 08-34 | | 1 | | 09-28 | | 2 |
| | 08-34 | | 2 | | 09-28 | | 3 |
| | 08-34 | | 3 | | 09-30 | | 2 |
| | 08-34 | | 4 | | 09-30 | | 3 |
| | 08-34 | | 5 | | 09-30 | | 4 |
| | 08-34 | | 6 | | 09-31 | | 7 |
| | 08-34 | | 7 | | 09-32 | | 2 |
| | 08-35 | | 1 | | 09-32 | | 2 |
| | 08-35 | | 2 | | 09-32 | | 3 |
| | 08-35 | | 3 | | 09-32 | | 3 |
| | 08-35 | | 4 | | 09-32 | | 4 |
| | 08-35 | | 5 | | 09-32 | | 4 |
| | 08-35 | | 6 | | 09-33 | | 7 |
| | 08-35 | | 7 | | 09-34 | | 2 |
| | 08-36 | | 7 | | 09-34 | | 3 |
| | 08-36 | | 8 | | 09-34 | | 4 |
| | 08-36 | | 9 | | 09-43 | | |
| | 08-37 | | 10 | | 09-43 | | |

HTTP://WWW.MINNPARBACKHOEPARTS.COM




| Number | Figure | Sequence | Ref. | Number | Figure | Sequence | Ref. |
|---|---|---|---|---|---|---|---|
| NSS | 09-47 | | 1 | REF | 09-10 | | |
| | 09-47 | | 2 | | 09-18 | | |
| | 09-47 | | 7 | | 09-19 | | |
| | 09-47 | | 8 | | 09-26 | | 28 |
| | 09-48 | | 9 | | 09-55 | | |
| | 09-49 | | 12 | | 09-56 | | |
| | 09-52 | | 1B | S109444 | 08-58 | | 15 |
| | 09-55 | | 1 | | 08-65 | | 18 |
| | 09-55 | | 1A | S109445 | 08-58 | | 16 |
| | 09-59 | | 1 | | 08-65 | | 19 |
| | 09-61 | | 19 | S115351 | 05-03 | | 2 |
| | 09-61 | | 21 | S300976 | 06-27 | | 7 |
| | 09-70 | | 15 | S301064 | 06-02 | | 18 |
| P1139855 | 06-28 | | 8 | S301065 | 06-02 | | 15 |
| P2230493 | 06-26 | | 25 | ST205A | 06-17 | | 1 |
| P2745466 | 06-20 | | 21 | | 06-20 | | 6 |
| P2745478 | 06-20 | | 10 | ST264 | 06-18 | | 23 |
| P2930467 | 06-30 | | 3 | T34857 | 04-15 | | 2 |
| P3034505 | 06-27 | | 9 | | | | |
| P3533055 | 06-19 | | 35 | | | | |
| | 06-20 | | 20 | | | | |
| P6427894 | 06-27 | | 16 | | | | |
| R24840 | 08-10 | | 28 | | | | |
| R32119 | 09-24 | | 8 | | | | |
| R46493 | 08-07 | | 7 | | | | |
| R54682 | 09-71 | | 6 | | | | |
| REF | 02-10 | | 11 | | | | |
| | 02-10 | | 12 | | | | |
| | 02-14 | | 15 | | | | |
| | 02-15 | | 4 | | | | |
| | 02-20 | | 6 | | | | |
| | 02-22 | | 5 | | | | |
| | 02-22 | | 6 | | | | |
| | 02-29 | | 7 | | | | |
| | 02-34 | | 12 | | | | |
| | 02-38 | | 10 | | | | |
| | 02-38 | | 4 | | | | |
| | 02-38 | | 7 | | | | |
| | 02-38 | | 8 | | | | |
| | 02-38 | | 9 | | | | |
| | 02-39 | | 5 | | | | |
| | 02-41 | | 3 | | | | |
| | 03-04 | | 5 | | | | |
| | 03-06 | | 10 | | | | |
| | 05-09 | | 2 | | | | |
| | 05-09 | | 5 | | | | |
| | 06-23 | | 3 | | | | |
| | 06-23 | | 3 | | | | |
| | 08-02 | | | | | | |
| | 08-02 | | | | | | |
| | 08-04 | | 1 | | | | |
| | 08-05 | | 1 | | | | |
| | 08-06 | | 1 | | | | |
| | 08-08 | | | | | | |
| | 08-08A | | | | | | |
| | 08-09 | | | | | | |
| | 08-09A | | | | | | |
| | 08-10 | | 1 | | | | |
| | 08-11 | | 1 | | | | |
| | 08-12 | | 1 | | | | |
| | 08-13 | | 1 | | | | |
| | 08-14 | | 1 | | | | |
| | 08-15 | | | | | | |
| | 08-16 | | | | | | |
| | 08-17 | | | | | | |
| | 08-18 | | | | | | |
| | 08-19 | | | | | | |
| | 08-20 | | | | | | |
| | 08-24 | | | | | | |
| | 08-25 | | | | | | |
| | 08-25 | | 16 | | | | |
| | 08-25 | | 21 | | | | |
| | 08-27 | | | | | | |
| | 08-27 | | 4 | | | | |
| | 08-32 | | | | | | |
| | 08-33 | | | | | | |
| | 08-34 | | | | | | |
| | 08-35 | | | | | | |
| | 09-01 | | 28 | | | | |
| | 09-02 | | 40 | | | | |
| | 09-04 | | | | | | |
| | 09-10 | | | | | | |

HTTP://WWW.MINNPARBACKHOEPARTS.COM

# RETROEXCAVADOR DE LA CARGADORA 580M SERIES 2 CATÁLOGO DE PIEZAS

Número de pieza de la publicación: 7-9030LAS




BD04A005

Esta unidad estuvo disponible por primera vez en Febrero 2004.

CONTENIDOS
INFORMACIÓN GENERAL
SECCIÓN 2 – MOTOR
SECCIÓN 3 – SISTEMA DE COMBUSTIBLE
SECCIÓN 4 – SISTEMA ELÉCTRICO
SECCIÓN 5 – ORUGAS / DIRECCIÓN
SECCIÓN 6 – TREN DE FUERZA
SECCIÓN 7 – FRENOS
SECCIÓN 8 – HIDRAULICA
SECCIÓN 9 – BASTIDOR/ACCESORIOS
ÍNDICE

HTTP://WWW.MINNPARBACKHOEPARTS.COM

Issued febrero 2004 (revised November, 2003) • 7-9030LAS • Bur
Copyright © 2004 CNH America LLC. All Rights Reserved.

HTTP://WWW.MINNPARBACKHOEPARTS.COM

# TABLE OF CONTENTS


| | |
|---|---|
| 02-01 | RADIADOR - SOPORTE |
| 02-02 | SISTEMA DE PURGA DE AIRE - SOPORTE |
| 02-03 | CONJUNTO DEL RADIADOR (CON/SIN AIRE ACONICIONADO) |
| 02-04 | FILTRO DE AIRE - PIEZAS DE ENTRADA DE AIRE (SIN TURBOCARGADOR) |
| 02-04A | FILTRO DE AIRE - PIEZAS DE ENTRADA DE AIRE (CON TURBOCARGADOR) |
| 02-05 | FILTRO DE AIRE (SIN TURBOCARGADOR) |
| 02-05A | FILTRO DE AIRE (CON TURBOCARGADOR) |
| 02-06 | SILENCIADOR - SISTEMA DE ESCAPE (CON TURBOCARGADOR) |
| 02-06A | SILENCIADOR, ASPIRADOR - SISTEMA DE ESCAPE |
| 02-06B | SILENCIADOR - SISTEMA DE ESCAPE (SIN TURBOCARGADOR) |
| 02-07 | MOTOR - SOPORTE |
| 02-08 | MOTOR |
| 02-09 | BLOQUE DE CILINDROS |
| 02-10 | BLOQUE DE CILINDROS |
| 02-11 | BOMBA DE ACEITE, BANDEJA |
| 02-12 | BLOQUE DE CILINDROS - CUBIERTAS |
| 02-13 | BLOQUE DE CILINDROS - CUBIERTAS |
| 02-14 | BLOQUE DE CILINDROS - CUBIERTAS |
| 02-15 | RESPIRADERO - MOTOR |
| 02-16 | CULATA DEL CILINDROS |
| 02-17 | CULATA DE CILINDRO |
| 02-18 | CULATA DEL CILINDROS - MECANISMO DE LA VALVULA |
| 02-19 | COLECTOR ESCAPE |
| 02-20 | COLECTOR ESCAPE |
| 02-21 | CIGUENAL |
| 02-22 | PISTONES - VARILLAS CONECTORAS |
| 02-23 | PISTONES - VARILLAS CONECTORAS |
| 02-24 | VOLANTE MOTOR |
| 02-25 | POLEA - CIGUENAL |
| 02-26 | EQUILIBRADOR, ENGRENAJES Y ARBOLES |
| 02-27 | EQUILIBRADOR, ENGRENAJES Y ARBOLES (2830952) |
| 02-28 | EJE DE LEVAS |
| 02-29 | TURBOCOMPRESOR |
| 02-30 | MOTOR, ACEITE |
| 02-31 | BOMBA DE ACEITE - MOTOR |
| 02-32 | FILTRO DE ACEITE - MOTOR |
| 02-33 | TUBERIAS - ACEITE DEL MOTOR |
| 02-34 | FILTRO Y REFRIGERADOR DE ACEITE |
| 02-35 | BOMBA DE AGUA |
| 02-36 | SISTEMA DE REFRIGERACIÓN - MOTOR |
| 02-37 | TERMOSTATO - REFRIGERACION DEL MOTOR |
| 02-38 | BOMBA DE AGUA - MANDO |
| 02-39 | POLEA DEL VENTILADOR |
| 02-40 | TOMA DE FUERZA |
| 02-41 | MOTOR - GANCHO DE ELEVACION |
| 03-01 | CONDUCTOS DE COMBUSTIBLE, DEPÓSITO - FILTRO, COMBUSTIBLE EN LINEA |
| 03-02 | CONTROLES - ACELERADOR, MANUAL |
| 03-03 | CONTROLES - ACELERADOR, PIE |
| 03-04 | BOMBA DE INYECCION |
| 03-05 | SISTEMA DE INYECCION DE COMBUSTIBLE |
| 03-06 | SISTEMA DE INYECCION DE COMBUSTIBLE |

HTTP://WWW.MINNPARBACKHOEPARTS.COM

# TABLE OF CONTENTS


| | |
|---|---|
| 03-07 | SISTEMA DE INYECCION DE COMBUSTIBLE |
| 03-08 | FILTRO COMBUSTIBLE |
| 03-09 | BOMBA DE ALIMENTACION |
| 03-10 | SISTEMA DE INYECCION DE COMBUSTIBLE |
| 03-11 | SISTEMA DE INYECCION DE COMBUSTIBLE |
| 04-01 | MOTOR DE ARRANQUE |
| 04-02 | ALTERNADOR |
| 04-03 | MONTAJE DEL ARRANQUE - MONTAJE DEL ALTERNADOR |
| 04-04 | MAZO DE CABLES, MOTOR - MONTAJE Y CONEXIONES |
| 04-05 | BATERIA CABLES (MODELOS SIN ARRANQUE EN FRÍO) |
| 04-06 | BATERIA, DOBLE - ARRANQUE EN FRÍO |
| 04-06A | CALENTADOR DE REJILLA PARA ARRANQUE EN FRÍO |
| 04-07 | MAZO DE CABLES, CONSOLA FRONTAL - INTERRUPTORES |
| 04-08 | MAZO DE CABLES, CONSOLA FRONTAL - SOPORTE |
| 04-09 | MAZO DE CABLES, CONSOLA LATERAL - INTERRUPTORES |
| 04-10 | PANEL DE INSTRUMENTOS, DELANTERO - CUBIERTAS |
| 04-11 | PANEL DE INSTRUMENTOS, LATERAL - CUBIERTAS (LADO DERECHO) |
| 04-12 | VELOCIMETRO COMB. |
| 04-13 | ELECTRICO - LUCES, TECHO DE LA ROPS |
| 04-14 | ELECTRICO - LUCES, CABINA DE LA ROPS |
| 04-15 | CONJUNTO DE LA LAMPARA (MODELOS CON TECHO ROPS) |
| 04-16 | BOCINA - ALARMA, RETROCESO |
| 04-17 | FARO, GIRATORIO (MODELOS CON CABINA O CON TECHO) |
| 04-18 | ANTENA, RADIO - MAZO DE CABLES, RADIO |
| 04-19 | ELECTRICO SISTEMA - HIDRÁULICO AUXILIAR DE LA RETROEXCAVADORA |
| 04-20 | ELECTRICO SISTEMA - HIDRÁULICO AUXILIAR DE LA RETROEXCAVADORA, CON DE CONTROL PILOTO |
| 05-01 | VOLANTE - COLUMNA |
| 05-02 | HIDRAULICA - DIRECCION |
| 05-03 | TUBO DE LA DIRECCION |
| 05-04 | EJE, DELANTERO (86990837) - SOPORTE |
| 05-05 | EJE, DELANTERO (86990837) - ALOJAMIENTO |
| 05-06 | EJE, DELANTERO (86990837) - ALOJAMIENTO, ARTICULACIÓN GIRATORIA |
| 05-07 | EJE, DELANTERO (86990837) - CILINDRO, DIRECCION |
| 05-08 | EJE, DELANTERO (86990837) - CUBO Y COJINETES |
| 05-09 | NEUMÁTICOS, FRONTALES - NEUMÁTICOS |
| 06-01 | EJE, TRANSMISIÓN DELANTERA - SOPORTE |
| 06-02 | EJE, TRANSMISIÓN DELANTERA - ALOJAMIENTO |
| 06-03 | EJE, TRANSMISIÓN DELANTERA - ALOJAMIENTO, ARTICULACIÓN GIRATORIA |
| 06-04 | EJE, TRANSMISIÓN DELANTERA - CILINDRO, DIRECCION |
| 06-05 | EJE, TRANSMISIÓN DELANTERA - VARILLAS, EJE |
| 06-06 | EJE, TRANSMISIÓN DELANTERA - PLANETARIO |
| 06-07 | EJE, TRANSMISIÓN DELANTERA - DIFERENCIAL |
| 06-08 | EJE, TRANSMISIÓN DELANTERA - ANILLO Y PIÑÓN |
| 06-09 | EJE DE TRANSMISIÓN, EJE DELANTERO |
| 06-10 | SISTEMA DE REFRIGERACIÓN - TRANSMISION |
| 06-11 | TRANSMISION - SOPORTE |
| 06-12 | CONJUNTO DE LA TRANSMISION - FILTRO, ACEITE |
| 06-13 | CONJUNTO DE LA TRANSMISION (2WD) - ALOJAMIENTO |
| 06-14 | CONJUNTO DE LA TRANSMISION (4WD) - ALOJAMIENTO |
| 06-15 | CONJUNTO DE LA TRANSMISION - BOMBA, ACEITE |

HTTP://WWW.MINNPARBACKHOEPARTS.COM

# TABLE OF CONTENTS


| | |
|---|---|
| 06-16 | CONJUNTO DE LA TRANSMISION - MECANISMO DE CAMBIO |
| 06-17 | CONJUNTO DE LA TRANSMISION - EJE, RUEDA GUÍA Y PRIMARIA |
| 06-18 | CONJUNTO DE LA TRANSMISION - EJE, ENTRADA |
| 06-19 | CONJUNTO DE LA TRANSMISION - EJE, SECUNDARIO |
| 06-20 | CONJUNTO DE LA TRANSMISION (4WD) - EJE, SALIDA |
| 06-21 | CONJUNTO DE LA TRANSMISION - VALVULA, CONTROL |
| 06-22 | CONJUNTO DE LA TRANSMISION (4WD) - VÁLVULA, SOLENOIDE |
| 06-23 | RUEDAS, PARTE TRASERA - NEUMÁTICOS |
| 06-24 | EJE, TRANSMISIÓN TRASERA - SOPORTE |
| 06-25 | EJE, TRASERO - BLOQUEO DEL DIFERENCIAL |
| 06-26 | EJE, TRANSMISIÓN TRASERA - ALOJAMIENTO |
| 06-27 | EJE, TRANSMISIÓN TRASERA - DIFERENCIAL |
| 06-28 | EJE, TRANSMISIÓN TRASERA - ANILLO Y PIÑÓN |
| 06-29 | EJE, TRANSMISIÓN TRASERA - BLOQUEO DEL DIFERENCIAL |
| 06-30 | EJE, TRANSMISIÓN TRASERA - PLANETARIO |
| 06-31 | EJE DE TRANSMISIÓN, EJE TRASERO |
| 07-01 | EJE, TRANSMISIÓN TRASERA - FRENO, DIFERENCIAL |
| 07-02 | EJE, TRANSMISIÓN TRASERA - FRENO, ESTACIONAMIENTO |
| 07-03 | FRENO - PEDALES |
| 07-04 | HIDRAULICA - CILINDRO  PRINCIPAL DEL FRENO |
| 07-05 | CONJUNTO DE CILINDRO - FRENO PRINCIPAL |
| 07-06 | CONTROLES - FRENO, ESTACIONAMIENTO |
| 08-01 | HIDRAULICA - BOMBA, FILTRO Y VÁLVULA DE LA CARGADORA |
| 08-02 | HIDRAULICA - VÁLVULA DE LA CARGADORA AL FILTRO A LA VÁLVULA DE LA RETROEXCAVADORA |
| 08-03 | HIDRAULICA - REFRIGERADOR, LÍNEAS DE RETORNO Y FILTRO |
| 08-04 | HIDRAULICA - CILINDRO, ELEVACIÓN DE LA CARGADORA |
| 08-05 | HIDRAULICA - CILINDRO, CUCHARÓN DE LA CARGADORA |
| 08-06 | HIDRAULICA - CILINDRO, ALMEJA DE LA CARGADORA |
| 08-07 | HIDRAULICA - CILINDRO, ALMEJA DE LA CARGADORA |
| 08-08 | HIDRAULICA - CILINDRO, ESTABILIZADOR DE LA RETROEXCAVADORA  (SIN DE CONTROL PILOTO) |
| 08-08A | HIDRAULICA - CILINDRO, ESTABILIZADOR DE LA RETROEXCAVADORA  (CON DE CONTROL PILOTO) |
| 08-09 | HIDRAULICA - CILINDRO, BALANCÍN DE LA RETROEXCAVADORA  (SIN DE CONTROL PILOTO) |
| 08-09A | HIDRAULICA - CILINDRO, BALANCÍN DE LA RETROEXCAVADORA  (CON DE CONTROL PILOTO) |
| 08-10 | HIDRAULICA - CILINDRO, AGUILÓN DE LA RETROEXCAVADORA |
| 08-11 | HIDRAULICA - CILINDRO, PALA DE LA RETROEXCAVADORA |
| 08-12 | HIDRAULICA - CILINDRO, CUCHARÓN DE LA RETROEXCAVADORA (MODELOS SIN PALA EXTENDIBLE) |
| 08-13 | HIDRAULICA - CILINDRO, CUCHARÓN DE LA RETROEXCAVADORA (MODELOS CON PALA EXTENDIBLE) |
| 08-14 | HIDRAULICA - CILINDRO, PALA EXTENSIBLE DE LA RETROEXCAVADORA |
| 08-15 | HIDRAULICA - VÁLVULA, CONTROL PILOTO DE PALANCA DE CONTROL (6 SPOOL, W/O EXT DIPPER, W/O AUX HYDS) |
| 08-16 | HIDRAULICA - VÁLVULA, CONTROL PILOTO DE PALANCA DE CONTROL (6 SPOOL, W/O EXT DIPPER, W/ AUX HYDS) |
| 08-17 | HIDRAULICA - VÁLVULA, CONTROL PILOTO DE PALANCA DE CONTROL (7 SPOOL, W/ EXT DIPPER, W/O AUX HYDS) |

HTTP://WWW.MINNPARBACKHOEPARTS.COM

# TABLE OF CONTENTS


| | |
|---|---|
| 08-18 | HIDRAULICA - VÁLVULA, CONTROL PILOTO DE PALANCA DE CONTROL (7 SPOOL, W/ EXT DIPPER, W/ AUX HYDS) |
| 08-19 | HIDRAULICA - VÁLVULA, CONTROL PILOTO DE PALANCA DE CONTROL (7 SPOOL, W/O EXT DIPPER, W/ AUX HYDS) |
| 08-20 | HIDRAULICA - VÁLVULA, CONTROL PILOTO DE PALANCA DE CONTROL (8 SPOOL, W/ EXT DIPPER, W/ AUX HYDS) |
| 08-21 | HIDRAULICA - CONTROL PILOTO DE PALANCA DE CONTROL |
| 08-22 | HIDRAULICA - CONTROL PILOTO |
| 08-23 | HIDRAULICA - AUXILIAR DE LA RETROEXCAVADORA |
| 08-24 | HIDRAULICA - AUXILIAR DE LA RETROEXCAVADORA |
| 08-25 | HIDRAULICA - DISPOSITIVO ANTICABECEO |
| 08-26 | HIDRAULICA - ACOPLADOR, HERRAMIENTA RÁPIDA DE LA CARGADORA |
| 08-27 | HIDRAULICA - ACOPLADOR, HERRAMIENTA RÁPIDA DE LA CARGADORA |
| 08-28 | CONJUNTO DE LA VÁLVULA DEL ACOPLADOR - HERRAMIENTA RÁPIDA DE LA CARGADORA |
| 08-29 | BOMBA, EQUIPAMIENTO HIDRÁULICO |
| 08-30 | CONJUNTO DE LA VALVULA - CONTROL DE LA CARGADORA, DOS CORREDERAS |
| 08-31 | CONJUNTO DE LA VALVULA - CONTROL DE LA CARGADORA, TRES CORREDERAS |
| 08-32 | CONJUNTO DE LA VALVULA - CONTROL DE LA RETROEXCAVADORA, 6 BOBINAS (SIN PALA EXTENSIBLE Y SIN SISTEM) |
| 08-33 | CONJUNTO DE LA VALVULA - CONTROL DE LA RETROEXCAVADORA, 7 BOBINAS (SIN PALA EXTENSIBLE Y CON SISTEM) |
| 08-34 | CONJUNTO DE LA VALVULA - CONTROL DE LA RETROEXCAVADORA, 7 BOBINAS (CON PALA EXTENSIBLE Y SIN SISTEM) |
| 08-35 | CONJUNTO DE LA VALVULA - CONTROL DE LA RETROEXCAVADORA, 8 BOBINAS (CON PALA EXTENSIBLE Y CON SISTEM) |
| 08-36 | CONJUNTO DE LA VALVULA - CONTROL DE LA RETROEXCAVADORA, 6 BOBINAS |
| 08-37 | CONJUNTO DE LA VALVULA - CONTROL DE LA RETROEXCAVADORA, 7 BOBINAS |
| 08-38 | CONJUNTO DE LA VALVULA - CONTROL DE LA RETROEXCAVADORA, 7 BOBINAS |
| 08-39 | CONJUNTO DE LA VALVULA - CONTROL DE LA RETROEXCAVADORA, 8 BOBINAS |
| 08-40 | SECCION DE LA VALVULA - DE LA RETROEXCAVADORA (CON DE CONTROL PILOTO) |
| 08-41 | SECCION DE LA VALVULA - AGUILON DE LA RETROEXCAVADORA (CON DE CONTROL PILOTO) |
| 08-42 | SECCION DE LA VALVULA - ESTABILIZADOR DE LA RETROEXCAVADORA (CON DE CONTROL PILOTO) |
| 08-43 | SECCION DE LA VALVULA - BRAZO DE LA RETROEXCAVADORA (CON DE CONTROL PILOTO) |
| 08-44 | SECCION DE LA VALVULA - CUCHARON DE LA RETROEXCAVADORA (CON DE CONTROL PILOTO) |
| 08-45 | SECCION DE LA VALVULA - PALA EXTENSIBLE (CON DE CONTROL PILOTO) |
| 08-46 | SECCION DE LA VALVULA - OPCIONES, SISTEMA HIDRÁULICO AUXILIAR (CON DE CONTROL PILOTO) |
| 08-47 | VALVULA DE REDUCCION DEPRESION (2 SPOOL) (CON DE CONTROL PILOTO) |
| 08-48 | VALVULA DE REDUCCION DEPRESION (3 SPOOL) (CON DE CONTROL PILOTO) |
| 08-49 | VALVULA DE REDUCCION DEPRESION (4 SPOOL) (CON DE CONTROL PILOTO) |
| 08-50 | VÁLVULA, PALANCA DE CONTROL ( CONTROL PILOTO) (IZQUIERDO) BOCINA |
| 08-51 | VÁLVULA, PALANCA DE CONTROL ( CONTROL PILOTO) (IZQUIERDO) BOCINA & UNI-DIR |
| 08-52 | VÁLVULA, PALANCA DE CONTROL ( CONTROL PILOTO) (IZQUIERDO) BOCINA & BI-DIR |

HTTP://WWW.MINNPARBACKHOEPARTS.COM

# TABLE OF CONTENTS


| | |
|---|---|
| 08-53 | VÁLVULA, PALANCA DE CONTROL ( CONTROL PILOTO) (DERECHA/O) SIN PALA EXTENDIBLE |
| 08-54 | VÁLVULA, PALANCA DE CONTROL ( CONTROL PILOTO) (DERECHA/O) CON PALA EXTENDIBLE |
| 08-55 | CONJUNTO DE LA VALVULA - ALMOHADILLA DE OSCILACIÓN |
| 08-56 | ACUMULADOR CONJ. - DISPOSITIVO ANTICABECEO |
| 08-57 | FILTRO DE ACEITE |
| 08-58 | CONJUNTO DE CILINDRO - ELEVADOR DE LA CARGADORA |
| 08-59 | CONJUNTO DE CILINDRO - CUCHARON DE LA CARGADORA |
| 08-60 | CONJUNTO DE CILINDRO - ALMEJA DE LA CARGADORA |
| 08-61 | CONJUNTO DE CILINDRO - ESTABILIZADOR DE LA RETROEXCAVADORA |
| 08-62 | CONJUNTO DE CILINDRO - DE LA RETROEXCAVADORA |
| 08-63 | CONJUNTO DE CILINDRO - AGUILON DE LA RETROEXCAVADORA |
| 08-64 | CONJUNTO DE CILINDRO - BRAZO DE LA RETROEXCAVADORA |
| 08-65 | CONJUNTO DE CILINDRO - CUCHARON DE LA RETROEXCAVADORA |
| 08-66 | CONJUNTO DE CILINDRO - PALA EXTENSIBLE DE LA RETROEXCAVADORA |
| 09-01 | CONTROLES - ELEVACIÓN DE LA CARGADORA Y CUCHARÓN |
| 09-02 | CONTROLES - ALMEJA DE LA CARGADORA |
| 09-03 | CONTROLES - CARGADORA AUTO-NIVELADORA |
| 09-04 | MARCO - ELEVADOR DE LA CARGADORA |
| 09-05 | MARCO - VARILLAJE DE LA CARGADORA |
| 09-06 | CUCHARÓN, BORDE ANCHO DE LA CARGADORA (82 IN) |
| 09-07 | CUCHARÓN, BORDE ANCHO DE LA CARGADORA (93 IN) |
| 09-08 | CUCHARÓN, ALMEJA DE LA CARGADORA |
| 09-09 | PROTECTOR - VÁLVULA, CARGADORA |
| 09-10 | ACOPLADOR RÁPIDO, HERRAMIENTA |
| 09-11 | CUBIERTAS - TORRE DE CONTROL DE LA RETROEXCAVADORA, SIN DE CONTROL PILOTO |
| 09-12 | APOYO DE LA TORRE DE CONTROL DE LA RETROEXCAVADORA Y JUNTAS, SIN DE CONTROL PILOTO |
| 09-13 | TORRE DE CONTROL DE LA RETROEXCAVADORA SOPORTE,  CON DE CONTROL PILOTO |
| 09-14 | TORRE DE CONTROL DE LA RETROEXCAVADORA SOPORTE DE JUNTA,  CON DE CONTROL PILOTO |
| 09-15 | TORRE DE CONTROL DE LA RETROEXCAVADORA PALANCA (TRABA DEL AGUILÓN), CON DE CONTROL PILOTO |
| 09-16 | CONTROLES - RETROEXCAVADORA, CON PEDAL DE OSCILACIÓN (MODELOS SIN PALA EXTENDIBLE) |
| 09-17 | CONTROLES - RETROEXCAVADORA, CON PEDAL DE OSCILACIÓN (MODELOS CON PALA EXTENDIBLE) |
| 09-18 | CONTROLES - RETROEXCAVADORA, CON OSCILACIÓN MANUAL (MODELOS SIN PALA EXTENDIBLE) |
| 09-19 | CONTROLES - RETROEXCAVADORA, CON OSCILACIÓN MANUAL (MODELOS SIN PALA EXTENDIBLE) |
| 09-20 | CONTROLES - RETROEXCAVADORA, CON OSCILACIÓN MANUAL (MODELOS CON PALA EXTENDIBLE) |
| 09-21 | CONTROLES - SISTEMA HIDRÁULICO AUXILIAR DE LA RETROEXCAVADORA, SIN DE CONTROL PILOTO |
| 09-22 | RETROEXCAVADORA - ESTABILIZADORES, PLACAS Y ALMOHADILLAS |
| 09-23 | RETROEXCAVADORA - TORRE DE OSCILACIÓN Y CILINDROS DE OSCILACIÓN |
| 09-24 | RETROEXCAVADORA - AGUILÓN Y TORRE DE OSCILACIÓN |

HTTP://WWW.MINNPARBACKHOEPARTS.COM

# TABLE OF CONTENTS


| | |
|---|---|
| 09-25 | TRABA DEL AGUILÓN (SIN DE CONTROL PILOTO) |
| 09-25A | TRABA DEL AGUILÓN (CON DE CONTROL PILOTO) |
| 09-26 | RETROEXCAVADORA - PALA Y CUCHARÓN |
| 09-27 | RETROEXCAVADORA - PALA, EXTENSIBLE |
| 09-28 | CUCHARÓN, RETROEXCAVADORA UNIVERSAL (305 MM (12 INCH) WIDE) |
| 09-29 | CUCHARÓN, RETROEXCAVADORA UNIVERSAL (406 MM (16 INCH) WIDE) |
| 09-30 | CUCHARÓN, RETROEXCAVADORA UNIVERSAL (457 MM (18 INCH) WIDE) |
| 09-31 | CUCHARÓN, RETROEXCAVADORA (457 MM (18 INCH) WIDE) |
| 09-32 | CUCHARÓN, RETROEXCAVADORA UNIVERSAL (610 MM (24 INCH) / 762 MM (30 INCH) WIDE) |
| 09-33 | CUCHARÓN, RETROEXCAVADORA (610 MM (24 INCH) WIDE) |
| 09-34 | CUCHARÓN, RETROEXCAVADORA UNIVERSAL (914 MM (36 INCH) WIDE) |
| 09-35 | CUCHARÓN, RETROEXCAVADORA UNIVERSAL (610 MM (24 INCH) WIDE) |
| 09-36 | CONTRAPESO, DELANTERO |
| 09-37 | CHASIS / SOPORTES, RECEPTÁCULO - PANTALLA, ENTRADA DE AIRE |
| 09-38 | DEPÓSITO, ACEITE - CAJA, BATERÍA Y HERRAMIENTA |
| 09-39 | REVESTIMIENTO DEL RADIADOR |
| 09-40 | CAPO - PANELES, LATERALES |
| 09-41 | CAPO - PARRILLA |
| 09-42 | PLACAS, SUELO - ALFOMBRILLAS |
| 09-43 | CUBIERTA DEL GUARDABARROS, LADO IZQUIERDO - PANEL, CIERRE TRASERO (BANDEJA DE ALMACENAMIENTO CON SUJ |
| 09-44 | EXTENSIONES DEL GUARDABARROS |
| 09-45 | GUARDABARROS |
| 09-46 | ASIENTO - SOPORTE |
| 09-47 | CONJUNTO DEL ASIENTO, ESTÁNDAR |
| 09-48 | SOPORTE DEL ASIENTO Y PEDESTAL, ESTÁNDAR |
| 09-49 | CONJUNTO DEL ASIENTO, SUSPENSION MECANICA |
| 09-50 | PEDESTAL DEL ASIENTO Y SUSPENSIÓN, SUSPENSIÓN MECÁNICA |
| 09-51 | CONJUNTO DEL ASIENTO, SUSPENSION DE AIRE |
| 09-52 | PEDESTAL DEL ASIENTO Y SUSPENSIÓN, SUSPENSIÓN DE AIRE |
| 09-53 | CABINA - CRISTAL, ESPEJO Y MANTENER ABIERTO |
| 09-54 | CABINA - CHASIS Y CUBIERTAS |
| 09-55 | CABINA - PUERTAS |
| 09-56 | CABINA - MONTAJE DE LA PUERTA |
| 09-57 | CABINA - VENTANILLA, DERECHA, PARA MARCOS DE CABINA DE PUERTA ÚNICA |
| 09-58 | CABINA - VENTANA, TRASERA |
| 09-59 | CABINA - ARANDELA, PARABRISAS |
| 09-60 | CABINA - LIMPIA PARABRISAS |
| 09-61 | REVESTIMIENTO DE LA CABINA - FILTRO, REJILLAS, LÁMPARA DEL TECHO |
| 09-62 | CABINA - FILTRO, AIRE |
| 09-63 | CABINA - ALOJAMIENTO DEL SOPLADOR, CONDUCTOS DE VENTILACIÓN, TUBOS DE DRENADO |
| 09-64 | CABINA - CALENTADOR |
| 09-65 | CABINA - TUBOS DE AIRE ACONDICIONADO, NÚCLEO DEL EVAPORADOR |
| 09-66 | CABINA - AIRE ACONDICIONADOR, CONDENSADOR, RECIBIDOR-SECADOR |
| 09-67 | CABINA - COMPRESOR DEL AIRE ACONDICIONADO |
| 09-68 | TECHO Y ROPS - CHASIS, CUBIERTAS, ESPEJOS, VISOR |
| 09-69 | TECHO Y ROPS - VIDRIO |
| 09-70 | TECHO Y ROPS - LIMPIAPARABRISAS, DELANTERO Y LAVAPARABRISAS |
| 09-71 | ESPEJO, VISTA TRASERA - SOPORTE, MODELLE MIT KABINE |

HTTP://WWW.MINNPARBACKHOEPARTS.COM

# TABLE OF CONTENTS


| | |
|---|---|
| 09-72 | EMBLEMA DE VEHICULO LENTO |
| 09-73 | CALCOMANIAS |
| 09-74 | CALCOMANIAS |
| 09-75 | CALCOMANIAS |
| 09-76 | CALCOMANIAS - INGLES |
| 09-77 | CALCOMANIAS - CASTELLANO PARA LATINOAMERICA |
| 09-78 | CALCOMANIAS - FRANCES CANADIENSE |
| 09-79 | CALCOMANIAS - INGLES |
| 09-80 | CALCOMANIAS - CASTELLANO PARA LATINOAMERICA |
| 09-81 | CALCOMANIAS - FRANCES CANADIENSE |

HTTP://WWW.MINNPARBACKHOEPARTS.COM

## NOTAS

HTTP://WWW.MINNPARBACKHOEPARTS.COM

# INFORMACIÓN GENERAL

## NOTA DE PATENTE

El contenido de este manual es propiedad de esta compañía. La reproducción o el uso de cualquier parte para cualquier otro propósito que no sea el funcionamiento y mantenimiento de nuestro equipo está permitido solamente si se autoriza expresamente por escrito.

Pueden obtenerse copias adicionales en su concesionario. Dirigir sus pedidos a su concesionario y hacer referencia al número de publicación que aparece en la parte inferior de la contraportada o en la cubierta de su manual.

## POLÍTICA DE LA COMPAÑÍA

La política de la compañía, de mejora continua, se reserva el derecho a cambiar los precios y a realizar cambios en el diseño y las especificaciones en cualquier momento sin previo aviso ni obligación de modificar las unidades fabricadas con anterioridad.

Todos los datos que se dan en este libro están sujetos a variaciones de producción. Las dimensiones y los pesos son aproximados solamente y las ilustraciones no muestran necesariamente las máquinas en condiciones estándar. Para información exacta sobre cualquier máquina en particular, ponerse en contacto con el concesionario.

## PIEZAS Y ACCESORIOS

Se han diseñado piezas y accesorios específicamente para estas máquinas.

Quisiéramos señalar que la compañía NO ha examinado y aprobado otras piezas y accesorios “no genuinos”. La instalación y/o el uso de tales productos puede tener efectos negativos en las características de diseño de su máquina y, por lo tanto, afectar su seguridad. La compañía no se responsabiliza por los daños causados por el uso de piezas y accesorios “no genuinos”.

## MEJORAS

Estamos continuamente intentando mejorar nuestros productos. Se reserva el derecho a mejorar el diseño o realizar cambios cuando resulte práctico y posible llevarlo a cabo, sin incurrir por ello en la obligación de realizar estos cambios o actualizar las unidades vendidas previamente.

## CÓDIGOS DE LOS MODELOS

El rango de las máquinas que se incluyen puede que no esté disponible en todos los países o mercados. Por lo tanto, para obtener la información más actualizada consultar con su concesionario local.

## AYUDA AL PROPIETARIO

Deseamos que esté completamente satisfecho con su inversión. Normalmente, cualquier problema con el equipo, será resuelto por el departamento de mantenimiento del concesionario. Sin embargo, pueden producirse malentendidos. Si el problema no ha sido resuelto a su satisfacción, le sugerimos lo siguiente:

1. Hablar con el propietario o gerente general del concesionario, explicar el problema y solicitar su ayuda. Cuando se necesite de ayuda especial, el concesionario tiene acceso directo con nuestras oficinas.
2. Proporcione al concesionario la siguiente información:
   - Su nombre, dirección y número de teléfono
   - Modelo de la máquina y número de serie
   - Nombre del concesionario y dirección
   - Fecha de compra de la máquina y tiempo de uso
   - Naturaleza del problema

Recuerde que el problema probablemente será resuelto en el concesionario, utilizando las instalaciones, equipo y personal del mismo. Así que es importante que el primer contacto sea con el concesionario.

## PIEZAS DE REPUESTO

Para mantener la eficacia operativa, usar piezas de repuesto originales.

Al pedir piezas, proporcionar la siguiente información:

- Modelo de la máquina
- Números de serie de la máquina y el motor
- Número de pieza del catálogo de piezas

HTTP://WWW.MINNPARBACKHOEPARTS.COM

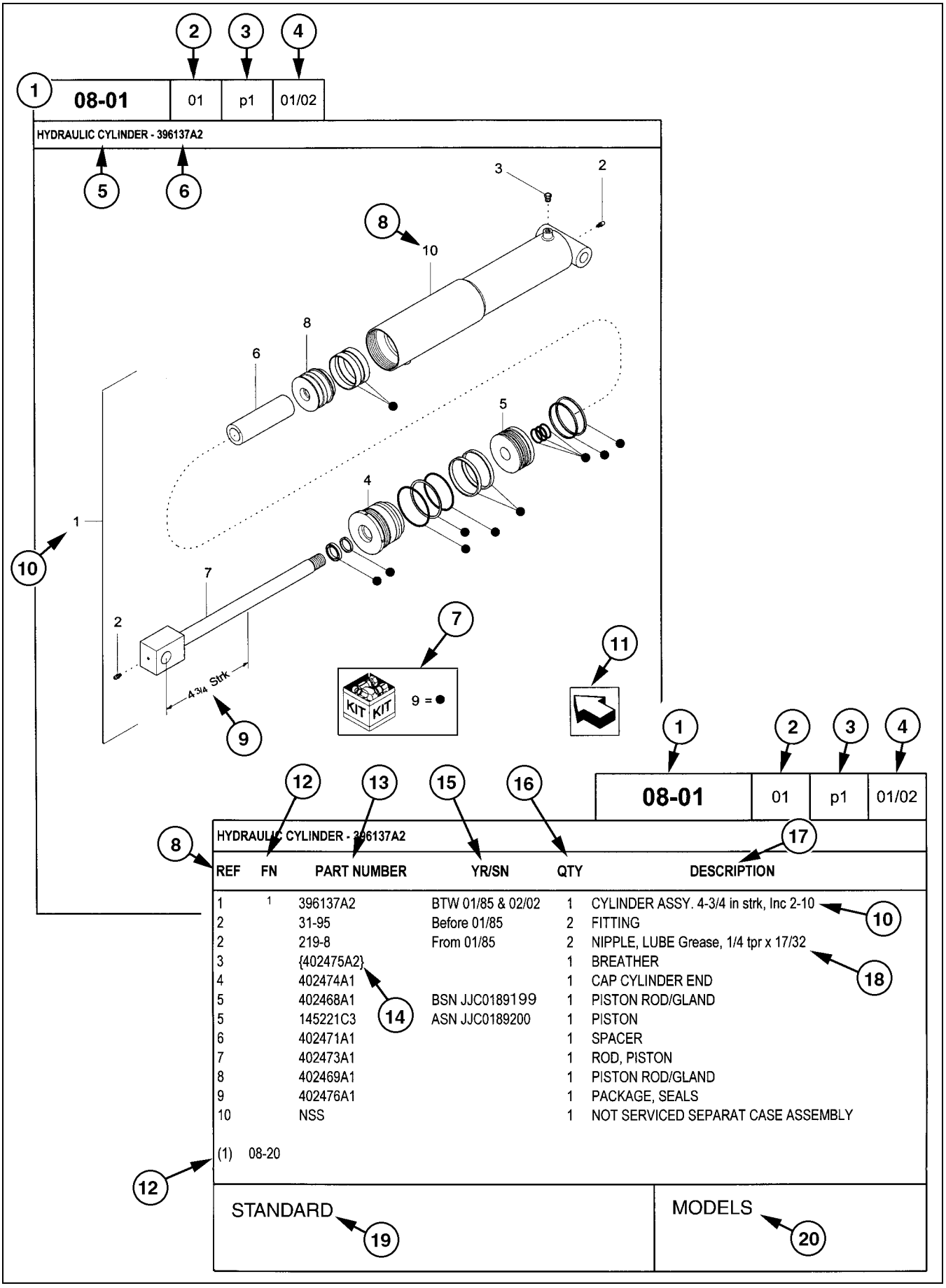


| REF | FN | PART NUMBER | YR/SN | QTY | DESCRIPTION |
|---|---|---|---|---|---|
| 1 | 1 | 396137A2 | BTW 01/85 & 02/02 | 1 | CYLINDER ASSY. 4-3/4 in strk, Inc 2-10 |
| 2 | | 31-95 | Before 01/85 | 2 | FITTING |
| 2 | | 219-8 | From 01/85 | 2 | NIPPLE, LUBE Grease, 1/4 tpr x 17/32 |
| 3 | | {402475A2} | | 1 | BREATHER |
| 4 | | 402474A1 | | 1 | CAP CYLINDER END |
| 5 | | 402468A1 | BSN JJC0189199 | 1 | PISTON ROD/GLAND |
| 5 | | 145221C3 | ASN JJC0189200 | 1 | PISTON |
| 6 | | 402471A1 | | 1 | SPACER |
| 7 | | 402473A1 | | 1 | ROD, PISTON |
| 8 | | 402469A1 | | 1 | PISTON ROD/GLAND |
| 9 | | 402476A1 | | 1 | PACKAGE, SEALS |
| 10 | | NSS | | 1 | NOT SERVICED SEPARAT CASE ASSEMBLY |

(1) 08-20

STANDARD

MODELS

HTTP://WWW.MINNPARBACKHOEPARTS.COM

# CÓMO USAR EL CATÁLOGO DE PIEZAS

1. Número de figura
2. Código de secuencia con número de figura
3. Número de página en el código de secuencia
4. Fecha de impresión (mes/año)
5. Descripción de la figura
6. Información general sobre la figura
7. Piezas suministradas en los juegos de reparación según la referencia del símbolo
8. Leyenda de referencia del número de pieza (REF)
9. Especificaciones técnicas referentes a la pieza indicada
10. Leyenda de figura que incluye artículos en paréntesis, los artículos incluidos pueden encontrarse también en el área de descripción adicional
11. Orientación – La flecha muestra la parte delantera de la máquina.
12. Pie de página – Información adicional referente al número de pieza. En este ejemplo, 08-20 equivale a otra figura en la que se muestra esta pieza.
13. Número de pieza
    NSS = Piezas que no reciben mantenimiento por separado (piezas sin mantenimiento)
    Números en paréntesis = No disponibles como piezas de mantenimiento en este mercado
14. No disponibles como piezas de mantenimiento en este mercado
15. YR/SN
    Año
    Antes de 01/85 = Pieza en fabricación en enero de 1985 y anteriormente
    Desde 01/85 = Pieza en fabricación desde enero de 1985 y posteriormente
    BTW 01/85 & 02/02 = Pieza válida para máquinas fabricadas entre enero de 1985 y febrero de 2002
    Número de serie (N.I.P.)
    BSN JJC0268800 = Pieza válida para el número de serie JJC0268800 y anteriores
    ASN JJC0268800 = Pieza válida para el número de serie JJC0268800 y posteriores
    BTW JJC0178000 & JJC0179000 = Pieza válida para los números de serie entre JJC0178000 y JJC0179000
16. Cantidad total de piezas referidas en la página. La cantidad puede reemplazarse por las siguientes instrucciones:
    SR = Según se requiera
    X = Según se requiera
17. Descripción de la pieza
18. Información adicional sobre la pieza para ayudar a confirmar la identificación
19. Notas de figura
20. Número(s) de modelo

## LADO DERECHO E IZQUIERDO

La referencia al lado derecho e izquierdo en este catálogo se identifica con el operador de pie en la parte trasera de la unidad básica (sin accesorio trasero), mirando hacia el frente de la máquina (con desplazamiento de avance normal).

Para las páginas que cubren los accesorios de la máquina, el lado derecho e izquierdo se definen con el operador sentado en la posición correcta de funcionamiento del accesorio.

## DIMENSIONES

Las dimensiones métricas e imperiales de la tornillería no muestran el número de medida de roscas anchas estándares. El número después de un punto y coma (;) es la clase o el grado de la tornillería. Una coma (,) representa el punto decimal (.) usando en dimensiones imperiales (EE.UU.).

HTTP://WWW.MINNPARBACKHOEPARTS.COM

# EXPLICACIÓN DE LAS ABREVIATURAS

| | |
|---|---|
| AC | corriente alterna |
| adj | ajustable |
| amp | amperios |
| AR | según sea necesario |
| ASN | número de serie y posterior<br>NIP y posterior |

| | |
|---|---|
| blkhd | mamparo |
| br | sucursal |
| BSN | antes del número de serie<br>antes del NIP |
| BTW | entre |

| | |
|---|---|
| cc | centímetros cúbicos |
| cl | clase |
| cmprsn | compresión |
| cn pt | punto de cono |
| cp pt | punto de copa |
| CRS | acero de aleación de cromo |
| CST | acero al carbono |
| cu yd | yarda cúbica |

| | |
|---|---|
| DC | corriente continua |
| deg | grados |
| dg pt | punto de garra |
| dia | diámetro |
| dr type | tipo de transmisión |

| | |
|---|---|
| fc | superficie |
| fc sl | superficie de sellado |
| fem | hembra |
| fem PT | rosca hembra de tubería |
| fl | ensanche |
| flat pt | punto plano |
| ft | pies (o pie) |

| | |
|---|---|
| ga | calibre |
| gal | galón o galones |
| gpm | galones por minuto |
| gr | grado |

| | |
|---|---|
| hd | cabeza |
| hdg pt | punto de media garra |
| hp | potencia en C.V. |
| ID | diámetro interior |
| in | pulgada o pulgadas |
| Incl. | incluye |
| inv fl | ensanche invertido |

| | |
|---|---|
| K | kilo |
| kg | kilogramo |
| km/h | kilómetros por hora |

| | |
|---|---|
| L | litro |
| lb | libras |
| lb-ft | libra pie |
| lg | largo |
| LH | lado izquierdo |
| LH thd | rosca izquierda |

| | |
|---|---|
| M | (prefijo) tamaño de rosca en métrico |
| m | metro |
| ml | milímetro |
| mm | milímetros |

| | |
|---|---|
| NF | National Fine |
| No. | número |
| NPT | National Pipe Thread |
| NS | National Super Fine |

| | |
|---|---|
| OD | diámetro exterior |
| ohm | unidad eléctrica de resistencia |
| Or | junta tórica |
| ORB | refuerzo de junta tórica |
| ORFS | superficie de sellado de junta tórica |
| ov cntr | sobre el centro |
| ov pt | punto oval |
| oz | onza |

| | |
|---|---|
| P | pitch |
| psi | libras por pulgada cuadrada |
| pt | pinta |
| PT | rosca de la tubería |

| | |
|---|---|
| rd | redondo/a |
| rd holes | agujeros redondos |
| RH | lado derecho |
| RH thd | rosca derecha |
| rpm | revoluciones por minuto |

| | |
|---|---|
| sl | autobloqueante |
| sq | cuadrado/a |
| SST | acero inoxidable |
| st | autorroscante |
| strk | carrera |
| sw | balancín |

| | |
|---|---|
| T | dientes |
| thk | grueso/a |
| tpr | ahusado/a |
| tube OD | diámetro exterior del tubo |

| | |
|---|---|
| V | voltio o voltios |
| W | vatio o vatios |
| X | según sea necesario |
| yd | yardas |

HTTP://WWW.MINNPARBACKHOEPARTS.COM

# SECTION INDEX


| | |
|---|---|
| 02-01 | RADIADOR - SOPORTE |
| 02-02 | SISTEMA DE PURGA DE AIRE - SOPORTE |
| 02-03 | CONJUNTO DEL RADIADOR (CON/SIN AIRE ACONICIONADO) |
| 02-04 | FILTRO DE AIRE - PIEZAS DE ENTRADA DE AIRE (SIN TURBOCARGADOR) |
| 02-04A | FILTRO DE AIRE - PIEZAS DE ENTRADA DE AIRE (CON TURBOCARGADOR) |
| 02-05 | FILTRO DE AIRE (SIN TURBOCARGADOR) |
| 02-05A | FILTRO DE AIRE (CON TURBOCARGADOR) |
| 02-06 | SILENCIADOR - SISTEMA DE ESCAPE (CON TURBOCARGADOR) |
| 02-06A | SILENCIADOR, ASPIRADOR - SISTEMA DE ESCAPE |
| 02-06B | SILENCIADOR - SISTEMA DE ESCAPE (SIN TURBOCARGADOR) |
| 02-07 | MOTOR - SOPORTE |
| 02-08 | MOTOR |
| 02-09 | BLOQUE DE CILINDROS |
| 02-10 | BLOQUE DE CILINDROS |
| 02-11 | BOMBA DE ACEITE, BANDEJA |
| 02-12 | BLOQUE DE CILINDROS - CUBIERTAS |
| 02-13 | BLOQUE DE CILINDROS - CUBIERTAS |
| 02-14 | BLOQUE DE CILINDROS - CUBIERTAS |
| 02-15 | RESPIRADERO - MOTOR |
| 02-16 | CULATA DEL CILINDROS |
| 02-17 | CULATA DE CILINDRO |
| 02-18 | CULATA DEL CILINDROS - MECANISMO DE LA VALVULA |
| 02-19 | COLECTOR ESCAPE |
| 02-20 | COLECTOR ESCAPE |
| 02-21 | CIGUENAL |
| 02-22 | PISTONES - VARILLAS CONECTORAS |
| 02-23 | PISTONES - VARILLAS CONECTORAS |
| 02-24 | VOLANTE MOTOR |
| 02-25 | POLEA - CIGUENAL |
| 02-26 | EQUILIBRADOR, ENGRENAJES Y ARBOLES |
| 02-27 | EQUILIBRADOR, ENGRENAJES Y ARBOLES (2830952) |
| 02-28 | EJE DE LEVAS |
| 02-29 | TURBOCOMPRESOR |
| 02-30 | MOTOR, ACEITE |
| 02-31 | BOMBA DE ACEITE - MOTOR |
| 02-32 | FILTRO DE ACEITE - MOTOR |
| 02-33 | TUBERIAS - ACEITE DEL MOTOR |
| 02-34 | FILTRO Y REFRIGERADOR DE ACEITE |
| 02-35 | BOMBA DE AGUA |
| 02-36 | SISTEMA DE REFRIGERACIÓN - MOTOR |
| 02-37 | TERMOSTATO - REFRIGERACION DEL MOTOR |
| 02-38 | BOMBA DE AGUA - MANDO |
| 02-39 | POLEA DEL VENTILADOR |
| 02-40 | TOMA DE FUERZA |
| 02-41 | MOTOR - GANCHO DE ELEVACION |

HTTP://WWW.MINNPARBACKHOEPARTS.COM

| 02-01 | | p1 | 10/03 |
|---|---|---|---|

RADIADOR - SOPORTE

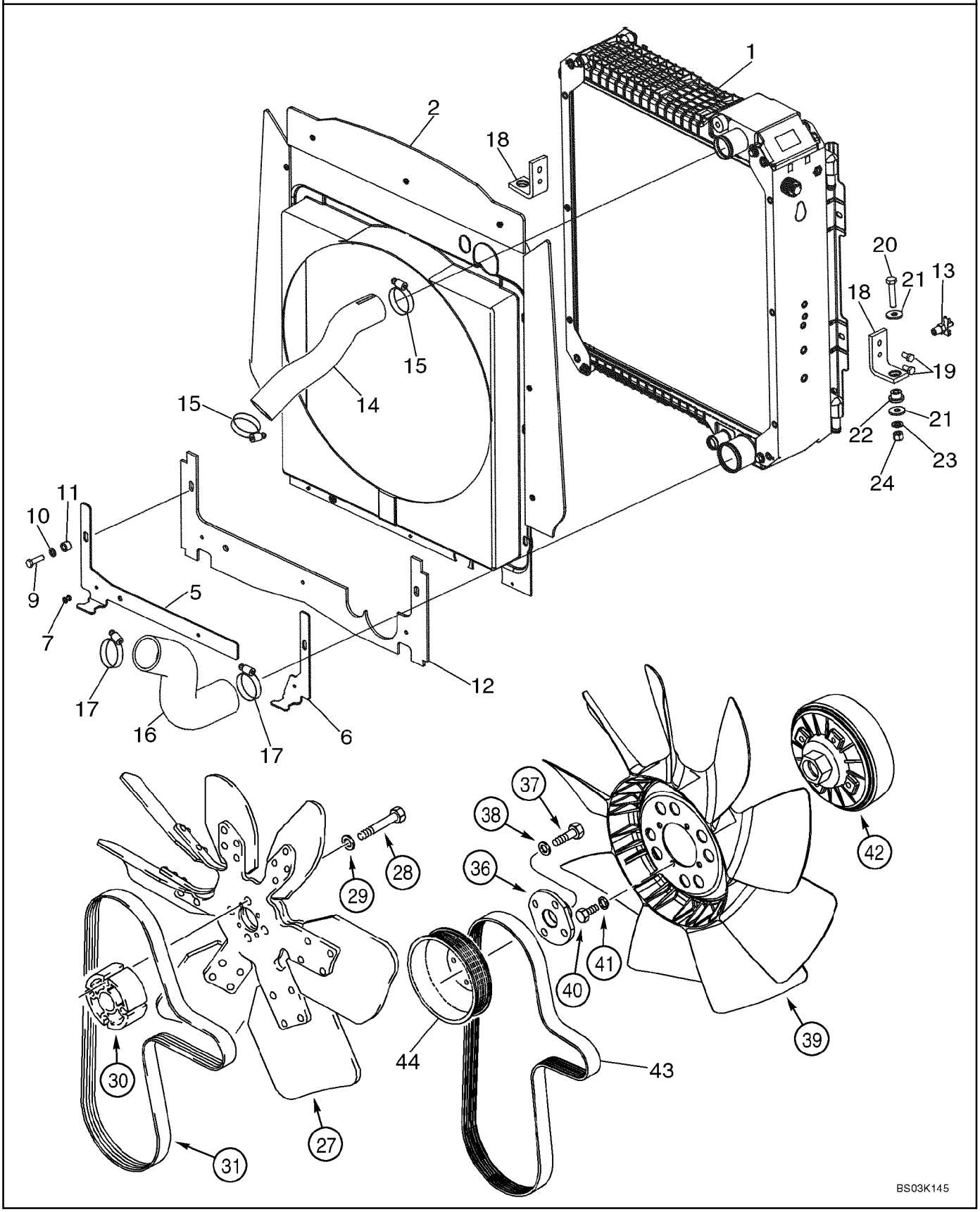

HTTP://WWW.MINNPARBACKHOEPARTS.COM



RADIADOR - SOPORTE

| REF | FN | PART NUMBER | YR/SN | QTY | DESCRIPTION |
|---|---|---|---|---|---|
| 1 | | 87410096 | | 1 | RADIADOR 3 Row Radiator, Models With Or Without Air Conditioning; See Figure 02-03 |
| 2 | | 87434793 | | 1 | BOQUILLA Shroud; Includes Seals |
| 5 | | 87434614 | | 1 | PLACA DE SUJECION Plate, Lower Left-Hand Shroud |
| 6 | | 87434649 | | 1 | PLACA DE SUJECION Plate, Lower Right-Hand Shroud |
| 7 | | 151-532 | | 3 | REMACHE 3/16 x 11/16 |
| 9 | | 614-8030 | | 2 | TORNILLO M8 x 30 |
| 10 | | 895-11008 | | 2 | ARANDELA 9 x 16 x 1,6 mm |
| 11 | | 407962A1 | | 2 | ESPACIADOR |
| 12 | | 87434978 | | 1 | JUNTA DE CAUCHO Lower Seal |
| 13 | | 76904 | | 1 | VALVULA Drain, 1/4 |
| 14 | | 87413237 | | 1 | TUBO RIGIDO Upper Hose |
| 15 | | 214-1432 | | 2 | COLLAR 1-9/16 x 2-1/2 |
| 16 | | 87407272 | | 1 | TUBO RIGIDO Lower Hose |
| 17 | | 214-1440 | | 2 | COLLAR 2-1/16 - 3 |
| 18 | | 87407771 | | 2 | PIEZA DE APOYO Radiator Mounting Support |
| 19 | | 614-8016 | | 4 | TORNILLO M8 x 16 |
| 20 | | 814-10050 | | 2 | TORNILLO M10 x 50 |
| 21 | | K691987 | | 4 | ARANDELA Flat, 10 mm |
| 22 | | D52276 | | 2 | AISLADOR Rubber |
| 23 | | 895-11010 | | 2 | ARANDELA 11 x 20 x 2 mm |
| 24 | | 832-10410 | | 2 | TUERCA M10 |
| 27 | | 228133A2 | | 1 | VENTILADOR 39 Degrees; With White Identification Dot; Standard Fan Drive; With Air Conditioning; With Turbo |
| 27 | | 127181A2 | | 1 | VENTILADOR 27 Degrees; Standard Fan Drive; Without Air Conditioning; With Or Without Turbo |
| 28 | | 814-10090 | | 4 | TORNILLO M10 x 90 |
| 29 | | 496-21041 | | 4 | ARANDELA 13/32 x 13/16 x 3/32 |
| 30 | | 85826229 | | 1 | SEPARADOR 59 mm Long, Standard Fan Drive; With Or Without Air Conditioning; With Or Without Turbo |
| 31 | | 85826230 | | 1 | CORREA V-Type, Standard Fan Drive; With Or Without Air Conditioning; With Or Without Turbo |

HTTP://WWW.MINNPARBACKHOEPARTS.COM

| 02-01 | | p2 | 10/03 |
|---|---|---|---|

RADIADOR - SOPORTE

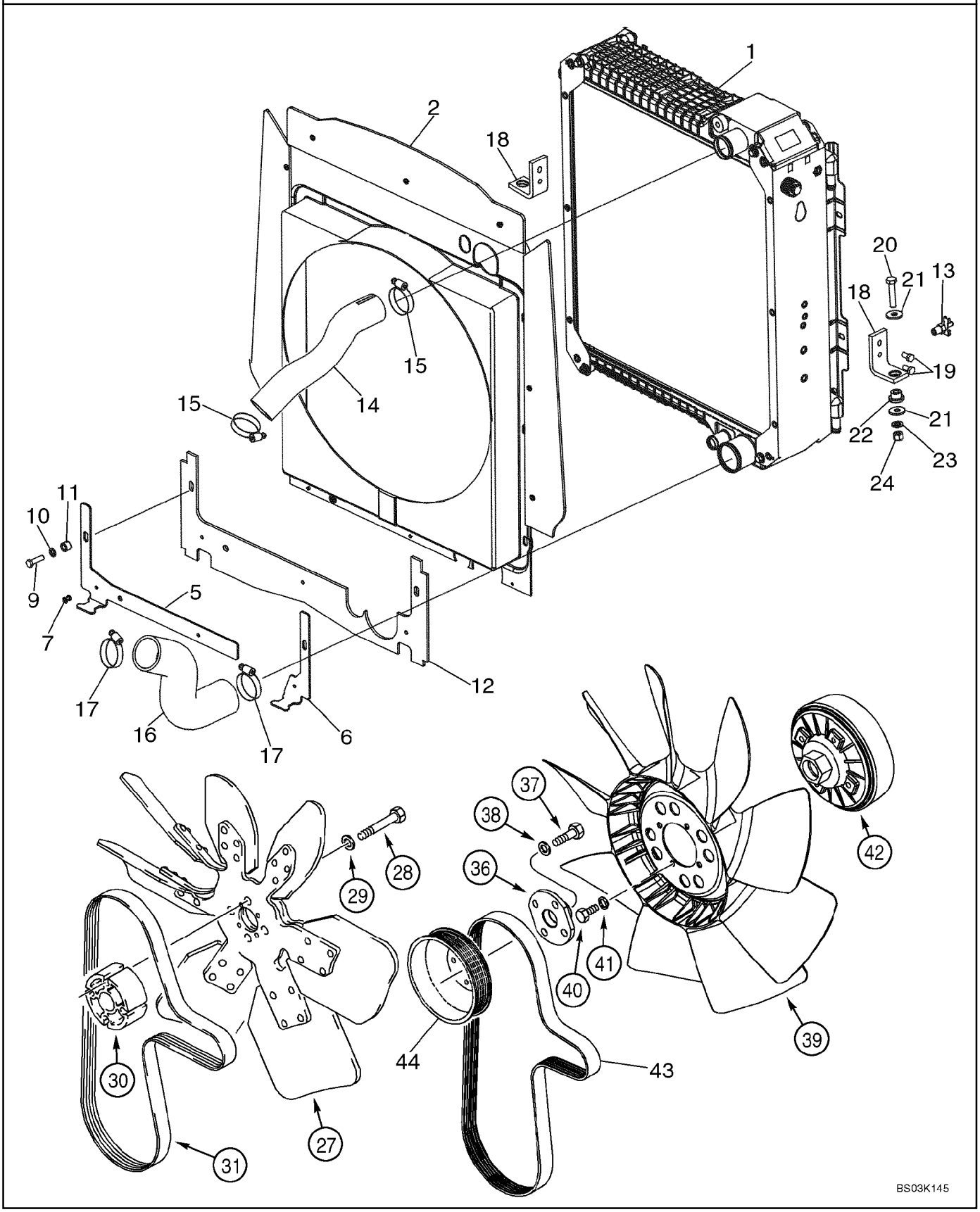

HTTP://WWW.MINNPARBACKHOEPARTS.COM



RADIADOR - SOPORTE

| REF | FN | PART NUMBER | YR/SN | QTY | DESCRIPTION |
|---|---|---|---|---|---|
| 36 | | 303192A1 | | 1 | ADAPTOR Viscous Fan Drive, With Air Conditioning; With Turbo |
| 37 | | 614-10030 | | 4 | TORNILLO M10 x 30 |
| 38 | | 896-11010 | | 4 | ARANDELA 11 x 21 x 2,5 mm |
| 39 | | 277800A1 | | 1 | VENTILADOR 9 Blade, Viscous Fan Drive; With Air Conditioning; With Turbo |
| 40 | | 614-8016 | | 4 | TORNILLO M8 x 16 |
| 41 | | 892-11008 | | 4 | ARANDELA M8 |
| 42 | | 303195A1 | | 1 | CONJUNTO Fan Drive; Component Parts Not Serviced Separately; Viscous Fan Drive; With Air Conditioning; With Turbo |
| 43 | | 87415774 | | 1 | COURROIE DE TRANSMISS. V-Type; Viscous Fan Drive, With Air Conditioning; With Turbo |
| | | {87419385} | | 1 | Fan 1:4 Ratio Pulley Kit; Includes Ref 44, 45; Viscous Fan Drive; With Air Conditioning |
| 44 | | 4890343 | | 1 | POLEA |
| 45 | | {2852621} | | 1 | Pulley Tensioner Support, Not Illustrated |

HTTP://WWW.MINNPARBACKHOEPARTS.COM

| 02-02 | | p1 | 10/03 |
|---|---|---|---|

SISTEMA DE PURGA DE AIRE - SOPORTE

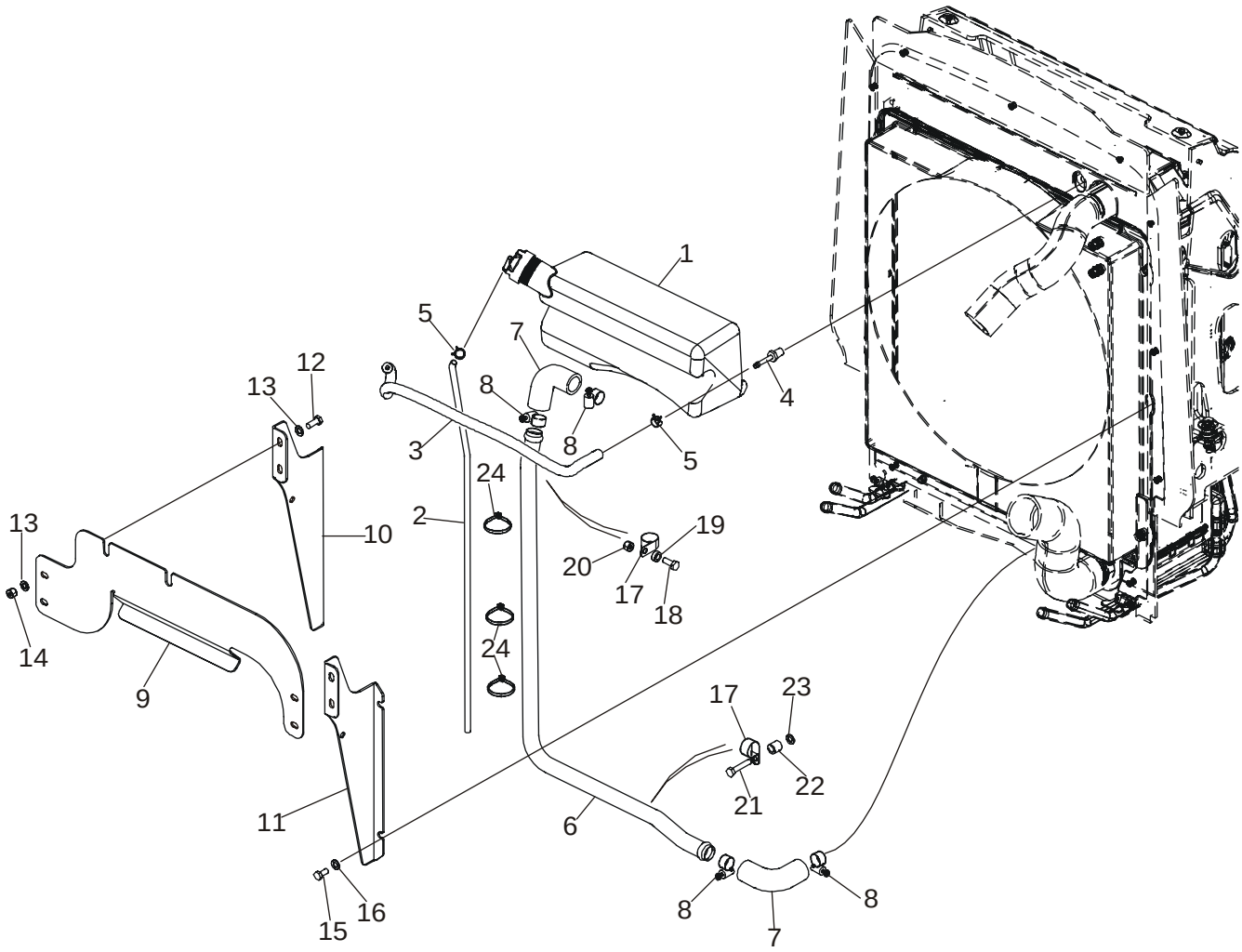


BS03G352

HTTP://WWW.MINNPARBACKHOEPARTS.COM



SISTEMA DE PURGA DE AIRE - SOPORTE

| REF | FN | PART NUMBER | YR/SN | QTY | DESCRIPTION |
|---|---|---|---|---|---|
| 1 | | 87412139 | | 1 | DEPOSITO DE VACIO Deaeration Reservoir, 3.5 Liters; Includes 85803019 Cap |
| | | 85803019 | | 1 | CACHUCHA (CONJUNTO) Cap, 13 psi |
| 2 | | 87435409 | | 1 | MANGA Overflow Hose |
| 3 | | 87417300 | | 1 | MANGA Recovery, 5/16 ID x 19/32 OD x 22-11/64; Reservoir to Radiator |
| 4 | | 217-154 | | 1 | CONEXION 1/4 Stem x 1/4 NPTF |
| 5 | | 1348264C1 | | 2 | ABRAZADERA MANGUERA |
| 6 | | 87433503 | | 1 | TUBO |
| 7 | | 87417299 | | 2 | MANGA |
| 8 | | 214-1416 | | 4 | COLLAR Type F, No. 16 |
| 9 | | 87417223 | | 1 | PIEZA DE SOPORTE |
| 10 | | 87417225 | | 1 | PIEZA DE SOPORTE Left-Hand Bracket |
| 11 | | 87417224 | | 1 | PIEZA DE SOPORTE Right-Hand Bracket |
| 12 | | 614-8020 | | 4 | TORNILLO M8 x 20 |
| 13 | | 895-11008 | | 8 | ARANDELA 9 x 16 x 1,6 mm |
| 14 | | 832-10408 | | 4 | TUERCA M8 |
| 15 | | 806-8016 | | 4 | TORNILLO M8 x 16 |
| 16 | | 895-11008 | | 4 | ARANDELA 9 x 16 x 1,6 mm |
| 17 | | 515-22254 | | 2 | COLLAR |
| 18 | | 614-8020 | | 1 | TORNILLO M8 x 20 |
| 19 | | 87418359 | | 1 | SEPARADOR 8 x 6 mm Spacer |
| 20 | | 829-1408 | | 2 | TUERCA M8 |
| 21 | | 614-8040 | | 1 | TORNILLO M8 x 40 |
| 22 | | 87418360 | | 1 | SEPARADOR 8 x 16 mm Spacer |
| 23 | | 895-11008 | | 1 | ARANDELA 9 x 16 x 1,6 mm |
| 24 | | L18337 | | 3 | BANDA Tie |

HTTP://WWW.MINNPARBACKHOEPARTS.COM

| 02-03 | | p1 | 09/03 |
|---|---|---|---|

CONJUNTO DEL RADIADOR (CON/SIN AIRE ACONICIONADO)

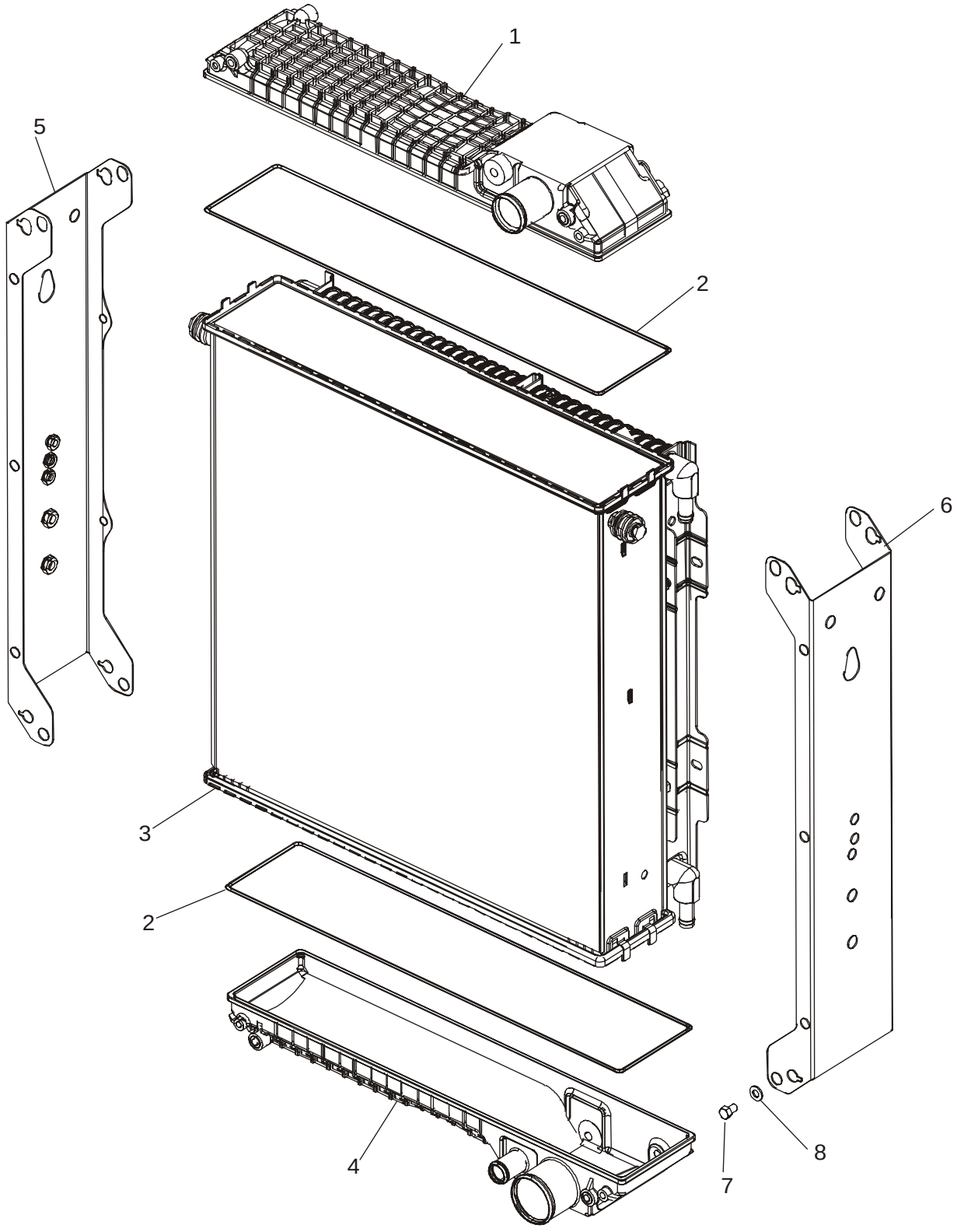

HTTP://WWW.MINNPARBACKHOEPARTS.COM



CONJUNTO DEL RADIADOR (CON/SIN AIRE ACONICIONADO)

| REF | FN | PART NUMBER | YR/SN | QTY | DESCRIPTION |
|---|---|---|---|---|---|
| | | 87410096 | | 1 | RADIADOR 3 Row Radiator, Models With or Without Air Conditioning; Incl. Ref 1 - 8 |
| 1 | | {87429694} | | 1 | Upper Reservoir |
| 2 | | 254409A1 | | 2 | ANILLO DE CIERRE |
| 3 | | {87429690} | | 1 | Core |
| 4 | | {87429695} | | 1 | Lower Reservoir |
| 5 | | {87429692} | | 1 | Left-Hand |
| 6 | | {87429693} | | 1 | Right-Hand |
| 7 | | 614-8012 | | 8 | TORNILLO M8 x 12 |
| 8 | | 895-11008 | | 8 | ARANDELA 9 x 17 x 1,6 mm |

HTTP://WWW.MINNPARBACKHOEPARTS.COM

| 02-04 | | p1 | 09/03 |
|---|---|---|---|

FILTRO DE AIRE - PIEZAS DE ENTRADA DE AIRE (SIN TURBOCARGADOR)

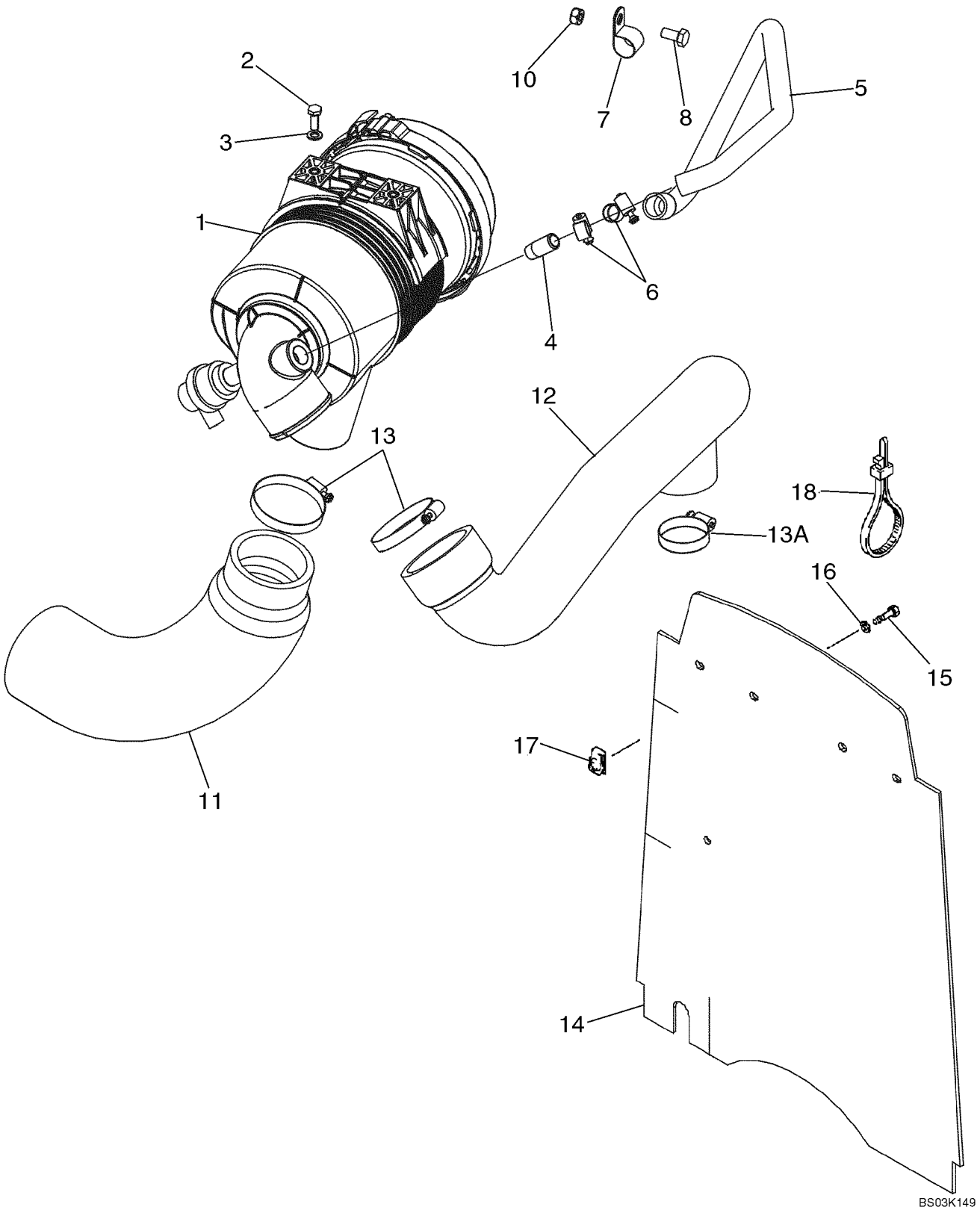

HTTP://WWW.MINNPARBACKHOEPARTS.COM



FILTRO DE AIRE - PIEZAS DE ENTRADA DE AIRE (SIN TURBOCARGADOR)

| REF | FN | PART NUMBER | YR/SN | QTY | DESCRIPTION |
|---|---|---|---|---|---|
| 1 | | 87419133 | | 1 | DEPURADOR Air Cleaner, Models Without Turbocharged Engines, See Figure 02-05 |
| 2 | | 614-8020 | | 2 | TORNILLO M8 x 20 |
| 3 | | 895-11008 | | 2 | ARANDELA 9 x 16 x 1,6 mm |
| 4 | | L17985 | | 1 | CONEXION |
| 5 | | 87423457 | | 1 | MANGA |
| 6 | | 214-1412 | | 2 | COLLAR Type F, No. 12 |
| 7 | | 515-24238 | | 1 | COLLAR P |
| 8 | | 614-10020 | | 1 | TORNILLO M10 x 20 |
| 9 | | 896-15010 | | 1 | ARANDELA 11 x 24 x 3 mm |
| 10 | | 829-1410 | | 1 | TUERCA M10 |
| 11 | | 87419135 | | 1 | MANGUITO Inlet |
| 12 | | 87418036 | | 1 | MANGUITO To Turbocharger |
| 13 | | 214-1456 | | 2 | COLLAR Type F, No. 56 |
| 13A | | 214-1440 | | 1 | COLLAR Type F, No. 40 |
| 14 | | 87434099 | | 1 | CORTINA Barrier, Heat and Noise Reduction |
| 15 | | 806-8025 | | 4 | TORNILLO M8 x 25; 10.9 |
| 16 | | 495-81001 | | 4 | ARANDELA 9,5 x 29 x 1,6 mm |
| 17 | | 833-40408 | | 4 | TUERCA U-Type, M8 |
| 18 | | L18337 | | 2 | BANDA 15 in |

HTTP://WWW.MINNPARBACKHOEPARTS.COM

| 02-04A | | p1 | 09/03 |
|---|---|---|---|

FILTRO DE AIRE - PIEZAS DE ENTRADA DE AIRE (CON TURBOCARGADOR)

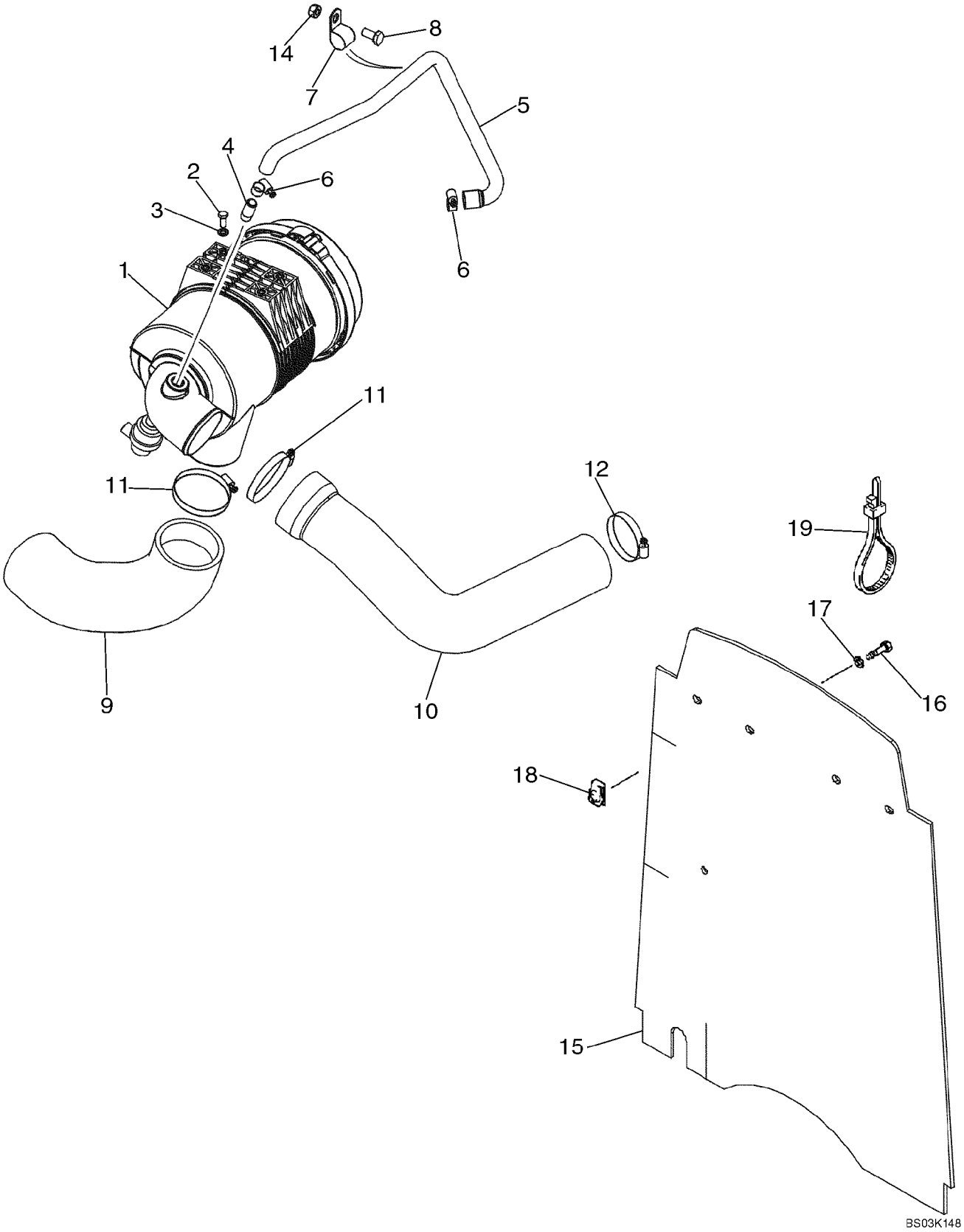

HTTP://WWW.MINNPARBACKHOEPARTS.COM



FILTRO DE AIRE - PIEZAS DE ENTRADA DE AIRE (CON TURBOCARGADOR)

| REF | FN | PART NUMBER | YR/SN | QTY | DESCRIPTION |
|---|---|---|---|---|---|
| 1 | | 87412636 | | 1 | DEPURADOR Air Cleaner; Models With Turbocharged Engine; See Figure 02-05A |
| 2 | | 614-8020 | | 4 | TORNILLO M8 x 20 |
| 3 | | 895-11008 | | 4 | ARANDELA 9 x 16 x 1,6 mm |
| 4 | | L17985 | | 1 | CONEXION |
| 5 | | 87423457 | | 1 | MANGA |
| 6 | | 214-1412 | | 2 | COLLAR Type F, No. 12 |
| 7 | | 515-24238 | | 1 | COLLAR P |
| 8 | | 614-10020 | | 1 | TORNILLO M10 x 20 |
| 9 | | 87420834 | | 1 | MANGUITO Inlet |
| 10 | | 87412489 | | 1 | MANGUITO To Turbocharger |
| 11 | | 214-1464 | | 2 | COLLAR Type F, No. 64, 3-9/16 - 4-1/2 |
| 12 | | 214-1456 | | 1 | COLLAR Type F, No. 56 |
| 13 | | 896-15010 | | 1 | ARANDELA 11 x 24 x 3 mm |
| 14 | | 829-1410 | | 1 | TUERCA M10 |
| 15 | | 87434099 | | 1 | CORTINA Barrier, Heat and Noise Reduction |
| 16 | | 806-8025 | | 4 | TORNILLO M8 x 25; 10.9 |
| 17 | | 495-81001 | | 4 | ARANDELA 9,5 x 29 x 1,6 mm |
| 18 | | 833-40408 | | 4 | TUERCA U-Type, M8 |
| 19 | | L18337 | | 2 | BANDA 15 in |

HTTP://WWW.MINNPARBACKHOEPARTS.COM

| 02-05 | | p1 | 10/03 |
|---|---|---|---|

FILTRO DE AIRE (SIN TURBOCARGADOR)

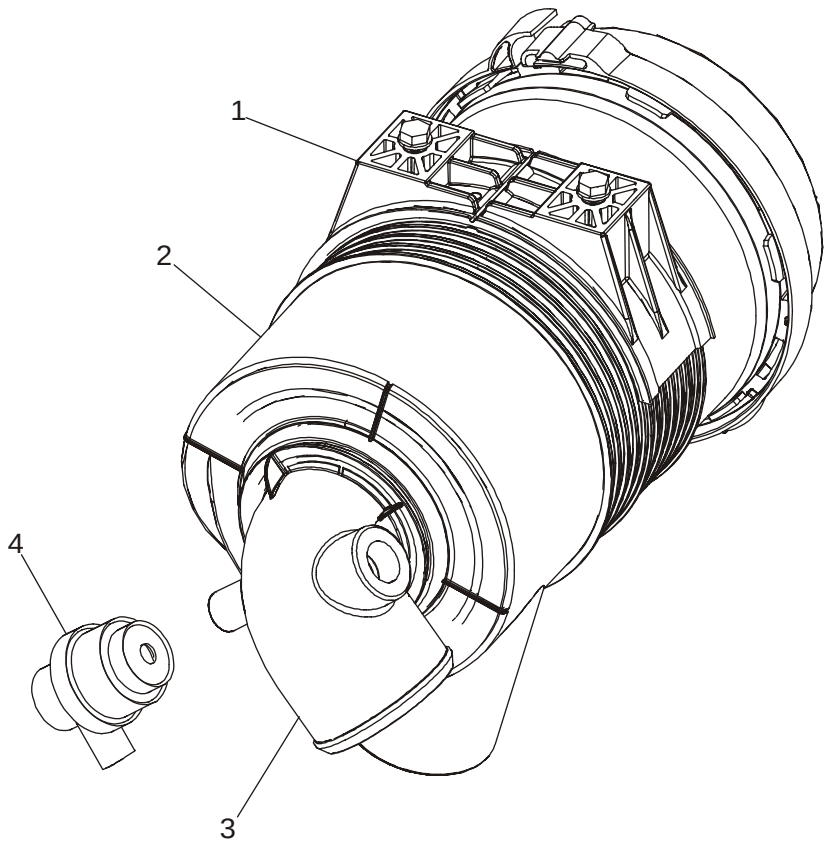


BS03K150

HTTP://WWW.MINNPARBACKHOEPARTS.COM



FILTRO DE AIRE (SIN TURBOCARGADOR)

| REF | FN | PART NUMBER | YR/SN | QTY | DESCRIPTION |
|---|---|---|---|---|---|
| | | 87419133 | | 1 | DEPURADOR Air Cleaner; Models Without Turbocharged Engines; Incl. Ref 1 - 4 |
| 1 | | 87418166 | | 1 | DEPURADOR Includes Rear Cover |
| 2 | | 87418366 | | 1 | ELEMENTO DE FILTRADO Primary |
| 3 | | 87418367 | | 1 | ELEMENTO DE FILTRADO Secondary |
| 4 | | 87405661 | | 1 | CONTACTOR Air Restriction Switch |

HTTP://WWW.MINNPARBACKHOEPARTS.COM



FILTRO DE AIRE (CON TURBOCARGADOR)

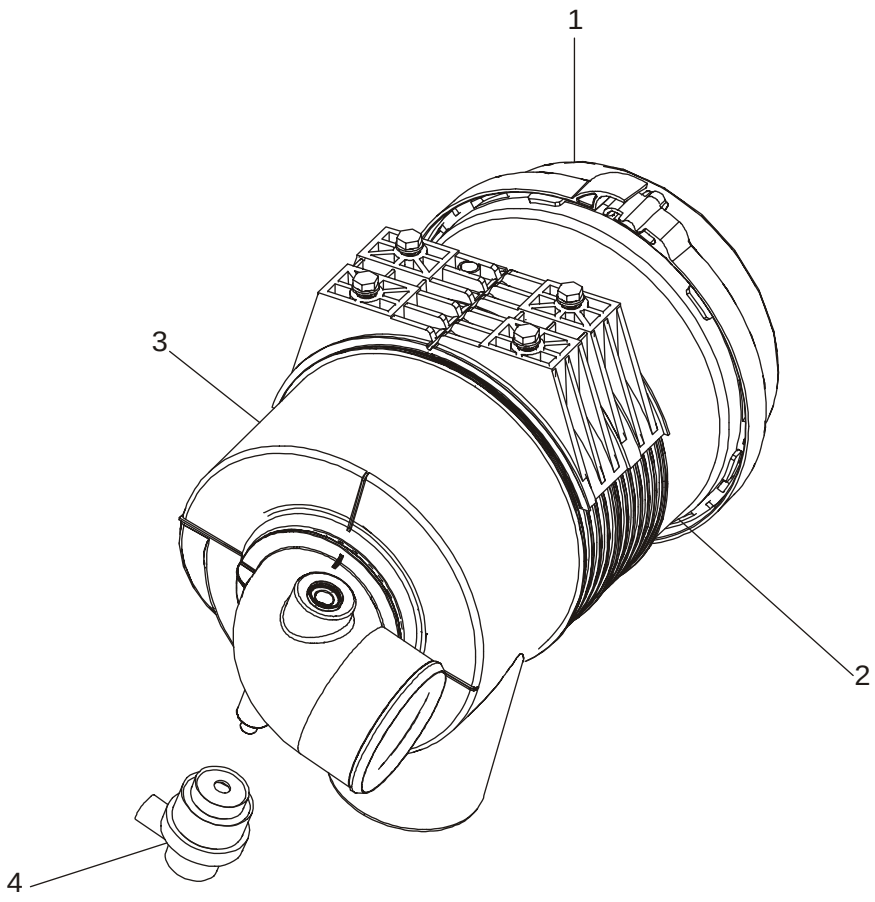


BS03K151

HTTP://WWW.MINNPARBACKHOEPARTS.COM



FILTRO DE AIRE (CON TURBOCARGADOR)

| REF | FN | PART NUMBER | YR/SN | QTY | DESCRIPTION |
|---|---|---|---|---|---|
| | | 87412636 | | 1 | DEPURADOR Air Cleaner; Models With Turbocharged Engines; Incl. Ref 1 - 4 |
| 1 | | 87412635 | | 1 | DEPURADOR Includes Rear Cover |
| 2 | | 87418364 | | 1 | ELEMENTO DE FILTRADO Primary |
| 3 | | 87418365 | | 1 | ELEMENTO DE FILTRADO Secondary |
| 4 | | 87405661 | | 1 | CONTACTOR Air Restriction Switch |

HTTP://WWW.MINNPARBACKHOEPARTS.COM

| 02-06 | | p1 | 12/03 |
|---|---|---|---|

SILENCIADOR - SISTEMA DE ESCAPE (CON TURBOCARGADOR)

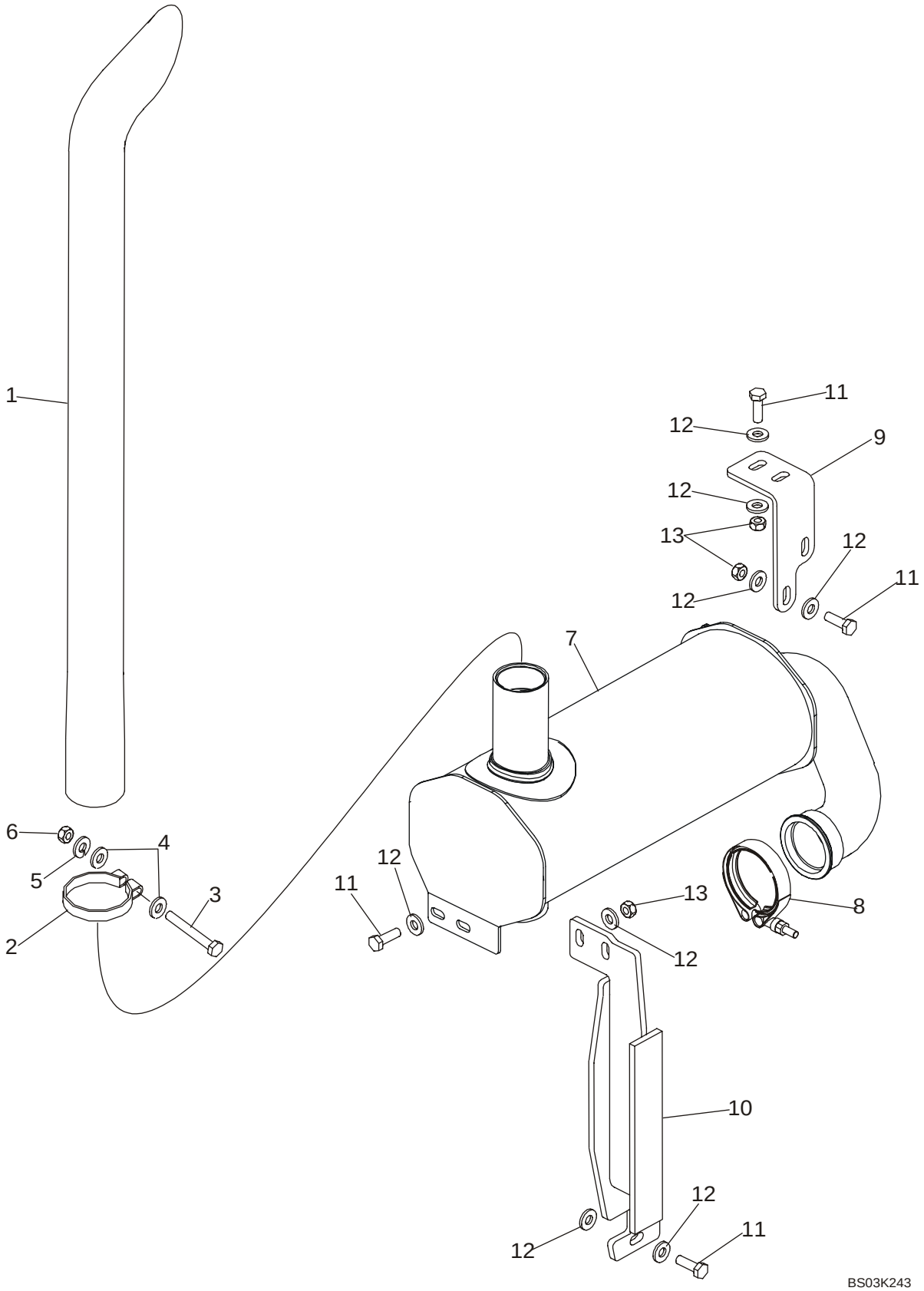

HTTP://WWW.MINNPARBACKHOEPARTS.COM



SILENCIADOR - SISTEMA DE ESCAPE (CON TURBOCARGADOR)

| REF | FN | PART NUMBER | YR/SN | QTY | DESCRIPTION |
|---|---|---|---|---|---|
| 1 | | 87437805 | | 1 | TUBO DE ESCAPE Exhaust Stack |
| 2 | | 87437804 | | 1 | SOPORTE CIERRA TUBO Stack Clamp |
| 3 | | 614-10080 | | 1 | TORNILLO M10 x 80 |
| 4 | | 896-15010 | | 2 | ARANDELA Flat |
| 5 | | 892-11010 | | 1 | ARANDELA DE FRENO M10 |
| 6 | | 829-1410 | | 1 | TUERCA M10 |
| 7 | | 87437834 | | 1 | SILENCIADOR Turbo Engine |
| 8 | | A170467 | | 1 | COLLAR Includes Hardware |
| 9 | | 87423531 | | 1 | PIEZA DE APOYO Front Support Bracket |
| 10 | | 87439444 | | 1 | PIEZA DE APOYO Rear Support Bracket |
| 11 | | 627-10030 | | 8 | TORNILLO M10 x 30 |
| 12 | | 896-15010 | | 16 | ARANDELA 11 x 24 x 3 mm |
| 13 | | 829-1410 | | 7 | TUERCA M10 |

HTTP://WWW.MINNPARBACKHOEPARTS.COM

| 02-06A | | p1 | 12/03 |
|---|---|---|---|

SILENCIADOR, ASPIRADOR - SISTEMA DE ESCAPE

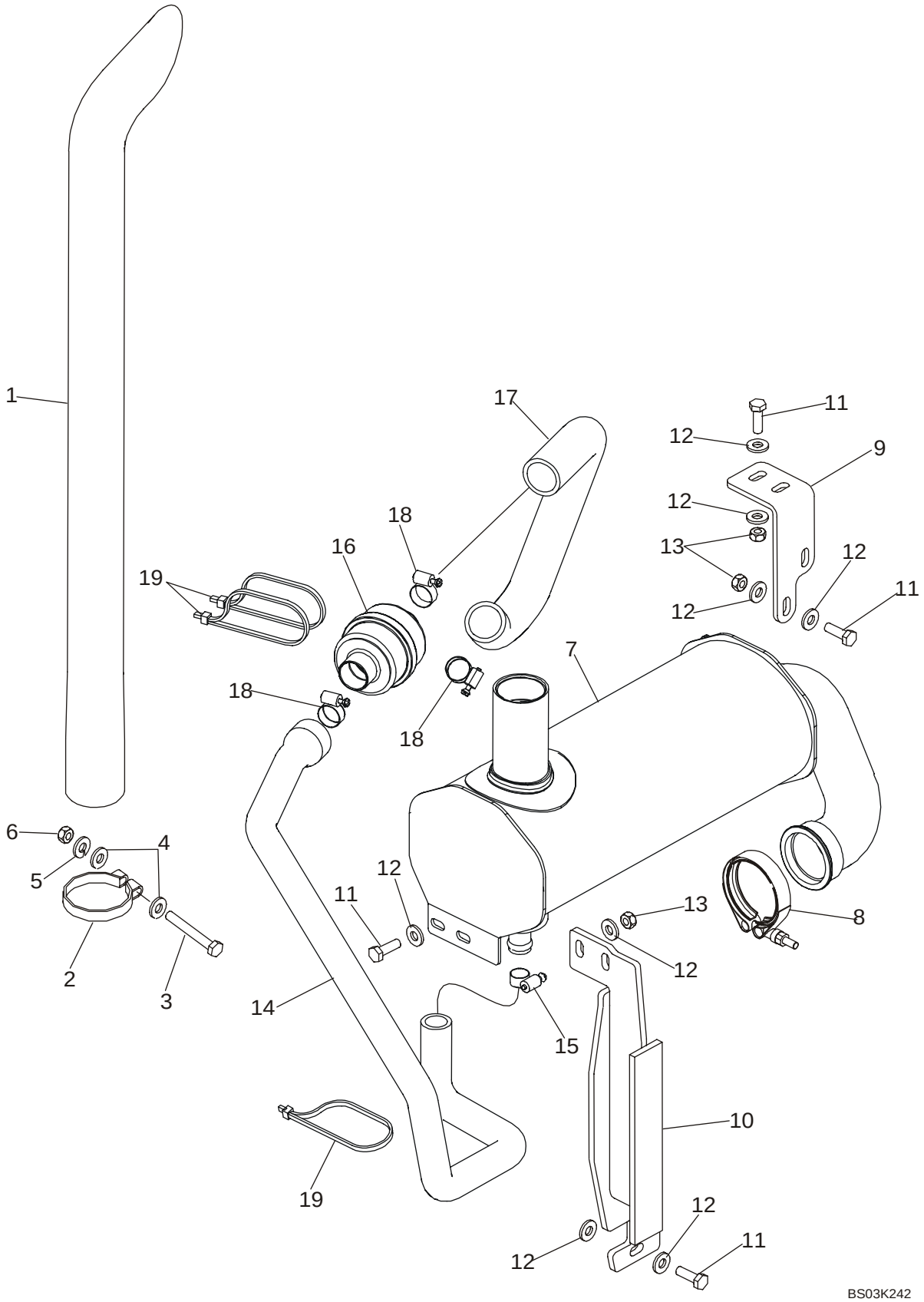

HTTP://WWW.MINNPARBACKHOEPARTS.COM



SILENCIADOR, ASPIRADOR - SISTEMA DE ESCAPE

| REF | FN | PART NUMBER | YR/SN | QTY | DESCRIPTION |
|---|---|---|---|---|---|
| 1 | | 87437805 | | 1 | TUBO DE ESCAPE Exhaust Stack |
| 2 | | 87437804 | | 1 | SOPORTE CIERRA TUBO Stack Clamp |
| 3 | | 614-10080 | | 1 | TORNILLO M10 x 80 |
| 4 | | 896-15010 | | 2 | ARANDELA Flat |
| 5 | | 892-11010 | | 1 | ARANDELA DE FRENO M10 |
| 6 | | 829-1410 | | 1 | TUERCA M10 |
| 7 | | 87435499 | | 1 | SILENCIADOR Aspirated and Spark Arrestor; For Gasket, Elbow and Attaching Hardware, See Figure 02-06B, Ref 9 - 12 |
| 8 | | A170467 | | 1 | COLLAR Includes Hardware |
| 9 | | 87423531 | | 1 | PIEZA DE APOYO Front Support Bracket |
| 10 | | 87439444 | | 1 | PIEZA DE APOYO Rear Support Bracket |
| 11 | | 627-10030 | | 8 | TORNILLO M10 x 30 |
| 12 | | 896-15010 | | 16 | ARANDELA 11 x 24 x 3 mm |
| 13 | | 829-1410 | | 7 | TUERCA M10 |
| 14 | | 87436615 | | 1 | MANGA Aspiration Hose, Check Valve to Muffler |
| 15 | | 214-1416 | | 1 | COLLAR #16, Type F |
| 16 | | 307123A1 | | 1 | VALVULA Aspirator Check |
| 17 | | 87436614 | | 1 | MANGA Aspiration Hose, Air Cleaner to Valve |
| 18 | | 214-1424 | | 3 | COLLAR #24, Type F |
| 19 | | L18337 | | 3 | BANDA Tie |

HTTP://WWW.MINNPARBACKHOEPARTS.COM

| 02-06B | | p1 | 12/03 |
|---|---|---|---|

SILENCIADOR - SISTEMA DE ESCAPE (SIN TURBOCARGADOR)

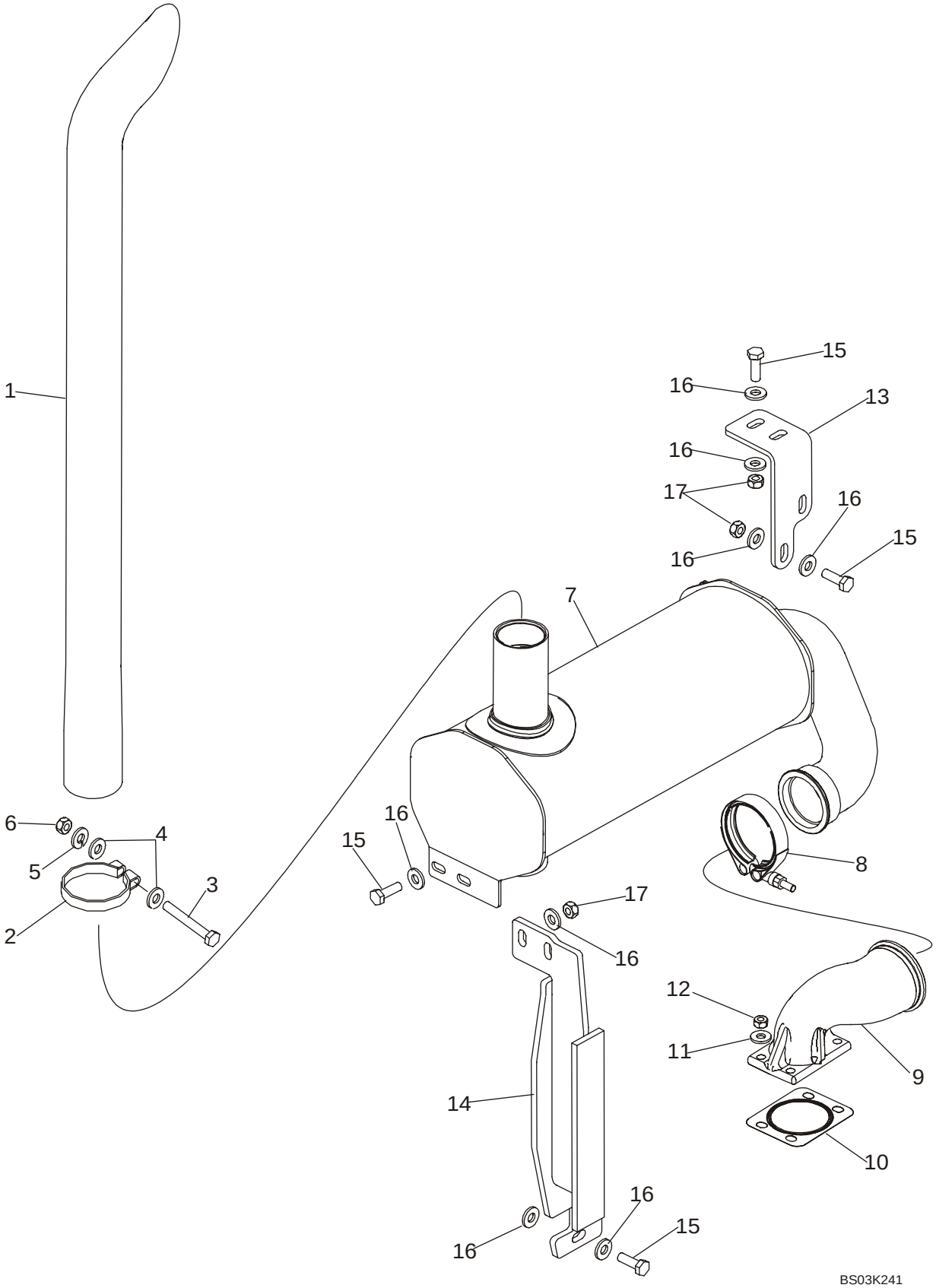

HTTP://WWW.MINNPARBACKHOEPARTS.COM



SILENCIADOR - SISTEMA DE ESCAPE (SIN TURBOCARGADOR)

| REF | FN | PART NUMBER | YR/SN | QTY | DESCRIPTION |
|---|---|---|---|---|---|
| 1 | | 87437805 | | 1 | TUBO DE ESCAPE Exhaust Stack |
| 2 | | 87437804 | | 1 | SOPORTE CIERRA TUBO Stack Clamp |
| 3 | | 614-10080 | | 1 | TORNILLO M10 x 80 |
| 4 | | 896-15010 | | 2 | ARANDELA Flat |
| 5 | | 892-11010 | | 1 | ARANDELA DE FRENO M10 |
| 6 | | 829-1410 | | 1 | TUERCA M10 |
| 7 | | 87437836 | | 1 | SILENCIADOR Naturally Aspirated Engine |
| 8 | | A170467 | | 1 | COLLAR Includes Hardware |
| 9 | | 87410196 | | 1 | CODO |
| 10 | | J936995 | | 1 | JUNTA HERMETICA |
| 11 | | 896-15008 | | 4 | ARANDELA 9 x 21 x 2,5 mm |
| 12 | | 829-1408 | | 4 | TUERCA M8 |
| 13 | | 87423531 | | 1 | PIEZA DE APOYO Front Support Bracket |
| 14 | | 87439444 | | 1 | PIEZA DE APOYO Rear Support Bracket |
| 15 | | 627-10030 | | 8 | TORNILLO M10 x 30 |
| 16 | | 896-15010 | | 16 | ARANDELA 11 x 24 x 3 mm |
| 17 | | 829-1410 | | 7 | TUERCA M10 |

HTTP://WWW.MINNPARBACKHOEPARTS.COM



MOTOR - SOPORTE

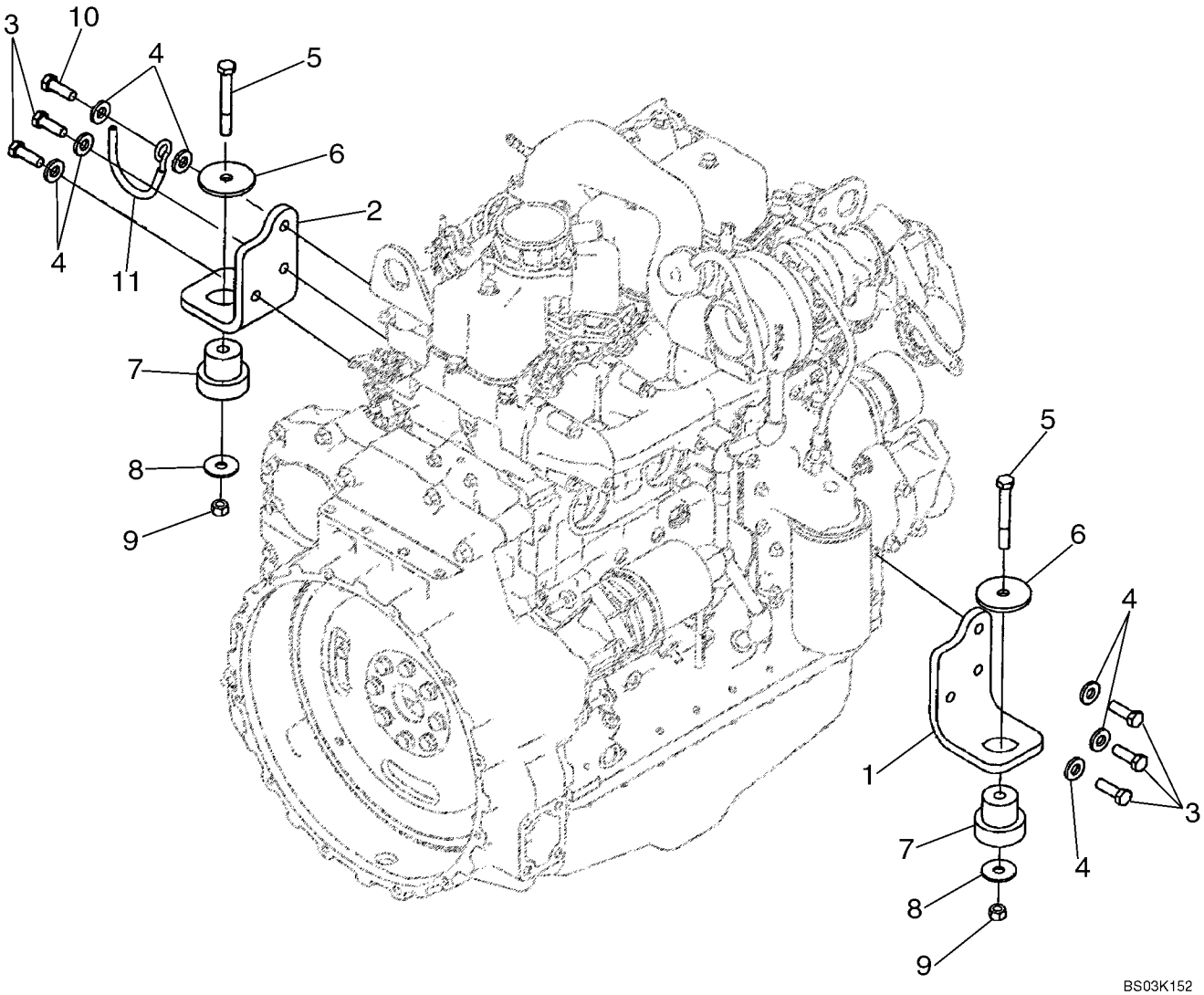

HTTP://WWW.MINNPARBACKHOEPARTS.COM



MOTOR - SOPORTE

| REF | FN | PART NUMBER | YR/SN | QTY | DESCRIPTION |
|---|---|---|---|---|---|
| | | {86990708} | | 1 | 80 hp Engine, Models Without Turbocharged Engine; Includes Parts On Figures 02-08 - 02-41, 03-4 - 03-11 |
| | | {86990709} | | 1 | 85 hp Engine, Models With Turbocharged Engine; Includes Parts On Figures 02-08 - 02-41, 03-4 - 03-11 |
| 1 | | 87411319 | | 1 | PIEZA DE SOPORTE Right-Hand |
| 2 | | 87411320 | | 1 | PIEZA DE SOPORTE Left-Hand |
| 3 | | 614-12035 | | 5 | TORNILLO M12 x 35 |
| 4 | | 896-15012 | | 7 | ARANDELA 13,5 x 28 x 4 mm |
| 5 | | 814-12080 | | 2 | TORNILLO M12 x 80 |
| 6 | | 85801585 | | 2 | ARANDELA |
| 7 | | 87416966 | | 2 | SOPORTE Insulator, Rubber Mount |
| 8 | | 85802618 | | 2 | JUNTA HERMETICA |
| 9 | | 832-10412 | | 2 | TUERCA M12 |
| 10 | | 614-12040 | | 1 | TORNILLO M12 x 40 |
| 11 | | 87431799 | | 1 | SOPORTE Hose Support |

HTTP://WWW.MINNPARBACKHOEPARTS.COM



MOTOR

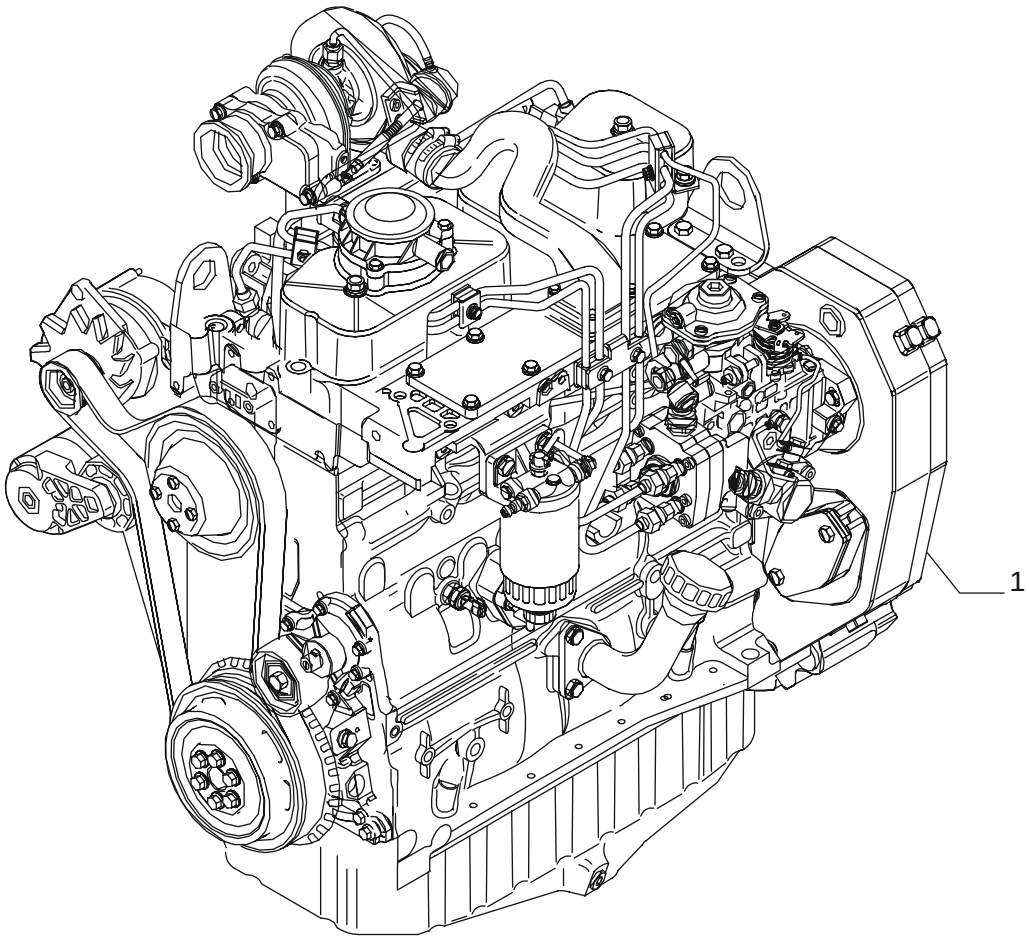


BS04A023

HTTP://WWW.MINNPARBACKHOEPARTS.COM



MOTOR

| REF | FN | PART NUMBER | YR/SN | QTY | DESCRIPTION |
|---|---|---|---|---|---|
| 1 | | {86990708} | | 1 | 80hp Engine, Models Without Turbocharged Engine; Includes Parts On Figures 02-08 - 02-41, 03-04 - 03-11 |
| 1 | | {86990709} | | 1 | 85hp Engine, Models With Turbocharged Engine; Includes Parts On Figures 02-08 - 02-41, 03-04 - 03-11 |

HTTP://WWW.MINNPARBACKHOEPARTS.COM



BLOQUE DE CILINDROS

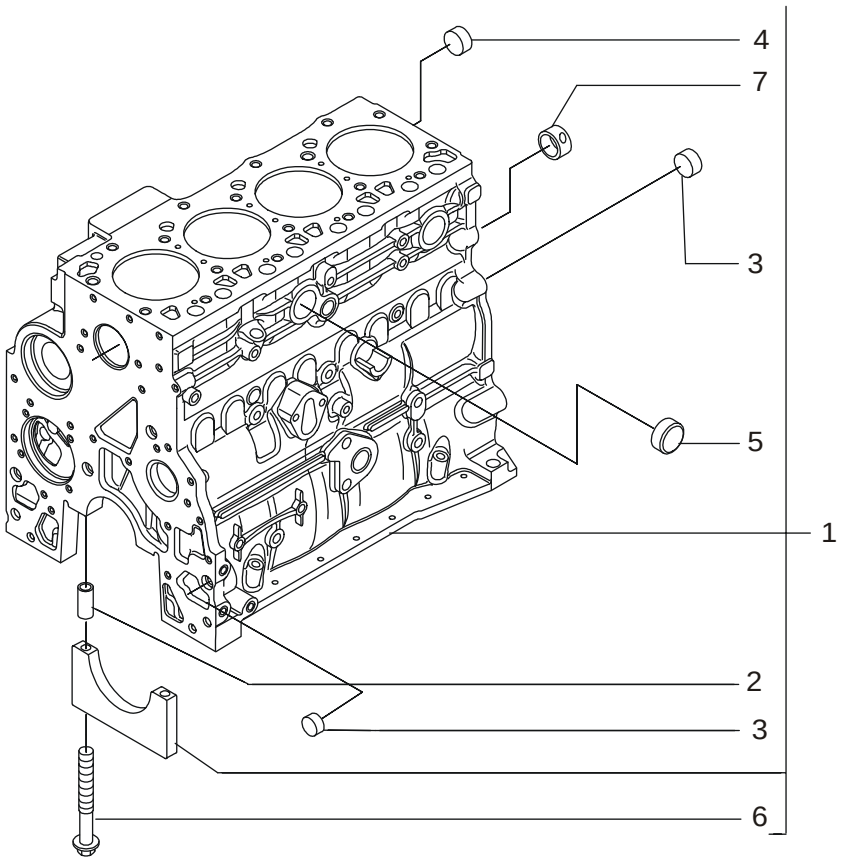


BS04A024

HTTP://WWW.MINNPARBACKHOEPARTS.COM



BLOQUE DE CILINDROS

| REF | FN | PART NUMBER | YR/SN | QTY | DESCRIPTION |
|---|---|---|---|---|---|
| 1 | | 2830082 | | 1 | BLOQUE DE CILINDROS - ASSY |
| 2 | | 4899026 | | 10 | PITON |
| 3 | | 4895039 | | 3 | TAPÓN |
| 4 | | 4895038 | | 4 | TAPÓN |
| 5 | | 4895228 | | 2 | TAPÓN |
| 6 | | 4891353 | | 10 | TORNILLO 12X120 |
| 7 | | 4895040 | | 1 | CASQUILLO |

HTTP://WWW.MINNPARBACKHOEPARTS.COM



BLOQUE DE CILINDROS

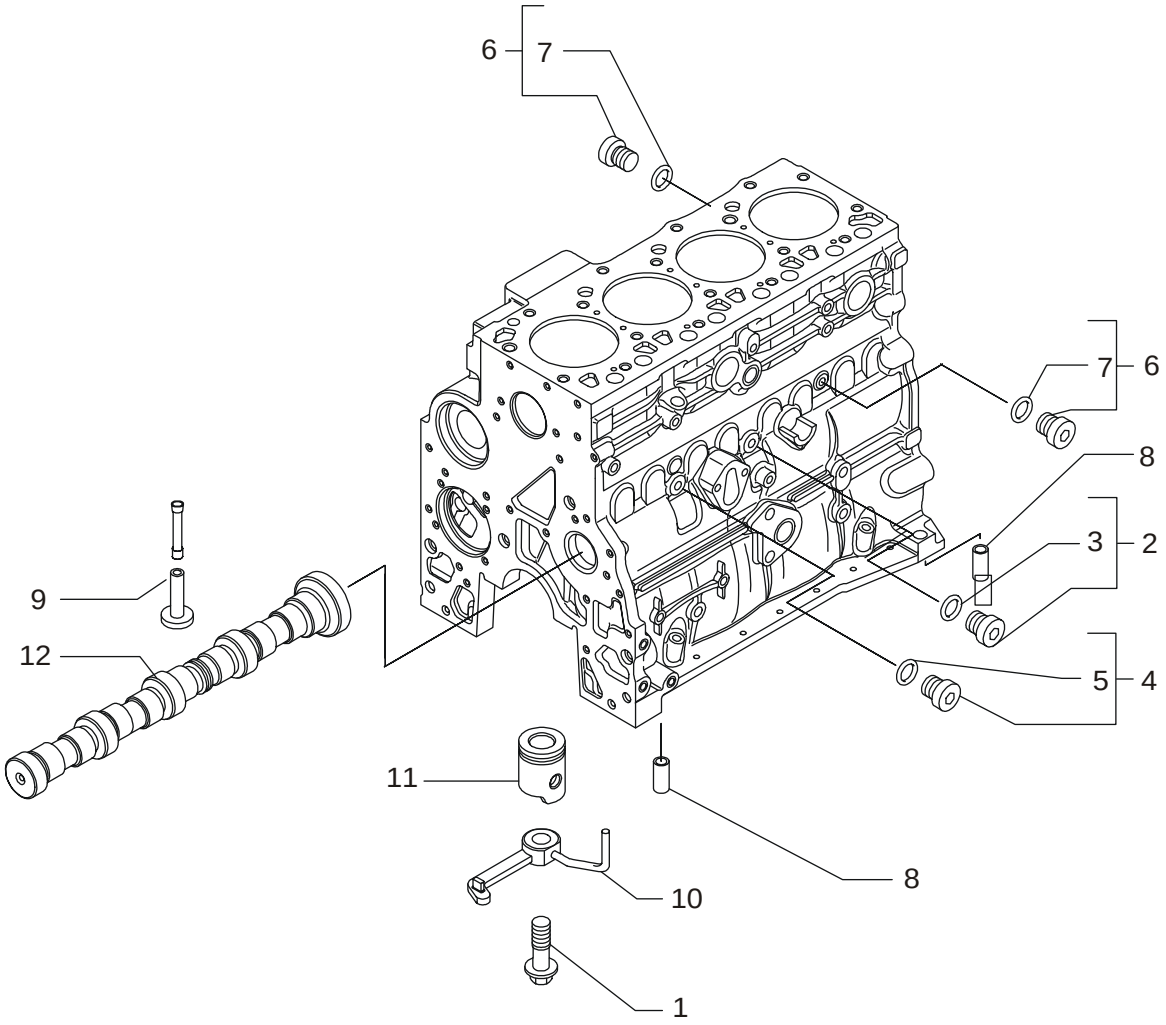

HTTP://WWW.MINNPARBACKHOEPARTS.COM



BLOQUE DE CILINDROS

| REF | FN | PART NUMBER | YR/SN | QTY | DESCRIPTION |
|---|---|---|---|---|---|
| 1 | | 4894218 | | 4 | TORNILLO |
| 2 | | 4895605 | | 1 | TAPÓN 14X1.5 - ASSY |
| 3 | | 4899115 | | 1 | JUNTA HERMETICA |
| 4 | | 4899009 | | 1 | TAPÓN 10X1.5 - ASSY |
| 5 | | 4899072 | | 1 | JUNTA HERMETICA |
| 6 | | 4895392 | | 2 | TAPÓN 18X1.5 - ASSY |
| 7 | | 4895393 | | 1 | JUNTA HERMETICA |
| 8 | | 4895049 | | 2 | PITON |
| 9 | | 4895180 | | 8 | EMPUJADOR |
| 10 | | 504047260 | | 4 | TOBERA |
| 11 | | REF | | 1 | MANUAL PISTON; See Figure 02-23 |
| 12 | | REF | | 1 | MANUAL CAMSHAFT; See Figure 02-28 |

HTTP://WWW.MINNPARBACKHOEPARTS.COM



BOMBA DE ACEITE, BANDEJA

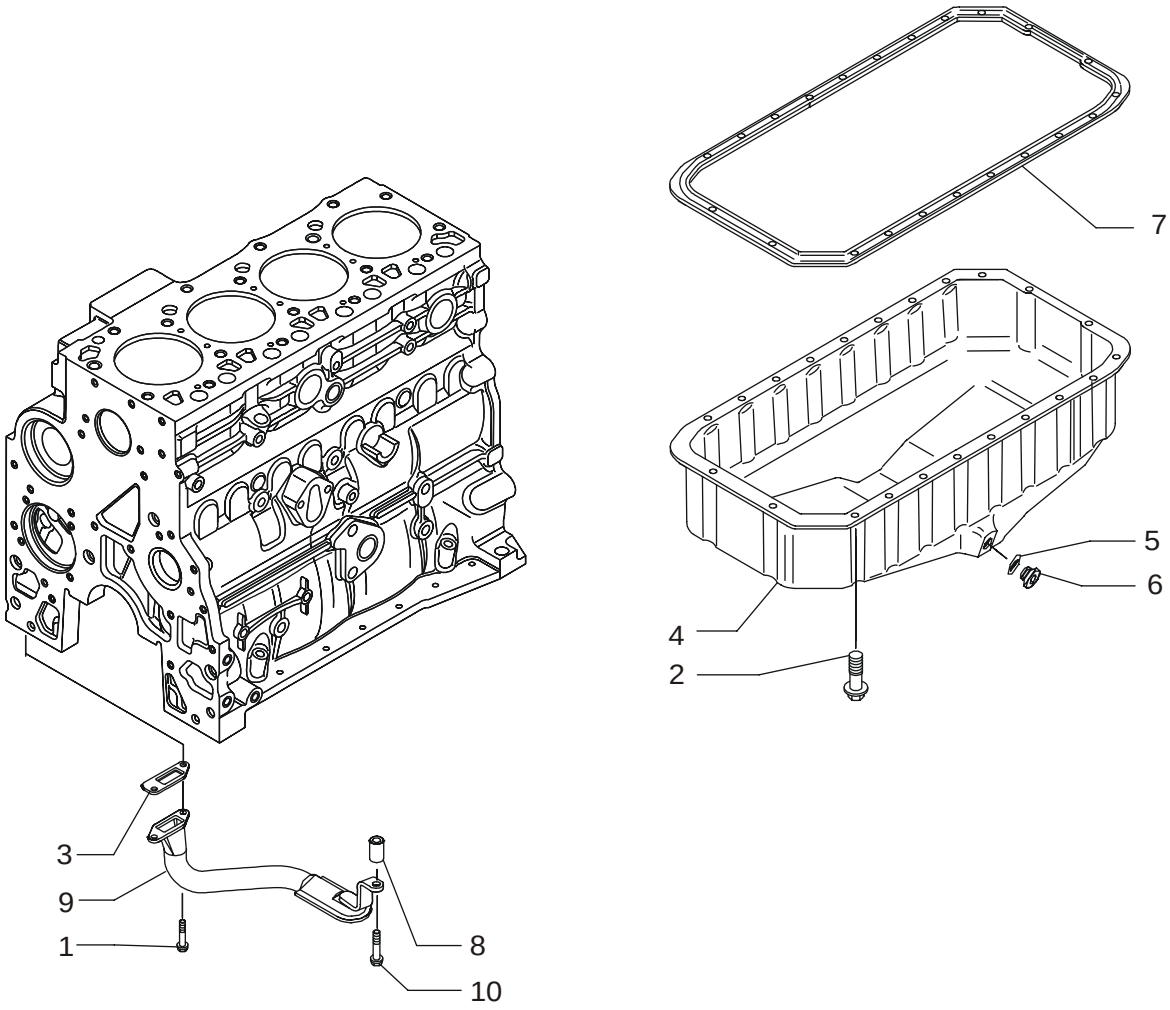

HTTP://WWW.MINNPARBACKHOEPARTS.COM



BOMBA DE ACEITE, BANDEJA

| REF | FN | PART NUMBER | YR/SN | QTY | DESCRIPTION |
|---|---|---|---|---|---|
| 1 | | 4899020 | | 2 | TORNILLO 8X20 |
| 2 | | 4899091 | | 22 | TORNILLO |
| 2 | | 4895489 | | 2 | TORNILLO |
| 3 | | 4898301 | | 1 | JUNTA HERMETICA |
| 4 | | {504043550} | | 1 | Oil Pan |
| 5 | | 4895584 | | 1 | JUNTA HERMETICA |
| 6 | | 4894139 | | 1 | TAPÓN 22X1.5 |
| 7 | | 504069777 | | 1 | JUNTA HERMETICA |
| 8 | | 504062812 | | 1 | SEPARADOR |
| 9 | | {504042165} | | 1 | Tube |
| 10 | | 4895538 | | 1 | TORNILLO |

HTTP://WWW.MINNPARBACKHOEPARTS.COM



BLOQUE DE CILINDROS - CUBIERTAS

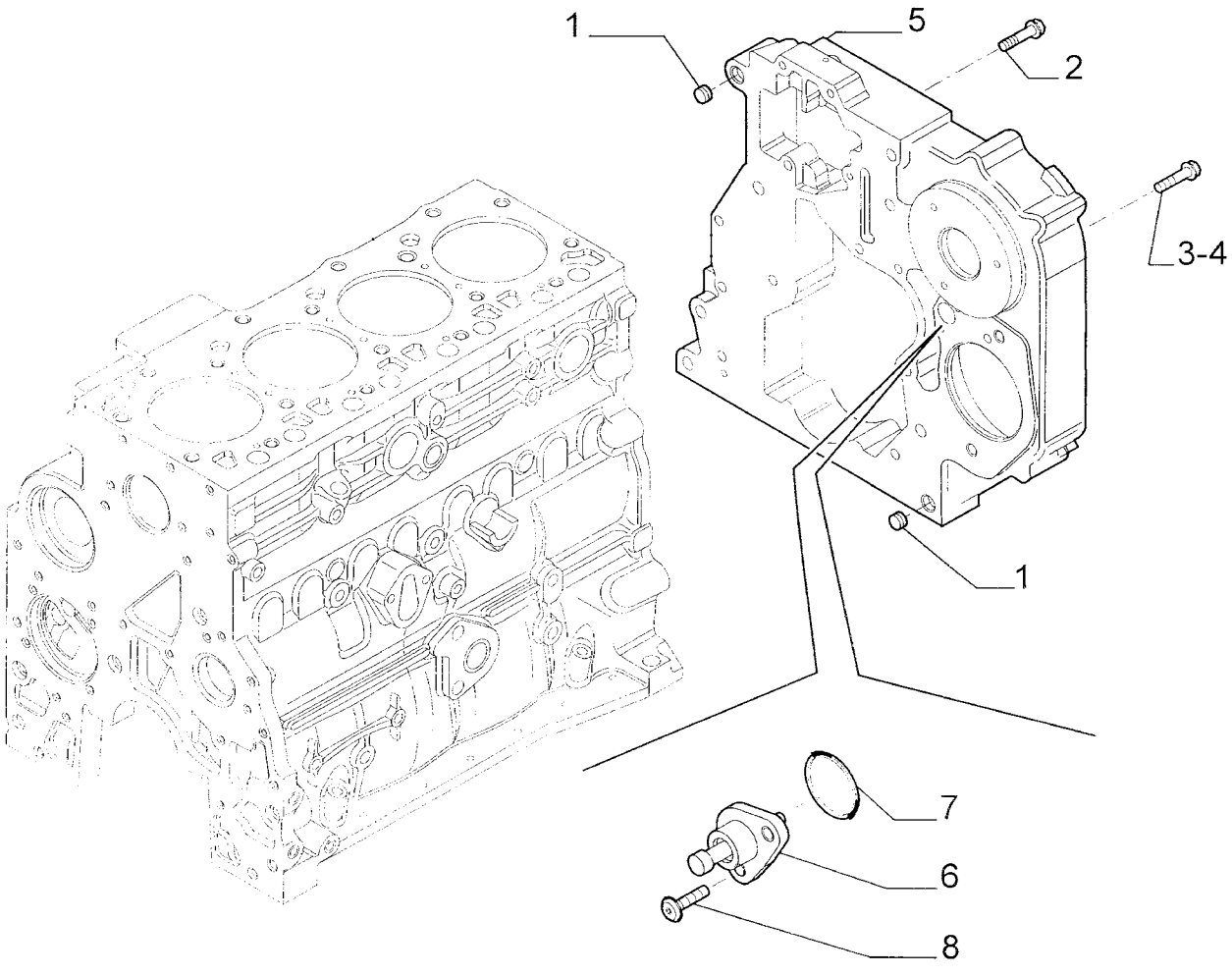

HTTP://WWW.MINNPARBACKHOEPARTS.COM



BLOQUE DE CILINDROS - CUBIERTAS

| REF | FN | PART NUMBER | YR/SN | QTY | DESCRIPTION |
|---|---|---|---|---|---|
| 1 | | 4899026 | | 2 | PITON |
| 2 | | 4899091 | | 4 | TORNILLO |
| 3 | | 4899093 | | 5 | TORNILLO |
| 4 | | 4899073 | | 2 | TORNILLO |
| 5 | | 504050848 | | 1 | TAPADERA |
| 6 | | 504074001 | | 1 | TAPADERA |
| 7 | | 17278780 | | 1 | JUNTA HERMETICA |
| 8 | | 4895355 | | 2 | TORNILLO 5X17 |

HTTP://WWW.MINNPARBACKHOEPARTS.COM

| 02-13 | | p1 | 01/04 |
|---|---|---|---|

BLOQUE DE CILINDROS - CUBIERTAS

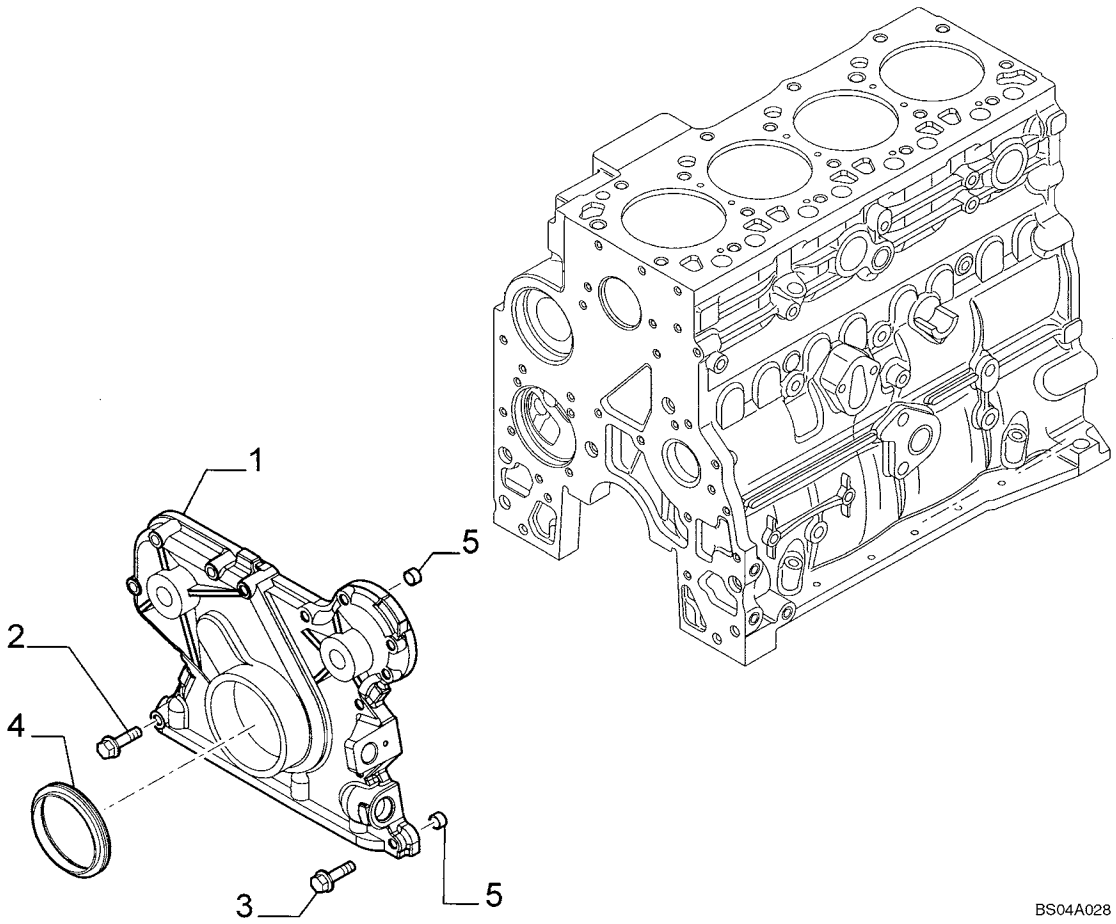

HTTP://WWW.MINNPARBACKHOEPARTS.COM



BLOQUE DE CILINDROS - CUBIERTAS

| REF | FN | PART NUMBER | YR/SN | QTY | DESCRIPTION |
|---|---|---|---|---|---|
| 1 | | 4897024 | | 1 | TAPADERA |
| 2 | | 4899078 | | 5 | TORNILLO |
| 3 | | 4899063 | | 8 | TORNILLO M8X30 |
| 4 | | 4890832 | | 1 | JUNTA HERMETICA |
| 5 | | 4891209 | | 2 | PITON |

HTTP://WWW.MINNPARBACKHOEPARTS.COM

| 02-14 | | p1 | 01/04 |
|---|---|---|---|

BLOQUE DE CILINDROS - CUBIERTAS

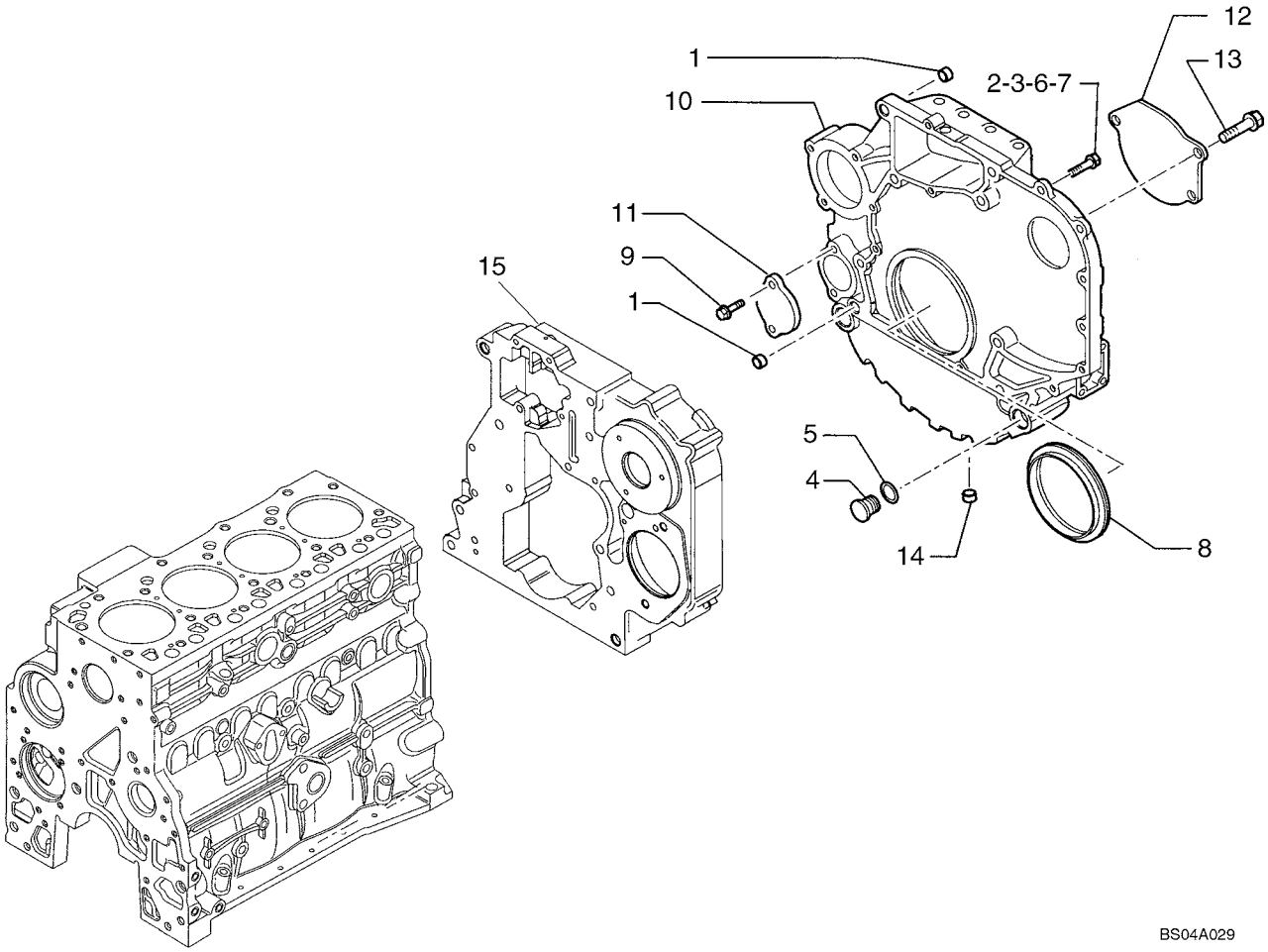

HTTP://WWW.MINNPARBACKHOEPARTS.COM



BLOQUE DE CILINDROS - CUBIERTAS

| REF | FN | PART NUMBER | YR/SN | QTY | DESCRIPTION |
|---|---|---|---|---|---|
| 1 | | 4899026 | | 2 | PITON |
| 2 | | 4899109 | | 3 | TORNILLO M10X1.5X80 |
| 3 | | 4899075 | | 8 | TORNILLO M10X1.5X40 |
| 4 | | 4895378 | | 2 | TAPÓN |
| 5 | | 4895379 | | 2 | JUNTA HERMETICA |
| 6 | | 4899076 | | 5 | TORNILLO M12X80 |
| 7 | | 4899074 | | 2 | TORNILLO |
| 8 | | 4890833 | | 1 | JUNTA HERMETICA |
| 9 | | 4899103 | | 2 | TORNILLO |
| 10 | | 504069775 | | 1 | TAPADERA |
| 11 | | 4895358 | | 1 | TAPADERA |
| 12 | | 504030423 | | 1 | TAPADERA |
| 13 | | 4899020 | | 1 | TORNILLO M8X20 |
| 13 | | 504062964 | | 2 | TORNILLO |
| 14 | | 4895079 | | 1 | TAPÓN |
| 15 | | REF | | 1 | MANUAL COVER; See Figure 02-12 |

HTTP://WWW.MINNPARBACKHOEPARTS.COM



RESPIRADERO - MOTOR

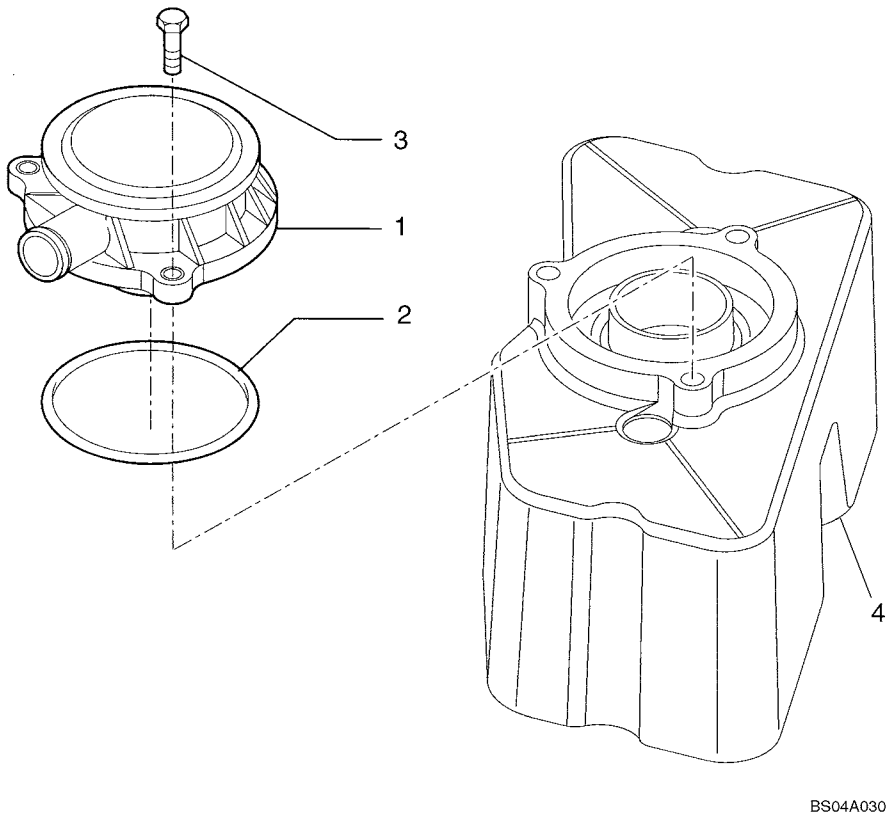

HTTP://WWW.MINNPARBACKHOEPARTS.COM



RESPIRADERO - MOTOR

| REF | FN | PART NUMBER | YR/SN | QTY | DESCRIPTION |
|---|---|---|---|---|---|
| 1 | | 504069558 | | 1 | RESPIRADERO |
| 2 | | 500315795 | | 1 | JUNTA HERMETICA |
| 3 | | 4899110 | | 3 | TORNILLO |
| 4 | | REF | | 1 | MANUAL COVER; See Figure 02-17 |

HTTP://WWW.MINNPARBACKHOEPARTS.COM

| 02-16 | | p1 | 01/04 |
|---|---|---|---|

CULATA DEL CILINDROS

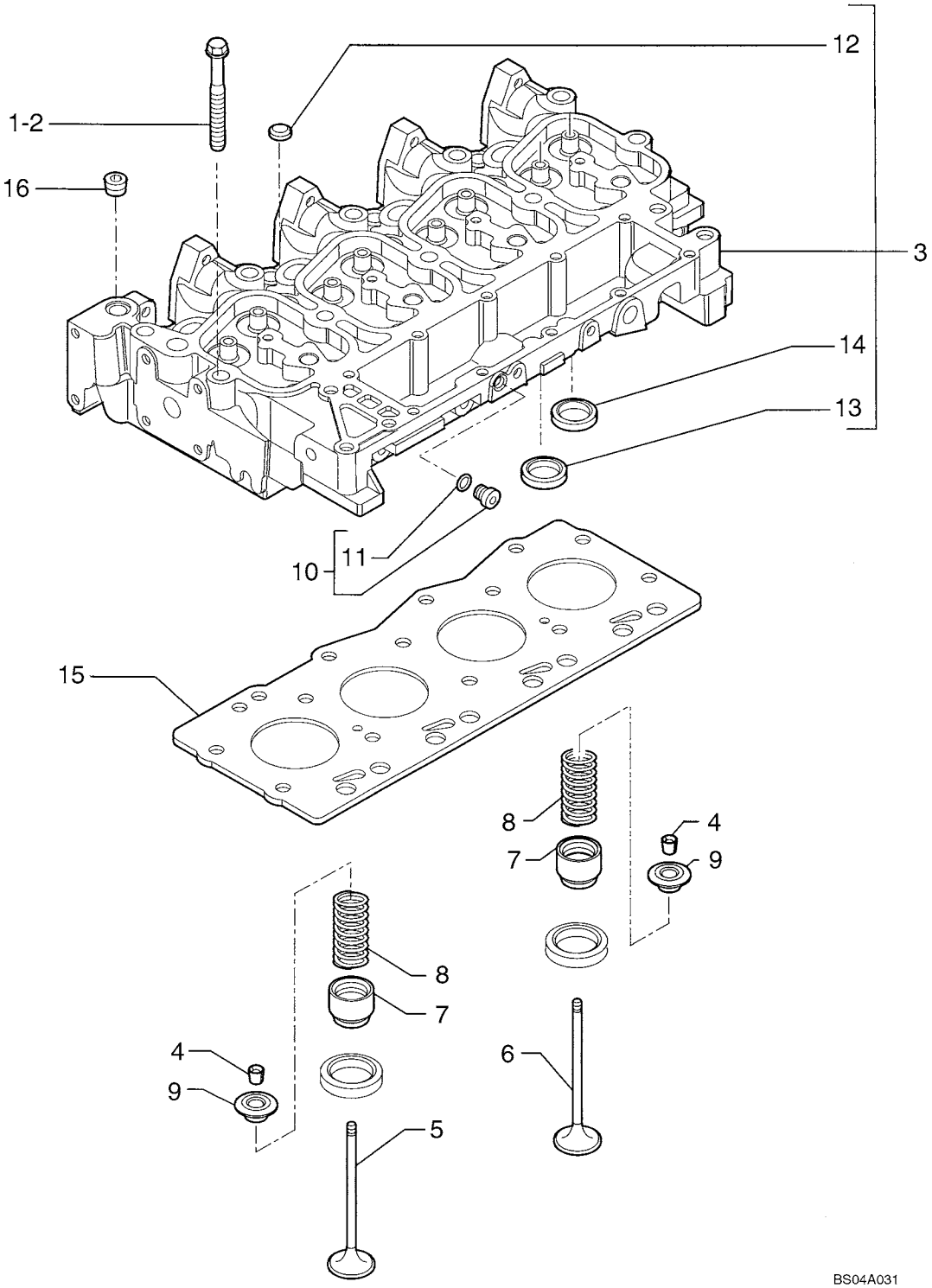

HTTP://WWW.MINNPARBACKHOEPARTS.COM



CULATA DEL CILINDROS

| REF | FN | PART NUMBER | YR/SN | QTY | DESCRIPTION |
|---|---|---|---|---|---|
| 1 | | 4892861 | | 4 | TORNILLO |
| 2 | | 4892859 | | 10 | TORNILLO |
| 3 | | 4895790 | | 1 | CULATA - ASSY |
| 4 | | 4895183 | | 16 | CHAVETA CONICA |
| 5 | | 4895188 | | 4 | VALVULA DE ESCAPE |
| 6 | | 4895187 | | 4 | VÁLVULA DE ADMISIÓN |
| 7 | | 4895347 | | 8 | TAZA |
| 8 | | 4895215 | | 8 | RESORTE |
| 9 | | 4895184 | | 8 | TAZA |
| 10 | | 4899009 | | 1 | TAPÓN - ASSY 10X1.5 |
| 11 | | 4899072 | | 1 | JUNTA HERMETICA |
| 12 | | 4895179 | | 3 | TAPÓN |
| 13 | | 4897178 | | 4 | ASIENTO DE VALVULA |
| 14 | | 4897179 | | 4 | ASIENTO DE VALVULA |
| 15 | | 2830919 | | 1 | JUNTA DE CULATA SP= 1.25 |
| 16 | | 4895078 | | 5 | TAPÓN |

HTTP://WWW.MINNPARBACKHOEPARTS.COM

| 02-17 | | p1 | 01/04 |
|---|---|---|---|

CULATA DE CILINDRO

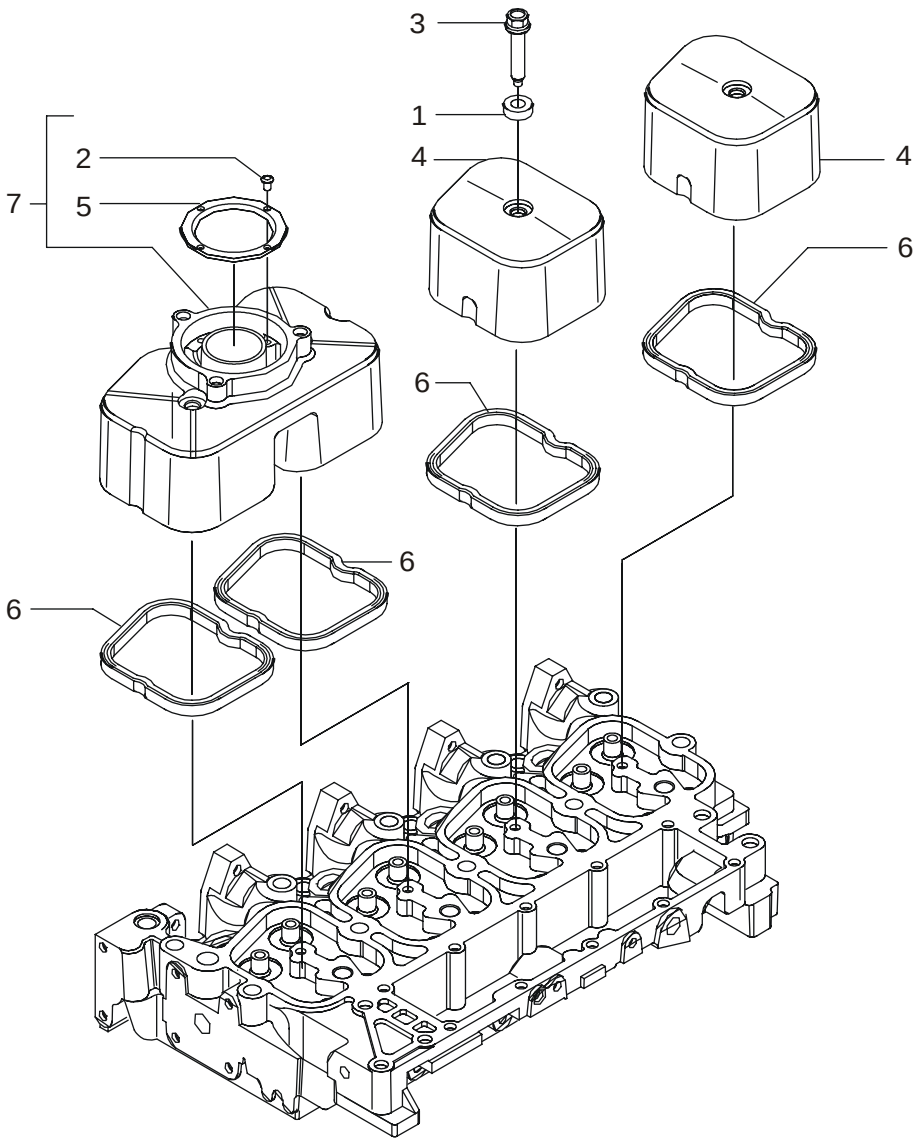


BS04A032

HTTP://WWW.MINNPARBACKHOEPARTS.COM



CULATA DE CILINDRO

| REF | FN | PART NUMBER | YR/SN | QTY | DESCRIPTION |
|---|---|---|---|---|---|
| 1 | | 4895360 | | 4 | CASQUILLO |
| 2 | | 16784504 | | 4 | TORNILLO |
| 3 | | 4895214 | | 4 | TORNILLO |
| 4 | | 504065040 | | 2 | TAPADERA |
| 5 | | 2830775 | | 1 | COLLARIN |
| 6 | | 504053522 | | 4 | JUNTA HERMETICA |
| 7 | | 2830784 | | 1 | TAPADERA - ASSY |

HTTP://WWW.MINNPARBACKHOEPARTS.COM



CULATA DEL CILINDROS - MECANISMO DE LA VALVULA

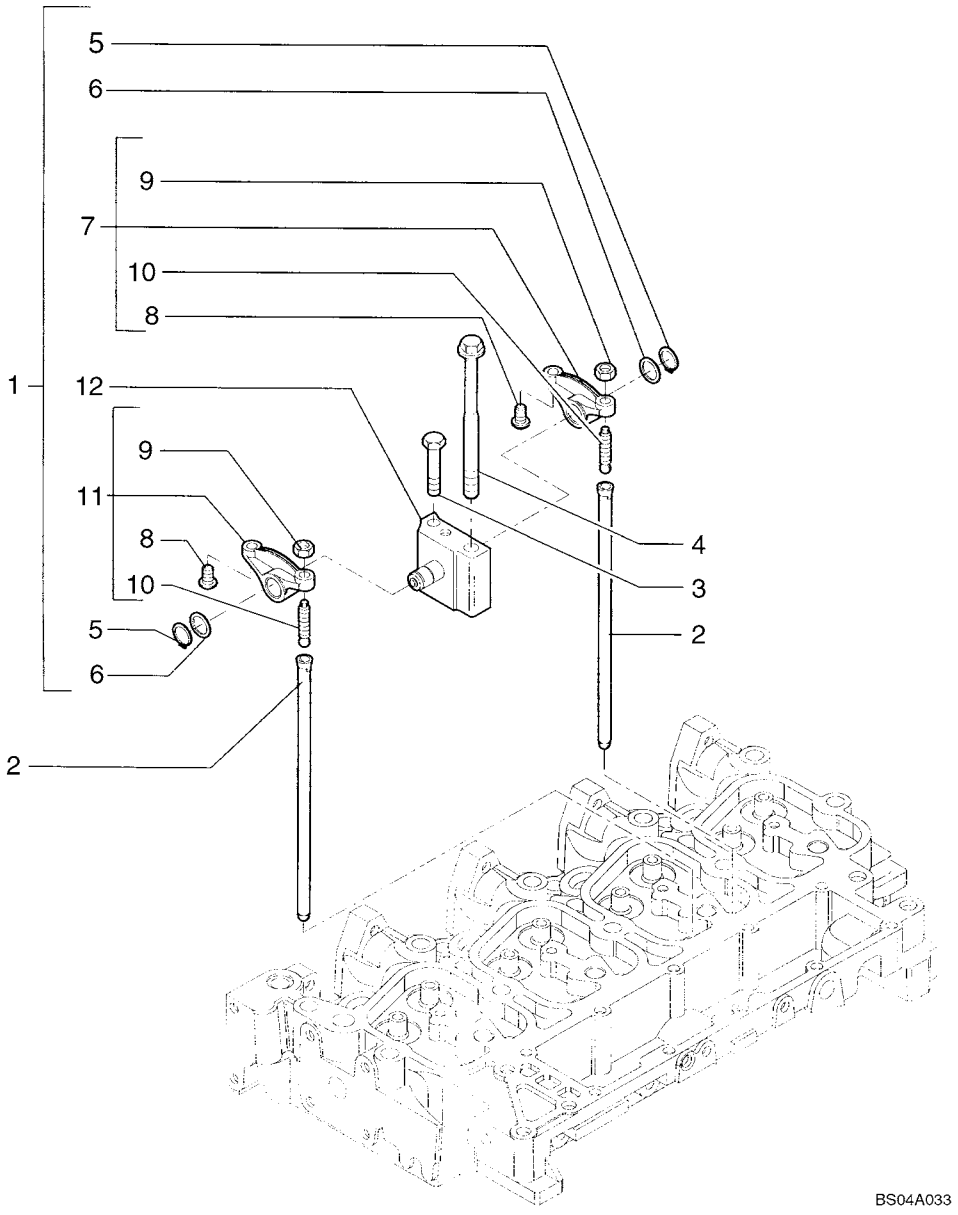

HTTP://WWW.MINNPARBACKHOEPARTS.COM



CULATA DEL CILINDROS - MECANISMO DE LA VALVULA

| REF | FN | PART NUMBER | YR/SN | QTY | DESCRIPTION |
|---|---|---|---|---|---|
| 1 | | 4895195 | | 4 | BALANCIN - ASSY |
| 2 | | 4895361 | | 8 | VARILLA DE EMPUJE |
| 3 | | 4895193 | | 4 | TORNILLO |
| 4 | | 4892860 | | 4 | TORNILLO |
| 5 | | 4895363 | | 2 | ANILLO |
| 6 | | 4895364 | | 2 | ARANDELA |
| 7 | | 4895196 | | 1 | BALANCIN - ASSY |
| 8 | | 4895365 | | 2 | SEPARADOR |
| 9 | | 4895198 | | 2 | TUERCA |
| 10 | | 4895199 | | 2 | TORNILLO |
| 11 | | 4895200 | | 1 | BALANCIN - ASSY |
| 12 | | 4895204 | | 1 | SOPORTE |

HTTP://WWW.MINNPARBACKHOEPARTS.COM

| 02-19 | | p1 | 01/04 |
|---|---|---|---|

COLECTOR ESCAPE

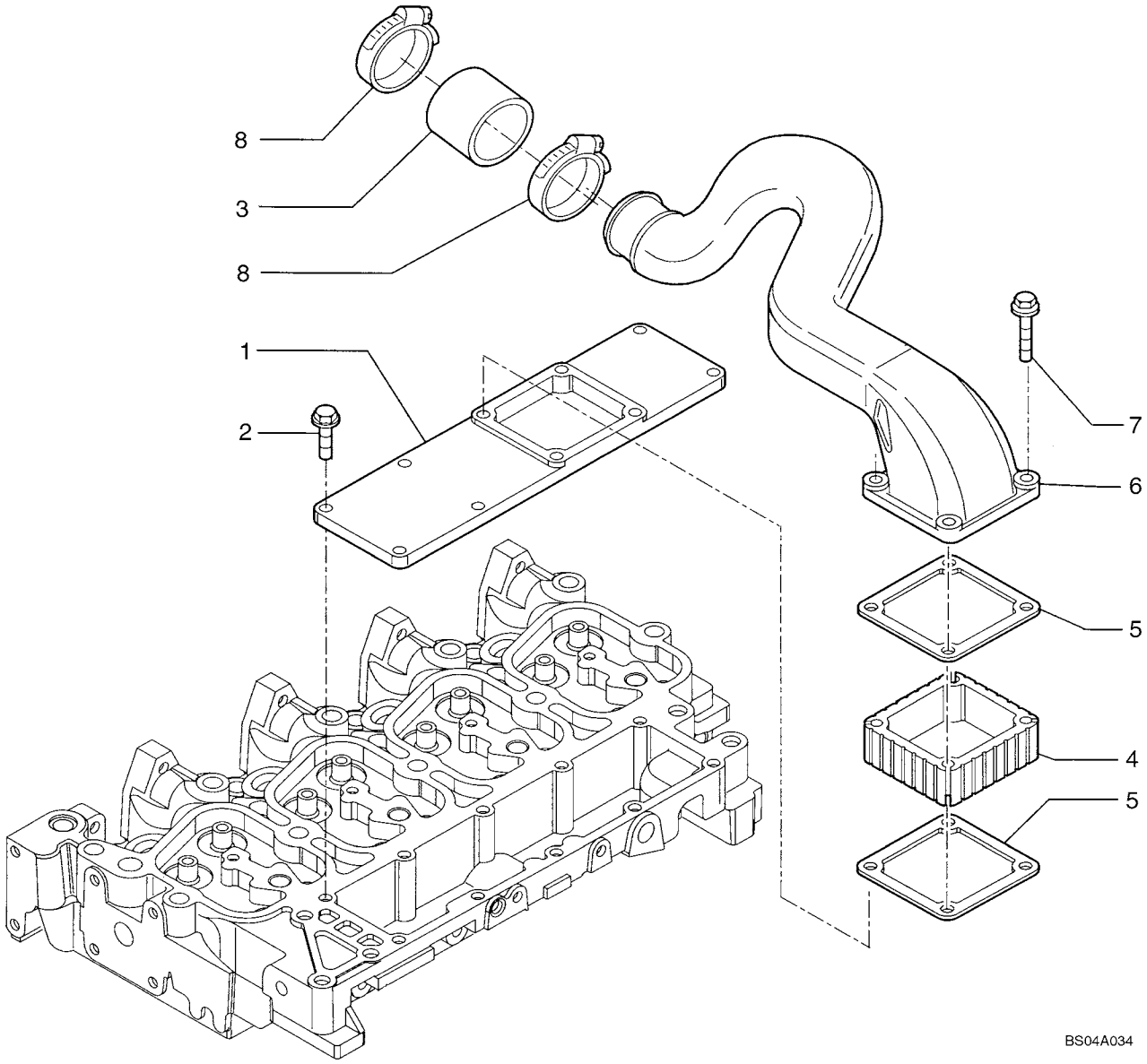

HTTP://WWW.MINNPARBACKHOEPARTS.COM



COLECTOR ESCAPE

| REF | FN | PART NUMBER | YR/SN | QTY | DESCRIPTION |
|---|---|---|---|---|---|
| 1 | | 504064865 | | 1 | TAPADERA |
| 2 | | 4899039 | | 6 | TORNILLO 8X1.25X25 |
| 3 | | 504063980 | | 1 | MANGUITO |
| 4 | | 4895648 | | 1 | SEPARADOR |
| 5 | | 4899921 | | 2 | JUNTA HERMETICA |
| 6 | | 504052006 | | 1 | MANGUERA (CONJUNTO) |
| 7 | | 4895294 | | 4 | TORNILLO 8X140 |
| 8 | | {4899629} | | 2 | Clamp |

HTTP://WWW.MINNPARBACKHOEPARTS.COM

| 02-20 | | p1 | 01/04 |
|---|---|---|---|

COLECTOR ESCAPE

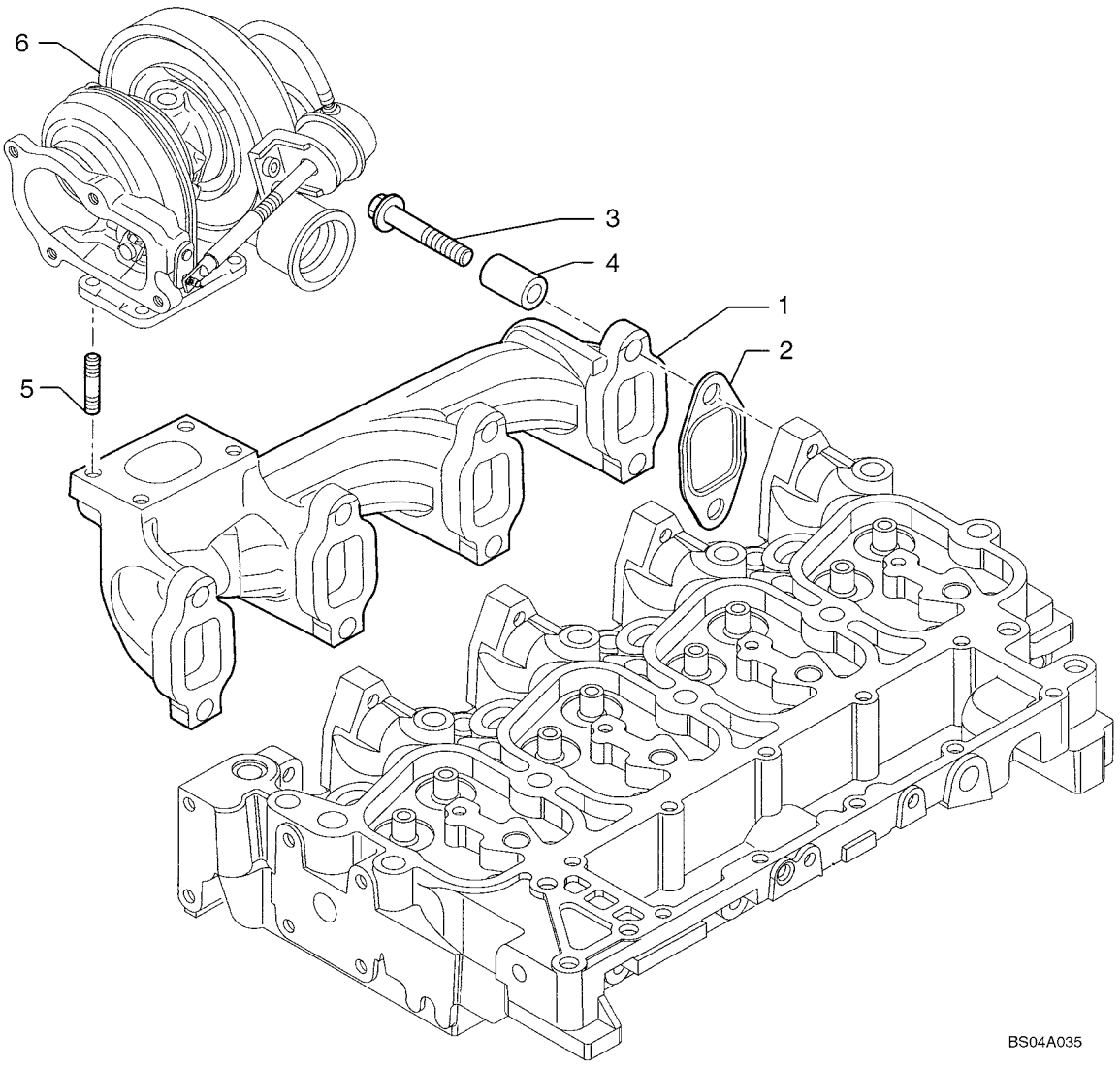

HTTP://WWW.MINNPARBACKHOEPARTS.COM



COLECTOR ESCAPE

| REF | FN | PART NUMBER | YR/SN | QTY | DESCRIPTION |
|---|---|---|---|---|---|
| 1 | | {4895273} | | 1 | Manifold, Exhaust |
| 2 | | 2830445 | | 4 | JUNTA HERMETICA |
| 3 | | 4895174 | | 8 | TORNILLO |
| 4 | | 4895336 | | 8 | SEPARADOR |
| 5 | | 4899119 | | 4 | PRISIONERO |
| 6 | | REF | | 1 | MANUAL TURBOCHARGER; See Figure 2-29 |

HTTP://WWW.MINNPARBACKHOEPARTS.COM



CIGUENAL

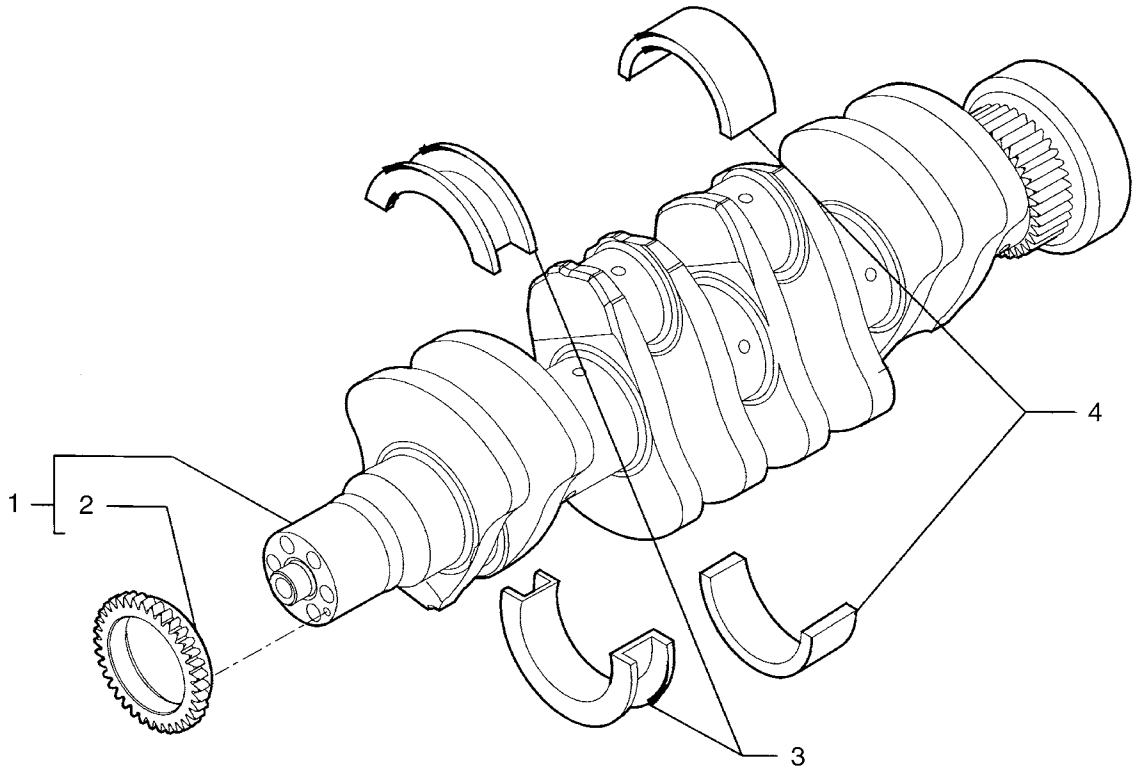


BS04A036

HTTP://WWW.MINNPARBACKHOEPARTS.COM



CIGUENAL

| REF | FN | PART NUMBER | YR/SN | QTY | DESCRIPTION |
|---|---|---|---|---|---|
| 1 | | 504048350 | | 1 | CIGÜEÑAL - ASSY |
| 2 | | 4893386 | | 1 | ENGRANAJE |
| 4 | | 2992147 | | 4 | SERIE SEMICOJIN. BANCO ( - 0.000) (- 0.000) |
| 4 | | 2992148 | | 4 | SERIE SEMICOJIN. BANCO ( - 0.254) ( - 0.250) |
| 4 | | 2992149 | | 4 | SERIE SEMICOJIN. BANCO ( - 0.508) ( - 0.500) |
| 3 | | 2992153 | | 1 | SERIE SEMICOJIN. BANCO (+ 0.000) ( + 0.000) |
| 3 | | 2992154 | | 1 | SERIE SEMICOJIN. BANCO ( + 0.254) ( + 0.250) |
| 3 | | 2992155 | | 1 | SERIE SEMICOJIN. BANCO ( + 0.508) ( + 0.500) |

HTTP://WWW.MINNPARBACKHOEPARTS.COM



PISTONES - VARILLAS CONECTORAS

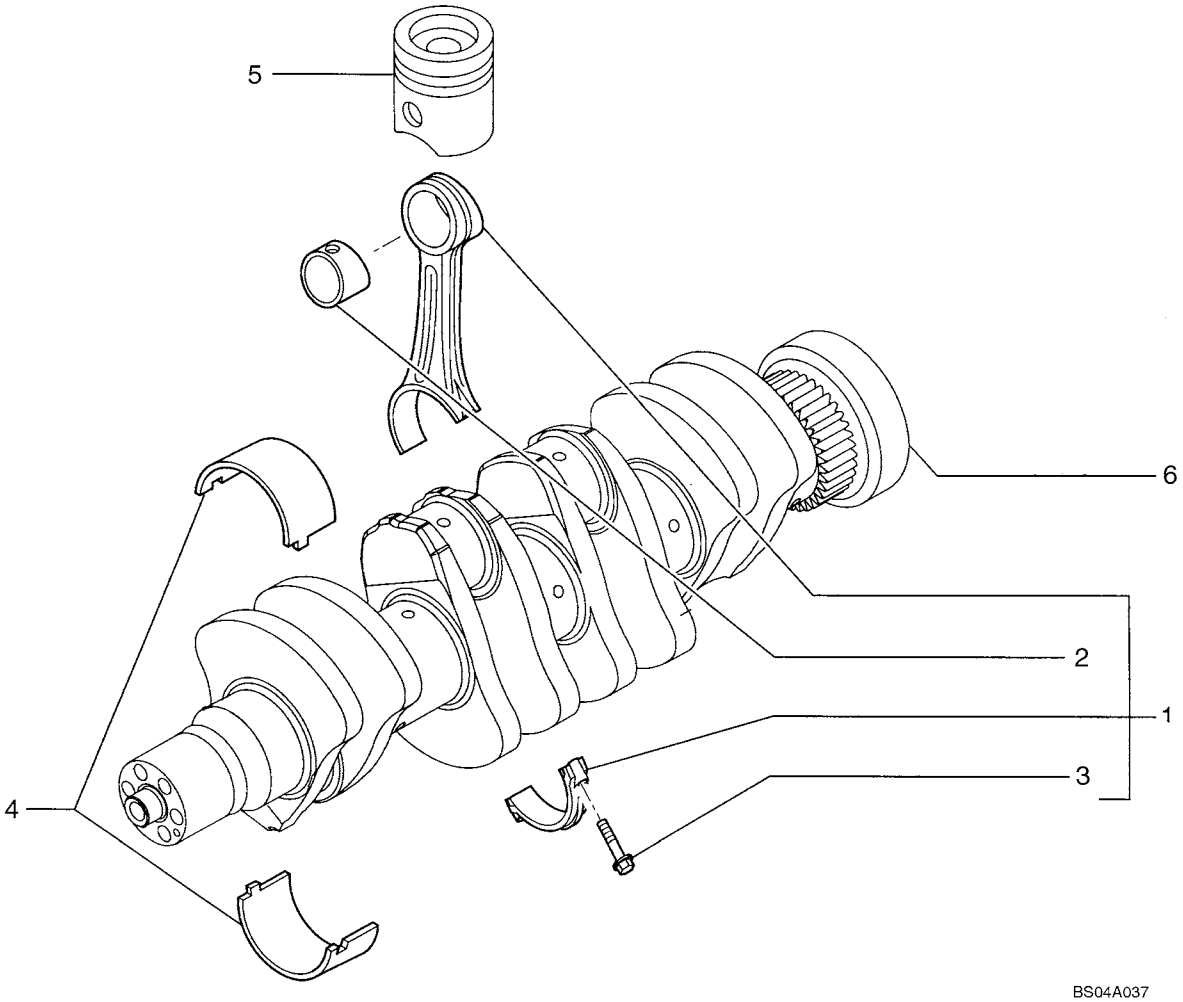

HTTP://WWW.MINNPARBACKHOEPARTS.COM



PISTONES - VARILLAS CONECTORAS

| REF | FN | PART NUMBER | YR/SN | QTY | DESCRIPTION |
|---|---|---|---|---|---|
| 1 | | 4895748 | | 4 | BIELA DE EMBOLO - ASSY |
| 2 | | 4892708 | | 1 | CASQUILLO |
| 3 | | 4892707 | | 2 | TORNILLO |
| 4 | | 8093882 | | 4 | SERIE SEMICOJIN. BANCO |
| 5 | | REF | | 1 | MANUAL PISTON; See Figure 02-23 |
| 6 | | REF | | 1 | MANUAL CRANKSHAFT; See Figure 02-21 |

HTTP://WWW.MINNPARBACKHOEPARTS.COM



PISTONES - VARILLAS CONECTORAS

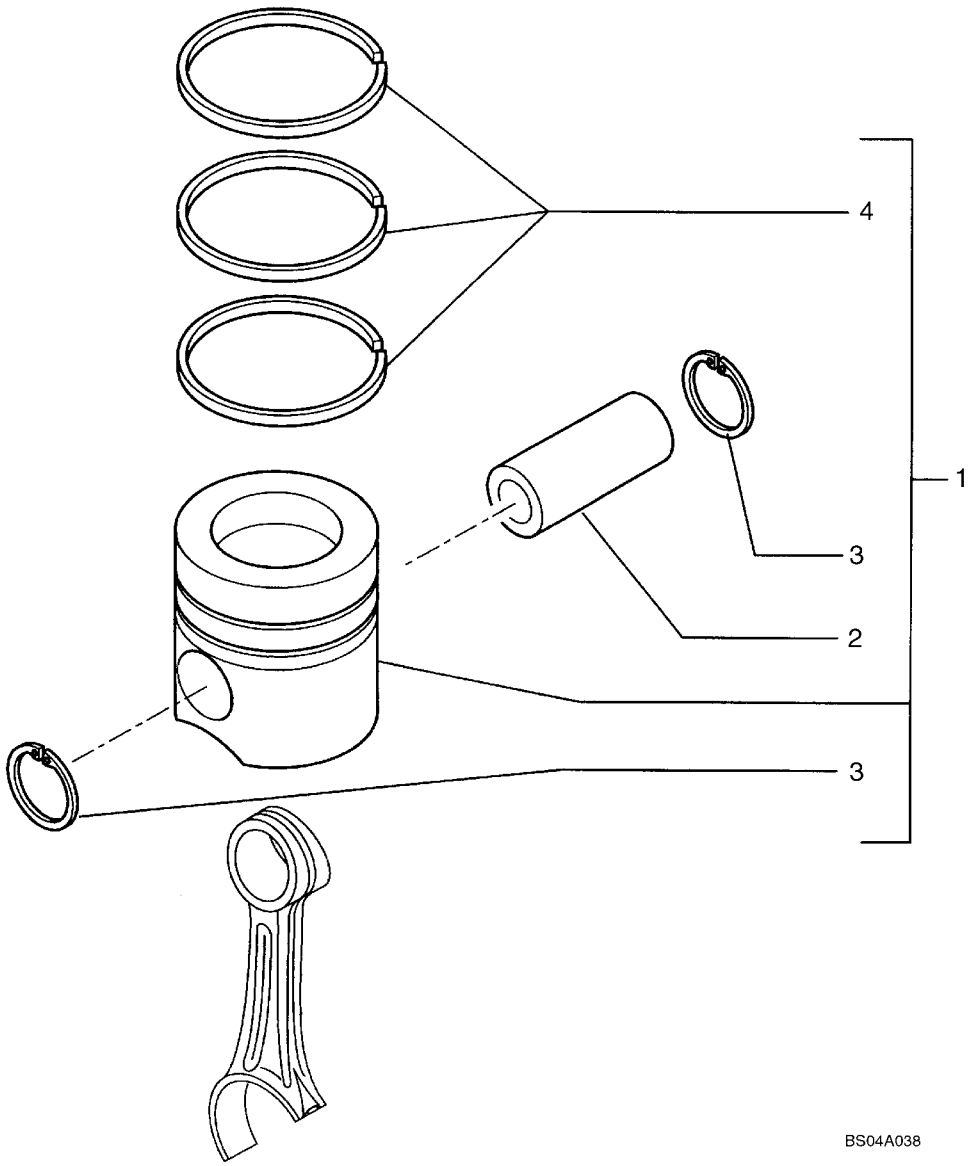

HTTP://WWW.MINNPARBACKHOEPARTS.COM



PISTONES - VARILLAS CONECTORAS

| REF | FN | PART NUMBER | YR/SN | QTY | DESCRIPTION |
|---|---|---|---|---|---|
| 1 | | 8093880 | | 4 | SERIE PISTONES |
| 2 | | 4892712 | | 1 | BULON DEL EMBOLO |
| 3 | | 4892713 | | 2 | ANILLO DE FRENO |
| 4 | | 8093881 | | 1 | SERIE ANILLO PISTON |

HTTP://WWW.MINNPARBACKHOEPARTS.COM



VOLANTE MOTOR

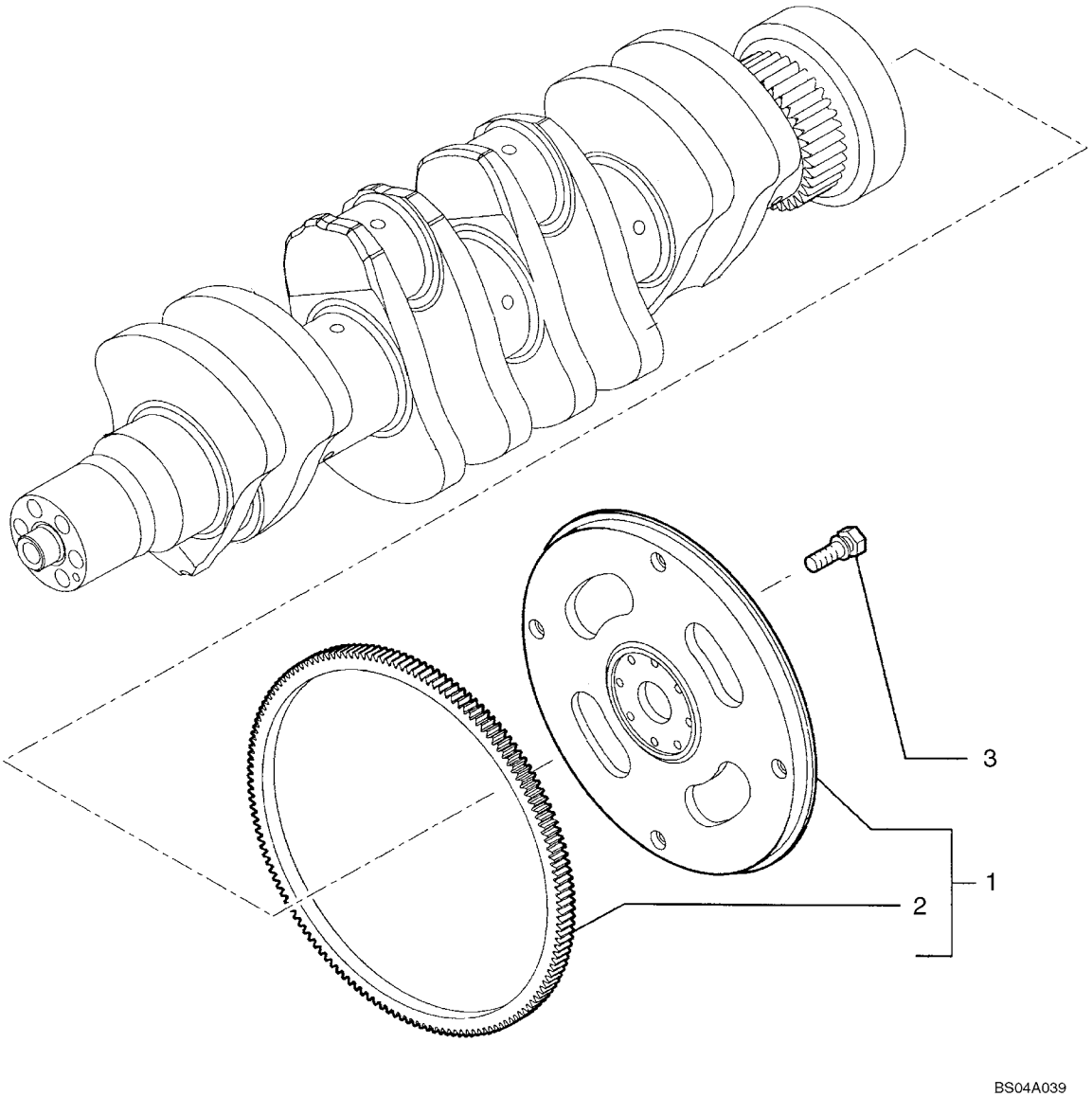

HTTP://WWW.MINNPARBACKHOEPARTS.COM



VOLANTE MOTOR

| REF | FN | PART NUMBER | YR/SN | QTY | DESCRIPTION |
|---|---|---|---|---|---|
| 1 | | 504057736 | | 1 | VOLANTE - ASSY |
| 2 | | 504062460 | | 1 | CORONA DENTADA |
| 3 | | 4894641 | | 8 | TORNILLO |

HTTP://WWW.MINNPARBACKHOEPARTS.COM



POLEA - CIGUENAL

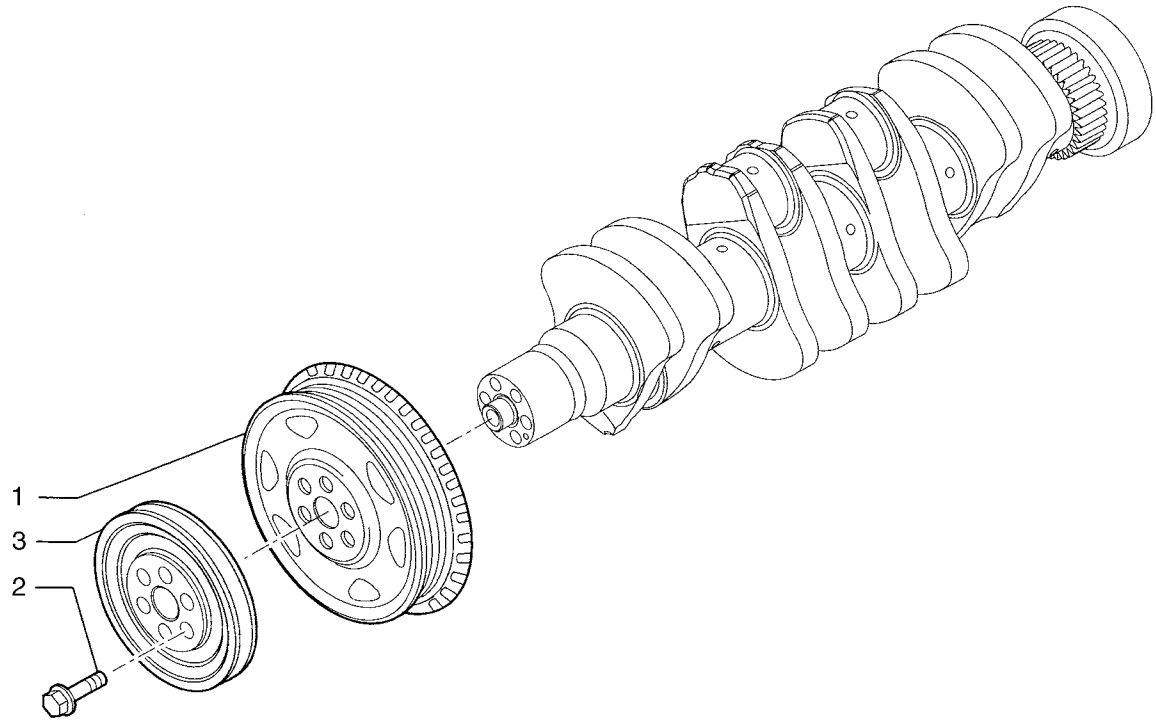

HTTP://WWW.MINNPARBACKHOEPARTS.COM



POLEA - CIGUENAL

| REF | FN | PART NUMBER | YR/SN | QTY | DESCRIPTION |
|---|---|---|---|---|---|
| 1 | | 504035087 | | 1 | POLEA |
| 2 | | 4892867 | | 6 | TORNILLO |
| 3 | | 504061622 | | 1 | POLEA |

HTTP://WWW.MINNPARBACKHOEPARTS.COM



EQUILIBRADOR, ENGRENAJES Y ARBOLES

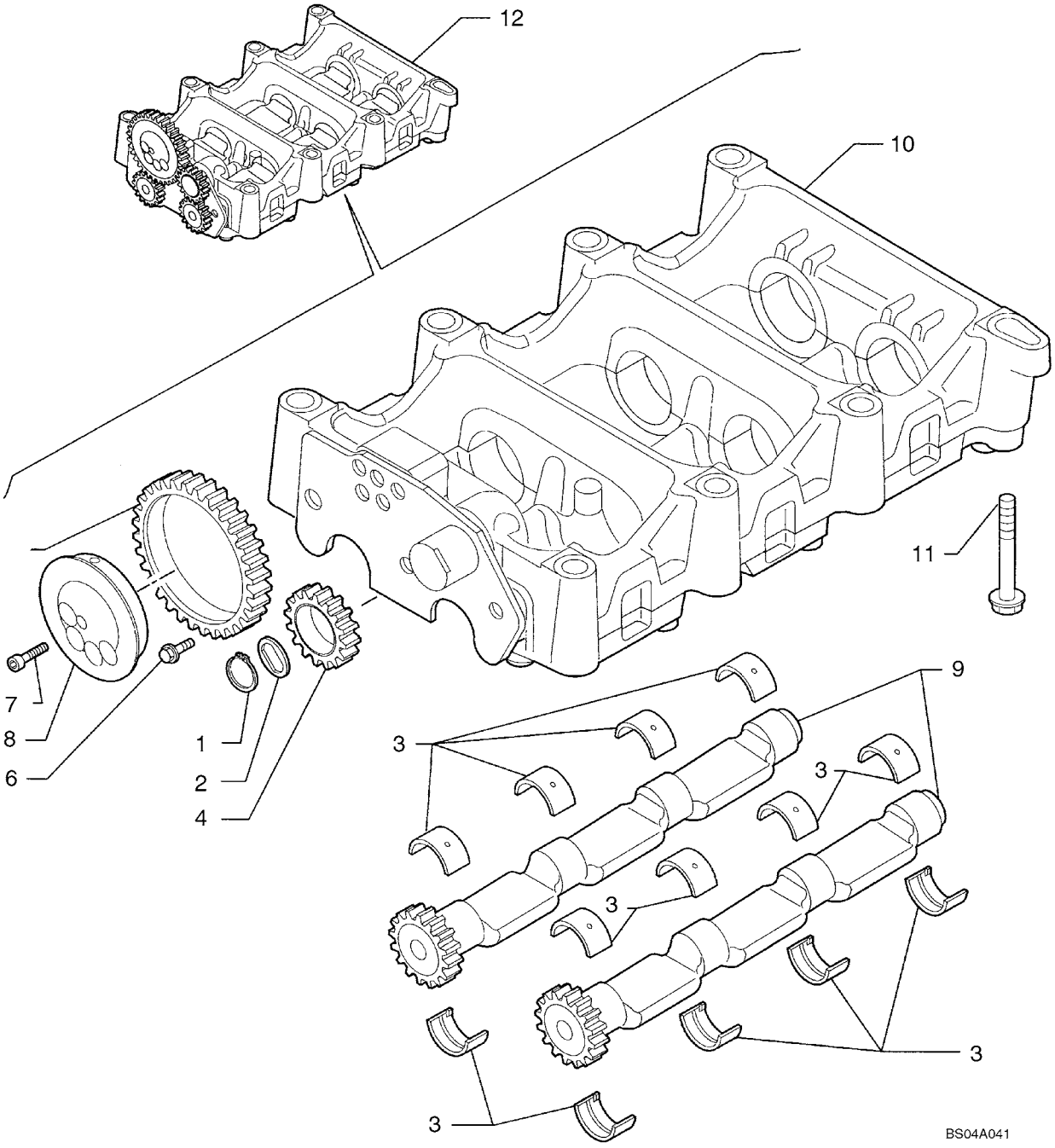

HTTP://WWW.MINNPARBACKHOEPARTS.COM



EQUILIBRADOR, ENGRENAJES Y ARBOLES

| REF | FN | PART NUMBER | YR/SN | QTY | DESCRIPTION |
|---|---|---|---|---|---|
| 1 | | 16866473 | | 1 | RETENEDOR |
| 2 | | 4897123 | | 1 | PLACA DE APOYO |
| 3 | | 4897071 | | 16 | CASQUILLO |
| 4 | | 4897048 | | 1 | PINON CONDUCIDO |
| 5 | | 4896947 | | 1 | PINON CONDUCIDO |
| 6 | | 4895586 | | 3 | TORNILLO |
| 7 | | 2830433 | | 4 | TORNILLO |
| 8 | | 2831031 | | 1 | ARBOL DE REENVIO |
| 9 | | 2831023 | | 2 | EJE |
| 10 | | 2830952 | | 1 | CAVIDAD - ASSY; See Figure 02-27 |
| 11 | | 4899109 | | 7 | TORNILLO |
| 11 | | 4897934 | | 1 | TORNILLO |
| 12 | | 2830953 | | 1 | EQUILIBRADOR - ASSY |

HTTP://WWW.MINNPARBACKHOEPARTS.COM



EQUILIBRADOR, ENGRENAJES Y ARBOLES (2830952)

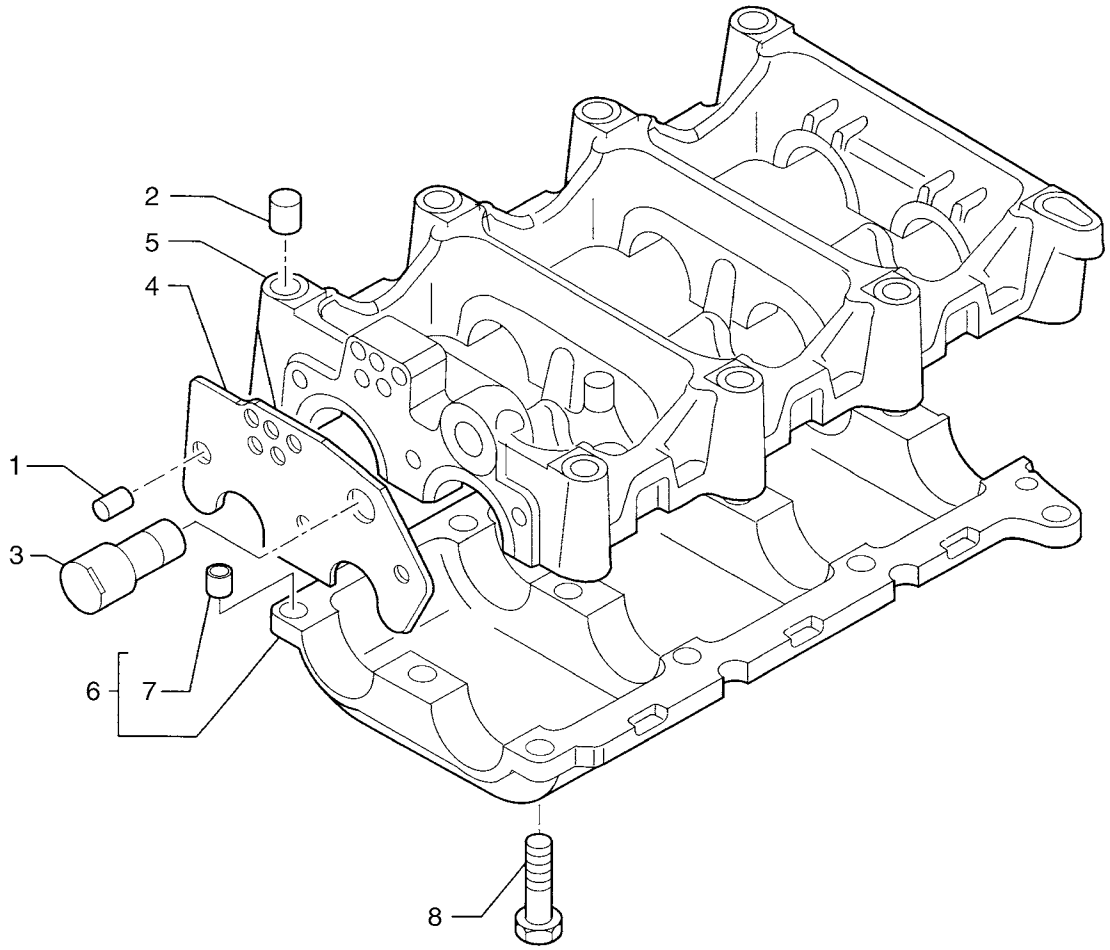

HTTP://WWW.MINNPARBACKHOEPARTS.COM



EQUILIBRADOR, ENGRENAJES Y ARBOLES (2830952)

| REF | FN | PART NUMBER | YR/SN | QTY | DESCRIPTION |
|---|---|---|---|---|---|
| | | 2830952 | | 1 | CAVIDAD Assy; Incl. Ref 1 - 8 |
| 1 | | 4892836 | | 1 | PITON |
| 2 | | 4899027 | | 2 | PITON |
| 3 | | 2830948 | | 1 | ARBOL DE REENVIO |
| 4 | | 2830905 | | 1 | PLACA DE APOYO |
| 5 | | 2830934 | | 1 | CAVIDAD |
| 6 | | 2831101 | | 1 | CAVIDAD - ASSY |
| 7 | | 4891209 | | 2 | PITON |
| 8 | | 2830411 | | 3 | TORNILLO |
| 8 | | 4895323 | | 9 | TORNILLO |

HTTP://WWW.MINNPARBACKHOEPARTS.COM



EJE DE LEVAS

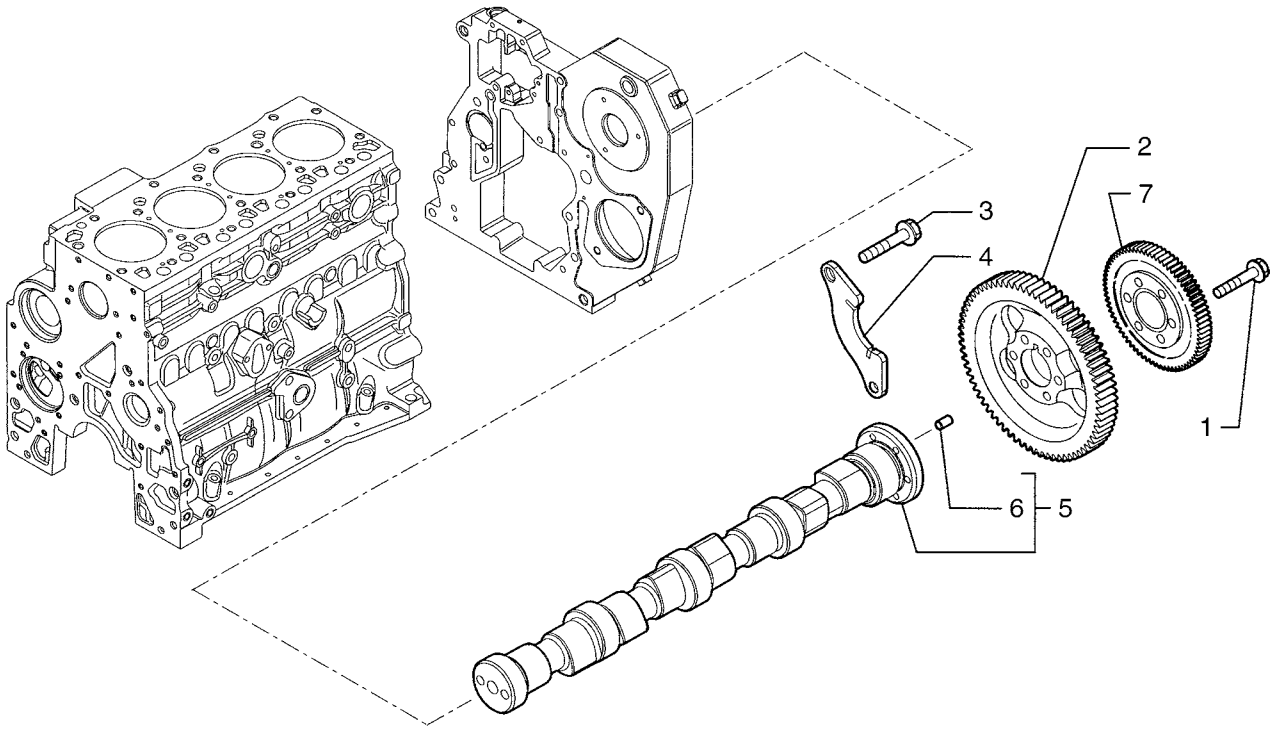


BS04A043

HTTP://WWW.MINNPARBACKHOEPARTS.COM



EJE DE LEVAS

| REF | FN | PART NUMBER | YR/SN | QTY | DESCRIPTION |
|---|---|---|---|---|---|
| 1 | | 4895323 | | 6 | TORNILLO |
| 2 | | 504062752 | | 1 | ENGRANAJE |
| 3 | | 4899068 | | 2 | TORNILLO 8X17 |
| 4 | | 4897457 | | 1 | BRIDA |
| 5 | | 4899610 | | 1 | ARBOL DE LEVAS - ASSY |
| 6 | | 4899080 | | 1 | PITON |
| 7 | | 504034954 | | 1 | PINON CONDUCIDO |

HTTP://WWW.MINNPARBACKHOEPARTS.COM



TURBOCOMPRESOR

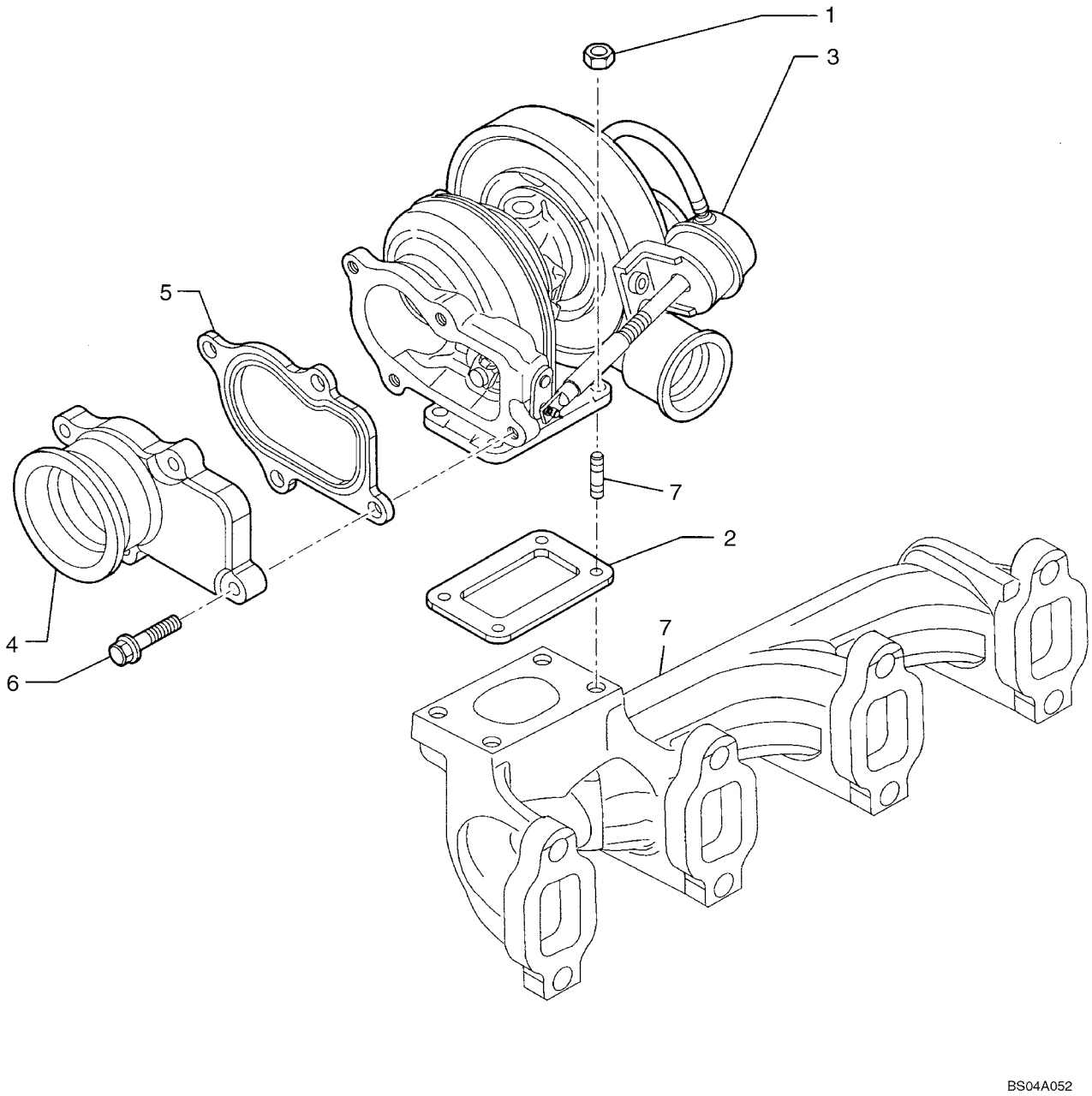

HTTP://WWW.MINNPARBACKHOEPARTS.COM



TURBOCOMPRESOR

| REF | FN | PART NUMBER | YR/SN | QTY | DESCRIPTION |
|---|---|---|---|---|---|
| 1 | | 4899118 | | 4 | TUERCA |
| 2 | | 4895133 | | 1 | JUNTA HERMETICA |
| 3 | | {504061374} | | 1 | Turbocharger Assembly |
| 4 | | 504010786 | | 1 | COLECTOR DE ESCAPE |
| 5 | | 504035094 | | 1 | JUNTA HERMETICA |
| 6 | | 4898482 | | 4 | TORNILLO |
| 7 | | REF | | 1 | MANUAL EXHAUST MANIFOLD; See Figure 02-20 |

HTTP://WWW.MINNPARBACKHOEPARTS.COM



MOTOR, ACEITE

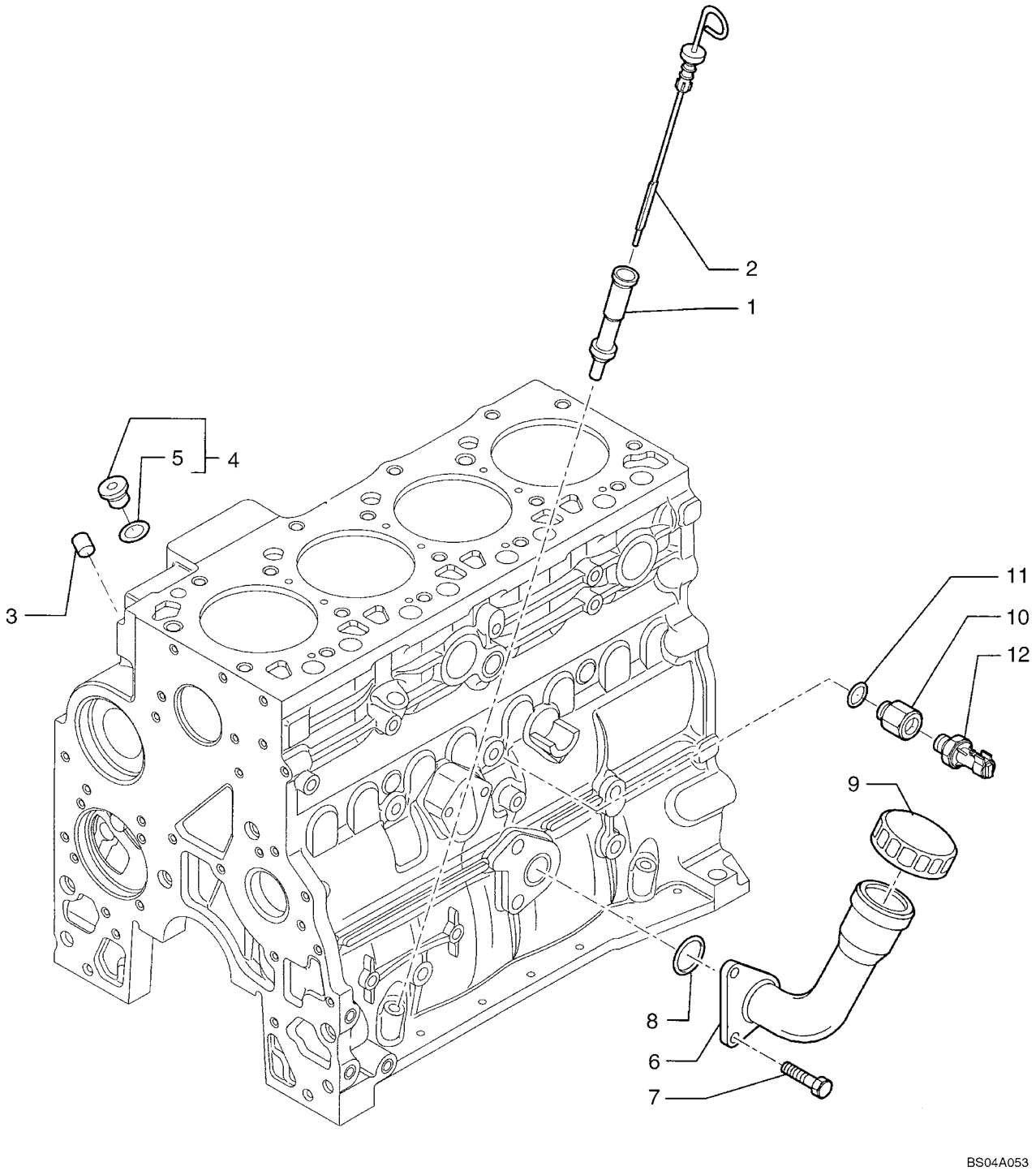

HTTP://WWW.MINNPARBACKHOEPARTS.COM



MOTOR, ACEITE

| REF | FN | PART NUMBER | YR/SN | QTY | DESCRIPTION |
|---|---|---|---|---|---|
| 1 | | 504011329 | | 1 | TUBO RIGIDO |
| 2 | | 504062795 | | 1 | VARILLA DE NIVEL |
| 3 | | 4899036 | | 1 | TAPÓN |
| 4 | | 4897330 | | 2 | TAPÓN - ASSY |
| 5 | | 4895610 | | 1 | JUNTA HERMETICA |
| 6 | | 504011338 | | 1 | TUBO RIGIDO |
| 7 | | 16587924 | | 2 | TORNILLO |
| 8 | | 17283181 | | 1 | JUNTA HERMETICA |
| 9 | | 98429552 | | 1 | TAPON DE LLENADO |
| 10 | | {504036358} | | 1 | Reducer |
| 11 | | 4899115 | | 1 | JUNTA HERMETICA |
| 12 | | 98442879 | | 1 | CONTACTOR Sipea version |
| 12 | | 98445111 | | 1 | CONTACTOR Borletti version |

HTTP://WWW.MINNPARBACKHOEPARTS.COM



BOMBA DE ACEITE - MOTOR

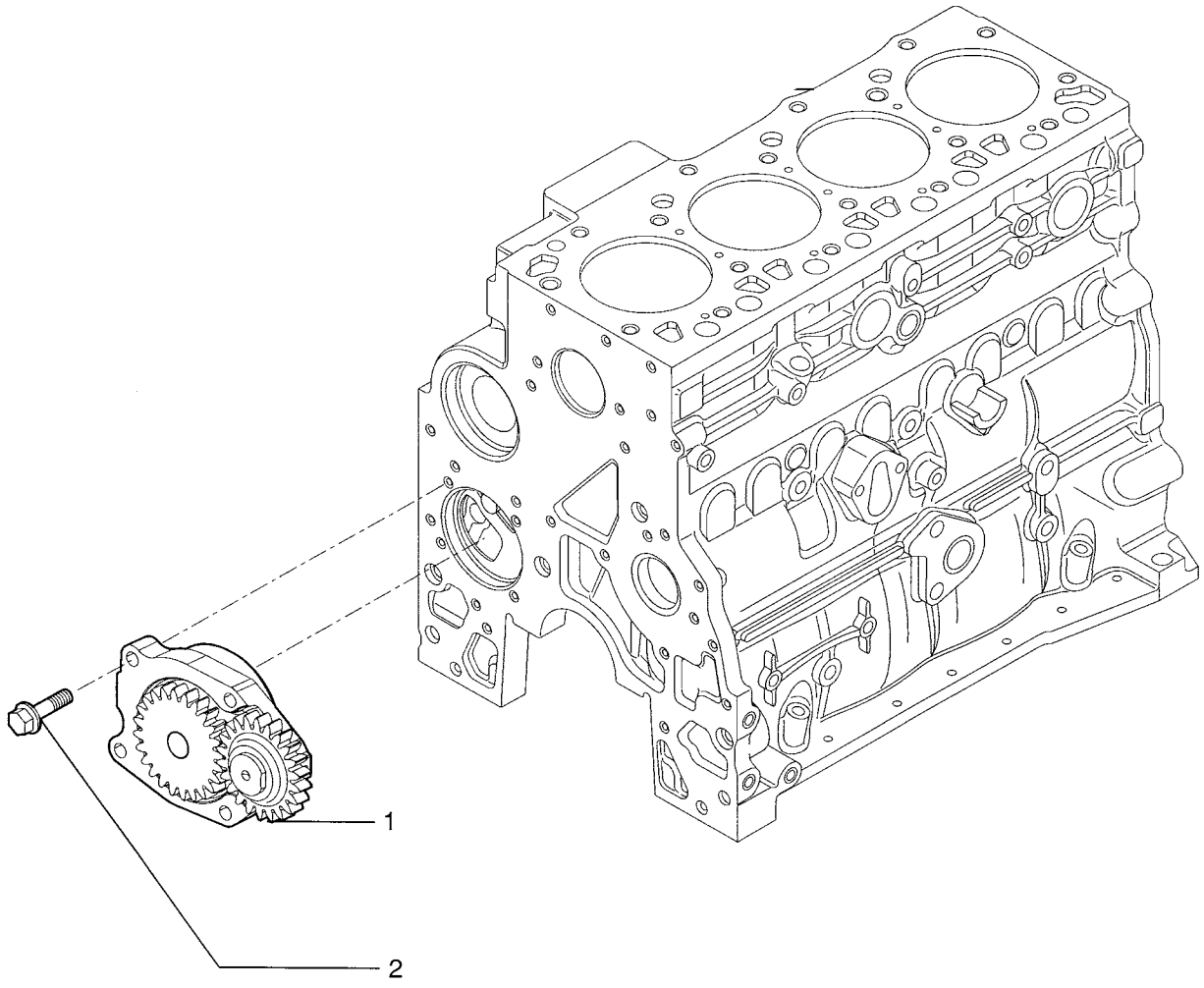

HTTP://WWW.MINNPARBACKHOEPARTS.COM



BOMBA DE ACEITE - MOTOR

| REF | FN | PART NUMBER | YR/SN | QTY | DESCRIPTION |
|---|---|---|---|---|---|
| 1 | | 4897480 | | 1 | BOMBA DE ACEITE |
| 2 | | 4899090 | | 4 | TORNILLO |

HTTP://WWW.MINNPARBACKHOEPARTS.COM

| 02-32 | | p1 | 01/04 |
|---|---|---|---|

FILTRO DE ACEITE - MOTOR

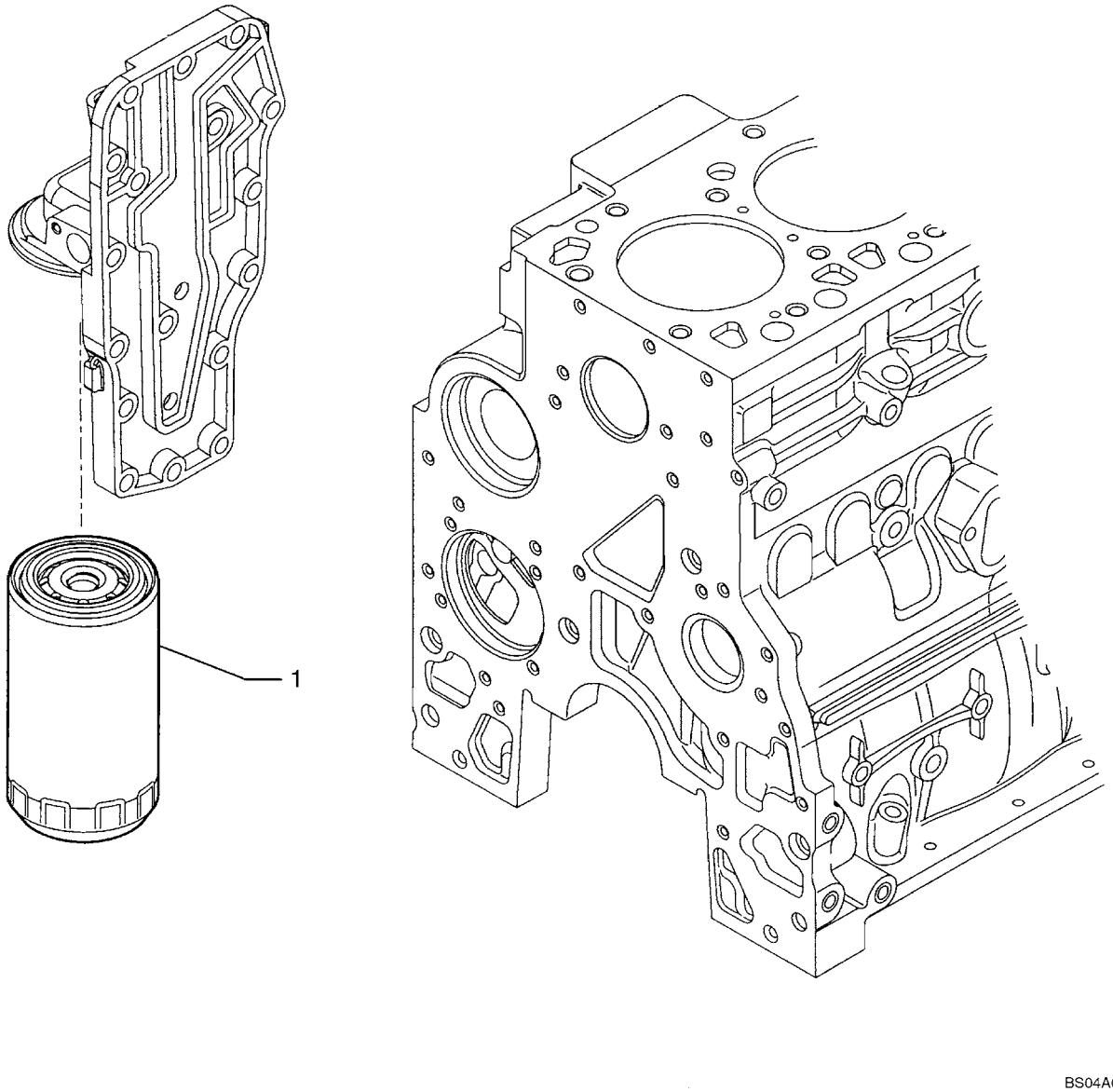

HTTP://WWW.MINNPARBACKHOEPARTS.COM



FILTRO DE ACEITE - MOTOR

| REF | FN | PART NUMBER | YR/SN | QTY | DESCRIPTION |
|---|---|---|---|---|---|
| 1 | | 87803261 | | 1 | FILTRO DE ACEITE |

HTTP://WWW.MINNPARBACKHOEPARTS.COM

| 02-33 | | p1 | 01/04 |
|---|---|---|---|

TUBERIAS - ACEITE DEL MOTOR

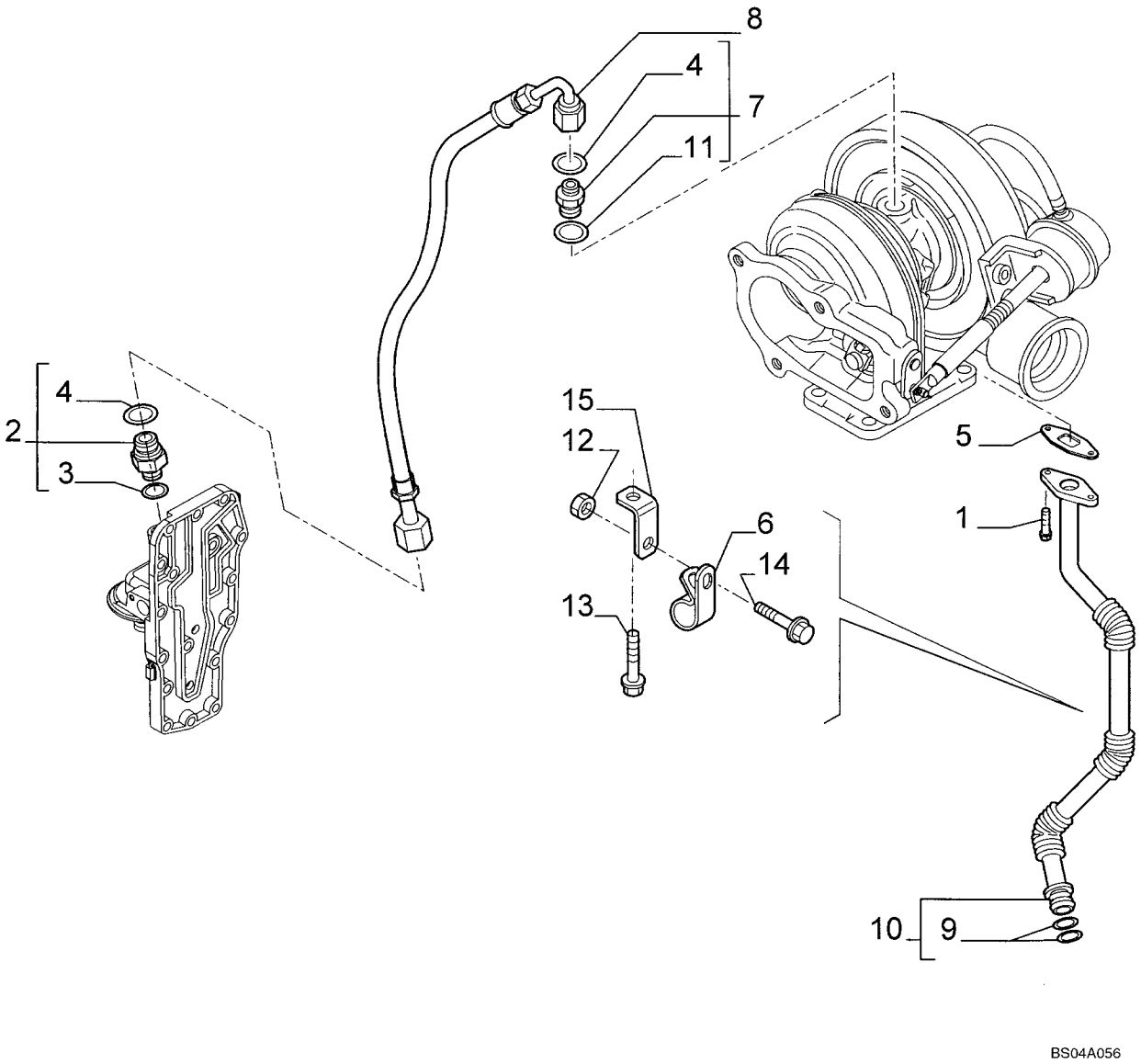

HTTP://WWW.MINNPARBACKHOEPARTS.COM



TUBERIAS - ACEITE DEL MOTOR

| REF | FN | PART NUMBER | YR/SN | QTY | DESCRIPTION |
|---|---|---|---|---|---|
| 1 | | 4895164 | | 2 | TORNILLO |
| 2 | | 4895107 | | 1 | RACOR - ASSY |
| 3 | | 4899107 | | 1 | JUNTA HERMETICA |
| 4 | | 4899108 | | 2 | JUNTA HERMETICA |
| 5 | | 4899467 | | 1 | JUNTA HERMETICA |
| 6 | | 4899519 | | 1 | PIEZA DE SOPORTE |
| 7 | | 4899106 | | 1 | RACOR |
| 8 | | 504053173 | | 1 | MANGUERA (CONJUNTO) |
| 9 | | 4899058 | | 2 | JUNTA HERMETICA |
| 10 | | {504053166} | | 1 | - ASSY; Tube |
| 11 | | 4899121 | | 1 | JUNTA HERMETICA |
| 12 | | 17044625 | | 1 | TUERCA M6 |
| 13 | | 18138324 | | 1 | TORNILLO M8X1.25X16 |
| 14 | | 18137824 | | 1 | TORNILLO M8X16 |
| 15 | | 504053894 | | 1 | PIEZA DE SOPORTE |

HTTP://WWW.MINNPARBACKHOEPARTS.COM



FILTRO Y REFRIGERADOR DE ACEITE

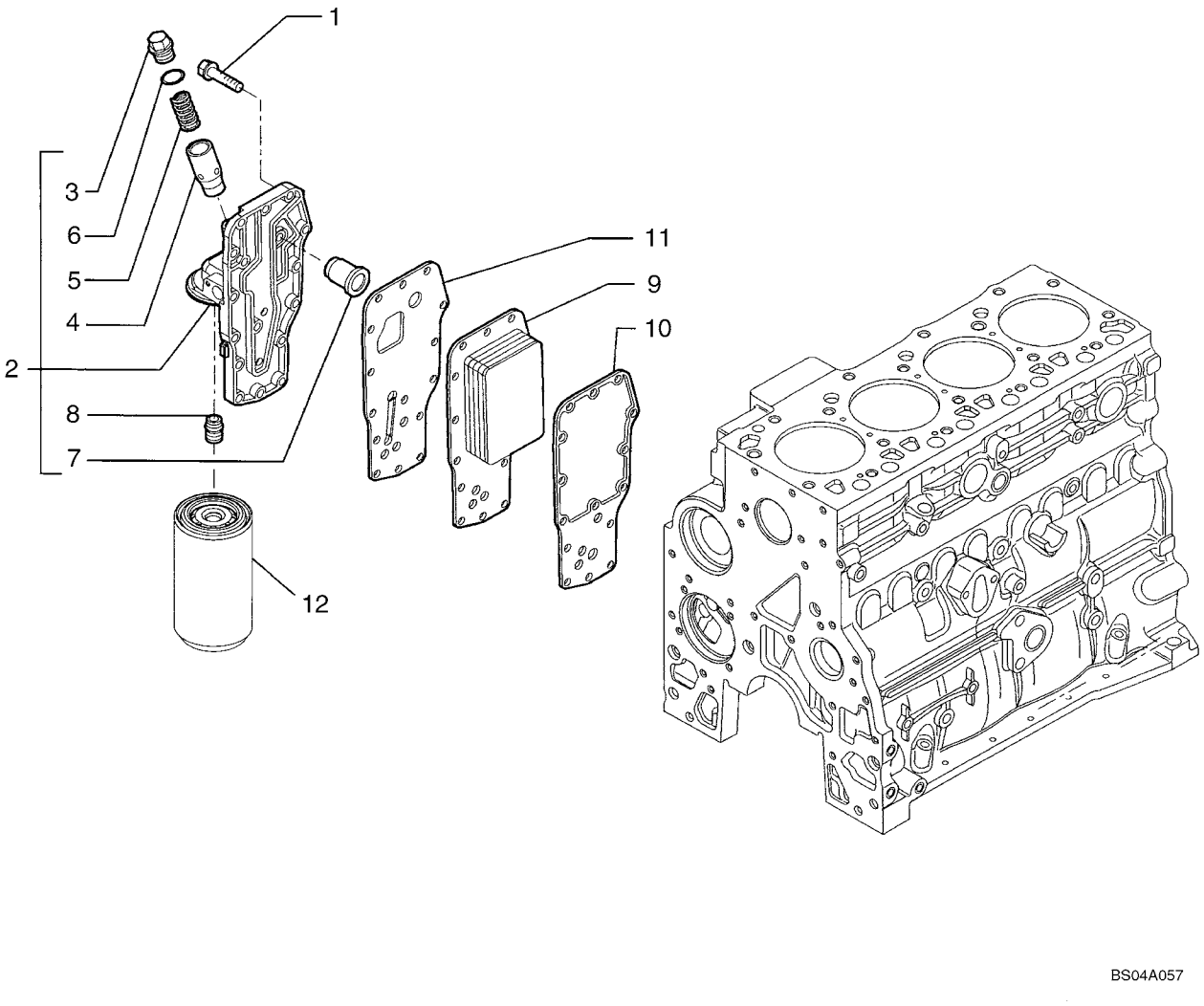

HTTP://WWW.MINNPARBACKHOEPARTS.COM



FILTRO Y REFRIGERADOR DE ACEITE

| REF | FN | PART NUMBER | YR/SN | QTY | DESCRIPTION |
|---|---|---|---|---|---|
| 1 | | 4899019 | | 15 | TORNILLO 8X35 |
| 2 | | 4892774 | | 1 | CAMBIADOR DE CALOR - ASSY |
| 3 | | 4895043 | | 1 | TAPÓN |
| 4 | | 4896404 | | 1 | CAVIDAD |
| 5 | | 4895045 | | 1 | MUELLE, VALVULA |
| 6 | | 4899035 | | 1 | JUNTA HERMETICA |
| 7 | | 4896410 | | 1 | VALVULA |
| 8 | | 4893391 | | 1 | RACOR |
| 9 | | 4896406 | | 1 | RADIADOR |
| 10 | | 4895742 | | 1 | JUNTA HERMETICA |
| 11 | | 4896409 | | 1 | JUNTA HERMETICA |
| 12 | | REF | | 1 | MANUAL FILTER, ENGINE OIL; See Figure 02-32 |

HTTP://WWW.MINNPARBACKHOEPARTS.COM

| 02-35 | | p1 | 01/04 |
|---|---|---|---|

BOMBA DE AGUA

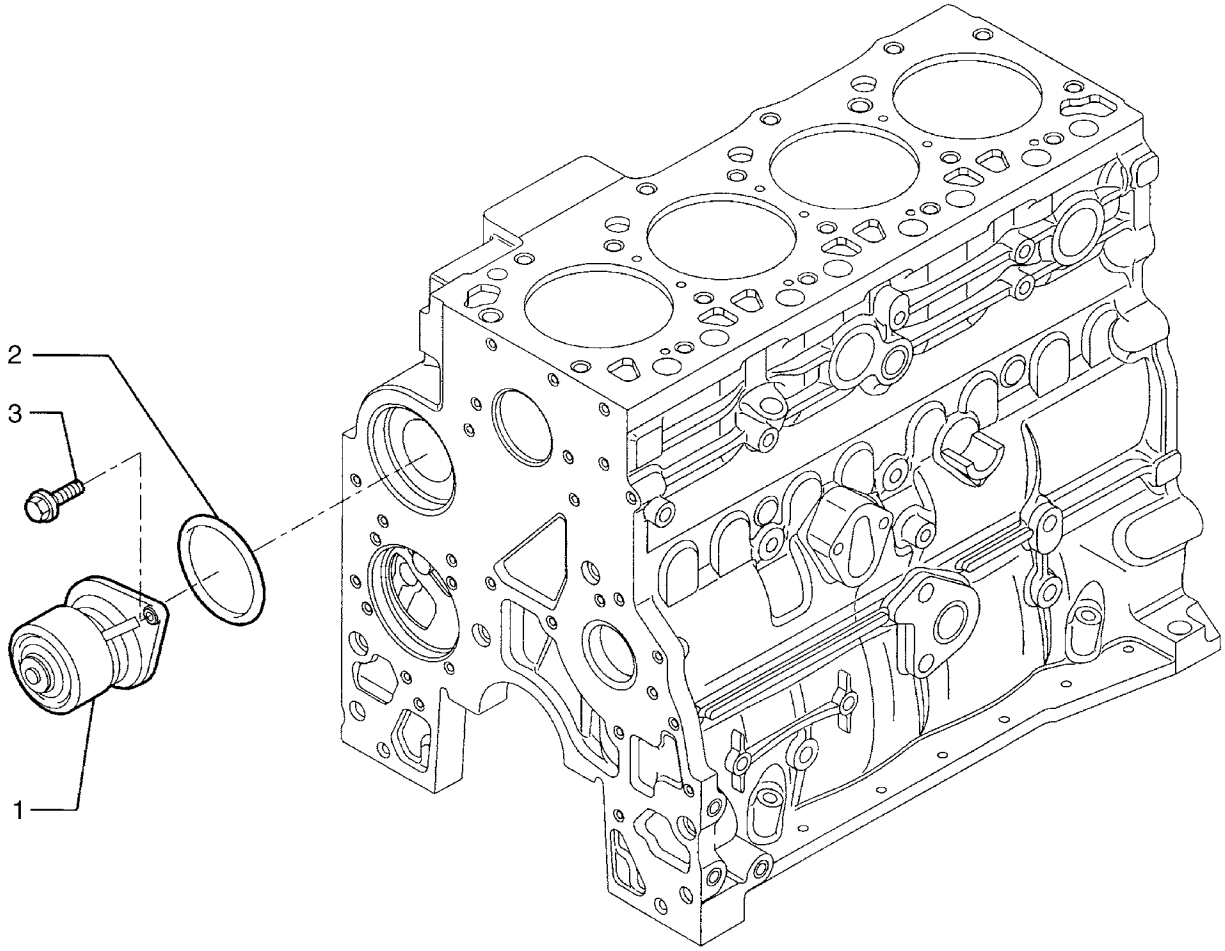


BS04A058

HTTP://WWW.MINNPARBACKHOEPARTS.COM



BOMBA DE AGUA

| REF | FN | PART NUMBER | YR/SN | QTY | DESCRIPTION |
|---|---|---|---|---|---|
| 1 | | 4891252 | | 1 | BOMBA DE AGUA |
| 2 | | 504062856 | | 1 | JUNTA HERMETICA |
| 3 | | 4899031 | | 2 | TORNILLO 8X25 |

HTTP://WWW.MINNPARBACKHOEPARTS.COM



SISTEMA DE REFRIGERACIÓN - MOTOR

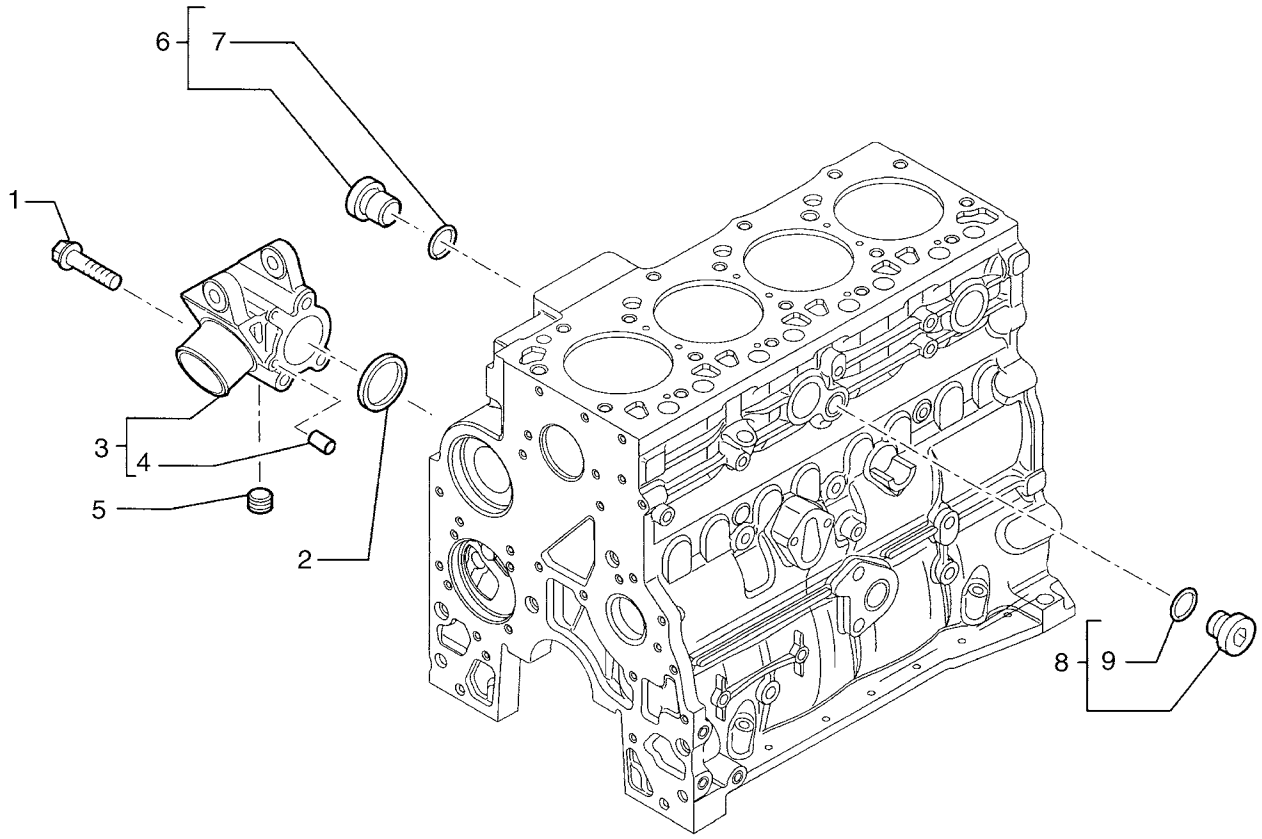

HTTP://WWW.MINNPARBACKHOEPARTS.COM



SISTEMA DE REFRIGERACIÓN - MOTOR

| REF | FN | PART NUMBER | YR/SN | QTY | DESCRIPTION |
|---|---|---|---|---|---|
| 1 | | 4899109 | | 3 | TORNILLO |
| 2 | | 4895121 | | 1 | JUNTA HERMETICA |
| 3 | | 504064336 | | 1 | SOPORTE - ASSY |
| 4 | | 4895576 | | 2 | PITON |
| 5 | | 504074178 | | 1 | TAPÓN |
| 6 | | 4895392 | | 1 | TAPÓN - ASSY M18X1.5 |
| 7 | | 4895393 | | 1 | JUNTA HERMETICA |
| 8 | | 4895623 | | 1 | TAPÓN - ASSY |
| 9 | | 4895625 | | 1 | JUNTA HERMETICA |

HTTP://WWW.MINNPARBACKHOEPARTS.COM



TERMOSTATO - REFRIGERACION DEL MOTOR

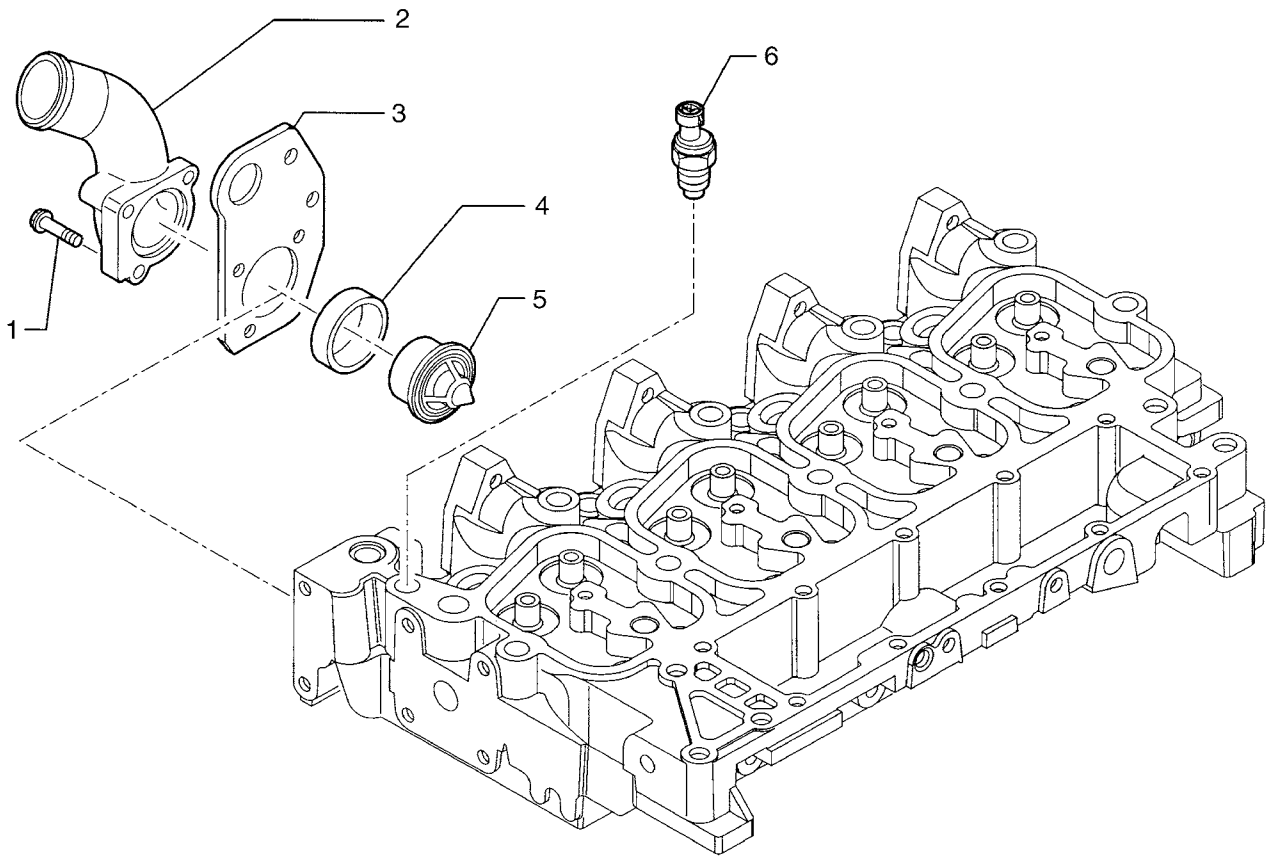

HTTP://WWW.MINNPARBACKHOEPARTS.COM



TERMOSTATO - REFRIGERACION DEL MOTOR

| REF | FN | PART NUMBER | YR/SN | QTY | DESCRIPTION |
|---|---|---|---|---|---|
| 1 | | 16586624 | | 1 | TORNILLO 8X35 |
| 1 | | 16592624 | | 2 | TORNILLO |
| 2 | | 504051210 | | 1 | CODO |
| 3 | | 504052013 | | 1 | ANILLO DE ELEVACIÓN |
| 4 | | 504053512 | | 1 | JUNTA HERMETICA |
| 5 | | 504038890 | | 1 | TERMOSTATO |
| 6 | | 504025599 | | 1 | TERMOSONDA |

HTTP://WWW.MINNPARBACKHOEPARTS.COM

| 02-38 | | p1 | 01/04 |
|---|---|---|---|

BOMBA DE AGUA - MANDO

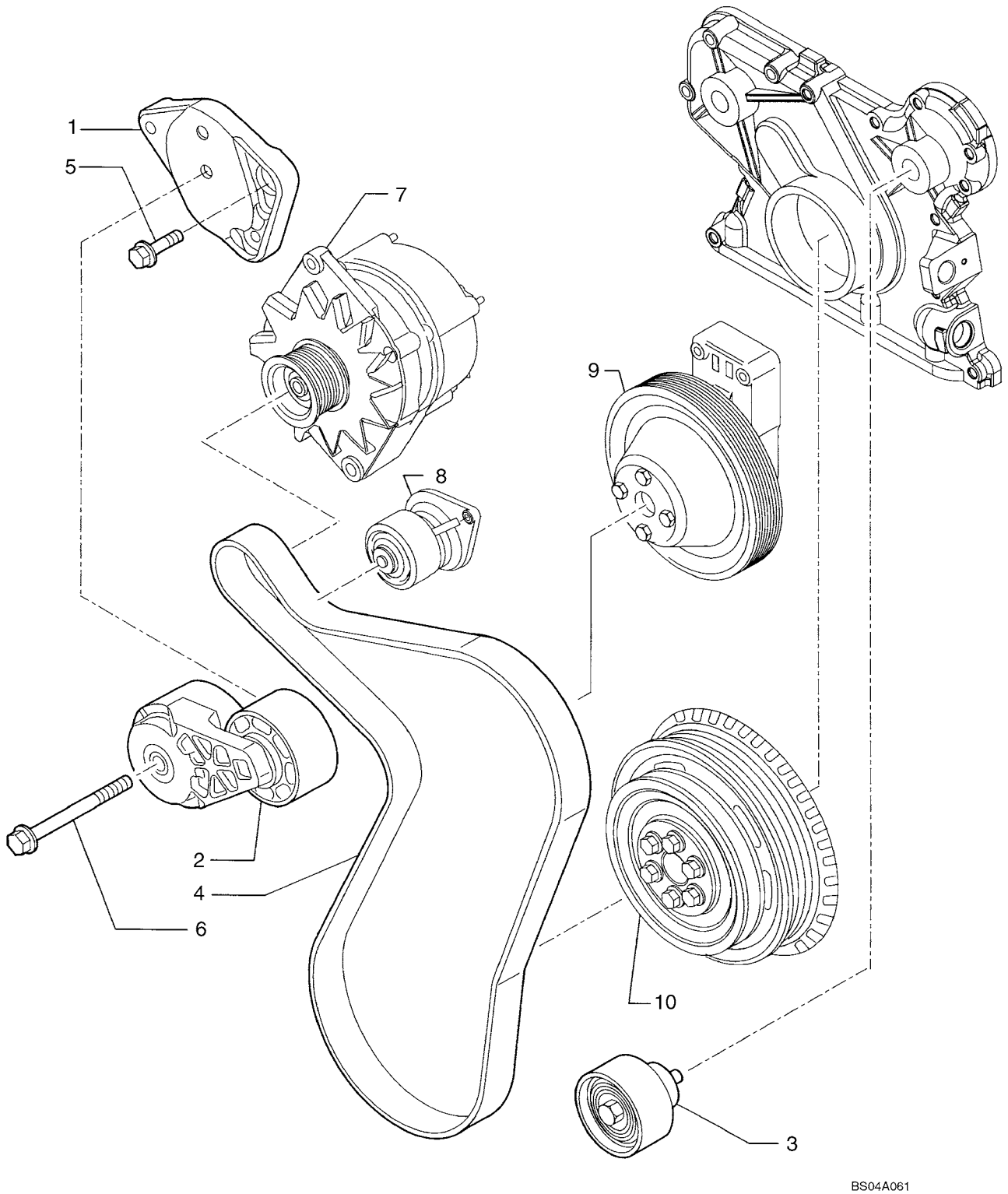

HTTP://WWW.MINNPARBACKHOEPARTS.COM



BOMBA DE AGUA - MANDO

| REF | FN | PART NUMBER | YR/SN | QTY | DESCRIPTION |
|---|---|---|---|---|---|
| 1 | | 504064340 | | 1 | PIEZA DE SOPORTE |
| 2 | | 504028028 | | 1 | TENSOR DE CORREA |
| 3 | | 504065880 | | 1 | POLEA |
| 4 | | REF | | 1 | MANUAL BELT; See Figure 02-01 |
| 5 | | 4899031 | | 1 | TORNILLO |
| 6 | | 4899109 | | 1 | TORNILLO |
| 7 | | REF | | 1 | MANUAL ALTERNATOR; See Figure 04-02 |
| 8 | | REF | | 1 | MANUAL WATER PUMP; See Figure 02-35 |
| 9 | | REF | | 1 | MANUAL FAN DRIVE; See Figure 02-39 |
| 10 | | REF | | 1 | MANUAL CRANKSHAFT PULLEY; See Figure 02-25 |

HTTP://WWW.MINNPARBACKHOEPARTS.COM



POLEA DEL VENTILADOR

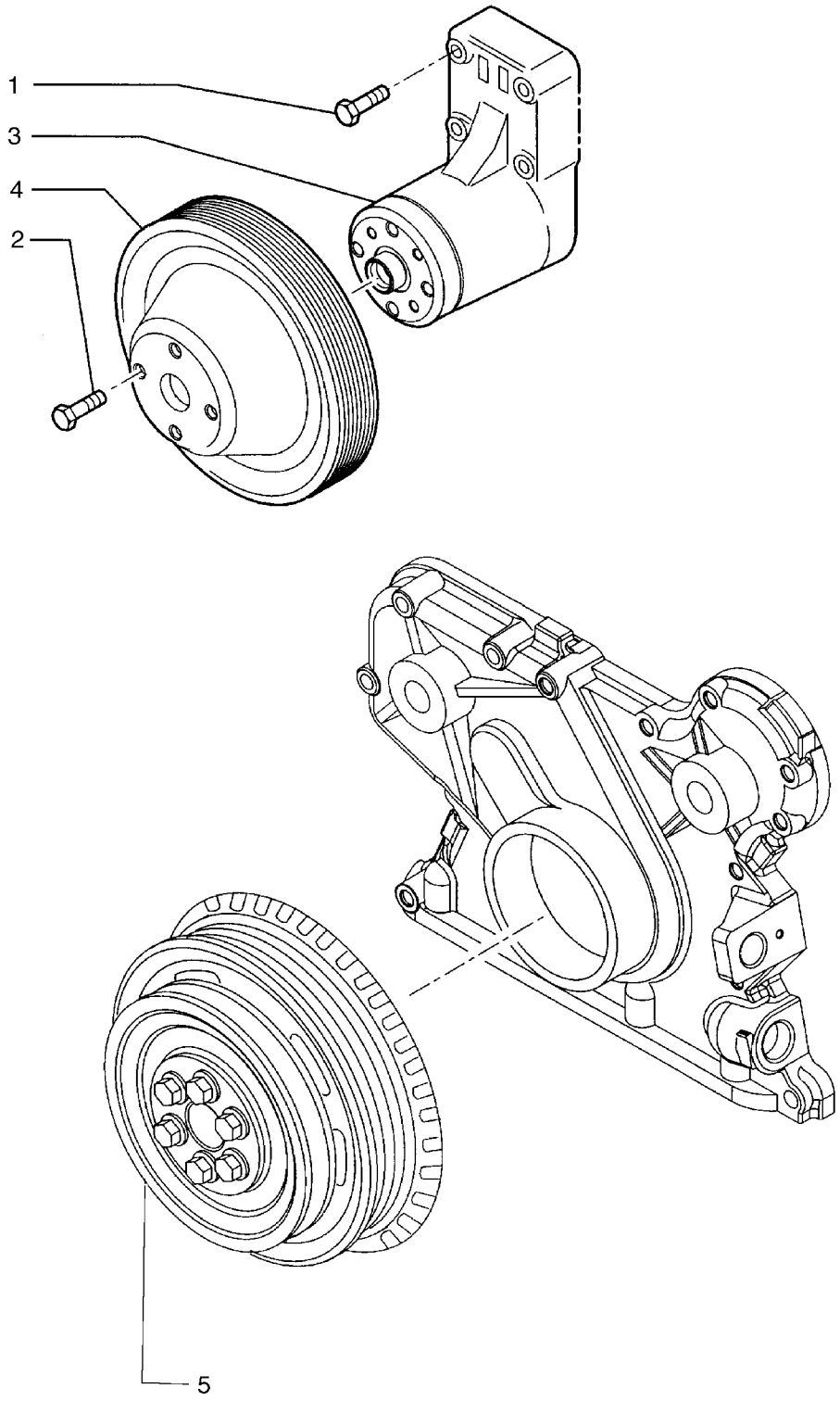

HTTP://WWW.MINNPARBACKHOEPARTS.COM



POLEA DEL VENTILADOR

| REF | FN | PART NUMBER | YR/SN | QTY | DESCRIPTION |
|---|---|---|---|---|---|
| 1 | | 4899053 | | 4 | TORNILLO |
| 2 | | 4895291 | | 4 | TORNILLO |
| 3 | | 504035148 | | 1 | SOPORTE M10X1.5X80 |
| 4 | | 4895301 | | 1 | POLEA |
| 5 | | REF | | 1 | MANUAL CRANKSHAFT PULLEY; See Figure 02-25 |

HTTP://WWW.MINNPARBACKHOEPARTS.COM



TOMA DE FUERZA

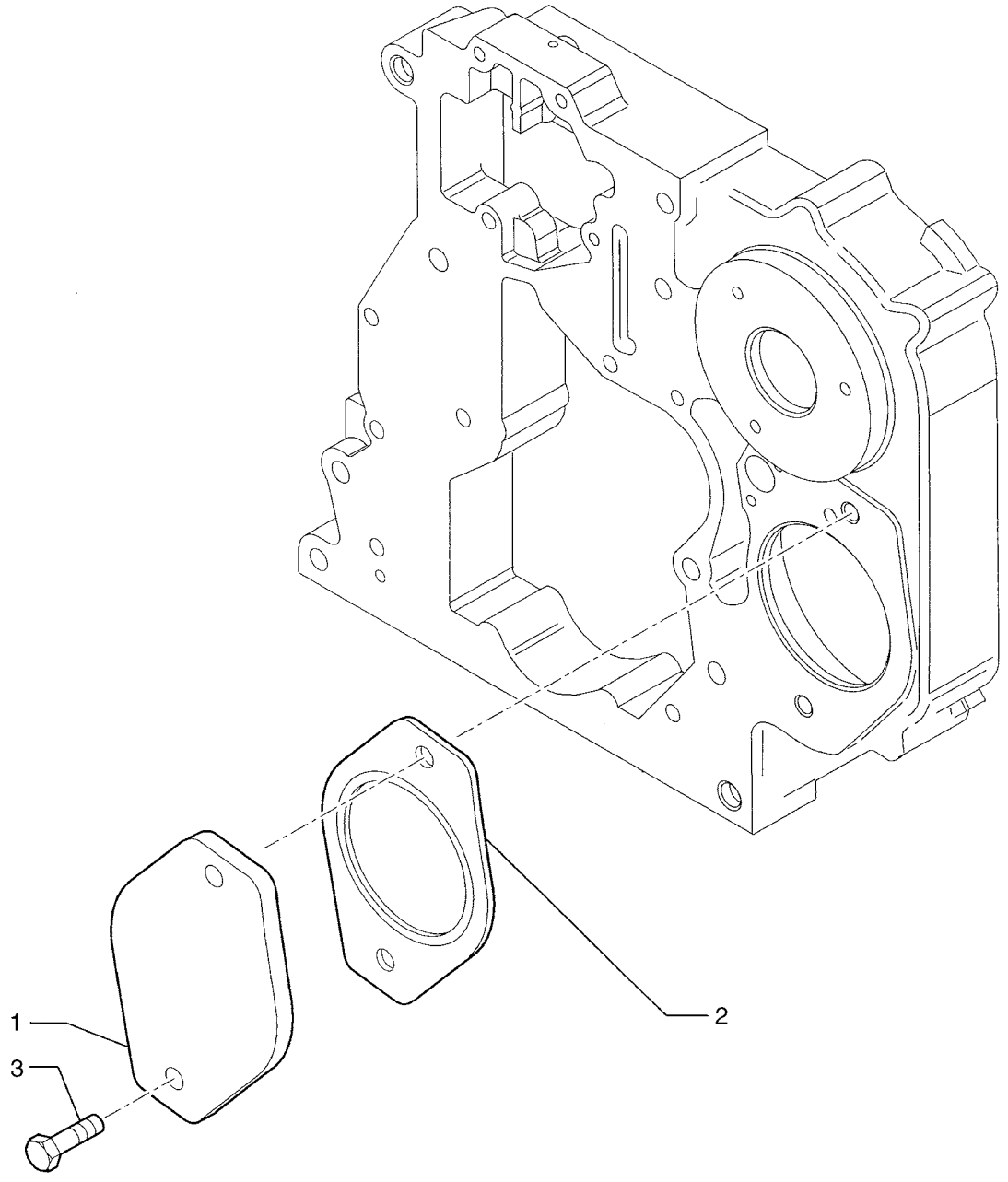

HTTP://WWW.MINNPARBACKHOEPARTS.COM



TOMA DE FUERZA

| REF | FN | PART NUMBER | YR/SN | QTY | DESCRIPTION |
|---|---|---|---|---|---|
| 1 | | 504049033 | | 1 | TAPADERA |
| 2 | | 4896897 | | 1 | JUNTA HERMETICA |
| 3 | | 4895327 | | 2 | TORNILLO |

HTTP://WWW.MINNPARBACKHOEPARTS.COM



MOTOR - GANCHO DE ELEVACION

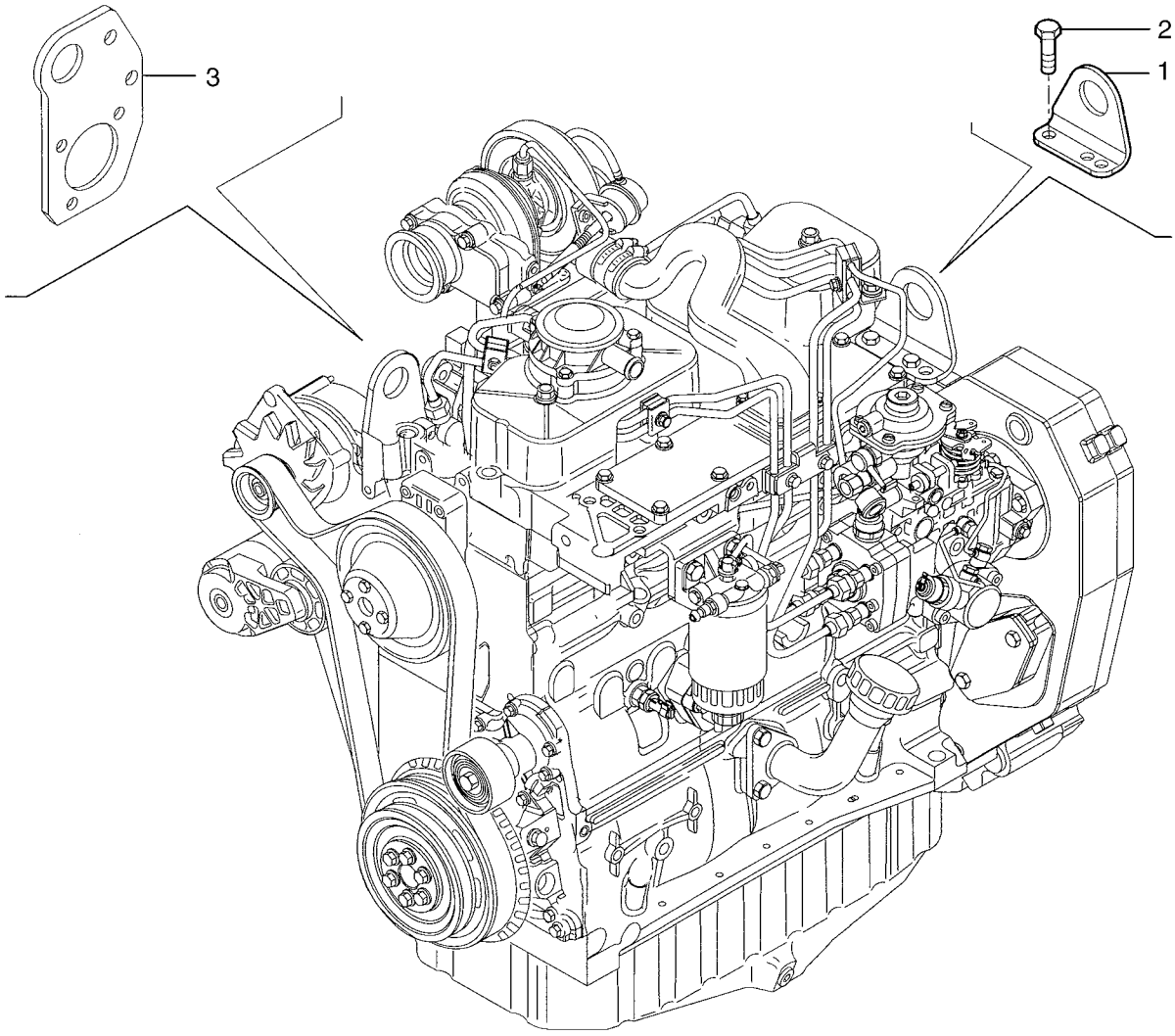

HTTP://WWW.MINNPARBACKHOEPARTS.COM



MOTOR - GANCHO DE ELEVACION

| REF | FN | PART NUMBER | YR/SN | QTY | DESCRIPTION |
|---|---|---|---|---|---|
| 1 | | 504026078 | | 1 | ANILLO DE ELEVACIÓN |
| 2 | | 4899073 | | 2 | TORNILLO |
| 3 | | REF | | 1 | MANUAL LIFT RING; See Figure 02-37 |

HTTP://WWW.MINNPARBACKHOEPARTS.COM

HTTP://WWW.MINNPARBACKHOEPARTS.COM

# SECTION INDEX


| | |
|---|---|
| 03-01 | CONDUCTOS DE COMBUSTIBLE, DEPÓSITO - FILTRO, COMBUSTIBLE EN LINEA |
| 03-02 | CONTROLES - ACELERADOR, MANUAL |
| 03-03 | CONTROLES - ACELERADOR, PIE |
| 03-04 | BOMBA DE INYECCION |
| 03-05 | SISTEMA DE INYECCION DE COMBUSTIBLE |
| 03-06 | SISTEMA DE INYECCION DE COMBUSTIBLE |
| 03-07 | SISTEMA DE INYECCION DE COMBUSTIBLE |
| 03-08 | FILTRO COMBUSTIBLE |
| 03-09 | BOMBA DE ALIMENTACION |
| 03-10 | SISTEMA DE INYECCION DE COMBUSTIBLE |
| 03-11 | SISTEMA DE INYECCION DE COMBUSTIBLE |

HTTP://WWW.MINNPARBACKHOEPARTS.COM

| 03-01 | | p1 | 09/03 |
|---|---|---|---|

CONDUCTOS DE COMBUSTIBLE, DEPÓSITO - FILTRO, COMBUSTIBLE EN LINEA

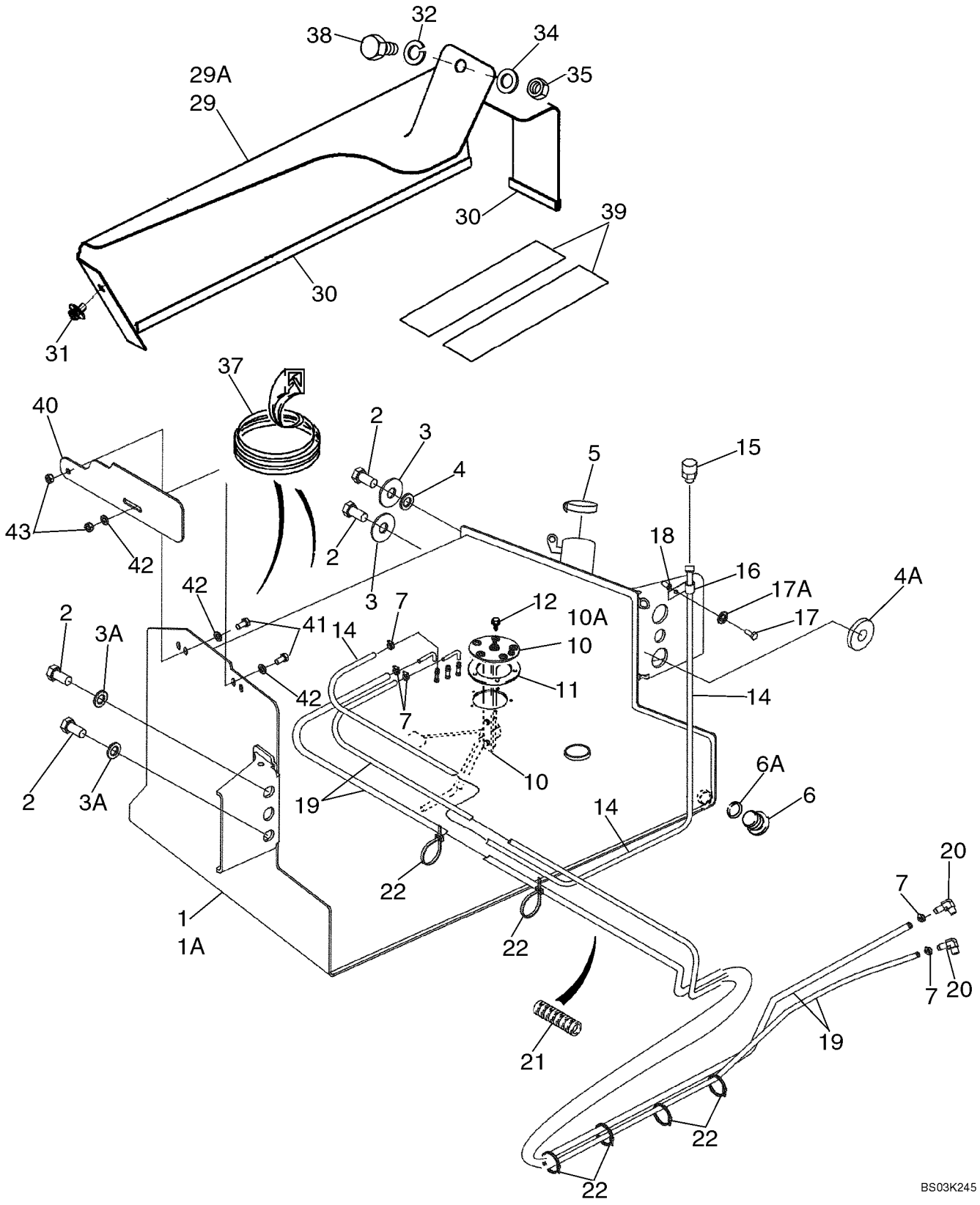

HTTP://WWW.MINNPARBACKHOEPARTS.COM



CONDUCTOS DE COMBUSTIBLE, DEPÓSITO - FILTRO, COMBUSTIBLE EN LINEA

| REF | FN | PART NUMBER | YR/SN | QTY | DESCRIPTION |
|---|---|---|---|---|---|
| 1 | | 87429310 | | 1 | TANQUE COMBUSTIBLE 31 gal; Incl. Ref 6; With Welded Fuel Sender Tubes; Includes Left Hand Steps, Mounts to Left Hand Side of Chassis |
| 1A | | 87429314 | | 1 | TANQUE COMBUSTIBLE 40 gal; Incl. Ref 6; Optional; With Welded Fuel Sender Tubes; Includes Left Hand Steps, Mounts to Left Hand Side of Chassis; If Used |
| 2 | | 443375A1 | | 4 | TORNILLO M20 x 60; With Loctite |
| 3 | | 302358A1 | | 2 | ARANDELA |
| 3A | | 896-11020 | | 2 | ARANDELA 22 x 37 x 4 mm |
| 4 | | 185926A1 | | 1 | ESPACIADOR Upper Left Hand Side of Tank |
| 4A | | 409472A1 | | 1 | ESPACIADOR Lower Left Hand Side of Tank |
| 5 | | 130049A1 | | 1 | TAPA DE DEPOSITO Cap; Non-Vented |
| 6 | | 218-5211 | | 1 | TAPÓN Hex Socket, 7/8 Or, Drain, Incl. Ref 6A; Included With Ref 1, 1A |
| 6A | | 237-6010 | | 1 | JUNTA HERMETICA 3/4 ID x 3/32 |
| 7 | | 214-1704 | | 5 | COLLAR 1/4 - 5/8 |
| 10 | | 86989676 | | 1 | CONTACTOR Fuel Level, 31 Gallon Tank, Without Tubes, If Used |
| 10A | | 87408480 | | 1 | CONTACTOR Fuel Level, 40 Gallon Tank, Without Tubes, If Used |
| 11 | | 188311A2 | | 1 | JUNTA HERMETICA |
| 12 | | D75465 | | 5 | TORNILLO No. 10 NF x 5/8 |
| 14 | | 234892A1 | | 1 | MANGUITO 1/4 ID x 1100 mm (43-5/16 in), Vent |
| 15 | | 130047A1 | | 1 | COLADOR CONJ Vent |
| 16 | | 515-23127 | | 1 | COLLAR 1/2 ID |
| 17 | | 276-24924 | | 1 | TORNILLO 3/8 x 1-1/2 |
| 17A | | 495-11041 | | 1 | ARANDELA 13/32 x 13/16 x 1/16 |
| 18 | | 87417383 | | 1 | ROSCA POSTIZA M8 Nut |
| 19 | | 87427943 | | 2 | MANGA 3/8 ID x 1800 mm (70-7/8 in); To Fuel Lift Pump and Injector Pump |
| 20 | | 87414560 | | 2 | RACOR ELBOW, 90 deg, Includes O-Ring |
| 21 | | 399004A1 | | 1 | DEFENSA 270 mm (10-5/8 in) |
| 22 | | L18337 | | X | BANDA 15 in |
| 29 | | 189602A3 | | 1 | TAPA Mounted Above Fuel Reservoir; Models With Two Spool Loader Valve |

HTTP://WWW.MINNPARBACKHOEPARTS.COM

| 03-01 | | p2 | 09/03 |
|---|---|---|---|

CONDUCTOS DE COMBUSTIBLE, DEPÓSITO - FILTRO, COMBUSTIBLE EN LINEA

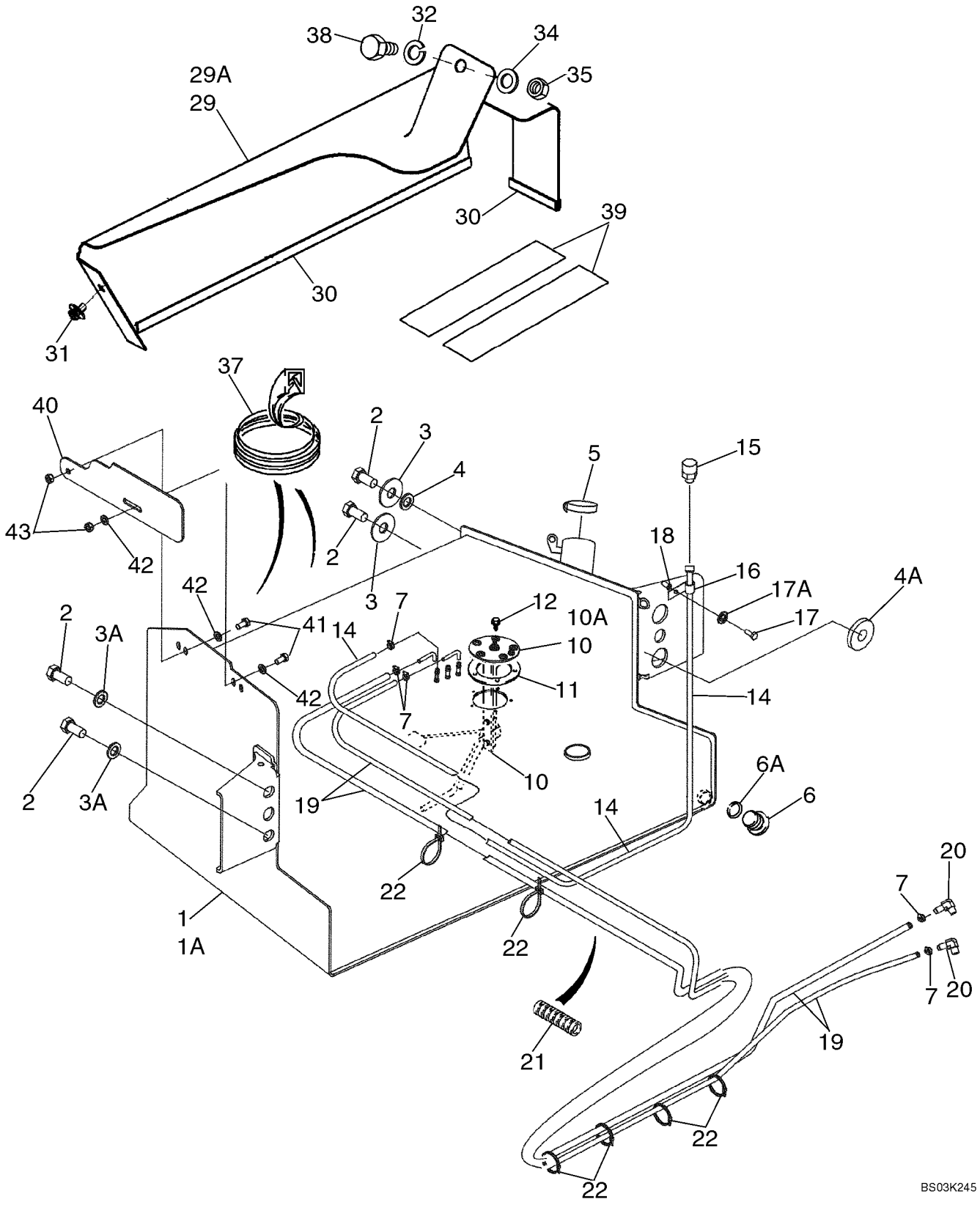

HTTP://WWW.MINNPARBACKHOEPARTS.COM



CONDUCTOS DE COMBUSTIBLE, DEPÓSITO - FILTRO, COMBUSTIBLE EN LINEA

| REF | FN | PART NUMBER | YR/SN | QTY | DESCRIPTION |
|---|---|---|---|---|---|
| 29A | | 188009A3 | | 1 | TAPA Mounted Above Fuel Reservoir, Models With Three Spool Loader Valve |
| 30 | | 191046A1 | | 1 | CINTA DE ADEREZO Trim, 650 mm (25-5/8 in), Cut From A165860; Apply 65 mm (2-9/16 in) of Trim to Front Lower Edge and 575 mm (22-11/16 in) of Trim to Outside Lower Edge of Cover |
| 31 | | 307577A1 | | 1 | TORNILLO Special, M8 x 20 |
| 32 | | 892-11010 | | 1 | ARANDELA DE FRENO M10 |
| 34 | | 895-11010 | | 1 | ARANDELA 11 x 21 x 2 mm |
| 35 | | 829-1410 | | 1 | TUERCA M10; 10.9 |
| 37 | | D40442 | | 1 | MOLDURA Trim, 305 mm (12 in), Cut From F42827; If Used |
| 38 | | 814-10045 | | 1 | TORNILLO M10 x 45; Models With Three Spool Loader Valve |
| 38 | | 614-10020 | | 1 | TORNILLO M10 x 20; Models With Two Spool Loader Valve |
| 39 | | D80270 | | 2 | CINTA 635 mm (25 in), 31 Gallon Tank |
| 39 | | 307348A1 | | 2 | CINTA 700 mm (27-9/16 in), 40 Gallon Tank |
| 40 | | 397548A4 | | 1 | PLACA Mud |
| 41 | | 614-10020 | | 2 | TORNILLO M10 x 20 |
| 42 | | 895-11010 | | 3 | ARANDELA 11 x 21 x 2 mm |
| 43 | | 829-1410 | | 2 | TUERCA M10; 10.9 |

HTTP://WWW.MINNPARBACKHOEPARTS.COM



CONTROLES - ACELERADOR, MANUAL

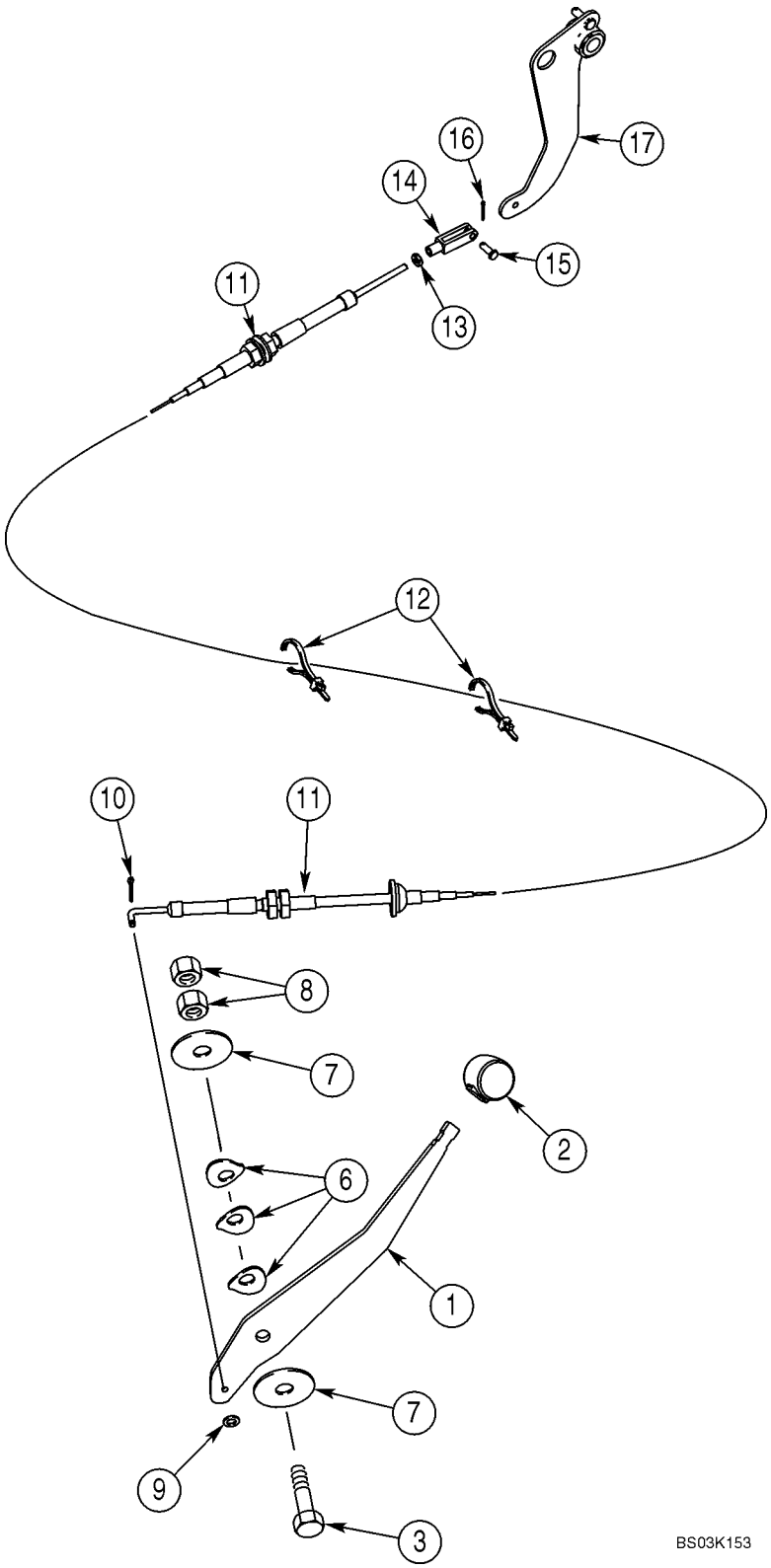

HTTP://WWW.MINNPARBACKHOEPARTS.COM



CONTROLES - ACELERADOR, MANUAL

| REF | FN | PART NUMBER | YR/SN | QTY | DESCRIPTION |
|---|---|---|---|---|---|
| 1 | | 395189A2 | | 1 | PALANCA |
| 2 | | A177435 | | 1 | BOLA Lever |
| 3 | | 514-847 | | 1 | TORNILLO M12 x 50 |
| 6 | | D148962 | | 3 | ARANDELA |
| 7 | | 496-81018 | | 2 | ARANDELA 33/64 x 2 x 1/8 |
| 8 | | 825-11412 | | 2 | TUERCA M12 |
| 9 | | 495-31022 | | 1 | ARANDELA 7/32 x 1/2 x 3/64 |
| 10 | | 432-48 | | 1 | PASADOR ABIERTO 1/16 x 1/2 |
| 11 | | 350014A3 | | 1 | CABLE |
| 12 | | L18337 | | 4 | BANDA 15 in, Nylon, Retaining |
| 13 | | 225-14210 | | 1 | TUERCA No. 10 NF |
| 14 | | 213-123 | | 1 | HORQUILLA PEQUENA No. 10 NF |
| 15 | | 427-3058 | | 1 | PASADOR DE HORQUILLA 3/16 x 9/16 |
| 16 | | 432-48 | | 1 | PASADOR ABIERTO 1/16 x 1/2 |
| 17 | | 378957A3 | | 1 | PALANCA (CONJUNTO) |

HTTP://WWW.MINNPARBACKHOEPARTS.COM

| 03-03 | | p1 | 10/03 |
|---|---|---|---|

CONTROLES - ACELERADOR, PIE

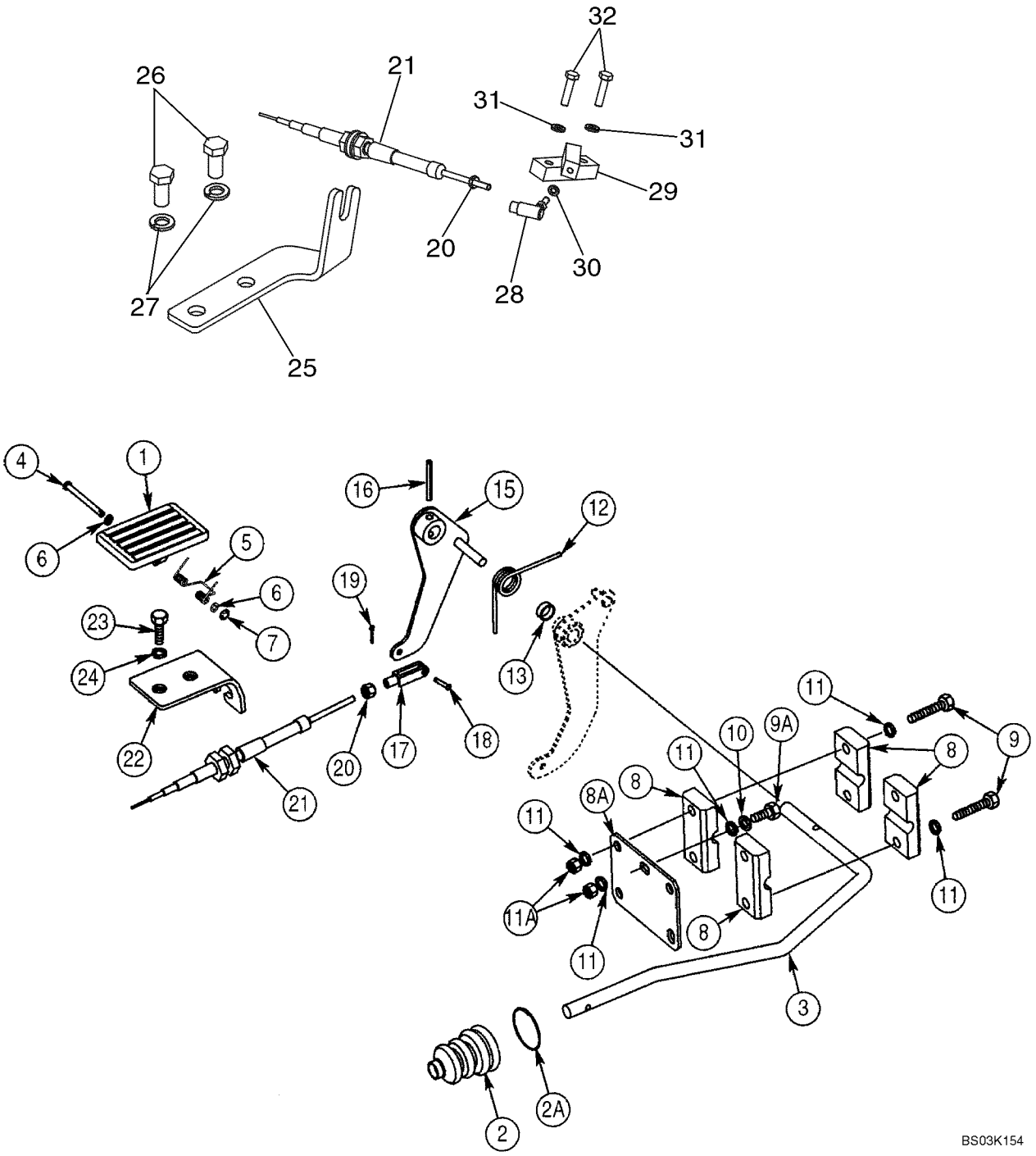

HTTP://WWW.MINNPARBACKHOEPARTS.COM



CONTROLES - ACELERADOR, PIE

| REF | FN | PART NUMBER | YR/SN | QTY | DESCRIPTION |
|---|---|---|---|---|---|
| 1 | | 282242A1 | | 1 | PEDAL Plastic |
| 2 | | 132931A1 | | 1 | FUELLE Boot, Accelerator Pedal Rod |
| 2A | | 189109A1 | | 1 | RESORTE Retainer |
| 3 | | 378960A1 | | 1 | VARILLA |
| 4 | | 322860A1 | | 1 | BULON/PIN, LARGO |
| 5 | | 256776A1 | | 1 | EJE DE SATELITES |
| 6 | | 895-11005 | | 2 | ARANDELA 5,5 x 10 x 1 mm |
| 7 | | 103-1518 | | 1 | ANILLO DE CIERRE No. 18 |
| 8 | | D124857 | | 4 | COLLAR |
| 8A | | 378955A1 | | 1 | PLACA |
| 9 | | 604-8050 | | 4 | TORNILLO Locking, M8 x 50 |
| 9A | | 614-8020 | | 1 | TORNILLO M8 x 20 |
| 10 | | 892-11008 | | 1 | ARANDELA M8 |
| 11 | | 895-11008 | | 7 | ARANDELA 9 x 17 x 1,6 mm |
| 11A | | 829-1408 | | 2 | TUERCA M8; 10 |
| 12 | | 380483A2 | | 1 | RESORTE |
| 13 | | 378958A1 | | 1 | CASQUILLO ESPACIADOR |
| 15 | | 378956A3 | | 1 | PALANCA (CONJUNTO) |
| 16 | | 838-3640 | | 1 | PERNO 6 x 40 mm |
| 17 | | 213-123 | | 1 | HORQUILLA PEQUENA No. 10 NF |
| 18 | | 427-3058 | | 1 | PASADOR DE HORQUILLA 3/16 x 9/16 |
| 19 | | 432-48 | | 1 | PASADOR ABIERTO 1/16 x 1/2 |
| 20 | | 225-14210 | | 2 | TUERCA No. 10 NF |
| 21 | | 380021A1 | | 1 | CABLE To Injection Pump |
| 22 | | 397065A2 | | 1 | PIEZA DE SOPORTE |
| 23 | | 614-10035 | | 2 | TORNILLO M10 x 35 |
| 24 | | 892-11010 | | 2 | ARANDELA DE FRENO M10 |
| 25 | | 87432547 | | 1 | PIEZA DE SOPORTE |
| 26 | | 627-12025 | | 2 | TORNILLO M12 x 25 |
| 27 | | 896-15012 | | 2 | ARANDELA 13,5 x 28 x 4 mm |
| 28 | | 87421807 | | 1 | UNION (CONJUNTO) |
| 29 | | 87421471 | | 1 | BLOQUE (CONJUNTO) |
| 30 | | 892-11005 | | 1 | ARANDELA DE FRENO M5 |
| 31 | | 892-11006 | | 2 | ARANDELA DE FRENO M6 |
| 32 | | 614-6025 | | 2 | TORNILLO M6 x 25 |

HTTP://WWW.MINNPARBACKHOEPARTS.COM



BOMBA DE INYECCION

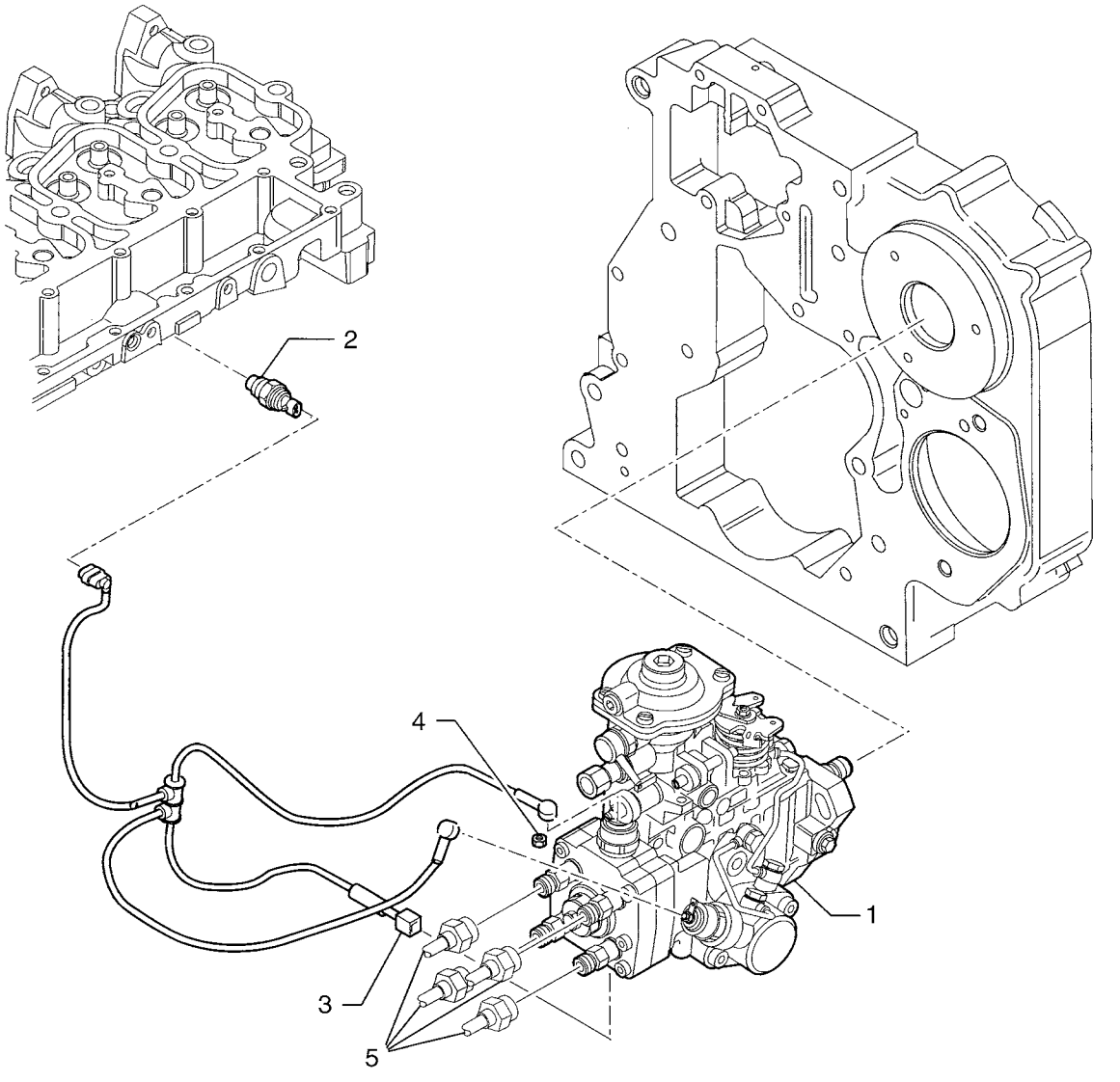

HTTP://WWW.MINNPARBACKHOEPARTS.COM



BOMBA DE INYECCION

| REF | FN | PART NUMBER | YR/SN | QTY | DESCRIPTION |
|---|---|---|---|---|---|
| 1 | | {504063450} | | 1 | - ASSY; Injection Pump |
| 2 | | 504032877 | | 1 | CONTACTOR |
| 3 | | 504060728 | | 1 | CONTACTO |
| 4 | | 16979231 | | 2 | TUERCA |
| 5 | | REF | | 1 | MANUAL TUBE; See Figure 03-07 for Tube Kit |

HTTP://WWW.MINNPARBACKHOEPARTS.COM



SISTEMA DE INYECCION DE COMBUSTIBLE

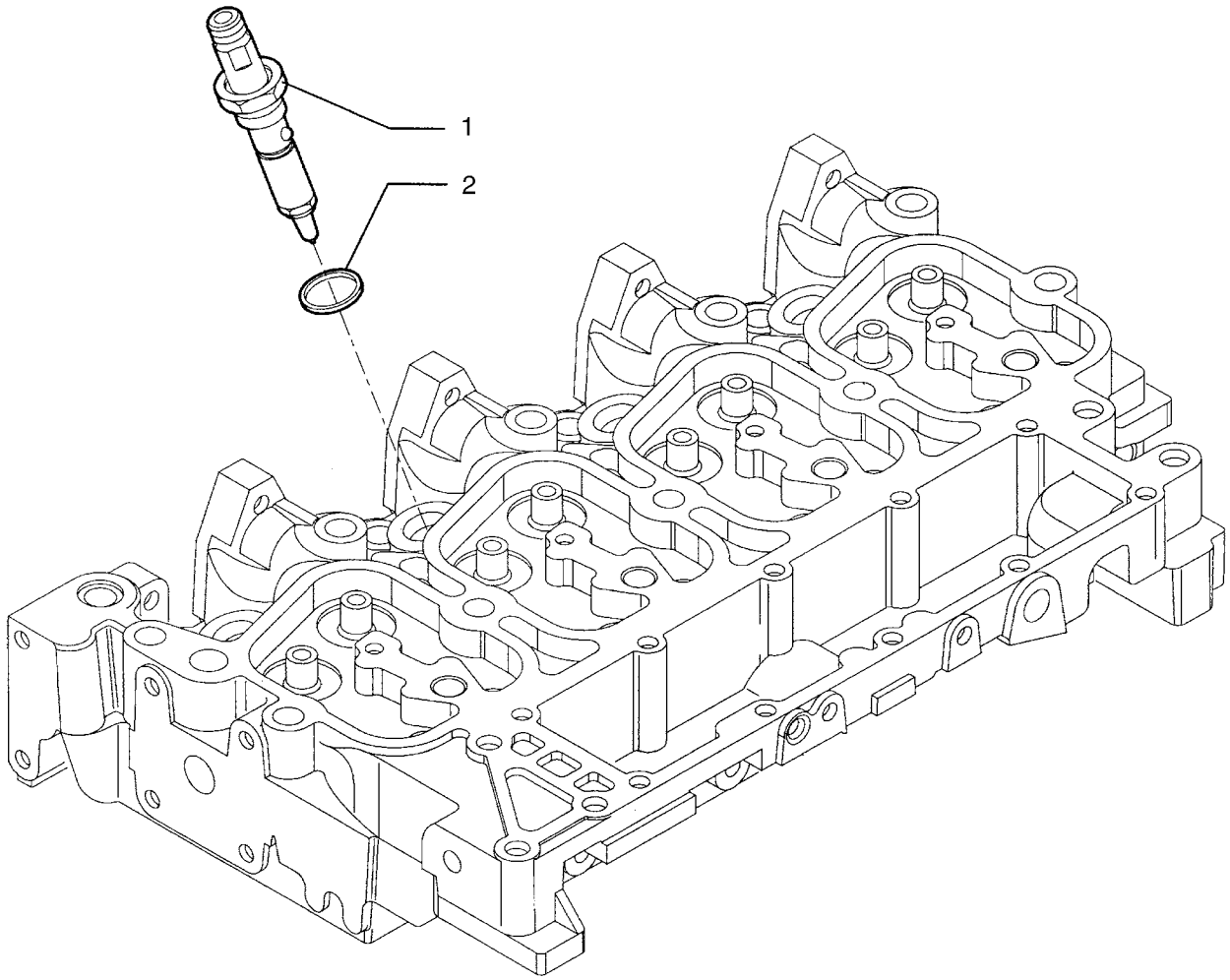


BS04A045

HTTP://WWW.MINNPARBACKHOEPARTS.COM



SISTEMA DE INYECCION DE COMBUSTIBLE

| REF | FN | PART NUMBER | YR/SN | QTY | DESCRIPTION |
|---|---|---|---|---|---|
| 1 | | {500390441} | | 4 | Injector |
| 2 | | 4895297 | | 4 | JUNTA HERMETICA |

HTTP://WWW.MINNPARBACKHOEPARTS.COM



SISTEMA DE INYECCION DE COMBUSTIBLE

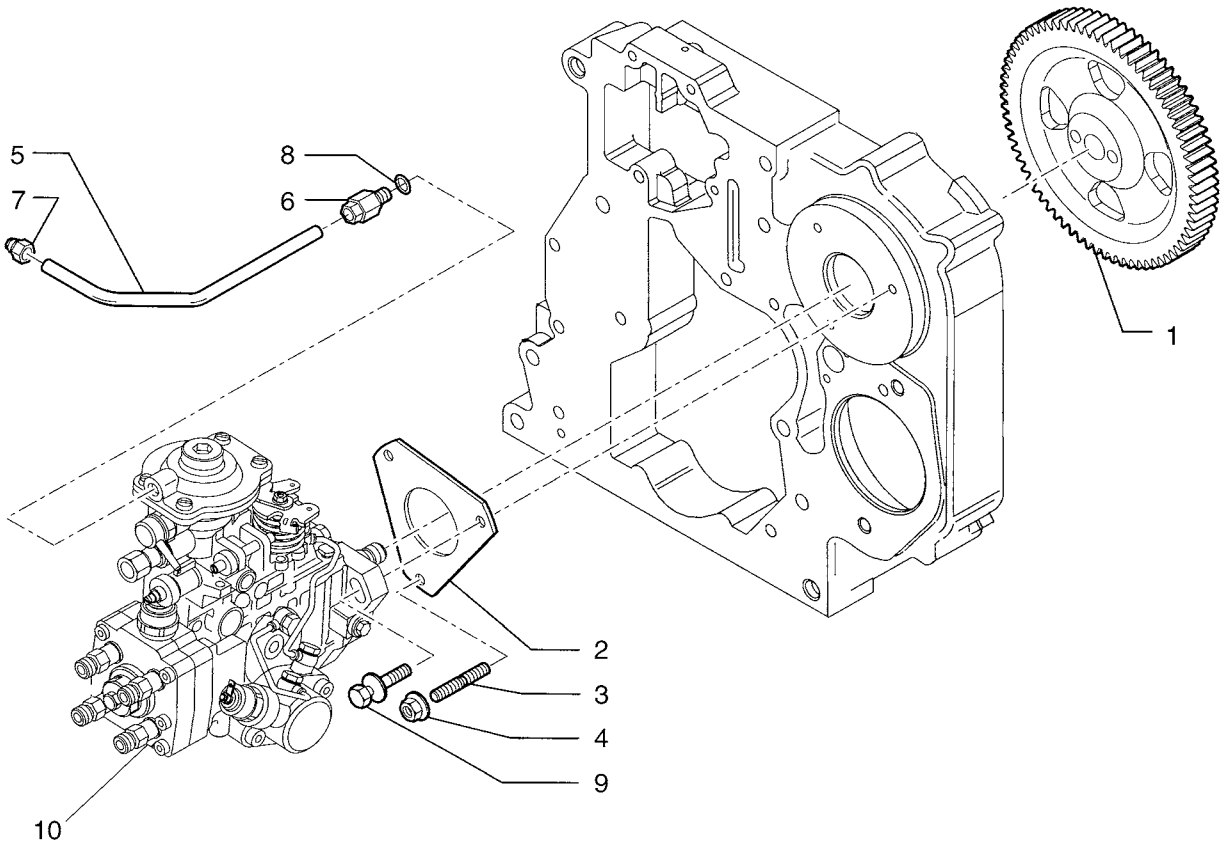


BS04A046

HTTP://WWW.MINNPARBACKHOEPARTS.COM



SISTEMA DE INYECCION DE COMBUSTIBLE

| REF | FN | PART NUMBER | YR/SN | QTY | DESCRIPTION |
|---|---|---|---|---|---|
| 1 | | 4894774 | | 1 | PINON CONDUCIDO |
| 2 | | 4895090 | | 1 | JUNTA HERMETICA |
| 3 | | {16746824} | | 2 | Stud |
| 4 | | 4899003 | | 2 | TUERCA 8X1.25 |
| 5 | | 504057292 | | 1 | TUBO RIGIDO |
| 6 | | 4893518 | | 1 | RACOR 8X1 |
| 7 | | 4896770 | | 1 | RACOR 10X1 |
| 8 | | 4858605 | | 1 | JUNTA HERMETICA |
| 9 | | 504065099 | | 1 | TORNILLO |
| 10 | | REF | | 1 | MANUAL INJECTION PUMP; See Figure 03-04 |

HTTP://WWW.MINNPARBACKHOEPARTS.COM



SISTEMA DE INYECCION DE COMBUSTIBLE

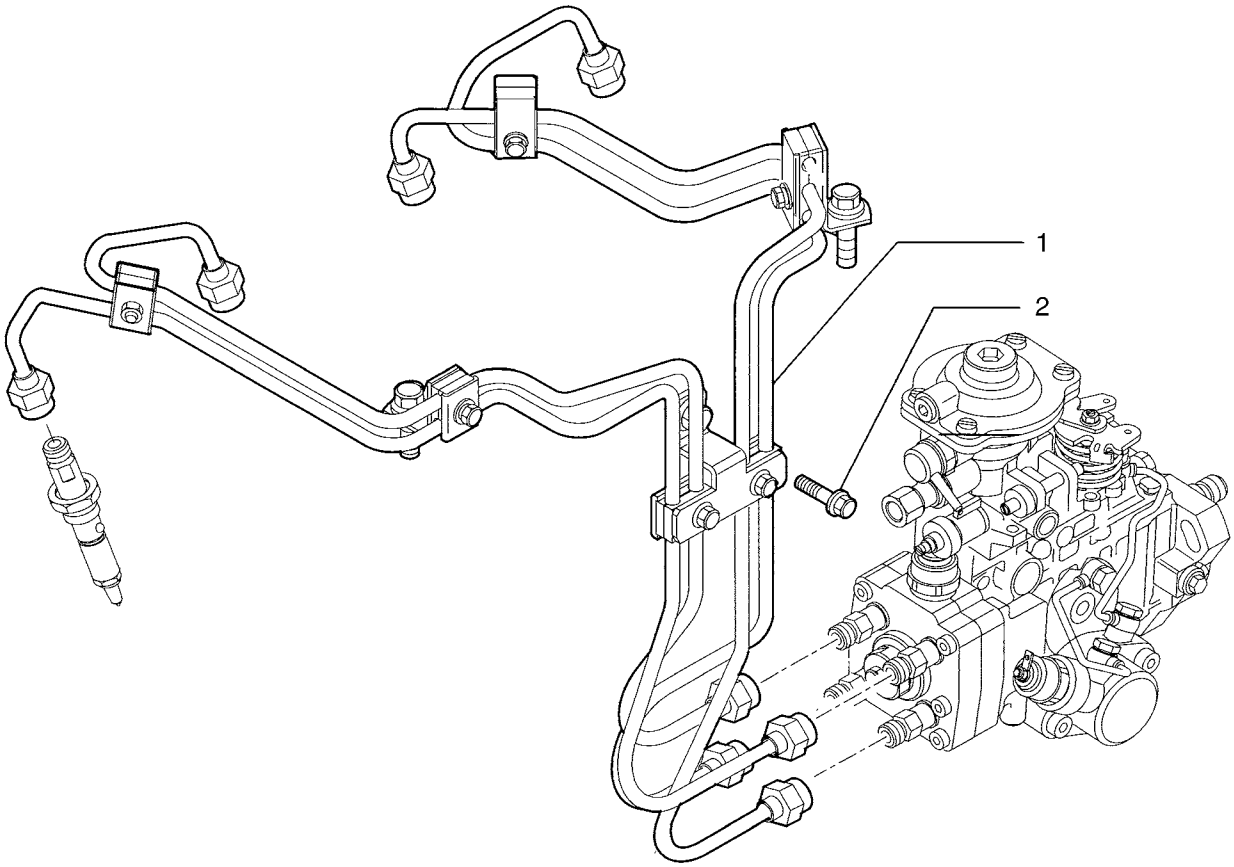


BS04A047

HTTP://WWW.MINNPARBACKHOEPARTS.COM



SISTEMA DE INYECCION DE COMBUSTIBLE

| REF | FN | PART NUMBER | YR/SN | QTY | DESCRIPTION |
|---|---|---|---|---|---|
| 1 | | 504042116 | | 1 | EQUIPO - ASSY |
| 2 | | 4899068 | | 1 | TORNILLO |

HTTP://WWW.MINNPARBACKHOEPARTS.COM

| 03-08 | | p1 | 01/04 |
|---|---|---|---|

FILTRO COMBUSTIBLE

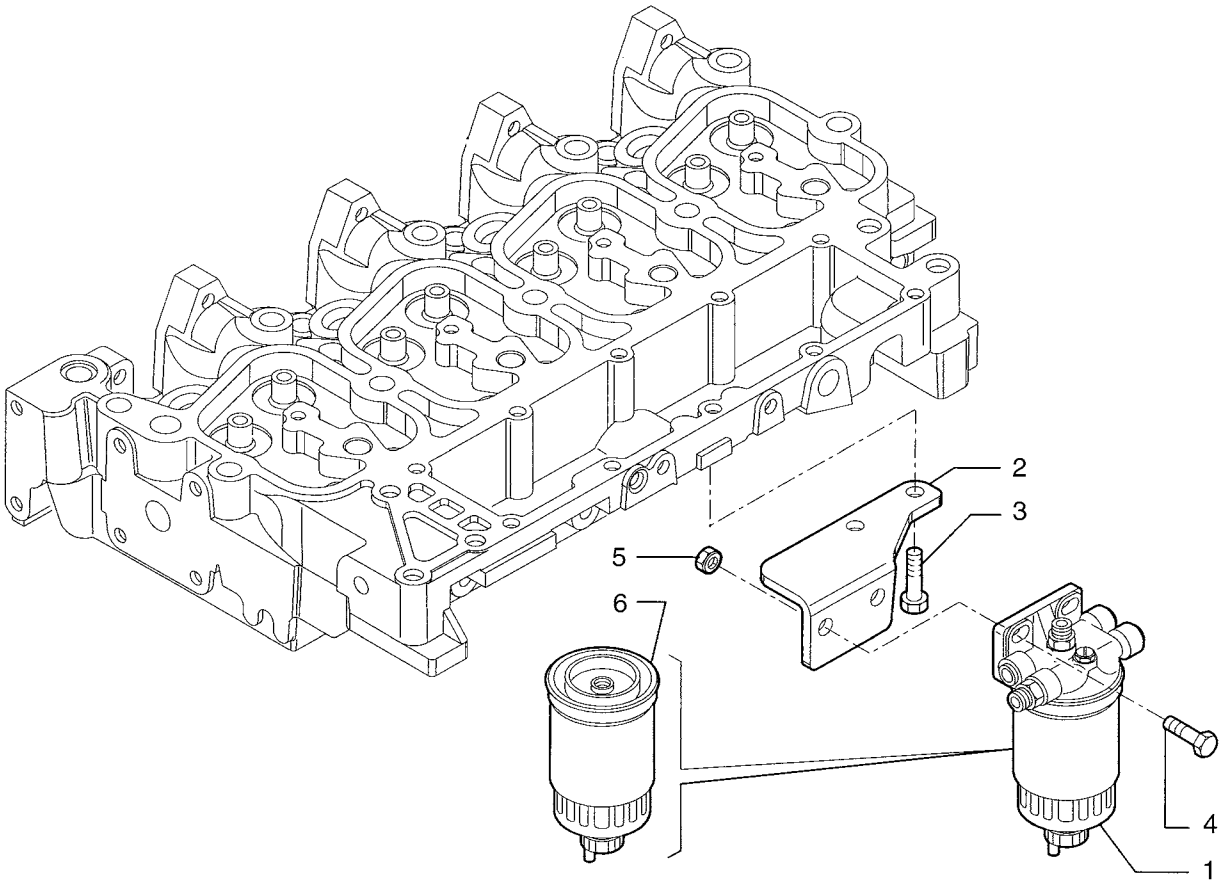


BS04A048

HTTP://WWW.MINNPARBACKHOEPARTS.COM



FILTRO COMBUSTIBLE

| REF | FN | PART NUMBER | YR/SN | QTY | DESCRIPTION |
|---|---|---|---|---|---|
| 1 | | 504066077 | | 1 | FILTRO CONJ - ASSY |
| 2 | | 504001088 | | 1 | SOPORTE |
| 3 | | 4899068 | | 2 | TORNILLO 8X17 |
| 4 | | 4899093 | | 2 | TORNILLO |
| 5 | | 4895166 | | 2 | TUERCA 10X1.5 |
| 6 | | 87803194 | | 1 | FILTRO DE COMBUSTIBLE |

HTTP://WWW.MINNPARBACKHOEPARTS.COM



BOMBA DE ALIMENTACION

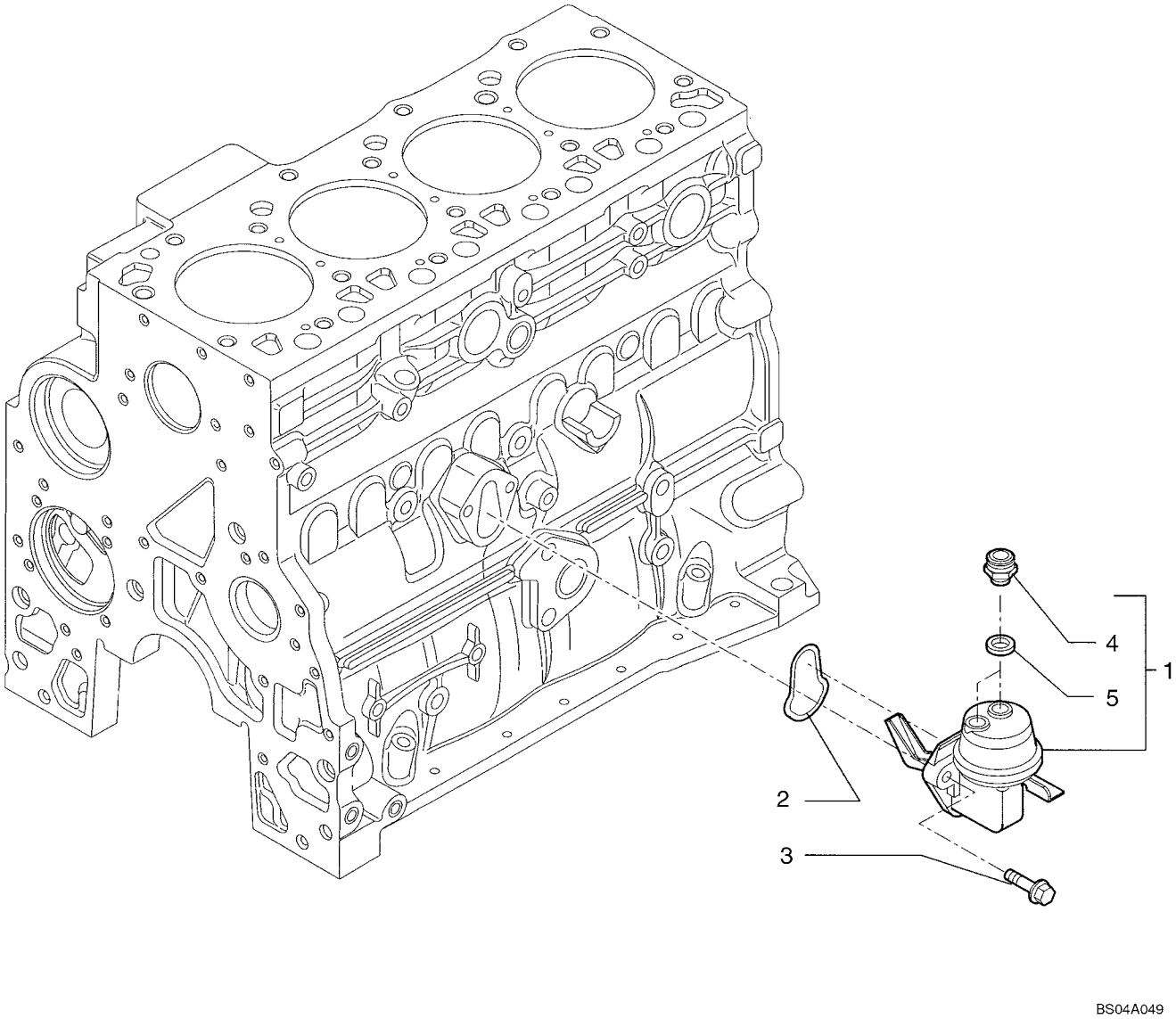

HTTP://WWW.MINNPARBACKHOEPARTS.COM



BOMBA DE ALIMENTACION

| REF | FN | PART NUMBER | YR/SN | QTY | DESCRIPTION |
|---|---|---|---|---|---|
| 1 | | 2830266 | | 1 | BOMBA DE ALIMENTACION - ASSY |
| 2 | | 2830156 | | 1 | JUNTA HERMETICA |
| 3 | | 4899031 | | 2 | TORNILLO 8X25 |
| 4 | | 4890964 | | 2 | RACOR |
| 5 | | 4894721 | | 2 | JUNTA HERMETICA |

HTTP://WWW.MINNPARBACKHOEPARTS.COM



SISTEMA DE INYECCION DE COMBUSTIBLE

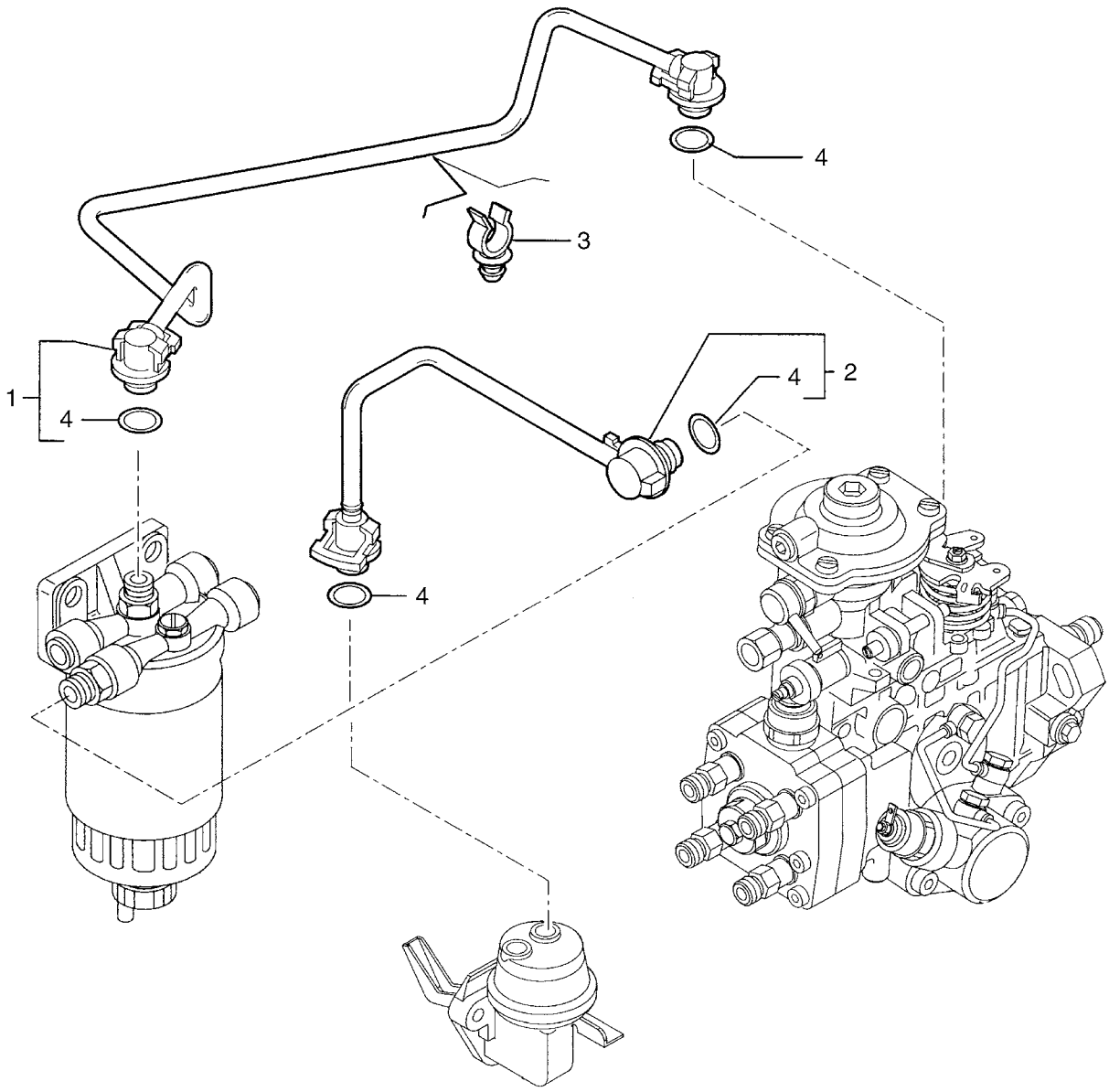

HTTP://WWW.MINNPARBACKHOEPARTS.COM



SISTEMA DE INYECCION DE COMBUSTIBLE

| REF | FN | PART NUMBER | YR/SN | QTY | DESCRIPTION |
|---|---|---|---|---|---|
| 1 | | 504057288 | | 1 | TUBO - ASSY; Tube |
| 2 | | 504046458 | | 1 | TUBO RIGIDO - ASSY |
| 3 | | 504065285 | | 1 | BORNE |
| 4 | | 4894095 | | 2 | JUNTA HERMETICA |

HTTP://WWW.MINNPARBACKHOEPARTS.COM



SISTEMA DE INYECCION DE COMBUSTIBLE

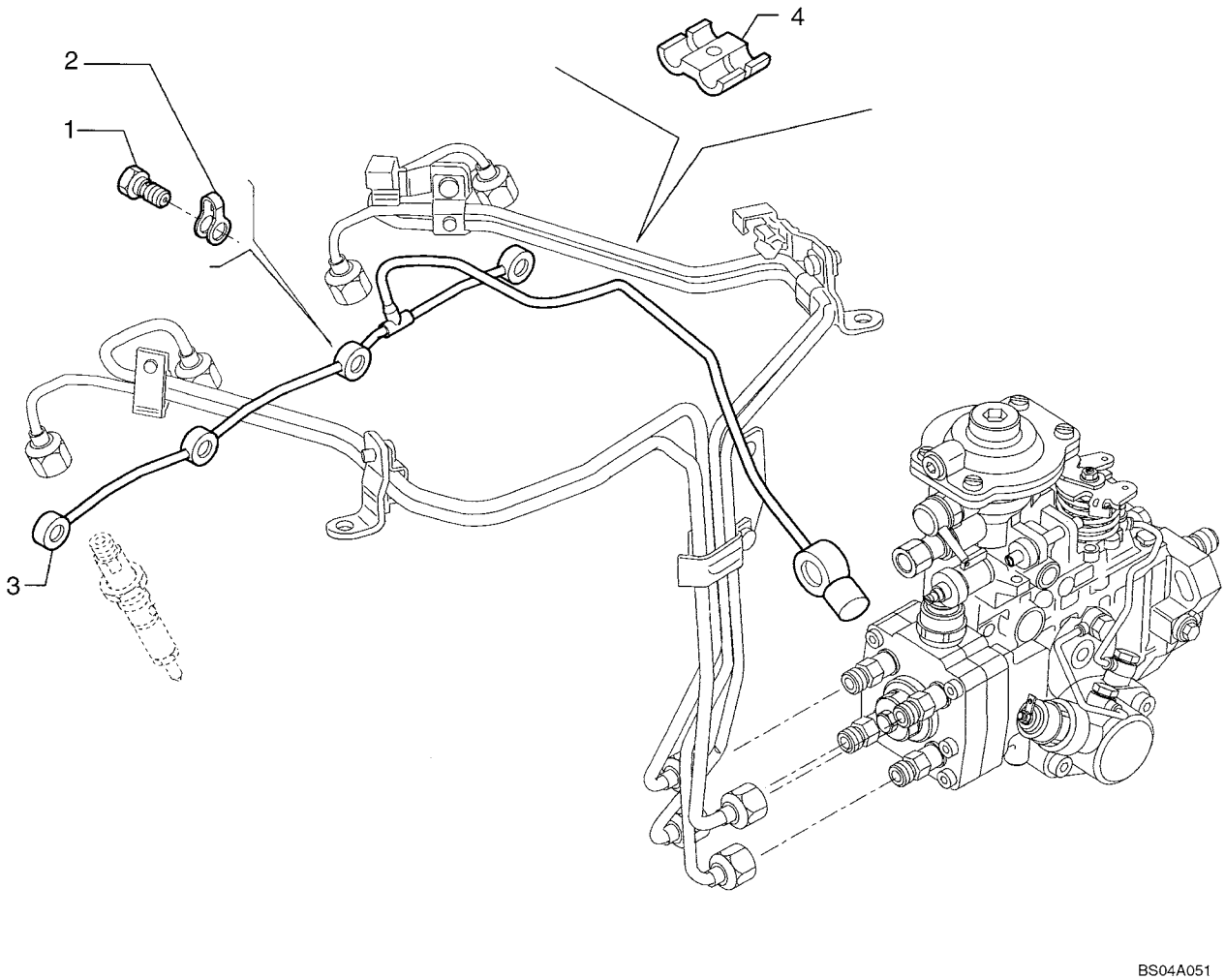

HTTP://WWW.MINNPARBACKHOEPARTS.COM



SISTEMA DE INYECCION DE COMBUSTIBLE

| REF | FN | PART NUMBER | YR/SN | QTY | DESCRIPTION |
|---|---|---|---|---|---|
| 1 | | 4895244 | | 4 | TORNILLO HUECO |
| 2 | | 4895305 | | 4 | JUNTA HERMETICA |
| 3 | | 504051276 | | 1 | TUBO RIGIDO |
| 4 | | 98429625 | | 1 | SUJETADOR DE RESORTE |

HTTP://WWW.MINNPARBACKHOEPARTS.COM

HTTP://WWW.MINNPARBACKHOEPARTS.COM

# SECTION INDEX


| | |
|---|---|
| 04-01 | MOTOR DE ARRANQUE |
| 04-02 | ALTERNADOR |
| 04-03 | MONTAJE DEL ARRANQUE - MONTAJE DEL ALTERNADOR |
| 04-04 | MAZO DE CABLES, MOTOR - MONTAJE Y CONEXIONES |
| 04-05 | BATERIA CABLES (MODELOS SIN ARRANQUE EN FRÍO) |
| 04-06 | BATERIA, DOBLE - ARRANQUE EN FRÍO |
| 04-06A | CALENTADOR DE REJILLA PARA ARRANQUE EN FRÍO |
| 04-07 | MAZO DE CABLES, CONSOLA FRONTAL - INTERRUPTORES |
| 04-08 | MAZO DE CABLES, CONSOLA FRONTAL - SOPORTE |
| 04-09 | MAZO DE CABLES, CONSOLA LATERAL - INTERRUPTORES |
| 04-10 | PANEL DE INSTRUMENTOS, DELANTERO - CUBIERTAS |
| 04-11 | PANEL DE INSTRUMENTOS, LATERAL - CUBIERTAS (LADO DERECHO) |
| 04-12 | VELOCIMETRO COMB. |
| 04-13 | ELECTRICO - LUCES, TECHO DE LA ROPS |
| 04-14 | ELECTRICO - LUCES, CABINA DE LA ROPS |
| 04-15 | CONJUNTO DE LA LAMPARA (MODELOS CON TECHO ROPS) |
| 04-16 | BOCINA - ALARMA, RETROCESO |
| 04-17 | FARO, GIRATORIO (MODELOS CON CABINA O CON TECHO) |
| 04-18 | ANTENA, RADIO - MAZO DE CABLES, RADIO |
| 04-19 | ELECTRICO SISTEMA - HIDRÁULICO AUXILIAR DE LA RETROEXCAVADORA |
| 04-20 | ELECTRICO SISTEMA - HIDRÁULICO AUXILIAR DE LA RETROEXCAVADORA, CON DE CONTROL PILOTO |

HTTP://WWW.MINNPARBACKHOEPARTS.COM

| 04-01 | | p1 | 10/03 |
|---|---|---|---|

MOTOR DE ARRANQUE

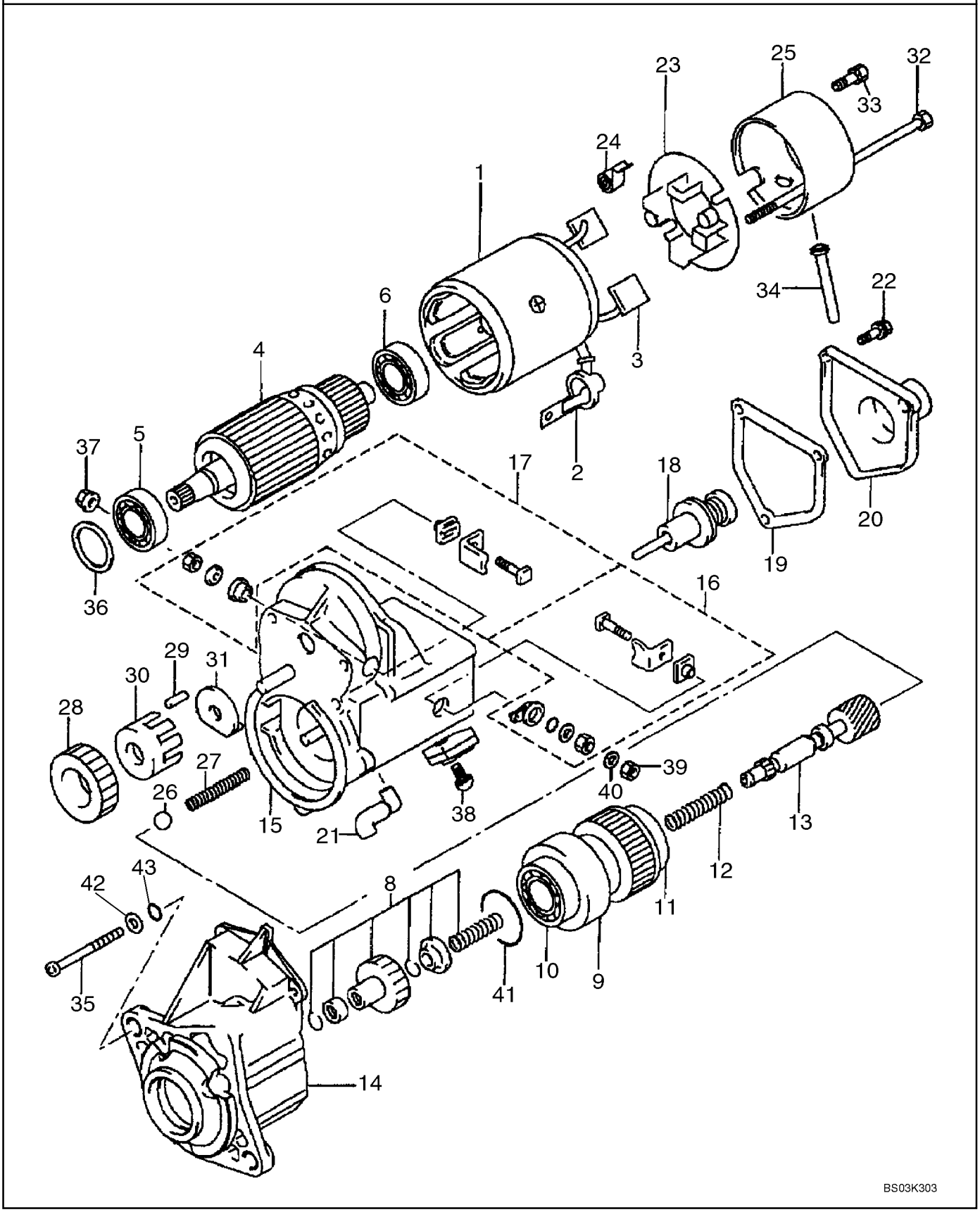

HTTP://WWW.MINNPARBACKHOEPARTS.COM



MOTOR DE ARRANQUE

| REF | FN | PART NUMBER | YR/SN | QTY | DESCRIPTION |
|---|---|---|---|---|---|
| | | 86992395 | | 1 | MOTOR DE ARRANQUE 12 V, 2.7 kw; Incl. Ref 1 - 43 |
| 1 | | {87438992} | | 1 | Housing, Yoke; Incl. Ref 2, 3 |
| 2 | | {87438993} | | 1 | Cover/Ring |
| 3 | | {87438925} | | 2 | Brush Kit |
| 4 | | {87438926} | | 1 | Armature; Incl. Ref 5, 6 |
| 5 | | {87438927} | | 1 | Ball Bearing, 35 mm OD |
| 6 | | {87438928} | | 1 | Ball Bearing, 30 mm OD |
| | | {87438994} | | 1 | Clutch; Incl. Ref 8 - 13 |
| 8 | | {87438929} | | 1 | Clutch Pinion Kit |
| 9 | | {87438930} | | 1 | Clutch Assembly; Incl. Ref 10, 11 |
| 10 | | {87438931} | | 1 | Ball Bearing, 47 mm OD |
| 11 | | {87438932} | | 1 | Ball Bearing, 47 mm OD |
| 12 | | {87438933} | | 1 | Compression Spring |
| 13 | | {87438935} | | 1 | Clutch Shaft |
| 14 | | {87438937} | | 1 | Housing |
| 15 | | {87438940} | | 1 | Magnetic Switch Assembly; Incl. Ref 16 - 22 |
| 16 | | {87438941} | | 1 | Kit, Terminal M |
| 17 | | {87438942} | | 1 | Kit, Terminal C |
| 18 | | {87438944} | | 1 | Plunger |
| 19 | | {87438946} | | 1 | Solenoid Switch Gasket |
| 20 | | {87438948} | | 1 | Solenoid Cover |
| 21 | | {87438995} | | 1 | Bushing, Drain |
| 22 | | {87438950} | | 3 | Bolt With Washer; M5 x 14 |
| 23 | | {87438996} | | 1 | Brush Holder; Incl. Ref 24 |
| 24 | | {87438997} | | 4 | Brush Tension Spring |
| 25 | | {87438999} | | 1 | Housing |
| 26 | | {87439000} | | 1 | Ball |
| 27 | | {87439001} | | 1 | Compression Spring |
| 28 | | {87439002} | | 1 | Pinion Gear |
| 29 | | {87439003} | | 5 | Roller, Clutch |
| 30 | | {87439004} | | 1 | Retainer |
| 31 | | {87439005} | | 1 | Snap Retainer |
| 32 | | {87438951} | | 2 | M6 x 182 Bolt |
| 33 | | {87439006} | | 2 | Bolt With Washer; M5 x 9.4 |
| 34 | | {87439007} | | 1 | Bushing, Drain |

HTTP://WWW.MINNPARBACKHOEPARTS.COM

| 04-01 | | p2 | 10/03 |
|---|---|---|---|

MOTOR DE ARRANQUE

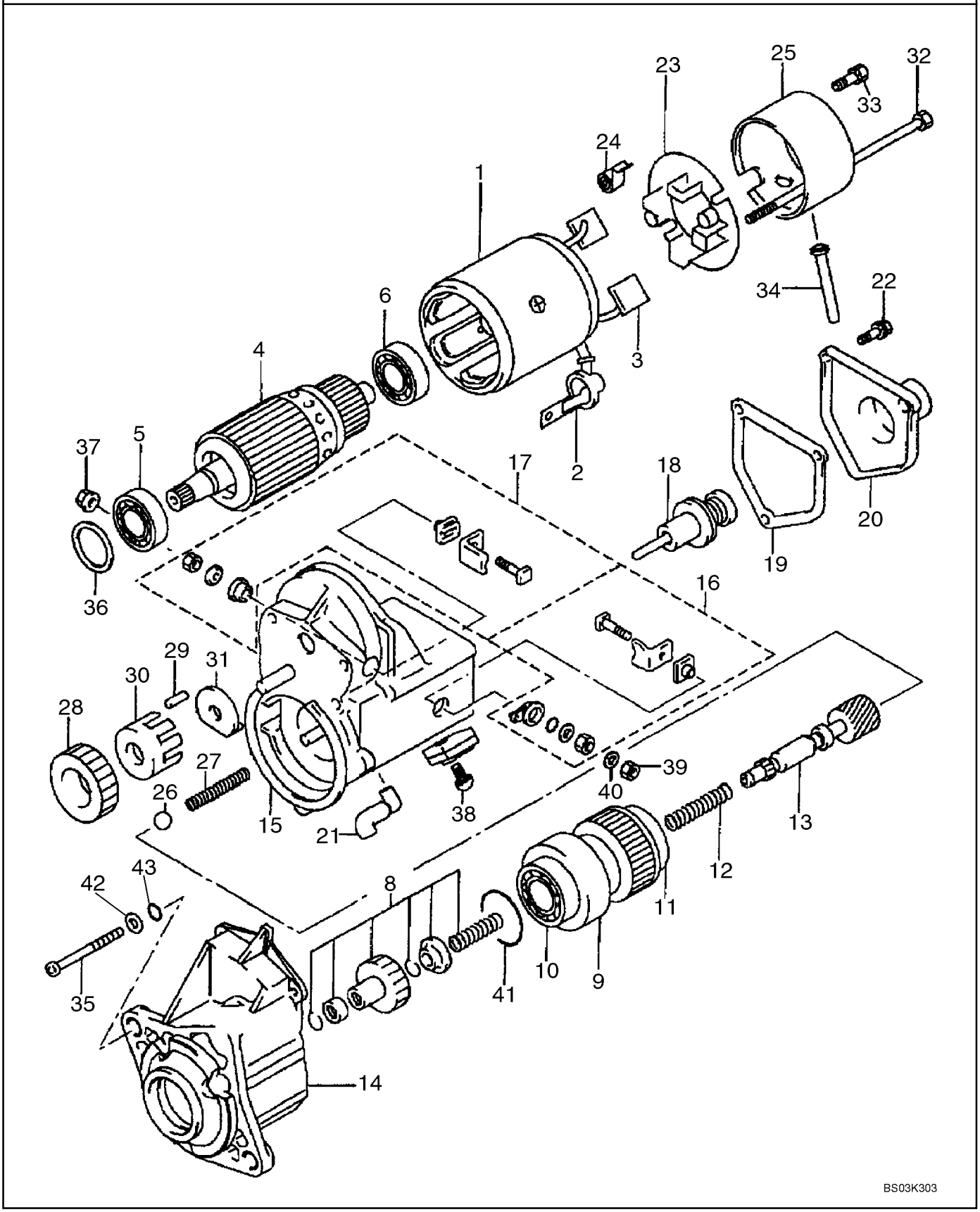

HTTP://WWW.MINNPARBACKHOEPARTS.COM



MOTOR DE ARRANQUE

| REF | FN | PART NUMBER | YR/SN | QTY | DESCRIPTION |
|---|---|---|---|---|---|
| 35 | | {87439008} | | 3 | Adapter Screw, M6 x 70 |
| 36 | | {87438954} | | 1 | Felt Washer |
| 37 | | {87439009} | | 1 | M10 Nut |
| 38 | | {87438956} | | 1 | M5 x 10 Bolt |
| 39 | | 100016 | | 1 | TUERCA M10 |
| 40 | | 140028 | | 1 | ARANDELA Lock, M10 |
| 41 | | {87439010} | | 1 | Seal |
| 42 | | {87439061} | | 3 | Washer, 9/32 x 1/2 x 3/64 |
| 43 | | {87439011} | | 3 | O-Ring, 4.8 ID |

HTTP://WWW.MINNPARBACKHOEPARTS.COM



ALTERNADOR

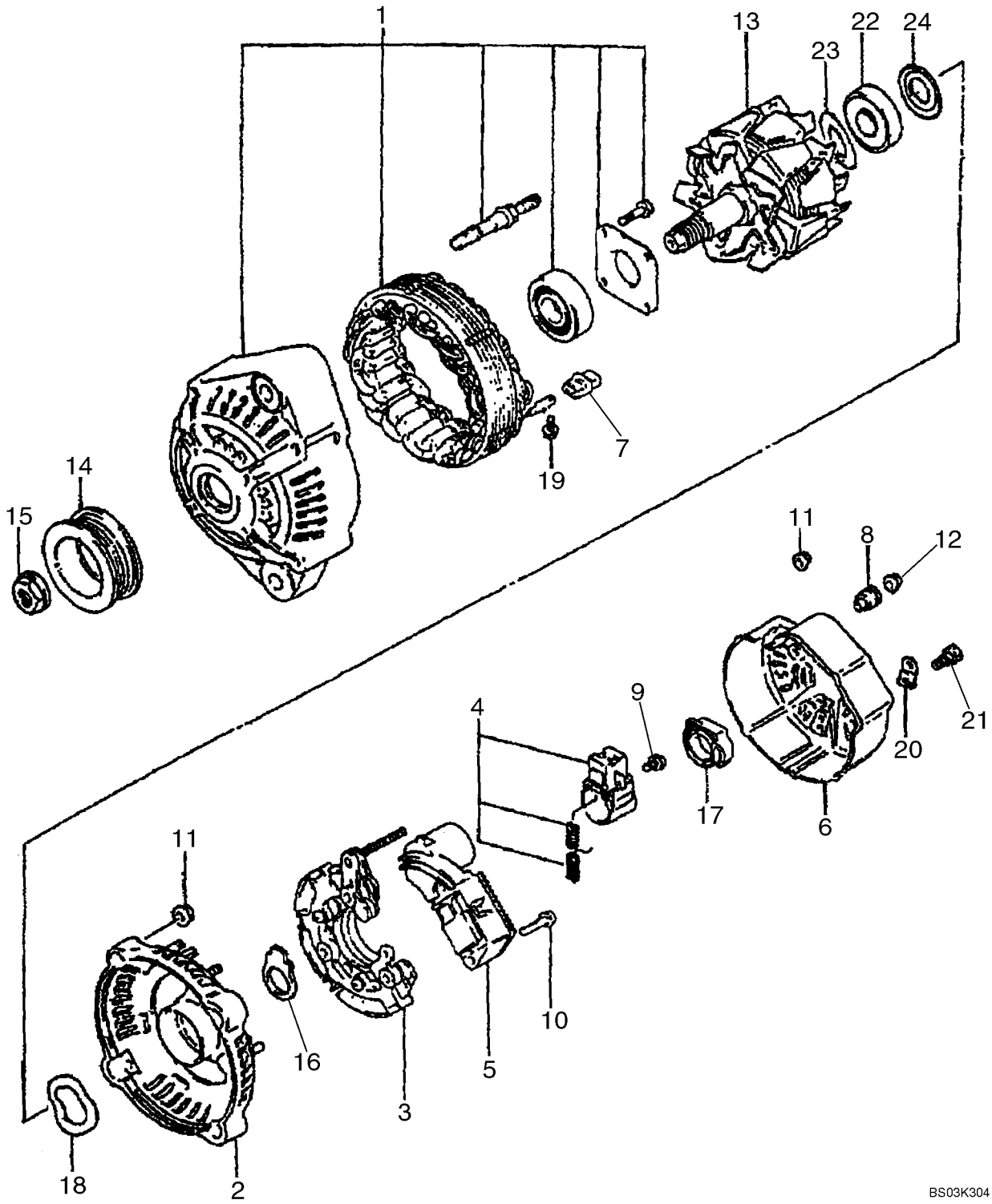

HTTP://WWW.MINNPARBACKHOEPARTS.COM



ALTERNADOR

| REF | FN | PART NUMBER | YR/SN | QTY | DESCRIPTION |
|---|---|---|---|---|---|
| | | 87422777 | | 1 | ALTERNADOR 12V, 90 amp; Incl. Ref 1 - 24 |
| 1 | | {87438960} | | 1 | Housing; Drive End, Includes Stator |
| 2 | | {87438963} | | 1 | Housing |
| 3 | | {87438965} | | 1 | Rectifier |
| 4 | | {87438967} | | 1 | Brush and Holder |
| 5 | | {87438969} | | 1 | Regulator |
| 6 | | {87438970} | | 1 | Cover |
| 7 | | {87438971} | | 4 | Insulation Bushing |
| 8 | | {87438972} | | 1 | Insulation Bushing |
| 9 | | {87438973} | | 3 | Screw |
| 10 | | {87438974} | | 2 | Bolt With Washer |
| 11 | | {87438975} | | 7 | Nut |
| 12 | | {87438976} | | 1 | Nut |
| 13 | | {87438977} | | 1 | Rotor |
| 14 | | {87438978} | | 1 | Pulley |
| 15 | | {87438979} | | 1 | Nut |
| 16 | | {87438980} | | 1 | Seal |
| 17 | | {87438981} | | 1 | Seal |
| 18 | | {87438982} | | 1 | Wave Washer |
| 19 | | {87438983} | | 4 | Bolt With Washer |
| 20 | | {87438984} | | 1 | Terminal Plate |
| 21 | | {87438985} | | 1 | Screw |
| 22 | | {87438986} | | 1 | Ball Bearing |
| 23 | | {87438987} | | 1 | Cover, Bearing |
| 24 | | {87438989} | | 1 | Cover, Bearing |

HTTP://WWW.MINNPARBACKHOEPARTS.COM

| 04-03 | | p1 | 10/03 |
|---|---|---|---|

MONTAJE DEL ARRANQUE - MONTAJE DEL ALTERNADOR

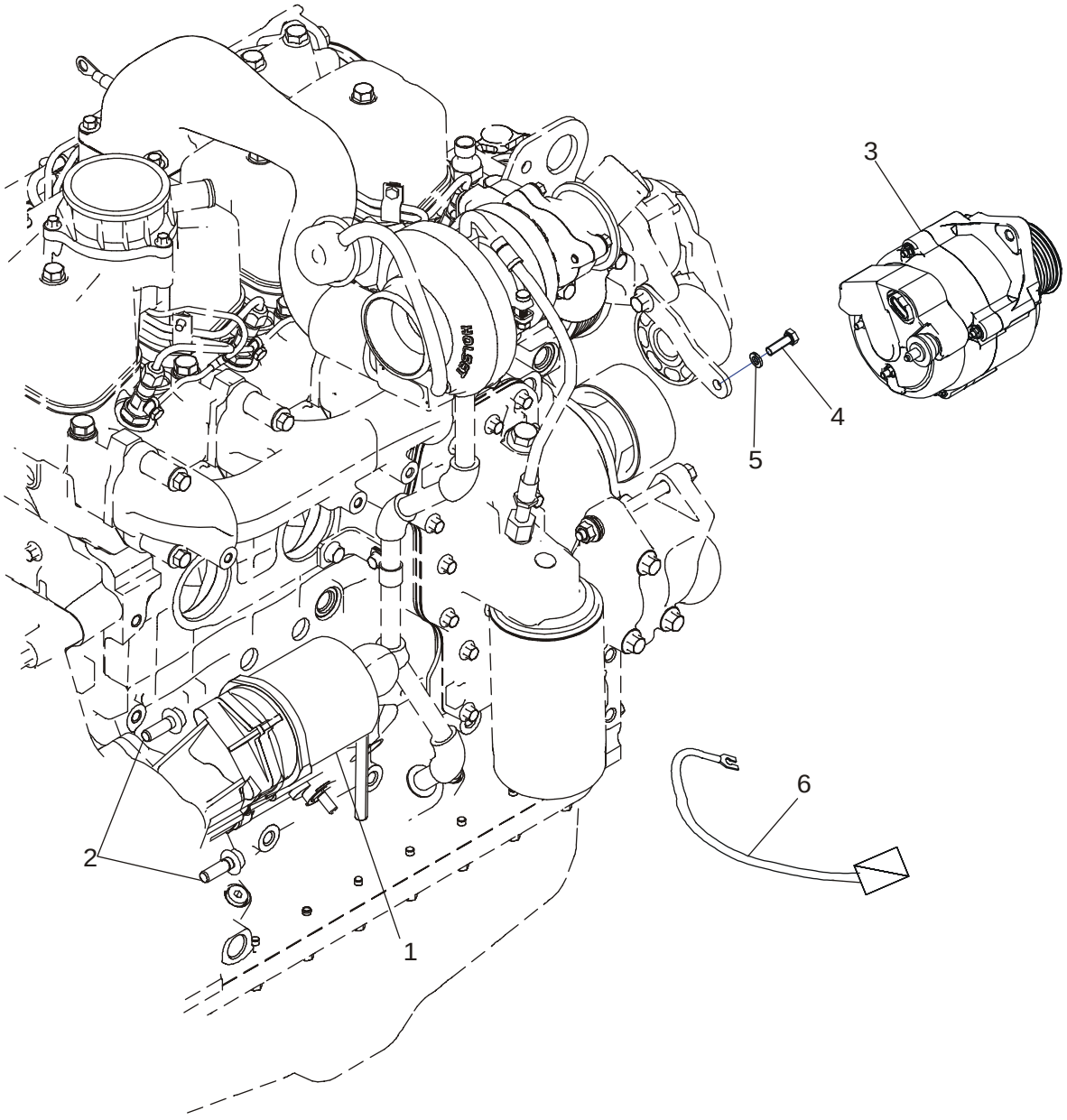

HTTP://WWW.MINNPARBACKHOEPARTS.COM



MONTAJE DEL ARRANQUE - MONTAJE DEL ALTERNADOR

| REF | FN | PART NUMBER | YR/SN | QTY | DESCRIPTION |
|---|---|---|---|---|---|
| 1 | | 86992395 | | 1 | MOTOR DE ARRANQUE See Figure 04-01 |
| 2 | | 844-10035 | | 2 | TORNILLO M10 x 35 |
| 3 | | 87422777 | | 1 | ALTERNADOR See Figure 04-02; Mounting Hardware Included With Engine Assembly |
| 4 | | 614-8025 | | 1 | TORNILLO M8 x 25 |
| 5 | | 892-11008 | | 1 | ARANDELA Lock, M8 |
| 6 | | 87433401 | | 1 | CABLE ELECTRICO Starter Solenoid Jumper Cable |

HTTP://WWW.MINNPARBACKHOEPARTS.COM

| 04-04 | | p1 | 01/04 |
|---|---|---|---|

MAZO DE CABLES, MOTOR - MONTAJE Y CONEXIONES

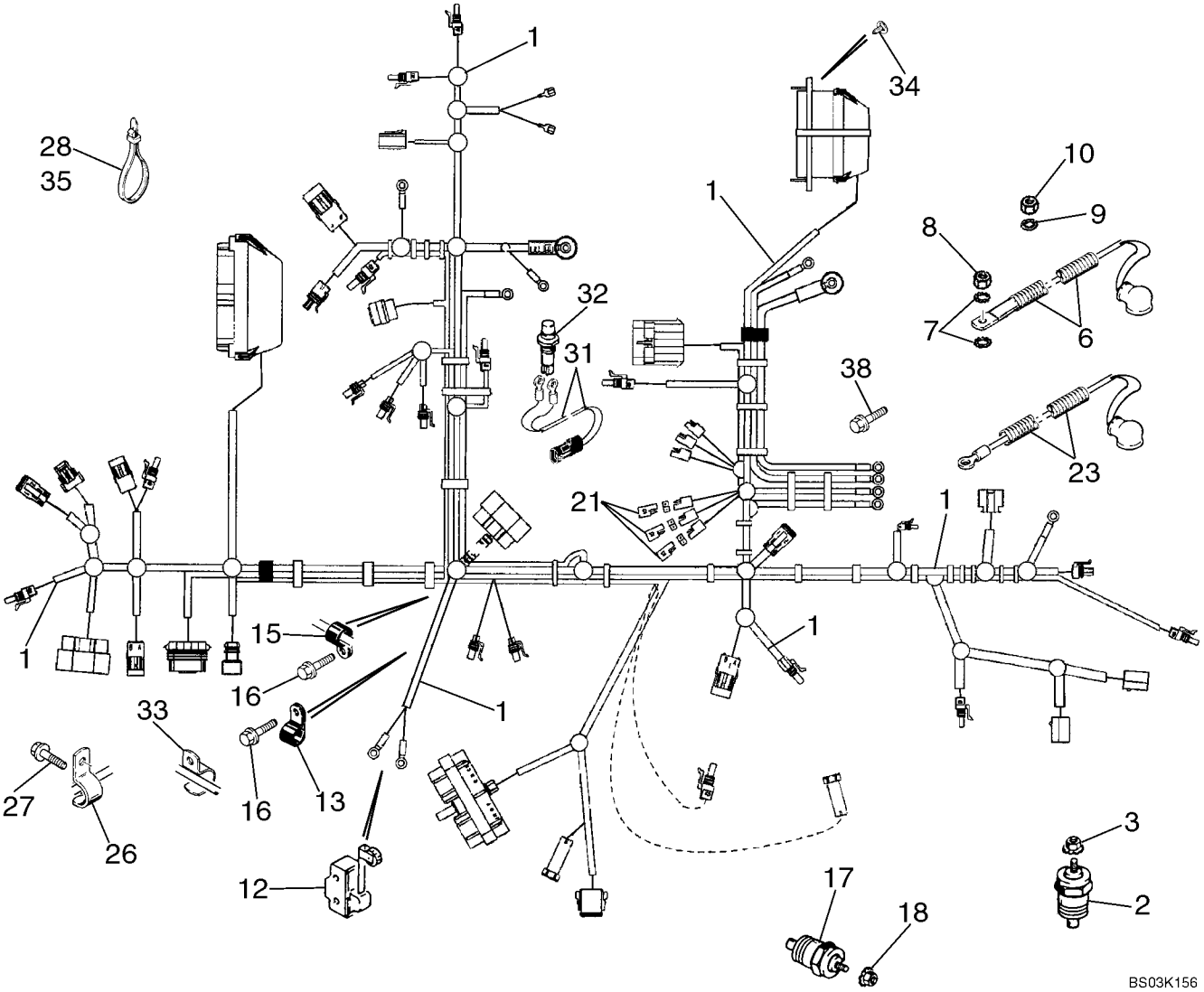

HTTP://WWW.MINNPARBACKHOEPARTS.COM



MAZO DE CABLES, MOTOR - MONTAJE Y CONEXIONES

| REF | FN | PART NUMBER | YR/SN | QTY | DESCRIPTION |
|---|---|---|---|---|---|
| 1 | | 87433543 | | 1 | GRUPO DE CABLES Engine, Main Chassis, Includes (3) L71879 Diodes |
| 2 | | A166057 | | 1 | SONDA Engine Water Coolant Temperature |
| 3 | | 193-1000 | | 1 | TUERCA No. 10 NF; With External Tooth Lock Washer |
| 6 | | 87423926 | | 1 | GRUPO DE CABLES Alternator Cable |
| 7 | | 493-21033 | | 2 | ARANDELA FRENO 5/16 |
| 8 | | 829-1408 | | 1 | TUERCA M8; 10 |
| 9 | | 493-21020 | | 1 | ARANDELA DE FRENO 3/16 |
| 10 | | 824-1405 | | 1 | TUERCA M5 |
| 12 | | D137363 | | 1 | CONTACTOR Return To Dig; For Mounting; See Figure 09-04 |
| 13 | | 515-23127 | | 1 | COLLAR 1/2 ID |
| 15 | | 515-23127 | | 1 | COLLAR 1/2 ID |
| 16 | | 844-10020 | | 2 | TORNILLO M10 x 20 |
| 17 | | A166057 | | 1 | SONDA Transmission Temperature |
| 18 | | 193-1000 | | 1 | TUERCA No. 10 NF; With External Tooth Lock Washer |
| 21 | | L71879 | | 3 | DIODO |
| 23 | | 87419229 | | 1 | GRUPO DE CABLES Power Wire |
| 26 | | 87032428 | | 1 | BORNE J-Clip For Brake Cable Bracket, See Figure 07-06 |
| 27 | | 814-10060 | | 1 | TORNILLO M10 x 60 |
| 28 | | L18337 | | 32 | BANDA 15 in |
| 31 | | 123809A2 | | 1 | HAZ Clutch Cutout; Transmission Gear Shift Lever; Incl. Ref 31A, 31B |
| 31A | | 246526A1 | | 1 | CONECTOR Not Illustrated |
| 31B | | NSS | | 2 | NO SE REPARA SEPARADAM. Eye; Not Illustrated |
| 32 | | 123097A1 | | 1 | CONTACTOR Push Button; Clutch Cutout; Transmission Gear Shift Lever; For Lever and Knob, See Figure 06-11 |
| 33 | | D147383 | | 1 | SUJETADOR Use Existing Hardware |
| 34 | | 781-24613 | | 4 | TORNILLO M6 x 13 |
| 35 | | 305342A1 | | 1 | BANDA 450 mm (18 in); Air Filter Restriction Branch to Air Filter Inlet Tube |
| 38 | | 844-10020 | | 1 | TORNILLO M10 x 20; Ground to Firewall |

HTTP://WWW.MINNPARBACKHOEPARTS.COM

| 04-05 | | p1 | 12/03 |
|---|---|---|---|

BATERIA CABLES (MODELOS SIN ARRANQUE EN FRÍO)

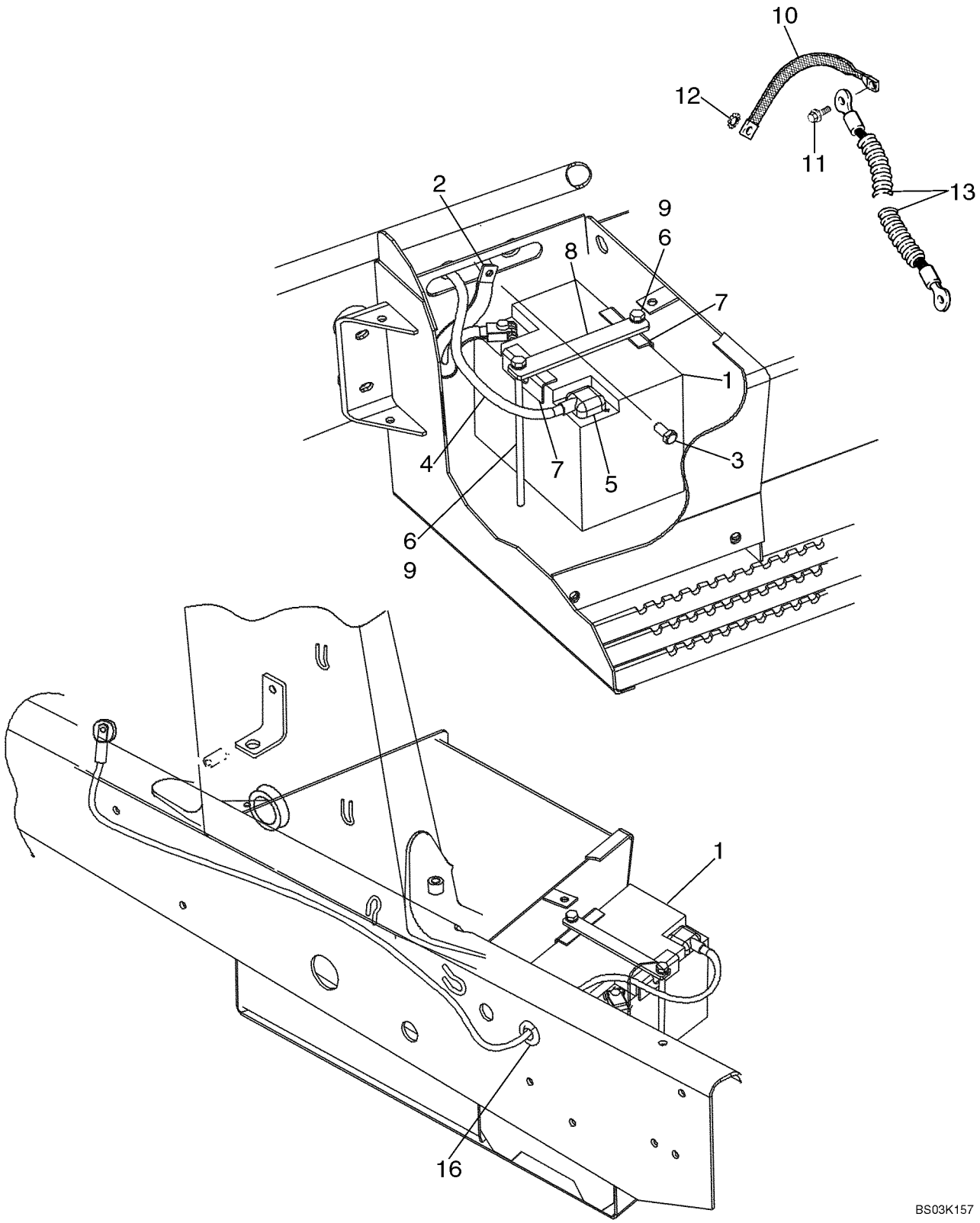

HTTP://WWW.MINNPARBACKHOEPARTS.COM



BATERIA CABLES (MODELOS SIN ARRANQUE EN FRÍO)

| REF | FN | PART NUMBER | YR/SN | QTY | DESCRIPTION |
|---|---|---|---|---|---|
| 1 | | 87403835 | | 1 | BATERIA CARGA HUMEDA 12V; Models Without Cold Start; Used In Production, For Service Order B4960W Through Ship Direct |
| 2 | | 87419259 | | 1 | ATADURA 350 mm; Negative Ground |
| 3 | | 844-10020 | | 1 | TORNILLO M10 x 20; Negative Battery Cable Ground; Bolt To Chassis |
| 4 | | 87419257 | | 1 | CABLE ELECTRICO 1550 mm; Positive; Incl. Ref 5; Battery to Starter |
| 5 | | 383619R1 | | 1 | TAPA |
| 6 | | 814-10220 | | 2 | TORNILLO M10 x 220 mm |
| 7 | | D125079 | | 2 | PIEZA DE SOPORTE Battery Hold-Down |
| 8 | | 87415781 | | 1 | PIEZA DE SOPORTE Plate |
| 9 | | 495-11041 | | 2 | ARANDELA 13/32 x 13/16 x 1/16 |
| 10 | | 87407206 | | 2 | CABLE 330 mm; Ground Strap to Chassis |
| 11 | | 844-10020 | | 1 | TORNILLO M10 x 20 |
| 12 | | 493-11039 | | 1 | ARANDELA 3/8; Internal External Tooth Lock Washer |
| 13 | | 381261A1 | | 1 | HILO Ground; Cab to Chassis |
| 16 | | 87423677 | | 2 | PASACABLES Battery Cable Grommet; Mounts In Chassis Side Channel |

HTTP://WWW.MINNPARBACKHOEPARTS.COM

| 04-06 | | p1 | 10/03 |
|---|---|---|---|

BATERIA, DOBLE - ARRANQUE EN FRÍO

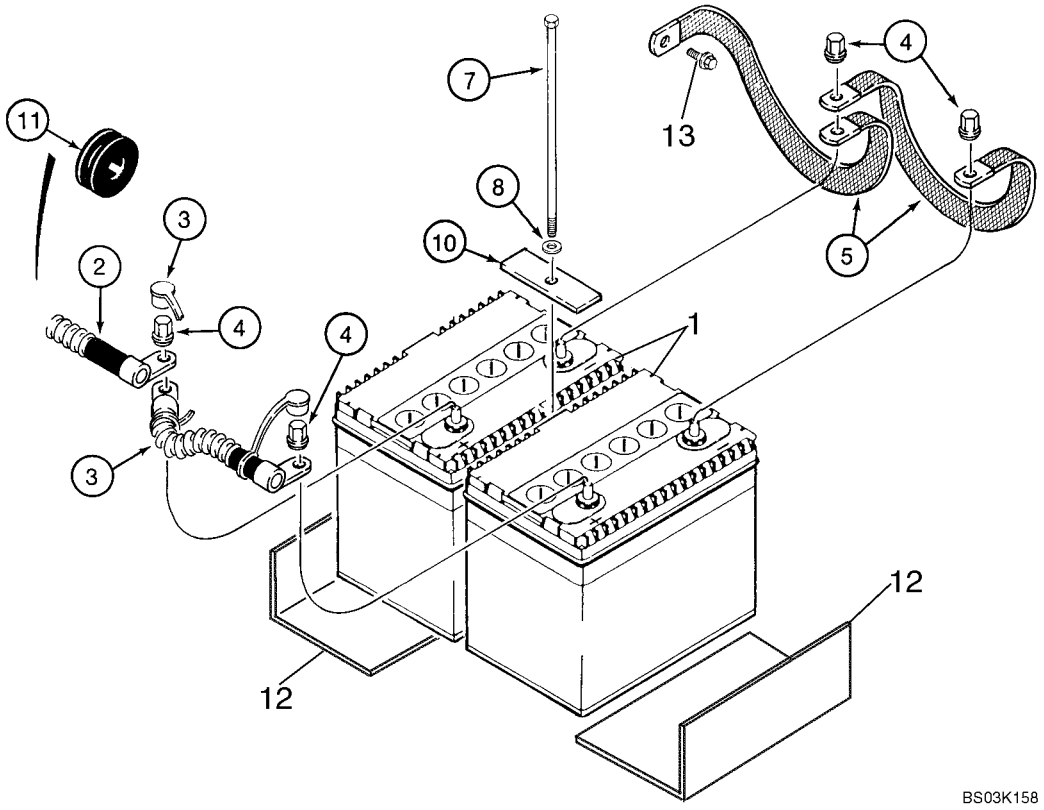

HTTP://WWW.MINNPARBACKHOEPARTS.COM



BATERIA, DOBLE - ARRANQUE EN FRÍO

| REF | FN | PART NUMBER | YR/SN | QTY | DESCRIPTION |
|---|---|---|---|---|---|
| 1 | | BMF28S | | 2 | BATERIA CARGA SECA 12V |
| 2 | | 87423675 | | 1 | CABLE ELECTRICO 1460 mm, Positive Cable; Chassis |
| 3 | | 184497A1 | | 1 | CABLE 227 mm, Positive Jumper |
| 4 | | D126409 | | 4 | TUERCA 3/8 |
| 5 | | 87423676 | | 2 | ATADURA 324 mm Flat Ground Strap |
| 7 | | 814-10245 | | 1 | TORNILLO M10 x 245 mm |
| 8 | | 495-11041 | | 1 | ARANDELA 13/32 x 13/16 x 1/16 |
| 10 | | 250854A1 | | 1 | BANDA |
| 11 | | 87423677 | | 2 | PASACABLES Battery Cable Grommet; Mounts In Chassis Side Channel |
| 12 | | 408535A1 | | 2 | PLACA 255 mm (10-1/32 in); Battery Support |
| 13 | | 844-10020 | | 1 | TORNILLO Flange, M10 x 20 |

HTTP://WWW.MINNPARBACKHOEPARTS.COM

| 04-06A | | p1 | 10/03 |
|---|---|---|---|

CALENTADOR DE REJILLA PARA ARRANQUE EN FRÍO

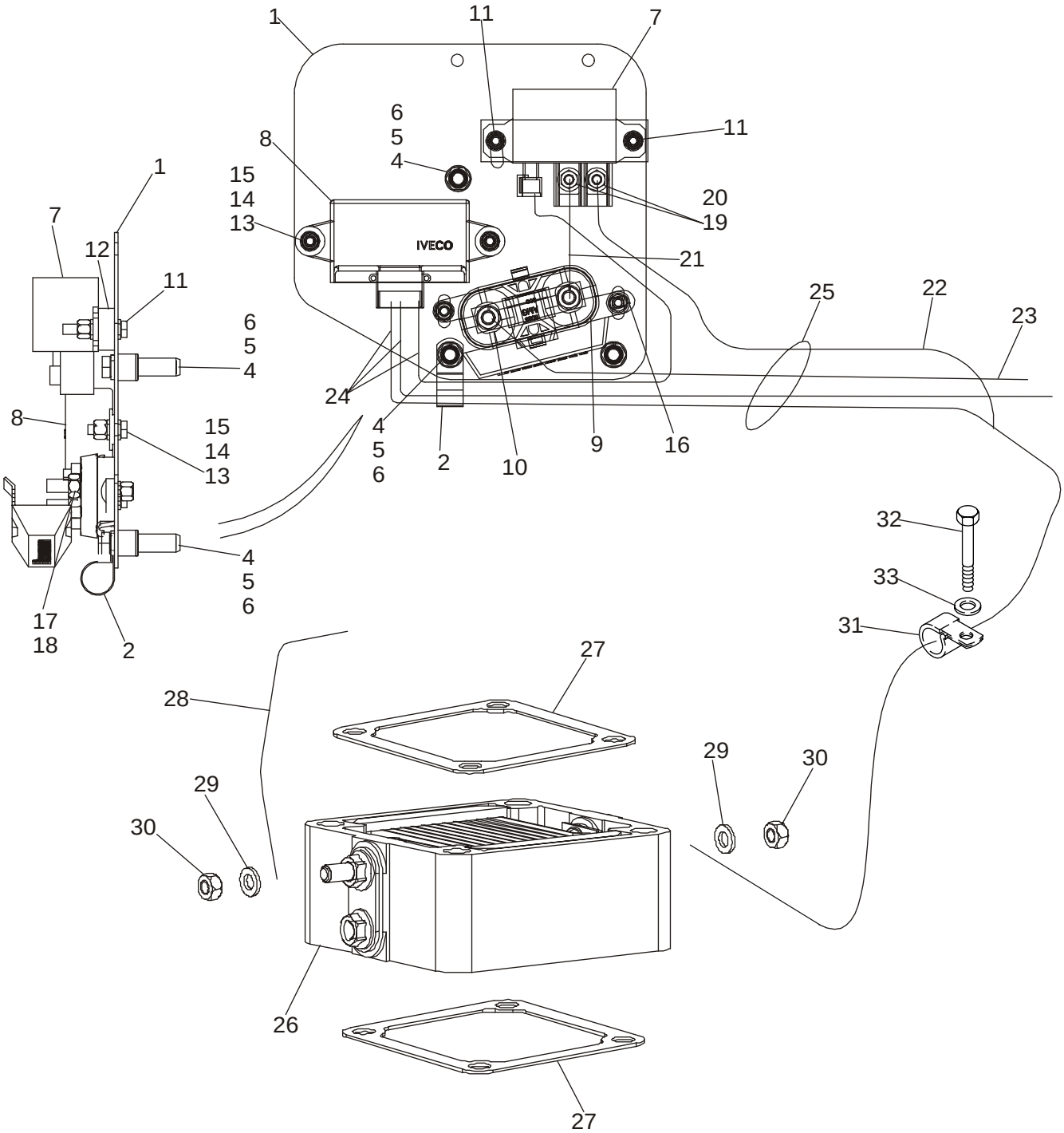


BS03K159

HTTP://WWW.MINNPARBACKHOEPARTS.COM



CALENTADOR DE REJILLA PARA ARRANQUE EN FRÍO

| REF | FN | PART NUMBER | YR/SN | QTY | DESCRIPTION |
|---|---|---|---|---|---|
| 1 | | 87410603 | | 1 | PLACA Cold Start Plate |
| 2 | | 515-22190 | | 1 | COLLAR |
| 3 | | 614-8040 | | 3 | TORNILLO M8 x 40 |
| 4 | | 407962A1 | | 3 | ESPACIADOR |
| 5 | | 238-5011 | | 3 | JUNTA HERMETICA 1/16 x 5/16 |
| 6 | | 87417383 | | 3 | ROSCA POSTIZA M8 x 1-1/4 |
| 7 | | 86619908 | | 1 | CONECTADOR Cold Start Relay |
| 8 | | 87409046 | | 1 | CAJA ELECTRONICA Controller, Grid Heater |
| 9 | | 440038A1 | | 1 | CONEXION Fuse Block |
| 10 | | 87410602 | | 1 | FUSIBLE 300 amp Fuse |
| 11 | | 614-6035 | | 2 | TORNILLO M6 x 35 |
| 12 | | 87414237 | | 1 | PLACA 10 mm Thick Spacer Bar |
| 13 | | 614-6020 | | 3 | TORNILLO M6 x 20 |
| 14 | | 895-11006 | | 11 | ARANDELA Flat, 6,6 x 12 x 1,6 mm |
| 15 | | 832-10406 | | 6 | TUERCA M6 |
| 16 | | 811-6016 | | 1 | TORNILLO Round Head, M6 x 16 |
| 17 | | 892-11008 | | 5 | ARANDELA Lock, M8 |
| 18 | | 829-1408 | | 2 | TUERCA M8 |
| 19 | | 322357 | | 2 | ARANDELA DE FRENO |
| 20 | | 829-1406 | | 2 | TUERCA M6 |
| 21 | | 87410265 | | 1 | CABLE. MASA 90 mm Jumper Wire; Fuse to Relay |
| 22 | | 87419616 | | 1 | CABLE (CONJUNTO) 500 mm Wire; Relay to Grid Heater |
| 23 | | 87419615 | | 1 | CABLE (CONJUNTO) 1250 mm Wire; Starter to Fuse Block |
| 24 | | 87433544 | | 1 | GRUPO DE CABLES Controller Harness, Cold Start Control; Attaches to Engine Harness |
| 25 | | D150521 | | 1 | COLLAR 292 mm Long Nylon Tie Strap |
| 26 | | 82017872 | | 1 | RECALENTADOR Grid |
| 27 | | 86014151 | | 2 | JUNTA HERMETICA |
| 28 | | 87413162 | | 1 | CABLE. MASA 150 mm Ground Wire |
| 29 | | 895-11006 | | 2 | ARANDELA Flat, 6,6 x 12 x 1,6 mm |
| 30 | | 829-1406 | | 2 | TUERCA M6 |
| 31 | | 515-25190 | | 1 | COLLAR |
| 32 | | 614-12025 | | 1 | TORNILLO M12 x 25 |
| 33 | | 896-11012 | | 1 | ARANDELA |

HTTP://WWW.MINNPARBACKHOEPARTS.COM



MAZO DE CABLES, CONSOLA FRONTAL - INTERRUPTORES

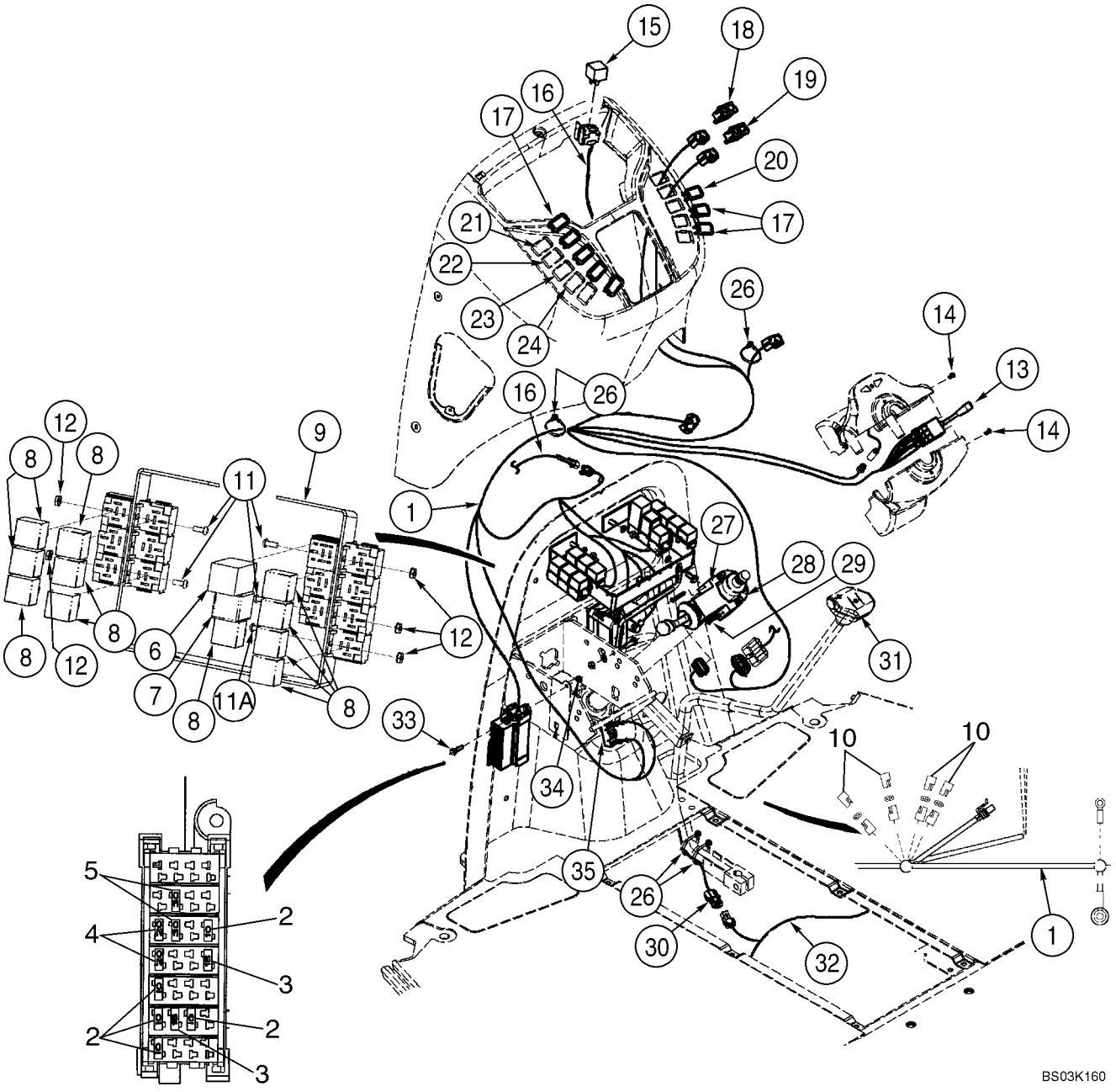

HTTP://WWW.MINNPARBACKHOEPARTS.COM



MAZO DE CABLES, CONSOLA FRONTAL - INTERRUPTORES

| REF | FN | PART NUMBER | YR/SN | QTY | DESCRIPTION |
|---|---|---|---|---|---|
| 1 | | 87418541 | | 1 | GRUPO DE CABLES Front Console Harness, Incl. Ref 13 |
| 2 | | 121412A1 | | 5-6 | FUSIBLE 10 amp; Mini, Red |
| 3 | | 121413A1 | | 2-3 | FUSIBLE 15 amp; Mini, Blue |
| 4 | | 121414A1 | | 2 | FUSIBLE 20 amp; Mini, Yellow |
| 5 | | 121416A1 | | 2 | FUSIBLE 30 amp; Mini, Green |
| 6 | | D147166 | | 1 | CONJUNTO INTERMITENT Relay, Flasher, Hazard; Turn Signal |
| 7 | | 347706A3 | | 1 | CONECTADOR Sealed Time Delay, Shuttle Interlock Timing Relay, Forward Reverse Control |
| 8 | | 87436836 | | 11 | CONECTADOR 40 amp, 12V |
| 9 | | 361900A1 | | 1 | PIEZA DE SOPORTE Relay Mounting |
| 10 | | L71879 | | 4 | DIODO |
| 11 | | 490-1108 | | 6 | TORNILLO No. 10 NF x 1/2 |
| 11A | | 490-1106 | | 1 | TORNILLO No 10 x 3/8 |
| 12 | | 193-1000 | | 7 | TUERCA No. 10 NF; With External Tooth Lock Washer |
| 13 | | 389487A1 | | 1 | CONTACTOR DE NIVEL Turn Signal/Driving Lamp High/Low Beam |
| 14 | | 404816A1 | | 2 | TORNILLO M4 x 12 |
| 15 | | 87436836 | | 1 | CONECTADOR 40 amp, 12V; Air Conditioning; Attaches To Front Console Options Harness |
| 16 | | 87433546 | | 1 | GRUPO DE CABLES Front Console Options; Includes (1) L71879 Diode |
| | | L71879 | | 1 | DIODO |
| | | 490-1108 | | 1 | TORNILLO No. 10 NF x 1/2; Mounts Relay Recepticle |
| | | 193-1000 | | 1 | TUERCA No. 10 NF; Mounts Relay Recepticle |
| 17 | | 126844A1 | | 2-8 | TAPÓN Accessory; If Used |
| 18 | | 386849A1 | | 1 | CONTACTOR Front Work Lamps |
| 19 | | 386850A1 | | 1 | CONTACTOR Hazard Lamps |
| 20 | | 386851A1 | | 1 | CONTACTOR Rotating Beacon; If Used |
| 21 | | 126844A1 | | 1 | TAPÓN If Used |
| 22 | | 386785A1 | | 1 | CONTACTOR Front Wiper; If Used |
| 23 | | 386787A1 | | 1 | CONTACTOR Front Windshield Washer; If Used |
| 24 | | 398675A2 | | 1 | CONTACTOR Loader Tool Quick Coupler; If Used |

HTTP://WWW.MINNPARBACKHOEPARTS.COM

| 04-07 | | p2 | 01/04 |
|---|---|---|---|

MAZO DE CABLES, CONSOLA FRONTAL - INTERRUPTORES

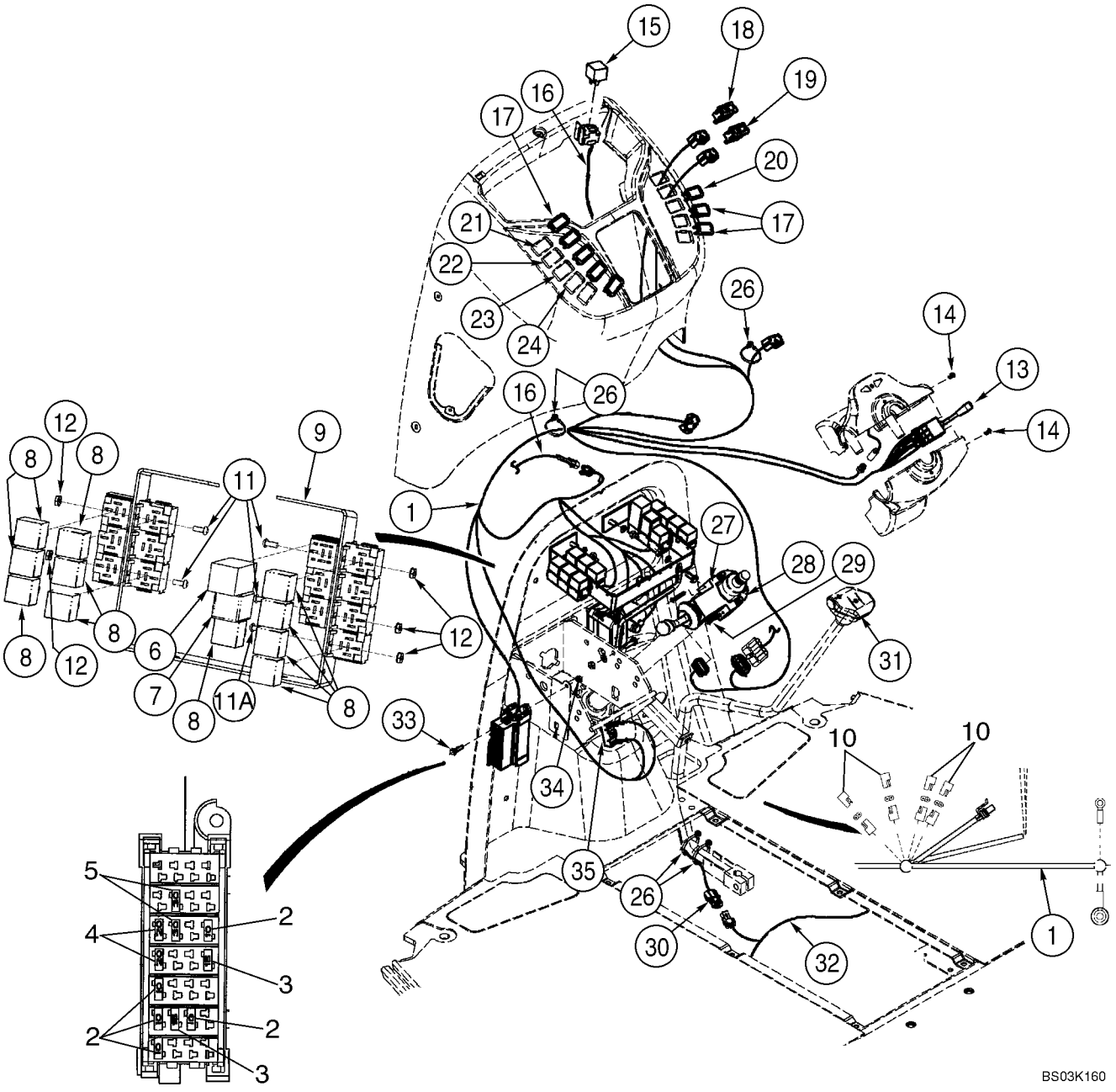

HTTP://WWW.MINNPARBACKHOEPARTS.COM



MAZO DE CABLES, CONSOLA FRONTAL - INTERRUPTORES

| REF | FN | PART NUMBER | YR/SN | QTY | DESCRIPTION |
|---|---|---|---|---|---|
| 26 | | L18337 | | 4 | BANDA 15 in |
| 27 | | 278328A1 | | 1 | CONTACTOR Shuttle Shift; Transmission Forward/Neutral/Reverse Switch |
| 28 | | 366889A2 | | 1 | MEDIA ABRAZADERA Shuttle Lever; Includes Threaded Insert |
| 29 | | 397990A1 | | 2 | TORNILLO M5 x 35 |
| 30 | | 123809A2 | | 1 | HAZ Clutch Cutout; Transmission Gear Shift Lever; For Lever, See Figure 06-11 |
| 31 | | 123097A1 | | 1 | CONTACTOR Clutch Cutout; For Lever and Knob, See Figure 06-11 |
| 32 | | 87433543 | | 1 | GRUPO DE CABLES Engine Harness, Main Chassis, Includes (3) L71879 Diodes |
| | | L71879 | | 3 | DIODO |
| 33 | | 844-6025 | | 1 | TORNILLO M6 x 25 |
| 34 | | 832-10406 | | 1 | TUERCA M6 |
| 35 | | D148108 | | 1 | CONTACTOR Brake Lamp; Includes Hardware; For Mounting, See Figure 07-03 |
| | | 87436675 | | 1 | GRUPO DE CABLES Chassis Options; Includes (4) L71879 Diodes |
| | | L71879 | | 4 | DIODO |

HTTP://WWW.MINNPARBACKHOEPARTS.COM

| 04-08 | | p1 | 10/03 |
|---|---|---|---|

MAZO DE CABLES, CONSOLA FRONTAL - SOPORTE

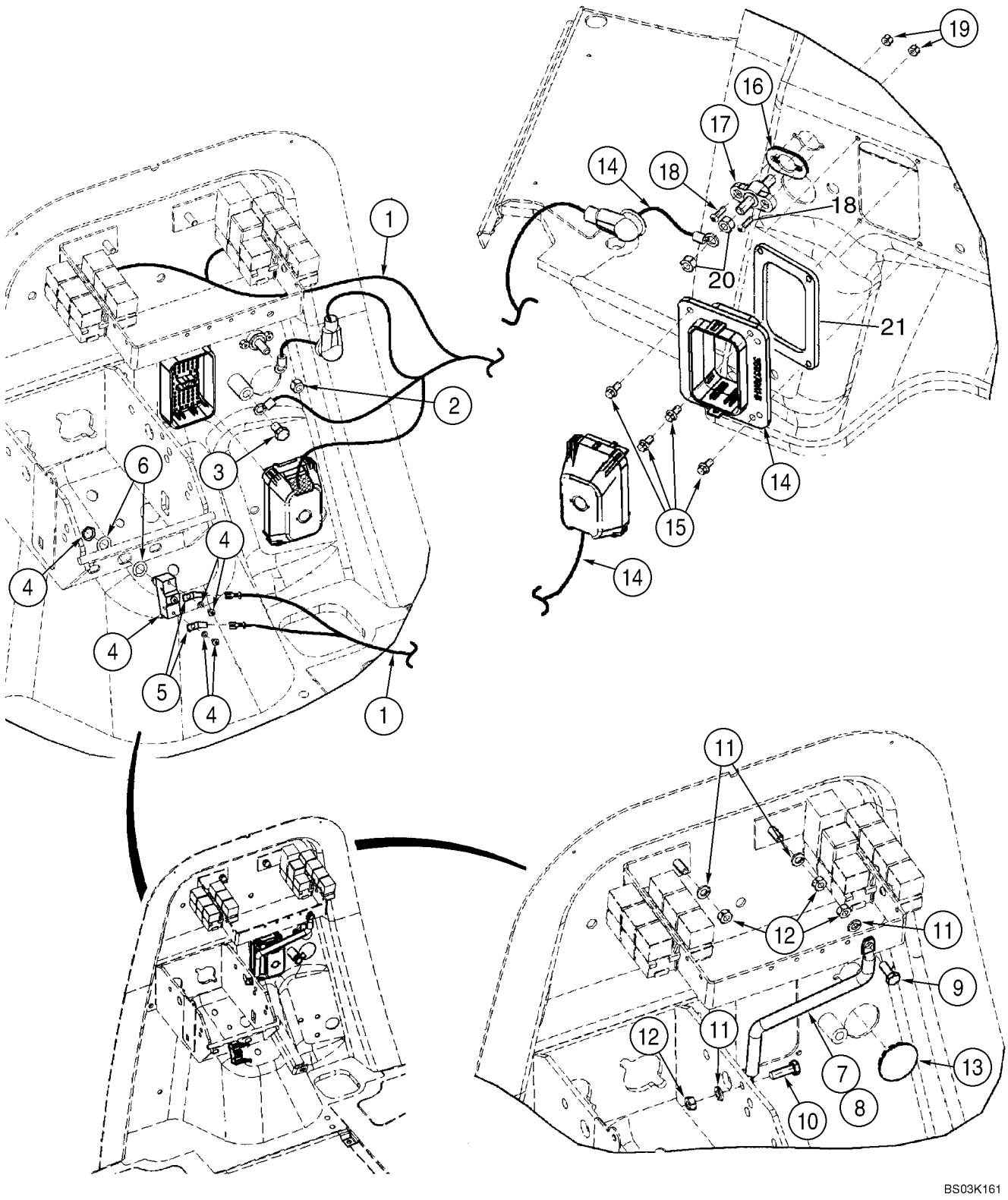

HTTP://WWW.MINNPARBACKHOEPARTS.COM



MAZO DE CABLES, CONSOLA FRONTAL - SOPORTE

| REF | FN | PART NUMBER | YR/SN | QTY | DESCRIPTION |
|---|---|---|---|---|---|
| 1 | | 87418541 | | 1 | GRUPO DE CABLES Front Console Harness; Mounts To Front Firewall |
| 2 | | 425-106 | | 1 | TUERCA 3/8 |
| 3 | | 128312A1 | | 1 | TORNILLO M10 x 15; Mounts To Front Firewall |
| 4 | | D148108 | | 1 | CONTACTOR Brake Lamp; Includes Hardware |
| 5 | | A187990 | | 2 | TERMINAL Male |
| 6 | | 495-81153 | | 2 | ARANDELA 15/32 x 3/4 x 1/32 |
| 7 | | 362930A2 | | 1 | TENSOR Relay Mounting |
| 8 | | 392353A1 | | 1 | TUBERIA |
| 9 | | 614-8020 | | 1 | TORNILLO M8 x 20 |
| 10 | | 614-8025 | | 1 | TORNILLO M8 x 25 |
| 11 | | 892-11008 | | 4 | ARANDELA M8 |
| 12 | | 829-1408 | | 4 | TUERCA M8; 10 |
| 13 | | 397876A1 | | 1 | TAPÓN 1-5/8 in, Button |
| 14 | | 87433543 | | 1 | GRUPO DE CABLES Engine Harness, Main Chassis; Mounts Behind Front Firewall; Includes (3) L71879 Diodes |
| | | L71879 | | 3 | DIODO |
| 15 | | 781-24613 | | 4 | TORNILLO Flange, M6 x 13 |
| 16 | | 357966A1 | | 1 | JUNTA HERMETICA |
| 17 | | 357278A1 | | 1 | RACOR Positive Battery |
| 18 | | 490-11012 | | 2 | TORNILLO No. 10 NF x 3/4 |
| 19 | | 231-24409 | | 2 | CONTRA TUERCA No. 10 |
| 20 | | 425-106 | | 2 | TUERCA 3/8 |
| 21 | | 414174A1 | | 1 | JUNTA HERMETICA |

HTTP://WWW.MINNPARBACKHOEPARTS.COM



MAZO DE CABLES, CONSOLA LATERAL - INTERRUPTORES

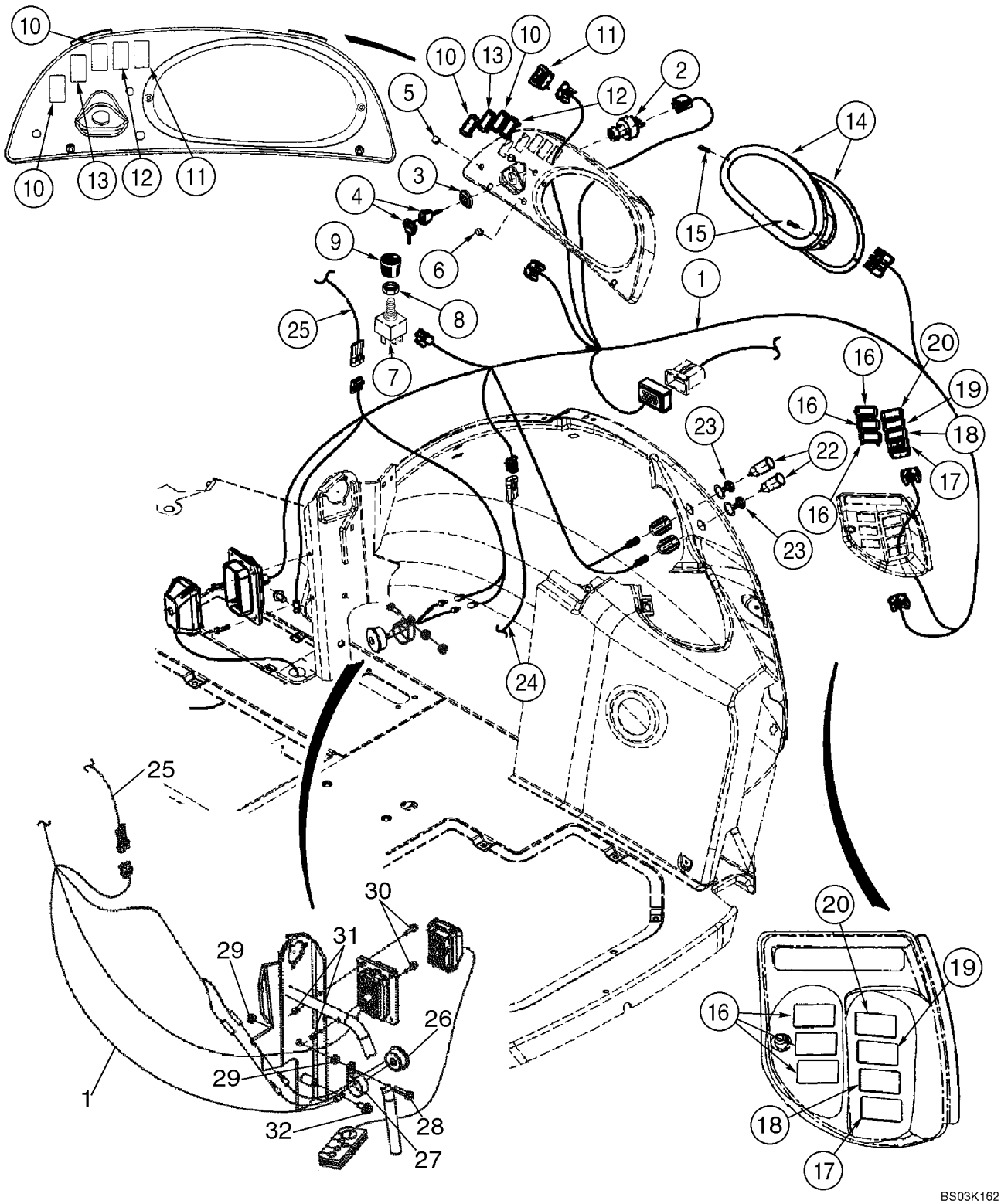

HTTP://WWW.MINNPARBACKHOEPARTS.COM



MAZO DE CABLES, CONSOLA LATERAL - INTERRUPTORES

| REF | FN | PART NUMBER | YR/SN | QTY | DESCRIPTION |
|---|---|---|---|---|---|
| 1 | | 87418542 | | 1 | GRUPO DE CABLES Side Console Harness |
| | | 282775A1 | | 1 | CONMUTADOR DE ARRANQ Incl. Ref 2 - 4 |
| 2 | | NSS | | 1 | NO SE REPARA SEPARADAM. Switch, Without Keys |
| 3 | | NSS | | 1 | NO SE REPARA SEPARADAM. Nut |
| 4 | | NSS | | 1 | NO SE REPARA SEPARADAM. Key, Ignition; Set Of Two; Padded |
| 5 | | 397569A1 | | 2 | TAPÓN 7/16 in, Dome, If Used; For Air Conditioning Switch and Knob; See Figure 09-65 |
| 6 | | 397570A1 | | 1 | TAPÓN 1/2 in, Dome, If Used; For Heater Switch and Knob; See Figure 09-64 |
| 7 | | 245258A1 | | 1 | CONTACTOR Blower |
| | | 121415A1 | | 1 | FUSIBLE 25 amp, Blower And Wiper |
| 8 | | A42561 | | 1 | TUERCA |
| 9 | | 400379A1 | | 1 | PLACA |
| 10 | | 126844A1 | | 1-4 | TAPÓN If Used |
| 11 | | 133715A1 | | 1 | CONTACTOR Rear Work Lamps |
| 12 | | 235002A1 | | 1 | CONTACTOR Ride Control, If Used |
| 13 | | 133716A1 | | 1 | CONTACTOR Four Wheel Drive, If Used |
| | | 121412A1 | | 1 | FUSIBLE 10 amp; Four Wheel Drive |
| 14 | | 87419320 | | 1 | CUADRO DE SENAL.MULTIPLE See Figure 04-12 |
| 15 | | 140-119 | | 2 | TORNILLO No. 10 x 1-1/4 |
| 16 | | 126844A1 | | 1-6 | TAPÓN If Used |
| 17 | | 386852A2 | | 1 | CONTACTOR Horn |
| 18 | | 386788A1 | | 1 | CONTACTOR Rear Window Washer, If Used |
| 19 | | 386786A1 | | 1 | CONTACTOR Rear Wiper, If Used |
| 20 | | 126844A1 | | 1 | TAPÓN If Used |
| 22 | | 283779A1 | | 2 | SALIDA Power Plug Outlet, 30 amp Maximum |
| 23 | | 283781A1 | | 2 | TAPON DEL DEPOSITO Power Plug Outlet |
| 25 | | NSS | | 1 | NO SE REPARA SEPARADAM. Harness, Loader Control Lever; Included In Loader Control Lever Handle |
| 26 | | D137468 | | 1 | TIMBRE ZUMBADOR Engine Water Temperature, Engine Oil Pressure and Parking Brake |
| 27 | | 515-23444 | | 1 | COLLAR 1-3/4 |
| 28 | | 614-10030 | | 1 | TORNILLO M10 x 30 |

HTTP://WWW.MINNPARBACKHOEPARTS.COM



MAZO DE CABLES, CONSOLA LATERAL - INTERRUPTORES

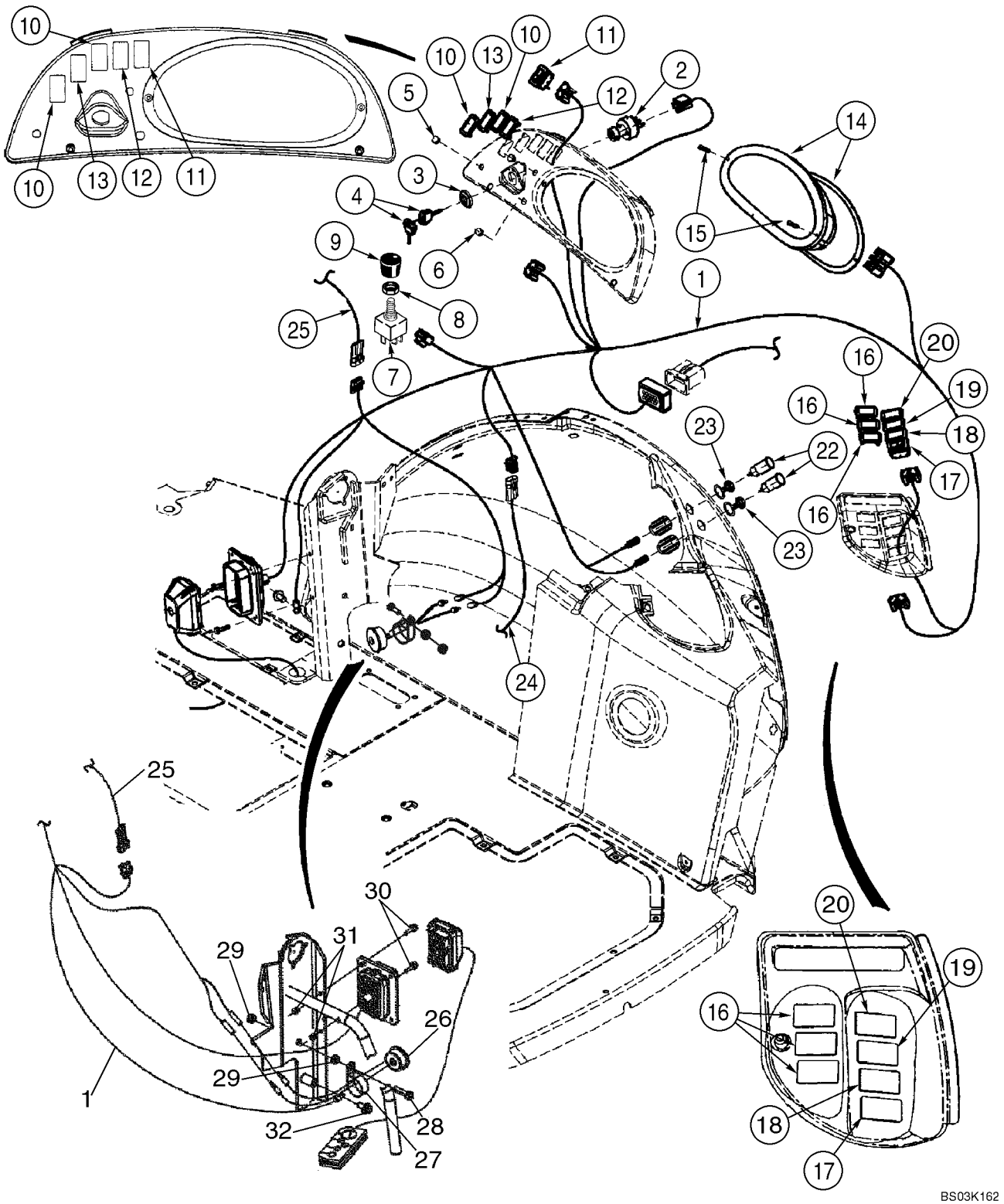

HTTP://WWW.MINNPARBACKHOEPARTS.COM



MAZO DE CABLES, CONSOLA LATERAL - INTERRUPTORES

| REF | FN | PART NUMBER | YR/SN | QTY | DESCRIPTION |
|---|---|---|---|---|---|
| 29 | | 829-1410 | | 2 | TUERCA M10 |
| 30 | | 844-6025 | | 2 | TORNILLO M6 x 25 |
| 31 | | 832-10406 | | 2 | TUERCA M6 |
| 32 | | 844-10020 | | 1 | TORNILLO M10 x 20 |
| | | 87436675 | | 1 | GRUPO DE CABLES Chassis Options Harness; Includes (4) L71879 Diodes |
| | | L71879 | | 4 | DIODO |

HTTP://WWW.MINNPARBACKHOEPARTS.COM

| 04-10 | | p1 | 08/03 |
|---|---|---|---|

PANEL DE INSTRUMENTOS, DELANTERO - CUBIERTAS

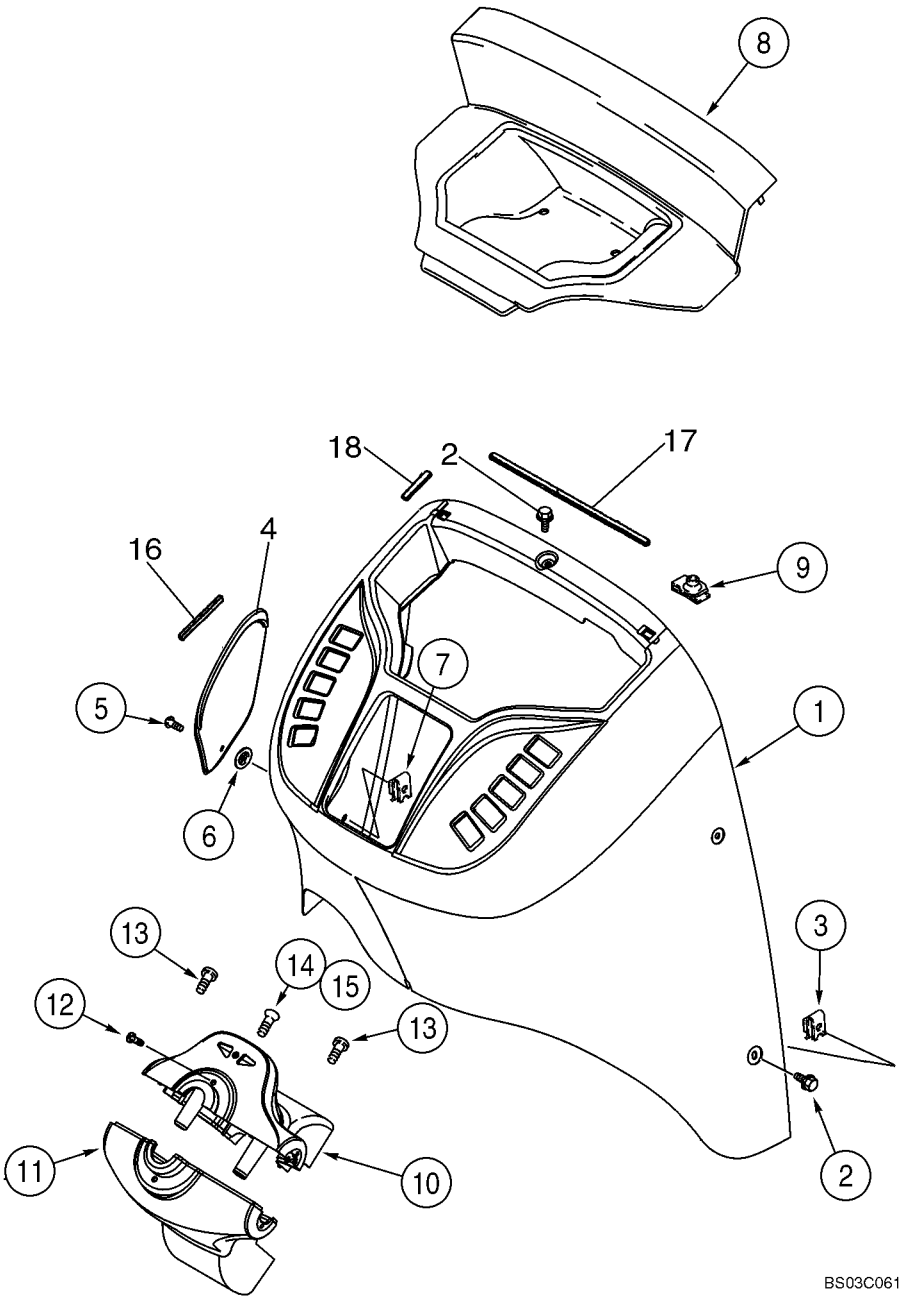

HTTP://WWW.MINNPARBACKHOEPARTS.COM



PANEL DE INSTRUMENTOS, DELANTERO - CUBIERTAS

| REF | FN | PART NUMBER | YR/SN | QTY | DESCRIPTION |
|---|---|---|---|---|---|
| 1 | | 355827A2 | | 1 | TAPA Front |
| 2 | | 555-10 | | 6 | TORNILLO |
| 3 | | 833-40406 | | 6 | TUERCA M6 |
| 4 | | 360244A1 | | 1 | TAPA Fuse Access |
| 5 | | 182276A1 | | 1 | TORNILLO |
| 6 | | 127009A1 | | 1 | CLIP ELECTRICO |
| 7 | | 131-861 | | 1 | TUERCA No. 10 |
| 8 | | 360245A2 | | 1 | TAPA Relay Access |
| 9 | | 278316A2 | | 2 | SUJETADOR |
| 10 | | 373689A2 | | 1 | TABA (CONJUNTO) Steering Column, Upper; Incl. Ref 10A - 10E; Components Not Illustrated |
| 10A | | 360242A2 | | 1 | TAPA |
| 10B | | 303465A2 | | 1 | LAMPARA Blinker |
| 10C | | 303466A1 | | 1 | IDEOGRAMA Right Flasher |
| 10D | | 303467A1 | | 1 | IDEOGRAMA Left Flasher |
| 10E | | 373693A1 | | 1 | TORNILLO Flat Head, No. 8 x 7/16 |
| 11 | | 360243A2 | | 1 | TAPA Steering Column, Lower |
| 12 | | 140-106 | | 2 | TORNILLO No. 10 x 1/2 |
| 13 | | 140-106 | | 2 | TORNILLO No. 10 x 1/2 |
| 14 | | 260-1358 | | 1 | TORNILLO No. 10-16 x 1/2 |
| 15 | | 131-121 | | 1 | TUERCA ESPECIAL No. 10 |
| 16 | | 414572A1 | | 1 | CINTA 100 mm, Adhesive Back |
| 17 | | 414034A1 | | 1 | CINTA 330 mm, Adhesive Back |
| 18 | | 414033A1 | | 4 | CINTA 60 mm, Adhesive Back |

HTTP://WWW.MINNPARBACKHOEPARTS.COM

| 04-11 | | p1 | 01/04 |
|---|---|---|---|

PANEL DE INSTRUMENTOS, LATERAL - CUBIERTAS (LADO DERECHO)

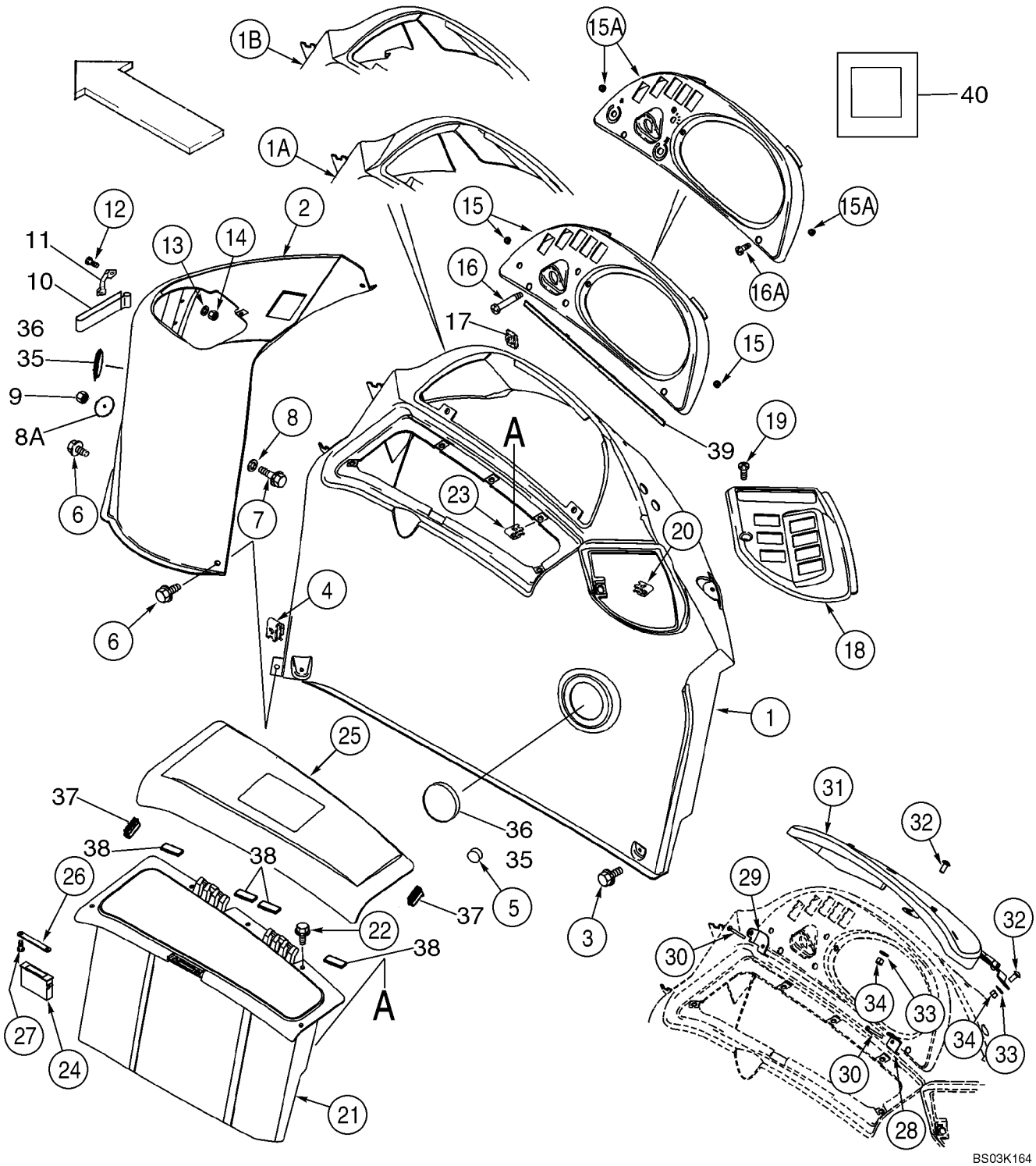

HTTP://WWW.MINNPARBACKHOEPARTS.COM



PANEL DE INSTRUMENTOS, LATERAL - CUBIERTAS (LADO DERECHO)

| REF | FN | PART NUMBER | YR/SN | QTY | DESCRIPTION |
|---|---|---|---|---|---|
| 1 | | 360250A2 | | 1 | REPISA Canopy Models |
| 1A | | 355198A2 | | 1 | REPISA Cab, Single Door |
| 1B | | 372167A3 | | 1 | REPISA Cab, Two Door |
| 2 | | 355197A2 | | 1 | REPISA Loader Control |
| 3 | | 555-2 | | 6 | TORNILLO Flange, M6 x 20 |
| 4 | | 833-40406 | | 5 | TUERCA M6 |
| 5 | | L60224 | | 1 | AMORTIGUADOR CAUCHO Rubber |
| 6 | | 555-10 | | 2 | TORNILLO Flange, M6 x 16 |
| 7 | | 844-6025 | | 1 | TORNILLO Flange, M6 x 25 |
| 8 | | 895-15006 | | 1 | ARANDELA 6,6 x 25 x 1,6 mm |
| 8A | | 407660A1 | | 1 | ARANDELA 7 mm ID x 50 mm OD |
| 9 | | 832-10406 | | 1 | TUERCA M6 |
| 10 | | 184726A1 | | 1 | BANDA DE FIJACTION Velcro |
| 11 | | 182594A1 | | 2 | MANECILLA Velcro Retainer |
| 12 | | 842-1416 | | 4 | TORNILLO M4 x 16; 4.8 |
| 13 | | 895-11004 | | 4 | ARANDELA 4,3 x 9 x 0,8 mm |
| 14 | | 832-10404 | | 4 | TUERCA M4 |
| 15 | | 391818A2 | | 1 | MARCO Instrument Cluster Mounting; Canopy Models; Includes 390258A1 |
| | | 390258A1 | | 2 | INTRODUCTOR No. 10, Threaded Insert |
| 15A | | 390255A2 | | 1 | MARCO Instrument Cluster Mounting; Cab Models; Includes 390258A1 |
| | | 390258A1 | | 2 | INTRODUCTOR No. 10, Threaded Insert |
| 16 | | 140-120 | | 2 | TORNILLO No. 10 x 2-1/4, Canopy Models |
| 16A | | 140-107 | | 2 | TORNILLO No. 10 x 3/4, Cab Models |
| 17 | | 131-619 | | 2 | TUERCA No. 10, Cab or Canopy |
| 18 | | 353068A2 | | 1 | MARCO Rear Switches |
| 19 | | 140-107 | | 1 | TORNILLO No. 10 x 3/4 |
| 20 | | 131-619 | | 1 | TUERCA No. 10 |
| 21 | | 366632A2 | | 1 | CAJA HERRAMIENTAS Right-Hand |
| 22 | | 555-2 | | 5 | TORNILLO M6 x 20 |
| 23 | | 833-40406 | | 5 | TUERCA M6 |
| 24 | | D127335 | | 1 | RETENEDOR Magnetic Catch |
| 25 | | 366633A3 | | 1 | TAPA Storage Box |
| 26 | | 375112A1 | | 1 | CERRADERO Striker |
| 27 | | 440-1066 | | 2 | TORNILLO No. 6 x 3/8 |

HTTP://WWW.MINNPARBACKHOEPARTS.COM

| 04-11 | | p2 | 01/04 |
|---|---|---|---|

PANEL DE INSTRUMENTOS, LATERAL - CUBIERTAS (LADO DERECHO)

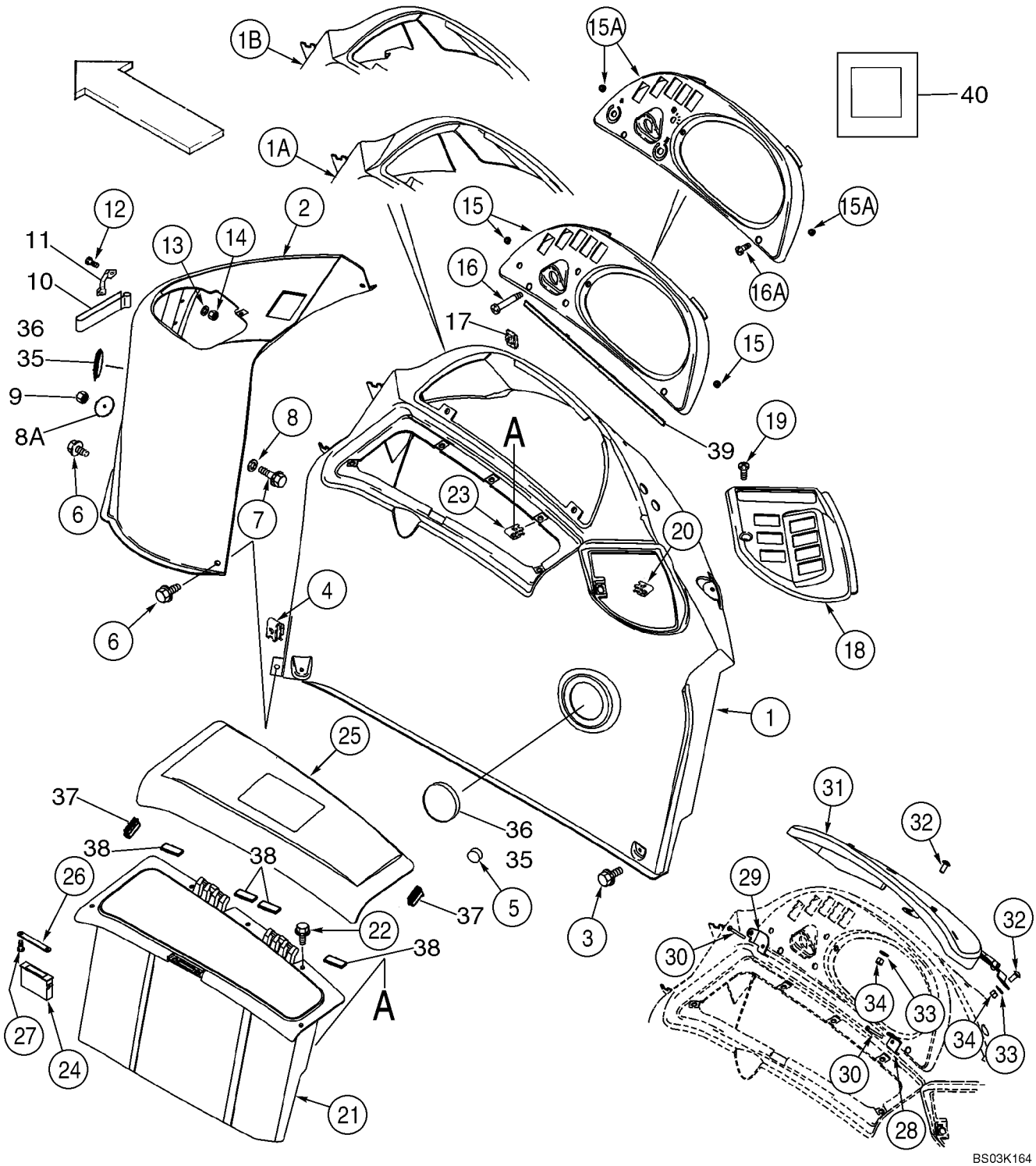

HTTP://WWW.MINNPARBACKHOEPARTS.COM



PANEL DE INSTRUMENTOS, LATERAL - CUBIERTAS (LADO DERECHO)

| REF | FN | PART NUMBER | YR/SN | QTY | DESCRIPTION |
|---|---|---|---|---|---|
| 28 | | 386369A2 | | 1 | PIEZA DE SOPORTE |
| 29 | | 386368A2 | | 1 | PIEZA DE SOPORTE |
| 30 | | 140-120 | | 2 | TORNILLO No. 10 x 2-1/4 |
| 31 | | 385614A4 | | 1 | TABA (CONJUNTO) Instrument Cluster; Anti-Vandalism, Canopy Models; Includes 386502A1, F22426 |
| | | 386502A1 | | 2 | PARACHOQUES |
| | | F22426 | | 3 | DISPOSITIVO DE TOPE |
| 32 | | 811-8020 | | 2 | TORNILLO Round Head, M8 x 20 |
| 33 | | 895-15008 | | 2 | ARANDELA 9 x 20 x 1,6 mm |
| 34 | | 832-10408 | | 2 | TUERCA M8 |
| 35 | | 1302758C1 | | 2 | TAPÓN 3 inch |
| 36 | | 413054A1 | | 4 | TORNILLO No. 6 x 1/2 |
| 37 | | 430471A1 | | 2 | ANILLO DE CIERRE Bulb, 40 mm; Storage Lid Bumper |
| 38 | | 414092A1 | | 4 | CINTA 50 mm, Adhesive Back; Storage Box |
| 39 | | 414071A1 | | 1 | BANDA HERMETICIDAD 480 mm, Adhesive Back |
| 40 | | 412510A1 | | 1 | ANILLO DE CIERRE 25 x 25 x 3 mm, Adhesive Back; Console To Fender |

HTTP://WWW.MINNPARBACKHOEPARTS.COM

| 04-12 | | p1 | 10/03 |
|---|---|---|---|

VELOCIMETRO COMB.

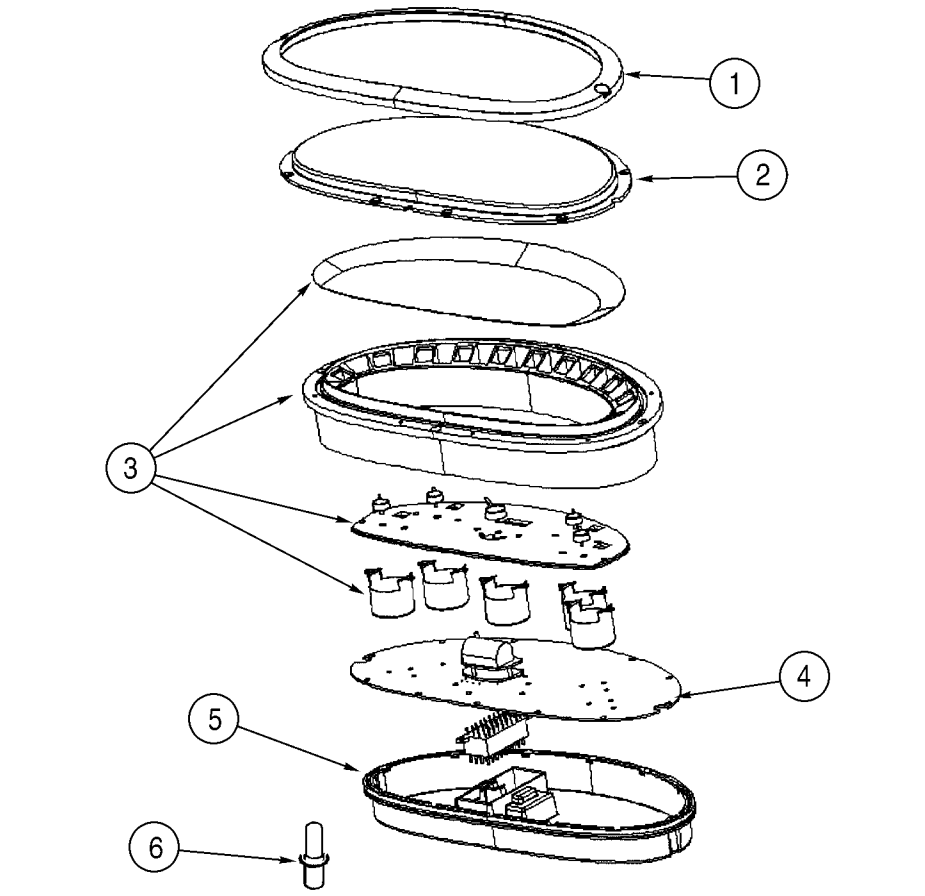


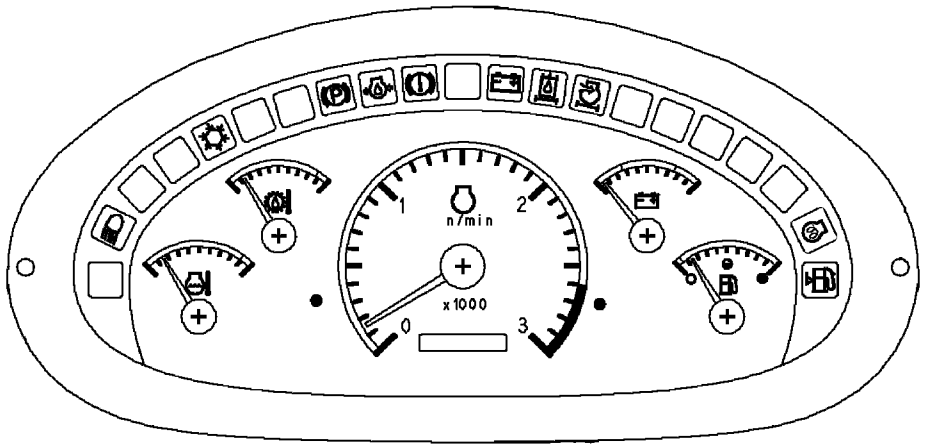


BS03K165

HTTP://WWW.MINNPARBACKHOEPARTS.COM



VELOCIMETRO COMB.

| REF | FN | PART NUMBER | YR/SN | QTY | DESCRIPTION |
|---|---|---|---|---|---|
| | | 87419320 | | 1 | CUADRO DE SENAL.MULTIPLE Incl. Ref 1 - 6 |
| 1 | | 370755A1 | | 1 | MARCO Black |
| | | NSS | | 2 | NO SE REPARA SEPARADAM. No. 6 x 1/4, Screw; Trim |
| 2 | | 370756A1 | | 1 | TAPA TRANSLUCIDA Clear; Includes O-Ring Which Is Not Serviced Separately |
| 3 | | 87423396 | | 1 | APARATO MEDIDOR Gauge Includes Overlay, Seal and Gauges Which Are Not Serviced Separately |
| 4 | | 87423397 | | 1 | CUENTAHORAS Hourmeter, Circuit Board; Includes Seal and Hourmeter Which Are Not Serviced Separately |
| | | NSS | | 25 | NO SE REPARA SEPARADAM. No. 6 x 3/8, Screw |
| 5 | | 370760A1 | | 1 | TRASERA TAPA Rear; Includes O-Ring Which Is Not Serviced Separately |
| | | NSS | | 2 | NO SE REPARA SEPARADAM. No. 6 x 3/4, Screw; Rear Cover |
| 6 | | 388053A2 | | 1 | AMPOLLA 1W, 14V; Includes Socket |

HTTP://WWW.MINNPARBACKHOEPARTS.COM

| 04-13 | | p1 | 08/03 |
|---|---|---|---|

ELECTRICO - LUCES, TECHO DE LA ROPS

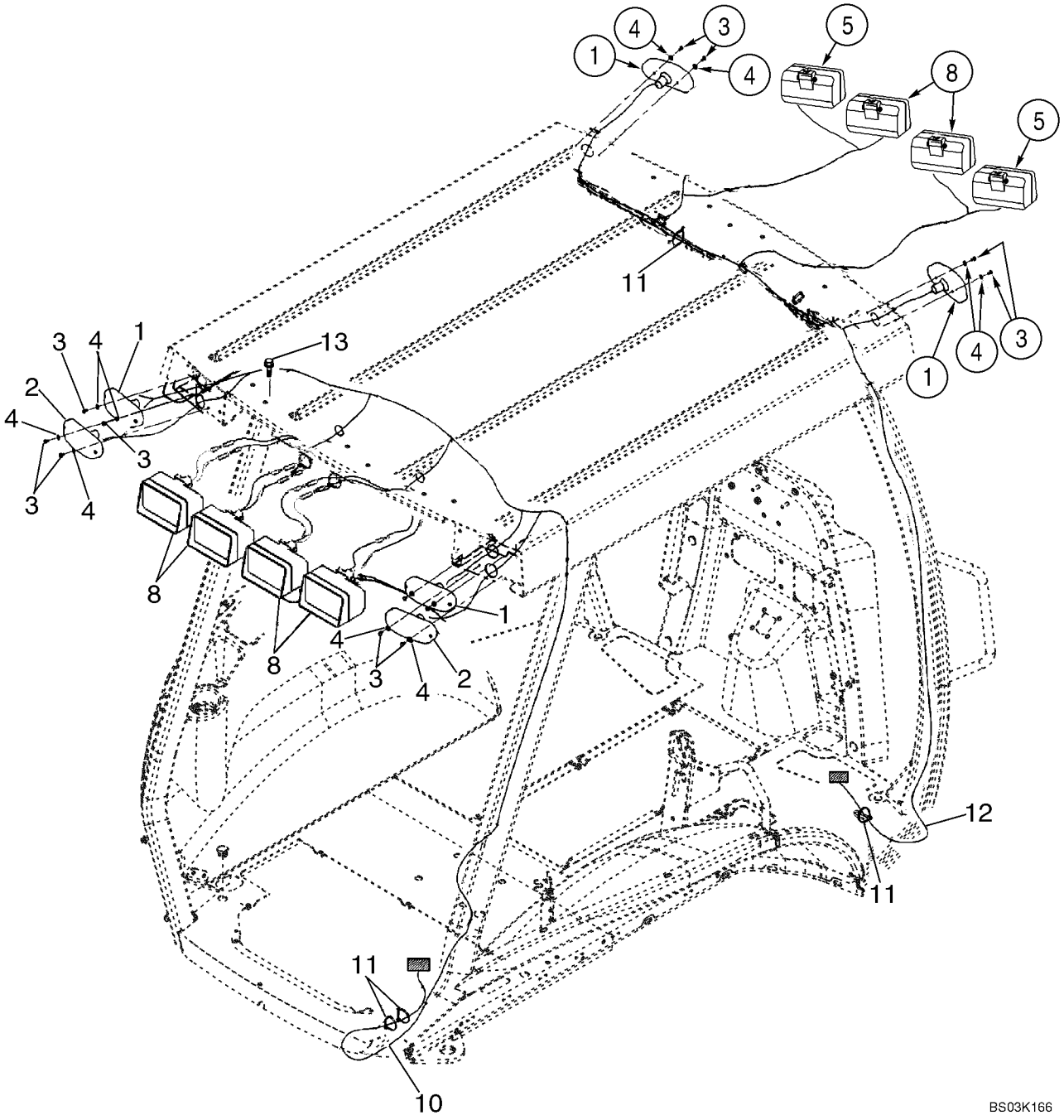

HTTP://WWW.MINNPARBACKHOEPARTS.COM



ELECTRICO - LUCES, TECHO DE LA ROPS

| REF | FN | PART NUMBER | YR/SN | QTY | DESCRIPTION |
|---|---|---|---|---|---|
| 1 | | D135384 | | 4 | LAMPARA Turn Signal and Flasher; See Figure 04-15 |
| 2 | | D121152 | | 2 | LAMPARA Stop And Tail; See Figure 04-15 |
| 3 | | 329032A1 | | 12 | TORNILLO No. 10 x 3/8 |
| 4 | | 495-31022 | | 12 | ARANDELA 7/32 x 1/2 x 3/64 |
| 5 | | 398846A3 | | 2 | FARO (CONJ) Front Driving; Incl. 1312210C2 |
| | | 1312210C2 | | 1 | AMPOLLA 12V, 55W |
| 8 | | 398847A3 | | 2-6 | FARO (CONJ) Front and Rear Flood and Work Lamps, Incl. 1312210C2, 276498A1 |
| | | 1312210C2 | | 1 | AMPOLLA 12V, 55W |
| | | 276498A1 | | 1 | TAPA TRANSLUCIDA With Hardened Glass; Replaces 1964801C1 Non-Hardened Lens Used In Production |
| 10 | | 396023A2 | | 1 | HAZ Canopy Lamps, Rear |
| 11 | | L18337 | | X | BANDA 15 in |
| 12 | | 404617A1 | | 1 | HAZ Canopy Lamps and Wiper, Front |
| 13 | | 128312A1 | | 4-8 | TORNILLO Flange, M10 x 15 |

HTTP://WWW.MINNPARBACKHOEPARTS.COM

| 04-14 | | p1 | 08/03 |
|---|---|---|---|

ELECTRICO - LUCES, CABINA DE LA ROPS

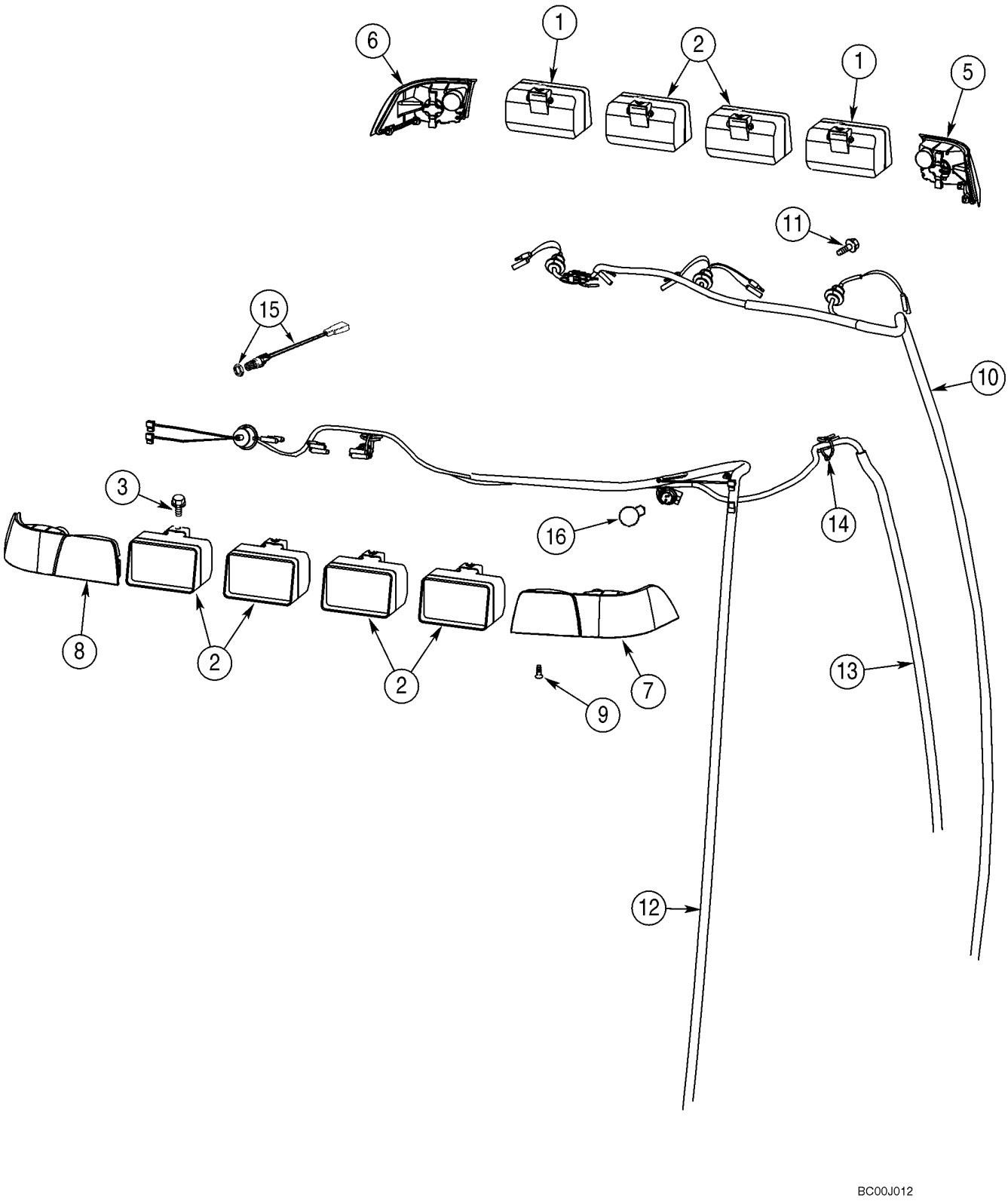

HTTP://WWW.MINNPARBACKHOEPARTS.COM



ELECTRICO - LUCES, CABINA DE LA ROPS

| REF | FN | PART NUMBER | YR/SN | QTY | DESCRIPTION |
|---|---|---|---|---|---|
| 1 | | 398846A3 | | 2 | FARO (CONJ) Front Driving, 1312210C2 |
| | | 1312210C2 | | 1 | AMPOLLA 12V, 55W |
| 2 | | 398847A3 | | 6 | FARO (CONJ) Front and Rear Flood and Work Lamps, Incl. 1312210C2, 276498A1 |
| | | 1312210C2 | | 1 | AMPOLLA 12V, 55W |
| | | 276498A1 | | 1 | TAPA TRANSLUCIDA With Hardened Glass; Replaces 1964801C1 Non-Hardened Lens Used In Production |
| 3 | | 128312A1 | | 8 | TORNILLO M10 x 15 |
| 5 | | 279224A1 | | 1 | LUNA FARO Amber; Right Front Corner |
| 6 | | 279223A1 | | 1 | LUNA FARO Amber; Left Front Corner |
| 7 | | 357540A1 | | 1 | FARO (CONJ) Amber and Red; Right Rear Corner |
| 8 | | 357541A1 | | 1 | FARO (CONJ) Amber and Red; Left Rear Corner |
| 9 | | 394863A1 | | 10 | TORNILLO M6 x 20 |
| 10 | | 404617A1 | | 1 | HAZ Front |
| 11 | | 844-10020 | | 2 | TORNILLO M10 x 20 |
| 12 | | 398380A3 | | 1 | HAZ Rear |
| 13 | | 396018A2 | | 1 | HAZ B-Post, Dome Lamp, Radio, Rear Wiper |
| 14 | | L18337 | | 5 | BANDA 15 in |
| 15 | | 279265A2 | | 1 | CONTACTOR Dome Lamp |
| 16 | | 279916A1 | | 2 | BOMBILLA |

HTTP://WWW.MINNPARBACKHOEPARTS.COM

| 04-15 | | p1 | 08/03 |
|---|---|---|---|

CONJUNTO DE LA LAMPARA (MODELOS CON TECHO ROPS)

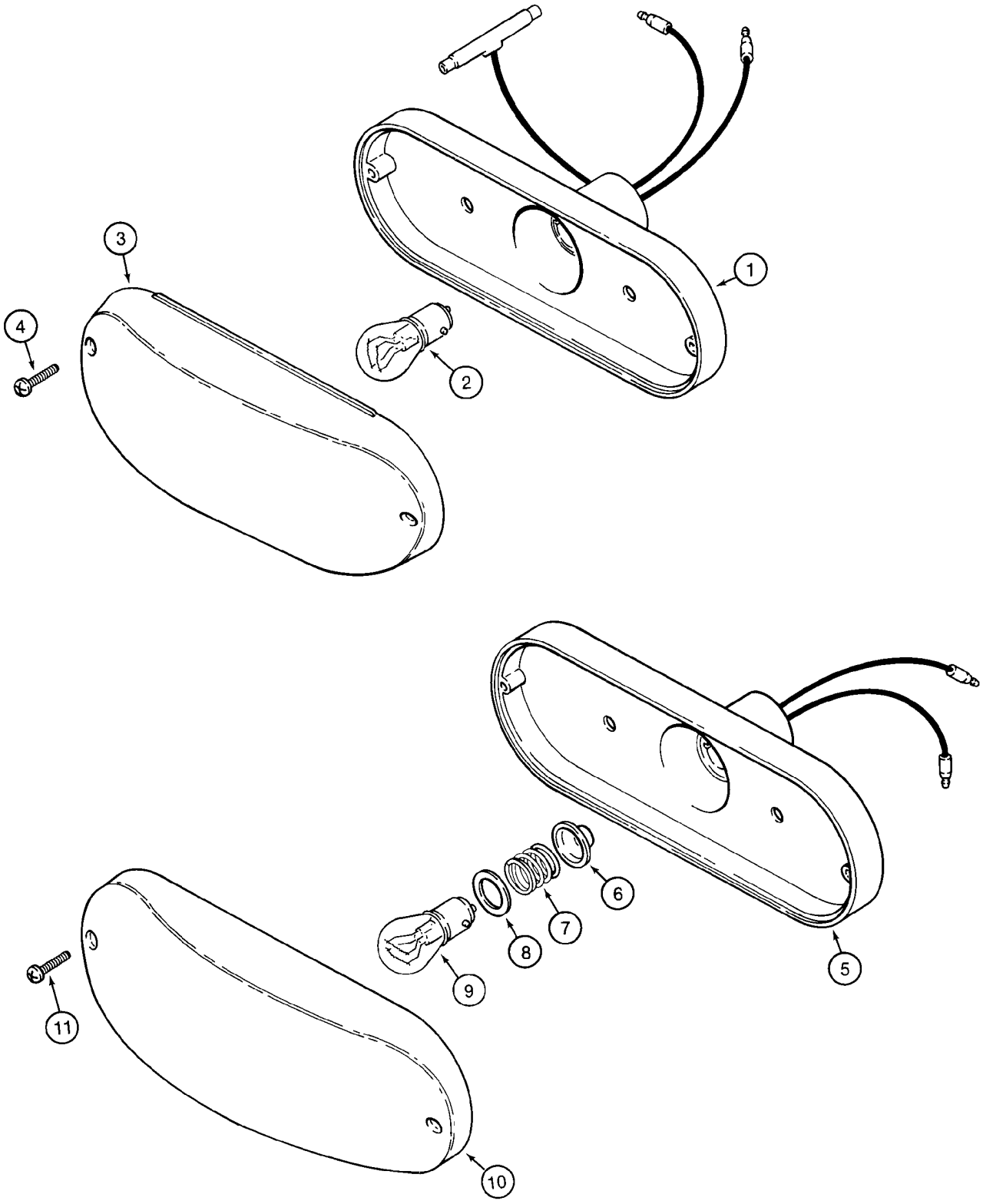

HTTP://WWW.MINNPARBACKHOEPARTS.COM



CONJUNTO DE LA LAMPARA (MODELOS CON TECHO ROPS)

| REF | FN | PART NUMBER | YR/SN | QTY | DESCRIPTION |
|---|---|---|---|---|---|
| | | D121152 | | 2 | LAMPARA Stop And Tail Lamp; Red; Incl. Ref 1 - 4 |
| 1 | | NSS | | 1 | NO SE REPARA SEPARADAM. Housing |
| 2 | | T34857 | | 1 | AMPOLLA No. 1157 |
| 3 | | N6836 | | 1 | TAPA TRANSLUCIDA Red |
| 4 | | 261-14310 | | 2 | TORNILLO No. 6 st x 5/8 |
| | | D135384 | | 4 | LAMPARA Turn Signal and Flasher; Amber; Incl. Ref 5 - 11 |
| 5 | | NSS | | 1 | NO SE REPARA SEPARADAM. Housing |
| 6 | | NSS | | 1 | NO SE REPARA SEPARADAM. Seal |
| 7 | | NSS | | 1 | NO SE REPARA SEPARADAM. Spring |
| 8 | | NSS | | 1 | NO SE REPARA SEPARADAM. Insulator |
| 9 | | A41264 | | 1 | BOMBILLA 12V, No. 1156 |
| 10 | | N14283 | | 1 | TAPA TRANSLUCIDA Amber |
| 11 | | 261-14310 | | 2 | TORNILLO No. 6 st x 5/8 |

HTTP://WWW.MINNPARBACKHOEPARTS.COM

| 04-16 | | p1 | 01/04 |
|---|---|---|---|

BOCINA - ALARMA, RETROCESO

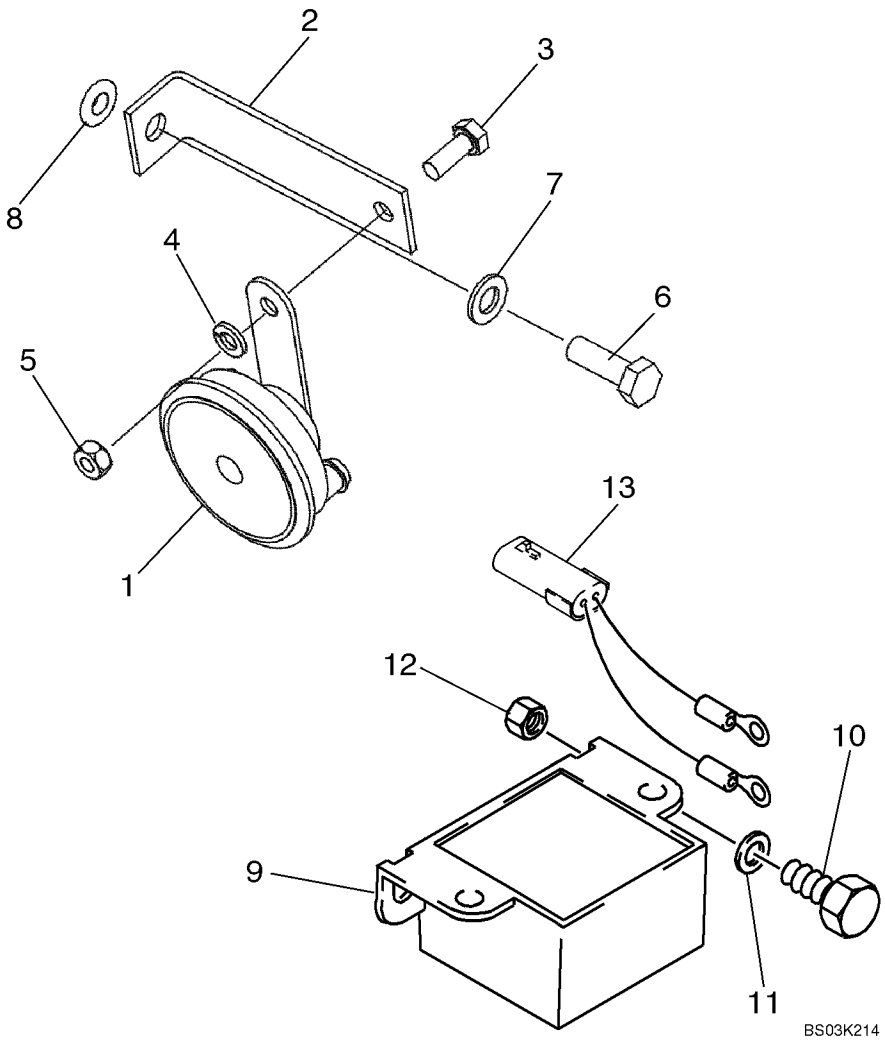

HTTP://WWW.MINNPARBACKHOEPARTS.COM



BOCINA - ALARMA, RETROCESO

| REF | FN | PART NUMBER | YR/SN | QTY | DESCRIPTION |
|---|---|---|---|---|---|
| 1 | | 237582A1 | | 1 | BOCINA Black |
| 2 | | {87423496} | | 1 | Bracket |
| 3 | | 614-8020 | | 1 | TORNILLO M8 x 20 |
| 4 | | 892-11008 | | 1 | ARANDELA M8 |
| 5 | | 829-1408 | | 1 | TUERCA M8; 10 |
| 6 | | 614-10030 | | 1 | TORNILLO M10 x 30 |
| 7 | | 895-11010 | | 1 | ARANDELA |
| 8 | | 87417721 | | 1 | ROSCA POSTIZA M10 Rivnut |
| 9 | | 109511A1 | | 1 | TIMBRE ZUMBADOR Backup Alarm; Includes Nuts |
| 10 | | 614-8025 | | 2 | TORNILLO M8 x 25 |
| 11 | | 895-11008 | | 2 | ARANDELA 9 x 17 x 1,6 mm |
| 12 | | 832-10408 | | 2 | TUERCA M8 |
| 13 | | {87425869} | | 1 | Pigtail Wire; Backup Alarm |

HTTP://WWW.MINNPARBACKHOEPARTS.COM

| 04-17 | | p1 | 08/03 |
|---|---|---|---|

FARO, GIRATORIO (MODELOS CON CABINA O CON TECHO)

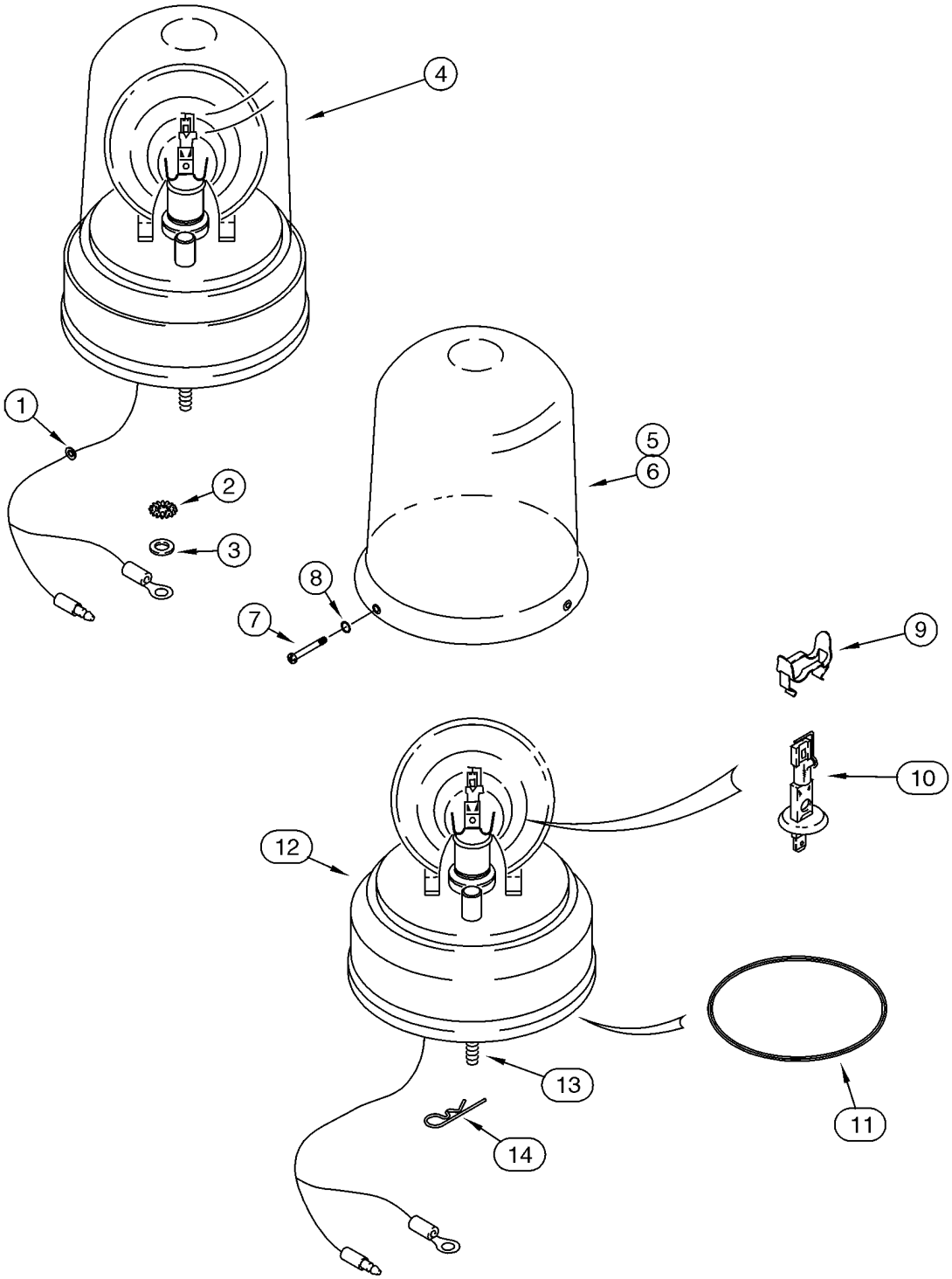

HTTP://WWW.MINNPARBACKHOEPARTS.COM



FARO, GIRATORIO (MODELOS CON CABINA O CON TECHO)

| REF | FN | PART NUMBER | YR/SN | QTY | DESCRIPTION |
|---|---|---|---|---|---|
| 1 | | A23870 | | 1 | PASACABLES |
| 2 | | 493-11026 | | 1 | ARANDELA 1/4; Internal External Tooth Lock Washer; Ground |
| 3 | | 495-21031 | | 1 | ARANDELA 5/16 x 3/4 x 1/16 |
| 4 | | 108366A1 | | 1 | LAMPARA DE SENALES Incl. Ref 5 - 14 |
| 5 | | A187542 | | 1 | TAPA TRANSLUCIDA Amber; If Used |
| 6 | | 127158A1 | | 1 | TAPA TRANSLUCIDA Blue; If Used |
| 7 | | 168-71 | | 3 | TORNILLO No. 8 x 1/2 |
| 8 | | 238-5005 | | 3 | JUNTA HERMETICA 3/32 ID x 1/16 |
| 9 | | 101531A1 | | 1 | SUJETADOR |
| 10 | | 3125705R1 | | 1 | BOMBILLA 12V, 55W |
| 11 | | A187575 | | 1 | CORREA Drive Motor |
| 12 | | NSS | | 1 | NO SE REPARA SEPARADAM. Base; With Drive Motor |
| 13 | | 614-6020 | | 3 | TORNILLO M6 x 20 |
| 14 | | 136-54 | | 3 | PERNO 1/4 x 11/16 |
| 15 | | 386851A1 | | 1 | CONTACTOR Rotating Beacon; Not Illustrated |
| 16 | | 121412A1 | | 1 | FUSIBLE 10 amp; Not Illustrated |

HTTP://WWW.MINNPARBACKHOEPARTS.COM

| 04-18 | | p1 | 08/03 |
|---|---|---|---|

ANTENA, RADIO - MAZO DE CABLES, RADIO

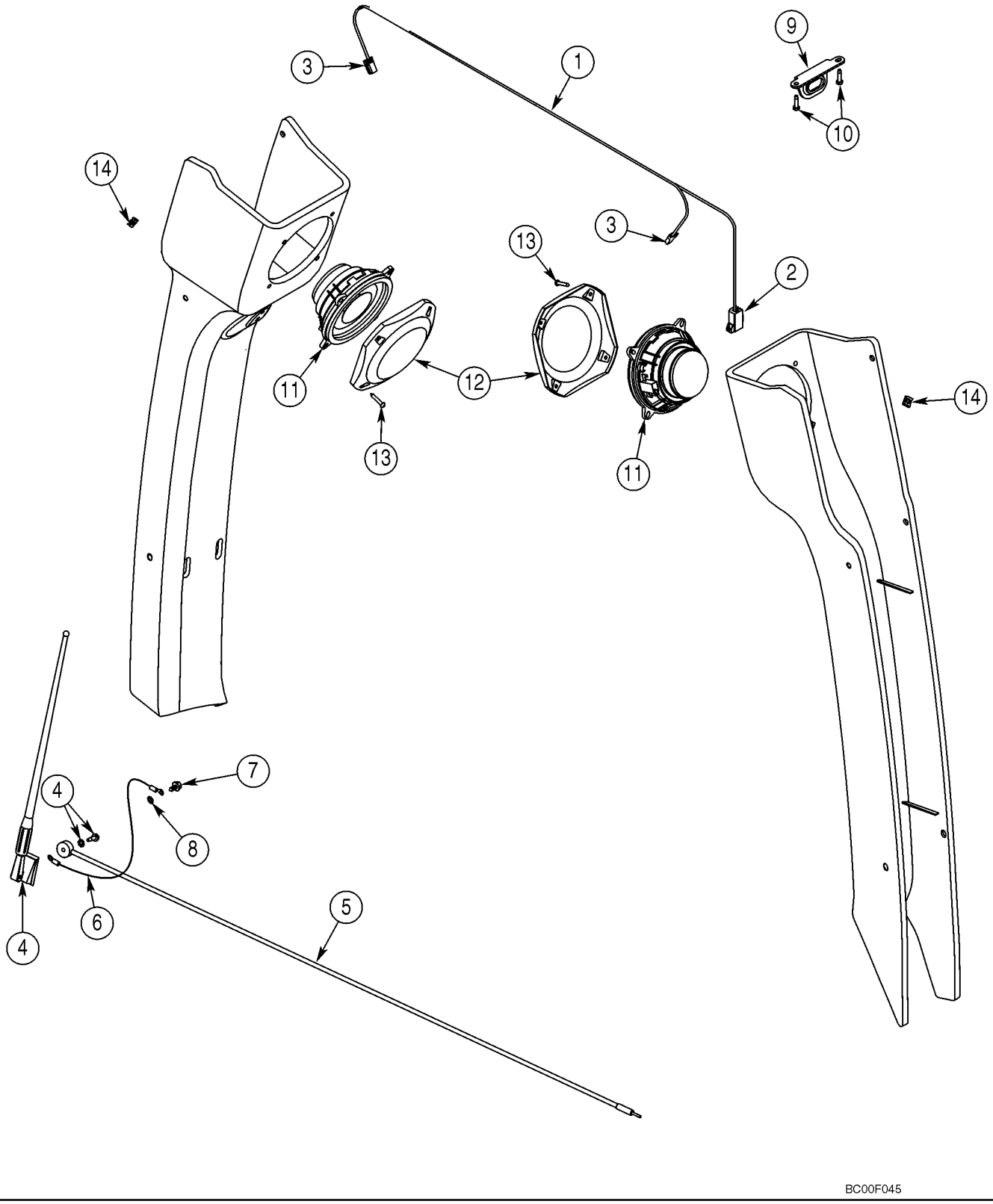

HTTP://WWW.MINNPARBACKHOEPARTS.COM



ANTENA, RADIO - MAZO DE CABLES, RADIO

| REF | FN | PART NUMBER | YR/SN | QTY | DESCRIPTION |
|---|---|---|---|---|---|
| 1 | | 382664A2 | | 1 | HAZ Speaker; Incl. Ref 2, 3 |
| 2 | | 227389A1 | | 1 | CONECTOR To Cab Harness |
| 3 | | 195552A1 | | 2 | CONEXION Speaker |
| 4 | | 197745A1 | | 1 | ANTENA Radio; Includes Flat Washer and Nut Which Are Not Serviced Separately |
| 5 | | 381659A1 | | 1 | CABLE (CONJUNTO) |
| 6 | | 291010A1 | | 1 | HILO Ground |
| 7 | | 282-16512 | | 1 | TORNILLO No. 10 x 3/4 |
| 8 | | 893-11005 | | 1 | ARANDELA M5 |
| 9 | | 386927A1 | | 1 | PIEZA DE SOPORTE Radio Mounting |
| 10 | | 276-26512 | | 2 | TORNILLO No. 10 x 3/4 |
| 11 | | 182721A2 | | 2 | ALTAVOZ |
| 12 | | 187281A1 | | 2 | TAPA |
| 13 | | 761-17325 | | 8 | TORNILLO M4,2 x 25 |
| 14 | | 177269A1 | | 8 | TUERCA |

HTTP://WWW.MINNPARBACKHOEPARTS.COM

| 04-19 | | p1 | 12/03 |
|---|---|---|---|

ELECTRICO SISTEMA - HIDRÁULICO AUXILIAR DE LA RETROEXCAVADORA

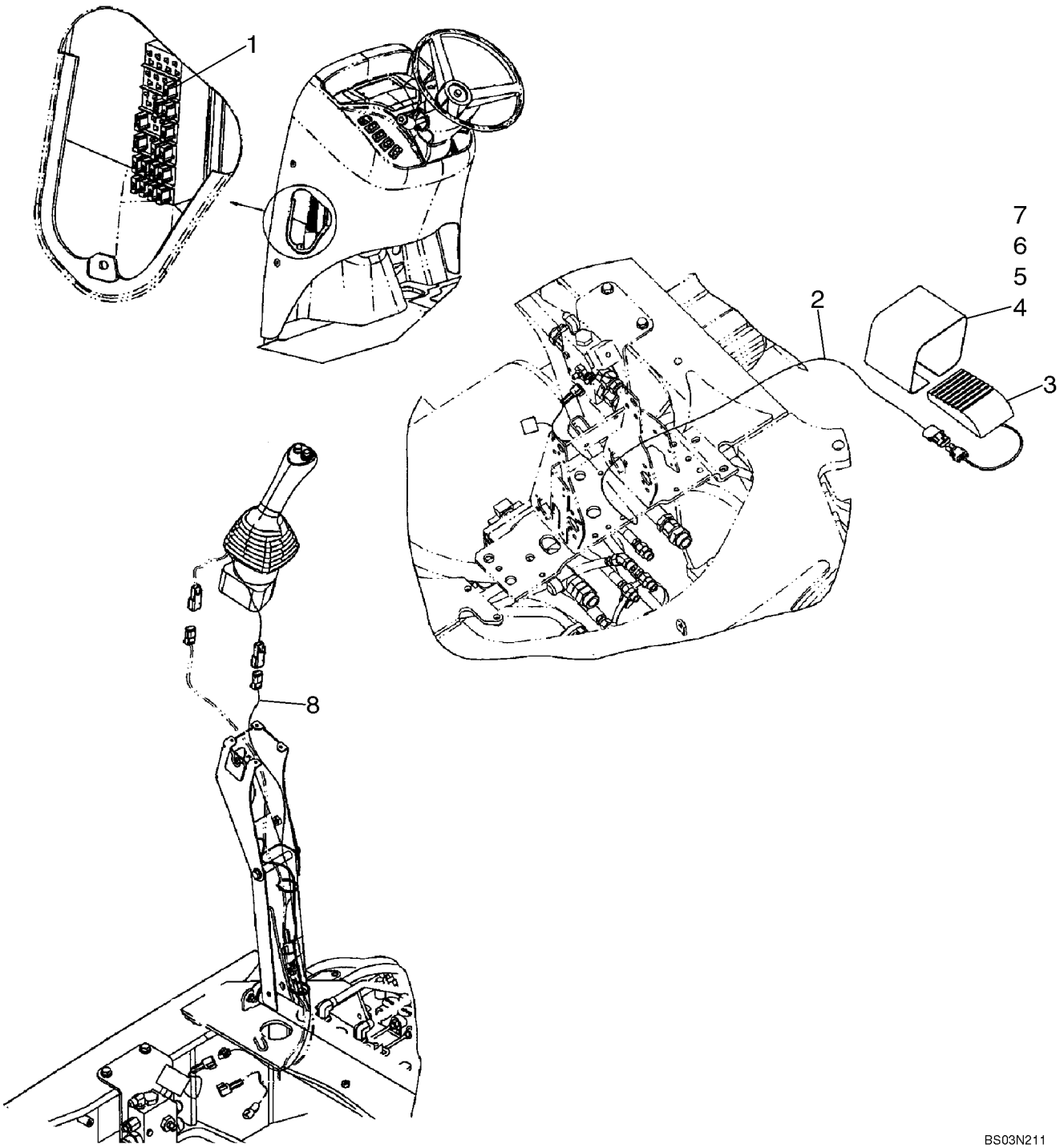

HTTP://WWW.MINNPARBACKHOEPARTS.COM



ELECTRICO SISTEMA - HIDRÁULICO AUXILIAR DE LA RETROEXCAVADORA

| REF | FN | PART NUMBER | YR/SN | QTY | DESCRIPTION |
|---|---|---|---|---|---|
| 1 | | 121413A1 | | 1 | FUSIBLE 15 amp |
| 2 | | {87425631} | | 1 | Auxiliary Hydraulic Harness, Uni-Directional; Models Without Pilot Controls |
| 3 | | 137219A1 | | 1 | CONTACTOR Foot; Without Pilot Controls |
| 4 | | 300030A1 | | 1 | TAPA Without Pilot Controls |
| 5 | | 843-1516 | | 2 | TORNILLO M5 x 16 |
| 6 | | 892-11005 | | 2 | ARANDELA DE FRENO M5 |
| 7 | | 824-1405 | | 2 | TUERCA M5 |
| 8 | | 87425635 | | 1 | GRUPO DE CABLES Auxiliary Hydraulic; Uni-Directional; Models With Pilot Controls |

HTTP://WWW.MINNPARBACKHOEPARTS.COM



ELECTRICO SISTEMA - HIDRÁULICO AUXILIAR DE LA RETROEXCAVADORA, CON DE CONTROL PILOTO

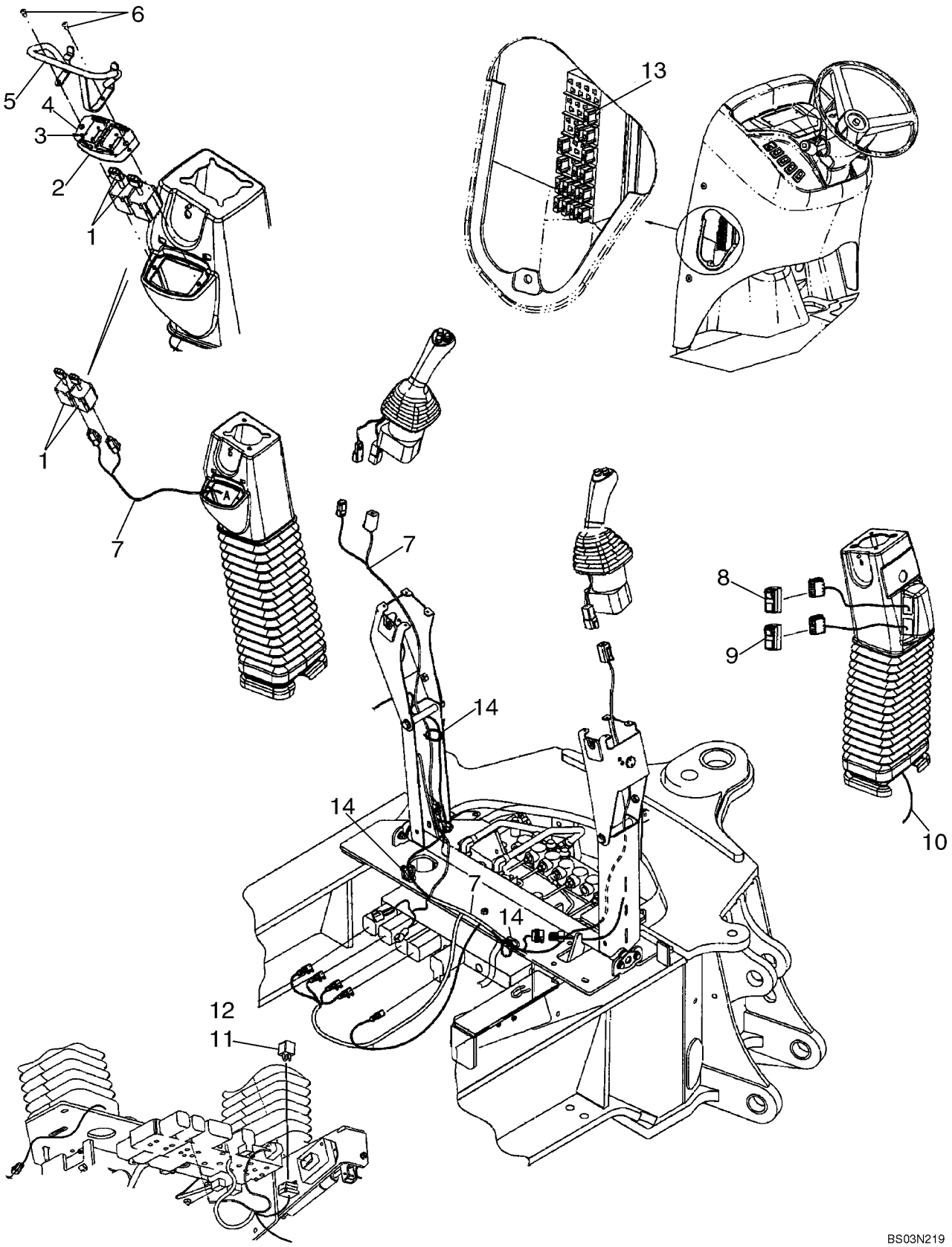

HTTP://WWW.MINNPARBACKHOEPARTS.COM



ELECTRICO SISTEMA - HIDRÁULICO AUXILIAR DE LA RETROEXCAVADORA, CON DE CONTROL PILOTO

| REF | FN | PART NUMBER | YR/SN | QTY | DESCRIPTION |
|---|---|---|---|---|---|
| 1 | | 86988086 | | 2 | INTERRUPTOR DE PALANCA Stabilizer |
| 2 | | 87435381 | | 1 | PLACA DE MONTAJE |
| 3 | | 87022296 | | 8 | TORNILLO |
| 4 | | 87423812 | | 1 | CALCOMANIA Stabilizer Switch |
| 5 | | 87436396 | | 1 | PIEZA DE SOPORTE Stabilizer Switch Guard |
| 6 | | 140-106 | | 2 | TORNILLO |
| 7 | | 87436676 | | 1 | GRUPO DE CABLES Pilot Control Joystick, Left-Hand |
| 8 | | 87423802 | | 1 | CONTACTOR Pilot Control, On/Off |
| 9 | | 87410105 | | 1 | CONTACTOR Pilot Control Pattern Selection |
| 10 | | 87425636 | | 1 | GRUPO DE CABLES Pilot Control Joystick, Right-Hand |
| 11 | | 87436836 | | 1 | CONECTADOR Mini, 12V |
| 12 | | 840-1416 | | 3 | TORNILLO M4 x 16 |
| 13 | | 121413A1 | | 1 | FUSIBLE Mini, 15 amp |
| 14 | | L18337 | | 6 | BANDA |

HTTP://WWW.MINNPARBACKHOEPARTS.COM

HTTP://WWW.MINNPARBACKHOEPARTS.COM

# SECTION INDEX


| | |
|---|---|
| 05-01 | VOLANTE - COLUMNA |
| 05-02 | HIDRAULICA - DIRECCION |
| 05-03 | TUBO DE LA DIRECCION |
| 05-04 | EJE, DELANTERO (86990837) - SOPORTE |
| 05-05 | EJE, DELANTERO (86990837) - ALOJAMIENTO |
| 05-06 | EJE, DELANTERO (86990837) - ALOJAMIENTO, ARTICULACIÓN GIRATORIA |
| 05-07 | EJE, DELANTERO (86990837) - CILINDRO, DIRECCION |
| 05-08 | EJE, DELANTERO (86990837) - CUBO Y COJINETES |
| 05-09 | NEUMÁTICOS, FRONTALES - NEUMÁTICOS |

HTTP://WWW.MINNPARBACKHOEPARTS.COM



VOLANTE - COLUMNA

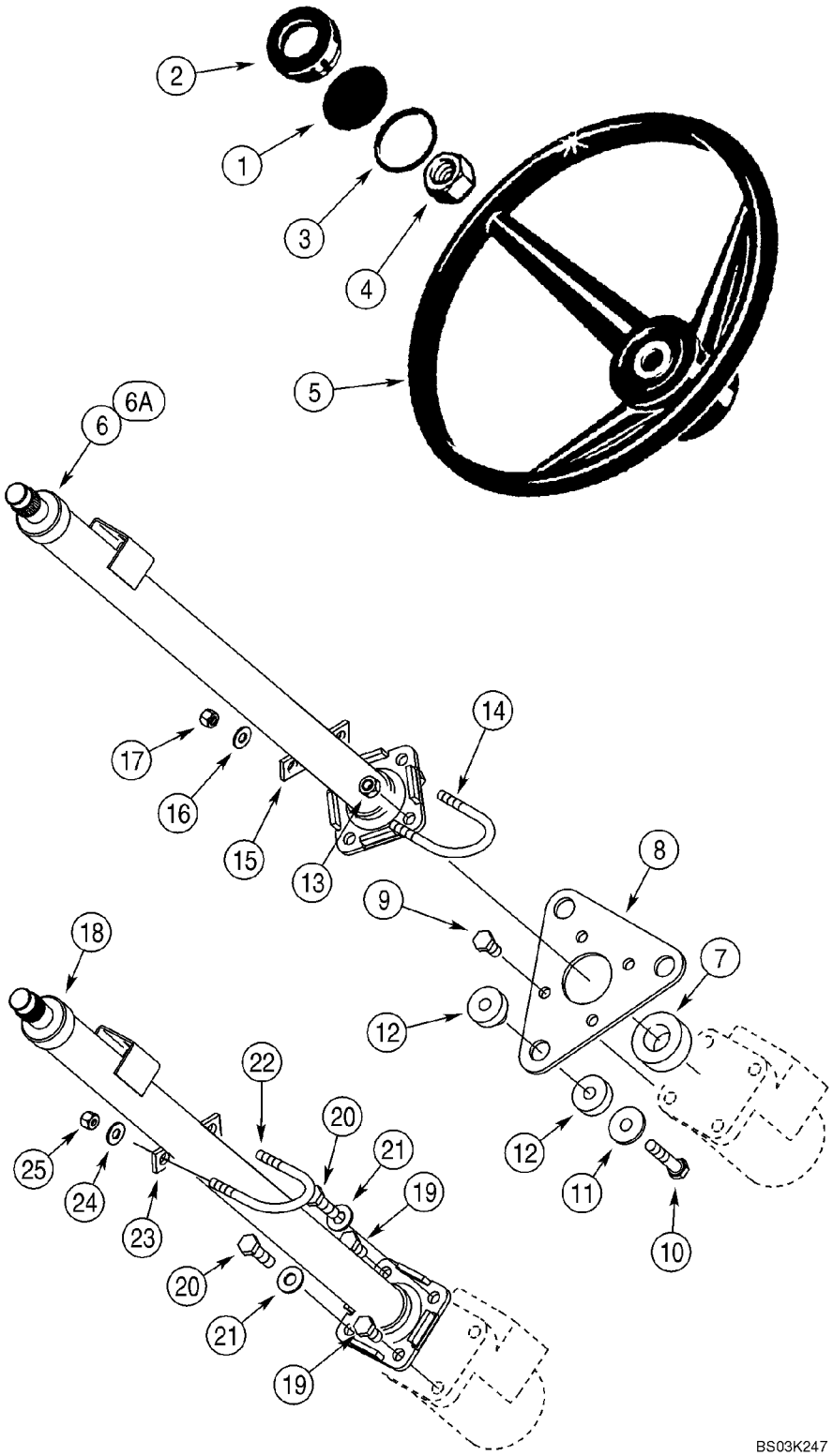

HTTP://WWW.MINNPARBACKHOEPARTS.COM



VOLANTE - COLUMNA

| REF | FN | PART NUMBER | YR/SN | QTY | DESCRIPTION |
|---|---|---|---|---|---|
| 1 | | {87435569} | | 1 | Insert, Case |
| 2 | | 114882A2 | | 1 | TAPON DEL DEPOSITO |
| 3 | | 238-5227 | | 1 | JUNTA HERMETICA 2-1/8 ID x 2-3/8 |
| 4 | | 1959509C1 | | 1 | TUERCA |
| 5 | | A65544 | | 1 | VOLANTE DIRECCION |
| 6 | | 352568A1 | | 1 | COLUMNA DE DIRECCION Cab Models, Without Tilt Steering, See Figure 05-03 |
| 6A | | 352569A4 | | 1 | COLUMNA DE DIRECCION Cab Models, With Tilt Steering, 712 mm Long, See Figure 05-03 |
| 7 | | 352401A1 | | 1 | ANILLO DE CIERRE 25 x 40 x 19 mm, Sound Insulation |
| 8 | | 388116A2 | | 1 | PLACA |
| 9 | | 614-10020 | | 4 | TORNILLO M10 x 20 |
| 10 | | 814-10050 | | 3 | TORNILLO M10 x 50 |
| 11 | | 496-81028 | | 3 | ARANDELA 13/32 x 1-1/4 x 1/8 in |
| 12 | | 141747A1 | | 3 | AISLADOR |
| 13 | | 832-10410 | | 2 | TUERCA Lock, M10 |
| 14 | | 379846A1 | | 1 | HORQUILLA |
| 15 | | 352727A1 | | 1 | ESPACIADOR |
| 16 | | 895-15008 | | 2 | ARANDELA 9 x 20 x 1,6 mm |
| 17 | | 832-10408 | | 2 | TUERCA Lock, M8 |
| 18 | | 348794A1 | | 1 | COLUMNA DE DIRECCION Canopy Models, See Figure 05-03 |
| 19 | | 614-10020 | | 2 | TORNILLO M10 x 20 |
| 20 | | 614-10035 | | 2 | TORNILLO M10 x 35 |
| 21 | | 895-15010 | | 2 | ARANDELA 11 x 24 x 2 mm |
| 22 | | 379846A1 | | 1 | HORQUILLA |
| 23 | | 352727A1 | | 1 | ESPACIADOR |
| 24 | | 895-15008 | | 2 | ARANDELA 9 x 20 x 1,6 mm |
| 25 | | 832-10408 | | 2 | TUERCA Lock, M8 |

HTTP://WWW.MINNPARBACKHOEPARTS.COM

| 05-02 | | p1 | 01/04 |
|---|---|---|---|

HIDRAULICA - DIRECCION

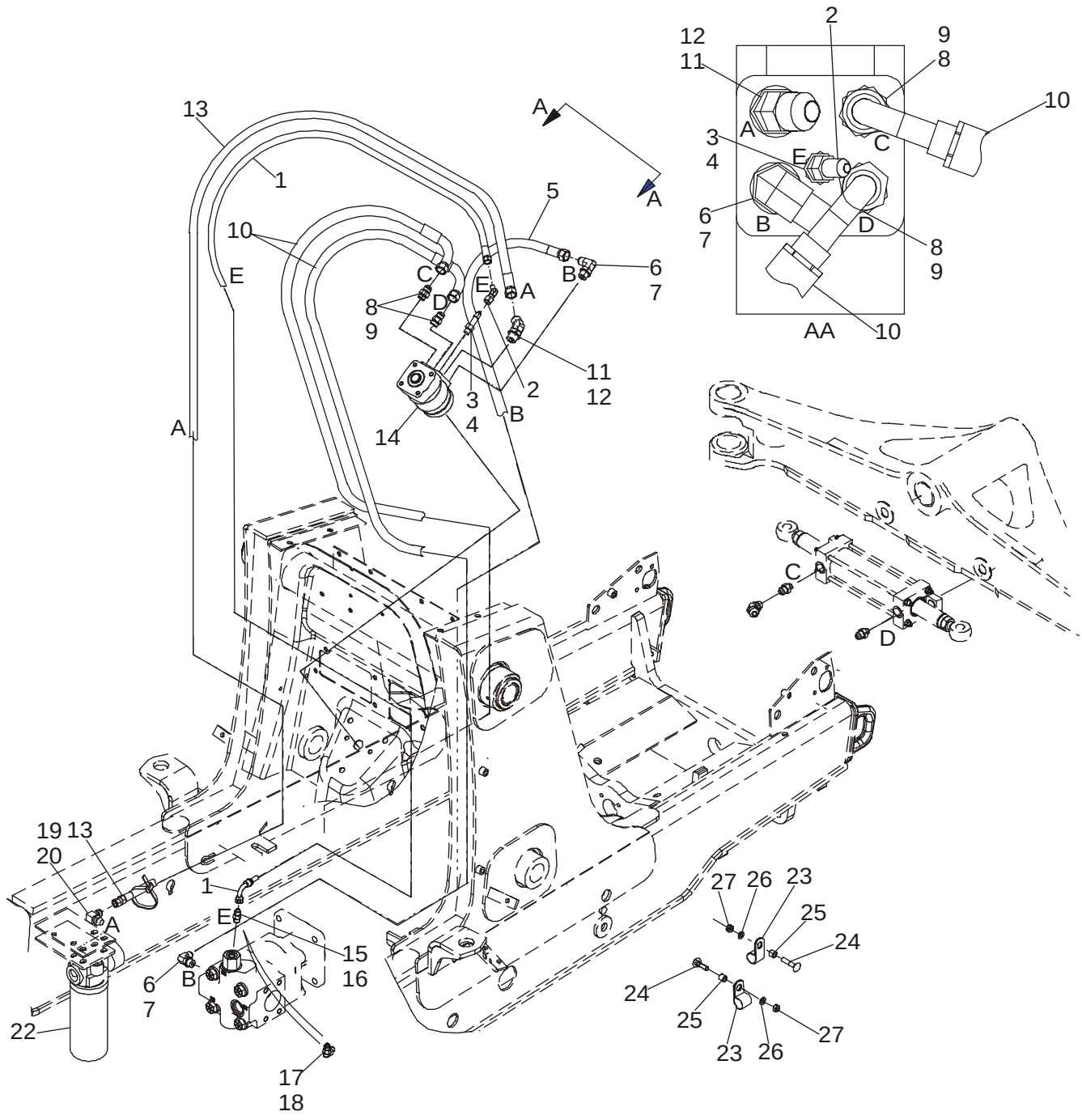


BS03M019

HTTP://WWW.MINNPARBACKHOEPARTS.COM



HIDRAULICA - DIRECCION

| REF | FN | PART NUMBER | YR/SN | QTY | DESCRIPTION |
|---|---|---|---|---|---|
| 1 | | 87439137 | | 1 | MANGUERA (CONJUNTO) 1675 mm (66 in), Steering Pilot Hose |
| 2 | | 218-5170 | | 1 | CONEXION Elbow, 45 deg, 7/16 fl x fem |
| 3 | | 218-5027 | | 1 | CONECTOR 7/16 fl x Or, Incl. Ref 4 |
| 4 | | 237-6004 | | 1 | JUNTA HERMETICA 23/64 ID x 5/64 |
| 5 | | 87439138 | | 1 | MANGUERA (CONJUNTO) 1600 mm (63 in), Steering Pressure |
| 6 | | 218-5106 | | 2 | CONEXION Elbow, 90 deg, 3/4 Or, Incl. Ref 7 |
| 7 | | 237-6008 | | 1 | JUNTA HERMETICA |
| 8 | | 218-5059 | | 2 | RACOR 3/4 fl x Or, Incl. Ref 9 |
| 9 | | 237-6008 | | 1 | JUNTA HERMETICA 41/64 ID x 3/32 |
| 10 | | 87429382 | | 2 | MANGUERA (CONJUNTO) 1520 mm (59-7/8 in), To Steering Cylinder |
| 11 | | 218-5136 | | 1 | CODO 45 deg, 3/4 Or; Incl. Ref 12 |
| 12 | | 237-6008 | | 1 | JUNTA HERMETICA |
| 13 | | 87439136 | | 1 | MANGUERA (CONJUNTO) 1550 mm (61-1/16 in), Return |
| 14 | | 87419634 | | 1 | BOMBA Steering Control Valve; Includes 396591A1 Seal Kit, 396592A1 Anti-Cavitation Valve Kit, 396593A1 Bolt Kit |
| 15 | | 218-5057 | | 1 | RACOR 9/16 fl x Or, Incl. Ref 16, Standard Equipment, Models Without Auxiliary Hydraulics |
| 16 | | 237-6006 | | 1 | JUNTA HERMETICA |
| 17 | | 282428A1 | | 1 | VÁLVULA DE PASO CHECK, Tee, 9/16; Incl. Ref 18; Models With Auxiliary Hydraulics |
| 18 | | 237-6006 | | 1 | JUNTA HERMETICA |
| 19 | | 218-5280 | | 1 | CONEXION ELBOW, 90 deg, 3/4 fl x 9/16 Or; Incl. Ref 20 |
| 20 | | 237-6008 | | 1 | JUNTA HERMETICA 41/64 ID x 3/32 |
| 22 | | 445674A1 | | 1 | FILTRO CONJ Hydraulic Oil, See Figure 08-57 |
| 23 | | 515-23159 | | 2 | COLLAR P-Type |
| 24 | | 711-10050 | | 2 | TORNILLO M10 x 50 |
| 25 | | 120303A1 | | 2 | ESPACIADOR |
| 26 | | 892-11010 | | 2 | ARANDELA DE FRENO M10 |
| 27 | | 829-1410 | | 2 | TUERCA M10; 10.9 |

HTTP://WWW.MINNPARBACKHOEPARTS.COM

| 05-03 | | p1 | 09/03 |
|---|---|---|---|

TUBO DE LA DIRECCION

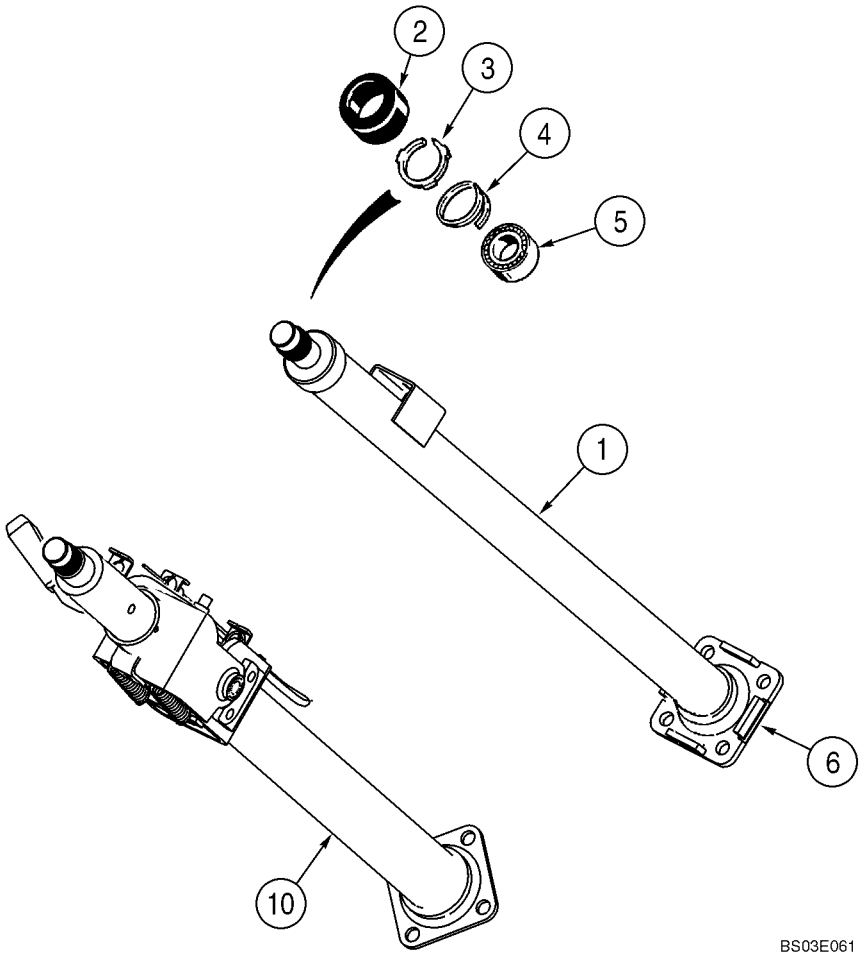

HTTP://WWW.MINNPARBACKHOEPARTS.COM



TUBO DE LA DIRECCION

| REF | FN | PART NUMBER | YR/SN | QTY | DESCRIPTION |
|---|---|---|---|---|---|
| | | 348794A1 | | 1 | COLUMNA DE DIRECCION Canopy Models, Incl. Ref 1 - 6 |
| | | 352568A1 | | 1 | COLUMNA DE DIRECCION Cab Models, Without Tilt Steering, Incl. Ref 1 - 6 |
| 1 | | NSS | | 1 | NO SE REPARA SEPARADAM. Column |
| 2 | | S115351 | | 1 | TAPON DEL DEPOSITO |
| 3 | | NSS | | 1 | NO SE REPARA SEPARADAM. Retainer |
| 4 | | 102-1387 | | 1 | ANILLO DE CIERRE No. 87 |
| 5 | | NSS | | 1 | NO SE REPARA SEPARADAM. Bearing |
| 6 | | NSS | | 1 | NO SE REPARA SEPARADAM. Flange |
| 10 | | 352569A4 | | 1 | COLUMNA DE DIRECCION 712 mm Long, Cab Models, With Tilt Steering, Component Parts Not Serviced Separately |

HTTP://WWW.MINNPARBACKHOEPARTS.COM

| 05-04 | | p1 | 01/04 |
|---|---|---|---|

EJE, DELANTERO (86990837) - SOPORTE

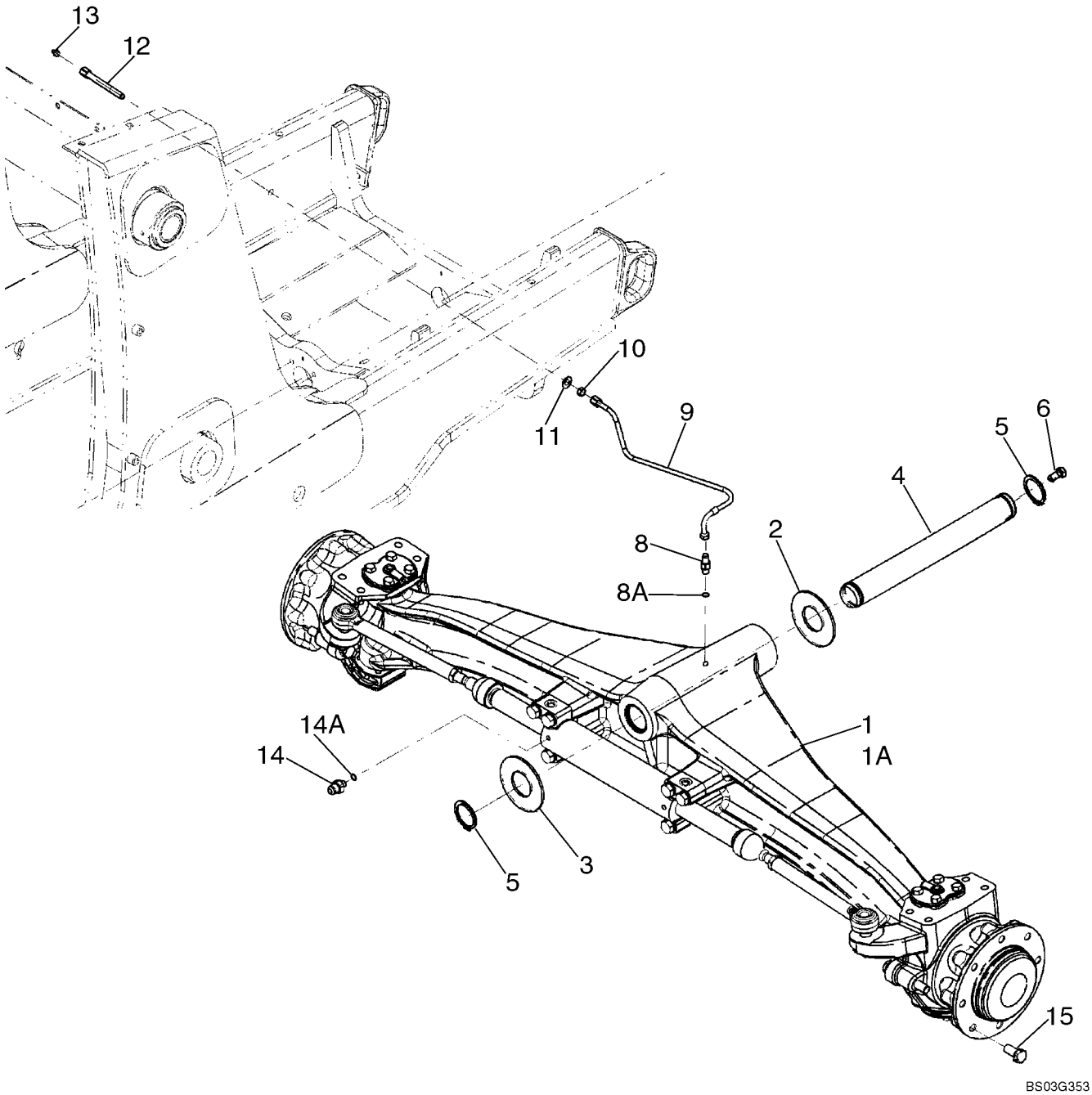

HTTP://WWW.MINNPARBACKHOEPARTS.COM



EJE, DELANTERO (86990837) - SOPORTE

| REF | FN | PART NUMBER | YR/SN | QTY | DESCRIPTION |
|---|---|---|---|---|---|
| 1 | | 86990837 | | 1 | EJE, DIRECTOR Front, Two Wheel Drive, See Figures 05-05 - 05-08 |
| 2 | | 191796A1 | | X | ARANDELA 2 x 4 x 1/16 |
| 3 | | D123684 | | 1 | ARANDELA Thrust, 2-1/2 x 4-1/2 x 3/16 |
| 4 | | 87404197 | | 1 | PERNO DE PIVOTE |
| 5 | | 800-44050 | | 2 | ANILLO DE CIERRE No. 50 |
| 6 | | 614-12025 | | 1 | TORNILLO M12 x 25 |
| 8 | | 218-5053 | | 1 | RACOR 7/16 fl x adj Or; Incl. Ref 8A |
| 8A | | 237-6004 | | 1 | JUNTA HERMETICA 23/64 ID x 5/64 |
| 9 | | 87433730 | | 1 | MANGUERA (CONJUNTO) 500 mm (19-11/16 in), Lubrication Line |
| 10 | | 218-1275 | | 1 | CONTRA TUERCA 7/16 |
| 11 | | 495-11047 | | 1 | ARANDELA 15/32 x 59/64 x 1/16 |
| 12 | | 381442A1 | | 1 | TERMINAL |
| 13 | | 219-1 | | 1 | ENGRASADOR 1/8 PT x 21/32 Grease Fitting |
| 14 | | 218-5351 | | 2 | RACOR 3/4 fl x 9/16 Or, Incl. Ref 14A |
| 14A | | 237-6006 | | 1 | JUNTA HERMETICA 15/32 ID x 5/64 |
| 15 | | A38208 | | 16 | TORNILLO Wheel Bolt |

HTTP://WWW.MINNPARBACKHOEPARTS.COM

| 05-05 | | p1 | 01/04 |
|---|---|---|---|

EJE, DELANTERO (86990837) - ALOJAMIENTO

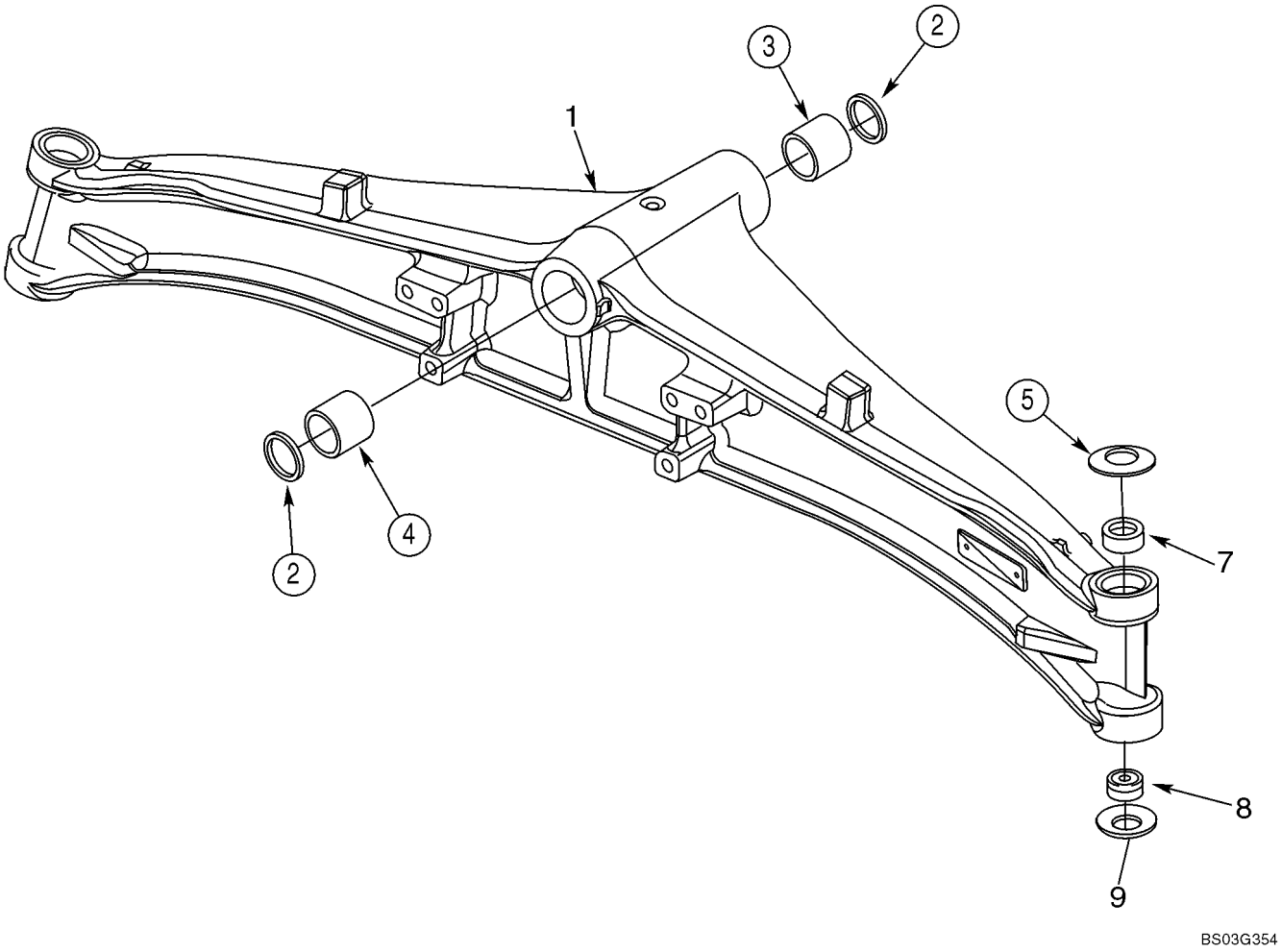

HTTP://WWW.MINNPARBACKHOEPARTS.COM



EJE, DELANTERO (86990837) - ALOJAMIENTO

| REF | FN | PART NUMBER | YR/SN | QTY | DESCRIPTION |
|---|---|---|---|---|---|
| | | 86990837 | | 1 | EJE, DIRECTOR Front, Two Wheel Drive, Incl. Figures 05-05 - 05-08 |
| 1 | | 429230A1 | | 1 | CÁRTER DE PUENTE |
| 2 | | N14367 | | 2 | ANILLO DE CIERRE |
| 3 | | D149726 | | 1 | CASQUILLO Front |
| 4 | | D149725 | | 1 | CASQUILLO Rear |
| 5 | | 122270A1 | | 2 | ARANDELA Belleville |
| 7 | | 87400286 | | 2 | CASQUILLO |
| 8 | | N14373 | | 2 | COJINETE Bushing; Two Piece; 28 ID x 50 OD x 16 |
| 9 | | 122261A1 | | 2 | ARANDELA Belleville |

HTTP://WWW.MINNPARBACKHOEPARTS.COM



EJE, DELANTERO (86990837) - ALOJAMIENTO, ARTICULACIÓN GIRATORIA

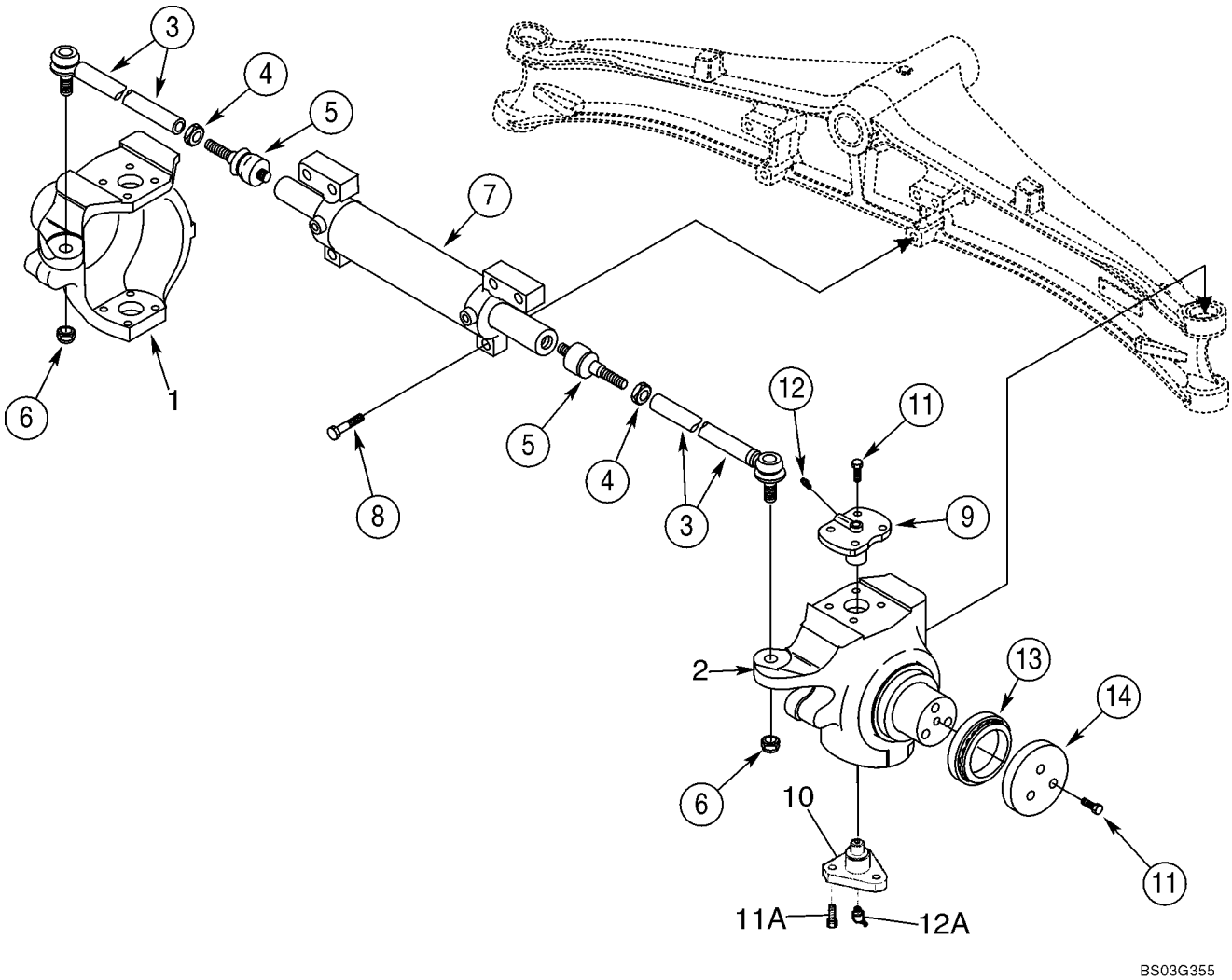

HTTP://WWW.MINNPARBACKHOEPARTS.COM



EJE, DELANTERO (86990837) - ALOJAMIENTO, ARTICULACIÓN GIRATORIA

| REF | FN | PART NUMBER | YR/SN | QTY | DESCRIPTION |
|---|---|---|---|---|---|
| | | 86990837 | | 1 | EJE, DIRECTOR Front, Two Wheel Drive, Incl. Figures 05-05 - 05-08 |
| 1 | | 429231A1 | | 1 | CAVIDAD Swivel, Left-Hand |
| 2 | | 429232A1 | | 1 | CAVIDAD Swivel, Right-Hand |
| | | 401052A1 | | 2 | DIRECCION (CJTO) Arm, Incl. Ref 3 - 5 |
| 3 | | 401054A1 | | 1 | TIRANTE |
| 4 | | 934727R1 | | 1 | TUERCA M18 |
| 5 | | 112509A1 | | 1 | JUNTA DE ROTULA |
| 6 | | 905839R1 | | 2 | TUERCA M18 |
| 7 | | 401055A1 | | 1 | CILINDRO DIRECTION See Figure 05-07 |
| 8 | | 863-16070 | | 6 | TORNILLO Socket Head, M16 x 70; 12.9 |
| 9 | | 122265A1 | | 2 | BULON/PIN, LARGO King Pin, Upper |
| 10 | | 122259A1 | | 2 | PIVOTE King Pin, Lower; Triangular Shape |
| 11 | | 100533A1 | | 14 | TORNILLO Lock, M12 x 30 |
| 11A | | D150214 | | 6 | TORNILLO Lock, M14 x 35; Lower King Pin |
| 12 | | 712998R91 | | 2 | ENGRASADOR M6x1, Grease Fitting |
| 12A | | N13505 | | 2 | ENGRASADOR M6x1, 45 deg Grease Fitting; Lower King Pin |
| 13 | | 401059A1 | | 2 | RODAMIENTO DE RODILLOS Thrust |
| 14 | | 401060A1 | | 2 | ARANDELA |

HTTP://WWW.MINNPARBACKHOEPARTS.COM



EJE, DELANTERO (86990837) - CILINDRO, DIRECCION

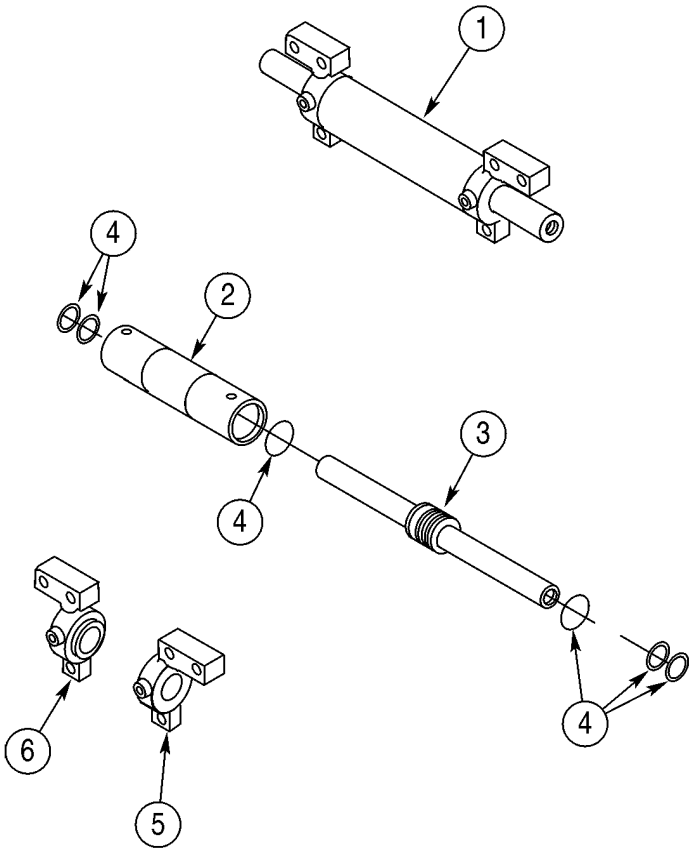


BC00G065

HTTP://WWW.MINNPARBACKHOEPARTS.COM



EJE, DELANTERO (86990837) - CILINDRO, DIRECCION

| REF | FN | PART NUMBER | YR/SN | QTY | DESCRIPTION |
|---|---|---|---|---|---|
| | | 86990837 | | 1 | EJE, DIRECTOR Front, Two Wheel Drive, Incl. Figures 05-05 - 05-08 |
| 1 | | 401055A1 | | 1 | CILINDRO DIRECTION Incl. Ref 2 - 6 |
| 2 | | NSS | | 1 | NO SE REPARA SEPARADAM. Tube, Cylinder |
| 3 | | 401062A1 | | 1 | VASTAGO CILINDRO |
| 4 | | 401061A1 | | 1 | JUEGO JUNTAS Seal, Component Parts Not Serviced Separately |
| 5 | | 401063A1 | | 1 | CABEZA (CONJUNTO) Right-Hand |
| 6 | | 401064A1 | | 1 | CABEZA (CONJUNTO) Left-Hand |

HTTP://WWW.MINNPARBACKHOEPARTS.COM

| 05-08 | | p1 | 01/04 |
|---|---|---|---|

EJE, DELANTERO (86990837) - CUBO Y COJINETES

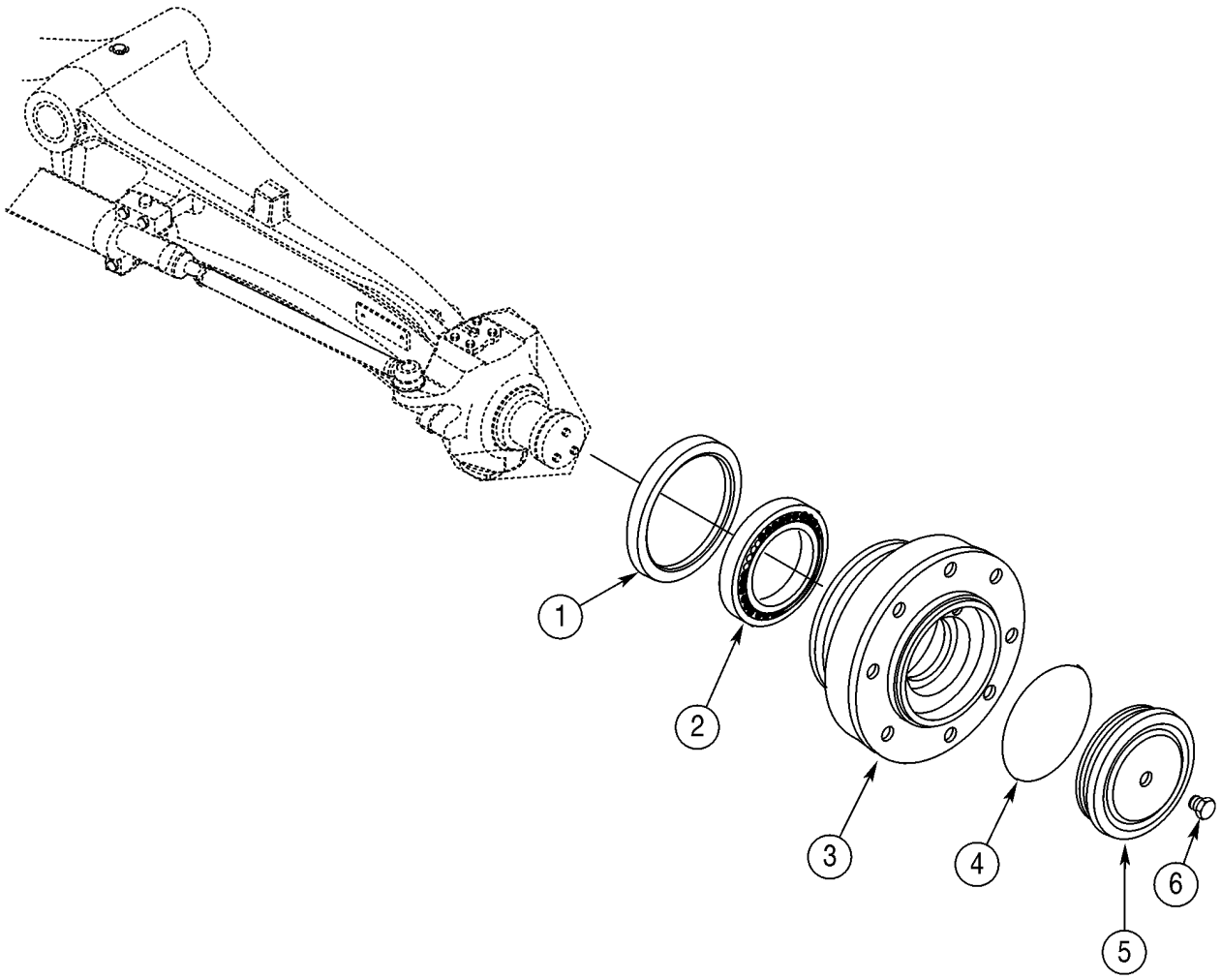

HTTP://WWW.MINNPARBACKHOEPARTS.COM



EJE, DELANTERO (86990837) - CUBO Y COJINETES

| REF | FN | PART NUMBER | YR/SN | QTY | DESCRIPTION |
|---|---|---|---|---|---|
| | | 86990837 | | 1 | EJE, DIRECTOR Front, Two Wheel Drive; Incl. Figures 05-05 - 05-08 |
| 1 | | 311569A1 | | 2 | JUNTA DE ACEITE |
| 2 | | 324213A1 | | 2 | COJINETE |
| 3 | | 401065A1 | | 2 | CUBO |
| 4 | | 401066A1 | | 2 | JUNTA HERMETICA |
| 5 | | 401067A1 | | 2 | TAPA |
| 6 | | D142898 | | 2 | TAPÓN 10 x 1 mm |

HTTP://WWW.MINNPARBACKHOEPARTS.COM



NEUMÁTICOS, FRONTALES - NEUMÁTICOS

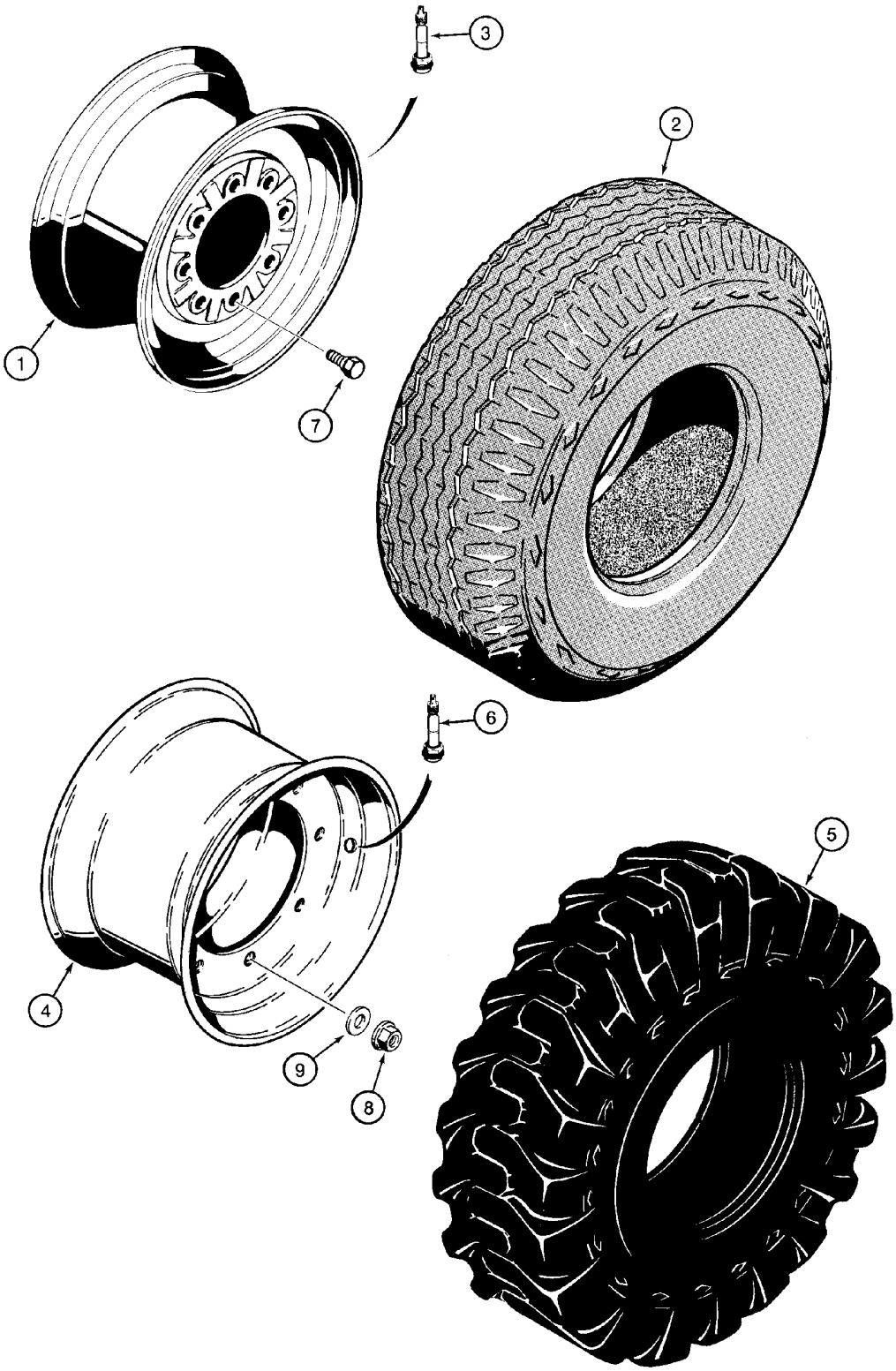

HTTP://WWW.MINNPARBACKHOEPARTS.COM



NEUMÁTICOS, FRONTALES - NEUMÁTICOS

| REF | FN | PART NUMBER | YR/SN | QTY | DESCRIPTION |
|---|---|---|---|---|---|
| 1 | | D125223 | | 2 | RIN For 11L x 16 - 10 PR F3 Tires; Two Wheel or Four Wheel Drive Models |
| 2 | | REF | | 2 | MANUAL Tire, Purchase Locally |
| 3 | | 387897R91 | | 2 | VALVULA |
| 4 | | 119243A1 | | 2 | RIN For 12 x 16.5 - 8 or 10 Ply Tires; Two Wheel or Four Wheel Drive Models |
| 5 | | REF | | 2 | MANUAL Tire, Purchase Locally |
| 6 | | 387897R91 | | 2 | VALVULA |
| 7 | | A38208 | | 16 | TORNILLO Wheel Bolts; Two Wheel Drive Models |
| 8 | | 825-11418 | | 16 | TUERCA M18; Wheel Nuts; Four Wheel Drive Models |
| 9 | | 496-81000 | | 16 | ARANDELA 25/32 x 1-3/8 x 1/8; Wheel Nuts; Four Wheel Drive Models |

HTTP://WWW.MINNPARBACKHOEPARTS.COM

HTTP://WWW.MINNPARBACKHOEPARTS.COM

# SECTION INDEX


| | |
|---|---|
| 06-01 | EJE, TRANSMISIÓN DELANTERA - SOPORTE |
| 06-02 | EJE, TRANSMISIÓN DELANTERA - ALOJAMIENTO |
| 06-03 | EJE, TRANSMISIÓN DELANTERA - ALOJAMIENTO, ARTICULACIÓN GIRATORIA |
| 06-04 | EJE, TRANSMISIÓN DELANTERA - CILINDRO, DIRECCION |
| 06-05 | EJE, TRANSMISIÓN DELANTERA - VARILLAS, EJE |
| 06-06 | EJE, TRANSMISIÓN DELANTERA - PLANETARIO |
| 06-07 | EJE, TRANSMISIÓN DELANTERA - DIFERENCIAL |
| 06-08 | EJE, TRANSMISIÓN DELANTERA - ANILLO Y PIÑÓN |
| 06-09 | EJE DE TRANSMISIÓN, EJE DELANTERO |
| 06-10 | SISTEMA DE REFRIGERACIÓN - TRANSMISION |
| 06-11 | TRANSMISION - SOPORTE |
| 06-12 | CONJUNTO DE LA TRANSMISION - FILTRO, ACEITE |
| 06-13 | CONJUNTO DE LA TRANSMISION (2WD) - ALOJAMIENTO |
| 06-14 | CONJUNTO DE LA TRANSMISION (4WD) - ALOJAMIENTO |
| 06-15 | CONJUNTO DE LA TRANSMISION - BOMBA, ACEITE |
| 06-16 | CONJUNTO DE LA TRANSMISION - MECANISMO DE CAMBIO |
| 06-17 | CONJUNTO DE LA TRANSMISION - EJE, RUEDA GUÍA Y PRIMARIA |
| 06-18 | CONJUNTO DE LA TRANSMISION - EJE, ENTRADA |
| 06-19 | CONJUNTO DE LA TRANSMISION - EJE, SECUNDARIO |
| 06-20 | CONJUNTO DE LA TRANSMISION (4WD) - EJE, SALIDA |
| 06-21 | CONJUNTO DE LA TRANSMISION - VALVULA, CONTROL |
| 06-22 | CONJUNTO DE LA TRANSMISION (4WD) - VÁLVULA, SOLENOIDE |
| 06-23 | RUEDAS, PARTE TRASERA - NEUMÁTICOS |
| 06-24 | EJE, TRANSMISIÓN TRASERA - SOPORTE |
| 06-25 | EJE, TRASERO - BLOQUEO DEL DIFERENCIAL |
| 06-26 | EJE, TRANSMISIÓN TRASERA - ALOJAMIENTO |
| 06-27 | EJE, TRANSMISIÓN TRASERA - DIFERENCIAL |
| 06-28 | EJE, TRANSMISIÓN TRASERA - ANILLO Y PIÑÓN |
| 06-29 | EJE, TRANSMISIÓN TRASERA - BLOQUEO DEL DIFERENCIAL |
| 06-30 | EJE, TRANSMISIÓN TRASERA - PLANETARIO |
| 06-31 | EJE DE TRANSMISIÓN, EJE TRASERO |

HTTP://WWW.MINNPARBACKHOEPARTS.COM

| 06-01 | | p1 | 08/03 |
|---|---|---|---|

EJE, TRANSMISIÓN DELANTERA - SOPORTE

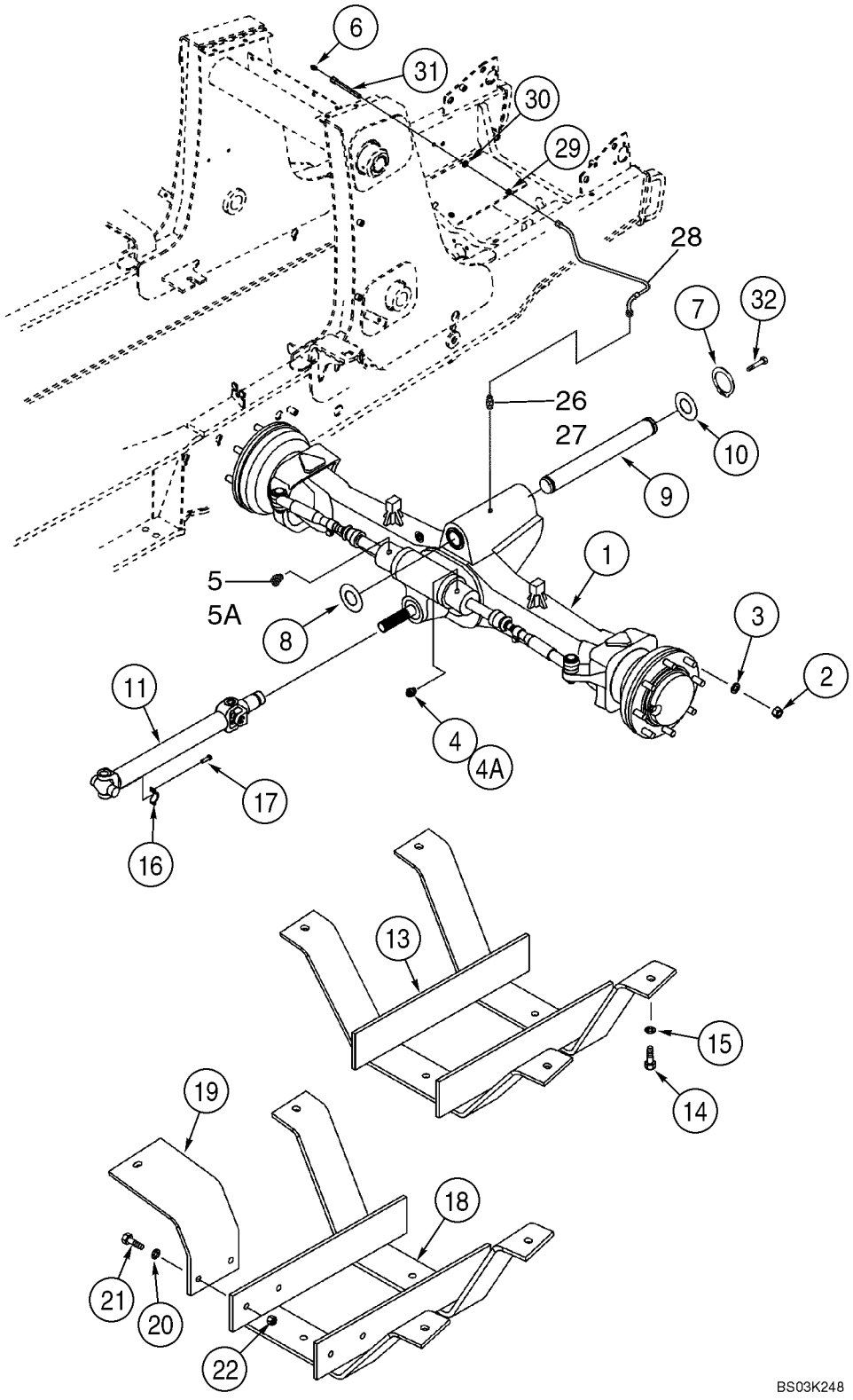

HTTP://WWW.MINNPARBACKHOEPARTS.COM



EJE, TRANSMISIÓN DELANTERA - SOPORTE

| REF | FN | PART NUMBER | YR/SN | QTY | DESCRIPTION |
|---|---|---|---|---|---|
| 1 | | 87417387 | | 1 | EJE (CONJUNTO) Front, See Figure 06-02 - 06-08 |
| 2 | | 825-11418 | | 16 | TUERCA M18 |
| 3 | | 496-81000 | | 16 | ARANDELA 25/32 x 1-3/8 x 1/8 |
| 4 | | 218-5351 | | 1 | RACOR 3/4 fl x 9/16 Or; Incl. Ref 4A |
| 4A | | 237-6006 | | 1 | JUNTA HERMETICA 15/32 ID x 5/64 |
| 5 | | 218-5529 | | 1 | CODO 45 deg, 3/4 fl x 9/16 Or; Incl. Ref 5A |
| 5A | | 237-6006 | | 1 | JUNTA HERMETICA 15/32 ID x 5/64 |
| 6 | | 219-1 | | 1 | ENGRASADOR 1/8 PT x 21/32 |
| 7 | | 800-44050 | | 2 | ANILLO DE CIERRE No. 50 |
| 8 | | 191796A1 | | X | ARANDELA 2 x 4 x 1/16 |
| 9 | | 87404197 | | 1 | PERNO DE PIVOTE Pivot Pin |
| 10 | | D123684 | | 1 | ARANDELA Thrust, 2-1/2 x 4-1/2 x 3/16 |
| 11 | | 367861A2 | | 1 | ARBOL DE MANDO See Figure 06-09 |
| 13 | | 137223A2 | | 1 | DEFENSA Drive Shaft, Used On Models With 31 Gallon Fuel Tank |
| 14 | | 827-12045 | | 4 | TORNILLO M12 x 45; 10.9 |
| 15 | | 495-21056 | | 4 | ARANDELA 9/16 x 1-3/8 x 7/64 |
| 16 | | 90-6682T1 | | 2 | COLLAR |
| 17 | | D137627 | | 4 | TORNILLO |
| 18 | | 282038A2 | | 1 | GUARDA (CONJUNTO) Drive Shaft, Used On Models With 40 Gallon Fuel Tank |
| 19 | | 282033A1 | | 1 | PIEZA DE SOPORTE |
| 20 | | 495-21056 | | 8 | ARANDELA 9/16 x 1-3/8 x 7/64 |
| 21 | | 827-12045 | | 6 | TORNILLO M12 x 45; 10.9 |
| 22 | | 829-1412 | | 2 | TUERCA M12; 10 |
| 26 | | 218-5053 | | 1 | RACOR 7/16 fl x adj Or; Incl. Ref 27 |
| 27 | | 237-6004 | | 1 | JUNTA HERMETICA 23/64 ID x 5/64 |
| 28 | | 87433730 | | 1 | MANGUERA (CONJUNTO) 500 mm (19-11/16 in), Lubrication Line |
| 29 | | 218-1275 | | 1 | CONTRA TUERCA 7/16 |
| 30 | | 495-11047 | | 1 | ARANDELA 15/32 x 59/64 x 1/16 |
| 31 | | 381442A1 | | 1 | TERMINAL Lubrication Line |
| 32 | | 614-12025 | | 1 | TORNILLO M12 x 25 |

HTTP://WWW.MINNPARBACKHOEPARTS.COM



EJE, TRANSMISIÓN DELANTERA - ALOJAMIENTO

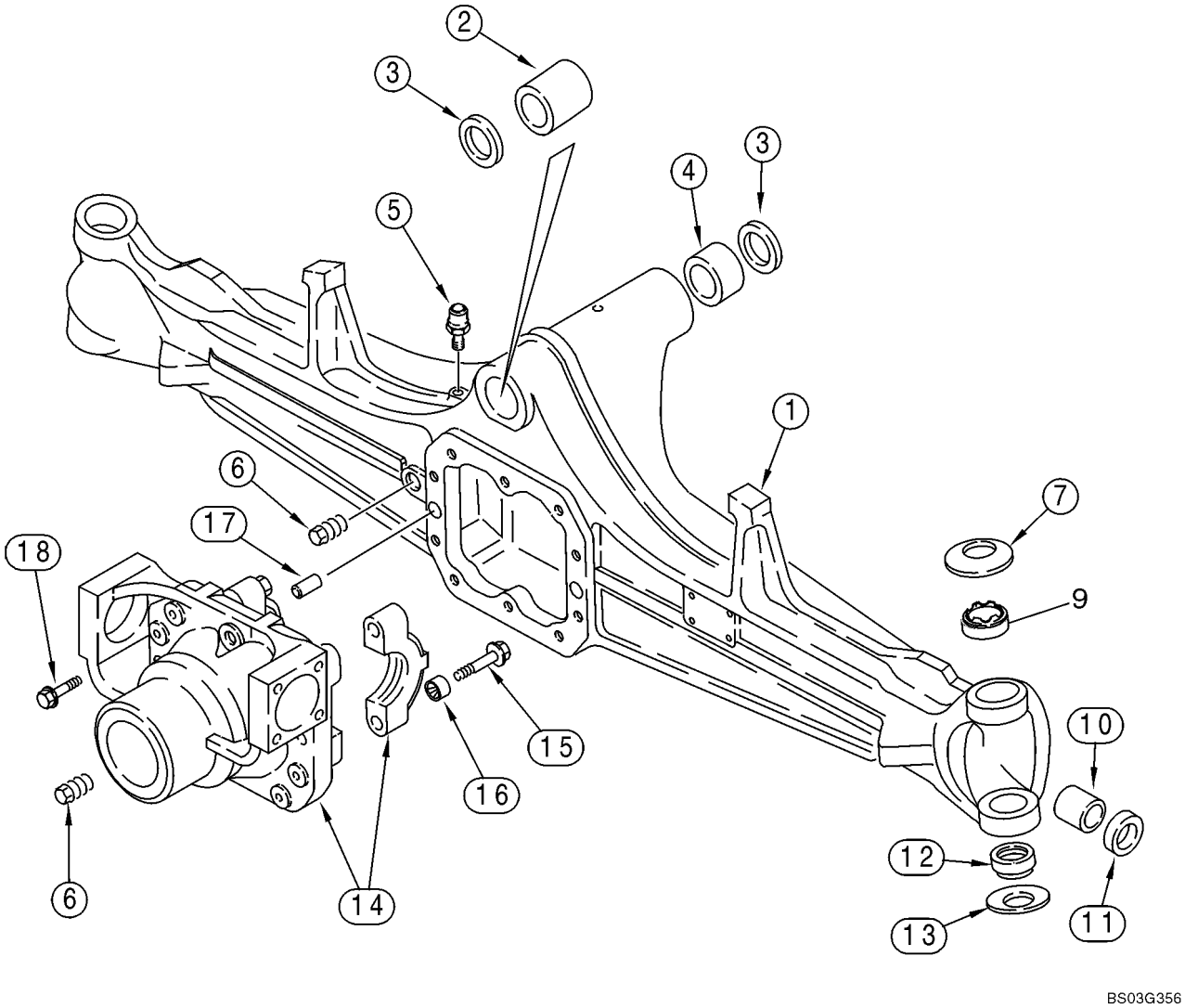

HTTP://WWW.MINNPARBACKHOEPARTS.COM



EJE, TRANSMISIÓN DELANTERA - ALOJAMIENTO

| REF | FN | PART NUMBER | YR/SN | QTY | DESCRIPTION |
|---|---|---|---|---|---|
| | | 87417387 | | 1 | EJE (CONJUNTO) Front; Incl. Ref 1 - 18; Also Includes Parts On Figures 06-02 - 06-08 |
| 1 | | 427107A1 | | 1 | CÁRTER DE PUENTE |
| | | B17575 | | X | FLÚIDO 89 ml, Black RTV Silicone; Differential Carrier to Axle Housing |
| 2 | | D149725 | | 1 | CASQUILLO |
| 3 | | N14367 | | 2 | ANILLO DE CIERRE |
| 4 | | D149726 | | 1 | CASQUILLO |
| 5 | | 1966149C2 | | 1 | RESPIRADERO |
| 6 | | A156873 | | 2 | TAPON DE VIACIADO 22 mm |
| 7 | | 122270A1 | | 2 | ARANDELA Belleville |
| 9 | | 87400286 | | 2 | CASQUILLO |
| 10 | | 1966186C1 | | 2 | CASQUILLO |
| 11 | | 311565A1 | | 2 | ANILLO DE CIERRE Oil, 30 x 44 x 14 mm thk, Triple Lip, Used In 15 mm Deep Counterbore |
| 12 | | 100520A1 | | 2 | JUNTA DE ROTULA Bushing, Two Piece |
| 13 | | 122268A1 | | 2 | ARANDELA Belleville |
| | | 144454A1 | | 1 | APOYADERO (CONJUNTO) Differential Carrier; Incl. Ref 14 - 16 |
| 14 | | NSS | | 1 | NO SE REPARA SEPARADAM. Carrier |
| 15 | | S301065 | | 4 | TORNILLO 14 x 75 mm |
| 16 | | 1966136C1 | | 4 | TUERCA ESPECIAL Bushing |
| 17 | | 1966138C1 | | 2 | BULON/PIN, LARGO Dowel |
| 18 | | S301064 | | 10 | TORNILLO Flange, M12 x 33; 12.9 |
| | | B17575 | | X | FLÚIDO 89 ml, Black RTV Silicone, Differential Carrier to Axle Housing |

HTTP://WWW.MINNPARBACKHOEPARTS.COM



EJE, TRANSMISIÓN DELANTERA - ALOJAMIENTO, ARTICULACIÓN GIRATORIA

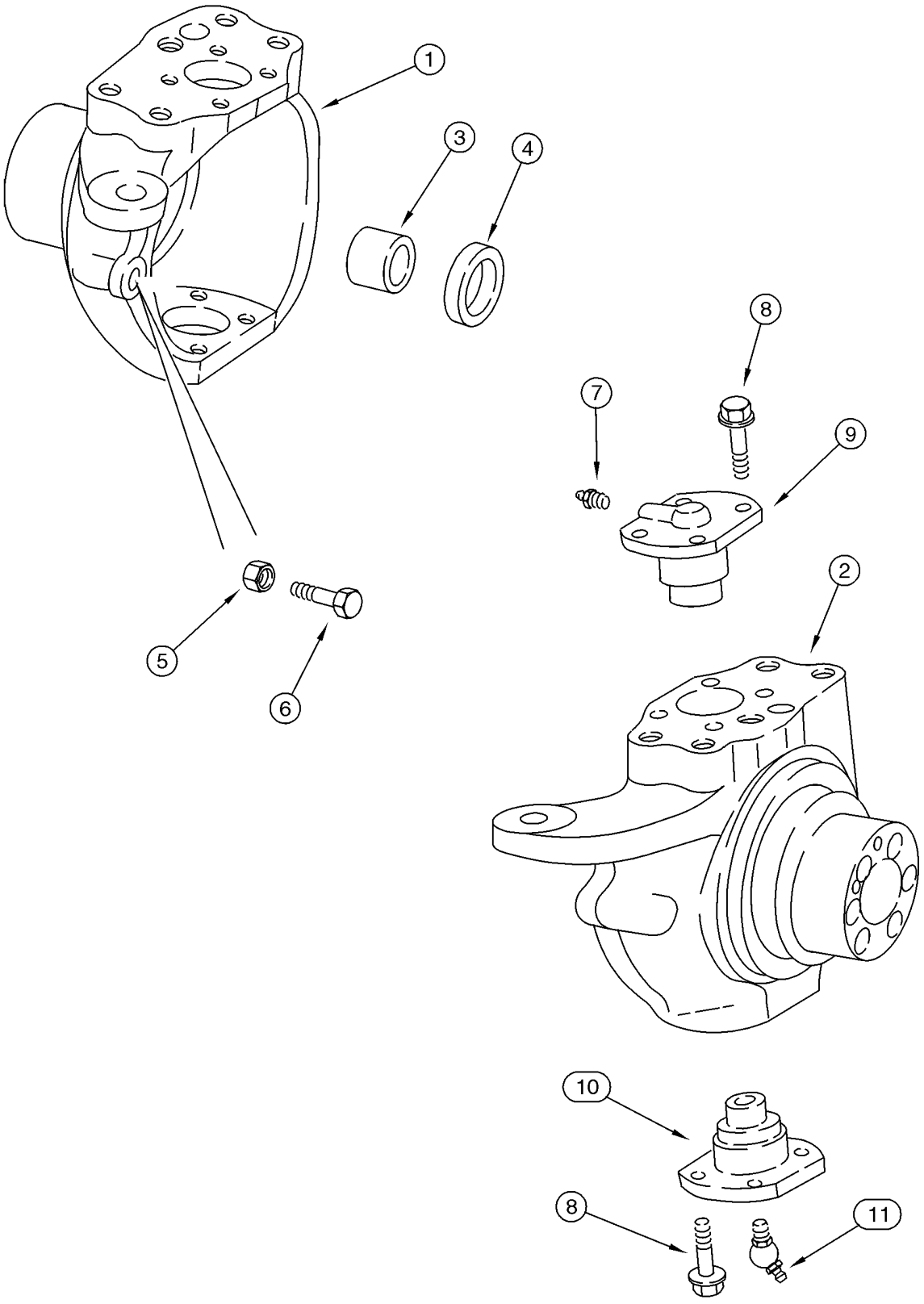

HTTP://WWW.MINNPARBACKHOEPARTS.COM



EJE, TRANSMISIÓN DELANTERA - ALOJAMIENTO, ARTICULACIÓN GIRATORIA

| REF | FN | PART NUMBER | YR/SN | QTY | DESCRIPTION |
|---|---|---|---|---|---|
| | | 87417387 | | 1 | EJE (CONJUNTO) Front; Incl. Ref 1 - 11; Also Includes Parts On Figures 06-02 - 06-08 |
| 1 | | 397653A1 | | 1 | CÁRTER DE PUENTE Left-Hand, 60 mm Diameter Axle Shaft Seal Counterbore |
| | | B17575 | | X | FLÚIDO 89 ml, Black RTV Silicone, Wear Ring to Swivel Housing |
| 2 | | 397654A1 | | 1 | CÁRTER DE PUENTE Right-Hand, 60 mm Diameter Axle Shaft Seal Counterbore |
| 3 | | 100532A1 | | 2 | CASQUILLO Used With Right-Hand or Left-Hand Swivel Housing, Not Included With Housing, Purchase Separately |
| 4 | | 402359A1 | | 2 | ANILLO DE CIERRE 45 x 60 x 16 mm thk, Triple Lip |
| 5 | | 1537663C1 | | 2 | TUERCA M16 |
| 6 | | 1537664C1 | | 2 | TORNILLO |
| 7 | | 712998R91 | | 2 | ENGRASADOR M6 x 1 |
| 8 | | 100533A1 | | 16 | TORNILLO M12 x 30 |
| 9 | | 122265A1 | | 2 | BULON/PIN, LARGO King Pin |
| 10 | | 122264A1 | | 2 | BULON/PIN, LARGO King Pin |
| 11 | | N13505 | | 2 | ENGRASADOR 45 deg, M6x1 |

HTTP://WWW.MINNPARBACKHOEPARTS.COM



EJE, TRANSMISIÓN DELANTERA - CILINDRO, DIRECCION

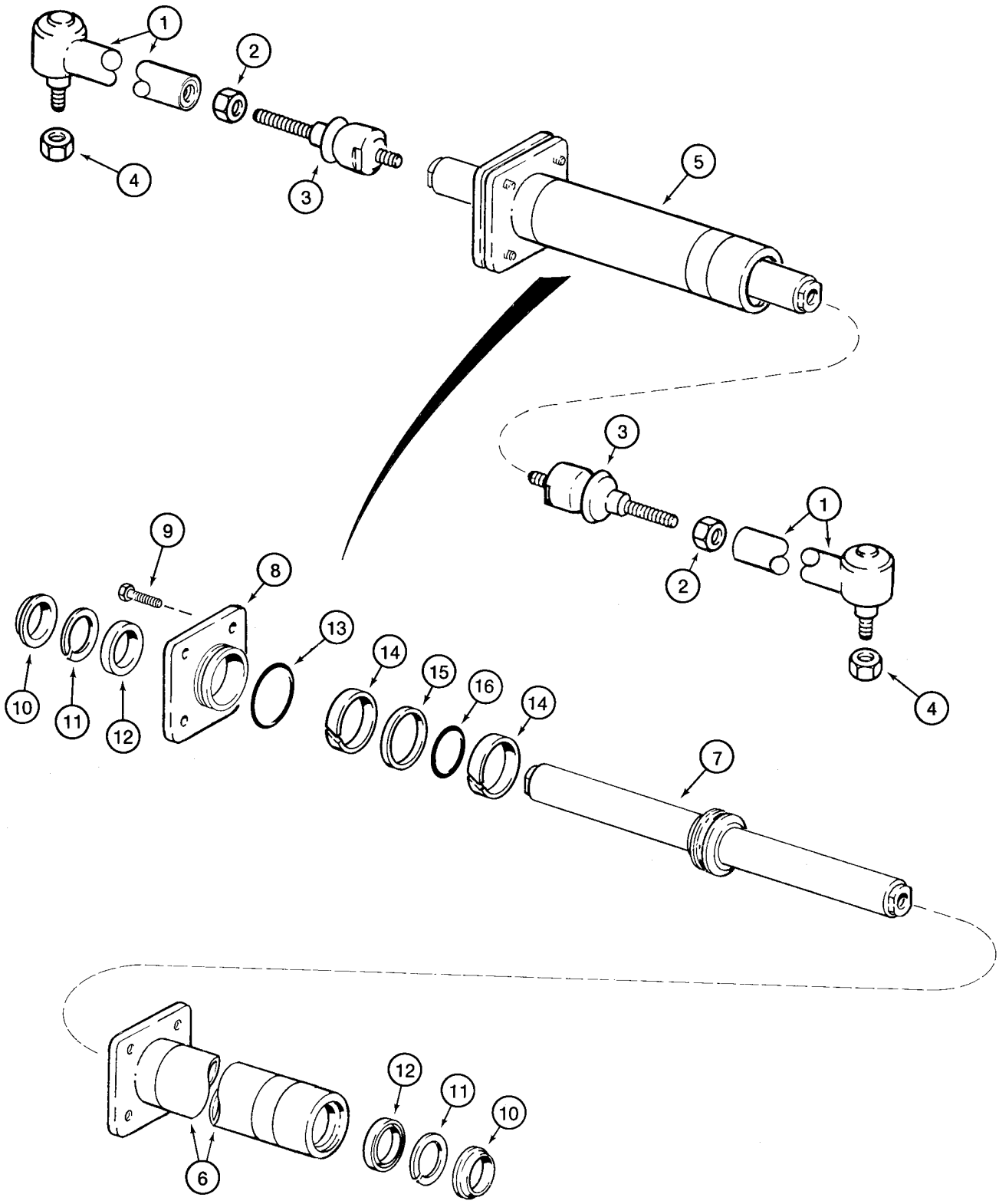

HTTP://WWW.MINNPARBACKHOEPARTS.COM



EJE, TRANSMISIÓN DELANTERA - CILINDRO, DIRECCION

| REF | FN | PART NUMBER | YR/SN | QTY | DESCRIPTION |
|---|---|---|---|---|---|
| | | 87417387 | | 1 | EJE (CONJUNTO) Front; Incl. Ref 1 - 16; Also Includes Parts On Figures 06-02 - 06-08 |
| | | 144457A1 | | 2 | BRAZO Incl. Ref 1 - 3 |
| 1 | | NSS | | 1 | NO SE REPARA SEPARADAM. Ball Joint |
| 2 | | 934727R1 | | 1 | TUERCA M18 |
| 3 | | 112509A1 | | 1 | JUNTA DE ROTULA |
| 4 | | 905839R1 | | 2 | TUERCA M18 |
| 5 | | 144458A1 | | 1 | CILINDRO Steering, Incl. Ref 6 - 16, Order D149739 Kit to Service Seals |
| 6 | | D149738 | | 1 | CILINDRO DIRECTION TUBE |
| 7 | | 144459A1 | | 1 | VARILLA Piston |
| 8 | | D149737 | | 1 | EMPAQUETADURA GLAND |
| | | B17575 | | X | FLÚIDO 89 ml, Black RTV Silicone, Cylinder Flange to Cylinder |
| 9 | | 114296A1 | | 4 | TORNILLO For Service Order 100524A1 Bolt and 892-11012 Washer |
| 10 | | NSS | | 2 | NO SE REPARA SEPARADAM. Seal, Wiper |
| 11 | | NSS | | 2 | NO SE REPARA SEPARADAM. Ring, Backup |
| 12 | | NSS | | 2 | NO SE REPARA SEPARADAM. Seal |
| 13 | | NSS | | 1 | NO SE REPARA SEPARADAM. O-Ring |
| 14 | | NSS | | 2 | NO SE REPARA SEPARADAM. Ring, Wear |
| 15 | | NSS | | 1 | NO SE REPARA SEPARADAM. Seal |
| 16 | | NSS | | 1 | NO SE REPARA SEPARADAM. O-Ring |
| | | D149739 | | 1 | JUEGO JUNTAS Incl. Ref 10 - 16 |

HTTP://WWW.MINNPARBACKHOEPARTS.COM



EJE, TRANSMISIÓN DELANTERA - VARILLAS, EJE

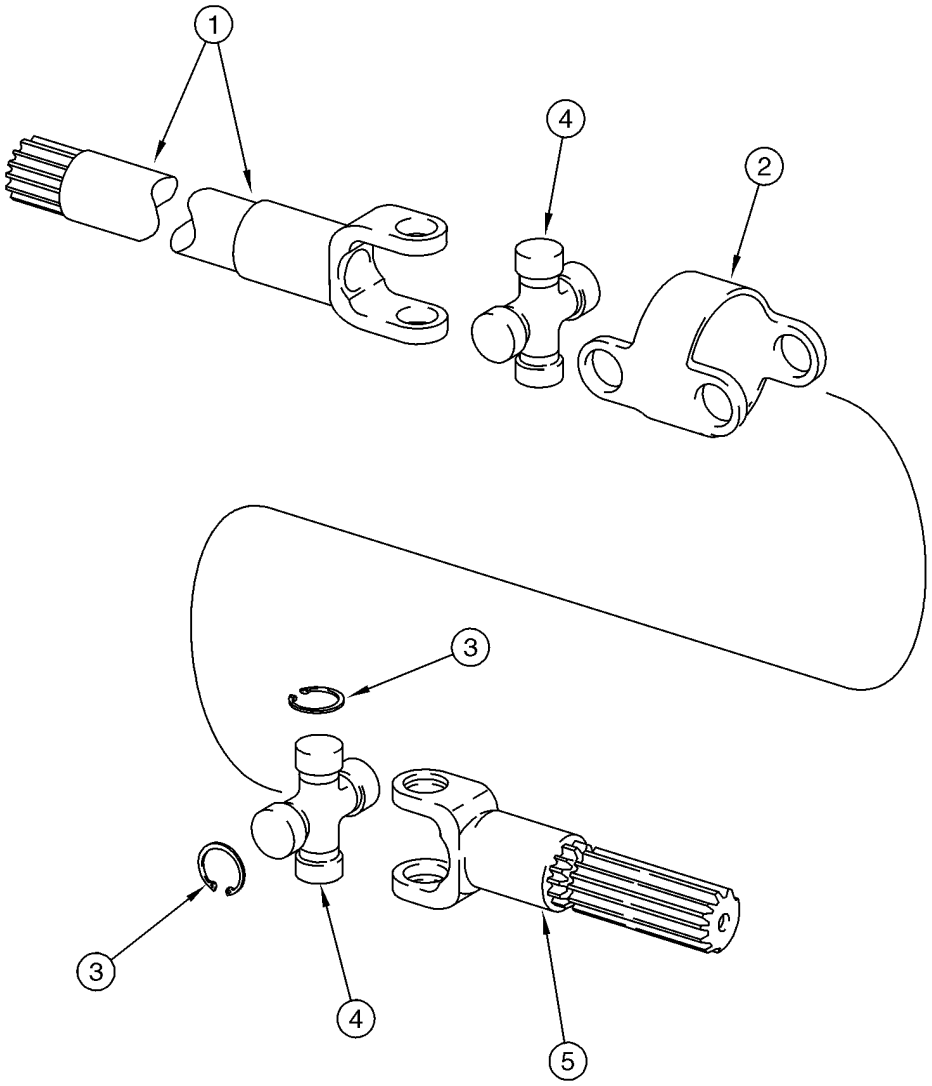


B9407022

HTTP://WWW.MINNPARBACKHOEPARTS.COM



EJE, TRANSMISIÓN DELANTERA - VARILLAS, EJE

| REF | FN | PART NUMBER | YR/SN | QTY | DESCRIPTION |
|---|---|---|---|---|---|
| | | 87417387 | | 1 | EJE (CONJUNTO) Front; Incl. Ref 1 - 5; Also Includes Parts On Figures 06-02 - 06-08 |
| | | 144461A1 | | 2 | SEMIEJE Incl. Ref 1 - 5; Not Available As An Assembly, Order Components |
| 1 | | 144462A1 | | 2 | HORQUETA Shaft, Long, Differential Side |
| 2 | | 390029A1 | | 2 | CUERPO |
| 3 | | N14410 | | 16 | ANILLO |
| 4 | | 144465A1 | | 4 | CRUCETA DE CARDÁN Incl. Ref 3 |
| 5 | | 144463A1 | | 2 | EJE Short, Wheel Side |

HTTP://WWW.MINNPARBACKHOEPARTS.COM



EJE, TRANSMISIÓN DELANTERA - PLANETARIO

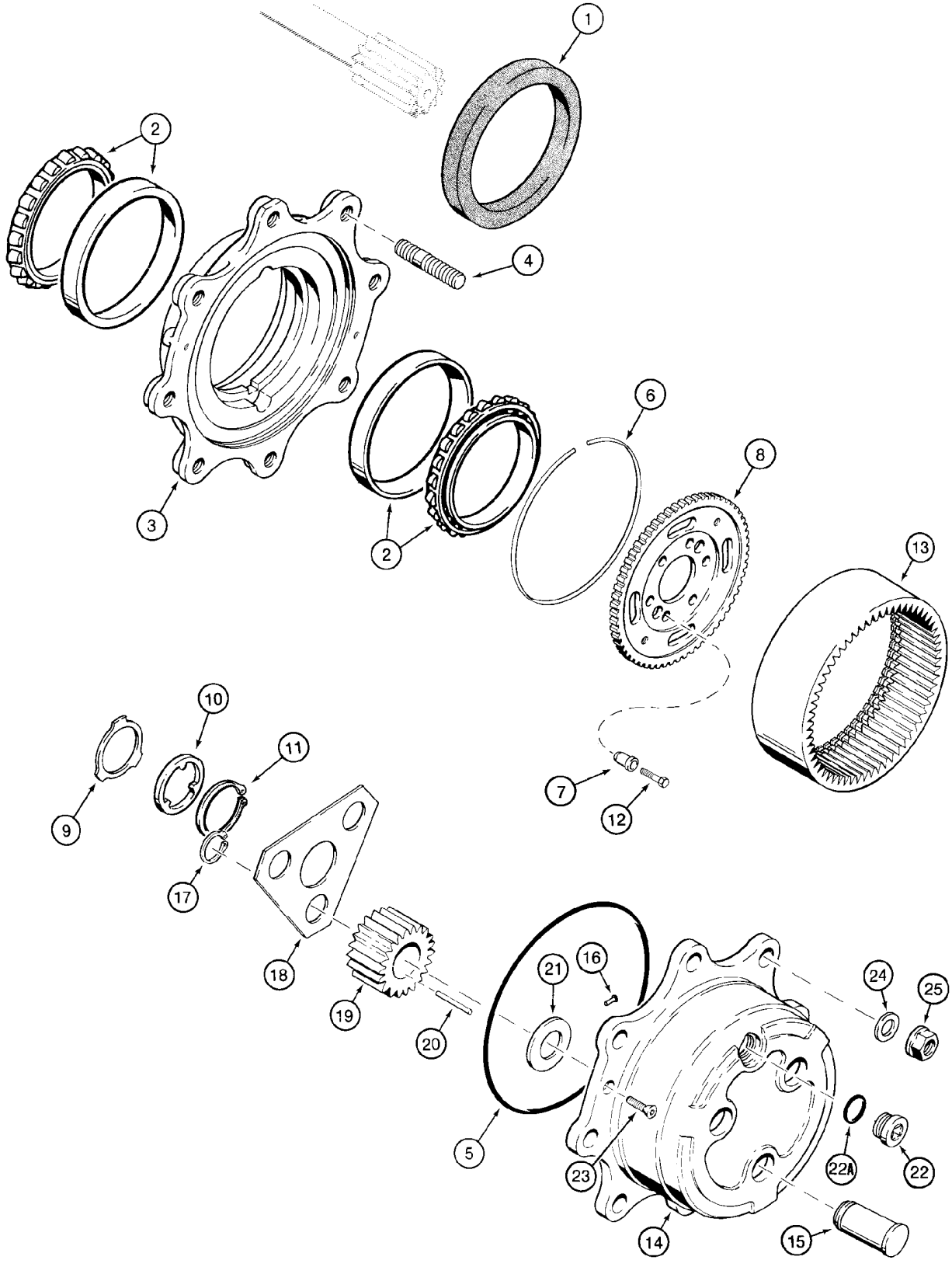

HTTP://WWW.MINNPARBACKHOEPARTS.COM



EJE, TRANSMISIÓN DELANTERA - PLANETARIO

| REF | FN | PART NUMBER | YR/SN | QTY | DESCRIPTION |
|---|---|---|---|---|---|
| | | 87417387 | | 1 | EJE (CONJUNTO) Front; Incl. Ref 1 - 25; Also Includes Parts On Figures 06-02 - 06-08 |
| 1 | | 311569A1 | | 2 | JUNTA DE ACEITE Triple Lip |
| 2 | | 1966169C1 | | 4 | COJINETE |
| | | 144466A1 | | 2 | CUBO Incl. Ref 3, 4 |
| 3 | | NSS | | 1 | NO SE REPARA SEPARADAM. Hub |
| 4 | | 100556A1 | | 8 | PRISIONERO |
| | | B17575 | | X | FLÚIDO 89 ml, RTV Silicone, Planetary Cover to Hub |
| 5 | | 100552A1 | | 2 | JUNTA HERMETICA |
| 6 | | 100559A1 | | 2 | JUNQUILLO |
| 7 | | 116426A1 | | 12 | CASQUILLO CENTRAJE Bushing |
| 8 | | 116427A1 | | 2 | ENGRANAJE CARRIER, Ring Gear |
| 9 | | 190684A1 | | 2 | ARANDELA Thrust |
| 10 | | 190682A1 | | 2 | ARANDELA Thrust |
| 11 | | A48041 | | 2 | RETENEDOR |
| 12 | | 116425A1 | | 12 | TORNILLO |
| 13 | | 100561A1 | | 2 | ENGRANAJE Ring |
| | | 100554A1 | | 2 | EJE DE SATELITE PLANETARY, Includes 100553A1, Ref 14 - 22A |
| | | 100553A1 | | 2 | CUBIERTA PRINCIPAL Carrier, Incl. Ref 14 - 16 |
| 14 | | NSS | | 1 | NO SE REPARA SEPARADAM. Carrier |
| 15 | | NSS | | 3 | NO SE REPARA SEPARADAM. Shaft, Pinion |
| 16 | | K395093 | | 1 | EJE CON CABEZA Lock |
| 17 | | 800-1134 | | 6 | ANILLO DE CIERRE No. 34 |
| 18 | | 100555A1 | | 2 | PLACA, GRANDE Retainer |
| 19 | | 100562A1 | | 6 | PINON PLANETARIO Pinion Gear |
| | | B17575 | | X | FLÚIDO , 89 ml, Black RTV Silicone, Planetary Cover to Hub |
| 20 | | 114295A1 | | 9 | KIT, 10 NEEDLE BRGS |
| 21 | | K395091 | | 6 | ARANDELA Thrust |
| 22 | | 100557A1 | | 2 | TAPON DE VIACIADO Incl. Ref 22A |
| 22A | | 238-6121 | | 1 | JUNTA HERMETICA 1-1/16 ID x 3/32 |
| 23 | | K395082 | | 4 | TORNILLO M8 x 20 |
| 24 | | 496-81000 | | 16 | ARANDELA 25/32 x 1-3/8 x 1/8, Not Included In Assembly, Purchase Separately |

HTTP://WWW.MINNPARBACKHOEPARTS.COM



EJE, TRANSMISIÓN DELANTERA - PLANETARIO

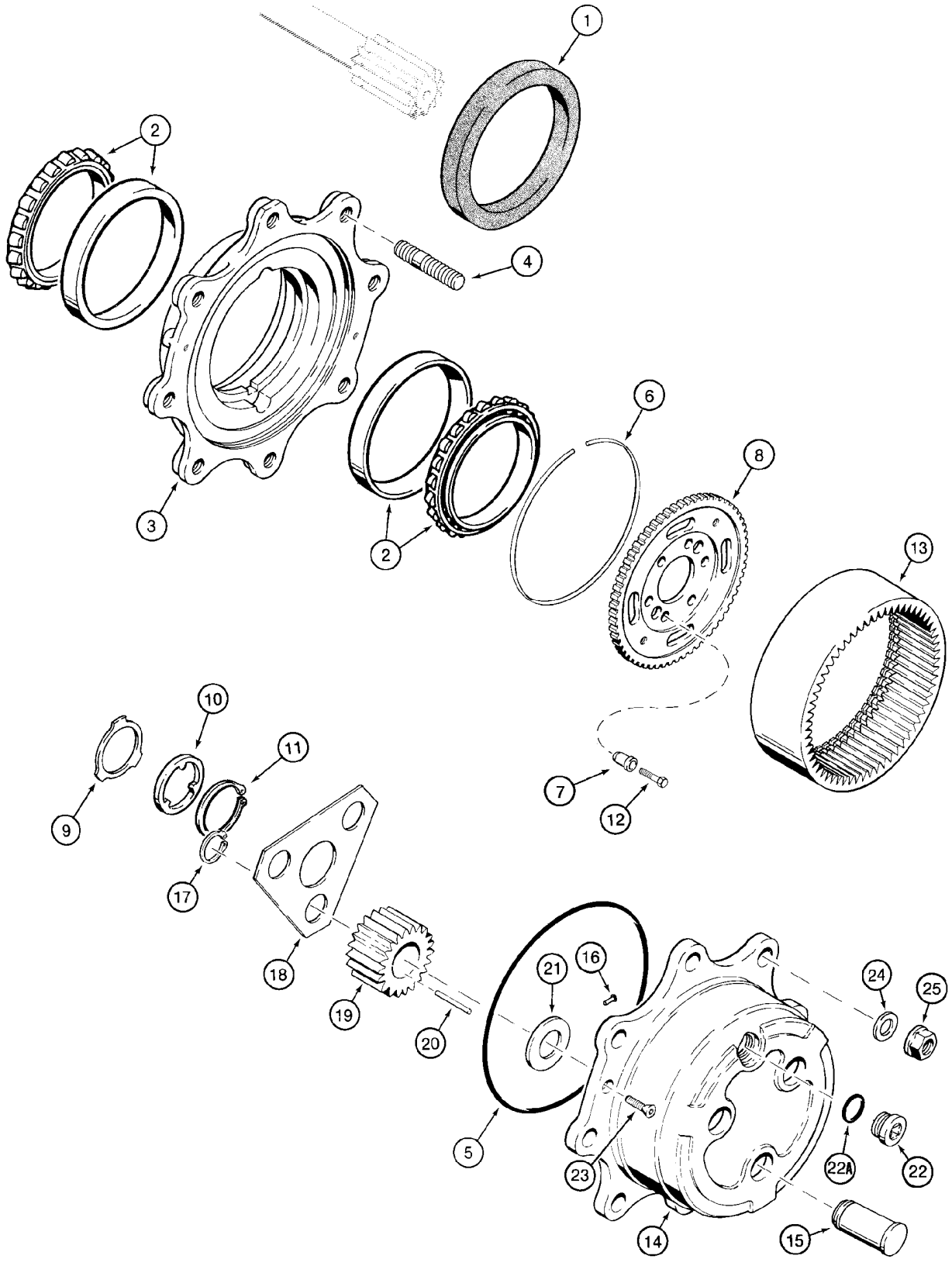

HTTP://WWW.MINNPARBACKHOEPARTS.COM



EJE, TRANSMISIÓN DELANTERA - PLANETARIO

| REF | FN | PART NUMBER | YR/SN | QTY | DESCRIPTION |
|---|---|---|---|---|---|
| 25 | | 825-11418 | | 16 | TUERCA M18, Not Included In Assembly, Purchase Separately |

HTTP://WWW.MINNPARBACKHOEPARTS.COM

| 06-07 | | p1 | 06/03 |
|---|---|---|---|

EJE, TRANSMISIÓN DELANTERA - DIFERENCIAL

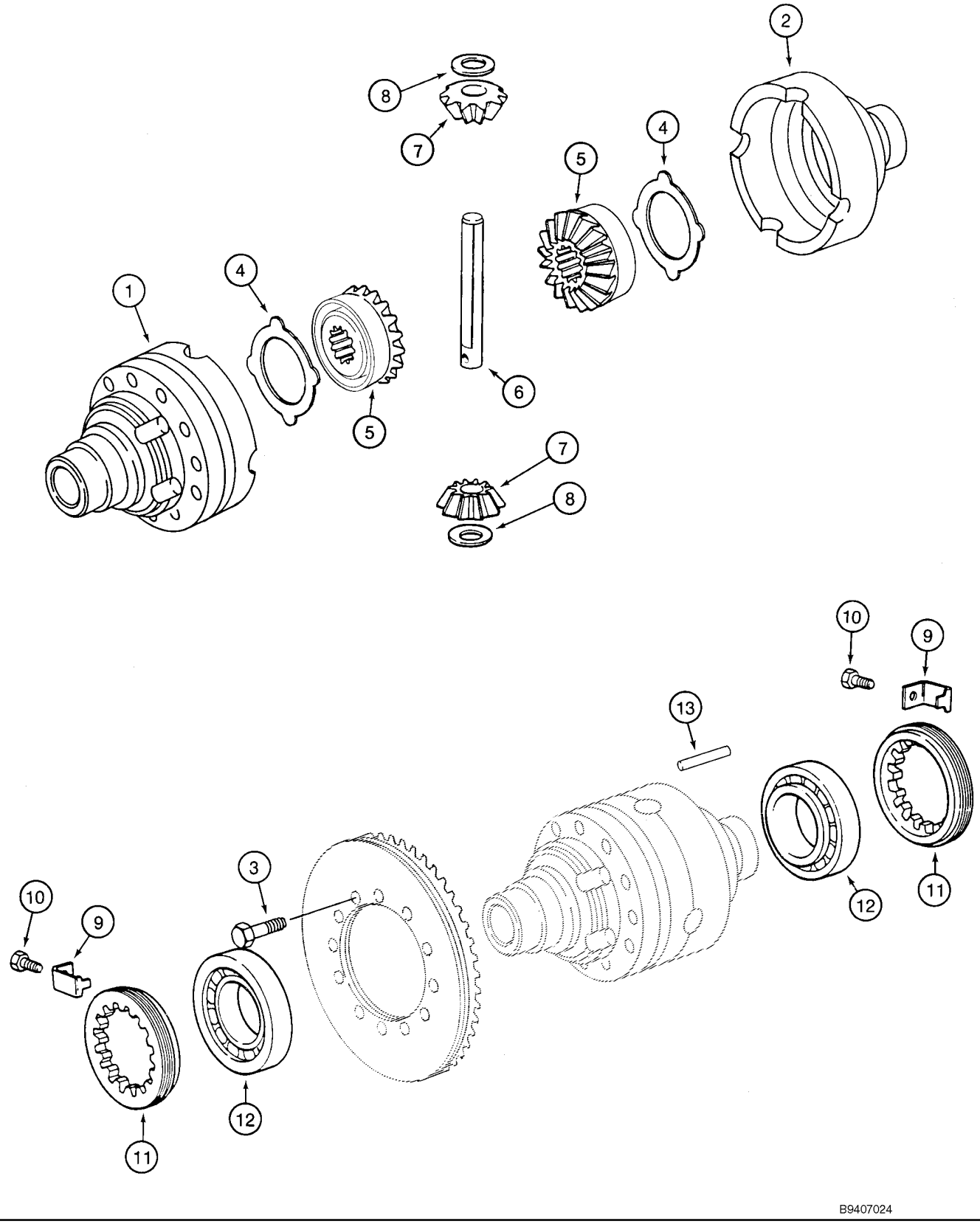

HTTP://WWW.MINNPARBACKHOEPARTS.COM



EJE, TRANSMISIÓN DELANTERA - DIFERENCIAL

| REF | FN | PART NUMBER | YR/SN | QTY | DESCRIPTION |
|---|---|---|---|---|---|
| | | 87417387 | | 1 | EJE (CONJUNTO) Front; Incl. Ref 1 - 13; Also Includes Parts On Figures 06-02 - 06-08 |
| | | 294933A1 | | 1 | APOYADERO (CONJUNTO) Differential Housing, Incl. Ref 1, 2 |
| 1 | | NSS | | 1 | NO SE REPARA SEPARADAM. Housing, Flange Half |
| 2 | | NSS | | 1 | NO SE REPARA SEPARADAM. Housing, Plain Half |
| | | B17575 | | X | FLÚIDO 89 ml, Black RTV Silicone, Bolt to Differential Housing |
| 3 | | 827-10075 | | 12 | TORNILLO M10 x 75; 10.9 |
| 4 | | 1967003C1 | | 2 | ARANDELA |
| | | 231397A1 | | 1 | JUEGO DE PIEZAS Differential Gear Set, Service Replacement, Incl. Ref 5 - 8, 13 |
| 5 | | N14407 | | 2 | ENGRANAJE Side, No Longer Available, Order 231397A1 Differential Gear Set Kit |
| 6 | | K395087 | | 1 | BULON/PIN, LARGO Shaft, Pinion Gear, No Longer Available, Order 231397A1 Differential Gear Set Kit |
| 7 | | N14408 | | 2 | PIÑÓN SOLAR Pinion Gear, No Longer Available, Order 231397A1 Differential Gear Set Kit |
| 8 | | K395075 | | 2 | ARANDELA Thrust, No Longer Available, Order 231397A1 Differential Gear Set Kit |
| 9 | | 1966153C1 | | 2 | PLACA DE FRENO Bracket |
| 10 | | 112486A1 | | 2 | TORNILLO M6 x 12 |
| 11 | | 1966559C1 | | 2 | TUERCA Locking Ring |
| 12 | | K395027 | | 2 | COJINETE |
| 13 | | K395086 | | 1 | BULON/PIN, LARGO Dowel, No Longer Available, Order 231397A1 Differential Gear Set Kit |

HTTP://WWW.MINNPARBACKHOEPARTS.COM



EJE, TRANSMISIÓN DELANTERA - ANILLO Y PIÑÓN

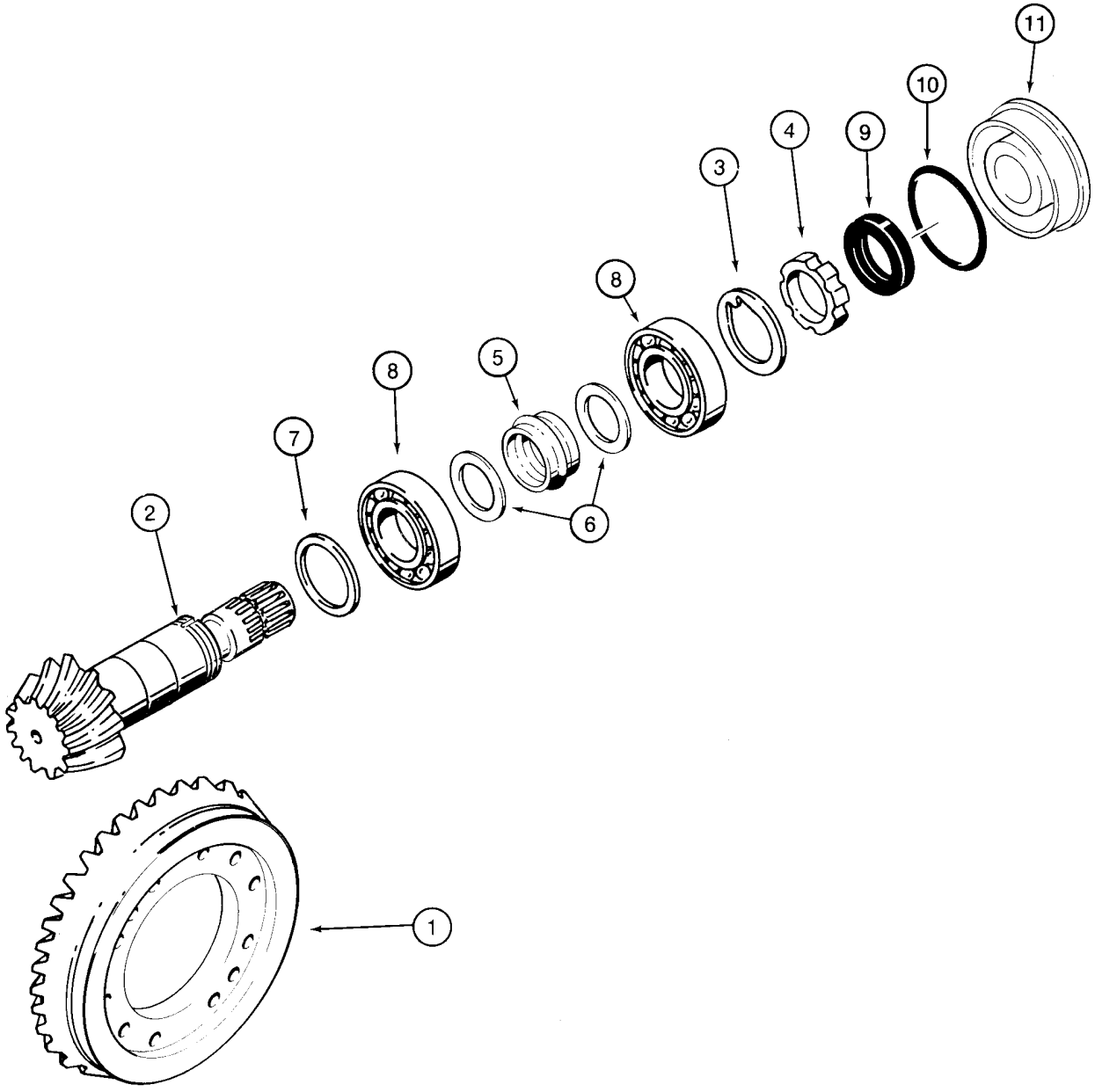


B9407025

HTTP://WWW.MINNPARBACKHOEPARTS.COM



EJE, TRANSMISIÓN DELANTERA - ANILLO Y PIÑÓN

| REF | FN | PART NUMBER | YR/SN | QTY | DESCRIPTION |
|---|---|---|---|---|---|
| | | 87417387 | | 1 | EJE (CONJUNTO) Front; Incl. Ref 1 - 11; Also Includes Parts On Figures 06-02 - 06-08 |
| | | 144460A1 | | 1 | JEUGO Ring and Pinion Gear Set, Incl. Ref 1 - 6 |
| 1 | | NSS | | 1 | NO SE REPARA SEPARADAM. Ring, Gear |
| 2 | | NSS | | 1 | NO SE REPARA SEPARADAM. Gear, Pinion Gear |
| 3 | | K261065 | | 1 | ARANDELA |
| 4 | | K261014 | | 1 | TUERCA Ring |
| 5 | | 1349058C1 | | 1 | ESPACIADOR Collapsible |
| 6 | | 1349059C1 | | 2 | ARANDELA |
| 7 | | 140954A1 | | X | SUPLEMENTO 2,5 mm (0,098 in) |
| 7 | | 140953A1 | | X | SUPLEMENTO 2,6 mm (0,102 in) |
| 7 | | 140951A1 | | X | SUPLEMENTO 2,7 mm (0,106 in) |
| 7 | | 140949A1 | | X | SUPLEMENTO 2,8 mm (0,110 in) |
| 7 | | 140948A1 | | X | SUPLEMENTO 2,9 mm (0,114 in) |
| 7 | | 140943A1 | | X | SUPLEMENTO 3,0 mm (0,118 in) |
| 7 | | 140944A1 | | X | SUPLEMENTO 3,1 mm (0,122 in) |
| 7 | | 140945A1 | | X | SUPLEMENTO 3,2 mm (0,125 in) |
| 7 | | 140946A1 | | X | SUPLEMENTO 3,3 mm (0,129 in) |
| 7 | | 140947A1 | | X | SUPLEMENTO 3,4 mm (0,133 in) |
| 8 | | K395090 | | 2 | RODAMIENTO DE BOLAS |
| 9 | | K262143 | | 1 | ANILLO DE CIERRE Oil |
| 10 | | 238-5152 | | 1 | JUNTA HERMETICA 3-1/4 ID x 3/32 |
| 11 | | 128570A1 | | 1 | TAPA Cover, Differential |
| | | B17575 | | X | FLÚIDO 89 ml, Black RTV Silicone, Differential Cover to Differential Carrier |

HTTP://WWW.MINNPARBACKHOEPARTS.COM



EJE DE TRANSMISIÓN, EJE DELANTERO

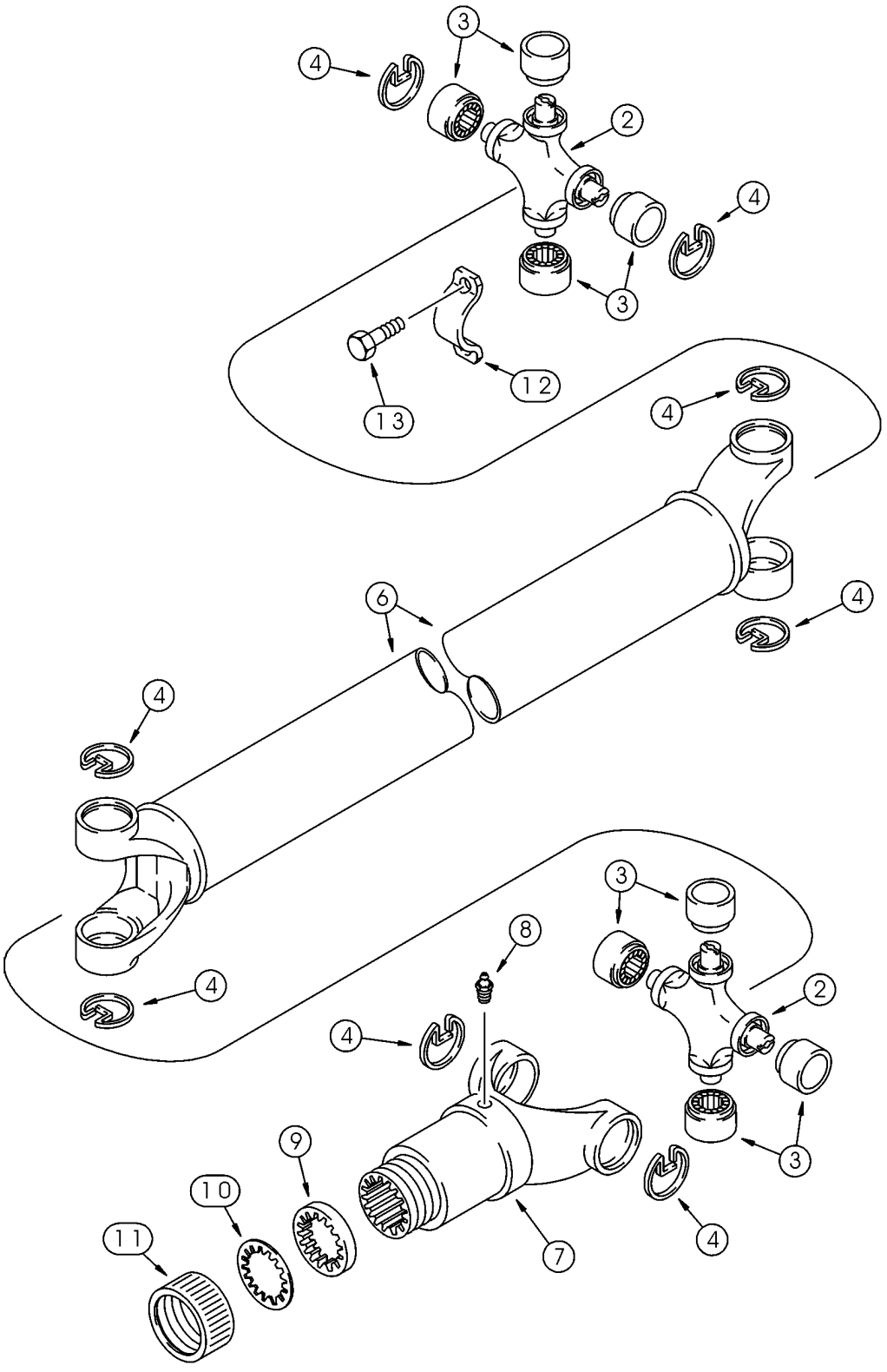

HTTP://WWW.MINNPARBACKHOEPARTS.COM



EJE DE TRANSMISIÓN, EJE DELANTERO

| REF | FN | PART NUMBER | YR/SN | QTY | DESCRIPTION |
|---|---|---|---|---|---|
| | | 367861A2 | | 1 | ARBOL DE MANDO Incl. 393231A1, Ref 2 - 13 |
| | | 393231A1 | | 2 | JEUGO Universal Joint, Incl. Ref 2 - 4 |
| 2 | | NSS | | 1 | NO SE REPARA SEPARADAM. Joint, Universal |
| 3 | | NSS | | 4 | NO SE REPARA SEPARADAM. Bearing, Journal |
| 4 | | NSS | | 4 | NO SE REPARA SEPARADAM. Ring, Retaining |
| 6 | | 393234A1 | | 1 | ARBOL DE MANDO |
| 7 | | 144279A1 | | 1 | HORQUILLA |
| 8 | | 219-10 | | 1 | ENGRASADOR 1/4 tpr x 11/16 |
| | | D149860 | | 1 | EMPAQUETADURA Incl. Ref 9 - 11 |
| 9 | | NSS | | 1 | NO SE REPARA SEPARADAM. Washer, Cork |
| 10 | | NSS | | 1 | NO SE REPARA SEPARADAM. Washer, Steel |
| 11 | | NSS | | 1 | NO SE REPARA SEPARADAM. Cap |
| 12 | | 90-6682T1 | | 2 | COLLAR |
| 13 | | D137627 | | 4 | TORNILLO |

HTTP://WWW.MINNPARBACKHOEPARTS.COM



SISTEMA DE REFRIGERACIÓN - TRANSMISION

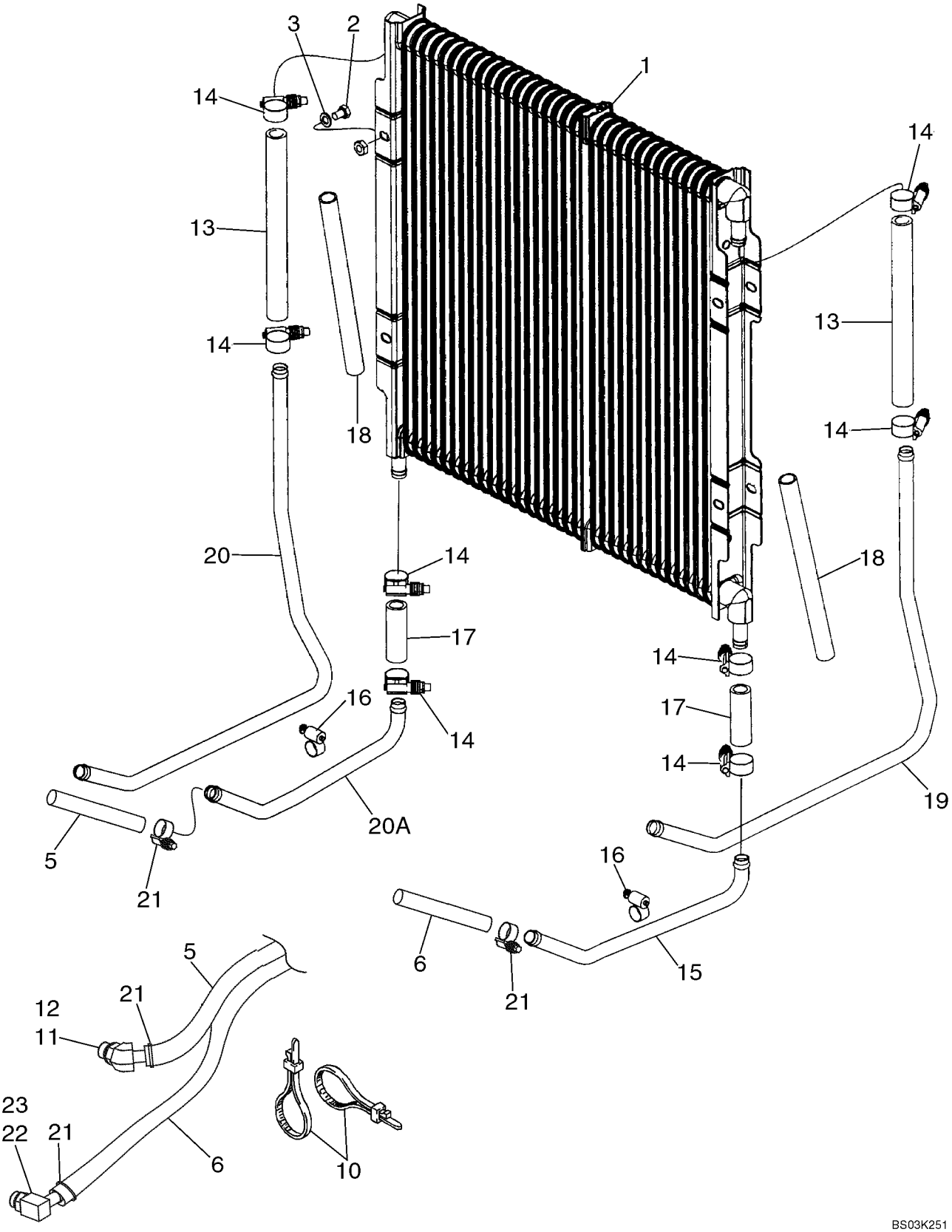

HTTP://WWW.MINNPARBACKHOEPARTS.COM



SISTEMA DE REFRIGERACIÓN - TRANSMISION

| REF | FN | PART NUMBER | YR/SN | QTY | DESCRIPTION |
|---|---|---|---|---|---|
| 1 | | 87427158 | | 1 | RADIADOR ACEITE Hydraulic Oil Cooler |
| 2 | | 614-8012 | | 4 | TORNILLO M8 x 12 |
| 3 | | 895-11008 | | 4 | ARANDELA 9 x 16 x 1,6 mm |
| 5 | | 87422597 | | 1 | MANGUERA (CONJUNTO) 975 mm (38-13/32 in), Transmission to Cooler Inlet |
| 6 | | 87422598 | | 1 | MANGUERA (CONJUNTO) 1225 mm (48-1/4 in), Cooler Outlet to Transmission |
| 10 | | L18337 | | 3 | BANDA 15 in |
| 11 | | 217-314 | | 1 | CODO 45 deg, 5/8 stem x 7/8 Or, Incl. Ref 12 |
| 12 | | 237-6010 | | 1 | JUNTA HERMETICA 3/4 ID x 3/32 |
| 13 | | 87417238 | | 2 | MANGA 235 mm (9-9/32 in) |
| 14 | | 328186A1 | | 8 | ABRAZADERA MANGUERA |
| 15 | | 87435277 | | 1 | TUBO Lower |
| 16 | | 214-1412 | | 2 | COLLAR No. 12 |
| 17 | | 87426742 | | 2 | MANGA 68 mm (2-11/16 in) |
| 18 | | 87428998 | | 2 | FUNDA DE PLÁSTICO 250 mm (9-7/8 in) Sleeve |
| 19 | | 87435278 | | 1 | TUBO Right-Hand Upper Cooler |
| 20 | | 87435280 | | 1 | TUBO Left-Hand Upper Cooler |
| 20A | | 87435279 | | 1 | TUBO Lower |
| 21 | | 328186A1 | | 4 | ABRAZADERA MANGUERA |
| 22 | | 217-349 | | 1 | CODO 90 deg, Incl. Ref 23 |
| 23 | | 237-6010 | | 1 | JUNTA HERMETICA |

HTTP://WWW.MINNPARBACKHOEPARTS.COM



TRANSMISION - SOPORTE

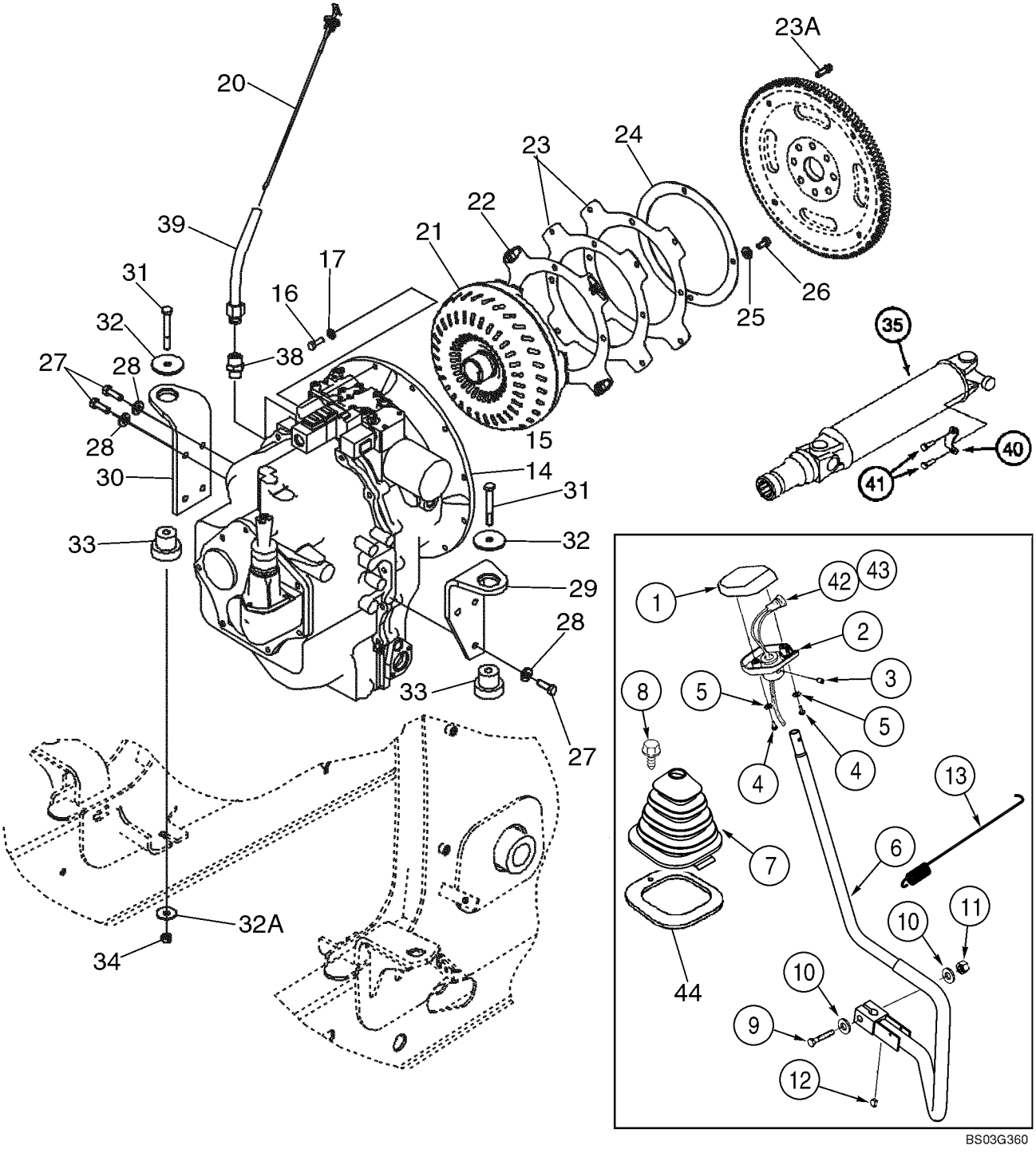

HTTP://WWW.MINNPARBACKHOEPARTS.COM



TRANSMISION - SOPORTE

| REF | FN | PART NUMBER | YR/SN | QTY | DESCRIPTION |
|---|---|---|---|---|---|
| | | 309747A1 | | 1 | PLACA Gear Shift Lever, Includes NSS Gasket, Incl. Ref 1, 2, 4, 5 |
| | | NSS | | 2 | NO SE REPARA SEPARADAM. GASKET, Knob |
| 1 | | 187714A1 | | 1 | BOTON Knob, Upper |
| 2 | | 187715A1 | | 1 | BOTON Knob, Lower |
| 3 | | 484-6316 | | 1 | TORNILLO Setscrew, 5/16 NF x 3/8; hdg pt |
| 4 | | 87020181 | | 2 | TORNILLO No. 10 NF x 7/8 |
| 5 | | 493-41020 | | 2 | ARANDELA DE FRENO 3/16 |
| 6 | | 379314A4 | | 1 | PALANCA (CONJUNTO) Gear Shift Lever |
| 7 | | 400588A2 | | 1 | PROTECTOR |
| 8 | | 233724A1 | | 1 | TORNILLO M6 x 25 |
| 9 | | 827-12065 | | 1 | TORNILLO M12 x 65; 10.9 |
| 10 | | 896-11012 | | 2 | ARANDELA 13,5 x 24 x 3 mm |
| 11 | | 832-10412 | | 1 | TUERCA M12 |
| 12 | | 126-116 | | 1 | CHAVETA 3/16 x 3/4 Woodruff Key |
| 13 | | 380537A2 | | 1 | RESORTE |
| 14 | | 86984097 | | 1 | CAMBIO DE VELOCIDAD Two Wheel Drive Models, See Figures 06-12 - 06-21 |
| 15 | | 86984098 | | 1 | CAMBIO DE VELOCIDAD Four Wheel Drive Models, See Figures 06-12 - 06-22 |
| 16 | | 627-10030 | | 12 | TORNILLO M10 x 30; 10.9 |
| 17 | | 496-21041 | | 12 | ARANDELA 13/32 x 13/16 x 3/32 |
| 20 | | 87430618 | | 1 | VARILLA DE NIVEL |
| 21 | | 86993548 | | 1 | CONVERTIDOR Torque Converter, New |
| 22 | | 87406934 | | 1 | PLACA DE SUJECION Flex Plate, With Caged Nuts |
| 23 | | 86993546 | | 2 | PLACA DE SUJECION Flex Plate |
| 23A | | 87019767 | | 4 | TORNILLO Flange, M10 x 30 |
| 24 | | 87409201 | | 1 | PLACA DE SUJECION Backing Plate |
| 25 | | 896-15010 | | 4 | ARANDELA 11 x 24 x 3 mm |
| 26 | | 614-10020 | | 4 | TORNILLO M10 x 20 |
| 27 | | 614-12035 | | 7 | TORNILLO M12 x 35 |
| 28 | | 896-15012 | | 7 | ARANDELA 13,5 x 28 x 4 mm |
| 29 | | 87416977 | | 1 | SOPORTE Right-Hand Bracket |
| 30 | | 87416978 | | 1 | SOPORTE Left-Hand Bracket |
| 31 | | 814-12080 | | 2 | TORNILLO M20 x 80 |
| 32 | | 85801585 | | 2 | ARANDELA Special |

HTTP://WWW.MINNPARBACKHOEPARTS.COM



TRANSMISION - SOPORTE

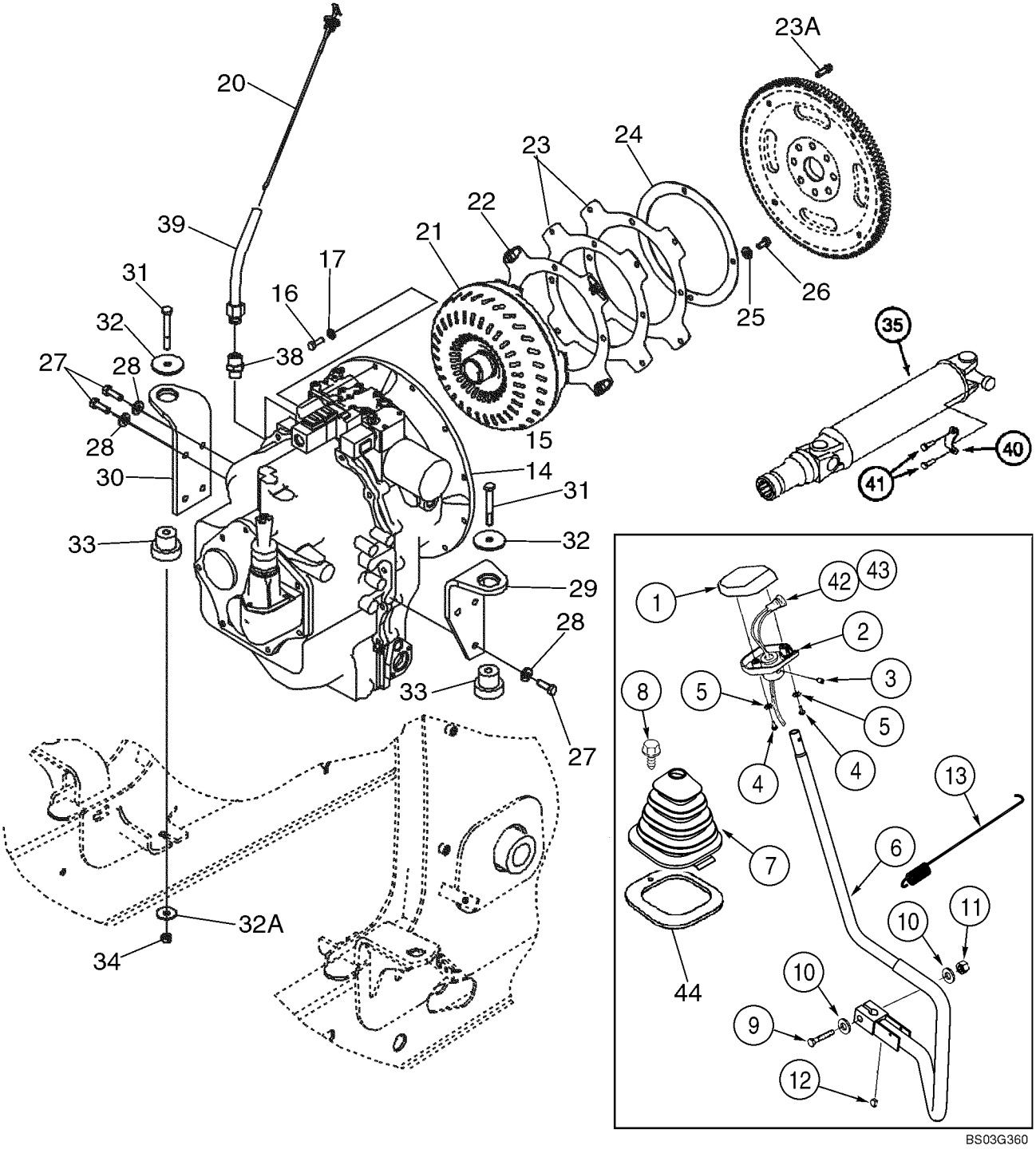

HTTP://WWW.MINNPARBACKHOEPARTS.COM



TRANSMISION - SOPORTE

| REF | FN | PART NUMBER | YR/SN | QTY | DESCRIPTION |
|---|---|---|---|---|---|
| 32A | | 85802618 | | 2 | JUNTA HERMETICA |
| 33 | | 87416967 | | 2 | SOPORTE |
| 34 | | 832-10412 | | 2 | TUERCA Lock, M12 |
| 35 | | 367860A3 | | 1 | ARBOL DE MANDO Transmission to Rear Axle, See Figure 06-31 |
| 38 | | 218-459 | | 1 | CONEXION 1-5/16 fl x 3/4 PT |
| 39 | | 395344A1 | | 1 | TUBO (CONJUNTO) Dipstick |
| 40 | | 90-6682T1 | | 2 | COLLAR |
| 41 | | D137627 | | 4 | TORNILLO |
| 42 | | 123097A1 | | 1 | CONTACTOR Push Button, Clutch Cutout |
| 43 | | 123809A2 | | 1 | HAZ Clutch Cutout, Transmission Gear Shift Lever |
| 44 | | 410561A1 | | 1 | ANILLO DE CIERRE Shift Lever Boot, Cab Models |

HTTP://WWW.MINNPARBACKHOEPARTS.COM



CONJUNTO DE LA TRANSMISION - FILTRO, ACEITE

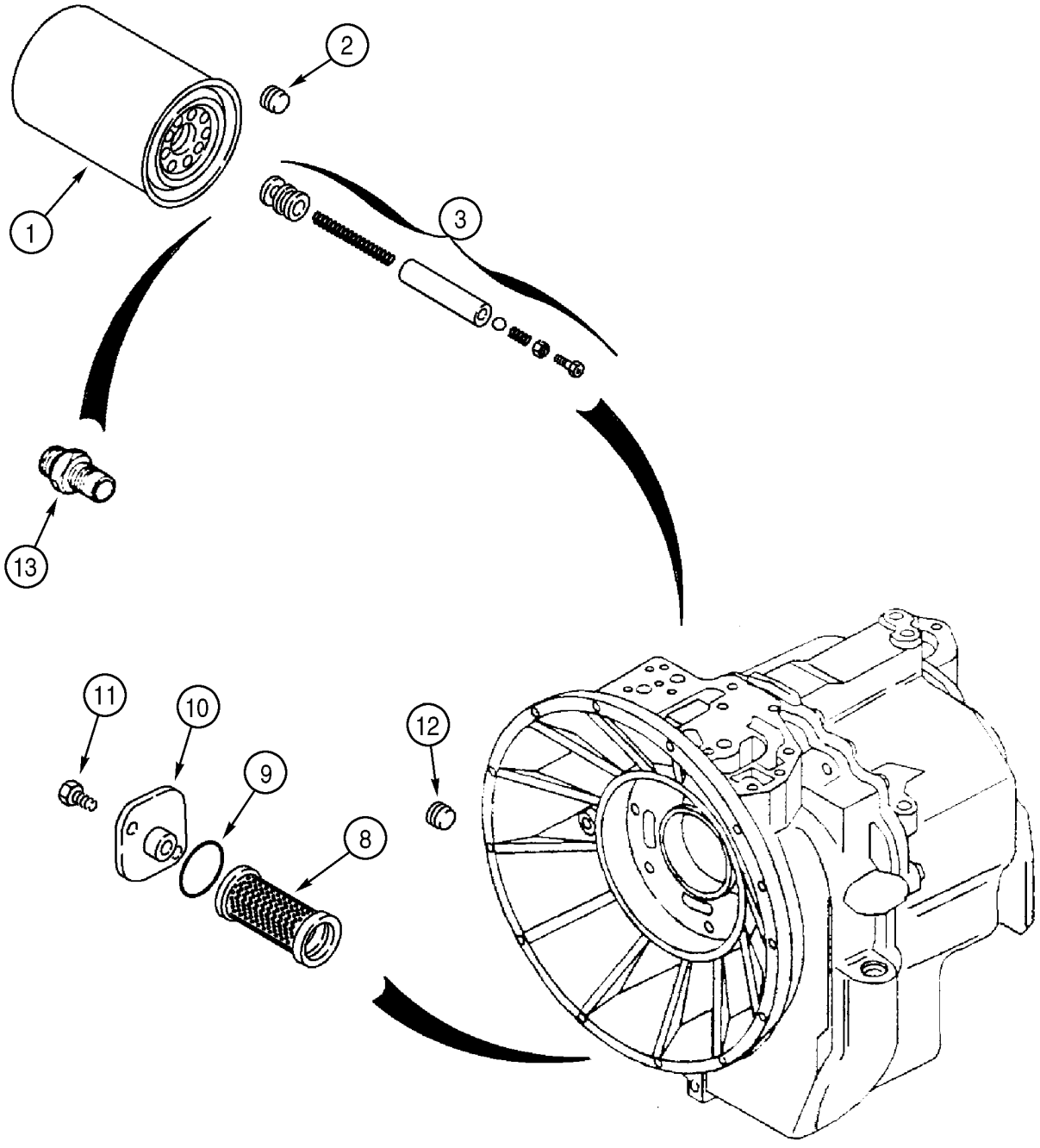

HTTP://WWW.MINNPARBACKHOEPARTS.COM



CONJUNTO DE LA TRANSMISION - FILTRO, ACEITE

| REF | FN | PART NUMBER | YR/SN | QTY | DESCRIPTION |
|---|---|---|---|---|---|
| | | 86984097 | | 1 | CAMBIO DE VELOCIDAD Two Wheel Drive, Incl. Ref 1, 8 - 11, 13; Also Includes Parts On Figures 06-12 - 06-21 |
| | | 86984098 | | 1 | CAMBIO DE VELOCIDAD Four Wheel Drive, Incl. Ref 1 - 13; Also Includes Parts On Figures 06-12 - 06-22 |
| 1 | | 254686A2 | | 1 | FILTRO Oil |
| 2 | | 181101A1 | | 1 | TAPÓN 14 - 1.5 mm; Four Wheel Drive Models Only |
| 3 | | 181274A1 | | 1 | JUEGO DE PIEZAS Valve; Four Wheel Drive Models Only |
| 8 | | 278534A1 | | 1 | REJILLA Oil |
| 9 | | 100748A1 | | 1 | JUNTA HERMETICA |
| 10 | | 181219A1 | | 1 | TAPA |
| 11 | | 614-8018 | | 2 | TORNILLO M8 x 18 |
| 12 | | 181102A1 | | 1 | TAPÓN Four Wheel Drive Models Only |
| 13 | | 181202A1 | | 1 | CONEXION |

HTTP://WWW.MINNPARBACKHOEPARTS.COM



CONJUNTO DE LA TRANSMISION (2WD) - ALOJAMIENTO

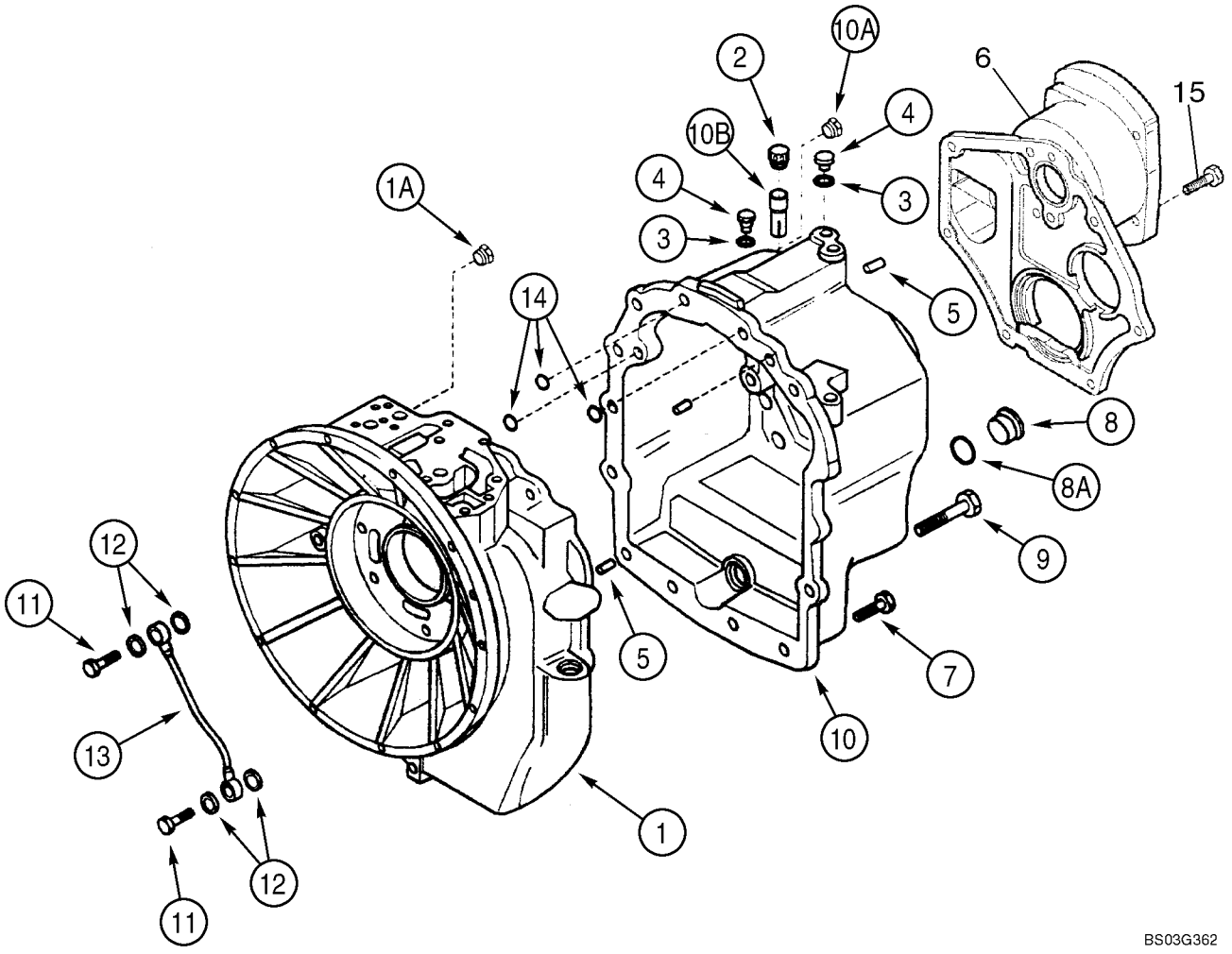

HTTP://WWW.MINNPARBACKHOEPARTS.COM



CONJUNTO DE LA TRANSMISION (2WD) - ALOJAMIENTO

| REF | FN | PART NUMBER | YR/SN | QTY | DESCRIPTION |
|---|---|---|---|---|---|
| | | 86984097 | | 1 | CAMBIO DE VELOCIDAD Two Wheel Drive, Incl. Ref 1 - 14; Also Includes Parts On Figures 06-12 - 06-21 |
| 1 | | 87429989 | | 1 | CAVIDAD Housing, Front Half, Use With Loctite 510 or 518 as a Gasket Eliminator; Incl. Ref 1A |
| 1A | | E135809 | | 1 | TAPÓN If Used |
| 2 | | 1530028C1 | | 1 | RESPIRADERO (CONJUNT |
| | | 310772A1 | | 1 | CUELLO DE CARGA 18 OD x 42 mm lg, Breather, Not Illustrated |
| 3 | | 934667R1 | | 4 | ARANDELA DE COBRE Copper Washer, 10 x 14 x 1.5 mm |
| 4 | | 181100A1 | | 3 | TAPÓN |
| 5 | | K260177 | | 3 | PERNO Dowel, 10 x 25 mm |
| 6 | | 87429987 | | 1 | ADAPTOR Adapter Cover, Pump, Copper |
| 7 | | 614-10030 | | 19 | TORNILLO M10 x 30 |
| 8 | | 100557A1 | | 1 | TAPON DE VIACIADO Incl. Ref 8A |
| 8A | | 238-6121 | | 1 | JUNTA HERMETICA 1-1/16 ID x 3/32 |
| 9 | | 814-10150 | | 2 | TORNILLO M10 x 150 |
| 10 | | 87429988 | | 1 | CAVIDAD HOUSING, Rear Half, Use With Superbond 539 as a Gasket Eliminator; Incl. Ref 10A, 10B |
| 10A | | E135809 | | 1 | TAPÓN If Used |
| 10B | | 310772A1 | | 1 | CUELLO DE CARGA 18 OD x 42 mm lg, Breather, Not Illustrated |
| 11 | | 181179A1 | | 2 | TORNILLO HUECO |
| 12 | | 181105A1 | | 4 | ARANDELA DE COBRE 14 x 20 x 1.5 mm; Sealing |
| 13 | | 181232A1 | | 1 | CUELLO DE CARGA Lubrication Tube |
| 14 | | 181141A1 | | 3 | JUNTA HERMETICA |
| 15 | | 814-10045 | | 2 | TORNILLO M10 x 45 |

HTTP://WWW.MINNPARBACKHOEPARTS.COM



CONJUNTO DE LA TRANSMISION (4WD) - ALOJAMIENTO

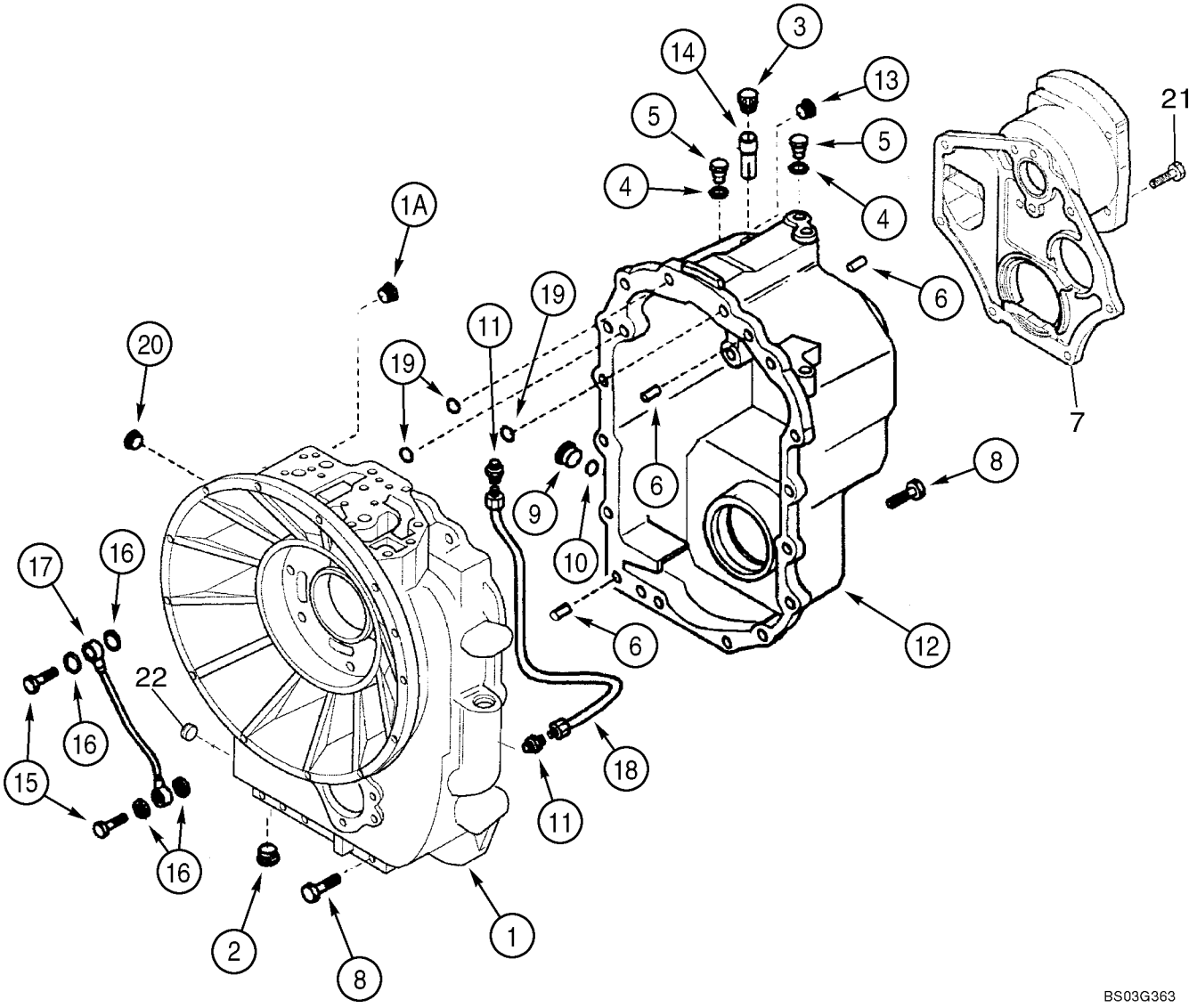

HTTP://WWW.MINNPARBACKHOEPARTS.COM



CONJUNTO DE LA TRANSMISION (4WD) - ALOJAMIENTO

| REF | FN | PART NUMBER | YR/SN | QTY | DESCRIPTION |
|---|---|---|---|---|---|
| | | 86984098 | | 1 | CAMBIO DE VELOCIDAD Four Wheel Drive, Incl. Ref 1 - 20; Also Includes Parts On Figures 06-12 - 06-22 |
| 1 | | 87429972 | | 1 | CAVIDAD Housing, Front Half, Use With Loctite 510 or 518 as a Gasket Eliminator; Incl. Ref 1A |
| 1A | | E135809 | | 1 | TAPÓN |
| 2 | | 239606A1 | | 1 | TAPÓN |
| 3 | | 1530028C1 | | 1 | RESPIRADERO (CONJUNT |
| | | 310772A1 | | 1 | CUELLO DE CARGA 18 OD x 42 mm lg, Breather, Not Illustrated |
| 4 | | 934667R1 | | 3 | ARANDELA DE COBRE Copper Washer, 10 x 14 x 1.5 mm |
| 5 | | 181100A1 | | 3 | TAPÓN |
| 6 | | K260177 | | 3 | PERNO Dowel, 10 x 25 mm |
| 7 | | 87429987 | | 1 | ADAPTOR Adapter Cover, Pump |
| 8 | | 614-10030 | | 23 | TORNILLO M10 x 30 |
| 9 | | 100557A1 | | 1 | TAPON DE VIACIADO Incl. Ref 10 |
| 10 | | 238-6121 | | 1 | JUNTA HERMETICA 1-1/16 ID x 3/32 |
| 11 | | 218-1023 | | 2 | RACOR 1/2 fl x 1/4 PT |
| 12 | | 87429986 | | 1 | CAVIDAD HOUSING, Rear Half, Use With Superbond 539 as a Gasket Eliminator; Incl. Ref 13, 14 |
| 13 | | E135809 | | 1 | TAPÓN If Used |
| 14 | | 310772A1 | | 1 | CUELLO DE CARGA 18 OD x 42 mm lg, Breather |
| 15 | | 181179A1 | | 2 | TORNILLO HUECO |
| 16 | | 181105A1 | | 4 | ARANDELA DE COBRE 14 x 20 x 1.5 mm |
| 17 | | 181232A1 | | 1 | CUELLO DE CARGA Lubrication Tube |
| 18 | | 181176A1 | | 1 | CUELLO DE CARGA Oil Tube |
| 19 | | 181141A1 | | 3 | JUNTA HERMETICA |
| 20 | | 181101A1 | | 1 | TAPÓN 14 - 1.5 mm |
| 21 | | 814-10045 | | 2 | TORNILLO M10 x 45 |
| 22 | | 181102A1 | | 1 | TAPÓN |

HTTP://WWW.MINNPARBACKHOEPARTS.COM



CONJUNTO DE LA TRANSMISION - BOMBA, ACEITE

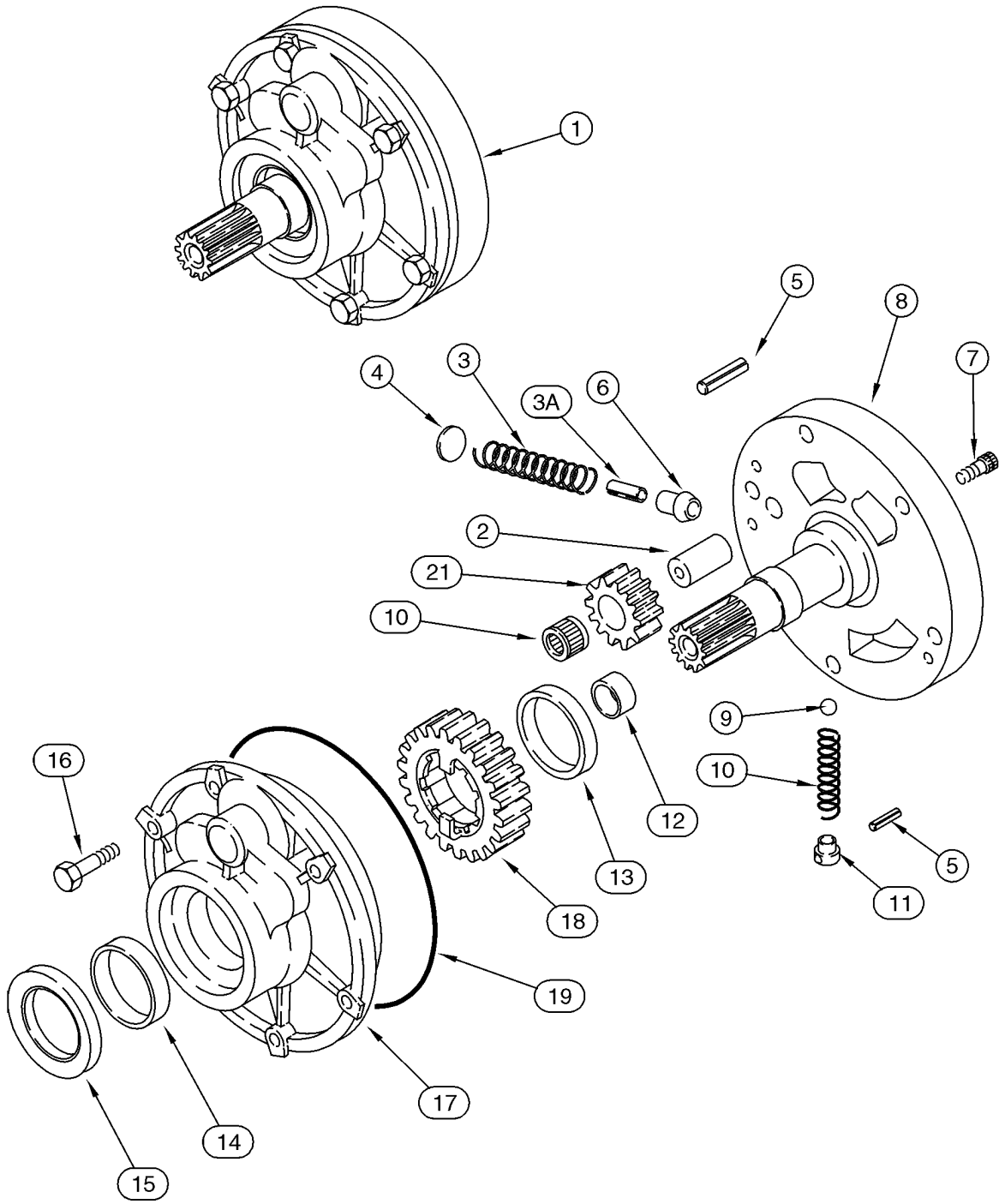

HTTP://WWW.MINNPARBACKHOEPARTS.COM



CONJUNTO DE LA TRANSMISION - BOMBA, ACEITE

| REF | FN | PART NUMBER | YR/SN | QTY | DESCRIPTION |
|---|---|---|---|---|---|
| | | 86984097 | | 1 | CAMBIO DE VELOCIDAD Two Wheel Drive, Incl. Ref 1 - 21; Also Includes Parts On Figures 06-12 - 06-21 |
| | | 86984098 | | 1 | CAMBIO DE VELOCIDAD Four Wheel Drive, Incl. Ref 1 - 21; Also Includes Parts On Figures 06-12 - 06-22 |
| 1 | | 87429970 | | 1 | BOMBA Charge, Incl. Ref 2 - 21 |
| 2 | | NSS | | 1 | NO SE REPARA SEPARADAM. Shaft |
| 3 | | NSS | | 1 | NO SE REPARA SEPARADAM. Spring |
| 3A | | NSS | | 1 | NO SE REPARA SEPARADAM. Pin |
| 4 | | NSS | | 1 | NO SE REPARA SEPARADAM. Stop |
| 5 | | NSS | | 2 | NO SE REPARA SEPARADAM. Pin, Roll |
| 6 | | NSS | | 1 | NO SE REPARA SEPARADAM. Piston |
| 7 | | NSS | | 2 | NO SE REPARA SEPARADAM. Bolt |
| 8 | | NSS | | 1 | NO SE REPARA SEPARADAM. Support |
| 9 | | NSS | | 1 | NO SE REPARA SEPARADAM. Ball |
| 10 | | NSS | | 1 | NO SE REPARA SEPARADAM. Spring |
| 11 | | NSS | | 1 | NO SE REPARA SEPARADAM. Guide |
| 12 | | NSS | | 1 | NO SE REPARA SEPARADAM. Bushing |
| 13 | | NSS | | 1 | NO SE REPARA SEPARADAM. Bushing |
| 14 | | NSS | | 1 | NO SE REPARA SEPARADAM. Bushing |
| 15 | | 87429971 | | 1 | JUNTA DE ACEITE Oil Seal |
| 16 | | 814-8060 | | 6 | TORNILLO M8 x 60 |
| 17 | | NSS | | 1 | NO SE REPARA SEPARADAM. Housing |
| 18 | | NSS | | 1 | NO SE REPARA SEPARADAM. Gear, 23T |
| 19 | | 181142A1 | | 1 | JUNTA HERMETICA |
| 20 | | NSS | | 1 | NO SE REPARA SEPARADAM. Bearing, Needle |
| 21 | | NSS | | 1 | NO SE REPARA SEPARADAM. Gear, 12T |

HTTP://WWW.MINNPARBACKHOEPARTS.COM



CONJUNTO DE LA TRANSMISION - MECANISMO DE CAMBIO

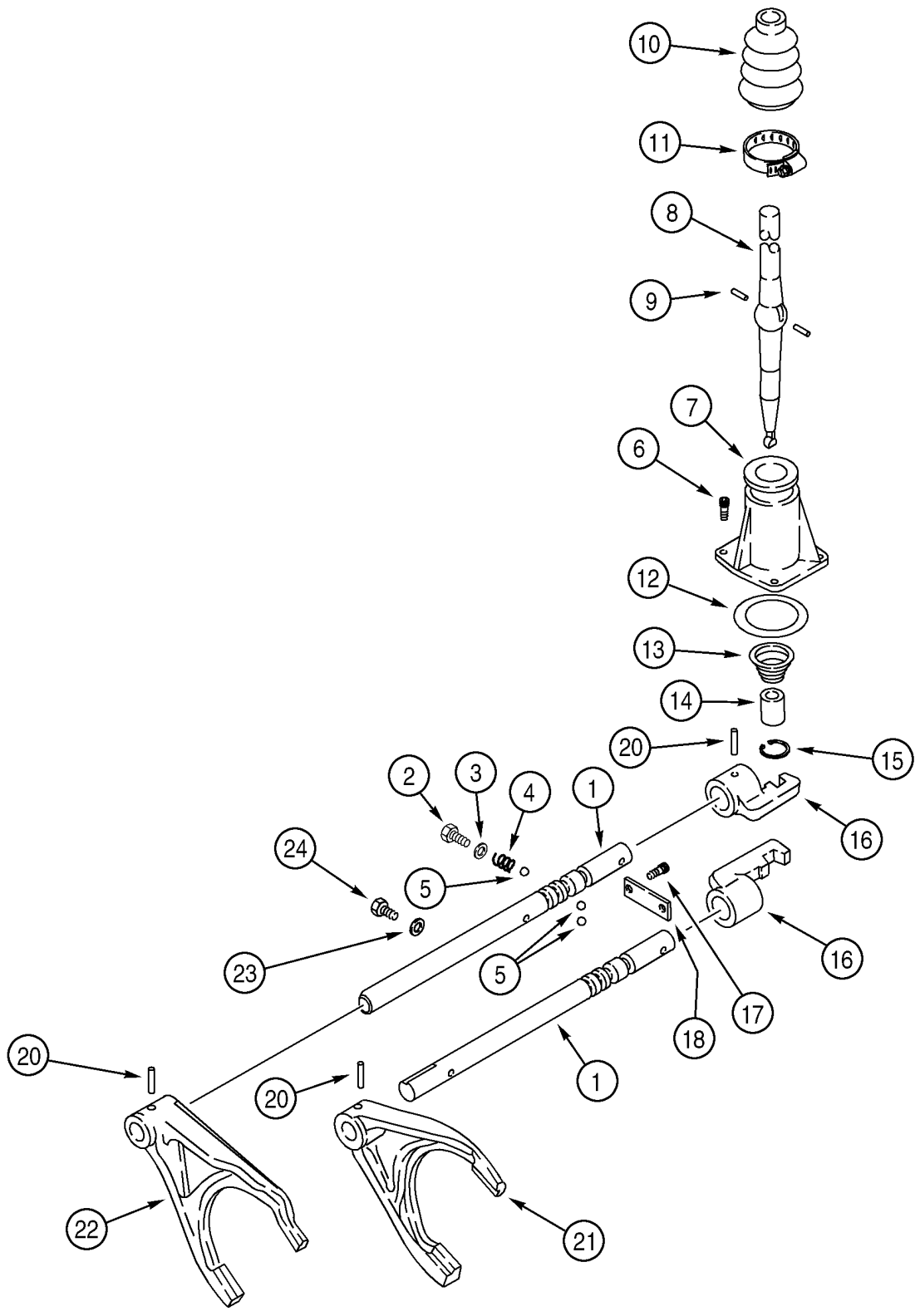

HTTP://WWW.MINNPARBACKHOEPARTS.COM



CONJUNTO DE LA TRANSMISION - MECANISMO DE CAMBIO

| REF | FN | PART NUMBER | YR/SN | QTY | DESCRIPTION |
|---|---|---|---|---|---|
| | | 86984097 | | 1 | CAMBIO DE VELOCIDAD Two Wheel Drive, Incl. Ref 1 - 24; Also Includes Parts On Figures 06-12 - 06-21 |
| | | 86984098 | | 1 | CAMBIO DE VELOCIDAD Four Wheel Drive, Incl. Ref 1 - 24; Also Includes Parts On Figures 06-12 - 06-22 |
| 1 | | 181245A2 | | 2 | VARILLA Shifter Fork Rail |
| 2 | | 614-12016 | | 2 | TORNILLO M12 x 16 |
| 3 | | 87429994 | | 2 | JUNTA HERMETICA 12 x 20 x 1.5 mm |
| 4 | | 1966993C1 | | 2 | RESORTE |
| 5 | | 181139A1 | | 4 | BOLA |
| 6 | | 864-8025 | | 3 | TORNILLO M8 x 25 |
| 7 | | 181171A1 | | 1 | TAPA |
| 8 | | 190428A3 | | 1 | PALANCA MANDO |
| 9 | | 1967585C1 | | 2 | PERNO Pin |
| 10 | | 1967581C1 | | 1 | CASQUETE |
| 11 | | 181177A1 | | 1 | COLLAR |
| 12 | | 181138A1 | | 1 | JUNTA HERMETICA |
| 13 | | 278533A1 | | 1 | RESORTE |
| 14 | | 278532A1 | | 1 | CASQUILLO |
| 15 | | 279039A1 | | 1 | ANILLO DE CIERRE |
| 16 | | 181173A1 | | 2 | SELECTOR Shifter |
| 17 | | 864-10025 | | 2 | TORNILLO M10 x 25 |
| 18 | | 181175A1 | | 1 | PLACA, GRANDE |
| 20 | | 905794R1 | | 4 | PERNO 6 x 30 mm |
| 21 | | 181203A1 | | 1 | HORQUILLA First and Second |
| 22 | | 181174A2 | | 1 | HORQUILLA Third and Fourth |
| 23 | | 87429985 | | 1 | JUNTA HERMETICA Washer |
| 24 | | 1967531C1 | | 1 | TORNILLO M10 x 1 x 25 |

HTTP://WWW.MINNPARBACKHOEPARTS.COM

| 06-17 | | p1 | 01/04 |
|---|---|---|---|

CONJUNTO DE LA TRANSMISION - EJE, RUEDA GUÍA Y PRIMARIA

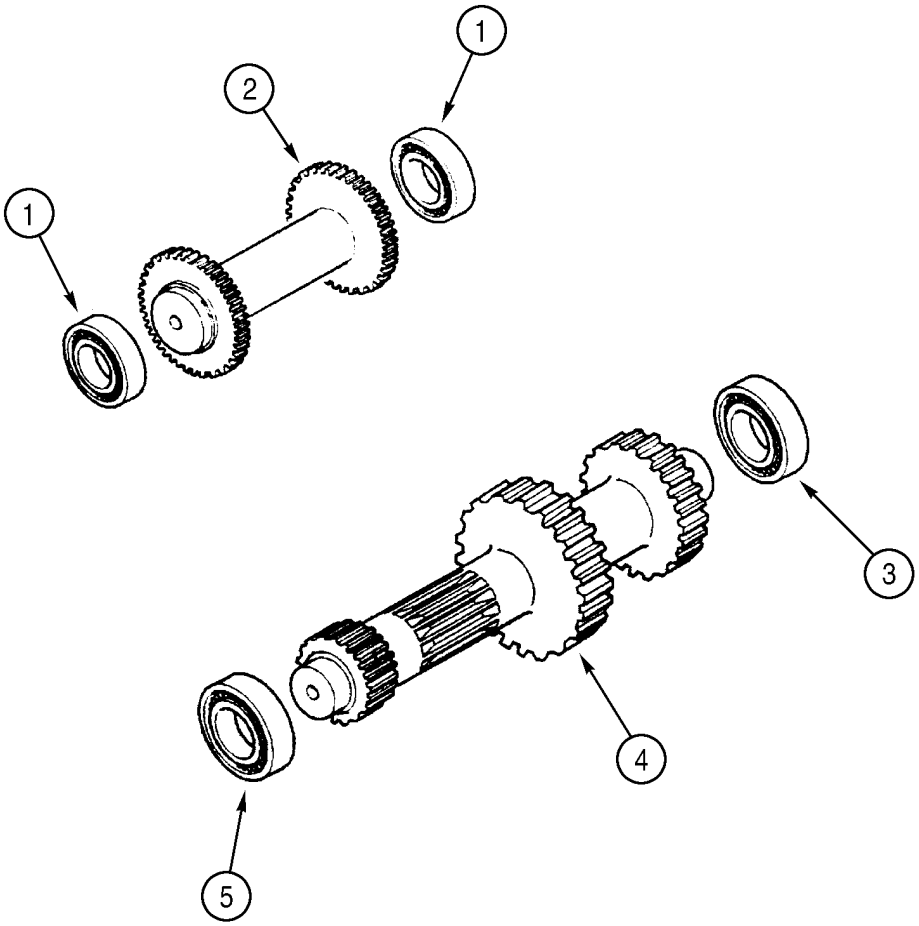


BS99H168

HTTP://WWW.MINNPARBACKHOEPARTS.COM



CONJUNTO DE LA TRANSMISION - EJE, RUEDA GUÍA Y PRIMARIA

| REF | FN | PART NUMBER | YR/SN | QTY | DESCRIPTION |
|---|---|---|---|---|---|
| | | 86984097 | | 1 | CAMBIO DE VELOCIDAD Two Wheel Drive, Incl. Ref 1 - 6; Also Includes Parts On Figures 06-12 - 06-21 |
| | | 86984098 | | 1 | CAMBIO DE VELOCIDAD Four Wheel Drive, Incl. Ref 1 - 6; Also Includes Parts On Figures 06-12 - 06-22 |
| 1 | | ST205A | | 2 | RODAMIENTO DE BOLAS |
| 2 | | 358636A1 | | 1 | EJE Idler Shaft |
| 3 | | 181126A1 | | 1 | RODAMIENTO DE BOLAS |
| 4 | | 358646A1 | | 1 | EJE Primary Shaft |
| 5 | | 181132A1 | | 1 | RODAMIENTO DE BOLAS |
| 6 | | A48041 | | 1 | RETENEDOR Not Illustrated |

HTTP://WWW.MINNPARBACKHOEPARTS.COM

| 06-18 | | p1 | 01/04 |
|---|---|---|---|

CONJUNTO DE LA TRANSMISION - EJE, ENTRADA

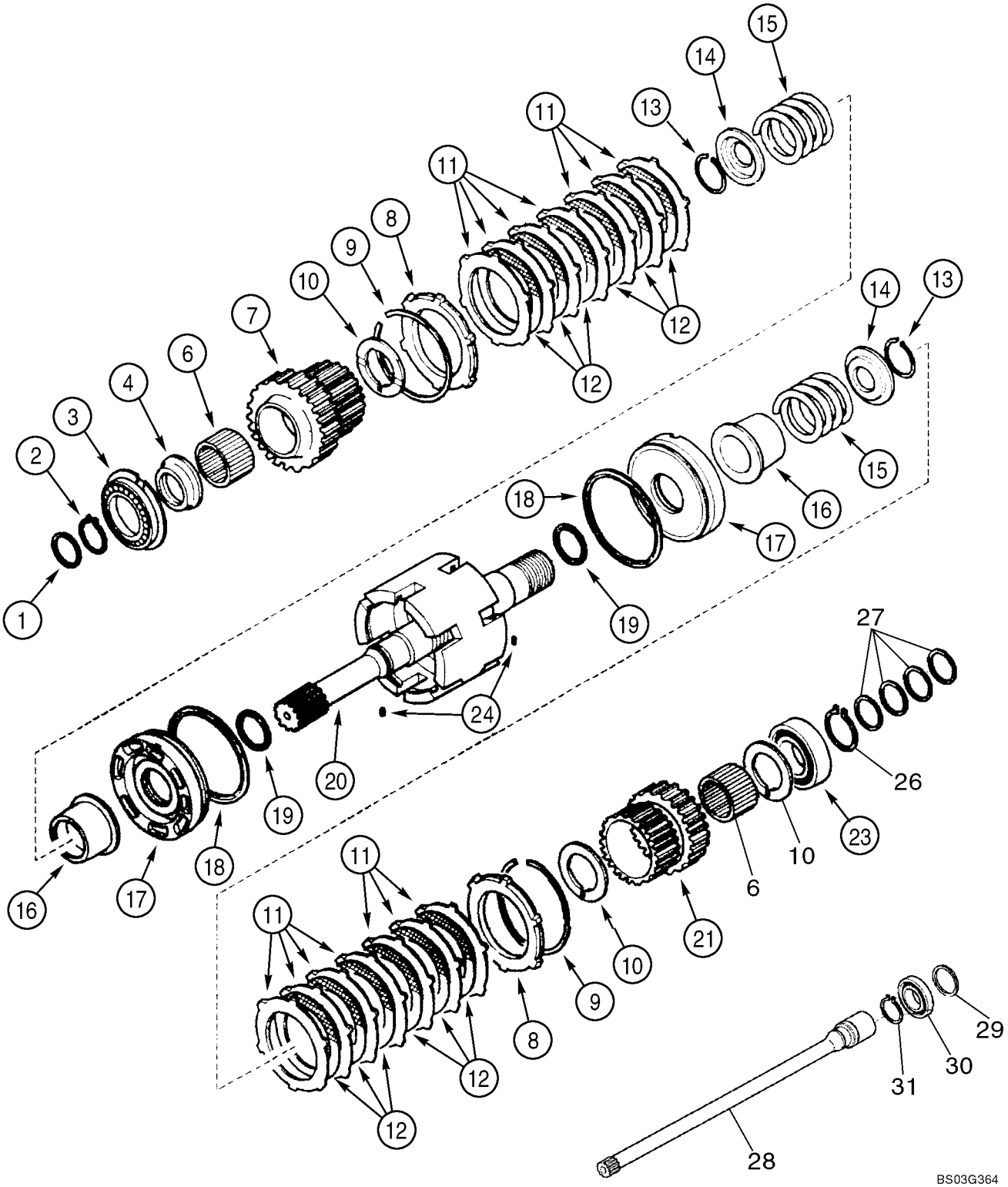

HTTP://WWW.MINNPARBACKHOEPARTS.COM



CONJUNTO DE LA TRANSMISION - EJE, ENTRADA

| REF | FN | PART NUMBER | YR/SN | QTY | DESCRIPTION |
|---|---|---|---|---|---|
| | | 86984097 | | 1 | CAMBIO DE VELOCIDAD Two Wheel Drive, Incl. Ref 1 - 25; Also Includes Parts On Figures 06-12 - 06-21 |
| | | 86984098 | | 1 | CAMBIO DE VELOCIDAD Four Wheel Drive, Incl. Ref 1 - 25; Also Includes Parts On Figures 06-12 - 06-22 |
| 1 | | 358645A1 | | 1 | JUNTA DE ACEITE |
| 2 | | A48041 | | 1 | RETENEDOR |
| 3 | | 181128A1 | | 1 | RODAMIENTO DE BOLAS |
| 4 | | 358635A1 | | 1 | ESPACIADOR 68 x 45 x 105 mm |
| 6 | | 358633A1 | | 2 | RODAMIENTO DE AGUJA |
| 7 | | 358632A1 | | 1 | PINON Gear, 35T |
| 8 | | 310519A1 | | 2 | PLACA |
| 9 | | 181116A1 | | 2 | ANILLO DE FRENO |
| 10 | | 358640A1 | | 3 | ARANDELA Thrust |
| 11 | | 181159A1 | | 14 | DISCO Plate |
| 12 | | 181158A1 | | 12 | DISCO (CONJUNTO) Plate |
| 13 | | 181111A1 | | 2 | ANILLO DE FRENO |
| 14 | | 181161A1 | | 2 | PLACA DE APOYO Pressure |
| 15 | | 358637A1 | | 2 | RESORTE |
| 16 | | 358641A1 | | 2 | ACOPLAMIENTO |
| 17 | | 358644A1 | | 2 | EMBOLO |
| 18 | | 358643A1 | | 2 | ANILLO DE CIERRE |
| 19 | | 358642A1 | | 2 | RETEN |
| 20 | | 87429973 | | 1 | EJE Input Shaft, Charge |
| 21 | | 358638A1 | | 1 | PINON Gear, 29T |
| 23 | | ST264 | | 1 | RODAMIENTO DE BOLAS |
| 24 | | 181108A1 | | 2 | ANILLO ELASTICO |
| 26 | | 800-1150 | | 1 | RETENEDOR |
| 27 | | 87429984 | | 4 | ANILLO Seal Ring |
| 28 | | 87429981 | | 1 | EJE |
| 29 | | 87429982 | | 1 | JUNTA HERMETICA |
| 30 | | 87429983 | | 1 | RODAMIENTO DE BOLAS |
| 31 | | 358655A1 | | 1 | ANILLO DE CIERRE |

HTTP://WWW.MINNPARBACKHOEPARTS.COM



CONJUNTO DE LA TRANSMISION - EJE, SECUNDARIO

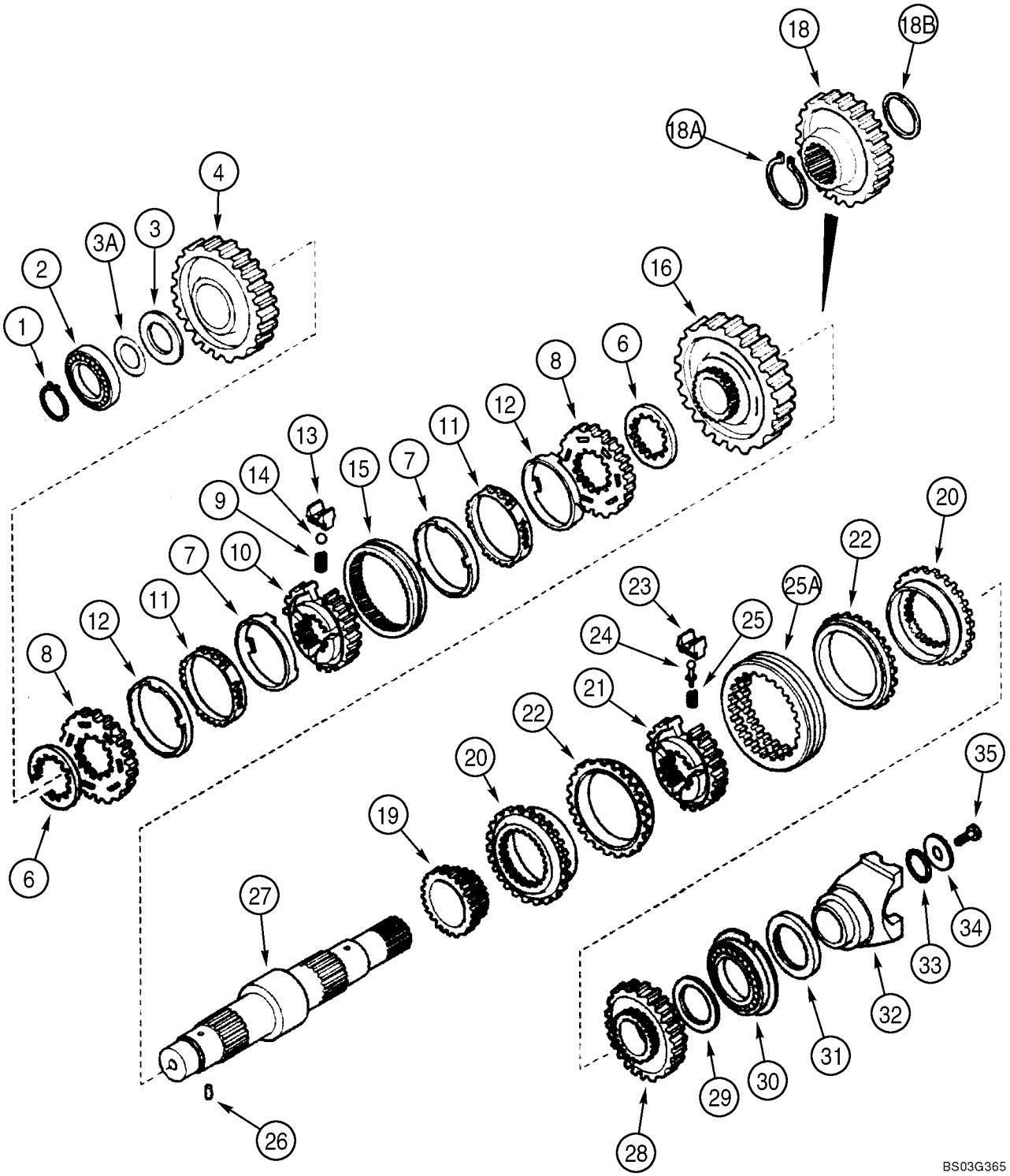

HTTP://WWW.MINNPARBACKHOEPARTS.COM



CONJUNTO DE LA TRANSMISION - EJE, SECUNDARIO

| REF | FN | PART NUMBER | YR/SN | QTY | DESCRIPTION |
|---|---|---|---|---|---|
| | | 86984097 | | 1 | CAMBIO DE VELOCIDAD Two Wheel Drive, Incl. Ref 1 - 35; Also Includes Parts On Figures 06-12 - 06-21 |
| | | 86984098 | | 1 | CAMBIO DE VELOCIDAD Four Wheel Drive, Incl. Ref 1 - 35; Also Includes Parts On Figures 06-12 - 06-22 |
| 1 | | 181118A1 | | 1 | ANILLO DE FRENO |
| 2 | | 181132A1 | | 1 | RODAMIENTO DE BOLAS |
| 3 | | 358649A1 | | 1 | ARANDELA Thrust |
| 3A | | 358650A1 | | X | SUPLEMENTO 0,05 mm |
| 3A | | 358651A1 | | X | SUPLEMENTO 0,10 mm |
| 3A | | 358652A1 | | X | SUPLEMENTO 0,30 mm |
| 3A | | 196454A1 | | X | SUPLEMENTO 0,50 mm |
| 4 | | 358648A1 | | 1 | PINON Gear, Driven, Second, 43T |
| 6 | | 244109A1 | | 2 | ESPACIADOR |
| | | 190427A1 | | 1 | SINCRONIZADOR Synchronizing Service Kit, Incl. Ref 7 - 15 |
| 7 | | NSS | | 2 | NO SE REPARA SEPARADAM. Ring |
| 8 | | NSS | | 2 | NO SE REPARA SEPARADAM. Ring |
| 9 | | 384773A1 | | 3 | MUELLE HELICOIDAL |
| 10 | | NSS | | 1 | NO SE REPARA SEPARADAM. Hub |
| 11 | | NSS | | 2 | NO SE REPARA SEPARADAM. Ring |
| 12 | | NSS | | 2 | NO SE REPARA SEPARADAM. Ring |
| 13 | | 326865A1 | | 3 | PLAQUETA |
| 14 | | 384769A1 | | 3 | BOLA |
| 15 | | NSS | | 1 | NO SE REPARA SEPARADAM. Sleeve |
| 16 | | 358647A1 | | 1 | PINON Gear, Driven, First, 49T |
| 18 | | 358656A1 | | 1 | ENGRANAJE Drive, Four Wheel Drive Models |
| 18A | | 358654A1 | | 1 | ANILLO DE CIERRE Four Wheel Drive Models |
| 18B | | 358655A1 | | 1 | ANILLO DE CIERRE Four Wheel Drive Models |
| 19 | | 358282A1 | | 1 | ENGRANAJE Driven, Fourth, 23T |
| | | 87429974 | | 1 | SINCRONIZADOR Synchronizing Service Kit, Incl. Ref 20 - 25A |
| 20 | | NSS | | 2 | NO SE REPARA SEPARADAM. Ring |
| 21 | | NSS | | 1 | NO SE REPARA SEPARADAM. Hub |
| 22 | | NSS | | 2 | NO SE REPARA SEPARADAM. Ring |

HTTP://WWW.MINNPARBACKHOEPARTS.COM



CONJUNTO DE LA TRANSMISION - EJE, SECUNDARIO

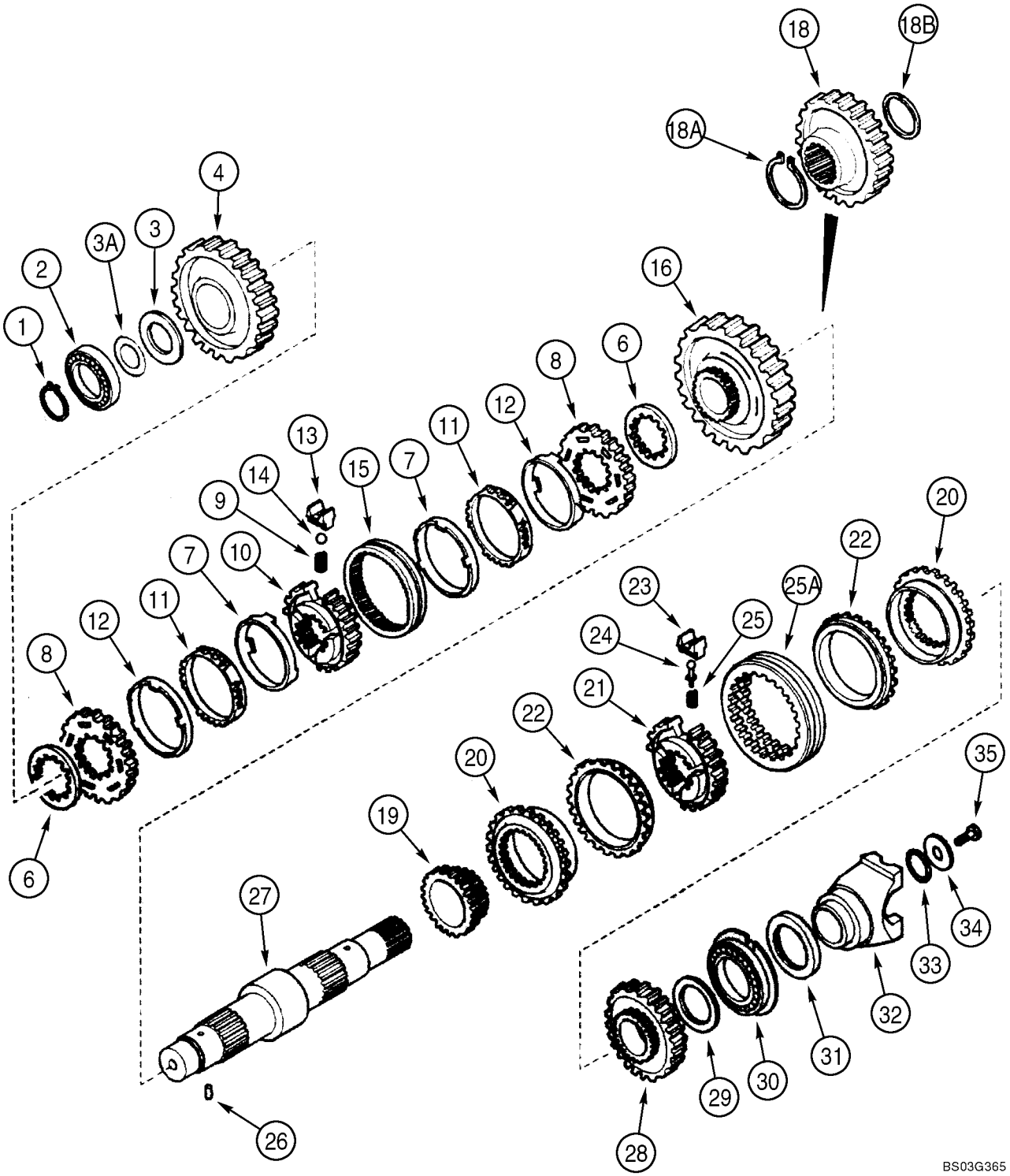

HTTP://WWW.MINNPARBACKHOEPARTS.COM



CONJUNTO DE LA TRANSMISION - EJE, SECUNDARIO

| REF | FN | PART NUMBER | YR/SN | QTY | DESCRIPTION |
|---|---|---|---|---|---|
| 23 | | NSS | | 3 | NO SE REPARA SEPARADAM. Plate |
| 24 | | NSS | | 3 | NO SE REPARA SEPARADAM. Pin |
| 25 | | NSS | | 3 | NO SE REPARA SEPARADAM. Spring |
| 25A | | NSS | | 1 | NO SE REPARA SEPARADAM. Sleeve |
| 26 | | 181108A1 | | 1 | ANILLO ELASTICO |
| 27 | | 366366A1 | | 1 | EJE Secondary, Two Wheel Drive Models |
| 27 | | 358653A1 | | 1 | EJE Secondary, Four Wheel Drive Models |
| 28 | | 358283A1 | | 1 | PINON Gear, Driven, Third, 33T |
| 29 | | 358639A1 | | 1 | ARANDELA Thrust, 68 x 45 x 4 mm |
| 30 | | 181130A1 | | 1 | RODAMIENTO DE BOLAS |
| 31 | | 181123A1 | | 1 | JUNTA DE ACEITE 60 x 75 x 8 mm; Two Wheel Drive Models |
| 32 | | 233284A1 | | 1 | HORQUETA Yoke |
| 33 | | 181144A1 | | 1 | JUNTA HERMETICA |
| 34 | | 181165A1 | | 1 | ARANDELA 52 x 12.5 x 5 mm |
| 35 | | P3533055 | | 1 | TORNILLO 12 x 25 mm |

HTTP://WWW.MINNPARBACKHOEPARTS.COM



CONJUNTO DE LA TRANSMISION (4WD) - EJE, SALIDA

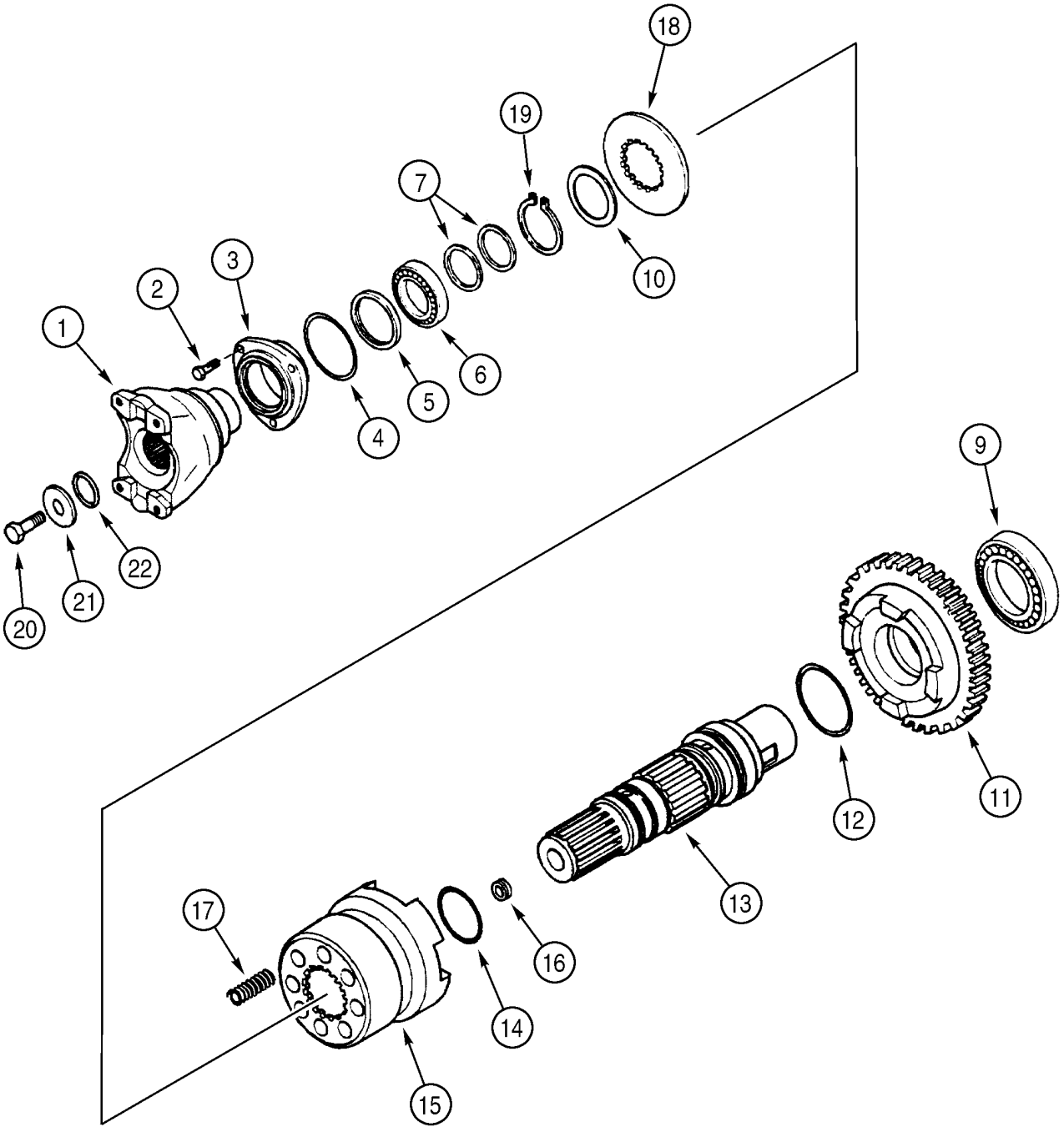


BS99H160

HTTP://WWW.MINNPARBACKHOEPARTS.COM



CONJUNTO DE LA TRANSMISION (4WD) - EJE, SALIDA

| REF | FN | PART NUMBER | YR/SN | QTY | DESCRIPTION |
|---|---|---|---|---|---|
| | | 86984098 | | 1 | CAMBIO DE VELOCIDAD Four Wheel Drive, Incl. Ref 1 - 22; Also Includes Parts On Figures 06-12 - 06-22 |
| 1 | | 233283A1 | | 1 | HORQUETA Yoke, Front |
| 2 | | 614-8022 | | 3 | TORNILLO M8 x 22 |
| 3 | | 181198A1 | | 1 | TAPA |
| 4 | | 112517A1 | | 1 | JUNTA HERMETICA |
| 5 | | 181122A1 | | 1 | JUNTA DE ACEITE 50 x 65 x 8 mm |
| 6 | | ST205A | | 1 | RODAMIENTO DE BOLAS |
| 7 | | 358645A1 | | 2 | JUNTA DE ACEITE |
| 9 | | 181126A1 | | 1 | RODAMIENTO DE BOLAS |
| 10 | | P2745478 | | 1 | ARANDELA |
| 11 | | 366234A1 | | 1 | PINON Gear, Driven, 36T |
| 12 | | 366235A1 | | 1 | JUNTA HERMETICA |
| 13 | | 366230A1 | | 1 | EJE Output Shaft |
| 14 | | 366236A1 | | 2 | JUNTA HERMETICA |
| 15 | | 366232A1 | | 1 | ACOPLAMIENTO |
| 16 | | D142898 | | 1 | TAPÓN 10 x 1 mm |
| 17 | | 100753A1 | | 8 | RESORTE |
| 18 | | 366231A1 | | 1 | ARANDELA |
| 19 | | 800-5145 | | 1 | ANILLO DE CIERRE |
| 20 | | P3533055 | | 1 | TORNILLO 12 x 25 mm |
| 21 | | P2745466 | | 1 | ARANDELA |
| 22 | | 238-8217 | | 1 | JUNTA HERMETICA 1-3/16 ID x 1/8 |

HTTP://WWW.MINNPARBACKHOEPARTS.COM

| 06-21 | | p1 | 01/04 |
|---|---|---|---|

CONJUNTO DE LA TRANSMISION - VALVULA, CONTROL

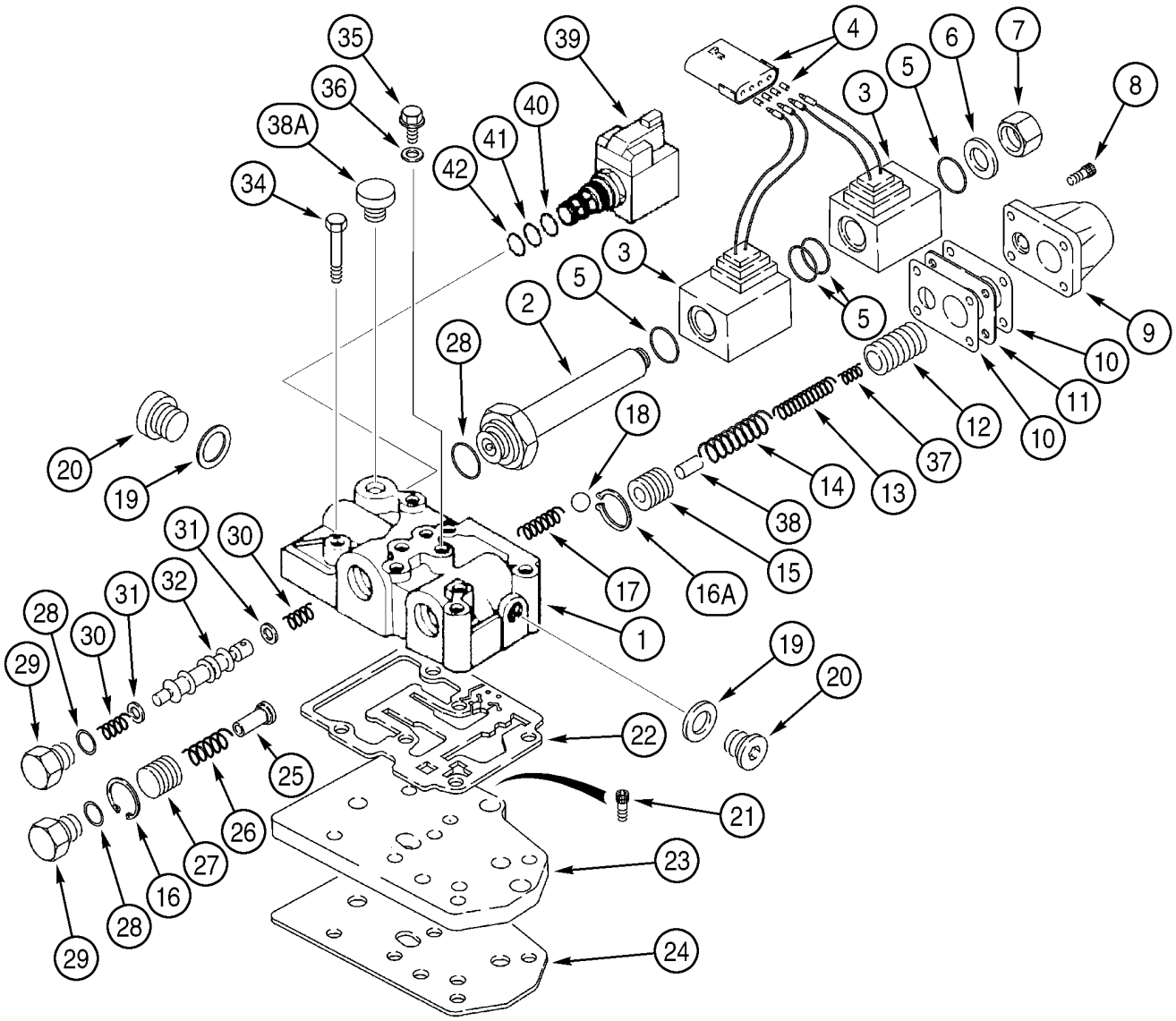


BS99J194

HTTP://WWW.MINNPARBACKHOEPARTS.COM



CONJUNTO DE LA TRANSMISION - VALVULA, CONTROL

| REF | FN | PART NUMBER | YR/SN | QTY | DESCRIPTION |
|---|---|---|---|---|---|
| | | 86984097 | | 1 | CAMBIO DE VELOCIDAD Two Wheel Drive, Incl. Ref 1 - 45; Also Includes Parts On Figures 06-12 - 06-21 |
| | | 86984098 | | 1 | CAMBIO DE VELOCIDAD Four Wheel Drive, Incl. Ref 1 - 45; Also Includes Parts On Figures 06-12 - 06-22 |
| | | 335640A2 | | 1 | VALVULA Transmission Control, Incl. Ref 1 - 45 |
| 1 | | NSS | | 1 | NO SE REPARA SEPARADAM. Housing |
| 2 | | 190442A1 | | 1 | EMBOLO |
| 3 | | 190443A1 | | 2 | BOBINA |
| 4 | | 190437A1 | | 1 | CONEXION |
| 5 | | 181136A1 | | 4 | JUNTA HERMETICA |
| 6 | | 181273A1 | | 1 | ARANDELA DE COBRE |
| 7 | | 181272A1 | | 1 | TAPÓN |
| 8 | | 864-6020 | | 4 | TORNILLO M6 x 20 |
| 9 | | 181251A1 | | 1 | TAPA |
| 10 | | 181256A1 | | 2 | ANILLO DE CIERRE Cover Gasket |
| 11 | | 190439A2 | | 1 | ESPACIADOR |
| 12 | | 190438A2 | | 1 | EMBOLO |
| 13 | | 190436A1 | | 1 | RESORTE |
| 14 | | 190441A1 | | 1 | RESORTE |
| 15 | | 181234A2 | | 1 | EMBOLO |
| 16 | | 299324A1 | | 1 | RETENEDOR |
| 16A | | 368436A1 | | 1 | RETENEDOR |
| 17 | | 181261A1 | | 1 | RESORTE |
| 18 | | 181146A1 | | 1 | BOLA |
| 19 | | 181107A1 | | 2 | ARANDELA DE COBRE |
| 20 | | 181103A1 | | 2 | TAPÓN |
| 21 | | 864-8020 | | 3 | TORNILLO M8 x 20, Not Included In Assembly, Purchase Separately |
| 22 | | 181166A1 | | 1 | ANILLO DE CIERRE Not Included In Assembly, Purchase Separately |
| 23 | | 181207A1 | | 1 | PLACA, GRANDE Not Included In Assembly, Purchase Separately |
| 24 | | 181208A1 | | 1 | ANILLO DE CIERRE Not Included In Assembly, Purchase Separately |

HTTP://WWW.MINNPARBACKHOEPARTS.COM

| 06-21 | | p2 | 01/04 |
|---|---|---|---|

CONJUNTO DE LA TRANSMISION - VALVULA, CONTROL

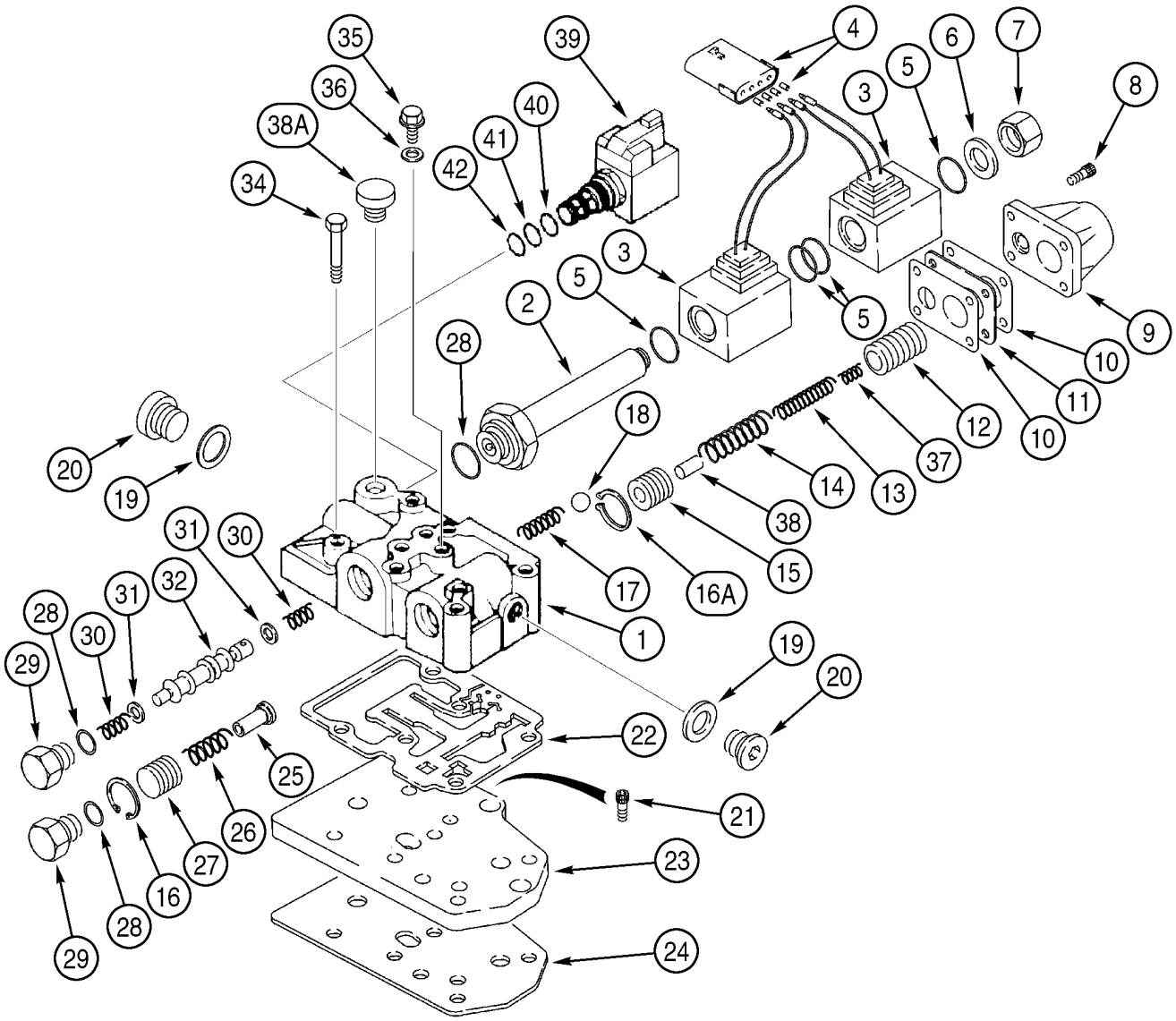


BS99J194

HTTP://WWW.MINNPARBACKHOEPARTS.COM



CONJUNTO DE LA TRANSMISION - VALVULA, CONTROL

| REF | FN | PART NUMBER | YR/SN | QTY | DESCRIPTION |
|---|---|---|---|---|---|
| 25 | | 181254A1 | | 1 | EJE |
| 26 | | 181260A1 | | 1 | RESORTE |
| 27 | | 181255A2 | | 1 | EMBOLO Flow Divider |
| 28 | | 181137A1 | | 3 | JUNTA HERMETICA |
| 29 | | 181258A1 | | 2 | TAPÓN PLUG |
| 30 | | 334724A1 | | 2 | RESORTE |
| 31 | | 181253A1 | | 2 | ESPACIADOR |
| 32 | | 334725A1 | | 1 | EMBOLO Spool, Forward/Reverse |
| 34 | | 814-8080 | | 6 | TORNILLO M8 x 80, Not Included In Assembly, Purchase Separately |
| 35 | | 181100A1 | | 4 | TAPÓN |
| 36 | | 934667R1 | | 4 | ARANDELA DE COBRE Copper Washer, 10 x 14 x 1.5 mm |
| 37 | | 190435A1 | | 1 | RESORTE |
| 38 | | 190440A1 | | 1 | PERNO |
| 38A | | NSS | | 1 | NO SE REPARA SEPARADAM. Plug |
| 39 | | 349295A1 | | 1 | SOLENOIDE Differential Lock Solenoid Valve; Incl. Ref 40 - 45 |
| 40 | | 237-6008 | | 1 | JUNTA HERMETICA 41/64 ID x 3/32 |
| 41 | | 238-5014 | | 1 | JUNTA HERMETICA 1/2 ID x 1/16 |
| 42 | | 238-5013 | | 1 | JUNTA HERMETICA 7/16 ID x 1/16 |
| 43 | | NSS | | 1 | NO SE REPARA SEPARADAM. Solenoid Valve, Cartridge, Component Parts Not Serviced Separately, Not Illustrated |
| 44 | | 298614A1 | | 1 | BOBINA (CONJUNTO) Not Illustrated |
| 45 | | NSS | | 1 | NO SE REPARA SEPARADAM. Nut, Not Illustrated |
| | | 368437A2 | | 1 | JEUGO Snap Ring, Without Tools, Includes 10, 15, 16A, 22, 25, Plus Instructions; Replaces 368437A1 |
| | | 368438A2 | | 1 | JEUGO Snap Ring, With Tools, Includes 10, 15, 16A, 22, 25, Plus 368439A1 Guide Tool and 368440A1 Pushing Tool for Snap Ring Service; Replaces 368438A1 |

HTTP://WWW.MINNPARBACKHOEPARTS.COM



CONJUNTO DE LA TRANSMISION (4WD) - VÁLVULA, SOLENOIDE

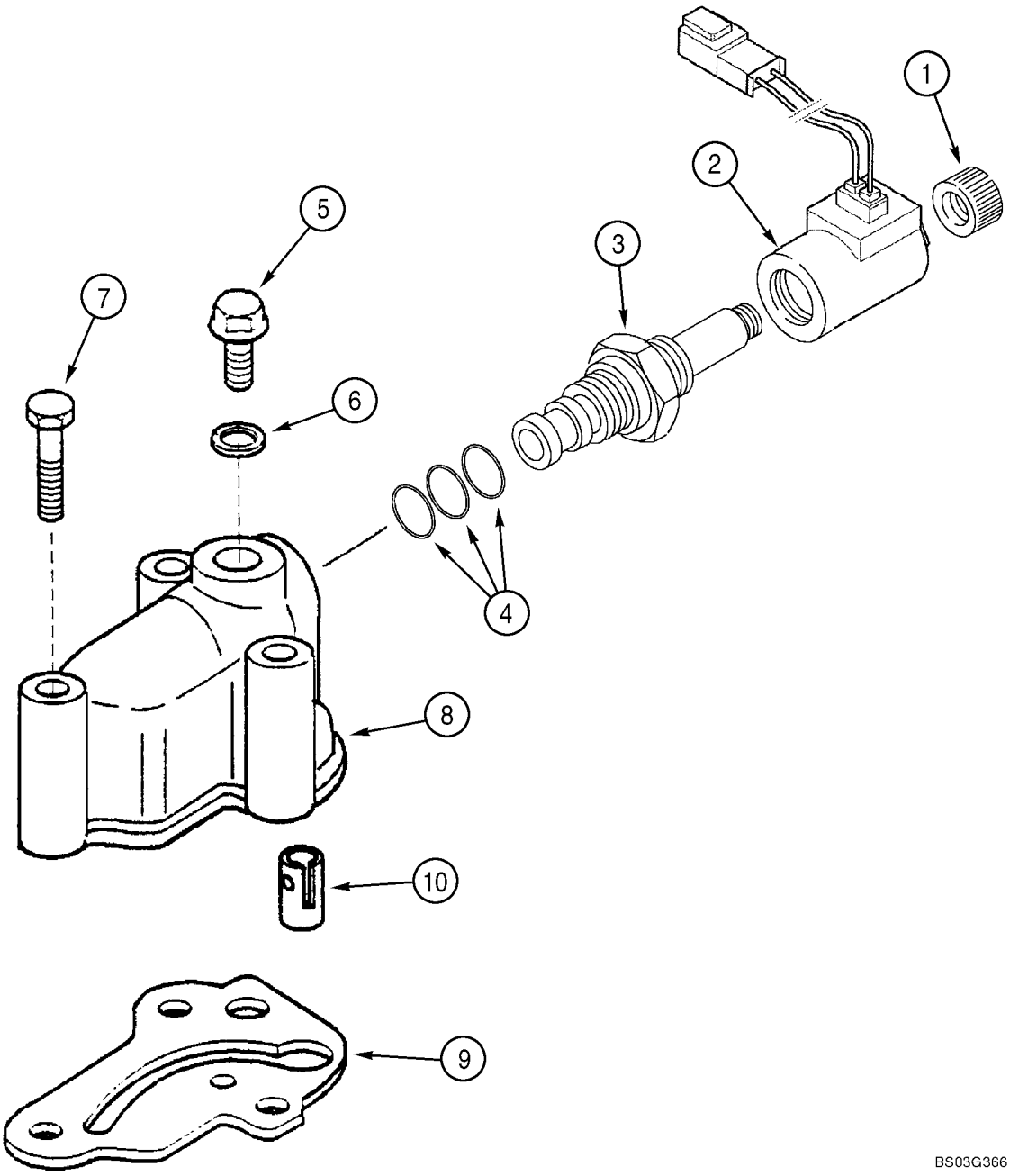

HTTP://WWW.MINNPARBACKHOEPARTS.COM



CONJUNTO DE LA TRANSMISION (4WD) - VÁLVULA, SOLENOIDE

| REF | FN | PART NUMBER | YR/SN | QTY | DESCRIPTION |
|---|---|---|---|---|---|
| | | 86984098 | | 1 | CAMBIO DE VELOCIDAD Four Wheel Drive, Incl. Ref 1 - 10; Also Includes Parts On Figures 06-12 - 06-22 |
| | | 87429978 | | 1 | ELECTROVÁLVULA Valve, Incl. Ref 1 - 4 |
| 1 | | NSS | | 1 | NO SE REPARA SEPARADAM. Nut |
| 2 | | NSS | | 1 | NO SE REPARA SEPARADAM. Coil |
| 3 | | NSS | | 1 | NO SE REPARA SEPARADAM. Valve, Solenoid |
| 4 | | NSS | | 1 | NO SE REPARA SEPARADAM. Kit, Seal, Includes 238-5014, 238-5015, 237-6010 O-Rings, Kit Not Serviced Separately, Order 190432A1 Solenoid Valve |
| 5 | | 181100A1 | | 1 | TAPÓN |
| 6 | | 934667R1 | | 1 | ARANDELA DE COBRE Copper Washer, 10 x 14 x 1.5 mm |
| 7 | | 814-8060 | | 3 | TORNILLO M8 x 60 |
| 8 | | 321428A1 | | 1 | CAVIDAD |
| 9 | | 366910A1 | | 1 | ANILLO DE CIERRE |
| 10 | | 190431A1 | | 1 | VALVULA Installed Between Ref 8 and 9 |

HTTP://WWW.MINNPARBACKHOEPARTS.COM



RUEDAS, PARTE TRASERA - NEUMÁTICOS

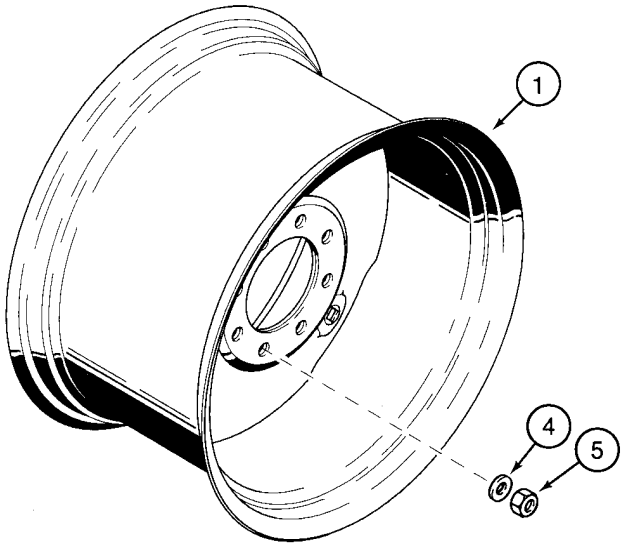


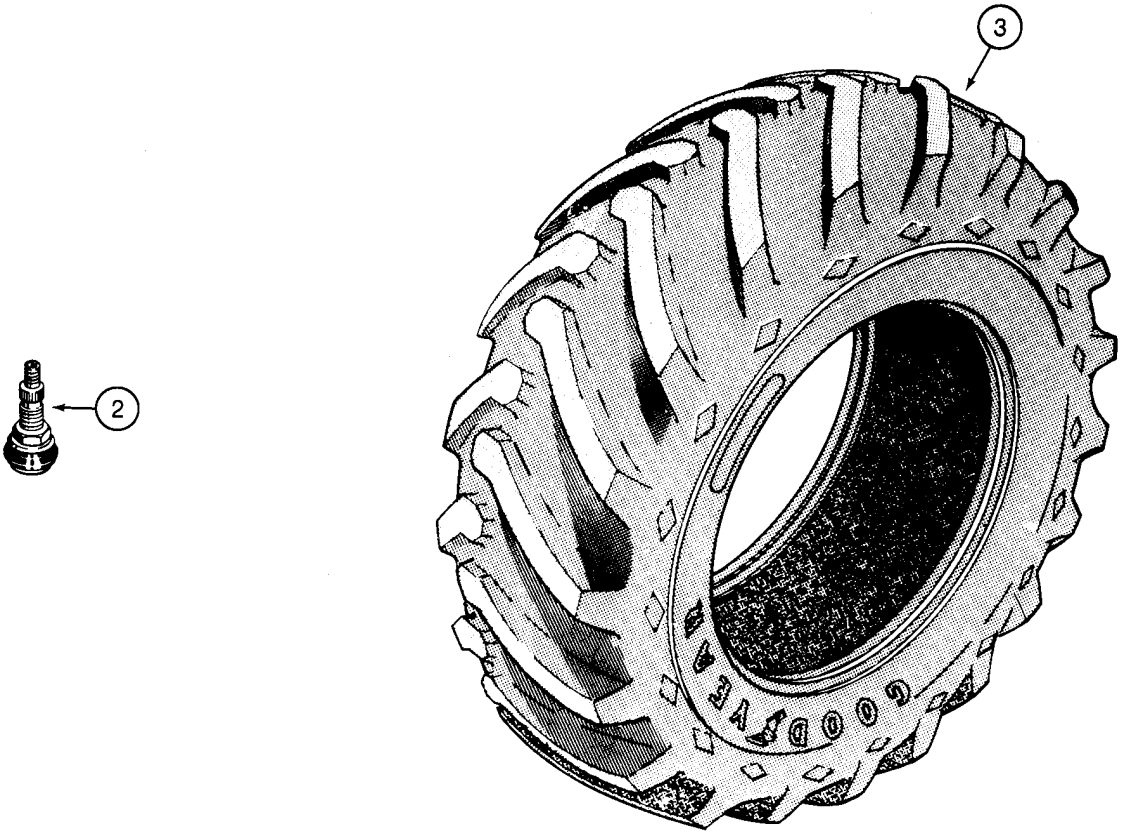


B9408129

HTTP://WWW.MINNPARBACKHOEPARTS.COM



RUEDAS, PARTE TRASERA - NEUMÁTICOS

| REF | FN | PART NUMBER | YR/SN | QTY | DESCRIPTION |
|---|---|---|---|---|---|
| 1 | | 104907A1 | | 2 | RIN 19.5L x 24 Tires - 10 PR or 14 Ply; Two Wheel or Four Wheel Drive |
| 2 | | 27549R1 | | 2 | VALVULA |
| 3 | | REF | | 2 | MANUAL Tire, Purchase Locally |
| 1 | | 119241A1 | | 2 | RIN 17.5L x 24 Tires - 10 PR, R4; Two Wheel or Four Wheel Drive |
| 2 | | 27549R1 | | 2 | VALVULA |
| 3 | | REF | | 2 | MANUAL Tire, Purchase Locally |
| 4 | | D138380 | | 20 | ARANDELA Wheel Nuts |
| 5 | | D138492 | | 20 | TUERCA M22; Wheel Nuts |

HTTP://WWW.MINNPARBACKHOEPARTS.COM



EJE, TRANSMISIÓN TRASERA - SOPORTE

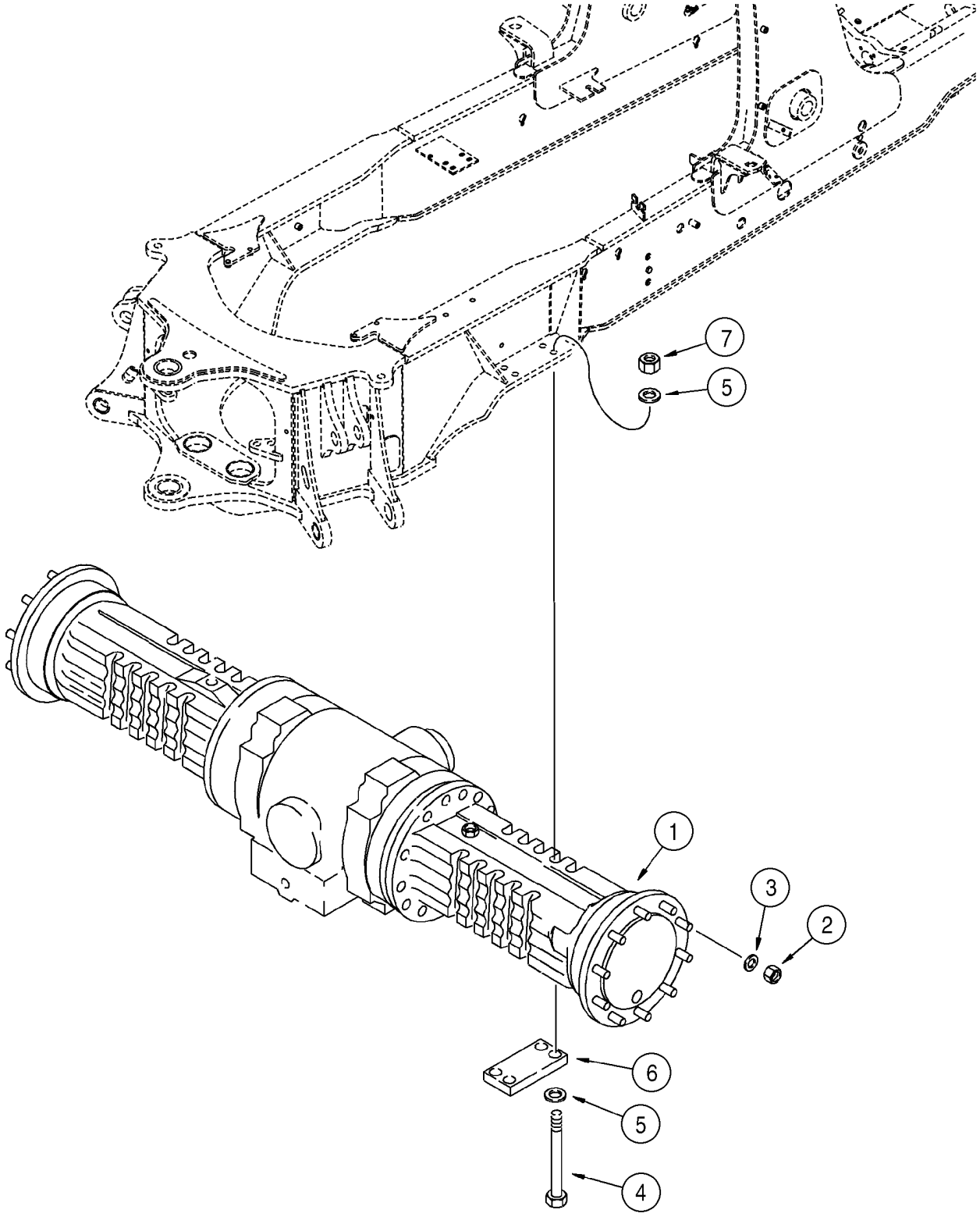

HTTP://WWW.MINNPARBACKHOEPARTS.COM



EJE, TRANSMISIÓN TRASERA - SOPORTE

| REF | FN | PART NUMBER | YR/SN | QTY | DESCRIPTION |
|---|---|---|---|---|---|
| 1 | | 384952A1 | | 1 | PUENTE POSTERIOR See Figures 06-26 - 06-30, 07-01, 07-02 |
| 2 | | D138492 | | 20 | TUERCA 22 mm |
| 3 | | D138380 | | 20 | ARANDELA |
| 4 | | 827-20230 | | 8 | TORNILLO M20 x 230; 10.9 |
| 5 | | 896-11020 | | 16 | ARANDELA 22 x 37 x 4 mm, Hardened |
| 6 | | 117933A1 | | 2 | PLACA, GRANDE |
| 7 | | 829-1420 | | 8 | TUERCA M20; 10 |

HTTP://WWW.MINNPARBACKHOEPARTS.COM



EJE, TRASERO - BLOQUEO DEL DIFERENCIAL

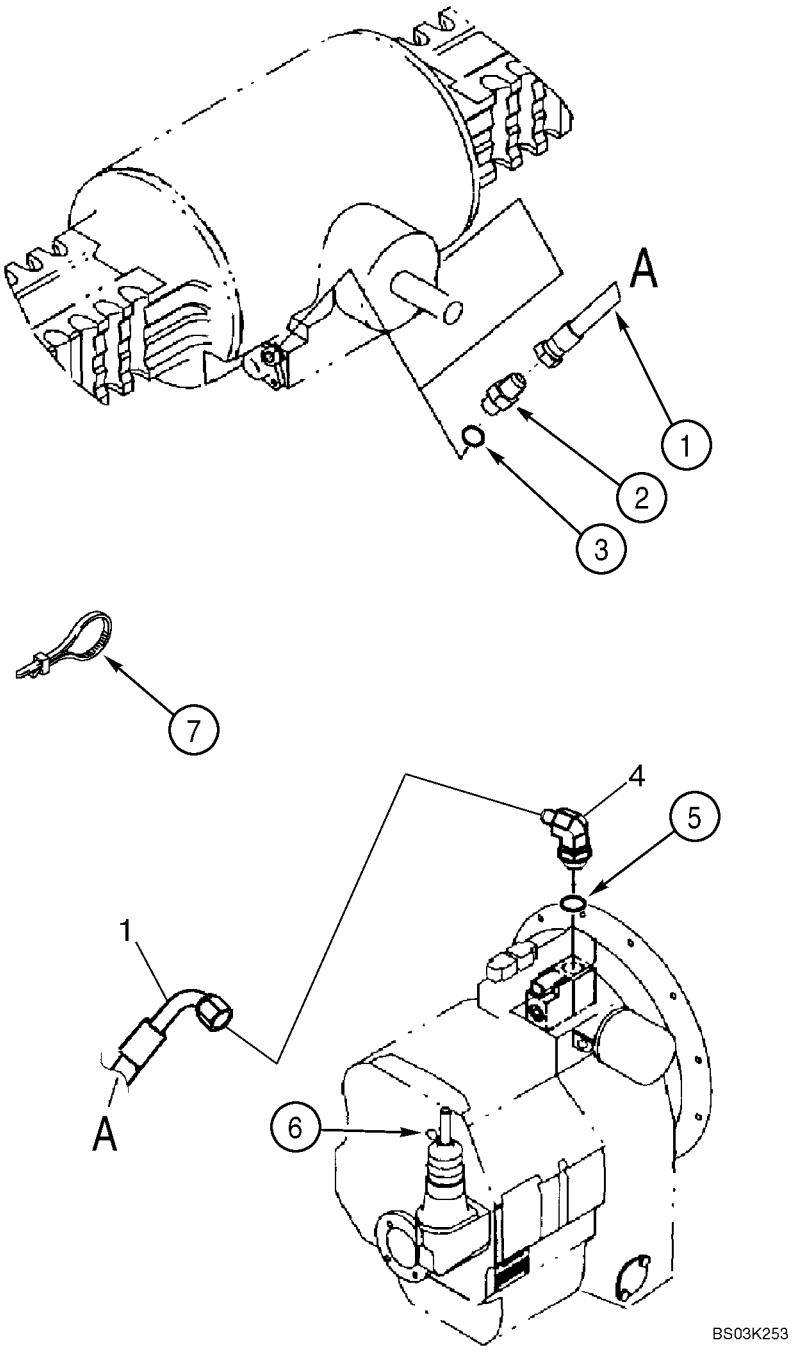

HTTP://WWW.MINNPARBACKHOEPARTS.COM



EJE, TRASERO - BLOQUEO DEL DIFERENCIAL

| REF | FN | PART NUMBER | YR/SN | QTY | DESCRIPTION |
|---|---|---|---|---|---|
| 1 | | 87431701 | | 1 | MANGUERA (CONJUNTO) 1500 mm (59-9/16 in) |
| 2 | | 218-5057 | | 1 | RACOR 9/16 fl x Or, Incl. Ref 3 |
| 3 | | 237-6006 | | 1 | JUNTA HERMETICA 15/32 ID x 5/64 |
| 4 | | 218-5105 | | 1 | CODO 90 deg, 9/16 fl x Or, Incl. Ref 5 |
| 5 | | 237-6006 | | 1 | JUNTA HERMETICA 15/32 ID x 5/64 |
| 6 | | E135809 | | 1 | TAPÓN If Used |
| 7 | | L18337 | | 2 | BANDA 15 in |

HTTP://WWW.MINNPARBACKHOEPARTS.COM



EJE, TRANSMISIÓN TRASERA - ALOJAMIENTO

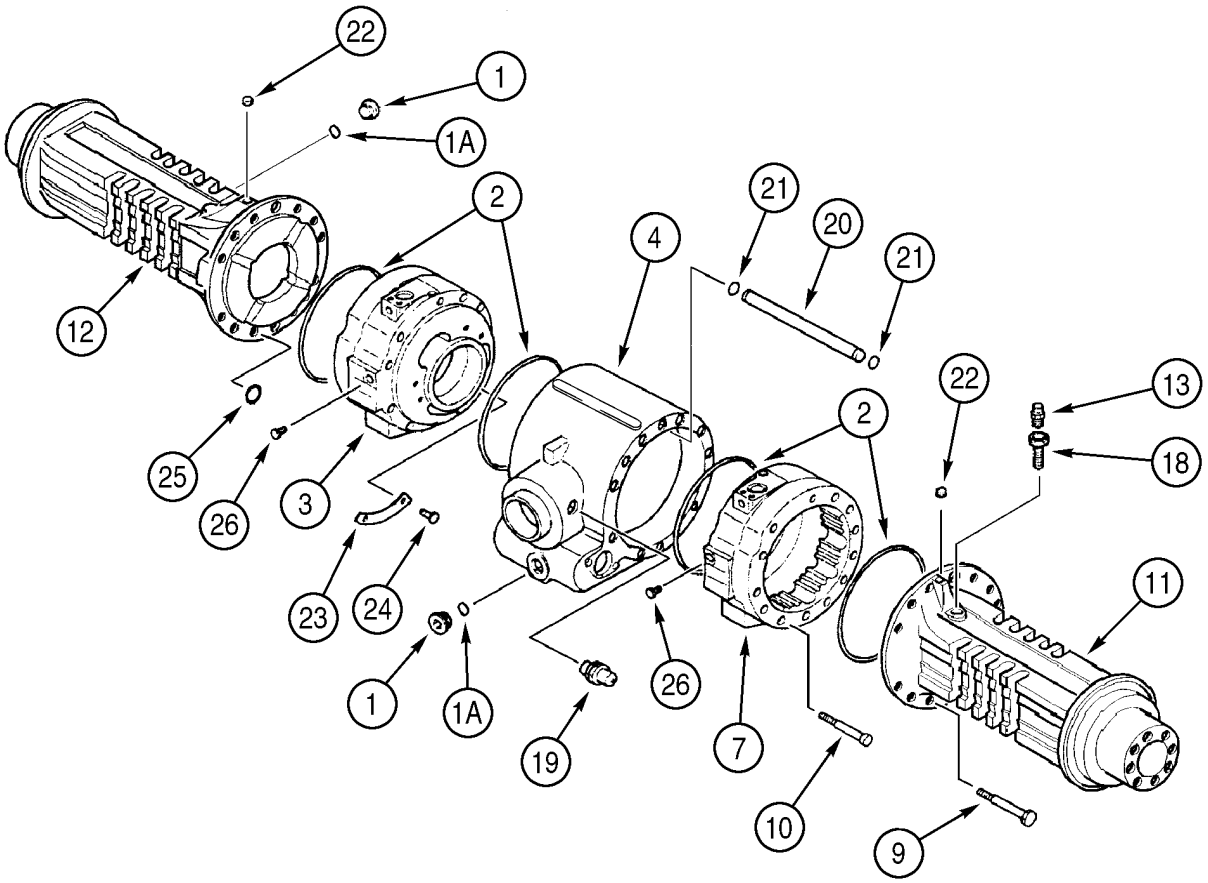


BS00C245

HTTP://WWW.MINNPARBACKHOEPARTS.COM



EJE, TRANSMISIÓN TRASERA - ALOJAMIENTO

| REF | FN | PART NUMBER | YR/SN | QTY | DESCRIPTION |
|---|---|---|---|---|---|
| | | 384952A1 | | 1 | PUENTE POSTERIOR Incl. Ref 1 - 26; Also Includes Parts On Figures 06-26 - 06-30, 07-01, 07-02 |
| 1 | | 100557A1 | | 2 | TAPON DE VIACIADO Incl. Ref 1A |
| 1A | | 238-6121 | | 1 | JUNTA HERMETICA 1-1/16 ID x 3/32 |
| 2 | | 238-5270 | | 4 | JUNTA HERMETICA 1-1/16 ID x 3/32 |
| 3 | | 445267A1 | | 1 | BRIDA Brake Cylinder, Right-Hand |
| 4 | | 367175A1 | | 1 | CUBO Center Housing |
| 7 | | 445266A1 | | 1 | BRIDA Brake Cylinder, Left-Hand |
| 9 | | 814-14140 | | 22 | TORNILLO M14 x 140 |
| 10 | | 864-12130 | | 2 | TORNILLO M12 x 130 |
| 11 | | 358280A1 | | 1 | CUBO Left-Hand, With Breather Port |
| 12 | | 358279A1 | | 1 | CUBO Right-Hand, Without Breather Port |
| 13 | | 1966149C2 | | 1 | RESPIRADERO |
| 18 | | E135750 | | 1 | PIVOTE DE EJE Breather Extension |
| 19 | | 393826A1 | | 1 | CONTACTOR Oil Temperature, Includes 237-8008 O-Ring |
| | | 237-8008 | | 1 | JUNTA HERMETICA 41/64 ID x 3/32 |
| 20 | | 346584A1 | | 1 | TUBO Internal |
| 21 | | 346583A1 | | 2 | JUNTA HERMETICA |
| 22 | | D142898 | | 2 | TAPÓN 10 x 1 mm, If Used |
| 23 | | 347959A1 | | 2 | PLACA |
| 24 | | 347960A1 | | 4 | REMACHE 4,8 x 6 mm |
| 25 | | P2230493 | | 8 | ANILLO DE CIERRE |
| 26 | | 294245A1 | | 2 | TAPON DEL DEPOSITO 7/16, If Used |

HTTP://WWW.MINNPARBACKHOEPARTS.COM



EJE, TRANSMISIÓN TRASERA - DIFERENCIAL

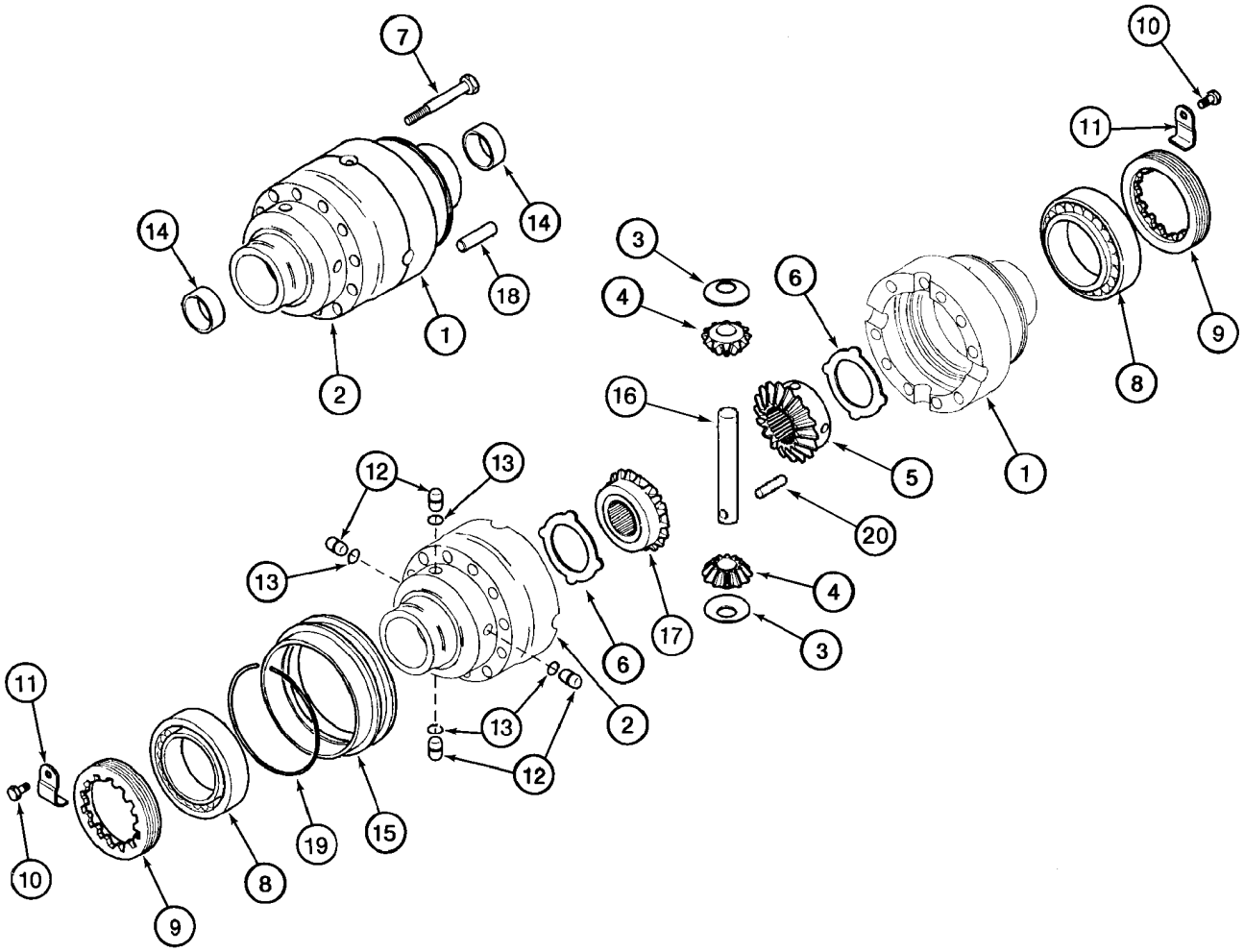


BS99H144

HTTP://WWW.MINNPARBACKHOEPARTS.COM



EJE, TRANSMISIÓN TRASERA - DIFERENCIAL

| REF | FN | PART NUMBER | YR/SN | QTY | DESCRIPTION |
|---|---|---|---|---|---|
| | | 384952A1 | | 1 | PUENTE POSTERIOR Incl. Ref 1 - 20; Also Includes Parts On Figures 06-26 - 06-30, 07-01, 07-02 |
| | | 292268A1 | | 1 | CAVIDAD Differential, Incl. Ref 1, 2 |
| 1 | | NSS | | 1 | NO SE REPARA SEPARADAM. Housing, Flange Half |
| 2 | | NSS | | 1 | NO SE REPARA SEPARADAM. Housing, Plain Half |
| | | 367184A1 | | 1 | DIFERENCIAL Gear Set Kit, Service Replacement; Incl. Ref 3 - 6, 16, 17, 20 |
| 3 | | E135777 | | 2 | ARANDELA Thrust |
| 4 | | 190471A1 | | 2 | PINON Sun Gear, 12T, No Longer Sold Separately, Must Be Replaced As a Set, For Service, Order 367184A1 Differential Gear Set Kit |
| 5 | | D142971 | | 1 | PINON Side Pinion Gear, No Longer Sold Separately, Must Be Replaced As a Set, For Service, Order 367184A1 Differential Gear Set Kit |
| 6 | | 190469A1 | | 2 | ARANDELA |
| 7 | | S300976 | | 10 | TORNILLO M12 x 90; 12.9 |
| 8 | | E135785 | | 2 | COJINETE |
| 9 | | P3034505 | | 2 | TUERCA Lock Ring |
| 10 | | 112486A1 | | 2 | TORNILLO M6 x 12 |
| 11 | | 175959A1 | | 2 | PIEZA DE SOPORTE |
| 12 | | 292207A1 | | 4 | BULON/PIN, LARGO |
| 13 | | 292208A1 | | 4 | JUNTA HERMETICA |
| 14 | | 190452A1 | | 2 | CASQUILLO |
| 15 | | 191067A1 | | 1 | MANGUITO |
| | | 367184A1 | | 1 | DIFERENCIAL Gear Set Kit, Service Replacement; Incl. Ref 3 - 6, 16, 17, 20 |
| 16 | | P6427894 | | 2 | BULON/PIN, LARGO Sun Gear, No Longer Sold Separately, Must Be Replaced As a Set, For Service, Order 367184A1 Differential Gear Set Kit |
| 17 | | 292890A1 | | 1 | ENGRANAJE Side Pinion Gear, No Longer Sold Separately, Must Be Replaced As a Set, For Service, Order 367184A1 Differential Gear Set Kit |
| 18 | | D143033 | | 2 | PITON 12 x 40 mm |
| 19 | | 175961A1 | | 1 | ANILLO DE FRENO |

HTTP://WWW.MINNPARBACKHOEPARTS.COM



EJE, TRANSMISIÓN TRASERA - DIFERENCIAL

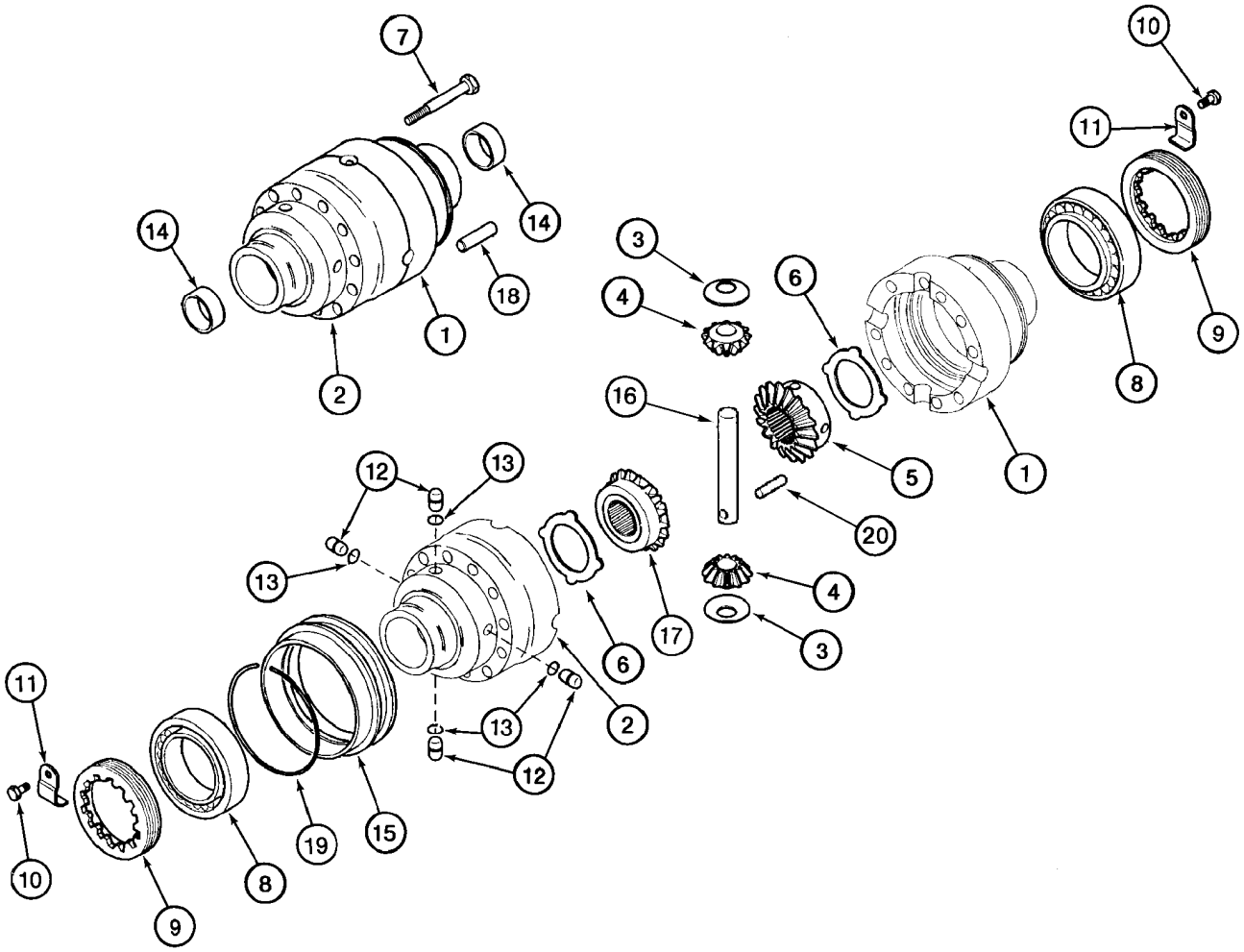


BS99H144

HTTP://WWW.MINNPARBACKHOEPARTS.COM



EJE, TRANSMISIÓN TRASERA - DIFERENCIAL

| REF | FN | PART NUMBER | YR/SN | QTY | DESCRIPTION |
|---|---|---|---|---|---|
| 20 | | 838-5840 | | 1 | PASADOR TUBOLAR 8 x 40 mm |

HTTP://WWW.MINNPARBACKHOEPARTS.COM



EJE, TRANSMISIÓN TRASERA - ANILLO Y PIÑÓN

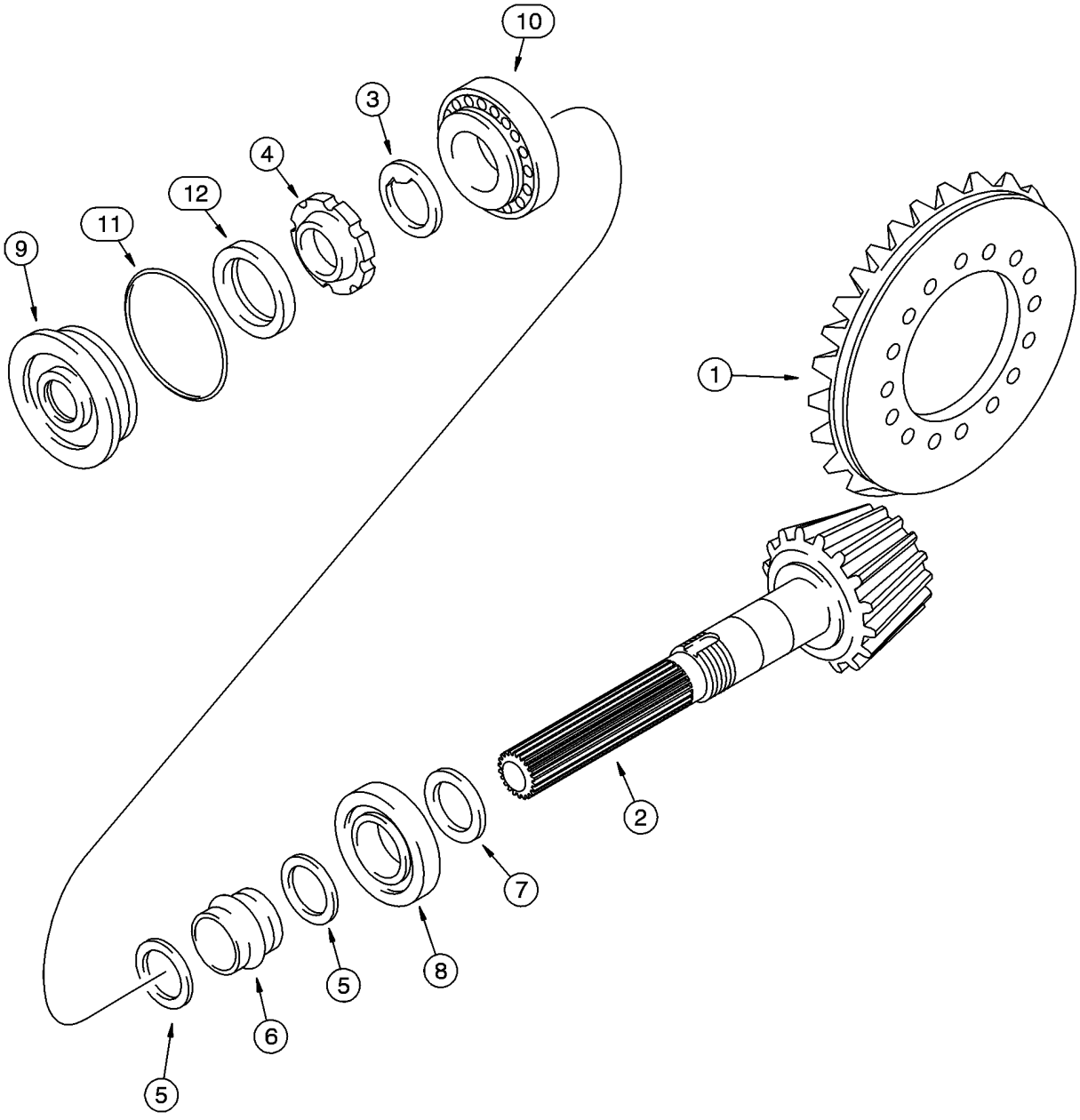


BT97M194

HTTP://WWW.MINNPARBACKHOEPARTS.COM



EJE, TRANSMISIÓN TRASERA - ANILLO Y PIÑÓN

| REF | FN | PART NUMBER | YR/SN | QTY | DESCRIPTION |
|---|---|---|---|---|---|
| | | 384952A1 | | 1 | PUENTE POSTERIOR Incl. Ref 1 - 12; Also Includes Parts On Figures 06-26 - 06-30, 07-01, 07-02 |
| | | 175956A1 | | 1 | JUEGO DE PINONES Ring and Pinion, Incl. Ref 1 - 6 |
| 1 | | NSS | | 1 | NO SE REPARA SEPARADAM. Gear, Ring |
| 2 | | NSS | | 1 | NO SE REPARA SEPARADAM. Gear, Pinion |
| 3 | | K261065 | | 1 | ARANDELA |
| 4 | | K261014 | | 1 | TUERCA Ring |
| 5 | | 1349059C1 | | 2 | ARANDELA |
| 6 | | 175957A1 | | 1 | ESPACIADOR Collapsible |
| 7 | | 190506A1 | | X | SUPLEMENTO 2,5 mm (0,098 in) |
| 7 | | 190508A1 | | X | SUPLEMENTO 2,6 mm (0,102 in) |
| 7 | | 190509A1 | | X | SUPLEMENTO 2,7 mm (0,106 in) |
| 7 | | 190510A1 | | X | SUPLEMENTO 2,8 mm (0,110 in) |
| 7 | | 190511A1 | | X | SUPLEMENTO 2,9 mm (0,114 in) |
| 7 | | 190512A1 | | X | SUPLEMENTO 3,0 mm (0,118 in) |
| 7 | | 190513A1 | | X | SUPLEMENTO 3,1 mm (0,122 in) |
| 7 | | 190514A1 | | X | SUPLEMENTO 3,2 mm (0,125 in) |
| 7 | | 190515A1 | | X | SUPLEMENTO 3,3 mm (0,129 in) |
| 7 | | 190516A1 | | X | SUPLEMENTO 3,4 mm (0,133 in) |
| 8 | | P1139855 | | 1 | COJINETE |
| 9 | | 128570A1 | | 1 | TAPA Cover |
| 10 | | K395090 | | 1 | RODAMIENTO DE BOLAS |
| 11 | | 238-5152 | | 1 | JUNTA HERMETICA 3-1/4 ID x 3/32 |
| 12 | | K262143 | | 1 | ANILLO DE CIERRE Oil |

HTTP://WWW.MINNPARBACKHOEPARTS.COM



EJE, TRANSMISIÓN TRASERA - BLOQUEO DEL DIFERENCIAL

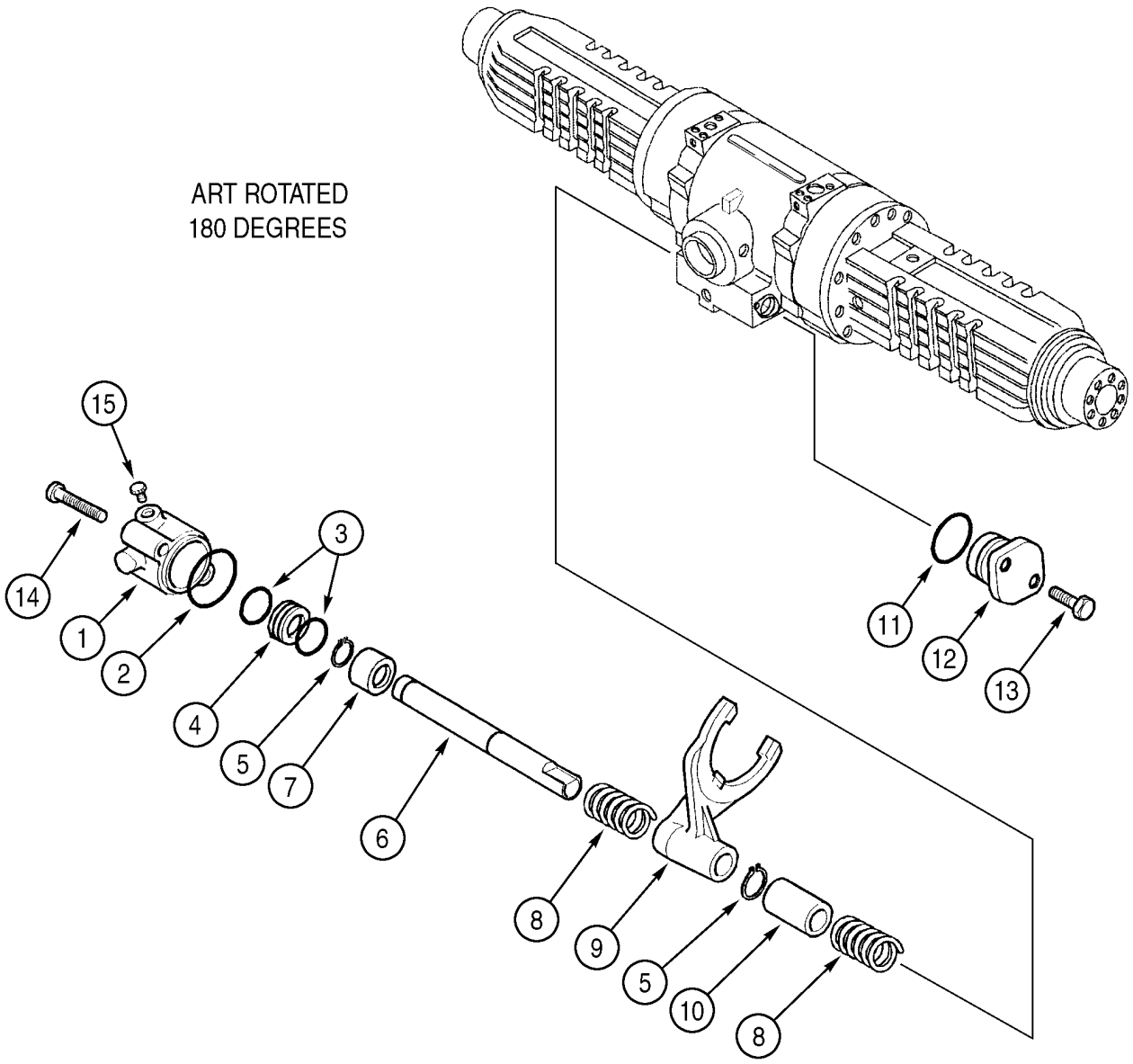

HTTP://WWW.MINNPARBACKHOEPARTS.COM



EJE, TRANSMISIÓN TRASERA - BLOQUEO DEL DIFERENCIAL

| REF | FN | PART NUMBER | YR/SN | QTY | DESCRIPTION |
|---|---|---|---|---|---|
| | | 384952A1 | | 1 | PUENTE POSTERIOR Incl. Ref 1 - 15; Also Includes Parts On Figures 06-26 - 06-30, 07-01, 07-02 |
| 1 | | 292213A1 | | 1 | CILINDRO |
| 2 | | 305152A1 | | 1 | JUNTA HERMETICA |
| 3 | | 292210A1 | | 2 | ANILLO DE CIERRE |
| 4 | | 292212A1 | | 1 | EMBOLO |
| 5 | | 800-5120 | | 2 | ANILLO DE CIERRE No. 20 |
| 6 | | 292214A1 | | 1 | EJE Rail, Shifter Fork |
| 7 | | 292902A1 | | 1 | ANILLO Bushing |
| 8 | | 175966A1 | | 2 | RESORTE |
| 9 | | 175964A2 | | 1 | HORQUETA |
| 10 | | 175965A1 | | 1 | CASQUILLO |
| 11 | | 128376A1 | | 1 | JUNTA HERMETICA |
| 12 | | 175968A1 | | 1 | APOYADERO Cover |
| 13 | | 614-8030 | | 2 | TORNILLO M8 x 30 |
| 14 | | 814-8080 | | 2 | TORNILLO M8 x 80 |
| 15 | | NSS | | 1 | NO SE REPARA SEPARADAM. Plug |

HTTP://WWW.MINNPARBACKHOEPARTS.COM



EJE, TRANSMISIÓN TRASERA - PLANETARIO

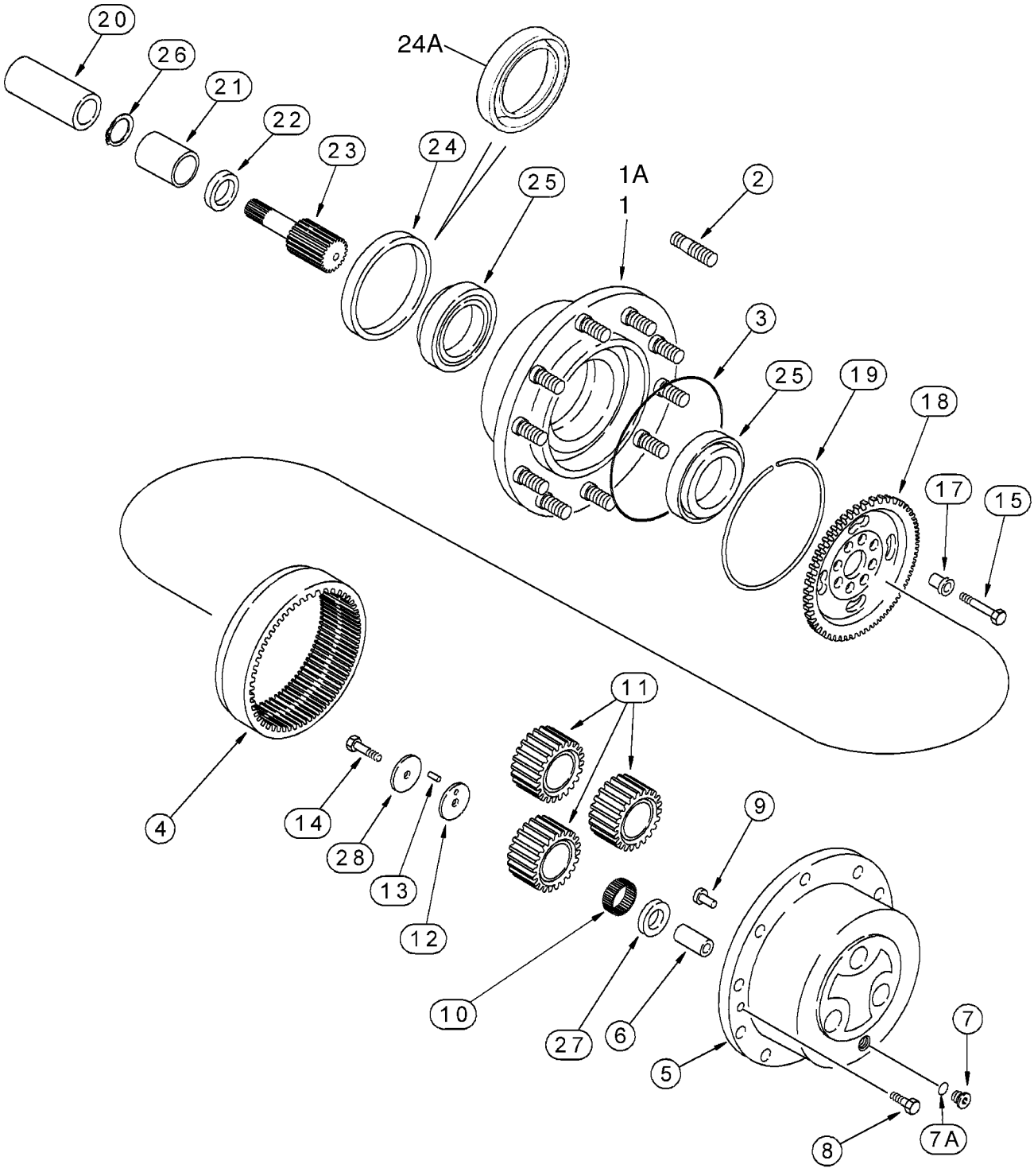

HTTP://WWW.MINNPARBACKHOEPARTS.COM



EJE, TRANSMISIÓN TRASERA - PLANETARIO

| REF | FN | PART NUMBER | YR/SN | QTY | DESCRIPTION |
|---|---|---|---|---|---|
| | | 384952A1 | | 1 | PUENTE POSTERIOR Incl. Ref 1 - 28; Also Includes Parts On Figures 06-26 - 06-30, 07-01, 07-02 |
| 1 | | 175974A1 | | 2 | CUBO Includes (20) D142986 Studs, Ref 2; Used With 1349265C1 Seal, Ref 24; If Used |
| 1A | | 87416108 | | 2 | KIT, SERVICE HUB ASSY, Includes (10) D142986 Stud, Ref 2; Used With 247546A1 Seal, Ref 24A; If Used |
| 2 | | D142986 | | 10-20 | PRISIONERO Without Flanged Collar |
| 2 | | 196090A1 | | 10 | PRISIONERO With Flanged Collar, For Recessed Bolt Holes; If Used |
| 3 | | P2930467 | | 2 | ANILLO DE CIERRE |
| 4 | | 175976A1 | | 2 | PINON Ring Gear |
| 5 | | 175977A1 | | 2 | EJE DE SATELITE Planetary Carrier, Incl. Ref 6, Use With Liquid Gasket Silastic 732, Carrier to Hub |
| 6 | | NSS | | 6 | NO SE REPARA SEPARADAM. Shaft |
| 7 | | 100557A1 | | 2 | TAPON DE VIACIADO Incl. Ref 7A |
| 7A | | 238-6121 | | 1 | JUNTA HERMETICA 1-1/16 ID x 3/32 |
| 8 | | K395082 | | 4 | TORNILLO |
| 9 | | K395093 | | 2 | EJE CON CABEZA Lock |
| 10 | | 175978A1 | | 17 | JUEGO Package of 10 Needles, 168 Needles Required |
| 11 | | 175979A1 | | 6 | PIÑÓN SOLAR Pinion Gear |
| 12 | | 175980A1 | | 6 | ARANDELA |
| 13 | | 247550A1 | | 1 | AGUJA PARA COJINETE Package of 10 Needles, Used As Pins, 6 Needles Required |
| 14 | | 175982A1 | | 6 | TORNILLO M10 x 50; 10.9 |
| 15 | | K395131 | | 16 | TORNILLO M14 x 65 |
| 17 | | 107071A1 | | 16 | CASQUILLO CENTRAJE Bushing, 20 mm OD |
| 18 | | 310492A1 | | 2 | PORTA SATELITE Hub, Ring Gear |
| 19 | | 175984A1 | | 2 | ANILLO DE FRENO |
| 20 | | NSS | | 2 | NO SE REPARA SEPARADAM. Coupling, Welded To and Included With the Differential Brake Oil Auger |
| 21 | | 196065A1 | | 2 | CASQUILLO |
| 22 | | 196066A1 | | 2 | JUNTA DE ACEITE |

HTTP://WWW.MINNPARBACKHOEPARTS.COM



EJE, TRANSMISIÓN TRASERA - PLANETARIO

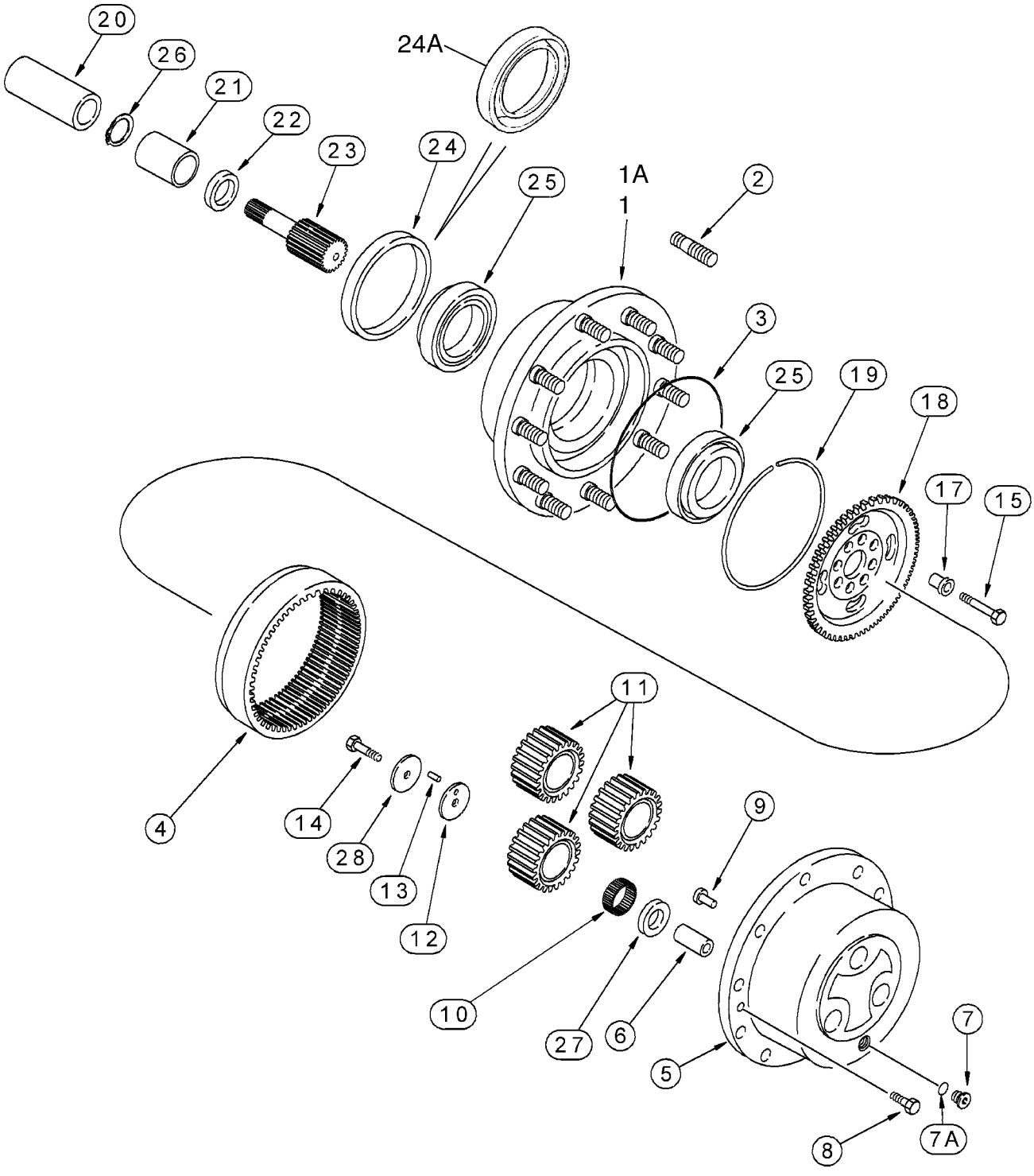

HTTP://WWW.MINNPARBACKHOEPARTS.COM



EJE, TRANSMISIÓN TRASERA - PLANETARIO

| REF | FN | PART NUMBER | YR/SN | QTY | DESCRIPTION |
|---|---|---|---|---|---|
| 23 | | 358286A1 | | 2 | ENGRANAJE Shaft |
| 24 | | 1349265C1 | | 2 | ANILLO DE CIERRE Used With 175974A1 Hub, Ref 1; If Used |
| 24A | | 247546A1 | | 2 | ANILLO DE CIERRE Oil, With Internal Garter Spring Seal; Used With 87416108 Hub, Ref 1A; If Used |
| 25 | | K395101 | | 4 | COJINETE |
| 26 | | 800-2136 | | 2 | ANILLO DE CIERRE No. 36 |
| 27 | | 175989A1 | | 6 | ARANDELA |
| 28 | | 175990A1 | | 6 | ARANDELA |

HTTP://WWW.MINNPARBACKHOEPARTS.COM



EJE DE TRANSMISIÓN, EJE TRASERO

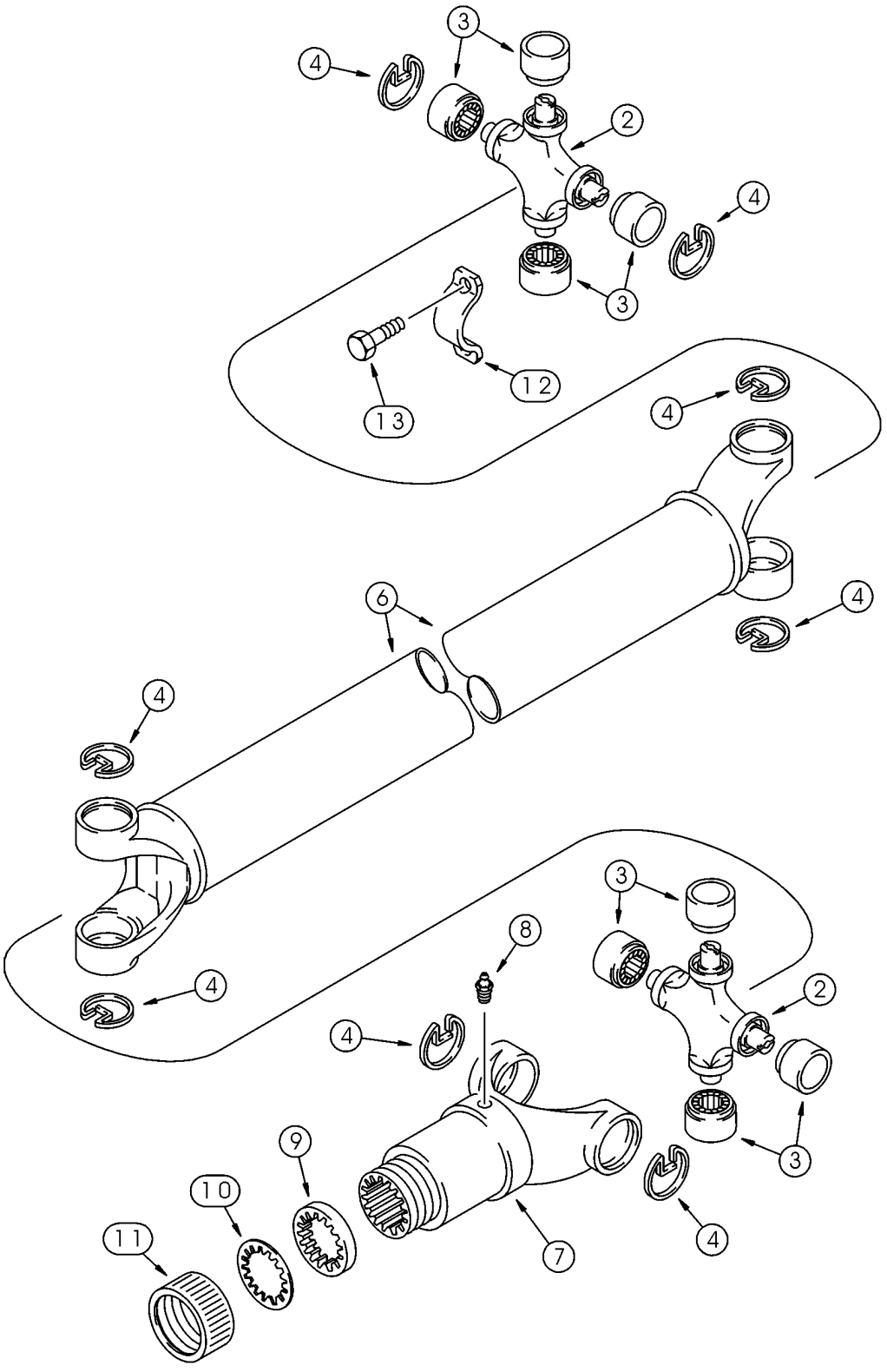


BC00G024

HTTP://WWW.MINNPARBACKHOEPARTS.COM



EJE DE TRANSMISIÓN, EJE TRASERO

| REF | FN | PART NUMBER | YR/SN | QTY | DESCRIPTION |
|---|---|---|---|---|---|
| | | 367860A3 | | 1 | ARBOL DE MANDO Incl. 393231A1, Ref 2 - 13 |
| | | 393231A1 | | 2 | JEUGO Universal Joint, Incl. Ref 2 - 4 |
| 2 | | NSS | | 1 | NO SE REPARA SEPARADAM. Joint, Universal |
| 3 | | NSS | | 4 | NO SE REPARA SEPARADAM. Bearing, Journal |
| 4 | | NSS | | 4 | NO SE REPARA SEPARADAM. Ring |
| 6 | | 393233A1 | | 1 | ARBOL DE MANDO |
| 7 | | 144279A1 | | 1 | HORQUILLA |
| 8 | | 219-10 | | 1 | ENGRASADOR 1/4 tpr x 11/16 |
| | | D149860 | | 1 | EMPAQUETADURA Incl. Ref 9 - 11 |
| 9 | | NSS | | 1 | NO SE REPARA SEPARADAM. Washer, Cork |
| 10 | | NSS | | 1 | NO SE REPARA SEPARADAM. Washer, Steel |
| 11 | | NSS | | 1 | NO SE REPARA SEPARADAM. Cap |
| 12 | | 90-6682T1 | | 2 | COLLAR |
| 13 | | D137627 | | 4 | TORNILLO |

HTTP://WWW.MINNPARBACKHOEPARTS.COM

HTTP://WWW.MINNPARBACKHOEPARTS.COM

# SECTION INDEX


| | |
|---|---|
| 07-01 | EJE, TRANSMISIÓN TRASERA - FRENO, DIFERENCIAL |
| 07-02 | EJE, TRANSMISIÓN TRASERA - FRENO, ESTACIONAMIENTO |
| 07-03 | FRENO - PEDALES |
| 07-04 | HIDRAULICA - CILINDRO  PRINCIPAL DEL FRENO |
| 07-05 | CONJUNTO DE CILINDRO - FRENO PRINCIPAL |
| 07-06 | CONTROLES - FRENO, ESTACIONAMIENTO |

HTTP://WWW.MINNPARBACKHOEPARTS.COM



EJE, TRANSMISIÓN TRASERA - FRENO, DIFERENCIAL

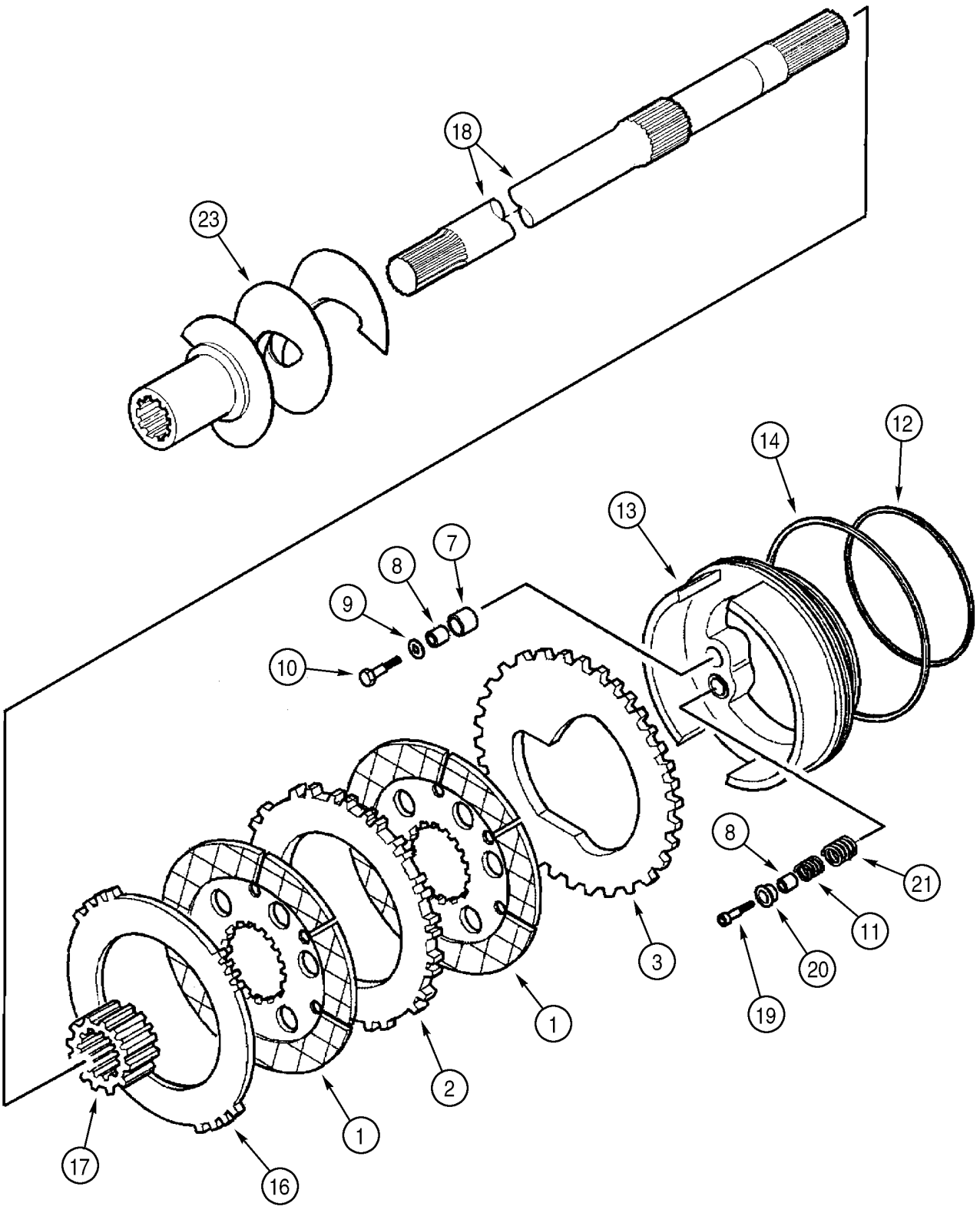

HTTP://WWW.MINNPARBACKHOEPARTS.COM



EJE, TRANSMISIÓN TRASERA - FRENO, DIFERENCIAL

| REF | FN | PART NUMBER | YR/SN | QTY | DESCRIPTION |
|---|---|---|---|---|---|
| | | 384952A1 | | 1 | PUENTE POSTERIOR Incl. Ref 1 - 25; Also Includes Parts On Figures 06-26 - 06-30, 07-01, 07-02 |
| 1 | | 237021A1 | | 4 | PLACA, GRANDE Disc |
| 2 | | 237022A1 | | 2 | PLACA, GRANDE Friction |
| 3 | | 308029A1 | | 2 | PLACA Piston |
| | | 358212A1 | | 1 | JEUGO Brake Self Adjuster, Incl. Ref 7, 8, Plus An Instruction Sheet |
| 7 | | 190449A1 | | 6 | ANILLO ELASTICO Spacer, 18 x 20 mm, No Longer Sold Separately, Order 358212A1 Kit |
| 8 | | 190496A1 | | 12 | CASQUILLO No Longer Sold Separately, Order 358212A1 Kit |
| 9 | | 190450A1 | | 6 | ARANDELA |
| 10 | | 814-6035 | | 6 | TORNILLO M6 x 35; 8,8 |
| 11 | | 237026A1 | | 6 | RESORTE |
| 12 | | 308036A1 | | 2 | JUNTA HERMETICA |
| 13 | | 359653A1 | | 2 | EMBOLO |
| 14 | | 190493A1 | | 2 | JUNTA HERMETICA |
| 16 | | 308030A1 | | 2 | PLACA Friction |
| 17 | | 308042A1 | | 2 | APOYADERO Sleeve |
| 18 | | 295111A1 | | 2 | EJE |
| 19 | | 864-6035 | | 6 | TORNILLO M6 x 35 |
| 20 | | 190500A1 | | 6 | TAPA |
| 21 | | 237025A1 | | 6 | RESORTE |
| 23 | | 295112A1 | | 1 | SINFIN Auger, Oil, Right-Hand, Includes Welded-On Clamp and Bolt, Plus Welded-On Drive Coupling, Incl. Ref 25 |
| 24 | | 295113A1 | | 1 | SINFIN Auger, Oil, Left-Hand, Includes Welded-On Clamp and Bolt, Plus Welded-On Drive Coupling, Incl. Ref 25 |
| 25 | | 863-6020 | | 2 | TORNILLO Socket, M6 x 20; 12.9, Not Illustrated |

HTTP://WWW.MINNPARBACKHOEPARTS.COM

| 07-02 | | p1 | 01/04 |
|---|---|---|---|

EJE, TRANSMISIÓN TRASERA - FRENO, ESTACIONAMIENTO

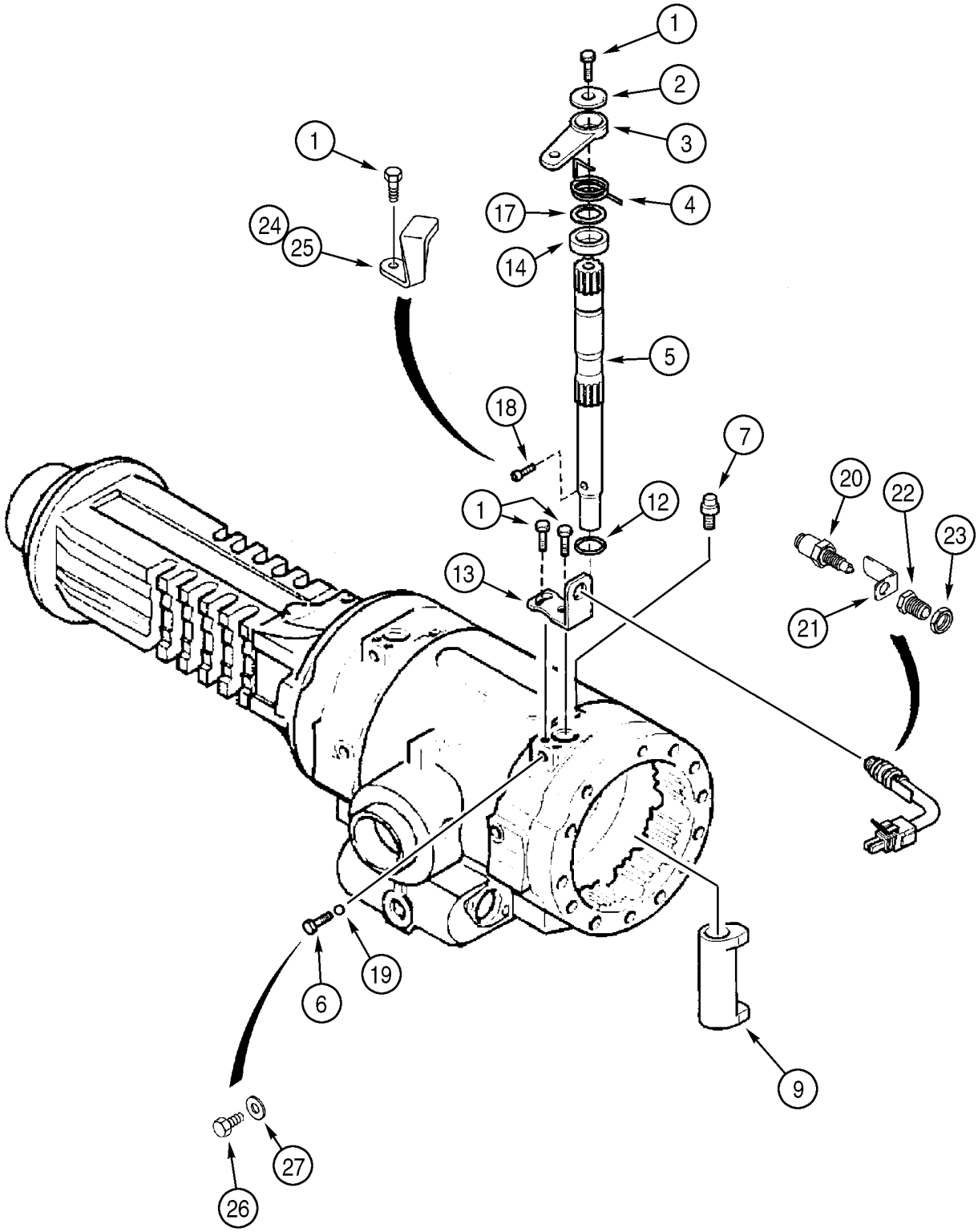

HTTP://WWW.MINNPARBACKHOEPARTS.COM



EJE, TRANSMISIÓN TRASERA - FRENO, ESTACIONAMIENTO

| REF | FN | PART NUMBER | YR/SN | QTY | DESCRIPTION |
|---|---|---|---|---|---|
| | | 384952A1 | | 1 | PUENTE POSTERIOR Incl. Ref 1 - 27; Also Includes Parts On Figures 06-26 - 06-30, 07-01, 07-02 |
| 1 | | 190451A1 | | 6 | TORNILLO M8 x 20 |
| 2 | | 190463A1 | | 2 | ARANDELA |
| 3 | | 280436A1 | | 2 | PALANCA |
| 4 | | 190476A2 | | 1 | RESORTE Left-Hand |
| 4 | | 190477A2 | | 1 | RESORTE Right-Hand, Not Illustrated |
| 5 | | 308040A1 | | 2 | EJE |
| 6 | | 283462A1 | | 2 | TORNILLO M8 x 23.5 |
| 7 | | E135810 | | 2 | TORNILLO RESPIRADERO Brake Bleeder |
| 9 | | 196085A1 | | 2 | LEVA |
| 12 | | 321183A1 | | 2 | JUNTA HERMETICA |
| 13 | | 256478A1 | | 2 | APOYADERO , Stop Bracket |
| 14 | | 256481A1 | | 2 | ESPACIADOR Bushing |
| 17 | | 256482A1 | | 2 | SUPLEMENTO |
| 18 | | 256485A1 | | 2 | TORNILLO M6 x 16 |
| 19 | | 283466A1 | | 2 | BOLA |
| | | 281952A1 | | 2 | EQUIPO Switch Kit, Incl. Ref 20 - 23 |
| 20 | | 280450A1 | | 1 | CONMUTADOR DE ARRANQ |
| 21 | | 280452A1 | | 1 | PIEZA DE SOPORTE |
| 22 | | 280457A1 | | 1 | PALANCA Sleeve |
| 23 | | 281960A1 | | 1 | TUERCA |
| | | 279645A1 | | 1 | JEUGO REPARACION Parking Brake, External Adjustment Parts, Includes Instructions, Incl. Ref 1, 12 - 17, 281952A1, 20 - 23, 24 - 27; If Used |
| 24 | | 259254A1 | | 1 | RETENEDOR Left-Hand |
| 25 | | 280443A1 | | 1 | RETENEDOR Right-Hand |
| 26 | | 514-634 | | 2 | TORNILLO M8 x 16 |
| 27 | | 181104A1 | | 2 | ARANDELA DE COBRE Copper |

HTTP://WWW.MINNPARBACKHOEPARTS.COM

| 07-03 | | p1 | 09/03 |
|---|---|---|---|

FRENO - PEDALES

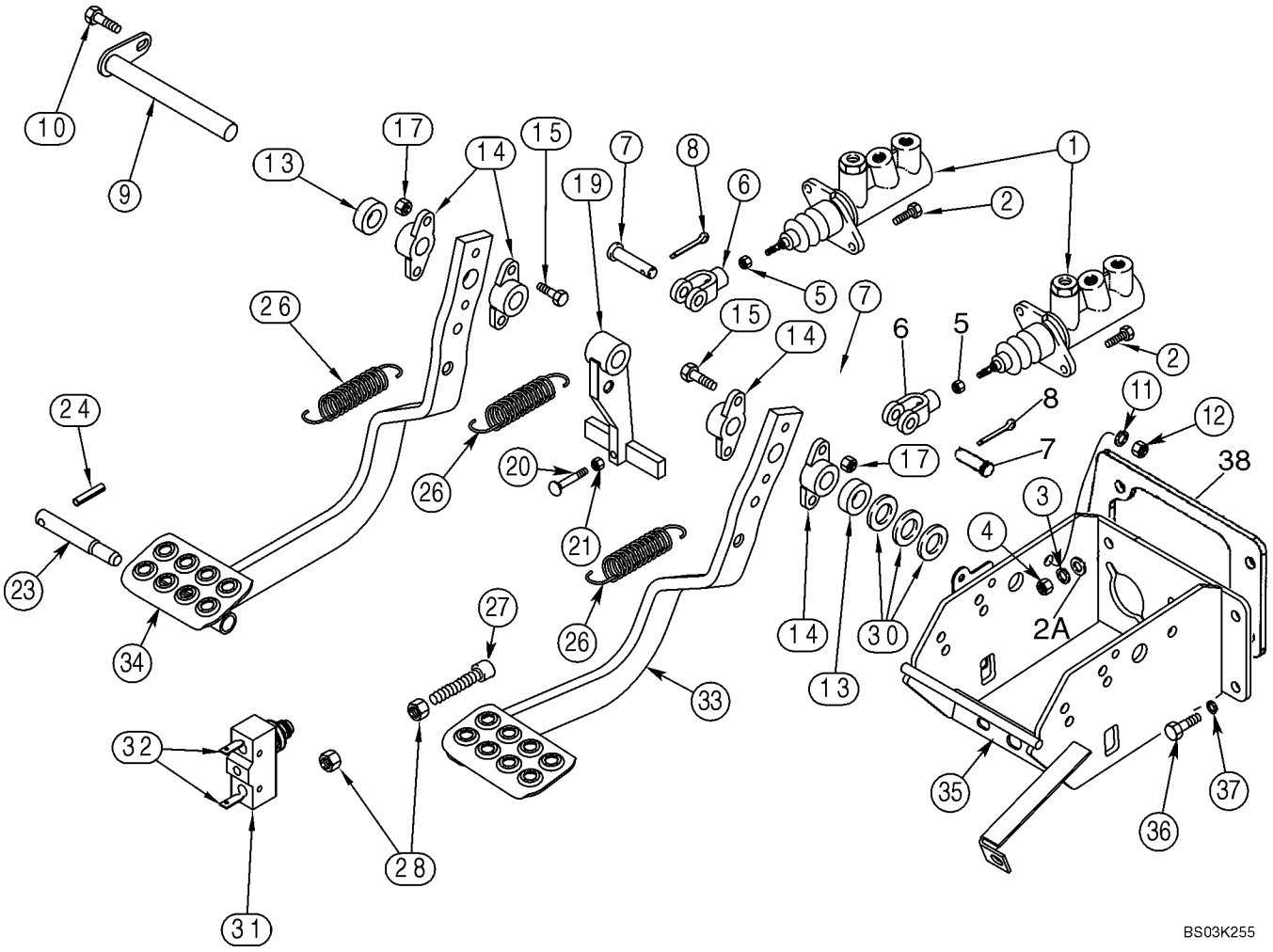

HTTP://WWW.MINNPARBACKHOEPARTS.COM



FRENO - PEDALES

| REF | FN | PART NUMBER | YR/SN | QTY | DESCRIPTION |
|---|---|---|---|---|---|
| 1 | | 182445A1 | | 2 | CILINDRO PRINCIPAL See Figure 07-05 |
| 2 | | 614-8030 | | 4 | TORNILLO M8 x 30 |
| 2A | | 895-11008 | | 4 | ARANDELA 9 x 17 x 1,6 mm |
| 3 | | 892-11008 | | 4 | ARANDELA M8 |
| 4 | | 829-1408 | | 4 | TUERCA M8; 10 |
| 5 | | 425-156 | | 2 | TUERCA 3/8 NF |
| 6 | | D137077 | | 2 | HORQUILLA PEQUENA |
| 7 | | L26209 | | 2 | PERNO 3/8 |
| 8 | | 432-612 | | 2 | PASADOR ABIERTO 3/32 x 3/4 |
| 9 | | D140035 | | 1 | BULON/PIN, LARGO |
| 10 | | 614-10025 | | 1 | TORNILLO M10 x 25 |
| 11 | | 892-11010 | | 1 | ARANDELA DE FRENO M10 |
| 12 | | 829-1410 | | 1 | TUERCA M10; 10.9 |
| 13 | | D124529 | | 2 | ESPACIADOR |
| 14 | | A77310 | | 4 | PIVOTE Bearing |
| 15 | | 814-8040 | | 4 | TORNILLO M8 x 40 |
| 17 | | 832-10408 | | 4 | TUERCA M8 |
| 19 | | D124528 | | 1 | PALANCA Brake Lamp |
| 20 | | 121-145 | | 1 | TORNILLO 5/16 X 2-1/2, Flat Countersunk Head |
| 21 | | 425-105 | | 1 | TUERCA 5/16 |
| 23 | | D124530 | | 1 | PERNO Brake Pedal Lock |
| 24 | | 438-12040 | | 1 | PASADOR 5/16 x 2-1/2 |
| 26 | | 230973A1 | | 3 | RESORTE |
| 27 | | 413870A1 | | 2 | AISLADOR M8 x 45, Rubber Head |
| 28 | | 829-1408 | | 4 | TUERCA M8; 10 |
| 30 | | 495-81261 | | X | ARANDELA 13/16 x 1-1/2 x 1/16; Used As A Spacer |
| 31 | | D148108 | | 1 | CONTACTOR Brake Lamp, Attaches To Front Console Wiring Harness |
| 32 | | A187990 | | 2 | TERMINAL Male |
| 33 | | 339047A3 | | 1 | PEDAL (CONJUNTO) Right-Hand |
| 34 | | 339046A3 | | 1 | PEDAL (CONJUNTO) Left-Hand |
| 35 | | 338886A4 | | 1 | PIEZA DE SOPORTE Brake Pedal and Brake Master Cylinder Mounting |
| 36 | | 614-8020 | | 4 | TORNILLO M8 x 20 |
| 37 | | 892-11008 | | 4 | ARANDELA M8 |
| 38 | | 409370A1 | | 1 | ANILLO DE CIERRE |

HTTP://WWW.MINNPARBACKHOEPARTS.COM

| 07-04 | | p1 | 09/03 |
|---|---|---|---|

HIDRAULICA - CILINDRO PRINCIPAL DEL FRENO

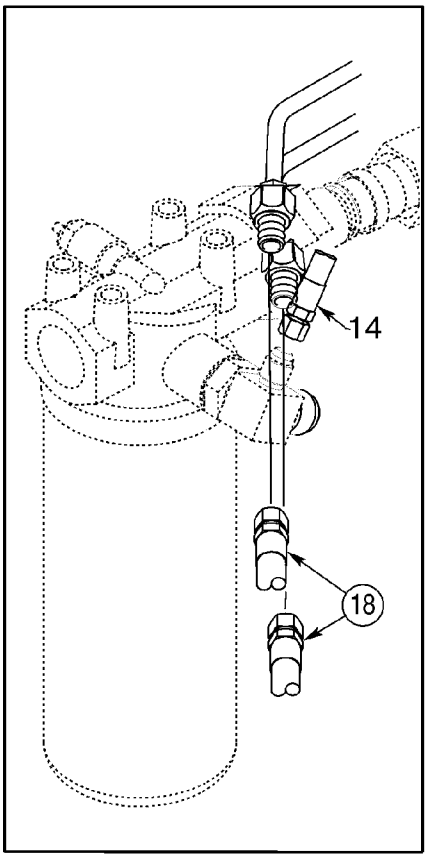

HTTP://WWW.MINNPARBACKHOEPARTS.COM



HIDRAULICA - CILINDRO PRINCIPAL DEL FRENO

| REF | FN | PART NUMBER | YR/SN | QTY | DESCRIPTION |
|---|---|---|---|---|---|
| 1 | | 182445A1 | | 2 | CILINDRO PRINCIPAL See Figure 07-05 |
| 2 | | 345061A2 | | 1 | TUBO (CONJUNTO) Crossover |
| 3 | | 345325A2 | | 2 | TUBO (CONJUNTO) |
| 5 | | 614-8020 | | 1 | TORNILLO M8 x 20 |
| 6 | | 892-11008 | | 2 | ARANDELA M8 |
| 8 | | 121729A1 | | 2 | MANGA 52 mm (2-3/64 in); To Master Cylinder |
| 9 | | 397076A1 | | 1 | MANGA 1500 mm (59-1/16 in), Reservoir Outlet, Attaches To Return To Tank Tube; See Figure 08-03 |
| 10 | | 214-1704 | | 5 | COLLAR 1/4 - 5/8 |
| 11 | | 214-1706 | | 2 | COLLAR 7/16 - 3/4 |
| 13 | | 184627A2 | | 1 | CUBA |
| 14 | | 86991496 | | 1 | MANGUERA (CONJUNTO) 1666 mm (65-19/32 in), Reservoir Inlet, Attaches to Tee At Hydraulic Oil Filter; See Figure 08-03 For Fitting |
| 15 | | 515-2379 | | 4 | COLLAR 7,9 mm |
| 16 | | 397177A2 | | 1 | TUBO (CONJUNTO) Left-Hand |
| 17 | | 396620A2 | | 1 | TUBO (CONJUNTO) Right-Hand |
| 18 | | 409318A1 | | 2 | MANGUERA (CONJUNTO) 565 mm (22-1/4 in) Brake Tube To Adapter On Rear Axle |
| 19 | | 218-5053 | | 2 | RACOR 7/16 fl x Or, Includes Ref 19A |
| 19A | | 237-6004 | | 1 | JUNTA HERMETICA 23/64 ID x 5/64, Boss Seal |
| 22 | | D132982 | | 1 | TUBO AISLANTE 400 mm (15-3/4 in) |
| 23 | | L18337 | | 3 | BANDA 15 in |
| 24 | | 614-8030 | | 1 | TORNILLO M8 x 30 |

HTTP://WWW.MINNPARBACKHOEPARTS.COM

| 07-05 | | p1 | 09/03 |
|---|---|---|---|

CONJUNTO DE CILINDRO - FRENO PRINCIPAL

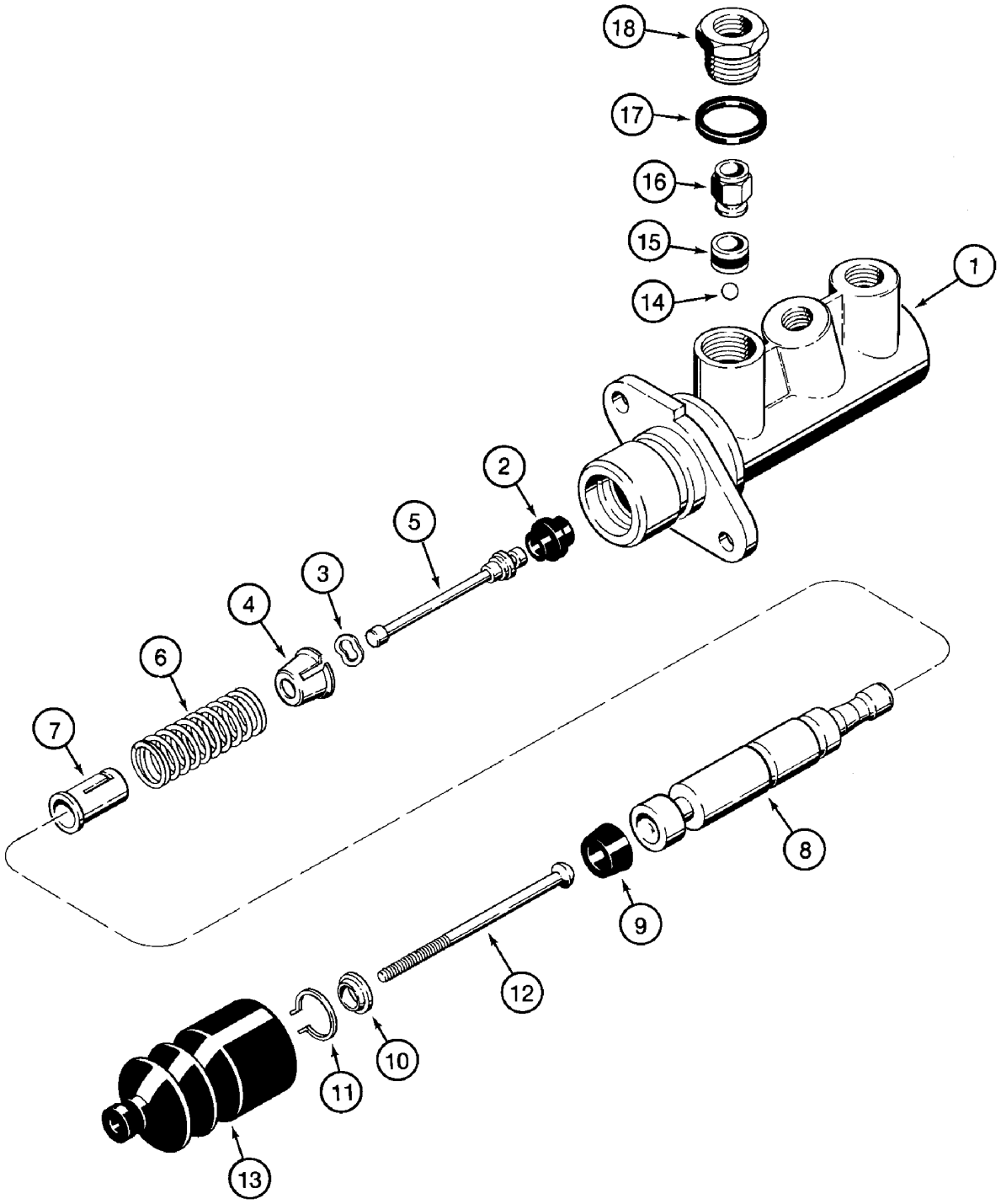

HTTP://WWW.MINNPARBACKHOEPARTS.COM



CONJUNTO DE CILINDRO - FRENO PRINCIPAL

| REF | FN | PART NUMBER | YR/SN | QTY | DESCRIPTION |
|---|---|---|---|---|---|
| | | 182445A1 | | 2 | CILINDRO PRINCIPAL Incl. Ref 1 - 18 |
| 1 | | NSS | | 1 | NO SE REPARA SEPARADAM. Housing |
| 2 | | NSS | | 1 | NO SE REPARA SEPARADAM. Seal |
| 3 | | NSS | | 1 | NO SE REPARA SEPARADAM. Washer |
| 4 | | NSS | | 1 | NO SE REPARA SEPARADAM. Seat |
| 5 | | NSS | | 1 | NO SE REPARA SEPARADAM. Plunger |
| 6 | | NSS | | 1 | NO SE REPARA SEPARADAM. Spring |
| 7 | | NSS | | 1 | NO SE REPARA SEPARADAM. Seat |
| 8 | | NSS | | 1 | NO SE REPARA SEPARADAM. Piston |
| 9 | | NSS | | 1 | NO SE REPARA SEPARADAM. Seal |
| 10 | | NSS | | 1 | NO SE REPARA SEPARADAM. Washer |
| 11 | | NSS | | 1 | NO SE REPARA SEPARADAM. Ring, Retaining |
| 12 | | NSS | | 1 | NO SE REPARA SEPARADAM. Rod |
| 13 | | NSS | | 1 | NO SE REPARA SEPARADAM. Boot |
| 14 | | NSS | | 1 | NO SE REPARA SEPARADAM. Ball |
| 15 | | NSS | | 1 | NO SE REPARA SEPARADAM. Seal |
| 16 | | NSS | | 1 | NO SE REPARA SEPARADAM. Valve, Check |
| 17 | | NSS | | 1 | NO SE REPARA SEPARADAM. Seal |
| 18 | | NSS | | 1 | NO SE REPARA SEPARADAM. Adapter |
| | | N14784 | | 1 | JEUGO Seal; Incl. Ref 2, 3, 9, 11, 13 - 15, 17 |

HTTP://WWW.MINNPARBACKHOEPARTS.COM

| 07-06 | | p1 | 01/04 |
|---|---|---|---|

CONTROLES - FRENO, ESTACIONAMIENTO

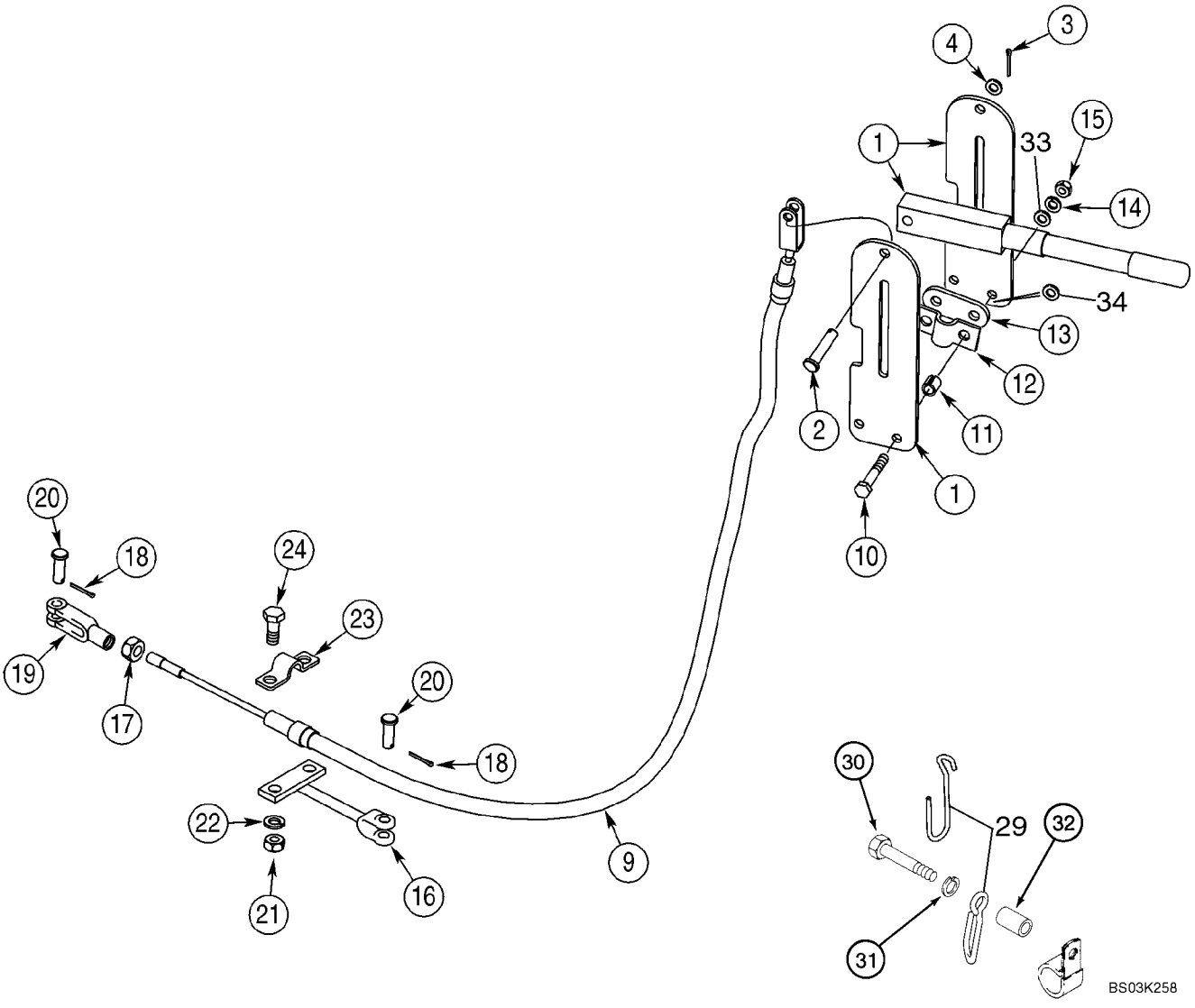

HTTP://WWW.MINNPARBACKHOEPARTS.COM



CONTROLES - FRENO, ESTACIONAMIENTO

| REF | FN | PART NUMBER | YR/SN | QTY | DESCRIPTION |
|---|---|---|---|---|---|
| | | 367977A1 | | 1 | PALANCA Incl. Ref 1 - 4 |
| 1 | | NSS | | 1 | NO SE REPARA SEPARADAM. Lever |
| 2 | | NSS | | 1 | NO SE REPARA SEPARADAM. Pin, Clevis |
| 3 | | 432-612 | | 1 | PASADOR ABIERTO 3/32 x 3/4 |
| 4 | | 495-21038 | | 1 | ARANDELA 3/8 x 7/8 x 3/32 |
| 9 | | 280681A1 | | 1 | CABLE 1325 mm (52-3/16 in) |
| 10 | | 827-8050 | | 2 | TORNILLO M8 x 50; 10.9 |
| 11 | | D150633 | | 2 | ESPACIADOR |
| 12 | | D121608 | | 1 | COLLAR |
| 13 | | D129747 | | 1 | PLACA |
| 14 | | 892-11008 | | 2 | ARANDELA M8 |
| 15 | | 829-1408 | | 2 | TUERCA M8; 10 |
| 16 | | 326348A1 | | 1 | APOYADERO 151 mm (6 in) |
| 17 | | 425-156 | | 1 | TUERCA 3/8 NF |
| 18 | | 432-612 | | 2 | PASADOR ABIERTO 3/32 x 3/4 |
| 19 | | 213-126 | | 1 | HORQUILLA PEQUENA 3/8 NF |
| 20 | | D149288 | | 2 | BULON/PIN, LARGO |
| 21 | | 829-1410 | | 2 | TUERCA M10; 10.9 |
| 22 | | 892-11010 | | 2 | ARANDELA DE FRENO M10 |
| 23 | | A188028 | | 1 | COLLAR |
| 24 | | 614-10025 | | 2 | TORNILLO M10 x 25 |
| 29 | | 87424794 | | 1 | SOPORTE See Figure 04-04 for Clamp |
| 30 | | 814-10060 | | 1 | TORNILLO M10 x 60 |
| 31 | | 895-11010 | | 1 | ARANDELA 11 x 21 x 2 mm |
| 32 | | 130245A1 | | 1 | ESPACIADOR |
| 33 | | 896-15008 | | 2 | ARANDELA 9 x 21 x 2,5 mm |
| 34 | | 895-11008 | | X | ARANDELA 9 x 16 x 1,6 mm |

HTTP://WWW.MINNPARBACKHOEPARTS.COM

HTTP://WWW.MINNPARBACKHOEPARTS.COM

# SECTION INDEX


| | |
|---|---|
| 08-01 | HIDRAULICA - BOMBA, FILTRO Y VÁLVULA DE LA CARGADORA |
| 08-02 | HIDRAULICA - VÁLVULA DE LA CARGADORA AL FILTRO A LA VÁLVULA DE LA RETROEXCAVADORA |
| 08-03 | HIDRAULICA - REFRIGERADOR, LÍNEAS DE RETORNO Y FILTRO |
| 08-04 | HIDRAULICA - CILINDRO, ELEVACIÓN DE LA CARGADORA |
| 08-05 | HIDRAULICA - CILINDRO, CUCHARÓN DE LA CARGADORA |
| 08-06 | HIDRAULICA - CILINDRO, ALMEJA DE LA CARGADORA |
| 08-07 | HIDRAULICA - CILINDRO, ALMEJA DE LA CARGADORA |
| 08-08 | HIDRAULICA - CILINDRO, ESTABILIZADOR DE LA RETROEXCAVADORA (SIN DE CONTROL PILOTO) |
| 08-08A | HIDRAULICA - CILINDRO, ESTABILIZADOR DE LA RETROEXCAVADORA (CON DE CONTROL PILOTO) |
| 08-09 | HIDRAULICA - CILINDRO, BALANCÍN DE LA RETROEXCAVADORA (SIN DE CONTROL PILOTO) |
| 08-09A | HIDRAULICA - CILINDRO, BALANCÍN DE LA RETROEXCAVADORA (CON DE CONTROL PILOTO) |
| 08-10 | HIDRAULICA - CILINDRO, AGUILÓN DE LA RETROEXCAVADORA |
| 08-11 | HIDRAULICA - CILINDRO, PALA DE LA RETROEXCAVADORA |
| 08-12 | HIDRAULICA - CILINDRO, CUCHARÓN DE LA RETROEXCAVADORA (MODELOS SIN PALA EXTENDIBLE) |
| 08-13 | HIDRAULICA - CILINDRO, CUCHARÓN DE LA RETROEXCAVADORA (MODELOS CON PALA EXTENDIBLE) |
| 08-14 | HIDRAULICA - CILINDRO, PALA EXTENSIBLE DE LA RETROEXCAVADORA |
| 08-15 | HIDRAULICA - VÁLVULA, CONTROL PILOTO DE PALANCA DE CONTROL (6 SPOOL, W/O EXT DIPPER, W/O AUX HYDS) |
| 08-16 | HIDRAULICA - VÁLVULA, CONTROL PILOTO DE PALANCA DE CONTROL (6 SPOOL, W/O EXT DIPPER, W/ AUX HYDS) |
| 08-17 | HIDRAULICA - VÁLVULA, CONTROL PILOTO DE PALANCA DE CONTROL (7 SPOOL, W/ EXT DIPPER, W/O AUX HYDS) |
| 08-18 | HIDRAULICA - VÁLVULA, CONTROL PILOTO DE PALANCA DE CONTROL (7 SPOOL, W/ EXT DIPPER, W/ AUX HYDS) |
| 08-19 | HIDRAULICA - VÁLVULA, CONTROL PILOTO DE PALANCA DE CONTROL (7 SPOOL, W/O EXT DIPPER, W/ AUX HYDS) |
| 08-20 | HIDRAULICA - VÁLVULA, CONTROL PILOTO DE PALANCA DE CONTROL (8 SPOOL, W/ EXT DIPPER, W/ AUX HYDS) |
| 08-21 | HIDRAULICA - CONTROL PILOTO DE PALANCA DE CONTROL |
| 08-22 | HIDRAULICA - CONTROL PILOTO |
| 08-23 | HIDRAULICA - AUXILIAR DE LA RETROEXCAVADORA |
| 08-24 | HIDRAULICA - AUXILIAR DE LA RETROEXCAVADORA |
| 08-25 | HIDRAULICA - DISPOSITIVO ANTICABECEO |
| 08-26 | HIDRAULICA - ACOPLADOR, HERRAMIENTA RÁPIDA DE LA CARGADORA |
| 08-27 | HIDRAULICA - ACOPLADOR, HERRAMIENTA RÁPIDA DE LA CARGADORA |
| 08-28 | CONJUNTO DE LA VÁLVULA DEL ACOPLADOR - HERRAMIENTA RÁPIDA DE LA CARGADORA |
| 08-29 | BOMBA, EQUIPAMIENTO HIDRÁULICO |
| 08-30 | CONJUNTO DE LA VALVULA - CONTROL DE LA CARGADORA, DOS CORREDERAS |
| 08-31 | CONJUNTO DE LA VALVULA - CONTROL DE LA CARGADORA, TRES CORREDERAS |
| 08-32 | CONJUNTO DE LA VALVULA - CONTROL DE LA RETROEXCAVADORA, 6 BOBINAS (SIN PALA EXTENSIBLE Y SIN SISTEM) |
| 08-33 | CONJUNTO DE LA VALVULA - CONTROL DE LA RETROEXCAVADORA, 7 BOBINAS (SIN PALA EXTENSIBLE Y CON SISTEM) |

HTTP://WWW.MINNPARBACKHOEPARTS.COM

# SECTION INDEX


| | |
|---|---|
| 08-34 | CONJUNTO DE LA VALVULA - CONTROL DE LA RETROEXCAVADORA, 7 BOBINAS (CON PALA EXTENSIBLE Y SIN SISTEM) |
| 08-35 | CONJUNTO DE LA VALVULA - CONTROL DE LA RETROEXCAVADORA, 8 BOBINAS (CON PALA EXTENSIBLE Y CON SISTEM) |
| 08-36 | CONJUNTO DE LA VALVULA - CONTROL DE LA RETROEXCAVADORA, 6 BOBINAS |
| 08-37 | CONJUNTO DE LA VALVULA - CONTROL DE LA RETROEXCAVADORA, 7 BOBINAS |
| 08-38 | CONJUNTO DE LA VALVULA - CONTROL DE LA RETROEXCAVADORA, 7 BOBINAS |
| 08-39 | CONJUNTO DE LA VALVULA - CONTROL DE LA RETROEXCAVADORA, 8 BOBINAS |
| 08-40 | SECCION DE LA VALVULA - DE LA RETROEXCAVADORA (CON DE CONTROL PILOTO) |
| 08-41 | SECCION DE LA VALVULA - AGUILON DE LA RETROEXCAVADORA (CON DE CONTROL PILOTO) |
| 08-42 | SECCION DE LA VALVULA - ESTABILIZADOR DE LA RETROEXCAVADORA (CON DE CONTROL PILOTO) |
| 08-43 | SECCION DE LA VALVULA - BRAZO DE LA RETROEXCAVADORA (CON DE CONTROL PILOTO) |
| 08-44 | SECCION DE LA VALVULA - CUCHARON DE LA RETROEXCAVADORA (CON DE CONTROL PILOTO) |
| 08-45 | SECCION DE LA VALVULA - PALA EXTENSIBLE (CON DE CONTROL PILOTO) |
| 08-46 | SECCION DE LA VALVULA - OPCIONES, SISTEMA HIDRÁULICO AUXILIAR (CON DE CONTROL PILOTO) |
| 08-47 | VALVULA DE REDUCCION DEPRESION (2 SPOOL) (CON DE CONTROL PILOTO) |
| 08-48 | VALVULA DE REDUCCION DEPRESION (3 SPOOL) (CON DE CONTROL PILOTO) |
| 08-49 | VALVULA DE REDUCCION DEPRESION (4 SPOOL) (CON DE CONTROL PILOTO) |
| 08-50 | VÁLVULA, PALANCA DE CONTROL ( CONTROL PILOTO) (IZQUIERDO) BOCINA |
| 08-51 | VÁLVULA, PALANCA DE CONTROL ( CONTROL PILOTO) (IZQUIERDO) BOCINA & UNI-DIR |
| 08-52 | VÁLVULA, PALANCA DE CONTROL ( CONTROL PILOTO) (IZQUIERDO) BOCINA & BI-DIR |
| 08-53 | VÁLVULA, PALANCA DE CONTROL ( CONTROL PILOTO) (DERECHA/O) SIN PALA EXTENDIBLE |
| 08-54 | VÁLVULA, PALANCA DE CONTROL ( CONTROL PILOTO) (DERECHA/O) CON PALA EXTENDIBLE |
| 08-55 | CONJUNTO DE LA VALVULA - ALMOHADILLA DE OSCILACIÓN |
| 08-56 | ACUMULADOR CONJ. - DISPOSITIVO ANTICABECEO |
| 08-57 | FILTRO DE ACEITE |
| 08-58 | CONJUNTO DE CILINDRO - ELEVADOR DE LA CARGADORA |
| 08-59 | CONJUNTO DE CILINDRO - CUCHARON DE LA CARGADORA |
| 08-60 | CONJUNTO DE CILINDRO - ALMEJA DE LA CARGADORA |
| 08-61 | CONJUNTO DE CILINDRO - ESTABILIZADOR DE LA RETROEXCAVADORA |
| 08-62 | CONJUNTO DE CILINDRO - DE LA RETROEXCAVADORA |
| 08-63 | CONJUNTO DE CILINDRO - AGUILON DE LA RETROEXCAVADORA |
| 08-64 | CONJUNTO DE CILINDRO - BRAZO DE LA RETROEXCAVADORA |
| 08-65 | CONJUNTO DE CILINDRO - CUCHARON DE LA RETROEXCAVADORA |
| 08-66 | CONJUNTO DE CILINDRO - PALA EXTENSIBLE DE LA RETROEXCAVADORA |

HTTP://WWW.MINNPARBACKHOEPARTS.COM

HTTP://WWW.MINNPARBACKHOEPARTS.COM

| 08-01 | | p1 | 01/04 |
|---|---|---|---|

HIDRAULICA - BOMBA, FILTRO Y VÁLVULA DE LA CARGADORA

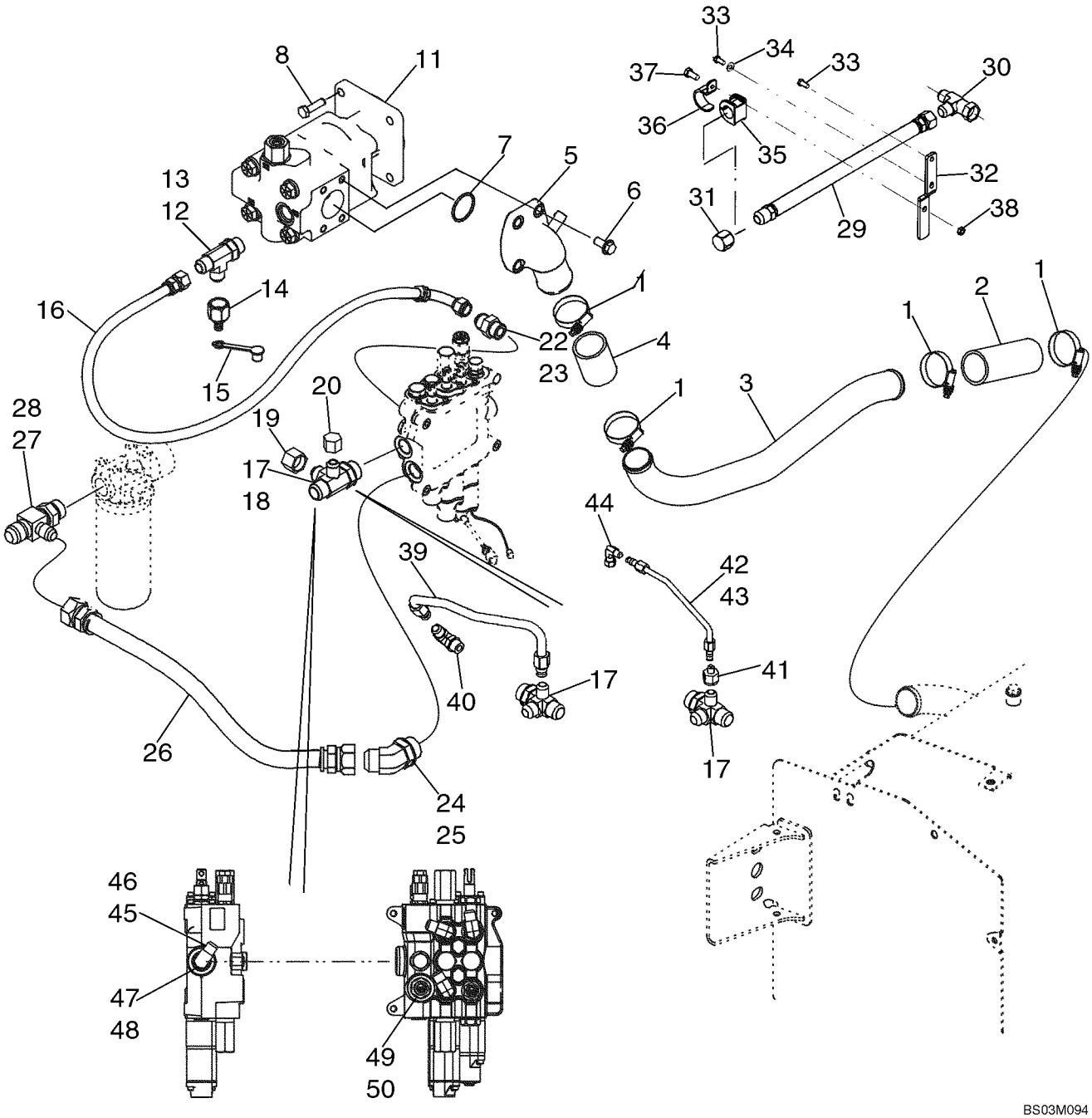

HTTP://WWW.MINNPARBACKHOEPARTS.COM



HIDRAULICA - BOMBA, FILTRO Y VÁLVULA DE LA CARGADORA

| REF | FN | PART NUMBER | YR/SN | QTY | DESCRIPTION |
|---|---|---|---|---|---|
| 1 | | 259044A1 | | 4 | COLLAR |
| 2 | | 282496A1 | | 1 | MANGA Suction, At Hydraulic Tank |
| 3 | | 87435761 | | 1 | TUBERIA RIGIDA Suction Tube |
| 4 | | 87422554 | | 1 | MANGA |
| 5 | | 87434257 | | 1 | CEJA (CONJUNTO) Pump Flange |
| 6 | | 864-12030 | | 3 | TORNILLO M12 x 30 |
| 7 | | 238-5228 | | 1 | JUNTA HERMETICA |
| 8 | | 514-832 | | 4 | TORNILLO M12 x 35 |
| 11 | | 87434672 | | 1 | BOMBA HIDRÁULICA Equipment, See Figure 08-29 |
| 12 | | 218-5239 | | 1 | CONEXION 1-1/16 fl br x fl x Or; Incl. Ref 13 |
| 13 | | 237-6012 | | 1 | JUNTA HERMETICA 59/64 ID x 7/64 |
| 14 | | D137625 | | 1 | ACOPLAMIENTO Quick Disconnect; Includes (1) 425-1120 Nut |
| 15 | | H434163 | | 1 | TAPON DEL DEPOSITO Dust |
| 16 | | 87429895 | | 1 | MANGUERA (CONJUNTO) 775 mm (30-9/16 in) |
| 17 | | 87436066 | | 1 | CONEXION 4-Way Special Fitting; Incl. Ref 18 |
| 18 | | 237-6016 | | 1 | JUNTA HERMETICA 1-11/64 ID x 7/64 wide |
| 19 | | 218-335 | | 1 | TAPON DEL DEPOSITO Hex, 1-1/16; Models Without Pilot Controls |
| 20 | | 218-756 | | 1 | TAPON DEL DEPOSITO Hex, 7/8; Models Without Pilot Controls |
| 22 | | 218-5064 | | 1 | RACOR 1-1/16 fl x Or; Incl. Ref 23 |
| 23 | | 237-6012 | | 1 | JUNTA HERMETICA 59/64 ID x 7/65 |
| 24 | | 218-5140 | | 1 | CONEXION Elbow, 45 Degree, 1-5/16 fl x Or; Incl. Ref 25 |
| 25 | | 237-6016 | | 1 | JUNTA HERMETICA 1-11/64 ID x 7/64 wide |
| 26 | | 87437228 | | 1 | MANGUERA (CONJUNTO) 635 mm (25 in), Loader Valve to Filter |
| 27 | | 218-5584 | | 1 | CONEXION TEE, 1-1/16 fl branch x 1-5/16 fl x Or; Incl. Ref 28 |
| 28 | | 237-6016 | | 1 | JUNTA HERMETICA 1-11/64 ID x 7/64 wide |
| 29 | | 397309A3 | | 1 | MANGUERA (CONJUNTO) 700 mm; Attenuator, To Hose At Large Pump Section Port; If Used |
| 30 | | 218-5221 | | 1 | CONECTOR 1-1/16 fl x fl x adj; If Used |
| 31 | | 218-335 | | 1 | TAPON DEL DEPOSITO 1-1/16; If Used |
| 32 | | 408757A1 | | 1 | PIEZA DE SOPORTE If Used |

HTTP://WWW.MINNPARBACKHOEPARTS.COM

| 08-01 | | p2 | 01/04 |
|---|---|---|---|

HIDRAULICA - BOMBA, FILTRO Y VÁLVULA DE LA CARGADORA

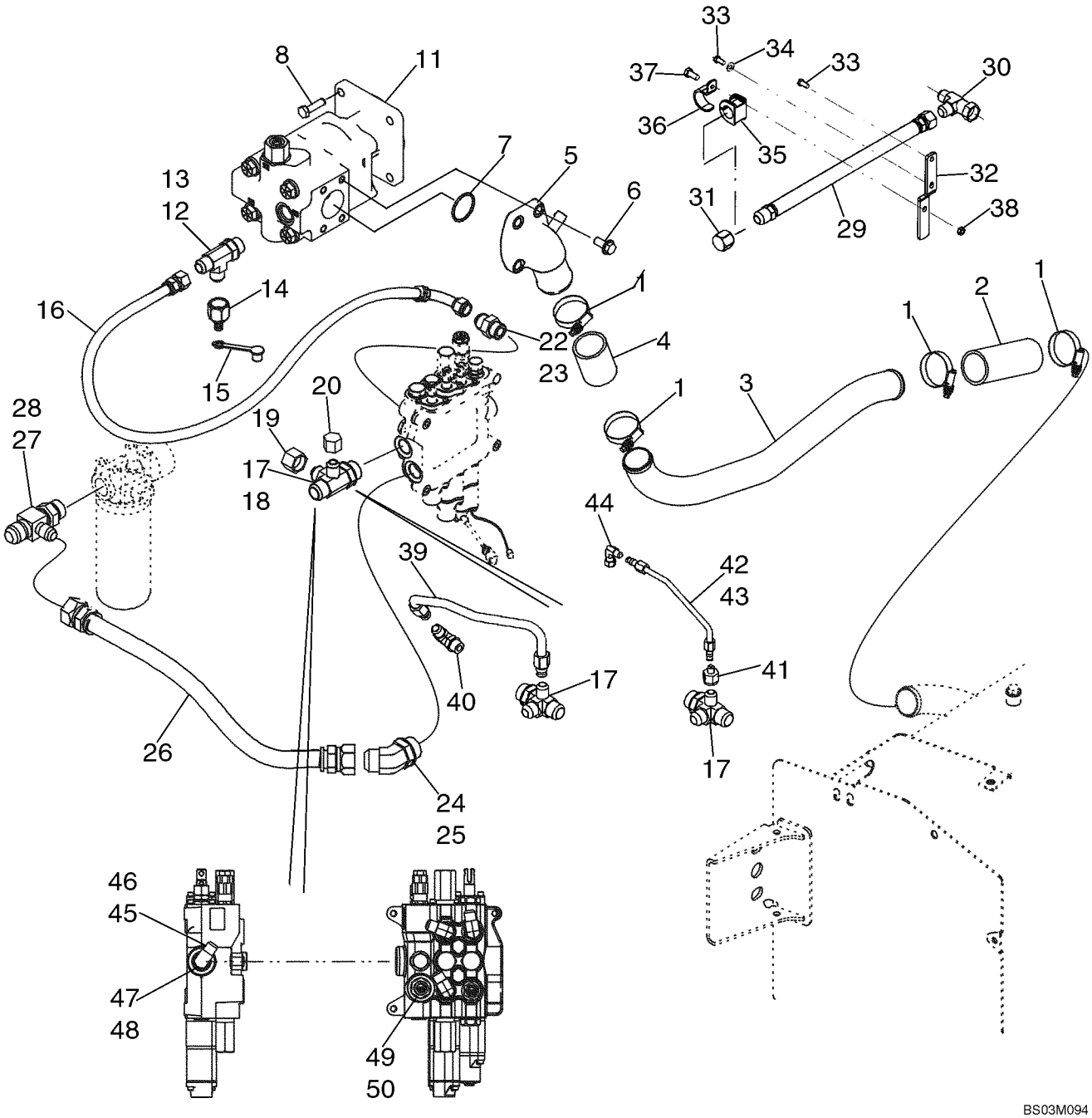

HTTP://WWW.MINNPARBACKHOEPARTS.COM



HIDRAULICA - BOMBA, FILTRO Y VÁLVULA DE LA CARGADORA

| REF | FN | PART NUMBER | YR/SN | QTY | DESCRIPTION |
|---|---|---|---|---|---|
| 33 | | 614-8020 | | 2 | TORNILLO M8 x 20; If Used |
| 34 | | 892-11008 | | 1 | ARANDELA Lock, M8; If Used |
| 35 | | D67298 | | 1 | AISLADOR If Used |
| 36 | | D68845 | | 1 | ARGOLLA DE FIJACION If Used |
| 37 | | 614-10025 | | 1 | TORNILLO M10 x 25; If Used |
| 38 | | 832-10410 | | 1 | TUERCA Lock, M10; If Used |
| 39 | | 87437655 | | 1 | TUBO (CONJUNTO) Two Spool Loader Valve; Models Without Pilot Controls |
| 40 | | 87437657 | | 1 | TUBO (CONJUNTO) Three Spool Loader Valve; Models Without Pilot Controls |
| 41 | | 218-765 | | 1 | REDUCTOR Models With Pilot Controls |
| 42 | | 87437980 | | 1 | TUBO (CONJUNTO) Two Spool Loader Valve; Models With Pilot Controls |
| 43 | | 87437982 | | 1 | TUBO (CONJUNTO) Three Spool Loader Valve; Models With Pilot Controls |
| 44 | | 218-980 | | 1 | CODO 90 deg, 9/16 fl x sw fl; Models With Pilot Controls |
| 45 | | 218-5107 | | 1 | CODO 90 deg, 7/8 fl x Or; Incl. Ref 46; Models Without Pilot Controls |
| 46 | | 237-6010 | | 1 | JUNTA HERMETICA 3/4 ID x 3/32 |
| 47 | | 218-5157 | | 1 | TAPÓN Hex, 7/8 Or; Incl. Ref 48; Models With Pilot Controls |
| 48 | | 237-6010 | | 1 | JUNTA HERMETICA 3/4 ID x 3/32 |
| 49 | | 218-5064 | | 1 | RACOR 1-1/16 fl x Or; Incl. Ref 50 |
| 50 | | 237-6012 | | 1 | JUNTA HERMETICA 59/64 ID x 7/64 |

HTTP://WWW.MINNPARBACKHOEPARTS.COM

| 08-02 | | p1 | 12/03 |
|---|---|---|---|

HIDRAULICA - VÁLVULA DE LA CARGADORA AL FILTRO A LA VÁLVULA DE LA RETROEXCAVADORA

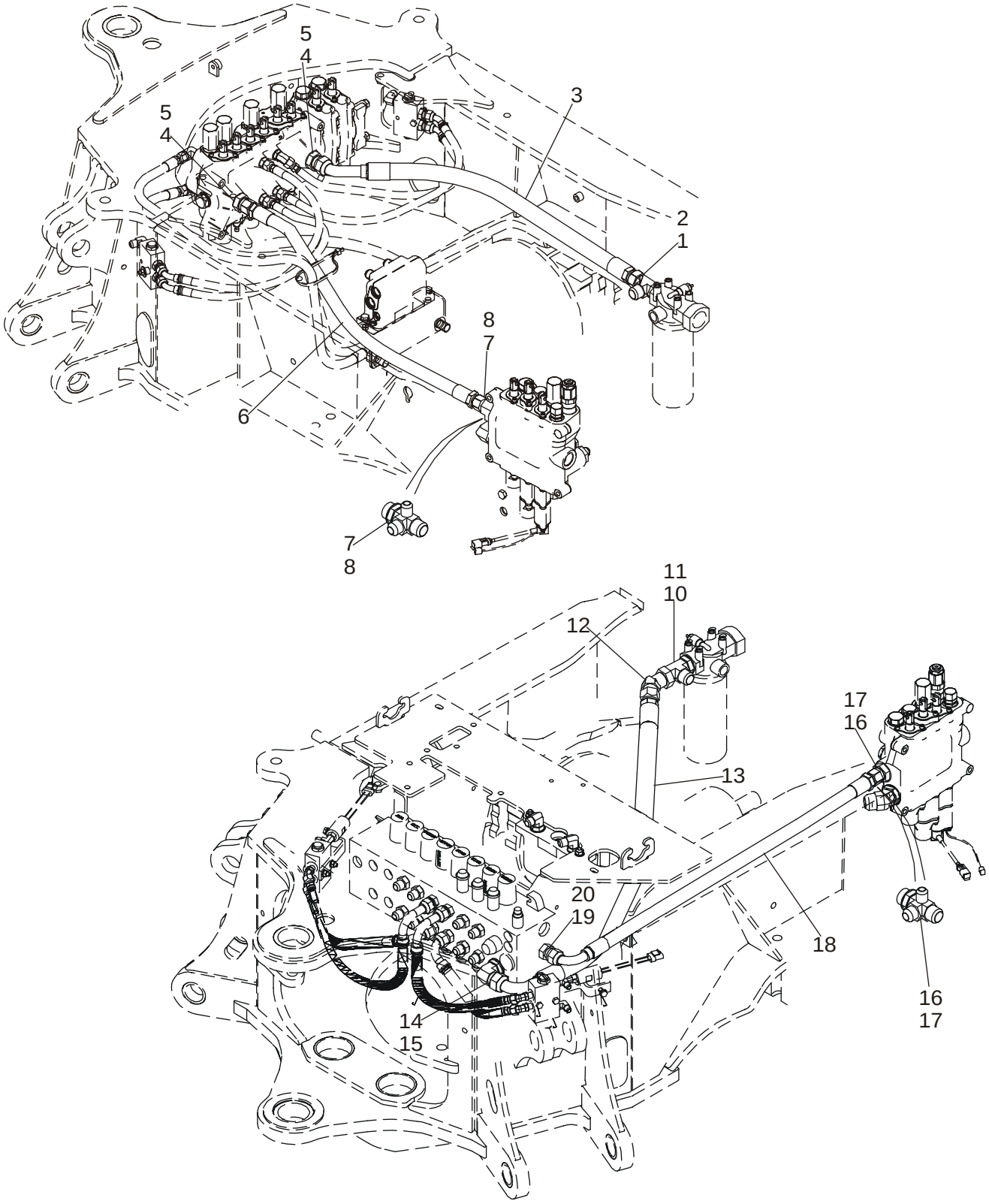

HTTP://WWW.MINNPARBACKHOEPARTS.COM



HIDRAULICA - VÁLVULA DE LA CARGADORA AL FILTRO A LA VÁLVULA DE LA RETROEXCAVADORA

| REF | FN | PART NUMBER | YR/SN | QTY | DESCRIPTION |
|---|---|---|---|---|---|
| | | REF | | | MANUAL MODELS WITHOUT PILOT CONTROLS |
| 1 | | 218-5245 | | 1 | CONEXION TEE, 1-5/16 fl br x fl x Or; Incl. Ref 2 |
| 2 | | 237-6016 | | 1 | JUNTA HERMETICA 1-11/64 ID x 7/64 |
| 3 | | 313648A1 | | 1 | MANGA 910 mm (35-7/8 in); Return; Models Without Pilot Controls |
| 4 | | 218-5069 | | 2 | CONECTOR 1-5/16 fl x Or; Incl. Ref 5 |
| 5 | | 237-6016 | | 1 | JUNTA HERMETICA 1-11/64 ID x 7/64 |
| 6 | | 87437441 | | 1 | MANGUERA (CONJUNTO) 1025 mm (40-3/8 in); 2 or 3 Spool Valve; Without Auxiliary Hydraulics, Without Pilot Controls; Loader Valve Power Beyond to Backhoe Valve |
| 6 | | 87437232 | | 1 | MANGUERA (CONJUNTO) 420 mm (16-9/16 in); 2 Spool Valve; With Auxiliary Hydraulics; With or Without Pilot Controls; Loader Valve Power Beyond to Backhoe Valve |
| 6 | | 87437231 | | 1 | MANGUERA (CONJUNTO) 370 mm (14-5/8 in); 3 Spool Valve; With Auxiliary Hydraulics; With or Without Pilot Controls; Loader Valve Power Beyond to Backhoe Valve |
| 7 | | 87436066 | | 1 | CONEXION 4-Way Special Tee, Incl. Ref 8 |
| 8 | | 237-6016 | | 1 | JUNTA HERMETICA 1-11/64 ID x 7/64 |
| | | REF | | | MANUAL MODELS WITH PILOT CONTROLS |
| 10 | | 218-5245 | | 1 | CONEXION TEE, 1-5/16 fl br x fl x Or; Incl. Ref 11 |
| 11 | | 237-6016 | | 1 | JUNTA HERMETICA 1-11/64 ID x 7/64 |
| 12 | | 218-5176 | | 1 | CONEXION ELBOW, 45 deg, 1-5/16 fl x sw str thrd |
| 13 | | 87437934 | | 1 | MANGUERA (CONJUNTO) 1230 mm (48-7/16 in); Return; Models With Pilot Controls |
| 14 | | 218-5110 | | 1 | CONEXION ELBOW, 90 deg, 1-5/16 fl x adj Or; Incl. Ref 15 |
| 15 | | 237-6016 | | 1 | JUNTA HERMETICA 1-11/64 ID x 7/64 |
| 16 | | 87436066 | | 1 | CONEXION 4-Way Tee, Special, 1-5/16 fl x Or; Incl. Ref 17 |
| 17 | | 237-6016 | | 1 | JUNTA HERMETICA 1-11/64 ID x 7/64 |
| 18 | | 87437442 | | 1 | MANGUERA (CONJUNTO) 1050 mm (41-3/8 in); 2 or 3 Spool Valve; Without Auxiliary Hydraulics, With Pilot Controls; Power Beyond |

HTTP://WWW.MINNPARBACKHOEPARTS.COM

| 08-02 | | p2 | 12/03 |
|---|---|---|---|

HIDRAULICA - VÁLVULA DE LA CARGADORA AL FILTRO A LA VÁLVULA DE LA RETROEXCAVADORA

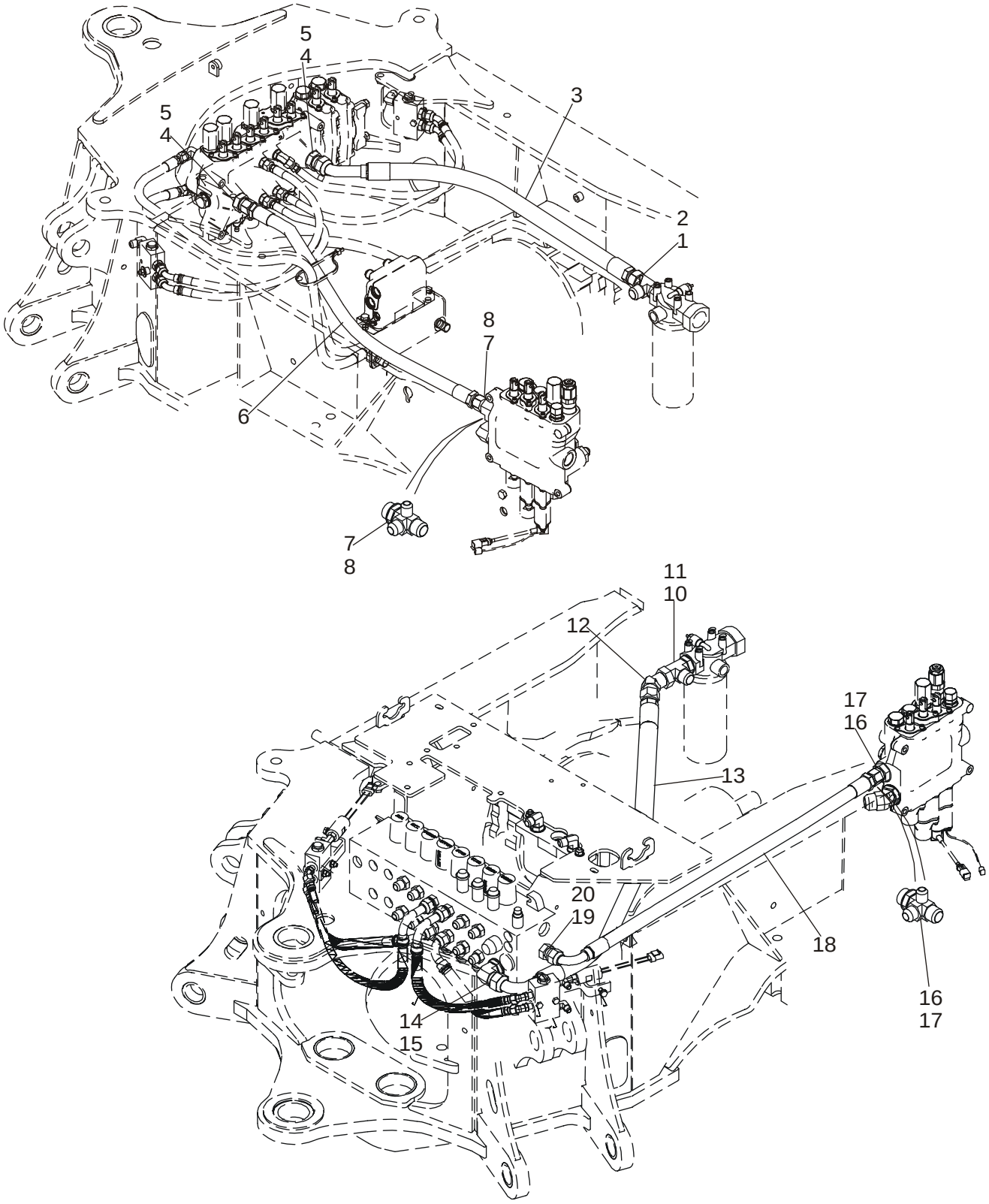

HTTP://WWW.MINNPARBACKHOEPARTS.COM



HIDRAULICA - VÁLVULA DE LA CARGADORA AL FILTRO A LA VÁLVULA DE LA RETROEXCAVADORA

| REF | FN | PART NUMBER | YR/SN | QTY | DESCRIPTION |
|---|---|---|---|---|---|
| 18 | | 87437232 | | 1 | MANGUERA (CONJUNTO) 420 mm (16-9/16 in); 2 Spool Valve; With Auxiliary Hydraulics; With or Without Pilot Controls; Loader Valve Power Beyond to Backhoe Valve |
| 18 | | 87437231 | | 1 | MANGUERA (CONJUNTO) 370 mm (14-5/8 in); 3 Spool Valve; With Auxiliary Hydraulics; With or Without Pilot Controls; Loader Valve Power Beyond to Backhoe Valve |
| 19 | | 218-5064 | | 1 | RACOR 1-1/16 fl x Or; Incl. Ref 20 |
| 20 | | 237-6012 | | 1 | JUNTA HERMETICA 59/64 ID x 7/64 |

HTTP://WWW.MINNPARBACKHOEPARTS.COM

| 08-03 | | p1 | 01/04 |
|---|---|---|---|

HIDRAULICA - REFRIGERADOR, LÍNEAS DE RETORNO Y FILTRO

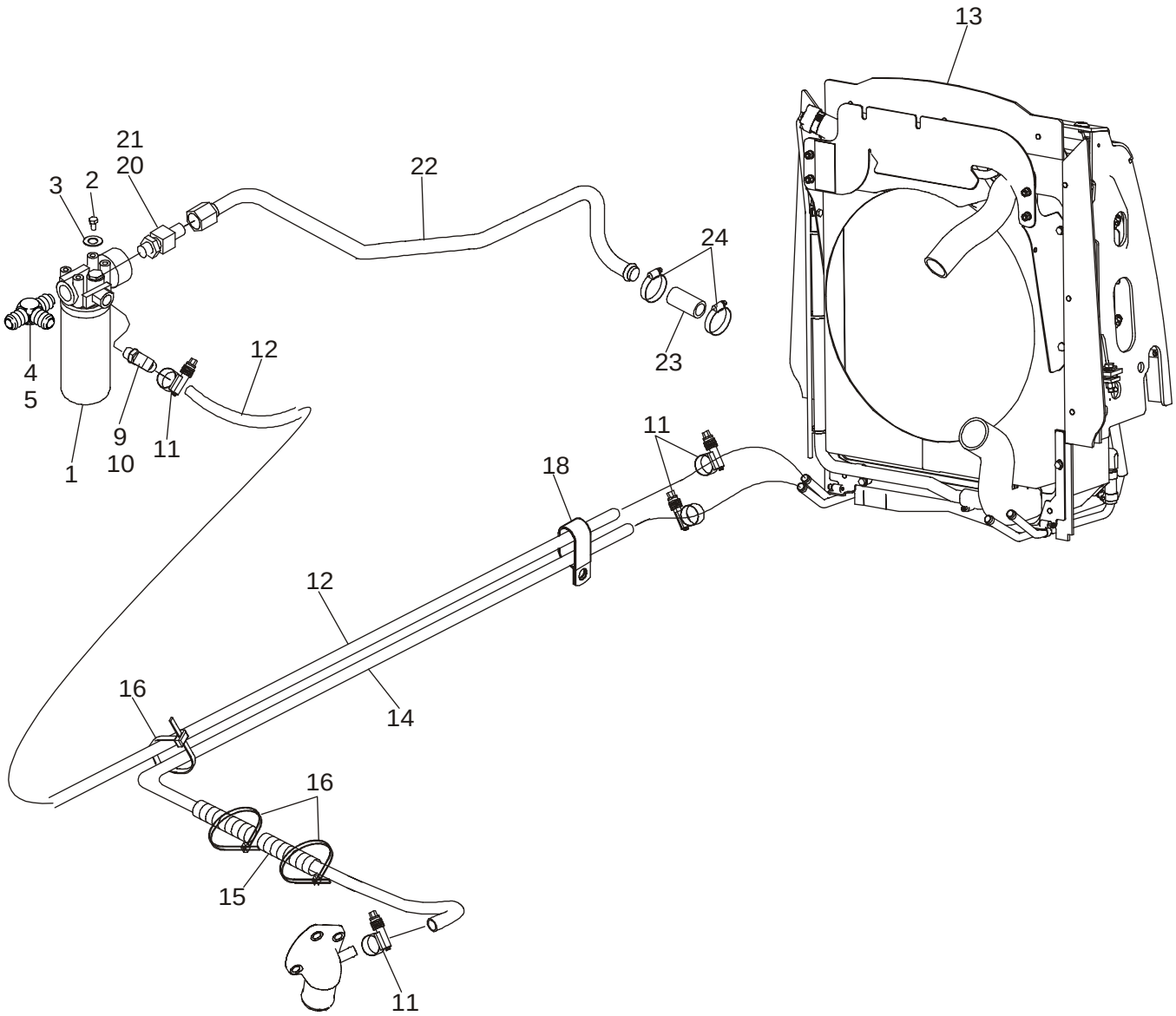


BS03M096

HTTP://WWW.MINNPARBACKHOEPARTS.COM



HIDRAULICA - REFRIGERADOR, LÍNEAS DE RETORNO Y FILTRO

| REF | FN | PART NUMBER | YR/SN | QTY | DESCRIPTION |
|---|---|---|---|---|---|
| 1 | | 445674A1 | | 1 | FILTRO CONJ Hydraulic Oil; See Figure 08-57 |
| 2 | | 614-10020 | | 4 | TORNILLO M10 x 20 |
| 3 | | 895-11010 | | 4 | ARANDELA 11 x 21 x 2 mm |
| 4 | | 218-5584 | | 1 | CONEXION TEE, 1-1/16 fl br x 1-5/16 fl x Or; Incl. Ref 5 |
| 5 | | 237-6016 | | 1 | JUNTA HERMETICA 1-11/64 ID x 7/64 wide |
| 9 | | 301104A1 | | 1 | CONEXION Special, Incl. Ref 10 |
| 10 | | 237-6010 | | 1 | JUNTA HERMETICA 3/4 ID x 3/32 wide |
| 11 | | 328186A1 | | 4 | ABRAZADERA MANGUERA |
| 12 | | 87426965 | | 1 | MANGA 1785 mm (70-5/16 in) |
| 13 | | 87427158 | | 1 | RADIADOR ACEITE Hydraulic Oil Cooler; For Attaching Parts, See Figure 06-10 |
| 14 | | 87426966 | | 1 | MANGA 1860 mm (73-1/4 in), Return |
| 15 | | D132982 | | 2 | TUBO AISLANTE Hose Sleeve |
| 16 | | L18337 | | 2 | BANDA |
| 18 | | D39696 | | 1 | COLLAR Double P-Type |
| 20 | | 218-5086 | | 1 | CONECTOR 5/16-12 fl x 1-5/8; Incl. Ref 21 |
| 21 | | 237-6020 | | 1 | JUNTA HERMETICA 1-15/32 ID x 1/8 |
| 22 | | 87421940 | | 1 | TUBO (CONJUNTO) Return To Tank |
| 23 | | D38435 | | 1 | MANGUITO 89 mm (3-5/8 in); Cut From S118383X; Return To Tank; For Attaching Brake Line Clamp, See Figure 07-04 |
| 24 | | 214-1420 | | 2 | COLLAR No. 20 |

HTTP://WWW.MINNPARBACKHOEPARTS.COM

| 08-04 | | p1 | 01/04 |
|---|---|---|---|

HIDRAULICA - CILINDRO, ELEVACIÓN DE LA CARGADORA

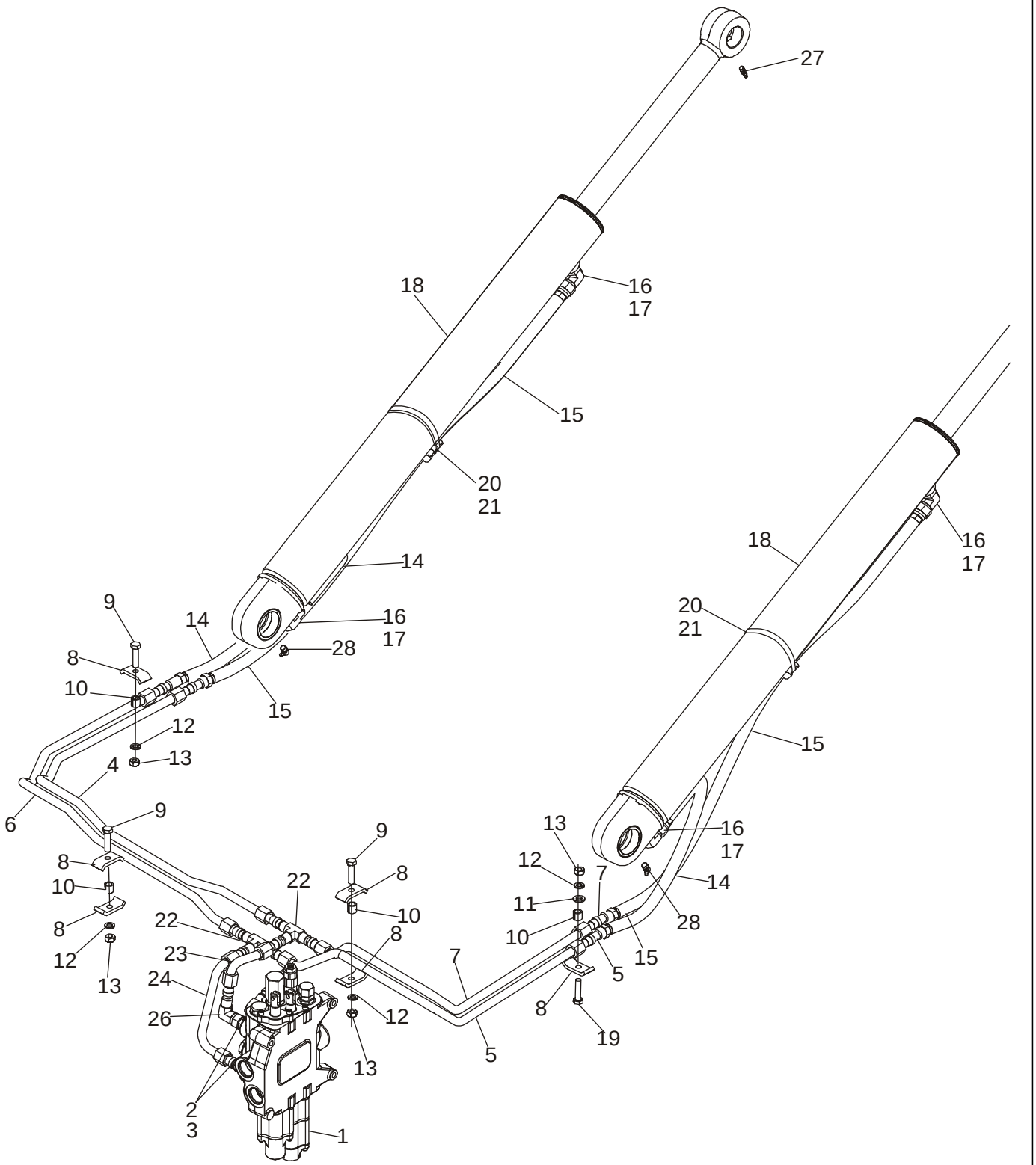


BS03M016

HTTP://WWW.MINNPARBACKHOEPARTS.COM



HIDRAULICA - CILINDRO, ELEVACIÓN DE LA CARGADORA

| REF | FN | PART NUMBER | YR/SN | QTY | DESCRIPTION |
|---|---|---|---|---|---|
| 1 | | REF | | 1 | MANUAL LOADER CONTROL VALVE; For Correct Assembly and Components, See Figures 08-30, 08-31 |
| 2 | | 218-5062 | | 2 | RACOR 7/8 fl x Or; Incl. Ref 3 |
| 3 | | 237-6010 | | 1 | JUNTA HERMETICA 3/4 ID x 3/32 |
| 4 | | 87421930 | | 1 | TUBO (CONJUNTO) Upper Lift Port |
| 5 | | 87421932 | | 1 | TUBO (CONJUNTO) Lower Lift Port |
| 6 | | 87421934 | | 1 | TUBO (CONJUNTO) Lower Lift Port |
| 7 | | 87421928 | | 1 | TUBO (CONJUNTO) Upper Lift Port |
| 8 | | D138055 | | 6 | COLLAR |
| 9 | | 814-10040 | | 3 | TORNILLO M10 x 40 |
| 10 | | 120303A1 | | 4 | ESPACIADOR |
| 11 | | 895-11010 | | 1 | ARANDELA 11 x 21 x 2 mm |
| 12 | | 892-11010 | | 4 | ARANDELA DE FRENO M10 |
| 13 | | 829-1410 | | 4 | TUERCA M10; 10.9 |
| 14 | | 87429290 | | 2 | MANGUERA (CONJUNTO) 780 mm (30-3/4 in) |
| 15 | | 87429293 | | 2 | MANGUERA (CONJUNTO) 1150 mm (45-5/16 in) |
| 16 | | 218-5107 | | 4 | CODO 7/8 fl x adj Or; Incl. Ref 17 |
| 17 | | 237-6010 | | 1 | JUNTA HERMETICA 3/4 ID x 3/32 |
| 18 | | 384240A1 | | 2 | CILINDRO (CONJUNTO) 82.6 ID x 766 mm strk; Loader Lift Cylinder; See Figure 08-58 |
| 19 | | 814-10045 | | 1 | TORNILLO M10 x 45 |
| 20 | | D142787 | | 2 | ESPACIADOR |
| 21 | | 214-1472 | | 2 | COLLAR 4-1/16 - 5 |
| 22 | | 218-595 | | 2 | CONEXION TEE, 7/8 fl |
| 23 | | 87416024 | | 1 | TUBO (CONJUNTO) Upper Lift Port |
| 24 | | 87437108 | | 1 | TUBO (CONJUNTO) Lower Lift Port |
| 26 | | 218-5232 | | 1 | CODO 90 Deg, 7/8 fl x sw fl |
| 27 | | 219-1 | | 2 | ENGRASADOR Straight, 1/8 PT x 21/32 |
| 28 | | 219-55 | | 2 | ENGRASADOR 90 Deg, 1/8 PT x 27/32 |

HTTP://WWW.MINNPARBACKHOEPARTS.COM

| 08-05 | | p1 | 01/04 |
|---|---|---|---|

HIDRAULICA - CILINDRO, CUCHARÓN DE LA CARGADORA

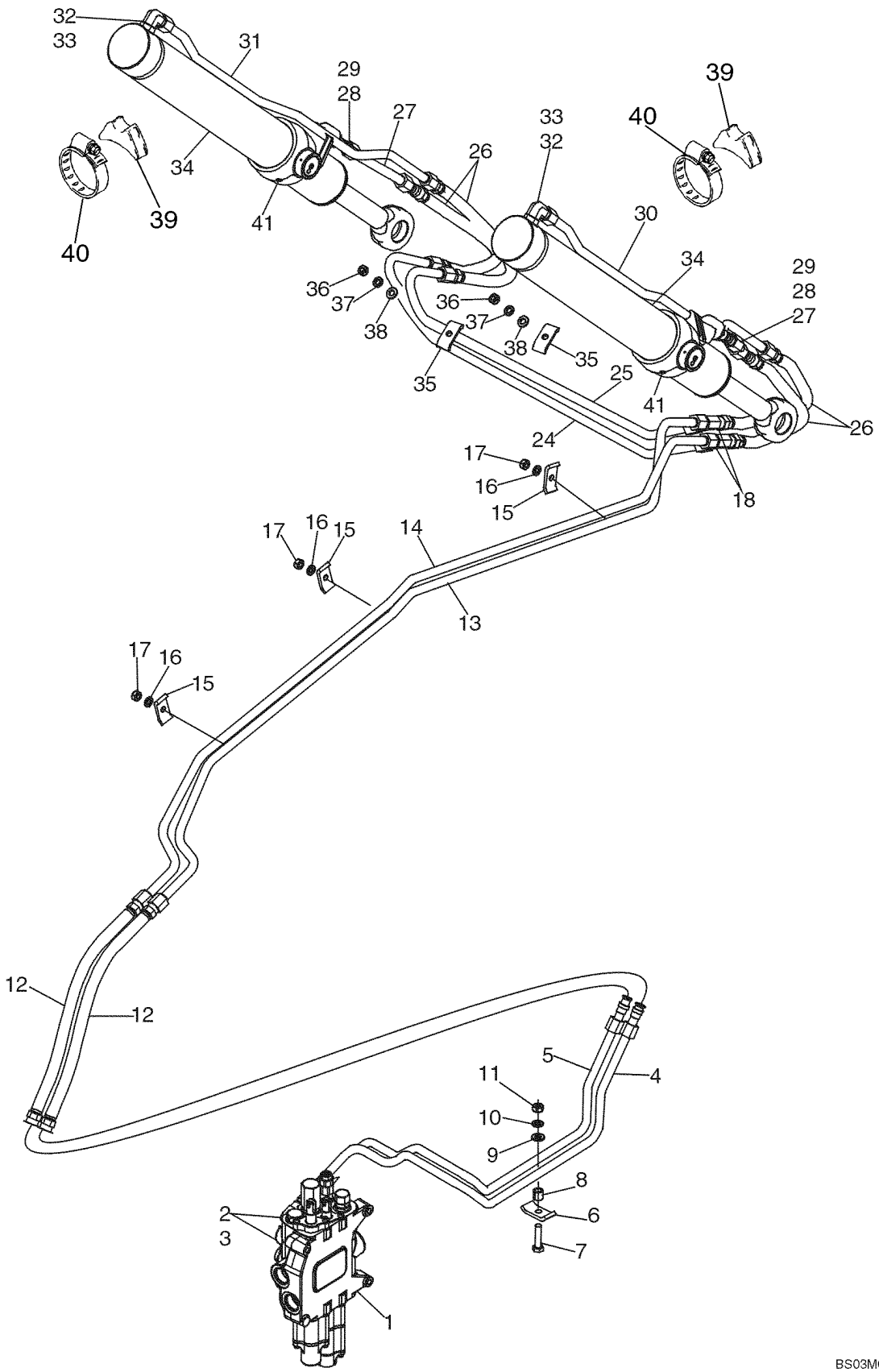

HTTP://WWW.MINNPARBACKHOEPARTS.COM



HIDRAULICA - CILINDRO, CUCHARÓN DE LA CARGADORA

| REF | FN | PART NUMBER | YR/SN | QTY | DESCRIPTION |
|---|---|---|---|---|---|
| 1 | | REF | | 1 | MANUAL LOADER CONTROL VALVE; For Correct Assembly and Components, See Figures 08-30, 08-31, For Mounting, See Figure 09-01 |
| 2 | | 218-5107 | | 2 | CODO 90 Deg, 7/8 fl x Or; Incl. Ref 3 |
| 3 | | 237-6010 | | 1 | JUNTA HERMETICA 3/4 ID x 3/32, Boss Seal |
| 4 | | 87421918 | | 1 | TUBO (CONJUNTO) Upper Bucket Port |
| 5 | | 87421920 | | 1 | TUBO (CONJUNTO) Lower Bucket Port |
| 6 | | D138055 | | 1 | COLLAR |
| 7 | | 814-10045 | | 1 | TORNILLO M10 x 45 |
| 8 | | 120303A1 | | 1 | ESPACIADOR |
| 9 | | 895-11010 | | 1 | ARANDELA 11 x 21 x 2 mm |
| 10 | | 892-11010 | | 1 | ARANDELA DE FRENO M10 |
| 11 | | 829-1410 | | 1 | TUERCA M10; 10.9 |
| 12 | | 87429287 | | 2 | MANGUERA (CONJUNTO) 710 mm (28 in) |
| 13 | | 418789A1 | | 1 | TUBO (CONJUNTO) To Upper Port |
| 14 | | 418791A1 | | 1 | TUBO (CONJUNTO) |
| 15 | | D138055 | | 3 | COLLAR |
| 16 | | 892-11010 | | 3 | ARANDELA DE FRENO M10 |
| 17 | | 829-1410 | | 3 | TUERCA M10; 10.9 |
| 18 | | 218-5220 | | 2 | RACOR-T 7/8 fl br x fl x sw |
| 24 | | 196815A1 | | 1 | CUELLO DE CARGA Rear |
| 25 | | 196813A1 | | 1 | CUELLO DE CARGA Front |
| 26 | | 371031A1 | | 4 | MANGUERA (CONJUNTO) 840 mm (33 in) |
| 27 | | 192152A1 | | 2 | CUELLO DE CARGA Bucket Cylinder Rod End |
| 28 | | 218-5062 | | 2 | RACOR 7/8 fl x Or; Incl. Ref 29 |
| 29 | | 237-6010 | | 1 | JUNTA HERMETICA 3/4 ID x 3/32, Boss Seal |
| 30 | | 192156A1 | | 1 | CUELLO DE CARGA Right-Hand Cylinder |
| 31 | | 192154A1 | | 1 | CUELLO DE CARGA Left-Hand Cylinder |
| 32 | | 218-5107 | | 2 | CODO 90 Deg, 7/8 fl x adj Or; Incl. Ref 33 |
| 33 | | 237-6010 | | 1 | JUNTA HERMETICA 3/4 ID x 3/32, Boss Seal |
| 34 | | 113133A2 | | 2 | CILINDRO (CONJUNTO) 76 ID x 522 mm strk; Loader Bucket Cylinder; See Figure 08-59 |
| 35 | | D138055 | | 2 | COLLAR |
| 36 | | 829-1410 | | 2 | TUERCA M10; 10.9 |
| 37 | | 892-11010 | | 2 | ARANDELA DE FRENO M10 |
| 38 | | 895-11010 | | 2 | ARANDELA 11 x 21 x 2 mm |

HTTP://WWW.MINNPARBACKHOEPARTS.COM

| 08-05 | | p2 | 01/04 |
|---|---|---|---|

HIDRAULICA - CILINDRO, CUCHARÓN DE LA CARGADORA

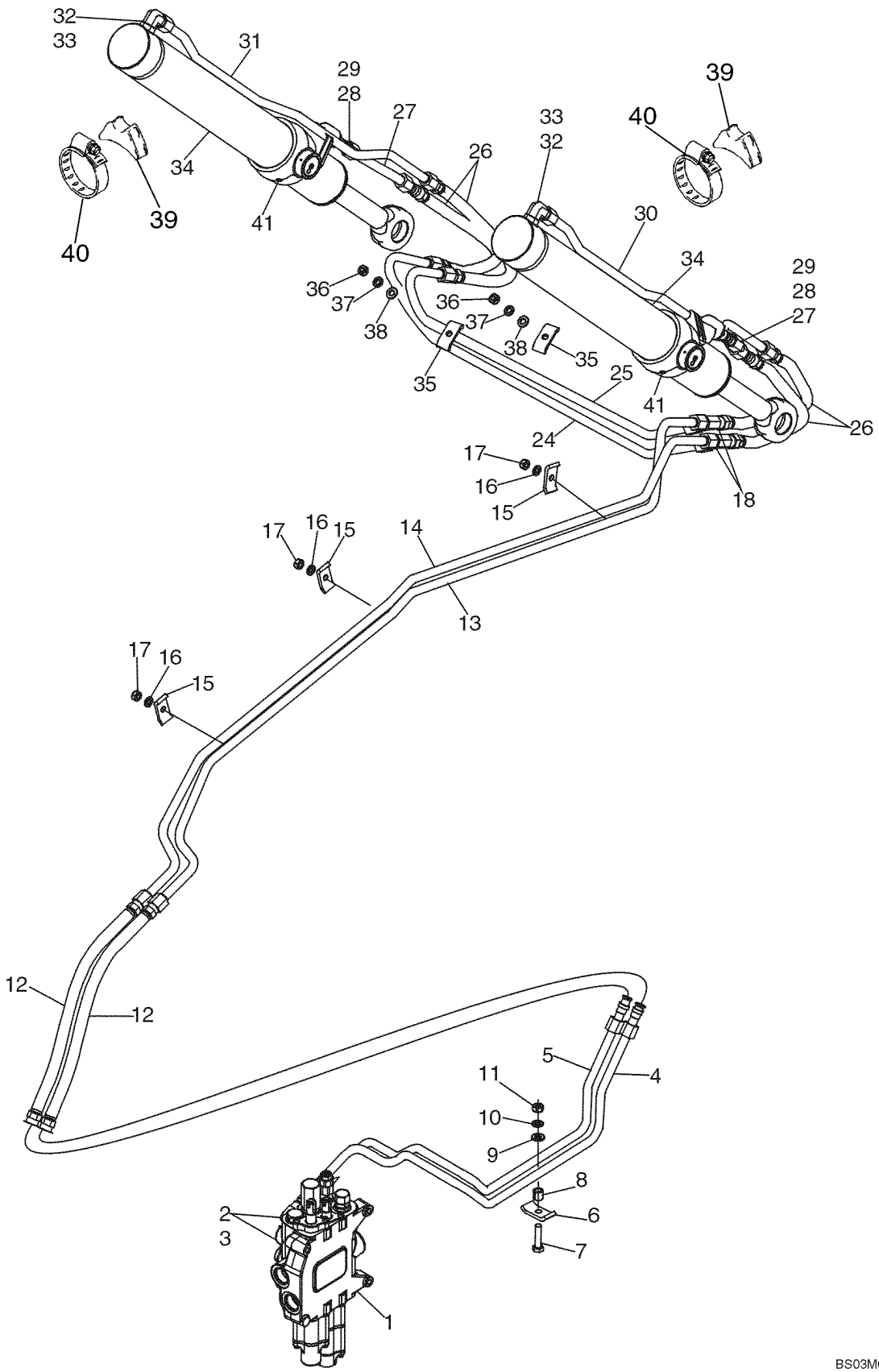

HTTP://WWW.MINNPARBACKHOEPARTS.COM



HIDRAULICA - CILINDRO, CUCHARÓN DE LA CARGADORA

| REF | FN | PART NUMBER | YR/SN | QTY | DESCRIPTION |
|---|---|---|---|---|---|
| 39 | | L79937 | | 2 | SILLA |
| 40 | | 214-1464 | | 2 | COLLAR 3-9/16 - 4-1/2 in dia |
| 41 | | 219-55 | | 2 | ENGRASADOR 90 Deg, 1/8 PT x 27/32 |

HTTP://WWW.MINNPARBACKHOEPARTS.COM

| 08-06 | | p1 | 01/04 |
|---|---|---|---|

HIDRAULICA - CILINDRO, ALMEJA DE LA CARGADORA

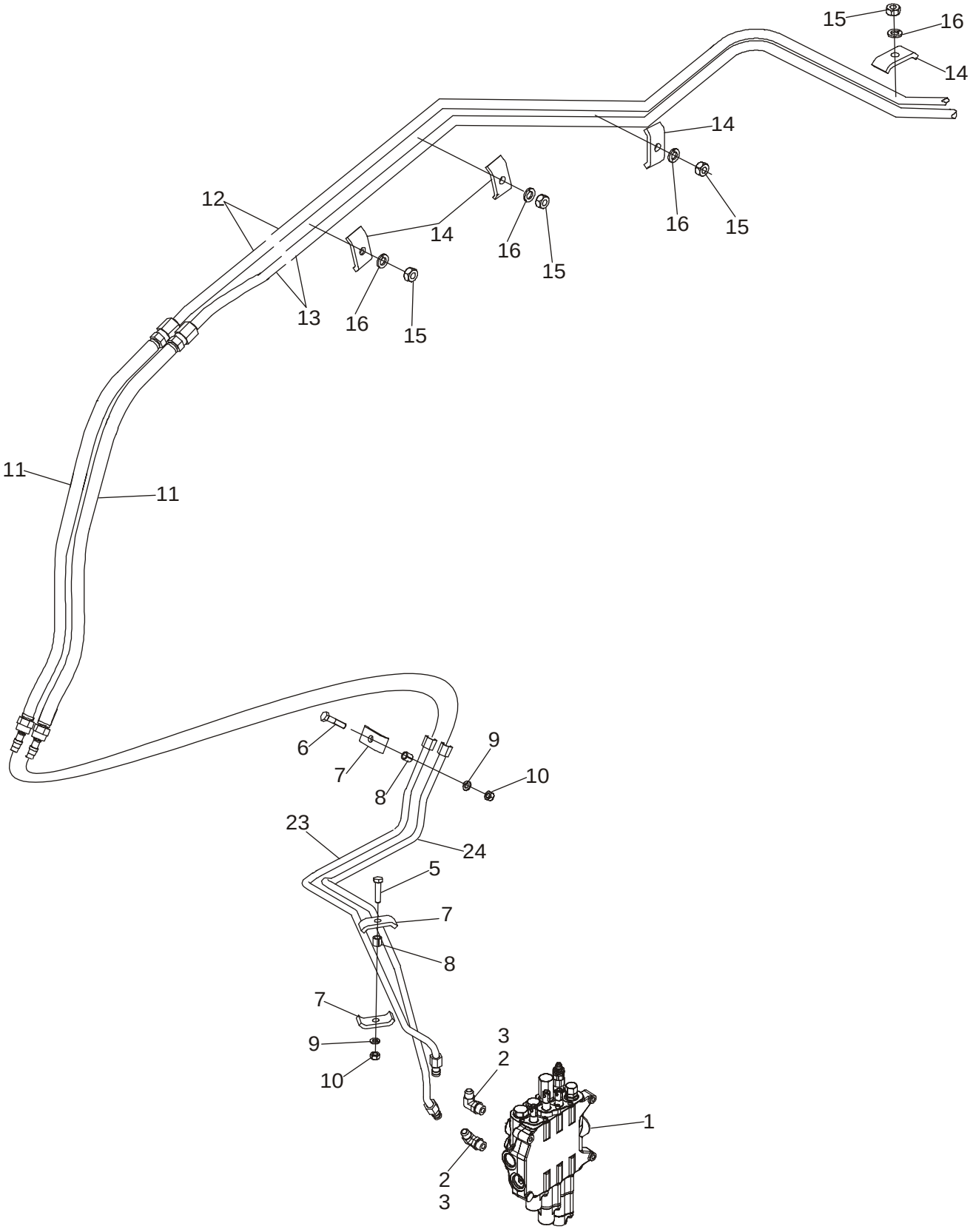

HTTP://WWW.MINNPARBACKHOEPARTS.COM



HIDRAULICA - CILINDRO, ALMEJA DE LA CARGADORA

| REF | FN | PART NUMBER | YR/SN | QTY | DESCRIPTION |
|---|---|---|---|---|---|
| 1 | | REF | | 1 | MANUAL LOADER CONTROL VALVE; Three Spool; See Figure 08-31 for Valve Options; For Mounting, See Figure 09-01 |
| 2 | | 218-5107 | | 2 | CODO 90 deg, 7/8 fl x Or; Incl. Ref 3 |
| 3 | | 237-6010 | | 1 | JUNTA HERMETICA 3/4 ID x 3/32, Boss Seal |
| 5 | | 814-10045 | | 1 | TORNILLO M10 x 45 |
| 6 | | 814-10040 | | 1 | TORNILLO M10 x 40 |
| 7 | | D138055 | | 3 | COLLAR |
| 8 | | 120303A1 | | 2 | ESPACIADOR |
| 9 | | 892-11010 | | 2 | ARANDELA DE FRENO M10 |
| 10 | | 829-1410 | | 2 | TUERCA M10; 10.9 |
| 11 | | 87429287 | | 2 | MANGUERA (CONJUNTO) 710 mm (28 in) |
| 12 | | 196824A1 | | 1 | CUELLO DE CARGA Upper Clam Port |
| 13 | | 196821A1 | | 1 | CUELLO DE CARGA Lower Clam Port |
| 14 | | D138055 | | 4 | COLLAR |
| 15 | | 829-1410 | | 4 | TUERCA M10; 10.9 |
| 16 | | 892-11010 | | 4 | ARANDELA DE FRENO M10 |
| 17 | | 218-776 | | 2 | TAPÓN 7/8 fl; Located on the End of Ref 13 Tube; Not Used On Models With Clam Bucket; Not Illustrated |
| 23 | | 87436908 | | 1 | TUBO (CONJUNTO) Upper Clam Port |
| 24 | | 87436910 | | 1 | TUBO (CONJUNTO) Lower Clam Port |

HTTP://WWW.MINNPARBACKHOEPARTS.COM

| 08-07 | | p1 | 01/04 |
|---|---|---|---|

HIDRAULICA - CILINDRO, ALMEJA DE LA CARGADORA

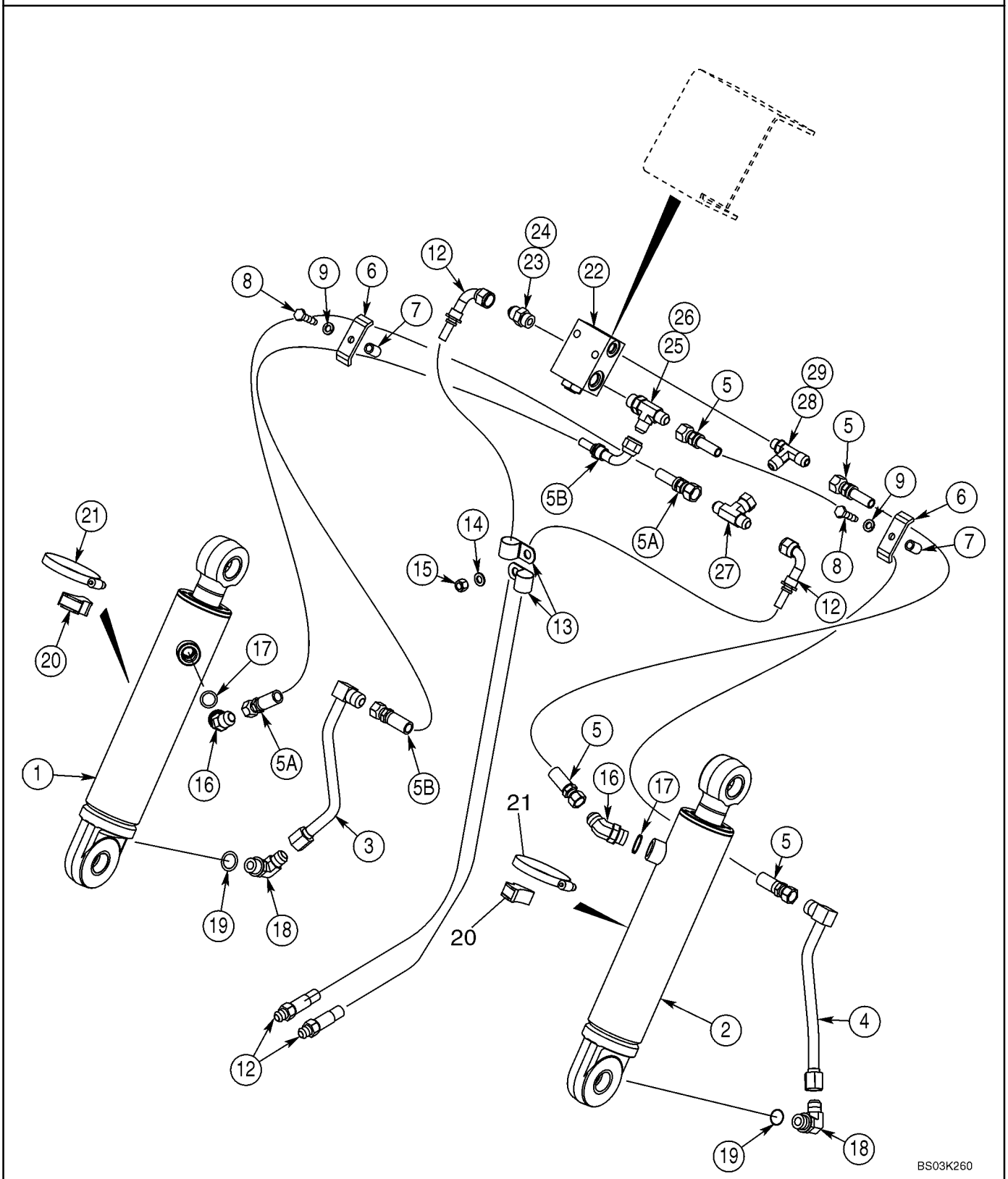

HTTP://WWW.MINNPARBACKHOEPARTS.COM



HIDRAULICA - CILINDRO, ALMEJA DE LA CARGADORA

| REF | FN | PART NUMBER | YR/SN | QTY | DESCRIPTION |
|---|---|---|---|---|---|
| 1 | | 1346190C2 | | 1 | CILINDRO (CONJUNTO) 76 ID x 231 mm strk: Loader Clam Cylinder; Left-Hand; See Figure 08-60 |
| 2 | | 1346189C2 | | 1 | CILINDRO (CONJUNTO) 76 ID x 231 mm strk; Loader Clam Cylinder; Right-Hand; See Figure 08-60 |
| 3 | | 192352A1 | | 1 | CUELLO DE CARGA Left-Hand Cylinder |
| 4 | | 192345A1 | | 1 | CUELLO DE CARGA Right-Hand Cylinder |
| 5 | | 353167A1 | | 2 | MANGUERA (CONJUNTO) 1100 mm (43-5/16 in); Right-Hand Cylinder |
| 5A | | 353103A1 | | 1 | MANGUERA (CONJUNTO) 1200 mm (47-1/4 in); Left-Hand Cylinder |
| 5B | | 367352A1 | | 1 | MANGUERA (CONJUNTO) 1200 mm (47-1/4 in); Left-Hand Cylinder |
| 6 | | D143846 | | 2 | BRIDA CLAMP |
| 7 | | R46493 | | 2 | ESPACIADOR |
| 8 | | 814-10040 | | 2 | TORNILLO M10 x 40 |
| 9 | | 892-11010 | | 2 | ARANDELA DE FRENO M10 |
| 12 | | 356743A1 | | 2 | MANGUERA (CONJUNTO) 1170 mm (46-1/16 in); Lift Frame |
| 13 | | 515-25254 | | 2 | COLLAR 1 in ID |
| 14 | | 895-11010 | | 1 | ARANDELA 11 x 21 x 2 mm |
| 15 | | 832-10410 | | 1 | TUERCA M10 |
| 16 | | 218-5137 | | 2 | CONEXION 7/8 fl x Or; Incl. Ref 17 |
| 17 | | 237-6010 | | 1 | JUNTA HERMETICA 3/4 ID x 3/32, Boss Seal |
| 18 | | 218-5107 | | 2 | CODO 7/8 fl x adj Or; Incl. Ref 19 |
| 19 | | 237-6010 | | 1 | JUNTA HERMETICA 3/4 ID x 3/32, Boss Seal |
| 20 | | D38648 | | 2 | BLOQUE MOTOR |
| 21 | | 214-1464 | | 2 | COLLAR 3-9/16 - 4-1/2 in dia |
| 22 | | 325465A2 | | 1 | VALVULA ANTIRRETORNO Pilot Operated Check Valve; For Mounting, See Figure 09-08 |
| | | 399963A1 | | 1 | JEUGO Seal; For Use With 325465A2 Valve; Includes (1) Piston, (1) Backup Ring, (2) O-Rings and Instructions |
| 23 | | 218-5059 | | 1 | RACOR 3/4 fl x Or; Incl. Ref 24 |
| 24 | | 237-6008 | | 1 | JUNTA HERMETICA 41/64 ID x 3/32, Boss Seal |
| 25 | | 218-5242 | | 1 | RACOR 3/4 fl br x fl x Or; Incl. Ref 26 |

HTTP://WWW.MINNPARBACKHOEPARTS.COM



HIDRAULICA - CILINDRO, ALMEJA DE LA CARGADORA

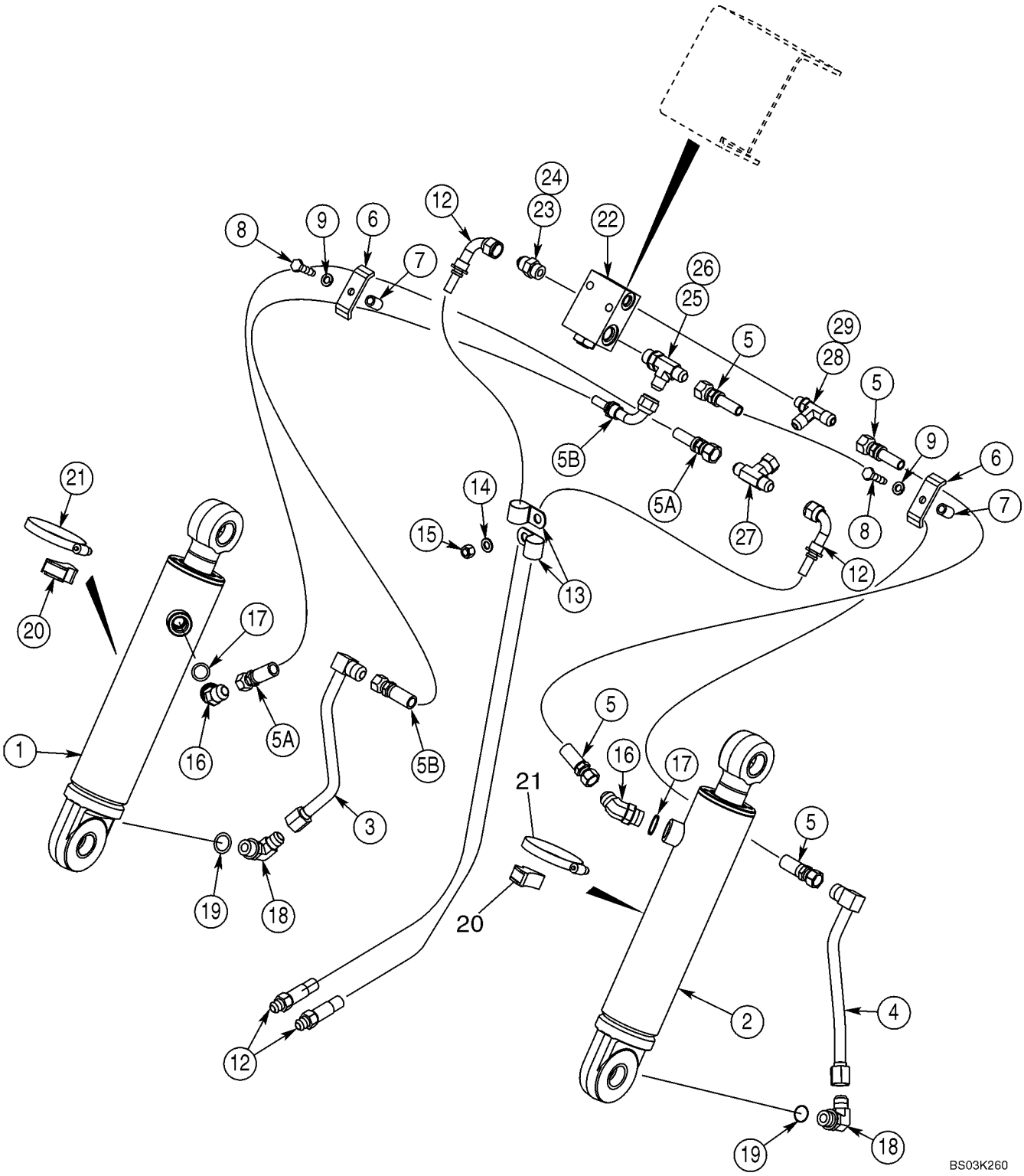

HTTP://WWW.MINNPARBACKHOEPARTS.COM



HIDRAULICA - CILINDRO, ALMEJA DE LA CARGADORA

| REF | FN | PART NUMBER | YR/SN | QTY | DESCRIPTION |
|---|---|---|---|---|---|
| 26 | | 237-6008 | | 1 | JUNTA HERMETICA 41/64 ID x 3/32, Boss Seal |
| 27 | | 218-840 | | 1 | RACOR-T 3/4 NF sw x fl x fl |
| 28 | | 218-5650 | | 1 | RACOR-T 3/4 fl x fl x 9/16 Or; Incl. Ref 29 |
| 29 | | 237-6006 | | 1 | JUNTA HERMETICA 15/32 ID x 5/64, Boss Seal |

HTTP://WWW.MINNPARBACKHOEPARTS.COM



HIDRAULICA - CILINDRO, ESTABILIZADOR DE LA RETROEXCAVADORA (SIN DE CONTROL PILOTO)

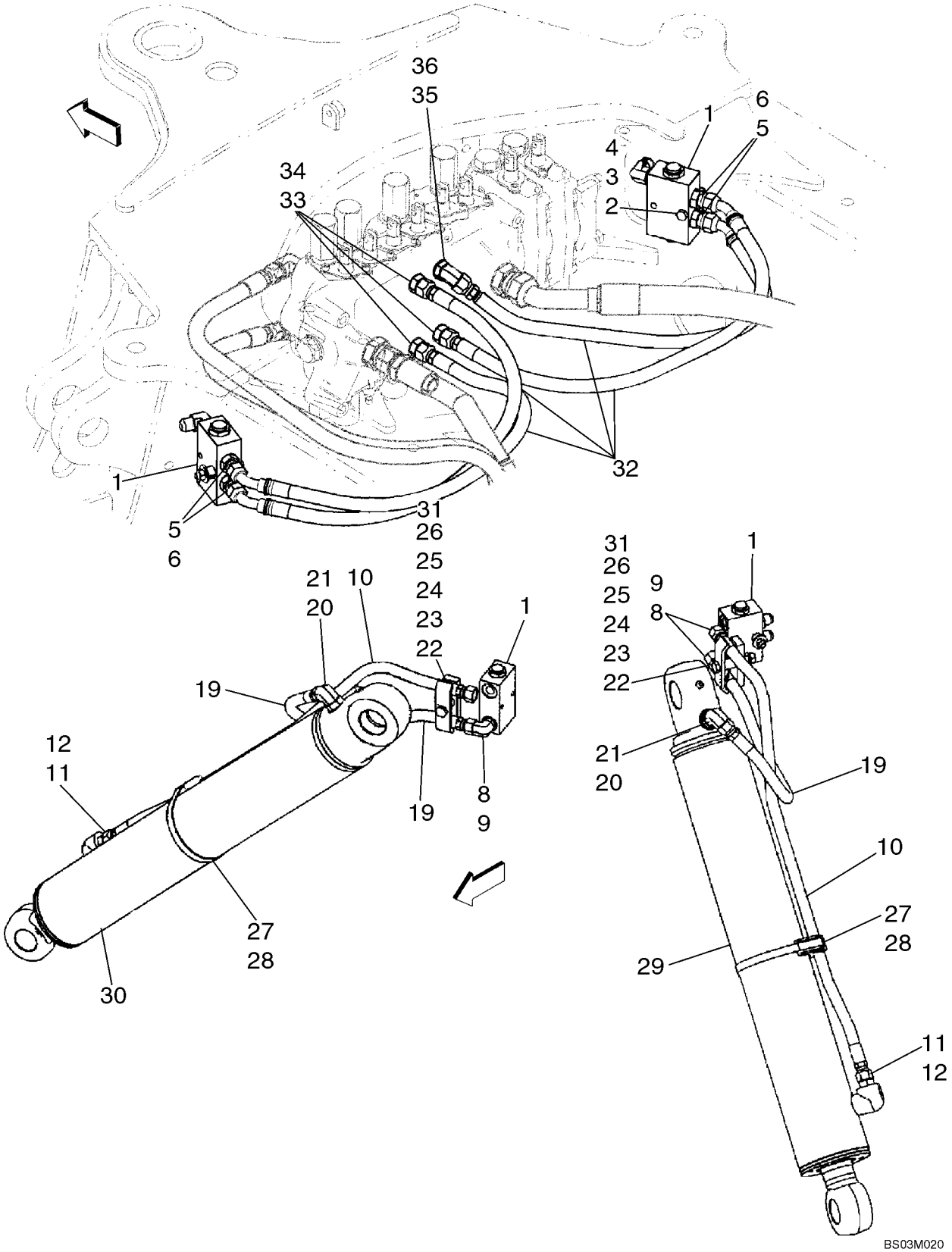

HTTP://WWW.MINNPARBACKHOEPARTS.COM



HIDRAULICA - CILINDRO, ESTABILIZADOR DE LA RETROEXCAVADORA (SIN DE CONTROL PILOTO)

| REF | FN | PART NUMBER | YR/SN | QTY | DESCRIPTION |
|---|---|---|---|---|---|
| | | REF | | | MANUAL MODELS WITHOUT PILOT CONTROLS |
| 1 | | 85802820 | | 2 | VALVULA Load Check; Component Parts Not Serviced Separately |
| 2 | | 814-8060 | | 2 | TORNILLO M8 x 60 |
| 3 | | 895-15010 | | 2 | ARANDELA |
| 4 | | 829-1408 | | 2 | TUERCA M8 |
| 5 | | 218-5057 | | 4 | RACOR 9/16 fl x Or; Incl. Ref 6 |
| 6 | | 237-6006 | | 1 | JUNTA HERMETICA 15/32 ID x 5/64 |
| 8 | | 218-5105 | | 4 | CODO 90 deg, 9/16 fl x Or; Incl. Ref 9 |
| 9 | | 237-6006 | | 1 | JUNTA HERMETICA 15/32 ID x 5/64 |
| 10 | | {87429586} | | 2 | 790 mm (31-1/8 in) Hose |
| 11 | | 218-5059 | | 2 | RACOR 3/4 fl x Or; Incl. Ref 12 |
| 12 | | 237-6008 | | 1 | JUNTA HERMETICA 41/64 ID x 3/32 |
| 19 | | {87429584} | | 2 | 500 mm (19-11/16 in) Hose |
| 20 | | 218-5121 | | 2 | CONEXION 3/4 fl x 7/8 Or; Incl. Ref 21 |
| 21 | | 237-6008 | | 1 | JUNTA HERMETICA 41/64 ID x 3/32 |
| 22 | | 814-10060 | | 2 | TORNILLO M10 x 60 |
| 23 | | {87420673} | | 2 | Clamp |
| 24 | | 131600A1 | | 2 | ESPACIADOR |
| 25 | | {87420672} | | 2 | Spacer, Clamp |
| 26 | | 829-1410 | | 2 | TUERCA M10; 10.9 |
| 27 | | D142787 | | 2 | ESPACIADOR |
| 28 | | 214-3188 | | 2 | COLLAR 4-3/4 - 5-5/8 |
| 29 | | 195504A1 | | 1 | CILINDRO 102 ID x 553 mm strk; Stabilizer Cylinder; Left-Hand; See Figure 08-61 |
| 30 | | 195503A1 | | 1 | CILINDRO (CONJUNTO) 102 ID x 553 mm strk; Stabilizer Cylinder; Right-Hand; See Figure 08-61 |
| 31 | | 895-11010 | | 2 | ARANDELA |
| 32 | | 87429654 | | 4 | MANGUERA (CONJUNTO) 720 mm (28-3/8 in) |
| 33 | | 218-5059 | | 3 | RACOR 3/4 fl x Or; Incl. Ref 34 |
| 34 | | 237-6008 | | 1 | JUNTA HERMETICA 41/64 ID x 3/32 |
| 35 | | 218-5136 | | 1 | CODO 45 deg, 3/4 fl x adj Or; Incl. Ref 36 |
| 36 | | 237-6008 | | 1 | JUNTA HERMETICA 41/64 ID x 3/32 |

HTTP://WWW.MINNPARBACKHOEPARTS.COM

| 08-08A | | p1 | 01/04 |
|---|---|---|---|

HIDRAULICA - CILINDRO, ESTABILIZADOR DE LA RETROEXCAVADORA (CON DE CONTROL PILOTO)

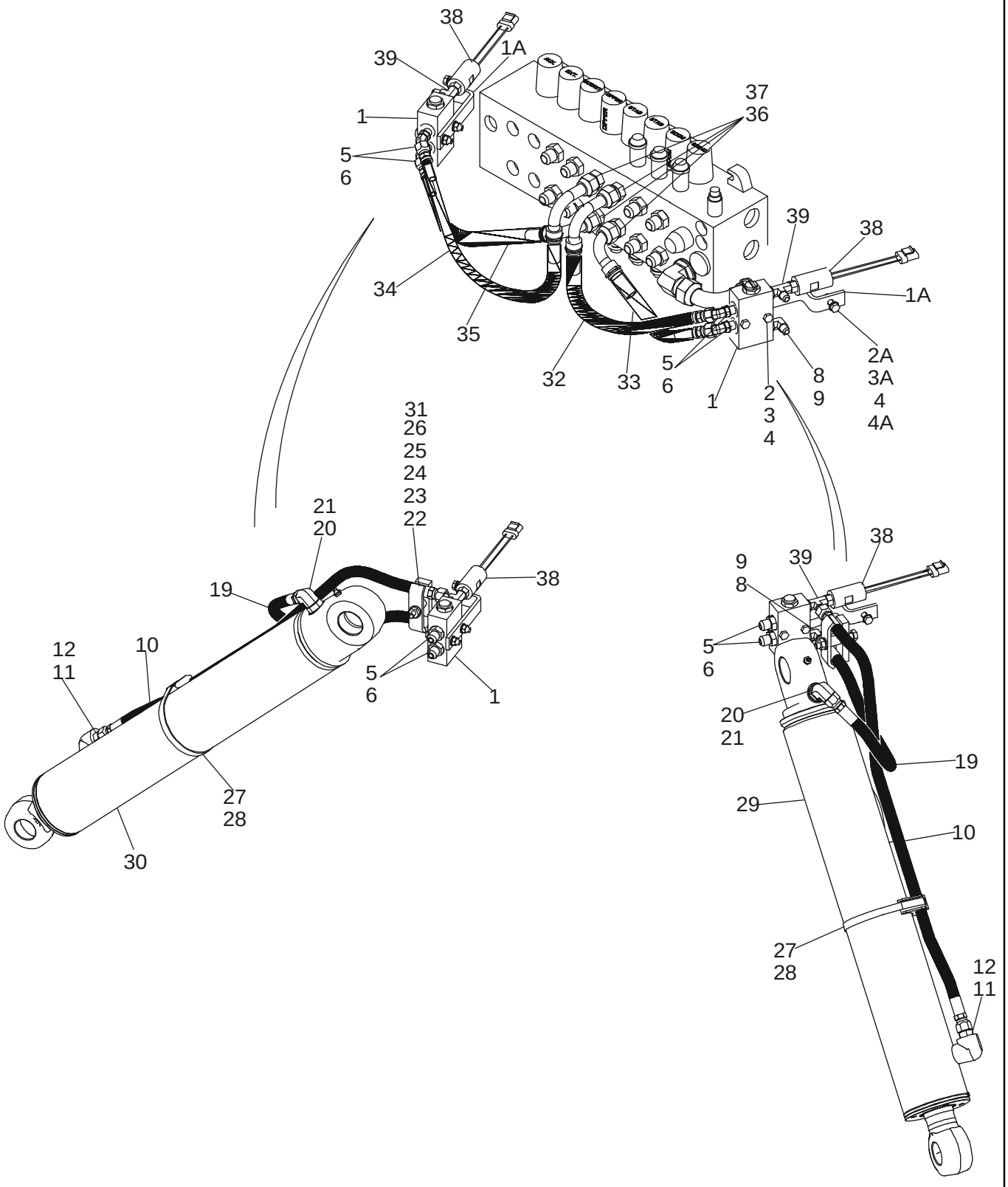

HTTP://WWW.MINNPARBACKHOEPARTS.COM



HIDRAULICA - CILINDRO, ESTABILIZADOR DE LA RETROEXCAVADORA (CON DE CONTROL PILOTO)

| REF | FN | PART NUMBER | YR/SN | QTY | DESCRIPTION |
|---|---|---|---|---|---|
| | | REF | | | MANUAL MODELS WITH PILOT CONTROLS |
| 1 | | 85802820 | | 2 | VALVULA Load Check; Component Parts Not Serviced Separately |
| 1A | | 87423034 | | 2 | PIEZA DE APOYO |
| 2 | | 814-8055 | | 4 | TORNILLO M8 x 55 |
| 2A | | 614-8030 | | 2 | TORNILLO M8 x 30 |
| 3 | | 895-15010 | | 8 | ARANDELA |
| 3A | | 892-11008 | | 4 | ARANDELA Lock, M8 |
| 4 | | 829-1408 | | 6 | TUERCA M8 |
| 4A | | {87437840} | | 2 | Spacer |
| 5 | | 218-5135 | | 4 | CODO 45 deg, 9/16 fl x Or; Incl. Ref 6 |
| 6 | | 237-6006 | | 1 | JUNTA HERMETICA 15/32 ID x 5/64 |
| 8 | | 218-5105 | | 2 | CODO 90 deg, 9/16 fl x Or; Incl. Ref 9 |
| 9 | | 237-6006 | | 1 | JUNTA HERMETICA 15/32 ID x 5/64 |
| 10 | | {87429586} | | 2 | 790 mm (31-1/8 in) Hose |
| 11 | | 218-5059 | | 2 | RACOR 3/4 fl x Or; Incl. Ref 12 |
| 12 | | 237-6008 | | 1 | JUNTA HERMETICA 41/64 ID x 3/32 |
| 19 | | {87429584} | | 2 | 500 mm (19-11/16 in) Hose |
| 20 | | 218-5121 | | 2 | CONEXION 3/4 fl x 7/8 Or; Incl. Ref 21 |
| 21 | | 237-6008 | | 1 | JUNTA HERMETICA 41/64 ID x 3/32 |
| 22 | | 814-10070 | | 2 | TORNILLO M10 x 70 |
| 23 | | {87420673} | | 2 | Clamp |
| 24 | | 131600A1 | | 2 | ESPACIADOR |
| 25 | | {87420672} | | 2 | Spacer, Clamp |
| 26 | | 829-1410 | | 2 | TUERCA M10; 10.9 |
| 27 | | D142787 | | 2 | ESPACIADOR |
| 28 | | 214-3188 | | 2 | COLLAR 4-3/4 - 5-5/8 |
| 29 | | 195504A1 | | 1 | CILINDRO 102 ID x 553 mm strk; Stabilizer Cylinder; Left-Hand; See Figure 08-61 |
| 30 | | 195503A1 | | 1 | CILINDRO (CONJUNTO) 102 ID x 553 mm strk; Stabilizer Cylinder; Right-Hand; See Figure 08-61 |
| 31 | | 895-11010 | | 2 | ARANDELA |
| 32 | | 87437938 | | 1 | MANGUERA (CONJUNTO) 350 mm (13-13/16 in) |
| 33 | | 87437939 | | 1 | MANGUERA (CONJUNTO) 440 mm (17-3/8 in) |
| 34 | | 87437940 | | 1 | MANGUERA (CONJUNTO) 400 mm (15-3/4 in) |
| 35 | | 87437941 | | 1 | MANGUERA (CONJUNTO) 485 mm (19-1/8 in) |

HTTP://WWW.MINNPARBACKHOEPARTS.COM



HIDRAULICA - CILINDRO, ESTABILIZADOR DE LA RETROEXCAVADORA (CON DE CONTROL PILOTO)

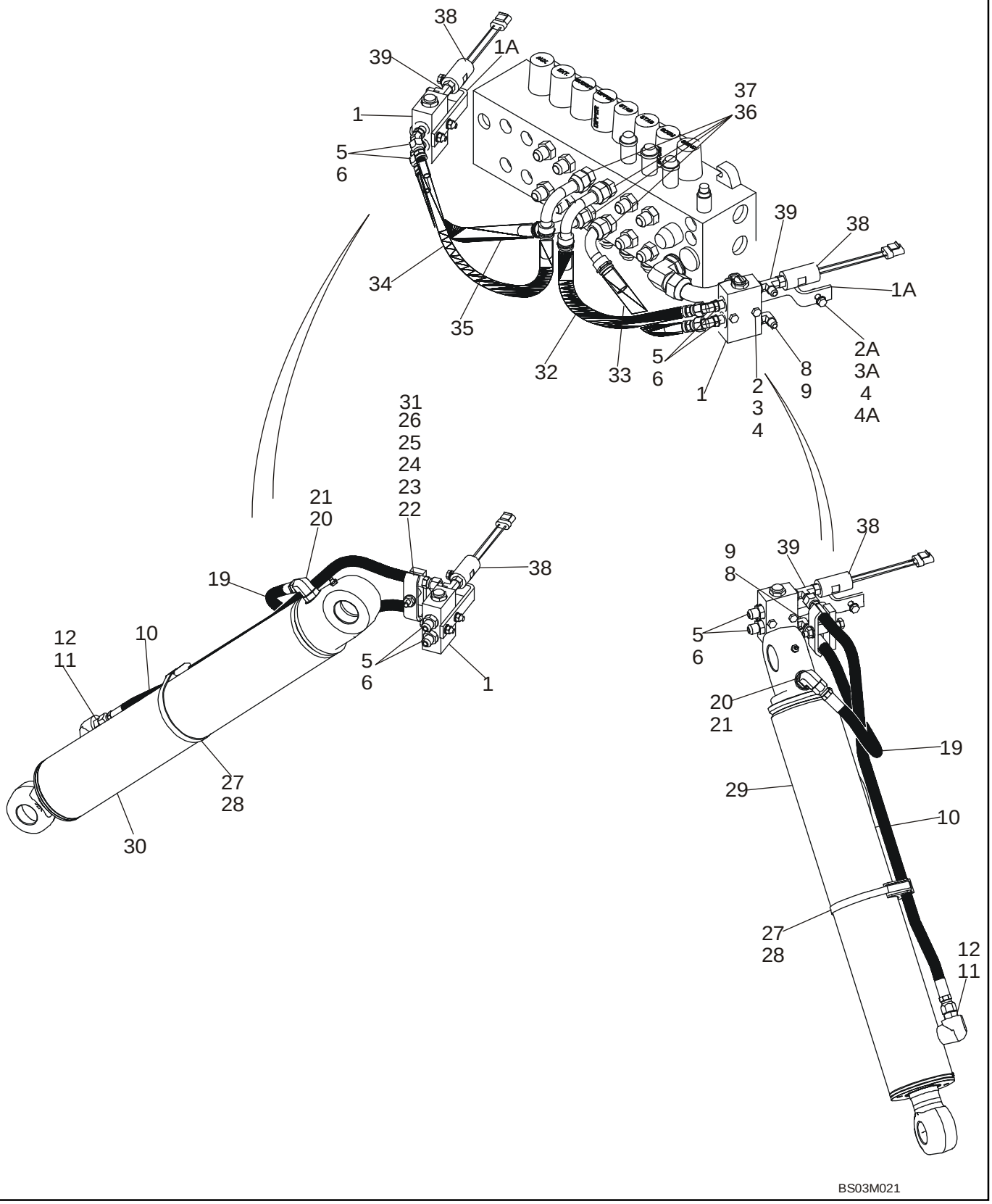

HTTP://WWW.MINNPARBACKHOEPARTS.COM



HIDRAULICA - CILINDRO, ESTABILIZADOR DE LA RETROEXCAVADORA (CON DE CONTROL PILOTO)

| REF | FN | PART NUMBER | YR/SN | QTY | DESCRIPTION |
|---|---|---|---|---|---|
| 36 | | 218-5070 | | 1 | CONECTOR 3/4 fl x 1-1/16 Or; Incl. Ref 37 |
| 37 | | 237-6012 | | 1 | JUNTA HERMETICA 59/64 ID x 7/64 |
| 38 | | 87439163 | | 2 | INTERRUPTOR DE PRESION Pilot Control; Includes 237-6004 O-Ring |
| 39 | | 87423033 | | 2 | RACOR-T 9/16 x 9/16 Or x 7/16 Or; Includes 237-6004, 237-6006 O-Ring |

HTTP://WWW.MINNPARBACKHOEPARTS.COM



HIDRAULICA - CILINDRO, BALANCÍN DE LA RETROEXCAVADORA (SIN DE CONTROL PILOTO)

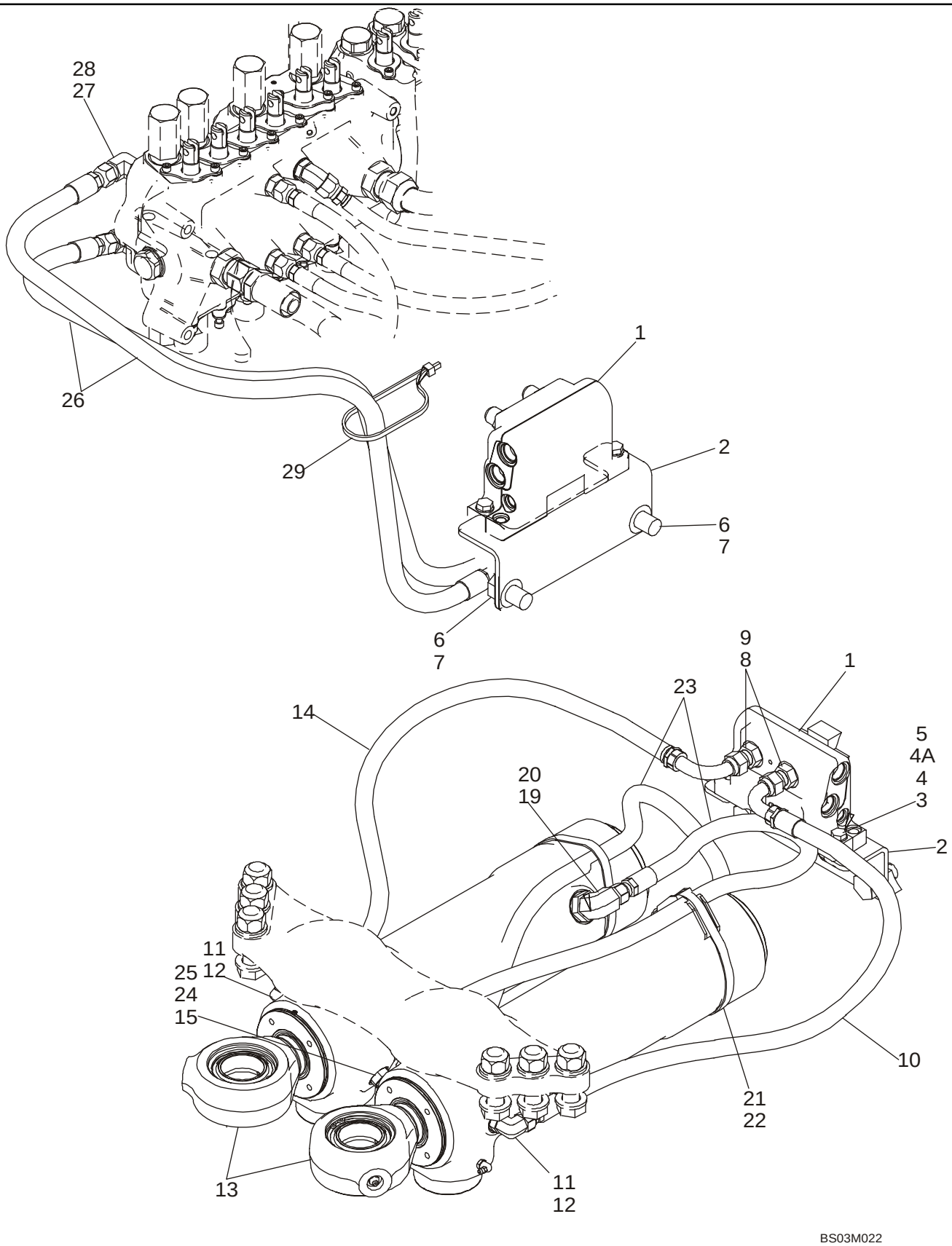

HTTP://WWW.MINNPARBACKHOEPARTS.COM



HIDRAULICA - CILINDRO, BALANCÍN DE LA RETROEXCAVADORA (SIN DE CONTROL PILOTO)

| REF | FN | PART NUMBER | YR/SN | QTY | DESCRIPTION |
|---|---|---|---|---|---|
| | | REF | | | MANUAL MODELS WITHOUT PILOT CONTROLS |
| 1 | | 87416975 | | 1 | VALVULA AMORTIGUADORA Swing Cushion; See Figure 08-55 |
| 2 | | {87428140} | | 1 | Valve Bracket |
| 3 | | 814-10040 | | 2 | TORNILLO M10 x 40 |
| 4 | | 895-11010 | | 4 | ARANDELA |
| 4A | | {87437840} | | 2 | Spacer |
| 5 | | 829-1410 | | 2 | TUERCA M10 |
| 6 | | 614-18035 | | 2 | TORNILLO M18 x 35 |
| 7 | | 895-11018 | | 4 | ARANDELA |
| 8 | | 218-5062 | | 4 | RACOR 7/8 fl x Or; Incl. Ref 9 |
| 9 | | 237-6010 | | 1 | JUNTA HERMETICA 3/4 ID x 3/32 |
| 10 | | 87423356 | | 1 | MANGUERA (CONJUNTO) 850 mm (33-1/2 in) |
| 11 | | 218-5106 | | 2 | CONEXION 3/4 fl x Or, Incl. Ref 12 |
| 12 | | 237-6008 | | 1 | JUNTA HERMETICA 41/64 ID x 3/32, Boss Seal |
| 13 | | 188027A2 | | 2 | CILINDRO (CONJUNTO) 95 ID x 292 mm strk; Swing Cylinder, See Figure 08-62 |
| 14 | | 87423356 | | 1 | MANGUERA (CONJUNTO) 850 mm (33-1/2 in) |
| 15 | | 192971A1 | | 2 | ORIFICIO Restrictor |
| 19 | | 218-5119 | | 2 | CONEXION 7/8 fl x 1-1/16 Or, Incl. Ref 20 |
| 20 | | 237-6012 | | 1 | JUNTA HERMETICA 59/64 ID x 7/64, Boss Seal |
| 21 | | D142787 | | 2 | ESPACIADOR |
| 22 | | 214-1492 | | 2 | COLLAR |
| 23 | | 255659A1 | | 2 | MANGA 815 mm (32-3/32 in) |
| 24 | | 218-5106 | | 2 | CONEXION 3/4 fl x Or, Incl. Ref 25 |
| 25 | | 237-6008 | | 1 | JUNTA HERMETICA 41/64 ID x 3/32, Boss Seal |
| 26 | | 87428158 | | 1 | MANGUERA (CONJUNTO) 1194 mm (47 in) |
| 27 | | 218-5107 | | 2 | CODO 90 deg, 7/8 fl x Or; Incl. Ref 28 |
| 28 | | 237-6010 | | 1 | JUNTA HERMETICA |
| 29 | | L18337 | | 1 | BANDA |

HTTP://WWW.MINNPARBACKHOEPARTS.COM



HIDRAULICA - CILINDRO, BALANCÍN DE LA RETROEXCAVADORA (CON DE CONTROL PILOTO)

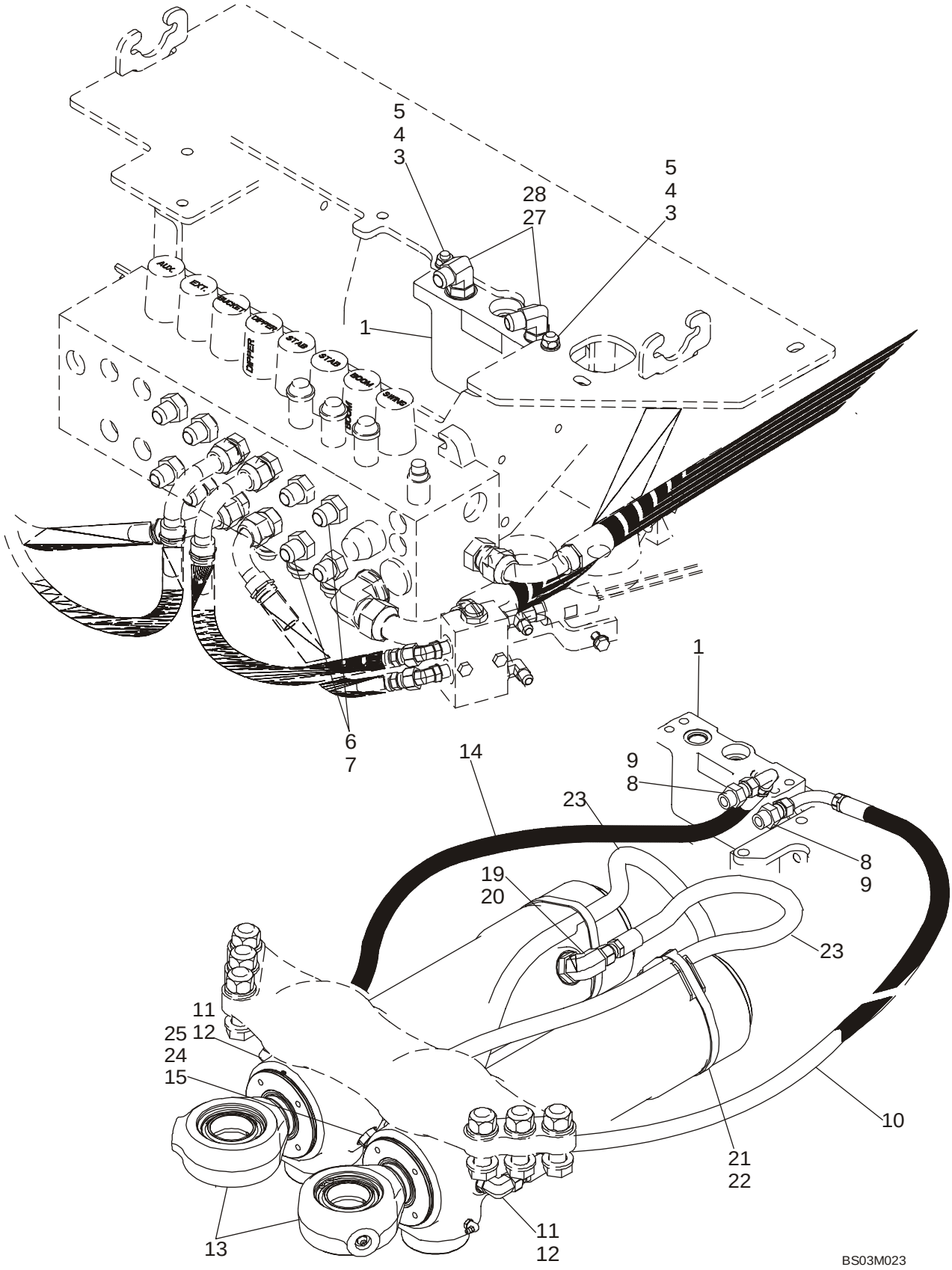

HTTP://WWW.MINNPARBACKHOEPARTS.COM



HIDRAULICA - CILINDRO, BALANCÍN DE LA RETROEXCAVADORA (CON DE CONTROL PILOTO)

| REF | FN | PART NUMBER | YR/SN | QTY | DESCRIPTION |
|---|---|---|---|---|---|
| | | REF | | | MANUAL MODELS WITH PILOT CONTROLS |
| 1 | | 87416975 | | 1 | VALVULA AMORTIGUADORA Swing Cushion; See Figure 08-55 |
| 3 | | 814-10045 | | 2 | TORNILLO M10 x 45 |
| 4 | | 895-11010 | | 4 | ARANDELA |
| 5 | | 829-1410 | | 2 | TUERCA M10 |
| 6 | | 218-5063 | | 2 | RACOR 7/8 fl x 1-1/16 Or; Incl. Ref 7 |
| 7 | | 237-6012 | | 1 | JUNTA HERMETICA |
| 8 | | 218-5062 | | 2 | RACOR 7/8 fl x Or; Incl. Ref 9 |
| 9 | | 237-6010 | | 1 | JUNTA HERMETICA 3/4 ID x 3/32 |
| 10 | | 87423356 | | 1 | MANGUERA (CONJUNTO) 850 mm (33-1/2 in) |
| 11 | | 218-5106 | | 2 | CONEXION 3/4 fl x Or, Incl. Ref 12 |
| 12 | | 237-6008 | | 1 | JUNTA HERMETICA 41/64 ID x 3/32, Boss Seal |
| 13 | | 188027A2 | | 2 | CILINDRO (CONJUNTO) 95 ID x 292 mm strk; Swing Cylinder, See Figure 08-62 |
| 14 | | 87437685 | | 1 | MANGUERA (CONJUNTO) 1310 mm (51-5/8 in) |
| 15 | | 192971A1 | | 2 | ORIFICIO Restrictor |
| 19 | | 218-5119 | | 2 | CONEXION 7/8 fl x 1-1/16 Or, Incl. Ref 20 |
| 20 | | 237-6012 | | 1 | JUNTA HERMETICA 59/64 ID x 7/64, Boss Seal |
| 21 | | D142787 | | 2 | ESPACIADOR |
| 22 | | 214-1492 | | 2 | COLLAR |
| 23 | | 255659A1 | | 2 | MANGA 815 mm (32-3/32 in) |
| 24 | | 218-5106 | | 2 | CONEXION 3/4 fl x Or, Incl. Ref 25 |
| 25 | | 237-6008 | | 1 | JUNTA HERMETICA 41/64 ID x 3/32, Boss Seal |
| 27 | | 218-5107 | | 2 | CODO 90 deg, 7/8 fl x Or; Incl. Ref 28 |
| 28 | | 237-6010 | | 1 | JUNTA HERMETICA |

HTTP://WWW.MINNPARBACKHOEPARTS.COM

| 08-10 | | p1 | 01/04 |
|---|---|---|---|

HIDRAULICA - CILINDRO, AGUILÓN DE LA RETROEXCAVADORA

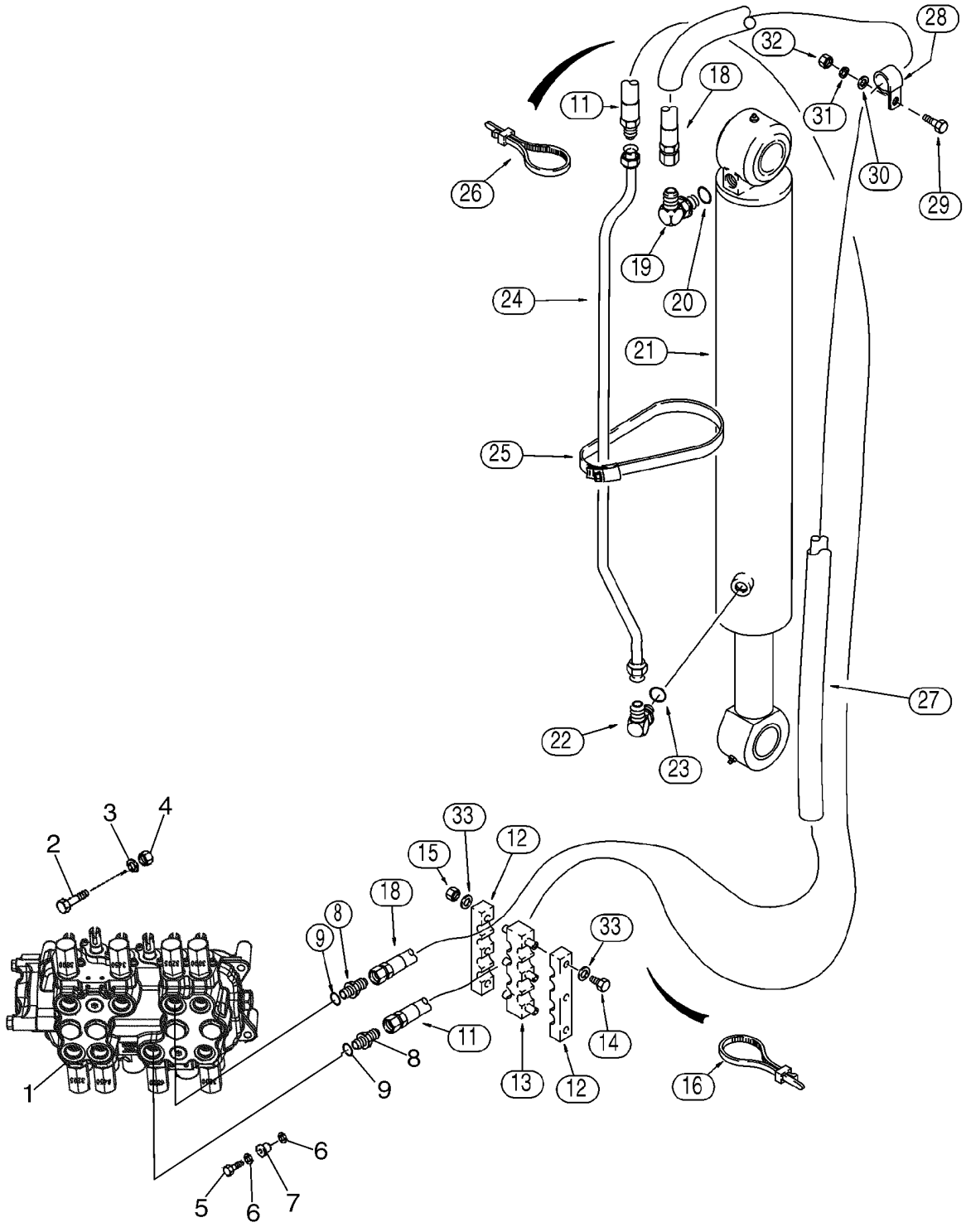


BS03M026

HTTP://WWW.MINNPARBACKHOEPARTS.COM



HIDRAULICA - CILINDRO, AGUILÓN DE LA RETROEXCAVADORA

| REF | FN | PART NUMBER | YR/SN | QTY | DESCRIPTION |
|---|---|---|---|---|---|
| 1 | | REF | | 1 | MANUAL Valve Assy, Control; Backhoe Control Valve; For Correct Assembly and Components, See Figures 08-32 - 08-39 |
| 2 | | 814-12045 | | 2 | TORNILLO M12 x 45 |
| 3 | | 896-11012 | | 2 | ARANDELA 13,5 x 24 x 3 mm |
| 4 | | 829-1412 | | 2 | TUERCA M12; 10 |
| 5 | | 614-10035 | | 1 | TORNILLO M10 x 35 |
| 6 | | 496-41041 | | 2 | ARANDELA 13/32 x 1-1/8 x 9/64 |
| 7 | | D52276 | | 1 | AISLADOR |
| 8 | | 218-5063 | | 2 | RACOR 7/8 fl x 1-1/16 Or, Incl. Ref 9 |
| 9 | | 237-6012 | | 1 | JUNTA HERMETICA 59/64 ID x 7/64, Boss Seal |
| 11 | | 397786A1 | | 1 | MANGUERA (CONJUNTO) 3470 mm (136-5/8 in), Lower Valve Port |
| 12 | | 178951A1 | | 2 | TORNILLO DE SUJECTIO |
| 13 | | 178952A1 | | 1 | TORNILLO DE SUJECTIO |
| 14 | | 814-10120 | | 3 | TORNILLO M10 x 120 |
| 15 | | 832-10410 | | 3 | TUERCA M10 |
| 16 | | L18337 | | 4 | BANDA 15 in |
| 18 | | 393369A1 | | 1 | MANGUERA (CONJUNTO) 3495 mm (137-5/8 in) |
| 19 | | 218-5107 | | 1 | CODO 7/8 fl x adj Or, Incl. Ref 20 |
| 20 | | 237-6010 | | 1 | JUNTA HERMETICA 3/4 ID x 3/32, Boss Seal |
| 21 | | 189653A2 | | 1 | CILINDRO (CONJUNTO) 114 ID x 982 mm strk, Boom Cylinder, See Figure 08-63 |
| 22 | | 218-5107 | | 1 | CODO 7/8 fl x adj Or, Incl. Ref 23 |
| 23 | | 237-6010 | | 1 | JUNTA HERMETICA 3/4 ID x 3/32, Boss Seal |
| 24 | | 357471A1 | | 1 | TUBO (CONJUNTO) |
| 25 | | 214-1488 | | 2 | COLLAR 5-1/8 - 6 in dia |
| 26 | | L18337 | | 4 | BANDA 15 in |
| 27 | | 224057A1 | | 2 | MANGUITO 946 mm (37-15/64 in) |
| 28 | | 515-23254 | | 1 | COLLAR 1 in ID |
| 28 | | R24840 | | 1 | COLLAR 1-1/8 in ID |
| 29 | | 614-10035 | | 2 | TORNILLO M10 x 35 |
| 30 | | 895-11010 | | 2 | ARANDELA 11 x 21 x 2 mm |
| 31 | | 892-11010 | | 2 | ARANDELA DE FRENO M10 |
| 32 | | 829-1410 | | 2 | TUERCA M10; 10.9 |
| 33 | | 895-11010 | | 6 | ARANDELA 11 x 21 x 2 mm |

HTTP://WWW.MINNPARBACKHOEPARTS.COM

| 08-11 | | p1 | 01/04 |
|---|---|---|---|

HIDRAULICA - CILINDRO, PALA DE LA RETROEXCAVADORA

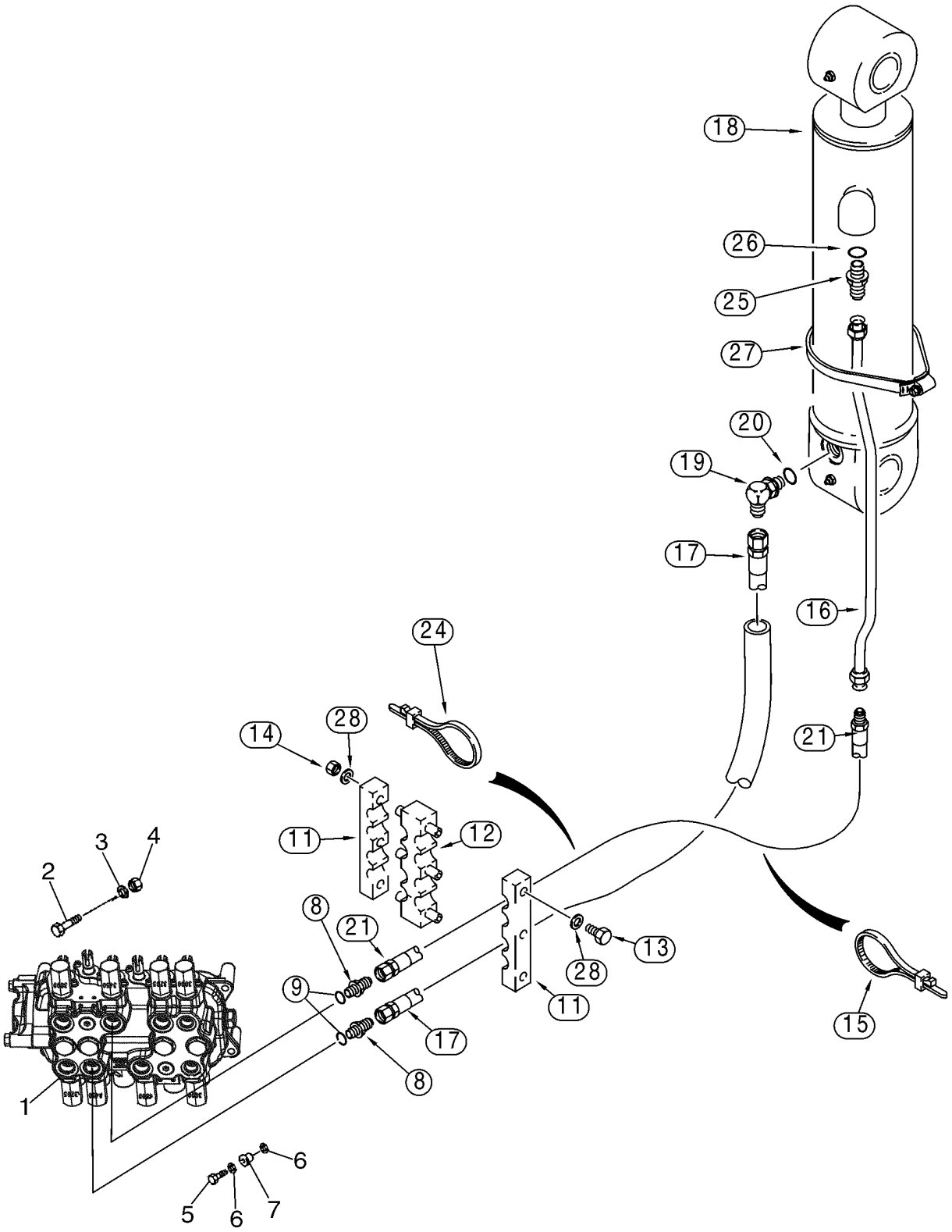

HTTP://WWW.MINNPARBACKHOEPARTS.COM



HIDRAULICA - CILINDRO, PALA DE LA RETROEXCAVADORA

| REF | FN | PART NUMBER | YR/SN | QTY | DESCRIPTION |
|---|---|---|---|---|---|
| 1 | | REF | | 1 | MANUAL Valve Assy, Control; Backhoe Control Valve; For Correct Assembly and Components, See Figures 08-32 - 08-39 |
| 2 | | 814-12045 | | 2 | TORNILLO M12 x 45 |
| 3 | | 896-11012 | | 2 | ARANDELA 13,5 x 24 x 3 mm |
| 4 | | 829-1412 | | 2 | TUERCA M12; 10 |
| 5 | | 614-10035 | | 1 | TORNILLO M10 x 35 |
| 6 | | 496-41041 | | 2 | ARANDELA 13/32 x 1-1/8 x 9/64 |
| 7 | | D52276 | | 1 | AISLADOR |
| 8 | | 218-5063 | | 2 | RACOR 7/8 fl x 1-1/16 Or, Incl. Ref 9 |
| 9 | | 237-6012 | | 1 | JUNTA HERMETICA 59/64 ID x 7/64, Boss Seal |
| 11 | | 178951A1 | | 2 | TORNILLO DE SUJECTIO |
| 12 | | 178952A1 | | 1 | TORNILLO DE SUJECTIO |
| 13 | | 814-10120 | | 3 | TORNILLO M10 x 120 |
| 14 | | 832-10410 | | 3 | TUERCA M10 |
| 15 | | L18337 | | 4 | BANDA 15 in |
| 16 | | 357469A1 | | 1 | TUBO (CONJUNTO) |
| 17 | | 393371A1 | | 1 | MANGUERA (CONJUNTO) 2025 mm (79-3/4 in), Lower Valve Port |
| 18 | | 233114A2 | | 1 | CILINDRO (CONJUNTO) 108 ID x 686 mm strk; Dipper Cylinder, See Figure 08-64 |
| 19 | | 218-5107 | | 1 | CODO 7/8 fl x adj Or, Incl. Ref 20 |
| 20 | | 237-6010 | | 1 | JUNTA HERMETICA 3/4 ID x 3/32, Boss Seal |
| 21 | | 397787A1 | | 1 | MANGUERA (CONJUNTO) 2025 mm (79-3/4 in), Upper Valve Port |
| 24 | | L18337 | | 2-4 | BANDA 15 in |
| 25 | | 218-5062 | | 1 | RACOR 7/8 fl x Or, Incl. Ref 26 |
| 26 | | 237-6010 | | 1 | JUNTA HERMETICA 3/4 ID x 3/32 |
| 27 | | 214-1488 | | 1 | COLLAR 5-1/8 - 6 in dia |
| 28 | | 895-11010 | | 6 | ARANDELA 11 x 21 x 2 mm |

HTTP://WWW.MINNPARBACKHOEPARTS.COM

| 08-12 | | p1 | 01/04 |
|---|---|---|---|

HIDRAULICA - CILINDRO, CUCHARÓN DE LA RETROEXCAVADORA (MODELOS SIN PALA EXTENDIBLE)

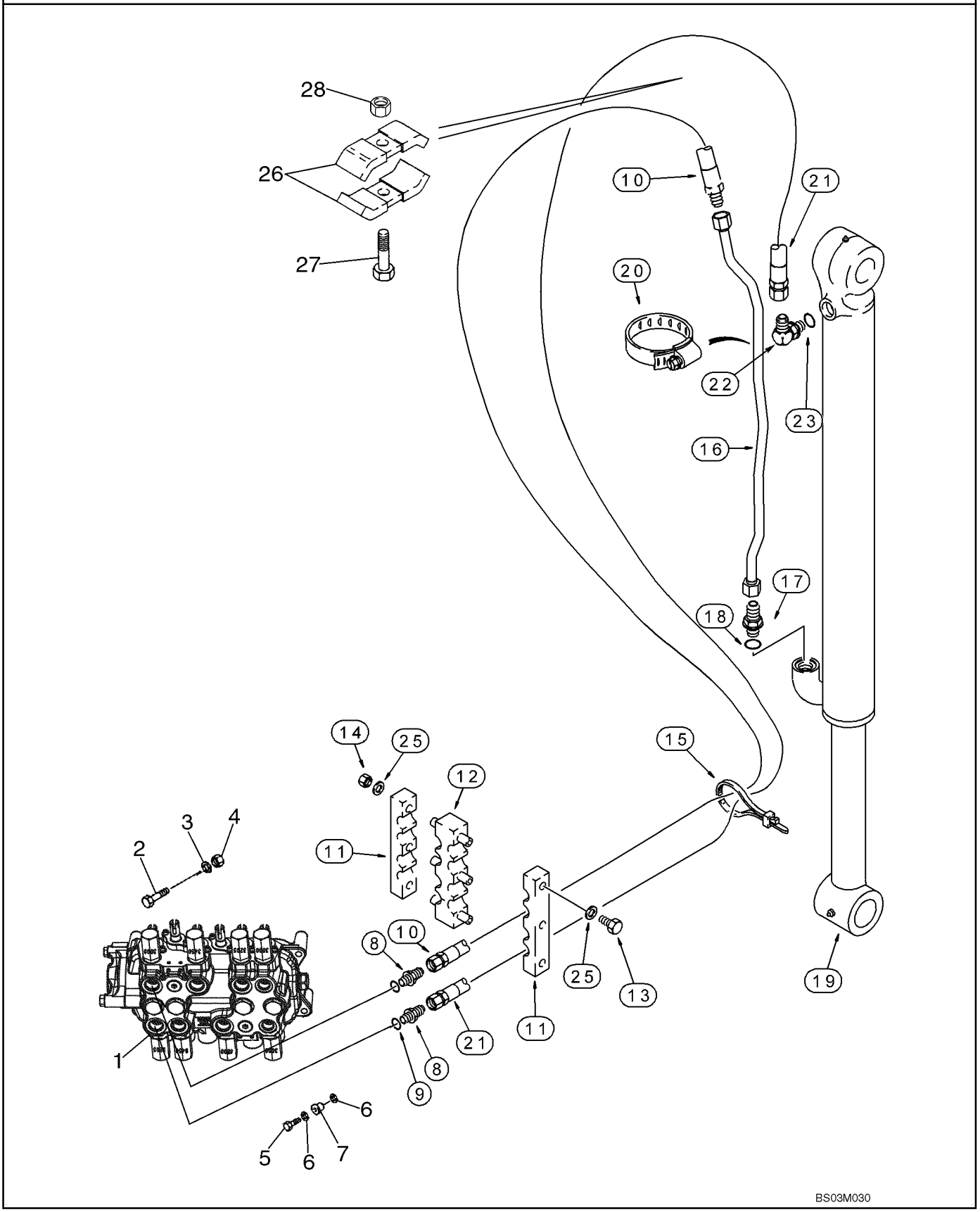

HTTP://WWW.MINNPARBACKHOEPARTS.COM



HIDRAULICA - CILINDRO, CUCHARÓN DE LA RETROEXCAVADORA (MODELOS SIN PALA EXTENDIBLE)

| REF | FN | PART NUMBER | YR/SN | QTY | DESCRIPTION |
|---|---|---|---|---|---|
| 1 | | REF | | 1 | MANUAL Valve Assy, Control; Backhoe Control Valve; For Correct Assembly and Components, See Figures 08-32 - 08-39 |
| 2 | | 814-12045 | | 2 | TORNILLO M12 x 45 |
| 3 | | 896-11012 | | 2 | ARANDELA 13,5 x 24 x 3 mm |
| 4 | | 829-1412 | | 2 | TUERCA M12; 10 |
| 5 | | 614-10035 | | 1 | TORNILLO M10 x 35 |
| 6 | | 496-41041 | | 2 | ARANDELA 13/32 x 1-1/8 x 9/64 |
| 7 | | D52276 | | 1 | AISLADOR |
| 8 | | 218-5063 | | 2 | RACOR 7/8 fl x 1-1/16 Or, Incl. Ref 9 |
| 9 | | 237-6012 | | 1 | JUNTA HERMETICA 59/64 ID x 7/64, Boss Seal |
| 10 | | 397788A1 | | 1 | MANGUERA (CONJUNTO) 3860 mm (152 in) |
| 11 | | 178951A1 | | 2 | TORNILLO DE SUJECTIO |
| 12 | | 178952A1 | | 1 | TORNILLO DE SUJECTIO |
| 13 | | 814-10120 | | 3 | TORNILLO M10 x 120 |
| 14 | | 832-10410 | | 3 | TUERCA M10 |
| 15 | | L18337 | | 2-4 | BANDA 15 in |
| 16 | | 396339A1 | | 1 | TUBO (CONJUNTO) Models Without Backhoe Auxiliary Hydraulics |
| 16 | | 357470A1 | | 1 | TUBO (CONJUNTO) Models With Backhoe Auxiliary Hydraulics |
| 17 | | 218-5062 | | 1 | RACOR 7/8 fl x Or, Incl. Ref 18 |
| 18 | | 237-6010 | | 1 | JUNTA HERMETICA 3/4 ID x 3/32, Boss Seal |
| 19 | | 128760A1 | | 1 | CILINDRO (CONJUNTO) 83 ID x 872 mm strk; Bucket Cylinder, See Figure 08-65 |
| 20 | | 214-1464 | | 1 | COLLAR 3-9/16 - 4-1/2 in dia |
| 21 | | 393360A1 | | 1 | MANGUERA (CONJUNTO) 3860 mm (152 in) |
| 22 | | 218-5107 | | 1 | CODO 7/8 fl x adj Or, Incl. Ref 23 |
| 23 | | 237-6010 | | 1 | JUNTA HERMETICA 3/4 ID x 3/32 |
| 25 | | 895-11010 | | 6 | ARANDELA 11 x 21 x 2 mm |
| 26 | | D143846 | | 2 | BRIDA Clamp |
| 27 | | 814-10055 | | 1 | TORNILLO M10 x 55 |
| 28 | | 832-10410 | | 1 | TUERCA M10 |

HTTP://WWW.MINNPARBACKHOEPARTS.COM

| 08-13 | | p1 | 01/04 |
|---|---|---|---|

HIDRAULICA - CILINDRO, CUCHARÓN DE LA RETROEXCAVADORA (MODELOS CON PALA EXTENDIBLE)

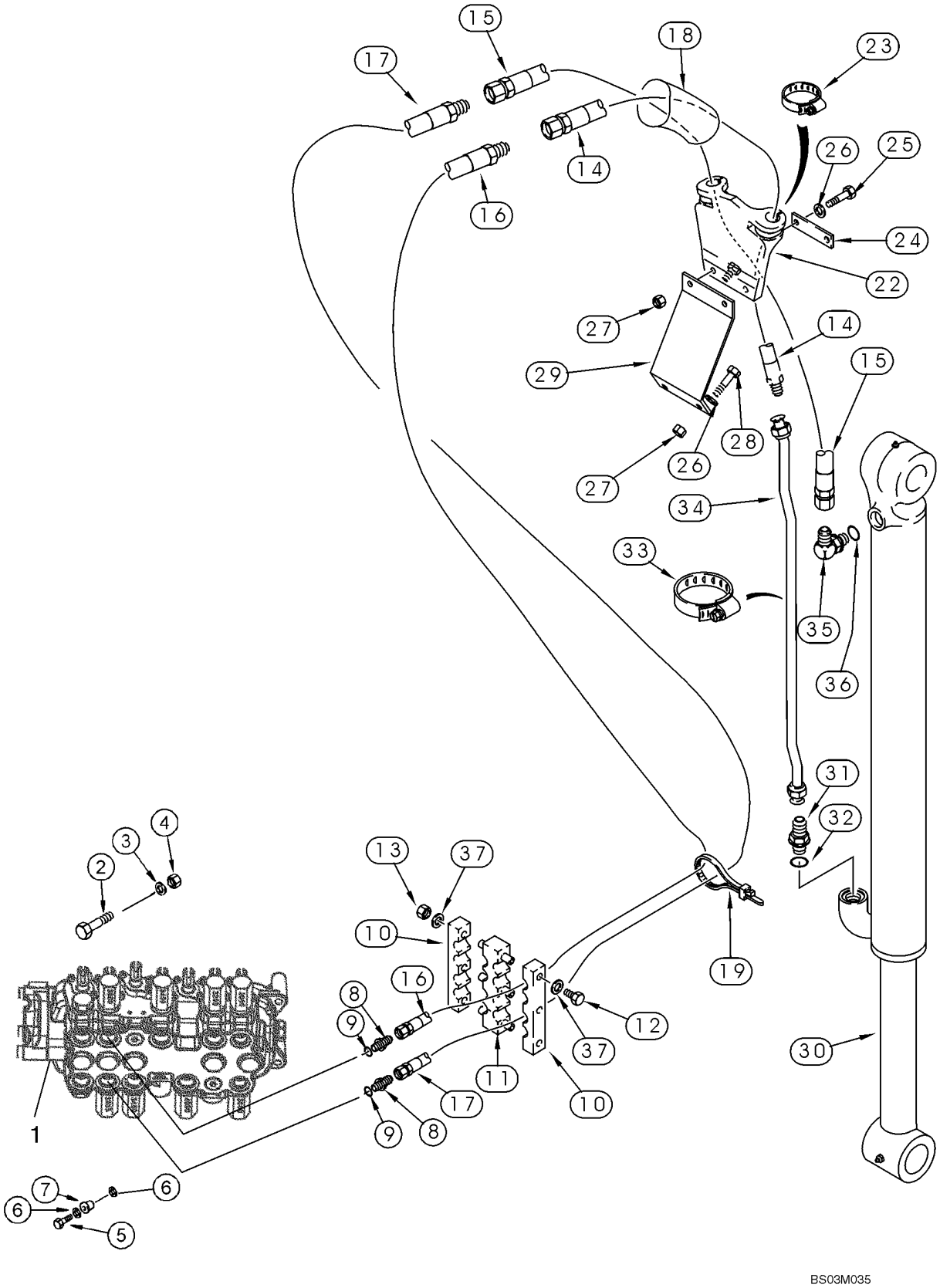

HTTP://WWW.MINNPARBACKHOEPARTS.COM



HIDRAULICA - CILINDRO, CUCHARÓN DE LA RETROEXCAVADORA (MODELOS CON PALA EXTENDIBLE)

| REF | FN | PART NUMBER | YR/SN | QTY | DESCRIPTION |
|---|---|---|---|---|---|
| 1 | | REF | | 1 | MANUAL Valve Assy, Control; Backhoe Control Valve; For Correct Assembly and Components, See Figures 08-33 - 08-39 |
| 2 | | 814-12045 | | 2 | TORNILLO M12 x 45 |
| 3 | | 896-11012 | | 2 | ARANDELA 13,5 x 24 x 3 mm |
| 4 | | 829-1412 | | 2 | TUERCA M12; 10 |
| 5 | | 614-10035 | | 1 | TORNILLO M10 x 35 |
| 6 | | 496-41041 | | 2 | ARANDELA 13/32 x 1-1/8 x 9/64 |
| 7 | | D52276 | | 1 | AISLADOR |
| 8 | | 218-5063 | | 2 | RACOR 7/8 fl x 1-1/16 Or, Incl. Ref 9 |
| 9 | | 237-6012 | | 1 | JUNTA HERMETICA 59/64 ID x 7/64 |
| 10 | | 178951A1 | | 2 | TORNILLO DE SUJECTIO |
| 11 | | 178952A1 | | 1 | TORNILLO DE SUJECTIO |
| 12 | | 814-10120 | | 3 | TORNILLO M10 x 120 |
| 13 | | 832-10410 | | 3 | TUERCA M10 |
| 14 | | 365309A1 | | 1 | MANGUERA (CONJUNTO) 2052 mm (80-3/4 in) |
| 15 | | 143400A1 | | 1 | MANGA 2052 mm (80-3/4 in) |
| 16 | | 393361A1 | | 1 | MANGUERA (CONJUNTO) 3048 mm (120 in) |
| 17 | | 393362A1 | | 1 | MANGUERA (CONJUNTO) 3048 mm (120 in) |
| 18 | | 183322A1 | | 1 | PROTECTOR 2000 mm (78-3/4 in) |
| 19 | | L18337 | | 2-5 | BANDA 15 in |
| 22 | | 184297A1 | | 1 | APOYADERO |
| 23 | | 214-3132 | | 2 | COLLAR |
| 24 | | 101479A1 | | 1 | APOYADERO |
| 25 | | 814-10045 | | 2 | TORNILLO M10 x 45 |
| 26 | | 895-11010 | | 4 | ARANDELA 11 x 21 x 2 mm |
| 27 | | 832-10410 | | 4 | TUERCA M10 |
| 28 | | 614-10030 | | 2 | TORNILLO M10 x 30 |
| 29 | | 183736A1 | | 1 | APOYADERO |
| 30 | | 128760A1 | | 1 | CILINDRO (CONJUNTO) 83 ID x 872 mm strk; Bucket Cylinder, See Figure 08-65 |
| 31 | | 218-5062 | | 1 | RACOR 7/8 fl x Or, Incl. Ref 32 |
| 32 | | 237-6010 | | 1 | JUNTA HERMETICA 3/4 ID x 3/32 |
| 33 | | 214-1464 | | 2 | COLLAR 3-9/16 - 4-1/2 in dia |
| 34 | | 396339A1 | | 1 | TUBO (CONJUNTO) Models Without Auxiliary Hydraulics |

HTTP://WWW.MINNPARBACKHOEPARTS.COM

| 08-13 | | p2 | 01/04 |
|---|---|---|---|

HIDRAULICA - CILINDRO, CUCHARÓN DE LA RETROEXCAVADORA (MODELOS CON PALA EXTENDIBLE)

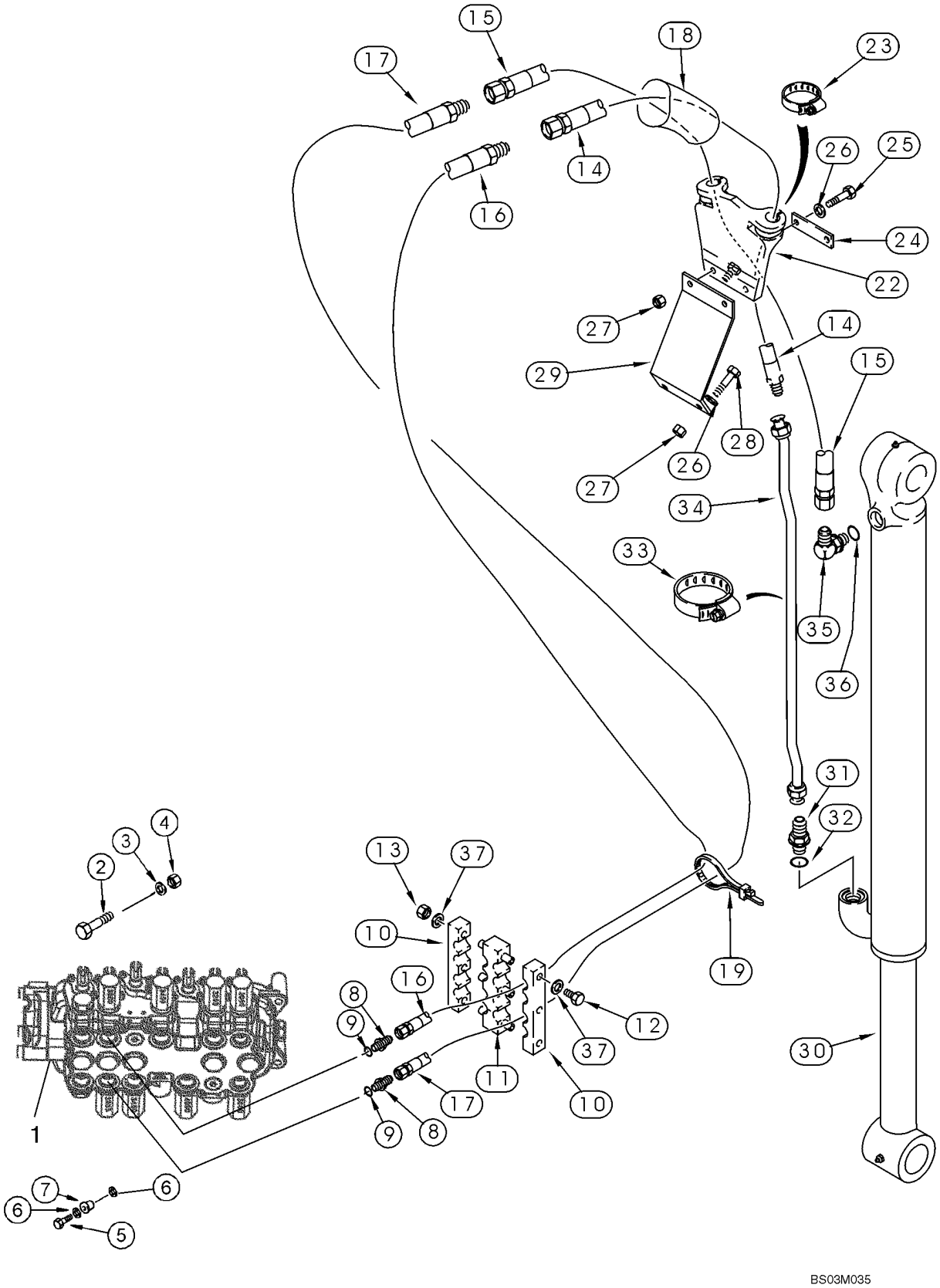

HTTP://WWW.MINNPARBACKHOEPARTS.COM



HIDRAULICA - CILINDRO, CUCHARÓN DE LA RETROEXCAVADORA (MODELOS CON PALA EXTENDIBLE)

| REF | FN | PART NUMBER | YR/SN | QTY | DESCRIPTION |
|---|---|---|---|---|---|
| 34 | | 357470A1 | | 1 | TUBO (CONJUNTO) Models With Auxiliary Hydraulics |
| 35 | | 218-5107 | | 1 | CODO 7/8 fl x adj Or, Incl. Ref 36 |
| 36 | | 237-6010 | | 1 | JUNTA HERMETICA 3/4 ID x 3/32 |
| 37 | | 895-11010 | | 6 | ARANDELA 11 x 21 x 2 mm |

HTTP://WWW.MINNPARBACKHOEPARTS.COM

| 08-14 | | p1 | 01/04 |
|---|---|---|---|

HIDRAULICA - CILINDRO, PALA EXTENSIBLE DE LA RETROEXCAVADORA

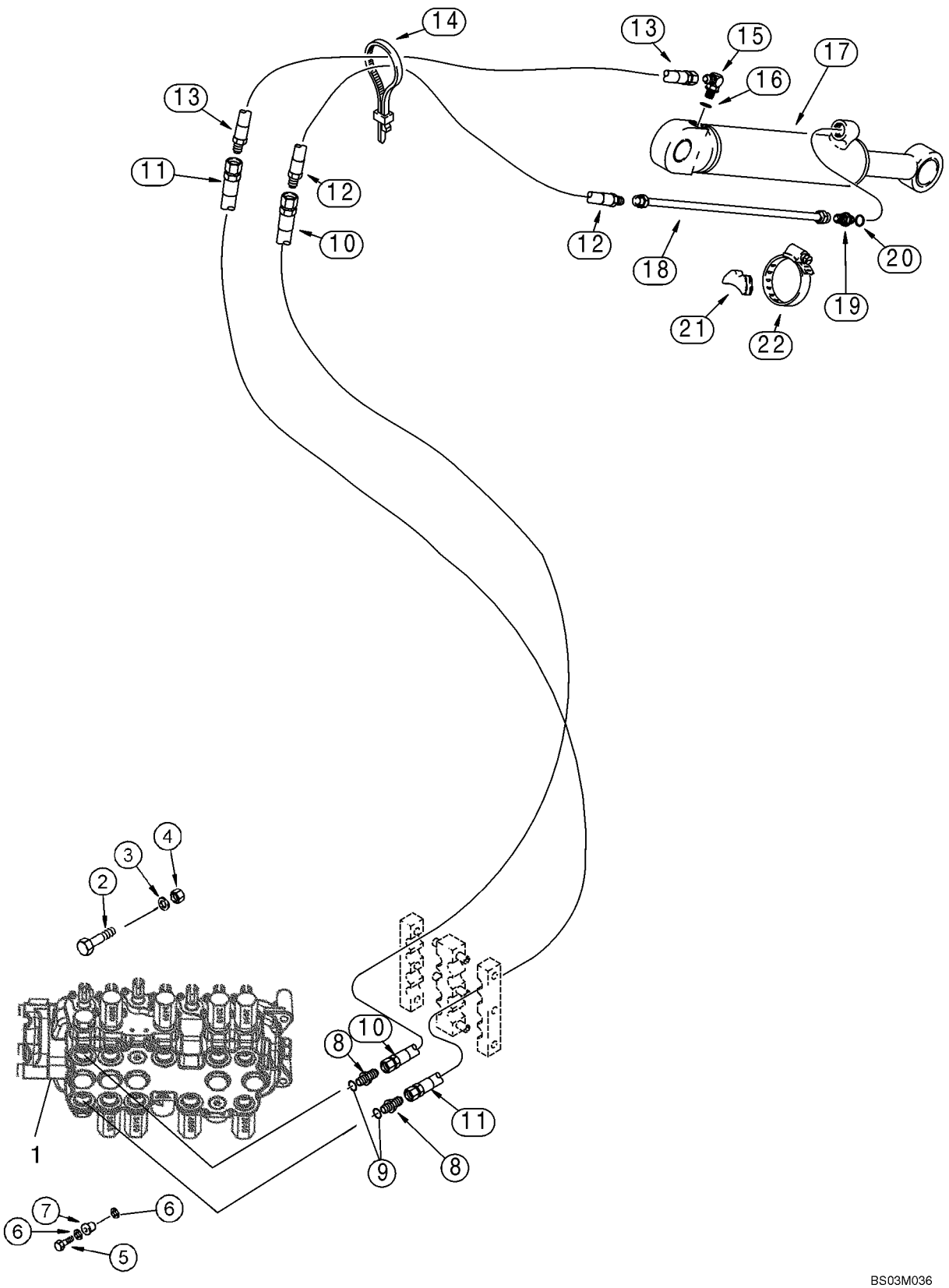

HTTP://WWW.MINNPARBACKHOEPARTS.COM



HIDRAULICA - CILINDRO, PALA EXTENSIBLE DE LA RETROEXCAVADORA

| REF | FN | PART NUMBER | YR/SN | QTY | DESCRIPTION |
|---|---|---|---|---|---|
| 1 | | REF | | 1 | MANUAL Valve Assy, Control; Backhoe Control Valve; For Correct Assembly and Components, See Figures 08-34, 08-35, 08-37, 08-39 |
| 2 | | 814-12045 | | 2 | TORNILLO M12 x 45 |
| 3 | | 896-11012 | | 2 | ARANDELA 13,5 x 24 x 3 mm |
| 4 | | 829-1412 | | 2 | TUERCA M12; 10 |
| 5 | | 614-10035 | | 1 | TORNILLO M10 x 35 |
| 6 | | 496-41041 | | 2 | ARANDELA 13/32 x 1-1/8 x 9/64 |
| 7 | | D52276 | | 1 | AISLADOR |
| 8 | | 218-5063 | | 2 | RACOR 7/8 fl x 1-1/16 Or, Incl. Ref 9 |
| 9 | | 237-6012 | | 1 | JUNTA HERMETICA 59/64 ID x 7/64 |
| 10 | | 393354A1 | | 1 | MANGUERA (CONJUNTO) 3073 mm (121 in) |
| 11 | | 393357A1 | | 1 | MANGUERA (CONJUNTO) 3073 mm (121 in) |
| 12 | | 184617A1 | | 1 | MANGA 850 mm (33-1/2 in) |
| 13 | | 184616A1 | | 1 | MANGA 700 mm (27-9/16 in) |
| 14 | | L18337 | | 4 | BANDA 15 in |
| 15 | | 218-5107 | | 1 | CODO 7/8 fl x adj Or, Incl. Ref 16 |
| 16 | | 237-6010 | | 1 | JUNTA HERMETICA 3/4 ID x 3/32 |
| 17 | | 1340969C2 | | 1 | CILINDRO (CONJUNTO) 76 ID x 1068 mm strk; Extendable Dipper Cylinder, See Figure 08-66 |
| 18 | | D140706 | | 1 | CUELLO DE CARGA Tube |
| 19 | | 218-5062 | | 1 | RACOR 7/8 fl x Or, Incl. Ref 20 |
| 20 | | 237-6010 | | 1 | JUNTA HERMETICA 3/4 ID x 3/32 |
| 21 | | D38648 | | 1 | BLOQUE MOTOR |
| 22 | | 214-1464 | | 1 | COLLAR 3-9/16 - 4-1/2 in dia |

HTTP://WWW.MINNPARBACKHOEPARTS.COM

| 08-15 | | p1 | 01/04 |
|---|---|---|---|

HIDRAULICA - VÁLVULA, CONTROL PILOTO DE PALANCA DE CONTROL (6 SPOOL, W/O EXT DIPPER, W/O AUX HYDS)

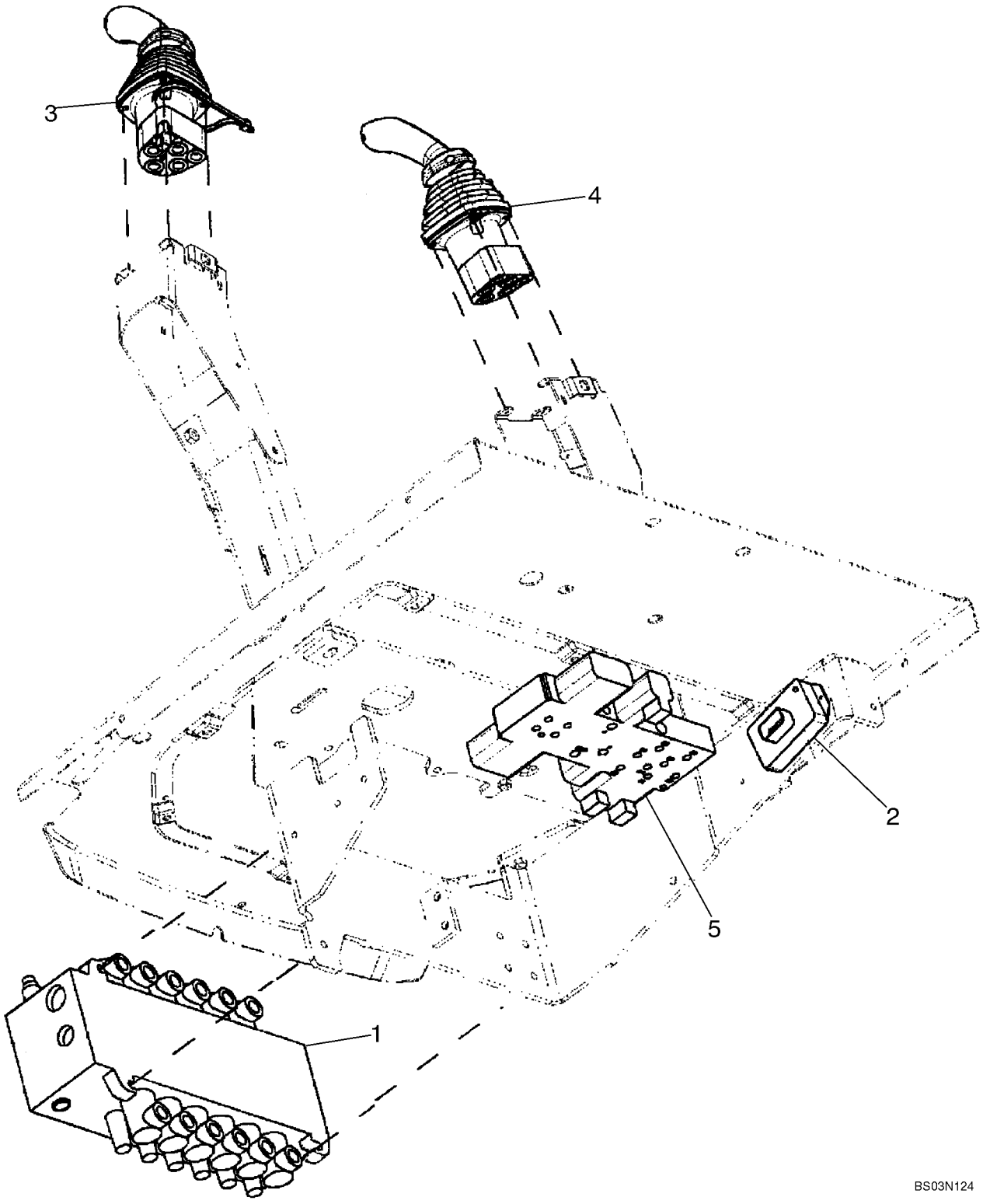

HTTP://WWW.MINNPARBACKHOEPARTS.COM



HIDRAULICA - VÁLVULA, CONTROL PILOTO DE PALANCA DE CONTROL (6 SPOOL, W/O EXT DIPPER, W/O AUX HYDS)

| REF | FN | PART NUMBER | YR/SN | QTY | DESCRIPTION |
|---|---|---|---|---|---|
| | | REF | | | MANUAL SIX SPOOL VALVE WITHOUT EXTENDABLE DIPPER; WITH AUTO-UP; WITHOUT AUXILIARY HYDRAULICS, WITHOUT UNI-DIRECTIONAL OR BI-DIRECTIONAL |
| 1 | | 86987459 | | 1 | VALVULA DISTRIBUIDORA Backhoe, 6 Spool; See Figure 08-36; For Mounting See Figure 08-22 |
| 2 | | 87419454 | | 1 | GRUPO REGULADOR Box, Pilot Control Power Supply Module |
| | | 840-1416 | | 2 | TORNILLO M4 x 16 |
| 3 | | 87437733 | | 1 | VALVULA DISTRIBUIDORA Joystick; Left-Hand; With Horn Button; See Figure 08-50 |
| 4 | | 87435510 | | 1 | VALVULA DISTRIBUIDORA Joystick; Right-Hand; See Figure 08-53 |
| 5 | | 85827472 | | 1 | VALVULA Pressure Reducing, 2 Spool; See Figure 08-47 |

HTTP://WWW.MINNPARBACKHOEPARTS.COM

| 08-16 | | p1 | 01/04 |
|---|---|---|---|

HIDRAULICA - VÁLVULA, CONTROL PILOTO DE PALANCA DE CONTROL (6 SPOOL, W/O EXT DIPPER, W/ AUX HYDS)

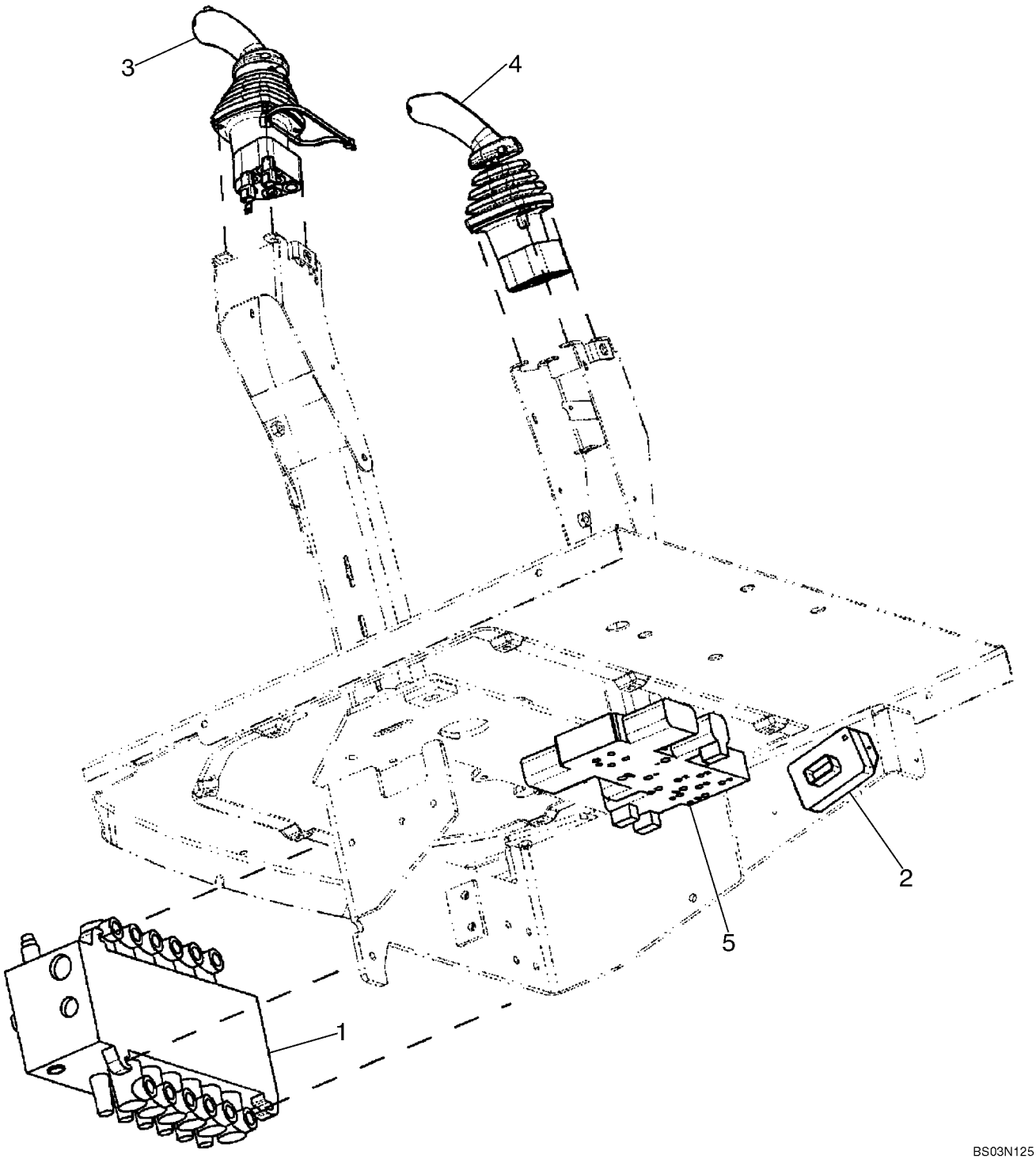

HTTP://WWW.MINNPARBACKHOEPARTS.COM



HIDRAULICA - VÁLVULA, CONTROL PILOTO DE PALANCA DE CONTROL (6 SPOOL, W/O EXT DIPPER, W/ AUX HYDS)

| REF | FN | PART NUMBER | YR/SN | QTY | DESCRIPTION |
|---|---|---|---|---|---|
| | | REF | | | MANUAL SIX SPOOL VALVE WITHOUT EXTENDABLE DIPPER; WITH AUTO-UP; WITH AUXILIARY HYDRAULICS, WITH UNI-DIRECTIONAL |
| 1 | | 86987459 | | 1 | VALVULA DISTRIBUIDORA Backhoe, 6 Spool; See Figure 08-36; For Mounting See Figure 08-22 |
| 2 | | 87419454 | | 1 | GRUPO REGULADOR Box, Pilot Control Power Supply Module |
| | | 840-1416 | | 2 | TORNILLO M4 x 16 |
| 3 | | 87437735 | | 1 | VALVULA DISTRIBUIDORA Joystick; Left-Hand; With Horn and Uni-Directional Buttons; See Figure 08-51 |
| 4 | | 87435510 | | 1 | VALVULA DISTRIBUIDORA Joystick; Right-Hand; See Figure 08-53 |
| 5 | | 85827472 | | 1 | VALVULA Pressure Reducing, 2 Spool; See Figure 08-47 |

HTTP://WWW.MINNPARBACKHOEPARTS.COM

| 08-17 | | p1 | 01/04 |
|---|---|---|---|

HIDRAULICA - VÁLVULA, CONTROL PILOTO DE PALANCA DE CONTROL (7 SPOOL, W/ EXT DIPPER, W/O AUX HYDS)

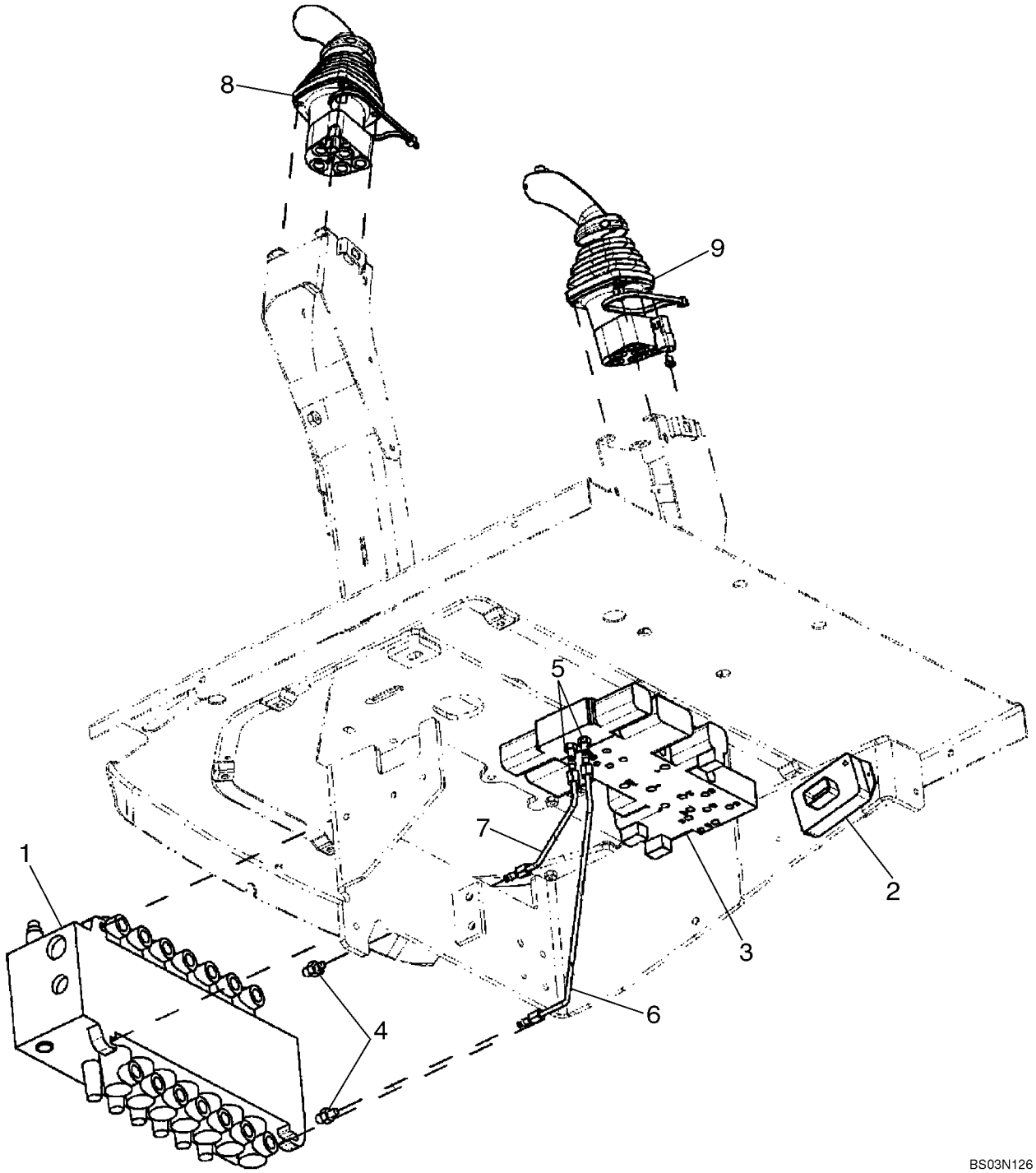

HTTP://WWW.MINNPARBACKHOEPARTS.COM



HIDRAULICA - VÁLVULA, CONTROL PILOTO DE PALANCA DE CONTROL (7 SPOOL, W/ EXT DIPPER, W/O AUX HYDS)

| REF | FN | PART NUMBER | YR/SN | QTY | DESCRIPTION |
|---|---|---|---|---|---|
| | | REF | | | MANUAL SEVEN SPOOL VALVE WITH EXTENDABLE DIPPER; WITHOUT AUXILIARY HYDRAULICS; WITH AUTO-UP; WITHOUT UNI-DIRECTIONAL OR BI-DIRECTIONAL |
| 1 | | 86987460 | | 1 | VALVULA DISTRIBUIDORA Backhoe, 7 Spool; See Figure 08-37; For Mounting See Figure 08-22 |
| 2 | | 87419454 | | 1 | GRUPO REGULADOR Box, Pilot Control Power Supply Module |
| | | 840-1416 | | 2 | TORNILLO M4 x 16 |
| 3 | | 85827471 | | 1 | VALVULA Pressure Reducing, 3 Spool; See Figure 08-48 |
| 4 | | 218-5089 | | 2 | CONECTOR 7/16 fl x 9/16 Or; Includes 237-6006 O-Ring |
| | | 237-6006 | | 1 | JUNTA HERMETICA 15/32 ID x 5/64 |
| 5 | | 218-5053 | | 2 | RACOR 7/16 fl x Or; Includes 237-6004 O-Ring |
| | | 237-6004 | | 1 | JUNTA HERMETICA 23/64 ID x 5/64 |
| 6 | | 87437633 | | 1 | TUBO (CONJUNTO) To Lower Extendable Dipper Port |
| 7 | | 87437635 | | 1 | TUBO (CONJUNTO) To Upper Extendable Dipper Port |
| 8 | | 87437733 | | 1 | VALVULA DISTRIBUIDORA Joystick; Left-Hand; With Horn Button; See Figure 08-50 |
| 9 | | 87437736 | | 1 | VALVULA DISTRIBUIDORA Joystick; Right-Hand; See Figure 08-54 |

HTTP://WWW.MINNPARBACKHOEPARTS.COM

| 08-18 | | p1 | 01/04 |
|---|---|---|---|

HIDRAULICA - VÁLVULA, CONTROL PILOTO DE PALANCA DE CONTROL (7 SPOOL, W/ EXT DIPPER, W/ AUX HYDS)

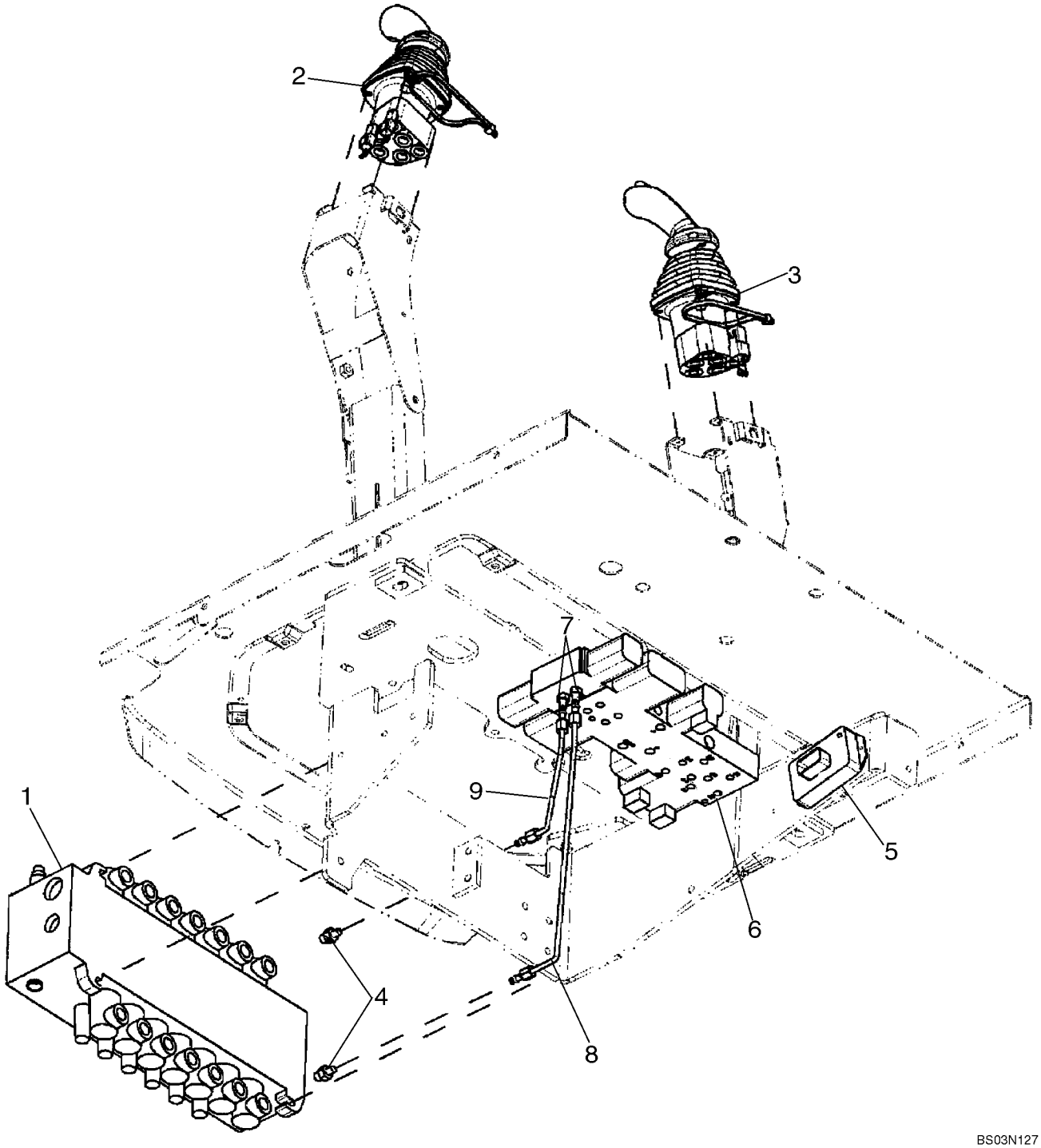

HTTP://WWW.MINNPARBACKHOEPARTS.COM



HIDRAULICA - VÁLVULA, CONTROL PILOTO DE PALANCA DE CONTROL (7 SPOOL, W/ EXT DIPPER, W/ AUX HYDS)

| REF | FN | PART NUMBER | YR/SN | QTY | DESCRIPTION |
|---|---|---|---|---|---|
| | | REF | | | MANUAL SEVEN SPOOL VALVE WITH EXTENDABLE DIPPER; WITH AUXILIARY HYDRAULICS; WITH AUTO-UP; WITH UNI-DIRECTIONAL |
| 1 | | 86987460 | | 1 | VALVULA DISTRIBUIDORA Backhoe, 7 Spool; See Figure 08-37; For Mounting See Figure 08-22 |
| 2 | | 87437735 | | 1 | VALVULA DISTRIBUIDORA Joystick; Left-Hand; With Horn and Uni-Directional Buttons; See Figure 08-51 |
| 3 | | 87437736 | | 1 | VALVULA DISTRIBUIDORA Joystick; Right-Hand; See Figure 08-54 |
| 4 | | 218-5089 | | 2 | CONECTOR 7/16 fl x 9/16 Or; Includes 237-6006 O-Ring |
| | | 237-6006 | | 1 | JUNTA HERMETICA 15/32 ID x 5/64 |
| 5 | | 87419454 | | 1 | GRUPO REGULADOR Box, Pilot Control Power Supply Module |
| | | 840-1416 | | 2 | TORNILLO M4 x 16 |
| 6 | | 85827471 | | 1 | VALVULA Pressure Reducing, 3 Spool; See Figure 08-48 |
| 7 | | 218-5053 | | 2 | RACOR 7/16 fl x Or; Includes 237-6004 O-Ring |
| | | 237-6004 | | 1 | JUNTA HERMETICA 23/64 ID x 5/64 |
| 8 | | 87437633 | | 1 | TUBO (CONJUNTO) To Lower Extendable Dipper Port |
| 9 | | 87437635 | | 1 | TUBO (CONJUNTO) To Upper Extendable Dipper Port |

HTTP://WWW.MINNPARBACKHOEPARTS.COM

| 08-19 | | p1 | 01/04 |
|---|---|---|---|

HIDRAULICA - VÁLVULA, CONTROL PILOTO DE PALANCA DE CONTROL (7 SPOOL, W/O EXT DIPPER, W/ AUX HYDS)

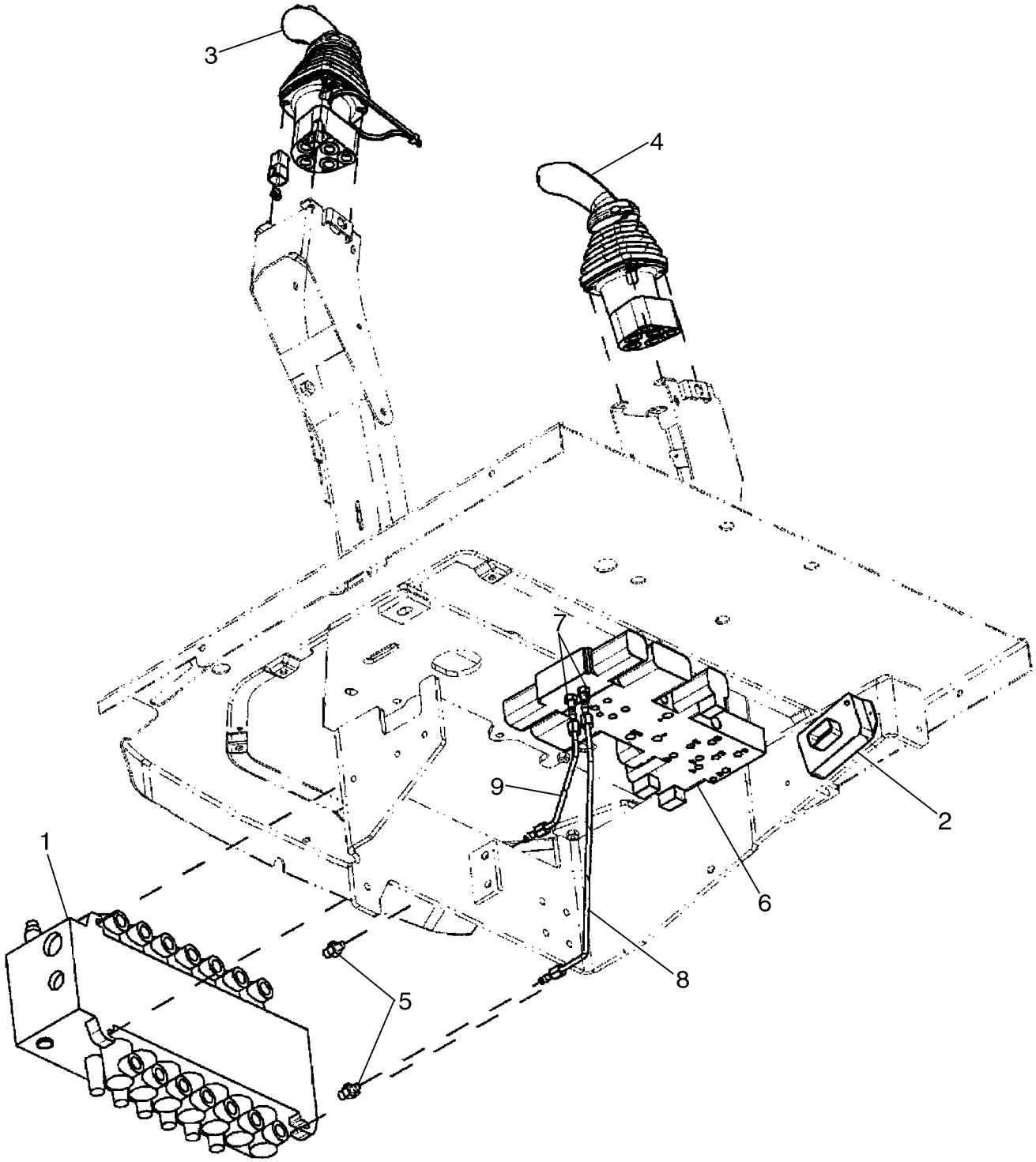

HTTP://WWW.MINNPARBACKHOEPARTS.COM



HIDRAULICA - VÁLVULA, CONTROL PILOTO DE PALANCA DE CONTROL (7 SPOOL, W/O EXT DIPPER, W/ AUX HYDS)

| REF | FN | PART NUMBER | YR/SN | QTY | DESCRIPTION |
|---|---|---|---|---|---|
| | | REF | | | MANUAL SEVEN SPOOL VALVE WITHOUT EXTENDABLE DIPPER; WITH AUXILIARY HYDRAULICS; WITH AUTO-UP; WITH BI-DIRECTIONAL |
| 1 | | 87407965 | | 1 | VALVULA DISTRIBUIDORA Backhoe, 7 Spool; See Figure 08-38; For Mounting See Figure 08-22 |
| 2 | | 87419455 | | 1 | GRUPO REGULADOR Box, Pilot Control Power Supply Module |
| | | 840-1416 | | 2 | TORNILLO M4 x 16 |
| 3 | | 87437734 | | 1 | VALVULA DISTRIBUIDORA Joystick; Left-Hand; With Horn and Bi-Directional Buttons; See Figure 08-52 |
| 4 | | 87435510 | | 1 | VALVULA DISTRIBUIDORA Joystick; Right-Hand; See Figure 08-53 |
| 5 | | 218-5089 | | 2 | CONECTOR 7/16 fl x 9/16 Or; Includes 237-6006 O-Ring |
| | | 237-6006 | | 1 | JUNTA HERMETICA 15/32 ID x 5/64 |
| 6 | | 85827471 | | 1 | VALVULA Pressure Reducing, 3 Spool; See Figure 08-48 |
| 7 | | 218-5053 | | 2 | RACOR 7/16 fl x Or; Includes 237-6004 O-Ring |
| | | 237-6004 | | 1 | JUNTA HERMETICA 23/64 ID x 5/64 |
| 8 | | 87438012 | | 1 | TUBO (CONJUNTO) To Lower Auxiliary Port |
| 9 | | 87438015 | | 1 | TUBO (CONJUNTO) To Upper Auxiliary Port |

HTTP://WWW.MINNPARBACKHOEPARTS.COM

| 08-20 | | p1 | 01/04 |
|---|---|---|---|

HIDRAULICA - VÁLVULA, CONTROL PILOTO DE PALANCA DE CONTROL (8 SPOOL, W/ EXT DIPPER, W/ AUX HYDS)

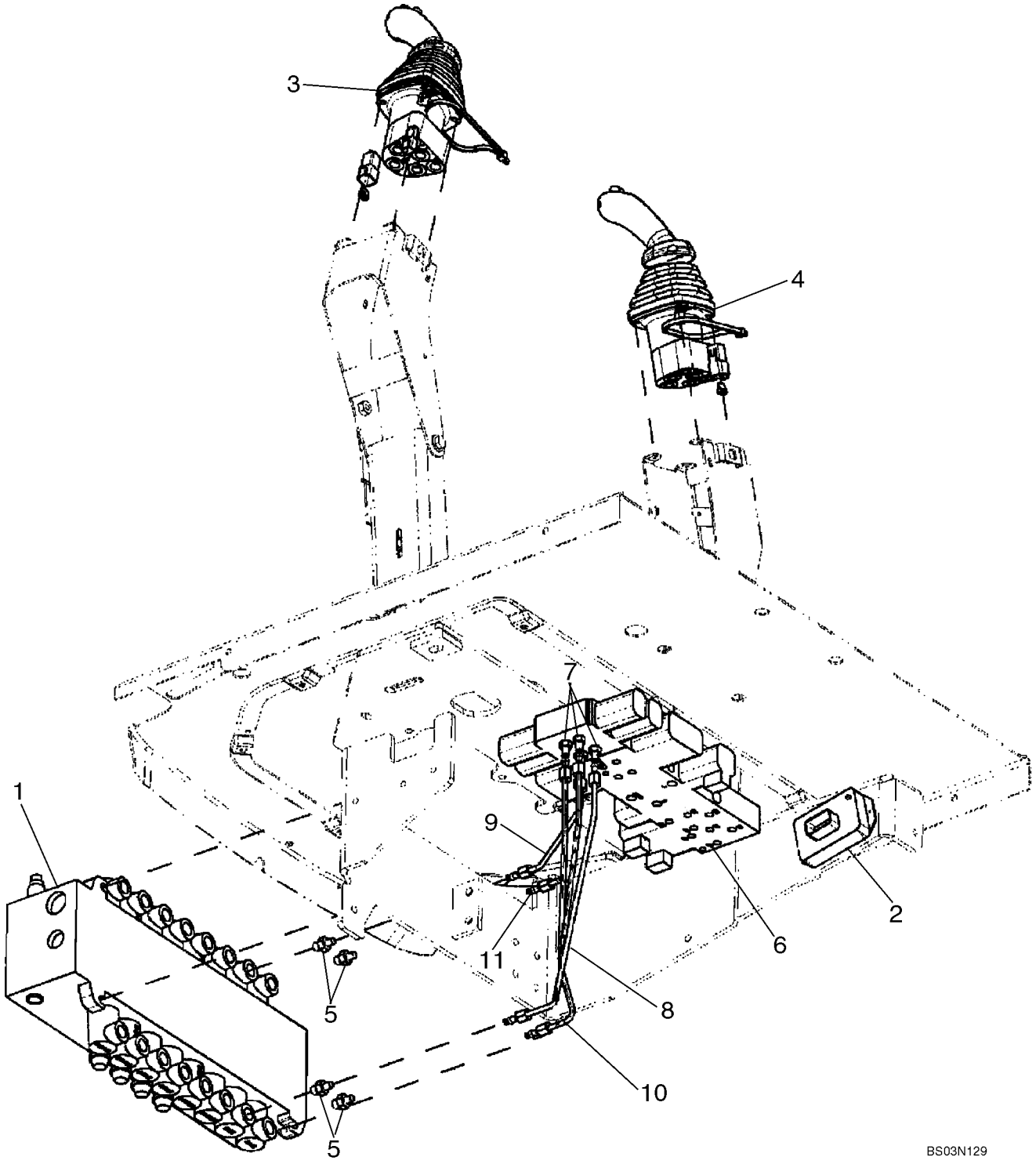

HTTP://WWW.MINNPARBACKHOEPARTS.COM



HIDRAULICA - VÁLVULA, CONTROL PILOTO DE PALANCA DE CONTROL (8 SPOOL, W/ EXT DIPPER, W/ AUX HYDS)

| REF | FN | PART NUMBER | YR/SN | QTY | DESCRIPTION |
|---|---|---|---|---|---|
| | | REF | | | MANUAL EIGHT SPOOL VALVE WITH EXTENDABLE DIPPER; WITH AUXILIARY HYDRAULICS; WITH AUTO-UP; WITH BI-DIRECTIONAL |
| 1 | | 86987461 | | 1 | VALVULA Backhoe, 8 Spool; See Figure 08-39; For Mounting See Figure 08-22 |
| 2 | | 87419455 | | 1 | GRUPO REGULADOR Box, Pilot Control Power Supply Module |
| | | 840-1416 | | 2 | TORNILLO M4 x 16 |
| 3 | | 87437734 | | 1 | VALVULA DISTRIBUIDORA Joystick; Left-Hand; With Horn and Bi-Directional Buttons; See Figure 08-52 |
| 4 | | 87437736 | | 1 | VALVULA DISTRIBUIDORA Joystick; Right-Hand; See Figure 08-54 |
| 5 | | 218-5089 | | 4 | CONECTOR 7/16 fl x 9/16 Or; Includes 237-6006 O-Ring |
| | | 237-6006 | | 1 | JUNTA HERMETICA 15/32 ID x 5/64 |
| 6 | | 87434621 | | 1 | VALVULA DISTRIBUIDORA Pressure Reducing, 4 Spool; See Figure 08-49 |
| 7 | | 218-5053 | | 4 | RACOR 7/16 fl x Or; Includes 237-6004 O-Ring |
| | | 237-6004 | | 1 | JUNTA HERMETICA 23/64 ID x 5/64 |
| 8 | | 87437633 | | 1 | TUBO (CONJUNTO) To Lower Extendable Dipper Port |
| 9 | | 87437635 | | 1 | TUBO (CONJUNTO) To Upper Extendable Dipper Port |
| 10 | | {87440835} | | 1 | Tube, To Lower Auxiliary Port |
| 11 | | {87440837} | | 1 | Tube, To Upper Auxiliary Port |

HTTP://WWW.MINNPARBACKHOEPARTS.COM



HIDRAULICA - CONTROL PILOTO DE PALANCA DE CONTROL

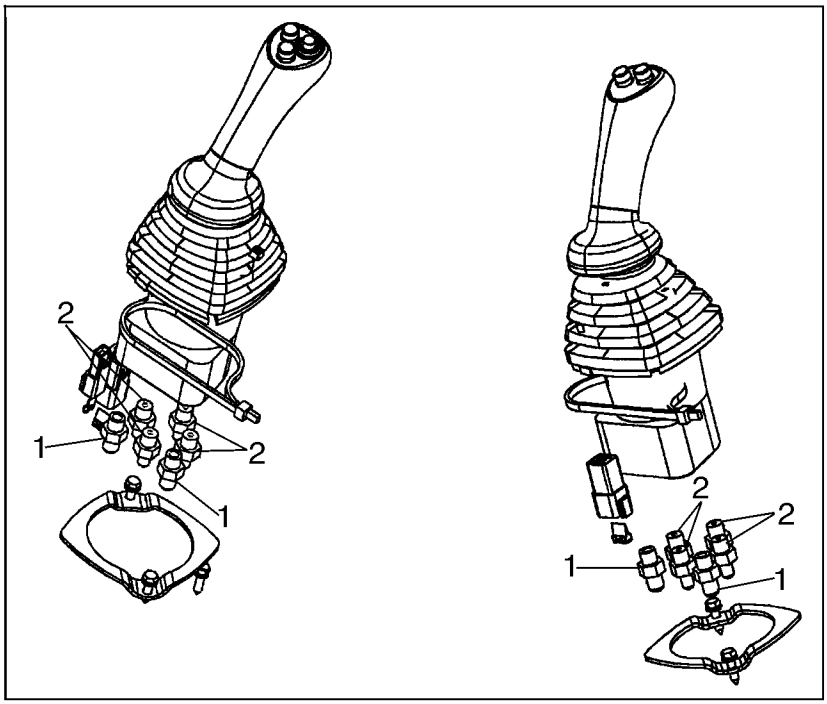


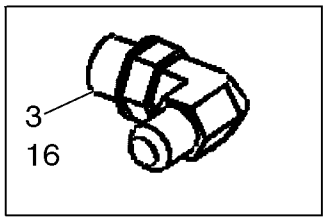


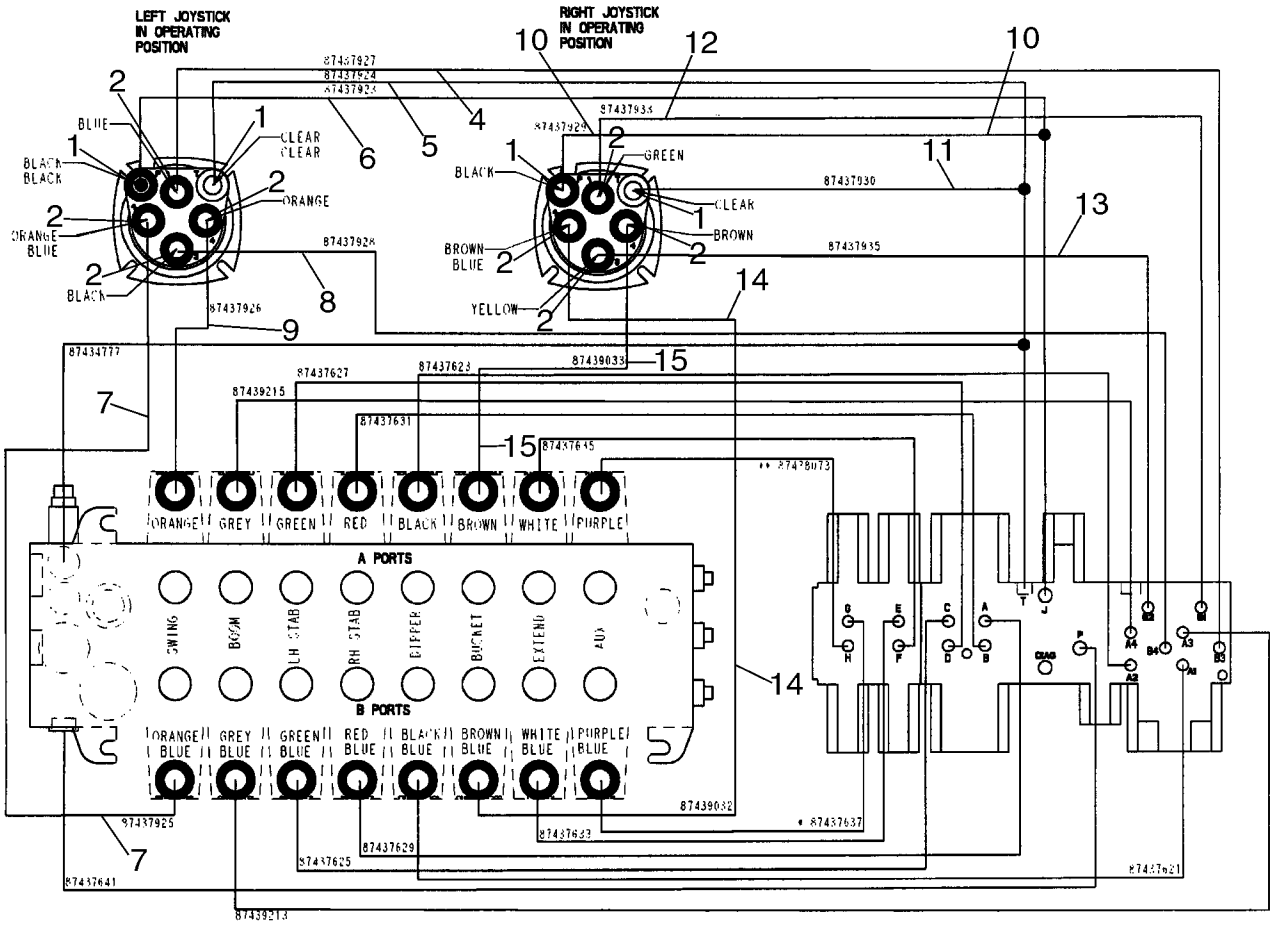


BS04A002

HTTP://WWW.MINNPARBACKHOEPARTS.COM



HIDRAULICA - CONTROL PILOTO DE PALANCA DE CONTROL

| REF | FN | PART NUMBER | YR/SN | QTY | DESCRIPTION |
|---|---|---|---|---|---|
| 1 | | 218-5057 | | 4 | RACOR 9/16 fl x Or; Includes 237-6006 O-Ring |
| 2 | | 218-5089 | | 8 | CONECTOR 7/16 fl x 9/16 Or; Includes 237-6006 O-Ring |
| 3 | | 218-5105 | | 1 | CODO 90 deg, 9/16 fl x Or; Includes 237-6006; Installs in Hydraulic Tank for Pilot Return |
| 4 | | 87437927 | | 1 | MANGUERA (CONJUNTO) 1295 mm (51 in); Left-Hand Joystick No. 1 to Selector Valve B3 |
| 5 | | 87437924 | | 1 | MANGUERA (CONJUNTO) 1000 mm (39-3/8 in); Left-Hand Joystick Tank to Pressure Reducing Valve T |
| 6 | | 87437923 | | 1 | MANGUERA (CONJUNTO) 1035 mm (40-3/4 in); Left-Hand Joystick Pressure to Pressure Reducing Valve J |
| 7 | | 87437925 | | 1 | MANGUERA (CONJUNTO) 1075 mm (42-3/8 in); Left-Hand Joystick No. 2 to Swing Port B |
| 8 | | 87437928 | | 1 | MANGUERA (CONJUNTO) 1270 mm (50 in); Left-Hand Joystick No. 3 to Selector Valve B4 |
| | | 399004A1 | | 1 | DEFENSA Hose, 38.9 ID x 270 mm long; Used With Ref 4 - 8 |
| 9 | | 87437926 | | 1 | MANGUERA (CONJUNTO) 825 mm (32-1/2 in); Left-Hand Joystick No. 4 to Swing Port A |
| 10 | | 87437929 | | 1 | MANGUERA (CONJUNTO) 1105 mm (43-1/2 in); Right-Hand Joystick Pressure to Pressure Reducing Valve J |
| 11 | | 87437930 | | 1 | MANGUERA (CONJUNTO) 1345 mm (53 in); Right-Hand Joystick Tank to Pressure Reducing Valve T |
| | | 191703A1 | | 1 | TUBO AISLANTE Hose Guard, 28 ID x 400 mm long; Used With Ref 10, 11 |
| 12 | | 87437933 | | 1 | MANGUERA (CONJUNTO) 1185 mm (46-11/16 in); Right-Hand Joystick No. 1 to Selector Valve B1 |
| 13 | | 87437935 | | 1 | MANGUERA (CONJUNTO) 1175 mm (46-5/16 in); Right-Hand Joystick No. 3 to Selector Valve B2 |
| 14 | | 87439032 | | 1 | MANGUERA (CONJUNTO) 1090 mm (42-15/16 in); Right-Hand Joystick No. 2 to Bucket Port B |

HTTP://WWW.MINNPARBACKHOEPARTS.COM



HIDRAULICA - CONTROL PILOTO DE PALANCA DE CONTROL

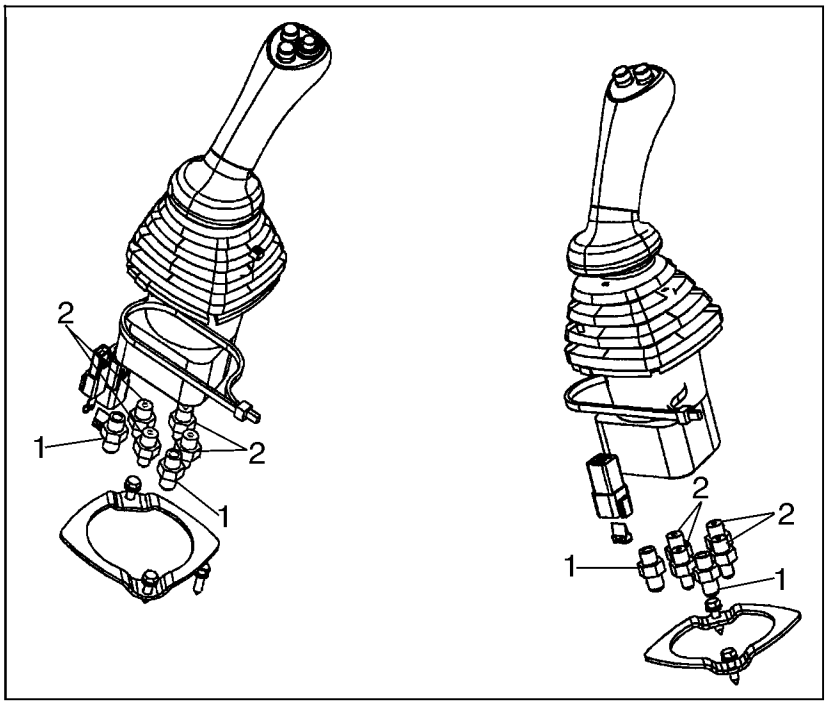


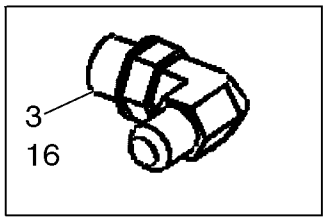


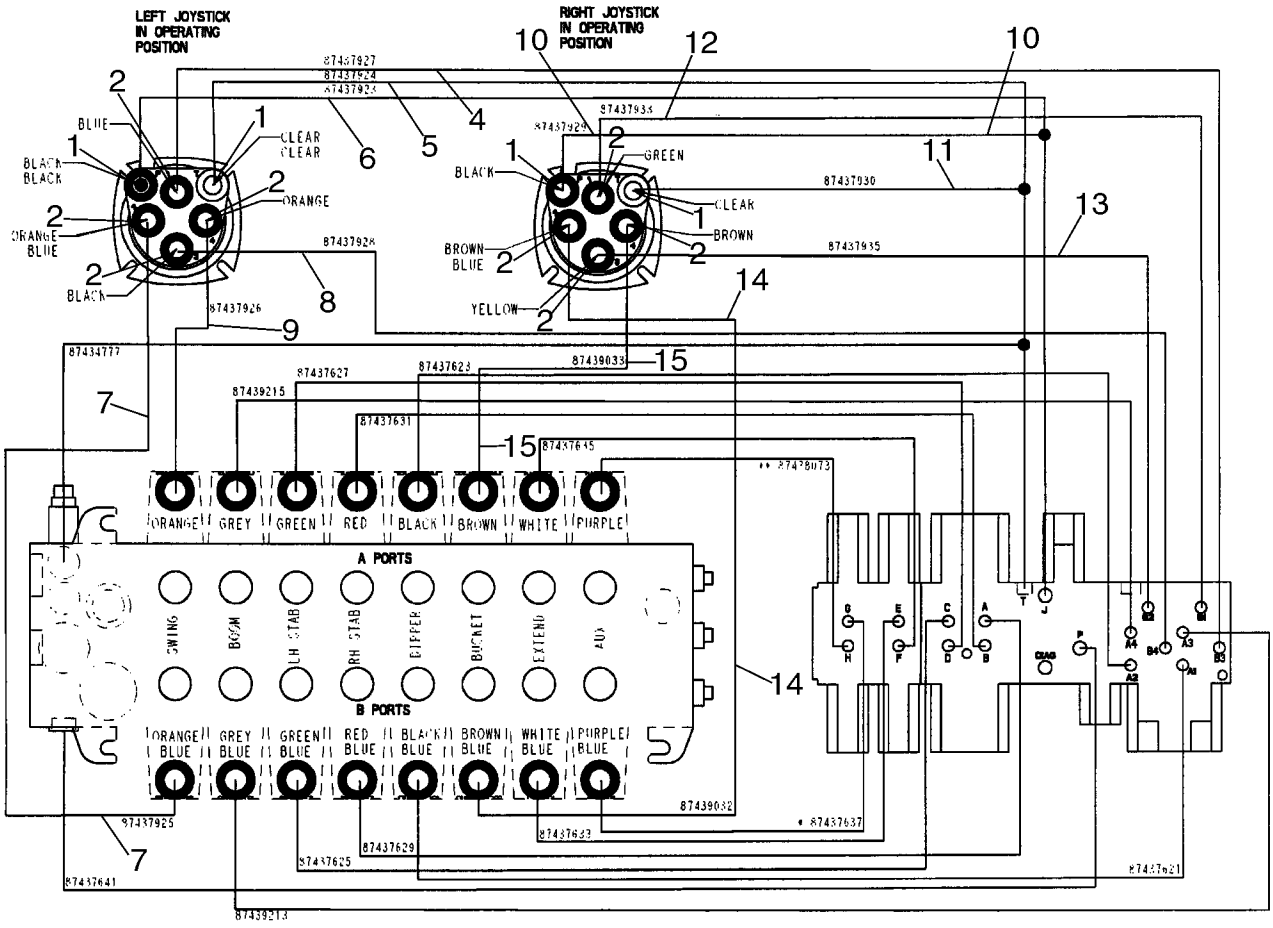


BS04A002

HTTP://WWW.MINNPARBACKHOEPARTS.COM



HIDRAULICA - CONTROL PILOTO DE PALANCA DE CONTROL

| REF | FN | PART NUMBER | YR/SN | QTY | DESCRIPTION |
|---|---|---|---|---|---|
| 15 | | 87439033 | | 1 | MANGUERA (CONJUNTO) 915 mm (36-1/32 in); Right-Hand Joystick No. 4 to Bucket Port A |
| | | 191703A1 | | 1 | TUBO AISLANTE Hose Guard, 28 ID x 400 mm long; Used With Ref 12 - 15 |
| 16 | | 87435073 | | 1 | MANGUERA (CONJUNTO) 1520 mm (59-7/8 in); Pressure Reducing Valve T to Tank |
| | | L18337 | | X | BANDA Tie |

HTTP://WWW.MINNPARBACKHOEPARTS.COM

| 08-22 | | p1 | 01/04 |
|---|---|---|---|

HIDRAULICA - CONTROL PILOTO

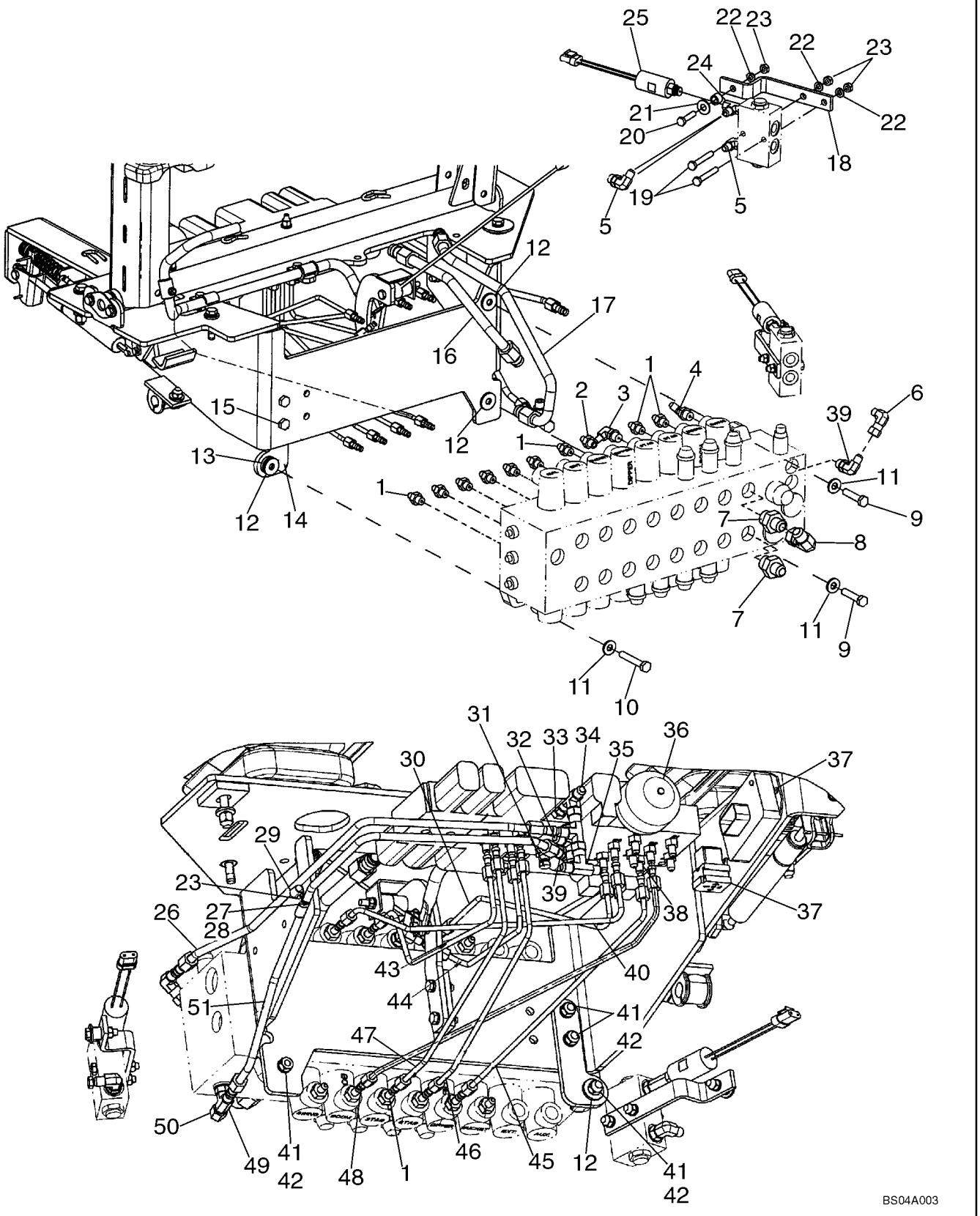

HTTP://WWW.MINNPARBACKHOEPARTS.COM



HIDRAULICA - CONTROL PILOTO

| REF | FN | PART NUMBER | YR/SN | QTY | DESCRIPTION |
|---|---|---|---|---|---|
| 1 | | 218-5089 | | 9 | CONECTOR 7/16 fl x 9/16 Or; Includes 237-6006 O-Ring |
| 2 | | 87423401 | | 1 | CONEXION Special Orifice |
| 3 | | 218-5283 | | 1 | CODO 90 deg, 7/16 fl x 9/16 Or; Includes 237-6006 O-Ring |
| 4 | | 218-5365 | | 1 | CONEXION ELBOW, 45 deg, 7/16 fl x 9/16 Or; Includes 237-6006 O-Ring |
| 5 | | 218-5105 | | 2-4 | CODO 90 deg, 9/16 fl x Or; Includes 237-6006; 2 Used on Models With Auto Up; 4 Used on Models Without Auto Up |
| 6 | | 218-980 | | 1 | CODO 90 deg, 9/16 fl x sw fl |
| 7 | | 218-5063 | | 2 | RACOR 7/8 fl x 1-1/16 Or; Includes 237-6012 O-Ring |
| 8 | | 218-5232 | | 1 | CODO 90 deg, 7/8 fl x sw fl |
| 9 | | 814-10045 | | 2 | TORNILLO M10 x 45 |
| 10 | | 814-10060 | | 1 | TORNILLO M10 x 60 |
| 11 | | 896-15010 | | 3 | ARANDELA 11 x 24 x 3 mm |
| 12 | | 496-41041 | | 5 | ARANDELA 13/32 x 1-1/8 x 1/8 |
| 13 | | D52276 | | 1 | AISLADOR Mount |
| 14 | | 87440712 | | 1 | PIEZA DE APOYO Valve Mounting Bracket |
| 15 | | 614-10030 | | 2 | TORNILLO M10 x 30 |
| 16 | | 87426488 | | 1 | TUBO (CONJUNTO) Swing Dampening Upper Port |
| 17 | | 87427948 | | 1 | TUBO (CONJUNTO) Swing Dampening Lower Port |
| 18 | | 87423034 | | 2 | PIEZA DE APOYO |
| 19 | | 814-8055 | | 4 | TORNILLO M8 x 55 |
| 20 | | 814-8035 | | 2 | TORNILLO M8 x 35 |
| 21 | | 895-15010 | | 2 | ARANDELA 11 x 24 x 2 mm |
| 22 | | 892-11008 | | 6 | ARANDELA Lock, M8 |
| 23 | | 829-1408 | | 7 | TUERCA M8 |
| 24 | | 87423033 | | 2 | RACOR-T Includes 237-6004 O-Ring, 237-6006 O-Ring; Models With Auto Up, If Used |
| 25 | | 87439163 | | 2 | INTERRUPTOR DE PRESION Includes 237-6004 O-Ring; Models With Auto Up, If Used |
| 26 | | 87434777 | | 1 | TUBO (CONJUNTO) Reducing Valve Tank to Backhoe Valve |
| 27 | | 895-11008 | | 1 | ARANDELA 9 x 16 x 1.6 mm |
| 28 | | 614-8025 | | 1 | TORNILLO M8 x 25 |

HTTP://WWW.MINNPARBACKHOEPARTS.COM



HIDRAULICA - CONTROL PILOTO

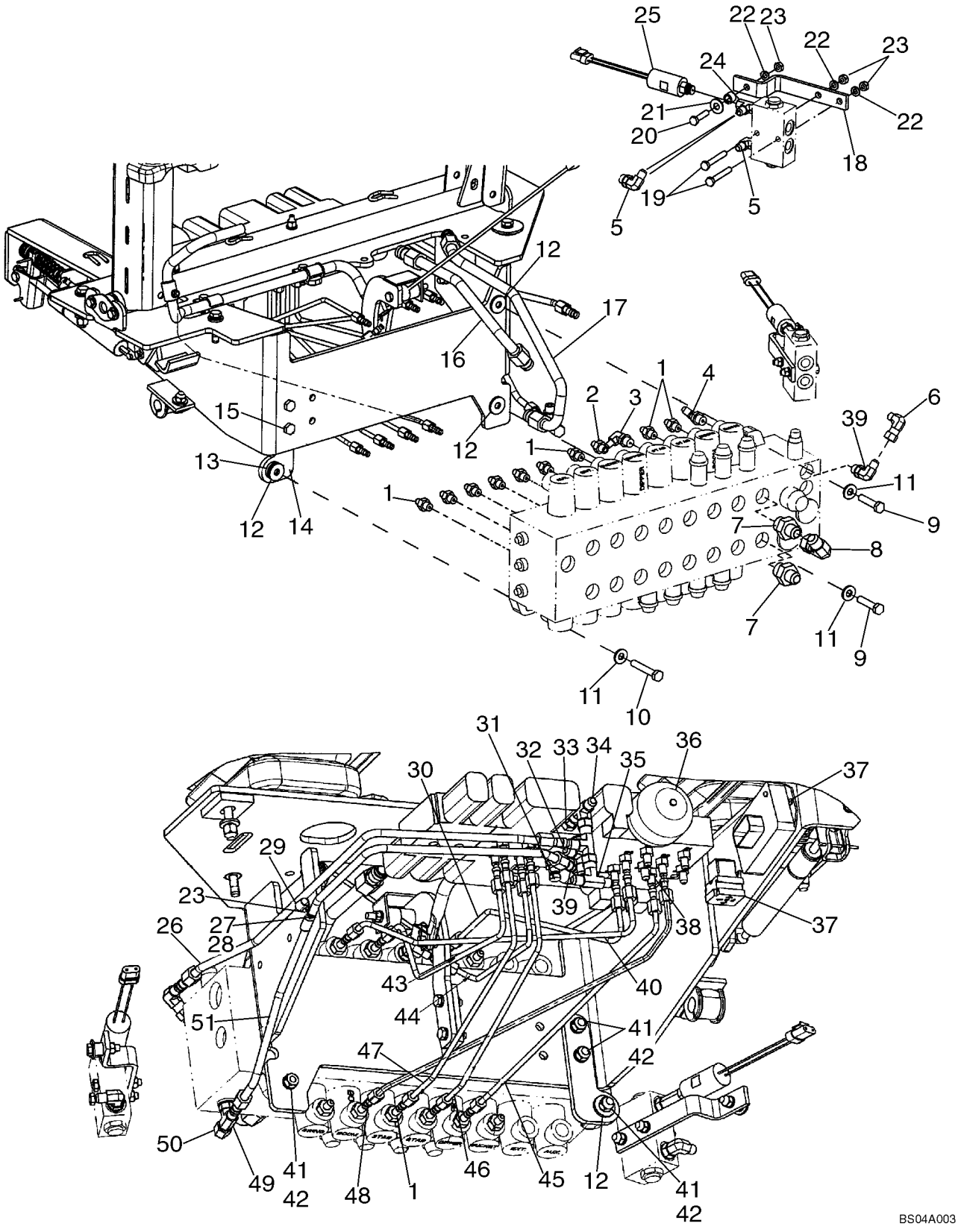

HTTP://WWW.MINNPARBACKHOEPARTS.COM



HIDRAULICA - CONTROL PILOTO

| REF | FN | PART NUMBER | YR/SN | QTY | DESCRIPTION |
|---|---|---|---|---|---|
| 29 | | 515-2295 | | 2 | COLLAR |
| 30 | | 87437623 | | 1 | TUBO (CONJUNTO) Selector A2 to Dipper Port A |
| 31 | | 86596853 | | 1 | EMPALME RAPIDO Includes 9617873 O-Ring |
| 32 | | 218-5243 | | 1 | CONEXION TEE; Includes 237-6006 O-Ring |
| 33 | | 218-5057 | | 1 | RACOR 9/16 fl x Or; Includes 237-6006 O-Ring |
| 34 | | 218-5222 | | 2 | CONEXION TEE |
| 35 | | 218-836 | | 1 | RACOR-T |
| 36 | | 87425225 | | 1 | ACUMULADOR Includes 237-6008 O-Ring |
| 37 | | 840-1416 | | 3 | TORNILLO M4 x 16; See Figure 08-15 - 08-20 For Pilot Control Power Supply Control Unit; See Figure 04-20 For Relay |
| 38 | | 218-5053 | | 12 | RACOR 7/16 fl x Or; Includes 237-6004 O-Ring |
| 39 | | 218-5105 | | 2 | CODO 90 deg, 9/16 fl x Or; Includes 237-6006 O-Ring |
| 40 | | 87439215 | | 1 | TUBO (CONJUNTO) Selector A4 to Boom Port A |
| 41 | | 829-1410 | | 5 | TUERCA M10 |
| 42 | | 892-11010 | | 4 | ARANDELA DE FRENO M10 |
| 43 | | 87437627 | | 1 | TUBO (CONJUNTO) Reducing Valve to Left-Hand Stabilizer Port A |
| 44 | | 87437631 | | 1 | TUBO (CONJUNTO) Reducing Valve to Right-Hand Stabilizer Port A |
| 45 | | 87437621 | | 1 | TUBO (CONJUNTO) Selector A1 to Dipper Port B |
| 46 | | 87437629 | | 1 | TUBO (CONJUNTO) Reducing Valve to Right-Hand Stabilizer Port B |
| 47 | | 87437625 | | 1 | TUBO (CONJUNTO) Reducing Valve to Left-Hand Stabilizer Port B |
| 48 | | 87439213 | | 1 | TUBO (CONJUNTO) Selector A3 to Boom Port B |
| 49 | | 218-5182 | | 1 | RACOR-T Includes 237-6006 O-Ring |
| 50 | | 218-754 | | 1 | TAPON DEL DEPOSITO Hex, 9/16 |
| 51 | | 87437641 | | 1 | TUBO (CONJUNTO) Reducing Valve Pressure to Backhoe Valve |

HTTP://WWW.MINNPARBACKHOEPARTS.COM

| 08-23 | | p1 | 01/04 |
|---|---|---|---|

HIDRAULICA - AUXILIAR DE LA RETROEXCAVADORA

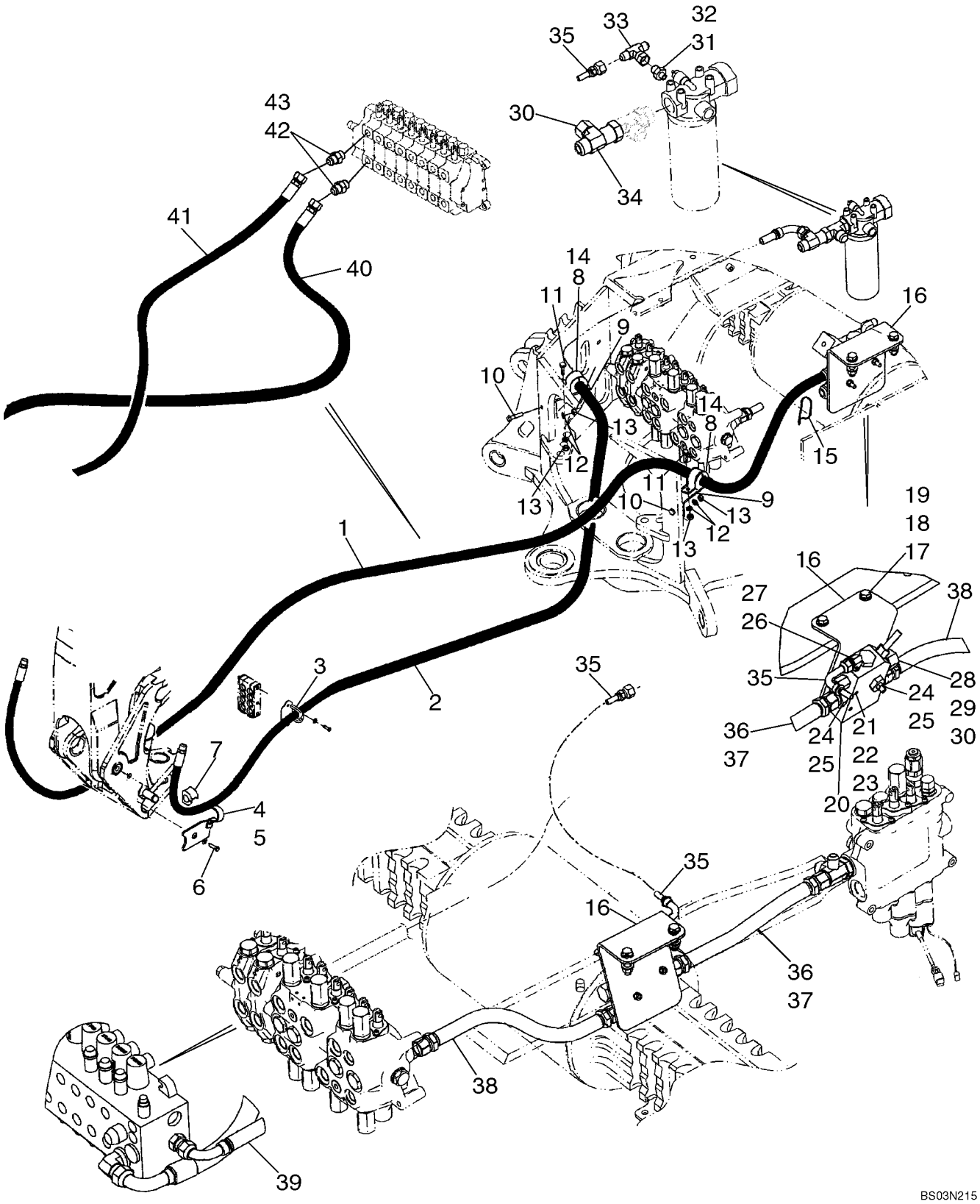

HTTP://WWW.MINNPARBACKHOEPARTS.COM



HIDRAULICA - AUXILIAR DE LA RETROEXCAVADORA

| REF | FN | PART NUMBER | YR/SN | QTY | DESCRIPTION |
|---|---|---|---|---|---|
| 1 | | {87430972} | | 1 | 2467 mm (97-1/8 in) Hose; Models With Uni-Directional |
| 2 | | {87429387} | | 1 | 2890 mm (113-13/16 in) Hose; Models With Uni-Directional |
| 3 | | 87431630 | | 2 | PIEZA DE SOPORTE |
| 4 | | 329799A1 | | 1 | APOYADERO Left-Hand |
| 5 | | 329797A1 | | 1 | APOYADERO Right-Hand |
| 6 | | 604-20045 | | 2 | TORNILLO M20 x 45 |
| 7 | | 144477A1 | | 2 | AMORTIGUADOR |
| 8 | | 144479A1 | | 2 | COLLAR |
| 9 | | 413778A1 | | 2 | PIEZA DE SOPORTE |
| 10 | | 814-10040 | | 2 | TORNILLO M10 x 40 |
| 11 | | 614-10025 | | 2 | TORNILLO M10 x 25 |
| 12 | | 892-11010 | | 4 | ARANDELA DE FRENO M10 |
| 13 | | 829-1410 | | 4 | TUERCA M10 |
| 14 | | 144477A1 | | 2 | AMORTIGUADOR |
| 15 | | L18337 | | 1 | BANDA |
| 16 | | {87440694} | | 1 | Bracket |
| 17 | | 814-12050 | | 2 | TORNILLO M12 x 50 |
| 18 | | 896-11012 | | 4 | ARANDELA |
| 19 | | 829-1412 | | 2 | TUERCA M12 |
| 20 | | {87421836} | | 1 | Auxiliary Uni-Directional Valve; Component Parts Not Available At Time Of Printing |
| 21 | | 814-8070 | | 2 | TORNILLO M8 x 70 |
| 22 | | 892-11008 | | 2 | ARANDELA Lock, M8 |
| 23 | | 829-1408 | | 2 | TUERCA M8 |
| 24 | | 218-5050 | | 2 | CONEXION 1-5/16 fl x 1-1/16 Or; Incl. Ref 25 |
| 25 | | 237-6012 | | 1 | JUNTA HERMETICA 59/64 ID x 7/64 |
| 26 | | 218-5280 | | 1 | CONEXION ELBOW, 90 deg, 3/4 fl x 9/16 Or; Incl. Ref 27 |
| 27 | | 237-6006 | | 1 | JUNTA HERMETICA 15/32 ID x 5/64 |
| 28 | | 218-5064 | | 1 | RACOR 1-1/16 fl x Or; Incl. Ref 29 |
| 29 | | 237-6012 | | 1 | JUNTA HERMETICA 59/64 ID x 7/64 |
| 30 | | 218-335 | | 2 | TAPON DEL DEPOSITO Hex, 1-1/16 |
| 31 | | 218-5351 | | 1 | RACOR 3/4 fl x 9/16 Or; Incl. Ref 32 |
| 32 | | 237-6006 | | 1 | JUNTA HERMETICA 15/32 ID x 5/64 |

HTTP://WWW.MINNPARBACKHOEPARTS.COM

| 08-23 | | p2 | 01/04 |
|---|---|---|---|

HIDRAULICA - AUXILIAR DE LA RETROEXCAVADORA

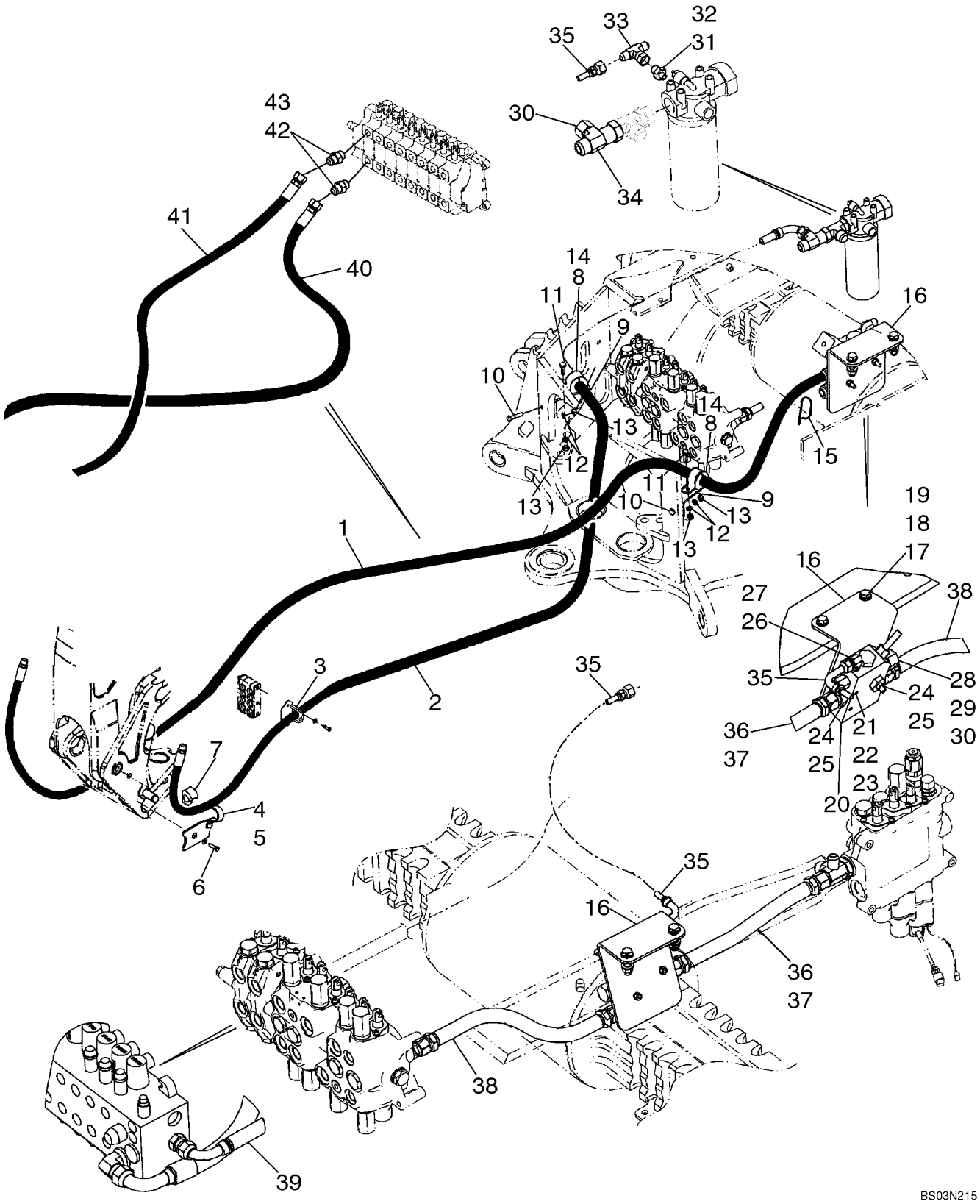

HTTP://WWW.MINNPARBACKHOEPARTS.COM



HIDRAULICA - AUXILIAR DE LA RETROEXCAVADORA

| REF | FN | PART NUMBER | YR/SN | QTY | DESCRIPTION |
|---|---|---|---|---|---|
| 33 | | 218-840 | | 1 | RACOR-T 3/4 sw str br x fl x fl |
| 34 | | 218-5216 | | 1 | CONEXION Tee, 1-1/16 fl br x 15/16 fl x adj str thrd |
| 35 | | {87422948} | | 1 | 930 mm (36-5/8 in) |
| 36 | | 87437232 | | 1 | MANGUERA (CONJUNTO) 420 mm (16-9/16 in); Two Spool Loader Valve |
| 37 | | 87437231 | | 1 | MANGUERA (CONJUNTO) 370 mm (14-19/32 in); Three Spool Loader Valve |
| 38 | | 87422977 | | 1 | MANGUERA (CONJUNTO) 465 mm (18-5/16 in); Power Beyond; Models Without Pilot Controls |
| 39 | | {87428814} | | 1 | 458 mm (18-1/32 in); Power Beyond; Models With Pilot Controls |
| 40 | | 87423969 | | 1 | MANGUERA (CONJUNTO) 1500 mm (59-1/16 in); Models With Bi-Directional |
| 41 | | 87423970 | | 1 | MANGUERA (CONJUNTO) 1725 mm (67-15/16 in); Models With Bi Directional |
| 42 | | 218-5064 | | 2 | RACOR 1-1/16 fl x Or; Incl. Ref 43 |
| 43 | | 237-6012 | | 1 | JUNTA HERMETICA 59/64 ID x 7/64 |

HTTP://WWW.MINNPARBACKHOEPARTS.COM



HIDRAULICA - AUXILIAR DE LA RETROEXCAVADORA

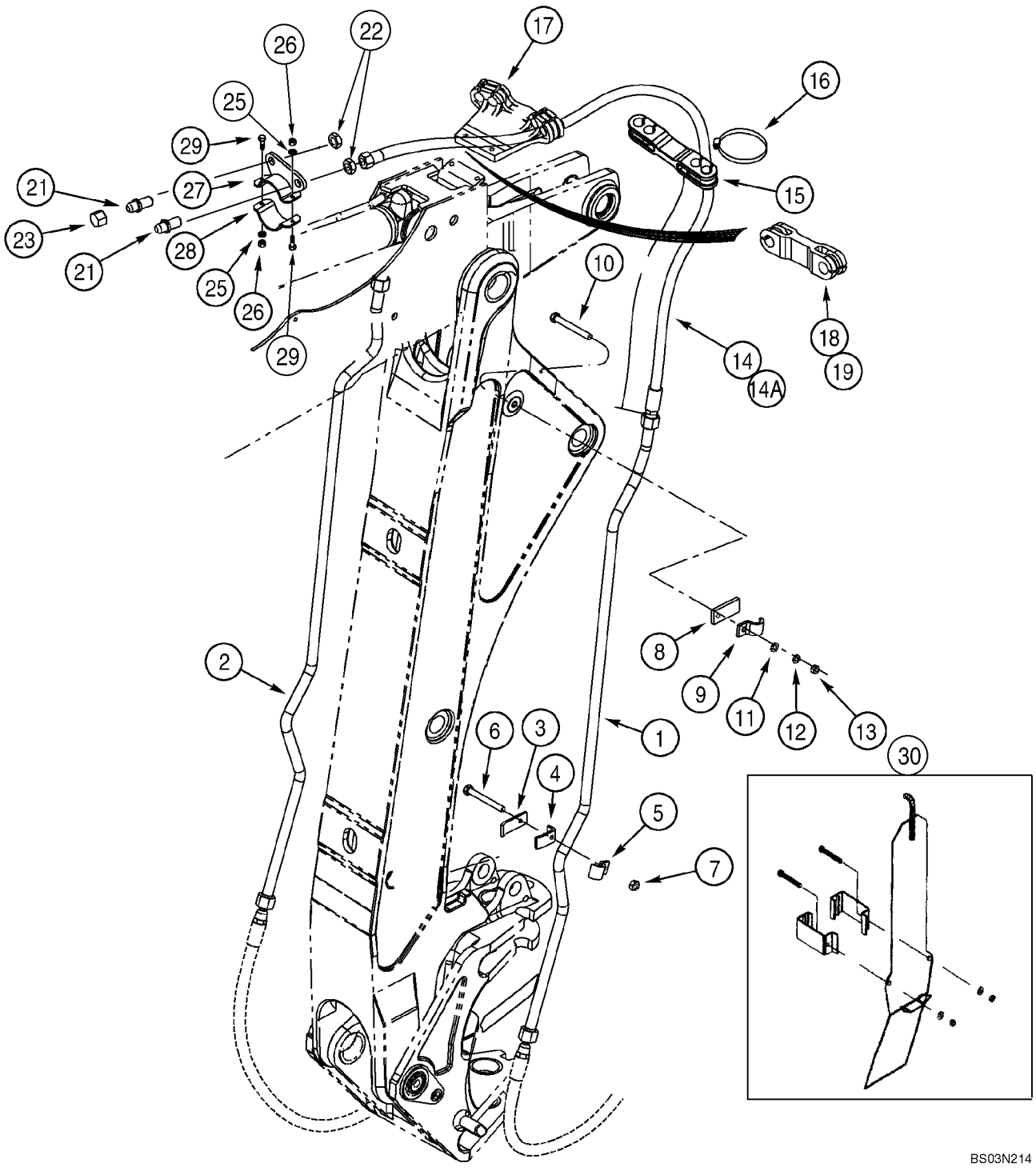

HTTP://WWW.MINNPARBACKHOEPARTS.COM



HIDRAULICA - AUXILIAR DE LA RETROEXCAVADORA

| REF | FN | PART NUMBER | YR/SN | QTY | DESCRIPTION |
|---|---|---|---|---|---|
| | | REF | | | MANUAL AT BOOM AND DIPPER |
| 1 | | 243300A1 | | 1 | CUELLO DE CARGA Tube |
| 2 | | 243404A1 | | 1 | CUELLO DE CARGA Tube |
| 3 | | D149309 | | 2 | COLLAR |
| 4 | | 243298A1 | | 2 | COLLAR |
| 5 | | 242459A1 | | 2 | BRIDA Clamp |
| 6 | | 814-10060 | | 2 | TORNILLO M10 x 60 |
| 7 | | 829-1410 | | 2 | TUERCA M10; 10.9 |
| 8 | | 243398A1 | | 2 | APOYADERO |
| 9 | | 242459A1 | | 2 | BRIDA Clamp |
| 10 | | 814-10040 | | 2 | TORNILLO M10 x 40; Not Required With Standard Dipper |
| 11 | | 895-11010 | | 2 | ARANDELA 11 x 21 x 2 mm |
| 12 | | 892-11010 | | 2 | ARANDELA DE FRENO M10 |
| 13 | | 829-1410 | | 2 | TUERCA M10; 10.9 |
| 14 | | 243679A2 | | 2 | MANGA 2665 mm (104-15/16 in); Models With Extendable Dipper |
| 14A | | 256210A2 | | 2 | MANGA 1285 mm (50-19/32 in); Models Without Extendable Dipper |
| 15 | | 246158A1 | | 1 | BRIDA Models Without Extendable Dipper; Used With (2) 214-3156 Clamps |
| 16 | | 214-3156 | | 2 | COLLAR 2-3/4 x 3-5/8 |
| 17 | | 246151A1 | | 1 | APOYADERO Models With Extendable Dipper; Used With (2) 214-3156 Clamps |
| 18 | | 103670A1 | | 2 | ABRAZADERA MANGUERA Rubber |
| 19 | | 214-3132 | | 4 | COLLAR |
| 21 | | 218-676 | | 2 | CONEXION 1-1/16 fl x bkhd fl |
| 22 | | 218-1256 | | 2 | CONTRA TUERCA 1-1/16 |
| 23 | | 218-335 | | 2 | TAPON DEL DEPOSITO 1/16 |
| 25 | | 896-11010 | | 2 | ARANDELA 11 x 21 x 2,5 mm |
| 26 | | 832-10410 | | 2 | TUERCA M10 |
| 27 | | 314319A1 | | 1 | ABRAZADERA |
| 28 | | 314320A1 | | 1 | ABRAZADERA |
| 29 | | 614-10040 | | 2 | TORNILLO M10 x 40 |
| 30 | | 317988A1 | | 1 | DEFENSA Boom; Component Parts Not Serviced Separately |

HTTP://WWW.MINNPARBACKHOEPARTS.COM

| 08-25 | | p1 | 01/04 |
|---|---|---|---|

HIDRAULICA - DISPOSITIVO ANTICABECEO

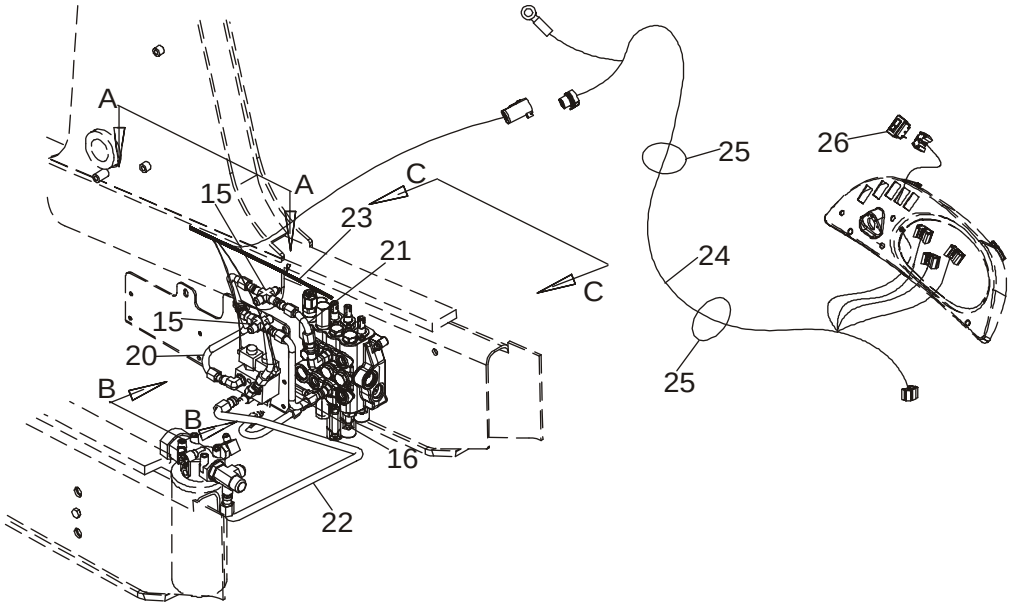


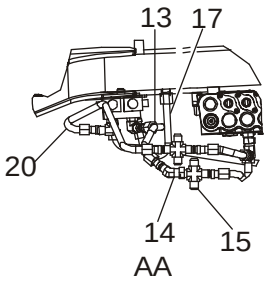


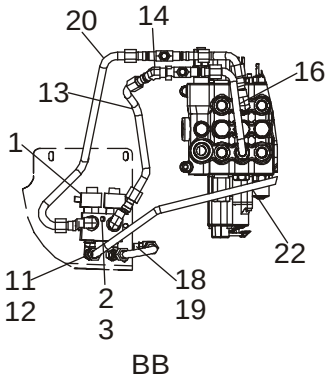


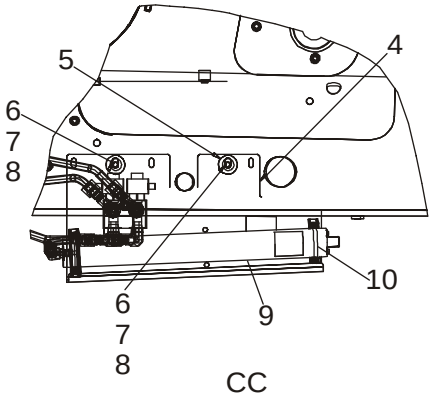


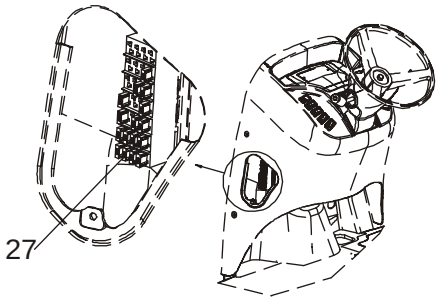


BS03M139

HTTP://WWW.MINNPARBACKHOEPARTS.COM



HIDRAULICA - DISPOSITIVO ANTICABECEO

| REF | FN | PART NUMBER | YR/SN | QTY | DESCRIPTION |
|---|---|---|---|---|---|
| | | REF | | | MANUAL RIDE CONTROL HYDRAULIC AND ELECTRICAL CIRCUIT |
| 1 | | 87433240 | | 1 | ELECTROVÁLVULA Ride Control; Component Parts Not Available At Time Of Printing |
| 2 | | 814-10080 | | 1 | TORNILLO M10 x 80 |
| 3 | | 895-11010 | | 1 | ARANDELA 11 x 21 x 2 mm |
| 4 | | 87421213 | | 1 | PIEZA DE APOYO Plate |
| 5 | | 87423067 | | 2 | SEPARADOR |
| 6 | | 814-10040 | | 2 | TORNILLO M10 x 40 |
| 7 | | 895-15010 | | 2 | ARANDELA 11 x 24 x 2 mm |
| 8 | | 829-1410 | | 2 | TUERCA M10 |
| 9 | | 448284A1 | | 1 | ACUMULADOR Ride Control; Component Parts Not Serviced Separately; Used In Production, For Service, Order 234412A1 Accumulator |
| 9 | | 234412A1 | | 1 | ACUMULADOR Ride Control; See Figure 08-56 |
| 10 | | A13240 | | 2 | COLLAR Two Piece; Includes Hardware |
| 11 | | 218-5117 | | 4 | CONEXION ELBOW, 90 deg, 7/8 fl x 3/4 adj Or; Incl. Ref 12 |
| 12 | | 237-6008 | | 1 | JUNTA HERMETICA 41/64 ID x 3/32 |
| 13 | | 87421938 | | 1 | TUBO (CONJUNTO) Solenoid Valve to Loader Control Valve Lower Lift Section Port |
| 14 | | 218-5174 | | 1 | CONEXION ELBOW, 45 deg, 7/8 fl x sw str thrd |
| 15 | | 218-655 | | 2 | CONEXION TEE |
| 16 | | REF | | 1 | MANUAL TUBE, For Tube and Fitting At Loader Valve, See Figure 08-04 |
| 17 | | 87420696 | | 1 | TUBO (CONJUNTO) Accumulator to Solenoid Valve |
| 18 | | 218-5600 | | 1 | CONEXION ELBOW, 90 deg, 7/8 fl x 3/4 Or; Incl. Ref 19 |
| 19 | | 237-6008 | | 1 | JUNTA HERMETICA 41/64 ID x 3/32 |
| 20 | | 87435923 | | 1 | TUBO (CONJUNTO) Solenoid Valve To Loader Control Valve Upper Lift Section Port |
| 21 | | REF | | 1 | MANUAL TUBE, For Tube and Fitting At Loader Valve, See Figure 08-04 |
| 22 | | 87437265 | | 1 | TUBO (CONJUNTO) Solenoid Valve To Filter |
| 23 | | 87436675 | | 1 | GRUPO DE CABLES Chassis Options Harness; Includes (4) L71879 Diodes |

HTTP://WWW.MINNPARBACKHOEPARTS.COM



HIDRAULICA - DISPOSITIVO ANTICABECEO

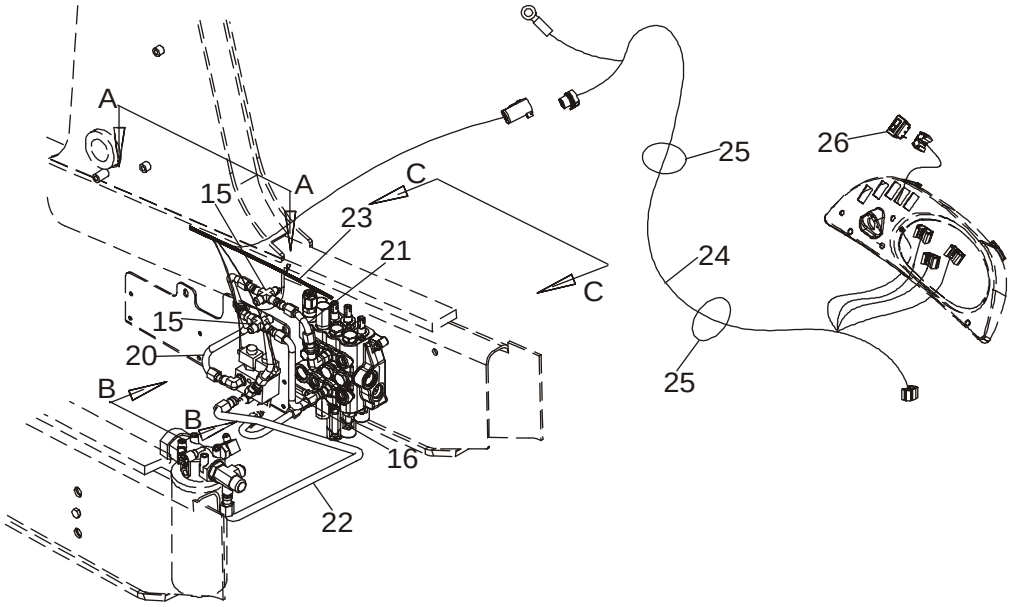


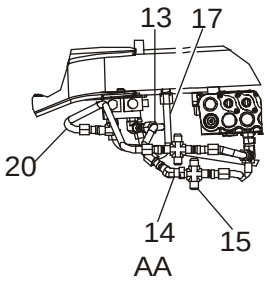


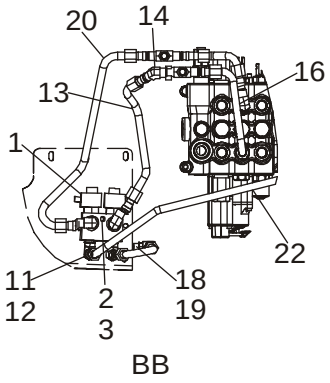


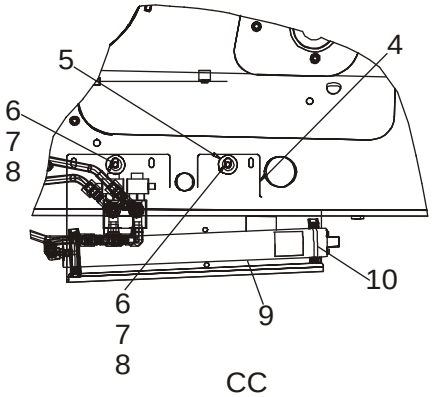


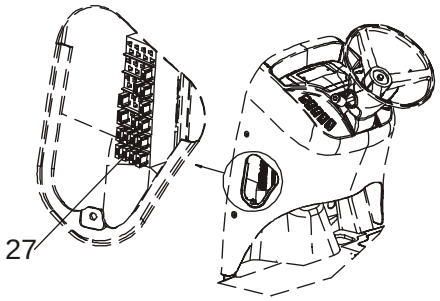


BS03M139

HTTP://WWW.MINNPARBACKHOEPARTS.COM



HIDRAULICA - DISPOSITIVO ANTICABECEO

| REF | FN | PART NUMBER | YR/SN | QTY | DESCRIPTION |
|---|---|---|---|---|---|
| 24 | | 87419256 | | 1 | GRUPO DE CABLES Side Console Options Harness; Includes (1) L71879 Diode; Attaches to Side Console Harness and Main Chassis Options Harness |
| 25 | | L18337 | | 2 | BANDA Tie |
| 26 | | 235002A1 | | 1 | CONTACTOR Ride Control |
| 27 | | 121413A1 | | 1 | FUSIBLE 15 amp, Mini, Blue |

HTTP://WWW.MINNPARBACKHOEPARTS.COM



HIDRAULICA - ACOPLADOR, HERRAMIENTA RÁPIDA DE LA CARGADORA

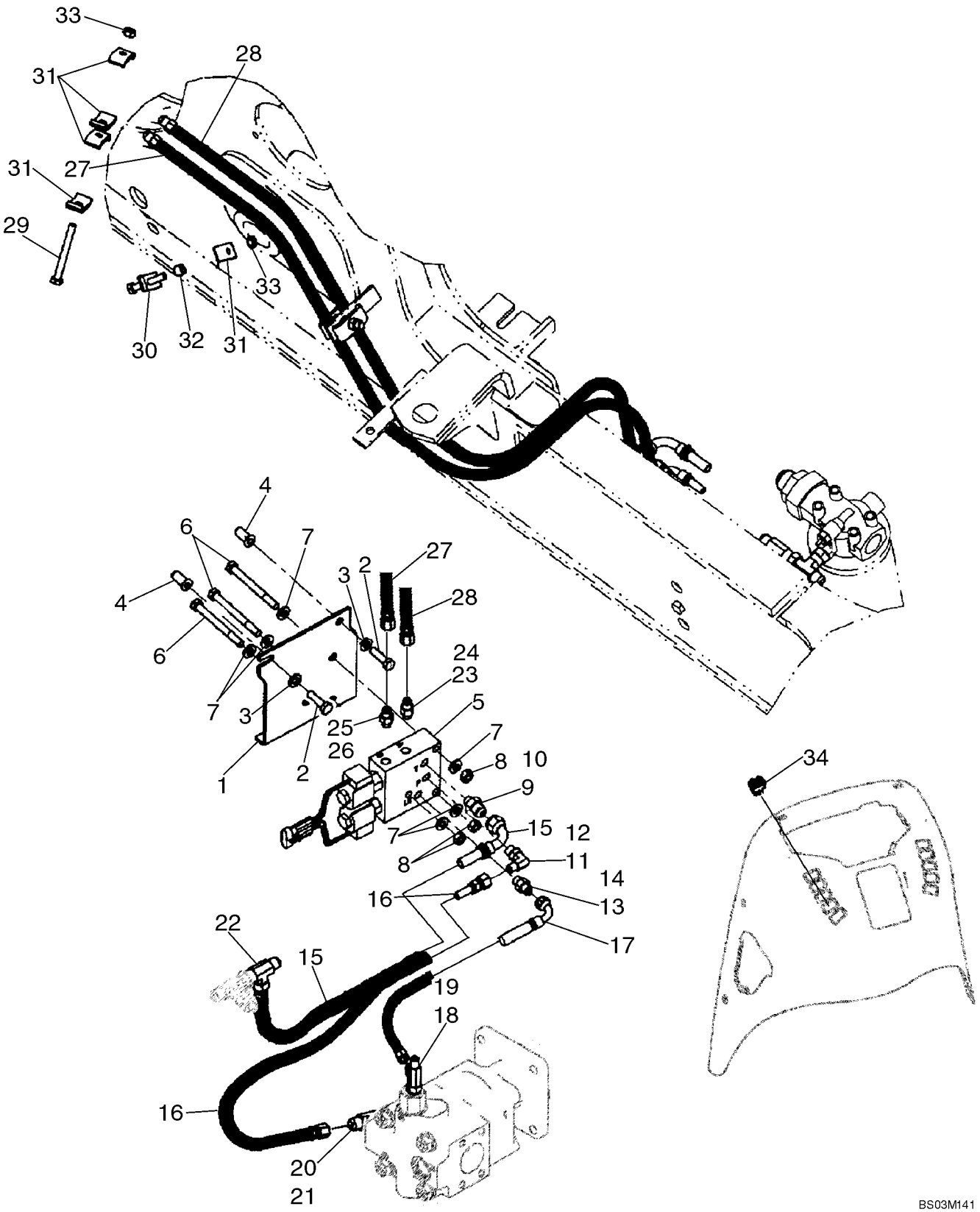

HTTP://WWW.MINNPARBACKHOEPARTS.COM



HIDRAULICA - ACOPLADOR, HERRAMIENTA RÁPIDA DE LA CARGADORA

| REF | FN | PART NUMBER | YR/SN | QTY | DESCRIPTION |
|---|---|---|---|---|---|
| 1 | | 87437263 | | 1 | PIEZA DE APOYO Coupler Valve Mounting |
| 2 | | 614-10035 | | 2 | TORNILLO M10 x 35 |
| 3 | | 896-11010 | | 2 | ARANDELA |
| 4 | | 87417721 | | 2 | ROSCA POSTIZA M10 |
| 5 | | 87435909 | | 1 | ELECTROVÁLVULA Coupler; Loader Tool; See Figure 08-28 |
| 6 | | 814-10060 | | 3 | TORNILLO M10 x 60 |
| 7 | | 896-11010 | | 6 | ARANDELA |
| 8 | | 829-1410 | | 3 | TUERCA M10 |
| 9 | | 218-5351 | | 1 | RACOR 3/4 fl x 9/16 Or; Incl. Ref 10 |
| 10 | | 237-6006 | | 1 | JUNTA HERMETICA 15/32 ID x 5/64 |
| 11 | | 218-5105 | | 1 | CODO 90 deg, 9/16 fl x Or; Incl. Ref 12 |
| 12 | | 237-6006 | | 1 | JUNTA HERMETICA 15/32 ID x 5/64 |
| 13 | | 218-5057 | | 1 | RACOR 9/16 fl x Or; Incl. Ref 14 |
| 14 | | 237-6006 | | 1 | JUNTA HERMETICA 15/32 ID x 5/64 |
| 15 | | 87434265 | | 1 | MANGUERA (CONJUNTO) 500 mm (19-11/16 in); Coupler Valve to Filter |
| 16 | | 87434262 | | 1 | MANGUERA (CONJUNTO) 830 mm (32-11/16 in); Pump to Coupler Pressure Port |
| 17 | | 87434261 | | 1 | MANGUERA (CONJUNTO) 600 mm (23-5/8 in); Pump to Coupler Valve Load Sense Port |
| 18 | | 282428A1 | | 1 | VÁLVULA DE PASO TEE, Check; Incl. Ref 19 |
| 19 | | 237-6006 | | 1 | JUNTA HERMETICA 15/32 ID x 5/64 |
| 20 | | 218-5198 | | 1 | RACOR-T 7/8 adj Or br x 3/4 fl x fl; Incl. Ref 21; Replaces Standard Steering Fitting |
| 21 | | 237-6010 | | 1 | JUNTA HERMETICA 3/4 ID x 3/32 |
| 22 | | 218-845 | | 1 | RACOR-T 3/4 fl br x fl x adj str thrd; Attaches to Tee At Back Of Filter |
| 23 | | 218-5053 | | 1 | RACOR 7/16 fl x Or; Incl. Ref 24 |
| 24 | | 237-6004 | | 1 | JUNTA HERMETICA 23/64 ID x 5/64 |
| 25 | | 218-5056 | | 1 | RACOR 1/2 fl x Or; Incl. Ref 26 |
| 26 | | 237-6005 | | 1 | JUNTA HERMETICA 13/32 ID x 5/64 |
| 27 | | 87427539 | | 1 | MANGUERA (CONJUNTO) 1815 mm (71-1/2 in); B Port |
| 28 | | 87427537 | | 1 | MANGUERA (CONJUNTO) 1815 mm (71-1/2 in); A Port |

HTTP://WWW.MINNPARBACKHOEPARTS.COM



HIDRAULICA - ACOPLADOR, HERRAMIENTA RÁPIDA DE LA CARGADORA

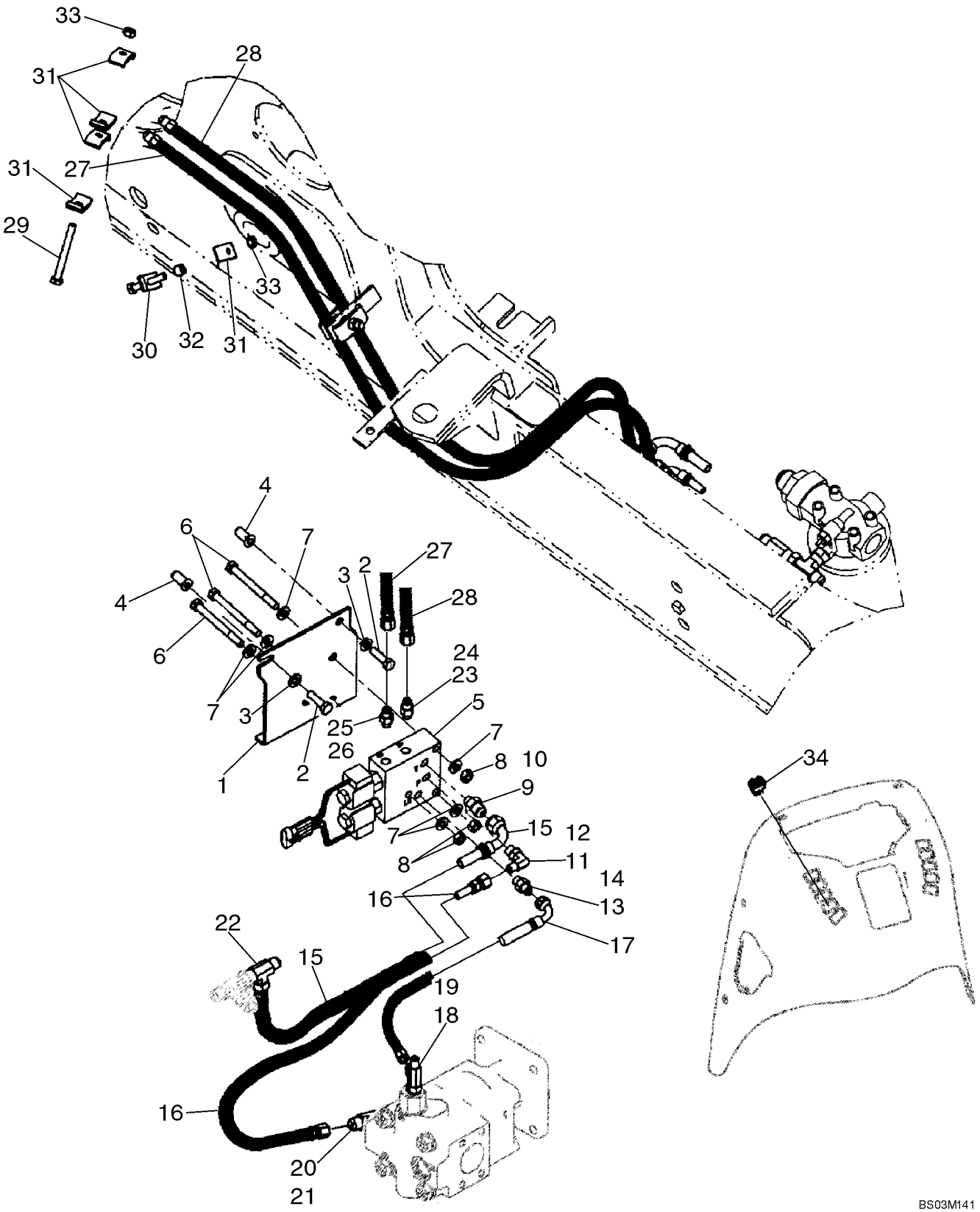

HTTP://WWW.MINNPARBACKHOEPARTS.COM



HIDRAULICA - ACOPLADOR, HERRAMIENTA RÁPIDA DE LA CARGADORA

| REF | FN | PART NUMBER | YR/SN | QTY | DESCRIPTION |
|---|---|---|---|---|---|
| 29 | | 814-10080 | | 1 | TORNILLO M10 x 80 |
| 30 | | 814-10070 | | 1 | TORNILLO M10 x 70 |
| 31 | | D138055 | | 6 | COLLAR |
| 32 | | 120303A1 | | 1 | ESPACIADOR |
| 33 | | 832-10410 | | 2 | TUERCA M10 |
| 34 | | 398675A2 | | 1 | CONTACTOR Loader Tool Quick Coupler |

HTTP://WWW.MINNPARBACKHOEPARTS.COM

| 08-27 | | p1 | 01/04 |
|---|---|---|---|

HIDRAULICA - ACOPLADOR, HERRAMIENTA RÁPIDA DE LA CARGADORA

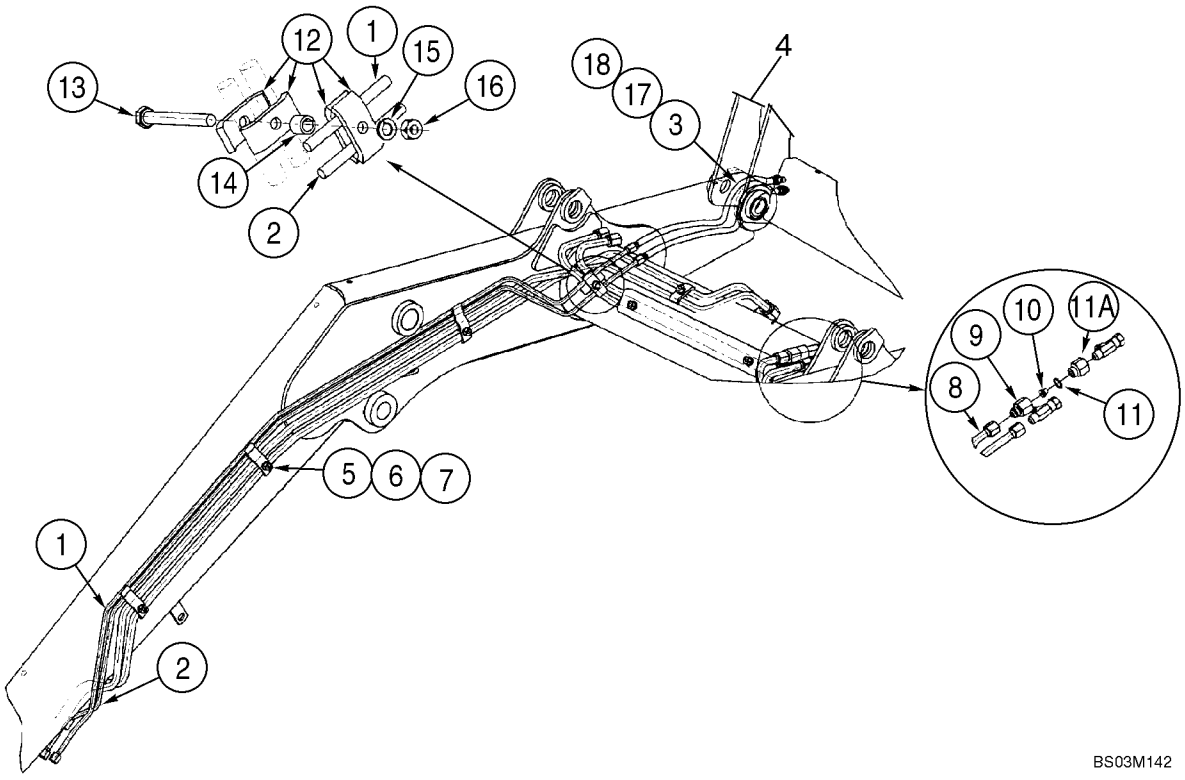

HTTP://WWW.MINNPARBACKHOEPARTS.COM



HIDRAULICA - ACOPLADOR, HERRAMIENTA RÁPIDA DE LA CARGADORA

| REF | FN | PART NUMBER | YR/SN | QTY | DESCRIPTION |
|---|---|---|---|---|---|
| | | REF | | | MANUAL AT LOADER LIFT FRAME |
| 1 | | 308255A1 | | 1 | TUBO (CONJUNTO) |
| 2 | | 308254A1 | | 1 | TUBO (CONJUNTO) |
| 3 | | 300996A3 | | 2 | MANGUERA (CONJUNTO) 772 mm (30-13/32 in) |
| 4 | | REF | | 1 | MANUAL Coupler, Hydr., Loader Tool Quick Coupler; For Complete Assembly, See Figure 09-10; Order From Machinery Price List; Use Standard Loader Bucket Pins To Mount Coupler |
| 5 | | 302820A2 | | 3 | COLLAR |
| 6 | | 892-11010 | | 3 | ARANDELA DE FRENO M10 |
| 7 | | 829-1410 | | 3 | TUERCA M10; 10.9 |
| 8 | | 434605A1 | | 1 | TUBO (CONJUNTO) |
| 9 | | 304424A1 | | 1 | CONECTOR |
| 10 | | 304890A1 | | 1 | UNION REDUCCION |
| 11 | | 237-6010 | | 1 | JUNTA HERMETICA 3/4 ID x 3/32 |
| 11A | | 309674A1 | | 1 | CONECTOR 7/8 male x 7/8 female |
| 12 | | D138055 | | 4 | COLLAR |
| 13 | | 814-10090 | | 1 | TORNILLO M10 x 90 |
| 14 | | 120303A1 | | 1 | ESPACIADOR |
| 15 | | 892-11010 | | 1 | ARANDELA DE FRENO M10 |
| 16 | | 829-1410 | | 1 | TUERCA M10; 10.9 |
| 17 | | 307277A1 | | 1 | MANGUITO |
| 18 | | L18337 | | 2 | BANDA 15 in |

HTTP://WWW.MINNPARBACKHOEPARTS.COM



CONJUNTO DE LA VÁLVULA DEL ACOPLADOR - HERRAMIENTA RÁPIDA DE LA CARGADORA

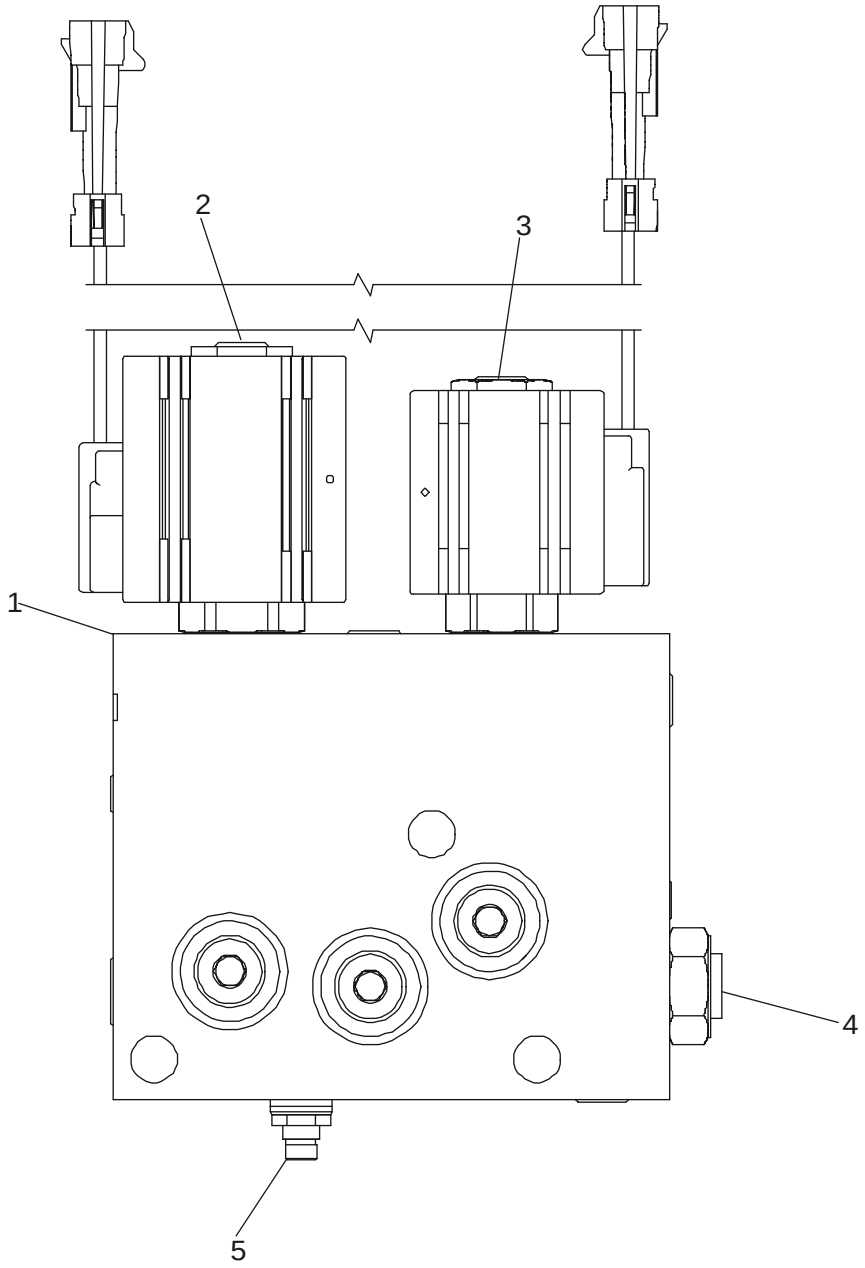


BS03M143

HTTP://WWW.MINNPARBACKHOEPARTS.COM



CONJUNTO DE LA VÁLVULA DEL ACOPLADOR - HERRAMIENTA RÁPIDA DE LA CARGADORA

| REF | FN | PART NUMBER | YR/SN | QTY | DESCRIPTION |
|---|---|---|---|---|---|
| | | 87435909 | | 1 | ELECTROVÁLVULA Incl. Ref 1 - 5 |
| 1 | | NSS | | 1 | NO SE REPARA SEPARADAM. Body |
| 2 | | {87438021} | | 1 | 4-Way Cartridge With Coil; Includes 87438022, 87438023, 87438024 |
| | | {87438022} | | 1 | Valve, Cartridge |
| | | {87438023} | | 1 | Coil, Solenoid |
| | | {87438024} | | 1 | Seal Kit, 4-Way Solenoid |
| 3 | | {87438025} | | 1 | 2-Way 2-Position Cartridge With Coil; Includes 87438026, 87438027, 87438028 |
| | | {87438026} | | 1 | Valve, Cartridge |
| | | {87438027} | | 1 | Coil, Solenoid |
| | | {87438028} | | 1 | Seal Kit, 2-Way Solenoid |
| 4 | | {87438029} | | 1 | Check Valve; Includes 87438028 Seal Kit |
| | | {87438028} | | 1 | Seal Kit, 2-Way Solenoid |
| 5 | | {87438031} | | 1 | Relief Valve; Includes 87438032 |
| | | {87438032} | | 1 | Seal Kit, Relief Valve |

HTTP://WWW.MINNPARBACKHOEPARTS.COM



BOMBA, EQUIPAMIENTO HIDRÁULICO

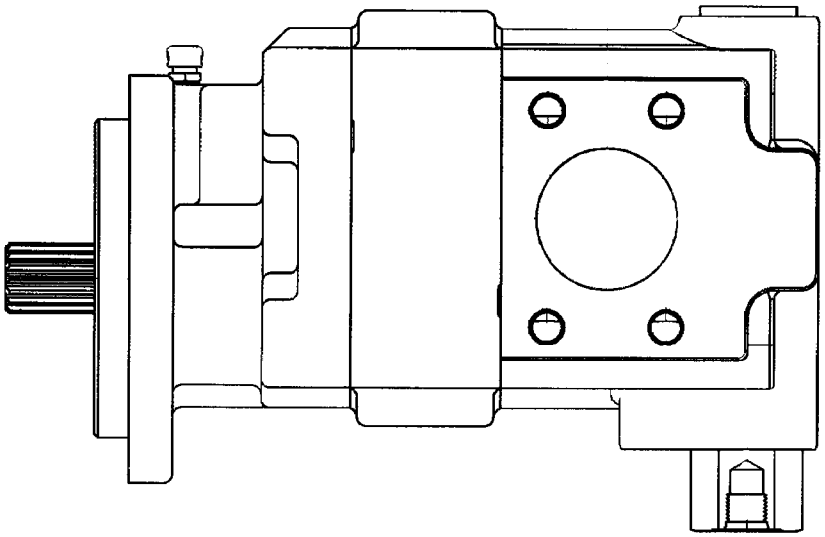

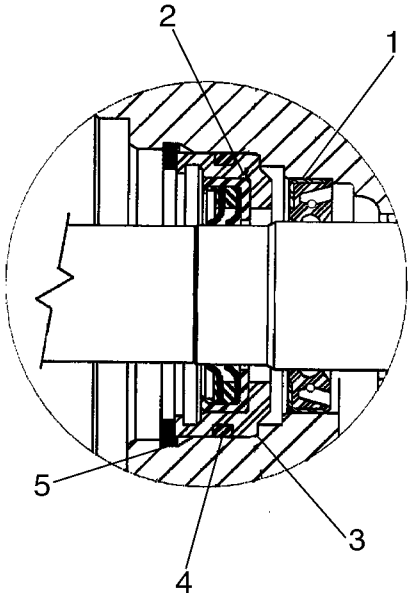


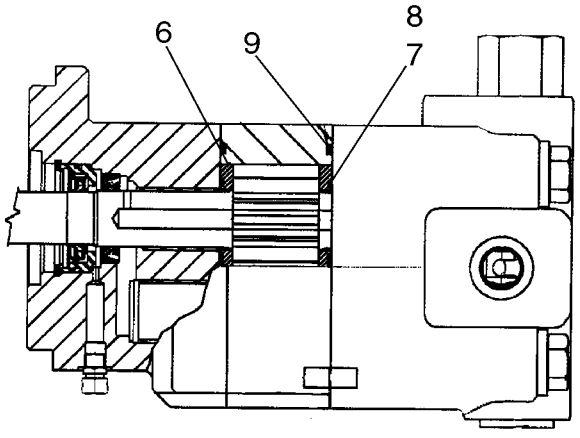


BS03M039

HTTP://WWW.MINNPARBACKHOEPARTS.COM



BOMBA, EQUIPAMIENTO HIDRÁULICO

| REF | FN | PART NUMBER | YR/SN | QTY | DESCRIPTION |
|---|---|---|---|---|---|
| | | 87434672 | | 1 | BOMBA HIDRÁULICA Component Parts Not Serviced Separately, Except for 87434070 and 87438045 Service Kits, Ref 1 - 17, See Below |
| | | {87434070} | | 1 | Pump Service Kit, Single Section; Incl. Ref 1 - 9 |
| 1 | | L32418 | | 1 | ANILLO DE CIERRE Double Lip |
| 2 | | {87434075} | | 1 | Lip Seal |
| 3 | | {87434076} | | 1 | Seal Retainer |
| 4 | | {87434077} | | 1 | O-Ring Seal |
| 5 | | 102-23206 | | 1 | RETENEDOR Retaining Ring |
| 6 | | N13582 | | 2 | PLACA Thrust |
| 7 | | 144173A1 | | 2 | ANILLO DE CIERRE |
| 8 | | 178051A1 | | 2 | JUNTA |
| 9 | | L32100 | | 2 | ANILLO DE CIERRE Gear Housing Gasket |
| | | {87438045} | | 1 | Priority Valve Service Kit, Single; Incl. Ref 10 - 17 Which Are Not Illustrated |
| 10 | | {87437899} | | 1 | Load Sense Plug; Not Illustrated |
| 11 | | 237-6014 | | 1 | JUNTA HERMETICA 1-3/64 ID x 7/64; Not Illustrated |
| 12 | | {87437905} | | 1 | Spool Spring, 100 psi; Not Illustrated |
| 13 | | {87437906} | | 1 | Spool Spring, 50 psi; Not Illustrated |
| 14 | | {87437914} | | 1 | Priority Valve Spool; Not Illustrated |
| 15 | | {87437917} | | 1 | Hex Socket Plug, Spool; Not Illustrated |
| 16 | | 218-5213 | | 1 | TAPÓN Hex Socket, 1-3/16 Or; Incl. Ref 17; Not Illustrated |
| 17 | | 237-6014 | | 1 | JUNTA HERMETICA 1-3/64 ID x 7/64; Not Illustrated |

HTTP://WWW.MINNPARBACKHOEPARTS.COM



CONJUNTO DE LA VALVULA - CONTROL DE LA CARGADORA, DOS CORREDERAS

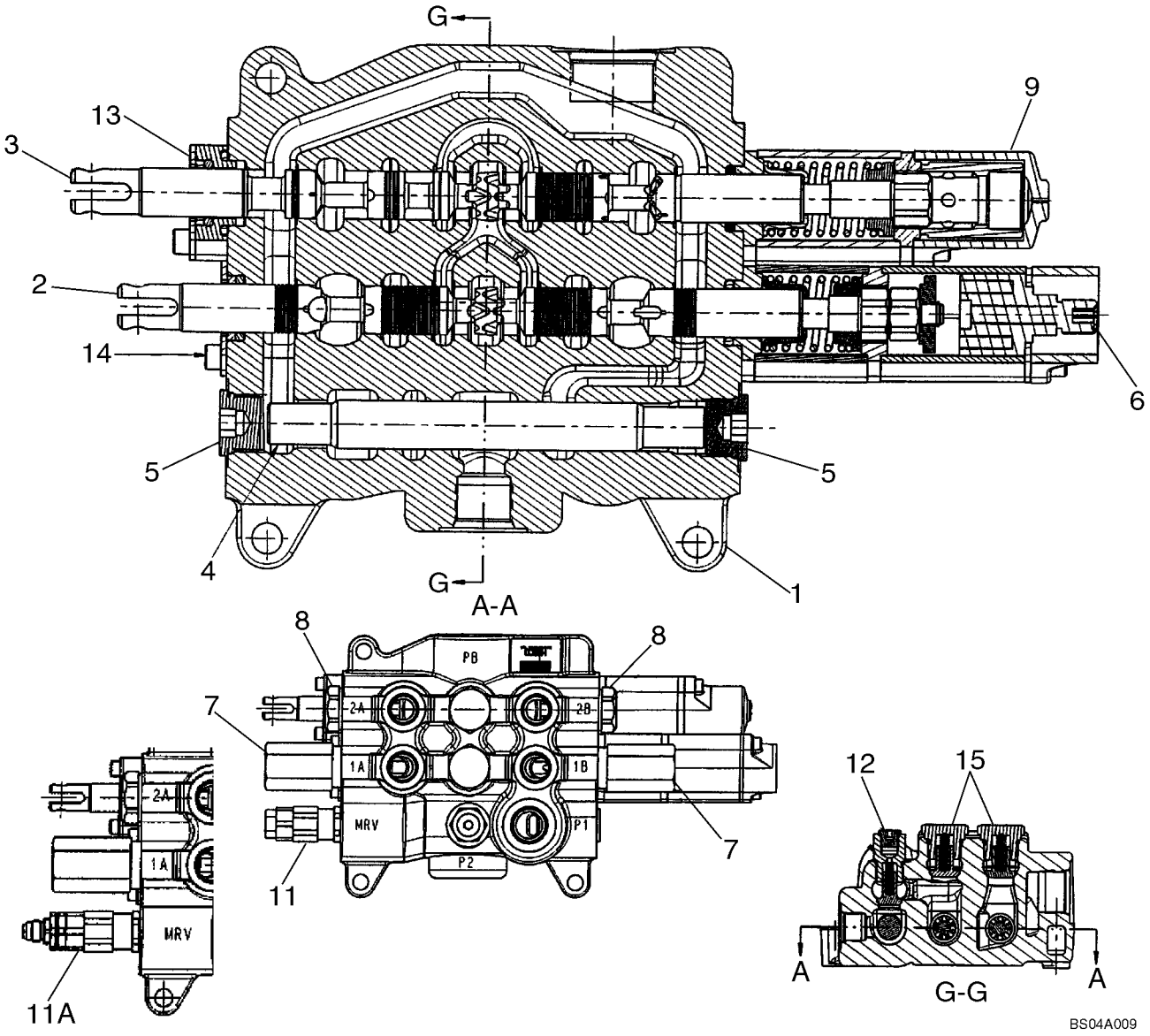

HTTP://WWW.MINNPARBACKHOEPARTS.COM



CONJUNTO DE LA VALVULA - CONTROL DE LA CARGADORA, DOS CORREDERAS

| REF | FN | PART NUMBER | YR/SN | QTY | DESCRIPTION |
|---|---|---|---|---|---|
| | | 87434766 | | 1 | VALVULA Two Spool Loader Valve, Used On Models Without Pilot Controls; Incl. Ref 1 - 11, 12 - 15 |
| | | 87434768 | | 1 | VALVULA Two Spool Loader Valve, Used On Models With Pilot Controls; Incl. Ref 1 - 9, 11A - 15 |
| 1 | | NSS | | 1 | NO SE REPARA SEPARADAM. HOUSING |
| 2 | | NSS | | 1 | NO SE REPARA SEPARADAM. SPOOL, Bucket |
| 3 | | NSS | | 1 | NO SE REPARA SEPARADAM. SPOOL, Lift |
| 4 | | NSS | | 1 | NO SE REPARA SEPARADAM. SPOOL |
| 5 | | {87426233} | | 2 | 7/8 - 14 NF Plug, Includes O-Ring; Component Parts Not Serviced Separately |
| 6 | | {87426221} | | 1 | Magnetic Detent Kit, Bucket; Component Parts Not Serviced Separately |
| 7 | | {87426232} | | 2 | Relief Valve Assembly; Component Parts Not Serviced Separately |
| 8 | | {81868381} | | 2 | Load Check Valve, Anti-Void; Component Parts Not Serviced Separately |
| 9 | | {87426227} | | 1 | Manual Detent Assembly, Lift; Component Parts Not Serviced Separately |
| 11 | | {87426717} | | 1 | Main Relief Valve Assembly, Single Stage; 87434766 Loader Valve, Models Without Pilot Controls; Component Parts Not Serviced Separately |
| 11A | | {87426235} | | 1 | Main Relief Valve Assembly, Two Stage; 87434768 Loader Valve, Models With Pilot Controls; Component Parts Not Serviced Separately |
| 12 | | {87426716} | | 1 | Check Valve; Component Parts Not Serviced Separately |
| 13 | | {87440815} | | 1 | Lift Spool Plate and Seal Assembly; Component Parts Not Serviced Separately |
| 14 | | {87440814} | | 1 | Bucket Spool Plate and Seal Assembly; Component Parts Not Serviced Separately |
| 15 | | {87426238} | | 2 | Check Valve; Component Parts Not Serviced Separately |

HTTP://WWW.MINNPARBACKHOEPARTS.COM



CONJUNTO DE LA VALVULA - CONTROL DE LA CARGADORA, TRES CORREDERAS

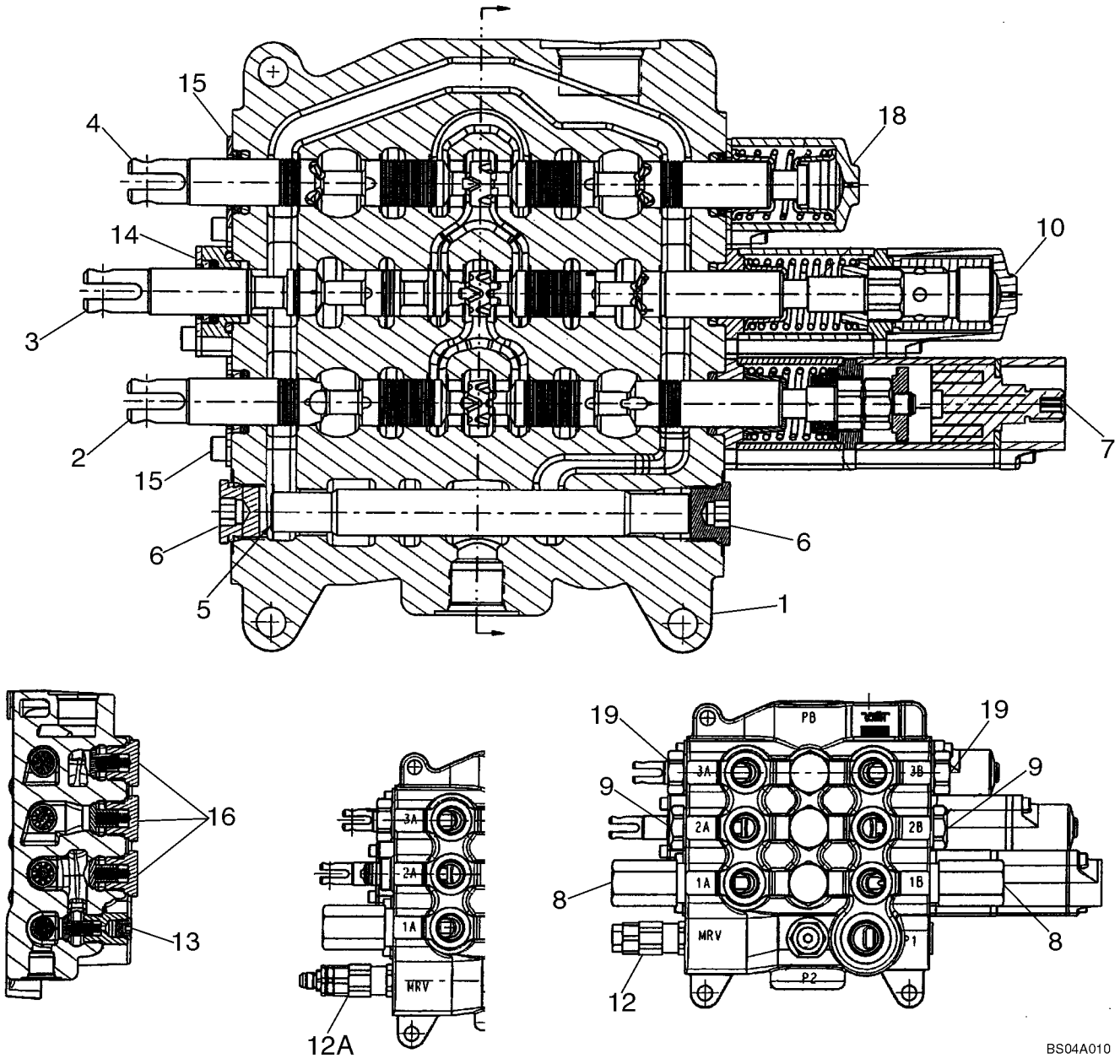

HTTP://WWW.MINNPARBACKHOEPARTS.COM



CONJUNTO DE LA VALVULA - CONTROL DE LA CARGADORA, TRES CORREDERAS

| REF | FN | PART NUMBER | YR/SN | QTY | DESCRIPTION |
|---|---|---|---|---|---|
| | | 87434767 | | 1 | VALVULA Three Spool Loader Valve, Used On Models Without Pilot Controls; Incl. Ref 1 - 12, 14 - 19 |
| | | 87434769 | | 1 | VALVULA Three Spool Loader Valve, Used On Models With Pilot Controls; Incl. Ref 1 - 10, 12A - 19 |
| 1 | | NSS | | 1 | NO SE REPARA SEPARADAM. HOUSING |
| 2 | | NSS | | 1 | NO SE REPARA SEPARADAM. SPOOL, Bucket |
| 3 | | NSS | | 1 | NO SE REPARA SEPARADAM. SPOOL, Lift |
| 4 | | NSS | | 1 | NO SE REPARA SEPARADAM. SPOOL, Clam |
| 5 | | NSS | | 1 | NO SE REPARA SEPARADAM. SPOOL |
| 6 | | {87426233} | | 2 | 7/8 - 14 NF Plug, Includes O-Ring; Component Parts Not Serviced Separately |
| 7 | | {87426221} | | 1 | Magnetic Detent Kit, Bucket; Component Parts Not Serviced Separately |
| 8 | | {87426232} | | 2 | Relief Valve Assembly; Component Parts Not Serviced Separately |
| 9 | | {81868381} | | 2 | Load Check Valve, Anti-Void; Component Parts Not Serviced Separately |
| 10 | | {87426227} | | 1 | Manual Detent Assembly, Lift; Component Parts Not Serviced Separately |
| 12 | | {87426717} | | 1 | Main Relief Valve Assembly, Single Stage; 87434767 Loader Valve, Models Without Pilot Controls; Component Parts Not Serviced Separately |
| 12A | | {87426235} | | 1 | Main Relief Valve Assembly, Two Stage; 87434769 Loader Valve, Models With Pilot Controls; Component Parts Not Serviced Separately |
| 13 | | {87426716} | | 1 | Check Valve; Component Parts Not Serviced Separately |
| 14 | | {87440815} | | 1 | Lift Spool Plate and Seal Assembly; Component Parts Not Serviced Separately |
| 15 | | {87440814} | | 2 | Bucket and Clam Spool Plate and Seal Assembly; Component Parts Not Serviced Separately |
| 16 | | {87426238} | | 3 | Check Valve; Component Parts Not Serviced Separately |
| 18 | | {87426241} | | 1 | Clam Spool End Cap Assembly; Component Parts Not Serviced Separately |

HTTP://WWW.MINNPARBACKHOEPARTS.COM



CONJUNTO DE LA VALVULA - CONTROL DE LA CARGADORA, TRES CORREDERAS

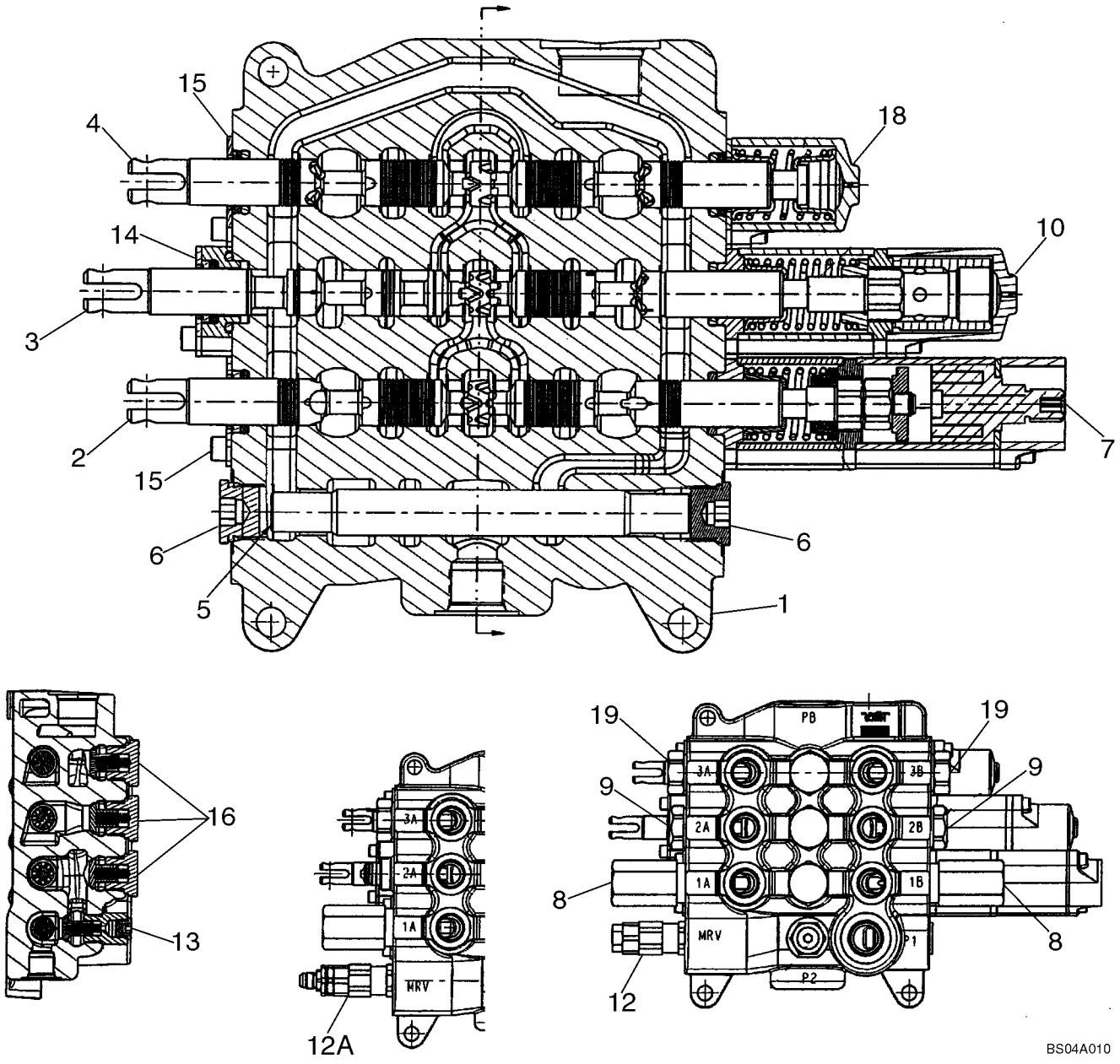

HTTP://WWW.MINNPARBACKHOEPARTS.COM



CONJUNTO DE LA VALVULA - CONTROL DE LA CARGADORA, TRES CORREDERAS

| REF | FN | PART NUMBER | YR/SN | QTY | DESCRIPTION |
|---|---|---|---|---|---|
| 19 | | {83981068} | | 2 | Shut-Off Plug Assembly Includes Seal; Component Parts Not Serviced Separately |

HTTP://WWW.MINNPARBACKHOEPARTS.COM



CONJUNTO DE LA VALVULA - CONTROL DE LA RETROEXCAVADORA, 6 BOBINAS (SIN PALA EXTENSIBLE Y SIN SISTEM)

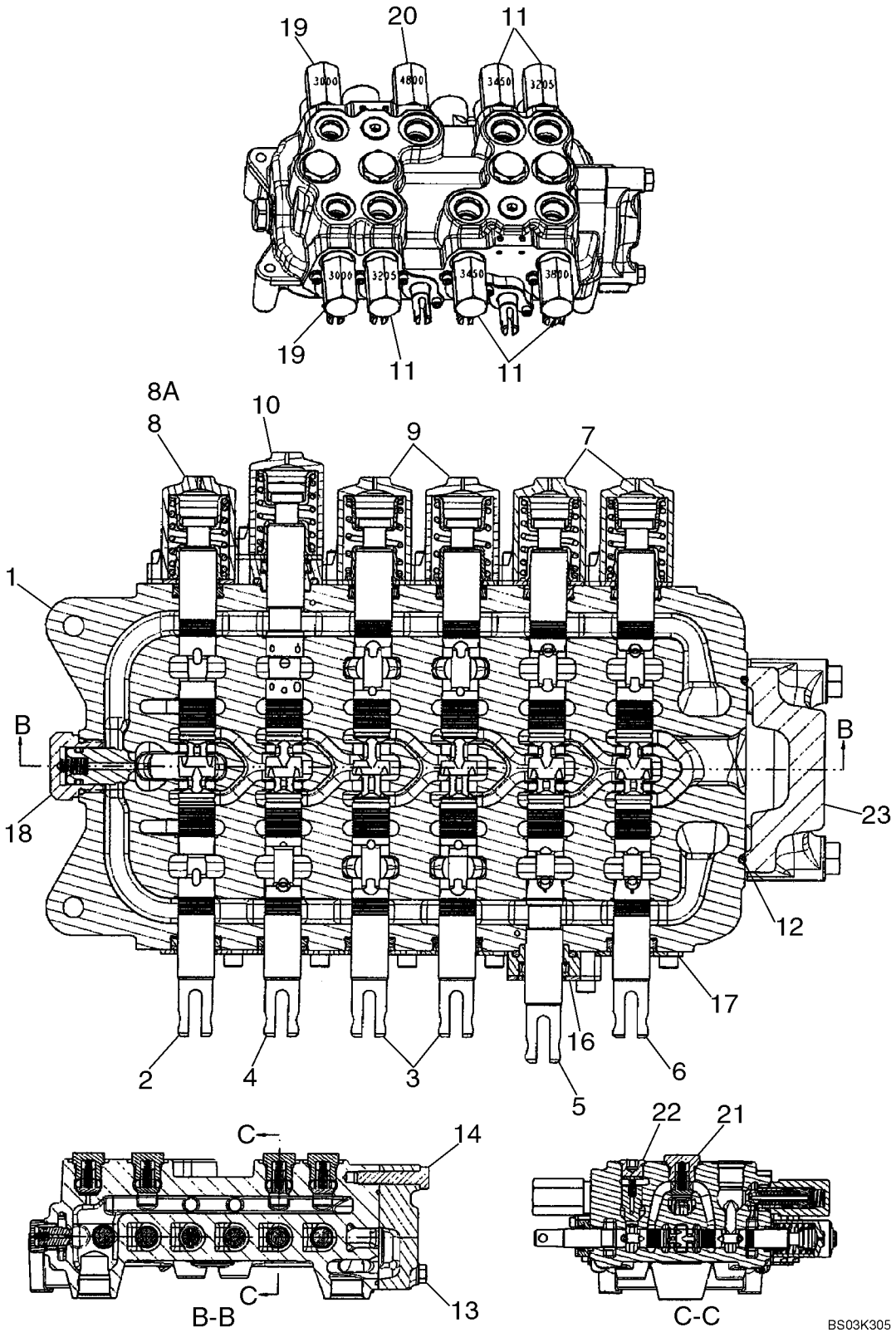

HTTP://WWW.MINNPARBACKHOEPARTS.COM



CONJUNTO DE LA VALVULA - CONTROL DE LA RETROEXCAVADORA, 6 BOBINAS (SIN PALA EXTENSIBLE Y SIN SISTEM)

| REF | FN | PART NUMBER | YR/SN | QTY | DESCRIPTION |
|---|---|---|---|---|---|
| | | REF | | | MANUAL MODELS WITHOUT EXTENDABLE DIPPER, WITHOUT AUXILIARY HYDRAULICS, WITHOUT PILOT CONTROLS |
| | | 87413144 | | 1 | VALVULA 6 Spool, Foot Swing; Incl. Ref 1 - 8, 9 - 23; If Used |
| | | 87416476 | | 1 | VALVULA 6 Spool, Hand Swing; Incl. Ref 1 - 7, 8A, 9 - 23; If Used |
| 1 | | NSS | | 1 | NO SE REPARA SEPARADAM. HOUSING |
| 2 | | NSS | | 1 | NO SE REPARA SEPARADAM. SPOOL, SWING |
| 3 | | NSS | | 2 | NO SE REPARA SEPARADAM. SPOOL, STABILIZER, Right-hand and Left-Hand |
| 4 | | NSS | | 1 | NO SE REPARA SEPARADAM. SPOOL, BOOM |
| 5 | | NSS | | 1 | NO SE REPARA SEPARADAM. SPOOL, DIPPER |
| 6 | | NSS | | 1 | NO SE REPARA SEPARADAM. SPOOL, BUCKET |
| 7 | | {87433028} | | 2 | Cap Assembly, Bucket and Dipper Spool End; Component Parts Not Serviced Separately |
| 8 | | {87433029} | | 1 | Cap Assembly, Swing Spool End; 87413144 Foot Swing Valve; Component Parts Not Serviced Separately |
| 8A | | {87433028} | | 1 | Cap Assembly, Swing Spool End; 87416476 Hand Swing Valve; Component Parts Not Serviced Separately |
| 9 | | {87428497} | | 2 | Cap Assembly, Stabilizer Spool Ends; Component Parts Not Serviced Separately |
| 10 | | {87433029} | | 1 | Cap Assembly, Boom Spool End; Component Parts Not Serviced Separately |
| 11 | | {87426232} | | 5 | Relief Valve Assembly; (2) 3205 psi, (2) 3450 psi, (1) 3800 psi; Component Parts Not Serviced Separately |
| 12 | | {87428495} | | 1 | O-Ring Seal, Outlet Section |
| 13 | | {87428491} | | 2 | Bolt |
| 14 | | {87428492} | | 1 | Bolt |
| 16 | | {87426240} | | 1 | Seal Plate Assembly, Dipper Spool; Component Parts Not Serviced Separately |
| 17 | | {87426239} | | 5 | Seal Plate Assembly; Component Parts Not Serviced Separately |

HTTP://WWW.MINNPARBACKHOEPARTS.COM



CONJUNTO DE LA VALVULA - CONTROL DE LA RETROEXCAVADORA, 6 BOBINAS (SIN PALA EXTENSIBLE Y SIN SISTEM)

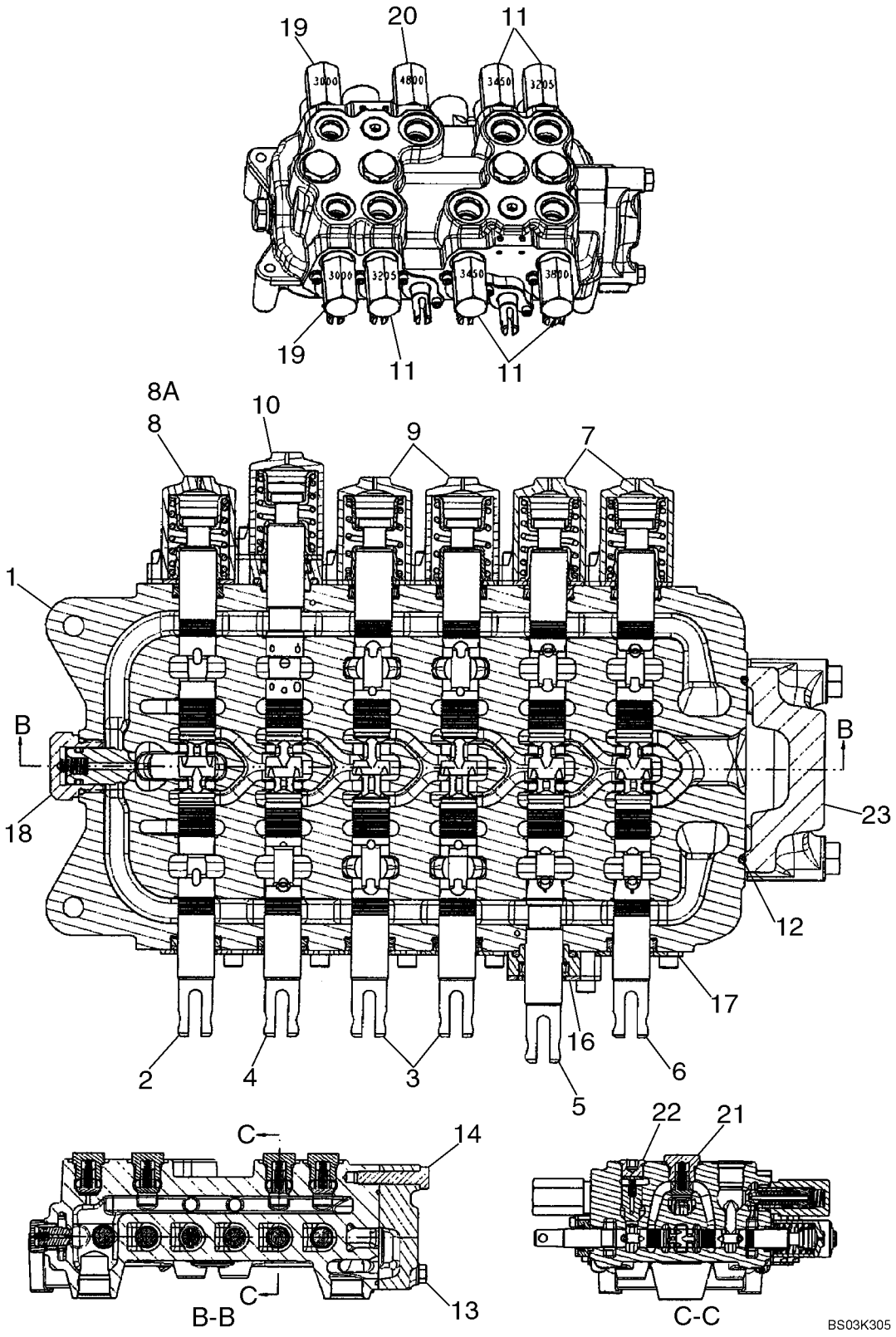

HTTP://WWW.MINNPARBACKHOEPARTS.COM



CONJUNTO DE LA VALVULA - CONTROL DE LA RETROEXCAVADORA, 6 BOBINAS (SIN PALA EXTENSIBLE Y SIN SISTEM)

| REF | FN | PART NUMBER | YR/SN | QTY | DESCRIPTION |
|---|---|---|---|---|---|
| 18 | | {81868381} | | 1 | Anti-Void Valve; Component Parts Not Serviced Separately |
| 19 | | {87428490} | | 2 | Relief Valve Assembly; 3000 psi; Component Parts Not Serviced Separately |
| 20 | | {87428488} | | 1 | Relief Valve Assembly; 4800 psi; Component Parts Not Serviced Separately |
| 21 | | {87426238} | | 4 | Check Valve Assembly; Hex Head; Component Parts Not Serviced Separately |
| 22 | | {87428486} | | 2 | Check Valve Assembly; Hex Socket Head; Component Parts Not Serviced Separately |
| 23 | | {87433030} | | 1 | Outlet Section Assembly; Component Parts Not Serviced Separately |

HTTP://WWW.MINNPARBACKHOEPARTS.COM

| 08-33 | | p1 | 01/04 |
|---|---|---|---|

CONJUNTO DE LA VALVULA - CONTROL DE LA RETROEXCAVADORA, 7 BOBINAS (SIN PALA EXTENSIBLE Y CON SISTEM)

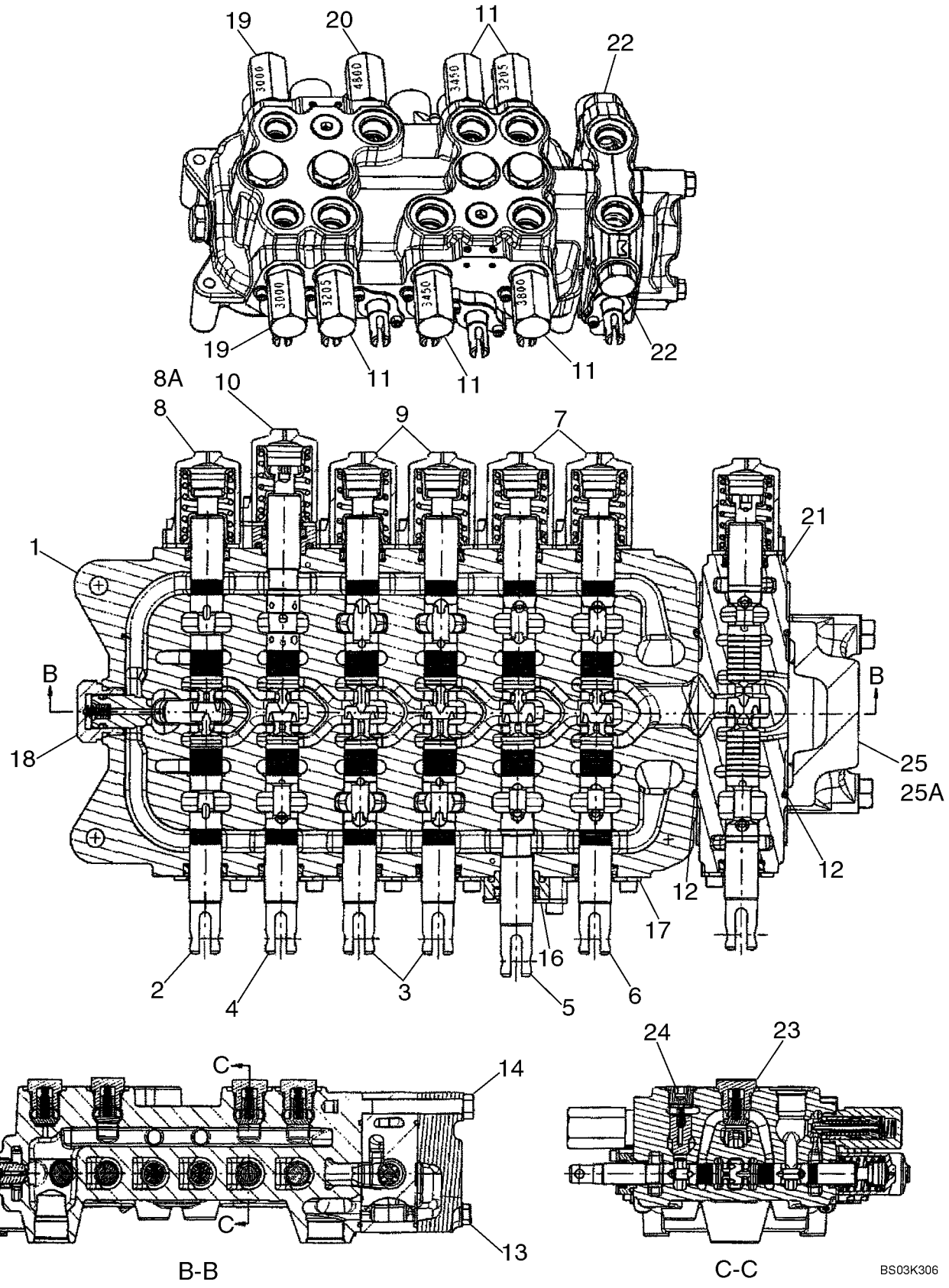

HTTP://WWW.MINNPARBACKHOEPARTS.COM



CONJUNTO DE LA VALVULA - CONTROL DE LA RETROEXCAVADORA, 7 BOBINAS (SIN PALA EXTENSIBLE Y CON SISTEM)

| REF | FN | PART NUMBER | YR/SN | QTY | DESCRIPTION |
|---|---|---|---|---|---|
| | | REF | | | MANUAL MODELS WITHOUT EXTENDABLE DIPPER, WITH AUXILIARY HYDRAULICS, WITHOUT PILOT CONTROLS |
| | | 87414278 | | 1 | VALVULA 7 Spool, Foot Swing; Incl. Ref 1 - 8, 9 - 25; If Used |
| | | 87414277 | | 1 | VALVULA 7 Spool, Hand Swing; Incl. Ref 1 - 7, 8A, 9 - 24, 25A; If Used |
| 1 | | NSS | | 1 | NO SE REPARA SEPARADAM. HOUSING |
| 2 | | NSS | | 1 | NO SE REPARA SEPARADAM. SPOOL, SWING |
| 3 | | NSS | | 2 | NO SE REPARA SEPARADAM. SPOOL, STABILIZER, Left-Hand and Right-Hand |
| 4 | | NSS | | 1 | NO SE REPARA SEPARADAM. SPOOL, BOOM |
| 5 | | NSS | | 1 | NO SE REPARA SEPARADAM. SPOOL, DIPPER |
| 6 | | NSS | | 1 | NO SE REPARA SEPARADAM. SPOOL, BUCKET |
| 7 | | {87433028} | | 2 | Cap Assembly, Bucket and Dipper Spool End; Component Parts Not Serviced Separately |
| 8 | | {87433029} | | 1 | Cap Assembly, Swing Spool End; 87414278 Foot Swing Valve; Component Parts Not Serviced Separately |
| 8A | | {87433028} | | 1 | Cap Assembly, Swing Spool End; 87414277 Hand Swing Valve; Component Parts Not Serviced Separately |
| 9 | | {87428497} | | 2 | Cap Assembly, Stabilizer Spool Ends; Component Parts Not Serviced Separately |
| 10 | | {87433029} | | 1 | Cap Assembly, Boom Spool End; Component Parts Not Serviced Separately |
| 11 | | {87426232} | | 5 | Relief Valve Assembly; (2) 3205 psi, (2) 3450 psi, (1) 3800 psi; Component Parts Not Serviced Separately |
| 12 | | {87428495} | | 2 | O-Ring Seal, Auxiliary/Outlet Section |
| 13 | | {87428476} | | 2 | Bolt |
| 14 | | {87428477} | | 1 | Bolt |
| 16 | | {87426240} | | 1 | Seal Plate Assembly, Dipper Spool; Component Parts Not Serviced Separately |
| 17 | | {87426239} | | 5 | Seal Plate Assembly; Component Parts Not Serviced Separately |

HTTP://WWW.MINNPARBACKHOEPARTS.COM



CONJUNTO DE LA VALVULA - CONTROL DE LA RETROEXCAVADORA, 7 BOBINAS (SIN PALA EXTENSIBLE Y CON SISTEM)

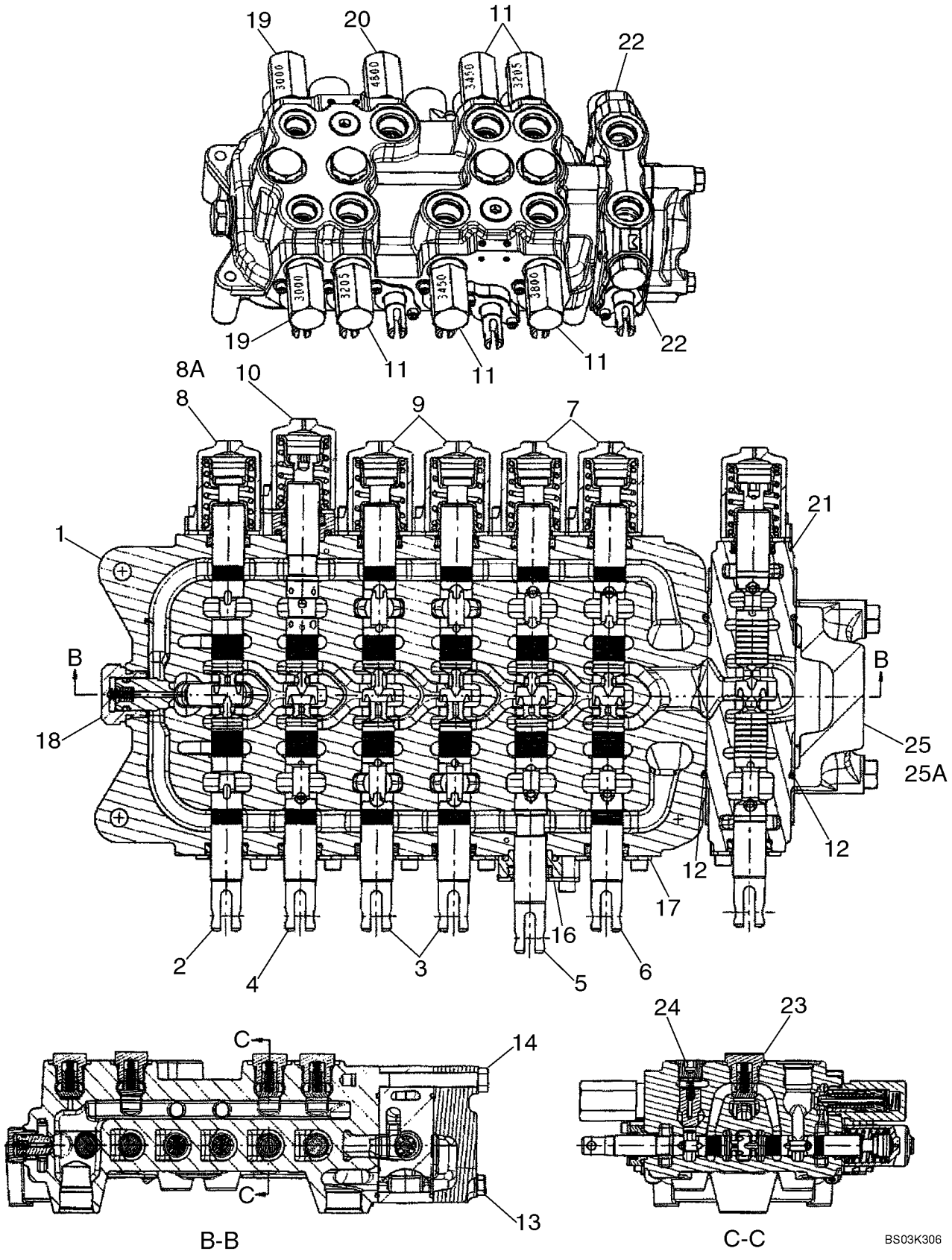

HTTP://WWW.MINNPARBACKHOEPARTS.COM



CONJUNTO DE LA VALVULA - CONTROL DE LA RETROEXCAVADORA, 7 BOBINAS (SIN PALA EXTENSIBLE Y CON SISTEM)

| REF | FN | PART NUMBER | YR/SN | QTY | DESCRIPTION |
|---|---|---|---|---|---|
| 18 | | {81868381} | | 1 | Anti-Void Valve; Component Parts Not Serviced Separately |
| 19 | | {87428490} | | 2 | Relief Valve Assembly; 3000 psi; Component Parts Not Serviced Separately |
| 20 | | {87428488} | | 1 | Relief Valve Assembly; 4800 psi; Component Parts Not Serviced Separately |
| 21 | | {87428501} | | 1 | Spool Section Assembly; Auxiliary Hydraulics; Component Parts Not Serviced Separately |
| 22 | | {83981068} | | 2 | Shut-Off Plug; Component Parts Not Serviced Separately |
| 23 | | {87426238} | | 4 | Check Valve Assembly; Hex Head; Component Parts Not Serviced Separately |
| 24 | | {87428486} | | 2 | Check Valve Assembly; Hex Socket Head; Component Parts Not Serviced Separately |
| 25 | | {87433030} | | 1 | Outlet Section Assembly; 87414278 Foot Swing Valve; Component Parts Not Serviced Separately |
| 25A | | {87428493} | | 1 | Outlet Section Assembly; 87414277 Hand Swing Valve; Component Parts Not Serviced Separately |

HTTP://WWW.MINNPARBACKHOEPARTS.COM



CONJUNTO DE LA VALVULA - CONTROL DE LA RETROEXCAVADORA, 7 BOBINAS (CON PALA EXTENSIBLE Y SIN SISTEM)

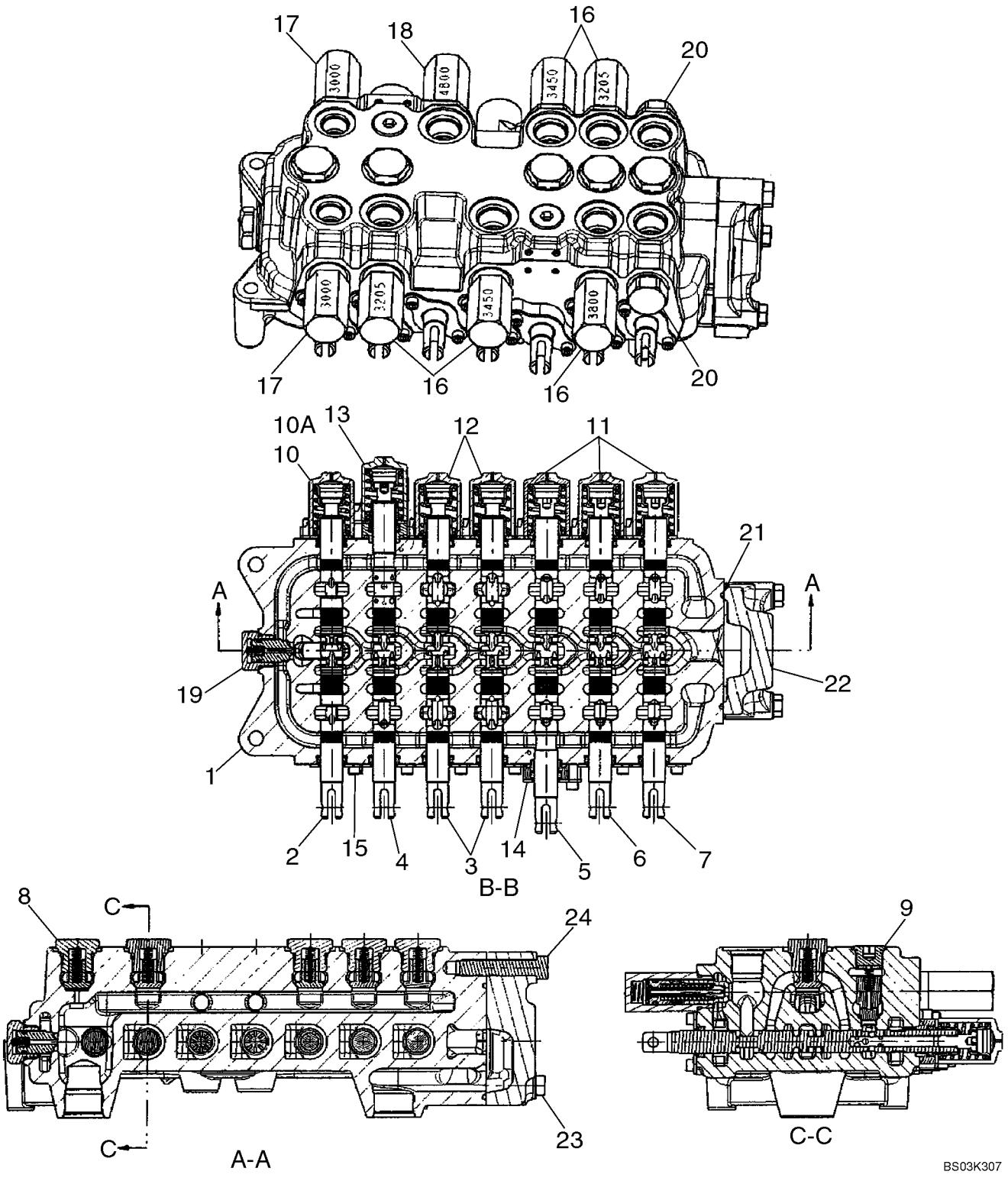

HTTP://WWW.MINNPARBACKHOEPARTS.COM



CONJUNTO DE LA VALVULA - CONTROL DE LA RETROEXCAVADORA, 7 BOBINAS (CON PALA EXTENSIBLE Y SIN SISTEM)

| REF | FN | PART NUMBER | YR/SN | QTY | DESCRIPTION |
|---|---|---|---|---|---|
| | | REF | | | MANUAL MODELS WITH EXTENDABLE DIPPER, WITHOUT AUXILIARY HYDRAULICS, WITHOUT PILOT CONTROLS |
| | | 87413145 | | 1 | VALVULA 7 Spool, Foot Swing; Incl. Ref 1 - 10, 11 - 24; If Used |
| | | 87403386 | | 1 | VALVULA 7 Spool, Hand Swing; Incl. Ref 1 - 9, 10A, 11 - 24; If Used |
| 1 | | NSS | | 1 | NO SE REPARA SEPARADAM. HOUSING |
| 2 | | NSS | | 1 | NO SE REPARA SEPARADAM. SPOOL, SWING |
| 3 | | NSS | | 2 | NO SE REPARA SEPARADAM. SPOOL, STABILIZER, Right-Hand and Left-Hand |
| 4 | | NSS | | 1 | NO SE REPARA SEPARADAM. SPOOL, BOOM |
| 5 | | NSS | | 1 | NO SE REPARA SEPARADAM. SPOOL, DIPPER |
| 6 | | NSS | | 1 | NO SE REPARA SEPARADAM. SPOOL, BUCKET |
| 7 | | NSS | | 1 | NO SE REPARA SEPARADAM. SPOOL, EXTENDABLE DIPPER |
| 8 | | {87426238} | | 5 | Check Valve Assembly; Hex Head; Component Parts Not Serviced Separately |
| 9 | | {87428486} | | 2 | Check Valve Assembly; Hex Socket Head; Component Parts Not Serviced Separately |
| 10 | | {87433029} | | 1 | Cap Assembly, Swing Spool End; 87413145 Foot Swing Valve; Component Parts Not Serviced Separately |
| 10A | | {87433028} | | 1 | Cap Assembly, Swing Spool End; 87403386 Hand Swing Valve; Component Parts Not Serviced Separately |
| 11 | | {87433028} | | 3 | Cap Assembly, Bucket, Dipper, and Extendahoe Spool End; Component Parts Not Serviced Separately |
| 12 | | {87428497} | | 2 | Cap Assembly, Stabilizer Spool Ends; Component Parts Not Serviced Separately |
| 13 | | {87433029} | | 1 | Cap Assembly, Boom Spool End; Component Parts Not Serviced Separately |
| 14 | | {87426240} | | 1 | Seal Plate Assembly, Dipper Spool; Component Parts Not Serviced Separately |

HTTP://WWW.MINNPARBACKHOEPARTS.COM



CONJUNTO DE LA VALVULA - CONTROL DE LA RETROEXCAVADORA, 7 BOBINAS (CON PALA EXTENSIBLE Y SIN SISTEM)

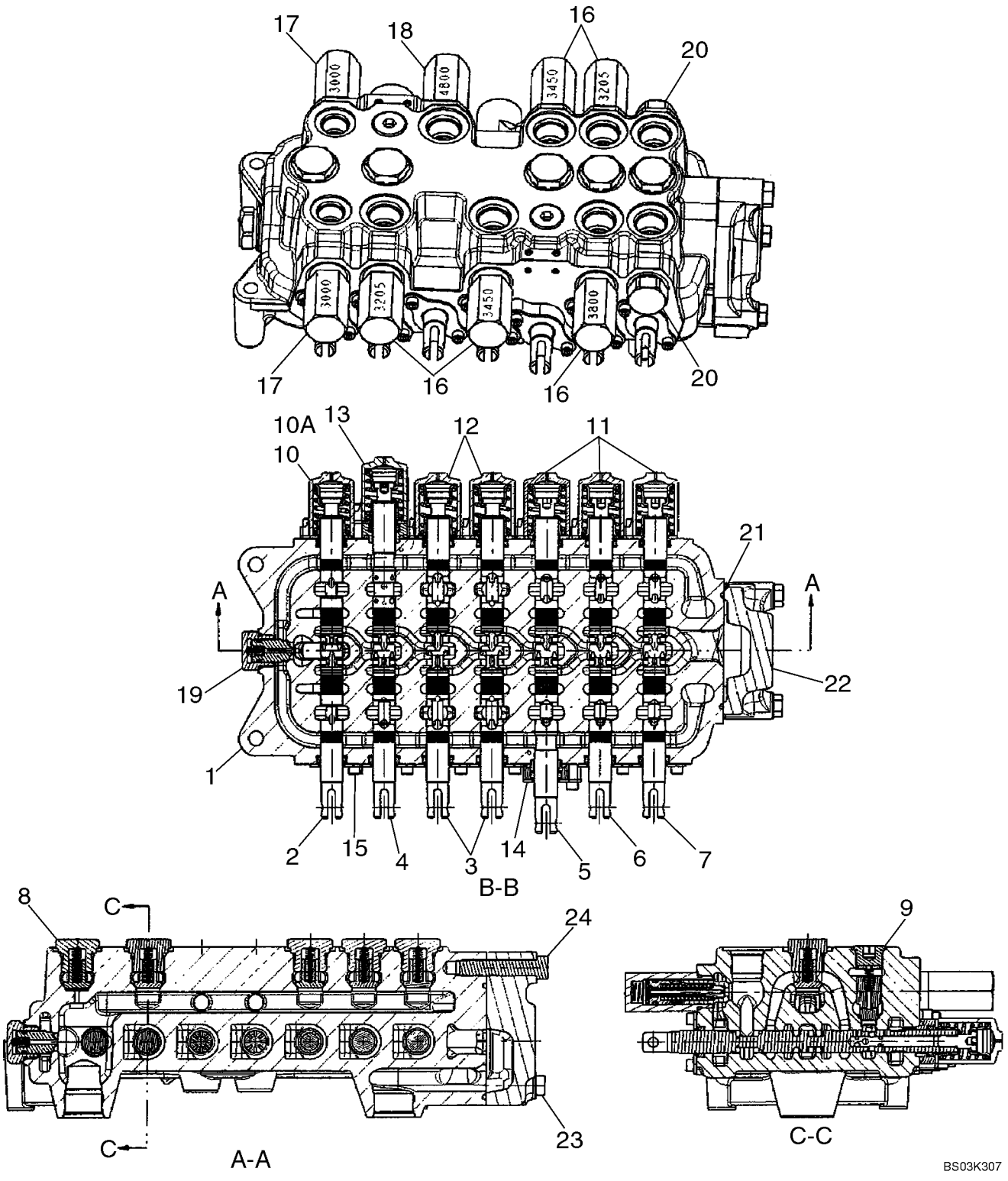

HTTP://WWW.MINNPARBACKHOEPARTS.COM



CONJUNTO DE LA VALVULA - CONTROL DE LA RETROEXCAVADORA, 7 BOBINAS (CON PALA EXTENSIBLE Y SIN SISTEM)

| REF | FN | PART NUMBER | YR/SN | QTY | DESCRIPTION |
|---|---|---|---|---|---|
| 15 | | {87426239} | | 6 | Seal Plate Assembly; Component Parts Not Serviced Separately |
| 16 | | {87426232} | | 5 | Relief Valve Assembly; (2) 3205 psi, (2) 3450 psi, (1) 3800 psi; Component Parts Not Serviced Separately |
| 17 | | {87428490} | | 2 | Relief Valve Assembly; 3000 psi; Component Parts Not Serviced Separately |
| 18 | | {87428488} | | 1 | Relief Valve Assembly; 4800 psi; Component Parts Not Serviced Separately |
| 19 | | {81868381} | | 1 | Anti-Void Plug; Component Parts Not Serviced Separately |
| 20 | | {83981068} | | 2 | Shut-Off Plug; Component Parts Not Serviced Separately |
| 21 | | {87428495} | | 1 | O-Ring Seal; Outlet Section |
| 22 | | {87428493} | | 1 | Outlet Section Assembly; Component Parts Not Serviced Separately |
| 23 | | {87428491} | | 2 | Bolt |
| 24 | | {87428492} | | 1 | Bolt |

HTTP://WWW.MINNPARBACKHOEPARTS.COM



CONJUNTO DE LA VALVULA - CONTROL DE LA RETROEXCAVADORA, 8 BOBINAS (CON PALA EXTENSIBLE Y CON SISTEM)

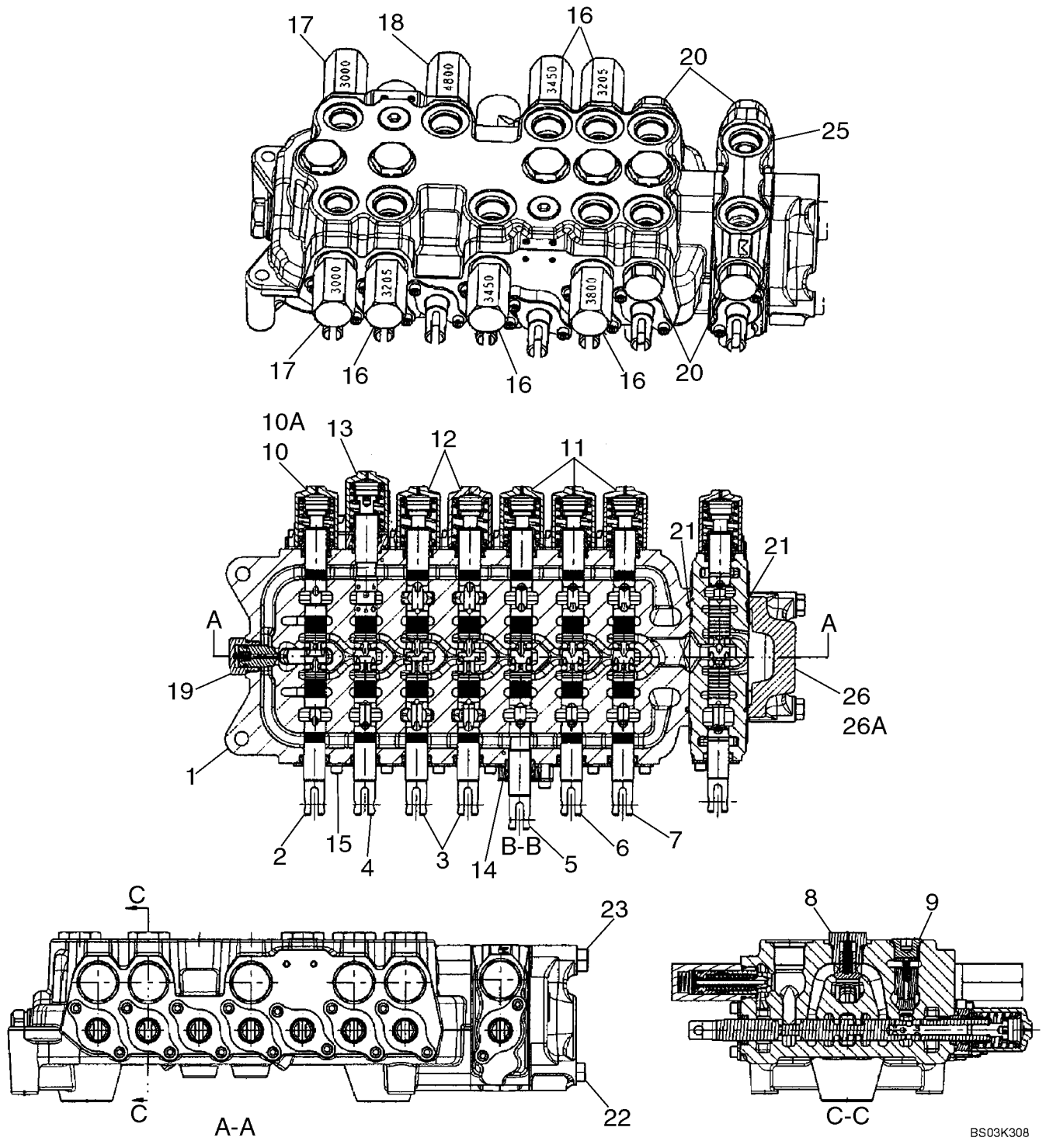

HTTP://WWW.MINNPARBACKHOEPARTS.COM



CONJUNTO DE LA VALVULA - CONTROL DE LA RETROEXCAVADORA, 8 BOBINAS (CON PALA EXTENSIBLE Y CON SISTEM)

| REF | FN | PART NUMBER | YR/SN | QTY | DESCRIPTION |
|---|---|---|---|---|---|
| | | REF | | | MANUAL MODELS WITH EXTENDABLE DIPPER, WITH AUXILIARY HYDRAULICS, WITHOUT PILOT CONTROLS |
| | | 87413146 | | 1 | VALVULA 8 Spool, Foot Swing; Incl. Ref 1 - 10, 12 - 26; If Used |
| | | 87403387 | | 1 | VALVULA 8 Spool, Hand Swing; Incl. Ref 1 - 9, 10A, 11 - 25, 26A; If Used |
| 1 | | NSS | | 1 | NO SE REPARA SEPARADAM. HOUSING |
| 2 | | NSS | | 1 | NO SE REPARA SEPARADAM. SPOOL, SWING |
| 3 | | NSS | | 2 | NO SE REPARA SEPARADAM. SPOOL, STABILIZER, Right-Hand and Left-Hand |
| 4 | | NSS | | 1 | NO SE REPARA SEPARADAM. SPOOL, BOOM |
| 5 | | NSS | | 1 | NO SE REPARA SEPARADAM. SPOOL, DIPPER |
| 6 | | NSS | | 1 | NO SE REPARA SEPARADAM. SPOOL, BUCKET |
| 7 | | NSS | | 1 | NO SE REPARA SEPARADAM. SPOOL, EXTENDABLE DIPPER |
| 8 | | {87426238} | | 5 | Check Valve Assembly; Hex Head; Component Parts Not Serviced Separately |
| 9 | | {87428486} | | 2 | Check Valve Assembly; Hex Socket Head; Component Parts Not Serviced Separately |
| 10 | | {87433029} | | 1 | Cap Assembly, Swing Spool End; 87413146 Foot Swing Valve; Component Parts Not Serviced Separately |
| 10A | | {87433028} | | 1 | Cap Assembly, Swing Spool End; 87403387 Hand Swing Valve; Component Parts Not Serviced Separately |
| 11 | | {87433028} | | 3 | Cap Assembly, Bucket, Dipper and Extendahoe Spool Ends; Component Parts Not Serviced Separately |
| 12 | | {87428497} | | 2 | Cap Assembly, Stabilizer Spool Ends; Component Parts Not Serviced Separately |
| 13 | | {87433029} | | 1 | Cap Assembly, Boom Spool End; Component Parts Not Serviced Separately |
| 14 | | {87426240} | | 1 | Seal Plate Assembly, Dipper Spool; Component Parts Not Serviced Separately |

HTTP://WWW.MINNPARBACKHOEPARTS.COM



CONJUNTO DE LA VALVULA - CONTROL DE LA RETROEXCAVADORA, 8 BOBINAS (CON PALA EXTENSIBLE Y CON SISTEM)

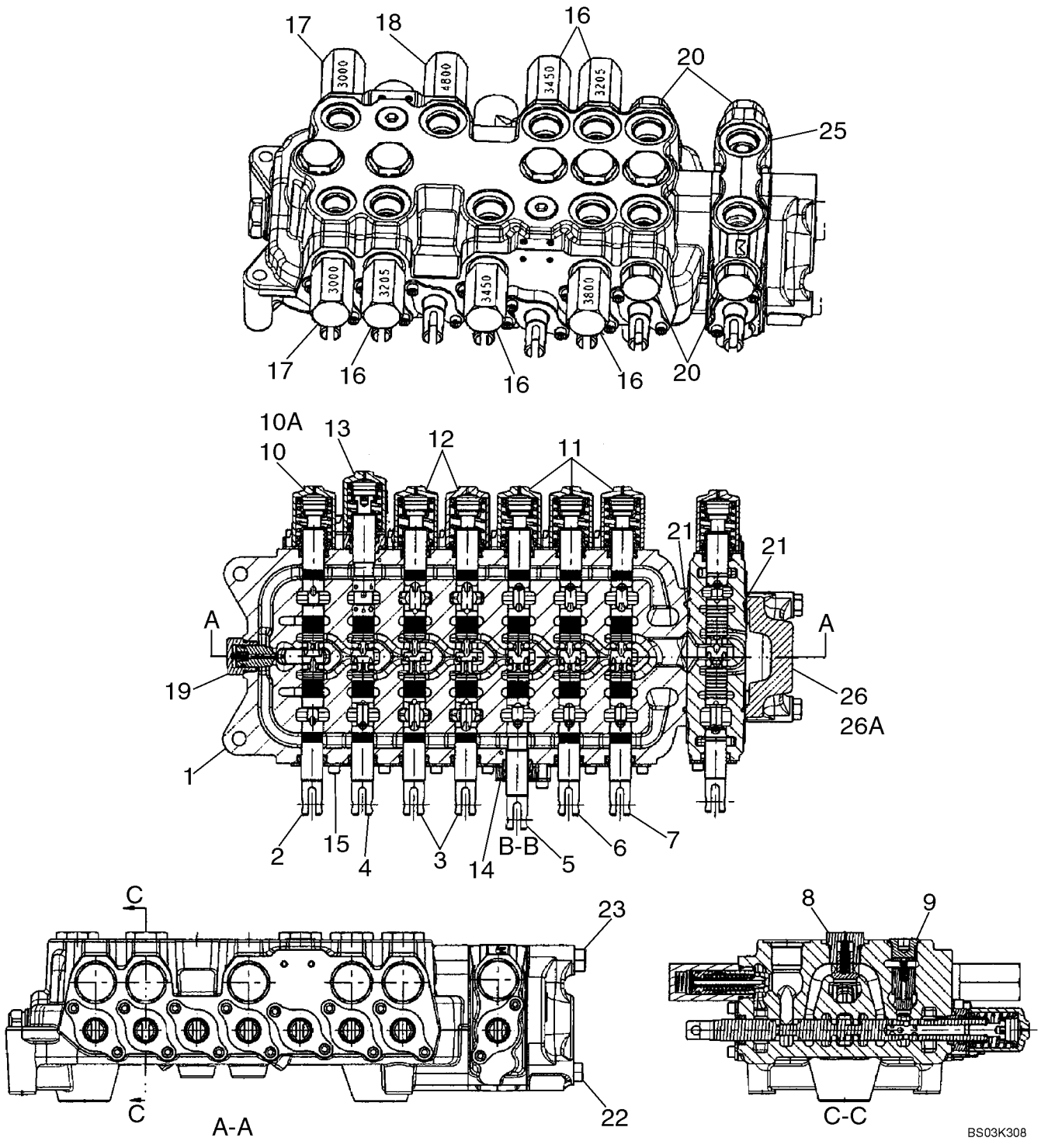

HTTP://WWW.MINNPARBACKHOEPARTS.COM



CONJUNTO DE LA VALVULA - CONTROL DE LA RETROEXCAVADORA, 8 BOBINAS (CON PALA EXTENSIBLE Y CON SISTEM)

| REF | FN | PART NUMBER | YR/SN | QTY | DESCRIPTION |
|---|---|---|---|---|---|
| 15 | | {87426239} | | 6 | Seal Plate Assembly; Component Parts Not Serviced Separately |
| 16 | | {87426232} | | 5 | Relief Valve Assembly; (2) 3205 psi, (2) 3450 psi, (1) 3800 psi; Component Parts Not Serviced Separately |
| 17 | | {87428490} | | 2 | Relief Valve Assembly; 3000 psi; Component Parts Not Serviced Separately |
| 18 | | {87428488} | | 1 | Relief Valve Assembly; 4800 psi; Component Parts Not Serviced Separately |
| 19 | | {81868381} | | 1 | Anti-Void Valve; Component Parts Not Serviced Separately |
| 20 | | {83981068} | | 4 | Shut-Off Plug; Component Parts Not Serviced Separately |
| 21 | | {87428495} | | 2 | O-Ring Seal, Auxiliary/Outlet Section |
| 22 | | {87428476} | | 2 | Bolt |
| 23 | | {87428477} | | 1 | Bolt |
| 25 | | {87428501} | | 1 | Spool Section Assembly; Auxiliary Hydraulics; Component Parts Not Serviced Separately |
| 26 | | {87433030} | | 1 | Outlet Section Assembly; 87413146 Foot Swing Valve; Component Parts Not Serviced Separately |
| 26A | | {87428493} | | 1 | Outlet Section Assembly; 87403387 Hand Swing Valve; Component Parts Not Serviced Separately |

HTTP://WWW.MINNPARBACKHOEPARTS.COM



CONJUNTO DE LA VALVULA - CONTROL DE LA RETROEXCAVADORA, 6 BOBINAS

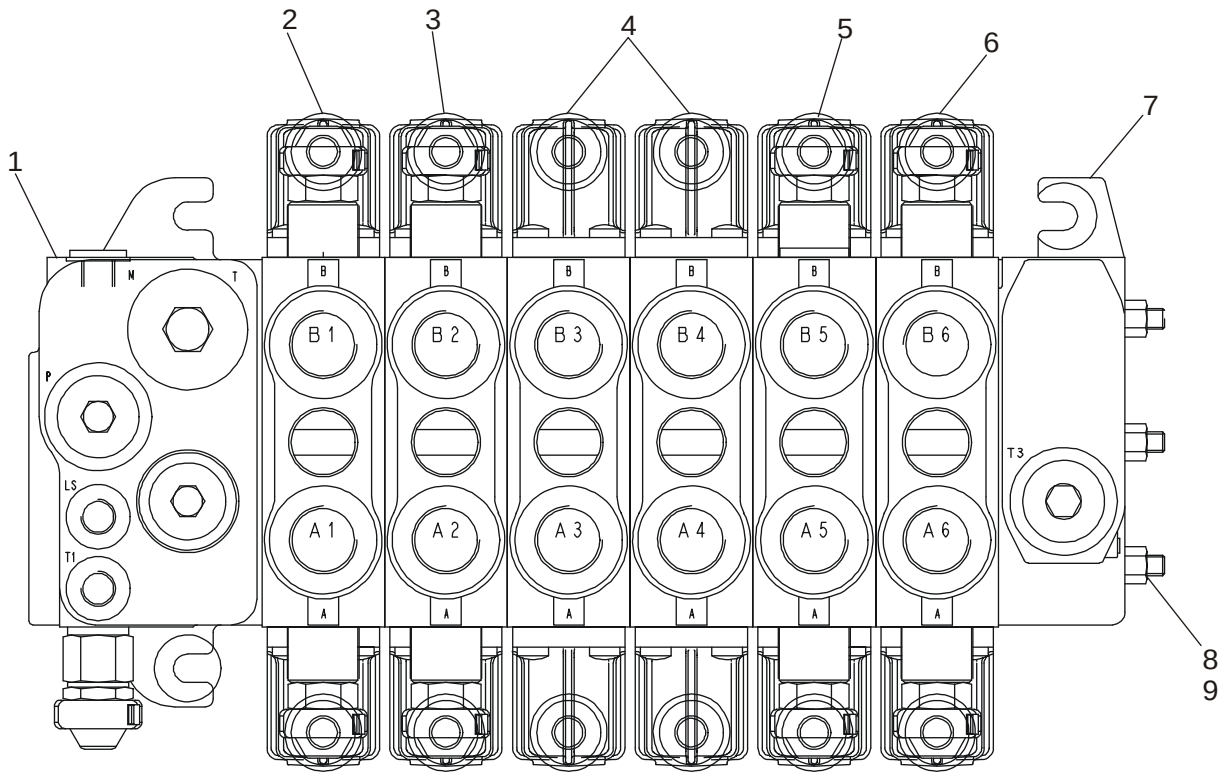


BS03N130

HTTP://WWW.MINNPARBACKHOEPARTS.COM



CONJUNTO DE LA VALVULA - CONTROL DE LA RETROEXCAVADORA, 6 BOBINAS

| REF | FN | PART NUMBER | YR/SN | QTY | DESCRIPTION |
|---|---|---|---|---|---|
| | | 86987459 | | 1 | VALVULA DISTRIBUIDORA Backhoe, 6 Spool; Incl. Ref 1 - 9 |
| 1 | | {87441495} | | 1 | Inlet Section; Component Parts Not Serviced Separately |
| 2 | | 85826339 | | 1 | DISTRIBUIDOR HYDR Swing Section; See Figure 08-40 |
| 3 | | 85826337 | | 1 | DISTRIBUIDOR HYDR Boom Section; See Figure 08-41 |
| 4 | | 85826340 | | 2 | DISTRIBUIDOR HYDR Stabilizer Section; See Figure 08-42 |
| 5 | | 85826338 | | 1 | DISTRIBUIDOR HYDR Dipper Section; See Figure 08-43 |
| 6 | | 85826365 | | 1 | DISTRIBUIDOR HYDR Bucket Section; See Figure 08-44 |
| 7 | | NSS | | 1 | NO SE REPARA SEPARADAM. Outlet Section |
| 8 | | NSS | | 3 | NO SE REPARA SEPARADAM. Tie Bolt |
| 9 | | NSS | | 3 | NO SE REPARA SEPARADAM. Nut |

HTTP://WWW.MINNPARBACKHOEPARTS.COM



CONJUNTO DE LA VALVULA - CONTROL DE LA RETROEXCAVADORA, 7 BOBINAS

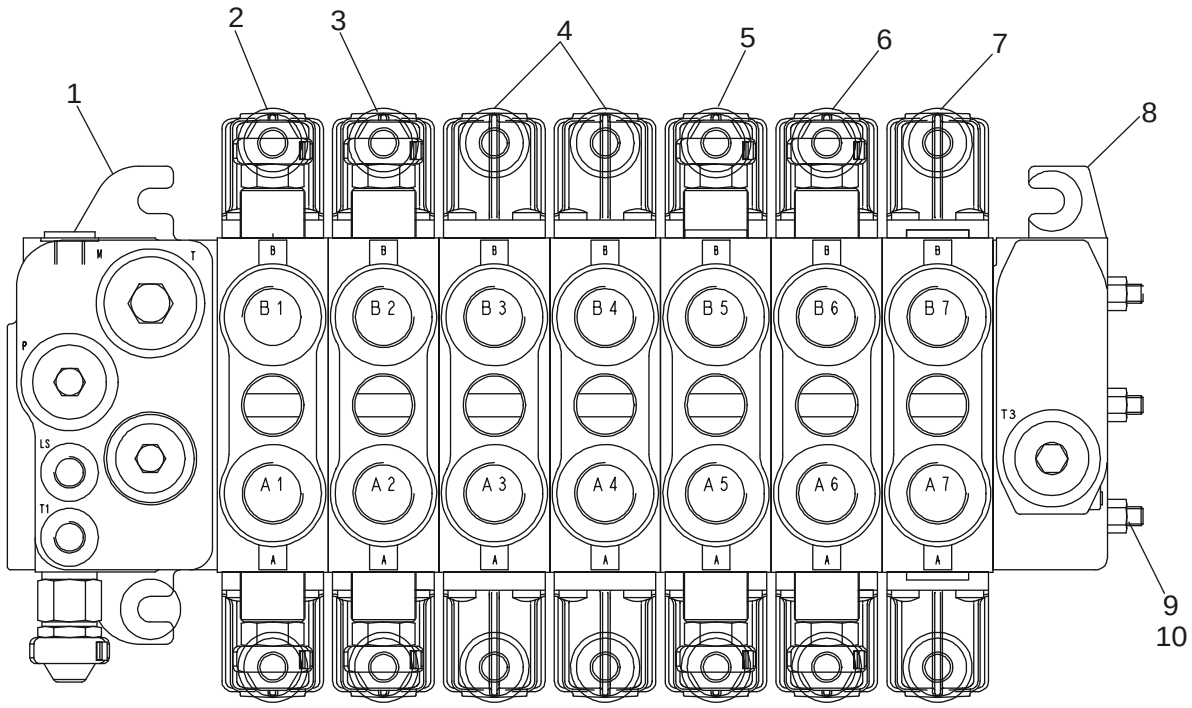


BS03N131

HTTP://WWW.MINNPARBACKHOEPARTS.COM



CONJUNTO DE LA VALVULA - CONTROL DE LA RETROEXCAVADORA, 7 BOBINAS

| REF | FN | PART NUMBER | YR/SN | QTY | DESCRIPTION |
|---|---|---|---|---|---|
| | | 86987460 | | 1 | VALVULA DISTRIBUIDORA Backhoe, 7 Spool; Incl. Ref 1 - 10 |
| 1 | | {87441495} | | 1 | Inlet Section; Component Parts Not Serviced Separately |
| 2 | | 85826339 | | 1 | DISTRIBUIDOR HYDR Swing Section; See Figure 08-40 |
| 3 | | 85826337 | | 1 | DISTRIBUIDOR HYDR Boom Section; See Figure 08-41 |
| 4 | | 85826340 | | 2 | DISTRIBUIDOR HYDR Stabilizer Section; See Figure 08-42 |
| 5 | | 85826338 | | 1 | DISTRIBUIDOR HYDR Dipper Section; See Figure 08-43 |
| 6 | | 85826365 | | 1 | DISTRIBUIDOR HYDR Bucket Section; See Figure 08-44 |
| 7 | | 85826341 | | 1 | DISTRIBUIDOR HYDR Extendable Dipper Section; See Figure 08-45 |
| 8 | | NSS | | 1 | NO SE REPARA SEPARADAM. Outlet Section |
| 9 | | NSS | | 3 | NO SE REPARA SEPARADAM. Tie Bolt |
| 10 | | NSS | | 3 | NO SE REPARA SEPARADAM. Nut |

HTTP://WWW.MINNPARBACKHOEPARTS.COM



CONJUNTO DE LA VALVULA - CONTROL DE LA RETROEXCAVADORA, 7 BOBINAS

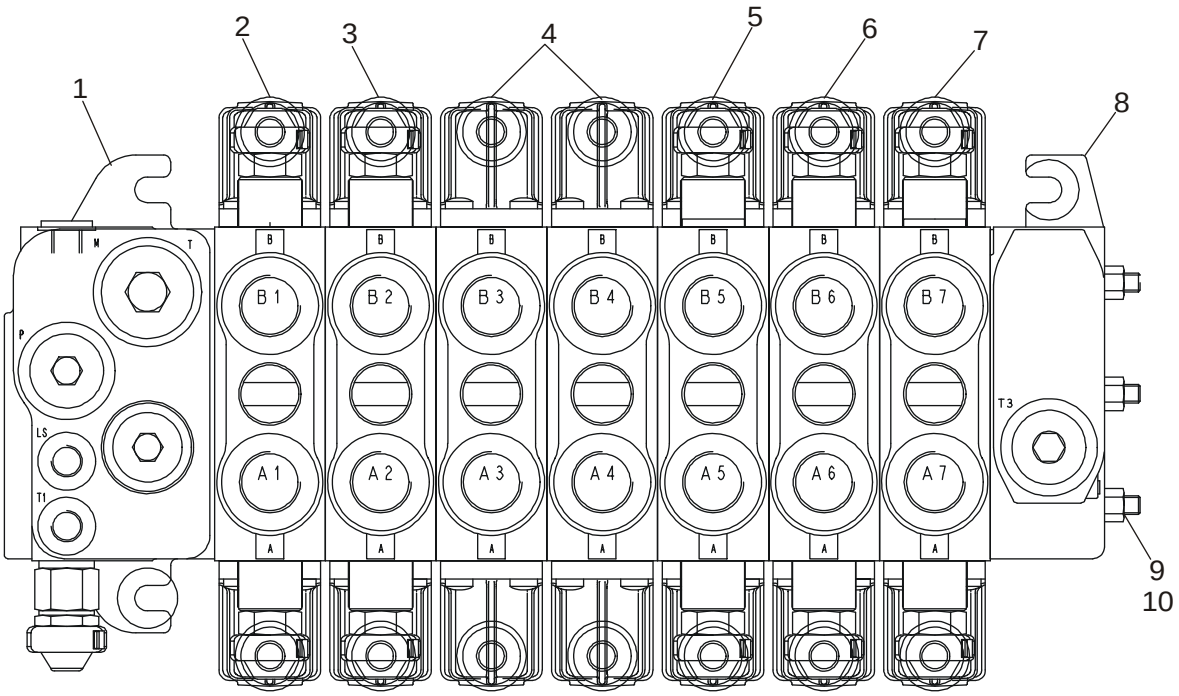


BS03N132

HTTP://WWW.MINNPARBACKHOEPARTS.COM



CONJUNTO DE LA VALVULA - CONTROL DE LA RETROEXCAVADORA, 7 BOBINAS

| REF | FN | PART NUMBER | YR/SN | QTY | DESCRIPTION |
|---|---|---|---|---|---|
| | | 87407965 | | 1 | VALVULA DISTRIBUIDORA Backhoe, 7 Spool; Incl. Ref 1 - 10 |
| 1 | | {87441495} | | 1 | Inlet Section; Component Parts Not Serviced Separately |
| 2 | | 85826339 | | 1 | DISTRIBUIDOR HYDR Swing Section; See Figure 08-40 |
| 3 | | 85826337 | | 1 | DISTRIBUIDOR HYDR Boom Section; See Figure 08-41 |
| 4 | | 85826340 | | 2 | DISTRIBUIDOR HYDR Stabilizer Section; See Figure 08-42 |
| 5 | | 85826338 | | 1 | DISTRIBUIDOR HYDR Dipper Section; See Figure 08-43 |
| 6 | | 85826365 | | 1 | DISTRIBUIDOR HYDR Bucket Section; See Figure 08-44 |
| 7 | | 85826342 | | 1 | DISTRIBUIDOR HYDR Auxiliary Section; See Figure 08-46 |
| 8 | | NSS | | 1 | NO SE REPARA SEPARADAM. Outlet Section |
| 9 | | NSS | | 3 | NO SE REPARA SEPARADAM. Tie Bolt |
| 10 | | NSS | | 3 | NO SE REPARA SEPARADAM. Nut |

HTTP://WWW.MINNPARBACKHOEPARTS.COM



CONJUNTO DE LA VALVULA - CONTROL DE LA RETROEXCAVADORA, 8 BOBINAS

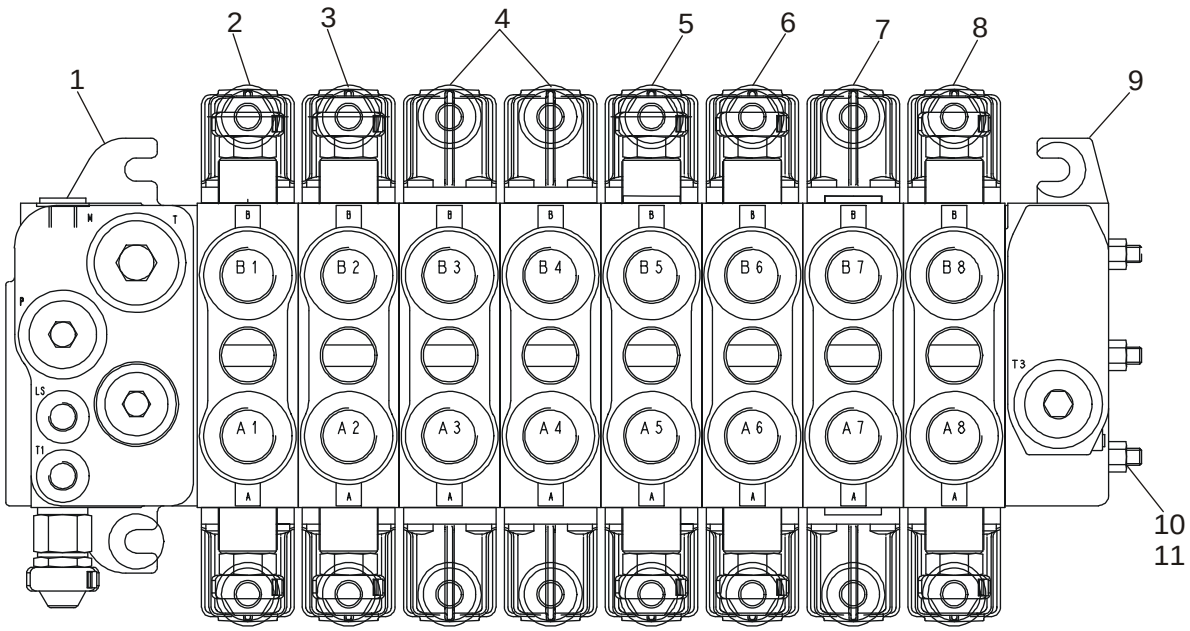


BS03N133

HTTP://WWW.MINNPARBACKHOEPARTS.COM



CONJUNTO DE LA VALVULA - CONTROL DE LA RETROEXCAVADORA, 8 BOBINAS

| REF | FN | PART NUMBER | YR/SN | QTY | DESCRIPTION |
|---|---|---|---|---|---|
| | | 86987461 | | 1 | VALVULA Backhoe, 8 Spool; Incl. Ref 1 - 11 |
| 1 | | {87441495} | | 1 | Inlet Section; Component Parts Not Serviced Separately |
| 2 | | 85826339 | | 1 | DISTRIBUIDOR HYDR Swing Section; See Figure 08-40 |
| 3 | | 85826337 | | 1 | DISTRIBUIDOR HYDR Boom Section; See Figure 08-41 |
| 4 | | 85826340 | | 2 | DISTRIBUIDOR HYDR Stabilizer Section; See Figure 08-42 |
| 5 | | 85826338 | | 1 | DISTRIBUIDOR HYDR Dipper Section; See Figure 08-43 |
| 6 | | 85826365 | | 1 | DISTRIBUIDOR HYDR Bucket Section; See Figure 08-44 |
| 7 | | 85826341 | | 1 | DISTRIBUIDOR HYDR Extendable Dipper Section; See Figure 08-45 |
| 8 | | 85826342 | | 1 | DISTRIBUIDOR HYDR Auxiliary Section; See Figure 08-46 |
| 9 | | NSS | | 1 | NO SE REPARA SEPARADAM. Outlet Section |
| 10 | | NSS | | 3 | NO SE REPARA SEPARADAM. Tie Bolt |
| 11 | | NSS | | 3 | NO SE REPARA SEPARADAM. Nut |

HTTP://WWW.MINNPARBACKHOEPARTS.COM



SECCION DE LA VALVULA - DE LA RETROEXCAVADORA (CON DE CONTROL PILOTO)

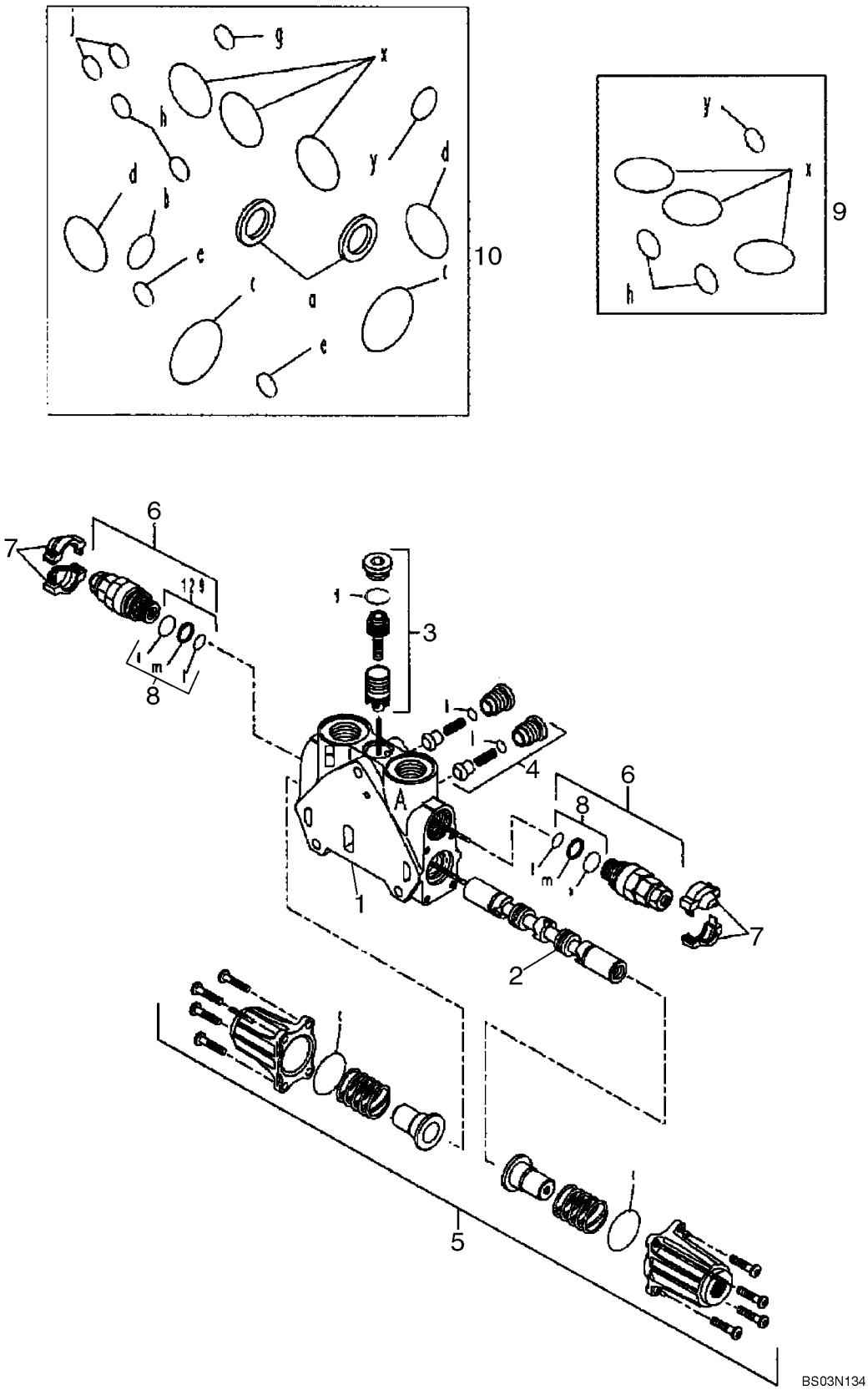

HTTP://WWW.MINNPARBACKHOEPARTS.COM



SECCION DE LA VALVULA - DE LA RETROEXCAVADORA (CON DE CONTROL PILOTO)

| REF | FN | PART NUMBER | YR/SN | QTY | DESCRIPTION |
|---|---|---|---|---|---|
| | | 85826339 | | 1 | DISTRIBUIDOR HYDR Swing; Incl. Ref 1 - 10 |
| 1 | | NSS | | 1 | NO SE REPARA SEPARADAM. HOUSING |
| 2 | | NSS | | 1 | NO SE REPARA SEPARADAM. SPOOL |
| 3 | | {85826345} | | 1 | Pressure Compensator Kit; Component Parts Not Serviced Separately |
| 4 | | {85811938} | | 2 | Check Valve Kit; Component Parts Not Serviced Separately |
| 5 | | 85826344 | | 1 | EQUIPO End Cap Kit; Component Parts Not Serviced Separately |
| 6 | | 85812114 | | 2 | VALVULA Pressure Relief Valve; Component Parts Not Serviced Separately |
| 7 | | 85811934 | | 2 | EQUIPO Cover, Orange |
| 7 | | 85811935 | | 2 | EQUIPO Cover, Blue |
| 8 | | 85811933 | | 2 | EQUIPO Seal Kit Includes (2) O-Rings, (1) Thrust Ring; Component Parts Not Serviced Separately |
| 9 | | 85819148 | | 1 | EQUIPO Seal Kit Includes (6) O-Rings; Component Parts Not Serviced Separately |
| 10 | | {85824282} | | 1 | Seal Kit Includes (15) O-Rings, (2) Lip Seals; Component Parts Not Serviced Separately |

HTTP://WWW.MINNPARBACKHOEPARTS.COM



SECCION DE LA VALVULA - AGUILON DE LA RETROEXCAVADORA (CON DE CONTROL PILOTO)

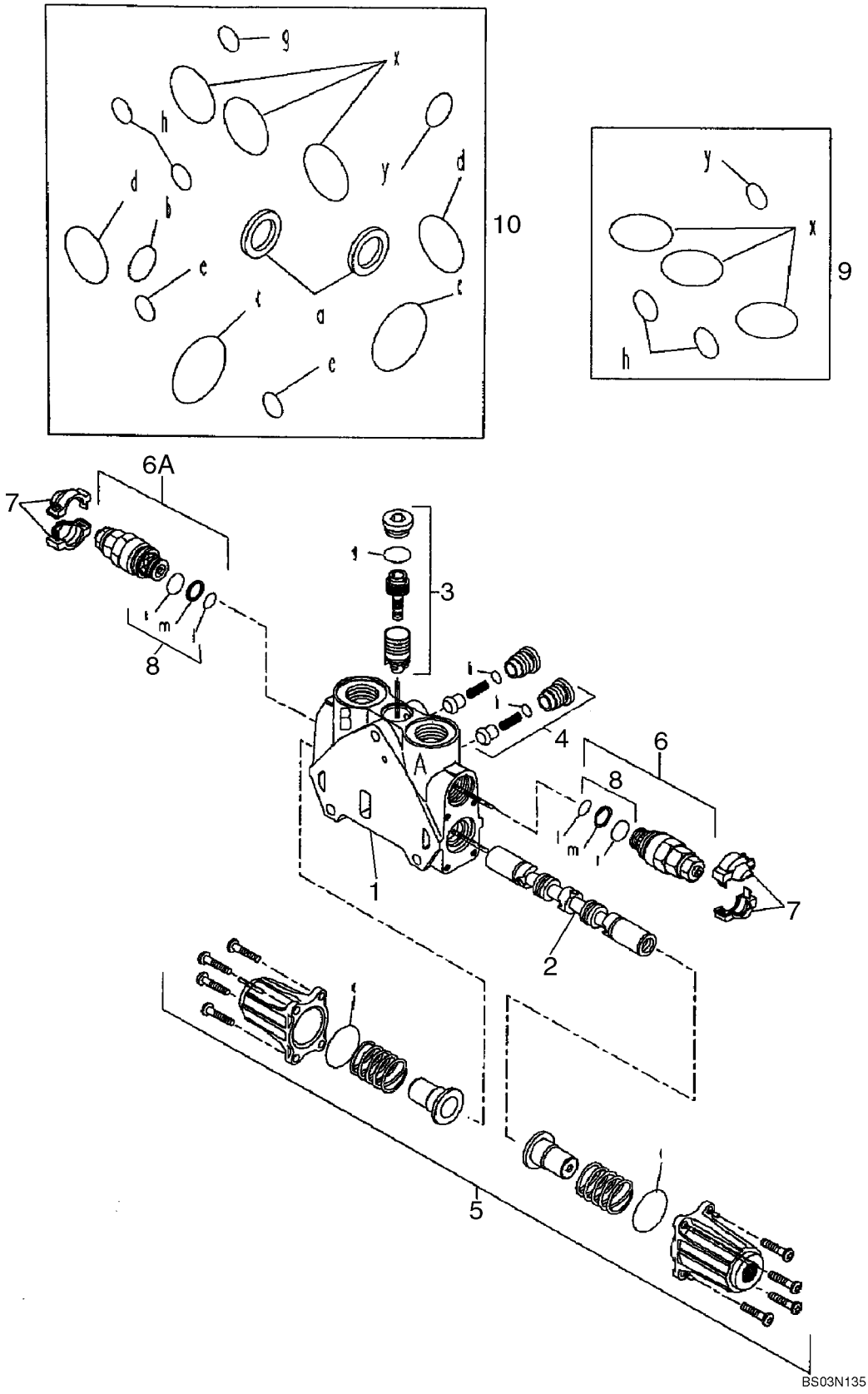

HTTP://WWW.MINNPARBACKHOEPARTS.COM



SECCION DE LA VALVULA - AGUILON DE LA RETROEXCAVADORA (CON DE CONTROL PILOTO)

| REF | FN | PART NUMBER | YR/SN | QTY | DESCRIPTION |
|---|---|---|---|---|---|
| | | 85826337 | | 1 | DISTRIBUIDOR HYDR Boom; Incl. Ref 1 - 10 |
| 1 | | NSS | | 1 | NO SE REPARA SEPARADAM. HOUSING |
| 2 | | NSS | | 1 | NO SE REPARA SEPARADAM. SPOOL |
| 3 | | 85819378 | | 1 | EQUIPO Pressure Compensator Kit; Component Parts Not Serviced Separately |
| 4 | | {85811938} | | 2 | Check Valve Kit; Component Parts Not Serviced Separately |
| 5 | | 85826344 | | 1 | EQUIPO End Cap Kit; Component Parts Not Serviced Separately |
| 6 | | 85812115 | | 1 | VALVULA Pressure Relief Valve Kit; Side A; Component Parts Not Serviced Separately |
| 6A | | {85826346} | | 1 | Pressure Relief Valve Kit; Side B; Component Parts Not Serviced Separately |
| 7 | | 85811934 | | 2 | EQUIPO Cover, Orange |
| 7 | | 85811935 | | 2 | EQUIPO Cover, Blue |
| 8 | | 85811933 | | 2 | EQUIPO Seal Kit Includes (2) O-Rings, (1) Thrust Ring; Component Parts Not Serviced Separately |
| 9 | | 85819148 | | 1 | EQUIPO Seal Kit Includes (6) O-Rings; Component Parts Not Serviced Separately |
| 10 | | {85824281} | | 1 | Seal Kit Includes (13) O-Rings, (2) Lip Seals; Component Parts Not Serviced Separately |

HTTP://WWW.MINNPARBACKHOEPARTS.COM



SECCION DE LA VALVULA - ESTABILIZADOR DE LA RETROEXCAVADORA (CON DE CONTROL PILOTO)

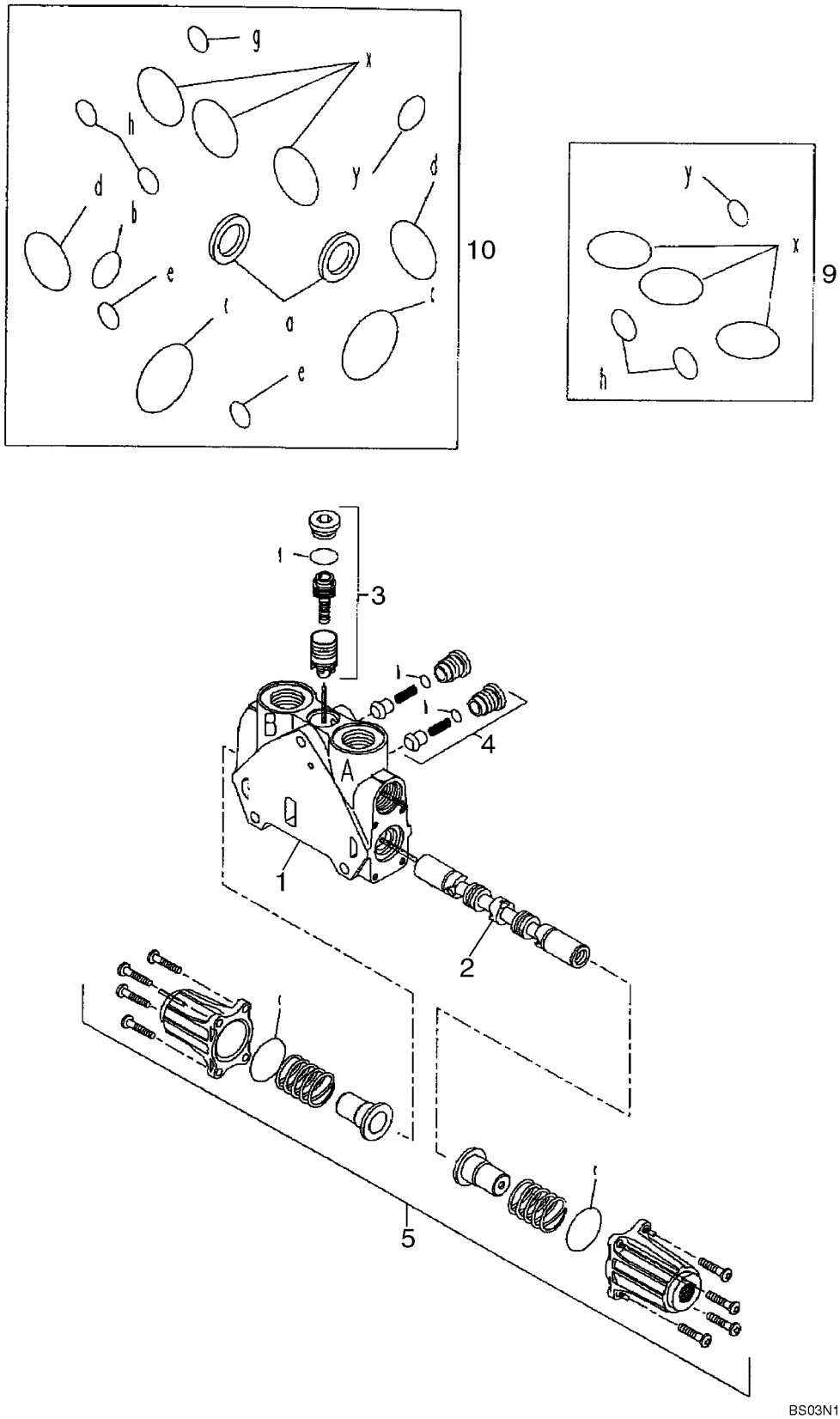

HTTP://WWW.MINNPARBACKHOEPARTS.COM



SECCION DE LA VALVULA - ESTABILIZADOR DE LA RETROEXCAVADORA (CON DE CONTROL PILOTO)

| REF | FN | PART NUMBER | YR/SN | QTY | DESCRIPTION |
|---|---|---|---|---|---|
| | | 85826340 | | 2 | DISTRIBUIDOR HYDR Stabilizer; Left-Hand and Right-Hand; Incl. Ref 1 - 10 |
| 1 | | NSS | | 1 | NO SE REPARA SEPARADAM. HOUSING |
| 2 | | NSS | | 1 | NO SE REPARA SEPARADAM. SPOOL |
| 3 | | 85819378 | | 1 | EQUIPO Pressure Compensator Kit; Component Parts Not Serviced Separately |
| 4 | | {85811938} | | 2 | Check Valve Kit; Component Parts Not Serviced Separately |
| 5 | | 85826344 | | 1 | EQUIPO End Cap Kit; Component Parts Not Serviced Separately |
| 9 | | 85819148 | | 1 | EQUIPO Seal Kit Includes (6) O-Rings; Component Parts Not Serviced Separately |
| 10 | | {85824281} | | 1 | Seal Kit Includes (13) O-Rings, (2) Lip Seals; Component Parts Not Serviced Separately |

HTTP://WWW.MINNPARBACKHOEPARTS.COM

| 08-43 | | p1 | 01/04 |
|---|---|---|---|

SECCION DE LA VALVULA - BRAZO DE LA RETROEXCAVADORA (CON DE CONTROL PILOTO)

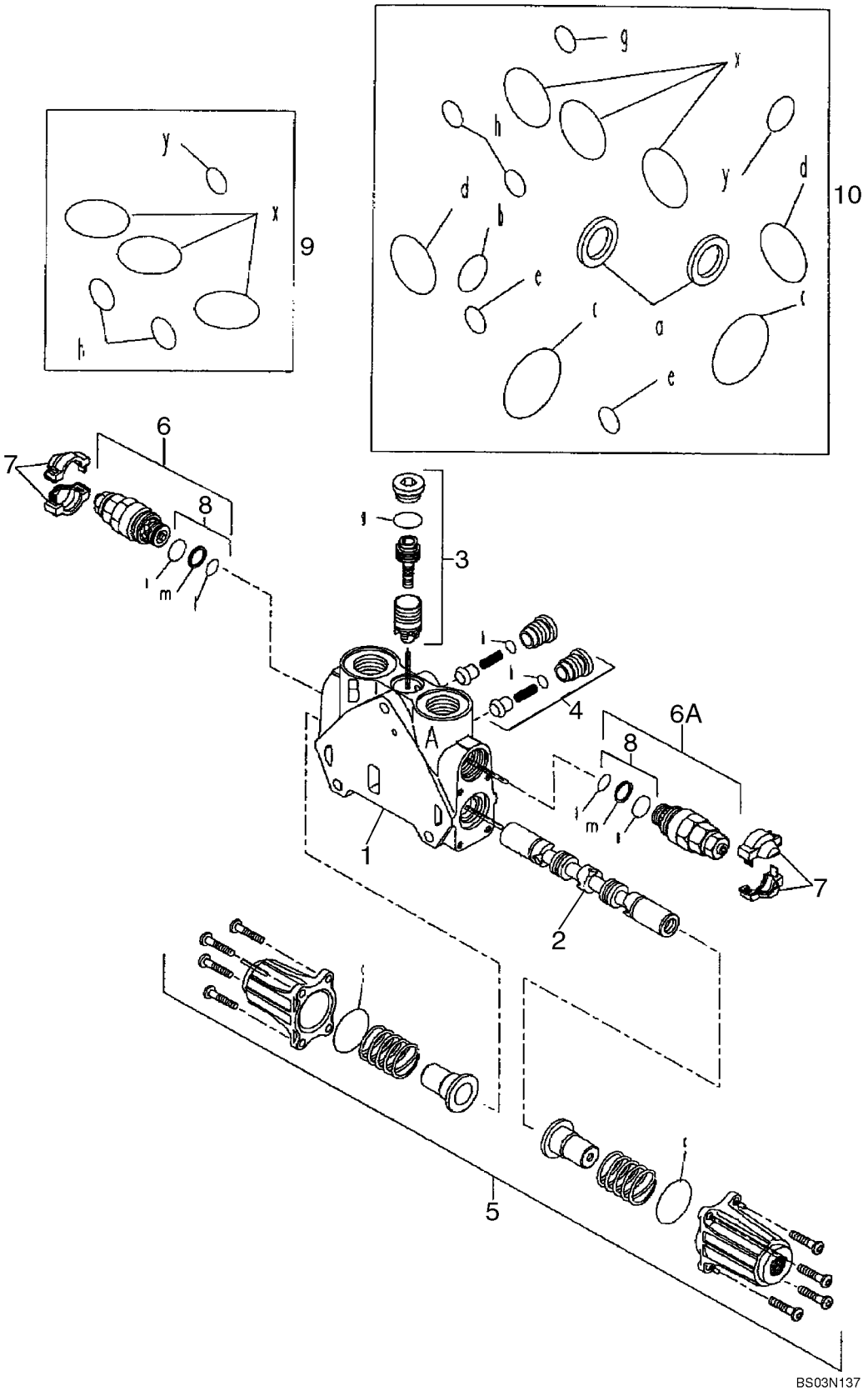

HTTP://WWW.MINNPARBACKHOEPARTS.COM



SECCION DE LA VALVULA - BRAZO DE LA RETROEXCAVADORA (CON DE CONTROL PILOTO)

| REF | FN | PART NUMBER | YR/SN | QTY | DESCRIPTION |
|---|---|---|---|---|---|
| | | 85826338 | | 1 | DISTRIBUIDOR HYDR Dipper; Incl. Ref 1 - 10 |
| 1 | | NSS | | 1 | NO SE REPARA SEPARADAM. HOUSING |
| 2 | | NSS | | 1 | NO SE REPARA SEPARADAM. SPOOL |
| 3 | | {85826345} | | 1 | Pressure Compensator Kit; Component Parts Not Serviced Separately |
| 4 | | {85811938} | | 2 | Check Valve Kit; Component Parts Not Serviced Separately |
| 5 | | 85826344 | | 1 | EQUIPO End Cap Kit; Component Parts Not Serviced Separately |
| 6 | | 85812116 | | 1 | VALVULA Pressure Relief Valve; Side B; Component Parts Not Serviced Separately |
| 6A | | {85826343} | | 1 | Pressure Relief Valve; Side A; Component Parts Not Serviced Separately |
| 7 | | 85811934 | | 2 | EQUIPO Cover, Orange |
| 7 | | 85811935 | | 2 | EQUIPO Cover, Blue |
| 8 | | 85811933 | | 2 | EQUIPO Seal Kit Includes (2) O-Rings, (1) Thrust Ring; Component Parts Not Serviced Separately |
| 9 | | 85819148 | | 1 | EQUIPO Seal Kit Includes (6) O-Rings; Component Parts Not Serviced Separately |
| 10 | | {85824281} | | 1 | Seal Kit Includes (13) O-Rings, (2) Lip Seals; Component Parts Not Serviced Separately |

HTTP://WWW.MINNPARBACKHOEPARTS.COM



SECCION DE LA VALVULA - CUCHARON DE LA RETROEXCAVADORA (CON DE CONTROL PILOTO)

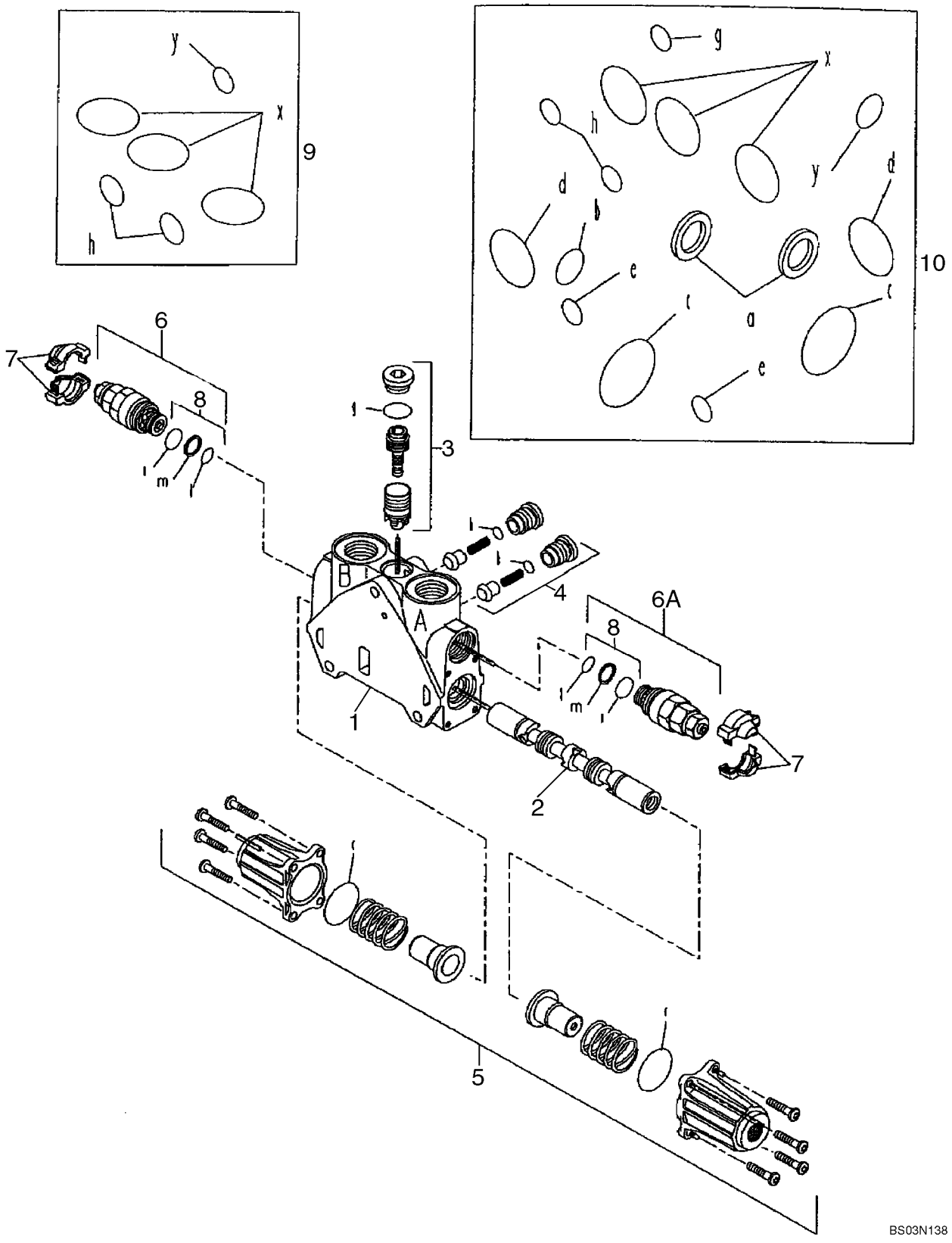

HTTP://WWW.MINNPARBACKHOEPARTS.COM



SECCION DE LA VALVULA - CUCHARON DE LA RETROEXCAVADORA (CON DE CONTROL PILOTO)

| REF | FN | PART NUMBER | YR/SN | QTY | DESCRIPTION |
|---|---|---|---|---|---|
| | | 85826365 | | 1 | DISTRIBUIDOR HYDR Bucket; Incl. Ref 1 - 10 |
| 1 | | NSS | | 1 | NO SE REPARA SEPARADAM. HOUSING |
| 2 | | NSS | | 1 | NO SE REPARA SEPARADAM. SPOOL |
| 3 | | 85819378 | | 1 | EQUIPO Pressure Compensator Kit; Component Parts Not Serviced Separately |
| 4 | | {85811938} | | 2 | Check Valve Kit; Component Parts Not Serviced Separately |
| 5 | | 85826344 | | 1 | EQUIPO End Cap Kit; Component Parts Not Serviced Separately |
| 6 | | 85812116 | | 1 | VALVULA Pressure Relief Valve; Side B; Component Parts Not Serviced Separately |
| 6A | | {85826905} | | 1 | Pressure Relief Valve; Side A; Component Parts Not Serviced Separately |
| 7 | | 85811934 | | 2 | EQUIPO Cover, Orange |
| 7 | | 85811935 | | 2 | EQUIPO Cover, Blue |
| 8 | | 85811933 | | 2 | EQUIPO Seal Kit Includes (2) O-Rings, (1) Thrust Ring; Component Parts Not Serviced Separately |
| 9 | | 85819148 | | 1 | EQUIPO Seal Kit Includes (6) O-Rings; Component Parts Not Serviced Separately |
| 10 | | {85824281} | | 1 | Seal Kit Includes (13) O-Rings, (2) Lip Seals; Component Parts Not Serviced Separately |

HTTP://WWW.MINNPARBACKHOEPARTS.COM



SECCION DE LA VALVULA - PALA EXTENSIBLE (CON DE CONTROL PILOTO)

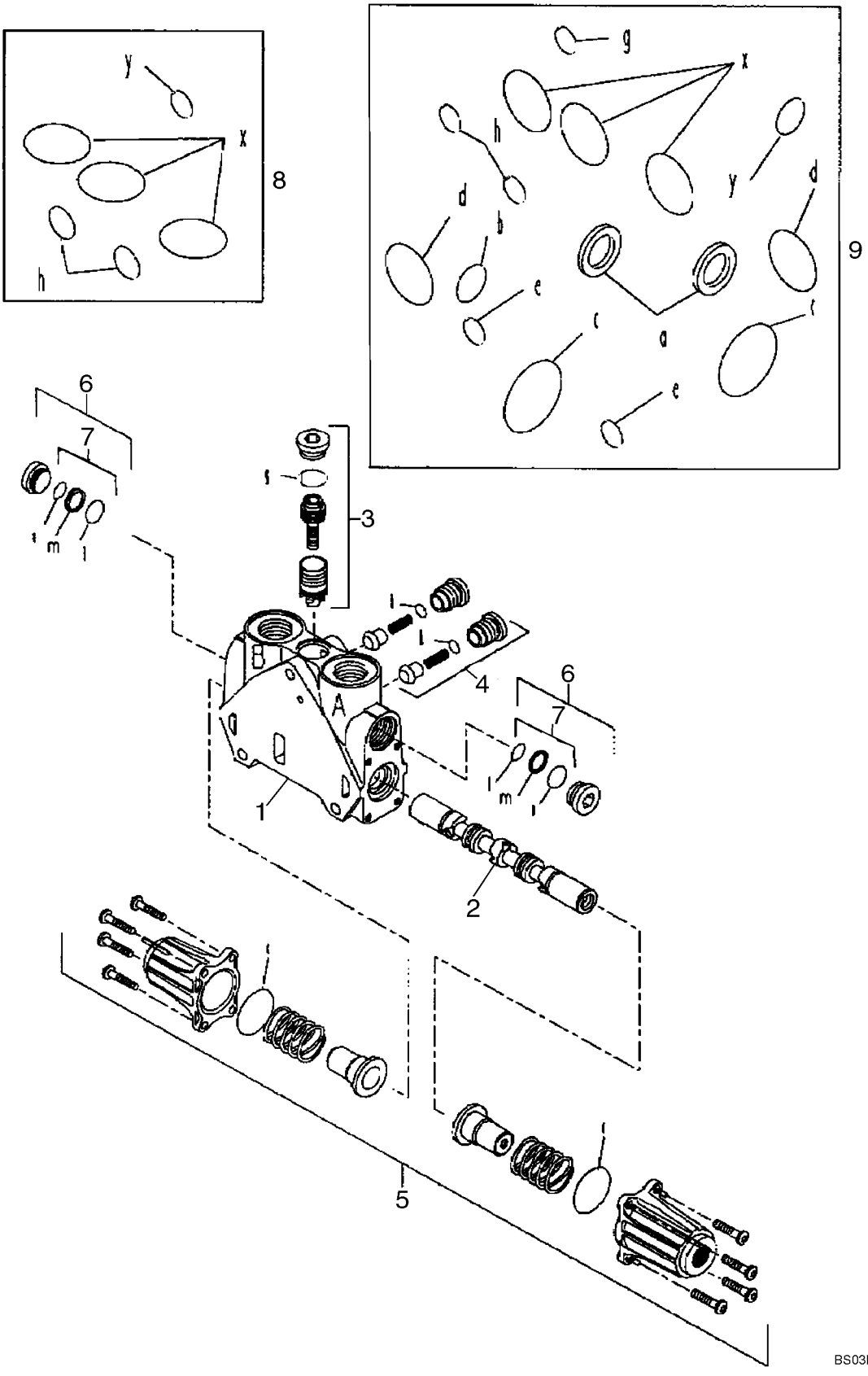

HTTP://WWW.MINNPARBACKHOEPARTS.COM



SECCION DE LA VALVULA - PALA EXTENSIBLE (CON DE CONTROL PILOTO)

| REF | FN | PART NUMBER | YR/SN | QTY | DESCRIPTION |
|---|---|---|---|---|---|
| | | 85826341 | | 1 | DISTRIBUIDOR HYDR Extendable Dipper; Incl. Ref 1 - 9 |
| 1 | | NSS | | 1 | NO SE REPARA SEPARADAM. HOUSING |
| 2 | | NSS | | 1 | NO SE REPARA SEPARADAM. SPOOL |
| 3 | | 85819378 | | 1 | EQUIPO Pressure Compensator Kit; Component Parts Not Serviced Separately |
| 4 | | {85811938} | | 2 | Check Valve Kit; Component Parts Not Serviced Separately |
| 5 | | 85826344 | | 1 | EQUIPO End Cap Kit; Component Parts Not Serviced Separately |
| 6 | | {85811937} | | 2 | Plug Assembly Kit; Component Parts Not Serviced Separately |
| 7 | | 85811933 | | 2 | EQUIPO Seal Kit Includes (2) O-Rings, (1) Thrust Ring; Component Parts Not Serviced Separately |
| 8 | | 85819148 | | 1 | EQUIPO Seal Kit Includes (6) O-Rings; Component Parts Not Serviced Separately |
| 9 | | {85824281} | | 1 | Seal Kit Includes (13) O-Rings, (2) Lip Seals; Component Parts Not Serviced Separately |

HTTP://WWW.MINNPARBACKHOEPARTS.COM



SECCION DE LA VALVULA - OPCIONES, SISTEMA HIDRÁULICO AUXILIAR (CON DE CONTROL PILOTO)

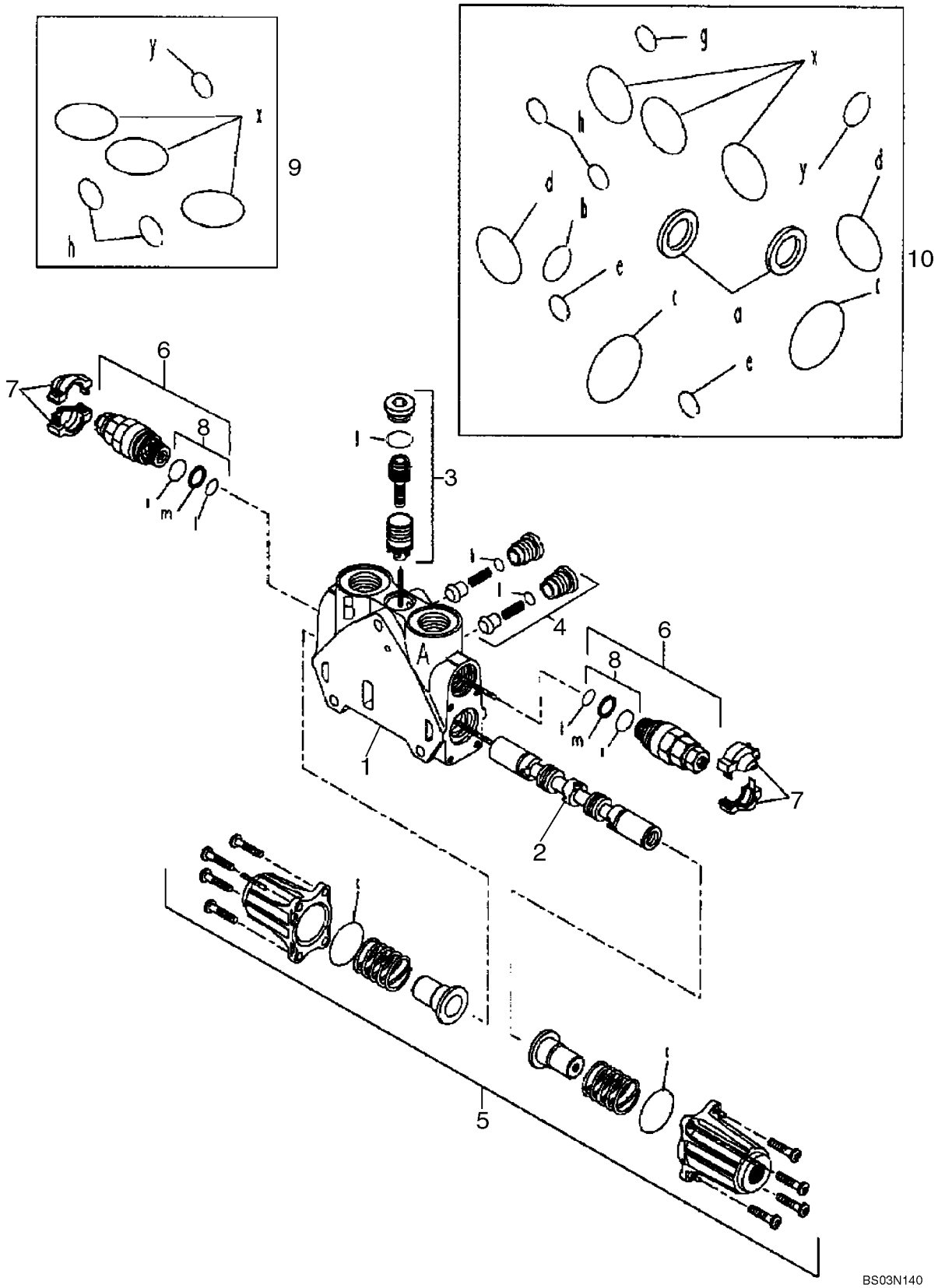

HTTP://WWW.MINNPARBACKHOEPARTS.COM



SECCION DE LA VALVULA - OPCIONES, SISTEMA HIDRÁULICO AUXILIAR (CON DE CONTROL PILOTO)

| REF | FN | PART NUMBER | YR/SN | QTY | DESCRIPTION |
|---|---|---|---|---|---|
| | | 85826342 | | 1 | DISTRIBUIDOR HYDR Options, Auxiliary Hydraulics; Incl. Ref 1 - 10 |
| 1 | | NSS | | 1 | NO SE REPARA SEPARADAM. HOUSING |
| 2 | | NSS | | 1 | NO SE REPARA SEPARADAM. SPOOL |
| 3 | | 85819378 | | 1 | EQUIPO Pressure Compensator Kit; Component Parts Not Serviced Separately |
| 4 | | {85811938} | | 2 | Check Valve Kit; Component Parts Not Serviced Separately |
| 5 | | 85826344 | | 1 | EQUIPO End Cap Kit; Component Parts Not Serviced Separately |
| 6 | | 85812115 | | 2 | VALVULA Pressure Relief Valve; Component Parts Not Serviced Separately |
| 7 | | 85811934 | | 2 | EQUIPO Cover, Orange |
| 7 | | 85811935 | | 2 | EQUIPO Cover, Blue |
| 8 | | 85811933 | | 2 | EQUIPO Seal Kit Includes (2) O-Rings, (1) Thrust Ring; Component Parts Not Serviced Separately |
| 9 | | 85819148 | | 1 | EQUIPO Seal Kit Includes (6) O-Rings; Component Parts Not Serviced Separately |
| 10 | | {85824281} | | 1 | Seal Kit Includes (13) O-Rings, (2) LIp Seals; Component Parts Not Serviced Separately |

HTTP://WWW.MINNPARBACKHOEPARTS.COM



VALVULA DE REDUCCION DEPRESION (2 SPOOL) (CON DE CONTROL PILOTO)

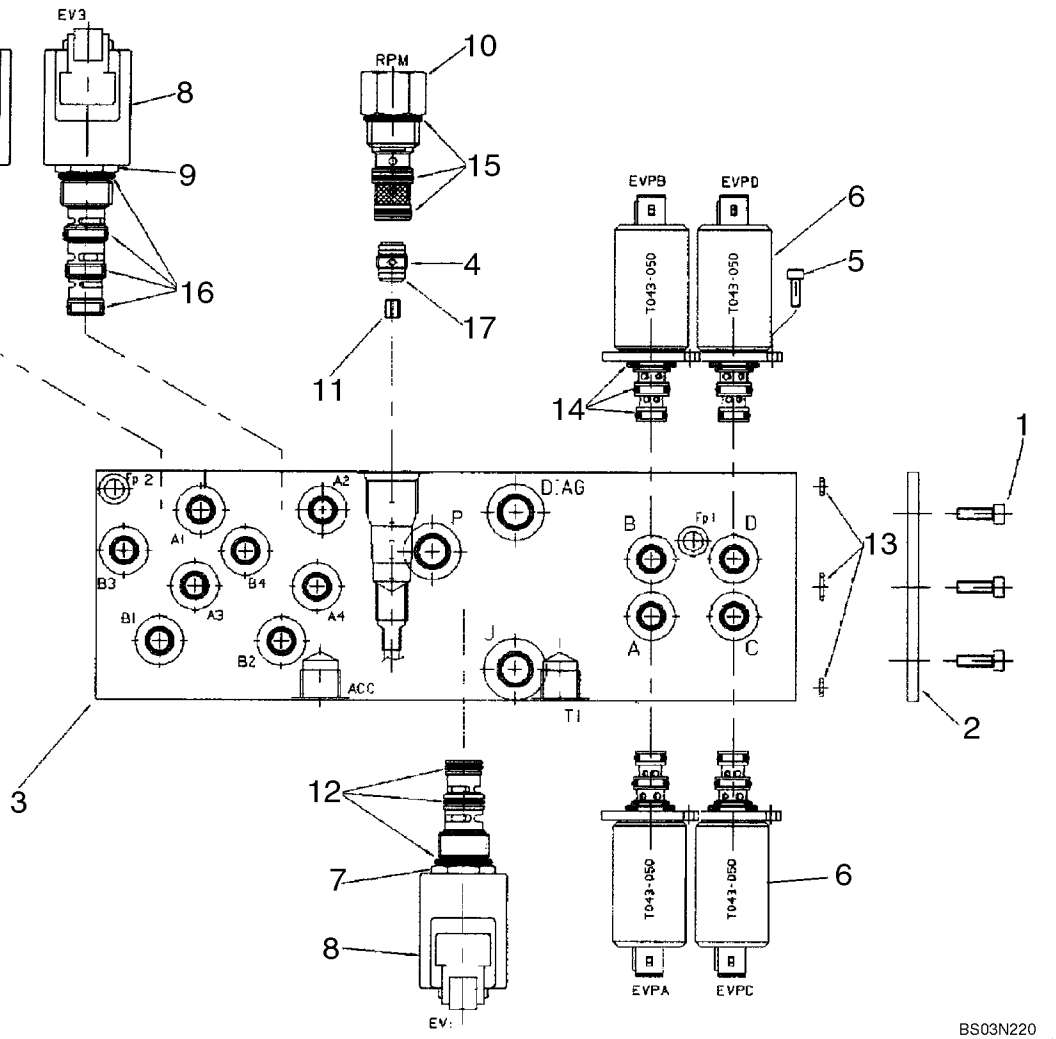

HTTP://WWW.MINNPARBACKHOEPARTS.COM



VALVULA DE REDUCCION DEPRESION (2 SPOOL) (CON DE CONTROL PILOTO)

| REF | FN | PART NUMBER | YR/SN | QTY | DESCRIPTION |
|---|---|---|---|---|---|
| | | 85827472 | | 1 | VALVULA Pressure Reducing, Two Spool, Pilot Controls; Incl. Ref 1 - 17 |
| 1 | | {14304021} | | 3 | M5 x 10 Screw |
| 2 | | {85827991} | | 1 | Sealing Plate |
| 3 | | {85828013} | | 1 | Manifold Block |
| 4 | | {85827992} | | 1 | Check Valve |
| 5 | | {14302921} | | 8 | M4 x 10 Screw |
| 6 | | {85827993} | | 4 | Pressure Reducing Valve |
| 7 | | {85827994} | | 1 | Solenoid Valve Cartridge, 3 Way, 2 Position |
| 8 | | {85827995} | | 3 | Coil With Diode |
| 9 | | {85827996} | | 2 | Solenoid Valve Cartridge, 4 Way, 2 Position |
| 10 | | {85827997} | | 1 | Mechanical Pressure Reducing Valve With Fixed Setting |
| 11 | | {85828005} | | 1 | 1.8 mm Orifice |
| 12 | | {85827998} | | 1 | O-Ring Kit |
| 13 | | {85827999} | | 1 | O-Ring Kit |
| 14 | | {85828000} | | 4 | O-Ring Kit |
| 15 | | {85828001} | | 1 | O-Ring Kit |
| 16 | | {85828002} | | 2 | O-Ring Kit |
| 17 | | {85828003} | | 1 | O-Ring, D9x1 |

HTTP://WWW.MINNPARBACKHOEPARTS.COM

| 08-48 | | p1 | 01/04 |
|---|---|---|---|

VALVULA DE REDUCCION DEPRESION (3 SPOOL) (CON DE CONTROL PILOTO)

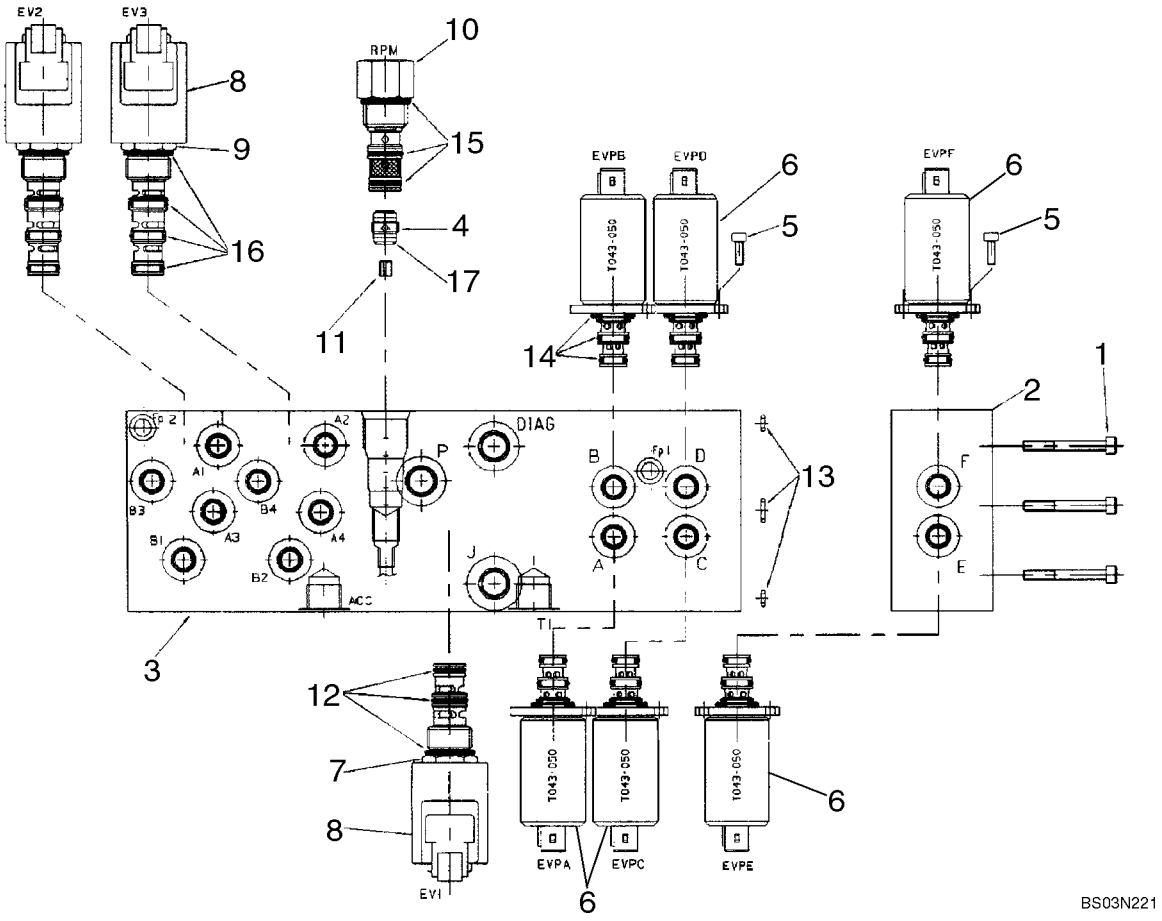

HTTP://WWW.MINNPARBACKHOEPARTS.COM



VALVULA DE REDUCCION DEPRESION (3 SPOOL) (CON DE CONTROL PILOTO)

| REF | FN | PART NUMBER | YR/SN | QTY | DESCRIPTION |
|---|---|---|---|---|---|
| | | 85827471 | | 1 | VALVULA Pressure Reducing, Three Spool, Pilot Controls; Incl. Ref 1 - 17 |
| 1 | | 14358921 | | 3 | TORNILLO M5 x 45 Screw |
| 2 | | {85828004} | | 1 | One Function Add-On Manifold Block |
| 3 | | {85828015} | | 1 | Manifold Block |
| 4 | | {85827992} | | 1 | Check Valve |
| 5 | | {14302921} | | 12 | M4 x 10 Screw |
| 6 | | {85827993} | | 6 | Pressure Reducing Valve |
| 7 | | {85827994} | | 1 | Solenoid Valve Cartridge, 3 Way, 2 Position |
| 8 | | {85827995} | | 3 | Coil With Diode |
| 9 | | {85827996} | | 2 | Solenoid Valve Cartridge, 4 Way, 2 Position |
| 10 | | {85827997} | | 1 | Mechanical Pressure Reducing Valve With Fixed Setting |
| 11 | | {85828005} | | 1 | 1.8 mm Orifice |
| 12 | | {85827998} | | 1 | O-Ring Kit |
| 13 | | {85827999} | | 1 | O-Ring Kit |
| 14 | | {85828000} | | 6 | O-Ring Kit |
| 15 | | {85828001} | | 1 | O-Ring Kit |
| 16 | | {85828002} | | 2 | O-Ring Kit |
| 17 | | {85828003} | | 1 | O-Ring, D9x1 |

HTTP://WWW.MINNPARBACKHOEPARTS.COM



VALVULA DE REDUCCION DEPRESION (4 SPOOL) (CON DE CONTROL PILOTO)

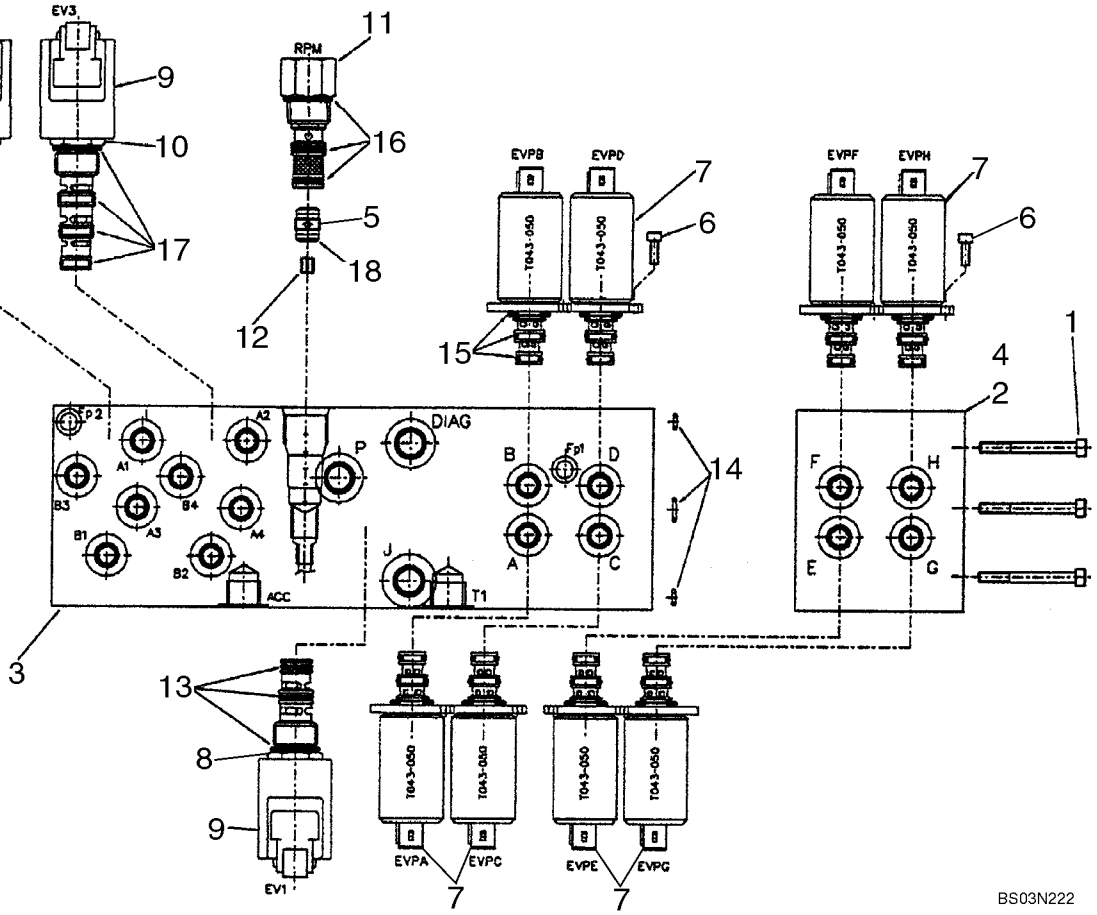

HTTP://WWW.MINNPARBACKHOEPARTS.COM



VALVULA DE REDUCCION DEPRESION (4 SPOOL) (CON DE CONTROL PILOTO)

| REF | FN | PART NUMBER | YR/SN | QTY | DESCRIPTION |
|---|---|---|---|---|---|
| | | 87434621 | | 1 | VALVULA DISTRIBUIDORA Pressure Reducing, Four Spool, Pilot Controls; Incl. Ref 1 - 18 |
| 1 | | {85828061} | | 3 | M5 x 80 Screw |
| 2 | | {85828048} | | 1 | Manifold Block |
| 3 | | {85828015} | | 1 | Manifold Block |
| 4 | | {85828054} | | 1 | Manifold Block |
| 5 | | {85827992} | | 1 | Check Valve |
| 6 | | {14302921} | | 16 | M4 x 10 Screw |
| 7 | | {85827993} | | 8 | Pressure Reducing Valve |
| 8 | | {85827994} | | 1 | Solenoid Valve Cartridge, 3 Way, 2 Position |
| 9 | | {85827995} | | 3 | Coil With Diode |
| 10 | | {85827996} | | 2 | Solenoid Valve Cartridge, 4 Way, 2 Position |
| 11 | | {85827997} | | 1 | Mechanical Pressure Reducing Valve With Fixed Setting |
| 12 | | {85828005} | | 1 | 1.8 mm Orifice |
| 13 | | {85827998} | | 1 | O-Ring Kit |
| 14 | | {85827999} | | 1 | O-Ring Kit |
| 15 | | {85828000} | | 8 | O-Ring Kit |
| 16 | | {85828001} | | 1 | O-Ring Kit |
| 17 | | {85828002} | | 2 | O-Ring Kit |
| 18 | | {85828003} | | 1 | O-Ring, D9x1 |

HTTP://WWW.MINNPARBACKHOEPARTS.COM

| 08-50 | | p1 | 01/04 |
|---|---|---|---|

VÁLVULA, PALANCA DE CONTROL ( CONTROL PILOTO) (IZQUIERDO) BOCINA

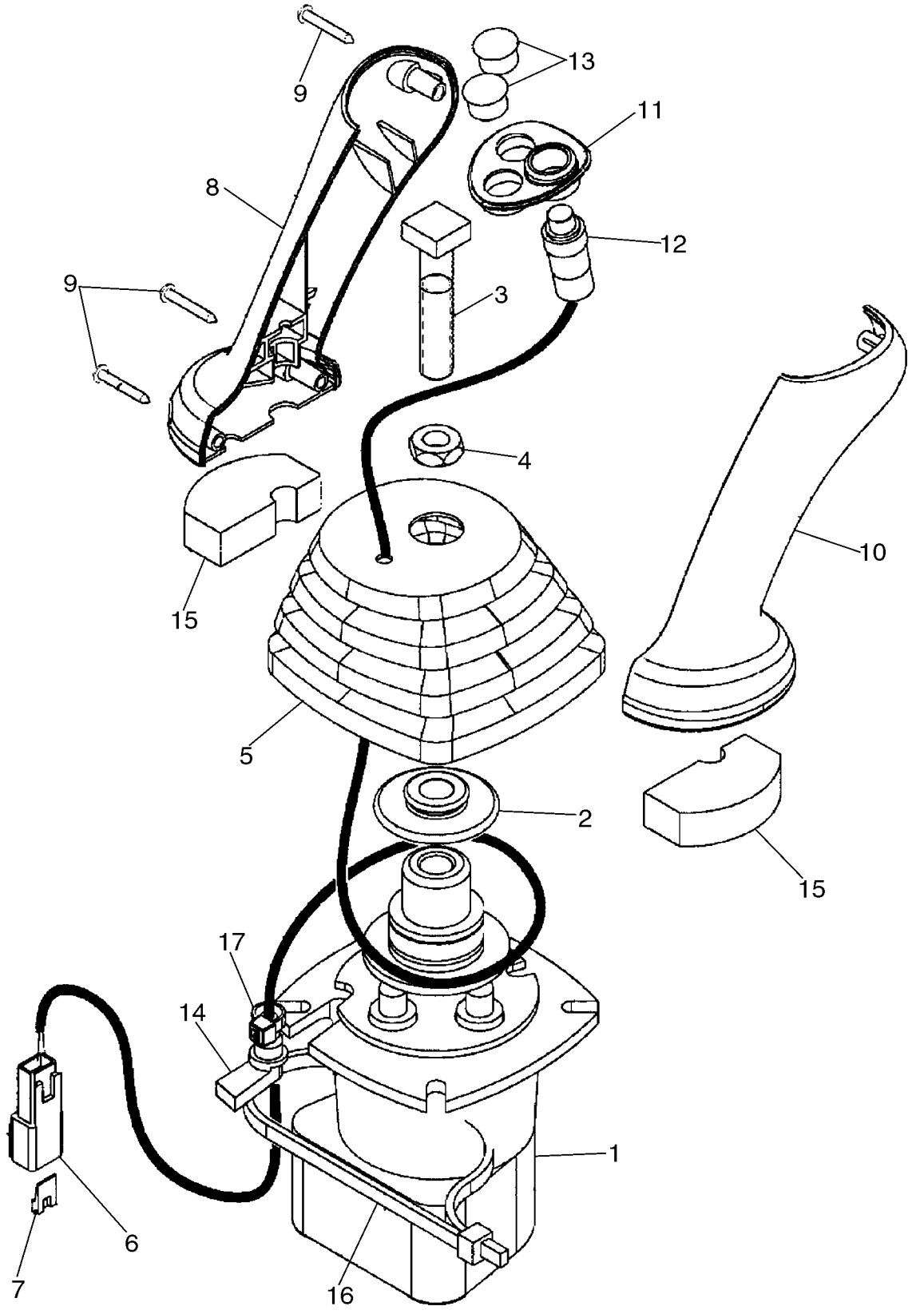

HTTP://WWW.MINNPARBACKHOEPARTS.COM



VÁLVULA, PALANCA DE CONTROL ( CONTROL PILOTO) (IZQUIERDO) BOCINA

| REF | FN | PART NUMBER | YR/SN | QTY | DESCRIPTION |
|---|---|---|---|---|---|
| | | 87437733 | | 1 | VALVULA DISTRIBUIDORA Joystick, Pilot Controls, Left-Hand, With Horn Button; Incl. Ref 1 - 17 |
| 1 | | 86983311 | | 1 | VALVULA DISTRIBUIDORA Pilot Control Joystick Valve; Component Parts Not Serviced Separately |
| 2 | | 87436225 | | 1 | RETENEDOR Control Boot Retainer |
| 3 | | 87428023 | | 1 | TORNILLO Square Head Bolt |
| 4 | | 87037944 | | 1 | TUERCA Thin M12 Nut |
| 5 | | 87428134 | | 1 | PROTECTOR Control Handle Boot |
| 6 | | 225315C1 | | 1 | CONECTOR |
| 7 | | 225318C1 | | 1 | CUNA Connector |
| 8 | | 87428164 | | 1 | PERILLA Joystick Control Handle |
| 9 | | 87032819 | | 3 | TORNILLO AUTOROSCANTE Special |
| 10 | | 87428165 | | 1 | PERILLA Joystick Control Handle |
| 11 | | 87435243 | | 1 | MARCO Switch Mounting Bezel |
| 12 | | 87437372 | | 1 | INTERRUPTOR Push Button Horn Switch |
| 13 | | 86625128 | | 2 | TAPÓN Dome Plug, .562 inch, Black Nylon |
| 14 | | 87424267 | | 1 | PASACABLES Wire Grommet |
| 15 | | 87435506 | | 2 | CUBREJUNTA PROTECTORA Pilot Control Handle Seal, Lower |
| 16 | | 87438046 | | 1 | BANDA Tie Strap |
| 17 | | 87000312 | | 1 | BANDA Black Tie Strap |

HTTP://WWW.MINNPARBACKHOEPARTS.COM

| 08-51 | | p1 | 01/04 |
|---|---|---|---|

VÁLVULA, PALANCA DE CONTROL ( CONTROL PILOTO) (IZQUIERDO) BOCINA & UNI-DIR

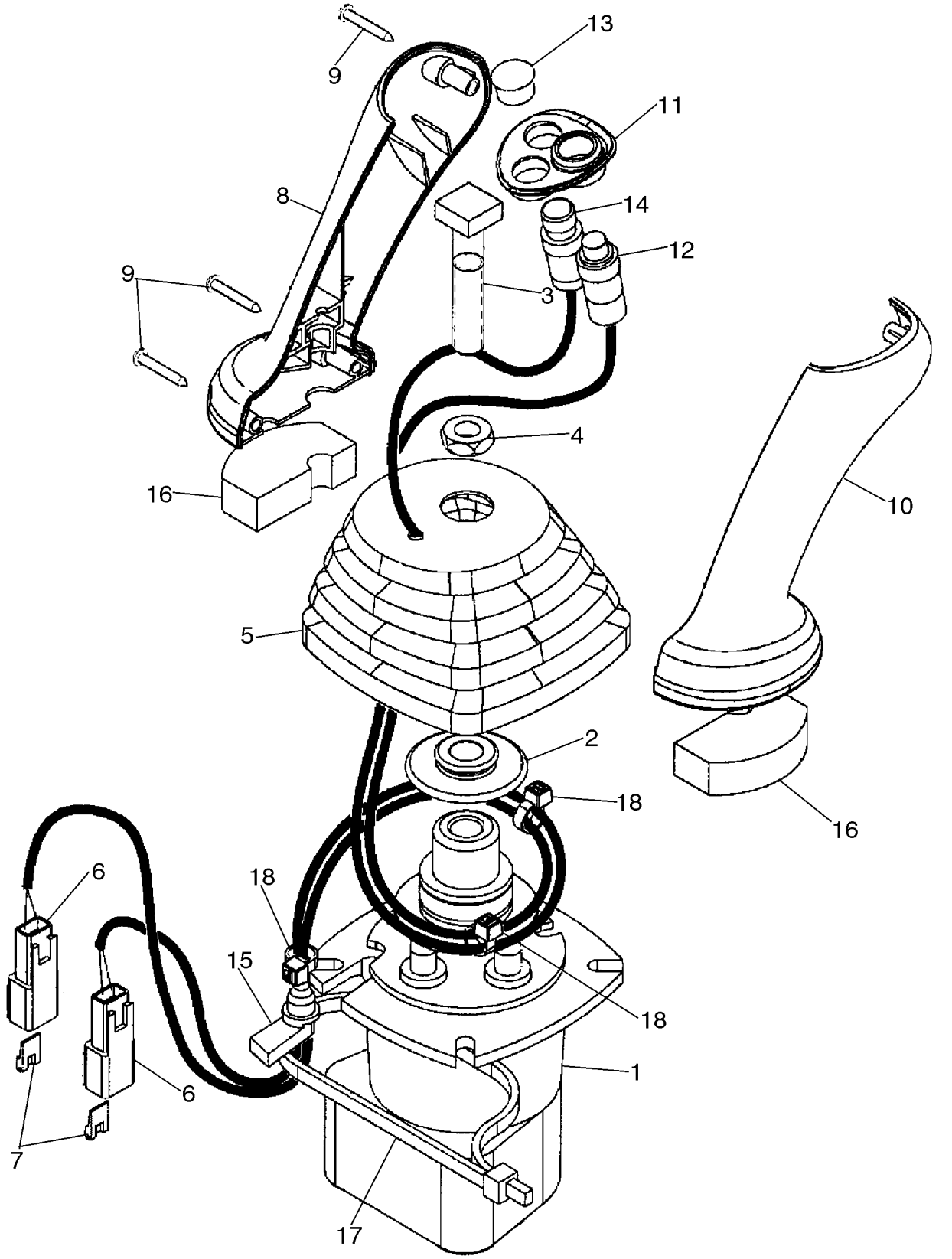

HTTP://WWW.MINNPARBACKHOEPARTS.COM



VÁLVULA, PALANCA DE CONTROL ( CONTROL PILOTO) (IZQUIERDO) BOCINA & UNI-DIR

| REF | FN | PART NUMBER | YR/SN | QTY | DESCRIPTION |
|---|---|---|---|---|---|
| | | 87437735 | | 1 | VALVULA DISTRIBUIDORA Joystick, Pilot Controls, Left-Hand, With Horn and Uni-Directional Buttons; Incl. Ref 1 - 18 |
| 1 | | 86983311 | | 1 | VALVULA DISTRIBUIDORA Pilot Control Joystick Valve; Component Parts Not Serviced Separately |
| 2 | | 87436225 | | 1 | RETENEDOR Control Boot Retainer |
| 3 | | 87428023 | | 1 | TORNILLO Square Head Bolt |
| 4 | | 87037944 | | 1 | TUERCA Thin M12 Nut |
| 5 | | 87428134 | | 1 | PROTECTOR Control Handle Boot |
| 6 | | 225315C1 | | 2 | CONECTOR |
| 7 | | 225318C1 | | 2 | CUNA Connector |
| 8 | | 87428164 | | 1 | PERILLA Joystick Control Handle |
| 9 | | 87032819 | | 3 | TORNILLO AUTOROSCANTE Special |
| 10 | | 87428165 | | 1 | PERILLA Joystick Control Handle |
| 11 | | 87435243 | | 1 | MARCO Switch Mounting Bezel |
| 12 | | 87437372 | | 1 | INTERRUPTOR Push Button Horn Switch |
| 13 | | 86625128 | | 1 | TAPÓN Dome Plug, .562 inch, Black Nylon |
| 14 | | 87437373 | | 1 | INTERRUPTOR Push Button Uni-Directional Auxiliary Hydraulic Switch |
| 15 | | 87424267 | | 1 | PASACABLES Wire Grommet |
| 16 | | 87435506 | | 2 | CUBREJUNTA PROTECTORA Pilot Control Handle Seal, Lower |
| 17 | | 87438046 | | 1 | BANDA Tie Strap |
| 18 | | 87000312 | | 3 | BANDA Black Tie Strap |

HTTP://WWW.MINNPARBACKHOEPARTS.COM

| 08-52 | | p1 | 01/04 |
|---|---|---|---|

VÁLVULA, PALANCA DE CONTROL ( CONTROL PILOTO) (IZQUIERDO) BOCINA & BI-DIR

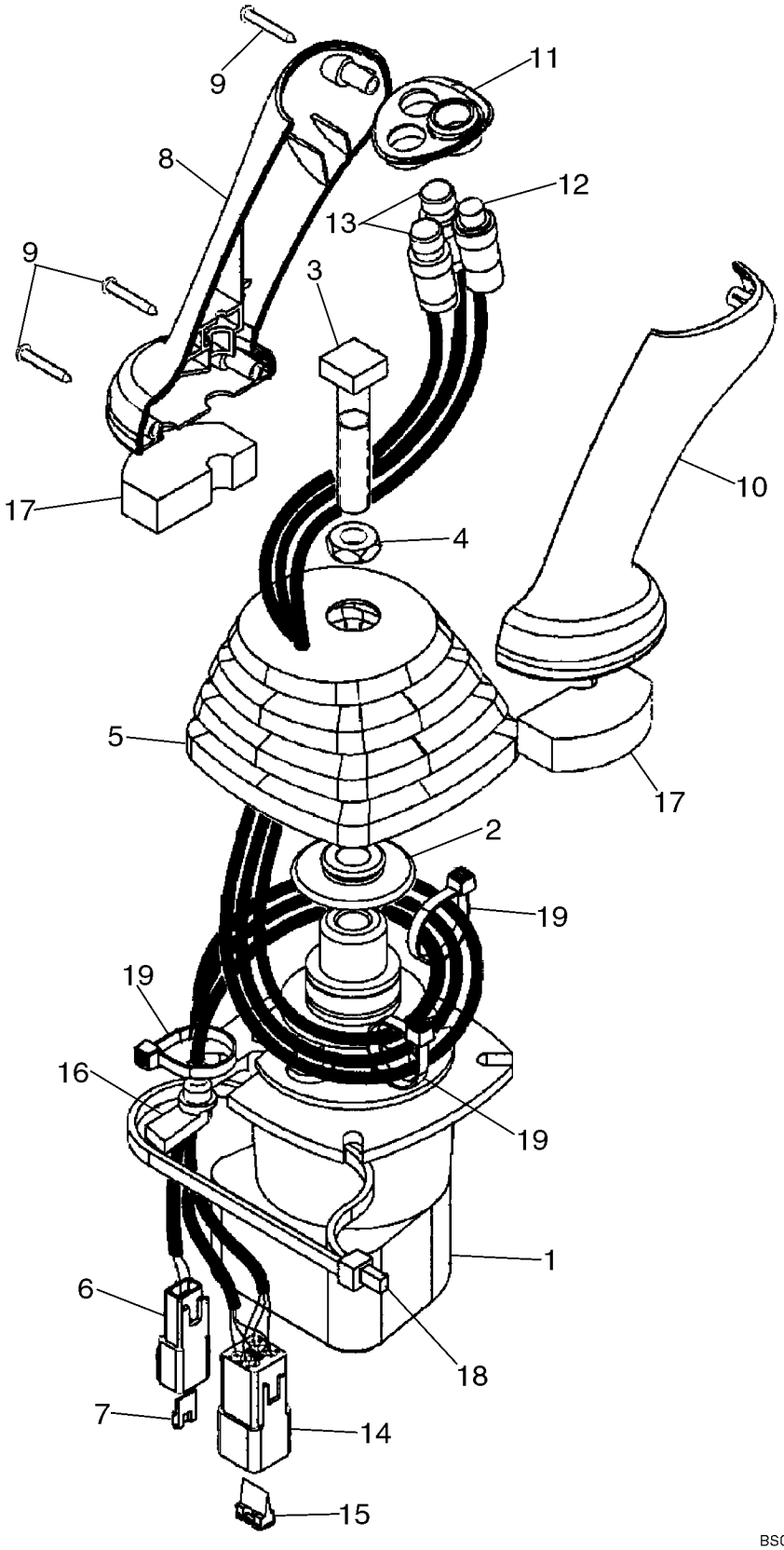

HTTP://WWW.MINNPARBACKHOEPARTS.COM



VÁLVULA, PALANCA DE CONTROL ( CONTROL PILOTO) (IZQUIERDO) BOCINA & BI-DIR

| REF | FN | PART NUMBER | YR/SN | QTY | DESCRIPTION |
|---|---|---|---|---|---|
| | | 87437734 | | 1 | VALVULA DISTRIBUIDORA Joystick, Pilot Controls, Left-Hand, With Horn and Bi-Directional Buttons; Incl. Ref 1 - 19 |
| 1 | | 86983311 | | 1 | VALVULA DISTRIBUIDORA Pilot Control Joystick Valve; Component Parts Not Serviced Separately |
| 2 | | 87436225 | | 1 | RETENEDOR Control Boot Retainer |
| 3 | | 87428023 | | 1 | TORNILLO Square Head Bolt |
| 4 | | 87037944 | | 1 | TUERCA Thin M12 Nut |
| 5 | | 87428134 | | 1 | PROTECTOR Control Handle Boot |
| 6 | | 225315C1 | | 1 | CONECTOR |
| 7 | | 225318C1 | | 1 | CUNA Connector |
| 8 | | 87428164 | | 1 | PERILLA Joystick Control Handle |
| 9 | | 87032819 | | 3 | TORNILLO AUTOROSCANTE Special |
| 10 | | 87428165 | | 1 | PERILLA Joystick Control Handle |
| 11 | | 87435243 | | 1 | MARCO Switch Mounting Bezel |
| 12 | | 87437372 | | 1 | INTERRUPTOR Push Button Horn Switch |
| 13 | | 87437371 | | 2 | INTERRUPTOR Push Button Bi-Directional Auxiliary Hydraulic Switch |
| 14 | | 225350C1 | | 1 | CONECTOR |
| 15 | | 225353C1 | | 1 | CUNA Connector |
| 16 | | 87424267 | | 1 | PASACABLES Wire Grommet |
| 17 | | 87435506 | | 2 | CUBREJUNTA PROTECTORA Pilot Control Handle Seal, Lower |
| 18 | | 87438046 | | 1 | BANDA Tie Strap |
| 19 | | 87000312 | | 3 | BANDA Black Tie Strap |

HTTP://WWW.MINNPARBACKHOEPARTS.COM

| 08-53 | | p1 | 01/04 |
|---|---|---|---|

VÁLVULA, PALANCA DE CONTROL ( CONTROL PILOTO) (DERECHA/O) SIN PALA EXTENDIBLE

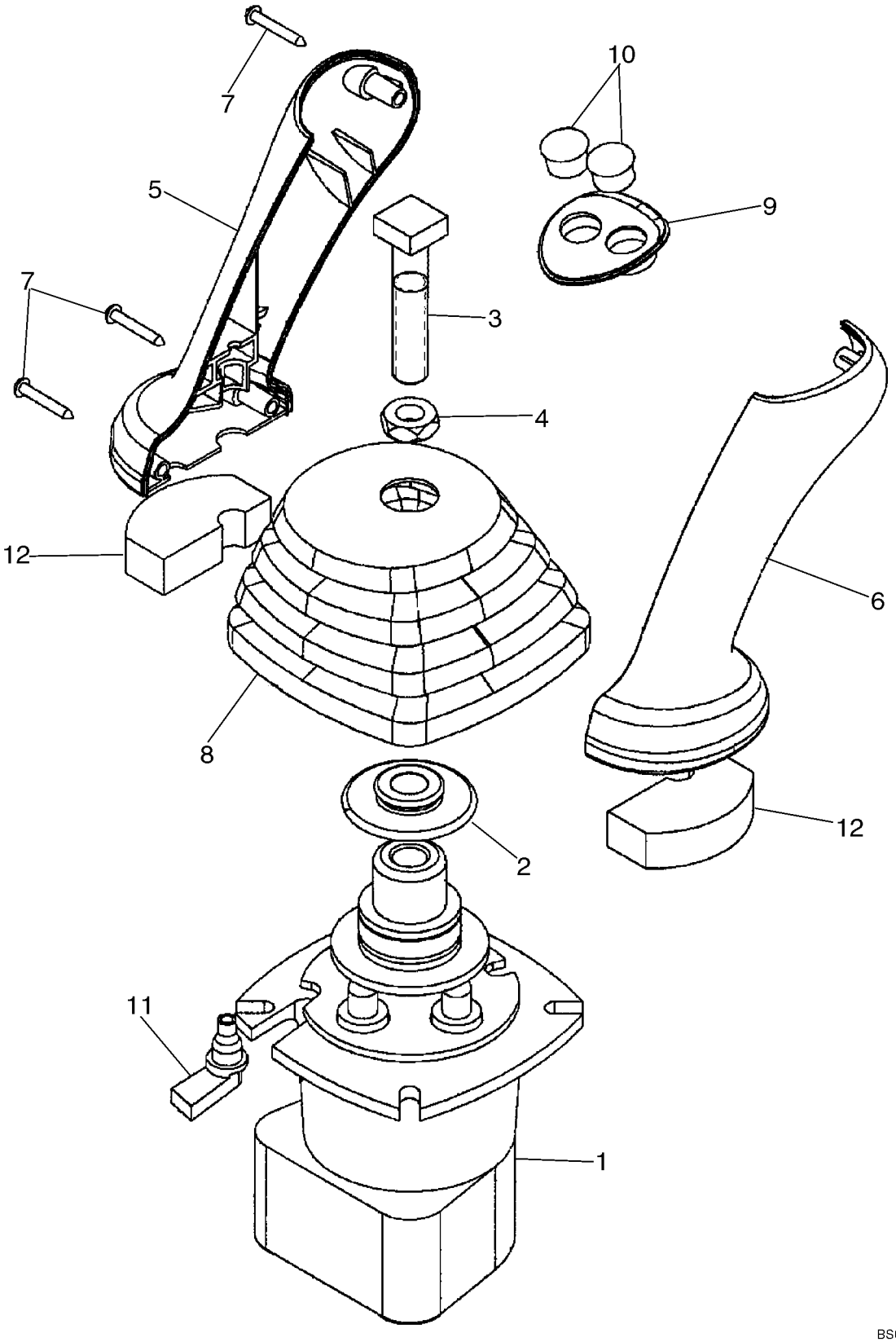

HTTP://WWW.MINNPARBACKHOEPARTS.COM



VÁLVULA, PALANCA DE CONTROL ( CONTROL PILOTO) (DERECHA/O) SIN PALA EXTENDIBLE

| REF | FN | PART NUMBER | YR/SN | QTY | DESCRIPTION |
|---|---|---|---|---|---|
| | | 87435510 | | 1 | VALVULA DISTRIBUIDORA Joystick, Pilot Controls, Right-Hand; Without Extendable Dipper; Incl. Ref 1 - 12 |
| 1 | | 86983311 | | 1 | VALVULA DISTRIBUIDORA Pilot Control Joystick Valve; Component Parts Not Serviced Separately |
| 2 | | 87436225 | | 1 | RETENEDOR Control Boot Retainer |
| 3 | | 87428023 | | 1 | TORNILLO Square Head Bolt |
| 4 | | 87037944 | | 1 | TUERCA Thin M12 Nut |
| 5 | | 87428164 | | 1 | PERILLA Joystick Control Handle |
| 6 | | 87428165 | | 1 | PERILLA Joystick Control Handle |
| 7 | | 87032819 | | 3 | TORNILLO AUTOROSCANTE Special |
| 8 | | {87435489} | | 1 | Joystick Control Boot |
| 9 | | 87435242 | | 1 | MARCO Switch Mounting Bezel |
| 10 | | 353-405 | | 2 | TAPÓN Dome Plug, .562 inch, Black Nylon |
| 11 | | 87424267 | | 1 | PASACABLES Wire Grommet |
| 12 | | 87435506 | | 2 | CUBREJUNTA PROTECTORA Pilot Control Handle Seal, Lower |

HTTP://WWW.MINNPARBACKHOEPARTS.COM

| 08-54 | | p1 | 01/04 |
|---|---|---|---|

VÁLVULA, PALANCA DE CONTROL ( CONTROL PILOTO) (DERECHA/O) CON PALA EXTENDIBLE

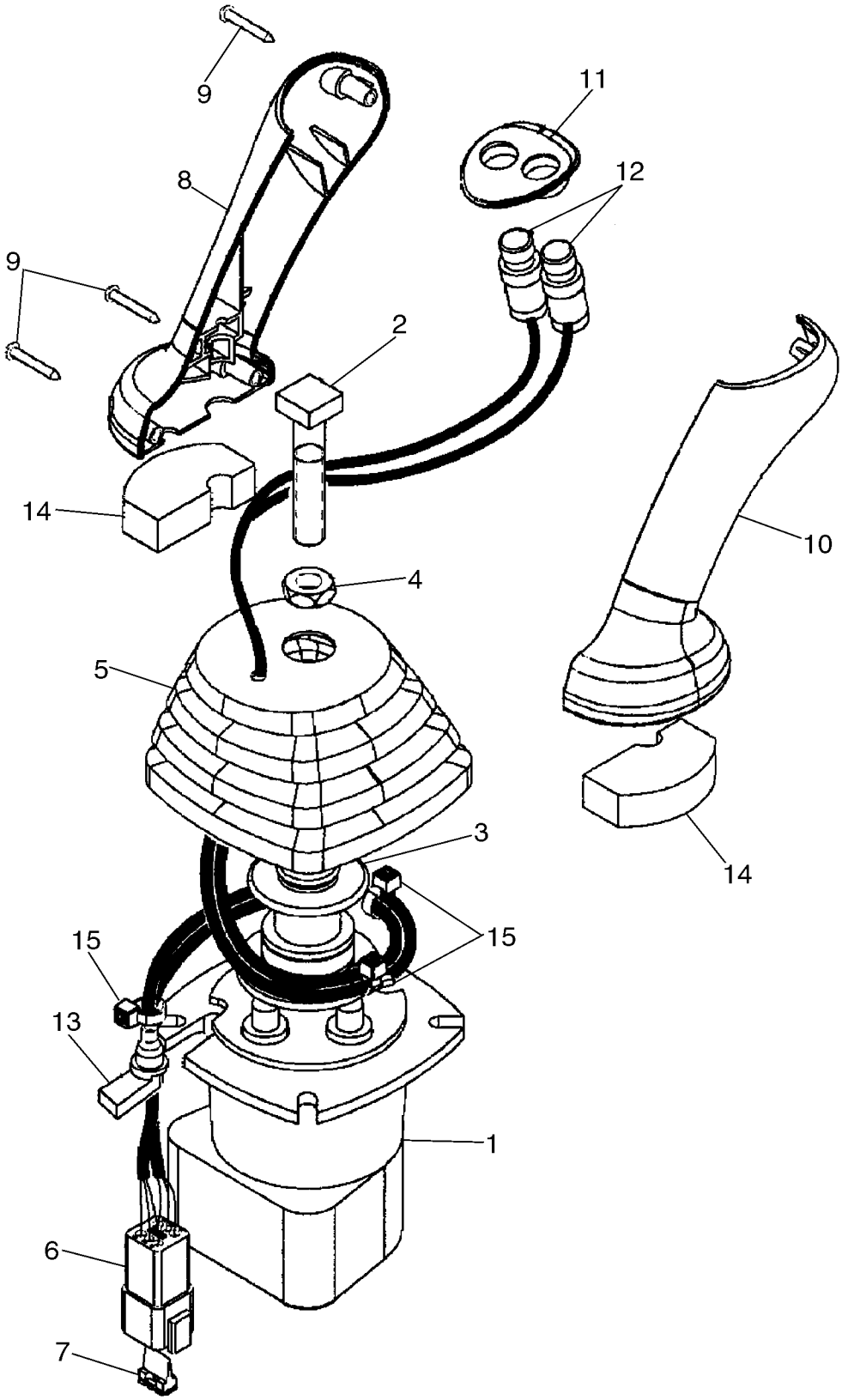

HTTP://WWW.MINNPARBACKHOEPARTS.COM



VÁLVULA, PALANCA DE CONTROL ( CONTROL PILOTO) (DERECHA/O) CON PALA EXTENDIBLE

| REF | FN | PART NUMBER | YR/SN | QTY | DESCRIPTION |
|---|---|---|---|---|---|
| | | 87437736 | | 1 | VALVULA DISTRIBUIDORA Joystick, Pilot Controls, Right-Hand; With Extendable Dipper; Incl. Ref 1 - 15 |
| 1 | | 86983311 | | 1 | VALVULA DISTRIBUIDORA Pilot Control Joystick Valve; Component Parts Not Serviced Separately |
| 2 | | 87428023 | | 1 | TORNILLO Square Head Bolt |
| 3 | | 87436225 | | 1 | RETENEDOR Control Boot Retainer |
| 4 | | 87037944 | | 1 | TUERCA Thin M12 Nut |
| 5 | | 87428134 | | 1 | PROTECTOR Joystick Control Boot |
| 6 | | 225350C1 | | 1 | CONECTOR |
| 7 | | 225353C1 | | 1 | CUNA Connector |
| 8 | | 87428164 | | 1 | PERILLA Joystick Control Handle |
| 9 | | 87032819 | | 3 | TORNILLO AUTOROSCANTE Special |
| 10 | | 87428165 | | 1 | PERILLA Joystick Control Handle |
| 11 | | 87435242 | | 1 | MARCO Switch Mounting Bezel |
| 12 | | 87437371 | | 2 | INTERRUPTOR Push Button Retract and Extendahoe Switches |
| 13 | | 87424267 | | 1 | PASACABLES Wire Grommet |
| 14 | | 87435506 | | 2 | CUBREJUNTA PROTECTORA Pilot Control Handle Seal, Lower |
| 15 | | 87000312 | | 3 | BANDA Black Nylon |

HTTP://WWW.MINNPARBACKHOEPARTS.COM



CONJUNTO DE LA VALVULA - ALMOHADILLA DE OSCILACIÓN

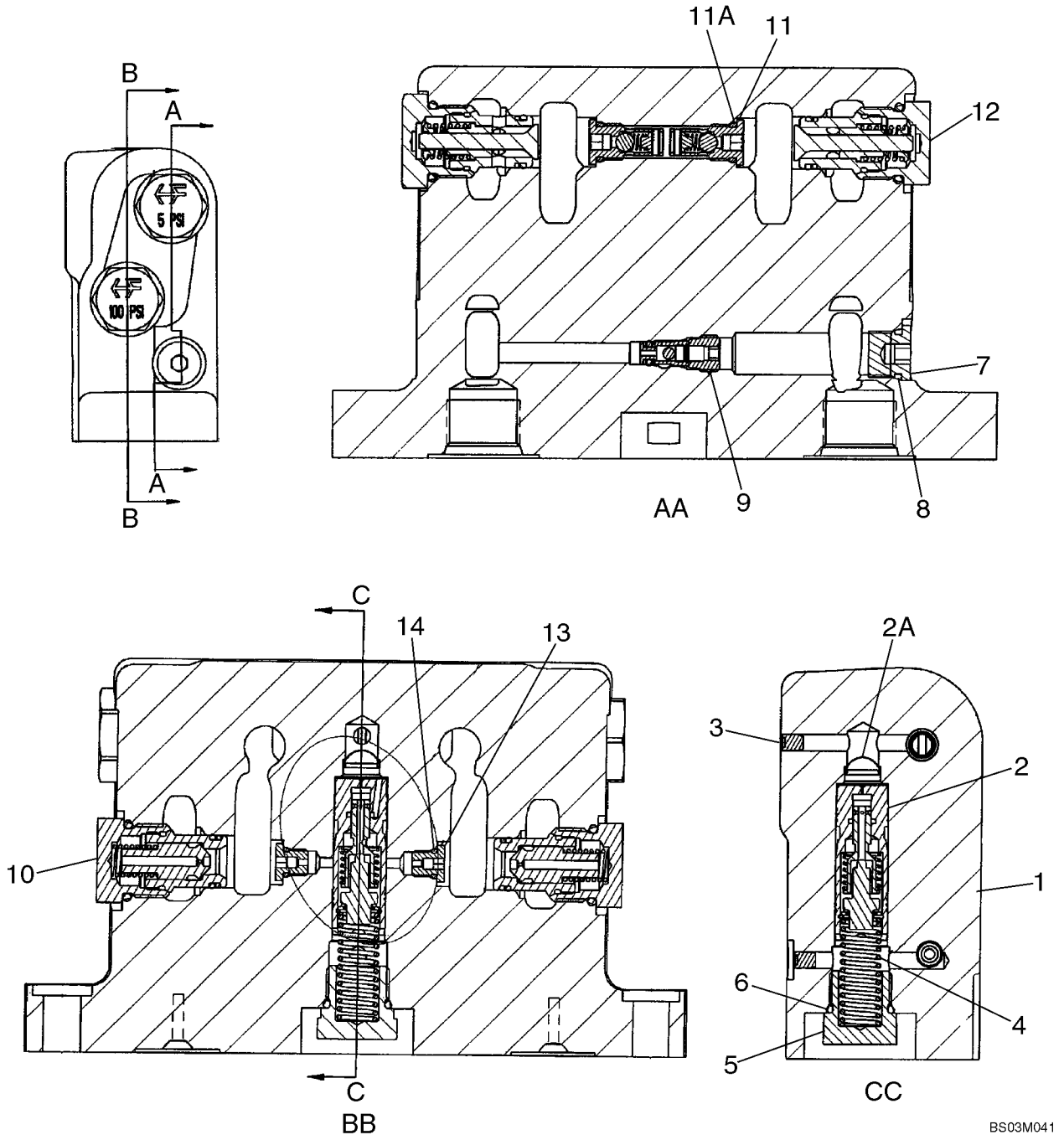

HTTP://WWW.MINNPARBACKHOEPARTS.COM



CONJUNTO DE LA VALVULA - ALMOHADILLA DE OSCILACIÓN

| REF | FN | PART NUMBER | YR/SN | QTY | DESCRIPTION |
|---|---|---|---|---|---|
| | | 87416975 | | 1 | VALVULA AMORTIGUADORA Swing Cushion; Incl. Ref 1 - 14 |
| 1 | | NSS | | 1 | NO SE REPARA SEPARADAM. Housing |
| 2 | | 388876A6 | | 1 | PISTONCILLO Thermal Compensating; Component Parts Not Serviced Separately |
| 2A | | 1976955C1 | | 1 | CARTUCHO FILTRO Screen, Filter |
| 3 | | 369372A1 | | 2 | TAPÓN M5; Plug, Expansion |
| 4 | | 388881A1 | | 1 | MUELLE HELICOIDAL |
| 5 | | 409025A1 | | 1 | TAPÓN Relief Check; Incl. Ref 6 |
| 6 | | 237-6008 | | 1 | JUNTA HERMETICA 41/64 ID x 3/32, Boss Seal |
| 7 | | 218-5209 | | 1 | TAPÓN 9/16 Or; Incl. Ref 8 |
| 8 | | 237-6006 | | 1 | JUNTA HERMETICA 15/32 ID x 5/64, Boss Seal |
| 9 | | 388712A2 | | 1 | VALVULA Bi-Directional Check Valve; Includes 388713A1 Seal Kit |
| | | 388713A1 | | 1 | JEUGO Seal; Includes An O-Ring and Backup Ring; Component Parts Not Serviced Separately |
| 10 | | 396422A2 | | 2 | VALVULA ANTIRRETORNO 100 psi, Orifice Check Valve; Component Parts Not Serviced Separately; Order 1542830C2 Seal Kit To Service External Seals |
| | | 443432A1 | | 1 | SERIE DE JUNTAS For Servicing External Seals on Ref 9, 10, 11 or 12 Valve; If Used |
| 11 | | 400296A2 | | 2 | VALVULA ANTIRRETORNO In-Line Check Valve; Component Parts Not Serviced Separately; Incl. Ref 11A |
| 11A | | 237-6004 | | 1 | JUNTA HERMETICA 23/64 ID x 5/64, Boss Seal |
| 12 | | 389541A1 | | 2 | VALVULA ANTIRRETORNO 5 psi; Component Parts Not Serviced Separately; Order 1542830C2 Seal Kit To Service External Seals |
| 13 | | 400657A1 | | 2 | TAPÓN Orifice 1.85 mm; Incl. Ref 14 |
| 14 | | 237-6002 | | 1 | JUNTA HERMETICA 1/4 ID x 1/16 |
| | | 1542830C2 | | 1 | EMPAQUE DE JUNTAS For Servicing External Seals on Ref 10 or 12 Valve |

HTTP://WWW.MINNPARBACKHOEPARTS.COM



ACUMULADOR CONJ. - DISPOSITIVO ANTICABECEO

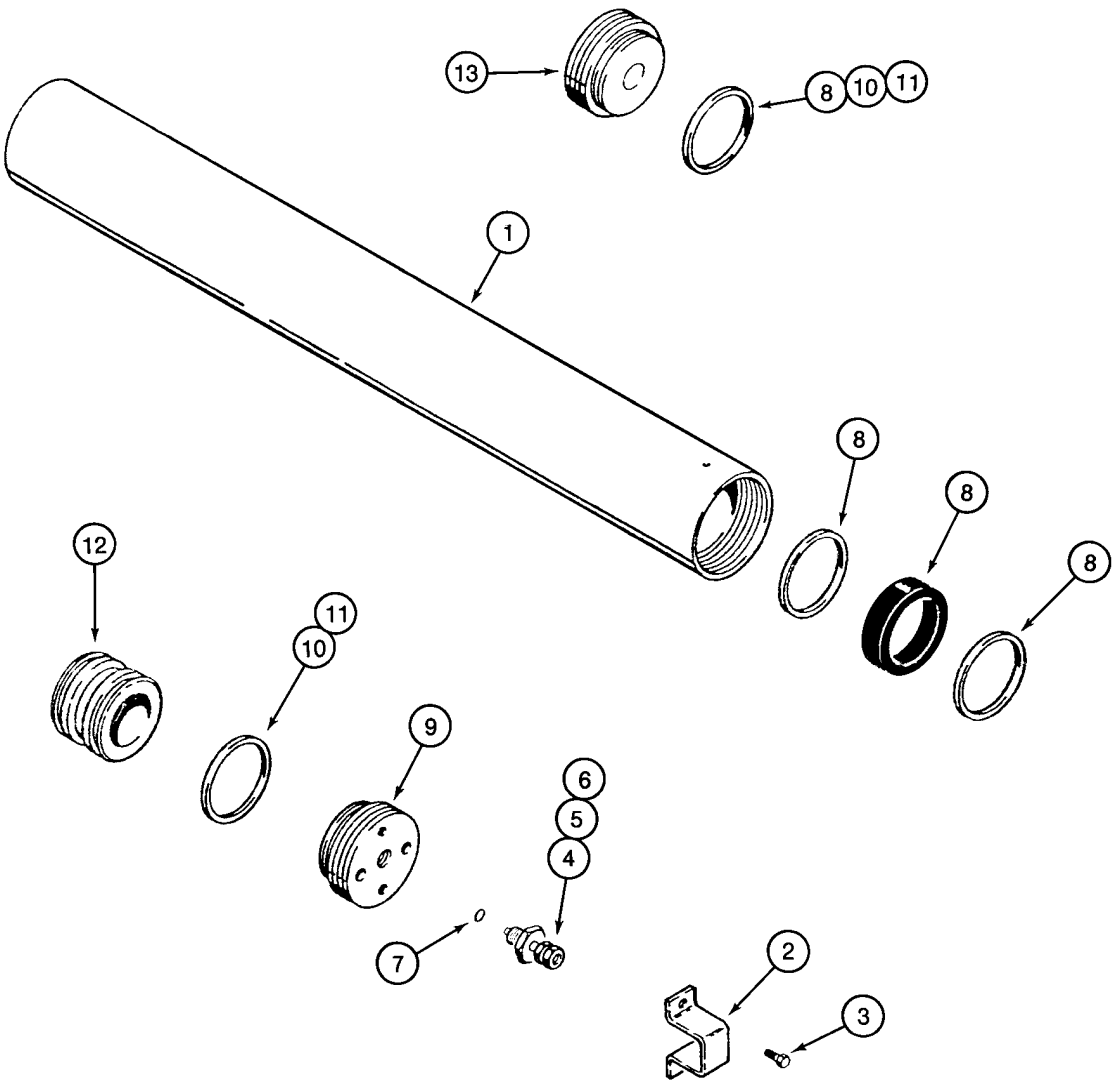


BS97C154

HTTP://WWW.MINNPARBACKHOEPARTS.COM



ACUMULADOR CONJ. - DISPOSITIVO ANTICABECEO

| REF | FN | PART NUMBER | YR/SN | QTY | DESCRIPTION |
|---|---|---|---|---|---|
| | | 234412A1 | | 1 | ACUMULADOR Incl. Ref 1 - 13 |
| 1 | | NSS | | 1 | NO SE REPARA SEPARADAM. Body |
| 2 | | 192895A1 | | 1 | PROTECTOR |
| 3 | | 276-2456 | | 2 | TORNILLO No. 10 x 3/8 |
| | | 1978142C1 | | 1 | VALVULA Incl. Ref 4 - 6 |
| 4 | | NSS | | 1 | NO SE REPARA SEPARADAM. Valve, Pressure |
| 5 | | 1978143C1 | | 1 | EMBOLO |
| 6 | | 1978144C1 | | 1 | TAPON DEL DEPOSITO |
| 7 | | 1978158C1 | | 1 | JUNTA HERMETICA |
| 8 | | 1978141C1 | | 1 | JUEGO JUNTAS Seal; Includes (1) V-Type O-Ring, (2) Teflon Bearing Rings and (1) Body End Seal Ring; Component Parts Not Serviced Separately |
| 9 | | NSS | | 1 | NO SE REPARA SEPARADAM. Gland, Cylinder |
| 10 | | NSS | | 2 | NO SE REPARA SEPARADAM. O-Ring |
| 11 | | NSS | | 2 | NO SE REPARA SEPARADAM. Ring, Backup, If Used |
| 12 | | NSS | | 1 | NO SE REPARA SEPARADAM. Piston |
| 13 | | NSS | | 1 | NO SE REPARA SEPARADAM. Cap |

HTTP://WWW.MINNPARBACKHOEPARTS.COM



FILTRO DE ACEITE

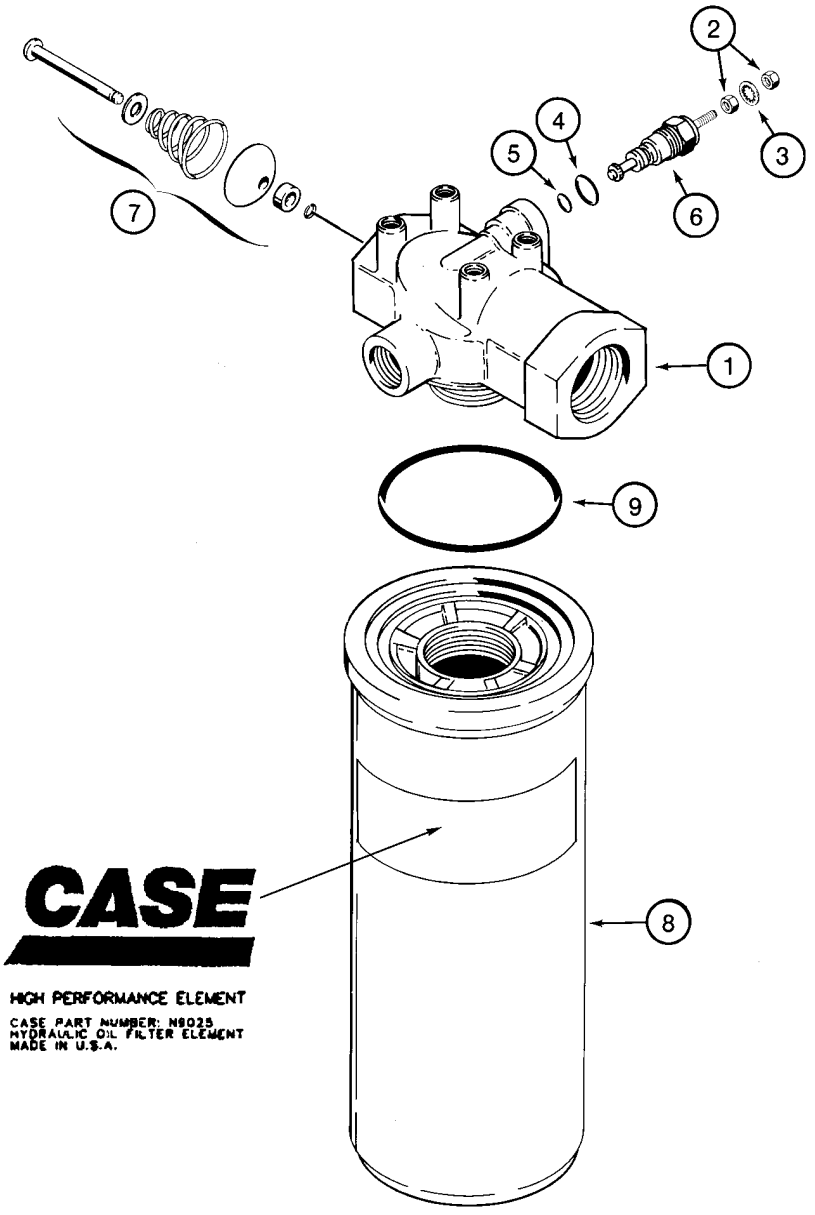


BS00D009

HTTP://WWW.MINNPARBACKHOEPARTS.COM



FILTRO DE ACEITE

| REF | FN | PART NUMBER | YR/SN | QTY | DESCRIPTION |
|---|---|---|---|---|---|
| | | 445674A1 | | 1 | FILTRO CONJ Hydraulic Oil Filter; Incl. Ref 1 - 9 |
| 1 | | NSS | | 1 | NO SE REPARA SEPARADAM. Head, Filter |
| | | N6755 | | 1 | TESTIGO Restriction; Includes N6941, Ref 6 |
| | | N6941 | | 1 | JEUGO Restriction Indicator Repair; Incl. Ref 2 - 5; Order Ref 2 - 5 |
| 2 | | 129-667 | | 2 | TUERCA No. 10 NF |
| 3 | | 493-21020 | | 1 | ARANDELA DE FRENO 3/16 |
| 4 | | 237-6006 | | 1 | JUNTA HERMETICA 15/32 ID x 5/64, Boss Seal |
| 5 | | 238-5011 | | 1 | JUNTA HERMETICA 5/16 ID x 1/16 |
| 6 | | NSS | | 1 | NO SE REPARA SEPARADAM. Indicator |
| 7 | | NSS | | 1 | NO SE REPARA SEPARADAM. Valve, By-Pass |
| | | N9025 | | 1 | ELEMENTO DE FILTRADO Incl. Ref 8, 9 |
| 8 | | NSS | | 1 | NO SE REPARA SEPARADAM. Element |
| 9 | | 238-5230 | | 1 | JUNTA HERMETICA 2-1/2 ID x 1/8 |

HTTP://WWW.MINNPARBACKHOEPARTS.COM

| 08-58 | | p1 | 01/04 |
|---|---|---|---|

CONJUNTO DE CILINDRO - ELEVADOR DE LA CARGADORA

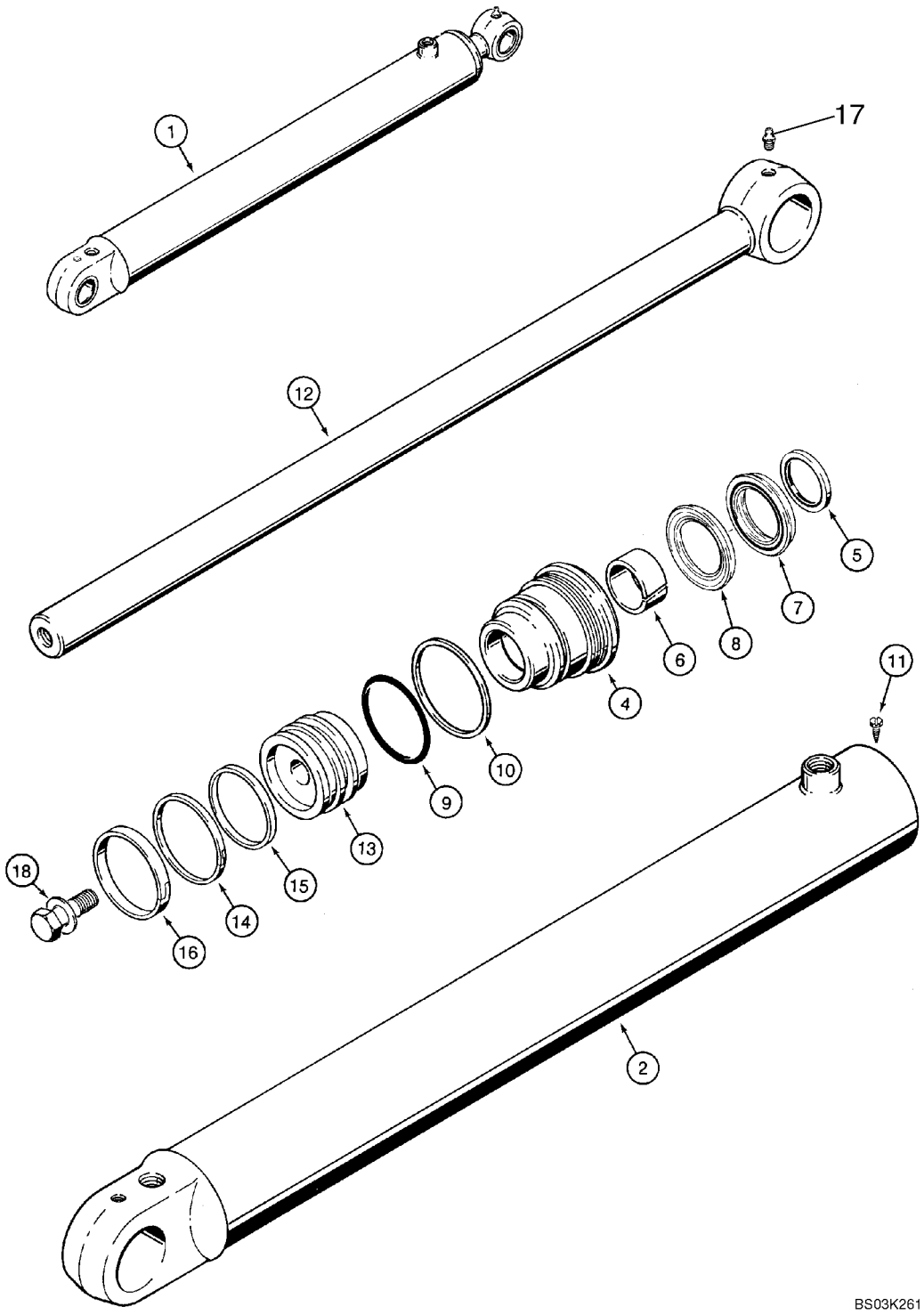

HTTP://WWW.MINNPARBACKHOEPARTS.COM



CONJUNTO DE CILINDRO - ELEVADOR DE LA CARGADORA

| REF | FN | PART NUMBER | YR/SN | QTY | DESCRIPTION |
|---|---|---|---|---|---|
| 1 | | 384240A1 | | 2 | CILINDRO (CONJUNTO) 82.6 ID x 766 mm strk; Loader Lift; Incl. Ref 2 - 18 |
| 2 | | 384241A1 | | 1 | CILINDRO DE GATO TUBE, Without Bushings |
| 4 | | 1980321C3 | | 1 | EMPAQUETADURA |
| | | 1543260C1 | | 1 | EMPAQUE DE JUNTAS Seal Repair, Incl. Ref 5 - 10, 14 - 16 |
| 5 | | D95143 | | 1 | ANILLO DE CIERRE Wiper |
| 6 | | G102425 | | 1 | CASQUILLO |
| | | 1542875C1 | | 1 | JUEGO DE PIEZAS Rod and Buffer Seal Kit; Incl. Ref 7, 8; Not Serviced Separately; Order 1543260C1 Seal Kit |
| 7 | | NSS | | 1 | NO SE REPARA SEPARADAM. Rod Seal; Order 1543260C1 Seal Kit |
| 8 | | NSS | | 1 | NO SE REPARA SEPARADAM. Buffer Seal; Order 1543260C1 Seal Kit |
| 9 | | 238-5233 | | 1 | JUNTA HERMETICA 2-7/8 ID x 1/8 in |
| 10 | | G32122 | | 1 | ANILLO |
| 11 | | 276-2446 | | 1 | TORNILLO No. 8 x 3/8, self-tapping |
| 12 | | 133083A1 | | 1 | VASTAGO CILINDRO 44 mm (1-3/4 in) dia |
| 13 | | 135161A1 | | 1 | EMBOLO |
| 14 | | G102287 | | 1 | ANILLO DE CIERRE |
| 15 | | S109444 | | 1 | ANILLO |
| 16 | | S109445 | | 1 | ANILLO |
| 17 | | 219-1 | | 1 | ENGRASADOR 1/8 PT x 21/32 |
| 18 | | 86982437 | | 1 | PERNO ESPECIAL 1 x 2,5 in; Includes Washer |

HTTP://WWW.MINNPARBACKHOEPARTS.COM

| 08-59 | | p1 | 01/04 |
|---|---|---|---|

CONJUNTO DE CILINDRO - CUCHARON DE LA CARGADORA

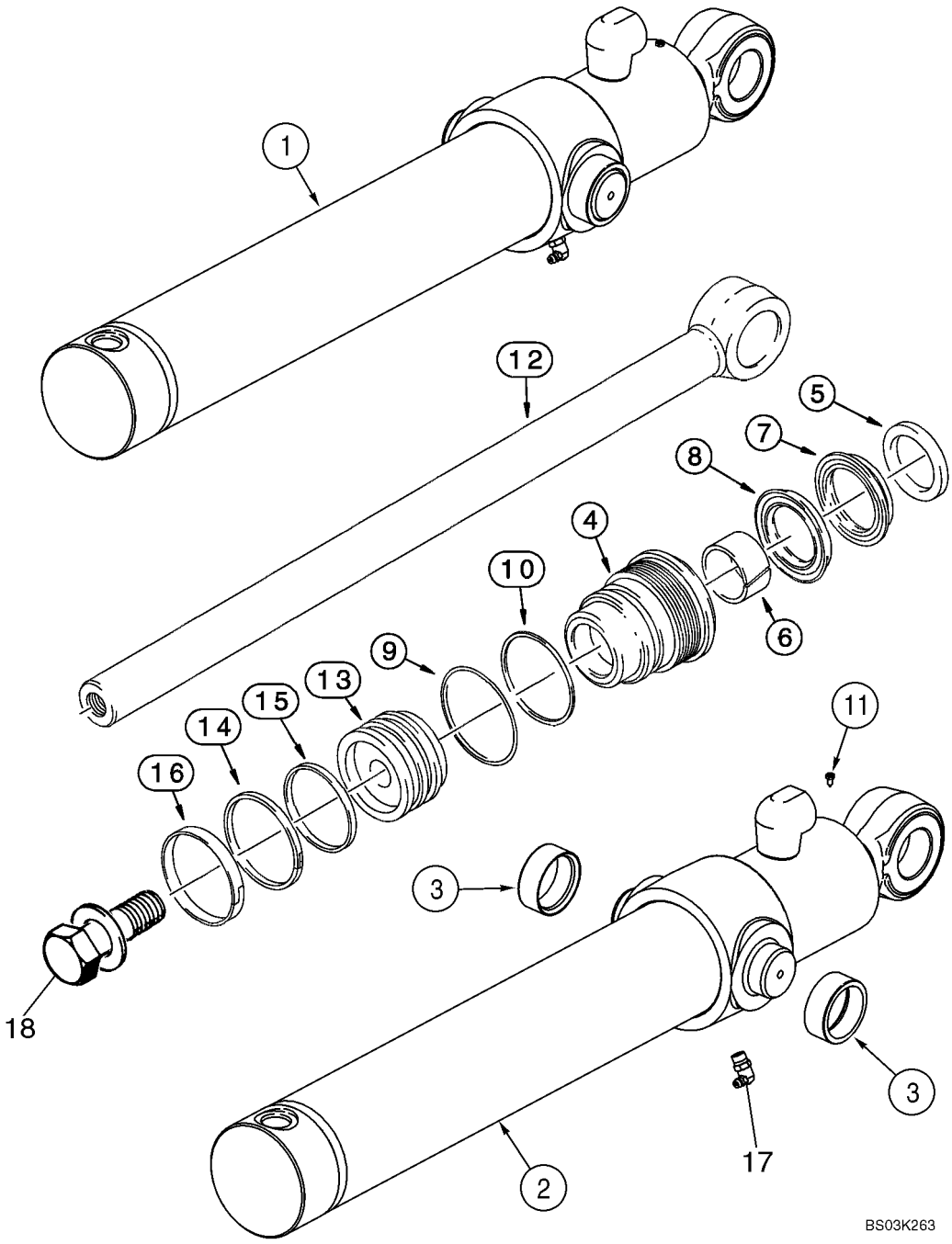

HTTP://WWW.MINNPARBACKHOEPARTS.COM



CONJUNTO DE CILINDRO - CUCHARON DE LA CARGADORA

| REF | FN | PART NUMBER | YR/SN | QTY | DESCRIPTION |
|---|---|---|---|---|---|
| 1 | | 113133A2 | | 2 | CILINDRO (CONJUNTO) 76 ID x 522 mm strk; Loader Bucket; Incl. Ref 2- 18 |
| 2 | | 113135A2 | | 1 | CILINDRO DE GATO TUBE, Incl. Ref 3 |
| 3 | | G108512 | | 2 | CASQUILLO |
| 4 | | 297280A1 | | 1 | EMPAQUETADURA |
| | | 1543256C1 | | 1 | EMPAQUE DE JUNTAS Seal Repair; Incl. Ref 5 - 10, 14 - 16 |
| 5 | | D95142 | | 1 | ANILLO DE CIERRE Wiper |
| 6 | | G102424 | | 1 | CASQUILLO |
| | | 1542874C1 | | 1 | PAQUETE Rod and Buffer Seal Kit; Incl. Ref 7, 8; Not Serviced Separately; Order 1543256C1 Seal Kit |
| 7 | | NSS | | 1 | NO SE REPARA SEPARADAM. Rod Seal; Order 1543256C1 Seal Kit |
| 8 | | NSS | | 1 | NO SE REPARA SEPARADAM. Buffer Seal; Order 1543256C1 Seal Kit |
| 9 | | 238-5231 | | 1 | JUNTA HERMETICA 2-5/8 ID x 1/8 |
| 10 | | G109298 | | 1 | ANILLO |
| 11 | | 276-2446 | | 1 | TORNILLO No. 8 x 3/8, self-tapping |
| 12 | | 110307A1 | | 1 | VASTAGO CILINDRO 38 mm (1-1/2 in) dia |
| 13 | | G108518 | | 1 | EMBOLO |
| 14 | | G102288 | | 1 | SELLO (CONJUNTO) |
| 15 | | G100444 | | 1 | ANILLO DE CIERRE |
| 16 | | G100449 | | 1 | ANILLO DE DESGASTE |
| 17 | | 219-55 | | 1 | ENGRASADOR 90 deg, 1/8 PT x 27/32 |
| 18 | | 86982435 | | 1 | PERNO ESPECIAL 3/4 x 2,5 in, Includes Washer |

HTTP://WWW.MINNPARBACKHOEPARTS.COM

| 08-60 | | p1 | 01/04 |
|---|---|---|---|

CONJUNTO DE CILINDRO - ALMEJA DE LA CARGADORA

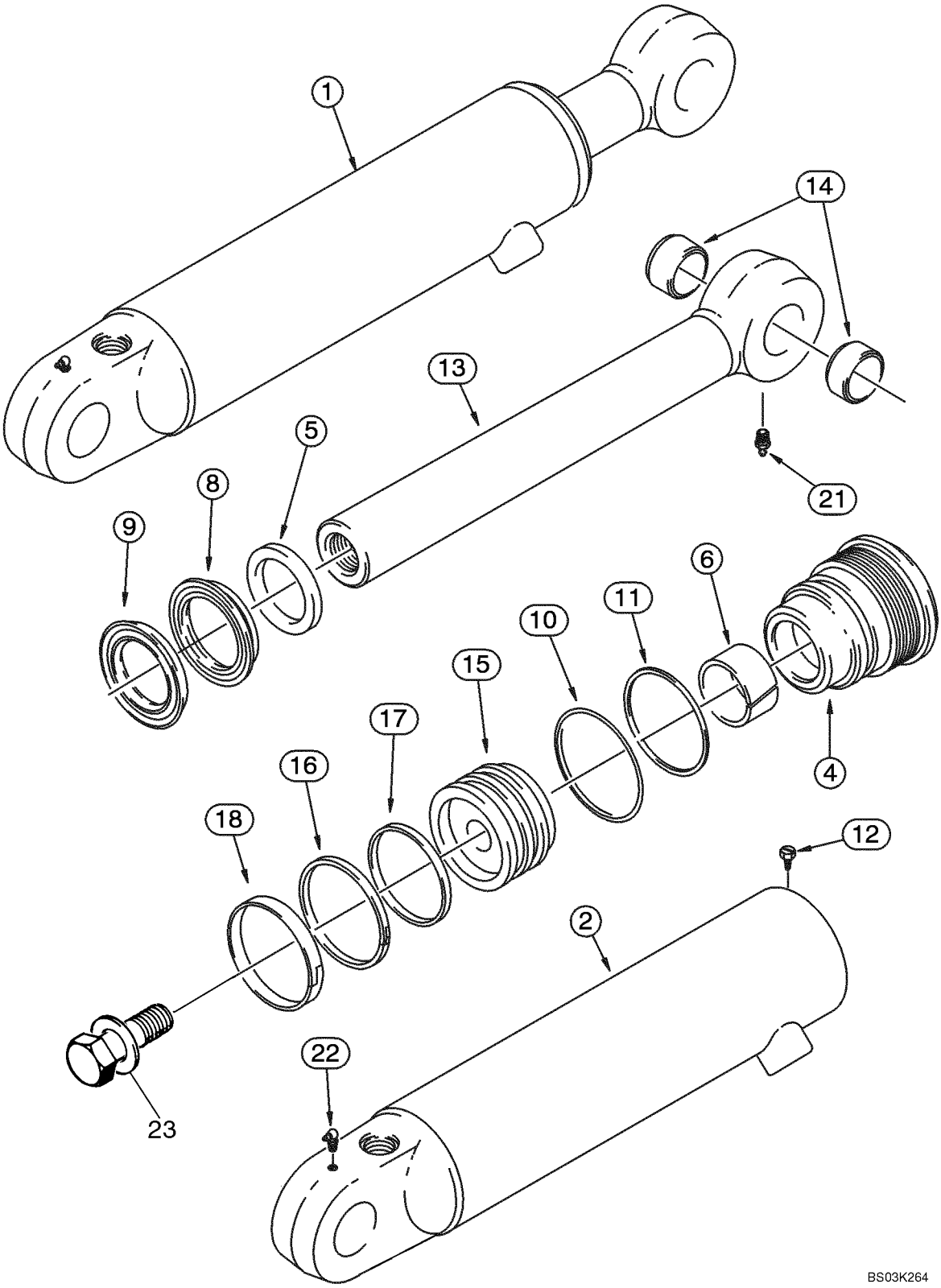

HTTP://WWW.MINNPARBACKHOEPARTS.COM



CONJUNTO DE CILINDRO - ALMEJA DE LA CARGADORA

| REF | FN | PART NUMBER | YR/SN | QTY | DESCRIPTION |
|---|---|---|---|---|---|
| 1 | | 1346189C2 | | 1 | CILINDRO (CONJUNTO) 76 ID x 231 mm strk; Right-Hand; Incl. Ref 2 - 23 |
| 1 | | 1346190C2 | | 1 | CILINDRO (CONJUNTO) 76 ID x 231 mm strk; Left-Hand; Incl. Ref 2 - 23 |
| 2 | | 1346191C2 | | 1 | CILINDRO DE GATO TUBE, Right-Hand; 1346189C2 Cylinder |
| 2 | | 1346192C2 | | 1 | CILINDRO DE GATO TUBE, Left-Hand; 1346190C2 Cylinder |
| 4 | | 297281A1 | | 1 | PALIER Gland |
| | | 1543267C1 | | 1 | EMPAQUE DE JUNTAS Seal Repair; Incl. Ref 5 - 11, 16 - 18 |
| 5 | | D95143 | | 1 | ANILLO DE CIERRE |
| 6 | | G102425 | | 1 | CASQUILLO |
| | | 1542875C1 | | 1 | JUEGO DE PIEZAS Rod and Buffer Seal; Incl. Ref 8, 9; Not Serviced Separately; Order 1543267C1 Seal Kit |
| 8 | | NSS | | 1 | NO SE REPARA SEPARADAM. Rod Seal; Order 1543267C1 Seal Kit |
| 9 | | NSS | | 1 | NO SE REPARA SEPARADAM. Buffer Seal; Order 1543267C1 Seal Kit |
| 10 | | 238-5231 | | 1 | JUNTA HERMETICA 2-5/8 ID x 1/8 |
| 11 | | G109298 | | 1 | ANILLO |
| 12 | | 276-2446 | | 1 | TORNILLO Self-Tapping, No. 8 x 3/8 |
| 13 | | 1346195C1 | | 1 | VASTAGO CILINDRO 44 mm (1-3/4 in) dia; Incl. Ref 14 |
| 14 | | 30634 | | 2 | CASQUILLO |
| 15 | | 1340798C1 | | 1 | EMBOLO |
| 16 | | G102288 | | 1 | SELLO (CONJUNTO) |
| 17 | | G100444 | | 1 | ANILLO DE CIERRE |
| 18 | | G100449 | | 1 | ANILLO DE DESGASTE |
| 21 | | 219-1 | | 1 | ENGRASADOR 1/8 PT x 21/32 |
| 22 | | 219-55 | | 1 | ENGRASADOR 90 deg, 1/8 PT x 27/32 |
| 23 | | 86982437 | | 1 | PERNO ESPECIAL 1,0 x 2,5 in, Includes Washer |

HTTP://WWW.MINNPARBACKHOEPARTS.COM

| 08-61 | | p1 | 01/04 |
|---|---|---|---|

CONJUNTO DE CILINDRO - ESTABILIZADOR DE LA RETROEXCAVADORA

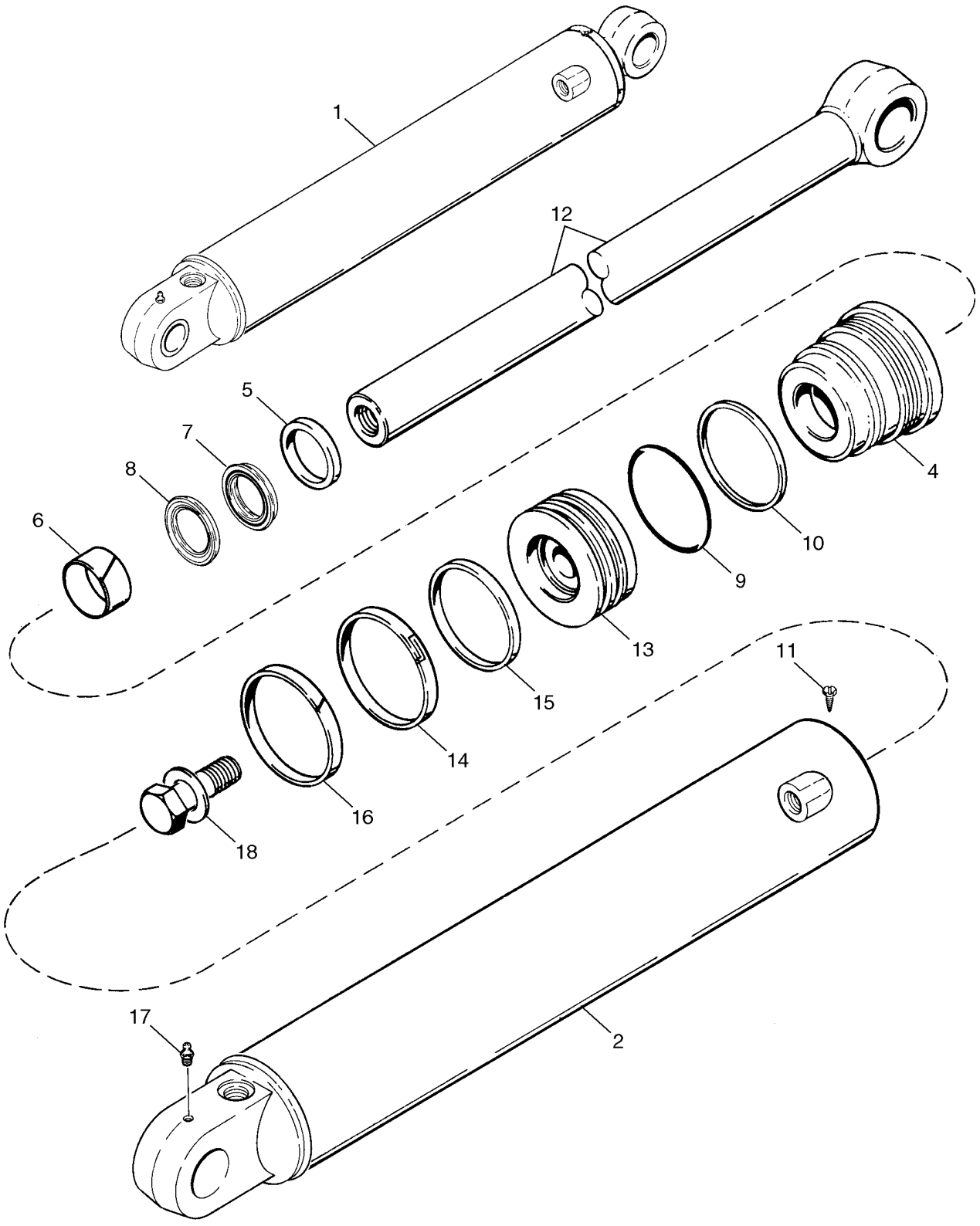

HTTP://WWW.MINNPARBACKHOEPARTS.COM



CONJUNTO DE CILINDRO - ESTABILIZADOR DE LA RETROEXCAVADORA

| REF | FN | PART NUMBER | YR/SN | QTY | DESCRIPTION |
|---|---|---|---|---|---|
| 1 | | 195503A1 | | 1 | CILINDRO (CONJUNTO) 102 ID x 553 mm strk, Right-Hand, Incl. Ref 2 - 18 |
| 1 | | 195504A1 | | 1 | CILINDRO 102 ID x 553 mm strk, Left-Hand, Incl. Ref 2 - 18 |
| 2 | | 195505A1 | | 1 | TUBO Right-Hand |
| 2 | | 195506A1 | | 1 | TUBO Left-Hand |
| 4 | | 128135A2 | | 1 | EMPAQUETADURA |
| | | 1543269C1 | | 1 | EMPAQUE DE JUNTAS Seal, Incl. Ref 5 - 10, 14 - 16 |
| 5 | | D95144 | | 1 | RETEN WIPER |
| 6 | | G101533 | | 1 | CASQUILLO |
| | | 1542876C1 | | 1 | EMPAQUETADURA Rod and Buffer Seal; Incl. Ref 7, 8; Not Serviced Separately; Order 1543269C1 Seal Kit |
| 7 | | NSS | | 1 | NO SE REPARA SEPARADAM. Rod Seal; Order 1543269C1 Seal Kit |
| 8 | | NSS | | 1 | NO SE REPARA SEPARADAM. Buffer Seal; Order 1543269C1 Seal Kit |
| 9 | | 238-5239 | | 1 | JUNTA HERMETICA 3-5/8 x 1/8 |
| 10 | | G109299 | | 1 | ANILLO Backup |
| 11 | | 276-2446 | | 1 | TORNILLO Self-Tapping, No. 8 x 3/8 |
| 12 | | 123726A1 | | 1 | VASTAGO CILINDRO 51 mm (2 in) dia |
| 13 | | G108123 | | 1 | EMBOLO |
| 14 | | G102285 | | 1 | ANILLO DE CIERRE |
| 15 | | G100440 | | 1 | ANILLO |
| 16 | | G100448 | | 1 | ANILLO |
| 17 | | 219-1 | | 1 | ENGRASADOR 1/8 PT x 21/32 |
| 18 | | 86982440 | | 1 | PERNO ESPECIAL 1,25 x 2,75; Incl. Washer |

HTTP://WWW.MINNPARBACKHOEPARTS.COM

| 08-62 | | p1 | 01/04 |
|---|---|---|---|

CONJUNTO DE CILINDRO - DE LA RETROEXCAVADORA

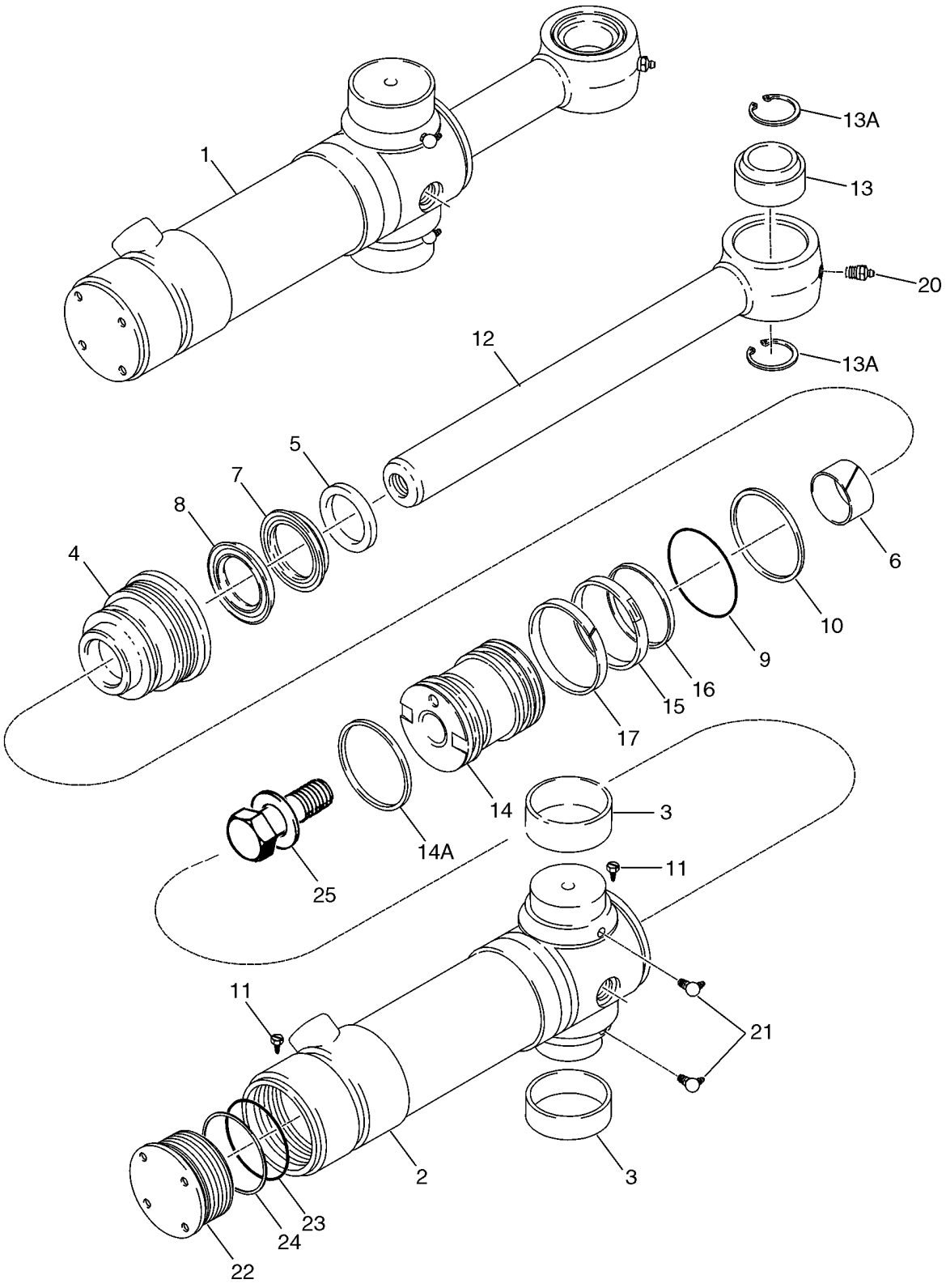

HTTP://WWW.MINNPARBACKHOEPARTS.COM



CONJUNTO DE CILINDRO - DE LA RETROEXCAVADORA

| REF | FN | PART NUMBER | YR/SN | QTY | DESCRIPTION |
|---|---|---|---|---|---|
| 1 | | 188027A2 | | 2 | CILINDRO (CONJUNTO) 95 ID x 292 mm strk, Incl. Ref 2- 25 |
| 2 | | 220165A2 | | 1 | TUBO Incl. Ref 2, 3, 11, 22 - 24; Not Available As An Assembly; Order Components |
| 2 | | 188028A2 | | 1 | TUBO (CONJUNTO) Incl. Ref 3 |
| 3 | | 124568A2 | | 2 | ANILLO Bushing |
| 4 | | 188032A2 | | 1 | EMPAQUETADURA |
| | | 191747A1 | | 1 | ANILLO DE CIERRE KIT, Incl. Ref 5 - 10, 14A - 17, 23, 24 |
| 5 | | D95144 | | 1 | RETEN WIPER |
| 6 | | G101533 | | 1 | CASQUILLO |
| | | 1542876C1 | | 1 | EMPAQUETADURA Rod and Buffer Seal; Incl. Ref 7, 8; Not Serviced Separately; Order 191747A1 Seal Kit |
| 7 | | NSS | | 1 | NO SE REPARA SEPARADAM. Rod Seal; Order 191747A1 Seal Kit |
| 8 | | NSS | | 1 | NO SE REPARA SEPARADAM. Buffer Seal; Order 191747A1 Seal Kit |
| 9 | | 238-5237 | | 1 | JUNTA HERMETICA 3-3/8 ID x 1/8 |
| 10 | | G32126 | | 1 | ANILLO Backup |
| 11 | | 276-2446 | | 2 | TORNILLO Self-Tapping, No. 8 x 3/8 |
| 12 | | 87413722 | | 1 | VASTAGO CILINDRO 51 mm (2 in) dia, Incl. Ref 13, 13A |
| 13 | | 137248A1 | | 1 | ANILLO |
| 13A | | 100-21315 | | 2 | ANILLO DE CIERRE No. 315 |
| 14 | | 188034A3 | | 1 | EMBOLO |
| 14A | | 191252A1 | | 1 | JUNTA DE ACEITE Cast Iron |
| 15 | | 1340764C1 | | 1 | SELLO (CONJUNTO) |
| 16 | | 1340763C1 | | 1 | ANILLO |
| 17 | | 1980245C1 | | 1 | JUNTA DE ACEITE |
| 20 | | 219-1 | | 1 | ENGRASADOR 1/8 PT x 21/32 |
| 21 | | 219-55 | | 2 | ENGRASADOR 90 deg, 1/8 PT x 27/32 |
| | | {188035A1} | | 1 | CAP ASSEMBLY, End; Incl. Ref 22 - 24; Not Available As An Assembly, Order Components |
| 22 | | 188036A1 | | 1 | TAPON DEL DEPOSITO End |
| 23 | | 238-5239 | | 1 | JUNTA HERMETICA 3-5/8 x 1/8 |

HTTP://WWW.MINNPARBACKHOEPARTS.COM



CONJUNTO DE CILINDRO - DE LA RETROEXCAVADORA

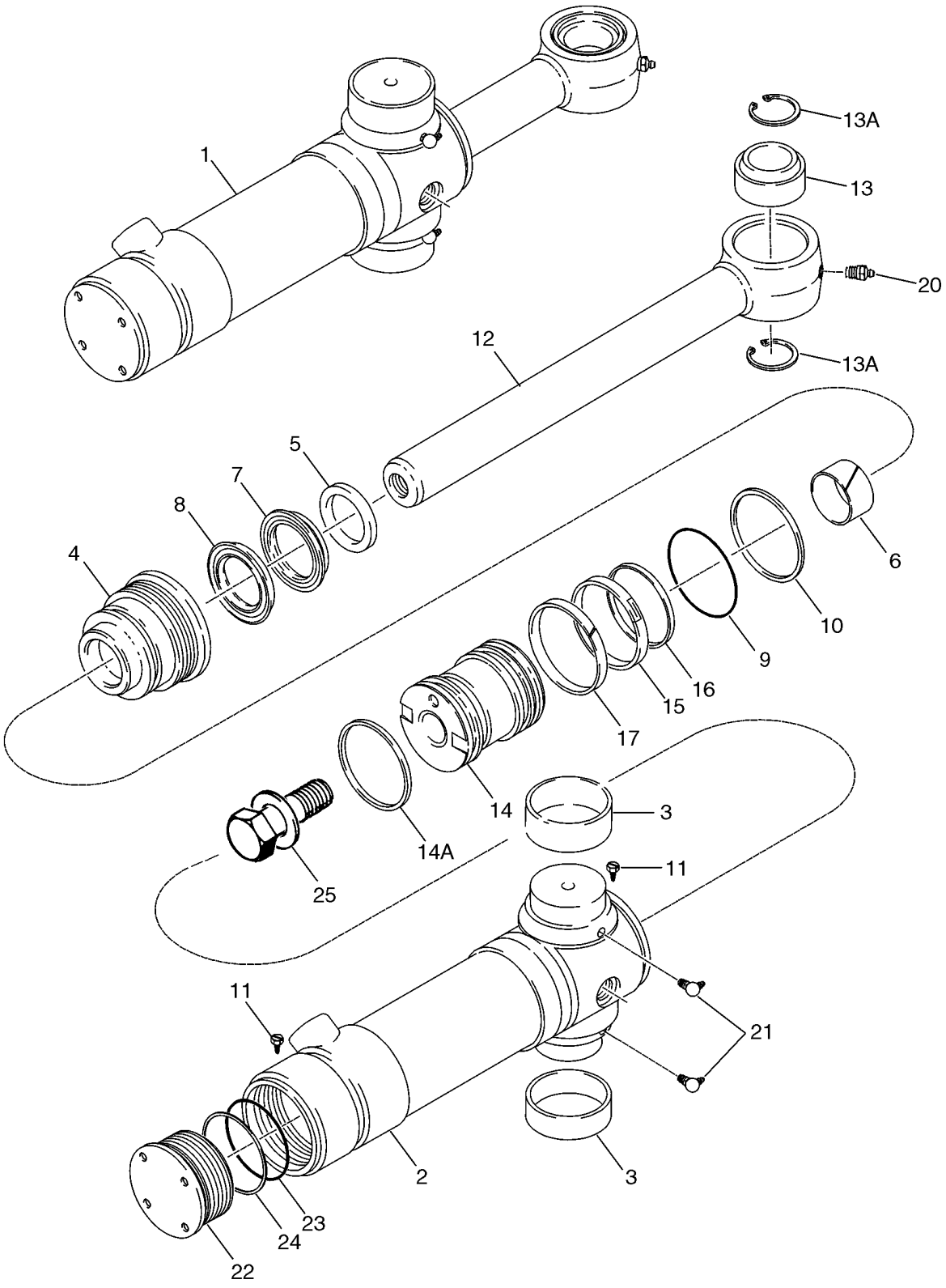

HTTP://WWW.MINNPARBACKHOEPARTS.COM



CONJUNTO DE CILINDRO - DE LA RETROEXCAVADORA

| REF | FN | PART NUMBER | YR/SN | QTY | DESCRIPTION |
|---|---|---|---|---|---|
| 24 | | G109299 | | 1 | ANILLO Backup |
| 25 | | 86982439 | | 1 | PERNO ESPECIAL 1 x 4,0; Incl. Washer |

HTTP://WWW.MINNPARBACKHOEPARTS.COM



CONJUNTO DE CILINDRO - AGUILON DE LA RETROEXCAVADORA

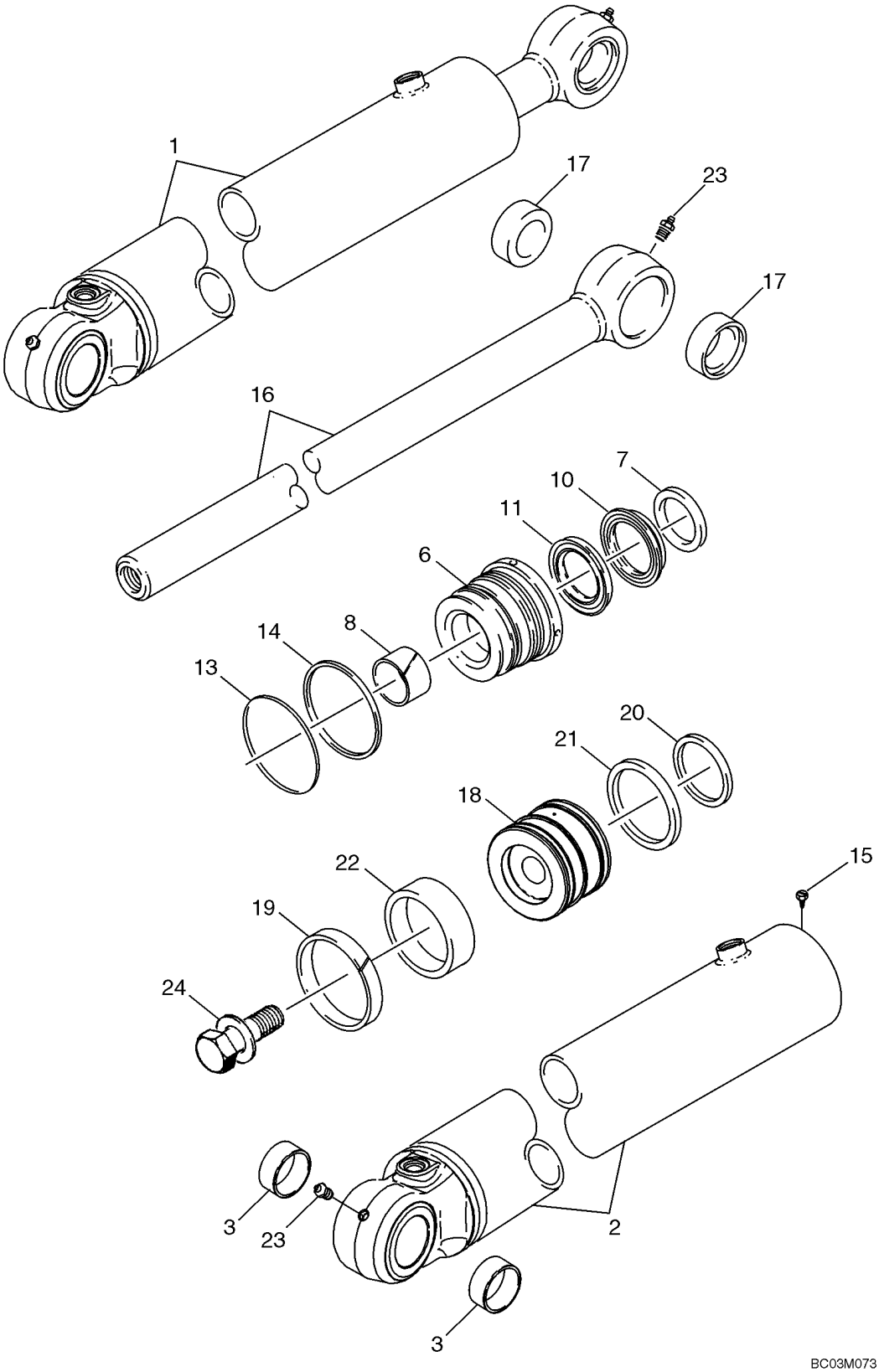

HTTP://WWW.MINNPARBACKHOEPARTS.COM



CONJUNTO DE CILINDRO - AGUILON DE LA RETROEXCAVADORA

| REF | FN | PART NUMBER | YR/SN | QTY | DESCRIPTION |
|---|---|---|---|---|---|
| 1 | | 189653A2 | | 1 | CILINDRO (CONJUNTO) 114 ID x 982 mm strk, Incl. Ref 2 - 24 |
| 2 | | 397080A1 | | 1 | CILINDRO DE GATO TUBE, Incl. Ref 3 |
| 3 | | D149079 | | 2 | CASQUILLO 50 x 34 mm lg |
| 6 | | 127862A2 | | 1 | PALIER GLAND |
| | | 182218A1 | | 1 | JUEGO JUNTAS Incl. Ref 7 - 14, 19 - 22 |
| 7 | | D95145 | | 1 | LIMPIADOR |
| 8 | | G102426 | | 1 | CASQUILLO |
| | | 1542877C1 | | 1 | JEUGO Rod and Buffer Seal; Incl. Ref 10, 11; Not Serviced Separately; Order 182218A1 Seal Kit |
| 10 | | NSS | | 1 | NO SE REPARA SEPARADAM. Rod Seal; Order 182218A1 Seal Kit |
| 11 | | NSS | | 1 | NO SE REPARA SEPARADAM. Buffer Seal; Order 182218A1 Seal Kit |
| 13 | | 238-5243 | | 1 | JUNTA HERMETICA 4-1/8 ID x 1/8 |
| 14 | | G109300 | | 1 | ANILLO Backup |
| 15 | | 276-2446 | | 1 | TORNILLO Self-Tapping, No. 8 x 3/8 |
| 16 | | 182109A1 | | 1 | VASTAGO CILINDRO 57 mm (2-1/4 in) dia, Incl. Ref 17 |
| 17 | | D149079 | | 2 | CASQUILLO 50 x 34 mm lg |
| 18 | | 189657A2 | | 1 | PISTON CILINDRO |
| 19 | | 182116A1 | | 1 | CASQUILLO Cast Iron |
| 20 | | G101995 | | 1 | JUNTA HERMETICA SEAL |
| 21 | | G101994 | | 2 | ANILLO DE CIERRE |
| 22 | | G101996 | | 1 | JUNTA HERMETICA |
| 23 | | 219-1 | | 2 | ENGRASADOR 1/8 PT x 21/32 |
| 24 | | 86982442 | | 1 | PERNO ESPECIAL 1,25 x 3,25; Incl. Washer |

HTTP://WWW.MINNPARBACKHOEPARTS.COM

| 08-64 | | p1 | 01/04 |
|---|---|---|---|

CONJUNTO DE CILINDRO - BRAZO DE LA RETROEXCAVADORA

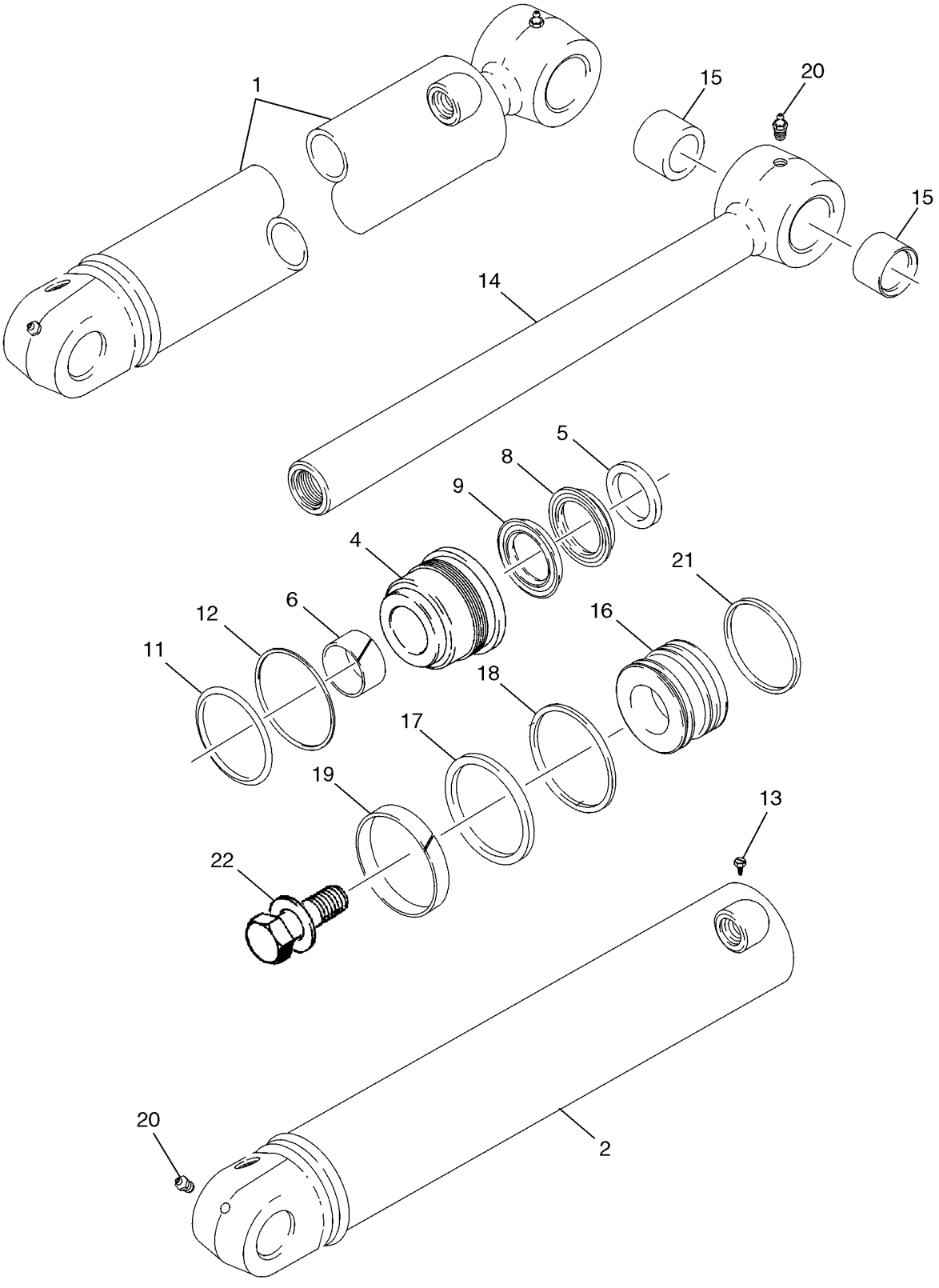

HTTP://WWW.MINNPARBACKHOEPARTS.COM



CONJUNTO DE CILINDRO - BRAZO DE LA RETROEXCAVADORA

| REF | FN | PART NUMBER | YR/SN | QTY | DESCRIPTION |
|---|---|---|---|---|---|
| 1 | | 233114A2 | | 1 | CILINDRO (CONJUNTO) 108 ID x 686 mm strk, Incl. Ref 2 - 22 |
| 2 | | 297952A1 | | 1 | CUELLO DE CARGA TUBE |
| 4 | | 234141A2 | | 1 | PALIER GLAND |
| | | 234844A1 | | 1 | EMPAQUE DE JUNTAS Incl. Ref 5 - 12, 17 - 19, 21 |
| 5 | | D95145 | | 1 | LIMPIADOR |
| 6 | | G102426 | | 1 | CASQUILLO |
| | | 1542877C1 | | 1 | JEUGO Rod and Buffer Seal; Incl. Ref 8, 9; Not Serviced Separately; Order 234844A1 Seal Kit |
| 8 | | NSS | | 1 | NO SE REPARA SEPARADAM. Rod Seal; Order 234844A1 Seal Kit |
| 9 | | NSS | | 1 | NO SE REPARA SEPARADAM. Buffer Seal; Order 234844A1 Seal Kit |
| 11 | | 238-5241 | | 1 | JUNTA HERMETICA 3-7/8 ID x 1/8 |
| 12 | | G32176 | | 1 | ANILLO Backup |
| 13 | | 276-2446 | | 1 | TORNILLO Self-Tapping, No. 8 x 3/8 |
| 14 | | 175778A1 | | 1 | VASTAGO CILINDRO 57 mm (2-1/4 in) dia, Incl. Ref 15 |
| 15 | | D149079 | | 2 | CASQUILLO |
| 16 | | 233110A2 | | 1 | EMBOLO |
| 17 | | G110531 | | 1 | ANILLO DE CIERRE |
| 18 | | G110529 | | 1 | ANILLO |
| 19 | | G110530 | | 1 | ANILLO |
| 20 | | 219-1 | | 2 | ENGRASADOR 1/8 PT x 21/32 |
| 21 | | 233104A1 | | 1 | ANILLO Cast Iron |
| 22 | | 86982443 | | 1 | PERNO ESPECIAL 1-3/8 x 3,5; Incl. Washer |

HTTP://WWW.MINNPARBACKHOEPARTS.COM

| 08-65 | | p1 | 01/04 |
|---|---|---|---|

CONJUNTO DE CILINDRO - CUCHARON DE LA RETROEXCAVADORA

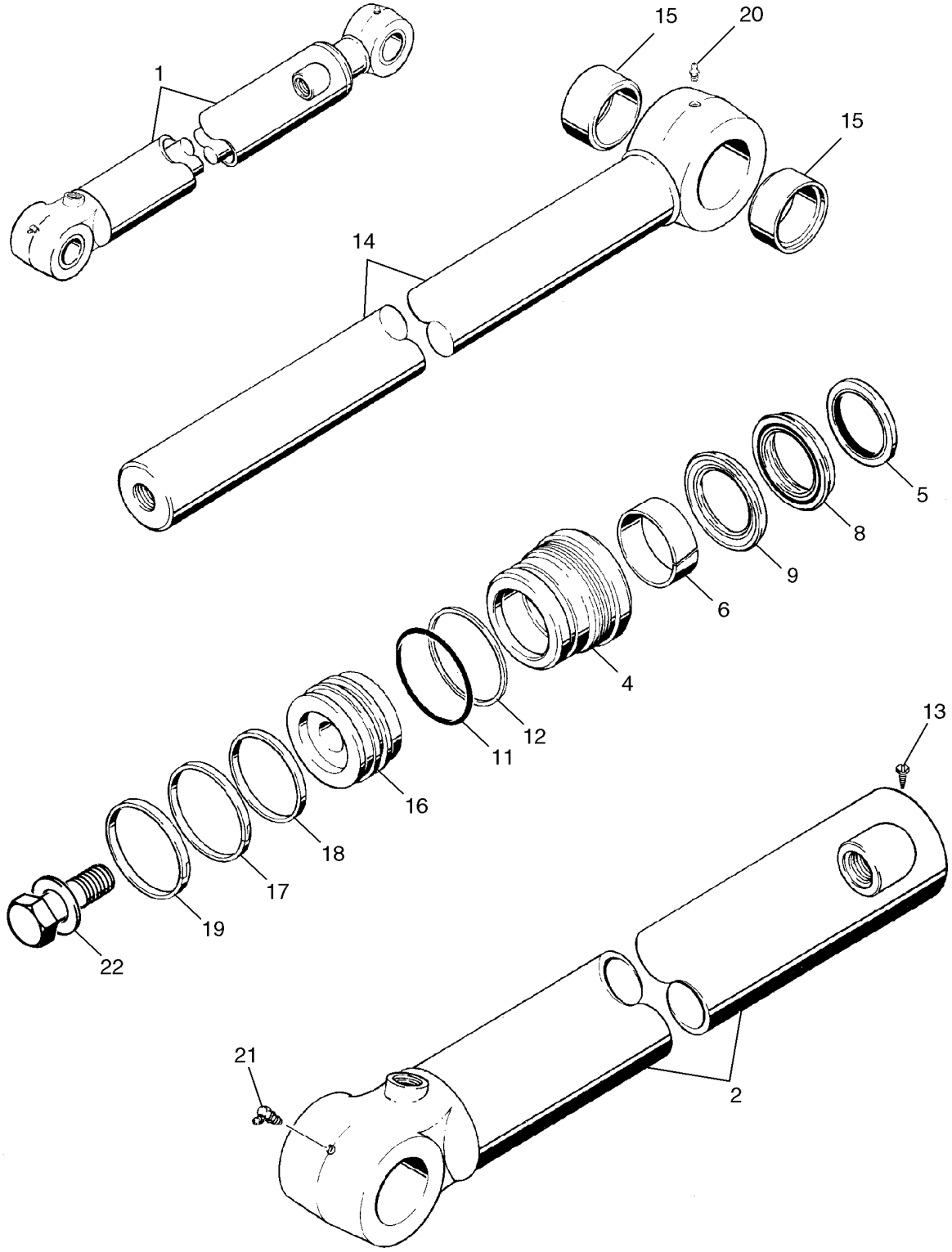

HTTP://WWW.MINNPARBACKHOEPARTS.COM



CONJUNTO DE CILINDRO - CUCHARON DE LA RETROEXCAVADORA

| REF | FN | PART NUMBER | YR/SN | QTY | DESCRIPTION |
|---|---|---|---|---|---|
| 1 | | 128760A1 | | 1 | CILINDRO (CONJUNTO) 83 ID x 872 mm strk, Incl. Ref 2 - 22 |
| 2 | | 128761A1 | | 1 | CILINDRO DE GATO TUBE |
| 4 | | 128770A2 | | 1 | PALIER GLAND |
| | | 131750A2 | | 1 | EMPAQUE DE JUNTAS Seal, Incl. Ref 5 - 12, 17 - 19 |
| 5 | | D95145 | | 1 | LIMPIADOR |
| 6 | | 1346476C1 | | 1 | ANILLO |
| | | 1542877C1 | | 1 | JEUGO Rod and Buffer Seal; Incl. Ref 8, 9; Not Serviced Separately; Order 131750A2 Seal Kit |
| 8 | | NSS | | 1 | NO SE REPARA SEPARADAM. Rod Seal; Order 131750A2 Seal Kit |
| 9 | | NSS | | 1 | NO SE REPARA SEPARADAM. Buffer Seal; Order 131750A2 Seal Kit |
| 11 | | 238-5233 | | 1 | JUNTA HERMETICA 2-7/8 ID x 1/8 in |
| 12 | | G32122 | | 1 | ANILLO Backup |
| 13 | | 276-2446 | | 1 | TORNILLO Self-Tapping, No. 8 x 3/8 |
| 14 | | 198033A1 | | 1 | VASTAGO CILINDRO 57 mm (2-1/4 in) dia, Incl. Ref 15 |
| 15 | | D140029 | | 2 | CASQUILLO |
| 16 | | 128772A1 | | 1 | EMBOLO |
| 17 | | G102287 | | 1 | ANILLO DE CIERRE |
| 18 | | S109444 | | 1 | ANILLO |
| 19 | | S109445 | | 1 | ANILLO |
| 20 | | 219-1 | | 1 | ENGRASADOR 1/8 PT x 21/32 |
| 21 | | 219-36 | | 1 | ENGRASADOR 45 deg, 1/8 PT x 7/8 |
| 22 | | 86982441 | | 1 | PERNO ESPECIAL 1,25 x 3,00; Incl. Washer |

HTTP://WWW.MINNPARBACKHOEPARTS.COM

| 08-66 | | p1 | 01/04 |
|---|---|---|---|

CONJUNTO DE CILINDRO - PALA EXTENSIBLE DE LA RETROEXCAVADORA

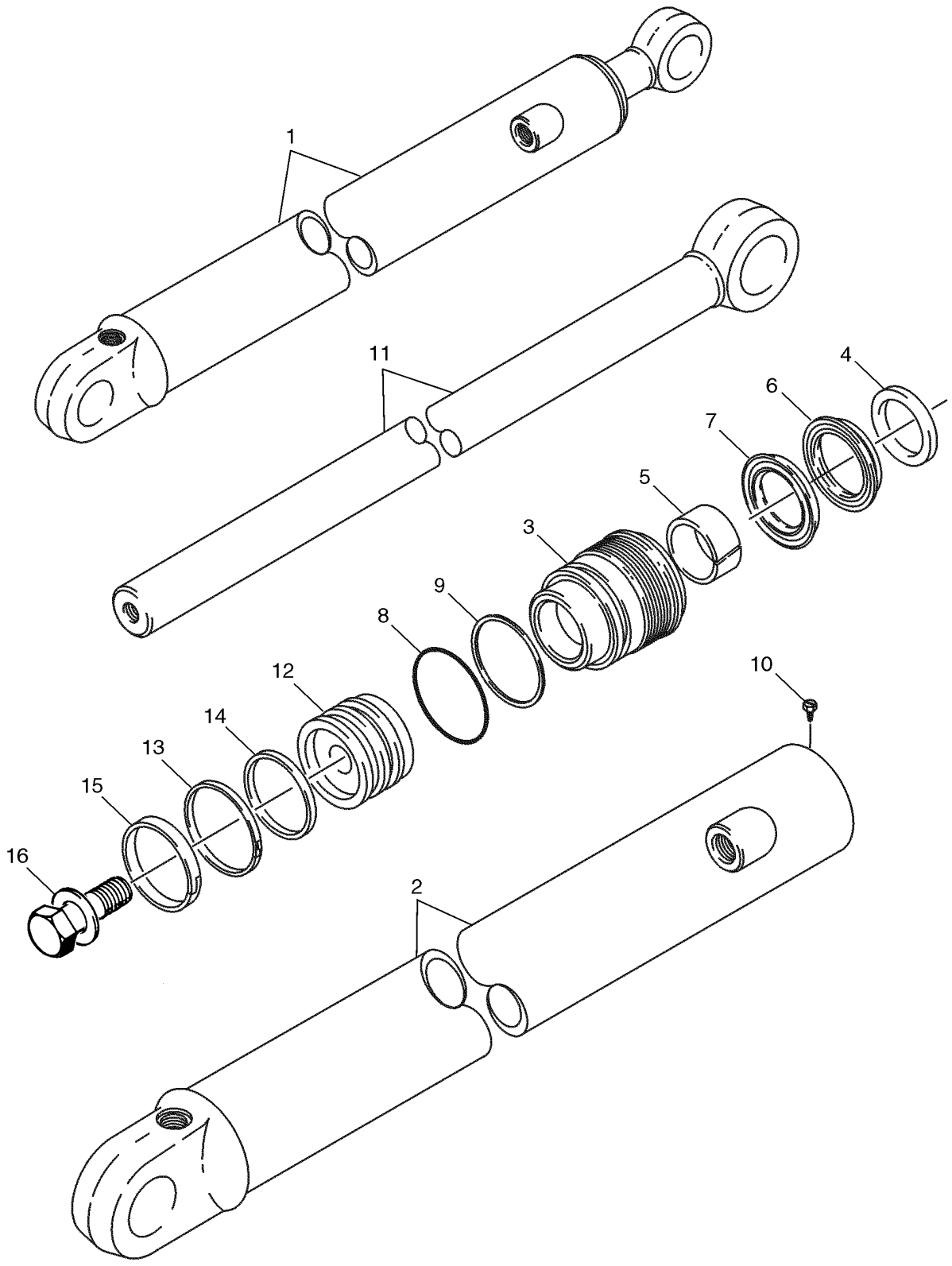

HTTP://WWW.MINNPARBACKHOEPARTS.COM



CONJUNTO DE CILINDRO - PALA EXTENSIBLE DE LA RETROEXCAVADORA

| REF | FN | PART NUMBER | YR/SN | QTY | DESCRIPTION |
|---|---|---|---|---|---|
| 1 | | 1340969C2 | | 1 | CILINDRO (CONJUNTO) 76 ID x 1068 mm strk; Incl. Ref 2 - 16 |
| 2 | | 1340970C1 | | 1 | CILINDRO DE GATO TUBE |
| 3 | | 297281A1 | | 1 | PALIER GLAND |
| | | 1543267C1 | | 1 | EMPAQUE DE JUNTAS Seal; Incl. Ref 4 - 9, 13 - 15 |
| 4 | | D95143 | | 1 | ANILLO DE CIERRE WIPER |
| 5 | | G102425 | | 1 | CASQUILLO |
| | | 1542875C1 | | 1 | JUEGO DE PIEZAS Rod and Buffer Seal; Incl. Ref 6, 7; Not Serviced Separately; Order 1543267C1 Seal Kit |
| 6 | | NSS | | 1 | NO SE REPARA SEPARADAM. Rod Seal; Order 1543267C1 Seal Kit |
| 7 | | NSS | | 1 | NO SE REPARA SEPARADAM. Buffer Seal; Order 1543267C1 Seal Kit |
| 8 | | 238-5231 | | 1 | JUNTA HERMETICA 2-5/8 ID x 1/8 |
| 9 | | G109298 | | 1 | ANILLO Backup |
| 10 | | 276-2446 | | 1 | TORNILLO Self-Tapping, No. 8 x 3/8 |
| 11 | | 1980296C1 | | 1 | VASTAGO CILINDRO 44 mm (1-3/4 in) dia |
| 12 | | G107277 | | 1 | EMBOLO |
| 13 | | G102288 | | 1 | SELLO (CONJUNTO) |
| 14 | | G100444 | | 1 | ANILLO DE CIERRE |
| 15 | | G100449 | | 1 | ANILLO DE DESGASTE |
| 16 | | 86982435 | | 1 | PERNO ESPECIAL 3/4 x 2,5 in, Incl. Washer |

HTTP://WWW.MINNPARBACKHOEPARTS.COM

HTTP://WWW.MINNPARBACKHOEPARTS.COM

# SECTION INDEX


| | |
|---|---|
| 09-01 | CONTROLES - ELEVACIÓN DE LA CARGADORA Y CUCHARÓN |
| 09-02 | CONTROLES - ALMEJA DE LA CARGADORA |
| 09-03 | CONTROLES - CARGADORA AUTO-NIVELADORA |
| 09-04 | MARCO - ELEVADOR DE LA CARGADORA |
| 09-05 | MARCO - VARILLAJE DE LA CARGADORA |
| 09-06 | CUCHARÓN, BORDE ANCHO DE LA CARGADORA (82 IN) |
| 09-07 | CUCHARÓN, BORDE ANCHO DE LA CARGADORA (93 IN) |
| 09-08 | CUCHARÓN, ALMEJA DE LA CARGADORA |
| 09-09 | PROTECTOR - VÁLVULA, CARGADORA |
| 09-10 | ACOPLADOR RÁPIDO, HERRAMIENTA |
| 09-11 | CUBIERTAS - TORRE DE CONTROL DE LA RETROEXCAVADORA, SIN DE CONTROL PILOTO |
| 09-12 | APOYO DE LA TORRE DE CONTROL DE LA RETROEXCAVADORA Y JUNTAS, SIN DE CONTROL PILOTO |
| 09-13 | TORRE DE CONTROL DE LA RETROEXCAVADORA SOPORTE, CON DE CONTROL PILOTO |
| 09-14 | TORRE DE CONTROL DE LA RETROEXCAVADORA SOPORTE DE JUNTA, CON DE CONTROL PILOTO |
| 09-15 | TORRE DE CONTROL DE LA RETROEXCAVADORA PALANCA (TRABA DEL AGUILÓN), CON DE CONTROL PILOTO |
| 09-16 | CONTROLES - RETROEXCAVADORA, CON PEDAL DE OSCILACIÓN (MODELOS SIN PALA EXTENDIBLE) |
| 09-17 | CONTROLES - RETROEXCAVADORA, CON PEDAL DE OSCILACIÓN (MODELOS CON PALA EXTENDIBLE) |
| 09-18 | CONTROLES - RETROEXCAVADORA, CON OSCILACIÓN MANUAL (MODELOS SIN PALA EXTENDIBLE) |
| 09-19 | CONTROLES - RETROEXCAVADORA, CON OSCILACIÓN MANUAL (MODELOS SIN PALA EXTENDIBLE) |
| 09-20 | CONTROLES - RETROEXCAVADORA, CON OSCILACIÓN MANUAL (MODELOS CON PALA EXTENDIBLE) |
| 09-21 | CONTROLES - SISTEMA HIDRÁULICO AUXILIAR DE LA RETROEXCAVADORA, SIN DE CONTROL PILOTO |
| 09-22 | RETROEXCAVADORA - ESTABILIZADORES, PLACAS Y ALMOHADILLAS |
| 09-23 | RETROEXCAVADORA - TORRE DE OSCILACIÓN Y CILINDROS DE OSCILACIÓN |
| 09-24 | RETROEXCAVADORA - AGUILÓN Y TORRE DE OSCILACIÓN |
| 09-25 | TRABA DEL AGUILÓN (SIN DE CONTROL PILOTO) |
| 09-25A | TRABA DEL AGUILÓN (CON DE CONTROL PILOTO) |
| 09-26 | RETROEXCAVADORA - PALA Y CUCHARÓN |
| 09-27 | RETROEXCAVADORA - PALA, EXTENSIBLE |
| 09-28 | CUCHARÓN, RETROEXCAVADORA UNIVERSAL (305 MM (12 INCH) WIDE) |
| 09-29 | CUCHARÓN, RETROEXCAVADORA UNIVERSAL (406 MM (16 INCH) WIDE) |
| 09-30 | CUCHARÓN, RETROEXCAVADORA UNIVERSAL (457 MM (18 INCH) WIDE) |
| 09-31 | CUCHARÓN, RETROEXCAVADORA (457 MM (18 INCH) WIDE) |
| 09-32 | CUCHARÓN, RETROEXCAVADORA UNIVERSAL (610 MM (24 INCH) / 762 MM (30 INCH) WIDE) |
| 09-33 | CUCHARÓN, RETROEXCAVADORA (610 MM (24 INCH) WIDE) |
| 09-34 | CUCHARÓN, RETROEXCAVADORA UNIVERSAL (914 MM (36 INCH) WIDE) |
| 09-35 | CUCHARÓN, RETROEXCAVADORA UNIVERSAL (610 MM (24 INCH) WIDE) |
| 09-36 | CONTRAPESO, DELANTERO |
| 09-37 | CHASIS / SOPORTES, RECEPTÁCULO - PANTALLA, ENTRADA DE AIRE |
| 09-38 | DEPÓSITO, ACEITE - CAJA, BATERÍA Y HERRAMIENTA |

HTTP://WWW.MINNPARBACKHOEPARTS.COM

# SECTION INDEX


| | |
|---|---|
| 09-39 | REVESTIMIENTO DEL RADIADOR |
| 09-40 | CAPO - PANELES, LATERALES |
| 09-41 | CAPO - PARRILLA |
| 09-42 | PLACAS, SUELO - ALFOMBRILLAS |
| 09-43 | CUBIERTA DEL GUARDABARROS, LADO IZQUIERDO - PANEL, CIERRE TRASERO (BANDEJA DE ALMACENAMIENTO CON SUJ |
| 09-44 | EXTENSIONES DEL GUARDABARROS |
| 09-45 | GUARDABARROS |
| 09-46 | ASIENTO - SOPORTE |
| 09-47 | CONJUNTO DEL ASIENTO, ESTÁNDAR |
| 09-48 | SOPORTE DEL ASIENTO Y PEDESTAL, ESTÁNDAR |
| 09-49 | CONJUNTO DEL ASIENTO, SUSPENSION MECANICA |
| 09-50 | PEDESTAL DEL ASIENTO Y SUSPENSIÓN, SUSPENSIÓN MECÁNICA |
| 09-51 | CONJUNTO DEL ASIENTO, SUSPENSION DE AIRE |
| 09-52 | PEDESTAL DEL ASIENTO Y SUSPENSIÓN, SUSPENSIÓN DE AIRE |
| 09-53 | CABINA - CRISTAL, ESPEJO Y MANTENER ABIERTO |
| 09-54 | CABINA - CHASIS Y CUBIERTAS |
| 09-55 | CABINA - PUERTAS |
| 09-56 | CABINA - MONTAJE DE LA PUERTA |
| 09-57 | CABINA - VENTANILLA, DERECHA, PARA MARCOS DE CABINA DE PUERTA ÚNICA |
| 09-58 | CABINA - VENTANA, TRASERA |
| 09-59 | CABINA - ARANDELA, PARABRISAS |
| 09-60 | CABINA - LIMPIA PARABRISAS |
| 09-61 | REVESTIMIENTO DE LA CABINA - FILTRO, REJILLAS, LÁMPARA DEL TECHO |
| 09-62 | CABINA - FILTRO, AIRE |
| 09-63 | CABINA - ALOJAMIENTO DEL SOPLADOR, CONDUCTOS DE VENTILACIÓN, TUBOS DE DRENADO |
| 09-64 | CABINA - CALENTADOR |
| 09-65 | CABINA - TUBOS DE AIRE ACONDICIONADO, NÚCLEO DEL EVAPORADOR |
| 09-66 | CABINA - AIRE ACONDICIONADOR, CONDENSADOR, RECIBIDOR-SECADOR |
| 09-67 | CABINA - COMPRESOR DEL AIRE ACONDICIONADO |
| 09-68 | TECHO Y ROPS - CHASIS, CUBIERTAS, ESPEJOS, VISOR |
| 09-69 | TECHO Y ROPS - VIDRIO |
| 09-70 | TECHO Y ROPS - LIMPIAPARABRISAS, DELANTERO Y LAVAPARABRISAS |
| 09-71 | ESPEJO, VISTA TRASERA - SOPORTE, MODELLE MIT KABINE |
| 09-72 | EMBLEMA DE VEHICULO LENTO |
| 09-73 | CALCOMANIAS |
| 09-74 | CALCOMANIAS |
| 09-75 | CALCOMANIAS |
| 09-76 | CALCOMANIAS - INGLES |
| 09-77 | CALCOMANIAS - CASTELLANO PARA LATINOAMERICA |
| 09-78 | CALCOMANIAS - FRANCES CANADIENSE |
| 09-79 | CALCOMANIAS - INGLES |
| 09-80 | CALCOMANIAS - CASTELLANO PARA LATINOAMERICA |
| 09-81 | CALCOMANIAS - FRANCES CANADIENSE |

HTTP://WWW.MINNPARBACKHOEPARTS.COM

HTTP://WWW.MINNPARBACKHOEPARTS.COM

| 09-01 | | p1 | 01/04 |
|---|---|---|---|

CONTROLES - ELEVACIÓN DE LA CARGADORA Y CUCHARÓN

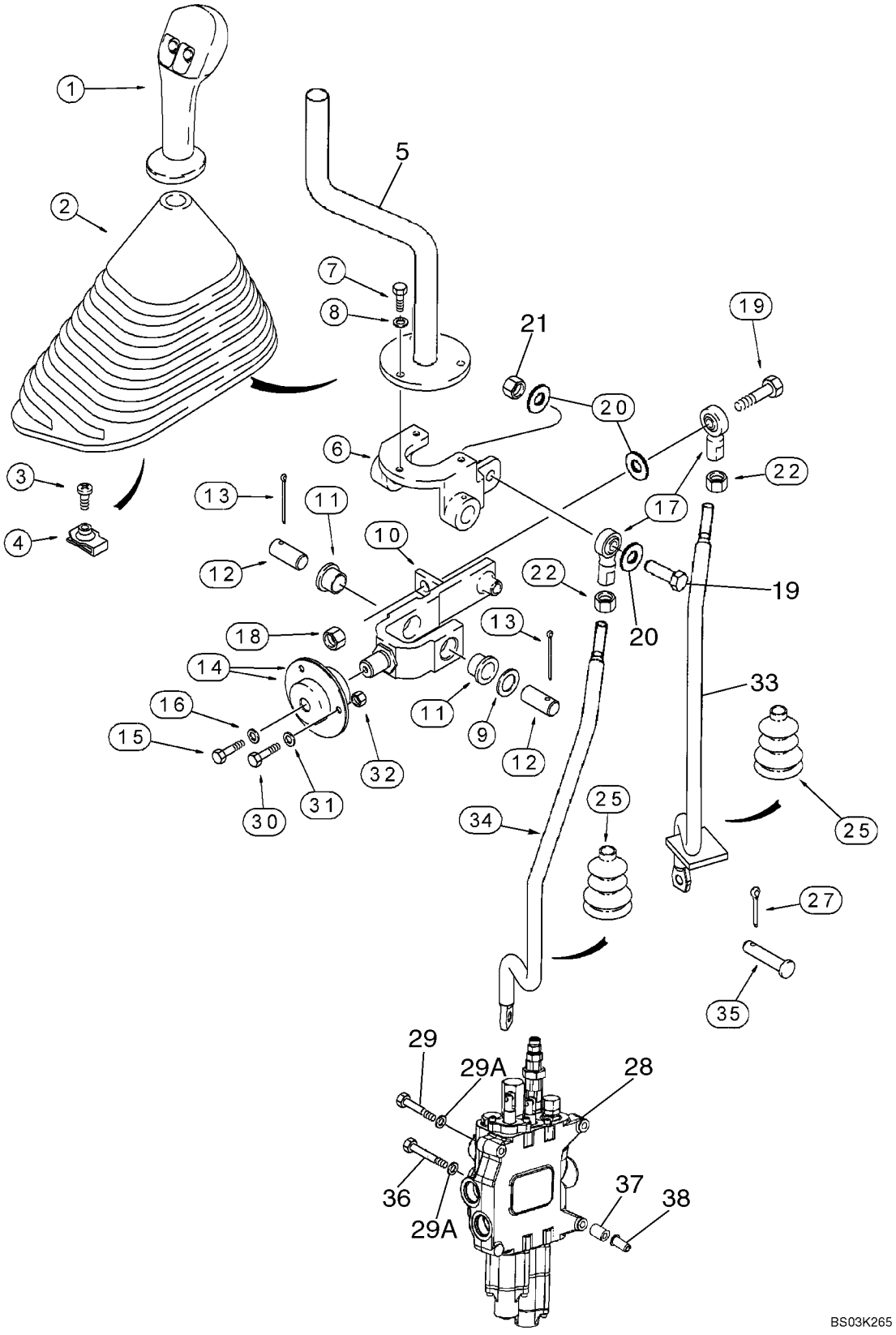

HTTP://WWW.MINNPARBACKHOEPARTS.COM



CONTROLES - ELEVACIÓN DE LA CARGADORA Y CUCHARÓN

| REF | FN | PART NUMBER | YR/SN | QTY | DESCRIPTION |
|---|---|---|---|---|---|
| 1 | | 87412687 | | 1 | MANECILLA Loader Control Lever; Two Button, Declutch and Differential Lock Switches |
| | | 256347A1 | | 1 | CONECTOR |
| | | 258616A1 | | 1 | CERRADURA |
| | | 298176A1 | | 1 | TAPÓN |
| | | 345-133 | | X | PEGA Superbonder 409, 1 ml |
| 2 | | 133615A1 | | 1 | FUELLE |
| 3 | | 140-107 | | 1 | TORNILLO No. 10 x 3/4 |
| 4 | | 131-861 | | 1 | TUERCA No. 10 |
| 5 | | 132661A1 | | 1 | PALANCA |
| 6 | | 195615A1 | | 1 | APOYADERO |
| 7 | | 614-6016 | | 3 | TORNILLO M6 x 16 |
| 8 | | 495-11028 | | 3 | ARANDELA 9/32 x 5/8 x 1/16 |
| 9 | | 495-81184 | | 1 | ARANDELA |
| 10 | | 176311A1 | | 1 | ARTICULACION Incl. Ref 11 |
| 11 | | 108088A1 | | 2 | CASQUILLO |
| 12 | | 102761A1 | | 2 | BULON/PIN, LARGO |
| 13 | | 432-828 | | 2 | PASADOR ABIERTO 1/8 x 1-3/4 |
| 14 | | 112380A1 | | 2 | COJINETE Incl. Ref 14A |
| 14A | | 465004R91 | | 1 | COJINETE Not Illustrated |
| 15 | | 614-6016 | | 1 | TORNILLO M6 x 16 |
| 16 | | 396-41028 | | 1 | ARANDELA 9/32 x 7/8 x 3/32 |
| 17 | | D136773 | | 2 | BOLA 3/8 NF |
| 18 | | 231-1446 | | 1 | CONTRA TUERCA 3/8 |
| 19 | | 413-628 | | 2 | TORNILLO 3/8 x 1-3/4 |
| 20 | | 496-21041 | | 3 | ARANDELA 13/32 x 13/16 x 3/32 |
| 21 | | 425-106 | | 1 | TUERCA 3/8 |
| 22 | | 425-116 | | 2 | TUERCA 3/8 NF |
| 25 | | 132931A1 | | 2 | FUELLE Cab Models |
| | | 189109A1 | | 2 | RESORTE Boot Retainer; Cab Models |
| 27 | | 432-612 | | 2 | PASADOR ABIERTO 3/32 x 3/4 |
| 28 | | REF | | 1 | MANUAL LOADER CONTROL VALVE; Two Spool, See Figure 08-30 for Two Spool Valve Options |
| 29 | | 814-10090 | | 2 | TORNILLO M10 x 90 |
| 29A | | 896-11010 | | 3 | ARANDELA 11 x 21 x 2,5 mm |
| 30 | | 614-6020 | | 3 | TORNILLO M6 x 20 |

HTTP://WWW.MINNPARBACKHOEPARTS.COM

| 09-01 | | p2 | 01/04 |
|---|---|---|---|

CONTROLES - ELEVACIÓN DE LA CARGADORA Y CUCHARÓN

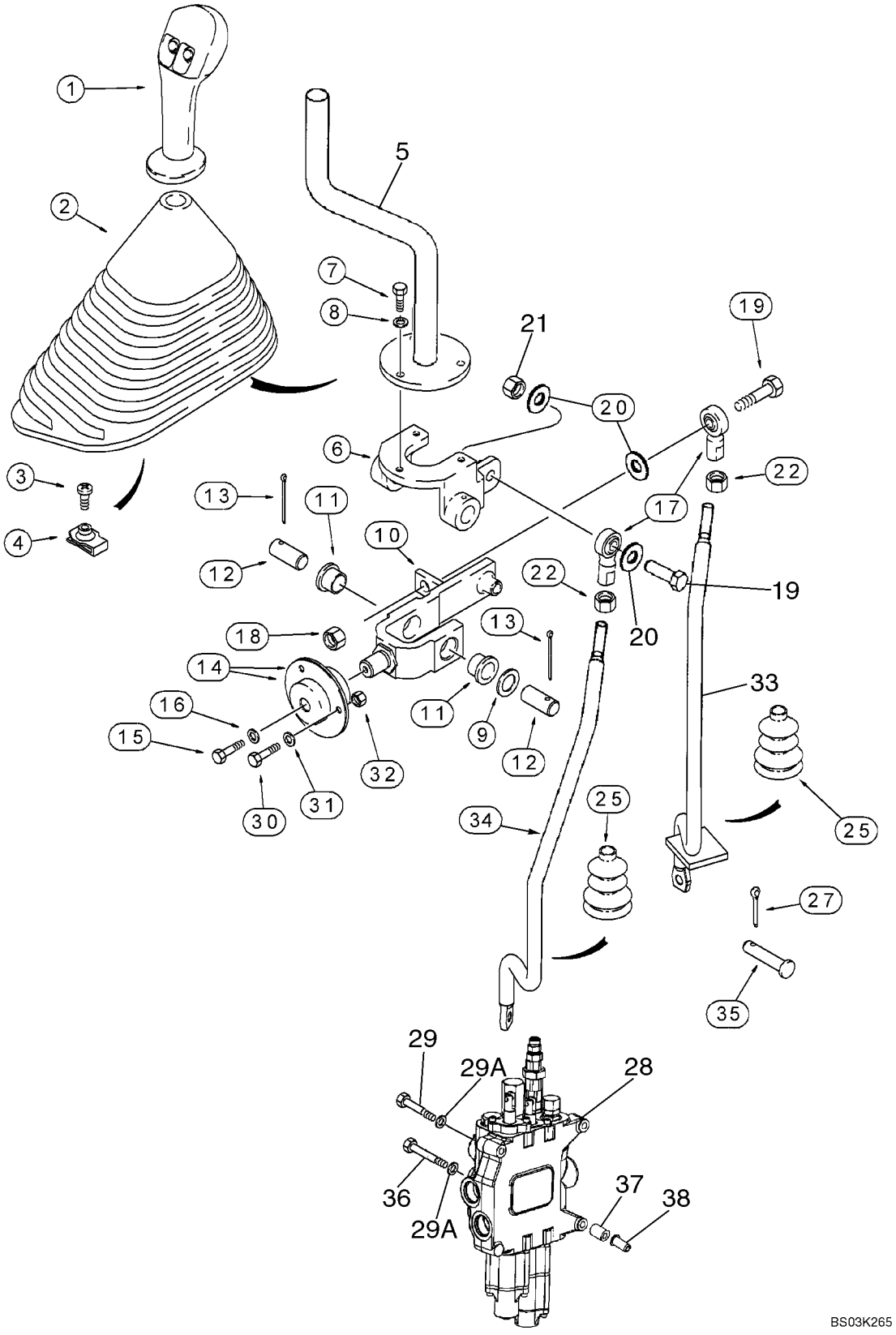

HTTP://WWW.MINNPARBACKHOEPARTS.COM



CONTROLES - ELEVACIÓN DE LA CARGADORA Y CUCHARÓN

| REF | FN | PART NUMBER | YR/SN | QTY | DESCRIPTION |
|---|---|---|---|---|---|
| 31 | | 396-41028 | | 3 | ARANDELA 9/32 x 7/8 x 3/32 |
| 32 | | 829-1406 | | 3 | TUERCA M6; 10.9 |
| 33 | | 87428151 | | 1 | VARILLA ROSCADA Bucket Control Rod |
| 34 | | 87428152 | | 1 | VARILLA ROSCADA Lift Control Rod |
| 35 | | D149287 | | 2 | BULON/PIN, LARGO |
| 36 | | 814-10110 | | 1 | TORNILLO M10 x 110 |
| 37 | | 87417599 | | 3 | SEPARADOR |
| 38 | | 87417721 | | 3 | ROSCA POSTIZA M10 |

HTTP://WWW.MINNPARBACKHOEPARTS.COM



CONTROLES - ALMEJA DE LA CARGADORA

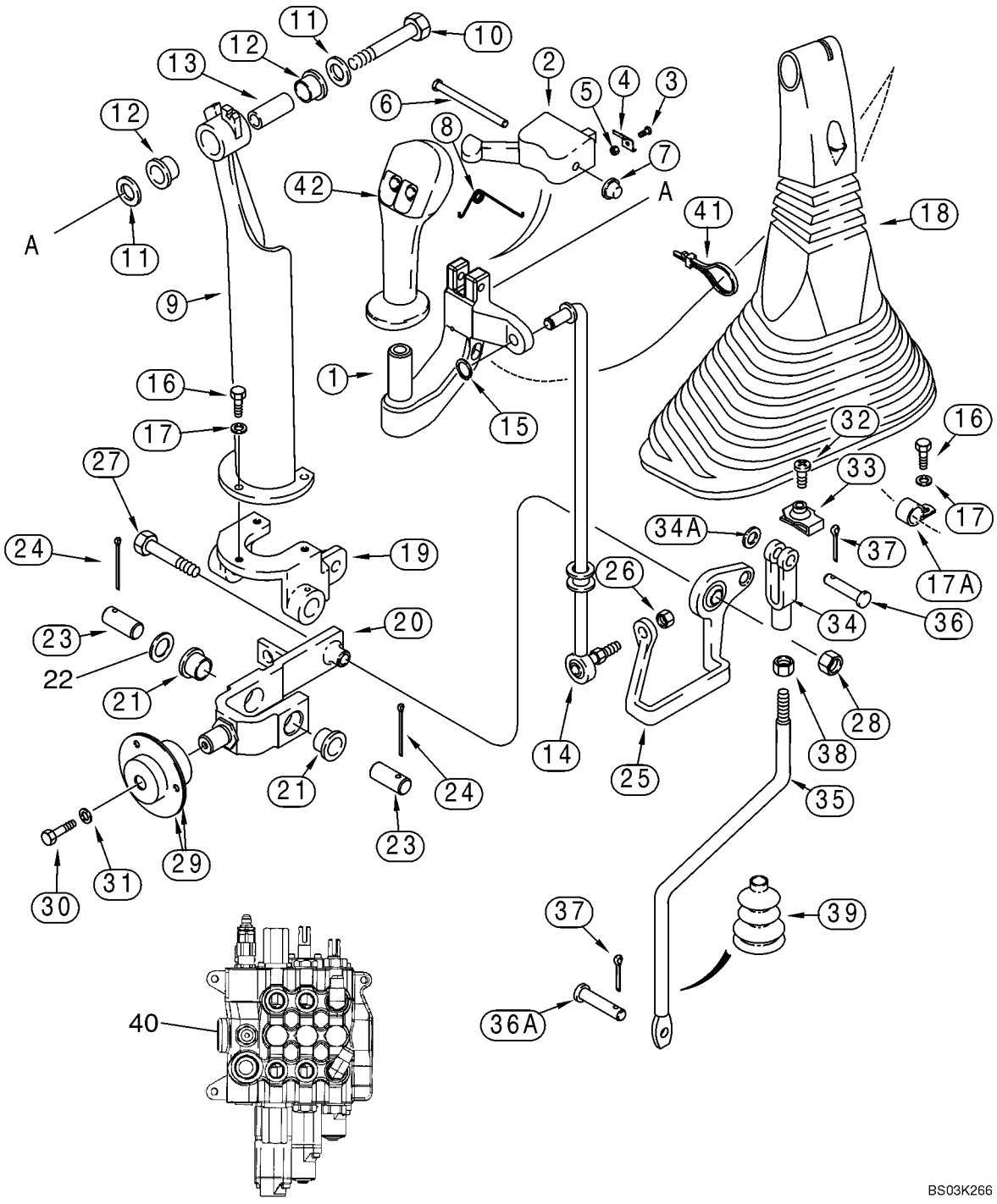

HTTP://WWW.MINNPARBACKHOEPARTS.COM



CONTROLES - ALMEJA DE LA CARGADORA

| REF | FN | PART NUMBER | YR/SN | QTY | DESCRIPTION |
|---|---|---|---|---|---|
| 1 | | 297615A1 | | 1 | MANECILLA |
| 2 | | 123815A1 | | 1 | PESTILLO |
| 3 | | 170-104 | | 2 | TORNILLO No. 5 x 3/8 |
| 4 | | 129914A1 | | 2 | RESORTE |
| 5 | | 225-14105 | | 2 | TUERCA No. 5 |
| 6 | | 439-5436 | | 1 | PASADOR 1/4 x 2-1/4 |
| 7 | | 143210A1 | | 1 | OBTURADOR CAP |
| 8 | | 124243A1 | | 1 | RESORTE |
| 9 | | 123493A1 | | 1 | APOYADERO |
| 10 | | 413-632 | | 1 | TORNILLO 3/8 x 2 |
| 11 | | 495-21044 | | 2 | ARANDELA 7/16 x 1 x 5/64 |
| 12 | | 108088A1 | | 2 | CASQUILLO |
| 13 | | 133989A1 | | 1 | BULON/PIN, LARGO SLEEVE |
| 14 | | 239306A1 | | 1 | PALANCA MANDO |
| 15 | | 103-1437 | | 1 | CLIP ELECTRICO Retaining Ring |
| 16 | | 614-6016 | | 3 | TORNILLO M6 x 16 |
| 17 | | 495-11028 | | 3 | ARANDELA 9/32 x 5/8 x 1/16 |
| 17A | | 515-2295 | | 1 | COLLAR 3/8 ID |
| 18 | | 133617A1 | | 1 | FUELLE |
| 19 | | 195615A1 | | 1 | APOYADERO |
| 20 | | 176311A1 | | 1 | ARTICULACION Incl. Ref 21 |
| 21 | | 108088A1 | | 2 | CASQUILLO |
| 22 | | 495-81184 | | 1 | ARANDELA |
| 23 | | 102761A1 | | 2 | BULON/PIN, LARGO |
| 24 | | 432-828 | | 2 | PASADOR ABIERTO 1/8 x 1-3/4 |
| 25 | | 112382A1 | | 1 | ARTICULACION Bellcrank |
| 26 | | 425-116 | | 1 | TUERCA 3/8 NF |
| 27 | | 413-632 | | 1 | TORNILLO 3/8 x 2 |
| 28 | | 231-1446 | | 1 | CONTRA TUERCA 3/8 |
| 29 | | 112380A1 | | 2 | COJINETE Includes (1) 465004R91 Internal Bearing |
| | | 465004R91 | | 1 | COJINETE |
| 30 | | 614-6016 | | 1 | TORNILLO M6 x 16 |
| 31 | | 396-41028 | | 1 | ARANDELA 9/32 x 7/8 x 3/32 |
| 32 | | 140-107 | | 1 | TORNILLO No. 10 x 3/4 |
| 33 | | 131-121 | | 1 | TUERCA ESPECIAL No. 10 |
| 34 | | 213-126 | | 1 | HORQUILLA PEQUENA 3/8 NF |

HTTP://WWW.MINNPARBACKHOEPARTS.COM



CONTROLES - ALMEJA DE LA CARGADORA

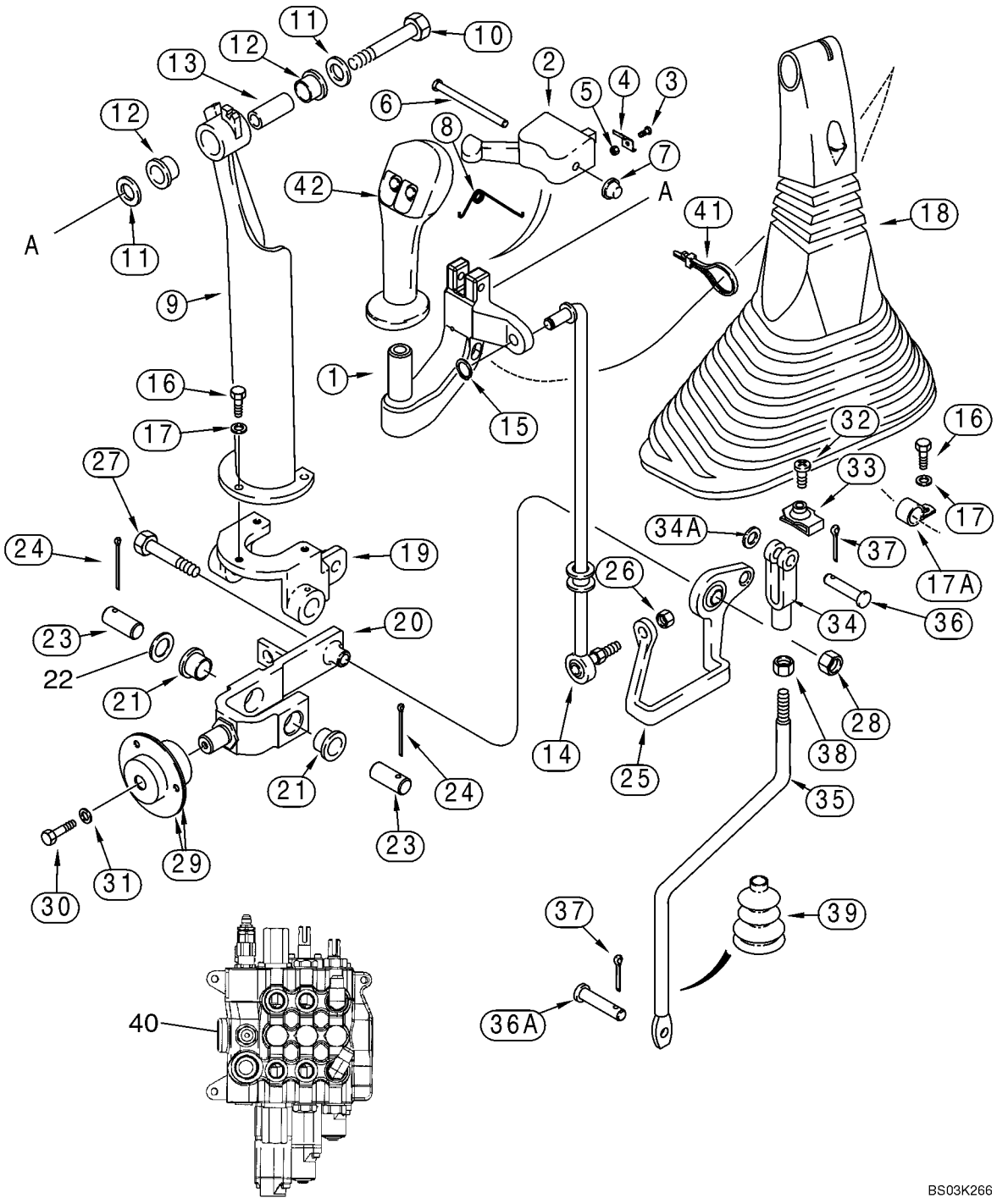

HTTP://WWW.MINNPARBACKHOEPARTS.COM



CONTROLES - ALMEJA DE LA CARGADORA

| REF | FN | PART NUMBER | YR/SN | QTY | DESCRIPTION |
|---|---|---|---|---|---|
| 34A | | 495-11041 | | 1 | ARANDELA 13/32 x 13/16 x 1/16 |
| 35 | | 87428153 | | 1 | VARILLA ROSCADA Clam Control Rod |
| 36 | | D149288 | | 1 | BULON/PIN, LARGO |
| 36A | | D149287 | | 1 | BULON/PIN, LARGO |
| 37 | | 432-612 | | 2 | PASADOR ABIERTO 3/32 x 3/4 |
| 38 | | 425-116 | | 1 | TUERCA 3/8 NF |
| 39 | | 132873A1 | | 1 | FUELLE |
| | | 189109A1 | | 1 | RESORTE Boot Retainer |
| 40 | | REF | | 1 | MANUAL LOADER CONTROL VALVE; Three Spool, See Figure 08-31 for Three Spool Valve Options |
| 41 | | L18337 | | 1 | BANDA 15 in |
| 42 | | 87412687 | | 1 | MANECILLA Loader Control Lever; Two Button, Declutch and Differential Lock Switches |
| | | 256347A1 | | 1 | CONECTOR |
| | | 258616A1 | | 1 | CERRADURA |
| | | 298176A1 | | 1 | TAPÓN |
| | | 345-133 | | X | PEGA Superbonder 409, 1 ml; For Attaching Ref 1 to Ref 42 |

HTTP://WWW.MINNPARBACKHOEPARTS.COM

| 09-03 | | p1 | 12/03 |
|---|---|---|---|

CONTROLES - CARGADORA AUTO-NIVELADORA

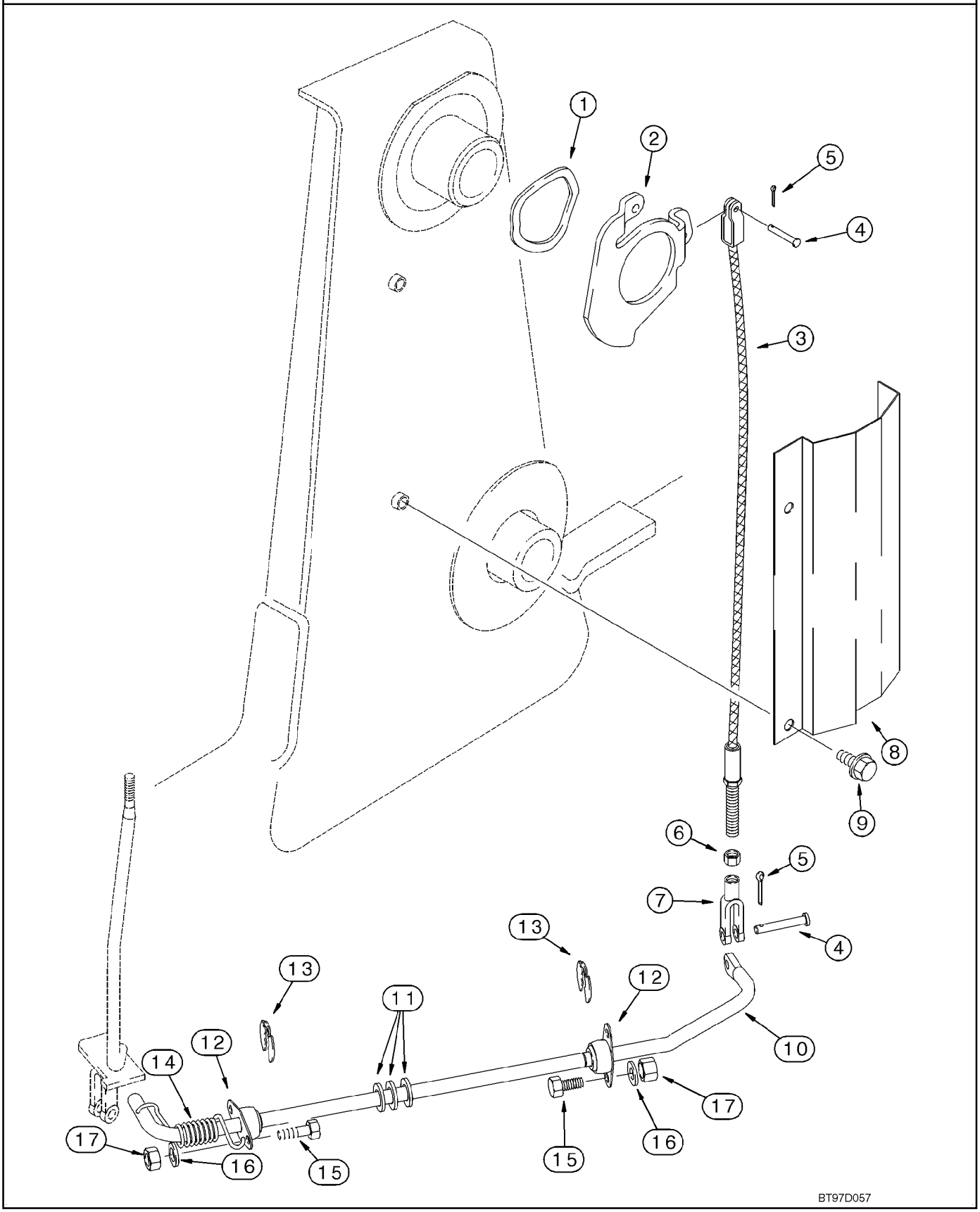

HTTP://WWW.MINNPARBACKHOEPARTS.COM



CONTROLES - CARGADORA AUTO-NIVELADORA

| REF | FN | PART NUMBER | YR/SN | QTY | DESCRIPTION |
|---|---|---|---|---|---|
| 1 | | 137283A1 | | 1 | ARANDELA |
| 2 | | 142404A1 | | 1 | LEVA |
| 3 | | 87428645 | | 1 | CABLE Self-Leveling Cable |
| 4 | | D149287 | | 2 | BULON/PIN, LARGO |
| 5 | | 432-612 | | 2 | PASADOR ABIERTO 3/32 x 3/4 |
| 6 | | 425-115 | | 1 | TUERCA 5/16 NF |
| 7 | | 239406A1 | | 1 | HORQUILLA PEQUENA 5/16 |
| 8 | | 139865A1 | | 1 | PROTECTOR |
| 9 | | 844-10020 | | 2 | TORNILLO M10 x 20 |
| | | 87417601 | | 1 | VARILLA (CONJUNTO) Incl. Ref 10 - 12 |
| 10 | | NSS | | 1 | NO SE REPARA SEPARADAM. Rod |
| 11 | | A30881 | | 3 | ARANDELA |
| 12 | | L15401 | | 2 | COJINETE |
| 13 | | D95096 | | 2 | ANILLO |
| 14 | | 124721A1 | | 1 | RESORTE |
| 15 | | 614-8025 | | 4 | TORNILLO M8 x 25 |
| 16 | | 895-11008 | | 4 | ARANDELA 9 x 17 x 1,6 mm |
| 17 | | 829-1408 | | 4 | TUERCA M8; 10 |

HTTP://WWW.MINNPARBACKHOEPARTS.COM

| 09-04 | | p1 | 01/04 |
|---|---|---|---|

MARCO - ELEVADOR DE LA CARGADORA

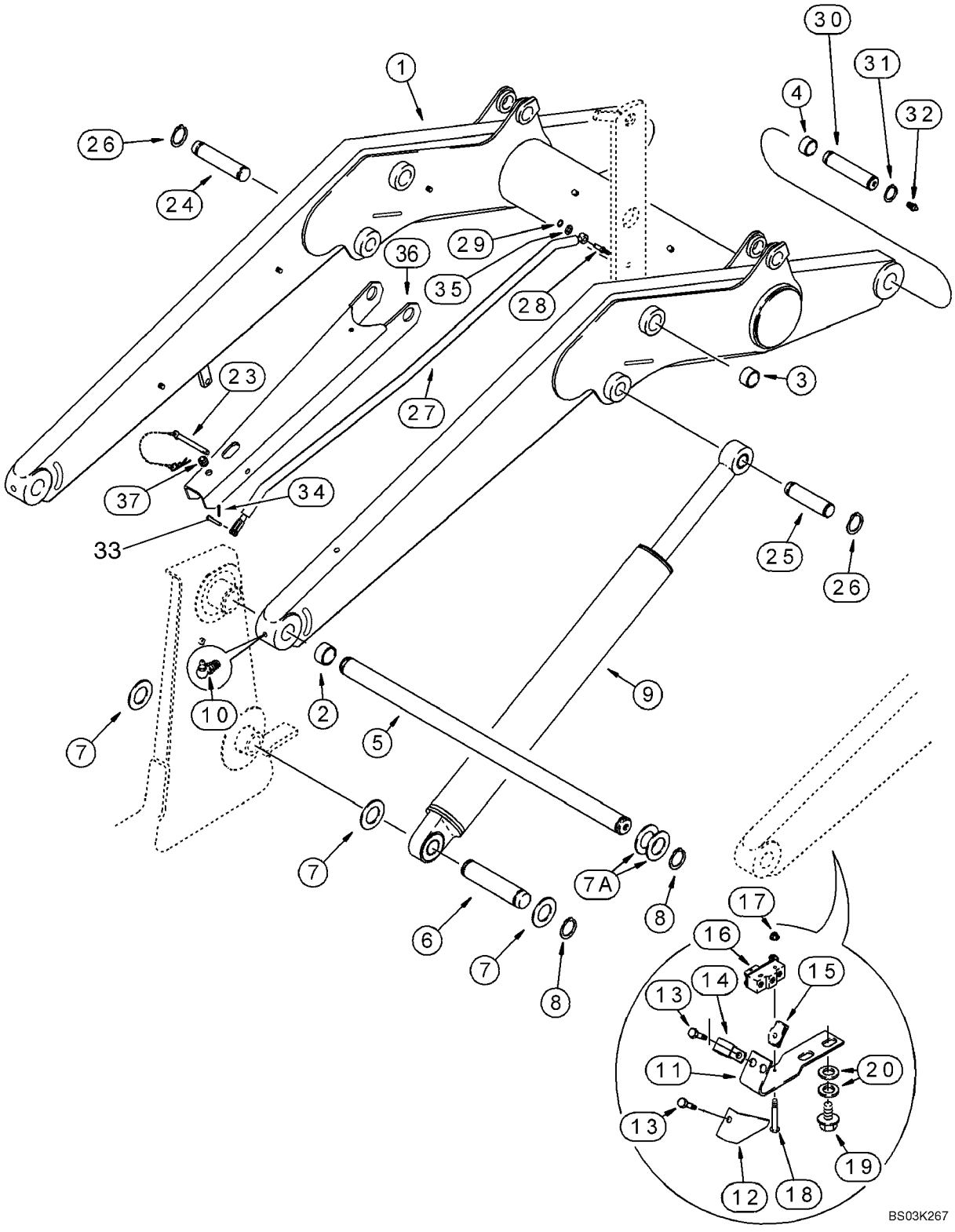

HTTP://WWW.MINNPARBACKHOEPARTS.COM



MARCO - ELEVADOR DE LA CARGADORA

| REF | FN | PART NUMBER | YR/SN | QTY | DESCRIPTION |
|---|---|---|---|---|---|
| | | REF | | | MANUAL LIFT CYLINDER, SUPPORT STRUT, RETURN-TO-DIG, AND ANTIROLLBACK |
| 1 | | 87426379 | | 1 | BRAZO (CONJUNTO) Incl. Ref 2, 4 |
| 2 | | D127542 | | 4 | CASQUILLO |
| 3 | | 100696A1 | | 4 | CASQUILLO Bucket Cylinder Link Pivot; Not Included With Frame; Purchase Separately |
| 4 | | 109268A1 | | 4 | CASQUILLO |
| 5 | | 111522A1 | | 1 | PERNO SHAFT |
| 6 | | 387019A1 | | 2 | PERNO |
| 7 | | 495-81282 | | 6 | ARANDELA 2-1/16 x 3 x 3/32 |
| 7A | | 181842A1 | | X | ARANDELA |
| 8 | | 800-44050 | | 6 | ANILLO DE CIERRE No. 50 |
| 9 | | 384240A1 | | 2 | CILINDRO (CONJUNTO) 82.6 ID x 766 mm strk; Loader Lift; See Figure 08-58 |
| 10 | | 219-55 | | 2 | ENGRASADOR 90 deg, 1/8 PT x 27/32 |
| 11 | | 128818A1 | | 1 | APOYADERO Return-To-Dig |
| 12 | | 142524A1 | | 1 | PROTECTOR |
| 13 | | 614-6016 | | 2 | TORNILLO M6 x 16 |
| 14 | | 515-2179 | | 1 | COLLAR 7,9 mm |
| 15 | | 833-40406 | | 2 | TUERCA M6 |
| 16 | | D137363 | | 1 | CONTACTOR Return-To-Dig |
| 17 | | 193-1003 | | 2 | TUERCA No. 6 |
| 18 | | 440-10616 | | 2 | TORNILLO No. 6 x 1 |
| 19 | | 128312A1 | | 2 | TORNILLO M10 x 15 |
| 20 | | 895-11010 | | 4 | ARANDELA 11 x 21 x 2 mm |
| 23 | | 104824A1 | | 1 | BULON/PIN, LARGO |
| 24 | | 118900A1 | | 1 | BULON/PIN, LARGO |
| 25 | | 113629A1 | | 1 | BULON/PIN, LARGO |
| 26 | | 800-44040 | | 4 | ANILLO DE CIERRE |
| 27 | | 311200A1 | | 1 | VARILLA (CONJUNTO) Anti-rollback |
| 28 | | 192815A1 | | 1 | PERNO |
| 29 | | 103-3350 | | 1 | ANILLO DE RESORTE No. 50 |
| 30 | | 118901A1 | | 2 | BULON/PIN, LARGO |
| 31 | | 800-44040 | | 4 | ANILLO DE CIERRE |
| 32 | | 219-1 | | 2 | ENGRASADOR 1/8 PT x 21/32 |
| 33 | | 427-6100 | | 1 | PASADOR DE HORQUILLA 3/8 x 1 |

HTTP://WWW.MINNPARBACKHOEPARTS.COM

| 09-04 | | p2 | 01/04 |
|---|---|---|---|

MARCO - ELEVADOR DE LA CARGADORA

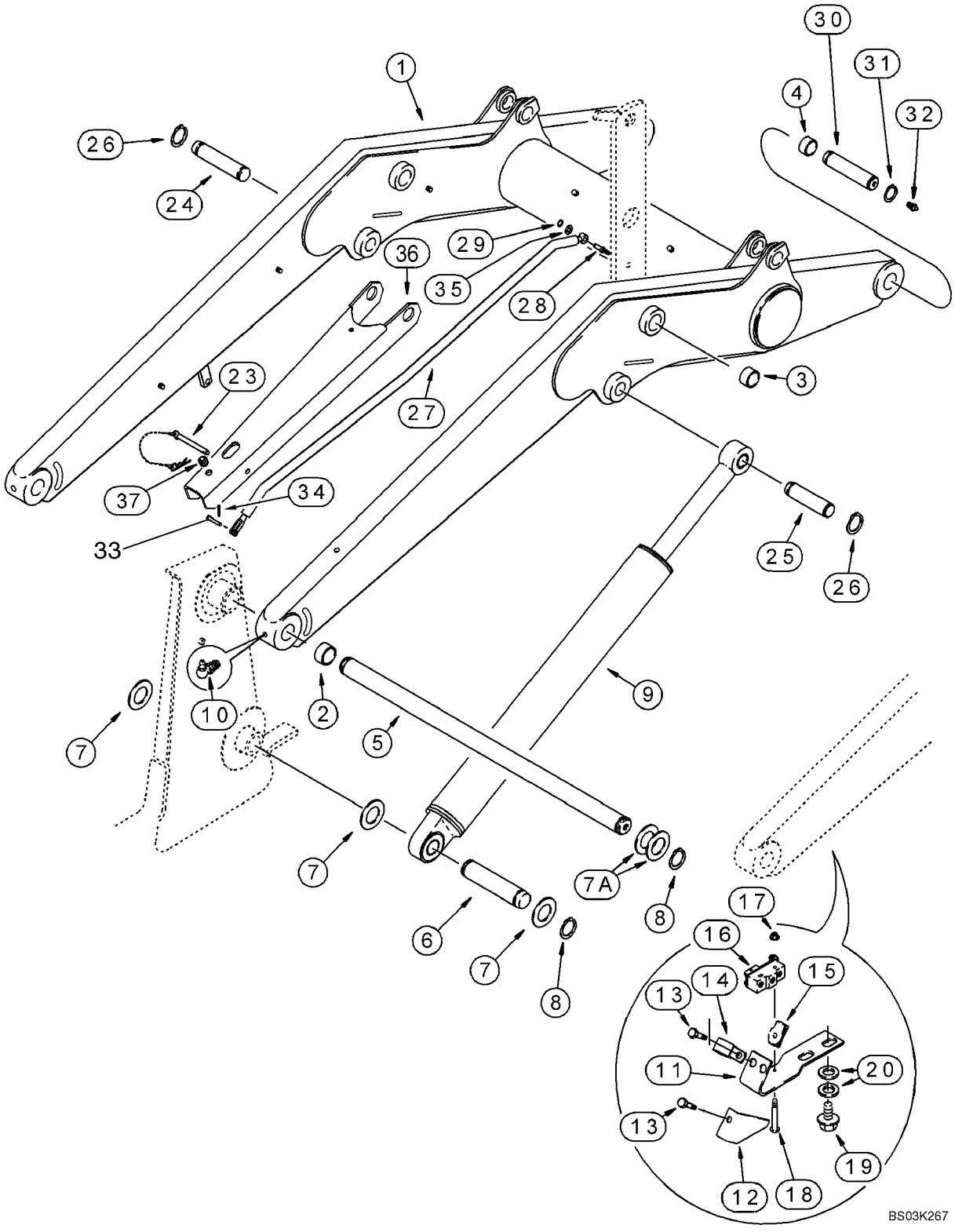

HTTP://WWW.MINNPARBACKHOEPARTS.COM



MARCO - ELEVADOR DE LA CARGADORA

| REF | FN | PART NUMBER | YR/SN | QTY | DESCRIPTION |
|---|---|---|---|---|---|
| 34 | | 432-612 | | 1 | PASADOR ABIERTO 3/32 x 3/4 |
| 35 | | 495-11053 | | 1 | ARANDELA 17/32 x 1-1/16 x 3/32 |
| 36 | | 341564A2 | | 1 | RESISTIDOR DE PRESIO |
| 37 | | 344892A1 | | 1 | PASACABLES |

HTTP://WWW.MINNPARBACKHOEPARTS.COM

| 09-05 | | p1 | 01/04 |
|---|---|---|---|

MARCO - VARILLAJE DE LA CARGADORA

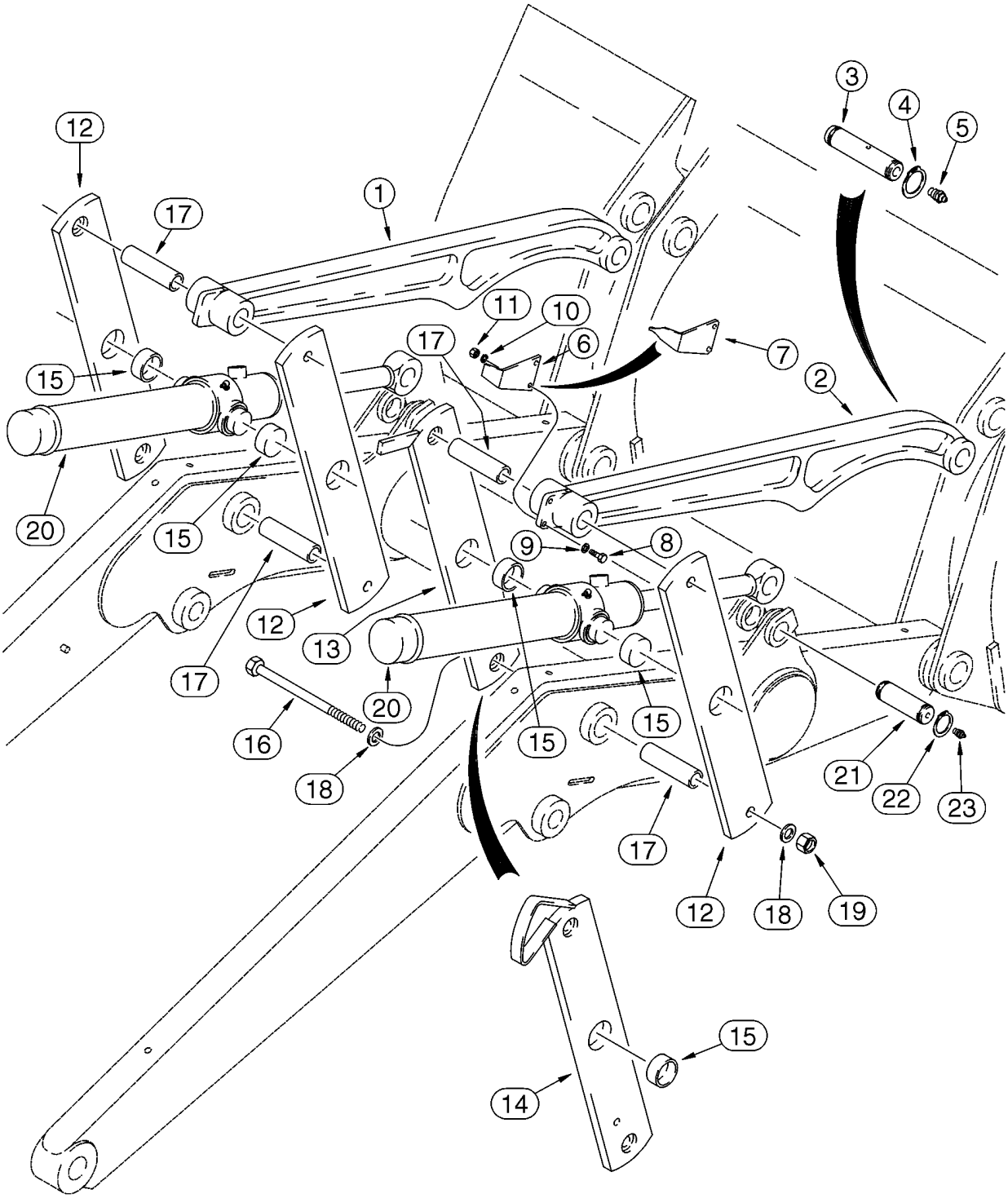


BT97N070

HTTP://WWW.MINNPARBACKHOEPARTS.COM



MARCO - VARILLAJE DE LA CARGADORA

| REF | FN | PART NUMBER | YR/SN | QTY | DESCRIPTION |
|---|---|---|---|---|---|
| 1 | | 331621A1 | | 1 | BIELA DE CONEXION Bucket, Left-Hand; Without Mounting Holes For Bucket Position Pointer; For Service, Order 331620A1 |
| 2 | | 331620A1 | | 1-2 | BIELA DE CONEXION Bucket, Left-Hand or Right-Hand; With Mounting Holes For Bucket Position Pointer |
| 3 | | 118901A1 | | 2 | BULON/PIN, LARGO |
| 4 | | 800-44040 | | 4 | ANILLO DE CIERRE |
| 5 | | 219-1 | | 2 | ENGRASADOR 1/8 PT x 21/32 |
| 6 | | D121194 | | 1 | INDICADOR Models Without Clam Bucket |
| 7 | | 250851A1 | | 1 | INDICADOR Models With Clam Bucket |
| 8 | | 614-8030 | | 2 | TORNILLO M8 x 30 |
| 9 | | 895-11008 | | 2 | ARANDELA 9 x 17 x 1,6 mm |
| 10 | | 892-11008 | | 2 | ARANDELA M8 |
| 11 | | 829-1408 | | 2 | TUERCA M8; 10 |
| 12 | | 139180A1 | | 3 | BIELA DE CONEXION Bucket Cylinder, Outer Right-Hand; Inner and Outer Left-Hand, Incl. Ref 15 |
| 13 | | 139235A1 | | 1 | BIELA DE CONEXION Bucket Cylinder, Inner Right-Hand; With Extra Hole For Antirollback Rod; Models Without Clam Bucket; Incl. Ref 15 |
| 14 | | 139195A1 | | 1 | BIELA DE CONEXION Bucket Cylinder, Inner Right-Hand; With Extra Hole For Antirollback Rod; Models With Clam Bucket, Incl. Ref 15 |
| 15 | | D151034 | | 1 | CASQUILLO |
| 16 | | 827-20190 | | 4 | TORNILLO M20 x 190; 10.9 |
| 17 | | D132076 | | 4 | ESPACIADOR |
| 18 | | 896-11020 | | 8 | ARANDELA 22 x 37 x 4 mm |
| 19 | | 829-1420 | | 4 | TUERCA M20; 10 |
| 20 | | 113133A2 | | 2 | CILINDRO (CONJUNTO) 76 ID x 522 mm strk; Loader Bucket; See Figure 08-59 |
| 21 | | 116339A1 | | 2 | BULON/PIN, LARGO |
| 22 | | 800-44040 | | 4 | ANILLO DE CIERRE |
| 23 | | 219-1 | | 2 | ENGRASADOR 1/8 PT x 21/32 |

HTTP://WWW.MINNPARBACKHOEPARTS.COM

| 09-06 | | p1 | 10/03 |
|---|---|---|---|

CUCHARÓN, BORDE ANCHO DE LA CARGADORA (82 IN)

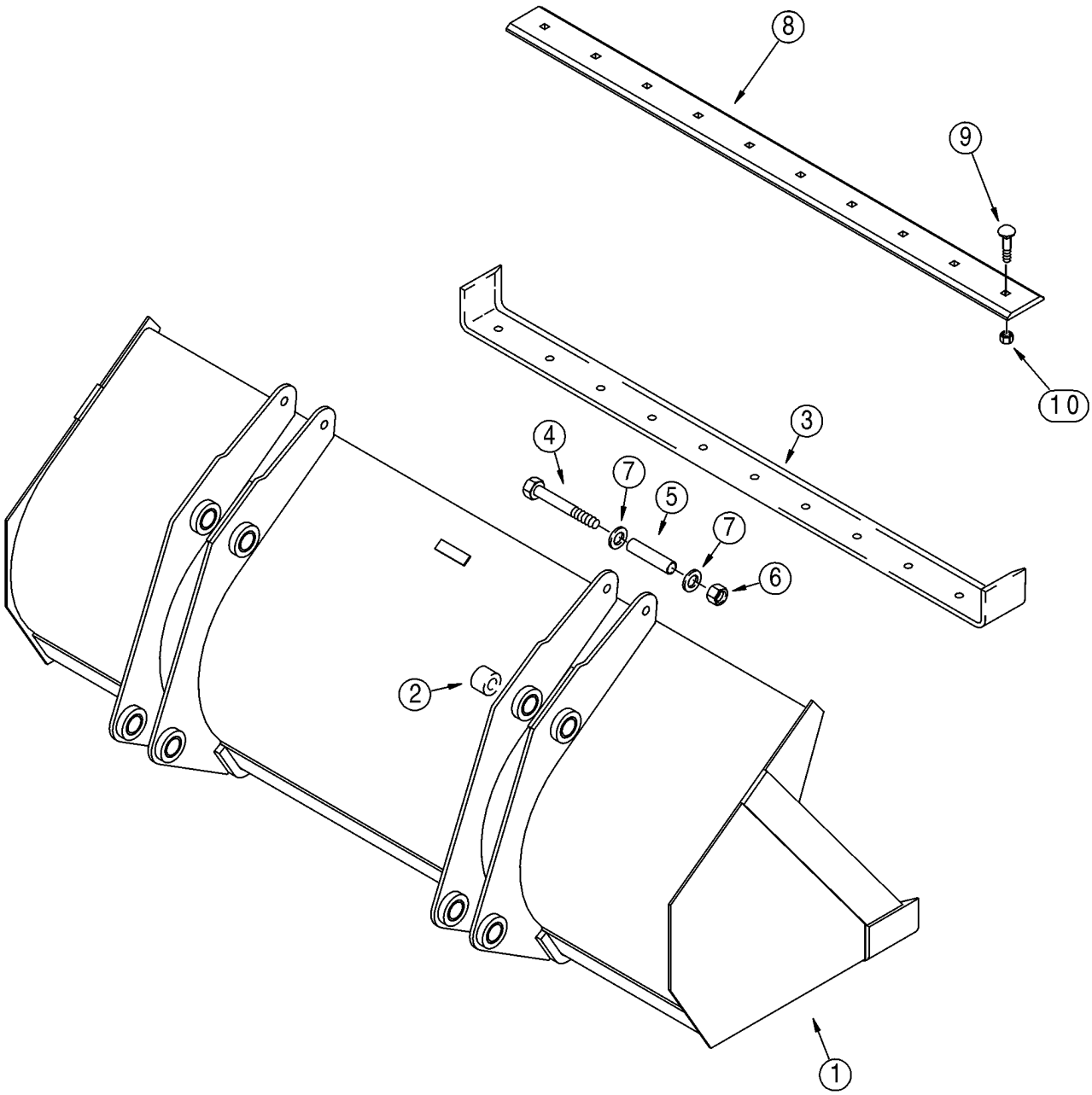

HTTP://WWW.MINNPARBACKHOEPARTS.COM



CUCHARÓN, BORDE ANCHO DE LA CARGADORA (82 IN)

| REF | FN | PART NUMBER | YR/SN | QTY | DESCRIPTION |
|---|---|---|---|---|---|
| | | 385588A1 | | 1 | CUCHARA ASSEMBLY, 2083 mm (82 in); Assembly Does Not Include Bolt-On Cutting Edge; Without Bucket Teeth; Incl. Ref 1 - 7; Order Through Parts Marketing |
| 1 | | NSS | | 1 | NO SE REPARA SEPARADAM. Bucket; Incl. Ref 2, 3 |
| 2 | | D129264 | | 8 | CASQUILLO |
| 3 | | 132988A1 | | 1 | BORDE Welded-On |
| 4 | | 828-20160 | | 2 | TORNILLO M20 x 160; 10.9 |
| 5 | | 142538A1 | | 2 | ESPACIADOR |
| 6 | | 832-10420 | | 2 | TUERCA M20 |
| 7 | | 896-11020 | | 4 | ARANDELA 22 x 37 x 4 mm |
| 8 | | 112946A1 | | 1 | CUCHILLA DE ATAQUE Bolt-On; Not Included In 385588A1 Bucket Assembly, Purchase Separately |
| 9 | | 420-21232 | | 10 | TORNILLO |
| 10 | | 429-1012 | | 10 | TUERCA 3/4; 8 |
| | | {385920A1} | | 1 | BUCKET ASSEMBLY, 2083 mm (82 in); Assembly Includes 385588A1 Bucket Assembly and 112946A1 Bolt-On Cutting Edge; Incl. Ref 1 - 10; Order Through Parts Marketing |
| | | 385588A1 | | 1 | CUCHARA 2083 mm (82 in); Incl. Ref 1 - 7; Order Through Parts Marketing |
| 1 | | NSS | | 1 | NO SE REPARA SEPARADAM. Bucket; Incl. Ref 2, 3 |
| 2 | | D129264 | | 8 | CASQUILLO |
| 3 | | 132988A1 | | 1 | BORDE Bolt-On |
| 4 | | 828-20160 | | 2 | TORNILLO M20 x 160; 10.9 |
| 5 | | 142538A1 | | 2 | ESPACIADOR |
| 6 | | 832-10420 | | 2 | TUERCA M20 |
| 7 | | 896-11020 | | 4 | ARANDELA 22 x 37 x 4 mm |
| 8 | | 112946A1 | | 1 | CUCHILLA DE ATAQUE Bolt-On |
| 9 | | 420-21232 | | 10 | TORNILLO |
| 10 | | 429-1012 | | 10 | TUERCA 3/4; 8 |

HTTP://WWW.MINNPARBACKHOEPARTS.COM



CUCHARÓN, BORDE ANCHO DE LA CARGADORA (93 IN)

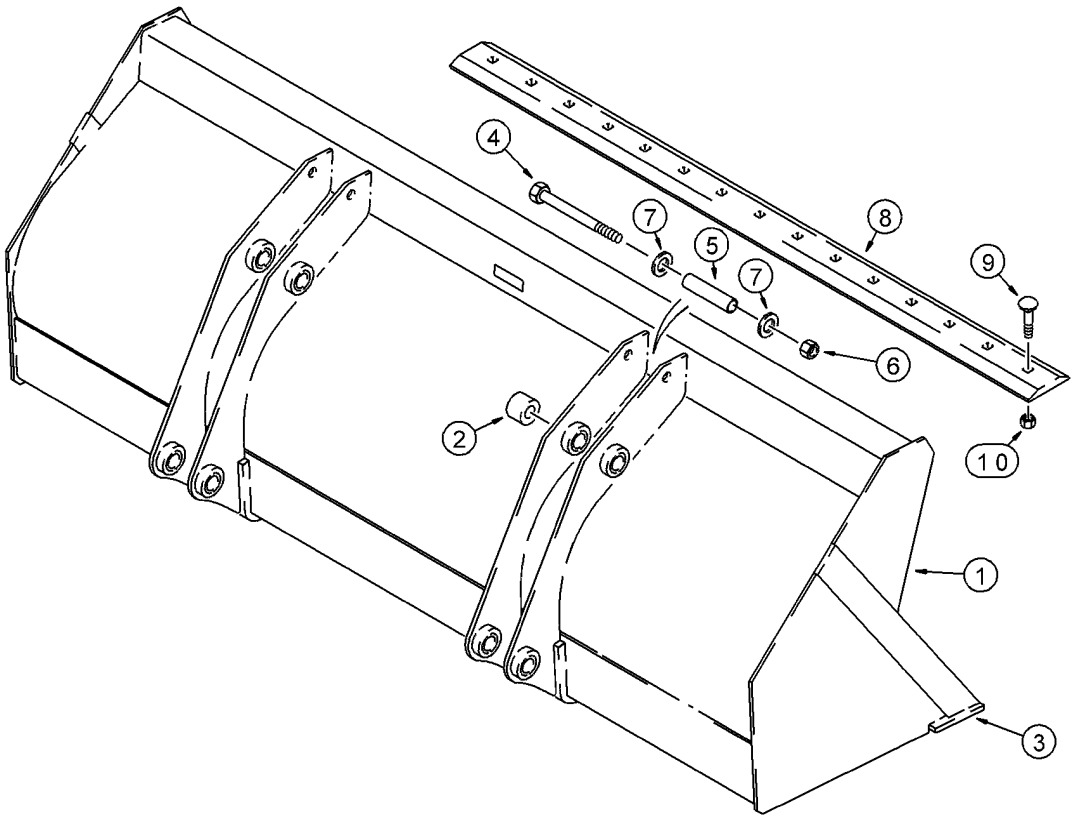


BS00C247

HTTP://WWW.MINNPARBACKHOEPARTS.COM



CUCHARÓN, BORDE ANCHO DE LA CARGADORA (93 IN)

| REF | FN | PART NUMBER | YR/SN | QTY | DESCRIPTION |
|---|---|---|---|---|---|
| | | 142687A1 | | 1 | CUCHARA 2362 mm (93 in), Without Bucket Teeth; Assembly Includes Bolt-On Cutting Edge; Incl. Ref 1 - 10; Order Through Parts Marketing |
| 1 | | NSS | | 1 | NO SE REPARA SEPARADAM. Bucket, Incl. Ref 2, 3 |
| 2 | | D129264 | | 8 | CASQUILLO |
| 3 | | 134844A1 | | 1 | PLACA, GRANDE Weld-On |
| 4 | | 828-20160 | | 2 | TORNILLO M20 x 160; 10.9 |
| 5 | | 142538A1 | | 2 | ESPACIADOR |
| 6 | | 832-10420 | | 2 | TUERCA M20 |
| 7 | | 896-11020 | | 4 | ARANDELA 22 x 37 x 4 mm |
| 8 | | 185506A1 | | 1 | BORDE BLADE, Bolt-On |
| 9 | | 20-21232 | | 10 | TORNILLO |
| 10 | | 429-1012 | | 10 | TUERCA 3/4; 8 |

HTTP://WWW.MINNPARBACKHOEPARTS.COM

| 09-08 | | p1 | 10/03 |
|---|---|---|---|

CUCHARÓN, ALMEJA DE LA CARGADORA

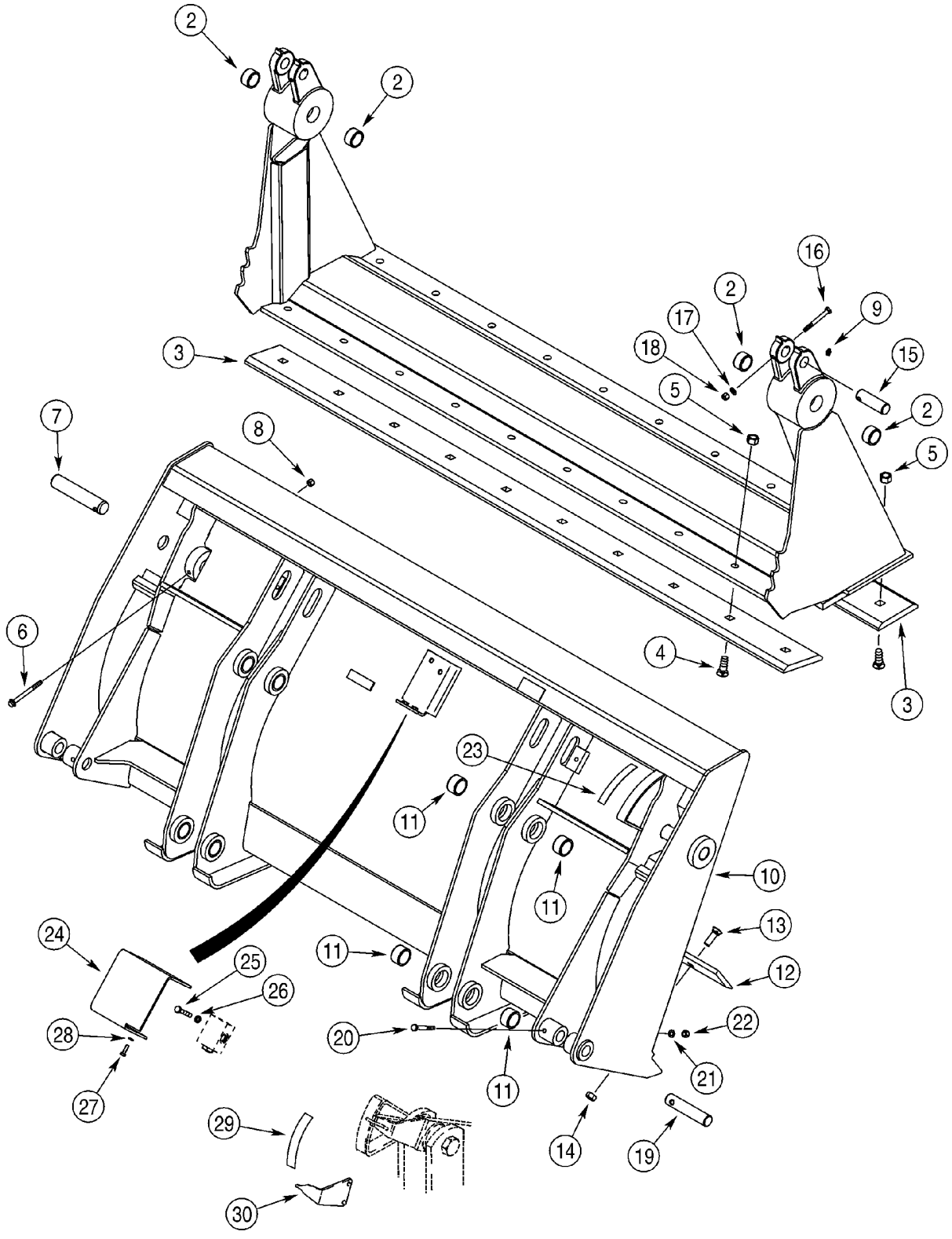

HTTP://WWW.MINNPARBACKHOEPARTS.COM



CUCHARÓN, ALMEJA DE LA CARGADORA

| REF | FN | PART NUMBER | YR/SN | QTY | DESCRIPTION |
|---|---|---|---|---|---|
| | | 376528A4 | | 1 | CUCHARA ASSEMBLY; 2083 mm (82 in); With Hydraulics; Includes 376288A2 Bucket Assembly, Ref 1 - 28; Also Includes Hydraulics on Figure 08-07, Ref 1 - 29; Order Through Parts Marketing |
| | | {376288A2} | | 1 | BUCKET ASSEMBLY; 2083 mm (82 in); Without Hydraulics; Includes 411668A1 Bucket and (2) Ref 7 Pins; Order Through Parts Marketing |
| | | 411668A1 | | 1 | CUCHARA BUCKET ASSEMBLY; 2083 mm (82 in; Without Hydraulics; Incl. Ref 1 - 6, 8 - 14 |
| | | 175156A1 | | 1 | COQUILLA CLAM, Incl. Ref 1, 2 |
| 1 | | NSS | | 1 | NO SE REPARA SEPARADAM. Clam Assy |
| 2 | | D31140 | | 4 | CASQUILLO |
| 3 | | 142300A1 | | 2 | MADIA HOJA |
| 4 | | 20-21232 | | 20 | TORNILLO 3/4 x 2 |
| 5 | | 29-1012 | | 20 | TUERCA 3/4; 8 |
| 6 | | 844-10110 | | 2 | TORNILLO Flange, M10 x 110 |
| 7 | | D51391 | | 2 | BULON/PIN, LARGO |
| 8 | | 832-10410 | | 2 | TUERCA M10 |
| 9 | | 219-1 | | 2 | ENGRASADOR 1/8 PT x 21/32 |
| | | 376286A2 | | 1 | CUCHARA BLADE, Incl. Ref 10, 11 |
| 10 | | NSS | | 1 | NO SE REPARA SEPARADAM. Blade Assy, Dozer |
| 11 | | D129264 | | 8 | CASQUILLO |
| 12 | | 121920A1 | | 1 | BORDE Cutting |
| 13 | | 20-21032 | | 10 | TORNILLO 5/8 x 2 |
| 14 | | 29-1010 | | 10 | TUERCA 5/8 |
| 15 | | D51392 | | 2 | PERNO |
| 16 | | 814-10090 | | 2 | TORNILLO M10 x 90 |
| 17 | | 895-11010 | | 2 | ARANDELA 11 x 21 x 2 mm |
| 18 | | 832-10410 | | 2 | TUERCA M10 |
| 19 | | D51393 | | 2 | BULON/PIN, LARGO |
| 20 | | 814-10080 | | 2 | TORNILLO M10 x 80 |
| 21 | | 895-11010 | | 2 | ARANDELA 11 x 21 x 2 mm |
| 22 | | 832-10410 | | 2 | TUERCA M10 |
| 23 | | 321-1708 | | 1 | CALCOMANIA |
| 24 | | 388848A1 | | 1 | DEFENSA Pilot Operated Check Valve |
| 25 | | 814-10060 | | 2 | TORNILLO M10 x 60 |

HTTP://WWW.MINNPARBACKHOEPARTS.COM

| 09-08 | | p2 | 10/03 |
|---|---|---|---|

CUCHARÓN, ALMEJA DE LA CARGADORA

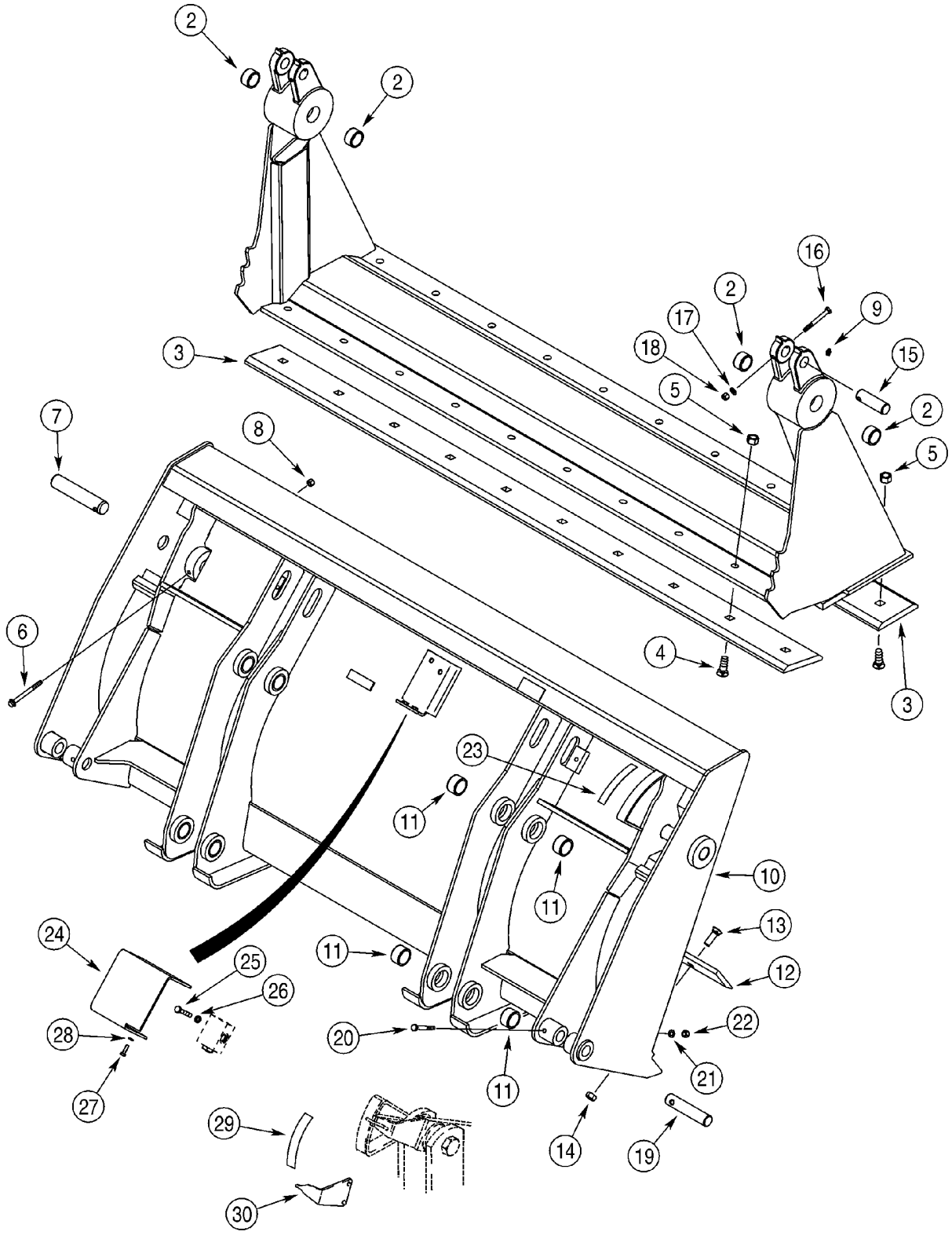

HTTP://WWW.MINNPARBACKHOEPARTS.COM



CUCHARÓN, ALMEJA DE LA CARGADORA

| REF | FN | PART NUMBER | YR/SN | QTY | DESCRIPTION |
|---|---|---|---|---|---|
| 26 | | 892-11010 | | 2 | ARANDELA DE FRENO M10 |
| 27 | | 614-8025 | | 2 | TORNILLO M8 x 25 |
| 28 | | 892-11008 | | 2 | ARANDELA M8 |
| 29 | | 321-1707 | | 1 | CALCOMANIA |
| 30 | | 250851A1 | | 1 | INDICADOR |

HTTP://WWW.MINNPARBACKHOEPARTS.COM

| 09-09 | | p1 | 09/03 |
|---|---|---|---|

PROTECTOR - VÁLVULA, CARGADORA

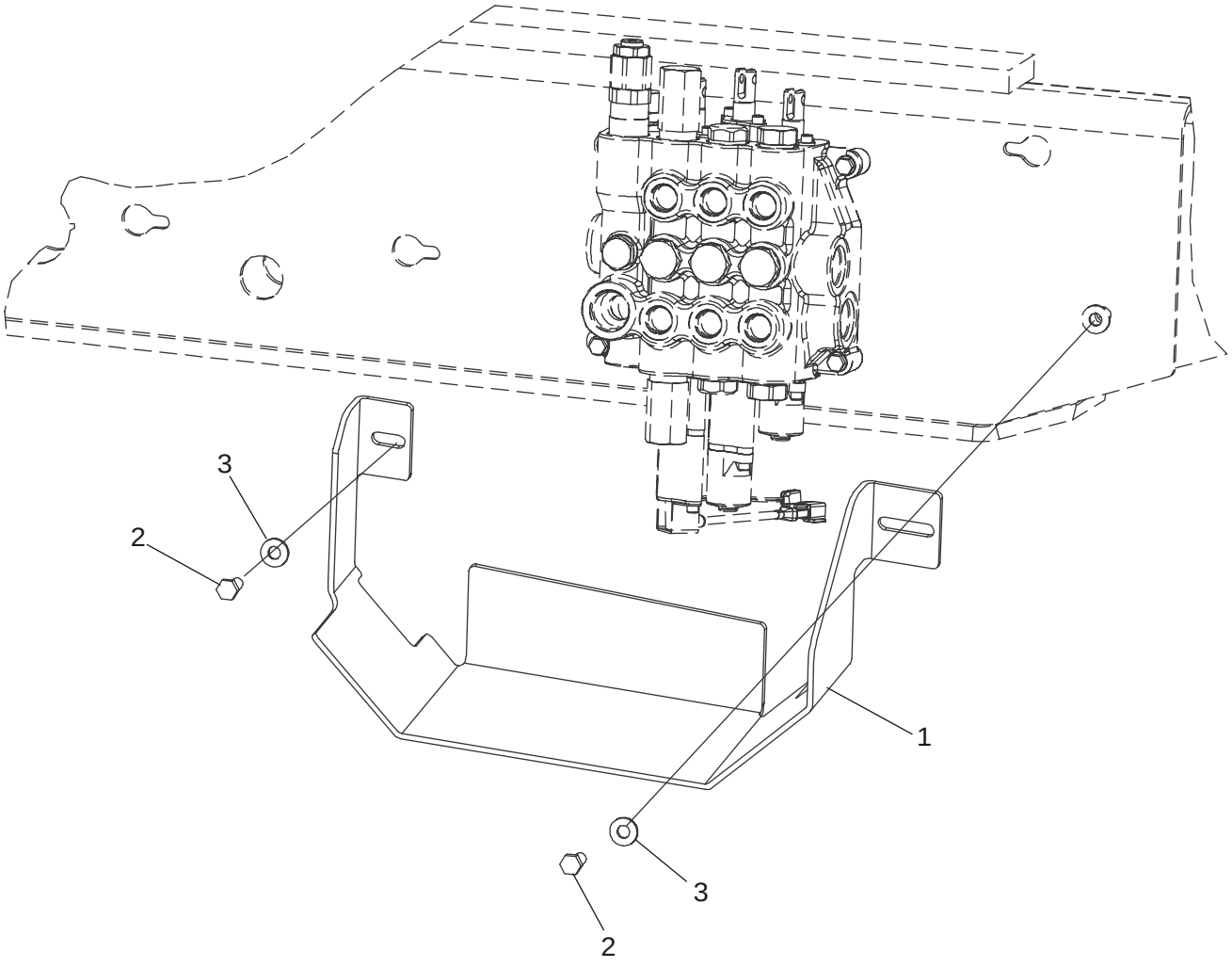

HTTP://WWW.MINNPARBACKHOEPARTS.COM



PROTECTOR - VÁLVULA, CARGADORA

| REF | FN | PART NUMBER | YR/SN | QTY | DESCRIPTION |
|---|---|---|---|---|---|
| 1 | | 87423463 | | 1 | PROTECCION |
| 2 | | 614-10025 | | 2 | TORNILLO M10 x 25 |
| 3 | | 896-15010 | | 2 | ARANDELA 11 x 24 x 3 mm |

HTTP://WWW.MINNPARBACKHOEPARTS.COM

| 09-10 | | p1 | 01/04 |
|---|---|---|---|

ACOPLADOR RÁPIDO, HERRAMIENTA

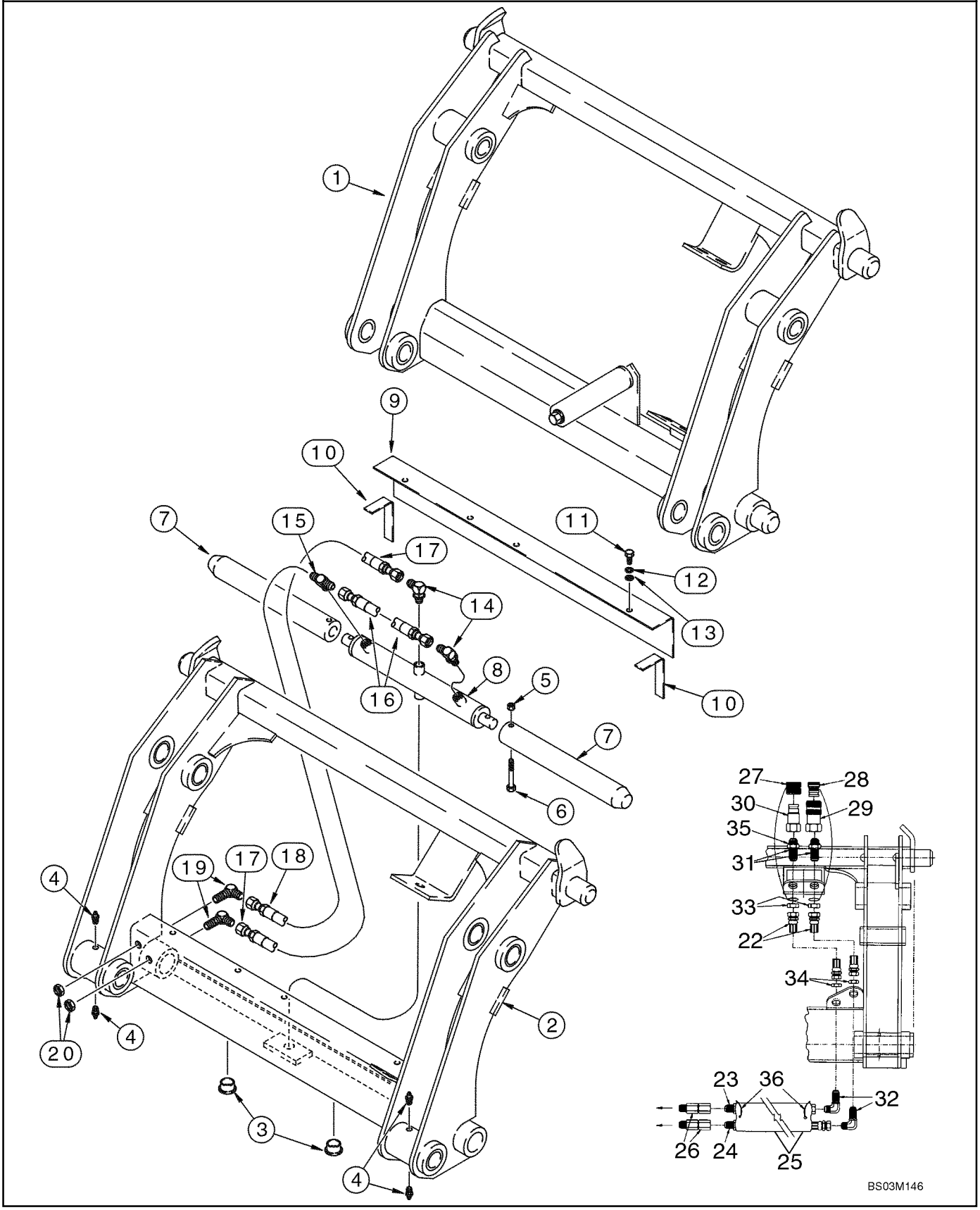

HTTP://WWW.MINNPARBACKHOEPARTS.COM



ACOPLADOR RÁPIDO, HERRAMIENTA

| REF | FN | PART NUMBER | YR/SN | QTY | DESCRIPTION |
|---|---|---|---|---|---|
| | | REF | | | MANUAL MANUAL COUPLER |
| 1 | | 191239A1 | | 1 | ELEMENTO DE ACOPLAM. Loader, Complete; Component Parts Not Serviced Separately; Used With D121194 Bucket Position Pointer and 139235A1 Bucket Cylinder Link; See Figure 09-05, Ref 6, 13 |
| | | REF | | | MANUAL HYDRAULIC COUPLER |
| | | 292969A2 | | 1 | ELEMENTO DE ACOPLAM. Loader; Incl. Ref 2 - 35; With Auxiliary Hydraulics; For Complete Assembly, Order From Machinery Price List; Category III; For Hydraulic Tool Quick Coupler Hydraulics, See Figure 08-26, 08-27 |
| 2 | | NSS | | 1 | NO SE REPARA SEPARADAM. Frame |
| 3 | | 305497A1 | | 2 | TAPÓN 1-1/4 ID x 1/2 in OD; Plastic |
| 4 | | 219-87 | | 4 | CONEXION 1/4 st x 9/16 |
| 5 | | 231-4246 | | 2 | TUERCA 3/8 |
| 6 | | 326-640 | | 2 | TORNILLO 3/8 x 2-1/2; 8 |
| 7 | | 305496A1 | | 2 | PERNO 1-15/16 OD x 15 in lg |
| 8 | | 305499A1 | | 1 | CILINDRO (CONJUNTO) Double Acting; Component Parts Not Serviced Separately |
| 9 | | 305495A1 | | 1 | TAPA |
| 10 | | NSS | | 2 | NO SE REPARA SEPARADAM. Seal; Foam |
| 11 | | 413-516 | | 3 | TORNILLO 5/16 x 1 |
| 12 | | 492-11031 | | 3 | ARANDELA DE FRENO 5/16 |
| 13 | | 495-11034 | | 3 | ARANDELA 11/32 x 11/16 x 1/16 |
| 14 | | 218-5105 | | 2 | CODO 9/16 fl x Or; Includes 237-6006 O-Ring |
| | | 237-6006 | | 1 | JUNTA HERMETICA 15/32 ID x 5/64, Boss Seal |
| 15 | | 218-5182 | | 1 | RACOR-T 9/16 adj Or x fl x fl; Includes 237-6006 O-Ring |
| | | 237-6006 | | 1 | JUNTA HERMETICA 15/32 ID x 5/64, Boss Seal |
| 16 | | 305492A1 | | 1 | MANGUERA (CONJUNTO) 260 mm (10-1/4 in) |
| 17 | | 305494A1 | | 1 | MANGUERA (CONJUNTO) 387 mm (15-1/4 in) |
| 18 | | 305493A1 | | 1 | MANGUERA (CONJUNTO) 235 mm (9-1/4 in) |
| 19 | | 218-693 | | 2 | CODO 9/16 fl x blkhd fl |
| 20 | | 218-1254 | | 2 | CONTRA TUERCA 9/16 NF |
| 21 | | 305508A1 | | 1 | JEUGO Decal; Includes Four Decals; Not Illustrated |

HTTP://WWW.MINNPARBACKHOEPARTS.COM

| 09-10 | | p2 | 01/04 |
|---|---|---|---|

ACOPLADOR RÁPIDO, HERRAMIENTA

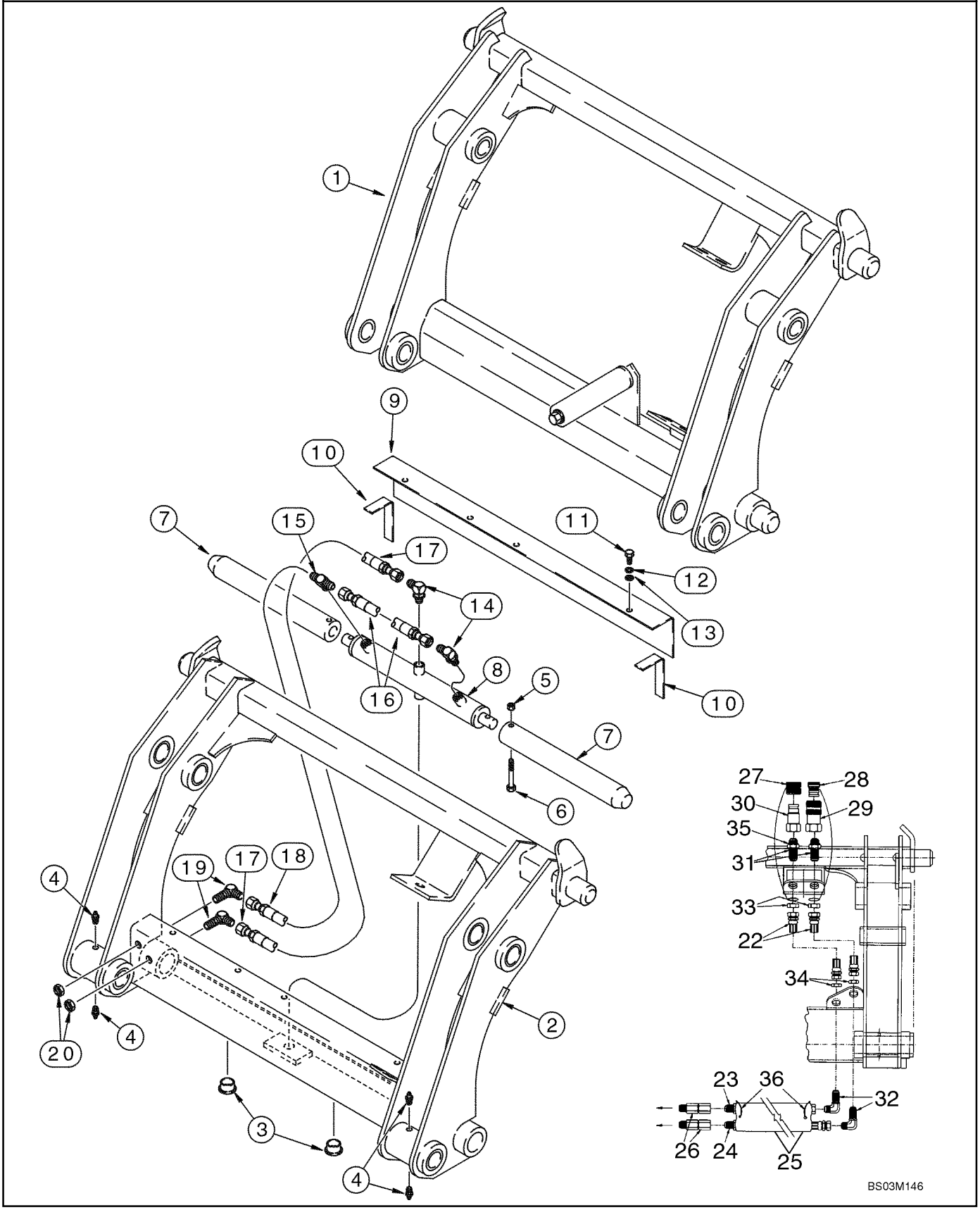

HTTP://WWW.MINNPARBACKHOEPARTS.COM



ACOPLADOR RÁPIDO, HERRAMIENTA

| REF | FN | PART NUMBER | YR/SN | QTY | DESCRIPTION |
|---|---|---|---|---|---|
| 22 | | 307385A1 | | 2 | MANGUERA (CONJUNTO) 387 mm (15-1/4 in) |
| 23 | | 307386A1 | | 1 | MANGUERA (CONJUNTO) 629 mm (24-3/4 in) |
| 24 | | 307387A1 | | 1 | MANGUERA (CONJUNTO) 718 mm (28-1/4 in) |
| 25 | | 307388A1 | | 1 | MANGA SLEEVE, 660 mm (26 in) |
| 26 | | 307389A1 | | 2 | PIVOTE Swivel |
| 27 | | 137344A1 | | 1 | TAPÓN Male Coupling |
| 28 | | 137343A1 | | 1 | TAPÓN Female Coupling |
| 29 | | 123537A1 | | 1 | CONEXION Quick Disconnect; Female |
| 30 | | 245423A1 | | 1 | CONEXION |
| 31 | | 126155A1 | | 2 | CONEXION 1-1/16 blkhd fl x Or |
| 32 | | 218-695 | | 2 | CONEXION ELBOW, 90 deg, 7/8 fl x bkhd fl |
| 33 | | 218-1256 | | 2 | CONTRA TUERCA 1-1/16 |
| 34 | | 218-1279 | | 2 | TUERCA 7/8 |
| 35 | | 237-6012 | | 2 | JUNTA HERMETICA 59/64 ID x 7/64 |
| 36 | | L18337 | | 2 | BANDA Tie |

HTTP://WWW.MINNPARBACKHOEPARTS.COM



CUBIERTAS - TORRE DE CONTROL DE LA RETROEXCAVADORA, SIN DE CONTROL PILOTO

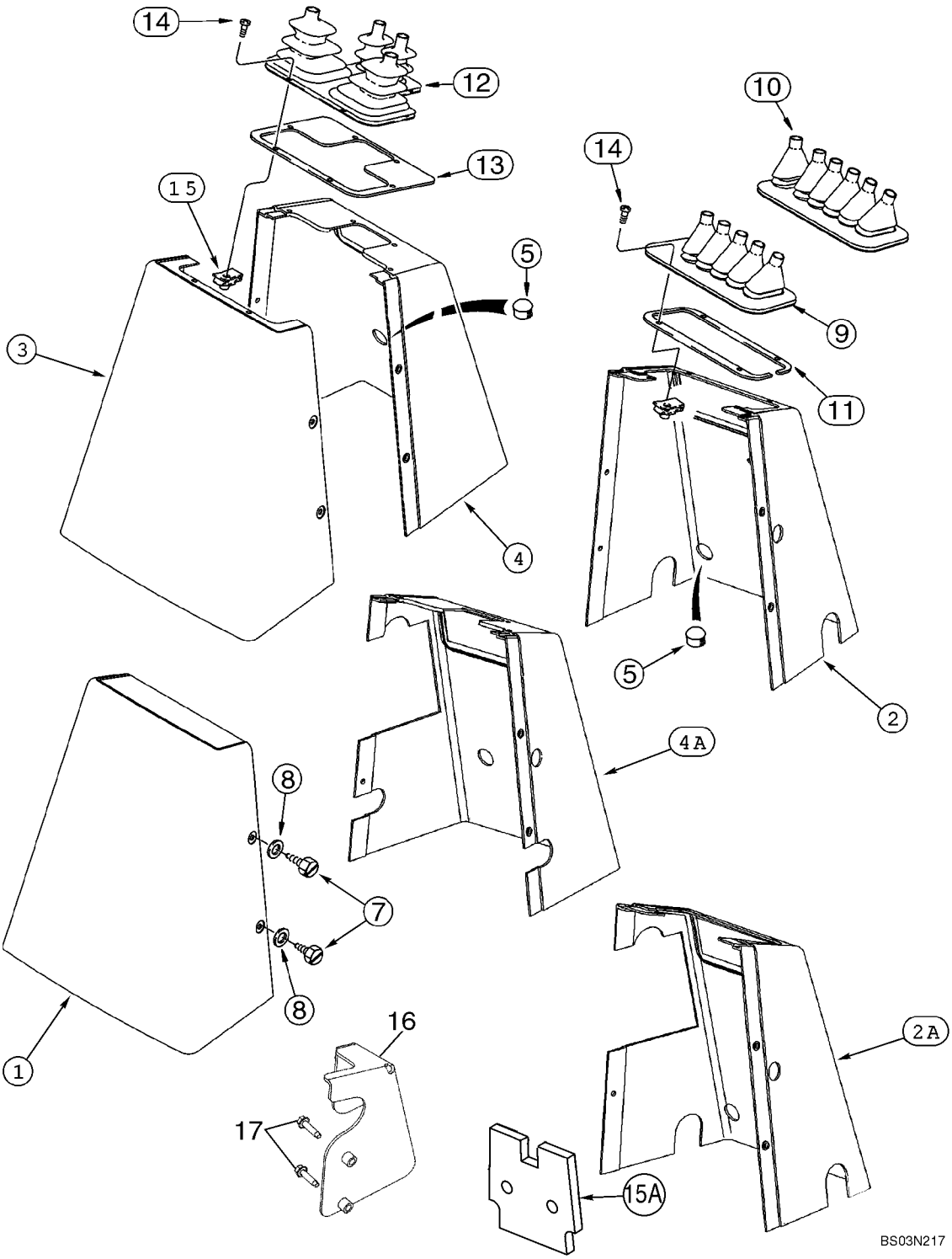

HTTP://WWW.MINNPARBACKHOEPARTS.COM



CUBIERTAS - TORRE DE CONTROL DE LA RETROEXCAVADORA, SIN DE CONTROL PILOTO

| REF | FN | PART NUMBER | YR/SN | QTY | DESCRIPTION |
|---|---|---|---|---|---|
| 1 | | 390759A1 | | 1 | PROTECTOR Rear; All Models With Foot Swing |
| 2 | | 390760A1 | | 1 | PROTECTOR Front; Foot Swing; Without Auxiliary Hydraulics |
| 2A | | 87411083 | | 1 | PROTECTOR Front; Foot Swing; With Auxiliary Hydraulics |
| 3 | | 390758A1 | | 1 | PROTECTOR Rear; All Models With Hand Swing |
| 4 | | 390690A1 | | 1 | PROTECTOR Front; Hand Swing; Without Auxiliary Hydraulics |
| 4A | | 87411084 | | 1 | PROTECTOR Front; Hand Swing; With Auxiliary Hydraulics |
| 5 | | 353-411 | | 1-2 | TAPÓN 1 in dia |
| 7 | | 779-37616 | | 5 | PUNZON VALVULA M6.3 x 16 st |
| 8 | | 195-140 | | 5 | ARANDELA fLAT, 1/4 |
| 9 | | D149866 | | 1 | PROTECTOR 5 Control Levers |
| 10 | | D149867 | | 1 | PROTECTOR 6 Control Levers |
| 11 | | 136822A1 | | 1 | JUNQUILLO |
| 12 | | D149868 | | 1 | FUELLE 4 Control Levers |
| 13 | | 136824A1 | | 1 | PLACA, GRANDE Used With Ref 12 Only |
| 14 | | 140-106 | | 4 | TORNILLO No. 10 x 1/2 |
| 14 | | 140-107 | | 6 | TORNILLO No. 10 x 3/4; Used With Ref 13 Retainer |
| 15 | | 131-861 | | 4-6 | TUERCA No. 10, 4; Used With Ref 11 Retainer; (6) Used With Ref 13 Retainer |
| 15A | | 397870A3 | | 2 | ANILLO DE CIERRE Front and Rear Console Covers; Noise Barrier; Adhesive Back |
| 16 | | 87425122 | | 1 | PIEZA DE SOPORTE Models With Backhoe Auxiliary Hydraulics |
| | | 87430677 | | 1 | CALCOMANIA Auxiliary Hydraulics |
| 17 | | 281-14716 | | 2 | TORNILLO |

HTTP://WWW.MINNPARBACKHOEPARTS.COM

| 09-12 | | p1 | 12/03 |
|---|---|---|---|

APOYO DE LA TORRE DE CONTROL DE LA RETROEXCAVADORA Y JUNTAS, SIN DE CONTROL PILOTO

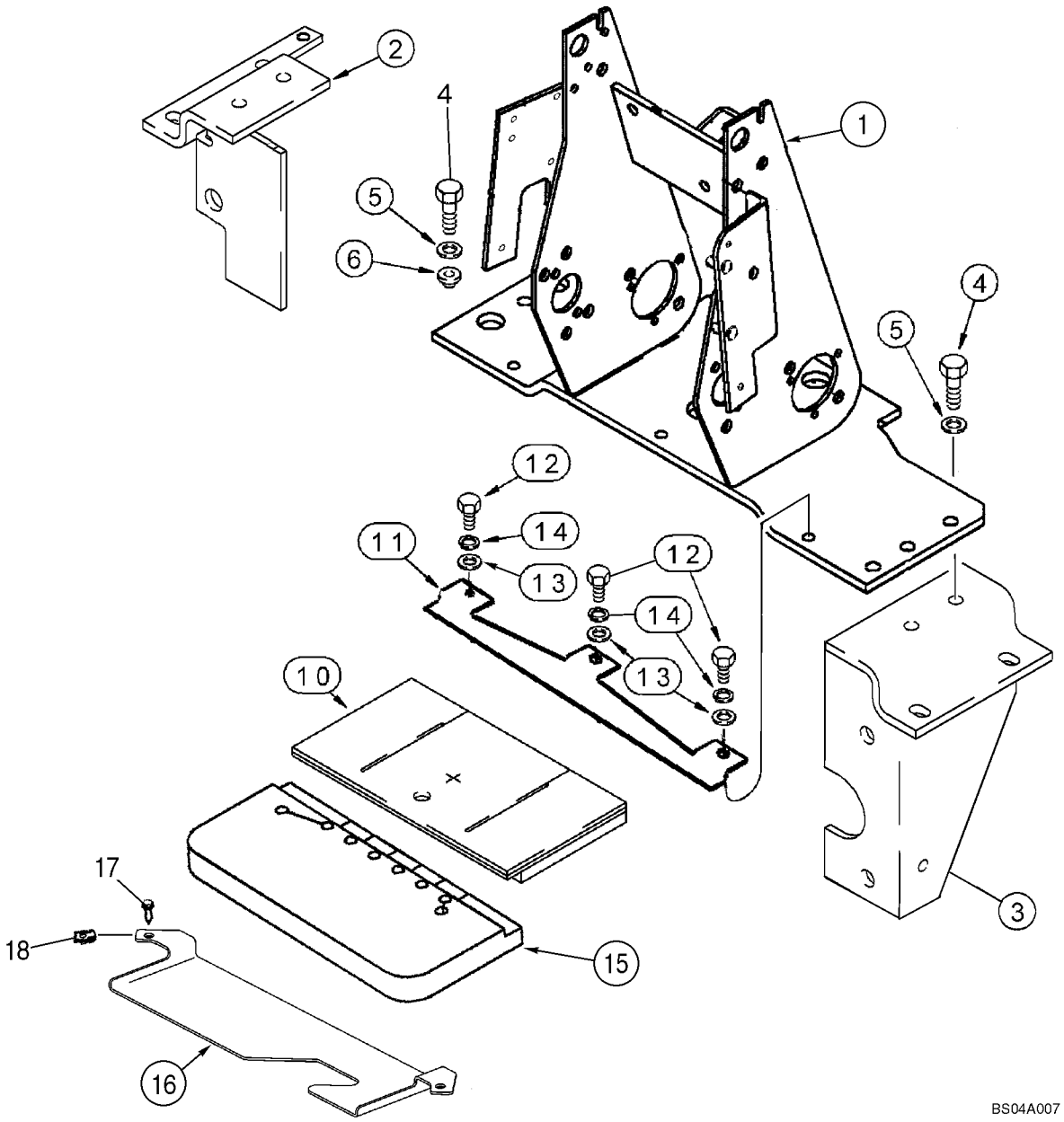

HTTP://WWW.MINNPARBACKHOEPARTS.COM



APOYO DE LA TORRE DE CONTROL DE LA RETROEXCAVADORA Y JUNTAS, SIN DE CONTROL PILOTO

| REF | FN | PART NUMBER | YR/SN | QTY | DESCRIPTION |
|---|---|---|---|---|---|
| 1 | | 87418516 | | 1 | PIEZA DE APOYO |
| 2 | | 86985341 | | 1 | PIEZA DE APOYO Left-Hand |
| 3 | | 86985339 | | 1 | PIEZA DE APOYO Right-Hand |
| 4 | | 614-10035 | | 8 | TORNILLO M10 x 35 |
| 5 | | 496-41041 | | 8 | ARANDELA 13/32 x 1-1/8 x 9/64 |
| 6 | | 179956A1 | | 2 | AMORTIGUADOR |
| 10 | | 400069A1 | | 1 | ESPUMA |
| 11 | | 87418518 | | 1 | PIEZA DE APOYO |
| 12 | | 614-8020 | | 3 | TORNILLO M8 x 20 |
| 13 | | 895-11008 | | 3 | ARANDELA 9 x 17 x 1,6 mm |
| 14 | | 892-11008 | | 3 | ARANDELA M8 |
| 15 | | 87439210 | | 1 | ESPUMA |
| 16 | | 397911A1 | | 1 | PIEZA DE SOPORTE |
| 17 | | 233724A1 | | 2 | TORNILLO M6 x 25 |
| 18 | | 833-40406 | | 2 | TUERCA M6 |

HTTP://WWW.MINNPARBACKHOEPARTS.COM

| 09-13 | | p1 | 01/04 |
|---|---|---|---|

TORRE DE CONTROL DE LA RETROEXCAVADORA SOPORTE, CON DE CONTROL PILOTO

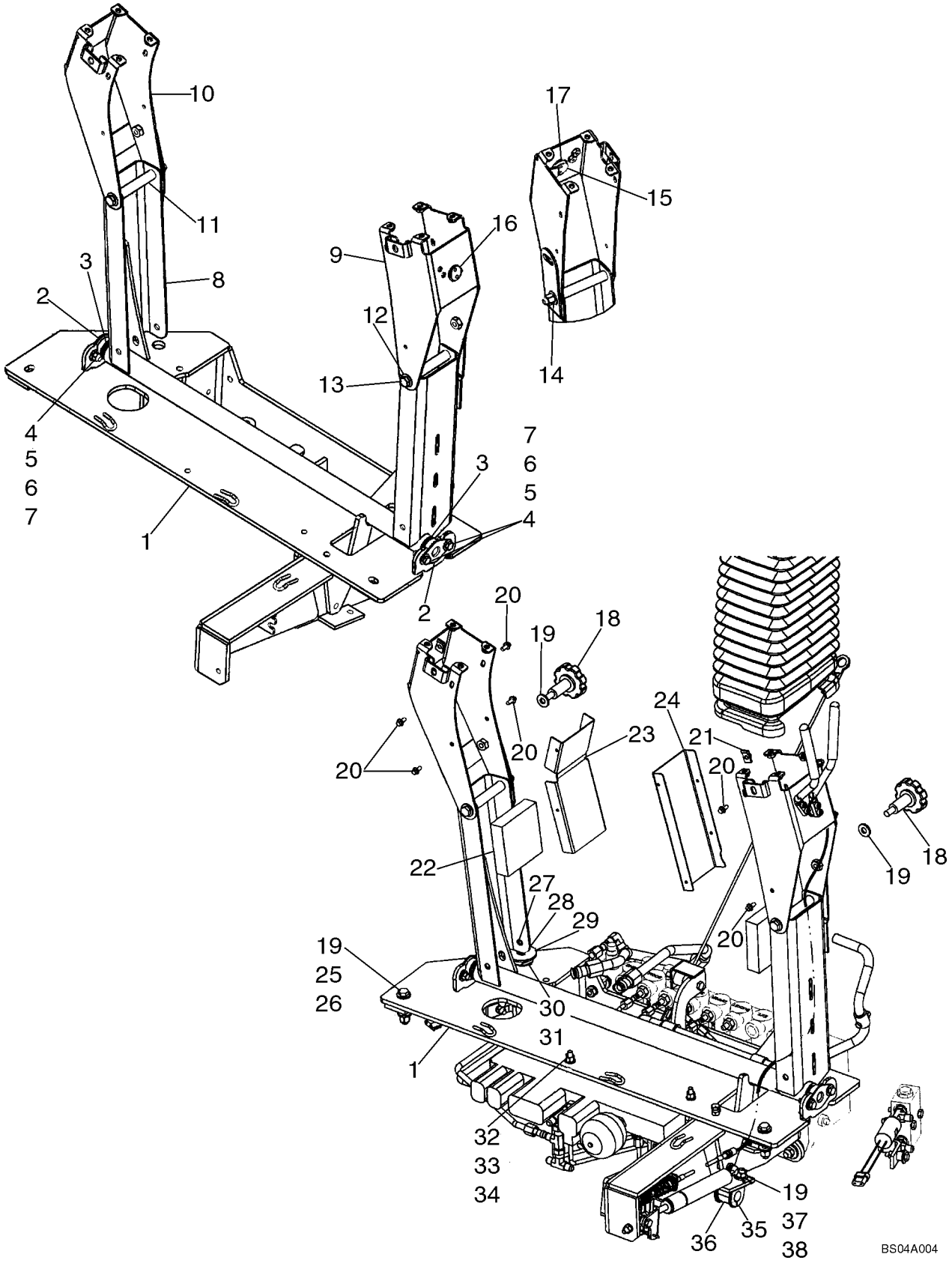

HTTP://WWW.MINNPARBACKHOEPARTS.COM



TORRE DE CONTROL DE LA RETROEXCAVADORA SOPORTE, CON DE CONTROL PILOTO

| REF | FN | PART NUMBER | YR/SN | QTY | DESCRIPTION |
|---|---|---|---|---|---|
| | | 87440711 | | 1 | TORRECILLA Tower Assembly; Pilot Controls; Includes Ref 1 - 17 |
| 1 | | 87440710 | | 1 | PIEZA DE APOYO Bracket, Tower |
| 2 | | D148993 | | 2 | COJINETE |
| 3 | | A30881 | | 4 | ARANDELA Seal |
| 4 | | 895-15008 | | 8 | ARANDELA 9 x 20 x 1.6 mm |
| 5 | | 614-8025 | | 4 | TORNILLO M8 x 25 |
| 6 | | 892-11008 | | 4 | ARANDELA Lock, M8 |
| 7 | | 829-1408 | | 4 | TUERCA M8 |
| 8 | | 87435275 | | 1 | PIVOTE (CONJUNTO) |
| 9 | | 87440704 | | 1 | PIEZA DE APOYO Right-Hand Joystick Mounting |
| 10 | | 87440706 | | 1 | PIEZA DE APOYO Left-Hand Joystick Mounting |
| 11 | | 86983278 | | 2 | TUBO Spacer |
| 12 | | 895-15010 | | 4 | ARANDELA 11 x 24 x 2 mm |
| 13 | | 814-10130 | | 2 | TORNILLO M10 x 130 |
| 14 | | 832-10410 | | 2 | TUERCA M10 |
| 15 | | 87431529 | | 1 | PALANCA (CONJUNTO) Control Tower Release |
| 16 | | 103-11100 | | 1 | ANILLO Retaining, No. 100 |
| 17 | | 87405706 | | 1 | ARANDELA Wave, 1 inch |
| 18 | | 87437688 | | 2 | POMO Lateral Adjustment Pilot Control Tower |
| 19 | | 896-15010 | | 8 | ARANDELA 11 x 24 x 3 mm |
| 20 | | 781-24613 | | 8 | TORNILLO Flange Head, M6 x 13, Self-Tapping |
| 21 | | 833-40406 | | 2 | TUERCA M6, Spring |
| 22 | | 87425696 | | 2 | JUNTA DE CAUCHO |
| 23 | | 87431301 | | 1 | PLACA Shield, Left-Hand |
| 24 | | 87431300 | | 1 | PLACA Shield, Right-Hand |
| 25 | | 814-10060 | | 2 | TORNILLO M10 x 60 |
| 26 | | 832-10410 | | 2 | TUERCA M10 |
| 27 | | 87040885 | | 2 | TORNILLO Locking, M10 x 45 |
| 28 | | 892-11010 | | 2 | ARANDELA DE FRENO M10 |
| 29 | | 496-81018 | | 1 | ARANDELA 17/32 x 2 x 1/8 |
| 30 | | D148962 | | 1 | ARANDELA Belleville |
| 31 | | 87440381 | | 1 | SEPARADOR Spacer |
| 32 | | 896-11008 | | 2 | ARANDELA 9 x 17 x 2 mm |
| 33 | | 832-10408 | | 2 | TUERCA M8 |
| 34 | | 864-8055 | | 2 | TORNILLO Socket, M8 x 55 |

HTTP://WWW.MINNPARBACKHOEPARTS.COM

| 09-13 | | p2 | 01/04 |
|---|---|---|---|

TORRE DE CONTROL DE LA RETROEXCAVADORA SOPORTE, CON DE CONTROL PILOTO

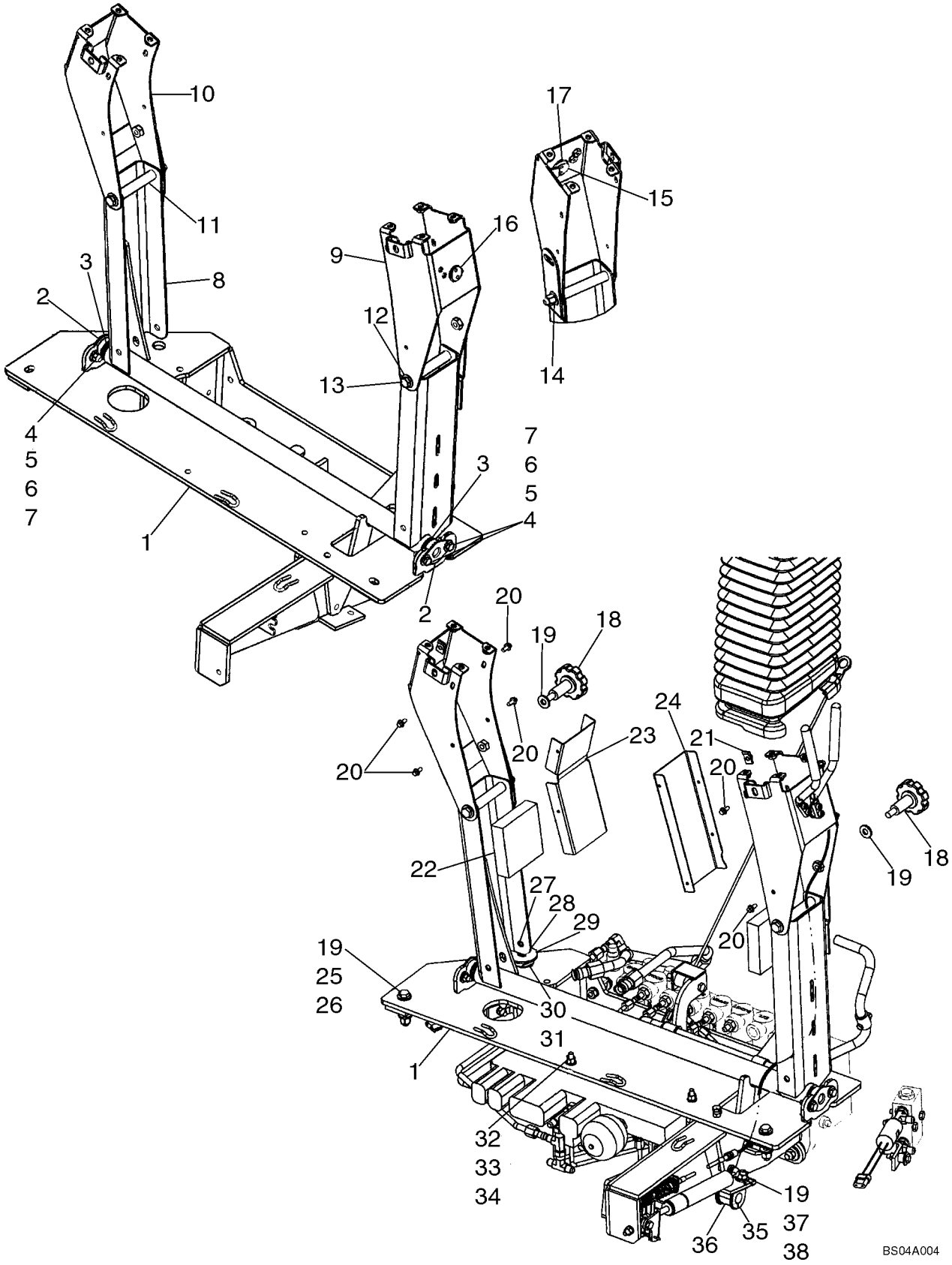

HTTP://WWW.MINNPARBACKHOEPARTS.COM



TORRE DE CONTROL DE LA RETROEXCAVADORA SOPORTE, CON DE CONTROL PILOTO

| REF | FN | PART NUMBER | YR/SN | QTY | DESCRIPTION |
|---|---|---|---|---|---|
| 35 | | D143411 | | 1 | COLLAR |
| 36 | | D74182 | | 1 | PASACABLES Isolation Block |
| 37 | | 829-1410 | | 1 | TUERCA M10 |
| 38 | | 614-10025 | | 1 | TORNILLO M10 x 25 |

HTTP://WWW.MINNPARBACKHOEPARTS.COM

| 09-14 | | p1 | 01/04 |
|---|---|---|---|

TORRE DE CONTROL DE LA RETROEXCAVADORA SOPORTE DE JUNTA, CON DE CONTROL PILOTO

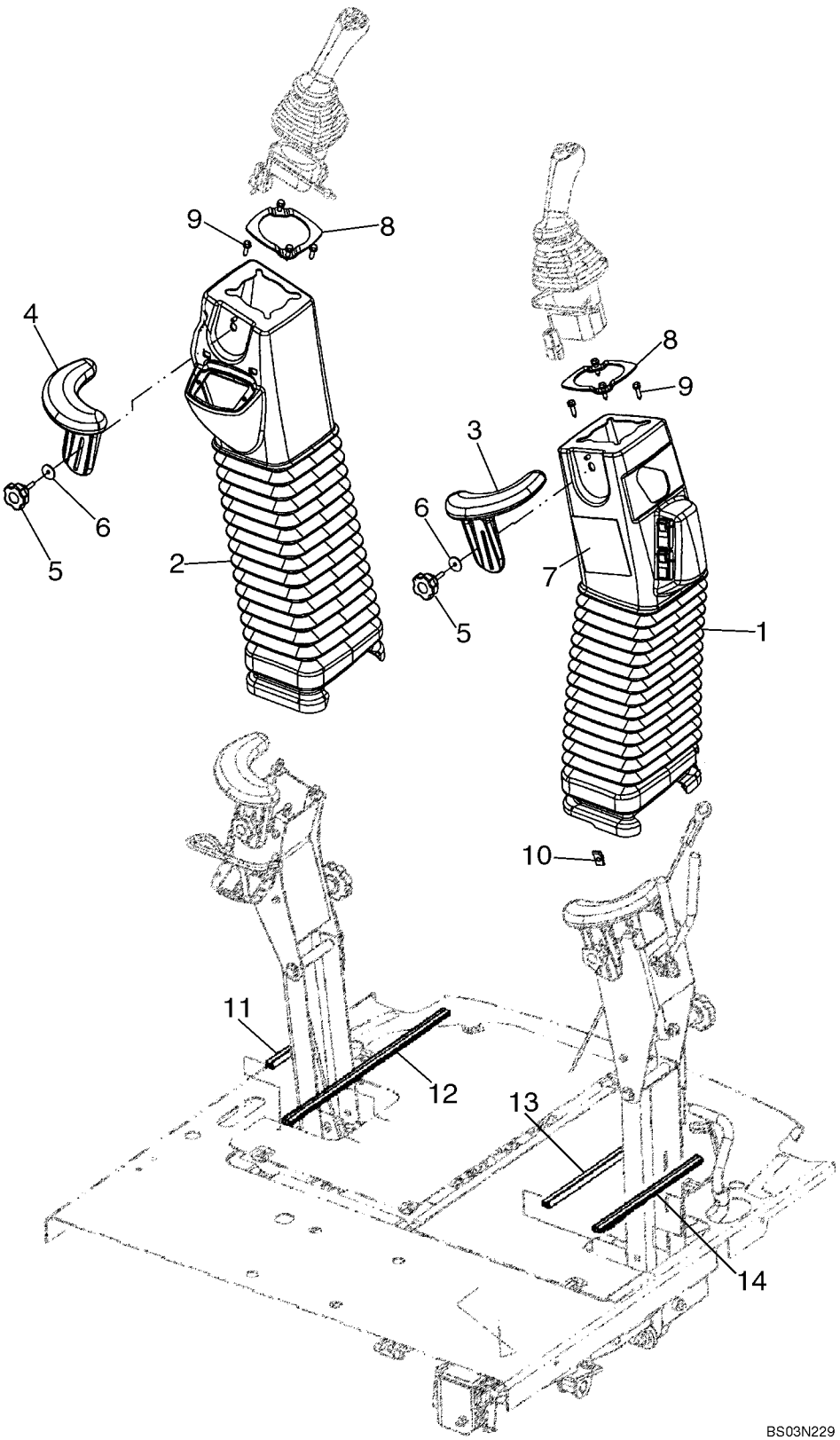

HTTP://WWW.MINNPARBACKHOEPARTS.COM



TORRE DE CONTROL DE LA RETROEXCAVADORA SOPORTE DE JUNTA, CON DE CONTROL PILOTO

| REF | FN | PART NUMBER | YR/SN | QTY | DESCRIPTION |
|---|---|---|---|---|---|
| 1 | | 87422678 | | 1 | PROTECTOR Includes (1) 87422679 Boot and (1) 86992675 Pin |
| 2 | | 87422675 | | 1 | PROTECTOR Includes (1) 87422676 Boot, (1) 86992675 Pin, (2) 87418520 No. 10 Threaded Inserts |
| 3 | | 87437366 | | 1 | SOPORTE Wrist |
| 4 | | 87437369 | | 1 | SOPORTE Wrist |
| 5 | | 87437689 | | 2 | POMO |
| 6 | | 895-30109 | | 2 | ARANDELA |
| 7 | | 87414205 | | 1 | CALCOMANIA Pattern Selecting |
| 8 | | 87435372 | | 2 | PLACA DE MONTAJE |
| 9 | | 233724A1 | | 8 | TORNILLO With Washer, M6 x 25 |
| 10 | | 833-40406 | | 2 | TUERCA M6 |
| 11 | | 87433008 | | 1 | JUNTA DE CAUCHO 183 mm (7-1/4 in); Cut From 87438002 |
| 12 | | 87433006 | | 1 | JUNTA DE CAUCHO 428 mm (16-7/8 in); Cut From 87438002 |
| 13 | | 87433005 | | 1 | JUNTA DE CAUCHO 335 mm (13-3/16 in); Cut From 87438002 |
| 14 | | 87433007 | | 1 | JUNTA DE CAUCHO 275 mm (10-7/8 in); Cut From 87438002 |

HTTP://WWW.MINNPARBACKHOEPARTS.COM

| 09-15 | | p1 | 01/04 |
|---|---|---|---|

TORRE DE CONTROL DE LA RETROEXCAVADORA PALANCA (TRABA DEL AGUILÓN), CON DE CONTROL PILOTO

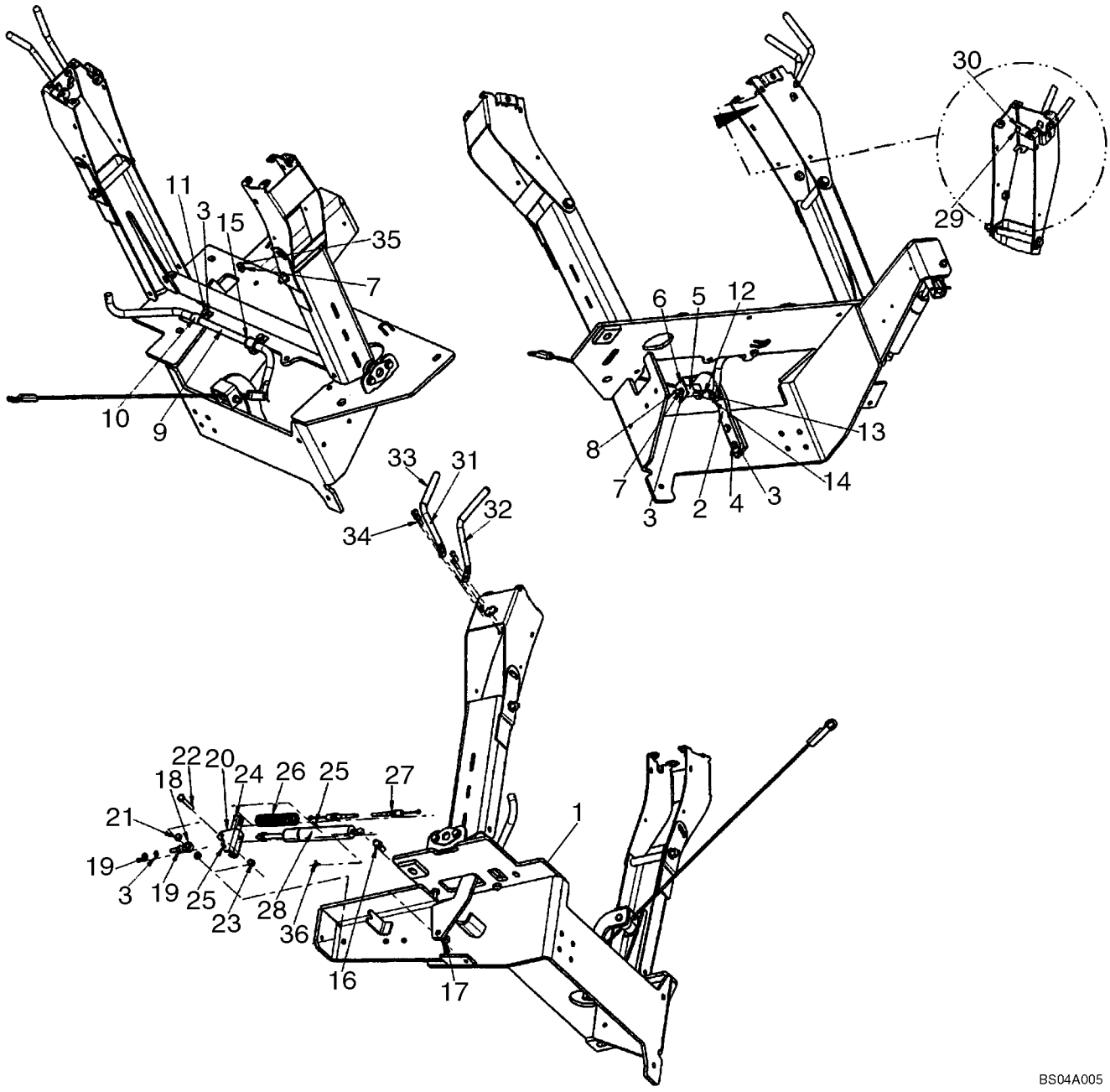

HTTP://WWW.MINNPARBACKHOEPARTS.COM



TORRE DE CONTROL DE LA RETROEXCAVADORA PALANCA (TRABA DEL AGUILÓN), CON DE CONTROL PILOTO

| REF | FN | PART NUMBER | YR/SN | QTY | DESCRIPTION |
|---|---|---|---|---|---|
| 1 | | 87440711 | | 1 | TORRECILLA Pilot Control Tower Assembly; See Figure 09-13 |
| 2 | | 86984544 | | 1 | PIEZA DE SOPORTE Roller Mounting |
| 3 | | 892-11008 | | 6 | ARANDELA Lock, M8 |
| 4 | | 614-8030 | | 2 | TORNILLO M8 x 30 |
| 5 | | 86984547 | | 2 | GUIA |
| 6 | | 86984545 | | 1 | PIEZA DE SOPORTE |
| 7 | | 829-1408 | | 2 | TUERCA M8 |
| 8 | | 814-8070 | | 1 | TORNILLO M8 x 70 |
| 9 | | 87422696 | | 1 | VARILLA Boom Latch Release |
| 10 | | D143723 | | 2 | BRIDA Clamp |
| 11 | | 614-8025 | | 2 | TORNILLO M8 x 25 |
| 12 | | 87435924 | | 1 | CABLE Boom Latch |
| 13 | | 427-5094 | | 1 | PASADOR DE HORQUILLA 5/16 x 15/16 |
| 14 | | 432-612 | | 1 | PASADOR ABIERTO 3/32 x 3/4 |
| 15 | | D143591 | | 2 | ANILLO DE CIERRE |
| 16 | | 85824067 | | 1 | CABEZA DE ARTICULACION Stud |
| 17 | | 832-10410 | | 1 | TUERCA M10 |
| 18 | | 85824081 | | 1 | JUNTA DE ROTULA |
| 19 | | 425-115 | | 2 | TUERCA 5/16 |
| 20 | | 85824080 | | 1 | PIEZA DE SOPORTE |
| 21 | | 85821520 | | 2 | SEPARADOR |
| 22 | | 413-528 | | 1 | TORNILLO 5/16 x 1-3/4 |
| 23 | | 231-1445 | | 1 | CONTRA TUERCA 5/16 |
| 24 | | 86984549 | | 1 | PERFIL Channel |
| 25 | | 432-828 | | 2 | PASADOR ABIERTO 1/8 x 1-3/4 |
| 26 | | 87405362 | | 1 | RESORTE |
| 27 | | 87437806 | | 1 | CABLE FLEXIBLE Pilot Control Positioner |
| 28 | | 86989616 | | 1 | COMPAS Cylinder |
| 29 | | 140-108 | | 1 | TORNILLO No. 10 x 3/4 |
| 30 | | 231-14409 | | 1 | CONTRA TUERCA No. 10 |
| 31 | | 87418368 | | 1 | VARILLA Tower Stationary |
| 32 | | 87418369 | | 1 | VARILLA Tower Position |
| 33 | | 87421909 | | 2 | MANGO |
| 34 | | 565-104 | | 4 | TORNILLO Socket, M6 x 20 |
| 35 | | 614-8040 | | 1 | TORNILLO M8 x 40 |

HTTP://WWW.MINNPARBACKHOEPARTS.COM

| 09-15 | | p2 | 01/04 |
|---|---|---|---|

TORRE DE CONTROL DE LA RETROEXCAVADORA PALANCA (TRABA DEL AGUILÓN), CON DE CONTROL PILOTO

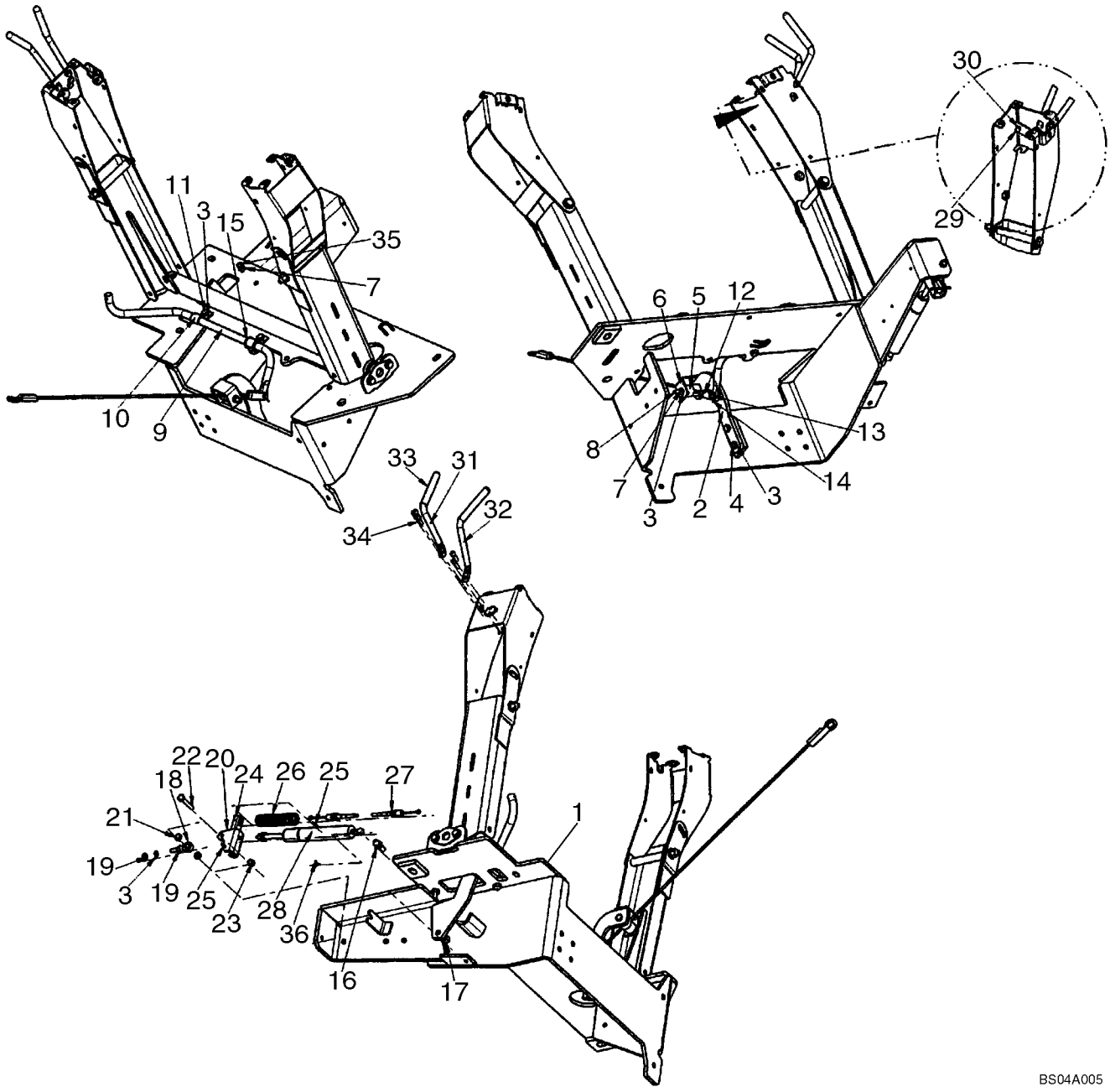

HTTP://WWW.MINNPARBACKHOEPARTS.COM



TORRE DE CONTROL DE LA RETROEXCAVADORA PALANCA (TRABA DEL AGUILÓN), CON DE CONTROL PILOTO

| REF | FN | PART NUMBER | YR/SN | QTY | DESCRIPTION |
|---|---|---|---|---|---|
| 36 | | 3233348R1 | | 1 | CLIP ELECTRICO |

HTTP://WWW.MINNPARBACKHOEPARTS.COM

| 09-16 | | p1 | 01/04 |
|---|---|---|---|

CONTROLES - RETROEXCAVADORA, CON PEDAL DE OSCILACIÓN (MODELOS SIN PALA EXTENDIBLE)

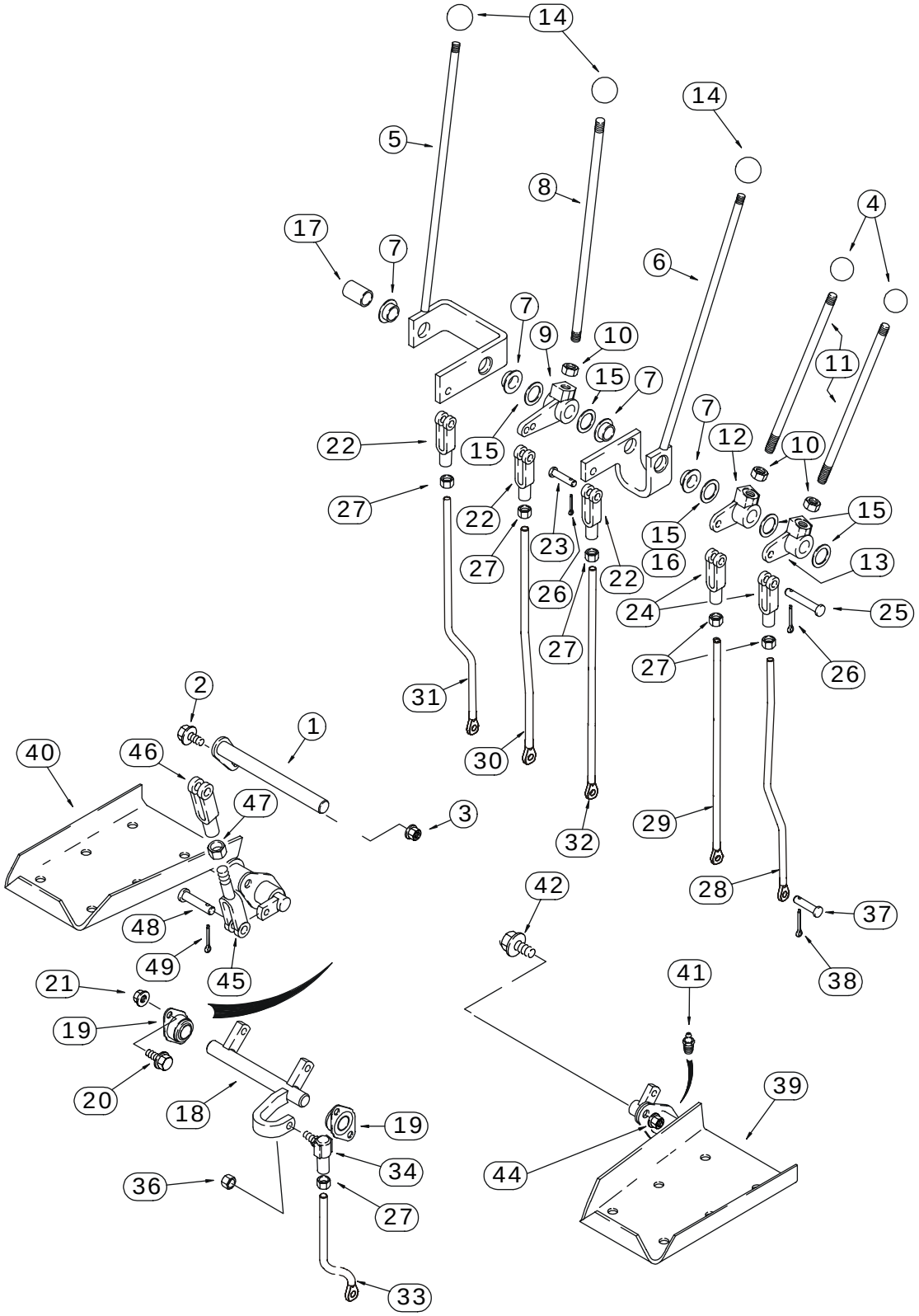


BS03M099

HTTP://WWW.MINNPARBACKHOEPARTS.COM



CONTROLES - RETROEXCAVADORA, CON PEDAL DE OSCILACIÓN (MODELOS SIN PALA EXTENDIBLE)

| REF | FN | PART NUMBER | YR/SN | QTY | DESCRIPTION |
|---|---|---|---|---|---|
| 1 | | 129015A1 | | 1 | EJE |
| 2 | | 614-8025 | | 1 | TORNILLO M8 x 25 |
| 3 | | 832-10408 | | 1 | TUERCA Lock, M8 |
| 4 | | D59912 | | 2 | PLACA Stabilizer Control Levers |
| 5 | | 136267A1 | | 1 | PALANCA Boom; Incl. Ref 7 |
| 6 | | 136269A1 | | 1 | PALANCA Bucket; Incl. Ref 7 |
| 7 | | D148992 | | 2 | CASQUILLO |
| 8 | | 136263A1 | | 1 | VARILLA Dipper |
| 9 | | D150397 | | 1 | PALANCA-REENVIO Dipper |
| 10 | | 425-118 | | 3 | TUERCA 1/2 NF |
| 11 | | 136261A1 | | 2 | PALANCA MANDO Stabilizer |
| 12 | | D150435 | | 1 | PALANCA-REENVIO Right-Hand Stabilizer Control |
| 13 | | D150434 | | 1 | PALANCA-REENVIO Left-Hand Stabilizer Control |
| 14 | | L54563 | | 3 | PLACA Boom, Dipper, and Bucket |
| 15 | | A30881 | | X | ARANDELA 49/64 x 1-15/64 x 1/32; Used As A Shim |
| 16 | | D34666 | | 1 | ARANDELA 25/32 x 1-3/8 x 9/64; May Be Used In Place Of Ref 15 |
| 17 | | D150486 | | 1 | ESPACIADOR Not Used On Models With Extendable Dipper |
| 18 | | D148994 | | 1 | EJE Swing |
| 19 | | D139039 | | 2 | COJINETE |
| 20 | | 614-8025 | | 4 | TORNILLO M8 x 25 |
| 21 | | 832-10408 | | 4 | TUERCA Lock, M8 |
| 22 | | 213-126 | | 3 | HORQUILLA PEQUENA 3/8 NF |
| 23 | | D149288 | | 3 | BULON/PIN, LARGO Special |
| 24 | | D150493 | | 2 | HORQUILLA PEQUENA |
| 25 | | 427-6088 | | 2 | BULON/PIN, LARGO 3/8 x 7/8 |
| 26 | | 432-612 | | 5 | PASADOR ABIERTO 3/32 x 3/4 |
| 27 | | 425-156 | | 6 | TUERCA 3/8 NF |
| 28 | | 87422243 | | 1 | VARILLA ROSCADA Left-Hand Stabilizer Control |
| 29 | | 87422245 | | 1 | VARILLA ROSCADA Right-Hand Stabilizer Control |
| 30 | | 87422247 | | 1 | VARILLA ROSCADA Dipper |
| 31 | | 87422241 | | 1 | VARILLA ROSCADA Boom |
| 32 | | 87422249 | | 1 | VARILLA ROSCADA Bucket |
| 33 | | 87422239 | | 1 | VARILLA ROSCADA Swing |
| 34 | | D149295 | | 1 | JUNTA DE ROTULA 3/8 |

HTTP://WWW.MINNPARBACKHOEPARTS.COM

| 09-16 | | p2 | 01/04 |
|---|---|---|---|

CONTROLES - RETROEXCAVADORA, CON PEDAL DE OSCILACIÓN (MODELOS SIN PALA EXTENDIBLE)

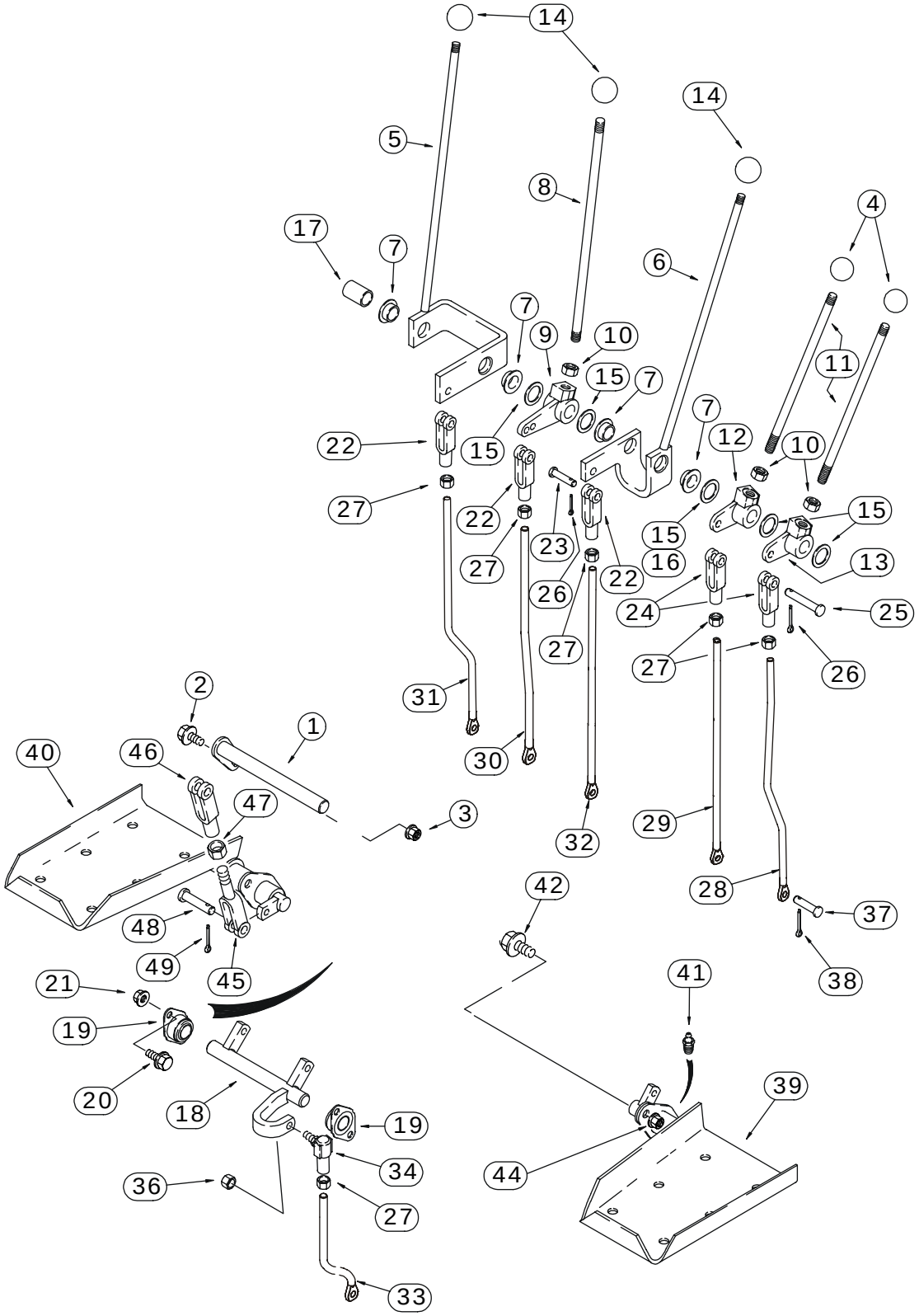


BS03M099

HTTP://WWW.MINNPARBACKHOEPARTS.COM



CONTROLES - RETROEXCAVADORA, CON PEDAL DE OSCILACIÓN (MODELOS SIN PALA EXTENDIBLE)

| REF | FN | PART NUMBER | YR/SN | QTY | DESCRIPTION |
|---|---|---|---|---|---|
| 36 | | 425-116 | | 1 | TUERCA 3/8 NF |
| 37 | | D149287 | | 6 | BULON/PIN, LARGO 5/16 |
| 38 | | 432-612 | | 6 | PASADOR ABIERTO 3/32 x 3/4 |
| 39 | | 136271A2 | | 1 | PEDAL (CONJUNTO) Left-Hand Swing; Without Pilot Controls |
| 40 | | 136270A2 | | 1 | PEDAL (CONJUNTO) Right-Hand Swing; Without Pilot Controls |
| 41 | | 219-1 | | 2 | ENGRASADOR 1/8 PT x 21/32 |
| 42 | | 614-10025 | | 4 | TORNILLO M10 x 25 |
| 44 | | 832-10410 | | 4 | TUERCA Lock, M10 |
| 45 | | D150503 | | 2 | EXTREMIDAD Yoke |
| 46 | | D149262 | | 2 | HORQUILLA PEQUENA 3/8 |
| 47 | | 425-156 | | 2 | TUERCA 3/8 NF |
| 48 | | D149288 | | 4 | BULON/PIN, LARGO 3/8 |
| 49 | | 432-612 | | 4 | PASADOR ABIERTO 3/32 x 3/4 |

HTTP://WWW.MINNPARBACKHOEPARTS.COM



CONTROLES - RETROEXCAVADORA, CON PEDAL DE OSCILACIÓN (MODELOS CON PALA EXTENDIBLE)

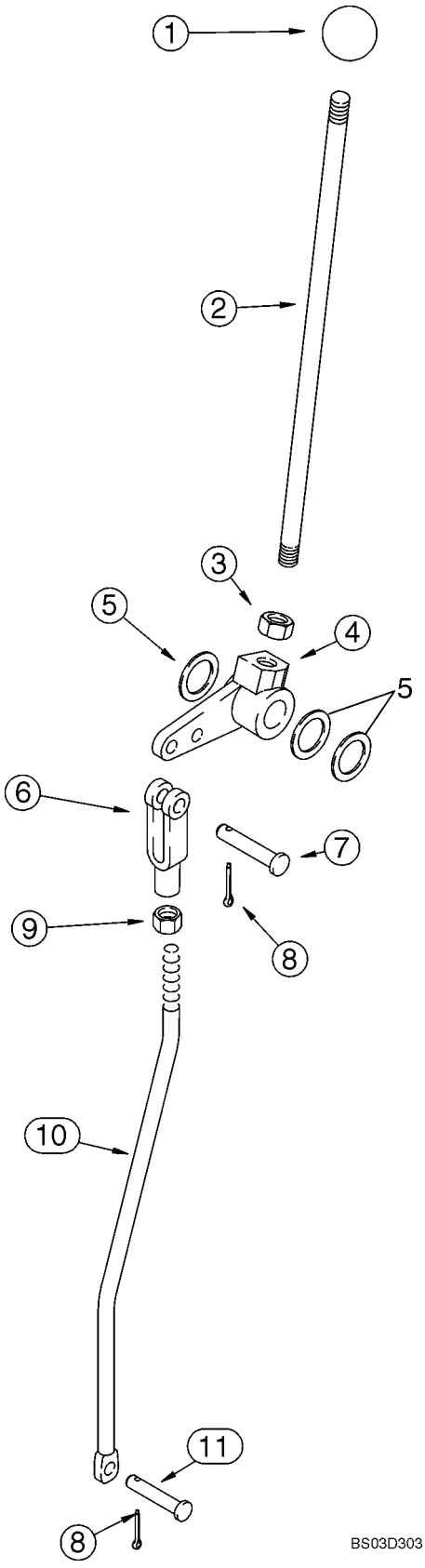

HTTP://WWW.MINNPARBACKHOEPARTS.COM



CONTROLES - RETROEXCAVADORA, CON PEDAL DE OSCILACIÓN (MODELOS CON PALA EXTENDIBLE)

| REF | FN | PART NUMBER | YR/SN | QTY | DESCRIPTION |
|---|---|---|---|---|---|
| 1 | | L54563 | | 1 | PLACA Extendahoe |
| 2 | | 136263A1 | | 1 | VARILLA Extendahoe |
| 3 | | 425-118 | | 1 | TUERCA 1/2 NF |
| 4 | | 182006A1 | | 1 | PALANCA |
| 5 | | A30881 | | X | ARANDELA 49/64 x 1-15/64 x 1/32 |
| 6 | | 213-126 | | 1 | HORQUILLA PEQUENA 3/8 NF |
| 7 | | 427-6088 | | 1 | BULON/PIN, LARGO 3/8 x 7/8 |
| 8 | | 432-612 | | 2 | PASADOR ABIERTO 3/32 x 3/4 |
| 9 | | 425-156 | | 1 | TUERCA 3/8 NF |
| 10 | | 87440076 | | 1 | VARILLA ROSCADA Extendahoe Rod |
| 11 | | D149287 | | 1 | BULON/PIN, LARGO |

HTTP://WWW.MINNPARBACKHOEPARTS.COM

| 09-18 | | p1 | 01/04 |
|---|---|---|---|

CONTROLES - RETROEXCAVADORA, CON OSCILACIÓN MANUAL (MODELOS SIN PALA EXTENDIBLE)

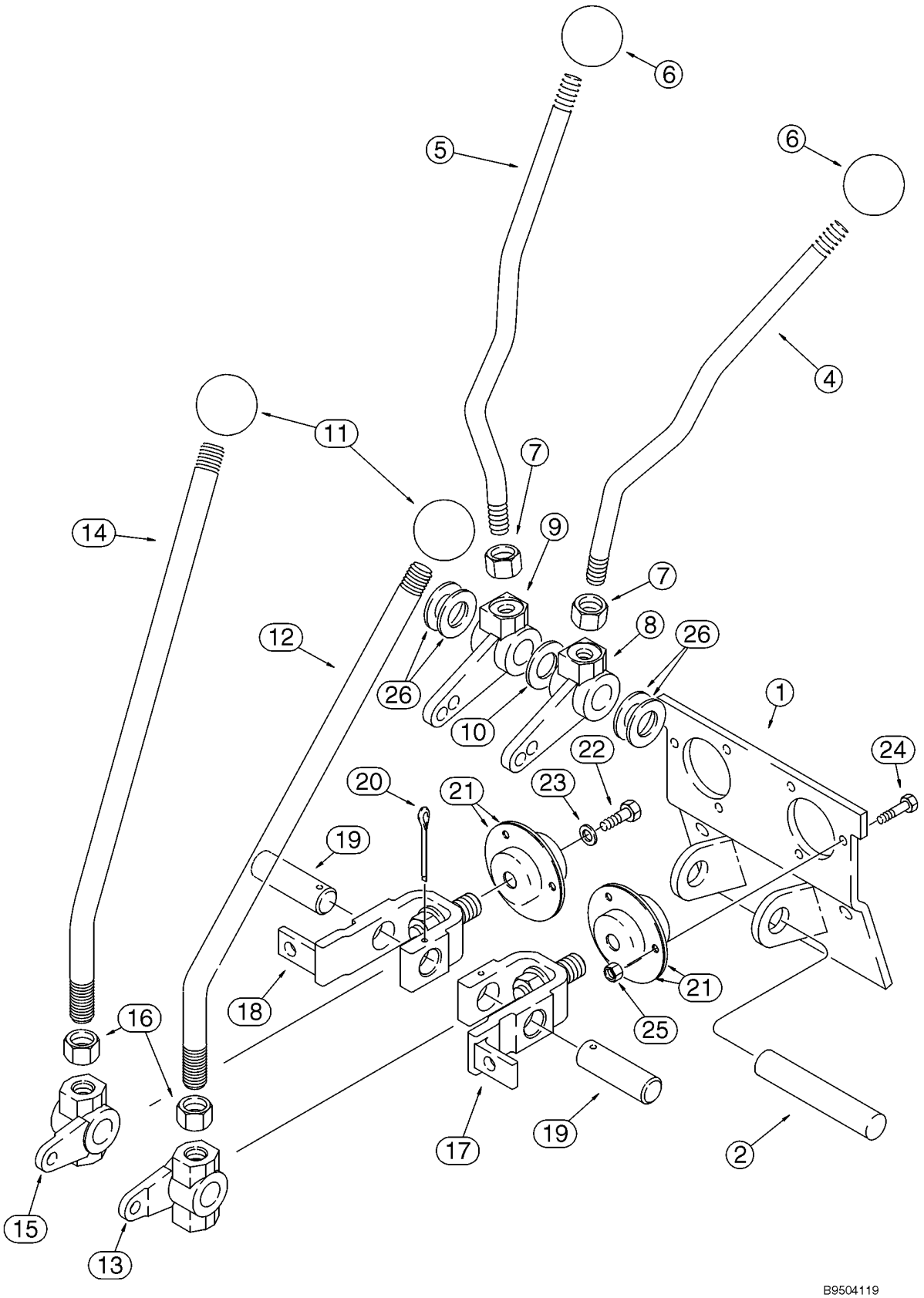

HTTP://WWW.MINNPARBACKHOEPARTS.COM



CONTROLES - RETROEXCAVADORA, CON OSCILACIÓN MANUAL (MODELOS SIN PALA EXTENDIBLE)

| REF | FN | PART NUMBER | YR/SN | QTY | DESCRIPTION |
|---|---|---|---|---|---|
| | | REF | | | MANUAL UPPER CONTROL LEVERS |
| 1 | | 108864A1 | | 1 | APOYADERO |
| 2 | | D148947 | | 1 | BULON/PIN, LARGO Stabilizer |
| 4 | | 409672A1 | | 1 | PALANCA Left-Hand; Stabilizer |
| 5 | | 409673A1 | | 1 | PALANCA Right-Hand; Stabilizer |
| 6 | | D59912 | | 2 | PLACA Stabilizer |
| 7 | | 425-118 | | 2 | TUERCA 1/2 NF |
| 8 | | 108924A1 | | 1 | PALANCA |
| 9 | | 108923A1 | | 1 | PALANCA |
| 10 | | 495-11081 | | 1 | ARANDELA 13/16 x 1-15/32 x 1/8 |
| 11 | | D39118 | | 2 | PLACA |
| 12 | | 125113A1 | | 1 | PALANCA Boom and Swing |
| 13 | | 106989A1 | | 1 | PALANCA Left-Hand Boom and Swing Lever |
| 14 | | 125113A1 | | 1 | PALANCA Bucket and Dipper |
| 15 | | 106990A1 | | 1 | PALANCA Right-Hand Bucket and Dipper Lever |
| 16 | | 425-1110 | | 2 | TUERCA 5/8 NF |
| 17 | | 178006A1 | | 1 | PALANCA Boom and Swing |
| 18 | | 178004A1 | | 1 | PALANCA Bucket and Dipper |
| 19 | | 102765A1 | | 2 | BULON/PIN, LARGO Bellcrank |
| 20 | | 432-828 | | 2 | PASADOR ABIERTO 1/8 x 1-3/4 |
| 21 | | 112380A1 | | 4 | COJINETE |
| 22 | | 614-6016 | | 2 | TORNILLO M6 x 16 |
| 23 | | 396-41028 | | 2 | ARANDELA 9/32 x 7/8 x 3/32 |
| 24 | | 614-6020 | | 6 | TORNILLO M6 x 20 |
| 25 | | 829-1406 | | 6 | TUERCA M6; 10.9 |
| 26 | | A30881 | | X | ARANDELA 49/64 x 1-15/64 x 1/32 |

HTTP://WWW.MINNPARBACKHOEPARTS.COM

| 09-19 | | p1 | 01/04 |
|---|---|---|---|

CONTROLES - RETROEXCAVADORA, CON OSCILACIÓN MANUAL (MODELOS SIN PALA EXTENDIBLE)

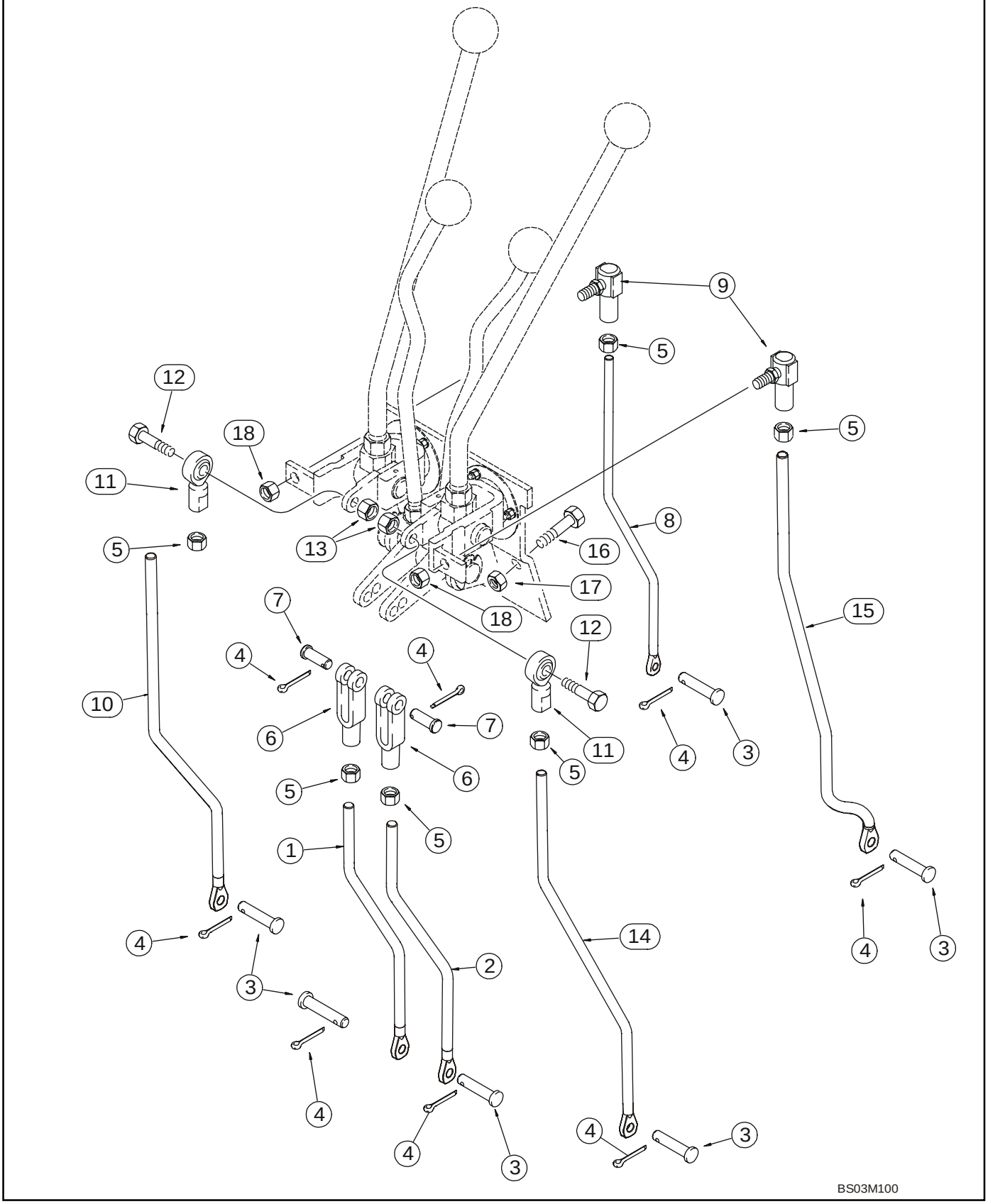

HTTP://WWW.MINNPARBACKHOEPARTS.COM



CONTROLES - RETROEXCAVADORA, CON OSCILACIÓN MANUAL (MODELOS SIN PALA EXTENDIBLE)

| REF | FN | PART NUMBER | YR/SN | QTY | DESCRIPTION |
|---|---|---|---|---|---|
| | | REF | | | MANUAL LOWER CONTROL LEVERS |
| 1 | | 87422260 | | 1 | VARILLA ROSCADA Right-Hand; Stabilizer |
| 2 | | 87422258 | | 1 | VARILLA ROSCADA Left-Hand; Stabilizer |
| 3 | | D149287 | | 6 | BULON/PIN, LARGO |
| 4 | | 432-612 | | 8 | PASADOR ABIERTO 3/32 x 3/4 |
| 5 | | 425-116 | | 6 | TUERCA 3/8 NF |
| 6 | | 213-126 | | 2 | HORQUILLA PEQUENA 3/8 NF |
| 7 | | D149288 | | 2 | BULON/PIN, LARGO Special |
| 8 | | 87422264 | | 1 | VARILLA ROSCADA Bucket |
| 9 | | D149295 | | 2 | JUNTA DE ROTULA |
| 10 | | 87422262 | | 1 | VARILLA ROSCADA Dipper |
| 11 | | D136773 | | 2 | BOLA 3/8 NF |
| 12 | | 413-624 | | 2 | TORNILLO 3/8 x 1-1/2 |
| 13 | | 425-106 | | 2 | TUERCA 3/8 |
| 14 | | 87422256 | | 1 | VARILLA ROSCADA Boom |
| 15 | | 87422253 | | 1 | VARILLA ROSCADA Swing |
| 16 | | 614-10025 | | 2 | TORNILLO M10 x 25 |
| 17 | | 832-10410 | | 2 | TUERCA M10 |
| 18 | | 231-2446 | | 2 | TUERCA 3/8 NF |

HTTP://WWW.MINNPARBACKHOEPARTS.COM



CONTROLES - RETROEXCAVADORA, CON OSCILACIÓN MANUAL (MODELOS CON PALA EXTENDIBLE)

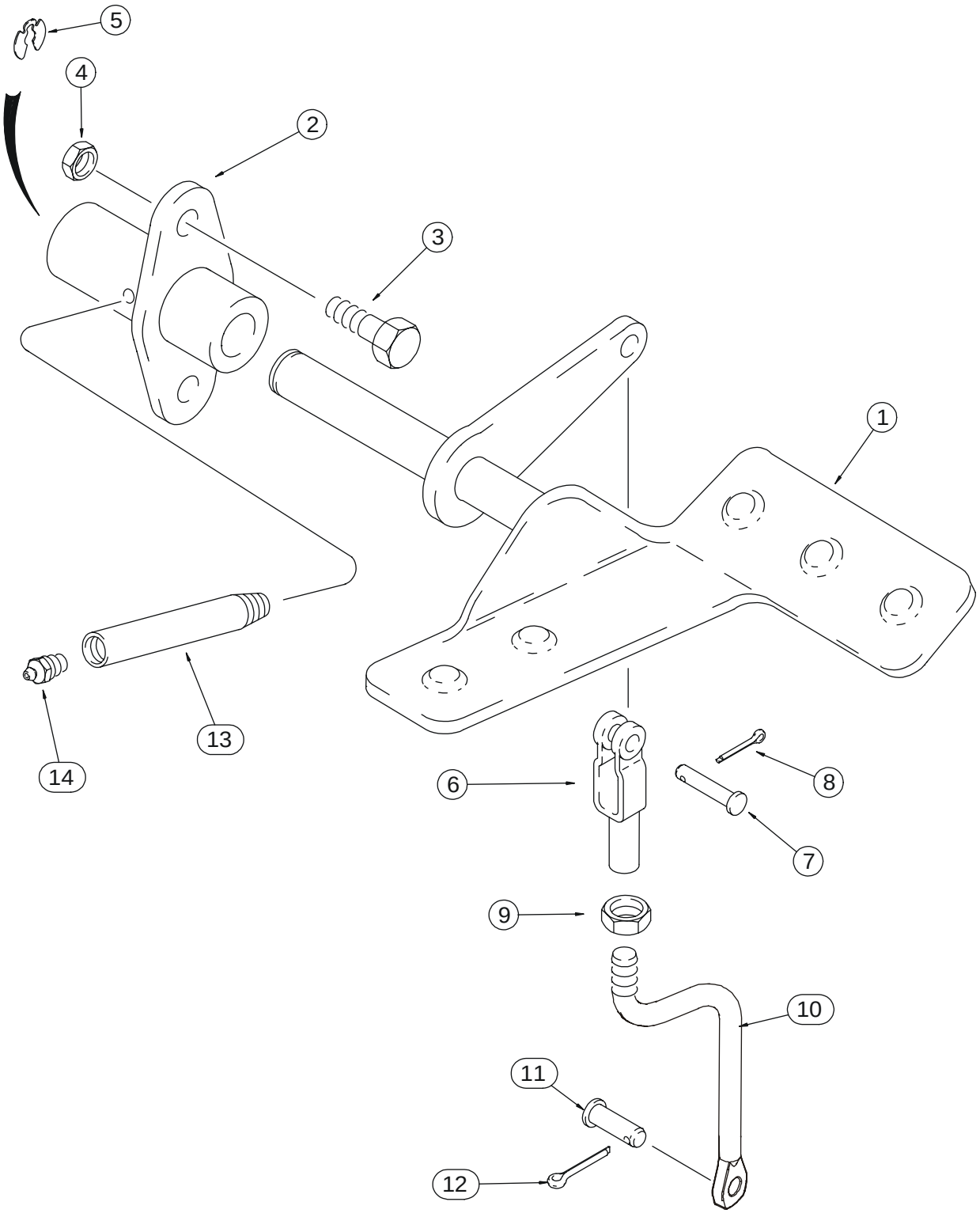


BS03M101

HTTP://WWW.MINNPARBACKHOEPARTS.COM



CONTROLES - RETROEXCAVADORA, CON OSCILACIÓN MANUAL (MODELOS CON PALA EXTENDIBLE)

| REF | FN | PART NUMBER | YR/SN | QTY | DESCRIPTION |
|---|---|---|---|---|---|
| 1 | | 179029A1 | | 1 | PEDAL Right-Hand; Extendahoe |
| 2 | | 126918A1 | | 1 | PALIER |
| 3 | | 614-10025 | | 2 | TORNILLO M10 x 25 |
| 4 | | 832-10410 | | 2 | TUERCA M10 |
| 5 | | D143416 | | 1 | ANILLO DE CIERRE |
| 6 | | D134900 | | 1 | HORQUILLA PEQUENA |
| 7 | | 427-6088 | | 1 | BULON/PIN, LARGO 3/8 x 7/8 |
| 8 | | 432-612 | | 1 | PASADOR ABIERTO 3/32 x 3/4 |
| 9 | | 425-156 | | 1 | TUERCA 3/8 NF |
| 10 | | 87440058 | | 1 | VARILLA ROSCADA Extendahoe Rod |
| 11 | | D149287 | | 1 | BULON/PIN, LARGO |
| 12 | | 432-612 | | 1 | PASADOR ABIERTO 3/32 x 3/4 |
| 13 | | D150032 | | 1 | TUBO Lube |
| 14 | | 219-1 | | 1 | ENGRASADOR 1/8 PT x 21/32 |

HTTP://WWW.MINNPARBACKHOEPARTS.COM

| 09-21 | | p1 | 01/04 |
|---|---|---|---|

CONTROLES - SISTEMA HIDRÁULICO AUXILIAR DE LA RETROEXCAVADORA, SIN DE CONTROL PILOTO

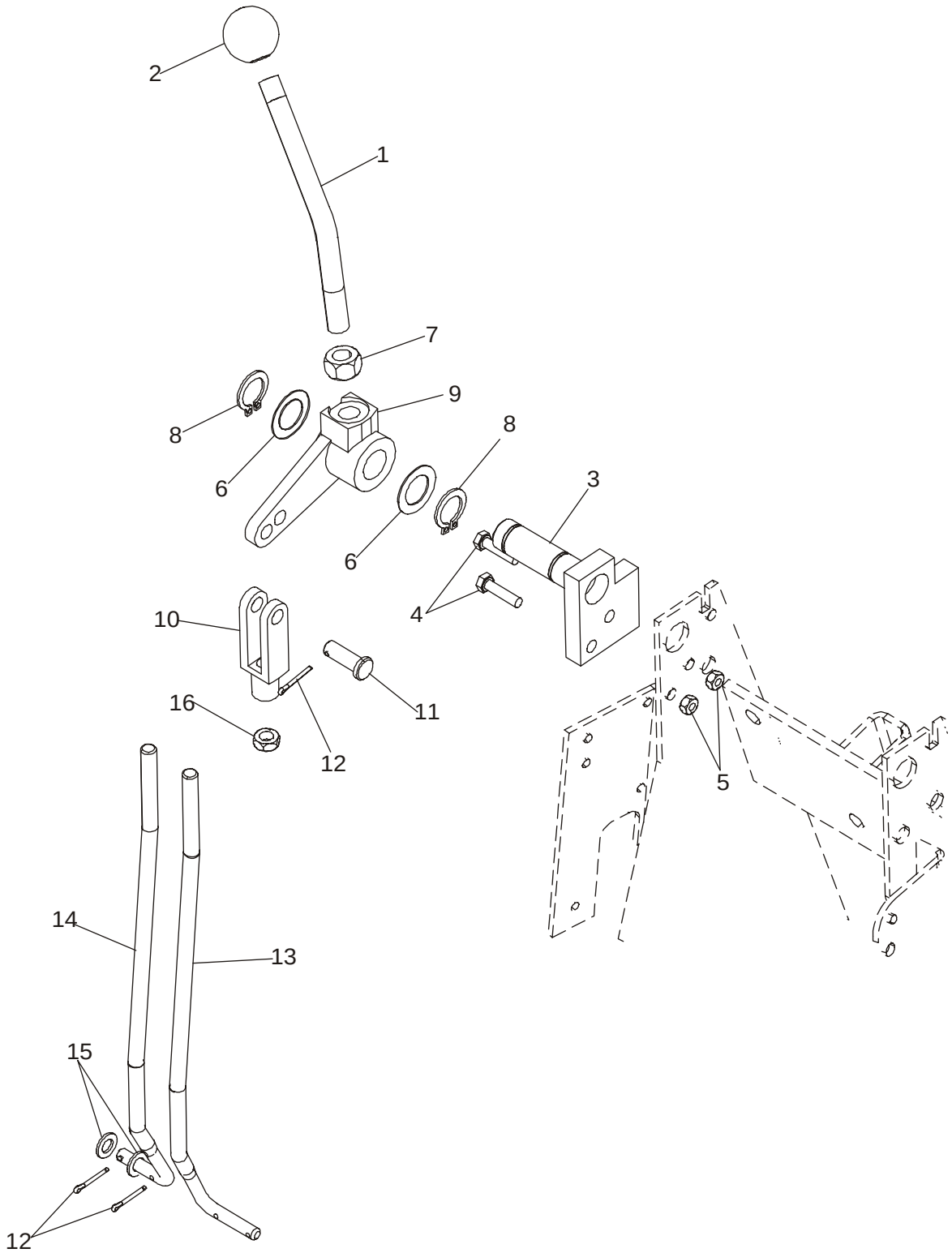

HTTP://WWW.MINNPARBACKHOEPARTS.COM



CONTROLES - SISTEMA HIDRÁULICO AUXILIAR DE LA RETROEXCAVADORA, SIN DE CONTROL PILOTO

| REF | FN | PART NUMBER | YR/SN | QTY | DESCRIPTION |
|---|---|---|---|---|---|
| 1 | | 87425118 | | 1 | VARILLA ROSCADA Auxiliary Control |
| 2 | | D59912 | | 1 | PLACA |
| 3 | | 87425117 | | 1 | PIVOTE (CONJUNTO) 7 or 8 Spool Valve |
| 4 | | 614-6025 | | 2 | TORNILLO M6 x 25 |
| 5 | | 829-1406 | | 2 | TUERCA M6; 10.9 |
| 6 | | A30881 | | 2 | ARANDELA Used As A Shim |
| 7 | | 425-118 | | 1 | TUERCA Hex, 1/2 |
| 8 | | 103-1475 | | 2 | ANILLO DE CIERRE No. 75 |
| 9 | | 182006A1 | | 1 | PALANCA |
| 10 | | 213-126 | | 1 | HORQUILLA PEQUENA 3/8 |
| 11 | | D149288 | | 1 | BULON/PIN, LARGO Clevis, 3/8 |
| 12 | | 432-612 | | 3 | PASADOR ABIERTO 3/32 x 3/4 |
| 13 | | 87439135 | | 1 | VARILLA ROSCADA 7 Spool Valve; If Used |
| 14 | | 87438157 | | 1 | VARILLA ROSCADA 8 Spool Valve; If Used |
| 15 | | 895-11008 | | 2 | ARANDELA 9 x 17 x 1,6 mm |
| 16 | | 425-156 | | 1 | TUERCA Hex, Jam, 3/8 NF |

HTTP://WWW.MINNPARBACKHOEPARTS.COM



RETROEXCAVADORA - ESTABILIZADORES, PLACAS Y ALMOHADILLAS

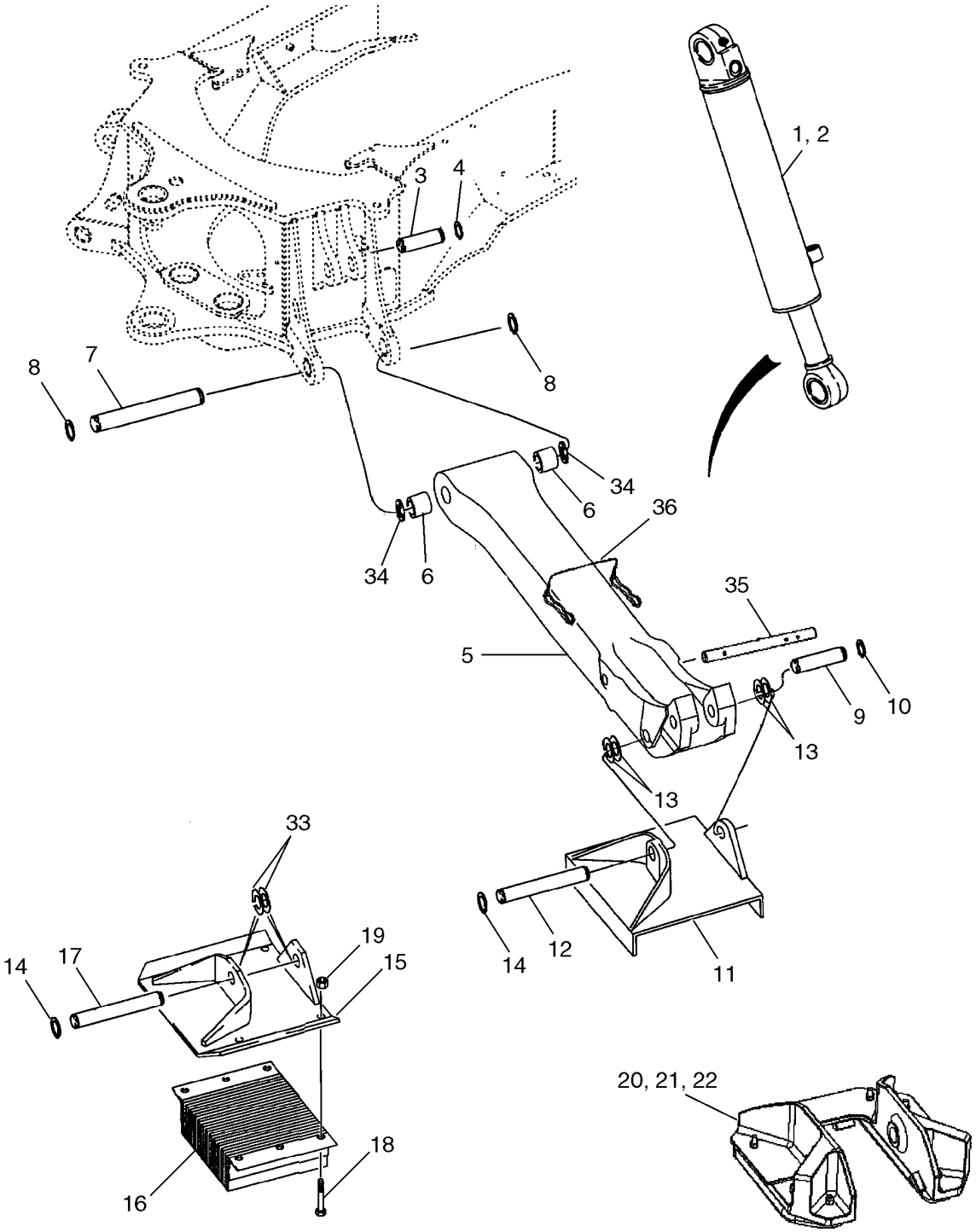

HTTP://WWW.MINNPARBACKHOEPARTS.COM



RETROEXCAVADORA - ESTABILIZADORES, PLACAS Y ALMOHADILLAS

| REF | FN | PART NUMBER | YR/SN | QTY | DESCRIPTION |
|---|---|---|---|---|---|
| 1 | | 195503A1 | | 1 | CILINDRO (CONJUNTO) 102 ID x 553 mm strk; Stabilizer; Right-Hand; See Figure 08-61 |
| 2 | | 195504A1 | | 1 | CILINDRO 102 ID x 553 mm strk; Stabilizer; Left-Hand; See Figure 08-61 |
| 3 | | D38907 | | 2 | PERNO Stabilizer Cylinder to Chassis |
| 4 | | 103-16175 | | 4 | ANILLO DE CIERRE No. 175 |
| 5 | | 446222A1 | | 2 | ESTABILIZADOR 1135 mm (44-11/16 in), Leg; Incl. Ref 6 |
| 6 | | D50146 | | 2 | CASQUILLO |
| 7 | | 121665A1 | | 2 | BULON/PIN, LARGO Stabilizer Leg to Chassis |
| 8 | | 103-16175 | | 4 | ANILLO DE CIERRE No. 175 |
| 9 | | D26002 | | 2 | PERNO Stabilizer Cylinder |
| 10 | | D25279 | | 4 | ANILLO DE CIERRE |
| 11 | | D88427 | | 2 | PLACA Cleated, If Used |
| 12 | | D28648 | | 2 | PERNO Plate/Pad to Leg |
| 13 | | D143406 | | X | ARANDELA Used as a Spacer |
| 14 | | D25279 | | 4 | ANILLO DE CIERRE |
| 15 | | D142519 | | 2 | ZAPATA (CONJUNTO) Street or Cemetery, If Used |
| 16 | | D61368 | | 2 | AMORTIGUADOR Rubber, If Used |
| 17 | | D39256 | | 2 | PIVOTE DE EJE Plate to Leg |
| 18 | | 413-1228 | | 8 | TORNILLO 3/4 x 1-3/4 |
| 19 | | 425-1012 | | 8 | TUERCA 3/4 |
| 25A | | 408398A1 | | 2 | TACO PLATE, Flipover |
| 25B | | 339680A2 | | 4 | PLACA, CAUCHO Flipover |
| 25C | | 832-41312 | | 16 | TUERCA M12 |
| 33 | | D143406 | | X | ARANDELA Used as a Spacer |
| 34 | | 495-81282 | | X | ARANDELA 2-1/16 x 3 x 3/32; Used as a Spacer |
| 35 | | 408405A1 | | 2 | PERNO DE PIVOTE Used With 408398A1 Pad |
| 36 | | 446454A1 | | 2 | PASADOR DE FIJACION Used With 408398A1 Pad |

HTTP://WWW.MINNPARBACKHOEPARTS.COM



RETROEXCAVADORA - TORRE DE OSCILACIÓN Y CILINDROS DE OSCILACIÓN

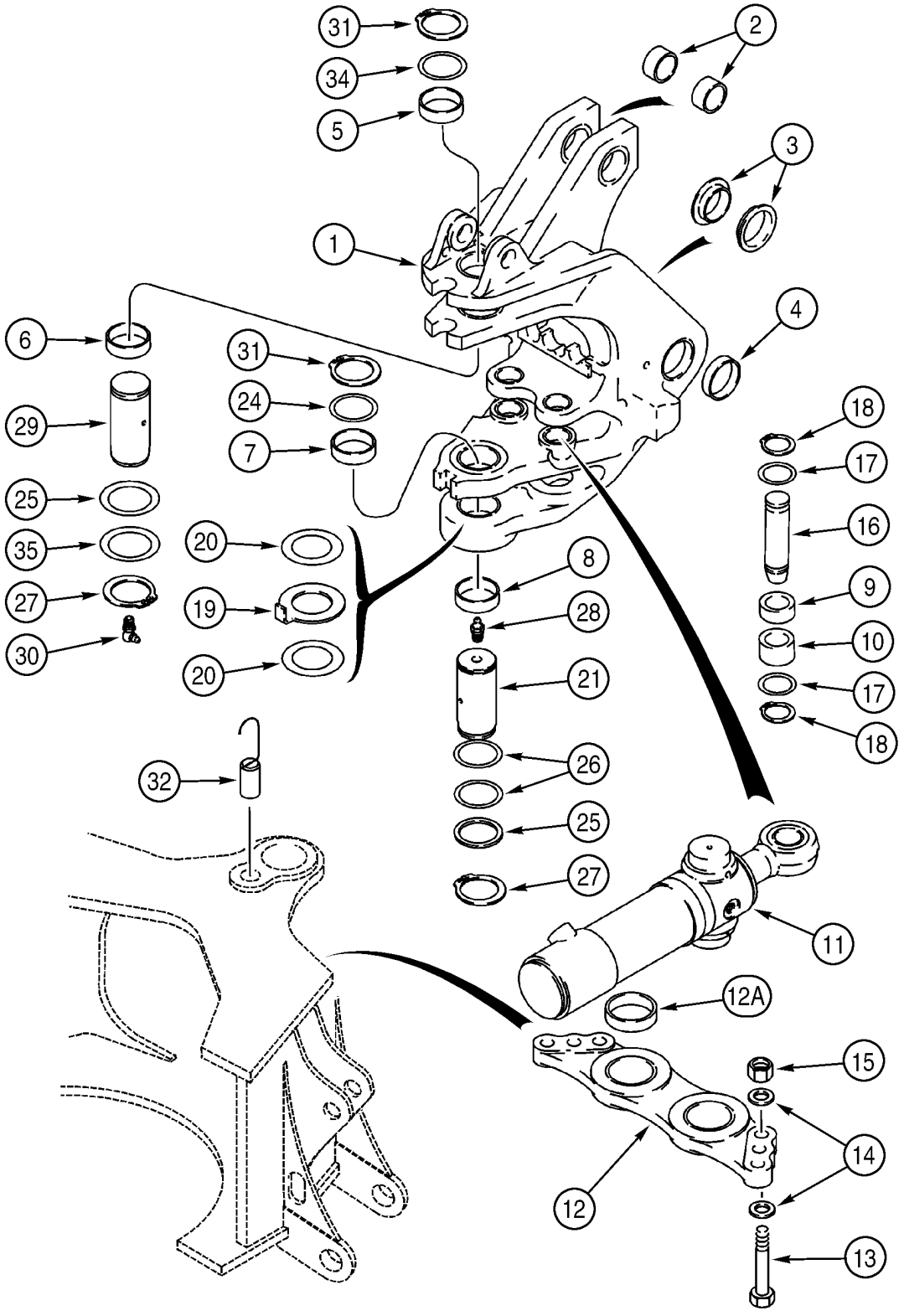

HTTP://WWW.MINNPARBACKHOEPARTS.COM



RETROEXCAVADORA - TORRE DE OSCILACIÓN Y CILINDROS DE OSCILACIÓN

| REF | FN | PART NUMBER | YR/SN | QTY | DESCRIPTION |
|---|---|---|---|---|---|
| 1 | | 326806A1 | | 1 | TORRECILLA Swing Tower; Incl. Ref 2 - 10 |
| 2 | | D149079 | | 2 | CASQUILLO 50 x 34 mm lg |
| 3 | | 121778A1 | | 2 | CASQUILLO |
| 4 | | 329998A1 | | 2 | CASQUILLO |
| 5 | | D135557 | | 1 | CASQUILLO |
| 6 | | D135559 | | 1 | CASQUILLO |
| 7 | | D151073 | | 1 | CASQUILLO |
| 8 | | D151074 | | 1 | CASQUILLO 70 x 86 x 28 mm lg |
| 9 | | 135249A1 | | 2 | CASQUILLO 28.6 mm lg |
| 10 | | 135248A1 | | 2 | CASQUILLO 38.1 mm lg |
| 11 | | 188027A2 | | 2 | CILINDRO (CONJUNTO) 95 ID x 292 mm strk; Swing; See Figure 08-62 |
| 12 | | 198976A1 | | 1 | PLACA, GRANDE Incl. Ref 12A |
| 12A | | 114318A1 | | 2 | CASQUILLO 80 x 90 x 29.3 mm |
| 13 | | 827-20075 | | 6 | TORNILLO M20 x 75; 10.9 |
| 14 | | 896-11020 | | 12 | ARANDELA 22 x 37 x 4 mm |
| 15 | | 829-1420 | | 6 | TUERCA M20; 10 |
| 16 | | 386092A2 | | 2 | BULON/PIN, LARGO |
| 17 | | 495-81227 | | 4 | ARANDELA 2-1/16 x 2-15/16 x 1/16 |
| 18 | | 103-16200 | | 4 | ANILLO DE CIERRE No. 200 |
| 19 | | 243084A1 | | 1 | ARANDELA 5 mm thk |
| 20 | | 134167A1 | | X | SUPLEMENTO 2.05 mm (.08 in) thk |
| 21 | | D151065 | | 1 | BULON/PIN, LARGO |
| 24 | | D136392 | | X | SUPLEMENTO 72 x 89 x 3.0 mm |
| 25 | | D136700 | | 2 | SUPLEMENTO 67 x 83 x 2.0 mm |
| 26 | | D136391 | | X | SUPLEMENTO 72 x 89 x 1.6 mm |
| 27 | | 800-40065 | | 2 | ANILLO DE CIERRE |
| 28 | | 219-1 | | 1 | ENGRASADOR 1/8 PT x 21/32 |
| 29 | | 292385A1 | | 1 | BULON/PIN, LARGO |
| 30 | | 219-55 | | 1 | ENGRASADOR 90 deg, 1/8 PT x 27/32 |
| 31 | | 800-40070 | | 2 | ANILLO DE CIERRE |
| 32 | | 384815A1 | | 1 | PASADOR (CONJUNTO) Swing Stop |
| 34 | | 293636A1 | | 1 | ARANDELA Upper |
| 35 | | D144423 | | X | ARANDELA 2-5/8 x 3-3/8 x 1/8; Used As A Shim |

HTTP://WWW.MINNPARBACKHOEPARTS.COM

| 09-24 | | p1 | 01/04 |
|---|---|---|---|

RETROEXCAVADORA - AGUILÓN Y TORRE DE OSCILACIÓN

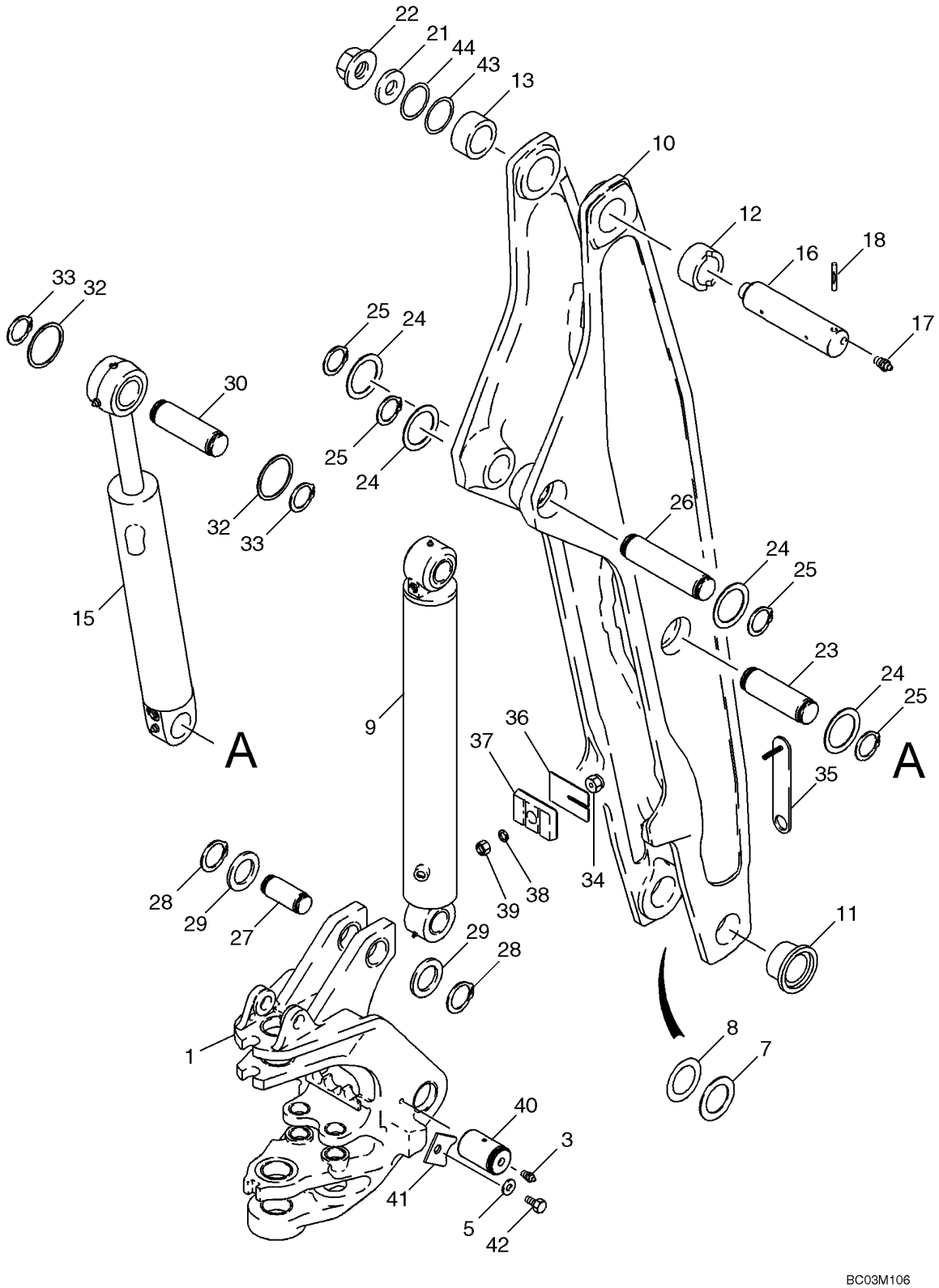

HTTP://WWW.MINNPARBACKHOEPARTS.COM



RETROEXCAVADORA - AGUILÓN Y TORRE DE OSCILACIÓN

| REF | FN | PART NUMBER | YR/SN | QTY | DESCRIPTION |
|---|---|---|---|---|---|
| 1 | | 326806A1 | | 1 | TORRECILLA Swing Tower; See Figure 09-23 For Bushings |
| 3 | | 219-1 | | 2 | ENGRASADOR 1/8 PT x 21/32 |
| 5 | | 496-41081 | | 2 | ARANDELA 13/16 x 1-3/4 x 7/32 in |
| 7 | | H71514 | | X | ARANDELA |
| 8 | | R32119 | | X | ARANDELA 71 ID x 114 mm |
| 9 | | 189653A2 | | 1 | CILINDRO (CONJUNTO) 114 ID x 982 mm strk; Boom; See Figure 08-63 |
| 10 | | 129883A1 | | 1 | PLUMA Incl. Ref 11 - 13 |
| 11 | | D151071 | | 2 | CASQUILLO 70 ID x 34 mm lg |
| 12 | | D135739 | | 1 | CASQUILLO 70 ID x 44 mm lg; With Slot For Groove Pin; Right-Hand Side |
| 13 | | D137218 | | 1 | CASQUILLO 70 ID x 44 mm lg; Without Slot For Groove Pin; Left-Hand Side |
| 15 | | 233114A2 | | 1 | CILINDRO (CONJUNTO) 108 ID x 686 mm strk; Dipper; See Figure 08-64 |
| 16 | | D132494 | | 1 | BULON/PIN, LARGO |
| 17 | | 219-1 | | 2 | ENGRASADOR 1/8 PT x 21/32 |
| 18 | | 135-51652 | | 1 | PASADOR RANURADO 1/2 x 3-1/4 lg, Center Grooved |
| 21 | | D133632 | | 1 | ARANDELA |
| 22 | | 181042A1 | | 1 | TUERCA Flange, Special |
| 23 | | 129040A1 | | 1 | BULON/PIN, LARGO |
| 24 | | 495-81226 | | 4 | ARANDELA 1-13/16 x 2-1/2 x 1/8 |
| 25 | | 103-16175 | | 4 | ANILLO DE CIERRE No. 175 |
| 26 | | 129040A1 | | 1 | BULON/PIN, LARGO |
| 27 | | 142842A1 | | 1 | BULON/PIN, LARGO |
| 28 | | 800-44050 | | 2 | ANILLO DE CIERRE No. 50 |
| 29 | | 495-81227 | | X | ARANDELA 2-1/16 x 2-15/16 x 1/16 |
| 30 | | 129041A1 | | 1 | BULON/PIN, LARGO |
| 32 | | 495-81226 | | X | ARANDELA 1-13/16 x 2-1/2 x 1/8 |
| 33 | | 103-16175 | | 2 | ANILLO DE CIERRE No. 175 |
| 34 | | 184884A1 | | 1 | TAPÓN Boom Bumper |
| 35 | | 184723A1 | | 1 | APOYADERO |
| 36 | | 138624A1 | | X | BLOQUE MOTOR 1.5 mm thk Shim |
| 37 | | 183938A1 | | 1 | AMORTIGUADOR Bumper |

HTTP://WWW.MINNPARBACKHOEPARTS.COM

| 09-24 | | p2 | 01/04 |
|---|---|---|---|

RETROEXCAVADORA - AGUILÓN Y TORRE DE OSCILACIÓN

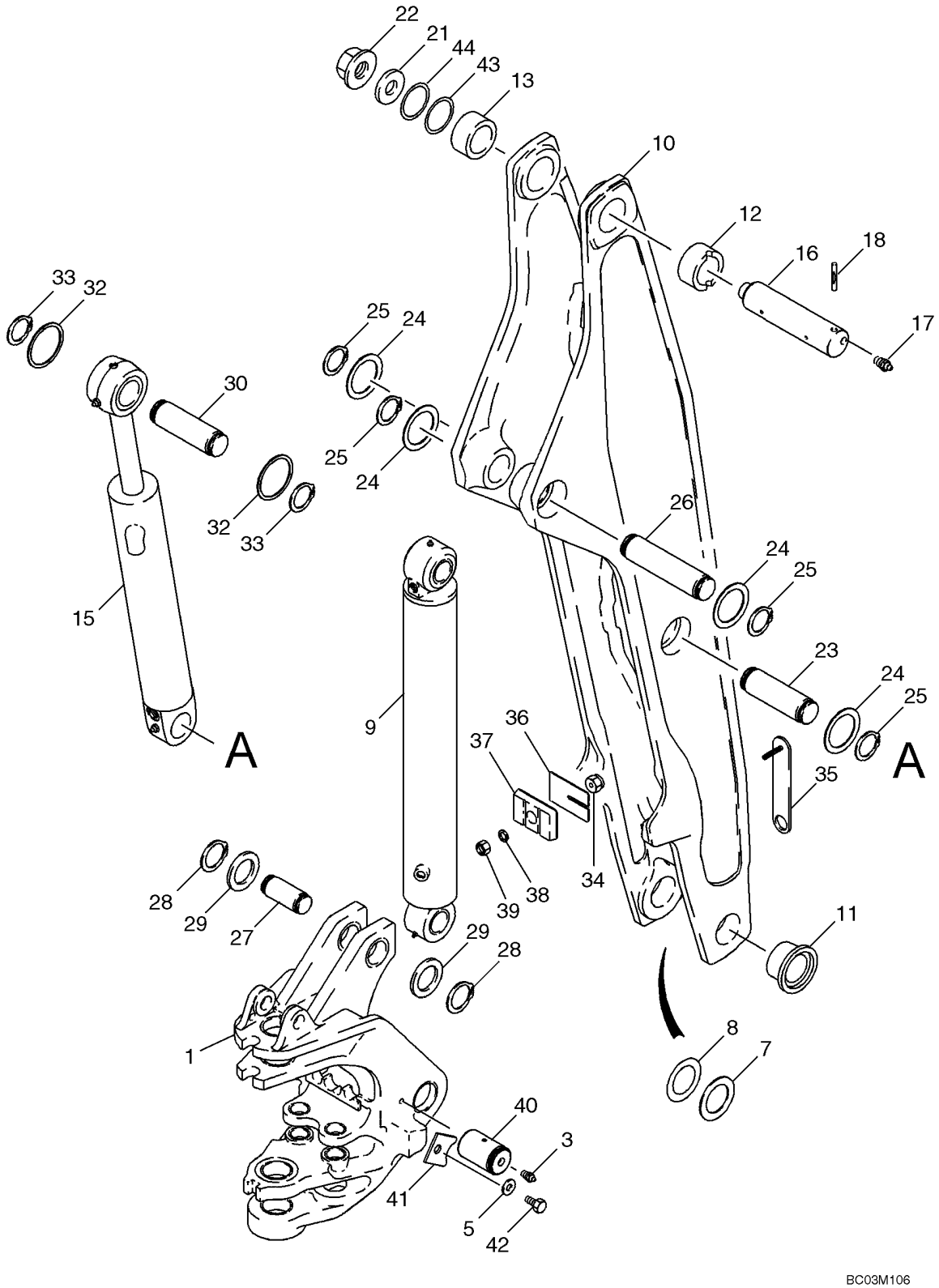

HTTP://WWW.MINNPARBACKHOEPARTS.COM



RETROEXCAVADORA - AGUILÓN Y TORRE DE OSCILACIÓN

| REF | FN | PART NUMBER | YR/SN | QTY | DESCRIPTION |
|---|---|---|---|---|---|
| 38 | | 892-11010 | | 1 | ARANDELA DE FRENO M10 |
| 39 | | 829-1410 | | 1 | TUERCA M10; 10.9 |
| 40 | | 250663A1 | | 2 | PERNO |
| 41 | | 303646A1 | | 2 | PIEZA DE SOPORTE |
| 42 | | 604-20035 | | 2 | TORNILLO M20 x 35 |
| 43 | | 404834A1 | | X | SUPLEMENTO 5 mm thk, Concave |
| 44 | | 404835A1 | | X | SUPLEMENTO 5 mm thk, Concave |

HTTP://WWW.MINNPARBACKHOEPARTS.COM

| 09-25 | | p1 | 01/04 |
|---|---|---|---|

TRABA DEL AGUILÓN (SIN DE CONTROL PILOTO)

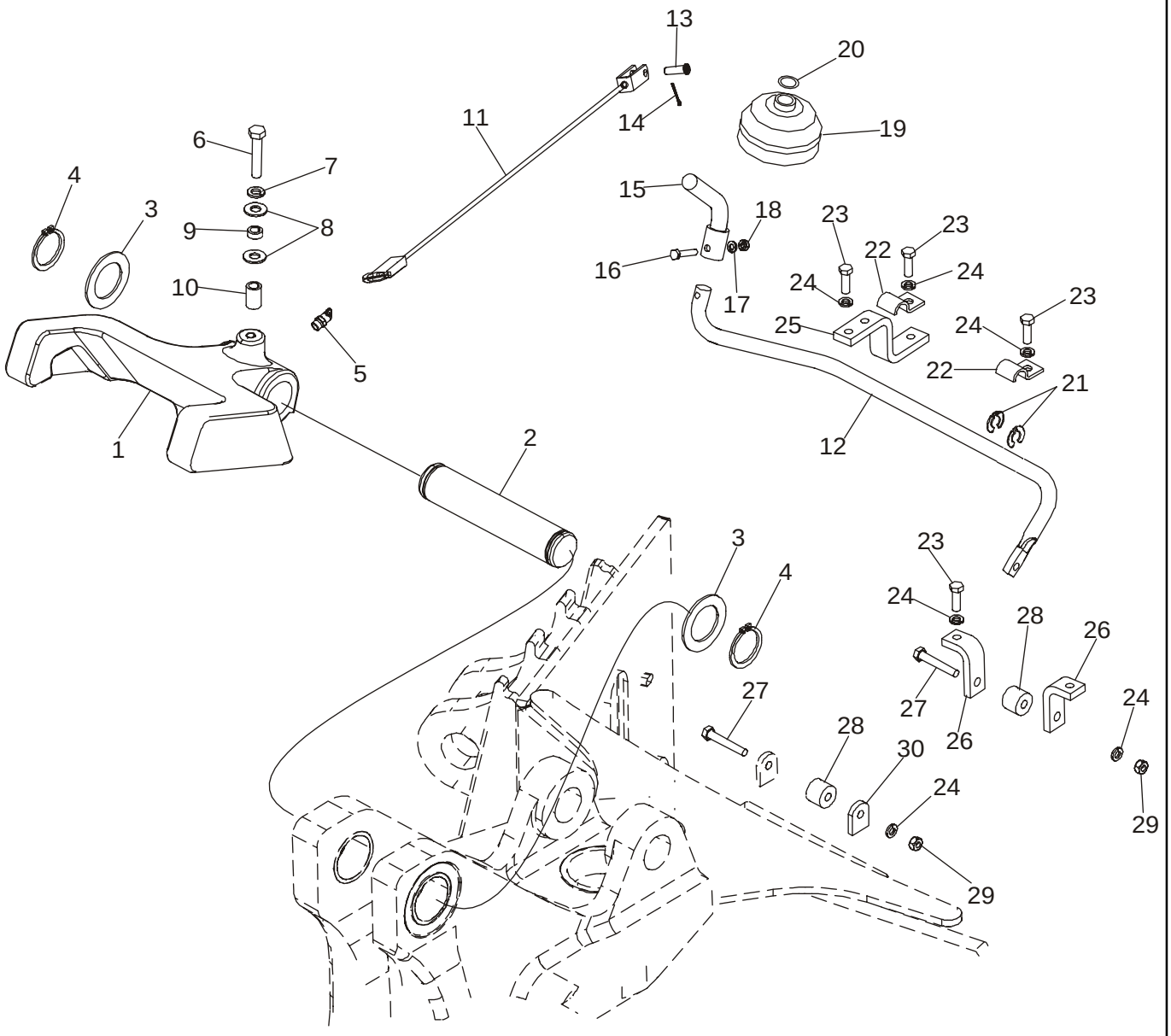

HTTP://WWW.MINNPARBACKHOEPARTS.COM



TRABA DEL AGUILÓN (SIN DE CONTROL PILOTO)

| REF | FN | PART NUMBER | YR/SN | QTY | DESCRIPTION |
|---|---|---|---|---|---|
| 1 | | 379941A1 | | 1 | PESTILLO |
| 2 | | D129227 | | 1 | BULON/PIN, LARGO |
| 3 | | D144592 | | 2 | ARANDELA |
| 4 | | 800-44040 | | 2 | ANILLO DE CIERRE |
| 5 | | 219-55 | | 1 | ENGRASADOR 90 deg, 1/8 PT x 27/32 |
| 6 | | 614-10050 | | 1 | TORNILLO M10 x 50 |
| 7 | | 892-11010 | | 1 | ARANDELA DE FRENO M10 |
| 8 | | 895-15010 | | 2 | ARANDELA 11 x 24 x 2 mm |
| 9 | | D143417 | | 1 | ESPACIADOR |
| 10 | | 396092A1 | | 1 | ESPACIADOR |
| 11 | | 87435924 | | 1 | CABLE |
| 12 | | 87422696 | | 1 | VARILLA Boom Latch Release |
| 13 | | 427-5094 | | 1 | PASADOR DE HORQUILLA 5/16 x 15/16 |
| 14 | | 432-612 | | 1 | PASADOR ABIERTO 3/32 x 3/4 |
| 15 | | 87427774 | | 1 | VARILLA (CONJUNTO) |
| 16 | | 814-6030 | | 1 | TORNILLO M6 x 30 |
| 17 | | 892-11006 | | 1 | ARANDELA DE FRENO M6 |
| 18 | | 829-1406 | | 1 | TUERCA M6 |
| 19 | | D86664 | | 1 | PROTECTOR |
| 20 | | D143735 | | 1 | COLLAR Ring |
| 21 | | D143591 | | 2 | ANILLO DE CIERRE CLIP RING, 5/8 dia |
| 22 | | D143723 | | 2 | BRIDA CLAMP, 5/8 |
| 23 | | 614-8025 | | 6 | TORNILLO M8 x 25 |
| 24 | | 892-11008 | | 8 | ARANDELA LOCK, M8 |
| 25 | | 87422701 | | 1 | PIEZA DE SOPORTE Rod |
| 26 | | 87422702 | | 2 | PIEZA DE SOPORTE Cable |
| 27 | | 814-8050 | | 2 | TORNILLO M8 x 50 |
| 28 | | 86984547 | | 2 | GUIA Roller, Cable Guide |
| 29 | | 829-1408 | | 2 | TUERCA M8 |
| 30 | | 87432811 | | 1 | PIEZA DE SOPORTE TAB |

HTTP://WWW.MINNPARBACKHOEPARTS.COM

| 09-25A | | p1 | 01/04 |
|---|---|---|---|

TRABA DEL AGUILÓN (CON DE CONTROL PILOTO)

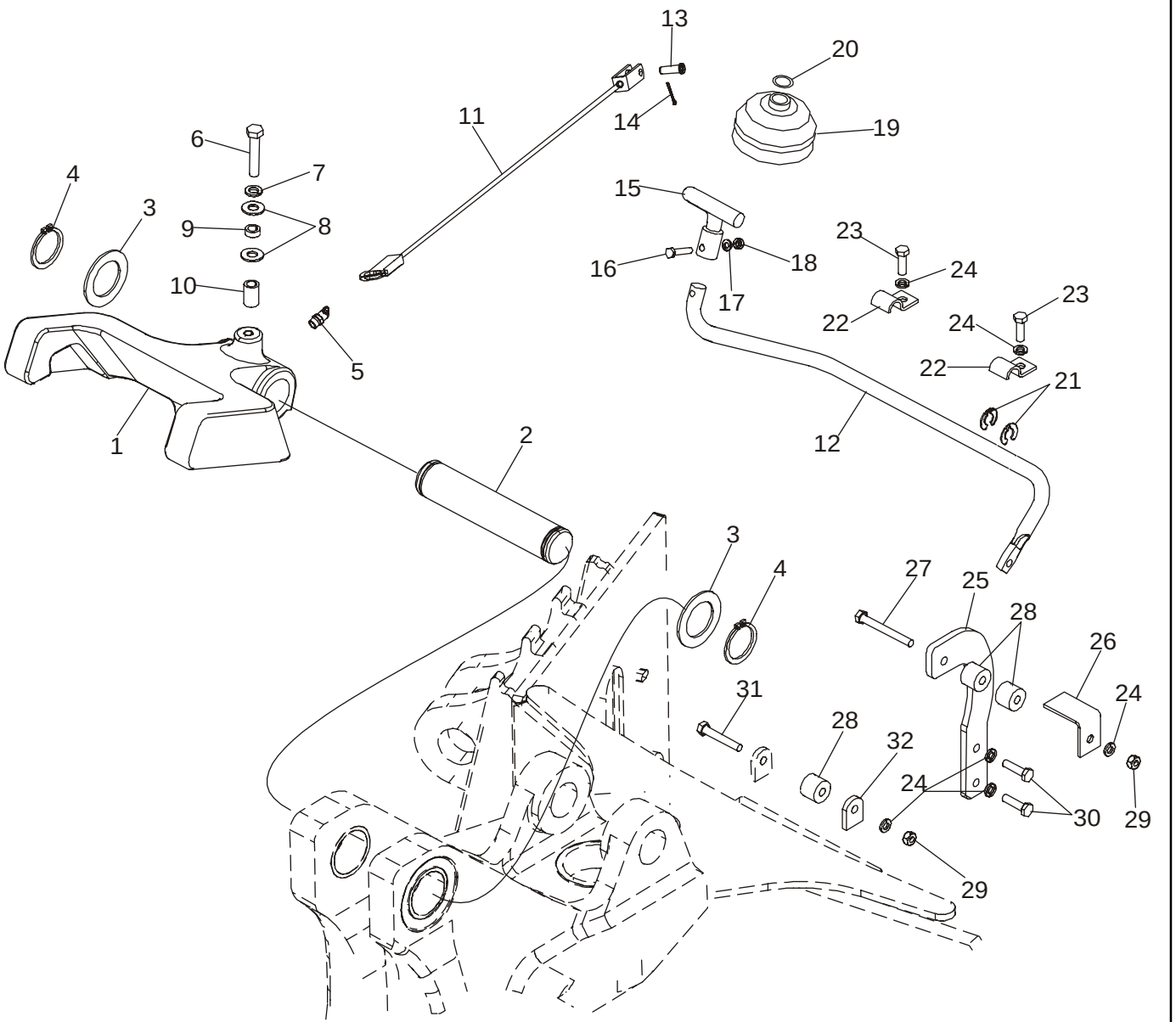

HTTP://WWW.MINNPARBACKHOEPARTS.COM



TRABA DEL AGUILÓN (CON DE CONTROL PILOTO)

| REF | FN | PART NUMBER | YR/SN | QTY | DESCRIPTION |
|---|---|---|---|---|---|
| 1 | | 379941A1 | | 1 | PESTILLO |
| 2 | | D129227 | | 1 | BULON/PIN, LARGO |
| 3 | | D144592 | | 2 | ARANDELA |
| 4 | | 800-44040 | | 2 | ANILLO DE CIERRE |
| 5 | | 219-55 | | 1 | ENGRASADOR 90 deg, 1/8 PT x 27/32 |
| 6 | | 614-10050 | | 1 | TORNILLO M10 x 50 |
| 7 | | 892-11010 | | 1 | ARANDELA DE FRENO M10 |
| 8 | | 895-15010 | | 2 | ARANDELA 11 x 24 x 2 mm |
| 9 | | D143417 | | 1 | ESPACIADOR |
| 10 | | 396092A1 | | 1 | ESPACIADOR |
| 11 | | 87435924 | | 1 | CABLE |
| 12 | | 87422696 | | 1 | VARILLA Boom Latch Release |
| 13 | | 427-5094 | | 1 | PASADOR DE HORQUILLA 5/16 x 15/16 |
| 14 | | 432-612 | | 1 | PASADOR ABIERTO 3/32 x 3/4 |
| 15 | | 87427775 | | 1 | VARILLA (CONJUNTO) |
| 16 | | 814-6030 | | 1 | TORNILLO M6 x 30 |
| 17 | | 892-11006 | | 1 | ARANDELA DE FRENO M6 |
| 18 | | 829-1406 | | 1 | TUERCA M6 |
| 19 | | D86664 | | 1 | PROTECTOR |
| 20 | | D143735 | | 1 | COLLAR Ring |
| 21 | | D143591 | | 2 | ANILLO DE CIERRE CLIP RING, 5/8 dia |
| 22 | | D143723 | | 2 | BRIDA CLAMP, 5/8 |
| 23 | | 614-8025 | | 2 | TORNILLO M8 x 25 |
| 24 | | 892-11008 | | 6 | ARANDELA LOCK, M8 |
| 25 | | 86984544 | | 1 | PIEZA DE SOPORTE Roller Mounting |
| 26 | | 86984545 | | 1 | PIEZA DE SOPORTE Cable |
| 27 | | 814-8070 | | 1 | TORNILLO M8 x 70 |
| 28 | | 86984547 | | 3 | GUIA Roller, Cable Guide |
| 29 | | 829-1408 | | 2 | TUERCA M8 |
| 30 | | 614-8030 | | 2 | TORNILLO M8 x 30 |
| 31 | | 814-8050 | | 1 | TORNILLO M8 x 50 |
| 32 | | 87432811 | | 1 | PIEZA DE SOPORTE TAB |

HTTP://WWW.MINNPARBACKHOEPARTS.COM



RETROEXCAVADORA - PALA Y CUCHARÓN

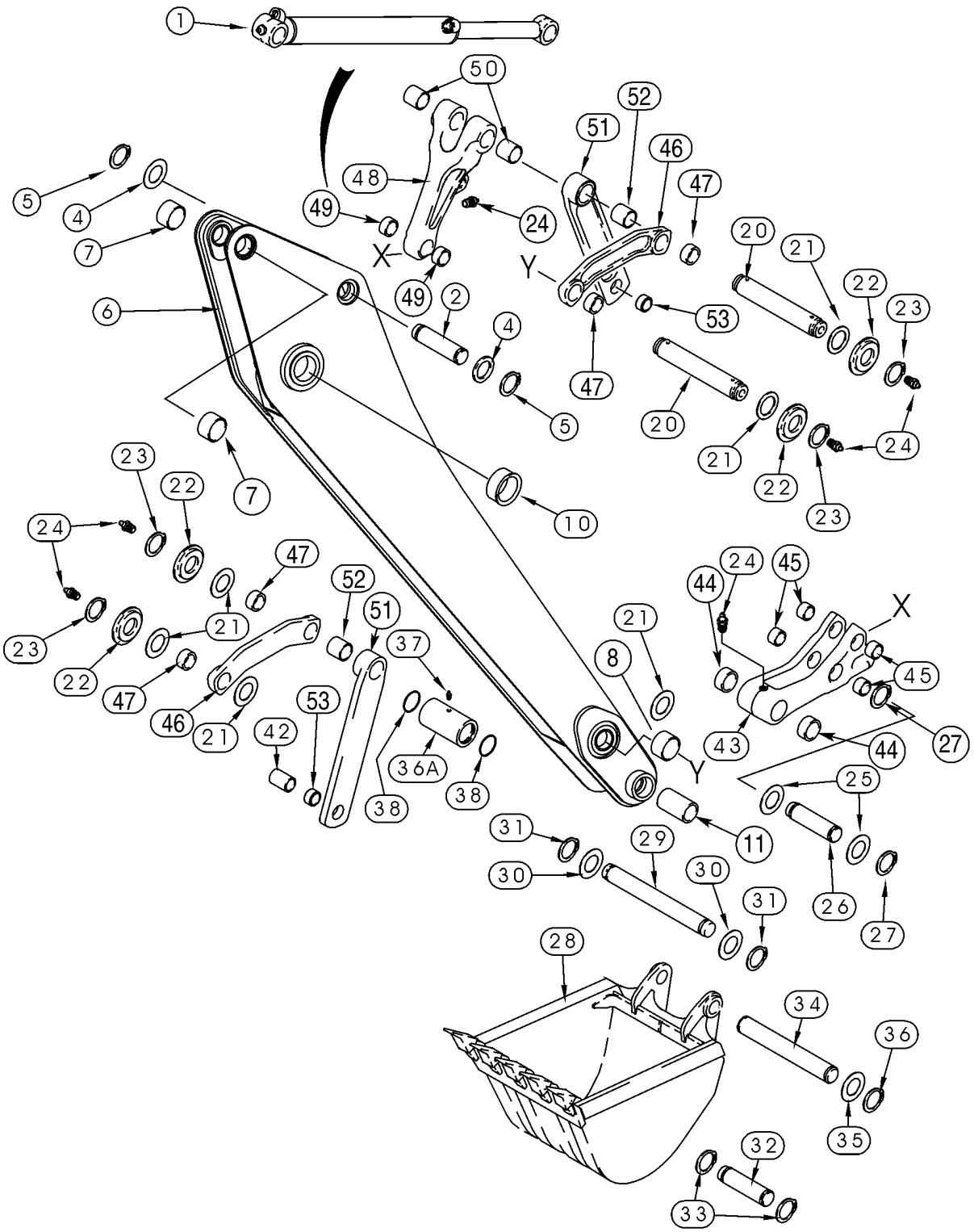

HTTP://WWW.MINNPARBACKHOEPARTS.COM



RETROEXCAVADORA - PALA Y CUCHARÓN

| REF | FN | PART NUMBER | YR/SN | QTY | DESCRIPTION |
|---|---|---|---|---|---|
| 1 | | 128760A1 | | 1 | CILINDRO (CONJUNTO) 83 ID x 872 mm strk; Bucket; See Figure 08-65 |
| 2 | | 129041A1 | | 1 | BULON/PIN, LARGO |
| 4 | | 495-81226 | | X | ARANDELA 1-13/16 x 2-1/2 x 1/8 |
| 5 | | 103-16175 | | 2 | ANILLO DE CIERRE No. 175 |
| | | 129884A2 | | 1 | ESCUADRA DE TRANSMIS Incl. Ref 6 - 10 |
| 6 | | NSS | | 1 | NO SE REPARA SEPARADAM. Dipper |
| 7 | | D145978 | | 2 | CASQUILLO |
| 8 | | D140029 | | 2 | CASQUILLO 50 x 60 x 25.5 mm lg |
| 10 | | D150121 | | 2 | CASQUILLO 70 ID x 36 mm lg |
| 11 | | 307186A1 | | 2 | CASQUILLO 104 mm lg; Not Included In Assembly; Purchase Separately |
| 20 | | D141142 | | 2 | BULON/PIN, LARGO 306 mm lg, Guide Link |
| 21 | | 495-81282 | | X | ARANDELA 2-1/16 x 3 x 3/32 |
| 22 | | D141164 | | 4 | ESPACIADOR |
| 23 | | 103-16175 | | 4 | ANILLO DE CIERRE No. 175 |
| 24 | | 219-1 | | 6 | ENGRASADOR 1/8 PT x 21/32 |
| 25 | | 495-81226 | | 2 | ARANDELA 1-13/16 x 2-1/2 x 1/8 |
| 26 | | D146288 | | 1 | BULON/PIN, LARGO |
| 27 | | 103-16175 | | 2 | ANILLO DE CIERRE No. 175 |
| 28 | | REF | | 1 | MANUAL Bucket; See Figure(s) 09-28 - 09-35 |
| 29 | | D37614 | | 1 | BULON/PIN, LARGO |
| 30 | | D143324 | | 2 | ARANDELA |
| 31 | | D25279 | | 2 | ANILLO DE CIERRE |
| 32 | | D149298 | | 1 | PERNO 305 mm (12 inch) Universal Bucket Only |
| 33 | | 103-16175 | | 2 | ANILLO DE CIERRE No. 175 |
| 34 | | D150619 | | 1 | BULON/PIN, LARGO All Buckets Except 12 Inch (305 mm) Buckets |
| 35 | | 495-81226 | | X | ARANDELA 1-13/16 x 2-1/2 x 1/8 |
| 36 | | 103-16175 | | 2 | ANILLO DE CIERRE No. 175 |
| 36A | | D141076 | | 1 | ESPACIADOR |
| 37 | | 219-1 | | 1 | ENGRASADOR 1/8 PT x 21/32 |
| 38 | | 238-5228 | | 2 | JUNTA HERMETICA 2-1/4 ID x 1/8 |
| 42 | | D141075 | | 1 | ESPACIADOR |
| | | 281185A1 | | 1 | ELEMENTO DE ACOPLAM. Bucket, Incl. Ref 43 - 45 |
| 43 | | NSS | | 1 | NO SE REPARA SEPARADAM. Coupler, Quick |

HTTP://WWW.MINNPARBACKHOEPARTS.COM



RETROEXCAVADORA - PALA Y CUCHARÓN

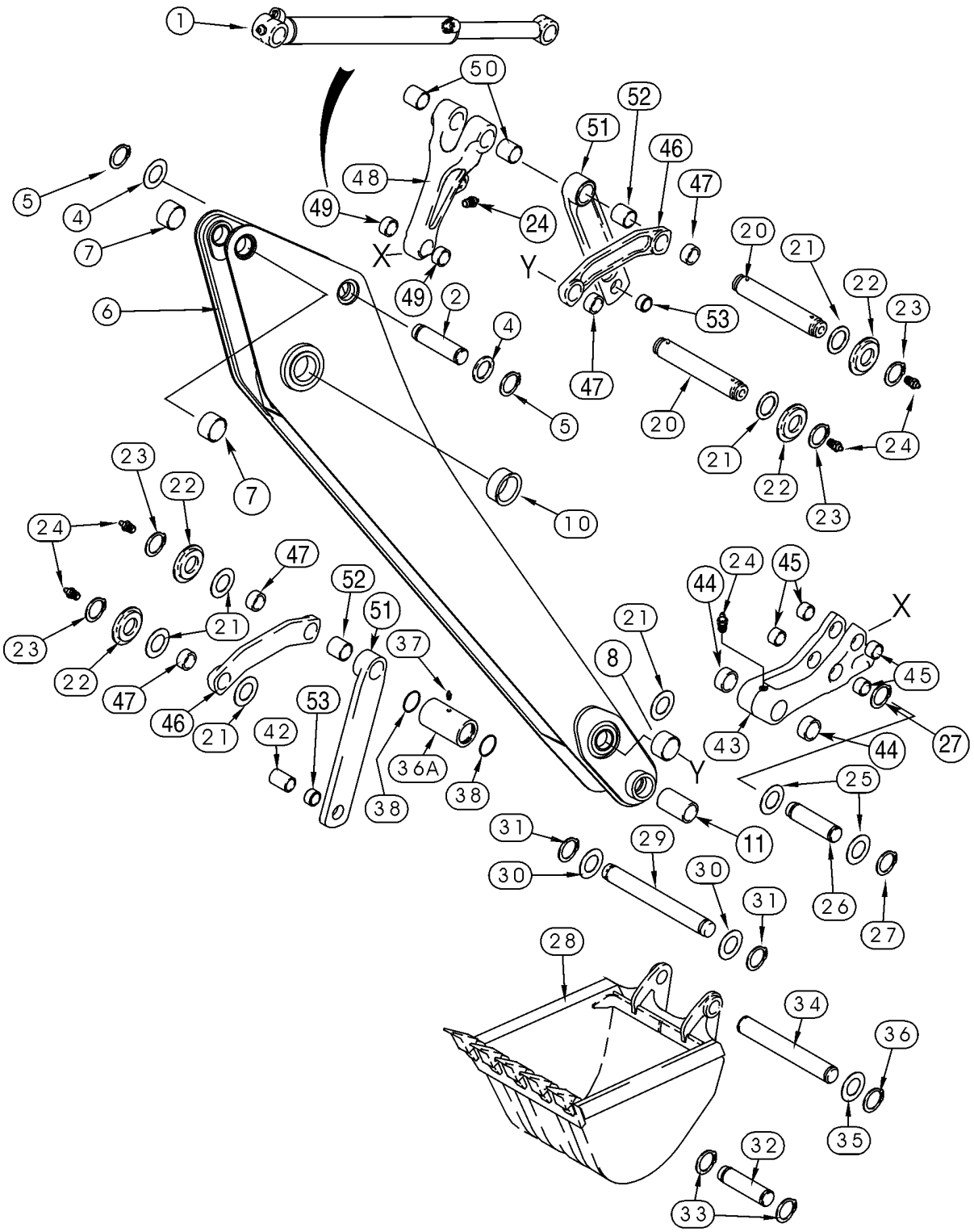

HTTP://WWW.MINNPARBACKHOEPARTS.COM



RETROEXCAVADORA - PALA Y CUCHARÓN

| REF | FN | PART NUMBER | YR/SN | QTY | DESCRIPTION |
|---|---|---|---|---|---|
| 44 | | D127167 | | 2 | CASQUILLO 30 mm lg |
| 45 | | 107124A1 | | 4 | CASQUILLO 29 mm lg |
| 46 | | 348706A1 | | 2 | ESLABON (CONJUNTO) Bucket Guide, Incl. Ref 47 |
| 47 | | D149079 | | 2 | CASQUILLO 50 x 34 mm lg |
| 48 | | 400398A1 | | 1 | ESLABON (CONJUNTO) Bucket Dump, Incl. Ref 49, 50 |
| 49 | | 107124A1 | | 2 | CASQUILLO |
| 50 | | D138047 | | 2 | CASQUILLO 54 mm (2-1/8 in) lg |
| 51 | | 244790A1 | | 2 | ESLABON (CONJUNTO) Standard Equipment; Bucket Dump; Incl. Ref 52, 53 |
| 52 | | D138047 | | 1 | CASQUILLO 54 mm (2-1/8 in) lg |
| 53 | | D31140 | | 1 | CASQUILLO |

HTTP://WWW.MINNPARBACKHOEPARTS.COM

| 09-27 | | p1 | 01/04 |
|---|---|---|---|

RETROEXCAVADORA - PALA, EXTENSIBLE

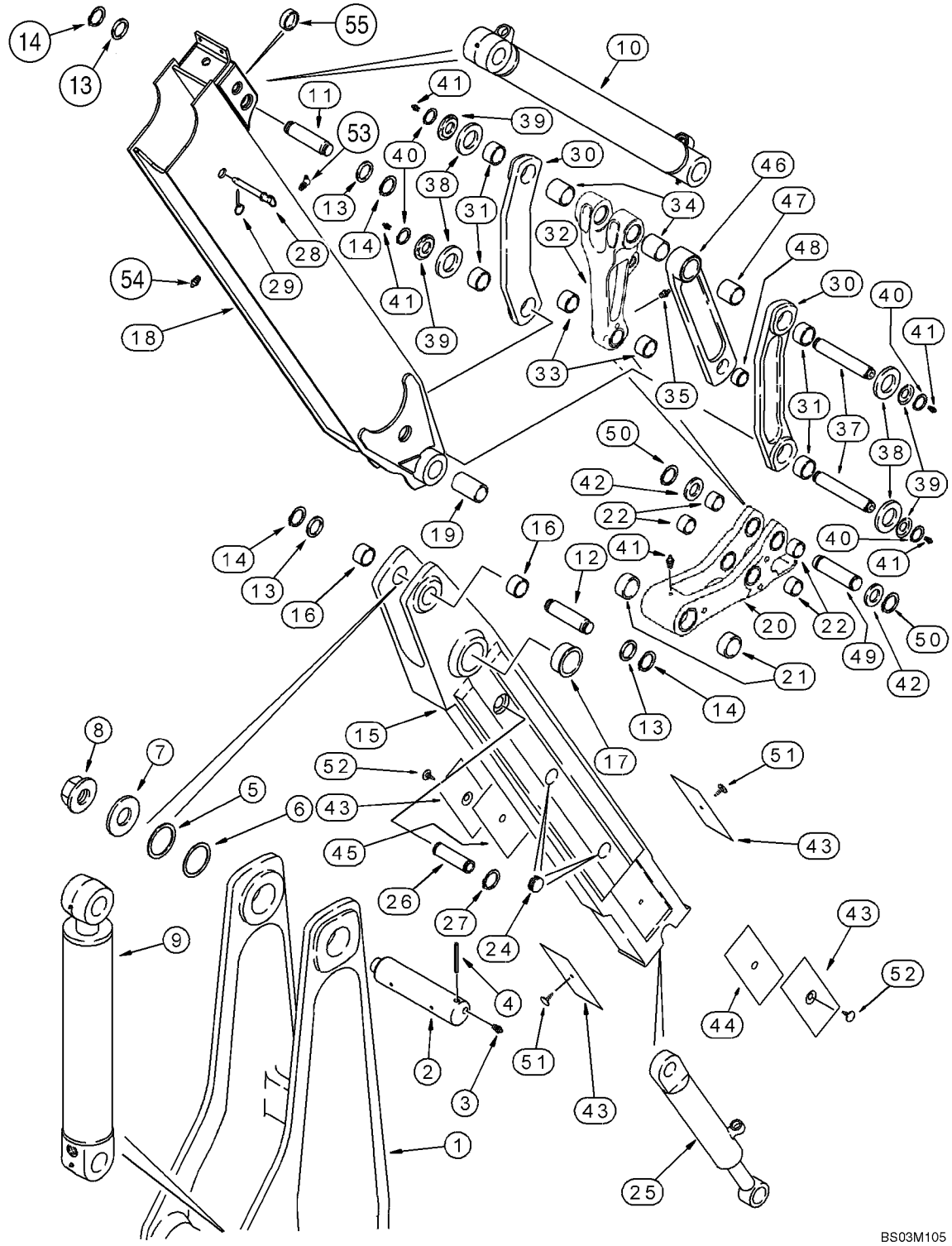

HTTP://WWW.MINNPARBACKHOEPARTS.COM



RETROEXCAVADORA - PALA, EXTENSIBLE

| REF | FN | PART NUMBER | YR/SN | QTY | DESCRIPTION |
|---|---|---|---|---|---|
| 1 | | 129883A1 | | 1 | PLUMA Boom, See Figure 09-24 |
| 2 | | D132494 | | 1 | BULON/PIN, LARGO |
| 3 | | 219-1 | | 2 | ENGRASADOR 1/8 PT x 21/32 |
| 4 | | 135-51652 | | 1 | PASADOR RANURADO 1/2 x 3-1/4 lg |
| 5 | | 404834A1 | | X | SUPLEMENTO |
| 6 | | 404835A1 | | X | SUPLEMENTO |
| 7 | | D133632 | | 1 | ARANDELA |
| 8 | | 181042A1 | | 1 | TUERCA Flange, Special |
| 9 | | 233114A2 | | 1 | CILINDRO (CONJUNTO) 108 ID x 686 mm strk, Dipper; See Figure 08-64 |
| 10 | | 128760A1 | | 1 | CILINDRO (CONJUNTO) 83 ID x 872 mm strk, Bucket; See Figure 08-65 |
| 11 | | D141666 | | 1 | BULON/PIN, LARGO |
| 12 | | 129041A1 | | 1 | BULON/PIN, LARGO |
| 13 | | 495-81282 | | 2 | ARANDELA 2-1/16 x 3 x 3/32 |
| 14 | | 103-16175 | | 4 | ANILLO DE CIERRE No. 175 |
| | | 122503A1 | | 1 | ESCUADRA DE TRANSMIS Inner; Incl. Ref 15 - 17 |
| 15 | | NSS | | 1 | NO SE REPARA SEPARADAM. Dipper |
| 16 | | D145978 | | 2 | CASQUILLO |
| 17 | | D150121 | | 2 | CASQUILLO 70 ID x 36 mm lg |
| 18 | | 87436235 | | 1 | ESCUADRA DE TRANSMIS Outer; Incl. Ref 53, 54 |
| 19 | | 307186A1 | | 2 | CASQUILLO 104 mm lg |
| | | 281185A1 | | 1 | ELEMENTO DE ACOPLAM. Bucket; Incl. Ref 20 - 22 |
| 20 | | NSS | | 1 | NO SE REPARA SEPARADAM. Coupler, Quick |
| 21 | | D127167 | | 2 | CASQUILLO 30 mm lg |
| 22 | | 107124A1 | | 4 | CASQUILLO 29 mm lg |
| 24 | | D133865 | | 4 | TAPÓN |
| 25 | | 1340969C2 | | 1 | CILINDRO (CONJUNTO) 76 ID x 1068 mm strk, Extendable Dipper; See Figure 08-66 |
| 26 | | 300588A1 | | 1 | BULON/PIN, LARGO |
| 27 | | 800-44040 | | 2 | ANILLO DE CIERRE |
| 28 | | D140247 | | 1 | BULON/PIN, LARGO Lock, Transport |
| 29 | | A33509 | | 1 | BULON/PIN, LARGO |
| 30 | | 348706A1 | | 2 | ESLABON (CONJUNTO) Bucket Guide, Incl. Ref 31 |
| 31 | | D149079 | | 2 | CASQUILLO 50 x 34 mm lg |

HTTP://WWW.MINNPARBACKHOEPARTS.COM



RETROEXCAVADORA - PALA, EXTENSIBLE

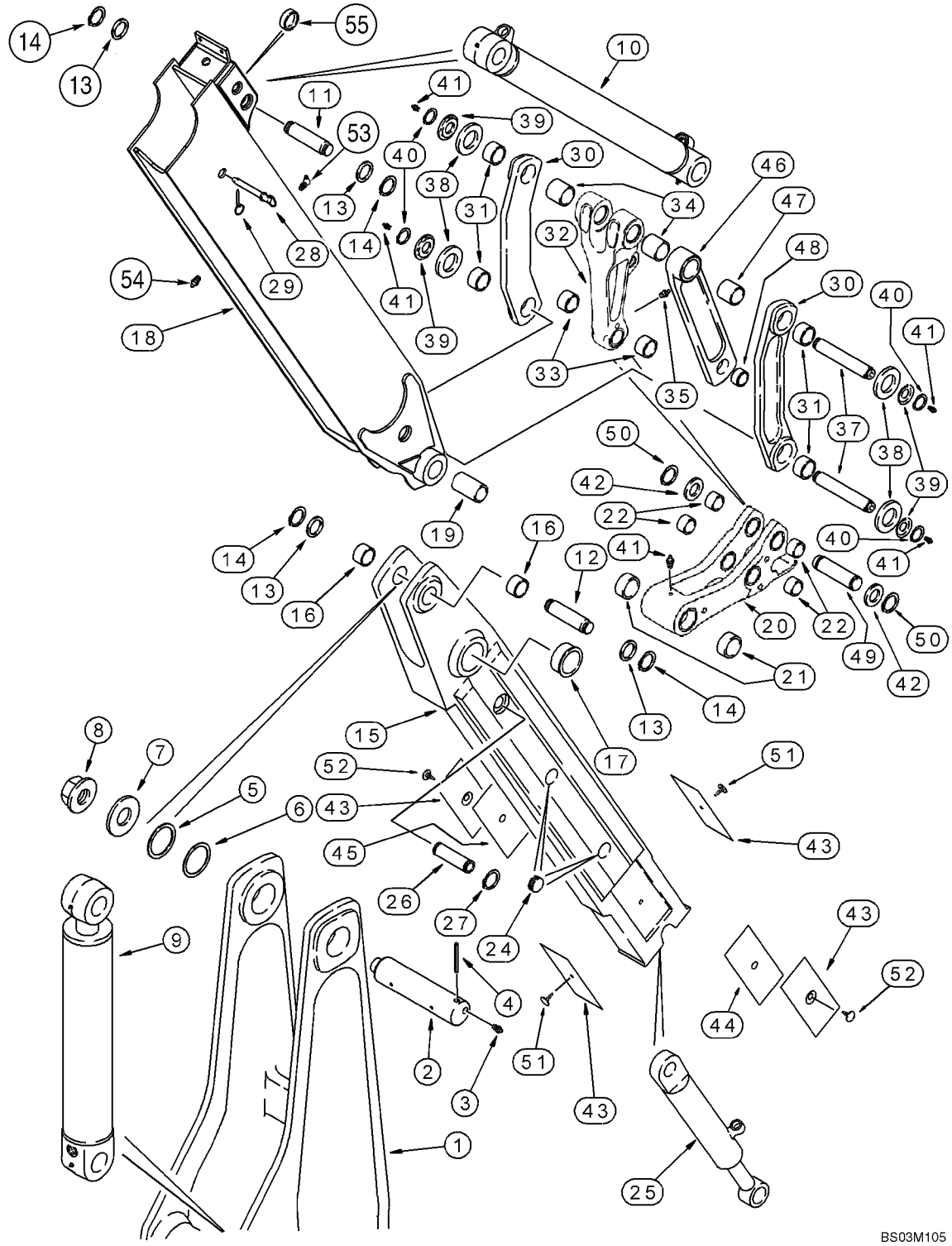

HTTP://WWW.MINNPARBACKHOEPARTS.COM



RETROEXCAVADORA - PALA, EXTENSIBLE

| REF | FN | PART NUMBER | YR/SN | QTY | DESCRIPTION |
|---|---|---|---|---|---|
| 32 | | 400398A1 | | 1 | ESLABON (CONJUNTO) Bucket Dump, Incl. Ref 33, 34 |
| 33 | | 107124A1 | | 2 | CASQUILLO |
| 34 | | D138047 | | 2 | CASQUILLO 54 mm (2-1/8 in) lg |
| 35 | | 219-1 | | 1 | ENGRASADOR 1/8 PT x 21/32 |
| 37 | | D141142 | | 2 | BULON/PIN, LARGO 306 mm lg |
| 38 | | 495-81282 | | 4 | ARANDELA 2-1/16 x 3 x 3/32 |
| 39 | | D141164 | | 4 | ESPACIADOR |
| 40 | | 103-16175 | | 4 | ANILLO DE CIERRE No. 175 |
| 41 | | 219-1 | | 5 | ENGRASADOR 1/8 PT x 21/32 |
| 42 | | 495-81226 | | 2 | ARANDELA 1-13/16 x 2-1/2 x 1/8 |
| 43 | | 451384A1 | | 4 | PLACA DE DESGASTE |
| 44 | | 132844A1 | | 1 | SUPLEMENTO 0.8 mm thk |
| 45 | | 132842A1 | | 1 | SUPLEMENTO 1.6 mm thk |
| 46 | | 244790A1 | | 2 | ESLABON (CONJUNTO) Bucket Dump; Standard Equipment; Incl. Ref 47, 48 |
| 47 | | D138047 | | 1 | CASQUILLO 54 mm (2-1/8 in) lg |
| 48 | | D31140 | | 1 | CASQUILLO |
| 49 | | D146288 | | 1 | BULON/PIN, LARGO |
| 50 | | 103-16175 | | 2 | ANILLO DE CIERRE No. 175 |
| 51 | | 183443A1 | | 2 | BULON/PIN, LARGO |
| 52 | | 183509A1 | | 2 | BULON/PIN, LARGO |
| 53 | | 219-89 | | 1 | ENGRASADOR 1/8 PT x 25/32 |
| 54 | | 219-86 | | 1 | CONEXION 1/8 PT x 5/8 |
| 55 | | 396483A1 | | 2 | ESPACIADOR |

HTTP://WWW.MINNPARBACKHOEPARTS.COM

| 09-28 | | p1 | 01/04 |
|---|---|---|---|

CUCHARÓN, RETROEXCAVADORA UNIVERSAL (305 MM (12 INCH) WIDE)

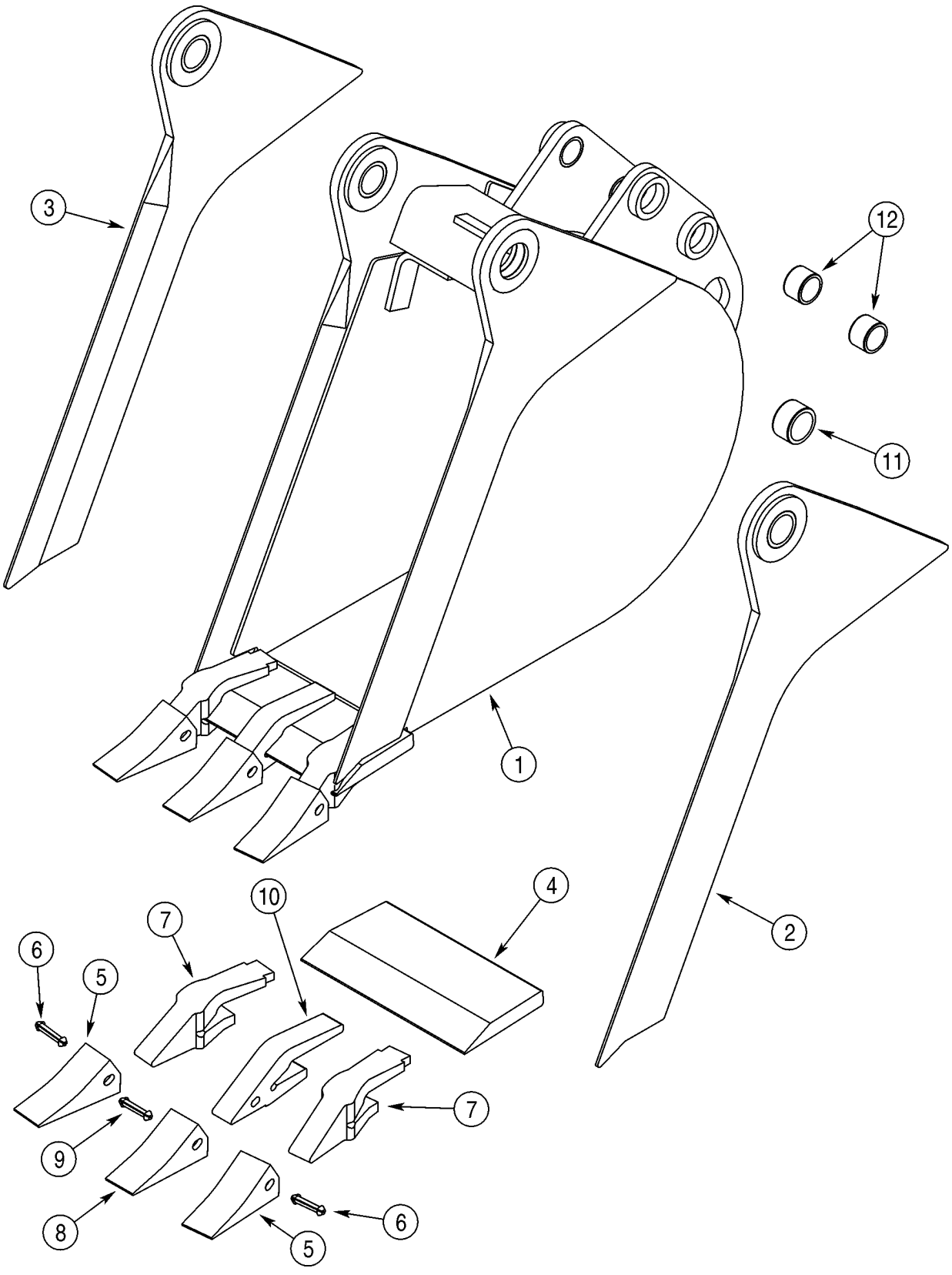

HTTP://WWW.MINNPARBACKHOEPARTS.COM



CUCHARÓN, RETROEXCAVADORA UNIVERSAL (305 MM (12 INCH) WIDE)

| REF | FN | PART NUMBER | YR/SN | QTY | DESCRIPTION |
|---|---|---|---|---|---|
| 1 | | 381488A4 | | 1 | CUCHARA 305 mm (12 in); With 3 Teeth; Order Through Parts Marketing; Incl. Ref 2 - 12 |
| 2 | | NSS | | 1 | NO SE REPARA SEPARADAM. Edge, Right-Hand; Incl. Ref 11 |
| 3 | | NSS | | 1 | NO SE REPARA SEPARADAM. Edge, Left-Hand; Incl. Ref 11 |
| 4 | | D147409 | | 1 | CUCHILLA DE ATAQUE |
| | | D139851 | | 2 | DIENTE Outer; Incl. Ref 5 - 7 |
| 5 | | D51750 | | 1 | PUNTA |
| 6 | | 245466A1 | | 1 | PASADOR |
| 7 | | D138157 | | 1 | PIE |
| | | D139849 | | 1 | DIENTE Center; Incl. Ref 8 - 10; Order Ref 8 - 10 |
| 8 | | D51750 | | 1 | PUNTA |
| 9 | | 245466A1 | | 1 | PASADOR |
| 10 | | D48212 | | 1 | PIE |
| 11 | | D43940 | | 2 | CASQUILLO 1-3/4 x 2-1/4 x 1 |
| 12 | | D30933 | | 4 | CASQUILLO |

HTTP://WWW.MINNPARBACKHOEPARTS.COM

| 09-29 | | p1 | 01/04 |
|---|---|---|---|

CUCHARÓN, RETROEXCAVADORA UNIVERSAL (406 MM (16 INCH) WIDE)

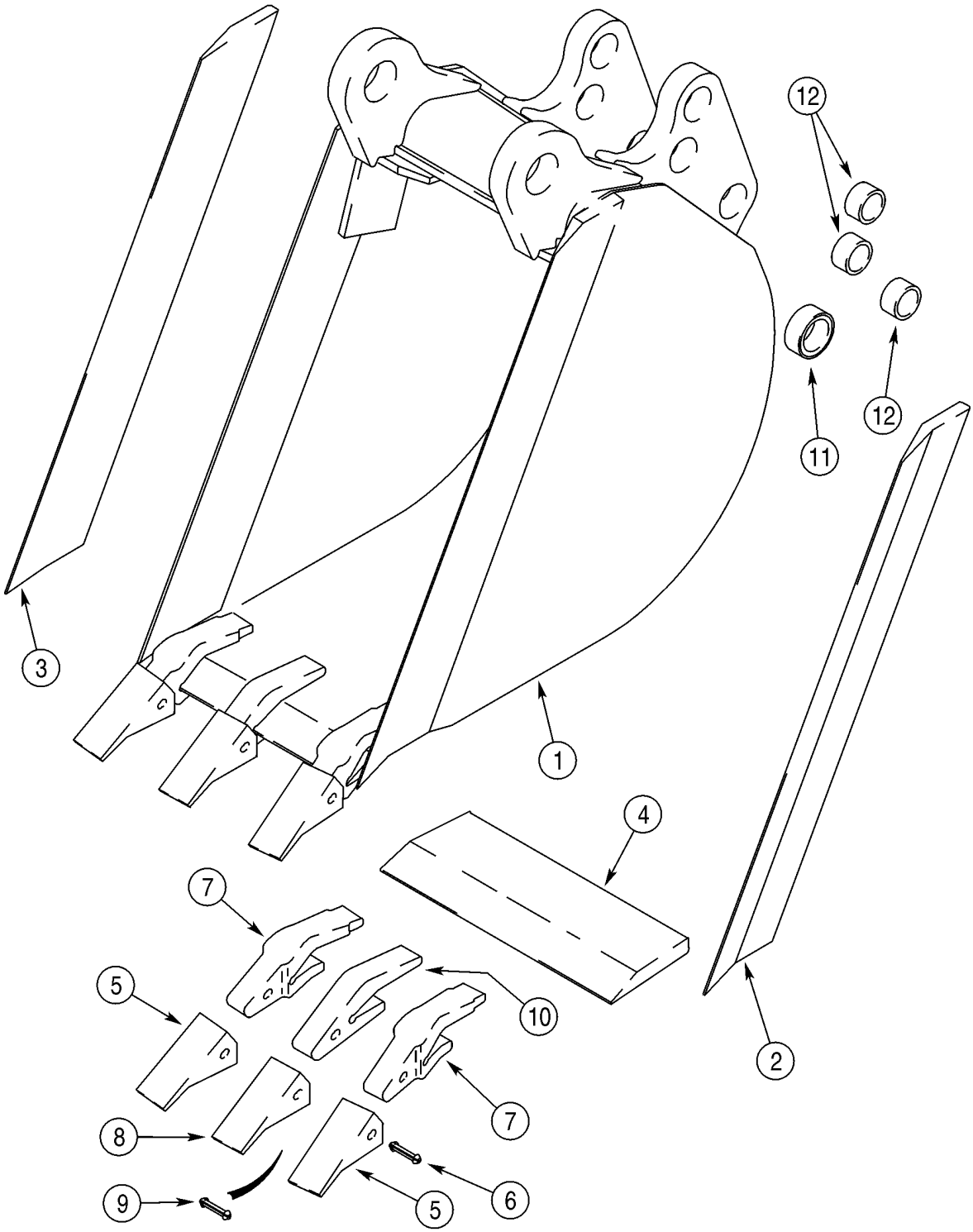


BC00B021

HTTP://WWW.MINNPARBACKHOEPARTS.COM



CUCHARÓN, RETROEXCAVADORA UNIVERSAL (406 MM (16 INCH) WIDE)

| REF | FN | PART NUMBER | YR/SN | QTY | DESCRIPTION |
|---|---|---|---|---|---|
| 1 | | 388843A1 | | 1 | CUCHARA 406 mm (16 in); With 3 Teeth; Order Through Parts Marketing; Incl. Ref 2 - 12 |
| 2 | | D146421 | | 1 | CUCHILLA DE ATAQUE Right-Hand |
| 3 | | D146420 | | 1 | CUCHILLA DE ATAQUE Left-Hand |
| 4 | | D147249 | | 1 | BORDE |
| | | D139851 | | 2 | DIENTE Outer; Incl. Ref 5 - 7 |
| 5 | | D51750 | | 1 | PUNTA |
| 6 | | 245466A1 | | 1 | PASADOR |
| 7 | | D138157 | | 1 | PIE |
| | | D139849 | | 1 | DIENTE Center; Incl. Ref 8 - 10; Order Ref 8 - 10 |
| 8 | | D51750 | | 1 | PUNTA |
| 9 | | 245466A1 | | 1 | PASADOR |
| 10 | | D48212 | | 1 | PIE |
| 11 | | D37495 | | 2 | CASQUILLO |
| 12 | | D30933 | | 6 | CASQUILLO |

HTTP://WWW.MINNPARBACKHOEPARTS.COM

| 09-30 | | p1 | 01/04 |
|---|---|---|---|

CUCHARÓN, RETROEXCAVADORA UNIVERSAL (457 MM (18 INCH) WIDE)

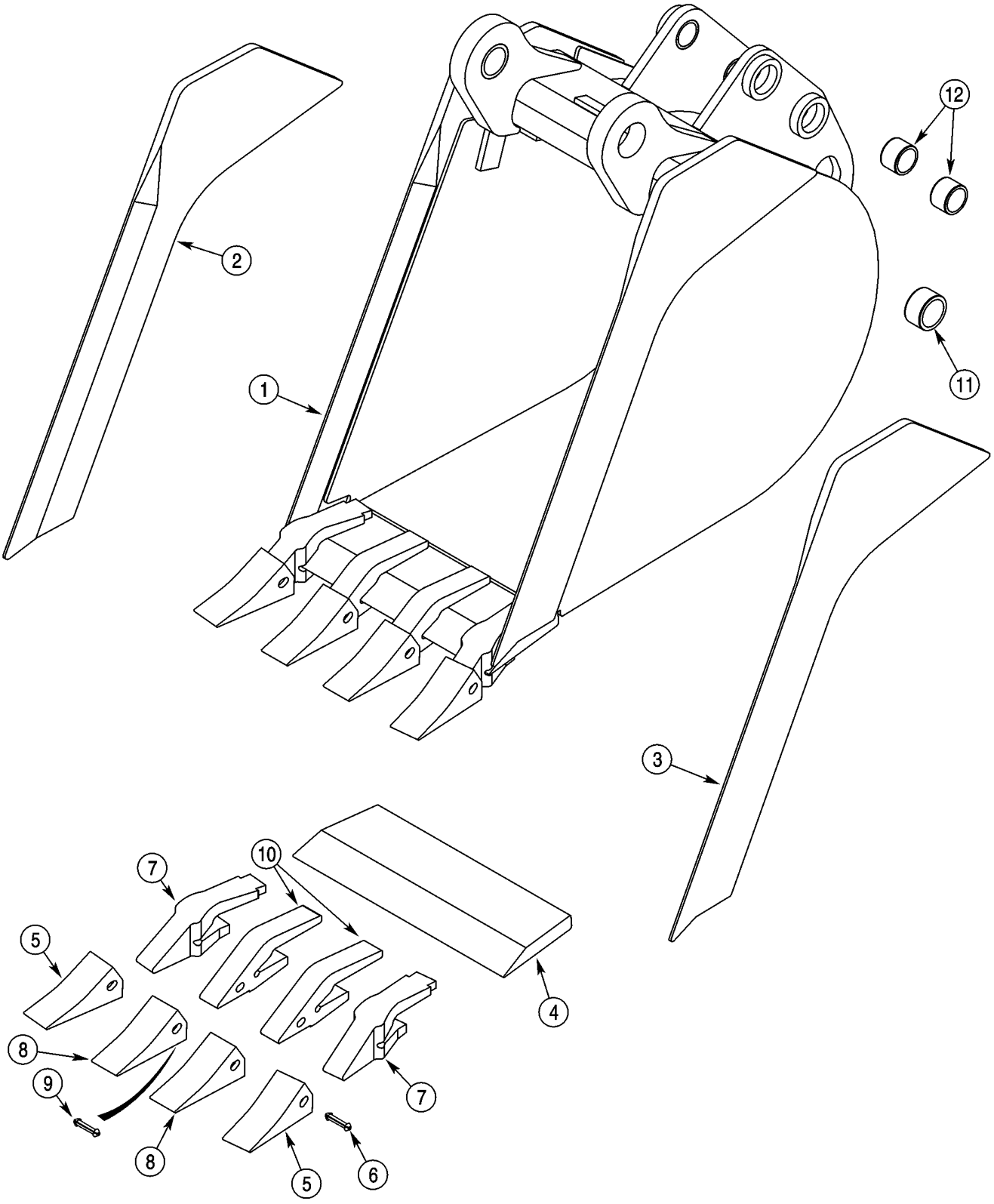

HTTP://WWW.MINNPARBACKHOEPARTS.COM



CUCHARÓN, RETROEXCAVADORA UNIVERSAL (457 MM (18 INCH) WIDE)

| REF | FN | PART NUMBER | YR/SN | QTY | DESCRIPTION |
|---|---|---|---|---|---|
| 1 | | 376384A1 | | 1 | CUCHARA 457 mm (18 in); With 4 Teeth; Order Through Parts Marketing; Incl. Ref 2 - 12 |
| 2 | | NSS | | 1 | NO SE REPARA SEPARADAM. Edge, Right-Hand |
| 3 | | NSS | | 1 | NO SE REPARA SEPARADAM. Edge, Left-Hand |
| 4 | | NSS | | 1 | NO SE REPARA SEPARADAM. Edge |
| | | D139851 | | 2 | DIENTE Outer; Incl. Ref 5 - 7 |
| 5 | | D51750 | | 1 | PUNTA |
| 6 | | 245466A1 | | 1 | PASADOR |
| 7 | | D138157 | | 1 | PIE |
| | | D139849 | | 2 | DIENTE Center; Incl. Ref 8 - 10; Order Ref 8 - 10 |
| 8 | | D51750 | | 1 | PUNTA |
| 9 | | 245466A1 | | 1 | PASADOR |
| 10 | | D48212 | | 1 | PIE |
| 11 | | D37495 | | 2 | CASQUILLO |
| 12 | | D30933 | | 4 | CASQUILLO |

HTTP://WWW.MINNPARBACKHOEPARTS.COM

| 09-31 | | p1 | 01/04 |
|---|---|---|---|

CUCHARÓN, RETROEXCAVADORA (457 MM (18 INCH) WIDE)

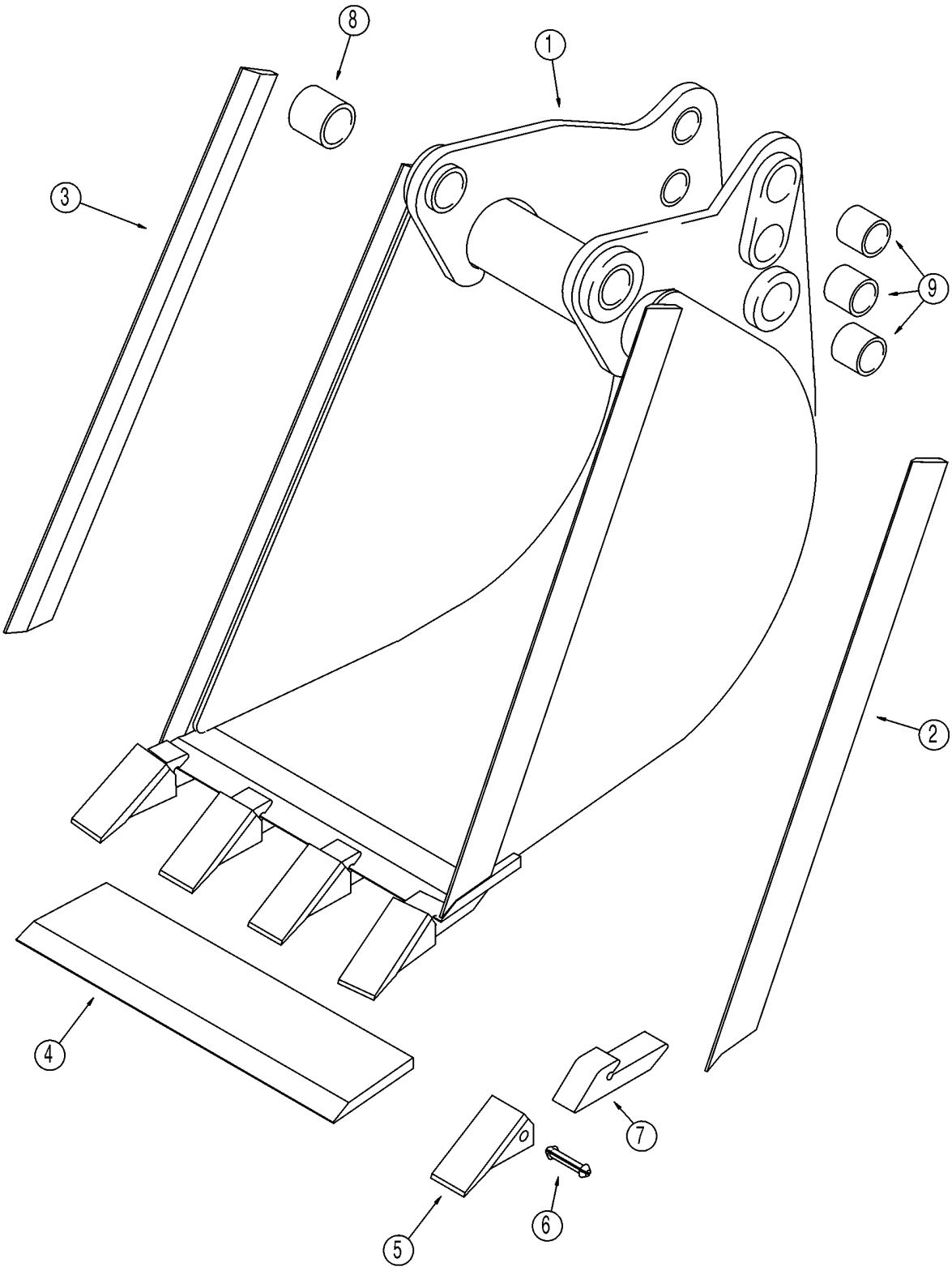

HTTP://WWW.MINNPARBACKHOEPARTS.COM



CUCHARÓN, RETROEXCAVADORA (457 MM (18 INCH) WIDE)

| REF | FN | PART NUMBER | YR/SN | QTY | DESCRIPTION |
|---|---|---|---|---|---|
| 1 | | 183808A1 | | 1 | CUCHARA 457 mm (18 in); With 4 Teeth; Order Through Parts Marketing; Incl. Ref 2 - 9 |
| 2 | | 129894A1 | | 1 | BORDE Right-Hand |
| 3 | | 129893A1 | | 1 | BORDE Left-Hand |
| 4 | | 183810A1 | | 1 | BORDE |
| | | D41659 | | 4 | DIENTE Incl. Ref 5 - 7 |
| 5 | | D51750 | | 1 | PUNTA |
| 6 | | 245466A1 | | 1 | PASADOR |
| 7 | | NSS | | 1 | NO SE REPARA SEPARADAM. Shank |
| 8 | | D37495 | | 2 | CASQUILLO |
| 9 | | D30933 | | 6 | CASQUILLO |

HTTP://WWW.MINNPARBACKHOEPARTS.COM

| 09-32 | | p1 | 01/04 |
|---|---|---|---|

CUCHARÓN, RETROEXCAVADORA UNIVERSAL (610 MM (24 INCH) / 762 MM (30 INCH) WIDE)

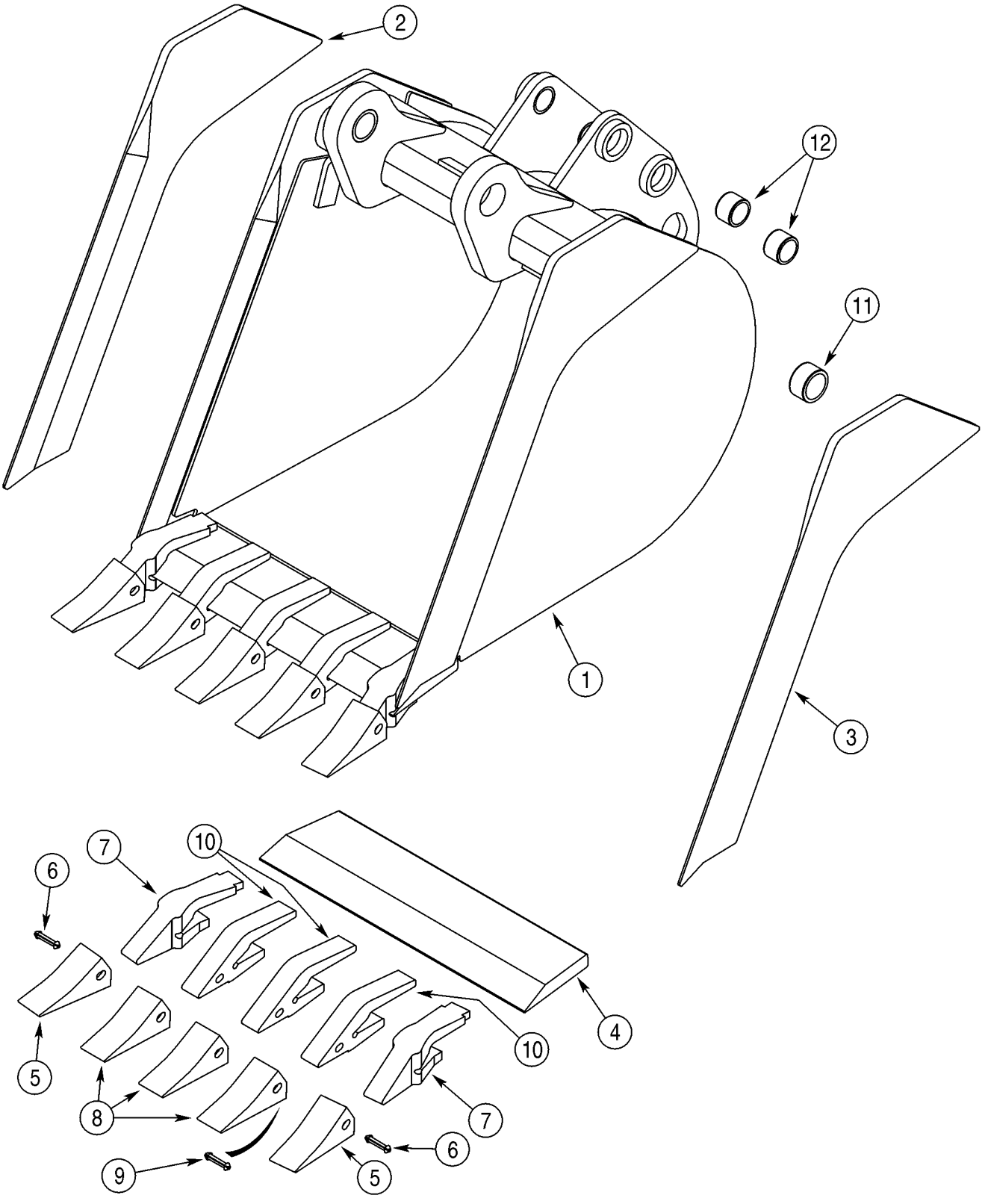

HTTP://WWW.MINNPARBACKHOEPARTS.COM



CUCHARÓN, RETROEXCAVADORA UNIVERSAL (610 MM (24 INCH) / 762 MM (30 INCH) WIDE)

| REF | FN | PART NUMBER | YR/SN | QTY | DESCRIPTION |
|---|---|---|---|---|---|
| 1 | | 365328A1 | | 1 | CUCHARA 610 mm (24 in); With 5 Teeth; Order Through Parts Marketing; Incl. Ref 2 - 12 |
| 2 | | NSS | | 1 | NO SE REPARA SEPARADAM. Edge, Right-Hand |
| 3 | | NSS | | 1 | NO SE REPARA SEPARADAM. Edge, Left-Hand |
| 4 | | NSS | | 1 | NO SE REPARA SEPARADAM. Edge |
| | | D139851 | | 2 | DIENTE Outer; Incl. Ref 5 - 7 |
| 5 | | D51750 | | 1 | PUNTA |
| 6 | | 245466A1 | | 1 | PASADOR |
| 7 | | D138157 | | 1 | PIE |
| | | D139849 | | 3 | DIENTE Center; Incl. Ref 8 - 10; Order Ref 8 - 10 |
| 8 | | D51750 | | 1 | PUNTA |
| 9 | | 245466A1 | | 1 | PASADOR |
| 10 | | D48212 | | 1 | PIE |
| 11 | | D37495 | | 2 | CASQUILLO |
| 12 | | D30933 | | 4 | CASQUILLO |
| 1 | | 376385A1 | | 1 | CUCHARA 762 mm (30 in); With 6 Teeth; Not Illustrated; Order Through Parts Marketing; Incl. Ref 2 - 12 |
| 2 | | NSS | | 1 | NO SE REPARA SEPARADAM. Edge, Right-Hand |
| 3 | | NSS | | 1 | NO SE REPARA SEPARADAM. Edge, Left-Hand |
| 4 | | NSS | | 1 | NO SE REPARA SEPARADAM. Edge |
| | | D139851 | | 2 | DIENTE Outer; Incl. Ref 5 - 7 |
| 5 | | D51750 | | 1 | PUNTA |
| 6 | | 245466A1 | | 1 | PASADOR |
| 7 | | D138157 | | 1 | PIE |
| | | D139849 | | 4 | DIENTE Center; Incl. Ref 8 - 10; Order Ref 8 - 10 |
| 8 | | D51750 | | 1 | PUNTA |
| 9 | | 245466A1 | | 1 | PASADOR |
| 10 | | D48212 | | 1 | PIE |
| 11 | | D37495 | | 2 | CASQUILLO |
| 12 | | D30933 | | 4 | CASQUILLO |

HTTP://WWW.MINNPARBACKHOEPARTS.COM

| 09-33 | | p1 | 01/04 |
|---|---|---|---|

CUCHARÓN, RETROEXCAVADORA (610 MM (24 INCH) WIDE)

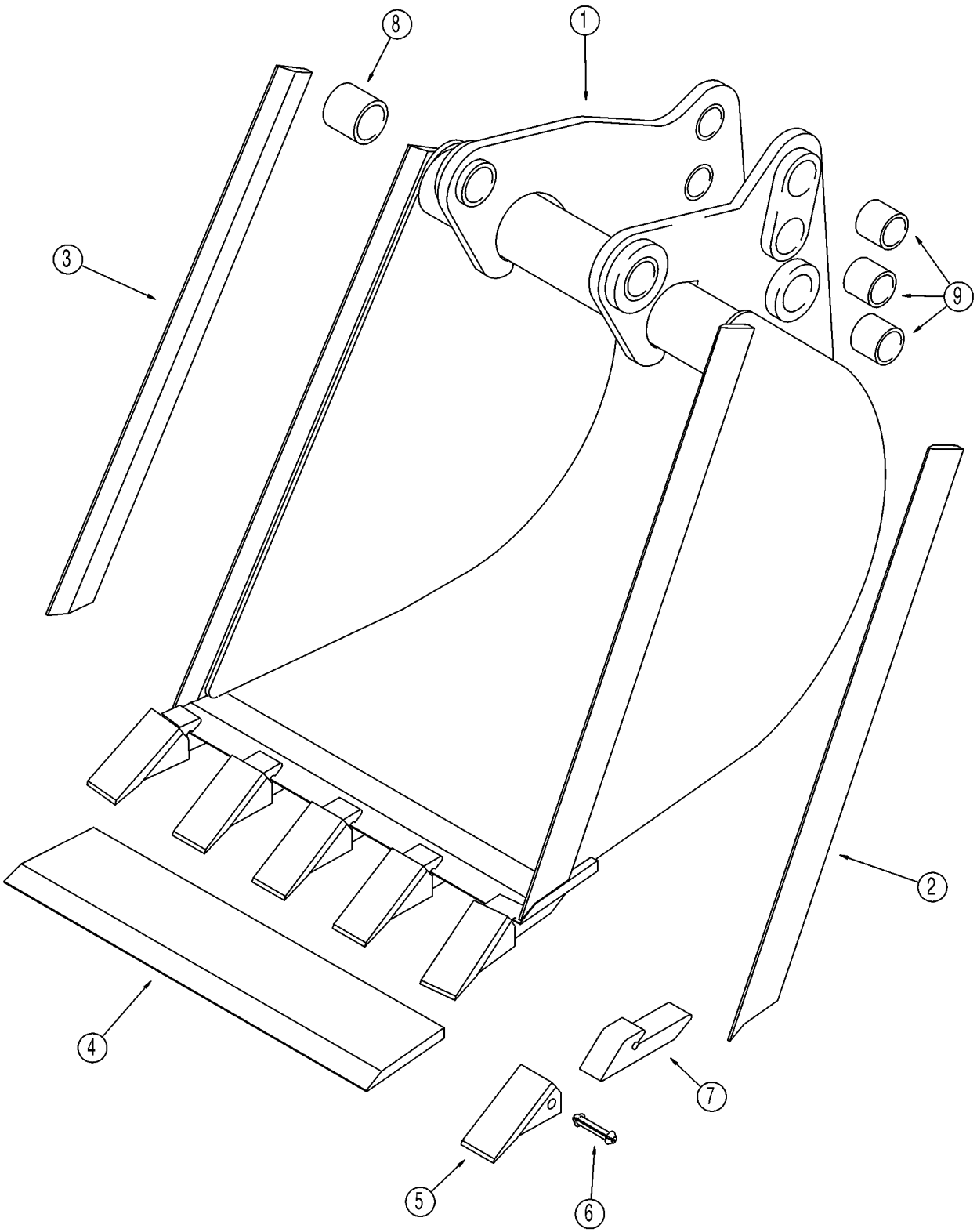

HTTP://WWW.MINNPARBACKHOEPARTS.COM



CUCHARÓN, RETROEXCAVADORA (610 MM (24 INCH) WIDE)

| REF | FN | PART NUMBER | YR/SN | QTY | DESCRIPTION |
|---|---|---|---|---|---|
| 1 | | 129885A1 | | 1 | CUCHARA 610 mm (24 in); With 5 Teeth; Order Through Parts Marketing; Incl. Ref 2 - 9 |
| 2 | | 129894A1 | | 1 | BORDE Right-Hand |
| 3 | | 129893A1 | | 1 | BORDE Left-Hand |
| 4 | | 129944A1 | | 1 | APOYADERO |
| | | D41659 | | 5 | DIENTE Incl. Ref 5 - 7 |
| 5 | | D51750 | | 1 | PUNTA |
| 6 | | 245466A1 | | 1 | PASADOR |
| 7 | | NSS | | 1 | NO SE REPARA SEPARADAM. Shank |
| 8 | | D37495 | | 2 | CASQUILLO |
| 9 | | D30933 | | 6 | CASQUILLO |

HTTP://WWW.MINNPARBACKHOEPARTS.COM



CUCHARÓN, RETROEXCAVADORA UNIVERSAL (914 MM (36 INCH) WIDE)

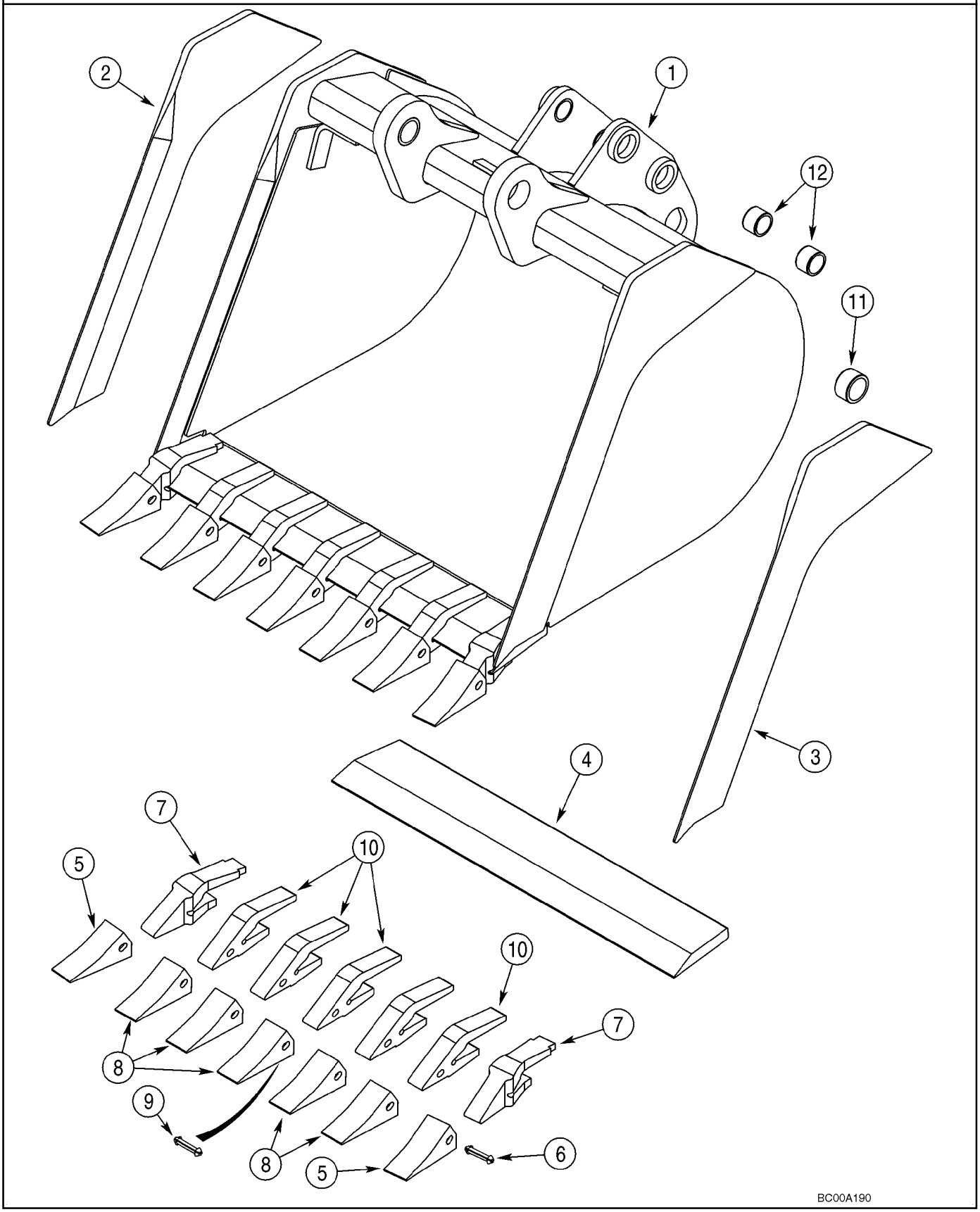

HTTP://WWW.MINNPARBACKHOEPARTS.COM



CUCHARÓN, RETROEXCAVADORA UNIVERSAL (914 MM (36 INCH) WIDE)

| REF | FN | PART NUMBER | YR/SN | QTY | DESCRIPTION |
|---|---|---|---|---|---|
| 1 | | 376386A1 | | 1 | CUCHARA 914 mm (36 in); With 7 Teeth; Order Through Parts Marketing; Incl. Ref 2 - 12 |
| 2 | | NSS | | 1 | NO SE REPARA SEPARADAM. Edge, Right-Hand |
| 3 | | NSS | | 1 | NO SE REPARA SEPARADAM. Edge, Left-Hand |
| 4 | | NSS | | 1 | NO SE REPARA SEPARADAM. Edge |
| | | D139851 | | 2 | DIENTE Outer; Incl. Ref 5 - 7 |
| 5 | | D51750 | | 1 | PUNTA |
| 6 | | 245466A1 | | 1 | PASADOR |
| 7 | | D138157 | | 1 | PIE |
| | | D139849 | | 5 | DIENTE Center; Incl. Ref 8 - 10; Order Ref 8 - 10 |
| 8 | | D51750 | | 1 | PUNTA |
| 9 | | 245466A1 | | 1 | PASADOR |
| 10 | | D48212 | | 1 | PIE |
| 11 | | D37495 | | 2 | CASQUILLO |
| 12 | | D30933 | | 4 | CASQUILLO |

HTTP://WWW.MINNPARBACKHOEPARTS.COM



CUCHARÓN, RETROEXCAVADORA UNIVERSAL (610 MM (24 INCH) WIDE)

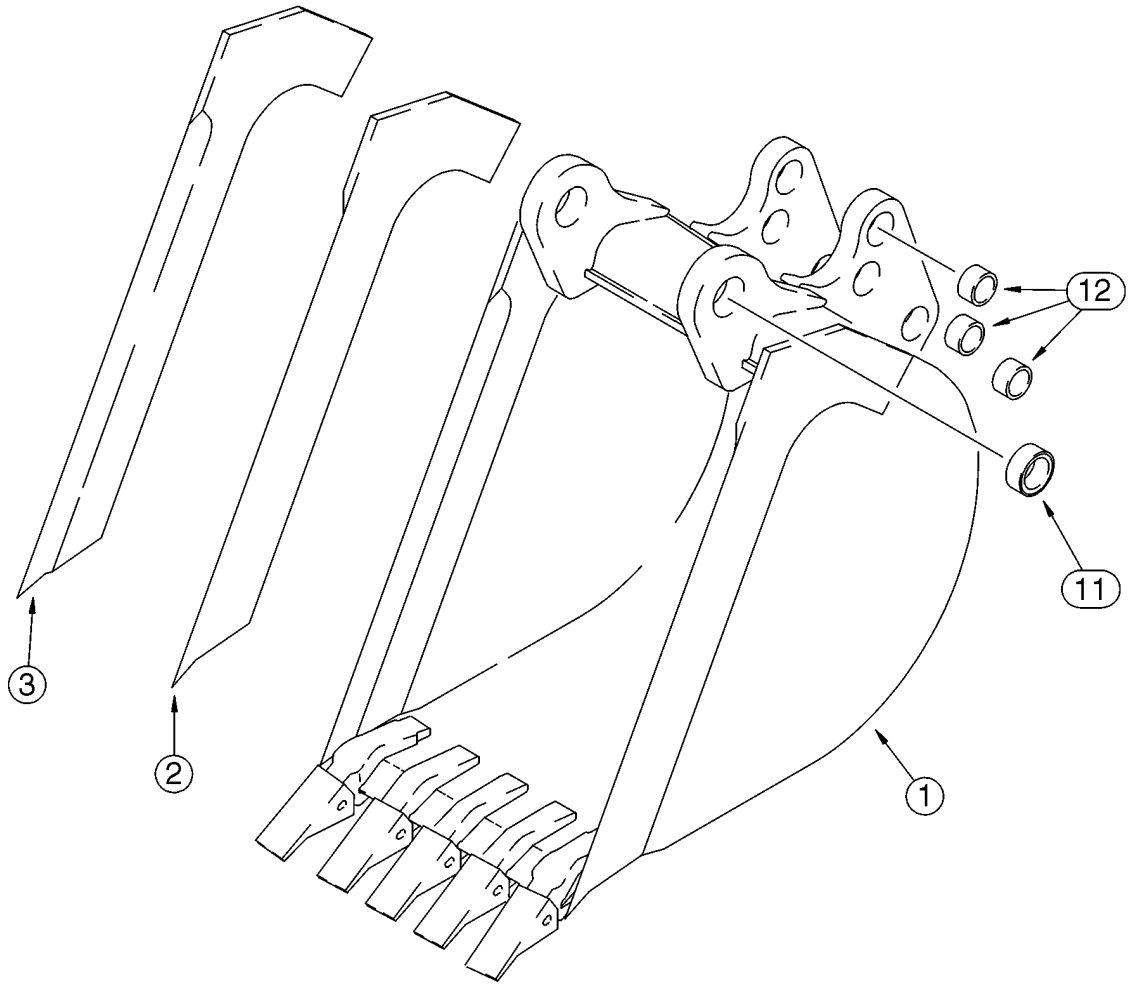


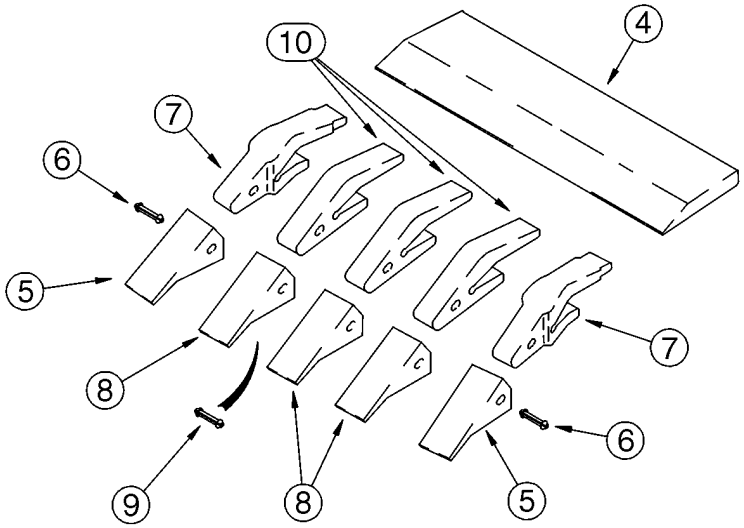


B9405159

HTTP://WWW.MINNPARBACKHOEPARTS.COM



CUCHARÓN, RETROEXCAVADORA UNIVERSAL (610 MM (24 INCH) WIDE)

| REF | FN | PART NUMBER | YR/SN | QTY | DESCRIPTION |
|---|---|---|---|---|---|
| 1 | | 141232A2 | | 1 | CUCHARA 610 mm (24 in); With 5 Teeth; Order Through Parts Marketing; Incl. Ref 2 - 12 |
| 2 | | 141234A1 | | 1 | CUCHILLA DE ATAQUE Right-Hand |
| 3 | | 141233A1 | | 1 | CUCHILLA DE ATAQUE Left-Hand |
| 4 | | D142012 | | 1 | CUCHILLA DE ATAQUE |
| | | D139851 | | 2 | DIENTE Outer; Incl. Ref 5 - 7 |
| 5 | | D51750 | | 1 | PUNTA |
| 6 | | 245466A1 | | 1 | PASADOR |
| 7 | | D138157 | | 1 | PIE |
| | | D139849 | | 3 | DIENTE Center; Incl. Ref 8 - 10; Order Ref 8 - 10 |
| 8 | | D51750 | | 1 | PUNTA |
| 9 | | 245466A1 | | 1 | PASADOR |
| 10 | | D48212 | | 1 | PIE |
| 11 | | D37495 | | 2 | CASQUILLO |
| 12 | | D30933 | | 6 | CASQUILLO |

HTTP://WWW.MINNPARBACKHOEPARTS.COM

| 09-36 | | p1 | 01/04 |
|---|---|---|---|

CONTRAPESO, DELANTERO

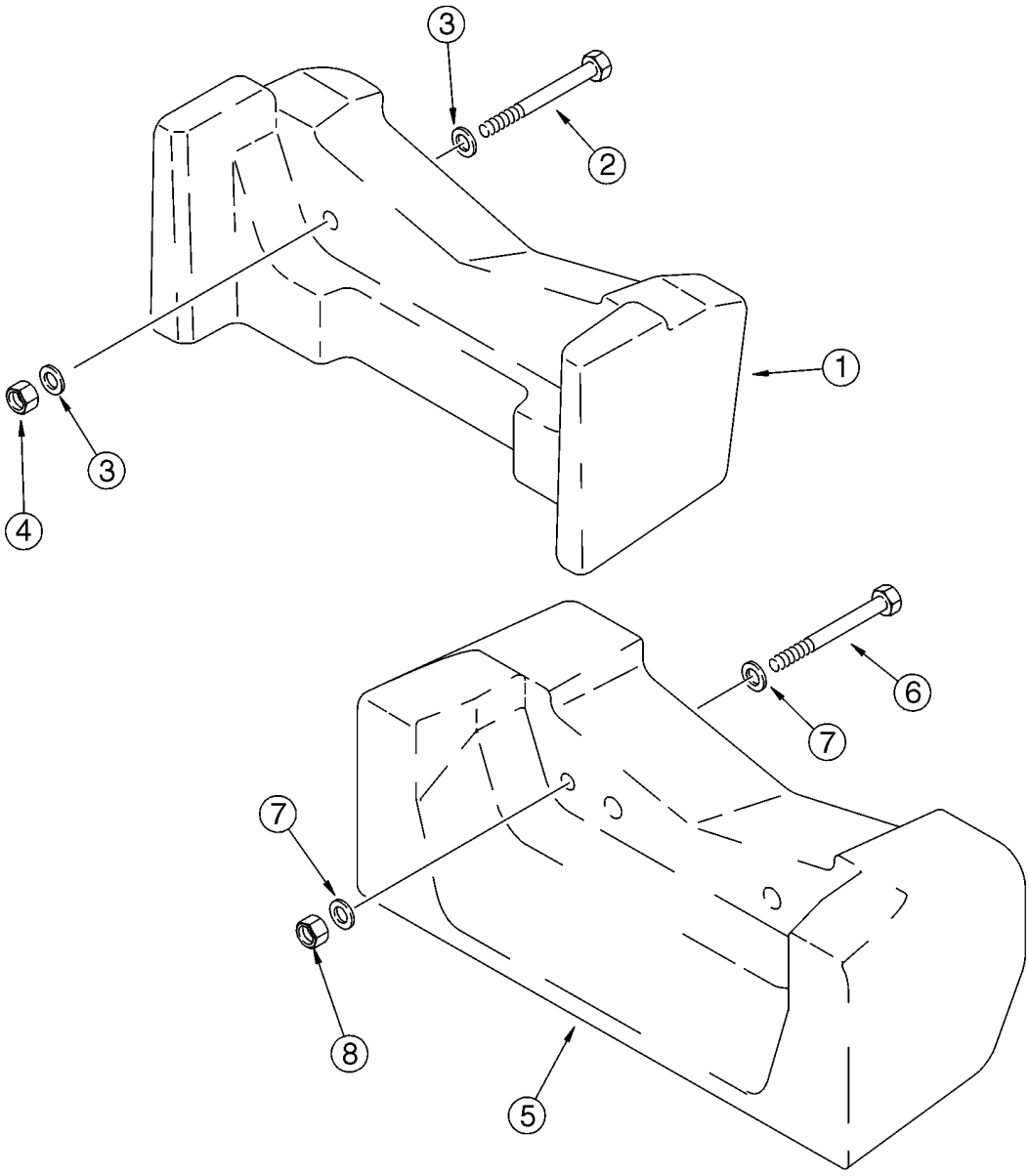


BT97N084

HTTP://WWW.MINNPARBACKHOEPARTS.COM



CONTRAPESO, DELANTERO

| REF | FN | PART NUMBER | YR/SN | QTY | DESCRIPTION |
|---|---|---|---|---|---|
| 1 | | 360867A1 | | 1 | CONTRAPESO 200 kg (441 lbs); If Used |
| 2 | | 827-20170 | | 2 | TORNILLO |
| 3 | | 896-11020 | | 4 | ARANDELA 22 x 37 x 4 mm |
| 4 | | 829-1420 | | 2 | TUERCA M20; 10 |
| 5 | | 87425456 | | 1 | EQUILIBRADOR 408 kg (900 lbs); If Used |
| 6 | | 827-20170 | | 2 | TORNILLO |
| 7 | | 896-11020 | | 4 | ARANDELA 22 x 37 x 4 mm |
| 8 | | 829-1420 | | 2 | TUERCA M20; 10 |

HTTP://WWW.MINNPARBACKHOEPARTS.COM

| 09-37 | | p1 | 01/04 |
|---|---|---|---|

CHASIS / SOPORTES, RECEPTÁCULO - PANTALLA, ENTRADA DE AIRE

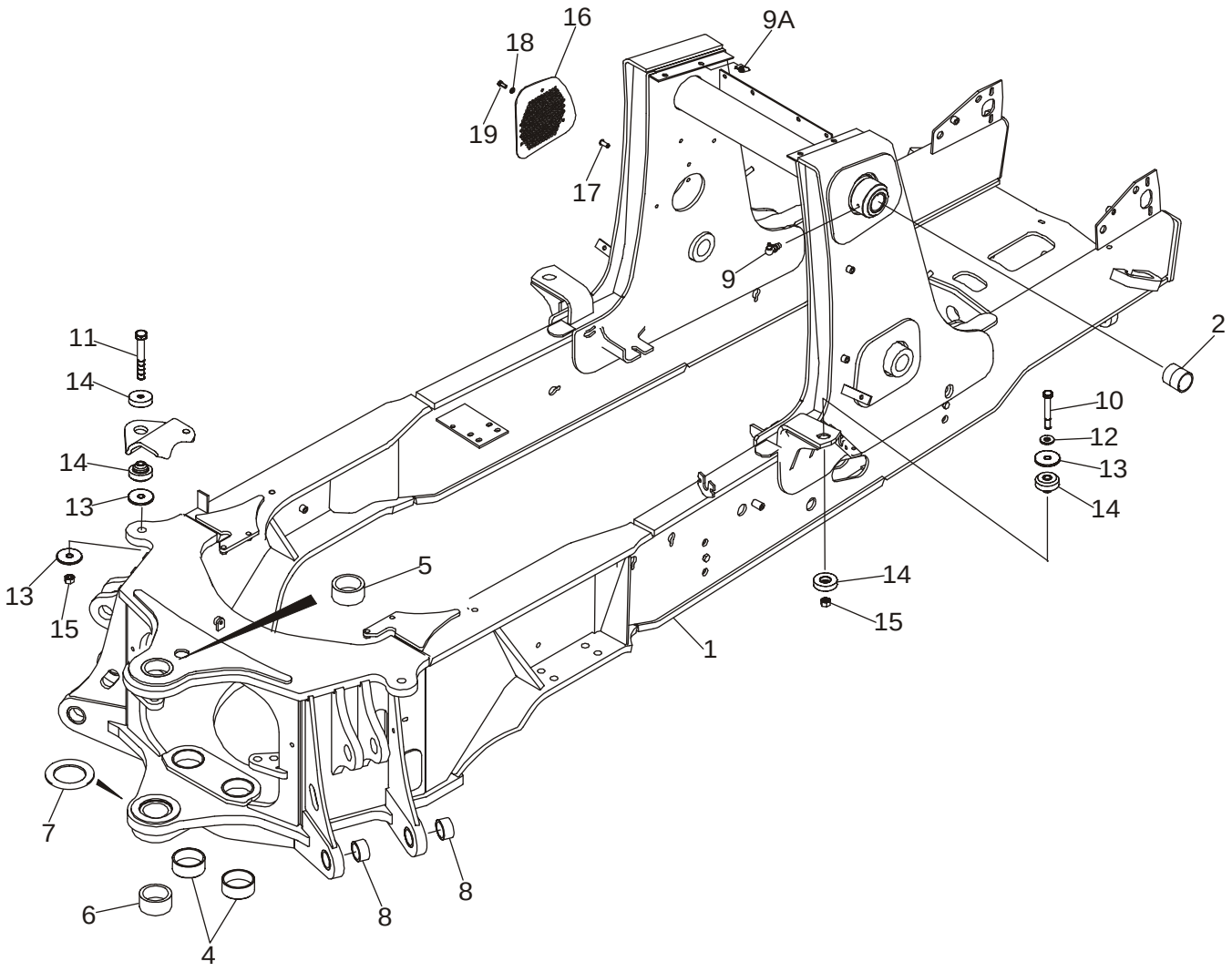


BS03J143

HTTP://WWW.MINNPARBACKHOEPARTS.COM



CHASIS / SOPORTES, RECEPTÁCULO - PANTALLA, ENTRADA DE AIRE

| REF | FN | PART NUMBER | YR/SN | QTY | DESCRIPTION |
|---|---|---|---|---|---|
| 1 | | 87423004 | | 1 | CHASIS Incl. Ref 2 - 8 |
| 2 | | 180427A1 | | 2 | CASQUILLO |
| 4 | | 114318A1 | | 2 | CASQUILLO |
| 5 | | D151069 | | 1 | CASQUILLO 70 x 10 x 32 mm |
| 6 | | D151070 | | 1 | CASQUILLO 70 x 10 x 38 mm |
| 7 | | 220413A1 | | 1 | ESPACIADOR 93 x 135 x 5 mm |
| 8 | | 107124A1 | | 4 | CASQUILLO |
| 9 | | 219-55 | | 2 | ENGRASADOR 90 deg, 1/8 PT x 27/32 |
| 9A | | 833-40310 | | 4 | TUERCA J-Type, M10 |
| 10 | | 827-16085 | | 2 | TORNILLO M16 x 85; 10.9 |
| 11 | | 827-16100 | | 2 | TORNILLO M16 x 100; 10.9 |
| 12 | | 896-11016 | | 2 | ARANDELA 17,5 x 30 x 4 mm |
| 13 | | 186977A1 | | 6 | ARANDELA 4,5 mm thick |
| 14 | | 411892A1 | | 4 | TEJUELO, GOMA M16; Operator Compartment Pod Mounts |
| 15 | | 829-1416 | | 4 | TUERCA M16; 10 |
| 16 | | 87423668 | | 1 | PANTALLA PROTECTORA Air Inlet |
| 17 | | 87417383 | | 3 | ROSCA POSTIZA Nut, M8 |
| 18 | | 895-11008 | | 3 | ARANDELA Flat, 8 mm |
| 19 | | 614-8030 | | 3 | TORNILLO M8 x 30 |

HTTP://WWW.MINNPARBACKHOEPARTS.COM

| 09-38 | | p1 | 01/04 |
|---|---|---|---|

DEPÓSITO, ACEITE - CAJA, BATERÍA Y HERRAMIENTA

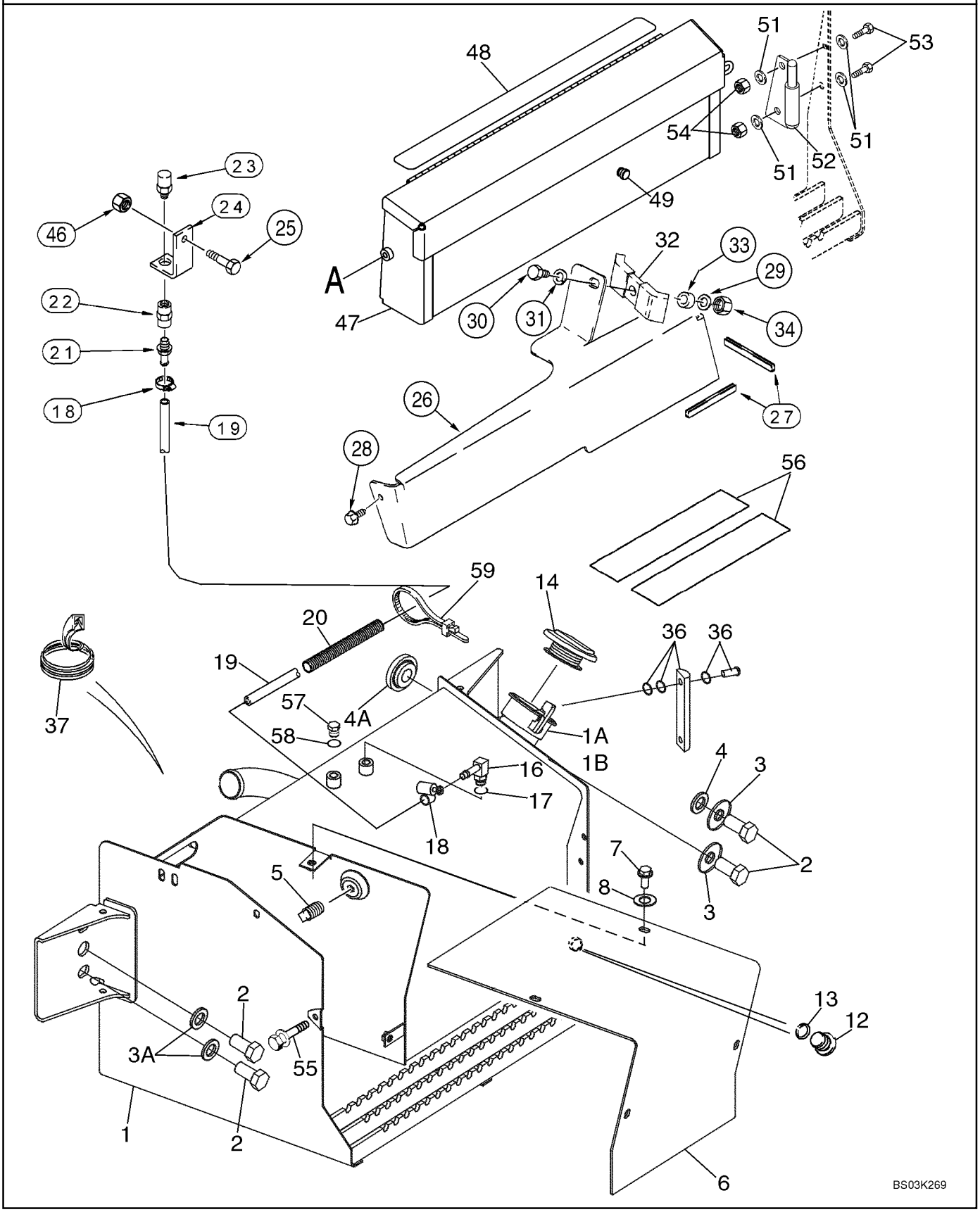

HTTP://WWW.MINNPARBACKHOEPARTS.COM



DEPÓSITO, ACEITE - CAJA, BATERÍA Y HERRAMIENTA

| REF | FN | PART NUMBER | YR/SN | QTY | DESCRIPTION |
|---|---|---|---|---|---|
| 1 | | 87434745 | | 1 | DESPOSITO ACEITE Right-Hand Side of Chassis; Incl. Ref 1A, 1B, 12 |
| 1A | | 230857A1 | | 1 | REJILLA Strainer; Fill Tube |
| 1B | | 440-1066 | | 2 | TORNILLO No. 6 x 3/8 |
| 2 | | 627-20060 | | 4 | TORNILLO M20 x 60; 10.9; Use With Loctite 345-49 |
| 3 | | 302358A1 | | 2 | ARANDELA Right-Hand |
| 3A | | 896-11020 | | 2 | ARANDELA 22 x 37 x 4 mm; Left-Hand |
| 4 | | 185926A1 | | 1 | ESPACIADOR Right-Hand; Upper |
| 4A | | 409472A1 | | 1 | ESPACIADOR Right-Hand; Lower |
| 5 | | 217-436 | | 1 | TAPÓN 3/8 PT; If Used |
| 6 | | 231656A1 | | 1 | TAPA Battery |
| 7 | | 614-10020 | | 4 | TORNILLO M10 x 20; Use With 345-56 Loctite No. 767 |
| 8 | | 495-21044 | | 4 | ARANDELA 7/16 x 1 x 5/64 |
| 12 | | 218-5211 | | 1 | TAPÓN 7/8 Or, Drain; Incl. Ref 13 |
| 13 | | 237-6010 | | 1 | JUNTA HERMETICA 3/4 ID x 3/32, Boss Seal |
| 14 | | 138595A1 | | 1 | TAPÓN CAP |
| 16 | | 217-347 | | 1 | CONEXION 3/8 stem x 9/16 Or; Incl. Ref 17 |
| 17 | | 237-6006 | | 1 | JUNTA HERMETICA 15/32 ID x 5/64, Boss Seal |
| 18 | | 214-1406 | | 2 | COLLAR 7/16 - 25/32 |
| 19 | | 393161A1 | | 1 | MANGA 912 mm (35-29/32 in); Vent |
| 20 | | 143219A1 | | 1 | PROTECTOR 380 mm Sleeve |
| 21 | | 217-380 | | 1 | CONEXION 3/8 stem x PT; Use With 345-147 Sealant |
| 22 | | 217-1102 | | 1 | CONEXION 3/8 in |
| 23 | | 361776A1 | | 1 | RESPIRADERO Use With 345-147 Sealant |
| 24 | | 122603A1 | | 1 | APOYADERO |
| 25 | | 711-10030 | | 1 | TORNILLO M10 x 30 |
| 26 | | 399959A2 | | 1 | TAPA Right-Hand Loader Lift Frame Tubing |
| 27 | | 191047A1 | | 1 | MOLDURA 305 mm (12 in) lg; Apply 65 mm (2-9/16 in) Of Trim To Front Lower Edge and 240 mm (9-1/2 in) Of Trim To Outisde Lower Edge of Cover |
| 28 | | 307577A1 | | 1 | TORNILLO With Washer, M8 x 20 |
| 29 | | 895-11010 | | 1 | ARANDELA 11 x 21 x 2 mm |
| 30 | | 814-10045 | | 1 | TORNILLO M10 x 45 |
| 31 | | 892-11010 | | 1 | ARANDELA DE FRENO M10 |

HTTP://WWW.MINNPARBACKHOEPARTS.COM



DEPÓSITO, ACEITE - CAJA, BATERÍA Y HERRAMIENTA

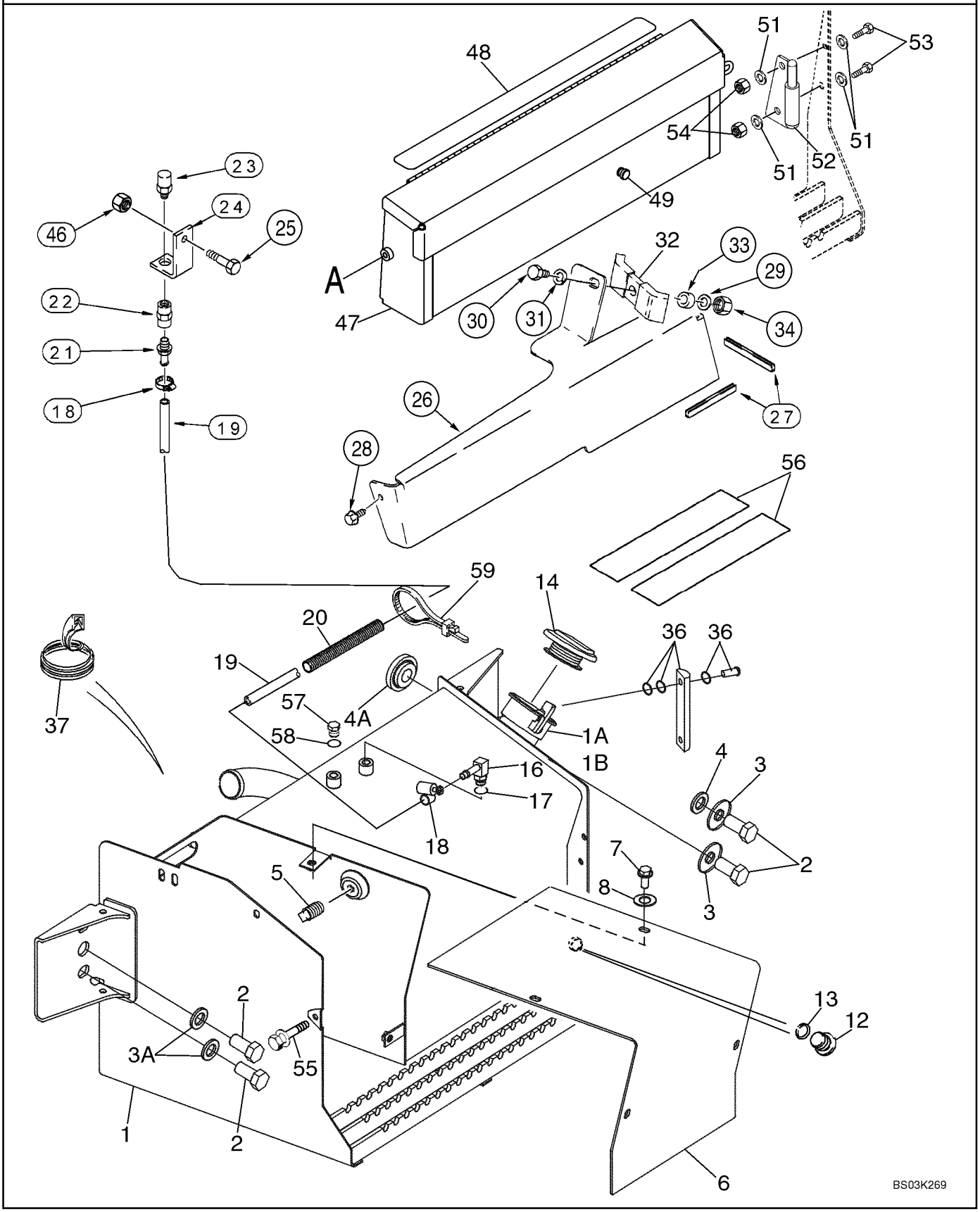

HTTP://WWW.MINNPARBACKHOEPARTS.COM



DEPÓSITO, ACEITE - CAJA, BATERÍA Y HERRAMIENTA

| REF | FN | PART NUMBER | YR/SN | QTY | DESCRIPTION |
|---|---|---|---|---|---|
| 32 | | D138055 | | 1 | COLLAR |
| 33 | | 120303A1 | | 1 | ESPACIADOR |
| 34 | | 829-1410 | | 1 | TUERCA M10; 10.9 |
| 35 | | 345-49 | | 1 | LOCTITE 242; 1 ml |
| 36 | | 226456A1 | | 1 | CALIBRE Aluminum; Includes (2) Hollow Head Bolts and (4) O-Rings; Component Parts Not Serviced Separately, Used With Ref 35 |
| 37 | | D40442 | | 1 | MOLDURA 305 mm (12 in); Cut From F42827 |
| 46 | | 829-1410 | | 1 | TUERCA M10; 10.9 |
| 47 | | 380807A4 | | 1 | CAJA HERRAMIENTAS |
| 48 | | D80270 | | 1 | CINTA 635 mm (25 in) |
| 49 | | L60224 | | 1 | AMORTIGUADOR CAUCHO 1/2 in Hole; Bumper |
| 51 | | 895-11010 | | 4 | ARANDELA 11 x 21 x 2 mm |
| 52 | | 382202A2 | | 1 | BISAGRA |
| 53 | | 614-10025 | | 2 | TORNILLO M10 x 25 |
| 54 | | 829-1410 | | 2 | TUERCA M10; 10.9 |
| 55 | | 121856A1 | | 1 | TORNILLO M10 x 30; Includes Washer |
| 56 | | D55216 | | 2 | TACO Non-Slip, 2 x 9 |
| 57 | | 218-5155 | | 1 | TAPÓN Hex, 9/16, Incl. Ref 58; Models Without Pilot Controls |
| 58 | | 237-6006 | | 1 | JUNTA HERMETICA |
| 59 | | L18337 | | 2 | BANDA |

HTTP://WWW.MINNPARBACKHOEPARTS.COM

| 09-39 | | p1 | 01/04 |
|---|---|---|---|

REVESTIMIENTO DEL RADIADOR

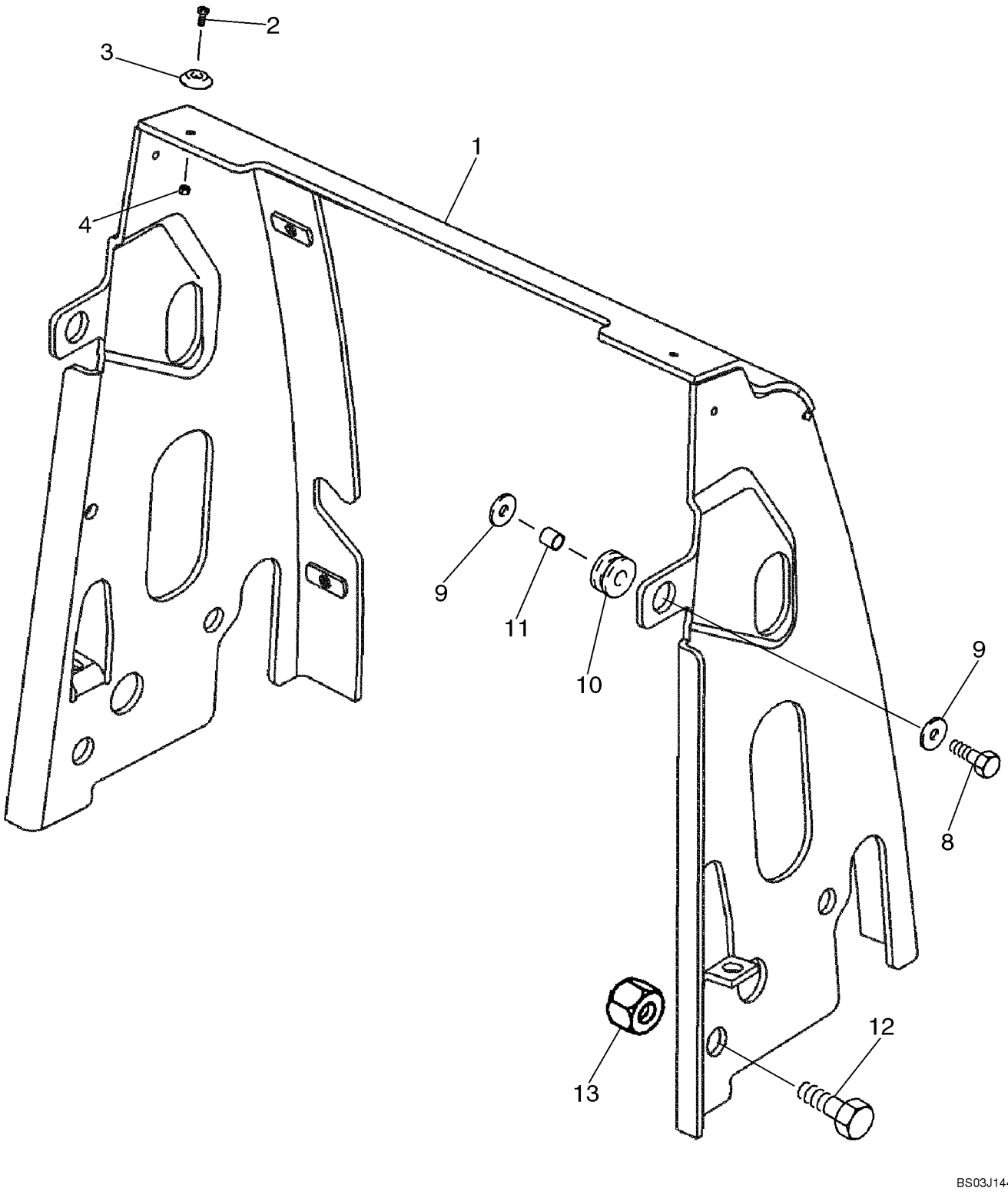

HTTP://WWW.MINNPARBACKHOEPARTS.COM



REVESTIMIENTO DEL RADIADOR

| REF | FN | PART NUMBER | YR/SN | QTY | DESCRIPTION |
|---|---|---|---|---|---|
| 1 | | 87433659 | | 1 | PLACA (CONJUNTO) |
| 2 | | 440-11010 | | 2 | TORNILLO No. 10 x 5/8 |
| 3 | | 109879A1 | | 2 | ESPACIADOR Hood; Plastic |
| 4 | | 231-14109 | | 2 | TUERCA No. 10 |
| 8 | | 614-10035 | | 2 | TORNILLO M10 x 35 |
| 9 | | K691987 | | 4 | ARANDELA Flat, 10 mm |
| 10 | | 86982682 | | 2 | PASACABLES Rubber Grommet |
| 11 | | D76209 | | 2 | ESPACIADOR |
| 12 | | 614-20030 | | 4 | TORNILLO M20 x 30 |
| 13 | | 829-1420 | | 4 | TUERCA M20; 10 |

HTTP://WWW.MINNPARBACKHOEPARTS.COM



CAPO - PANELES, LATERALES

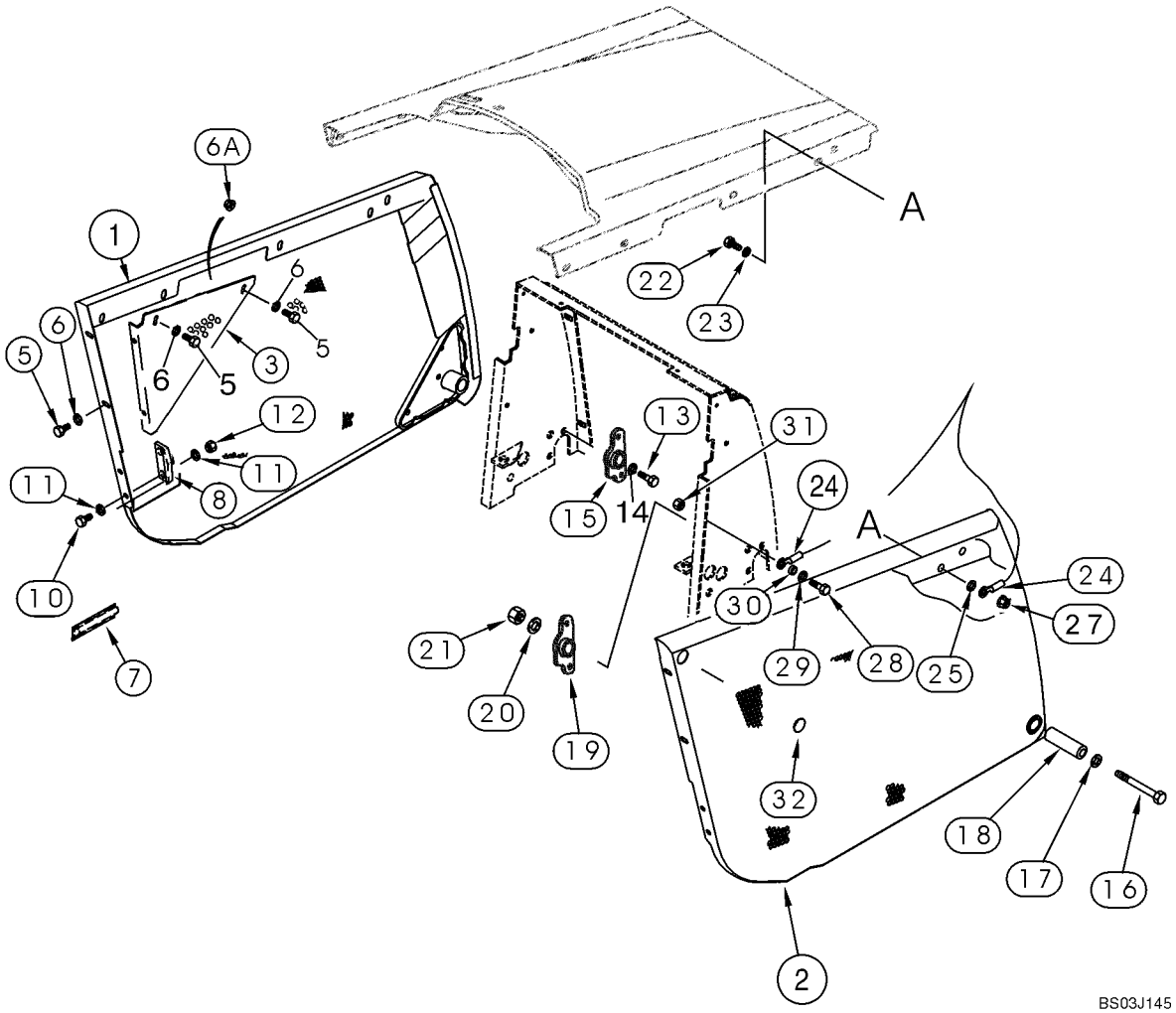

HTTP://WWW.MINNPARBACKHOEPARTS.COM



CAPO - PANELES, LATERALES

| REF | FN | PART NUMBER | YR/SN | QTY | DESCRIPTION |
|---|---|---|---|---|---|
| 1 | | 339022A3 | | 1 | PANEL LATERAL Left-Hand Side |
| 2 | | 339021A2 | | 1 | PANEL LATERAL Right-Hand Side |
| 3 | | 362609A1 | | 1 | TENSOR Left-Hand |
| 4 | | 362607A1 | | 1 | TENSOR Right-Hand; Not Illustrated |
| 5 | | 614-10025 | | 8 | TORNILLO M10 x 25 |
| 6 | | 895-11010 | | 8 | ARANDELA 11 x 21 x 2 mm |
| 6A | | 825-2410 | | 4 | TUERCA M10 |
| 7 | | 183168A1 | | 1 | MANECILLA Left-Hand |
| 8 | | D143715 | | 1 | APOYADERO Guide, Left-Hand |
| 9 | | D143714 | | 1 | APOYADERO Guide, Right-Hand; Not Illustrated |
| 10 | | 614-10025 | | 4 | TORNILLO M10 x 25 |
| 11 | | 895-11010 | | 8 | ARANDELA 11 x 21 x 2 mm |
| 12 | | 832-10410 | | 4 | TUERCA M10 |
| 13 | | 614-10020 | | 4 | TORNILLO M10 x 20 |
| 14 | | 895-11010 | | 4 | ARANDELA Flat, 10 mm |
| 15 | | 87407769 | | 1 | PIVOTE Left-Hand |
| 16 | | 814-12100 | | 2 | TORNILLO M12 x 100 |
| 17 | | 896-15012 | | 2 | ARANDELA 13,5 x 28 x 4 mm |
| 18 | | 87412060 | | 2 | TUBO Spacer |
| 19 | | 87407770 | | 1 | PIVOTE Right-Hand |
| 20 | | 896-15012 | | 2 | ARANDELA 13,5 x 28 x 4 mm |
| 21 | | 829-1412 | | 2 | TUERCA M12; 10 |
| 22 | | 614-10025 | | 1 | TORNILLO M10 x 25 |
| 23 | | 895-11010 | | 1 | ARANDELA 11 x 21 x 2 mm |
| 24 | | 144908A2 | | 1 | CABLE |
| 25 | | D143417 | | 1 | ESPACIADOR |
| 27 | | 825-2410 | | 1 | TUERCA M10 |
| 28 | | 614-10030 | | 1 | TORNILLO M10 x 30 |
| 29 | | 895-11010 | | 1 | ARANDELA 11 x 21 x 2 mm |
| 30 | | 396605A1 | | 1 | ESPACIADOR |
| 31 | | 825-2410 | | 1 | TUERCA M10 |
| 32 | | D140267 | | 2 | TAPÓN |

HTTP://WWW.MINNPARBACKHOEPARTS.COM

| 09-41 | | p1 | 01/04 |
|---|---|---|---|

CAPO - PARRILLA

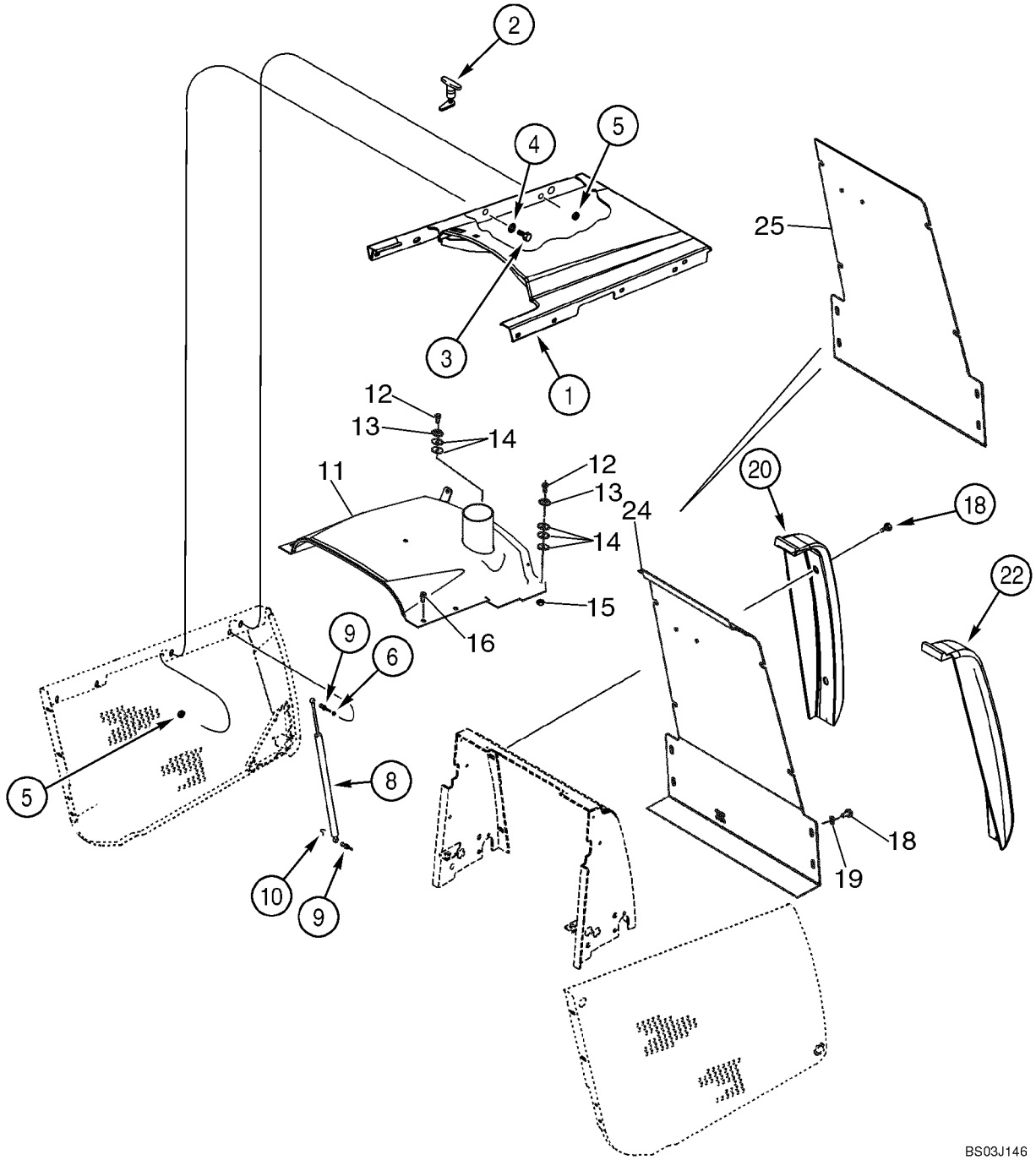

HTTP://WWW.MINNPARBACKHOEPARTS.COM



CAPO - PARRILLA

| REF | FN | PART NUMBER | YR/SN | QTY | DESCRIPTION |
|---|---|---|---|---|---|
| 1 | | 362340A6 | | 1 | CAPO Engine; Tilt |
| 2 | | 175599A1 | | 1 | PESTILLO |
| 3 | | 614-10025 | | 3 | TORNILLO M10 x 25 |
| 4 | | 895-11010 | | 3 | ARANDELA 11 x 21 x 2 mm |
| 5 | | 825-2410 | | 5 | TUERCA M10 |
| 6 | | 895-11010 | | 2 | ARANDELA 11 x 21 x 2 mm |
| 8 | | 114980A1 | | 2 | AMORTIGUADOR Spring; Counterbalance |
| 9 | | 139363A1 | | 4 | JUNTA DE ROTULA Stud |
| 10 | | F44883 | | 4 | CLIP ELECTRICO |
| 11 | | 87439448 | | 1 | PLACA (CONJUNTO) Fixed Hood |
| 12 | | 440-11012 | | 3 | TORNILLO No. 10 x 3/4 |
| 13 | | 109879A1 | | 3 | ESPACIADOR |
| 14 | | 185325A1 | | 8 | ESPACIADOR |
| 15 | | 231-14109 | | 3 | TUERCA No. 10 |
| 16 | | 392828A2 | | 4 | TORNILLO With Washer, M10 x 40 |
| 18 | | 392828A2 | | 8 | TORNILLO With Washer, M10 x 40 |
| 19 | | 87423817 | | 4 | ARANDELA |
| 20 | | 381927A1 | | 1 | PARACHOQUES Left-Hand |
| 22 | | 381926A1 | | 1 | PARACHOQUES Right-Hand |
| 24 | | 87402618 | | 1 | PANTALLA PROTECTORA GRILLE |
| 25 | | 87432387 | | 1 | PANTALLA PROTECTORA Chaff Screen |

HTTP://WWW.MINNPARBACKHOEPARTS.COM

| 09-42 | | p1 | 01/04 |
|---|---|---|---|

PLACAS, SUELO - ALFOMBRILLAS

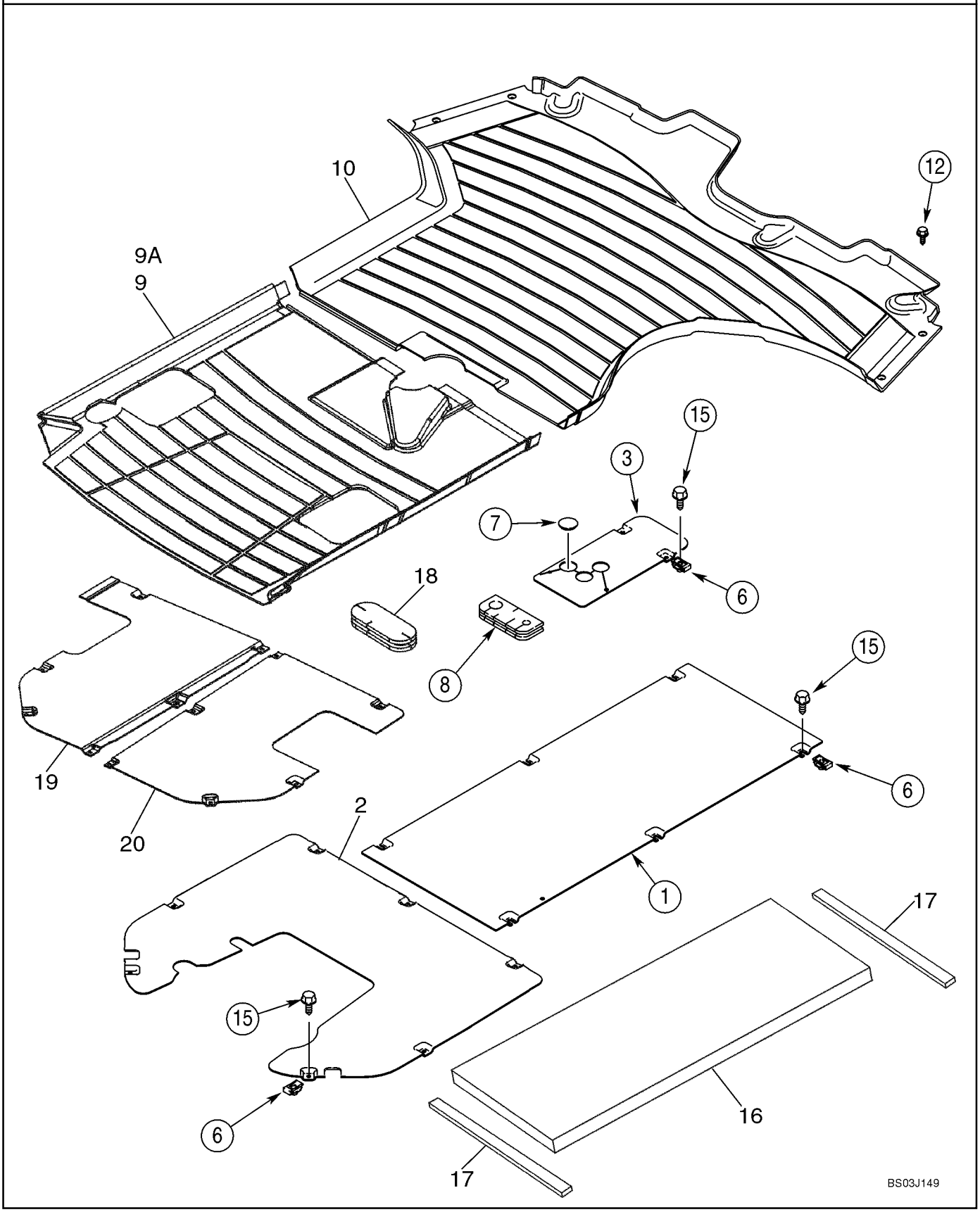

HTTP://WWW.MINNPARBACKHOEPARTS.COM



PLACAS, SUELO - ALFOMBRILLAS

| REF | FN | PART NUMBER | YR/SN | QTY | DESCRIPTION |
|---|---|---|---|---|---|
| 1 | | 355984A2 | | 1 | PLACA, GRANDE Front |
| 2 | | 86983190 | | 1 | PLAQUITA Rear; Without Pilot Controls |
| 3 | | 87436076 | | 1 | PLAQUITA Loader Control Lever |
| 6 | | 833-40406 | | 16-17 | TUERCA M6 |
| 7 | | 353-422 | | 1 | TAPÓN Models Without Clam Bucket |
| 8 | | 393623A1 | | 1 | BLOQUE MOTOR Floor |
| 9 | | 86983325 | | 1 | TAPETE DE SUELO Rear, Canopy Models, Without Pilot Controls |
| 9A | | 86983269 | | 1 | TAPETE DE SUELO Rear, Canopy Models, With Pilot Controls; Not Illustrated |
| 10 | | 390551A2 | | 1 | TAPETE DE SUELO Front, Cab or Canopy Models |
| 12 | | 280-16516 | | 4 | TORNILLO Hex Washer Head, No. 10 x 1, Self-Tapping |
| 15 | | 233724A1 | | 16-17 | TORNILLO M6 x 25 |
| 16 | | 411074A1 | | 1 | ANILLO DE CIERRE Cab Models |
| 17 | | 181981A1 | | 2 | JUNTA HERMETICA Foam; Adhesive Back; Cab Models |
| 18 | | 87407927 | | 1 | PLOT DE SUSPENSIÓN Rubber Grommet |
| 19 | | 87434049 | | 1 | PLAQUITA Rear, With Pilot Controls |
| 20 | | 87434050 | | 1 | PLAQUITA Rear, With Pilot Controls |

HTTP://WWW.MINNPARBACKHOEPARTS.COM



CUBIERTA DEL GUARDABARROS, LADO IZQUIERDO - PANEL, CIERRE TRASERO (BANDEJA DE ALMACENAMIENTO CON SUJ

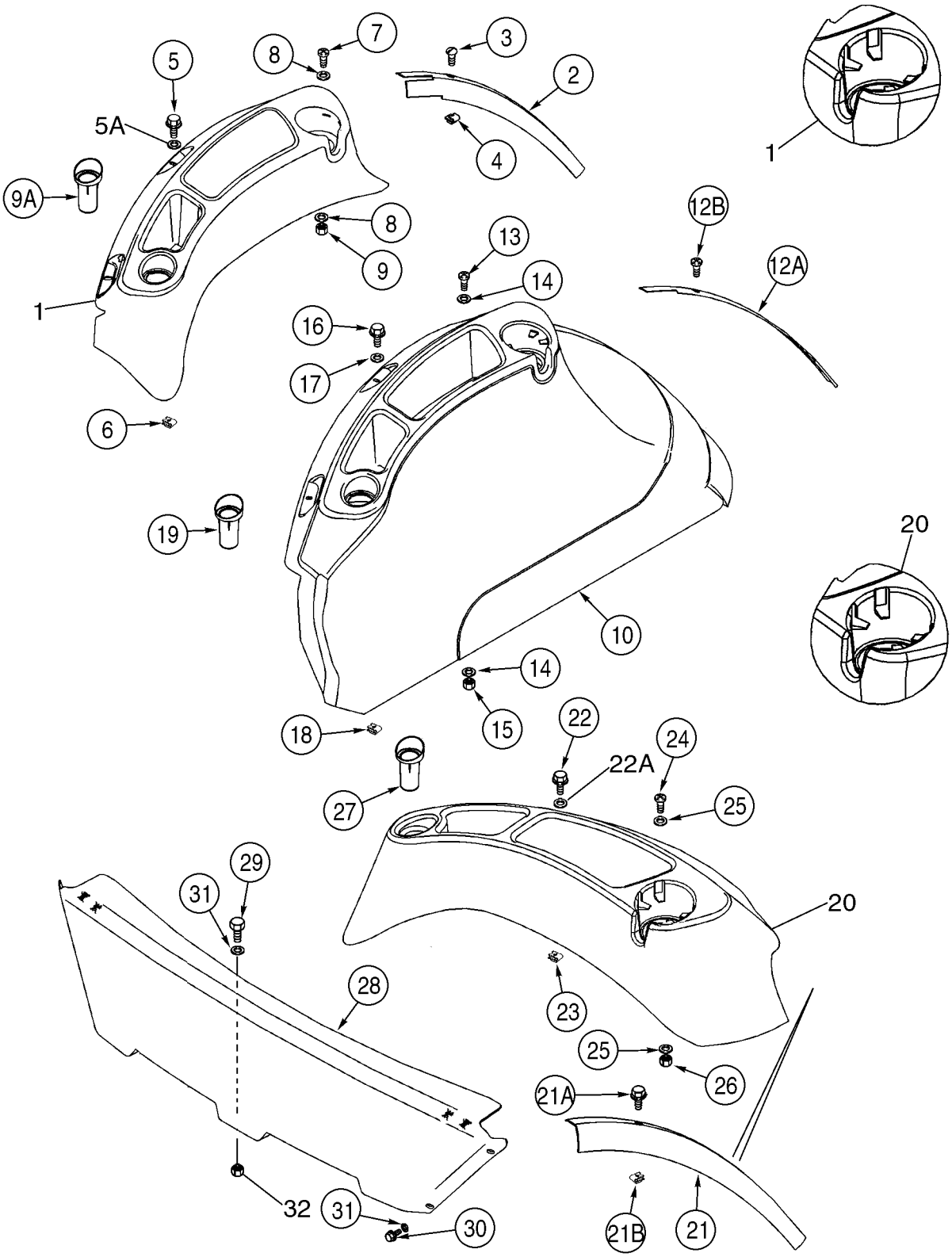

HTTP://WWW.MINNPARBACKHOEPARTS.COM



CUBIERTA DEL GUARDABARROS, LADO IZQUIERDO - PANEL, CIERRE TRASERO (BANDEJA DE ALMACENAMIENTO CON SUJ

| REF | FN | PART NUMBER | YR/SN | QTY | DESCRIPTION |
|---|---|---|---|---|---|
| 1 | | 86992247 | | 1 | BANDEJA Cab Models, With Standard Interior; Includes 86992284, 400077A1 |
| | | NSS | | 1 | NO SE REPARA SEPARADAM. Tray |
| | | 86992284 | | 4 | PARACHOQUES |
| | | 400077A1 | | 1 | BANDA POR METRO 1300 mm (51-3/16 in); Cut From 1977224C1 |
| 2 | | 397026A3 | | 1 | BANDA DE PROTECCIÓN Trim, Left-Hand Fender, Cab Models With Standard Interior |
| 3 | | 398113A1 | | 3 | TORNILLO No. 10 x 3/4 |
| 4 | | 131-869 | | 3 | TUERCA No. 10 |
| 5 | | 555-2 | | 2 | TORNILLO M6 x 20 |
| 5A | | 895-30109 | | 2 | ARANDELA 6,6 x 25 x 1,6 mm |
| 6 | | 833-40406 | | 2 | TUERCA M6 |
| 7 | | 140-117 | | 2 | TORNILLO No. 10 x 1 |
| 8 | | 495-61020 | | 4 | ARANDELA 13/64 x 3/4 x 1/16 |
| 9 | | 231-14109 | | 2 | TUERCA No. 10 |
| 9A | | 378742A3 | | 1 | INTRODUCTOR Swing Pin Holder |
| 10 | | 86992245 | | 1 | TABA (CONJUNTO) Cab Models With Deluxe Interior; Includes (4) 86992284 Bumpers |
| 12A | | 397774A3 | | 1 | CINTA Deluxe Interior |
| 12B | | 398113A1 | | 3 | TORNILLO No. 10 x 3/4 |
| 13 | | 140-117 | | 2 | TORNILLO No. 10 x 1 |
| 14 | | 495-61020 | | 4 | ARANDELA 13/64 x 3/4 x 1/16 |
| 15 | | 231-14109 | | 2 | TUERCA No. 10 |
| 16 | | 555-2 | | 2 | TORNILLO M6 x 20 |
| 17 | | 895-30109 | | 2 | ARANDELA |
| 18 | | 833-40406 | | 2 | TUERCA M6 |
| 19 | | 378742A3 | | 1 | INTRODUCTOR Swing Pin Holder |
| 20 | | 86992243 | | 1 | BANDEJA (CONJUNTO) Canopy Models; Includes 86992284, 4000077A1 |
| | | NSS | | 1 | NO SE REPARA SEPARADAM. Tray |
| | | 86992284 | | 4 | PARACHOQUES |
| | | 400077A1 | | 1 | BANDA POR METRO 1300 mm (51-3/16 in); Cut From 1977224C1 |
| 21 | | 397025A2 | | 1 | BANDA DE PROTECCIÓN Trim, Canopy Models |
| 21A | | 398113A1 | | 3 | TORNILLO No. 10 x 3/4 |

HTTP://WWW.MINNPARBACKHOEPARTS.COM

| 09-43 | | p2 | 01/04 |
|---|---|---|---|

CUBIERTA DEL GUARDABARROS, LADO IZQUIERDO - PANEL, CIERRE TRASERO (BANDEJA DE ALMACENAMIENTO CON SUJ

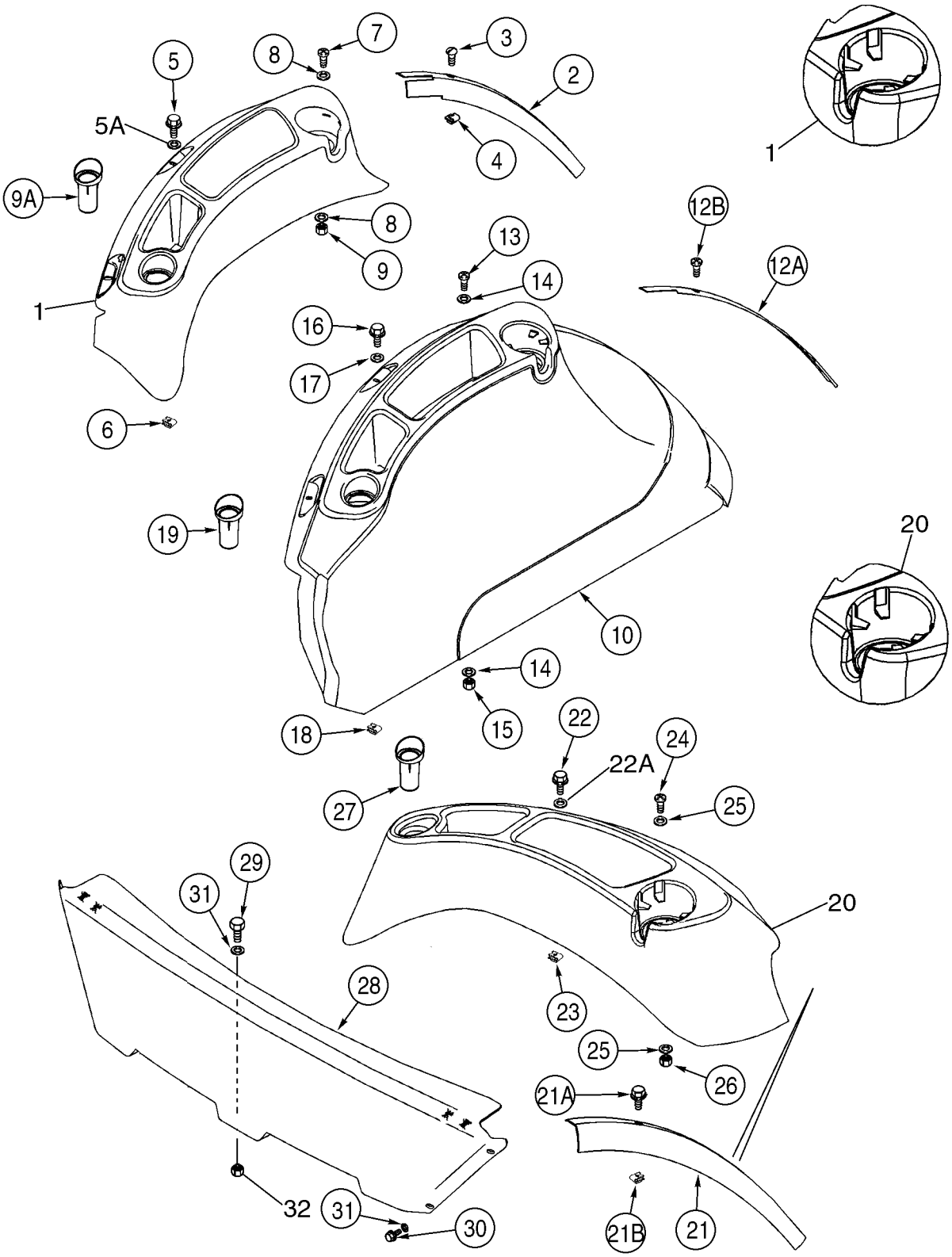

HTTP://WWW.MINNPARBACKHOEPARTS.COM



CUBIERTA DEL GUARDABARROS, LADO IZQUIERDO - PANEL, CIERRE TRASERO (BANDEJA DE ALMACENAMIENTO CON SUJ

| REF | FN | PART NUMBER | YR/SN | QTY | DESCRIPTION |
|---|---|---|---|---|---|
| 21B | | 131-869 | | 3 | TUERCA No. 10 |
| 22 | | 555-2 | | 2 | TORNILLO M6 x 20 |
| 22A | | 895-30109 | | 2 | ARANDELA 6,6 x 25 x 1,6 mm |
| 23 | | 833-40406 | | 2 | TUERCA M6 |
| 24 | | 140-117 | | 2 | TORNILLO No. 10 x 1 |
| 25 | | 495-61020 | | 4 | ARANDELA 13/64 x 3/4 x 1/16 |
| 26 | | 231-14109 | | 2 | TUERCA No. 10 |
| 27 | | 378742A3 | | 1 | INTRODUCTOR Swing Pin Holder |
| 28 | | 86992977 | | 1 | CONTRAPANEL Rear Closure Panel; Canopy Models |
| 29 | | 614-8025 | | 1 | TORNILLO M8 x 25 |
| 30 | | 781-24820 | | 4 | TORNILLO Flange, M8 x 20 |
| 31 | | 895-15008 | | 5 | ARANDELA 9 x 16 x 1,6 mm |
| 32 | | 832-10408 | | 1 | TUERCA M8 |

HTTP://WWW.MINNPARBACKHOEPARTS.COM



EXTENSIONES DEL GUARDABARROS

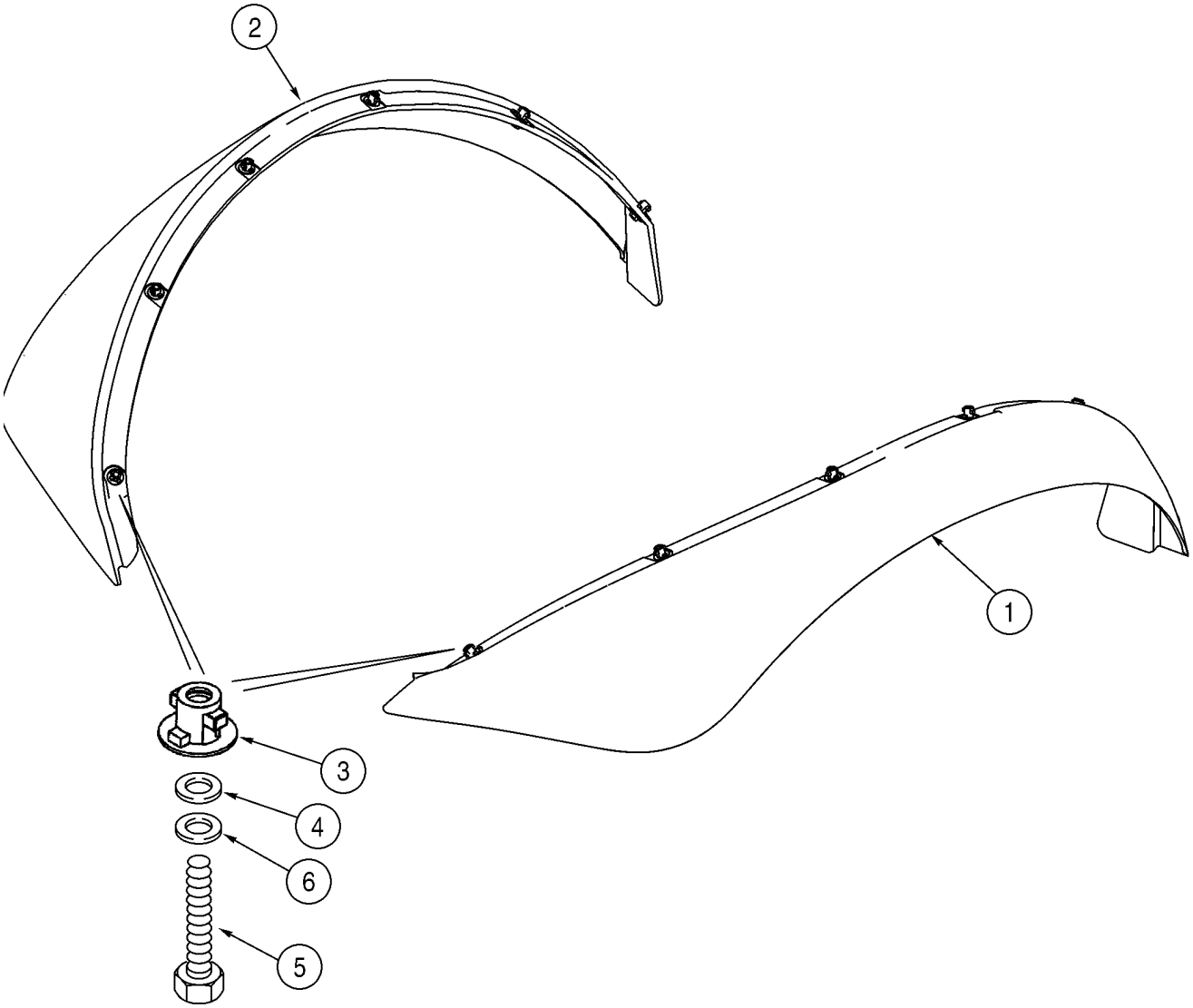


BC00F002

HTTP://WWW.MINNPARBACKHOEPARTS.COM



EXTENSIONES DEL GUARDABARROS

| REF | FN | PART NUMBER | YR/SN | QTY | DESCRIPTION |
|---|---|---|---|---|---|
| 1 | | 340998A3 | | 1 | GUARDABARROS Right-Hand |
| 2 | | 340997A3 | | 1 | GUARDABARROS Left-Hand |
| 3 | | 345231A1 | | 12 | BOTON DE RESORTE |
| 4 | | 496-41041 | | 12 | ARANDELA 13/32 x 1-1/8 x 9/64 |
| 5 | | 614-8030 | | 12 | TORNILLO M8 x 30 |
| 6 | | 892-11008 | | 12 | ARANDELA 8 mm; Lock |

HTTP://WWW.MINNPARBACKHOEPARTS.COM

| 09-45 | | p1 | 01/04 |
|---|---|---|---|

GUARDABARROS

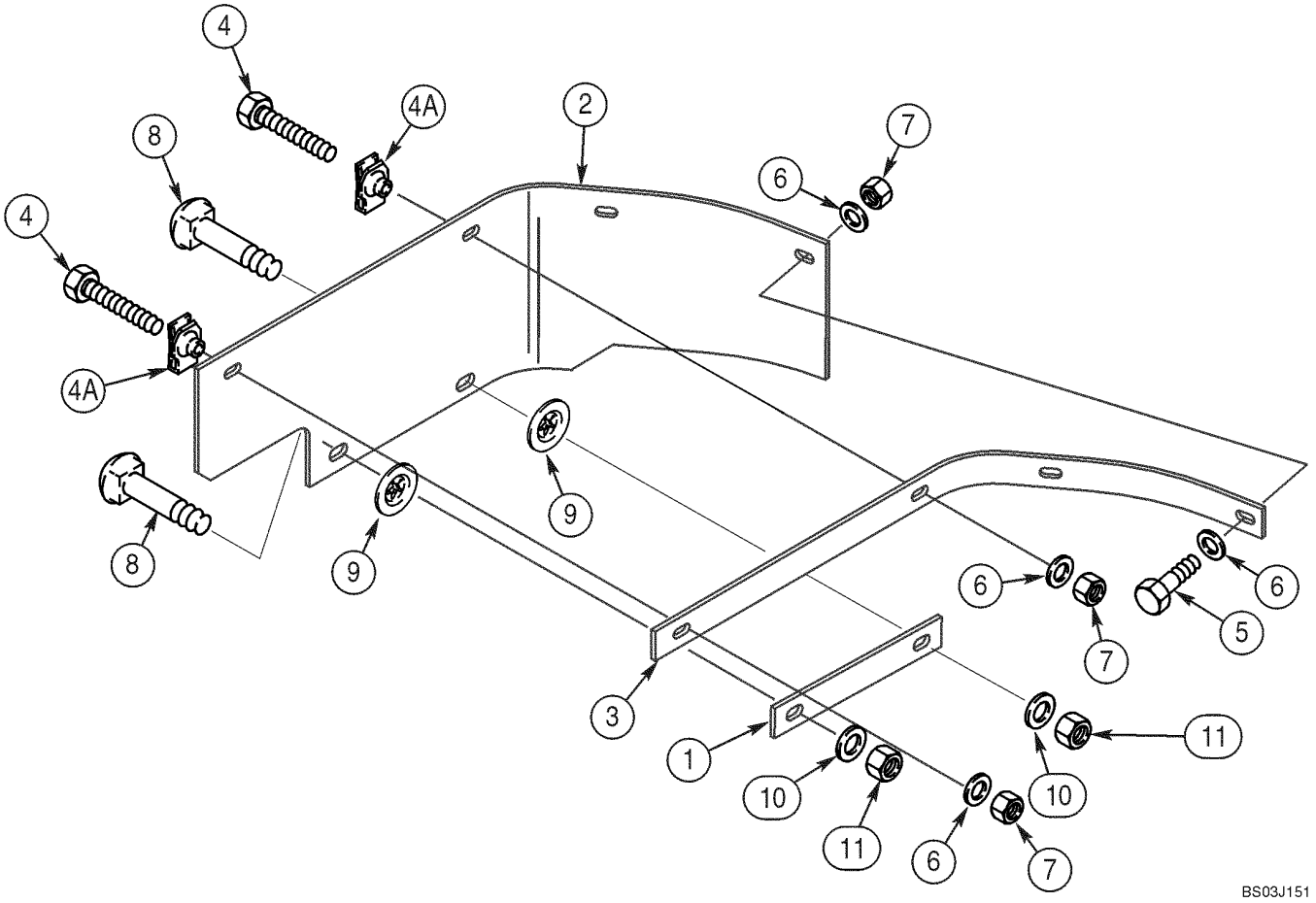

HTTP://WWW.MINNPARBACKHOEPARTS.COM



GUARDABARROS

| REF | FN | PART NUMBER | YR/SN | QTY | DESCRIPTION |
|---|---|---|---|---|---|
| 1 | | 362557A1 | | 1 | CINTA Plate |
| 2 | | 362556A2 | | 1 | DEFENSA Mounts At Right-Hand Fender |
| 3 | | 362558A1 | | 1 | CINTA Angle |
| 4 | | 614-8040 | | 2 | TORNILLO M8 x 40 |
| 4A | | 833-40408 | | 2 | TUERCA M8 |
| 5 | | 614-8030 | | 2 | TORNILLO M8 x 30 |
| 6 | | 495-21038 | | 6 | ARANDELA 3/8 x 7/8 x 3/32 |
| 7 | | 832-10408 | | 4 | TUERCA M8 |
| 8 | | 711-10040 | | 2 | TORNILLO M10 x 40 |
| 9 | | 368417A1 | | 2 | ARANDELA |
| 10 | | 895-11010 | | 2 | ARANDELA 11 x 21 x 2 mm |
| 11 | | 832-10410 | | 2 | TUERCA M10 |

HTTP://WWW.MINNPARBACKHOEPARTS.COM



ASIENTO - SOPORTE

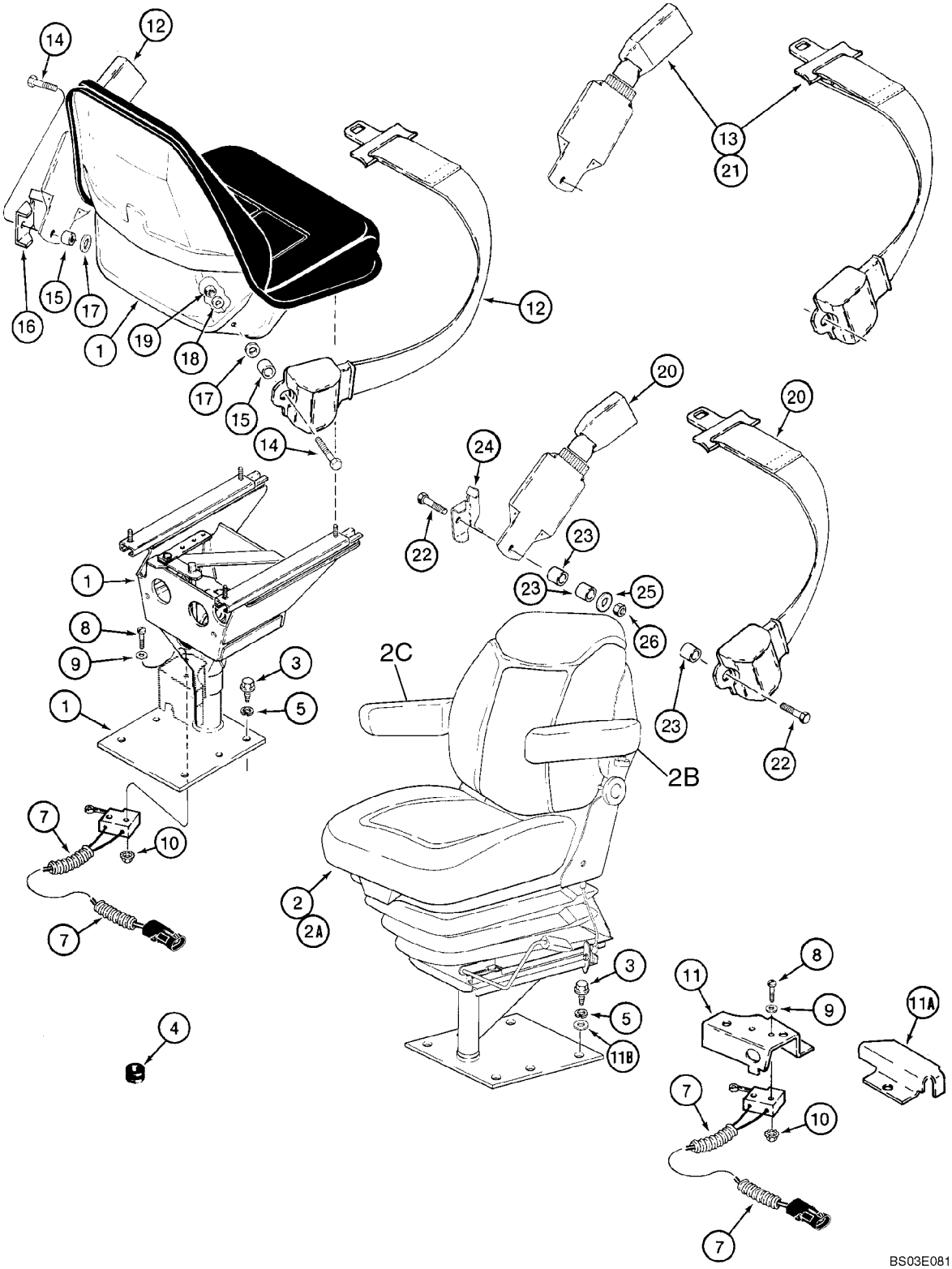

HTTP://WWW.MINNPARBACKHOEPARTS.COM



ASIENTO - SOPORTE

| REF | FN | PART NUMBER | YR/SN | QTY | DESCRIPTION |
|---|---|---|---|---|---|
| 1 | | 397132A1 | | 1 | ASIENTO (CONJUNTO) Standard, Vinyl, Without Armrest, Includes Seat, Pedestal, and Support, See Figures 09-47, 09-48 |
| 2 | | 397137A1 | | 1 | ASIENTO (CONJUNTO) Air Suspension, Cloth, Deluxe, With Armrests On Figure 09-51, See Figures 09-51, 09-52 |
| 2A | | 397136A2 | | 1 | ASIENTO (CONJUNTO) Suspension, Cloth, Without Armrests, Includes Seat, Suspension, and Pedestal, See Figures 09-49, 09-50; Order 397407A1 Service Kit For Seat Assy With Armrests |
| 2A | | 397134A2 | | 1 | ASIENTO (CONJUNTO) Suspension, Vinyl, Without Armrests, Includes Seat, Suspension, and Pedestal, See Figures 09-49, 09-50; Order 397408A1 Service Kit For Seat Assy With Armrests |
| 2B | | 292262A1 | | 1 | APOYO DE BRAZO (CONJ Kit, Left-Hand |
| 2C | | 292263A2 | | 1 | APOYO DE BRAZO (CONJ Kit, Right-Hand |
| 3 | | 604-12030 | | 4 | TORNILLO M12 x 30 |
| 4 | | 248-2373 | | 1 | PASACABLES 1-1/4 |
| 5 | | 896-15012 | | 4 | ARANDELA 13,5 x 28 x 4 mm |
| 7 | | 118769A1 | | 1 | CONTACTOR Limit Switch |
| 8 | | 470-10620 | | 2 | TORNILLO No. 6 x 1-1/4 |
| 9 | | 495-31016 | | 2 | ARANDELA 5/32 x 3/8 x 3/64 |
| 10 | | 193-1003 | | 2 | TUERCA No. 6 |
| 11 | | 119211A1 | | 1 | PIEZA DE SOPORTE Switch Mounting, Suspension Seat |
| 11A | | 186351A1 | | 1 | DEFENSA Harness |
| 11B | | 896-11012 | | 1 | ARANDELA Flat, 13,5 x 24 x 3 mm |
| 12 | | 87408889 | | 1 | CINTURÓN, SEGURIDAD 51 mm (2 in), If Used; Standard Seat Belt Mounting |
| 13 | | 87408888 | | 1 | CINTURÓN, SEGURIDAD 76 mm (3 in), Retractable, If Used; Standard Seat Belt Mounting |
| 14 | | 414-724 | | 2 | TORNILLO 7/16 x 1-1/2; 5 |
| 15 | | D150391 | | 2 | ESPACIADOR |
| 16 | | D150392 | | 1 | PIEZA DE SOPORTE Left-Hand |
| 17 | | 495-81169 | | 2 | ARANDELA 17/32 x 2,5 x 1/8, Not Used On Deluxe Air Suspension Seat |

HTTP://WWW.MINNPARBACKHOEPARTS.COM



ASIENTO - SOPORTE

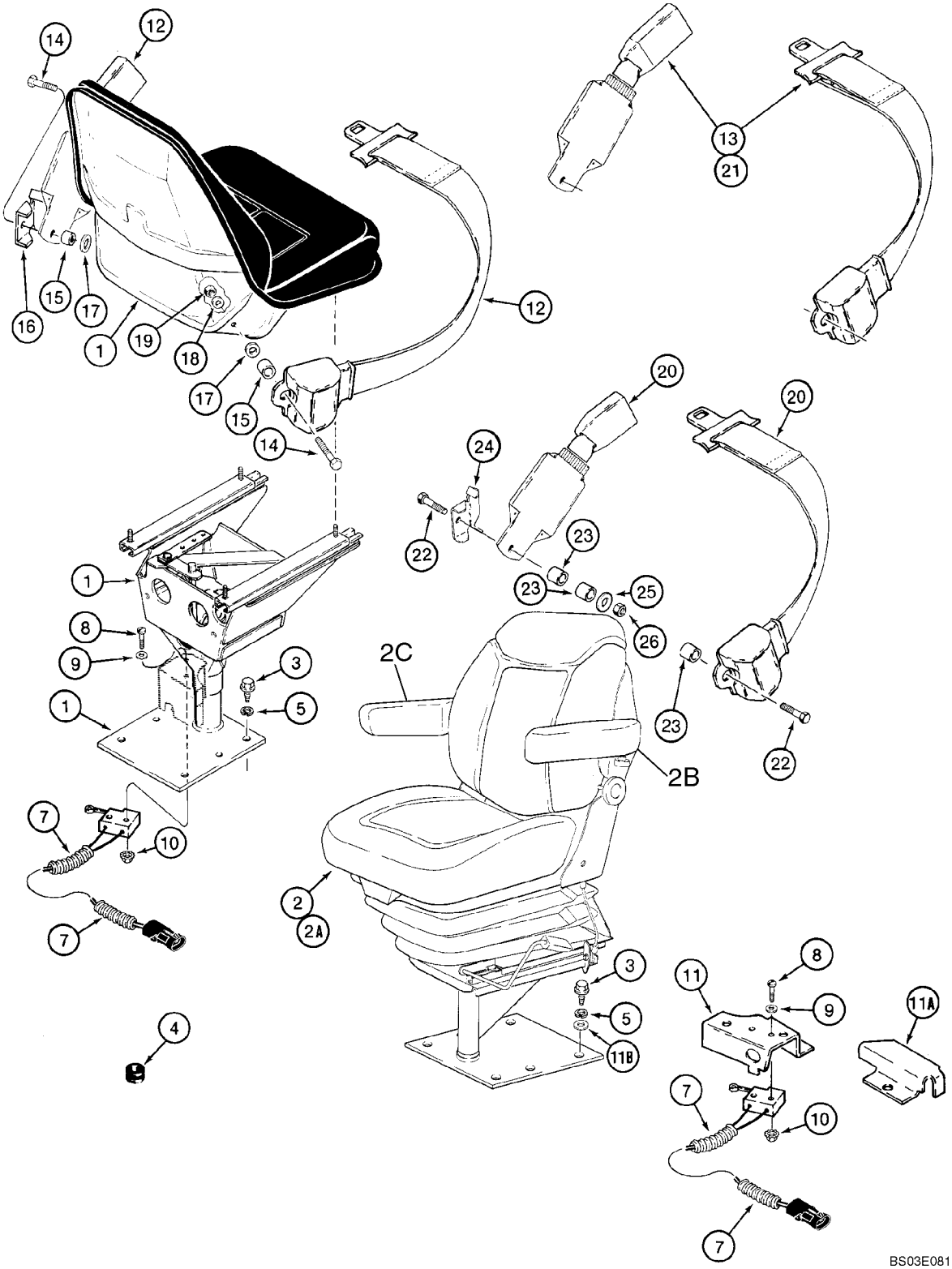

HTTP://WWW.MINNPARBACKHOEPARTS.COM



ASIENTO - SOPORTE

| REF | FN | PART NUMBER | YR/SN | QTY | DESCRIPTION |
|---|---|---|---|---|---|
| 18 | | 496-81010 | | 4 | ARANDELA 15/32 x 1 x 7/64 |
| 19 | | 232-4617 | | 2 | TUERCA 7/16 NF; 8 |
| 20 | | 87408889 | | 1 | CINTURÓN, SEGURIDAD 51 mm (2 in), If Used; Suspension Seat Belt Mounting |
| 21 | | 87408888 | | 1 | CINTURÓN, SEGURIDAD 76 mm (3 in), Retractable, If Used; Suspension Seat Belt Mounting |
| 22 | | 414-724 | | 2 | TORNILLO 7/16 x 1-1/2; 5 |
| 23 | | D150391 | | 2 | ESPACIADOR |
| 24 | | D150392 | | 1 | PIEZA DE SOPORTE Left-Hand |
| 25 | | 496-81010 | | 2 | ARANDELA 15/32 x 1 x 7/64 |
| 26 | | 232-4617 | | 2 | TUERCA 7/16 NF; 8 |

HTTP://WWW.MINNPARBACKHOEPARTS.COM



CONJUNTO DEL ASIENTO, ESTÁNDAR

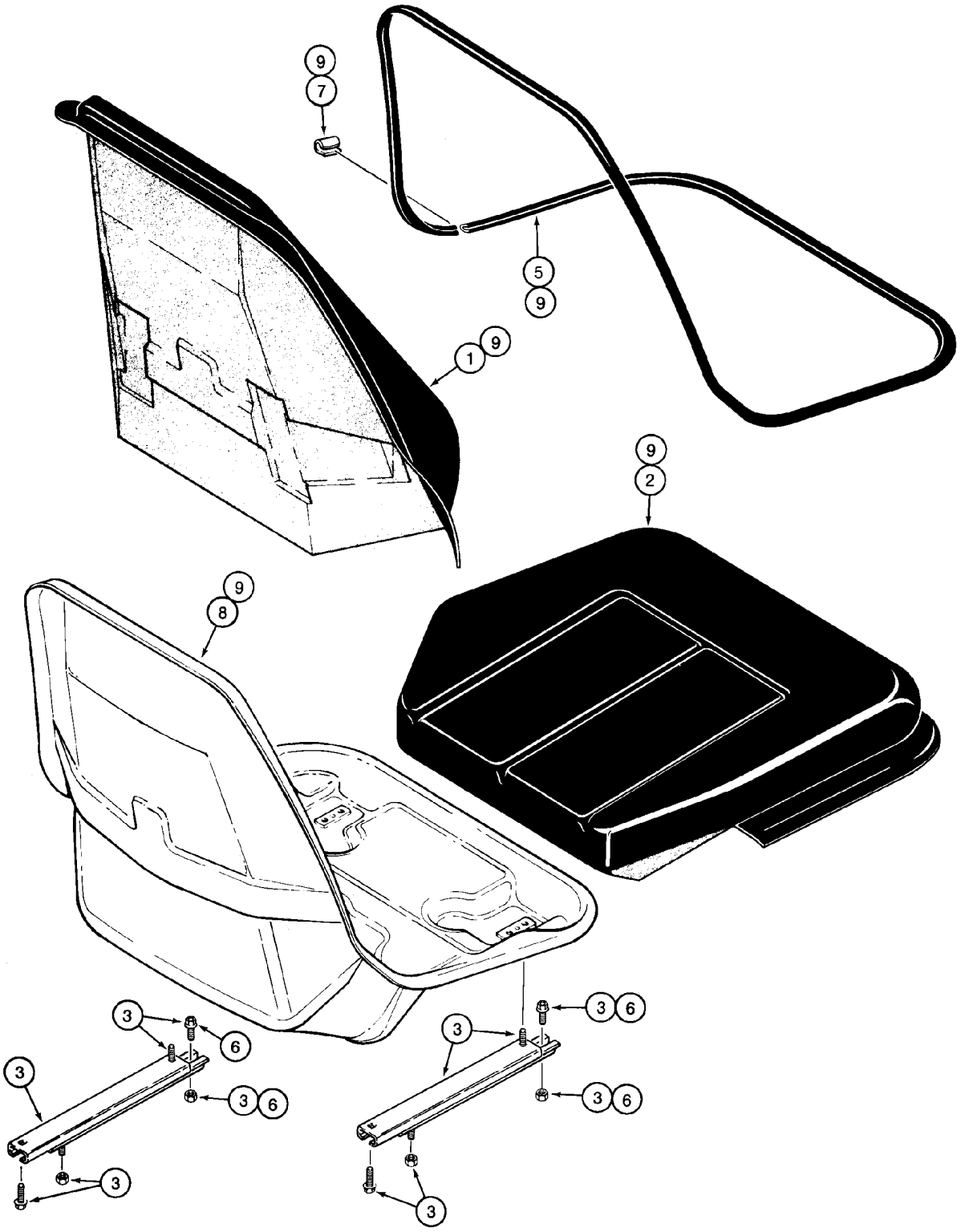


BS00J117

HTTP://WWW.MINNPARBACKHOEPARTS.COM



CONJUNTO DEL ASIENTO, ESTÁNDAR

| REF | FN | PART NUMBER | YR/SN | QTY | DESCRIPTION |
|---|---|---|---|---|---|
| | | 397132A1 | | 1 | ASIENTO (CONJUNTO) Vinyl, Standard Seat; Incl. Ref 1 - 9; Also Includes Parts On Figure 09-48 |
| 1 | | NSS | | 1 | NO SE REPARA SEPARADAM. Cushion, Backrest; Order 406700A1 Cushion Assy, Ref 9 |
| 2 | | NSS | | 1 | NO SE REPARA SEPARADAM. Cushion, Seat; Order 406700A1 Cushion Assy, Ref 9 |
| 3 | | 399777A1 | | 1 | JEUGO Seat Slide Adjusters |
| 5 | | 176924A1 | | 1 | JUEGO DE PIEZAS Trim |
| 6 | | 181169A1 | | 1 | JEUGO Cable, Fore-Aft/Swivel Mechanism, For Cable, See Figure 09-48 |
| 7 | | NSS | | 1 | NO SE REPARA SEPARADAM. Clip, Order N7802 Clip Kit |
| 8 | | NSS | | 1 | NO SE REPARA SEPARADAM. Shell, Seat Frame, Order 406700A1 Cushion Assy, Ref 9 |
| 9 | | 406700A1 | | 1 | COJIN (CONJUNTO) Seat Shell, Cushions, and Trim, Incl. Ref 1, 2, 5, 8 |
| | | N7802 | | 1 | SUJETADOR Clip, Incl. Ref 7 Clip, Plus 6 Additional Narrow Clips |

HTTP://WWW.MINNPARBACKHOEPARTS.COM



SOPORTE DEL ASIENTO Y PEDESTAL, ESTÁNDAR

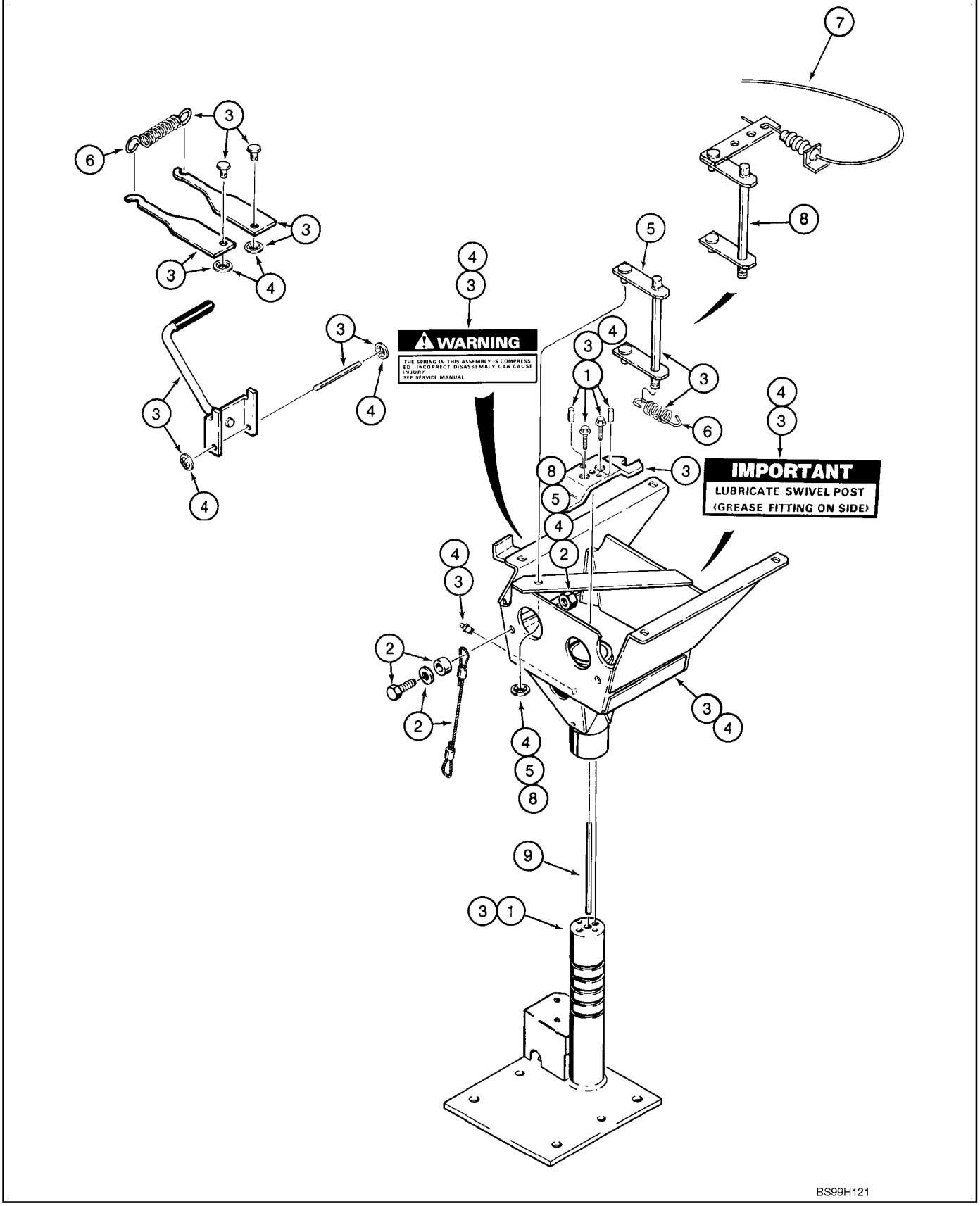

HTTP://WWW.MINNPARBACKHOEPARTS.COM



SOPORTE DEL ASIENTO Y PEDESTAL, ESTÁNDAR

| REF | FN | PART NUMBER | YR/SN | QTY | DESCRIPTION |
|---|---|---|---|---|---|
| | | 397132A1 | | 1 | ASIENTO (CONJUNTO) Vinyl, Standard Seat, Incl. Ref 1 - 9, Also Includes Parts On Figure 09-47 |
| 1 | | 116761A3 | | 1 | JEUGO Support, Base, Includes (6) Lock Nuts, (2) Pins, (1) Rivet, (1) Washer, (1) Spacer, 2 Screws |
| 2 | | 116763A1 | | 1 | JEUGO Cable, Anchor, Includes Hardware For Both Ends |
| 3 | | 116764A3 | | 1 | JEUGO Pedestal, Includes (4) Lock Nuts, (1) Rivet, (1) Washer, (1) Spacer, (1) Tie, (2) Screws |
| | | 219-16 | | 1 | ENGRASADOR 5/16 dr type x 19/32; If Used |
| 4 | | 116766A2 | | 1 | JEUGO Pedestal Box, Includes (4) Lock Nuts For Seat Adjuster Slide, Includes 219-16 |
| | | 219-16 | | 1 | ENGRASADOR 5/16 dr type x 19/32 |
| 5 | | 116767A1 | | 1 | JEUGO Swivel Latch, Includes (6) Lock Nuts, (1) Push Nut, (1) Swivel Latch; Also Includes (4) Lock Nuts For Seat Adjuster Slide |
| 6 | | 119171A1 | | 1 | JEUGO Spring |
| 7 | | 181169A1 | | 1 | JEUGO Cable, Fore-Aft/Swivel Mechanism, Also Includes (4) Nuts |
| 8 | | 253209A1 | | 1 | JEUGO Swivel Latch, Includes (4) Lock Nuts, (1) Rivet, (1) Spacer, (1) Washer, (1) Push Nut, (1) Swivel Latch |
| 9 | | NSS | | 1 | NO SE REPARA SEPARADAM. Pin, Seat |

HTTP://WWW.MINNPARBACKHOEPARTS.COM

| 09-49 | | p1 | 01/04 |
|---|---|---|---|

CONJUNTO DEL ASIENTO, SUSPENSION MECANICA

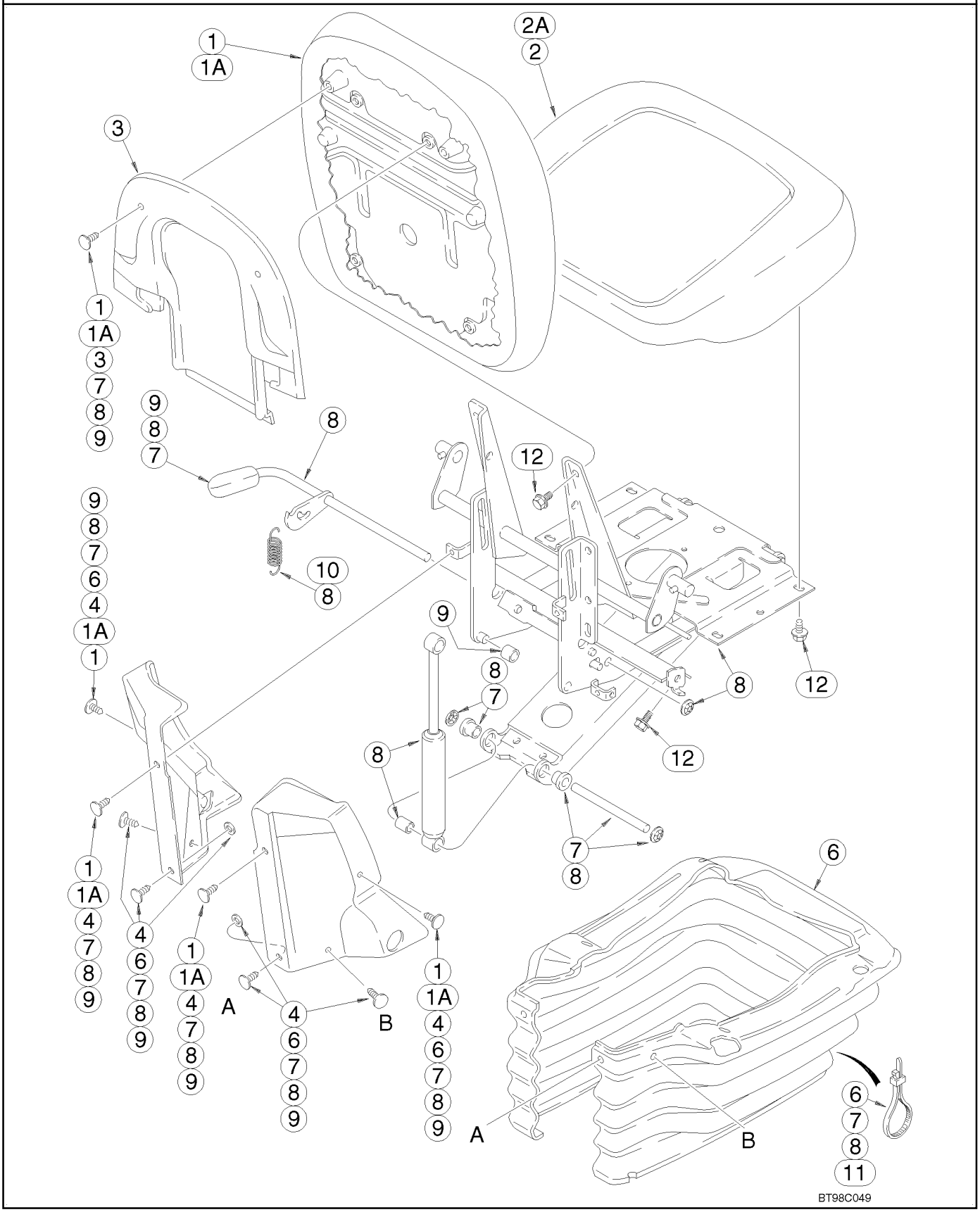

HTTP://WWW.MINNPARBACKHOEPARTS.COM



CONJUNTO DEL ASIENTO, SUSPENSION MECANICA

| REF | FN | PART NUMBER | YR/SN | QTY | DESCRIPTION |
|---|---|---|---|---|---|
| | | 397136A2 | | 1 | ASIENTO (CONJUNTO) Cloth, Includes Seat, Suspension, Pedestal and Weight Adjuster, Without Armrests, Incl. Ref 1 - 11; Also Includes Parts On Figure 09-50 |
| | | 397134A2 | | 1 | ASIENTO (CONJUNTO) Vinyl, Includes Seat, Suspension, Pedestal and Weight Adjuster, Without Armrests, Incl. Ref 1 - 11; Also Includes Parts On Figure 09-50 |
| 1 | | 399757A1 | | 1 | JEUGO Cushion, Backrest, Cloth, Includes Lumbar Knob, (6) Clips and (4) Screws |
| 1A | | 399759A1 | | 1 | JEUGO Cushion, Backrest, Vinyl, Includes Lumbar Knob, (6) Clips and (4) Screws |
| 2 | | 399758A1 | | 1 | JEUGO Cushion, Seat, Cloth, Includes (6) Screws |
| 2A | | 399760A1 | | 1 | JEUGO Cushion, Seat, Vinyl, Includes (6) Screws |
| 3 | | 307091A1 | | 1 | CONJUNTO Kit, Backrest Shroud, Includes (2) Clips |
| 4 | | 307090A1 | | 1 | JEUGO Side Shroud, Left-Hand and Right-Hand, Includes (6) Clips, (2) Washers, (1) Height Adjustment Grip, (1) Back Angle Grip |
| 6 | | 307098A1 | | 1 | JEUGO Boot, Includes (2) Ties, (2) Washers, (4) Clips |
| 7 | | 176919A1 | | 1 | JEUGO Swing Arm Pivot Shaft, Includes (2) Flanged Bearings, (4) Push Nuts, (2) Clips, (2) Washers, (1) Grip, (2) Ties |
| 8 | | 307092A1 | | 1 | JEUGO Suspension, Includes Suspension, Back Angle Adjust, (2) Groove Pins, (1) Handle, (8) Screws, (2) Springs, (3) Washers, (1) Rivet; Includes Parts From Seat Frame To Adjuster Slides; For Additional Kit Parts See Figure 09-50, Ref 1 |
| 8 | | 307092A1 | | 1 | JEUGO 307092A1 Suspension Kit Also Includes (1) Spacer, (2) Ties, (8) Clips, (12) Nuts, (1) Height Adjust Grip, (1) Back Angle Grip, (1) Rake Grip, (1) Fore/Aft/Swivel Grip, (1) Decal |
| 9 | | 176921A1 | | 1 | JEUGO Plastic Components, Includes (2) Rollers, (4) Downstops, (2) Roller Guides, (2) Bearings, (1) Bumper, (4) Nuts, (10) Clips, (2) Washers, (1) Grip; For Additional Kit Parts, See Figure 09-50, Ref 2 |

HTTP://WWW.MINNPARBACKHOEPARTS.COM



CONJUNTO DEL ASIENTO, SUSPENSION MECANICA

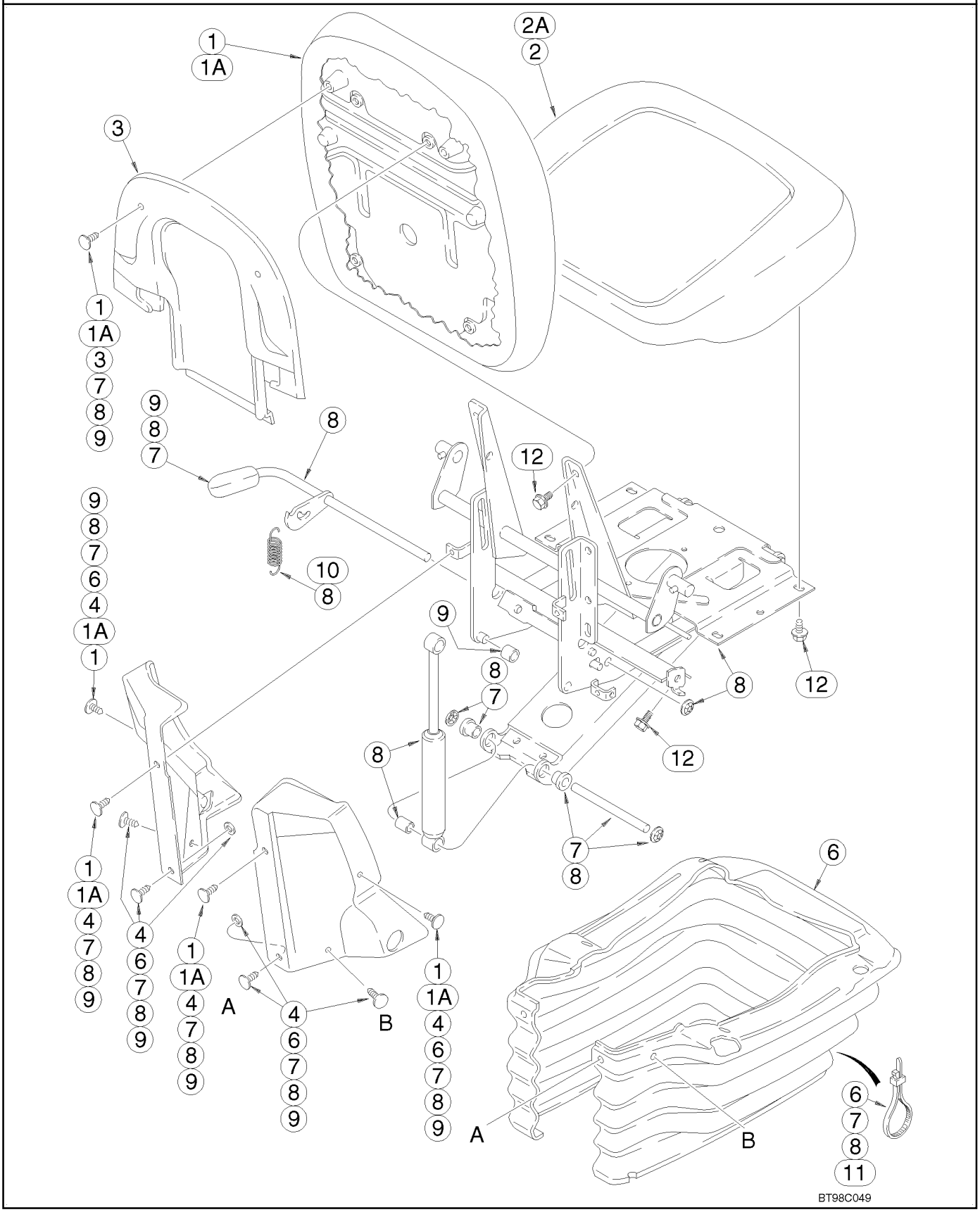

HTTP://WWW.MINNPARBACKHOEPARTS.COM



CONJUNTO DEL ASIENTO, SUSPENSION MECANICA

| REF | FN | PART NUMBER | YR/SN | QTY | DESCRIPTION |
|---|---|---|---|---|---|
| 10 | | 116547A1 | | 1 | JEUGO Height Adjusting Spring, Includes (10) Shroud Retainers, (2) Washers, (2) Springs, (1) Wear Strip; For Additional Kit Parts, See Figure 09-50, Ref 6 |
| 11 | | 181170A1 | | 1 | JEUGO Cable, Fore-Aft/Swivel Mechanism, Includes (2) Screws, (2) Ties, Cable, (4) Nuts |
| 12 | | NSS | | 8 | NO SE REPARA SEPARADAM. Bolt, 5/16 Inch Thread, Length As Required, Purchase Locally, Seat Cushion and Backrest |

HTTP://WWW.MINNPARBACKHOEPARTS.COM



PEDESTAL DEL ASIENTO Y SUSPENSIÓN, SUSPENSIÓN MECÁNICA

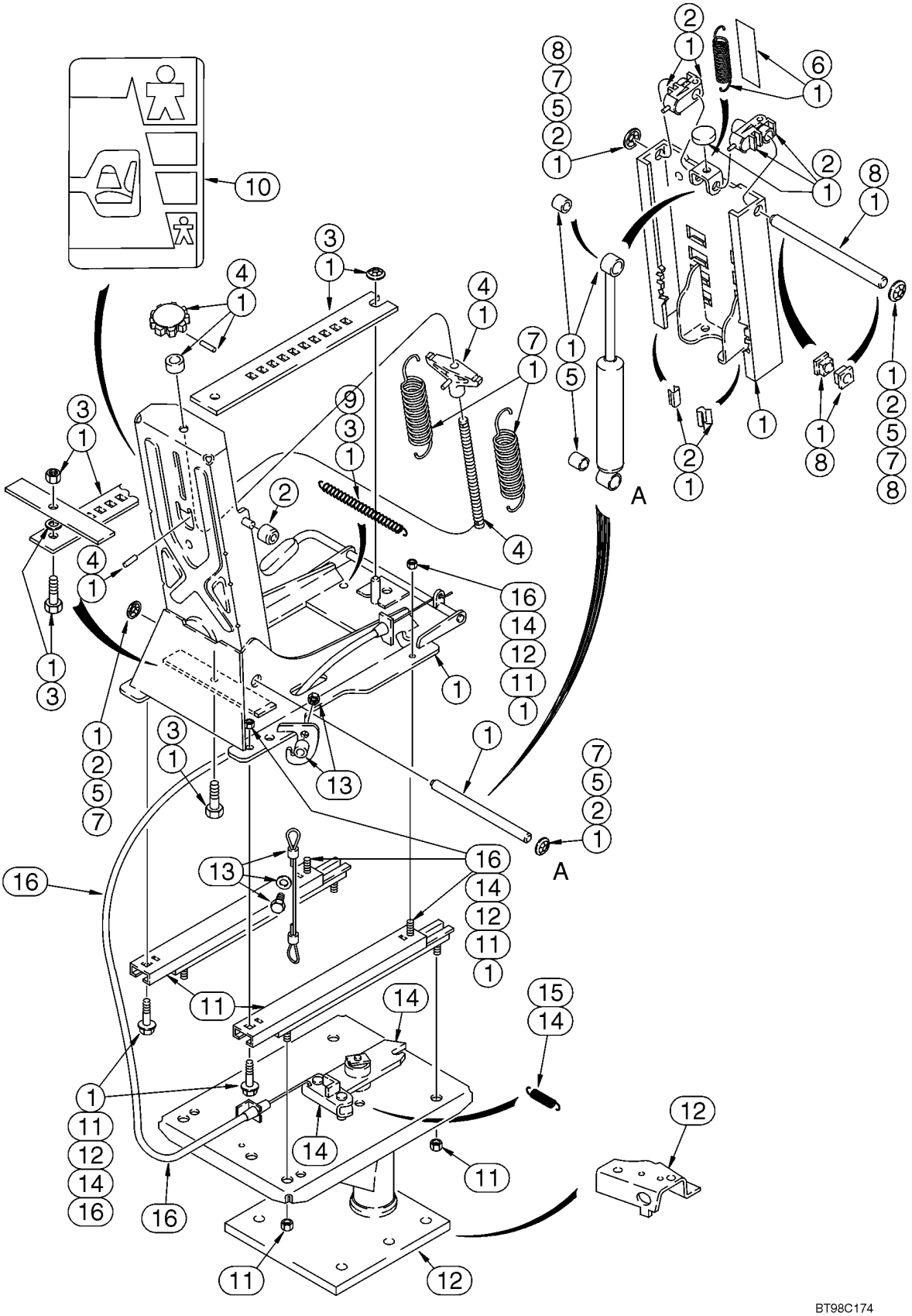

HTTP://WWW.MINNPARBACKHOEPARTS.COM



PEDESTAL DEL ASIENTO Y SUSPENSIÓN, SUSPENSIÓN MECÁNICA

| REF | FN | PART NUMBER | YR/SN | QTY | DESCRIPTION |
|---|---|---|---|---|---|
| | | 397136A2 | | 1 | ASIENTO (CONJUNTO) Cloth, Includes Seat, Suspension, Pedestal and Weight Adjuster, Without Armrests; Incl. Ref 1 - 16; Also Includes Parts On Figure 09-49 |
| | | 397134A2 | | 1 | ASIENTO (CONJUNTO) Vinyl, Includes Seat, Suspension, Pedestal and Weight Adjuster, Without Armrests; Incl. Ref 1 - 16; Also Includes Parts On Figure 09-49 |
| 1 | | 307092A1 | | 1 | JEUGO Suspension, Includes Suspension, Back Angle Adjust, (2) Groove Pins, (1) Handle, (8) Screws, (2) Springs, (3) Washers and (1) Rivet; Includes Parts From Seat Frame To Adjuster Slides; For Additional Kit Parts, See Figure 09-49, Ref 8 |
| 1 | | 307092A1 | | 1 | JEUGO Suspension; Also Includes (1) Spacer, (2) Ties, (8) Clips, (12) Nuts, (1) Height Adjust Grip, (1) Back Angle Grip, (1) Rake Grip, (1) Fore/Aft/Swivel Grip, (1) Decal |
| 2 | | 176921A1 | | 1 | JEUGO Plastic Components, Includes (2) Rollers, (4) Downstops, (2) Roller Guides, (2) Bearings, (1) Bumper, (4) Nuts, (10) Clips, (2) Washers, (1) Grip; For Additional Kit Parts, See Figure 09-49, Ref 9 |
| 3 | | 116521A1 | | 1 | JEUGO Fore/Aft Adjuster Latch, Includes (1) Latch Bar, (1) Bolt, (1) Spacer, (2) Nuts, (1) Spring and (2) Ties, Includes 131-435 Nut |
| | | 131-435 | | X | TUERCA 3/8 |
| 4 | | 176916A1 | | 1 | JEUGO Weight Adjuster, Includes Adjusting Knob, (1) Spacer, (2) Roll Pins, (1) Shaft, (1) Spring, (10) Clips, (2) Washers, (1) Grip and (2) Ties; Also Includes (10) Shroud Retainers, (2) Washers, (2) Ties, See Figure 09-49 |
| 5 | | 176914A1 | | 1 | JEUGO Suspension Damper, Includes Damper, (2) Spacers, (4) Nuts, (10) Clips, (2) Washers, (1) Grip and (2) Ties; Also Includes (10) Shroud Retainers, (2) Washers, (2) Ties, See Figure 09-49 |

HTTP://WWW.MINNPARBACKHOEPARTS.COM



PEDESTAL DEL ASIENTO Y SUSPENSIÓN, SUSPENSIÓN MECÁNICA

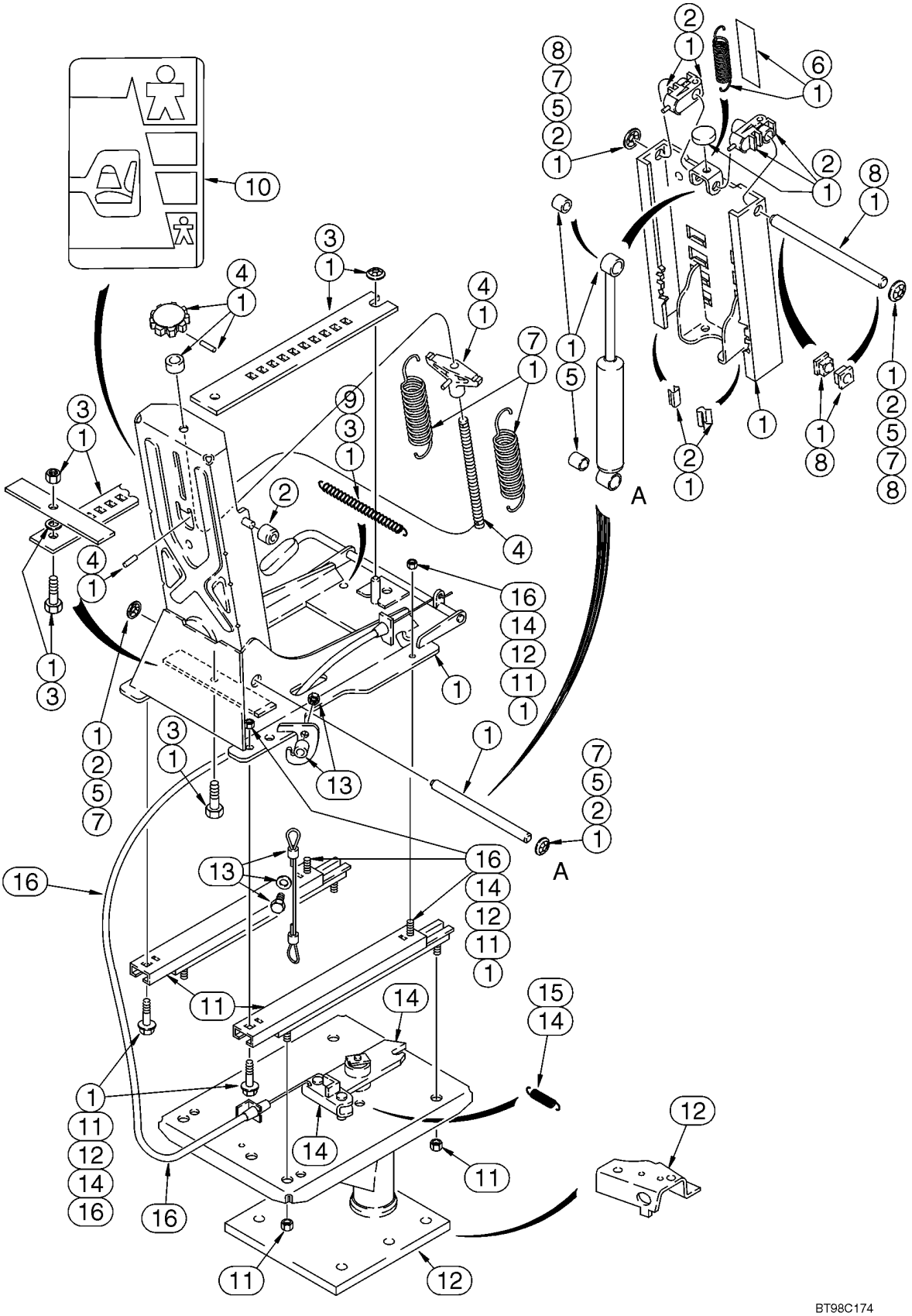

HTTP://WWW.MINNPARBACKHOEPARTS.COM



PEDESTAL DEL ASIENTO Y SUSPENSIÓN, SUSPENSIÓN MECÁNICA

| REF | FN | PART NUMBER | YR/SN | QTY | DESCRIPTION |
|---|---|---|---|---|---|
| 6 | | 116547A1 | | 1 | JEUGO Height Adjusting Spring, Includes (10) Shroud Retainers, (2) Washers, (2) Springs, (1) Wear Strip; For Additional Kit Parts, See Figure 09-49, Ref 10 |
| 7 | | 176920A1 | | 1 | JEUGO Main Extension Springs, Includes (2) Springs, (4) Nuts, (2) Washers, (10) Clips, (1) Grip, (2) Ties |
| 8 | | 116551A1 | | 1 | JEUGO Upper Suspension Tower Shaft, Includes Shaft, (2) Bearings, (2) Nuts, (10) Clips, (2) Washers |
| 9 | | 116545A1 | | 1 | JEUGO Fore/Aft Latch Spring, Includes (1) Spring, (2) Ties |
| 10 | | 116534A1 | | 1 | JEUGO Decal, Seat Weight Adjustment |
| 11 | | 399764A1 | | 1 | JEUGO Fore/Aft Adjuster Slides |
| 12 | | 116538A2 | | 1 | JEUGO Pedestal, Includes Pedestal, (4) Screws, (4) Nuts and 119211A1 Bracket |
| 13 | | 116552A1 | | 1 | JEUGO Cable, Includes (2) Cables, (2) Screws, (2) Spacers, (2) Washers, (2) Nuts |
| 14 | | 116550A1 | | 1 | JEUGO Swivel Latch Bar, Includes Latch Bar, (1) Spring, (1) Ring, (4) Screws, (4) Nuts |
| 14 | | 336375A1 | | 1 | JEUGO Swivel Latch Plate, Includes Latch, Swivel Plate Latch, (5) Screws, (6) Nuts, (2) Pins |
| 15 | | 116548A1 | | 1 | JEUGO Swivel Latch Spring Only |
| 16 | | 181170A1 | | 1 | JEUGO Cable, Fore-Aft/Swivel Mechanism, Includes (2) Screws, (2) Ties, Cable, (4) Nuts |

HTTP://WWW.MINNPARBACKHOEPARTS.COM

| 09-51 | | p1 | 01/04 |
|---|---|---|---|

CONJUNTO DEL ASIENTO, SUSPENSION DE AIRE

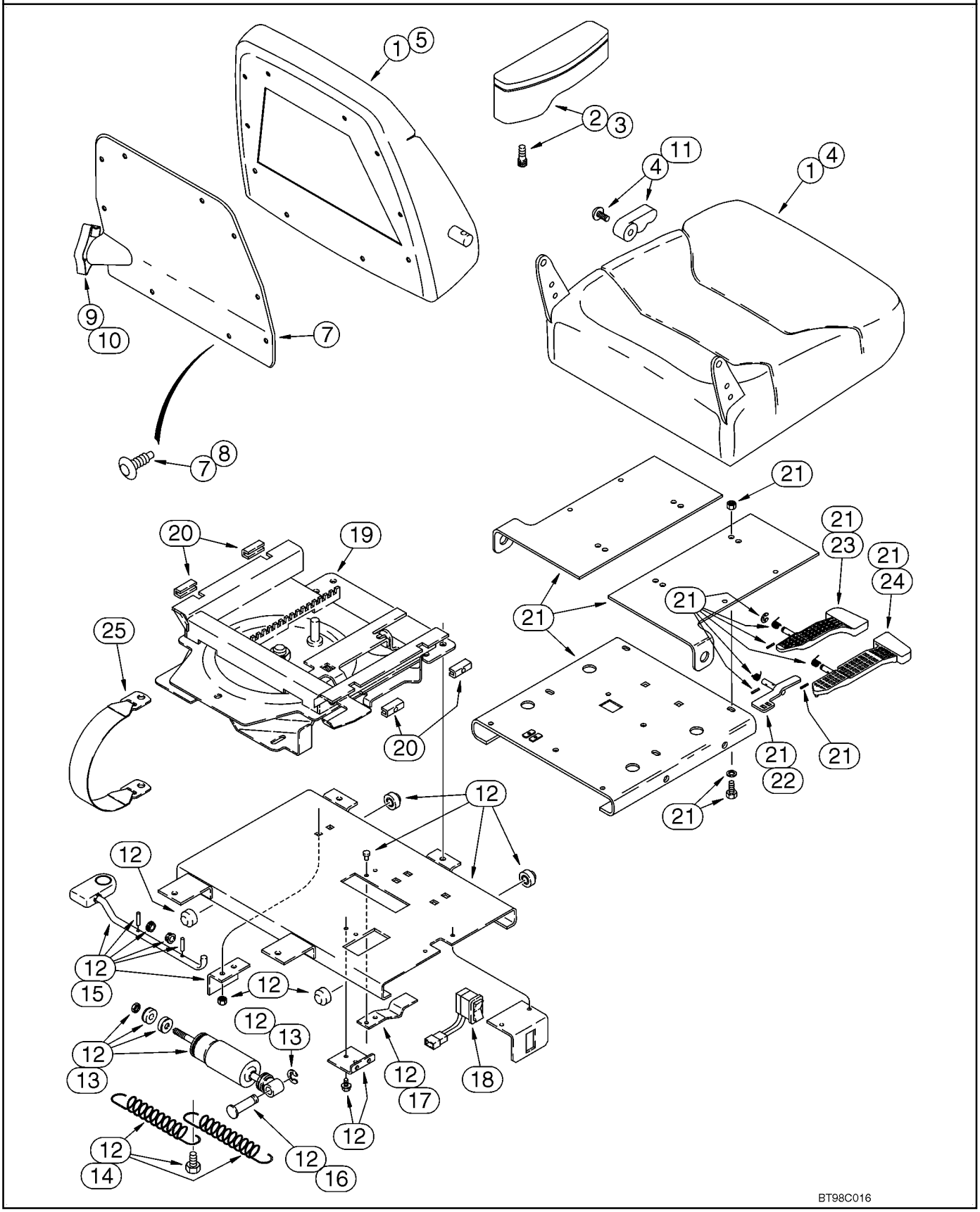

HTTP://WWW.MINNPARBACKHOEPARTS.COM



CONJUNTO DEL ASIENTO, SUSPENSION DE AIRE

| REF | FN | PART NUMBER | YR/SN | QTY | DESCRIPTION |
|---|---|---|---|---|---|
| | | 121414A1 | | 1 | FUSIBLE 20 amp, Not Illustrated |
| | | 604-12030 | | 4 | TORNILLO M12 x 30 |
| | | 896-15012 | | 4 | ARANDELA 13,5 x 28 x 4 mm |
| | | 397137A1 | | 1 | ASIENTO (CONJUNTO) Air Suspension Seat, Cloth, With Armrests, Incl. Ref 1 - 25; Also Includes Parts On Figure 09-52 |
| 1 | | 400981A1 | | 1 | JEUGO Seat Cushion and Backrest, Includes Seat, Backrest, Backrest Cover and Hardware |
| 2 | | 300659A1 | | 1 | JEUGO Armrest, Right-Hand, Includes Armrest Knob and Shaft, Groove Pin, Pivot Stud and Screw |
| 3 | | 300661A1 | | 1 | JEUGO Armrest, Left-Hand, Includes Armrest Knob and Shaft, Groove Pin, Pivot Stud and Screw |
| 4 | | 400837A1 | | 1 | JEUGO Seat Cushion, With Frame, Includes (5) Clips, (18) Rings, (1) Screw and Recliner Handle |
| 5 | | 400838A1 | | 1 | JEUGO Backrest Cushion, With Frame, Includes (23) Rings, Lumbar, (2) Screws and (2) Clips |
| 6 | | 176091A1 | | 1 | EMPAQUETADURA Package of 48 Rings For Cushions, Not Illustrated |
| 7 | | 300664A1 | | 1 | JEUGO Backrest Cover and Retainers, Incl. Ref 8 |
| 8 | | 1999693C1 | | 1 | JEUGO Clip, Package of 14 |
| 9 | | 300665A1 | | 1 | JEUGO Lumbar, With Knob |
| 10 | | 300667A1 | | 1 | PLACA Lumbar Knob, Includes Knob, Actuator and (2) Screws |
| 11 | | 1987212C1 | | 1 | PAQUETE Seat Cushion Back Tilt Knob, Includes Knob, Recliner Handle and (1) Screw |
| 12 | | 300670A1 | | 1 | JEUGO Lateral Isolator Assy, Incl. Ref 13 - 17 |
| 13 | | 1987219C2 | | 1 | JUEGO DE PIEZAS Lateral Isolator Shock, Includes Shock Absorber, (1) Bearing, (2) Bushings, (1) Nut, (2) Washers, (1) Spacer, (1) Ring |
| 14 | | 1987290C1 | | 1 | JUEGO DE PIEZAS Spring, Includes (2) Springs, (1) Bolt |
| 15 | | 259054A1 | | 1 | JUEGO DE PIEZAS Lock, Includes Latch Rod, Bracket, (2) Bearings, Knob, (2) Roll Pins |
| 16 | | 1344025C1 | | 1 | BULON/PIN, LARGO Pivot |
| 17 | | 1344026C1 | | 1 | RESORTE |
| 18 | | 300672A1 | | 1 | CONTACTOR Rocker, Height Adjustment |

HTTP://WWW.MINNPARBACKHOEPARTS.COM

| 09-51 | | p2 | 01/04 |
|---|---|---|---|

CONJUNTO DEL ASIENTO, SUSPENSION DE AIRE

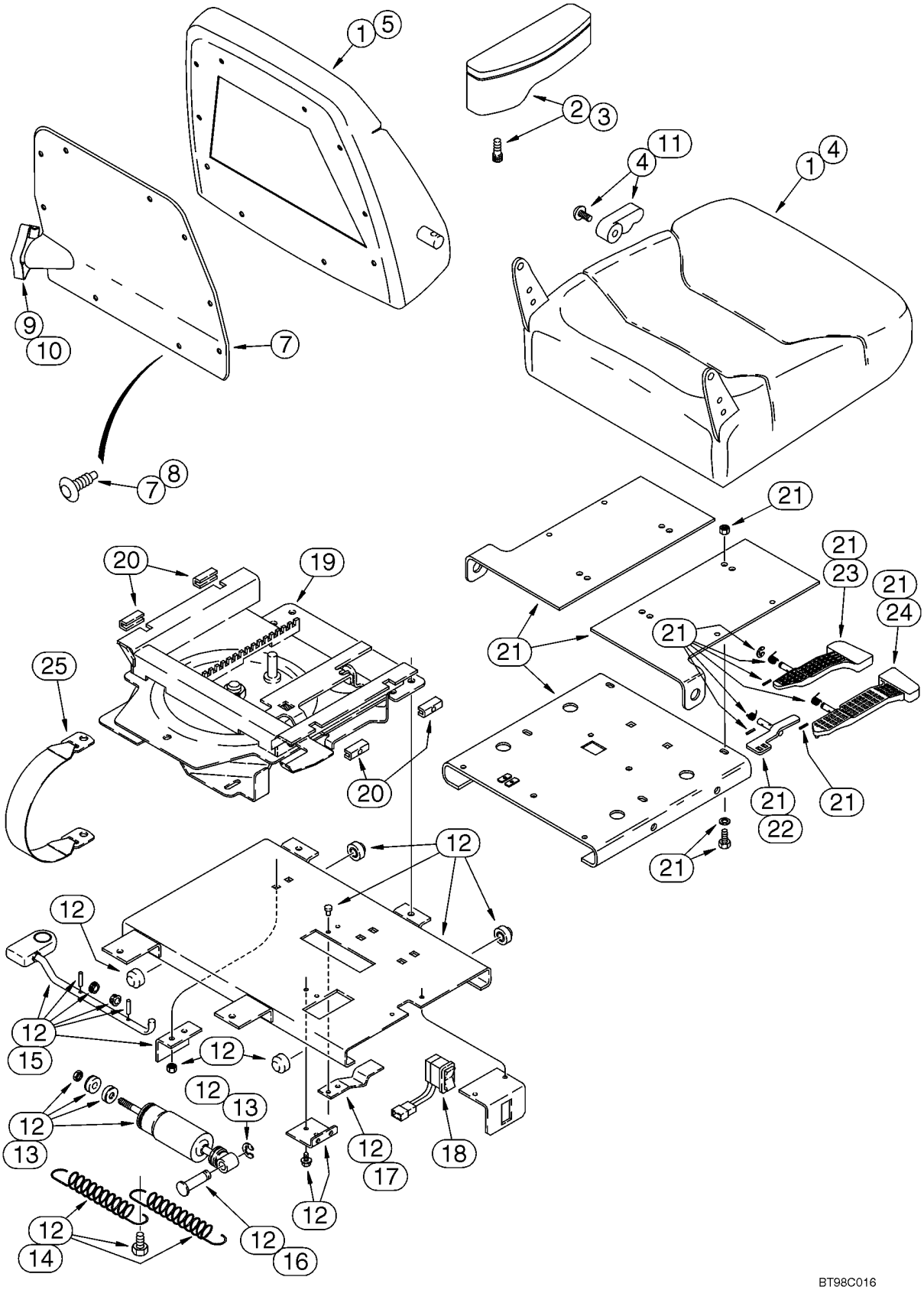

HTTP://WWW.MINNPARBACKHOEPARTS.COM



CONJUNTO DEL ASIENTO, SUSPENSION DE AIRE

| REF | FN | PART NUMBER | YR/SN | QTY | DESCRIPTION |
|---|---|---|---|---|---|
| | | 300674A1 | | 1 | HAZ Swivel Switch, Not Illustrated |
| 19 | | 300675A1 | | 1 | JEUGO Slide/Swivel Assy, Incl. Ref 21 |
| 20 | | 300680A1 | | 1 | JEUGO Slide Blocks, Includes (2) Adjustable Slider Blocks, (2) Stationary Slider Blocks, (2) Setscrews |
| 21 | | 300677A1 | | 1 | JEUGO Upper Slide Plate Assy, Includes Upper Slide Plate, Slide and Swivel Levers, (3) Springs, (3) Roll Pins, (3) E-Rings and Slide Latch, Incl. Ref 22 - 24 |
| 22 | | 300679A1 | | 1 | DESLIZADOR Latch |
| 23 | | 300681A1 | | 1 | PALANCA MANDO Slide |
| 24 | | 300683A1 | | 1 | PALANCA Swivel |
| 25 | | 300684A1 | | 1 | CINTURON, SECURITAD Tether |

HTTP://WWW.MINNPARBACKHOEPARTS.COM

| 09-52 | | p1 | 01/04 |
|---|---|---|---|

PEDESTAL DEL ASIENTO Y SUSPENSIÓN, SUSPENSIÓN DE AIRE

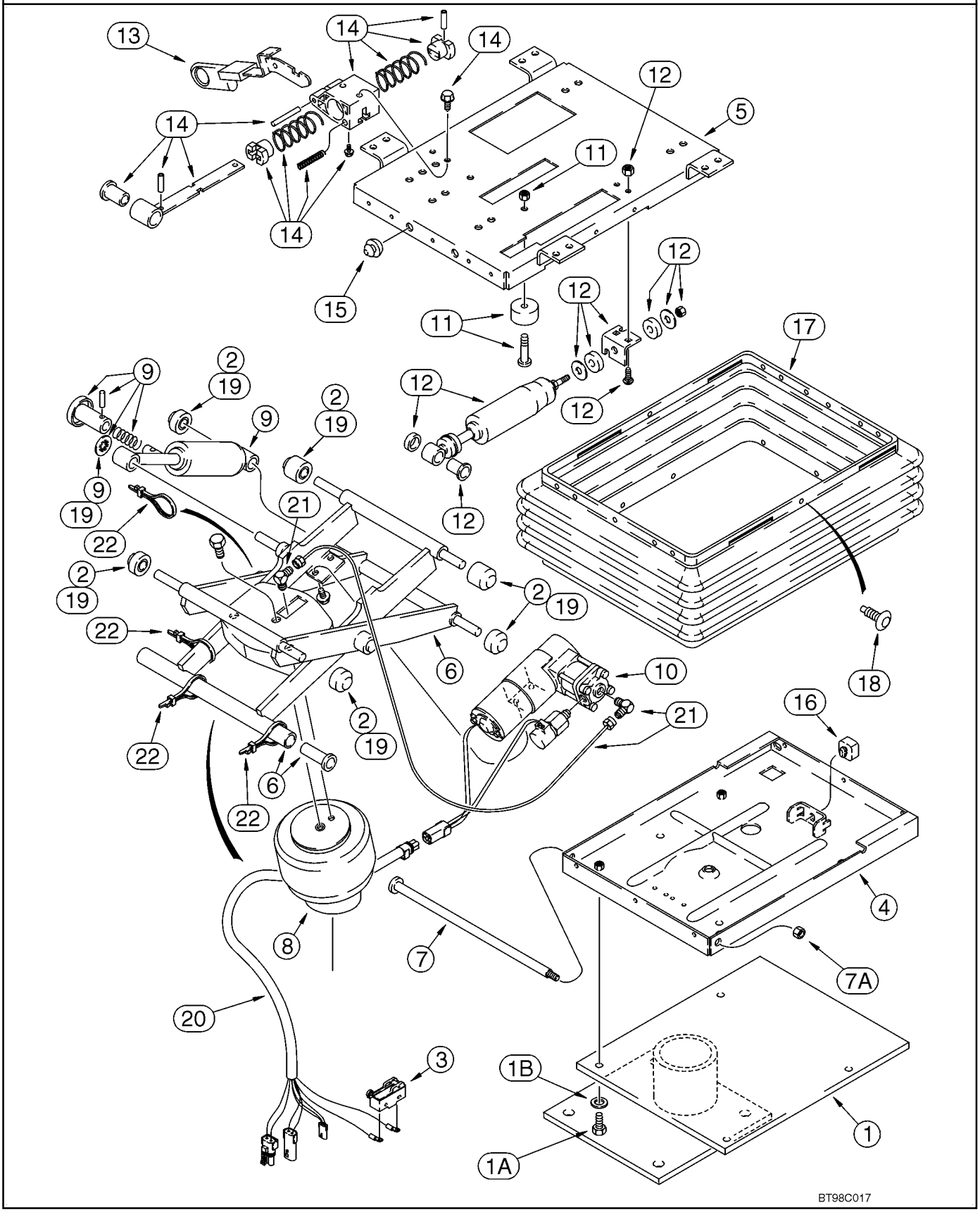

HTTP://WWW.MINNPARBACKHOEPARTS.COM



PEDESTAL DEL ASIENTO Y SUSPENSIÓN, SUSPENSIÓN DE AIRE

| REF | FN | PART NUMBER | YR/SN | QTY | DESCRIPTION |
|---|---|---|---|---|---|
| | | 397137A1 | | 1 | ASIENTO (CONJUNTO) Air Suspension Seat, Cloth, With Armrests, Incl. Ref 1 - 22; Also Includes Parts On Figure 09-51 |
| 1 | | 300669A1 | | 1 | ZÓCALO Support, Base |
| 1A | | 614-8025 | | 4 | TORNILLO M8 x 25 |
| 1B | | NSS | | 2 | NO SE REPARA SEPARADAM. Washer |
| | | 300685A1 | | 1 | JEUGO Air Suspension Assembly, Includes Parts From Upper To Lower Housing Plates, Incl. Ref 2 - 16, 18 - 22, Includes all items shown except for the boot and pedestal, Ref 1 and 17 |
| 2 | | 135512A3 | | 1 | PAQUETE Roller Bearing, Isolator, Includes (4) Narrow Rollers, (2) Wide Rollers, (1) Bushing, (1) Spacer, (1) Retaining Ring, Isolator |
| 3 | | D137363 | | 1 | CONTACTOR Contact, Swivel Limit Switch |
| 4 | | 226560A1 | | 1 | CAVIDAD Lower, With Upper Stop Bracket |
| 5 | | 300688A1 | | 1 | CAVIDAD Upper |
| 6 | | 132862A1 | | 1 | ESCUADRA DE TRANSMIS Arm, Suspension |
| 7 | | 143786A1 | | 1 | EJE |
| 7A | | 230-4216 | | 1 | TUERCA 3/8 |
| 8 | | 197793A1 | | 1 | RESORTE Air Spring, Includes Air Spring, J-Clip and (3) Ties |
| 9 | | 132866A1 | | 1 | AMORTIGUADOR Kit, Includes Shock, (2) Bearings, Fastener, Actuator Arm, Roll Pin, Bracket and Retaining Ring |
| | | 132864A1 | | 1 | COMPRESSOR Kit, Compressor/Valve, Includes Compressor, Valve, Mount, Air Line Tubing, (2) Screws, (2) Sleeves and (2) Nuts, Includes 300689A1, 300690A1 |
| 10 | | 300689A1 | | 1 | JEUGO Compressor/Valve |
| | | 300690A1 | | 1 | PIEZAS DE FIJACIÓN Compressor |
| 11 | | 180593A1 | | 1 | PAQUETE Bumper, Includes 231-1444, 340-12520 |
| | | 231-1444 | | 2 | CONTRA TUERCA 1/4 |
| | | 340-12520 | | 2 | TORNILLO 1/4 x 1-1/4 |
| 12 | | 300691A1 | | 1 | CONJUNTO REPUESTOS Fore/Aft Isolator Latch, Includes Shock Absorber, (3) Nuts, (2) Washers, (2) Grommets, (1) Bearing and (15) Clips |

HTTP://WWW.MINNPARBACKHOEPARTS.COM

| 09-52 | | p2 | 01/04 |
|---|---|---|---|

PEDESTAL DEL ASIENTO Y SUSPENSIÓN, SUSPENSIÓN DE AIRE

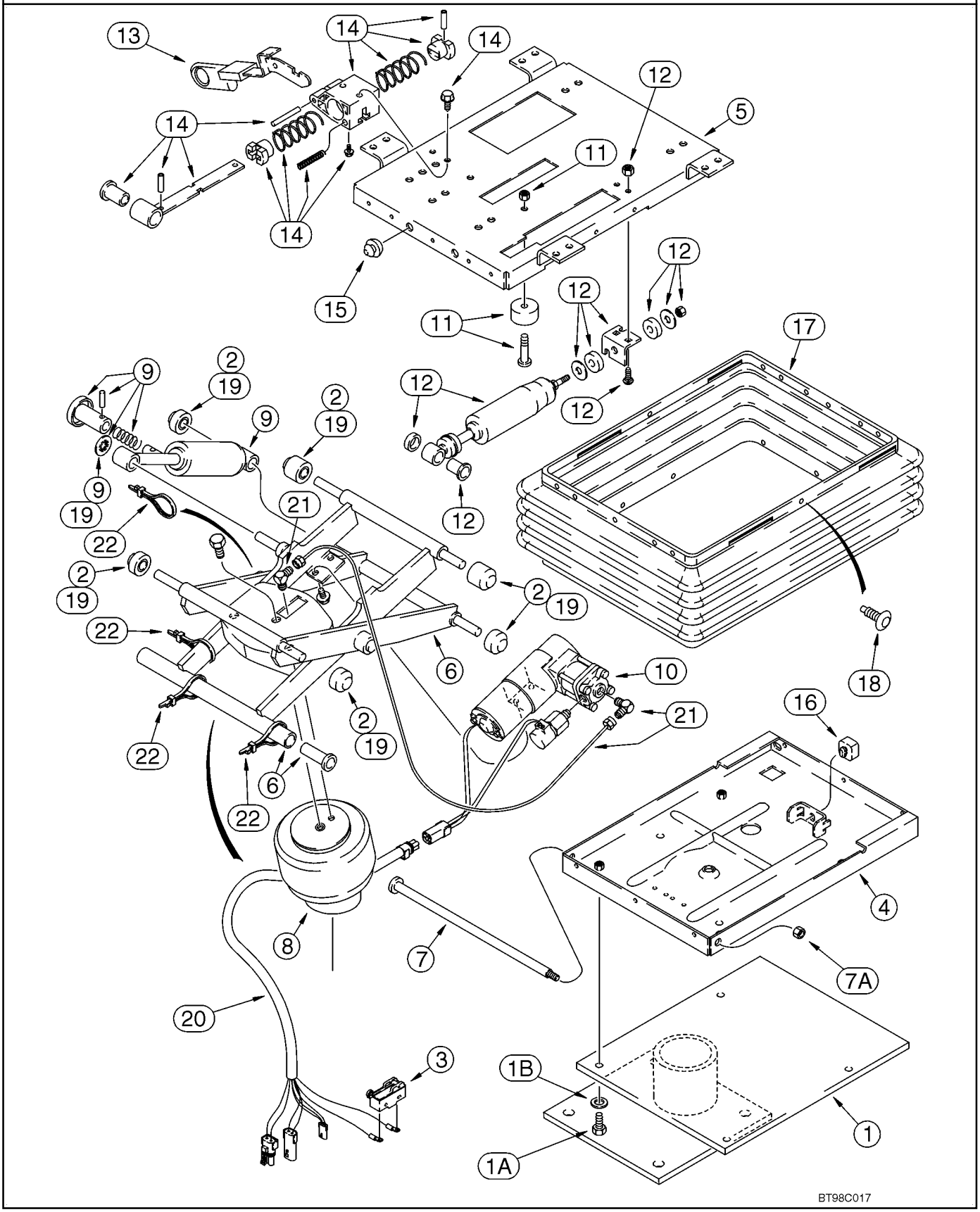

HTTP://WWW.MINNPARBACKHOEPARTS.COM



PEDESTAL DEL ASIENTO Y SUSPENSIÓN, SUSPENSIÓN DE AIRE

| REF | FN | PART NUMBER | YR/SN | QTY | DESCRIPTION |
|---|---|---|---|---|---|
| 13 | | 1981850C1 | | 1 | MANGO Knob, Isolator Control, Fore/Aft |
| 14 | | 300692A1 | | 1 | CONJUNTO REPUESTOS Fore/Aft Isolator Latch, Includes Latch Assy and (2) Screws |
| 15 | | 133422A1 | | 2 | BOMBILLA Rubber |
| 16 | | A45054 | | 1 | PARACHOQUES Seat |
| 17 | | 133421A1 | | 1 | PAQUETE Boot, With Pins |
| 18 | | 132872A1 | | 1 | JUEGO DE PIEZAS Boot Pin, Package of 23 Retainers and (3) Dome Nuts |
| 19 | | 180594A3 | | 1 | PAQUETE Rollers and Bearings, Includes (2) Bushings, (6) Rollers, (1) Push Nut, (5) Bearings and (2) Spacers, Includes 131-425 Nut |
| | | 131-425 | | 1 | TUERCA 1/2 |
| 20 | | 300896A1 | | 1 | HAZ |
| 21 | | 1990548C4 | | 1 | PAQUETE Air Line and Fittings, Includes (2) Elbows, (1) Tee, (2) Adapters, 3.5 Feet Nylon Tubing, (5) Ties and (1) J-Clip, Incl. Ref 22 |
| 22 | | L18337 | | 4 | BANDA 15 in |

HTTP://WWW.MINNPARBACKHOEPARTS.COM



CABINA - CRISTAL, ESPEJO Y MANTENER ABIERTO

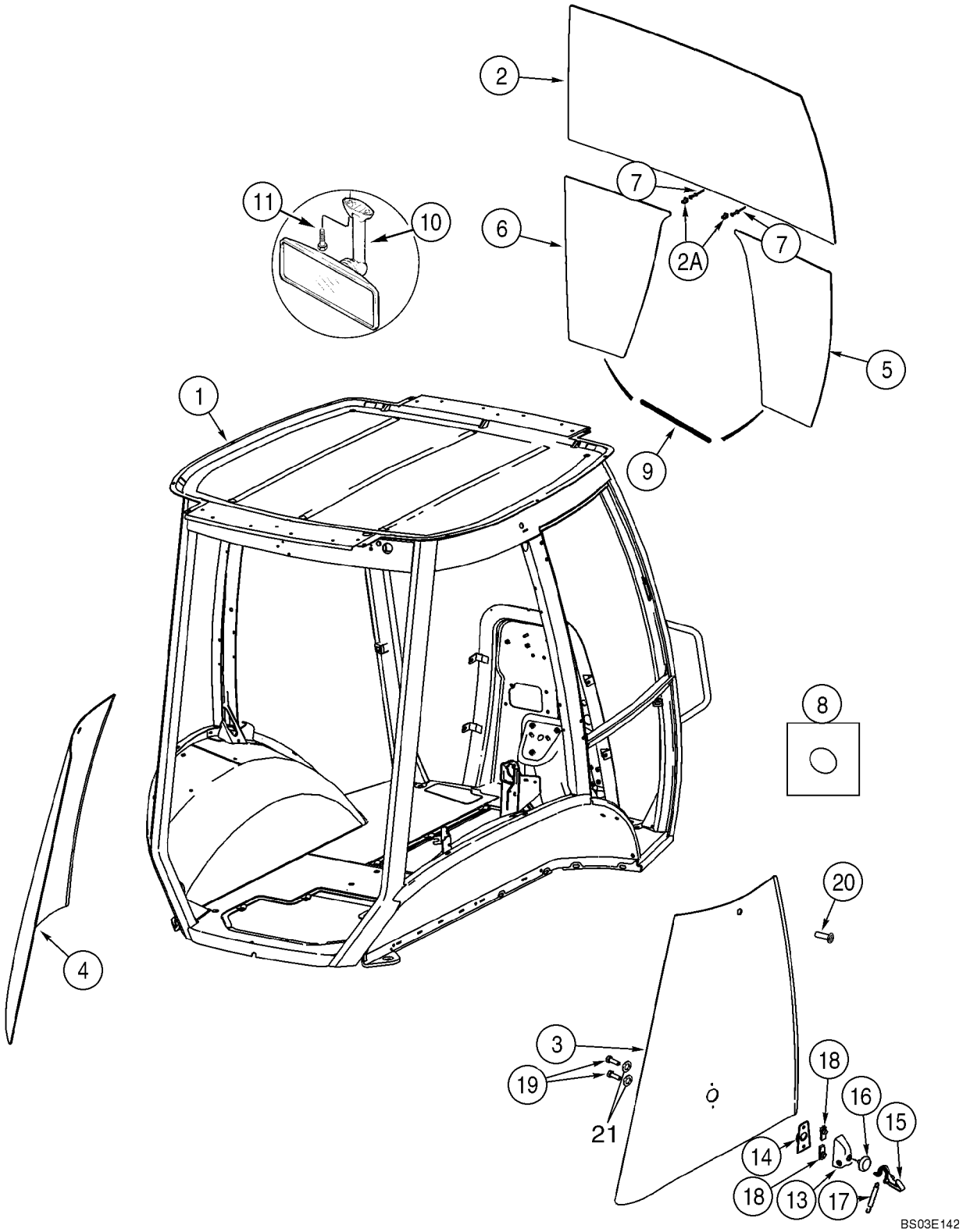

HTTP://WWW.MINNPARBACKHOEPARTS.COM



CABINA - CRISTAL, ESPEJO Y MANTENER ABIERTO

| REF | FN | PART NUMBER | YR/SN | QTY | DESCRIPTION |
|---|---|---|---|---|---|
| 1 | | 87434979 | | 1 | CABINA Single Door; Includes Frame, Left-Hand Door, Right-Hand Window, All Glass, Front and Rear Wipers and Exterior Lamps; Order From Machinery Price List |
| 1 | | 87434980 | | 1 | CABINA Two Door; Includes Frame, Left-Hand and Right-Hand Doors, All Glass, Front and Rear Wipers and Exterior Lamps; Order From Machinery Price List |
| 2 | | 448607A1 | | 1 | PARABRISAS |
| 2A | | 279482A1 | | 2 | TORNILLO DE SUJECTIO Windshield |
| 3 | | 338425A1 | | 1 | VENTANILLA Right Rear Quarter Panel |
| 4 | | 338424A1 | | 1 | VENTANILLA Left Rear Quarter Panel |
| 5 | | 448609A1 | | 1 | PARABRISAS Lower Right-Hand |
| 6 | | 448608A1 | | 1 | PARABRISAS Lower Left-Hand |
| 7 | | 151-516 | | 2 | REMACHE |
| 8 | | 391827A1 | | 36 | ESPACIADOR |
| 9 | | 395793A1 | | 2 | BANDA DE PROTECCIÓN |
| 10 | | 87406924 | | 1 | ESPEJO RETROVISOR Interior |
| 11 | | 286-56520 | | 2 | TORNILLO No. 10 x 1-1/4 |
| 13 | | 405740A1 | | 2 | TAPA |
| 14 | | 405739A1 | | 2 | CUERPO |
| 15 | | 405738A1 | | 2 | PALANCA Hold Open |
| 16 | | 400573A1 | | 2 | PASACABLES |
| 17 | | 405741A1 | | 2 | MUELLE HELICOIDAL Latch Back |
| 18 | | 405742A1 | | 4 | TUERCA M8 |
| 19 | | 400572A1 | | 4 | TORNILLO M8; Nylon |
| 20 | | 400571A2 | | 2 | PARACHOQUES |
| 21 | | 431801A1 | | 4 | ARANDELA Black Nylon |

HTTP://WWW.MINNPARBACKHOEPARTS.COM

| 09-54 | | p1 | 01/04 |
|---|---|---|---|

CABINA - CHASIS Y CUBIERTAS

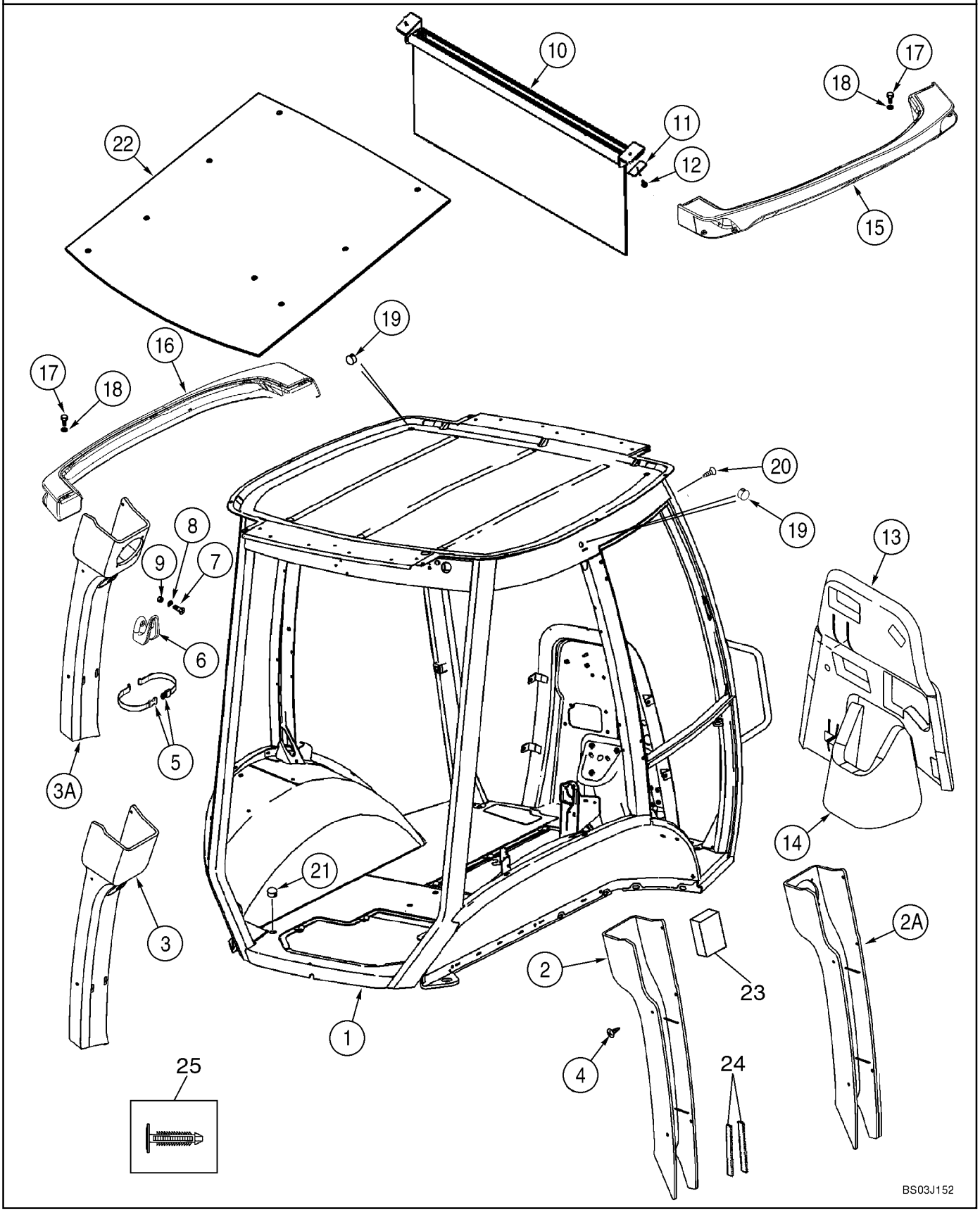

HTTP://WWW.MINNPARBACKHOEPARTS.COM



CABINA - CHASIS Y CUBIERTAS

| REF | FN | PART NUMBER | YR/SN | QTY | DESCRIPTION |
|---|---|---|---|---|---|
| 1 | | 87407908 | | 1 | ESTRUCTURA CABINA Single Door |
| 1 | | 87407909 | | 1 | ESTRUCTURA CABINA Two Door |
| 2 | | 360267A3 | | 1 | TAPA Plastic; Right-Hand Post; Standard Interior |
| 2A | | 379425A3 | | 1 | TAPA Vinyl; With Speaker Holes; Right-Hand Post; Deluxe Interior |
| 3 | | 360266A2 | | 1 | TAPA Plastic; Left-Hand Post; Standard Interior |
| 3A | | 379424A2 | | 1 | TAPA Vinyl; With Speaker Holes; Left-Hand Post; Deluxe Interior |
| 4 | | 401949A1 | | 10 | BOTON DE RESORTE |
| 5 | | 378227A1 | | 1 | BANDA Garment Strap |
| 6 | | 114549A1 | | 1 | PERCHA |
| 7 | | 540-720 | | 2 | TORNILLO M4 x 16 |
| 8 | | 895-11004 | | 2 | ARANDELA 4,3 x 9 x 0,8 mm |
| 9 | | 832-10404 | | 2 | TUERCA M4 |
| 10 | | 364180A1 | | 1 | PARASOL |
| 11 | | 409618A1 | | 2 | PLACA 1/4 in Mounting Hole |
| 12 | | 396516A1 | | 3 | PUNZON VALVULA No. 10 x 1; With Washer; Phillips |
| 13 | | 390601A5 | | 1 | TAPA Firewall |
| 14 | | 390602A1 | | 1 | TAPA Firewall, Lower |
| 15 | | 360247A3 | | 1 | FARO (CONJ) Right-Hand |
| 16 | | 360246A3 | | 1 | FARO (CONJ) Left-Hand |
| 17 | | 394863A1 | | 10 | TORNILLO M6 x 20 |
| 18 | | 395387A1 | | 10 | ARANDELA 6.4 ID; Nylon |
| 19 | | 395388A1 | | 3 | TAPÓN |
| | | 353-415 | | 1 | TAPÓN 1-1/2 in; Cab Roof; Models Without Radio Antenna |
| | | 353-410 | | 1 | TAPÓN 7/8; Upper Windshield Frame; Models Without Radio Antenna |
| | | 353-407 | | 1 | TAPÓN 11/16; Rear Filter Plate On Models Without Windshield Washer |
| | | 353-425 | | 2 | TAPÓN 7/16 in dia |
| | | 353-421 | | 1 | TAPÓN 3/16 |
| | | 353-402 | | 4 | TAPÓN 3/8, Dome, Black Nylon |
| | | 353-405 | | 1 | TAPÓN 9/16 |
| | | 353-406 | | 2 | TAPÓN 5/8, Dome, Black Nylon |

HTTP://WWW.MINNPARBACKHOEPARTS.COM

| 09-54 | | p2 | 01/04 |
|---|---|---|---|

CABINA - CHASIS Y CUBIERTAS

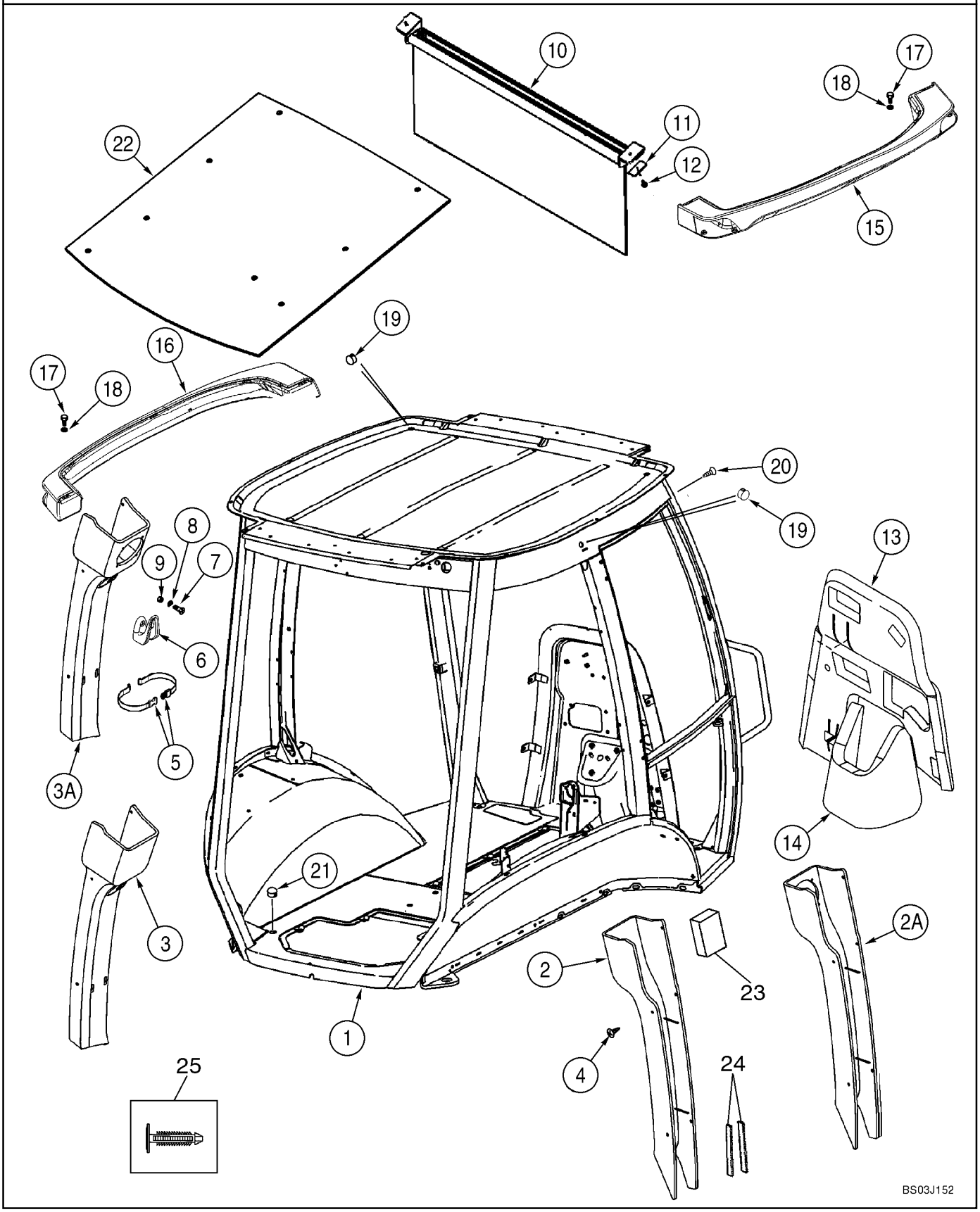

HTTP://WWW.MINNPARBACKHOEPARTS.COM



CABINA - CHASIS Y CUBIERTAS

| REF | FN | PART NUMBER | YR/SN | QTY | DESCRIPTION |
|---|---|---|---|---|---|
| | | 353-408 | | 1 | TAPÓN 3/4 |
| 20 | | 402610A1 | | 8 | BOTON DE RESORTE Cab Frame; Models Without Exterior Mirrors |
| 21 | | 382298A1 | | 2 | TAPÓN |
| 22 | | 368809A1 | | 1 | AISLADOR Insulation |
| 23 | | 412285A1 | | 1 | CINTA Foam; Adhesive Back; B-Post |
| 24 | | 414939A1 | | 2 | BANDA HERMETICIDAD Adhesive Back; B Post |
| 25 | | 411399A1 | | 1 | BOTON DE RESORTE For 1/4 in dia Hole; Christmas Tree Clip |

HTTP://WWW.MINNPARBACKHOEPARTS.COM



CABINA - PUERTAS

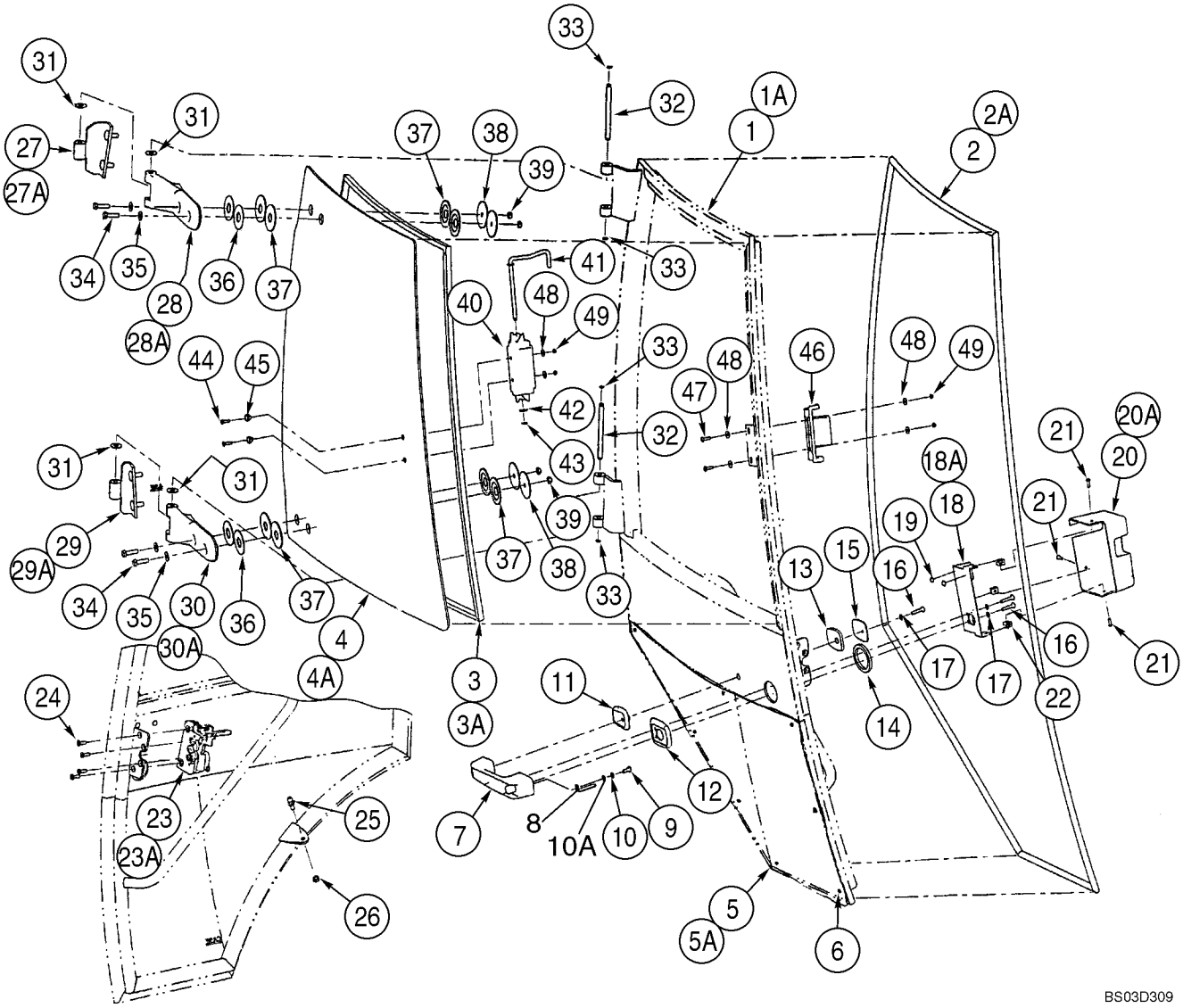

HTTP://WWW.MINNPARBACKHOEPARTS.COM



CABINA - PUERTAS

| REF | FN | PART NUMBER | YR/SN | QTY | DESCRIPTION |
|---|---|---|---|---|---|
| | | REF | | | MANUAL Left-Hand and Right-Hand Cab Doors; Left-Hand Door Not Illustrated |
| | | 394585A3 | | 1 | PUERTA DE CABINA, DERECH Right-Hand Door; Incl. Ref 1 - 49, Except Where Noted For Left-Hand Door |
| | | 341743A3 | | 1 | PUERTA DE CABINA,I. Left-Hand Door; Incl. Ref 1A - 49, Except Where Noted For Right-Hand Door |
| 1 | | NSS | | 1 | NO SE REPARA SEPARADAM. Frame; Right-Hand Door |
| 1A | | NSS | | 1 | NO SE REPARA SEPARADAM. Frame; Left-Hand Door |
| 2 | | 394707A1 | | 1 | PORCION DE GOMMA Right-Hand Door |
| 2A | | 390838A1 | | 1 | PORCION DE GOMMA Left-Hand Door |
| 3 | | 394708A1 | | 1 | JUNTA DE CRISTAL Window; Upper; Right-Hand Door |
| 3A | | 391850A1 | | 1 | JUNTA DE CRISTAL Window; Upper; Left-Hand Door |
| 4 | | 394700A1 | | 1 | VIDRIO Upper; Right-Hand Door |
| 4A | | 338429A1 | | 1 | VIDRIO Upper; Left-Hand Door |
| 5 | | 338427A1 | | 1 | VENTANA Lower; Right-Hand Door |
| 5A | | 338426A1 | | 1 | VENTANA Lower; Left-Hand Door |
| 6 | | 391827A1 | | 4 | ESPACIADOR 4 Per Door; Cut Bumpers In Half For 8 Locations |
| 7 | | 60-7083T1 | | 1 | MANECILLA Outer |
| 8 | | 442718A1 | | 1 | BOTON Release |
| 9 | | 440-12510 | | 1 | TORNILLO 1/4 x 5/8 |
| 10 | | 492-11025 | | 1 | ARANDELA DE FRENO 1/4 |
| 10A | | 895-11006 | | 1 | ARANDELA 6,6 x 12,5 x 1,6 mm |
| 11 | | 315276A1 | | 1 | MARCO Small |
| 12 | | 315273A1 | | 1 | MARCO Large |
| 13 | | 391847A1 | | 1 | JUNTA HERMETICA Small |
| 14 | | 391838A1 | | 1 | JUNTA HERMETICA Large |
| 15 | | 391848A1 | | 1 | PLACA DORSAL |
| 16 | | 393203A1 | | 3 | TORNILLO |
| 17 | | 393202A1 | | 3 | ARANDELA 6 mm |

HTTP://WWW.MINNPARBACKHOEPARTS.COM



CABINA - PUERTAS

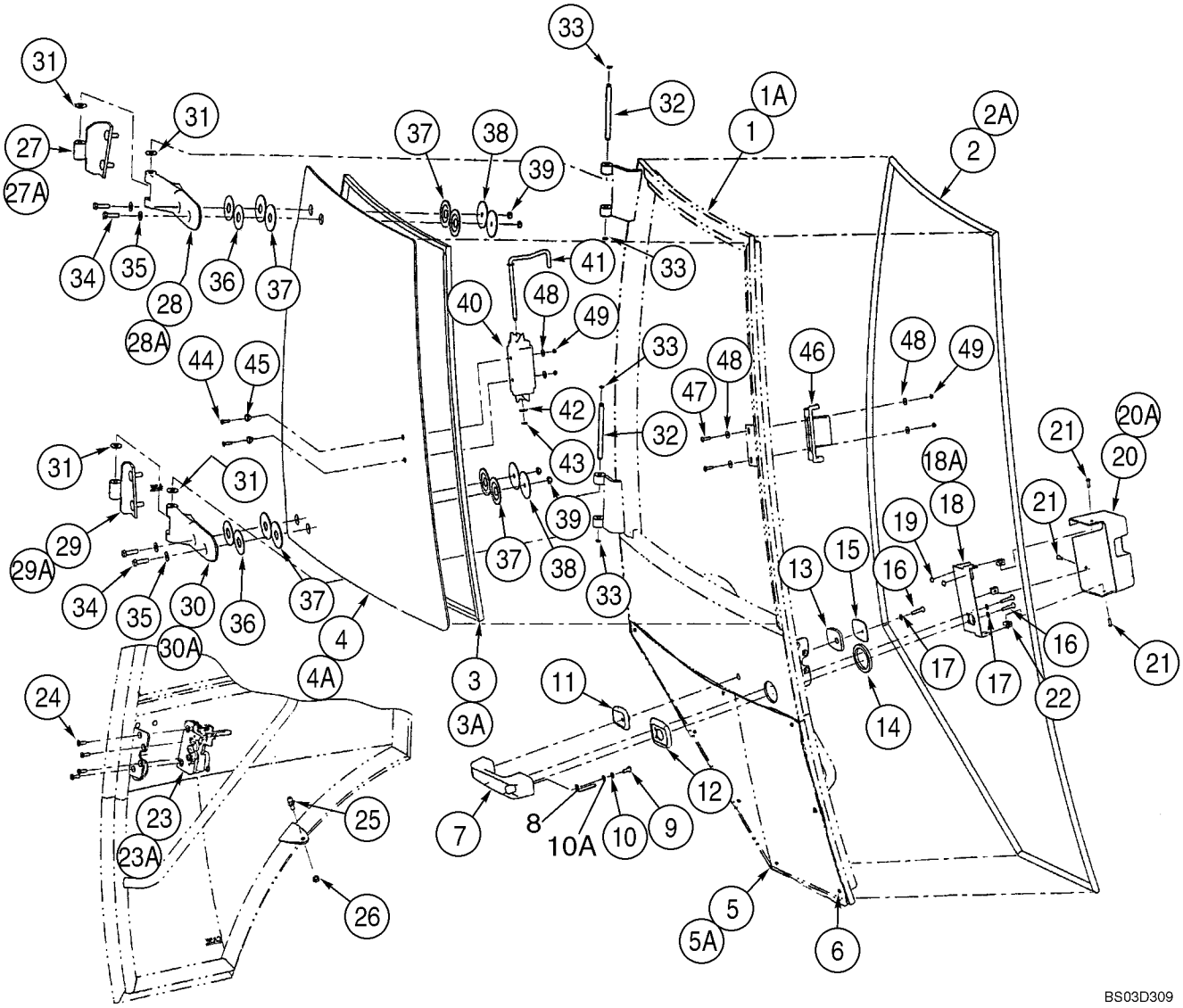

HTTP://WWW.MINNPARBACKHOEPARTS.COM



CABINA - PUERTAS

| REF | FN | PART NUMBER | YR/SN | QTY | DESCRIPTION |
|---|---|---|---|---|---|
| 18 | | 394704A1 | | 1 | PIEZA DE SOPORTE Cover Mounting; Right-Hand Door |
| 18A | | 391841A1 | | 1 | PIEZA DE SOPORTE Cover Mounting; Left-Hand Door |
| 19 | | 391827A1 | | 2 | ESPACIADOR |
| 20 | | 394705A1 | | 1 | TAPA Latch; Right-Hand Door |
| 20A | | 391842A1 | | 1 | TAPA Latch; Left-Hand Door |
| 21 | | 390-100 | | 3 | TORNILLO |
| 22 | | 393209A1 | | 3 | TUERCA ESPECIAL |
| 23 | | 382777A1 | | 1 | PESTILLO Right-Hand Door |
| 23A | | 382775A1 | | 1 | PESTILLO Left-Hand Door |
| 24 | | 569-4 | | 4 | TORNILLO |
| 25 | | 3234063R1 | | 1 | JUNTA DE ROTULA |
| 26 | | 832-10408 | | 1 | TUERCA M8 |
| 27 | | 394701A1 | | 1 | BISAGRA Upper; Right-Hand Door |
| 27A | | 390840A1 | | 1 | BISAGRA Upper; Left-Hand Door |
| 28 | | 364134A2 | | 1 | BISAGRA Plastic; Upper; Right-Hand Door |
| 28A | | 364132A2 | | 1 | BISAGRA Plastic; Upper; Left-Hand Door |
| 29 | | 394702A1 | | 1 | BISAGRA Lower; Right-Hand Door |
| 29A | | 390841A1 | | 1 | BISAGRA Lower; Left-Hand Door |
| 30 | | 364135A2 | | 1 | BISAGRA Plastic; Lower; Right-Hand Door |
| 30A | | 364133A2 | | 1 | BISAGRA Plastic; Lower; Left-Hand Door |
| 31 | | 391845A1 | | 4 | ARANDELA Nylon |
| 32 | | 391843A1 | | 2 | PERNO |
| 33 | | 442773A1 | | 4 | RETENEDOR |
| 34 | | 514-633 | | 4 | TORNILLO M8 x 30 |
| 35 | | 895-30107 | | 4 | ARANDELA |
| 36 | | 376334A1 | | 4 | ARANDELA 55 mm OD; Yellow |
| 37 | | 376336A1 | | 8 | ARANDELA ELASTICA Rubber |
| 38 | | 376332A1 | | 4 | ARANDELA 60 mm OD; Black |
| 39 | | 832-10508 | | 4 | TUERCA M8 |
| 40 | | 368147A1 | | 1 | MANECILLA Slam Latch |
| 41 | | 391849A1 | | 1 | VARILLA |
| 42 | | 906086R1 | | 1 | ARANDELA 8.4 x 16 x 1.6 thk |
| 43 | | 100-39001 | | 1 | ANILLO |
| 44 | | 140-104 | | 2 | TORNILLO No. 8 x 3/4 |

HTTP://WWW.MINNPARBACKHOEPARTS.COM



CABINA - PUERTAS

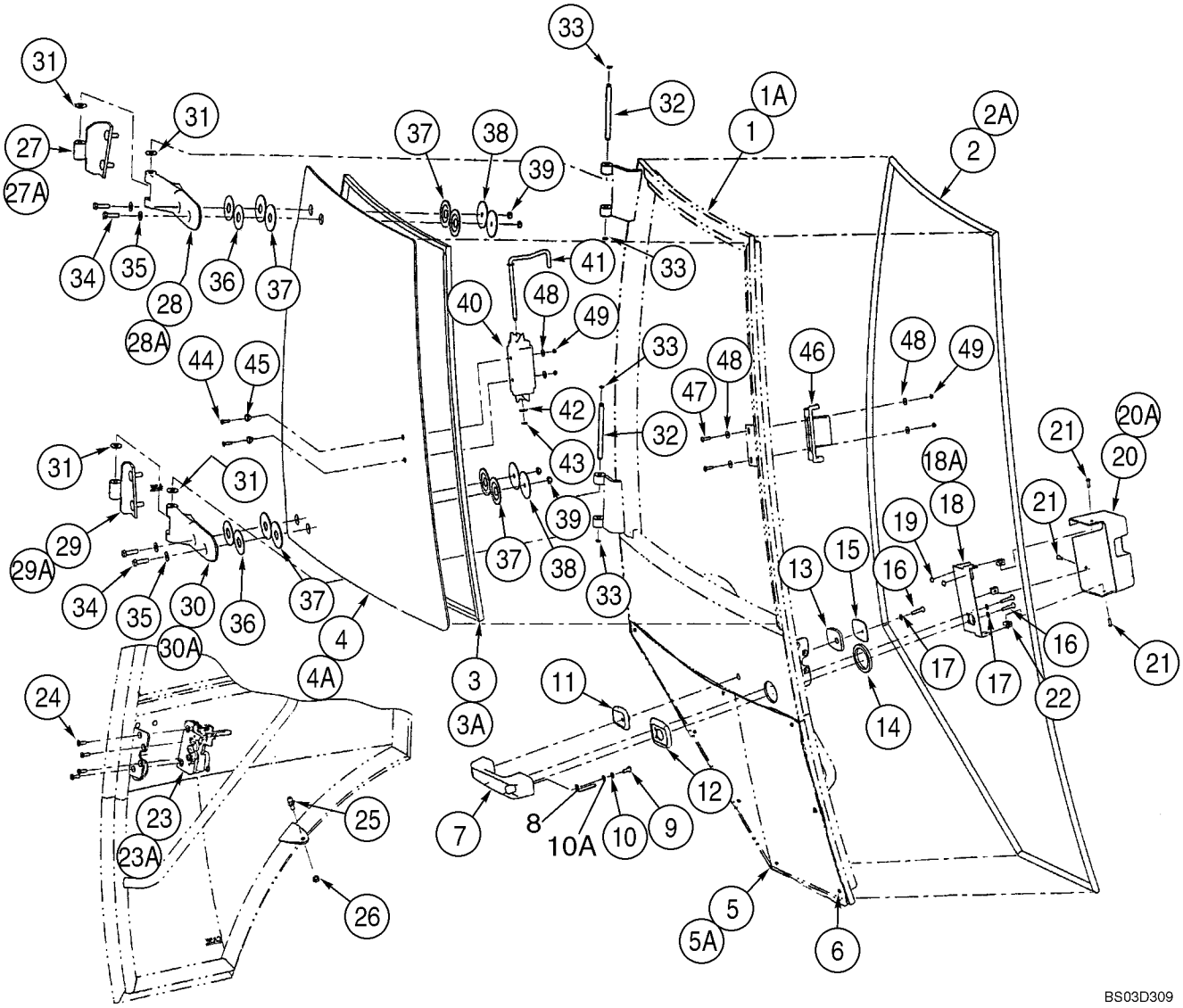

HTTP://WWW.MINNPARBACKHOEPARTS.COM



CABINA - PUERTAS

| REF | FN | PART NUMBER | YR/SN | QTY | DESCRIPTION |
|---|---|---|---|---|---|
| 45 | | F64198 | | 2 | CASQUILLO Nylon |
| 46 | | 368146A1 | | 1 | PESTILLO Slam Latch |
| 47 | | 142-103 | | 2 | TORNILLO |
| 48 | | 195-81023 | | 6 | ARANDELA 1/4 x 9/16 x 3/64 |
| 49 | | F45165 | | 4 | TUERCA SEGURIDAD No. 10 |

HTTP://WWW.MINNPARBACKHOEPARTS.COM

| 09-56 | | p1 | 01/04 |
|---|---|---|---|

CABINA - MONTAJE DE LA PUERTA

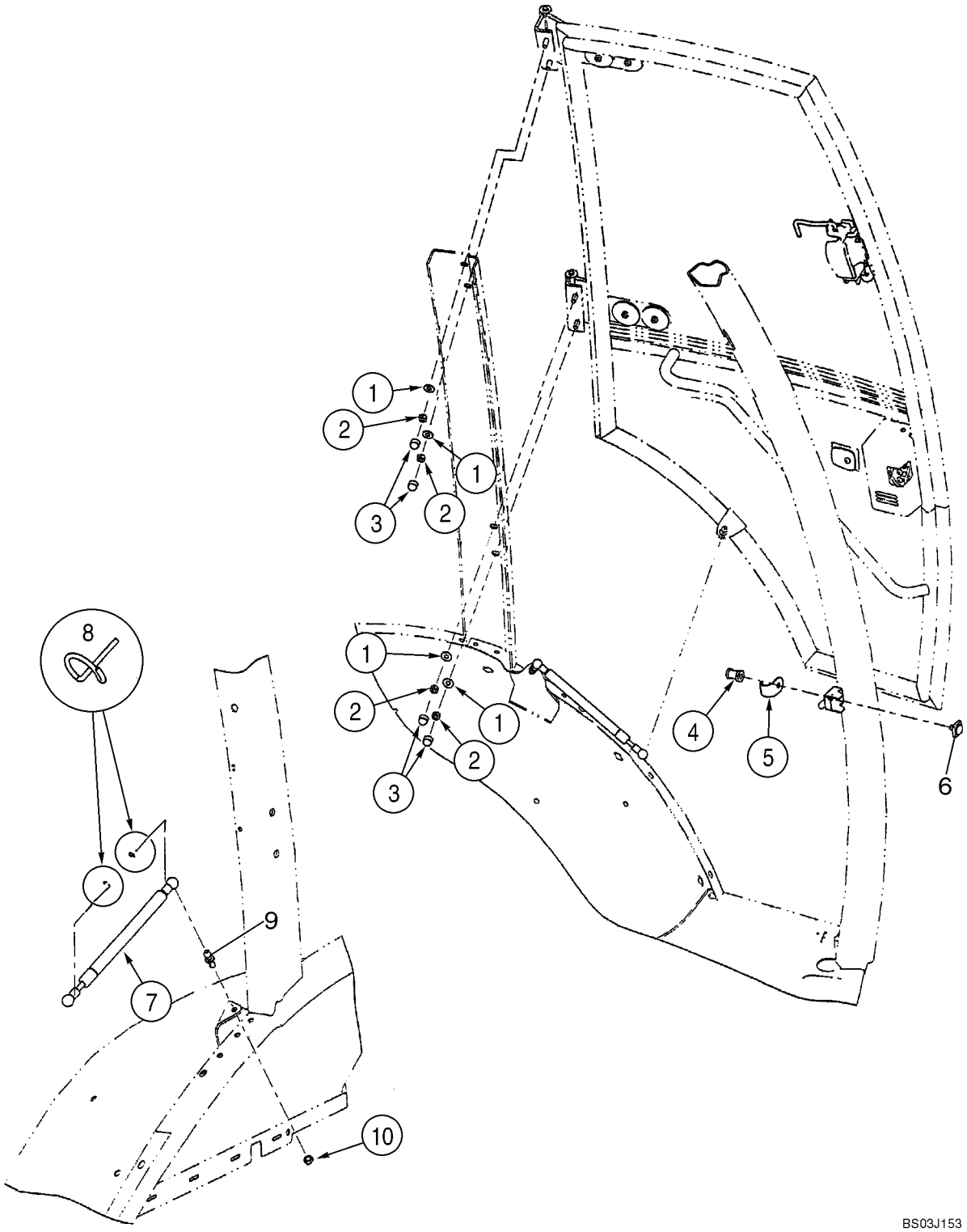

HTTP://WWW.MINNPARBACKHOEPARTS.COM



CABINA - MONTAJE DE LA PUERTA

| REF | FN | PART NUMBER | YR/SN | QTY | DESCRIPTION |
|---|---|---|---|---|---|
| | | REF | | | MANUAL Left-Hand and Right-Hand Cab Doors; Left-Hand Cab Door Shown |
| 1 | | 397064A1 | | 4-8 | ARANDELA FRENO 3/8 x 7/8 x 1/16 thk |
| 2 | | 232-1446 | | 4-8 | TUERCA 3/8 |
| 3 | | 396841A1 | | 4-8 | TAPON DEL DEPOSITO |
| 4 | | 87411108 | | 1-2 | PERNO ESPECIAL Striker |
| 5 | | 393211A1 | | 1-2 | DEFENSA |
| 6 | | 442842A1 | | 1-2 | BLOQUE (CONJUNTO) Striker |
| 7 | | 394800A1 | | 1-2 | RESORTE Gas Spring |
| 8 | | 3233348R1 | | 2-4 | CLIP ELECTRICO |
| 9 | | 432431A1 | | 1-2 | PRISIONERO Ball |
| 10 | | 832-10408 | | 1-2 | TUERCA M8 |

HTTP://WWW.MINNPARBACKHOEPARTS.COM

| 09-57 | | p1 | 01/04 |
|---|---|---|---|

CABINA - VENTANILLA, DERECHA, PARA MARCOS DE CABINA DE PUERTA ÚNICA

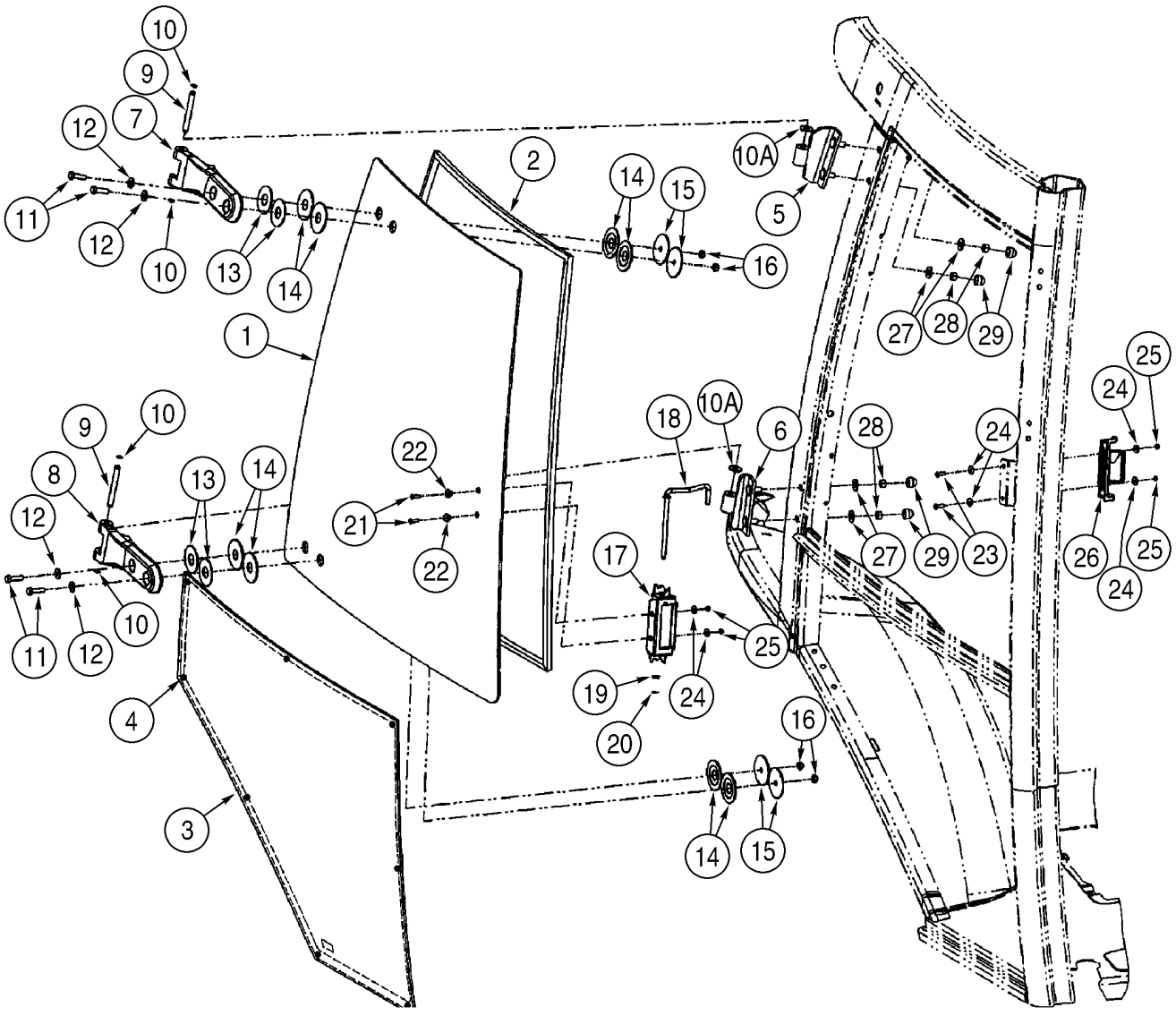

HTTP://WWW.MINNPARBACKHOEPARTS.COM



CABINA - VENTANILLA, DERECHA, PARA MARCOS DE CABINA DE PUERTA ÚNICA

| REF | FN | PART NUMBER | YR/SN | QTY | DESCRIPTION |
|---|---|---|---|---|---|
| | | 341746A2 | | 1 | VENTANA (CJTO) Right-Hand; Incl. Ref 1 - 29 |
| 1 | | 360046A1 | | 1 | VENTANA Upper |
| 2 | | 394864A1 | | 1 | JUNTA DE CRISTAL |
| 3 | | 338428A1 | | 1 | VENTANA (CJTO) Lower |
| 4 | | 391827A1 | | 4 | ESPACIADOR Cut Bumpers In Half For 8 Locations |
| 5 | | 394701A1 | | 1 | BISAGRA Upper |
| 6 | | 394702A1 | | 1 | BISAGRA Lower |
| 7 | | 364134A2 | | 1 | BISAGRA Plastic; Upper |
| 8 | | 364135A2 | | 1 | BISAGRA Plastic; Lower |
| 9 | | 394865A1 | | 2 | PERNO |
| 10 | | 393330A1 | | 4 | ANILLO |
| 10A | | 391845A1 | | 4 | ARANDELA Nylon |
| 11 | | 514-633 | | 4 | TORNILLO M8 x 30 |
| 12 | | 895-30107 | | 4 | ARANDELA |
| 13 | | 376334A1 | | 4 | ARANDELA 55 mm OD; Yellow |
| 14 | | 376336A1 | | 8 | ARANDELA ELASTICA Rubber |
| 15 | | 376332A1 | | 4 | ARANDELA 60 mm OD; Black |
| 16 | | 832-10508 | | 4 | TUERCA M8 |
| 17 | | 368147A1 | | 1 | MANECILLA Slam Latch |
| 18 | | 391849A1 | | 1 | VARILLA |
| 19 | | 906086R1 | | 1 | ARANDELA 8.4 x 16 x 1.6 thk |
| 20 | | 100-39001 | | 1 | ANILLO |
| 21 | | 140-104 | | 2 | TORNILLO No. 8 x 3/4 |
| 22 | | F64198 | | 2 | CASQUILLO Nylon |
| 23 | | 142-103 | | 2 | TORNILLO |
| 24 | | 195-81023 | | 6 | ARANDELA 1/4 x 9/16 x 3/64 |
| 25 | | F45165 | | 4 | TUERCA SEGURIDAD No. 10 |
| 26 | | 368146A1 | | 1 | PESTILLO Slam Latch |
| 27 | | 397064A1 | | 4 | ARANDELA FRENO 3/8 x 7/8 x 1/16 thk |
| 28 | | 232-1446 | | 4 | TUERCA 3/8 |
| 29 | | 396841A1 | | 4 | TAPON DEL DEPOSITO |

HTTP://WWW.MINNPARBACKHOEPARTS.COM

| 09-58 | | p1 | 01/04 |
|---|---|---|---|

CABINA - VENTANA, TRASERA

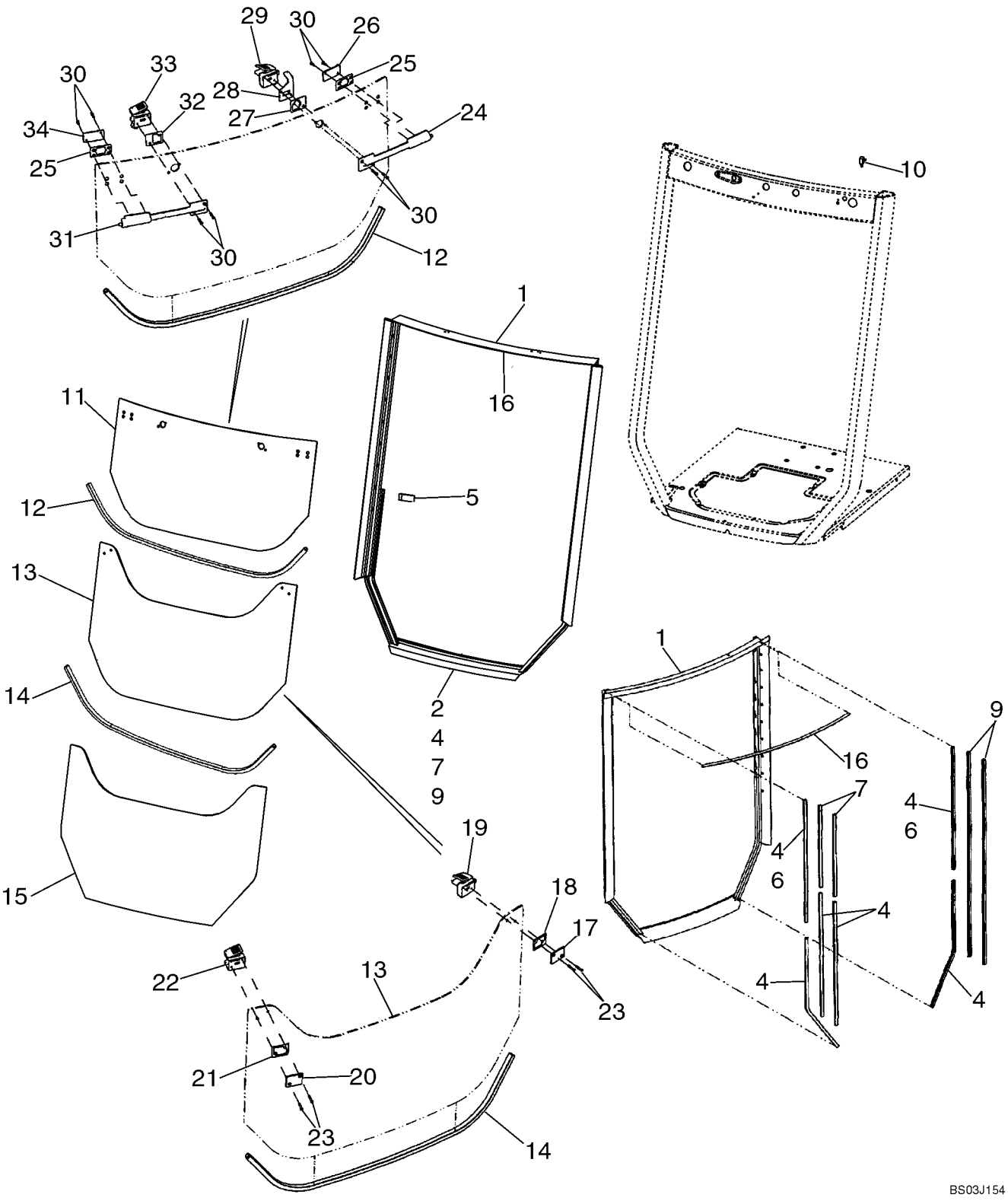

HTTP://WWW.MINNPARBACKHOEPARTS.COM



CABINA - VENTANA, TRASERA

| REF | FN | PART NUMBER | YR/SN | QTY | DESCRIPTION |
|---|---|---|---|---|---|
| | | 411850A1 | | 1 | JEUGO Frame and Seal; Incl. 1, 4, 7, 9, 16 |
| 1 | | 403948A1 | | 1 | BASTIDOR (CONJUNTO) Included in 411850A1 Frame and Seal Kit |
| 2 | | 410867A1 | | 1 | JUNTA HERMETICA Rubber Seal; Bulb Type |
| | | 411851A1 | | 1 | JEUGO Seal; Incl. 4, 7, 9, 16 |
| 4 | | 404228A1 | | 6 | ANILLO DE CIERRE 760 mm (29-15/16 in), Flocked Channel Seals; Cut From 402852A1; Included in 411851A1 Seal Kit and 411850A1 Frame and Seal Kit |
| 5 | | 400200A1 | | 2 | PORCION DE GOMMA Stop |
| 6 | | 404226A1 | | 2 | ANILLO DE CIERRE 787 mm (31 in), Flocked Channel Seals; Cut From 402852A1 |
| 7 | | 404229A1 | | 2 | ANILLO DE CIERRE 508 mm (20 in), Flocked Channel Seals; Cut From 402852A1; Included In 411851A1 Seal Kit and 411850A1 Frame and Seal Kit |
| 9 | | 404227A1 | | 2 | ANILLO DE CIERRE 1270 mm (50 in), Flocked Channel Seals; Cut From 402852A1; Included in 411851A1 Seal Kit and 411850A1 Frame and Seal Kit |
| 10 | | A187714 | | 1 | CONTACTOR Rear Wiper Cutout |
| | | 495-11047 | | 2 | ARANDELA 15/32 x 59/64 x 1/16 |
| | | 425-147 | | 1 | TUERCA 7/16 |
| 11 | | 352208A1 | | 1 | VENTANA Upper |
| 12 | | 395348A1 | | 1 | CINTA DE ADEREZO 1210 mm (47-21/32 in), Lower Glass Edge; Cut From 404426A1 |
| | | 87434783 | | 1 | VENTANA (CJTO) Center; Includes Ref 13, 19, 22, 23; Plus (4) Backing Plates and (4) Grommets Which Are Not Serviced Separately; Includes Instructions |
| 13 | | 352209A1 | | 1 | VENTANA Center |
| 14 | | 395348A1 | | 1 | CINTA DE ADEREZO 1210 mm (47-21/32 in), Lower Glass Edge; Cut From 404426A1 |
| 15 | | 352210A1 | | 1 | VENTANA Lower |

HTTP://WWW.MINNPARBACKHOEPARTS.COM

| 09-58 | | p2 | 01/04 |
|---|---|---|---|

CABINA - VENTANA, TRASERA

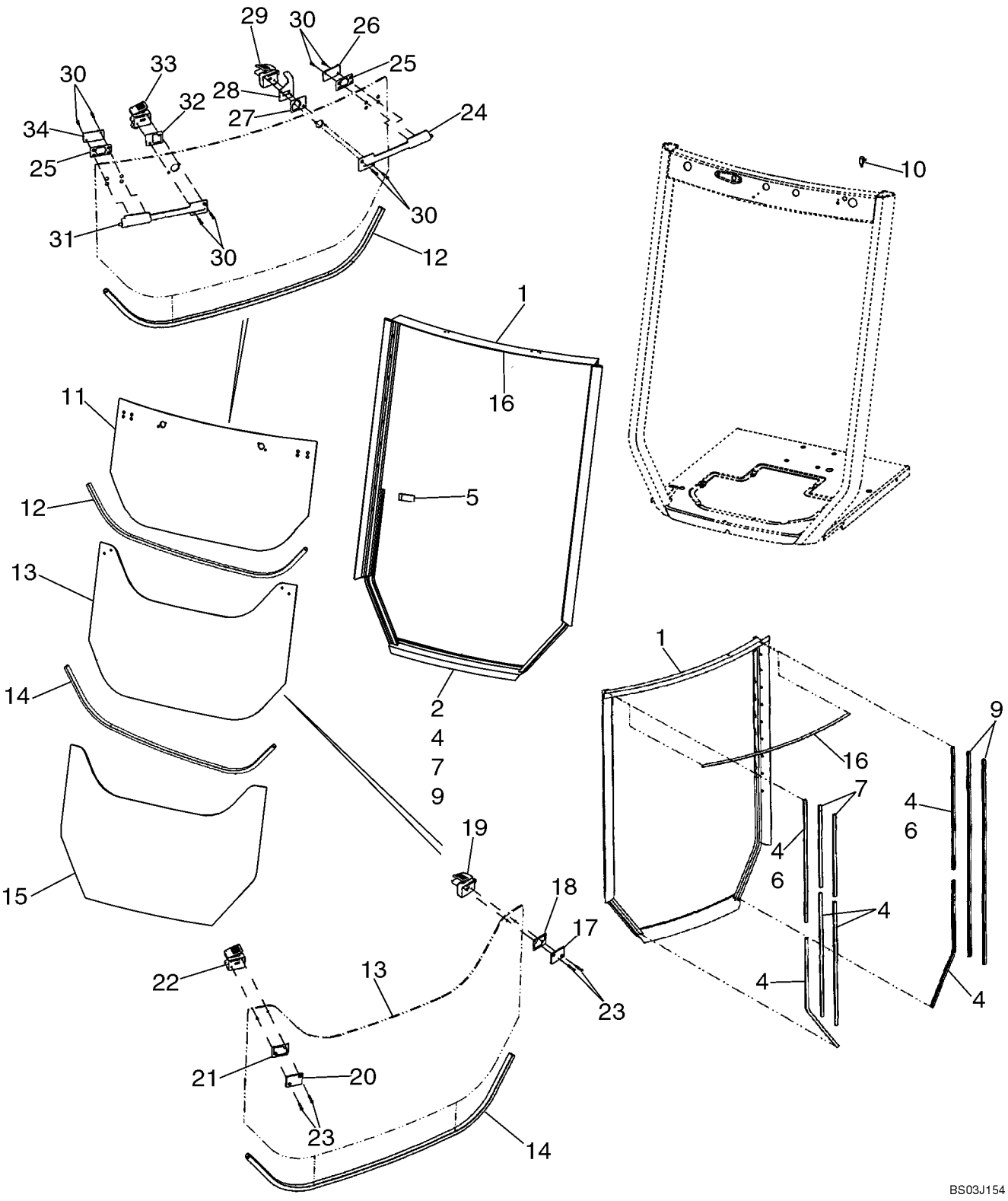

HTTP://WWW.MINNPARBACKHOEPARTS.COM



CABINA - VENTANA, TRASERA

| REF | FN | PART NUMBER | YR/SN | QTY | DESCRIPTION |
|---|---|---|---|---|---|
| 16 | | 400494A1 | | 1 | ANILLO DE CIERRE 1095 mm (43-1/8 in), Hollow Seal; Cut From 404231A1; Included in 411851A1 Seal Kit and 411850A1 Frame and Seal Kit |
| 17 | | 411917A1 | | 1 | PLACA DORSAL Kit; Includes 1 Each 402849A1 Plate, 411942A1 Gasket Pad |
| 18 | | 402847A1 | | 1 | PLACA PLASTICA Bushing |
| 19 | | 411909A1 | | 1 | PESTILLO Kit, Includes 1 Each 402868A1 Cover, 402867A1 Lever, 402833A1 Plunger, 402831A1 Housing, 402830A1 Bushing, 402870A1 Spring, 402869A1 Rivet, 402865A1 Bumper |
| 20 | | 411916A1 | | 1 | PLACA DORSAL Kit; Includes 1 Each 402848A1 Plate, 411942A1 Gasket Pad |
| 21 | | 402846A1 | | 1 | PLACA PLASTICA Bushing |
| 22 | | 411908A1 | | 1 | PESTILLO Kit, Includes 1 Each 402871A1 Cover, 402872A1 Lever, 402873A1 Plunger, 402832A1 Housing, 402830A1 Bushing, 402870A1 Spring, 402869A1 Rivet, 402865A1 Bumper |
| 23 | | 86989736 | | 8 | TORNILLO M5 x 30 Screw |
| 24 | | 411910A1 | | 1 | PESTILLO Kit, Bolt Assy; Includes 1 Each 402860A1 Housing, 402840A1 Gasket, 402837A1 Bolt, 402861A1 Insert, 402838A1 Rod, 402856A1 Spring |
| 25 | | 402843A1 | | 2 | PLACA PLASTICA |
| 26 | | 87423503 | | 1 | PLACA DORSAL Backing Plate |
| 27 | | 402844A1 | | 1 | PLACA PLASTICA |
| 28 | | 402836A1 | | 1 | PIEZA DE SOPORTE Rear Wiper Cutout Switch |
| 29 | | 411914A1 | | 1 | PESTILLO Kit, Includes 1 Each 402831A1 Housing, 402866A1 Bumper, 402830A1 Bushing, 402833A1 Plunger, 402867A1 Lever, 402868A1 Cover |
| 30 | | 409690A1 | | 8 | TORNILLO M5 x 16 |
| 31 | | 411911A1 | | 1 | PESTILLO Kit, Bolt Assy; Includes 1 Each 402863A1 Housing, 402851A1 Gasket, 402856A1 Spring, 402841A1 Bolt, 402861A1 Insert, 402838A1 Rod |
| 32 | | 402845A1 | | 1 | PLACA PLASTICA |

HTTP://WWW.MINNPARBACKHOEPARTS.COM

| 09-58 | | p3 | 01/04 |
|---|---|---|---|

CABINA - VENTANA, TRASERA

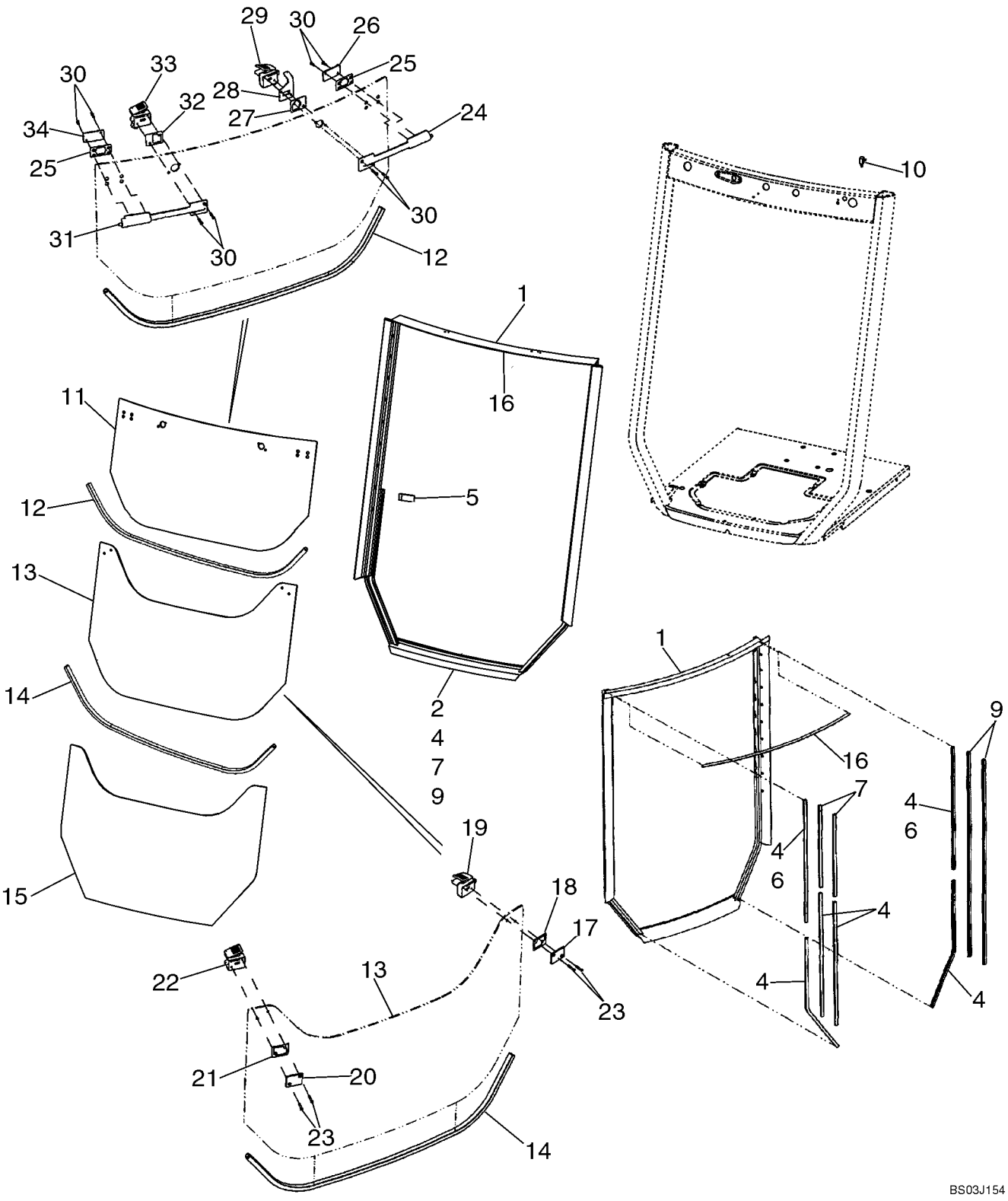

HTTP://WWW.MINNPARBACKHOEPARTS.COM



CABINA - VENTANA, TRASERA

| REF | FN | PART NUMBER | YR/SN | QTY | DESCRIPTION |
|---|---|---|---|---|---|
| 33 | | 411912A1 | | 1 | PESTILLO Kit, Includes 1 Each 402832A1 Housing, 402866A1 Bumper, 402830A1 Bushing, 402873A1 Plunger, 402872A1 Lever, 402871A1 Cover |
| 34 | | 87423502 | | 1 | PLACA DORSAL Backing Plate |
| | | 411844A1 | | 1 | JEUGO Upper Bolt Latch; Includes 1 Each 411910A1 Bolt Assy Ref 24, 87423502 Backing Plate Ref 34, 87423503 Backing Plate Ref 26, (2) 402843A1 Bushing late Ref 25 |
| | | 411845A1 | | 1 | JEUGO Upper Bolt Latch; Includes 1 Each 411911A1 Bolt Assy Ref 31, 87423502 Backing Plate Ref 34, 87423503 Backing Plate Ref 26, (2) 402843A1 Bushing Plate Ref 25 |
| | | 411846A1 | | 1 | JEUGO Mid Catch; Includes 1 Each 411908A1 Catch Kit Ref 22, 411916A1 Backing Plate Kit Ref 20, 402846A1 Bushing Plate Ref 21 |
| | | 411847A1 | | 1 | JEUGO Mid Catch; Includes 1 Each 411909A1 Catch Kit Ref 19, 411917A1 Backing Plate Ref 17, 402847A1 Bushing Plate Ref 18 |
| | | 411848A1 | | 1 | JEUGO Upper Catch; Includes 1 Each 411912A1 Upper Catch Kit Ref 33, 402845A1 Bushing Plate Ref 32 |
| | | 411849A1 | | 1 | JEUGO Upper Catch; Includes 1 Each 411914A1 Upper Catch Kit Ref 29, 402844A1 Bushing Plate Ref 27 |

HTTP://WWW.MINNPARBACKHOEPARTS.COM

| 09-59 | | p1 | 01/04 |
|---|---|---|---|

CABINA - ARANDELA, PARABRISAS

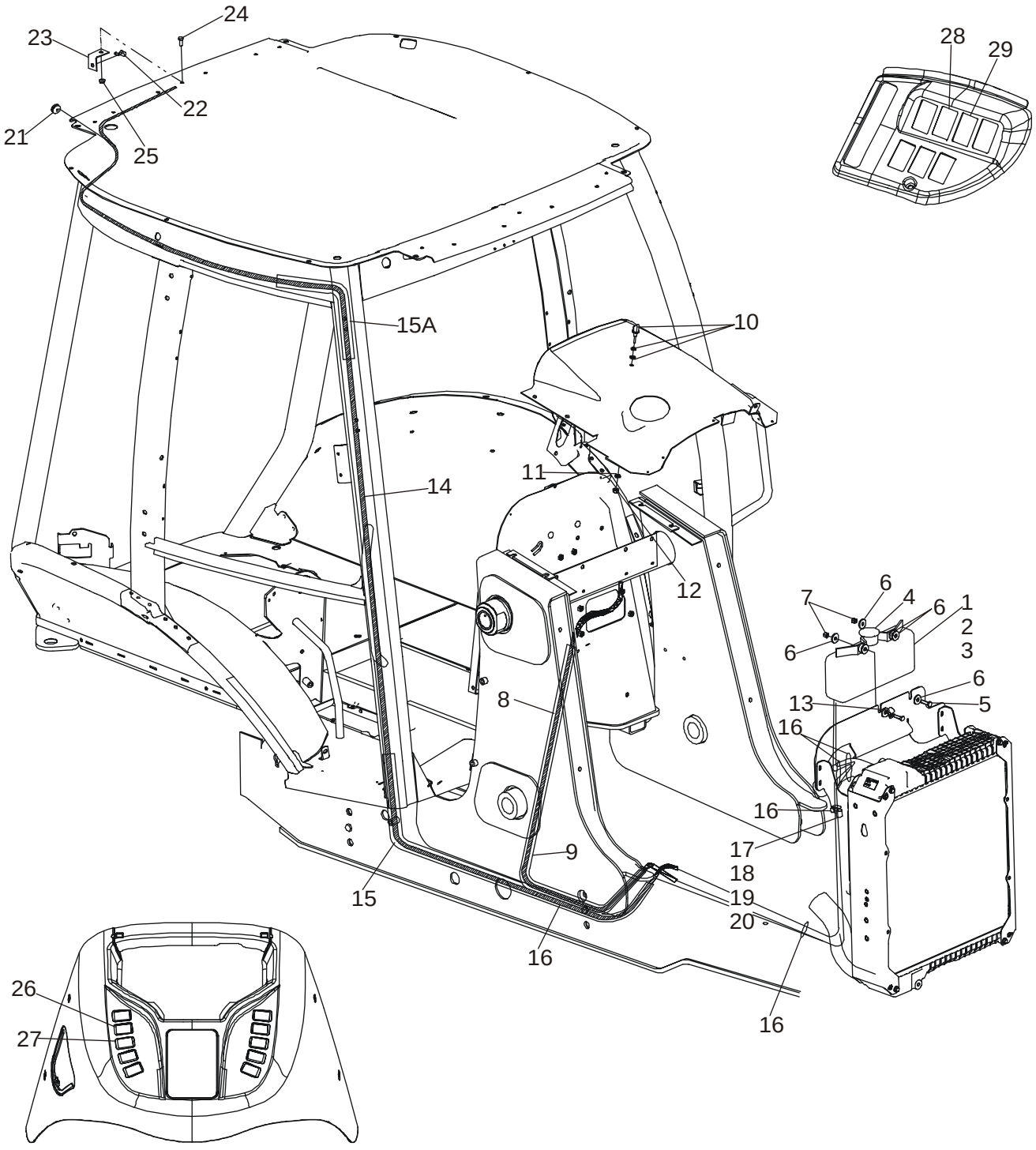

HTTP://WWW.MINNPARBACKHOEPARTS.COM



CABINA - ARANDELA, PARABRISAS

| REF | FN | PART NUMBER | YR/SN | QTY | DESCRIPTION |
|---|---|---|---|---|---|
| | | E46560 | | 1 | DEPÓSITO Incl. Ref 1 - 4 |
| 1 | | NSS | | 1 | NO SE REPARA SEPARADAM. RESERVOIR |
| 2 | | E47239 | | 2 | ANILLO DE CIERRE |
| 3 | | E47238 | | 2 | BOMBA MOTOR, 12 Volt |
| 4 | | E47240 | | 1 | TAPÓN Cap |
| 5 | | 614-8030 | | 2 | TORNILLO M8 x 30 |
| 6 | | 496-41041 | | 8 | ARANDELA 13/32 x 1-1/8 x 1/8 |
| 7 | | 832-10408 | | 2 | TUERCA M8 |
| 8 | | {87428316} | | 1 | HOSE 3150 mm (124-1/64 in); Front Washer; Cut From 1968141CX |
| 9 | | 386718A3 | | 1 | DEFENSA 1630 mm (64-3/16 in); Cut From 397155A2 |
| 10 | | 284154A1 | | 1 | INYECTOR Includes A Steel and Rubber Washer Which Are Not Serviced Separately |
| 11 | | 492-11038 | | 1 | ARANDELA DE FRENO 3/8 |
| 12 | | 425-106 | | 1 | TUERCA 3/8 |
| 13 | | 515-22159 | | 1 | COLLAR P, 16 mm |
| 14 | | 87423346 | | 1 | MANGA 6325 mm (249-1/64 in); Rear Washer; Cut From 1968141CX |
| 15 | | 408966A1 | | 1 | DEFENSA 2200 mm (86-5/8 in); Rear Washer Hose; Lower; Cut From 397155A2 |
| 15A | | 408965A1 | | 1 | DEFENSA 550 mm (21-11/16 in); Rear Washer Hose, Upper; Cut From 397155A2 |
| 16 | | L18337 | | 6 | BANDA 15 in |
| 17 | | D147383 | | 1 | SUJETADOR 5/8 Clamp |
| 18 | | 614-8016 | | 1 | TORNILLO M8 x 16 |
| 19 | | 895-11008 | | 1 | ARANDELA Flat |
| 20 | | 829-1408 | | 1 | TUERCA M8 |
| 21 | | 386722A1 | | 1 | PASACABLES Washer, Hose |
| 22 | | E43769 | | 1 | VAPORIZADOR Rear Nozzle; Includes Rubber Seal Which Is Not Serviced Separately |
| 23 | | 386720A1 | | 1 | PIEZA DE SOPORTE Rear Nozzle |
| 24 | | 614-8020 | | 1 | TORNILLO M8 x 20 |
| 25 | | 825-2408 | | 1 | TUERCA M8 |
| 26 | | 386785A1 | | 1 | CONTACTOR Front Wiper |
| 27 | | 386787A1 | | 1 | CONTACTOR Front Washer |

HTTP://WWW.MINNPARBACKHOEPARTS.COM

| 09-59 | | p2 | 01/04 |
|---|---|---|---|

CABINA - ARANDELA, PARABRISAS

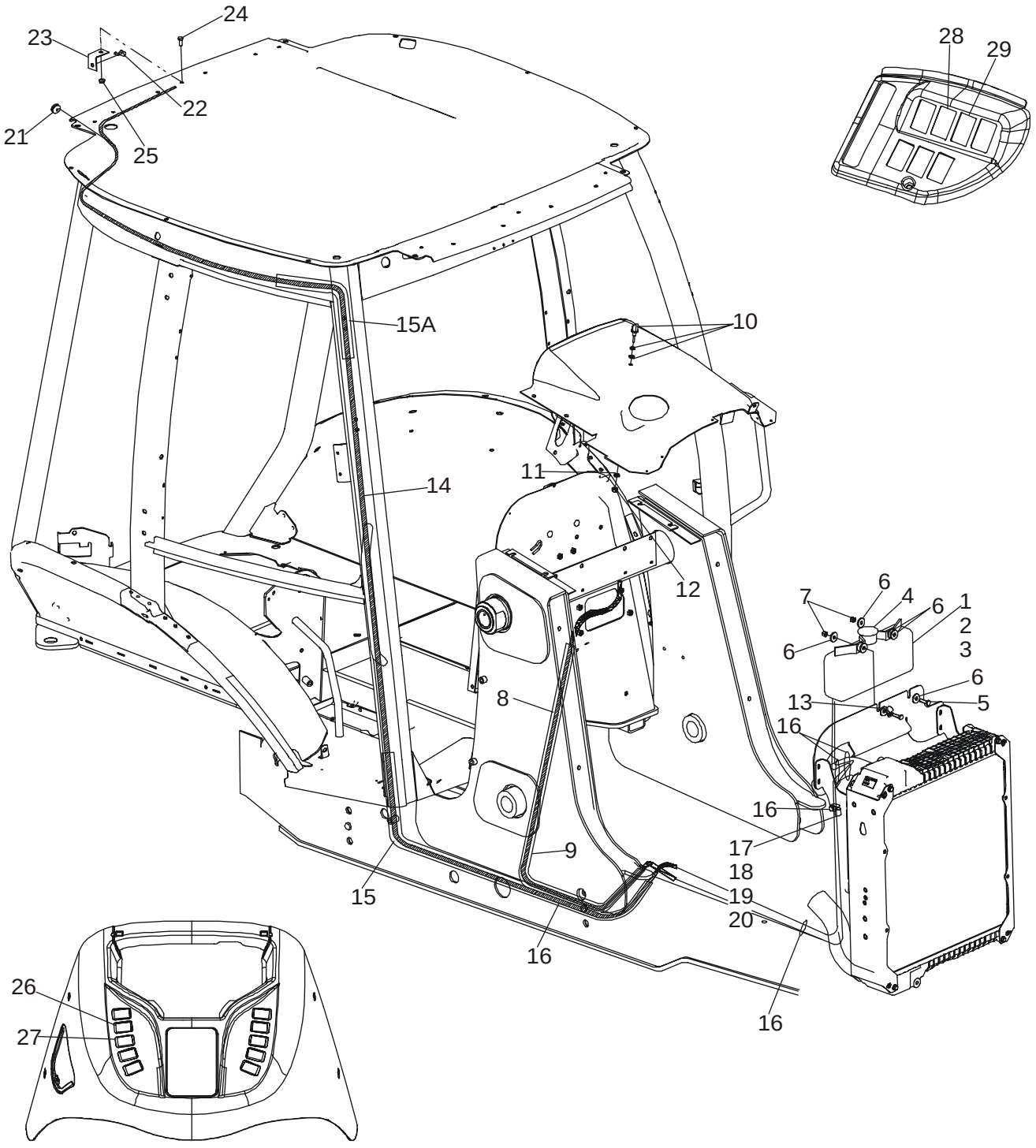

HTTP://WWW.MINNPARBACKHOEPARTS.COM



CABINA - ARANDELA, PARABRISAS

| REF | FN | PART NUMBER | YR/SN | QTY | DESCRIPTION |
|---|---|---|---|---|---|
| 28 | | 386786A1 | | 1 | CONTACTOR Rear Wiper |
| 29 | | 386788A1 | | 1 | CONTACTOR Rear Washer |

HTTP://WWW.MINNPARBACKHOEPARTS.COM



CABINA - LIMPIA PARABRISAS

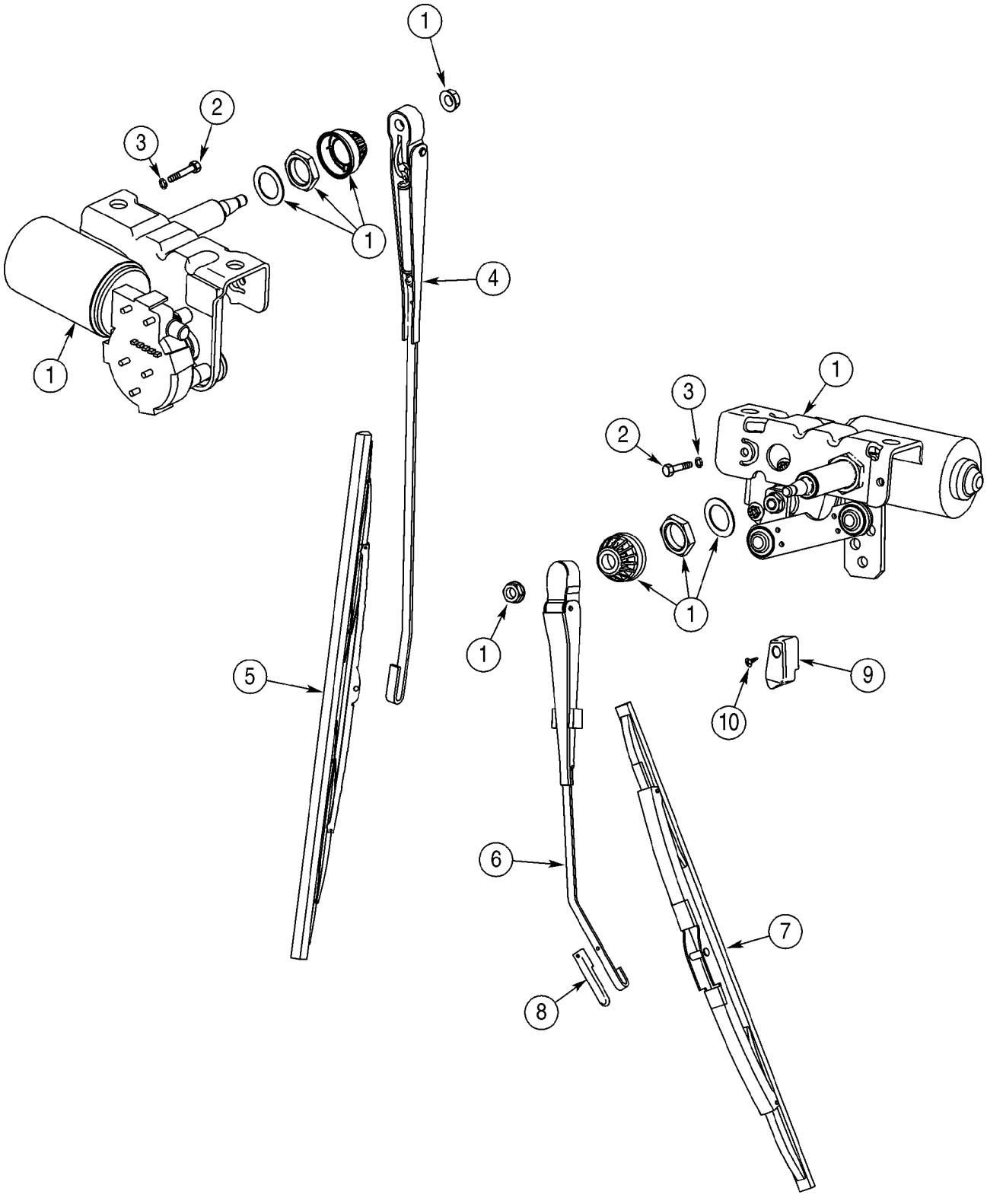

HTTP://WWW.MINNPARBACKHOEPARTS.COM



CABINA - LIMPIA PARABRISAS

| REF | FN | PART NUMBER | YR/SN | QTY | DESCRIPTION |
|---|---|---|---|---|---|
| 1 | | 450037A1 | | 2 | LIMPIA-PARABRISAS 12V |
| | | 404617A1 | | 1 | HAZ Front Lamps and Wiper |
| | | 396018A2 | | 1 | HAZ Cab, B-Post, Rear Wiper, Radio, Blower, Dome Lamp |
| | | 386786A1 | | 1 | CONTACTOR Rear Wiper |
| | | 386785A1 | | 1 | CONTACTOR Front Wiper |
| | | A187714 | | 1 | CONTACTOR Rear Wiper Cutout Switch |
| | | 495-11047 | | 2 | ARANDELA 15/32 x 59/64 x 1/16 |
| | | 425-147 | | 1 | TUERCA 7/16 |
| 2 | | 814-6050 | | 4 | TORNILLO M6 x 50 |
| 3 | | 892-11006 | | 4 | ARANDELA DE FRENO M6 |
| 4 | | D128745 | | 1 | BRAZO DE ESCOBILLAS Front Wiper |
| 5 | | 414426A1 | | 1 | ESCOBILLA Front Wiper |
| 6 | | 395136A1 | | 1 | BRAZO DE ESCOBILLAS Rear Wiper |
| 7 | | D128022 | | 1 | ESCOBILLA Rear Wiper |
| 8 | | 395033A1 | | 1 | SUJETADOR |
| 9 | | 395026A1 | | 1 | RAMPA Block |
| 10 | | 395389A1 | | 1 | TORNILLO M6 |

HTTP://WWW.MINNPARBACKHOEPARTS.COM

| 09-61 | | p1 | 01/04 |
|---|---|---|---|

REVESTIMIENTO DE LA CABINA - FILTRO, REJILLAS, LÁMPARA DEL TECHO

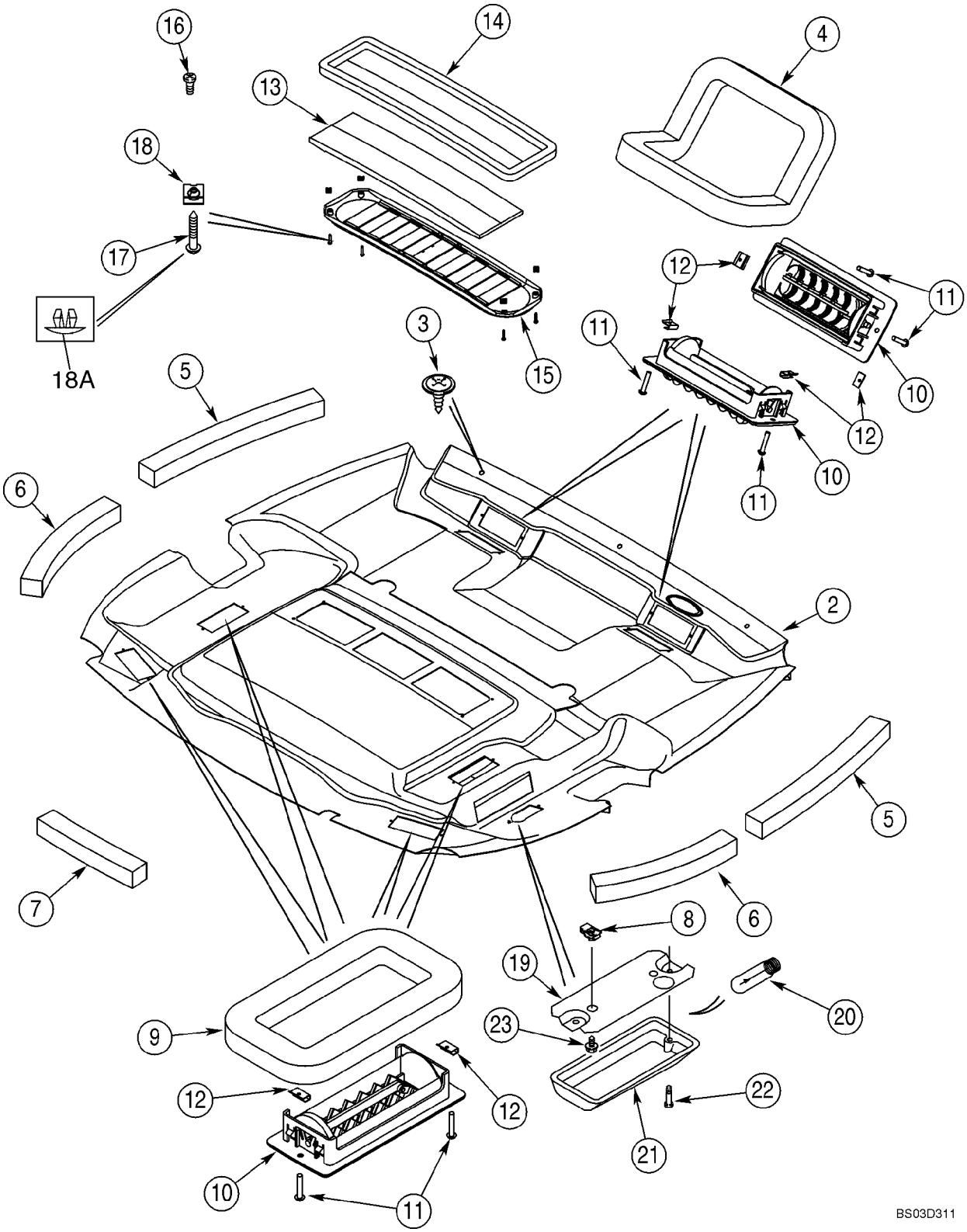

HTTP://WWW.MINNPARBACKHOEPARTS.COM



REVESTIMIENTO DE LA CABINA - FILTRO, REJILLAS, LÁMPARA DEL TECHO

| REF | FN | PART NUMBER | YR/SN | QTY | DESCRIPTION |
|---|---|---|---|---|---|
| | | 367705A6 | | 1 | REVESTIMIENTO/TECHO HEADLINER ASSY, Standard Interior; Incl. Ref 1, 4 - 18A |
| | | 360272A6 | | 1 | REVESTIMIENTO/TECHO HEADLINER ASSY, Deluxe Interior; Incl. Ref 2, 4 - 18A |
| 1 | | 367704A4 | | 1 | REVESTIMIENTO/TECHO Shell; Standard Interior; Not Illustrated |
| 2 | | 381696A5 | | 1 | REVESTIMIENTO/TECHO Shell With Foam and Fabric Covering; Deluxe Interior |
| 3 | | 396516A1 | | 3 | PUNZON VALVULA |
| 4 | | 368813A2 | | 2 | ANILLO DE CIERRE Defrost |
| 5 | | 379160A1 | | 2 | ANILLO DE CIERRE 494 mm; Foam; Adhesive Back; Front |
| 6 | | 379161A1 | | 2 | ANILLO DE CIERRE 379 mm; Foam; Adhesive Back; Rear |
| 7 | | 379209A1 | | 1 | ANILLO DE CIERRE 303 mm; Foam; Adhesive Back, Center, Rear |
| 8 | | 131-861 | | 2 | TUERCA No. 10; Dome Lamp |
| 9 | | 377194A1 | | 4 | ANILLO DE CIERRE Heat and Air |
| 10 | | 363883A1 | | 8 | RERILLA (CONJUNTO) |
| 11 | | 140-103 | | 16 | TORNILLO No. 6 x 3/4 |
| 12 | | 125749A1 | | 16 | TUERCA J-Type, No. 6 |
| 13 | | 377594A5 | | 1 | FILTRO Air Recirculation |
| 14 | | 381972A1 | | 1 | ANILLO DE CIERRE |
| 15 | | 369450A1 | | 1 | CALANDRIA Air Recirculation; Incl. Ref 16 |
| 16 | | 260-1436 | | 2 | TORNILLO |
| 17 | | 414600A1 | | 4 | TORNILLO |
| 18 | | 177269A1 | | 4 | TUERCA |
| 18A | | 409723A1 | | 4 | TAPÓN Plastic; Fits 5,5 mm Hole |
| | | 380719A2 | | 1 | FARO Dome Lamp; Incl. Ref 19 - 21 |
| 19 | | NSS | | 1 | NO SE REPARA SEPARADAM. Base |
| 20 | | N14466 | | 1 | AMPOLLA |
| 21 | | NSS | | 1 | NO SE REPARA SEPARADAM. Lens; With Switch |
| 22 | | 440-1088 | | 2 | TORNILLO No. 8 x 1/2 in; Base To Lens |
| 23 | | 281-54512 | | 2 | TORNILLO No. 10 x 3/4; Lamp To Headliner |

HTTP://WWW.MINNPARBACKHOEPARTS.COM

| 09-62 | | p1 | 01/04 |
|---|---|---|---|

CABINA - FILTRO, AIRE

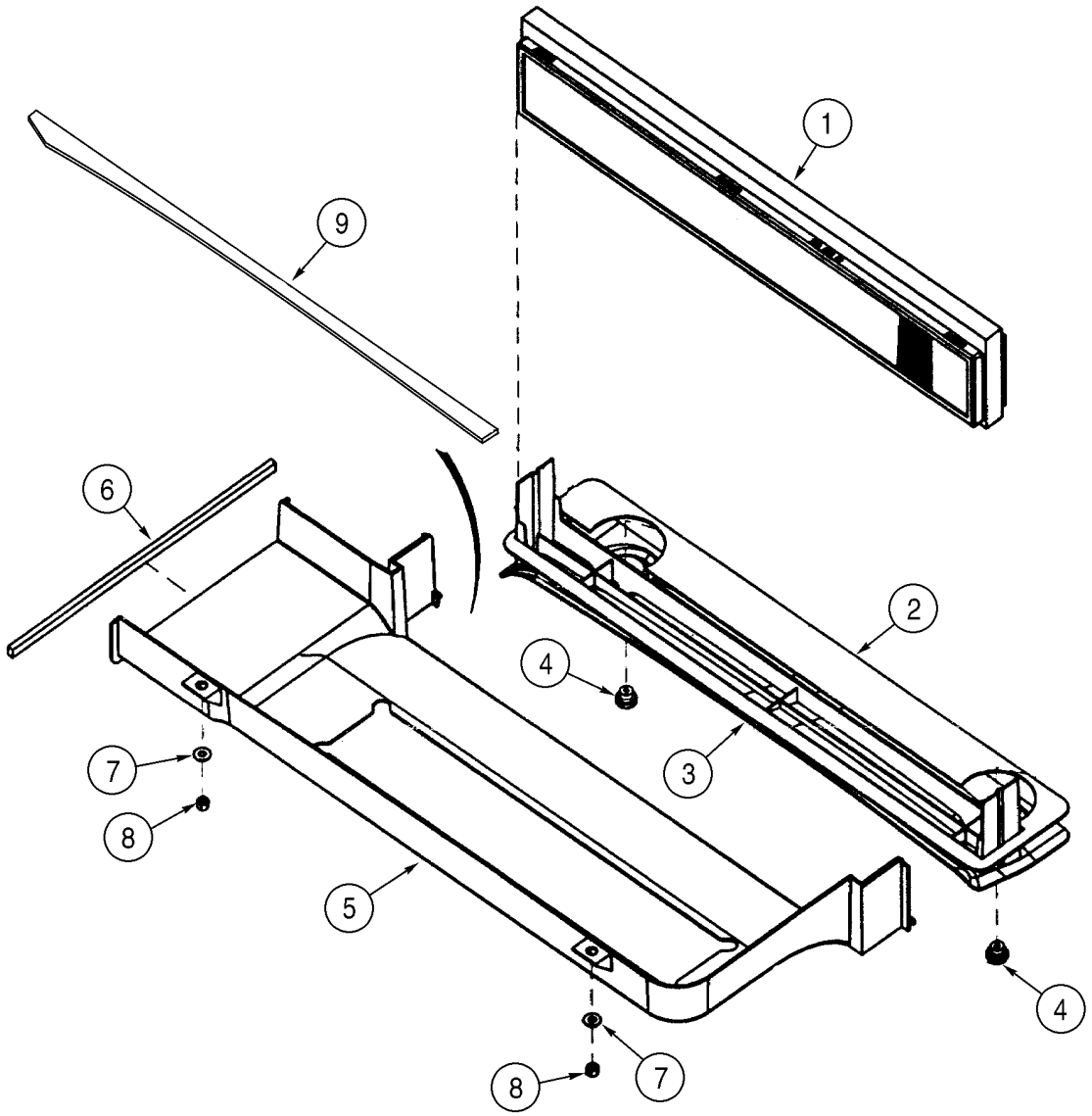


BS00F073

HTTP://WWW.MINNPARBACKHOEPARTS.COM



CABINA - FILTRO, AIRE

| REF | FN | PART NUMBER | YR/SN | QTY | DESCRIPTION |
|---|---|---|---|---|---|
| 1 | | 360260A2 | | 1 | ELEMENTO DE FILTRADO Includes Foam Seal |
| 2 | | 382770A2 | | 1 | ANILLO DE CIERRE |
| 3 | | 360261A1 | | 1 | BANDEJA |
| 4 | | 398738A1 | | 2 | PLACA Fresh Air Duct Retainer |
| 5 | | 360252A2 | | 1 | CONDUCTO Fresh Air Intake |
| 6 | | 368990A1 | | 1 | ANILLO DE CIERRE |
| 7 | | 895-15008 | | 2 | ARANDELA 9 x 20 x 1,6 mm |
| 8 | | 832-10408 | | 2 | TUERCA M8 |
| 9 | | 403271A1 | | 1 | ANILLO DE CIERRE 882 mm; Adhesive Back |

HTTP://WWW.MINNPARBACKHOEPARTS.COM

| 09-63 | | p1 | 01/04 |
|---|---|---|---|

CABINA - ALOJAMIENTO DEL SOPLADOR, CONDUCTOS DE VENTILACIÓN, TUBOS DE DRENADO

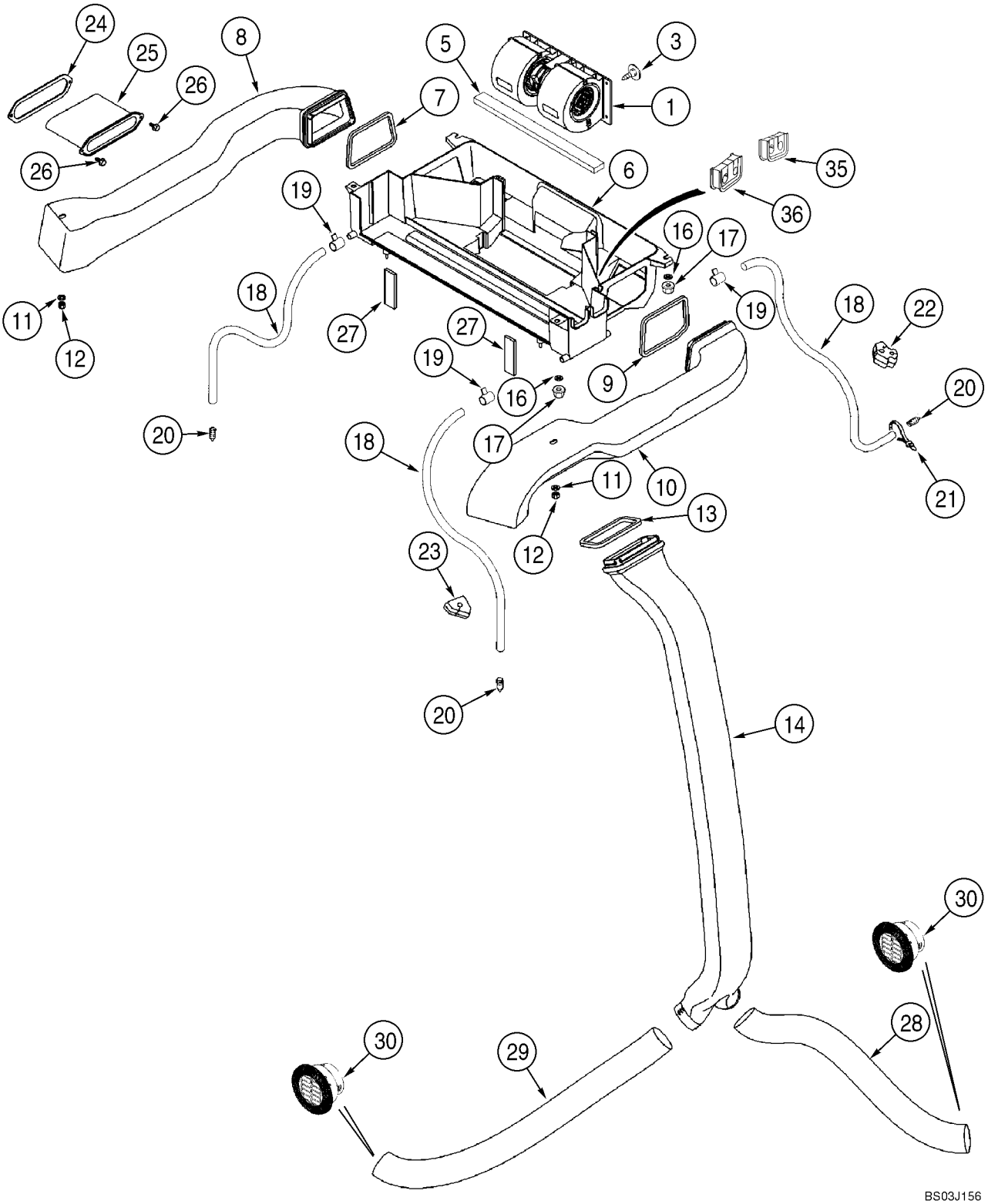

HTTP://WWW.MINNPARBACKHOEPARTS.COM



CABINA - ALOJAMIENTO DEL SOPLADOR, CONDUCTOS DE VENTILACIÓN, TUBOS DE DRENADO

| REF | FN | PART NUMBER | YR/SN | QTY | DESCRIPTION |
|---|---|---|---|---|---|
| 1 | | {377221A2} | | 1 | BLOWER; Component Parts Not Serviced Separately; For Blower Switch, See Figure 04-09 |
| 3 | | 182697A1 | | 1 | GRAPA |
| 5 | | 181981A1 | | 1 | JUNTA HERMETICA 6 x 20 x 355 mm; Adhesive Back; Under Blower |
| 6 | | 360251A3 | | 1 | CUBIERTA PRINCIPAL Heat and Air; Includes 373995A1 |
| | | 373995A1 | | 2 | INTRODUCTOR |
| 7 | | 368805A1 | | 1 | ANILLO DE CIERRE Left-Hand Duct |
| 8 | | 360253A3 | | 1 | CONDUCTO Left-Hand |
| 9 | | 369249A1 | | 1 | ANILLO DE CIERRE Right-Hand Duct |
| 10 | | 360254A3 | | 1 | CONDUCTO Right-Hand |
| 11 | | 895-15010 | | 2 | ARANDELA 11 x 24 x 2 mm |
| 12 | | 832-10408 | | 2 | TUERCA M8 |
| 13 | | 368807A1 | | 1 | ANILLO DE CIERRE |
| 14 | | 360255A1 | | 1 | CONDUCTO |
| 16 | | 895-15008 | | 4 | ARANDELA 9 x 20 x 1,6 mm |
| 17 | | 832-10408 | | 4 | TUERCA M8 |
| 18 | | 368821A1 | | 4 | MANGA 3050 mm; Drain |
| 19 | | 214-1406 | | 4 | COLLAR 7/16 - 25/32 |
| 20 | | 365789A1 | | 4 | GRIFO DE VACIADO Drain |
| 21 | | L18337 | | 2 | BANDA 15 in |
| 22 | | 383794A2 | | 2 | TAPÓN |
| 23 | | 383795A2 | | 2 | TAPÓN |
| 24 | | 381113A2 | | 1 | ANILLO DE CIERRE |
| 25 | | 381111A2 | | 1 | MANGUITO |
| 26 | | 281-18712 | | 2 | TORNILLO 1/4 st x 3/4 |
| 27 | | 377230A3 | | 2 | ANILLO DE CIERRE 16 mm thk; Fresh Air Duct To Ventilation Housing |
| 28 | | 375392A1 | | 1 | MANGUITO 750 mm; Cut From 236559A1 |
| 29 | | 368818A1 | | 1 | MANGUITO 1015 mm; Cut From 236559A1 |
| 30 | | 398986A1 | | 2 | RESPIRADERO |
| 35 | | 403225A1 | | 1 | ANILLO DE CIERRE Heater Tubes At Housing |
| 36 | | 403193A1 | | 1 | ANILLO DE CIERRE Air Conditioning Tubes At Housing |

HTTP://WWW.MINNPARBACKHOEPARTS.COM

| 09-64 | | p1 | 01/04 |
|---|---|---|---|

CABINA - CALENTADOR

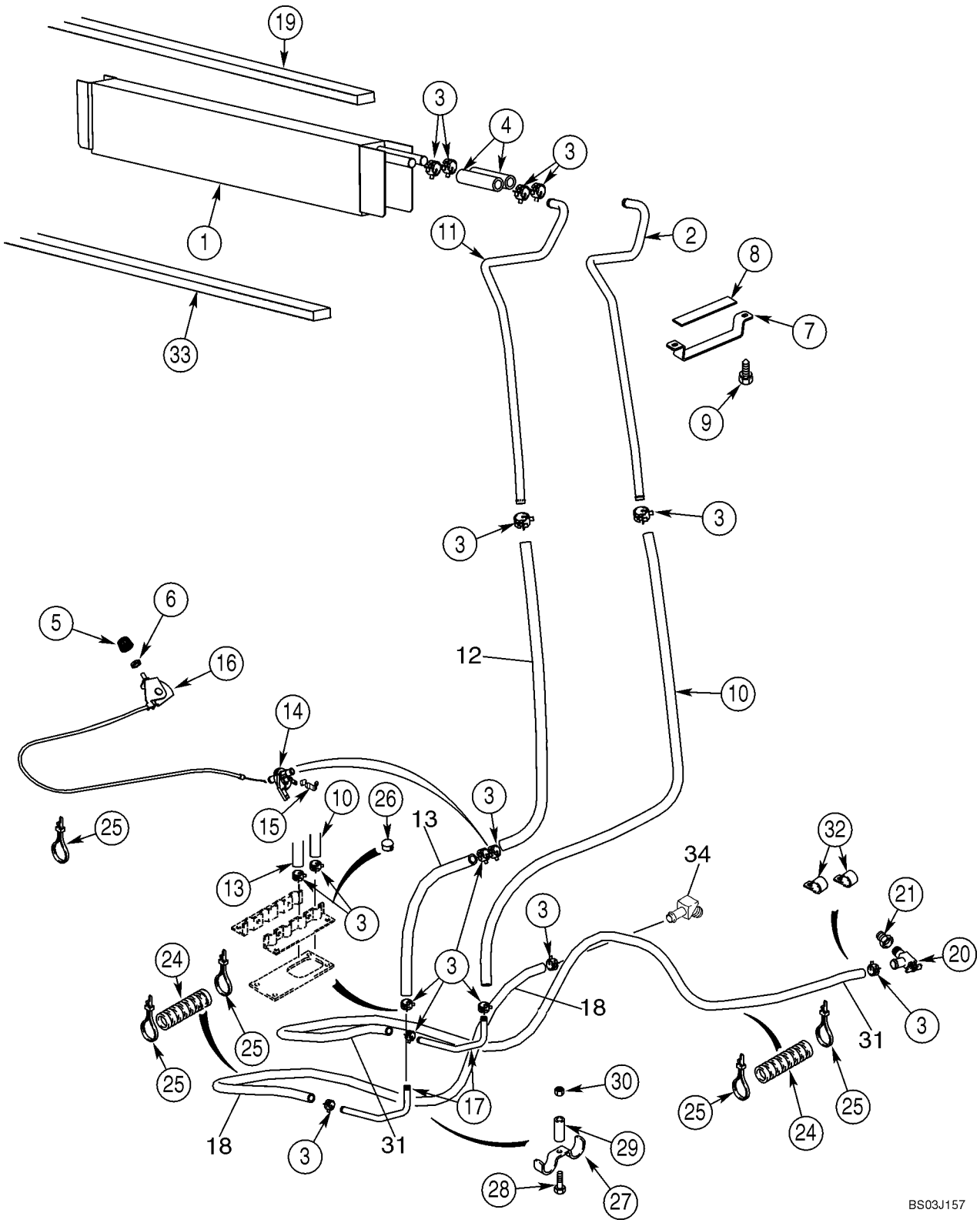

HTTP://WWW.MINNPARBACKHOEPARTS.COM



CABINA - CALENTADOR

| REF | FN | PART NUMBER | YR/SN | QTY | DESCRIPTION |
|---|---|---|---|---|---|
| 1 | | 360262A2 | | 1 | INTERCAMBIADOR/CALOR Core, Mounts In Blower Housing Box; Seal Mounts On Top Of Core On Models With Heat Only |
| 2 | | 400282A1 | | 1 | TUBO Front |
| 3 | | 1954736C1 | | 14 | COLLAR No. 24 |
| 4 | | 377222A1 | | 2 | MANGA 100 mm; Cut From 97252CX |
| 5 | | 400379A1 | | 1 | PLACA 23 mm |
| 6 | | A42561 | | 1 | TUERCA |
| 7 | | 388762A1 | | 1 | PIEZA DE SOPORTE |
| 8 | | 389402A1 | | 1 | ANILLO DE CIERRE |
| 9 | | 281-14520 | | 2 | TORNILLO AUTOROSCANTE With Washer, No. 10 x 1,25 |
| 10 | | 368801A2 | | 1 | MANGA 1361 mm; Cut From 97252CX |
| 11 | | 400280A1 | | 1 | TUBO Rear |
| 12 | | 448428A1 | | 1 | TUBO (METROS) 1175 mm (46-1/4 in); Heater Valve To Core; Cut From 97252CX |
| 13 | | 448429A1 | | 1 | TUBO (METROS) 150 mm (5-29/32 in) Floor To Valve; Cut From 97252CX |
| 14 | | 1331087C1 | | 1 | VALVULA Heater Control |
| 15 | | 1954626C1 | | 1 | COLLAR |
| 16 | | 1999666C1 | | 1 | MANDO Heater; Includes 1999667C1, 1999668C1 |
| | | 1999667C1 | | 1 | MANDO |
| | | 1999668C1 | | 1 | CABLE |
| 17 | | 190675A1 | | 2 | CUELLO DE CARGA |
| 18 | | {377232A2} | | 1 | HOSE 2650 mm (104-21/64 in); Heater; Return To Water Pump; Cut From 97252CX |
| 19 | | 406287A1 | | 1 | ANILLO DE CIERRE 19 x 19 x 736 mm; Location Of Seal On Models With Heat Only; On Models With Air Conditioning, Seal Is Located On Evaporator Core |
| 20 | | 301803R1 | | 1 | VALVULA DE CIERRE |
| 21 | | 221-89 | | 1 | UNION REDUCCION 1/2 x 3/8; Replaces Existing Plug |
| 24 | | D132982 | | 6 | TUBO AISLANTE Sleeve, 400 mm (15-3/4 in) |
| 25 | | L18337 | | 6 | BANDA 15 in |
| 26 | | 353-410 | | 2 | TAPÓN 7/8; Models With Heat Only |

HTTP://WWW.MINNPARBACKHOEPARTS.COM

| 09-64 | | p2 | 01/04 |
|---|---|---|---|

CABINA - CALENTADOR

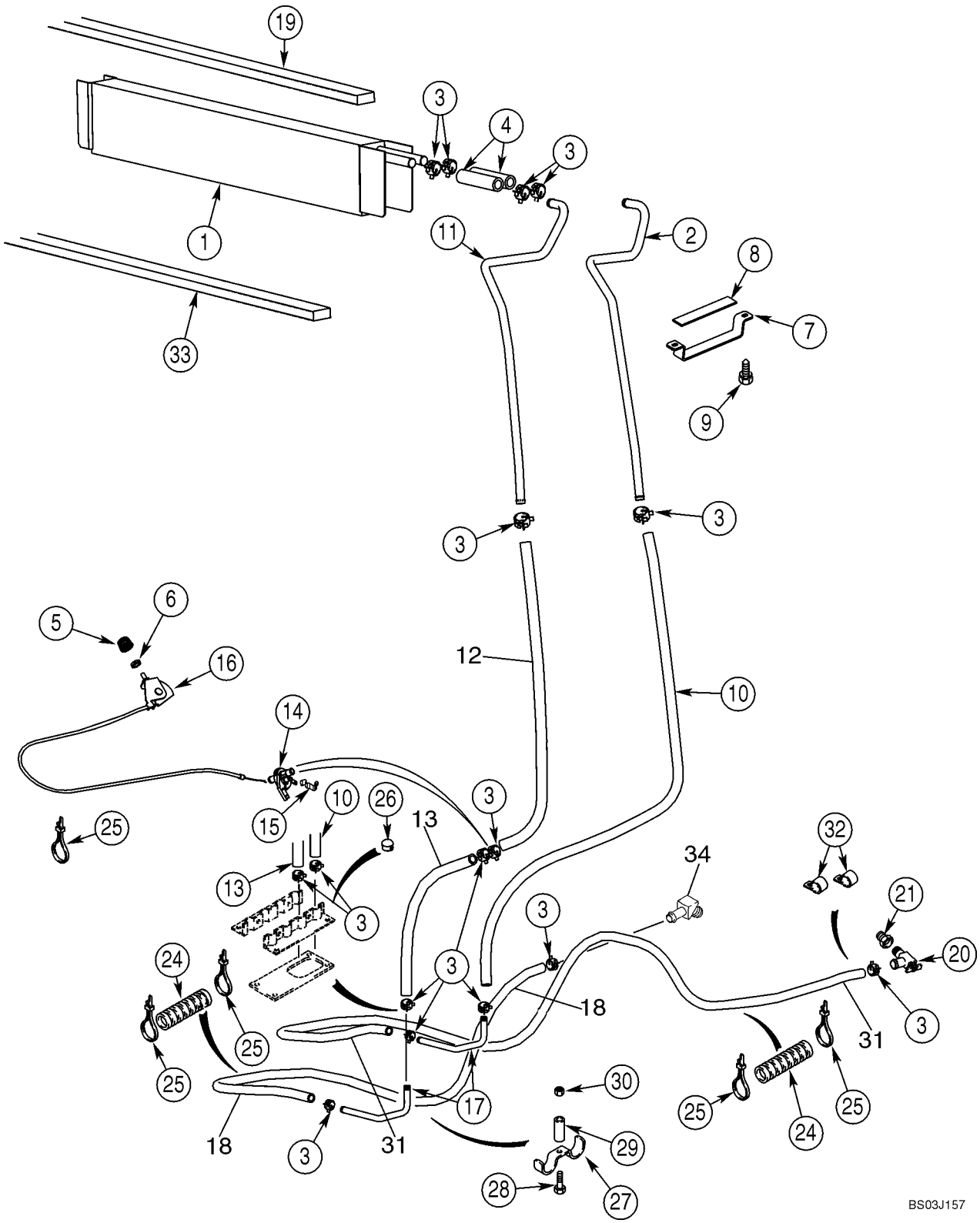

HTTP://WWW.MINNPARBACKHOEPARTS.COM



CABINA - CALENTADOR

| REF | FN | PART NUMBER | YR/SN | QTY | DESCRIPTION |
|---|---|---|---|---|---|
| 27 | | D143427 | | 1 | COLLAR |
| 28 | | 614-8030 | | 1 | TORNILLO M8 x 30 |
| 29 | | D143417 | | 1 | ESPACIADOR |
| 30 | | 825-2408 | | 1 | TUERCA M8 |
| 31 | | {377233A2} | | 1 | HOSE 1830 mm (72-3/64 in); Heater; Inlet From Engine; Cut From 97252CX |
| 32 | | D88052 | | 2 | COLLAR |
| 33 | | 1987096C1 | | 1 | PLACA, GRANDE Seal, Below Heater Core; Location Of Seal On Models With Heat Only; On Models With Air Conditioning, Seal Is Located At Rear Of Housing |
| 34 | | 217-144 | | 1 | CODO 45 deg, 5/8 stm x 1/2 NPTF |

HTTP://WWW.MINNPARBACKHOEPARTS.COM

| 09-65 | | p1 | 01/04 |
|---|---|---|---|

CABINA - TUBOS DE AIRE ACONDICIONADO, NÚCLEO DEL EVAPORADOR

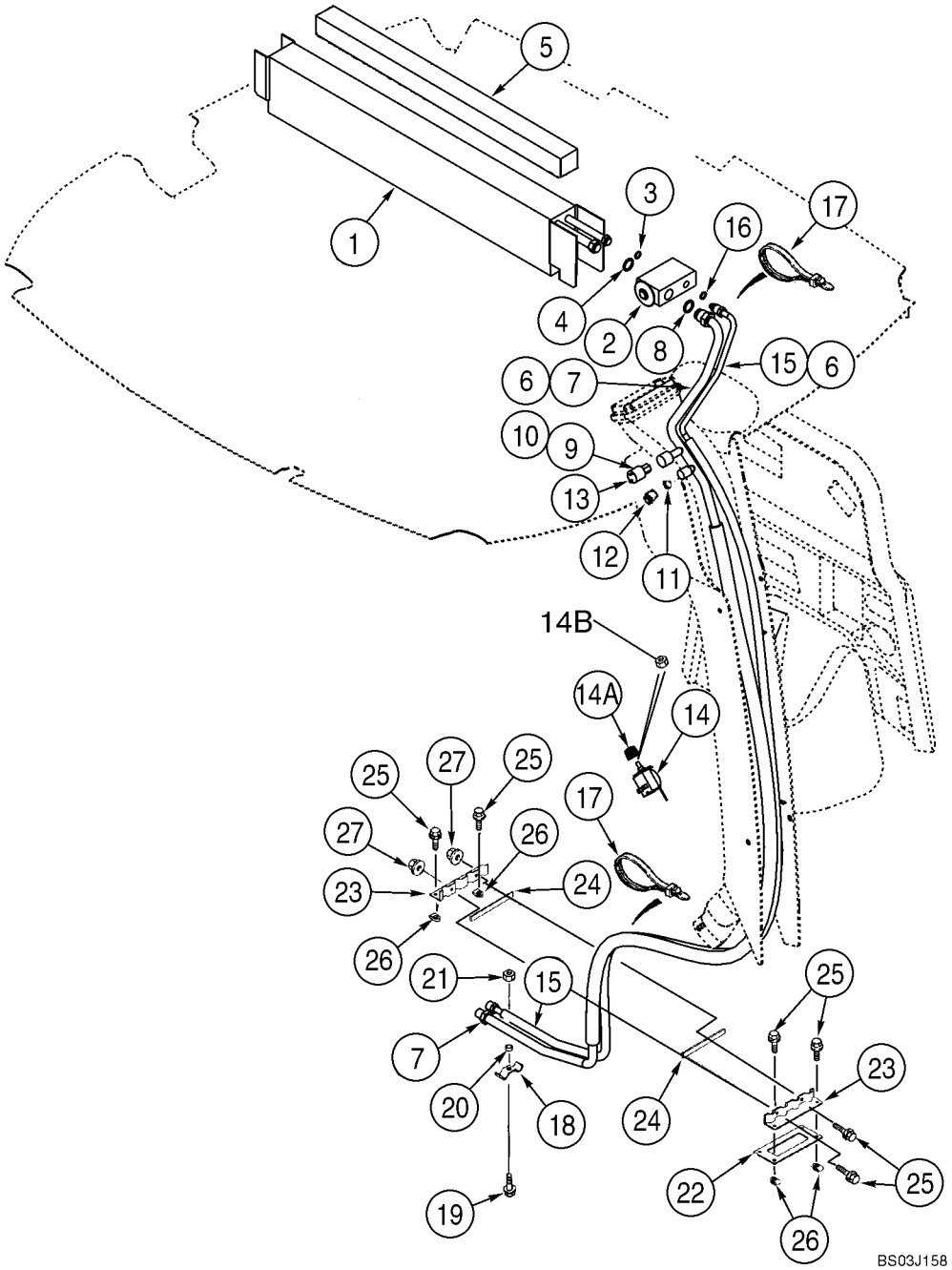

HTTP://WWW.MINNPARBACKHOEPARTS.COM



CABINA - TUBOS DE AIRE ACONDICIONADO, NÚCLEO DEL EVAPORADOR

| REF | FN | PART NUMBER | YR/SN | QTY | DESCRIPTION |
|---|---|---|---|---|---|
| | | 363832A5 | | 1 | EVAPORADOR Incl. Ref 1 - 4; Not Available as An Assembly; Order Components |
| 1 | | 360263A4 | | 1 | EVAPORADOR Core |
| 2 | | 386535A1 | | 1 | VALVULA |
| 3 | | 128484A1 | | 1 | JUNTA HERMETICA 7/16 ID x 1/16 |
| 4 | | 128485A1 | | 1 | JUNTA HERMETICA 9/16 ID x 1/16 |
| | | 83822C1 | | 3 | CINTA Insulation; 63,5 (2-1/2 in) x 610 mm (24-1/64 in) |
| 5 | | 406287A1 | | 1 | ANILLO DE CIERRE 19 x 19 x 736 mm; Adhesive Back; Models With Heat and Air, Locate Seal On Top Of Core |
| | | 345-621 | | 2 | CINTA 2 x 6 in |
| 7 | | 360257A1 | | 1 | FUNDA DE PLÁSTICO Suction; Incl. Ref 8 - 12 |
| 8 | | 128485A1 | | 1 | JUNTA HERMETICA 9/16 ID x 1/16 |
| 9 | | 128483A1 | | 1 | JUNTA HERMETICA 5/16 ID x 1/16; Valve Core |
| 10 | | 1250594C1 | | 1 | NÚCLEO Low Pressure Switch |
| 11 | | 1250594C1 | | 1 | NÚCLEO Low Side Service Port |
| 12 | | 122553A1 | | 1 | TAPON DEL DEPOSITO |
| 13 | | 122579A1 | | 1 | CONTACTOR Low Pressure |
| 14 | | 370381A1 | | 1 | CONTACTOR Temperature Control; Air Conditioning |
| 14A | | 400379A1 | | 1 | PLACA 23 mm |
| 14B | | A42561 | | 1 | TUERCA 7/16 |
| 15 | | 360256A1 | | 1 | FUNDA DE PLÁSTICO Pressure; Incl. Ref 16 |
| 16 | | 128483A1 | | 1 | JUNTA HERMETICA 5/16 ID x 1/16 |
| 17 | | L18337 | | 4 | BANDA 15 in |
| 18 | | D143427 | | 1 | COLLAR |
| 19 | | 614-8030 | | 1 | TORNILLO M8 x 30 |
| 20 | | D143417 | | 1 | ESPACIADOR |
| 21 | | 825-2408 | | 1 | TUERCA M8 |
| 22 | | 124011A1 | | 1 | JUNTA HERMETICA |
| 23 | | 123980A1 | | 2 | BRIDA CLAMP, Heater and Air Conditioning Hoses |
| 24 | | 181979A1 | | 2 | JUNTA HERMETICA |
| 25 | | 845-6020 | | 6 | TORNILLO M6 x 20 |
| 26 | | 833-40406 | | 4 | TUERCA M6 |
| 27 | | 825-2406 | | 2 | TUERCA M6 |

HTTP://WWW.MINNPARBACKHOEPARTS.COM

| 09-66 | | p1 | 01/04 |
|---|---|---|---|

CABINA - AIRE ACONDICIONADOR, CONDENSADOR, RECIBIDOR-SECADOR

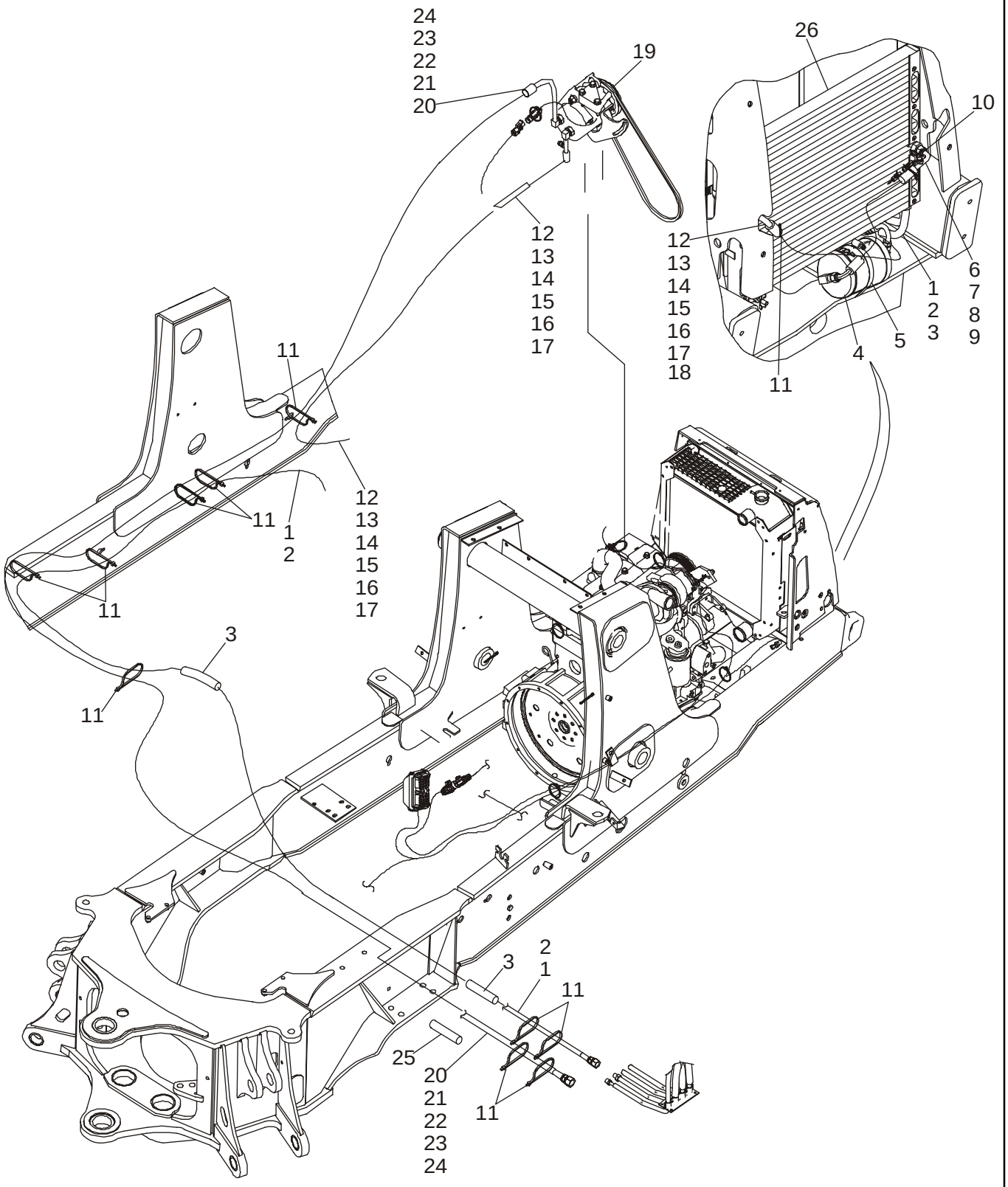

HTTP://WWW.MINNPARBACKHOEPARTS.COM



CABINA - AIRE ACONDICIONADOR, CONDENSADOR, RECIBIDOR-SECADOR

| REF | FN | PART NUMBER | YR/SN | QTY | DESCRIPTION |
|---|---|---|---|---|---|
| 1 | | 87421777 | | 1 | MANGUERA (CONJUNTO) 2730 mm (107-1/2 in), Receiver Drier to Cab; Incl. Ref 2 |
| 2 | | 128483A1 | | 2 | JUNTA HERMETICA 5/16 ID x 1/16 |
| 3 | | 191704A1 | | 3 | TUBO AISLANTE 460 mm (18-1/8 in) |
| 4 | | 86984155 | | 1 | RECEPTOR-DESHIDRAT. Receiver-Drier |
| 5 | | 214-1464 | | 2 | COLLAR No. 64 |
| 6 | | 87421775 | | 1 | MANGUERA (CONJUNTO) 431 mm (17 in), Condenser to Drier; Incl. Ref 7 - 9 |
| 7 | | 128483A1 | | 3 | JUNTA HERMETICA 5/16 ID x 1/16 |
| 8 | | 1250594C1 | | 1 | NÚCLEO Valve, High Pressure Switch |
| 9 | | 122081A1 | | 1 | CONEXION Switch |
| 10 | | 232948A1 | | 1 | INTERRUPTOR DE PRESION High Pressure |
| 11 | | L18337 | | 15 | BANDA |
| 12 | | 87421776 | | 1 | MANGUERA (CONJUNTO) 1542 mm (60-3/4 in), Compressor to Condenser; Incl. Ref 13 - 17 |
| 13 | | 128484A1 | | 1 | JUNTA HERMETICA 7/16 D x 1/16 |
| 14 | | 128485A1 | | 1 | JUNTA HERMETICA 9/16 ID x 1/16 |
| 15 | | 1999926C1 | | 1 | TUBO, BOQUILLA |
| 16 | | 1250594C1 | | 1 | NÚCLEO Valve |
| 17 | | {122554C1} | | 1 | Sealing Cap |
| 18 | | 193913A1 | | 1 | PROTECTOR Guard, 1200 mm (47-1/4 in) |
| 19 | | 87430122 | | 1 | COMPRESOR ACOND. Component Parts Not Serviced Separately, See Figure 09-67 for Mounting |
| 20 | | 87427294 | | 1 | MANGUERA (CONJUNTO) 2240 mm (88-3/16 in), Cab to Compressor; Incl. Ref 21 - 24 |
| 21 | | 128485A1 | | 2 | JUNTA HERMETICA 9/16 ID x 1/16 |
| 22 | | 1999927C1 | | 1 | TUBO, BOQUILLA |
| 23 | | 1250594C1 | | 1 | NÚCLEO Valve |
| 24 | | 122553A1 | | 1 | TAPON DEL DEPOSITO Sealing |
| 25 | | 191703A1 | | 2 | TUBO AISLANTE Sleeve, 400 mm (15-3/4 in) |
| 26 | | 87417329 | | 1 | CONDENSADOR Condenser |
| | | 895-11008 | | 4 | ARANDELA 9 x 16 x 1,6 mm |
| | | 829-1408 | | 4 | TUERCA M8 |

HTTP://WWW.MINNPARBACKHOEPARTS.COM

| 09-67 | | p1 | 01/04 |
|---|---|---|---|

CABINA - COMPRESOR DEL AIRE ACONDICIONADO

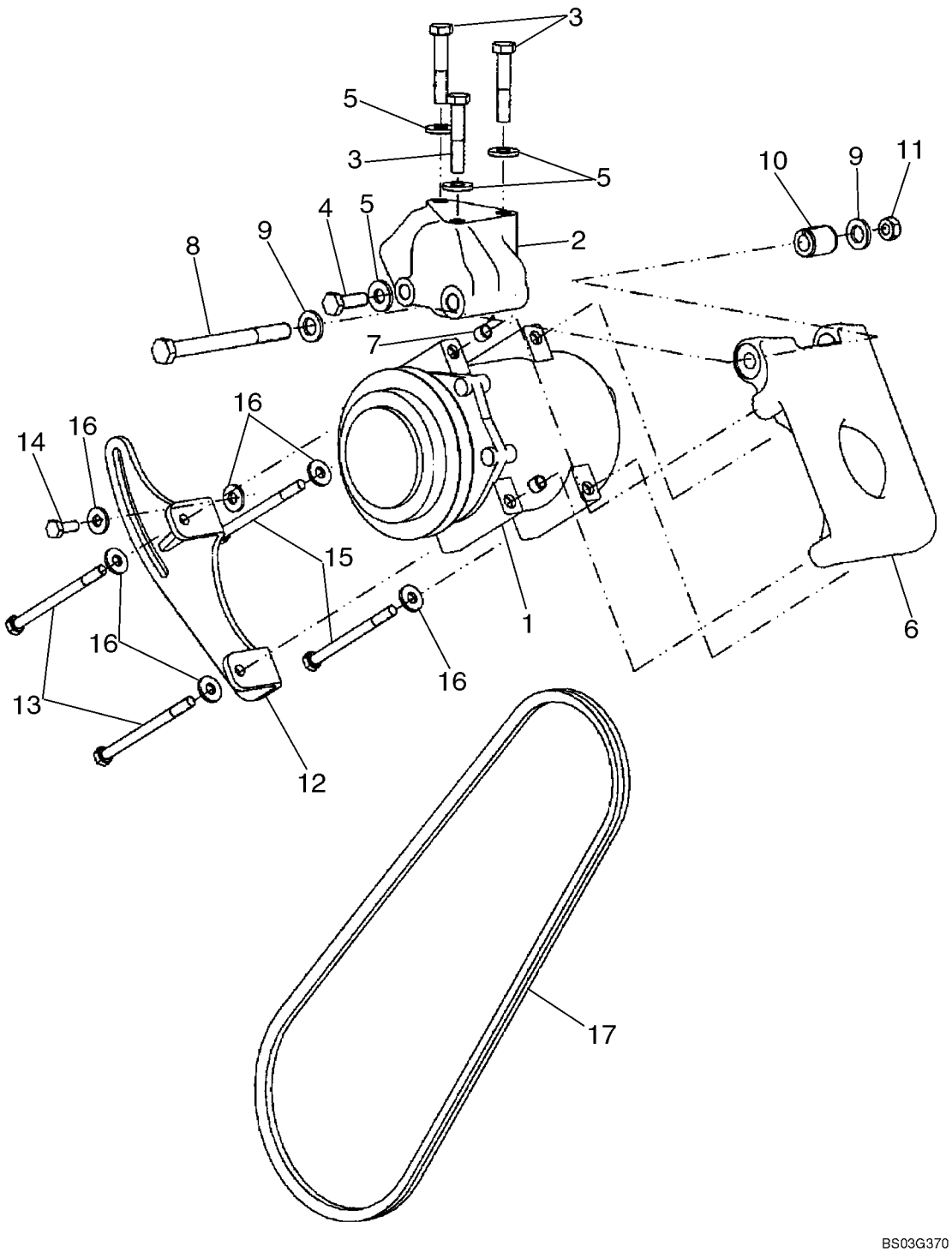

HTTP://WWW.MINNPARBACKHOEPARTS.COM



CABINA - COMPRESOR DEL AIRE ACONDICIONADO

| REF | FN | PART NUMBER | YR/SN | QTY | DESCRIPTION |
|---|---|---|---|---|---|
| 1 | | 87430122 | | 1 | COMPRESOR ACOND. Compressor Component Parts Not Serviced Separately |
| 2 | | 87429950 | | 1 | SOPORTE Mounting Support |
| 3 | | 814-10055 | | 3 | TORNILLO M10 x 55 |
| 4 | | 614-10030 | | 1 | TORNILLO M10 x 30 |
| 5 | | 896-15010 | | 4 | ARANDELA 11 x 24 x 3mm |
| 6 | | 87429948 | | 1 | SOPORTE |
| 7 | | 87429952 | | 2 | ANILLO |
| 8 | | 814-12130 | | 1 | TORNILLO M12 x 130 |
| 9 | | 896-11012 | | 2 | ARANDELA 13,5 x 24 x 3 mm |
| 10 | | 87429951 | | 1 | SEPARADOR Pivot |
| 11 | | 829-1410 | | 1 | TUERCA M10 |
| 12 | | 87429949 | | 1 | PIEZA DE APOYO |
| 13 | | 814-8110 | | 2 | TORNILLO M8 x 110 |
| 14 | | 614-8020 | | 1 | TORNILLO M8 x 20 |
| 15 | | 814-8100 | | 2 | TORNILLO M8 x 100 |
| 16 | | 896-15008 | | 6 | ARANDELA 9 x 21 x 2,5 mm |
| 17 | | 87429954 | | 1 | COURROIE DE TRANSMISS. V-Belt |

HTTP://WWW.MINNPARBACKHOEPARTS.COM

| 09-68 | | p1 | 01/04 |
|---|---|---|---|

TECHO Y ROPS - CHASIS, CUBIERTAS, ESPEJOS, VISOR

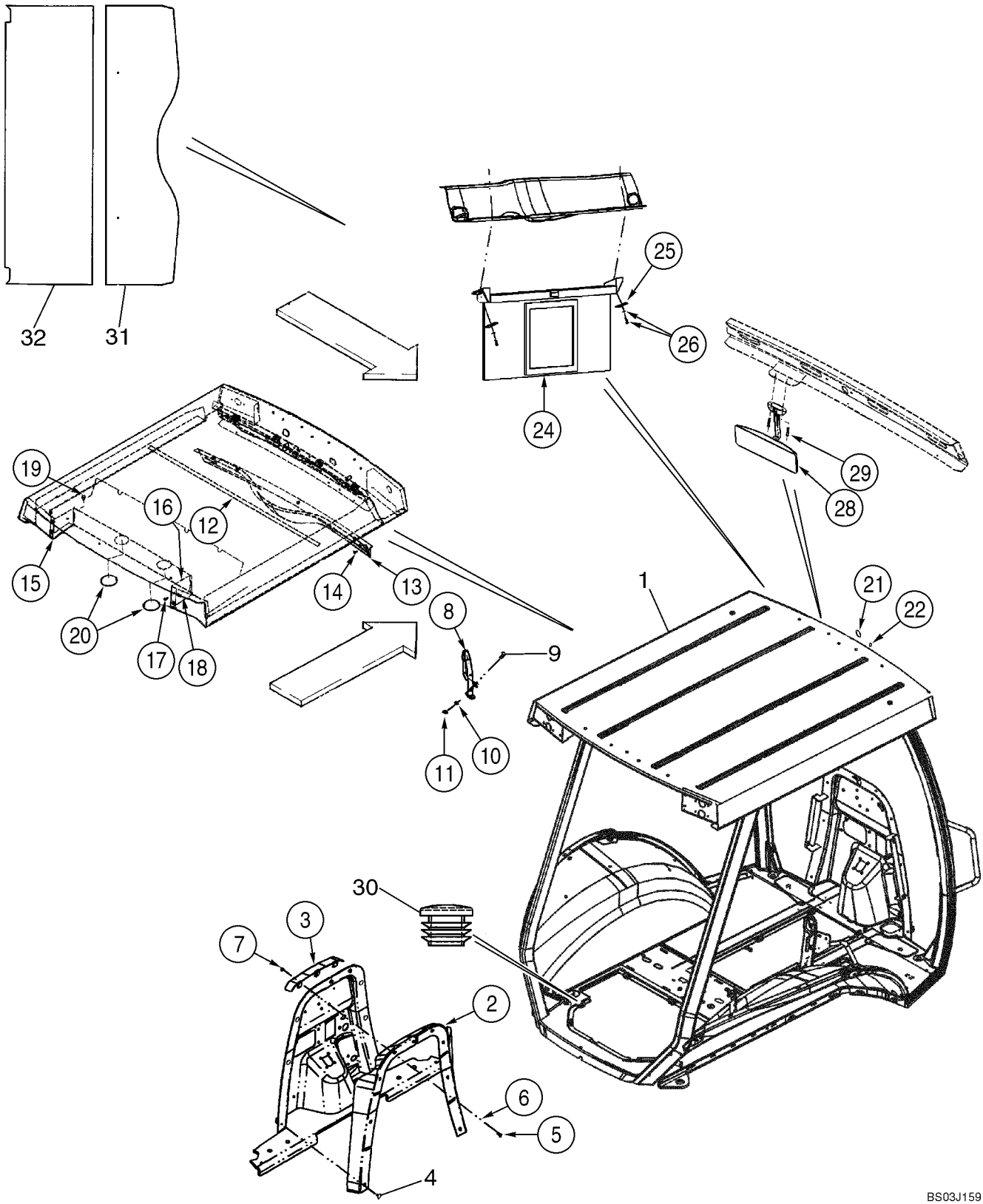

HTTP://WWW.MINNPARBACKHOEPARTS.COM



TECHO Y ROPS - CHASIS, CUBIERTAS, ESPEJOS, VISOR

| REF | FN | PART NUMBER | YR/SN | QTY | DESCRIPTION |
|---|---|---|---|---|---|
| 1 | | 87434974 | | 1 | ESTRUCTURA CABINA ROPS Canopy Frame; Order From Machinery Price List |
| 2 | | 396938A3 | | 1 | MOLDURA Firewall |
| 3 | | 395478A3 | | 1 | PIEZA DE SOPORTE |
| 4 | | D143242 | | 6 | TAPÓN Push-In Fastener |
| 5 | | 614-8020 | | 3 | TORNILLO M8 x 20 |
| 6 | | 495-81001 | | 3 | ARANDELA ,375 x 1,125 x ,065 |
| 7 | | 832-10408 | | 3 | TUERCA M8 |
| 8 | | 392930A1 | | 1 | BARANDILLA Grab Handle |
| 9 | | 811-10025 | | 2 | TORNILLO M10 x 25; 8.8 |
| 10 | | 495-81267 | | 2 | ARANDELA ,469 x 1,5 |
| 11 | | 832-10410 | | 2 | TUERCA M10 |
| 12 | | 385506A1 | | 1 | BANDA DE PROTECCIÓN 127 mm; Foam; Adhesive Back |
| 13 | | 367712A3 | | 1 | TAPA Harness |
| 14 | | F64519 | | 5 | TORNILLO No. 10 x 3/4; For Service, Order 265-16512, F64315 |
| 15 | | 357099A1 | | 1 | TAPA Left-Hand |
| 16 | | 357100A1 | | 1 | TAPA Right-Hand |
| 17 | | 555-2 | | 4 | TORNILLO Flange, M6 x 20 |
| 18 | | 833-40406 | | 4 | TUERCA Spring, M6 |
| 19 | | 353-402 | | 4 | TAPÓN 3/8; Models With Four Lamps; Not Used On Models With Eight Lamps |
| 20 | | 1302758C1 | | 2 | TAPÓN 3 in |
| | | 353-410 | | 1 | TAPÓN Dome, 7/8 Black Nylon |
| 21 | | 411549A1 | | 1 | TAPÓN 1 in; Windshield Frame |
| 22 | | 353-421 | | 2 | TAPÓN 3/16; Upper Windshield Frame |
| 24 | | 364180A1 | | 1 | PARASOL |
| 25 | | 409618A1 | | 2 | PLACA 1/4 in Mounting Hole |
| 26 | | 396516A1 | | 2 | PUNZON VALVULA No 10 x 1 st; With Washer; Phillips |
| 28 | | 87406924 | | 1 | ESPEJO RETROVISOR |
| 29 | | 286-56520 | | 2 | TORNILLO No. 10 x 1-1/4 |
| 30 | | 382298A1 | | 2 | TAPÓN 7/8 in |
| 31 | | 431583A1 | | 1 | CONTRAPANEL Foam; Roof Front |
| 32 | | 431584A1 | | 1 | CONTRAPANEL Foam: Roof Rear |

HTTP://WWW.MINNPARBACKHOEPARTS.COM

| 09-69 | | p1 | 01/04 |
|---|---|---|---|

TECHO Y ROPS - VIDRIO

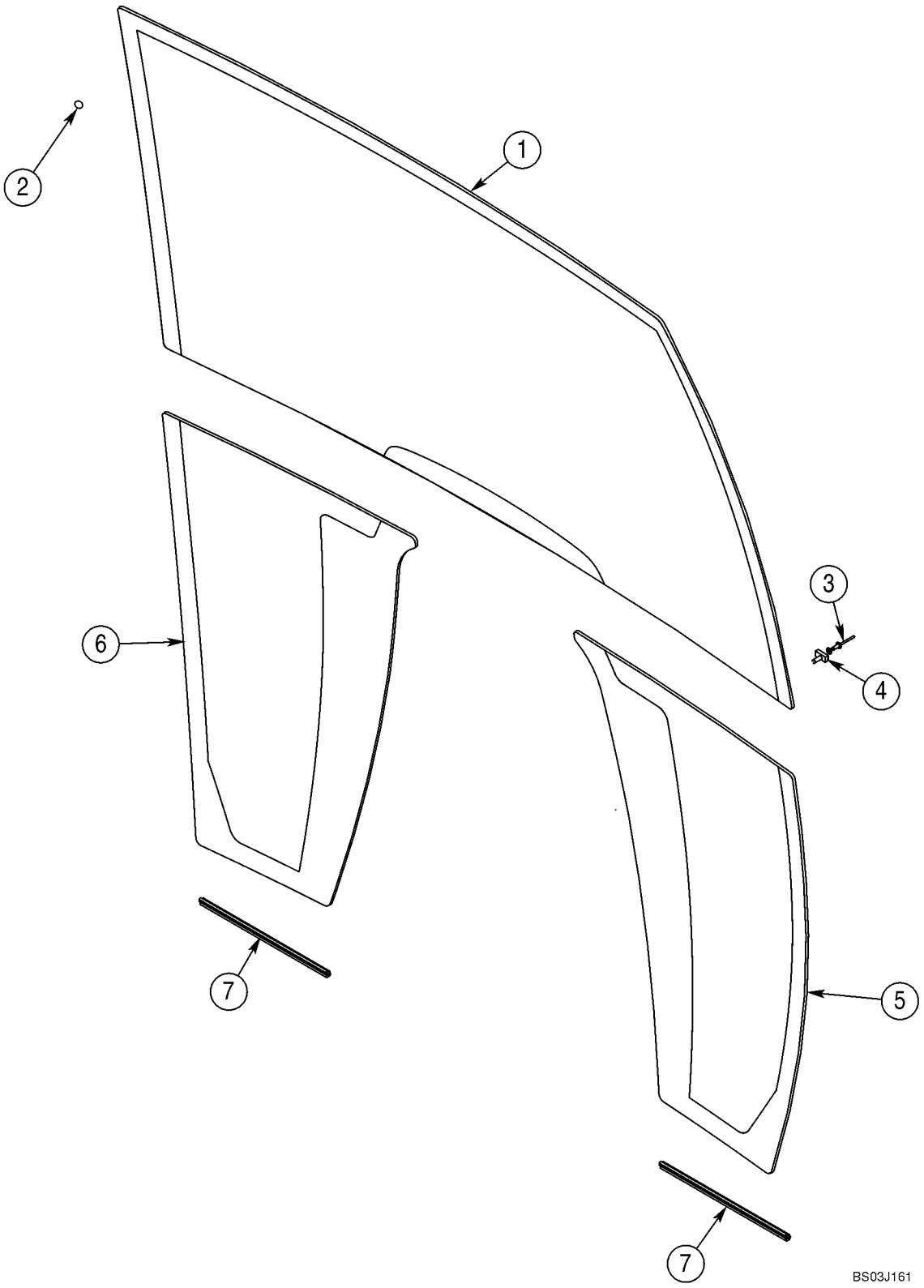

HTTP://WWW.MINNPARBACKHOEPARTS.COM



TECHO Y ROPS - VIDRIO

| REF | FN | PART NUMBER | YR/SN | QTY | DESCRIPTION |
|---|---|---|---|---|---|
| 1 | | 448607A1 | | 1 | PARABRISAS |
| 2 | | 391827A1 | | 28 | ESPACIADOR |
| 3 | | 151-516 | | 2 | REMACHE |
| 4 | | 279482A1 | | 2 | TORNILLO DE SUJECTIO |
| 5 | | 448609A1 | | 1 | PARABRISAS Lower; Right-Hand |
| 6 | | 448608A1 | | 1 | PARABRISAS Lower; Left-Hand |
| 7 | | 395793A1 | | 2 | BANDA DE PROTECCIÓN Lower Glass Trim |

HTTP://WWW.MINNPARBACKHOEPARTS.COM

| 09-70 | | p1 | 01/04 |
|---|---|---|---|

TECHO Y ROPS - LIMPIAPARABRISAS, DELANTERO Y LAVAPARABRISAS

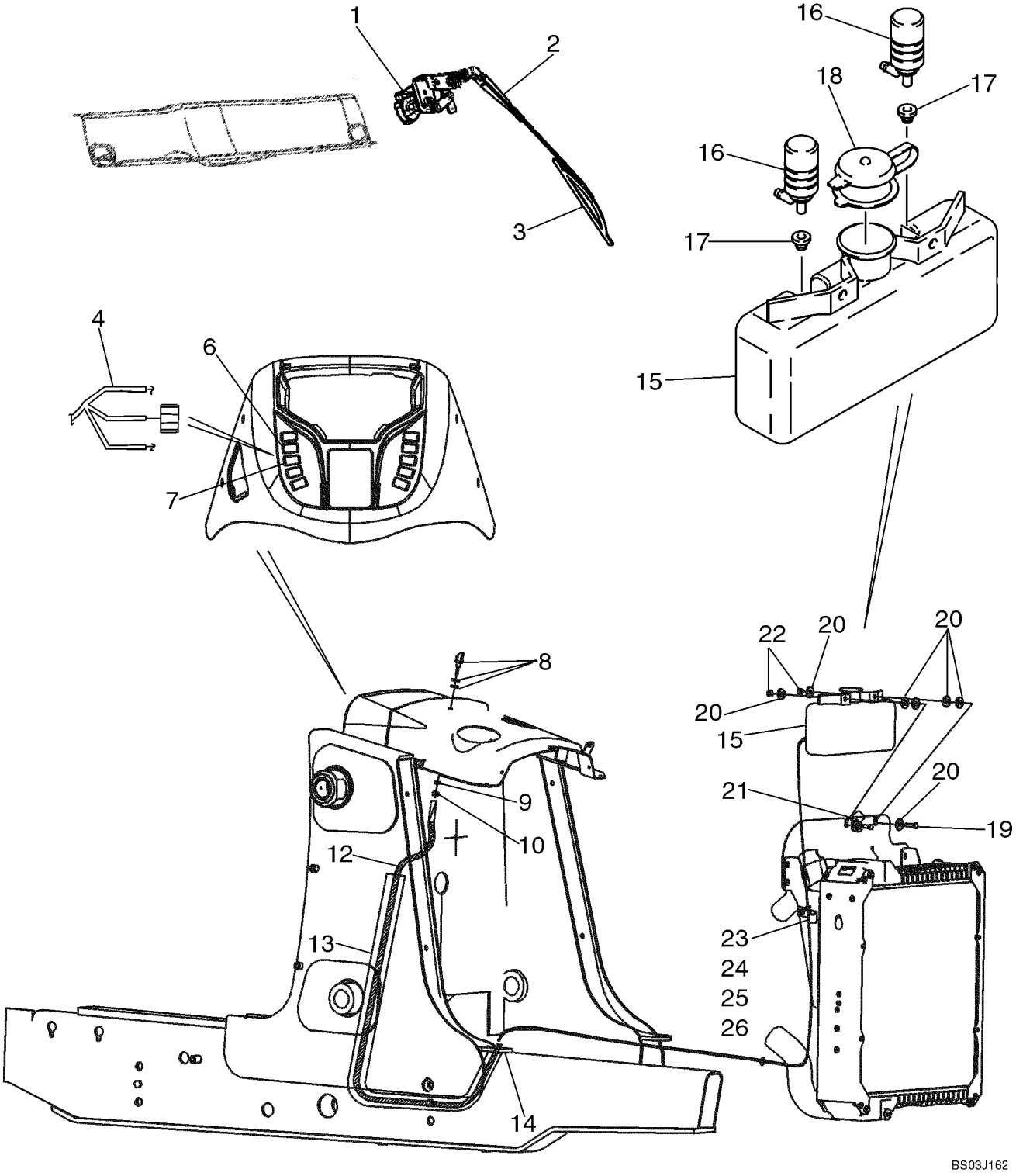

HTTP://WWW.MINNPARBACKHOEPARTS.COM



TECHO Y ROPS - LIMPIAPARABRISAS, DELANTERO Y LAVAPARABRISAS

| REF | FN | PART NUMBER | YR/SN | QTY | DESCRIPTION |
|---|---|---|---|---|---|
| 1 | | 450037A1 | | 1 | LIMPIA-PARABRISAS 12V |
| | | 814-6050 | | 2 | TORNILLO M6 x 50; Wiper Motor Mounting |
| | | 892-11006 | | 2 | ARANDELA DE FRENO M6 |
| 2 | | D128745 | | 1 | BRAZO DE ESCOBILLAS |
| 3 | | 414426A1 | | 1 | ESCOBILLA 600 mm |
| | | 404617A1 | | 1 | HAZ Front Lamps and Wiper |
| 4 | | 87433546 | | 1 | GRUPO DE CABLES Front Console Options; Includes (1) L71879 Diode |
| 5 | | 87436675 | | 1 | GRUPO DE CABLES Chassis Options; Includes (4) L71879 Diodes |
| 6 | | 386785A1 | | 1 | CONTACTOR Front Wiper |
| 7 | | 386787A1 | | 1 | CONTACTOR Windshield Washer |
| 8 | | 284154A1 | | 1 | INYECTOR Includes A Steel and Rubber Washer Which Are Not Serviced Separately |
| 9 | | 492-11038 | | 1 | ARANDELA DE FRENO 3/8 |
| 10 | | 425-106 | | 1 | TUERCA 3/8 |
| 12 | | {87428316} | | 1 | 3150 mm (124-1/64 in); Cut From 1968141CX |
| 13 | | 386718A3 | | 1 | DEFENSA 1630 mm (64-3/16 in); Cut From 397155A2 |
| 14 | | L18337 | | 6 | BANDA 15 in |
| | | E46560 | | 1 | DEPÓSITO Windshield Washer; Incl. Ref 15 - 18 |
| 15 | | NSS | | 1 | NO SE REPARA SEPARADAM. Reservoir |
| 16 | | E47238 | | 2 | BOMBA 12 Volt |
| 17 | | E47239 | | 2 | ANILLO DE CIERRE Pump to Reservoir |
| 18 | | E47240 | | 1 | TAPÓN Cap |
| 19 | | 614-8030 | | 2 | TORNILLO M8 x 30 |
| 20 | | 496-41041 | | 8 | ARANDELA 13/32 x 1-1/8 x 1/8 |
| 21 | | 515-22159 | | 1 | COLLAR P, 16 mm |
| 22 | | 832-10408 | | 2 | TUERCA M8 |
| 23 | | 614-8016 | | 1 | TORNILLO M8 x 16 |
| 24 | | 895-11008 | | 1 | ARANDELA Flat, 8 mm |
| 25 | | D147383 | | 1 | SUJETADOR J-Clamp, 5/8 |
| 26 | | 829-1408 | | 1 | TUERCA M8 |

HTTP://WWW.MINNPARBACKHOEPARTS.COM

| 09-71 | | p1 | 01/04 |
|---|---|---|---|

ESPEJO, VISTA TRASERA - SOPORTE, MODELLE MIT KABINE

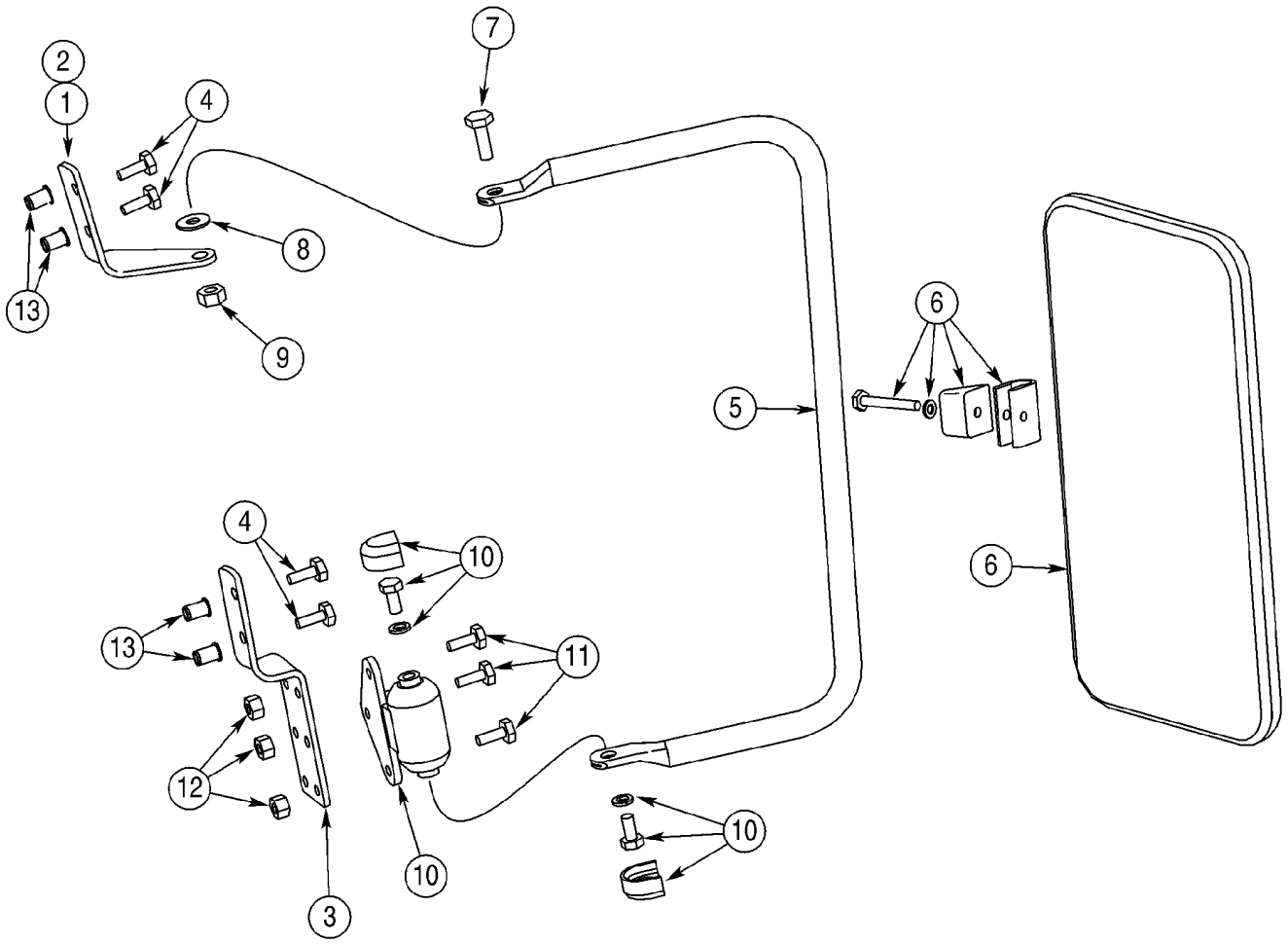


BC00H065

HTTP://WWW.MINNPARBACKHOEPARTS.COM



ESPEJO, VISTA TRASERA - SOPORTE, MODELLE MIT KABINE

| REF | FN | PART NUMBER | YR/SN | QTY | DESCRIPTION |
|---|---|---|---|---|---|
| 1 | | 402933A1 | | 1 | PIEZA DE SOPORTE Upper; Right-Hand |
| 2 | | 402934A1 | | 1 | PIEZA DE SOPORTE Upper; Left-Hand; Not Illustrated |
| 3 | | 402936A1 | | 2 | PIEZA DE SOPORTE Lower |
| 4 | | 281-54712 | | 8 | TORNILLO 1/4 st x 3/4 |
| 5 | | 402935A1 | | 2 | TUBO PORTADOR |
| 6 | | R54682 | | 2 | ESPEJO Exterior |
| 7 | | 413-516 | | 2 | TORNILLO 5/16 x 1 |
| 8 | | A167037 | | 2 | ARANDELA |
| 9 | | 231-4115 | | 2 | CONTRA TUERCA 5/16 |
| 10 | | D142144 | | 2 | CHARNELA Includes Hardware |
| 11 | | 413-412 | | 6 | TORNILLO 1/4 x 3/4 |
| 12 | | 231-1444 | | 6 | CONTRA TUERCA 1/4 |
| 13 | | 255447A1 | | 8 | REMACHE Cab Front ROPS Post |

HTTP://WWW.MINNPARBACKHOEPARTS.COM



EMBLEMA DE VEHICULO LENTO

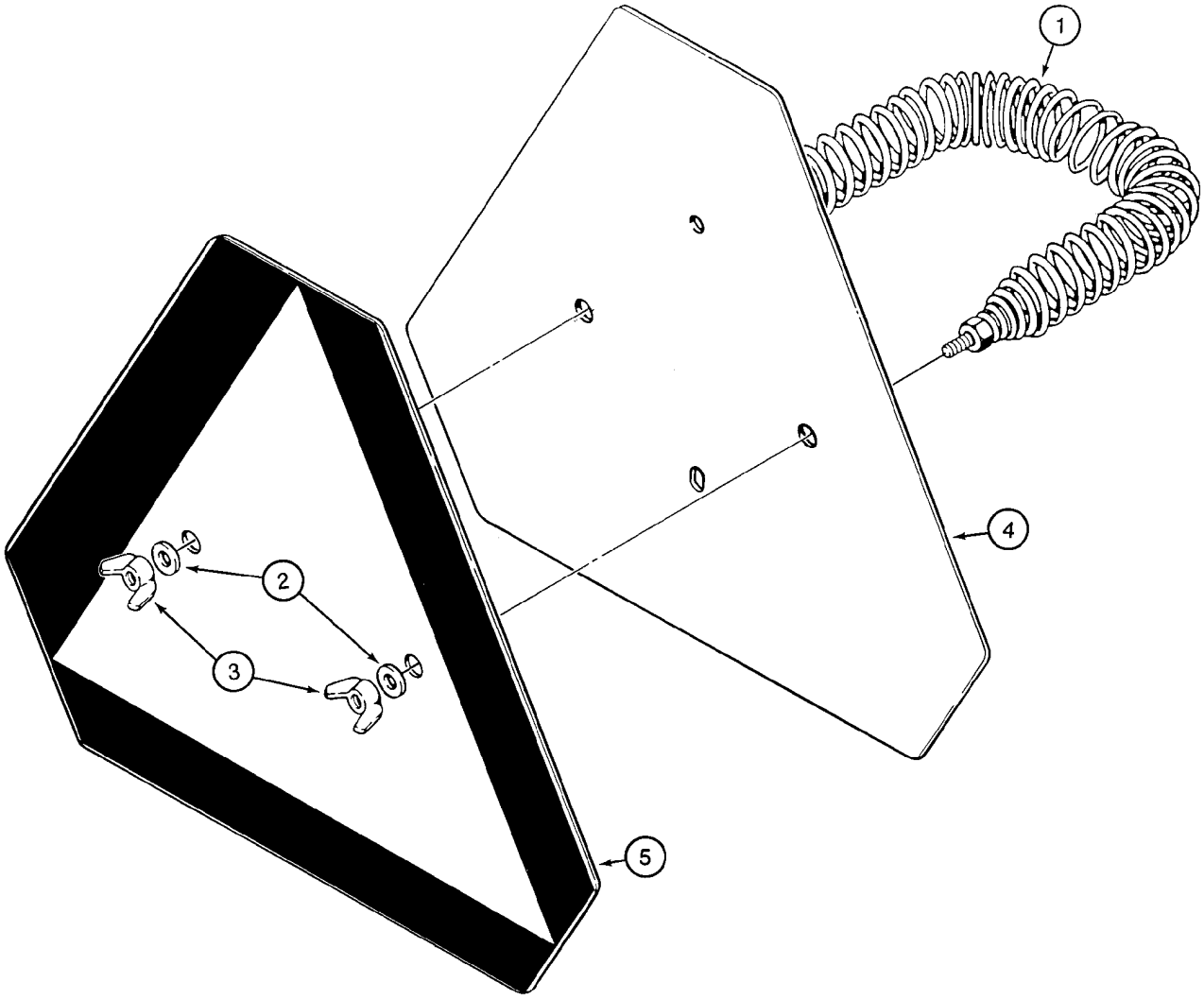


B9409034

HTTP://WWW.MINNPARBACKHOEPARTS.COM



EMBLEMA DE VEHICULO LENTO

| REF | FN | PART NUMBER | YR/SN | QTY | DESCRIPTION |
|---|---|---|---|---|---|
| 1 | | D52564 | | 1 | RESORTE |
| 2 | | 495-11028 | | 2 | ARANDELA 9/32 x 5/8 x 1/16 |
| 3 | | 126177 | | 2 | TUERCA MARIPOSA 1/4 |
| 4 | | D123347 | | 1 | SENALES ADVERT Incl. Ref 5 |
| 5 | | 321-4311 | | 1 | CALCOMANIA Slow Moving Vehicle |

HTTP://WWW.MINNPARBACKHOEPARTS.COM



CALCOMANIAS

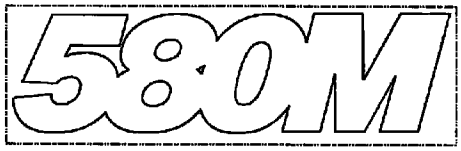


1




8




1A




1B

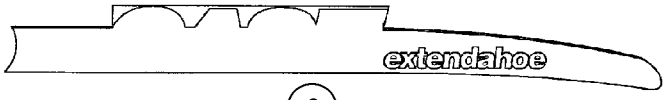


9

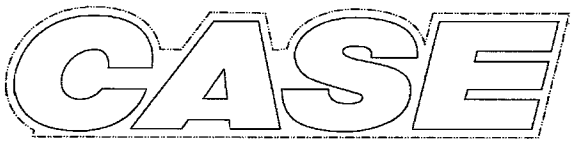


2 3

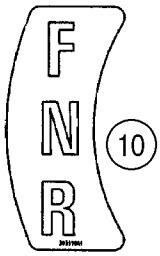


10




11

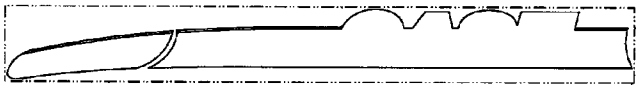

4

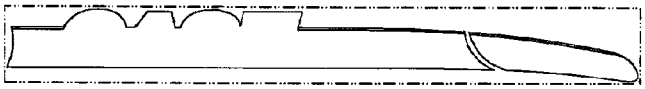

5




12



6




13



14

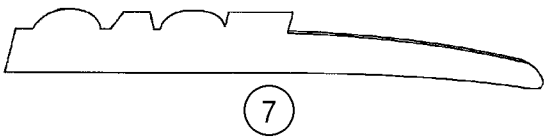

7




15

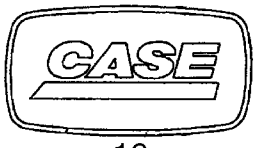


16

BS03K272

HTTP://WWW.MINNPARBACKHOEPARTS.COM



CALCOMANIAS

| REF | FN | PART NUMBER | YR/SN | QTY | DESCRIPTION |
|---|---|---|---|---|---|
| 1 | | 401462A1 | | 2 | CALCOMANIA Model Designation |
| 1A | | 401466A1 | | 2 | CALCOMANIA Model Designation |
| 1B | | {87436192} | | 2 | Series 2 |
| 2 | | 401457A1 | | 2 | CALCOMANIA 525 mm (20-11/16 in) Wide; Case Logo; Loader Arm |
| 3 | | 401458A1 | | 4 | CALCOMANIA 655 mm (25-13/16 in) Wide, Case Logo; Backhoe Dipper |
| 4 | | 401459A2 | | 1 | CALCOMANIA Case, Loader Arm Pin Stripe, Left-Hand Stripe |
| 5 | | 401460A2 | | 1 | CALCOMANIA Case, Loader Arm Pin Stripe, Right-Hand Stripe |
| 6 | | 407009A2 | | 1 | CALCOMANIA Case, Standard Dipper, Left-Hand Stripe |
| 7 | | 407010A2 | | 1 | CALCOMANIA Case, Standard Dipper, Right-Hand Stripe |
| 8 | | 373698A2 | | 1 | CALCOMANIA Case, Extendahoe Dipper, Left-Hand Stripe |
| 9 | | 373699A2 | | 1 | CALCOMANIA Case, Extendahoe Dipper, Right-Hand Stripe |
| 10 | | 395910A2 | | 1 | CALCOMANIA FNR (Forward/Neutral/Reverse); Shuttle Shift Lever Control Pattern |
| 11 | | 321-1708 | | 1 | CALCOMANIA 0-2-4, Clam Bucket Opening Indicator |
| 12 | | {87435569} | | 1 | Insert, Case; Steering Wheel |
| 13 | | 186989A1 | | 1 | CALCOMANIA EMBLEM, Case |
| 14 | | 131-431 | | 2 | TUERCA 1/4 |
| 15 | | 87415931 | | 2 | CALCOMANIA Case, 37 x 70 mm; Located On Engine Filters |
| 16 | | 87429186 | | 1 | SIMBOLO Case, 37 x 70 mm; Located On Engine |

HTTP://WWW.MINNPARBACKHOEPARTS.COM



CALCOMANIAS

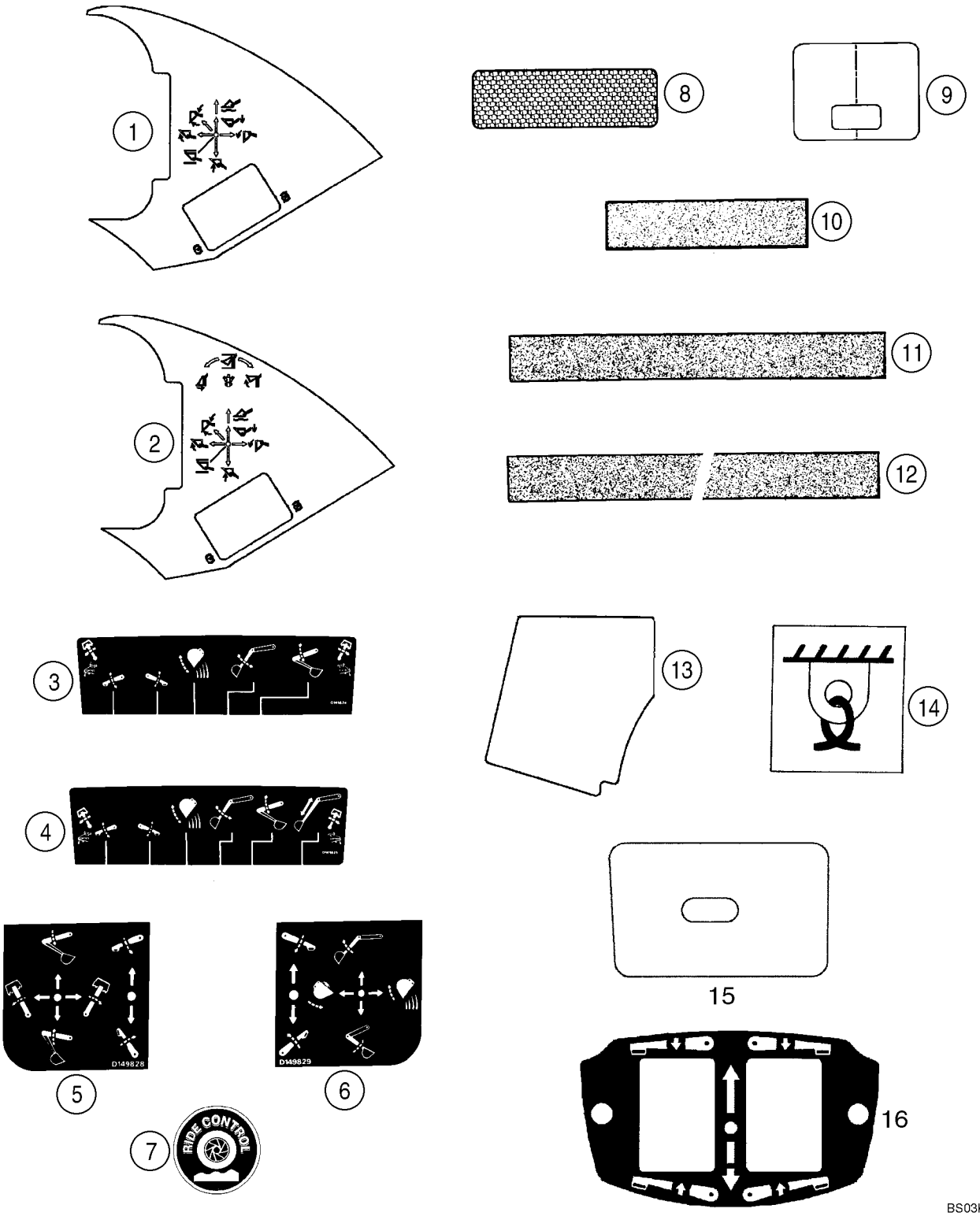

HTTP://WWW.MINNPARBACKHOEPARTS.COM



CALCOMANIAS

| REF | FN | PART NUMBER | YR/SN | QTY | DESCRIPTION |
|---|---|---|---|---|---|
| 1 | | 384930A2 | | 1 | CALCOMANIA Two Function Loader Control |
| 2 | | 384931A2 | | 1 | CALCOMANIA Three Function Loader Control |
| 3 | | D149824 | | 1 | CALCOMANIA Upper; Standard Backhoe Control Pattern |
| 4 | | D149825 | | 1 | CALCOMANIA Upper; Extendahoe Control Pattern; With Foot Swing |
| 5 | | D149828 | | 1 | CALCOMANIA Upper; Standard Backhoe Control Pattern; With Hand Swing; Left-Hand Side Of Console |
| 6 | | D149829 | | 1 | CALCOMANIA Upper; Standard Backhoe Control Pattern; With Hand Swing; Right-Hand Side Of Console |
| 7 | | 304083A1 | | 2 | CALCOMANIA Ride Control |
| 8 | | 449842A1 | | 2 | CALCOMANIA 2 x 6-5/16 in; Red, Reflector |
| 9 | | 192450A1 | | 1 | CALCOMANIA Clear Vinyl; Hood |
| 10 | | D55216 | | 2-11 | TACO 2 x 9 in; Anti-Skid |
| 11 | | D80270 | | 3-4 | CINTA 635 mm (25 in); Anti-Skid |
| 12 | | 307348A1 | | 2 | CINTA 700 mm (27-9/16 in); Anti-Skid; 40 gallon fuel tank |
| 13 | | 367848A2 | | 1 | TACO Anti-Skid; Canopy Models |
| 14 | | 139728A1 | | 4 | CALCOMANIA Tie Down |
| 15 | | 406723A1 | | 1 | CALCOMANIA Poly Film; Lockup Cover; Canopy Models |
| 16 | | 87423812 | | 1 | CALCOMANIA Stabilizer Switch; Models With Pilot Controls |

HTTP://WWW.MINNPARBACKHOEPARTS.COM



CALCOMANIAS




1

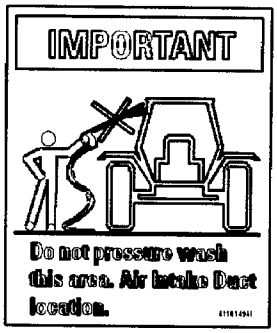


2

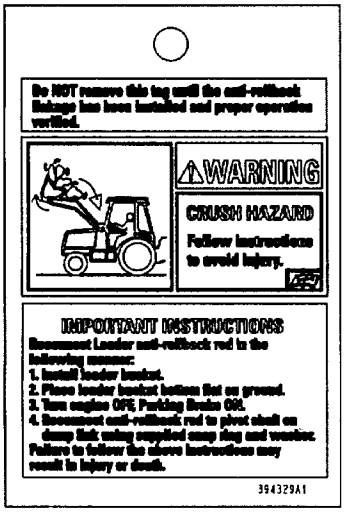


3

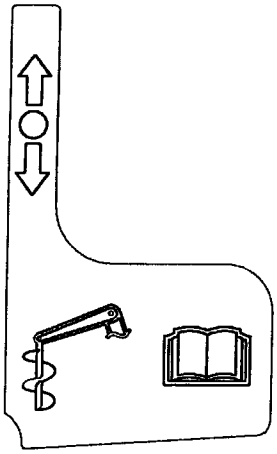

4

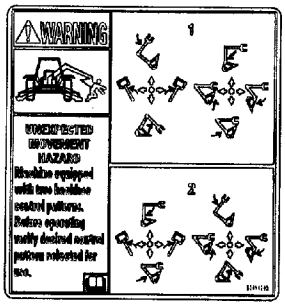


5

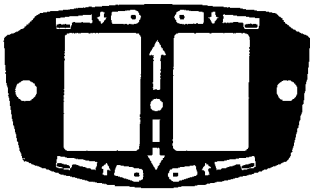

6

BS04A008

HTTP://WWW.MINNPARBACKHOEPARTS.COM



CALCOMANIAS

| REF | FN | PART NUMBER | YR/SN | QTY | DESCRIPTION |
|---|---|---|---|---|---|
| 1 | | 116534A1 | | 1 | JEUGO Decal; Seat Weight Adjustment; Included In Seat Assy |
| 2 | | 411049A1 | | 1 | CALCOMANIA Important, Do Not Pressure Wash This Area |
| 3 | | 394329A1 | | 1 | ETIQUETA Warning; Anti-Rollback Hazard |
| 4 | | 87430677 | | 1 | CALCOMANIA Auxiliary Hydraulics |
| 5 | | 87414205 | | 1 | CALCOMANIA Warning, Unexpected Movement |
| 6 | | 87423812 | | 1 | CALCOMANIA Stabilizer Control Switch |

HTTP://WWW.MINNPARBACKHOEPARTS.COM



CALCOMANIAS - INGLES

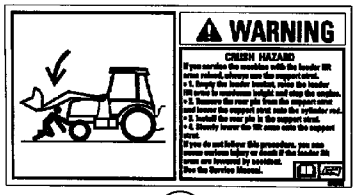


1

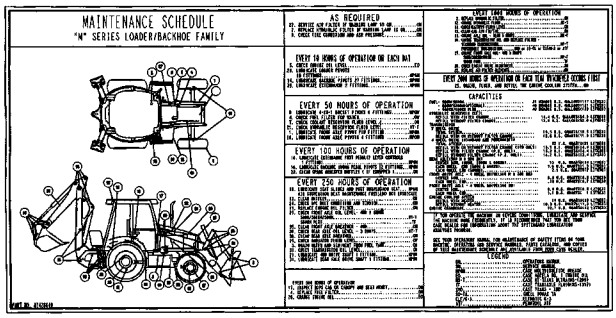


2




3

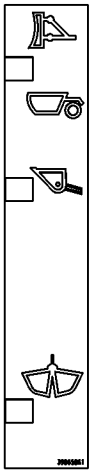

5

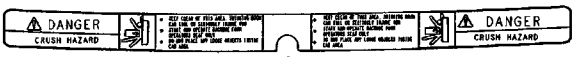


4

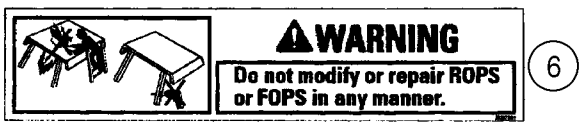


6

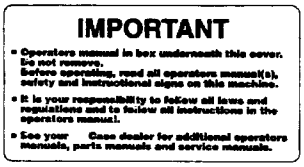


7

| FUSES | | | 87423410 |
|---|---|---|---|
| SPARE | ---- | ---- | ---- |
| SPARE | POWER OUTLET 30A | ---- | PILOT CONTROLS BH AUX (OPT.) 15AMP |
| FRONT WORK LIGHTS 20A | POWER OUTLET 30A | AIR SUSP. SEAT-AIR COMP. (OPT) 20A | RETURN TO DIG 10A |
| REAR WORK LIGHTS 20A | SPARE | SPARE | DRIVING LIGHTS 15A |
| FUEL SHUTOFF 10A | BLOWER 25A | DOME LIGHT 10A | ROTATING BEACON (OPT) 10A |
| INSTRUMENTS ALARM SYS. 10A | SIGNAL LIGHTS 15A | HORN 10A | 4WD (OPT) 10A |
| STARTING TRANSMISSION CONTROL 10A | RADIO, RIDE CONTROL, HAND AUX HYD'S 15A | RADIO (BATT) (OPT) 10A | WIPERS 15A |

8

| RELAYS | | | 87423409 |
|---|---|---|---|
| POWER RELAY #1 | POWER RELAY #4 | FLASHER RELAY | STARTER RELAY |
| POWER RELAY #2 | LDR LVR DIFF LK RELAY | SHUTTLE INTLK TIMING RELAY | NEUTRAL RELAY |
| POWER RELAY #3 | CLUTCH RELAY | SHUTTLE INTLK RELAY | FORWARD RELAY |
| ---- | ---- | ---- | REVERSE RELAY |
| ---- | ---- | AC RELAY (OPTION) | ---- |

9

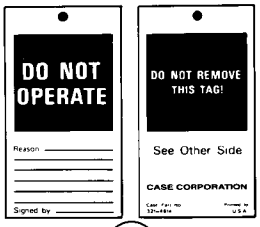


11

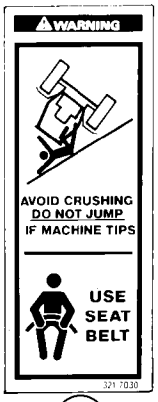


10




12

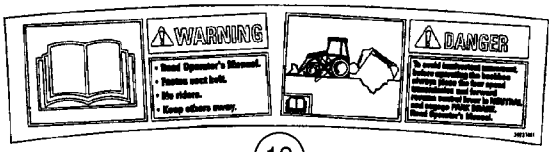


13

BS03K274

HTTP://WWW.MINNPARBACKHOEPARTS.COM



CALCOMANIAS - INGLES

| REF | FN | PART NUMBER | YR/SN | QTY | DESCRIPTION |
|---|---|---|---|---|---|
| 1 | | 384264A1 | | 1 | CALCOMANIA Warning; Crush Hazard; Loader Arm Support Strut |
| 2 | | {87428640} | | 1 | Maintenance Schedule; Supplied by Parts and Components |
| 3 | | 8603092 | | 1 | CALCOMANIA Warning; Explosion Hazard, Do Not Use Ether |
| 4 | | 86992976 | | 1 | CALCOMANIA Danger; Crush Hazard |
| 5 | | 398658A1 | | 1 | CALCOMANIA Clam Bucket Position |
| 6 | | 383972A1 | | 1 | CALCOMANIA Warning; Do Not Modify or Repair ROPS or FOPS In Any Manner |
| 7 | | 144193A3 | | 1 | CALCOMANIA Important; Operator's Manual In Box Underneath This Cover; Glove Box Lid |
| 8 | | 87423410 | | 1 | CALCOMANIA Fuse Location |
| 9 | | 87423409 | | 1 | CALCOMANIA Relay |
| 10 | | 321-7030 | | 2 | CALCOMANIA Warning; Avoid Crushing; Do Not Jump / Use Seat Belt |
| 11 | | 321-4614 | | 1 | CALCOMANIA TAG, Do Not Operate |
| 12 | | 86992975 | | 2 | CALCOMANIA Warning; No Step/Not An Exit; Canopy |
| 13 | | 392374A1 | | 1 | CALCOMANIA Warning/Danger; Read the Operator's Manual |

HTTP://WWW.MINNPARBACKHOEPARTS.COM



CALCOMANIAS - CASTELLANO PARA LATINOAMERICA

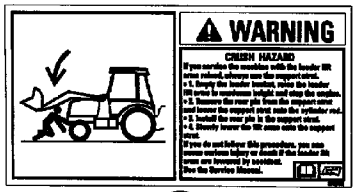


1

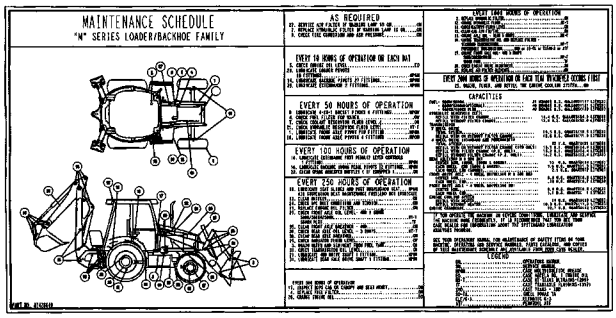


2




3

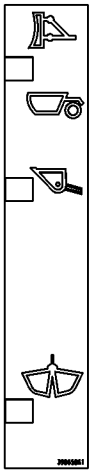

5

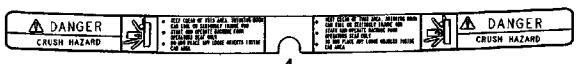


4




6

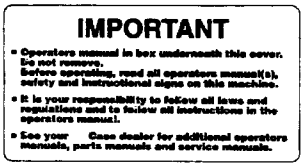


7

| FUSES | | | 87423410 |
|---|---|---|---|
| SPARE | ---- | ---- | ---- |
| SPARE | POWER OUTLET 30A | ---- | PILOT CONTROLS BH AUX (OPT.) 15AMP |
| FRONT WORK LIGHTS 20A | POWER OUTLET 30A | AIR SUSP. SEAT-AIR COMP. (OPT) 20A | RETURN TO DIG 10A |
| REAR WORK LIGHTS 20A | SPARE | SPARE | DRIVING LIGHTS 15A |
| FUEL SHUTOFF 10A | BLOWER 25A | DOME LIGHT 10A | ROTATING BEACON (OPT) 10A |
| INSTRUMENTS ALARM SYS. 10A | SIGNAL LIGHTS 15A | HORN 10A | 4WD (OPT) 10A |
| STARTING TRANSMISSION CONTROL 10A | RADIO, RIDE CONTROL, HAND AUX HYD'S 15A | RADIO (BATT) (OPT) 10A | WIPERS 15A |

8

| RELAYS | | | 87423409 |
|---|---|---|---|
| POWER RELAY #1 | POWER RELAY #4 | FLASHER RELAY | STARTER RELAY |
| POWER RELAY #2 | LDR LVR DIFF LK RELAY | SHUTTLE INTLK TIMING RELAY | NEUTRAL RELAY |
| POWER RELAY #3 | CLUTCH RELAY | SHUTTLE INTLK RELAY | FORWARD RELAY |
| ---- | ---- | ---- | REVERSE RELAY |
| ---- | ---- | AC RELAY (OPTION) | ---- |

9

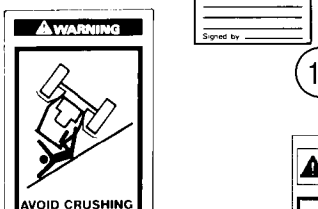


10

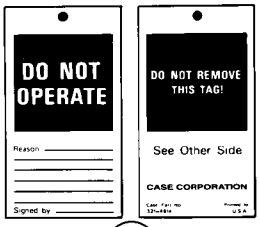


11




12

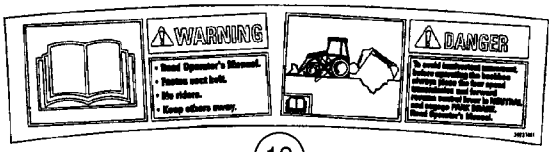


13

BS03K274

HTTP://WWW.MINNPARBACKHOEPARTS.COM



CALCOMANIAS - CASTELLANO PARA LATINOAMERICA

| REF | FN | PART NUMBER | YR/SN | QTY | DESCRIPTION |
|---|---|---|---|---|---|
| 1 | | 398576A1 | | 1 | CALCOMANIA Warning; Crush Hazard; Loader Arm Support Strut |
| 2 | | {87430921} | | 1 | Maintenance Schedule; Supplied by Parts and Components |
| 3 | | 8603094 | | 1 | CALCOMANIA Warning; Explosion Hazard, Do Not Use Ether |
| 4 | | 86992981 | | 1 | CALCOMANIA Danger; Crush Hazard |
| 5 | | 398658A1 | | 1 | CALCOMANIA Clam Bucket Position |
| 6 | | 389729A1 | | 1 | CALCOMANIA Warning; Do Not Modify or Repair ROPS or FOPS In Any Manner |
| 7 | | 398662A1 | | 1 | CALCOMANIA Important; Operator's Manual In Box Underneath This Cover; Glove Box Lid |
| 8 | | {87431078} | | 1 | Fuse Location |
| 9 | | {87431081} | | 1 | Relay |
| 10 | | 398672A1 | | 2 | CALCOMANIA Warning; Avoid Crushing; Do Not Jump / Use Seat Belt |
| 11 | | 298521A1 | | 1 | ETIQUETA Do Not Operate |
| 12 | | 86992980 | | 2 | CALCOMANIA Warning; No Step/Not An Exit; Canopy |
| 13 | | 398598A1 | | 1 | CALCOMANIA Warning/Danger; Read the Operator's Manual |
| 14 | | {148093A1} | | 1 | DECAL, Important; Lubrication; Not Illustrated |
| 15 | | {148095A1} | | 1 | DECAL, Attention; Welding; Not Illustrated |

HTTP://WWW.MINNPARBACKHOEPARTS.COM



CALCOMANIAS - FRANCES CANADIENSE

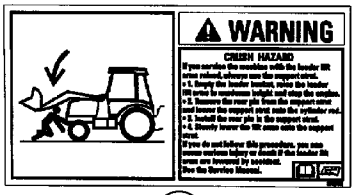


1

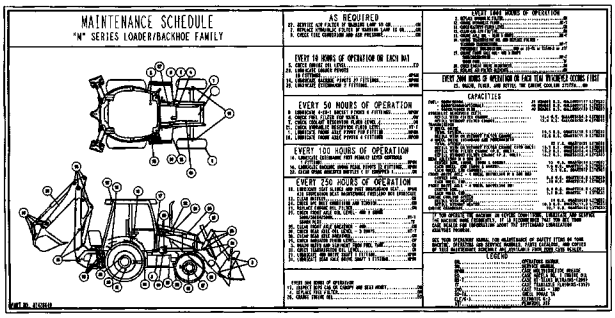


2




3

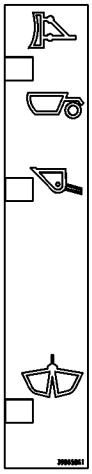

5

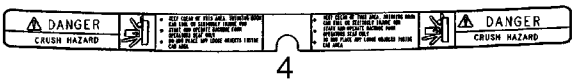


4

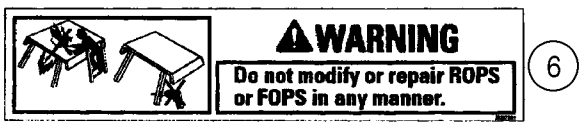


6

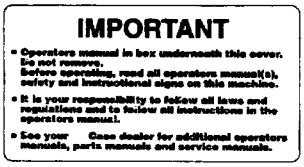


7

| FUSES | | | 87423410 |
|---|---|---|---|
| SPARE | ---- | ---- | ---- |
| SPARE | POWER OUTLET 30A | ---- | PILOT CONTROLS BH AUX (OPT.) 15AMP |
| FRONT WORK LIGHTS 20A | POWER OUTLET 30A | AIR SUSP. SEAT-AIR COMP. (OPT) 20A | RETURN TO DIG 10A |
| REAR WORK LIGHTS 20A | SPARE | SPARE | DRIVING LIGHTS 15A |
| FUEL SHUTOFF 10A | BLOWER 25A | DOME LIGHT 10A | ROTATING BEACON (OPT) 10A |
| INSTRUMENTS ALARM SYS. 10A | SIGNAL LIGHTS 15A | HORN 10A | 4WD (OPT) 10A |
| STARTING TRANSMISSION CONTROL 10A | RADIO, RIDE CONTROL, HAND AUX HYD'S 15A | RADIO (BATT) (OPT) 10A | WIPERS 15A |

8

| RELAYS | | | 87423409 |
|---|---|---|---|
| POWER RELAY #1 | POWER RELAY #4 | FLASHER RELAY | STARTER RELAY |
| POWER RELAY #2 | LDR LVR DIFF LK RELAY | SHUTTLE INTLK TIMING RELAY | NEUTRAL RELAY |
| POWER RELAY #3 | CLUTCH RELAY | SHUTTLE INTLK RELAY | FORWARD RELAY |
| ---- | ---- | ---- | REVERSE RELAY |
| ---- | ---- | AC RELAY (OPTION) | ---- |

9

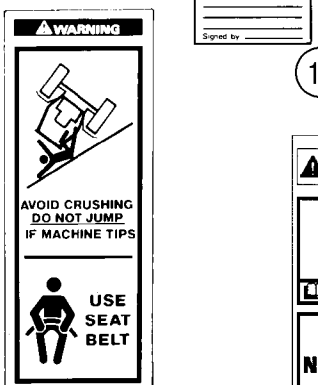


10

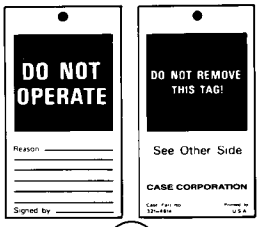


11




12

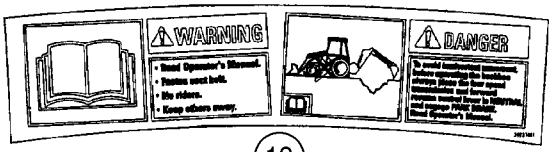


13

BS03K274

HTTP://WWW.MINNPARBACKHOEPARTS.COM



CALCOMANIAS - FRANCES CANADIENSE

| REF | FN | PART NUMBER | YR/SN | QTY | DESCRIPTION |
|---|---|---|---|---|---|
| 1 | | 398577A1 | | 1 | CALCOMANIA Warning; Crush Hazard; Loader Arm Support Strut |
| 2 | | {87430922} | | 1 | Maintenance Schedule; Supplied by Parts and Components |
| 3 | | 8603093 | | 1 | CALCOMANIA Warning; Explosion Hazard, Do Not Use Ether |
| 4 | | 86992979 | | 1 | CALCOMANIA Danger; Crush Hazard |
| 5 | | 398658A1 | | 1 | CALCOMANIA Clam Bucket Position |
| 6 | | 389730A1 | | 1 | CALCOMANIA Warning; Do Not Modify or Repair ROPS or FOPS In Any Manner |
| 7 | | 398663A1 | | 1 | CALCOMANIA Important; Operator's Manual In Box Underneath This Cover; Glove Box Lid |
| 8 | | {87431077} | | 1 | Fuse Location |
| 9 | | {87431080} | | 1 | Relay |
| 10 | | 398673A1 | | 2 | CALCOMANIA Warning; Avoid Crushing; Do Not Jump / Use Seat Belt |
| 11 | | 321-5675 | | 1 | CALCOMANIA Do Not Operate |
| 12 | | 86992978 | | 2 | CALCOMANIA Warning; No Step/Not An Exit; Canopy |
| 13 | | 398599A1 | | 1 | CALCOMANIA Warning/Danger; Read the Operator's Manual |

HTTP://WWW.MINNPARBACKHOEPARTS.COM



CALCOMANIAS - INGLES

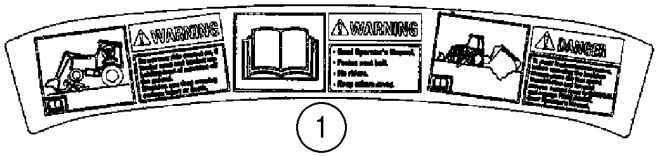


1




2




3

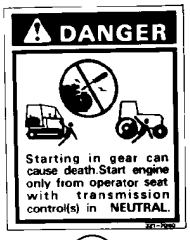


4




5

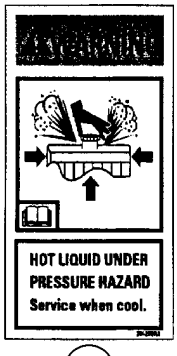


6

DIESEL FUEL

7

HYDRAULIC FLUID

8




8A

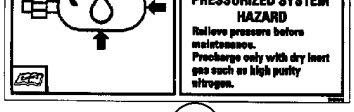


9




10




11

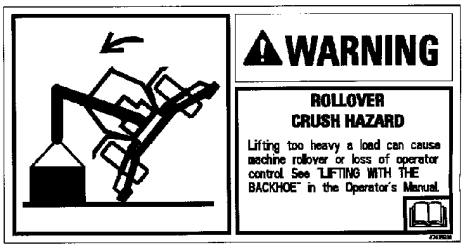


12

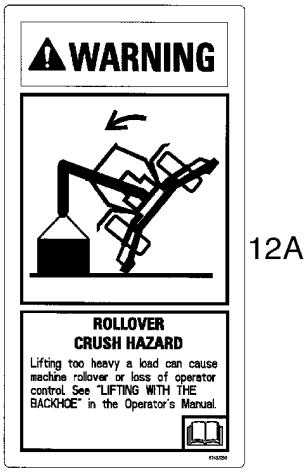


12A




14




13

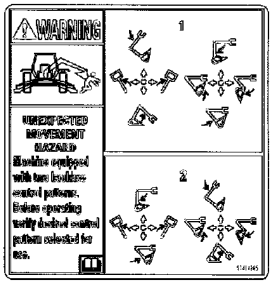


15

BS03K275

HTTP://WWW.MINNPARBACKHOEPARTS.COM



CALCOMANIAS - INGLES

| REF | FN | PART NUMBER | YR/SN | QTY | DESCRIPTION |
|---|---|---|---|---|---|
| 1 | | 392375A1 | | 1 | CALCOMANIA Warning/Warning/Danger; Front, With Ride Control; Do Not Turn Ride Control On/Read Operator's Manual/To Avoid Inadvertent Movement |
| 2 | | 384265A1 | | 1 | CALCOMANIA Warning; Crush Hazard; Keep Clear; Support Loader Lift Arms During Maintenance |
| 3 | | 384267A1 | | 2 | CALCOMANIA Warning; Entanglement Hazard, Fan; Keep Clear or Stop Engine Before Servicing |
| 4 | | 321-7040 | | 1 | CALCOMANIA Danger; Starting In Gear |
| 5 | | 384269A1 | | 2 | CALCOMANIA Danger; Jump Start |
| 6 | | 384258A1 | | 1 | CALCOMANIA Warning; Hot Liquid Under Pressure |
| 7 | | 321-230 | | 1 | CALCOMANIA Diesel Fuel |
| 8 | | 321-229 | | 1 | CALCOMANIA Hydraulic Fluid; Used In Production; For Service, Order 321-6376, English Decal Only |
| 8A | | 321-6376 | | 1 | CALCOMANIA Hydraulic Fluid |
| 9 | | 384260A1 | | 1 | CALCOMANIA Warning; Ride Control Accumulator |
| 10 | | D149826 | | 1 | CALCOMANIA Caution/Important; For All Models With Foot Swing Backhoe Controls and Standard Backhoe Models With Hand Swing |
| 11 | | D149827 | | 1 | CALCOMANIA Caution/Important; Extendahoe Backhoe Models With Hand Swing |
| 12 | | {87435938} | | 1 | Warning; Rollover Crush Hazard; Lifting Too Heavy A Load; Models Without Pilot Controls |
| 12A | | {87433209} | | 1 | Warning; Rollover Crush Hazard; Lifting Too Heavy A Load; Models With Pilot Controls |
| 13 | | 321-6774 | | 1 | CALCOMANIA Warning; Seat Spring |
| 14 | | {87423813} | | 2 | Warning; Unexpected Movement Hazard; Before Adjusting Windows |
| 15 | | 87414205 | | 1 | CALCOMANIA Pilot Control Pattern |

HTTP://WWW.MINNPARBACKHOEPARTS.COM



CALCOMANIAS - CASTELLANO PARA LATINOAMERICA

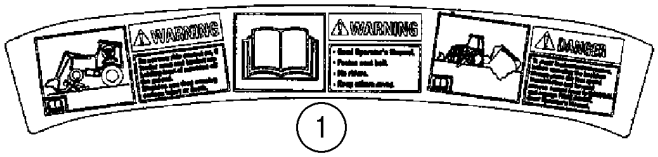


1




2

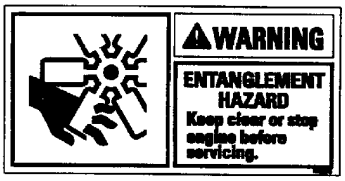


3

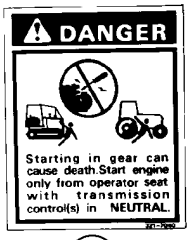


4




5

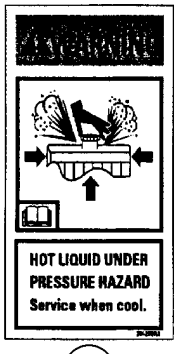


6

DIESEL FUEL

7

HYDRAULIC FLUID

8




8A

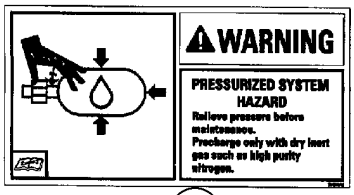


9




10

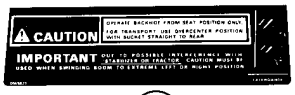


11

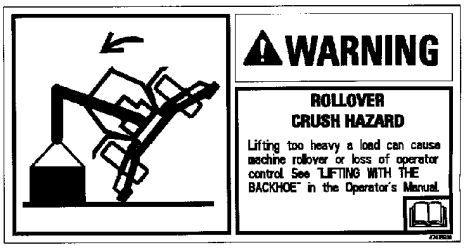


12

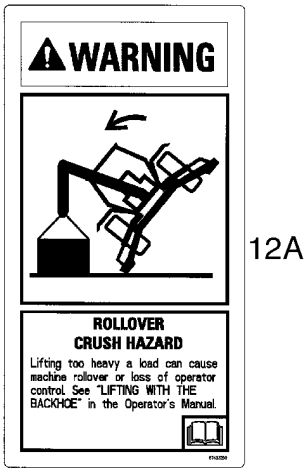


12A




14




13

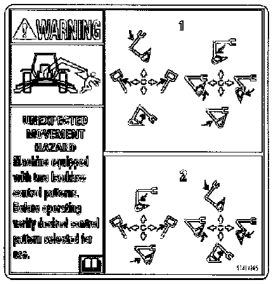


15

BS03K275

HTTP://WWW.MINNPARBACKHOEPARTS.COM



CALCOMANIAS - CASTELLANO PARA LATINOAMERICA

| REF | FN | PART NUMBER | YR/SN | QTY | DESCRIPTION |
|---|---|---|---|---|---|
| 1 | | 398600A1 | | 1 | CALCOMANIA Warning/Warning/Danger; Front, With Ride Control; Do Not Turn Ride Control On/Read Operator's Manual/To Avoid Inadvertent Movement |
| 2 | | 398578A1 | | 1 | CALCOMANIA Warning; Crush Hazard; Keep Clear; Support Loader Lift Arms During Maintenance |
| 3 | | 398580A1 | | 2 | CALCOMANIA Warning; Entanglement Hazard, Fan; Keep Clear or Stop Engine Before Servicing |
| 4 | | 398674A1 | | 1 | CALCOMANIA Danger; Starting In Gear |
| 5 | | 398582A1 | | 2 | CALCOMANIA Danger; Jump Start |
| 6 | | 398570A1 | | 1 | CALCOMANIA Warning; Hot Liquid Under Pressure |
| 7 | | 398667A1 | | 1 | CALCOMANIA Diesel Fuel |
| 8 | | 398665A1 | | 1 | CALCOMANIA Hydraulic Fluid |
| 8A | | 321-6376 | | 1 | CALCOMANIA Hydraulic Fluid, English Decal Only |
| 9 | | 398572A1 | | 1 | CALCOMANIA Warning; Ride Control Accumulator |
| 10 | | 398677A1 | | 1 | CALCOMANIA Caution/Important; For All Models With Foot Swing Backhoe Controls and Standard Backhoe Models With Hand Swing |
| 11 | | 398669A1 | | 1 | CALCOMANIA Caution/Important; Extendahoe Backhoe Models With Hand Swing |
| 12 | | {87435939} | | 1 | Warning; Rollover Crush Hazard; Lifting Too Heavy A Load; Models Without Pilot Controls |
| 12A | | {87434771} | | 1 | Warning; Rollover Crush Hazard; Lifting Too Heavy A Load; Models With Pilot Controls |
| 13 | | 398670A1 | | 1 | CALCOMANIA Warning; Seat Spring |
| 14 | | {87429163} | | 2 | Warning; Unexpected Movement Hazard; Before Adjusting Windows |
| 15 | | {87429165} | | 1 | Pilot Control Pattern |

HTTP://WWW.MINNPARBACKHOEPARTS.COM



CALCOMANIAS - FRANCES CANADIENSE

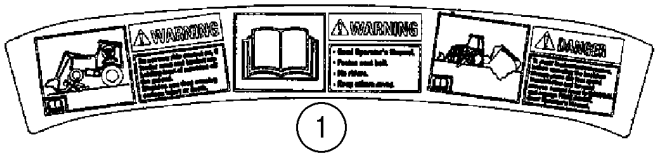


1




2

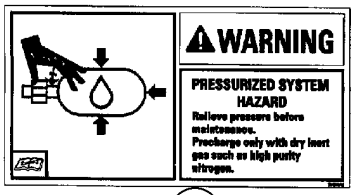


9




10

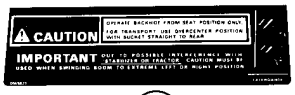


11




3

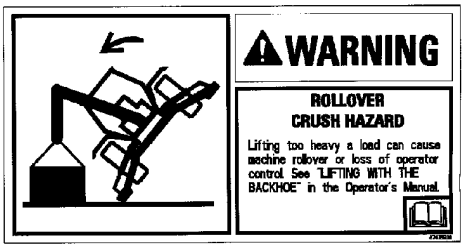


12

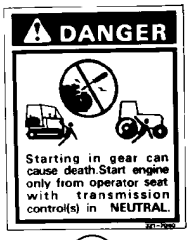


4




5

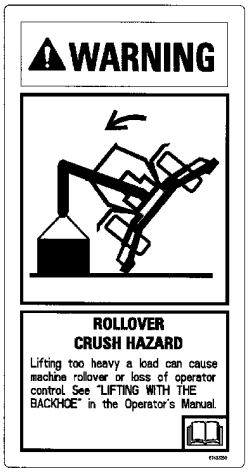


12A




14

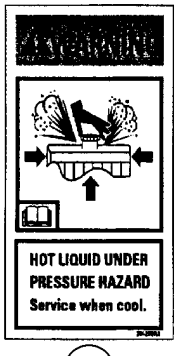


6

DIESEL FUEL

7

HYDRAULIC FLUID

8




13

HYDRAULIC FLUID

8A

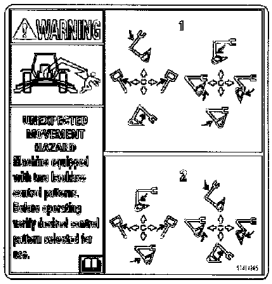


15

BS03K275

HTTP://WWW.MINNPARBACKHOEPARTS.COM



CALCOMANIAS - FRANCES CANADIENSE

| REF | FN | PART NUMBER | YR/SN | QTY | DESCRIPTION |
|---|---|---|---|---|---|
| 1 | | 398601A1 | | 1 | CALCOMANIA Warning/Warning/Danger; Front, With Ride Control; Do Not Turn Ride Control On/Read Operator's Manual/To Avoid Inadvertent Movement |
| 2 | | 398579A1 | | 1 | CALCOMANIA Warning; Crush Hazard; Keep Clear; Support Loader Lift Arms During Maintenance |
| 3 | | 398581A1 | | 2 | CALCOMANIA Warning; Entanglement Hazard, Fan; Keep Clear or Stop Engine Before Servicing |
| 4 | | 398676A1 | | 1 | CALCOMANIA Danger; Starting In Gear |
| 5 | | 398583A1 | | 2 | CALCOMANIA Danger; Jump Start |
| 6 | | 398571A1 | | 1 | CALCOMANIA Warning; Hot Liquid Under Pressure |
| 7 | | 398668A1 | | 1 | CALCOMANIA Diesel Fuel |
| 8 | | 398666A1 | | 1 | CALCOMANIA Hydraulic Fluid |
| 8A | | 321-6376 | | 1 | CALCOMANIA Hydraulic Fluid, English Decal Only |
| 9 | | 398573A1 | | 1 | CALCOMANIA Warning; Ride Control Accumulator |
| 10 | | 398656A1 | | 1 | CALCOMANIA Caution/Important; For All Models With Foot Swing Backhoe Controls and Standard Backhoe Models With Hand Swing |
| 11 | | 398654A1 | | 1 | CALCOMANIA Caution/Important; Extendahoe Backhoe Models With Hand Swing |
| 12 | | {87435940} | | 1 | Warning; Rollover Crush Hazard; Lifting Too Heavy A Load; Models Without Pilot Controls |
| 12A | | {87434772} | | 1 | Warning; Rollover Crush Hazard; Lifting Too Heavy A Load; Models With Pilot Controls |
| 13 | | 398671A1 | | 1 | CALCOMANIA Warning; Seat Spring |
| 14 | | {87429164} | | 2 | Warning; Unexpected Movement Hazard; Before Adjusting Windows |
| 15 | | {87429166} | | 1 | Pilot Control Pattern |

HTTP://WWW.MINNPARBACKHOEPARTS.COM

# INDEX - INDICE - INDEX - ZAHLENVERZEICHNIS - INDICE - INDICE - INDHOLD - INHOUD


| Number | Figure | Sequence | Ref. |
|---|---|---|---|
| {122554C1} | 09-66 | | 17 |
| {14302921} | 08-47 | | 5 |
| | 08-48 | | 5 |
| | 08-49 | | 6 |
| {14304021} | 08-47 | | 1 |
| {148093A1} | 09-77 | | 14 |
| {148095A1} | 09-77 | | 15 |
| {16746824} | 03-06 | | 3 |
| {188035A1} | 08-62 | | |
| {2852621} | 02-01 | | 45 |
| {376288A2} | 09-08 | | |
| {377221A2} | 09-63 | | 1 |
| {377232A2} | 09-64 | | 18 |
| {377233A2} | 09-64 | | 31 |
| {385920A1} | 09-06 | | |
| {4895273} | 02-20 | | 1 |
| {4899629} | 02-19 | | 8 |
| {500390441} | 03-05 | | 1 |
| {504036358} | 02-30 | | 10 |
| {504042165} | 02-11 | | 9 |
| {504043550} | 02-11 | | 4 |
| {504053166} | 02-33 | | 10 |
| {504061374} | 02-29 | | 3 |
| {504063450} | 03-04 | | 1 |
| {81868381} | 08-30 | | 8 |
| | 08-31 | | 9 |
| | 08-32 | | 18 |
| | 08-33 | | 18 |
| | 08-34 | | 19 |
| | 08-35 | | 19 |
| {83981068} | 08-31 | | 19 |
| | 08-33 | | 22 |
| | 08-34 | | 20 |
| | 08-35 | | 20 |
| {85811937} | 08-45 | | 6 |
| {85811938} | 08-40 | | 4 |
| | 08-41 | | 4 |
| | 08-42 | | 4 |
| | 08-43 | | 4 |
| | 08-44 | | 4 |
| | 08-45 | | 4 |
| | 08-46 | | 4 |
| {85824281} | 08-41 | | 10 |
| | 08-42 | | 10 |
| | 08-43 | | 10 |
| | 08-44 | | 10 |
| | 08-45 | | 9 |
| | 08-46 | | 10 |
| {85824282} | 08-40 | | 10 |
| {85826343} | 08-43 | | 6A |
| {85826345} | 08-40 | | 3 |
| | 08-43 | | 3 |
| {85826346} | 08-41 | | 6A |
| {85826905} | 08-44 | | 6A |
| {85827991} | 08-47 | | 2 |
| {85827992} | 08-47 | | 4 |
| | 08-48 | | 4 |
| | 08-49 | | 5 |
| {85827993} | 08-47 | | 6 |
| | 08-48 | | 6 |
| | 08-49 | | 7 |
| {85827994} | 08-47 | | 7 |
| | 08-48 | | 7 |
| | 08-49 | | 8 |
| {85827995} | 08-47 | | 8 |
| | 08-48 | | 8 |
| | 08-49 | | 9 |
| {85827996} | 08-47 | | 9 |
| | 08-48 | | 9 |
| | 08-49 | | 10 |
| {85827997} | 08-47 | | 10 |
| | 08-48 | | 10 |
| | 08-49 | | 11 |
| {85827998} | 08-47 | | 12 |
| | 08-48 | | 12 |
| | 08-49 | | 13 |
| {85827999} | 08-47 | | 13 |
| | 08-48 | | 13 |
| | 08-49 | | 14 |
| {85828000} | 08-47 | | 14 |
| | 08-48 | | 14 |
| | 08-49 | | 15 |
| {85828001} | 08-47 | | 15 |
| | 08-48 | | 15 |
| | 08-49 | | 16 |
| {85828002} | 08-47 | | 16 |
| | 08-48 | | 16 |
| | 08-49 | | 17 |
| {85828003} | 08-47 | | 17 |
| | 08-48 | | 17 |
| | 08-49 | | 18 |
| {85828004} | 08-48 | | 2 |
| {85828005} | 08-47 | | 11 |
| | 08-48 | | 11 |
| | 08-49 | | 12 |
| {85828013} | 08-47 | | 3 |
| {85828015} | 08-48 | | 3 |
| | 08-49 | | 3 |
| {85828048} | 08-49 | | 2 |
| {85828054} | 08-49 | | 4 |
| {85828061} | 08-49 | | 1 |
| {86990708} | 02-07 | | |
| | 02-08 | | 1 |
| {86990709} | 02-07 | | |
| | 02-08 | | 1 |
| {87419385} | 02-01 | | |
| {87420672} | 08-08 | | 25 |
| | 08-08A | | 25 |
| {87420673} | 08-08 | | 23 |
| | 08-08A | | 23 |
| {87421836} | 08-23 | | 20 |
| {87422948} | 08-23 | | 35 |
| {87423496} | 04-16 | | 2 |
| {87423813} | 09-79 | | 14 |
| {87425631} | 04-19 | | 2 |
| {87425869} | 04-16 | | 13 |
| {87426221} | 08-30 | | 6 |
| | 08-31 | | 7 |
| {87426227} | 08-30 | | 9 |
| | 08-31 | | 10 |
| {87426232} | 08-30 | | 7 |
| | 08-31 | | 8 |
| | 08-32 | | 11 |
| | 08-33 | | 11 |
| | 08-34 | | 16 |
| | 08-35 | | 16 |
| {87426233} | 08-30 | | 5 |
| | 08-31 | | 6 |
| {87426235} | 08-30 | | 11A |
| | 08-31 | | 12A |
| {87426238} | 08-30 | | 15 |
| | 08-31 | | 16 |
| | 08-32 | | 21 |
| | 08-33 | | 23 |
| | 08-34 | | 8 |
| | 08-35 | | 8 |
| {87426239} | 08-32 | | 17 |
| | 08-33 | | 17 |
| | 08-34 | | 15 |
| | 08-35 | | 15 |
| {87426240} | 08-32 | | 16 |
| | 08-33 | | 16 |
| | 08-34 | | 14 |
| | 08-35 | | 14 |
| {87426241} | 08-31 | | 18 |
| {87426716} | 08-30 | | 12 |
| | 08-31 | | 13 |
| {87426717} | 08-30 | | 11 |
| | 08-31 | | 12 |
| {87428140} | 08-09 | | 2 |
| {87428316} | 09-59 | | 8 |
| | 09-70 | | 12 |
| {87428476} | 08-33 | | 13 |
| | 08-35 | | 22 |
| {87428477} | 08-33 | | 14 |
| | 08-35 | | 23 |
| {87428486} | 08-32 | | 22 |
| | 08-33 | | 24 |
| | 08-34 | | 9 |
| | 08-35 | | 9 |
| {87428488} | 08-32 | | 20 |
| | 08-33 | | 20 |
| | 08-34 | | 18 |
| | 08-35 | | 18 |

HTTP://WWW.MINNPARBACKHOEPARTS.COM




| Number | Figure | Sequence | Ref. | Number | Figure | Sequence | Ref. |
|---|---|---|---|---|---|---|---|
| {87428490} | 08-32 | | 19 | {87437914} | 08-29 | | 14 |
| | 08-33 | | 19 | {87437917} | 08-29 | | 15 |
| | 08-34 | | 17 | {87438021} | 08-28 | | 2 |
| | 08-35 | | 17 | {87438022} | 08-28 | | |
| {87428491} | 08-32 | | 13 | {87438023} | 08-28 | | |
| | 08-34 | | 23 | {87438024} | 08-28 | | |
| {87428492} | 08-32 | | 14 | {87438025} | 08-28 | | 3 |
| | 08-34 | | 24 | {87438026} | 08-28 | | |
| {87428493} | 08-33 | | 25A | {87438027} | 08-28 | | |
| | 08-34 | | 22 | {87438028} | 08-28 | | |
| | 08-35 | | 26A | | 08-28 | | |
| {87428495} | 08-32 | | 12 | {87438029} | 08-28 | | 4 |
| | 08-33 | | 12 | {87438031} | 08-28 | | 5 |
| | 08-34 | | 21 | {87438032} | 08-28 | | |
| | 08-35 | | 21 | {87438045} | 08-29 | | |
| {87428497} | 08-32 | | 9 | {87438925} | 04-01 | | 3 |
| | 08-33 | | 9 | {87438926} | 04-01 | | 4 |
| | 08-34 | | 12 | {87438927} | 04-01 | | 5 |
| | 08-35 | | 12 | {87438928} | 04-01 | | 6 |
| {87428501} | 08-33 | | 21 | {87438929} | 04-01 | | 8 |
| | 08-35 | | 25 | {87438930} | 04-01 | | 9 |
| {87428640} | 09-76 | | 2 | {87438931} | 04-01 | | 10 |
| {87428814} | 08-23 | | 39 | {87438932} | 04-01 | | 11 |
| {87429163} | 09-80 | | 14 | {87438933} | 04-01 | | 12 |
| {87429164} | 09-81 | | 14 | {87438935} | 04-01 | | 13 |
| {87429165} | 09-80 | | 15 | {87438937} | 04-01 | | 14 |
| {87429166} | 09-81 | | 15 | {87438940} | 04-01 | | 15 |
| {87429387} | 08-23 | | 2 | {87438941} | 04-01 | | 16 |
| {87429584} | 08-08 | | 19 | {87438942} | 04-01 | | 17 |
| | 08-08A | | 19 | {87438944} | 04-01 | | 18 |
| {87429586} | 08-08 | | 10 | {87438946} | 04-01 | | 19 |
| | 08-08A | | 10 | {87438948} | 04-01 | | 20 |
| {87429690} | 02-03 | | 3 | {87438950} | 04-01 | | 22 |
| {87429692} | 02-03 | | 5 | {87438951} | 04-01 | | 32 |
| {87429693} | 02-03 | | 6 | {87438954} | 04-01 | | 36 |
| {87429694} | 02-03 | | 1 | {87438956} | 04-01 | | 38 |
| {87429695} | 02-03 | | 4 | {87438960} | 04-02 | | 1 |
| {87430921} | 09-77 | | 2 | {87438963} | 04-02 | | 2 |
| {87430922} | 09-78 | | 2 | {87438965} | 04-02 | | 3 |
| {87430972} | 08-23 | | 1 | {87438967} | 04-02 | | 4 |
| {87431077} | 09-78 | | 8 | {87438969} | 04-02 | | 5 |
| {87431078} | 09-77 | | 8 | {87438970} | 04-02 | | 6 |
| {87431080} | 09-78 | | 9 | {87438971} | 04-02 | | 7 |
| {87431081} | 09-77 | | 9 | {87438972} | 04-02 | | 8 |
| {87433028} | 08-32 | | 7 | {87438973} | 04-02 | | 9 |
| | 08-32 | | 8A | {87438974} | 04-02 | | 10 |
| | 08-33 | | 7 | {87438975} | 04-02 | | 11 |
| | 08-33 | | 8A | {87438976} | 04-02 | | 12 |
| | 08-34 | | 10A | {87438977} | 04-02 | | 13 |
| | 08-34 | | 11 | {87438978} | 04-02 | | 14 |
| | 08-35 | | 10A | {87438979} | 04-02 | | 15 |
| | 08-35 | | 11 | {87438980} | 04-02 | | 16 |
| {87433029} | 08-32 | | 10 | {87438981} | 04-02 | | 17 |
| | 08-32 | | 8 | {87438982} | 04-02 | | 18 |
| | 08-33 | | 10 | {87438983} | 04-02 | | 19 |
| | 08-33 | | 8 | {87438984} | 04-02 | | 20 |
| | 08-34 | | 10 | {87438985} | 04-02 | | 21 |
| | 08-34 | | 13 | {87438986} | 04-02 | | 22 |
| | 08-35 | | 10 | {87438987} | 04-02 | | 23 |
| | 08-35 | | 13 | {87438989} | 04-02 | | 24 |
| {87433030} | 08-32 | | 23 | {87438992} | 04-01 | | 1 |
| | 08-33 | | 25 | {87438993} | 04-01 | | 2 |
| | 08-35 | | 26 | {87438994} | 04-01 | | |
| {87433209} | 09-79 | | 12A | {87438995} | 04-01 | | 21 |
| {87434070} | 08-29 | | | {87438996} | 04-01 | | 23 |
| {87434075} | 08-29 | | 2 | {87438997} | 04-01 | | 24 |
| {87434076} | 08-29 | | 3 | {87438999} | 04-01 | | 25 |
| {87434077} | 08-29 | | 4 | {87439000} | 04-01 | | 26 |
| {87434771} | 09-80 | | 12A | {87439001} | 04-01 | | 27 |
| {87434772} | 09-81 | | 12A | {87439002} | 04-01 | | 28 |
| {87435489} | 08-53 | | 8 | {87439003} | 04-01 | | 29 |
| {87435569} | 05-01 | | 1 | {87439004} | 04-01 | | 30 |
| | 09-73 | | 12 | {87439005} | 04-01 | | 31 |
| {87435938} | 09-79 | | 12 | {87439006} | 04-01 | | 33 |
| {87435939} | 09-80 | | 12 | {87439007} | 04-01 | | 34 |
| {87435940} | 09-81 | | 12 | {87439008} | 04-01 | | 35 |
| {87436192} | 09-73 | | 1B | {87439009} | 04-01 | | 37 |
| {87437840} | 08-08A | | 4A | {87439010} | 04-01 | | 41 |
| | 08-09 | | 4A | {87439011} | 04-01 | | 43 |
| {87437899} | 08-29 | | 10 | {87439061} | 04-01 | | 42 |
| {87437905} | 08-29 | | 12 | {87440694} | 08-23 | | 16 |
| {87437906} | 08-29 | | 13 | {87440814} | 08-30 | | 14 |

HTTP://WWW.MINNPARBACKHOEPARTS.COM




| Number | Figure | Sequence | Ref. | Number | Figure | Sequence | Ref. |
|---|---|---|---|---|---|---|---|
| {87440814} | 08-31 | | 15 | 112380A1 | 09-01 | | 14 |
| {87440815} | 08-30 | | 13 | | 09-02 | | 29 |
| | 08-31 | | 14 | | 09-18 | | 21 |
| {87440835} | 08-20 | | 10 | 112382A1 | 09-02 | | 25 |
| {87440837} | 08-20 | | 11 | 112486A1 | 06-07 | | 10 |
| {87441495} | 08-36 | | 1 | | 06-27 | | 10 |
| | 08-37 | | 1 | 112509A1 | 05-06 | | 5 |
| | 08-38 | | 1 | | 06-04 | | 3 |
| | 08-39 | | 1 | 112517A1 | 06-20 | | 4 |
| 100-21315 | 08-62 | | 13A | 112946A1 | 09-06 | | 8 |
| 100-39001 | 09-55 | | 43 | | 09-06 | | 8 |
| | 09-57 | | 20 | 113133A2 | 08-05 | | 34 |
| 100016 | 04-01 | | 39 | | 08-59 | | 1 |
| 100520A1 | 06-02 | | 12 | | 09-05 | | 20 |
| 100532A1 | 06-03 | | 3 | 113135A2 | 08-59 | | 2 |
| 100533A1 | 05-06 | | 11 | 113629A1 | 09-04 | | 25 |
| | 06-03 | | 8 | 114295A1 | 06-06 | | 20 |
| 100552A1 | 06-06 | | 5 | 114296A1 | 06-04 | | 9 |
| 100553A1 | 06-06 | | | 114318A1 | 09-23 | | 12A |
| 100554A1 | 06-06 | | | | 09-37 | | 4 |
| 100555A1 | 06-06 | | 18 | 114549A1 | 09-54 | | 6 |
| 100556A1 | 06-06 | | 4 | 114882A2 | 05-01 | | 2 |
| 100557A1 | 06-06 | | 22 | 114980A1 | 09-41 | | 8 |
| | 06-13 | | 8 | 116339A1 | 09-05 | | 21 |
| | 06-14 | | 9 | 116425A1 | 06-06 | | 12 |
| | 06-26 | | 1 | 116426A1 | 06-06 | | 7 |
| | 06-30 | | 7 | 116427A1 | 06-06 | | 8 |
| 100559A1 | 06-06 | | 6 | 116521A1 | 09-50 | | 3 |
| 100561A1 | 06-06 | | 13 | 116534A1 | 09-50 | | 10 |
| 100562A1 | 06-06 | | 19 | | 09-75 | | 1 |
| 100696A1 | 09-04 | | 3 | 116538A2 | 09-50 | | 12 |
| 100748A1 | 06-12 | | 9 | 116545A1 | 09-50 | | 9 |
| 100753A1 | 06-20 | | 17 | 116547A1 | 09-49 | | 10 |
| 101479A1 | 08-13 | | 24 | | 09-50 | | 6 |
| 101531A1 | 04-17 | | 9 | 116548A1 | 09-50 | | 15 |
| 102-1387 | 05-03 | | 4 | 116550A1 | 09-50 | | 14 |
| 102-23206 | 08-29 | | 5 | 116551A1 | 09-50 | | 8 |
| 102761A1 | 09-01 | | 12 | 116552A1 | 09-50 | | 13 |
| | 09-02 | | 23 | 116761A3 | 09-48 | | 1 |
| 102765A1 | 09-18 | | 19 | 116763A1 | 09-48 | | 2 |
| 103-11100 | 09-13 | | 16 | 116764A3 | 09-48 | | 3 |
| 103-1437 | 09-02 | | 15 | 116766A2 | 09-48 | | 4 |
| 103-1475 | 09-21 | | 8 | 116767A1 | 09-48 | | 5 |
| 103-1518 | 03-03 | | 7 | 117933A1 | 06-24 | | 6 |
| 103-16175 | 09-22 | | 4 | 118769A1 | 09-46 | | 7 |
| | 09-22 | | 8 | 118900A1 | 09-04 | | 24 |
| | 09-24 | | 25 | 118901A1 | 09-04 | | 30 |
| | 09-24 | | 33 | | 09-05 | | 3 |
| | 09-26 | | 23 | 119171A1 | 09-48 | | 6 |
| | 09-26 | | 27 | 119211A1 | 09-46 | | 11 |
| | 09-26 | | 33 | 119241A1 | 06-23 | | 1 |
| | 09-26 | | 36 | 119243A1 | 05-09 | | 4 |
| | 09-26 | | 5 | 120303A1 | 05-02 | | 25 |
| | 09-27 | | 14 | | 08-04 | | 10 |
| | 09-27 | | 40 | | 08-05 | | 8 |
| | 09-27 | | 50 | | 08-06 | | 8 |
| 103-16200 | 09-23 | | 18 | | 08-26 | | 32 |
| 103-3350 | 09-04 | | 29 | | 08-27 | | 14 |
| 103670A1 | 08-24 | | 18 | | 09-38 | | 33 |
| 104824A1 | 09-04 | | 23 | 121-145 | 07-03 | | 20 |
| 104907A1 | 06-23 | | 1 | 121412A1 | 04-07 | | 2 |
| 106989A1 | 09-18 | | 13 | | 04-09 | | |
| 106990A1 | 09-18 | | 15 | | 04-17 | | 16 |
| 107071A1 | 06-30 | | 17 | 121413A1 | 04-07 | | 3 |
| 107124A1 | 09-26 | | 45 | | 04-19 | | 1 |
| | 09-26 | | 49 | | 04-20 | | 13 |
| | 09-27 | | 22 | | 08-25 | | 27 |
| | 09-27 | | 33 | 121414A1 | 04-07 | | 4 |
| | 09-37 | | 8 | | 09-51 | | |
| 108088A1 | 09-01 | | 11 | 121415A1 | 04-09 | | |
| | 09-02 | | 12 | 121416A1 | 04-07 | | 5 |
| | 09-02 | | 21 | 121665A1 | 09-22 | | 7 |
| 108366A1 | 04-17 | | 4 | 121729A1 | 07-04 | | 8 |
| 108864A1 | 09-18 | | 1 | 121778A1 | 09-23 | | 3 |
| 108923A1 | 09-18 | | 9 | 121856A1 | 09-38 | | 55 |
| 108924A1 | 09-18 | | 8 | 121920A1 | 09-08 | | 12 |
| 109268A1 | 09-04 | | 4 | 122081A1 | 09-66 | | 9 |
| 109511A1 | 04-16 | | 9 | 122259A1 | 05-06 | | 10 |
| 109879A1 | 09-39 | | 3 | 122261A1 | 05-05 | | 9 |
| | 09-41 | | 13 | 122264A1 | 06-03 | | 10 |
| 110307A1 | 08-59 | | 12 | 122265A1 | 05-06 | | 9 |
| 111522A1 | 09-04 | | 5 | | 06-03 | | 9 |

HTTP://WWW.MINNPARBACKHOEPARTS.COM




| Number | Figure | Sequence | Ref. |
|---|---|---|---|
| 122268A1 | 06-02 | | 13 |
| 122270A1 | 05-05 | | 5 |
| | 06-02 | | 7 |
| 122503A1 | 09-27 | | |
| 122553A1 | 09-65 | | 12 |
| | 09-66 | | 24 |
| 122579A1 | 09-65 | | 13 |
| 122603A1 | 09-38 | | 24 |
| 123097A1 | 04-04 | | 32 |
| | 04-07 | | 31 |
| | 06-11 | | 42 |
| 123493A1 | 09-02 | | 9 |
| 123537A1 | 09-10 | | 29 |
| 123726A1 | 08-61 | | 12 |
| 123809A2 | 04-04 | | 31 |
| | 04-07 | | 30 |
| | 06-11 | | 43 |
| 123815A1 | 09-02 | | 2 |
| 123980A1 | 09-65 | | 23 |
| 124011A1 | 09-65 | | 22 |
| 124243A1 | 09-02 | | 8 |
| 124568A2 | 08-62 | | 3 |
| 124721A1 | 09-03 | | 14 |
| 1250594C1 | 09-65 | | 10 |
| | 09-65 | | 11 |
| | 09-66 | | 16 |
| | 09-66 | | 23 |
| | 09-66 | | 8 |
| 125113A1 | 09-18 | | 12 |
| | 09-18 | | 14 |
| 125749A1 | 09-61 | | 12 |
| 126-116 | 06-11 | | 12 |
| 126155A1 | 09-10 | | 31 |
| 126177 | 09-72 | | 3 |
| 126844A1 | 04-07 | | 17 |
| | 04-07 | | 21 |
| | 04-09 | | 10 |
| | 04-09 | | 16 |
| | 04-09 | | 20 |
| 126918A1 | 09-20 | | 2 |
| 127009A1 | 04-10 | | 6 |
| 127158A1 | 04-17 | | 6 |
| 127181A2 | 02-01 | | 27 |
| 127862A2 | 08-63 | | 6 |
| 128135A2 | 08-61 | | 4 |
| 128312A1 | 04-08 | | 3 |
| | 04-13 | | 13 |
| | 04-14 | | 3 |
| | 09-04 | | 19 |
| 128376A1 | 06-29 | | 11 |
| 128483A1 | 09-65 | | 16 |
| | 09-65 | | 9 |
| | 09-66 | | 2 |
| | 09-66 | | 7 |
| 128484A1 | 09-65 | | 3 |
| | 09-66 | | 13 |
| 128485A1 | 09-65 | | 4 |
| | 09-65 | | 8 |
| | 09-66 | | 14 |
| | 09-66 | | 21 |
| 128570A1 | 06-08 | | 11 |
| | 06-28 | | 9 |
| 128760A1 | 08-12 | | 19 |
| | 08-13 | | 30 |
| | 08-65 | | 1 |
| | 09-26 | | 1 |
| | 09-27 | | 10 |
| 128761A1 | 08-65 | | 2 |
| 128770A2 | 08-65 | | 4 |
| 128772A1 | 08-65 | | 16 |
| 128818A1 | 09-04 | | 11 |
| 129-667 | 08-57 | | 2 |
| 129015A1 | 09-16 | | 1 |
| 129040A1 | 09-24 | | 23 |
| | 09-24 | | 26 |
| 129041A1 | 09-24 | | 30 |
| | 09-26 | | 2 |
| | 09-27 | | 12 |
| 129883A1 | 09-24 | | 10 |
| | 09-27 | | 1 |
| 129884A2 | 09-26 | | |
| 129885A1 | 09-33 | | 1 |
| 129893A1 | 09-31 | | 3 |
| | 09-33 | | 3 |
| 129894A1 | 09-31 | | 2 |
| | 09-33 | | 2 |
| 129914A1 | 09-02 | | 4 |
| 129944A1 | 09-33 | | 4 |
| 130047A1 | 03-01 | | 15 |
| 130049A1 | 03-01 | | 5 |
| 130245A1 | 07-06 | | 32 |
| 1302758C1 | 04-11 | | 35 |
| | 09-68 | | 20 |
| 131-121 | 04-10 | | 15 |
| | 09-02 | | 33 |
| 131-425 | 09-52 | | |
| 131-431 | 09-73 | | 14 |
| 131-435 | 09-50 | | |
| 131-619 | 04-11 | | 17 |
| | 04-11 | | 20 |
| 131-861 | 04-10 | | 7 |
| | 09-01 | | 4 |
| | 09-11 | | 15 |
| | 09-61 | | 8 |
| 131-869 | 09-43 | | 21B |
| | 09-43 | | 4 |
| 1312210C2 | 04-13 | | |
| | 04-13 | | |
| | 04-14 | | |
| | 04-14 | | |
| 131600A1 | 08-08 | | 24 |
| | 08-08A | | 24 |
| 131750A2 | 08-65 | | |
| 132661A1 | 09-01 | | 5 |
| 132842A1 | 09-27 | | 45 |
| 132844A1 | 09-27 | | 44 |
| 132862A1 | 09-52 | | 6 |
| 132864A1 | 09-52 | | |
| 132866A1 | 09-52 | | 9 |
| 132872A1 | 09-52 | | 18 |
| 132873A1 | 09-02 | | 39 |
| 132931A1 | 03-03 | | 2 |
| | 09-01 | | 25 |
| 132988A1 | 09-06 | | 3 |
| | 09-06 | | 3 |
| 133083A1 | 08-58 | | 12 |
| 1331087C1 | 09-64 | | 14 |
| 133421A1 | 09-52 | | 17 |
| 133422A1 | 09-52 | | 15 |
| 133615A1 | 09-01 | | 2 |
| 133617A1 | 09-02 | | 18 |
| 133715A1 | 04-09 | | 11 |
| 133716A1 | 04-09 | | 13 |
| 133989A1 | 09-02 | | 13 |
| 1340763C1 | 08-62 | | 16 |
| 1340764C1 | 08-62 | | 15 |
| 1340798C1 | 08-60 | | 15 |
| 1340969C2 | 08-14 | | 17 |
| | 08-66 | | 1 |
| | 09-27 | | 25 |
| 1340970C1 | 08-66 | | 2 |
| 134167A1 | 09-23 | | 20 |
| 1344025C1 | 09-51 | | 16 |
| 1344026C1 | 09-51 | | 17 |
| 1346189C2 | 08-07 | | 2 |
| | 08-60 | | 1 |
| 1346190C2 | 08-07 | | 1 |
| | 08-60 | | 1 |
| 1346191C2 | 08-60 | | 2 |
| 1346192C2 | 08-60 | | 2 |
| 1346195C1 | 08-60 | | 13 |
| 1346476C1 | 08-65 | | 6 |
| 1348264C1 | 02-02 | | 5 |
| 134844A1 | 09-07 | | 3 |
| 1349058C1 | 06-08 | | 5 |
| 1349059C1 | 06-08 | | 6 |
| | 06-28 | | 5 |
| 1349265C1 | 06-30 | | 24 |
| 135-51652 | 09-24 | | 18 |
| | 09-27 | | 4 |
| 135161A1 | 08-58 | | 13 |
| 135248A1 | 09-23 | | 10 |
| 135249A1 | 09-23 | | 9 |
| 135512A3 | 09-52 | | 2 |

HTTP://WWW.MINNPARBACKHOEPARTS.COM




| Number | Figure | Sequence | Ref. |
|---|---|---|---|
| 136-54 | 04-17 | | 14 |
| 136261A1 | 09-16 | | 11 |
| 136263A1 | 09-16 | | 8 |
| | 09-17 | | 2 |
| 136267A1 | 09-16 | | 5 |
| 136269A1 | 09-16 | | 6 |
| 136270A2 | 09-16 | | 40 |
| 136271A2 | 09-16 | | 39 |
| 136822A1 | 09-11 | | 11 |
| 136824A1 | 09-11 | | 13 |
| 137219A1 | 04-19 | | 3 |
| 137223A2 | 06-01 | | 13 |
| 137248A1 | 08-62 | | 13 |
| 137283A1 | 09-03 | | 1 |
| 137343A1 | 09-10 | | 28 |
| 137344A1 | 09-10 | | 27 |
| 138595A1 | 09-38 | | 14 |
| 138624A1 | 09-24 | | 36 |
| 139180A1 | 09-05 | | 12 |
| 139195A1 | 09-05 | | 14 |
| 139235A1 | 09-05 | | 13 |
| 139363A1 | 09-41 | | 9 |
| 139728A1 | 09-74 | | 14 |
| 139865A1 | 09-03 | | 8 |
| 140-103 | 09-61 | | 11 |
| 140-104 | 09-55 | | 44 |
| | 09-57 | | 21 |
| 140-106 | 04-10 | | 12 |
| | 04-10 | | 13 |
| | 04-20 | | 6 |
| | 09-11 | | 14 |
| 140-107 | 04-11 | | 16A |
| | 04-11 | | 19 |
| | 09-01 | | 3 |
| | 09-02 | | 32 |
| | 09-11 | | 14 |
| 140-108 | 09-15 | | 29 |
| 140-117 | 09-43 | | 13 |
| | 09-43 | | 24 |
| | 09-43 | | 7 |
| 140-119 | 04-09 | | 15 |
| 140-120 | 04-11 | | 16 |
| | 04-11 | | 30 |
| 140028 | 04-01 | | 40 |
| 140943A1 | 06-08 | | 7 |
| 140944A1 | 06-08 | | 7 |
| 140945A1 | 06-08 | | 7 |
| 140946A1 | 06-08 | | 7 |
| 140947A1 | 06-08 | | 7 |
| 140948A1 | 06-08 | | 7 |
| 140949A1 | 06-08 | | 7 |
| 140951A1 | 06-08 | | 7 |
| 140953A1 | 06-08 | | 7 |
| 140954A1 | 06-08 | | 7 |
| 141232A2 | 09-35 | | 1 |
| 141233A1 | 09-35 | | 3 |
| 141234A1 | 09-35 | | 2 |
| 141747A1 | 05-01 | | 12 |
| 142-103 | 09-55 | | 47 |
| | 09-57 | | 23 |
| 142300A1 | 09-08 | | 3 |
| 142404A1 | 09-03 | | 2 |
| 142524A1 | 09-04 | | 12 |
| 142538A1 | 09-06 | | 5 |
| | 09-06 | | 5 |
| | 09-07 | | 5 |
| 142687A1 | 09-07 | | |
| 142842A1 | 09-24 | | 27 |
| 143210A1 | 09-02 | | 7 |
| 143219A1 | 09-38 | | 20 |
| 143400A1 | 08-13 | | 15 |
| 14358921 | 08-48 | | 1 |
| 143786A1 | 09-52 | | 7 |
| 144173A1 | 08-29 | | 7 |
| 144193A3 | 09-76 | | 7 |
| 144279A1 | 06-09 | | 7 |
| | 06-31 | | 7 |
| 144454A1 | 06-02 | | |
| 144457A1 | 06-04 | | |
| 144458A1 | 06-04 | | 5 |
| 144459A1 | 06-04 | | 7 |
| 144460A1 | 06-08 | | |
| 144461A1 | 06-05 | | |
| 144462A1 | 06-05 | | 1 |
| 144463A1 | 06-05 | | 5 |
| 144465A1 | 06-05 | | 4 |
| 144466A1 | 06-06 | | |
| 144477A1 | 08-23 | | 14 |
| | 08-23 | | 7 |
| 144479A1 | 08-23 | | 8 |
| 144908A2 | 09-40 | | 24 |
| 151-516 | 09-53 | | 7 |
| | 09-69 | | 3 |
| 151-532 | 02-01 | | 7 |
| 1530028C1 | 06-13 | | 2 |
| | 06-14 | | 3 |
| 1537663C1 | 06-03 | | 5 |
| 1537664C1 | 06-03 | | 6 |
| 1542830C2 | 08-55 | | |
| 1542874C1 | 08-59 | | |
| 1542875C1 | 08-58 | | |
| | 08-60 | | |
| | 08-66 | | |
| 1542876C1 | 08-61 | | |
| | 08-62 | | |
| 1542877C1 | 08-63 | | |
| | 08-64 | | |
| | 08-65 | | |
| 1543256C1 | 08-59 | | |
| 1543260C1 | 08-58 | | |
| 1543267C1 | 08-60 | | |
| | 08-66 | | |
| 1543269C1 | 08-61 | | |
| 16586624 | 02-37 | | 1 |
| 16587924 | 02-30 | | 7 |
| 16592624 | 02-37 | | 1 |
| 16784504 | 02-17 | | 2 |
| 168-71 | 04-17 | | 7 |
| 16866473 | 02-26 | | 1 |
| 16979231 | 03-04 | | 4 |
| 170-104 | 09-02 | | 3 |
| 17044625 | 02-33 | | 12 |
| 17278780 | 02-12 | | 7 |
| 17283181 | 02-30 | | 8 |
| 175156A1 | 09-08 | | |
| 175599A1 | 09-41 | | 2 |
| 175778A1 | 08-64 | | 14 |
| 175956A1 | 06-28 | | |
| 175957A1 | 06-28 | | 6 |
| 175959A1 | 06-27 | | 11 |
| 175961A1 | 06-27 | | 19 |
| 175964A2 | 06-29 | | 9 |
| 175965A1 | 06-29 | | 10 |
| 175966A1 | 06-29 | | 8 |
| 175968A1 | 06-29 | | 12 |
| 175974A1 | 06-30 | | 1 |
| 175976A1 | 06-30 | | 4 |
| 175977A1 | 06-30 | | 5 |
| 175978A1 | 06-30 | | 10 |
| 175979A1 | 06-30 | | 11 |
| 175980A1 | 06-30 | | 12 |
| 175982A1 | 06-30 | | 14 |
| 175984A1 | 06-30 | | 19 |
| 175989A1 | 06-30 | | 27 |
| 175990A1 | 06-30 | | 28 |
| 176091A1 | 09-51 | | 6 |
| 176311A1 | 09-01 | | 10 |
| | 09-02 | | 20 |
| 176914A1 | 09-50 | | 5 |
| 176916A1 | 09-50 | | 4 |
| 176919A1 | 09-49 | | 7 |
| 176920A1 | 09-50 | | 7 |
| 176921A1 | 09-49 | | 9 |
| | 09-50 | | 2 |
| 176924A1 | 09-47 | | 5 |
| 177269A1 | 04-18 | | 14 |
| | 09-61 | | 18 |
| 178004A1 | 09-18 | | 18 |
| 178006A1 | 09-18 | | 17 |
| 178051A1 | 08-29 | | 8 |
| 178951A1 | 08-10 | | 12 |
| | 08-11 | | 11 |
| | 08-12 | | 11 |
| | 08-13 | | 10 |

HTTP://WWW.MINNPARBACKHOEPARTS.COM




| Number | Figure | Sequence | Ref. | Number | Figure | Sequence | Ref. |
|---|---|---|---|---|---|---|---|
| 178952A1 | 08-10 | | 13 | 181273A1 | 06-21 | | 6 |
| | 08-11 | | 12 | 181274A1 | 06-12 | | 3 |
| | 08-12 | | 12 | 18137824 | 02-33 | | 14 |
| | 08-13 | | 11 | 18138324 | 02-33 | | 13 |
| 179029A1 | 09-20 | | 1 | 181842A1 | 09-04 | | 7A |
| 179956A1 | 09-12 | | 6 | 181979A1 | 09-65 | | 24 |
| 180427A1 | 09-37 | | 2 | 181981A1 | 09-42 | | 17 |
| 180593A1 | 09-52 | | 11 | | 09-63 | | 5 |
| 180594A3 | 09-52 | | 19 | 182006A1 | 09-17 | | 4 |
| 181042A1 | 09-24 | | 22 | | 09-21 | | 9 |
| | 09-27 | | 8 | 182109A1 | 08-63 | | 16 |
| 181100A1 | 06-13 | | 4 | 182116A1 | 08-63 | | 19 |
| | 06-14 | | 5 | 182218A1 | 08-63 | | |
| | 06-21 | | 35 | 182276A1 | 04-10 | | 5 |
| | 06-22 | | 5 | 182445A1 | 07-03 | | 1 |
| 181101A1 | 06-12 | | 2 | | 07-04 | | 1 |
| | 06-14 | | 20 | | 07-05 | | |
| 181102A1 | 06-12 | | 12 | 182594A1 | 04-11 | | 11 |
| | 06-14 | | 22 | 182697A1 | 09-63 | | 3 |
| 181103A1 | 06-21 | | 20 | 182721A2 | 04-18 | | 11 |
| 181104A1 | 07-02 | | 27 | 183168A1 | 09-40 | | 7 |
| 181105A1 | 06-13 | | 12 | 183322A1 | 08-13 | | 18 |
| | 06-14 | | 16 | 183443A1 | 09-27 | | 51 |
| 181107A1 | 06-21 | | 19 | 183509A1 | 09-27 | | 52 |
| 181108A1 | 06-18 | | 24 | 183736A1 | 08-13 | | 29 |
| | 06-19 | | 26 | 183808A1 | 09-31 | | 1 |
| 181111A1 | 06-18 | | 13 | 183810A1 | 09-31 | | 4 |
| 181116A1 | 06-18 | | 9 | 183938A1 | 09-24 | | 37 |
| 181118A1 | 06-19 | | 1 | 184297A1 | 08-13 | | 22 |
| 181122A1 | 06-20 | | 5 | 184497A1 | 04-06 | | 3 |
| 181123A1 | 06-19 | | 31 | 184616A1 | 08-14 | | 13 |
| 181126A1 | 06-17 | | 3 | 184617A1 | 08-14 | | 12 |
| | 06-20 | | 9 | 184627A2 | 07-04 | | 13 |
| 181128A1 | 06-18 | | 3 | 184723A1 | 09-24 | | 35 |
| 181130A1 | 06-19 | | 30 | 184726A1 | 04-11 | | 10 |
| 181132A1 | 06-17 | | 5 | 184884A1 | 09-24 | | 34 |
| | 06-19 | | 2 | 185325A1 | 09-41 | | 14 |
| 181136A1 | 06-21 | | 5 | 185506A1 | 09-07 | | 8 |
| 181137A1 | 06-21 | | 28 | 185926A1 | 03-01 | | 4 |
| 181138A1 | 06-16 | | 12 | | 09-38 | | 4 |
| 181139A1 | 06-16 | | 5 | 186351A1 | 09-46 | | 11A |
| 181141A1 | 06-13 | | 14 | 186977A1 | 09-37 | | 13 |
| | 06-14 | | 19 | 186989A1 | 09-73 | | 13 |
| 181142A1 | 06-15 | | 19 | 187281A1 | 04-18 | | 12 |
| 181144A1 | 06-19 | | 33 | 187714A1 | 06-11 | | 1 |
| 181146A1 | 06-21 | | 18 | 187715A1 | 06-11 | | 2 |
| 181158A1 | 06-18 | | 12 | 188009A3 | 03-01 | | 29A |
| 181159A1 | 06-18 | | 11 | 188027A2 | 08-09 | | 13 |
| 181161A1 | 06-18 | | 14 | | 08-09A | | 13 |
| 181165A1 | 06-19 | | 34 | | 08-62 | | 1 |
| 181166A1 | 06-21 | | 22 | | 09-23 | | 11 |
| 181169A1 | 09-47 | | 6 | 188028A2 | 08-62 | | 2 |
| | 09-48 | | 7 | 188032A2 | 08-62 | | 4 |
| 181170A1 | 09-49 | | 11 | 188034A3 | 08-62 | | 14 |
| | 09-50 | | 16 | 188036A1 | 08-62 | | 22 |
| 181171A1 | 06-16 | | 7 | 188311A2 | 03-01 | | 11 |
| 181173A1 | 06-16 | | 16 | 189109A1 | 03-03 | | 2A |
| 181174A2 | 06-16 | | 22 | | 09-01 | | |
| 181175A1 | 06-16 | | 18 | | 09-02 | | |
| 181176A1 | 06-14 | | 18 | 189602A3 | 03-01 | | 29 |
| 181177A1 | 06-16 | | 11 | 189653A2 | 08-10 | | 21 |
| 181179A1 | 06-13 | | 11 | | 08-63 | | 1 |
| | 06-14 | | 15 | | 09-24 | | 9 |
| 181198A1 | 06-20 | | 3 | 189657A2 | 08-63 | | 18 |
| 181202A1 | 06-12 | | 13 | 190427A1 | 06-19 | | |
| 181203A1 | 06-16 | | 21 | 190428A3 | 06-16 | | 8 |
| 181207A1 | 06-21 | | 23 | 190431A1 | 06-22 | | 10 |
| 181208A1 | 06-21 | | 24 | 190435A1 | 06-21 | | 37 |
| 181219A1 | 06-12 | | 10 | 190436A1 | 06-21 | | 13 |
| 181232A1 | 06-13 | | 13 | 190437A1 | 06-21 | | 4 |
| | 06-14 | | 17 | 190438A2 | 06-21 | | 12 |
| 181234A2 | 06-21 | | 15 | 190439A2 | 06-21 | | 11 |
| 181245A2 | 06-16 | | 1 | 190440A1 | 06-21 | | 38 |
| 181251A1 | 06-21 | | 9 | 190441A1 | 06-21 | | 14 |
| 181253A1 | 06-21 | | 31 | 190442A1 | 06-21 | | 2 |
| 181254A1 | 06-21 | | 25 | 190443A1 | 06-21 | | 3 |
| 181255A2 | 06-21 | | 27 | 190449A1 | 07-01 | | 7 |
| 181256A1 | 06-21 | | 10 | 190450A1 | 07-01 | | 9 |
| 181258A1 | 06-21 | | 29 | 190451A1 | 07-02 | | 1 |
| 181260A1 | 06-21 | | 26 | 190452A1 | 06-27 | | 14 |
| 181261A1 | 06-21 | | 17 | 190463A1 | 07-02 | | 2 |
| 181272A1 | 06-21 | | 7 | 190469A1 | 06-27 | | 6 |

HTTP://WWW.MINNPARBACKHOEPARTS.COM




| Number | Figure | Sequence | Ref. |
|---|---|---|---|
| 190471A1 | 06-27 | | 4 |
| 190476A2 | 07-02 | | 4 |
| 190477A2 | 07-02 | | 4 |
| 190493A1 | 07-01 | | 14 |
| 190496A1 | 07-01 | | 8 |
| 190500A1 | 07-01 | | 20 |
| 190506A1 | 06-28 | | 7 |
| 190508A1 | 06-28 | | 7 |
| 190509A1 | 06-28 | | 7 |
| 190510A1 | 06-28 | | 7 |
| 190511A1 | 06-28 | | 7 |
| 190512A1 | 06-28 | | 7 |
| 190513A1 | 06-28 | | 7 |
| 190514A1 | 06-28 | | 7 |
| 190515A1 | 06-28 | | 7 |
| 190516A1 | 06-28 | | 7 |
| 190675A1 | 09-64 | | 17 |
| 190682A1 | 06-06 | | 10 |
| 190684A1 | 06-06 | | 9 |
| 191046A1 | 03-01 | | 30 |
| 191047A1 | 09-38 | | 27 |
| 191067A1 | 06-27 | | 15 |
| 191239A1 | 09-10 | | 1 |
| 191252A1 | 08-62 | | 14A |
| 191703A1 | 08-21 | | |
| | 08-21 | | |
| | 09-66 | | 25 |
| 191704A1 | 09-66 | | 3 |
| 191747A1 | 08-62 | | |
| 191796A1 | 05-04 | | 2 |
| | 06-01 | | 8 |
| 192152A1 | 08-05 | | 27 |
| 192154A1 | 08-05 | | 31 |
| 192156A1 | 08-05 | | 30 |
| 192345A1 | 08-07 | | 4 |
| 192352A1 | 08-07 | | 3 |
| 192450A1 | 09-74 | | 9 |
| 192815A1 | 09-04 | | 28 |
| 192895A1 | 08-56 | | 2 |
| 192971A1 | 08-09 | | 15 |
| | 08-09A | | 15 |
| 193-1000 | 04-04 | | 18 |
| | 04-04 | | 3 |
| | 04-07 | | |
| | 04-07 | | 12 |
| 193-1003 | 09-04 | | 17 |
| | 09-46 | | 10 |
| 193913A1 | 09-66 | | 18 |
| 195-140 | 09-11 | | 8 |
| 195-81023 | 09-55 | | 48 |
| | 09-57 | | 24 |
| 1954626C1 | 09-64 | | 15 |
| 1954736C1 | 09-64 | | 3 |
| 195503A1 | 08-08 | | 30 |
| | 08-08A | | 30 |
| | 08-61 | | 1 |
| | 09-22 | | 1 |
| 195504A1 | 08-08 | | 29 |
| | 08-08A | | 29 |
| | 08-61 | | 1 |
| | 09-22 | | 2 |
| 195505A1 | 08-61 | | 2 |
| 195506A1 | 08-61 | | 2 |
| 195552A1 | 04-18 | | 3 |
| 195615A1 | 09-01 | | 6 |
| | 09-02 | | 19 |
| 1959509C1 | 05-01 | | 4 |
| 196065A1 | 06-30 | | 21 |
| 196066A1 | 06-30 | | 22 |
| 196085A1 | 07-02 | | 9 |
| 196090A1 | 06-30 | | 2 |
| 196454A1 | 06-19 | | 3A |
| 1966136C1 | 06-02 | | 16 |
| 1966138C1 | 06-02 | | 17 |
| 1966149C2 | 06-02 | | 5 |
| | 06-26 | | 13 |
| 1966153C1 | 06-07 | | 9 |
| 1966169C1 | 06-06 | | 2 |
| 1966186C1 | 06-02 | | 10 |
| 1966559C1 | 06-07 | | 11 |
| 1966993C1 | 06-16 | | 4 |
| 1967003C1 | 06-07 | | 4 |
| 1967531C1 | 06-16 | | 24 |
| 1967581C1 | 06-16 | | 10 |
| 1967585C1 | 06-16 | | 9 |
| 196813A1 | 08-05 | | 25 |
| 196815A1 | 08-05 | | 24 |
| 196821A1 | 08-06 | | 13 |
| 196824A1 | 08-06 | | 12 |
| 1976955C1 | 08-55 | | 2A |
| 197745A1 | 04-18 | | 4 |
| 197793A1 | 09-52 | | 8 |
| 1978141C1 | 08-56 | | 8 |
| 1978142C1 | 08-56 | | |
| 1978143C1 | 08-56 | | 5 |
| 1978144C1 | 08-56 | | 6 |
| 1978158C1 | 08-56 | | 7 |
| 1980245C1 | 08-62 | | 17 |
| 1980296C1 | 08-66 | | 11 |
| 1980321C3 | 08-58 | | 4 |
| 198033A1 | 08-65 | | 14 |
| 1981850C1 | 09-52 | | 13 |
| 1987096C1 | 09-64 | | 33 |
| 1987212C1 | 09-51 | | 11 |
| 1987219C2 | 09-51 | | 13 |
| 1987290C1 | 09-51 | | 14 |
| 198976A1 | 09-23 | | 12 |
| 1990548C4 | 09-52 | | 21 |
| 1999666C1 | 09-64 | | 16 |
| 1999667C1 | 09-64 | | |
| 1999668C1 | 09-64 | | |
| 1999693C1 | 09-51 | | 8 |
| 1999926C1 | 09-66 | | 15 |
| 1999927C1 | 09-66 | | 22 |
| 20-21032 | 09-08 | | 13 |
| 20-21232 | 09-07 | | 9 |
| | 09-08 | | 4 |
| 213-123 | 03-02 | | 14 |
| | 03-03 | | 17 |
| 213-126 | 07-06 | | 19 |
| | 09-02 | | 34 |
| | 09-16 | | 22 |
| | 09-17 | | 6 |
| | 09-19 | | 6 |
| | 09-21 | | 10 |
| 214-1406 | 09-38 | | 18 |
| | 09-63 | | 19 |
| 214-1412 | 02-04 | | 6 |
| | 02-04A | | 6 |
| | 06-10 | | 16 |
| 214-1416 | 02-02 | | 8 |
| | 02-06A | | 15 |
| 214-1420 | 08-03 | | 24 |
| 214-1424 | 02-06A | | 18 |
| 214-1432 | 02-01 | | 15 |
| 214-1440 | 02-01 | | 17 |
| | 02-04 | | 13A |
| 214-1456 | 02-04 | | 13 |
| | 02-04A | | 12 |
| 214-1464 | 02-04A | | 11 |
| | 08-05 | | 40 |
| | 08-07 | | 21 |
| | 08-12 | | 20 |
| | 08-13 | | 33 |
| | 08-14 | | 22 |
| | 09-66 | | 5 |
| 214-1472 | 08-04 | | 21 |
| 214-1488 | 08-10 | | 25 |
| | 08-11 | | 27 |
| 214-1492 | 08-09 | | 22 |
| | 08-09A | | 22 |
| 214-1704 | 03-01 | | 7 |
| | 07-04 | | 10 |
| 214-1706 | 07-04 | | 11 |
| 214-3132 | 08-13 | | 23 |
| | 08-24 | | 19 |
| 214-3156 | 08-24 | | 16 |
| 214-3188 | 08-08 | | 28 |
| | 08-08A | | 28 |
| 217-1102 | 09-38 | | 22 |
| 217-144 | 09-64 | | 34 |
| 217-154 | 02-02 | | 4 |
| 217-314 | 06-10 | | 11 |
| 217-347 | 09-38 | | 16 |

HTTP://WWW.MINNPARBACKHOEPARTS.COM




| Number | Figure | Sequence | Ref. | Number | Figure | Sequence | Ref. |
|---|---|---|---|---|---|---|---|
| 217-349 | 06-10 | | 22 | 218-5107 | 08-05 | | 2 |
| 217-380 | 09-38 | | 21 | | 08-05 | | 32 |
| 217-436 | 09-38 | | 5 | | 08-06 | | 2 |
| 218-1023 | 06-14 | | 11 | | 08-07 | | 18 |
| 218-1254 | 09-10 | | 20 | | 08-09 | | 27 |
| 218-1256 | 08-24 | | 22 | | 08-09A | | 27 |
| | 09-10 | | 33 | | 08-10 | | 19 |
| 218-1275 | 05-04 | | 10 | | 08-10 | | 22 |
| | 06-01 | | 29 | | 08-11 | | 19 |
| 218-1279 | 09-10 | | 34 | | 08-12 | | 22 |
| 218-335 | 08-01 | | 19 | | 08-13 | | 35 |
| | 08-01 | | 31 | | 08-14 | | 15 |
| | 08-23 | | 30 | 218-5110 | 08-02 | | 14 |
| | 08-24 | | 23 | 218-5117 | 08-25 | | 11 |
| 218-459 | 06-11 | | 38 | 218-5119 | 08-09 | | 19 |
| 218-5027 | 05-02 | | 3 | | 08-09A | | 19 |
| 218-5050 | 08-23 | | 24 | 218-5121 | 08-08 | | 20 |
| 218-5053 | 05-04 | | 8 | | 08-08A | | 20 |
| | 06-01 | | 26 | 218-5135 | 08-08A | | 5 |
| | 07-04 | | 19 | 218-5136 | 05-02 | | 11 |
| | 08-17 | | 5 | | 08-08 | | 35 |
| | 08-18 | | 7 | 218-5137 | 08-07 | | 16 |
| | 08-19 | | 7 | 218-5140 | 08-01 | | 24 |
| | 08-20 | | 7 | 218-5155 | 09-38 | | 57 |
| | 08-22 | | 38 | 218-5157 | 08-01 | | 47 |
| | 08-26 | | 23 | 218-5170 | 05-02 | | 2 |
| 218-5056 | 08-26 | | 25 | 218-5174 | 08-25 | | 14 |
| 218-5057 | 05-02 | | 15 | 218-5176 | 08-02 | | 12 |
| | 06-25 | | 2 | 218-5182 | 08-22 | | 49 |
| | 08-08 | | 5 | | 09-10 | | 15 |
| | 08-21 | | 1 | 218-5198 | 08-26 | | 20 |
| | 08-22 | | 33 | 218-5209 | 08-55 | | 7 |
| | 08-26 | | 13 | 218-5211 | 03-01 | | 6 |
| 218-5059 | 05-02 | | 8 | | 09-38 | | 12 |
| | 08-07 | | 23 | 218-5213 | 08-29 | | 16 |
| | 08-08 | | 11 | 218-5216 | 08-23 | | 34 |
| | 08-08 | | 33 | 218-5220 | 08-05 | | 18 |
| | 08-08A | | 11 | 218-5221 | 08-01 | | 30 |
| 218-5062 | 08-04 | | 2 | 218-5222 | 08-22 | | 34 |
| | 08-05 | | 28 | 218-5232 | 08-04 | | 26 |
| | 08-09 | | 8 | | 08-22 | | 8 |
| | 08-09A | | 8 | 218-5239 | 08-01 | | 12 |
| | 08-11 | | 25 | 218-5242 | 08-07 | | 25 |
| | 08-12 | | 17 | 218-5243 | 08-22 | | 32 |
| | 08-13 | | 31 | 218-5245 | 08-02 | | 1 |
| | 08-14 | | 19 | | 08-02 | | 10 |
| 218-5063 | 08-09A | | 6 | 218-5280 | 05-02 | | 19 |
| | 08-10 | | 8 | | 08-23 | | 26 |
| | 08-11 | | 8 | 218-5283 | 08-22 | | 3 |
| | 08-12 | | 8 | 218-5351 | 05-04 | | 14 |
| | 08-13 | | 8 | | 06-01 | | 4 |
| | 08-14 | | 8 | | 08-23 | | 31 |
| | 08-22 | | 7 | | 08-26 | | 9 |
| 218-5064 | 08-01 | | 22 | 218-5365 | 08-22 | | 4 |
| | 08-01 | | 49 | 218-5529 | 06-01 | | 5 |
| | 08-02 | | 19 | 218-5584 | 08-01 | | 27 |
| | 08-23 | | 28 | | 08-03 | | 4 |
| | 08-23 | | 42 | 218-5600 | 08-25 | | 18 |
| 218-5069 | 08-02 | | 4 | 218-5650 | 08-07 | | 28 |
| 218-5070 | 08-08A | | 36 | 218-595 | 08-04 | | 22 |
| 218-5086 | 08-03 | | 20 | 218-655 | 08-25 | | 15 |
| 218-5089 | 08-17 | | 4 | 218-676 | 08-24 | | 21 |
| | 08-18 | | 4 | 218-693 | 09-10 | | 19 |
| | 08-19 | | 5 | 218-695 | 09-10 | | 32 |
| | 08-20 | | 5 | 218-754 | 08-22 | | 50 |
| | 08-21 | | 2 | 218-756 | 08-01 | | 20 |
| | 08-22 | | 1 | 218-765 | 08-01 | | 41 |
| 218-5105 | 06-25 | | 4 | 218-776 | 08-06 | | 17 |
| | 08-08 | | 8 | 218-836 | 08-22 | | 35 |
| | 08-08A | | 8 | 218-840 | 08-07 | | 27 |
| | 08-21 | | 3 | | 08-23 | | 33 |
| | 08-22 | | 39 | 218-845 | 08-26 | | 22 |
| | 08-22 | | 5 | 218-980 | 08-01 | | 44 |
| | 08-26 | | 11 | | 08-22 | | 6 |
| | 09-10 | | 14 | 219-1 | 05-04 | | 13 |
| 218-5106 | 05-02 | | 6 | | 06-01 | | 6 |
| | 08-09 | | 11 | | 08-04 | | 27 |
| | 08-09 | | 24 | | 08-58 | | 17 |
| | 08-09A | | 11 | | 08-60 | | 21 |
| | 08-09A | | 24 | | 08-61 | | 17 |
| 218-5107 | 08-01 | | 45 | | 08-62 | | 20 |
| | 08-04 | | 16 | | 08-63 | | 23 |

HTTP://WWW.MINNPARBACKHOEPARTS.COM




| Number | Figure | Sequence | Ref. |
|---|---|---|---|
| 219-1 | 08-64 | | 20 |
| | 08-65 | | 20 |
| | 09-04 | | 32 |
| | 09-05 | | 23 |
| | 09-05 | | 5 |
| | 09-08 | | 9 |
| | 09-16 | | 41 |
| | 09-20 | | 14 |
| | 09-23 | | 28 |
| | 09-24 | | 17 |
| | 09-24 | | 3 |
| | 09-26 | | 24 |
| | 09-26 | | 37 |
| | 09-27 | | 3 |
| | 09-27 | | 35 |
| | 09-27 | | 41 |
| 219-10 | 06-09 | | 8 |
| | 06-31 | | 8 |
| 219-16 | 09-48 | | |
| | 09-48 | | |
| 219-36 | 08-65 | | 21 |
| 219-55 | 08-04 | | 28 |
| | 08-05 | | 41 |
| | 08-59 | | 17 |
| | 08-60 | | 22 |
| | 08-62 | | 21 |
| | 09-04 | | 10 |
| | 09-23 | | 30 |
| | 09-25 | | 5 |
| | 09-25A | | 5 |
| | 09-37 | | 9 |
| 219-86 | 09-27 | | 54 |
| 219-87 | 09-10 | | 4 |
| 219-89 | 09-27 | | 53 |
| 220165A2 | 08-62 | | 2 |
| 220413A1 | 09-37 | | 7 |
| 221-89 | 09-64 | | 21 |
| 224057A1 | 08-10 | | 27 |
| 225-14105 | 09-02 | | 5 |
| 225-14210 | 03-02 | | 13 |
| | 03-03 | | 20 |
| 225315C1 | 08-50 | | 6 |
| | 08-51 | | 6 |
| | 08-52 | | 6 |
| 225318C1 | 08-50 | | 7 |
| | 08-51 | | 7 |
| | 08-52 | | 7 |
| 225350C1 | 08-52 | | 14 |
| | 08-54 | | 6 |
| 225353C1 | 08-52 | | 15 |
| | 08-54 | | 7 |
| 226456A1 | 09-38 | | 36 |
| 226560A1 | 09-52 | | 4 |
| 227389A1 | 04-18 | | 2 |
| 228133A2 | 02-01 | | 27 |
| 230-4216 | 09-52 | | 7A |
| 230857A1 | 09-38 | | 1A |
| 230973A1 | 07-03 | | 26 |
| 231-14109 | 09-39 | | 4 |
| | 09-41 | | 15 |
| | 09-43 | | 15 |
| | 09-43 | | 26 |
| | 09-43 | | 9 |
| 231-14409 | 09-15 | | 30 |
| 231-1444 | 09-52 | | |
| | 09-71 | | 12 |
| 231-1445 | 09-15 | | 23 |
| 231-1446 | 09-01 | | 18 |
| | 09-02 | | 28 |
| 231-24409 | 04-08 | | 19 |
| 231-2446 | 09-19 | | 18 |
| 231-4115 | 09-71 | | 9 |
| 231-4246 | 09-10 | | 5 |
| 231397A1 | 06-07 | | |
| 231656A1 | 09-38 | | 6 |
| 232-1446 | 09-56 | | 2 |
| | 09-57 | | 28 |
| 232-4617 | 09-46 | | 19 |
| | 09-46 | | 26 |
| 232948A1 | 09-66 | | 10 |
| 233104A1 | 08-64 | | 21 |
| 233110A2 | 08-64 | | 16 |
| 233114A2 | 08-11 | | 18 |
| | 08-64 | | 1 |
| | 09-24 | | 15 |
| | 09-27 | | 9 |
| 233283A1 | 06-20 | | 1 |
| 233284A1 | 06-19 | | 32 |
| 233724A1 | 06-11 | | 8 |
| | 09-12 | | 17 |
| | 09-14 | | 9 |
| | 09-42 | | 15 |
| 234141A2 | 08-64 | | 4 |
| 234412A1 | 08-25 | | 9 |
| | 08-56 | | |
| 234844A1 | 08-64 | | |
| 234892A1 | 03-01 | | 14 |
| 235002A1 | 04-09 | | 12 |
| | 08-25 | | 26 |
| 237-6002 | 08-55 | | 14 |
| 237-6004 | 05-02 | | 4 |
| | 05-04 | | 8A |
| | 06-01 | | 27 |
| | 07-04 | | 19A |
| | 08-17 | | |
| | 08-18 | | |
| | 08-19 | | |
| | 08-20 | | |
| | 08-26 | | 24 |
| | 08-55 | | 11A |
| 237-6005 | 08-26 | | 26 |
| 237-6006 | 05-02 | | 16 |
| | 05-02 | | 18 |
| | 05-04 | | 14A |
| | 06-01 | | 4A |
| | 06-01 | | 5A |
| | 06-25 | | 3 |
| | 06-25 | | 5 |
| | 08-07 | | 29 |
| | 08-08 | | 6 |
| | 08-08 | | 9 |
| | 08-08A | | 6 |
| | 08-08A | | 9 |
| | 08-17 | | |
| | 08-18 | | |
| | 08-19 | | |
| | 08-20 | | |
| | 08-23 | | 27 |
| | 08-23 | | 32 |
| | 08-26 | | 10 |
| | 08-26 | | 12 |
| | 08-26 | | 14 |
| | 08-26 | | 19 |
| | 08-55 | | 8 |
| | 08-57 | | 4 |
| | 09-10 | | |
| | 09-10 | | |
| | 09-38 | | 17 |
| | 09-38 | | 58 |
| 237-6008 | 05-02 | | 12 |
| | 05-02 | | 20 |
| | 05-02 | | 7 |
| | 05-02 | | 9 |
| | 06-21 | | 40 |
| | 08-07 | | 24 |
| | 08-07 | | 26 |
| | 08-08 | | 12 |
| | 08-08 | | 21 |
| | 08-08 | | 34 |
| | 08-08 | | 36 |
| | 08-08A | | 12 |
| | 08-08A | | 21 |
| | 08-09 | | 12 |
| | 08-09 | | 25 |
| | 08-09A | | 12 |
| | 08-09A | | 25 |
| | 08-25 | | 12 |
| | 08-25 | | 19 |
| | 08-55 | | 6 |
| 237-6010 | 03-01 | | 6A |
| | 06-10 | | 12 |
| | 06-10 | | 23 |
| | 08-01 | | 46 |
| | 08-01 | | 48 |

HTTP://WWW.MINNPARBACKHOEPARTS.COM




| Number | Figure | Sequence | Ref. | Number | Figure | Sequence | Ref. |
|---|---|---|---|---|---|---|---|
| 237-6010 | 08-03 | | 10 | 238-5243 | 08-63 | | 13 |
| | 08-04 | | 17 | 238-5270 | 06-26 | | 2 |
| | 08-04 | | 3 | 238-6121 | 06-06 | | 22A |
| | 08-05 | | 29 | | 06-13 | | 8A |
| | 08-05 | | 3 | | 06-14 | | 10 |
| | 08-05 | | 33 | | 06-26 | | 1A |
| | 08-06 | | 3 | | 06-30 | | 7A |
| | 08-07 | | 17 | 238-8217 | 06-20 | | 22 |
| | 08-07 | | 19 | 239306A1 | 09-02 | | 14 |
| | 08-09 | | 28 | 239406A1 | 09-03 | | 7 |
| | 08-09 | | 9 | 239606A1 | 06-14 | | 2 |
| | 08-09A | | 28 | 242459A1 | 08-24 | | 5 |
| | 08-09A | | 9 | | 08-24 | | 9 |
| | 08-10 | | 20 | 243084A1 | 09-23 | | 19 |
| | 08-10 | | 23 | 243298A1 | 08-24 | | 4 |
| | 08-11 | | 20 | 243300A1 | 08-24 | | 1 |
| | 08-11 | | 26 | 243398A1 | 08-24 | | 8 |
| | 08-12 | | 18 | 243404A1 | 08-24 | | 2 |
| | 08-12 | | 23 | 243679A2 | 08-24 | | 14 |
| | 08-13 | | 32 | 244109A1 | 06-19 | | 6 |
| | 08-13 | | 36 | 244790A1 | 09-26 | | 51 |
| | 08-14 | | 16 | | 09-27 | | 46 |
| | 08-14 | | 20 | 245258A1 | 04-09 | | 7 |
| | 08-26 | | 21 | 245423A1 | 09-10 | | 30 |
| | 08-27 | | 11 | 245466A1 | 09-28 | | 6 |
| | 09-38 | | 13 | | 09-28 | | 9 |
| 237-6012 | 08-01 | | 13 | | 09-29 | | 6 |
| | 08-01 | | 23 | | 09-29 | | 9 |
| | 08-01 | | 50 | | 09-30 | | 6 |
| | 08-02 | | 20 | | 09-30 | | 9 |
| | 08-08A | | 37 | | 09-31 | | 6 |
| | 08-09 | | 20 | | 09-32 | | 6 |
| | 08-09A | | 20 | | 09-32 | | 6 |
| | 08-09A | | 7 | | 09-32 | | 9 |
| | 08-10 | | 9 | | 09-32 | | 9 |
| | 08-11 | | 9 | | 09-33 | | 6 |
| | 08-12 | | 9 | | 09-34 | | 6 |
| | 08-13 | | 9 | | 09-34 | | 9 |
| | 08-14 | | 9 | | 09-35 | | 6 |
| | 08-23 | | 25 | | 09-35 | | 9 |
| | 08-23 | | 29 | 246151A1 | 08-24 | | 17 |
| | 08-23 | | 43 | 246158A1 | 08-24 | | 15 |
| | 09-10 | | 35 | 246526A1 | 04-04 | | 31A |
| 237-6014 | 08-29 | | 11 | 247546A1 | 06-30 | | 24A |
| | 08-29 | | 17 | 247550A1 | 06-30 | | 13 |
| 237-6016 | 08-01 | | 18 | 248-2373 | 09-46 | | 4 |
| | 08-01 | | 25 | 250663A1 | 09-24 | | 40 |
| | 08-01 | | 28 | 250851A1 | 09-05 | | 7 |
| | 08-02 | | 11 | | 09-08 | | 30 |
| | 08-02 | | 15 | 250854A1 | 04-06 | | 10 |
| | 08-02 | | 17 | 253209A1 | 09-48 | | 8 |
| | 08-02 | | 2 | 254409A1 | 02-03 | | 2 |
| | 08-02 | | 5 | 254686A2 | 06-12 | | 1 |
| | 08-02 | | 8 | 255447A1 | 09-71 | | 13 |
| | 08-03 | | 5 | 255659A1 | 08-09 | | 23 |
| 237-6020 | 08-03 | | 21 | | 08-09A | | 23 |
| 237-8008 | 06-26 | | | 256210A2 | 08-24 | | 14A |
| 237021A1 | 07-01 | | 1 | 256347A1 | 09-01 | | |
| 237022A1 | 07-01 | | 2 | | 09-02 | | |
| 237025A1 | 07-01 | | 21 | 256478A1 | 07-02 | | 13 |
| 237026A1 | 07-01 | | 11 | 256481A1 | 07-02 | | 14 |
| 237582A1 | 04-16 | | 1 | 256482A1 | 07-02 | | 17 |
| 238-5005 | 04-17 | | 8 | 256485A1 | 07-02 | | 18 |
| 238-5011 | 04-06A | | 5 | 256776A1 | 03-03 | | 5 |
| | 08-57 | | 5 | 258616A1 | 09-01 | | |
| 238-5013 | 06-21 | | 42 | | 09-02 | | |
| 238-5014 | 06-21 | | 41 | 259044A1 | 08-01 | | 1 |
| 238-5152 | 06-08 | | 10 | 259054A1 | 09-51 | | 15 |
| | 06-28 | | 11 | 259254A1 | 07-02 | | 24 |
| 238-5227 | 05-01 | | 3 | 260-1358 | 04-10 | | 14 |
| 238-5228 | 08-01 | | 7 | 260-1436 | 09-61 | | 16 |
| | 09-26 | | 38 | 261-14310 | 04-15 | | 11 |
| 238-5230 | 08-57 | | 9 | | 04-15 | | 4 |
| 238-5231 | 08-59 | | 9 | 27549R1 | 06-23 | | 2 |
| | 08-60 | | 10 | | 06-23 | | 2 |
| | 08-66 | | 8 | 276-2446 | 08-58 | | 11 |
| 238-5233 | 08-58 | | 9 | | 08-59 | | 11 |
| | 08-65 | | 11 | | 08-60 | | 12 |
| 238-5237 | 08-62 | | 9 | | 08-61 | | 11 |
| 238-5239 | 08-61 | | 9 | | 08-62 | | 11 |
| | 08-62 | | 23 | | 08-63 | | 15 |
| 238-5241 | 08-64 | | 11 | | 08-64 | | 13 |

HTTP://WWW.MINNPARBACKHOEPARTS.COM




| Number | Figure | Sequence | Ref. |
|---|---|---|---|
| 276-2446 | 08-65 | | 13 |
| | 08-66 | | 10 |
| 276-2456 | 08-56 | | 3 |
| 276-24924 | 03-01 | | 17 |
| 276-26512 | 04-18 | | 10 |
| 276498A1 | 04-13 | | |
| | 04-14 | | |
| 277800A1 | 02-01 | | 39 |
| 278316A2 | 04-10 | | 9 |
| 278328A1 | 04-07 | | 27 |
| 278532A1 | 06-16 | | 14 |
| 278533A1 | 06-16 | | 13 |
| 278534A1 | 06-12 | | 8 |
| 279039A1 | 06-16 | | 15 |
| 279223A1 | 04-14 | | 6 |
| 279224A1 | 04-14 | | 5 |
| 279265A2 | 04-14 | | 15 |
| 279482A1 | 09-53 | | 2A |
| | 09-69 | | 4 |
| 279645A1 | 07-02 | | |
| 279916A1 | 04-14 | | 16 |
| 280-16516 | 09-42 | | 12 |
| 280436A1 | 07-02 | | 3 |
| 280443A1 | 07-02 | | 25 |
| 280450A1 | 07-02 | | 20 |
| 280452A1 | 07-02 | | 21 |
| 280457A1 | 07-02 | | 22 |
| 280681A1 | 07-06 | | 9 |
| 281-14520 | 09-64 | | 9 |
| 281-14716 | 09-11 | | 17 |
| 281-18712 | 09-63 | | 26 |
| 281-54512 | 09-61 | | 23 |
| 281-54712 | 09-71 | | 4 |
| 281185A1 | 09-26 | | |
| | 09-27 | | |
| 281952A1 | 07-02 | | |
| 281960A1 | 07-02 | | 23 |
| 282-16512 | 04-18 | | 7 |
| 282033A1 | 06-01 | | 19 |
| 282038A2 | 06-01 | | 18 |
| 282242A1 | 03-03 | | 1 |
| 282428A1 | 05-02 | | 17 |
| | 08-26 | | 18 |
| 282496A1 | 08-01 | | 2 |
| 282775A1 | 04-09 | | |
| 2830082 | 02-09 | | 1 |
| 2830156 | 03-09 | | 2 |
| 2830266 | 03-09 | | 1 |
| 2830411 | 02-27 | | 8 |
| 2830433 | 02-26 | | 7 |
| 2830445 | 02-20 | | 2 |
| 2830775 | 02-17 | | 5 |
| 2830784 | 02-17 | | 7 |
| 2830905 | 02-27 | | 4 |
| 2830919 | 02-16 | | 15 |
| 2830934 | 02-27 | | 5 |
| 2830948 | 02-27 | | 3 |
| 2830952 | 02-26 | | 10 |
| | 02-27 | | |
| 2830953 | 02-26 | | 12 |
| 2831023 | 02-26 | | 9 |
| 2831031 | 02-26 | | 8 |
| 2831101 | 02-27 | | 6 |
| 283462A1 | 07-02 | | 6 |
| 283466A1 | 07-02 | | 19 |
| 283779A1 | 04-09 | | 22 |
| 283781A1 | 04-09 | | 23 |
| 284154A1 | 09-59 | | 10 |
| | 09-70 | | 8 |
| 286-56520 | 09-53 | | 11 |
| | 09-68 | | 29 |
| 29-1010 | 09-08 | | 14 |
| 29-1012 | 09-08 | | 5 |
| 291010A1 | 04-18 | | 6 |
| 292207A1 | 06-27 | | 12 |
| 292208A1 | 06-27 | | 13 |
| 292210A1 | 06-29 | | 3 |
| 292212A1 | 06-29 | | 4 |
| 292213A1 | 06-29 | | 1 |
| 292214A1 | 06-29 | | 6 |
| 292262A1 | 09-46 | | 2B |
| 292263A2 | 09-46 | | 2C |
| 292268A1 | 06-27 | | |
| 292385A1 | 09-23 | | 29 |
| 292890A1 | 06-27 | | 17 |
| 292902A1 | 06-29 | | 7 |
| 292969A2 | 09-10 | | |
| 293636A1 | 09-23 | | 34 |
| 294245A1 | 06-26 | | 26 |
| 294933A1 | 06-07 | | |
| 295111A1 | 07-01 | | 18 |
| 295112A1 | 07-01 | | 23 |
| 295113A1 | 07-01 | | 24 |
| 297280A1 | 08-59 | | 4 |
| 297281A1 | 08-60 | | 4 |
| | 08-66 | | 3 |
| 297615A1 | 09-02 | | 1 |
| 297952A1 | 08-64 | | 2 |
| 298176A1 | 09-01 | | |
| | 09-02 | | |
| 298521A1 | 09-77 | | 11 |
| 298614A1 | 06-21 | | 44 |
| 2992147 | 02-21 | | 4 |
| 2992148 | 02-21 | | 4 |
| 2992149 | 02-21 | | 4 |
| 2992153 | 02-21 | | 3 |
| 2992154 | 02-21 | | 3 |
| 2992155 | 02-21 | | 3 |
| 299324A1 | 06-21 | | 16 |
| 300030A1 | 04-19 | | 4 |
| 300588A1 | 09-27 | | 26 |
| 300659A1 | 09-51 | | 2 |
| 300661A1 | 09-51 | | 3 |
| 300664A1 | 09-51 | | 7 |
| 300665A1 | 09-51 | | 9 |
| 300667A1 | 09-51 | | 10 |
| 300669A1 | 09-52 | | 1 |
| 300670A1 | 09-51 | | 12 |
| 300672A1 | 09-51 | | 18 |
| 300674A1 | 09-51 | | |
| 300675A1 | 09-51 | | 19 |
| 300677A1 | 09-51 | | 21 |
| 300679A1 | 09-51 | | 22 |
| 300680A1 | 09-51 | | 20 |
| 300681A1 | 09-51 | | 23 |
| 300683A1 | 09-51 | | 24 |
| 300684A1 | 09-51 | | 25 |
| 300685A1 | 09-52 | | |
| 300688A1 | 09-52 | | 5 |
| 300689A1 | 09-52 | | 10 |
| 300690A1 | 09-52 | | |
| 300691A1 | 09-52 | | 12 |
| 300692A1 | 09-52 | | 14 |
| 300896A1 | 09-52 | | 20 |
| 300996A3 | 08-27 | | 3 |
| 301104A1 | 08-03 | | 9 |
| 301803R1 | 09-64 | | 20 |
| 302358A1 | 03-01 | | 3 |
| | 09-38 | | 3 |
| 302820A2 | 08-27 | | 5 |
| 303192A1 | 02-01 | | 36 |
| 303195A1 | 02-01 | | 42 |
| 303465A2 | 04-10 | | 10B |
| 303466A1 | 04-10 | | 10C |
| 303467A1 | 04-10 | | 10D |
| 303646A1 | 09-24 | | 41 |
| 304083A1 | 09-74 | | 7 |
| 304424A1 | 08-27 | | 9 |
| 304890A1 | 08-27 | | 10 |
| 305152A1 | 06-29 | | 2 |
| 305342A1 | 04-04 | | 35 |
| 305492A1 | 09-10 | | 16 |
| 305493A1 | 09-10 | | 18 |
| 305494A1 | 09-10 | | 17 |
| 305495A1 | 09-10 | | 9 |
| 305496A1 | 09-10 | | 7 |
| 305497A1 | 09-10 | | 3 |
| 305499A1 | 09-10 | | 8 |
| 305508A1 | 09-10 | | 21 |
| 30634 | 08-60 | | 14 |
| 307090A1 | 09-49 | | 4 |
| 307091A1 | 09-49 | | 3 |
| 307092A1 | 09-49 | | 8 |
| | 09-49 | | 8 |

HTTP://WWW.MINNPARBACKHOEPARTS.COM




| Number | Figure | Sequence | Ref. | Number | Figure | Sequence | Ref. |
|---|---|---|---|---|---|---|---|
| 307092A1 | 09-50 | | 1 | 336375A1 | 09-50 | | 14 |
| | 09-50 | | 1 | 338424A1 | 09-53 | | 4 |
| 307098A1 | 09-49 | | 6 | 338425A1 | 09-53 | | 3 |
| 307123A1 | 02-06A | | 16 | 338426A1 | 09-55 | | 5A |
| 307186A1 | 09-26 | | 11 | 338427A1 | 09-55 | | 5 |
| | 09-27 | | 19 | 338428A1 | 09-57 | | 3 |
| 307277A1 | 08-27 | | 17 | 338429A1 | 09-55 | | 4A |
| 307348A1 | 03-01 | | 39 | 338886A4 | 07-03 | | 35 |
| | 09-74 | | 12 | 339021A2 | 09-40 | | 2 |
| 307385A1 | 09-10 | | 22 | 339022A3 | 09-40 | | 1 |
| 307386A1 | 09-10 | | 23 | 339046A3 | 07-03 | | 34 |
| 307387A1 | 09-10 | | 24 | 339047A3 | 07-03 | | 33 |
| 307388A1 | 09-10 | | 25 | 339680A2 | 09-22 | | 25B |
| 307389A1 | 09-10 | | 26 | 340-12520 | 09-52 | | |
| 307577A1 | 03-01 | | 31 | 340997A3 | 09-44 | | 2 |
| | 09-38 | | 28 | 340998A3 | 09-44 | | 1 |
| 308029A1 | 07-01 | | 3 | 341564A2 | 09-04 | | 36 |
| 308030A1 | 07-01 | | 16 | 341743A3 | 09-55 | | |
| 308036A1 | 07-01 | | 12 | 341746A2 | 09-57 | | |
| 308040A1 | 07-02 | | 5 | 344892A1 | 09-04 | | 37 |
| 308042A1 | 07-01 | | 17 | 345-133 | 09-01 | | |
| 308254A1 | 08-27 | | 2 | | 09-02 | | |
| 308255A1 | 08-27 | | 1 | 345-49 | 09-38 | | 35 |
| 309674A1 | 08-27 | | 11A | 345-621 | 09-65 | | |
| 309747A1 | 06-11 | | | 345061A2 | 07-04 | | 2 |
| 310492A1 | 06-30 | | 18 | 345231A1 | 09-44 | | 3 |
| 310519A1 | 06-18 | | 8 | 345325A2 | 07-04 | | 3 |
| 310772A1 | 06-13 | | | 346583A1 | 06-26 | | 21 |
| | 06-13 | | 10B | 346584A1 | 06-26 | | 20 |
| | 06-14 | | | 347706A3 | 04-07 | | 7 |
| | 06-14 | | 14 | 347959A1 | 06-26 | | 23 |
| 311200A1 | 09-04 | | 27 | 347960A1 | 06-26 | | 24 |
| 311565A1 | 06-02 | | 11 | 348706A1 | 09-26 | | 46 |
| 311569A1 | 05-08 | | 1 | | 09-27 | | 30 |
| | 06-06 | | 1 | 348794A1 | 05-01 | | 18 |
| 3125705R1 | 04-17 | | 10 | | 05-03 | | |
| 313648A1 | 08-02 | | 3 | 349295A1 | 06-21 | | 39 |
| 314319A1 | 08-24 | | 27 | 350014A3 | 03-02 | | 11 |
| 314320A1 | 08-24 | | 28 | 352208A1 | 09-58 | | 11 |
| 315273A1 | 09-55 | | 12 | 352209A1 | 09-58 | | 13 |
| 315276A1 | 09-55 | | 11 | 352210A1 | 09-58 | | 15 |
| 317988A1 | 08-24 | | 30 | 352401A1 | 05-01 | | 7 |
| 321-1707 | 09-08 | | 29 | 352568A1 | 05-01 | | 6 |
| 321-1708 | 09-08 | | 23 | | 05-03 | | |
| | 09-73 | | 11 | 352569A4 | 05-01 | | 6A |
| 321-229 | 09-79 | | 8 | | 05-03 | | 10 |
| 321-230 | 09-79 | | 7 | 352727A1 | 05-01 | | 15 |
| 321-4311 | 09-72 | | 5 | | 05-01 | | 23 |
| 321-4614 | 09-76 | | 11 | 353-402 | 09-54 | | |
| 321-5675 | 09-78 | | 11 | | 09-68 | | 19 |
| 321-6376 | 09-79 | | 8A | 353-405 | 08-53 | | 10 |
| | 09-80 | | 8A | | 09-54 | | |
| | 09-81 | | 8A | 353-406 | 09-54 | | |
| 321-6774 | 09-79 | | 13 | 353-407 | 09-54 | | |
| 321-7030 | 09-76 | | 10 | 353-408 | 09-54 | | |
| 321-7040 | 09-79 | | 4 | 353-410 | 09-54 | | |
| 321183A1 | 07-02 | | 12 | | 09-64 | | 26 |
| 321428A1 | 06-22 | | 8 | | 09-68 | | |
| 322357 | 04-06A | | 19 | 353-411 | 09-11 | | 5 |
| 322860A1 | 03-03 | | 4 | 353-415 | 09-54 | | |
| 3233348R1 | 09-15 | | 36 | 353-421 | 09-54 | | |
| | 09-56 | | 8 | | 09-68 | | 22 |
| 3234063R1 | 09-55 | | 25 | 353-422 | 09-42 | | 7 |
| 324213A1 | 05-08 | | 2 | 353-425 | 09-54 | | |
| 325465A2 | 08-07 | | 22 | 353068A2 | 04-11 | | 18 |
| 326-640 | 09-10 | | 6 | 353103A1 | 08-07 | | 5A |
| 326348A1 | 07-06 | | 16 | 353167A1 | 08-07 | | 5 |
| 326806A1 | 09-23 | | 1 | 355197A2 | 04-11 | | 2 |
| | 09-24 | | 1 | 355198A2 | 04-11 | | 1A |
| 326865A1 | 06-19 | | 13 | 355827A2 | 04-10 | | 1 |
| 328186A1 | 06-10 | | 14 | 355984A2 | 09-42 | | 1 |
| | 06-10 | | 21 | 356743A1 | 08-07 | | 12 |
| | 08-03 | | 11 | 357099A1 | 09-68 | | 15 |
| 329032A1 | 04-13 | | 3 | 357100A1 | 09-68 | | 16 |
| 329797A1 | 08-23 | | 5 | 357278A1 | 04-08 | | 17 |
| 329799A1 | 08-23 | | 4 | 357469A1 | 08-11 | | 16 |
| 329998A1 | 09-23 | | 4 | 357470A1 | 08-12 | | 16 |
| 331620A1 | 09-05 | | 2 | | 08-13 | | 34 |
| 331621A1 | 09-05 | | 1 | 357471A1 | 08-10 | | 24 |
| 334724A1 | 06-21 | | 30 | 357540A1 | 04-14 | | 7 |
| 334725A1 | 06-21 | | 32 | 357541A1 | 04-14 | | 8 |
| 335640A2 | 06-21 | | | 357966A1 | 04-08 | | 16 |

HTTP://WWW.MINNPARBACKHOEPARTS.COM




| Number | Figure | Sequence | Ref. | Number | Figure | Sequence | Ref. |
|---|---|---|---|---|---|---|---|
| 358212A1 | 07-01 | | | 366235A1 | 06-20 | | 12 |
| 358279A1 | 06-26 | | 12 | 366236A1 | 06-20 | | 14 |
| 358280A1 | 06-26 | | 11 | 366366A1 | 06-19 | | 27 |
| 358282A1 | 06-19 | | 19 | 366632A2 | 04-11 | | 21 |
| 358283A1 | 06-19 | | 28 | 366633A3 | 04-11 | | 25 |
| 358286A1 | 06-30 | | 23 | 366889A2 | 04-07 | | 28 |
| 358632A1 | 06-18 | | 7 | 366910A1 | 06-22 | | 9 |
| 358633A1 | 06-18 | | 6 | 367175A1 | 06-26 | | 4 |
| 358635A1 | 06-18 | | 4 | 367184A1 | 06-27 | | |
| 358636A1 | 06-17 | | 2 | | 06-27 | | |
| 358637A1 | 06-18 | | 15 | 367352A1 | 08-07 | | 5B |
| 358638A1 | 06-18 | | 21 | 367704A4 | 09-61 | | 1 |
| 358639A1 | 06-19 | | 29 | 367705A6 | 09-61 | | |
| 358640A1 | 06-18 | | 10 | 367712A3 | 09-68 | | 13 |
| 358641A1 | 06-18 | | 16 | 367848A2 | 09-74 | | 13 |
| 358642A1 | 06-18 | | 19 | 367860A3 | 06-11 | | 35 |
| 358643A1 | 06-18 | | 18 | | 06-31 | | |
| 358644A1 | 06-18 | | 17 | 367861A2 | 06-01 | | 11 |
| 358645A1 | 06-18 | | 1 | | 06-09 | | |
| | 06-20 | | 7 | 367977A1 | 07-06 | | |
| 358646A1 | 06-17 | | 4 | 368146A1 | 09-55 | | 46 |
| 358647A1 | 06-19 | | 16 | | 09-57 | | 26 |
| 358648A1 | 06-19 | | 4 | 368147A1 | 09-55 | | 40 |
| 358649A1 | 06-19 | | 3 | | 09-57 | | 17 |
| 358650A1 | 06-19 | | 3A | 368417A1 | 09-45 | | 9 |
| 358651A1 | 06-19 | | 3A | 368436A1 | 06-21 | | 16A |
| 358652A1 | 06-19 | | 3A | 368437A2 | 06-21 | | |
| 358653A1 | 06-19 | | 27 | 368438A2 | 06-21 | | |
| 358654A1 | 06-19 | | 18A | 368801A2 | 09-64 | | 10 |
| 358655A1 | 06-18 | | 31 | 368805A1 | 09-63 | | 7 |
| | 06-19 | | 18B | 368807A1 | 09-63 | | 13 |
| 358656A1 | 06-19 | | 18 | 368809A1 | 09-54 | | 22 |
| 359653A1 | 07-01 | | 13 | 368813A2 | 09-61 | | 4 |
| 360046A1 | 09-57 | | 1 | 368818A1 | 09-63 | | 29 |
| 360242A2 | 04-10 | | 10A | 368821A1 | 09-63 | | 18 |
| 360243A2 | 04-10 | | 11 | 368990A1 | 09-62 | | 6 |
| 360244A1 | 04-10 | | 4 | 369249A1 | 09-63 | | 9 |
| 360245A2 | 04-10 | | 8 | 369372A1 | 08-55 | | 3 |
| 360246A3 | 09-54 | | 16 | 369450A1 | 09-61 | | 15 |
| 360247A3 | 09-54 | | 15 | 370381A1 | 09-65 | | 14 |
| 360250A2 | 04-11 | | 1 | 370755A1 | 04-12 | | 1 |
| 360251A3 | 09-63 | | 6 | 370756A1 | 04-12 | | 2 |
| 360252A2 | 09-62 | | 5 | 370760A1 | 04-12 | | 5 |
| 360253A3 | 09-63 | | 8 | 371031A1 | 08-05 | | 26 |
| 360254A3 | 09-63 | | 10 | 372167A3 | 04-11 | | 1B |
| 360255A1 | 09-63 | | 14 | 373689A2 | 04-10 | | 10 |
| 360256A1 | 09-65 | | 15 | 373693A1 | 04-10 | | 10E |
| 360257A1 | 09-65 | | 7 | 373698A2 | 09-73 | | 8 |
| 360260A2 | 09-62 | | 1 | 373699A2 | 09-73 | | 9 |
| 360261A1 | 09-62 | | 3 | 373995A1 | 09-63 | | |
| 360262A2 | 09-64 | | 1 | 375112A1 | 04-11 | | 26 |
| 360263A4 | 09-65 | | 1 | 375392A1 | 09-63 | | 28 |
| 360266A2 | 09-54 | | 3 | 376286A2 | 09-08 | | |
| 360267A3 | 09-54 | | 2 | 376332A1 | 09-55 | | 38 |
| 360272A6 | 09-61 | | | | 09-57 | | 15 |
| 360867A1 | 09-36 | | 1 | 376334A1 | 09-55 | | 36 |
| 361776A1 | 09-38 | | 23 | | 09-57 | | 13 |
| 361900A1 | 04-07 | | 9 | 376336A1 | 09-55 | | 37 |
| 362340A6 | 09-41 | | 1 | | 09-57 | | 14 |
| 362556A2 | 09-45 | | 2 | 376384A1 | 09-30 | | 1 |
| 362557A1 | 09-45 | | 1 | 376385A1 | 09-32 | | 1 |
| 362558A1 | 09-45 | | 3 | 376386A1 | 09-34 | | 1 |
| 362607A1 | 09-40 | | 4 | 376528A4 | 09-08 | | |
| 362609A1 | 09-40 | | 3 | 377194A1 | 09-61 | | 9 |
| 362930A2 | 04-08 | | 7 | 377222A1 | 09-64 | | 4 |
| 363832A5 | 09-65 | | | 377230A3 | 09-63 | | 27 |
| 363883A1 | 09-61 | | 10 | 377594A5 | 09-61 | | 13 |
| 364132A2 | 09-55 | | 28A | 378227A1 | 09-54 | | 5 |
| 364133A2 | 09-55 | | 30A | 378742A3 | 09-43 | | 19 |
| 364134A2 | 09-55 | | 28 | | 09-43 | | 27 |
| | 09-57 | | 7 | | 09-43 | | 9A |
| 364135A2 | 09-55 | | 30 | 378955A1 | 03-03 | | 8A |
| | 09-57 | | 8 | 378956A3 | 03-03 | | 15 |
| 364180A1 | 09-54 | | 10 | 378957A3 | 03-02 | | 17 |
| | 09-68 | | 24 | 378958A1 | 03-03 | | 13 |
| 365309A1 | 08-13 | | 14 | 378960A1 | 03-03 | | 3 |
| 365328A1 | 09-32 | | 1 | 379160A1 | 09-61 | | 5 |
| 365789A1 | 09-63 | | 20 | 379161A1 | 09-61 | | 6 |
| 366230A1 | 06-20 | | 13 | 379209A1 | 09-61 | | 7 |
| 366231A1 | 06-20 | | 18 | 379314A4 | 06-11 | | 6 |
| 366232A1 | 06-20 | | 15 | 379424A2 | 09-54 | | 3A |
| 366234A1 | 06-20 | | 11 | 379425A3 | 09-54 | | 2A |

HTTP://WWW.MINNPARBACKHOEPARTS.COM




| Number | Figure | Sequence | Ref. |
|---|---|---|---|
| 379846A1 | 05-01 | | 14 |
| | 05-01 | | 22 |
| 379941A1 | 09-25 | | 1 |
| | 09-25A | | 1 |
| 380021A1 | 03-03 | | 21 |
| 380483A2 | 03-03 | | 12 |
| 380537A2 | 06-11 | | 13 |
| 380719A2 | 09-61 | | |
| 380807A4 | 09-38 | | 47 |
| 381111A2 | 09-63 | | 25 |
| 381113A2 | 09-63 | | 24 |
| 381261A1 | 04-05 | | 13 |
| 381442A1 | 05-04 | | 12 |
| | 06-01 | | 31 |
| 381488A4 | 09-28 | | 1 |
| 381659A1 | 04-18 | | 5 |
| 381696A5 | 09-61 | | 2 |
| 381926A1 | 09-41 | | 22 |
| 381927A1 | 09-41 | | 20 |
| 381972A1 | 09-61 | | 14 |
| 382202A2 | 09-38 | | 52 |
| 382298A1 | 09-54 | | 21 |
| | 09-68 | | 30 |
| 382664A2 | 04-18 | | 1 |
| 382770A2 | 09-62 | | 2 |
| 382775A1 | 09-55 | | 23A |
| 382777A1 | 09-55 | | 23 |
| 383619R1 | 04-05 | | 5 |
| 383794A2 | 09-63 | | 22 |
| 383795A2 | 09-63 | | 23 |
| 383972A1 | 09-76 | | 6 |
| 384240A1 | 08-04 | | 18 |
| | 08-58 | | 1 |
| | 09-04 | | 9 |
| 384241A1 | 08-58 | | 2 |
| 384258A1 | 09-79 | | 6 |
| 384260A1 | 09-79 | | 9 |
| 384264A1 | 09-76 | | 1 |
| 384265A1 | 09-79 | | 2 |
| 384267A1 | 09-79 | | 3 |
| 384269A1 | 09-79 | | 5 |
| 384769A1 | 06-19 | | 14 |
| 384773A1 | 06-19 | | 9 |
| 384815A1 | 09-23 | | 32 |
| 384930A2 | 09-74 | | 1 |
| 384931A2 | 09-74 | | 2 |
| 384952A1 | 06-24 | | 1 |
| | 06-26 | | |
| | 06-27 | | |
| | 06-28 | | |
| | 06-29 | | |
| | 06-30 | | |
| | 07-01 | | |
| | 07-02 | | |
| 385506A1 | 09-68 | | 12 |
| 385588A1 | 09-06 | | |
| | 09-06 | | |
| 385614A4 | 04-11 | | 31 |
| 386092A2 | 09-23 | | 16 |
| 386368A2 | 04-11 | | 29 |
| 386369A2 | 04-11 | | 28 |
| 386502A1 | 04-11 | | |
| 386535A1 | 09-65 | | 2 |
| 386718A3 | 09-59 | | 9 |
| | 09-70 | | 13 |
| 386720A1 | 09-59 | | 23 |
| 386722A1 | 09-59 | | 21 |
| 386785A1 | 04-07 | | 22 |
| | 09-59 | | 26 |
| | 09-60 | | |
| | 09-70 | | 6 |
| 386786A1 | 04-09 | | 19 |
| | 09-59 | | 28 |
| | 09-60 | | |
| 386787A1 | 04-07 | | 23 |
| | 09-59 | | 27 |
| | 09-70 | | 7 |
| 386788A1 | 04-09 | | 18 |
| | 09-59 | | 29 |
| 386849A1 | 04-07 | | 18 |
| 386850A1 | 04-07 | | 19 |
| 386851A1 | 04-07 | | 20 |
| 386851A1 | 04-17 | | 15 |
| 386852A2 | 04-09 | | 17 |
| 386927A1 | 04-18 | | 9 |
| 387019A1 | 09-04 | | 6 |
| 387897R91 | 05-09 | | 3 |
| | 05-09 | | 6 |
| 388053A2 | 04-12 | | 6 |
| 388116A2 | 05-01 | | 8 |
| 388712A2 | 08-55 | | 9 |
| 388713A1 | 08-55 | | |
| 388762A1 | 09-64 | | 7 |
| 388843A1 | 09-29 | | 1 |
| 388848A1 | 09-08 | | 24 |
| 388876A6 | 08-55 | | 2 |
| 388881A1 | 08-55 | | 4 |
| 389402A1 | 09-64 | | 8 |
| 389487A1 | 04-07 | | 13 |
| 389541A1 | 08-55 | | 12 |
| 389729A1 | 09-77 | | 6 |
| 389730A1 | 09-78 | | 6 |
| 390-100 | 09-55 | | 21 |
| 390029A1 | 06-05 | | 2 |
| 390255A2 | 04-11 | | 15A |
| 390258A1 | 04-11 | | |
| | 04-11 | | |
| 390551A2 | 09-42 | | 10 |
| 390601A5 | 09-54 | | 13 |
| 390602A1 | 09-54 | | 14 |
| 390690A1 | 09-11 | | 4 |
| 390758A1 | 09-11 | | 3 |
| 390759A1 | 09-11 | | 1 |
| 390760A1 | 09-11 | | 2 |
| 390838A1 | 09-55 | | 2A |
| 390840A1 | 09-55 | | 27A |
| 390841A1 | 09-55 | | 29A |
| 391818A2 | 04-11 | | 15 |
| 391827A1 | 09-53 | | 8 |
| | 09-55 | | 19 |
| | 09-55 | | 6 |
| | 09-57 | | 4 |
| | 09-69 | | 2 |
| 391838A1 | 09-55 | | 14 |
| 391841A1 | 09-55 | | 18A |
| 391842A1 | 09-55 | | 20A |
| 391843A1 | 09-55 | | 32 |
| 391845A1 | 09-55 | | 31 |
| | 09-57 | | 10A |
| 391847A1 | 09-55 | | 13 |
| 391848A1 | 09-55 | | 15 |
| 391849A1 | 09-55 | | 41 |
| | 09-57 | | 18 |
| 391850A1 | 09-55 | | 3A |
| 392353A1 | 04-08 | | 8 |
| 392374A1 | 09-76 | | 13 |
| 392375A1 | 09-79 | | 1 |
| 392828A2 | 09-41 | | 16 |
| | 09-41 | | 18 |
| 392930A1 | 09-68 | | 8 |
| 393161A1 | 09-38 | | 19 |
| 393202A1 | 09-55 | | 17 |
| 393203A1 | 09-55 | | 16 |
| 393209A1 | 09-55 | | 22 |
| 393211A1 | 09-56 | | 5 |
| 393231A1 | 06-09 | | |
| | 06-31 | | |
| 393233A1 | 06-31 | | 6 |
| 393234A1 | 06-09 | | 6 |
| 393330A1 | 09-57 | | 10 |
| 393354A1 | 08-14 | | 10 |
| 393357A1 | 08-14 | | 11 |
| 393360A1 | 08-12 | | 21 |
| 393361A1 | 08-13 | | 16 |
| 393362A1 | 08-13 | | 17 |
| 393369A1 | 08-10 | | 18 |
| 393371A1 | 08-11 | | 17 |
| 393623A1 | 09-42 | | 8 |
| 393826A1 | 06-26 | | 19 |
| 394329A1 | 09-75 | | 3 |
| 394585A3 | 09-55 | | |
| 394700A1 | 09-55 | | 4 |
| 394701A1 | 09-55 | | 27 |
| | 09-57 | | 5 |

HTTP://WWW.MINNPARBACKHOEPARTS.COM




| Number | Figure | Sequence | Ref. | Number | Figure | Sequence | Ref. |
|---|---|---|---|---|---|---|---|
| 394702A1 | 09-55 | | 29 | 398113A1 | 09-43 | | 3 |
| | 09-57 | | 6 | 398380A3 | 04-14 | | 12 |
| 394704A1 | 09-55 | | 18 | 398570A1 | 09-80 | | 6 |
| 394705A1 | 09-55 | | 20 | 398571A1 | 09-81 | | 6 |
| 394707A1 | 09-55 | | 2 | 398572A1 | 09-80 | | 9 |
| 394708A1 | 09-55 | | 3 | 398573A1 | 09-81 | | 9 |
| 394800A1 | 09-56 | | 7 | 398576A1 | 09-77 | | 1 |
| 394863A1 | 04-14 | | 9 | 398577A1 | 09-78 | | 1 |
| | 09-54 | | 17 | 398578A1 | 09-80 | | 2 |
| 394864A1 | 09-57 | | 2 | 398579A1 | 09-81 | | 2 |
| 394865A1 | 09-57 | | 9 | 398580A1 | 09-80 | | 3 |
| 395026A1 | 09-60 | | 9 | 398581A1 | 09-81 | | 3 |
| 395033A1 | 09-60 | | 8 | 398582A1 | 09-80 | | 5 |
| 395136A1 | 09-60 | | 6 | 398583A1 | 09-81 | | 5 |
| 395189A2 | 03-02 | | 1 | 398598A1 | 09-77 | | 13 |
| 395344A1 | 06-11 | | 39 | 398599A1 | 09-78 | | 13 |
| 395348A1 | 09-58 | | 12 | 398600A1 | 09-80 | | 1 |
| | 09-58 | | 14 | 398601A1 | 09-81 | | 1 |
| 395387A1 | 09-54 | | 18 | 398654A1 | 09-81 | | 11 |
| 395388A1 | 09-54 | | 19 | 398656A1 | 09-81 | | 10 |
| 395389A1 | 09-60 | | 10 | 398658A1 | 09-76 | | 5 |
| 395478A3 | 09-68 | | 3 | | 09-77 | | 5 |
| 395793A1 | 09-53 | | 9 | | 09-78 | | 5 |
| | 09-69 | | 7 | 398662A1 | 09-77 | | 7 |
| 395910A2 | 09-73 | | 10 | 398663A1 | 09-78 | | 7 |
| 396-41028 | 09-01 | | 16 | 398665A1 | 09-80 | | 8 |
| | 09-01 | | 31 | 398666A1 | 09-81 | | 8 |
| | 09-02 | | 31 | 398667A1 | 09-80 | | 7 |
| | 09-18 | | 23 | 398668A1 | 09-81 | | 7 |
| 396018A2 | 04-14 | | 13 | 398669A1 | 09-80 | | 11 |
| | 09-60 | | | 398670A1 | 09-80 | | 13 |
| 396023A2 | 04-13 | | 10 | 398671A1 | 09-81 | | 13 |
| 396092A1 | 09-25 | | 10 | 398672A1 | 09-77 | | 10 |
| | 09-25A | | 10 | 398673A1 | 09-78 | | 10 |
| 396339A1 | 08-12 | | 16 | 398674A1 | 09-80 | | 4 |
| | 08-13 | | 34 | 398675A2 | 04-07 | | 24 |
| 396422A2 | 08-55 | | 10 | | 08-26 | | 34 |
| 396483A1 | 09-27 | | 55 | 398676A1 | 09-81 | | 4 |
| 396516A1 | 09-54 | | 12 | 398677A1 | 09-80 | | 10 |
| | 09-61 | | 3 | 398738A1 | 09-62 | | 4 |
| | 09-68 | | 26 | 398846A3 | 04-13 | | 5 |
| 396605A1 | 09-40 | | 30 | | 04-14 | | 1 |
| 396620A2 | 07-04 | | 17 | 398847A3 | 04-13 | | 8 |
| 396841A1 | 09-56 | | 3 | | 04-14 | | 2 |
| | 09-57 | | 29 | 398986A1 | 09-63 | | 30 |
| 396938A3 | 09-68 | | 2 | 399004A1 | 03-01 | | 21 |
| 397025A2 | 09-43 | | 21 | | 08-21 | | |
| 397026A3 | 09-43 | | 2 | 399757A1 | 09-49 | | 1 |
| 397064A1 | 09-56 | | 1 | 399758A1 | 09-49 | | 2 |
| | 09-57 | | 27 | 399759A1 | 09-49 | | 1A |
| 397065A2 | 03-03 | | 22 | 399760A1 | 09-49 | | 2A |
| 397076A1 | 07-04 | | 9 | 399764A1 | 09-50 | | 11 |
| 397080A1 | 08-63 | | 2 | 399777A1 | 09-47 | | 3 |
| 397132A1 | 09-46 | | 1 | 399959A2 | 09-38 | | 26 |
| | 09-47 | | | 399963A1 | 08-07 | | |
| | 09-48 | | | 400069A1 | 09-12 | | 10 |
| 397134A2 | 09-46 | | 2A | 400077A1 | 09-43 | | |
| | 09-49 | | | | 09-43 | | |
| | 09-50 | | | 400200A1 | 09-58 | | 5 |
| 397136A2 | 09-46 | | 2A | 400280A1 | 09-64 | | 11 |
| | 09-49 | | | 400282A1 | 09-64 | | 2 |
| | 09-50 | | | 400296A2 | 08-55 | | 11 |
| 397137A1 | 09-46 | | 2 | 400379A1 | 04-09 | | 9 |
| | 09-51 | | | | 09-64 | | 5 |
| | 09-52 | | | | 09-65 | | 14A |
| 397177A2 | 07-04 | | 16 | 400398A1 | 09-26 | | 48 |
| 397309A3 | 08-01 | | 29 | | 09-27 | | 32 |
| 397548A4 | 03-01 | | 40 | 400494A1 | 09-58 | | 16 |
| 397569A1 | 04-09 | | 5 | 400571A2 | 09-53 | | 20 |
| 397570A1 | 04-09 | | 6 | 400572A1 | 09-53 | | 19 |
| 397653A1 | 06-03 | | 1 | 400573A1 | 09-53 | | 16 |
| 397654A1 | 06-03 | | 2 | 400588A2 | 06-11 | | 7 |
| 397774A3 | 09-43 | | 12A | 400657A1 | 08-55 | | 13 |
| 397786A1 | 08-10 | | 11 | 400837A1 | 09-51 | | 4 |
| 397787A1 | 08-11 | | 21 | 400838A1 | 09-51 | | 5 |
| 397788A1 | 08-12 | | 10 | 400981A1 | 09-51 | | 1 |
| 397870A3 | 09-11 | | 15A | 401052A1 | 05-06 | | |
| 397876A1 | 04-08 | | 13 | 401054A1 | 05-06 | | 3 |
| 397911A1 | 09-12 | | 16 | 401055A1 | 05-06 | | 7 |
| 397990A1 | 04-07 | | 29 | | 05-07 | | 1 |
| 398113A1 | 09-43 | | 12B | 401059A1 | 05-06 | | 13 |
| | 09-43 | | 21A | 401060A1 | 05-06 | | 14 |

HTTP://WWW.MINNPARBACKHOEPARTS.COM




| Number | Figure | Sequence | Ref. |
|---|---|---|---|
| 401061A1 | 05-07 | | 4 |
| 401062A1 | 05-07 | | 3 |
| 401063A1 | 05-07 | | 5 |
| 401064A1 | 05-07 | | 6 |
| 401065A1 | 05-08 | | 3 |
| 401066A1 | 05-08 | | 4 |
| 401067A1 | 05-08 | | 5 |
| 401457A1 | 09-73 | | 2 |
| 401458A1 | 09-73 | | 3 |
| 401459A2 | 09-73 | | 4 |
| 401460A2 | 09-73 | | 5 |
| 401462A1 | 09-73 | | 1 |
| 401466A1 | 09-73 | | 1A |
| 401949A1 | 09-54 | | 4 |
| 402359A1 | 06-03 | | 4 |
| 402610A1 | 09-54 | | 20 |
| 402836A1 | 09-58 | | 28 |
| 402843A1 | 09-58 | | 25 |
| 402844A1 | 09-58 | | 27 |
| 402845A1 | 09-58 | | 32 |
| 402846A1 | 09-58 | | 21 |
| 402847A1 | 09-58 | | 18 |
| 402933A1 | 09-71 | | 1 |
| 402934A1 | 09-71 | | 2 |
| 402935A1 | 09-71 | | 5 |
| 402936A1 | 09-71 | | 3 |
| 403193A1 | 09-63 | | 36 |
| 403225A1 | 09-63 | | 35 |
| 403271A1 | 09-62 | | 9 |
| 403948A1 | 09-58 | | 1 |
| 404226A1 | 09-58 | | 6 |
| 404227A1 | 09-58 | | 9 |
| 404228A1 | 09-58 | | 4 |
| 404229A1 | 09-58 | | 7 |
| 404617A1 | 04-13 | | 12 |
| | 04-14 | | 10 |
| | 09-60 | | |
| | 09-70 | | |
| 404816A1 | 04-07 | | 14 |
| 404834A1 | 09-24 | | 43 |
| | 09-27 | | 5 |
| 404835A1 | 09-24 | | 44 |
| | 09-27 | | 6 |
| 405738A1 | 09-53 | | 15 |
| 405739A1 | 09-53 | | 14 |
| 405740A1 | 09-53 | | 13 |
| 405741A1 | 09-53 | | 17 |
| 405742A1 | 09-53 | | 18 |
| 406287A1 | 09-64 | | 19 |
| | 09-65 | | 5 |
| 406700A1 | 09-47 | | 9 |
| 406723A1 | 09-74 | | 15 |
| 407009A2 | 09-73 | | 6 |
| 407010A2 | 09-73 | | 7 |
| 407660A1 | 04-11 | | 8A |
| 407962A1 | 02-01 | | 11 |
| | 04-06A | | 4 |
| 408398A1 | 09-22 | | 25A |
| 408405A1 | 09-22 | | 35 |
| 408535A1 | 04-06 | | 12 |
| 408757A1 | 08-01 | | 32 |
| 408965A1 | 09-59 | | 15A |
| 408966A1 | 09-59 | | 15 |
| 409025A1 | 08-55 | | 5 |
| 409318A1 | 07-04 | | 18 |
| 409370A1 | 07-03 | | 38 |
| 409472A1 | 03-01 | | 4A |
| | 09-38 | | 4A |
| 409618A1 | 09-54 | | 11 |
| | 09-68 | | 25 |
| 409672A1 | 09-18 | | 4 |
| 409673A1 | 09-18 | | 5 |
| 409690A1 | 09-58 | | 30 |
| 409723A1 | 09-61 | | 18A |
| 410561A1 | 06-11 | | 44 |
| 410867A1 | 09-58 | | 2 |
| 411049A1 | 09-75 | | 2 |
| 411074A1 | 09-42 | | 16 |
| 411399A1 | 09-54 | | 25 |
| 411549A1 | 09-68 | | 21 |
| 411668A1 | 09-08 | | |
| 411844A1 | 09-58 | | |
| 411845A1 | 09-58 | | |
| 411846A1 | 09-58 | | |
| 411847A1 | 09-58 | | |
| 411848A1 | 09-58 | | |
| 411849A1 | 09-58 | | |
| 411850A1 | 09-58 | | |
| 411851A1 | 09-58 | | |
| 411892A1 | 09-37 | | 14 |
| 411908A1 | 09-58 | | 22 |
| 411909A1 | 09-58 | | 19 |
| 411910A1 | 09-58 | | 24 |
| 411911A1 | 09-58 | | 31 |
| 411912A1 | 09-58 | | 33 |
| 411914A1 | 09-58 | | 29 |
| 411916A1 | 09-58 | | 20 |
| 411917A1 | 09-58 | | 17 |
| 412285A1 | 09-54 | | 23 |
| 412510A1 | 04-11 | | 40 |
| 413-1228 | 09-22 | | 18 |
| 413-412 | 09-71 | | 11 |
| 413-516 | 09-10 | | 11 |
| | 09-71 | | 7 |
| 413-528 | 09-15 | | 22 |
| 413-624 | 09-19 | | 12 |
| 413-628 | 09-01 | | 19 |
| 413-632 | 09-02 | | 10 |
| | 09-02 | | 27 |
| 413054A1 | 04-11 | | 36 |
| 413778A1 | 08-23 | | 9 |
| 413870A1 | 07-03 | | 27 |
| 414-724 | 09-46 | | 14 |
| | 09-46 | | 22 |
| 414033A1 | 04-10 | | 18 |
| 414034A1 | 04-10 | | 17 |
| 414071A1 | 04-11 | | 39 |
| 414092A1 | 04-11 | | 38 |
| 414174A1 | 04-08 | | 21 |
| 414426A1 | 09-60 | | 5 |
| | 09-70 | | 3 |
| 414572A1 | 04-10 | | 16 |
| 414600A1 | 09-61 | | 17 |
| 414939A1 | 09-54 | | 24 |
| 418789A1 | 08-05 | | 13 |
| 418791A1 | 08-05 | | 14 |
| 420-21232 | 09-06 | | 9 |
| | 09-06 | | 9 |
| 425-1012 | 09-22 | | 19 |
| 425-105 | 07-03 | | 21 |
| 425-106 | 04-08 | | 2 |
| | 04-08 | | 20 |
| | 09-01 | | 21 |
| | 09-19 | | 13 |
| | 09-59 | | 12 |
| | 09-70 | | 10 |
| 425-1110 | 09-18 | | 16 |
| 425-115 | 09-03 | | 6 |
| | 09-15 | | 19 |
| 425-116 | 09-01 | | 22 |
| | 09-02 | | 26 |
| | 09-02 | | 38 |
| | 09-16 | | 36 |
| | 09-19 | | 5 |
| 425-118 | 09-16 | | 10 |
| | 09-17 | | 3 |
| | 09-18 | | 7 |
| | 09-21 | | 7 |
| 425-147 | 09-58 | | |
| | 09-60 | | |
| 425-156 | 07-03 | | 5 |
| | 07-06 | | 17 |
| | 09-16 | | 27 |
| | 09-16 | | 47 |
| | 09-17 | | 9 |
| | 09-20 | | 9 |
| | 09-21 | | 16 |
| 427-3058 | 03-02 | | 15 |
| | 03-03 | | 18 |
| 427-5094 | 09-15 | | 13 |
| | 09-25 | | 13 |
| | 09-25A | | 13 |
| 427-6088 | 09-16 | | 25 |
| | 09-17 | | 7 |

HTTP://WWW.MINNPARBACKHOEPARTS.COM




| Number | Figure | Sequence | Ref. | Number | Figure | Sequence | Ref. |
|---|---|---|---|---|---|---|---|
| 427-6088 | 09-20 | | 7 | 4890833 | 02-14 | | 8 |
| 427-6100 | 09-04 | | 33 | 4890964 | 03-09 | | 4 |
| 427107A1 | 06-02 | | 1 | 4891209 | 02-13 | | 5 |
| 429-1012 | 09-06 | | 10 | | 02-27 | | 7 |
| | 09-06 | | 10 | 4891252 | 02-35 | | 1 |
| | 09-07 | | 10 | 4891353 | 02-09 | | 6 |
| 429230A1 | 05-05 | | 1 | 4892707 | 02-22 | | 3 |
| 429231A1 | 05-06 | | 1 | 4892708 | 02-22 | | 2 |
| 429232A1 | 05-06 | | 2 | 4892712 | 02-23 | | 2 |
| 430471A1 | 04-11 | | 37 | 4892713 | 02-23 | | 3 |
| 431583A1 | 09-68 | | 31 | 4892774 | 02-34 | | 2 |
| 431584A1 | 09-68 | | 32 | 4892836 | 02-27 | | 1 |
| 431801A1 | 09-53 | | 21 | 4892859 | 02-16 | | 2 |
| 432-48 | 03-02 | | 10 | 4892860 | 02-18 | | 4 |
| | 03-02 | | 16 | 4892861 | 02-16 | | 1 |
| | 03-03 | | 19 | 4892867 | 02-25 | | 2 |
| 432-612 | 07-03 | | 8 | 4893386 | 02-21 | | 2 |
| | 07-06 | | 18 | 4893391 | 02-34 | | 8 |
| | 07-06 | | 3 | 4893518 | 03-06 | | 6 |
| | 09-01 | | 27 | 4894095 | 03-10 | | 4 |
| | 09-02 | | 37 | 4894139 | 02-11 | | 6 |
| | 09-03 | | 5 | 4894218 | 02-10 | | 1 |
| | 09-04 | | 34 | 4894641 | 02-24 | | 3 |
| | 09-15 | | 14 | 4894721 | 03-09 | | 5 |
| | 09-16 | | 26 | 4894774 | 03-06 | | 1 |
| | 09-16 | | 38 | 4895038 | 02-09 | | 4 |
| | 09-16 | | 49 | 4895039 | 02-09 | | 3 |
| | 09-17 | | 8 | 4895040 | 02-09 | | 7 |
| | 09-19 | | 4 | 4895043 | 02-34 | | 3 |
| | 09-20 | | 12 | 4895045 | 02-34 | | 5 |
| | 09-20 | | 8 | 4895049 | 02-10 | | 8 |
| | 09-21 | | 12 | 4895078 | 02-16 | | 16 |
| | 09-25 | | 14 | 4895079 | 02-14 | | 14 |
| | 09-25A | | 14 | 4895090 | 03-06 | | 2 |
| 432-828 | 09-01 | | 13 | 4895107 | 02-33 | | 2 |
| | 09-02 | | 24 | 4895121 | 02-36 | | 2 |
| | 09-15 | | 25 | 4895133 | 02-29 | | 2 |
| | 09-18 | | 20 | 4895164 | 02-33 | | 1 |
| 432431A1 | 09-56 | | 9 | 4895166 | 03-08 | | 5 |
| 434605A1 | 08-27 | | 8 | 4895174 | 02-20 | | 3 |
| 438-12040 | 07-03 | | 24 | 4895179 | 02-16 | | 12 |
| 439-5436 | 09-02 | | 6 | 4895180 | 02-10 | | 9 |
| 440-10616 | 09-04 | | 18 | 4895183 | 02-16 | | 4 |
| 440-1066 | 04-11 | | 27 | 4895184 | 02-16 | | 9 |
| | 09-38 | | 1B | 4895187 | 02-16 | | 6 |
| 440-1088 | 09-61 | | 22 | 4895188 | 02-16 | | 5 |
| 440-11010 | 09-39 | | 2 | 4895193 | 02-18 | | 3 |
| 440-11012 | 09-41 | | 12 | 4895195 | 02-18 | | 1 |
| 440-12510 | 09-55 | | 9 | 4895196 | 02-18 | | 7 |
| 440038A1 | 04-06A | | 9 | 4895198 | 02-18 | | 9 |
| 442718A1 | 09-55 | | 8 | 4895199 | 02-18 | | 10 |
| 442773A1 | 09-55 | | 33 | 4895200 | 02-18 | | 11 |
| 442842A1 | 09-56 | | 6 | 4895204 | 02-18 | | 12 |
| 443375A1 | 03-01 | | 2 | 4895214 | 02-17 | | 3 |
| 443432A1 | 08-55 | | | 4895215 | 02-16 | | 8 |
| 445266A1 | 06-26 | | 7 | 4895228 | 02-09 | | 5 |
| 445267A1 | 06-26 | | 3 | 4895244 | 03-11 | | 1 |
| 445674A1 | 05-02 | | 22 | 4895291 | 02-39 | | 2 |
| | 08-03 | | 1 | 4895294 | 02-19 | | 7 |
| | 08-57 | | | 4895297 | 03-05 | | 2 |
| 446222A1 | 09-22 | | 5 | 4895301 | 02-39 | | 4 |
| 446454A1 | 09-22 | | 36 | 4895305 | 03-11 | | 2 |
| 448284A1 | 08-25 | | 9 | 4895323 | 02-27 | | 8 |
| 448428A1 | 09-64 | | 12 | | 02-28 | | 1 |
| 448429A1 | 09-64 | | 13 | 4895327 | 02-40 | | 3 |
| 448607A1 | 09-53 | | 2 | 4895336 | 02-20 | | 4 |
| | 09-69 | | 1 | 4895347 | 02-16 | | 7 |
| 448608A1 | 09-53 | | 6 | 4895355 | 02-12 | | 8 |
| | 09-69 | | 6 | 4895358 | 02-14 | | 11 |
| 448609A1 | 09-53 | | 5 | 4895360 | 02-17 | | 1 |
| | 09-69 | | 5 | 4895361 | 02-18 | | 2 |
| 449842A1 | 09-74 | | 8 | 4895363 | 02-18 | | 5 |
| 450037A1 | 09-60 | | 1 | 4895364 | 02-18 | | 6 |
| | 09-70 | | 1 | 4895365 | 02-18 | | 8 |
| 451384A1 | 09-27 | | 43 | 4895378 | 02-14 | | 4 |
| 465004R91 | 09-01 | | 14A | 4895379 | 02-14 | | 5 |
| | 09-02 | | | 4895392 | 02-10 | | 6 |
| 470-10620 | 09-46 | | 8 | | 02-36 | | 6 |
| 484-6316 | 06-11 | | 3 | 4895393 | 02-10 | | 7 |
| 4858605 | 03-06 | | 8 | | 02-36 | | 7 |
| 4890343 | 02-01 | | 44 | 4895489 | 02-11 | | 2 |
| 4890832 | 02-13 | | 4 | 4895538 | 02-11 | | 10 |

HTTP://WWW.MINNPARBACKHOEPARTS.COM



| Number | Figure | Sequence | Ref. | Number | Figure | Sequence | Ref. |
|---|---|---|---|---|---|---|---|
| 4895576 | 02-36 | | 4 | 4899610 | 02-28 | | 5 |
| 4895584 | 02-11 | | 5 | 4899921 | 02-19 | | 5 |
| 4895586 | 02-26 | | 6 | 490-11012 | 04-08 | | 18 |
| 4895605 | 02-10 | | 2 | 490-1106 | 04-07 | | 11A |
| 4895610 | 02-30 | | 5 | 490-1108 | 04-07 | | |
| 4895623 | 02-36 | | 8 | | 04-07 | | 11 |
| 4895625 | 02-36 | | 9 | 492-11025 | 09-55 | | 10 |
| 4895648 | 02-19 | | 4 | 492-11031 | 09-10 | | 12 |
| 4895742 | 02-34 | | 10 | 492-11038 | 09-59 | | 11 |
| 4895748 | 02-22 | | 1 | | 09-70 | | 9 |
| 4895790 | 02-16 | | 3 | 493-11026 | 04-17 | | 2 |
| 4896404 | 02-34 | | 4 | 493-11039 | 04-05 | | 12 |
| 4896406 | 02-34 | | 9 | 493-21020 | 04-04 | | 9 |
| 4896409 | 02-34 | | 11 | | 08-57 | | 3 |
| 4896410 | 02-34 | | 7 | 493-21033 | 04-04 | | 7 |
| 4896770 | 03-06 | | 7 | 493-41020 | 06-11 | | 5 |
| 4896897 | 02-40 | | 2 | 495-11028 | 09-01 | | 8 |
| 4896947 | 02-26 | | 5 | | 09-02 | | 17 |
| 4897024 | 02-13 | | 1 | | 09-72 | | 2 |
| 4897048 | 02-26 | | 4 | 495-11034 | 09-10 | | 13 |
| 4897071 | 02-26 | | 3 | 495-11041 | 03-01 | | 17A |
| 4897123 | 02-26 | | 2 | | 04-05 | | 9 |
| 4897178 | 02-16 | | 13 | | 04-06 | | 8 |
| 4897179 | 02-16 | | 14 | | 09-02 | | 34A |
| 4897330 | 02-30 | | 4 | 495-11047 | 05-04 | | 11 |
| 4897457 | 02-28 | | 4 | | 06-01 | | 30 |
| 4897480 | 02-31 | | 1 | | 09-58 | | |
| 4897934 | 02-26 | | 11 | | 09-60 | | |
| 4898301 | 02-11 | | 3 | 495-11053 | 09-04 | | 35 |
| 4898482 | 02-29 | | 6 | 495-11081 | 09-18 | | 10 |
| 4899003 | 03-06 | | 4 | 495-21031 | 04-17 | | 3 |
| 4899009 | 02-10 | | 4 | 495-21038 | 07-06 | | 4 |
| | 02-16 | | 10 | | 09-45 | | 6 |
| 4899019 | 02-34 | | 1 | 495-21044 | 09-02 | | 11 |
| 4899020 | 02-11 | | 1 | | 09-38 | | 8 |
| | 02-14 | | 13 | 495-21056 | 06-01 | | 15 |
| 4899026 | 02-09 | | 2 | | 06-01 | | 20 |
| | 02-12 | | 1 | 495-31016 | 09-46 | | 9 |
| | 02-14 | | 1 | 495-31022 | 03-02 | | 9 |
| 4899027 | 02-27 | | 2 | | 04-13 | | 4 |
| 4899031 | 02-35 | | 3 | 495-61020 | 09-43 | | 14 |
| | 02-38 | | 5 | | 09-43 | | 25 |
| | 03-09 | | 3 | | 09-43 | | 8 |
| 4899035 | 02-34 | | 6 | 495-81001 | 02-04 | | 16 |
| 4899036 | 02-30 | | 3 | | 02-04A | | 17 |
| 4899039 | 02-19 | | 2 | | 09-68 | | 6 |
| 4899053 | 02-39 | | 1 | 495-81153 | 04-08 | | 6 |
| 4899058 | 02-33 | | 9 | 495-81169 | 09-46 | | 17 |
| 4899063 | 02-13 | | 3 | 495-81184 | 09-01 | | 9 |
| 4899068 | 02-28 | | 3 | | 09-02 | | 22 |
| | 03-07 | | 2 | 495-81226 | 09-24 | | 24 |
| | 03-08 | | 3 | | 09-24 | | 32 |
| 4899072 | 02-10 | | 5 | | 09-26 | | 25 |
| | 02-16 | | 11 | | 09-26 | | 35 |
| 4899073 | 02-12 | | 4 | | 09-26 | | 4 |
| | 02-41 | | 2 | | 09-27 | | 42 |
| 4899074 | 02-14 | | 7 | 495-81227 | 09-23 | | 17 |
| 4899075 | 02-14 | | 3 | | 09-24 | | 29 |
| 4899076 | 02-14 | | 6 | 495-81261 | 07-03 | | 30 |
| 4899078 | 02-13 | | 2 | 495-81267 | 09-68 | | 10 |
| 4899080 | 02-28 | | 6 | 495-81282 | 09-04 | | 7 |
| 4899090 | 02-31 | | 2 | | 09-22 | | 34 |
| 4899091 | 02-11 | | 2 | | 09-26 | | 21 |
| | 02-12 | | 2 | | 09-27 | | 13 |
| 4899093 | 02-12 | | 3 | | 09-27 | | 38 |
| | 03-08 | | 4 | 496-21041 | 02-01 | | 29 |
| 4899103 | 02-14 | | 9 | | 06-11 | | 17 |
| 4899106 | 02-33 | | 7 | | 09-01 | | 20 |
| 4899107 | 02-33 | | 3 | 496-41041 | 08-10 | | 6 |
| 4899108 | 02-33 | | 4 | | 08-11 | | 6 |
| 4899109 | 02-14 | | 2 | | 08-12 | | 6 |
| | 02-26 | | 11 | | 08-13 | | 6 |
| | 02-36 | | 1 | | 08-14 | | 6 |
| | 02-38 | | 6 | | 08-22 | | 12 |
| 4899110 | 02-15 | | 3 | | 09-12 | | 5 |
| 4899115 | 02-10 | | 3 | | 09-44 | | 4 |
| | 02-30 | | 11 | | 09-59 | | 6 |
| 4899118 | 02-29 | | 1 | | 09-70 | | 20 |
| 4899119 | 02-20 | | 5 | 496-41081 | 09-24 | | 5 |
| 4899121 | 02-33 | | 11 | 496-81000 | 05-09 | | 9 |
| 4899467 | 02-33 | | 5 | | 06-01 | | 3 |
| 4899519 | 02-33 | | 6 | | 06-06 | | 24 |

HTTP://WWW.MINNPARBACKHOEPARTS.COM




| Number | Figure | Sequence | Ref. | Number | Figure | Sequence | Ref. |
|---|---|---|---|---|---|---|---|
| 496-81010 | 09-46 | | 18 | 540-720 | 09-54 | | 7 |
| | 09-46 | | 25 | 555-10 | 04-10 | | 2 |
| 496-81018 | 03-02 | | 7 | | 04-11 | | 6 |
| | 09-13 | | 29 | 555-2 | 04-11 | | 22 |
| 496-81028 | 05-01 | | 11 | | 04-11 | | 3 |
| 500315795 | 02-15 | | 2 | | 09-43 | | 16 |
| 504001088 | 03-08 | | 2 | | 09-43 | | 22 |
| 504010786 | 02-29 | | 4 | | 09-43 | | 5 |
| 504011329 | 02-30 | | 1 | | 09-68 | | 17 |
| 504011338 | 02-30 | | 6 | 565-104 | 09-15 | | 34 |
| 504025599 | 02-37 | | 6 | 569-4 | 09-55 | | 24 |
| 504026078 | 02-41 | | 1 | 60-7083T1 | 09-55 | | 7 |
| 504028028 | 02-38 | | 2 | 604-12030 | 09-46 | | 3 |
| 504030423 | 02-14 | | 12 | | 09-51 | | |
| 504032877 | 03-04 | | 2 | 604-20035 | 09-24 | | 42 |
| 504034954 | 02-28 | | 7 | 604-20045 | 08-23 | | 6 |
| 504035087 | 02-25 | | 1 | 604-8050 | 03-03 | | 9 |
| 504035094 | 02-29 | | 5 | 614-10020 | 02-04 | | 8 |
| 504035148 | 02-39 | | 3 | | 02-04A | | 8 |
| 504038890 | 02-37 | | 5 | | 03-01 | | 38 |
| 504042116 | 03-07 | | 1 | | 03-01 | | 41 |
| 504046458 | 03-10 | | 2 | | 05-01 | | 19 |
| 504047260 | 02-10 | | 10 | | 05-01 | | 9 |
| 504048350 | 02-21 | | 1 | | 06-11 | | 26 |
| 504049033 | 02-40 | | 1 | | 08-03 | | 2 |
| 504050848 | 02-12 | | 5 | | 09-38 | | 7 |
| 504051210 | 02-37 | | 2 | | 09-40 | | 13 |
| 504051276 | 03-11 | | 3 | 614-10025 | 07-03 | | 10 |
| 504052006 | 02-19 | | 6 | | 07-06 | | 24 |
| 504052013 | 02-37 | | 3 | | 08-01 | | 37 |
| 504053173 | 02-33 | | 8 | | 08-23 | | 11 |
| 504053512 | 02-37 | | 4 | | 09-09 | | 2 |
| 504053522 | 02-17 | | 6 | | 09-13 | | 38 |
| 504053894 | 02-33 | | 15 | | 09-16 | | 42 |
| 504057288 | 03-10 | | 1 | | 09-19 | | 16 |
| 504057292 | 03-06 | | 5 | | 09-20 | | 3 |
| 504057736 | 02-24 | | 1 | | 09-38 | | 53 |
| 504060728 | 03-04 | | 3 | | 09-40 | | 10 |
| 504061622 | 02-25 | | 3 | | 09-40 | | 22 |
| 504062460 | 02-24 | | 2 | | 09-40 | | 5 |
| 504062752 | 02-28 | | 2 | | 09-41 | | 3 |
| 504062795 | 02-30 | | 2 | 614-10030 | 02-01 | | 37 |
| 504062812 | 02-11 | | 8 | | 04-09 | | 28 |
| 504062856 | 02-35 | | 2 | | 04-16 | | 6 |
| 504062964 | 02-14 | | 13 | | 06-13 | | 7 |
| 504063980 | 02-19 | | 3 | | 06-14 | | 8 |
| 504064336 | 02-36 | | 3 | | 08-13 | | 28 |
| 504064340 | 02-38 | | 1 | | 08-22 | | 15 |
| 504064865 | 02-19 | | 1 | | 09-40 | | 28 |
| 504065040 | 02-17 | | 4 | | 09-67 | | 4 |
| 504065099 | 03-06 | | 9 | 614-10035 | 03-03 | | 23 |
| 504065285 | 03-10 | | 3 | | 05-01 | | 20 |
| 504065880 | 02-38 | | 3 | | 08-10 | | 29 |
| 504066077 | 03-08 | | 1 | | 08-10 | | 5 |
| 504069558 | 02-15 | | 1 | | 08-11 | | 5 |
| 504069775 | 02-14 | | 10 | | 08-12 | | 5 |
| 504069777 | 02-11 | | 7 | | 08-13 | | 5 |
| 504074001 | 02-12 | | 6 | | 08-14 | | 5 |
| 504074178 | 02-36 | | 5 | | 08-26 | | 2 |
| 514-633 | 09-55 | | 34 | | 09-12 | | 4 |
| | 09-57 | | 11 | | 09-39 | | 8 |
| 514-634 | 07-02 | | 26 | 614-10040 | 08-24 | | 29 |
| 514-832 | 08-01 | | 8 | 614-10050 | 09-25 | | 6 |
| 514-847 | 03-02 | | 3 | | 09-25A | | 6 |
| 515-2179 | 09-04 | | 14 | 614-10080 | 02-06 | | 3 |
| 515-22159 | 09-59 | | 13 | | 02-06A | | 3 |
| | 09-70 | | 21 | | 02-06B | | 3 |
| 515-22190 | 04-06A | | 2 | 614-12016 | 06-16 | | 2 |
| 515-22254 | 02-02 | | 17 | 614-12025 | 04-06A | | 32 |
| 515-2295 | 08-22 | | 29 | | 05-04 | | 6 |
| | 09-02 | | 17A | | 06-01 | | 32 |
| 515-23127 | 03-01 | | 16 | 614-12035 | 02-07 | | 3 |
| | 04-04 | | 13 | | 06-11 | | 27 |
| | 04-04 | | 15 | 614-12040 | 02-07 | | 10 |
| 515-23159 | 05-02 | | 23 | 614-18035 | 08-09 | | 6 |
| 515-23254 | 08-10 | | 28 | 614-20030 | 09-39 | | 12 |
| 515-23444 | 04-09 | | 27 | 614-6016 | 09-01 | | 15 |
| 515-2379 | 07-04 | | 15 | | 09-01 | | 7 |
| 515-24238 | 02-04 | | 7 | | 09-02 | | 16 |
| | 02-04A | | 7 | | 09-02 | | 30 |
| 515-25190 | 04-06A | | 31 | | 09-04 | | 13 |
| 515-25254 | 08-07 | | 13 | | 09-18 | | 22 |

HTTP://WWW.MINNPARBACKHOEPARTS.COM



| Number | Figure | Sequence | Ref. |
|---|---|---|---|
| 614-6020 | 04-06A | | 13 |
| | 04-17 | | 13 |
| | 09-01 | | 30 |
| | 09-18 | | 24 |
| 614-6025 | 03-03 | | 32 |
| | 09-21 | | 4 |
| 614-6035 | 04-06A | | 11 |
| 614-8012 | 02-03 | | 7 |
| | 06-10 | | 2 |
| 614-8016 | 02-01 | | 19 |
| | 02-01 | | 40 |
| | 09-59 | | 18 |
| | 09-70 | | 23 |
| 614-8018 | 06-12 | | 11 |
| 614-8020 | 02-02 | | 12 |
| | 02-02 | | 18 |
| | 02-04 | | 2 |
| | 02-04A | | 2 |
| | 03-03 | | 9A |
| | 04-08 | | 9 |
| | 04-16 | | 3 |
| | 07-03 | | 36 |
| | 07-04 | | 5 |
| | 08-01 | | 33 |
| | 09-12 | | 12 |
| | 09-59 | | 24 |
| | 09-67 | | 14 |
| | 09-68 | | 5 |
| 614-8022 | 06-20 | | 2 |
| 614-8025 | 04-03 | | 4 |
| | 04-08 | | 10 |
| | 04-16 | | 10 |
| | 08-22 | | 28 |
| | 09-03 | | 15 |
| | 09-08 | | 27 |
| | 09-13 | | 5 |
| | 09-15 | | 11 |
| | 09-16 | | 2 |
| | 09-16 | | 20 |
| | 09-25 | | 23 |
| | 09-25A | | 23 |
| | 09-43 | | 29 |
| | 09-52 | | 1A |
| 614-8030 | 02-01 | | 9 |
| | 06-29 | | 13 |
| | 07-03 | | 2 |
| | 07-04 | | 24 |
| | 08-08A | | 2A |
| | 09-05 | | 8 |
| | 09-15 | | 4 |
| | 09-25A | | 30 |
| | 09-37 | | 19 |
| | 09-44 | | 5 |
| | 09-45 | | 5 |
| | 09-59 | | 5 |
| | 09-64 | | 28 |
| | 09-65 | | 19 |
| | 09-70 | | 19 |
| 614-8040 | 02-02 | | 21 |
| | 04-06A | | 3 |
| | 09-15 | | 35 |
| | 09-45 | | 4 |
| 627-10030 | 02-06 | | 11 |
| | 02-06A | | 11 |
| | 02-06B | | 15 |
| | 06-11 | | 16 |
| 627-12025 | 03-03 | | 26 |
| 627-20060 | 09-38 | | 2 |
| 711-10030 | 09-38 | | 25 |
| 711-10040 | 09-45 | | 8 |
| 711-10050 | 05-02 | | 24 |
| 712998R91 | 05-06 | | 12 |
| | 06-03 | | 7 |
| 761-17325 | 04-18 | | 13 |
| 76904 | 02-01 | | 13 |
| 779-37616 | 09-11 | | 7 |
| 781-24613 | 04-04 | | 34 |
| | 04-08 | | 15 |
| | 09-13 | | 20 |
| 781-24820 | 09-43 | | 30 |
| 800-1134 | 06-06 | | 17 |
| 800-1150 | 06-18 | | 26 |
| 800-2136 | 06-30 | | 26 |
| 800-40065 | 09-23 | | 27 |
| 800-40070 | 09-23 | | 31 |
| 800-44040 | 09-04 | | 26 |
| | 09-04 | | 31 |
| | 09-05 | | 22 |
| | 09-05 | | 4 |
| | 09-25 | | 4 |
| | 09-25A | | 4 |
| | 09-27 | | 27 |
| 800-44050 | 05-04 | | 5 |
| | 06-01 | | 7 |
| | 09-04 | | 8 |
| | 09-24 | | 28 |
| 800-5120 | 06-29 | | 5 |
| 800-5145 | 06-20 | | 19 |
| 806-8016 | 02-02 | | 15 |
| 806-8025 | 02-04 | | 15 |
| | 02-04A | | 16 |
| 8093880 | 02-23 | | 1 |
| 8093881 | 02-23 | | 4 |
| 8093882 | 02-22 | | 4 |
| 811-10025 | 09-68 | | 9 |
| 811-6016 | 04-06A | | 16 |
| 811-8020 | 04-11 | | 32 |
| 814-10040 | 08-04 | | 9 |
| | 08-06 | | 6 |
| | 08-07 | | 8 |
| | 08-09 | | 3 |
| | 08-23 | | 10 |
| | 08-24 | | 10 |
| | 08-25 | | 6 |
| 814-10045 | 03-01 | | 38 |
| | 06-13 | | 15 |
| | 06-14 | | 21 |
| | 08-04 | | 19 |
| | 08-05 | | 7 |
| | 08-06 | | 5 |
| | 08-09A | | 3 |
| | 08-13 | | 25 |
| | 08-22 | | 9 |
| | 09-38 | | 30 |
| 814-10050 | 02-01 | | 20 |
| | 05-01 | | 10 |
| 814-10055 | 08-12 | | 27 |
| | 09-67 | | 3 |
| 814-10060 | 04-04 | | 27 |
| | 07-06 | | 30 |
| | 08-08 | | 22 |
| | 08-22 | | 10 |
| | 08-24 | | 6 |
| | 08-26 | | 6 |
| | 09-08 | | 25 |
| | 09-13 | | 25 |
| 814-10070 | 08-08A | | 22 |
| | 08-26 | | 30 |
| 814-10080 | 08-25 | | 2 |
| | 08-26 | | 29 |
| | 09-08 | | 20 |
| 814-10090 | 02-01 | | 28 |
| | 08-27 | | 13 |
| | 09-01 | | 29 |
| | 09-08 | | 16 |
| 814-10110 | 09-01 | | 36 |
| 814-10120 | 08-10 | | 14 |
| | 08-11 | | 13 |
| | 08-12 | | 13 |
| | 08-13 | | 12 |
| 814-10130 | 09-13 | | 13 |
| 814-10150 | 06-13 | | 9 |
| 814-10220 | 04-05 | | 6 |
| 814-10245 | 04-06 | | 7 |
| 814-12045 | 08-10 | | 2 |
| | 08-11 | | 2 |
| | 08-12 | | 2 |
| | 08-13 | | 2 |
| | 08-14 | | 2 |
| 814-12050 | 08-23 | | 17 |
| 814-12080 | 02-07 | | 5 |
| | 06-11 | | 31 |
| 814-12100 | 09-40 | | 16 |
| 814-12130 | 09-67 | | 8 |

HTTP://WWW.MINNPARBACKHOEPARTS.COM




| Number | Figure | Sequence | Ref. |
|---|---|---|---|
| 814-14140 | 06-26 | | 9 |
| 814-6030 | 09-25 | | 16 |
| | 09-25A | | 16 |
| 814-6035 | 07-01 | | 10 |
| 814-6050 | 09-60 | | 2 |
| | 09-70 | | |
| 814-8035 | 08-22 | | 20 |
| 814-8040 | 07-03 | | 15 |
| 814-8050 | 09-25 | | 27 |
| | 09-25A | | 31 |
| 814-8055 | 08-08A | | 2 |
| | 08-22 | | 19 |
| 814-8060 | 06-15 | | 16 |
| | 06-22 | | 7 |
| | 08-08 | | 2 |
| 814-8070 | 08-23 | | 21 |
| | 09-15 | | 8 |
| | 09-25A | | 27 |
| 814-8080 | 06-21 | | 34 |
| | 06-29 | | 14 |
| 814-8100 | 09-67 | | 15 |
| 814-8110 | 09-67 | | 13 |
| 82017872 | 04-06A | | 26 |
| 824-1405 | 04-04 | | 10 |
| | 04-19 | | 7 |
| 825-11412 | 03-02 | | 8 |
| 825-11418 | 05-09 | | 8 |
| | 06-01 | | 2 |
| | 06-06 | | 25 |
| 825-2406 | 09-65 | | 27 |
| 825-2408 | 09-59 | | 25 |
| | 09-64 | | 30 |
| | 09-65 | | 21 |
| 825-2410 | 09-40 | | 27 |
| | 09-40 | | 31 |
| | 09-40 | | 6A |
| | 09-41 | | 5 |
| 827-10075 | 06-07 | | 3 |
| 827-12045 | 06-01 | | 14 |
| | 06-01 | | 21 |
| 827-12065 | 06-11 | | 9 |
| 827-16085 | 09-37 | | 10 |
| 827-16100 | 09-37 | | 11 |
| 827-20075 | 09-23 | | 13 |
| 827-20170 | 09-36 | | 2 |
| | 09-36 | | 6 |
| 827-20190 | 09-05 | | 16 |
| 827-20230 | 06-24 | | 4 |
| 827-8050 | 07-06 | | 10 |
| 828-20160 | 09-06 | | 4 |
| | 09-06 | | 4 |
| | 09-07 | | 4 |
| 829-1406 | 04-06A | | 20 |
| | 04-06A | | 30 |
| | 09-01 | | 32 |
| | 09-18 | | 25 |
| | 09-21 | | 5 |
| | 09-25 | | 18 |
| | 09-25A | | 18 |
| 829-1408 | 02-02 | | 20 |
| | 02-06B | | 12 |
| | 03-03 | | 11A |
| | 04-04 | | 8 |
| | 04-06A | | 18 |
| | 04-08 | | 12 |
| | 04-16 | | 5 |
| | 07-03 | | 28 |
| | 07-03 | | 4 |
| | 07-06 | | 15 |
| | 08-08 | | 4 |
| | 08-08A | | 4 |
| | 08-22 | | 23 |
| | 08-23 | | 23 |
| | 09-03 | | 17 |
| | 09-05 | | 11 |
| | 09-13 | | 7 |
| | 09-15 | | 7 |
| | 09-25 | | 29 |
| | 09-25A | | 29 |
| | 09-59 | | 20 |
| | 09-66 | | |
| | 09-70 | | 26 |
| 829-1410 | 02-04 | | 10 |
| | 02-04A | | 14 |
| | 02-06 | | 13 |
| | 02-06 | | 6 |
| | 02-06A | | 13 |
| | 02-06A | | 6 |
| | 02-06B | | 17 |
| | 02-06B | | 6 |
| | 03-01 | | 35 |
| | 03-01 | | 43 |
| | 04-09 | | 29 |
| | 05-02 | | 27 |
| | 07-03 | | 12 |
| | 07-06 | | 21 |
| | 08-04 | | 13 |
| | 08-05 | | 11 |
| | 08-05 | | 17 |
| | 08-05 | | 36 |
| | 08-06 | | 10 |
| | 08-06 | | 15 |
| | 08-08 | | 26 |
| | 08-08A | | 26 |
| | 08-09 | | 5 |
| | 08-09A | | 5 |
| | 08-10 | | 32 |
| | 08-22 | | 41 |
| | 08-23 | | 13 |
| | 08-24 | | 13 |
| | 08-24 | | 7 |
| | 08-25 | | 8 |
| | 08-26 | | 8 |
| | 08-27 | | 16 |
| | 08-27 | | 7 |
| | 09-13 | | 37 |
| | 09-24 | | 39 |
| | 09-38 | | 34 |
| | 09-38 | | 46 |
| | 09-38 | | 54 |
| | 09-67 | | 11 |
| 829-1412 | 06-01 | | 22 |
| | 08-10 | | 4 |
| | 08-11 | | 4 |
| | 08-12 | | 4 |
| | 08-13 | | 4 |
| | 08-14 | | 4 |
| | 08-23 | | 19 |
| | 09-40 | | 21 |
| 829-1416 | 09-37 | | 15 |
| 829-1420 | 06-24 | | 7 |
| | 09-05 | | 19 |
| | 09-23 | | 15 |
| | 09-36 | | 4 |
| | 09-36 | | 8 |
| | 09-39 | | 13 |
| 832-10404 | 04-11 | | 14 |
| | 09-54 | | 9 |
| 832-10406 | 04-06A | | 15 |
| | 04-07 | | 34 |
| | 04-09 | | 31 |
| | 04-11 | | 9 |
| 832-10408 | 02-02 | | 14 |
| | 04-11 | | 34 |
| | 04-16 | | 12 |
| | 05-01 | | 17 |
| | 05-01 | | 25 |
| | 07-03 | | 17 |
| | 09-13 | | 33 |
| | 09-16 | | 21 |
| | 09-16 | | 3 |
| | 09-43 | | 32 |
| | 09-45 | | 7 |
| | 09-55 | | 26 |
| | 09-56 | | 10 |
| | 09-59 | | 7 |
| | 09-62 | | 8 |
| | 09-63 | | 12 |
| | 09-63 | | 17 |
| | 09-68 | | 7 |
| | 09-70 | | 22 |
| 832-10410 | 02-01 | | 24 |
| | 05-01 | | 13 |
| | 08-01 | | 38 |

HTTP://WWW.MINNPARBACKHOEPARTS.COM



| Number | Figure | Sequence | Ref. |
|---|---|---|---|
| 832-10410 | 08-07 | | 15 |
| | 08-10 | | 15 |
| | 08-11 | | 14 |
| | 08-12 | | 14 |
| | 08-12 | | 28 |
| | 08-13 | | 13 |
| | 08-13 | | 27 |
| | 08-24 | | 26 |
| | 08-26 | | 33 |
| | 09-08 | | 18 |
| | 09-08 | | 22 |
| | 09-08 | | 8 |
| | 09-13 | | 14 |
| | 09-13 | | 26 |
| | 09-15 | | 17 |
| | 09-16 | | 44 |
| | 09-19 | | 17 |
| | 09-20 | | 4 |
| | 09-40 | | 12 |
| | 09-45 | | 11 |
| | 09-68 | | 11 |
| 832-10412 | 02-07 | | 9 |
| | 06-11 | | 11 |
| | 06-11 | | 34 |
| 832-10420 | 09-06 | | 6 |
| | 09-06 | | 6 |
| | 09-07 | | 6 |
| 832-10508 | 09-55 | | 39 |
| | 09-57 | | 16 |
| 832-41312 | 09-22 | | 25C |
| 833-40310 | 09-37 | | 9A |
| 833-40406 | 04-10 | | 3 |
| | 04-11 | | 23 |
| | 04-11 | | 4 |
| | 09-04 | | 15 |
| | 09-12 | | 18 |
| | 09-13 | | 21 |
| | 09-14 | | 10 |
| | 09-42 | | 6 |
| | 09-43 | | 18 |
| | 09-43 | | 23 |
| | 09-43 | | 6 |
| | 09-65 | | 26 |
| | 09-68 | | 18 |
| 833-40408 | 02-04 | | 17 |
| | 02-04A | | 18 |
| | 09-45 | | 4A |
| 838-3640 | 03-03 | | 16 |
| 838-5840 | 06-27 | | 20 |
| 83822C1 | 09-65 | | |
| 840-1416 | 04-20 | | 12 |
| | 08-15 | | |
| | 08-16 | | |
| | 08-17 | | |
| | 08-18 | | |
| | 08-19 | | |
| | 08-20 | | |
| | 08-22 | | 37 |
| 842-1416 | 04-11 | | 12 |
| 843-1516 | 04-19 | | 5 |
| 844-10020 | 04-04 | | 16 |
| | 04-04 | | 38 |
| | 04-05 | | 11 |
| | 04-05 | | 3 |
| | 04-06 | | 13 |
| | 04-09 | | 32 |
| | 04-14 | | 11 |
| | 09-03 | | 9 |
| 844-10035 | 04-03 | | 2 |
| 844-10110 | 09-08 | | 6 |
| 844-6025 | 04-07 | | 33 |
| | 04-09 | | 30 |
| | 04-11 | | 7 |
| 845-6020 | 09-65 | | 25 |
| 85801585 | 02-07 | | 6 |
| | 06-11 | | 32 |
| 85802618 | 02-07 | | 8 |
| | 06-11 | | 32A |
| 85802820 | 08-08 | | 1 |
| | 08-08A | | 1 |
| 85803019 | 02-02 | | |
| 85811933 | 08-40 | | 8 |
| 85811933 | 08-41 | | 8 |
| | 08-43 | | 8 |
| | 08-44 | | 8 |
| | 08-45 | | 7 |
| | 08-46 | | 8 |
| 85811934 | 08-40 | | 7 |
| | 08-41 | | 7 |
| | 08-43 | | 7 |
| | 08-44 | | 7 |
| | 08-46 | | 7 |
| 85811935 | 08-40 | | 7 |
| | 08-41 | | 7 |
| | 08-43 | | 7 |
| | 08-44 | | 7 |
| | 08-46 | | 7 |
| 85812114 | 08-40 | | 6 |
| 85812115 | 08-41 | | 6 |
| | 08-46 | | 6 |
| 85812116 | 08-43 | | 6 |
| | 08-44 | | 6 |
| 85819148 | 08-40 | | 9 |
| | 08-41 | | 9 |
| | 08-42 | | 9 |
| | 08-43 | | 9 |
| | 08-44 | | 9 |
| | 08-45 | | 8 |
| | 08-46 | | 9 |
| 85819378 | 08-41 | | 3 |
| | 08-42 | | 3 |
| | 08-44 | | 3 |
| | 08-45 | | 3 |
| | 08-46 | | 3 |
| 85821520 | 09-15 | | 21 |
| 85824067 | 09-15 | | 16 |
| 85824080 | 09-15 | | 20 |
| 85824081 | 09-15 | | 18 |
| 85826229 | 02-01 | | 30 |
| 85826230 | 02-01 | | 31 |
| 85826337 | 08-36 | | 3 |
| | 08-37 | | 3 |
| | 08-38 | | 3 |
| | 08-39 | | 3 |
| | 08-41 | | |
| 85826338 | 08-36 | | 5 |
| | 08-37 | | 5 |
| | 08-38 | | 5 |
| | 08-39 | | 5 |
| | 08-43 | | |
| 85826339 | 08-36 | | 2 |
| | 08-37 | | 2 |
| | 08-38 | | 2 |
| | 08-39 | | 2 |
| | 08-40 | | |
| 85826340 | 08-36 | | 4 |
| | 08-37 | | 4 |
| | 08-38 | | 4 |
| | 08-39 | | 4 |
| | 08-42 | | |
| 85826341 | 08-37 | | 7 |
| | 08-39 | | 7 |
| | 08-45 | | |
| 85826342 | 08-38 | | 7 |
| | 08-39 | | 8 |
| | 08-46 | | |
| 85826344 | 08-40 | | 5 |
| | 08-41 | | 5 |
| | 08-42 | | 5 |
| | 08-43 | | 5 |
| | 08-44 | | 5 |
| | 08-45 | | 5 |
| | 08-46 | | 5 |
| 85826365 | 08-36 | | 6 |
| | 08-37 | | 6 |
| | 08-38 | | 6 |
| | 08-39 | | 6 |
| | 08-44 | | |
| 85827471 | 08-17 | | 3 |
| | 08-18 | | 6 |
| | 08-19 | | 6 |
| | 08-48 | | |
| 85827472 | 08-15 | | 5 |
| | 08-16 | | 5 |

HTTP://WWW.MINNPARBACKHOEPARTS.COM




| Number | Figure | Sequence | Ref. |
|---|---|---|---|
| 85827472 | 08-47 | | |
| 86014151 | 04-06A | | 27 |
| 8603092 | 09-76 | | 3 |
| 8603093 | 09-78 | | 3 |
| 8603094 | 09-77 | | 3 |
| 863-16070 | 05-06 | | 8 |
| 863-6020 | 07-01 | | 25 |
| 864-10025 | 06-16 | | 17 |
| 864-12030 | 08-01 | | 6 |
| 864-12130 | 06-26 | | 10 |
| 864-6020 | 06-21 | | 8 |
| 864-6035 | 07-01 | | 19 |
| 864-8020 | 06-21 | | 21 |
| 864-8025 | 06-16 | | 6 |
| 864-8055 | 09-13 | | 34 |
| 86596853 | 08-22 | | 31 |
| 86619908 | 04-06A | | 7 |
| 86625128 | 08-50 | | 13 |
| | 08-51 | | 13 |
| 86982435 | 08-59 | | 18 |
| | 08-66 | | 16 |
| 86982437 | 08-58 | | 18 |
| | 08-60 | | 23 |
| 86982439 | 08-62 | | 25 |
| 86982440 | 08-61 | | 18 |
| 86982441 | 08-65 | | 22 |
| 86982442 | 08-63 | | 24 |
| 86982443 | 08-64 | | 22 |
| 86982682 | 09-39 | | 10 |
| 86983190 | 09-42 | | 2 |
| 86983269 | 09-42 | | 9A |
| 86983278 | 09-13 | | 11 |
| 86983311 | 08-50 | | 1 |
| | 08-51 | | 1 |
| | 08-52 | | 1 |
| | 08-53 | | 1 |
| | 08-54 | | 1 |
| 86983325 | 09-42 | | 9 |
| 86984097 | 06-11 | | 14 |
| | 06-12 | | |
| | 06-13 | | |
| | 06-15 | | |
| | 06-16 | | |
| | 06-17 | | |
| | 06-18 | | |
| | 06-19 | | |
| | 06-21 | | |
| 86984098 | 06-11 | | 15 |
| | 06-12 | | |
| | 06-14 | | |
| | 06-15 | | |
| | 06-16 | | |
| | 06-17 | | |
| | 06-18 | | |
| | 06-19 | | |
| | 06-20 | | |
| | 06-21 | | |
| | 06-22 | | |
| 86984155 | 09-66 | | 4 |
| 86984544 | 09-15 | | 2 |
| | 09-25A | | 25 |
| 86984545 | 09-15 | | 6 |
| | 09-25A | | 26 |
| 86984547 | 09-15 | | 5 |
| | 09-25 | | 28 |
| | 09-25A | | 28 |
| 86984549 | 09-15 | | 24 |
| 86985339 | 09-12 | | 3 |
| 86985341 | 09-12 | | 2 |
| 86987459 | 08-15 | | 1 |
| | 08-16 | | 1 |
| | 08-36 | | |
| 86987460 | 08-17 | | 1 |
| | 08-18 | | 1 |
| | 08-37 | | |
| 86987461 | 08-20 | | 1 |
| | 08-39 | | |
| 86988086 | 04-20 | | 1 |
| 86989616 | 09-15 | | 28 |
| 86989676 | 03-01 | | 10 |
| 86989736 | 09-58 | | 23 |
| 86990837 | 05-04 | | 1 |
| 86990837 | 05-05 | | |
| | 05-06 | | |
| | 05-07 | | |
| | 05-08 | | |
| 86991496 | 07-04 | | 14 |
| 86992243 | 09-43 | | 20 |
| 86992245 | 09-43 | | 10 |
| 86992247 | 09-43 | | 1 |
| 86992284 | 09-43 | | |
| | 09-43 | | |
| 86992395 | 04-01 | | |
| | 04-03 | | 1 |
| 86992975 | 09-76 | | 12 |
| 86992976 | 09-76 | | 4 |
| 86992977 | 09-43 | | 28 |
| 86992978 | 09-78 | | 12 |
| 86992979 | 09-78 | | 4 |
| 86992980 | 09-77 | | 12 |
| 86992981 | 09-77 | | 4 |
| 86993546 | 06-11 | | 23 |
| 86993548 | 06-11 | | 21 |
| 87000312 | 08-50 | | 17 |
| | 08-51 | | 18 |
| | 08-52 | | 19 |
| | 08-54 | | 15 |
| 87019767 | 06-11 | | 23A |
| 87020181 | 06-11 | | 4 |
| 87022296 | 04-20 | | 3 |
| 87032428 | 04-04 | | 26 |
| 87032819 | 08-50 | | 9 |
| | 08-51 | | 9 |
| | 08-52 | | 9 |
| | 08-53 | | 7 |
| | 08-54 | | 9 |
| 87037944 | 08-50 | | 4 |
| | 08-51 | | 4 |
| | 08-52 | | 4 |
| | 08-53 | | 4 |
| | 08-54 | | 4 |
| 87040885 | 09-13 | | 27 |
| 87400286 | 05-05 | | 7 |
| | 06-02 | | 9 |
| 87402618 | 09-41 | | 24 |
| 87403386 | 08-34 | | |
| 87403387 | 08-35 | | |
| 87403835 | 04-05 | | 1 |
| 87404197 | 05-04 | | 4 |
| | 06-01 | | 9 |
| 87405362 | 09-15 | | 26 |
| 87405661 | 02-05 | | 4 |
| | 02-05A | | 4 |
| 87405706 | 09-13 | | 17 |
| 87406924 | 09-53 | | 10 |
| | 09-68 | | 28 |
| 87406934 | 06-11 | | 22 |
| 87407206 | 04-05 | | 10 |
| 87407272 | 02-01 | | 16 |
| 87407769 | 09-40 | | 15 |
| 87407770 | 09-40 | | 19 |
| 87407771 | 02-01 | | 18 |
| 87407908 | 09-54 | | 1 |
| 87407909 | 09-54 | | 1 |
| 87407927 | 09-42 | | 18 |
| 87407965 | 08-19 | | 1 |
| | 08-38 | | |
| 87408480 | 03-01 | | 10A |
| 87408888 | 09-46 | | 13 |
| | 09-46 | | 21 |
| 87408889 | 09-46 | | 12 |
| | 09-46 | | 20 |
| 87409046 | 04-06A | | 8 |
| 87409201 | 06-11 | | 24 |
| 87410096 | 02-01 | | 1 |
| | 02-03 | | |
| 87410105 | 04-20 | | 9 |
| 87410196 | 02-06B | | 9 |
| 87410265 | 04-06A | | 21 |
| 87410602 | 04-06A | | 10 |
| 87410603 | 04-06A | | 1 |
| 87411083 | 09-11 | | 2A |
| 87411084 | 09-11 | | 4A |
| 87411108 | 09-56 | | 4 |

HTTP://WWW.MINNPARBACKHOEPARTS.COM



| Number | Figure | Sequence | Ref. | Number | Figure | Sequence | Ref. |
|---|---|---|---|---|---|---|---|
| 87411319 | 02-07 | | 1 | 87419320 | 04-12 | | |
| 87411320 | 02-07 | | 2 | 87419454 | 08-15 | | 2 |
| 87412060 | 09-40 | | 18 | | 08-16 | | 2 |
| 87412139 | 02-02 | | 1 | | 08-17 | | 2 |
| 87412489 | 02-04A | | 10 | | 08-18 | | 5 |
| 87412635 | 02-05A | | 1 | 87419455 | 08-19 | | 2 |
| 87412636 | 02-04A | | 1 | | 08-20 | | 2 |
| | 02-05A | | | 87419615 | 04-06A | | 23 |
| 87412687 | 09-01 | | 1 | 87419616 | 04-06A | | 22 |
| | 09-02 | | 42 | 87419634 | 05-02 | | 14 |
| 87413144 | 08-32 | | | 87420696 | 08-25 | | 17 |
| 87413145 | 08-34 | | | 87420834 | 02-04A | | 9 |
| 87413146 | 08-35 | | | 87421213 | 08-25 | | 4 |
| 87413162 | 04-06A | | 28 | 87421471 | 03-03 | | 29 |
| 87413237 | 02-01 | | 14 | 87421775 | 09-66 | | 6 |
| 87413722 | 08-62 | | 12 | 87421776 | 09-66 | | 12 |
| 87414205 | 09-14 | | 7 | 87421777 | 09-66 | | 1 |
| | 09-75 | | 5 | 87421807 | 03-03 | | 28 |
| | 09-79 | | 15 | 87421909 | 09-15 | | 33 |
| 87414237 | 04-06A | | 12 | 87421918 | 08-05 | | 4 |
| 87414277 | 08-33 | | | 87421920 | 08-05 | | 5 |
| 87414278 | 08-33 | | | 87421928 | 08-04 | | 7 |
| 87414560 | 03-01 | | 20 | 87421930 | 08-04 | | 4 |
| 87415774 | 02-01 | | 43 | 87421932 | 08-04 | | 5 |
| 87415781 | 04-05 | | 8 | 87421934 | 08-04 | | 6 |
| 87415931 | 09-73 | | 15 | 87421938 | 08-25 | | 13 |
| 87416024 | 08-04 | | 23 | 87421940 | 08-03 | | 22 |
| 87416108 | 06-30 | | 1A | 87422239 | 09-16 | | 33 |
| 87416476 | 08-32 | | | 87422241 | 09-16 | | 31 |
| 87416966 | 02-07 | | 7 | 87422243 | 09-16 | | 28 |
| 87416967 | 06-11 | | 33 | 87422245 | 09-16 | | 29 |
| 87416975 | 08-09 | | 1 | 87422247 | 09-16 | | 30 |
| | 08-09A | | 1 | 87422249 | 09-16 | | 32 |
| | 08-55 | | | 87422253 | 09-19 | | 15 |
| 87416977 | 06-11 | | 29 | 87422256 | 09-19 | | 14 |
| 87416978 | 06-11 | | 30 | 87422258 | 09-19 | | 2 |
| 87417223 | 02-02 | | 9 | 87422260 | 09-19 | | 1 |
| 87417224 | 02-02 | | 11 | 87422262 | 09-19 | | 10 |
| 87417225 | 02-02 | | 10 | 87422264 | 09-19 | | 8 |
| 87417238 | 06-10 | | 13 | 87422554 | 08-01 | | 4 |
| 87417299 | 02-02 | | 7 | 87422597 | 06-10 | | 5 |
| 87417300 | 02-02 | | 3 | 87422598 | 06-10 | | 6 |
| 87417329 | 09-66 | | 26 | 87422675 | 09-14 | | 2 |
| 87417383 | 03-01 | | 18 | 87422678 | 09-14 | | 1 |
| | 04-06A | | 6 | 87422696 | 09-15 | | 9 |
| | 09-37 | | 17 | | 09-25 | | 12 |
| 87417387 | 06-01 | | 1 | | 09-25A | | 12 |
| | 06-02 | | | 87422701 | 09-25 | | 25 |
| | 06-03 | | | 87422702 | 09-25 | | 26 |
| | 06-04 | | | 87422777 | 04-02 | | |
| | 06-05 | | | | 04-03 | | 3 |
| | 06-06 | | | 87422977 | 08-23 | | 38 |
| | 06-07 | | | 87423004 | 09-37 | | 1 |
| | 06-08 | | | 87423033 | 08-08A | | 39 |
| 87417599 | 09-01 | | 37 | | 08-22 | | 24 |
| 87417601 | 09-03 | | | 87423034 | 08-08A | | 1A |
| 87417721 | 04-16 | | 8 | | 08-22 | | 18 |
| | 08-26 | | 4 | 87423067 | 08-25 | | 5 |
| | 09-01 | | 38 | 87423346 | 09-59 | | 14 |
| 87418036 | 02-04 | | 12 | 87423356 | 08-09 | | 10 |
| 87418166 | 02-05 | | 1 | | 08-09 | | 14 |
| 87418359 | 02-02 | | 19 | | 08-09A | | 10 |
| 87418360 | 02-02 | | 22 | 87423396 | 04-12 | | 3 |
| 87418364 | 02-05A | | 2 | 87423397 | 04-12 | | 4 |
| 87418365 | 02-05A | | 3 | 87423401 | 08-22 | | 2 |
| 87418366 | 02-05 | | 2 | 87423409 | 09-76 | | 9 |
| 87418367 | 02-05 | | 3 | 87423410 | 09-76 | | 8 |
| 87418368 | 09-15 | | 31 | 87423457 | 02-04 | | 5 |
| 87418369 | 09-15 | | 32 | | 02-04A | | 5 |
| 87418516 | 09-12 | | 1 | 87423463 | 09-09 | | 1 |
| 87418518 | 09-12 | | 11 | 87423502 | 09-58 | | 34 |
| 87418541 | 04-07 | | 1 | 87423503 | 09-58 | | 26 |
| | 04-08 | | 1 | 87423531 | 02-06 | | 9 |
| 87418542 | 04-09 | | 1 | | 02-06A | | 9 |
| 87419133 | 02-04 | | 1 | | 02-06B | | 13 |
| | 02-05 | | | 87423668 | 09-37 | | 16 |
| 87419135 | 02-04 | | 11 | 87423675 | 04-06 | | 2 |
| 87419229 | 04-04 | | 23 | 87423676 | 04-06 | | 5 |
| 87419256 | 08-25 | | 24 | 87423677 | 04-05 | | 16 |
| 87419257 | 04-05 | | 4 | | 04-06 | | 11 |
| 87419259 | 04-05 | | 2 | 87423802 | 04-20 | | 8 |
| 87419320 | 04-09 | | 14 | 87423812 | 04-20 | | 4 |

HTTP://WWW.MINNPARBACKHOEPARTS.COM



| Number | Figure | Sequence | Ref. | Number | Figure | Sequence | Ref. |
|---|---|---|---|---|---|---|---|
| 87423812 | 09-74 | | 16 | 87429982 | 06-18 | | 29 |
| | 09-75 | | 6 | 87429983 | 06-18 | | 30 |
| 87423817 | 09-41 | | 19 | 87429984 | 06-18 | | 27 |
| 87423926 | 04-04 | | 6 | 87429985 | 06-16 | | 23 |
| 87423969 | 08-23 | | 40 | 87429986 | 06-14 | | 12 |
| 87423970 | 08-23 | | 41 | 87429987 | 06-13 | | 6 |
| 87424267 | 08-50 | | 14 | | 06-14 | | 7 |
| | 08-51 | | 15 | 87429988 | 06-13 | | 10 |
| | 08-52 | | 16 | 87429989 | 06-13 | | 1 |
| | 08-53 | | 11 | 87429994 | 06-16 | | 3 |
| | 08-54 | | 13 | 87430122 | 09-66 | | 19 |
| 87424794 | 07-06 | | 29 | | 09-67 | | 1 |
| 87425117 | 09-21 | | 3 | 87430618 | 06-11 | | 20 |
| 87425118 | 09-21 | | 1 | 87430677 | 09-11 | | |
| 87425122 | 09-11 | | 16 | | 09-75 | | 4 |
| 87425225 | 08-22 | | 36 | 87431300 | 09-13 | | 24 |
| 87425456 | 09-36 | | 5 | 87431301 | 09-13 | | 23 |
| 87425635 | 04-19 | | 8 | 87431529 | 09-13 | | 15 |
| 87425636 | 04-20 | | 10 | 87431630 | 08-23 | | 3 |
| 87425696 | 09-13 | | 22 | 87431701 | 06-25 | | 1 |
| 87426379 | 09-04 | | 1 | 87431799 | 02-07 | | 11 |
| 87426488 | 08-22 | | 16 | 87432387 | 09-41 | | 25 |
| 87426742 | 06-10 | | 17 | 87432547 | 03-03 | | 25 |
| 87426965 | 08-03 | | 12 | 87432811 | 09-25 | | 30 |
| 87426966 | 08-03 | | 14 | | 09-25A | | 32 |
| 87427158 | 06-10 | | 1 | 87433005 | 09-14 | | 13 |
| | 08-03 | | 13 | 87433006 | 09-14 | | 12 |
| 87427294 | 09-66 | | 20 | 87433007 | 09-14 | | 14 |
| 87427537 | 08-26 | | 28 | 87433008 | 09-14 | | 11 |
| 87427539 | 08-26 | | 27 | 87433240 | 08-25 | | 1 |
| 87427774 | 09-25 | | 15 | 87433401 | 04-03 | | 6 |
| 87427775 | 09-25A | | 15 | 87433503 | 02-02 | | 6 |
| 87427943 | 03-01 | | 19 | 87433543 | 04-04 | | 1 |
| 87427948 | 08-22 | | 17 | | 04-07 | | 32 |
| 87428023 | 08-50 | | 3 | | 04-08 | | 14 |
| | 08-51 | | 3 | 87433544 | 04-06A | | 24 |
| | 08-52 | | 3 | 87433546 | 04-07 | | 16 |
| | 08-53 | | 3 | | 09-70 | | 4 |
| | 08-54 | | 2 | 87433659 | 09-39 | | 1 |
| 87428134 | 08-50 | | 5 | 87433730 | 05-04 | | 9 |
| | 08-51 | | 5 | | 06-01 | | 28 |
| | 08-52 | | 5 | 87434049 | 09-42 | | 19 |
| | 08-54 | | 5 | 87434050 | 09-42 | | 20 |
| 87428151 | 09-01 | | 33 | 87434099 | 02-04 | | 14 |
| 87428152 | 09-01 | | 34 | | 02-04A | | 15 |
| 87428153 | 09-02 | | 35 | 87434257 | 08-01 | | 5 |
| 87428158 | 08-09 | | 26 | 87434261 | 08-26 | | 17 |
| 87428164 | 08-50 | | 8 | 87434262 | 08-26 | | 16 |
| | 08-51 | | 8 | 87434265 | 08-26 | | 15 |
| | 08-52 | | 8 | 87434614 | 02-01 | | 5 |
| | 08-53 | | 5 | 87434621 | 08-20 | | 6 |
| | 08-54 | | 8 | | 08-49 | | |
| 87428165 | 08-50 | | 10 | 87434649 | 02-01 | | 6 |
| | 08-51 | | 10 | 87434672 | 08-01 | | 11 |
| | 08-52 | | 10 | | 08-29 | | |
| | 08-53 | | 6 | 87434745 | 09-38 | | 1 |
| | 08-54 | | 10 | 87434766 | 08-30 | | |
| 87428645 | 09-03 | | 3 | 87434767 | 08-31 | | |
| 87428998 | 06-10 | | 18 | 87434768 | 08-30 | | |
| 87429186 | 09-73 | | 16 | 87434769 | 08-31 | | |
| 87429287 | 08-05 | | 12 | 87434777 | 08-22 | | 26 |
| | 08-06 | | 11 | 87434783 | 09-58 | | |
| 87429290 | 08-04 | | 14 | 87434793 | 02-01 | | 2 |
| 87429293 | 08-04 | | 15 | 87434974 | 09-68 | | 1 |
| 87429310 | 03-01 | | 1 | 87434978 | 02-01 | | 12 |
| 87429314 | 03-01 | | 1A | 87434979 | 09-53 | | 1 |
| 87429382 | 05-02 | | 10 | 87434980 | 09-53 | | 1 |
| 87429654 | 08-08 | | 32 | 87435073 | 08-21 | | 16 |
| 87429895 | 08-01 | | 16 | 87435242 | 08-53 | | 9 |
| 87429948 | 09-67 | | 6 | | 08-54 | | 11 |
| 87429949 | 09-67 | | 12 | 87435243 | 08-50 | | 11 |
| 87429950 | 09-67 | | 2 | | 08-51 | | 11 |
| 87429951 | 09-67 | | 10 | | 08-52 | | 11 |
| 87429952 | 09-67 | | 7 | 87435275 | 09-13 | | 8 |
| 87429954 | 09-67 | | 17 | 87435277 | 06-10 | | 15 |
| 87429970 | 06-15 | | 1 | 87435278 | 06-10 | | 19 |
| 87429971 | 06-15 | | 15 | 87435279 | 06-10 | | 20A |
| 87429972 | 06-14 | | 1 | 87435280 | 06-10 | | 20 |
| 87429973 | 06-18 | | 20 | 87435372 | 09-14 | | 8 |
| 87429974 | 06-19 | | | 87435381 | 04-20 | | 2 |
| 87429978 | 06-22 | | | 87435409 | 02-02 | | 2 |
| 87429981 | 06-18 | | 28 | 87435499 | 02-06A | | 7 |

HTTP://WWW.MINNPARBACKHOEPARTS.COM




| Number | Figure | Sequence | Ref. |
|---|---|---|---|
| 87435506 | 08-50 | | 15 |
| | 08-51 | | 16 |
| | 08-52 | | 17 |
| | 08-53 | | 12 |
| | 08-54 | | 14 |
| 87435510 | 08-15 | | 4 |
| | 08-16 | | 4 |
| | 08-19 | | 4 |
| | 08-53 | | |
| 87435761 | 08-01 | | 3 |
| 87435909 | 08-26 | | 5 |
| | 08-28 | | |
| 87435923 | 08-25 | | 20 |
| 87435924 | 09-15 | | 12 |
| | 09-25 | | 11 |
| | 09-25A | | 11 |
| 87436066 | 08-01 | | 17 |
| | 08-02 | | 16 |
| | 08-02 | | 7 |
| 87436076 | 09-42 | | 3 |
| 87436225 | 08-50 | | 2 |
| | 08-51 | | 2 |
| | 08-52 | | 2 |
| | 08-53 | | 2 |
| | 08-54 | | 3 |
| 87436235 | 09-27 | | 18 |
| 87436396 | 04-20 | | 5 |
| 87436614 | 02-06A | | 17 |
| 87436615 | 02-06A | | 14 |
| 87436675 | 04-07 | | |
| | 04-09 | | |
| | 08-25 | | 23 |
| | 09-70 | | 5 |
| 87436676 | 04-20 | | 7 |
| 87436836 | 04-07 | | 15 |
| | 04-07 | | 8 |
| | 04-20 | | 11 |
| 87436908 | 08-06 | | 23 |
| 87436910 | 08-06 | | 24 |
| 87437108 | 08-04 | | 24 |
| 87437228 | 08-01 | | 26 |
| 87437231 | 08-02 | | 18 |
| | 08-02 | | 6 |
| | 08-23 | | 37 |
| 87437232 | 08-02 | | 18 |
| | 08-02 | | 6 |
| | 08-23 | | 36 |
| 87437263 | 08-26 | | 1 |
| 87437265 | 08-25 | | 22 |
| 87437366 | 09-14 | | 3 |
| 87437369 | 09-14 | | 4 |
| 87437371 | 08-52 | | 13 |
| | 08-54 | | 12 |
| 87437372 | 08-50 | | 12 |
| | 08-51 | | 12 |
| | 08-52 | | 12 |
| 87437373 | 08-51 | | 14 |
| 87437441 | 08-02 | | 6 |
| 87437442 | 08-02 | | 18 |
| 87437621 | 08-22 | | 45 |
| 87437623 | 08-22 | | 30 |
| 87437625 | 08-22 | | 47 |
| 87437627 | 08-22 | | 43 |
| 87437629 | 08-22 | | 46 |
| 87437631 | 08-22 | | 44 |
| 87437633 | 08-17 | | 6 |
| | 08-18 | | 8 |
| | 08-20 | | 8 |
| 87437635 | 08-17 | | 7 |
| | 08-18 | | 9 |
| | 08-20 | | 9 |
| 87437641 | 08-22 | | 51 |
| 87437655 | 08-01 | | 39 |
| 87437657 | 08-01 | | 40 |
| 87437685 | 08-09A | | 14 |
| 87437688 | 09-13 | | 18 |
| 87437689 | 09-14 | | 5 |
| 87437733 | 08-15 | | 3 |
| | 08-17 | | 8 |
| | 08-50 | | |
| 87437734 | 08-19 | | 3 |
| | 08-20 | | 3 |
| 87437734 | 08-52 | | |
| 87437735 | 08-16 | | 3 |
| | 08-18 | | 2 |
| | 08-51 | | |
| 87437736 | 08-17 | | 9 |
| | 08-18 | | 3 |
| | 08-20 | | 4 |
| | 08-54 | | |
| 87437804 | 02-06 | | 2 |
| | 02-06A | | 2 |
| | 02-06B | | 2 |
| 87437805 | 02-06 | | 1 |
| | 02-06A | | 1 |
| | 02-06B | | 1 |
| 87437806 | 09-15 | | 27 |
| 87437834 | 02-06 | | 7 |
| 87437836 | 02-06B | | 7 |
| 87437923 | 08-21 | | 6 |
| 87437924 | 08-21 | | 5 |
| 87437925 | 08-21 | | 7 |
| 87437926 | 08-21 | | 9 |
| 87437927 | 08-21 | | 4 |
| 87437928 | 08-21 | | 8 |
| 87437929 | 08-21 | | 10 |
| 87437930 | 08-21 | | 11 |
| 87437933 | 08-21 | | 12 |
| 87437934 | 08-02 | | 13 |
| 87437935 | 08-21 | | 13 |
| 87437938 | 08-08A | | 32 |
| 87437939 | 08-08A | | 33 |
| 87437940 | 08-08A | | 34 |
| 87437941 | 08-08A | | 35 |
| 87437980 | 08-01 | | 42 |
| 87437982 | 08-01 | | 43 |
| 87438012 | 08-19 | | 8 |
| 87438015 | 08-19 | | 9 |
| 87438046 | 08-50 | | 16 |
| | 08-51 | | 17 |
| | 08-52 | | 18 |
| 87438157 | 09-21 | | 14 |
| 87439032 | 08-21 | | 14 |
| 87439033 | 08-21 | | 15 |
| 87439135 | 09-21 | | 13 |
| 87439136 | 05-02 | | 13 |
| 87439137 | 05-02 | | 1 |
| 87439138 | 05-02 | | 5 |
| 87439163 | 08-08A | | 38 |
| | 08-22 | | 25 |
| 87439210 | 09-12 | | 15 |
| 87439213 | 08-22 | | 48 |
| 87439215 | 08-22 | | 40 |
| 87439444 | 02-06 | | 10 |
| | 02-06A | | 10 |
| | 02-06B | | 14 |
| 87439448 | 09-41 | | 11 |
| 87440058 | 09-20 | | 10 |
| 87440076 | 09-17 | | 10 |
| 87440381 | 09-13 | | 31 |
| 87440704 | 09-13 | | 9 |
| 87440706 | 09-13 | | 10 |
| 87440710 | 09-13 | | 1 |
| 87440711 | 09-13 | | |
| | 09-15 | | 1 |
| 87440712 | 08-22 | | 14 |
| 87803194 | 03-08 | | 6 |
| 87803261 | 02-32 | | 1 |
| 892-11005 | 03-03 | | 30 |
| | 04-19 | | 6 |
| 892-11006 | 03-03 | | 31 |
| | 09-25 | | 17 |
| | 09-25A | | 17 |
| | 09-60 | | 3 |
| | 09-70 | | |
| 892-11008 | 02-01 | | 41 |
| | 03-03 | | 10 |
| | 04-03 | | 5 |
| | 04-06A | | 17 |
| | 04-08 | | 11 |
| | 04-16 | | 4 |
| | 07-03 | | 3 |
| | 07-03 | | 37 |
| | 07-04 | | 6 |

HTTP://WWW.MINNPARBACKHOEPARTS.COM




| Number | Figure | Sequence | Ref. |
|---|---|---|---|
| 892-11008 | 07-06 | | 14 |
| | 08-01 | | 34 |
| | 08-08A | | 3A |
| | 08-22 | | 22 |
| | 08-23 | | 22 |
| | 09-05 | | 10 |
| | 09-08 | | 28 |
| | 09-12 | | 14 |
| | 09-13 | | 6 |
| | 09-15 | | 3 |
| | 09-25 | | 24 |
| | 09-25A | | 24 |
| | 09-44 | | 6 |
| 892-11010 | 02-06 | | 5 |
| | 02-06A | | 5 |
| | 02-06B | | 5 |
| | 03-01 | | 32 |
| | 03-03 | | 24 |
| | 05-02 | | 26 |
| | 07-03 | | 11 |
| | 07-06 | | 22 |
| | 08-04 | | 12 |
| | 08-05 | | 10 |
| | 08-05 | | 16 |
| | 08-05 | | 37 |
| | 08-06 | | 16 |
| | 08-06 | | 9 |
| | 08-07 | | 9 |
| | 08-10 | | 31 |
| | 08-22 | | 42 |
| | 08-23 | | 12 |
| | 08-24 | | 12 |
| | 08-27 | | 15 |
| | 08-27 | | 6 |
| | 09-08 | | 26 |
| | 09-13 | | 28 |
| | 09-24 | | 38 |
| | 09-25 | | 7 |
| | 09-25A | | 7 |
| | 09-38 | | 31 |
| 893-11005 | 04-18 | | 8 |
| 895-11004 | 04-11 | | 13 |
| | 09-54 | | 8 |
| 895-11005 | 03-03 | | 6 |
| 895-11006 | 04-06A | | 14 |
| | 04-06A | | 29 |
| | 09-55 | | 10A |
| 895-11008 | 02-01 | | 10 |
| | 02-02 | | 13 |
| | 02-02 | | 16 |
| | 02-02 | | 23 |
| | 02-03 | | 8 |
| | 02-04 | | 3 |
| | 02-04A | | 3 |
| | 03-03 | | 11 |
| | 04-16 | | 11 |
| | 06-10 | | 3 |
| | 07-03 | | 2A |
| | 07-06 | | 34 |
| | 08-22 | | 27 |
| | 09-03 | | 16 |
| | 09-05 | | 9 |
| | 09-12 | | 13 |
| | 09-21 | | 15 |
| | 09-37 | | 18 |
| | 09-59 | | 19 |
| | 09-66 | | |
| | 09-70 | | 24 |
| 895-11010 | 02-01 | | 23 |
| | 03-01 | | 34 |
| | 03-01 | | 42 |
| | 04-16 | | 7 |
| | 07-06 | | 31 |
| | 08-03 | | 3 |
| | 08-04 | | 11 |
| | 08-05 | | 38 |
| | 08-05 | | 9 |
| | 08-07 | | 14 |
| | 08-08 | | 31 |
| | 08-08A | | 31 |
| | 08-09 | | 4 |
| | 08-09A | | 4 |
| 895-11010 | 08-10 | | 30 |
| | 08-10 | | 33 |
| | 08-11 | | 28 |
| | 08-12 | | 25 |
| | 08-13 | | 26 |
| | 08-13 | | 37 |
| | 08-24 | | 11 |
| | 08-25 | | 3 |
| | 09-04 | | 20 |
| | 09-08 | | 17 |
| | 09-08 | | 21 |
| | 09-38 | | 29 |
| | 09-38 | | 51 |
| | 09-40 | | 11 |
| | 09-40 | | 14 |
| | 09-40 | | 23 |
| | 09-40 | | 29 |
| | 09-40 | | 6 |
| | 09-41 | | 4 |
| | 09-41 | | 6 |
| | 09-45 | | 10 |
| 895-11018 | 08-09 | | 7 |
| 895-15006 | 04-11 | | 8 |
| 895-15008 | 04-11 | | 33 |
| | 05-01 | | 16 |
| | 05-01 | | 24 |
| | 09-13 | | 4 |
| | 09-43 | | 31 |
| | 09-62 | | 7 |
| | 09-63 | | 16 |
| 895-15010 | 05-01 | | 21 |
| | 08-08 | | 3 |
| | 08-08A | | 3 |
| | 08-22 | | 21 |
| | 08-25 | | 7 |
| | 09-13 | | 12 |
| | 09-25 | | 8 |
| | 09-25A | | 8 |
| | 09-63 | | 11 |
| 895-30107 | 09-55 | | 35 |
| | 09-57 | | 12 |
| 895-30109 | 09-14 | | 6 |
| | 09-43 | | 17 |
| | 09-43 | | 22A |
| | 09-43 | | 5A |
| 896-11008 | 09-13 | | 32 |
| 896-11010 | 02-01 | | 38 |
| | 08-24 | | 25 |
| | 08-26 | | 3 |
| | 08-26 | | 7 |
| | 09-01 | | 29A |
| 896-11012 | 04-06A | | 33 |
| | 06-11 | | 10 |
| | 08-10 | | 3 |
| | 08-11 | | 3 |
| | 08-12 | | 3 |
| | 08-13 | | 3 |
| | 08-14 | | 3 |
| | 08-23 | | 18 |
| | 09-46 | | 11B |
| | 09-67 | | 9 |
| 896-11016 | 09-37 | | 12 |
| 896-11020 | 03-01 | | 3A |
| | 06-24 | | 5 |
| | 09-05 | | 18 |
| | 09-06 | | 7 |
| | 09-06 | | 7 |
| | 09-07 | | 7 |
| | 09-23 | | 14 |
| | 09-36 | | 3 |
| | 09-36 | | 7 |
| | 09-38 | | 3A |
| 896-15008 | 02-06B | | 11 |
| | 07-06 | | 33 |
| | 09-67 | | 16 |
| 896-15010 | 02-04 | | 9 |
| | 02-04A | | 13 |
| | 02-06 | | 12 |
| | 02-06 | | 4 |
| | 02-06A | | 12 |
| | 02-06A | | 4 |
| | 02-06B | | 16 |

HTTP://WWW.MINNPARBACKHOEPARTS.COM




| Number | Figure | Sequence | Ref. |
|---|---|---|---|
| 896-15010 | 02-06B | | 4 |
| | 06-11 | | 25 |
| | 08-22 | | 11 |
| | 09-09 | | 3 |
| | 09-13 | | 19 |
| | 09-67 | | 5 |
| 896-15012 | 02-07 | | 4 |
| | 03-03 | | 27 |
| | 06-11 | | 28 |
| | 09-40 | | 17 |
| | 09-40 | | 20 |
| | 09-46 | | 5 |
| | 09-51 | | |
| 90-6682T1 | 06-01 | | 16 |
| | 06-09 | | 12 |
| | 06-11 | | 40 |
| | 06-31 | | 12 |
| 905794R1 | 06-16 | | 20 |
| 905839R1 | 05-06 | | 6 |
| | 06-04 | | 4 |
| 906086R1 | 09-55 | | 42 |
| | 09-57 | | 19 |
| 934667R1 | 06-13 | | 3 |
| | 06-14 | | 4 |
| | 06-21 | | 36 |
| | 06-22 | | 6 |
| 934727R1 | 05-06 | | 4 |
| | 06-04 | | 2 |
| 98429552 | 02-30 | | 9 |
| 98429625 | 03-11 | | 4 |
| 98442879 | 02-30 | | 12 |
| 98445111 | 02-30 | | 12 |
| A13240 | 08-25 | | 10 |
| A156873 | 06-02 | | 6 |
| A166057 | 04-04 | | 17 |
| | 04-04 | | 2 |
| A167037 | 09-71 | | 8 |
| A170467 | 02-06 | | 8 |
| | 02-06A | | 8 |
| | 02-06B | | 8 |
| A177435 | 03-02 | | 2 |
| A187542 | 04-17 | | 5 |
| A187575 | 04-17 | | 11 |
| A187714 | 09-58 | | 10 |
| | 09-60 | | |
| A187990 | 04-08 | | 5 |
| | 07-03 | | 32 |
| A188028 | 07-06 | | 23 |
| A23870 | 04-17 | | 1 |
| A30881 | 09-03 | | 11 |
| | 09-13 | | 3 |
| | 09-16 | | 15 |
| | 09-17 | | 5 |
| | 09-18 | | 26 |
| | 09-21 | | 6 |
| A33509 | 09-27 | | 29 |
| A38208 | 05-04 | | 15 |
| | 05-09 | | 7 |
| A41264 | 04-15 | | 9 |
| A42561 | 04-09 | | 8 |
| | 09-64 | | 6 |
| | 09-65 | | 14B |
| A45054 | 09-52 | | 16 |
| A48041 | 06-06 | | 11 |
| | 06-17 | | 6 |
| | 06-18 | | 2 |
| A65544 | 05-01 | | 5 |
| A77310 | 07-03 | | 14 |
| B17575 | 06-02 | | |
| | 06-02 | | |
| | 06-03 | | |
| | 06-04 | | |
| | 06-06 | | |
| | 06-06 | | |
| | 06-07 | | |
| | 06-08 | | |
| BMF28S | 04-06 | | 1 |
| D121152 | 04-13 | | 2 |
| | 04-15 | | |
| D121194 | 09-05 | | 6 |
| D121608 | 07-06 | | 12 |
| D123347 | 09-72 | | 4 |
| D123684 | 05-04 | | 3 |
| | 06-01 | | 10 |
| D124528 | 07-03 | | 19 |
| D124529 | 07-03 | | 13 |
| D124530 | 07-03 | | 23 |
| D124857 | 03-03 | | 8 |
| D125079 | 04-05 | | 7 |
| D125223 | 05-09 | | 1 |
| D126409 | 04-06 | | 4 |
| D127167 | 09-26 | | 44 |
| | 09-27 | | 21 |
| D127335 | 04-11 | | 24 |
| D127542 | 09-04 | | 2 |
| D128022 | 09-60 | | 7 |
| D128745 | 09-60 | | 4 |
| | 09-70 | | 2 |
| D129227 | 09-25 | | 2 |
| | 09-25A | | 2 |
| D129264 | 09-06 | | 2 |
| | 09-06 | | 2 |
| | 09-07 | | 2 |
| | 09-08 | | 11 |
| D129747 | 07-06 | | 13 |
| D132076 | 09-05 | | 17 |
| D132494 | 09-24 | | 16 |
| | 09-27 | | 2 |
| D132982 | 07-04 | | 22 |
| | 08-03 | | 15 |
| | 09-64 | | 24 |
| D133632 | 09-24 | | 21 |
| | 09-27 | | 7 |
| D133865 | 09-27 | | 24 |
| D134900 | 09-20 | | 6 |
| D135384 | 04-13 | | 1 |
| | 04-15 | | |
| D135557 | 09-23 | | 5 |
| D135559 | 09-23 | | 6 |
| D135739 | 09-24 | | 12 |
| D136391 | 09-23 | | 26 |
| D136392 | 09-23 | | 24 |
| D136700 | 09-23 | | 25 |
| D136773 | 09-01 | | 17 |
| | 09-19 | | 11 |
| D137077 | 07-03 | | 6 |
| D137218 | 09-24 | | 13 |
| D137363 | 04-04 | | 12 |
| | 09-04 | | 16 |
| | 09-52 | | 3 |
| D137468 | 04-09 | | 26 |
| D137625 | 08-01 | | 14 |
| D137627 | 06-01 | | 17 |
| | 06-09 | | 13 |
| | 06-11 | | 41 |
| | 06-31 | | 13 |
| D138047 | 09-26 | | 50 |
| | 09-26 | | 52 |
| | 09-27 | | 34 |
| | 09-27 | | 47 |
| D138055 | 08-04 | | 8 |
| | 08-05 | | 15 |
| | 08-05 | | 35 |
| | 08-05 | | 6 |
| | 08-06 | | 14 |
| | 08-06 | | 7 |
| | 08-26 | | 31 |
| | 08-27 | | 12 |
| | 09-38 | | 32 |
| D138157 | 09-28 | | 7 |
| | 09-29 | | 7 |
| | 09-30 | | 7 |
| | 09-32 | | 7 |
| | 09-32 | | 7 |
| | 09-34 | | 7 |
| | 09-35 | | 7 |
| D138380 | 06-23 | | 4 |
| | 06-24 | | 3 |
| D138492 | 06-23 | | 5 |
| | 06-24 | | 2 |
| D139039 | 09-16 | | 19 |
| D139849 | 09-28 | | |
| | 09-29 | | |
| | 09-30 | | |

HTTP://WWW.MINNPARBACKHOEPARTS.COM




| Number | Figure | Sequence | Ref. |
|---|---|---|---|
| D139849 | 09-32 | | |
| | 09-32 | | |
| | 09-34 | | |
| | 09-35 | | |
| D139851 | 09-28 | | |
| | 09-29 | | |
| | 09-30 | | |
| | 09-32 | | |
| | 09-32 | | |
| | 09-34 | | |
| | 09-35 | | |
| D140029 | 08-65 | | 15 |
| | 09-26 | | 8 |
| D140035 | 07-03 | | 9 |
| D140247 | 09-27 | | 28 |
| D140267 | 09-40 | | 32 |
| D140706 | 08-14 | | 18 |
| D141075 | 09-26 | | 42 |
| D141076 | 09-26 | | 36A |
| D141142 | 09-26 | | 20 |
| | 09-27 | | 37 |
| D141164 | 09-26 | | 22 |
| | 09-27 | | 39 |
| D141666 | 09-27 | | 11 |
| D142012 | 09-35 | | 4 |
| D142144 | 09-71 | | 10 |
| D142519 | 09-22 | | 15 |
| D142787 | 08-04 | | 20 |
| | 08-08 | | 27 |
| | 08-08A | | 27 |
| | 08-09 | | 21 |
| | 08-09A | | 21 |
| D142898 | 05-08 | | 6 |
| | 06-20 | | 16 |
| | 06-26 | | 22 |
| D142971 | 06-27 | | 5 |
| D142986 | 06-30 | | 2 |
| D143033 | 06-27 | | 18 |
| D143242 | 09-68 | | 4 |
| D143324 | 09-26 | | 30 |
| D143406 | 09-22 | | 13 |
| | 09-22 | | 33 |
| D143411 | 09-13 | | 35 |
| D143416 | 09-20 | | 5 |
| D143417 | 09-25 | | 9 |
| | 09-25A | | 9 |
| | 09-40 | | 25 |
| | 09-64 | | 29 |
| | 09-65 | | 20 |
| D143427 | 09-64 | | 27 |
| | 09-65 | | 18 |
| D143591 | 09-15 | | 15 |
| | 09-25 | | 21 |
| | 09-25A | | 21 |
| D143714 | 09-40 | | 9 |
| D143715 | 09-40 | | 8 |
| D143723 | 09-15 | | 10 |
| | 09-25 | | 22 |
| | 09-25A | | 22 |
| D143735 | 09-25 | | 20 |
| | 09-25A | | 20 |
| D143846 | 08-07 | | 6 |
| | 08-12 | | 26 |
| D144423 | 09-23 | | 35 |
| D144592 | 09-25 | | 3 |
| | 09-25A | | 3 |
| D145978 | 09-26 | | 7 |
| | 09-27 | | 16 |
| D146288 | 09-26 | | 26 |
| | 09-27 | | 49 |
| D146420 | 09-29 | | 3 |
| D146421 | 09-29 | | 2 |
| D147166 | 04-07 | | 6 |
| D147249 | 09-29 | | 4 |
| D147383 | 04-04 | | 33 |
| | 09-59 | | 17 |
| | 09-70 | | 25 |
| D147409 | 09-28 | | 4 |
| D148108 | 04-07 | | 35 |
| | 04-08 | | 4 |
| | 07-03 | | 31 |
| D148947 | 09-18 | | 2 |
| D148962 | 03-02 | | 6 |
| | 09-13 | | 30 |
| D148992 | 09-16 | | 7 |
| D148993 | 09-13 | | 2 |
| D148994 | 09-16 | | 18 |
| D149079 | 08-63 | | 17 |
| | 08-63 | | 3 |
| | 08-64 | | 15 |
| | 09-23 | | 2 |
| | 09-26 | | 47 |
| | 09-27 | | 31 |
| D149262 | 09-16 | | 46 |
| D149287 | 09-01 | | 35 |
| | 09-02 | | 36A |
| | 09-03 | | 4 |
| | 09-16 | | 37 |
| | 09-17 | | 11 |
| | 09-19 | | 3 |
| | 09-20 | | 11 |
| D149288 | 07-06 | | 20 |
| | 09-02 | | 36 |
| | 09-16 | | 23 |
| | 09-16 | | 48 |
| | 09-19 | | 7 |
| | 09-21 | | 11 |
| D149295 | 09-16 | | 34 |
| | 09-19 | | 9 |
| D149298 | 09-26 | | 32 |
| D149309 | 08-24 | | 3 |
| D149725 | 05-05 | | 4 |
| | 06-02 | | 2 |
| D149726 | 05-05 | | 3 |
| | 06-02 | | 4 |
| D149737 | 06-04 | | 8 |
| D149738 | 06-04 | | 6 |
| D149739 | 06-04 | | |
| D149824 | 09-74 | | 3 |
| D149825 | 09-74 | | 4 |
| D149826 | 09-79 | | 10 |
| D149827 | 09-79 | | 11 |
| D149828 | 09-74 | | 5 |
| D149829 | 09-74 | | 6 |
| D149860 | 06-09 | | |
| | 06-31 | | |
| D149866 | 09-11 | | 9 |
| D149867 | 09-11 | | 10 |
| D149868 | 09-11 | | 12 |
| D150032 | 09-20 | | 13 |
| D150121 | 09-26 | | 10 |
| | 09-27 | | 17 |
| D150214 | 05-06 | | 11A |
| D150391 | 09-46 | | 15 |
| | 09-46 | | 23 |
| D150392 | 09-46 | | 16 |
| | 09-46 | | 24 |
| D150397 | 09-16 | | 9 |
| D150434 | 09-16 | | 13 |
| D150435 | 09-16 | | 12 |
| D150486 | 09-16 | | 17 |
| D150493 | 09-16 | | 24 |
| D150503 | 09-16 | | 45 |
| D150521 | 04-06A | | 25 |
| D150619 | 09-26 | | 34 |
| D150633 | 07-06 | | 11 |
| D151034 | 09-05 | | 15 |
| D151065 | 09-23 | | 21 |
| D151069 | 09-37 | | 5 |
| D151070 | 09-37 | | 6 |
| D151071 | 09-24 | | 11 |
| D151073 | 09-23 | | 7 |
| D151074 | 09-23 | | 8 |
| D25279 | 09-22 | | 10 |
| | 09-22 | | 14 |
| | 09-26 | | 31 |
| D26002 | 09-22 | | 9 |
| D28648 | 09-22 | | 12 |
| D30933 | 09-28 | | 12 |
| | 09-29 | | 12 |
| | 09-30 | | 12 |
| | 09-31 | | 9 |
| | 09-32 | | 12 |
| | 09-32 | | 12 |

HTTP://WWW.MINNPARBACKHOEPARTS.COM



| Number | Figure | Sequence | Ref. | Number | Figure | Sequence | Ref. |
|---|---|---|---|---|---|---|---|
| D30933 | 09-33 | | 9 | D95142 | 08-59 | | 5 |
| | 09-34 | | 12 | D95143 | 08-58 | | 5 |
| | 09-35 | | 12 | | 08-60 | | 5 |
| D31140 | 09-08 | | 2 | | 08-66 | | 4 |
| | 09-26 | | 53 | D95144 | 08-61 | | 5 |
| | 09-27 | | 48 | | 08-62 | | 5 |
| D34666 | 09-16 | | 16 | D95145 | 08-63 | | 7 |
| D37495 | 09-29 | | 11 | | 08-64 | | 5 |
| | 09-30 | | 11 | | 08-65 | | 5 |
| | 09-31 | | 8 | E135750 | 06-26 | | 18 |
| | 09-32 | | 11 | E135777 | 06-27 | | 3 |
| | 09-32 | | 11 | E135785 | 06-27 | | 8 |
| | 09-33 | | 8 | E135809 | 06-13 | | 10A |
| | 09-34 | | 11 | | 06-13 | | 1A |
| | 09-35 | | 11 | | 06-14 | | 13 |
| D37614 | 09-26 | | 29 | | 06-14 | | 1A |
| D38435 | 08-03 | | 23 | | 06-25 | | 6 |
| D38648 | 08-07 | | 20 | E135810 | 07-02 | | 7 |
| | 08-14 | | 21 | E43769 | 09-59 | | 22 |
| D38907 | 09-22 | | 3 | E46560 | 09-59 | | |
| D39118 | 09-18 | | 11 | | 09-70 | | |
| D39256 | 09-22 | | 17 | E47238 | 09-59 | | 3 |
| D39696 | 08-03 | | 18 | | 09-70 | | 16 |
| D40442 | 03-01 | | 37 | E47239 | 09-59 | | 2 |
| | 09-38 | | 37 | | 09-70 | | 17 |
| D41659 | 09-31 | | | E47240 | 09-59 | | 4 |
| | 09-33 | | | | 09-70 | | 18 |
| D43940 | 09-28 | | 11 | F22426 | 04-11 | | |
| D48212 | 09-28 | | 10 | F44883 | 09-41 | | 10 |
| | 09-29 | | 10 | F45165 | 09-55 | | 49 |
| | 09-30 | | 10 | | 09-57 | | 25 |
| | 09-32 | | 10 | F64198 | 09-55 | | 45 |
| | 09-32 | | 10 | | 09-57 | | 22 |
| | 09-34 | | 10 | F64519 | 09-68 | | 14 |
| | 09-35 | | 10 | G100440 | 08-61 | | 15 |
| D50146 | 09-22 | | 6 | G100444 | 08-59 | | 15 |
| D51391 | 09-08 | | 7 | | 08-60 | | 17 |
| D51392 | 09-08 | | 15 | | 08-66 | | 14 |
| D51393 | 09-08 | | 19 | G100448 | 08-61 | | 16 |
| D51750 | 09-28 | | 5 | G100449 | 08-59 | | 16 |
| | 09-28 | | 8 | | 08-60 | | 18 |
| | 09-29 | | 5 | | 08-66 | | 15 |
| | 09-29 | | 8 | G101533 | 08-61 | | 6 |
| | 09-30 | | 5 | | 08-62 | | 6 |
| | 09-30 | | 8 | G101994 | 08-63 | | 21 |
| | 09-31 | | 5 | G101995 | 08-63 | | 20 |
| | 09-32 | | 5 | G101996 | 08-63 | | 22 |
| | 09-32 | | 5 | G102285 | 08-61 | | 14 |
| | 09-32 | | 8 | G102287 | 08-58 | | 14 |
| | 09-32 | | 8 | | 08-65 | | 17 |
| | 09-33 | | 5 | G102288 | 08-59 | | 14 |
| | 09-34 | | 5 | | 08-60 | | 16 |
| | 09-34 | | 8 | | 08-66 | | 13 |
| | 09-35 | | 5 | G102424 | 08-59 | | 6 |
| | 09-35 | | 8 | G102425 | 08-58 | | 6 |
| D52276 | 02-01 | | 22 | | 08-60 | | 6 |
| | 08-10 | | 7 | | 08-66 | | 5 |
| | 08-11 | | 7 | G102426 | 08-63 | | 8 |
| | 08-12 | | 7 | | 08-64 | | 6 |
| | 08-13 | | 7 | G107277 | 08-66 | | 12 |
| | 08-14 | | 7 | G108123 | 08-61 | | 13 |
| | 08-22 | | 13 | G108512 | 08-59 | | 3 |
| D52564 | 09-72 | | 1 | G108518 | 08-59 | | 13 |
| D55216 | 09-38 | | 56 | G109298 | 08-59 | | 10 |
| | 09-74 | | 10 | | 08-60 | | 11 |
| D59912 | 09-16 | | 4 | | 08-66 | | 9 |
| | 09-18 | | 6 | G109299 | 08-61 | | 10 |
| | 09-21 | | 2 | | 08-62 | | 24 |
| D61368 | 09-22 | | 16 | G109300 | 08-63 | | 14 |
| D67298 | 08-01 | | 35 | G110529 | 08-64 | | 18 |
| D68845 | 08-01 | | 36 | G110530 | 08-64 | | 19 |
| D74182 | 09-13 | | 36 | G110531 | 08-64 | | 17 |
| D75465 | 03-01 | | 12 | G32122 | 08-58 | | 10 |
| D76209 | 09-39 | | 11 | | 08-65 | | 12 |
| D80270 | 03-01 | | 39 | G32126 | 08-62 | | 10 |
| | 09-38 | | 48 | G32176 | 08-64 | | 12 |
| | 09-74 | | 11 | H434163 | 08-01 | | 15 |
| D86664 | 09-25 | | 19 | H71514 | 09-24 | | 7 |
| | 09-25A | | 19 | J936995 | 02-06B | | 10 |
| D88052 | 09-64 | | 32 | K260177 | 06-13 | | 5 |
| D88427 | 09-22 | | 11 | | 06-14 | | 6 |
| D95096 | 09-03 | | 13 | K261014 | 06-08 | | 4 |

HTTP://WWW.MINNPARBACKHOEPARTS.COM




| Number | Figure | Sequence | Ref. |
|---|---|---|---|
| K261014 | 06-28 | | 4 |
| K261065 | 06-08 | | 3 |
| | 06-28 | | 3 |
| K262143 | 06-08 | | 9 |
| | 06-28 | | 12 |
| K395027 | 06-07 | | 12 |
| K395075 | 06-07 | | 8 |
| K395082 | 06-06 | | 23 |
| | 06-30 | | 8 |
| K395086 | 06-07 | | 13 |
| K395087 | 06-07 | | 6 |
| K395090 | 06-08 | | 8 |
| | 06-28 | | 10 |
| K395091 | 06-06 | | 21 |
| K395093 | 06-06 | | 16 |
| | 06-30 | | 9 |
| K395101 | 06-30 | | 25 |
| K395131 | 06-30 | | 15 |
| K691987 | 02-01 | | 21 |
| | 09-39 | | 9 |
| L15401 | 09-03 | | 12 |
| L17985 | 02-04 | | 4 |
| | 02-04A | | 4 |
| L18337 | 02-02 | | 24 |
| | 02-04 | | 18 |
| | 02-04A | | 19 |
| | 02-06A | | 19 |
| | 03-01 | | 22 |
| | 03-02 | | 12 |
| | 04-04 | | 28 |
| | 04-07 | | 26 |
| | 04-13 | | 11 |
| | 04-14 | | 14 |
| | 04-20 | | 14 |
| | 06-10 | | 10 |
| | 06-25 | | 7 |
| | 07-04 | | 23 |
| | 08-03 | | 16 |
| | 08-09 | | 29 |
| | 08-10 | | 16 |
| | 08-10 | | 26 |
| | 08-11 | | 15 |
| | 08-11 | | 24 |
| | 08-12 | | 15 |
| | 08-13 | | 19 |
| | 08-14 | | 14 |
| | 08-21 | | |
| | 08-23 | | 15 |
| | 08-25 | | 25 |
| | 08-27 | | 18 |
| | 09-02 | | 41 |
| | 09-10 | | 36 |
| | 09-38 | | 59 |
| | 09-52 | | 22 |
| | 09-59 | | 16 |
| | 09-63 | | 21 |
| | 09-64 | | 25 |
| | 09-65 | | 17 |
| | 09-66 | | 11 |
| | 09-70 | | 14 |
| L26209 | 07-03 | | 7 |
| L32100 | 08-29 | | 9 |
| L32418 | 08-29 | | 1 |
| L54563 | 09-16 | | 14 |
| | 09-17 | | 1 |
| L60224 | 04-11 | | 5 |
| | 09-38 | | 49 |
| L71879 | 04-04 | | 21 |
| | 04-07 | | |
| | 04-07 | | |
| | 04-07 | | |
| | 04-07 | | 10 |
| | 04-08 | | |
| | 04-09 | | |
| L79937 | 08-05 | | 39 |
| N13505 | 05-06 | | 12A |
| | 06-03 | | 11 |
| N13582 | 08-29 | | 6 |
| N14283 | 04-15 | | 10 |
| N14367 | 05-05 | | 2 |
| | 06-02 | | 3 |
| N14373 | 05-05 | | 8 |
| N14407 | 06-07 | | 5 |
| N14408 | 06-07 | | 7 |
| N14410 | 06-05 | | 3 |
| N14466 | 09-61 | | 20 |
| N14784 | 07-05 | | |
| N6755 | 08-57 | | |
| N6836 | 04-15 | | 3 |
| N6941 | 08-57 | | |
| N7802 | 09-47 | | |
| N9025 | 08-57 | | |
| NSS | 04-04 | | 31B |
| | 04-09 | | 2 |
| | 04-09 | | 25 |
| | 04-09 | | 3 |
| | 04-09 | | 4 |
| | 04-12 | | |
| | 04-12 | | |
| | 04-12 | | |
| | 04-15 | | 1 |
| | 04-15 | | 5 |
| | 04-15 | | 6 |
| | 04-15 | | 7 |
| | 04-15 | | 8 |
| | 04-17 | | 12 |
| | 05-03 | | 1 |
| | 05-03 | | 3 |
| | 05-03 | | 5 |
| | 05-03 | | 6 |
| | 05-07 | | 2 |
| | 06-02 | | 14 |
| | 06-04 | | 1 |
| | 06-04 | | 10 |
| | 06-04 | | 11 |
| | 06-04 | | 12 |
| | 06-04 | | 13 |
| | 06-04 | | 14 |
| | 06-04 | | 15 |
| | 06-04 | | 16 |
| | 06-06 | | 14 |
| | 06-06 | | 15 |
| | 06-06 | | 3 |
| | 06-07 | | 1 |
| | 06-07 | | 2 |
| | 06-08 | | 1 |
| | 06-08 | | 2 |
| | 06-09 | | 10 |
| | 06-09 | | 11 |
| | 06-09 | | 2 |
| | 06-09 | | 3 |
| | 06-09 | | 4 |
| | 06-09 | | 9 |
| | 06-11 | | |
| | 06-15 | | 10 |
| | 06-15 | | 11 |
| | 06-15 | | 12 |
| | 06-15 | | 13 |
| | 06-15 | | 14 |
| | 06-15 | | 17 |
| | 06-15 | | 18 |
| | 06-15 | | 2 |
| | 06-15 | | 20 |
| | 06-15 | | 21 |
| | 06-15 | | 3 |
| | 06-15 | | 3A |
| | 06-15 | | 4 |
| | 06-15 | | 5 |
| | 06-15 | | 6 |
| | 06-15 | | 7 |
| | 06-15 | | 8 |
| | 06-15 | | 9 |
| | 06-19 | | 10 |
| | 06-19 | | 11 |
| | 06-19 | | 12 |
| | 06-19 | | 15 |
| | 06-19 | | 20 |
| | 06-19 | | 21 |
| | 06-19 | | 22 |
| | 06-19 | | 23 |
| | 06-19 | | 24 |
| | 06-19 | | 25 |
| | 06-19 | | 25A |
| | 06-19 | | 7 |

HTTP://WWW.MINNPARBACKHOEPARTS.COM



| Number | Figure | Sequence | Ref. | Number | Figure | Sequence | Ref. |
|---|---|---|---|---|---|---|---|
| NSS | 06-19 | | 8 | NSS | 08-37 | | 8 |
| | 06-21 | | 1 | | 08-37 | | 9 |
| | 06-21 | | 38A | | 08-38 | | 10 |
| | 06-21 | | 43 | | 08-38 | | 8 |
| | 06-21 | | 45 | | 08-38 | | 9 |
| | 06-22 | | 1 | | 08-39 | | 10 |
| | 06-22 | | 2 | | 08-39 | | 11 |
| | 06-22 | | 3 | | 08-39 | | 9 |
| | 06-22 | | 4 | | 08-40 | | 1 |
| | 06-27 | | 1 | | 08-40 | | 2 |
| | 06-27 | | 2 | | 08-41 | | 1 |
| | 06-28 | | 1 | | 08-41 | | 2 |
| | 06-28 | | 2 | | 08-42 | | 1 |
| | 06-29 | | 15 | | 08-42 | | 2 |
| | 06-30 | | 20 | | 08-43 | | 1 |
| | 06-30 | | 6 | | 08-43 | | 2 |
| | 06-31 | | 10 | | 08-44 | | 1 |
| | 06-31 | | 11 | | 08-44 | | 2 |
| | 06-31 | | 2 | | 08-45 | | 1 |
| | 06-31 | | 3 | | 08-45 | | 2 |
| | 06-31 | | 4 | | 08-46 | | 1 |
| | 06-31 | | 9 | | 08-46 | | 2 |
| | 07-05 | | 1 | | 08-55 | | 1 |
| | 07-05 | | 10 | | 08-56 | | 1 |
| | 07-05 | | 11 | | 08-56 | | 10 |
| | 07-05 | | 12 | | 08-56 | | 11 |
| | 07-05 | | 13 | | 08-56 | | 12 |
| | 07-05 | | 14 | | 08-56 | | 13 |
| | 07-05 | | 15 | | 08-56 | | 4 |
| | 07-05 | | 16 | | 08-56 | | 9 |
| | 07-05 | | 17 | | 08-57 | | 1 |
| | 07-05 | | 18 | | 08-57 | | 6 |
| | 07-05 | | 2 | | 08-57 | | 7 |
| | 07-05 | | 3 | | 08-57 | | 8 |
| | 07-05 | | 4 | | 08-58 | | 7 |
| | 07-05 | | 5 | | 08-58 | | 8 |
| | 07-05 | | 6 | | 08-59 | | 7 |
| | 07-05 | | 7 | | 08-59 | | 8 |
| | 07-05 | | 8 | | 08-60 | | 8 |
| | 07-05 | | 9 | | 08-60 | | 9 |
| | 07-06 | | 1 | | 08-61 | | 7 |
| | 07-06 | | 2 | | 08-61 | | 8 |
| | 08-28 | | 1 | | 08-62 | | 7 |
| | 08-30 | | 1 | | 08-62 | | 8 |
| | 08-30 | | 2 | | 08-63 | | 10 |
| | 08-30 | | 3 | | 08-63 | | 11 |
| | 08-30 | | 4 | | 08-64 | | 8 |
| | 08-31 | | 1 | | 08-64 | | 9 |
| | 08-31 | | 2 | | 08-65 | | 8 |
| | 08-31 | | 3 | | 08-65 | | 9 |
| | 08-31 | | 4 | | 08-66 | | 6 |
| | 08-31 | | 5 | | 08-66 | | 7 |
| | 08-32 | | 1 | | 09-03 | | 10 |
| | 08-32 | | 2 | | 09-06 | | 1 |
| | 08-32 | | 3 | | 09-06 | | 1 |
| | 08-32 | | 4 | | 09-07 | | 1 |
| | 08-32 | | 5 | | 09-08 | | 1 |
| | 08-32 | | 6 | | 09-08 | | 10 |
| | 08-33 | | 1 | | 09-10 | | 10 |
| | 08-33 | | 2 | | 09-10 | | 2 |
| | 08-33 | | 3 | | 09-26 | | 43 |
| | 08-33 | | 4 | | 09-26 | | 6 |
| | 08-33 | | 5 | | 09-27 | | 15 |
| | 08-33 | | 6 | | 09-27 | | 20 |
| | 08-34 | | 1 | | 09-28 | | 2 |
| | 08-34 | | 2 | | 09-28 | | 3 |
| | 08-34 | | 3 | | 09-30 | | 2 |
| | 08-34 | | 4 | | 09-30 | | 3 |
| | 08-34 | | 5 | | 09-30 | | 4 |
| | 08-34 | | 6 | | 09-31 | | 7 |
| | 08-34 | | 7 | | 09-32 | | 2 |
| | 08-35 | | 1 | | 09-32 | | 2 |
| | 08-35 | | 2 | | 09-32 | | 3 |
| | 08-35 | | 3 | | 09-32 | | 3 |
| | 08-35 | | 4 | | 09-32 | | 4 |
| | 08-35 | | 5 | | 09-32 | | 4 |
| | 08-35 | | 6 | | 09-33 | | 7 |
| | 08-35 | | 7 | | 09-34 | | 2 |
| | 08-36 | | 7 | | 09-34 | | 3 |
| | 08-36 | | 8 | | 09-34 | | 4 |
| | 08-36 | | 9 | | 09-43 | | |
| | 08-37 | | 10 | | 09-43 | | |

HTTP://WWW.MINNPARBACKHOEPARTS.COM




| Number | Figure | Sequence | Ref. | Number | Figure | Sequence | Ref. |
|---|---|---|---|---|---|---|---|
| NSS | 09-47 | | 1 | REF | 09-10 | | |
| | 09-47 | | 2 | | 09-18 | | |
| | 09-47 | | 7 | | 09-19 | | |
| | 09-47 | | 8 | | 09-26 | | 28 |
| | 09-48 | | 9 | | 09-55 | | |
| | 09-49 | | 12 | | 09-56 | | |
| | 09-52 | | 1B | S109444 | 08-58 | | 15 |
| | 09-55 | | 1 | | 08-65 | | 18 |
| | 09-55 | | 1A | S109445 | 08-58 | | 16 |
| | 09-59 | | 1 | | 08-65 | | 19 |
| | 09-61 | | 19 | S115351 | 05-03 | | 2 |
| | 09-61 | | 21 | S300976 | 06-27 | | 7 |
| | 09-70 | | 15 | S301064 | 06-02 | | 18 |
| P1139855 | 06-28 | | 8 | S301065 | 06-02 | | 15 |
| P2230493 | 06-26 | | 25 | ST205A | 06-17 | | 1 |
| P2745466 | 06-20 | | 21 | | 06-20 | | 6 |
| P2745478 | 06-20 | | 10 | ST264 | 06-18 | | 23 |
| P2930467 | 06-30 | | 3 | T34857 | 04-15 | | 2 |
| P3034505 | 06-27 | | 9 | | | | |
| P3533055 | 06-19 | | 35 | | | | |
| | 06-20 | | 20 | | | | |
| P6427894 | 06-27 | | 16 | | | | |
| R24840 | 08-10 | | 28 | | | | |
| R32119 | 09-24 | | 8 | | | | |
| R46493 | 08-07 | | 7 | | | | |
| R54682 | 09-71 | | 6 | | | | |
| REF | 02-10 | | 11 | | | | |
| | 02-10 | | 12 | | | | |
| | 02-14 | | 15 | | | | |
| | 02-15 | | 4 | | | | |
| | 02-20 | | 6 | | | | |
| | 02-22 | | 5 | | | | |
| | 02-22 | | 6 | | | | |
| | 02-29 | | 7 | | | | |
| | 02-34 | | 12 | | | | |
| | 02-38 | | 10 | | | | |
| | 02-38 | | 4 | | | | |
| | 02-38 | | 7 | | | | |
| | 02-38 | | 8 | | | | |
| | 02-38 | | 9 | | | | |
| | 02-39 | | 5 | | | | |
| | 02-41 | | 3 | | | | |
| | 03-04 | | 5 | | | | |
| | 03-06 | | 10 | | | | |
| | 05-09 | | 2 | | | | |
| | 05-09 | | 5 | | | | |
| | 06-23 | | 3 | | | | |
| | 06-23 | | 3 | | | | |
| | 08-02 | | | | | | |
| | 08-02 | | | | | | |
| | 08-04 | | 1 | | | | |
| | 08-05 | | 1 | | | | |
| | 08-06 | | 1 | | | | |
| | 08-08 | | | | | | |
| | 08-08A | | | | | | |
| | 08-09 | | | | | | |
| | 08-09A | | | | | | |
| | 08-10 | | 1 | | | | |
| | 08-11 | | 1 | | | | |
| | 08-12 | | 1 | | | | |
| | 08-13 | | 1 | | | | |
| | 08-14 | | 1 | | | | |
| | 08-15 | | | | | | |
| | 08-16 | | | | | | |
| | 08-17 | | | | | | |
| | 08-18 | | | | | | |
| | 08-19 | | | | | | |
| | 08-20 | | | | | | |
| | 08-24 | | | | | | |
| | 08-25 | | | | | | |
| | 08-25 | | 16 | | | | |
| | 08-25 | | 21 | | | | |
| | 08-27 | | | | | | |
| | 08-27 | | 4 | | | | |
| | 08-32 | | | | | | |
| | 08-33 | | | | | | |
| | 08-34 | | | | | | |
| | 08-35 | | | | | | |
| | 09-01 | | 28 | | | | |
| | 09-02 | | 40 | | | | |
| | 09-04 | | | | | | |
| | 09-10 | | | | | | |