MARÇO 2008

RUTHZIL TRATOR COMERCIAL DE PEÇAS LTDA 11 97083-6812 ROLANDO CITRANGULO

PARTS CATALOG

LOADER BACKHOE

580M SERIES 3



BD08B046

TABLE OF CONTENTS

General Information
Section 2 – Engine
Section 3 – Fuel System
Section 4 – Electrical System
Section 5 – Tracks / Steering
Section 6 – Power train
Section 7 – Brakes
Section 8 – Hydraulics
Section 9 – Chassis/Attachments
Index

Bur • Issued 01Mar 08
Printed in U.S.A. • Book/Form Number 87632283 NA
Copyright © 2007. CNH America, LLC. All Rights Reserved.

CNH America, LLC reserves the right to make improvements in design or changes in specifications at any time without incurring any obligation to install them on units previously sold.

All data given in this publication is subject to production variations. Dimensions and weights are only approximate. Illustrations do not necessarily show products in standard condition. For exact information about any particular product, please consult your Dealer

This unit first became available 03-2008			
REVISION HISTORY			
Issue	Issue Date	Applicable Machines	Remarks
First Edition	01Mar 08	580M Series 3 Loader Backhoe	87632283 NA

Any use of editorial or pictorial content is strictly prohibited without express written permission from
CNH America, LLC. Racine, WI 53403 U.S.A..

TABLE OF CONTENTS

02-01	RADIATOR - MOUNTING
02-02	DEAERATION SYSTEM - MOUNTING
02-04	AIR CLEANER - AIR INTAKE PARTS
02-05	AIR CLEANER ASSY
02-06	MUFFLER, ASPIRATED - EXHAUST SYSTEM
02-07	ENGINE - MOUNTING
02-08	ENGINE
02-09	CYLINDER BLOCK
02-10	CYLINDER BLOCK
02-11	OIL PUMP, PAN
02-12	CRANKCASE COVERS
02-13	CYLINDER BLOCK - COVERS
02-14	CRANKCASE COVERS
02-15	BREATHER - ENGINE
02-16	CYLINDER HEAD
02-17	CYLINDER HEAD - COVERS
02-18	CYLINDER HEAD - VALVE MECHANISM
02-19	MANIFOLD - INTAKE
02-20	EXHAUST MANIFOLD
02-21	CRANKSHAFT
02-22	CONNECTING ROD
02-23	PISTON - ENGINE
02-24	FLYWHEEL - ENGINE
02-25	PULLEY - CRANKSHAFT
02-26	DYNAMIC BALANCER, GEARS & SHAFTS
02-28	CAMSHAFT
02-29	TURBOCHARGER
02-30	ENGINE OIL DIPSTICK
02-31	OIL PUMP - ENGINE
02-32	OIL FILTERS - ENGINE
02-33	PIPING - ENGINE OIL
02-34	HEAT EXCHANGER - ENGINE
02-35	WATER PUMP
02-36	COOLING SYSTEM - ENGINE
02-37	THERMOSTAT - ENGINE COOLING SYSTEM
02-38	WATER PUMP - CONTROL
02-39	FAN DRIVE
02-41	ENGINE - LIFT HOOK
02-42	ALTERNATOR MOUNTING
03-01	FUEL LINES, RESERVOIR
03-02	CONTROLS - THROTTLE, HAND
03-03	CONTROLS - THROTTLE, FOOT
03-04	FUEL INJECTION PUMP
03-05	FUEL INJECTION SYSTEM
03-06	FUEL INJECTION SYSTEM
03-07	INJECTION EQUIPMENT - PIPING
03-08	FUEL FILTER
03-09	FUEL PUMP
03-10	PIPING - FUEL
03-11	FUEL INJECTION SYSTEM
04-01	STARTER

TABLE OF CONTENTS

04-02	ALTERNATOR
04-03	STARTER MOUNTING - ALTERNATOR MOUNTING
04-04	HARNESS, ENGINE - MOUNTING AND CONNECTIONS
04-05	BATTERY, SINGLE
04-06	BATTERY, DUAL - COLD START
04-06A	COLD START GRID HEATER
04-07	HARNESS, FRONT CONSOLE - SWITCHES
04-08	HARNESS, FRONT CONSOLE - MOUNTING
04-09	HARNESS, SIDE CONSOLE - SWITCHES
04-10	INSTRUMENT PANEL, FRONT - COVERS
04-11	INSTRUMENT PANEL, SIDE - COVERS (RIGHT-HAND SIDE)
04-12	INSTRUMENT CLUSTER
04-13	ELECTRICAL - LAMPS, ROPS CANOPY
04-14	ELECTRICAL - LAMPS, ROPS CAB
04-15	LAMP ASSY (ROPS CANOPY MODELS)
04-16	HORN - ALARM, BACKUP
04-17	BEACON, ROTATING (CAB OR CANOPY MODELS)
04-18	ANTENNA, RADIO - HARNESS, RADIO
04-19	ELECTRICAL - BACKHOE AUXILIARY HYDRAULIC, UNI-DIRECTIONAL
04-20	ELECTRICAL - BACKHOE AUXILIARY HYDRAULIC, WITH PILOT CONTROLS
05-01	STEERING WHEEL - COLUMN
05-02	HYDRAULICS - STEERING
05-02A	HYDRAULICS - STEERING (COMFORT STEER)
05-03	STEERING COLUMN
05-04	AXLE, FRONT (86990837) - MOUNTING
05-05	AXLE, FRONT (86990837) - HOUSING
05-06	AXLE, FRONT (86990837) - HOUSING, SWIVEL
05-07	AXLE, FRONT (86990837) - CYLINDER, STEERING
05-08	AXLE, FRONT (86990837) - HUB AND BEARINGS
05-09	WHEELS, FRONT - TIRES
06-01	AXLE, FRONT DRIVE - MOUNTING
06-02	AXLE, FRONT DRIVE - HOUSING
06-03	AXLE, FRONT DRIVE - HOUSING, SWIVEL
06-04	AXLE, FRONT DRIVE - CYLINDER, STEERING
06-05	AXLE, FRONT DRIVE - SHAFTS, AXLE
06-06	AXLE, FRONT DRIVE - PLANETARY
06-07	AXLE, FRONT DRIVE - DIFFERENTIAL
06-08	AXLE, FRONT DRIVE - RING AND PINION
06-09	DRIVE SHAFT, FRONT AXLE
06-10	COOLING SYSTEM - TRANSMISSION
06-11	TRANSMISSION - MOUNTING
06-12	TRANSMISSION ASSY, 2WD - FILTER, OIL
06-13	TRANSMISSION ASSY, 2WD - HOUSING
06-14	TRANSMISSION ASSY, 2WD - PUMP, OIL
06-15	TRANSMISSION ASSY, 2WD - SHIFTER MECHANISM
06-16	TRANSMISSION ASSY, 2WD - SHAFT, REVERSE & PRIMARY
06-17	TRANSMISSION ASSY, 2WD - SHAFT, INPUT & PTO
06-18	TRANSMISSION ASSY, 2WD - SHAFT, SECONDARY
06-19	TRANSMISSION ASSY, 2WD - VALVE, CONTROL
06-20	TRANSMISSION ASSY, 4WD - FILTER, OIL
06-21	TRANSMISSION ASSY, 4WD - HOUSING

TABLE OF CONTENTS

06-22		TRANSMISSION ASSY, 4WD - PUMP, OIL
06-23		TRANSMISSION ASSY, 4WD - SHIFTER MECHANISM
06-24		TRANSMISSION ASSY, 4WD - SHAFT, REVERSE & PRIMARY
06-25		TRANSMISSION ASSY, 4WD - SHAFT, INPUT & PTO
06-26		TRANSMISSION ASSY, 4WD - SHAFT, SECONDARY
06-27		TRANSMISSION ASSY, 4WD - SHAFT, OUTPUT
06-28		TRANSMISSION ASSY, 4WD - VALVE, CONTROL
06-29		TRANSMISSION ASSY, 4WD - VALVE, SOLENOID
06-30		WHEELS, REAR - TIRES
06-31		AXLE, REAR DRIVE - MOUNTING
06-32		AXLE, REAR - DIFFERENTIAL LOCK
06-33		87395372 AXLE, REAR DRIVE - HOUSING
06-34		87395372 AXLE, REAR DRIVE - DIFFERENTIAL
06-35		87395372 AXLE, REAR DRIVE - RING AND PINION
06-36		87395372 AXLE, REAR DRIVE - DIFFERENTIAL LOCK
06-37		87395372 AXLE, REAR DRIVE - PLANETARY
06-38		DRIVE SHAFT, REAR AXLE
07-01		TRANSMISSION ASSY, 2WD - BRAKE, PARKING
07-01	01	TRANSMISSION ASSY, 4WD - BRAKE, PARKING
07-02		AXLE, REAR DRIVE - BRAKE, DIFFERENTIAL
07-03		BRAKE - PEDALS
07-04		HYDRAULICS - BRAKE MASTER CYLINDER
07-05		BRAKE LINES TO TRANSMISSION
07-06		BRAKE LINES TO AXLES
07-07		CYLINDER ASSY - BRAKE MASTER
08-01		HYDRAULICS - PUMP, FILTER AND LOADER VALVE
08-02		HYDRAULICS - LOADER VALVE AND FILTER TO BACKHOE VALVE
08-03		HYDRAULICS - COOLER, RETURN LINES AND FILTER
08-04		HYDRAULICS - CYLINDER, LOADER LIFT
08-05		HYDRAULICS - CYLINDER, LOADER BUCKET
08-06		HYDRAULICS - CYLINDER, LOADER CLAM
08-07		HYDRAULICS - CYLINDER, LOADER CLAM
08-07A		HYDRAULICS - LOADER CLAM, AT ACCUMULATOR W/ ELECTRICAL (MODELS WITHOUT PILOT CONTROLS)
08-07B		HYDRAULICS - LOADER CLAM, AT ACCUMULATOR W/ ELECTRICAL (MODELS WITH PILOT CONTROLS)
08-08		HYDRAULICS - CYLINDER, BACKHOE STABILIZER (WITHOUT PILOT CONTROLS)
08-08A		HYDRAULICS - CYLINDER, BACKHOE STABILIZER (WITH PILOT CONTROLS)
08-09		HYDRAULICS - CYLINDER, BACKHOE SWING (WITHOUT PILOT CONTROLS)
08-09A		HYDRAULICS - CYLINDER, BACKHOE SWING (WITH PILOT CONTROLS)
08-10		HYDRAULICS - CYLINDER, BACKHOE BOOM
08-10A		HYDRAULICS - BACKHOE BOOM LOCK AND ELECTRICAL CIRCUIT
08-11		HYDRAULICS - CYLINDER, BACKHOE DIPPER
08-12		HYDRAULICS - CYLINDER, BACKHOE BUCKET (MODELS WITHOUT EXTENDABLE DIPPER)
08-13		HYDRAULICS - CYLINDER, BACKHOE BUCKET (MODELS WITH EXTENDABLE DIPPER)
08-14		HYDRAULICS - CYLINDER, BACKHOE EXTENDABLE DIPPER
08-15		HYDRAULICS - VALVE, PILOT CONTROL AND JOYSTICKS (6 SPOOL, W/O EXT DIPPER, W/O AUX HYDS)

TABLE OF CONTENTS

08-16	HYDRAULICS - VALVE, PILOT CONTROL AND JOYSTICKS (6 SPOOL, W/O EXT DIPPER, W/ AUX HYDS)
08-17	HYDRAULICS - VALVE, PILOT CONTROL AND JOYSTICKS (7 SPOOL, W/ EXT DIPPER, W/O AUX HYDS)
08-18	HYDRAULICS - VALVE, PILOT CONTROL AND JOYSTICKS (7 SPOOL, W/ EXT DIPPER, W/ AUX HYDS)
08-19	HYDRAULICS - VALVE, PILOT CONTROL AND JOYSTICKS (7 SPOOL, W/O EXT DIPPER, W/ AUX HYDS)
08-20	HYDRAULICS - VALVE, PILOT CONTROL AND JOYSTICKS (8 SPOOL, W/ EXT DIPPER, W/ AUX HYDS)
08-21	HYDRAULICS - PILOT CONTROL JOYSTICKS
08-22	HYDRAULICS - PILOT CONTROLS
08-23	HYDRAULICS - BACKHOE AUXILIARY (WITHOUT PILOT CONTROLS)
08-23A	VALVE ASSY - AUXILIARY UNI-DIRECTIONAL (WITHOUT PILOT CONTROLS)
08-23B	HYDRAULICS - BACKHOE AUXILIARY (WITH PILOT CONTROLS)
08-23C	VALVE ASSY - AUXILIARY UNI-DIRECTIONAL (WITH PILOT CONTROLS)
08-24	HYDRAULICS - BACKHOE AUXILIARY, AT BOOM AND DIPPER
08-25	HYDRAULICS - RIDE CONTROL
08-26	HYDRAULICS - COUPLER, LOADER TOOL QUICK
08-27	HYDRAULICS - COUPLER, LOADER TOOL QUICK, AT LOADER LIFT FRAME
08-28	VALVE, COUPLER (87435909) - LOADER TOOL
08-29	PUMP, EQUIPMENT HYDRAULIC
08-30	VALVE ASSY - LOADER CONTROL, TWO SPOOL
08-31	VALVE ASSY - LOADER CONTROL, THREE SPOOL
08-32	VALVE ASSY - BACKHOE CONTROL, 6 SPOOL (W/O EXT DIPPER, W/O AUX HYDS, W/O PILOT CONTROLS)
08-33	VALVE ASSY - BACKHOE CONTROL, 7 SPOOL (W/O EXT DIPPER, W/ AUX HYDS, W/O PILOT CONTROLS)
08-34	VALVE ASSY - BACKHOE CONTROL, 7 SPOOL (W/ EXT DIPPER, W/O AUX HYDS, W/O PILOT CONTROLS)
08-35	VALVE ASSY - BACKHOE CONTROL, 8 SPOOL (W/ EXT DIPPER, W/ AUX HYDS, W/O PILOT CONTROLS)
08-36	VALVE ASSY - BACKHOE CONTROL, 6 SPOOL (W/O EXT DIPPER, W/ OR W/O AUX HYDS, W/ PILOT CONTROLS)
08-37	VALVE ASSY - BACKHOE CONTROL, 7 SPOOL (W/ EXT DIPPER, W/ OR W/O AUX HYDS, W/ PILOT CONTROLS)
08-38	VALVE ASSY - BACKHOE CONTROL, 7 SPOOL (W/O EXT DIPPER, W/ AUX HYDS, W/ PILOT CONTROLS)
08-39	VALVE ASSY - BACKHOE CONTROL, 8 SPOOL (W/ EXT DIPPER, W/ AUX HYDS, W/ PILOT CONTROLS)
08-40	VALVE SECTION - BACKHOE SWING (WITH PILOT CONTROLS)
08-41	VALVE SECTION - BACKHOE BOOM (WITH PILOT CONTROLS)
08-42	VALVE SECTION - BACKHOE STABILIZER (WITH PILOT CONTROLS)
08-43	VALVE SECTION - BACKHOE DIPPER (WITH PILOT CONTROLS)
08-44	VALVE SECTION - BACKHOE BUCKET (WITH PILOT CONTROLS)
08-45	VALVE SECTION - EXTENDABLE DIPPER (WITH PILOT CONTROLS)
08-46	VALVE SECTION - OPTIONS, AUXILIARY HYDRAULICS (WITH PILOT CONTROLS)
08-47	VALVE ASSY, PRESSURE REDUCING (2 SPOOL) (WITH PILOT CONTROLS)
08-48	VALVE ASSY, PRESSURE REDUCING (3 SPOOL) (WITH PILOT CONTROLS)
08-49	VALVE ASSY, PRESSURE REDUCING (4 SPOOL) (WITH PILOT CONTROLS)
08-50	VALVE, JOYSTICK (PILOT CONTROLS) (LEFT-HAND) WITH HORN BUTTON

TABLE OF CONTENTS

08-51	VALVE, JOYSTICK (PILOT CONTROLS) (LEFT-HAND) WITH HORN & UNI-DIRECTIONAL BUTTONS
08-52	VALVE, JOYSTICK (PILOT CONTROLS) (LEFT-HAND) WITH HORN & BI-DIRECTIONAL BUTTONS
08-53	VALVE, JOYSTICK (PILOT CONTROLS) (RIGHT-HAND) WITHOUT EXTENDABLE DIPPER
08-54	VALVE, JOYSTICK (PILOT CONTROLS) (RIGHT-HAND) WITH EXTENDABLE DIPPER
08-55	VALVE ASSY - SWING CUSHION (DAMPENING)
08-55A	SOLENOID VALVE - BOOM LOCK
08-56	ACCUMULATOR ASSY - RIDE CONTROL
08-57	FILTER ASSY, OIL
08-58	CYLINDER ASSY - LOADER LIFT
08-59	CYLINDER ASSY - LOADER BUCKET
08-60	CYLINDER ASSY - LOADER CLAM
08-61	CYLINDER ASSY - BACKHOE STABILIZER
08-62	CYLINDER ASSY - BACKHOE SWING
08-63	CYLINDER ASSY - BACKHOE BOOM
08-64	CYLINDER ASSY - BACKHOE DIPPER
08-65	CYLINDER ASSY - BACKHOE BUCKET
08-66	CYLINDER ASSY - BACKHOE EXTENDABLE DIPPER
09-01	CONTROLS - LOADER LIFT AND BUCKET
09-01A	HANDLE, LOADER CONTROL - TRANSMISSION ASSY, 2WD, 4WD
09-02	CONTROLS - LOADER CLAM
09-03	CONTROLS - LOADER SELF-LEVELING
09-04	FRAME - LOADER LIFT
09-05	FRAME - LOADER LINKAGE
09-06	BUCKETS, LOADER LONG LIP (82 IN)
09-07	BUCKET, LOADER LONG LIP (93 IN)
09-08	BUCKET, LOADER CLAM
09-09	GUARD - VALVE, LOADER
09-10	COUPLER, TOOL QUICK
09-11	COVERS - BACKHOE CONTROL TOWER, WITHOUT PILOT CONTROLS
09-12	BACKHOE CONTROL TOWER SUPPORT AND SEALS, WITHOUT PILOT CONTROLS
09-13	BACKHOE CONTROL TOWER SUPPORT, WITH PILOT CONTROLS
09-14	BACKHOE CONTROL TOWER BOOTS AND SEALS, WITH PILOT CONTROLS
09-15	BACKHOE CONTROL TOWER LEVERS (BOOM LATCH), WITH PILOT CONTROLS
09-16	CONTROLS - BACKHOE, WITH FOOT SWING (MODELS WITH OR WITHOUT EXTENDABLE DIPPER)
09-17	CONTROLS - BACKHOE, WITH FOOT SWING (MODELS WITH EXTENDABLE DIPPER)
09-18	CONTROLS - BACKHOE, WITH HAND SWING (MODELS WITH OR WITHOUT EXTENDABLE DIPPER)
09-19	CONTROLS - BACKHOE, WITH HAND SWING (MODELS WITH OR WITHOUT EXTENDABLE DIPPER)
09-19A	CONTROLS - BACKHOE, EXCAVATOR CONTROL PATTERN
09-20	CONTROLS - BACKHOE, WITH HAND SWING (MODELS WITH EXTENDABLE DIPPER)
09-21	CONTROLS - BACKHOE AUXILIARY HYDRAULICS, WITHOUT PILOT CONTROLS
09-22	BACKHOE - STABILIZERS, PLATES AND PADS
09-23	BACKHOE - SWING TOWER AND SWING CYLINDERS
09-24	BACKHOE - BOOM AND SWING TOWER

TABLE OF CONTENTS

09-24A	BOOM GUARD
09-25	BOOM LATCH (WITHOUT PILOT CONTROLS)
09-25A	BOOM LATCH (WITH PILOT CONTROLS)
09-26	BACKHOE - DIPPER AND BUCKET
09-27	BACKHOE - DIPPER, EXTENDABLE
09-28	BUCKET, UNIVERSAL BACKHOE (305 MM (12 INCH) WIDE)
09-29	BUCKET, UNIVERSAL BACKHOE (406 MM (16 INCH) WIDE)
09-30	BUCKET, UNIVERSAL BACKHOE (457 MM (18 INCH) WIDE)
09-31	BUCKET, BACKHOE (457 MM (18 INCH) WIDE)
09-32	BUCKET, UNIVERSAL BACKHOE (610 MM (24 INCH) / 762 MM (30 INCH) WIDE)
09-33	BUCKET, BACKHOE (610 MM (24 INCH) WIDE)
09-34	BUCKET, UNIVERSAL BACKHOE (914 MM (36 INCH) WIDE)
09-35	BUCKET, UNIVERSAL BACKHOE (610 MM (24 INCH) WIDE)
09-35A	FROST POINT ASSEMBLY
09-36	COUNTERWEIGHT, FRONT
09-37	CHASSIS / MOUNTS, POD - SCREEN, AIR INLET
09-38	TANK, OIL - BOX, BATTERY AND TOOL
09-39	RADIATOR WRAPPER
09-40	HOOD - PANELS, SIDE
09-41	HOOD - GRILLE
09-42	PLATES, FLOOR - FLOORMATS
09-43	FENDER COVER, LEFT-HAND - PANEL, REAR CLOSURE (STORAGE TRAY WITH CUP HOLDER)
09-44	FENDER EXTENSIONS
09-45	GUARD, MUD
09-46	SEAT ASSY - MOUNTING (SEARS, STANDARD)
09-47	SEAT - MOUNTING (SEARS MECHANICAL SUSPENSION)
09-48	SEAT ASSY, MECHANICAL SUSPENSION (SEARS)
09-49	SEAT - MOUNTING (AIR SUSPENSION)
09-53	CAB - GLASS, MIRROR AND HOLD OPEN
09-54	CAB - FRAME AND COVERS
09-55	CAB - DOORS
09-56	CAB - DOOR MOUNTING
09-57	CAB - WINDOW, RIGHT-HAND, FOR SINGLE DOOR CAB FRAMES
09-58	CAB - WINDOW, REAR
09-59	CAB - WASHER, WINDSHIELD
09-60	CAB - WIPERS
09-61	CAB HEADLINER - FILTER, LOUVERS, DOME LAMP
09-62	CAB - FILTER, AIR
09-63	CAB - BLOWER HOUSING, VENTILATION DUCTS, DRAIN LINES
09-64	CAB - HEATER
09-65	CAB - AIR CONDITIONING LINES, EVAPORATOR CORE
09-66	CAB - AIR CONDITIONING, CONDENSER, RECEIVER-DRIER
09-67	CAB - AIR CONDITIONING COMPRESSOR
09-68	CANOPY, ROPS - FRAME, COVERS, MIRROR, VISOR
09-69	CANOPY, ROPS - GLASS
09-70	CANOPY, ROPS - WIPER, FRONT AND WINDSHIELD WASHER
09-71	MIRROR, REAR VIEW - MOUNTING, CAB MODELS
09-72	SLOW MOVING VEHICLE EMBLEM
09-73	DECALS
09-74	DECALS

TABLE OF CONTENTS

09-75	DECALS
09-76	DECALS - ENGLISH
09-77	DECALS - LATIN AMERICAN SPANISH
09-78	DECALS - CANADIAN FRENCH
09-79	DECALS - ENGLISH
09-80	DECALS - LATIN AMERICAN SPANISH
09-81	DECALS - CANADIAN FRENCH

NOTES

GENERAL INFORMATION

PROPRIETARY NOTICE

The contents of this manual are proprietary data of this company. Reproduction or use of any part for other than the operation and maintenance of our equipment is permissible only if expressly authorized in writing.

Additional copies may be obtained from your dealer. Address requests for copies to your Dealer and refer to the publication part number appearing on the bottom of the rear catalog cover or on the title page.

COMPANY POLICY

Company policy, which is one of continuous improvement, reserves the right to change prices and to make changes in design and specification at any time without notice and without obligation to modify units previously built.

All data given in this book is subject to production variations. Dimensions and weights are approximate only and the illustrations do not necessarily show machines in standard condition. For exact information about any particular machine please consult your dealer.

PARTS AND ACCESSORIES

Genuine parts and accessories have been specifically designed for these machines.

We would like to point out that “non-genuine” parts and accessories have NOT been examined and released by the Company. The installation and or use of such products could have negative effects upon the design characteristics of your machine and thereby affect its safety. The company is not liable for any damage caused by the use of “non-genuine” parts and accessories.

IMPROVEMENTS

We are continually striving to improve our products. We reserve the right to make improvements or changes when it becomes practical and possible to do so, without incurring any obligation to make changes or additions to the equipment sold previously.

MODEL CODES

The range of machines listed may not be available in all countries or markets therefore, for the latest information consult your local dealer.

OWNER ASSISTANCE

We want you to be completely satisfied with your investment. Normally any problems with your equipment will be handled by your dealer's Service Department; however, misunderstandings can occur. If your problem has not been handled to your satisfaction, we suggest the following:

1. Contact the owner or General Manager of the dealership, explain the problem, and request assistance. When additional assistance is needed, your dealer has direct access to our office.
2. Provide your dealer with:
   - Your Name, Address, and Telephone number
   - Machine Model and Serial Number
   - Dealership Name and Address
   - Machine purchase date and amount of use
   - Nature of problem

Be aware that your problem will likely be resolved in the dealership using the dealer's facilities, equipment, and personnel. So it is important that your initial contact be with the dealer.

SPARE PARTS

To maintain operating efficiency, use original spare parts.

When ordering parts, give the following information:

- Machine Model
- Machine and Engine Serial Numbers
- Part Number from the Parts Catalog

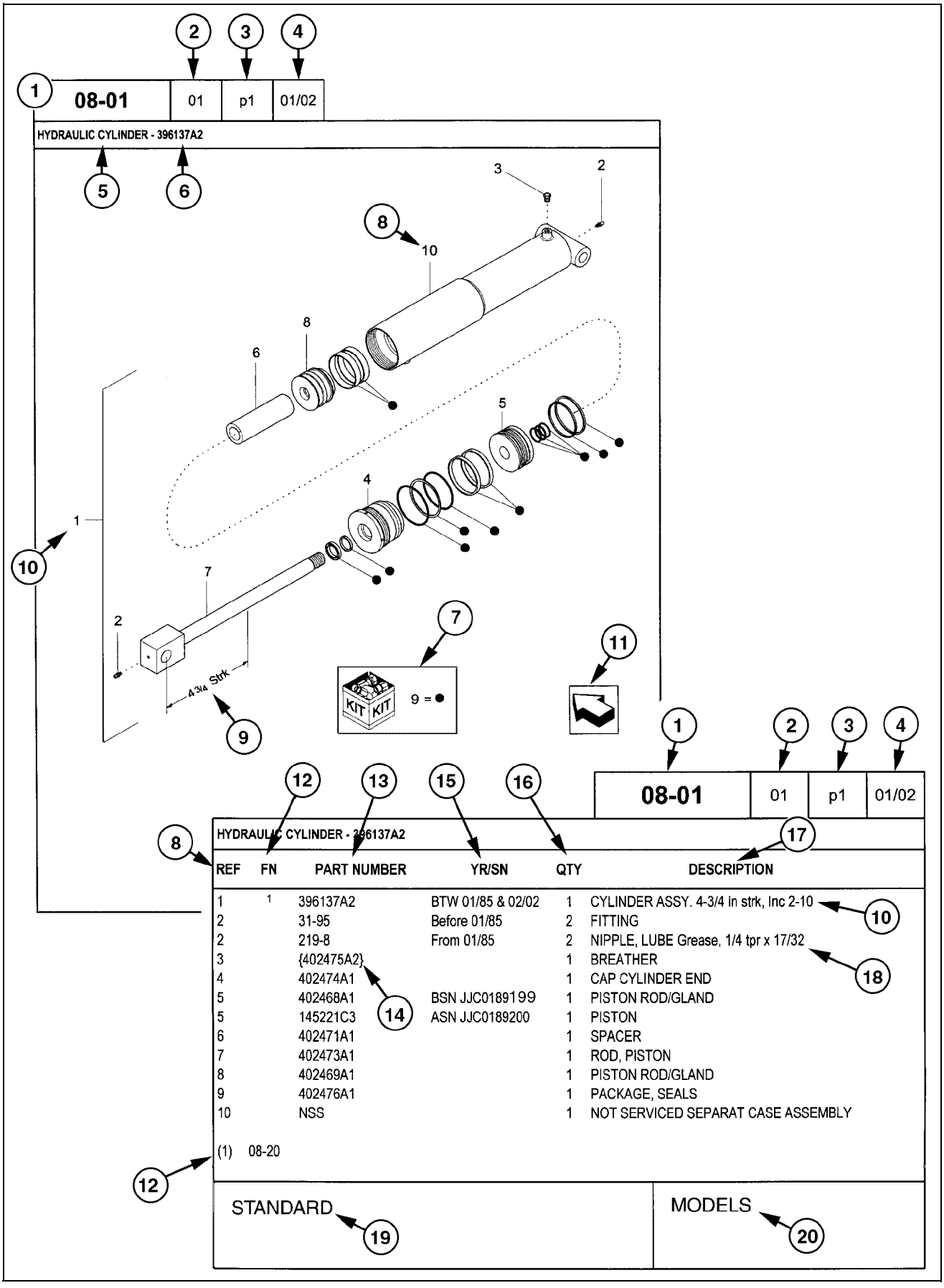
1
2
3
4
08-01
01
p1
01/02
HYDRAULIC CYLINDER - 396137A2
5
6
8
10
KIT
KIT
9 = ●
11
7
9
Strk
12
13
15
16
17
08-01
01
p1
01/02
HYDRAULIC CYLINDER - 396137A2
8
REF FN PART NUMBER YR/SN QTY DESCRIPTION
1 1 396137A2 BTW 01/85 & 02/02 1 CYLINDER ASSY. 4-3/4 in strk, Inc 2-10
2 31-95 Before 01/85 2 FITTING
2 219-8 From 01/85 2 NIPPLE, LUBE Grease, 1/4 tpr x 17/32
3 {402475A2} 1 BREATHER
4 402474A1 1 CAP CYLINDER END
5 402468A1 BSN JJC0189199 1 PISTON ROD/GLAND
5 145221C3 ASN JJC0189200 1 PISTON
6 402471A1 1 SPACER
7 402473A1 1 ROD, PISTON
8 402469A1 1 PISTON ROD/GLAND
9 402476A1 1 PACKAGE, SEALS
10 NSS 1 NOT SERVICED SEPARAT CASE ASSEMBLY
(1) 08-20
14
18
12
STANDARD
19
MODELS
20

HOW TO USE YOUR PARTS CATALOG

1. Figure Number
2. Sequence Code within the Figure Number
3. Page Number within the Sequence Code
4. Date of Printing (month / year)
5. Figure Description
6. General information regarding the figure
7. Parts supplied in repair kits per symbol reference
8. Figure call-out of the part number (REF)
9. Technical specifications relating to the part indicated
10. Figure call-out includes bracketed items, the included items may also be listed in the additional description area
11. Orientation - Arrow indicates front of the machine
12. Footnote - Additional information relating to the part number. In this example, 08-20 equals another figure that this part is shown on
13. Part Number
    NSS = Not Serviced Separately (Non-serviced parts)
    Bracketed numbers = not available as service parts in this market
14. Not Available as service part in this market
15. YR/SN

    Year
    Before 01/85 = Part valid for production January 1985 and before
    From 01/85 = Part valid for production from January 1985 and after
    BTW 01/85 & 02/02 = Part valid for machines produced between January 1985 and February 2002.

    Serial Number (P.I.N.)
    BSN JJC0268800 = Part valid for serial number JJC0268800 and below
    ASN JJC0268800 = Part valid for serial number JJC0268800 and above
    BTW JJC0178000 & JJC0179000 = Part valid for serial numbers between JJC0178000 & JJC0179000
16. Total Quantity of the Part referred to in the page. The quantity can be replaced by the following indications:
    AR = As Required
    X = As required
17. Part Description
18. Additional description of the part to help confirm identification
19. Figure Notes
20. Model Number(s)

RIGHT-HAND AND LEFT-HAND

The reference to right-hand and left-hand in this catalog is identified by the operator standing at the rear of the basic unit (without rear attachment), looking toward the front of the machine (in normal forward travel).

For pages covering any machine attachments, right-hand and left-hand are defined by the operator sitting in the position for proper operation of the attachment.

DIMENSIONS

Metric and U.S. hardware dimensions do not show the numeric designations of standard coarse threads. A number following a semi colon (;) is the class or grade of hardware. A comma (,) represents the decimal point (.) used in U.S. dimensions.

EXPLANATION OF ABBREVIATIONS

AC	Alternating Current
adj	adjustable
amp	ampere
AR	As required
ASN	Serial number and after P.I.N. and after
blkhd	bulkhead
br	branch
BSN	before Serial number before P.I.N.
BTW	between
cc	cubic centimetre
cl	class
cmprsn	compression
cn pt	cone point
cp pt	cup point
CRS	Chrome Alloy Steel
CST	Carbon Steel
cu yd	cubic yard
DC	Direct Current
deg	degree
dg pt	dog point
dia	diameter
dr type	drive type
fc	face
fc sl	face seal
fem	female
fem PT	female pipe thread
fl	flare
flat pt	flat point
ft	feet or foot
ga	gauge
gal	gallon or gallons
gpm	gallons per minute
gr	grade
hd	head
hdg pt	half dog point
hp	horsepower
ID	inside diameter
in	inch or inches
Incl.	Includes
inv fl	inverted flare
K	kilo
kg	kilogram
km/h	kilometers per hour
L	litre
lb	pounds
lb-ft	pound-foot
lg	long
LH	left-hand
LH thd	left-hand thread
M	(prefix) metric thread size
m	metre
ml	milliliter
mm	millimetre
NF	National Fine
No.	number
NPT	National Pipe Thread
NS	National Super Fine
OD	outside diameter
ohm	electrical unit of resistance
Or	O-ring
ORB	O-ring boss
ORFS	O-ring face seal
ov cntr	over center
ov pt	oval point
oz	ounce
P	pitch
psi	pounds per square inch
pt	pint
PT	pipe thread
rd	round
rd holes	round holes
RH	right-hand
RH thd	right-hand thread
rpm	revolutions per minute
sl	self-locking
sq	square
SST	Stainless Steel
st	self-tapping
strk	stroke
sw	swivel
T	teeth
thk	thick
tpr	taper
tube OD	tube outside diameter
V	volt or volts
W	watt or watts
X	as required
yd	yard

SECTION INDEX
Engine

02-01	RADIATOR - MOUNTING
02-02	DEAERATION SYSTEM - MOUNTING
02-04	AIR CLEANER - AIR INTAKE PARTS
02-05	AIR CLEANER ASSY
02-06	MUFFLER, ASPIRATED - EXHAUST SYSTEM
02-07	ENGINE - MOUNTING
02-08	ENGINE
02-09	CYLINDER BLOCK
02-10	CYLINDER BLOCK
02-11	OIL PUMP, PAN
02-12	CRANKCASE COVERS
02-13	CYLINDER BLOCK - COVERS
02-14	CRANKCASE COVERS
02-15	BREATHER - ENGINE
02-16	CYLINDER HEAD
02-17	CYLINDER HEAD - COVERS
02-18	CYLINDER HEAD - VALVE MECHANISM
02-19	MANIFOLD - INTAKE
02-20	EXHAUST MANIFOLD
02-21	CRANKSHAFT
02-22	CONNECTING ROD
02-23	PISTON - ENGINE
02-24	FLYWHEEL - ENGINE
02-25	PULLEY - CRANKSHAFT
02-26	DYNAMIC BALANCER, GEARS & SHAFTS
02-28	CAMSHAFT
02-29	TURBOCHARGER
02-30	ENGINE OIL DIPSTICK
02-31	OIL PUMP - ENGINE
02-32	OIL FILTERS - ENGINE
02-33	PIPING - ENGINE OIL
02-34	HEAT EXCHANGER - ENGINE
02-35	WATER PUMP
02-36	COOLING SYSTEM - ENGINE
02-37	THERMOSTAT - ENGINE COOLING SYSTEM
02-38	WATER PUMP - CONTROL
02-39	FAN DRIVE
02-41	ENGINE - LIFT HOOK
02-42	ALTERNATOR MOUNTING

02-01		p1	12/07

RADIATOR - MOUNTING

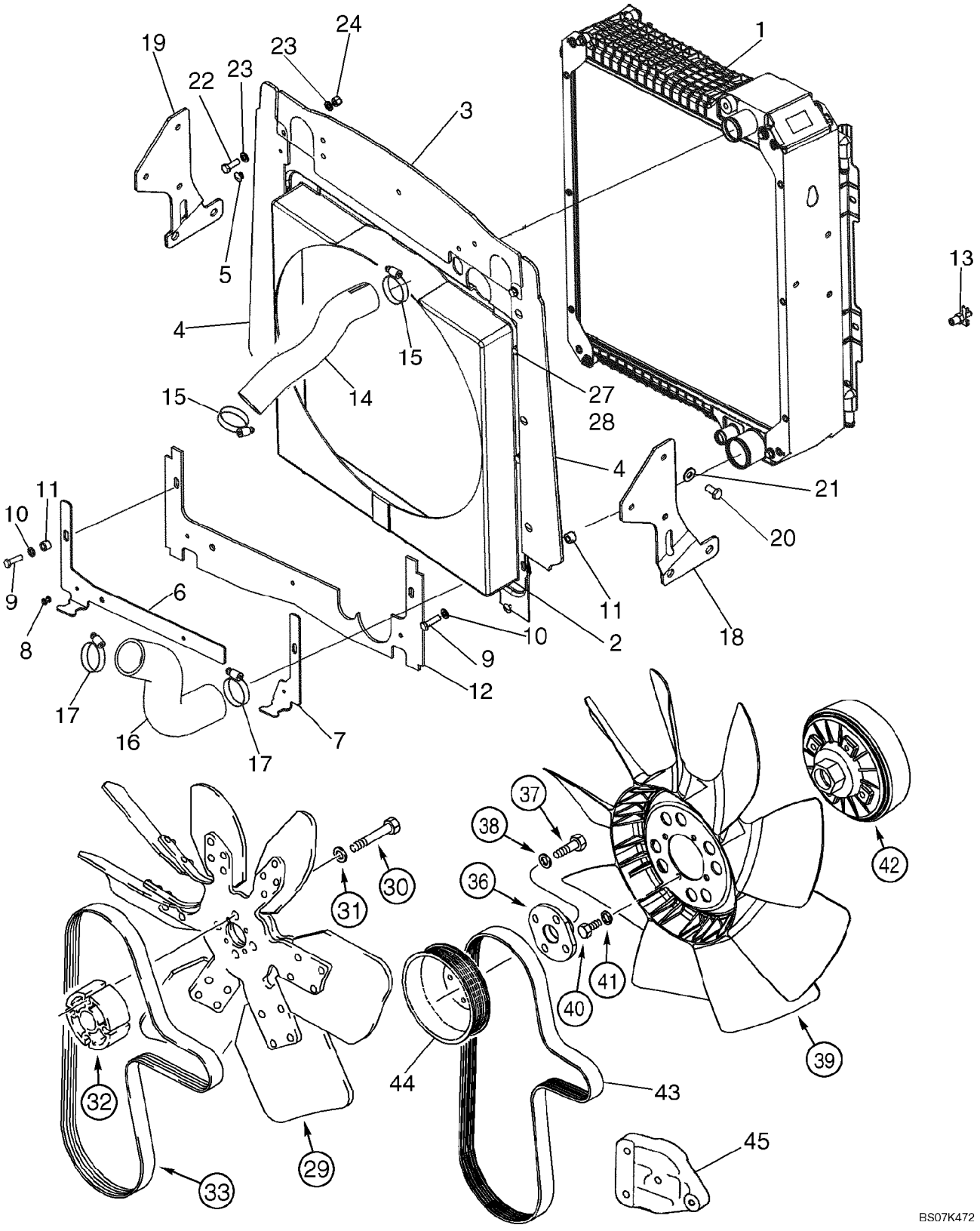

RADIATOR - MOUNTING

REF	FN	PART NUMBER	YR/SN	QTY	DESCRIPTION
1		87576643		1	RADIATOR, 3 Row Radiator, Models With Or Without Air Conditioning; Component Parts Not Available At Time Of Printing
2		87559003		1	SHROUD, Fan
3		87628324		1	SEAL, RUBBER, Top
4		87628308		2	SEAL, RUBBER, Sides
5		87301355		6	RIVET, Pop, 3/16" x .575"
6		87446082		1	PLATE, RETAINING, Lower Left-Hand Shroud
7		87446081		1	PLATE, RETAINING, Lower Right-Hand Shroud; 195 mm (7-11/16 in) Long
8		87301356		3	RIVET, Pop, 3/16" x .700"
9		614-8030		2	BOLT, Hex, M8 x 30, 8.8
10		895-11008		2	WASHER, M8 x 16 x 1.6
11		407962A1		2	SPACER
12		87434978		1	SEAL, RUBBER, Lower Seal
13		81465471		1	DRAINCOCK/TAP, SUPPLY, Drain, 1/4
14		87454377		1	HOSE, LARGE, Upper
15		87647029		2	CLAMP, HOSE
16		87454378		1	HOSE, LARGE, Lower; 5.6 mm (7/32 in) Thick
17		214-1440		2	CLAMP, HOSE, #40, 2.06/3.00 Type F Worm
18		87608368		1	BRACKET, SUPPORTING, Radiator, RH
19		87608370		1	BRACKET, SUPPORTING, Radiator, LH
20		614-10020		6	BOLT, Hex, M10 x 20, 8.8, Full Thd
21		895-15010		6	WASHER, M11 x 24 x 2
22		614-8025		2	BOLT, Hex, M8 x 25, 8.8
23		895-11008		4	WASHER, M8 x 16 x 1.6
24		832-10408		2	NUT, LOCK, M8 x 1.25, Cl 8
27		806-8016		4	BOLT, Hex, Lock, M8 x 16, Cl 10.9
28		895-11008		4	WASHER, M8 x 16 x 1.6
29		228133A2		1	FAN, 39 Degrees; With White Identification Dot; Standard Fan Drive; With Air Conditioning; With Turbo
29		185377A1		1	FAN, 33 Degrees; Standard Fan Drive; Without Air Conditioning; With Or Without Turbo
30		814-10090		4	BOLT, Hex, M10 x 90, 8.8

02-01		p2	12/07

RADIATOR - MOUNTING

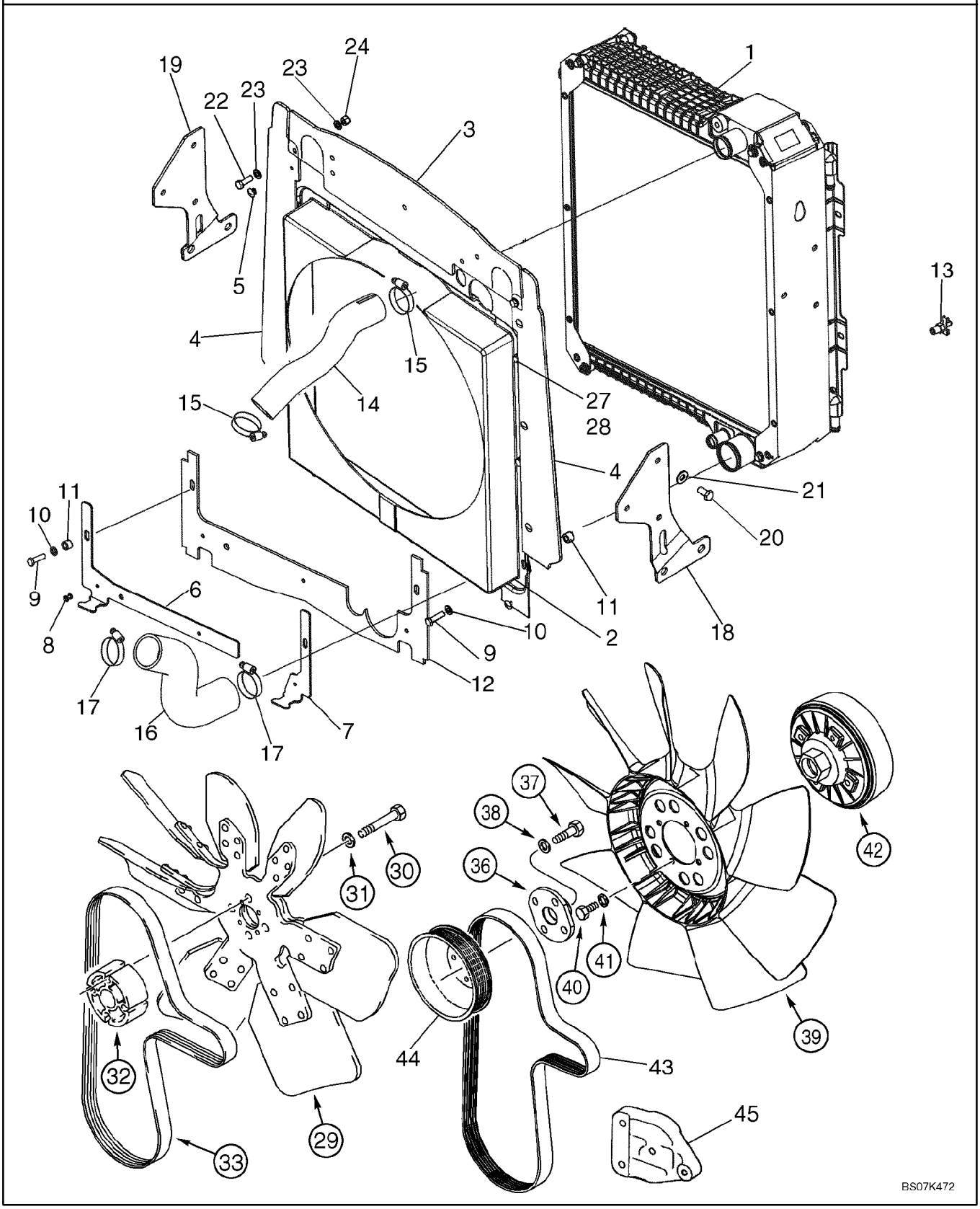

RADIATOR - MOUNTING

REF	FN	PART NUMBER	YR/SN	QTY	DESCRIPTION
31		496-21041		4	WASHER, 13/32" x 13/16" x .089", HDN
32		87353191		1	SPACER, 59 mm Long, Standard Fan Drive; With Or Without Air Conditioning; With Or Without Turbo; Replaces 85826229 Aluminium 59 mm Long Spacer that has Part Number Stamped On Spacer Used On Some Models
33		85826230		1	BELT, V-Type, Standard Fan Drive; With Or Without Air Conditioning; With Or Without Turbo
36		303192A1		1	ADAPTER, Viscous Fan Drive, With Air Conditioning; With Turbo
37		614-10030		4	BOLT, Hex, M10 x 30, 8.8
38		896-11010		4	WASHER, M10 x 21.5 x 2.5, HT
39		277800A1		1	FAN, 9 Blade, Viscous Fan Drive; With Air Conditioning; With Turbo
40		614-8016		4	BOLT, Hex, M8 x 16, 8.8
41		892-11008		4	WASHER, LOCK, M8
42		87340008		1	DRIVE, Fan Drive; Component Parts Not Serviced Separately; Viscous Fan Drive; With Air Conditioning; With Turbo
43		87415774		1	BELT, V-Type; Viscous Fan Drive, With Air Conditioning; With Turbo
44		4890343		1	PULLEY
45		87442419		1	BRACKET, Pulley Tensioner Support, Painted

02-02		p1	12/07

DEAERATION SYSTEM - MOUNTING

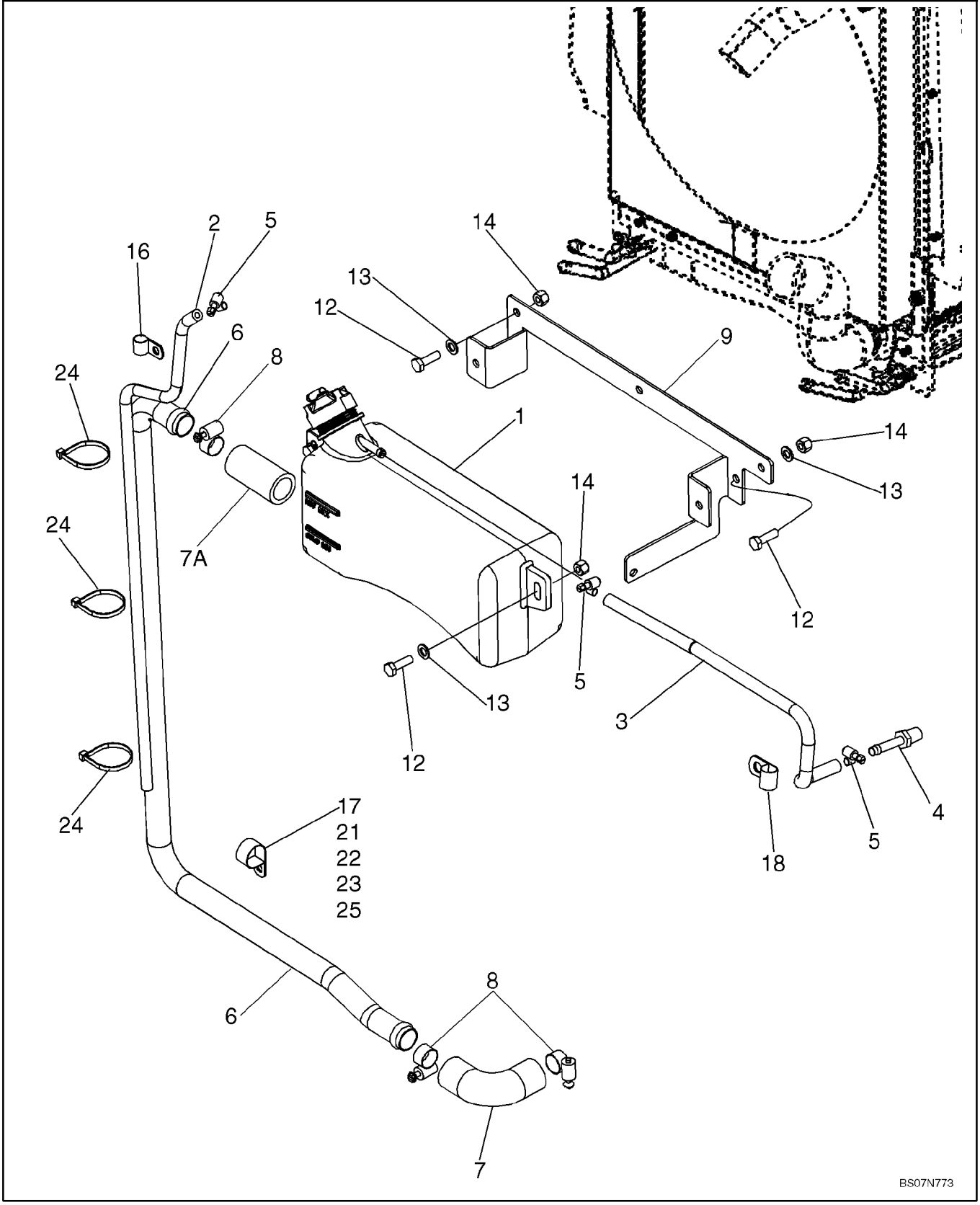

DEAERATION SYSTEM - MOUNTING

REF	FN	PART NUMBER	YR/SN	QTY	DESCRIPTION
1		87674844		1	RESERVOIR, COOLANT EXPNSN, Deaeration Reservoir, 3.0 Liters; Includes 85803019 Cap
		85803019		1	CAP, FILLER, 13 psi
2		87616934		1	HOSE, Overflow Hose; 750 mm
3		87715487		1	HOSE, Recovery, 440 mm; Reservoir to Radiator
4		87301325		1	FITTING, 5/16" Hose X 1/4" NPTF Beaded
5		214-1704		3	CLAMP, HOSE, #4, 0.25/0.62 Type M Worm
6		87557237		1	TUBE, RIGID
7		87454376		1	HOSE
7A		87367622		1	HOSE
8		214-1416		4	CLAMP, HOSE, #16, 0.81/1.50 Type F Worm
9		87632870		1	BRACKET, SUPPORTING, Bottle Retaining
12		614-8025		7	BOLT, Hex, M8 x 25, 8.8
13		895-11008		7	WASHER, M8 x 16 x 1.6
14		832-10408		7	NUT, LOCK, M8 x 1.25, Cl 8
16		515-22127		1	CLAMP, 1/2", Insul, 5/16" Bolt
17		515-22254		1	CLAMP, 1", Insul, 5/16" Bolt
18		515-23143		1	CLAMP, 9/16", Insul, 3/8" Bolt
21		614-8040		1	BOLT, Hex, M8 x 40, 8.8, Full Thd
22		87418360		1	SPACER, 8 x 16 mm
23		895-11008		1	WASHER, M8 x 16 x 1.6
24		L18337		3	STRAP, CABLE, 9.95"-12.1" lg
25		832-10408		1	NUT, LOCK, M8 x 1.25, Cl 8

02-04		p1	11/07

AIR CLEANER - AIR INTAKE PARTS

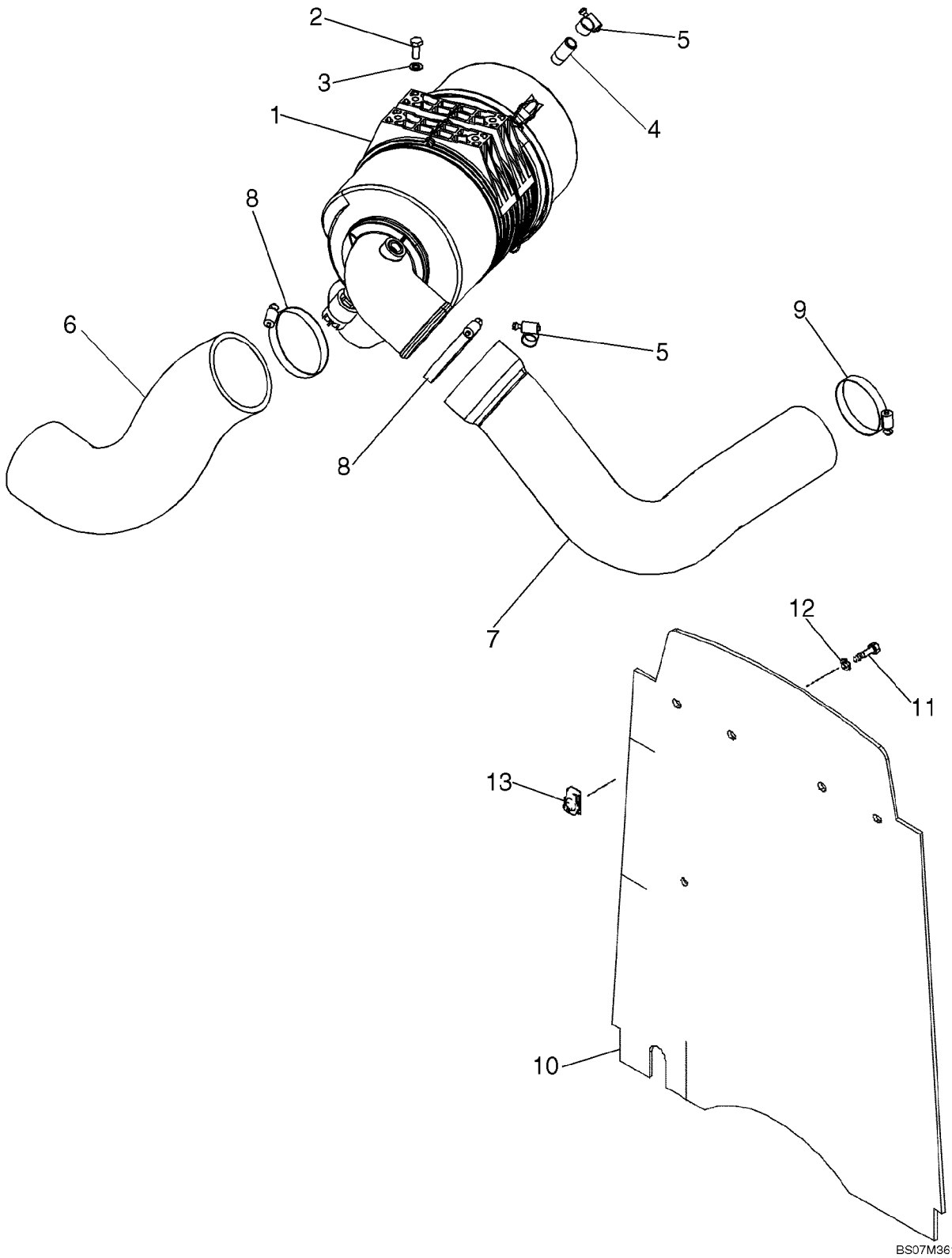

AIR CLEANER - AIR INTAKE PARTS

REF	FN	PART NUMBER	YR/SN	QTY	DESCRIPTION
1		87610338		1	AIR CLEANER, See Figure 02-05
2		614-8020		4	BOLT, Hex, M8 x 20, 8.8
3		895-11008		4	WASHER, M8 x 16 x 1.6
4		L17985		1	FITTING
5		214-1412		2	CLAMP, HOSE, #12, 0.69/1.25 Type F Worm
6		87545561		1	HOSE, LARGE, Inlet
7		87666451		1	HOSE, LARGE, To Turbocharger
8		214-1464		2	CLAMP, HOSE, #64, 3.56/4.50 Type F Worm
9		214-1456		1	CLAMP, HOSE, #56, 3.06/4.00 Type F Worm
10		87652272		1	CURTAIN, Barrier, Heat and Noise Reduction
11		806-8025		4	BOLT, Hex, Lock, M8 x 25, Cl 10.9
12		495-81001		4	WASHER, 5/16"
13		833-40408		4	NUT, M8, U

02-05		p1	11/07

AIR CLEANER ASSY

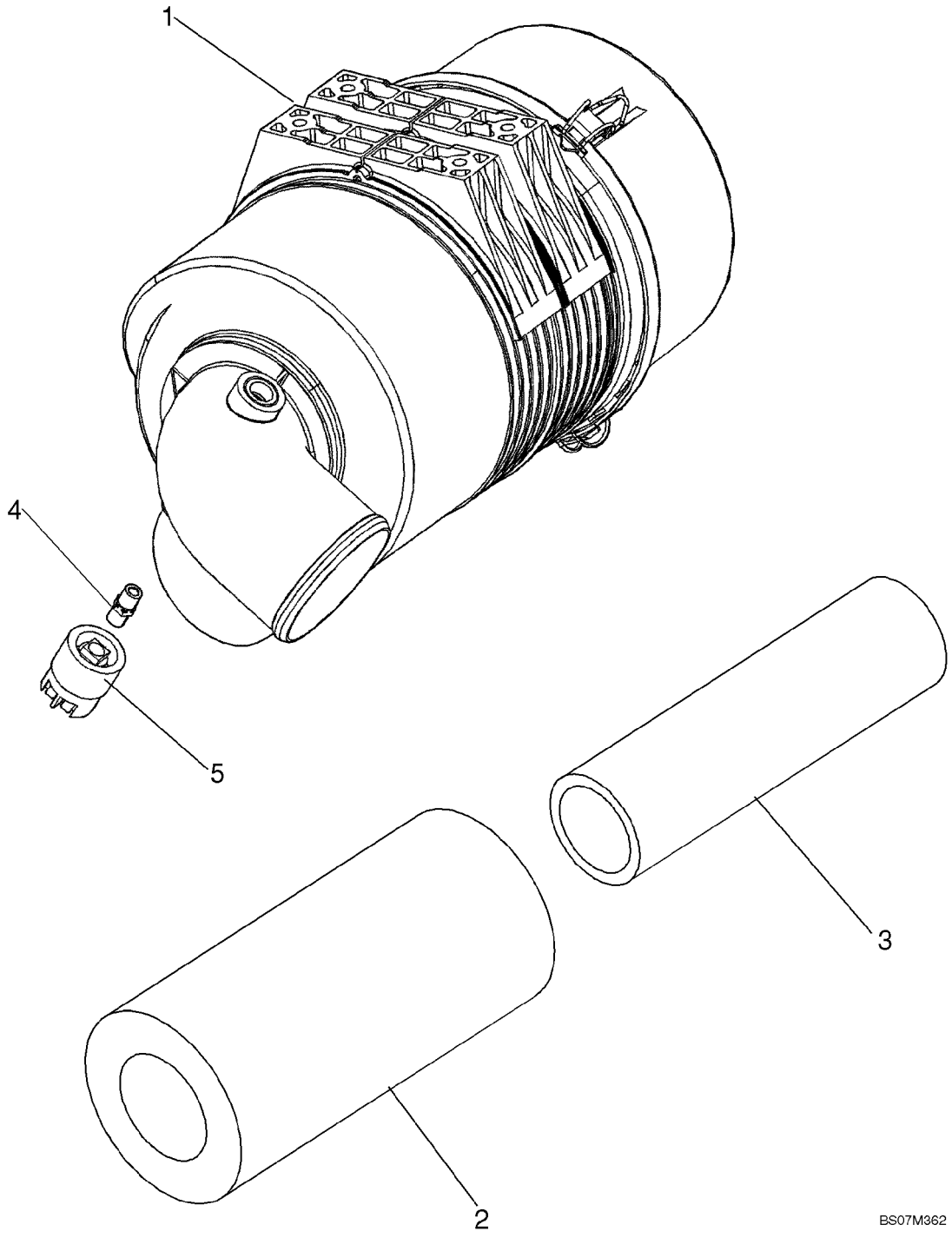

AIR CLEANER ASSY

REF	FN	PART NUMBER	YR/SN	QTY	DESCRIPTION
		87610338		1	AIR CLEANER, Air Cleaner; Incl. Ref 1 - 5
1		NSS		1	NOT SERVICED SEPARATELY, Body
2		87682993		1	FILTER, AIR, Primary
3		47132347		1	FILTER, AIR, Secondary
4		86976679		1	ADAPTER
5		79081900		1	SWITCH, PRESSURE, Air Restriction

02-06		p1	11/07

MUFFLER, ASPIRATED - EXHAUST SYSTEM

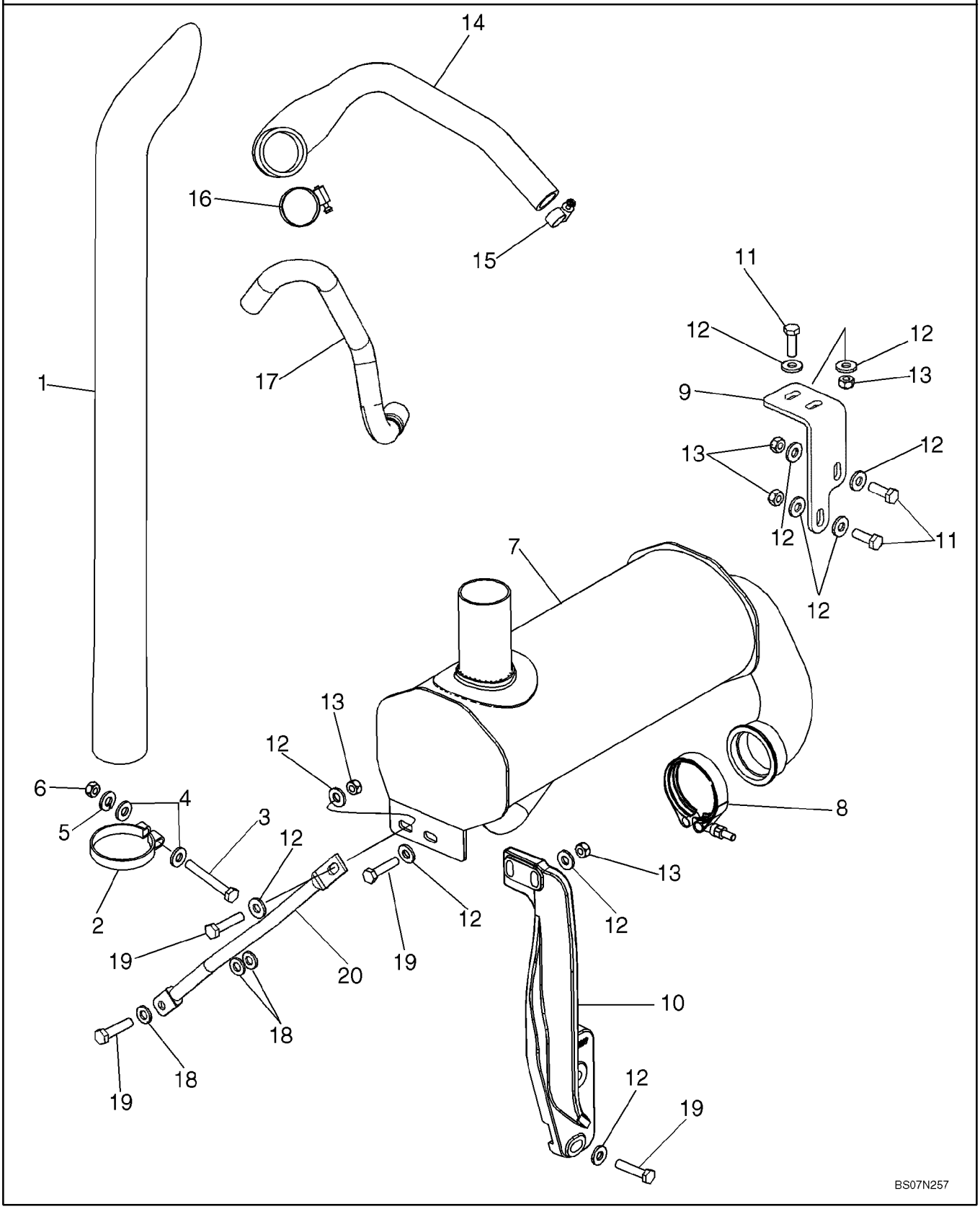

MUFFLER, ASPIRATED - EXHAUST SYSTEM

REF	FN	PART NUMBER	YR/SN	QTY	DESCRIPTION
1		87309656		1	VERTICAL EXHAUST, 844 mm (33-1/4 in) Long Exhaust Stack
2		87437804		1	PIPE CLAMP, Stack Clamp
3		614-10080		1	BOLT, Hex, M10 x 80, 8.8, Full Thd
4		896-15010		2	WASHER, M10 x 24.5 x 3, HT
5		892-11010		1	WASHER, LOCK, M10
6		829-1410		1	NUT, M10, Cl 10
7		87617576		1	MUFFLER, Aspirated
8		A170467		1	CLAMP, Includes Hardware
9		87423531		1	BRACKET, SUPPORTING, Front Support
10		87451167		1	BRACKET, SUPPORTING, Rear Support
11		627-10030		4	BOLT, Hex, M10 x 30, 10.9, Full Thd
12		896-15010		14	WASHER, M10 x 24.5 x 3, HT
13		829-1410		6	NUT, M10, Cl 10
14		87704858		1	HOSE, LARGE, Aspiration Hose
15		214-1416		1	CLAMP, HOSE, #16, 0.81/1.50 Type F Worm
16		214-1436		1	CLAMP, HOSE, #36, 1.81/2.75 Type F Worm
17		87611852		1	HOSE, LARGE
18		896-11010		3	WASHER, M10 x 21.5 x 2.5, HT
19		827-10045		5	BOLT, Hex, M10 x 45, 10.9
20		87442357		1	BRACE

ENGINE - MOUNTING

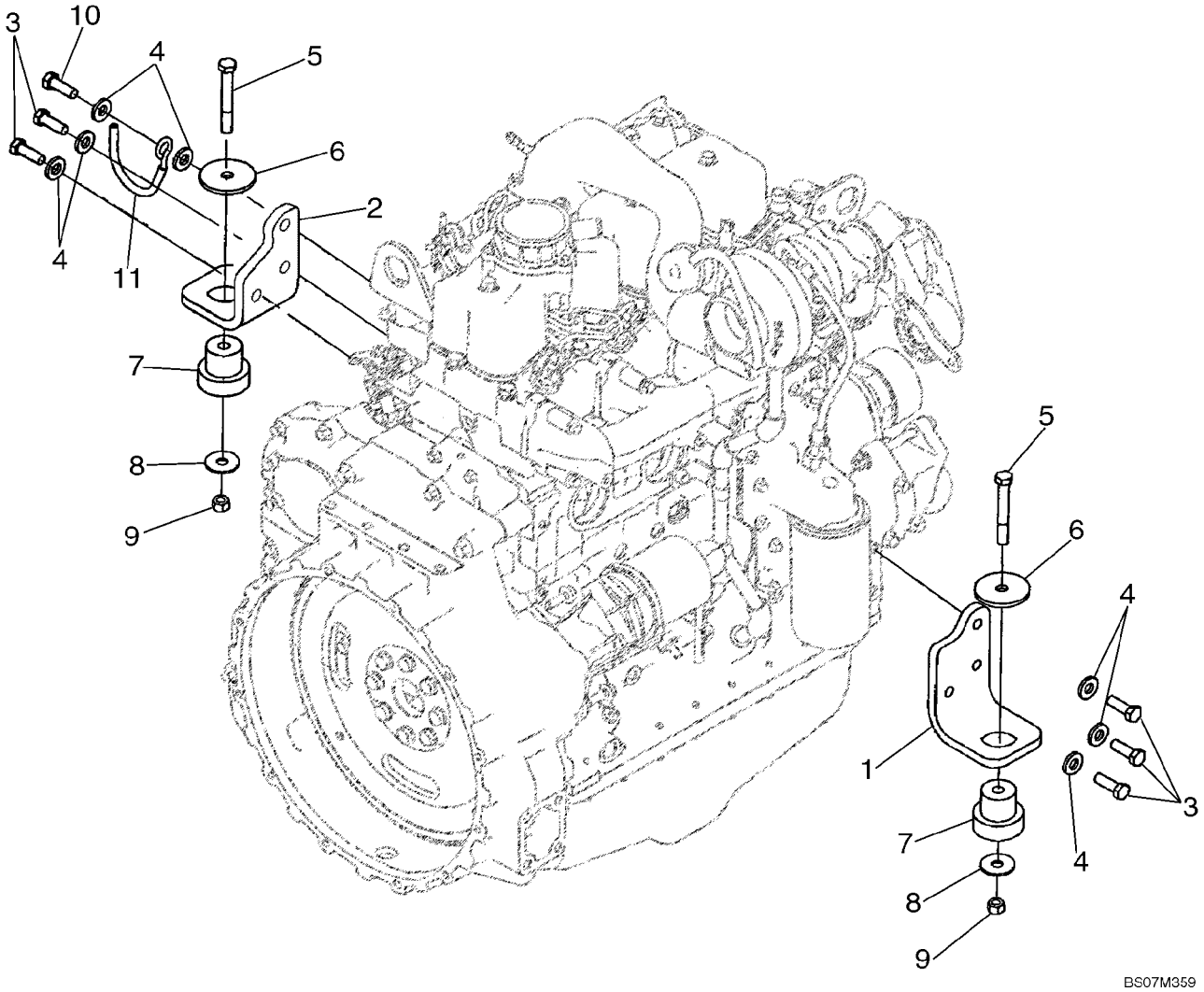

ENGINE - MOUNTING

REF	FN	PART NUMBER	YR/SN	QTY	DESCRIPTION
		87603948		1	ENGINE, 85 hp, Internal Intake EGR; Bosch Injection Pump; Turbocharged Engine; Includes Parts On Figures 02-08 - 02-42, 03-04 - 03-11
1		87411319		1	BRACKET, Right-Hand
2		87411319		1	BRACKET, Left-Hand
3		614-12035		5	BOLT, Hex, M12 x 35, 8.8, Full Thd
4		896-15012		7	WASHER, M12 x 28.5 x 4, HT
5		814-12080		2	BOLT, Hex, M12 x 80, 8.8
6		85801585		2	WASHER, SEALING
7		87416966		2	ISOLATOR, Insulator, Rubber Mount
8		85802618		2	WASHER, SEALING
9		832-10412		2	NUT, LOCK, M12 x 1.75, Cl 8
10		614-12040		1	BOLT, Hex, M12 x 40, 8.8, Full Thd
11		87431799		1	SUPPORT, Hose Support

ENGINE

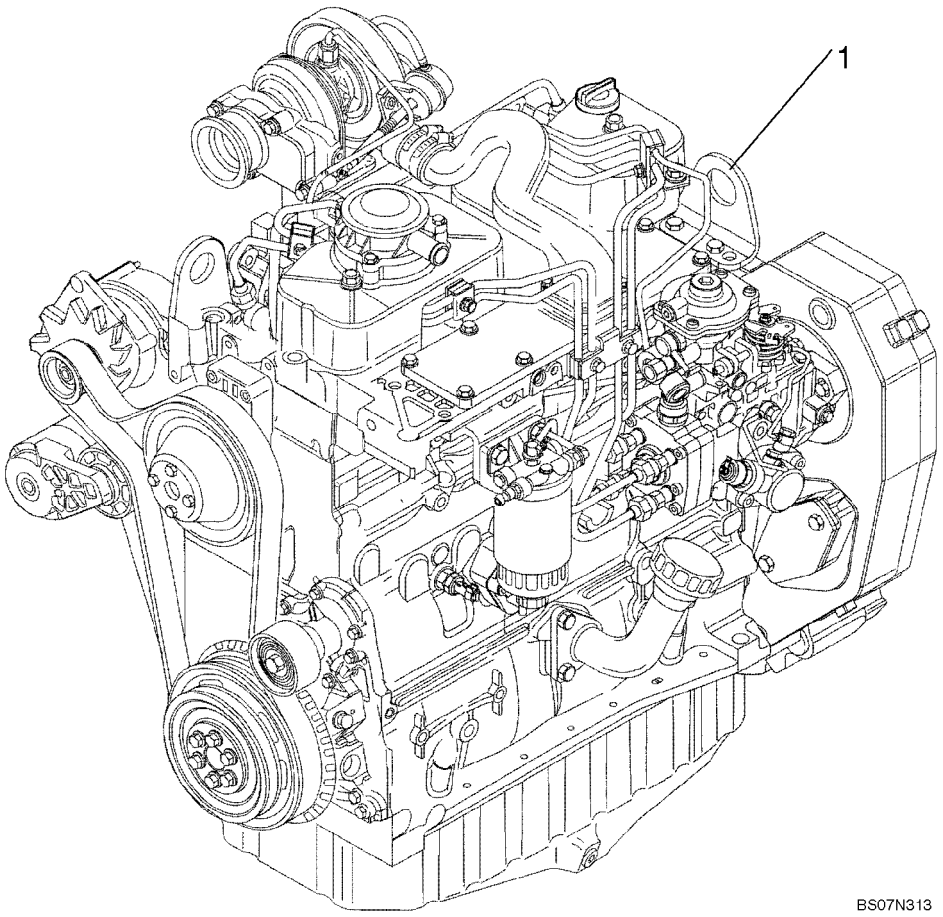

ENGINE

REF	FN	PART NUMBER	YR/SN	QTY	DESCRIPTION
1		87603948		1	ENGINE, 85 hp, Internal Intake EGR; Bosch Injection Pump; Turbocharged Engine; Includes Parts On Figures 02-08 - 02-42, 03-04 - 03-11

CYLINDER BLOCK

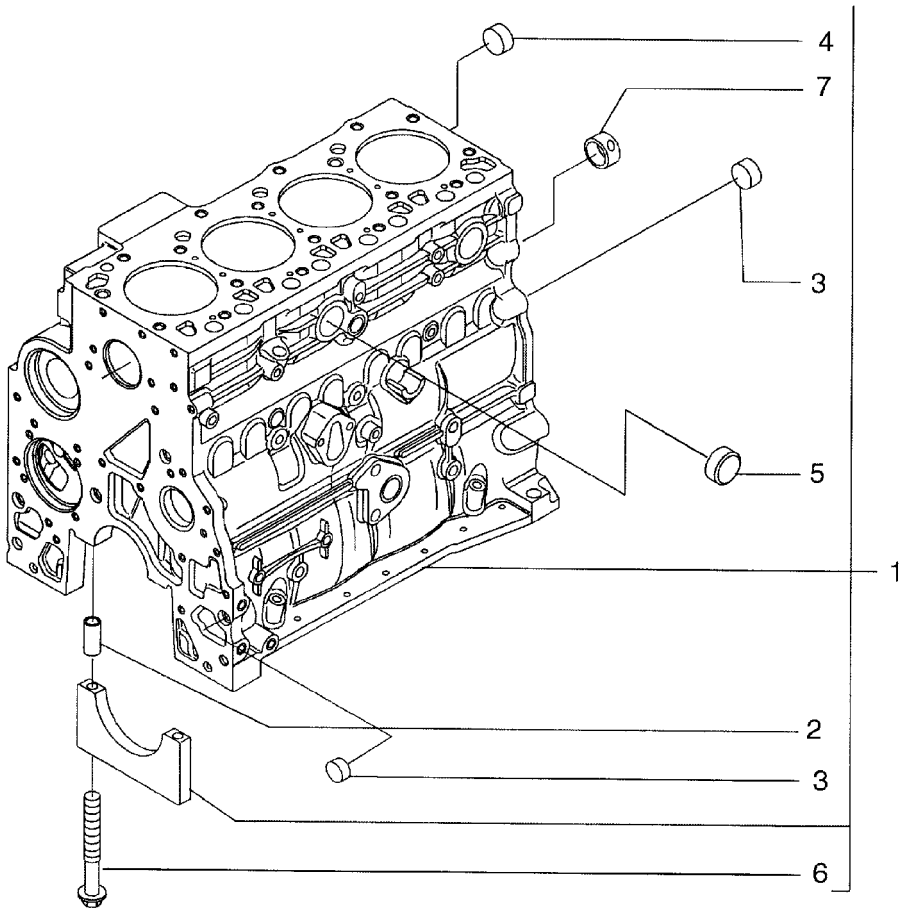

BS04A024

CYLINDER BLOCK

REF	FN	PART NUMBER	YR/SN	QTY	DESCRIPTION
1		2830082		1	CYLINDER BLOCK, - ASSY; Incl. Ref 2 - 7, Plus Main Bearing Caps
		4895919		4	BEARING, CRANKSHAFT, Main Bearing Cap; Not Serviced Separately
		4895921		1	BEARING, CRANKSHAFT, Main Bearing Cap; Not Serviced Separately
2		4899026		10	DOWEL
3		4895039		3	PLUG
4		4895038		4	PLUG
5		4895228		2	PLUG
6		4891353		10	SCREW, Flg Hd, M12 x 1.5 x 120
7		4895040		1	BUSHING

CYLINDER BLOCK

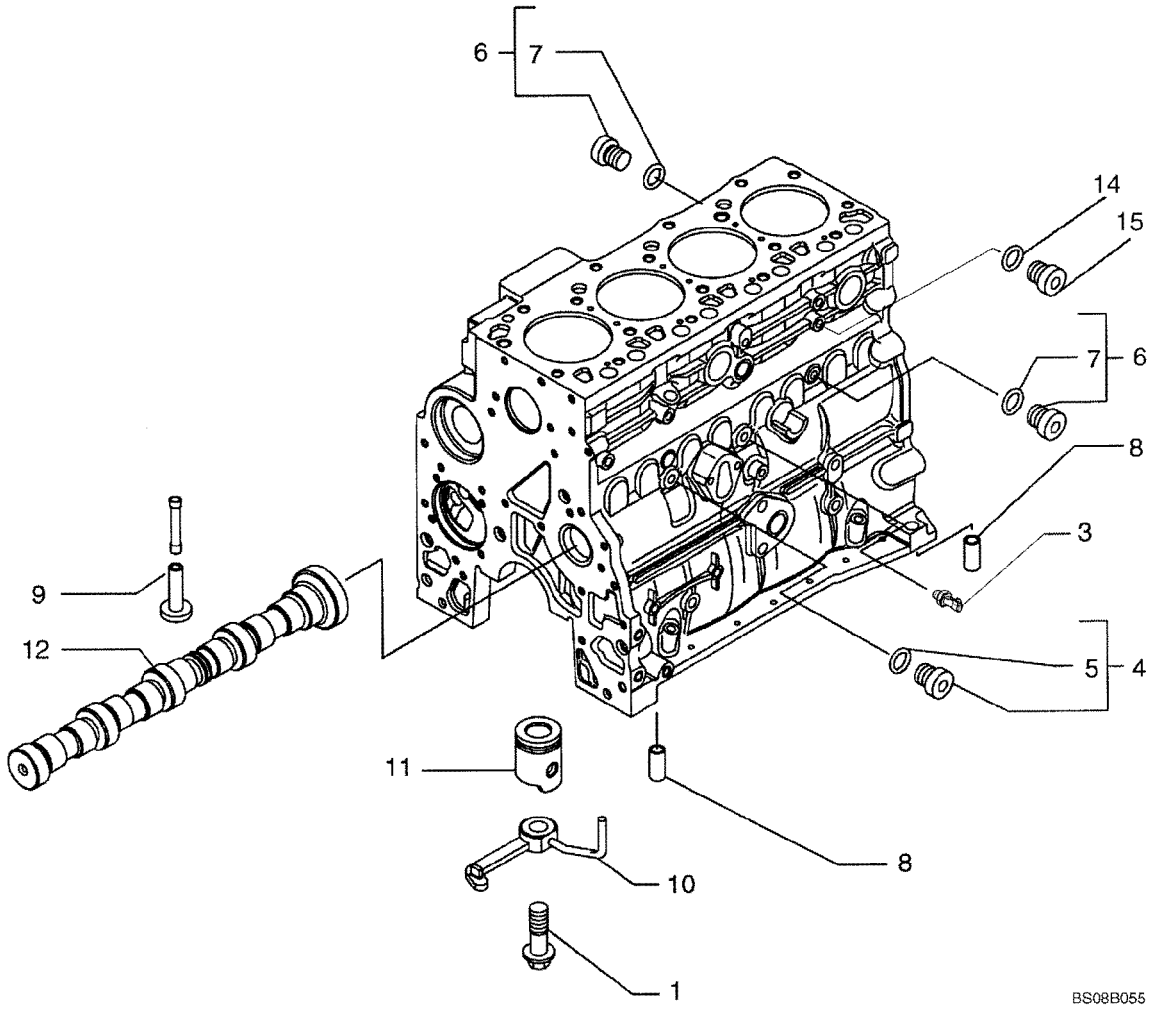

CYLINDER BLOCK

REF	FN	PART NUMBER	YR/SN	QTY	DESCRIPTION
1		4894218		4	SCREW
3		2852889		1	SWITCH, PRESSURE
4		4899009		1	PLUG, M10 x 1; Incl. Ref 5
5		4899072		1	O-RING
6		4895392		2	PLUG, 18 x 1.5; Incl. Ref 7
7		4895393		1	O-RING
8		4895049		2	DOWEL
9		4895180		8	TAPPET
10		2852202		4	NOZZLE, LUB. OIL JET, Incl. Ref 1
11		REF		1	INSTRUCTION, PISTON; See Figure 02-23
12		REF		1	INSTRUCTION, CAMSHAFT; See Figure 02-28
13		4896153		1	PLUG, Piston Cooling, M6.08 OD x 30 lg; If Used
14		4895623		1	PLUG
15		4895625		1	O-RING

OIL PUMP, PAN

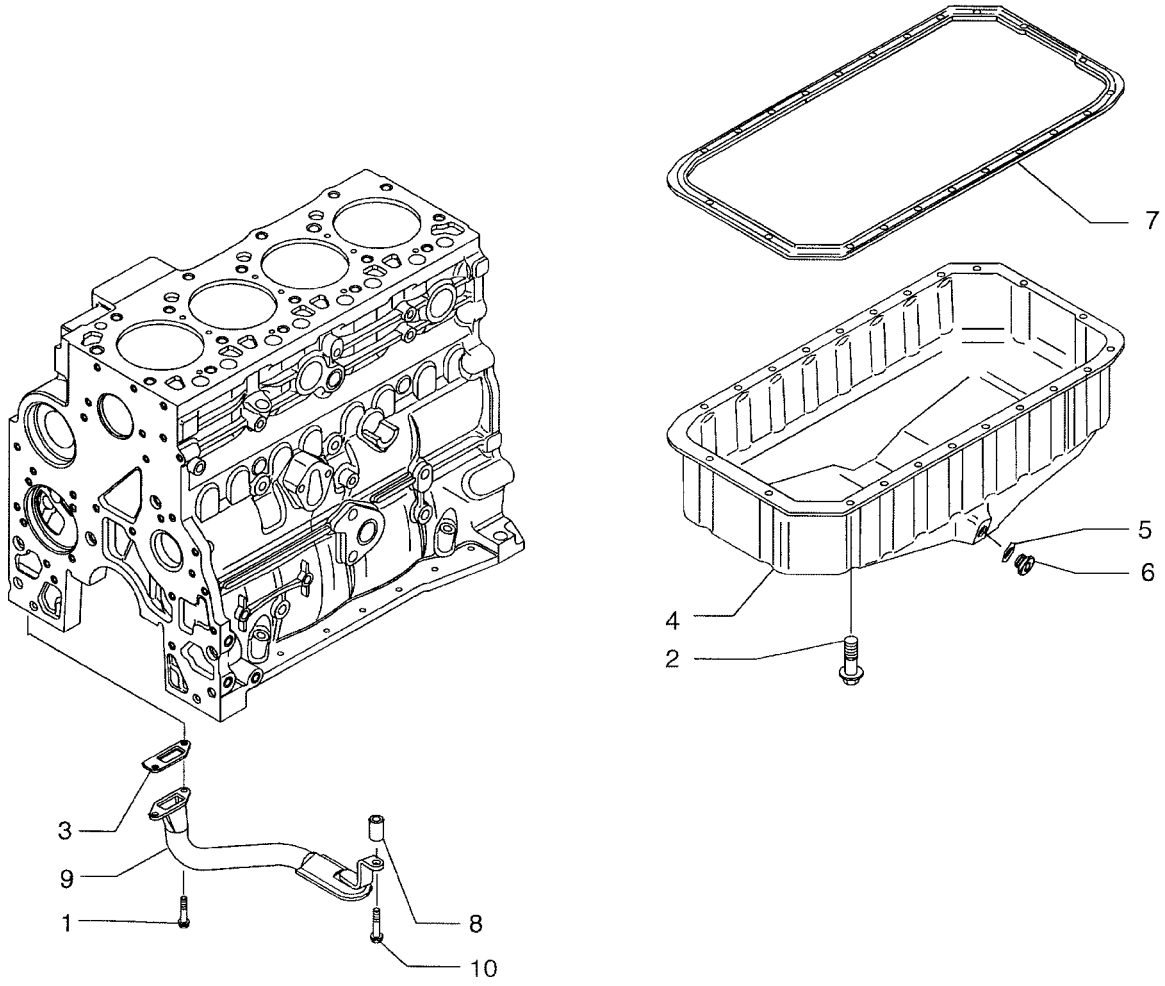

OIL PUMP, PAN

REF	FN	PART NUMBER	YR/SN	QTY	DESCRIPTION
1		16673635		2	SCREW, M8 x 20mm
2		4899091		22	SCREW, Hex Flg, M8 x 1.25 x 40
2		4895489		2	SCREW, Flange, M8 x 110
3		4898301		1	GASKET
4		2852011		1	PAN, ENGINE OIL
5		2852978		1	O-RING, Seal
6		2856086		1	PLUG, 22 x 1.5; Does Not Include Seal, Purchase Seal Separately
7		2852012		1	GASKET
8		2852016		1	SPACER
9		2852013		1	STRAINER, ELEMENT, Tube; Oil Suction, Includes Screen Which Is Not Serviced Separately
10		4895538		1	SCREW, Flange, M10 x 120

CRANKCASE COVERS

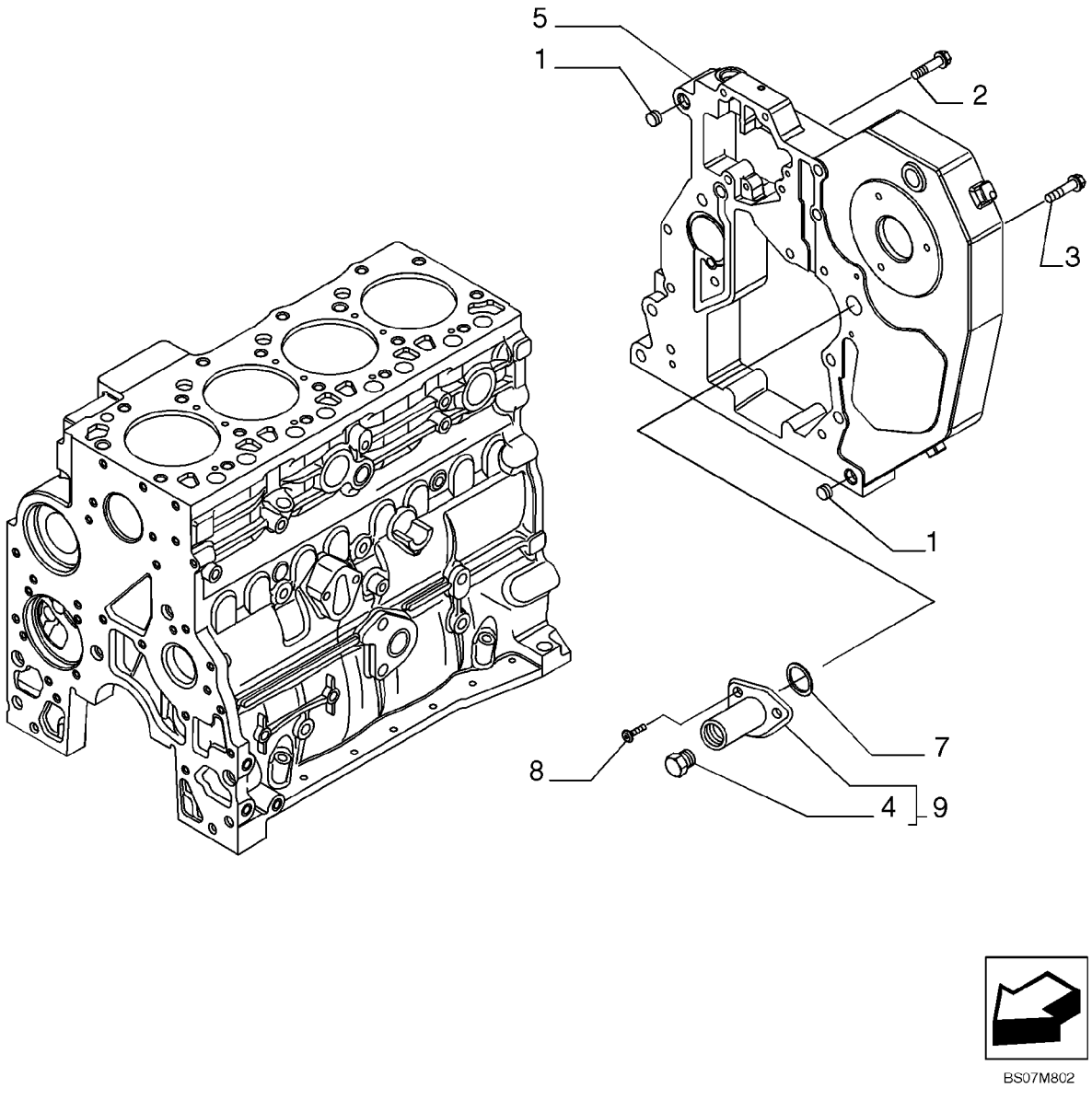

CRANKCASE COVERS

REF	FN	PART NUMBER	YR/SN	QTY	DESCRIPTION
1		4899026		2	DOWEL
2		4899091		4	SCREW, Hex Flg, M8 x 1.25 x 40
3		4899093		5	SCREW, Hex Flg, M10 x 1.5 x 30
3		4899073		1	SCREW, Hex Flg, M12 x 1.75 x 30
4		16882515		1	PLUG, Plug
		4899115		1	O-RING, (Part of 16882515), Not Shown
5		2853671		1	HOUSING
7		2852519		1	O-RING
8		4895355		2	SCREW, Torx Rd Hd, M5 x .8 x 17
9		2855287		1	HOUSING, - ASSY

CYLINDER BLOCK - COVERS

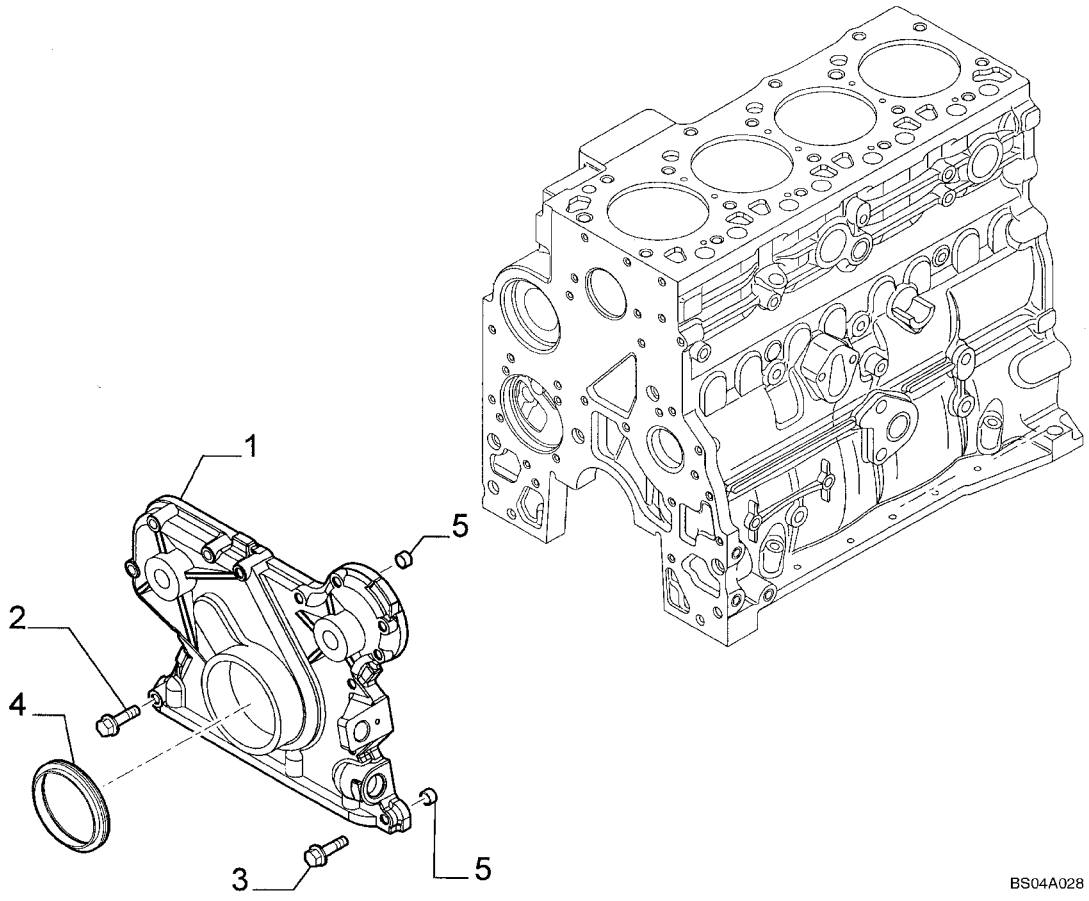

CYLINDER BLOCK - COVERS

REF	FN	PART NUMBER	YR/SN	QTY	DESCRIPTION
1		4897024		1	COVER, Front Gear
2		4899078		5	SCREW, Hex Flg, M8 x 1.25 x 45
3		4899063		8	SCREW, Hex Flg, M8 x 1.25 x 30
4		4890832		1	SEAL
5		4891209		2	DOWEL

CRANKCASE COVERS

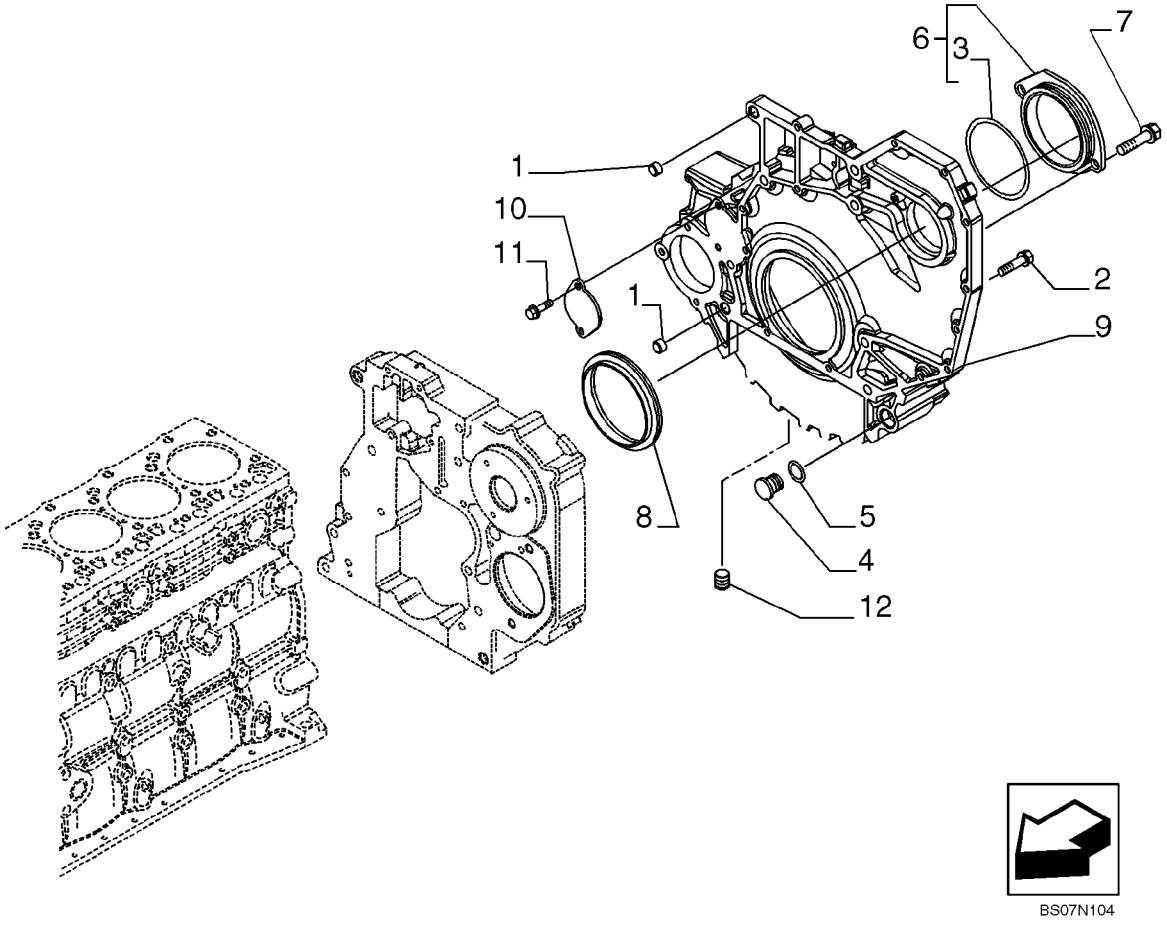

BS07N104

CRANKCASE COVERS

REF	FN	PART NUMBER	YR/SN	QTY	DESCRIPTION
1		4899026		2	DOWEL
2		4899109		3	SCREW, Hex, M10 x 1.5 x 80
2		4892915		7	SCREW, M10 x1.5 x 40
2		4899076		5	SCREW, Hex Flg, M12 x 1.75 x 80
2		4899074		2	SCREW, Hex Flg, M12 x 1.75 x 120
2		4899143		1	SCREW, Hex Flg, M10 x 1.5 x 140
2		2852865		2	SCREW
3		2854075		1	O-RING
4		4895378		2	PLUG
5		4895379		2	O-RING, M21.82 ID x 3.53 Thk
6		2854073		1	COVER
7		4899020		2	SCREW
8		4890833		1	SEAL
9		2855178		1	HOUSING
10		4895155		1	COVER
11		4899068		2	SCREW, Hex Flg, M8 x 1.25 x 16
12		4893036		1	PLUG, Alternate part to 2854866
12		{ 2854866}		1	Plug, Alternate part to 4893036

BREATHER - ENGINE

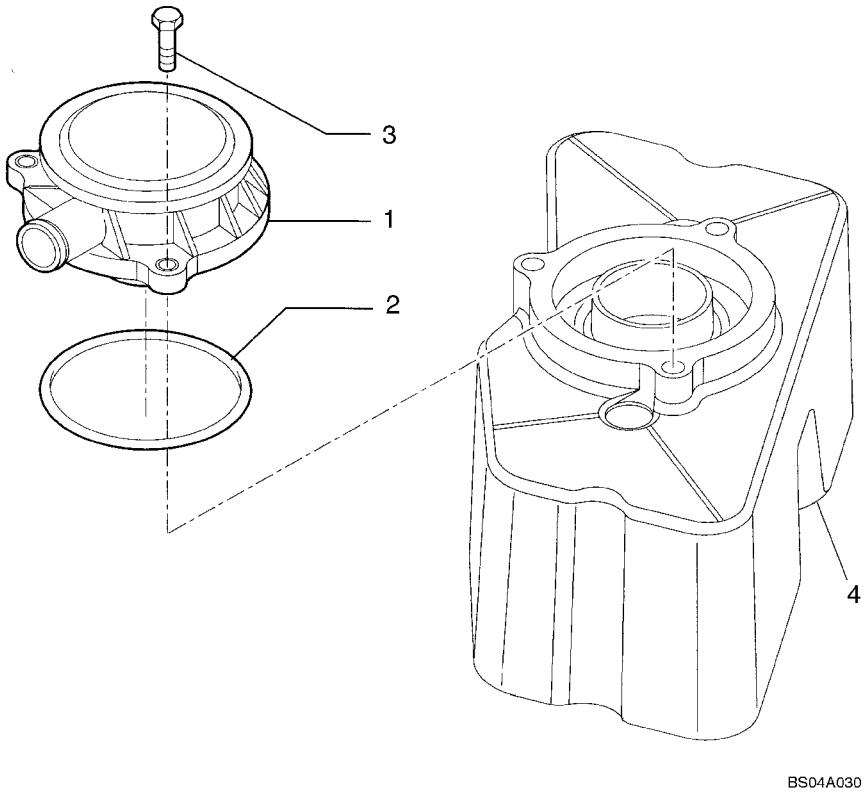

BREATHER - ENGINE

REF	FN	PART NUMBER	YR/SN	QTY	DESCRIPTION
1		2852531		1	BREATHER
2		2852028		1	GASKET
3		4899110		3	SCREW, Hex Flg, M6 x 1 x 20, Alternate Part to 4899092
3		4899092		3	SCREW, Hex Flg, M6 x 1 x 25, Alternate Part to 4899110
4		REF		1	INSTRUCTION, COVER; See Figure 02-17

CYLINDER HEAD

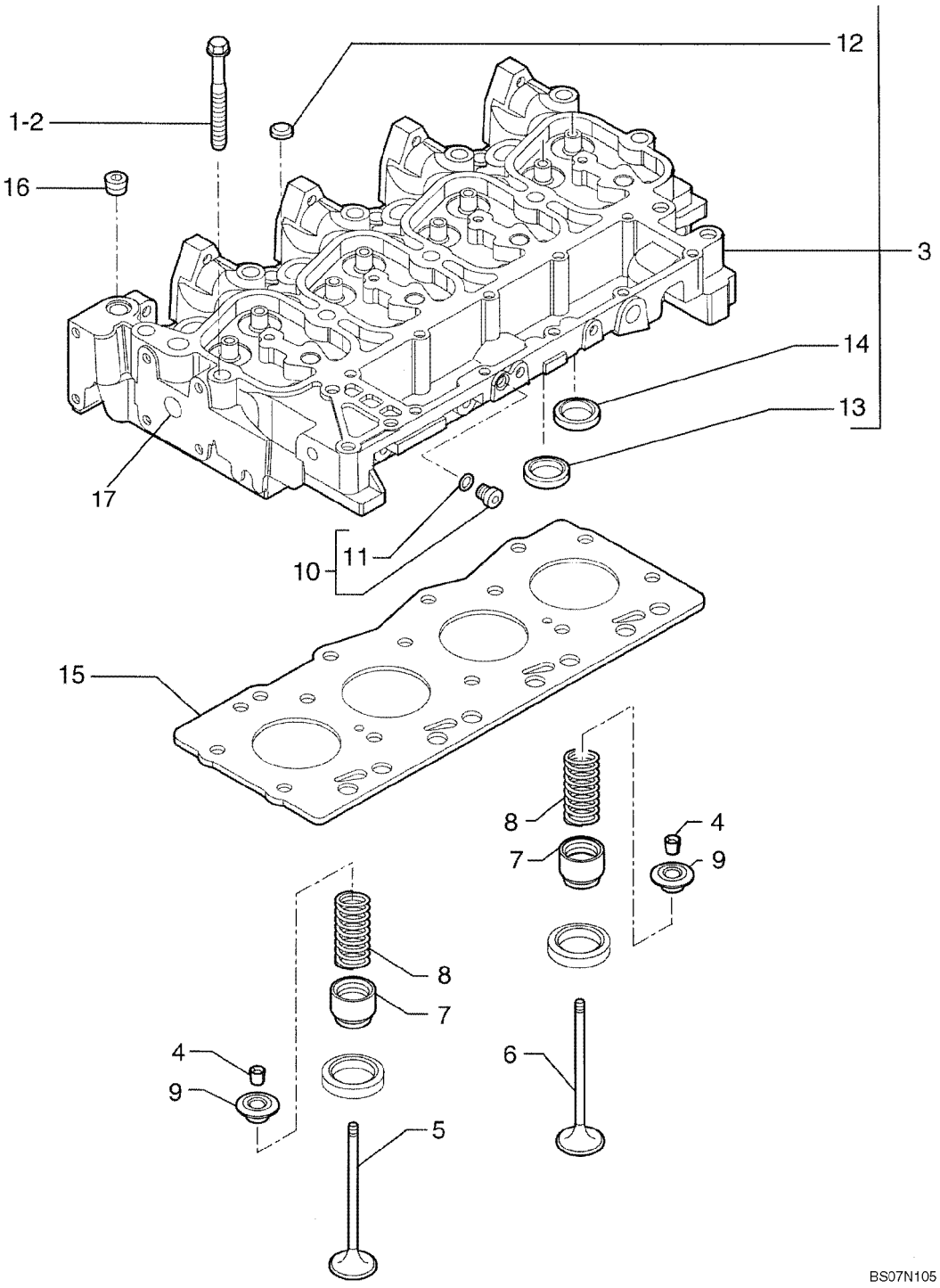

CYLINDER HEAD

REF	FN	PART NUMBER	YR/SN	QTY	DESCRIPTION
1		4892861		4	SCREW, Wash Hd, M12 x 1.25 x 73
2		4892859		10	SCREW, Wash Hd, M12 x 1.25 x 143
3		2856017		1	CYLINDER HEAD, Incl. Ref 12 - 14, 17
4		4895183		16	COLLET
5		4895188		4	VALVE, ENG EXHAUST, STD
6		4895187		4	VALVE, ENGINE, INLET, STD
7		4895347		8	SEAL
8		4895215		8	SPRING, VALVE
9		4895184		8	RETAINER
10		4899009		1	PLUG, M10 x 1; Incl. Ref 11
11		4899072		1	O-RING
12		4895179		3	PLUG
13		4897178		4	VALVE SEAT, Intake
14		4897179		4	VALVE SEAT, Exhaust
15		2830919		1	GASKET, CYLINDER HEAD, SP=1.25
15		2830920		1	GASKET, CYLINDER HEAD, SP=1.15
16		4895078		5	PLUG
17		4895085		1	PLUG, 25.74mm

CYLINDER HEAD - COVERS

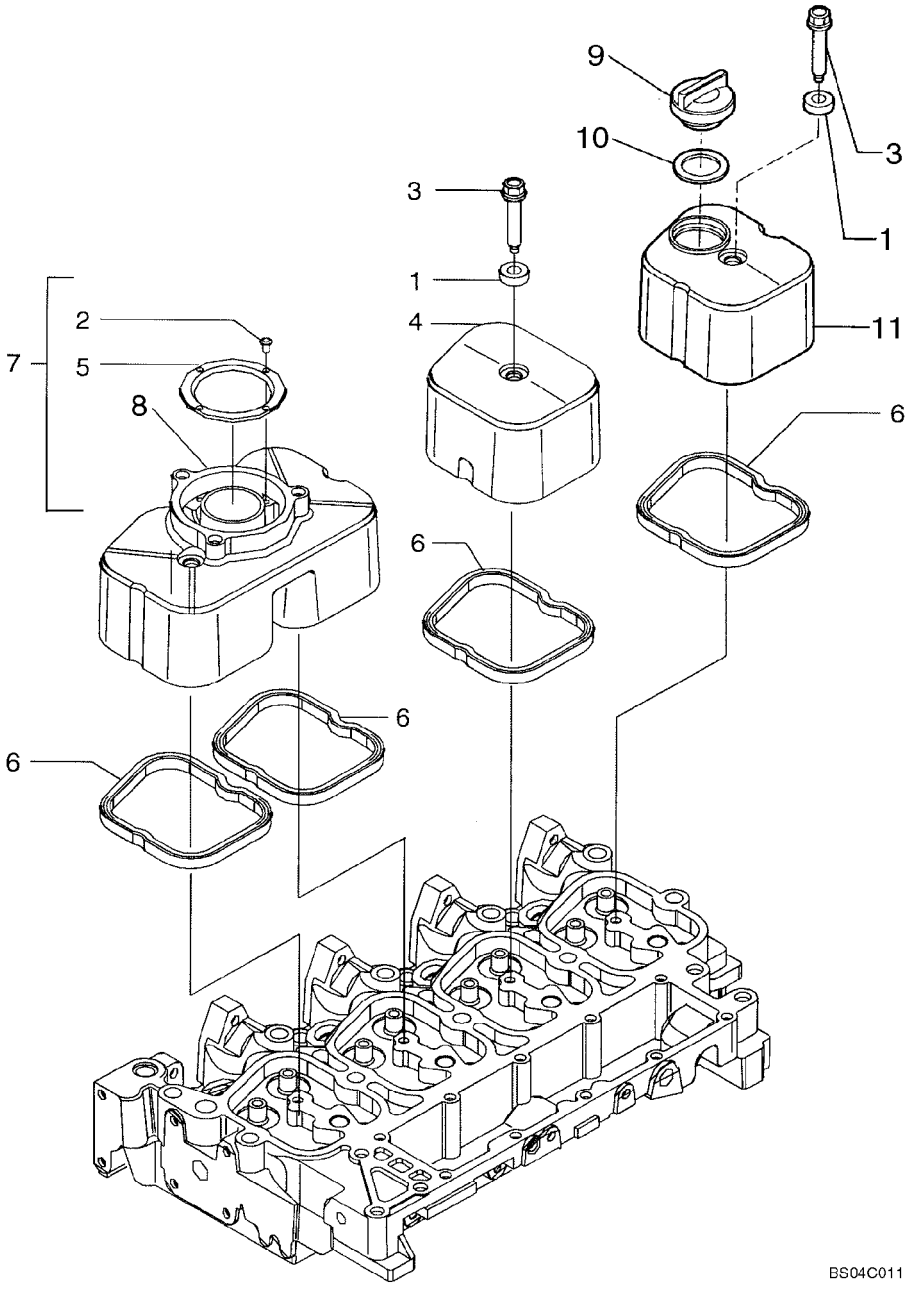

CYLINDER HEAD - COVERS

REF	FN	PART NUMBER	YR/SN	QTY	DESCRIPTION
1		4895360		4	ISOLATOR
2		2830281		4	SCREW, SELF TAP
3		4895214		4	SCREW, Flange
4		2852032		1	COVER
5		2830775		1	BAFFLE
6		2852033		4	GASKET
7		2830784		1	COVER, VALVE, Incl. Ref 2, 5
8		2830769		1	COVER
9		4895202		1	CAP, FILLER
10		4895296		1	SEAL
11		2852894		1	COVER

CYLINDER HEAD - VALVE MECHANISM

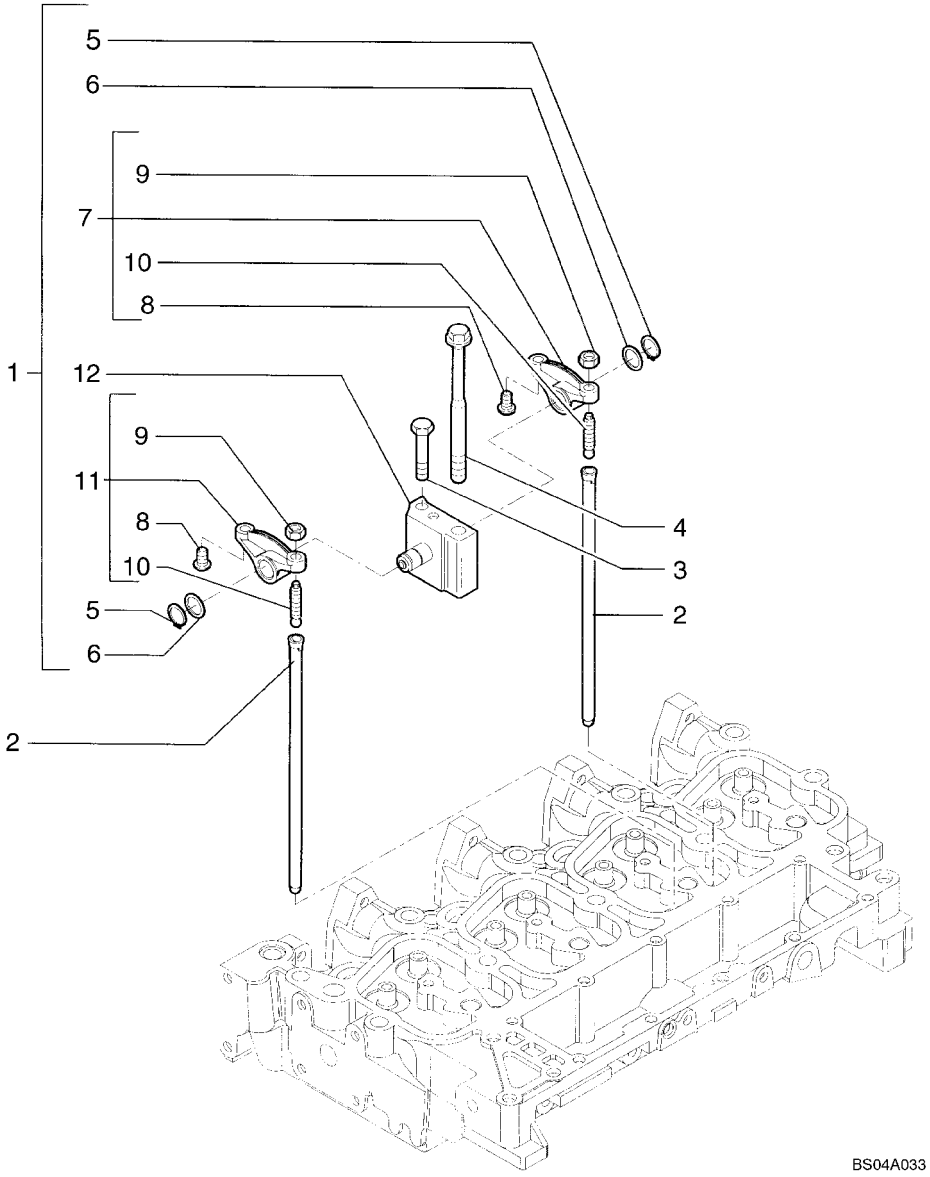

CYLINDER HEAD - VALVE MECHANISM

REF	FN	PART NUMBER	YR/SN	QTY	DESCRIPTION
1		4895195		4	ROCKER ARM, Incl. Ref 5 - 12
2		4895361		8	ROD, PUSH
3		2852866		4	SCREW, Hex
4		4892860		4	SCREW, Wash Hd, M12 x 1.25 x 183
5		4895363		2	RING, SNAP
6		4895364		2	WASHER
7		4895196		1	ROCKER ARM, Incl. Ref 8 - 10
8		4895365		2	INSERT
9		4895198		2	NUT
10		4895199		2	SCREW
11		4895200		1	ROCKER ARM, Incl. Ref 8 - 10
12		4895204		1	SUPPORT

MANIFOLD - INTAKE

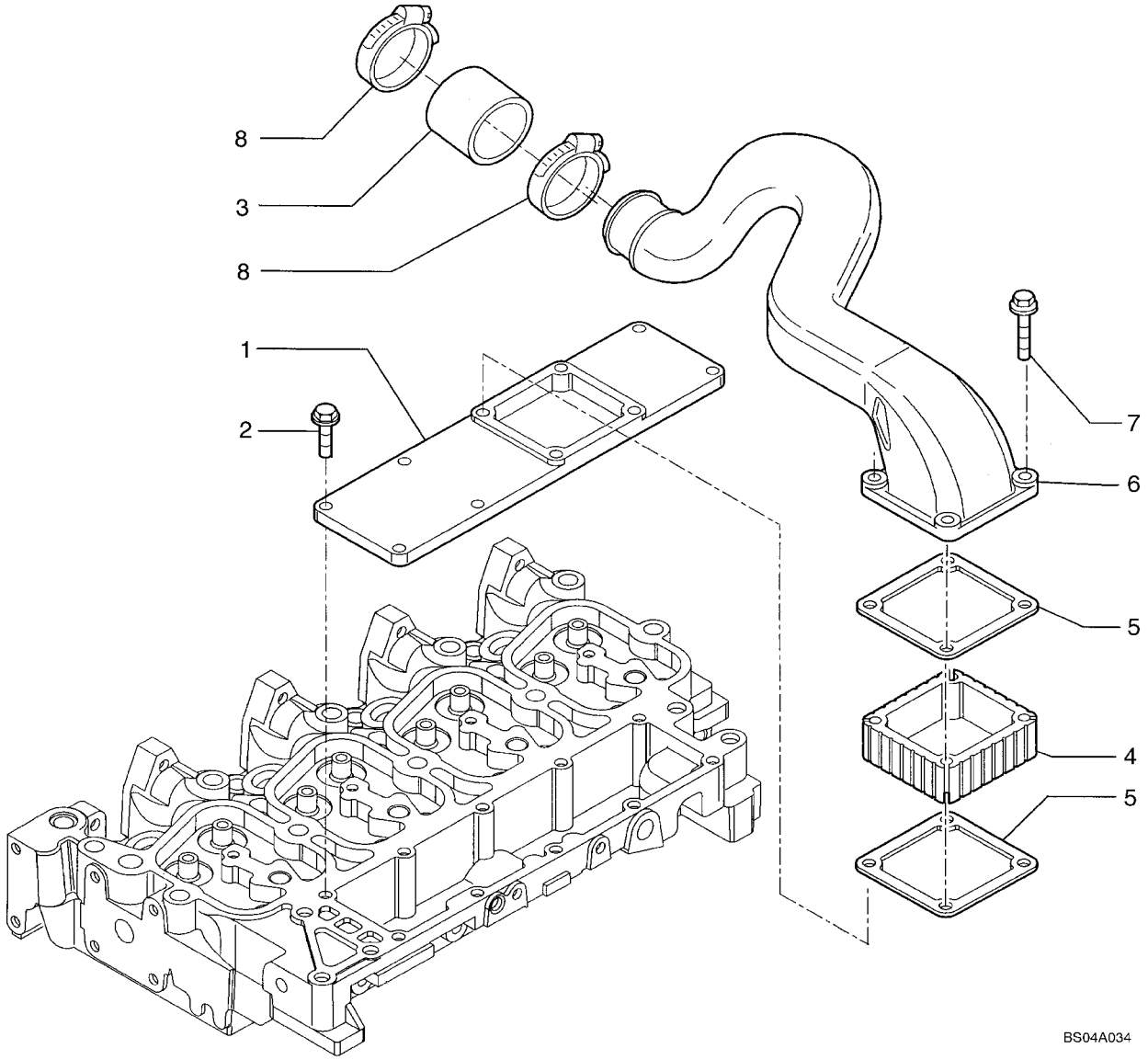

MANIFOLD - INTAKE

REF	FN	PART NUMBER	YR/SN	QTY	DESCRIPTION
1		2852044		1	COVER, Manifold Inlet; Aluminum; If Used
1		2856462		1	MANIFOLD, INLET, COVER, Plastic; If Used
2		4899039		6	SCREW, Hex Flg, M8 x 1.25 x 25
3		2852029		1	SLEEVE
4		2856263		1	SPACER, Intake
5		4899921		2	GASKET
6		2852030		1	PIPE, SUCTION
7		4895294		4	SCREW, Flange, M8 x 80
8		4895641		2	COLLAR CLAMP

EXHAUST MANIFOLD

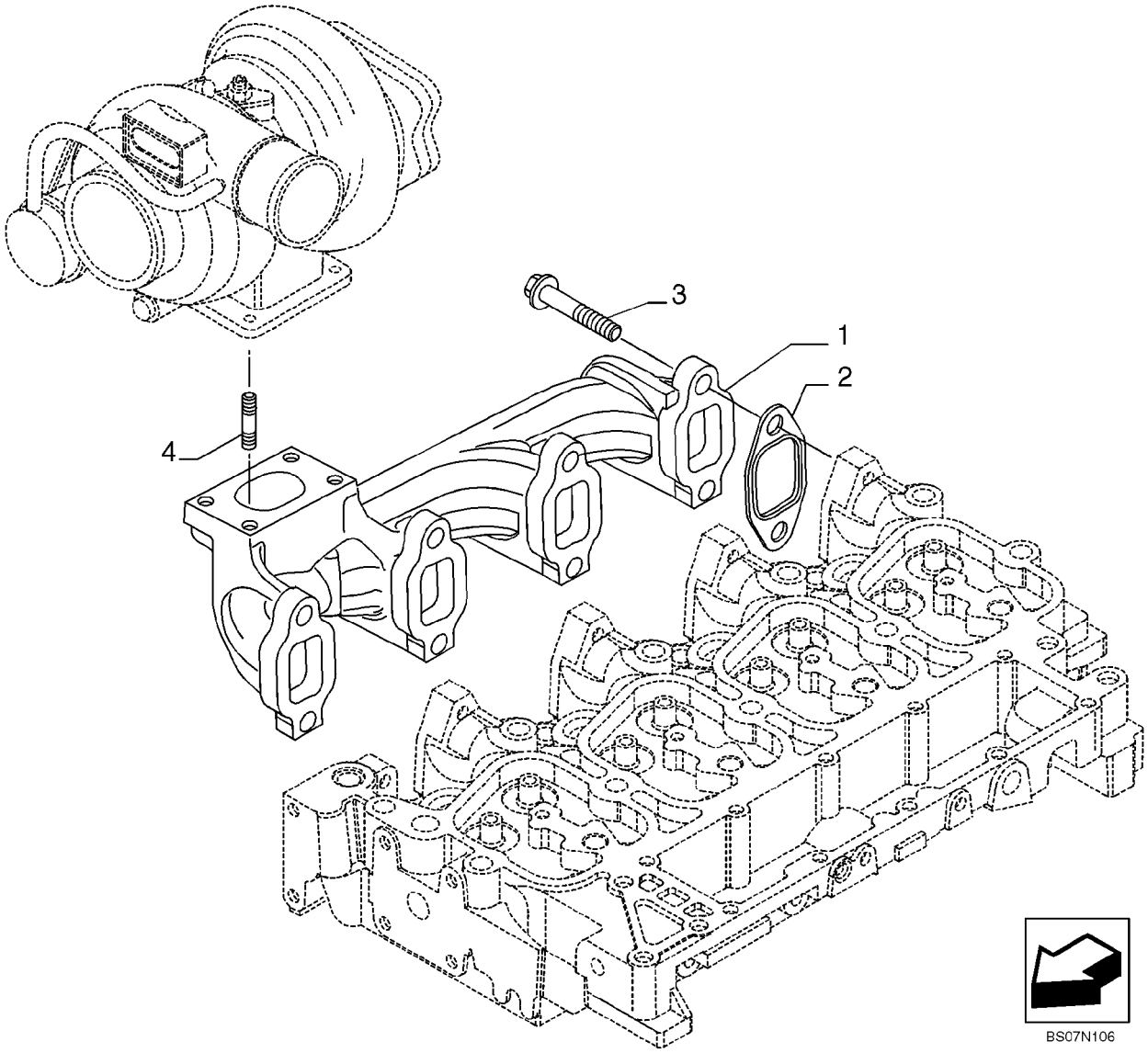

EXHAUST MANIFOLD

REF	FN	PART NUMBER	YR/SN	QTY	DESCRIPTION
1		2831203		1	MANIFOLD, EXHAUST
2		2852743		4	GASKET
3		2852834		8	SCREW
4		4899859		4	STUD

CRANKSHAFT

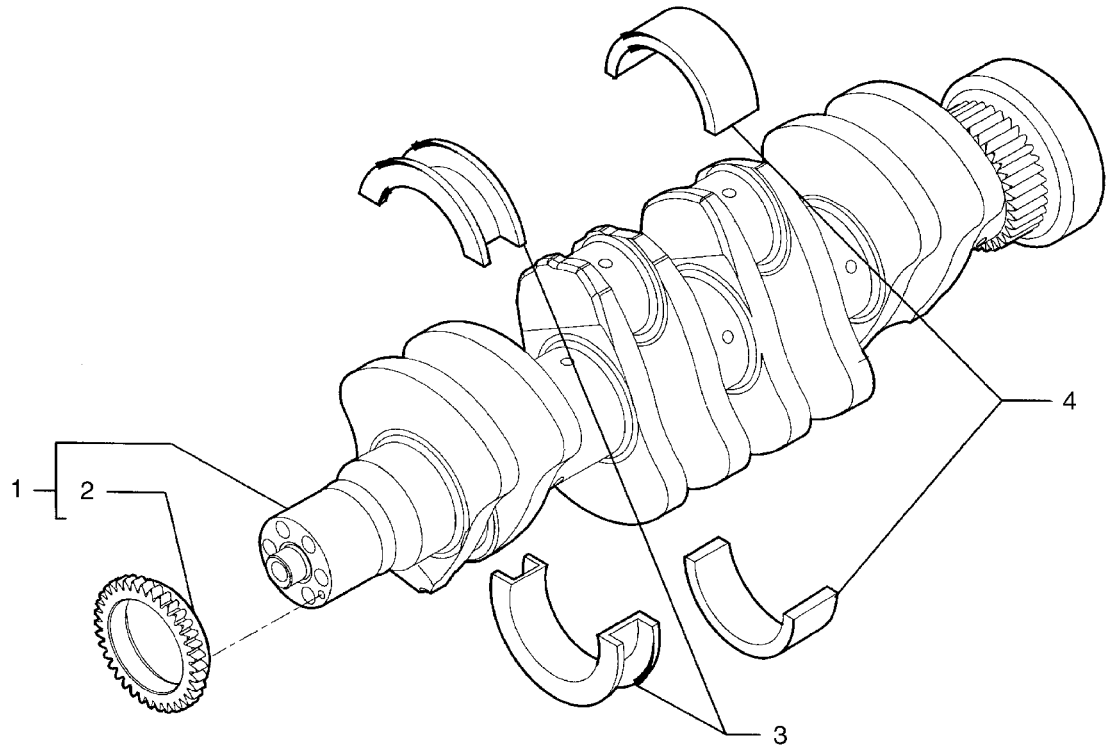

BS04A036

CRANKSHAFT

REF	FN	PART NUMBER	YR/SN	QTY	DESCRIPTION
1		{2856271}		1	Crankshaft Assembly, Incls. Refs. 2
2		4893386		1	GEAR
3		{2853816}		1	Set, Thrust Washers (Standard)
3		4895414		1	BEARING, THRUST
4		{2853815}		4	Set, Main Bearings (Standard)
4		4895017		4	BEARING, CRANKSHAFT
5		4899046		1	DOWEL

CONNECTING ROD

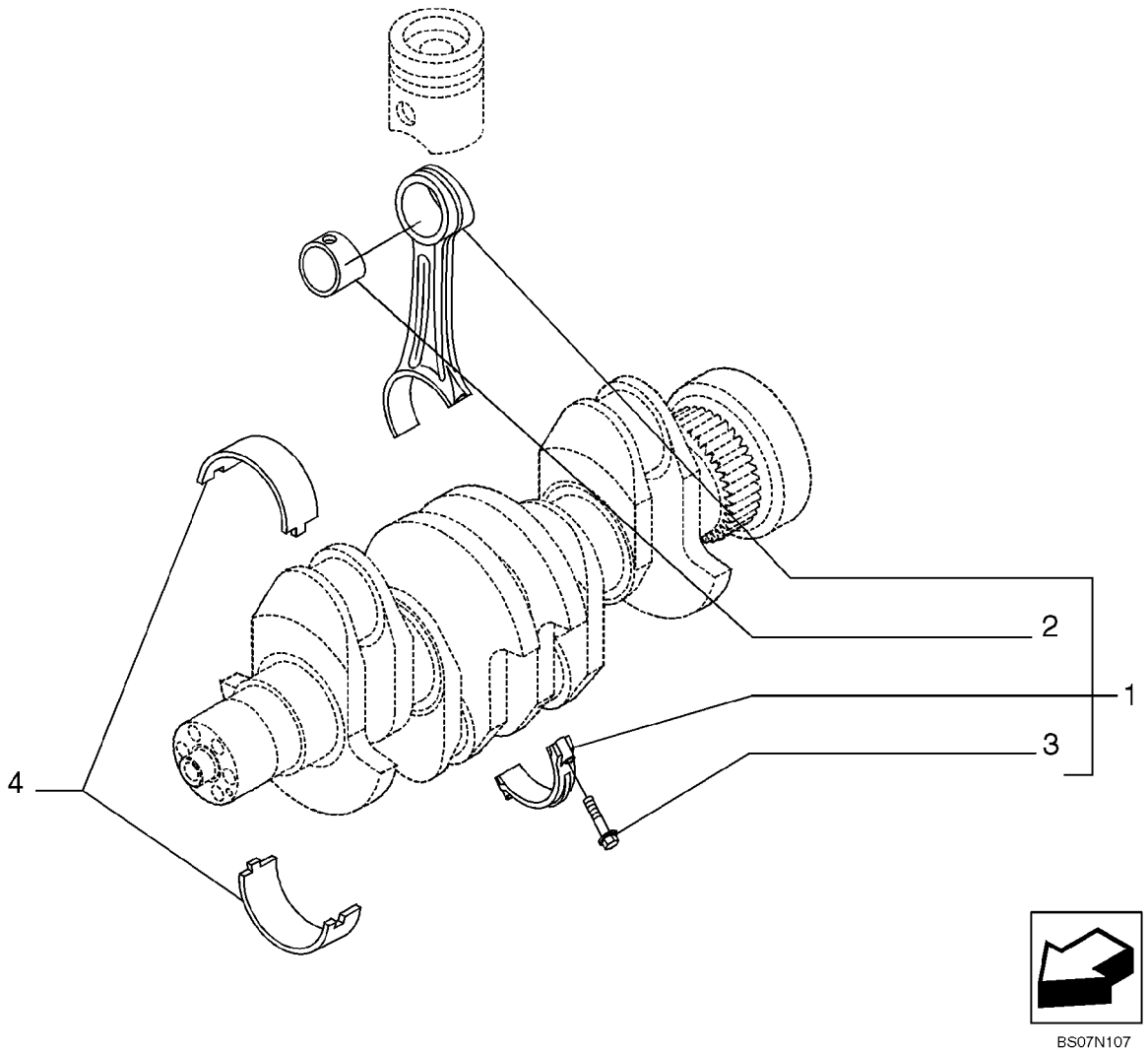

CONNECTING ROD

REF	FN	PART NUMBER	YR/SN	QTY	DESCRIPTION
1		2831298		4	ROD, CONNECTING
2		4892708		1	BUSHING
3		2831297		2	SCREW
4		4892715		4	BEARING, CON. ROD
4		{2856309}		4	Bearing, Crankshaft

02-23		p1	02/08

PISTON - ENGINE

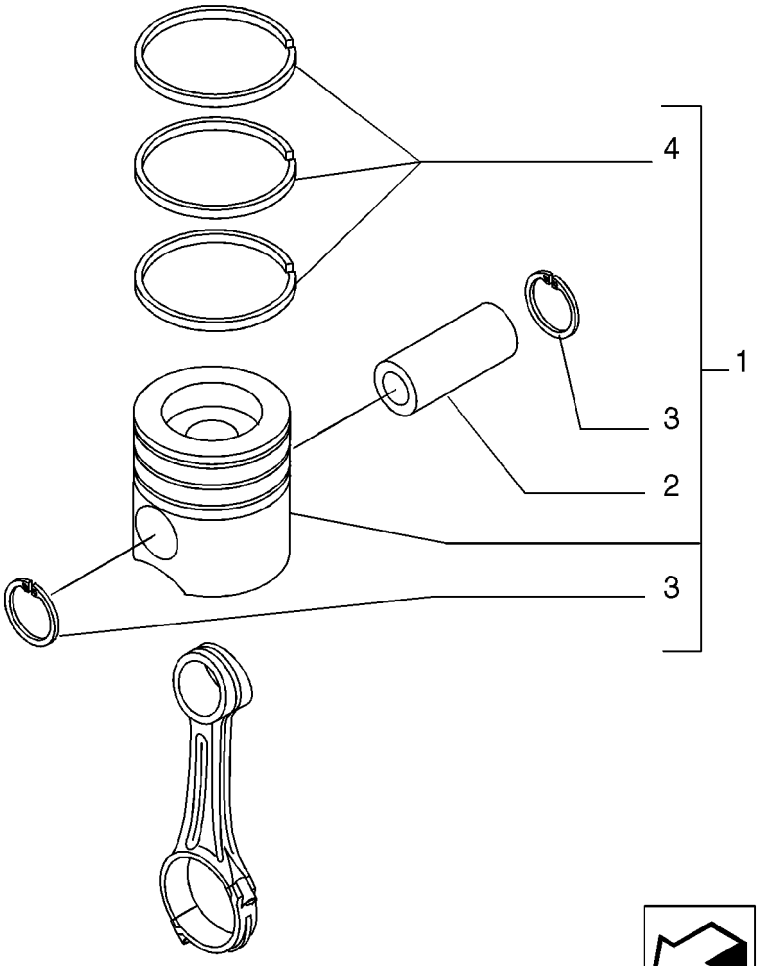

BS07N108

PISTON - ENGINE

REF	FN	PART NUMBER	YR/SN	QTY	DESCRIPTION
1		2855531		4	PISTON ASSY, (Standard)
2		4892712		4	PIN, PISTON
3		2854030		8	RING, SNAP
3		4892713		8	RING, SNAP, Alternate with 2854030
4		2830158		1	RING, PISTON, (Standard)
4		2852037		1	RING, OIL SCRAPER
4		2854603		1	KIT, Piston seal

FLYWHEEL - ENGINE

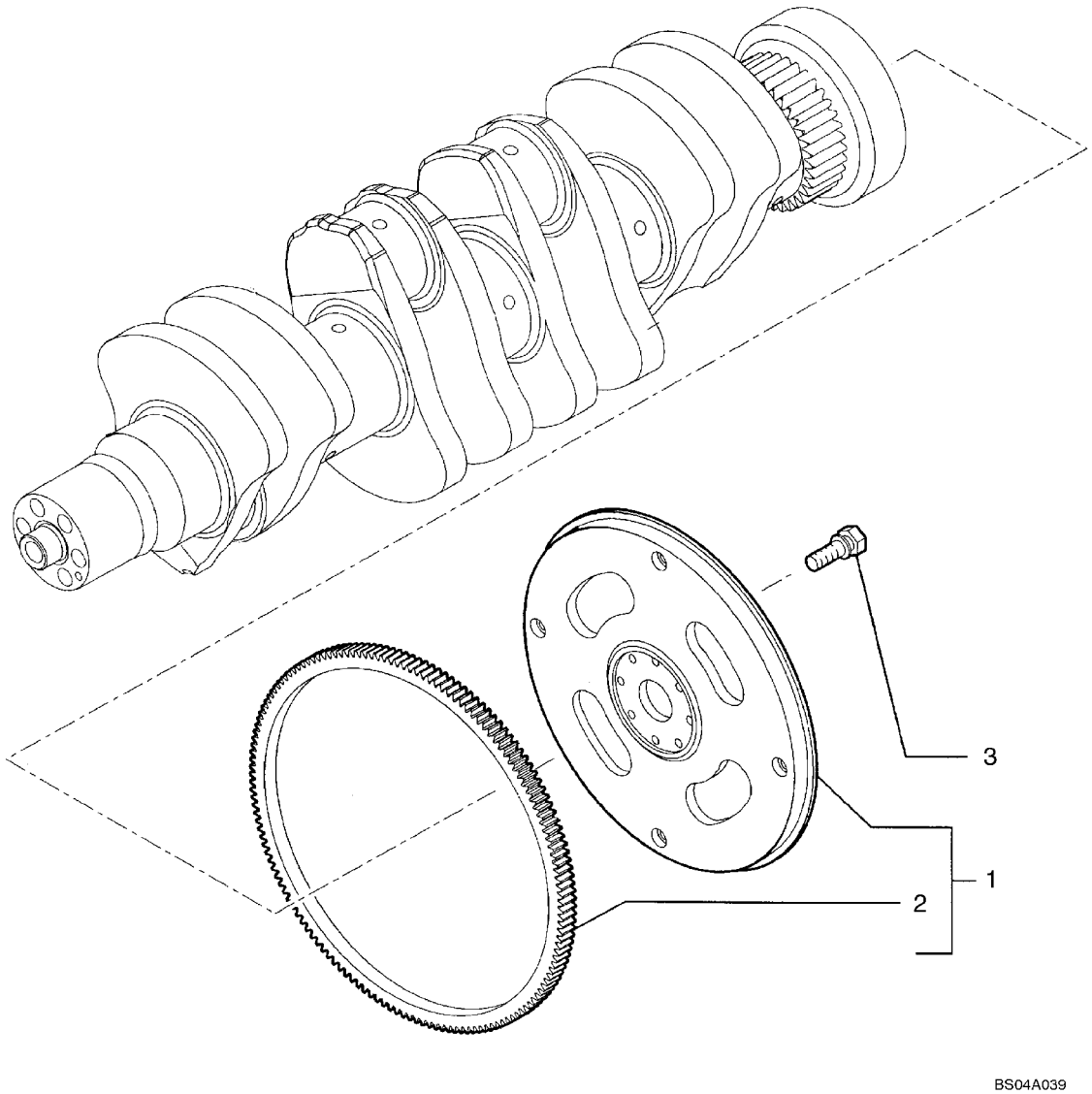

FLYWHEEL - ENGINE

REF	FN	PART NUMBER	YR/SN	QTY	DESCRIPTION
1		2852049		1	FLYWHEEL, ENGINE, - ASSY; Incl. Ref 2
2		2852051		1	GEAR, RING
3		4894641		8	SCREW, Wash Hd, M12 x 1.25 x 31

PULLEY - CRANKSHAFT

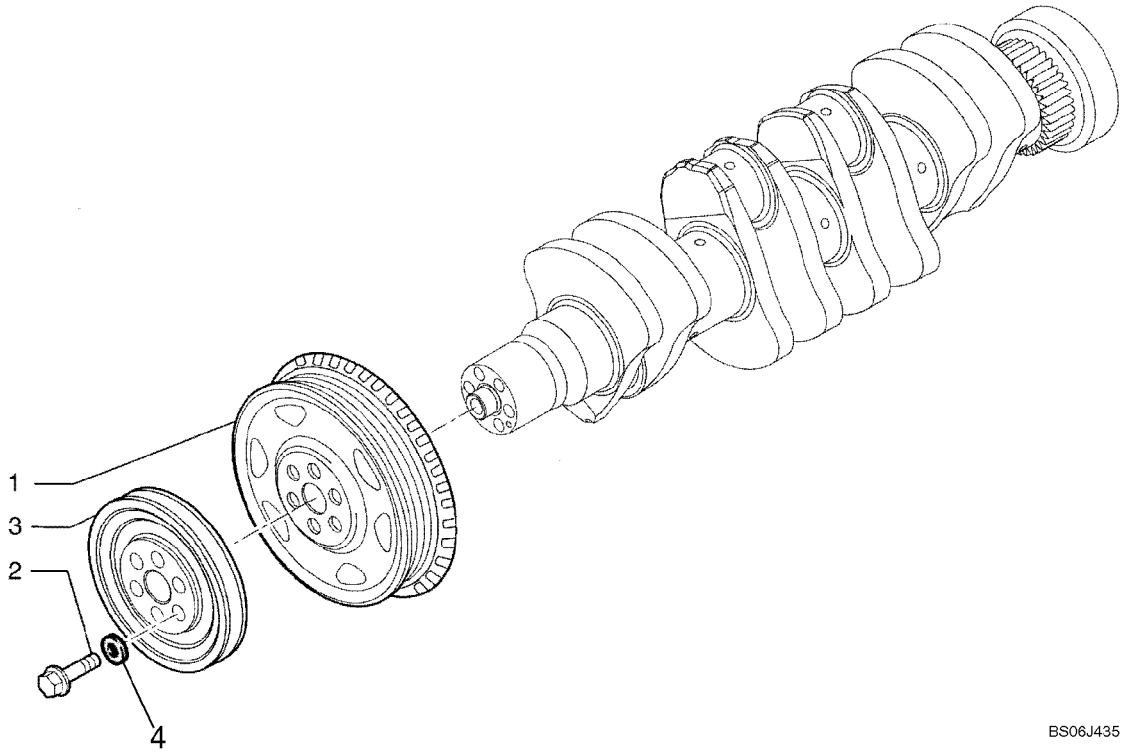

PULLEY - CRANKSHAFT

REF	FN	PART NUMBER	YR/SN	QTY	DESCRIPTION
		{2855380}		1	Pulley Assembly, Incls. Refs. 1 - 3
1		4896773		1	PULLEY
2		4892867		6	SCREW, Torx Wash Hd, M12 x 1.25 x 78.5
3		{2855381}		1	Pulley
4		{}		6	Washer, (Part of 4892867)

DYNAMIC BALANCER, GEARS & SHAFTS

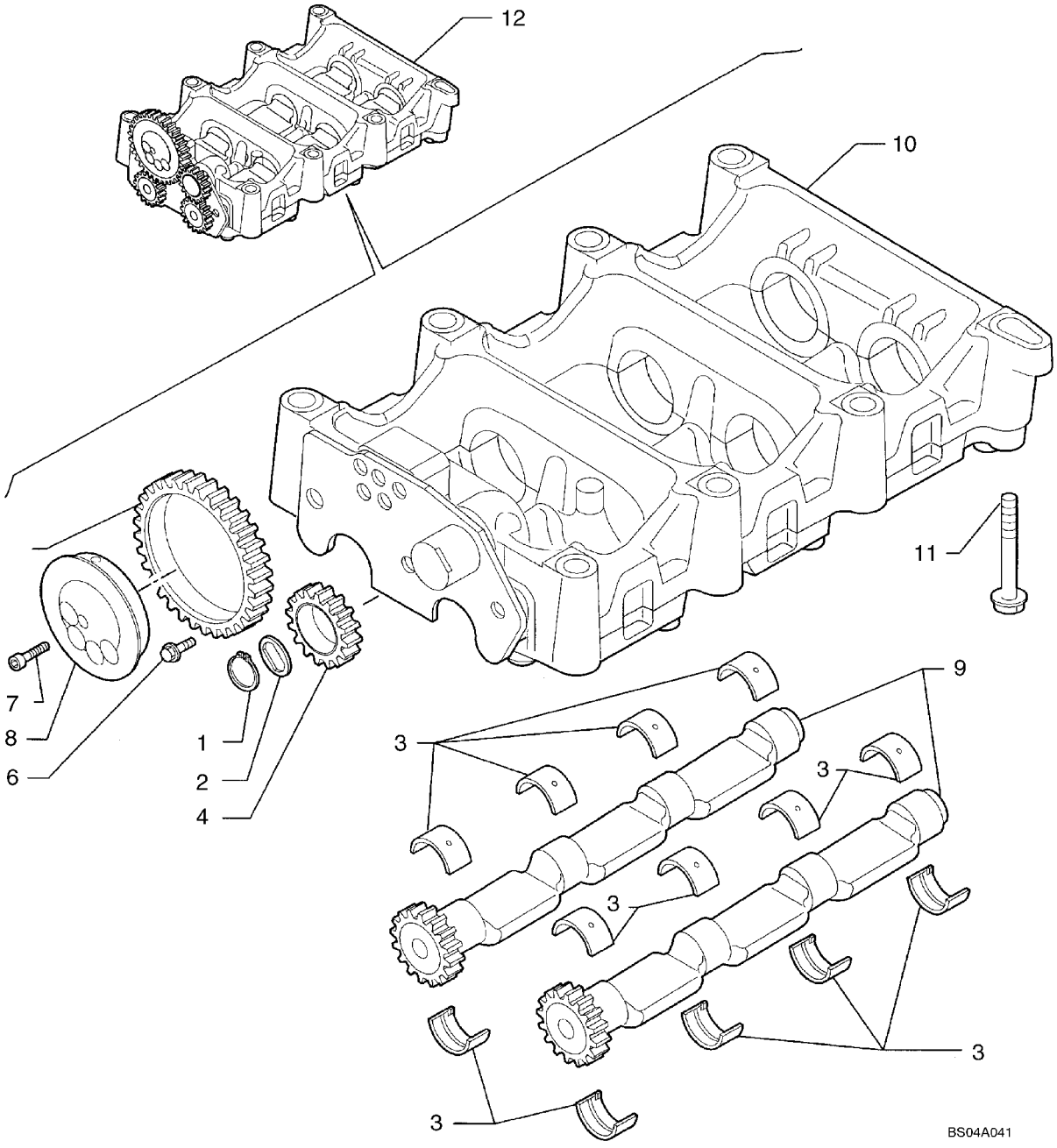

DYNAMIC BALANCER, GEARS & SHAFTS

REF	FN	PART NUMBER	YR/SN	QTY	DESCRIPTION
		2855743		1	BALANCER, Assembly, Incl. Ref 1 - 10
1		4897125		1	RING, SNAP
2		2855753		1	PLATE, THRUST
3		8093883		16	SET OF MAIN BRGS.STD, Replaces 4897071
3		2855747		16	BUSHING
4		4897048		1	GEAR, IDLER
4		2855750		1	GEAR, IDLER, Gear Assembly; Alternate Part to 4897048, 4897001
5		4896947		1	GEAR, IDLER
5		2855748		1	GEAR, IDLER, Gear Assembly; Alternate Part to 4896947
6		4895586		3	SCREW, Flange, M8 x 16
7		2830433		5-4	SCREW, Socket; (4) Used With 2830953 Balancer Assy
8		2831031		1	SHAFT, IDLE
9		2831354		2	SHAFT
10		NSS		1	NOT SERVICED SEPARATELY, Housing
11		4899109		6-7	SCREW, Hex, M10 x 1.5 x 80, Flange
11		4897934		1	SCREW, Flange, M10 x 100
14		2831305		1	DOWEL
15		2855746		1	PLATE, THRUST
16		2830948		1	SHAFT, IDLE
17		4899027		2	DOWEL, Ring

02-28		p1	02/08

CAMSHAFT

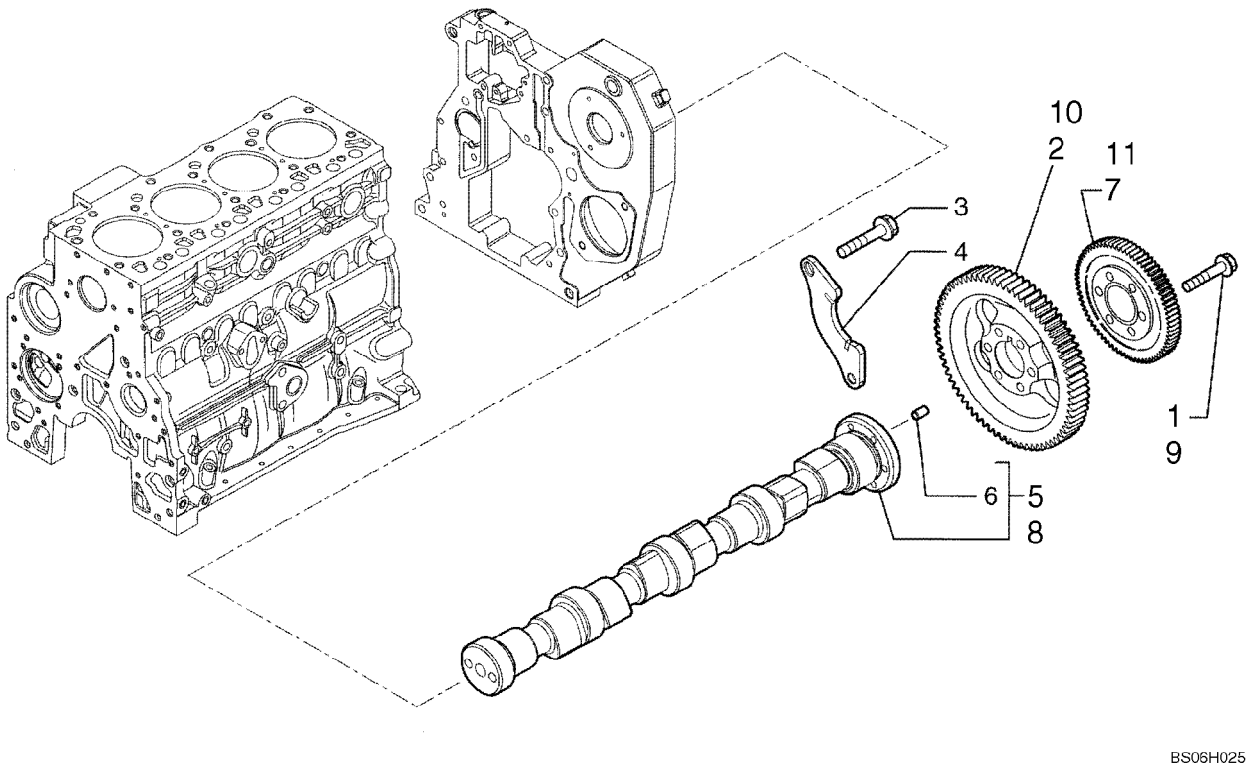

CAMSHAFT

REF	FN	PART NUMBER	YR/SN	QTY	DESCRIPTION
1		4895323		6	SCREW, M8 x 1.25 x 40mm Long
2		2852062		1	GEAR
3		4899068		2	SCREW, Hex Flg, M8 x 1.25 x 16
4		4897457		1	SUPPORT
5		2856170		1	CAMSHAFT
6		4899080		1	DOWEL, Pin
7		{2855183}		1	Gear

02-29		p1	12/07

TURBOCHARGER

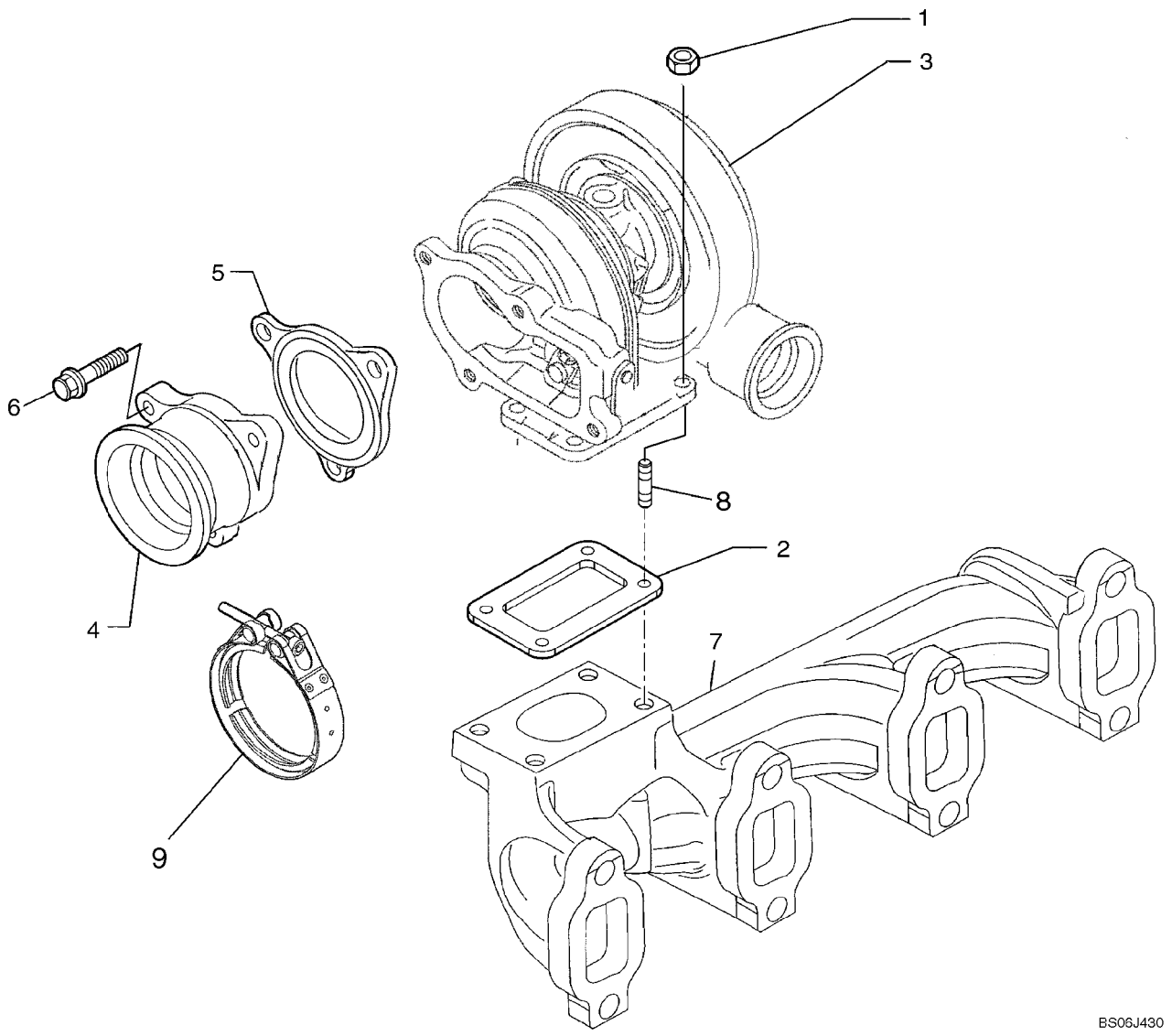

TURBOCHARGER

REF	FN	PART NUMBER	YR/SN	QTY	DESCRIPTION
		REF		1	INSTRUCTION, MODELS WITH TURBOCHARGED ENGINE ONLY
1		4899118		4	NUT, Flange, M8
2		4895133		1	GASKET
3		2852507		1	TURBOCHARGER, Assembly
4		2852510		1	TUBE, RIGID, Exhaust Manifold
5		2852509		1	GASKET, MANIFOLD
6		4898482		3	SCREW, Flg Hd, M8 x 1.25 x 30
7		REF		1	INSTRUCTION, EXHAUST MANIFOLD; See Figure 02-20
8		4899859		4	STUD
9		2855273		1	COLLAR, Screw

ENGINE OIL DIPSTICK

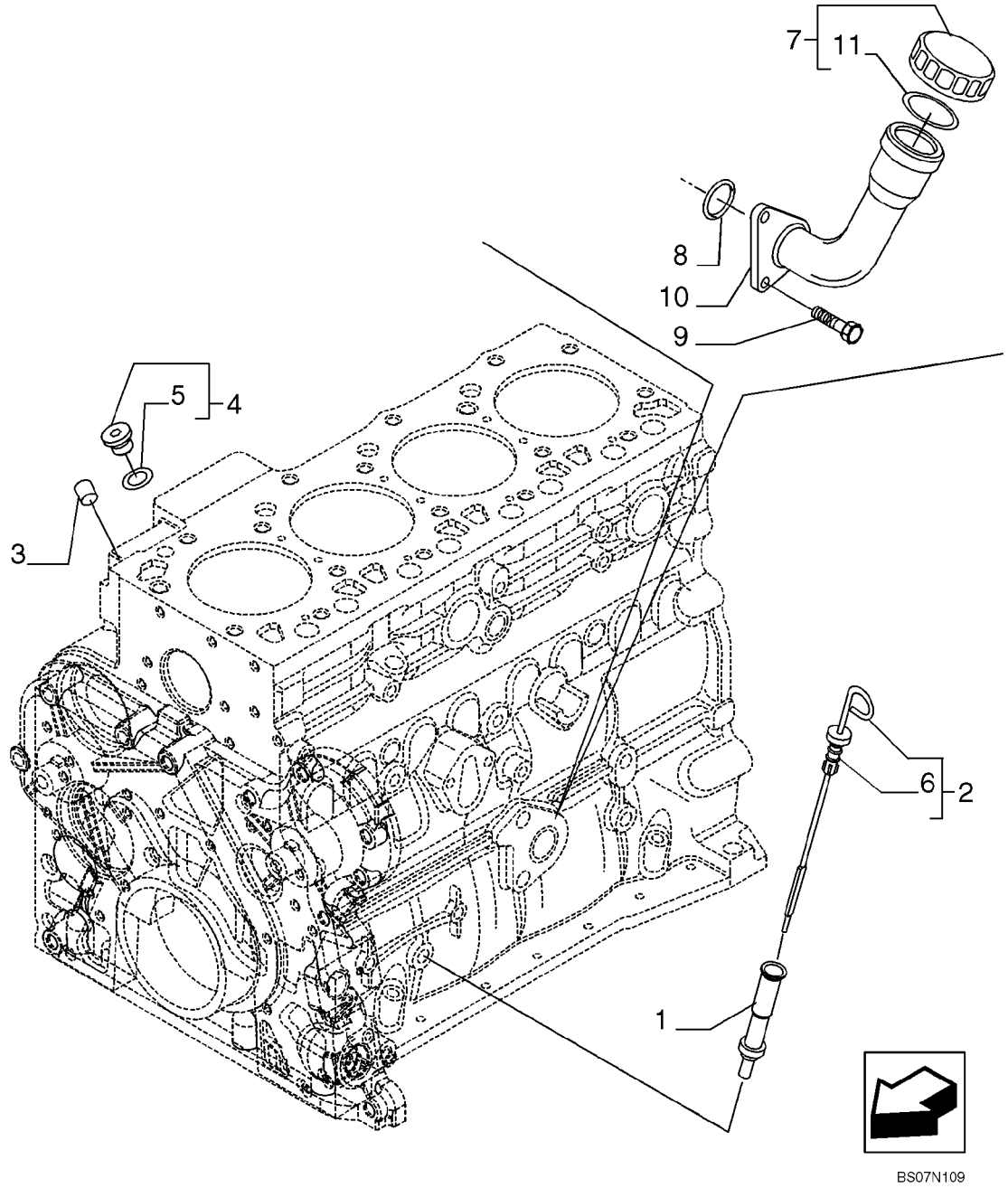

ENGINE OIL DIPSTICK

REF	FN	PART NUMBER	YR/SN	QTY	DESCRIPTION
1		2852122		1	TUBE, - OIL LEVEL
2		2852125		1	DIPSTICK, - ASSY
3		4895406		1	PLUG, 9.8mm OD
4		4897330		2	PLUG, - ASSY
5		4895610		1	O-RING
6		2852127		1	GASKET
7		2853410		1	CAP, INTRODUCTION, - ASSY
8		2852135		1	GASKET
9		2852134		2	SCREW
10		2853407		1	NECK FILLER
11		2853412		1	O-RING

OIL PUMP - ENGINE

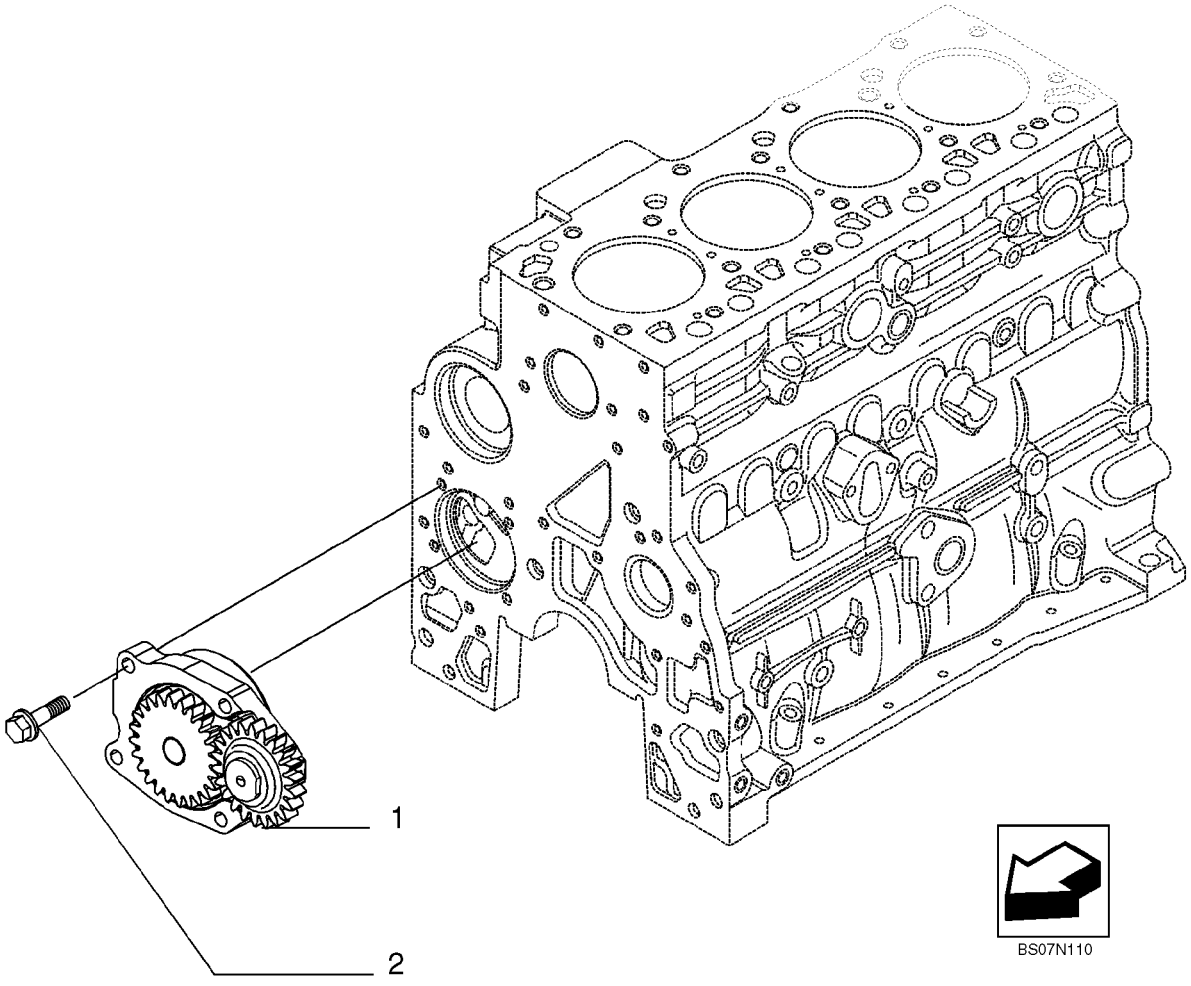

OIL PUMP - ENGINE

REF	FN	PART NUMBER	YR/SN	QTY	DESCRIPTION
1		4897480		1	PUMP, ENGINE OIL, IN ALTERNATIVE
1		2853414		1	PUMP, ENGINE OIL, IN ALTERNATIVE
2		4899090		4	SCREW, Hex Flg, M8 x 1.25 x 30

OIL FILTERS - ENGINE

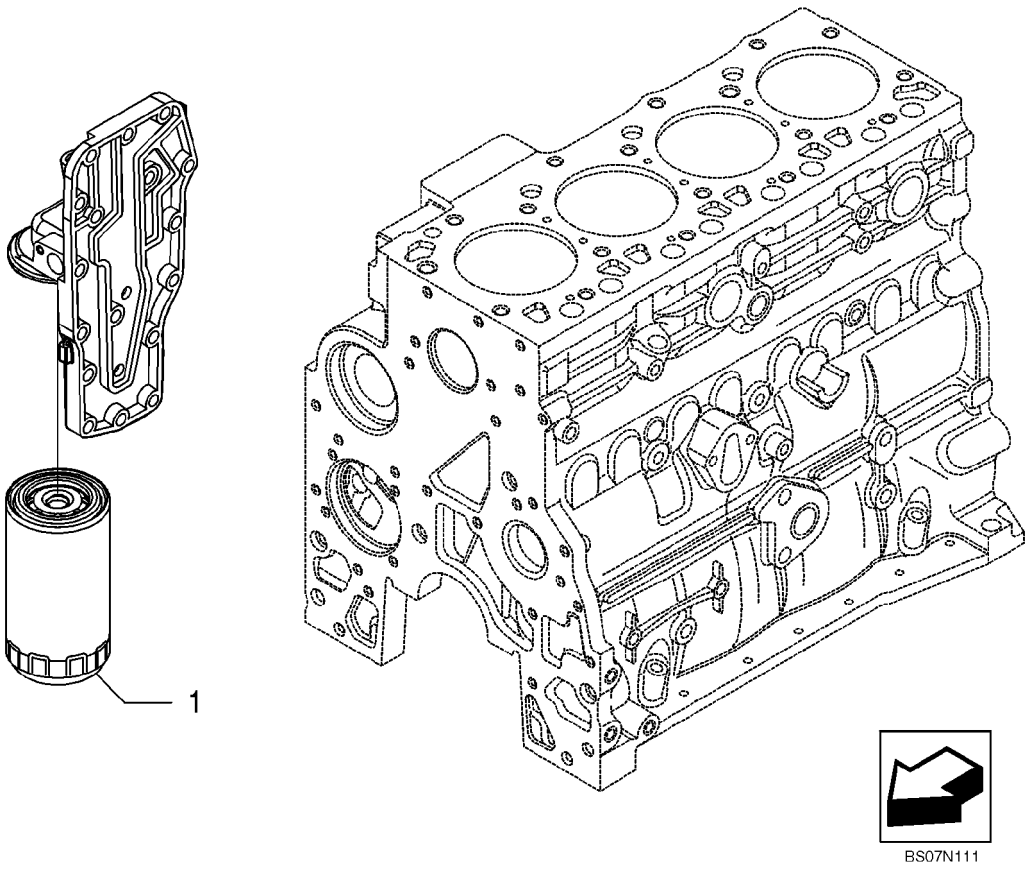

OIL FILTERS - ENGINE

REF	FN	PART NUMBER	YR/SN	QTY	DESCRIPTION
1		87803261		1	FILTER, ENGINE OIL, 2/4V

02-33		p1	02/08

PIPING - ENGINE OIL

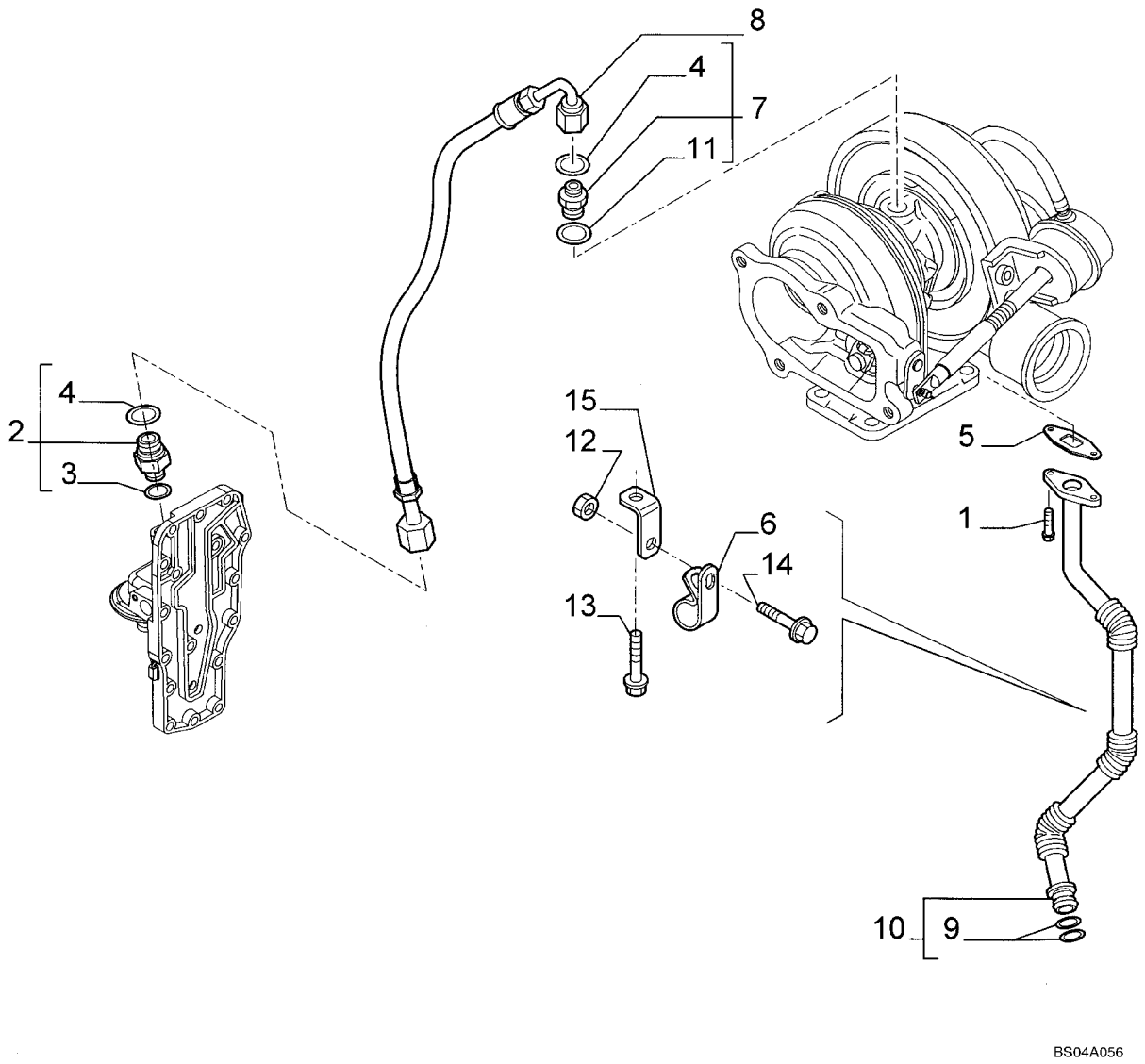

PIPING - ENGINE OIL

REF	FN	PART NUMBER	YR/SN	QTY	DESCRIPTION
1		4895164		2	SCREW, Flange, M6 x 16
2		4895107		1	CONNECTOR, HYD., Incl. Ref 3, 4
3		4899107		1	O-RING
4		4899108		1	O-RING
5		4899467		1	GASKET, Oil Drain
6		4899519		1	CLAMP, Clamp
6		2854493		1	CLIP, Alternate Part To 4899519, Bracket Clamp
7		4899106		1	CONNECTOR, HYD., Incl. Ref 4, 11
8		2852195		1	HOSE
9		5135738		2	O-RING, -115, Cl 9, .674" ID x .103" Thk
10		2852102		1	PIPE, Tube; Incl. Ref 9
11		NSS		1	NOT SERVICED SEPARATELY, Washer
12		2852197		1	NUT, Flange, M6
13		2852101		1	SCREW, Flange; M6 x 16
14		16586225		1	SCREW, Flange; M8 x 16
15		2852196		1	BRACKET

HEAT EXCHANGER - ENGINE

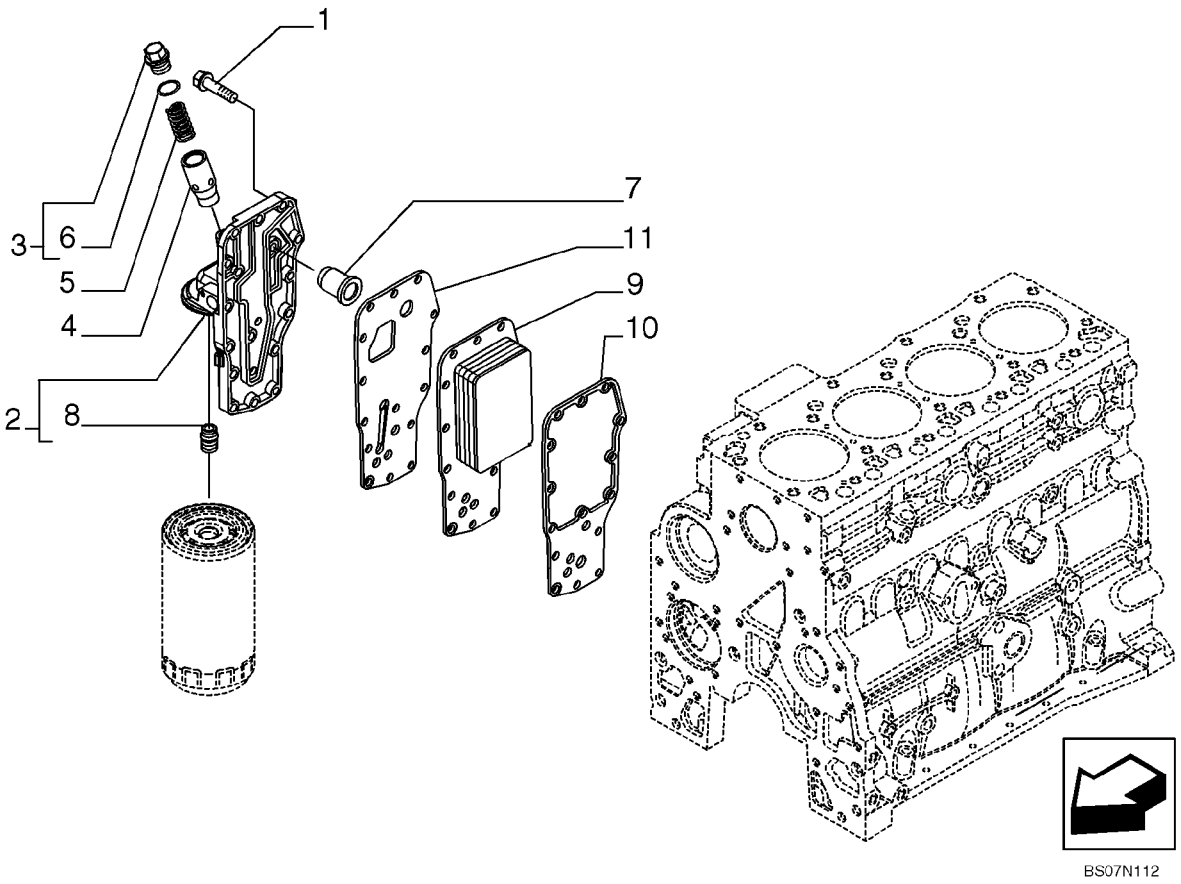

HEAT EXCHANGER - ENGINE

REF	FN	PART NUMBER	YR/SN	QTY	DESCRIPTION
1		4899019		15	SCREW, Hex Flg, M8 x 1.25 x 35
		2853782		1	HEAD, FILTER, Incls. Refs. 2, 4, 5, 7, 8
2		4899643		1	HEAD, FILTER
3		2853781		1	PLUG
4		4896404		1	PLUNGER
5		4895045		1	SPRING
6		17916280		1	GASKET, M18.39 ID x 2.69 Thk
7		4896410		1	VALVE, PRESSURE RELIEF
8		4893391		1	ADAPTER
9		2853722		1	COOLER, OIL
10		2830559		1	GASKET
11		4896409		1	GASKET

WATER PUMP

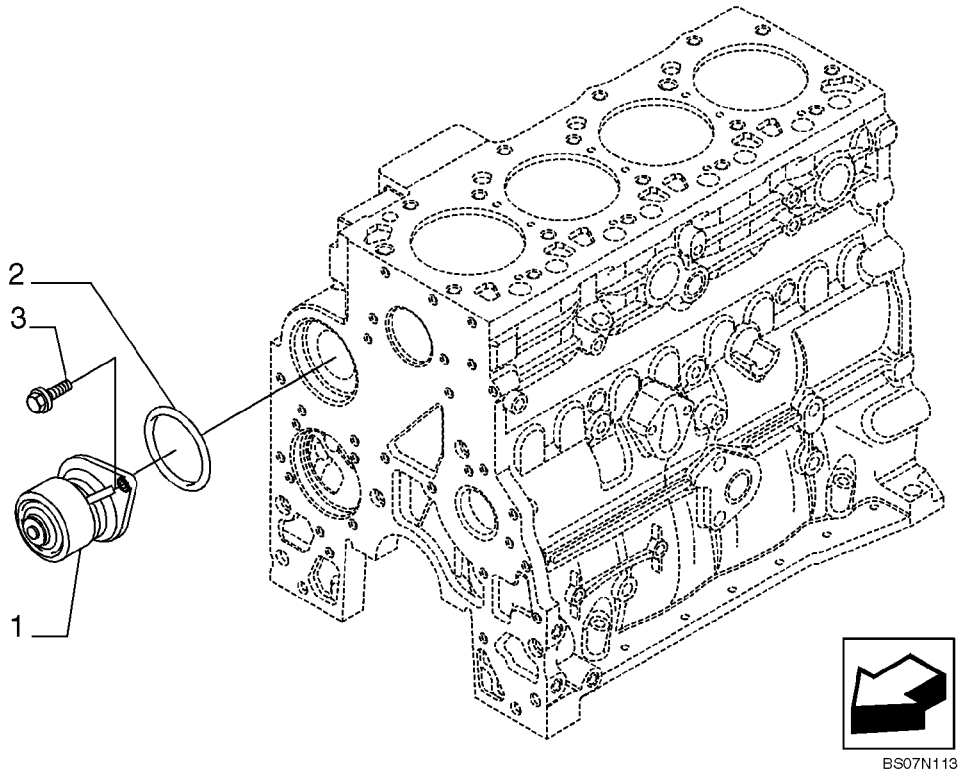

WATER PUMP

REF	FN	PART NUMBER	YR/SN	QTY	DESCRIPTION
1		2852114		1	PUMP, WATER, -ASSY IN ALTERNATIVE
1		4891252		1	PUMP, WATER, -ASSY IN ALTERNATIVE
2		2852047		1	SEALRING
3		4899079		2	SCREW, Hex Flg, M8 x 1.25 x 25

COOLING SYSTEM - ENGINE

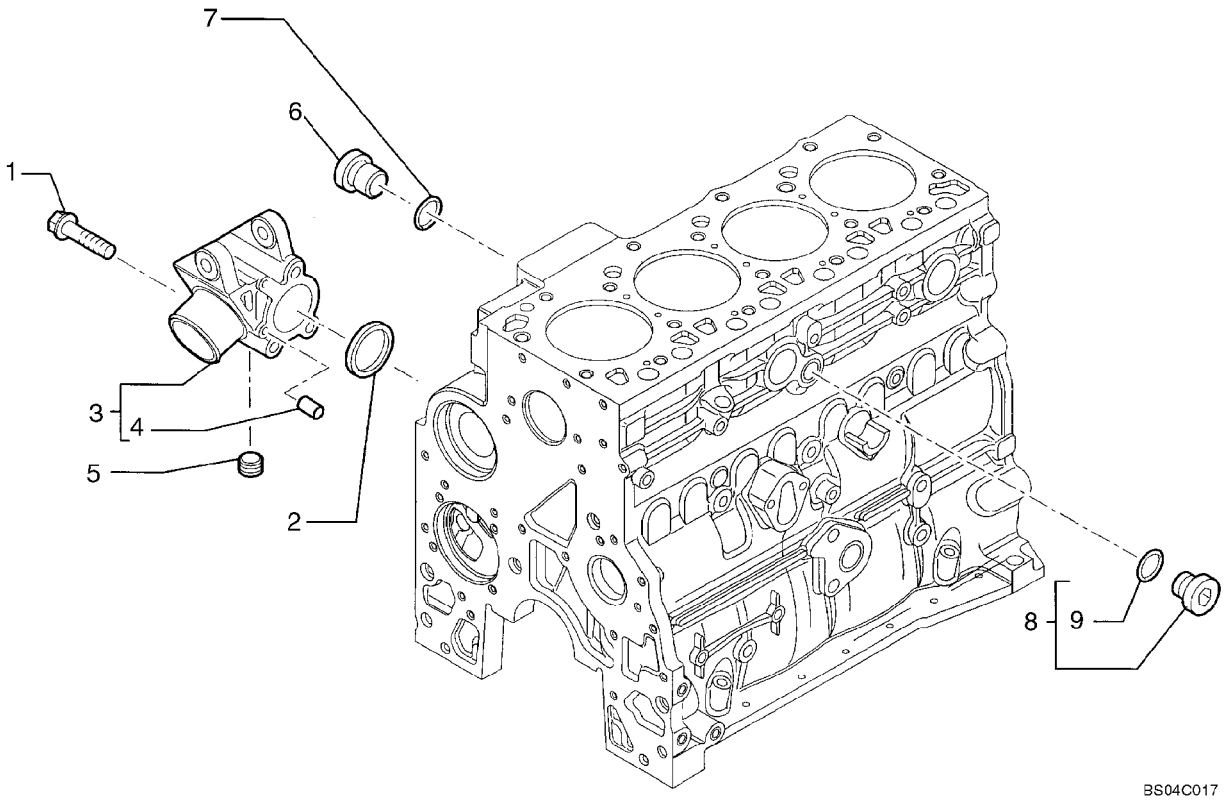

COOLING SYSTEM - ENGINE

REF	FN	PART NUMBER	YR/SN	QTY	DESCRIPTION
1		4899109		3	SCREW, Hex, M10 x 1.5 x 80
2		2854072		1	O-RING
3		2852145		1	SUPPORT, Incl. Ref 4
4		NSS		2	NOT SERVICED SEPARATELY, Dowel
5		2852511		1	PLUG
		4895392		1	PLUG, M18; Torque Converter Oil; Incl. Ref 6, 7
6		4895394		1	PLUG
7		4895393		1	O-RING
8		4895623		1	PLUG, Compressor Plumbing; Incl. Ref 9
9		4895625		1	O-RING

THERMOSTAT - ENGINE COOLING SYSTEM

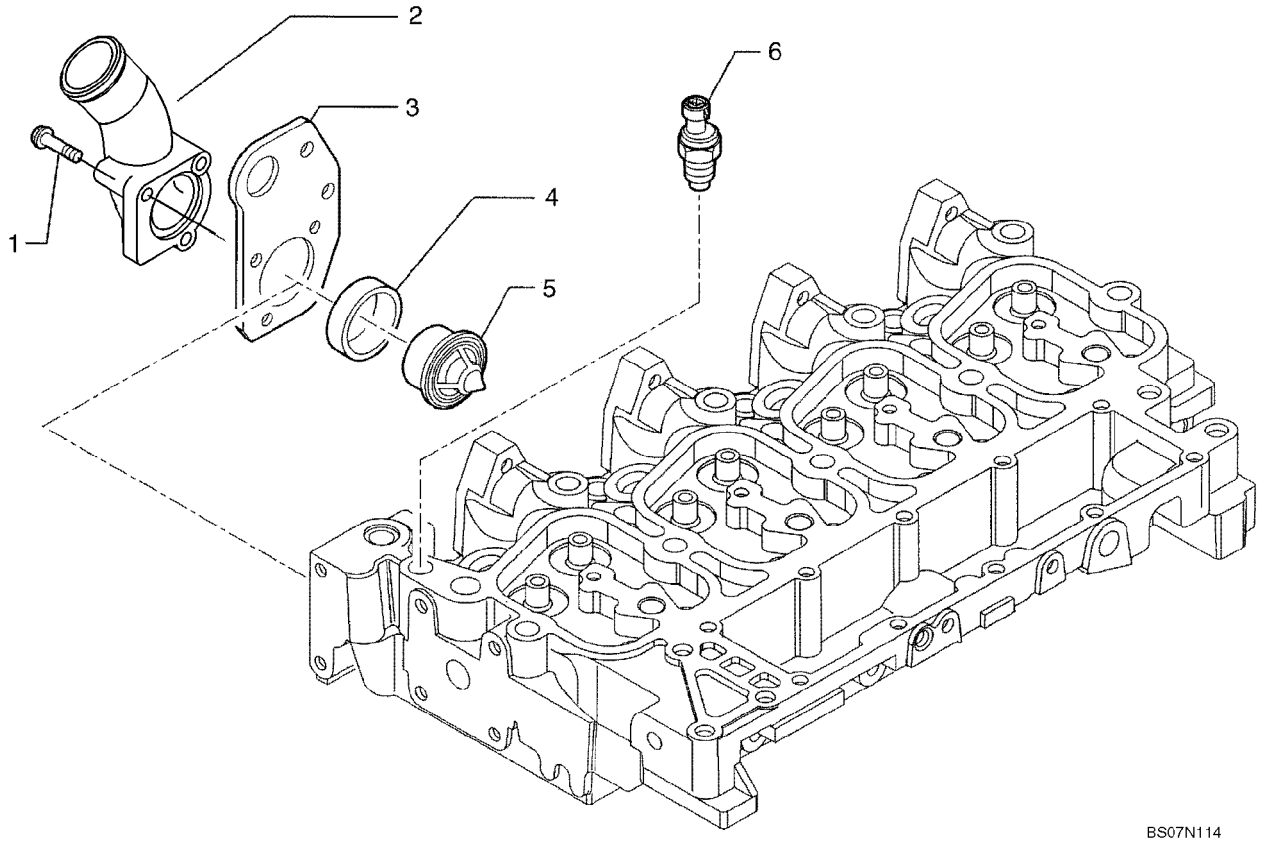

THERMOSTAT - ENGINE COOLING SYSTEM

REF	FN	PART NUMBER	YR/SN	QTY	DESCRIPTION
1		2852151		1	SCREW, Flange; M8 x 35
1		2852155		2	SCREW, Flange; M8 x 80
2		2852153		1	ELBOW, Thermostat Housing
3		2855894		1	BRACKET
4		2853133		1	SEAL
5		2853135		1	THERMOSTAT, Kit
		2852473		1	GASKET, (Part of 2853135)
6		2852157		1	SENDER, TEMPERATURE, Water; Grid Heater

WATER PUMP - CONTROL

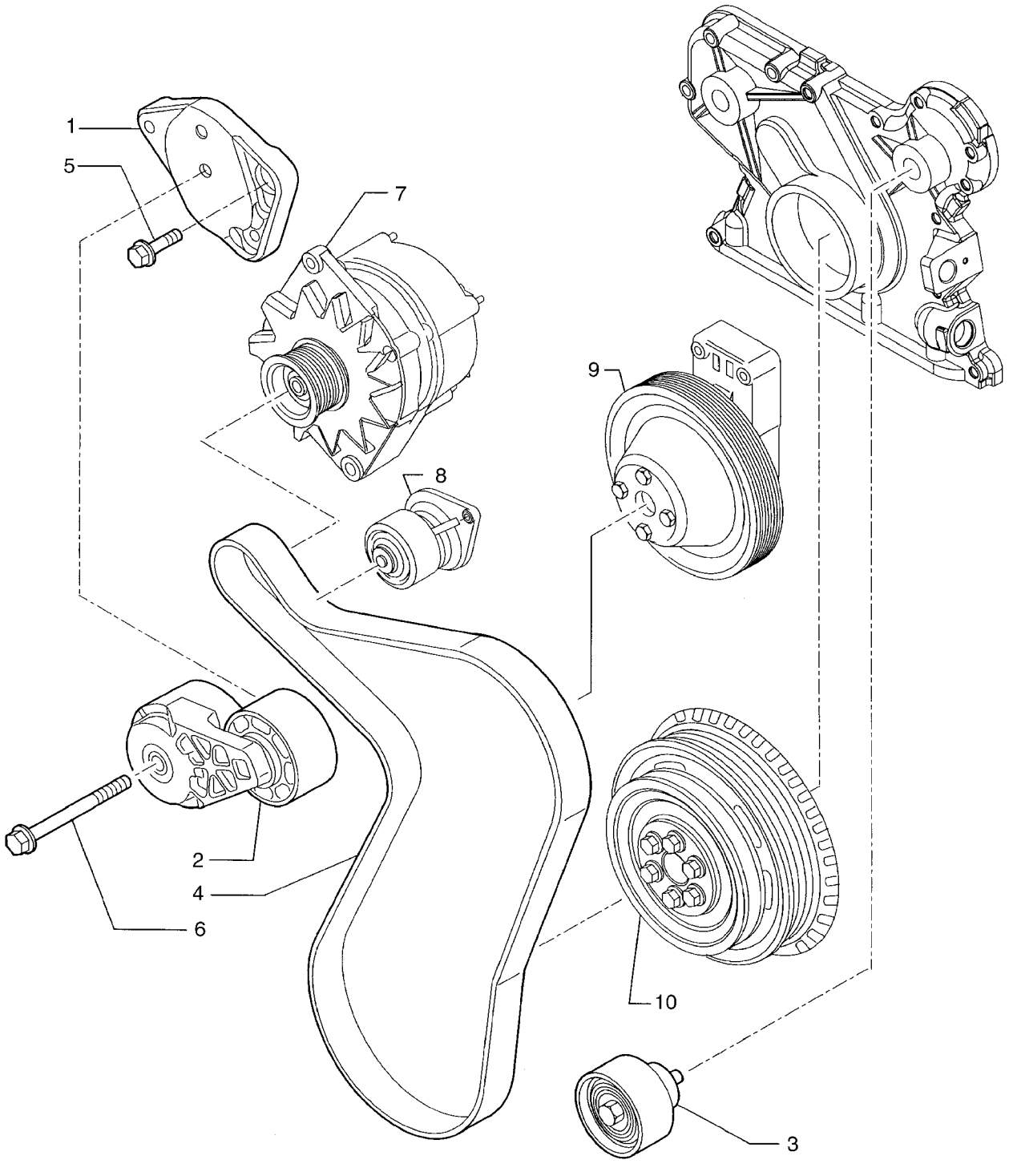

WATER PUMP - CONTROL

REF	FN	PART NUMBER	YR/SN	QTY	DESCRIPTION
		2854611		1	PULLEY, Incls. 1,2,3,5 & 6
1		2852163		1	BRACKET, Support
2		2852161		1	TENSIONER, BELT
2		2855622		1	TENSIONER, BELT, Alternate Part To 2852161
3		2852162		1	PULLEY, Pulley
4		REF		1	INSTRUCTION, BELT; See Figure 02-01
5		4899079		2	SCREW, Hex Flg, M8 x 1.25 x 25
6		4899109		1	SCREW, Hex, M10 x 1.5 x 80
7		REF		1	INSTRUCTION, ALTERNATOR; See Figure 04-02
8		REF		1	INSTRUCTION, WATER PUMP; See Figure 02-35
9		REF		1	INSTRUCTION, FAN DRIVE; See Figure 02-39
10		REF		1	INSTRUCTION, CRANKSHAFT PULLEY; See Figure 02-25

FAN DRIVE

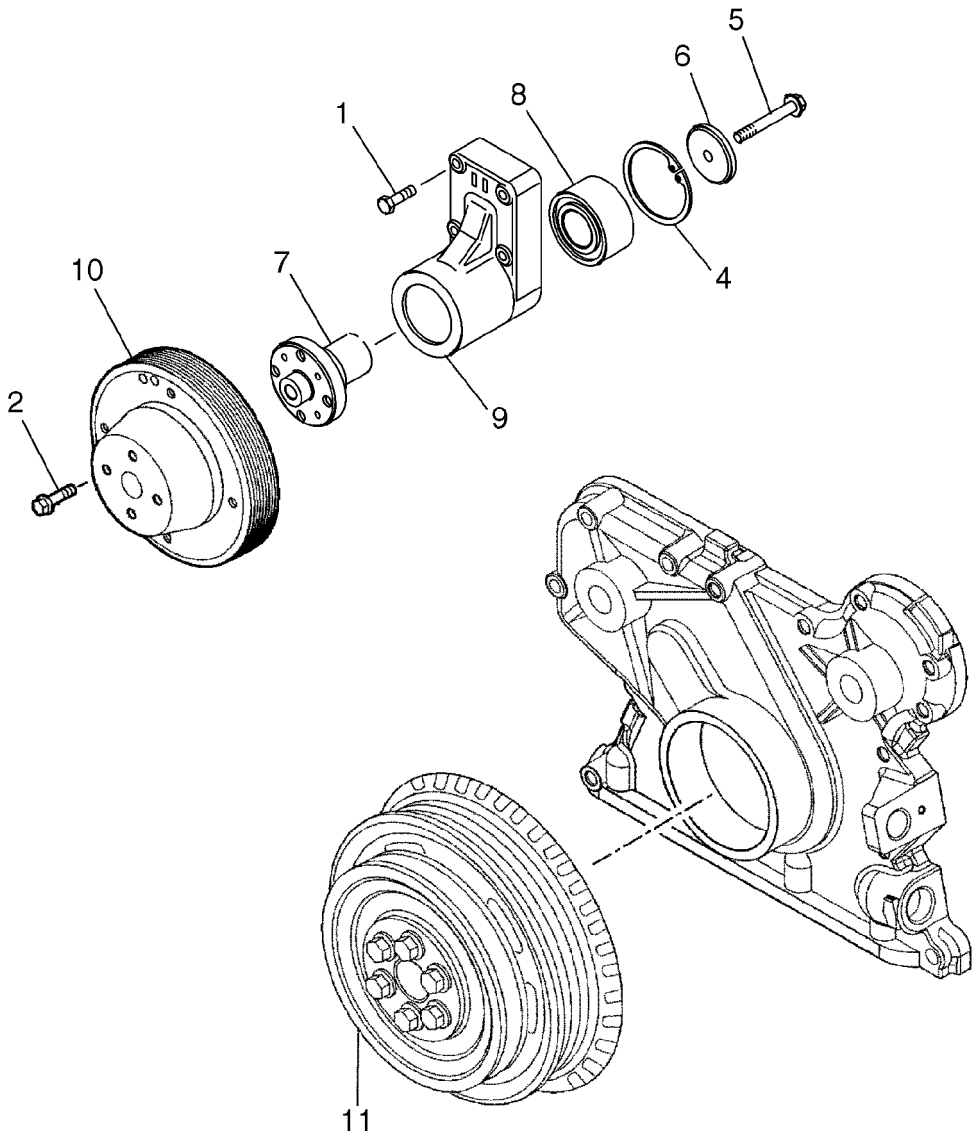

BS07N115

FAN DRIVE

REF	FN	PART NUMBER	YR/SN	QTY	DESCRIPTION
1		4899053		4	SCREW, Hex Flg, M8 x 45
2		4895291		4	SCREW, Hex Flg, M10 x 1.5 x 20
3		2852170		1	SUPPORT, Incls. Refs. 4 - 9
4		2852171		1	CIRCLIP
5		2852172		1	SCREW
6		4892732		1	BEARING, BALL
7		4892426		1	HUB
8		4890732		1	RETAINER, Hub
9		NSS		1	NOT SERVICED SEPARATELY, Support
10		4895301		1	PULLEY
11		REF		1	INSTRUCTION, CRANKSHAFT PULLEY; See Figure 02-25

ENGINE - LIFT HOOK

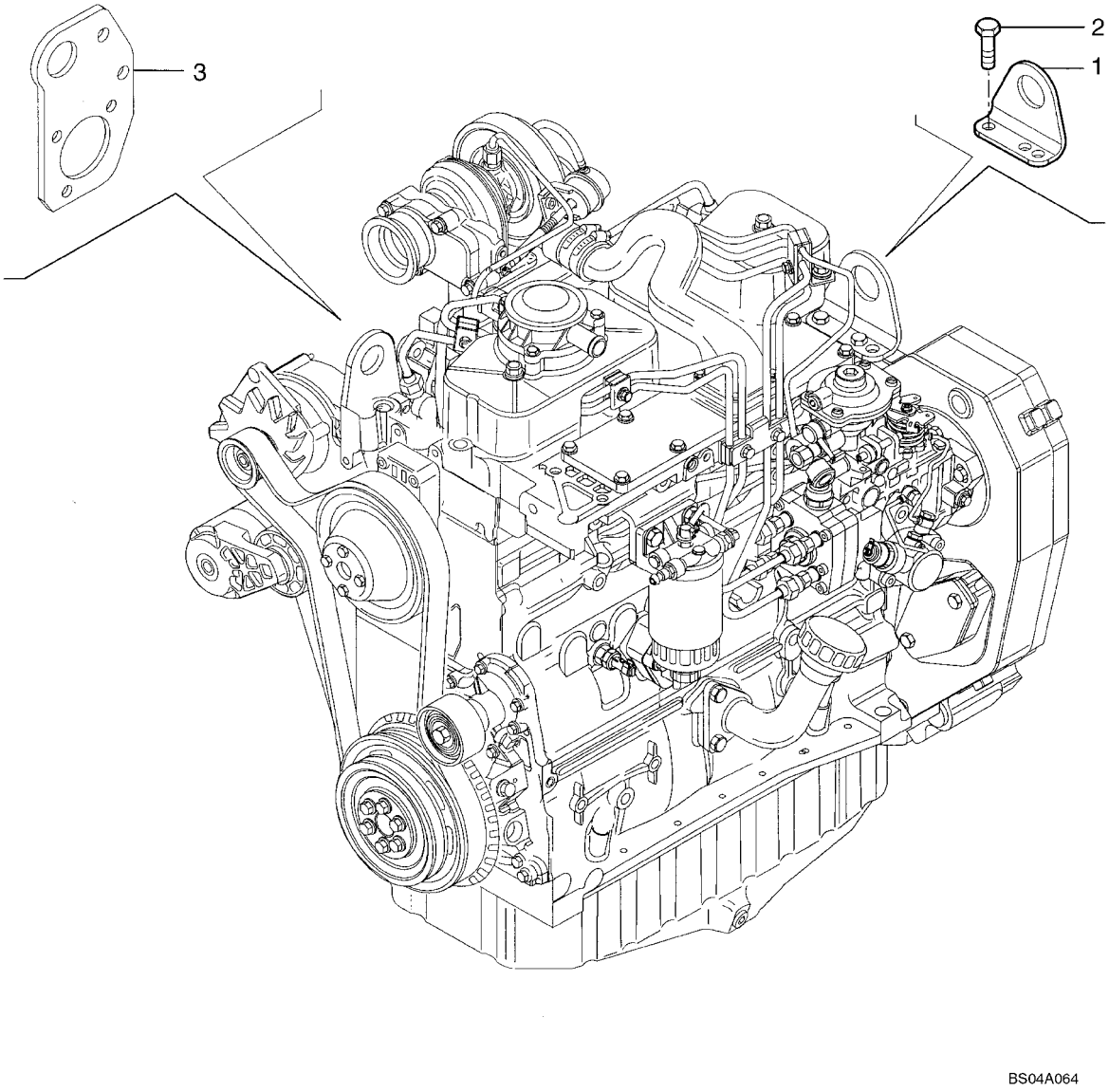

ENGINE - LIFT HOOK

REF	FN	PART NUMBER	YR/SN	QTY	DESCRIPTION
1		2852183		1	RING, LIFTING
2		4899073		2	SCREW, Hex Flg, M12 x 1.75 x 30
3		2855894		1	BRACKET, Lift Hook; See Figure 02-37

ALTERNATOR MOUNTING

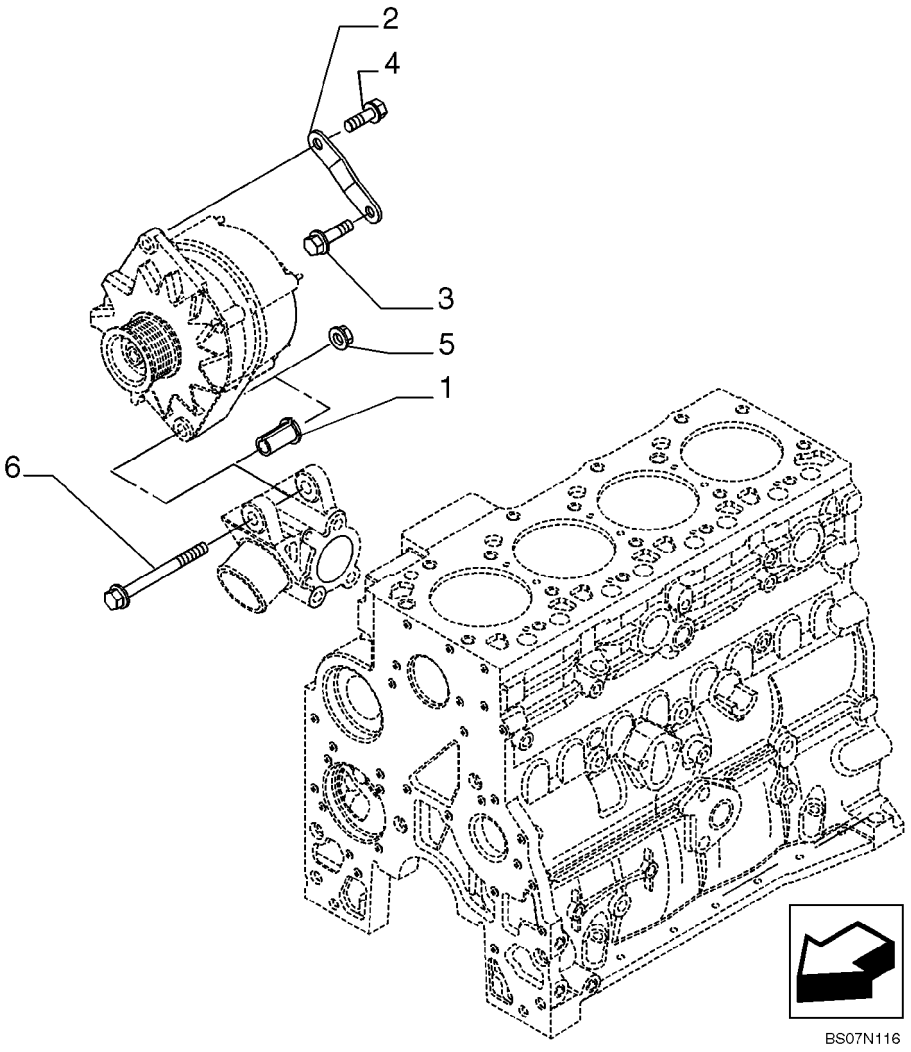

ALTERNATOR MOUNTING

REF	FN	PART NUMBER	YR/SN	QTY	DESCRIPTION
1		2852181		1	SPACER
2		2852180		1	BRACKET
3		4895291		1	SCREW, Hex Flg, M10 x 1.5 x 20
4		4899031		1	SCREW, Hex Flg, M8 x 1.25 x 25
5		4895166		1	NUT, M10 x 1.5
6		4895538		1	SCREW

NOTES

SECTION INDEX
Fuel System

03-01	FUEL LINES, RESERVOIR
03-02	CONTROLS - THROTTLE, HAND
03-03	CONTROLS - THROTTLE, FOOT
03-04	FUEL INJECTION PUMP
03-05	FUEL INJECTION SYSTEM
03-06	FUEL INJECTION SYSTEM
03-07	INJECTION EQUIPMENT - PIPING
03-08	FUEL FILTER
03-09	FUEL PUMP
03-10	PIPING - FUEL
03-11	FUEL INJECTION SYSTEM

03-01		p1	02/08

FUEL LINES, RESERVOIR

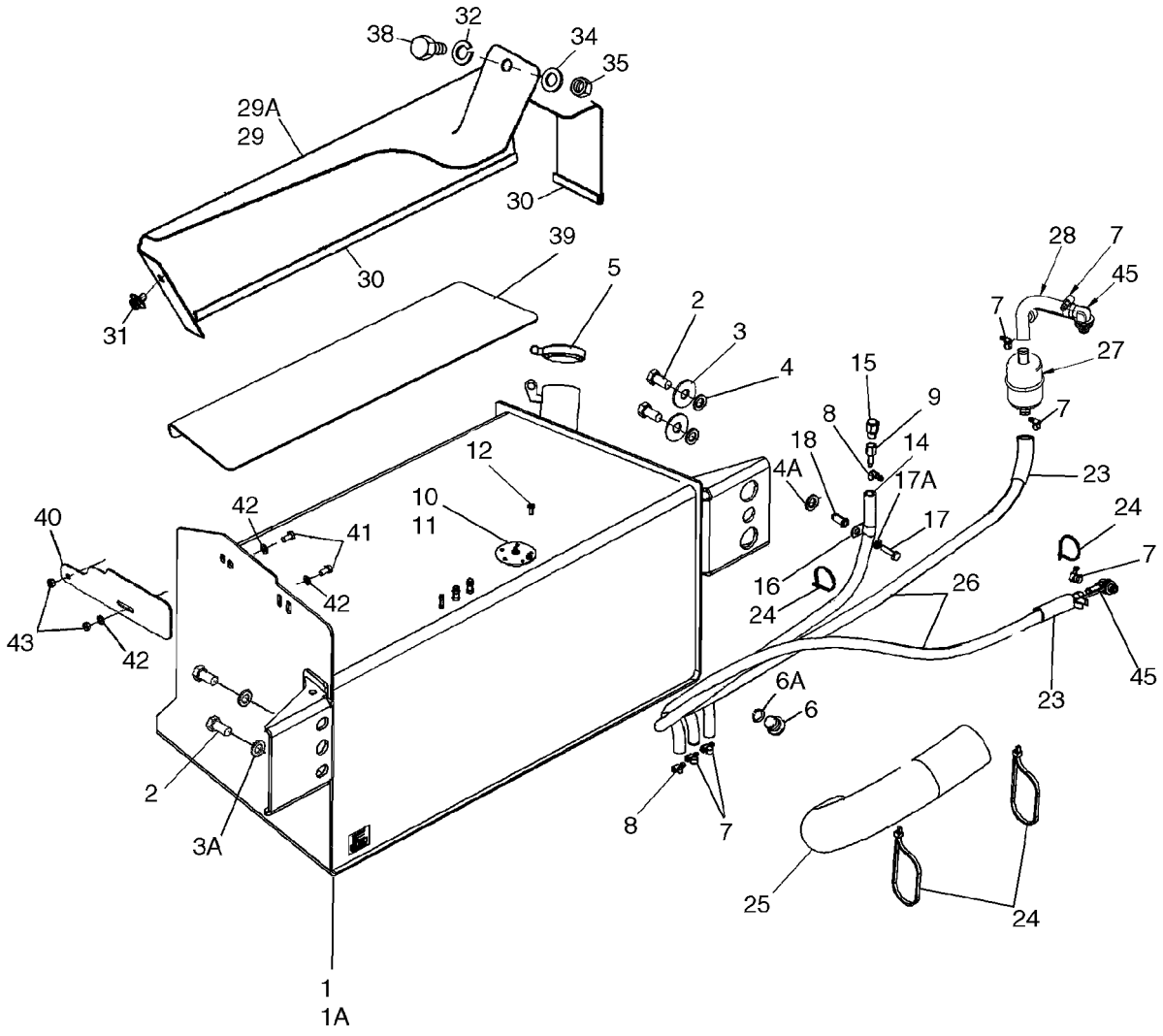

BS07N507

FUEL LINES, RESERVOIR

REF	FN	PART NUMBER	YR/SN	QTY	DESCRIPTION
1		87429310		1	FUEL TANK, 31 gal; Incl. Ref 6; With Welded Fuel Sender Tubes; Includes Left Hand Steps, Mounts to Left Hand Side of Chassis
1A		87429314		1	FUEL TANK, 40 gal; Incl. Ref 6; Optional; With Welded Fuel Sender Tubes; Includes Left Hand Steps, Mounts to Left Hand Side of Chassis; If Used
2		443375A1		4	BOLT, M20 x 60; With Loctite
3		302358A1		2	WASHER
3A		896-11020		2	WASHER, M20 x 37.5 x 4, HT
4		185926A1		2	SPACER, 21 ID x 40 OD x 6.6 mm thk
4A		87360280		1	SPACER
5		87335469		1	CAP, FUEL, LOCKABLE
6		86625138		1	PLUG, Hex Soc, 7/8"-14 ORB, Drain, Includes Ref. 6A; Included with Ref 1, 1A
6A		237-6010		1	O-RING, 10-1, 90 Duro, .755" ID x .097" Thk
7		214-1706		6	CLAMP, HOSE, #6, 0.44/0.78 Type M Worm
8		214-1704		2	CLAMP, HOSE, #4, 0.25/0.62 Type M Worm
9		217-117		1	FITTING, 1/4" Hose x 1/4" NPTF, Fem, Barbed, Brass
10		86989676		1	SENDER UNIT, Fuel Level, 31 Gallon Tank, Without Tubes, Includes Seal and Grounding Hardware, If Used
11		87408480		1	SENDER UNIT, Fuel Level, 40 Gallon Tank, Without Tubes, Includes Seal and Grounding Hardware, If Used
12		87693492		5	SCREW
14		87656146		1	HOSE, 880 mm (34-5/8 in), Vent
15		130047A1		1	BREATHER ASSY., Vent
16		515-23127		1	CLAMP, 1/2", Insul, 3/8" Bolt
17		614-8030		1	BOLT, Hex, M8 x 30, 8.8
17A		892-11008		1	WASHER, LOCK, M8
18		87417383		1	INSERT, THREADED, M8 Nut
23		191704A1		2	LOOM
24		L18337		5	STRAP, CABLE, 9.95"-12.1" lg
25		87656501		1	HOSE, PROTECTION
26		87658696		1	HOSE, 1350 mm (53-1/8 in); Inlet and Return

03-01		p2	02/08

FUEL LINES, RESERVOIR

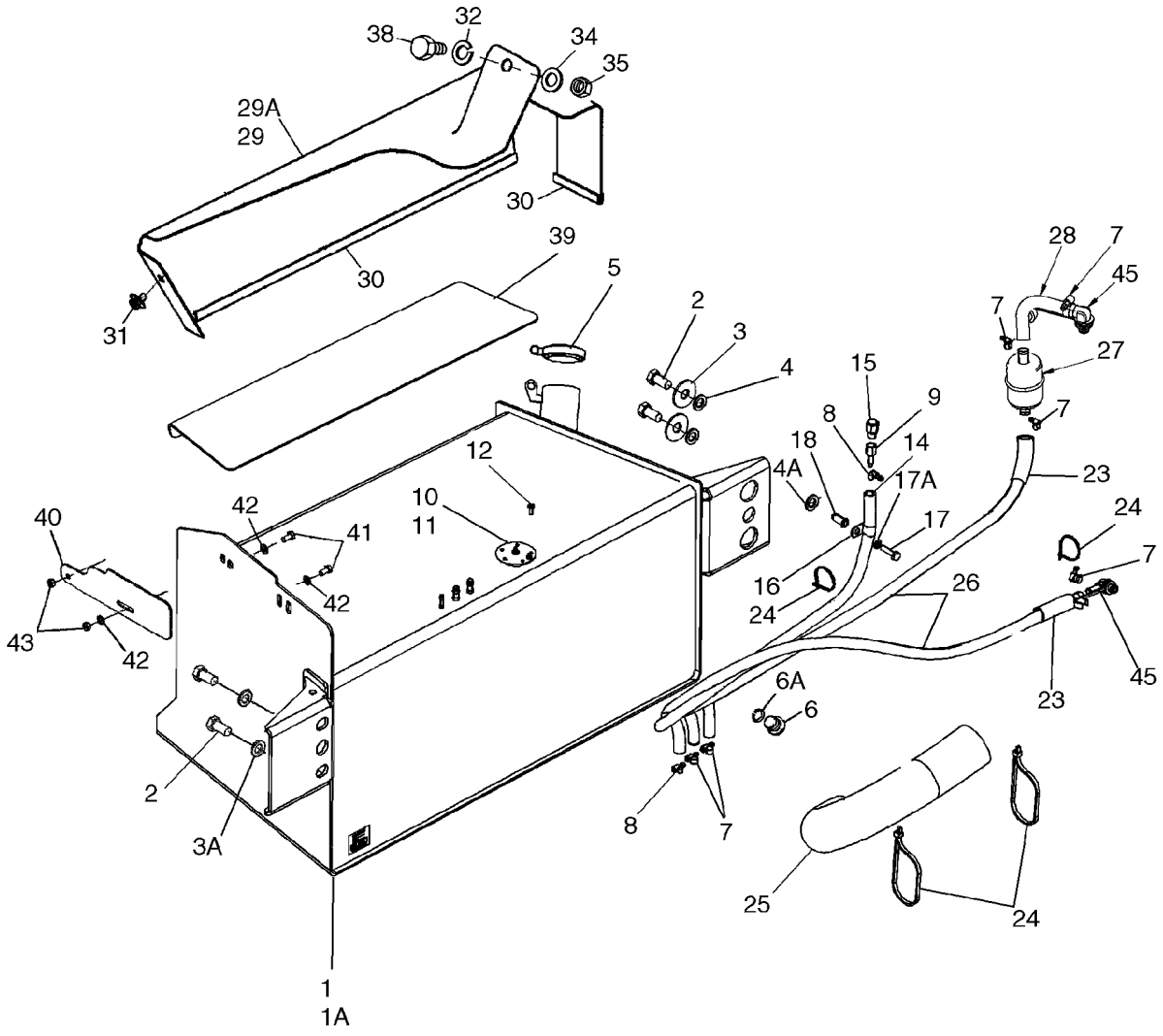

BS07N507

FUEL LINES, RESERVOIR

REF	FN	PART NUMBER	YR/SN	QTY	DESCRIPTION
27		D139225		1	FILTER, FUEL, Inline
28		87690874		1	HOSE, 170 mm (6-11/16 in)
29		189602A3		1	COVER, Mounted Above Fuel Reservoir; Models With Two Spool Loader Valve
29A		188009A3		1	COVER, Mounted Above Fuel Reservoir, Models With Three Spool Loader Valve
30		191046A1		1	STRIP, ORNAMENTAL, Trim, 650 mm (25-5/8 in), Cut From A165860; Apply 65 mm (2-9/16 in) of Trim to Front Lower Edge and 575 mm (22-11/16 in) of Trim to Outside Lower Edge of Cover
31		307577A1		1	BOLT, Special, M8 x 20
32		892-11010		1	WASHER, LOCK, M10
34		895-11010		1	WASHER, M10 x 20 x 2
35		829-1410		1	NUT, M10, Cl 10
38		814-10045		1	BOLT, Hex, M10 x 45, 8.8, Models With Three Spool Loader Valve
38		614-10020		1	BOLT, Hex, M10 x 20, 8.8, Full Thd, Models with Two Spool Loader Valve
39		87679228		1	STRIP, ANTI-SKID
40		397548A4		1	PLATE, Mud
41		614-10020		2	BOLT, Hex, M10 x 20, 8.8, Full Thd
42		895-11010		3	WASHER, M10 x 20 x 2
43		829-1410		2	NUT, M10, Cl 10
45		87414560		3	FITTING

03-02		p1	11/07

CONTROLS - THROTTLE, HAND

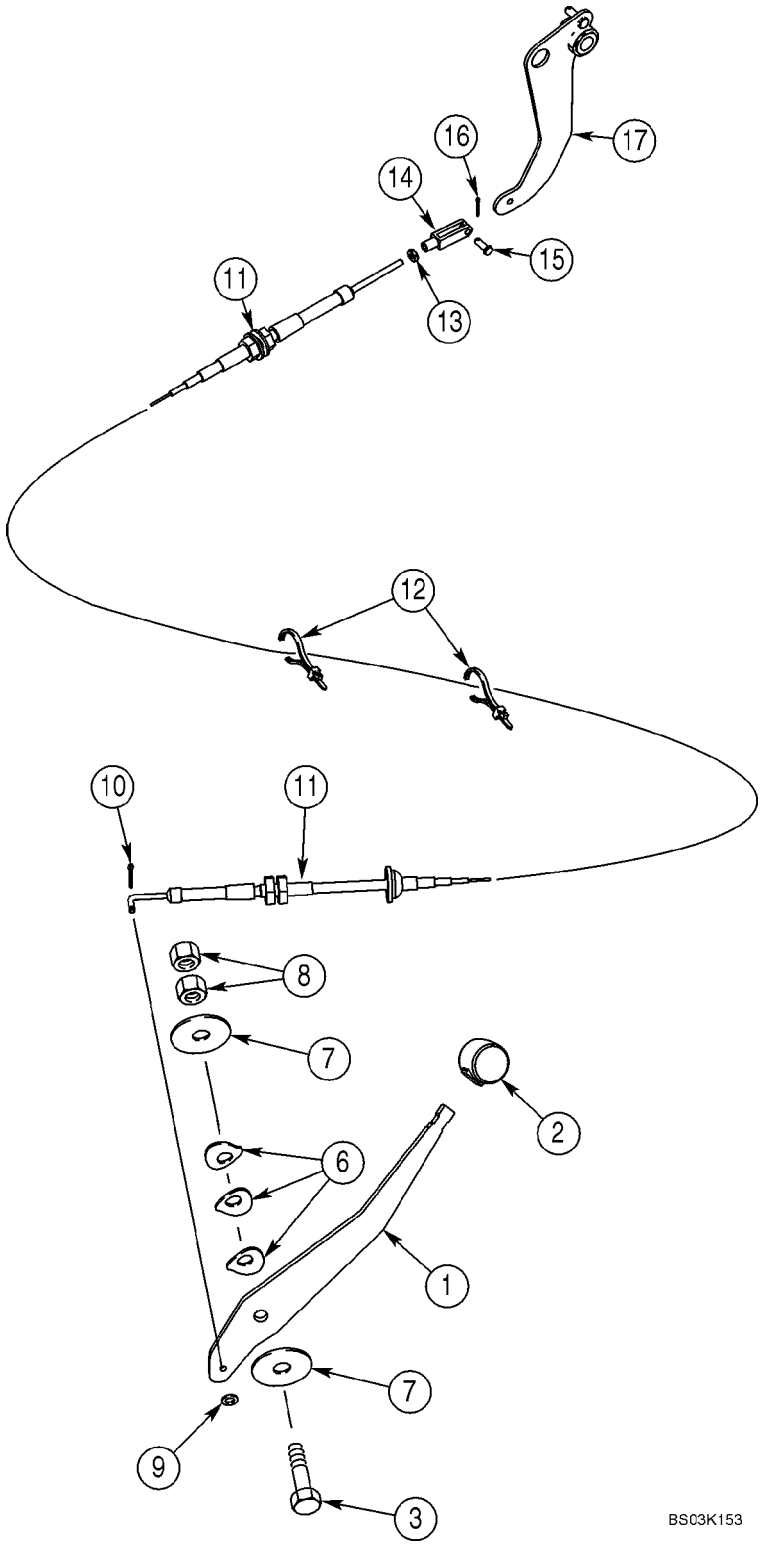

CONTROLS - THROTTLE, HAND

REF	FN	PART NUMBER	YR/SN	QTY	DESCRIPTION
1		395189A2		1	LEVER
2		A177435		1	KNOB,BALL, Lever
3		514-847		1	BOLT, Hex, M12 x 1.25 x 50, 8.8
6		D148962		3	WASHER
7		496-81018		2	WASHER, 33/64 x 2 x 1/8
8		825-11412		2	NUT, M12 x 1.25, Cl 8
9		495-31022		1	WASHER, #10
10		432-48		1	PIN, SPLIT (COTTER), 1/16" x 1/2"
11		87340753		1	CABLE, Replaces 350014A3; 87330322
12		L18337		4	STRAP, CABLE, 9.95"-12.1" lg, Nylon, Retaining
13		225-14210		1	NUT, #10-32
14		213-123		1	CLEVIS, ADJUSTABLE, #10-32 x 1 9/16"
15		427-3058		1	PIN, CLEVIS, 3/16" x .580"
16		432-48		1	PIN, SPLIT (COTTER), 1/16" x 1/2"
17		378957A3		1	LEVER ASSY.

03-03		p1	12/07

CONTROLS - THROTTLE, FOOT

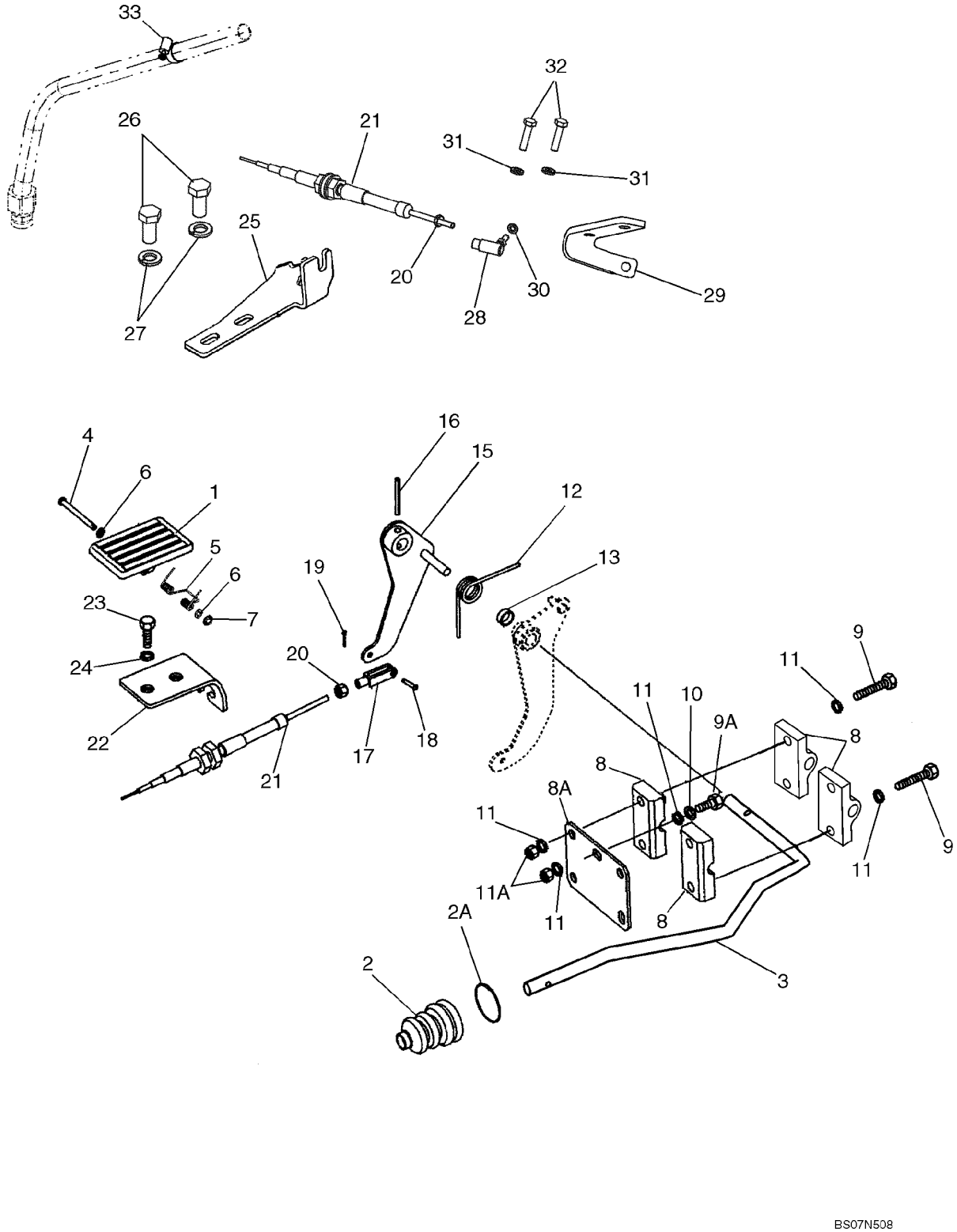

CONTROLS - THROTTLE, FOOT

REF	FN	PART NUMBER	YR/SN	QTY	DESCRIPTION
1		282242A1		1	PEDAL, Plastic
2		132931A1		1	BELLOWS, Boot, Accelerator Pedal Rod
2A		189109A1		1	SPRING, Retainer
3		87593642		1	ROD
4		322860A1		1	PIN, LARGE
5		256776A1		1	SPRING
6		895-11005		2	WASHER, M5 x 10 x 1
7		103-1518		1	RING, SNAP, #18, Ext
8		87345006		1	BLOCK, Throttle Pivot
8A		378955A1		1	PLATE
9		87378776		4	BOLT, Special; M8 x 30
9A		614-8020		1	BOLT, Hex, M8 x 20, 8.8
10		892-11008		1	WASHER, LOCK, M8
11		895-11008		7	WASHER, M8 x 16 x 1.6
11A		829-1408		2	NUT, M8, Cl 10
12		380483A2		1	SPRING
13		378958A1		1	SPACER, RING
15		378956A3		1	LEVER ASSY.
16		838-3640		1	PIN, M6 x 40, Coiled
17		213-123		1	CLEVIS, ADJUSTABLE, #10-32 x 1 9/16"
18		427-3058		1	PIN, CLEVIS, 3/16" x .580"
19		432-48		1	PIN, SPLIT (COTTER), 1/16" x 1/2"
20		225-14210		2-3	NUT, #10-32
21		87340754		1	CABLE, To Injection Pump
22		397065A2		1	BRACKET
23		614-10035		2	BOLT, Hex, M10 x 35, 8.8, Full Thd
24		892-11010		2	WASHER, LOCK, M10
25		87648733		1	BRACKET, SUPPORTING
26		627-12025		2	BOLT, Hex, M12 x 25, 10.9
27		896-15012		2	WASHER, M12 x 28.5 x 4, HT
28		87421807		1	JOINT ASSY.
29		87452823		1	BLOCK ASSY., BRACKET, Throttle Cable
30		892-11005		1	WASHER, LOCK, M5
31		892-11006		2	WASHER, LOCK, M6
32		614-6016		2	BOLT, Hex, M6 x 16, 8.8

CONTROLS - THROTTLE, FOOT

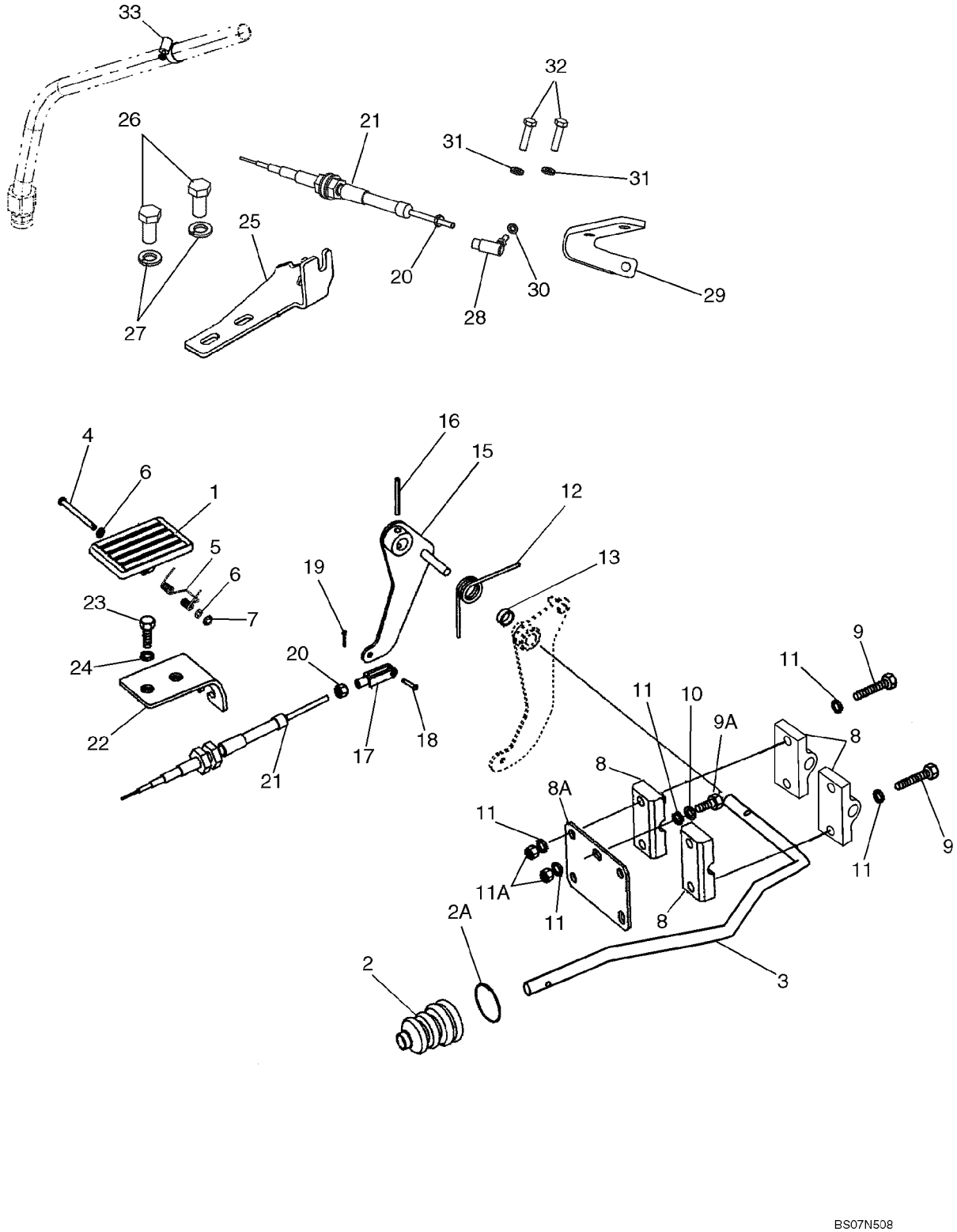

CONTROLS - THROTTLE, FOOT

REF	FN	PART NUMBER	YR/SN	QTY	DESCRIPTION
33		214-1416		1	CLAMP, HOSE, #16, 0.81/1.50 Type F Worm, Throttle Cable (Ref 21) To Transmission Dipstick

FUEL INJECTION PUMP

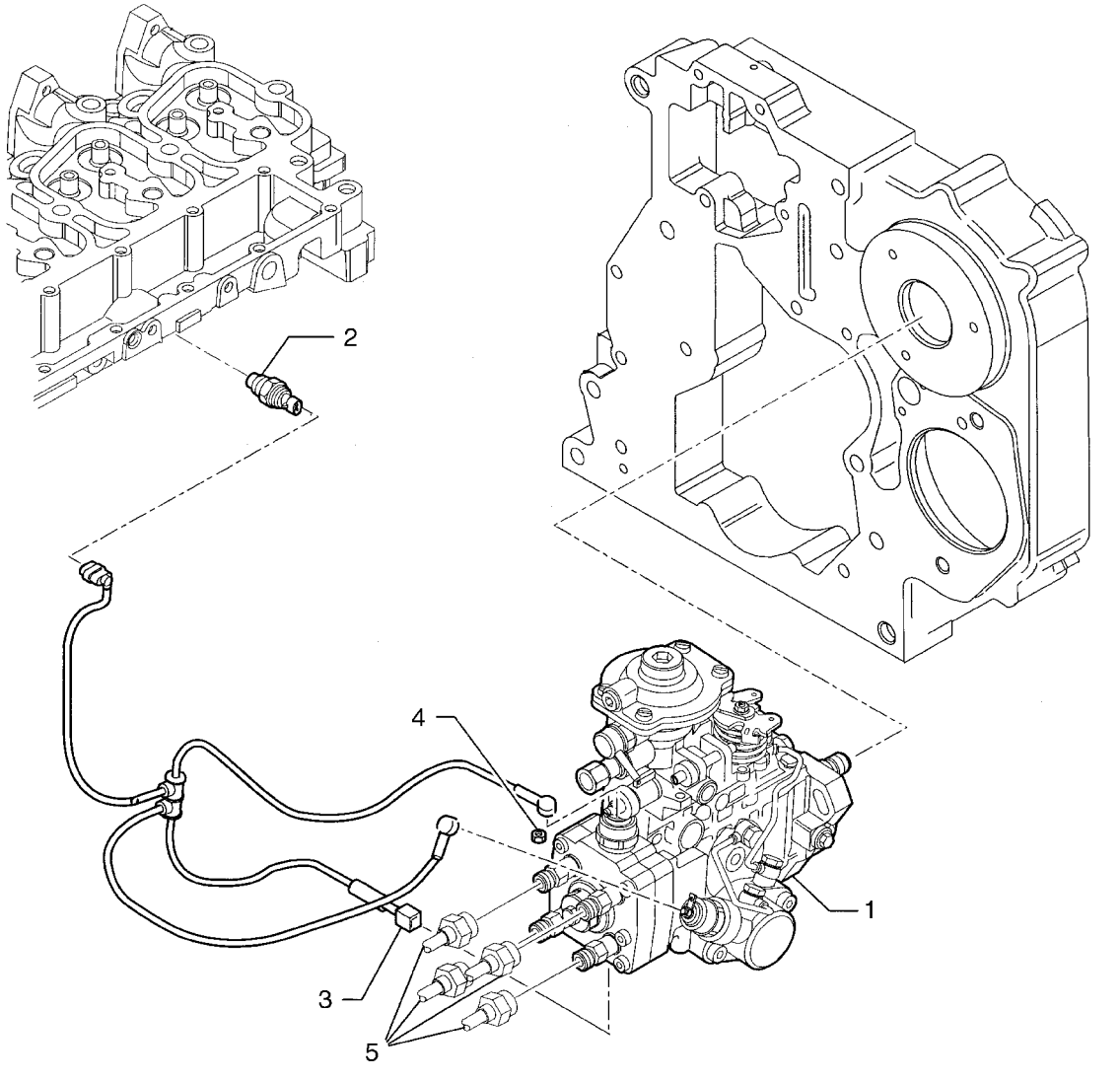

FUEL INJECTION PUMP

REF	FN	PART NUMBER	YR/SN	QTY	DESCRIPTION
1		2856352		1	PUMP, FUEL INJECTION
2		2856350		1	SENSOR, Water Temperature
3		2852088		1	CONNECTOR, WIRE
4		2852089		2	NUT, Lock
5		REF		1	INSTRUCTION, TUBE; See Figure 03-07 for Tube Kit

FUEL INJECTION SYSTEM

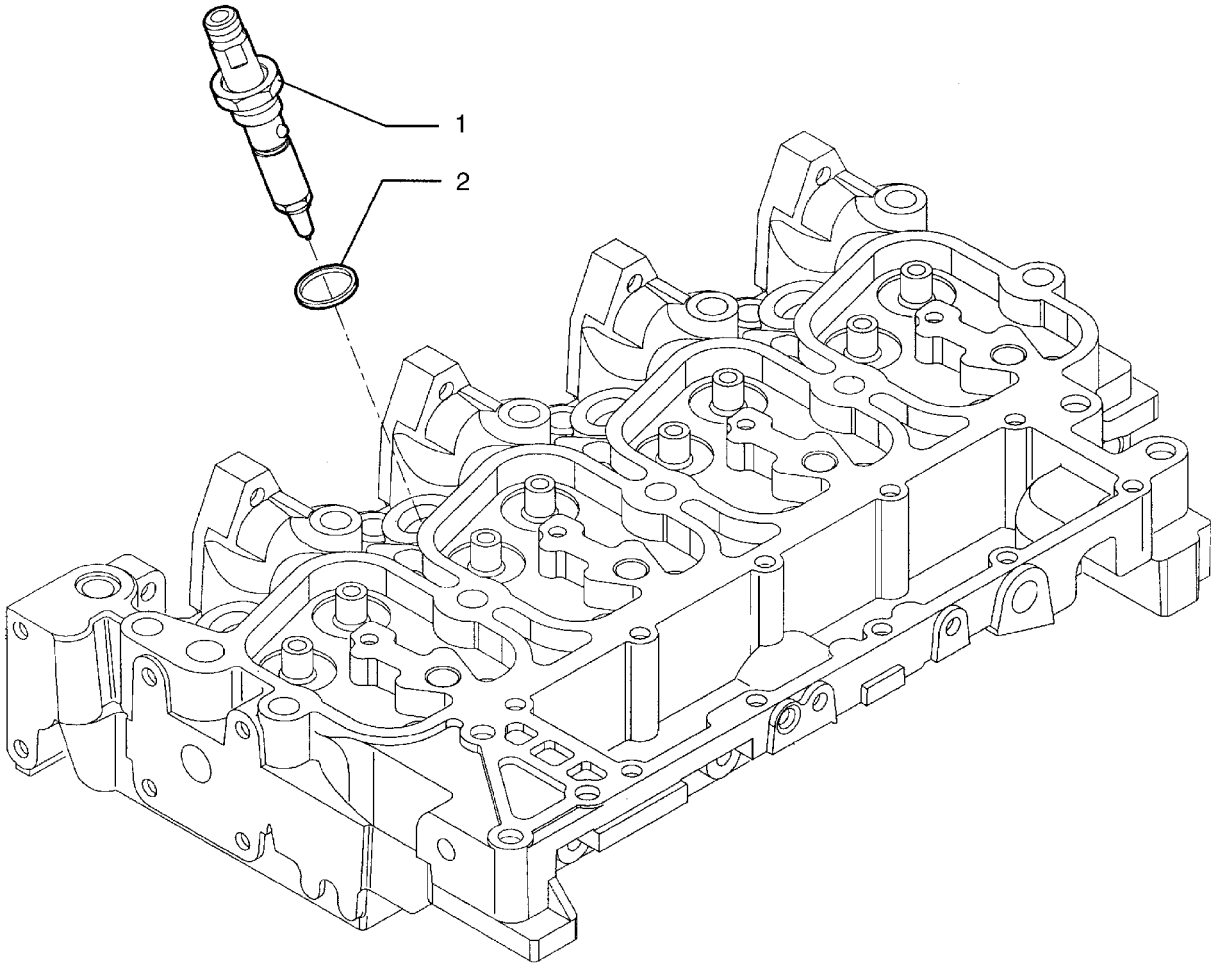

BS04A045

FUEL INJECTION SYSTEM

REF	FN	PART NUMBER	YR/SN	QTY	DESCRIPTION
1		2856255		4	INJECTOR, FUEL SYSTEM, Fuel Injector Assembly
		{2856436}		1	Washer (Part of 2856255), Not Shown
2		4895297		4	SEALRING

FUEL INJECTION SYSTEM

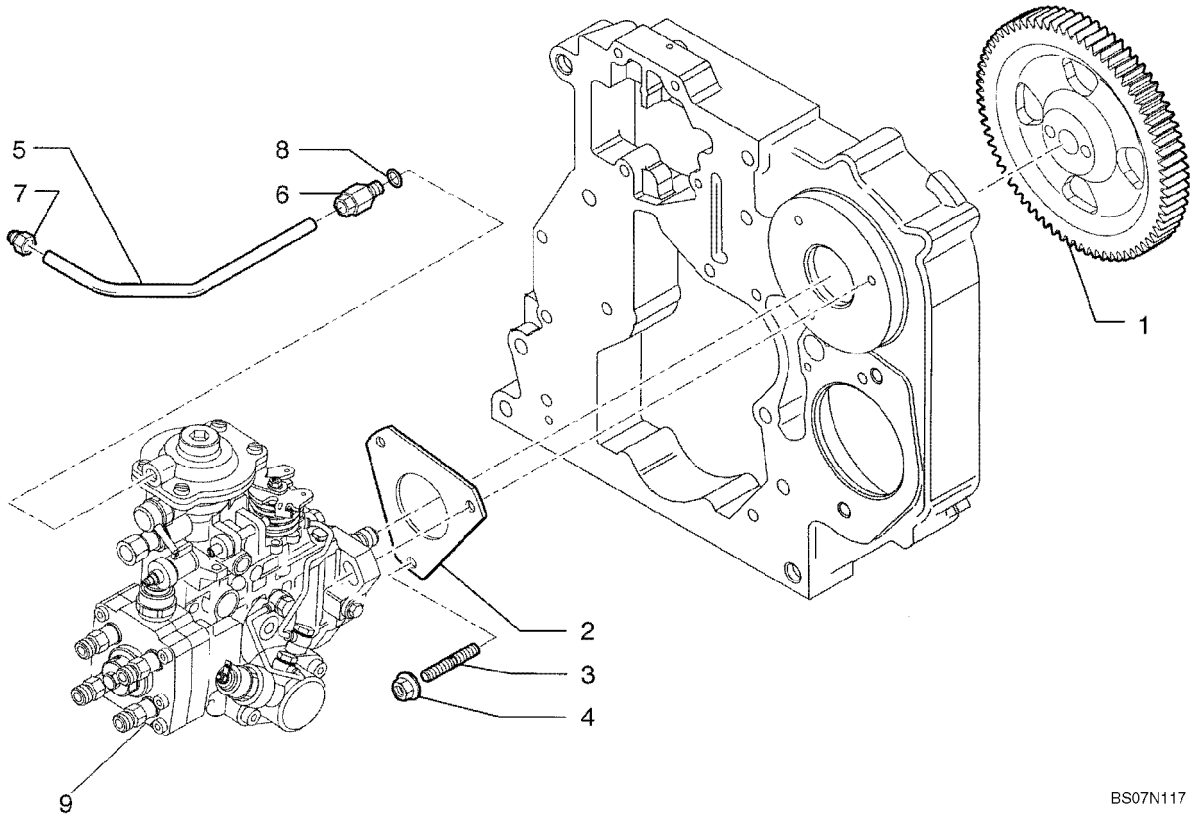

FUEL INJECTION SYSTEM

REF	FN	PART NUMBER	YR/SN	QTY	DESCRIPTION
1		2854340		1	GEAR
2		2852885		1	GASKET
3		2852294		3	STUD, M8 x 30
4		4899003		3	NUT, Flange, M8
5		2852059		1	TUBE, RIGID
6		4893518		1	FITTING, 8 x 1
7		4896770		1	FITTING, 10 x 1
8		2852057		1	GASKET
9		REF		1	INSTRUCTION, INJECTION PUMP; See Figure 03-04

INJECTION EQUIPMENT - PIPING

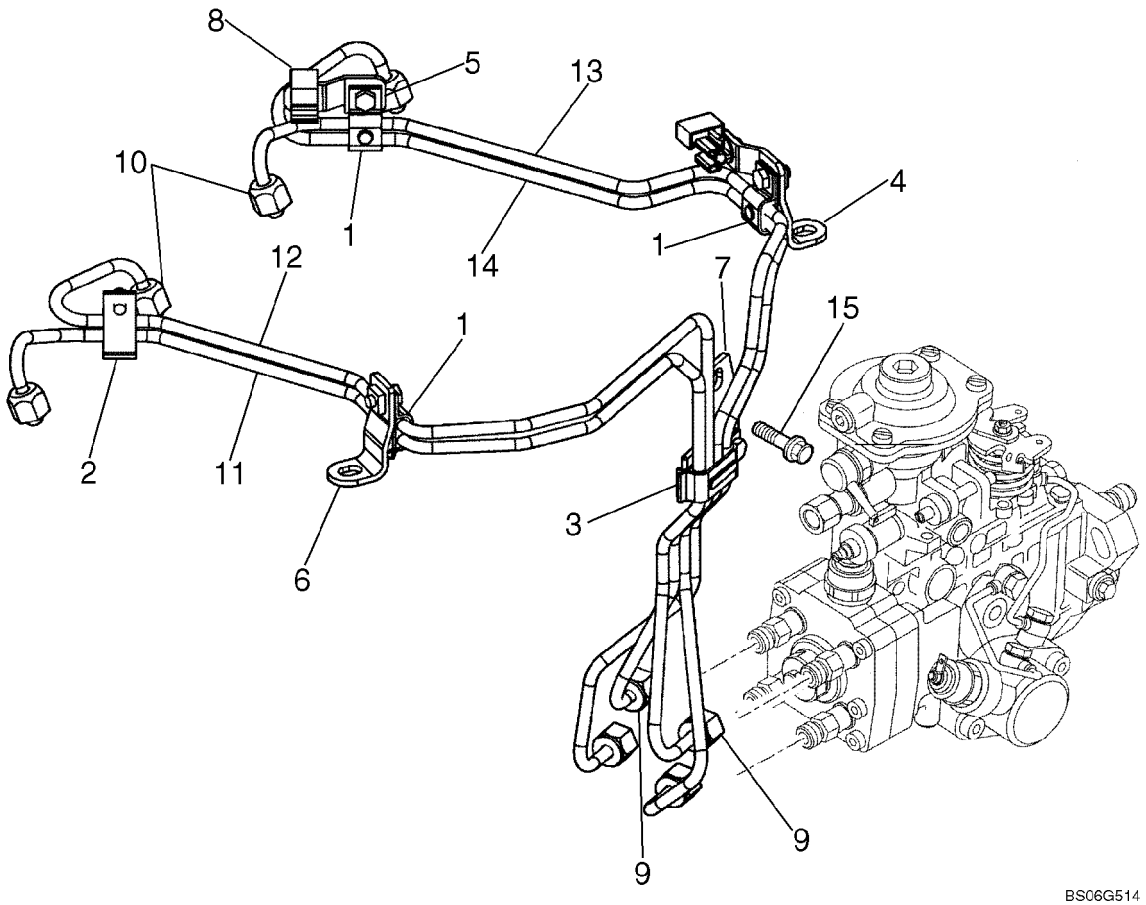

INJECTION EQUIPMENT - PIPING

REF	FN	PART NUMBER	YR/SN	QTY	DESCRIPTION
		2852075		1	KIT, Fuel Injection Tube; Incl Ref 2 - 15
1		2852871		3	BRACKET, Fuel Injection Pipe
2		2852872		1	BRACKET, Fuel Injection Pipe
3		2852873		1	BRACKET, Fuel Injection Pipe
4		2852874		1	BRACKET, Fuel Injection Pipe
5		2852875		1	BRACKET, Fuel Injection Pipe
6		2852876		1	BRACKET, Fuel Injection Pipe
7		2852877		1	BRACKET, Fuel Injection Pipe
8		2852878		2	CLAMP BRACKET
9		2852879		4	NUT
10		2852880		4	NUT
11		2852881		1	PIPE INJECTION
12		2852882		1	PIPE INJECTION
13		2852883		1	PIPE INJECTION
14		2852884		1	PIPE INJECTION
15		4896884		1	SCREW, M8 x 1.25 x 16mm

FUEL FILTER

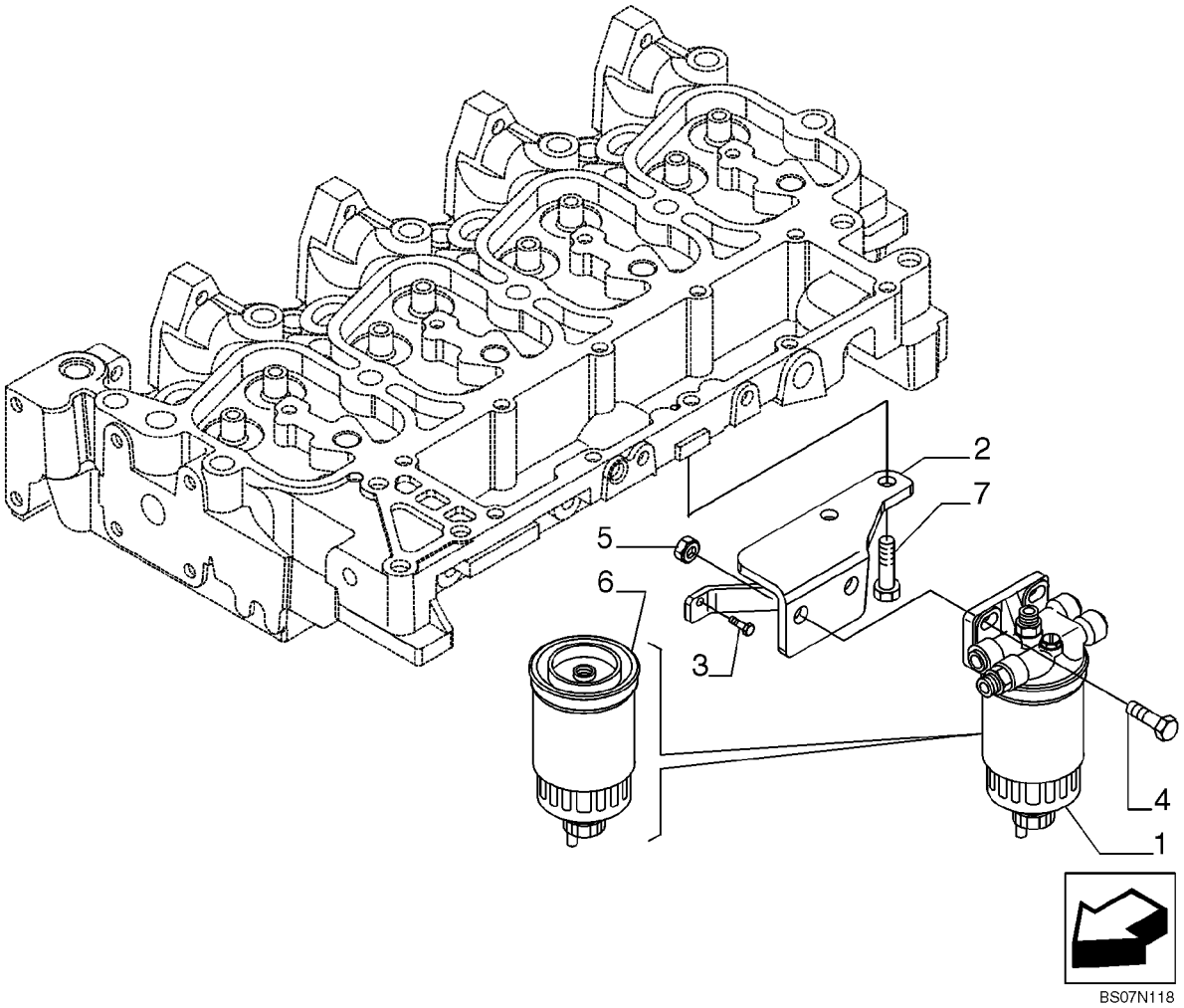

FUEL FILTER

REF	FN	PART NUMBER	YR/SN	QTY	DESCRIPTION
1		2852098		1	FILTER ASSY.
2		2855103		1	SUPPORT
3		4899068		1	SCREW, Hex Flg, M8 x 1.25 x 16
4		4899849		2	SCREW, M10 x 1.5 x 35mm Long
5		4895166		2	NUT, M10 x 1.5 mm
6		87803194		1	FILTER, FUEL
7		2830411		2	SCREW, M08 x 1.25 x 30mm Long

FUEL PUMP

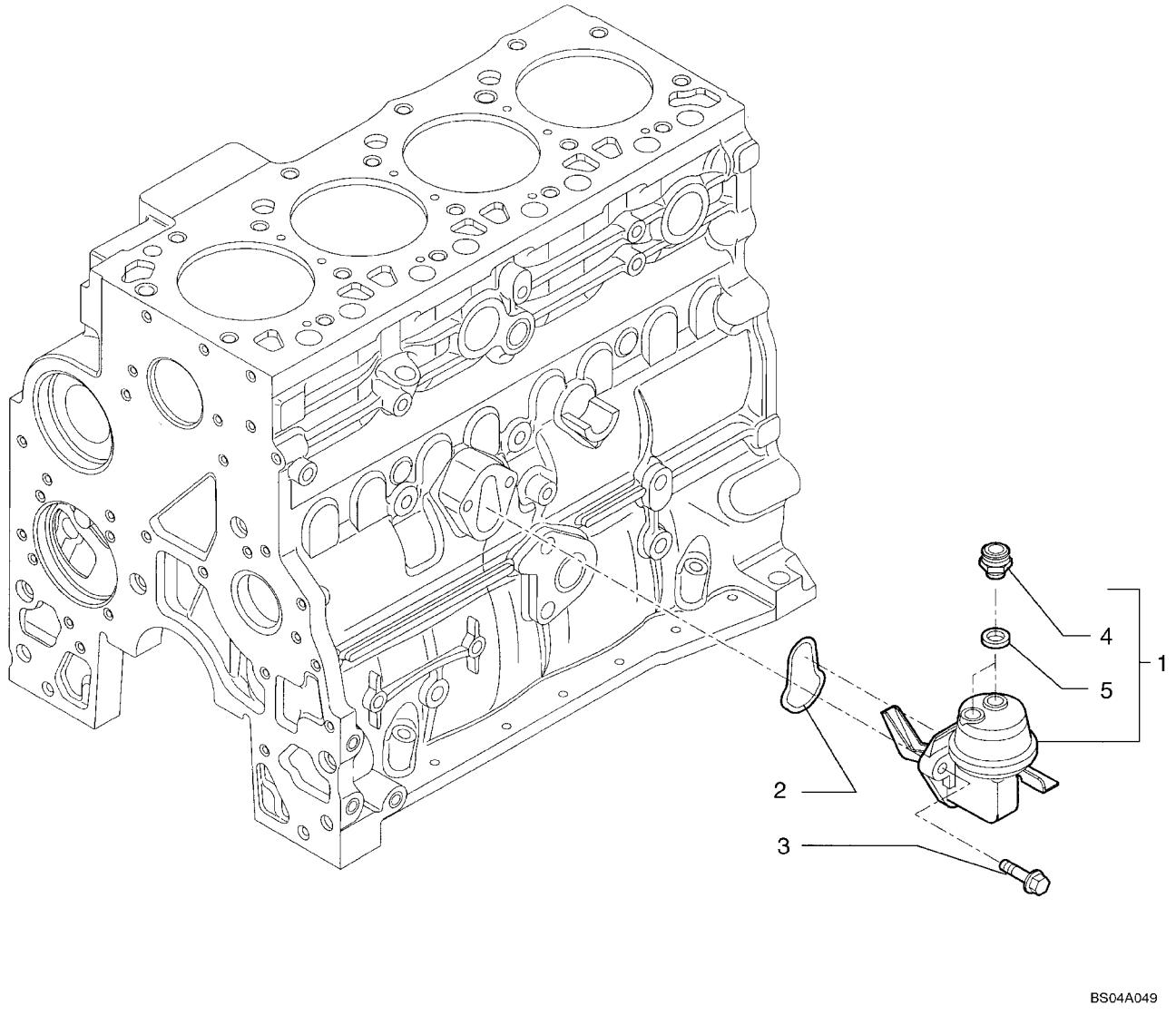

FUEL PUMP

REF	FN	PART NUMBER	YR/SN	QTY	DESCRIPTION
1		2830266		1	PUMP, FUEL, Fuel Transfer; Incl. Ref 4, 5
2		2830156		1	GASKET
3		4899031		2	SCREW, Hex Flg, M8 x 1.25 x 25
4		4890964		2	FITTING
5		4894721		2	WASHER, SEALING

03-10		p1	02/08

PIPING - FUEL

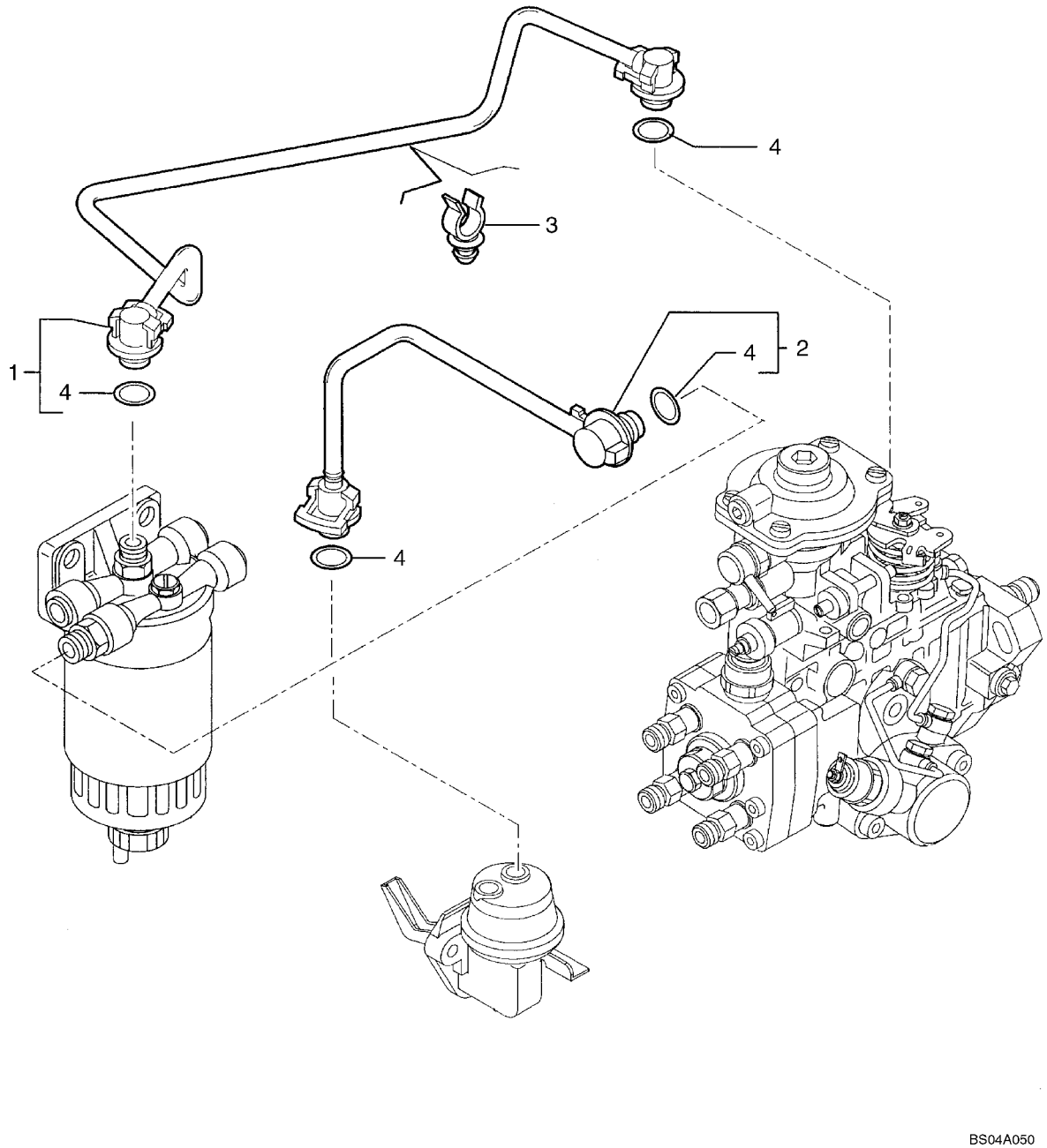

PIPING - FUEL

REF	FN	PART NUMBER	YR/SN	QTY	DESCRIPTION
1		2852105		1	TUBE, Incl. Ref 4
2		2852594		1	TUBE, Incl. Ref 4
3		2852111		1	CLAMP
4		4894095		2	O-RING

FUEL INJECTION SYSTEM

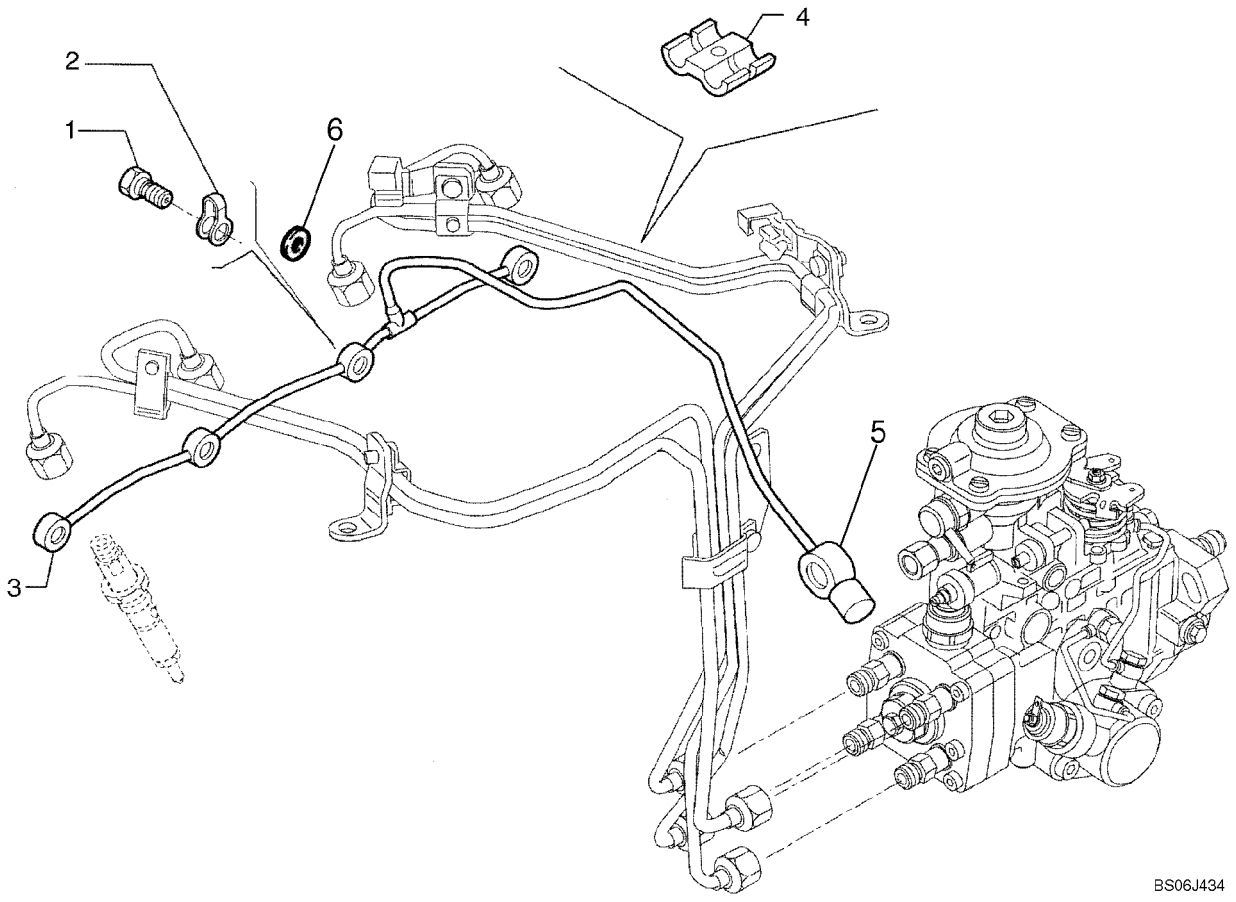

FUEL INJECTION SYSTEM

REF	FN	PART NUMBER	YR/SN	QTY	DESCRIPTION
1		4895244		4	BOLT, BANJO
2		4895305		4	SEAL, If Used
3		2852065		1	TUBE, RIGID
4		2852521		1	CLIP, SPRING
5		NSS		1	NOT SERVICED SEPARATELY, Banjo Connector Assy; Order 2852065 Tube, Ref 3
6		2855903		8	WASHER, SEALING, If Used

NOTES

SECTION INDEX
Electrical System

04-01	STARTER
04-02	ALTERNATOR
04-03	STARTER MOUNTING - ALTERNATOR MOUNTING
04-04	HARNESS, ENGINE - MOUNTING AND CONNECTIONS
04-05	BATTERY, SINGLE
04-06	BATTERY, DUAL - COLD START
04-06A	COLD START GRID HEATER
04-07	HARNESS, FRONT CONSOLE - SWITCHES
04-08	HARNESS, FRONT CONSOLE - MOUNTING
04-09	HARNESS, SIDE CONSOLE - SWITCHES
04-10	INSTRUMENT PANEL, FRONT - COVERS
04-11	INSTRUMENT PANEL, SIDE - COVERS (RIGHT-HAND SIDE)
04-12	INSTRUMENT CLUSTER
04-13	ELECTRICAL - LAMPS, ROPS CANOPY
04-14	ELECTRICAL - LAMPS, ROPS CAB
04-15	LAMP ASSY (ROPS CANOPY MODELS)
04-16	HORN - ALARM, BACKUP
04-17	BEACON, ROTATING (CAB OR CANOPY MODELS)
04-18	ANTENNA, RADIO - HARNESS, RADIO
04-19	ELECTRICAL - BACKHOE AUXILIARY HYDRAULIC, UNI-DIRECTIONAL
04-20	ELECTRICAL - BACKHOE AUXILIARY HYDRAULIC, WITH PILOT CONTROLS

04-01		p1	11/07

STARTER

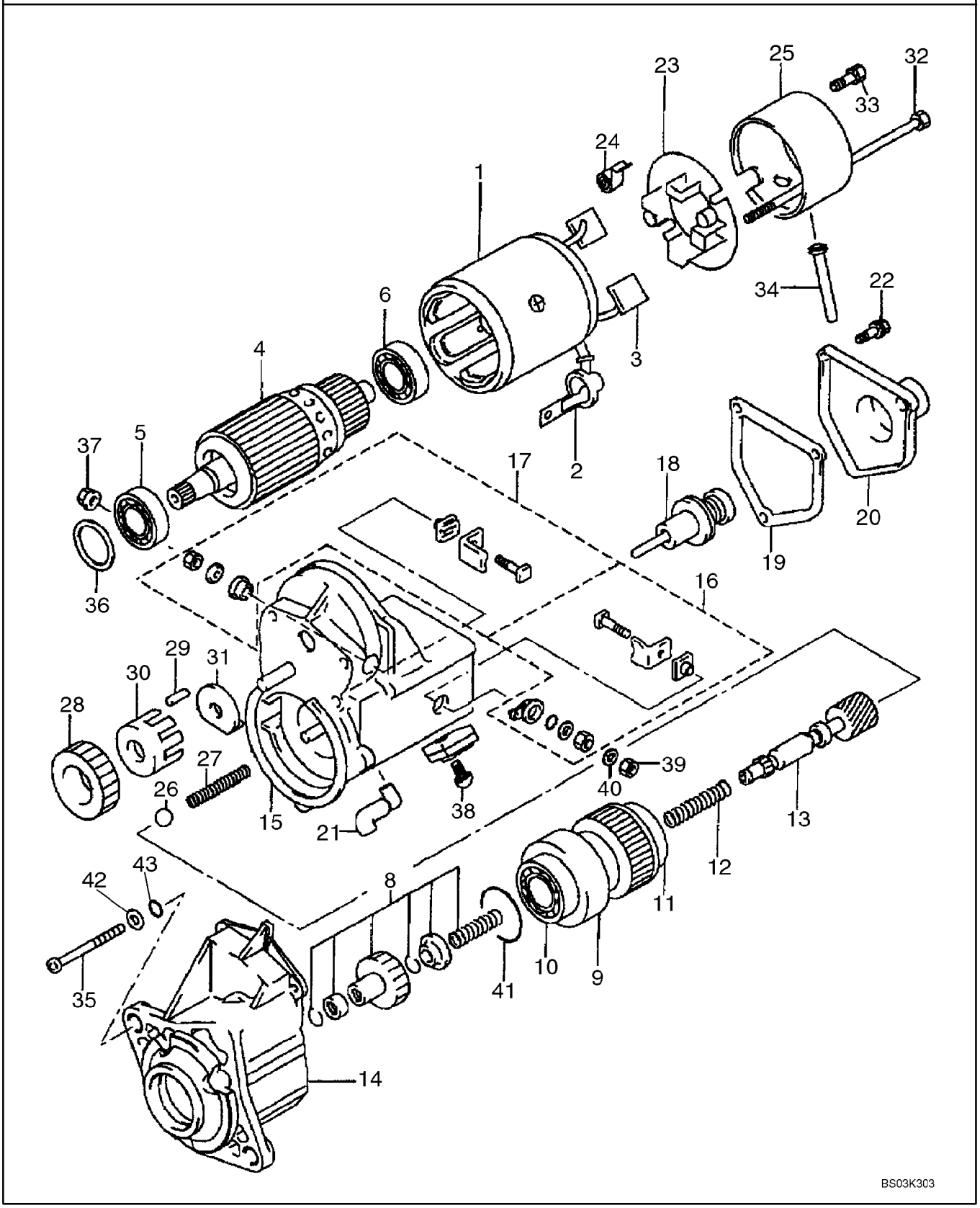

STARTER

REF	FN	PART NUMBER	YR/SN	QTY	DESCRIPTION
		86992395		1	MOTOR, STARTER, 12 V, 2.7 kw; Incl. Ref 1 - 43
1		87438992		1	YOKE, Housing, Yoke; Incl. Ref 2, 3
2		87438993		1	COVER ASSY
3		87438925		2	BRUSH
4		87438926		1	ARMATURE, Incl. Ref 5, 6
5		87438927		1	BEARING, BALL, 35 mm OD
6		87438928		1	BEARING, BALL, 30 mm OD
		87438994		1	CLUTCH ASSEMBLY, Incl. Ref 8 - 13
8		87438929		1	KIT, STARTER MTR REPAIR, Clutch Pinion Kit
9		87438930		1	KIT, STARTER MTR REPAIR, Clutch Assembly; Incl. Ref 10, 11
10		87438931		1	BEARING, BALL, 47 mm OD
11		87438932		1	BEARING, BALL, 47 mm OD
12		87438933		1	SPRING, COMPRESSION
13		87438935		1	SHAFT, Clutch
14		87438937		1	HOUSING
15		87438940		1	SWITCH ASSY, Magnetic; Incl. Ref 16 - 22
16		87438941		1	KIT, STARTER MTR REPAIR, Kit, Terminal M
17		87438942		1	KIT, STARTER MTR REPAIR, Kit, Terminal C
18		87438944		1	PLUNGER ASSY.
19		87438946		1	GASKET, Solenoid Switch
20		87438948		1	COVER, Solenoid
21		87438995		1	BUSHING, Drain
22		87438950		3	BOLT, With Washer; M5 x 14
23		87438996		1	HOLDER, Brush; Incl. Ref 24
24		87438997		4	SPRING, Brush Tension
25		87438999		1	FRAME
26		87439000		1	BALL
27		87439001		1	SPRING, COMPRESSION
28		87439002		1	PINION, Gear
29		87439003		5	ROLLER, Clutch
30		87439004		1	RETAINER
31		87439005		1	RETAINER
32		87438951		2	BOLT
33		87439006		2	SCREW, M5 x 9.4

04-01		p2	11/07

STARTER

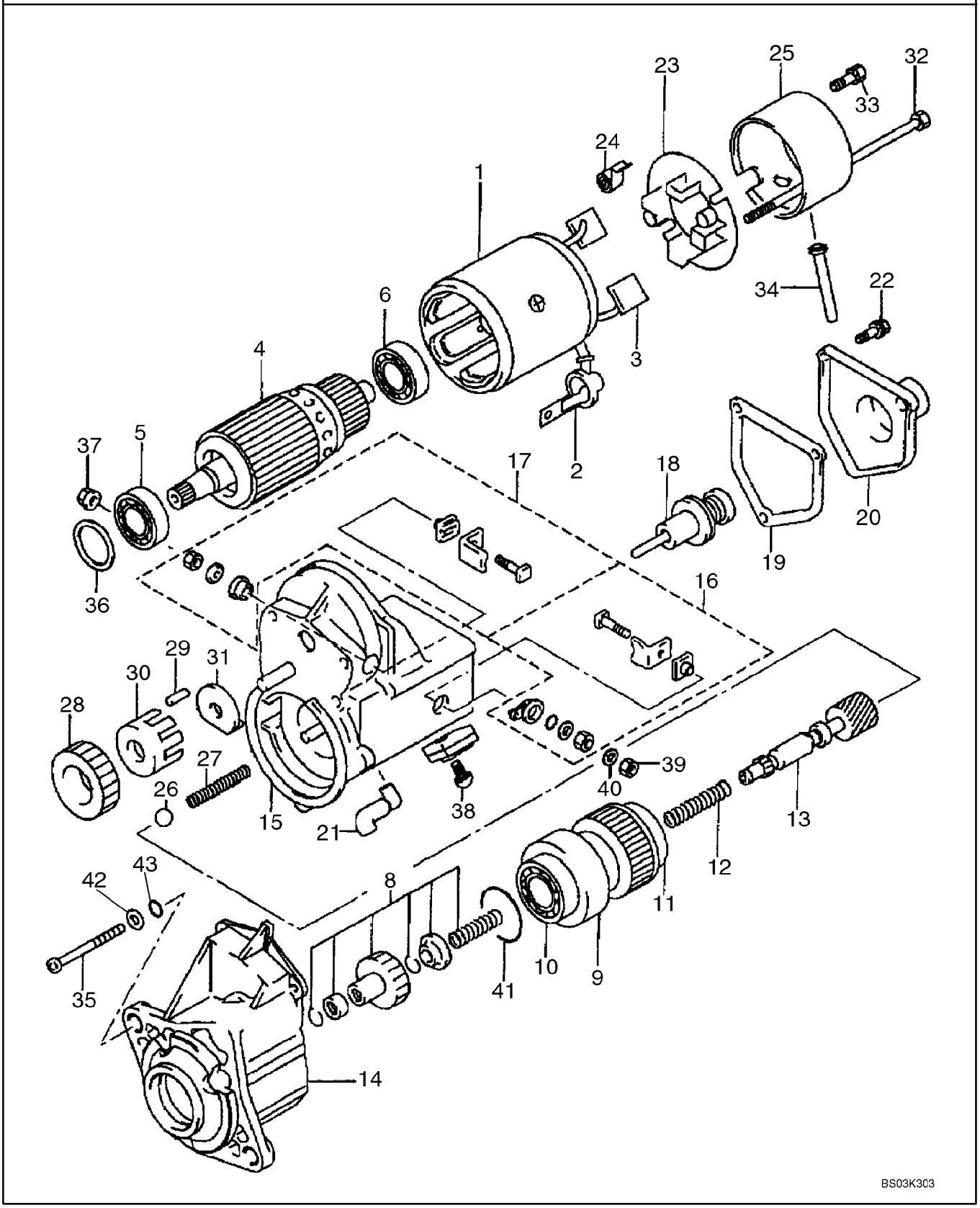

STARTER

REF	FN	PART NUMBER	YR/SN	QTY	DESCRIPTION
34		87439007		1	BUSHING, Drain
35		87439008		3	SCREW, M6 x 70
36		87438954		1	WASHER, Felt
37		87439009		1	NUT, M10
38		87438956		1	BOLT, M5 x 10
39		100016		1	NUT, M10, Cl 8
40		892-11010		1	WASHER, LOCK, M10
41		87439010		1	SEAL
42		87439061		3	WASHER, 9/32 x 1/2 x 3/64
43		87439011		3	O-RING, 4.8 ID

04-02		p1	11/07

ALTERNATOR

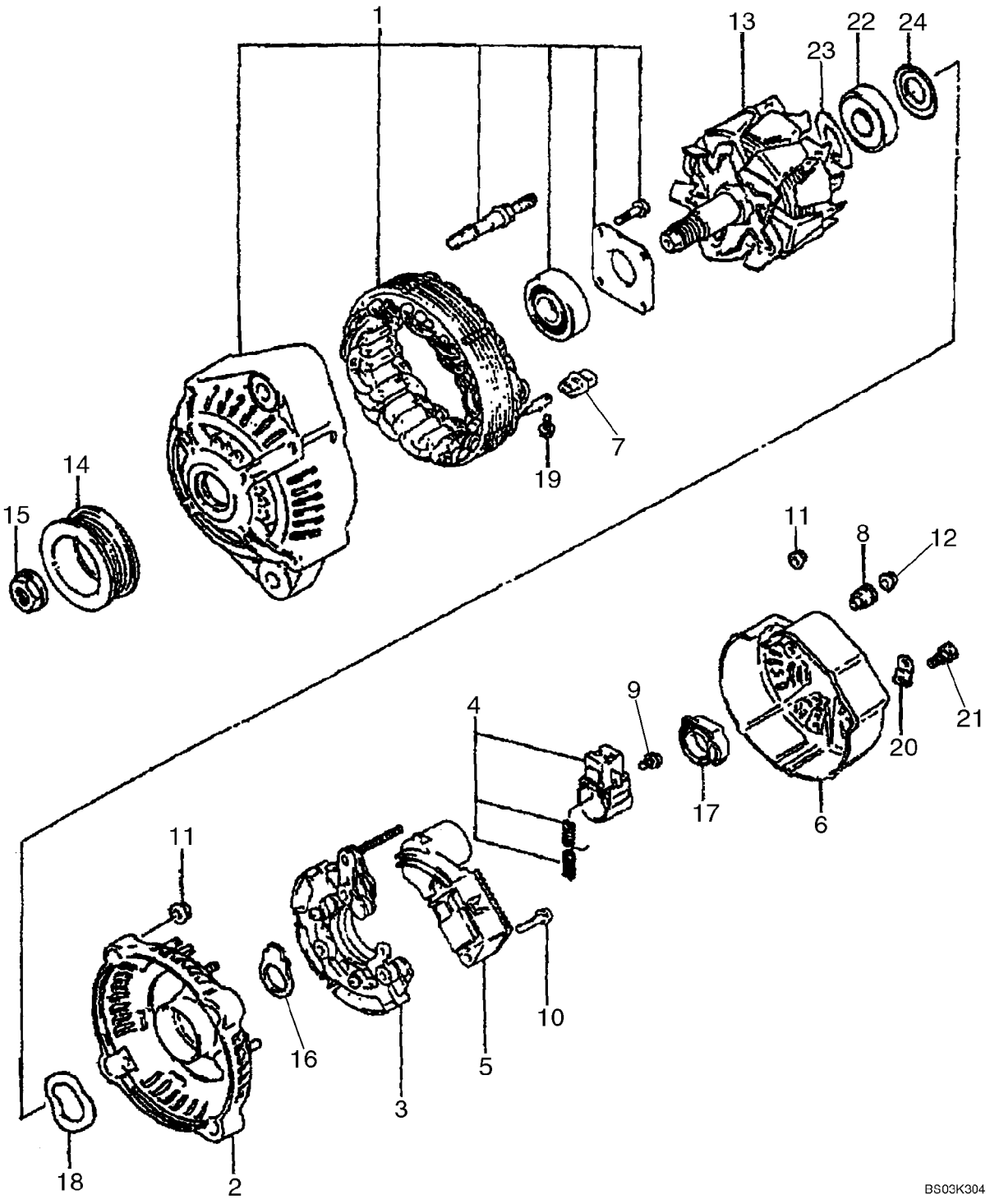

ALTERNATOR

REF	FN	PART NUMBER	YR/SN	QTY	DESCRIPTION
		87422777		1	ALTERNATOR, 12V, 90 amp; Incl. Ref 1 - 24; Connector on 87433543 Engine Harness Attaching to Alternator is (1) 382203A1 3-Pin Plug Connector, (3) 382204A1 Terminal, (3) 382207A1 Seal
1		87438960		1	FRAME ASSY, Drive End, Includes Stator
2		87438963		1	FRAME
3		87438965		1	HOLDER, Rectifier
4		87438967		1	HOLDER, Brush
5		87438969		1	REGULATOR, VOLTAGE
6		87438970		1	COVER, REAR
7		87438971		4	BUSHING, Insulation
8		87438972		1	BUSHING, Insulation
9		87438973		3	SCREW
10		87438974		2	SCREW
11		87438975		7	NUT
12		87438976		1	NUT
13		87438977		1	ROTOR ASSY.
14		87438978		1	PULLEY
15		87438979		1	NUT
16		87438980		1	SEALRING
17		87438981		1	SEALRING
18		87438982		1	WASHER
19		87438983		4	SCREW
20		87438984		1	PLATE, Terminal
21		87438985		1	SCREW
22		87438986		1	BEARING, BALL
23		87438987		1	COVER, Bearing
24		87438989		1	COVER, Bearing

STARTER MOUNTING - ALTERNATOR MOUNTING

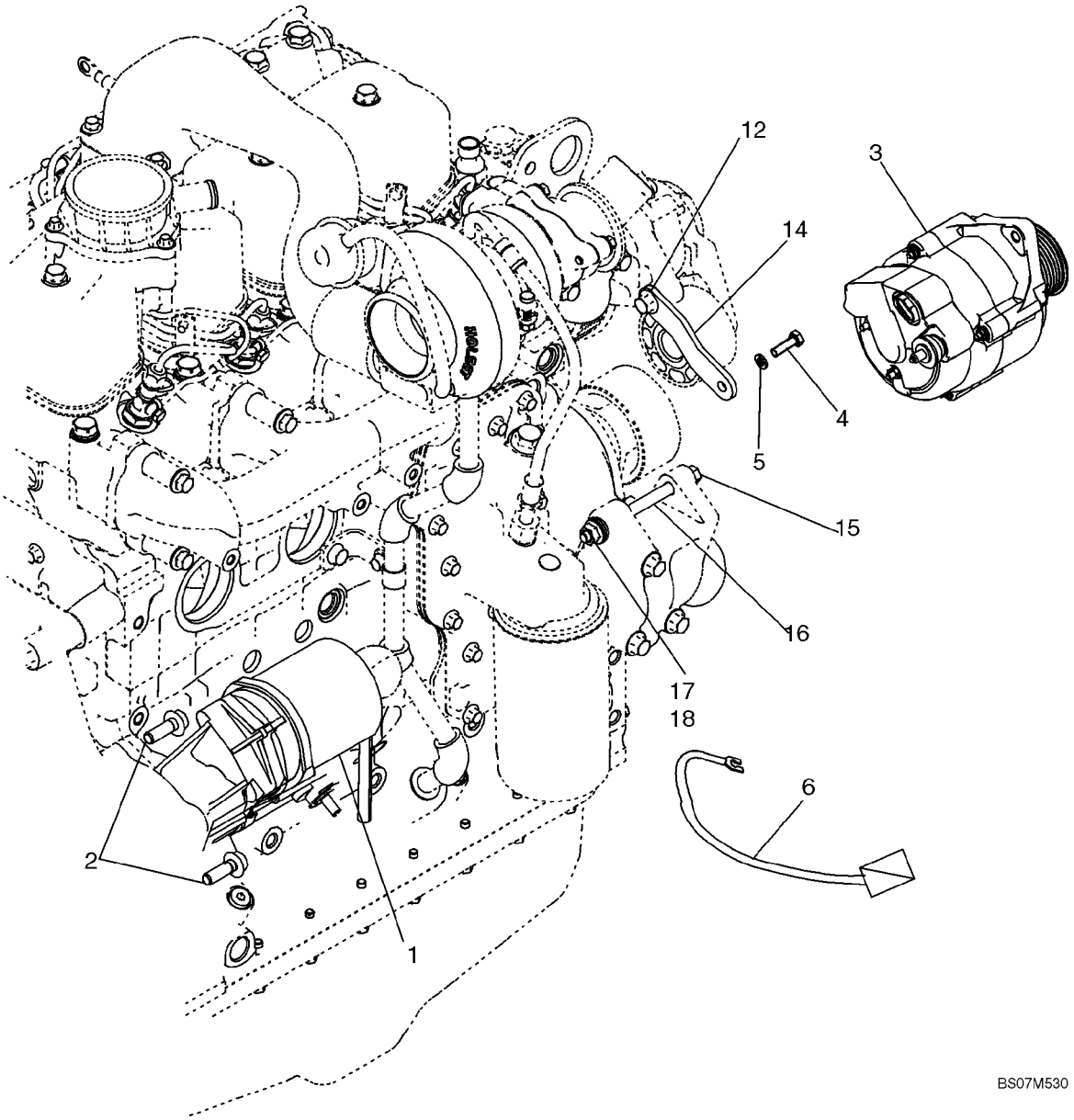

STARTER MOUNTING - ALTERNATOR MOUNTING

REF	FN	PART NUMBER	YR/SN	QTY	DESCRIPTION
1		86992395		1	MOTOR, STARTER, See Figure 04-01
2		844-10035		2	BOLT, Hex Flg, M10 x 35, 8.8
3		87422777		1	ALTERNATOR, See Figure 04-02; Mounting Hardware Included With 87584965 Engine Assembly; See Ref. 12, 14, 16
4		614-8025		1	BOLT, Hex, M8 x 25, 8.8
5		892-11008		1	WASHER, LOCK, M8
6		87433401		1	CABLE, ELECTRIC, Starter Solenoid Jumper Cable
12		4895291		1	SCREW, Hex Flg, M10 x 1.5 x 20, Included With 87584965 Engine Assy
14		2852180		1	BRACKET, Included With 87584965 Engine Assy
15		827-10130		1	BOLT, Hex, M10 x 130, 10.9
16		2852181		1	SPACER, Included With 87584965 Engine Assy
17		896-11010		2	WASHER, M10 x 21.5 x 2.5, HT
18		832-10410		1	NUT, LOCK, M10 x 1.5, Cl 8

04-04		p1	12/07

HARNESS, ENGINE - MOUNTING AND CONNECTIONS

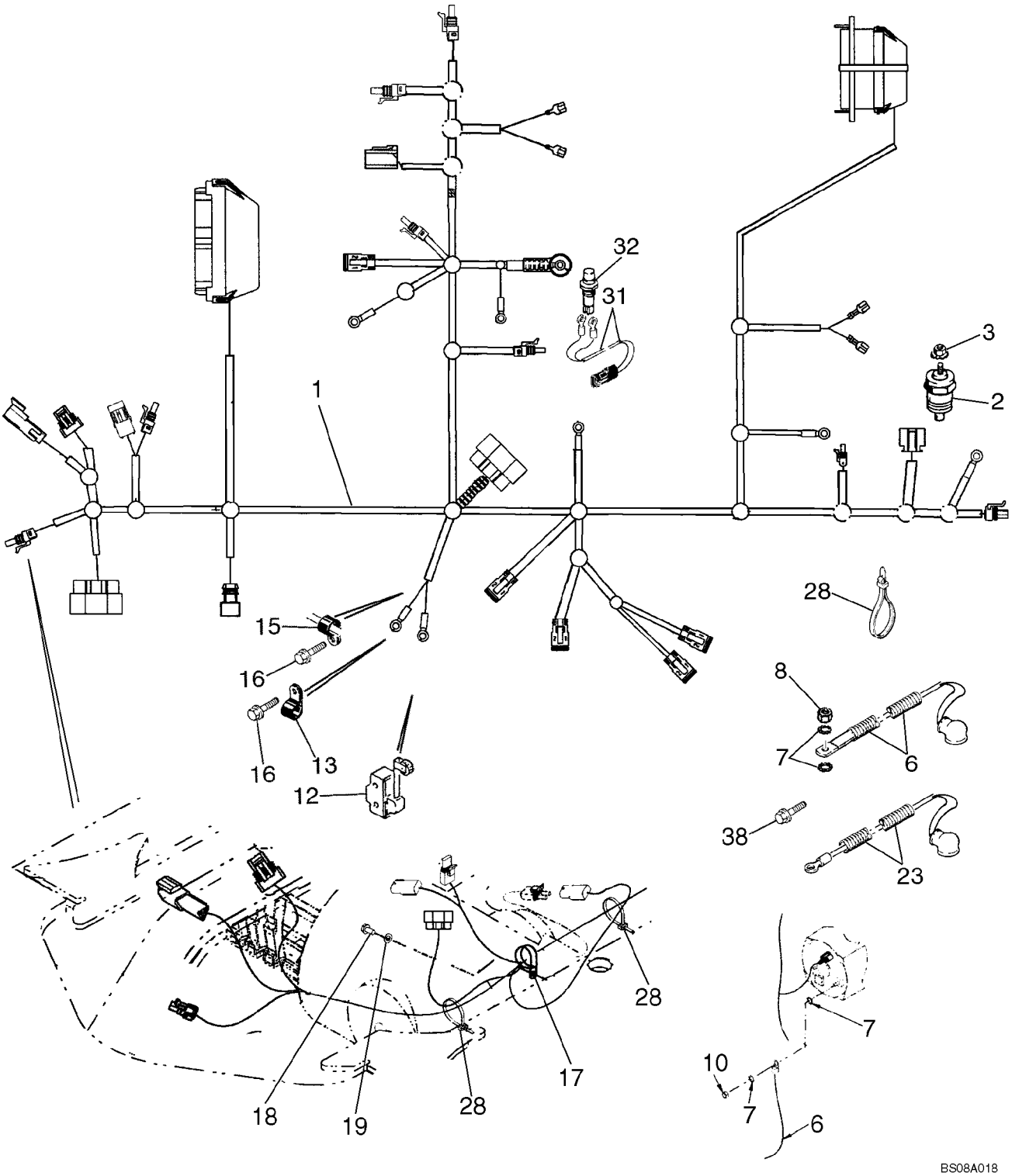

HARNESS, ENGINE - MOUNTING AND CONNECTIONS

REF	FN	PART NUMBER	YR/SN	QTY	DESCRIPTION
1		87726584		1	HARNESS, WIRE, Main Chassis
2		A166057		1	SENDER, TEMPERATURE, Engine Water Coolant Temperature
3		193-1000		1	NUT, Keps, w/LW,#10-32
6		87423926		1	CABLE, Alternator Cable
7		493-21033		2	WASHER, LOCK, Int Tooth, 5/16"
8		829-1408		1	NUT, M8, Cl 10
12		D137363		1	SWITCH, Return To Dig; For Mounting; See Figure 09-04
13		515-23127		1	CLAMP, 1/2", Insul, 3/8" Bolt
15		515-23127		1	CLAMP, 1/2", Insul, 3/8" Bolt
16		844-10020		2	BOLT, Hex Flg, M10 x 20, 8.8
17		9827902		1	CLAMP, 1", Insul, 3/8" Bolt
18		614-10030		1	BOLT, Hex, M10 x 30, 8.8
19		895-11010		1	WASHER, M10 x 20 x 2
23		87419229		1	HARNESS, WIRE, Power Wire
28		L18337		AR	STRAP, CABLE, 9.95"-12.1" lg
31		123809A2		1	HARNESS, Clutch Cutout; Transmission Gear Shift Lever; Incl. Ref 31A, 31B
31A		246526A1		1	CONNECTOR, Not Illustrated
31B		NSS		2	NOT SERVICED SEPARATELY, Eye; Not Illustrated
32		87312712		1	SWITCH, Push Button; Clutch Cutout; Transmission Gear Shift Lever; For Lever and Knob, See Figure 06-12;
38		128312A1		1	BOLT

04-05		p1	02/08

BATTERY, SINGLE

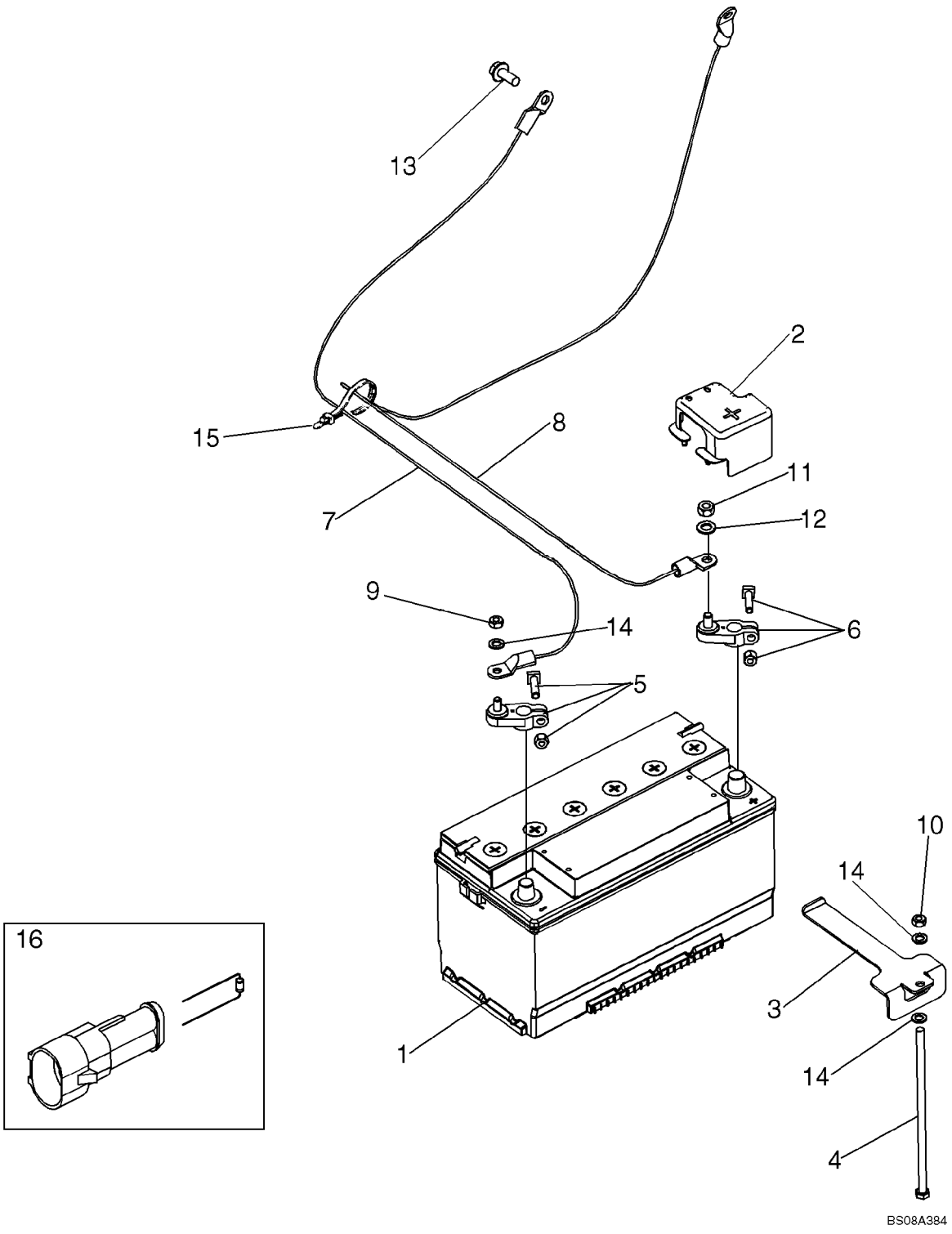

BATTERY, SINGLE

REF	FN	PART NUMBER	YR/SN	QTY	DESCRIPTION
1		87403835		1	BATTERY, WET, 12V; Used In Production, For Service Order B4960W Through Ship Direct
2		87664021		1	COVER, Protective; Battery Positive
3		87653377		1	BRACKET, Tie Down
4		87522766		1	BOLT
5		87682197		1	CLAMP, Battery Cable Negative
6		87656128		1	CLAMP, Battery Cable Positive
7		87610680		1	CABLE, BATTERY (NEG), Battery Negative
8		87610679		1	CABLE, ELECTRIC, Battery Positive
9		829-1408		1	NUT, M8, Cl 10
10		832-10408		1	NUT, LOCK, M8 x 1.25, Cl 8
11		829-1410		1	NUT, M10, Cl 10
12		895-11010		1	WASHER, M10 x 20 x 2
13		844-10025		2	BOLT, Hex Flg, M10 x 25, 8.8, Full Thd
14		895-11008		3	WASHER, M8 x 16 x 1.6
15		L18337		2	STRAP, CABLE, 9.95"-12.1" lg
16		87584645		1	RESISTOR, Grid Heater

04-06		p1	02/08

BATTERY, DUAL - COLD START

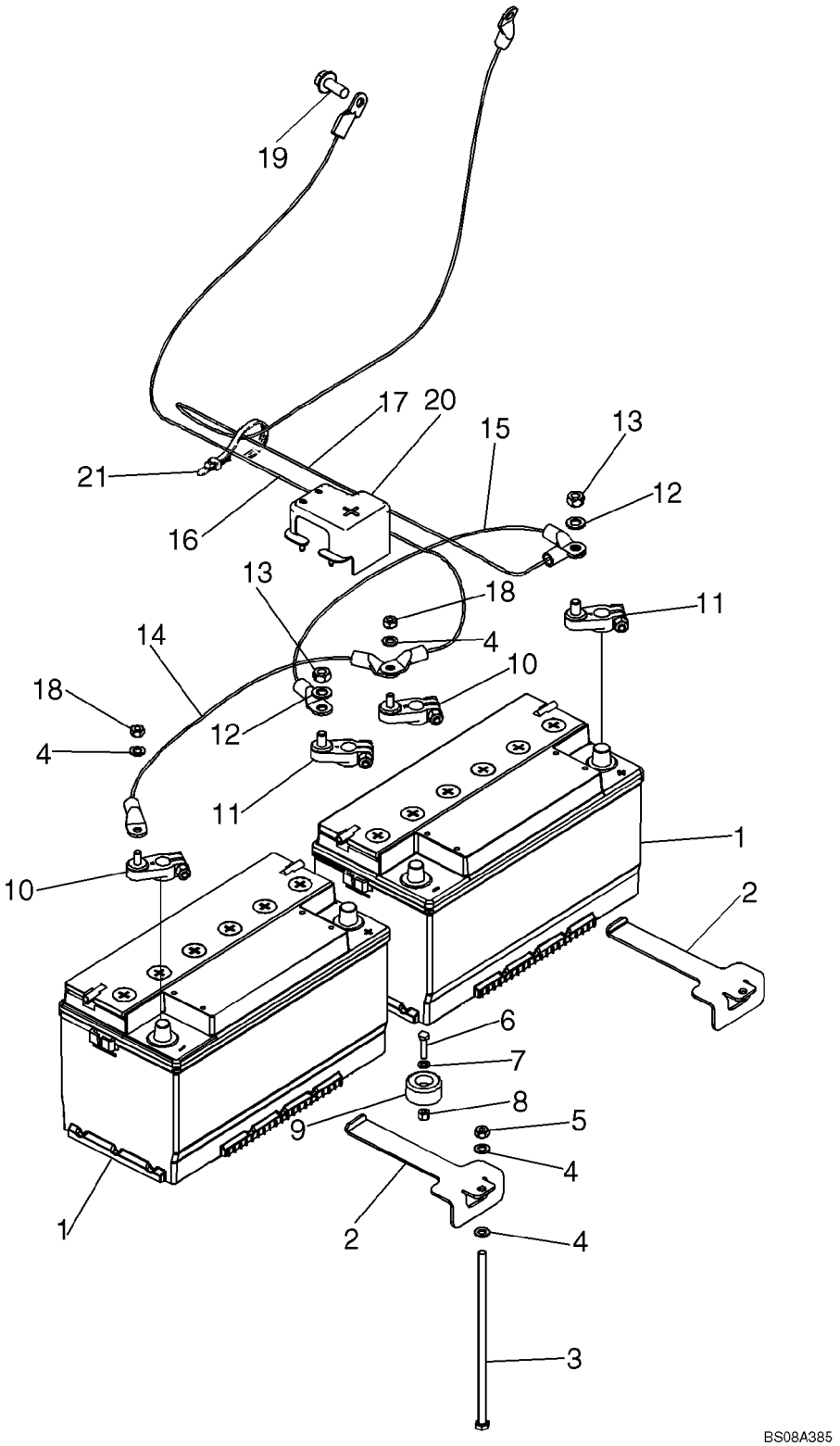

BATTERY, DUAL - COLD START

REF	FN	PART NUMBER	YR/SN	QTY	DESCRIPTION
1		87403835		2	BATTERY, WET, 12V; Used In Production, For Service Order B4960W Through Ship Direct
2		87653377		2	BRACKET, Tie Down
3		87522766		2	BOLT, M8 x 220
4		895-11008		6	WASHER, M8 x 16 x 1.6
5		832-10408		2	NUT, LOCK, M8 x 1.25, Cl 8
6		614-6025		1	BOLT, Hex, M6 x 25, 8.8
7		895-11006		1	WASHER, M6
8		832-10406		1	NUT, LOCK, M6 x 1, Cl 8
9		87671746		1	BUMPER
10		87682197		2	CLAMP, Battery Cable Stud, Negative
11		87656128		2	CLAMP, Battery Cable Stud, Positive
12		895-11010		2	WASHER, M10 x 20 x 2
13		829-1410		2	NUT, M10, Cl 10
14		87610682		1	CABLE, ELECTRIC, Negative Jumper
15		87610681		1	CABLE, ELECTRIC, Postivie Jumper
16		87610680		1	CABLE, BATTERY (NEG), Negative
17		87610679		1	CABLE, ELECTRIC, Positive
18		829-1408		2	NUT, M8, Cl 10
19		844-10025		2	BOLT, Hex Flg, M10 x 25, 8.8, Full Thd
20		87664021		2	COVER, Protective; Positive Battery
21		L18337		3	STRAP, CABLE, 9.95"-12.1" lg

04-06A		p1	12/07

COLD START GRID HEATER

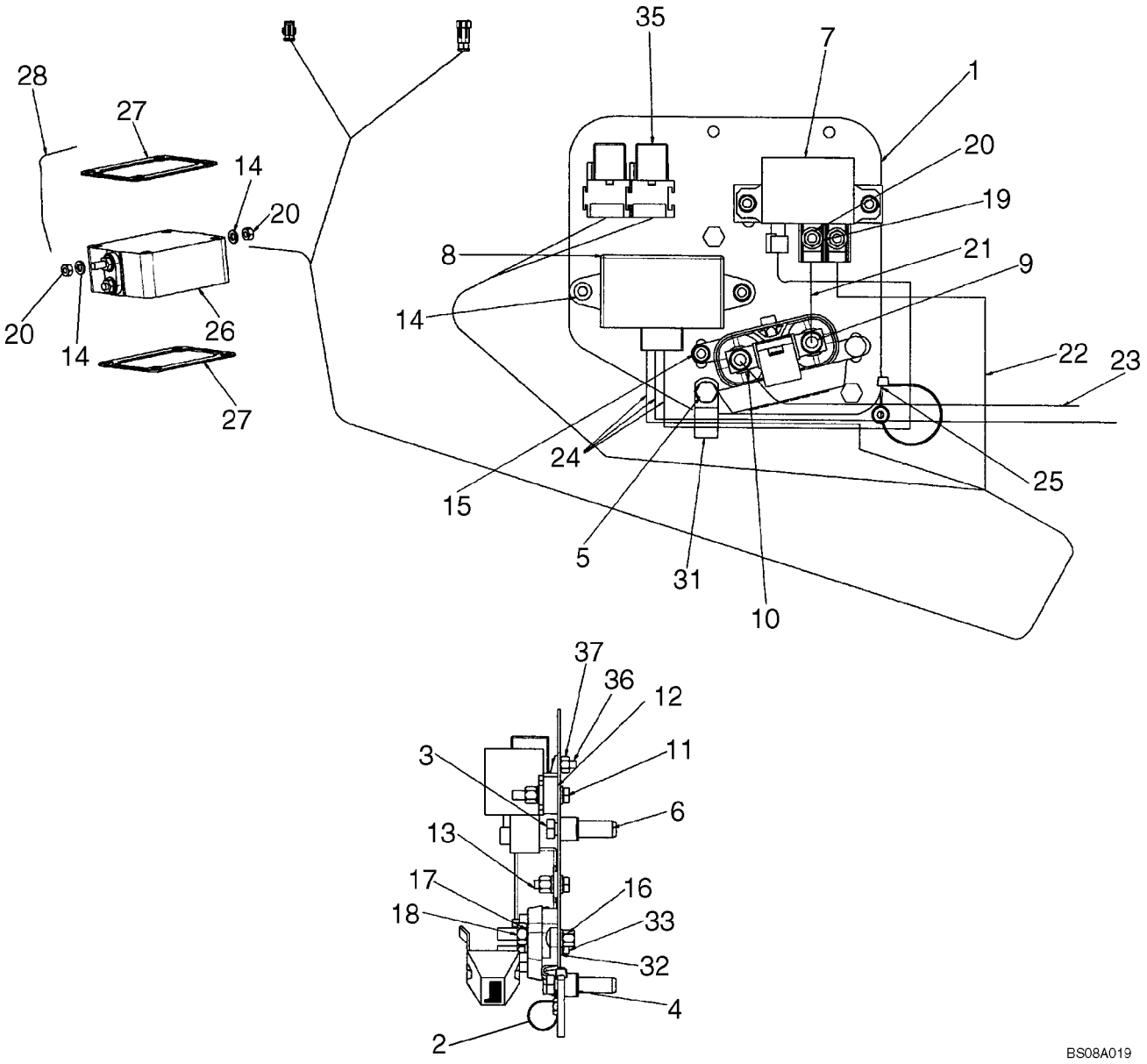

COLD START GRID HEATER

REF	FN	PART NUMBER	YR/SN	QTY	DESCRIPTION
1		87397601		1	BRACKET, SUPPORTING, Cold Start Plate
2		515-22190		1	CLAMP, 3/4", Insul, 5/16" Bolt
3		614-8040		3	BOLT, Hex, M8 x 40, 8.8, Full Thd
4		407962A1		3	SPACER
5		238-5011		3	O-RING, -011, 70 Duro, .301" ID x .070" Thk
6		87417383		3	INSERT, THREADED, M8 x 1-1/4
7		86619908		1	RELAY, Cold Start
8		47132002		1	ELECTRONIC UNIT, CONTROL, Electronic Unit Controller, Grid Heater
9		440038A1		1	JUNCTION BLOCK, Fuse Block
10		87410602		1	FUSE, 300 amp Fuse
11		614-6035		2	BOLT, Hex, M6 x 35, 8.8, Full Thd
12		87414237		1	PLATE, 10 mm Thick Spacer Bar
13		614-6020		3	BOLT, Hex, M6 x 20, 8.8
14		895-11006		13	WASHER, M6
15		832-10406		6	NUT, LOCK, M6 x 1, Cl 8
16		811-6016		1	BOLT, CARRIAGE, Short NK, M6 x 16, Cl8.8, Full Thd
17		892-11008		5	WASHER, LOCK, M8
18		829-1408		2	NUT, M8, Cl 10
19		322357		2	WASHER, SPRING, Belleville, M6
20		829-1406		4	NUT, M6, Cl 10
21		87410265		1	RELAY, 90 mm Jumper Wire; Fuse to Relay
22		87608352		1	CABLE, ELECTRIC, 650 mm Wire; Relay to Grid Heater
23		87419615		1	CABLE ASSY., 1250 mm Wire; Starter to Fuse Block
24		87396228		1	HARNESS, WIRE, Cold Start Control
25		L18337		1	STRAP, CABLE, 9.95"-12.1" lg
26		82017872		1	HEATER, Grid
27		86014151		2	GASKET
28		87601612		1	CABLE, GROUND, 240 mm, Grid Heater Ground
31		515-25190		1	CLAMP, 3/4", Insul, 1/2" Bolt
32		614-12025		1	BOLT, Hex, M12 x 25, 8.8
33		896-11012		1	WASHER, M13.5 x 24.5 x 3, HT
35		87436836		2	RELAY, Mini, 12V, 40A; Engine Crank
36		87301687		2	SCREW, Hex Wash Hd, #10-32 x 1/2"

04-06A		p2	12/07

COLD START GRID HEATER

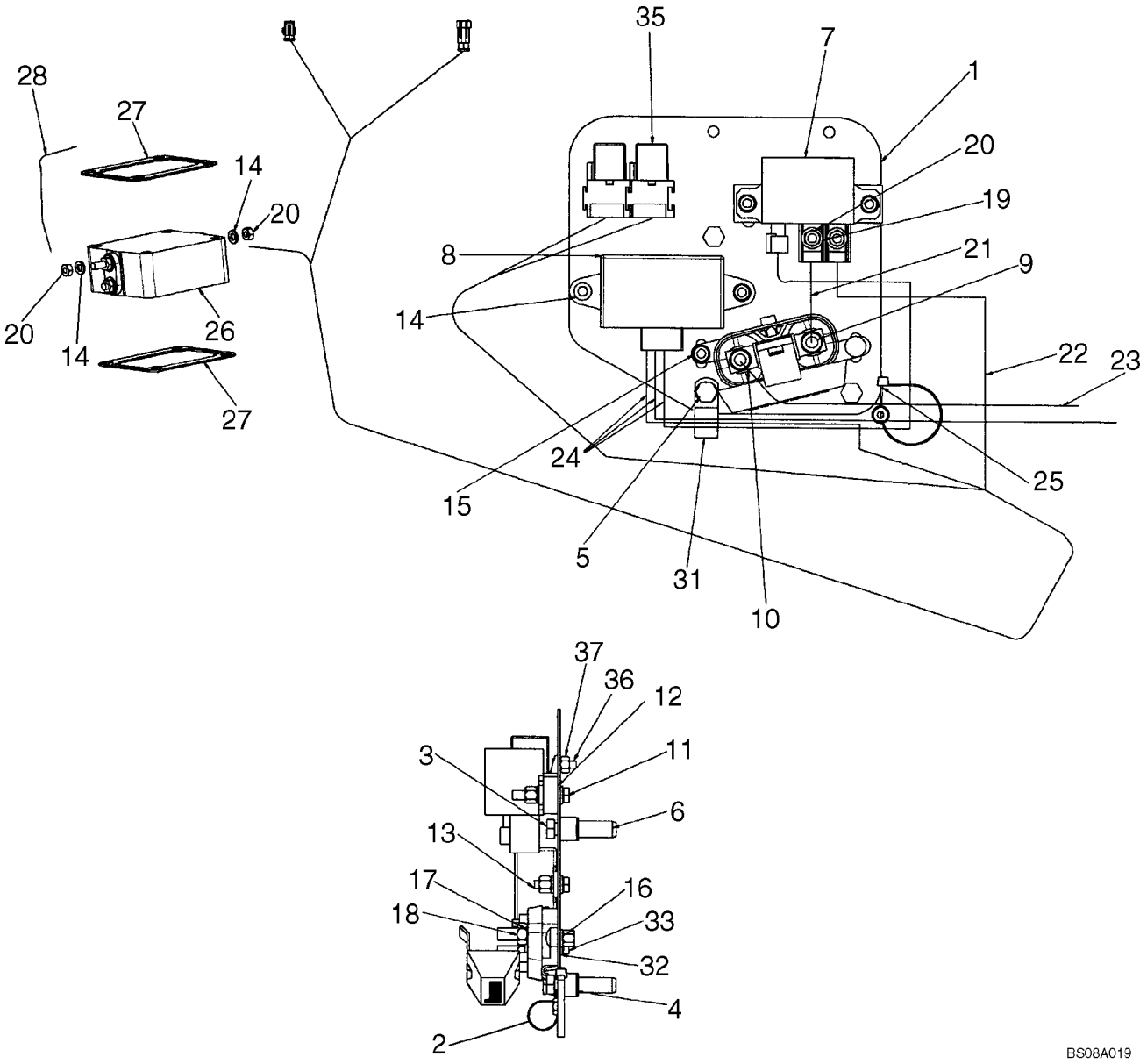

COLD START GRID HEATER

REF	FN	PART NUMBER	YR/SN	QTY	DESCRIPTION
37		231-24409		2	NUT, LOCK, #10-32

04-07		p1	01/08

HARNESS, FRONT CONSOLE - SWITCHES

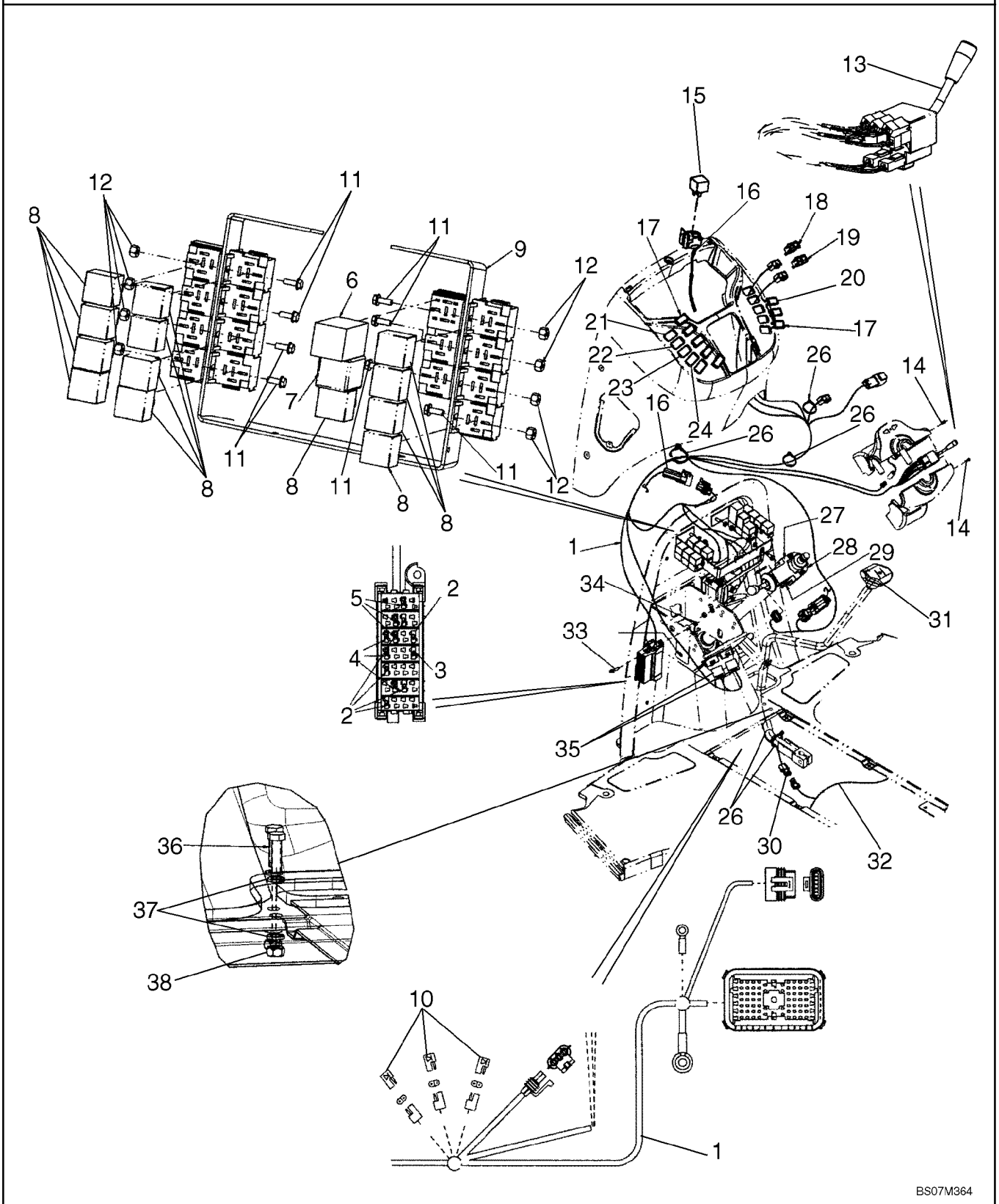

HARNESS, FRONT CONSOLE - SWITCHES

REF	FN	PART NUMBER	YR/SN	QTY	DESCRIPTION
1		87726592		1	HARNESS, WIRE, Front Console Harness
2		121412A1		5-6	FUSE, 10 amp; Mini, Red
3		121413A1		2-3	FUSE, 15 amp; Mini, Blue
4		121414A1		3	FUSE, 20 amp; Mini, Yellow
5		121416A1		2	FUSE, 30 amp; Mini, Green
6		87578455		1	FLASHER UNIT, Relay, Flasher, Hazard; Turn Signal
7		347706A3		1	RELAY, Sealed Time Delay, Shuttle Interlock Timing Relay, Forward Reverse Control
8		87436836		13	RELAY, 40 amp, 12V
9		361900A1		1	BRACKET, Relay Mounting
10		L71879		3	DIODE-ELEMENT
11		87301687		8	SCREW, Hex Wash Hd, #10-32 x 1/2"
12		231-24409		8	NUT, LOCK, #10-32
13		389487A1		1	SWITCH, LIGHTS, Turn Signal/Driving Lamp High/Low Beam
14		404816A1		2	SCREW, M4 x 12
15		87436836		1	RELAY, 40 amp, 12V; Air Conditioning; Attaches To Front Console Options Harness
16		87726574		1	HARNESS, WIRE, Front console Options, Includes (1) L71879 Diode
		L71879		1	DIODE-ELEMENT
		490-11012		1	SCREW, Cross Pan Hd, #10-32 x 3/4", Mounts Relay Recepticle
		193-1000		1	NUT, Keps, w/LW,#10-32, Mounts Relay Recepticle
17		86000535		2-8	PLUG, 1.427" x .62", Plastic, Accessory; If used
18		386849A1		1	SWITCH, Front Work Lamps
19		386850A1		1	SWITCH, Hazard Lamps
20		386851A1		1	SWITCH, Rotating Beacon; If Used
21		87585817		1	SWITCH ASSY, Comfort Steer Switch; If Used
22		386785A1		1	SWITCH, Front Wiper; If Used
23		386787A1		1	SWITCH, Front Windshield Washer; If Used
24		398675A2		1	SWITCH, Loader Tool Quick Coupler; If Used
26		L18337		4	STRAP, CABLE, 9.95"-12.1" lg, 15 in
27		278328A1		1	SWITCH, Shuttle Shift; Transmission Forward/Neutral/Reverse Switch

HARNESS, FRONT CONSOLE - SWITCHES

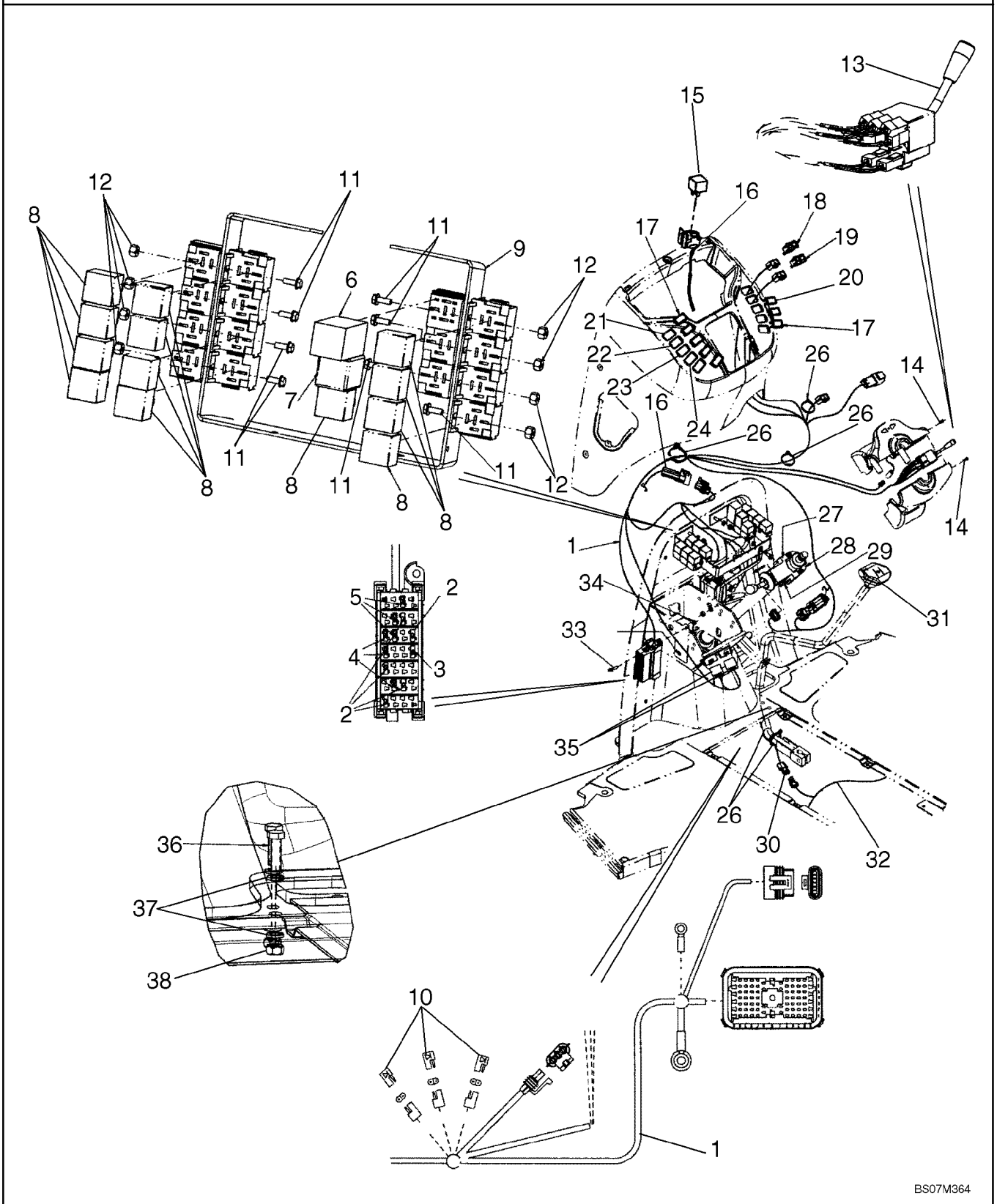

HARNESS, FRONT CONSOLE - SWITCHES

REF	FN	PART NUMBER	YR/SN	QTY	DESCRIPTION
28		366889A2		1	HALF COLLAR, Shuttle Lever; Includes Threaded Insert
29		397990A1		2	SCREW, M5 x 35
30		123809A2		1	HARNESS, Clutch Cutout; Transmission Gear Shift Lever; For Lever, See Figure 06-12
31		87312712		1	SWITCH, Clutch Cutout; For Lever and Knob, See Figure 06-12; Otto 21649 Marking; If Used
32		87726576		1	HARNESS, WIRE, Engine, Main Chassis
33		844-6025		1	BOLT, Hex Flg, M6 x 25, 8.8
34		832-10406		1	NUT, LOCK, M6 x 1, Cl 8
35		82026949		2	SWITCH, Brake Lamp; Includes Hardware; For Mounting, See Figure 07-03
36		844-8025		2	BOLT, Hex Flg, M8 x 25, 8.8
37		895-15010		4	WASHER, M11 x 24 x 2
38		829-1410		2	NUT, M10, Cl 10

04-08		p1	12/07

HARNESS, FRONT CONSOLE - MOUNTING

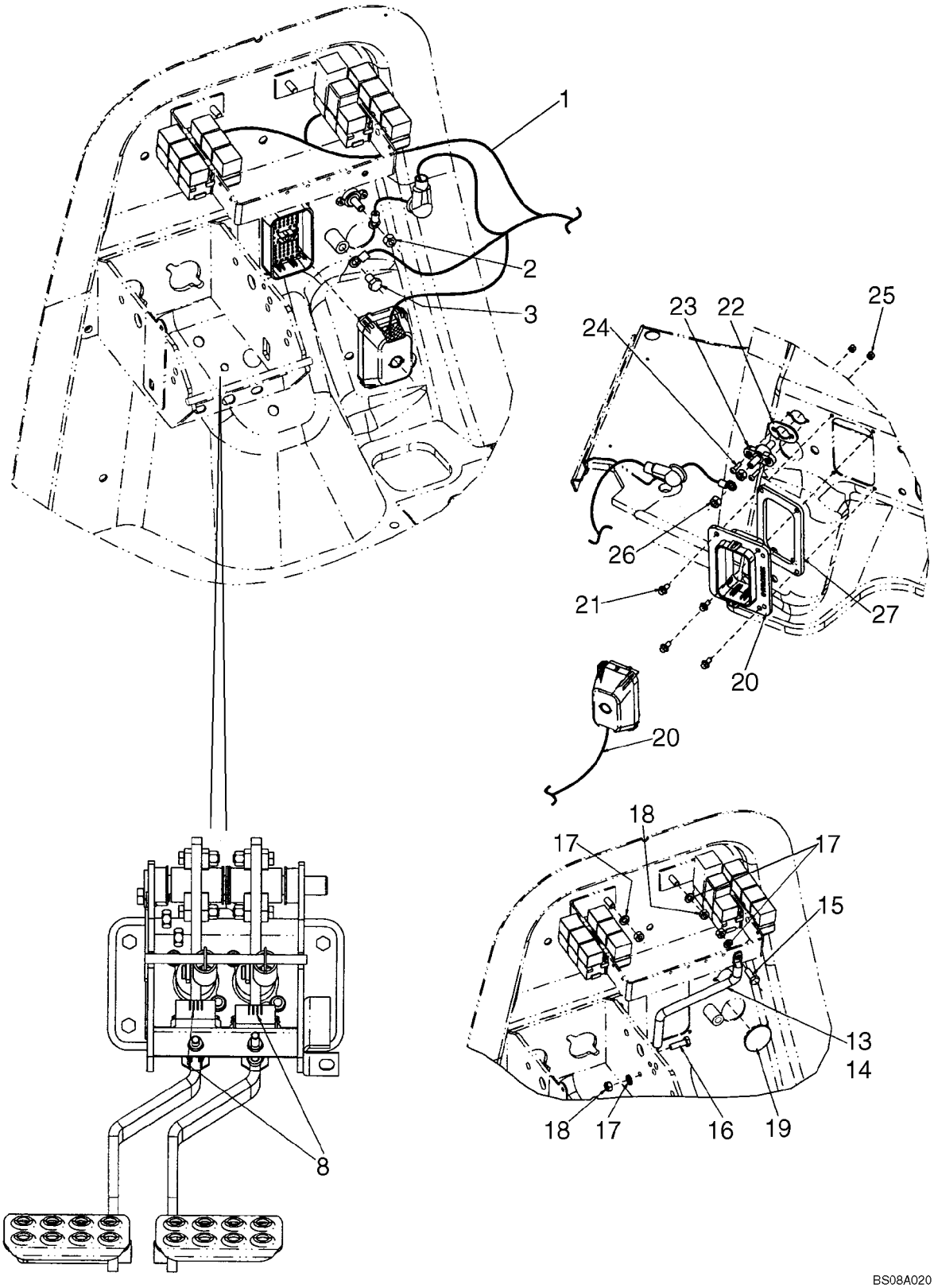

HARNESS, FRONT CONSOLE - MOUNTING

REF	FN	PART NUMBER	YR/SN	QTY	DESCRIPTION
1		87726592		1	HARNESS, WIRE, Front Console Harness; Mounts To Front Firewall
2		425-106		1	NUT, 3/8"-16, G5
3		128312A1		1	BOLT, M10 x 15; Mounts To Front Firewall
8		82026949		2	SWITCH, Brake
13		362930A2		1	BRACE, Relay Mounting
14		392353A1		1	CONDUIT
15		614-8020		1	BOLT, Hex, M8 x 20, 8.8
16		614-8025		1	BOLT, Hex, M8 x 25, 8.8
17		892-11008		4	WASHER, LOCK, M8
18		829-1408		4	NUT, M8, Cl 10
19		397876A1		1	PLUG, 1-5/8 in, Button
20		87726584		1	HARNESS, WIRE, Engine, Main Chassis
21		781-24613		4	SCREW, SELF TAP, Hex Flg Hd, M6 x 13
22		357966A1		1	GASKET
23		357278A1		1	JUNCTION BLOCK, Positive Battery
24		490-11012		2	SCREW, Cross Pan Hd, #10-32 x 3/4"
25		231-24409		2	NUT, LOCK, #10-32
26		425-106		2	NUT, 3/8"-16, G5
27		87649405		1	GASKET

04-09		p1	02/08

HARNESS, SIDE CONSOLE - SWITCHES

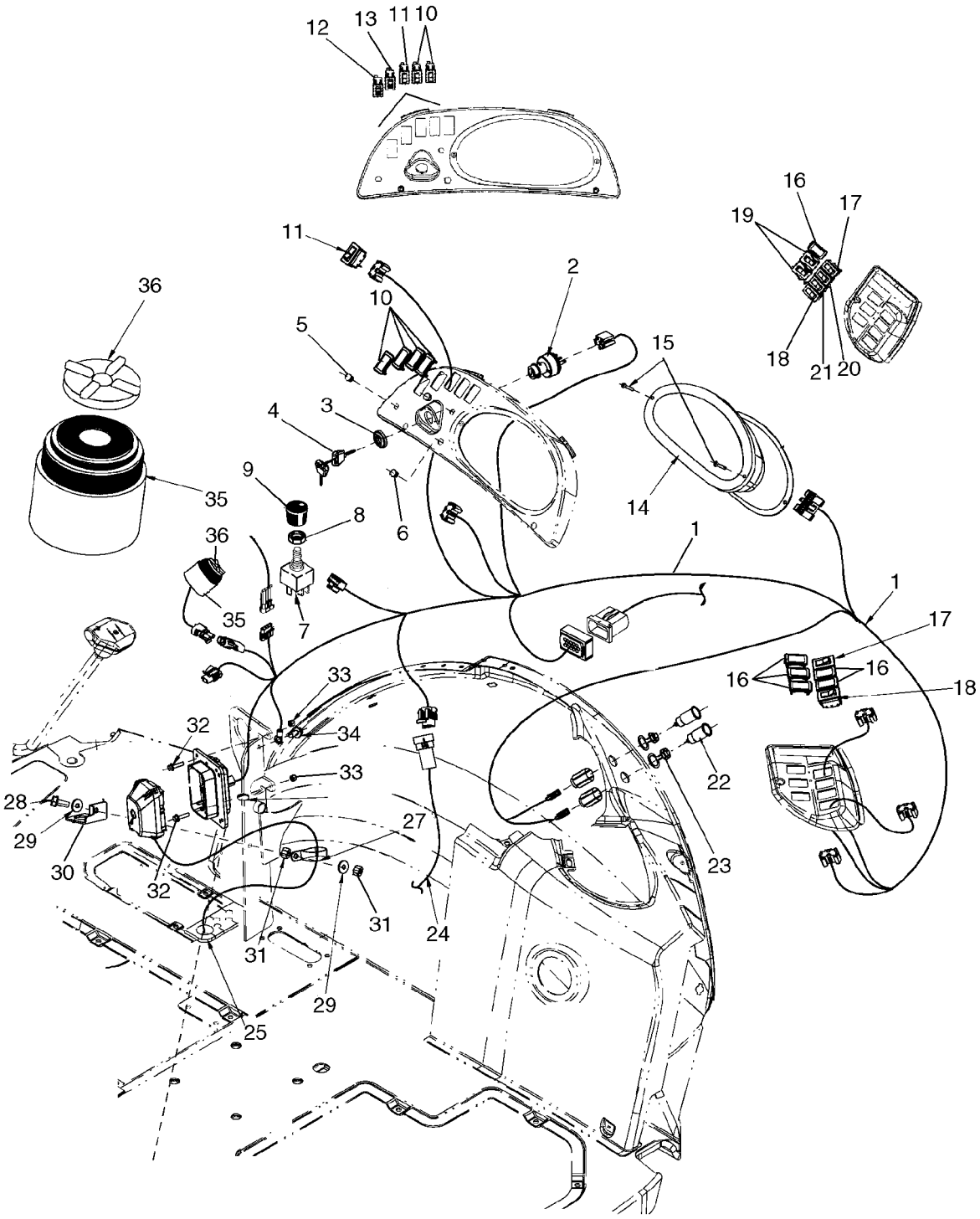

HARNESS, SIDE CONSOLE - SWITCHES

REF	FN	PART NUMBER	YR/SN	QTY	DESCRIPTION
1		87726595		1	HARNESS, WIRE, Side Console Harness
		282775A1		1	SWITCH, IGNITION, Incl. Ref 2 - 4
2		NSS		1	NOT SERVICED SEPARATELY, Switch, Without Keys
3		NSS		1	NOT SERVICED SEPARATELY, Nut
4		1964831C2		1	SET OF 2 KEYS, Padded
5		397569A1		2	PLUG, 7/16 in, Dome, If Used; For Air Conditioning Switch and Knob; See Figure 09-65
6		397570A1		1	PLUG, 1/2 in, Dome, If Used; For Heater Switch and Knob; See Figure 09-64
7		245258A1		1	SWITCH, Blower
		121415A1		1	FUSE, 25 amp, Blower
8		A42561		1	NUT
9		400379A1		1	KNOB
10		86000535		2-4	PLUG, 1.427" x .62", Plastic, If Used
11		87614808		1	SWITCH, Parking Brake
12		239408A1		1	SWITCH, Four Wheel Drive, If Used
		121412A1		1	FUSE, 10 Amp; Four Wheel Drive
13		235002A1		1	SWITCH, Ride Control, If Used
		121413A1		1	FUSE, 15 Amp, Ride Control
14		{87521766}		1	Instrument Cluster; See Figure 04-12
15		140-119		2	SCREW, Cross Pan Hd, #10-24 x 1 1/4"
16		86000535		1-5	PLUG, 1.427" x .62", Plastic, If Used
17		133715A1		1	SWITCH, Rear Work Lights
18		386852A2		1	SWITCH, Rear Horn
19		386789A2		2	SWITCH, Backhoe Quick Coupler, If Used
20		386788A1		1	SWITCH, Rear Wndshield Washer; If Used
21		386786A1		1	SWITCH, Rear Wiper; If Used
22		283779A1		2	OUTLET, Power Plug Outlet, 30 amp Maximum
23		283781A1		2	CAP, Power Plug Outlet
24		87726574		1	HARNESS, WIRE, Side Options Harness
25		NSS		1	NOT SERVICED SEPARATELY, Harness, Loader Control Lever; Included In Loader Control Lever Handle
27		515-23444		1	CLAMP, 1 3/4", Insul, 3/8" Bolt

04-09		p2	02/08

HARNESS, SIDE CONSOLE - SWITCHES

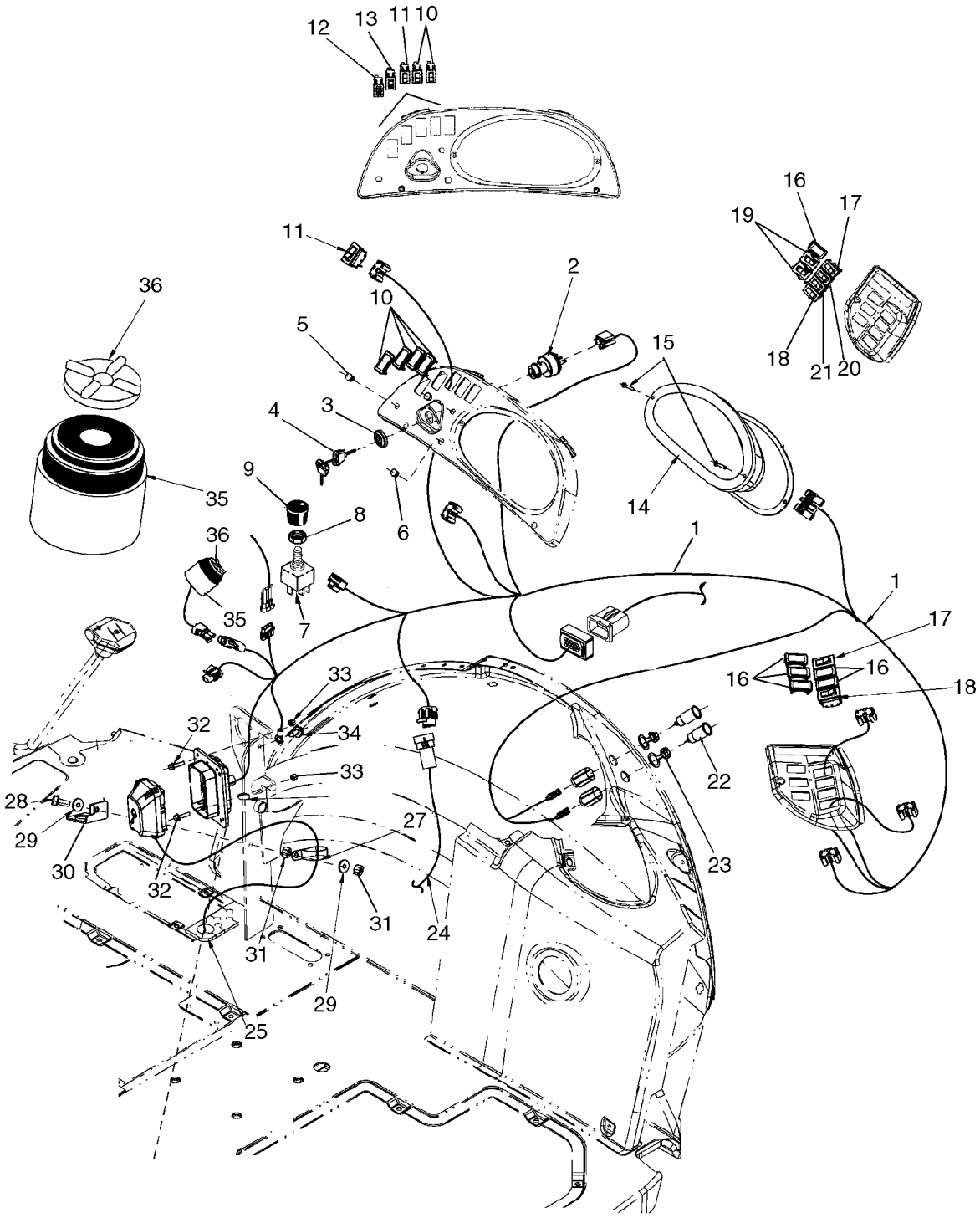

HARNESS, SIDE CONSOLE - SWITCHES

REF	FN	PART NUMBER	YR/SN	QTY	DESCRIPTION
28		614-8030		1	BOLT, Hex, M8 x 30, 8.8
29		895-15008		2	WASHER, M8 x 20 x 1.6
30		87700144		2	BRACKET, SUPPORTING, Alarm
31		829-1408		2	NUT, M8, Cl 10
32		844-6025		2	BOLT, Hex Flg, M6 x 25, 8.8
33		832-10406		2	NUT, LOCK, M6 x 1, Cl 8
34		844-10020		1	BOLT, Hex Flg, M10 x 20, 8.8
35		87527167		1	HORN, Alarm, Warning
36		87539792		1	COVER, For Muting Audible Alarm, Cab Models Only
		87726573		1	HARNESS, WIRE, Chassis Options Harness

04-10		p1	01/08

INSTRUMENT PANEL, FRONT - COVERS

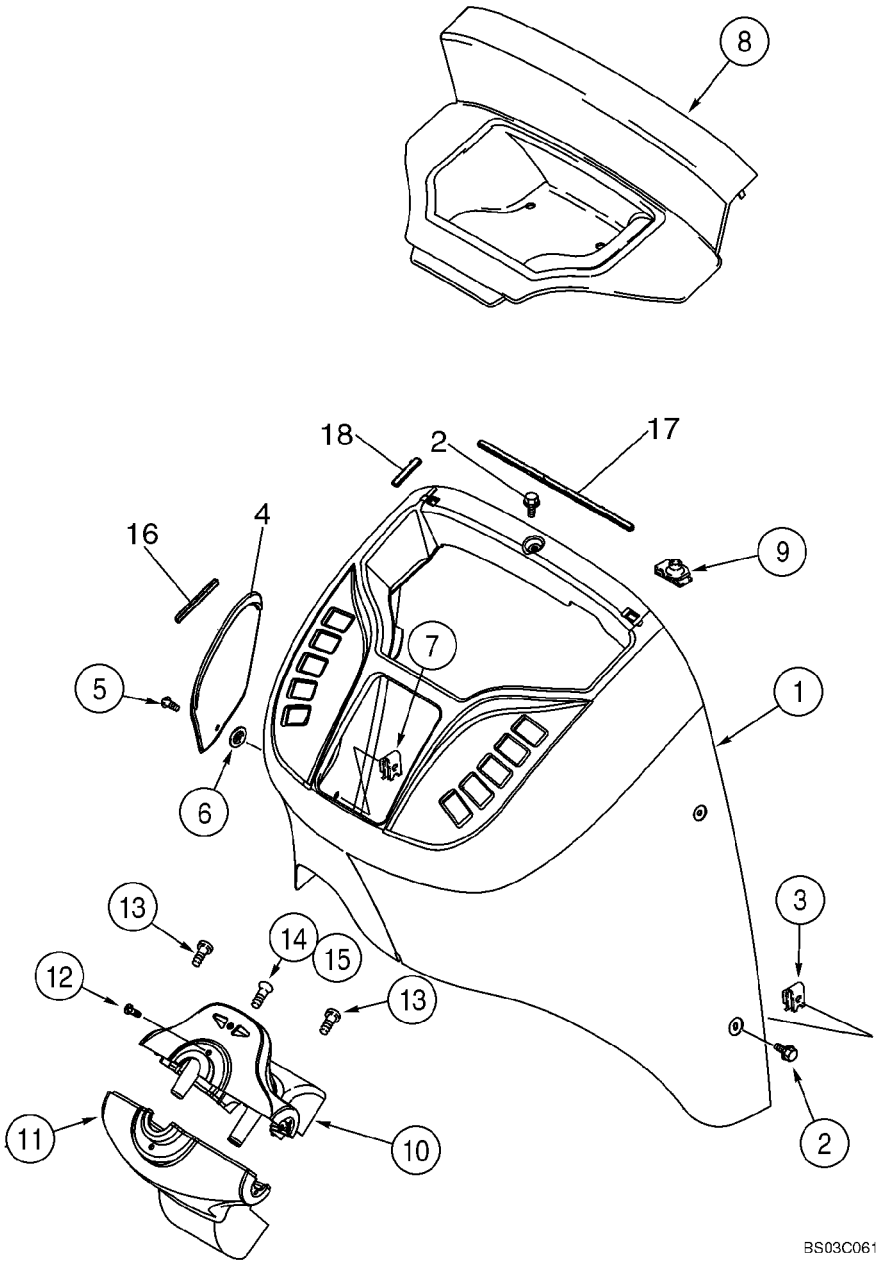

INSTRUMENT PANEL, FRONT - COVERS

REF	FN	PART NUMBER	YR/SN	QTY	DESCRIPTION
1		355827A2		1	COVER, Front; Standard; If Used
1		87694305		1	CONSOLE, Front; Deluxe Cab; If Used
2		87310152		6	BOLT, Hex Flange, M6 x 16, Stainless Steel
3		833-40406		6	NUT, M6, U
4		360244A1		1	COVER, Fuse Access
5		87310086		1	SCREW, Includes Washer, Stainless Steel
6		127009A1		1	CLIP, ELECTRICAL
7		131-861		1	NUT, Tinn, U, #10-24
8		360245A2		1	COVER, Relay Access
9		278316A2		2	CLIP
10		373689A2		1	COVER ASSY, Steering Column, Upper; Incl. Ref 10A - 10E; Components Not Illustrated
10A		360242A2		1	COVER
10B		303465A2		1	LAMP, Blinker
10C		303466A1		1	SYMBOLS, Right Flasher
10D		303467A1		1	SYMBOLS, Left Flasher
10E		373693A1		1	SCREW, Flat Head, No. 8 x 7/16
11		360243A2		1	COVER, Steering Column, Lower
12		87310124		2	SCREW, No. 10 x 1/2, Stainless Steel
13		87310124		2	SCREW, No. 10 x 1/2, Stainless Steel
14		87540980		1	SCREW, No. 10-16 x 1/2, High Grade Stainless Steel
15		131-121		1	NUT, Tinn, U, #10-24
16		414572A1		1	STRIP, 100 mm, Adhesive Back
17		414034A1		1	STRIP, 330 mm, Adhesive Back
18		414033A1		4	STRIP, 60 mm, Adhesive Back

04-11		p1	01/08

INSTRUMENT PANEL, SIDE - COVERS (RIGHT-HAND SIDE)

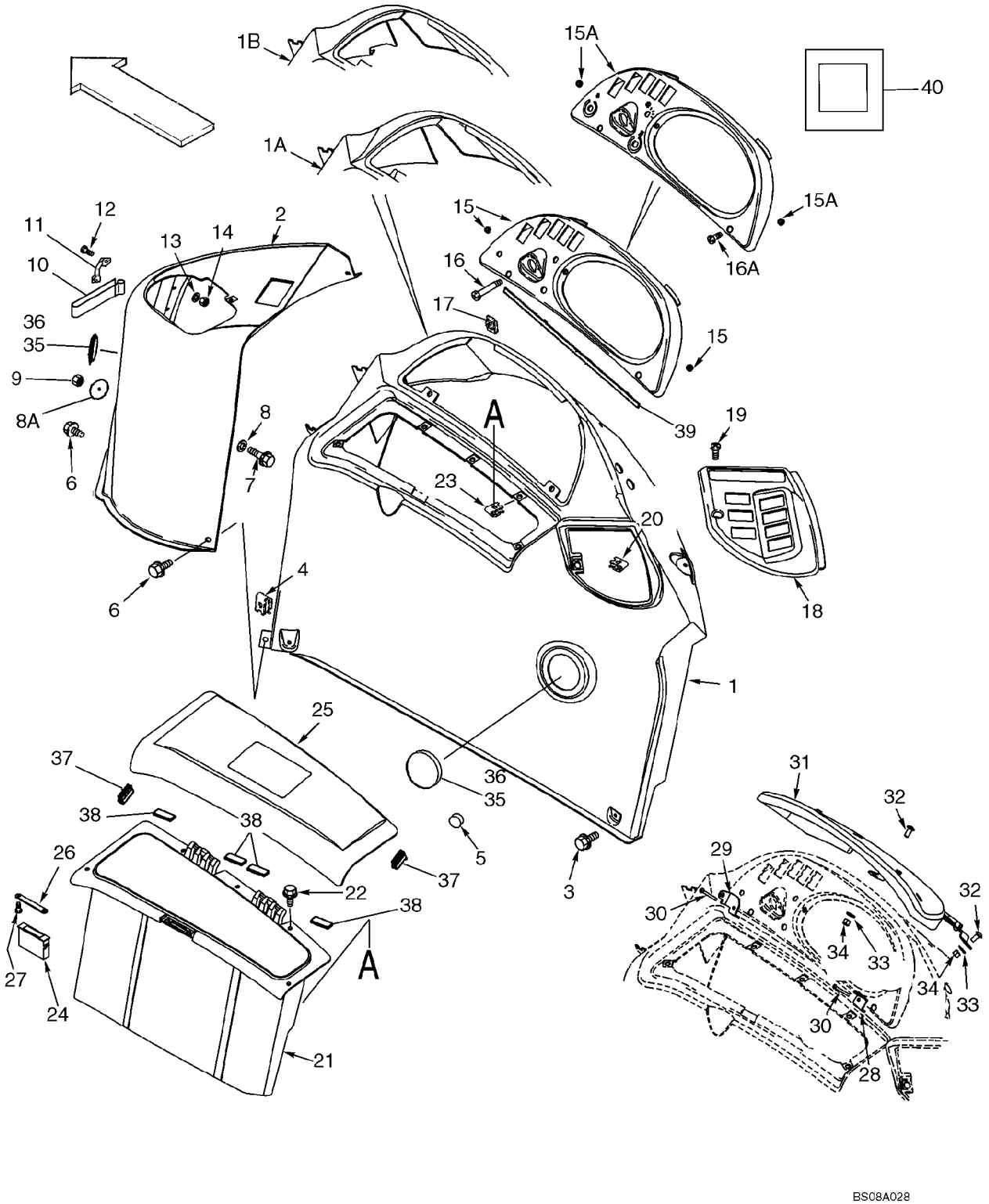

INSTRUMENT PANEL, SIDE - COVERS (RIGHT-HAND SIDE)

REF	FN	PART NUMBER	YR/SN	QTY	DESCRIPTION
1		360250A2		1	CONSOLE, Canopy Models
1A		355198A2		1	CONSOLE, Cab, Single Door
1B		372167A3		1	CONSOLE, Cab, Two Door
2		87633581		1	CONSOLE, Loader Control
3		87310098		6	BOLT, Flange, M6 x 20, Stainless Steel
4		833-40406		5	NUT, M6, U
5		L60224		1	BUMPER, Rubber
6		87310152		2	BOLT, Flange, M6 x 16, Stainless Steel
7		844-6025		1	BOLT, Hex Flg, M6 x 25, 8.8
8		895-15006		1	WASHER, M6 x 25 x 1.6
8A		407660A1		1	WASHER, 7 mm ID x 50 mm OD
9		832-10406		1	NUT, LOCK, M6 x 1, Cl 8
10		184726A1		1	STRIP, FIXING, Velcro
11		182594A1		2	HANDLE, Velcro Retainer
12		87310184		4	SCREW, M4 x 16; 4.8, Stainless Steel
13		895-11004		4	WASHER, M4, 4,3 x 9 x 0,8 mm
14		832-10404		4	NUT, LOCK, M4 x .7, Cl 8
15		391818A2		1	BEZEL, Instrument Cluster Mounting; Canopy Models; Includes 390258A1
		390258A1		2	INSERT, No. 10, Threaded Insert
15A		390255A2		1	BEZEL, Instrument Cluster Mounting; Cab Models; Includes 390258A1
		390258A1		2	INSERT, No. 10, Threaded Insert
16		87310128		2	SCREW, No. 10 x 2-1/4, Stainless Steel; Canopy Models
16A		87310126		2	SCREW, No. 10 x 3/4, Stainless Steel; Cab Models
17		131-619		2	NUT, J, Ret, #10-24, Cab or Canopy
18		353068A2		1	BEZEL, Rear Switches
19		87310126		1	SCREW, No. 10 x 3/4, Stainless Steel
20		131-619		1	NUT, J, Ret, #10-24
21		366632A2		1	BOX, TOOL, Right-Hand
22		87310098		5	BOLT, Flange, M6 x 20, Stainless Steel
23		833-40406		5	NUT, M6, U
24		D127335		1	RETAINER, Magnetic Catch
25		366633A3		1	LID, Storage Box

INSTRUMENT PANEL, SIDE - COVERS (RIGHT-HAND SIDE)

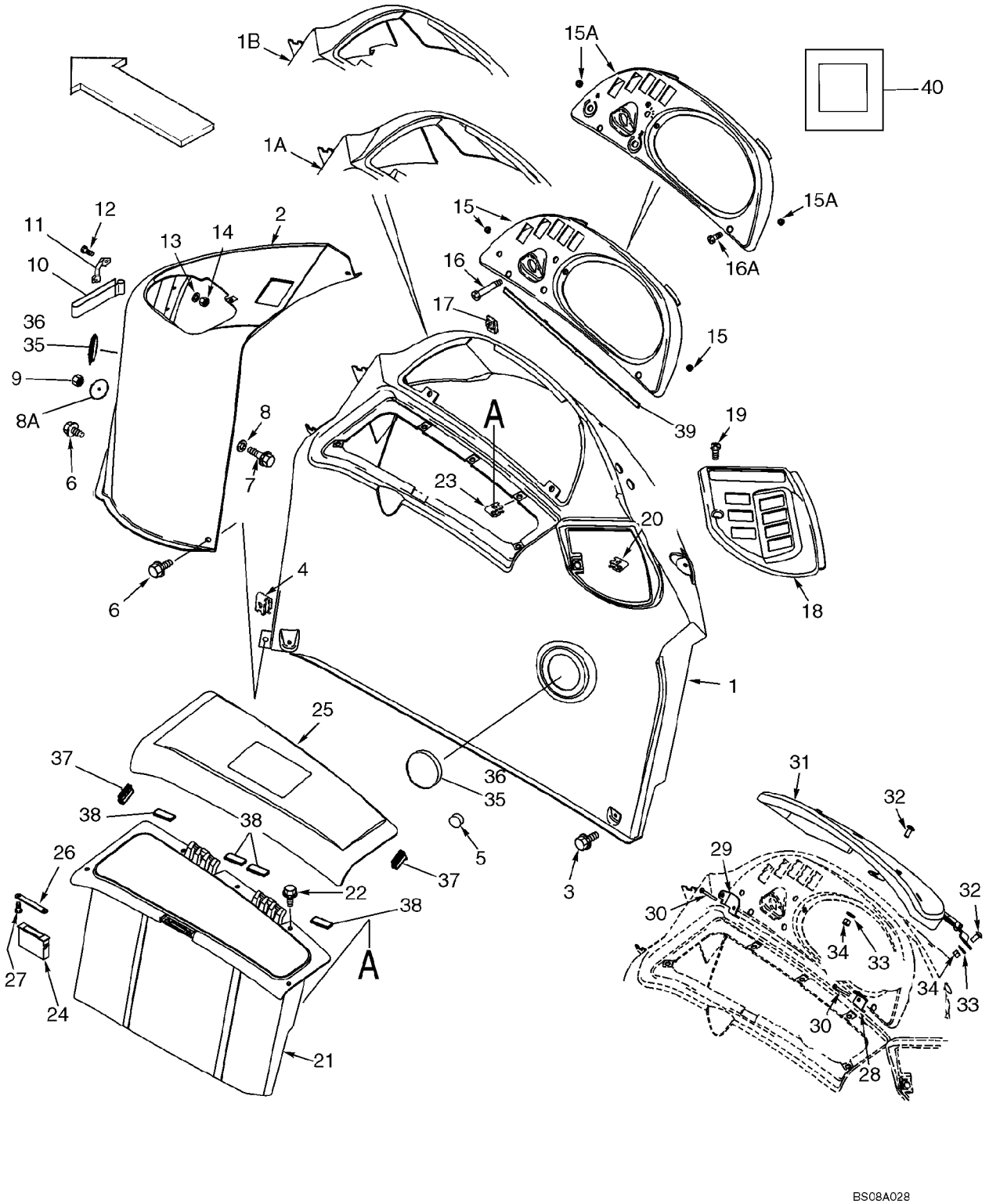

BS08A028

INSTRUMENT PANEL, SIDE - COVERS (RIGHT-HAND SIDE)

REF	FN	PART NUMBER	YR/SN	QTY	DESCRIPTION
26		375112A1		1	PLATE, CATCH, Striker
27		440-1066		2	SCREW, Cross Pan Hd, #6-32 x 3/8"
28		386369A2		1	BRACKET
29		386368A2		1	BRACKET
30		87310128		2	SCREW, No. 10 x 2-1/4, Stainless Steel
31		385614A4		1	COVER ASSY, Instrument Cluster; Anti-Vandalism, Canopy Models; Includes 386502A1, F22426
		386502A1		2	BUMPER
		F22426		3	STOP
32		87310176		2	BOLT, Round Head, M8 x 20, Stainless Steel
33		87310185		2	WASHER, 9 x 20 x 1,6 mm, Stainless Steel
34		832-10408		2	NUT, LOCK, M8 x 1.25, Cl 8
35		1302758C1		2	PLUG, 3 inch
36		87310144		4	SCREW, SELF TAP, No. 6 x 1/2, Stainless Steel
37		430471A1		2	SEAL, Bulb, 40 mm; Storage Lid Bumper
38		414092A1		4	STRIP, 50 mm, Adhesive Back; Storage Box
39		414071A1		1	STRIP, SEALING, 480 mm, Adhesive Back
40		412510A1		1	SEAL, 25 x 25 x 3 mm, Adhesive Back; Console To Fender

INSTRUMENT CLUSTER

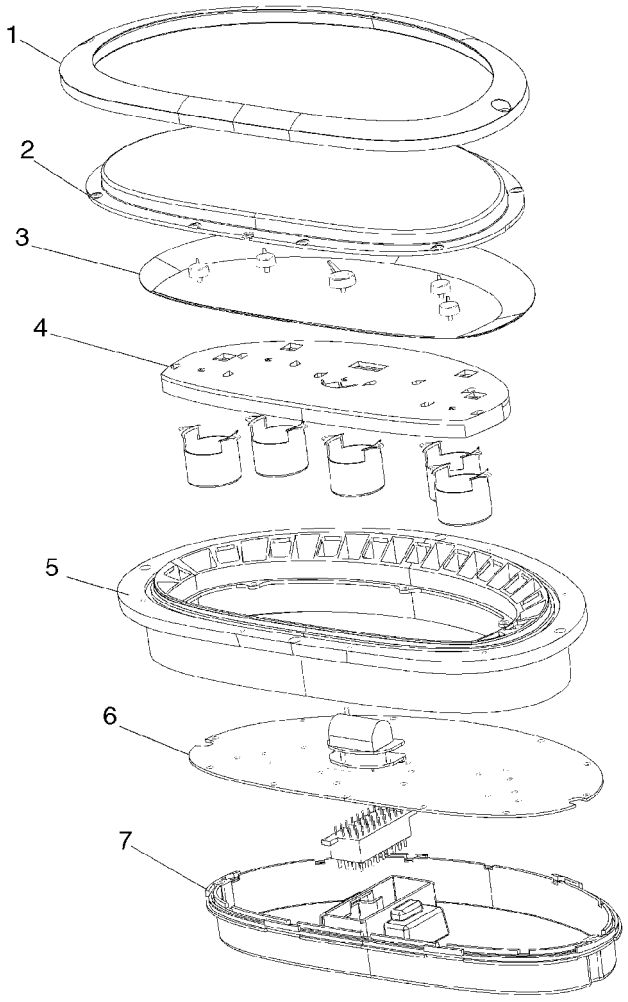

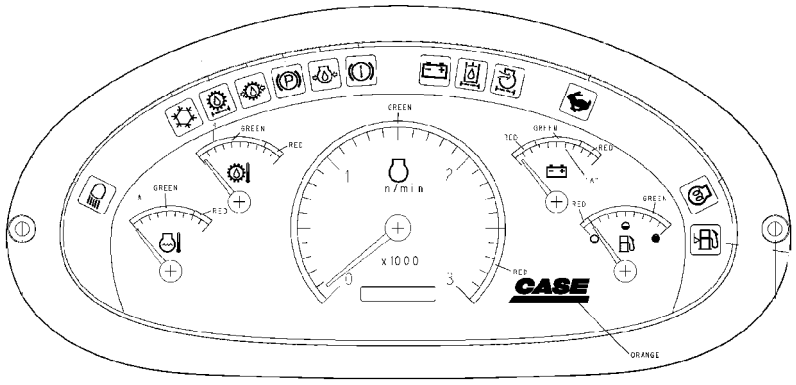

BS08A027

INSTRUMENT CLUSTER

REF	FN	PART NUMBER	YR/SN	QTY	DESCRIPTION
		{87521766}		1	Instrument Cluster; Component Parts Not Available At Printing
1		NSS		1	NOT SERVICED SEPARATELY, Bezel
2		NSS		1	NOT SERVICED SEPARATELY, Lens
3		NSS		1	NOT SERVICED SEPARATELY, Overlay
4		NSS		1	NOT SERVICED SEPARATELY, Lightpipe
5		NSS		1	NOT SERVICED SEPARATELY, Frame
6		NSS		1	NOT SERVICED SEPARATELY, PCB
7		NSS		1	NOT SERVICED SEPARATELY, Rear Cover

04-13		p1	12/07

ELECTRICAL - LAMPS, ROPS CANOPY

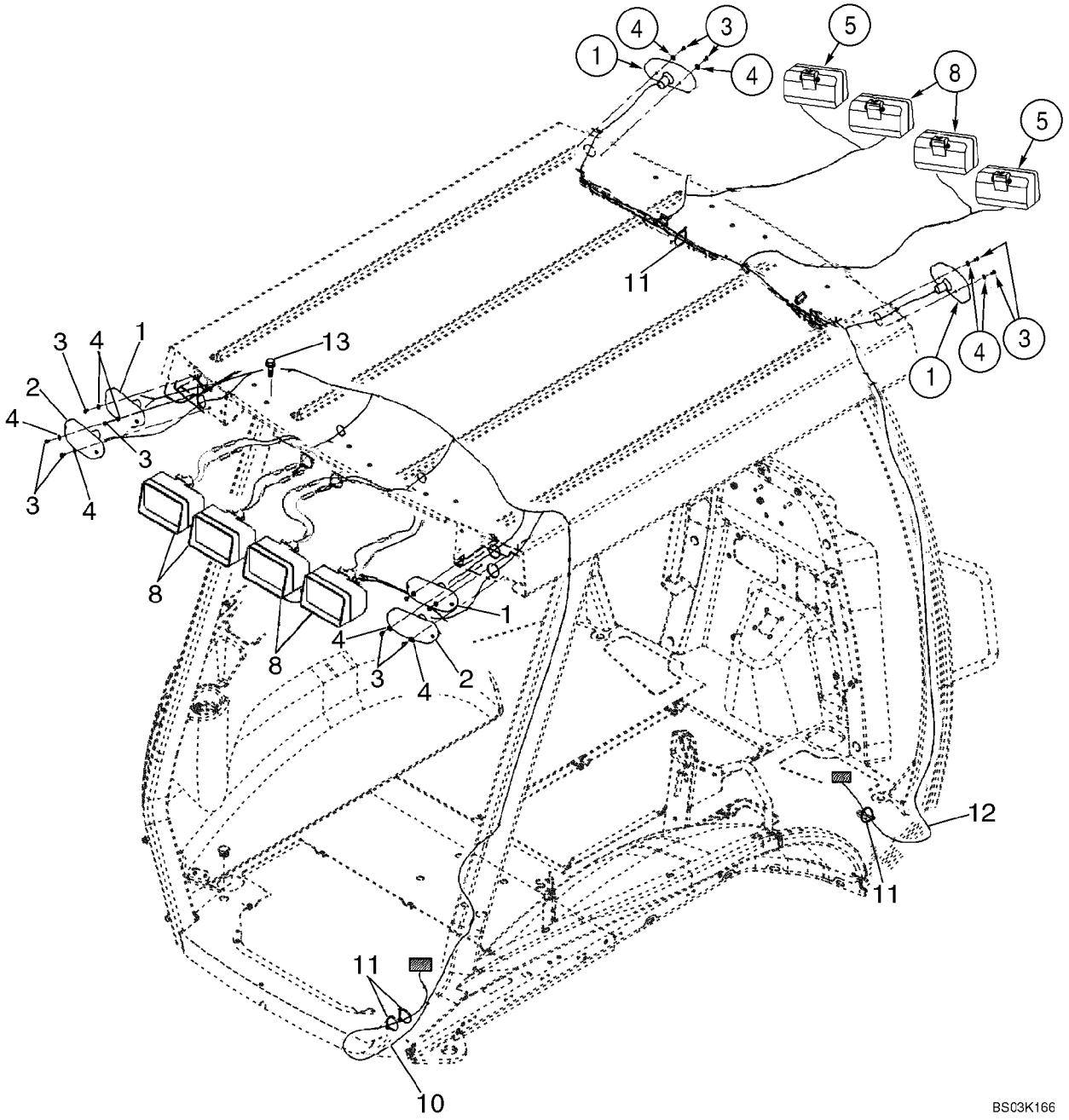

ELECTRICAL - LAMPS, ROPS CANOPY

REF	FN	PART NUMBER	YR/SN	QTY	DESCRIPTION
1		D135384		4	LAMP, Turn Signal and Flasher; See Figure 04-15
2		D121152		2	LAMP, Stop And Tail; See Figure 04-15
3		329032A1		12	SCREW, No. 10 x 3/8
4		495-31022		12	WASHER, #10
5		87343247		2	LIGHT ASSY., Front Driving; Outer; Incl. 1312210C2 Bulb; Cobo Brand; If Used
		1312210C2		1	BULB, 12V, 55W, H3
8		398847A3		6	LIGHT ASSY., Front and Rear Flood and Work Lamps; Includes 1312210C2, 276498A1; ABL Brand, If Used
8		87443080		6	LIGHT ASSY., Front and Rear Flood and Work Lamps; Includes 1312210C2 Bulb; Cobo Brand, If Used
		1312210C2		1	BULB, 12V, 55W, H3
		276498A1		1	LENS, With Hardened Glass; Replaces 1964801C1 Non-Hardened Lens Used In Production
10		396023A2		1	HARNESS, Canopy Lamps; Rear
11		L18337		AR	STRAP, CABLE, 9.95"-12.1" lg
12		404617A1		1	HARNESS, Canopy Lamps and Wiper; Front
13		128312A1		8	BOLT, Flange, M10 x 15

ELECTRICAL - LAMPS, ROPS CAB

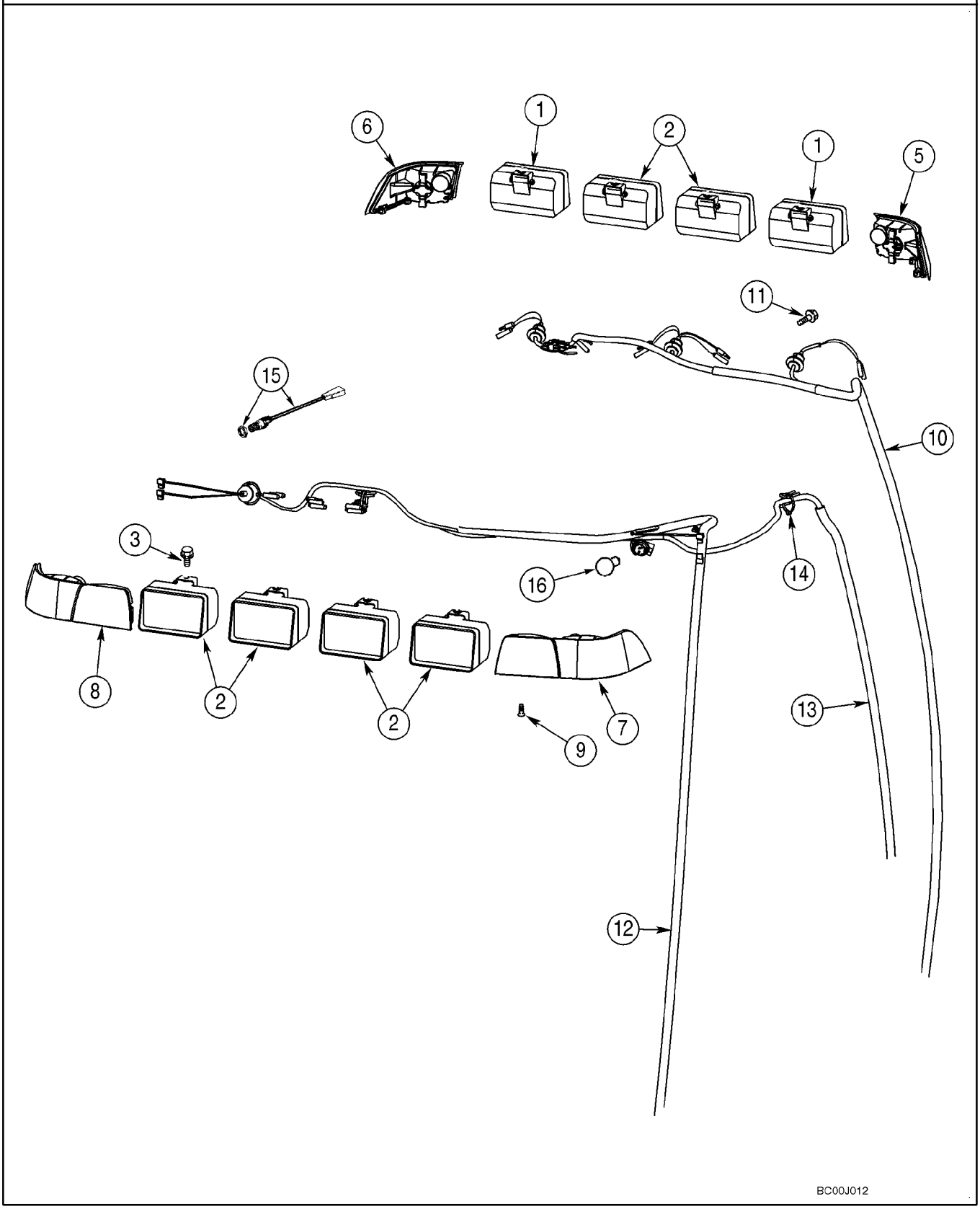

ELECTRICAL - LAMPS, ROPS CAB

REF	FN	PART NUMBER	YR/SN	QTY	DESCRIPTION
1		87343247		2	LIGHT ASSY., Front Driving; Outer; Incl. 9703399 Bulb; Cobo Brand; If Used
		9703399		1	BULB, 12V, 55W, H3
2		398847A3		6	LIGHT ASSY., Front and Rear Flood and Work Lamps; Includes 9703399, 276498A1; ABL Brand, If Used
2		87443080		6	LIGHT ASSY., Front and Rear Flood and Work Lamps; Includes 9703399 Bulb; Cobo Brand, If Used
		9703399		1	BULB, 12V, 55W, H3
		276498A1		1	LENS, With Hardened Glass
3		128312A1		8	BOLT, M10 x 15
5		279224A1		1	LIGHT, WARNING, Amber; Right Front Corner; Includes 87517414 Bulb Holder
6		279223A1		1	LIGHT, WARNING, Amber; Left Front Corner; Incl. 87517414 Bulb Holder
7		357540A1		1	LAMP, TAIL, Amber and Red; Right Rear Corner
8		357541A1		1	LAMP, TAIL, Amber and Red; Left Rear Corner
9		394863A1		10	SCREW, M6 x 20
10		404617A1		1	HARNESS, Front
11		844-10020		2	BOLT, Hex Flg, M10 x 20, 8.8
12		398380A3		1	HARNESS, Rear
13		396018A3		1	HARNESS, B-Post, Dome Lamp, Radio, Rear Wiper
14		L18337		5	STRAP, CABLE, 9.95"-12.1" lg
15		279265A2		1	SWITCH, Dome Lamp
16		279916A1		2	BULB

04-15		p1	12/07

LAMP ASSY (ROPS CANOPY MODELS)

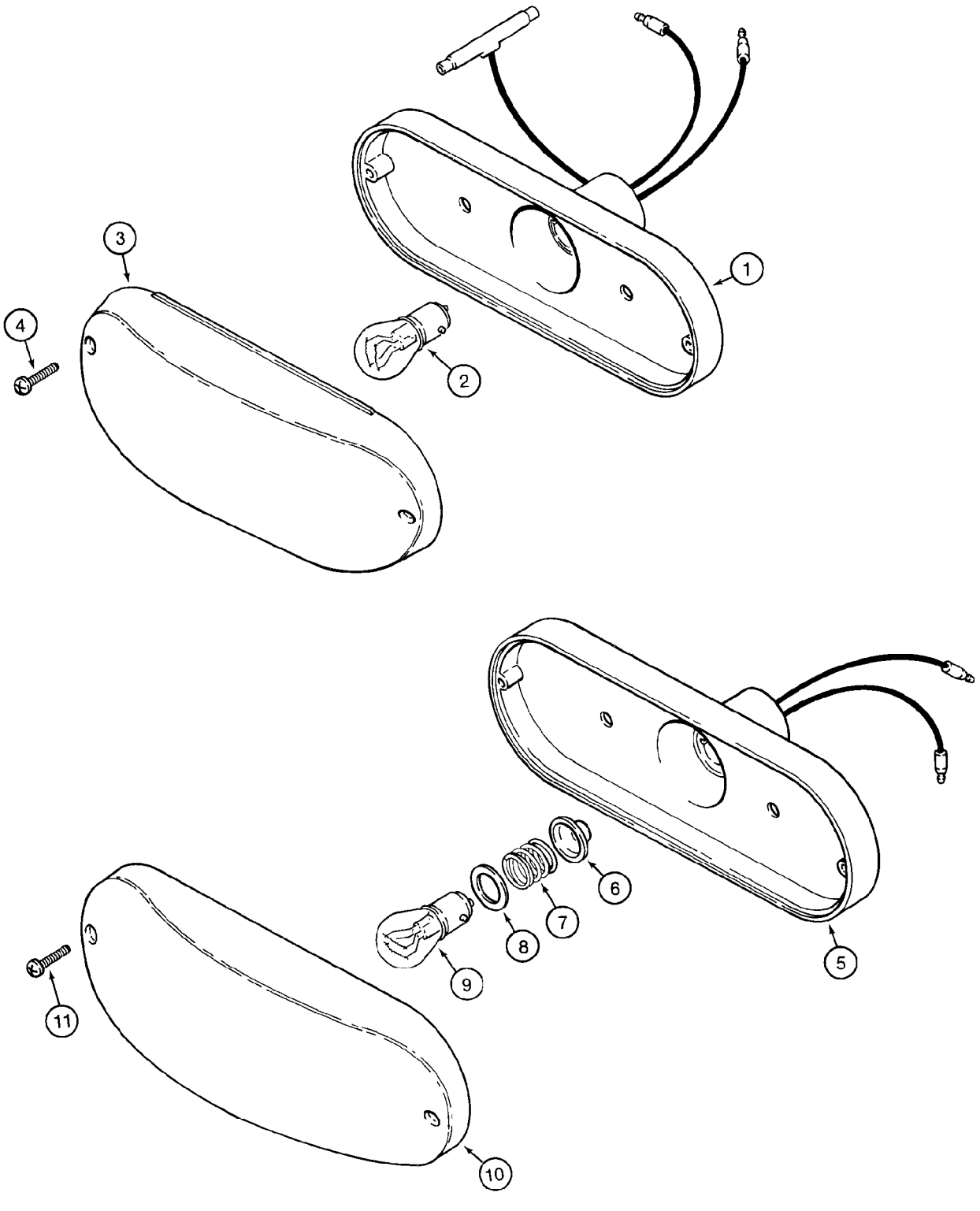

LAMP ASSY (ROPS CANOPY MODELS)

REF	FN	PART NUMBER	YR/SN	QTY	DESCRIPTION
		D121152		2	LAMP, Stop And Tail Lamp; Red; Incl. Ref 1 - 4
1		NSS		1	NOT SERVICED SEPARATELY, Housing
2		T34857		1	BULB, C6, #1157, 12.8V
3		N6836		1	LENS, Red
4		261-14310		2	SCREW, SELF TAP, Cross Pan Hd, #6 x 5/8"
		D135384		4	LAMP, Turn Signal and Flasher; Amber; Incl. Ref 5 - 11
5		NSS		1	NOT SERVICED SEPARATELY, Housing
6		NSS		1	NOT SERVICED SEPARATELY, Seal
7		NSS		1	NOT SERVICED SEPARATELY, Spring
8		NSS		1	NOT SERVICED SEPARATELY, Insulator
9		A41264		1	BULB, #1156, 12V
10		N14283		1	LENS, Amber
11		261-14310		2	SCREW, SELF TAP, Cross Pan Hd, #6 x 5/8"

HORN - ALARM, BACKUP

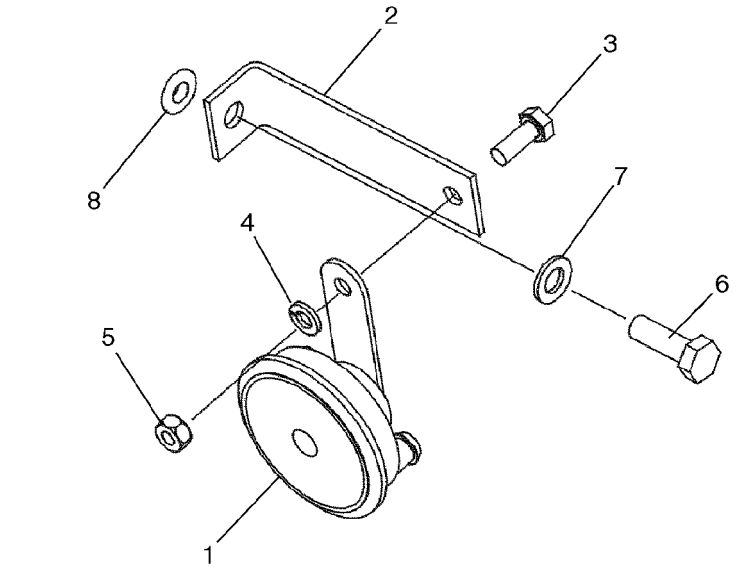

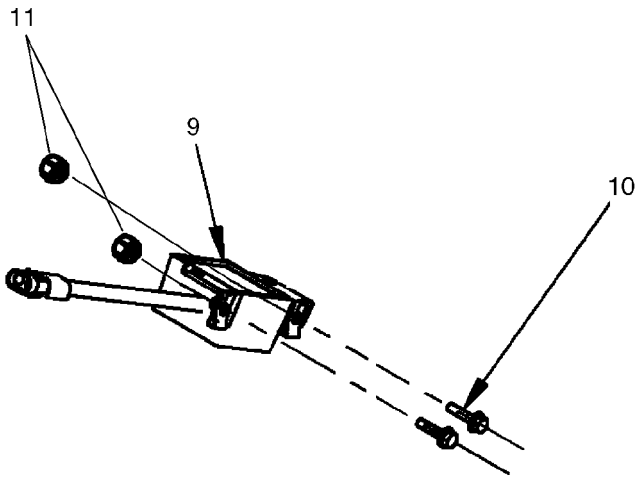

BS08A029

HORN - ALARM, BACKUP

REF	FN	PART NUMBER	YR/SN	QTY	DESCRIPTION
1		237582A1		1	HORN, Black
2		87423496		1	BRACKET
3		614-8020		1	BOLT, Hex, M8 x 20, 8.8
4		892-11008		1	WASHER, LOCK, M8
5		829-1408		1	NUT, M8, Cl 10
6		614-10030		1	BOLT, Hex, M10 x 30, 8.8
7		895-11010		1	WASHER, M10 x 20 x 2
8		87417721		1	INSERT, THREADED, M10
9		87528887		1	ALARM, Backup; Includes Wire
10		844-6025		2	BOLT, Hex Flg, M6 x 25, 8.8
11		833-40406		2	NUT, M6, U

04-17		p1	01/08

BEACON, ROTATING (CAB OR CANOPY MODELS)

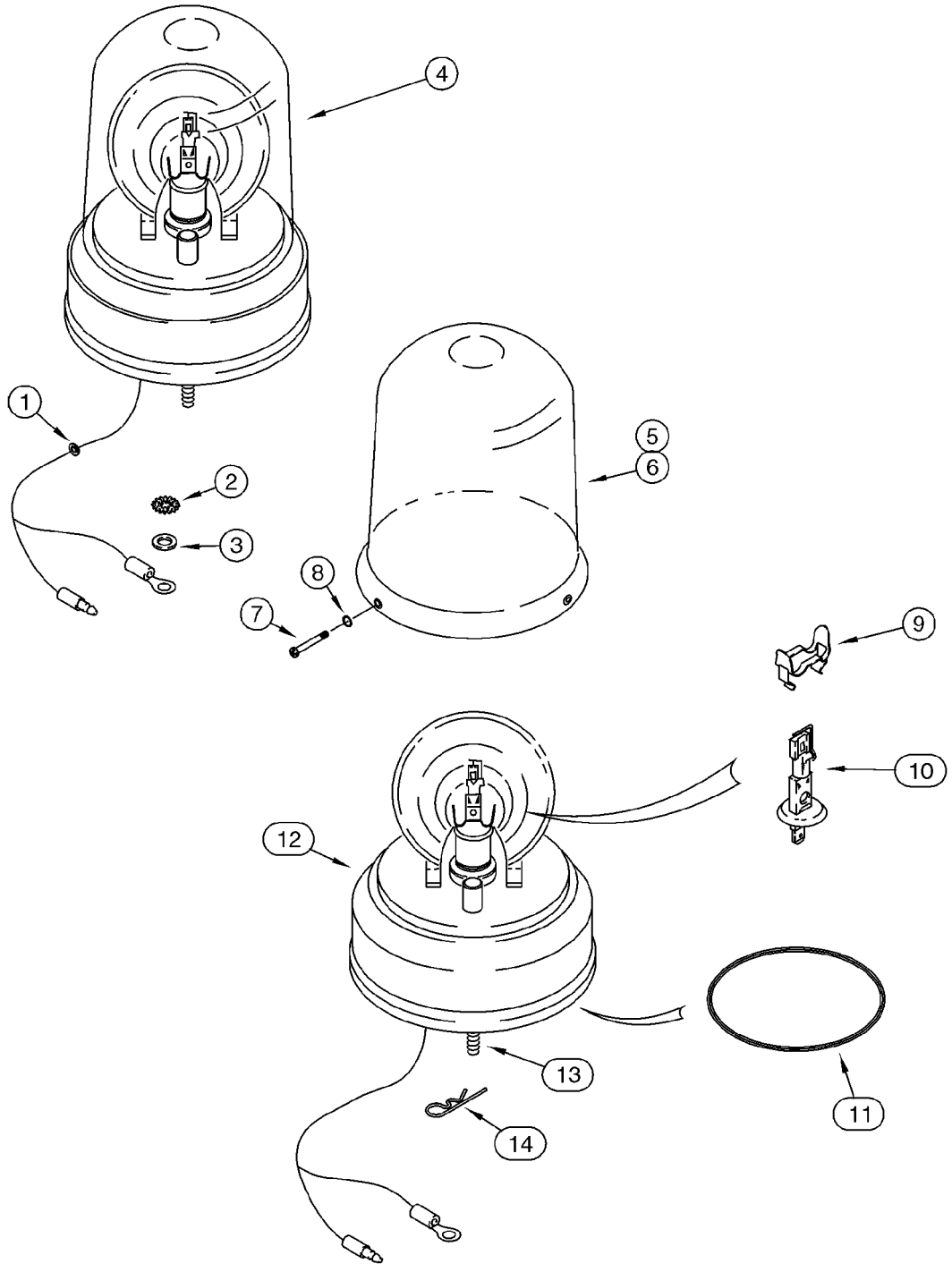

BEACON, ROTATING (CAB OR CANOPY MODELS)

REF	FN	PART NUMBER	YR/SN	QTY	DESCRIPTION
		387940A1		1	KIT, Rotating Beacon; Amber, 12V; Incl. Ref 1 - 5, 7 - 16 and Instructions
1		A23870		1	GROMMET
2		493-11026		1	WASHER, LOCK, Ext-Int Tooth, 1/4", Ground
3		495-21031		1	WASHER, 1/4"
4		108366A1		1	LIGHT, WARNING, Rotating Beacon Assembly; Amber, 12V; Incl. Ref 5, 7 - 14
5		A187542		1	LENS, Amber; If Used
6		127158A1		1	LENS, Blue; Optional; Not Included In Kit, Purchase Separately; If Used
7		168-71		3	SCREW, Drive, #8 x 1/2"
8		238-5005		3	O-RING, -005, 70 Duro, .101" ID x .070" Thk
9		101531A1		1	CLIP
10		86616248		1	BULB, #HI, 55w
11		A187575		1	BELT, Drive Motor
12		NSS		1	NOT SERVICED SEPARATELY, Base; With Drive Motor
13		614-6020		3	BOLT, Hex, M6 x 20, 8.8
14		136-54		3	PIN, 1/4 x 11/16
15		386851A1		1	SWITCH, Rotating Beacon; Not Illustrated
16		121412A1		1	FUSE, Fuse, 10 amp; Not Illustrated

04-18		p1	01/08

ANTENNA, RADIO - HARNESS, RADIO

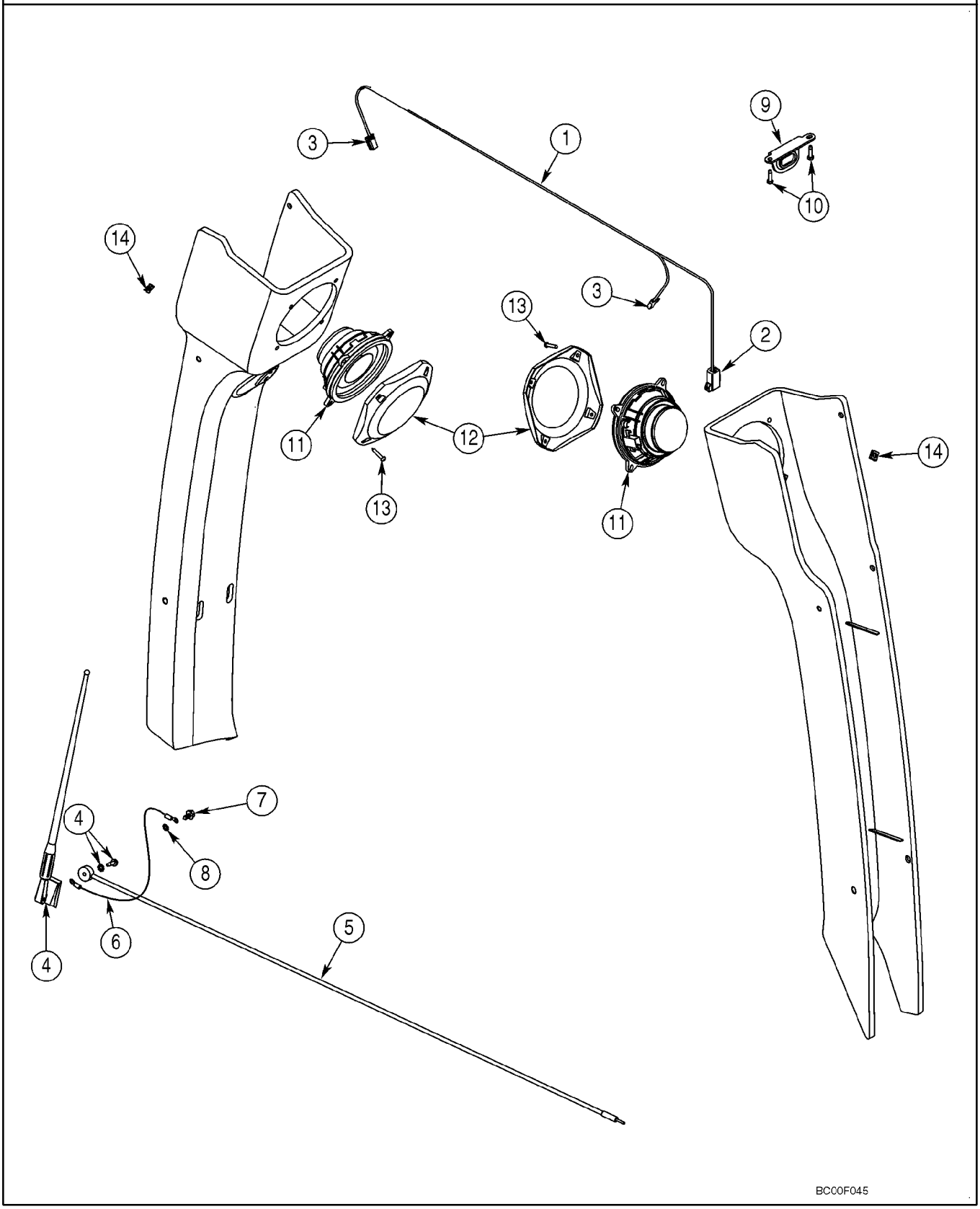

ANTENNA, RADIO - HARNESS, RADIO

REF	FN	PART NUMBER	YR/SN	QTY	DESCRIPTION
1		382664A2		1	HARNESS, Speaker; Incl. Ref 2, 3
2		227389A1		1	CONNECTOR, To Cab Harness
3		195552A1		2	FITTING, Speaker
4		197745A1		1	ANTENNA, Radio; Includes Flat Washer and Nut Which Are Not Serviced Separately
5		381659A1		1	CABLE ASSY.
6		291010A1		1	WIRE, Ground
7		282-16512		2	SCREW, Hex Wash Hd, #10-16 x 3/4"
8		893-11005		1	WASHER, LOCK, Ext Tooth, M5
9		386927A1		1	BRACKET, Radio Mounting
10		276-26512		2	SCREW, SELF TAP, Hex Hd, #10 x 3/4"
11		182721A2		2	SPEAKER
12		187281A1		2	COVER
13		761-17325		8	SCREW, SELF TAP, Pan Hd, M4.2 x 25
14		177269A1		8	NUT, Spring
15		L18331		1	STRAP, CABLE, Tie; Not Illustrated

ELECTRICAL - BACKHOE AUXILIARY HYDRAULIC, UNI-DIRECTIONAL

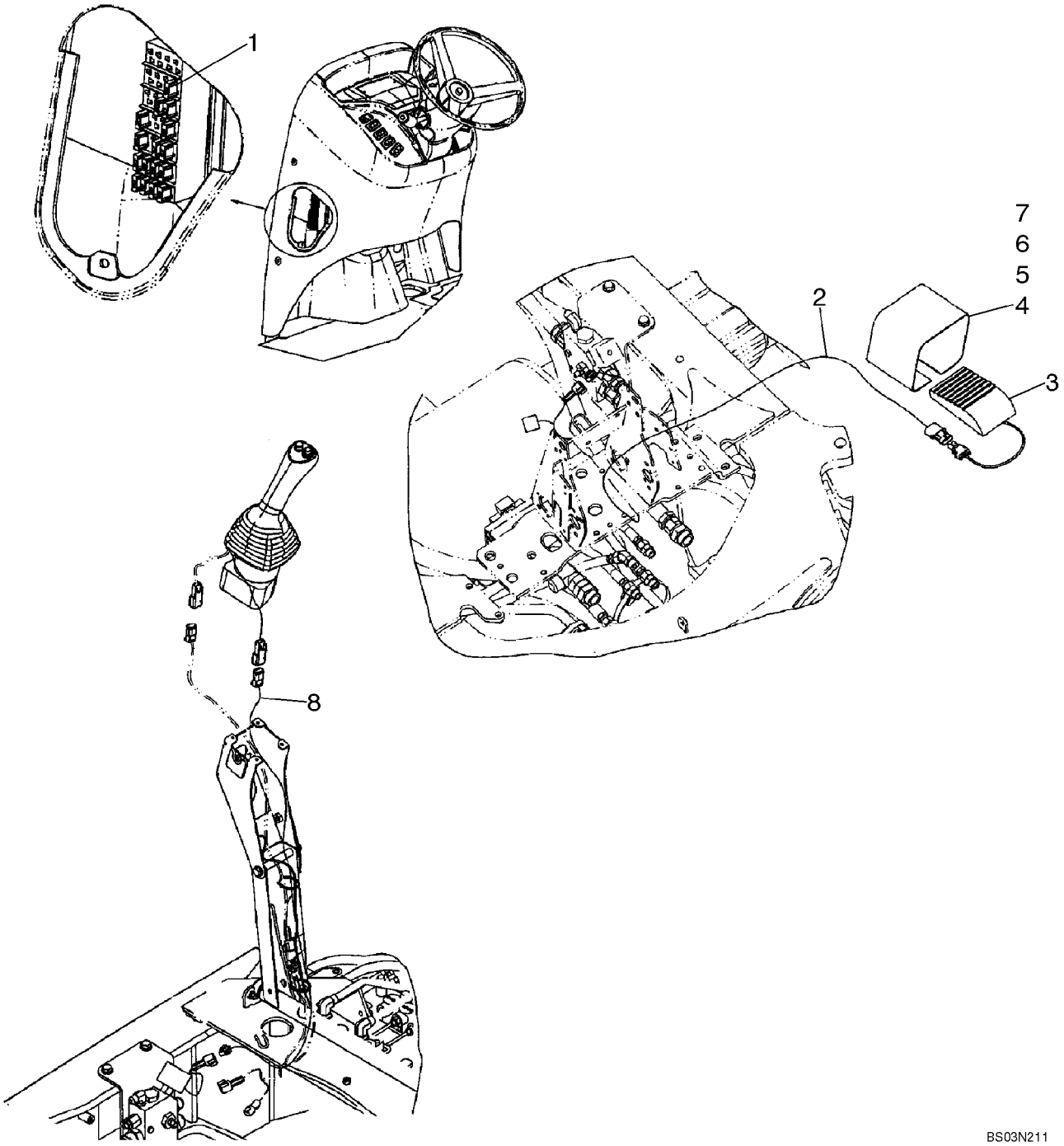

ELECTRICAL - BACKHOE AUXILIARY HYDRAULIC, UNI-DIRECTIONAL

REF	FN	PART NUMBER	YR/SN	QTY	DESCRIPTION
1		121413A1		1	FUSE, 15 amp
2		87425631		1	HARNESS, WIRE, Auxiliary Hydraulic Harness, Uni-Directional; Models Without Pilot Controls
3		137219A1		1	SWITCH, Foot; Without Pilot Controls
4		300030A1		1	COVER, Without Pilot Controls
5		843-1516		2	SCREW, Hex Flat Hd, M5 x 16, 4.8
6		892-11005		2	WASHER, LOCK, M5
7		824-1405		2	NUT, M5, Cl 5
8		87425635		1	HARNESS, WIRE, Auxiliary Hydraulic; Uni-Directional; Models With Pilot Controls

04-20		p1	01/08

ELECTRICAL - BACKHOE AUXILIARY HYDRAULIC, WITH PILOT CONTROLS

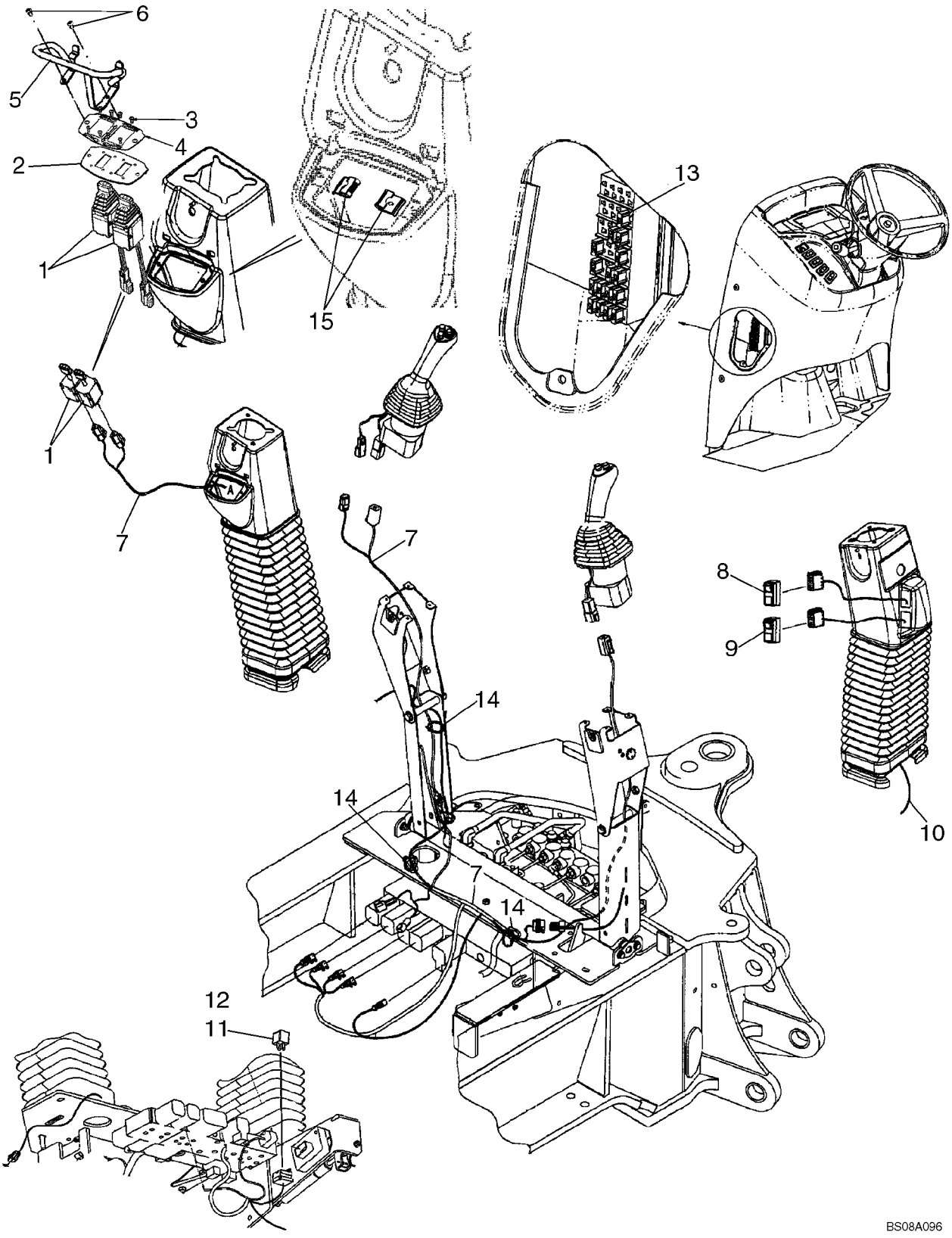

ELECTRICAL - BACKHOE AUXILIARY HYDRAULIC, WITH PILOT CONTROLS

REF	FN	PART NUMBER	YR/SN	QTY	DESCRIPTION
1		86988086		2	JOYSTICK, Stabilizer
2		87435381		1	PLATE, MOUNTING
3		87303784		8	SCREW, Cross Pan Hd, M3 x 8
4		87423812		1	DECAL, Stabilizer Switch
5		87307656		1	GUARD, Stabilizer Switch Guard
6		87310085		2	SCREW, SELF TAP, Hex Washer Head, No. 10-16 x 1, Full Thread
7		87726617		1	HARNESS, WIRE, Pilot Control Joystick, Left-Hand
8		87423802		1	SWITCH, Pilot Control, On/Off
9		87410105		1	SWITCH, Pilot Control Pattern Selection
10		87425636		1	HARNESS, WIRE, Pilot Control Joystick, Right-Hand
11		87436836		1	RELAY, Mini, 12V, 40 amp
12		840-1416		3	SCREW, Cross Pan Hd, M4 x 16
13		121413A1		1	FUSE, Mini, 15 amp
14		L18337		6	STRAP, CABLE, 9.95"-12.1" lg
15		87452511		2	NUT, J-Type Nut; If Used

NOTES

SECTION INDEX
Steering

05-01	STEERING WHEEL - COLUMN
05-02	HYDRAULICS - STEERING
05-02A	HYDRAULICS - STEERING (COMFORT STEER)
05-03	STEERING COLUMN
05-04	AXLE, FRONT (86990837) - MOUNTING
05-05	AXLE, FRONT (86990837) - HOUSING
05-06	AXLE, FRONT (86990837) - HOUSING, SWIVEL
05-07	AXLE, FRONT (86990837) - CYLINDER, STEERING
05-08	AXLE, FRONT (86990837) - HUB AND BEARINGS
05-09	WHEELS, FRONT - TIRES

STEERING WHEEL - COLUMN

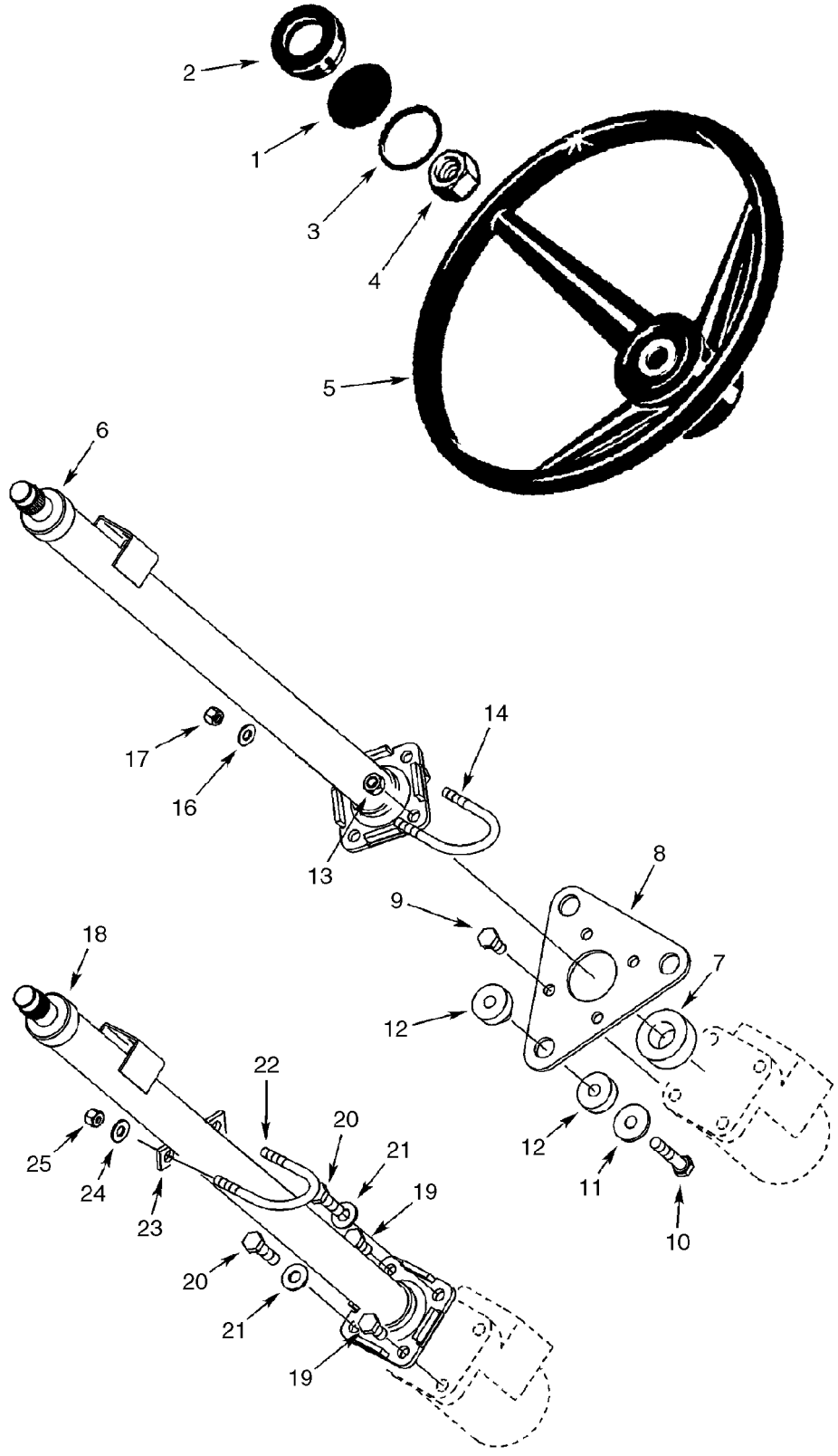

STEERING WHEEL - COLUMN

REF	FN	PART NUMBER	YR/SN	QTY	DESCRIPTION
1		87435569		1	EMBLEM, Insert, Case
2		114882A2		1	CAP
3		238-5227		1	O-RING, -227, 70 Duro, 2.109" ID x .139" Thk
4		1959509C1		1	NUT
5		A65544		1	WHEEL (STEERING)
6		352569A4		1	STEERING COLUMN, Cab Models, With Tilt Steering, 712 mm Long, See Figure 05-03
7		352401A1		1	SEAL, 25 x 40 x 19 mm, Sound Insulation
8		388116A2		1	PLATE
9		614-10020		4	BOLT, Hex, M10 x 20, 8.8, Full Thd
10		814-10050		3	BOLT, Hex, M10 x 50, 8.8
11		496-81028		3	WASHER, 13/32" x 1 1/4" x .134", HDN
12		87447450		3	ISOLATOR, 10 mm Hole
13		832-10410		2	NUT, LOCK, M10 x 1.5, Cl 8
14		379846A1		1	U-BOLT
16		895-15008		2	WASHER, M8 x 20 x 1.6
17		832-10408		2	NUT, LOCK, M8 x 1.25, Cl 8
18		348794A1		1	STEERING COLUMN, Canopy Models, See Figure 05-03
19		614-10020		2	BOLT, Hex, M10 x 20, 8.8, Full Thd
20		614-10035		2	BOLT, Hex, M10 x 35, 8.8, Full Thd
21		895-15010		2	WASHER, M11 x 24 x 2
22		379846A1		1	U-BOLT
23		352727A1		1	SPACER
24		895-15008		2	WASHER, M8 x 20 x 1.6
25		832-10408		2	NUT, LOCK, M8 x 1.25, Cl 8

05-02		p1	10/07

HYDRAULICS - STEERING

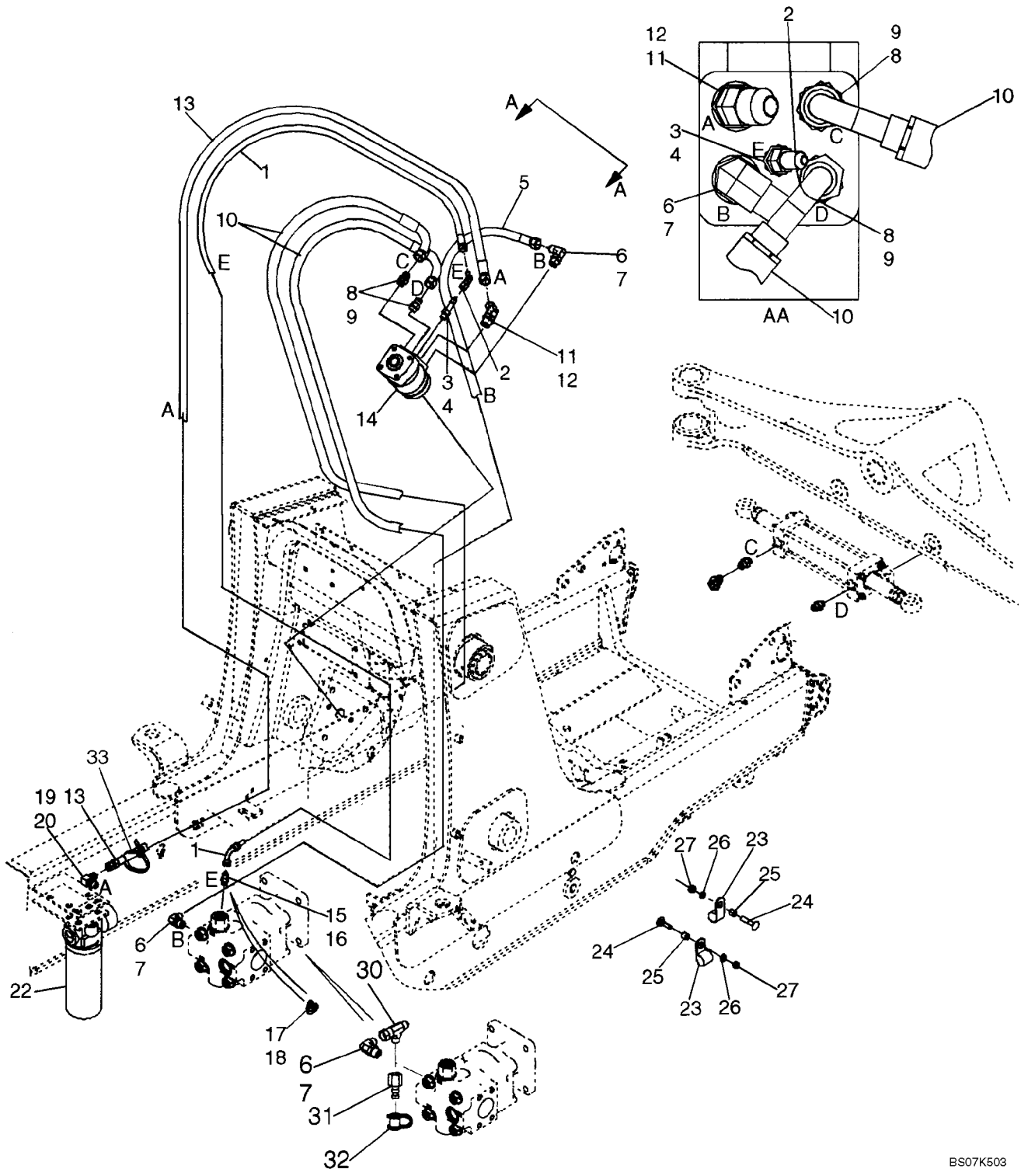

HYDRAULICS - STEERING

REF	FN	PART NUMBER	YR/SN	QTY	DESCRIPTION
1		87439137		1	HOSE ASSY., 1675 mm (66 in), Steering Pilot Hose
2		218-5228		1	ELBOW, 90Ü, 7/16"-20, 37Ü x 7/16"-20, 37Ü Fem Sw
3		218-5027		1	CONNECTOR, HYD., 1/4", Tube x 1/4", NPTF, 37Ü, Incl. Ref 4
4		237-6004		1	O-RING, 4-1, 90 Duro, .351" ID x .072" Thk
5		87439138		1	HOSE ASSY., 1600 mm (63 in), Steering Pressure
6		218-5106		2	ELBOW, 90Ü, 3/4"-16, 37Ü x 3/4"-16, O-Ring, Incl. Ref 7
7		237-6008		1	O-RING, 8-1, 90 Duro, .644" ID x .087" Thk
8		218-5059		2	CONNECTOR, HYD., 3/4"-16, 37Ü x 3/4"-16, O-Ring, Incl. Ref 9
9		237-6008		1	O-RING, 8-1, 90 Duro, .644" ID x .087" Thk
10		87429382		2	HOSE ASSY., 1520 mm (59-7/8 in), To Steering Cylinder
11		218-5136		1	ELBOW, 45Ü, 3/4"-16, 37Ü x 3/4"-16, O-Ring, Incl. Ref 12
12		237-6008		1	O-RING, 8-1, 90 Duro, .644" ID x .087" Thk
13		87439136		1	HOSE ASSY., 1550 mm (61-1/16 in), Return
14		87419634		1	PUMP, Steering Control Valve; Includes 87454545 Seal Kit, 396592A1 Anti-Cavitation Valve Kit, 396593A1 Bolt Kit
		87454545		1	KIT, SEALS, Seal; Includes (2) Seals, (8) O-Rings
		396592A1		1	KIT, Anti-Cavitation Valve; Includes (2) Balls, (4) Springs, (2) Retainers
		396593A1		1	KIT, Bolt; Includes (7) Bolts
15		218-5057		1	CONNECTOR, HYD., 9/16"-18, 37Ü x 9/16"-18, O-Ring, Incl. Ref 16, Standard Equipment, Models Without Auxiliary Hydraulics
16		237-6006		1	O-RING, 6-1, 90 Duro, .468" ID x .078" Thk
17		282428A1		1	POPPET, VALVE, CHECK, Tee, 9/16; Incl. Ref 18; Models With Auxiliary Hydraulics
18		237-6006		1	O-RING, 6-1, 90 Duro, .468" ID x .078" Thk
19		218-5280		1	ELBOW, 90Ü, 3/4"-16, 37Ü x 9/16"-18, O-Ring, Incl. Ref 20
20		237-6006		1	O-RING, 6-1, 90 Duro, .468" ID x .078" Thk

HYDRAULICS - STEERING

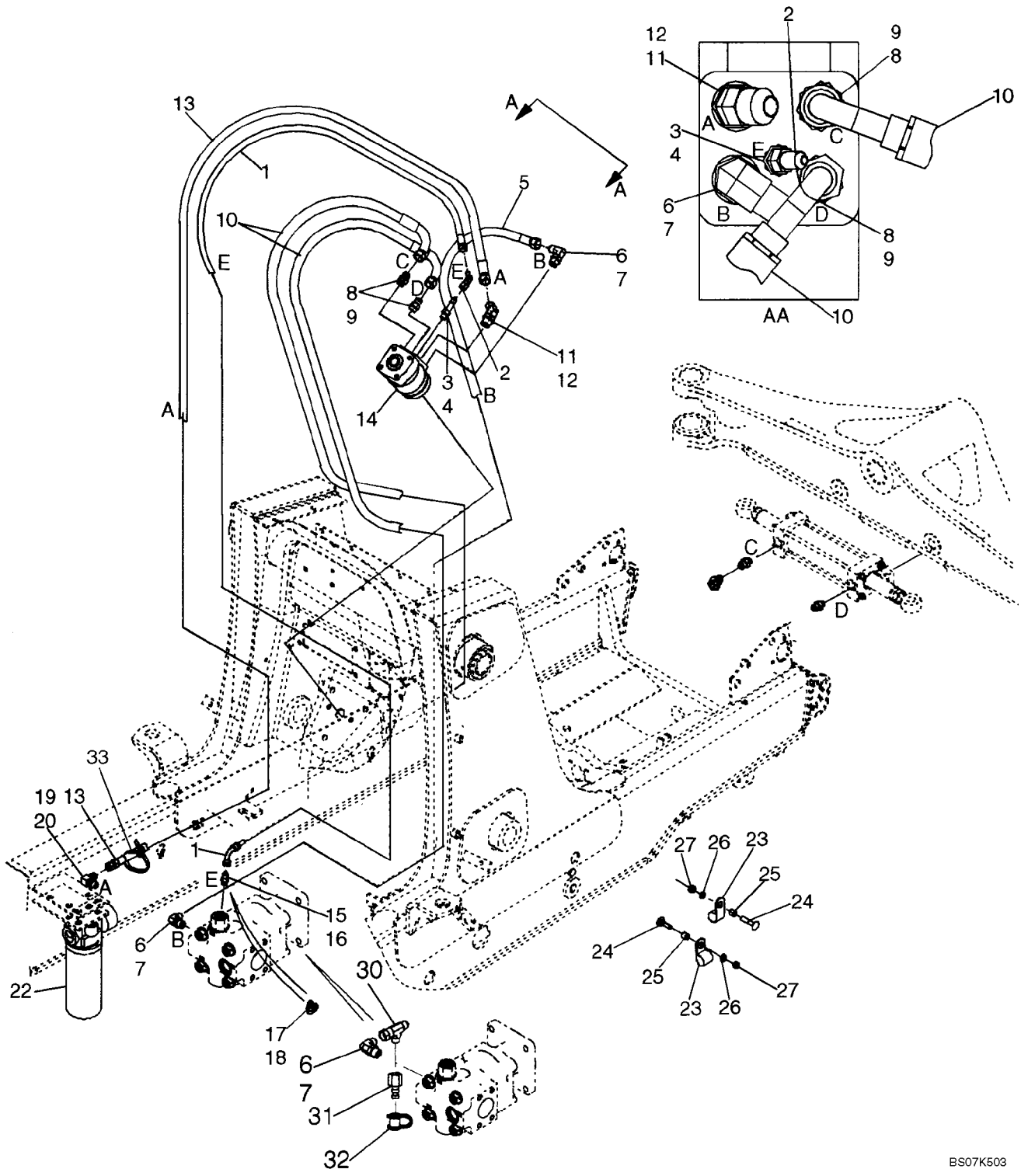

HYDRAULICS - STEERING

REF	FN	PART NUMBER	YR/SN	QTY	DESCRIPTION
22		87440045		1	FILTER ASSY., Hydraulic Oil, See Figure 08-57
23		515-23159		2	CLAMP, 5/8", Insul, 3/8" Bolt, P-Type
24		711-10050		2	BOLT, CARRIAGE, Short NK, M10 x 50, Cl8.8
25		120303A1		2	SPACER
26		892-11010		2	WASHER, LOCK, M10
27		829-1410		2	NUT, M10, Cl 10
30		218-845		1	TEE, 37Ü, 3/4"-16 x 3/4"-16, Fem Sw Run
31		192834A1		1	COUPLING, Diagnostic
32		H434163		1	DUST CAP, Dust
33		L11541		1	STRAP, CABLE

05-02A		p1	02/08

HYDRAULICS - STEERING (COMFORT STEER)

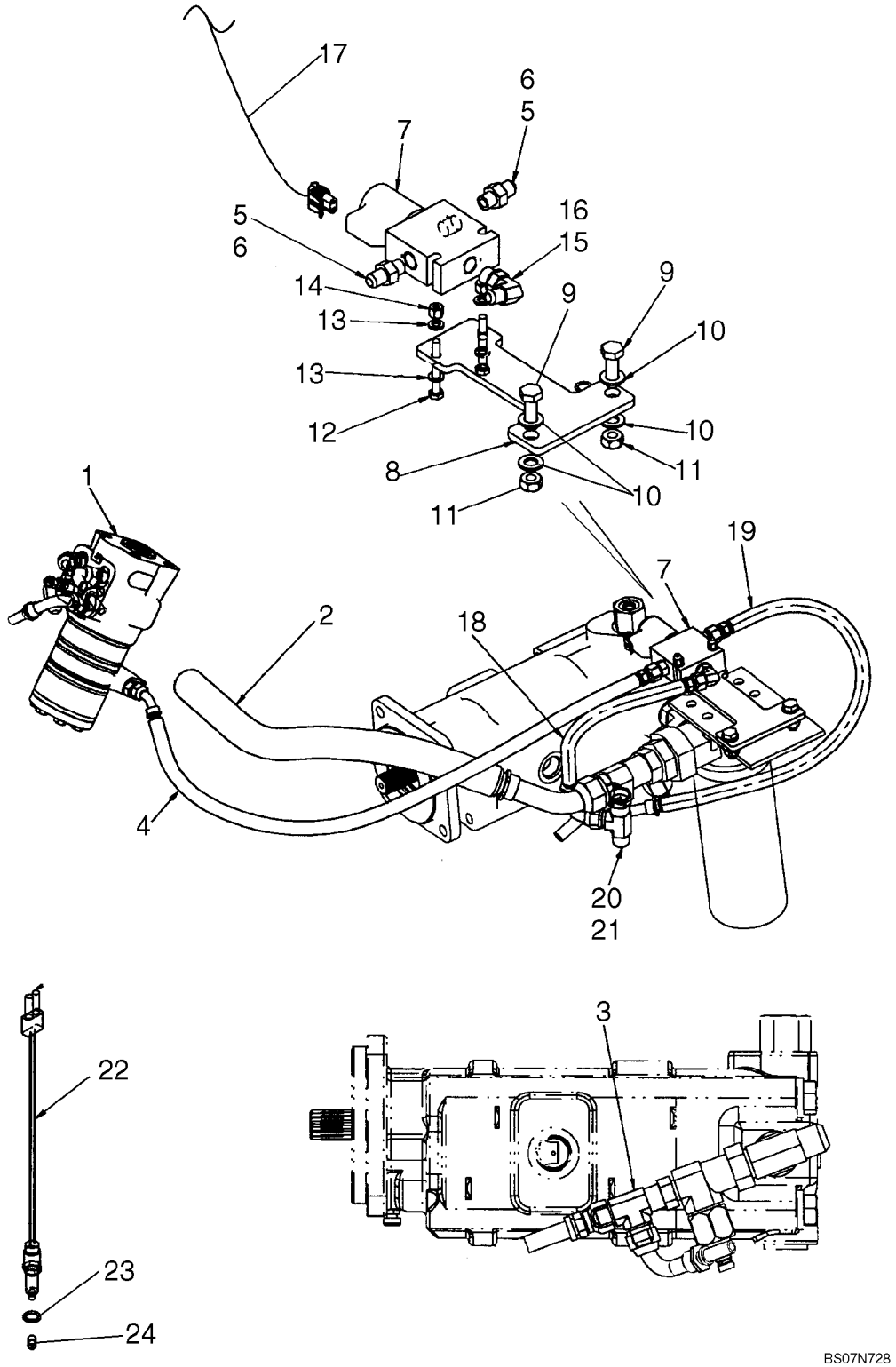

HYDRAULICS - STEERING (COMFORT STEER)

REF	FN	PART NUMBER	YR/SN	QTY	DESCRIPTION
		REF			INSTRUCTION, For Comfort Steer Electrical, See Figure 04-09A; For Steering Common Parts, See Figure 05-02
1		87579286		1	PUMP, HYDRAULIC, Steering Control Valve Pump, Dual Speed Steering; Includes 87454545, 396592A1, 87619415; For Attaching Fittings and Hoses, See Figure 05-02
		87454545		1	KIT, SEALS, Seal Kit; Includes (2) Seals, (8) O-Rings, Instructions
		396592A1		1	KIT, Anti-Cavitation; Includes (2) Balls, (4) Springs, (2) Retainers
		87619415		1	SET OF SCREW, Bolt Kit Includes (7) Capscrews
2		87659613		1	HOSE ASSY., Return Tube, Filter to Tank; For Fitting at Filter, See Figure 08-03
3		218-845		1	TEE, 37Ü, 3/4"-16 x 3/4"-16, Fem Sw Run, Used In Addition to Existing Fittings
4		87560508		1	HOSE ASSY., 1580 mm (62-7/32 in) long Hose; Pilot; Dual Speed
5		218-5057		2	CONNECTOR, HYD., 9/16"-18, 37Ü x 9/16"-18, O-Ring, Incl. Ref 6
6		237-6006		1	O-RING, 6-1, 90 Duro, .468" ID x .078" Thk
7		87382811		1	VALVE, SOLENOID, Two-Position Three-Way Solenoid Valve; Includes 87348571, 329483A1, 87613159, 87613161
		87348571		1	NUT, Hex, 1/2-20 NF; Coil
		329483A1		1	KIT, SEALS
		87613159		1	VALVE, SOLENOID, Cartridge, Valve
		87613161		1	SOLENOID, Coil
8		87610318		1	PLATE, MOUNTING, Solenoid Mount Bracket, Painted Tan
9		614-10030		2	BOLT, Hex, M10 x 30, 8.8
10		895-11010		4	WASHER, M10 x 20 x 2
11		829-1410		2	NUT, M10, Cl 10
12		814-6050		2	BOLT, Hex, M6 x 50, 8.8
13		895-11006		4	WASHER, M6

HYDRAULICS - STEERING (COMFORT STEER)

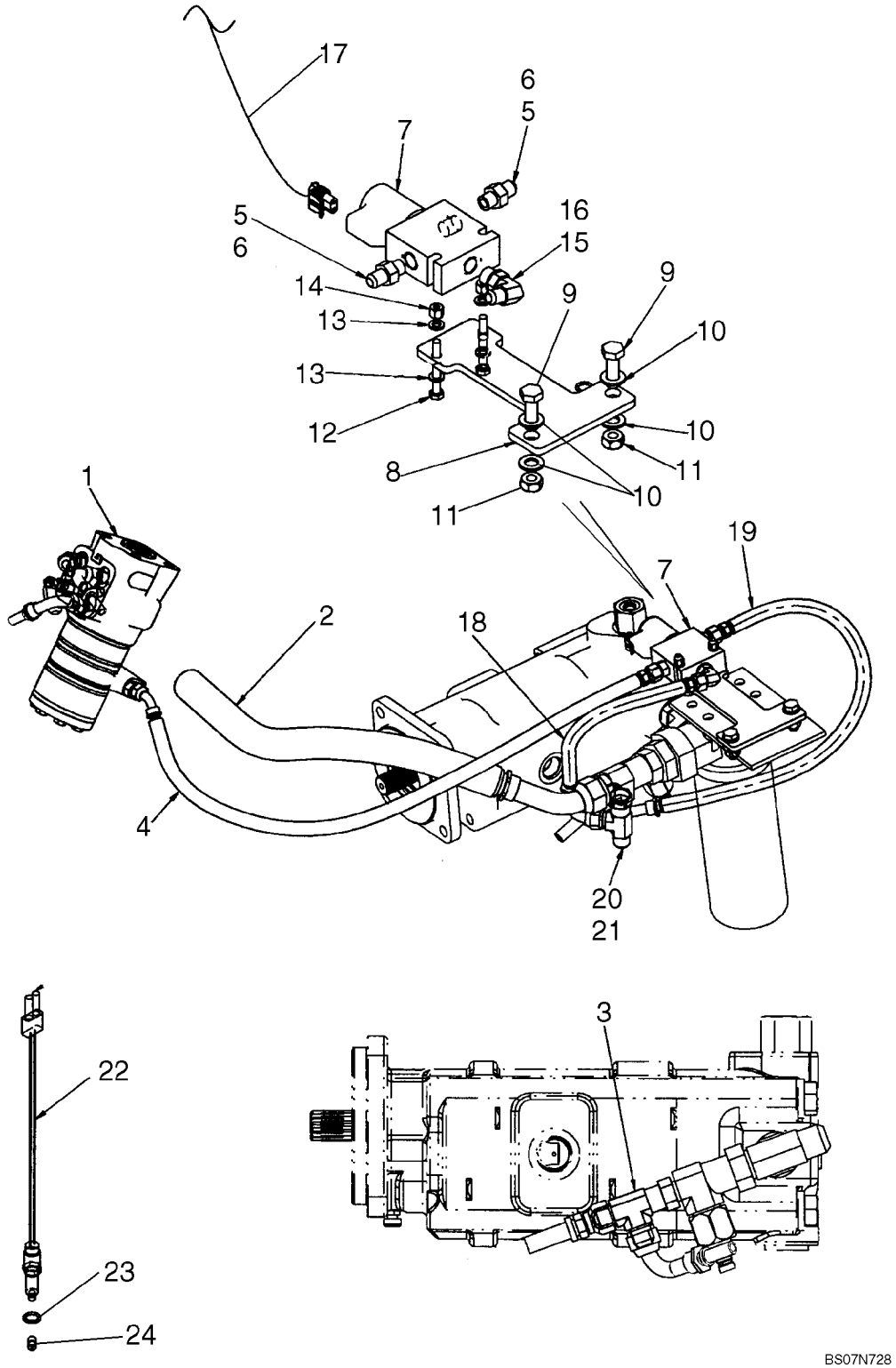

HYDRAULICS - STEERING (COMFORT STEER)

REF	FN	PART NUMBER	YR/SN	QTY	DESCRIPTION
14		832-10406		2	NUT, LOCK, M6 x 1, Cl 8
15		218-5105		1	ELBOW, 90Ü, 9/16"-18, 37Ü x 9/16"-18, O-Ring, Incl. Ref 16
16		237-6006		1	O-RING, 6-1, 90 Duro, .468" ID x .078" Thk
17		87663365		1	HARNESS, WIRE, Comfort Steer Jumper
18		87671893		1	HOSE ASSY., 315 mm (12-3/8 in) long Hose; Dual Speed To Tank
19		87560507		1	HOSE ASSY., 705 mm (27-25/32 in) long Hose; Pressure; Dual Speed
20		218-5486		1	TEE, 37Ü, 7/8"-14 x 7/8"-14, Fem Sw Run x 3/4"-16 Br
21		237-6012		1	O-RING, 12-1, 90 Duro, .924 ID x .118" Thk
		87578910		1	SENSOR, Position; Modesl With Standard Transmission Only; Attaches To Chassis Option Harness; Incl. 25 - 27
22		NSS		1	NOT SERVICED SEPARATELY, Switch
23		NSS		1	NOT SERVICED SEPARATELY, O-Ring
24		NSS		1	NOT SERVICED SEPARATELY, Pin

STEERING COLUMN

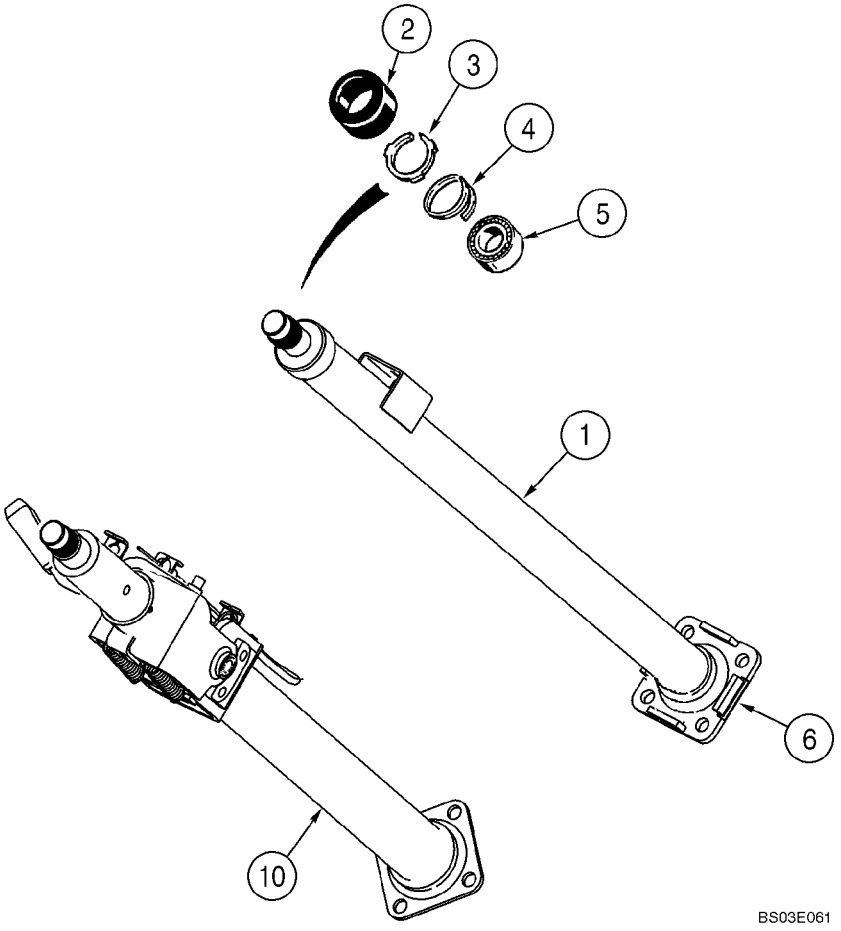

STEERING COLUMN

REF	FN	PART NUMBER	YR/SN	QTY	DESCRIPTION
		348794A1		1	STEERING COLUMN, Canopy Models, Incl. Ref 1 - 6
1		NSS		1	NOT SERVICED SEPARATELY, Column
2		S115351		1	CAP
3		NSS		1	NOT SERVICED SEPARATELY, Retainer
4		102-1387		1	RING, SNAP, #87, Ext, Spiral
5		NSS		1	NOT SERVICED SEPARATELY, Bearing
6		NSS		1	NOT SERVICED SEPARATELY, Flange
10		352569A4		1	STEERING COLUMN, 712 mm Long, Cab Models, With Tilt Steering, Includes 87659610, 87659611, 87659612, 87659616
		87659610		1	SET OF PARTS, Spring Set, Tilt Column, SVC
		87659611		1	SET OF PARTS, Segment Set, Tilt Column SVC
		87659612		1	SET OF PARTS, Lever Set, Tilt Column SVC
		87659616		1	SET OF PARTS, Cable, Tilt Column SVC

AXLE, FRONT (86990837) - MOUNTING

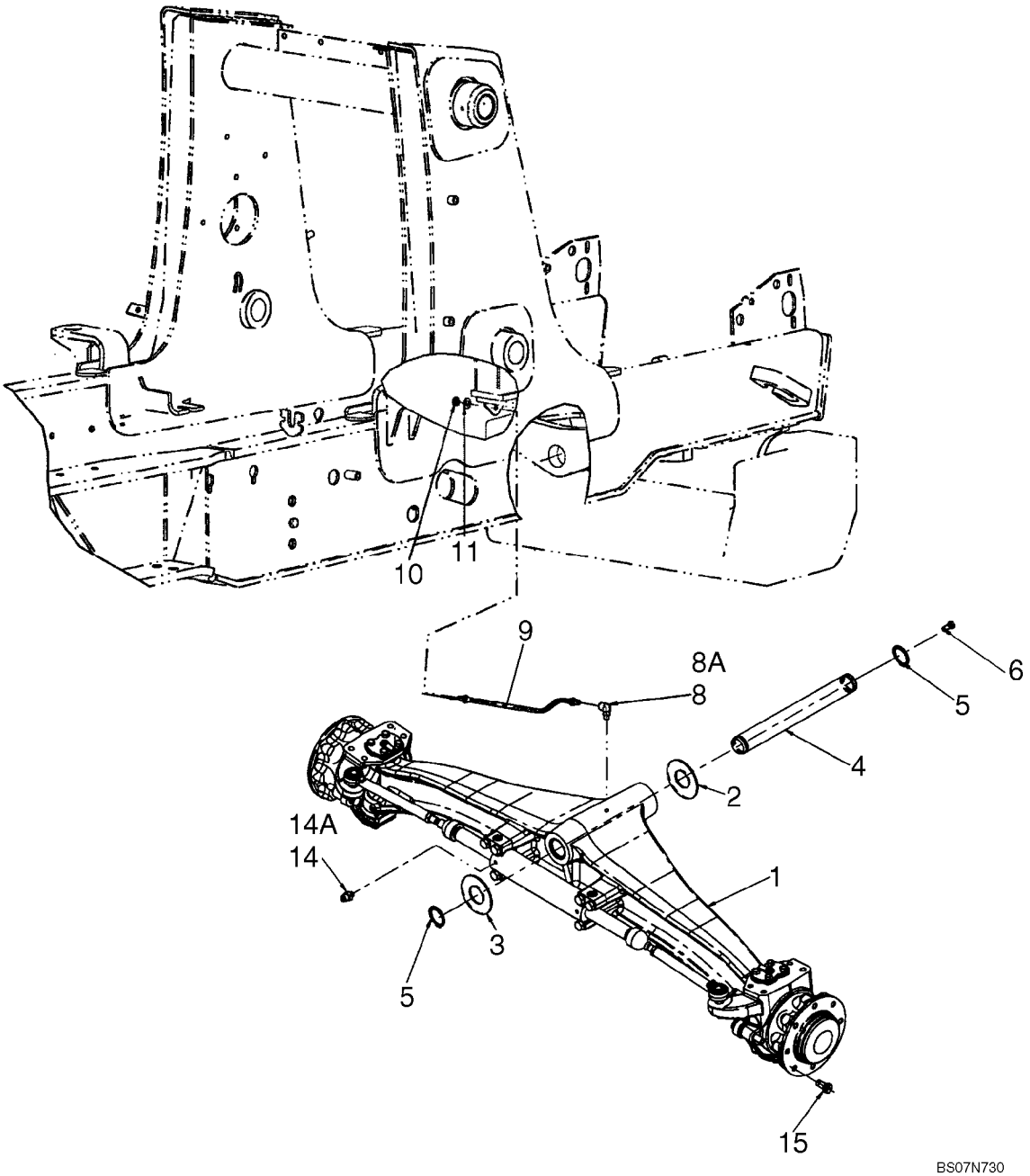

AXLE, FRONT (86990837) - MOUNTING

REF	FN	PART NUMBER	YR/SN	QTY	DESCRIPTION
1		86990837		1	AXLE, STEERING, Front, Two Wheel Drive, See Figures 05-05 - 05-08
2		191796A1		AR	WASHER, 2 x 4 x 1/16
3		D123684		1	WASHER, Thrust, 2-1/2 x 4-1/2 x 3/16
4		87404197		1	PIN, PIVOT
5		800-44050		2	RING, SNAP, M50, Ext
6		614-12025		1	BOLT, Hex, M12 x 25, 8.8
8		218-5103		1	ELBOW, 90Ü, 7/16"-20, 37Ü x 7/16"-20, O-Ring, Incl. Ref 8A
8A		237-6004		1	O-RING, 4-1, 90 Duro, .351" ID x .072" Thk
9		87572760		1	HOSE ASSY., 533 mm (21 in), Lubrication Line
10		F53473		1	NUT
11		495-11047		1	WASHER, 7/16", SAE
14		218-5351		2	CONNECTOR, HYD., 3/4"-16, 37Ü x 9/16"-18, O-Ring, Incl. Ref 14A
14A		237-6006		1	O-RING, 6-1, 90 Duro, .468" ID x .078" Thk
15		A38208		16	BOLT, Wheel Bolt

AXLE, FRONT (86990837) - HOUSING

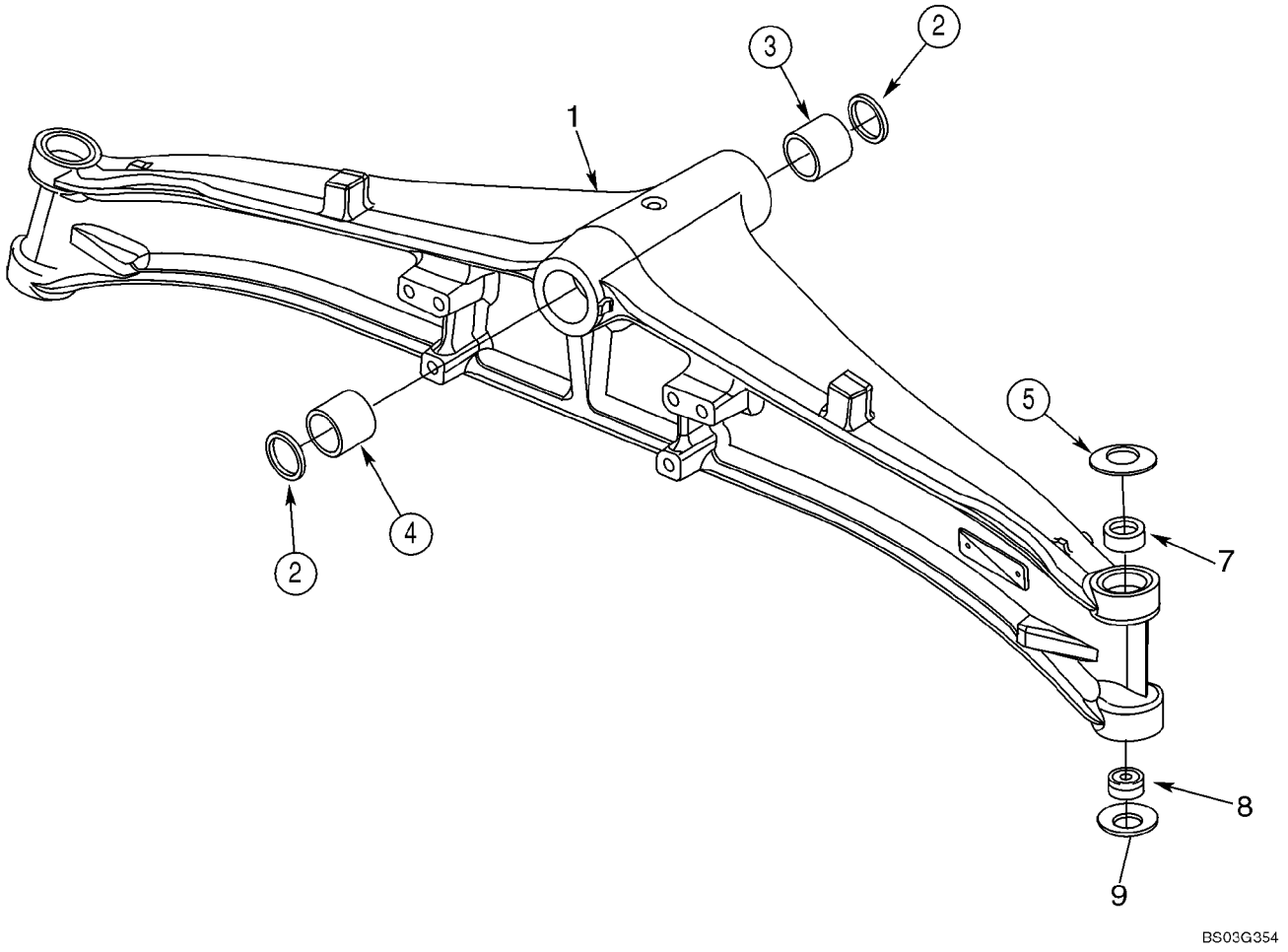

AXLE, FRONT (86990837) - HOUSING

REF	FN	PART NUMBER	YR/SN	QTY	DESCRIPTION
		86990837		1	AXLE, STEERING, Front, Two Wheel Drive, Incl. 1 - 9; Also Includes Parts On Figures 05-05 - 05-08
1		429230A1		1	HOUSING, AXLE
2		N14367		2	SEAL
3		D149726		1	BUSHING, Front
4		D149725		1	BUSHING, Rear
5		122270A1		2	WASHER, Belleville
7		87400286		2	BUSHING
8		N14373		2	BUSHING, Bushing; Two Piece; 28 ID x 50 OD x 16
9		122261A1		2	WASHER, Belleville

AXLE, FRONT (86990837) - HOUSING, SWIVEL

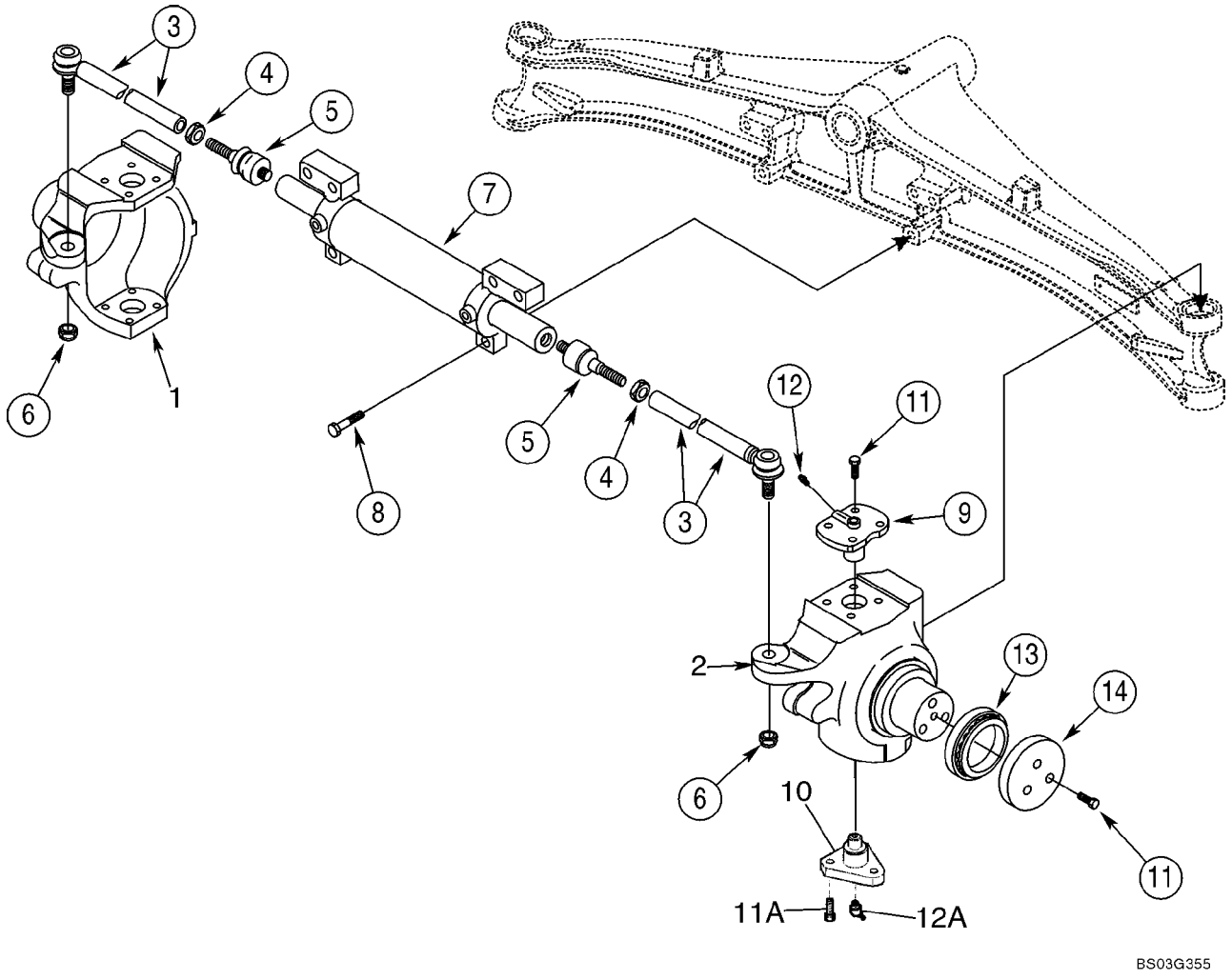

AXLE, FRONT (86990837) - HOUSING, SWIVEL

REF	FN	PART NUMBER	YR/SN	QTY	DESCRIPTION
		86990837		1	AXLE, STEERING, Front, Two Wheel Drive, Incl. 1 - 14; Also Includes Parts On Figures 05-05 - 05-08
1		429231A1		1	HOUSING, Swivel, Left-Hand
2		429232A1		1	HOUSING, Swivel, Right-Hand
		401052A1		2	STEERING ASSY, Arm, Incl. Ref 3 - 5
3		401054A1		1	TIE ROD
4		934727R1		1	NUT, Thin, M18 x 1.5, Cl 04
5		112509A1		1	BALL JOINT
6		905839R1		2	NUT, LOCK, M18 x 1.5, Thin
7		401055A1		1	CYLINDER STEERING, See Figure 05-07
8		863-16070		6	SCREW, Hex Soc Hd, M16 x 70, 12.9
9		122265A1		2	PIN, LARGE, King Pin, Upper
10		122259A1		2	PIVOT, King Pin, Lower; Triangular Shape
11		100533A1		14	BOLT, Lock, M12 x 30
11A		D150214		6	SCREW, Lock, M14 x 35; Lower King Pin
12		321204		2	NIPPLE, LUBE, M6 x 1, 16mm lg
12A		N13505		2	NIPPLE, LUBE, 45Ü, M6 x 1, Lower King Pin
13		401059A1		2	BEARING, ROLLER, Thrust
14		401060A1		2	WASHER, THRUST

AXLE, FRONT (86990837) - CYLINDER, STEERING

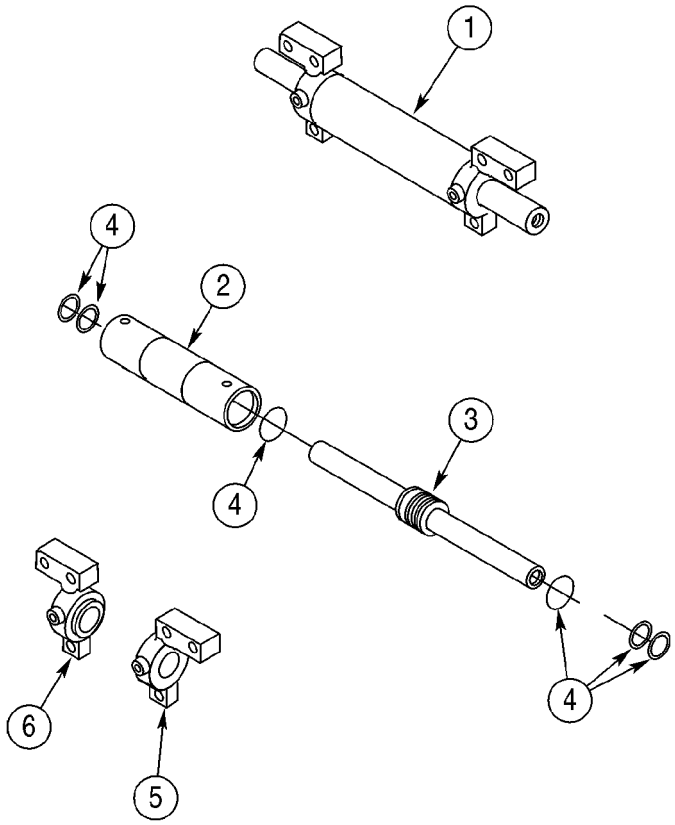

BC00G065

AXLE, FRONT (86990837) - CYLINDER, STEERING

REF	FN	PART NUMBER	YR/SN	QTY	DESCRIPTION
		86990837		1	AXLE, STEERING, Front, Two Wheel Drive, Incl. 1 - 6; Also Includes Parts On Figures 05-05 - 05-08
1		401055A1		1	CYLINDER STEERING, Incl. Ref 2 - 6
2		NSS		1	NOT SERVICED SEPARATELY, Tube, Cylinder
3		401062A1		1	ROD, PISTON
4		401061A1		1	PACKAGE, SEALS, Seal, Component Parts Not Serviced Separately
5		401063A1		1	HEAD ASSY., Right-Hand
6		401064A1		1	HEAD ASSY., Left-Hand

AXLE, FRONT (86990837) - HUB AND BEARINGS

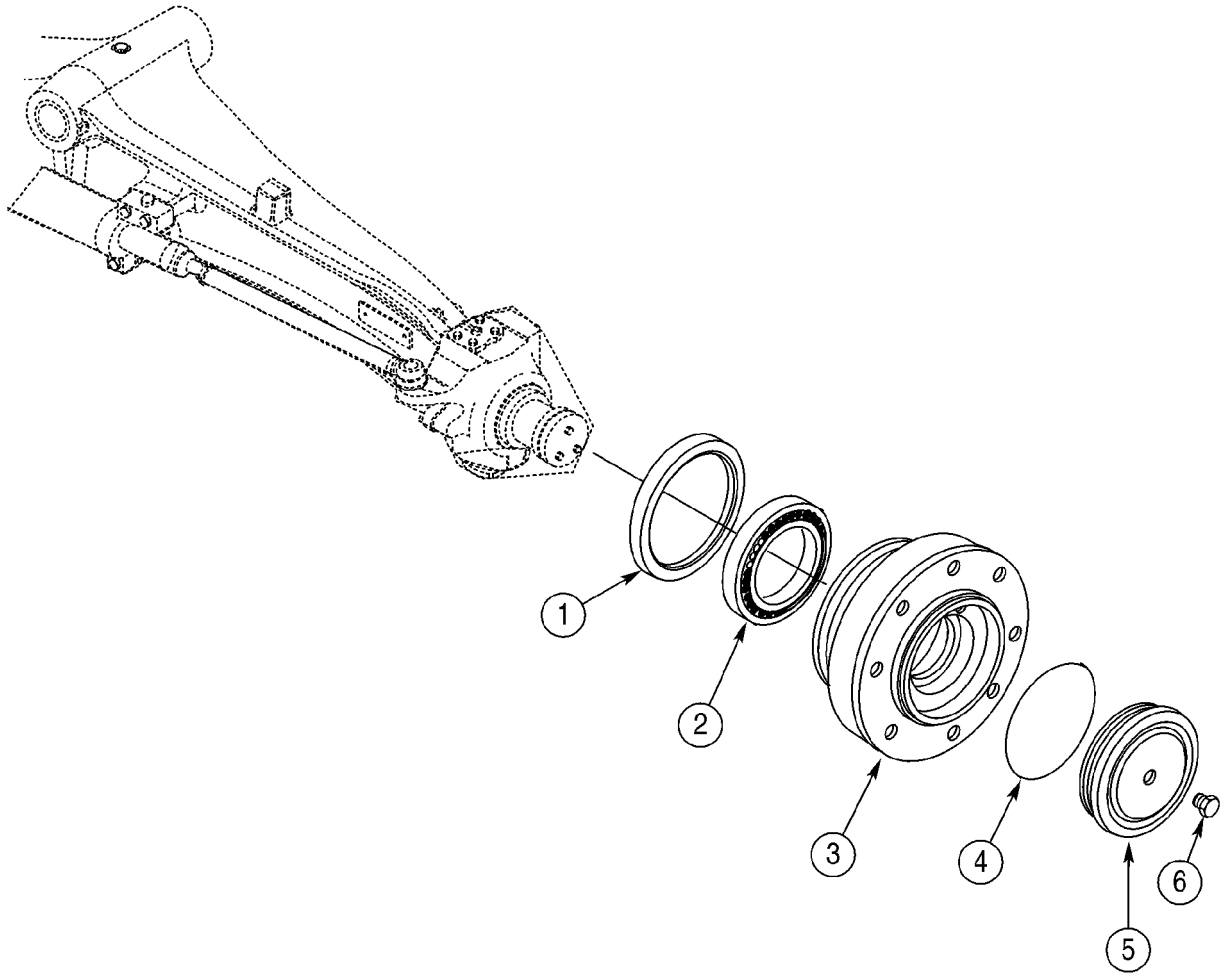

BC00G066

AXLE, FRONT (86990837) - HUB AND BEARINGS

REF	FN	PART NUMBER	YR/SN	QTY	DESCRIPTION
		86990837		1	AXLE, STEERING, Front, Two Wheel Drive; Incl. 1 - 6; Also Includes Parts On Figures 05-05 - 05-08
1		311569A1		2	SEAL, OIL
2		324213A1		2	BEARING
3		401065A1		2	HUB
4		401066A1		2	O-RING
5		401067A1		2	COVER
6		D142898		2	PLUG, 10 x 1 mm

WHEELS, FRONT - TIRES

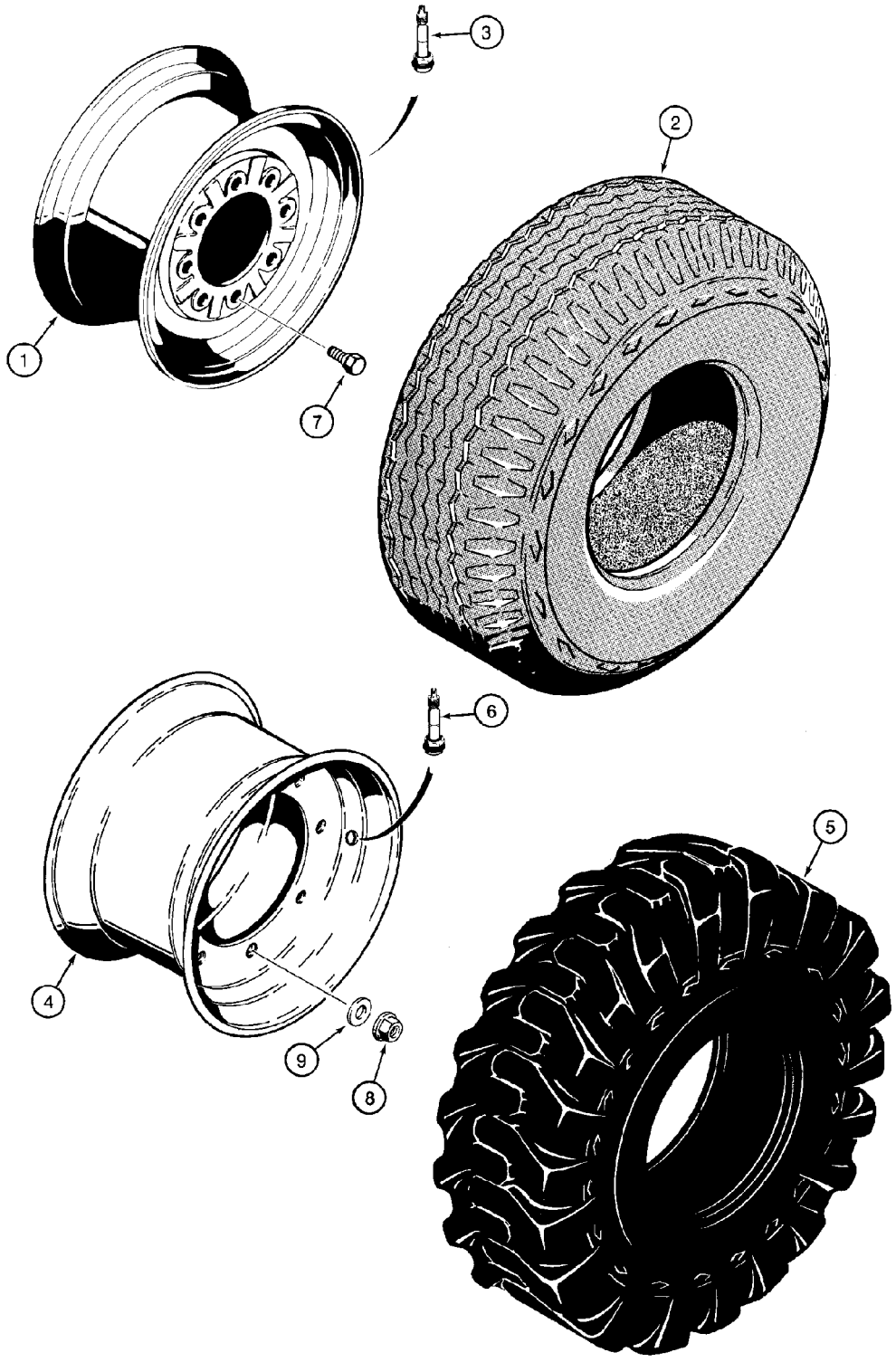

WHEELS, FRONT - TIRES

REF	FN	PART NUMBER	YR/SN	QTY	DESCRIPTION
1		D125223		2	RIM, For 11L x 16 - 10 PR F3 Tires; Two Wheel or Four Wheel Drive Models
1		197771A1		2	WHEEL, For 11L x 16 - 10 PR F3 Tires; Two Wheel or Four Wheel Drive Models
2		REF		2	INSTRUCTION, Tire, Purchase Locally
3		387897R91		2	VALVE STEM
4		119243A1		2	RIM, For 12 x 16.5 - 8 or 10 Ply Tires; Two Wheel or Four Wheel Drive Models
5		REF		2	INSTRUCTION, Tire, Purchase Locally
6		387897R91		2	VALVE STEM
7		A38208		16	BOLT, Wheel Bolts; Two Wheel Drive Models
8		825-11418		16	NUT, M18 x 1.5, Cl 8, Wheel Nuts; Four Wheel Drive Models
9		496-81000		16	WASHER, 25/32" x 1 3/8" x .134", HDN, Wheel Nuts; Four Wheel Drive Models

NOTES

SECTION INDEX
Power Train

06-01	AXLE, FRONT DRIVE - MOUNTING
06-02	AXLE, FRONT DRIVE - HOUSING
06-03	AXLE, FRONT DRIVE - HOUSING, SWIVEL
06-04	AXLE, FRONT DRIVE - CYLINDER, STEERING
06-05	AXLE, FRONT DRIVE - SHAFTS, AXLE
06-06	AXLE, FRONT DRIVE - PLANETARY
06-07	AXLE, FRONT DRIVE - DIFFERENTIAL
06-08	AXLE, FRONT DRIVE - RING AND PINION
06-09	DRIVE SHAFT, FRONT AXLE
06-10	COOLING SYSTEM - TRANSMISSION
06-11	TRANSMISSION - MOUNTING
06-12	TRANSMISSION ASSY, 2WD - FILTER, OIL
06-13	TRANSMISSION ASSY, 2WD - HOUSING
06-14	TRANSMISSION ASSY, 2WD - PUMP, OIL
06-15	TRANSMISSION ASSY, 2WD - SHIFTER MECHANISM
06-16	TRANSMISSION ASSY, 2WD - SHAFT, REVERSE & PRIMARY
06-17	TRANSMISSION ASSY, 2WD - SHAFT, INPUT & PTO
06-18	TRANSMISSION ASSY, 2WD - SHAFT, SECONDARY
06-19	TRANSMISSION ASSY, 2WD - VALVE, CONTROL
06-20	TRANSMISSION ASSY, 4WD - FILTER, OIL
06-21	TRANSMISSION ASSY, 4WD - HOUSING
06-22	TRANSMISSION ASSY, 4WD - PUMP, OIL
06-23	TRANSMISSION ASSY, 4WD - SHIFTER MECHANISM
06-24	TRANSMISSION ASSY, 4WD - SHAFT, REVERSE & PRIMARY
06-25	TRANSMISSION ASSY, 4WD - SHAFT, INPUT & PTO
06-26	TRANSMISSION ASSY, 4WD - SHAFT, SECONDARY
06-27	TRANSMISSION ASSY, 4WD - SHAFT, OUTPUT
06-28	TRANSMISSION ASSY, 4WD - VALVE, CONTROL
06-29	TRANSMISSION ASSY, 4WD - VALVE, SOLENOID
06-30	WHEELS, REAR - TIRES
06-31	AXLE, REAR DRIVE - MOUNTING
06-32	AXLE, REAR - DIFFERENTIAL LOCK
06-33	87395372 AXLE, REAR DRIVE - HOUSING
06-34	87395372 AXLE, REAR DRIVE - DIFFERENTIAL
06-35	87395372 AXLE, REAR DRIVE - RING AND PINION
06-36	87395372 AXLE, REAR DRIVE - DIFFERENTIAL LOCK
06-37	87395372 AXLE, REAR DRIVE - PLANETARY
06-38	DRIVE SHAFT, REAR AXLE

06-01		p1	02/08

AXLE, FRONT DRIVE - MOUNTING

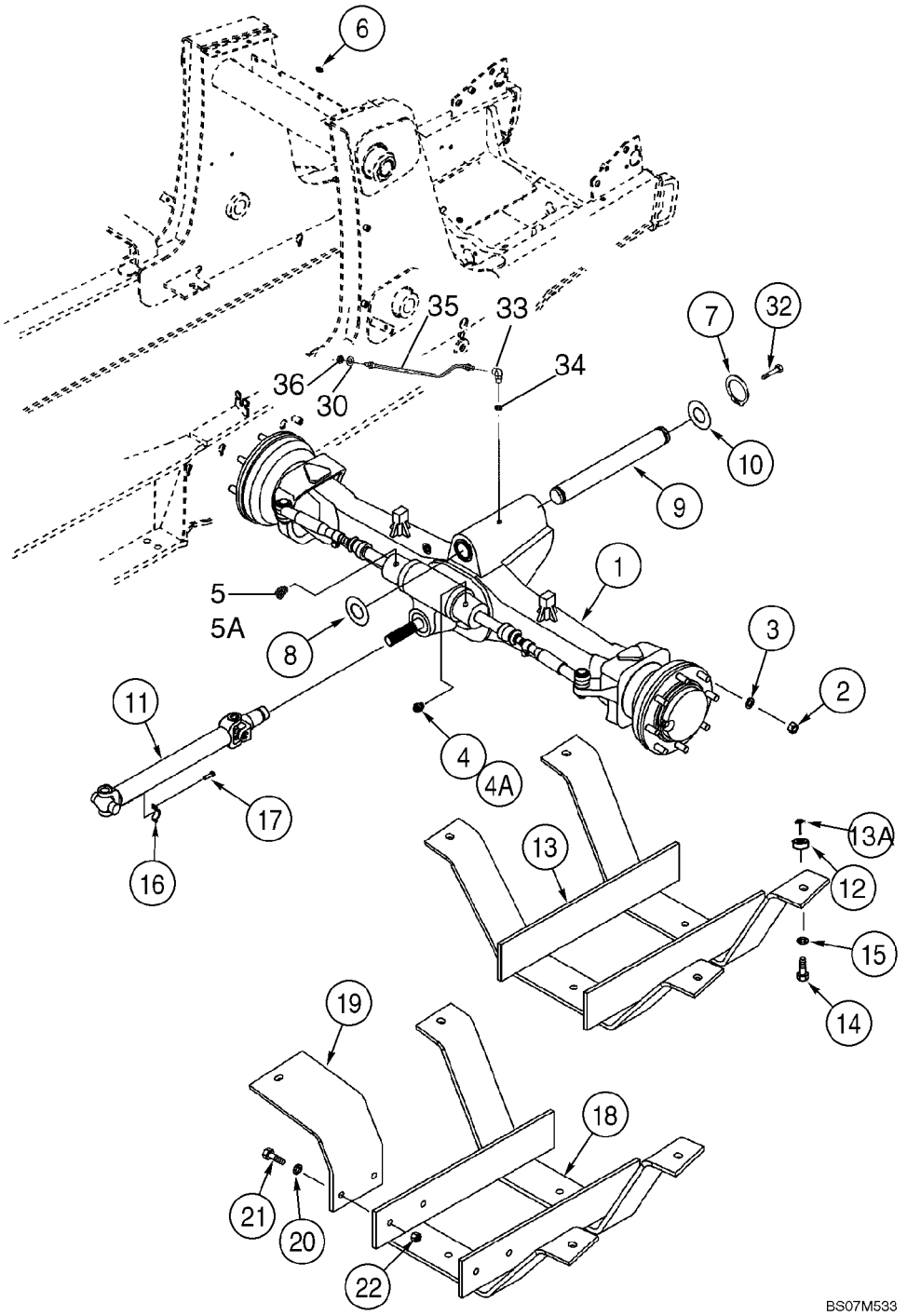

AXLE, FRONT DRIVE - MOUNTING

REF	FN	PART NUMBER	YR/SN	QTY	DESCRIPTION
1		87395365		1	AXLE ASSY, 4WD, Front; See Figures 06-02 - 06-08
2		825-11418		16	NUT, M18 x 1.5, Cl 8
3		496-81000		16	WASHER, 25/32" x 1 3/8" x .134", HDN
4		218-5351		1	CONNECTOR, HYD., 3/4"-16, 37Ü x 9/16"-18, O-Ring, Incl. Ref 4A
4A		237-6006		1	O-RING, 6-1, 90 Duro, .468" ID x .078" Thk
5		218-5529		1	ELBOW, 45Ü, 3/4"-16, 37Ü x 9/16"-18, O-Ring, Incl. Ref 5A
5A		237-6006		1	O-RING, 6-1, 90 Duro, .468" ID x .078" Thk
6		219-1		1	NIPPLE, LUBE, 1/8"-27 x .66 lg
7		800-44050		2	RING, SNAP, M50, Ext
8		191796A1		AR	WASHER, 2 x 4 x 1/16
9		87404197		1	PIN, PIVOT, Pivot Pin
10		D123684		1	WASHER, Thrust, 2-1/2 x 4-1/2 x 3/16
11		87694656		1	SHAFT, DRIVE, See Figure 06-09
12		87649398		4	SPACER
13		137223A2		1	GUARD, Drive Shaft, Used On Models With 31 Gallon Fuel Tank
13A		238-6012		4	O-RING, -012, 90 Duro, .364" ID x .070" Thk
14		827-12060		4	BOLT, Hex, M12 x 60, 10.9
15		495-81025		4	WASHER, 17/32" x 1 1/4" x .179"
16		90-6682T1		2	CLAMP
17		9637611		4	SCREW, Hex Flange Head, Locking, Special, 5/16 - 24 UNF x 1-1/16; Replaces D137627 Bolt
18		282038A2		1	GUARD ASSY., Drive Shaft, Used On Models With 40 Gallon Fuel Tank
19		87699880		1	BRACKET, SUPPORTING
20		495-81025		8	WASHER, 17/32" x 1 1/4" x .179"
21		827-12060		6	BOLT, Hex, M12 x 60, 10.9
22		829-1412		2	NUT, M12, Cl 10
30		495-11047		1	WASHER, 7/16", SAE
32		614-12025		1	BOLT, Hex, M12 x 25, 8.8
33		218-5103		1	ELBOW, 90Ü, 7/16"-20, 37Ü x 7/16"-20, O-Ring, Incl. Ref 34
34		237-6004		1	O-RING, 4-1, 90 Duro, .351" ID x .072" Thk

AXLE, FRONT DRIVE - MOUNTING

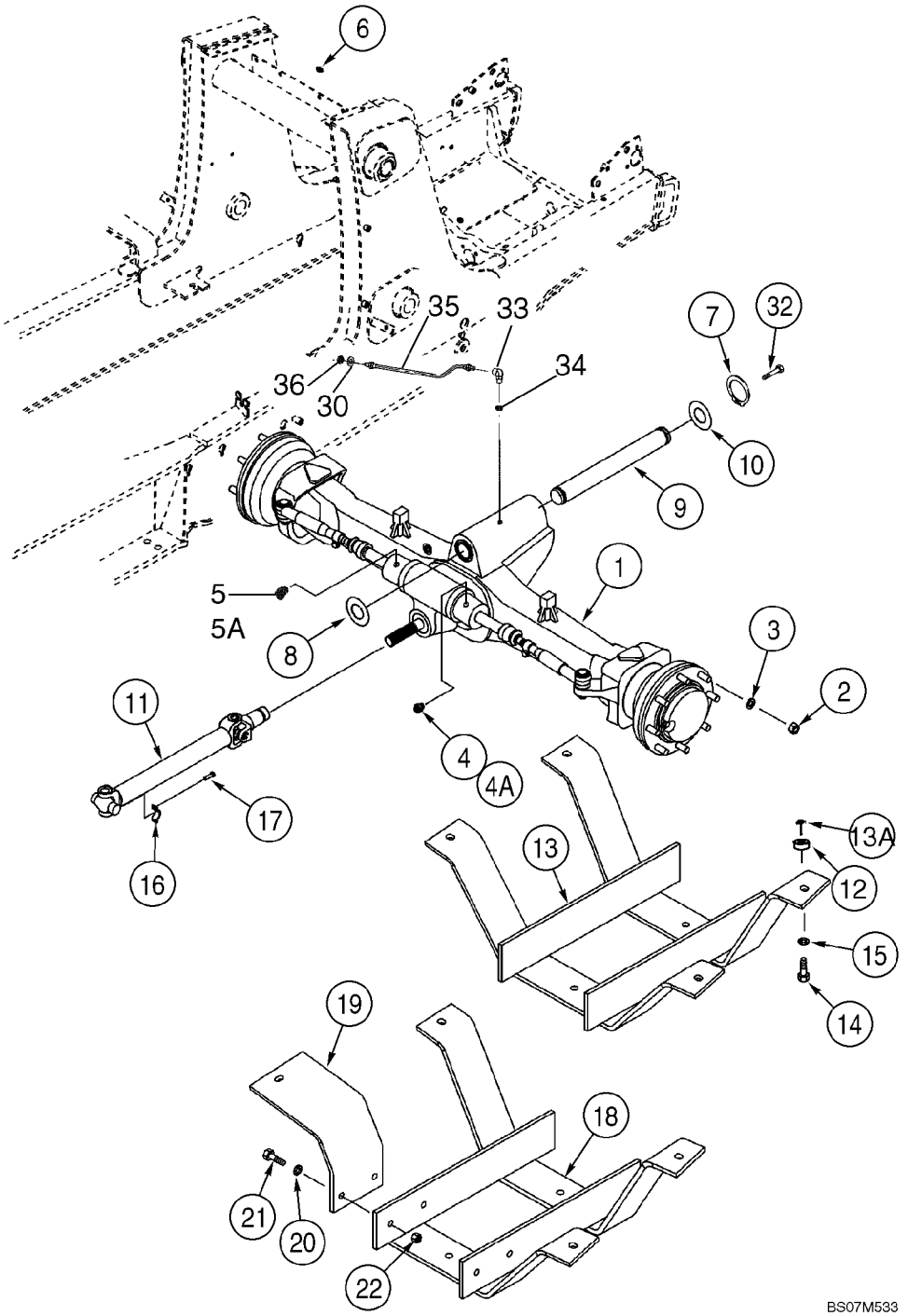

AXLE, FRONT DRIVE - MOUNTING

REF	FN	PART NUMBER	YR/SN	QTY	DESCRIPTION
35		87572760		1	HOSE ASSY., 7/16-20 Fem Swivel x 1/8 NPSN x 21 inch; Remote Lube; Includes Grease Fitting
36		F53473		1	NUT, Hex

AXLE, FRONT DRIVE - HOUSING

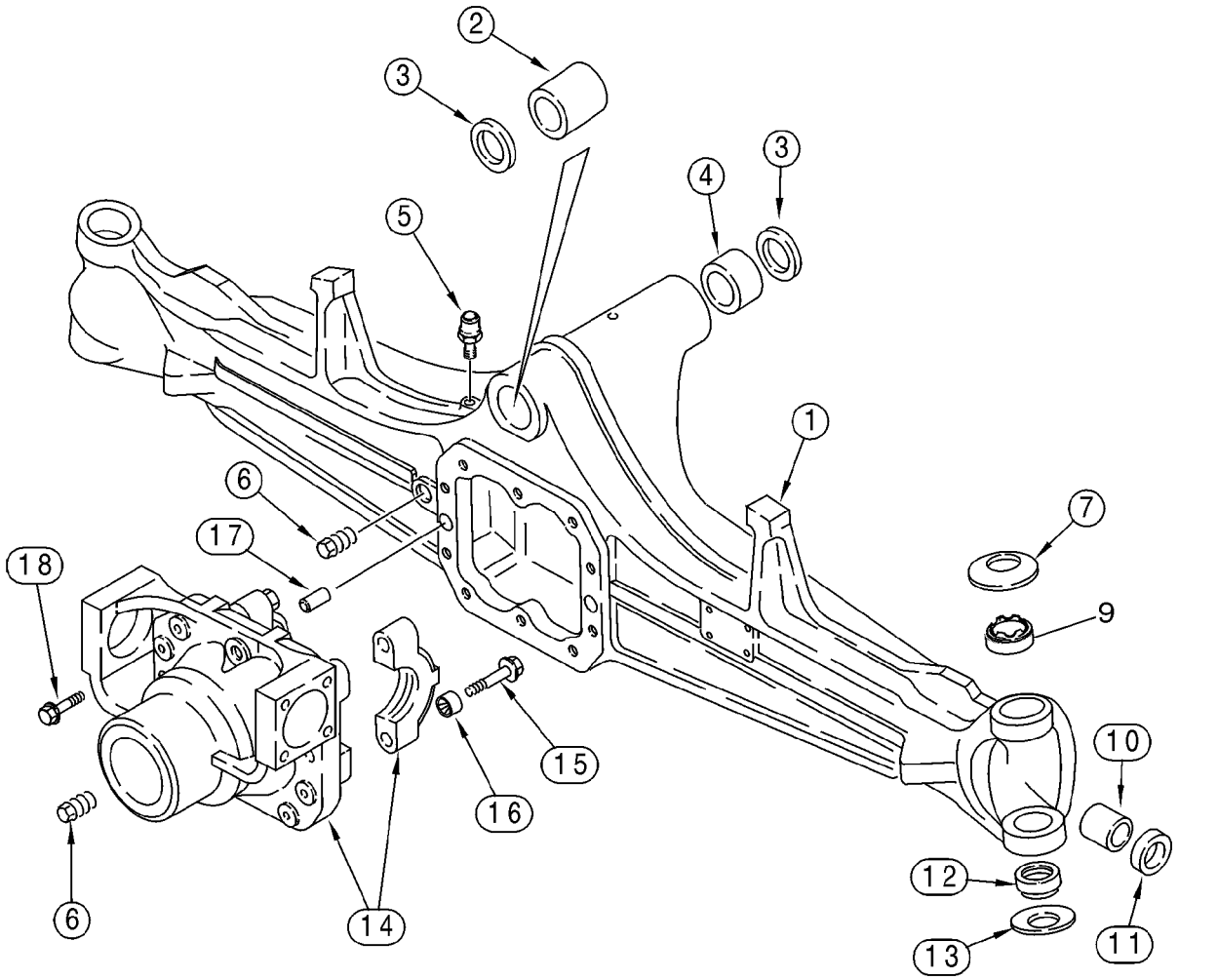

AXLE, FRONT DRIVE - HOUSING

REF	FN	PART NUMBER	YR/SN	QTY	DESCRIPTION
		87395365		1	AXLE ASSY, 4WD, Front, Incl. Ref 1 - 18; Also Includes Parts On Figures 06-02 - 06-08
1		427107A1		1	HOUSING, AXLE
2		D149725		1	BUSHING
3		N14367		2	SEAL
4		D149726		1	BUSHING
5		1966149C2		1	BREATHER
6		A156873		2	PLUG, DRAIN, 22 mm
7		122270A1		2	WASHER, Belleville
9		87400286		2	BUSHING
10		1966186C1		2	BUSHING
11		87710155		2	SEALRING, SEAL
12		100520A1		2	BALL JOINT, Bushing, Two Piece
13		122268A1		2	WASHER, Belleville
		{87710131}		1	Differential Carrier; Incl. Ref 14 - 16
14		NSS		1	NOT SERVICED SEPARATELY, Carrier
15		S301065		4	SCREW, Hex Flg, M14 x 75, 12.9
16		1966136C1		4	BUSHING
17		1966138C1		2	DOWEL
18		5194169		10	SCREW, Hex Flg, M12 x 33, 12.9

AXLE, FRONT DRIVE - HOUSING, SWIVEL

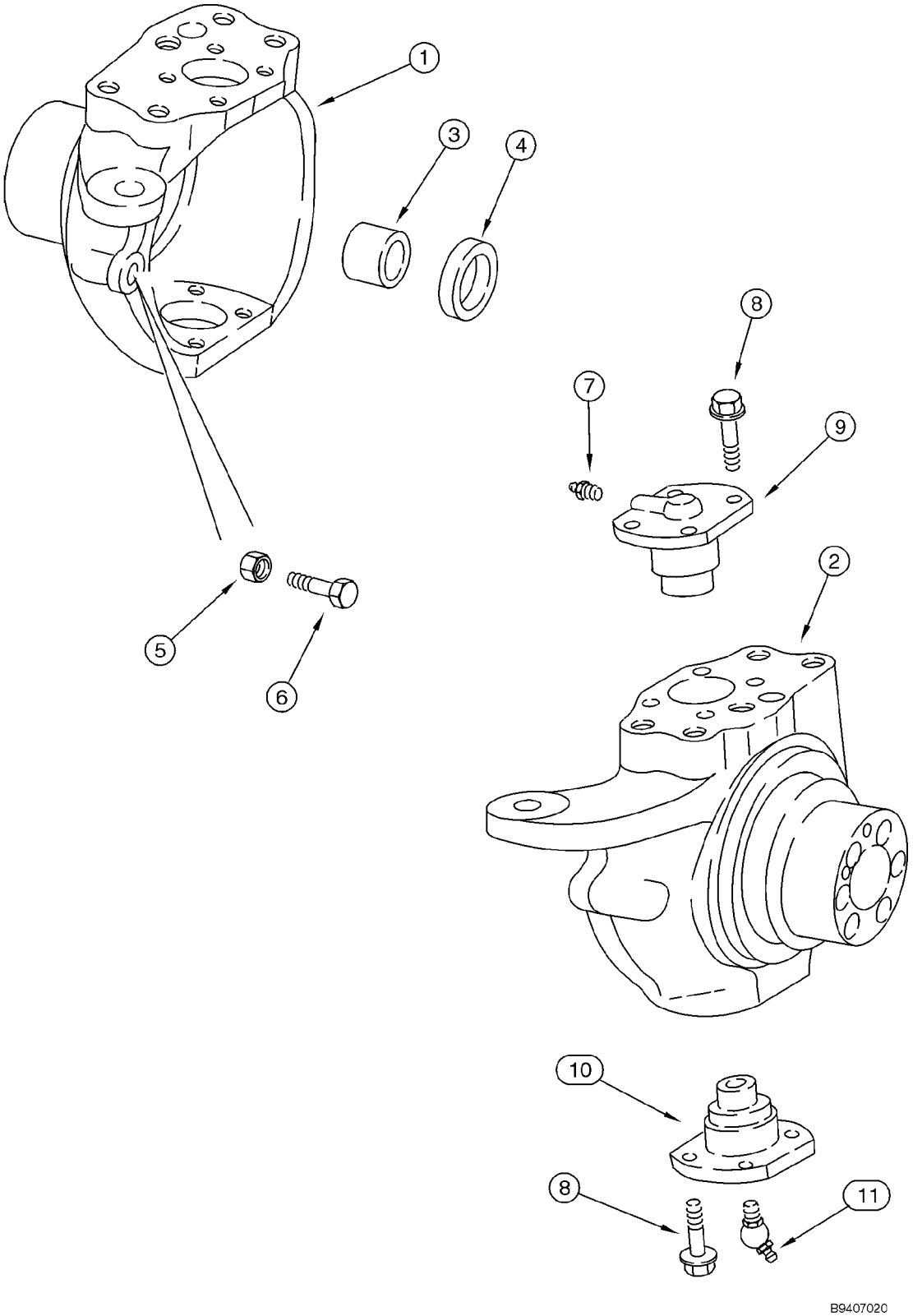

AXLE, FRONT DRIVE - HOUSING, SWIVEL

REF	FN	PART NUMBER	YR/SN	QTY	DESCRIPTION
		87395365		1	AXLE ASSY, 4WD, Front, Incl. Ref 1 - 11; Also Includes Parts On Figures 06-02 - 06-08
1		{87710156}		1	HOUSING, AXLE, Left-Hand
2		{87710159}		1	HOUSING, AXLE, Right-Hand
3		100532A1		2	BUSHING, Used With Right-Hand or Left-Hand Swivel Housing, Not Included With Housing, Purchase Separately
4		87710145		2	SEALRING
5		85805986		2	NUT, M16
6		5194264		2	SCREW, M16 X 75
7		321204		2	NIPPLE, LUBE, M6 x 1, 16mm lg
8		100533A1		16	BOLT, M12 x 30
9		122265A1		2	PIN, LARGE, King Pin
10		122264A1		2	PIN, LARGE, King Pin
11		N13505		2	NIPPLE, LUBE, 45Ü, M6 x 1

AXLE, FRONT DRIVE - CYLINDER, STEERING

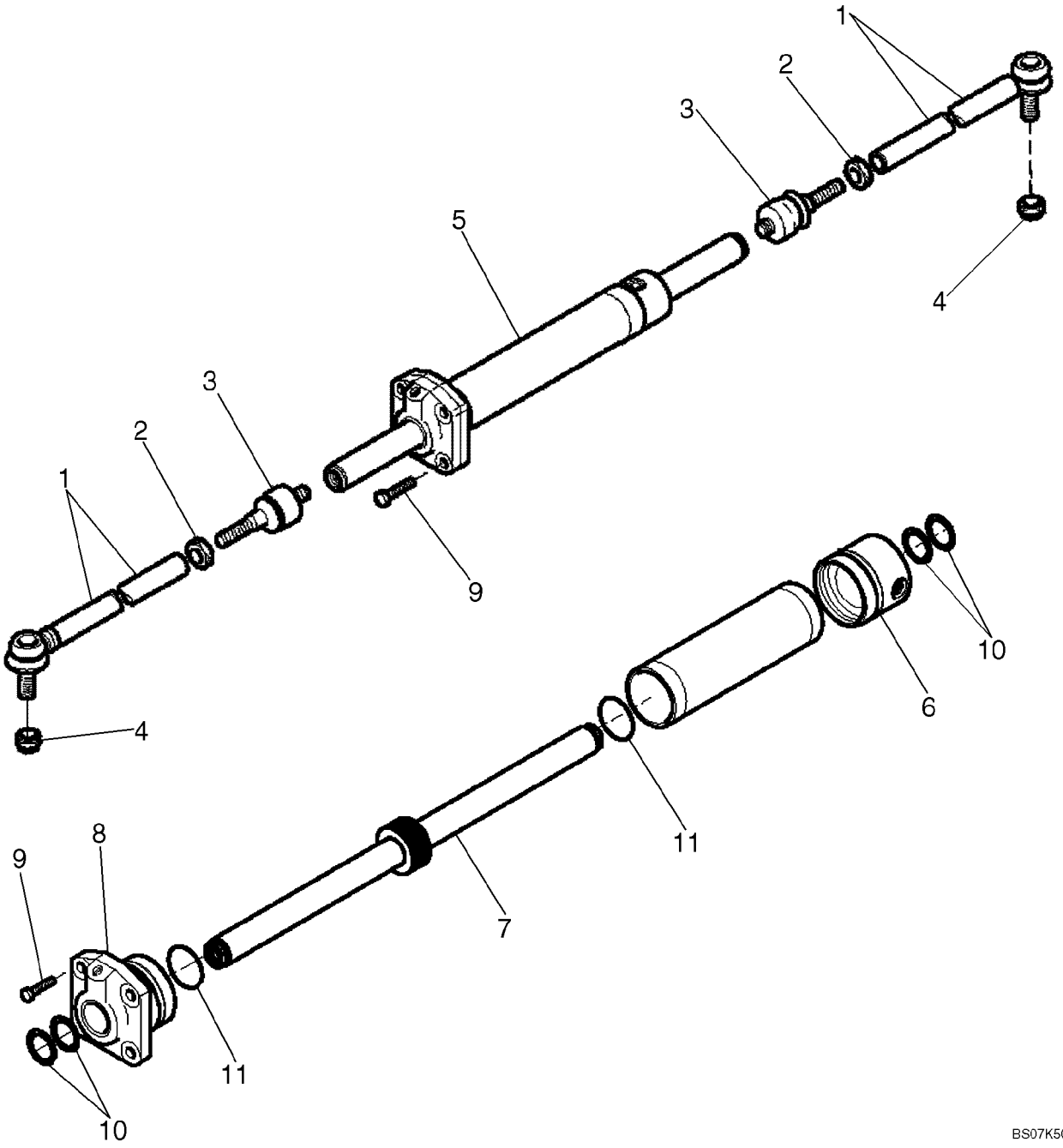

AXLE, FRONT DRIVE - CYLINDER, STEERING

REF	FN	PART NUMBER	YR/SN	QTY	DESCRIPTION
		87395365		1	AXLE ASSY, 4WD, Front, Incl. Ref 1 - 11; Also Includes Parts On Figures 06-02 - 06-08
		144457A1		2	ARM, Incl. Ref 1 - 3
1		NSS		1	NOT SERVICED SEPARATELY, Ball Joint
2		934727R1		1	NUT, Thin, M18 x 1.5, Cl 04
3		112509A1		1	BALL JOINT
4		905839R1		2	NUT, LOCK, M18 x 1.5, Thin, M18
5		{87710158}		1	CYLINDER, Steering, Incl. Ref 6 - 16, Order 87710144 Kit to Service Seals
6		{87710142}		1	Cylinder Head
7		{87710143}		1	Rod
8		{87710141}		1	Gland
9		{87710137}		4	Bolt; M12 x 35
10		NSS		4	NOT SERVICED SEPARATELY, Seal, Wiper
11		NSS		2	NOT SERVICED SEPARATELY, O-Ring
		{87710144}		1	Seal Kit; Incl. Ref 10, 11

06-05		p1	11/07

AXLE, FRONT DRIVE - SHAFTS, AXLE

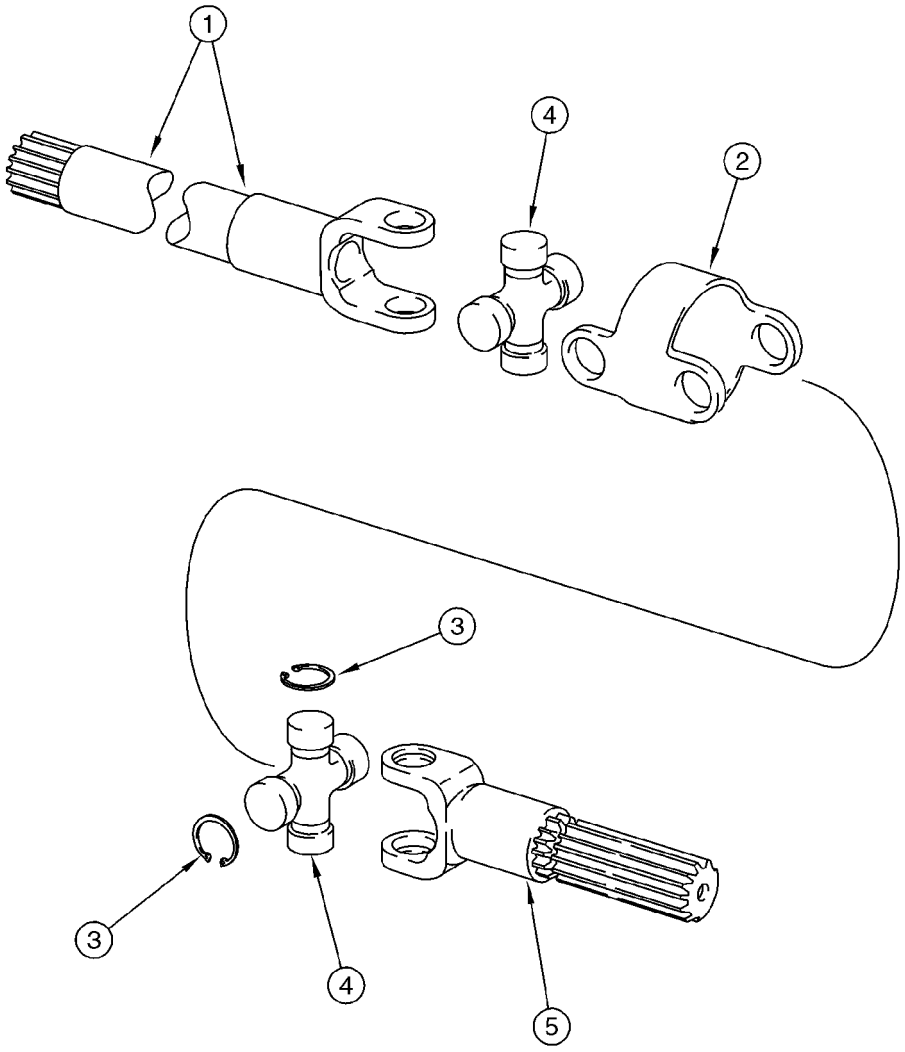

B9407022

AXLE, FRONT DRIVE - SHAFTS, AXLE

REF	FN	PART NUMBER	YR/SN	QTY	DESCRIPTION
		87395365		1	AXLE ASSY, 4WD, Front, Incl. Ref 1 - 5; Also Includes Parts On Figures 06-02 - 06-08
		144461A1		2	AXLE SHAFT, Incl. Ref 1 - 5
1		144462A1		2	FORK, Shaft, Long, Differential Side
2		390029A1		2	BODY
3		N14410		16	RING
4		144465A1		4	SPIDER, U-JOINT, Incl. Ref 3
5		144463A1		2	SHAFT, Short, Wheel Side

06-06		p1	11/07

AXLE, FRONT DRIVE - PLANETARY

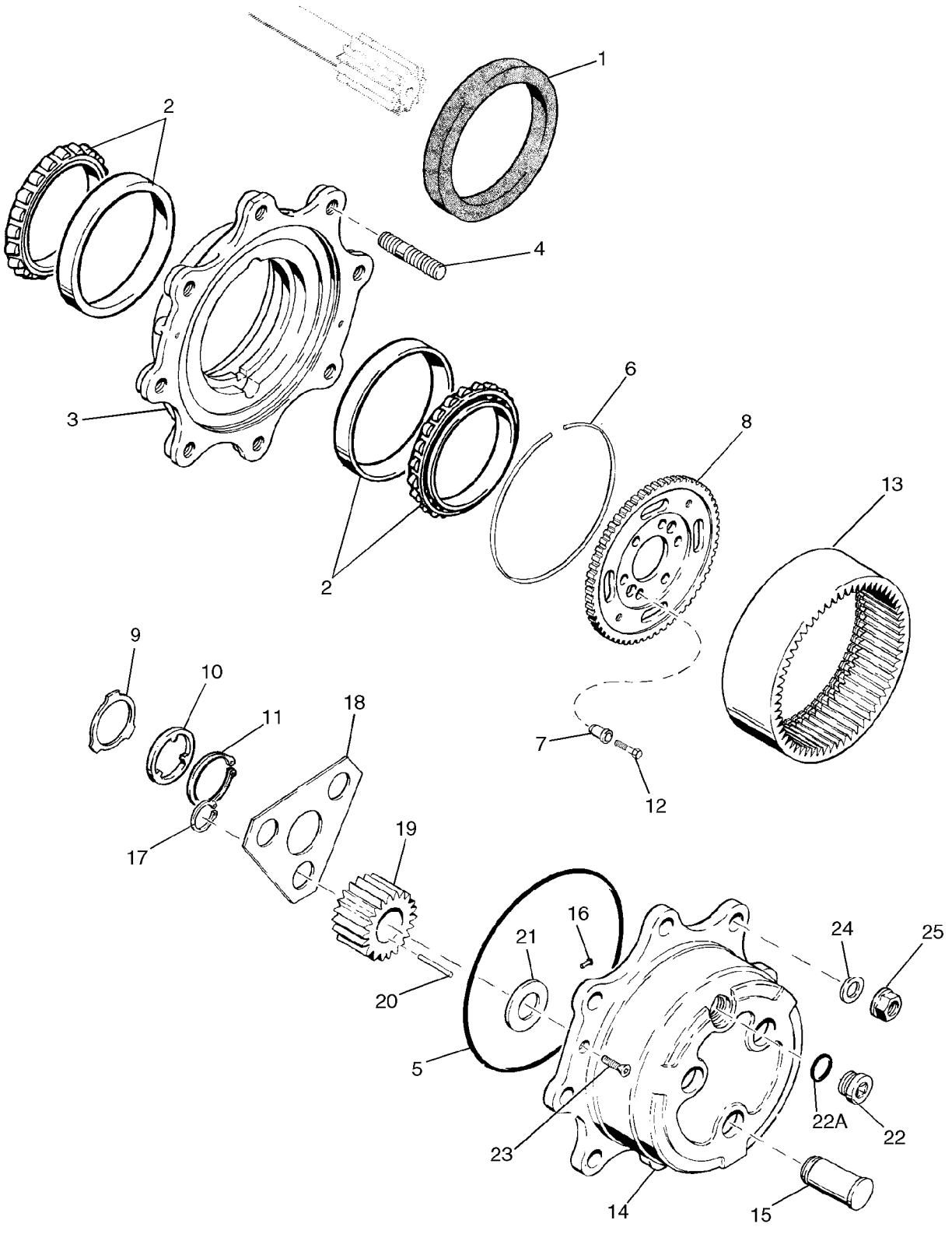

AXLE, FRONT DRIVE - PLANETARY

REF	FN	PART NUMBER	YR/SN	QTY	DESCRIPTION
		87395365		1	AXLE ASSY, 4WD, Front, Incl. Ref 1 - 23; Also Includes Parts On Figures 06-02 - 06-08
1		311569A1		2	SEAL, OIL, Triple Lip
2		1966169C1		4	BEARING, CONE
		144466A1		2	HUB, Incl. Ref 3, 4
3		NSS		1	NOT SERVICED SEPARATELY, Hub
4		100556A1		8	STUD
5		100552A1		2	O-RING
6		100559A1		2	RING, SPECIAL
7		116426A1		12	BUSHING
8		116427A1		2	GEAR, CARRIER, Ring Gear
9		190684A1		2	WASHER, Thrust
10		190682A1		2	WASHER, Thrust
11		A48041		2	CIRCLIP
12		116425A1		12	SCREW
13		100561A1		2	GEAR, Ring
		100554A1		2	PINION CARRIER, PLANETARY, Includes 100553A1, Ref 14 - 22A
		100553A1		2	HOUSING ASSY., Carrier, Incl. Ref 14 - 16
14		NSS		1	NOT SERVICED SEPARATELY, Carrier
15		NSS		3	NOT SERVICED SEPARATELY, Shaft, Pinion
16		K395093		1	PIN, HEADED, Lock
17		800-1134		6	RING, SNAP, M34, Ext
18		100555A1		2	PLATE, LARGE, Retainer
19		100562A1		6	GEAR, PLANETARY, Pinion Gear
20		114295A1		9	KIT, 10 NEEDLE BRGS
21		K395091		6	WASHER, Thrust
22		100557A1		2	PLUG, DRAIN, Incl. Ref 22A
22A		238-6121		1	O-RING, -121, 90 Duro, 1.049" ID x .103" Thk
23		K395082		4	SCREW, M8 x 20
24		496-81000		16	WASHER, 25/32" x 1 3/8" x .134", HDN, Not Included In Assembly, Purchase Separately
25		825-11418		16	NUT, M18 x 1.5, Cl 8, Not Included In Assembly, Purchase Separately

AXLE, FRONT DRIVE - DIFFERENTIAL

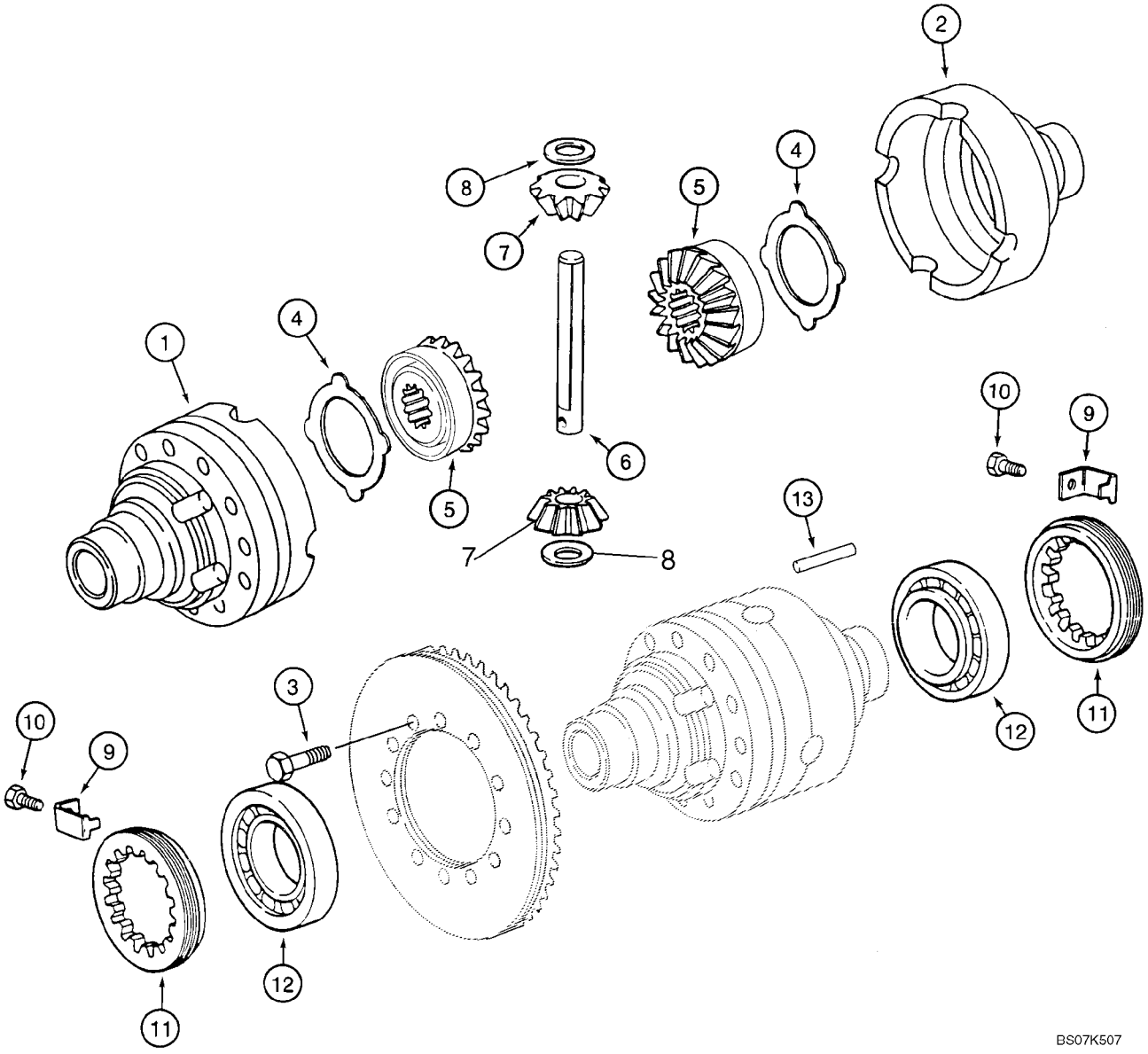

AXLE, FRONT DRIVE - DIFFERENTIAL

REF	FN	PART NUMBER	YR/SN	QTY	DESCRIPTION
		87395365		1	AXLE ASSY, 4WD, Front, Incl. Ref 1 - 13; Also Includes Parts On Figures 06-02 - 06-08
		294933A1		1	SUPPORT ASSY., Differential Housing, Incl. Ref 1, 2
1		NSS		1	NOT SERVICED SEPARATELY, Housing, Flange Half
2		NSS		1	NOT SERVICED SEPARATELY, Housing, Plain Half
3		5194194		12	SCREW, M10 x 75
4		1967003C1		2	WASHER, THRUST
		231397A1		1	SET OF PARTS, Differential Gear Set, Service Replacement, Incl. Ref 5 - 8
5		NSS		2	NOT SERVICED SEPARATELY, Gear, Side
6		NSS		1	NOT SERVICED SEPARATELY, Shaft, Pinion Gear
7		NSS		2	NOT SERVICED SEPARATELY, Pinion Gear
8		9966352		2	WASHER, THRUST
9		5194191		2	CLIP, Bracket
10		112486A1		2	SCREW, LOCK, Hex, M6 x 12
11		5194190		2	NUT, RING, Locking Ring
12		561201		2	BEARING ASSY
13		9966356		1	PIN, ROLL

AXLE, FRONT DRIVE - RING AND PINION

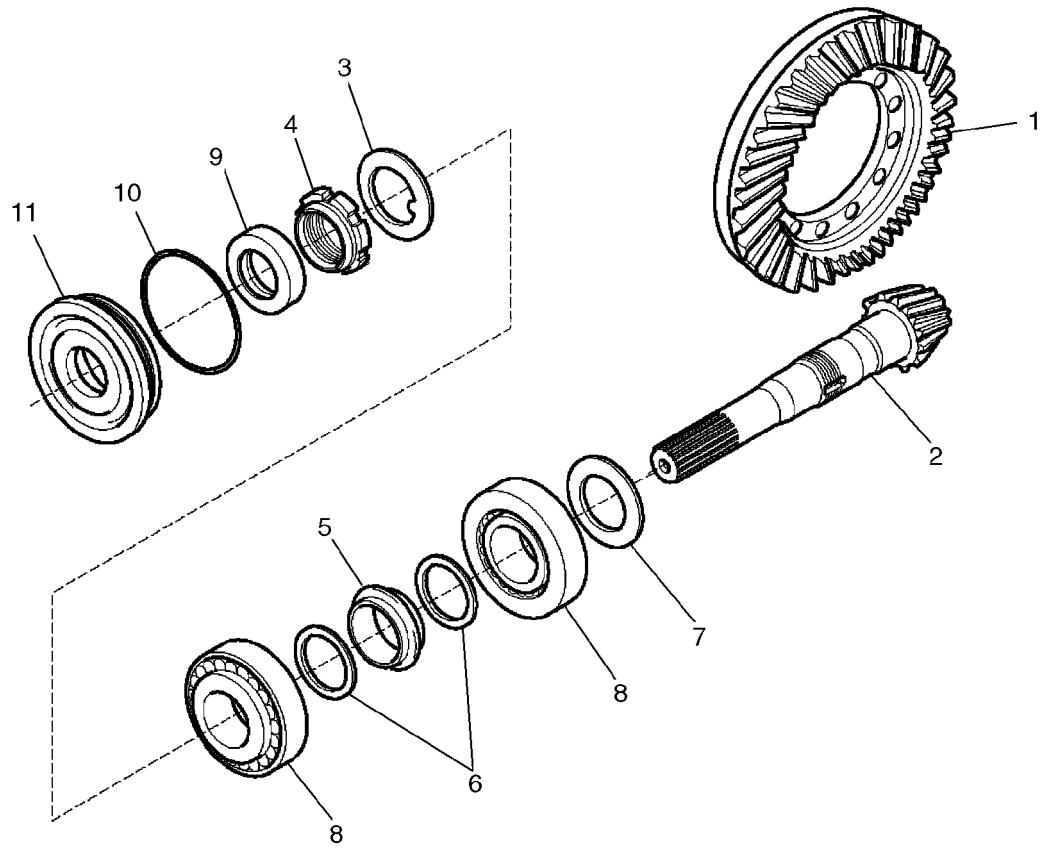

AXLE, FRONT DRIVE - RING AND PINION

REF	FN	PART NUMBER	YR/SN	QTY	DESCRIPTION
		87395365		1	AXLE ASSY, 4WD, Front, Incl. Ref 1 - 11; Also Includes Parts On Figures 06-02 - 06-08
		144460A1		1	KIT, Ring and Pinion Gear Set, Incl. Ref 1 - 6
1		NSS		1	NOT SERVICED SEPARATELY, Ring, Gear
2		NSS		1	NOT SERVICED SEPARATELY, Pinion Gear
3		9968031		1	WASHER, LOCK
4		K261014		1	NUT, Ring
5		1349058C1		1	SPACER, Collapsible
6		1349059C1		2	WASHER
7		140954A1		AR	SHIM, 2,5 mm (0,098 in)
7		140953A1		AR	SHIM, 2,6 mm (0,102 in)
7		140951A1		AR	SHIM, 2,7 mm (0,106 in)
7		140949A1		AR	SHIM, 2,8 mm (0,110 in)
7		140948A1		AR	SHIM, 2,9 mm (0,114 in)
7		140943A1		AR	SHIM, 3,0 mm (0,118 in)
7		140944A1		AR	SHIM, 3,1 mm (0,122 in)
7		140945A1		AR	SHIM, 3,2 mm (0,125 in)
7		140946A1		AR	SHIM, 3,3 mm (0,129 in)
7		140947A1		AR	SHIM, 3,4 mm (0,133 in)
8		K395090		2	BEARING, BALL
9		K262143		1	SEAL, Oil
10		238-5152		1	O-RING, -152, 70 Duro, 3.237" ID x .103" Thk
11		128570A1		1	FLANGE, Cover, Differential

06-09		p1	11/07

DRIVE SHAFT, FRONT AXLE

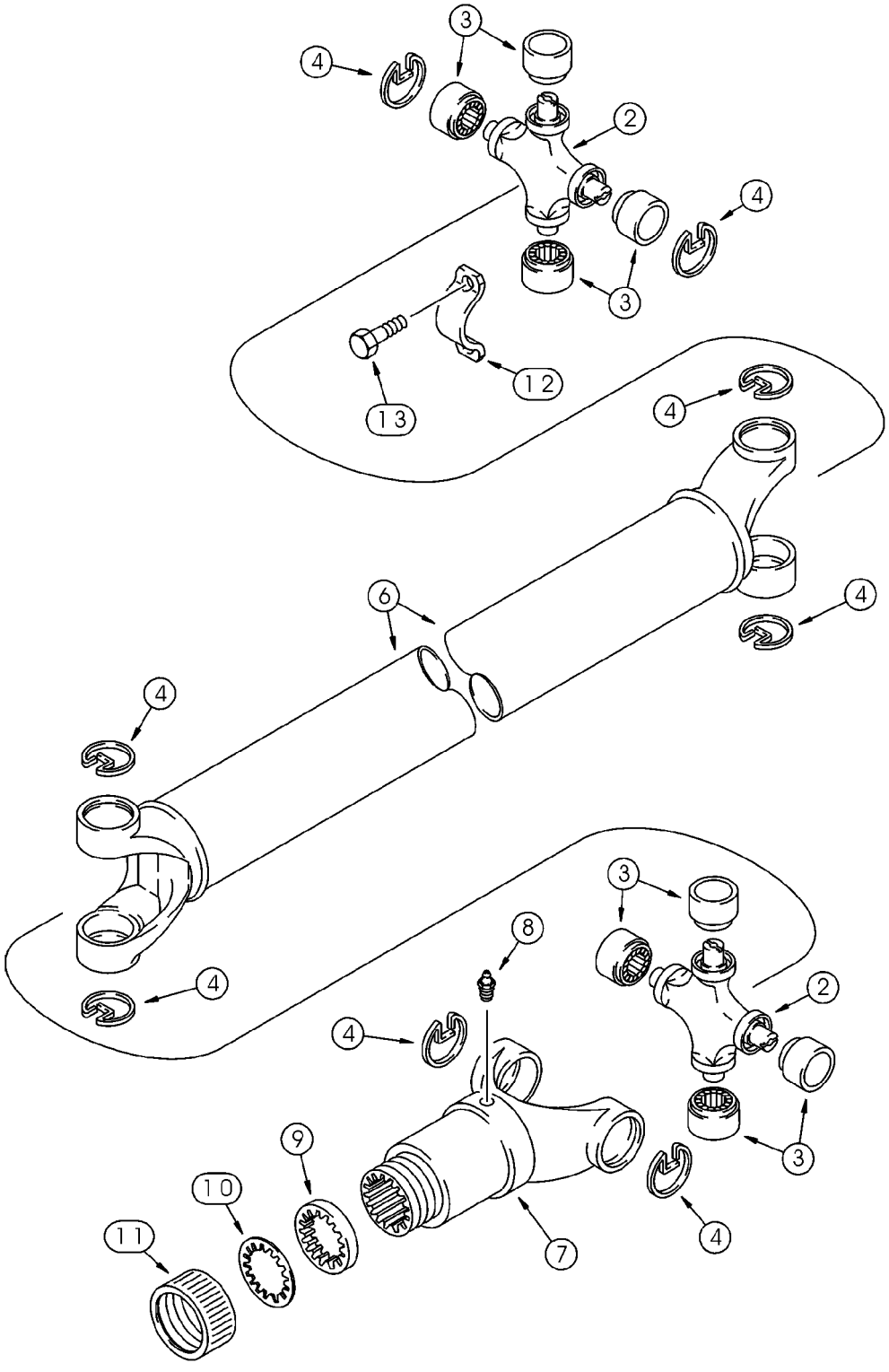

DRIVE SHAFT, FRONT AXLE

REF	FN	PART NUMBER	YR/SN	QTY	DESCRIPTION
		87694656		1	SHAFT, DRIVE, With or Without Powershift Transmission, Incl. 393231A1, Ref 2 - 11
		393231A1		2	KIT, Universal Joint, Incl. Ref 2 - 4
2		NSS		1	NOT SERVICED SEPARATELY, Joint, Universal
3		NSS		4	NOT SERVICED SEPARATELY, Bearing, Journal
4		NSS		4	NOT SERVICED SEPARATELY, Ring, Retaining
6		87716824		1	CAP
7		87716823		1	YOKE
8		219-10		1	NIPPLE, LUBE, 1/4"-28 NPT x .68" lg
		D149860		1	PACKAGE,SERVICE, Incl. Ref 9 - 11
9		NSS		1	NOT SERVICED SEPARATELY, Washer, Cork
10		NSS		1	NOT SERVICED SEPARATELY, Washer, Steel
11		NSS		1	NOT SERVICED SEPARATELY, Cap
12		87538515		2	RETAINER
13		9637611		4	SCREW, Hex Flange Head, Locking, Special, 5/16 - 24 UNF x 1-1/16

06-10		p1	02/08

COOLING SYSTEM - TRANSMISSION

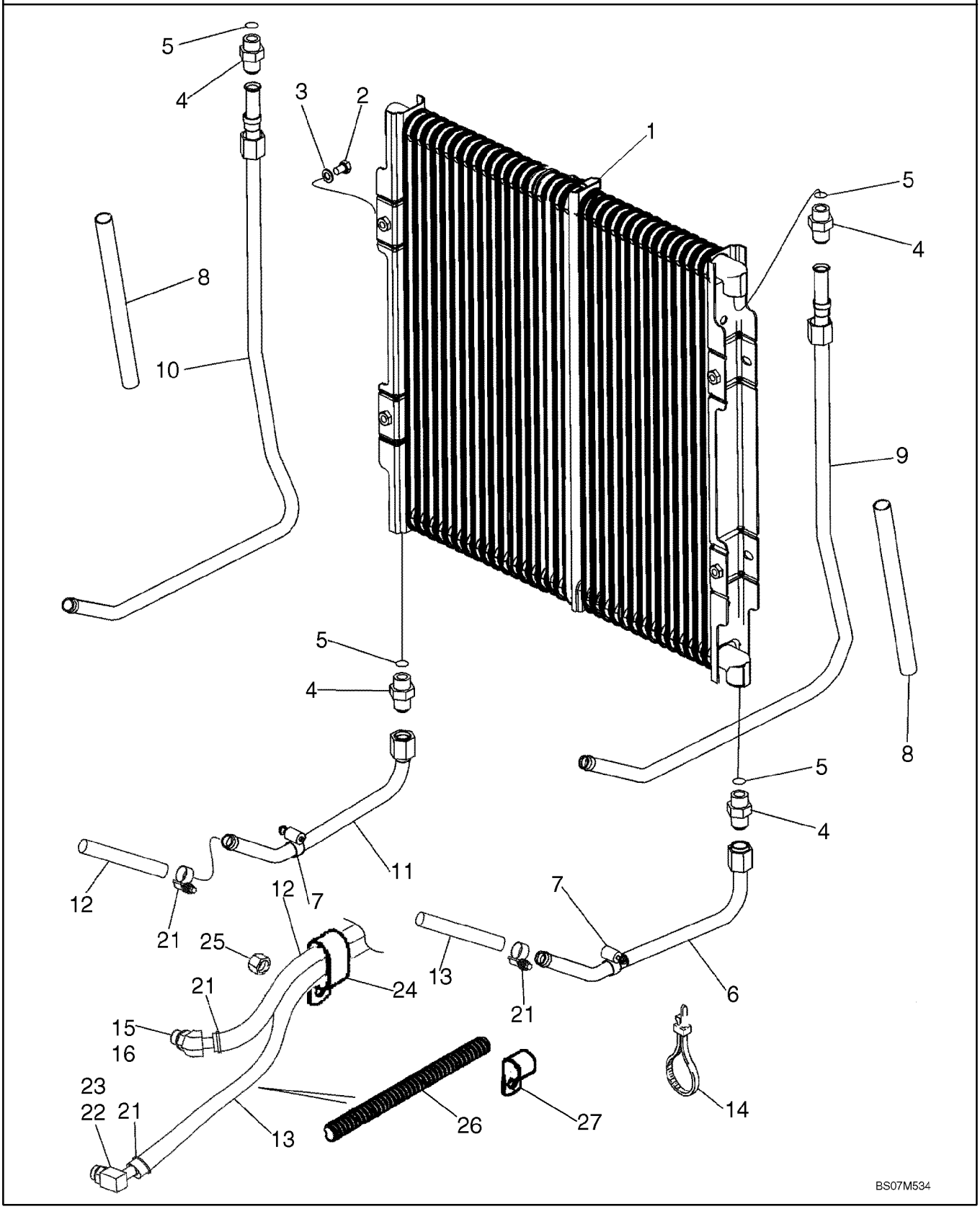

COOLING SYSTEM - TRANSMISSION

REF	FN	PART NUMBER	YR/SN	QTY	DESCRIPTION
1		87441876		1	COOLER, OIL, Hydraulic
2		614-8012		4	BOLT, Hex, M8 x 12, 8.8, Full Thd
3		895-11008		4	WASHER, M8 x 16 x 1.6
4		218-5062		4	CONNECTOR, HYD., 7/8"-14, 37Ü x 7/8"-14, O-Ring, Incl. Ref 5
5		237-6010		1	O-RING, 10-1, 90 Duro, .755" ID x .097" Thk
6		87435078		1	TUBE, Lower Right-Hand Tube
7		214-1412		2	CLAMP, HOSE, #12, 0.69/1.25 Type F Worm
8		87311219		2	TUBE, PLASTIC-RUBBER, 250 mm (9-7/8 in) Sleeve
9		87435076		1	TUBE, Right-Hand Upper Cooler
10		87435080		1	TUBE, Left-Hand Upper Cooler
11		87435082		1	TUBE, Left-Hand Lower
12		87422597		1	HOSE ASSY., 975 mm (38-13/32 in), Transmission to Cooler Inlet
13		87422598		1	HOSE ASSY., 1225 mm (48-1/4 in), Cooler Outlet to Transmission
14		L18337		1	STRAP, CABLE, 9.95"-12.1" lg
15		217-314		1	FITTING, 45Ü, 5/8" Hose x 7/8"-14 ORB Beaded, Incl. Ref 16
16		237-6010		1	O-RING, 10-1, 90 Duro, .755" ID x .097" Thk
21		328186A1		4	CLAMP, HOSE
22		217-349		1	FITTING, 90Ü, 5/8" Hose x 7/8"-14 ORB Beaded, Incl. Ref 23
23		237-6010		1	O-RING, 10-1, 90 Duro, .755" ID x .097" Thk
24		D39696		1	CLAMP, Double P
25		829-1410		1	NUT, M10, Cl 10
26		D132982		1	LOOM
27		515-25190		2	CLAMP, 3/4", Insul, 1/2" Bolt

TRANSMISSION - MOUNTING

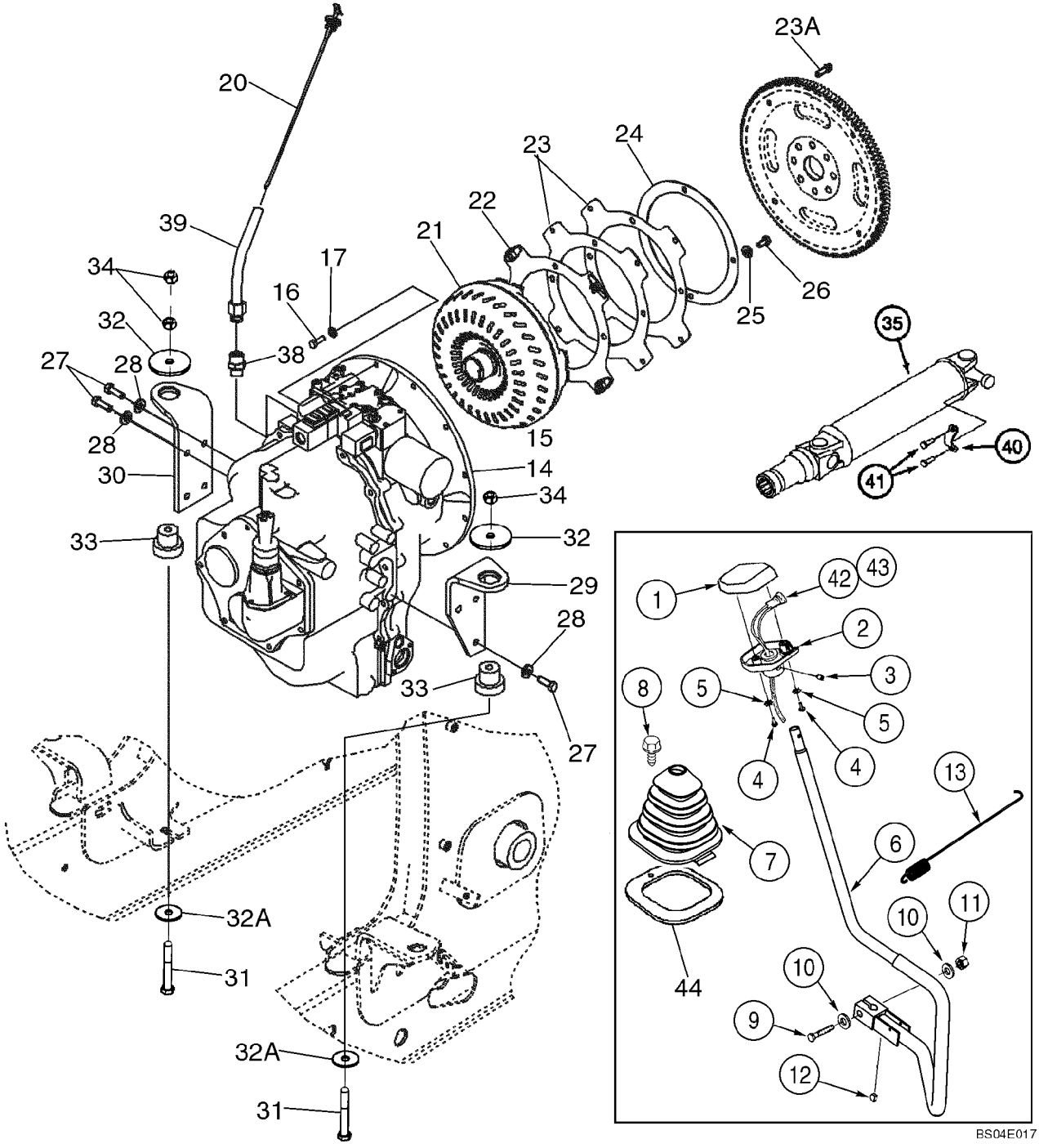

TRANSMISSION - MOUNTING

REF	FN	PART NUMBER	YR/SN	QTY	DESCRIPTION
		309747A1		1	KNOB, Gear Shift Lever, Includes NSS Gasket, Incl. Ref 1, 2, 4, 5
		NSS		2	NOT SERVICED SEPARATELY, GASKET, Knob
1		187714A1		1	BUTTON, Knob, Upper
2		187715A1		1	BUTTON, Knob, Lower
3		484-6316		1	SET SCREW, Hex Soc, 5/16"-24 x 3/8"
4		87020181		2	SCREW, No. 10 NF x 7/8
5		493-41020		2	WASHER, LOCK, Ext Tooth, #10
6		379314A4		1	LEVER ASSY., Gear Shift Lever
7		400588A2		1	BOOT
8		87310096		1	BOLT, M6 x 25, Includes Washer, Stainless Steel
9		827-12065		1	BOLT, Hex, M12 x 65, 10.9
10		896-11012		2	WASHER, M13.5 x 24.5 x 3, HT
11		832-10412		1	NUT, LOCK, M12 x 1.75, Cl 8
12		126-116		1	WOODRUFF KEY, #9, 3/16" x 3/4", HT
13		380537A2		1	SPRING
14		87395300		1	TRANSMISSION, Two Wheel Drive Models, See Figure 06-12 - 06-19, 07-01
15		87395301		1	TRANSMISSION, Four Wheel Drive Models, See Figure 06-19(00) - 06-19(10), 07-01(01)
16		627-10030		12	BOLT, Hex, M10 x 30, 10.9, Full Thd
17		496-21041		12	WASHER, 13/32" x 13/16" x .089", HDN
20		87601345		1	DIPSTICK
21		87702194		1	TORQUE CONVERTER, Torque Converter, New
22		87406934		1	PLATE, Flex Plate, With Caged Nuts
23		86993546		2	PLATE, Flex Plate
23A		87019767		4	SCREW, 12 Pt Hd, M10 x 1.25 x 30, 12.9
24		87409201		1	PLATE, BACKING
25		896-15010		4	WASHER, M10 x 24.5 x 3, HT
26		614-10020		4	BOLT, Hex, M10 x 20, 8.8, Full Thd
27		614-12035		7	BOLT, Hex, M12 x 35, 8.8, Full Thd
28		896-15012		7	WASHER, M12 x 28.5 x 4, HT
29		87416977		1	SUPPORT, Right-Hand Bracket
30		87416978		1	SUPPORT, Left-Hand Bracket
31		814-12080		2	BOLT, Hex, M12 x 80, 8.8

TRANSMISSION - MOUNTING

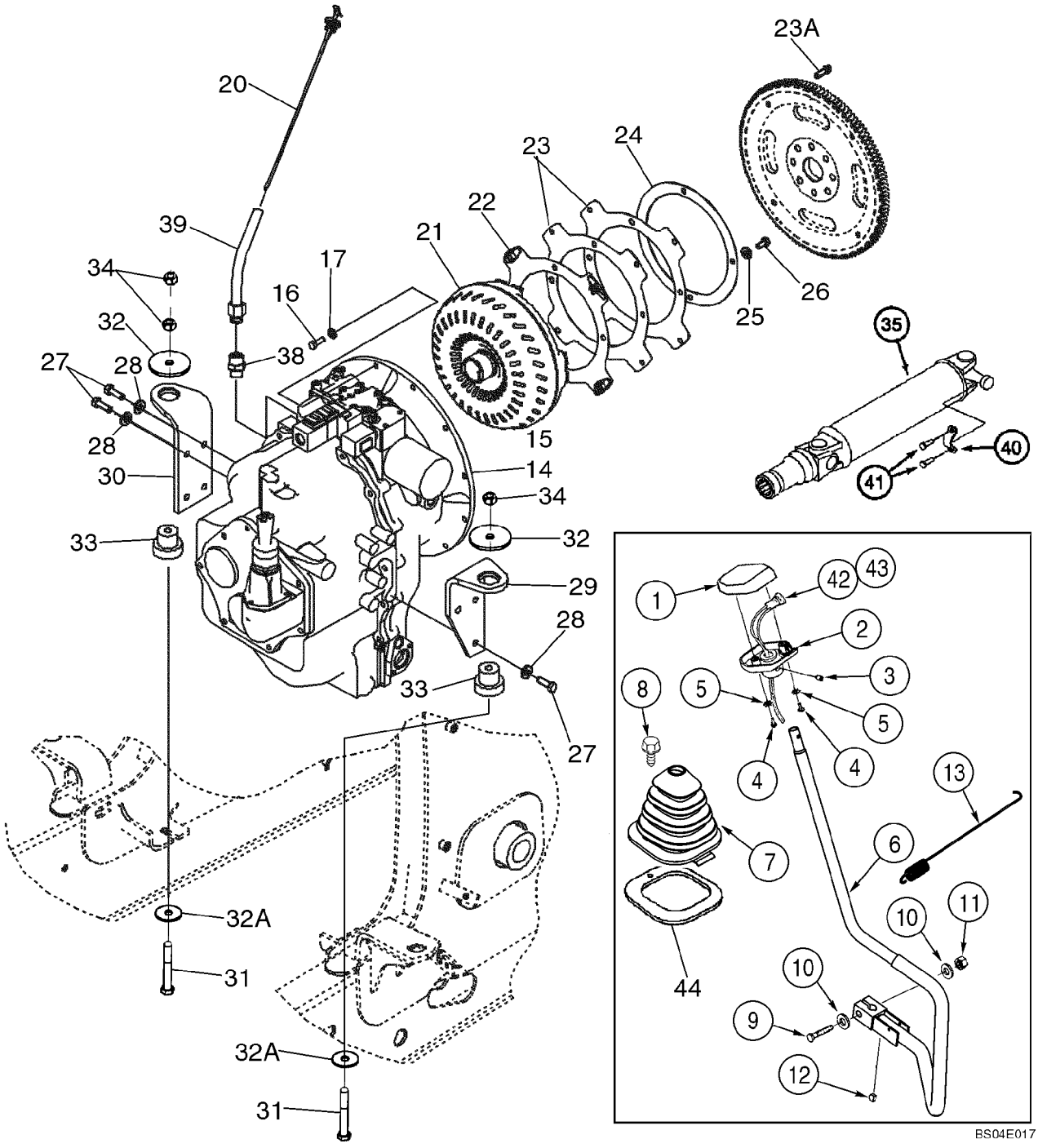

TRANSMISSION - MOUNTING

REF	FN	PART NUMBER	YR/SN	QTY	DESCRIPTION
32		85801585		2	WASHER, SEALING, Special
32A		85802618		2	WASHER, SEALING
33		87416967		2	SUPPORT
34		832-10412		3	NUT, LOCK, M12 x 1.75, Cl 8
35		87613924		1	SHAFT, DRIVE, Transmission to Rear Axle; Component Parts Not Available; See Figure 06-47
38		218-459		1	CONNECTOR, HYD., 1 5/16"-12, 37Ü x 3/4"-14, NPTF
39		87601338		1	TUBE, Dipstick
40		87538515		2	RETAINER
41		9637611		4	SCREW, Hex Flange Head, Locking, Special, 5/16 - 24 UNF x 1-1/16
42		87312712		1	SWITCH, Push Button, Clutch Cutout
43		123809A2		1	HARNESS, Clutch Cutout, Transmission Gear Shift Lever
44		410561A1		1	SEAL, Shift Lever Boot, Cab Models

TRANSMISSION ASSY, 2WD - FILTER, OIL

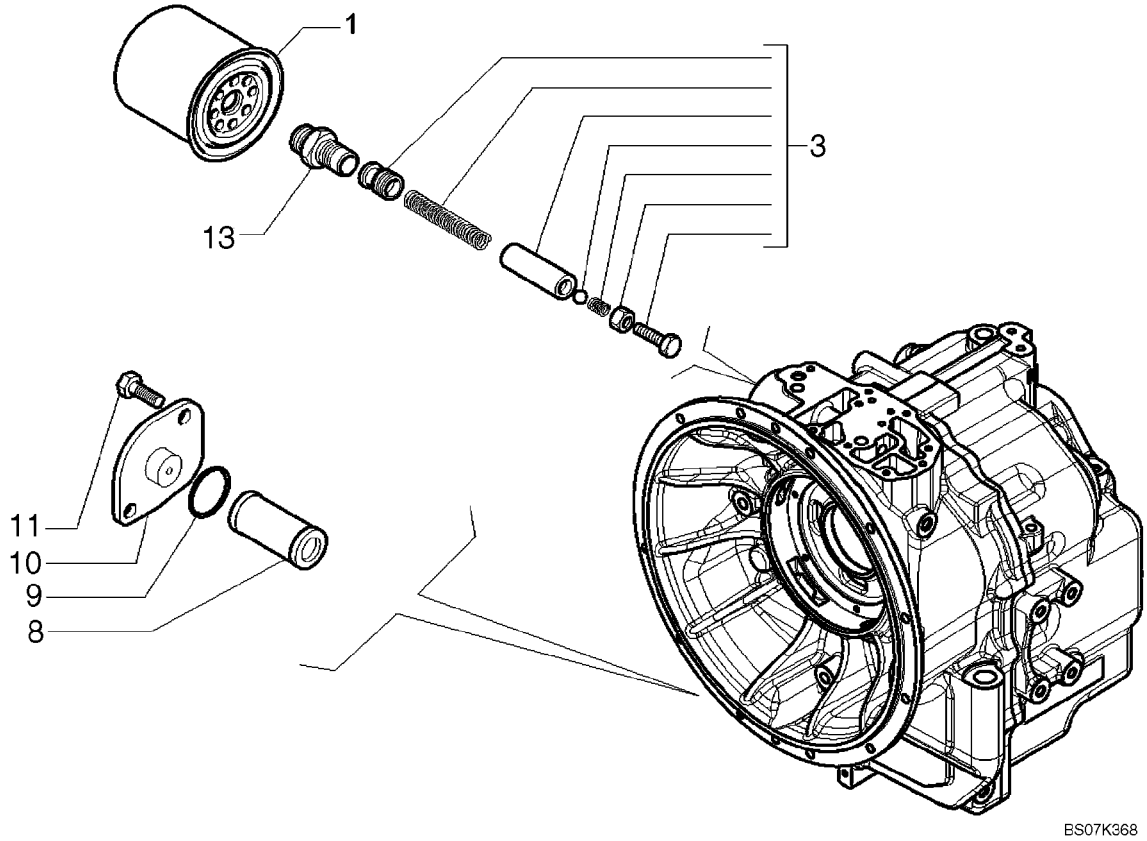

TRANSMISSION ASSY, 2WD - FILTER, OIL

REF	FN	PART NUMBER	YR/SN	QTY	DESCRIPTION
		87395300		1	TRANSMISSION, Two Wheel Drive, Incl. Ref 1 - 13; Also Includes Parts On Figures 06-12 - 06-19, 07-01
1		254686A2		1	FILTER, Oil
3		181274A1		1	SET OF PARTS, Valve
8		278534A1		1	SCREEN, FILTER, Oil
9		100748A1		1	O-RING
10		181219A1		1	COVER
11		614-8018		2	BOLT, Hex, M8 x 18, 8.8, Full Thd
13		181202A1		1	FITTING

TRANSMISSION ASSY, 2WD - HOUSING

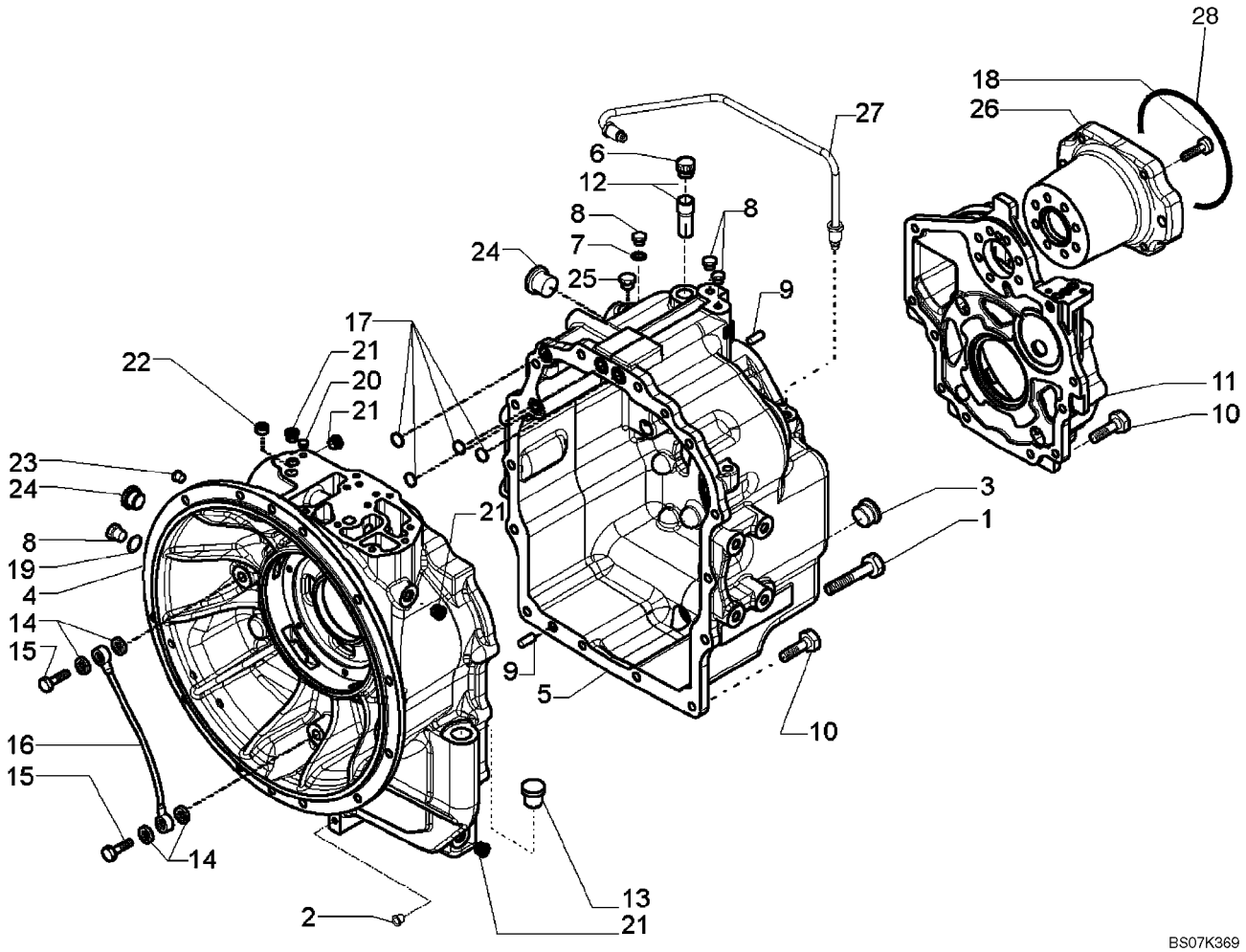

TRANSMISSION ASSY, 2WD - HOUSING

REF	FN	PART NUMBER	YR/SN	QTY	DESCRIPTION
		87395300		1	TRANSMISSION, Two Wheel Drive, Incl. Ref 1 - 28; Also Includes Parts On Figures 06-12 - 06-19, 07-01
1		814-10150		2	BOLT, Hex, M10 x 150, 8.8
2		NSS		1	NOT SERVICED SEPARATELY, PLUG, Shipping Plug
3		100557A1		1	PLUG, DRAIN, M30 x 2; Incl 238-6121 O-Ring
		238-6121		1	O-RING, -121, 90 Duro, 1.049" ID x .103" Thk
4		{87701253}		1	Front Housing
5		{87701255}		1	Rear Housing
6		1530028C1		1	BREATHER ASSY.
7		934667R1		4	WASHER, SEALING, M10 x 14 x 1
8		181100A1		4	PLUG
9		K260177		3	PIN, 10 x 25
10		614-10030		17	BOLT, Hex, M10 x 30, 8.8
11		{87701257}		1	Cover
12		310772A1		1	PIPE, Breather
13		NSS		1	NOT SERVICED SEPARATELY, PLUG, Shipping Plug
14		181105A1		4	WASHER, COPPER
15		181179A1		2	JACK SCREW, M14 x 1.5
16		181232A1		1	PIPE, Lubrication
17		181141A1		4	O-RING
18		{87701258}		7	M10 x 45 Bolt
19		87429985		1	WASHER, SEALING, Copper, 10 x 18 x 1.5 mm
20		{87702570}		1	Plug
21		E135809		4	PLUG, 9/16
22		{87701260}		1	M16 x 1.5 Plug
23		181101A1		1	PLUG, M14 x 1.5
24		NSS		1	NOT SERVICED SEPARATELY, PLUG, Shipping Plug
25		NSS		1	NOT SERVICED SEPARATELY, PLUG, Shipping Plug
26		{87701269}		1	PTO Flange
27		{87701270}		1	Oil Tube
28		87429982		1	O-RING, Pump Mounting

TRANSMISSION ASSY, 2WD - PUMP, OIL

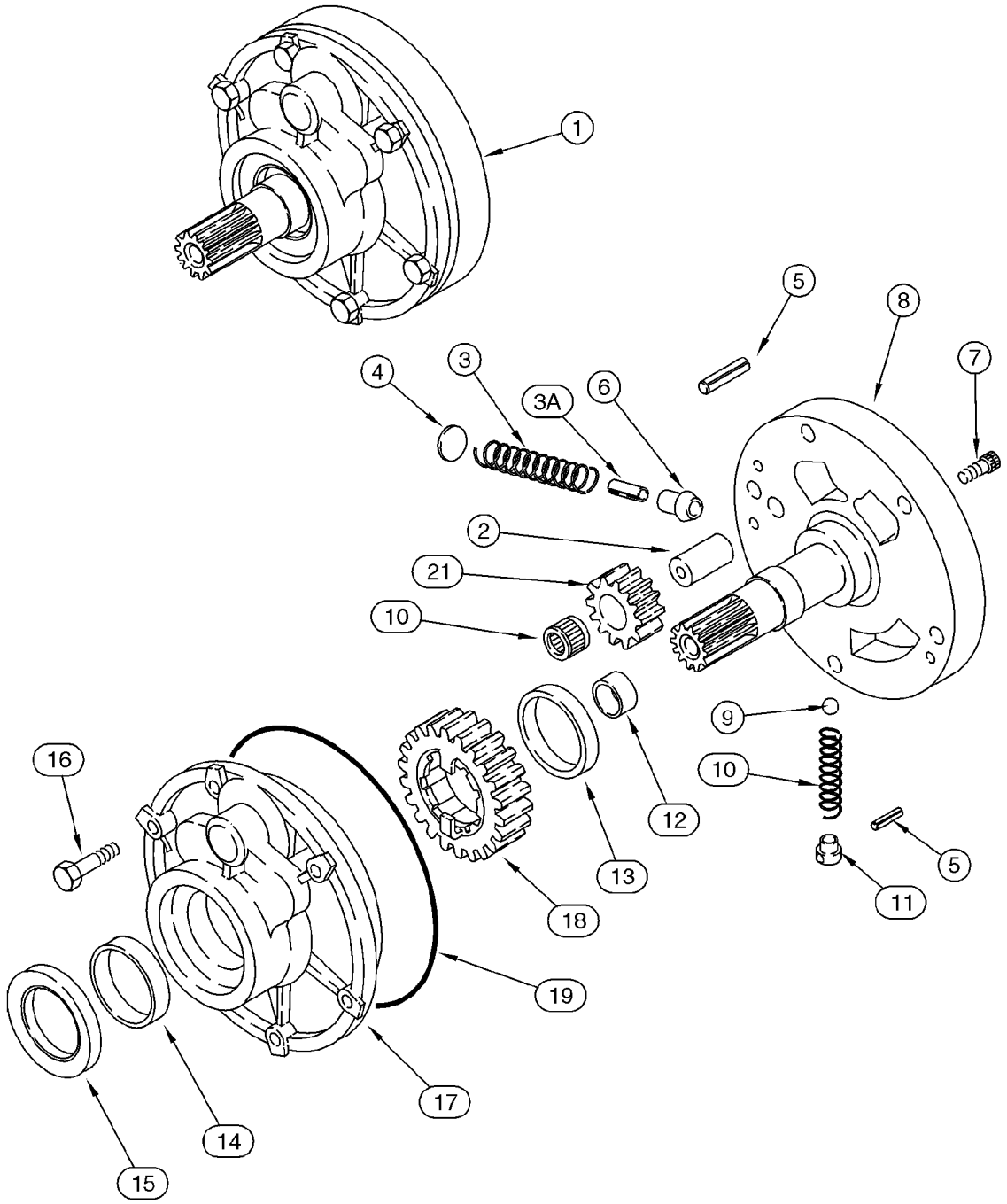

TRANSMISSION ASSY, 2WD - PUMP, OIL

REF	FN	PART NUMBER	YR/SN	QTY	DESCRIPTION
		87395300		1	TRANSMISSION, Two Wheel Drive, Incl. Ref 1 - 21; Also Includes Parts On Figures 06-12 - 06-19, 07-01
1		87429970		1	PUMP, Charge, Incl. Ref 2 - 21
2		NSS		1	NOT SERVICED SEPARATELY, Shaft
3		NSS		1	NOT SERVICED SEPARATELY, Spring
3A		NSS		1	NOT SERVICED SEPARATELY, Pin
4		NSS		1	NOT SERVICED SEPARATELY, Stop
5		NSS		2	NOT SERVICED SEPARATELY, Pin, Roll
6		NSS		1	NOT SERVICED SEPARATELY, Piston
7		NSS		2	NOT SERVICED SEPARATELY, Bolt
8		NSS		1	NOT SERVICED SEPARATELY, Support
9		NSS		1	NOT SERVICED SEPARATELY, Ball
10		NSS		1	NOT SERVICED SEPARATELY, Spring
11		NSS		1	NOT SERVICED SEPARATELY, Guide
12		NSS		1	NOT SERVICED SEPARATELY, Bushing
13		NSS		1	NOT SERVICED SEPARATELY, Bushing
14		NSS		1	NOT SERVICED SEPARATELY, Bushing
15		87429971		1	SEAL, OIL, Oil Seal
16		814-8060		6	BOLT, Hex, M8 x 60, 8.8
17		NSS		1	NOT SERVICED SEPARATELY, Housing
18		NSS		1	NOT SERVICED SEPARATELY, Gear, 23T
19		181142A1		1	O-RING
20		NSS		1	NOT SERVICED SEPARATELY, Bearing, Needle
21		NSS		1	NOT SERVICED SEPARATELY, Gear, 12T

TRANSMISSION ASSY, 2WD - SHIFTER MECHANISM

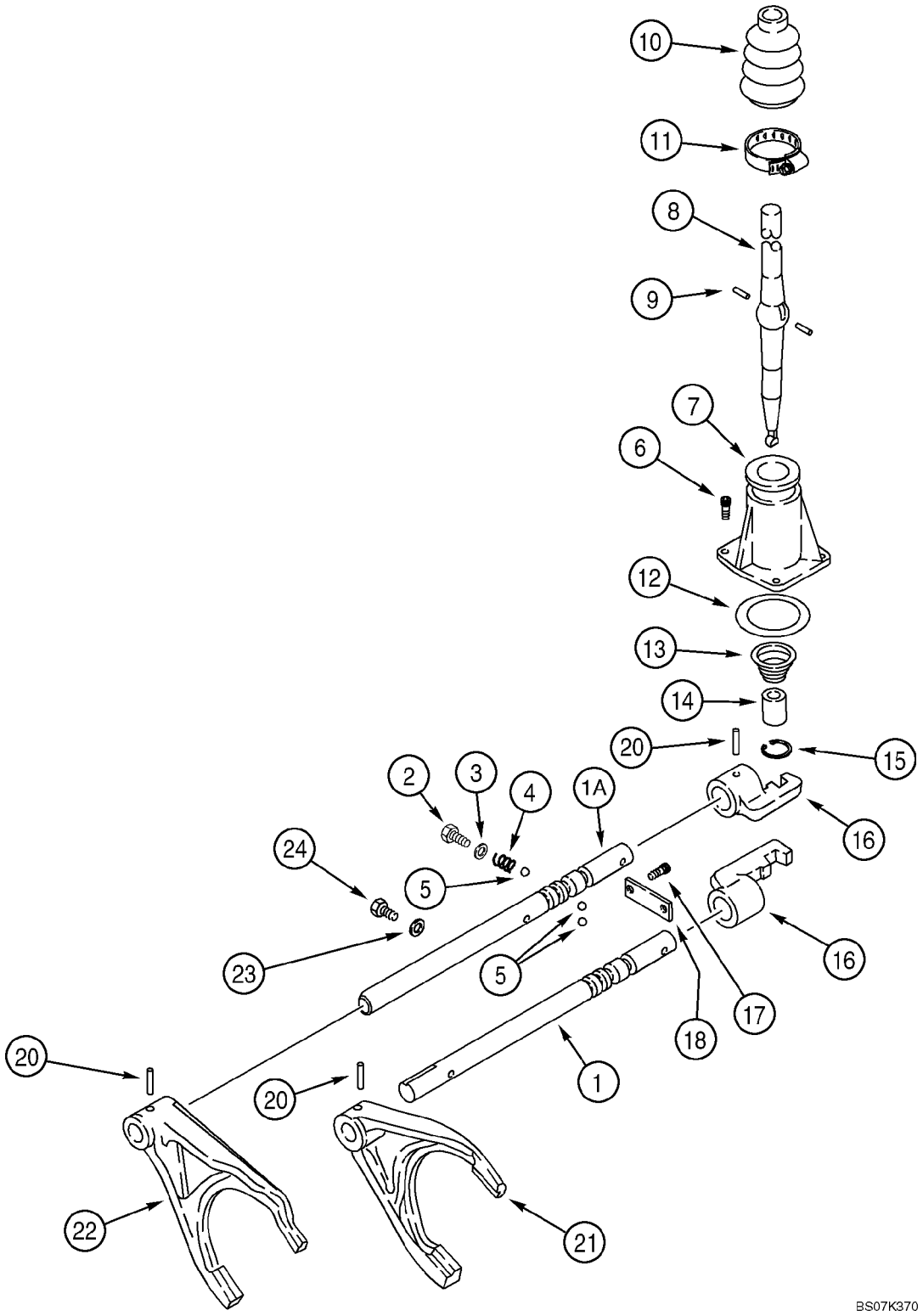

TRANSMISSION ASSY, 2WD - SHIFTER MECHANISM

REF	FN	PART NUMBER	YR/SN	QTY	DESCRIPTION
		87395300		1	TRANSMISSION, Two Wheel Drive, Incl. Ref 1 - 24; Also Includes Parts On Figures 06-12 - 06-19, 07-01
1		181245A2		1	ROD, Shifter Fork Rail; First and Second
1A		{87578867}		1	Shifter Fork Rail; Third and Fourth
2		614-12016		2	BOLT, Hex, M12 x 16, 8.8, Full Thd
3		87429994		2	WASHER, SEALING, 12 x 20 x 1.5 mm
4		1966993C1		2	SPRING
5		181139A1		4	BALL
6		864-8025		3	SCREW, Hex Soc Hd, M8 x 25, 8.8
7		181171A1		1	COVER
8		190428A3		1	LEVER, CONTROL
9		1967585C1		2	PIN, Pin
10		1967581C1		1	BOOT
11		181177A1		1	CLAMP
12		181138A1		1	O-RING
13		278533A1		1	SPRING
14		278532A1		1	BUSHING, LARGE
15		279039A1		1	SNAP RING
16		181173A1		2	SELECTOR, Shifter
17		864-10025		2	SCREW, Hex Soc Hd, M10 x 25, 8.8
18		181175A1		1	PLATE, LARGE
20		905794R1		4	PIN, M6 x 30, Coiled
21		181203A1		1	FORK, SHIFTER, First and Second
22		181174A2		1	FORK, SHIFTER, Third and Fourth
23		87429985		1	WASHER, SEALING, Washer
24		181100A1		1	PLUG, M10 x 23

TRANSMISSION ASSY, 2WD - SHAFT, REVERSE & PRIMARY

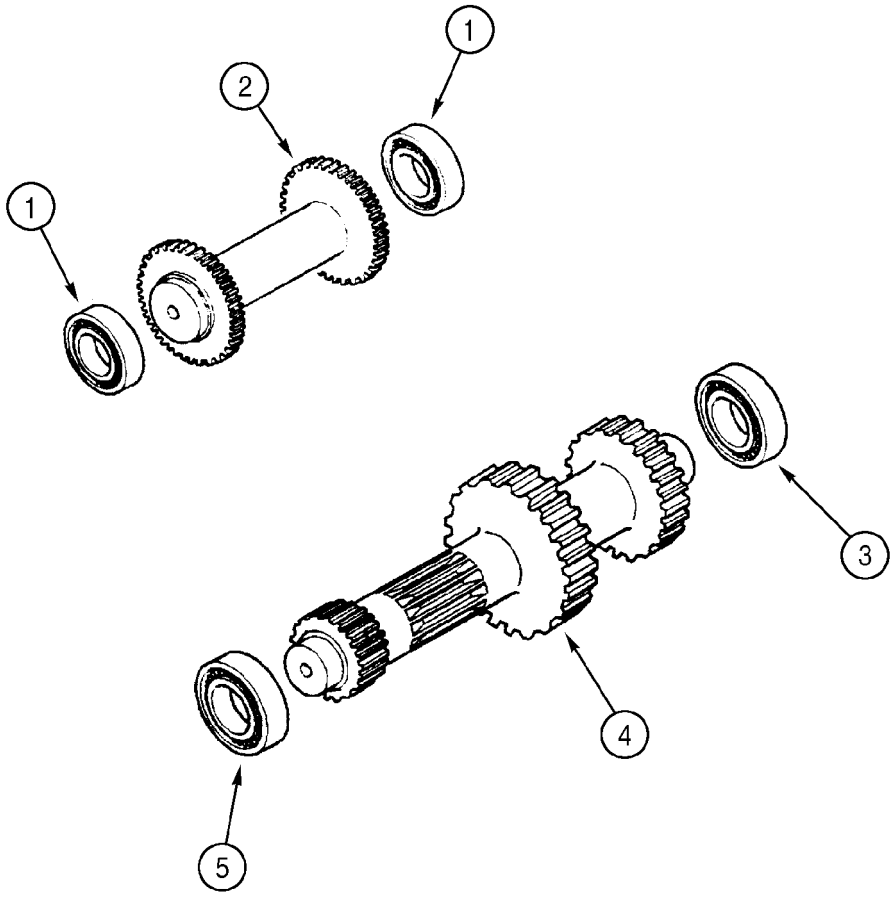

BS99H168

TRANSMISSION ASSY, 2WD - SHAFT, REVERSE & PRIMARY

REF	FN	PART NUMBER	YR/SN	QTY	DESCRIPTION
		87395300		1	TRANSMISSION, Two Wheel Drive, Incl. Ref 1 - 6; Also Includes Parts On Figures 06-12 - 06-19, 07-01
1		ST205A		2	BEARING, BALL
2		358636A1		1	SHAFT, Idler/Reverse Shaft
3		181126A1		1	BEARING, BALL
4		{87701276}		1	Primary Shaft
5		181132A1		1	BEARING, BALL
6		A48041		1	CIRCLIP, Bearing to Axle Housing; Not Illustrated

TRANSMISSION ASSY, 2WD - SHAFT, INPUT & PTO

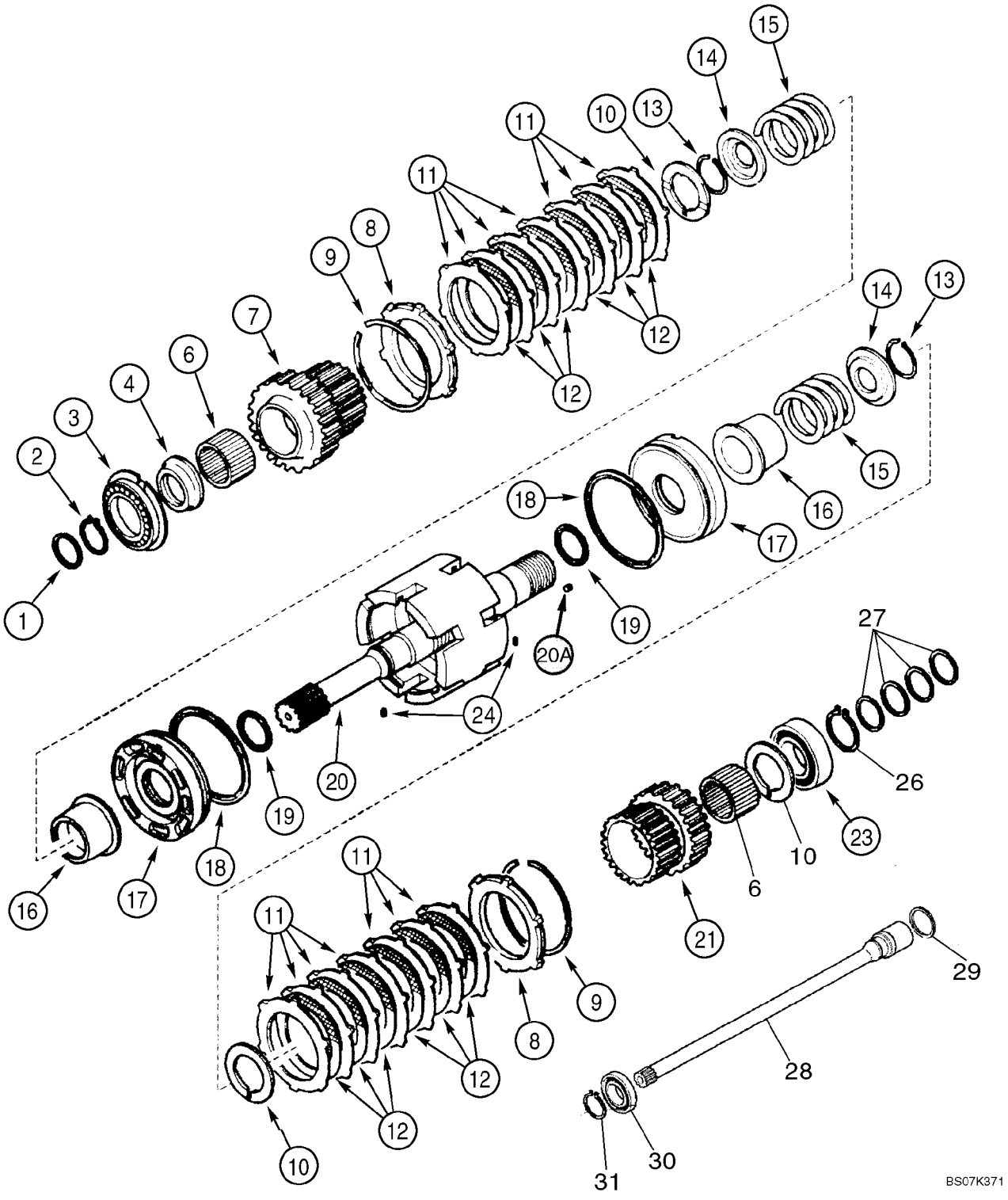

TRANSMISSION ASSY, 2WD - SHAFT, INPUT & PTO

REF	FN	PART NUMBER	YR/SN	QTY	DESCRIPTION
		87395300		1	TRANSMISSION, Two Wheel Drive, Incl. Ref 1 - 31; Also Includes Parts On Figures 06-12 - 06-19, 07-01
1		358645A1		1	SEAL, OIL
2		A48041		1	CIRCLIP
3		181128A1		1	BEARING, BALL
4		358635A1		1	SPACER, 68 x 45 x 105 mm
6		358633A1		2	BEARING, NEEDLE
7		358632A1		1	PINION, Gear, 35T
8		310519A1		2	PLATE
9		181116A1		2	RING, LOCKING
10		358640A1		3	WASHER, Thrust
11		181159A1		14	DISC, Plate
12		181158A1		12	DISC, CLUTCH, Plate
13		181111A1		2	RING, LOCKING
14		181161A1		2	PLATE, THRUST, Pressure
15		358637A1		2	SPRING
16		358641A1		2	SLEEVE, TRANSMISSION
17		358644A1		2	PISTON
18		358643A1		2	SNAP RING
19		358642A1		2	SEALRING
20		87525849		1	KIT, REPAIR, Input Shaft, Incl Ref 20A (4) 139312A1 Rivets; Also Incl (1) 87429973 Input Shaft Which Is Not Serviced Separately
20A		139312A1		4	PLUG, Rivet
21		358638A1		1	PINION, Gear, 29T
23		ST264		1	BEARING, BALL
24		181108A1		2	SPLIT PIN
26		800-1150		1	RING, SNAP, M50, Ext
27		87429984		4	RING, Seal Ring
28		{87701275}		1	Shaft
29		358645A1		1	SEAL, OIL
30		87429983		1	BEARING, BALL
31		800-1130		1	RING, SNAP, M30, Ext

TRANSMISSION ASSY, 2WD - SHAFT, SECONDARY

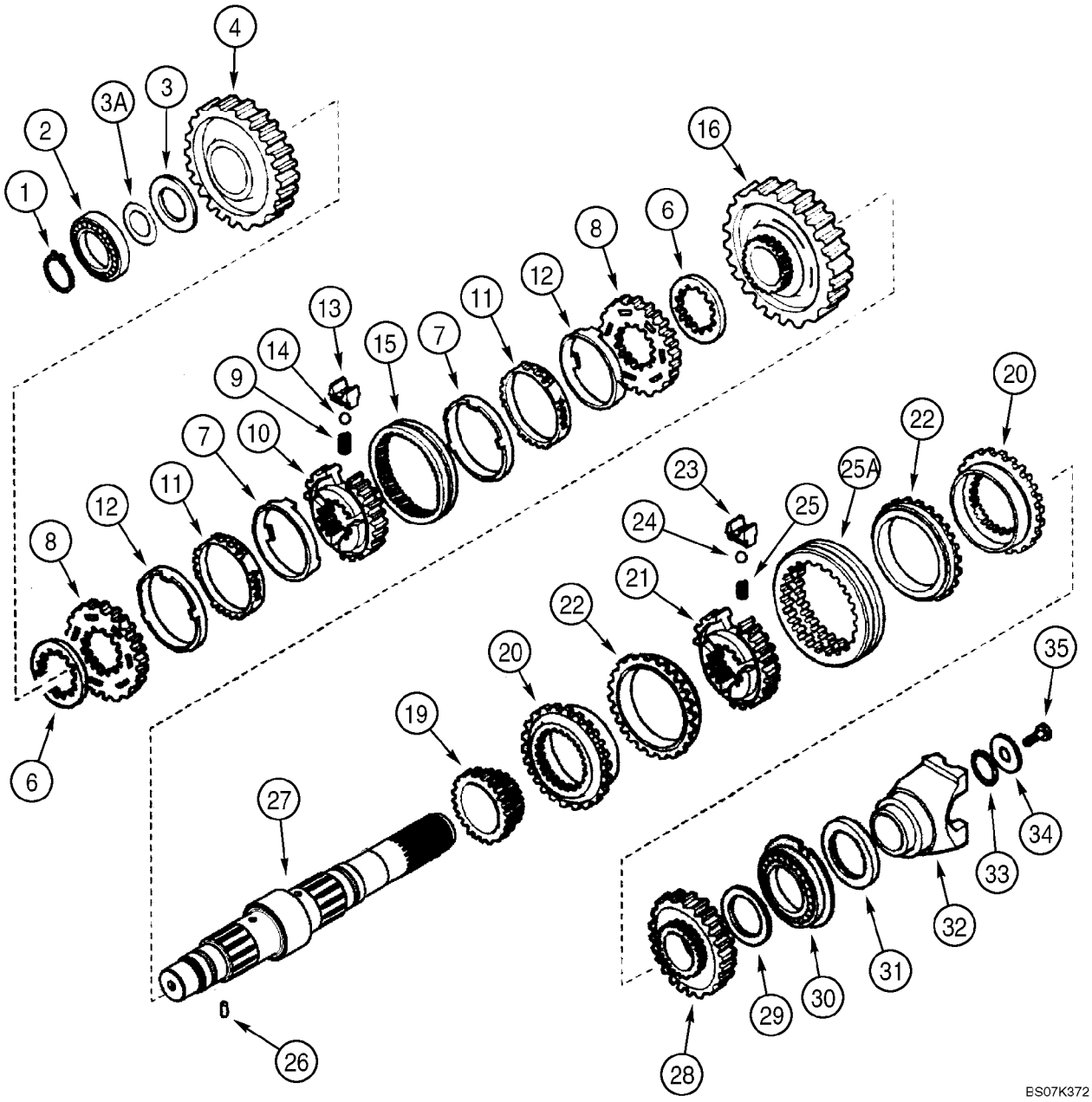

TRANSMISSION ASSY, 2WD - SHAFT, SECONDARY

REF	FN	PART NUMBER	YR/SN	QTY	DESCRIPTION
		87395300		1	TRANSMISSION, Two Wheel Drive, Incl. Ref 1 - 35; Also Includes Parts On Figures 06-12 - 06-19, 07-01
1		181118A1		1	RING, LOCKING
2		181132A1		1	BEARING, BALL
3		358649A1		1	WASHER, Thrust
3A		358650A1		AR	SHIM, 0,05 mm
3A		358651A1		AR	SHIM, 0,10 mm
3A		358652A1		AR	SHIM, 0,30 mm
3A		196454A1		AR	SHIM, 0,50 mm
4		{87701278}		1	Gear, Driven, Second, 44T Pinion Gear
6		244109A1		2	SPACER
		190427A1		1	SYNCHRONIZER, Synchronizing Service Kit, Incl. Ref 7 - 15
7		NSS		2	NOT SERVICED SEPARATELY, Ring
8		NSS		2	NOT SERVICED SEPARATELY, Ring
9		384773A1		3	SPRING, COIL
10		NSS		1	NOT SERVICED SEPARATELY, Hub
11		NSS		2	NOT SERVICED SEPARATELY, Ring
12		NSS		2	NOT SERVICED SEPARATELY, Ring
13		326865A1		3	PLATE, SPACER
14		384769A1		3	BALL
15		NSS		1	NOT SERVICED SEPARATELY, Sleeve
16		{87701293}		1	Gear, Driven, First, 50T Pinion Gear
19		358282A1		1	GEAR, Driven, Fourth, 23T
		87429974		1	SYNCHRONIZER, Synchronizing Service Kit, Incl. Ref 20 - 25A
20		NSS		2	NOT SERVICED SEPARATELY, Ring
21		NSS		1	NOT SERVICED SEPARATELY, Hub
22		NSS		2	NOT SERVICED SEPARATELY, Ring
23		NSS		3	NOT SERVICED SEPARATELY, Plate
24		NSS		3	NOT SERVICED SEPARATELY, Ball
25		NSS		3	NOT SERVICED SEPARATELY, Spring
25A		NSS		1	NOT SERVICED SEPARATELY, Sleeve
26		181108A1		1	SPLIT PIN
27		{87701294}		1	Shaft, Secondary

TRANSMISSION ASSY, 2WD - SHAFT, SECONDARY

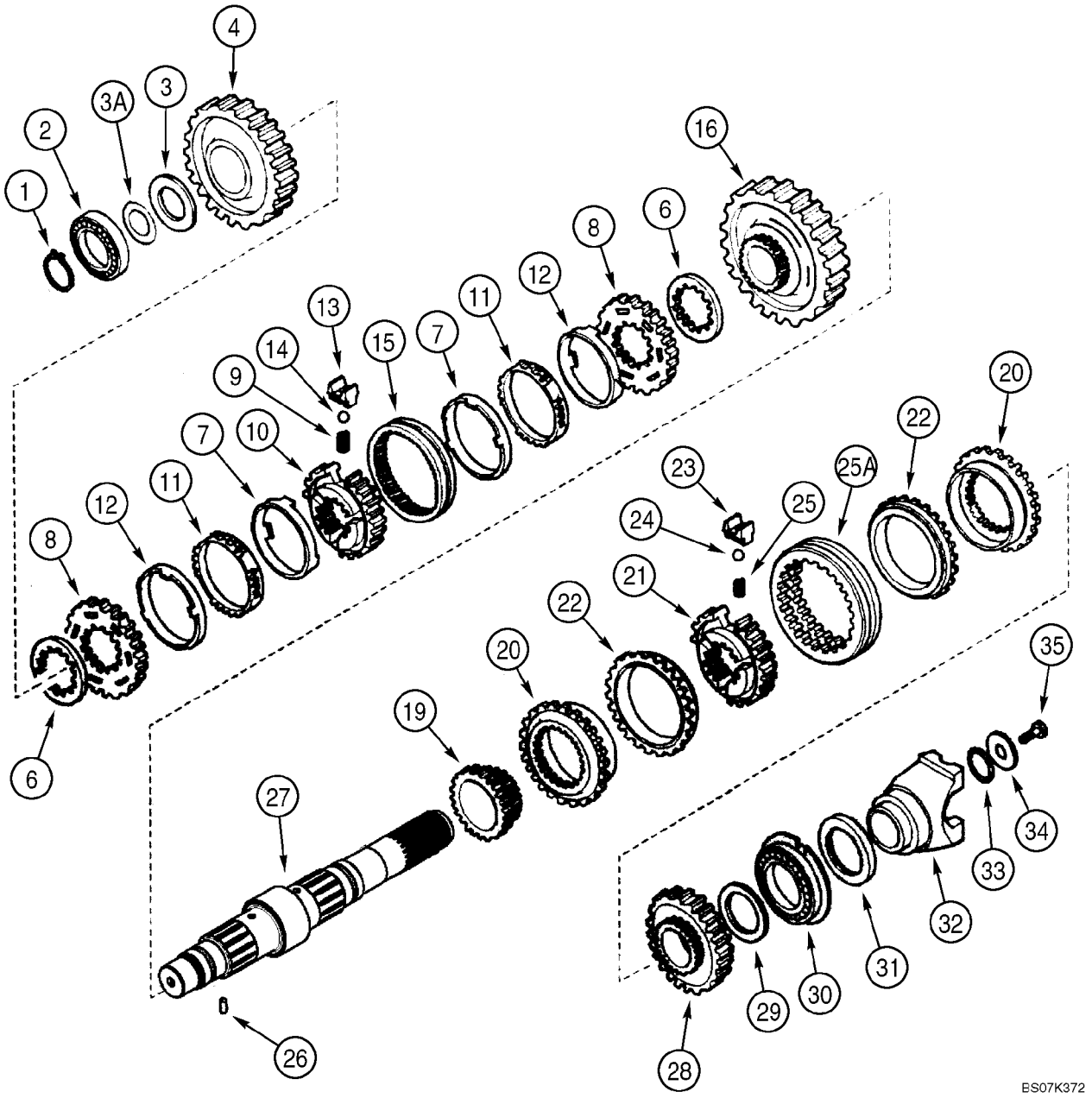

TRANSMISSION ASSY, 2WD - SHAFT, SECONDARY

REF	FN	PART NUMBER	YR/SN	QTY	DESCRIPTION
28		358283A1		1	PINION, Gear, Driven, Third, 33T
29		358639A1		1	WASHER, Thrust, 68 x 45 x 4 mm
30		181130A1		1	BEARING, BALL
31		181123A1		1	SEAL, OIL, 60 x 75 x 8 mm
32		233284A1		1	FORK, Yoke
33		181144A1		1	O-RING
34		181165A1		1	WASHER, 52 x 12.5 x 5 mm
35		P3533055		1	SCREW, 12 x 25 mm

TRANSMISSION ASSY, 2WD - VALVE, CONTROL

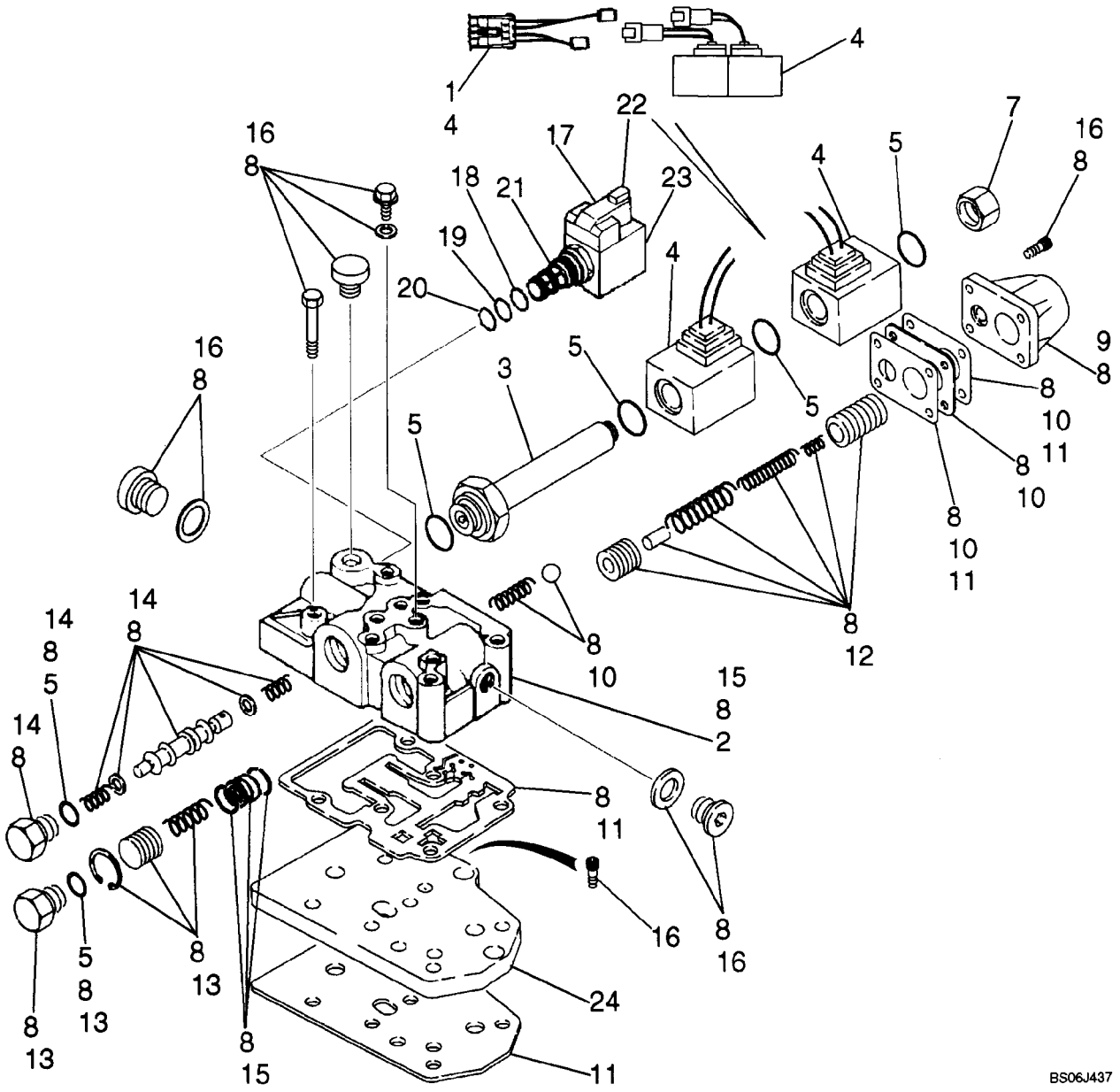

TRANSMISSION ASSY, 2WD - VALVE, CONTROL

REF	FN	PART NUMBER	YR/SN	QTY	DESCRIPTION
		87395300		1	TRANSMISSION, Two Wheel Drive, Incl. Ref 1 - 23; Also Includes Parts On Figures 06-12 - 06-19, 07-01
		87525756		1	KIT, REPAIR, Transmission Control Valve With Jumper Harness; Includes (1) 87456968 Forward/Reverse Jumper Harness, Ref 1; Plus (1) 87524409 Control Valve, Ref 1 - 23
1		87456968		1	HARNESS, WIRE, Jumper; If Used; Required On Transmissions Prior To Ones With Deutsch Connector Type Solenoids
		87524409		1	VALVE, CONTROL, Transmission Control, With Improved Snap Ring at Flow Divider Area; Incl. Ref 2 - 23
2		NSS		1	NOT SERVICED SEPARATELY, Housing
3		190442A1		1	PLUNGER
4		87456900		1	KIT, SERVICE, Solenoid; Includes (2) Solenoids, (1) Jumper Wire Used For Transmissions Prior to Ones With The Solenoids With Plastic Connections
5		87524436		1	KIT, REPAIR, Seal; Includes (6) O-Rings; Component Parts Not Serviced Separately
7		87530365		1	PLUG
8		87524441		1	ASSEMBLY, Valve Body Kit; Component Parts Not Serviced Separately
9		181251A1		1	COVER, Modulation
10		87524439		1	KIT, REPAIR, Plate; Includes (1) Plate, (2) Gasket, (1) Ball, (1) Spring; Component Parts Not Serviced Separately
11		87524437		1	KIT, REPAIR, Gasket; Includes (4) Gasket Plates; Component Parts Not Serviced Separately
12		87524438		1	KIT, REPAIR, Modulation Valve; Includes (2) Piston, (1) Pin, (3) Spring; Component Parts Not Serviced Separately
13		87524433		1	KIT, REPAIR, Flow Divider Piston; Includes (1 each) Plug, O-Ring, Spring, Piston, Snap Ring; Component Parts Not Serviced Separately

TRANSMISSION ASSY, 2WD - VALVE, CONTROL

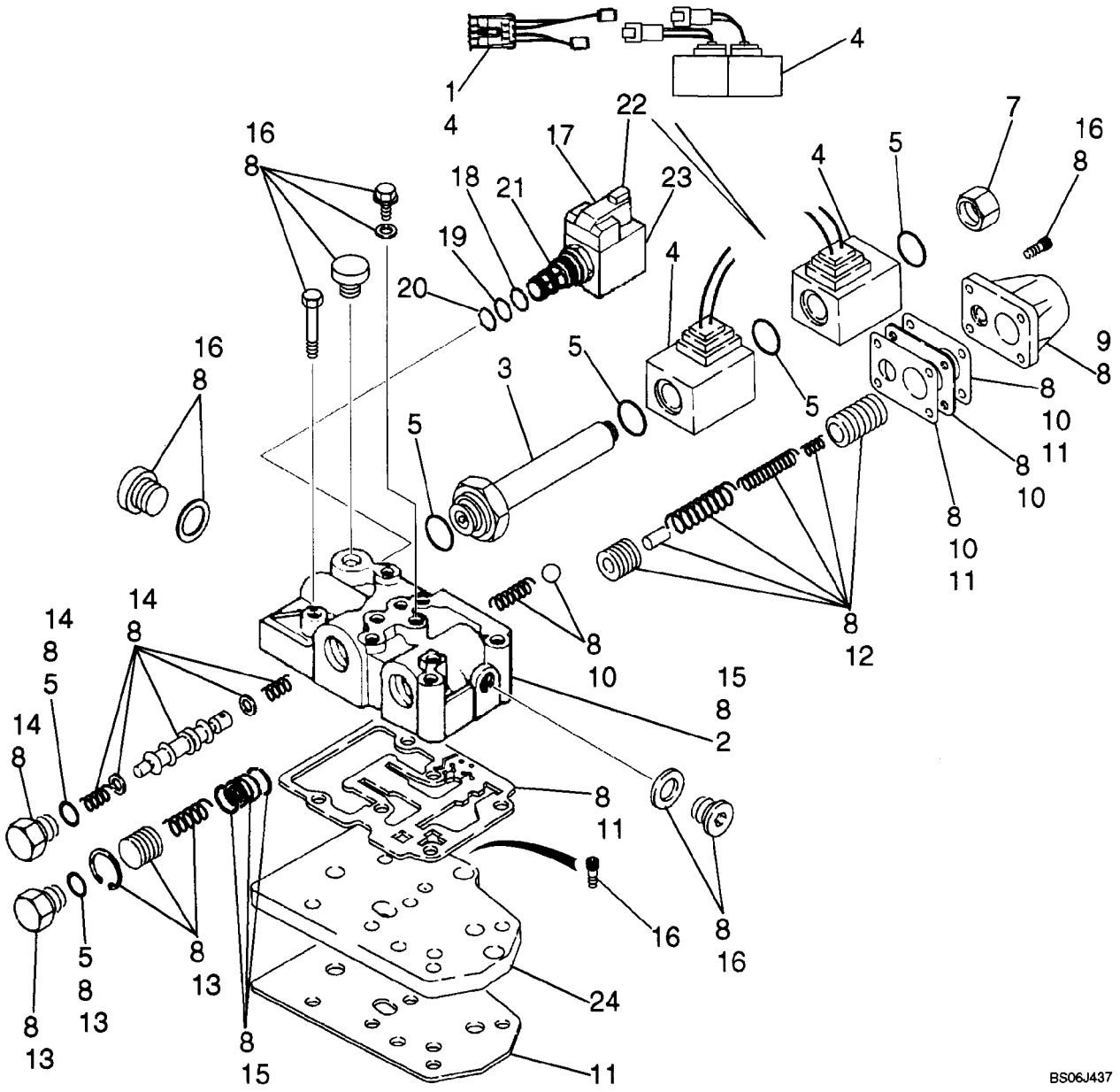

TRANSMISSION ASSY, 2WD - VALVE, CONTROL

REF	FN	PART NUMBER	YR/SN	QTY	DESCRIPTION
14		87524432		1	KIT, REPAIR, Forward/Reverse Spool; Includes (1) O-Ring, (2) Washer, (1) Plug, (1) Piston Spool, (2) Spring; Component Parts Not Serviced Separately
15		87524440		1	KIT, REPAIR, Control Valve Body/Housing; Includes (1) Housing, Plus (1) Bushing, (2) Snap Rings at Flow Divider; Component Parts Not Serviced Separately
16		87524435		1	KIT, REPAIR, Bolt; Includes (7) Plugs, (13) Bolts, (6) Copper Washers; Component Parts Not Serviced Separately
17		349295A1		1	SOLENOID, Differential Lock Solenoid Valve; Incl. Ref 18 - 23
18		237-6008		1	O-RING, 8-1, 90 Duro, .644" ID x .087" Thk
19		238-5014		1	O-RING, -014, 70 Duro, .489" ID x .070" Thk
20		238-5013		1	O-RING, -013, 70 Duro, .426" ID x .070" Thk
21		349291A1		1	CARTRIDGE, Valve, Cartridge, Component Parts Not Serviced Separately
21A		196096A1		1	SCREEN, Relief Valve, Internal; Not Illustrated
22		298614A1		1	SOLENOID
23		349292A1		1	NUT
24		181207A1		1	PLATE, LARGE, Feeding; Not Included In Assembly, Purchase Separately

TRANSMISSION ASSY, 4WD - FILTER, OIL

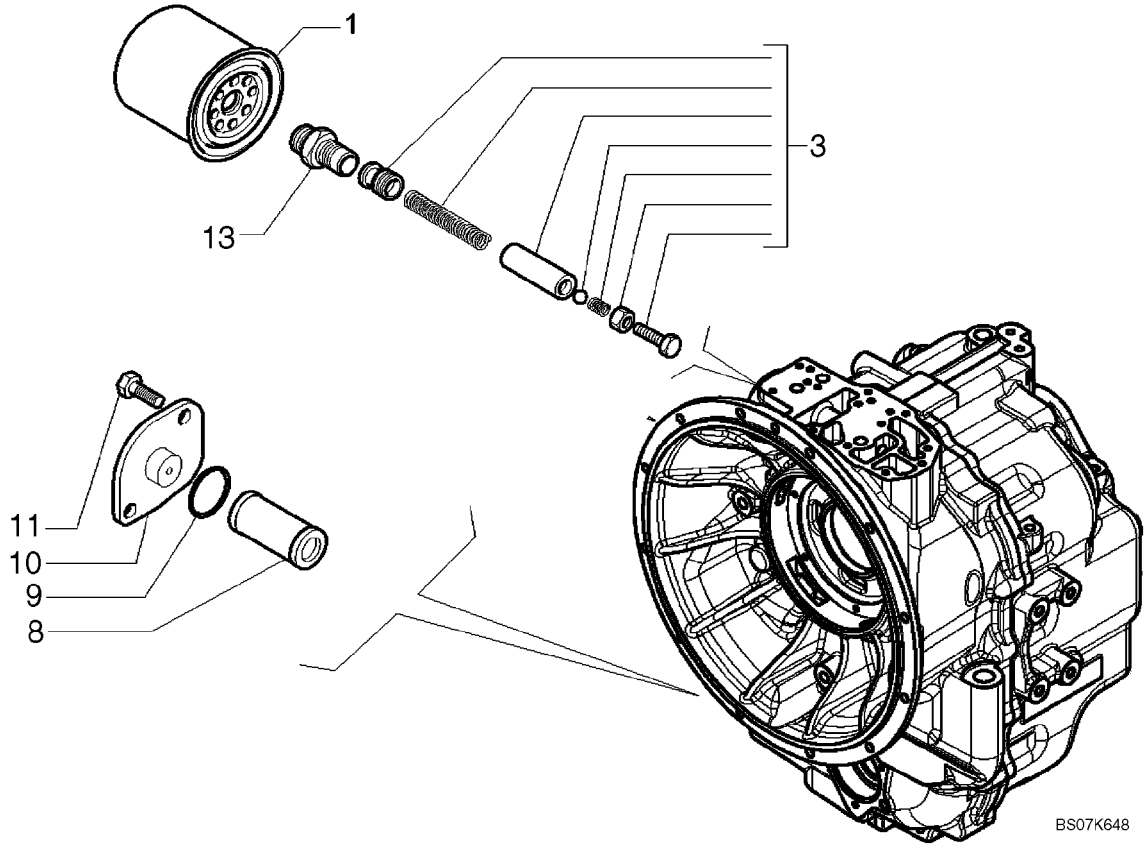

TRANSMISSION ASSY, 4WD - FILTER, OIL

REF	FN	PART NUMBER	YR/SN	QTY	DESCRIPTION
		87395301		1	TRANSMISSION, Four Wheel Drive, Incl. Ref 1 - 13; Also Includes Parts On Figures 06-20 - 06-29, 07-01(01)
1		254686A2		1	FILTER, Oil
3		181274A1		1	SET OF PARTS, Valve
8		278534A1		1	SCREEN, FILTER, Oil
9		100748A1		1	O-RING
10		181219A1		1	COVER
11		614-8018		2	BOLT, Hex, M8 x 18, 8.8, Full Thd
13		181202A1		1	FITTING

06-21		p1	02/08

TRANSMISSION ASSY, 4WD - HOUSING

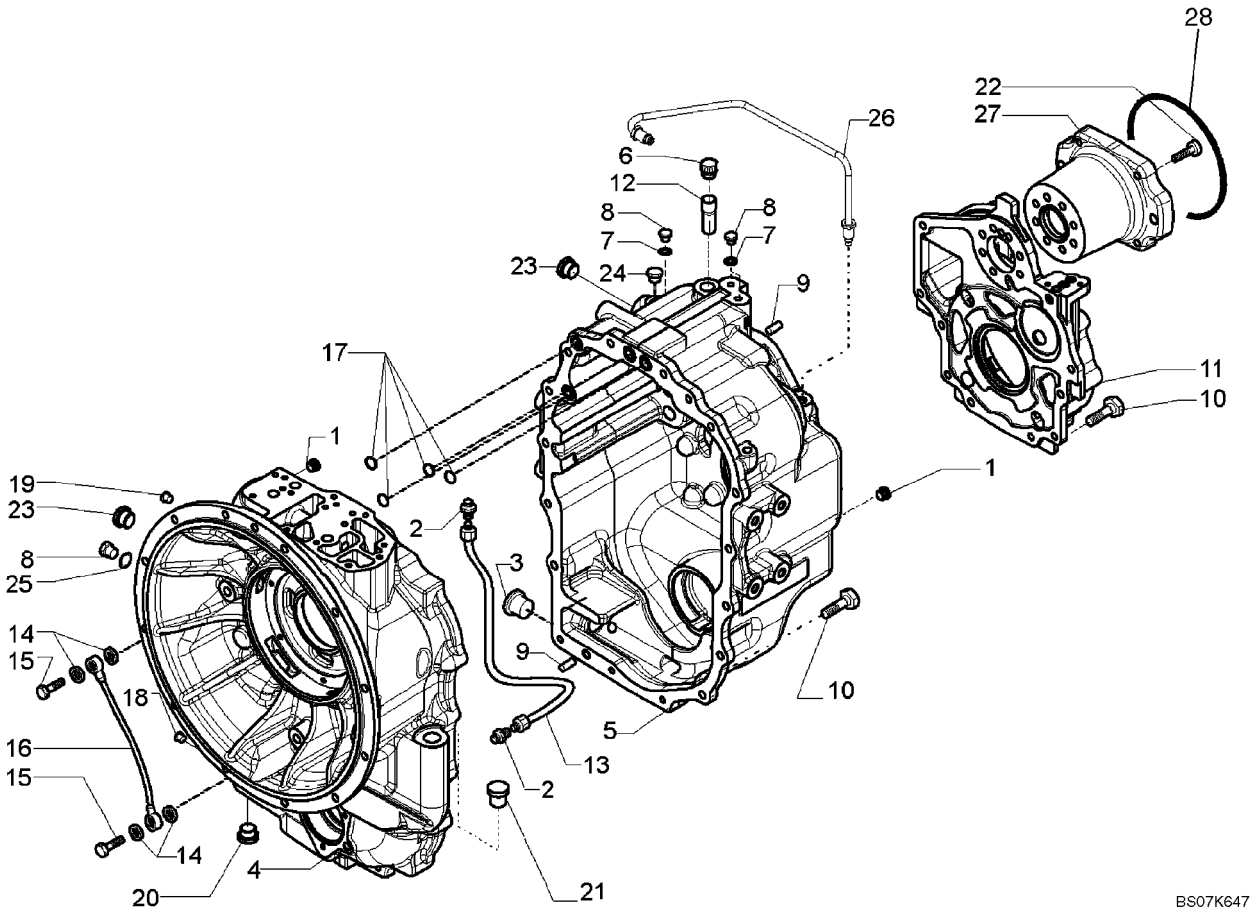

TRANSMISSION ASSY, 4WD - HOUSING

REF	FN	PART NUMBER	YR/SN	QTY	DESCRIPTION
		87395301		1	TRANSMISSION, Four Wheel Drive, Incl. Ref 1 - 28; Also Includes Parts On Figures 06-20 - 06-29, 07-01(01)
1		E135809		2	PLUG, 9/16
2		218-1023		2	CONNECTOR, HYD., 1/2"-20, 37Ü x 1/4"-18, NPTF
3		100557A1		1	PLUG, DRAIN, M30 x 2; Incl 238-6121 O-Ring
		238-6121		1	O-RING, -121, 90 Duro, 1.049" ID x .103" Thk
4		{87701053}		1	Front Housing
5		{87701777}		1	Rear Housing
6		1530028C1		1	BREATHER ASSY.
7		934667R1		4	WASHER, SEALING, M10 x 14 x 1
8		181100A1		4	PLUG
9		K260177		3	PIN, 10 x 25
10		614-10030		21	BOLT, Hex, M10 x 30, 8.8
11		{87701257}		1	Cover
12		310772A1		1	PIPE, Breather
13		181176A1		1	PIPE, Oil Tube
14		181105A1		4	WASHER, COPPER
15		181179A1		2	JACK SCREW, M14 x 1.5
16		181232A1		1	PIPE, Lubrication
17		181141A1		4	O-RING
18		{87702570}		1	Plug
19		181101A1		1	PLUG, M14 x 1.5
20		239606A1		1	PLUG
21		NSS		1	NOT SERVICED SEPARATELY, PLUG, Shipping Plug
22		{87701258}		7	M10 x 45 Bolt
23		NSS		1	NOT SERVICED SEPARATELY, PLUG, Shipping Plug
24		NSS		1	NOT SERVICED SEPARATELY, PLUG, Shipping Plug
25		87429985		1	WASHER, SEALING, Copper, 10 x 18 x 1.5 mm
26		{87701270}		1	Oil Tube
27		{87701269}		1	PTO Flange
28		87429982		1	O-RING, Pump Mounting

TRANSMISSION ASSY, 4WD - PUMP, OIL

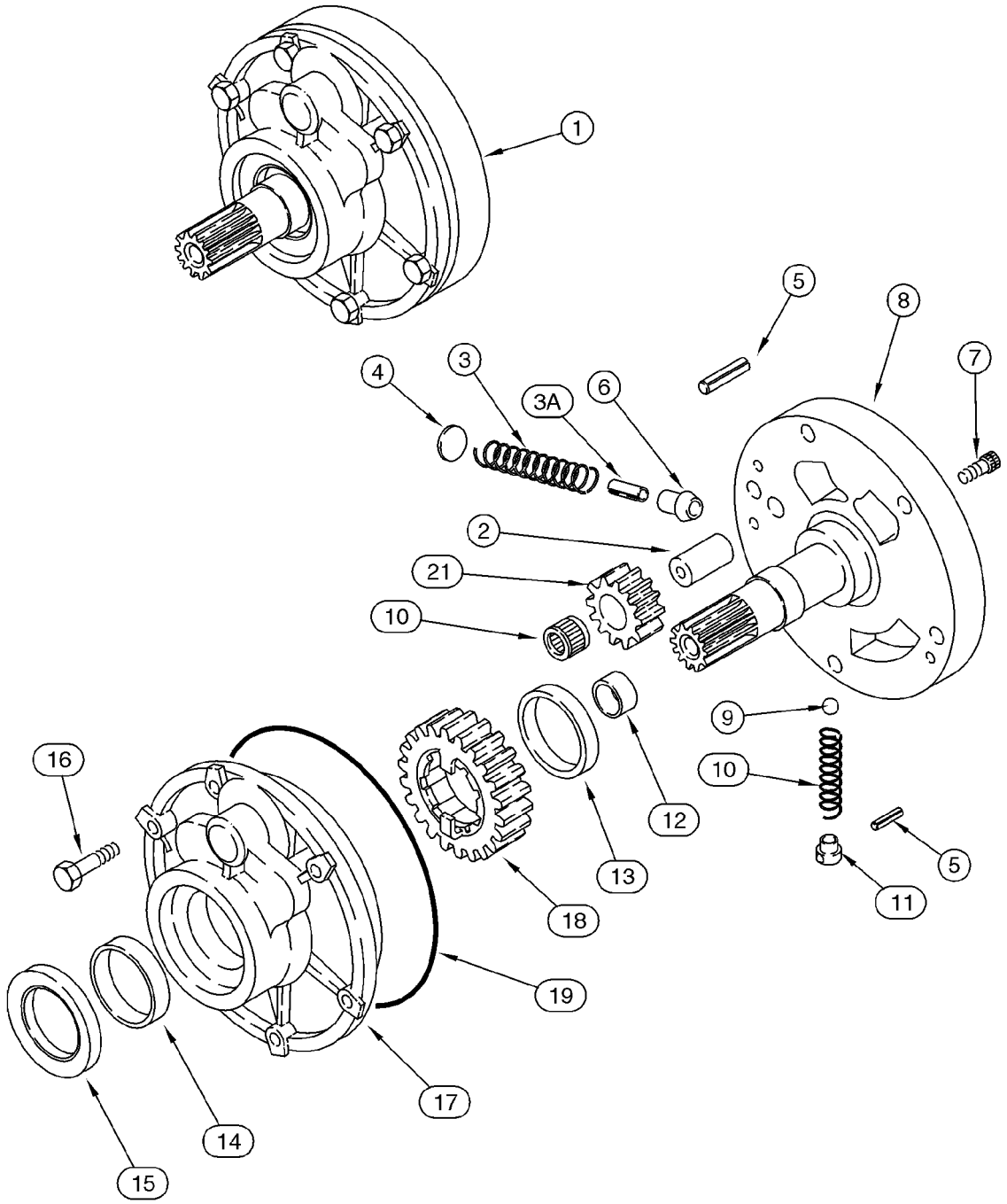

TRANSMISSION ASSY, 4WD - PUMP, OIL

REF	FN	PART NUMBER	YR/SN	QTY	DESCRIPTION
		87395301		1	TRANSMISSION, Four Wheel Drive, Incl. Ref 1 - 21; Also Includes Parts On Figures 06-20 - 06-29, 07-01(01)
1		87429970		1	PUMP, Charge, Incl. Ref 2 - 21
2		NSS		1	NOT SERVICED SEPARATELY, Shaft
3		NSS		1	NOT SERVICED SEPARATELY, Spring
3A		NSS		1	NOT SERVICED SEPARATELY, Pin
4		NSS		1	NOT SERVICED SEPARATELY, Stop
5		NSS		2	NOT SERVICED SEPARATELY, Pin, Roll
6		NSS		1	NOT SERVICED SEPARATELY, Piston
7		NSS		2	NOT SERVICED SEPARATELY, Bolt
8		NSS		1	NOT SERVICED SEPARATELY, Support
9		NSS		1	NOT SERVICED SEPARATELY, Ball
10		NSS		1	NOT SERVICED SEPARATELY, Spring
11		NSS		1	NOT SERVICED SEPARATELY, Guide
12		NSS		1	NOT SERVICED SEPARATELY, Bushing
13		NSS		1	NOT SERVICED SEPARATELY, Bushing
14		NSS		1	NOT SERVICED SEPARATELY, Bushing
15		87429971		1	SEAL, OIL, Oil Seal
16		814-8060		6	BOLT, Hex, M8 x 60, 8.8
17		NSS		1	NOT SERVICED SEPARATELY, Housing
18		NSS		1	NOT SERVICED SEPARATELY, Gear, 23T
19		181142A1		1	O-RING
20		NSS		1	NOT SERVICED SEPARATELY, Bearing, Needle
21		NSS		1	NOT SERVICED SEPARATELY, Gear, 12T

TRANSMISSION ASSY, 4WD - SHIFTER MECHANISM

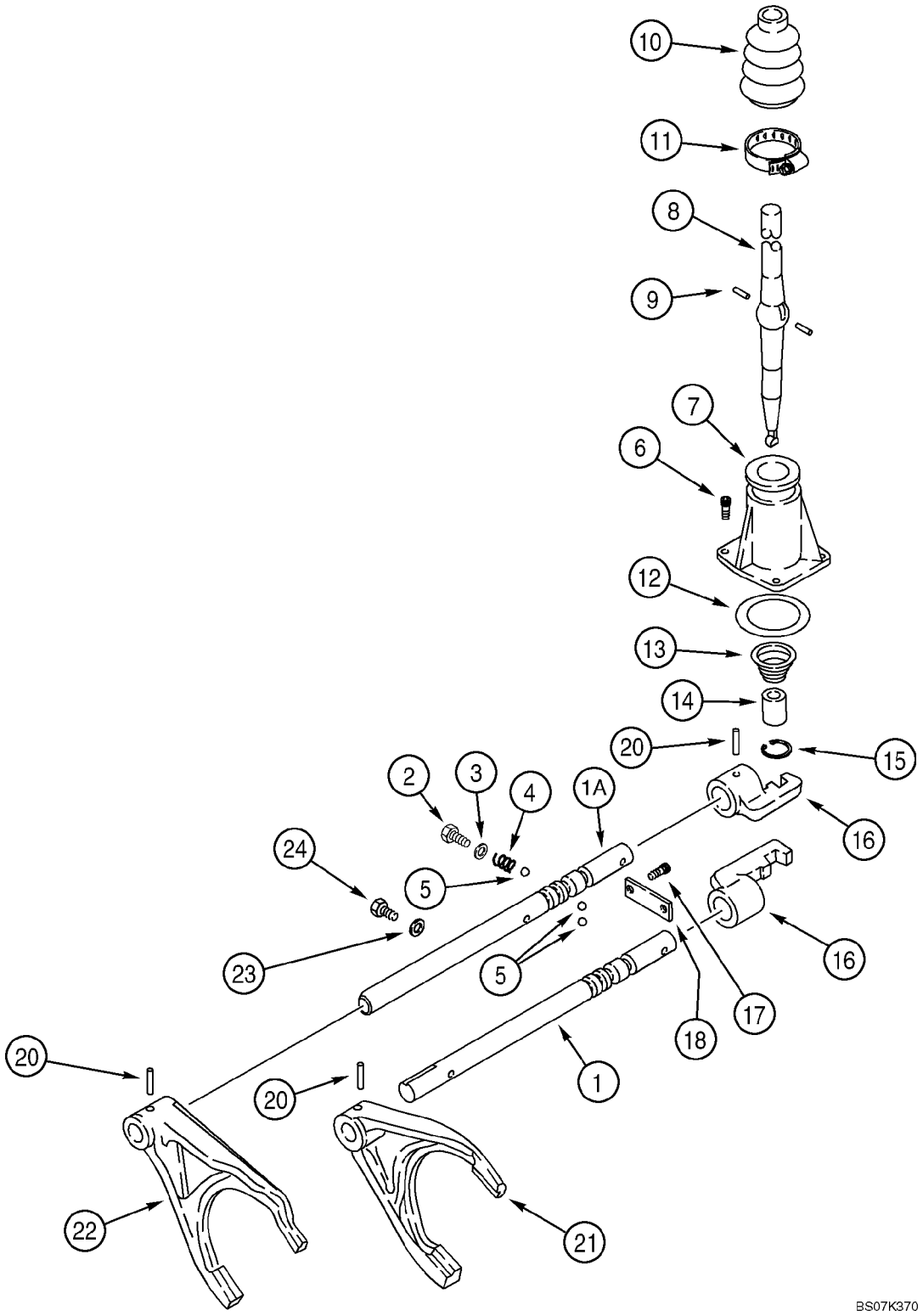

TRANSMISSION ASSY, 4WD - SHIFTER MECHANISM

REF	FN	PART NUMBER	YR/SN	QTY	DESCRIPTION
		87395301		1	TRANSMISSION, Four Wheel Drive, Incl. Ref 1 - 24; Also Includes Parts On Figures 06-20 - 06-29, 07-01(01)
1		181245A2		1	ROD, Shifter Fork Rail; First and Second
1A		{87578867}		1	Shifter Fork Rail; Third and Fourth
2		614-12016		2	BOLT, Hex, M12 x 16, 8.8, Full Thd
3		87429994		2	WASHER, SEALING, 12 x 20 x 1.5 mm
4		1966993C1		2	SPRING
5		181139A1		4	BALL
6		864-8025		3	SCREW, Hex Soc Hd, M8 x 25, 8.8
7		181171A1		1	COVER
8		190428A3		1	LEVER, CONTROL
9		1967585C1		2	PIN, Pin
10		1967581C1		1	BOOT
11		181177A1		1	CLAMP
12		181138A1		1	O-RING
13		278533A1		1	SPRING
14		278532A1		1	BUSHING, LARGE
15		279039A1		1	SNAP RING
16		181173A1		2	SELECTOR, Shifter
17		864-10025		2	SCREW, Hex Soc Hd, M10 x 25, 8.8
18		181175A1		1	PLATE, LARGE
20		905794R1		4	PIN, M6 x 30, Coiled
21		181203A1		1	FORK, SHIFTER, First and Second
22		181174A2		1	FORK, SHIFTER, Third and Fourth
23		87429985		1	WASHER, SEALING, Washer
24		181100A1		1	PLUG, M10 x 23

TRANSMISSION ASSY, 4WD - SHAFT, REVERSE & PRIMARY

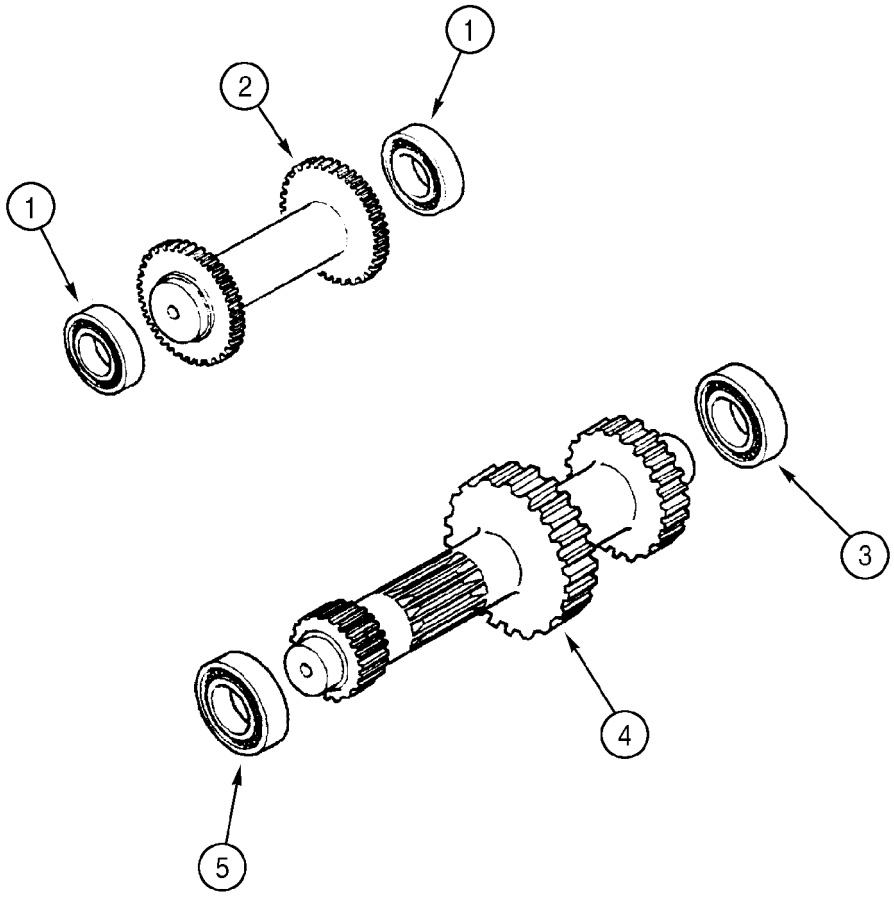

BS99H168

TRANSMISSION ASSY, 4WD - SHAFT, REVERSE & PRIMARY

REF	FN	PART NUMBER	YR/SN	QTY	DESCRIPTION
		87395301		1	TRANSMISSION, Four Wheel Drive, Incl. Ref 1 - 6; Also Includes Parts On Figures 06-20 - 06-29, 07-01(01)
1		ST205A		2	BEARING, BALL
2		358636A1		1	SHAFT, Idler/Reverse Shaft
3		181126A1		1	BEARING, BALL
4		{87701276}		1	Primary Shaft
5		181132A1		1	BEARING, BALL
6		A48041		1	CIRCLIP, Bearing to Axle Housing; Not Illustrated

TRANSMISSION ASSY, 4WD - SHAFT, INPUT & PTO

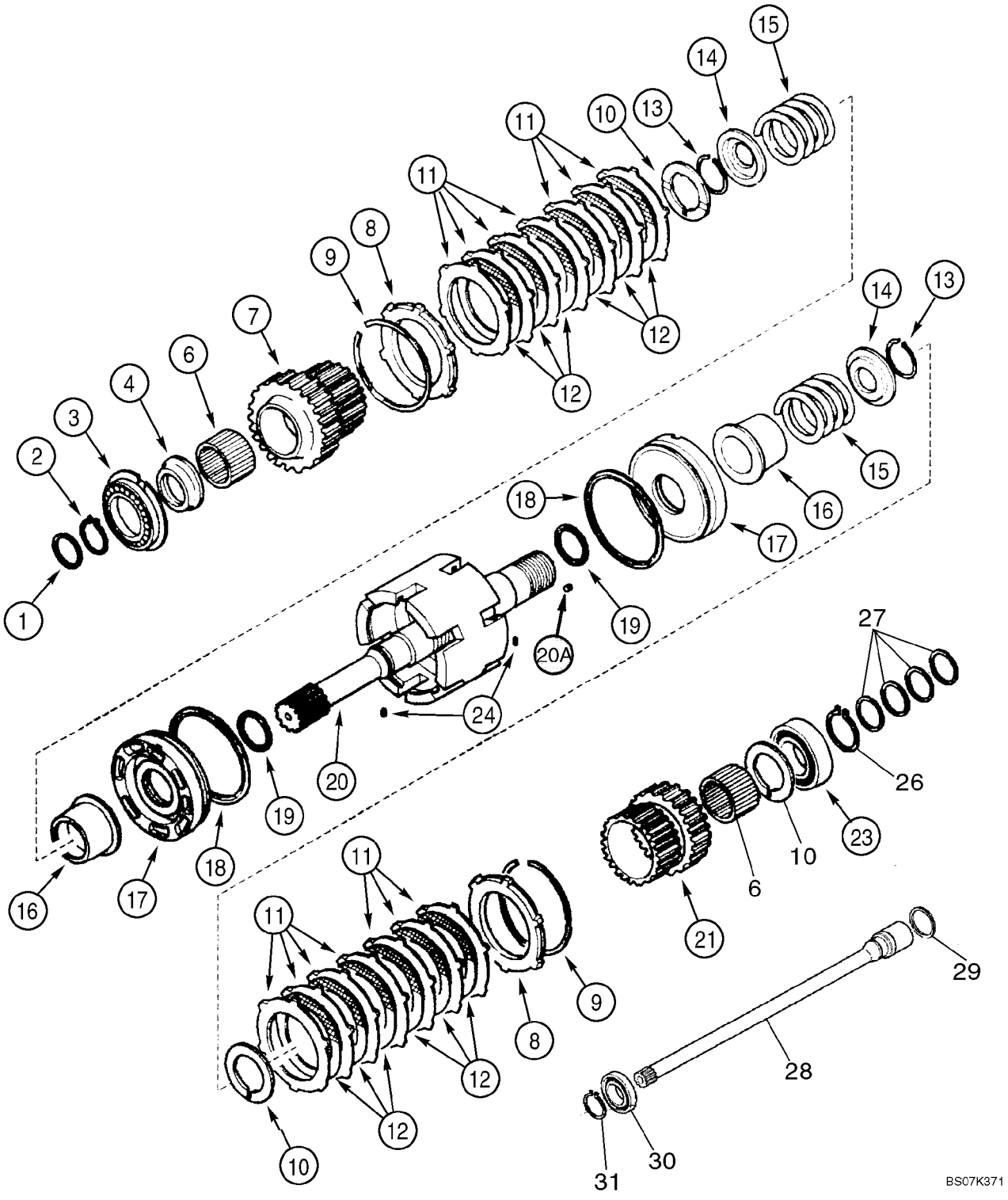

TRANSMISSION ASSY, 4WD - SHAFT, INPUT & PTO

REF	FN	PART NUMBER	YR/SN	QTY	DESCRIPTION
		87395301		1	TRANSMISSION, Four Wheel Drive, Incl. Ref 1 - 31; Also Includes Parts On Figures 06-20 - 06-29, 07-01(01)
1		358645A1		1	SEAL, OIL
2		A48041		1	CIRCLIP
3		181128A1		1	BEARING, BALL
4		358635A1		1	SPACER, 68 x 45 x 105 mm
6		358633A1		2	BEARING, NEEDLE
7		358632A1		1	PINION, Gear, 35T
8		310519A1		2	PLATE
9		181116A1		2	RING, LOCKING
10		358640A1		3	WASHER, Thrust
11		181159A1		14	DISC, Plate
12		181158A1		12	DISC, CLUTCH, Plate
13		181111A1		2	RING, LOCKING
14		181161A1		2	PLATE, THRUST, Pressure
15		358637A1		2	SPRING
16		358641A1		2	SLEEVE, TRANSMISSION
17		358644A1		2	PISTON
18		358643A1		2	SNAP RING
19		358642A1		2	SEALRING
20		87525849		1	KIT, REPAIR, Input Shaft, Incl Ref 20A (4) 139312A1 Rivets; Also Incl (1) 87429973 Input Shaft Which Is Not Serviced Separately
20A		139312A1		4	PLUG, Rivet
21		358638A1		1	PINION, Gear, 29T
23		ST264		1	BEARING, BALL
24		181108A1		2	SPLIT PIN
26		800-1150		1	RING, SNAP, M50, Ext
27		87429984		4	RING, Seal Ring
28		{87701275}		1	Shaft
29		358645A1		1	SEAL, OIL
30		87429983		1	BEARING, BALL
31		800-1130		1	RING, SNAP, M30, Ext

TRANSMISSION ASSY, 4WD - SHAFT, SECONDARY

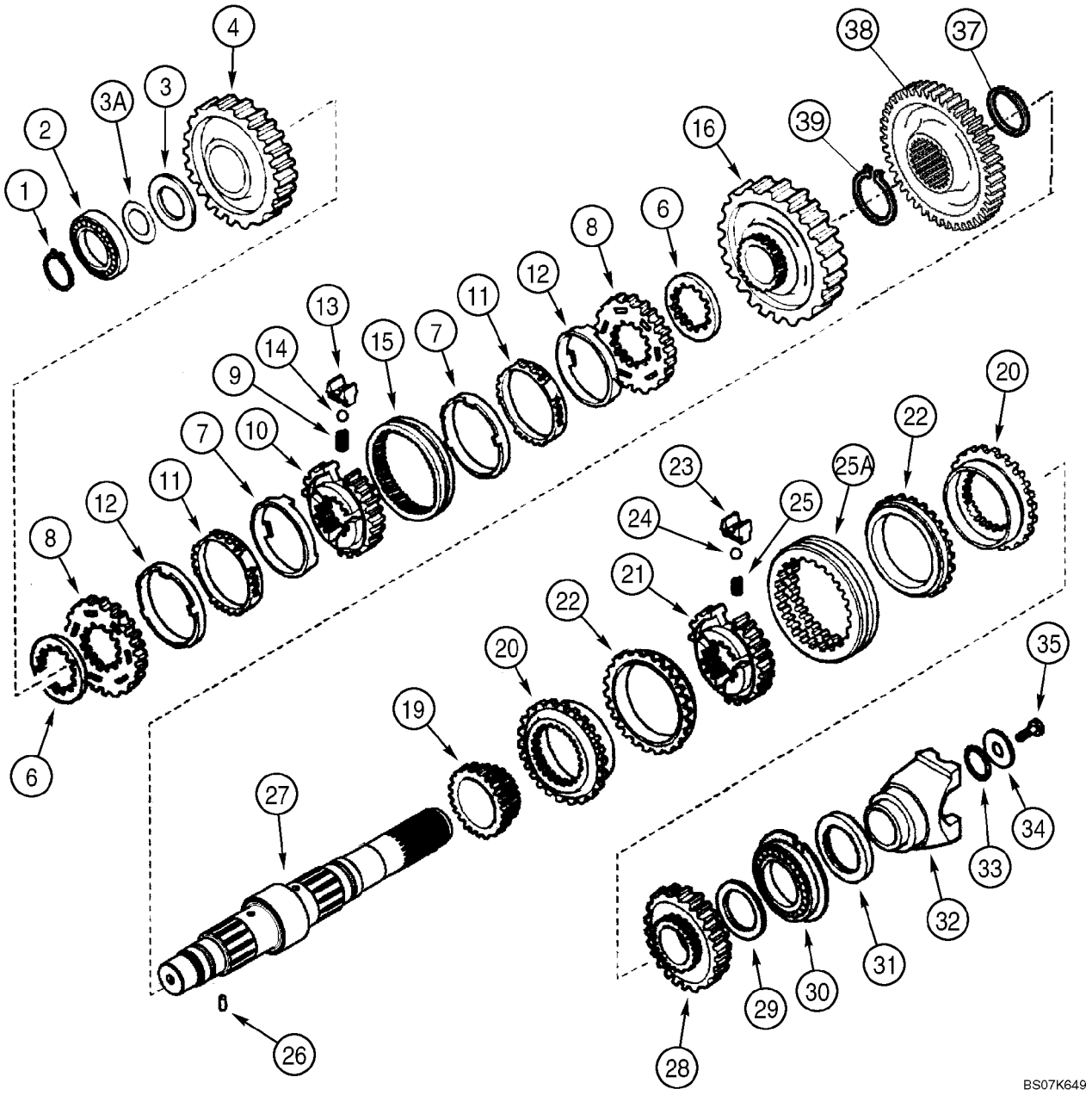

TRANSMISSION ASSY, 4WD - SHAFT, SECONDARY

REF	FN	PART NUMBER	YR/SN	QTY	DESCRIPTION
		87395301		1	TRANSMISSION, Four Wheel Drive, Incl. Ref 1 - 39; Also Includes Parts On Figures 06-20 - 06-29, 07-01(01)
1		181118A1		1	RING, LOCKING
2		181132A1		1	BEARING, BALL
3		358649A1		1	WASHER, Thrust
3A		358650A1		AR	SHIM, 0,05 mm
3A		358651A1		AR	SHIM, 0,10 mm
3A		358652A1		AR	SHIM, 0,30 mm
3A		196454A1		AR	SHIM, 0,50 mm
4		{87701278}		1	Gear, Driven, Second, 44T Pinion Gear
6		244109A1		2	SPACER
		190427A1		1	SYNCHRONIZER, Synchronizing Service Kit, Incl. Ref 7 - 15
7		NSS		2	NOT SERVICED SEPARATELY, Ring
8		NSS		2	NOT SERVICED SEPARATELY, Ring
9		384773A1		3	SPRING, COIL
10		NSS		1	NOT SERVICED SEPARATELY, Hub
11		NSS		2	NOT SERVICED SEPARATELY, Ring
12		NSS		2	NOT SERVICED SEPARATELY, Ring
13		326865A1		3	PLATE, SPACER
14		384769A1		3	BALL
15		NSS		1	NOT SERVICED SEPARATELY, Sleeve
16		{87701293}		1	Gear, Driven, First, 50T Pinion Gear
19		358282A1		1	GEAR, Driven, Fourth, 23T
		87429974		1	SYNCHRONIZER, Synchronizing Service Kit, Incl. Ref 20 - 25A
20		NSS		2	NOT SERVICED SEPARATELY, Ring
21		NSS		1	NOT SERVICED SEPARATELY, Hub
22		NSS		2	NOT SERVICED SEPARATELY, Ring
23		NSS		3	NOT SERVICED SEPARATELY, Plate
24		NSS		3	NOT SERVICED SEPARATELY, Ball
25		NSS		3	NOT SERVICED SEPARATELY, Spring
25A		NSS		1	NOT SERVICED SEPARATELY, Sleeve
26		181108A1		1	SPLIT PIN

TRANSMISSION ASSY, 4WD - SHAFT, SECONDARY

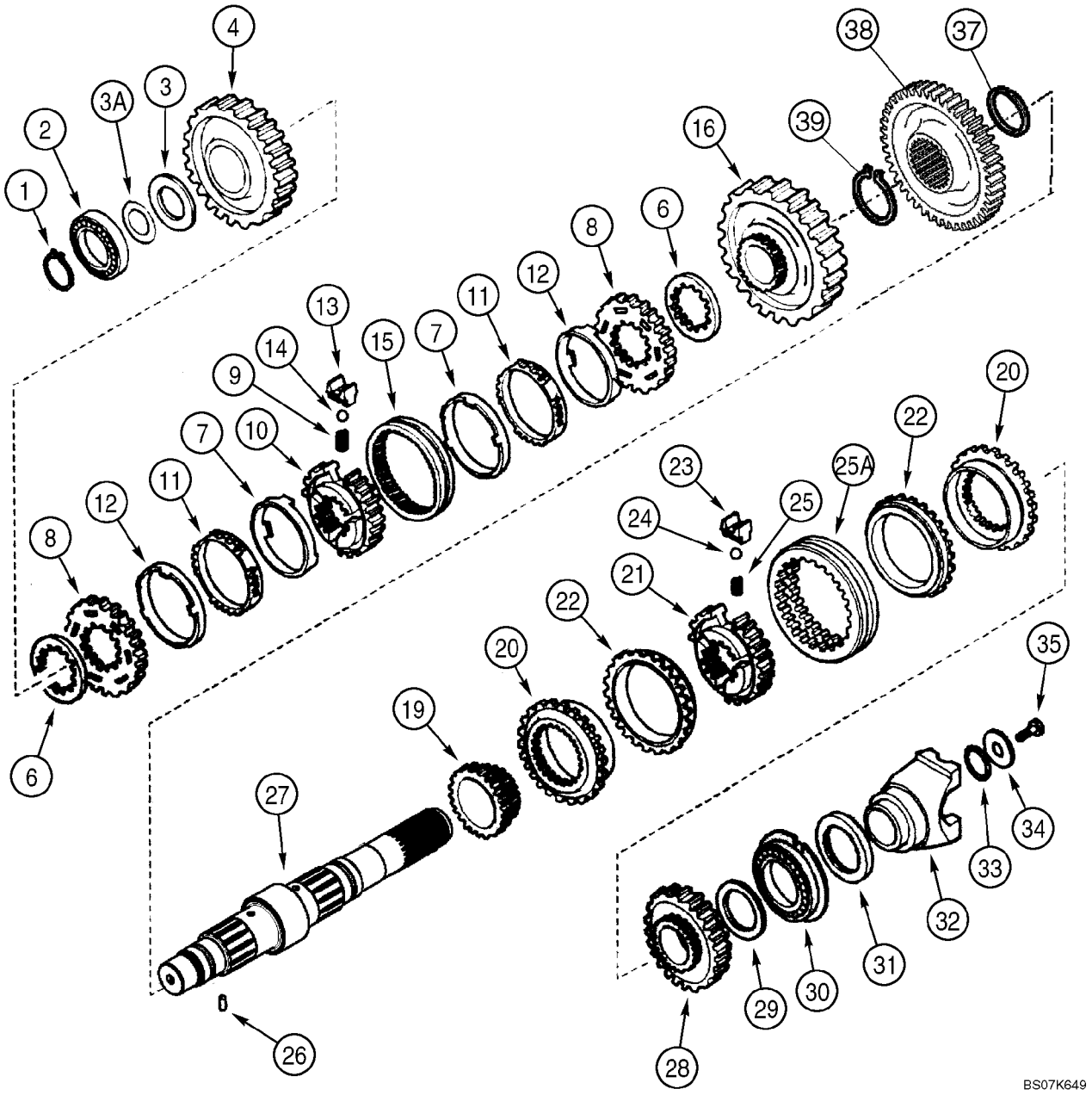

TRANSMISSION ASSY, 4WD - SHAFT, SECONDARY

REF	FN	PART NUMBER	YR/SN	QTY	DESCRIPTION
27		{87701775}		1	Shaft, Secondary, Four Wheel Drive Models
28		358283A1		1	PINION, Gear, Driven, Third, 33T
29		358639A1		1	WASHER, Thrust, 68 x 45 x 4 mm
30		181130A1		1	BEARING, BALL
31		181123A1		1	SEAL, OIL, 60 x 75 x 8 mm
32		233284A1		1	FORK, Yoke
33		181144A1		1	O-RING
34		181165A1		1	WASHER, 52 x 12.5 x 5 mm
35		P3533055		1	SCREW, 12 x 25 mm
37		358654A1		1	SNAP RING, Four Wheel Drive Models
38		358656A1		1	GEAR, 44T, Four Wheel Drive Models
39		358655A1		1	SNAP RING, Four Wheel Drive Models

TRANSMISSION ASSY, 4WD - SHAFT, OUTPUT

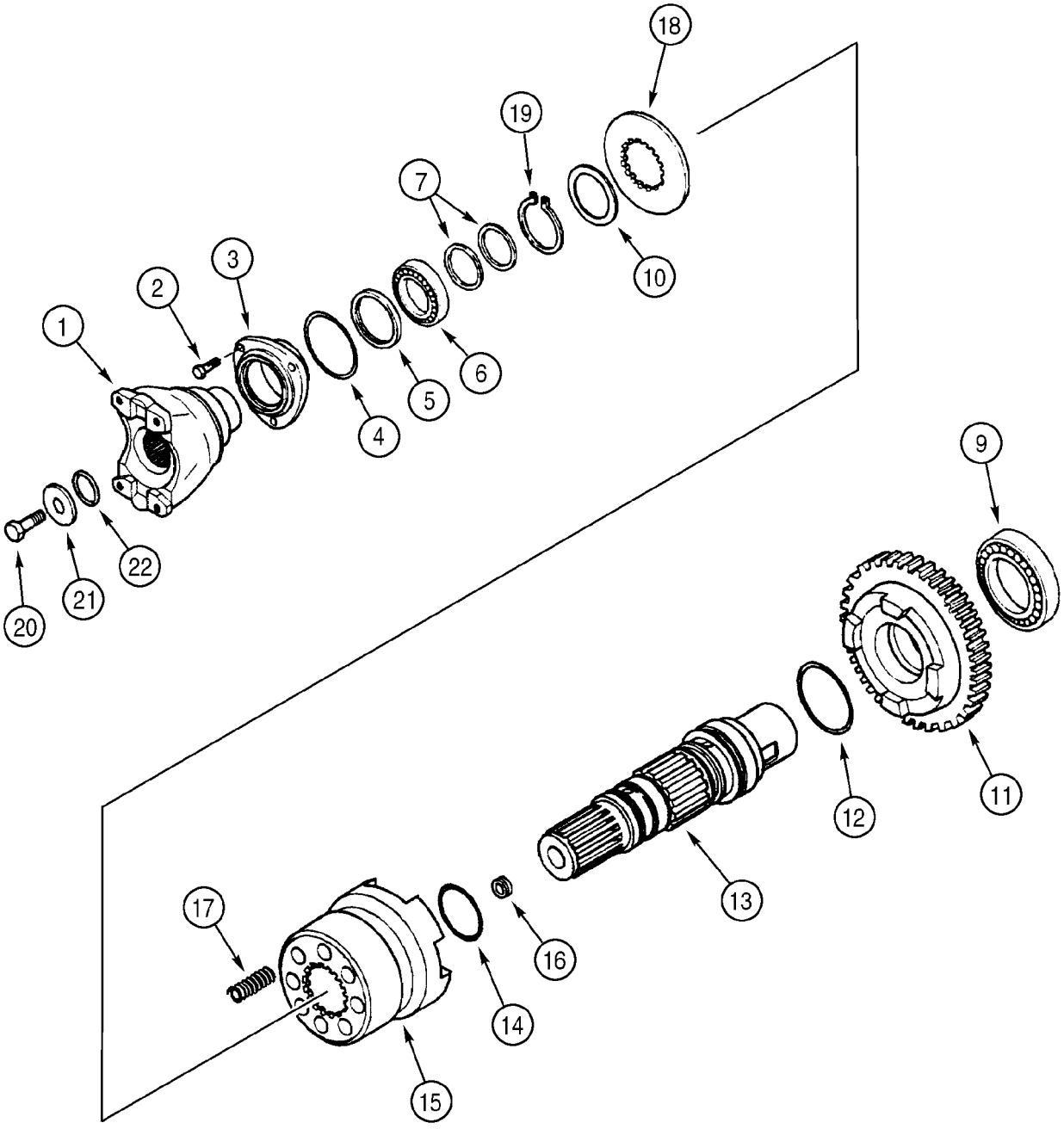

TRANSMISSION ASSY, 4WD - SHAFT, OUTPUT

REF	FN	PART NUMBER	YR/SN	QTY	DESCRIPTION
		87395301		1	TRANSMISSION, Four Wheel Drive, Incl. Ref 1 - 22; Also Includes Parts On Figures 06-20 - 06-29, 07-01(01)
1		{87704971}		1	Yoke, Fork, Front
2		614-8022		3	BOLT, Hex, M8 x 22, 8.8, Full Thd
3		181198A1		1	COVER
4		112517A1		1	O-RING
5		181122A1		1	SEAL, OIL, 50 x 65 x 8 mm
6		ST205A		1	BEARING, BALL
7		358645A1		2	SEAL, OIL
9		181126A1		1	BEARING, BALL
10		P2745478		1	WASHER
11		366234A1		1	PINION, Gear, Driven, 36T
12		366235A1		1	O-RING
13		366230A1		1	SHAFT, Output Shaft
14		366236A1		2	O-RING
15		366232A1		1	SLEEVE, TRANSMISSION
16		D142898		1	PLUG, 10 x 1 mm
17		100753A1		8	SPRING
18		366231A1		1	WASHER
19		800-5145		1	RING, SNAP, M45, Ext
20		P3533055		1	SCREW, 12 x 25 mm
21		P2745466		1	WASHER
22		238-8217		1	O-RING, -217, Cl 8, 1.171" ID x .139" Thk

TRANSMISSION ASSY, 4WD - VALVE, CONTROL

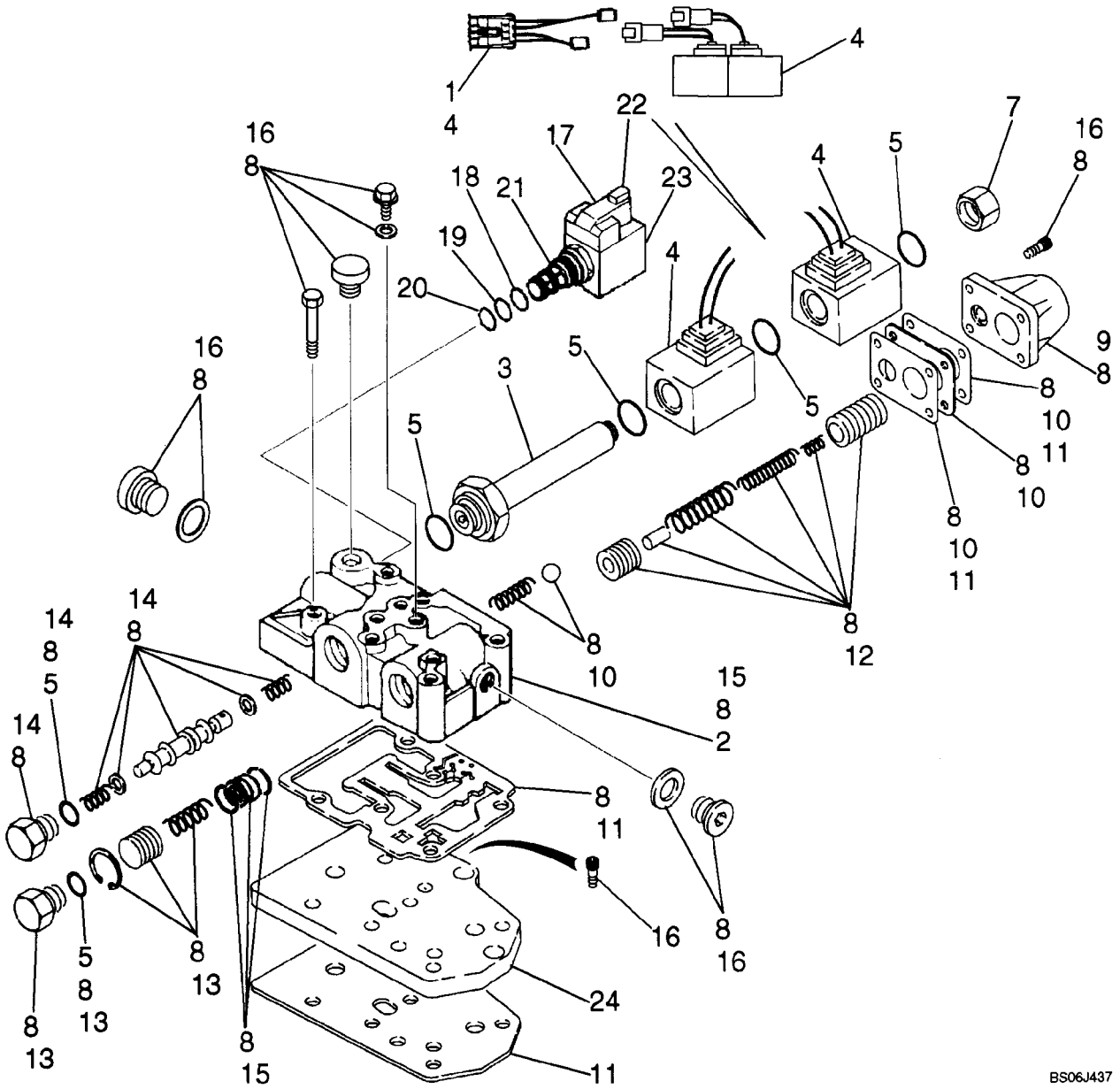

TRANSMISSION ASSY, 4WD - VALVE, CONTROL

REF	FN	PART NUMBER	YR/SN	QTY	DESCRIPTION
		87395301		1	TRANSMISSION, Four Wheel Drive, Incl. Ref 1 - 23; Also Includes Parts On Figures 06-20 - 06-29, 07-01(01)
		87525756		1	KIT, REPAIR, Transmission Control Valve With Jumper Harness; Includes (1) 87456968 Forward/Reverse Jumper Harness, Ref 1; Plus (1) 87524409 Control Valve, Ref 1 - 23
1		87456968		1	HARNESS, WIRE, Jumper; If Used; Required On Transmissions Prior To Ones With Deutsch Connector Type Solenoids
		87524409		1	VALVE, CONTROL, Transmission Control, With Improved Snap Ring at Flow Divider Area; Incl. Ref 2 - 23
2		NSS		1	NOT SERVICED SEPARATELY, Housing
3		190442A1		1	PLUNGER
4		87456900		1	KIT, SERVICE, Solenoid; Includes (2) Solenoids, (1) Jumper Wire Used For Transmissions Prior to Ones With The Solenoids With Plastic Connections
5		87524436		1	KIT, REPAIR, Seal; Includes (6) O-Rings; Component Parts Not Serviced Separately
7		87530365		1	PLUG
8		87524441		1	ASSEMBLY, Valve Body Kit; Component Parts Not Serviced Separately
9		181251A1		1	COVER, Modulation
10		87524439		1	KIT, REPAIR, Plate; Includes (1) Plate, (2) Gasket, (1) Ball, (1) Spring; Component Parts Not Serviced Separately
11		87524437		1	KIT, REPAIR, Gasket; Includes (4) Gasket Plates; Component Parts Not Serviced Separately
12		87524438		1	KIT, REPAIR, Modulation Valve; Includes (2) Piston, (1) Pin, (3) Spring; Component Parts Not Serviced Separately
13		87524433		1	KIT, REPAIR, Flow Divider Piston; Includes (1 each) Plug, O-Ring, Spring, Piston, Snap Ring; Component Parts Not Serviced Separately

TRANSMISSION ASSY, 4WD - VALVE, CONTROL

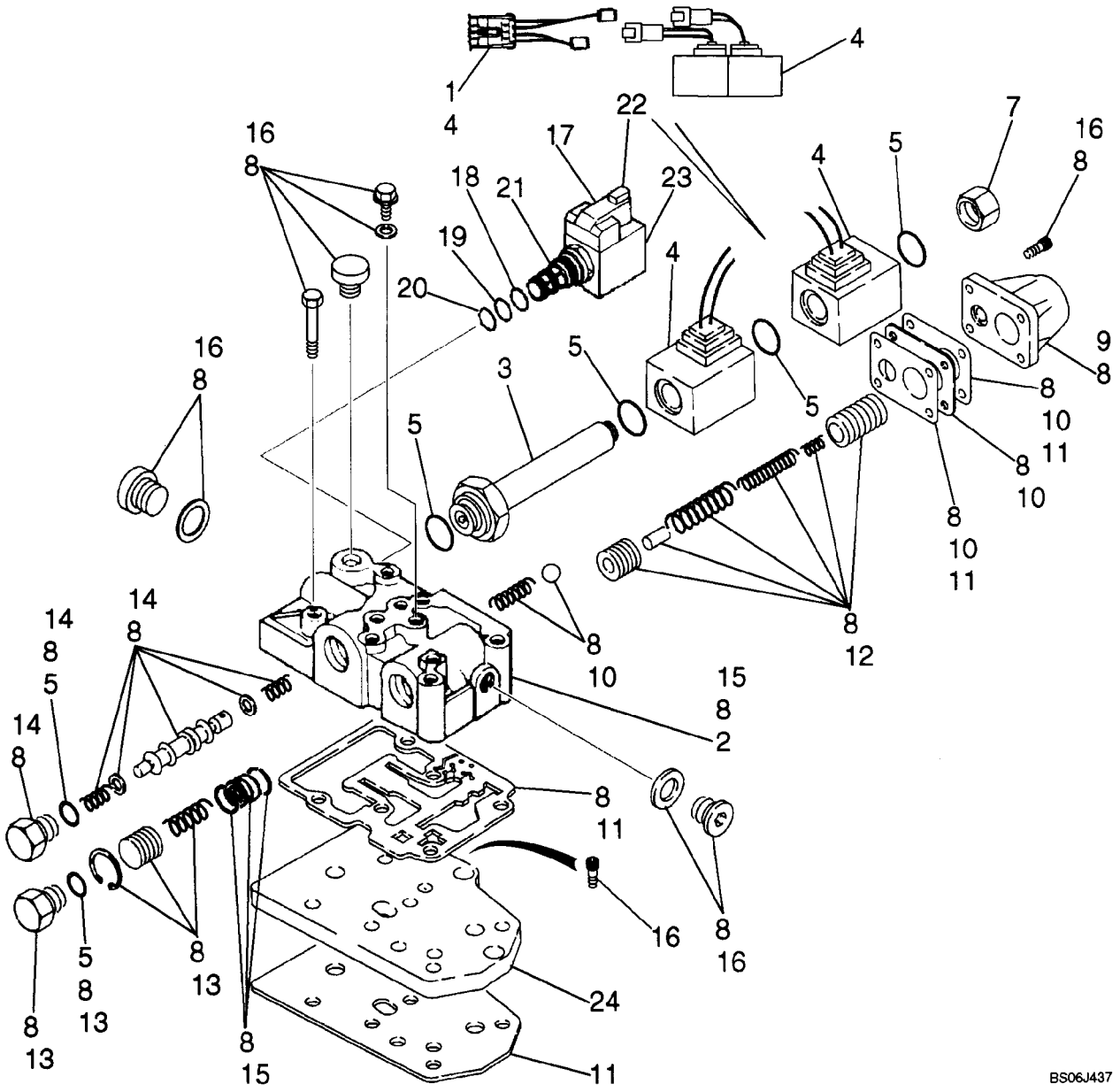

TRANSMISSION ASSY, 4WD - VALVE, CONTROL

REF	FN	PART NUMBER	YR/SN	QTY	DESCRIPTION
14		87524432		1	KIT, REPAIR, Forward/Reverse Spool; Includes (1) O-Ring, (2) Washer, (1) Plug, (1) Piston Spool, (2) Spring; Component Parts Not Serviced Separately
15		87524440		1	KIT, REPAIR, Control Valve Body/Housing; Includes (1) Housing, Plus (1) Bushing, (2) Snap Rings at Flow Divider; Component Parts Not Serviced Separately
16		87524435		1	KIT, REPAIR, Bolt; Includes (7) Plugs, (13) Bolts, (6) Copper Washers; Component Parts Not Serviced Separately
17		349295A1		1	SOLENOID, Differential Lock Solenoid Valve; Incl. Ref 18 - 23
18		237-6008		1	O-RING, 8-1, 90 Duro, .644" ID x .087" Thk
19		238-5014		1	O-RING, -014, 70 Duro, .489" ID x .070" Thk
20		238-5013		1	O-RING, -013, 70 Duro, .426" ID x .070" Thk
21		349291A1		1	CARTRIDGE, Valve, Cartridge, Component Parts Not Serviced Separately
21A		196096A1		1	SCREEN, Relief Valve, Internal; Not Illustrated
22		298614A1		1	SOLENOID
23		349292A1		1	NUT
24		181207A1		1	PLATE, LARGE, Feeding; Not Included In Assembly, Purchase Separately

TRANSMISSION ASSY, 4WD - VALVE, SOLENOID

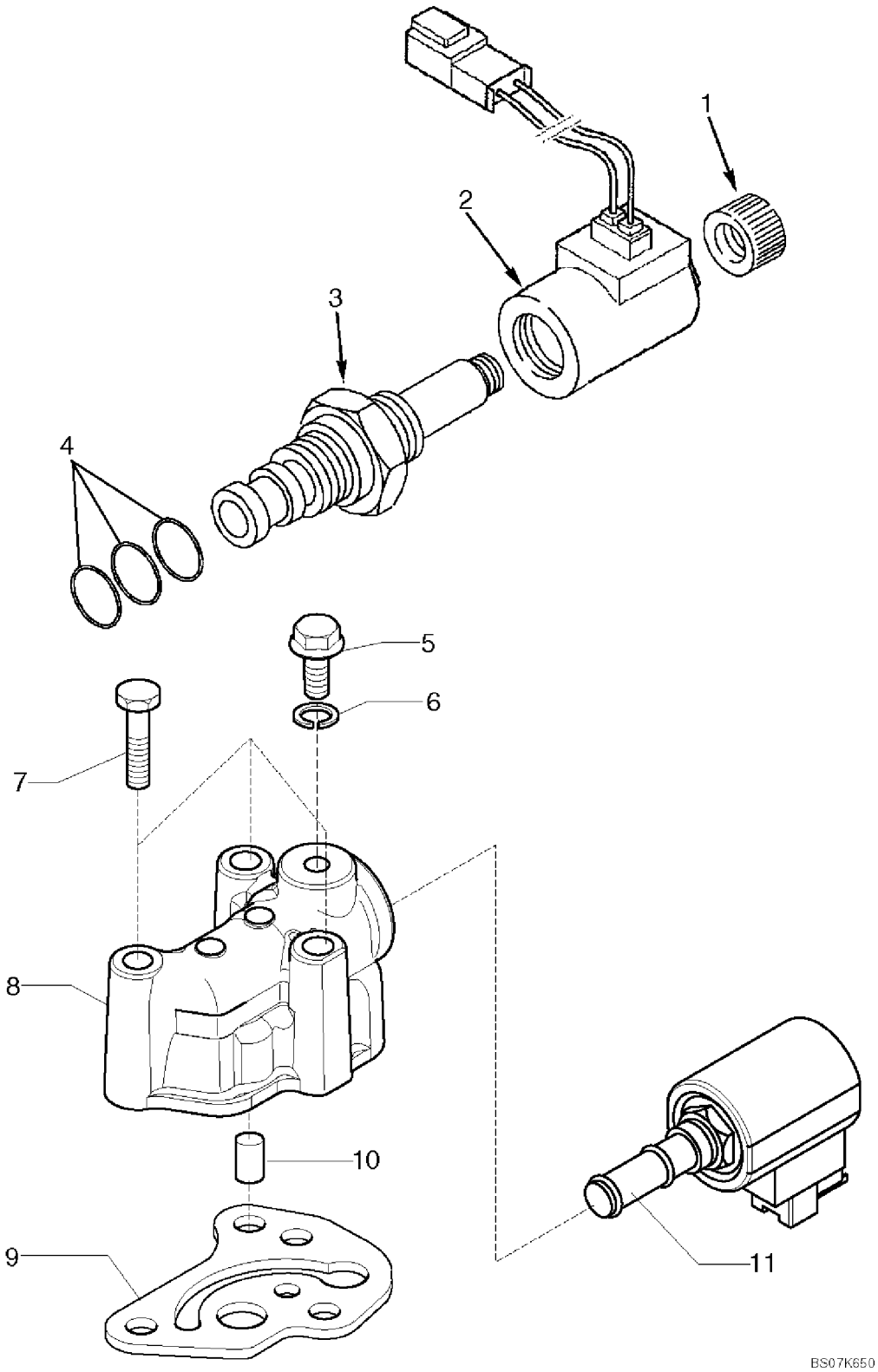

TRANSMISSION ASSY, 4WD - VALVE, SOLENOID

REF	FN	PART NUMBER	YR/SN	QTY	DESCRIPTION
		87395301		1	TRANSMISSION, Four Wheel Drive, Incl. Ref 1 - 10; Also Includes Parts On Figures 06-20 - 06-29, 07-01(01)
		87429978		1	VALVE, SOLENOID, Valve, Incl. Ref 1 - 4; With Deutsch Connectors
1		NSS		1	NOT SERVICED SEPARATELY, Nut
2		NSS		1	NOT SERVICED SEPARATELY, Coil
3		NSS		1	NOT SERVICED SEPARATELY, Valve, Solenoid
4		NSS		1	NOT SERVICED SEPARATELY, Kit, Seal, Includes 238-5014, 238-5015, 237-6010 O-Rings, Kit Not Serviced Separately
5		181100A1		1	PLUG, M10 x 23
6		934667R1		1	WASHER, SEALING, M10 x 14 x 1, Copper Washer
7		814-8060		3	BOLT, Hex, M8 x 60, 8.8
8		321428A1		1	HOUSING
9		366910A1		1	SEAL
10		190431A1		1	VALVE, Installed Between Ref 8 and 9
11		87456901		1	SOLENOID, Component Parts Not Serviced Separately; Includes Solenoid and Ref 12 Jumper Harness; Jumper Is For Coverting Transmissions Prior to Connector Change From Weather Pack to Deutsch
12		87456969		1	HARNESS, WIRE, Jumper; Weather Pack Connector/Deutsch Connector

WHEELS, REAR - TIRES

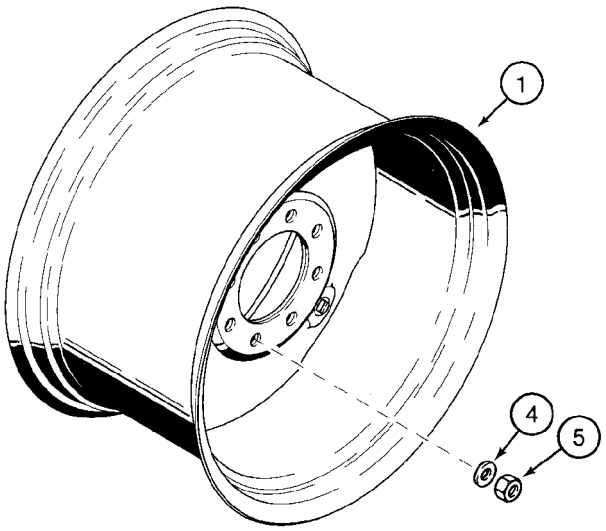

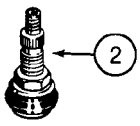

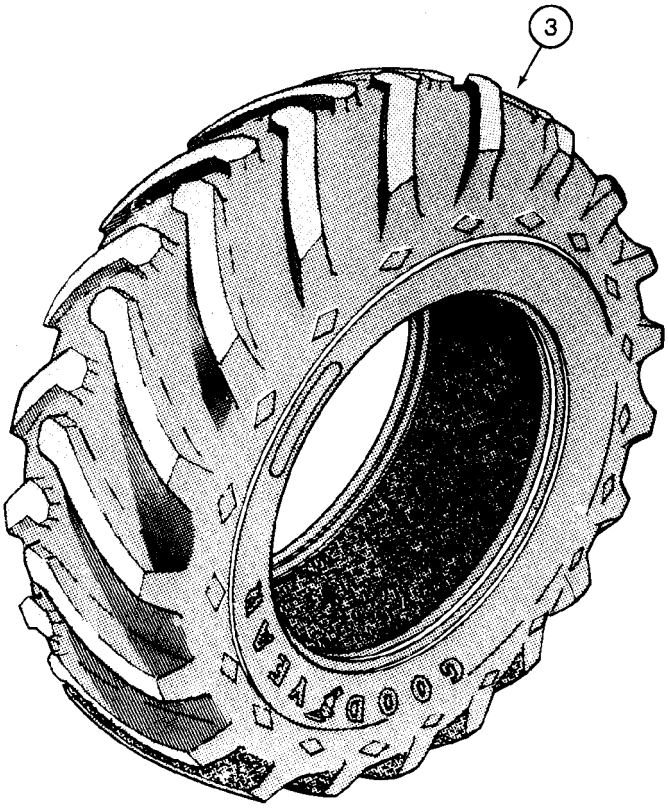

B9408129

WHEELS, REAR - TIRES

REF	FN	PART NUMBER	YR/SN	QTY	DESCRIPTION
1		104907A1		2	RIM, 19.5L x 24 Tires - 10 PR or 14 Ply; Two Wheel or Four Wheel Drive
2		27549R1		2	VALVE
3		REF		2	INSTRUCTION, Tire, Purchase Locally
1		119241A1		2	RIM, 17.5L x 24 Tires - 10 PR, R4; Two Wheel or Four Wheel Drive
2		27549R1		2	VALVE
3		REF		2	INSTRUCTION, Tire, Purchase Locally
4		D138380		20	WASHER, Wheel Nuts
5		D138492		20	NUT, M22; Wheel Nuts

AXLE, REAR DRIVE - MOUNTING

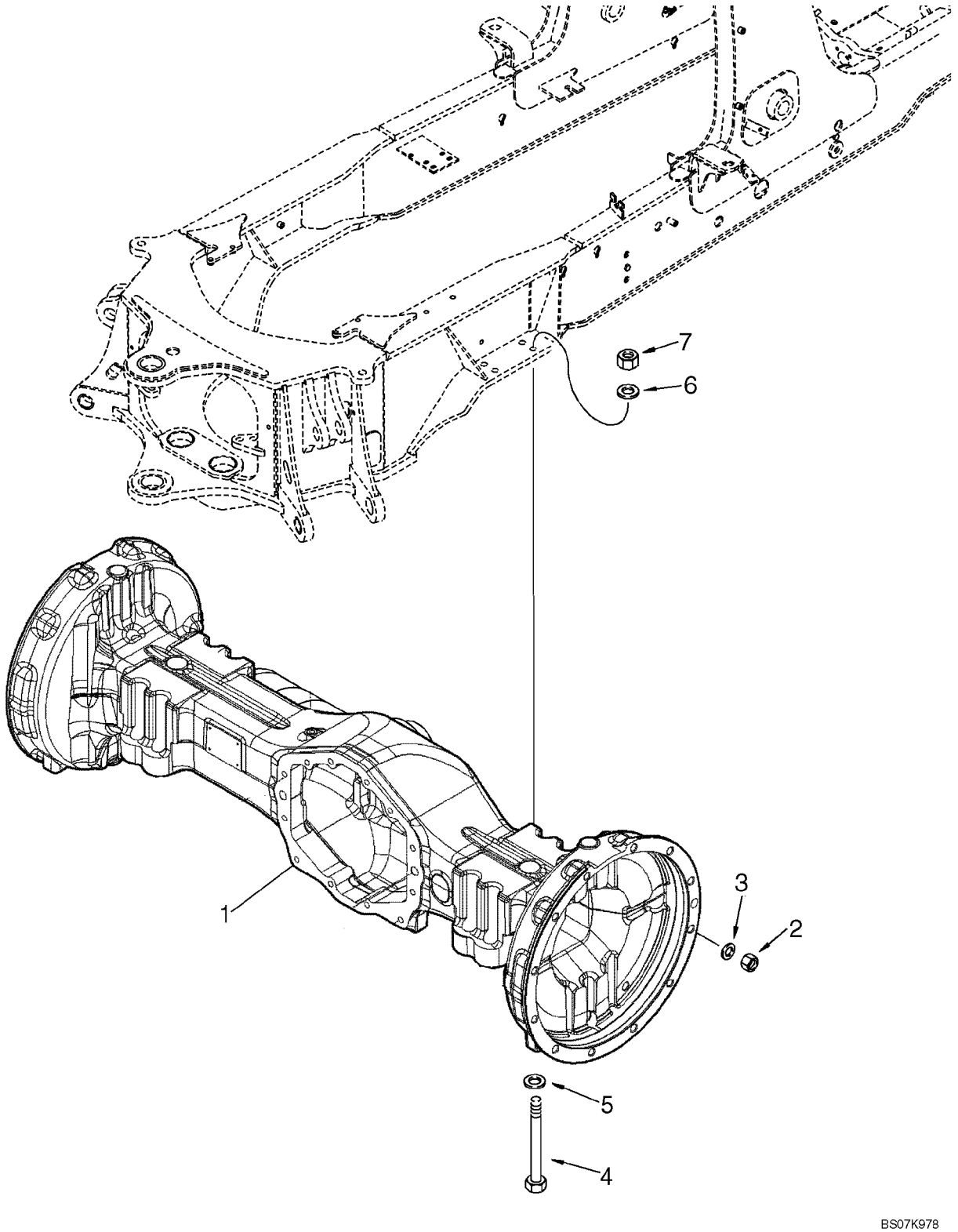

AXLE, REAR DRIVE - MOUNTING

REF	FN	PART NUMBER	YR/SN	QTY	DESCRIPTION
1		87395372		1	AXLE, REAR, See Figures 06-33 - 06-37, 07-02
2		D138492		20	NUT, 22 mm
3		87313544		20	WASHER, 22.52 ID x 44.0 OD x 5.0 mm thk, Hardened
4		827-20200		8	BOLT, Hex, M20 x 200, 10.9
5		896-11020		8	WASHER, M20 x 37.5 x 4, HT
6		87618533		8	WASHER, M20
7		829-1420		8	NUT, M20, Cl 10

AXLE, REAR - DIFFERENTIAL LOCK

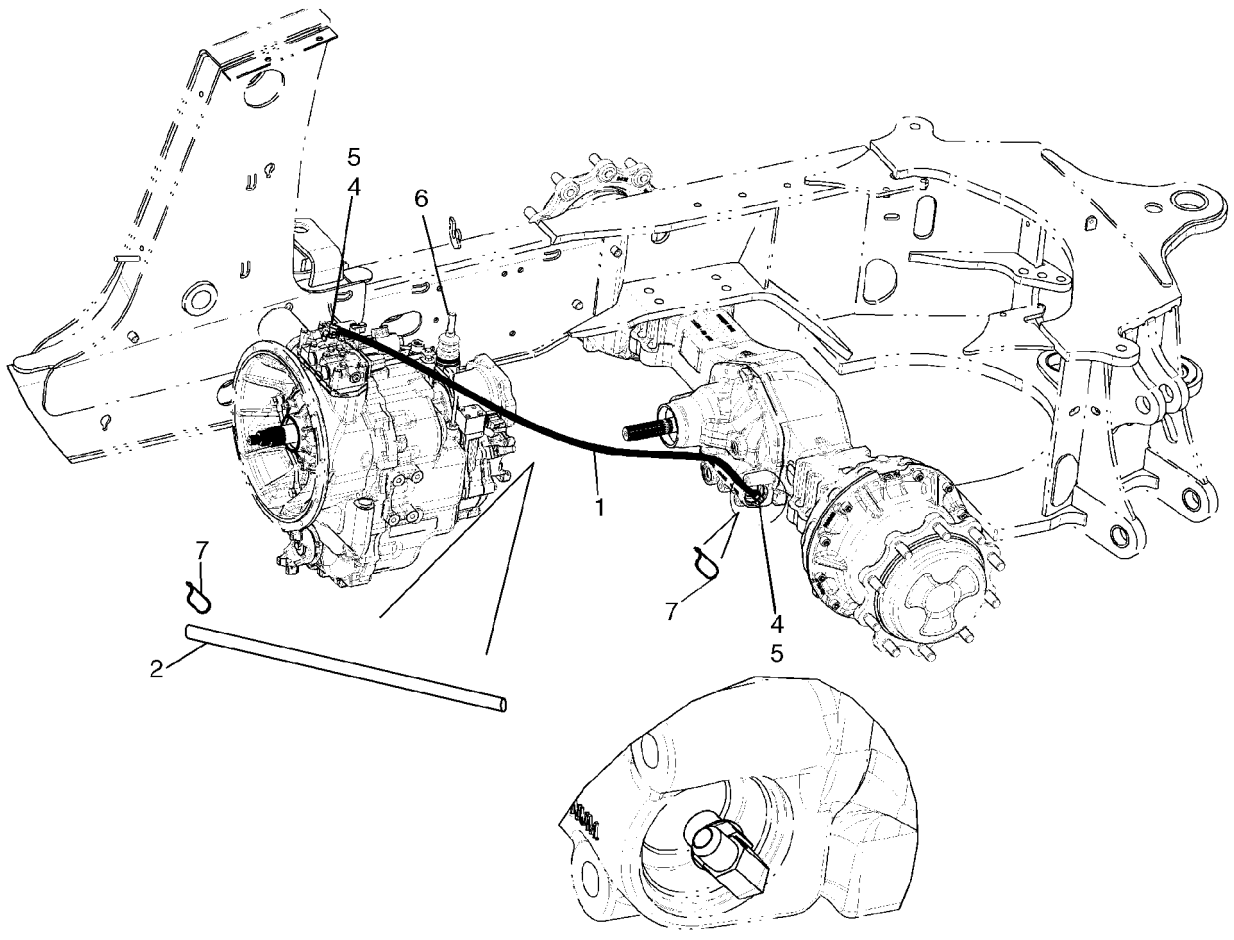

BS07N589

AXLE, REAR - DIFFERENTIAL LOCK

REF	FN	PART NUMBER	YR/SN	QTY	DESCRIPTION
1		87431701		1	HOSE ASSY., 1500 mm (59-9/16 in)
2		191704A1		1	LOOM
4		218-5105		1	ELBOW, 90Ü, 9/16"-18, 37Ü x 9/16"-18, O-Ring, Incl. Ref 5
5		237-6006		1	O-RING, 6-1, 90 Duro, .468" ID x .078" Thk
6		E135809		1	PLUG, If Used
7		L18337		2	STRAP, CABLE, 9.95"-12.1" lg

87395372 AXLE, REAR DRIVE - HOUSING

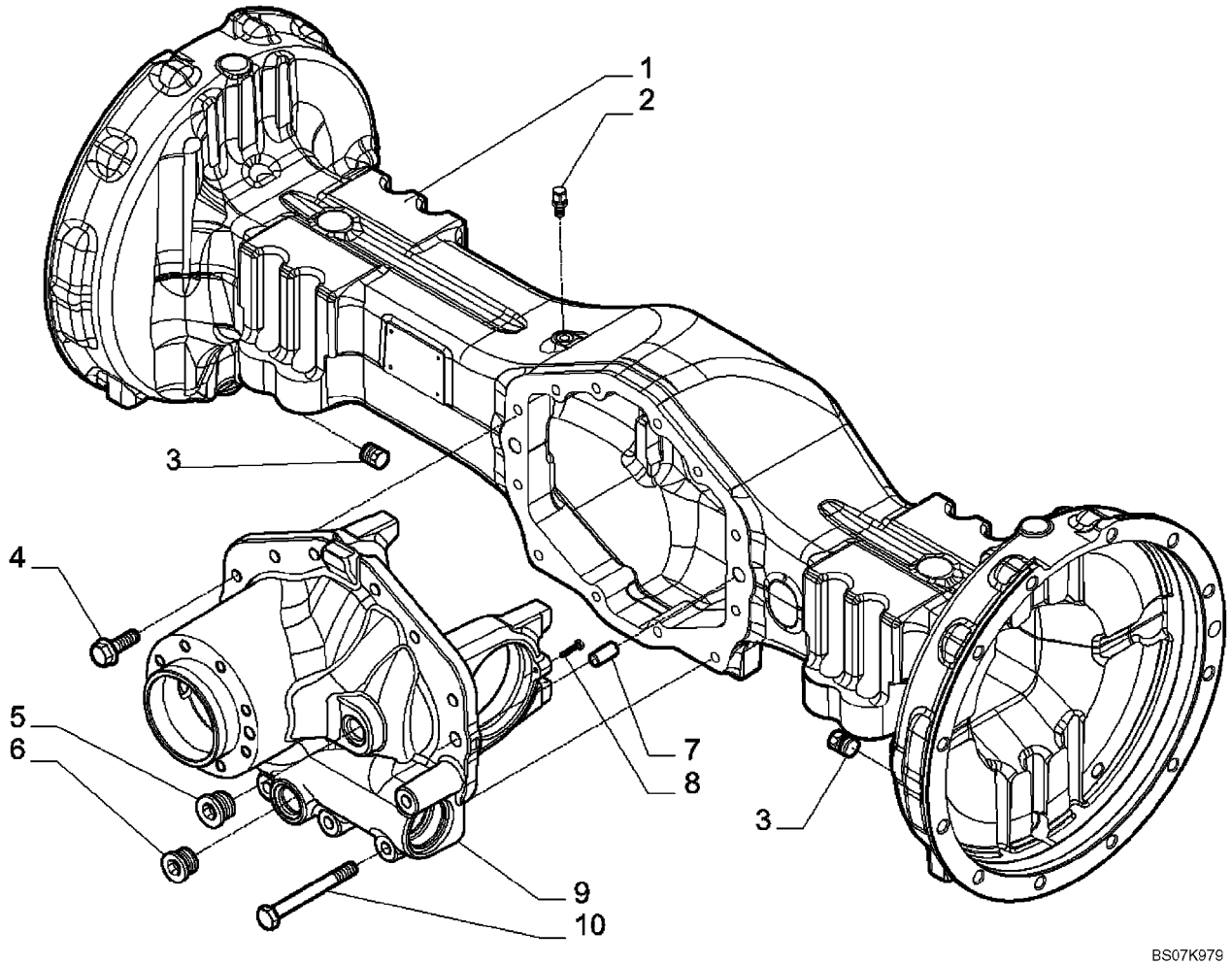

87395372 AXLE, REAR DRIVE - HOUSING

REF	FN	PART NUMBER	YR/SN	QTY	DESCRIPTION
		87395372		1	AXLE, REAR, Incl. Ref 1 - 10; Also Includes Parts On Figures 06-33 - 06-37, 07-02
1		{87708390}		1	Housing, Axle
2		1966149C1		1	BREATHER, M10 x 1
3		A156873		2	PLUG, DRAIN, M22 x 1.5
4		S301064		8	SCREW, M12 x 1.75
5		{434746A1}		1	Plug; M24 x 1.5
6		100557A1		1	PLUG, DRAIN, M30 x 2
7		1966138C1		2	DOWEL
8		864-6025		2	SCREW, Hex Soc Hd, M6 x 25, 8.8
9		{87708391}		1	Differential Support
10		{87708392}		4	Screw; M12 x 100

87395372 AXLE, REAR DRIVE - DIFFERENTIAL

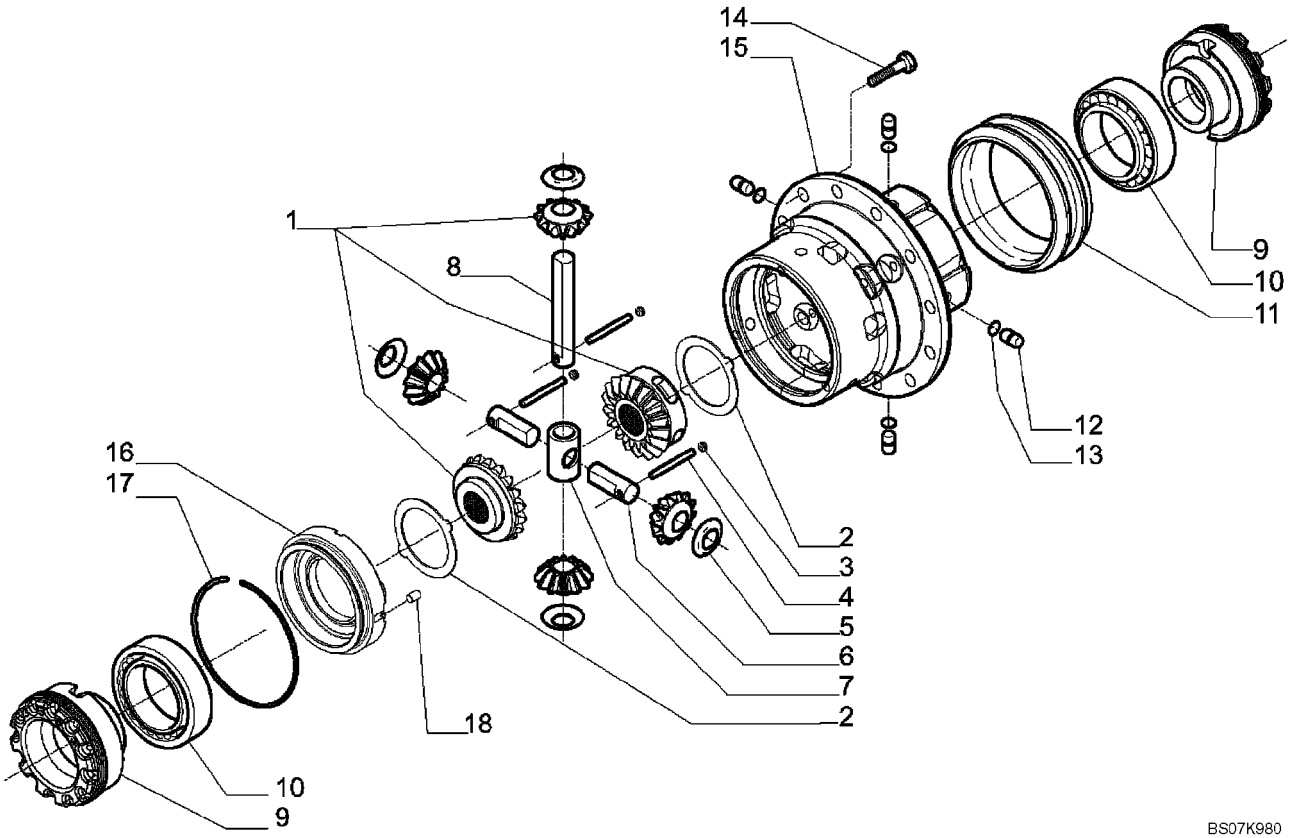

87395372 AXLE, REAR DRIVE - DIFFERENTIAL

REF	FN	PART NUMBER	YR/SN	QTY	DESCRIPTION
		87395372		1	AXLE, REAR, Incl. Ref 1 - 18; Also Includes Parts On Figures 06-33 - 06-37, 07-02
1		{87708394}		1	Kit, Differential
2		{87708395}		2	Differential Drive Plate
3		D142898		3	PLUG, M10 x 1
4		{87708396}		2	Pin; 9 x 45
5		E135777		4	WASHER, Thrust
6		{87708397}		2	Differential Pin
7		{87708398}		1	Spider Gear
8		{87708399}		1	Differential Pin
9		{87708400}		2	Ring Nut; M104 x 1.5
10		E135785		2	BEARING
11		{87708401}		1	Sleeve
12		292207A1		4	PIN, LARGE
13		292208A1		4	O-RING
14		{87708402}		12	Bolt; M12 x 25
15		{87708403}		1	Differential Housing
16		{87708408}		1	Differential Housing Cover
17		{87708409}		1	Locking Ring, Differential
18		{87708411}		1	Roller; 8 x 12

87395372 AXLE, REAR DRIVE - RING AND PINION

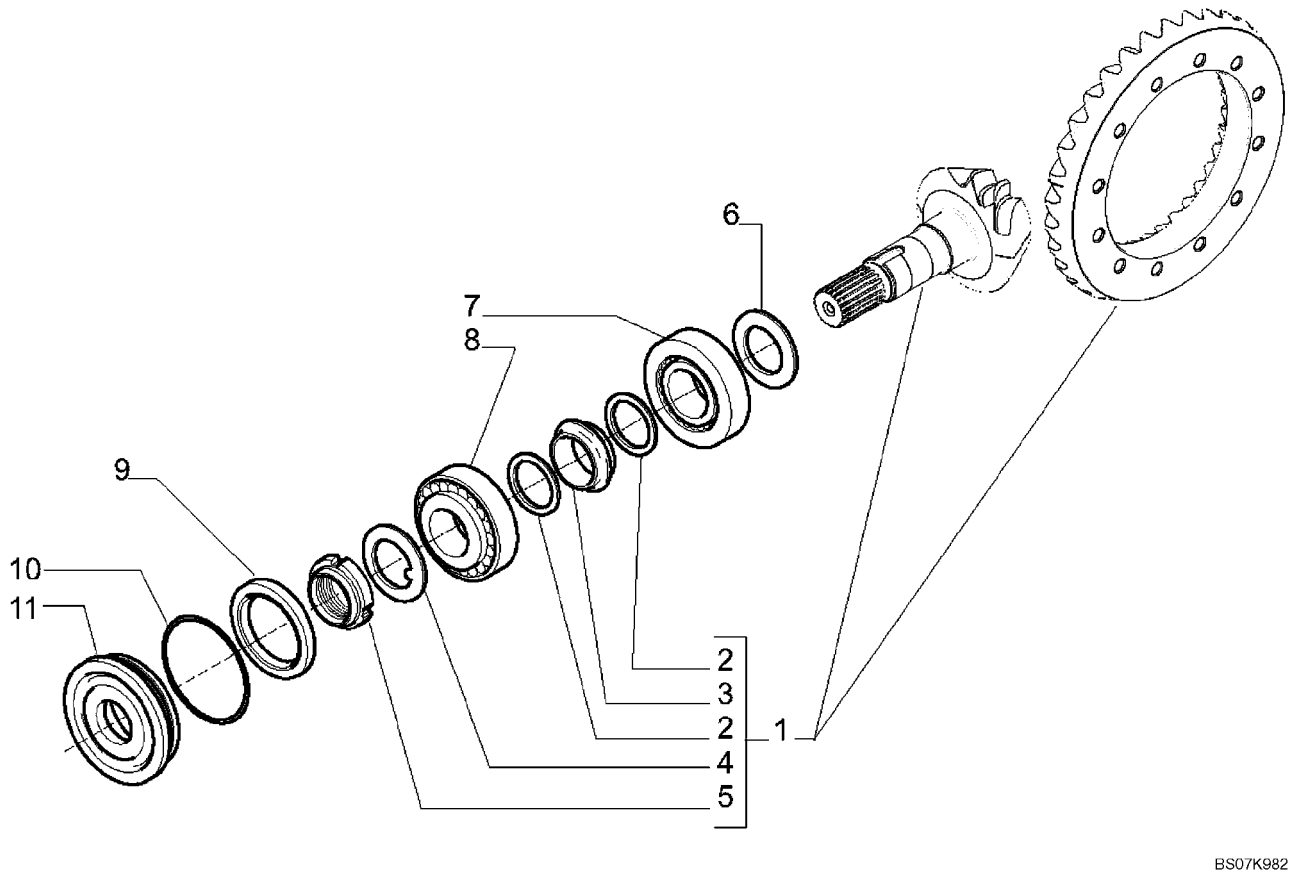

87395372 AXLE, REAR DRIVE - RING AND PINION

REF	FN	PART NUMBER	YR/SN	QTY	DESCRIPTION
		87395372		1	AXLE, REAR, Incl. Ref 1 - 11; Also Includes Parts On Figures 06-33 - 06-37, 07-02
1		{87708393}		1	Bevel Gear Set, 14/35
2		1349059C1		2	WASHER, Elastic
3		175957A1		1	SPACER
4		N7536		1	WASHER, Lock
5		K261014		2	NUT, Ring; M40 x 105
6		190506A1		AR	SHIM, 2,5 mm (0,098 in)
6		190508A1		AR	SHIM, 2,6 mm (0,102 in)
6		190509A1		AR	SHIM, 2,7 mm (0,106 in)
6		190510A1		AR	SHIM, 2,8 mm (0,110 in)
6		190511A1		AR	SHIM, 2,9 mm (0,114 in)
6		190512A1		AR	SHIM, 3,0 mm (0,118 in)
6		190513A1		AR	SHIM, 3,1 mm (0,122 in)
6		190514A1		AR	SHIM, 3,2 mm (0,125 in)
6		190515A1		AR	SHIM, 3,3 mm (0,129 in)
6		190516A1		AR	SHIM, 3,4 mm (0,133 in)
7		{P1139855X}		1	Bearing
8		K395090		1	BEARING, BALL
9		K262143		1	SEAL, Ring
10		445720A1		1	O-RING
11		128570A1		1	FLANGE, Seal

06-36		p1	02/08

87395372 AXLE, REAR DRIVE - DIFFERENTIAL LOCK

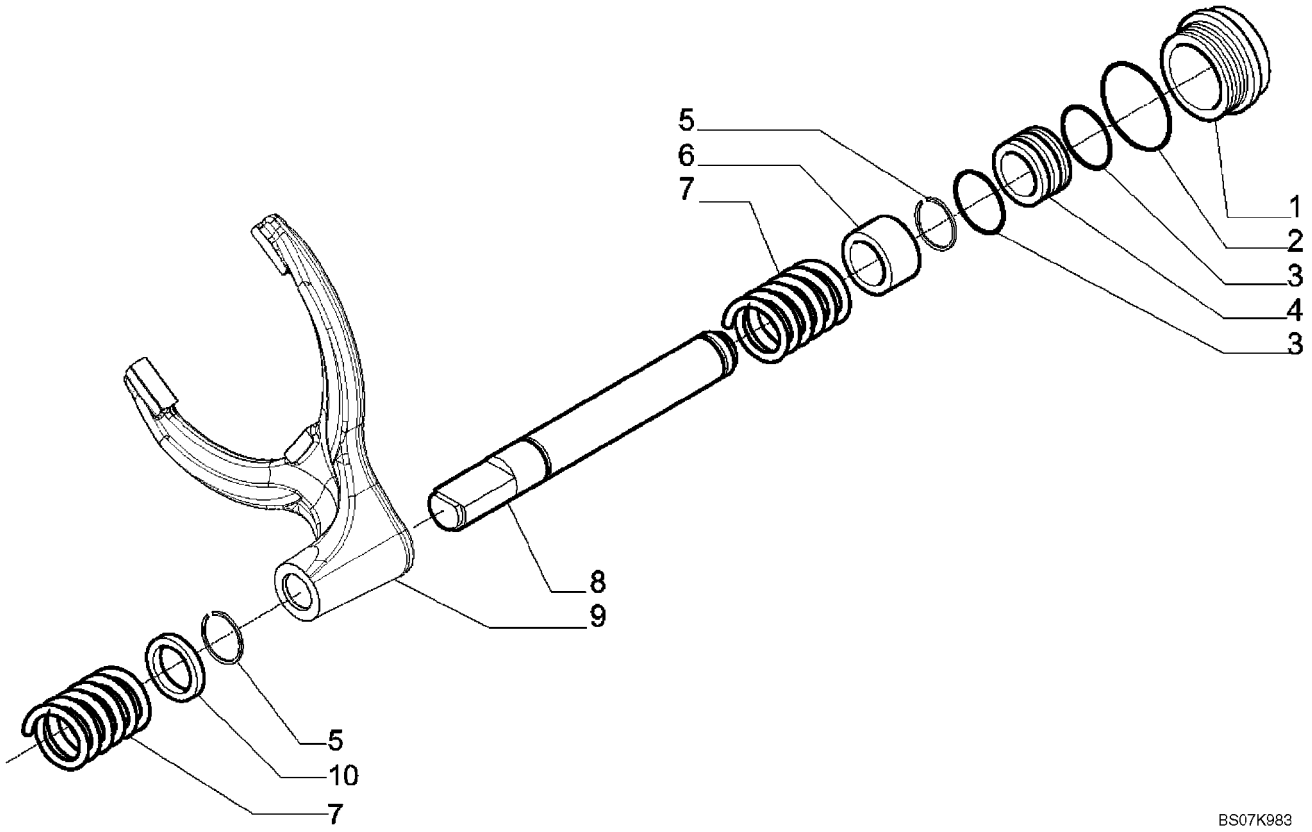

87395372 AXLE, REAR DRIVE - DIFFERENTIAL LOCK

REF	FN	PART NUMBER	YR/SN	QTY	DESCRIPTION
		87395372		1	AXLE, REAR, Incl. Ref 1 - 10; Also Includes Parts On Figures 06-33 - 06-37, 07-02
1		{87708413}		1	Differential Lock Cylinder
2		{87708415}		1	O-Ring
3		292210A1		2	SEAL
4		292212A1		1	PISTON
5		{87708417}		2	Locking Ring
6		{87708420}		1	Bushing
7		175966A1		2	SPRING
8		{87708422}		1	Control Piston, Differential Locking
9		{87708424}		1	Fork
10		{87708427}		1	Spacer

87395372 AXLE, REAR DRIVE - PLANETARY

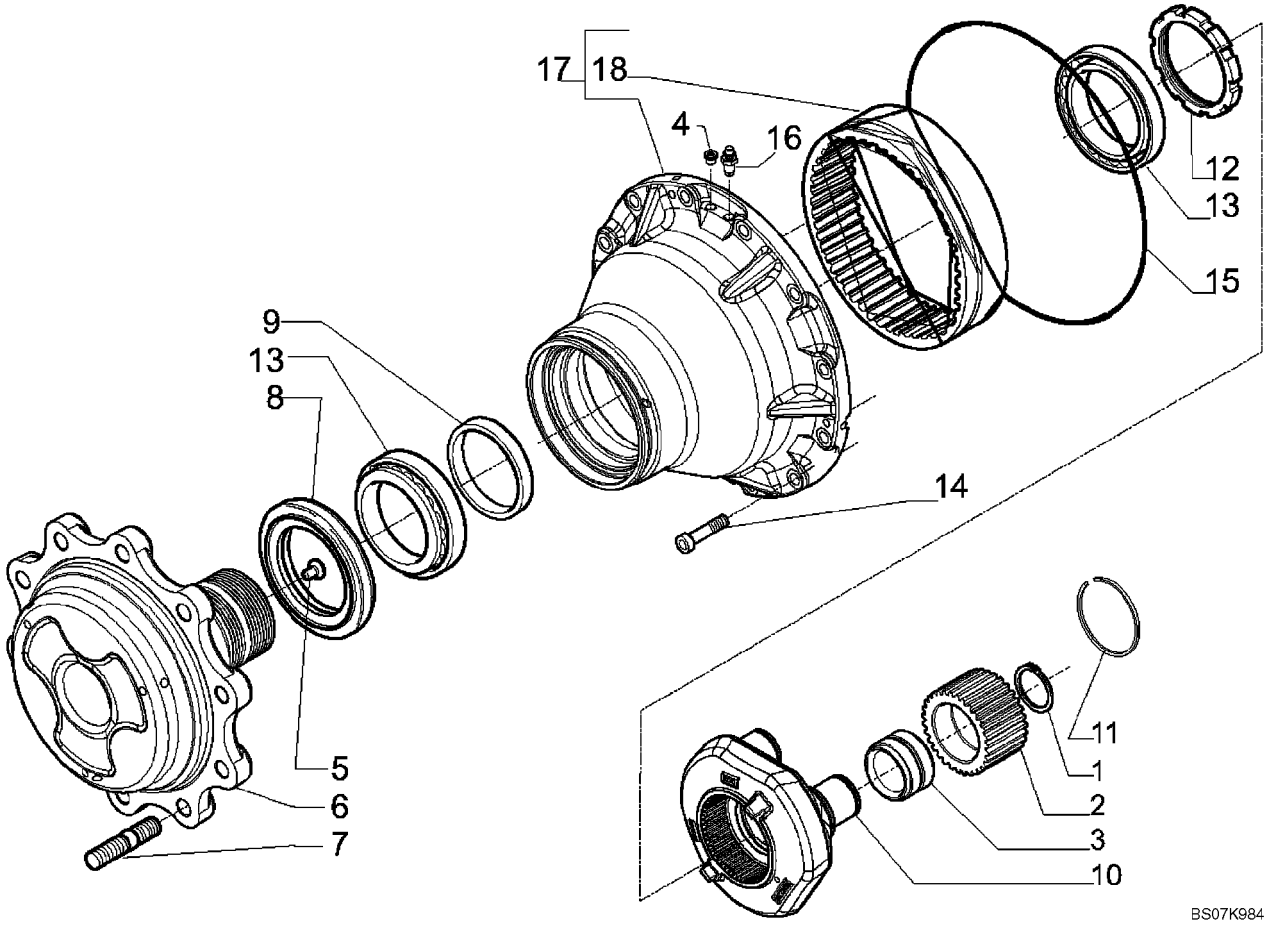

87395372 AXLE, REAR DRIVE - PLANETARY

REF	FN	PART NUMBER	YR/SN	QTY	DESCRIPTION
		87395372		1	AXLE, REAR, Incl. Ref 1 - 18; Also Includes Parts On Figures 06-33 - 06-37, 07-02
1		800-1150		6	RING, SNAP, M50, Ext
2		{87708443}		6	Wheel Hub Gear
3		{87708444}		6	Bearing
4		9625178		2	PLUG, Hex Soc, 9/16"-18 ORB
5		K395093		2	PIN, HEADED
6		{87708445}		2	Wheel Flange
7		D142986		20	STUD
8		{452140A1}		2	Seal Ring
9		{87708447}		2	Spacer
10		{87708452}		2	Planetary Carrier
11		{87708453}		2	Snap Ring
12		{87708454}		2	Ring Nut; M108 x 2
13		K395101		4	BEARING, ROLLER, TAPERED
14		403955A1		24	BOLT, M14 x 45
15		{87711038}		2	Ring, Wheel Hub
16		E135810		2	SCREW, VENTING
17		{87708466}		2	Hub Ring Gear Kit
18		{87708467}		2	Ring Gear

DRIVE SHAFT, REAR AXLE

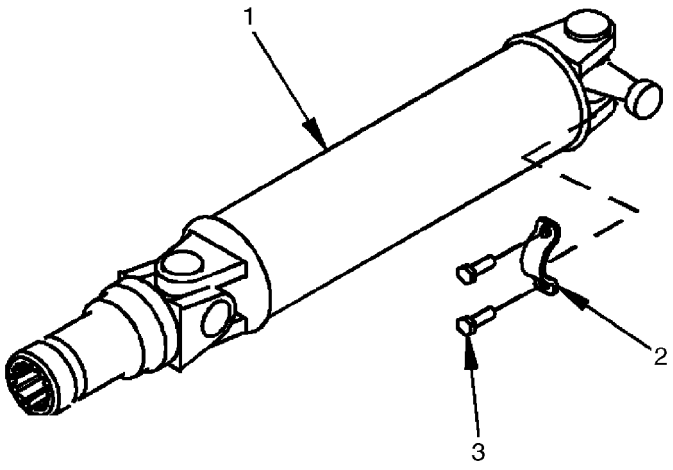

BS07N590

DRIVE SHAFT, REAR AXLE

REF	FN	PART NUMBER	YR/SN	QTY	DESCRIPTION
1		87613924		1	SHAFT, DRIVE, Component Parts Not Available At Time Of Printing
2		87538515		2	RETAINER
3		9637611		4	SCREW, Hex Flange Head, Locking, Special, 5/16 - 24 UNF x 1-1/16

NOTES

SECTION INDEX
Brakes

07-01		TRANSMISSION ASSY, 2WD - BRAKE, PARKING
07-01	01	TRANSMISSION ASSY, 4WD - BRAKE, PARKING
07-02		AXLE, REAR DRIVE - BRAKE, DIFFERENTIAL
07-03		BRAKE - PEDALS
07-04		HYDRAULICS - BRAKE MASTER CYLINDER
07-05		BRAKE LINES TO TRANSMISSION
07-06		BRAKE LINES TO AXLES
07-07		CYLINDER ASSY - BRAKE MASTER

TRANSMISSION ASSY, 2WD - BRAKE, PARKING

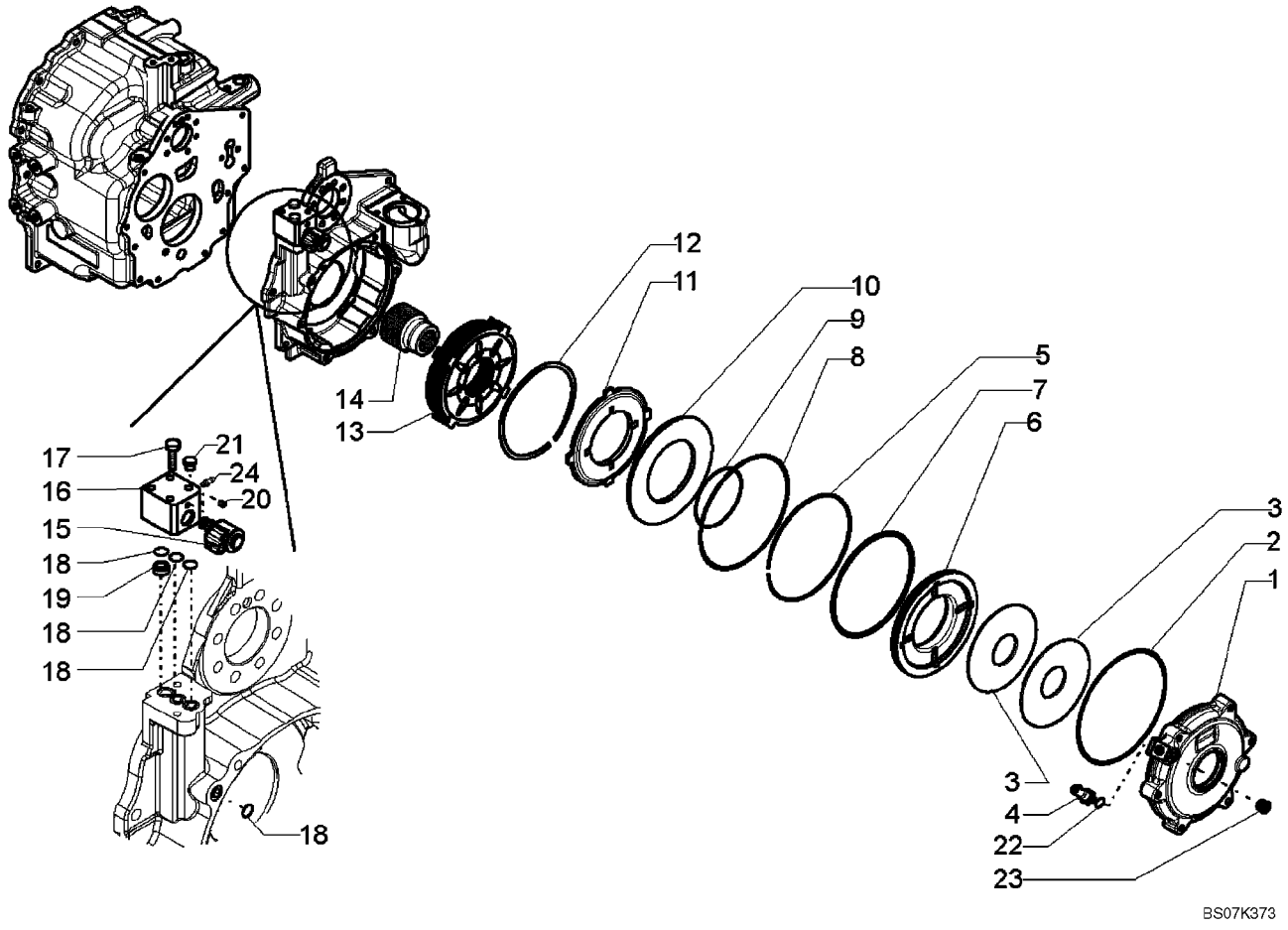

TRANSMISSION ASSY, 2WD - BRAKE, PARKING

REF	FN	PART NUMBER	YR/SN	QTY	DESCRIPTION
		87395300		1	TRANSMISSION, Two Wheel Drive; Incl Ref 1 - 24; Also Includes Parts On Figures 06-12 - 06-19, 07-01
1		{87701309}		1	Brake Cover
2		{87701310}		1	O-Ring
3		363485A1		2	WASHER, SPRING, Belleville Washer
4		{87701313}		1	Pressure Sensor
5		{87701315}		1	Stop Ring
6		{87701317}		1	Brake Piston
7		{87701318}		1	Seal With O-Ring
8		{87701320}		1	O-Ring
9		{87701321}		1	Seal With O-Ring
10		{87701323}		1	Retaining Plate
11		{87701324}		1	Brake Counterplate
12		{87701325}		5	Spacer
13		{87701327}		1	Brake Pack
14		{87701328}		1	Link Bushing
15		{87701329}		1	Electrovalve
16		{87701330}		1	Control Block
17		{87701331}		2	M8 x 55 Bolt
18		{87701332}		4	O-Ring
19		{87701333}		1	Bushing
20		139312A1		1	PLUG
21		NSS		1	NOT SERVICED SEPARATELY, PLUG, Shipping Plug
22		100760A1		1	O-RING
23		E135809		1	PLUG, 9/16
24		933781R1		1	NIPPLE, LUBE, M10 x 1

07-01	01	p1	02/08

TRANSMISSION ASSY, 4WD - BRAKE, PARKING

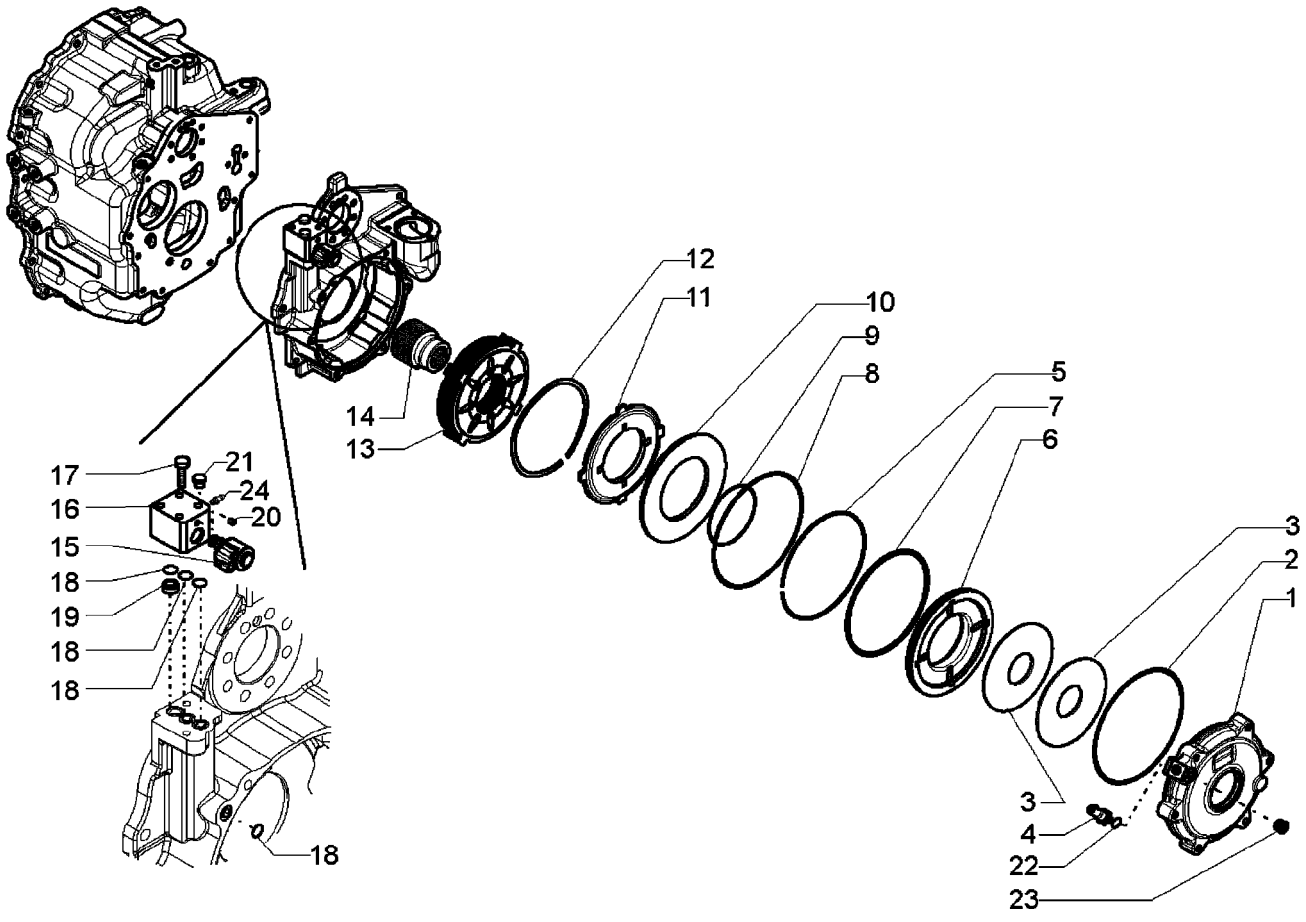

TRANSMISSION ASSY, 4WD - BRAKE, PARKING

REF	FN	PART NUMBER	YR/SN	QTY	DESCRIPTION
		87395301		1	TRANSMISSION, Four Wheel Drive; Incl Ref 1 - 24; Also Includes Parts On Figures 06-20 - 06-29, 07-01(01)
1		{87701309}		1	Brake Cover
2		{87701310}		1	O-Ring
3		363485A1		2	WASHER, SPRING, Belleville Washer
4		{87701313}		1	Pressure Sensor
5		{87701315}		1	Stop Ring
6		{87701317}		1	Brake Piston
7		{87701318}		1	Seal With O-Ring
8		{87701320}		1	O-Ring
9		{87701321}		1	Seal With O-Ring
10		{87701323}		1	Retaining Plate
11		{87701324}		1	Brake Counterplate
12		{87701325}		5	Spacer
13		{87701327}		1	Brake Pack
14		{87701328}		1	Link Bushing
15		{87701329}		1	Electrovalve
16		{87701330}		1	Control Block
17		{87701331}		2	M8 x 55 Bolt
18		{87701332}		4	O-Ring
19		{87701333}		1	Bushing
20		139312A1		1	PLUG
21		NSS		1	NOT SERVICED SEPARATELY, PLUG, Shipping Plug
22		100760A1		1	O-RING
23		E135809		1	PLUG, 9/16
24		933781R1		1	NIPPLE, LUBE, M10 x 1

AXLE, REAR DRIVE - BRAKE, DIFFERENTIAL

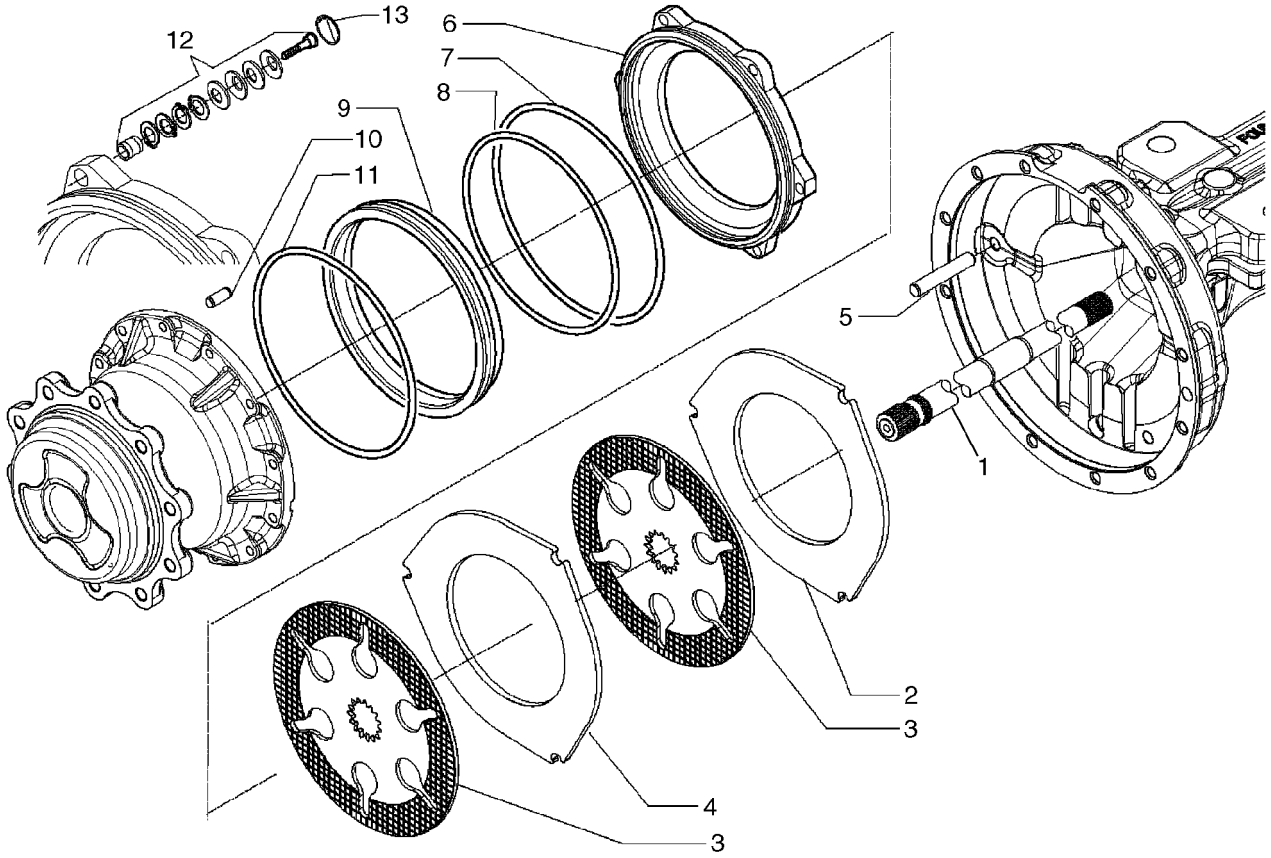

BS07N834

AXLE, REAR DRIVE - BRAKE, DIFFERENTIAL

REF	FN	PART NUMBER	YR/SN	QTY	DESCRIPTION
		87395372		1	AXLE, REAR, Incl. Ref 1 - 13; Also Includes Parts On Figures 06-26 - 06-30, 07-02
1		{87708431}		1	LH Half Shaft
1		{87708432}		1	RH Half Shaft
2		{87708433}		2	Brake Separation Plate, 5 thk
3		{87708434}		4	Brake Plate
4		{87708435}		2	Brake Separation Plate, 8 thk
5		139294A1		6	GUIDE
6		{87708436}		2	Brake Piston
7		{87708438}		2	O-Ring
8		371144A1		2	O-RING, Piston, External
9		{87708440}		2	Brake Piston
10		D142890		2	DOWEL
11		371145A1		2	O-RING, Piston Carrier
12		{87708441}		6	Kit, Rear Axle Self Adjust; 0.6 mm
13		{87708442}		6	Lock Ring

07-03		p1	11/07

BRAKE - PEDALS

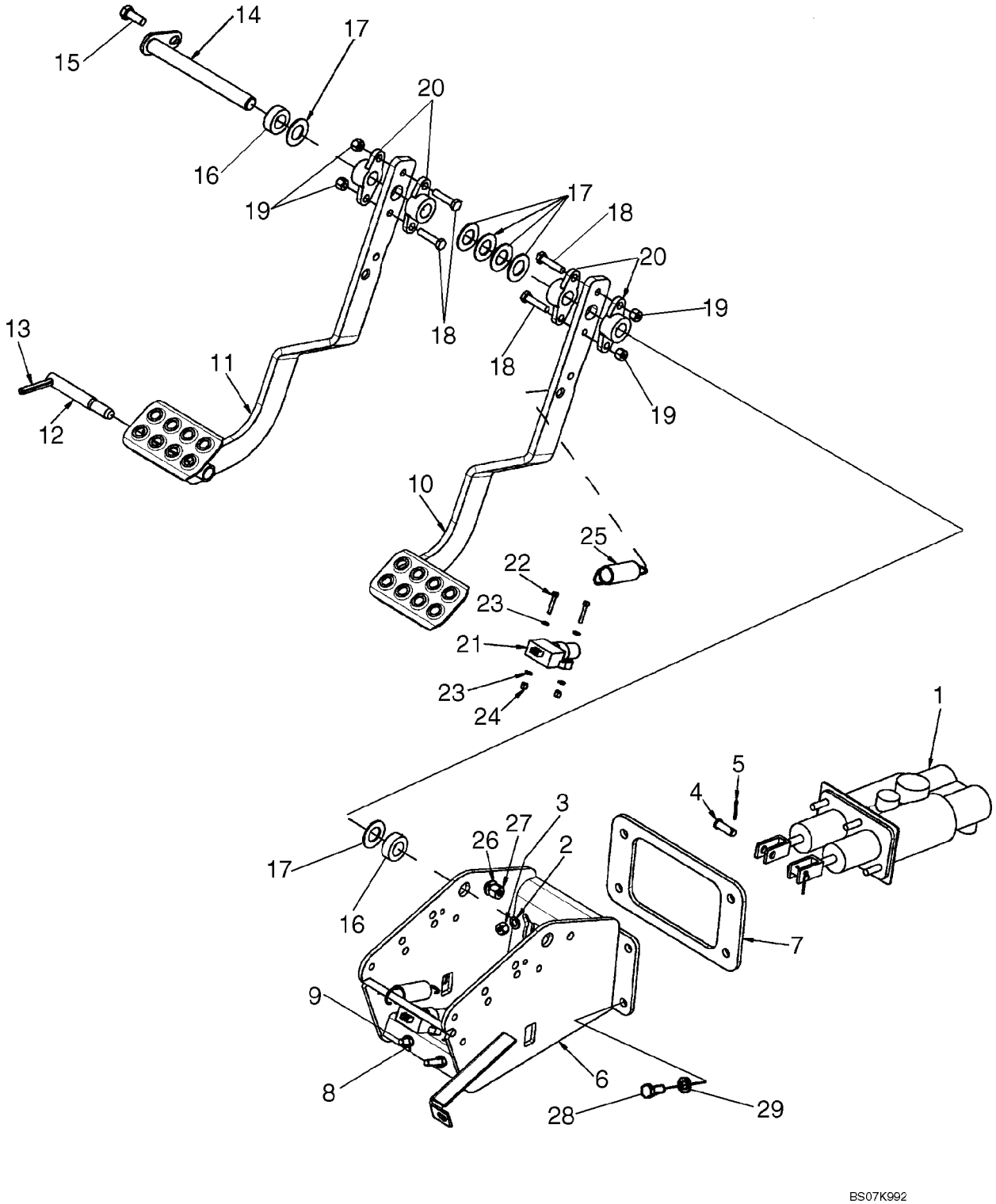

BRAKE - PEDALS

REF	FN	PART NUMBER	YR/SN	QTY	DESCRIPTION
1		87714038		1	MASTER CYLINDER, See Figure 07-07
2		895-11008		4	WASHER, M8 x 16 x 1.6
3		832-10408		4	NUT, LOCK, M8 x 1.25, Cl 8
4		427-6106		2	PIN, CLEVIS, 3/8" x 1 1/16"
5		432-612		2	PIN, SPLIT (COTTER), 3/32" x 3/4"
6		87642370		1	BRACKET, SUPPORTING, Brake Pedal and Brake Master Cylinder Mounting
7		87644495		1	GASKET
8		829-1408		4	NUT, M8, Cl 10
9		87644497		2	ISOLATOR, Brake Pedal
10		87642365		1	PEDAL, Right-Hand
11		87642364		1	PEDAL, Left-Hand
12		D124530		1	PIN, Brake Pedal Lock
13		86625112		1	PIN, LOCK, 5/16" x 2 1/2", Slotted
14		D140035		1	PIN, LARGE, Shaft
15		614-10025		1	BOLT, Hex, M10 x 25, 8.8, Full Thd
16		D124529		2	SPACER
17		495-81261		X	WASHER, 13/16" x 1 1/2" x .067", HDN, Used As A Spacer
18		814-8035		4	BOLT, Hex, M8 x 35, 8.8
19		832-10408		4	NUT, LOCK, M8 x 1.25, Cl 8
20		A77310		4	PIVOT, Bearing
21		82026949		2	SWITCH, Push Button, Brake Lamp, Attaches To Front Console Wiring Harness
22		87016468		4	SCREW, Hex Soc Hd, M4 x 25, 8.8
23		895-11004		8	WASHER, M4
24		832-10404		4	NUT, LOCK, M4 x .7, Cl 8
25		230973A1		2	SPRING
26		895-11010		1	WASHER, M10 x 20 x 2
27		832-10410		1	NUT, LOCK, M10 x 1.5, Cl 8
28		614-8020		4	BOLT, Hex, M8 x 20, 8.8
29		895-11008		4	WASHER, M8 x 16 x 1.6

HYDRAULICS - BRAKE MASTER CYLINDER

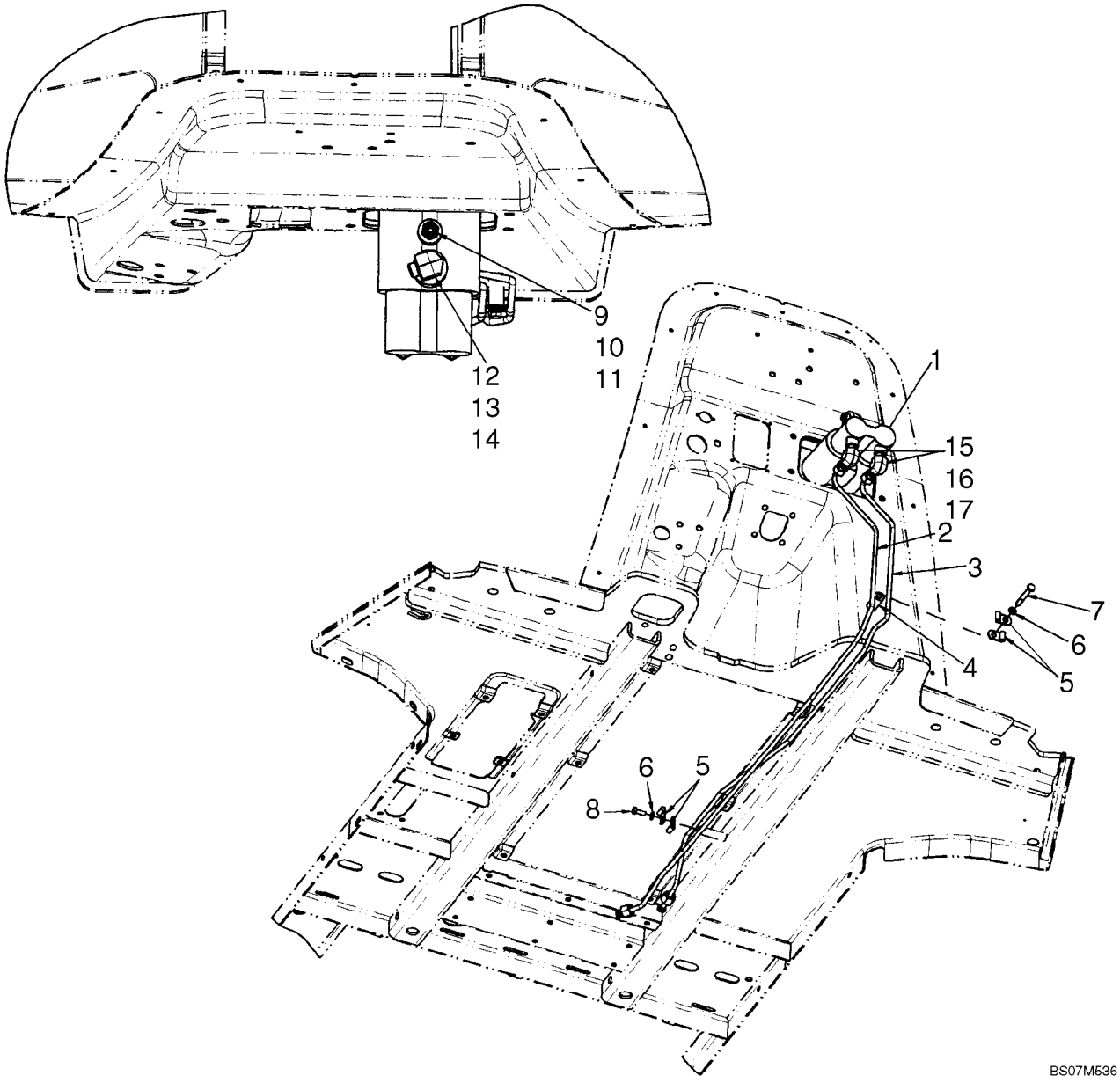

HYDRAULICS - BRAKE MASTER CYLINDER

REF	FN	PART NUMBER	YR/SN	QTY	DESCRIPTION
1		87714038		1	MASTER CYLINDER, See Figure 07-07
2		87697589		1	TUBE, HYD, RH Brake
3		87697590		1	TUBE, HYD, LH Brake
4		87449579		1	SPACER, Brake Tube
5		515-2379		4	CLAMP, 5/16", Insul, 3/8" Bolt
6		895-11008		2	WASHER, M8 x 16 x 1.6
7		814-8060		1	BOLT, Hex, M8 x 60, 8.8
8		614-8020		1	BOLT, Hex, M8 x 20, 8.8
9		700-101		1	CONNECTOR, HYD., 11/16"-16 ORFS x M14 x 1.5 ORB, Incl. 10, 11
10		238-6012		1	O-RING, -012, 90 Duro, .364" ID x .070" Thk, Face Seal End
11		637-63113		1	O-RING, Cl 6, 11.3MM ID x 2.2 Thk
12		700-345		1	ELBOW, 90Ü, 11/16"-18 ORFS x M18 x 1.5 ORB, Incl. 13, 14
13		637-63153		1	O-RING, Cl 6, 15.3MM ID x 2.2 Thk
14		238-6012		1	O-RING, -012, 90 Duro, .364" ID x .070" Thk, Face Seal End
15		700-304		2	ELBOW, 90Ü, 11/16"-18 ORFS x M14 x 1.5 ORB, Incl. 16, 17
16		238-6012		1	O-RING, -012, 90 Duro, .364" ID x .070" Thk, Face Seal End
17		637-63113		1	O-RING, Cl 6, 11.3MM ID x 2.2 Thk

BRAKE LINES TO TRANSMISSION

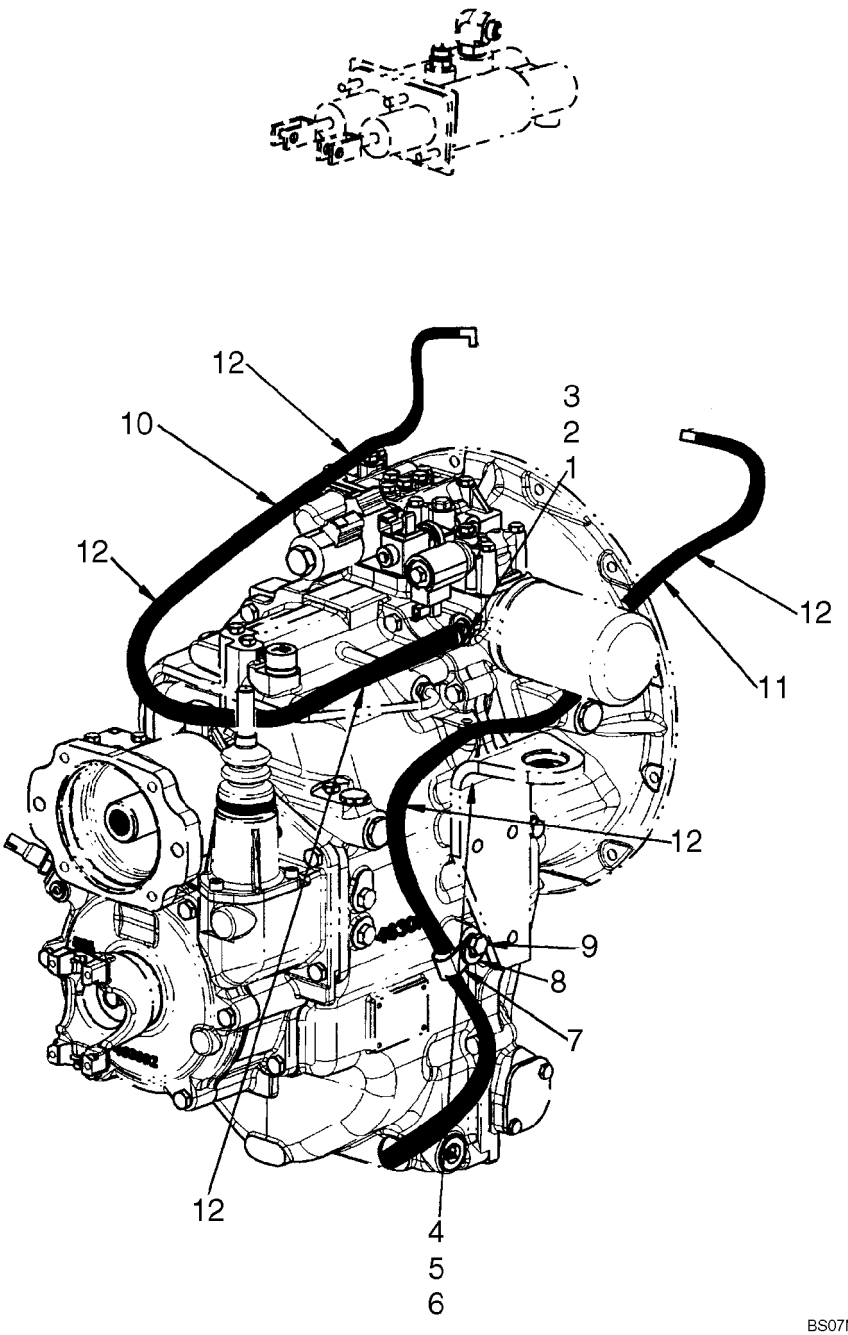

BRAKE LINES TO TRANSMISSION

REF	FN	PART NUMBER	YR/SN	QTY	DESCRIPTION
1		201-101		1	CONNECTOR, HYD., 11/16"-16 ORFS x 9/16"-18 ORB, Incl. 2, 3
2		237-6006		1	O-RING, 6-1, 90 Duro, .468" ID x .078" Thk, Face Seal End
3		238-6012		1	O-RING, -012, 90 Duro, .364" ID x .070" Thk, Boss End
4		201-304		1	ELBOW, 90Ü, 11/16"-16 x 9/16"-18 Adj, ORFS, Incl. 5, 6
5		238-6012		1	O-RING, -012, 90 Duro, .364" ID x .070" Thk, Face Seal End
6		237-6006		1	O-RING, 6-1, 90 Duro, .468" ID x .078" Thk, Boss End
7		515-25190		1	CLAMP, 3/4", Insul, 1/2" Bolt
8		896-15012		1	WASHER, M12 x 28.5 x 4, HT
9		614-12025		1	BOLT, Hex, M12 x 25, 8.8
10		87603513		1	HOSE ASSY.
11		87603514		1	HOSE ASSY.
12		191704A1		5	LOOM

BRAKE LINES TO AXLES

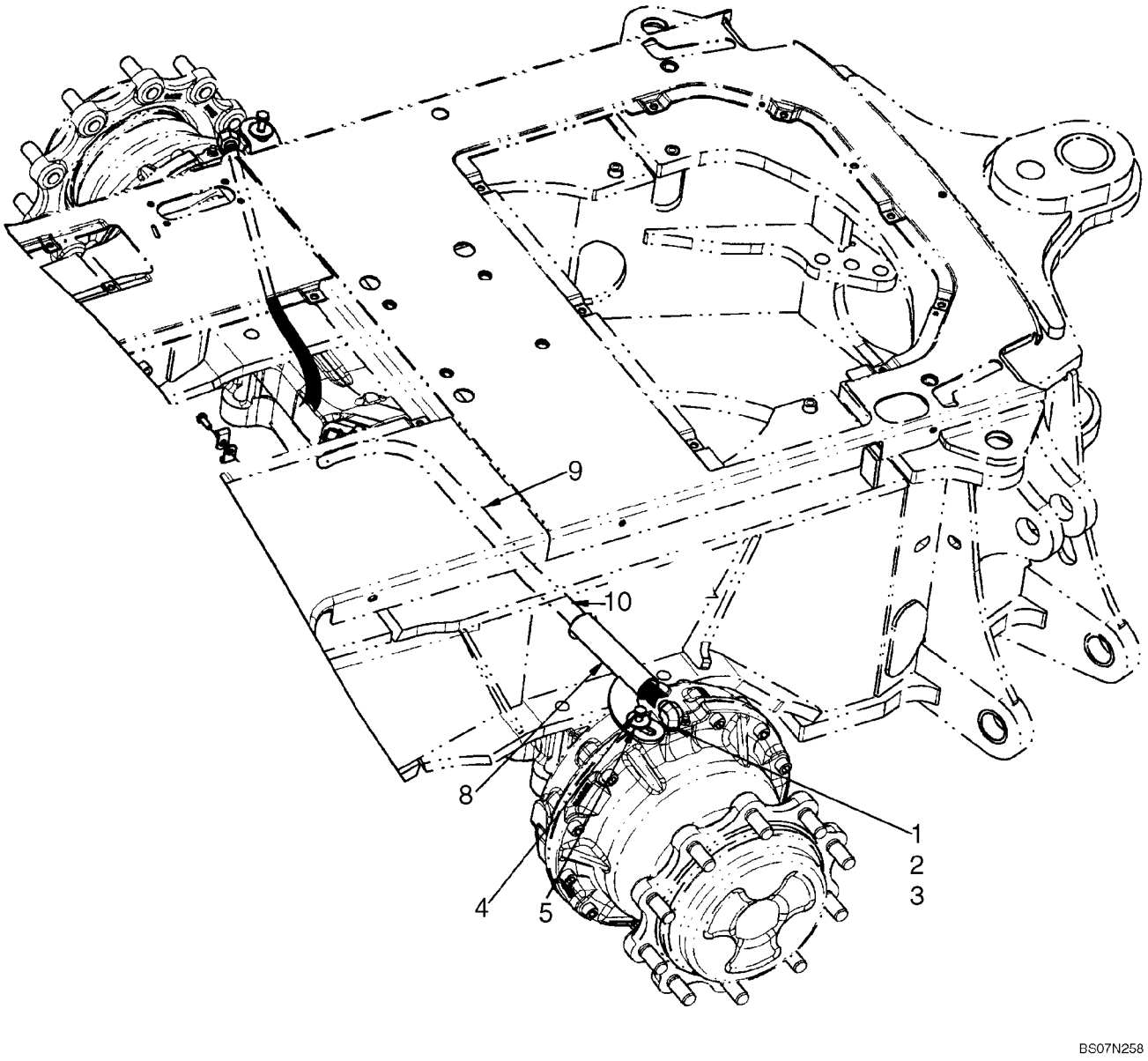

BRAKE LINES TO AXLES

REF	FN	PART NUMBER	YR/SN	QTY	DESCRIPTION
1		700-304		2	ELBOW, 90Ü, 11/16"-18 ORFS x M14 x 1.5 ORB, Incl. 2, 3
2		238-6012		1	O-RING, -012, 90 Duro, .364" ID x .070" Thk, Face Seal End
3		237-6006		1	O-RING, 6-1, 90 Duro, .468" ID x .078" Thk, Boss End
4		614-10020		2	BOLT, Hex, M10 x 20, 8.8, Full Thd
5		12644301		2	WASHER, M10 x 35 x 3
8		87699881		2	GUARD
9		87603511		2	HOSE ASSY.
10		191704A1		2	LOOM

CYLINDER ASSY - BRAKE MASTER

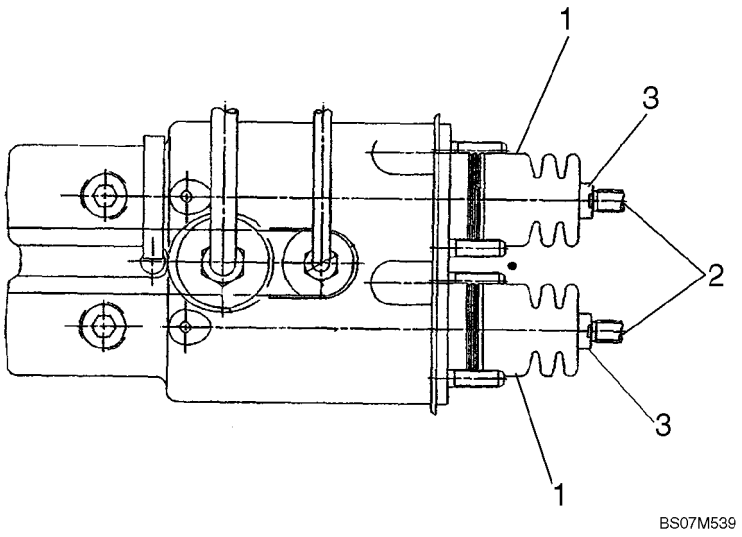

CYLINDER ASSY - BRAKE MASTER

REF	FN	PART NUMBER	YR/SN	QTY	DESCRIPTION
		87714038		1	MASTER CYLINDER, Incl. Ref 1 - 3
1		87716969		2	COVER, PROTECTIVE
2		87716970		2	CLEVIS
3		829-1410		2	NUT, M10, Cl 10

NOTES

SECTION INDEX
Hydraulics

08-01	HYDRAULICS - PUMP, FILTER AND LOADER VALVE
08-02	HYDRAULICS - LOADER VALVE AND FILTER TO BACKHOE VALVE
08-03	HYDRAULICS - COOLER, RETURN LINES AND FILTER
08-04	HYDRAULICS - CYLINDER, LOADER LIFT
08-05	HYDRAULICS - CYLINDER, LOADER BUCKET
08-06	HYDRAULICS - CYLINDER, LOADER CLAM
08-07	HYDRAULICS - CYLINDER, LOADER CLAM
08-07A	HYDRAULICS - LOADER CLAM, AT ACCUMULATOR W/ ELECTRICAL (MODELS WITHOUT PILOT CONTROLS)
08-07B	HYDRAULICS - LOADER CLAM, AT ACCUMULATOR W/ ELECTRICAL (MODELS WITH PILOT CONTROLS)
08-08	HYDRAULICS - CYLINDER, BACKHOE STABILIZER (WITHOUT PILOT CONTROLS)
08-08A	HYDRAULICS - CYLINDER, BACKHOE STABILIZER (WITH PILOT CONTROLS)
08-09	HYDRAULICS - CYLINDER, BACKHOE SWING (WITHOUT PILOT CONTROLS)
08-09A	HYDRAULICS - CYLINDER, BACKHOE SWING (WITH PILOT CONTROLS)
08-10	HYDRAULICS - CYLINDER, BACKHOE BOOM
08-10A	HYDRAULICS - BACKHOE BOOM LOCK AND ELECTRICAL CIRCUIT
08-11	HYDRAULICS - CYLINDER, BACKHOE DIPPER
08-12	HYDRAULICS - CYLINDER, BACKHOE BUCKET (MODELS WITHOUT EXTENDABLE DIPPER)
08-13	HYDRAULICS - CYLINDER, BACKHOE BUCKET (MODELS WITH EXTENDABLE DIPPER)
08-14	HYDRAULICS - CYLINDER, BACKHOE EXTENDABLE DIPPER
08-15	HYDRAULICS - VALVE, PILOT CONTROL AND JOYSTICKS (6 SPOOL, W/O EXT DIPPER, W/O AUX HYDS)
08-16	HYDRAULICS - VALVE, PILOT CONTROL AND JOYSTICKS (6 SPOOL, W/O EXT DIPPER, W/ AUX HYDS)
08-17	HYDRAULICS - VALVE, PILOT CONTROL AND JOYSTICKS (7 SPOOL, W/ EXT DIPPER, W/O AUX HYDS)
08-18	HYDRAULICS - VALVE, PILOT CONTROL AND JOYSTICKS (7 SPOOL, W/ EXT DIPPER, W/ AUX HYDS)
08-19	HYDRAULICS - VALVE, PILOT CONTROL AND JOYSTICKS (7 SPOOL, W/O EXT DIPPER, W/ AUX HYDS)
08-20	HYDRAULICS - VALVE, PILOT CONTROL AND JOYSTICKS (8 SPOOL, W/ EXT DIPPER, W/ AUX HYDS)
08-21	HYDRAULICS - PILOT CONTROL JOYSTICKS
08-22	HYDRAULICS - PILOT CONTROLS
08-23	HYDRAULICS - BACKHOE AUXILIARY (WITHOUT PILOT CONTROLS)
08-23A	VALVE ASSY - AUXILIARY UNI-DIRECTIONAL (WITHOUT PILOT CONTROLS)
08-23B	HYDRAULICS - BACKHOE AUXILIARY (WITH PILOT CONTROLS)
08-23C	VALVE ASSY - AUXILIARY UNI-DIRECTIONAL (WITH PILOT CONTROLS)
08-24	HYDRAULICS - BACKHOE AUXILIARY, AT BOOM AND DIPPER
08-25	HYDRAULICS - RIDE CONTROL
08-26	HYDRAULICS - COUPLER, LOADER TOOL QUICK
08-27	HYDRAULICS - COUPLER, LOADER TOOL QUICK, AT LOADER LIFT FRAME
08-28	VALVE, COUPLER (87435909) - LOADER TOOL
08-29	PUMP, EQUIPMENT HYDRAULIC
08-30	VALVE ASSY - LOADER CONTROL, TWO SPOOL
08-31	VALVE ASSY - LOADER CONTROL, THREE SPOOL
08-32	VALVE ASSY - BACKHOE CONTROL, 6 SPOOL (W/O EXT DIPPER, W/O AUX HYDS, W/O PILOT CONTROLS)

SECTION INDEX
Hydraulics

08-33	VALVE ASSY - BACKHOE CONTROL, 7 SPOOL (W/O EXT DIPPER, W/ AUX HYDS, W/O PILOT CONTROLS)
08-34	VALVE ASSY - BACKHOE CONTROL, 7 SPOOL (W/ EXT DIPPER, W/O AUX HYDS, W/O PILOT CONTROLS)
08-35	VALVE ASSY - BACKHOE CONTROL, 8 SPOOL (W/ EXT DIPPER, W/ AUX HYDS, W/O PILOT CONTROLS)
08-36	VALVE ASSY - BACKHOE CONTROL, 6 SPOOL (W/O EXT DIPPER, W/ OR W/O AUX HYDS, W/ PILOT CONTROLS)
08-37	VALVE ASSY - BACKHOE CONTROL, 7 SPOOL (W/ EXT DIPPER, W/ OR W/O AUX HYDS, W/ PILOT CONTROLS)
08-38	VALVE ASSY - BACKHOE CONTROL, 7 SPOOL (W/O EXT DIPPER, W/ AUX HYDS, W/ PILOT CONTROLS)
08-39	VALVE ASSY - BACKHOE CONTROL, 8 SPOOL (W/ EXT DIPPER, W/ AUX HYDS, W/ PILOT CONTROLS)
08-40	VALVE SECTION - BACKHOE SWING (WITH PILOT CONTROLS)
08-41	VALVE SECTION - BACKHOE BOOM (WITH PILOT CONTROLS)
08-42	VALVE SECTION - BACKHOE STABILIZER (WITH PILOT CONTROLS)
08-43	VALVE SECTION - BACKHOE DIPPER (WITH PILOT CONTROLS)
08-44	VALVE SECTION - BACKHOE BUCKET (WITH PILOT CONTROLS)
08-45	VALVE SECTION - EXTENDABLE DIPPER (WITH PILOT CONTROLS)
08-46	VALVE SECTION - OPTIONS, AUXILIARY HYDRAULICS (WITH PILOT CONTROLS)
08-47	VALVE ASSY, PRESSURE REDUCING (2 SPOOL) (WITH PILOT CONTROLS)
08-48	VALVE ASSY, PRESSURE REDUCING (3 SPOOL) (WITH PILOT CONTROLS)
08-49	VALVE ASSY, PRESSURE REDUCING (4 SPOOL) (WITH PILOT CONTROLS)
08-50	VALVE, JOYSTICK (PILOT CONTROLS) (LEFT-HAND) WITH HORN BUTTON
08-51	VALVE, JOYSTICK (PILOT CONTROLS) (LEFT-HAND) WITH HORN & UNI-DIRECTIONAL BUTTONS
08-52	VALVE, JOYSTICK (PILOT CONTROLS) (LEFT-HAND) WITH HORN & BI-DIRECTIONAL BUTTONS
08-53	VALVE, JOYSTICK (PILOT CONTROLS) (RIGHT-HAND) WITHOUT EXTENDABLE DIPPER
08-54	VALVE, JOYSTICK (PILOT CONTROLS) (RIGHT-HAND) WITH EXTENDABLE DIPPER
08-55	VALVE ASSY - SWING CUSHION (DAMPENING)
08-55A	SOLENOID VALVE - BOOM LOCK
08-56	ACCUMULATOR ASSY - RIDE CONTROL
08-57	FILTER ASSY, OIL
08-58	CYLINDER ASSY - LOADER LIFT
08-59	CYLINDER ASSY - LOADER BUCKET
08-60	CYLINDER ASSY - LOADER CLAM
08-61	CYLINDER ASSY - BACKHOE STABILIZER
08-62	CYLINDER ASSY - BACKHOE SWING
08-63	CYLINDER ASSY - BACKHOE BOOM
08-64	CYLINDER ASSY - BACKHOE DIPPER
08-65	CYLINDER ASSY - BACKHOE BUCKET
08-66	CYLINDER ASSY - BACKHOE EXTENDABLE DIPPER

NOTES

08-01		p1	02/08

HYDRAULICS - PUMP, FILTER AND LOADER VALVE

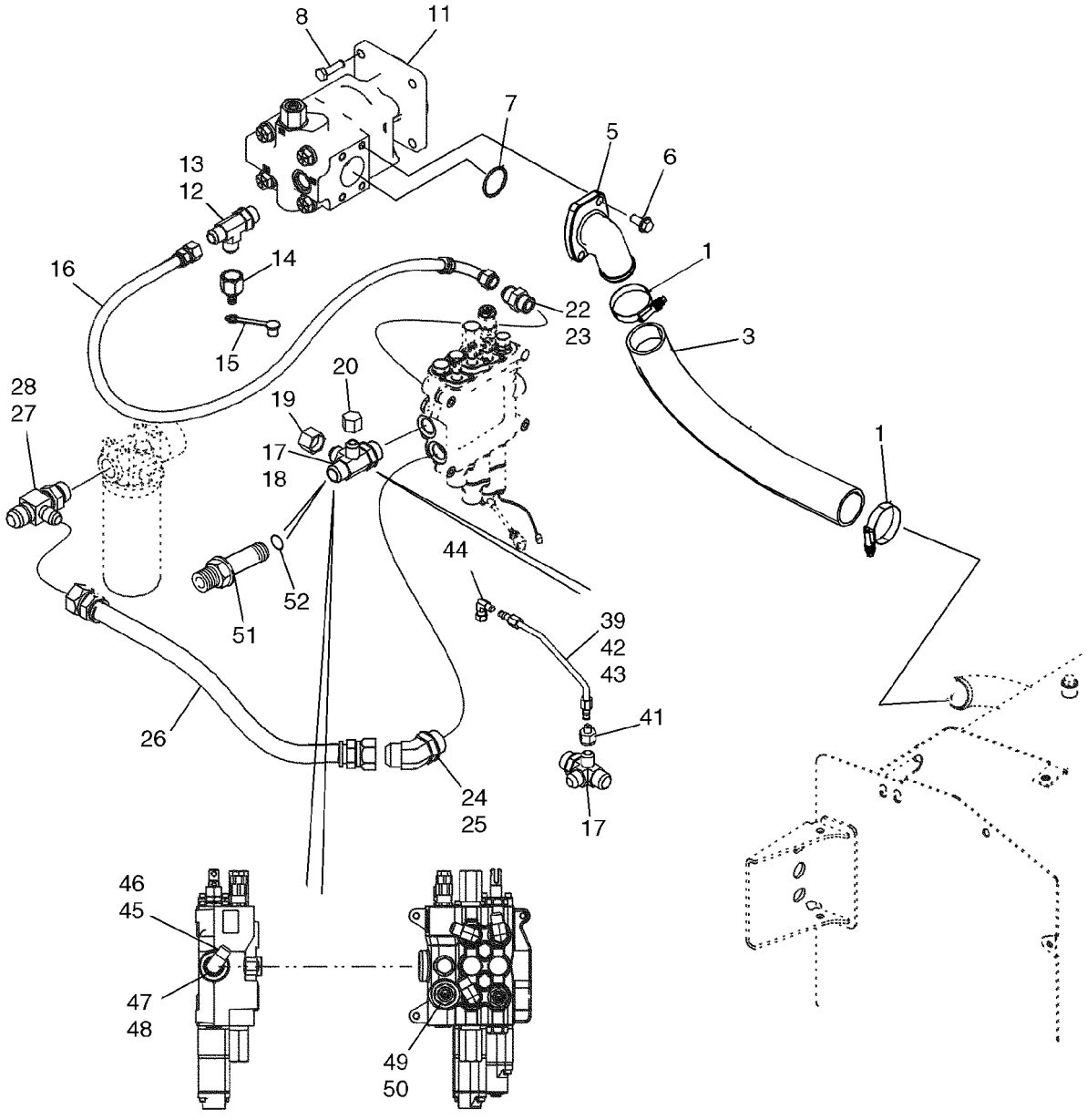

HYDRAULICS - PUMP, FILTER AND LOADER VALVE

REF	FN	PART NUMBER	YR/SN	QTY	DESCRIPTION
1		259044A1		2	CLAMP
3		87627903		1	HOSE, LARGE, Suction
5		87592658		1	FLANGE, Pump
6		864-12030		3	SCREW, Hex Soc Hd, M12 x 30, 8.8
7		238-5228		1	O-RING, -228, 70 Duro, 2.234" ID x .139" Thk
8		514-832		4	BOLT, Hex, M12 x 1.25 x 35, 8.8, Full Thd
11		87434672		1	PUMP, HYDRAULIC, Equipment, See Figure 08-29
12		218-5239		1	TEE, 1 1/16"-12, 37Ü x 1 1/16"-12, O-Ring run, Incl. Ref 13
13		237-6012		1	O-RING, 12-1, 90 Duro, .924 ID x .118" Thk
14		D137625		1	COUPLING, BREAK AWAY, Quick Disconnect; Includes (1) 425-1120 Nut
15		H434163		1	DUST CAP
16		87452399		1	HOSE ASSY., 775 mm (30-9/16 in)
17		87436066		1	FITTING, 4-Way Special Fitting; Incl. Ref 18; If Used
18		237-6016		1	O-RING, 16-1, 90 Duro, 1.171" ID x .118" Thk
19		218-335		1	CAP, 37Ü, 1 1/16"-12, Models Without Pilot Controls; If Used
20		218-756		1	CAP, 37Ü, 7/8"-14, Models Without Pilot Controls; If Used
22		218-5064		1	CONNECTOR, HYD., 1 1/16"-12, 37Ü x 1 1/16"-12, O-Ring, Incl. Ref 23
23		237-6012		1	O-RING, 12-1, 90 Duro, .924 ID x .118" Thk
24		218-5140		1	ELBOW, 45Ü, 1 5/16"-12 x 1 5/16"-12, O-Ring, Incl. Ref 25
25		237-6016		1	O-RING, 16-1, 90 Duro, 1.171" ID x .118" Thk
26		87452400		1	HOSE ASSY., 635 mm (25 in), Loader Valve to Filter
27		218-5584		1	TEE, 37Ü, 1 5/16"-12, 1 5/16"-12 O-Ring Run, 1 1/16"-12, Incl. Ref 28
28		237-6016		1	O-RING, 16-1, 90 Duro, 1.171" ID x .118" Thk
39		87437655		1	TUBE ASSY., Two Spool Loader Valve; Models Without Pilot Controls
39		87437657		1	TUBE ASSY., Three Spool Loader Valve; Models Without Pilot Controls

HYDRAULICS - PUMP, FILTER AND LOADER VALVE

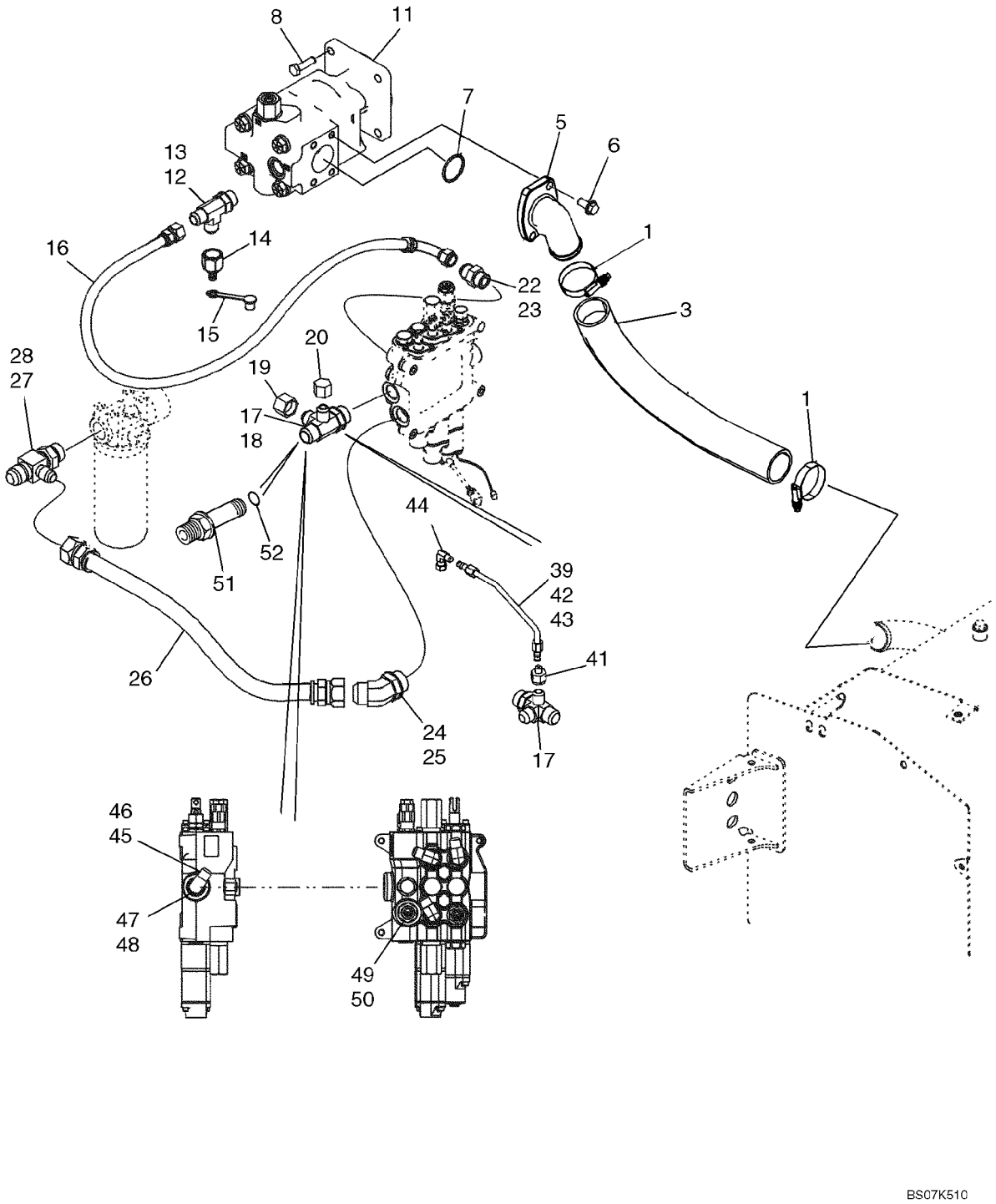

HYDRAULICS - PUMP, FILTER AND LOADER VALVE

REF	FN	PART NUMBER	YR/SN	QTY	DESCRIPTION
41		218-765		1	REDUCER, 37Ü, 7/8"-14, Fem x 9/16"-18 Male, Models With Pilot Controls
42		87437980		1	TUBE ASSY., Two Spool Loader Valve; Models With Pilot Controls
43		87437982		1	TUBE ASSY., Three Spool Loader Valve; Models With Pilot Controls
44		218-980		1	ELBOW, 90Ü, 9/16"-18, 37Ü x 9/16"-18, 37Ü Fem Sw, Models With Pilot Controls
45		218-5107		1	ELBOW, 90Ü, 7/8"-14, 37Ü x 7/8"-14, O-Ring, Incl. Ref 46; Models Without Pilot Controls
46		237-6010		1	O-RING, 10-1, 90 Duro, .755" ID x .097" Thk
47		86512512		1	PLUG, Hex Hd, 7/8"-14 ORB, Incl. Ref 48; Models with Pilot Controls
48		237-6010		1	O-RING, 10-1, 90 Duro, .755" ID x .097" Thk
49		218-5064		1	CONNECTOR, HYD., 1 1/16"-12, 37Ü x 1 1/16"-12, O-Ring, Incl. Ref 50
50		237-6012		1	O-RING, 12-1, 90 Duro, .924 ID x .118" Thk
51		218-5034		1	CONNECTOR, HYD., 3/8"-24, 37Ü x 3/8"-24, Pipe, Incl. Ref 52
52		237-6016		1	O-RING, 16-1, 90 Duro, 1.171" ID x .118" Thk

HYDRAULICS - LOADER VALVE AND FILTER TO BACKHOE VALVE

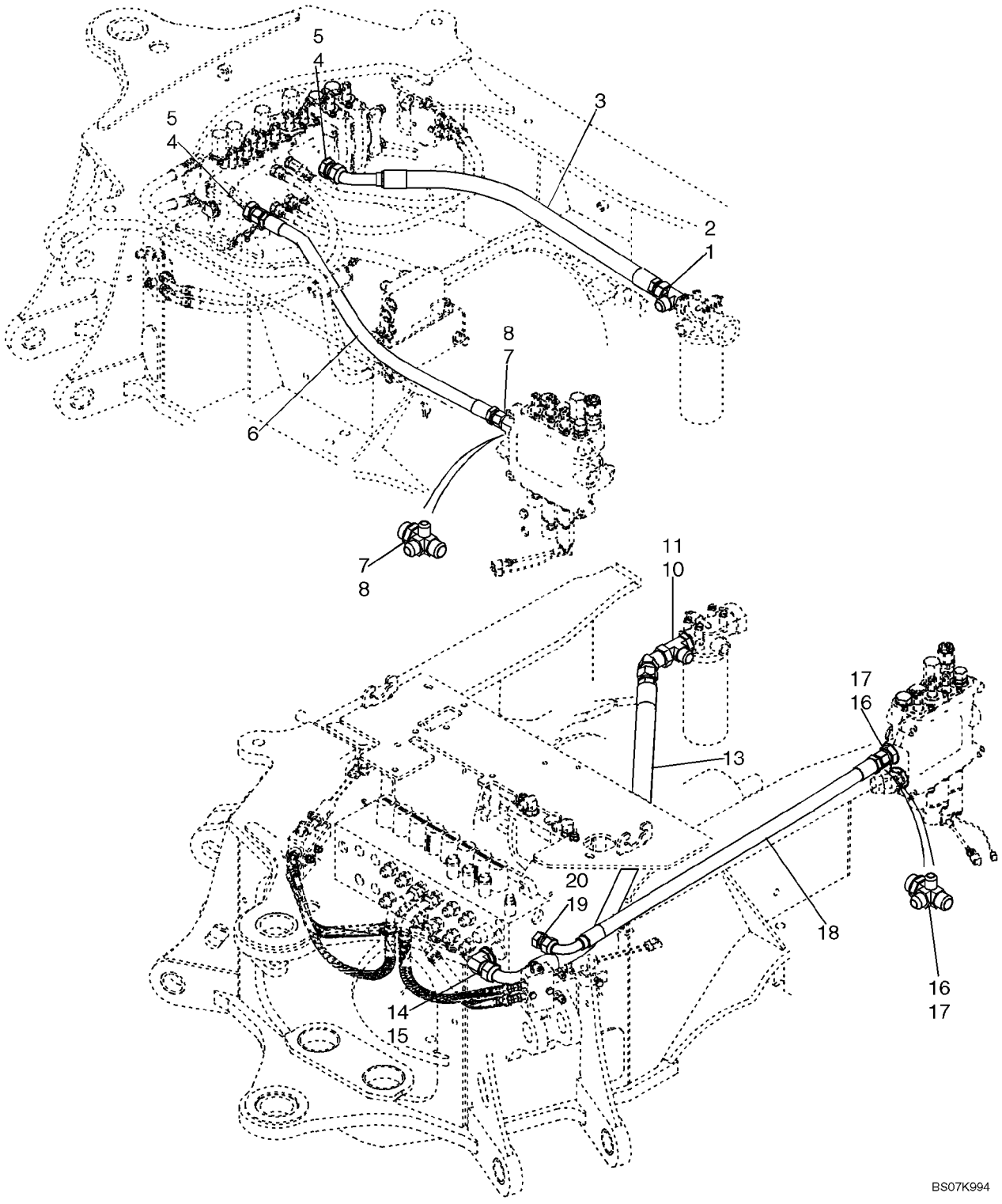

HYDRAULICS - LOADER VALVE AND FILTER TO BACKHOE VALVE

REF	FN	PART NUMBER	YR/SN	QTY	DESCRIPTION
		REF			INSTRUCTION, MODELS WITHOUT PILOT CONTROLS
1		218-5584		1	TEE, 37Ü, 1 5/16"-12, 1 5/16"-12 O-Ring Run, 1 1/16"-12, Incl. Ref 2
2		237-6016		1	O-RING, 16-1, 90 Duro, 1.171" ID x .118" Thk
3		313648A1		1	HOSE, 910 mm (35-7/8 in); Return; Models Without Pilot Controls
4		218-5069		2	CONNECTOR, HYD., 1 5/16"-12, 37Ü x 1 5/16"-12, O-Ring, Incl. Ref 5
5		237-6016		1	O-RING, 16-1, 90 Duro, 1.171" ID x .118" Thk
6		87437441		1	HOSE ASSY., 1025 mm (40-3/8 in); 2 or 3 Spool Valve; Without Auxiliary Hydraulics, Without Pilot Controls; Loader Valve Power Beyond to Backhoe Valve
6		87437232		1	HOSE ASSY., 420 mm (16-9/16 in); 2 Spool Valve; With Auxiliary Hydraulics; With or Without Pilot Controls; Loader Valve Power Beyond to Backhoe Valve
6		87437231		1	HOSE ASSY., 370 mm (14-5/8 in); 3 Spool Valve; With Auxiliary Hydraulics; With or Without Pilot Controls; Loader Valve Power Beyond to Backhoe Valve
7		87436066		1	FITTING, 4-Way Special Tee; Incl. Ref 8
8		237-6016		1	O-RING, 16-1, 90 Duro, 1.171" ID x .118" Thk
		REF			INSTRUCTION, MODELS WITH PILOT CONTROLS
10		218-5584		1	TEE, 37Ü, 1 5/16"-12, 1 5/16"-12 O-Ring Run, 1 1/16"-12, Incl. Ref 11
11		237-6016		1	O-RING, 16-1, 90 Duro, 1.171" ID x .118" Thk
13		87450456		1	HOSE ASSY., 1254 mm (49-3/8 in); Return; Models With Pilot Controls
14		218-5110		1	ELBOW, 90Ü, 1 5/16"-12, 37Ü x 1 5/16"-12, O-Ring, Incl. Ref 15
15		237-6016		1	O-RING, 16-1, 90 Duro, 1.171" ID x .118" Thk
16		87436066		1	FITTING, 4-Way Tee, Special, 1-5/16 fl x Or; Incl. Ref 17

HYDRAULICS - LOADER VALVE AND FILTER TO BACKHOE VALVE

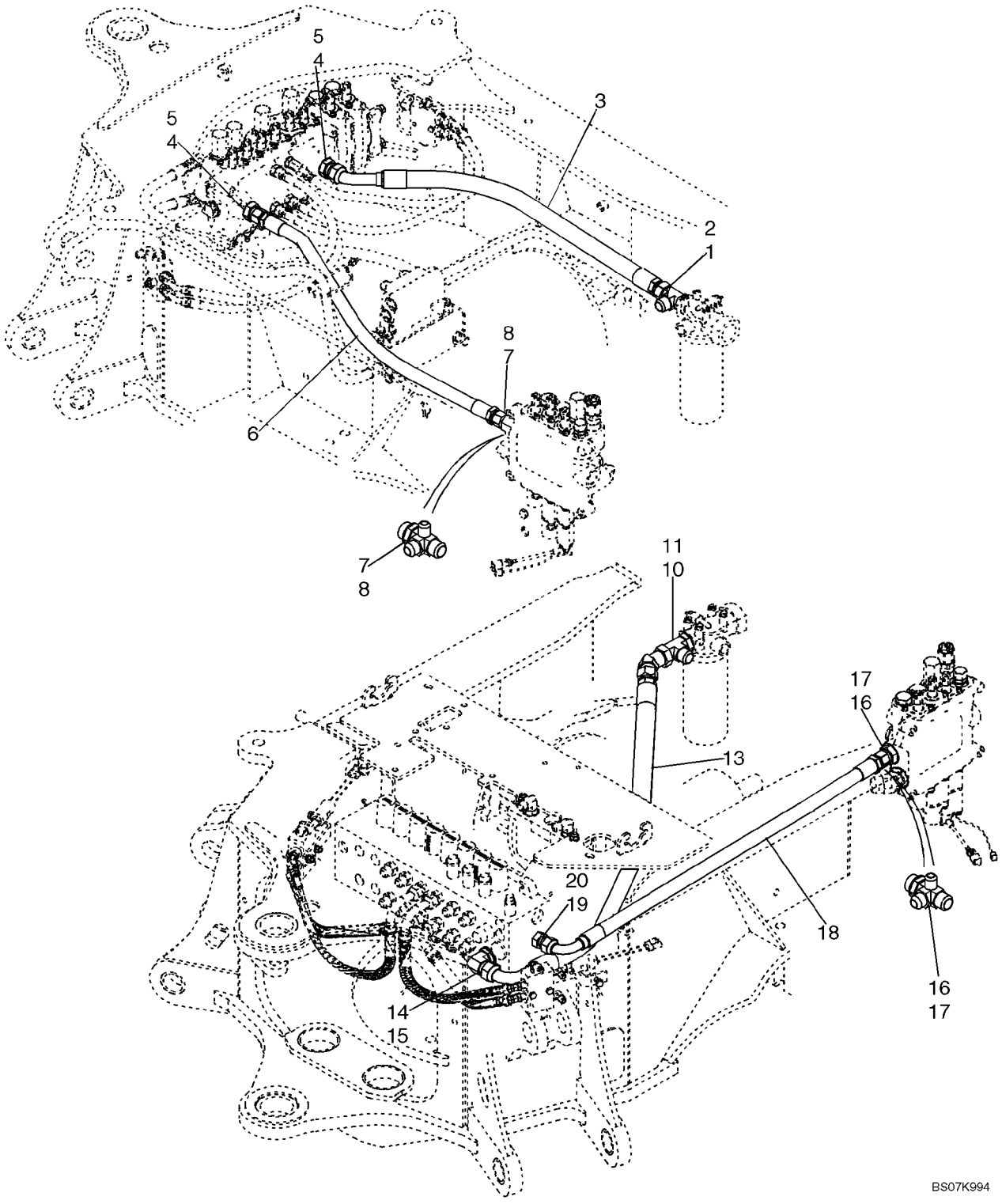

HYDRAULICS - LOADER VALVE AND FILTER TO BACKHOE VALVE

REF	FN	PART NUMBER	YR/SN	QTY	DESCRIPTION
17		237-6016		1	O-RING, 16-1, 90 Duro, 1.171" ID x .118" Thk
18		87455832		1	HOSE ASSY., 1020 mm (40-5/32 in); 2 or 3 Spool Valve; Without Auxiliary Hydraulics, With Pilot Controls; Power Beyond
18		87437232		1	HOSE ASSY., 420 mm (16-9/16 in); 2 Spool Valve; With Auxiliary Hydraulics; With or Without Pilot Controls; Loader Valve Power Beyond to Backhoe Valve
18		87437231		1	HOSE ASSY., 370 mm (14-5/8 in); 3 Spool Valve; With Auxiliary Hydraulics; With or Without Pilot Controls; Loader Valve Power Beyond to Backhoe Valve
19		218-5064		1	CONNECTOR, HYD., 1 1/16"-12, 37Ü x 1 1/16"-12, O-Ring, Incl. Ref 20
20		237-6012		1	O-RING, 12-1, 90 Duro, .924 ID x .118" Thk

HYDRAULICS - COOLER, RETURN LINES AND FILTER

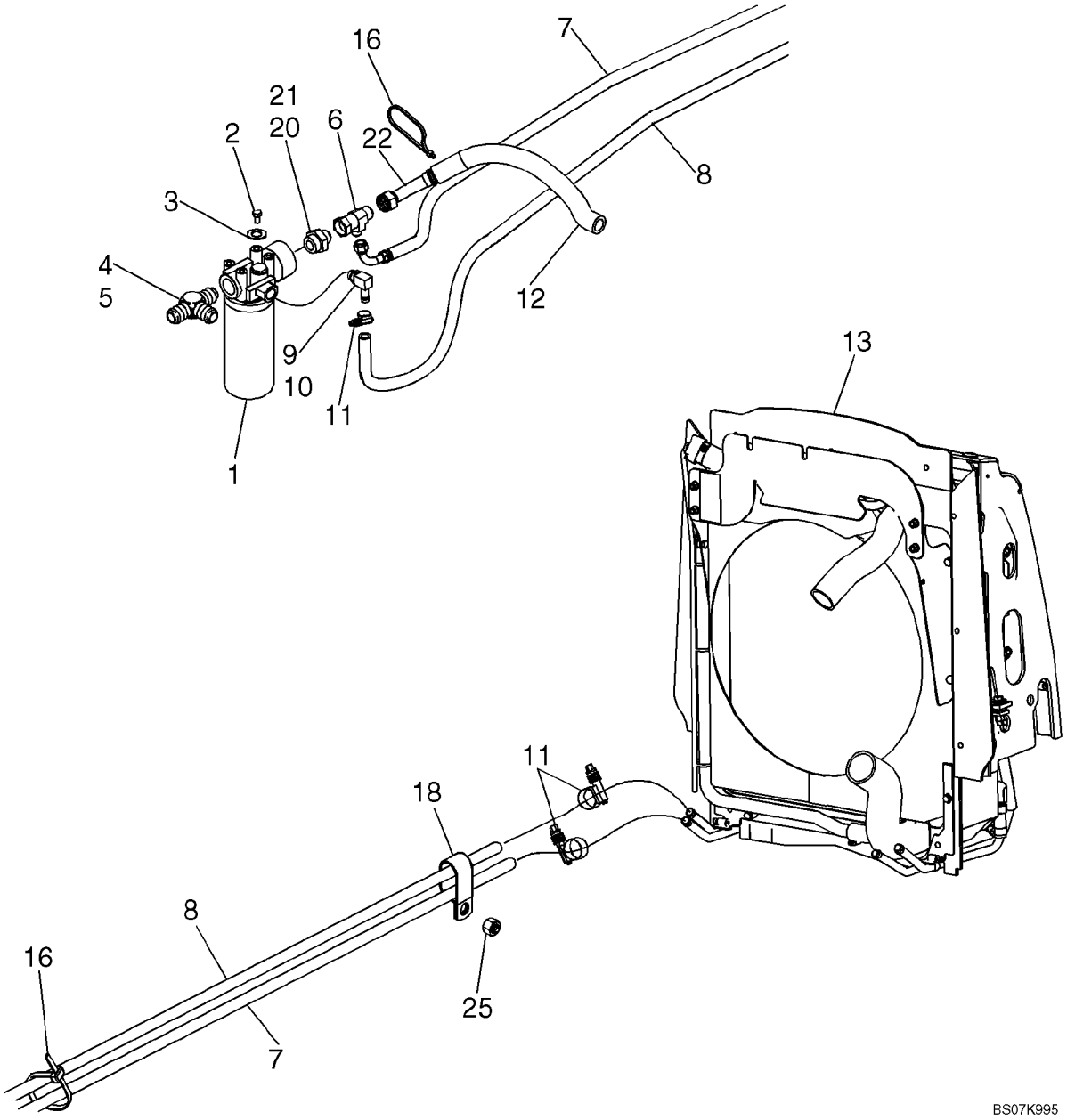

HYDRAULICS - COOLER, RETURN LINES AND FILTER

REF	FN	PART NUMBER	YR/SN	QTY	DESCRIPTION
1		87440045		1	FILTER ASSY., Hydraulic Oil; See Figure 08-57
2		614-10020		4	BOLT, Hex, M10 x 20, 8.8, Full Thd
3		895-11010		4	WASHER, M10 x 20 x 2
4		218-5584		1	TEE, 37Ü, 1 5/16"-12, 1 5/16"-12 O-Ring Run, 1 1/16"-12, Incl. Ref 5
5		237-6016		1	O-RING, 16-1, 90 Duro, 1.171" ID x .118" Thk
6		218-5490		1	TEE, 37Ü, 1 1/16"-12x1 1/16"-12, Fem Sw Runx7/8"-14 Br
7		87659604		1	HOSE ASSY., Hydraulic Cooler Outlet To Filter
8		87659784		1	HOSE, Cooler Return To Filter
9		217-349		1	FITTING, 90Ü, 5/8" Hose x 7/8"-14 ORB Beaded, Incl. Ref 10
10		237-6010		1	O-RING, 10-1, 90 Duro, .755" ID x .097" Thk
11		328186A1		3	CLAMP, HOSE
12		87656501		1	HOSE, PROTECTION
13		REF		1	INSTRUCTION, Hydraulic Oil Cooler; For Cooler and Attaching Parts, See Figure 06-10
16		L18337		4	STRAP, CABLE, 9.95"-12.1" lg
18		D39696		1	CLAMP, Double P-Type
20		218-5086		1	CONNECTOR, HYD., 1 5/16"-12, 37Ü x 1 5/8"-12, O-Ring, Incl. Ref 21
21		237-6020		1	O-RING, 20-1, 90 Duro, 1.475" ID x .118" Thk
22		87659613		1	HOSE ASSY., Return To Tank
25		829-1410		1	NUT, M10, Cl 10

08-04		p1	02/08

HYDRAULICS - CYLINDER, LOADER LIFT

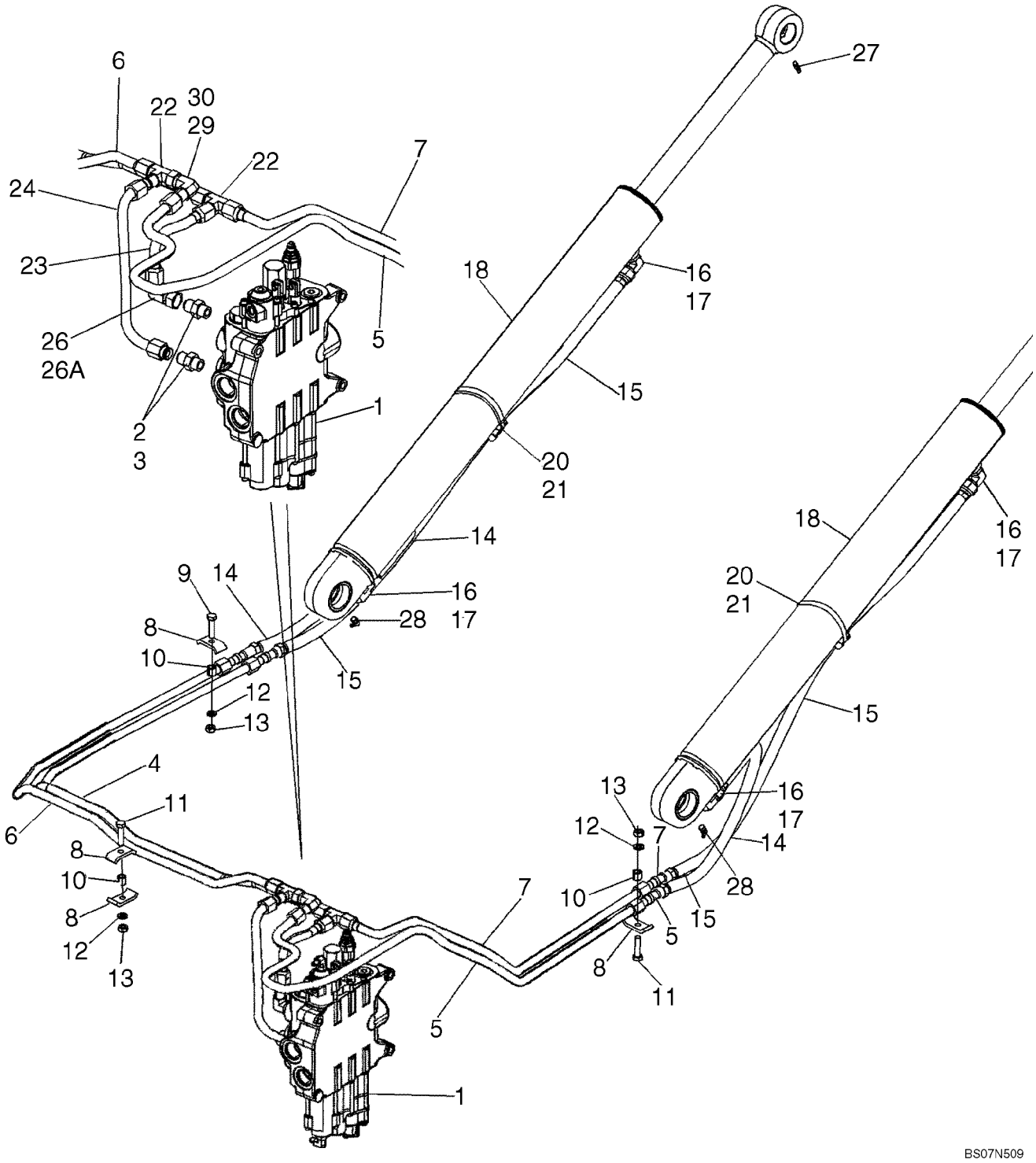

HYDRAULICS - CYLINDER, LOADER LIFT

REF	FN	PART NUMBER	YR/SN	QTY	DESCRIPTION
1		REF		1	INSTRUCTION, LOADER CONTROL VALVE; For Correct Assembly and Components, See Figures 08-30, 08-31; For Mounting, See Figure 09-01
2		218-5062		2	CONNECTOR, HYD., 7/8"-14, 37Ü x 7/8"-14, O-Ring, Incl. Ref 3
3		237-6010		1	O-RING, 10-1, 90 Duro, .755" ID x .097" Thk
4		87622718		1	TUBE, HYD, Upper Lift Port
5		87712299		1	TUBE, HYD, Lower Lift Port
6		87622714		1	TUBE, HYD, Lower Lift Port
7		87642658		1	TUBE, HYD, Upper Lift Port
8		D138055		5	CLAMP
9		614-10040		1	BOLT, Hex, M10 x 40, 8.8, Full Thd
10		120303A1		4	SPACER
11		614-10045		3	BOLT, Hex, M10 x 45, 8.8, Full Thd
12		892-11010		4	WASHER, LOCK, M10
13		829-1410		4	NUT, M10, Cl 10
14		87443150		2	HOSE ASSY., 740 mm (29-5/32 in)
15		87443149		2	HOSE ASSY., 1130 mm (44-1/2 in)
16		218-5107		4	ELBOW, 90Ü, 7/8"-14, 37Ü x 7/8"-14, O-Ring, Incl. Ref 17
17		237-6010		1	O-RING, 10-1, 90 Duro, .755" ID x .097" Thk
18		384240A1		2	CYLINDER ASSY., 82.6 ID x 766 mm strk; Loader Lift Cylinder; See Figure 08-58
20		D142787		2	SPACER
21		214-1472		2	CLAMP, HOSE, #72, 4.06/5.00 Type F Worm
22		218-595		2	TEE, 7/8"-14, 37Ü
23		87625976		1	TUBE, HYD, Upper Lift Port
24		87675513		1	TUBE, HYD, Lower Lift Port
26		218-5232		1	ELBOW, 90Ü, 7/8"-14, 37Ü x 7/8"-14, 37Ü Fem Sw, Incl. 26A
26A		237-6010		1	O-RING, 10-1, 90 Duro, .755" ID x .097" Thk
27		219-1		2	NIPPLE, LUBE, 1/8"-27 x .66 lg
28		219-55		2	NIPPLE, LUBE, 90Ü, 1/8" NPT x .84" lg
29		218-5232		1	ELBOW, 90Ü, 7/8"-14, 37Ü x 7/8"-14, 37Ü Fem Sw, Incl. 30

HYDRAULICS - CYLINDER, LOADER LIFT

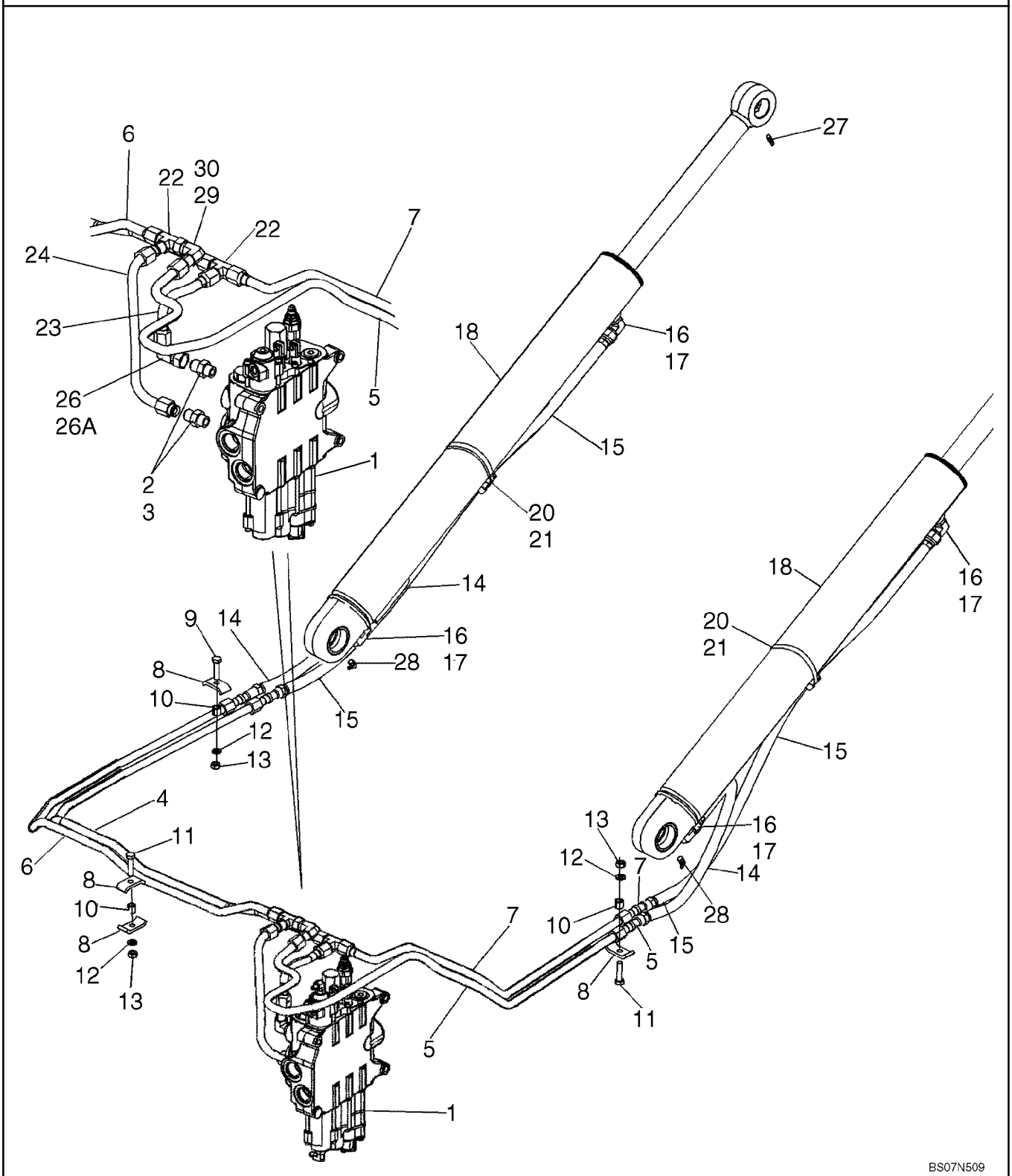

HYDRAULICS - CYLINDER, LOADER LIFT

REF	FN	PART NUMBER	YR/SN	QTY	DESCRIPTION
30		237-6010		1	O-RING, 10-1, 90 Duro, .755" ID x .097" Thk

08-05		p1	02/08

HYDRAULICS - CYLINDER, LOADER BUCKET

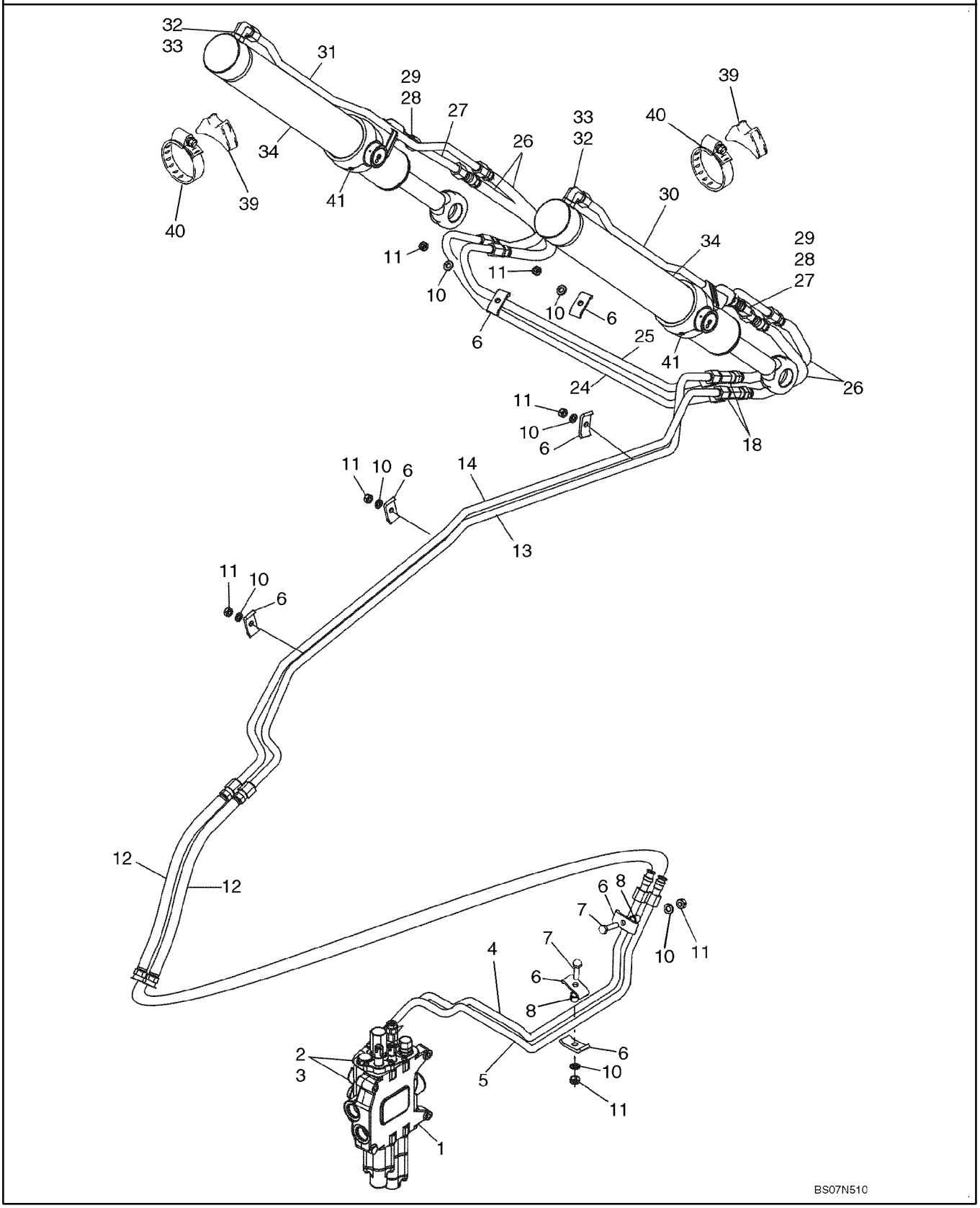

HYDRAULICS - CYLINDER, LOADER BUCKET

REF	FN	PART NUMBER	YR/SN	QTY	DESCRIPTION
1		REF		1	INSTRUCTION, LOADER CONTROL VALVE; For Correct Assembly and Components, See Figures 08-30, 08-31; For Mounting, See Figure 09-01
2		218-5107		2	ELBOW, 90Ü, 7/8"-14, 37Ü x 7/8"-14, O-Ring, Incl. Ref 3
3		237-6010		1	O-RING, 10-1, 90 Duro, .755" ID x .097" Thk, Boss Seal
4		87421918		1	TUBE ASSY., Upper Bucket Port
5		87421920		1	TUBE ASSY., Lower Bucket Port
6		D138055		8	CLAMP
7		614-10045		2	BOLT, Hex, M10 x 45, 8.8, Full Thd
8		120303A1		2	SPACER
10		892-11010		7	WASHER, LOCK, M10
11		829-1410		7	NUT, M10, Cl 10
12		87429287		2	HOSE ASSY., 710 mm (28 in)
13		87716480		1	TUBE, HYD, To Upper Port
14		87716482		1	TUBE, HYD
18		218-5220		2	TEE, 37Ü, 7/8"-14 x 7/8"-14, Fem Sw Run
24		196815A1		1	PIPE, Rear
25		196813A1		1	PIPE, Front
26		371031A1		4	HOSE ASSY., 840 mm (33 in)
27		87316049		2	TUBE ASSY., Bucket Cylinder Rod End
28		218-5062		2	CONNECTOR, HYD., 7/8"-14, 37Ü x 7/8"-14, O-Ring, Incl. Ref 29
29		237-6010		1	O-RING, 10-1, 90 Duro, .755" ID x .097" Thk, Boss Seal
30		87316270		1	TUBE ASSY., Right-Hand Cylinder Closed End
31		87316264		1	TUBE ASSY., Left-Hand Cylinder Closed End
32		218-5107		2	ELBOW, 90Ü, 7/8"-14, 37Ü x 7/8"-14, O-Ring, Incl. Ref 33
33		237-6010		1	O-RING, 10-1, 90 Duro, .755" ID x .097" Thk, Boss Seal
34		87609669		2	HYDRAULIC CYLINDER, 76 ID x 522 mm strk; Loader Bucket Cylinder; See Figure 08-59
39		L79937		2	SADDLE

08-05		p2	02/08

HYDRAULICS - CYLINDER, LOADER BUCKET

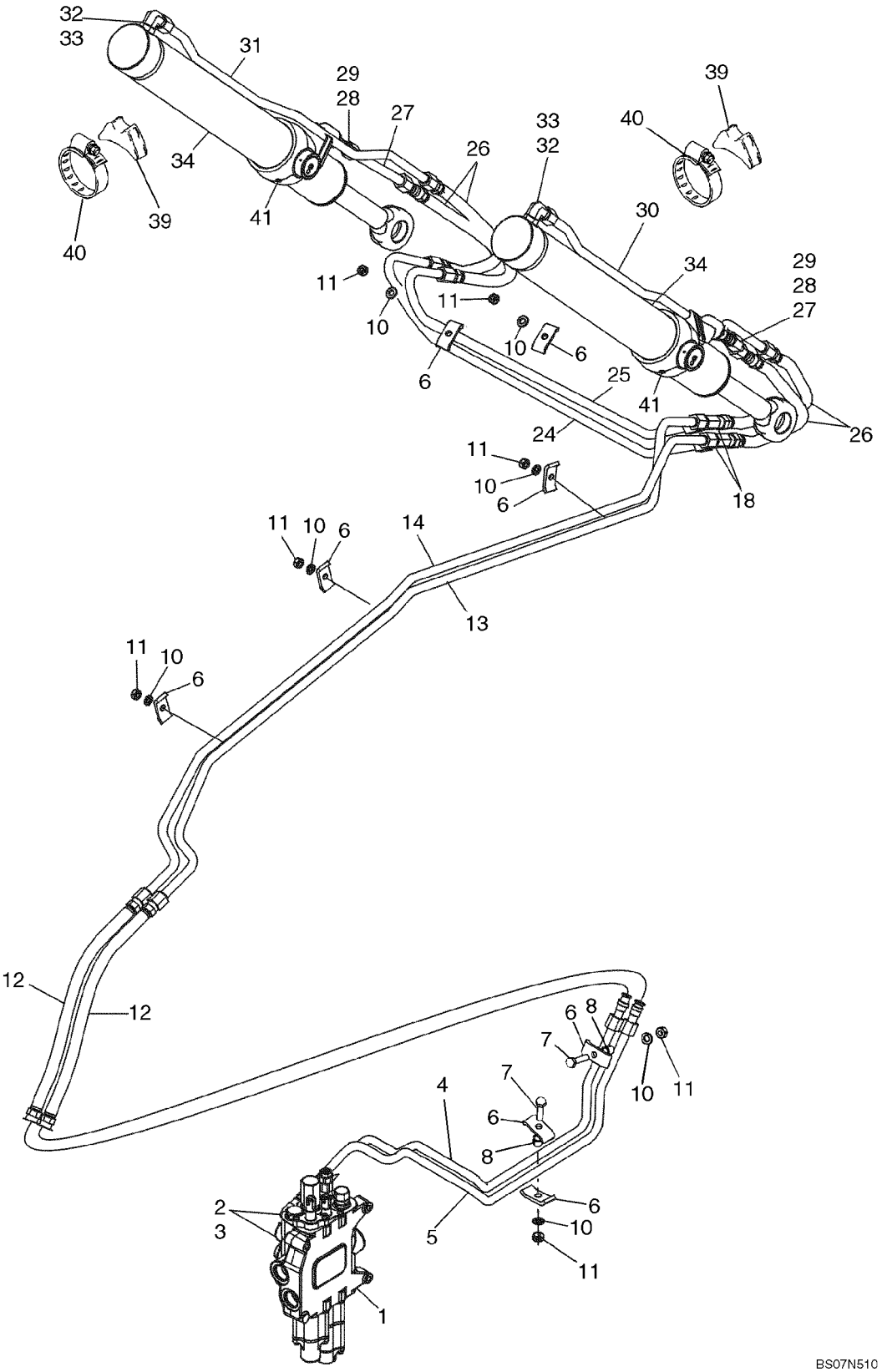

BS07N510

HYDRAULICS - CYLINDER, LOADER BUCKET

REF	FN	PART NUMBER	YR/SN	QTY	DESCRIPTION
40		214-1464		2	CLAMP, HOSE, #64, 3.56/4.50 Type F Worm
41		219-55		2	NIPPLE, LUBE, 90Ü, 1/8" NPT x .84" lg

HYDRAULICS - CYLINDER, LOADER CLAM

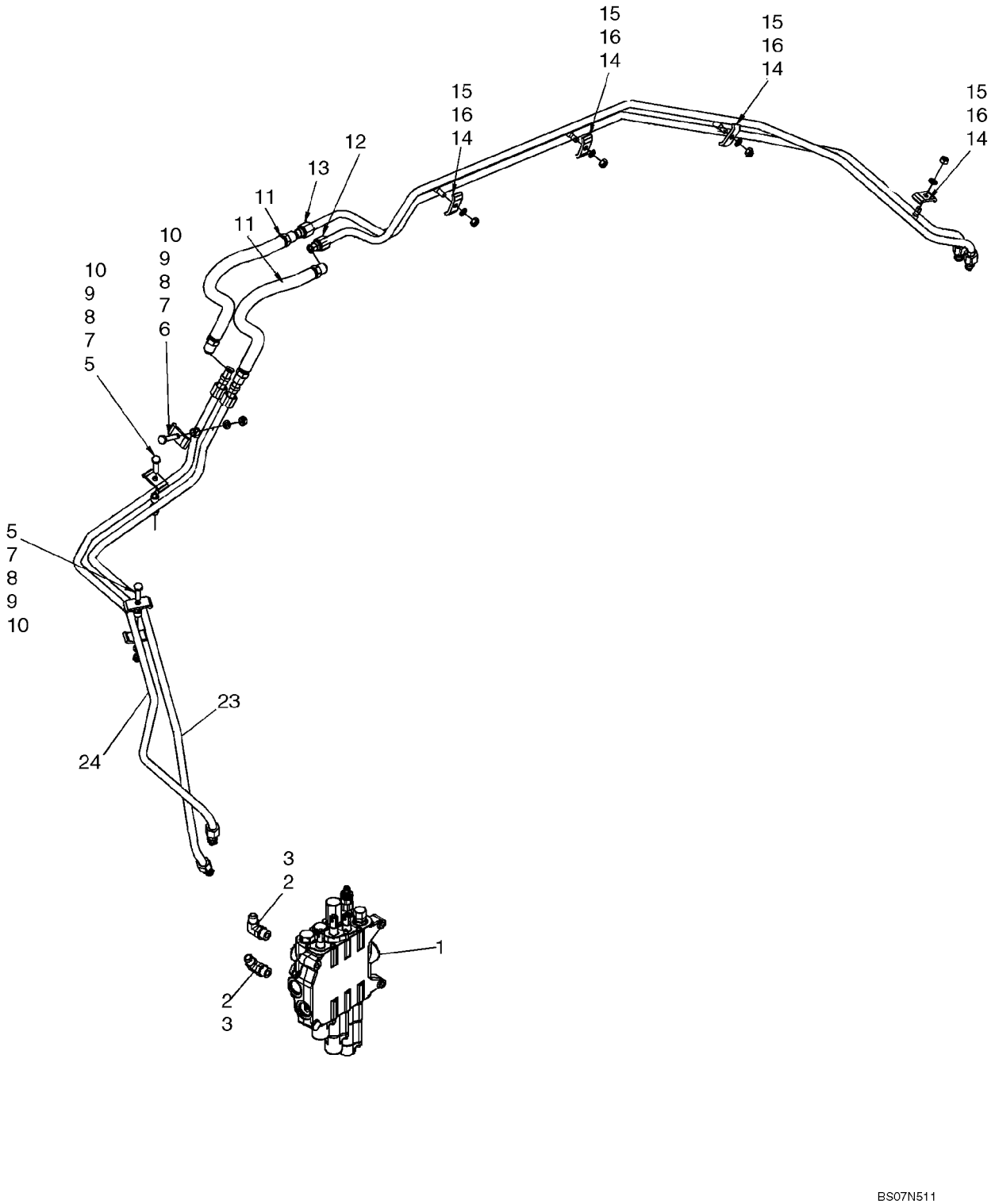

HYDRAULICS - CYLINDER, LOADER CLAM

REF	FN	PART NUMBER	YR/SN	QTY	DESCRIPTION
1		REF		1	INSTRUCTION, LOADER CONTROL VALVE; Three Spool; See Figure 08-31 for Valve Options; For Mounting, See Figure 09-01
2		218-5107		2	ELBOW, 90Ü, 7/8"-14, 37Ü x 7/8"-14, O-Ring, Incl. Ref 3
3		237-6010		1	O-RING, 10-1, 90 Duro, .755" ID x .097" Thk, Boss Seal
5		614-10040		2	BOLT, Hex, M10 x 40, 8.8, Full Thd
6		614-10045		1	BOLT, Hex, M10 x 45, 8.8, Full Thd
7		D138055		4	CLAMP
8		120303A1		3	SPACER
9		892-11010		3	WASHER, LOCK, M10
10		829-1410		3	NUT, M10, Cl 10
11		87429287		2	HOSE ASSY., 710 mm (28 in)
12		87716486		1	TUBE, HYD, Upper Clam Port
13		87716488			TUBE, HYD, Lower Clam Port
14		D138055		4	CLAMP
15		829-1410		4	NUT, M10, Cl 10
16		892-11010		4	WASHER, LOCK, M10
23		{87478483}		1	Tube, Upper Clam Port
24		87449440		1	TUBE ASSY., Lower Clam Port

08-07		p1	10/07

HYDRAULICS - CYLINDER, LOADER CLAM

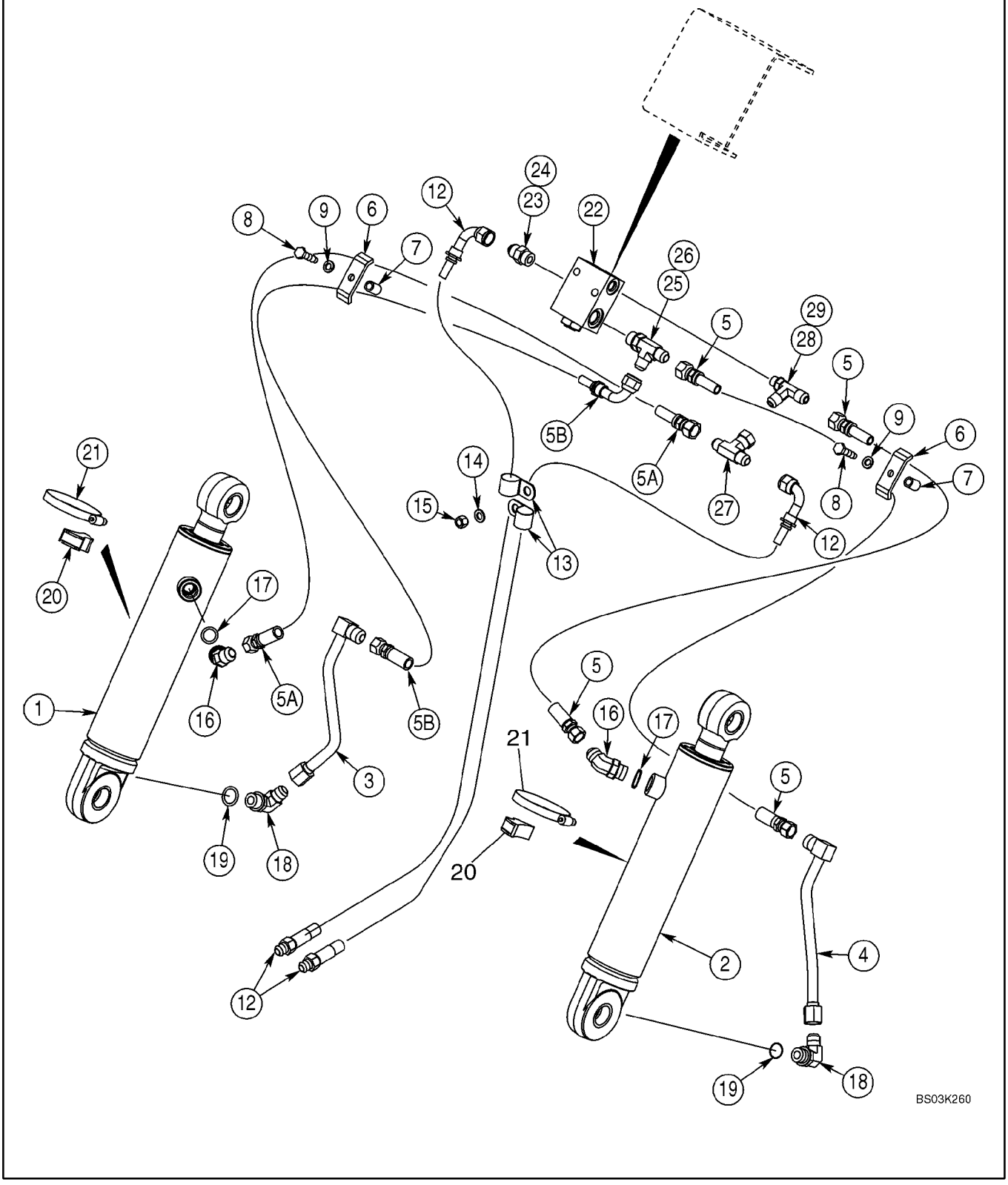

HYDRAULICS - CYLINDER, LOADER CLAM

REF	FN	PART NUMBER	YR/SN	QTY	DESCRIPTION
1		87454016		1	CYLINDER ASSY., 76 ID x 231 mm strk: Loader Clam Cylinder; Left-Hand; See Figure 08-60
2		87454017		1	CYLINDER ASSY., 76 ID x 231 mm strk; Loader Clam Cylinder; Right-Hand; See Figure 08-60
3		192352A1		1	PIPE, LH Cylinder
4		192345A1		1	PIPE, RH Cylinder
5		353167A1		2	HOSE ASSY., 1100 mm (43-5/16 in); Right-Hand Cylinder
5A		353103A1		1	HOSE ASSY., 1200 mm (47-1/4 in); Left-Hand Cylinder
5B		367352A1		1	HOSE ASSY., 1200 mm (47-1/4 in); Left-Hand Cylinder
6		D143846		2	SHIN, CLAMP
7		R46493		2	SPACER
8		614-10040		2	BOLT, Hex, M10 x 40, 8.8, Full Thd
9		892-11010		2	WASHER, LOCK, M10
12		356743A1		2	HOSE ASSY., 1170 mm (46-1/16 in); Lift Frame
13		515-25254		2	CLAMP, 1", Insul, 1/2" Bolt
14		895-11010		1	WASHER, M10 x 20 x 2
15		832-10410		1	NUT, LOCK, M10 x 1.5, Cl 8
16		218-5137		2	ELBOW, 45Ü, 7/8"-14 x 7/8"-14, O-Ring, Incl. Ref 17
17		237-6010		1	O-RING, 10-1, 90 Duro, .755" ID x .097" Thk, Boss Seal
18		218-5107		2	ELBOW, 90Ü, 7/8"-14, 37Ü x 7/8"-14, O-Ring, Incl. Ref 19
19		237-6010		1	O-RING, 10-1, 90 Duro, .755" ID x .097" Thk, Boss Seal
20		D38648		2	BLOCK
21		214-1464		2	CLAMP, HOSE, #64, 3.56/4.50 Type F Worm
22		325465A2		1	VALVE, CHECK, Pilot Operated Check Valve; For Mounting, See Figure 09-08
		399963A1		1	KIT, Seal; For Use With 325465A2 Valve; Includes (1) Piston, (1) Backup Ring, (2) O-Rings and Instructions

HYDRAULICS - CYLINDER, LOADER CLAM

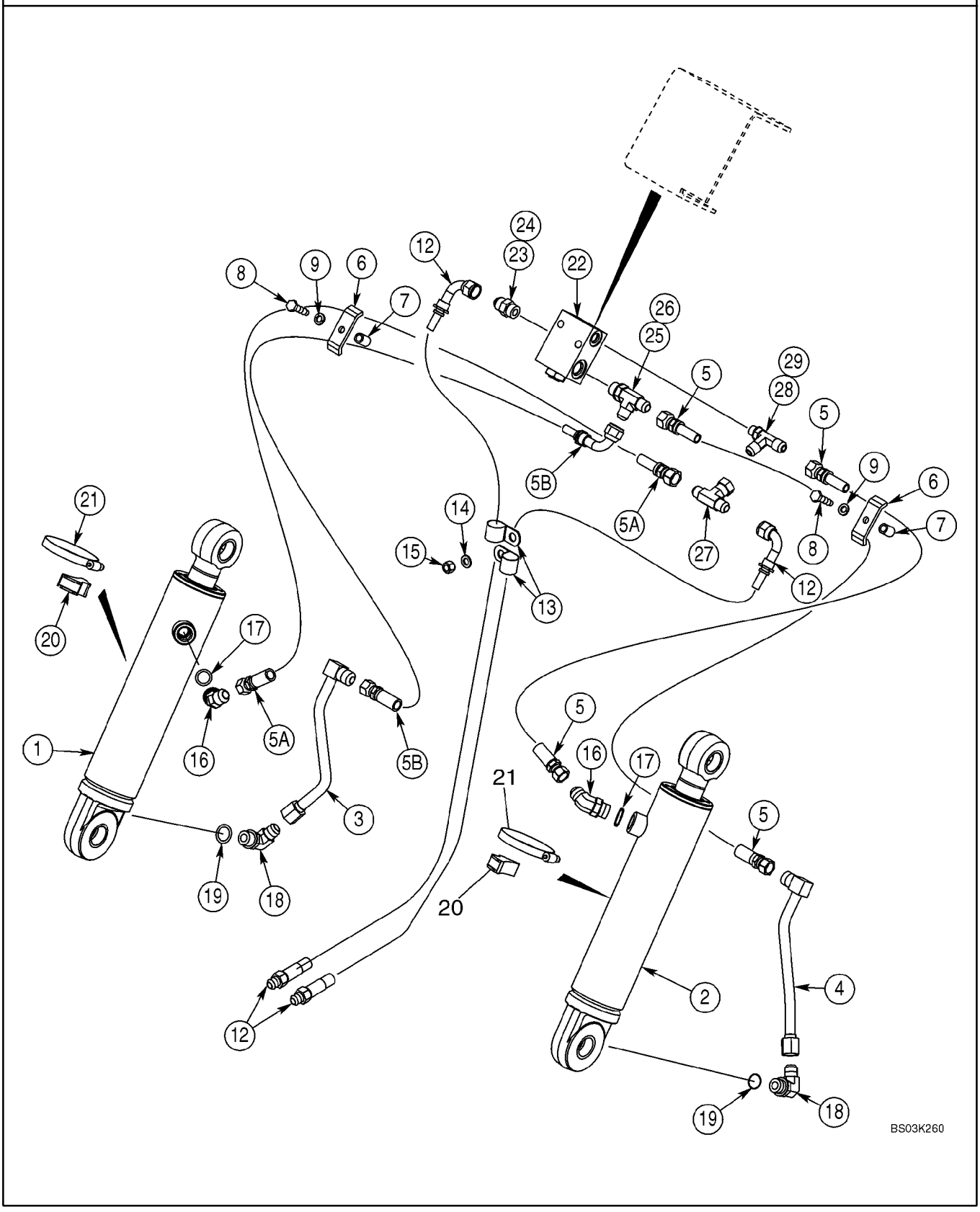

HYDRAULICS - CYLINDER, LOADER CLAM

REF	FN	PART NUMBER	YR/SN	QTY	DESCRIPTION
23		218-5059		1	CONNECTOR, HYD., 3/4"-16, 37Ü x 3/4"-16, O-Ring, Incl. Ref 24
24		237-6008		1	O-RING, 8-1, 90 Duro, .644" ID x .087" Thk, Boss seal
25		218-5242		1	TEE, 3/4"-16, 37Ü x 3/4"-18, O-Ring Run, Incl. Ref 26
26		237-6008		1	O-RING, 8-1, 90 Duro, .644" ID x .087" Thk, Boss seal
27		218-840		1	TEE, 37Ü, 3/4"-16 x 3/4"-16, Fem Sw Br
28		218-5650		1	TEE, 37Ü, 3/4"-16, 9/16"-18 O-Ring Run, 3/4"-16, Incl. Ref 29
29		237-6006		1	O-RING, 6-1, 90 Duro, .468" ID x .078" Thk, Boss seal

08-07A		p1	02/08

HYDRAULICS - LOADER CLAM, AT ACCUMULATOR W/ ELECTRICAL (MODELS WITHOUT PILOT CONTROLS)

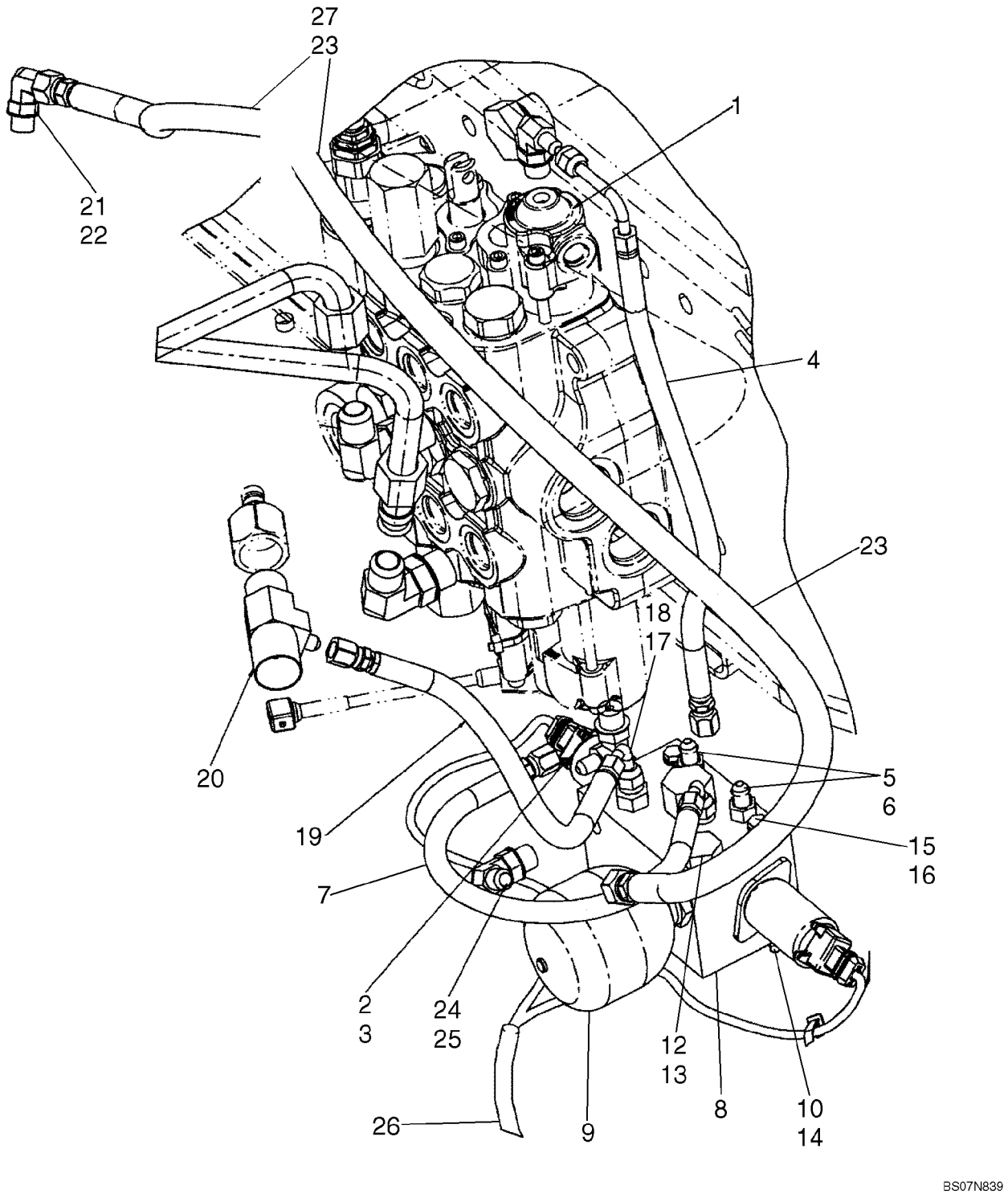

HYDRAULICS - LOADER CLAM, AT ACCUMULATOR W/ ELECTRICAL (MODELS WITHOUT PILOT CONTROLS)

REF	FN	PART NUMBER	YR/SN	QTY	DESCRIPTION
1		REF		1	INSTRUCTION, LOADER CONTROL VALVE; Three Spool; See Figure 08-31; For Mounting, See Figure 09-01
2		218-5283		2	ELBOW, 90Ü, 7/16"-20, 37Ü x 9/16"-18, O-Ring, Incl. 3
3		237-6006		1	O-RING, 6-1, 90 Duro, .468" ID x .078" Thk
4		87662930		1	HOSE ASSY., Loader Control Valve To Proportional Control Valve
5		218-5053		2	CONNECTOR, HYD., 7/16"-20, 37Ü x 7/16"-20, O-Ring, Incl. 6
6		237-6004		1	O-RING, 4-1, 90 Duro, .351" ID x .072" Thk
7		87662928		1	HOSE ASSY., Proportional Control Valve
8		87566480		1	VALVE, Proportional Control; Component Parts Not Available At Time Of Printing
9		87425225		1	ACCUMULATOR, Includes 237-6008 O-Ring
10		814-6090		2	BOLT, Hex, M6 x 90, 8.8
12		218-5156		1	PLUG, Hex Hd, 3/4"-16 ORB, Incl. 13
13		237-6008		1	O-RING, 8-1, 90 Duro, .644" ID x .087" Thk
14		895-25006		2	WASHER, M6 x 18 x 1.6
15		892-11006		2	WASHER, LOCK, M6
16		829-1406		2	NUT, M6, Cl 10
17		218-5089		1	CONNECTOR, HYD., 7/16"-20, 37Ü x 9/16"-18, O-Ring, Incl. 18
18		237-6006		1	O-RING, 6-1, 90 Duro, .468" ID x .078" Thk
19		87662932		1	HOSE ASSY., Proportional Control Valve To Pump
20		218-5411		1	TEE, 37Ü, 7/8"-14 x 3/4"-16, Fem Sw Run x 7/16"-20 Br
21		218-5105		1	ELBOW, 90Ü, 9/16"-18, 37Ü x 9/16"-18, O-Ring, Incl. 22
22		237-6006		1	O-RING, 6-1, 90 Duro, .468" ID x .078" Thk
23		87650602		1	HOSE ASSY., Proportional Control Valve To Tank
24		218-5105		1	ELBOW, 90Ü, 9/16"-18, 37Ü x 9/16"-18, O-Ring, Incl. 25
25		237-6006		1	O-RING, 6-1, 90 Duro, .468" ID x .078" Thk
26		87651975		1	HARNESS, WIRE, Jumper
27		87452021		1	TUBE, PLASTIC-RUBBER, 650 mm; Hose Guard

08-07B		p1	02/08

HYDRAULICS - LOADER CLAM, AT ACCUMULATOR W/ ELECTRICAL (MODELS WITH PILOT CONTROLS)

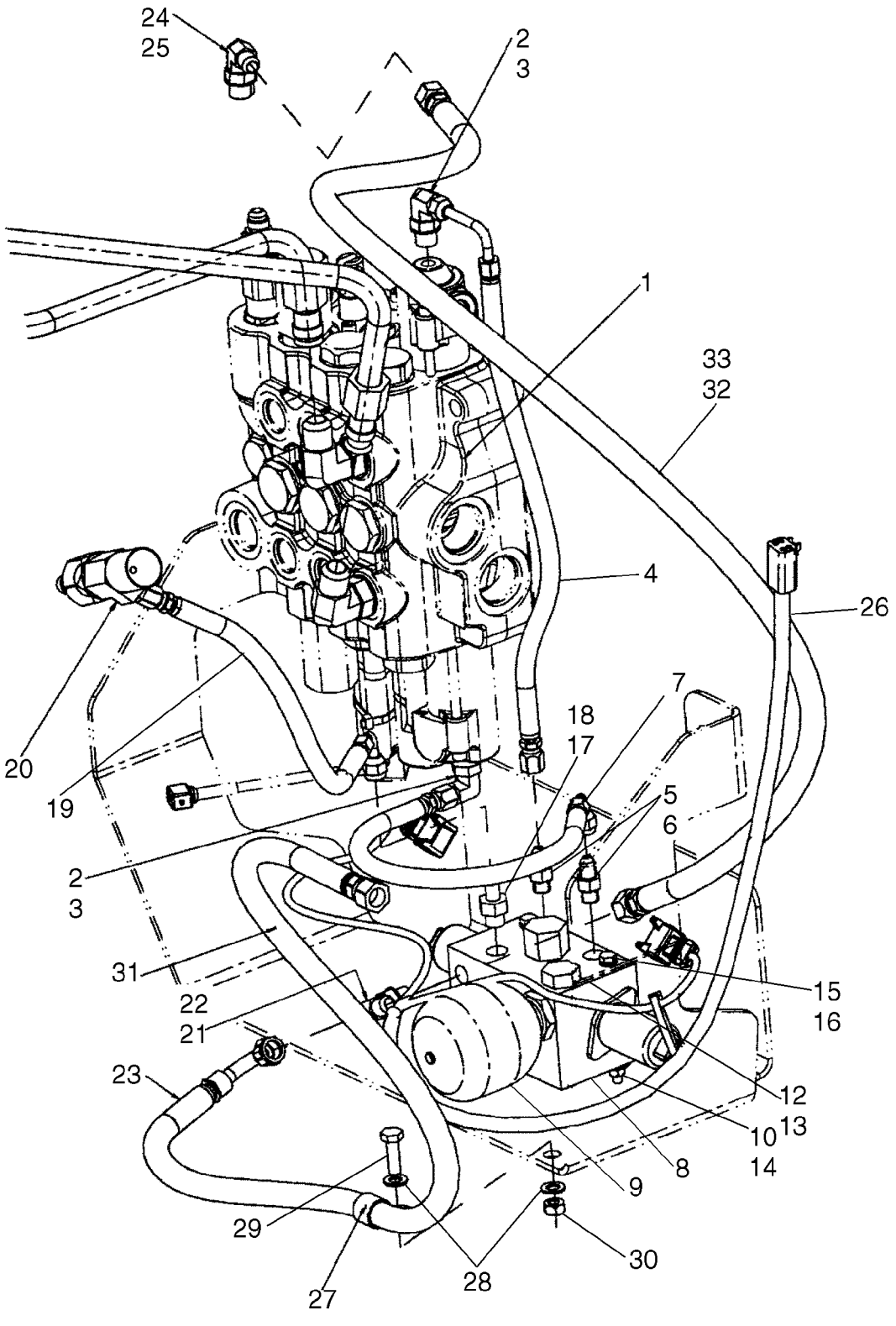

HYDRAULICS - LOADER CLAM, AT ACCUMULATOR W/ ELECTRICAL (MODELS WITH PILOT CONTROLS)

REF	FN	PART NUMBER	YR/SN	QTY	DESCRIPTION
1		REF		1	INSTRUCTION, LOADER CONTROL VALVE; Three Spool; See Figure 08-31; For Mounting, See Figure 09-01
2		218-5283		2	ELBOW, 90Ü, 7/16"-20, 37Ü x 9/16"-18, O-Ring, Incl. 3
3		237-6006		1	O-RING, 6-1, 90 Duro, .468" ID x .078" Thk
4		87662930		1	HOSE ASSY., Loader Control Valve To Proportional Control Valve
5		218-5053		2	CONNECTOR, HYD., 7/16"-20, 37Ü x 7/16"-20, O-Ring, Incl. 6
6		237-6004		1	O-RING, 4-1, 90 Duro, .351" ID x .072" Thk
7		87662928		1	HOSE ASSY., Proportional Control Valve
8		87566480		1	VALVE, Proportional Control; Component Parts Not Available At Time Of Printing
9		87425225		1	ACCUMULATOR
10		814-6090		2	BOLT, Hex, M6 x 90, 8.8
12		218-5156		1	PLUG, Hex Hd, 3/4"-16 ORB, Incl. 13
13		237-6008		1	O-RING, 8-1, 90 Duro, .644" ID x .087" Thk
14		895-25006		2	WASHER, M6 x 18 x 1.6
15		892-11006		2	WASHER, LOCK, M6
16		829-1406		2	NUT, M6, Cl 10
17		218-5089		1	CONNECTOR, HYD., 7/16"-20, 37Ü x 9/16"-18, O-Ring, Incl. 18
18		237-6006		1	O-RING, 6-1, 90 Duro, .468" ID x .078" Thk
19		87662932		1	HOSE ASSY., Proportional Control Valve To Pump
20		218-5411		1	TEE, 37Ü, 7/8"-14 x 3/4"-16, Fem Sw Run x 7/16"-20 Br
21		218-5182		1	TEE, 9/16"-18, 37Ü x 9/16"-18, O-Ring Br, Incl. 22
22		237-6006		1	O-RING, 6-1, 90 Duro, .468" ID x .078" Thk
23		87668167		1	HOSE ASSY., Proportional Control Valve To Tank
24		218-5105		1	ELBOW, 90Ü, 9/16"-18, 37Ü x 9/16"-18, O-Ring, Incl. 25
25		237-6006		1	O-RING, 6-1, 90 Duro, .468" ID x .078" Thk
26		87651975		1	HARNESS, WIRE, Jumper
27		515-22190		1	CLAMP, 3/4", Insul, 5/16" Bolt
28		895-11008		2	WASHER, M8 x 16 x 1.6

HYDRAULICS - LOADER CLAM, AT ACCUMULATOR W/ ELECTRICAL (MODELS WITH PILOT CONTROLS)

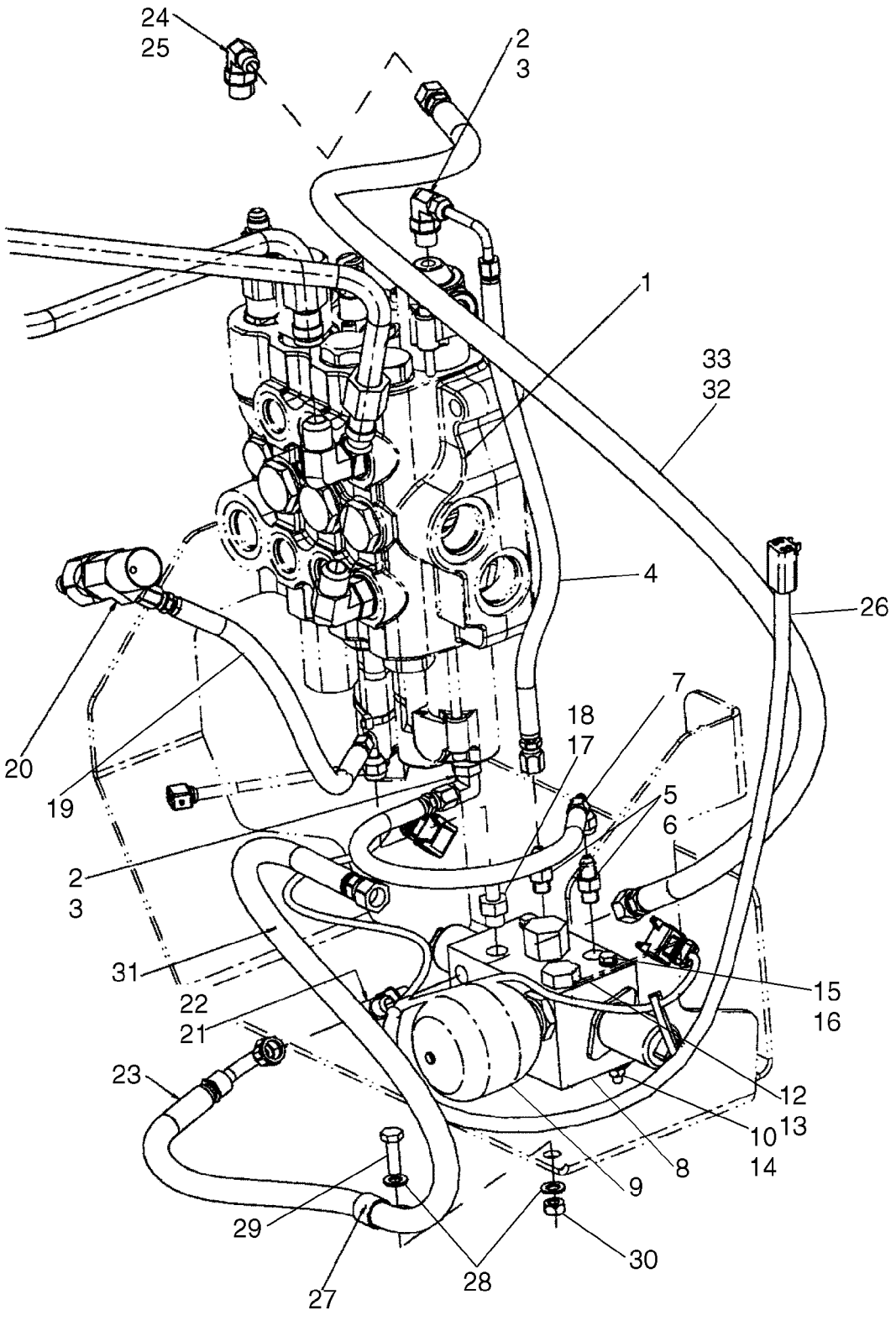

HYDRAULICS - LOADER CLAM, AT ACCUMULATOR W/ ELECTRICAL (MODELS WITH PILOT CONTROLS)

REF	FN	PART NUMBER	YR/SN	QTY	DESCRIPTION
29		614-8025		1	BOLT, Hex, M8 x 25, 8.8
30		829-1408		1	NUT, M8, Cl 10
31		191704A1		1	LOOM
32		87650602		1	HOSE ASSY.
33		87452021		1	TUBE, PLASTIC-RUBBER, 650 mm; Hose Guard

HYDRAULICS - CYLINDER, BACKHOE STABILIZER (WITHOUT PILOT CONTROLS)

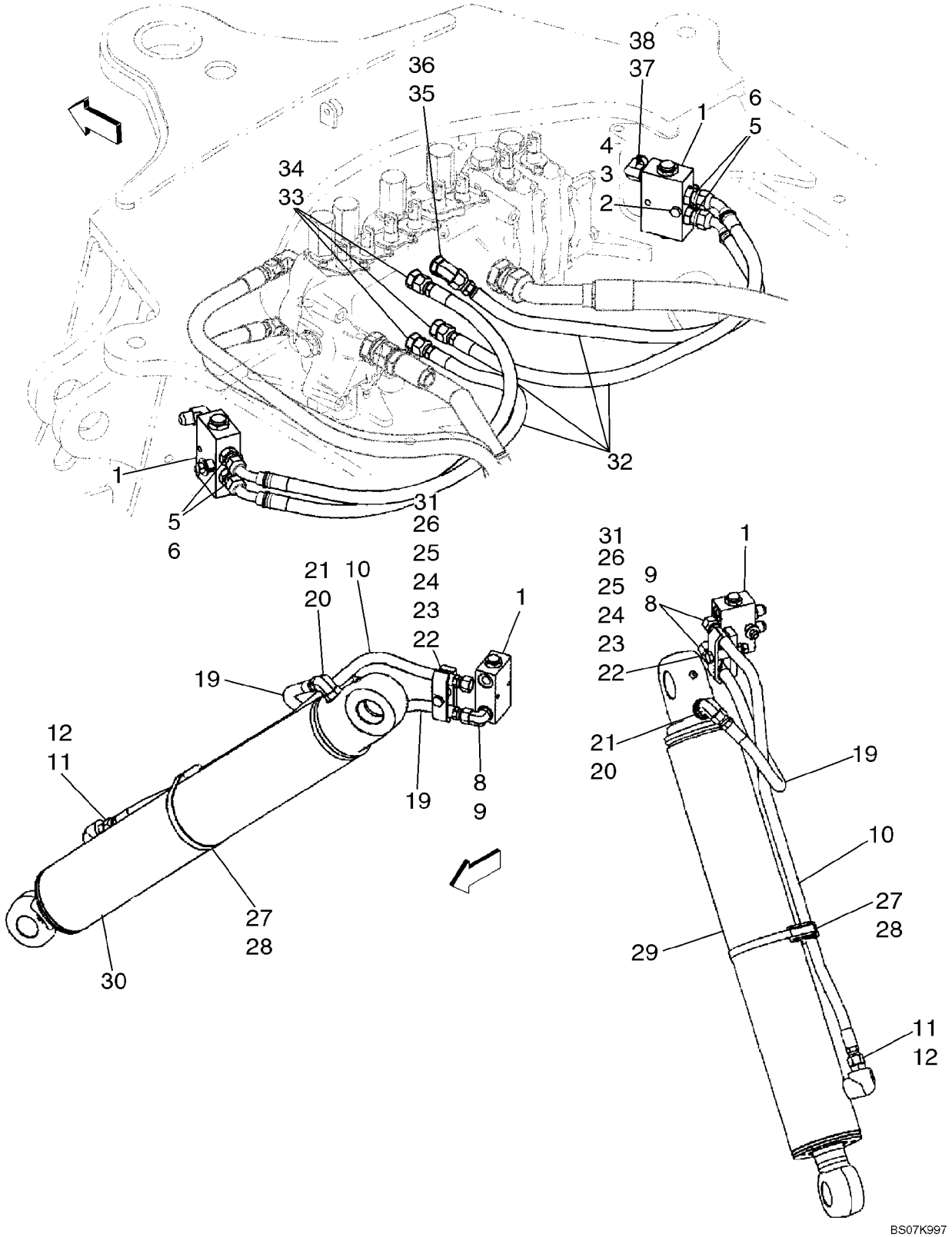

HYDRAULICS - CYLINDER, BACKHOE STABILIZER (WITHOUT PILOT CONTROLS)

REF	FN	PART NUMBER	YR/SN	QTY	DESCRIPTION
		REF			INSTRUCTION, MODELS WITHOUT PILOT CONTROLS
1		85802820		2	VALVE, CHECK, Load Check; Includes 85820159, 85820160, 85821126
		85820159		1	PLUNGER
		85820160		1	VALVE, HYDRAULIC
		85821126		1	KIT
2		814-8060		2	BOLT, Hex, M8 x 60, 8.8
		87437840		2	SPACER
4		829-1408		2	NUT, M8, Cl 10
3		496-81028		2	WASHER, 13/32" x 1 1/4" x .134", HDN
5		218-5057		4	CONNECTOR, HYD., 9/16"-18, 37Ü x 9/16"-18, O-Ring, Incl. Ref 6
6		237-6006		1	O-RING, 6-1, 90 Duro, .468" ID x .078" Thk
8		218-5105		4	ELBOW, 90Ü, 9/16"-18, 37Ü x 9/16"-18, O-Ring, Incl. Ref 9
9		237-6006		1	O-RING, 6-1, 90 Duro, .468" ID x .078" Thk
10		87439306		2	HOSE ASSY., 830 mm (32-11/16 in)
19		87429584		2	HOSE ASSY., 500 mm (19-11/16 in) Hose
11		218-5059		2	CONNECTOR, HYD., 3/4"-16, 37Ü x 3/4"-16, O-Ring, Incl. Ref 12
20		218-5121		2	ELBOW, 90Ü, 3/4"-16, 37Ü x 7/8"-14, O-Ring, Incl. Ref 21
12		237-6008		1	O-RING, 8-1, 90 Duro, .644" ID x .087" Thk
21		237-6008		1	O-RING, 8-1, 90 Duro, .644" ID x .087" Thk
22		814-10070		2	BOLT, Hex, M10 x 70, 8.8
24		87439665		2	SPACER
23		87420673		2	CLAMP, HOSE
25		87420672		2	SPACER
		496-81028		2	WASHER, 13/32" x 1 1/4" x .134", HDN
26		829-1410		2	NUT, M10, Cl 10
27		D142787		2	SPACER
28		214-3188		2	CLAMP, HOSE, 4.75/5.625 HD Worm
29		195504A1		1	CYLINDER, 102 ID x 553 mm strk; Stabilizer Cylinder; Left-Hand; See Figure 08-61

HYDRAULICS - CYLINDER, BACKHOE STABILIZER (WITHOUT PILOT CONTROLS)

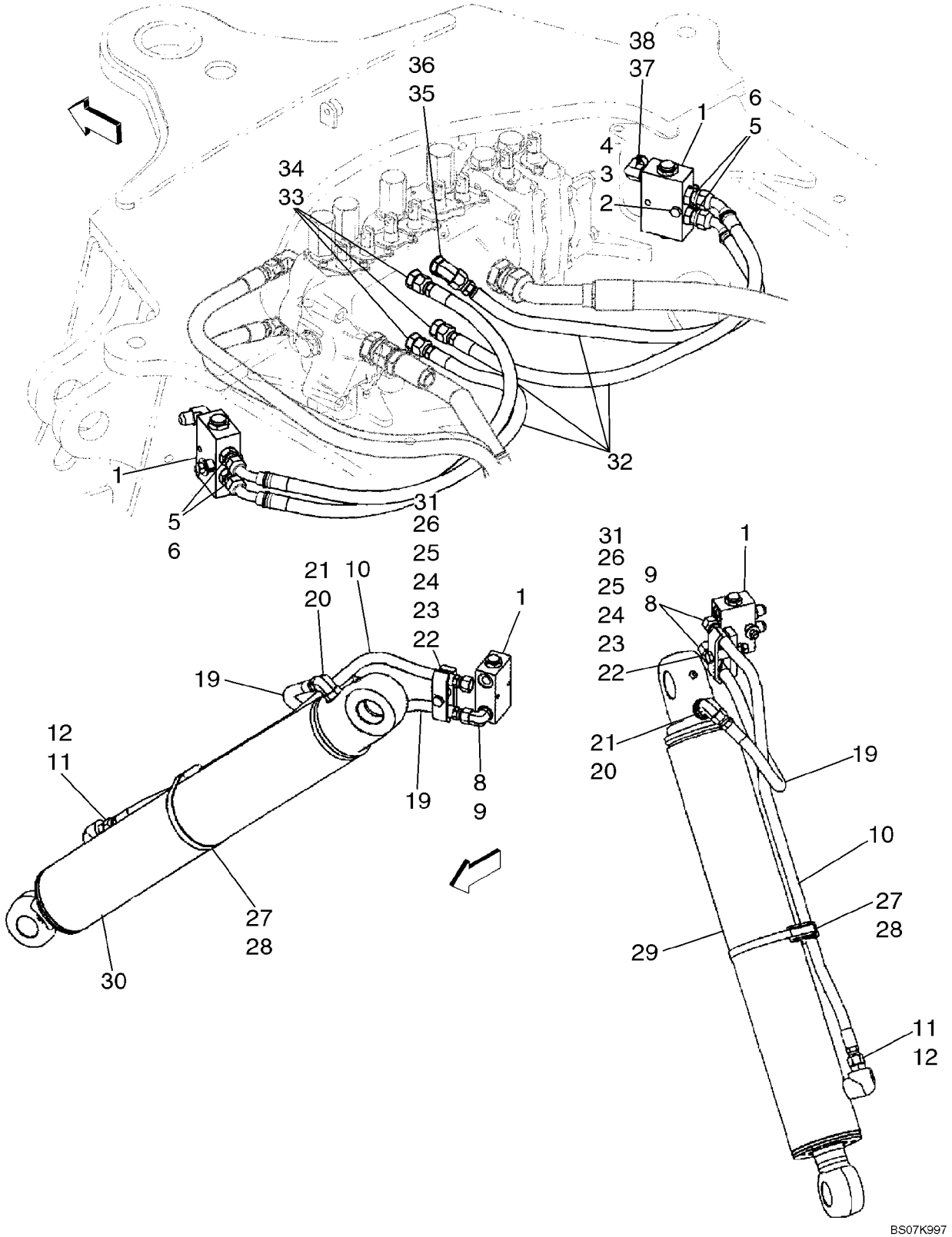

HYDRAULICS - CYLINDER, BACKHOE STABILIZER (WITHOUT PILOT CONTROLS)

REF	FN	PART NUMBER	YR/SN	QTY	DESCRIPTION
30		195503A1		1	CYLINDER ASSY., 102 ID x 553 mm strk; Stabilizer Cylinder; Right-Hand; See Figure 08-61
31		895-11010		2	WASHER, M10 x 20 x 2
32		87429654		4	HOSE ASSY., 720 mm (28-3/8 in)
33		218-5059		3	CONNECTOR, HYD., 3/4"-16, 37Ü x 3/4"-16, O-Ring, Incl. Ref 34
34		237-6008		1	O-RING, 8-1, 90 Duro, .644" ID x .087" Thk
35		218-5136		1	ELBOW, 45Ü, 3/4"-16, 37Ü x 3/4"-16, O-Ring, Incl. Ref 36
36		237-6008		1	O-RING, 8-1, 90 Duro, .644" ID x .087" Thk
37		218-5280		2	ELBOW, 90Ü, 3/4"-16, 37Ü x 9/16"-18, O-Ring, Incl. Ref 38
38		237-6006		1	O-RING, 6-1, 90 Duro, .468" ID x .078" Thk

08-08A		p1	02/08

HYDRAULICS - CYLINDER, BACKHOE STABILIZER (WITH PILOT CONTROLS)

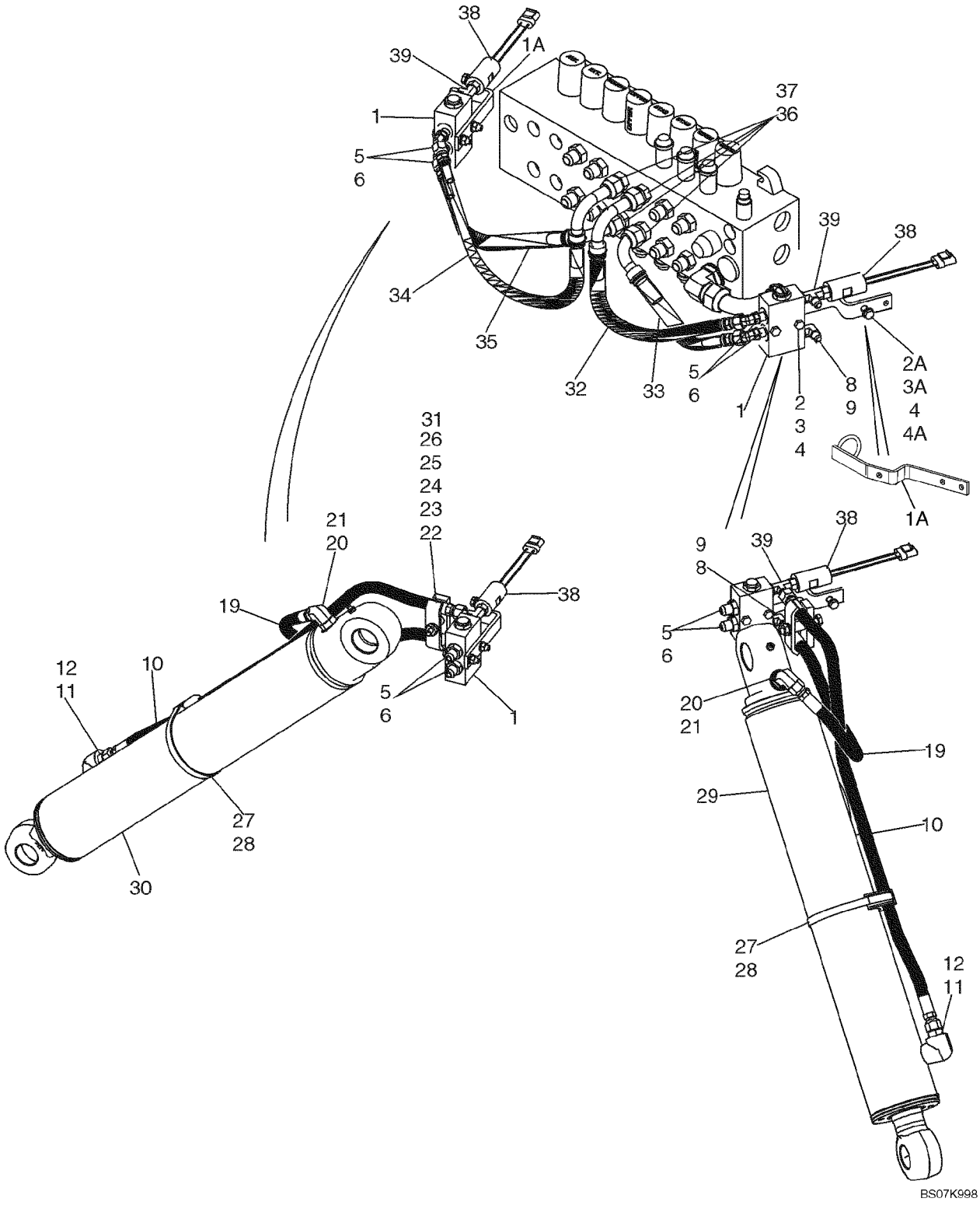

HYDRAULICS - CYLINDER, BACKHOE STABILIZER (WITH PILOT CONTROLS)

REF	FN	PART NUMBER	YR/SN	QTY	DESCRIPTION
		REF			INSTRUCTION, MODELS WITH PILOT CONTROLS
1		85802820		2	VALVE, CHECK, Load Check; Includes 85820159, 85820160, 85821126
		85820159		1	PLUNGER
		85820160		1	VALVE, HYDRAULIC
		85821126		1	KIT
1A		87450318		2	BRACKET, SUPPORTING
2		814-8055		4	BOLT, Hex, M8 x 55, 8.8
2A		814-8035		2	BOLT, Hex, M8 x 35, 8.8
3		496-81028		2	WASHER, 13/32" x 1 1/4" x .134", HDN
3A		895-11008		6	WASHER, M8 x 16 x 1.6
4		829-1408		6	NUT, M8, Cl 10
4A		87437840		2	SPACER
5		218-5135		4	ELBOW, 45Ü, 9/16"-18, 37Ü x 9/16"-18, O-Ring, Incl. Ref 6
6		237-6006		1	O-RING, 6-1, 90 Duro, .468" ID x .078" Thk
8		218-5105		2-4	ELBOW, 90Ü, 9/16"-18, 37Ü x 9/16"-18, O-Ring, Incl. Ref 9; (2) Used On Models With Auto-Up; (4) Used On Models Without Auto-Up
9		237-6006		1	O-RING, 6-1, 90 Duro, .468" ID x .078" Thk
10		87439306		2	HOSE ASSY., 830 mm (32-11/16 in)
11		218-5059		2	CONNECTOR, HYD., 3/4"-16, 37Ü x 3/4"-16, O-Ring, Incl. Ref 12
12		237-6008		1	O-RING, 8-1, 90 Duro, .644" ID x .087" Thk
19		87429584		2	HOSE ASSY., 500 mm (19-11/16 in) Hose
20		218-5121		2	ELBOW, 90Ü, 3/4"-16, 37Ü x 7/8"-14, O-Ring, Incl. Ref 21
21		237-6008		1	O-RING, 8-1, 90 Duro, .644" ID x .087" Thk
22		814-10070		2	BOLT, Hex, M10 x 70, 8.8
23		87420673		2	CLAMP, HOSE, Clamp
		496-81028		2	WASHER, 13/32" x 1 1/4" x .134", HDN
24		87439665		2	SPACER
25		87420672		2	SPACER, Clamp
26		829-1410		2	NUT, M10, Cl 10
27		D142787		2	SPACER

HYDRAULICS - CYLINDER, BACKHOE STABILIZER (WITH PILOT CONTROLS)

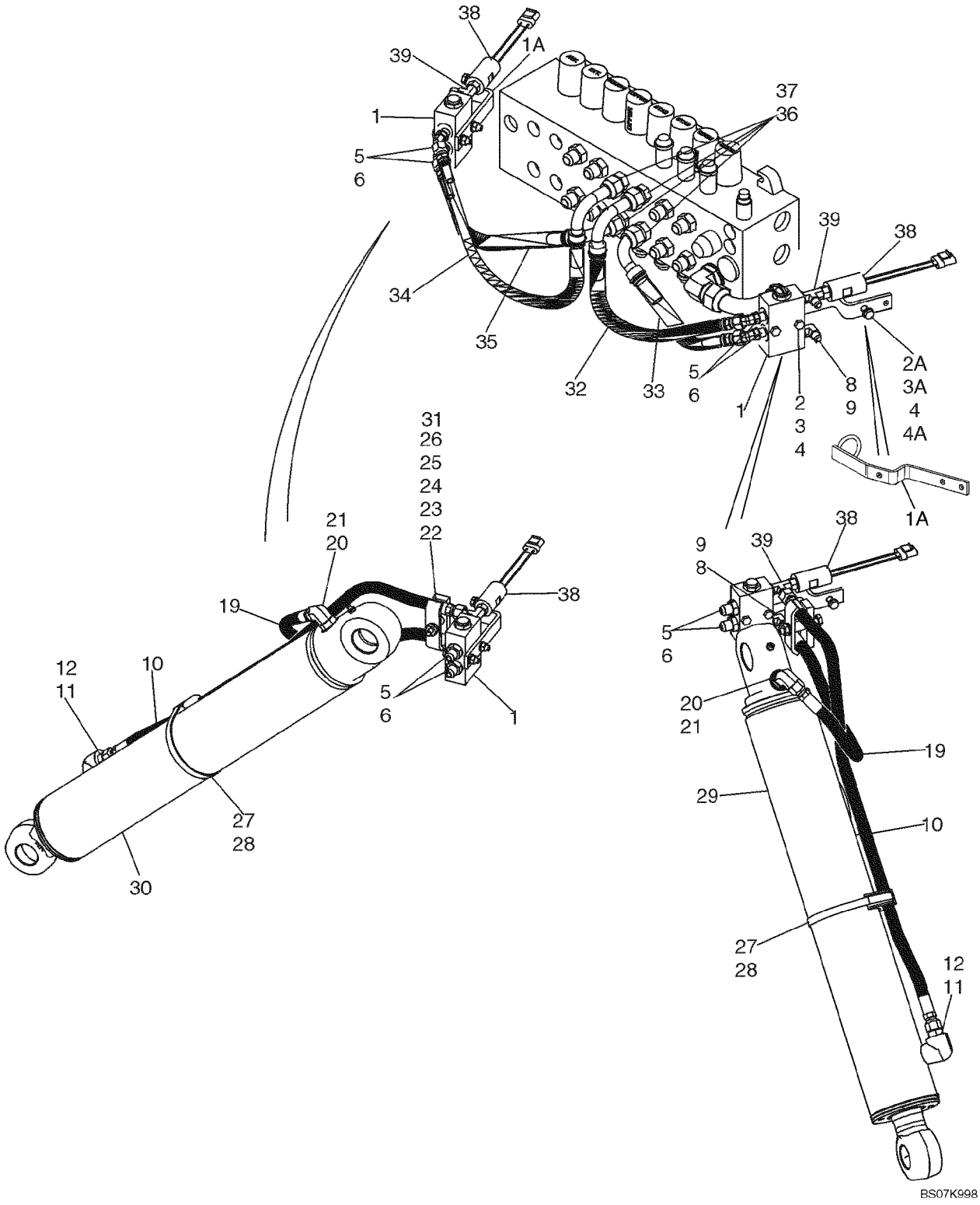

HYDRAULICS - CYLINDER, BACKHOE STABILIZER (WITH PILOT CONTROLS)

REF	FN	PART NUMBER	YR/SN	QTY	DESCRIPTION
28		214-3188		2	CLAMP, HOSE, 4.75/5.625 HD Worm
29		195504A1		1	CYLINDER, 102 ID x 553 mm strk; Stabilizer Cylinder; Left-Hand; See Figure 08-61
30		195503A1		1	CYLINDER ASSY., 102 ID x 553 mm strk; Stabilizer Cylinder; Right-Hand; See Figure 08-61
31		895-11010		2	WASHER, M10 x 20 x 2
32		87437939		1	HOSE ASSY., 440 mm (17-3/8 in)
33		87437938		1	HOSE ASSY., 350 mm (13-13/16 in)
34		87437941		1	HOSE ASSY., 485 mm (19-1/8 in)
35		87437940		1	HOSE ASSY., 400 mm (15-3/4 in)
36		218-5070		4	CONNECTOR, HYD., 3/4"-16, 37Ü x 1 1/16"-12, O-Ring, Incl. Ref 37
37		237-6012		1	O-RING, 12-1, 90 Duro, .924 ID x .118" Thk
38		87552560		2	SWITCH, PRESSURE, Pilot Control; Includes 237-6004 O-Ring; Used On Models With Auto-Up; 12 inch Wire Lead; With Rubber Snubbing; CNH Part Number Stamped On Body Of Switch; North American Models; Replaces 87439163 Switch
38		86992557		2	SWITCH, PRESSURE, Pilot Control; Includes 237-6004 O-Ring; Used On Models With Auto-Up; 6 inch Wire Lead; CNH Part Number Stamped On Body Of Switch; European Models
39		87423033		2	TEE, 9/16 x 9/16 Or x 7/16 Or; Includes 237-6004, 237-6006 O-Ring; Used On Models With Auto-Up

HYDRAULICS - CYLINDER, BACKHOE SWING (WITHOUT PILOT CONTROLS)

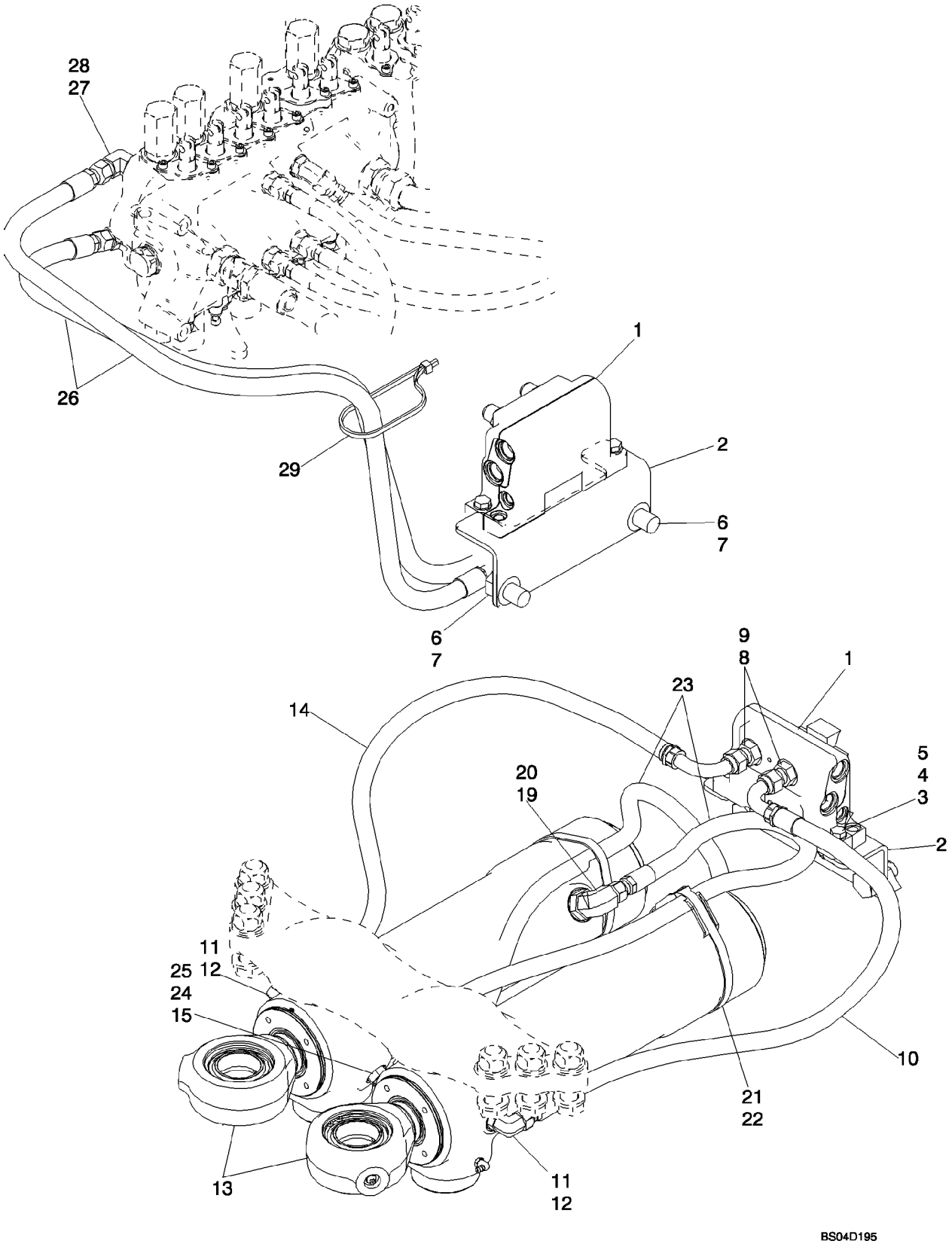

HYDRAULICS - CYLINDER, BACKHOE SWING (WITHOUT PILOT CONTROLS)

REF	FN	PART NUMBER	YR/SN	QTY	DESCRIPTION
		REF			INSTRUCTION, MODELS WITHOUT PILOT CONTROLS
1		87449373		1	VALVE, HYDRAULIC, Swing Cushion; See Figure 08-55
2		87428140		1	BRACKET, SUPPORTING, Valve Bracket
3		814-10040		2	BOLT, Hex, M10 x 40, 8.8, Full Thd
4		895-11010		4	WASHER, M10 x 20 x 2
5		829-1410		2	NUT, M10, Cl 10
6		614-18035		2	BOLT, Hex, M18 x 35, 8.8, Full Thd
7		895-11018		4	WASHER, M18 x 34 x 3
8		218-5062		4	CONNECTOR, HYD., 7/8"-14, 37Ü x 7/8"-14, O-Ring, Incl. Ref 9
9		237-6010		1	O-RING, 10-1, 90 Duro, .755" ID x .097" Thk
10		87423356		1	HOSE ASSY., 850 mm (33-1/2 in)
11		218-5106		2	ELBOW, 90Ü, 3/4"-16, 37Ü x 3/4"-16, O-Ring, Incl. Ref 12
12		237-6008		1	O-RING, 8-1, 90 Duro, .644" ID x .087" Thk, Boss seal
13		188027A2		2	CYLINDER ASSY., 95 ID x 292 mm strk; Swing Cylinder, See Figure 08-62
14		87423356		1	HOSE ASSY., 850 mm (33-1/2 in)
15		192971A1		2	ORIFICE, Restrictor
19		218-5119		2	ELBOW, 90Ü, 7/8"-14, 37Ü x 1 1/16"-12, O-Ring, Incl. Ref 20
20		237-6012		1	O-RING, 12-1, 90 Duro, .924 ID x .118" Thk, Boss Seal
21		D142787		2	SPACER
22		214-1492		2	CLAMP, HOSE, #92, 5.38/6.25 Type F Worm, W/liner
23		87441076		2	HOSE ASSY., 802 mm (31-19/32 in)
24		218-5106		2	ELBOW, 90Ü, 3/4"-16, 37Ü x 3/4"-16, O-Ring, Incl. Ref 25
25		237-6008		1	O-RING, 8-1, 90 Duro, .644" ID x .087" Thk, Boss seal
26		87428158		2	HOSE ASSY., 1194 mm (47 in)

HYDRAULICS - CYLINDER, BACKHOE SWING (WITHOUT PILOT CONTROLS)

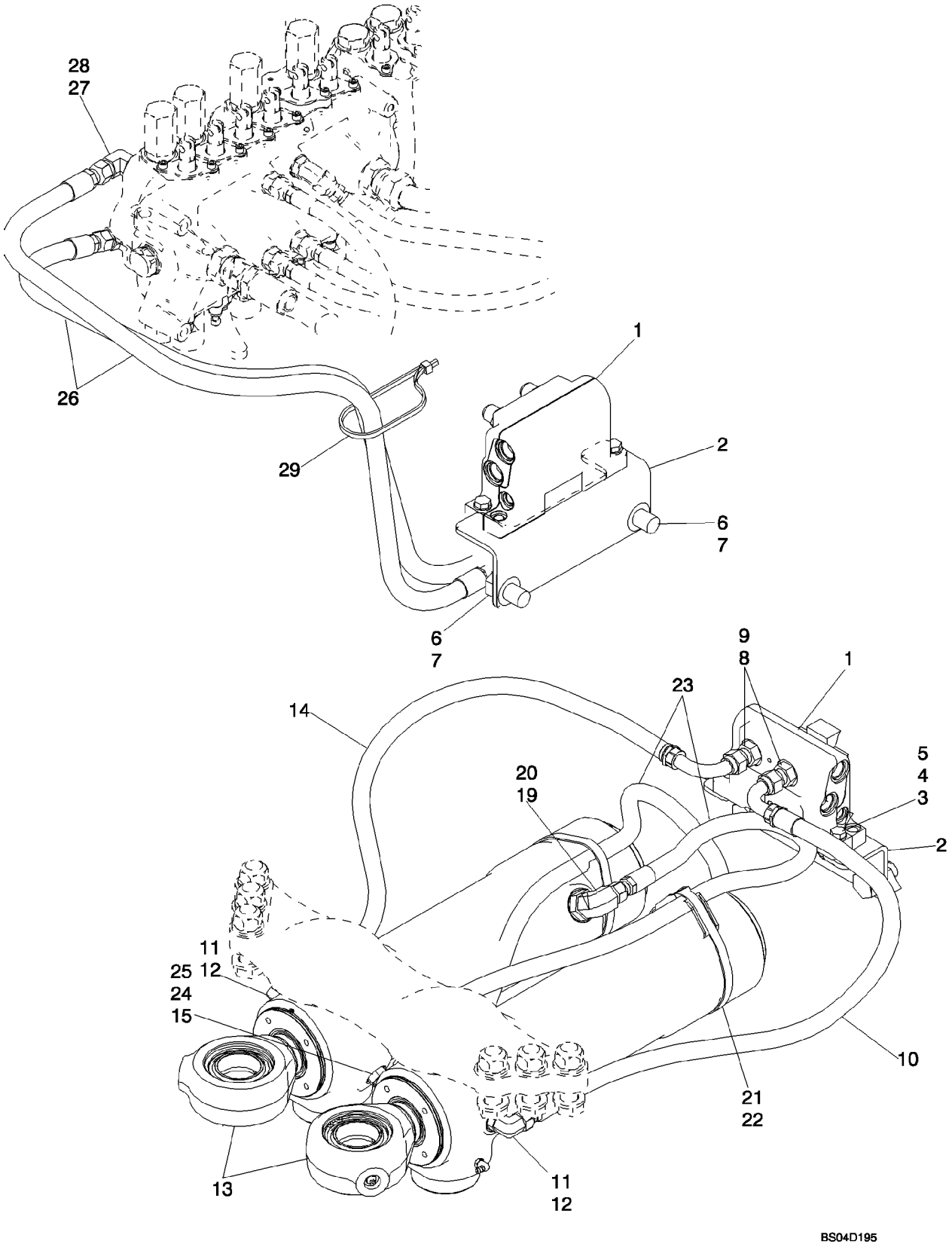

HYDRAULICS - CYLINDER, BACKHOE SWING (WITHOUT PILOT CONTROLS)

REF	FN	PART NUMBER	YR/SN	QTY	DESCRIPTION
27		218-5107		2	ELBOW, 90Ü, 7/8"-14, 37Ü x 7/8"-14, O-Ring, Incl. Ref 28
28		237-6010		1	O-RING, 10-1, 90 Duro, .755" ID x .097" Thk
29		L18337		1	STRAP, CABLE, 9.95"-12.1" lg

08-09A		p1	02/08

HYDRAULICS - CYLINDER, BACKHOE SWING (WITH PILOT CONTROLS)

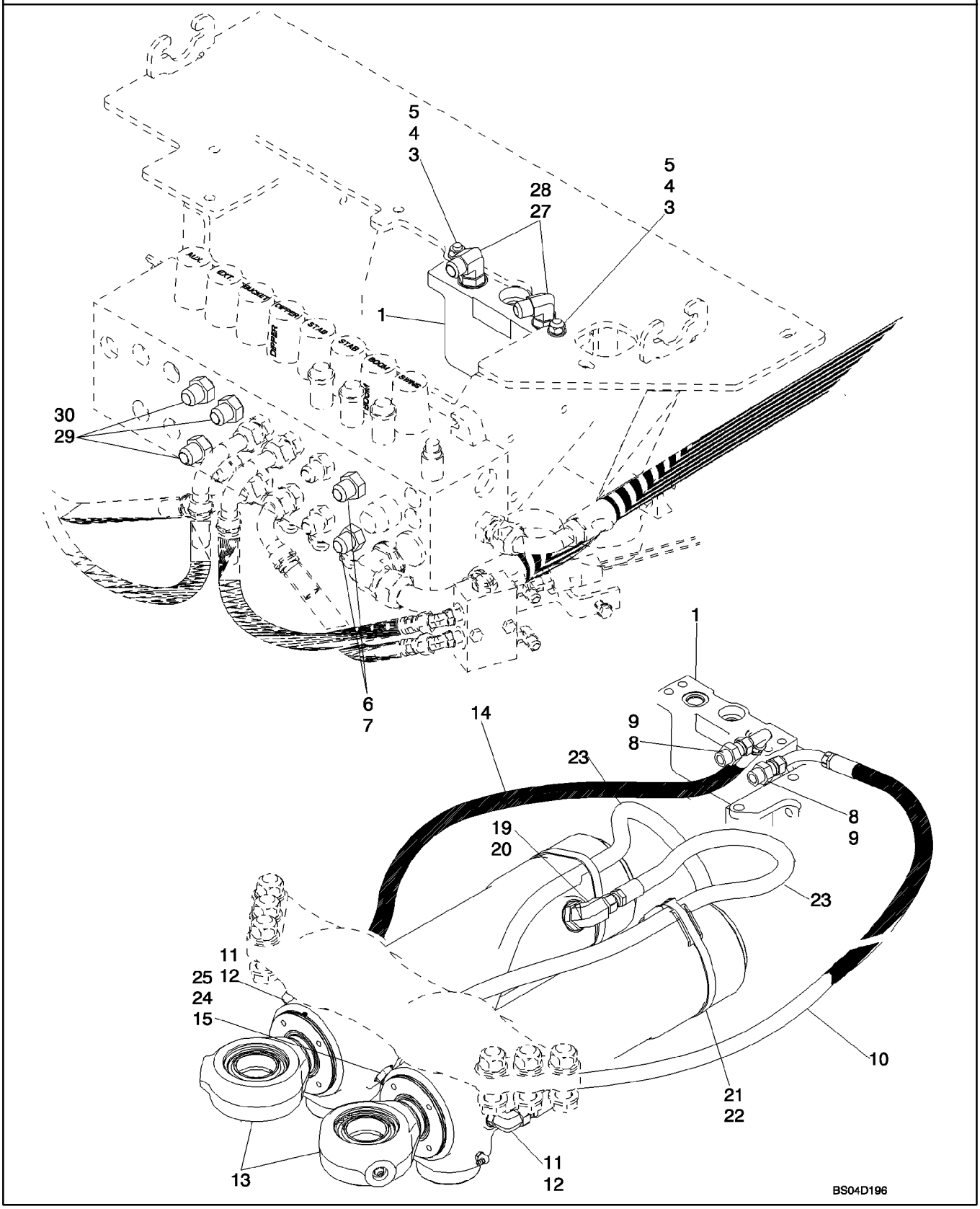

HYDRAULICS - CYLINDER, BACKHOE SWING (WITH PILOT CONTROLS)

REF	FN	PART NUMBER	YR/SN	QTY	DESCRIPTION
		REF			INSTRUCTION, MODELS WITH PILOT CONTROLS
1		87449373		1	VALVE, HYDRAULIC, Swing Cushion; See Figure 08-55
3		814-10045		2	BOLT, Hex, M10 x 45, 8.8
4		895-11010		4	WASHER, M10 x 20 x 2
5		829-1410		2	NUT, M10, Cl 10
6		218-5063		2	CONNECTOR, HYD., 7/8"-14, 37Ü x 1 1/16"-12, O-Ring, Incl. Ref 7
7		237-6012		1	O-RING, 12-1, 90 Duro, .924 ID x .118" Thk
8		218-5062		2	CONNECTOR, HYD., 7/8"-14, 37Ü x 7/8"-14, O-Ring, Incl. Ref 9
9		237-6010		1	O-RING, 10-1, 90 Duro, .755" ID x .097" Thk
10		87440812		1	HOSE ASSY., 950 mm (37-13/32 in)
11		218-5106		2	ELBOW, 90Ü, 3/4"-16, 37Ü x 3/4"-16, O-Ring, Incl. Ref 12
12		237-6008		1	O-RING, 8-1, 90 Duro, .644" ID x .087" Thk, Boss seal
13		188027A2		2	CYLINDER ASSY., 95 ID x 292 mm strk; Swing Cylinder, See Figure 08-62
14		87450698		1	HOSE ASSY., 1285 mm (50-19/32 in)
15		192971A1		2	ORIFICE, Restrictor
19		218-5119		2	ELBOW, 90Ü, 7/8"-14, 37Ü x 1 1/16"-12, O-Ring, Incl. Ref 20
20		237-6012		1	O-RING, 12-1, 90 Duro, .924 ID x .118" Thk, Boss Seal
21		D142787		2	SPACER
22		214-1492		2	CLAMP, HOSE, #92, 5.38/6.25 Type F Worm, W/liner
23		87441076		2	HOSE ASSY., 802 mm (31-19/32 in)
24		218-5106		2	ELBOW, 90Ü, 3/4"-16, 37Ü x 3/4"-16, O-Ring, Incl. Ref 25
25		237-6008		1	O-RING, 8-1, 90 Duro, .644" ID x .087" Thk, Boss seal
27		218-5107		2	ELBOW, 90Ü, 7/8"-14, 37Ü x 7/8"-14, O-Ring, Incl. Ref 28
28		237-6010		1	O-RING, 10-1, 90 Duro, .755" ID x .097" Thk

HYDRAULICS - CYLINDER, BACKHOE SWING (WITH PILOT CONTROLS)

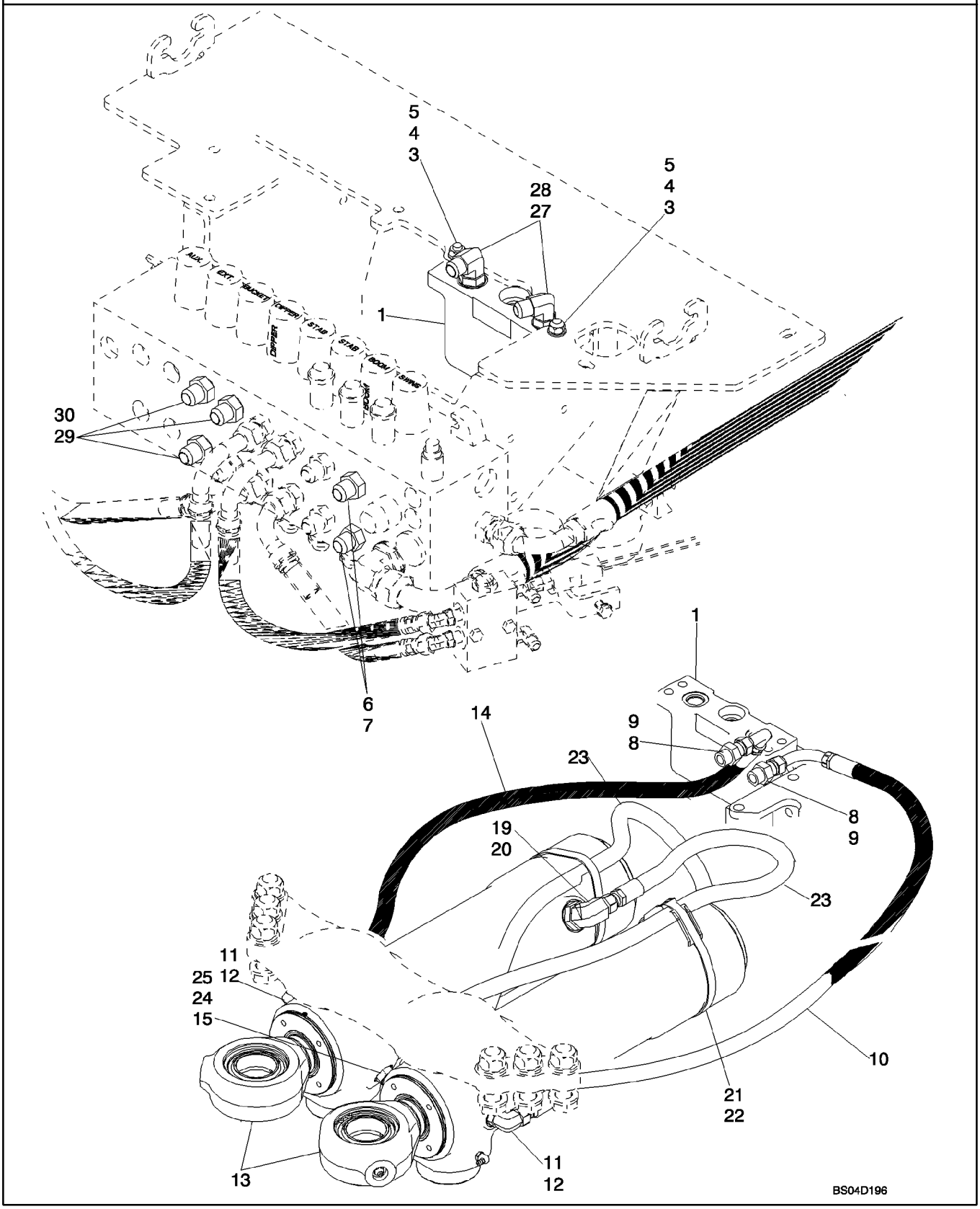

HYDRAULICS - CYLINDER, BACKHOE SWING (WITH PILOT CONTROLS)

REF	FN	PART NUMBER	YR/SN	QTY	DESCRIPTION
29		218-5063		6	CONNECTOR, HYD., 7/8"-14, 37Ü x 1 1/16"-12, O-Ring, Incl. Ref 30
30		237-6012		1	O-RING, 12-1, 90 Duro, .924 ID x .118" Thk

08-10		p1	01/08

HYDRAULICS - CYLINDER, BACKHOE BOOM

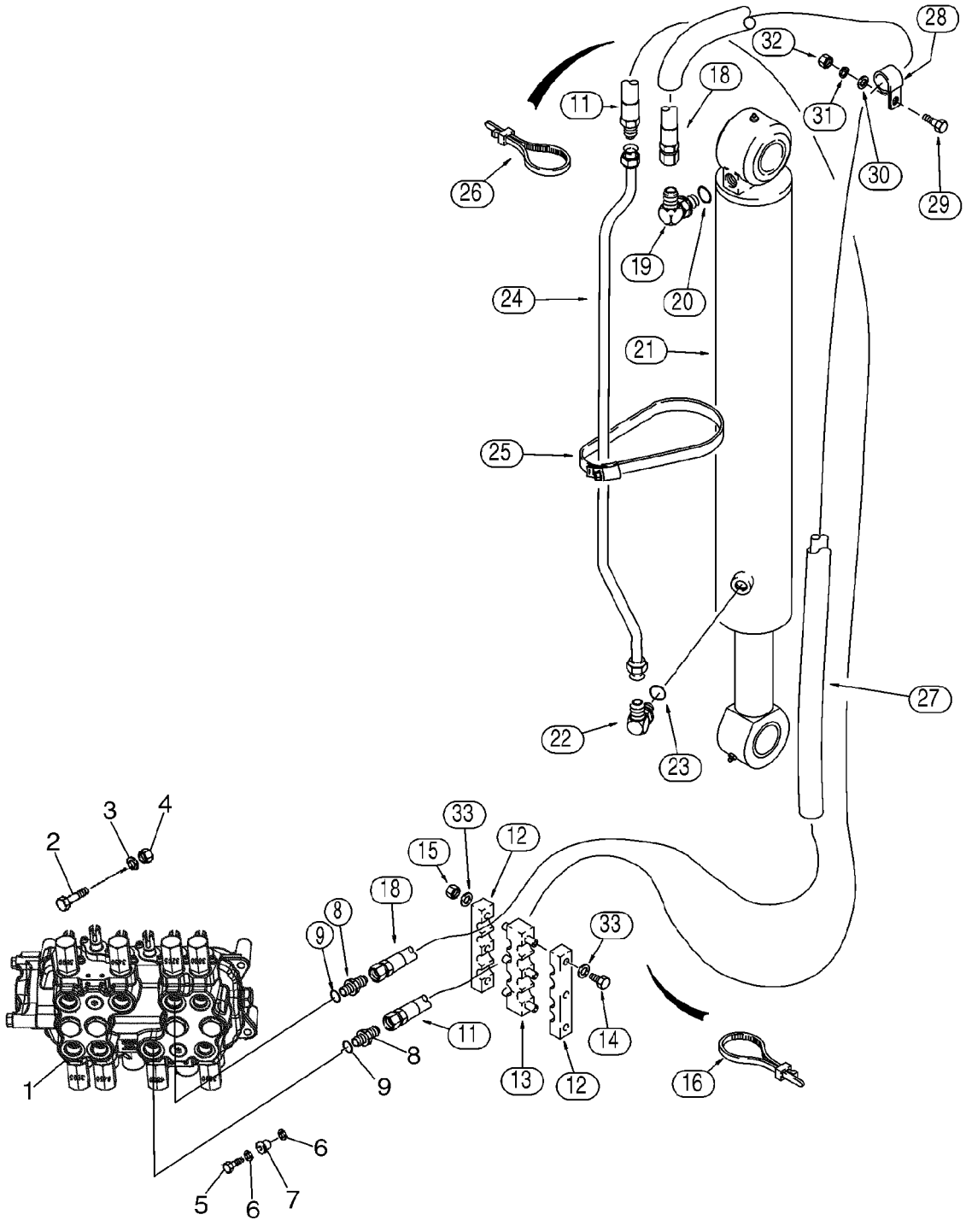

BS03M026

HYDRAULICS - CYLINDER, BACKHOE BOOM

REF	FN	PART NUMBER	YR/SN	QTY	DESCRIPTION
1		REF		1	INSTRUCTION, Valve Assy, Control; Backhoe Control Valve; For Correct Assembly and Components, See Figures 08-32 - 08-39
2		814-10080		2	BOLT, Hex, M10 x 80, 8.8
3		896-11010		2	WASHER, M10 x 21.5 x 2.5, HT
4		829-1410		2	NUT, M10, Cl 10
5		614-10035		1	BOLT, Hex, M10 x 35, 8.8, Full Thd
6		496-41041		2	WASHER, 13/32" x 1 1/8" x .134"
7		D52276		1	ISOLATOR
8		218-5063		2	CONNECTOR, HYD., 7/8"-14, 37Ü x 1 1/16"-12, O-Ring, Incl. Ref 9
9		237-6012		1	O-RING, 12-1, 90 Duro, .924 ID x .118" Thk, Boss Seal
11		397786A1		1	HOSE ASSY., 3470 mm (136-5/8 in), Lower Valve Port
12		178951A1		2	CLAMP
13		178952A1		1	CLAMP
14		814-10120		3	BOLT, Hex, M10 x 120, 8.8
15		832-10410		3	NUT, LOCK, M10 x 1.5, Cl 8
16		L18337		4	STRAP, CABLE, 9.95"-12.1" lg
18		393369A1		1	HOSE ASSY., 3495 mm (137-5/8 in)
19		218-5107		1	ELBOW, 90Ü, 7/8"-14, 37Ü x 7/8"-14, O-Ring, Incl. Ref 20
20		237-6010		1	O-RING, 10-1, 90 Duro, .755" ID x .097" Thk, Boss Seal
21		189653A2		1	CYLINDER ASSY., 114 ID x 982 mm strk, Boom Cylinder, See Figure 08-63
22		218-5107		1	ELBOW, 90Ü, 7/8"-14, 37Ü x 7/8"-14, O-Ring, Incl. Ref 23
23		237-6010		1	O-RING, 10-1, 90 Duro, .755" ID x .097" Thk, Boss Seal
24		357471A1		1	TUBE ASSY.
25		214-1488		2	CLAMP, HOSE, #88, 5.12/6.00 Type F Worm
26		L18337		4	STRAP, CABLE, 9.95"-12.1" lg
27		224057A1		2	SLEEVE, 946 mm (37-15/64 in)

HYDRAULICS - CYLINDER, BACKHOE BOOM

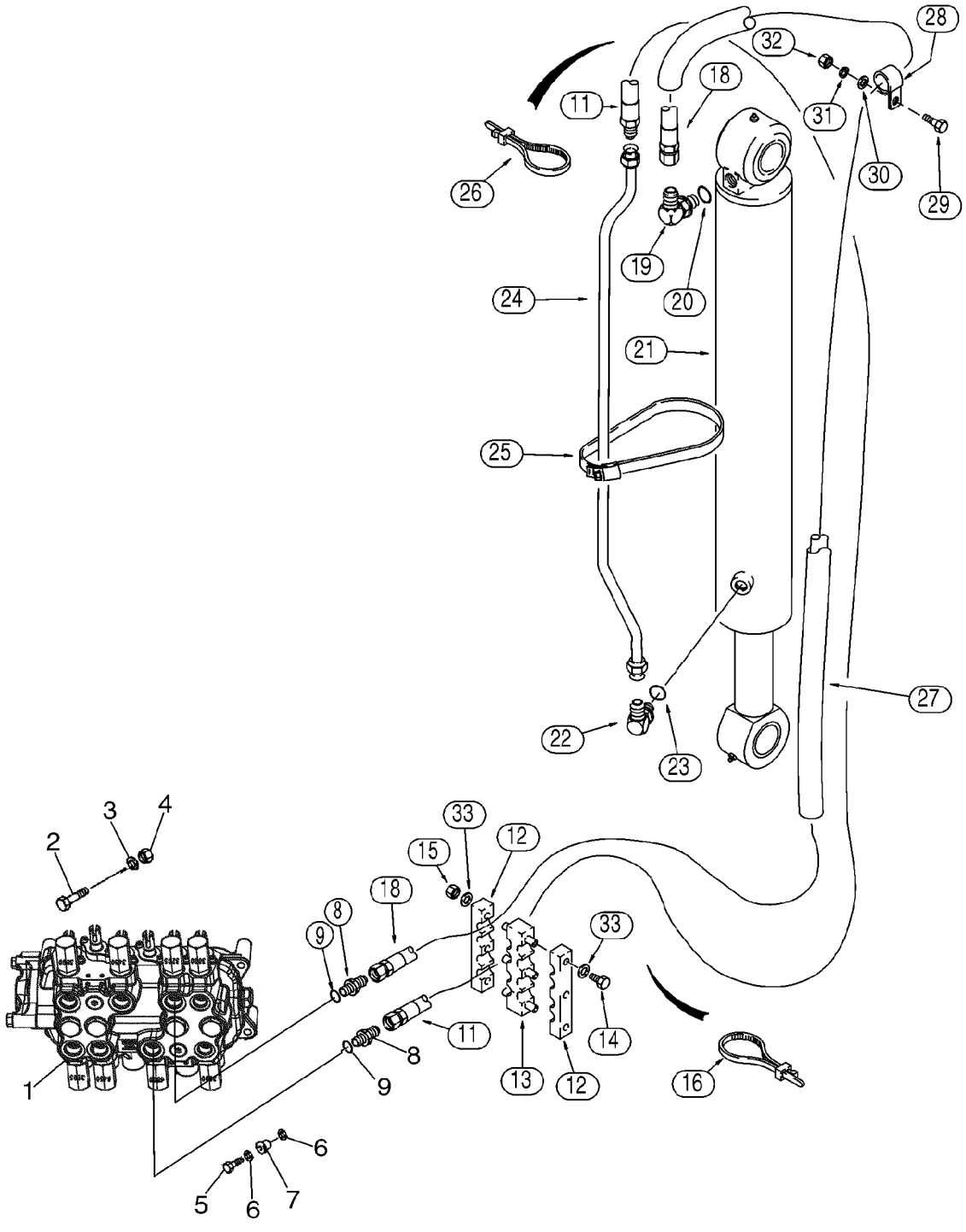

BS03M026

HYDRAULICS - CYLINDER, BACKHOE BOOM

REF	FN	PART NUMBER	YR/SN	QTY	DESCRIPTION
28		515-23254		1	CLAMP, 1", Insul, 3/8" Bolt
28		R24840		1	CLAMP, 1-1/8 in ID
29		614-10035		2	BOLT, Hex, M10 x 35, 8.8, Full Thd
30		895-11010		2	WASHER, M10 x 20 x 2
31		892-11010		2	WASHER, LOCK, M10
32		829-1410		2	NUT, M10, Cl 10
33		895-11010		6	WASHER, M10 x 20 x 2

08-10A		p1	01/08

HYDRAULICS - BACKHOE BOOM LOCK AND ELECTRICAL CIRCUIT

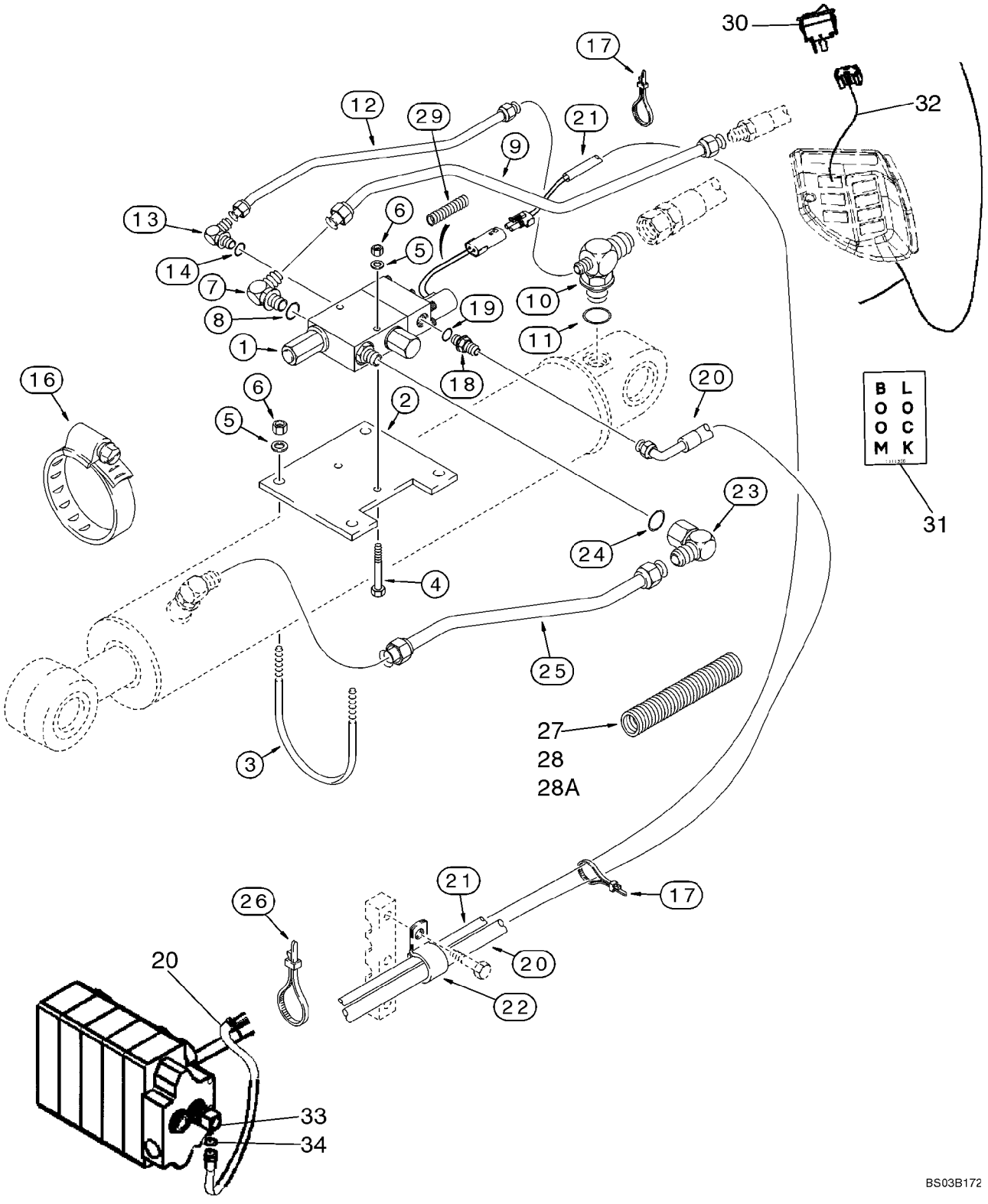

HYDRAULICS - BACKHOE BOOM LOCK AND ELECTRICAL CIRCUIT

REF	FN	PART NUMBER	YR/SN	QTY	DESCRIPTION
		399227A1		1	KIT, Backhoe Boom Lock, Incl. Ref 1 - 34 and an Instruction Sheet; Also Includes Boom Lock Valve On Figure 08-55A
1		189957A1		1	VALVE, Solenoid, Backhoe Boom Lock, Incl. (2) 321-6046 Warning Decals; See Figure 08-55A
2		D150054		1	PLATE, LARGE, Valve Mounting
3		D150053		2	BOLT, 3/8 in
4		413-648		2	BOLT, Hex, 3/8"-16 x 3", G5
5		495-11041		6	WASHER, 3/8", SAE
6		231-1446		6	NUT, LOCK, 3/8"-16, GB
7		218-5118		1	ELBOW, 90Ü, 1 1/16"-12, 37Ü x 1 5/16"-12, O-Ring, Incl. Ref 8
8		237-6016		1	O-RING, 16-1, 90 Duro, 1.171" ID x .118" Thk, Boss Seal
9		191756A1		1	TUBE, Valve Port; Attaches to Ref 11 Hose on Figure 08-10
10		191063A1		1	FITTING, Reducer, Boom Cylinder Closed End; Attaches to Ref 18 Hose, Figure 08-10
11		237-6010		1	O-RING, 10-1, 90 Duro, .755" ID x .097" Thk, Boss Seal
12		191790A1		1	TUBE, Pilot Port
13		218-5283		1	ELBOW, 90Ü, 7/16"-20, 37Ü x 9/16"-18, O-Ring, Incl. Ref 14
14		237-6006		1	O-RING, 6-1, 90 Duro, .468" ID x .078" Thk, Boss Seal
16		214-31104		1	CLAMP, HOSE, 5.75/6.625 HD Worm
17		L18337		15	STRAP, CABLE, 9.95"-12.1" lg
18		218-5359		1	CONNECTOR, HYD., 7/16"-20, 37Ü x 3/4"-16, O-Ring, Incl. Ref 19
19		237-6008		1	O-RING, 8-1, 90 Duro, .644" ID x .087" Thk, Boss seal
20		189103A1		1	HOSE, 3700 mm (145-11/16 in), Return; Attaches to Elbow at Backhoe Valve
21		189263A1		1	HARNESS, Boom Lock Valve to Control Tower Harness

08-10A		p2	01/08

HYDRAULICS - BACKHOE BOOM LOCK AND ELECTRICAL CIRCUIT

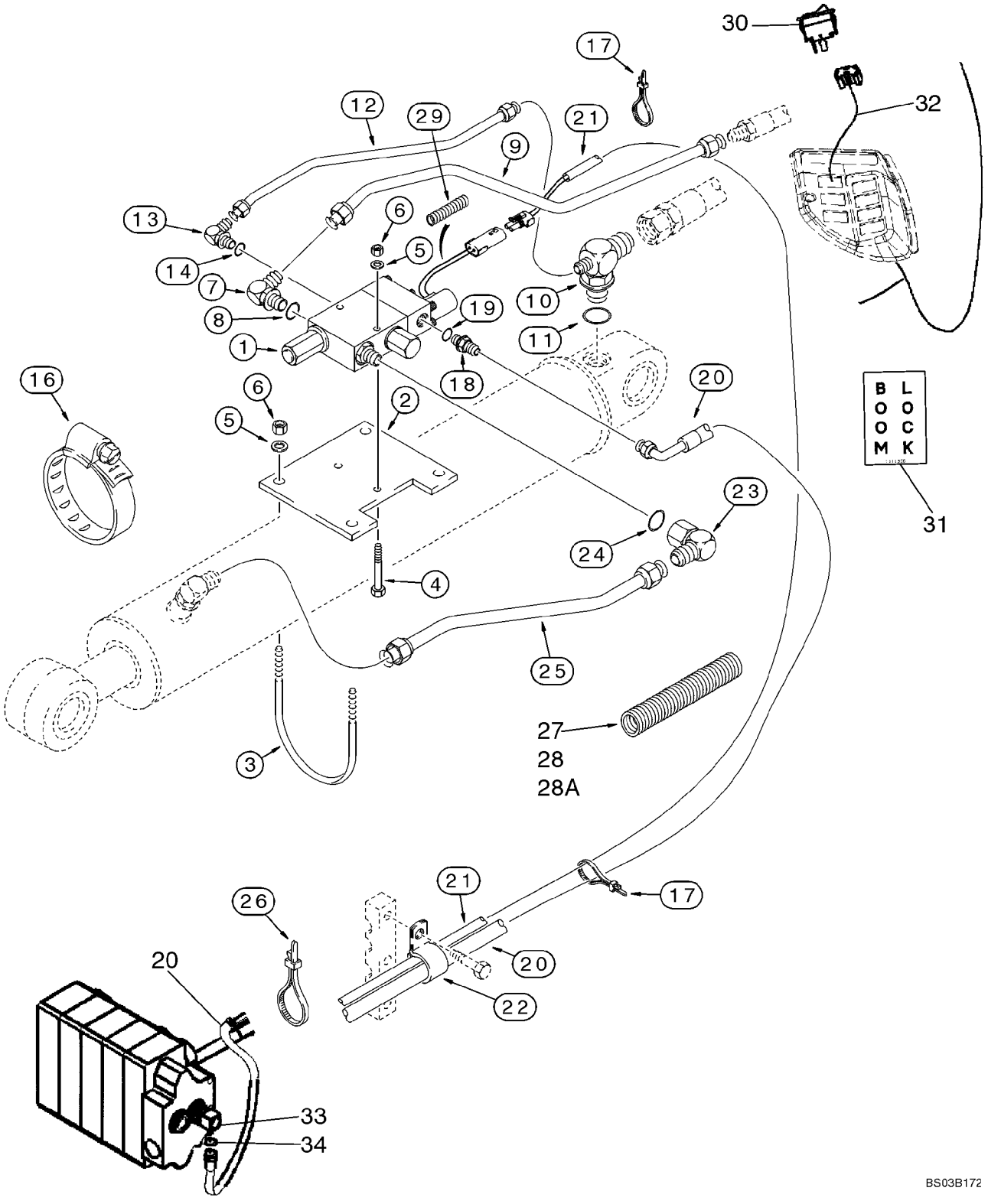

HYDRAULICS - BACKHOE BOOM LOCK AND ELECTRICAL CIRCUIT

REF	FN	PART NUMBER	YR/SN	QTY	DESCRIPTION
22		515-25190		1	CLAMP, 3/4", Insul, 1/2" Bolt, Return Hose
23		218-5382		1	ELBOW, 90Ü, 1 1/16"-12, 37Ü x 1 5/16"-12, 37Ü Fem Sw, Incl. Ref 24
24		237-6016		1	O-RING, 16-1, 90 Duro, 1.171" ID x .118" Thk, Boss Seal
25		187612A1		1	TUBE, Boom Lock Valve to Boom Cylinder Rod End, See Figure 08-10, Ref 22 for Elbow
26		D147773		1	CLAMP, Tie, 11 in
27		226582A1		1	PROTECTOR, 1850 mm lg, Harness Guard, Below Floor Plate
28		220276A1		1	SLEEVE, 610 mm lg, Harness Ahead of Swing Tower Opening
28A		404907A1		1	SLEEVE, 740 mm lg, Harness Behind Swing Tower Opening
29		1999528C1		1	CABLE SHEATH., 455 mm lg, Solenoid Wire
30		400016A1		1	SWITCH, Rocker, Boom Lock
31		L111356		1	DECAL, Boom Lock
32		399246A1		1	HARNESS, Cab To Solenoid
33		189414A1		1	ELBOW, 90 deg, Incl. Ref 34
34		237-6010		1	O-RING, 10-1, 90 Duro, .755" ID x .097" Thk, Boss Seal

08-11		p1	01/08

HYDRAULICS - CYLINDER, BACKHOE DIPPER

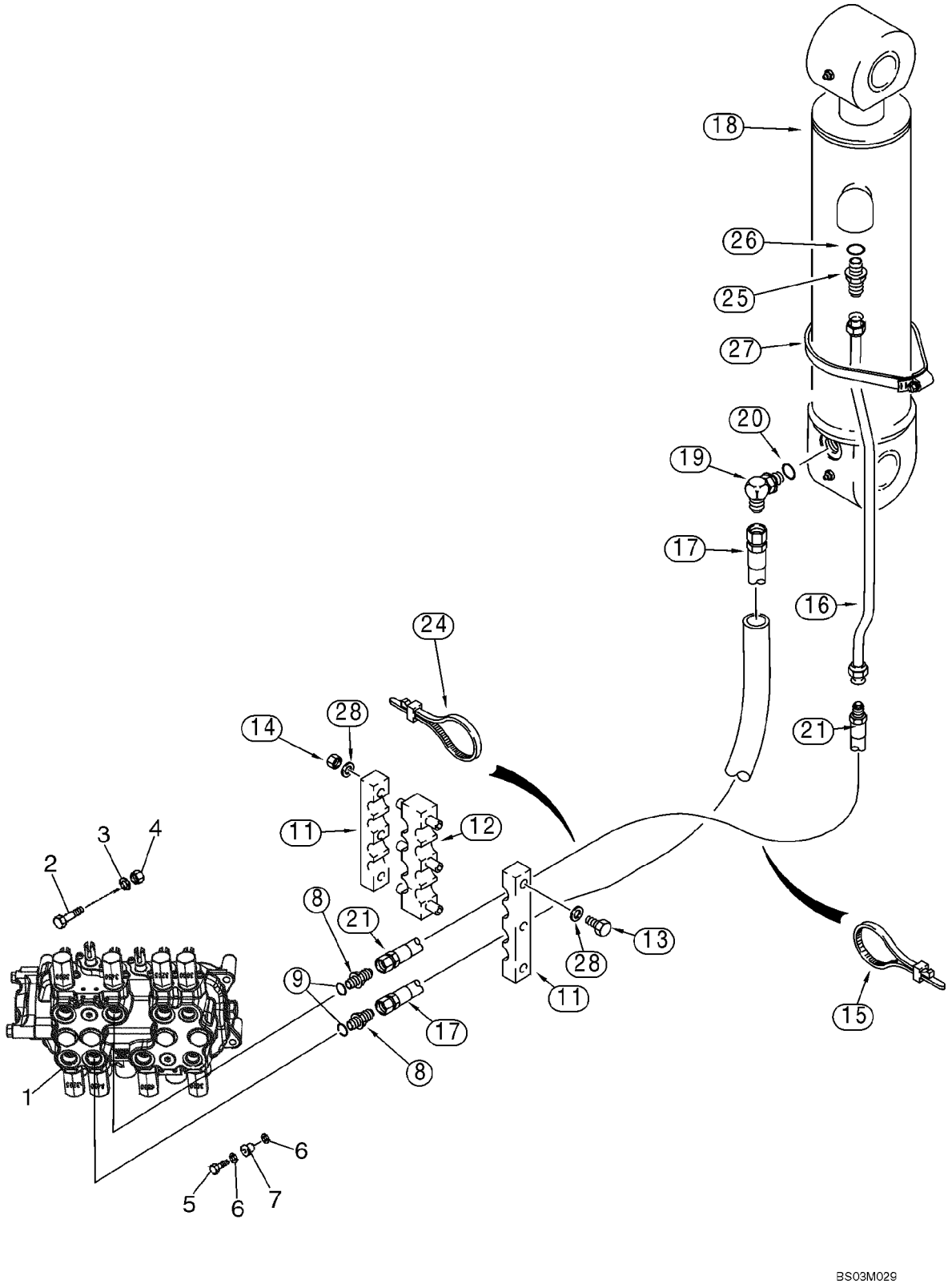

HYDRAULICS - CYLINDER, BACKHOE DIPPER

REF	FN	PART NUMBER	YR/SN	QTY	DESCRIPTION
1		REF		1	INSTRUCTION, Valve Assy, Control; Backhoe Control Valve; For Correct Assembly and Components, See Figures 08-32 - 08-39
2		814-10080		2	BOLT, Hex, M10 x 80, 8.8
3		896-11010		2	WASHER, M10 x 21.5 x 2.5, HT
4		829-1410		2	NUT, M10, Cl 10
5		614-10035		1	BOLT, Hex, M10 x 35, 8.8, Full Thd
6		496-41041		2	WASHER, 13/32" x 1 1/8" x .134"
7		D52276		1	ISOLATOR
8		218-5063		2	CONNECTOR, HYD., 7/8"-14, 37Ü x 1 1/16"-12, O-Ring, Incl. Ref 9
9		237-6012		1	O-RING, 12-1, 90 Duro, .924 ID x .118" Thk, Boss Seal
11		178951A1		2	CLAMP
12		178952A1		1	CLAMP
13		814-10120		3	BOLT, Hex, M10 x 120, 8.8
14		832-10410		3	NUT, LOCK, M10 x 1.5, Cl 8
15		L18337		4	STRAP, CABLE, 9.95"-12.1" lg
16		357469A1		1	TUBE ASSY.
17		393371A1		1	HOSE ASSY., 2025 mm (79-3/4 in), Lower Valve Port
18		233114A2		1	CYLINDER ASSY., 108 ID x 686 mm strk; Dipper Cylinder, See Figure 08-64
19		218-5107		1	ELBOW, 90Ü, 7/8"-14, 37Ü x 7/8"-14, O-Ring, Incl. Ref 20
20		237-6010		1	O-RING, 10-1, 90 Duro, .755" ID x .097" Thk, Boss Seal
21		397787A1		1	HOSE ASSY., 2025 mm (79-3/4 in), Upper Valve Port
24		L18337		2-4	STRAP, CABLE, 9.95"-12.1" lg
25		218-5062		1	CONNECTOR, HYD., 7/8"-14, 37Ü x 7/8"-14, O-Ring, Incl. Ref 26
26		237-6010		1	O-RING, 10-1, 90 Duro, .755" ID x .097" Thk
27		214-1488		1	CLAMP, HOSE, #88, 5.12/6.00 Type F Worm
28		895-11010		6	WASHER, M10 x 20 x 2

08-12		p1	02/08

HYDRAULICS - CYLINDER, BACKHOE BUCKET (MODELS WITHOUT EXTENDABLE DIPPER)

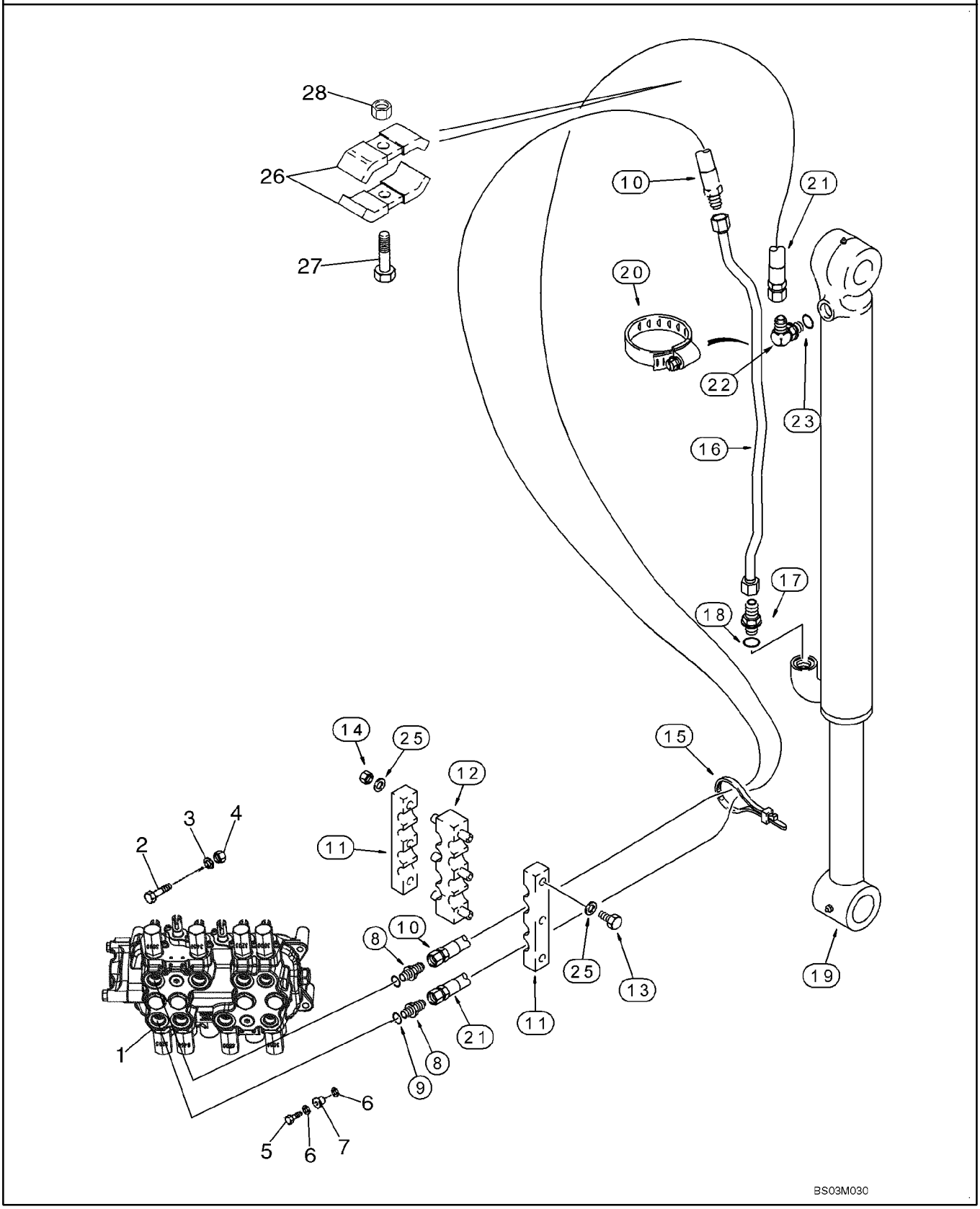

HYDRAULICS - CYLINDER, BACKHOE BUCKET (MODELS WITHOUT EXTENDABLE DIPPER)

REF	FN	PART NUMBER	YR/SN	QTY	DESCRIPTION
1		REF		1	INSTRUCTION, Valve Assy, Control; Backhoe Control Valve; For Correct Assembly and Components, See Figures 08-32, 08-33, 08-36, 08-38
2		814-10080		2	BOLT, Hex, M10 x 80, 8.8
3		896-11010		2	WASHER, M10 x 21.5 x 2.5, HT
4		829-1410		2	NUT, M10, Cl 10
5		614-10035		1	BOLT, Hex, M10 x 35, 8.8, Full Thd
6		496-41041		2	WASHER, 13/32" x 1 1/8" x .134"
7		D52276		1	ISOLATOR
8		218-5063		2	CONNECTOR, HYD., 7/8"-14, 37Ü x 1 1/16"-12, O-Ring, Incl. Ref 9
9		237-6012		1	O-RING, 12-1, 90 Duro, .924 ID x .118" Thk, Boss Seal
10		397788A1		1	HOSE ASSY., 3860 mm (152 in)
11		178951A1		2	CLAMP
12		178952A1		1	CLAMP
13		814-10120		3	BOLT, Hex, M10 x 120, 8.8
14		832-10410		3	NUT, LOCK, M10 x 1.5, Cl 8
15		L18337		2-4	STRAP, CABLE, 9.95"-12.1" lg
16		396339A1		1	TUBE ASSY., Models Without Backhoe Auxiliary Hydraulics
16		357470A1		1	TUBE ASSY., Models With Backhoe Auxiliary Hydraulics
17		218-5062		1	CONNECTOR, HYD., 7/8"-14, 37Ü x 7/8"-14, O-Ring, Incl. Ref 18
18		237-6010		1	O-RING, 10-1, 90 Duro, .755" ID x .097" Thk, Boss Seal
19		128760A1		1	CYLINDER ASSY., 83 ID x 872 mm strk; Bucket Cylinder, See Figure 08-65
20		214-1464		1	CLAMP, HOSE, #64, 3.56/4.50 Type F Worm
21		393360A1		1	HOSE ASSY., 3860 mm (152 in)
22		218-5107		1	ELBOW, 90Ü, 7/8"-14, 37Ü x 7/8"-14, O-Ring, Incl. Ref 23
23		237-6010		1	O-RING, 10-1, 90 Duro, .755" ID x .097" Thk

HYDRAULICS - CYLINDER, BACKHOE BUCKET (MODELS WITHOUT EXTENDABLE DIPPER)

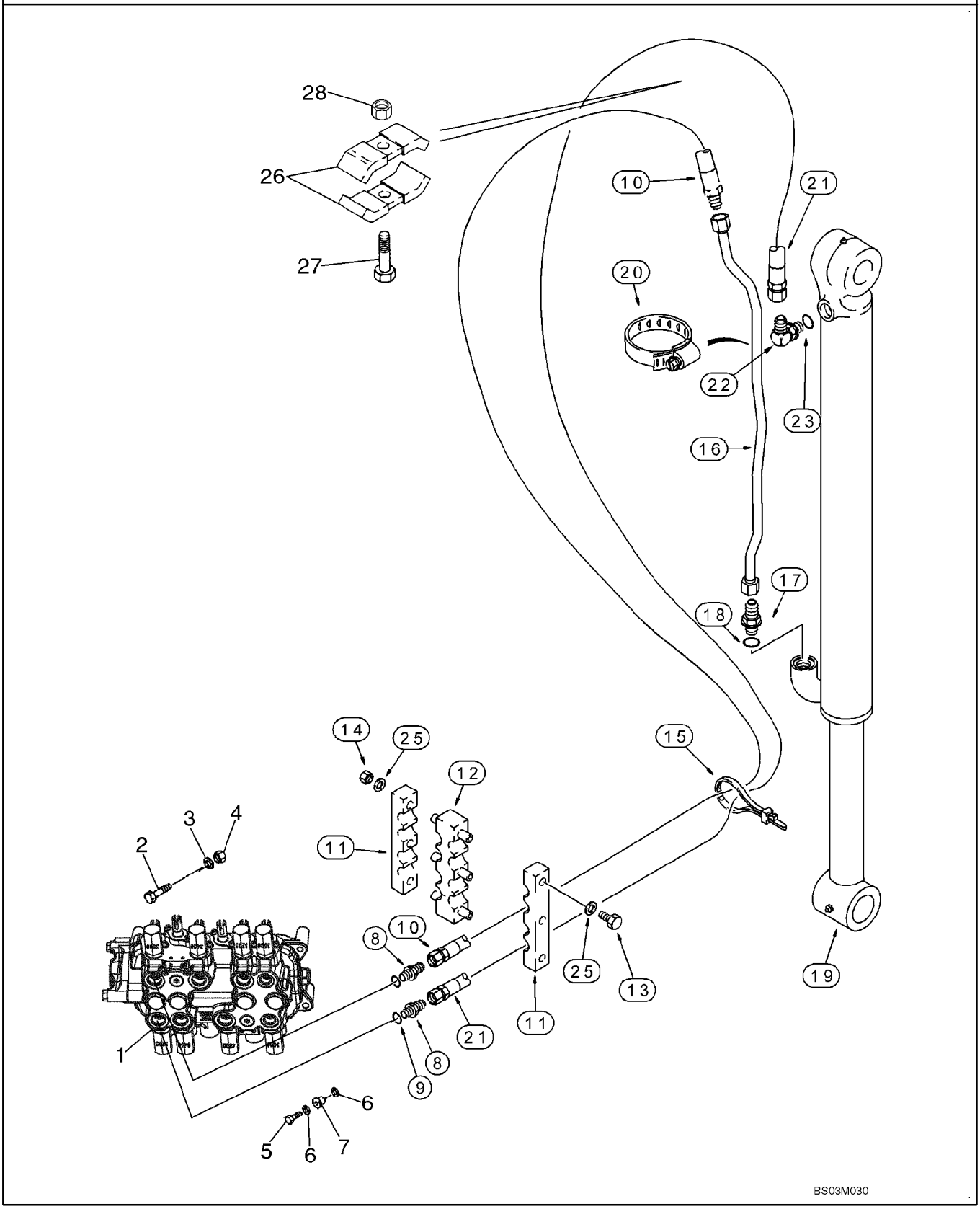

HYDRAULICS - CYLINDER, BACKHOE BUCKET (MODELS WITHOUT EXTENDABLE DIPPER)

REF	FN	PART NUMBER	YR/SN	QTY	DESCRIPTION
25		895-11010		6	WASHER, M10 x 20 x 2
26		D143846		2	SHIN, Clamp
27		814-10055		1	BOLT, Hex, M10 x 55, 8.8
28		832-10410		1	NUT, LOCK, M10 x 1.5, Cl 8

08-13		p1	02/08

HYDRAULICS - CYLINDER, BACKHOE BUCKET (MODELS WITH EXTENDABLE DIPPER)

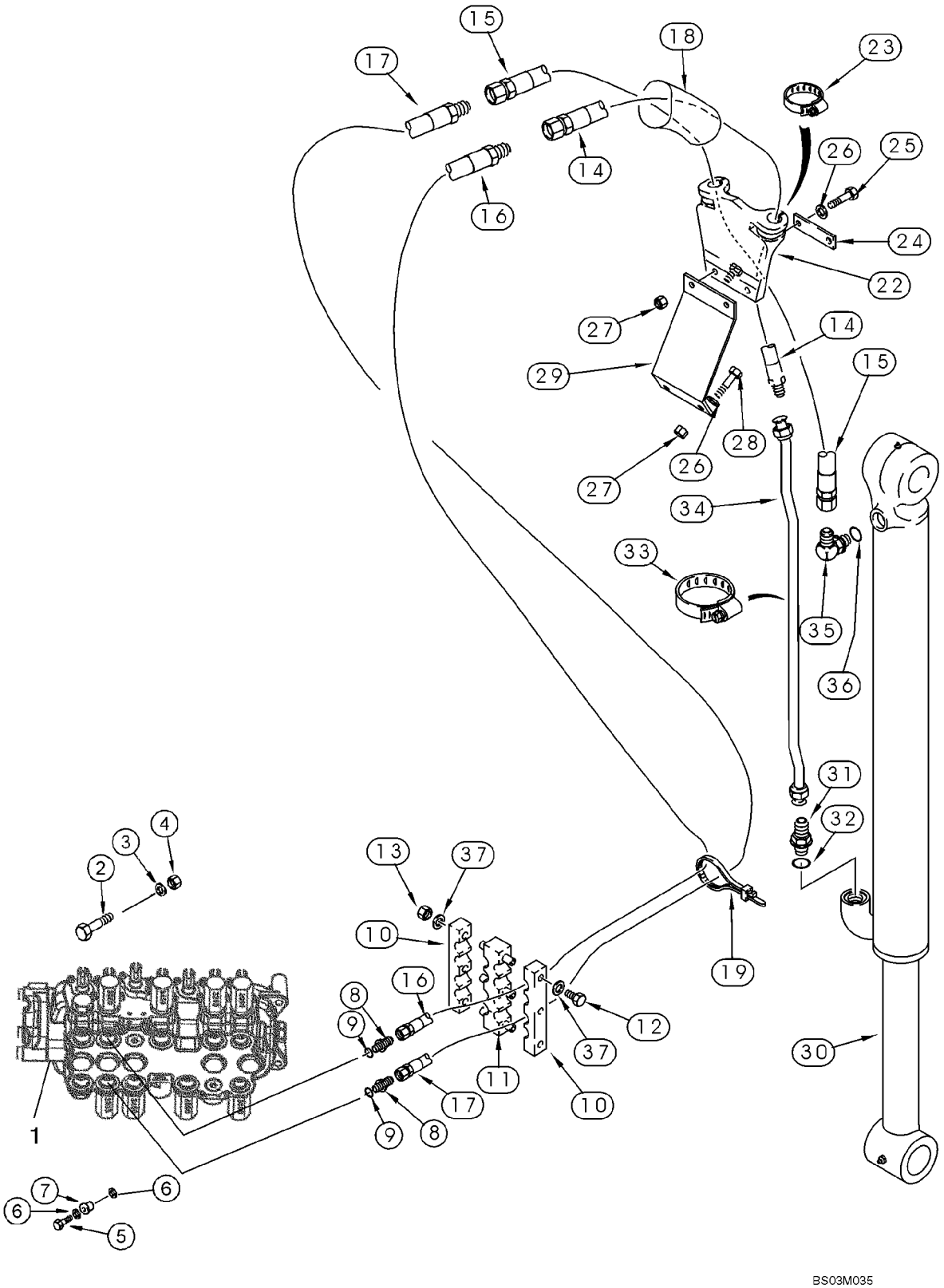

HYDRAULICS - CYLINDER, BACKHOE BUCKET (MODELS WITH EXTENDABLE DIPPER)

REF	FN	PART NUMBER	YR/SN	QTY	DESCRIPTION
1		REF		1	INSTRUCTION, Valve Assy, Control; Backhoe Control Valve; For Correct Assembly and Components, See Figures 08-34, 08-35, 08-37, 08-39
2		814-10080		2	BOLT, Hex, M10 x 80, 8.8
3		896-11010		2	WASHER, M10 x 21.5 x 2.5, HT
4		829-1410		2	NUT, M10, Cl 10
5		614-10035		1	BOLT, Hex, M10 x 35, 8.8, Full Thd
6		496-41041		2	WASHER, 13/32" x 1 1/8" x .134"
7		D52276		1	ISOLATOR
8		218-5063		2	CONNECTOR, HYD., 7/8"-14, 37Ü x 1 1/16"-12, O-Ring, Incl. Ref 9
9		237-6012		1	O-RING, 12-1, 90 Duro, .924 ID x .118" Thk
10		178951A1		2	CLAMP
11		178952A1		1	CLAMP
12		814-10120		3	BOLT, Hex, M10 x 120, 8.8
13		832-10410		3	NUT, LOCK, M10 x 1.5, Cl 8
14		365309A1		1	HOSE ASSY., 2052 mm (80-3/4 in)
15		143400A1		1	HOSE, 2052 mm (80-3/4 in)
16		393361A1		1	HOSE ASSY., 3048 mm (120 in)
17		393362A1		1	HOSE ASSY., 3048 mm (120 in)
18		87455961		1	TUBE, PLASTIC-RUBBER, Sleeve; 87.4 Flat ID x 2000 mm
19		L18337		2-5	STRAP, CABLE, 9.95"-12.1" lg
22		184297A1		1	SUPPORT
23		214-3132		2	CLAMP, HOSE, 1.25/2.125 HD Worm
24		101479A1		1	SUPPORT
25		814-10045		2	BOLT, Hex, M10 x 45, 8.8
26		895-11010		4	WASHER, M10 x 20 x 2
27		832-10410		4	NUT, LOCK, M10 x 1.5, Cl 8
28		614-10030		2	BOLT, Hex, M10 x 30, 8.8
29		183736A1		1	SUPPORT
30		128760A1		1	CYLINDER ASSY., 83 ID x 872 mm strk; Bucket Cylinder, See Figure 08-65

HYDRAULICS - CYLINDER, BACKHOE BUCKET (MODELS WITH EXTENDABLE DIPPER)

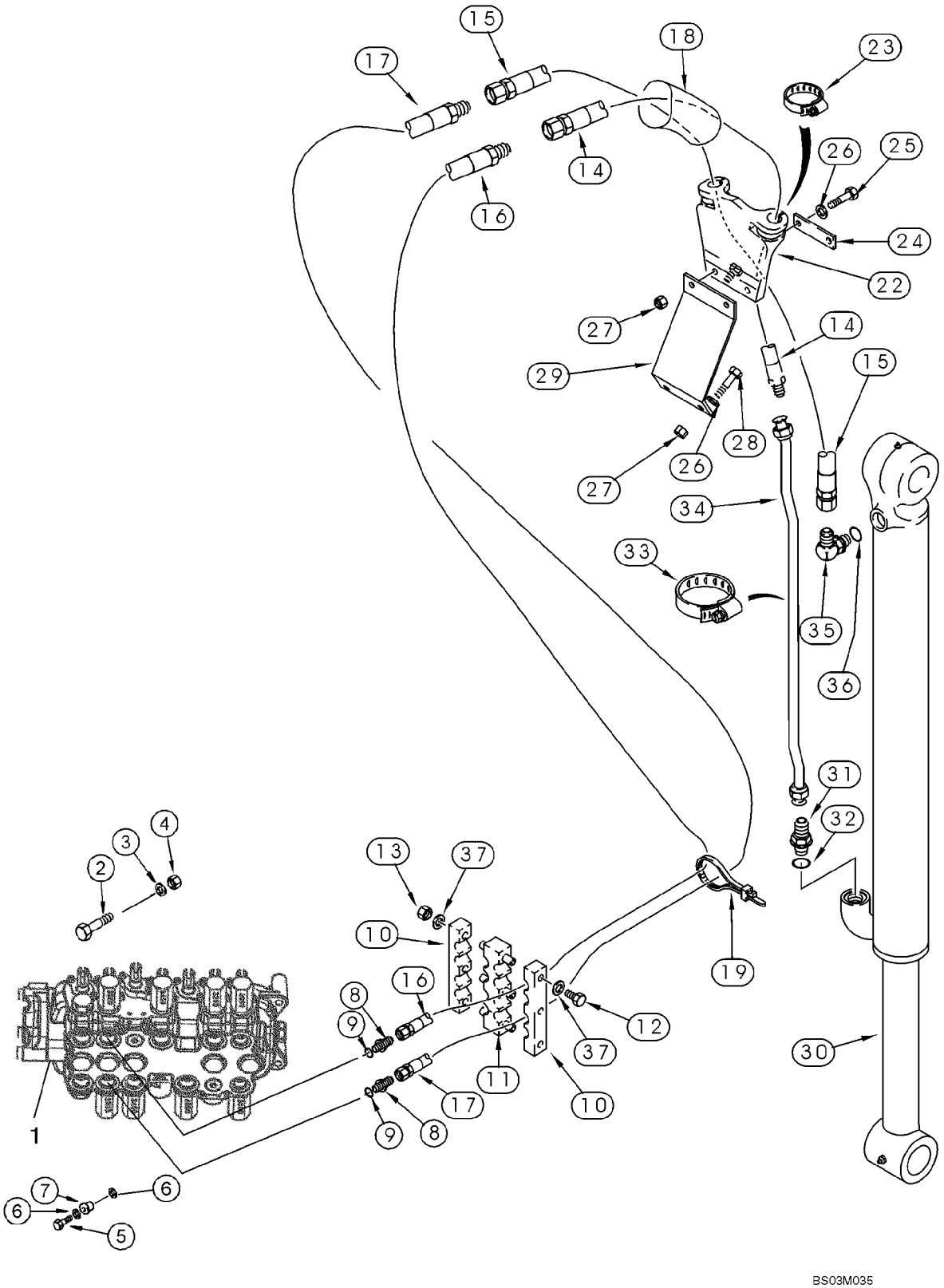

HYDRAULICS - CYLINDER, BACKHOE BUCKET (MODELS WITH EXTENDABLE DIPPER)

REF	FN	PART NUMBER	YR/SN	QTY	DESCRIPTION
31		218-5062		1	CONNECTOR, HYD., 7/8"-14, 37Ü x 7/8"-14, O-Ring, Incl. Ref 32
32		237-6010		1	O-RING, 10-1, 90 Duro, .755" ID x .097" Thk
33		214-1464		2	CLAMP, HOSE, #64, 3.56/4.50 Type F Worm
34		396339A1		1	TUBE ASSY., Models Without Auxiliary Hydraulics
34		357470A1		1	TUBE ASSY., Models With Auxiliary Hydraulics
35		218-5107		1	ELBOW, 90Ü, 7/8"-14, 37Ü x 7/8"-14, O-Ring, Incl. Ref 36
36		237-6010		1	O-RING, 10-1, 90 Duro, .755" ID x .097" Thk
37		895-11010		6	WASHER, M10 x 20 x 2

08-14		p1	02/08

HYDRAULICS - CYLINDER, BACKHOE EXTENDABLE DIPPER

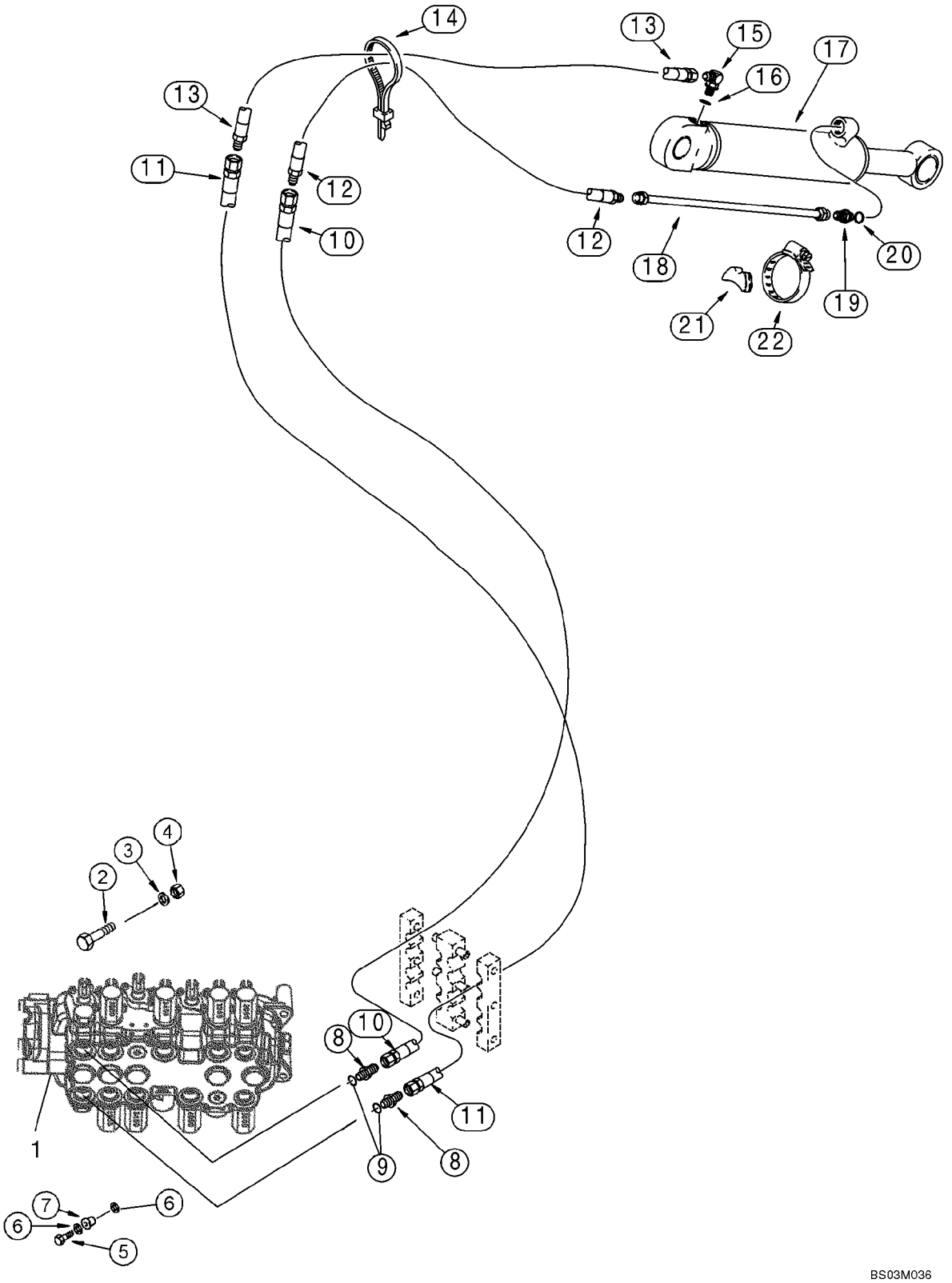

HYDRAULICS - CYLINDER, BACKHOE EXTENDABLE DIPPER

REF	FN	PART NUMBER	YR/SN	QTY	DESCRIPTION
1		REF		1	INSTRUCTION, Valve Assy, Control; Backhoe Control Valve; For Correct Assembly and Components, See Figures 08-34, 08-35, 08-37, 08-39
2		814-10080		2	BOLT, Hex, M10 x 80, 8.8
3		896-11010		2	WASHER, M10 x 21.5 x 2.5, HT
4		829-1410		2	NUT, M10, Cl 10
5		614-10035		1	BOLT, Hex, M10 x 35, 8.8, Full Thd
6		496-41041		2	WASHER, 13/32" x 1 1/8" x .134"
7		D52276		1	ISOLATOR
8		218-5063		2	CONNECTOR, HYD., 7/8"-14, 37Ü x 1 1/16"-12, O-Ring, Incl. Ref 9
9		237-6012		1	O-RING, 12-1, 90 Duro, .924 ID x .118" Thk
10		393354A1		1	HOSE ASSY., 3073 mm (121 in)
11		393357A1		1	HOSE ASSY., 3073 mm (121 in)
12		184617A1		1	HOSE, 850 mm (33-1/2 in)
13		184616A1		1	HOSE, 700 mm (27-9/16 in)
14		L18337		4	STRAP, CABLE, 9.95"-12.1" lg
15		218-5107		1	ELBOW, 90Ü, 7/8"-14, 37Ü x 7/8"-14, O-Ring, Incl. Ref 16
16		237-6010		1	O-RING, 10-1, 90 Duro, .755" ID x .097" Thk
17		1340969C2		1	CYLINDER ASSY., 76 ID x 1068 mm strk; Extendable Dipper Cylinder, See Figure 08-66
18		87439537		1	TUBE ASSY.
19		218-5062		1	CONNECTOR, HYD., 7/8"-14, 37Ü x 7/8"-14, O-Ring, Incl. Ref 20
20		237-6010		1	O-RING, 10-1, 90 Duro, .755" ID x .097" Thk
21		D38648		1	BLOCK
22		214-1464		1	CLAMP, HOSE, #64, 3.56/4.50 Type F Worm

HYDRAULICS - VALVE, PILOT CONTROL AND JOYSTICKS (6 SPOOL, W/O EXT DIPPER, W/O AUX HYDS)

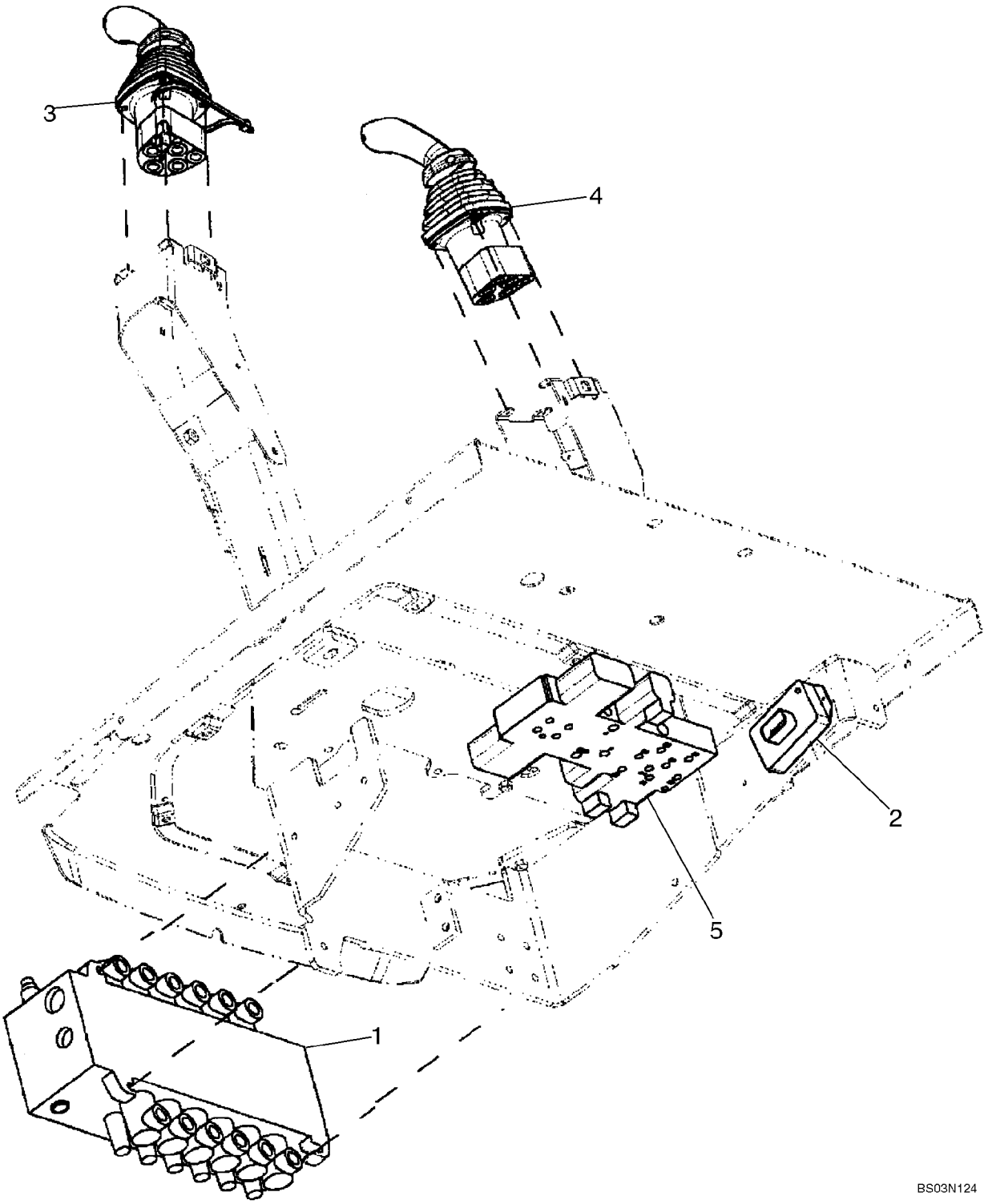

HYDRAULICS - VALVE, PILOT CONTROL AND JOYSTICKS (6 SPOOL, W/O EXT DIPPER, W/O AUX HYDS)

REF	FN	PART NUMBER	YR/SN	QTY	DESCRIPTION
		REF			INSTRUCTION, SIX SPOOL VALVE WITHOUT EXTENDABLE DIPPER; WITH AUTO-UP; WITHOUT AUXILIARY HYDRAULICS, WITHOUT UNI-DIRECTIONAL OR BI-DIRECTIONAL
1		87577343		1	VALVE, CONTROL, Backhoe, 6 Spool; Rexroth No. 08 403 273; See Figure 08-36; For Mounting See Figure 08-22
2		{87746673}		1	Box; Pilot Control Power Supply Module
		840-1416		2	SCREW, Cross Pan Hd, M4 x 16
3		87685948		1	VALVE, CONTROL, LH; With Horn Button; See Figure 08-50
4		87685954		1	VALVE, CONTROL, RH; See Figure 08-53
5		85827472		1	VALVE, HYDRAULIC, Pressure Reducing, 2 Spool; See Figure 08-47

HYDRAULICS - VALVE, PILOT CONTROL AND JOYSTICKS (6 SPOOL, W/O EXT DIPPER, W/ AUX HYDS)

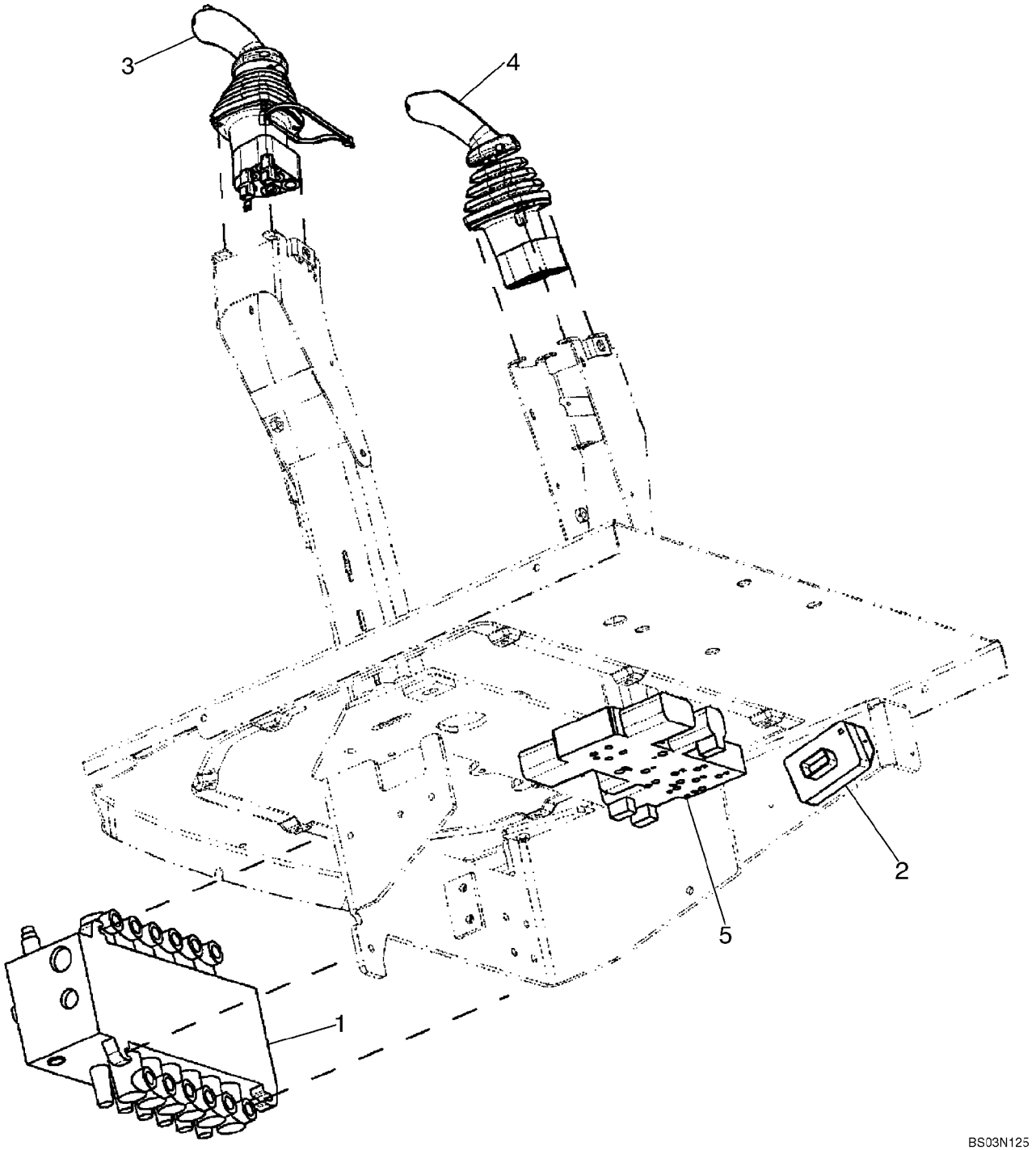

HYDRAULICS - VALVE, PILOT CONTROL AND JOYSTICKS (6 SPOOL, W/O EXT DIPPER, W/ AUX HYDS)

REF	FN	PART NUMBER	YR/SN	QTY	DESCRIPTION
		REF			INSTRUCTION, SIX SPOOL VALVE WITHOUT EXTENDABLE DIPPER; WITH AUTO-UP; WITH AUXILIARY HYDRAULICS, WITH UNI-DIRECTIONAL
1		87577343		1	VALVE, CONTROL, Backhoe, 6 Spool; Rexroth No. 08 403 273; See Figure 08-36; For Mounting See Figure 08-22
2		{87746673}		1	Box; Pilot Control Power Supply Module
		840-1416		2	SCREW, Cross Pan Hd, M4 x 16
3		87685953		1	VALVE, CONTROL, LH; With Horn and Uni-Directional Buttons; See Figure 08-51
4		87685954		1	VALVE, CONTROL, RH; See Figure 08-53
5		85827472		1	VALVE, HYDRAULIC, Pressure Reducing, 2 Spool; See Figure 08-47

08-17		p1	02/08

HYDRAULICS - VALVE, PILOT CONTROL AND JOYSTICKS (7 SPOOL, W/ EXT DIPPER, W/O AUX HYDS)

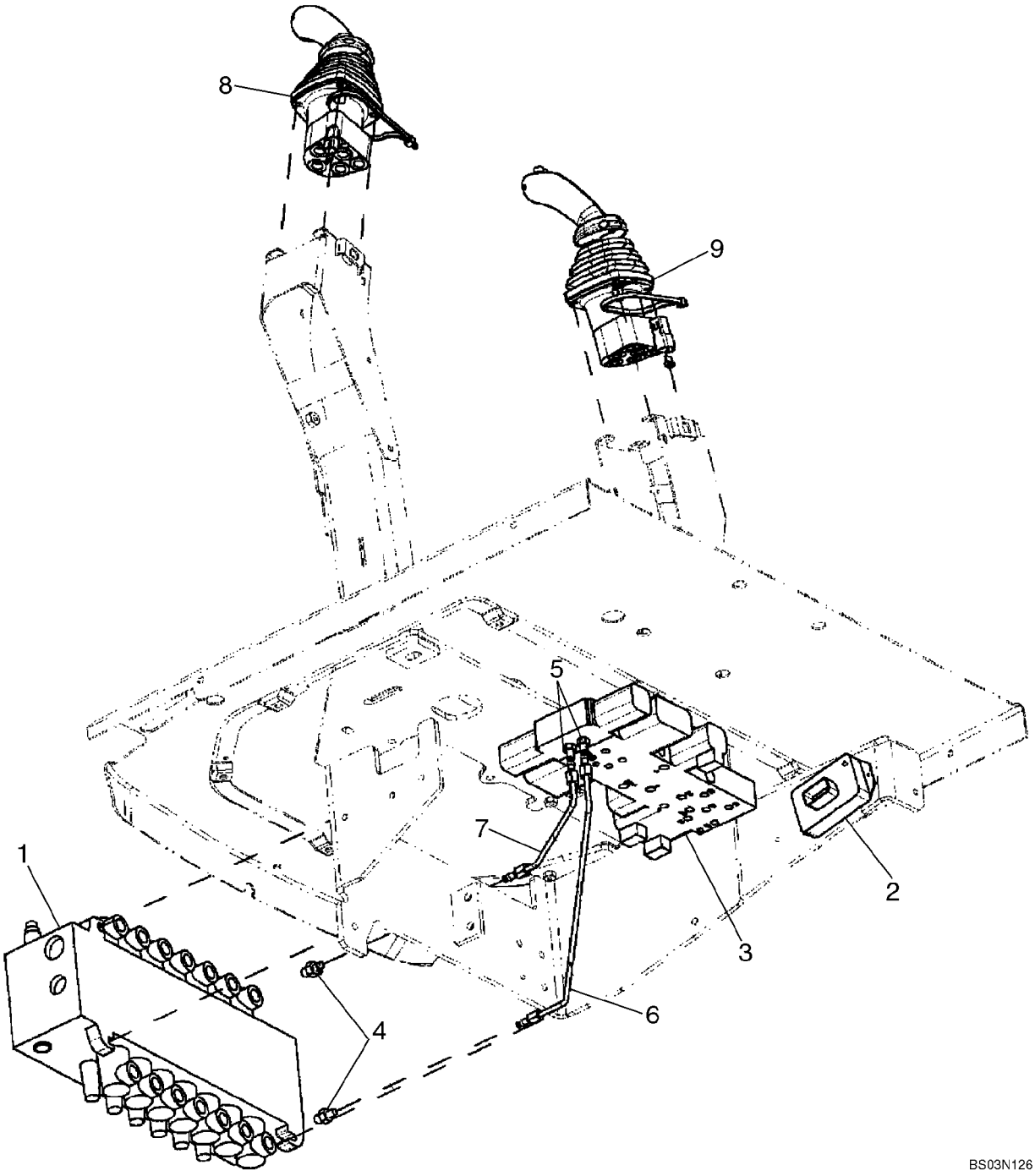

HYDRAULICS - VALVE, PILOT CONTROL AND JOYSTICKS (7 SPOOL, W/ EXT DIPPER, W/O AUX HYDS)

REF	FN	PART NUMBER	YR/SN	QTY	DESCRIPTION
		REF			INSTRUCTION, SEVEN SPOOL VALVE WITH EXTENDABLE DIPPER; WITHOUT AUXILIARY HYDRAULICS; WITH AUTO-UP; WITHOUT UNI-DIRECTIONAL OR BI-DIRECTIONAL
1		87577346		1	VALVE, CONTROL, Backhoe, 7 Spool; Rexroth No. 08 402 663; See Figure 08-37; For Mounting See Figure 08-22
2		{87746673}		1	Box; Pilot Control Power Supply Module
		840-1416		2	SCREW, Cross Pan Hd, M4 x 16
3		85827471		1	VALVE, HYDRAULIC, Pressure Reducing, 3 Spool; See Figure 08-48
4		218-5089		2	CONNECTOR, HYD., 7/16"-20, 37Ü x 9/16"-18, O-Ring, Includes 237-6006 O-Ring
		237-6006		1	O-RING, 6-1, 90 Duro, .468" ID x .078" Thk
5		218-5053		2	CONNECTOR, HYD., 7/16"-20, 37Ü x 7/16"-20, O-Ring, Incl. 237-6004 O-Ring
		237-6004		1	O-RING, 4-1, 90 Duro, .351" ID x .072" Thk
6		87437633		1	TUBE ASSY., To Lower Extendable Dipper Port
7		87437635		1	TUBE ASSY., To Upper Extendable Dipper Port
8		87685948		1	VALVE, CONTROL, LH; With Horn Button; See Figure 08-50
9		87685955		1	VALVE, CONTROL, RH; See Figure 08-54

08-18		p1	02/08

HYDRAULICS - VALVE, PILOT CONTROL AND JOYSTICKS (7 SPOOL, W/ EXT DIPPER, W/ AUX HYDS)

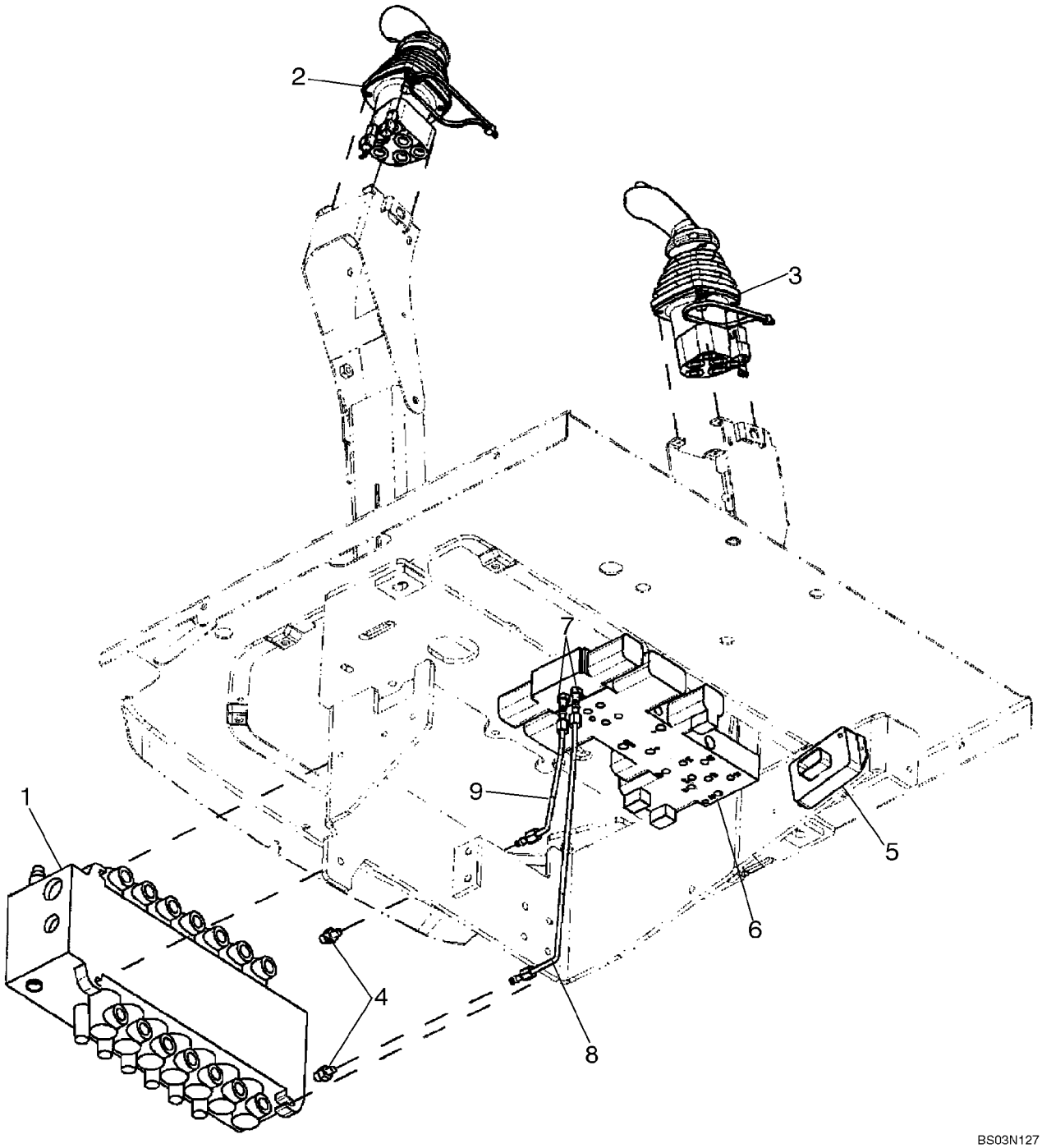

HYDRAULICS - VALVE, PILOT CONTROL AND JOYSTICKS (7 SPOOL, W/ EXT DIPPER, W/ AUX HYDS)

REF	FN	PART NUMBER	YR/SN	QTY	DESCRIPTION
		REF			INSTRUCTION, SEVEN SPOOL VALVE WITH EXTENDABLE DIPPER; WITH AUXILIARY HYDRAULICS; WITH AUTO-UP; WITH UNI-DIRECTIONAL
1		87577346		1	VALVE, CONTROL, Backhoe, 7 Spool; Rexroth No. 08 402 663; See Figure 08-37; For Mounting See Figure 08-22
2		87685953		1	VALVE, CONTROL, LH; With Horn and Uni-Directional Buttons; See Figure 08-51
3		87685955		1	VALVE, CONTROL, RH; See Figure 08-54
4		218-5089		2	CONNECTOR, HYD., 7/16"-20, 37Ü x 9/16"-18, O-Ring, Includes 237-6006 O-Ring
		237-6006		1	O-RING, 6-1, 90 Duro, .468" ID x .078" Thk
5		{87746673}		1	Box; Pilot Control Power Supply Module
		840-1416		2	SCREW, Cross Pan Hd, M4 x 16
6		85827471		1	VALVE, HYDRAULIC, Pressure Reducing, 3 Spool; See Figure 08-48
7		218-5053		2	CONNECTOR, HYD., 7/16"-20, 37Ü x 7/16"-20, O-Ring, Incl. 237-6004 O-Ring
		237-6004		1	O-RING, 4-1, 90 Duro, .351" ID x .072" Thk
8		87437633		1	TUBE ASSY., To Lower Extendable Dipper Port
9		87437635		1	TUBE ASSY., To Upper Extendable Dipper Port

08-19		p1	02/08

HYDRAULICS - VALVE, PILOT CONTROL AND JOYSTICKS (7 SPOOL, W/O EXT DIPPER, W/ AUX HYDS)

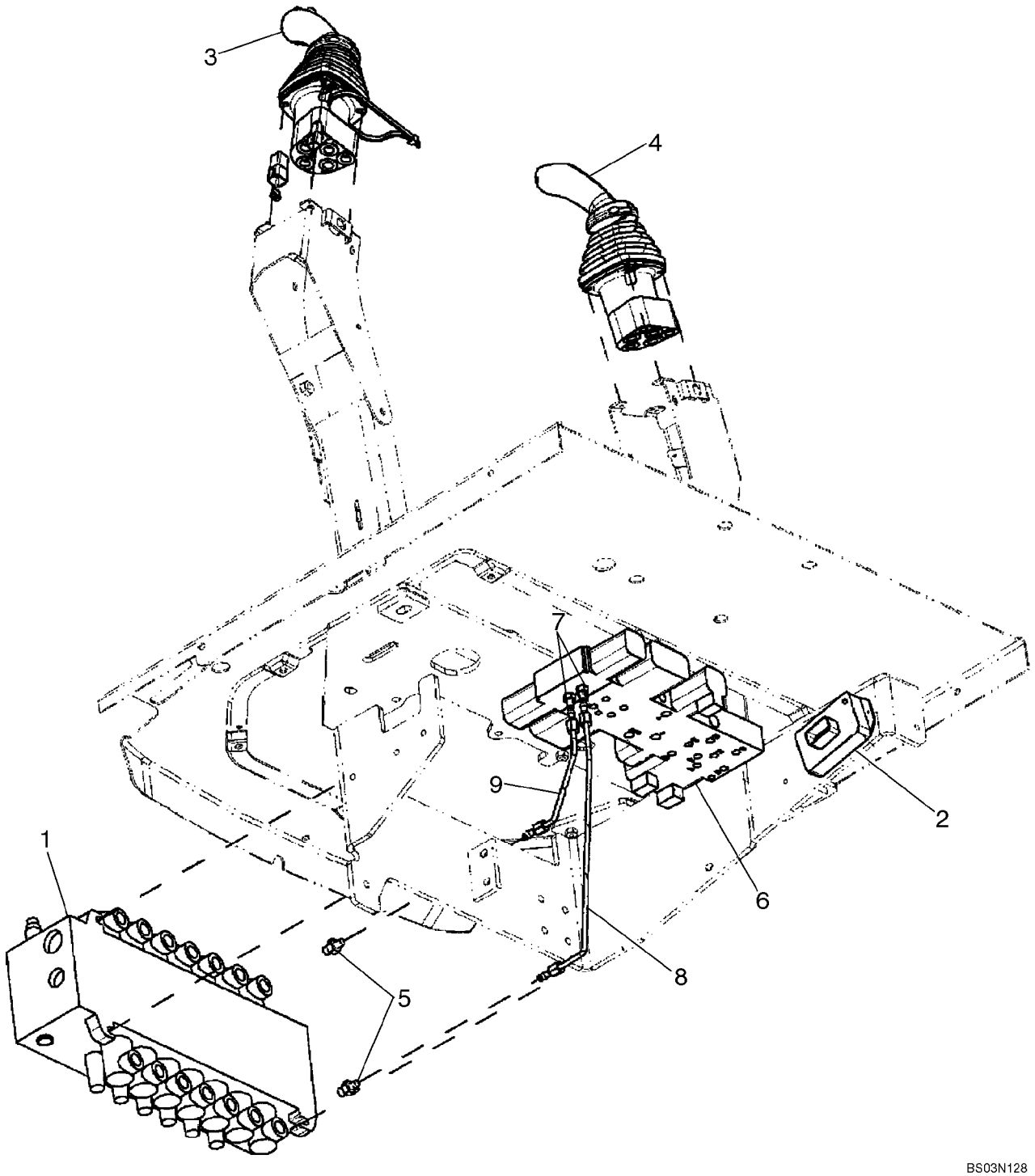

HYDRAULICS - VALVE, PILOT CONTROL AND JOYSTICKS (7 SPOOL, W/O EXT DIPPER, W/ AUX HYDS)

REF	FN	PART NUMBER	YR/SN	QTY	DESCRIPTION
		REF			INSTRUCTION, SEVEN SPOOL VALVE WITHOUT EXTENDABLE DIPPER; WITH AUXILIARY HYDRAULICS; WITH AUTO-UP; WITH BI-DIRECTIONAL
1		87577348		1	VALVE, CONTROL, Backhoe, 7 Spool; Rexroth No. 08 403 27; See Figure 08-38; For Mounting See Figure 08-22
2		87419455		1	CONTROL UNIT, Pilot Control Power Supply Module
		840-1416		2	SCREW, Cross Pan Hd, M4 x 16
3		87685952		1	VALVE, CONTROL, LH; With Horn and Bi-Directional Buttons; See Figure 08-52
4		87685954		1	VALVE, CONTROL, RH; See Figure 08-53
5		218-5089		2	CONNECTOR, HYD., 7/16"-20, 37Ü x 9/16"-18, O-Ring, Includes 237-6006 O-Ring
		237-6006		1	O-RING, 6-1, 90 Duro, .468" ID x .078" Thk
6		85827471		1	VALVE, HYDRAULIC, Pressure Reducing, 3 Spool; See Figure 08-48
7		218-5053		2	CONNECTOR, HYD., 7/16"-20, 37Ü x 7/16"-20, O-Ring, Incl. 237-6004 O-Ring
		237-6004		1	O-RING, 4-1, 90 Duro, .351" ID x .072" Thk
8		87438012		1	TUBE ASSY., To Lower Auxiliary Port
9		87438015		1	TUBE ASSY., To Upper Auxiliary Port

08-20		p1	02/08

HYDRAULICS - VALVE, PILOT CONTROL AND JOYSTICKS (8 SPOOL, W/ EXT DIPPER, W/ AUX HYDS)

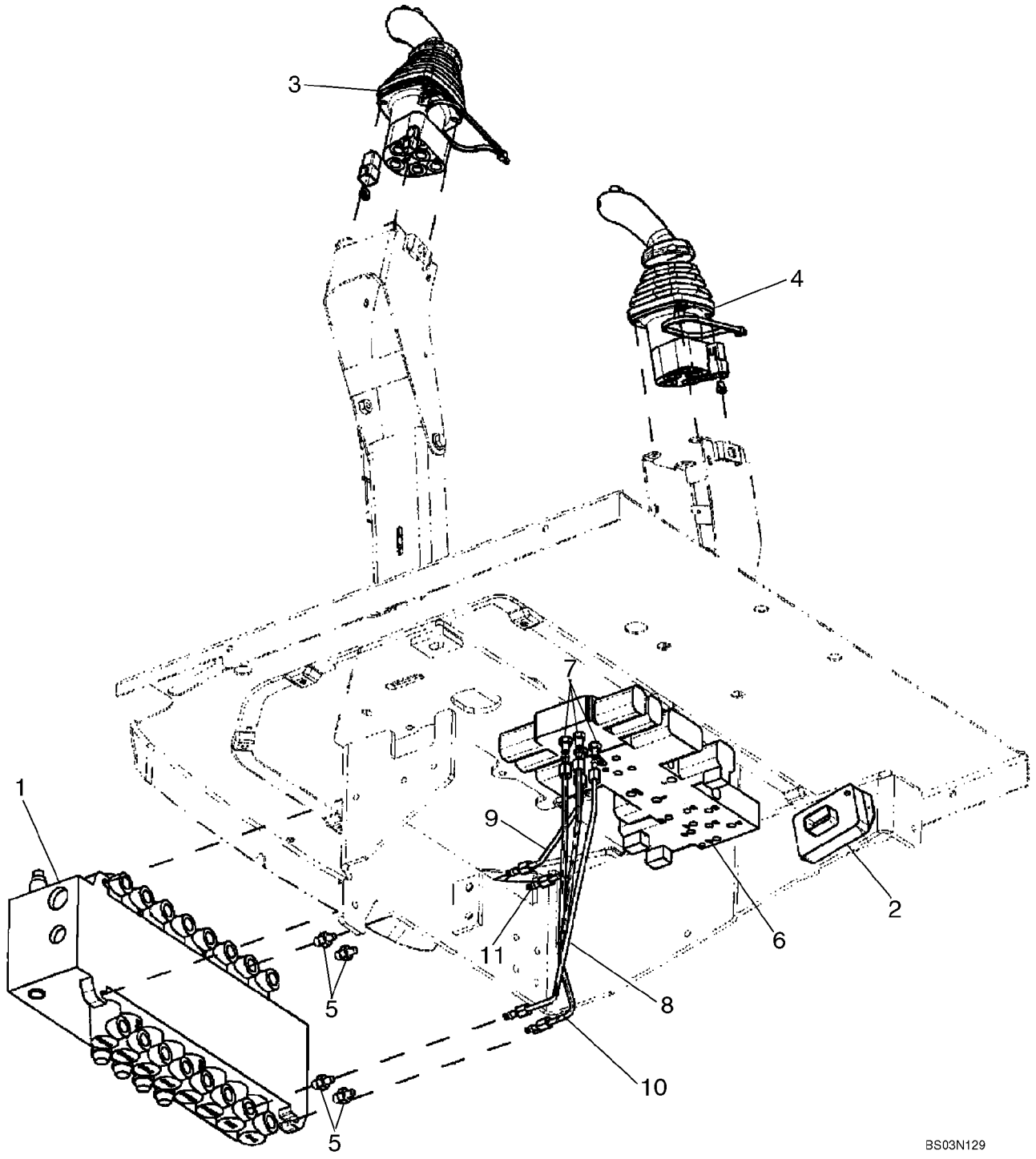

HYDRAULICS - VALVE, PILOT CONTROL AND JOYSTICKS (8 SPOOL, W/ EXT DIPPER, W/ AUX HYDS)

REF	FN	PART NUMBER	YR/SN	QTY	DESCRIPTION
		REF			INSTRUCTION, EIGHT SPOOL VALVE WITH EXTENDABLE DIPPER; WITH AUXILIARY HYDRAULICS; WITH AUTO-UP; WITH BI-DIRECTIONAL
1		87577349		1	VALVE, CONTROL, Backhoe, 8 Spool; Rexroth No. 08 403 271; See Figure 08-39; For Mounting See Figure 08-22
2		87419455		1	CONTROL UNIT, Pilot Control Power Supply Module
		840-1416		2	SCREW, Cross Pan Hd, M4 x 16
3		87685952		1	VALVE, CONTROL, LH; With Horn and Bi-Directional Buttons; See Figure 08-52
4		87685955		1	VALVE, CONTROL, RH; See Figure 08-54
5		218-5089		4	CONNECTOR, HYD., 7/16"-20, 37Ü x 9/16"-18, O-Ring, Includes 237-6006 O-Ring
		237-6006		1	O-RING, 6-1, 90 Duro, .468" ID x .078" Thk
6		87434621		1	VALVE, CONTROL, Pressure Reducing, 4 Spool; See Figure 08-49
7		218-5053		4	CONNECTOR, HYD., 7/16"-20, 37Ü x 7/16"-20, O-Ring, Incl. 237-6004 O-Ring
		237-6004		1	O-RING, 4-1, 90 Duro, .351" ID x .072" Thk
8		87437633		1	TUBE ASSY., To Lower Extendable Dipper Port
9		87437635		1	TUBE ASSY., To Upper Extendable Dipper Port
10		87440835		1	TUBE ASSY., Tube, To Lower Auxiliary Port
11		87440837		1	TUBE ASSY., Tube, To Upper Auxiliary Port

HYDRAULICS - PILOT CONTROL JOYSTICKS

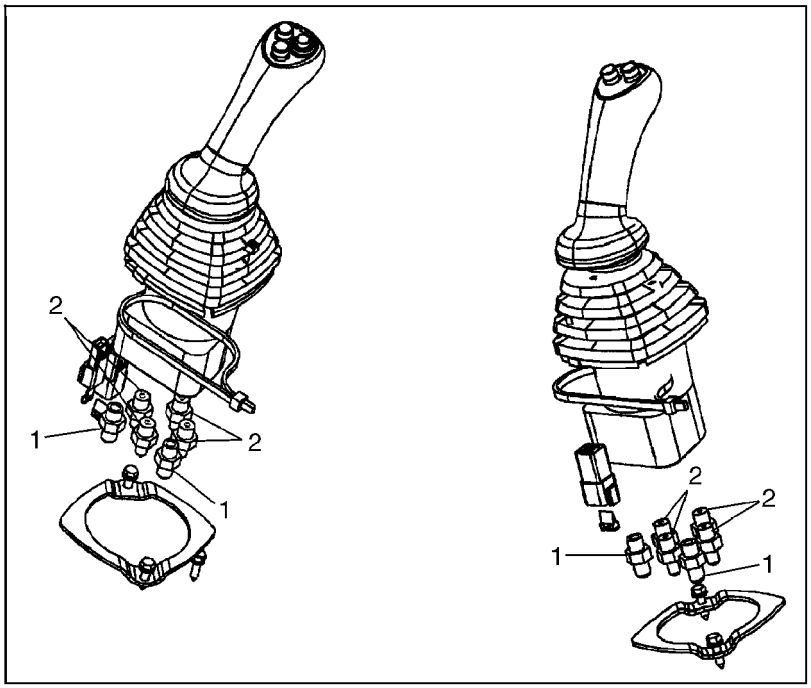

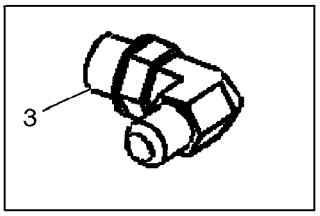

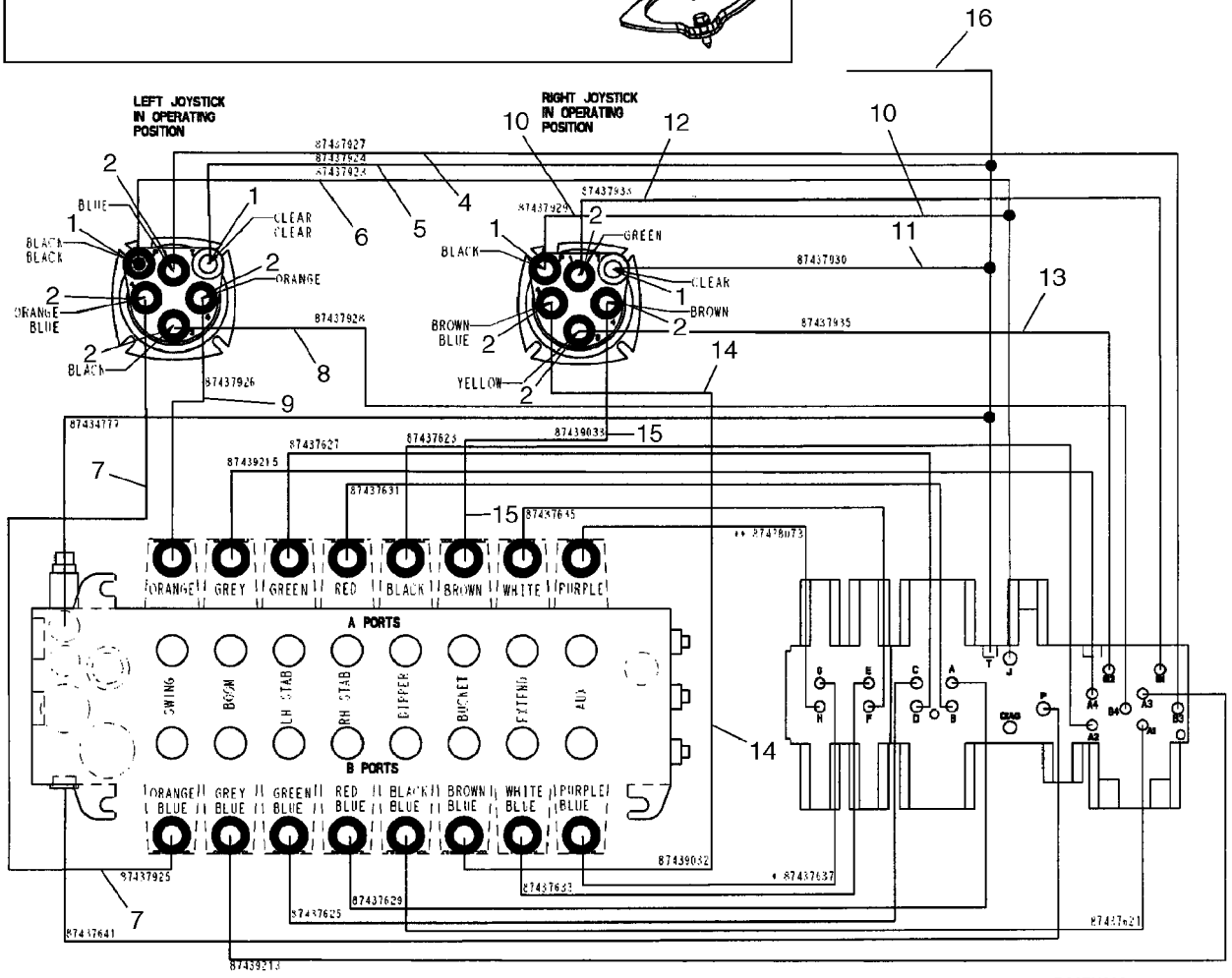

BS07N609

HYDRAULICS - PILOT CONTROL JOYSTICKS

REF	FN	PART NUMBER	YR/SN	QTY	DESCRIPTION
1		218-5057		4	CONNECTOR, HYD., 9/16"-18, 37Ü x 9/16"-18, O-Ring, Incl. 237-6006 O-Ring
2		218-5089		8	CONNECTOR, HYD., 7/16"-20, 37Ü x 9/16"-18, O-Ring, Includes 237-6006 O-Ring
3		218-5105		1	ELBOW, 90Ü, 9/16"-18, 37Ü x 9/16"-18, O-Ring, Includes 237-6006; Installs in Hydraulic Tank for Pilot Return
4		87437927		1	HOSE ASSY., 1295 mm (51 in); LH Joystick No. 1 to Selector Valve B3
5		87437924		1	HOSE ASSY., 1000 mm (39-3/8 in); LH Joystick Tank to Pressure Reducing Valve T
6		87437923		1	HOSE ASSY., 1035 mm (40-3/4 in); LH Joystick Pressure to Pressure Reducing Valve J
7		87437925		1	HOSE ASSY., 1075 mm (42-3/8 in); LH Joystick No. 2 to Swing Port B
8		87437928		1	HOSE ASSY., 1270 mm (50 in); LH Joystick No. 3 to Selector Valve B4
		399004A1		1	GUARD, Hose, 38.9 ID x 270 mm long; Used With Ref 4 - 8
9		87437926		1	HOSE ASSY., 825 mm (32-1/2 in); LH Joystick No. 4 to Swing Port A
10		87437929		1	HOSE ASSY., 1105 mm (43-1/2 in); RH Joystick Pressure to Pressure Reducing Valve J
11		87437930		1	HOSE ASSY., 1345 mm (53 in); RH Joystick Tank to Pressure Reducing Valve T
		191703A1		1	LOOM, Hose Guard, 28 ID x 400 mm long; Used With Ref 10, 11
12		87437933		1	HOSE ASSY., 1185 mm (46-11/16 in); RH Joystick No. 1 to Selector Valve B1
13		87437935		1	HOSE ASSY., 1175 mm (46-5/16 in); RH Joystick No. 3 to Selector Valve B2
14		87439032		1	HOSE ASSY., 1090 mm (42-15/16 in); RH Joystick No. 2 to Bucket Port B
15		87439033		1	HOSE ASSY., 915 mm (36-1/32 in); RH Joystick No. 4 to Bucket Port A

HYDRAULICS - PILOT CONTROL JOYSTICKS

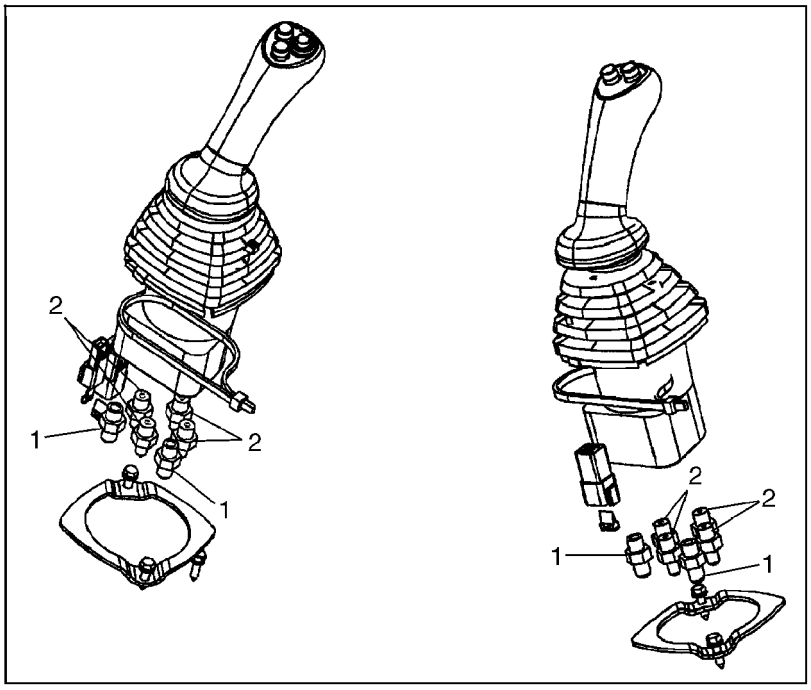

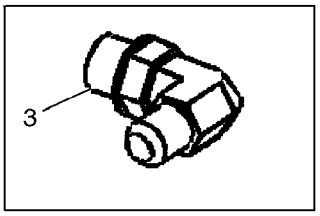

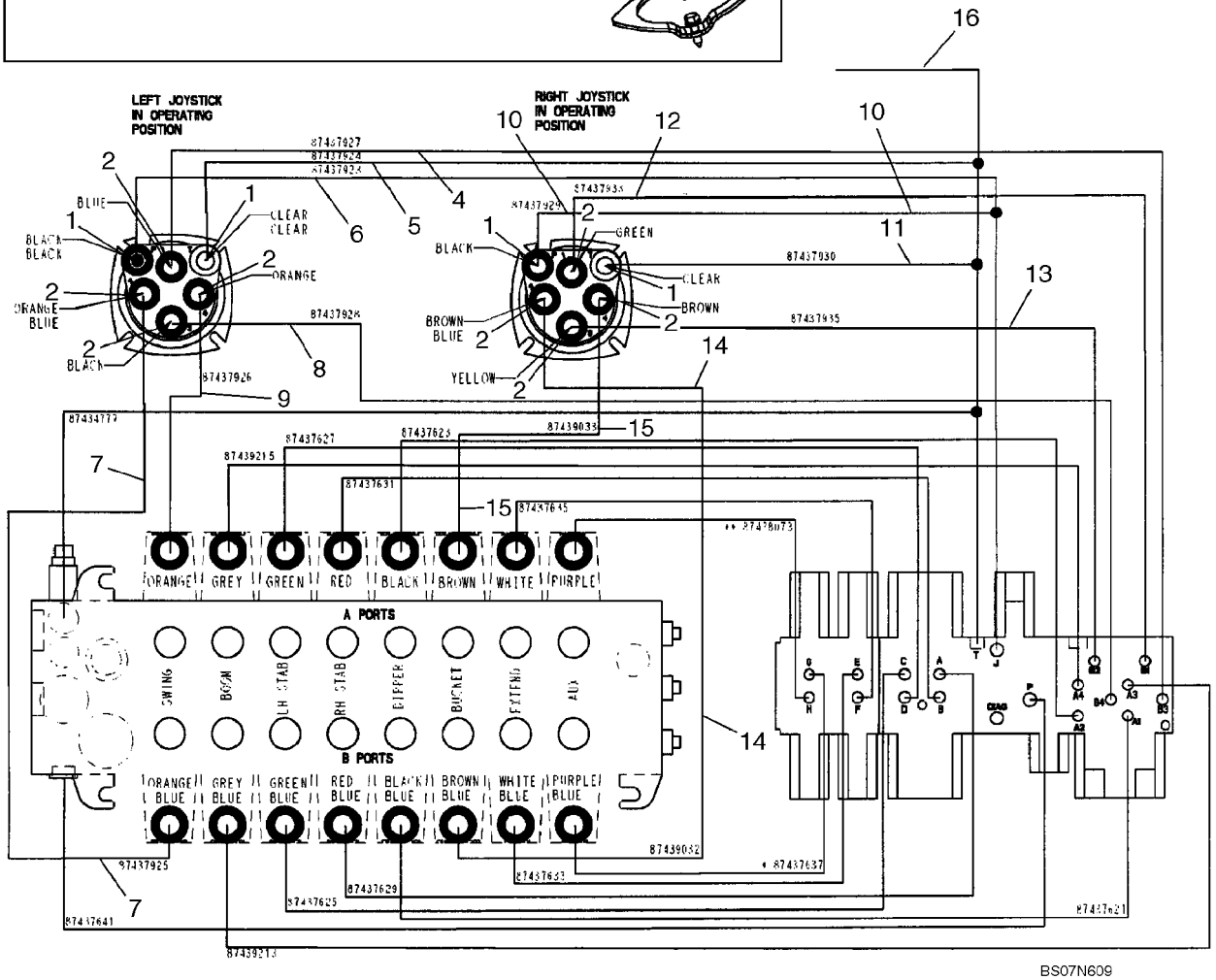

BS07N609

HYDRAULICS - PILOT CONTROL JOYSTICKS

REF	FN	PART NUMBER	YR/SN	QTY	DESCRIPTION
		191703A1		1	LOOM, Hose Guard, 28 ID x 400 mm long; Used With Ref 12 - 15
16		87452405		1	HOSE ASSY., 1520 mm (59-7/8 in); Pressure Reducing Valve T to Tank; Replaces 87435073
		143219A1		1	PROTECTOR, HOSE GUARD, 19 ID x 450 mm long; Used With Ref 16
		L18337		AR	STRAP, CABLE, 9.95"-12.1" lg

08-22		p1	02/08

HYDRAULICS - PILOT CONTROLS

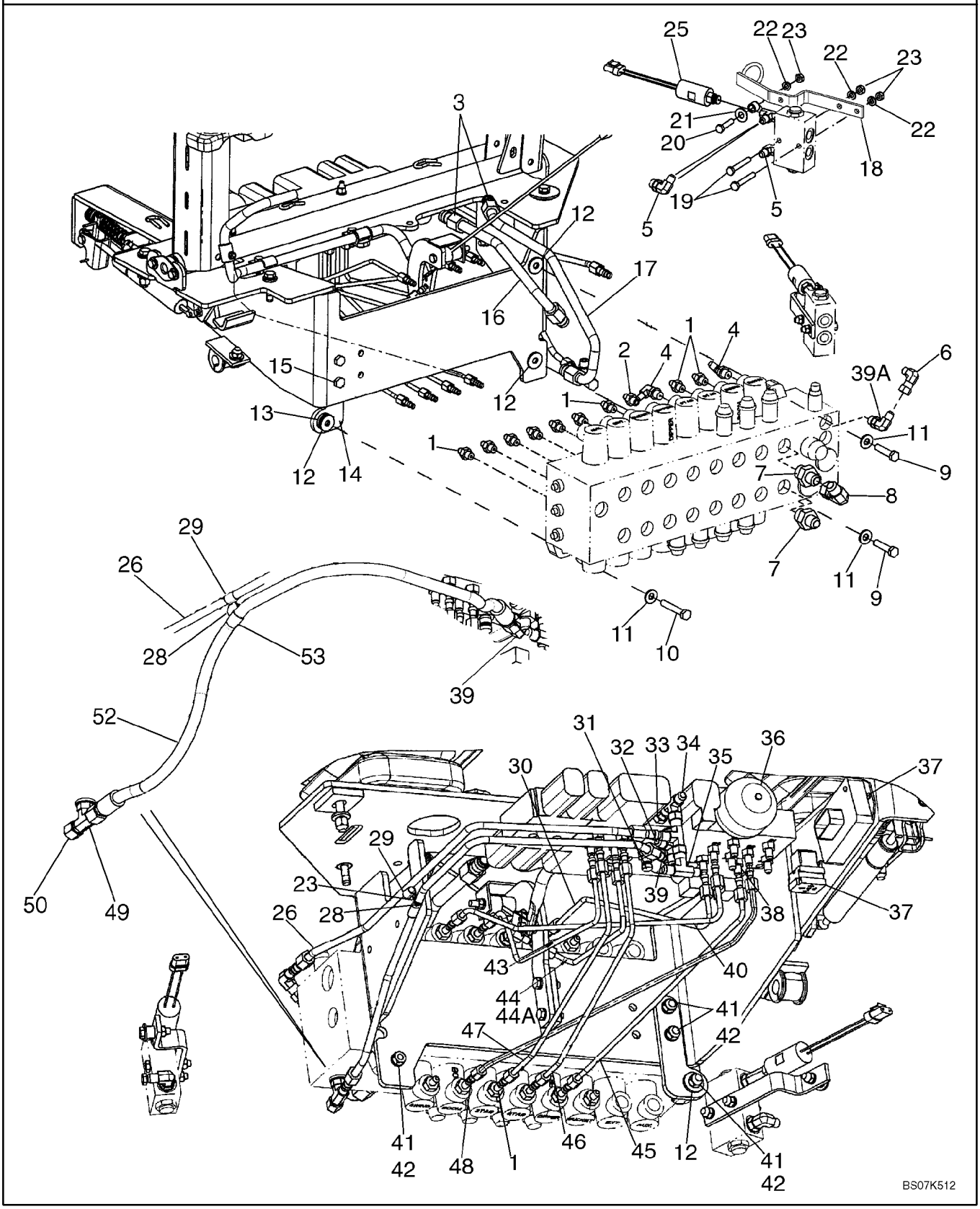

HYDRAULICS - PILOT CONTROLS

REF	FN	PART NUMBER	YR/SN	QTY	DESCRIPTION
1		218-5089		9	CONNECTOR, HYD., 7/16"-20, 37Ü x 9/16"-18, O-Ring, Includes 237-6006 O-Ring
2		87423401		1	FITTING, Special Orifice; 7/16 fl x 9/16 Or; Incl. 237-6006 O-Ring; If Unit Experiences Dipper Stuttering, As Dipper Is Moving Toward the Unit, Replace Ref 2 Fitting & Ref 30 & 45 Tubes, With (1) 87594363 Snubber, (2) 87594364 Hoses
2		87594363		1	VALVE, DAMPING, Snubber Fitting; Incl. 237-6006 O-ring; Used In Place of 87423401 Fitting On Models With Dipper Stuttering
3		218-5107		1	ELBOW, 90Ü, 7/8"-14, 37Ü x 7/8"-14, O-Ring, Includes 237-6010 O-Ring
4		218-5365		2	ELBOW, 45Ü, 7/16"-20, 37Ü x 9/16"-18, O-Ring, Includes 237-6006 O-Ring
5		218-5105		2-4	ELBOW, 90Ü, 9/16"-18, 37Ü x 9/16"-18, O-Ring, Includes 237-6006; 2 Used on Models With Auto Up; 4 Used on Models Without Auto Up
6		218-980		1	ELBOW, 90Ü, 9/16"-18, 37Ü x 9/16"-18, 37Ü Fem Sw
7		218-5063		2	CONNECTOR, HYD., 7/8"-14, 37Ü x 1 1/16"-12, O-Ring, Includes 237-6012 O-Ring
8		218-5232		1	ELBOW, 90Ü, 7/8"-14, 37Ü x 7/8"-14, 37Ü Fem Sw
9		814-10045		2	BOLT, Hex, M10 x 45, 8.8
10		814-10060		1	BOLT, Hex, M10 x 60, 8.8
11		896-15010		3	WASHER, M10 x 24.5 x 3, HT
12		496-41041		5	WASHER, 13/32" x 1 1/8" x .134"
13		D52276		1	ISOLATOR, Mount
14		87440712		1	BRACKET, SUPPORTING, Valve Mounting Bracket
15		614-10030		2	BOLT, Hex, M10 x 30, 8.8
16		87426488		1	TUBE ASSY., Swing Dampening Upper Port
17		87427948		1	TUBE ASSY., Swing Dampening Lower Port
18		87450318		2	BRACKET, SUPPORTING
19		814-8055		4	BOLT, Hex, M8 x 55, 8.8
20		814-8035		2	BOLT, Hex, M8 x 35, 8.8
21		496-81028		2	WASHER, 13/32" x 1 1/4" x .134", HDN
21A		87437840		2	SPACER, Not Illustrated

08-22		p2	02/08

HYDRAULICS - PILOT CONTROLS

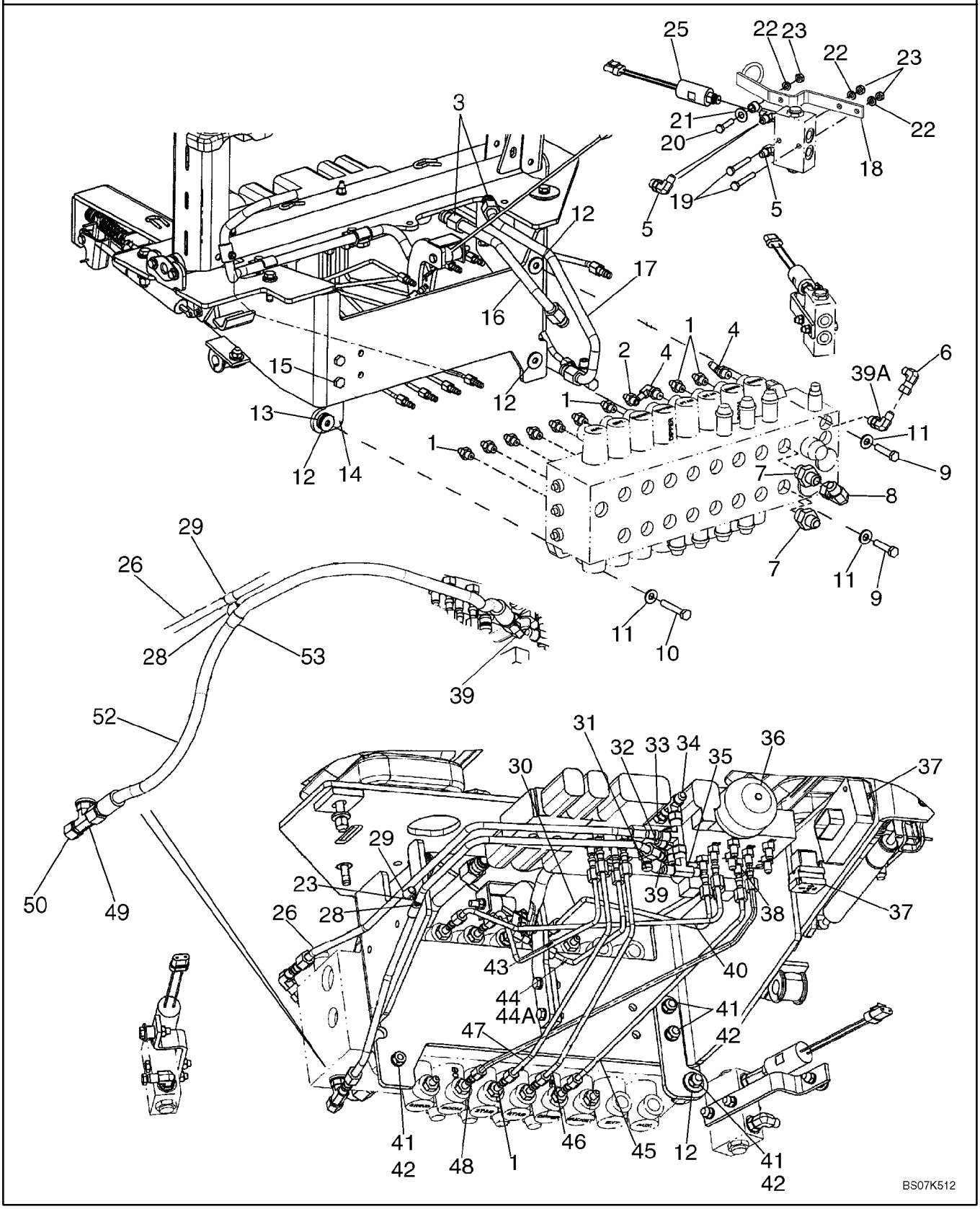

HYDRAULICS - PILOT CONTROLS

REF	FN	PART NUMBER	YR/SN	QTY	DESCRIPTION
22		895-11008		6	WASHER, M8 x 16 x 1.6
23		829-1408		7	NUT, M8, Cl 10
24		87423033		2	TEE, Includes 237-6004 O-Ring, 237-6006 O-Ring; Models With Auto Up, If Used
25		87552560		2	SWITCH, PRESSURE, Includes 237-6004 O-Ring; Models With Auto Up, 12 inch Wire Lead; With Rubber Snubbing; CNH Part Number Stamped On Body Of Switch; North American Models; Replaces 87439163 Switch
26		87434777		1	TUBE ASSY., Reducing Valve Tank to Backhoe Valve
28		614-8025		1	BOLT, Hex, M8 x 25, 8.8
29		515-2295		1-2	CLAMP, 3/8", Insul, 5/16" Bolt
30		87437623		1	TUBE ASSY., Selector A2 to Dipper Port A; If Unit Experiences Dipper Stuttering, As Dipper Is Moving Toward the Unit, Replace Ref 2 Fitting & Ref 30 & 45 Tubes, With (1) 87594363 Snubber, (2) 87594364 Hoses
30		87594364		1	HOSE ASSY., 550 mm (21-21/32 in); Used in Place of 87437623 Tube On Models With Dipper Stuttering
31		86596853		1	COUPLING, QUICK, MALE, Includes 9617873 O-Ring
32		218-5243		1	TEE, 9/16"-18, 37Ü x 9/16"-18, O-Ring Run, Includes 237-6006 O-Ring
33		218-5057		1	CONNECTOR, HYD., 9/16"-18, 37Ü x 9/16"-18, O-Ring, Incl. 237-6006 O-Ring
34		218-5222		2	TEE, 37Ü, 9/16"-18, x 9/16"-18, Fem Sw Run
35		218-836		1	TEE, 37Ü, 9/16"-18 x 9/16"-18, Fem Sw Br
36		87425225		1	ACCUMULATOR, Includes 237-6008 O-Ring
37		840-1416		3	SCREW, Cross Pan Hd, M4 x 16, See Figure 08-15 - 08-20 For Pilot Control Power Supply Control Unit; See Figure 04-20 For Relay
38		218-5053		12	CONNECTOR, HYD., 7/16"-20, 37Ü x 7/16"-20, O-Ring, Incl. 237-6004 O-Ring
39		218-5105		2	ELBOW, 90Ü, 9/16"-18, 37Ü x 9/16"-18, O-Ring, Includes 237-6006 O-Ring
39A		87448990		1	ELBOW, Includes Orifice; Includes 237-6006 O-Ring

HYDRAULICS - PILOT CONTROLS

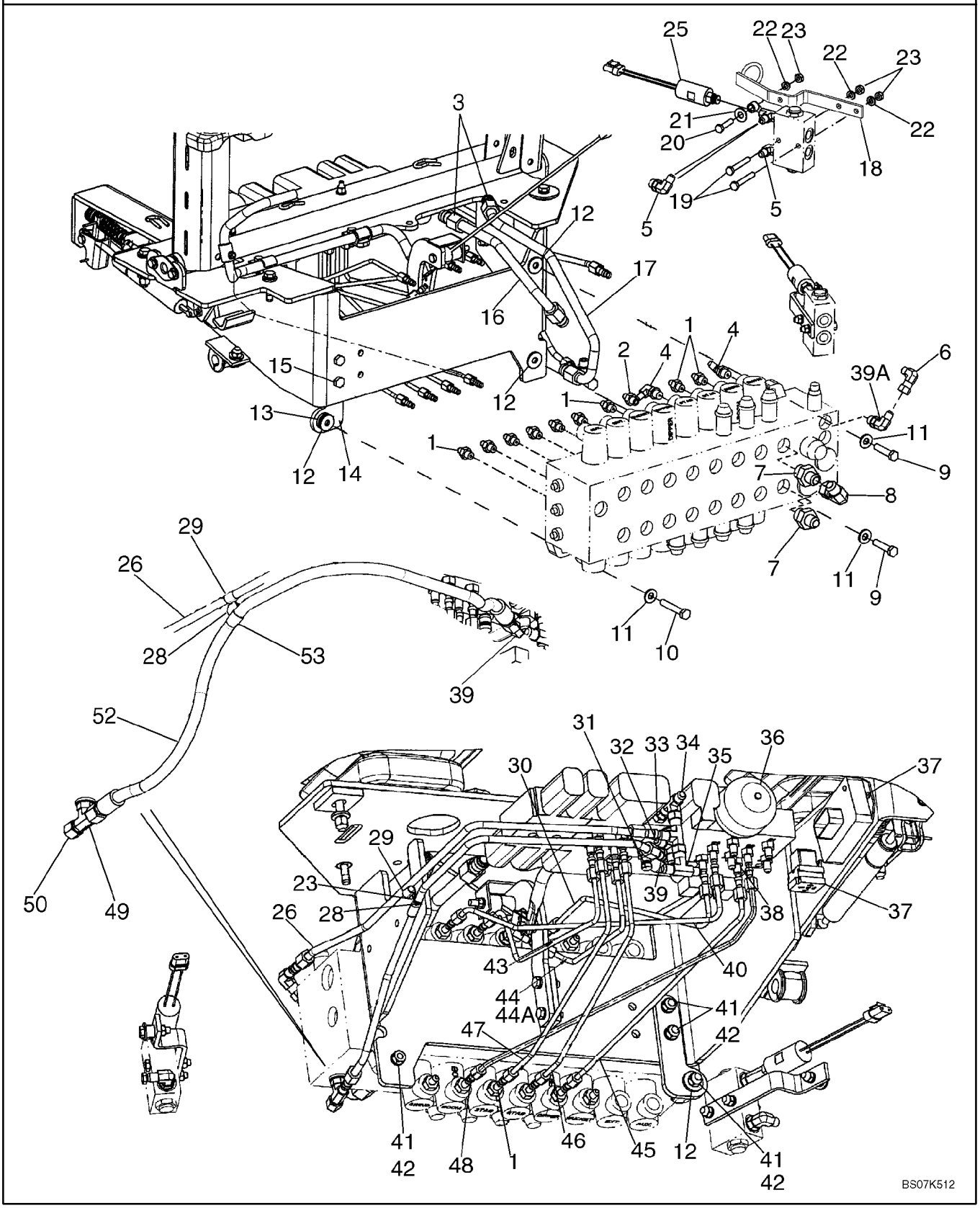

HYDRAULICS - PILOT CONTROLS

REF	FN	PART NUMBER	YR/SN	QTY	DESCRIPTION
40		87439215		1	TUBE ASSY., Selector A4 to Boom Port A
41		829-1410		5	NUT, M10, Cl 10
42		892-11010		4	WASHER, LOCK, M10
43		87437627		1	TUBE ASSY., Reducing Valve to Left-Hand Stabilizer Port A
44		87445557		1	TUBE ASSY., Reducing Valve to Right-Hand Stabilizer Port A; Used With 45 deg Elbow, Ref 44B
45		87437621		1	TUBE ASSY., Selector A1 to Dipper Port B; If Unit Experiences Dipper Stuttering, As Dipper Is Moving Toward the Unit, Replace Ref 2 Fitting & Ref 30 & 45 Tubes, With (1) 87594363 Snubber, (2) 87594364 Hoses
45		87594364		1	HOSE ASSY., 550 mm (21-21/32 in); Used in Place of 87437621 Tube On Models With Dipper Stuttering
46		87437629		1	TUBE ASSY., Reducing Valve to Right-Hand Stabilizer Port B
47		87437625		1	TUBE ASSY., Reducing Valve to Left-Hand Stabilizer Port B
48		87439213		1	TUBE ASSY., Selector A3 to Boom Port B
49		218-5182		1	TEE, 9/16"-18, 37Ü x 9/16"-18, O-Ring Br, Includes 237-6006 O-Ring
50		218-754		1	CAP, 37Ü, 9/16"-18
52		87352590		1	HOSE ASSY., 809 mm (31-7/8 in); Reducing Valve Pressure to Backhoe Valve
53		515-22127		1	CLAMP, 1/2", Insul, 5/16" Bolt

08-23		p1	01/08

HYDRAULICS - BACKHOE AUXILIARY (WITHOUT PILOT CONTROLS)

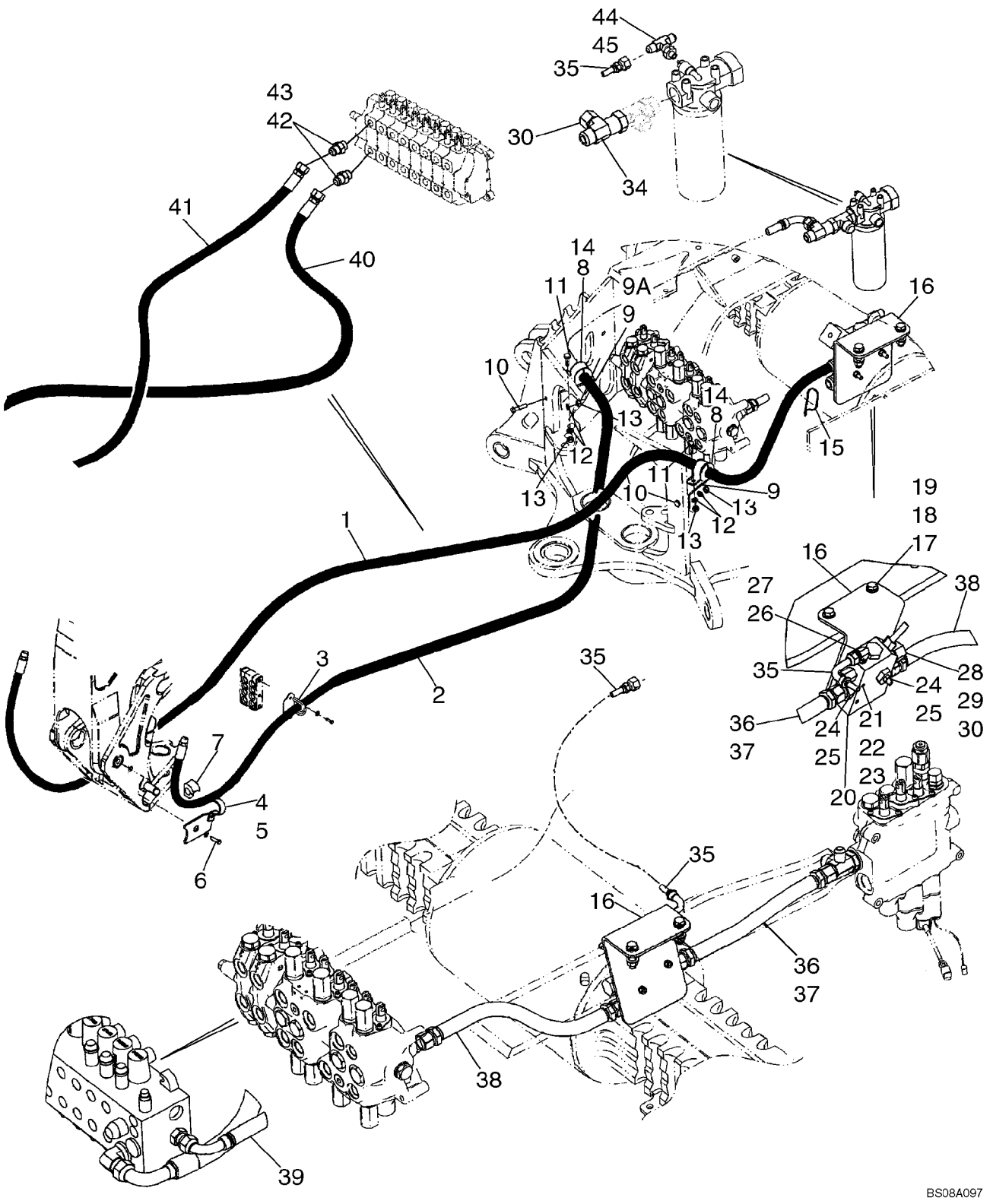

HYDRAULICS - BACKHOE AUXILIARY (WITHOUT PILOT CONTROLS)

REF	FN	PART NUMBER	YR/SN	QTY	DESCRIPTION
1		87430972		1	HOSE ASSY., 2467 mm (97-1/8 in) Hose; Models With Uni-Directional
2		87429387		1	HOSE ASSY., 2890 mm (113-13/16 in) Hose; Models With Uni-Directional
3		87431630		2	BRACKET
4		329799A1		1	SUPPORT, LH
5		329797A1		1	SUPPORT, RH
6		604-20045		2	BOLT, Hex, Lock, M20 x 45, Cl 8.8
7		144477A1		2	SHOCK ABSORBER
8		144479A1		2	CLAMP
9		413778A1		1-2	BRACKET, 45 degree Bend
9A		282842A1		1	BRACKET, 90 degree Bend
10		614-10040		2	BOLT, Hex, M10 x 40, 8.8, Full Thd
11		614-10025		2	BOLT, Hex, M10 x 25, 8.8, Full Thd
12		892-11010		4	WASHER, LOCK, M10
13		829-1410		4	NUT, M10, Cl 10
14		144477A1		2	SHOCK ABSORBER
15		L18337		1	STRAP, CABLE, 9.95"-12.1" lg
16		87440694		1	BRACKET, SUPPORTING
17		814-12050		2	BOLT, Hex, M12 x 50, 8.8
18		896-11012		4	WASHER, M13.5 x 24.5 x 3, HT
19		829-1412		2	NUT, M12, Cl 10
20		87421836		1	VALVE, HYDRAULIC, Auxiliary Uni-Directional Valve; See Figure 08-23A
21		814-8070		2	BOLT, Hex, M8 x 70, 8.8
22		892-11008		2	WASHER, LOCK, M8
23		829-1408		2	NUT, M8, Cl 10
24		218-5050		2	CONNECTOR, HYD., 1 5/16"-12, 37Ü x 1 1/16"-12, O-Ring, Incl. Ref 25
25		237-6012		1	O-RING, 12-1, 90 Duro, .924 ID x .118" Thk
26		218-5280		1	ELBOW, 90Ü, 3/4"-16, 37Ü x 9/16"-18, O-Ring, Incl. Ref 27
27		237-6006		1	O-RING, 6-1, 90 Duro, .468" ID x .078" Thk
28		218-5064		1	CONNECTOR, HYD., 1 1/16"-12, 37Ü x 1 1/16"-12, O-Ring, Incl. Ref 29

08-23		p2	01/08

HYDRAULICS - BACKHOE AUXILIARY (WITHOUT PILOT CONTROLS)

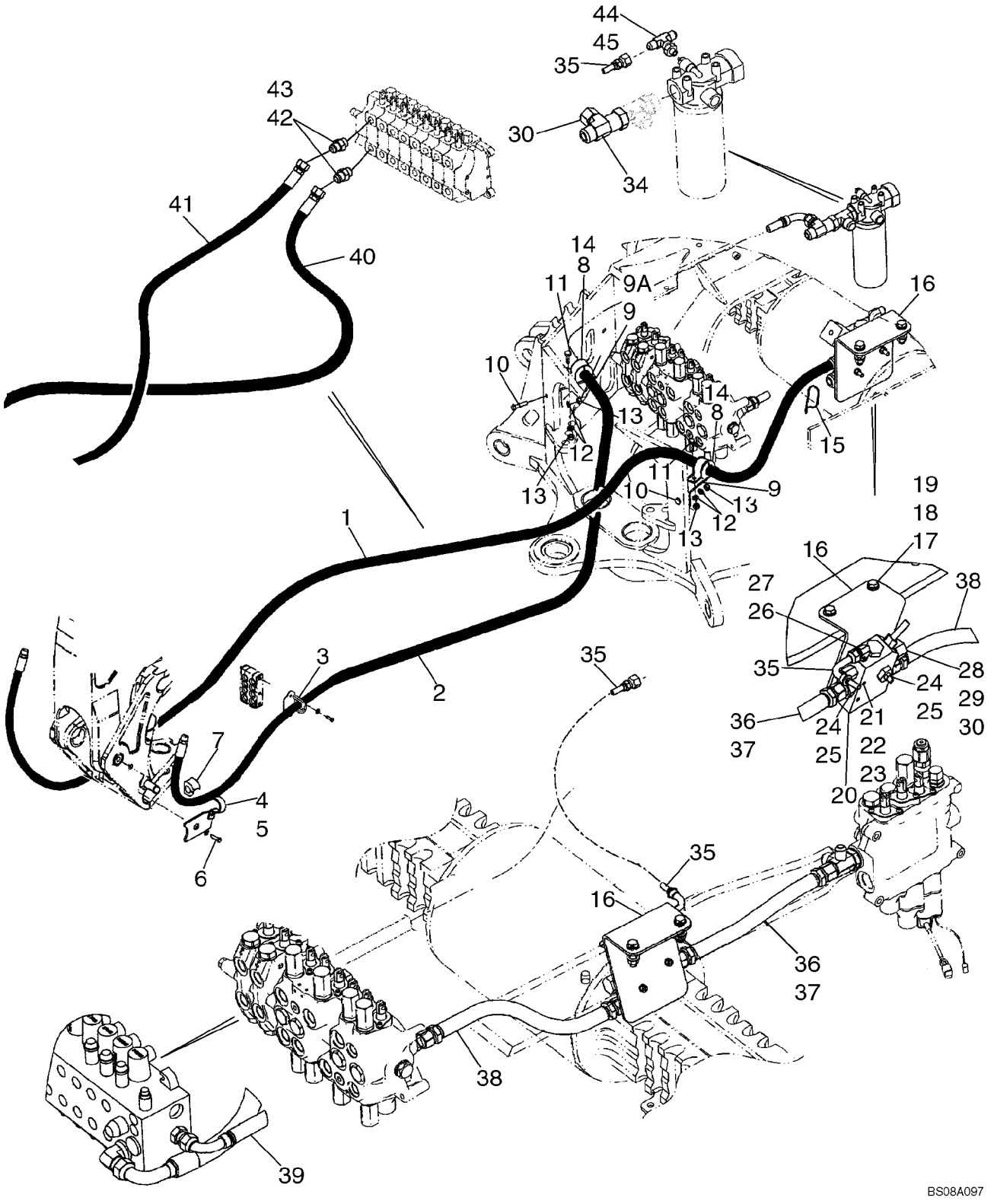

HYDRAULICS - BACKHOE AUXILIARY (WITHOUT PILOT CONTROLS)

REF	FN	PART NUMBER	YR/SN	QTY	DESCRIPTION
29		237-6012		1	O-RING, 12-1, 90 Duro, .924 ID x .118" Thk
30		218-335		2	CAP, 37Ü, 1 1/16"-12
34		218-5216		1	TEE, 37Ü, 1 1/16"-12x1 1/16"-12, Fem Sw Runx1 1/16"-12
35		87422948		1	HOSE ASSY., 930 mm (36-5/8 in)
36		87437232		1	HOSE ASSY., 420 mm (16-9/16 in); Two Spool Loader Valve
37		87437231		1	HOSE ASSY., 370 mm (14-19/32 in); Three Spool Loader Valve
38		87422977		1	HOSE ASSY., 465 mm (18-5/16 in); Power Beyond; Models Without Pilot Controls; Hose Lengthened to 485 mm (19-3/32 in)
39		87428814		1	HOSE ASSY., 458 mm (18-1/32 in); Power Beyond; Models With Pilot Controls
40		87423969		1	HOSE ASSY., 1500 mm (59-1/16 in); Models With Bi-Directional
41		87423970		1	HOSE ASSY., 1725 mm (67-15/16 in); Models With Bi Directional
42		218-5064		2	CONNECTOR, HYD., 1 1/16"-12, 37Ü x 1 1/16"-12, O-Ring, Incl. Ref 43
43		237-6012		1	O-RING, 12-1, 90 Duro, .924 ID x .118" Thk
44		218-5511		1	TEE, 37Ü, 3/4"-16 x 9/16"-18, O-Ring Br, Incl. Ref 45
45		237-6006		1	O-RING, 6-1, 90 Duro, .468" ID x .078" Thk

VALVE ASSY - AUXILIARY UNI-DIRECTIONAL (WITHOUT PILOT CONTROLS)

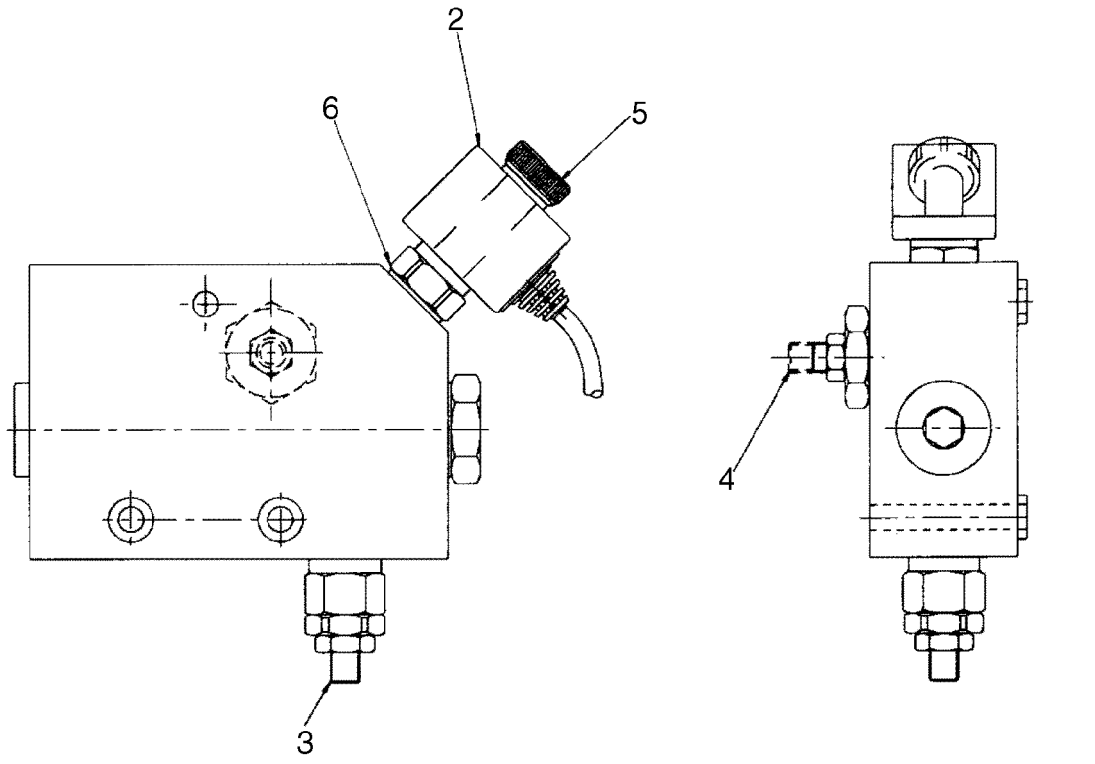

BS07E500

VALVE ASSY - AUXILIARY UNI-DIRECTIONAL (WITHOUT PILOT CONTROLS)

REF	FN	PART NUMBER	YR/SN	QTY	DESCRIPTION
		87421836		1	VALVE, HYDRAULIC, Auxiliary Uni-Directional Valve; Incl. 1 - 6
1		9970181		1	KIT, SEALS, Miscellaneous Gaskets; Not Illustrated
2		87421832		1	COIL, Solenoid With Connector
3		9970178		1	VALVE, PRESSURE RELIEF
4		9970179		1	REGULATOR, Voltage Assy
5		9970384		1	NUT, Ring
6		9970180		1	VALVE, SOLENOID

08-23B		p1	01/08

HYDRAULICS - BACKHOE AUXILIARY (WITH PILOT CONTROLS)

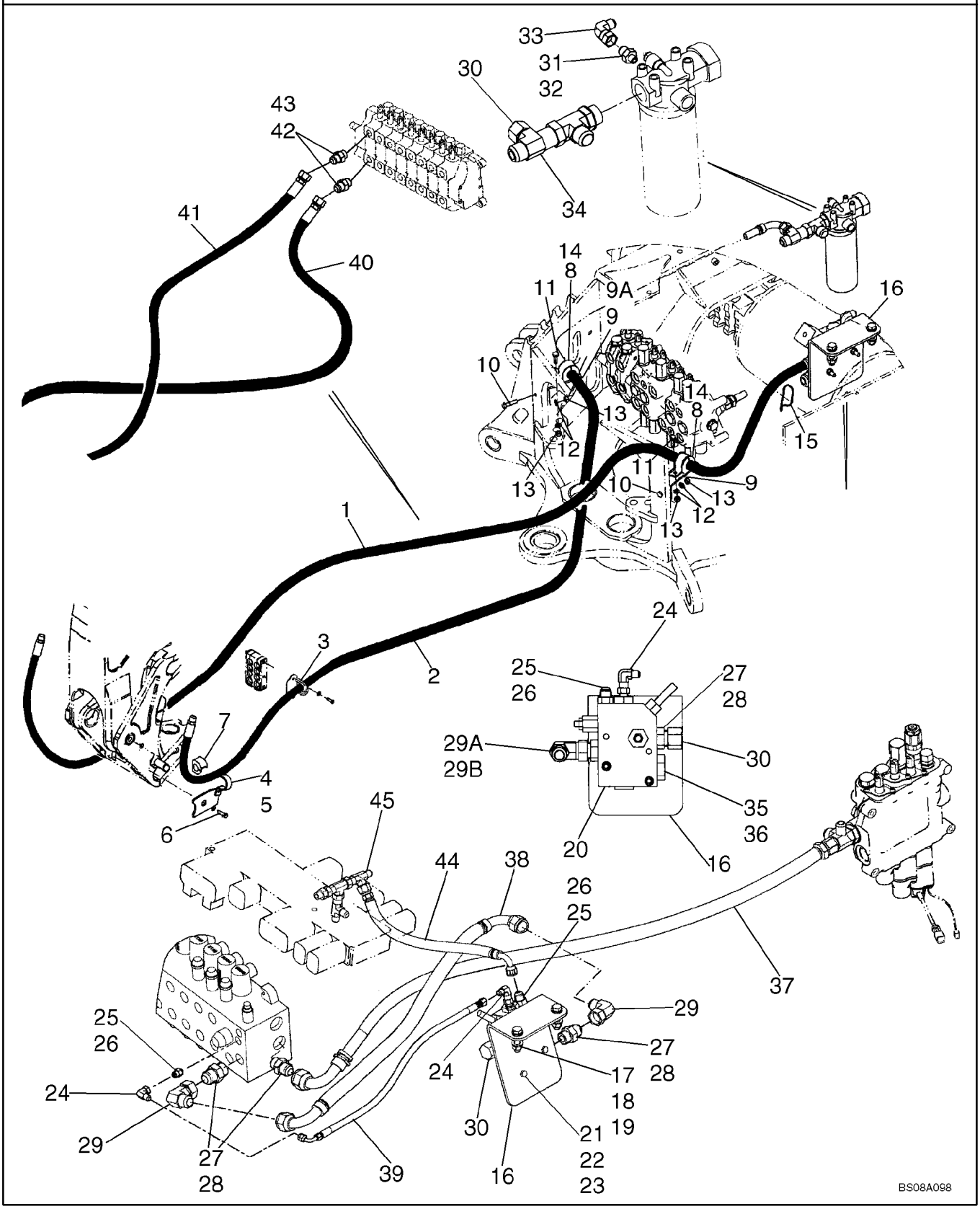

HYDRAULICS - BACKHOE AUXILIARY (WITH PILOT CONTROLS)

REF	FN	PART NUMBER	YR/SN	QTY	DESCRIPTION
1		87430972		1	HOSE ASSY., 2467 mm (97-1/8 in) Hose; Models With Uni-Directional
2		87429387		1	HOSE ASSY., 2890 mm (113-13/16 in) Hose; Models With Uni-Directional
3		87431630		2	BRACKET
4		329799A1		1	SUPPORT, LH
5		329797A1		1	SUPPORT, RH
6		604-20045		2	BOLT, Hex, Lock, M20 x 45, Cl 8.8
7		144477A1		2	SHOCK ABSORBER
8		144479A1		2	CLAMP
9		413778A1		1-2	BRACKET, 45 degree Bend
9A		282842A1		1	BRACKET, 90 degree Bend
10		614-10040		2	BOLT, Hex, M10 x 40, 8.8, Full Thd
11		614-10025		2	BOLT, Hex, M10 x 25, 8.8, Full Thd
12		892-11010		4	WASHER, LOCK, M10
13		829-1410		4	NUT, M10, Cl 10
14		144477A1		2	SHOCK ABSORBER
15		L18337		1	STRAP, CABLE, 9.95"-12.1" lg
16		87440694		1	BRACKET, SUPPORTING
17		814-12050		2	BOLT, Hex, M12 x 50, 8.8
18		896-11012		4	WASHER, M13.5 x 24.5 x 3, HT
19		829-1412		2	NUT, M12, Cl 10
20		87448993		1	VALVE, HYDRAULIC, Auxiliary Hammer Uni-Directional Valve; See Figure 08-23C
21		814-8070		2	BOLT, Hex, M8 x 70, 8.8
22		892-11008		2	WASHER, LOCK, M8
23		829-1408		2	NUT, M8, Cl 10
24		218-980		2	ELBOW, 90Ü, 9/16"-18, 37Ü x 9/16"-18, 37Ü Fem Sw
25		218-5057		2	CONNECTOR, HYD., 9/16"-18, 37Ü x 9/16"-18, O-Ring, Incl. Ref 26
26		237-6006		1	O-RING, 6-1, 90 Duro, .468" ID x .078" Thk
27		218-5064		4	CONNECTOR, HYD., 1 1/16"-12, 37Ü x 1 1/16"-12, O-Ring, Incl. Ref 28
28		237-6012		1	O-RING, 12-1, 90 Duro, .924 ID x .118" Thk

08-23B		p2	01/08

HYDRAULICS - BACKHOE AUXILIARY (WITH PILOT CONTROLS)

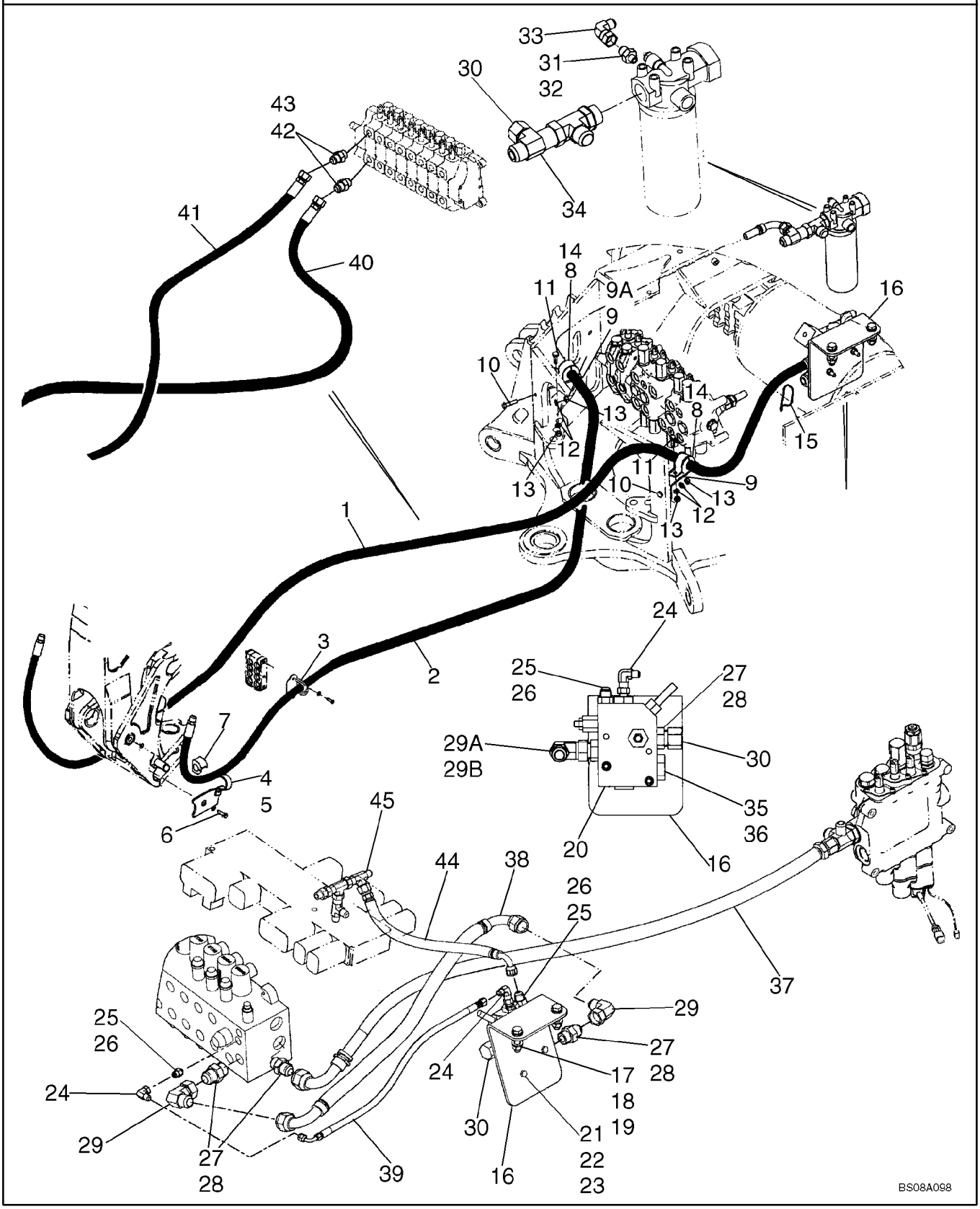

HYDRAULICS - BACKHOE AUXILIARY (WITH PILOT CONTROLS)

REF	FN	PART NUMBER	YR/SN	QTY	DESCRIPTION
29		218-5231		1	ELBOW, 90Ü, 1 1/16"-12, 37Ü x 1 1/16"-12, 37Ü Fem Sw
29A		218-5108		1	ELBOW, 90Ü, 1 1/16"-12, 37Ü x 1 1/16"-12, O-Ring
30		218-335		2	CAP, 37Ü, 1 1/16"-12
29B		237-6012		1	O-RING, 12-1, 90 Duro, .924 ID x .118" Thk
32		237-6006		1	O-RING, 6-1, 90 Duro, .468" ID x .078" Thk
31		218-5351		1	CONNECTOR, HYD., 3/4"-16, 37Ü x 9/16"-18, O-Ring, Incl. Ref 32
33		218-5230		1	ELBOW, 90Ü, 3/4"-16, 37Ü x 3/4"-16, 37Ü Fem Sw
34		218-5216		1	TEE, 37Ü, 1 1/16"-12x1 1/16"-12, Fem Sw Runx1 1/16"-12
35		218-5158		1	PLUG, Hex Hd, 1 1/16"-12 ORB, Incl. Ref 36
36		237-6012		1	O-RING, 12-1, 90 Duro, .924 ID x .118" Thk
37		87455832		1	HOSE ASSY., 1020 mm (40-3/16 in); Loader Valve to Backhoe Valve; Power Beyond
38		87518479		1	HOSE ASSY., 770 mm (30-11/32 in); 'E' Port Auxiliary Hammer Uni-Directional Valve to Backhoe Valve
39		87443052		1	HOSE ASSY., 715 mm (28-5/32 in); 'LS' Port Auxiliary Hammer Uni-Direction Valve to Backhoe Valve
40		87423969		1	HOSE ASSY., 1500 mm (59-1/16 in); Models With Bi-Directional
41		87423970		1	HOSE ASSY., 1725 mm (67-15/16 in); Models With Bi Directional
42		218-5064		2	CONNECTOR, HYD., 1 1/16"-12, 37Ü x 1 1/16"-12, O-Ring, Incl. Ref 43
43		237-6012		1	O-RING, 12-1, 90 Duro, .924 ID x .118" Thk
44		87445794		1	HOSE ASSY., 375 mm (14-13/16 in)
45		218-5222		1	TEE, 37Ü, 9/16"-18, x 9/16"-18, Fem Sw Run

VALVE ASSY - AUXILIARY UNI-DIRECTIONAL (WITH PILOT CONTROLS)

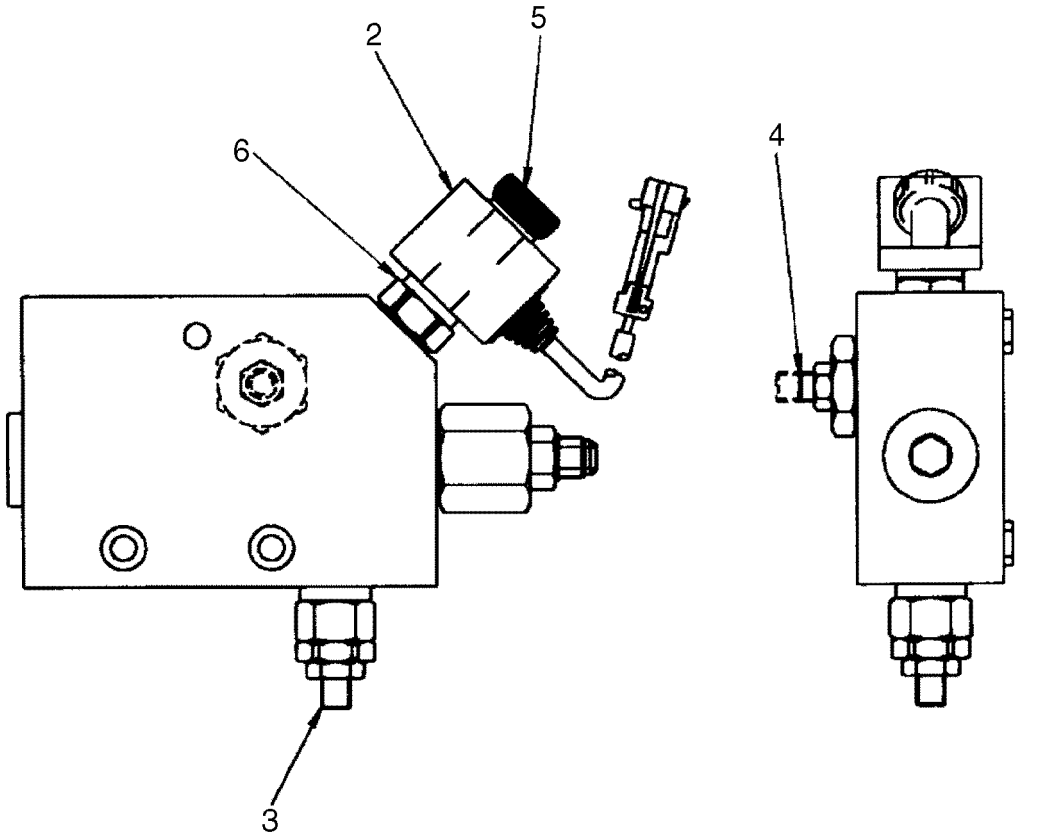

BS07E499

VALVE ASSY - AUXILIARY UNI-DIRECTIONAL (WITH PILOT CONTROLS)

REF	FN	PART NUMBER	YR/SN	QTY	DESCRIPTION
		87448993		1	VALVE, HYDRAULIC, Auxiliary Uni-Directional Valve; Incl. 1 - 6
1		9970181		1	KIT, SEALS, Miscellaneous Gaskets; Not Illustrated
2		87421832		1	COIL, Solenoid With Connector
3		9970178		1	VALVE, PRESSURE RELIEF
4		9970179		1	REGULATOR, Voltage Assy
5		9970384		1	NUT, Ring
6		9970180		1	VALVE, SOLENOID

08-24		p1	02/08

HYDRAULICS - BACKHOE AUXILIARY, AT BOOM AND DIPPER

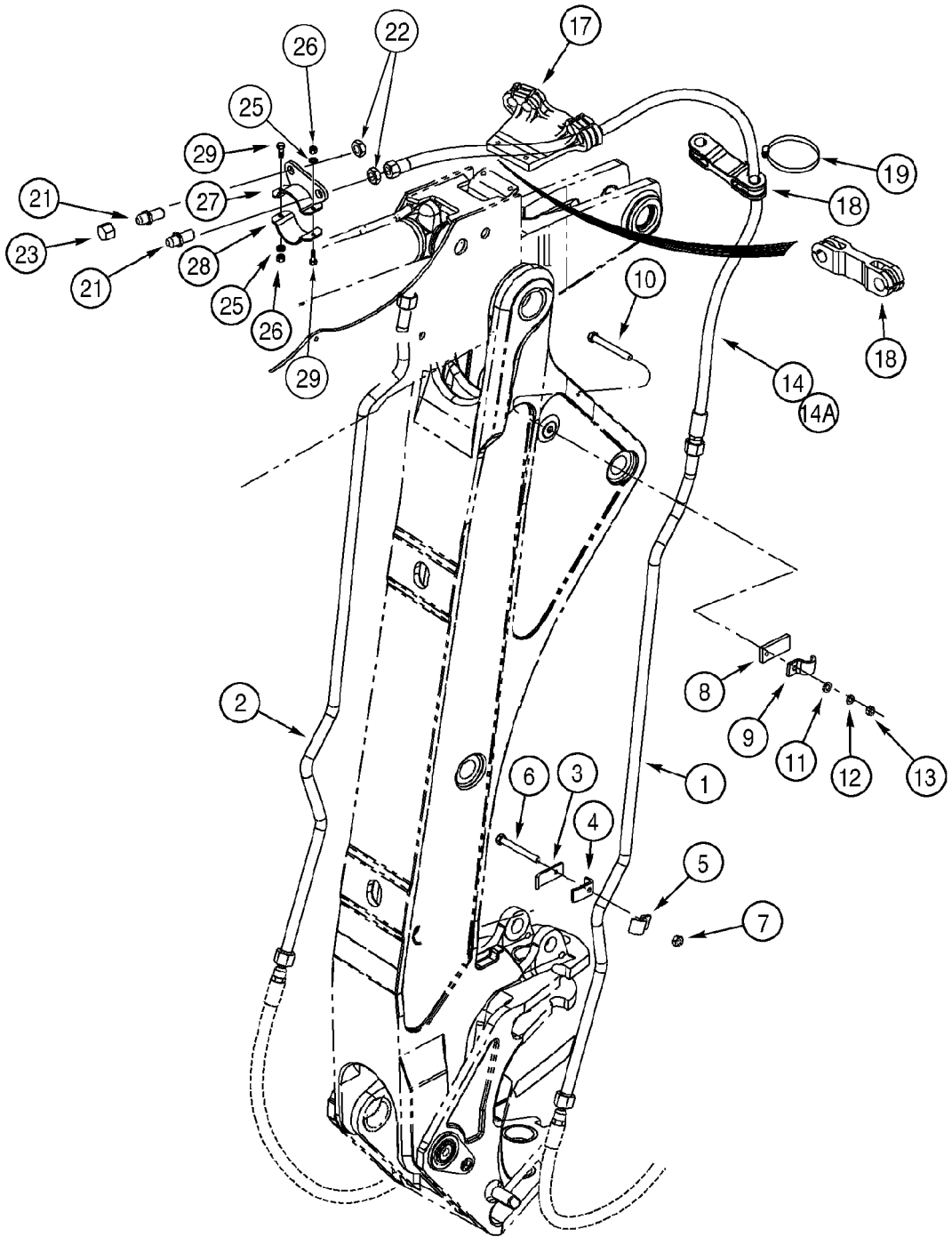

HYDRAULICS - BACKHOE AUXILIARY, AT BOOM AND DIPPER

REF	FN	PART NUMBER	YR/SN	QTY	DESCRIPTION
		REF			INSTRUCTION, AT BOOM AND DIPPER
1		243300A1		1	PIPE, Tube
2		243404A1		1	PIPE, Tube
3		D149309		2	CLAMP
4		243298A1		2	CLAMP
5		242459A1		2	SHIN, Clamp
6		814-10060		2	BOLT, Hex, M10 x 60, 8.8
7		829-1410		2	NUT, M10, Cl 10
8		243398A1		2	SUPPORT
9		242459A1		2	SHIN, Clamp
10		814-10050		2	BOLT, Hex, M10 x 50, 8.8, Not Required With Standard Dipper
11		895-11010		2	WASHER, M10 x 20 x 2
12		892-11010		2	WASHER, LOCK, M10
13		829-1410		2	NUT, M10, Cl 10
14		243679A2		2	HOSE, 2665 mm (104-15/16 in); Models With Extendable Dipper
14A		256210A2		2	HOSE, 1285 mm (50-19/32 in); Models Without Extendable Dipper
17		246151A1		1	SUPPORT, Models With Extendable Dipper; Used With (2) 214-3156 Clamps
18		103670A1		2	CLAMP, HOSE, Rubber
19		214-3132		4	CLAMP, HOSE, 1.25/2.125 HD Worm
21		218-676		2	FITTING, Blkhd, 1 1/16"-12, 37Ü x 1 1/16"-12, 37Ü
22		218-1256		2	NUT, LOCK, Blkhd, 1 1/16"-12
23		218-335		2	CAP, 37Ü, 1 1/16"-12
25		896-11010		2	WASHER, M10 x 21.5 x 2.5, HT
26		832-10410		2	NUT, LOCK, M10 x 1.5, Cl 8
27		314319A1		1	CLAMP, SPECIAL
28		314320A1		1	CLAMP, SPECIAL
29		614-10040		2	BOLT, Hex, M10 x 40, 8.8, Full Thd

HYDRAULICS - RIDE CONTROL

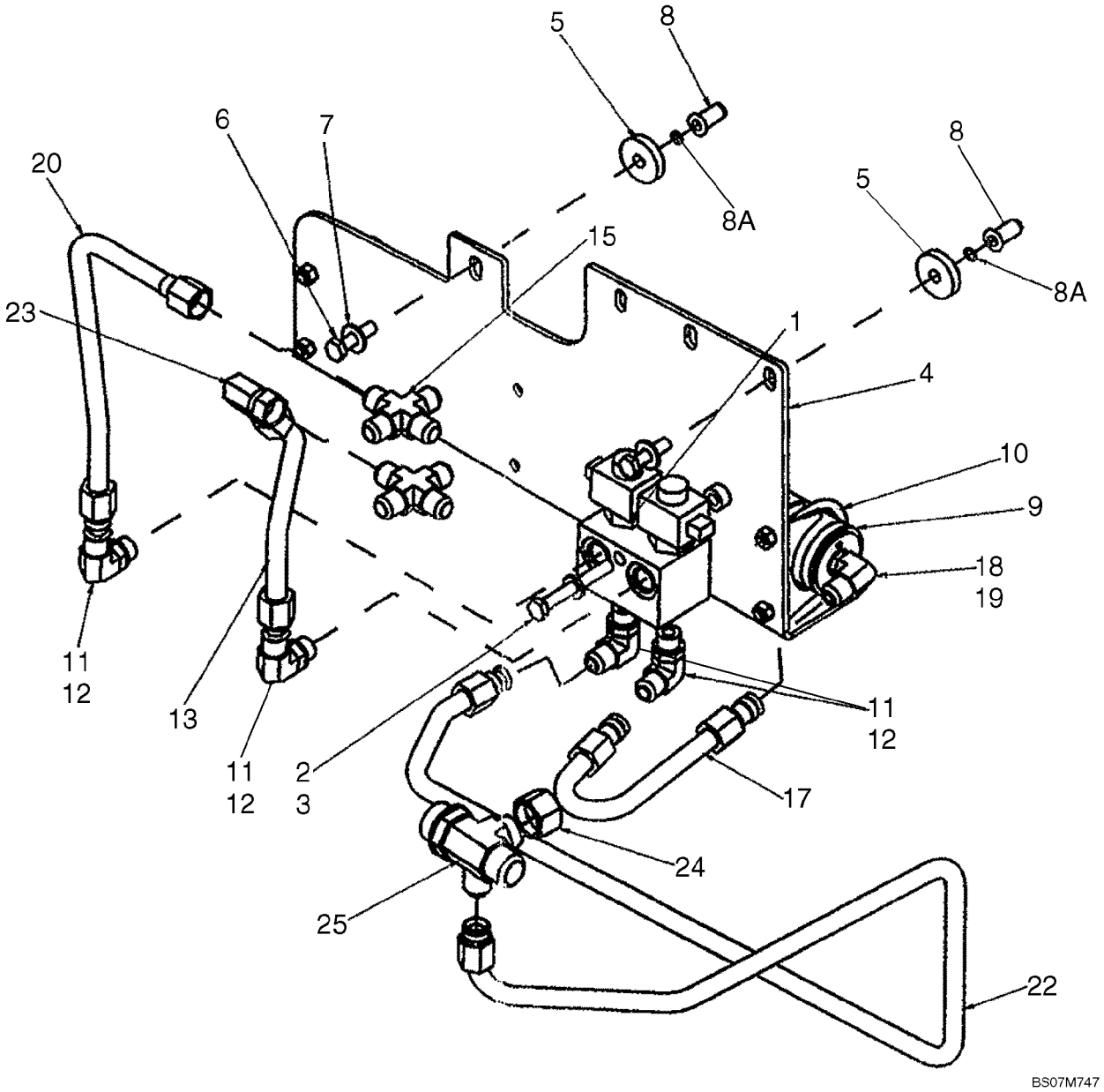

HYDRAULICS - RIDE CONTROL

REF	FN	PART NUMBER	YR/SN	QTY	DESCRIPTION
		REF			INSTRUCTION, RIDE CONTROL HYDRAULIC AND ELECTRICAL CIRCUIT
1		87433240		1	VALVE, SOLENOID, Ride Control; Component Parts Not Available At Time Of Printing
2		814-10080		1	BOLT, Hex, M10 x 80, 8.8
3		895-11010		1	WASHER, M10 x 20 x 2
4		87421213		1	BRACKET, SUPPORTING
5		87423067		2	SPACER
6		814-10040		2	BOLT, Hex, M10 x 40, 8.8, Full Thd
7		895-15010		2	WASHER, M11 x 24 x 2
8		87417721		2	INSERT, THREADED, M10
8A		238-5011		2	O-RING, -011, 70 Duro, .301" ID x .070" Thk
9		448284A1		1	ACCUMULATOR, Ride Control; Component Parts Not Serviced Separately; Used In Production, For Service, Order 234412A1 Accumulator
9		234412A1		1	ACCUMULATOR, Ride Control; See Figure 08-60
10		A13240		2	CLAMP, Two Piece; Includes Hardware
11		218-5117		4	ELBOW, 90Ü, 7/8"-14, 37Ü x 3/4"-16, O-Ring, Incl. Ref 12
12		237-6008		1	O-RING, 8-1, 90 Duro, .644" ID x .087" Thk
13		87675026		1	TUBE, HYD, Solenoid Valve to Loader Control Valve Lower Lift Section Port
15		218-655		2	CONNECTION, 4 WAY, 7/8"-14, 37Ü
17		87420696		1	TUBE ASSY., Accumulator to Solenoid Valve
18		218-5600		1	ELBOW, 90Ü, 7/8"-14, 37Ü x 3/4"-16, O-Ring, Incl. Ref 19
19		237-6008		1	O-RING, 8-1, 90 Duro, .644" ID x .087" Thk
20		87675071		1	TUBE, HYD, Solenoid Valve To Loader Control Valve Upper Lift Section Port
22		87675074		1	TUBE, HYD, Solenoid Valve To Filter
23		218-5232		1	ELBOW, 90Ü, 7/8"-14, 37Ü x 7/8"-14, 37Ü Fem Sw
24		218-335		1	CAP, 37Ü, 1 1/16"-12
25		87436066		1	FITTING
26		235002A1		1	SWITCH, Ride Control; Not Illustrated; See Figure 04-10

08-26		p1	02/08

HYDRAULICS - COUPLER, LOADER TOOL QUICK

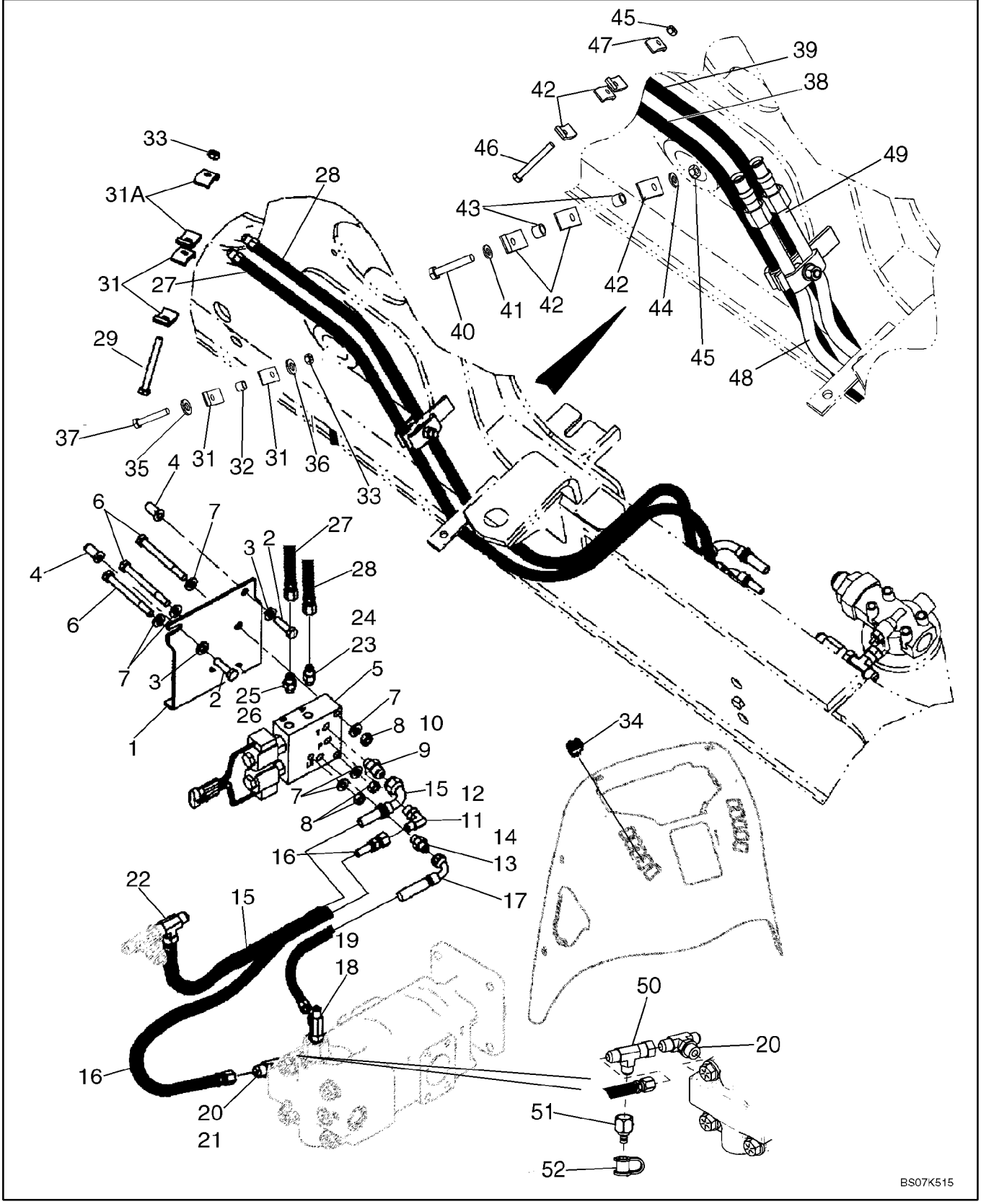

HYDRAULICS - COUPLER, LOADER TOOL QUICK

REF	FN	PART NUMBER	YR/SN	QTY	DESCRIPTION
1		87437263		1	BRACKET, SUPPORTING, Coupler Valve Mounting
2		614-10035		2	BOLT, Hex, M10 x 35, 8.8, Full Thd
3		896-11010		2	WASHER, M10 x 21.5 x 2.5, HT
4		87417721		2	INSERT, THREADED, M10
5		87435909		1	VALVE, SOLENOID, Coupler; Loader Tool; See Figure 08-28
6		814-10060		3	BOLT, Hex, M10 x 60, 8.8
7		896-11010		6	WASHER, M10 x 21.5 x 2.5, HT
8		829-1410		3	NUT, M10, Cl 10
9		218-5351		1	CONNECTOR, HYD., 3/4"-16, 37Ü x 9/16"-18, O-Ring, Incl. Ref 10
10		237-6006		1	O-RING, 6-1, 90 Duro, .468" ID x .078" Thk
11		218-5105		1	ELBOW, 90Ü, 9/16"-18, 37Ü x 9/16"-18, O-Ring, Incl. Ref 12
12		237-6006		1	O-RING, 6-1, 90 Duro, .468" ID x .078" Thk
13		218-5057		1	CONNECTOR, HYD., 9/16"-18, 37Ü x 9/16"-18, O-Ring, Incl. Ref 14
14		237-6006		1	O-RING, 6-1, 90 Duro, .468" ID x .078" Thk
15		87434265		1	HOSE ASSY., 500 mm (19-11/16 in); Coupler Valve to Filter
16		87452402		1	HOSE ASSY., 830 mm (32-11/16 in); Pump to Coupler Pressure Port
17		87452403		1	HOSE ASSY., 600 mm (23-5/8 in); Pump to Coupler Valve Load Sense Port
18		282428A1		1	POPPET, VALVE, Check Tee; Incl. Ref 19
19		237-6006		1	O-RING, 6-1, 90 Duro, .468" ID x .078" Thk
20		218-5183		1	TEE, 3/4"-16, 37Ü x 3/4"-16, O-Ring Br, Incl. Ref 21; Replaces Standard Steering Fitting
21		237-6008		1	O-RING, 8-1, 90 Duro, .644" ID x .087" Thk
22		218-845		1	TEE, 37Ü, 3/4"-16 x 3/4"-16, Fem Sw Run, Attaches to Tee At Back Of Filter
23		218-5053		1	CONNECTOR, HYD., 7/16"-20, 37Ü x 7/16"-20, O-Ring, Incl. Ref 24
24		237-6004		1	O-RING, 4-1, 90 Duro, .351" ID x .072" Thk

08-26		p2	02/08

HYDRAULICS - COUPLER, LOADER TOOL QUICK

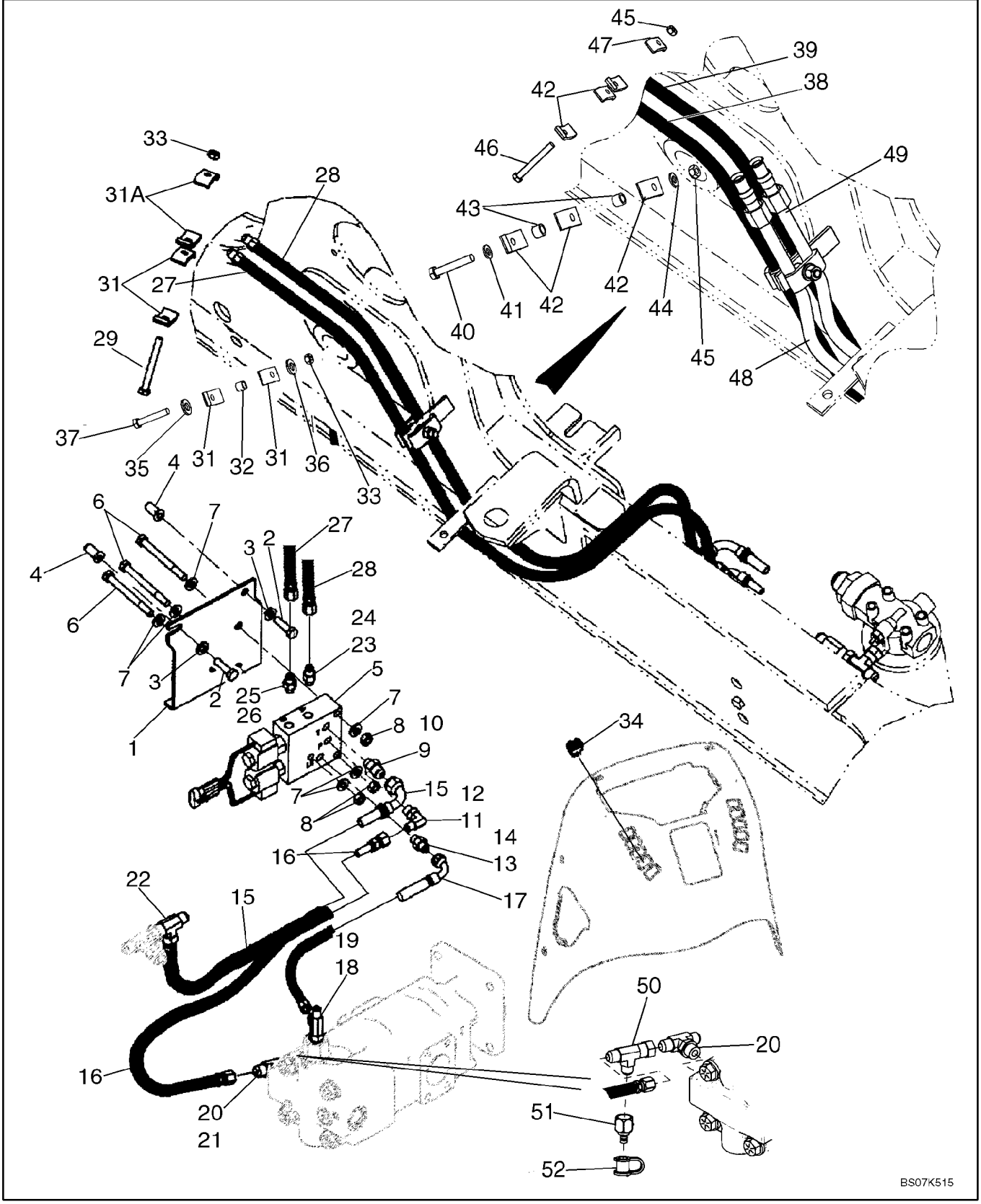

HYDRAULICS - COUPLER, LOADER TOOL QUICK

REF	FN	PART NUMBER	YR/SN	QTY	DESCRIPTION
25		218-5056		1	CONNECTOR, HYD., 1/2"-20, 37Ü x 1/2"-20, O-Ring, Incl. Ref 26
26		237-6005		1	O-RING, 5-1, 90 Duro, .414" ID x .072" Thk
		REF			INSTRUCTION, COUPLER ONLY (SEE REF 38-49 FOR CLAMPING ON MODELS WITH COUPLER AND 3-SPOOL LOADER VALVE)
27		87427539		1	HOSE ASSY., 1815 mm (71-1/2 in); B Port
28		87427537		1	HOSE ASSY., 1815 mm (71-1/2 in); A Port
29		814-10090		1	BOLT, Hex, M10 x 90, 8.8
31		D138055		5	CLAMP
31A		D143846		2	SHIN, CLAMP
32		120303A1		1	SPACER
33		832-10410		2	NUT, LOCK, M10 x 1.5, Cl 8
34		398675A2		1	SWITCH, Loader Tool Quick Coupler
35		892-11010		1	WASHER, LOCK, M10
36		896-11010		1	WASHER, M10 x 21.5 x 2.5, HT
37		83931335		1	BOLT, Hex, M10 x 75, 8.8
		REF			INSTRUCTION, COUPLER AND 3-SPOOL LOADER VALVE (SEE REF 27-37 FOR CLAMPING ON MODELS WITH COUPLER ONLY)
38		87427539		1	HOSE ASSY., 1815 mm (71-1/2 in); B Port
39		87427537		1	HOSE ASSY., 1815 mm (71-1/2 in); A Port
40		83931335		1	BOLT, Hex, M10 x 75, 8.8
41		892-11010		1	WASHER, LOCK, M10
42		D138055		5	CLAMP
43		120303A1		2	SPACER
44		896-11010		1	WASHER, M10 x 21.5 x 2.5, HT
45		832-10410		2	NUT, LOCK, M10 x 1.5, Cl 8
46		814-10090		1	BOLT, Hex, M10 x 90, 8.8
47		D143846		2	SHIN, Clamp
48		{87478483}		1	Tube, Loader Clam; A Port
49		87449440		1	TUBE ASSY., Loader Clam; B Port
50		218-845		1	TEE, 37Ü, 3/4"-16 x 3/4"-16, Fem Sw Run
51		192834A1		1	COUPLING, Diagnostic
52		H434163		1	DUST CAP

08-27		p1	02/08

HYDRAULICS - COUPLER, LOADER TOOL QUICK, AT LOADER LIFT FRAME

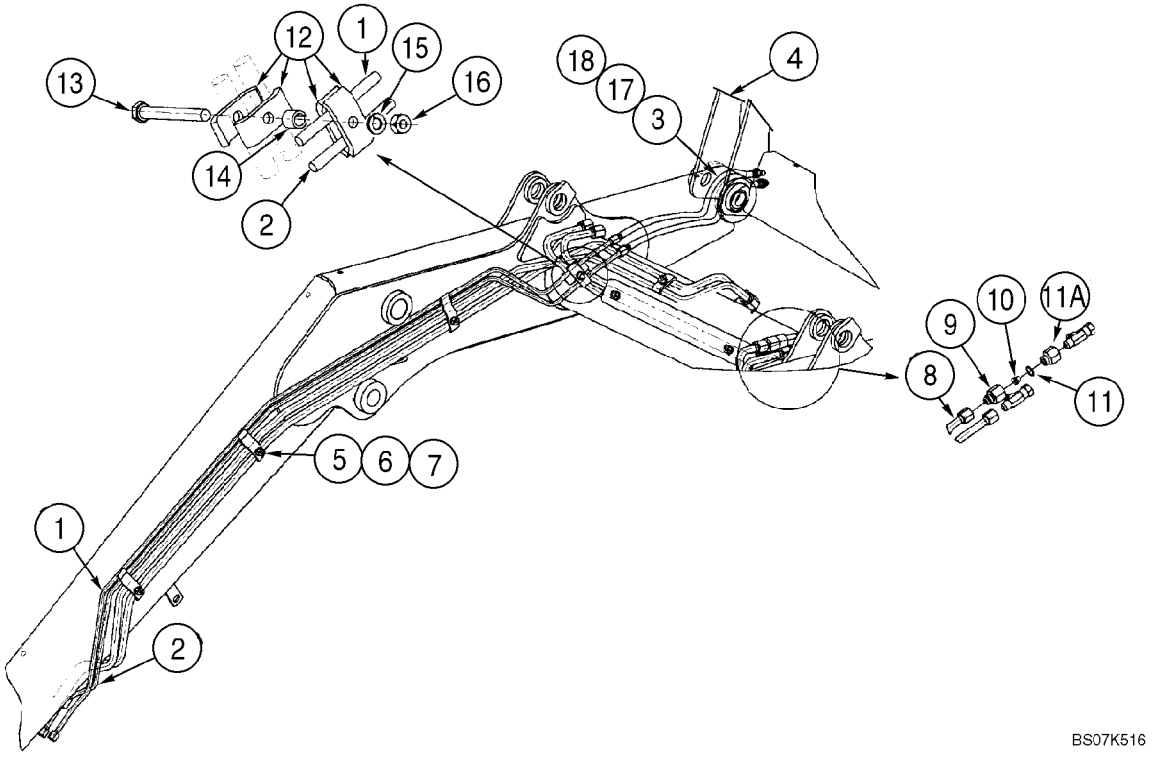

HYDRAULICS - COUPLER, LOADER TOOL QUICK, AT LOADER LIFT FRAME

REF	FN	PART NUMBER	YR/SN	QTY	DESCRIPTION
		REF			INSTRUCTION, AT LOADER LIFT FRAME
1		87716490		1	TUBE, HYD
2		87716492		1	TUBE, HYD
3		300996A3		2	HOSE ASSY., 772 mm (30-13/32 in)
4		REF		1	INSTRUCTION, Coupler, Hydr., Loader Tool Quick Coupler; For Complete Assembly, See Figure 09-10; Order From Machinery Price List; Use Standard Loader Bucket Pins To Mount Coupler
5		302820A2		3	CLAMP
6		892-11010		3	WASHER, LOCK, M10
7		829-1410		3	NUT, M10, Cl 10
8		87716484		1	TUBE, HYD
9		304424A1		1	CONNECTOR
10		304890A1		1	RESTRICTOR
11		237-6010		1	O-RING, 10-1, 90 Duro, .755" ID x .097" Thk
11A		309674A1		1	CONNECTOR, 7/8 male x 7/8 female
12		D138055		4	CLAMP
13		814-10090		1	BOLT, Hex, M10 x 90, 8.8
14		120303A1		1	SPACER
15		892-11010		1	WASHER, LOCK, M10
16		829-1410		1	NUT, M10, Cl 10
17		307277A1		1	SLEEVE
18		L18337		2	STRAP, CABLE, 9.95"-12.1" lg

VALVE, COUPLER (87435909) - LOADER TOOL

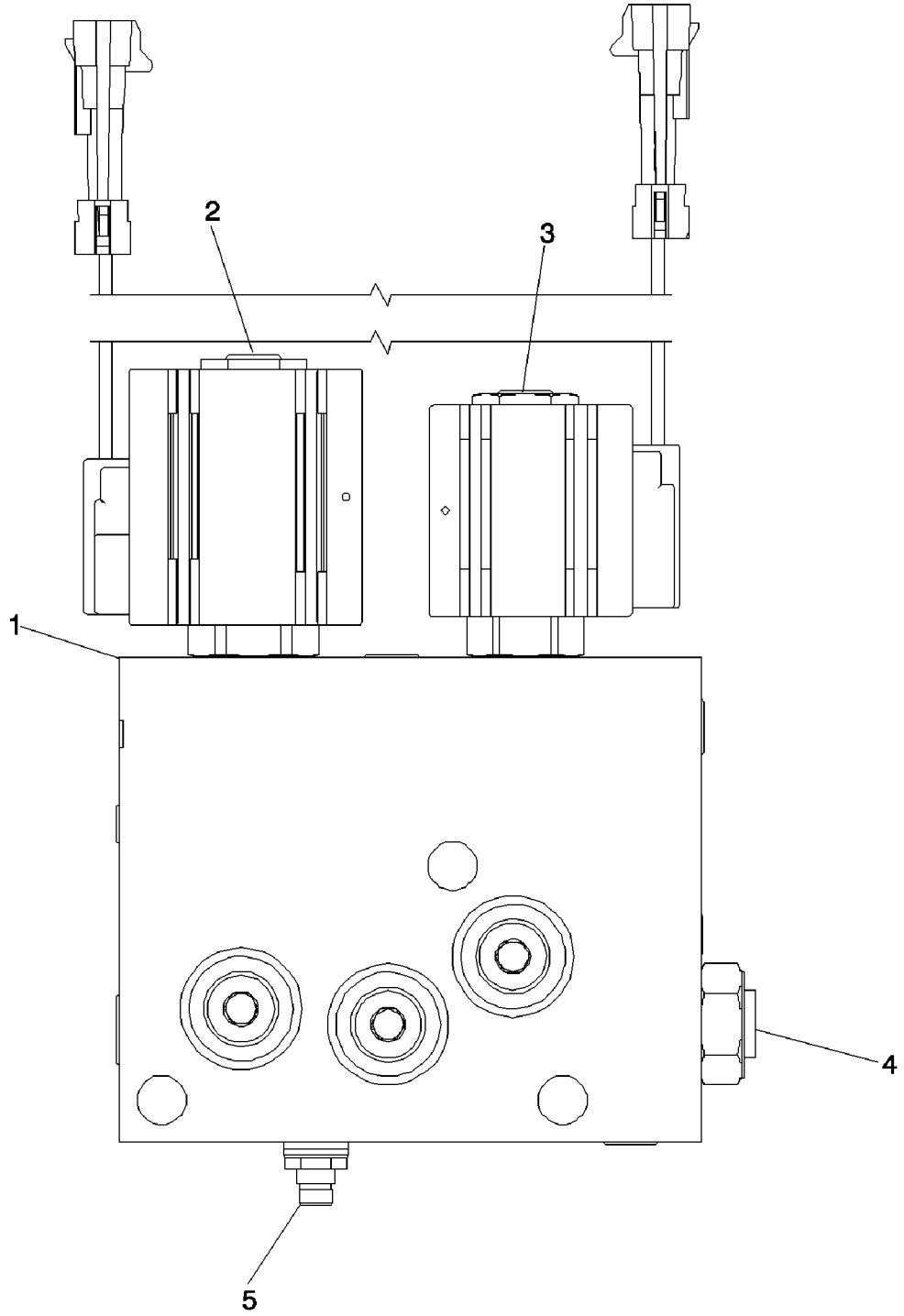

VALVE, COUPLER (87435909) - LOADER TOOL

REF	FN	PART NUMBER	YR/SN	QTY	DESCRIPTION
		87435909		1	VALVE, SOLENOID, Incl. Ref 1 - 5
1		NSS		1	NOT SERVICED SEPARATELY, Body
2		87438021		1	VALVE, SOLENOID, 4-Way Cartridge With Coil; Includes 87438022, 87438023, 87438024
		87438022		1	VALVE, HYDRAULIC, Cartridge
		87438023		1	COIL, Solenoid
		87438024		1	KIT, SEALS, 4-Way Solenoid
3		87438025		1	VALVE, SOLENOID, 2-Way 2-Position Cartridge With Coil; Includes 87438026, 87438027, 87438028
		87438026		1	VALVE, HYDRAULIC, Cartridge
		87438027		1	COIL, Solenoid
		87438028		1	KIT, SEALS, 2-Way Solenoid
4		87438029		1	VALVE, CHECK, Includes 87438028 Seal Kit
		87438028		1	KIT, SEALS, 2-Way Solenoid
5		87438031		1	VALVE, PRESSURE RELIEF, Includes 87438032
		87438032		1	KIT, SEALS, Relief Valve

PUMP, EQUIPMENT HYDRAULIC

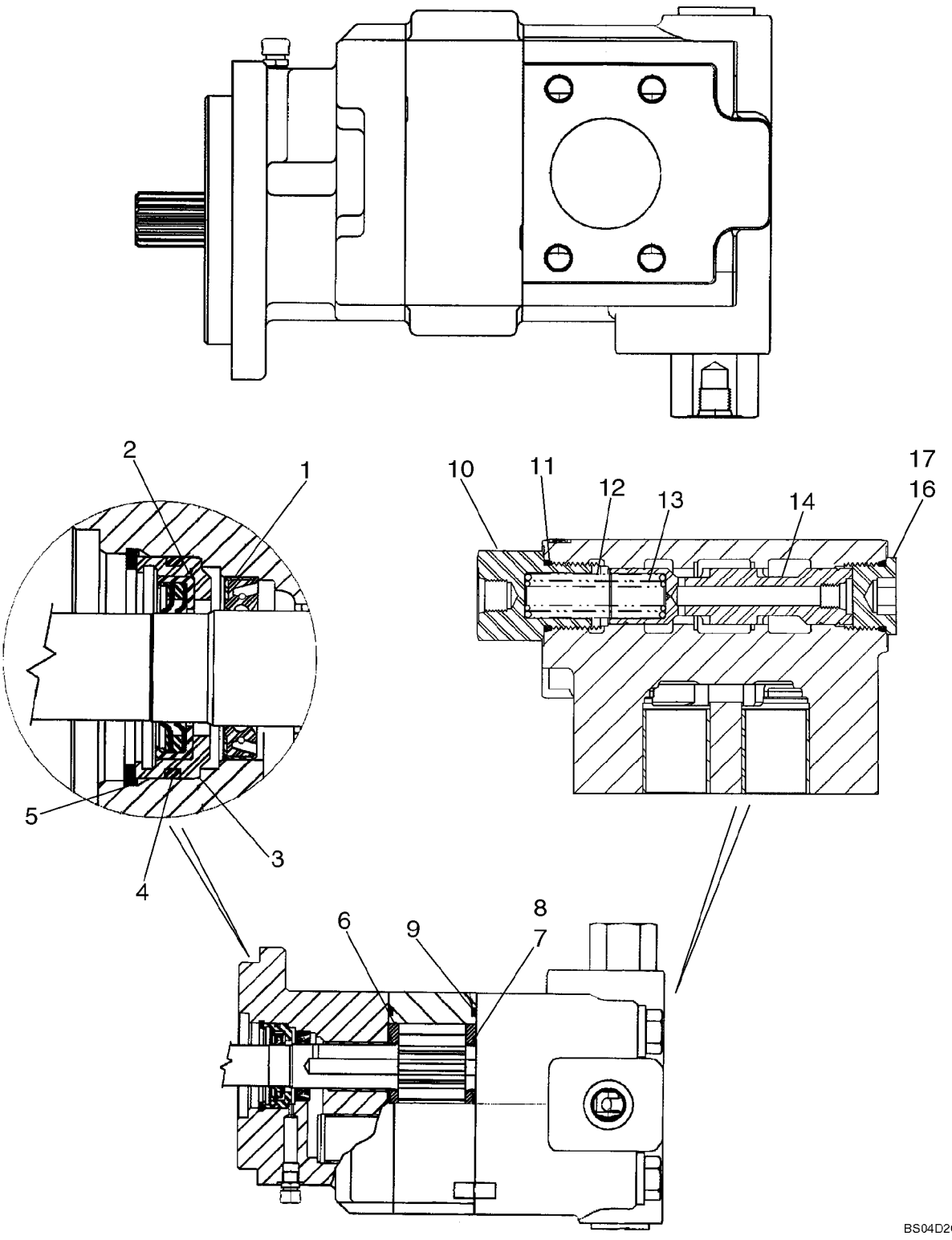

PUMP, EQUIPMENT HYDRAULIC

REF	FN	PART NUMBER	YR/SN	QTY	DESCRIPTION
		87434672		1	PUMP, HYDRAULIC, Component Parts Not Serviced Separately, Except for 87434070 and 87438045 Service Kits, Ref 1 - 17, See Below
		87434070		1	KIT, HYD PUMP REPAIR, Pump Service Kit, Single Section; Incl. Ref 1 - 9
1		L32418		1	SEAL, Double Lip
2		87434075		1	SEAL, Lip Seal
3		87434076		1	RETAINER, SEAL
4		87434077		1	SEALRING
5		102-23206		1	RING, SNAP, #206, 2.190", Int, Spiral
6		N13582		2	PLATE, Thrust
7		144173A1		2	SEAL
8		178051A1		2	BACK-UP RING
9		L32100		2	SEAL, Gear Housing Gasket
		87438045		1	KIT, HYD PUMP REPAIR, Priority Valve Service Kit, Single; Incl. Ref 10 - 17
10		87437899		1	PLUG, Load Sense
11		237-6014		1	O-RING, 14-1, 90 Duro, 1.048" ID x .118" Thk
12		87437905		1	SPRING-CHECK, Spool Spring, 100 psi
13		87437906		1	SPRING-CHECK, Spool Spring, 50 psi
14		87437914		1	SPOOL, Priority Valve Spool
16		218-5213		1	PLUG, Hex Soc, 1 3/16"-12 ORB, Incl. Ref 17
17		237-6014		1	O-RING, 14-1, 90 Duro, 1.048" ID x .118" Thk

VALVE ASSY - LOADER CONTROL, TWO SPOOL

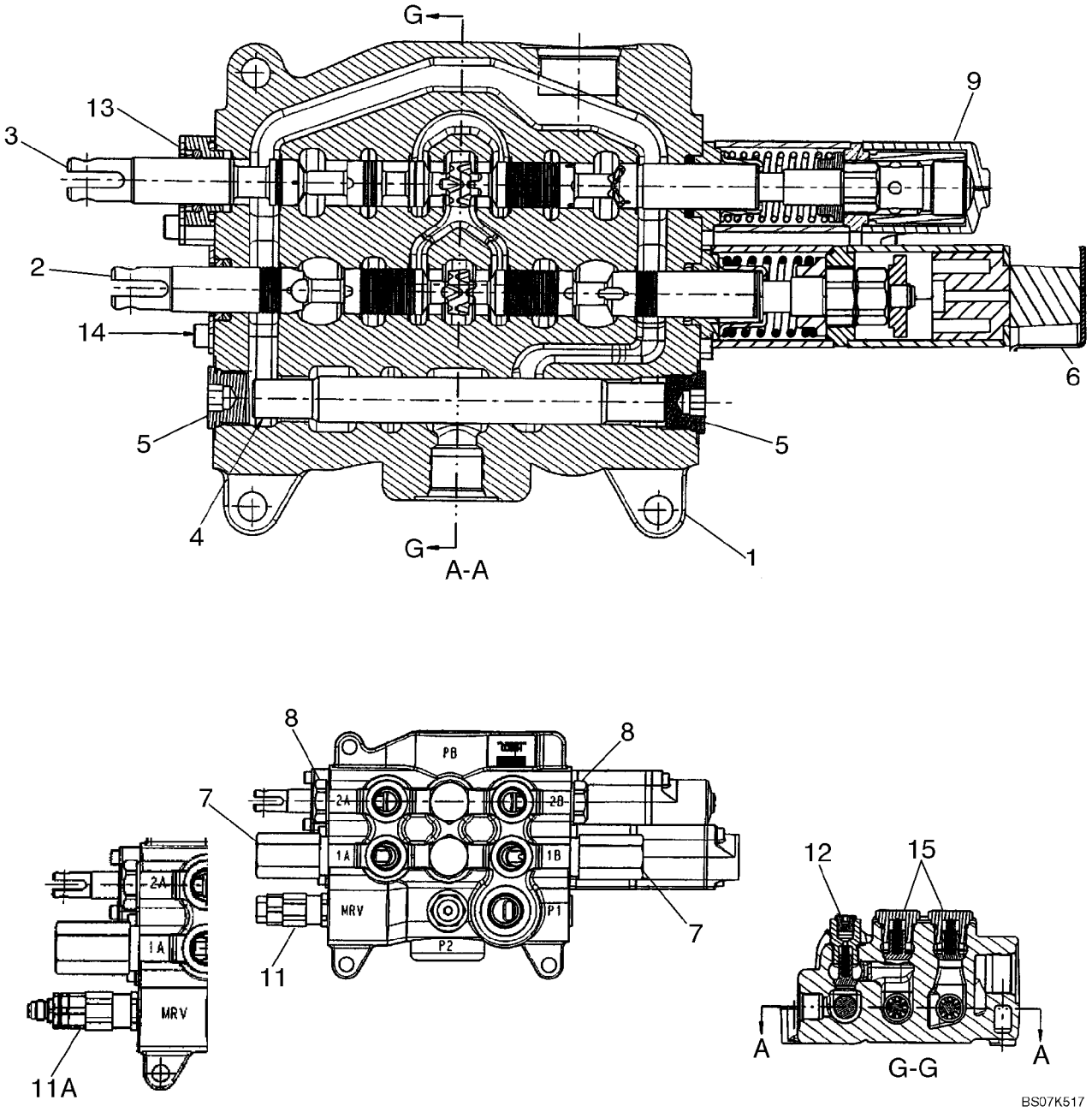

VALVE ASSY - LOADER CONTROL, TWO SPOOL

REF	FN	PART NUMBER	YR/SN	QTY	DESCRIPTION
		87351494		1	VALVE, HYDRAULIC, Two Spool Loader Valve, Used On Models Without Pilot Controls; Incl. Ref 1 - 11, 12 - 15
		87351498		1	VALVE, HYDRAULIC, Two Spool Loader Valve, Used On Models With Pilot Controls; Incl. Ref 1 - 9, 11A - 15
1		NSS		1	NOT SERVICED SEPARATELY, HOUSING
2		NSS		1	NOT SERVICED SEPARATELY, SPOOL, Bucket
3		NSS		1	NOT SERVICED SEPARATELY, SPOOL, Lift
4		NSS		1	NOT SERVICED SEPARATELY, SPOOL
5		87426233		2	PLUG, 7/8 - 14 NF Plug, Includes Serviceable (1) 87455974 O-Ring
6		87515955		1	DETENT, Magnetic Detent Kit, Bucket; Some Component Parts Not Serviced Separately; Serviceable Includes (1) 87454547 O-Ring, (1) 87515957 Magnet, (2) 87310278 Screw
7		87450978		2	VALVE, PRESSURE RELIEF, Component Parts Not Serviced Separately; Serviceable Includes (1) 87455549 Seal Kit
8		81868381		2	VALVE, CHECK, Load Check Valve, Anti-Void; Component Parts Not Serviced Separately; Includes Serviceable 87455580 Seal Kit
9		87426227		1	DETENT, Manual Detent Assembly, Lift; Some Component Parts Not Serviced Separately; Serviceable Includes (1) 87454547 O-Ring, (2) 87310275 Screw, (4) 87310276 Ball Bearing
11		87426717		1	VALVE, PRESSURE RELIEF, Main Relief Valve Assembly, Single Stage; 87351494 Loader Valve, Models Without Pilot Controls; Component Parts Not Serviced Separately; Includes Serviceable 87455551 Seal Kit

VALVE ASSY - LOADER CONTROL, TWO SPOOL

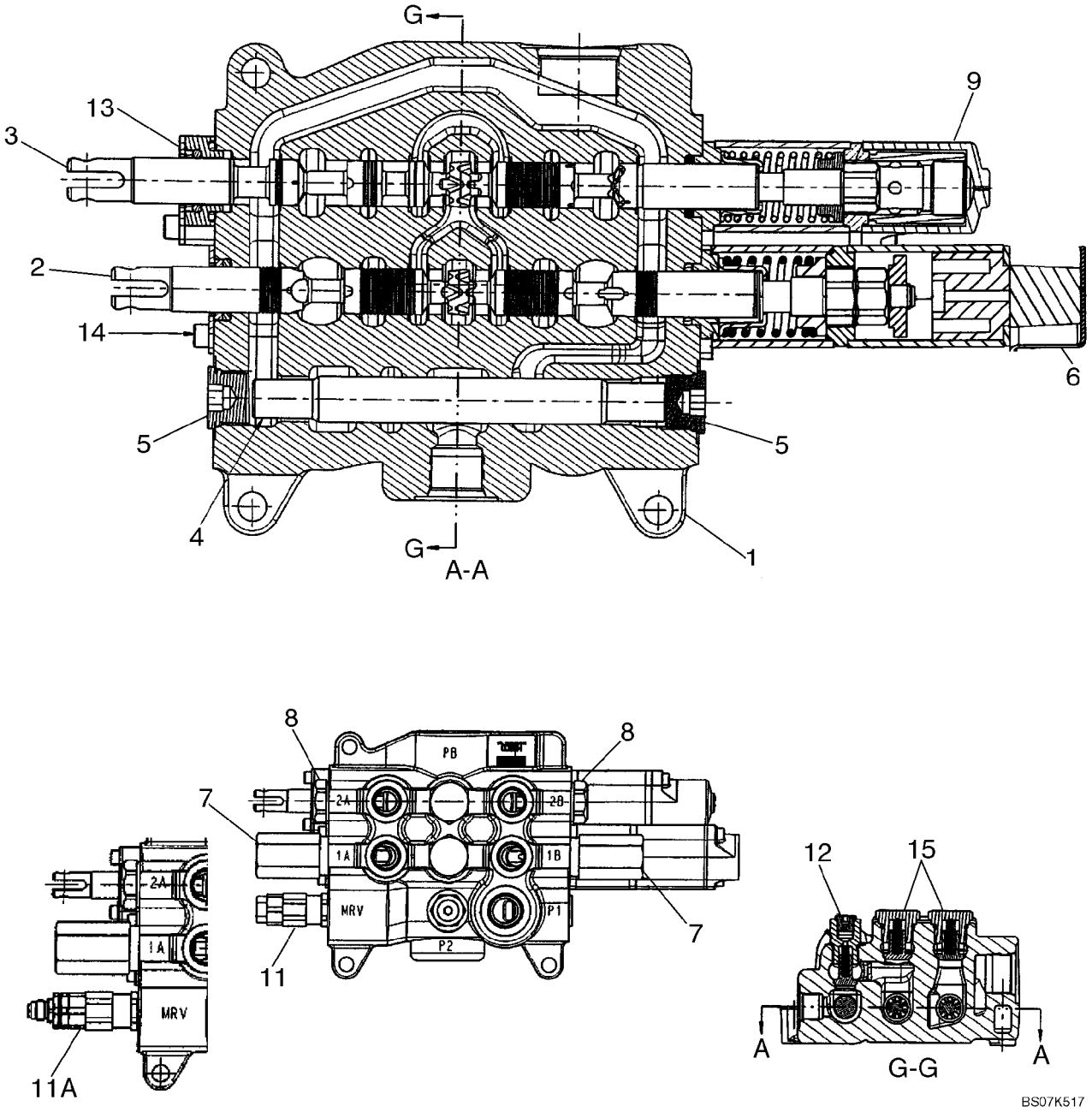

VALVE ASSY - LOADER CONTROL, TWO SPOOL

REF	FN	PART NUMBER	YR/SN	QTY	DESCRIPTION
11A		87426235		1	VALVE, PRESSURE RELIEF, Main Relief Valve Assembly, Two Stage; 87351498 Loader Valve, Models With Pilot Controls; Component Parts Not Serviced Separately; Includes Serviceable 87455550 Seal Kit
12		87426716		1	VALVE, CHECK, Check Valve; Some Component Parts Not Serviced Separately; Serviceable Includes (1) 87455974 O-Ring, (1) 87309001 O-Ring, (1) 87446002 Poppet, (1) 87446003 Spring
13		87440815		1	PLATE ASSY., Lift Spool Plate and Seal Assembly; Some Component Parts Not Serviced Separately; Serviceable Includes (1) 87454547 O-Ring, (1) 87454548 Seal, (1) 87455538 O-Ring, (2) 87455534 Screw
14		87440814		1	PLATE ASSY., Bucket Spool Plate and Seal Assembly; Some Component Parts Not Serviced Separately; Serviceable Includes (1) 87454547 O-Ring, (1) 87454548 Seal, (2) 87455540 Screw
15		87426238		2	VALVE, CHECK, Check Valve; Some Component Parts Not Serviced Separately; Serviceable Includes (1) 87455975 O-Ring

08-31		p1	02/08

VALVE ASSY - LOADER CONTROL, THREE SPOOL

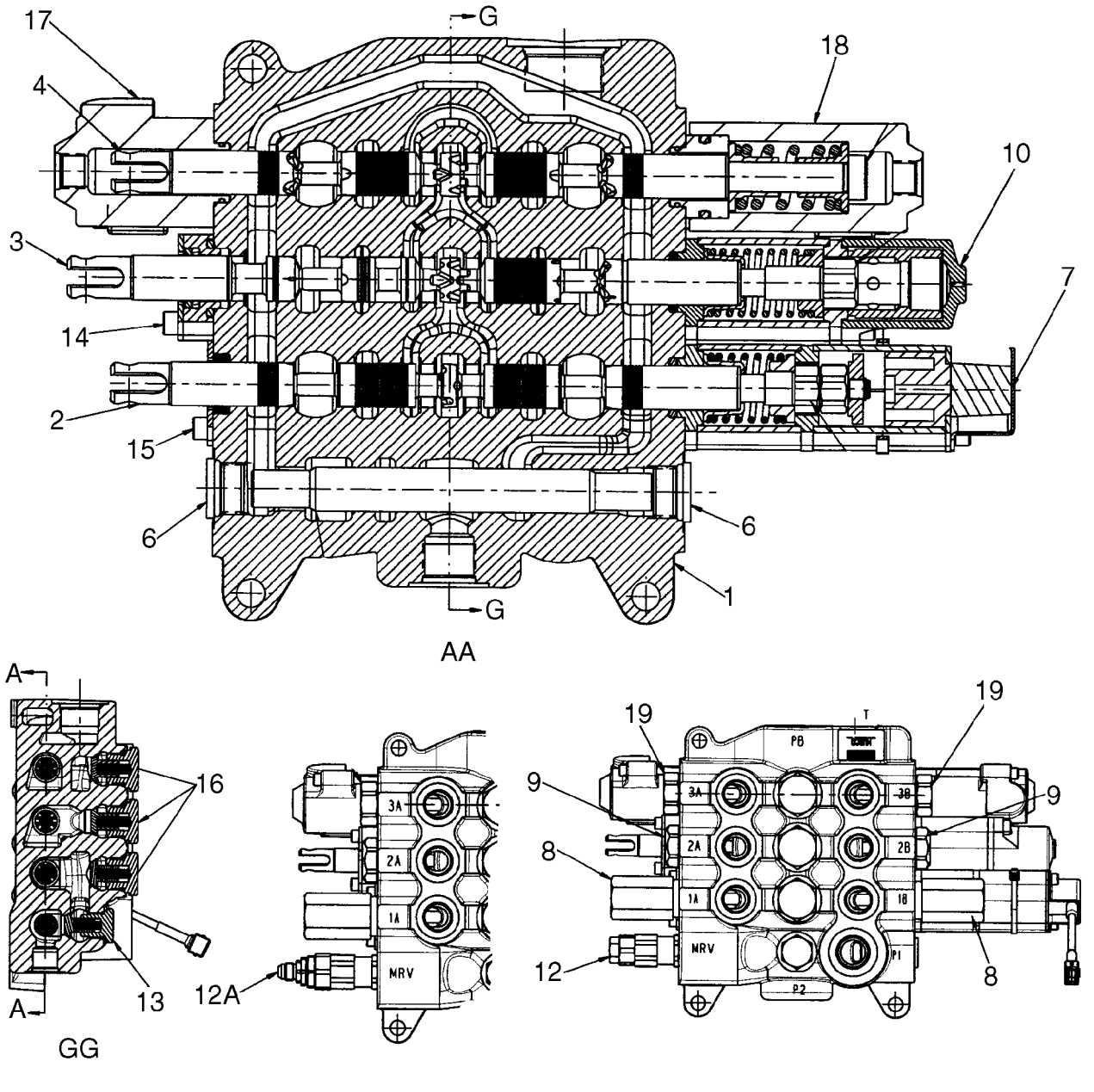

VALVE ASSY - LOADER CONTROL, THREE SPOOL

REF	FN	PART NUMBER	YR/SN	QTY	DESCRIPTION
		87593382		1	VALVE, CONTROL, Three Spool Loader Valve, Used On Models Without Pilot Controls; Component Parts Not Available At Time Of Printing
		87593381		1	VALVE, CONTROL, Three Spool Loader Valve, Used On Models With Pilot Controls; Component Parts Not Available At Time Of Printing
1		NSS		1	NOT SERVICED SEPARATELY, Housing
2		NSS		1	NOT SERVICED SEPARATELY, Spool, Bucket
3		NSS		1	NOT SERVICED SEPARATELY, Spool, Lift
4		NSS		1	NOT SERVICED SEPARATELY, Spool, Clam
5		NSS		1	NOT SERVICED SEPARATELY, Spool
6		87426233		1	PLUG, 7/8 - 14 NF Plug, Serviceable Includes (1) 87455974 O-Ring
7		87515955		1	DETENT, Magnetic Detent Kit, Bucket; Included In 87351496 or 87351501 Valve, Some Component Parts Not Serviced Separately; Serviceable Includes (1) 87454547 O-Ring, (1) 87515957 Magnet, (2) 87310278 Screw
8		87450978		2	VALVE, PRESSURE RELIEF, Relief Valve Assembly; Some Component Parts Not Serviced Separately; Includes Serviceable 87455549 Seal Kit
9		81868381		2	VALVE, CHECK, Load Check Valve, Anti-Void; Component Parts Not Serviced Separately; Includes Serviceable 87455580 Seal Kit
10		87426227		1	DETENT, Manual Detent Assembly, Lift; Some Component Parts Not Serviced Separately; Serviceable Includes (1) 87454547 O-Ring, (2) 87310275 Screw, (4) 87310276 Ball Bearing
12		87426717		1	VALVE, PRESSURE RELIEF, Main Relief Valve Assembly, Single Stage; 87434767 or 87351496Loader Valve, Models Without Pilot Controls; Component Parts Not Serviced Separately; Includes Serviceable 87455551 Seal Kit

VALVE ASSY - LOADER CONTROL, THREE SPOOL

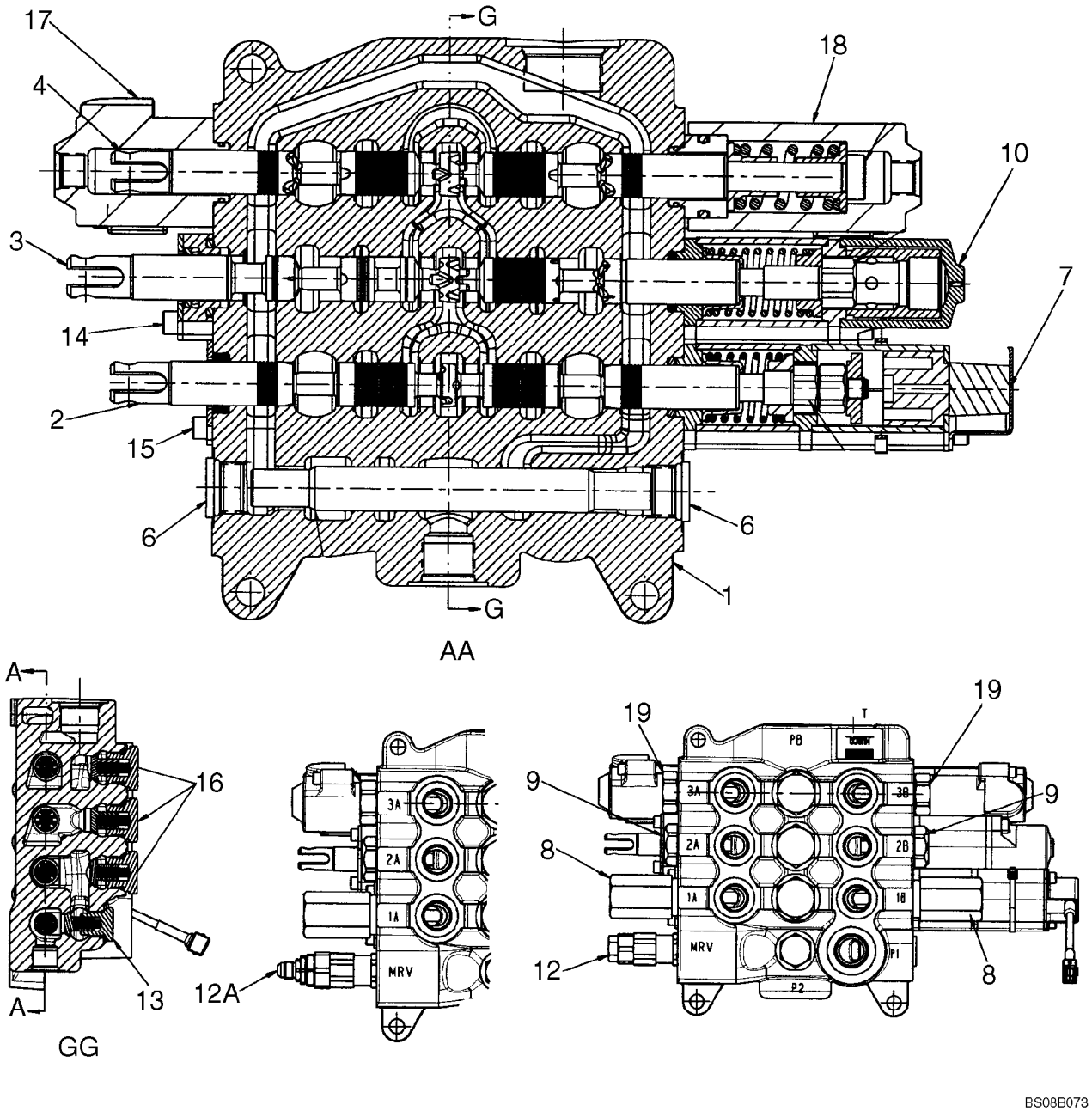

VALVE ASSY - LOADER CONTROL, THREE SPOOL

REF	FN	PART NUMBER	YR/SN	QTY	DESCRIPTION
12A		87426235		1	VALVE, PRESSURE RELIEF, Main Relief Valve Assembly, Two Stage; 87434769 or 87351501 Loader Valve, Models With Pilot Controls; Component Parts Not Serviced Separately; Includes Serviceable 87455550 Seal Kit
13		87426716		1	VALVE, CHECK, Some Component Parts Not Serviced Separately; Serviceable Includes (1) 87455974 O-Ring, (1) 87309001 O-Ring, (1) 87446002 Poppet, (1) 87446003 Spring
14		87440815		1	PLATE ASSY., Lift Spool Plate and Seal Assembly; Some Component Parts Not Serviced Separately; Serviceable Includes (1) 87454547 O-Ring, (1) 87454548 Seal, (1) 87455538 O-Ring, (2) 87455534 Screw
15		87440814		2	PLATE ASSY., Bucket and Clam Spool Plate and Seal Assembly; Some Component Parts Not Serviced Separately; Serviceable Includes (1) 87454547 O-Ring, (1) 87454548 Seal, (2) 87455540 Screw
16		87426238		3	VALVE, CHECK, Component Parts Not Serviced Separately; Includes Serviceable 87455975 O-Ring
17		{87757931}		1	End Cap; Clam Spool; Component Parts Not Available At Time Of Printing
18		{87757932}		1	End Cap; Clam Spool; Component Parts Not Available At Time Of Printing
19		83981068		2	PLUG, STOP, Shut-Off Plug Assembly Includes Seal; Component Parts Not Serviced Separately

08-32		p1	09/07

VALVE ASSY - BACKHOE CONTROL, 6 SPOOL (W/O EXT DIPPER, W/O AUX HYDS, W/O PILOT CONTROLS)

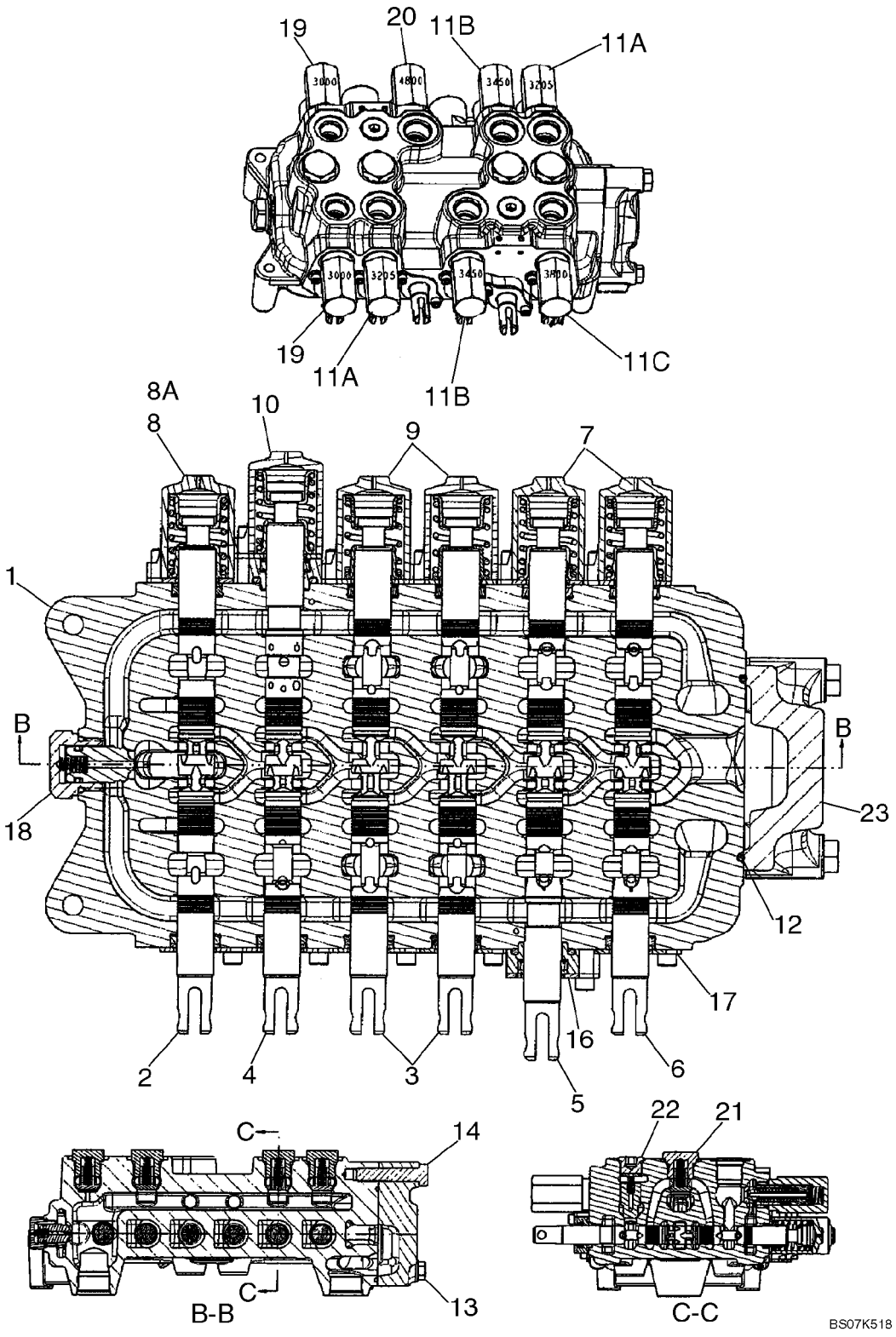

VALVE ASSY - BACKHOE CONTROL, 6 SPOOL (W/O EXT DIPPER, W/O AUX HYDS, W/O PILOT CONTROLS)

REF	FN	PART NUMBER	YR/SN	QTY	DESCRIPTION
		REF			INSTRUCTION, MODELS WITHOUT EXTENDABLE DIPPER, WITHOUT AUXILIARY HYDRAULICS, WITHOUT PILOT CONTROLS
		87555499		1	VALVE, HYDRAULIC, 6 Spool, Foot Swing; Incl. Ref 1 - 8, 9 - 23; If Used
		87555505		1	VALVE, HYDRAULIC, 6 Spool, Hand Swing; Incl. Ref 1 - 7, 8A, 9 - 23; If Used
1		NSS		1	NOT SERVICED SEPARATELY, HOUSING
2		NSS		1	NOT SERVICED SEPARATELY, SPOOL, SWING
3		NSS		2	NOT SERVICED SEPARATELY, SPOOL, STABILIZER, Right-hand and Left-Hand
4		NSS		1	NOT SERVICED SEPARATELY, SPOOL, BOOM
5		NSS		1	NOT SERVICED SEPARATELY, SPOOL, DIPPER
6		NSS		1	NOT SERVICED SEPARATELY, SPOOL, BUCKET
7		87426241		2	END ASSY., Cap Assembly, Bucket and Dipper Spool End; Some Component Parts Not Serviced Separately; Serviceable Includes (1) 87454547 O-Ring, (1) 87454548 Seal, (1) 87444567 Spring, (2) 87455541 Screw
8		87428500		1	END ASSY., Cap Assembly, Swing Spool End; 87555499 Foot Swing Valve; Some Component Parts Not Serviced Separately; Serviceable Includes (1) 87454547 O-Ring, (1) 87454548 Seal, (1) 87429151 Centering Spring, (2) 87455541 Screw
8A		87426241		1	END ASSY., Cap Assembly, Swing Spool End; 87555505 Hand Swing Valve; Some Component Parts Not Serviced Separately; Serviceable Includes (1) 87454547 O-Ring, (1) 87454548 Seal, (1) 87444567 Spring, (2) 87455541 Screw
9		87428497		2	END ASSY., Cap Assembly, Stabilizer Spool Ends; Some Component Parts Not Serviced Separately; Serviceable Includes (1) 87454547 O-Rings, (1) 87454548 Seal, (1) 87455533 Spring, (2) 87455541 Screw

VALVE ASSY - BACKHOE CONTROL, 6 SPOOL (W/O EXT DIPPER, W/O AUX HYDS, W/O PILOT CONTROLS)

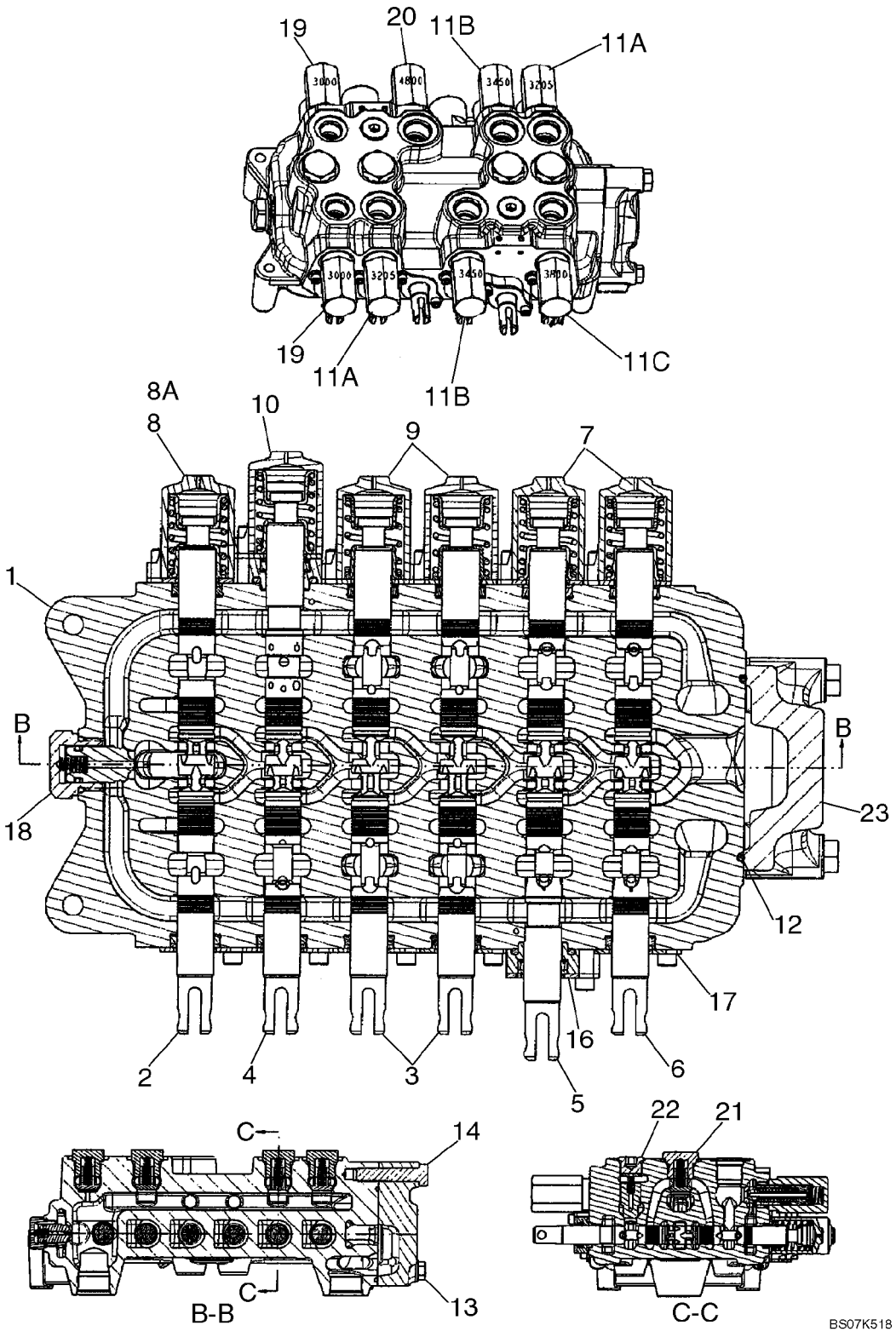

VALVE ASSY - BACKHOE CONTROL, 6 SPOOL (W/O EXT DIPPER, W/O AUX HYDS, W/O PILOT CONTROLS)

REF	FN	PART NUMBER	YR/SN	QTY	DESCRIPTION
10		87433029		1	END ASSY., Cap Assembly, Boom Spool End; Some Component Parts Not Serviced Separately; Serviceable Includes (1) 87454547 O-Ring, (1) 87454548 Seal, (1) 87444567 Spring, (1) 87455538 O-Ring, (2) 87455545 Screw
11A		87450978		2	VALVE, PRESSURE RELIEF, Circuit; 3205 psi; Component Parts Not Serviced Separately; Includes 87455549 Seal Kit
11B		87450979		2	VALVE, PRESSURE RELIEF, Circuit; 3450 psi; Component Parts Not Serviced Separately; Includes 87455549 Seal Kit
11C		87450980		1	VALVE, PRESSURE RELIEF, Circuit; 3800 psi; Component Parts Not Serviced Separately; Includes 87455549 Seal Kit
12		87428495		1	O-RING, O-Ring Seal, Outlet Section
13		87428491		2	SCREW, Bolt
14		87428492		1	SCREW, Bolt
16		87440815		1	PLATE ASSY., Seal Plate Assembly, Dipper Spool; Some Component Parts Not Serviced Separately; Serviceable Includes (1) 87454547 O-Ring, (1) 87454548 Seal, (1) 87455538 O-Ring, (2) 87455534 Screw
17		87440814		5	PLATE ASSY., Seal Plate Assembly; Some Component Parts Not Serviced Separately; Serviceable Includes (1) 87454547 O-Ring, (1) 87454548 Seal, (2) 87455540 Screw
18		81868381		1	VALVE, CHECK, Anti-Void Valve; Component Parts Not Serviced Separately; Includes 87455580 Seal Kit
19		87428490		2	VALVE, PRESSURE RELIEF, Relief Valve Assembly; 3000 psi; Component Parts Not Serviced Separately; Includes 87455549 Seal Kit
20		87566237		1	VALVE, PRESSURE RELIEF, Relief Valve Assembly; 4800 psi; Component Parts Not Serviced Separately; Includes 87455549 Seal Kit

VALVE ASSY - BACKHOE CONTROL, 6 SPOOL (W/O EXT DIPPER, W/O AUX HYDS, W/O PILOT CONTROLS)

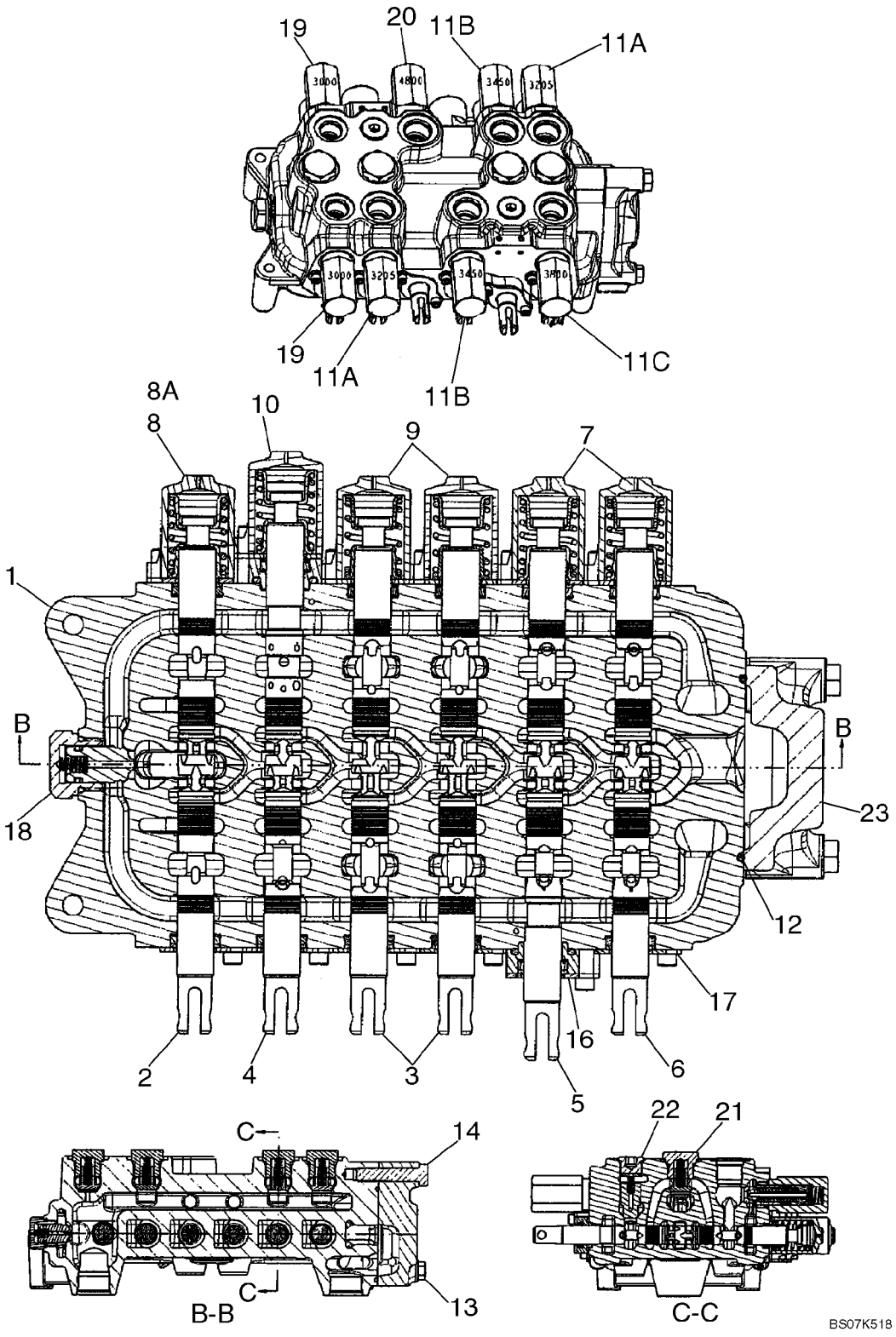

VALVE ASSY - BACKHOE CONTROL, 6 SPOOL (W/O EXT DIPPER, W/O AUX HYDS, W/O PILOT CONTROLS)

REF	FN	PART NUMBER	YR/SN	QTY	DESCRIPTION
21		87426238		4	VALVE, CHECK, Check Valve Assembly; Hex Head; Component Parts Not Serviced Separately; Includes (1) 87455975 O-Ring
22		87428486		2	VALVE, CHECK, Check Valve Assembly; Hex Socket Head; Component Parts Not Serviced Separately; Includes (1) 87455974 O-Ring
23		87433030		1	VALVE SECTION, HYD, Outlet Section Assembly; Component Parts Not Serviced Separately

08-33		p1	09/07

VALVE ASSY - BACKHOE CONTROL, 7 SPOOL (W/O EXT DIPPER, W/ AUX HYDS, W/O PILOT CONTROLS)

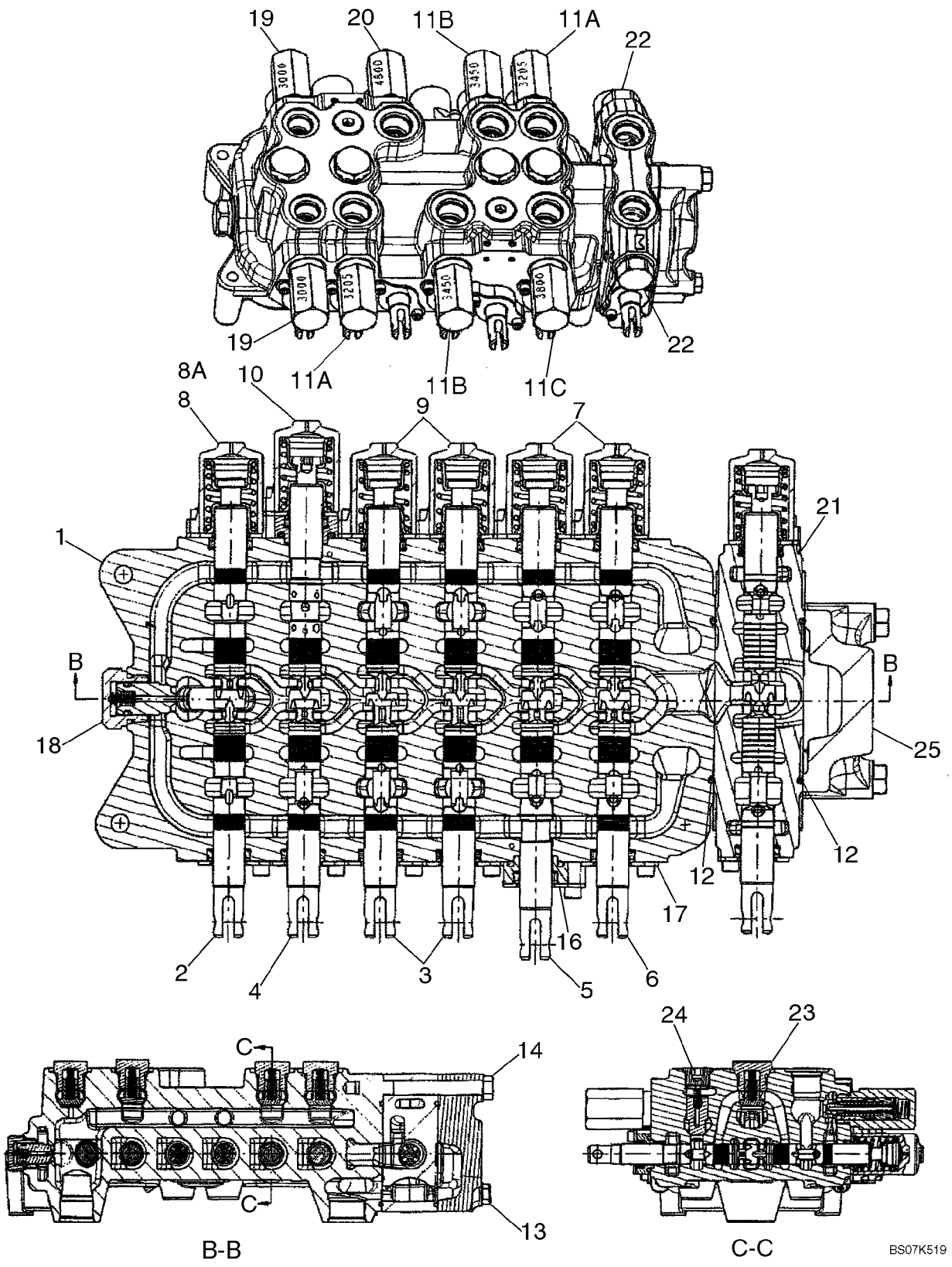

VALVE ASSY - BACKHOE CONTROL, 7 SPOOL (W/O EXT DIPPER, W/ AUX HYDS, W/O PILOT CONTROLS)

REF	FN	PART NUMBER	YR/SN	QTY	DESCRIPTION
		REF			INSTRUCTION, MODELS WITHOUT EXTENDABLE DIPPER, WITH AUXILIARY HYDRAULICS, WITHOUT PILOT CONTROLS
		87555536		1	VALVE, HYDRAULIC, 7 Spool, Foot Swing; Incl. Ref 1 - 8, 9 - 25; If Used
		87555530		1	VALVE, HYDRAULIC, 7 Spool, Hand Swing; Incl. Ref 1 - 7, 8A, 9 - 24, 25A; If Used
1		NSS		1	NOT SERVICED SEPARATELY, HOUSING
2		NSS		1	NOT SERVICED SEPARATELY, SPOOL, SWING
3		NSS		2	NOT SERVICED SEPARATELY, SPOOL, STABILIZER, Left-Hand and Right-Hand
4		NSS		1	NOT SERVICED SEPARATELY, SPOOL, BOOM
5		NSS		1	NOT SERVICED SEPARATELY, SPOOL, DIPPER
6		NSS		1	NOT SERVICED SEPARATELY, SPOOL, BUCKET
7		87426241		2	END ASSY., Cap Assembly, Bucket and Dipper Spool End; Some Component Parts Not Serviced Separately; Serviceable Includes (1) 87454547 O-Ring, (1) 87454548 Seal, (1) 87444567 Spring, (2) 87455541 Screw
8		87428500		1	END ASSY., Cap Assembly, Swing Spool End; 87555536 Foot Swing Valve; Some Component Parts Not Serviced Separately; Serviceable Includes (1) 87454547 O-Ring, (1) 87454548 Seal, (1) 87429151 Centering Spring, (2) 87455541 Screw
8A		87426241		1	END ASSY., Cap Assembly, Swing Spool End; 87555530 Hand Swing Valve; Some Component Parts Not Serviced Separately; Serviceable Includes (1) 87454547 O-Ring, (1) 87454548 Seal, (1) 87444567 Spring, (2) 87455541 Screw
9		87428497		2	END ASSY., Cap Assembly, Stabilizer Spool Ends; Some Component Parts Not Serviced Separately; Serviceable Includes (2) 87454547 O-Ring, (1) 87454548 Seal, (1) 87455533 Spring, (2) 87455541 Screw

08-33		p2	09/07

VALVE ASSY - BACKHOE CONTROL, 7 SPOOL (W/O EXT DIPPER, W/ AUX HYDS, W/O PILOT CONTROLS)

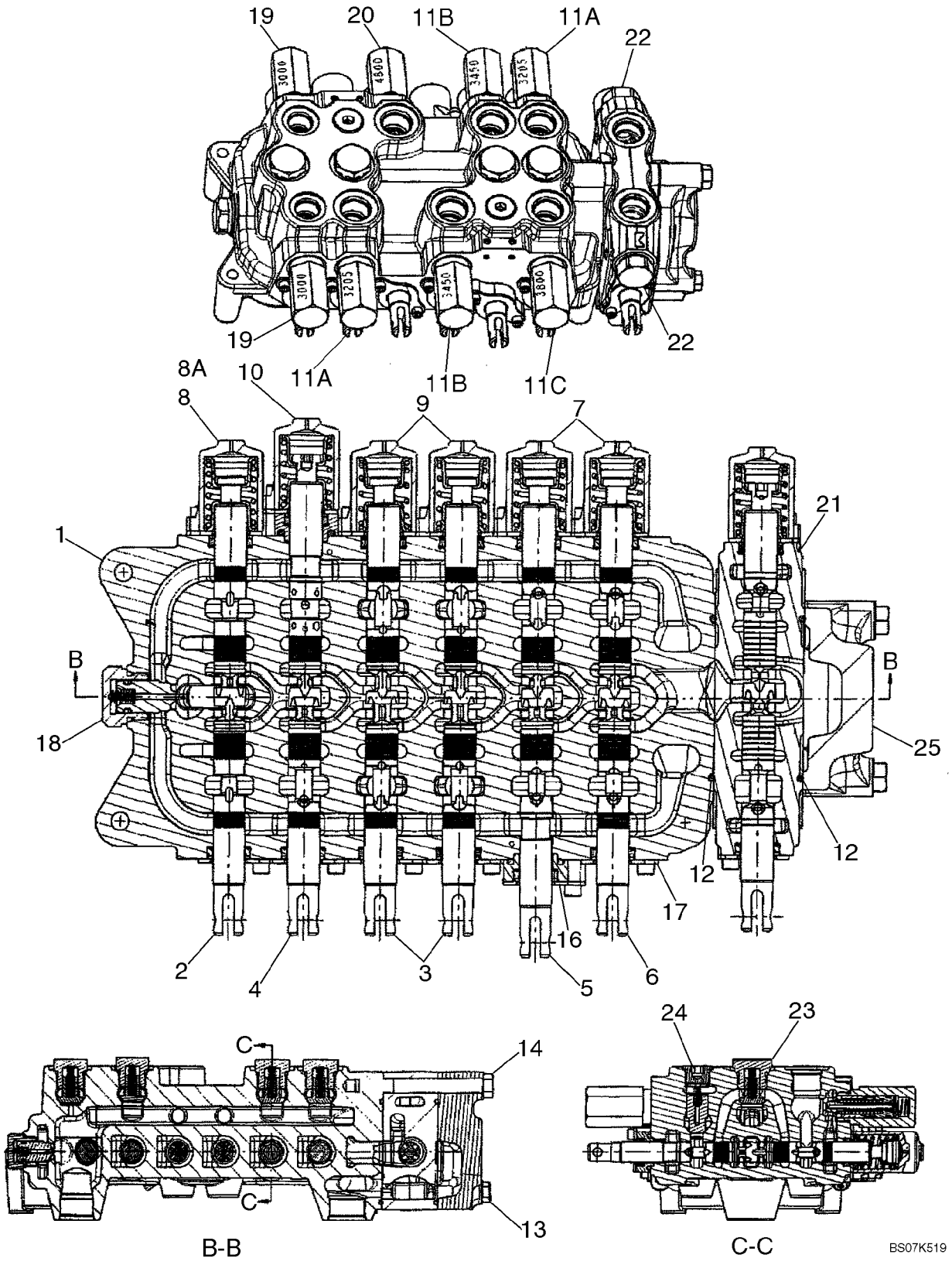

VALVE ASSY - BACKHOE CONTROL, 7 SPOOL (W/O EXT DIPPER, W/ AUX HYDS, W/O PILOT CONTROLS)

REF	FN	PART NUMBER	YR/SN	QTY	DESCRIPTION
10		87433029		1	END ASSY., Cap Assembly, Boom Spool End; Some Component Parts Not Serviced Separately; Serviceable Includes (1) 87454547 O-Ring, (1) 87454548 Seal, (1) 87444567 Spring, (1) 87455538 O-Ring, (2) 87455545 Screw
11A		87450978		2	VALVE, PRESSURE RELIEF, Circuit; 3205 psi; Component Parts Not Serviced Separately; Includes 87455549 Seal Kit
11B		87450979		2	VALVE, PRESSURE RELIEF, Circuit; 3450 psi; Component Parts Not Serviced Separately; Includes 87455549 Seal Kit
11C		87450980		1	VALVE, PRESSURE RELIEF, Circuit; 3800 psi; Component Parts Not Serviced Separately; Includes 87455549 Seal Kit
12		87428495		2	O-RING, Auxiliary/Outlet Section
13		87428476		2	SCREW
14		87428477		1	SCREW
16		87440815		1	PLATE ASSY., Seal, Dipper Spool; Some Component Parts Not Serviced Separately; Serviceable Includes (1) 87454547 O-Ring, (1) 87454548 Seal, (1) 87455538 O-Ring, (2) 87455534 Screw
17		87440814		5	PLATE ASSY., Seal; Some Component Parts Not Serviced Separately; Serviceable Includes (1) 87454547 O-Ring, (1) 87454548 Seal, (2) 87455540 Screw
18		81868381		1	VALVE, CHECK, Anti-Void Valve; Component Parts Not Serviced Separately; Includes 87455580 Seal Kit
19		87428490		2	VALVE, PRESSURE RELIEF, 3000 psi; Component Parts Not Serviced Separately; Includes 87455549 Seal Kit
20		87566237		1	VALVE, PRESSURE RELIEF, 4800 psi; Component Parts Not Serviced Separately; Includes 87455549 Seal Kit

VALVE ASSY - BACKHOE CONTROL, 7 SPOOL (W/O EXT DIPPER, W/ AUX HYDS, W/O PILOT CONTROLS)

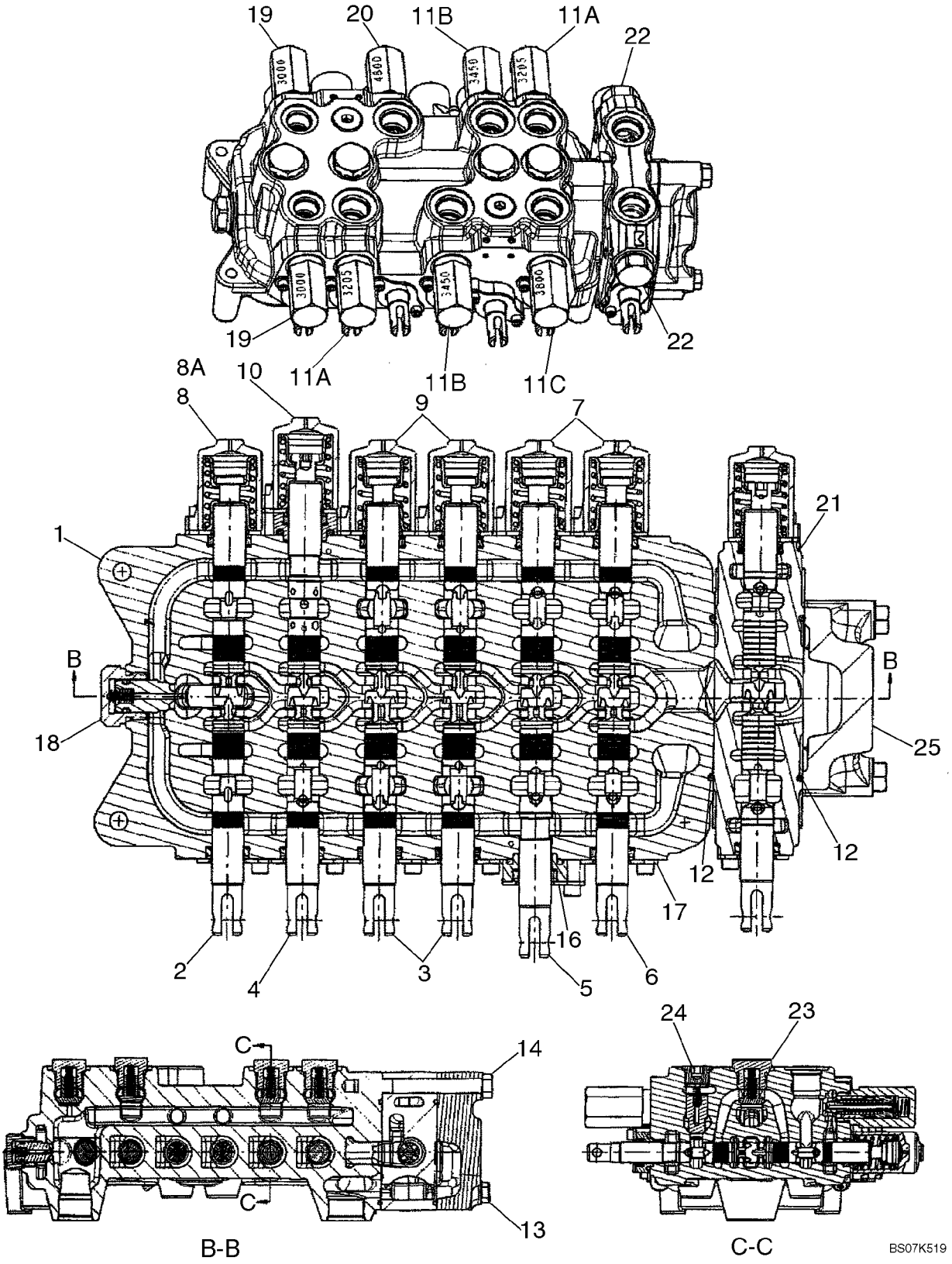

VALVE ASSY - BACKHOE CONTROL, 7 SPOOL (W/O EXT DIPPER, W/ AUX HYDS, W/O PILOT CONTROLS)

REF	FN	PART NUMBER	YR/SN	QTY	DESCRIPTION
21		87428501		1	VALVE SECTION, HYD, Spool Section Assembly; Auxiliary Hydraulics; Incl. Ref 21A - 21I, Which Are Not Illustrated; Remainder Component Parts Not Serviced Separately
21A		87433028		1	END ASSY., Spool; Incl. Ref 21B - 21E, Which Are Not Illustrated; Remainder Components Not Serviced Separately
21B		87454547		1	O-RING
21C		87454548		1	SEAL, Wiper
21D		87429150		1	SPRING, VALVE
21E		87455541		2	SCREW
21F		87428495		1	O-RING
21G		87455564		1	POPPET, VALVE, Load Check
21H		87455565		1	SPRING, VALVE, Load Check
21I		83981068		2	PLUG, STOP
22		83981068		2	PLUG, STOP, Component Parts Not Serviced Separately; Now Included With Ref 21
23		87426238		4	VALVE, CHECK, Hex Head; Component Parts Not Serviced Separately; Includes (1) 87455975 O-Ring
24		87428486		2	VALVE, CHECK, Hex Socket Head; Component Parts Not Serviced Separately; Includes (1) 87455974 O-Ring
25		87433030		1	VALVE SECTION, HYD, Outlet Section Assembly; Component Parts Not Serviced Separately

08-34		p1	09/07

VALVE ASSY - BACKHOE CONTROL, 7 SPOOL (W/ EXT DIPPER, W/O AUX HYDS, W/O PILOT CONTROLS)

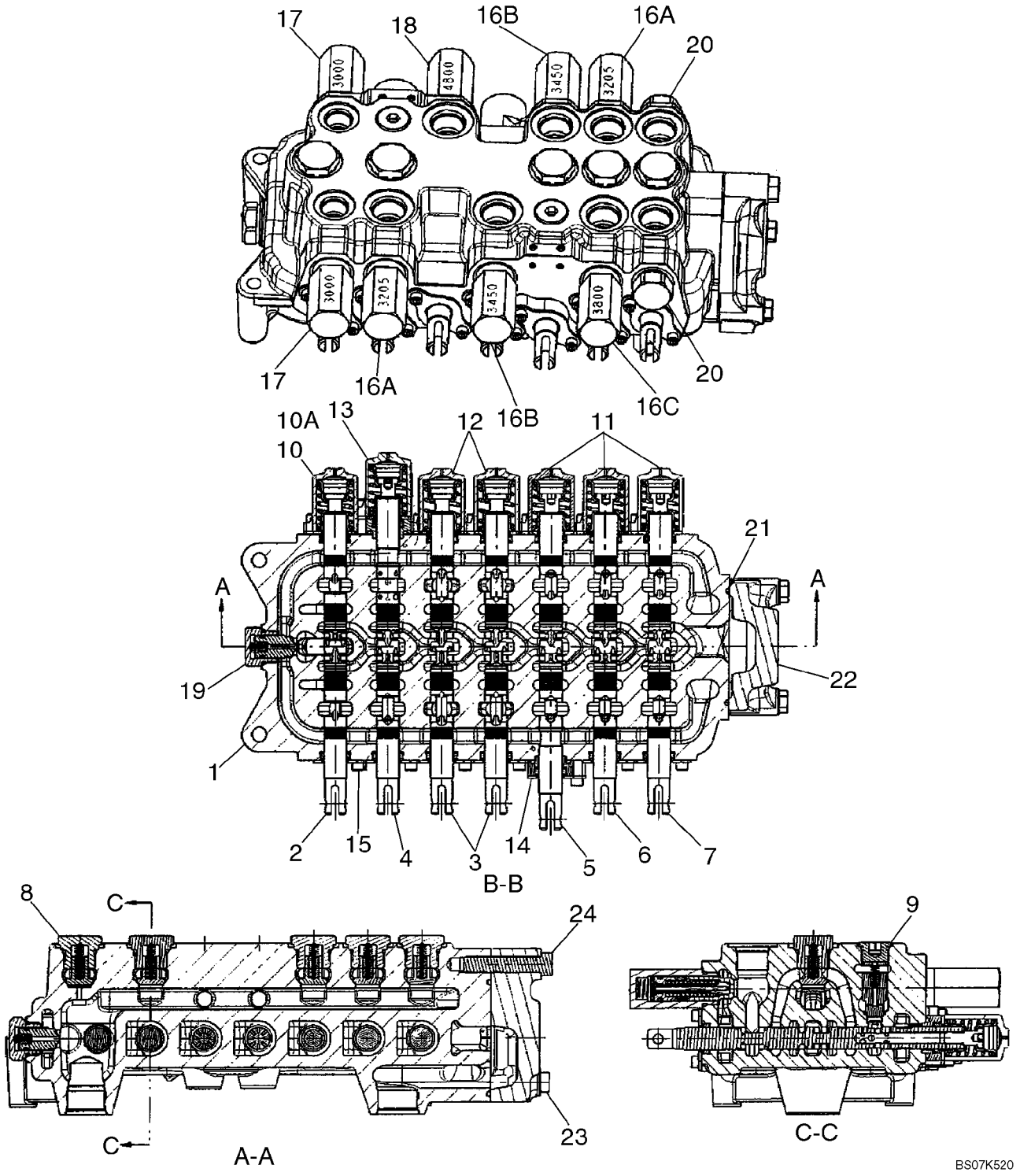

VALVE ASSY - BACKHOE CONTROL, 7 SPOOL (W/ EXT DIPPER, W/O AUX HYDS, W/O PILOT CONTROLS)

REF	FN	PART NUMBER	YR/SN	QTY	DESCRIPTION
		REF			INSTRUCTION, MODELS WITH EXTENDABLE DIPPER, WITHOUT AUXILIARY HYDRAULICS, WITHOUT PILOT CONTROLS
		87555524		1	VALVE, HYDRAULIC, 7 Spool, Foot Swing; Incl. Ref 1 - 10, 11 - 24; If Used
		87555519		1	VALVE, HYDRAULIC, 7 Spool, Hand Swing; Incl. Ref 1 - 9, 10A, 11 - 24; If Used
1		NSS		1	NOT SERVICED SEPARATELY, HOUSING
2		NSS		1	NOT SERVICED SEPARATELY, SPOOL, SWING
3		NSS		2	NOT SERVICED SEPARATELY, SPOOL, STABILIZER, Right-Hand and Left-Hand
4		NSS		1	NOT SERVICED SEPARATELY, SPOOL, BOOM
5		NSS		1	NOT SERVICED SEPARATELY, SPOOL, DIPPER
6		NSS		1	NOT SERVICED SEPARATELY, SPOOL, BUCKET
7		NSS		1	NOT SERVICED SEPARATELY, SPOOL, EXTENDABLE DIPPER
8		87426238		5	VALVE, CHECK, Hex Head; Component Parts Not Serviced Separately; Includes (1) 87455975 O-Ring
9		87428486		2	VALVE, CHECK, Hex Socket Head; Component Parts Not Serviced Separately; Includes (1) 87455974 O-Ring
10		87428500		1	END ASSY., Cap Assembly, Swing Spool End; 87555524 Foot Swing Valve; Some Component Parts Not Serviced Separately; Serviceable Includes (1) 87454547 O-Ring, (1) 87454548 Seal, (1) 87429151 Centering Spring, (2)
10A		87426241		1	END ASSY., Cap Assembly, Swing Spool End; 87555519 Hand Swing Valve; Some Component Parts Not Serviced Separately; Serviceable Includes (1) 87454547 O-Ring, (1) 87454548 Seal, (1) 87444567 Spring, (2) 87455541 Screw

The o-rings in each of the component descriptions are not found in any kits. Must order the o-rings individually.

VALVE ASSY - BACKHOE CONTROL, 7 SPOOL (W/ EXT DIPPER, W/O AUX HYDS, W/O PILOT CONTROLS)

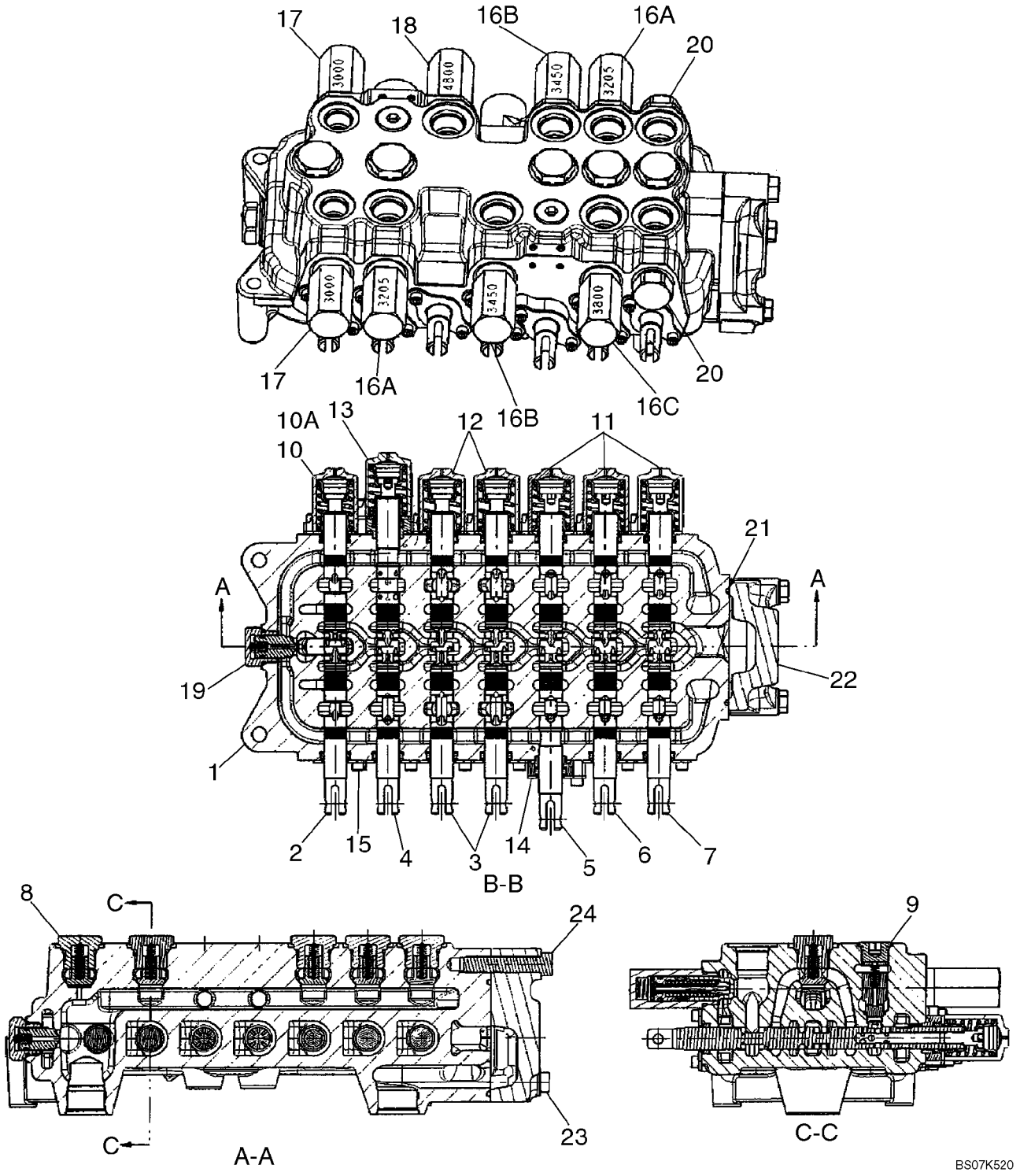

VALVE ASSY - BACKHOE CONTROL, 7 SPOOL (W/ EXT DIPPER, W/O AUX HYDS, W/O PILOT CONTROLS)

REF	FN	PART NUMBER	YR/SN	QTY	DESCRIPTION
11		87426241		3	END ASSY., Cap Assembly, Bucket, Dipper, and Extendahoe Spool End; Some Component Parts Not Serviced Separately; Serviceable Includes (1) 87454547 O-Ring, (1) 87454548 Seal, (1) 87444567 Spring, (2) 87455541 Screw
12		87428497		2	END ASSY., Cap Assembly, Stabilizer Spool Ends; Some Component Parts Not Serviced Separately; Serviceable Includes (1) 87454547 O-Ring, (1) 87454548 Seal, (1) 87455533 Spring, (2) 87455541 Screw
13		87433029		1	END ASSY., Cap Assembly, Boom Spool End; Some Component Parts Not Serviced Separately; Serviceable Includes (1) 87454547 O-Ring, (1) 87454548 Seal, (1) 87444567 Spring, (1) 87455538 O-Ring, (2) 87455545 Screw
14		87440815		1	PLATE ASSY., Seal, Dipper Spool; Some Component Parts Not Serviced Separately; Serviceable Includes (1) 87454547 O-Ring, (1) 87454548 Seal, (1) 87455538 O-Ring, (2) 87455534 Screw
15		87440814		6	PLATE ASSY., Seal; Some Component Parts Not Serviced Separately; Serviceable Includes (1) 87454547 O-Ring, (1) 87454548 Seal, (2) 87455540 Screw
16A		87450978		2	VALVE, PRESSURE RELIEF, Circuit; 3205 psi; Component Parts Not Serviced Separately; Includes 87455549 Seal Kit
16B		87450979		2	VALVE, PRESSURE RELIEF, Circuit; 3450 psi; Component Parts Not Serviced Separately; Includes 87455549 Seal Kit
16C		87450980		1	VALVE, PRESSURE RELIEF, Circuit; 3800 psi; Component Parts Not Serviced Separately; Includes 87455549 Seal Kit

The o-rings in each of the component descriptions are not found in any kits. Must order the o-rings individually.

VALVE ASSY - BACKHOE CONTROL, 7 SPOOL (W/ EXT DIPPER, W/O AUX HYDS, W/O PILOT CONTROLS)

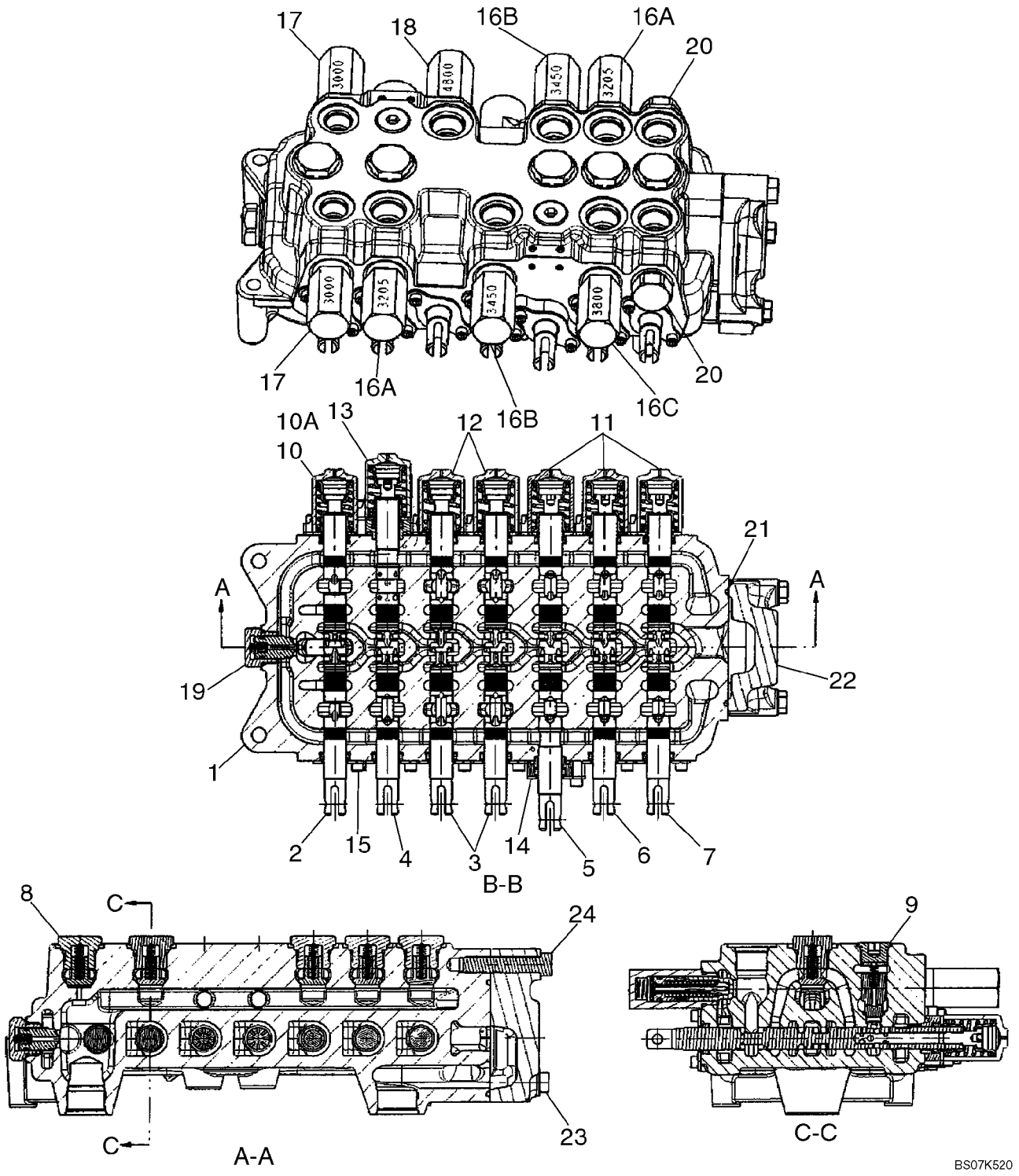

VALVE ASSY - BACKHOE CONTROL, 7 SPOOL (W/ EXT DIPPER, W/O AUX HYDS, W/O PILOT CONTROLS)

REF	FN	PART NUMBER	YR/SN	QTY	DESCRIPTION
17		87428490		2	VALVE, PRESSURE RELIEF, 3000 psi; Component Parts Not Serviced Separately; Includes 87455549 Seal Kit
18		87566237		1	VALVE, PRESSURE RELIEF, 4800 psi; Component Parts Not Serviced Separately; Includes 87455549 Seal Kit
19		81868381		1	VALVE, CHECK, Anti-Void Plug; Component Parts Not Serviced Separately; Includes 87455580 Seal Kit
20		83981068		2	PLUG, STOP, Component Parts Not Serviced Separately
21		87428495		1	O-RING, Outlet Section
22		87433030		1	VALVE SECTION, HYD, Outlet Section Assembly; Component Parts Not Serviced Separately
23		87428491		2	SCREW
24		87428492		1	SCREW

The o-rings in each of the component descriptions are not found in any kits. Must order the o-rings individually.

08-35		p1	11/07

VALVE ASSY - BACKHOE CONTROL, 8 SPOOL (W/ EXT DIPPER, W/ AUX HYDS, W/O PILOT CONTROLS)

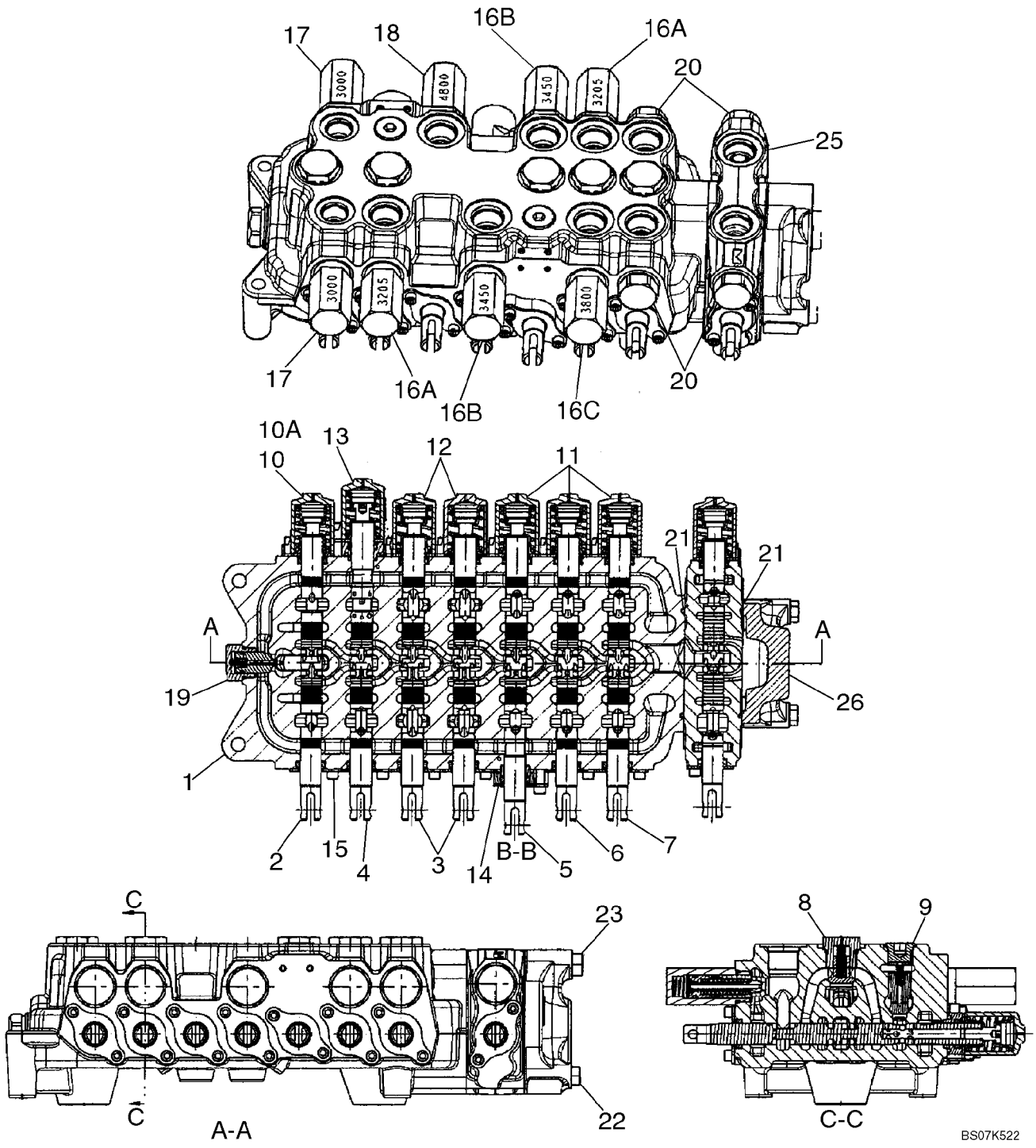

VALVE ASSY - BACKHOE CONTROL, 8 SPOOL (W/ EXT DIPPER, W/ AUX HYDS, W/O PILOT CONTROLS)

REF	FN	PART NUMBER	YR/SN	QTY	DESCRIPTION
		REF			INSTRUCTION, MODELS WITH EXTENDABLE DIPPER, WITH AUXILIARY HYDRAULICS, WITHOUT PILOT CONTROLS
		87555570		1	VALVE, HYDRAULIC, 8 Spool, Foot Swing; Incl. Ref 1 - 10, 12 - 26; If Used
		87555567		1	VALVE, HYDRAULIC, 8 Spool, Hand Swing; Incl. Ref 1 - 9, 10A, 11 - 25, 26A; If Used
1		NSS		1	NOT SERVICED SEPARATELY, HOUSING
2		NSS		1	NOT SERVICED SEPARATELY, SPOOL, SWING
3		NSS		2	NOT SERVICED SEPARATELY, SPOOL, STABILIZER, Right-Hand and Left-Hand
4		NSS		1	NOT SERVICED SEPARATELY, SPOOL, BOOM
5		NSS		1	NOT SERVICED SEPARATELY, SPOOL, DIPPER
6		NSS		1	NOT SERVICED SEPARATELY, SPOOL, BUCKET
7		NSS		1	NOT SERVICED SEPARATELY, SPOOL, EXTENDABLE DIPPER
8		87426238		5	VALVE, CHECK, Hex Head; Component Parts Not Serviced Separately; Includes (1) 87455975 O-Ring
9		87428486		2	VALVE, CHECK, Hex Socket Head; Component Parts Not Serviced Separately; Includes (1) 87455974 O-Ring
10		87428500		1	END ASSY., Cap Assembly, Swing Spool End; 87555570 Foot Swing Valve; Component Parts Not Serviced Separately; Includes 87429151 Centering Spring
10A		87426241		1	END ASSY., Cap Assembly, Swing Spool End; 87555567 Hand Swing Valve; Some Component Parts Not Serviced Separately; Serviceable Includes (1) 87454547 O-Ring, (1) 87454548 Seal, (1) 87444567 Spring, (2) 87455541 Screw
11		87426241		3	END ASSY., Cap Assembly, Bucket, Dipper and Extendahoe Spool Ends; Some Component Parts Not Serviced Separately; Serviceable Includes (1) 87454547 O-Ring, (1) 87454548 Seal, (1) 87444567 Spring, (2) 87455541 Screw

VALVE ASSY - BACKHOE CONTROL, 8 SPOOL (W/ EXT DIPPER, W/ AUX HYDS, W/O PILOT CONTROLS)

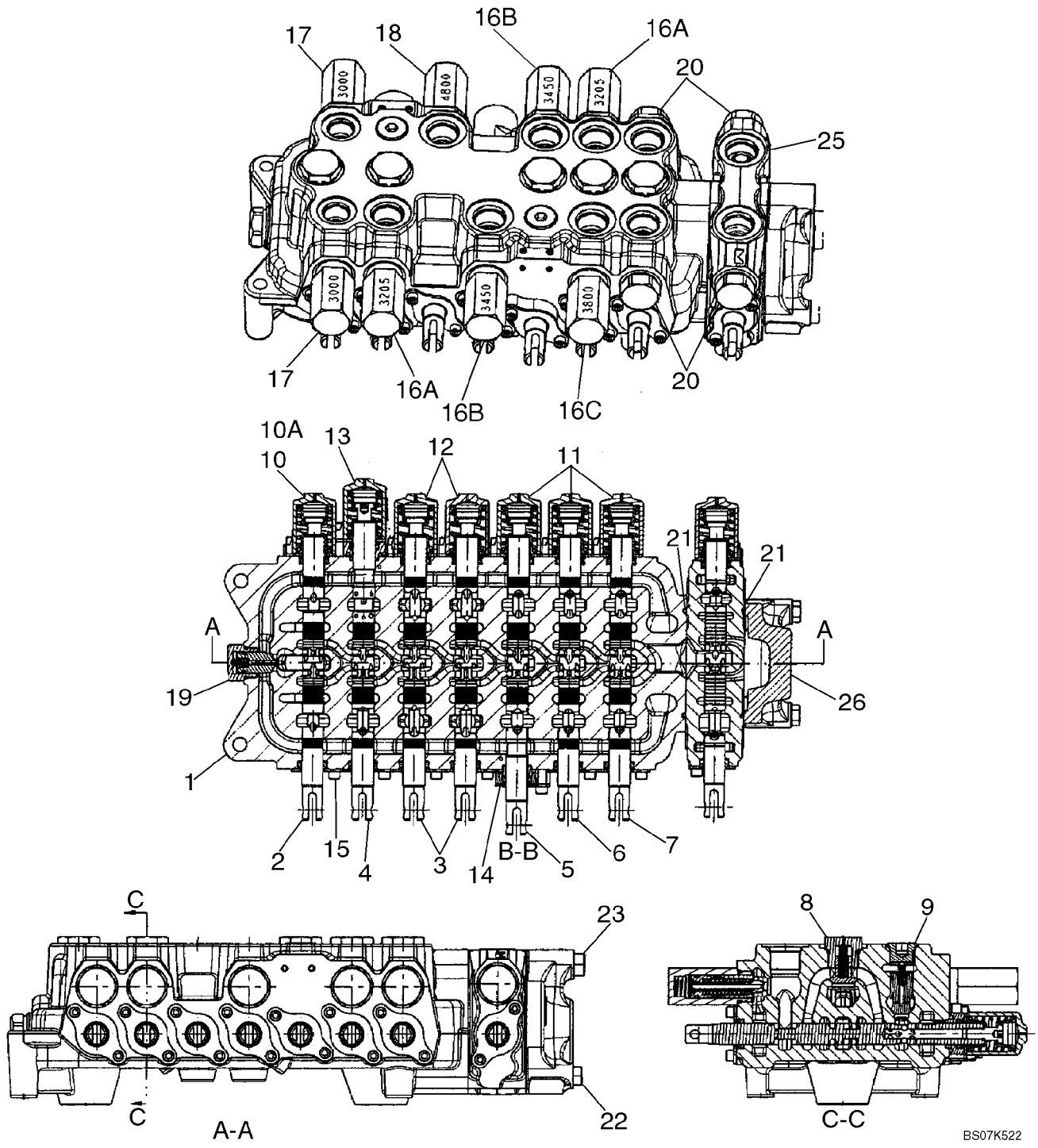

VALVE ASSY - BACKHOE CONTROL, 8 SPOOL (W/ EXT DIPPER, W/ AUX HYDS, W/O PILOT CONTROLS)

REF	FN	PART NUMBER	YR/SN	QTY	DESCRIPTION
12		87428497		2	END ASSY., Cap Assembly, Stabilizer Spool Ends; Some Component Parts Not Serviced Separately; Serviceable Includes (1) 87454547 O-Ring, (1) 87454548 Seal, (1) 87455533 Spring, (2) 87455541 Screw
13		87433029		1	END ASSY., Cap Assembly, Boom Spool End; Some Component Parts Not Serviced Separately; Serviceable Includes (1) 87454547 O-Ring, (1) 87454548 Seal, (1) 87444567 Spring, (1) 87455538 O-Ring, (2) 87455545 Screw
14		87440815		1	PLATE ASSY., Seal, Dipper Spool; Some Component Parts Not Serviced Separately; Serviceable Includes (1) 87454547 O-Ring, (1) 87454548 Seal, (1) 87455538 O-Ring, (2) 87455534 Screw
15		87440814		6	PLATE ASSY., Seal; Some Component Parts Not Serviced Separately; Serviceable Includes (1) 87454547 O-Ring, (1) 87454548 Seal, (2) 87455540 Screw
16A		87450978		2	VALVE, PRESSURE RELIEF, Circuit; 3205 psi; Component Parts Not Serviced Separately; Includes 87455549 Seal Kit
16B		87450979		2	VALVE, PRESSURE RELIEF, Circuit; 3450 psi; Component Parts Not Serviced Separately; Includes 87455549 Seal Kit
16C		87450980		1	VALVE, PRESSURE RELIEF, Circuit; 3800 psi; Component Parts Not Serviced Separately; Includes 87455549 Seal Kit
17		87428490		2	VALVE, PRESSURE RELIEF, 3000 psi; Component Parts Not Serviced Separately; Includes 87455549 Seal Kit
18		87566237		1	VALVE, PRESSURE RELIEF, 4800 psi; Component Parts Not Serviced Separately; Includes 87455549 Seal Kit

08-35		p3	11/07

VALVE ASSY - BACKHOE CONTROL, 8 SPOOL (W/ EXT DIPPER, W/ AUX HYDS, W/O PILOT CONTROLS)

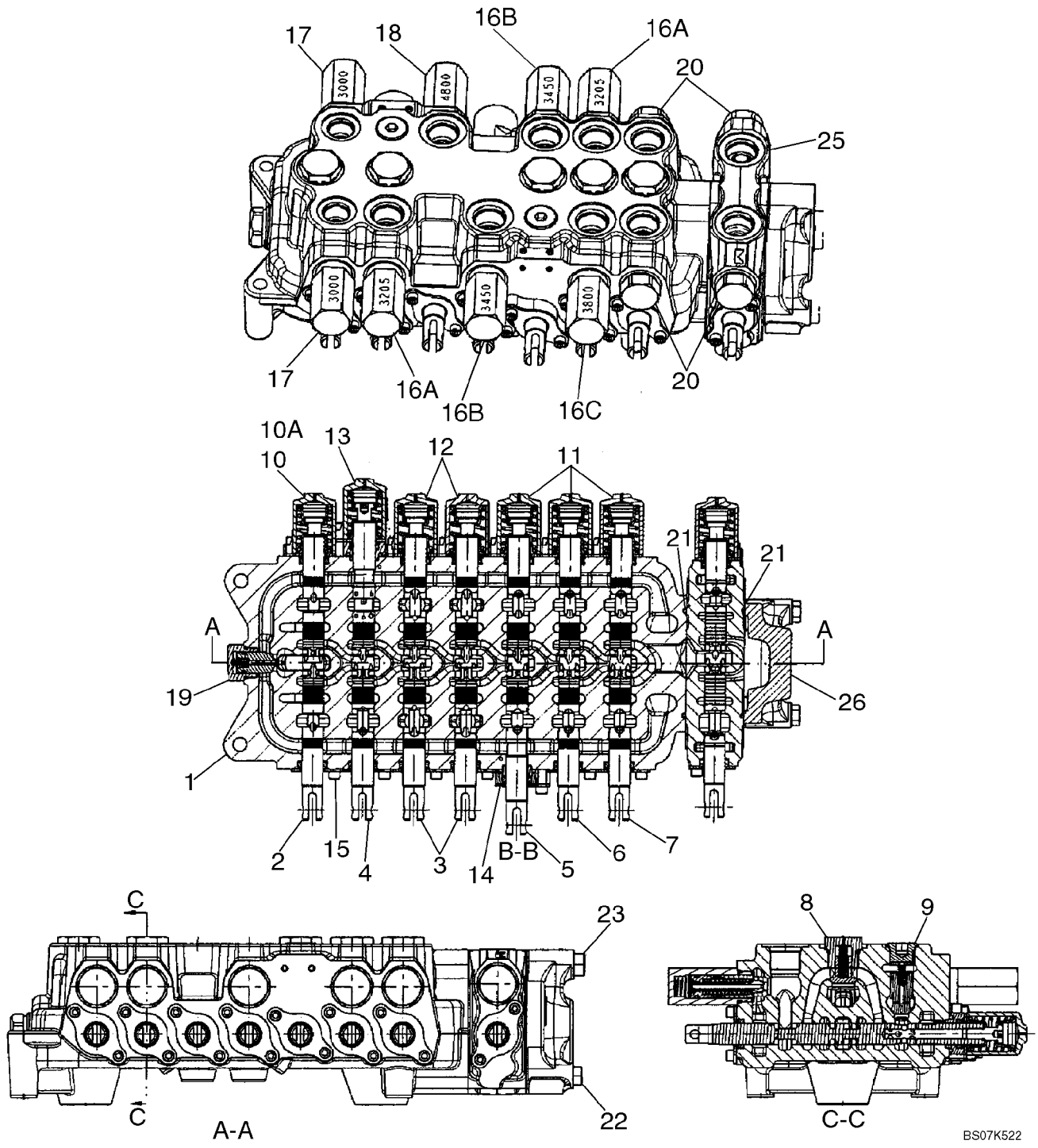

VALVE ASSY - BACKHOE CONTROL, 8 SPOOL (W/ EXT DIPPER, W/ AUX HYDS, W/O PILOT CONTROLS)

REF	FN	PART NUMBER	YR/SN	QTY	DESCRIPTION
19		81868381		1	VALVE, CHECK, Anti-Void Valve; Component Parts Not Serviced Separately; Includes 87455580 Seal Kit
20		83981068		4	PLUG, STOP, Component Parts Not Serviced Separately; (2) Are Now Included With Ref 25
21		87428495		2	O-RING, Auxiliary/Outlet Section
22		87428476		2	SCREW
23		87428477		1	SCREW
25		87428501		1	VALVE SECTION, HYD, Spool Section Assembly; Auxiliary Hydraulics; Includes Ref 25A - 25I, Which Are Not Illustrated; Remainder Component Parts Not Serviced Separately
25A		87433028		1	END ASSY., Spool; Incl. Ref 25B - 25E, Which Are Not Illustrated; Remainder Component Parts Not Serviced Separately
25B		87454547		1	O-RING
25C		87454548		1	SEAL, Wiper
25D		87429150		1	SPRING, VALVE
25E		87455541		2	SCREW
25F		87428495		1	O-RING
25G		87455564		1	POPPET, VALVE, Load Check
25H		87455565		1	SPRING, VALVE, Load Check
25I		83981068		2	PLUG, STOP
26		87433030		1	VALVE SECTION, HYD, Outlet Section Assembly; Component Parts Not Serviced Separately

08-36		p1	09/07

VALVE ASSY - BACKHOE CONTROL, 6 SPOOL (W/O EXT DIPPER, W/ OR W/O AUX HYDS, W/ PILOT CONTROLS)

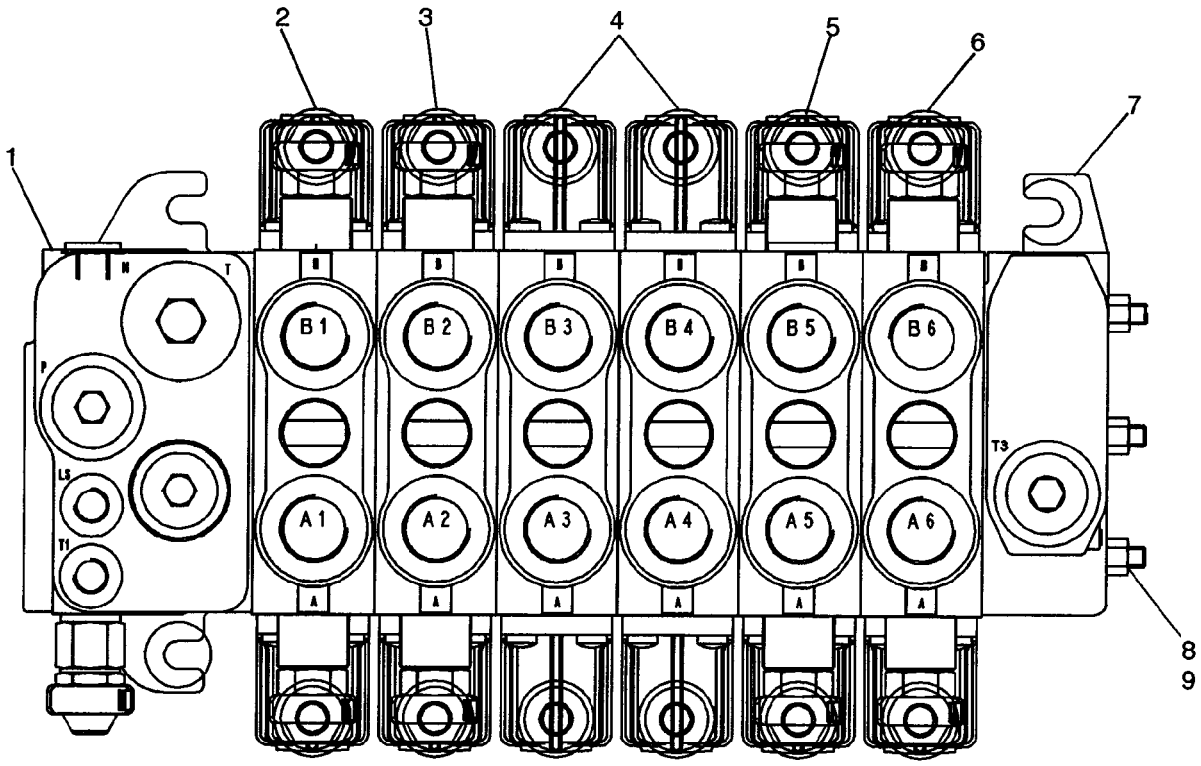

BS07K523

VALVE ASSY - BACKHOE CONTROL, 6 SPOOL (W/O EXT DIPPER, W/ OR W/O AUX HYDS, W/ PILOT CONTROLS)

REF	FN	PART NUMBER	YR/SN	QTY	DESCRIPTION
		87577343		1	VALVE, CONTROL, Backhoe 6 Spool; Rexroth No. 08 403 273; Check Data Plate On Valve For Part Number; Incl. Ref 1 - 9
1		87441495		1	VALVE SECTION, HYD, Inlet Section; With Orifice Threaded In LS Cavity; See Figure 08-39A
2		85826339		1	VALVE SECTION, HYD, Swing Section; See Figure 08-40
3		85826337		1	VALVE SECTION, HYD, Boom Section; See Figure 08-41
4		87617618		2	VALVE SECTION, HYD, Stabilizer Section; Without Flow Sharing to Provide Open Center Performance; See Figure 08-42
5		85826338		1	VALVE SECTION, HYD, Dipper Section; See Figure 08-43
6		85826365		1	VALVE SECTION, HYD, Bucket Section; See Figure 08-44
7		NSS		1	NOT SERVICED SEPARATELY, Outlet Section
8		NSS		3	NOT SERVICED SEPARATELY, Tie Bolt
9		NSS		3	NOT SERVICED SEPARATELY, Nut

08-37		p1	01/08

VALVE ASSY - BACKHOE CONTROL, 7 SPOOL (W/ EXT DIPPER, W/ OR W/O AUX HYDS, W/ PILOT CONTROLS)

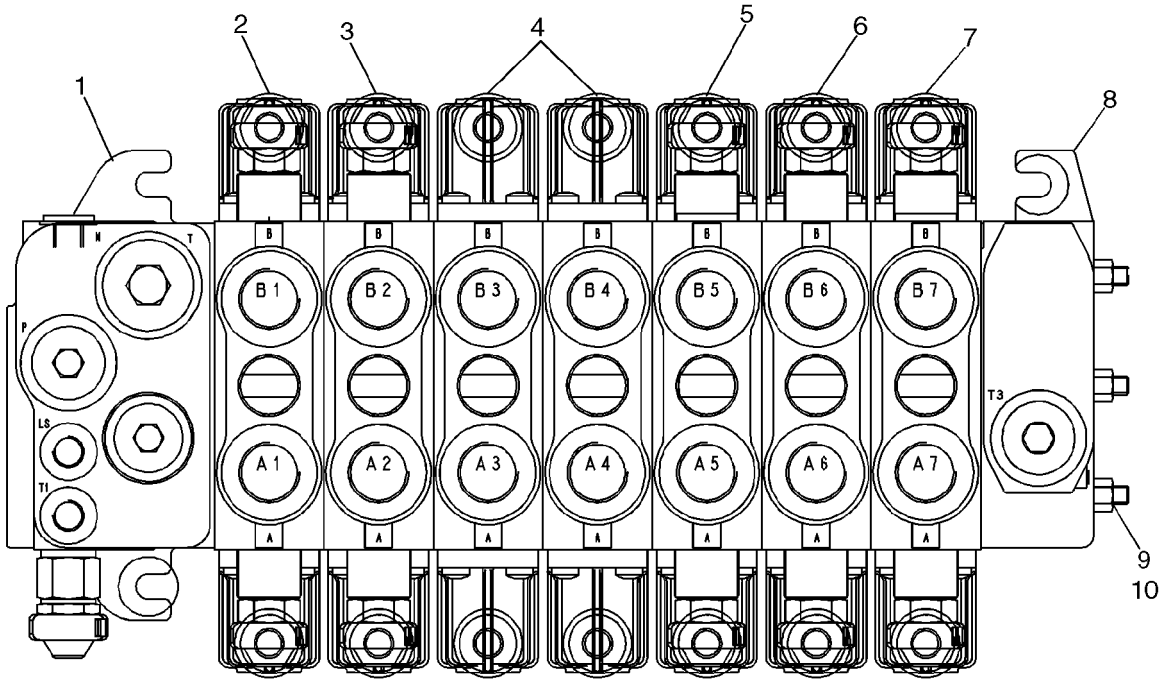

BS07K524

VALVE ASSY - BACKHOE CONTROL, 7 SPOOL (W/ EXT DIPPER, W/ OR W/O AUX HYDS, W/ PILOT CONTROLS)

REF	FN	PART NUMBER	YR/SN	QTY	DESCRIPTION
		87577346		1	VALVE, CONTROL, Backhoe 7 Spool; Rexroth No. 08 402 663; Check Data Plate On Valve For Part Number; Incl. Ref 1 - 10;
1		87441495		1	VALVE SECTION, HYD, Inlet Section; With Orifice Threaded In LS Cavity; See Figure 08-39A
2		85826339		1	VALVE SECTION, HYD, Swing Section; See Figure 08-40
3		85826337		1	VALVE SECTION, HYD, Boom Section; See Figure 08-41
4		87617618		2	VALVE SECTION, HYD, Stabilizer Section; Without Flow Sharing to Provide Open Center Performance; 87577346 Valve; See Figure 08-42
5		85826338		1	VALVE SECTION, HYD, Dipper Section; See Figure 08-43
6		85826365		1	VALVE SECTION, HYD, Bucket Section; See Figure 08-44
7		85826341		1	VALVE SECTION, HYD, Extendable Dipper Section; See Figure 08-45
8		NSS		1	NOT SERVICED SEPARATELY, Outlet Section
9		NSS		3	NOT SERVICED SEPARATELY, Tie Bolt
10		NSS		3	NOT SERVICED SEPARATELY, Nut

VALVE ASSY - BACKHOE CONTROL, 7 SPOOL (W/O EXT DIPPER, W/ AUX HYDS, W/ PILOT CONTROLS)

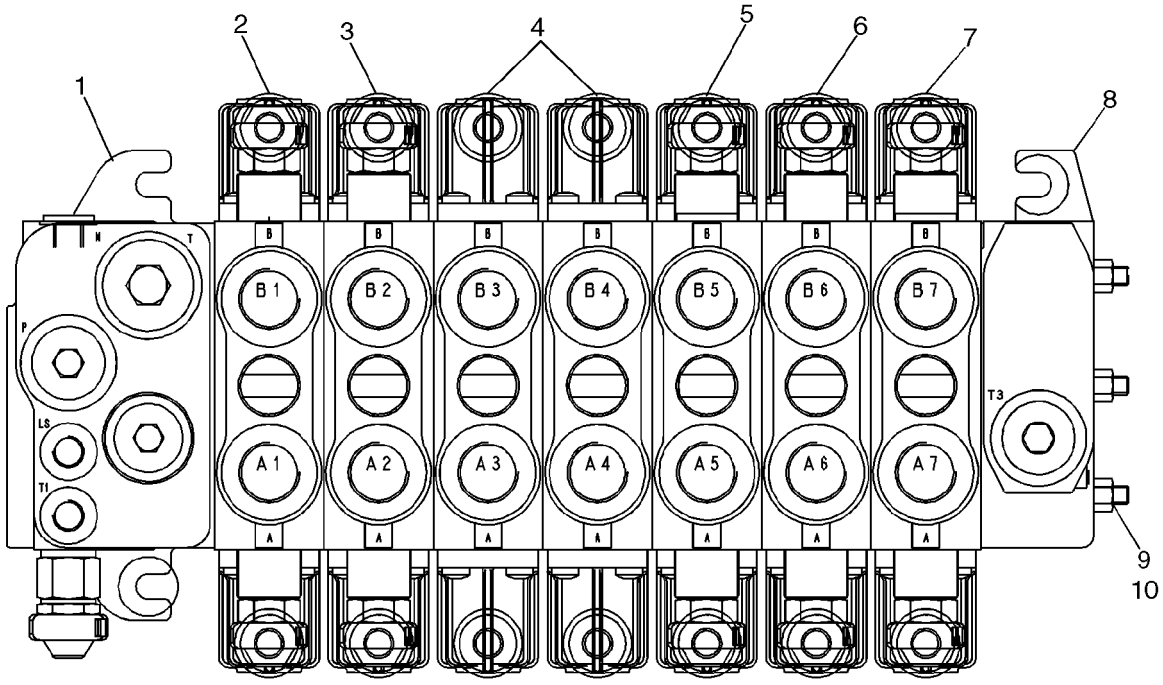

BS07K524

VALVE ASSY - BACKHOE CONTROL, 7 SPOOL (W/O EXT DIPPER, W/ AUX HYDS, W/ PILOT CONTROLS)

REF	FN	PART NUMBER	YR/SN	QTY	DESCRIPTION
		87577348		1	VALVE, CONTROL, Backhoe 7 Spool; Rexroth No. 08 403 272; Check Data Plate On Valve For Part Number; Incl. Ref 1 - 10
1		87441495		1	VALVE SECTION, HYD, Inlet Section; With Orifice Threaded In LS Cavity; See Figure 08-39A
2		85826339		1	VALVE SECTION, HYD, Swing Section; See Figure 08-40
3		85826337		1	VALVE SECTION, HYD, Boom Section; See Figure 08-41
4		87617618		2	VALVE SECTION, HYD, Stabilizer Section; Without Flow Sharing to Provide Open Center Performance; See Figure 08-42
5		85826338		1	VALVE SECTION, HYD, Dipper Section; See Figure 08-43
6		85826365		1	VALVE SECTION, HYD, Bucket Section; See Figure 08-44
7		85826342		1	VALVE SECTION, HYD, Auxiliary Section; See Figure 08-46
8		NSS		1	NOT SERVICED SEPARATELY, Outlet Section
9		NSS		3	NOT SERVICED SEPARATELY, Tie Bolt
10		NSS		3	NOT SERVICED SEPARATELY, Nut

08-39		p1	01/08

VALVE ASSY - BACKHOE CONTROL, 8 SPOOL (W/ EXT DIPPER, W/ AUX HYDS, W/ PILOT CONTROLS)

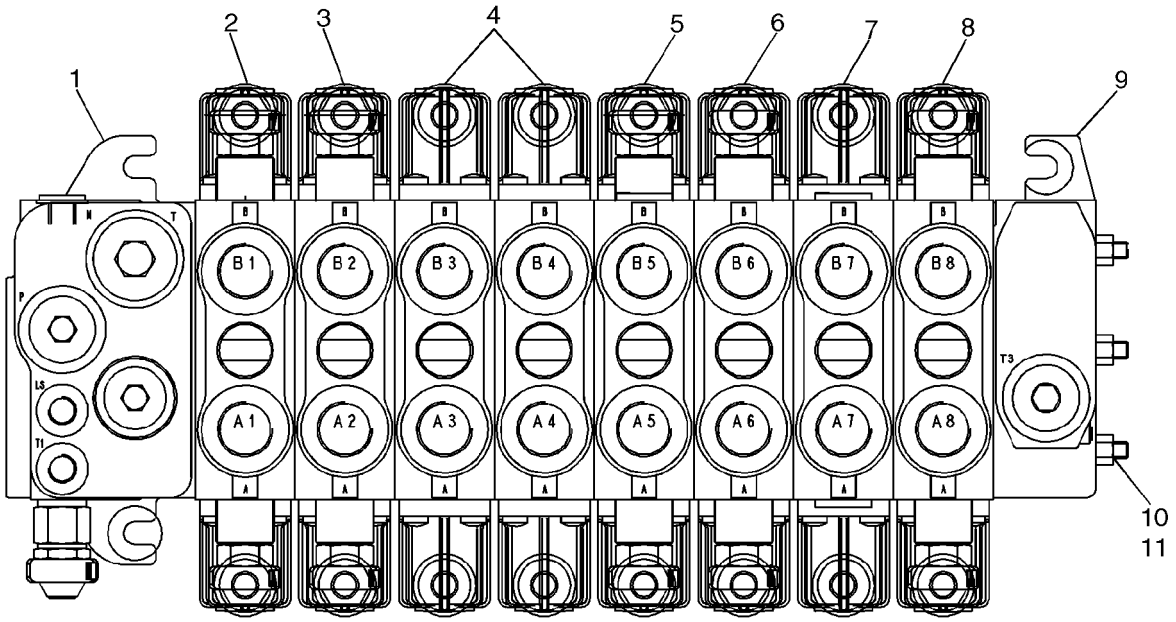

BS07M008

VALVE ASSY - BACKHOE CONTROL, 8 SPOOL (W/ EXT DIPPER, W/ AUX HYDS, W/ PILOT CONTROLS)

REF	FN	PART NUMBER	YR/SN	QTY	DESCRIPTION
		87577349		1	VALVE, CONTROL, Backhoe 8 Spool; Rexroth No. 08 403 271; Check Data Plate On Valve For Part Number; Incl. Ref 1 - 11
1		87441495		1	VALVE SECTION, HYD, Inlet Section; With Orifice Threaded In LS Cavity; See Figure 08-43A
2		85826339		1	VALVE SECTION, HYD, Swing Section; See Figure 08-44
3		85826337		1	VALVE SECTION, HYD, Boom Section; See Figure 08-45
4		87617618		2	VALVE SECTION, HYD, Stabilizer Section; Without Flow Sharing to Provide Open Center Performance; 87577349 Valve; See Figure 08-46; If Used
5		85826338		1	VALVE SECTION, HYD, Dipper Section; See Figure 08-47
6		85826365		1	VALVE SECTION, HYD, Bucket Section; See Figure 08-48
7		85826341		1	VALVE SECTION, HYD, Extendable Dipper Section; See Figure 08-49
8		85826342		1	VALVE SECTION, HYD, Auxiliary Section; See Figure 08-50
9		NSS		1	NOT SERVICED SEPARATELY, Outlet Section
10		87447477		3	SET OF PARTS, Tie Bolt
11		280136		3	NUT, 3/8"-16, G8

VALVE SECTION - BACKHOE SWING (WITH PILOT CONTROLS)

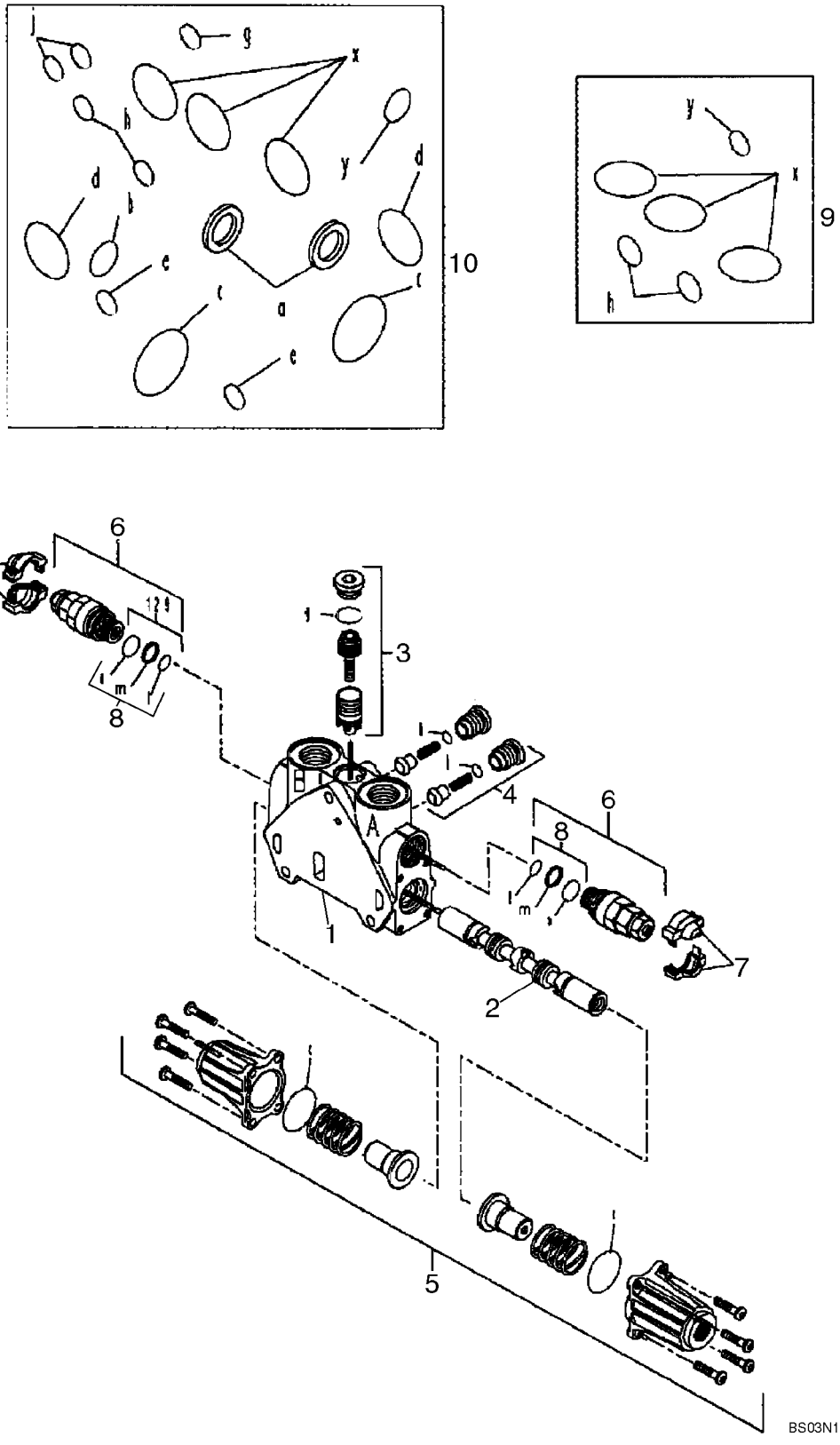

VALVE SECTION - BACKHOE SWING (WITH PILOT CONTROLS)

REF	FN	PART NUMBER	YR/SN	QTY	DESCRIPTION
		85826339		1	VALVE SECTION, HYD, Swing; Incl. Ref 1 - 10
1		NSS		1	NOT SERVICED SEPARATELY, HOUSING
2		NSS		1	NOT SERVICED SEPARATELY, SPOOL
3		85826345		1	KIT, Pressure Compensator; Component Parts Not Serviced Separately
4		85811938		2	VALVE, CHECK, Component Parts Not Serviced Separately
5		85826344		1	KIT, End Cap; Component Parts Not Serviced Separately
6		85812114		2	VALVE, HYDRAULIC, Pressure Relief Valve; Some Component Parts Not Serviced Separately; Serviceable Includes 85811933, Ref 8 Kit
7		85811934		2	KIT, Cover, Orange
8		85811933		2	KIT, SEALS, Includes (2) O-Rings, (1) Thrust Ring; Component Parts Not Serviced Separately
9		85819148		1	KIT, SEALS, Includes (6) O-Rings; Component Parts Not Serviced Separately
10		85824282		1	KIT, Seal, Includes (15) O-Rings, (2) Lip Seals; Component Parts Not Serviced Separately

VALVE SECTION - BACKHOE BOOM (WITH PILOT CONTROLS)

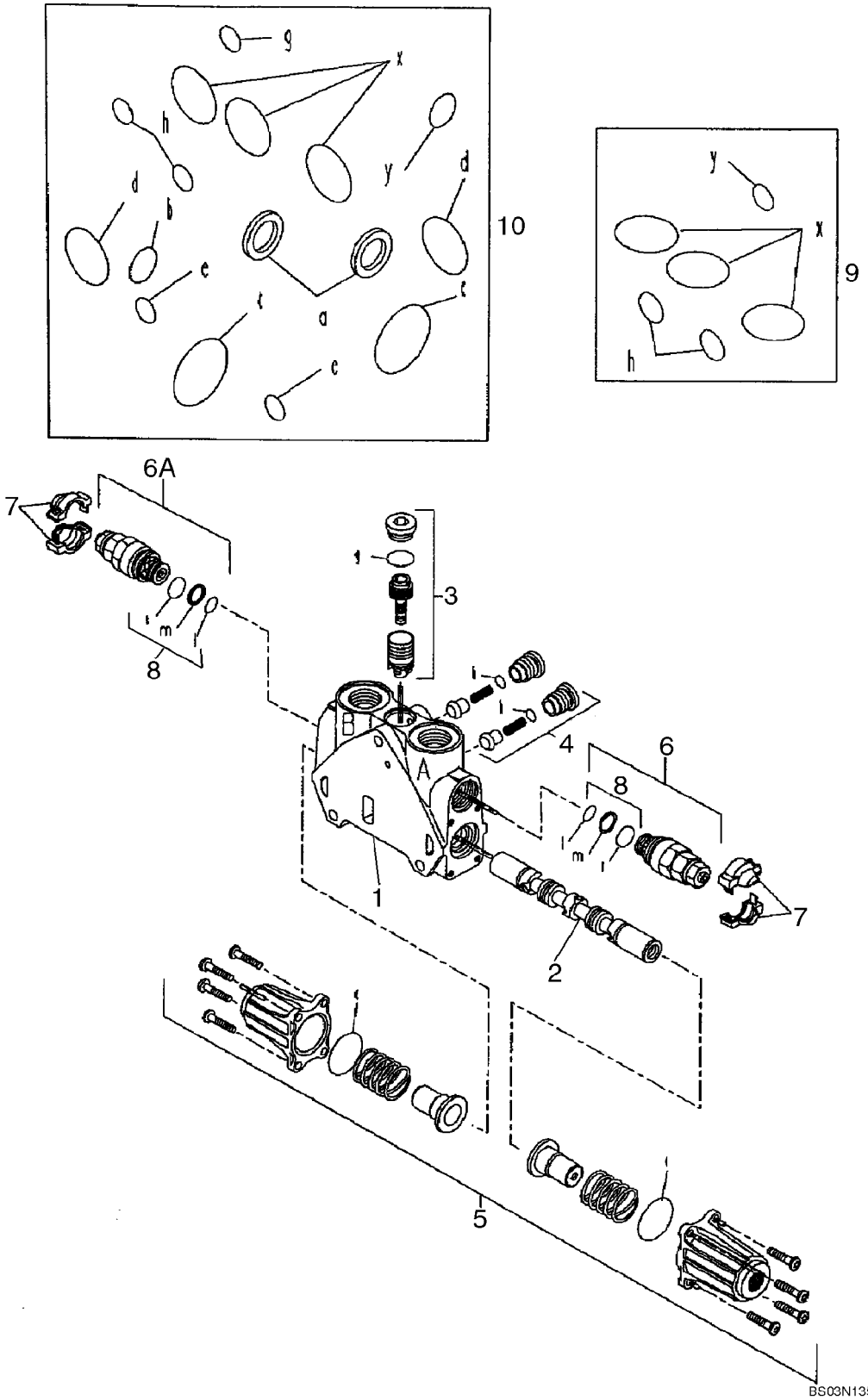

VALVE SECTION - BACKHOE BOOM (WITH PILOT CONTROLS)

REF	FN	PART NUMBER	YR/SN	QTY	DESCRIPTION
		85826337		1	VALVE SECTION, HYD, Boom; Incl. Ref 1 - 10
1		NSS		1	NOT SERVICED SEPARATELY, HOUSING
2		NSS		1	NOT SERVICED SEPARATELY, SPOOL
3		85819378		1	KIT, SEALS, Pressure Compensator; Component Parts Not Serviced Separately
4		85811938		2	VALVE, CHECK, Component Parts Not Serviced Separately
5		85826344		1	KIT, End Cap; Component Parts Not Serviced Separately
6		85812115		1	VALVE, HYDRAULIC, Pressure Relief Valve Kit; Side A; Some Component Parts Not Serviced Separately; Serviceable Includes 85811933, Ref 8 Kit
6A		85826346		1	VALVE, PRESSURE RELIEF, Pressure Relief Valve Kit; Side B; Component Parts Not Serviced Separately
7		85811934		2	KIT, Cover, Orange
7		85811935		2	KIT, Cover, Blue
8		85811933		2	KIT, SEALS, Seal Kit Includes (2) O-Rings, (1) Thrust Ring; Component Parts Not Serviced Separately
9		85819148		1	KIT, SEALS, Seal Kit Includes (6) O-Rings; Component Parts Not Serviced Separately
10		85824281		1	KIT, SEALS, Seal Kit Includes (13) O-Rings, (2) Lip Seals; Component Parts Not Serviced Separately

VALVE SECTION - BACKHOE STABILIZER (WITH PILOT CONTROLS)

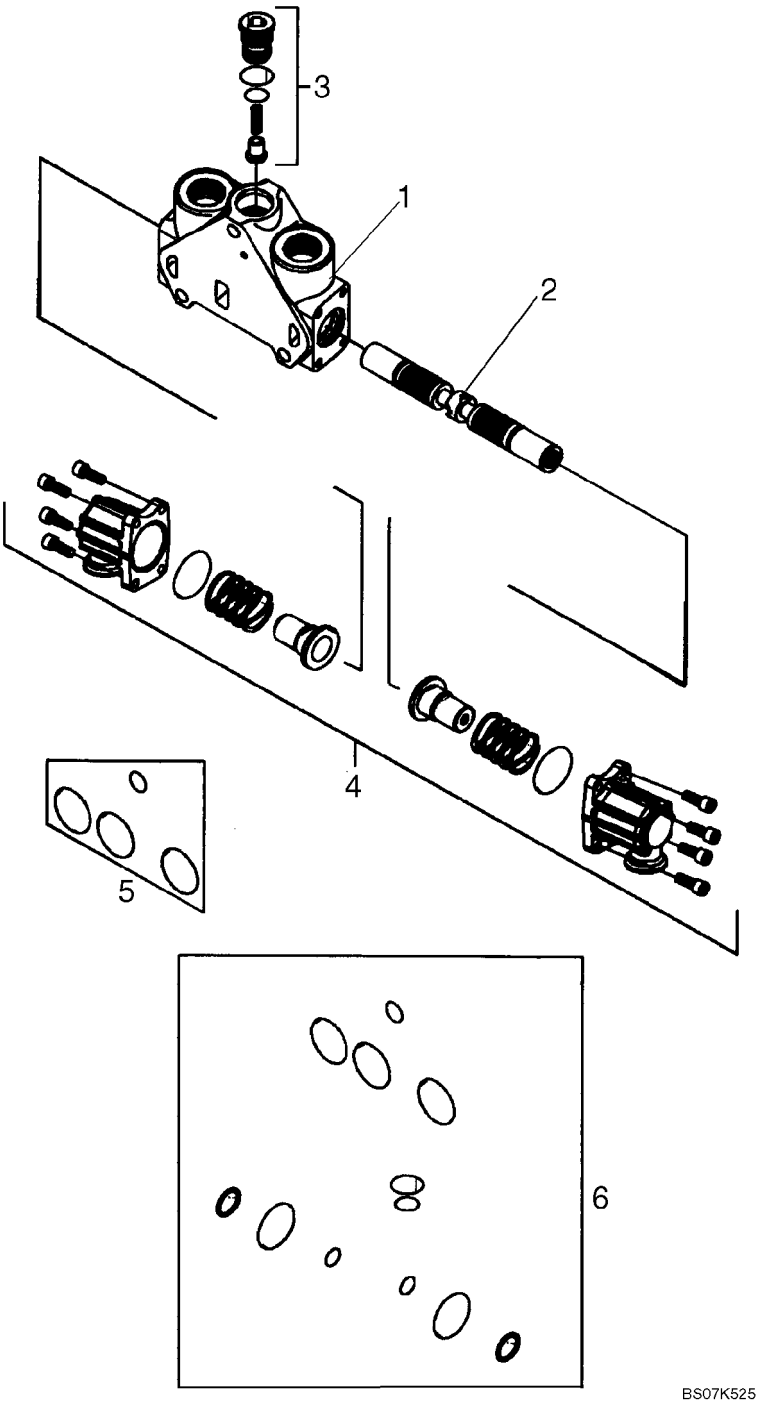

VALVE SECTION - BACKHOE STABILIZER (WITH PILOT CONTROLS)

REF	FN	PART NUMBER	YR/SN	QTY	DESCRIPTION
		87617618		2	VALVE SECTION, HYD, Stabilizer; Left-Hand and Right-Hand; Without Flow Sharing to Provide Open Center Performance; Incl. Ref 1 - 6
1		NSS		1	NOT SERVICED SEPARATELY, HOUSING
2		NSS		1	NOT SERVICED SEPARATELY, SPOOL
3		87617655		1	VALVE, CHECK, Kit; Component Parts Not Serviced Separately
4		85826344		1	KIT, End Cap; Component Parts Not Serviced Separately
5		85825473		1	KIT, SEALS, Includes (4) O-Rings; Component Parts Not Serviced Separately
6		87617657		1	KIT, O-RING, Includes (12) Seals; Component Parts Not Serviced Separately

VALVE SECTION - BACKHOE DIPPER (WITH PILOT CONTROLS)

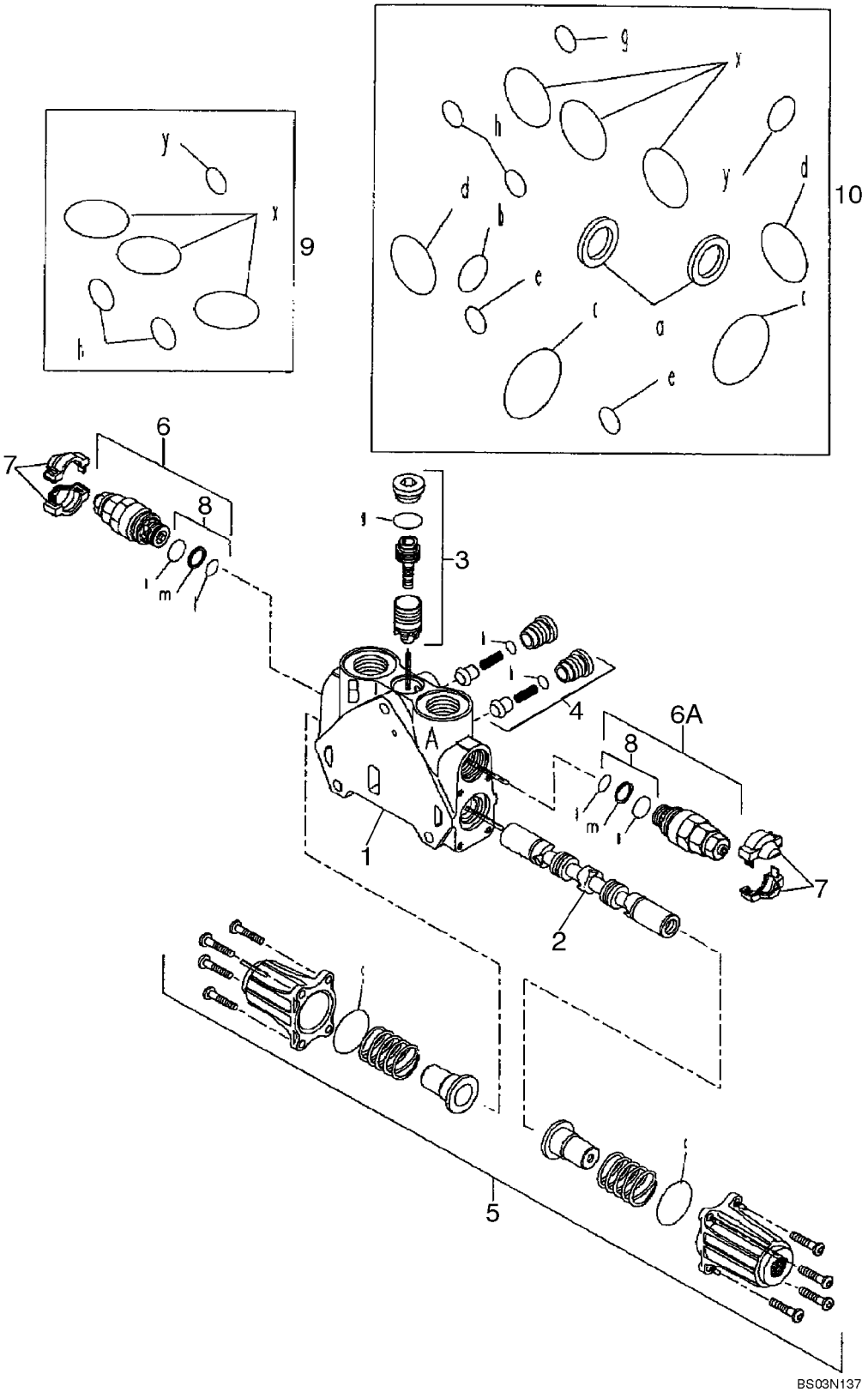

VALVE SECTION - BACKHOE DIPPER (WITH PILOT CONTROLS)

REF	FN	PART NUMBER	YR/SN	QTY	DESCRIPTION
		85826338		1	VALVE SECTION, HYD, Dipper; Incl. Ref 1 - 10
1		NSS		1	NOT SERVICED SEPARATELY, HOUSING
2		NSS		1	NOT SERVICED SEPARATELY, SPOOL
3		85826345		1	KIT, Pressure Compensator; Component Parts Not Serviced Separately
4		85811938		2	VALVE, CHECK, Kit; Component Parts Not Serviced Separately
5		85826344		1	KIT, End Cap; Component Parts Not Serviced Separately
6		85812116		1	VALVE, PRESSURE RELIEF, Side B; Some Component Parts Not Serviced Separately; Serviceable Includes 85811933, Ref 8 Kit
6A		85826343		1	VALVE, PRESSURE RELIEF, Side A; Component Parts Not Serviced Separately
7		85811934		2	KIT, Cover, Orange
7		85811935		2	KIT, Cover, Blue
8		85811933		2	KIT, SEALS, Includes (2) O-Rings, (1) Thrust Ring; Component Parts Not Serviced Separately
9		85819148		1	KIT, SEALS, Includes (6) O-Rings; Component Parts Not Serviced Separately
10		85824281		1	KIT, SEALS, Includes (13) O-Rings, (2) Lip Seals; Component Parts Not Serviced Separately

VALVE SECTION - BACKHOE BUCKET (WITH PILOT CONTROLS)

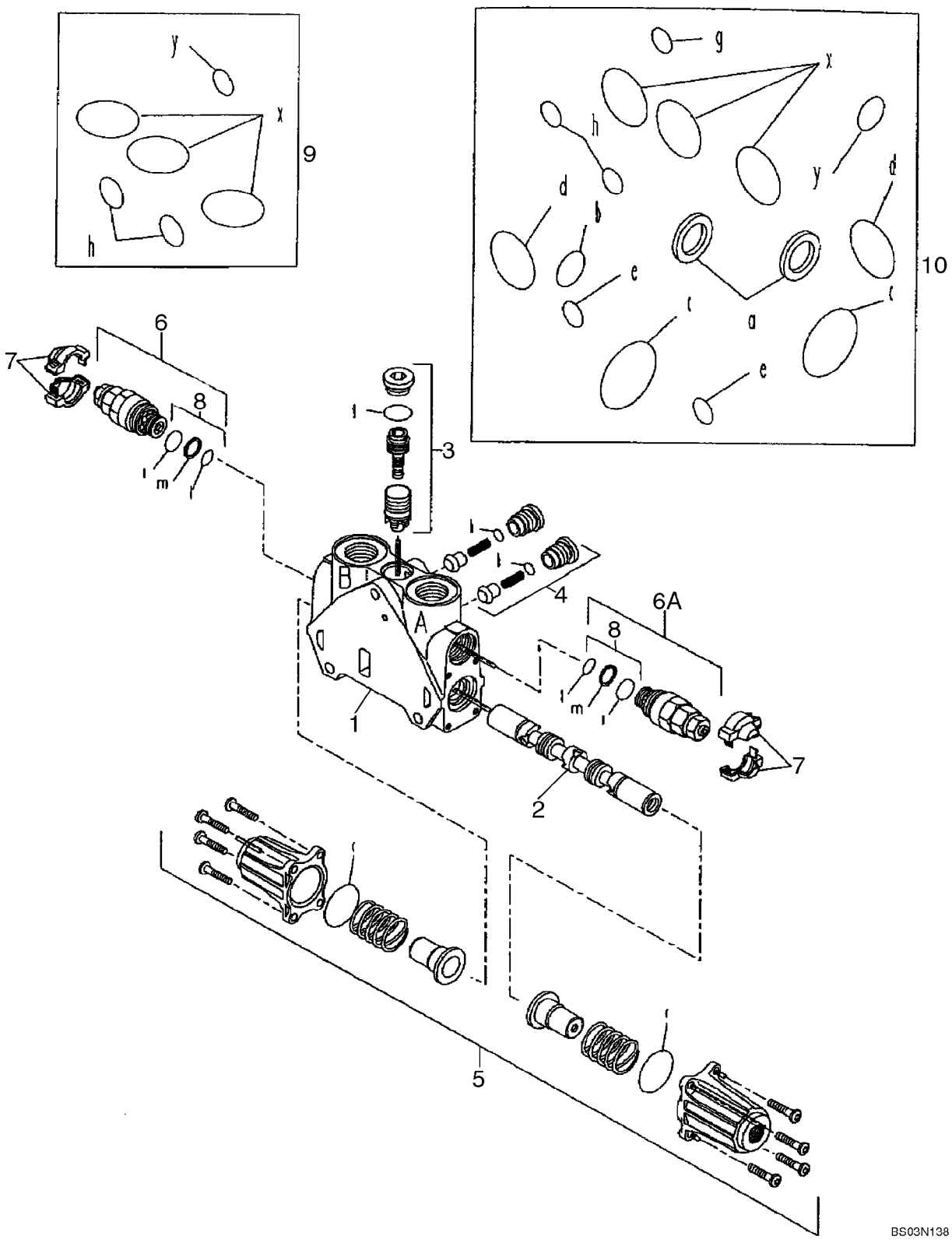

VALVE SECTION - BACKHOE BUCKET (WITH PILOT CONTROLS)

REF	FN	PART NUMBER	YR/SN	QTY	DESCRIPTION
		85826365		1	VALVE SECTION, HYD, Bucket; Incl. Ref 1 - 10
1		NSS		1	NOT SERVICED SEPARATELY, HOUSING
2		NSS		1	NOT SERVICED SEPARATELY, SPOOL
3		85819378		1	KIT, SEALS, Pressure Compensator; Component Parts Not Serviced Separately
4		85811938		2	VALVE, CHECK, Kit; Component Parts Not Serviced Separately
5		85826344		1	KIT, End Cap; Component Parts Not Serviced Separately
6		85812116		1	VALVE, PRESSURE RELIEF, Side B; Some Component Parts Not Serviced Separately; Serviceable Includes 85811933, Ref 8 Kit
6A		85826905		1	VALVE, PRESSURE RELIEF, Side A; Some Component Parts Not Serviced Separately; Serviceable Includes 85811933, Ref 8 Kit
7		85811934		2	KIT, Cover, Orange
7		85811935		2	KIT, Cover, Blue
8		85811933		2	KIT, SEALS, Includes (2) O-Rings, (1) Thrust Ring; Component Parts Not Serviced Separately
9		85819148		1	KIT, SEALS, Includes (6) O-Rings; Component Parts Not Serviced Separately
10		85824281		1	KIT, SEALS, Includes (13) O-Rings, (2) Lip Seals; Component Parts Not Serviced Separately

VALVE SECTION - EXTENDABLE DIPPER (WITH PILOT CONTROLS)

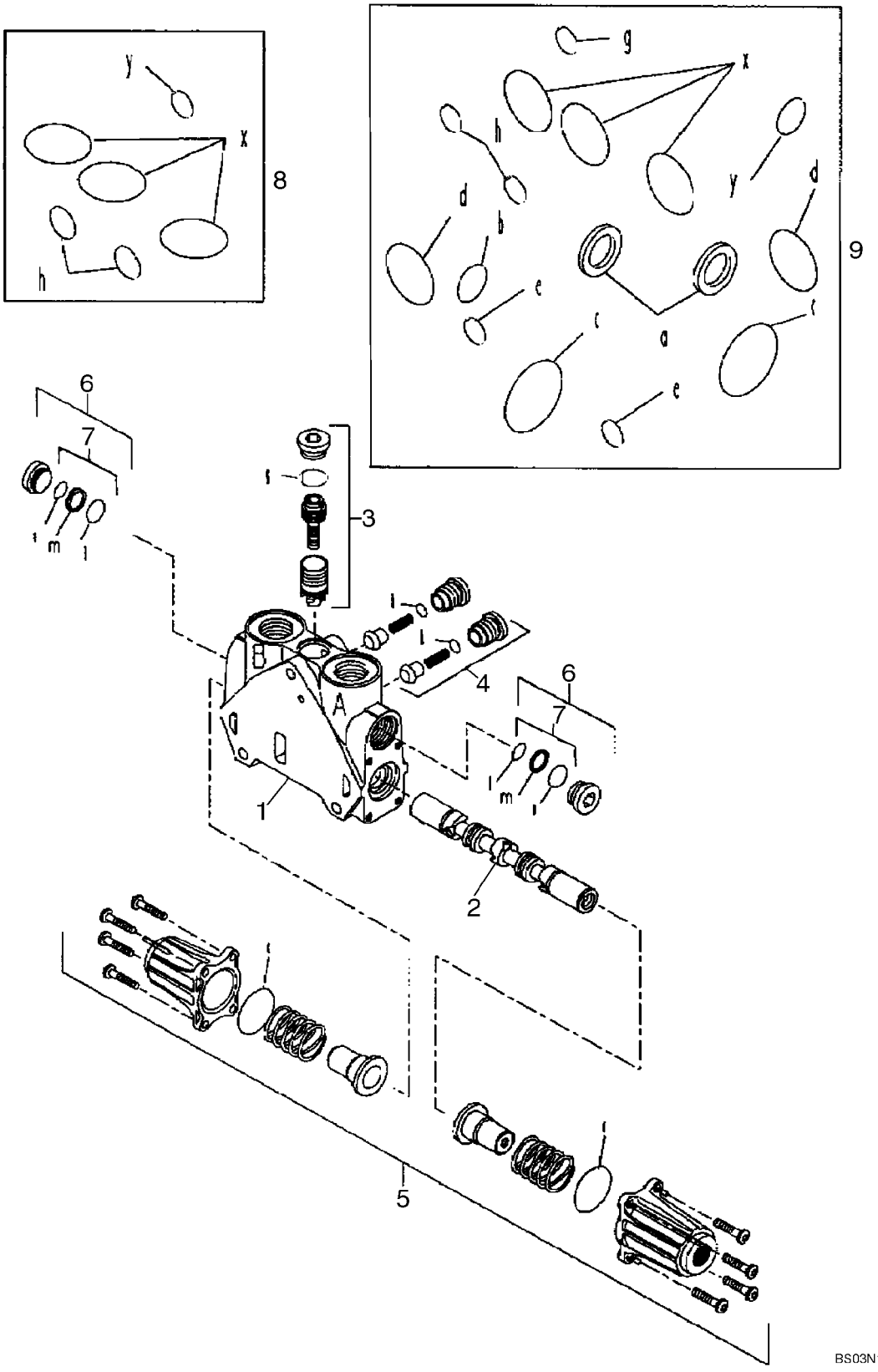

VALVE SECTION - EXTENDABLE DIPPER (WITH PILOT CONTROLS)

REF	FN	PART NUMBER	YR/SN	QTY	DESCRIPTION
		85826341		1	VALVE SECTION, HYD, Extendable Dipper; Incl. Ref 1 - 9
1		NSS		1	NOT SERVICED SEPARATELY, HOUSING
2		NSS		1	NOT SERVICED SEPARATELY, SPOOL
3		85819378		1	KIT, SEALS, Pressure Compensator Kit; Component Parts Not Serviced Separately
4		85811938		2	VALVE, CHECK, Check Valve Kit; Component Parts Not Serviced Separately
5		85826344		1	KIT, End Cap Kit; Component Parts Not Serviced Separately
6		85811937		2	PLUG, Plug Assembly Kit; Some Component Parts Not Serviced Separately; Serviceable Includes 85811933, Ref 7 Kit
7		85811933		2	KIT, SEALS, Seal Kit Includes (2) O-Rings, (1) Thrust Ring; Component Parts Not Serviced Separately
8		85819148		1	KIT, SEALS, Seal Kit Includes (6) O-Rings; Component Parts Not Serviced Separately
9		85824281		1	KIT, SEALS, Seal Kit Includes (13) O-Rings, (2) Lip Seals; Component Parts Not Serviced Separately

VALVE SECTION - OPTIONS, AUXILIARY HYDRAULICS (WITH PILOT CONTROLS)

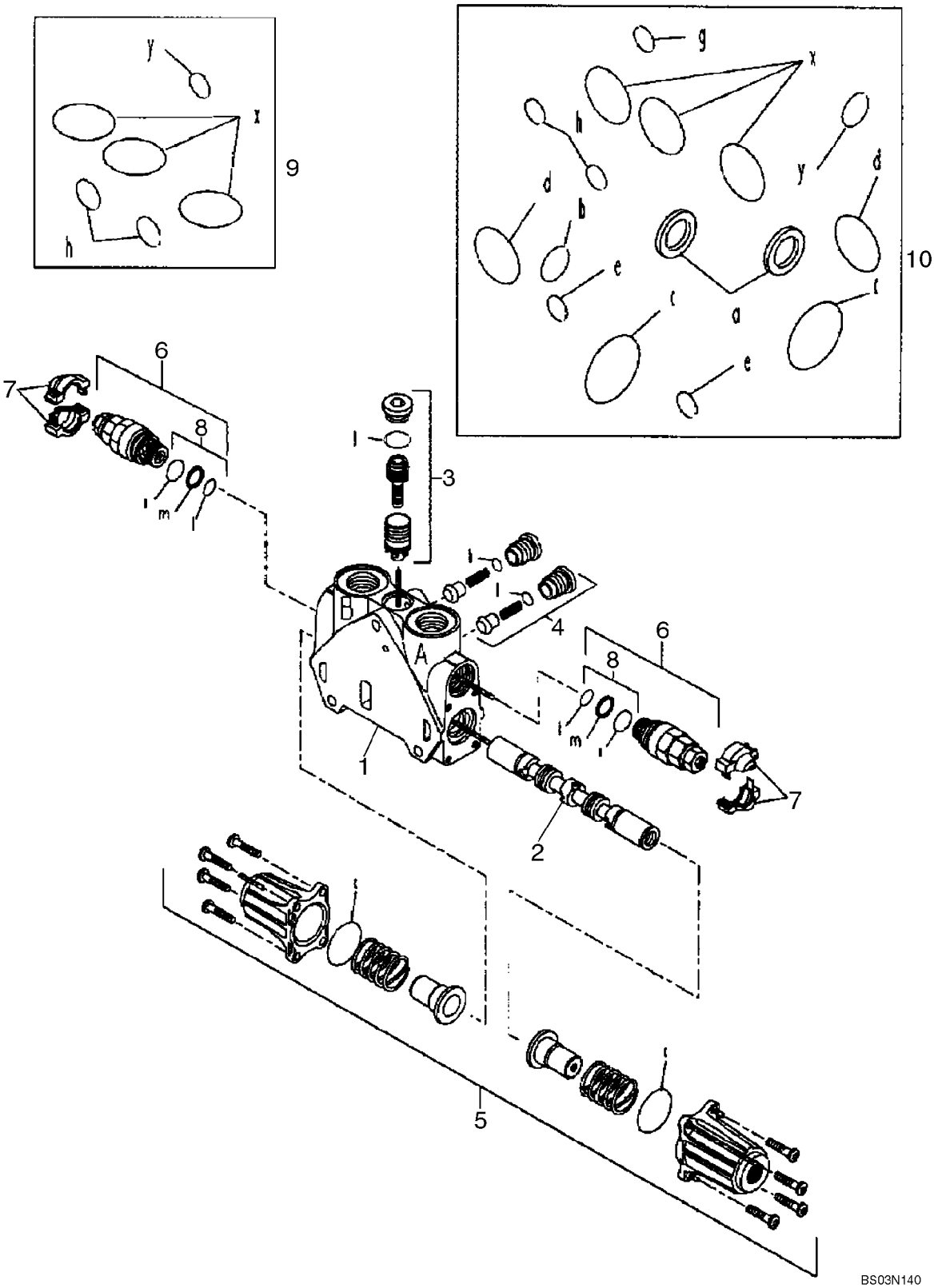

VALVE SECTION - OPTIONS, AUXILIARY HYDRAULICS (WITH PILOT CONTROLS)

REF	FN	PART NUMBER	YR/SN	QTY	DESCRIPTION
		85826342		1	VALVE SECTION, HYD, Options, Auxiliary Hydraulics; Incl. Ref 1 - 10
1		NSS		1	NOT SERVICED SEPARATELY, HOUSING
2		NSS		1	NOT SERVICED SEPARATELY, SPOOL
3		85819378		1	KIT, SEALS, Pressure Compensator Kit; Component Parts Not Serviced Separately
4		85811938		2	VALVE, CHECK, Check Valve Kit; Component Parts Not Serviced Separately
5		85826344		1	KIT, End Cap Kit; Component Parts Not Serviced Separately
6		85812115		2	VALVE, HYDRAULIC, Pressure Relief Valve; Some Component Parts Not Serviced Separately; Serviceable Includes 85811933, Ref 8 Kit
7		85811934		2	KIT, Cover, Orange
7		85811935		2	KIT, Cover, Blue
8		85811933		2	KIT, SEALS, Seal Kit Includes (2) O-Rings, (1) Thrust Ring; Component Parts Not Serviced Separately
9		85819148		1	KIT, SEALS, Seal Kit Includes (6) O-Rings; Component Parts Not Serviced Separately
10		85824281		1	KIT, SEALS, Seal Kit Includes (13) O-Rings, (2) LIp Seals; Component Parts Not Serviced Separately

VALVE ASSY, PRESSURE REDUCING (2 SPOOL) (WITH PILOT CONTROLS)

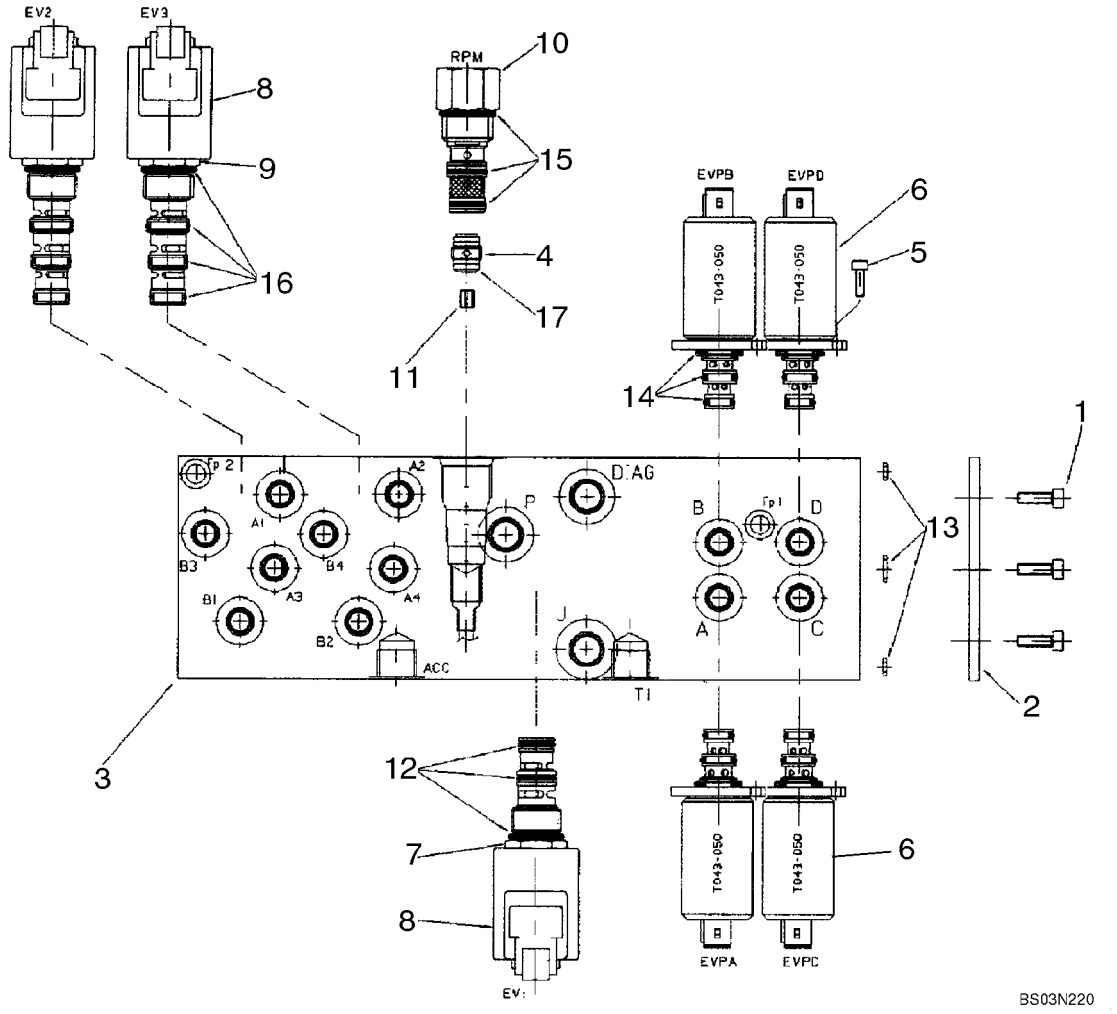

VALVE ASSY, PRESSURE REDUCING (2 SPOOL) (WITH PILOT CONTROLS)

REF	FN	PART NUMBER	YR/SN	QTY	DESCRIPTION
		85827472		1	VALVE, HYDRAULIC, Pressure Reducing, Two Spool, Pilot Controls; Incl. Ref 1 - 17
1		14304021		3	SCREW, Hex Soc Hd, M5 x 10, 8.8
2		85827991		1	PLATE, Sealing
3		85828013		1	BODY, Manifold Block
4		85827992		1	VALVE, CHECK, Incl. 17
5		14302921		8	BOLT, Hex, M4 x 10, 8.8, Full Thd
6		85827993		4	SOLENOID, Pressure Reducing Valve; Incl. 14
7		85827994		1	SOLENOID, Valve Cartridge, 3 Way, 2 Position; Incl. Ref 8, 12
8		85827995		3	COIL, With Diode
9		85827996		2	SOLENOID, Valve Cartridge, 4 Way, 2 Position; Incl. Ref 8, 16
10		85827997		1	VALVE, Mechanical Pressure Reducing Valve With Fixed Setting; Incl. 15
11		85828005		1	ORIFICE, 1.8 mm
12		85827998		1	KIT, SEALS
13		85827999		1	KIT, SEALS
14		85828000		4	KIT, SEALS
15		85828001		1	KIT, SEALS
16		85828002		2	KIT, SEALS
17		85828003		1	O-RING, D9x1

VALVE ASSY, PRESSURE REDUCING (3 SPOOL) (WITH PILOT CONTROLS)

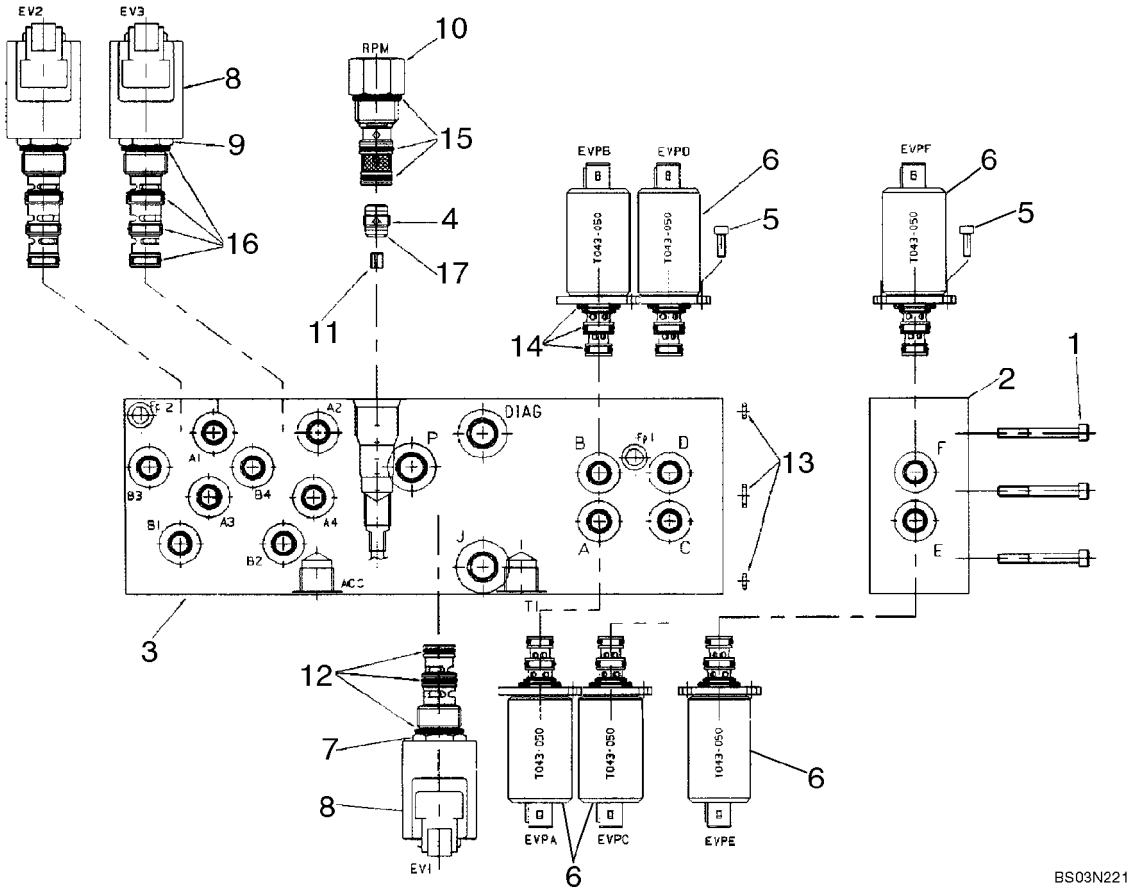

VALVE ASSY, PRESSURE REDUCING (3 SPOOL) (WITH PILOT CONTROLS)

REF	FN	PART NUMBER	YR/SN	QTY	DESCRIPTION
		85827471		1	VALVE, HYDRAULIC, Pressure Reducing, Three Spool, Pilot Controls; Incl. Ref 1 - 17
1		14358921		3	SCREW, Hex Soc Hd, M5 x 45, 10.9
2		85828004		1	BODY, One Function Add-On Manifold Block; Incl. 1, 5, 6
3		85828015		1	BODY, Manifold Block
4		85827992		1	VALVE, CHECK, Incl. 17
5		14302921		12	BOLT, Hex, M4 x 10, 8.8, Full Thd
6		85827993		6	SOLENOID, Pressure Reducing Valve; Incl. 14
7		85827994		1	SOLENOID, Valve Cartridge, 3 Way, 2 Position; Incl. Ref 8, 12
8		85827995		3	COIL, With Diode
9		85827996		2	SOLENOID, Valve Cartridge, 4 Way, 2 Position; Incl. Ref 8, 16
10		85827997		1	VALVE, Mechanical Pressure Reducing Valve With Fixed Setting; Incl. 15
11		85828005		1	ORIFICE, 1.8 mm
12		85827998		1	KIT, SEALS
13		85827999		1	KIT, SEALS
14		85828000		6	KIT, SEALS
15		85828001		1	KIT, SEALS
16		85828002		2	KIT, SEALS
17		85828003		1	O-RING, D9x1

VALVE ASSY, PRESSURE REDUCING (4 SPOOL) (WITH PILOT CONTROLS)

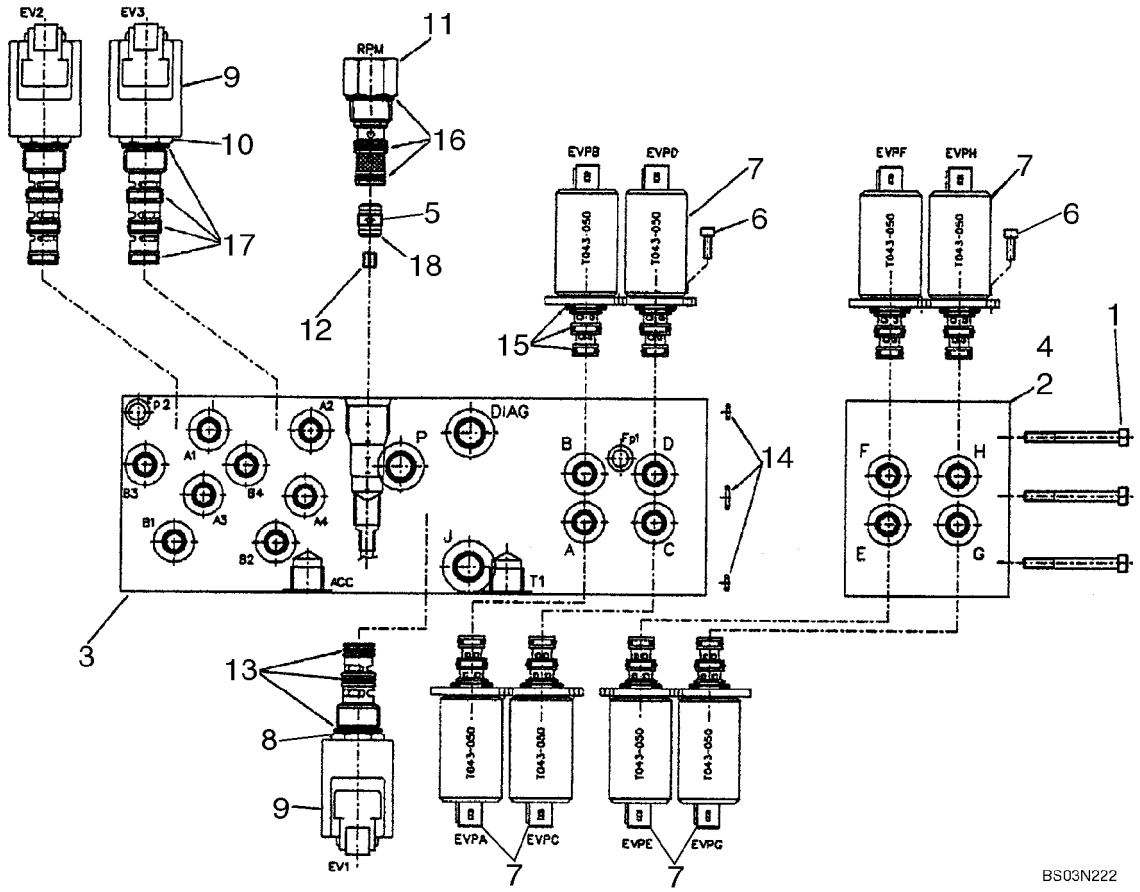

VALVE ASSY, PRESSURE REDUCING (4 SPOOL) (WITH PILOT CONTROLS)

REF	FN	PART NUMBER	YR/SN	QTY	DESCRIPTION
		87434621		1	VALVE, CONTROL, Pressure Reducing, Four Spool, Pilot Controls; Incl. Ref 1 - 18
1		85828061		3	SCREW, M5 x 80
2		85828048		1	MANIFOLD VALVE, Manifold Block
3		85828015		1	BODY, Manifold Block
4		85828054		1	MANIFOLD VALVE, Manifold Block
5		85827992		1	VALVE, CHECK
6		14302921		16	BOLT, Hex, M4 x 10, 8.8, Full Thd
7		85827993		8	SOLENOID, Pressure Reducing Valve
8		85827994		1	SOLENOID, Valve Cartridge, 3 Way, 2 Position; Incl. Ref 9, 13
9		85827995		3	COIL, With Diode
10		85827996		2	SOLENOID, Valve Cartridge, 4 Way, 2 Position; Incl. Ref 9, 17
11		85827997		1	VALVE, Mechanical Pressure Reducing Valve With Fixed Setting
12		85828005		1	ORIFICE, 1.8 mm
13		85827998		1	KIT, SEALS
14		85827999		1	KIT, SEALS
15		85828000		8	KIT, SEALS
16		85828001		1	KIT, SEALS
17		85828002		2	KIT, SEALS
18		85828003		1	O-RING, D9x1

08-50		p1	02/08

VALVE, JOYSTICK (PILOT CONTROLS) (LEFT-HAND) WITH HORN BUTTON

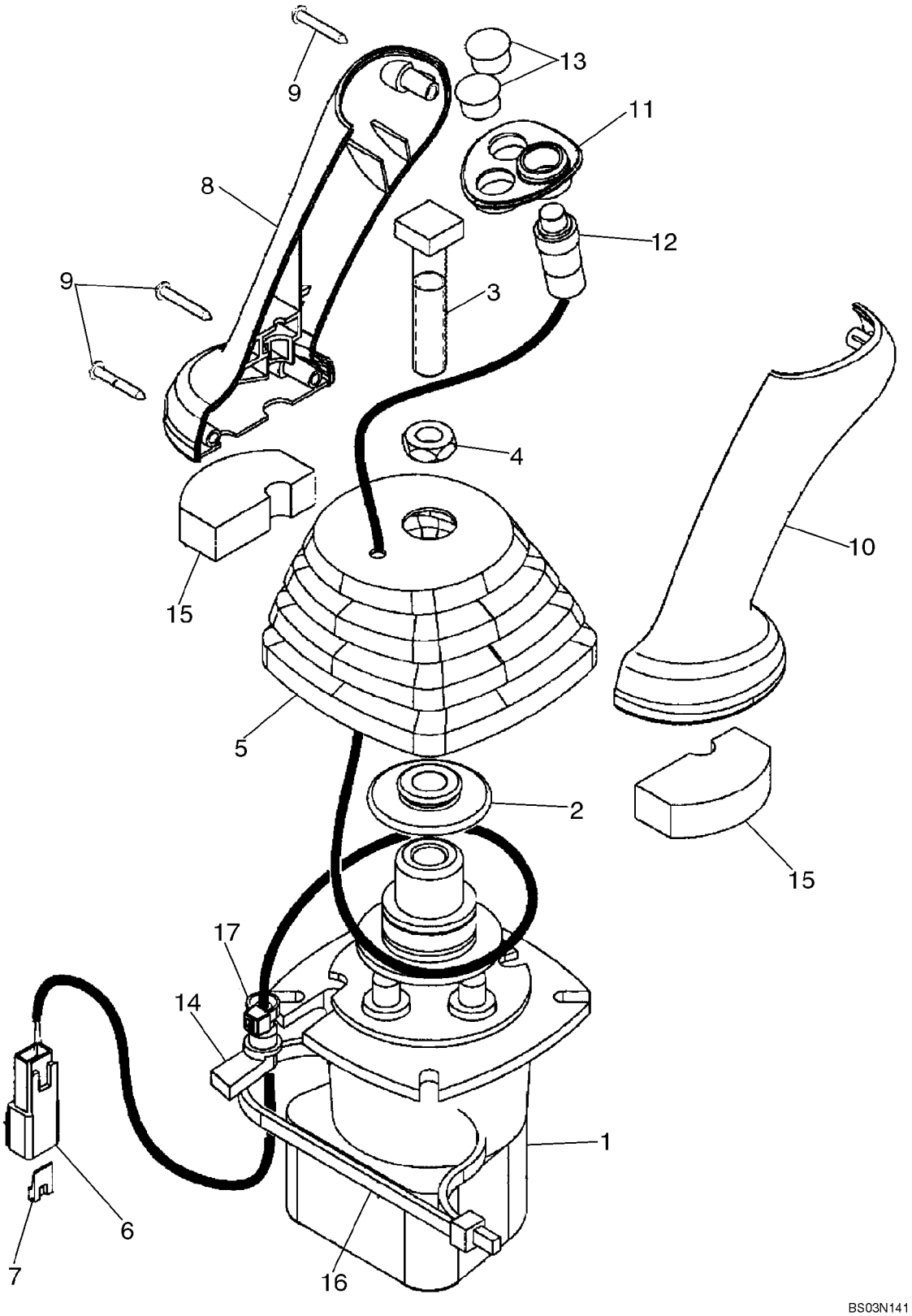

VALVE, JOYSTICK (PILOT CONTROLS) (LEFT-HAND) WITH HORN BUTTON

REF	FN	PART NUMBER	YR/SN	QTY	DESCRIPTION
		87685948		1	VALVE, CONTROL, Pilot Controls, LH; With Horn Button; Incl. Ref 1 - 17; Part Number Stamped On Valve Base
1		87687141		1	VALVE, PILOT, Pilot Control Joystick Valve; Component Parts Not Serviced Separately
		87586776		1	HANDLE, Incl. Ref 2 - 17
2		87436225		1	RETAINER, Control Boot Retainer
3		87428023		1	BOLT, Square Head Bolt
4		87037944		1	NUT, Thin, M12 x 1.75, Cl 05
5		87443721		1	BOOT, Control Handle
6		225315C1		1	CONNECTOR, ELEC
7		225318C1		1	WEDGE, Connector
8		87308838		1	HANDLE GRIP, Joystick Control Handle
9		15687475		3	SCREW, SELF TAP, Pan Hd, M3.5 x 25, Stainless
10		87308839		1	HANDLE GRIP, Joystick Control Handle
11		87435243		1	BEZEL, Switch Mounting
12		87437372		1	SWITCH, Push Button Horn
13		86625128		2	PLUG, Dome, .562" hole, Nylon
14		87424267		1	GROMMET, Wire
15		87435506		2	SEAL, Pilot Control Handle Seal, Lower
16		87438046		1	STRAP, CABLE
17		87000312		1	STRAP, CABLE

08-51		p1	10/07

VALVE, JOYSTICK (PILOT CONTROLS) (LEFT-HAND) WITH HORN & UNI-DIRECTIONAL BUTTONS

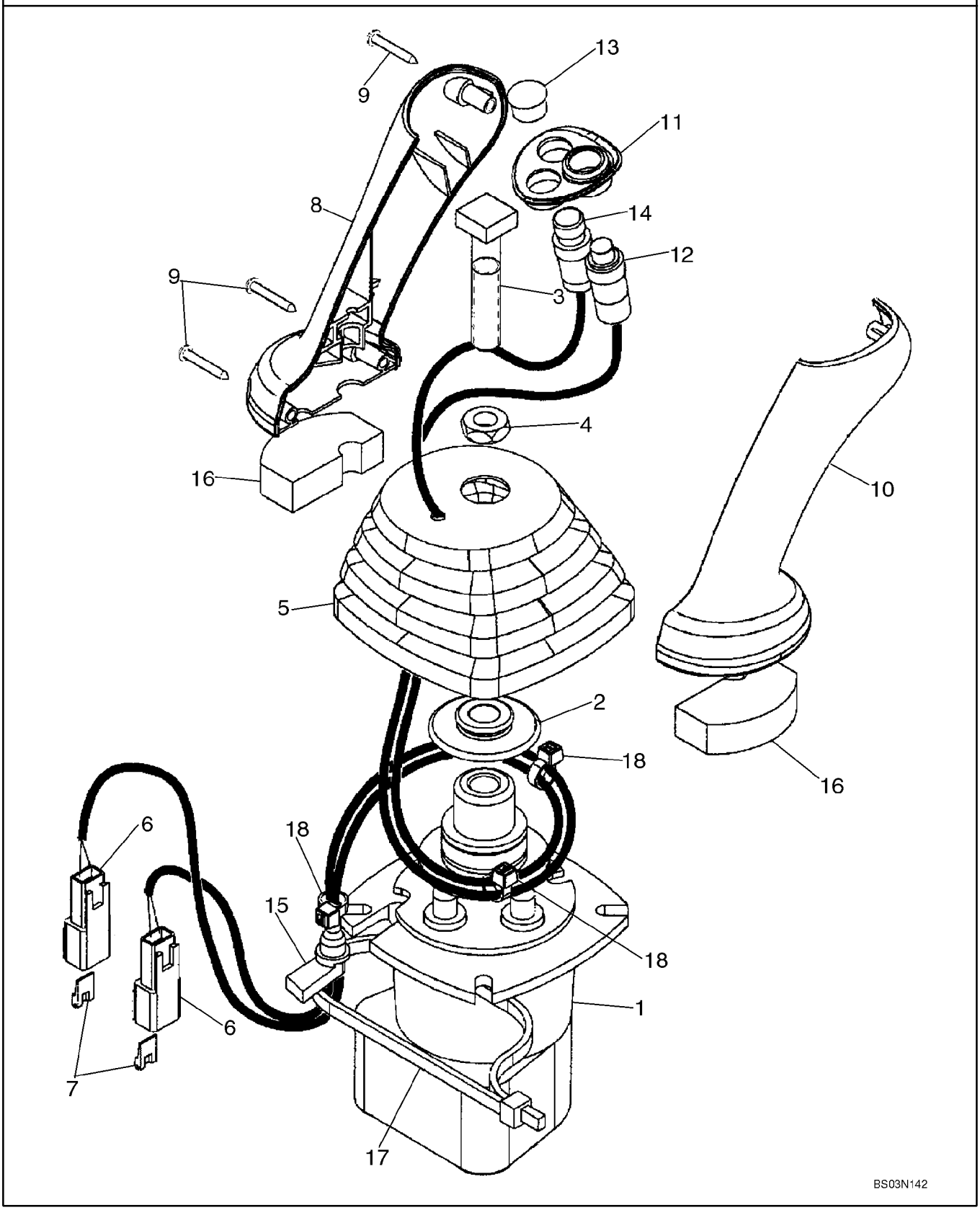

VALVE, JOYSTICK (PILOT CONTROLS) (LEFT-HAND) WITH HORN & UNI-DIRECTIONAL BUTTONS

REF	FN	PART NUMBER	YR/SN	QTY	DESCRIPTION
		87685953		1	VALVE, CONTROL, Pilot Controls, LH; With Horn and Uni-Directional Buttons; Incl. Ref 1 - 18; Part Number Stamped On Valve Base
1		87687141		1	VALVE, PILOT, Pilot Control Joystick Valve; Component Parts Not Serviced Separately
2		87436225		1	RETAINER, Control Boot
3		87428023		1	BOLT, Square Head
4		87037944		1	NUT, Thin, M12 x 1.75, Cl 05
5		87443721		1	BOOT, Control Handle
6		225315C1		2	CONNECTOR, ELEC
7		225318C1		2	WEDGE, Connector
8		87308838		1	HANDLE GRIP, Joystick Control Handle
9		15687475		3	SCREW, SELF TAP, Pan Hd, M3.5 x 25, Stainless
10		87308839		1	HANDLE GRIP, Joystick Control Handle
11		87435243		1	BEZEL, Switch Mounting
12		87437372		1	SWITCH, Push Button Horn
13		86625128		1	PLUG, Dome, .562" hole, Nylon
14		87437373		1	SWITCH ASSY, Push Button Uni-Directional Auxiliary Hydraulic Switch
15		87424267		1	GROMMET, Wire
16		87435506		2	SEAL, Pilot Control Handle Seal, Lower
17		L18331		1	STRAP, CABLE
18		L11541		3	STRAP, CABLE

08-52		p1	10/07

VALVE, JOYSTICK (PILOT CONTROLS) (LEFT-HAND) WITH HORN & BI-DIRECTIONAL BUTTONS

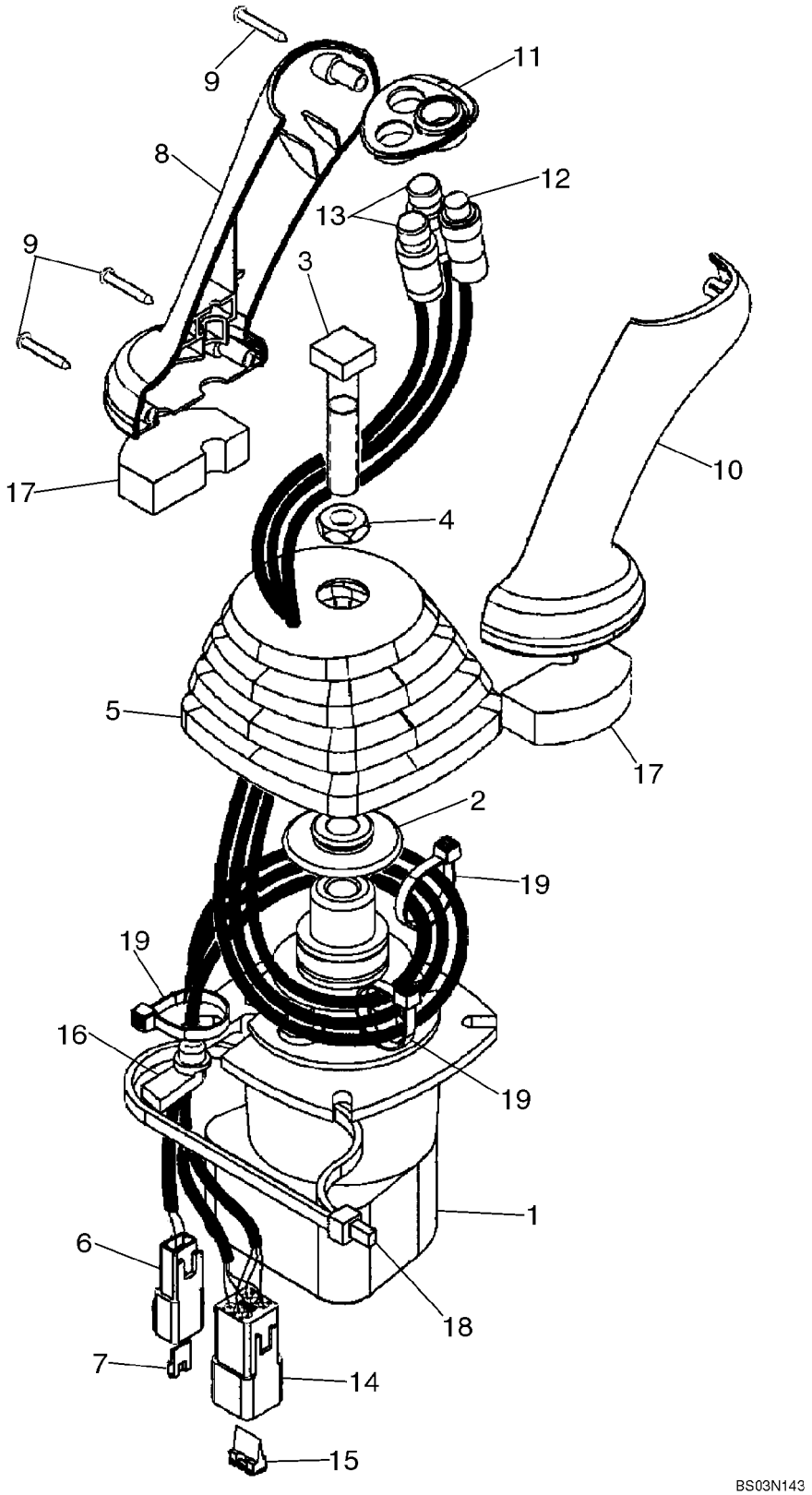

VALVE, JOYSTICK (PILOT CONTROLS) (LEFT-HAND) WITH HORN & BI-DIRECTIONAL BUTTONS

REF	FN	PART NUMBER	YR/SN	QTY	DESCRIPTION
		87685952		1	VALVE, CONTROL, Pilot Controls, LH; With Horn and Bi-Directional Buttons; Incl. Ref 1 - 19; Part Number Stamped On Valve Base
1		87687141		1	VALVE, PILOT, Pilot Control Joystick Valve; Component Parts Not Serviced Separately
2		87436225		1	RETAINER, Control Boot
3		87428023		1	BOLT, Square Head
4		87037944		1	NUT, Thin, M12 x 1.75, Cl 05
5		87443721		1	BOOT, Control Handle
6		225315C1		1	CONNECTOR, ELEC
7		225318C1		1	WEDGE, Connector
8		87308838		1	HANDLE GRIP, Joystick Control Handle
9		15687475		3	SCREW, SELF TAP, Pan Hd, M3.5 x 25, Stainless
10		87308839		1	HANDLE GRIP, Joystick Control Handle
11		87435243		1	BEZEL, Switch Mounting
12		87437372		1	SWITCH, Push Button Horn
13		87437371		2	SWITCH ASSY, Push Button Bi-Directional Auxiliary Hydraulic
14		225350C1		1	CONNECTOR, ELEC
15		225353C1		1	WEDGE, Connector
16		87424267		1	GROMMET, Wire
17		87435506		2	SEAL, Pilot Control Handle Seal, Lower
18		87438046		1	STRAP, CABLE
19		87000312		3	STRAP, CABLE, Black

VALVE, JOYSTICK (PILOT CONTROLS) (RIGHT-HAND) WITHOUT EXTENDABLE DIPPER

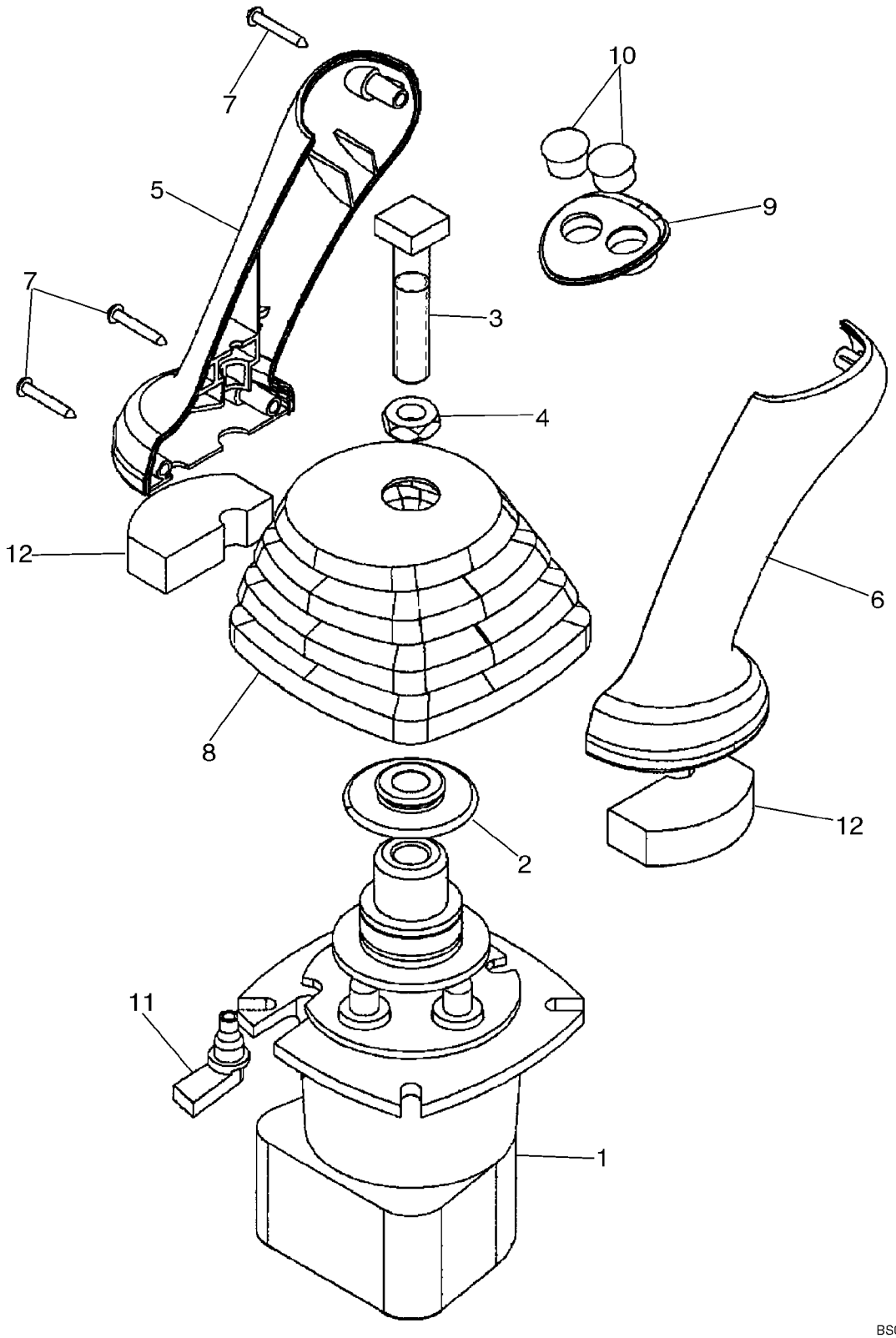

VALVE, JOYSTICK (PILOT CONTROLS) (RIGHT-HAND) WITHOUT EXTENDABLE DIPPER

REF	FN	PART NUMBER	YR/SN	QTY	DESCRIPTION
		87685954		1	VALVE, CONTROL, Pilot Controls, RH; Without Extendable Dipper; Incl. Ref 1 - 12; Part Number Stamped On Valve Base
1		87687141		1	VALVE, PILOT, Pilot Control Joystick Valve; Component Parts Not Serviced Separately
2		87436225		1	RETAINER, Control Boot
3		87428023		1	BOLT, Square Head
4		87037944		1	NUT, Thin, M12 x 1.75, Cl 05
5		87308838		1	HANDLE GRIP, Joystick Control Handle
6		87308839		1	HANDLE GRIP, Joystick Control Handle
7		15687475		3	SCREW, SELF TAP, Pan Hd, M3.5 x 25, Stainless
8		87443722		1	BOOT, Joystick Control
9		87435242		1	BEZEL, Switch Mounting
10		86625128		2	PLUG, Dome, .562" hole, Nylon
11		87451448		1	GROMMET, Wire
12		87435506		2	SEAL, Pilot Control Handle, Lower

08-54		p1	10/07

VALVE, JOYSTICK (PILOT CONTROLS) (RIGHT-HAND) WITH EXTENDABLE DIPPER

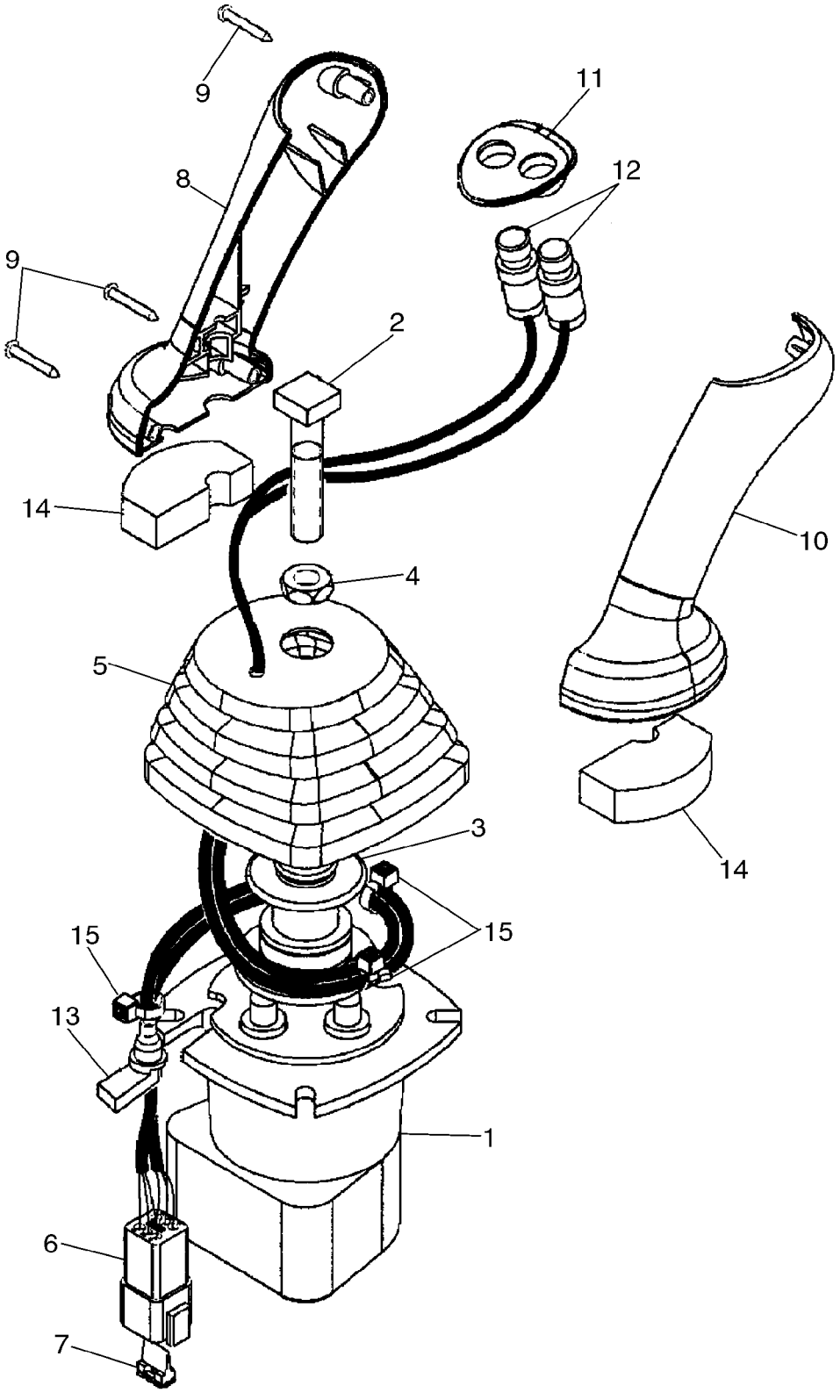

VALVE, JOYSTICK (PILOT CONTROLS) (RIGHT-HAND) WITH EXTENDABLE DIPPER

REF	FN	PART NUMBER	YR/SN	QTY	DESCRIPTION
		87685955		1	VALVE, CONTROL, Pilot Controls, RH; With Extendable Dipper; Includes 87398960 Base Valve; Incl. Ref 1 - 15; Part Number Stamped On Valve Base
1		87687141		1	VALVE, PILOT, Pilot Control Joystick Valve; Component Parts Not Serviced Separately
2		87428023		1	BOLT, Square Head
3		87436225		1	RETAINER, Control Boot
4		87037944		1	NUT, Thin, M12 x 1.75, Cl 05
5		87443721		1	BOOT, Joystick Control
6		225350C1		1	CONNECTOR, ELEC
7		225353C1		1	WEDGE, Connector
8		87308838		1	HANDLE GRIP, Joystick Control Handle
9		15687475		3	SCREW, SELF TAP, Pan Hd, M3.5 x 25, Stainless
10		87308839		1	HANDLE GRIP, Joystick Control Handle
11		87435242		1	BEZEL, Switch Mounting
12		87437371		2	SWITCH ASSY, Push Button Retract and Extendahoe
13		87424267		1	GROMMET, Wire
14		87435506		2	SEAL, Pilot Control Handle Seal, Lower
15		87000312		3	STRAP, CABLE
		87438046		1	STRAP, CABLE

VALVE ASSY - SWING CUSHION (DAMPENING)

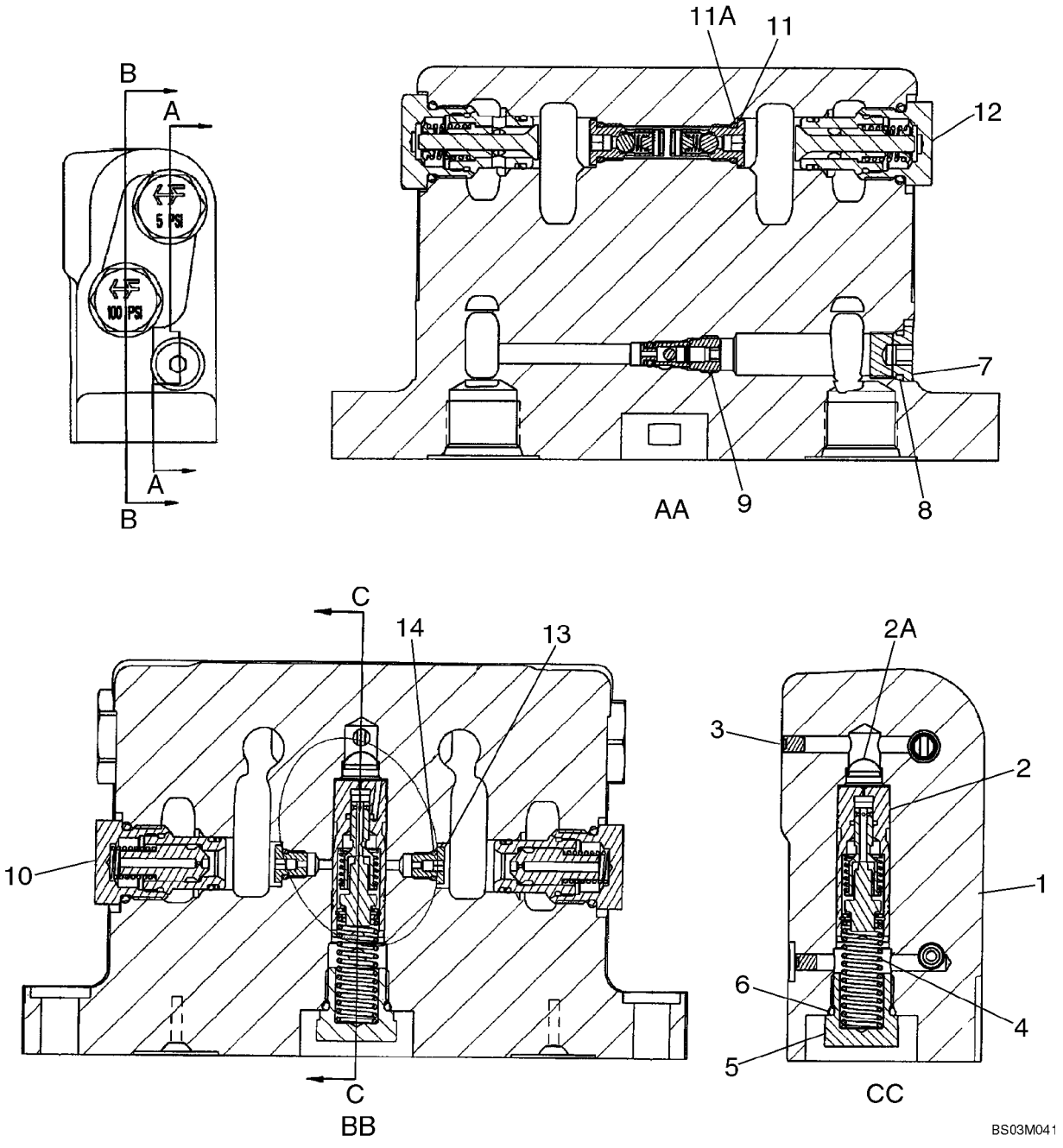

VALVE ASSY - SWING CUSHION (DAMPENING)

REF	FN	PART NUMBER	YR/SN	QTY	DESCRIPTION
		87449373		1	VALVE, HYDRAULIC, Swing Cushion; Incl. Ref 1 - 14
1		NSS		1	NOT SERVICED SEPARATELY, Housing
2		87449374		1	SPOOL, Thermal Compensating; Component Parts Not Serviced Separately; Replaces 388876A6 Spool
2A		1976955C1		1	FILTER CARTRIDGE, Screen, Filter
3		369372A1		2	PLUG, M5; Plug, Expansion
4		388881A1		1	SPRING, COIL
5		409025A1		1	PLUG, Relief Check; Incl. Ref 6
6		237-6008		1	O-RING, 8-1, 90 Duro, .644" ID x .087" Thk, Boss seal
7		9625178		1	PLUG, Hex Soc, 9/16"-18 ORB, Includes Ref 8
8		237-6006		1	O-RING, 6-1, 90 Duro, .468" ID x .078" Thk, Boss seal
9		388712A2		1	VALVE, Bi-Directional Check Valve; Includes 388713A1 Seal Kit
		388713A1		1	KIT, Seal; Includes An O-Ring and Backup Ring; Component Parts Not Serviced Separately
10		396422A2		2	VALVE, CHECK, 100 psi, Orifice Check Valve; Component Parts Not Serviced Separately; Order 1542830C2 Seal Kit To Service External Seals
		443432A1		1	KIT, SEALS, For Servicing External Seals on Ref 9, 10, 11 or 12 Valve; If Used
11		400296A2		2	VALVE, CHECK, In-Line Check Valve; Component Parts Not Serviced Separately; Incl. Ref 11A
11A		237-6004		1	O-RING, 4-1, 90 Duro, .351" ID x .072" Thk, Boss seal
12		389541A1		2	VALVE, CHECK, 5 psi; Component Parts Not Serviced Separately; Order 1542830C2 Seal Kit To Service External Seals
13		400657A1		2	PLUG, Orifice 1.85 mm; Incl. Ref 14
		1542830C2		1	KIT, GASKET, For Servicing External Seals on Ref 10 or 12 Valve
14		237-6002		1	O-RING, 2-1, .239" ID x .064" Thk

08-55A		p1	12/07

SOLENOID VALVE - BOOM LOCK

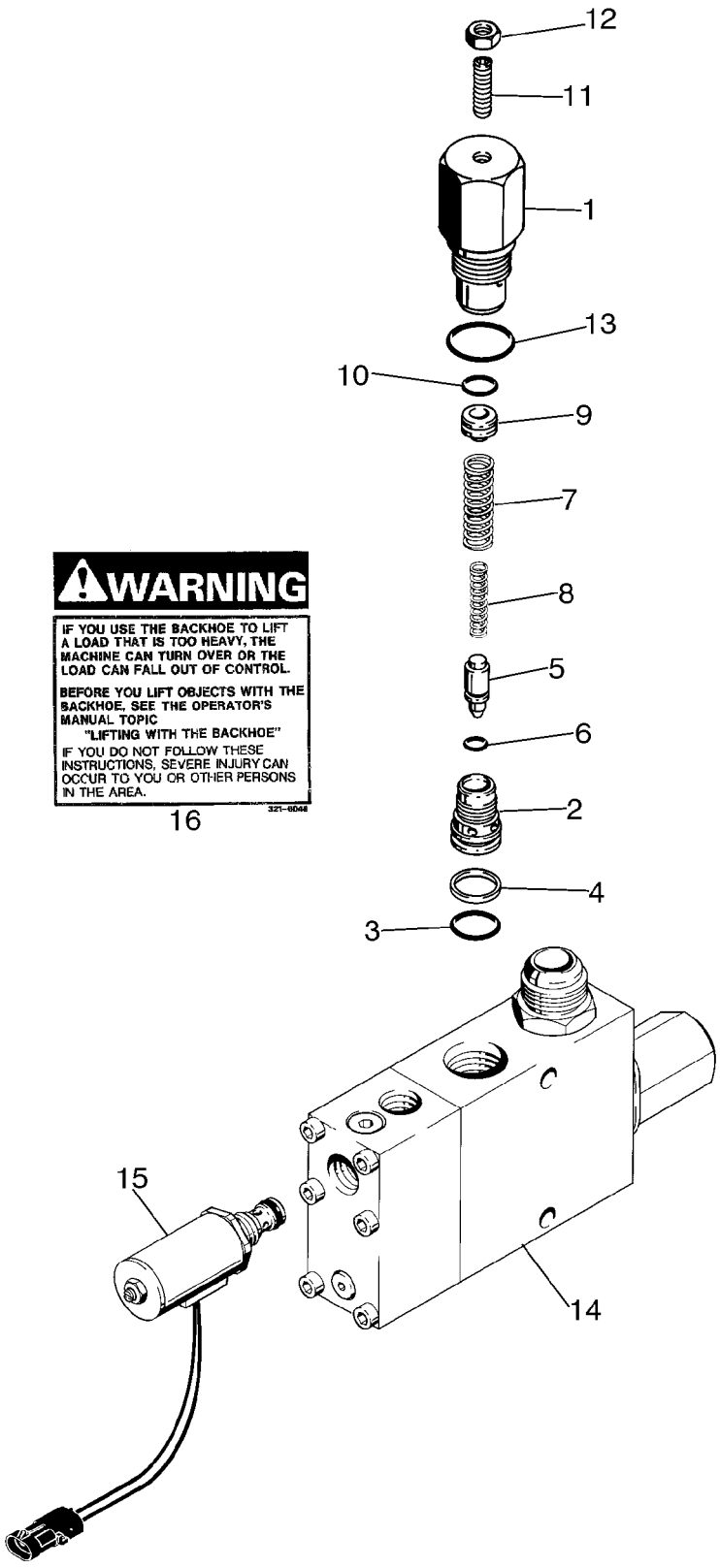

BS03B174

SOLENOID VALVE - BOOM LOCK

REF	FN	PART NUMBER	YR/SN	QTY	DESCRIPTION
		189957A1		1	VALVE, Solenoid, Backhoe Boom Lock; Incl. Ref 1 - 16; Included In 399227A1 Backhoe Boom Lock Kit
		G110467		1	VALVE, PRESSURE RELIEF, Circuit, Solenoid; Used In Production; Order G110077, Kit For Service
1		NSS		1	NOT SERVICED SEPARATELY, Body, Relief Valve
2		NSS		1	NOT SERVICED SEPARATELY, Seat, Relief Valve
3		238-6018		1	O-RING, -018, 90 Duro, .739" ID x .070" Thk, Face Seal
4		G35540		1	RING, Backup, Seat
5		NSS		1	NOT SERVICED SEPARATELY, Poppet
6		NSS		1	NOT SERVICED SEPARATELY, O-Ring
7		NSS		1	NOT SERVICED SEPARATELY, Spring, Relief, Outer
8		NSS		1	NOT SERVICED SEPARATELY, Spring, Relief, Inner
9		NSS		1	NOT SERVICED SEPARATELY, Piston
10		NSS		1	NOT SERVICED SEPARATELY, O-Ring
11		484-43120		1	SET SCREW, Hex Soc, 5/16"-24 x 1 1/4"
12		425-155		1	NUT, Jam, 5/16"-24, G5
13		237-6012		1	O-RING, 12-1, 90 Duro, .924 ID x .118" Thk, Boss Seal
14		NSS		1	NOT SERVICED SEPARATELY, Body, Solenoid
15		221168A1		1	SOLENOID, 12 Volt; Relief, With Connector
		D150781		1	KIT, Repair; Incl. (3) Springs, (1) Ball, (1) Poppet, (1) Plug; Not Serviced Separately; and D150810 Seal Kit, Not Shown
		D150810		1	SEAL, Kit, Incl. (8) O-Rings and (2) Backup Rings; Which Are Not Serviced Separately, Not Shown
		G110077		1	KIT, Service For G110467, Circuit Relief Valve; Incl. G110078, Circuit Relief Valve Assembly (Ref. 1 - 13), Instruction Sheet
16		321-6046		2	DECAL, Warning, If You Use The Backhoe To Lift A Load That Is Too Heavy

ACCUMULATOR ASSY - RIDE CONTROL

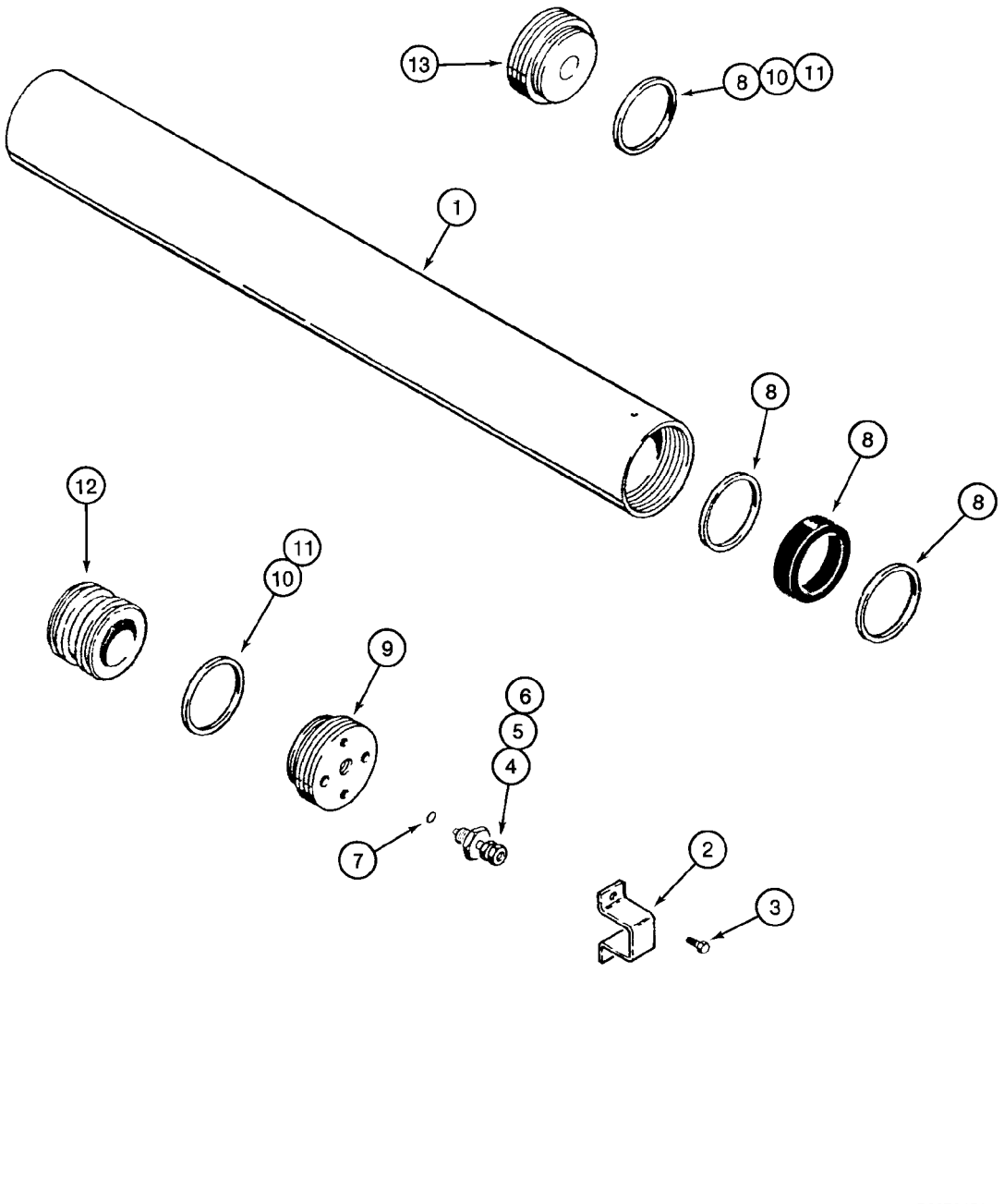

ACCUMULATOR ASSY - RIDE CONTROL

REF	FN	PART NUMBER	YR/SN	QTY	DESCRIPTION
		234412A1		1	ACCUMULATOR, Incl. Ref 1 - 13
1		NSS		1	NOT SERVICED SEPARATELY, Body
2		192895A1		1	PROTECTOR
3		276-2456		2	SCREW, SELF TAP, Hex Hd, #10 x 3/8"
		1978142C1		1	VALVE, Incl. Ref 4 - 6
4		NSS		1	NOT SERVICED SEPARATELY, Valve, Pressure
5		1978143C1		1	PISTON
6		1978144C1		1	CAP
7		1978158C1		1	O-RING
8		1978141C1		1	PACKAGE, SEALS, Includes (1) V-Type O-Ring, (2) Teflon Bearing Rings and (1) Body End Seal Ring; Component Parts Not Serviced Separately
9		NSS		1	NOT SERVICED SEPARATELY, Gland, Cylinder
10		NSS		2	NOT SERVICED SEPARATELY, O-Ring
11		NSS		2	NOT SERVICED SEPARATELY, Ring, Backup, If Used
12		NSS		1	NOT SERVICED SEPARATELY, Piston
13		NSS		1	NOT SERVICED SEPARATELY, Cap

08-57		p1	12/07

FILTER ASSY, OIL

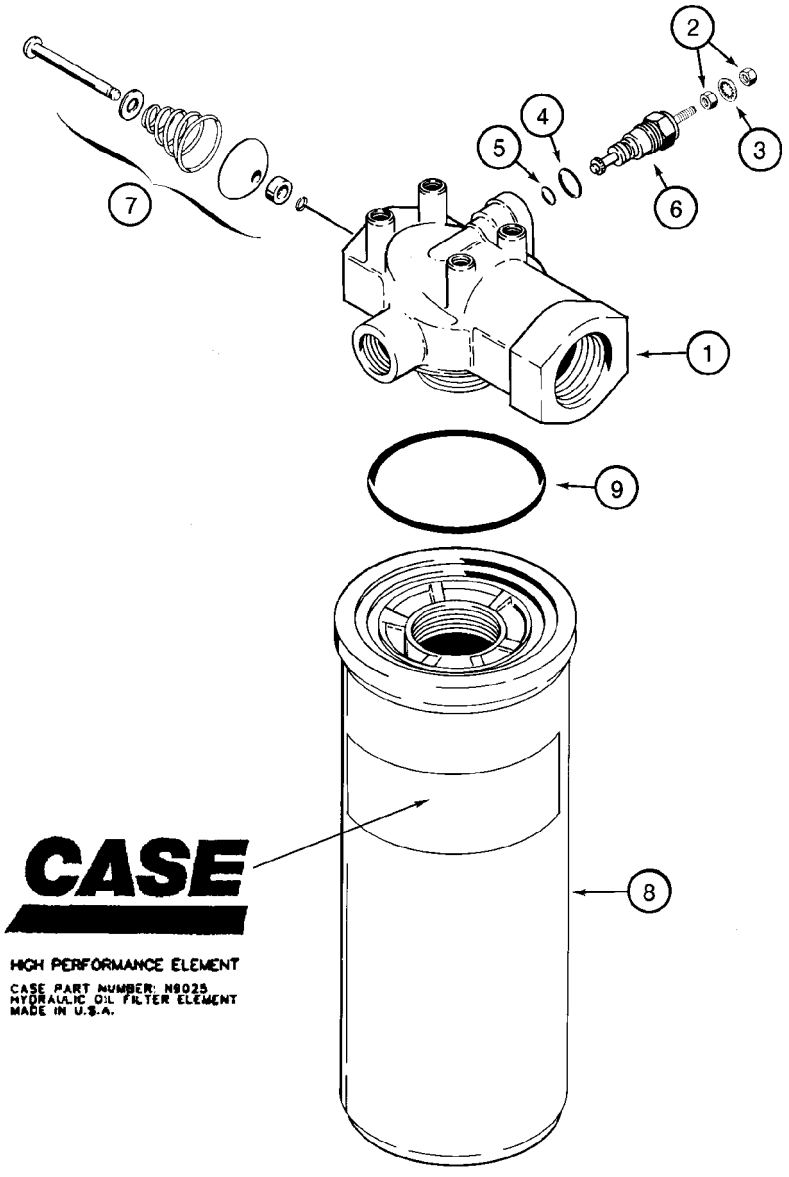

BS00D009

FILTER ASSY, OIL

REF	FN	PART NUMBER	YR/SN	QTY	DESCRIPTION
		87440045		1	FILTER ASSY., Hydraulic Oil Filter; Incl. Ref 1 - 9
1		NSS		1	NOT SERVICED SEPARATELY, Head, Filter
		N6755		1	INDICATOR, Restriction; Includes N6941, Ref 6
		N6941		1	KIT, Restriction Indicator Repair; Incl. Ref 2 - 5; Order Ref 2 - 5
2		129-667		2	NUT, #10-32, LH
3		493-21020		1	WASHER, LOCK, Int Tooth, #10
4		237-6006		1	O-RING, 6-1, 90 Duro, .468" ID x .078" Thk, Boss Seal
5		238-5011		1	O-RING, -011, 70 Duro, .301" ID x .070" Thk
6		NSS		1	NOT SERVICED SEPARATELY, Indicator
7		NSS		1	NOT SERVICED SEPARATELY, Valve, By-Pass
		N9025		1	FILTER, ELEMENT, Incl. Ref 8, 9
8		NSS		1	NOT SERVICED SEPARATELY, Element
9		238-5230		1	O-RING, -230, 70 Duro, 2.484" ID x .139" Thk

08-58		p1	07/07

CYLINDER ASSY - LOADER LIFT

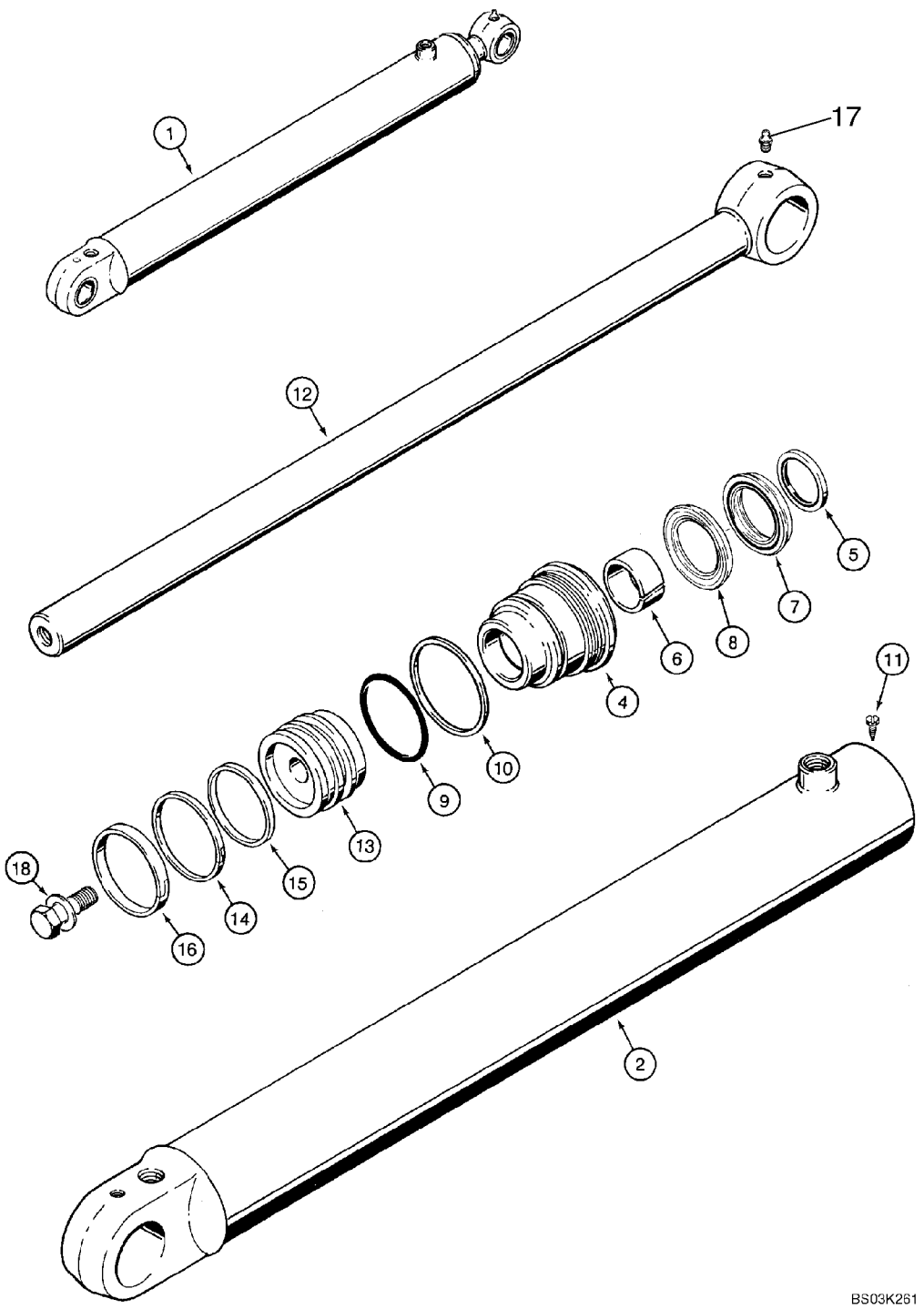

CYLINDER ASSY - LOADER LIFT

REF	FN	PART NUMBER	YR/SN	QTY	DESCRIPTION
1		384240A1		2	CYLINDER ASSY., 82.6 ID x 766 mm strk; Loader Lift; Incl. Ref 2 - 18
2		384241A1		1	SLEEVE, HYD CYL, TUBE, Without Bushings
4		1980321C3		1	GLAND
		1543260C1		1	KIT, GASKET, Seal Repair, Incl. Ref 5 - 10, 14 - 16
5		D95143		1	SEAL, Wiper
6		G102425		1	BUSHING
		1542875C1		1	KIT, SEALS, Rod and Buffer Seal Kit; Incl. Ref 7, 8
7		NSS		1	NOT SERVICED SEPARATELY, Rod Seal
8		NSS		1	NOT SERVICED SEPARATELY, Buffer Seal
9		238-5233		1	O-RING, -233, 70 Duro, 2.859" ID x .139" Thk
10		G32122		1	RING
11		86642312		1	SCREW, SELF TAP, Hex Hd, #8 x 3/8"
12		133083A1		1	ROD, PISTON, 44 mm (1-3/4 in) dia
13		135161A1		1	PISTON
14		G102287		1	SEAL
15		S109444		1	RING
16		S109445		1	RING
17		219-1		1	NIPPLE, LUBE, 1/8"-27 x .66 lg
18		86982437		1	BOLT, SPECIAL, 1 x 2,5 in; Includes Washer

08-59		p1	09/07

CYLINDER ASSY - LOADER BUCKET

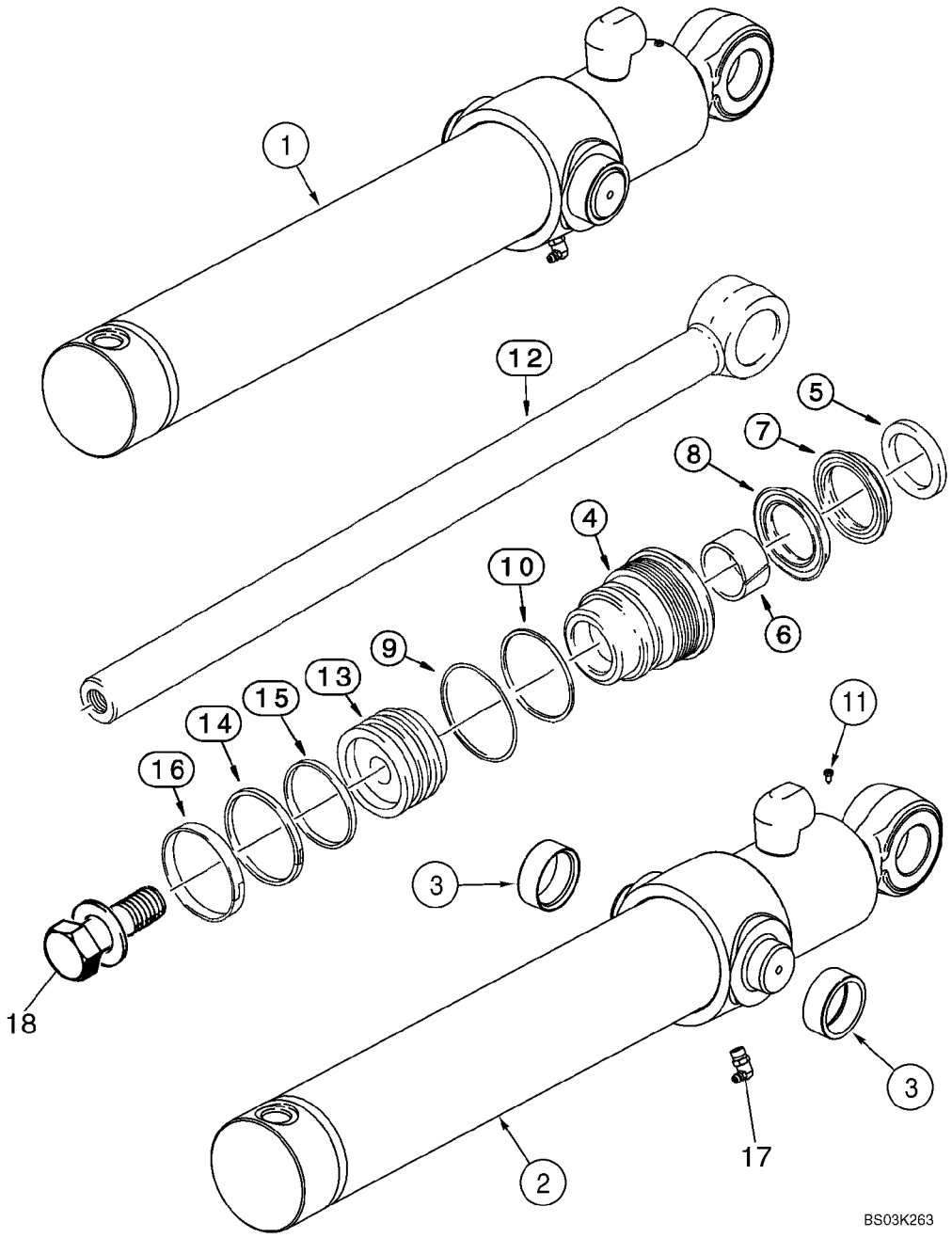

CYLINDER ASSY - LOADER BUCKET

REF	FN	PART NUMBER	YR/SN	QTY	DESCRIPTION
1		87609669		2	HYDRAULIC CYLINDER, 76 ID x 522 mm strk; Loader Bucket; Incl. Ref 2- 18
2		113135A2		1	SLEEVE, HYD CYL, TUBE, Incl. Ref 3
3		G108512		2	BUSHING
4		297280A1		1	GLAND
		1543256C1		1	KIT, GASKET, Seal Repair; Incl. Ref 5 - 10, 14 - 16
5		D95142		1	SEAL, Wiper
6		G102424		1	BUSHING, LARGE
		1542874C1		1	PACKAGE, Rod and Buffer Seal Kit; Incl. Ref 7, 8; Not Serviced Separately; Order 1543256C1 Seal Kit
7		NSS		1	NOT SERVICED SEPARATELY, Rod Seal; Order 1543256C1 Seal Kit
8		NSS		1	NOT SERVICED SEPARATELY, Buffer Seal; Order 1543256C1 Seal Kit
9		238-5231		1	O-RING, -231, 70 Duro, 2.609" ID x .139" Thk
10		G109298		1	RING
11		86642312		1	SCREW, SELF TAP, Hex Hd, #8 x 3/8", No. 8 x 3/8, self-tapping
12		87609666		1	ROD, PISTON, Rod, Piston; 38 mm (1-1/2 in) dia
13		G108518		1	PISTON
14		G102288		1	SEAL ASSY.
15		G100444		1	SEAL
16		G100449		1	RING, WEAR
17		219-55		1	NIPPLE, LUBE, 90Ü, 1/8" NPT x .84" lg, 90 deg, 1/8 PT x 27/32
18		86982435		1	BOLT, SPECIAL, 3/4 x 2,5 in, Includes Washer

08-60		p1	10/07

CYLINDER ASSY - LOADER CLAM

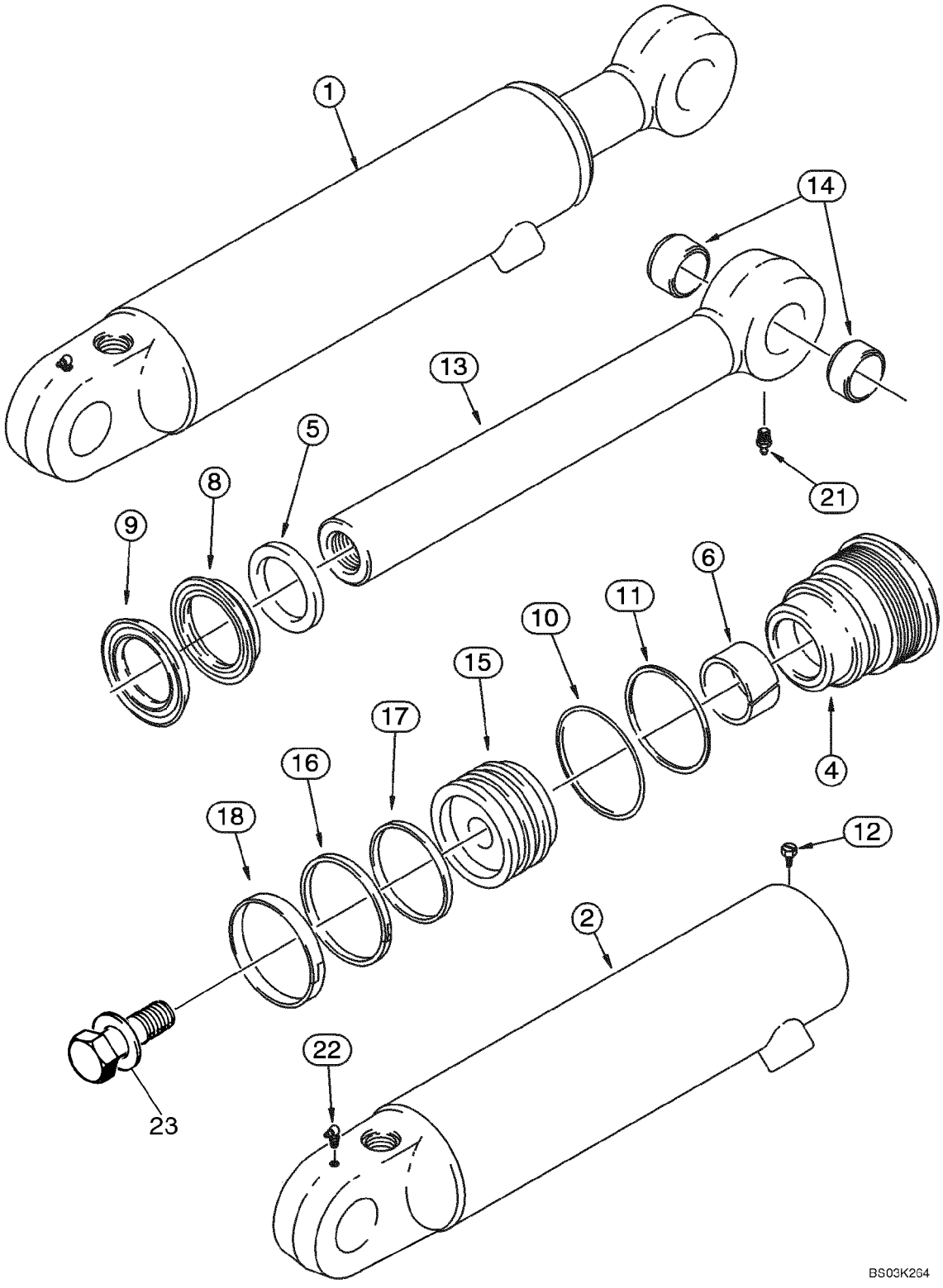

CYLINDER ASSY - LOADER CLAM

REF	FN	PART NUMBER	YR/SN	QTY	DESCRIPTION
1		87454017		1	CYLINDER ASSY., 76 ID x 231 mm strk; RH; Incl. Ref 2 - 23
1		87454016		1	CYLINDER ASSY., 76 ID x 231 mm strk; LH; Incl. Ref 2 - 23
2		87454907		1	TUBE ASSY., RH; 87454017 Cylinder; Includes (2) 30634 Bushings, Ref 14
2		87454908		1	TUBE ASSY., LH; 87454016 Cylinder; Includes (2) 30634 Bushings, Ref 14
4		297281A1		1	CAP CYLINDER END, Gland
		1543267C1		1	KIT, GASKET, Seal Repair; Incl. Ref 5 - 11, 16 - 18
5		D95143		1	SEAL
6		G102425		1	BUSHING
		1542875C1		1	KIT, SEALS, Rod and Buffer Seal; Incl. Ref 8, 9; Not Serviced Separately; Order 1543267C1 Seal Kit
8		NSS		1	NOT SERVICED SEPARATELY, Rod Seal; Order 1543267C1 Seal Kit
9		NSS		1	NOT SERVICED SEPARATELY, Buffer Seal; Order 1543267C1 Seal Kit
10		238-5231		1	O-RING, -231, 70 Duro, 2.609" ID x .139" Thk
11		G109298		1	RING
12		86642312		1	SCREW, SELF TAP, Hex Hd, #8 x 3/8"
13		1346195C1		1	ROD, PISTON, 44 mm (1-3/4 in) dia; Incl. Ref 14
14		30634		2	BUSHING
15		1340798C1		1	PISTON
16		G102288		1	SEAL ASSY.
17		G100444		1	SEAL
18		G100449		1	RING, WEAR
21		219-1		1	NIPPLE, LUBE, 1/8"-27 x .66 lg
22		219-55		1	NIPPLE, LUBE, 90Ü, 1/8" NPT x .84" lg
23		86982437		1	BOLT, SPECIAL, 1,0 x 2,5 in, Includes Washer

08-61		p1	01/08

CYLINDER ASSY - BACKHOE STABILIZER

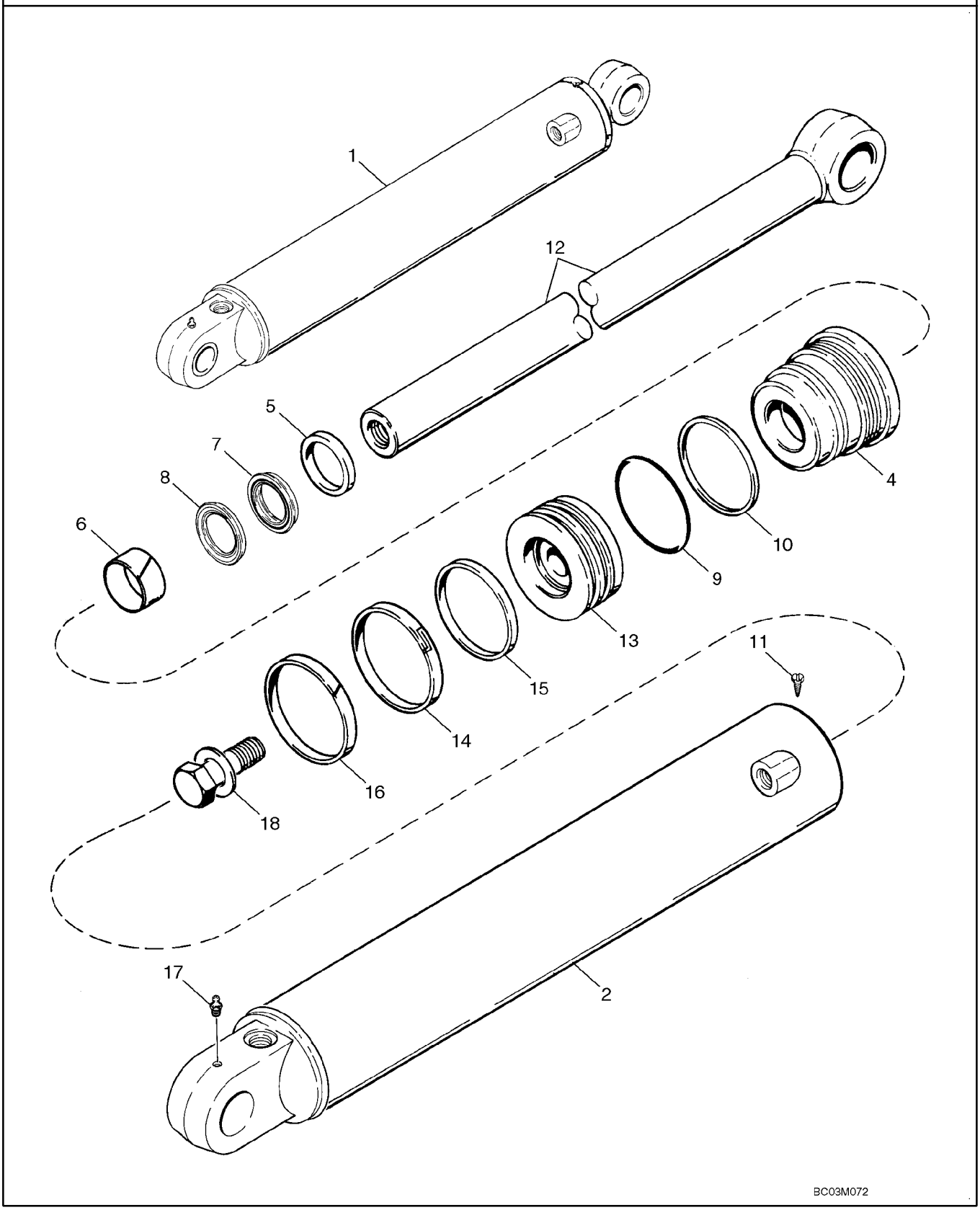

CYLINDER ASSY - BACKHOE STABILIZER

REF	FN	PART NUMBER	YR/SN	QTY	DESCRIPTION
1		195503A1		1	CYLINDER ASSY., 102 ID x 553 mm strk, RH, Incl. Ref 2 - 18
1		195504A1		1	CYLINDER, 102 ID x 553 mm strk, LH, Incl. Ref 2 - 18
2		195505A1		1	TUBE, RH
2		195506A1		1	TUBE, LH
4		128135A2		1	GLAND
		1543269C1		1	KIT, GASKET, Seal, Incl. Ref 5 - 10, 14 - 16
5		D95144		1	SEALRING, WIPER
6		G101533		1	RING, WEAR
		1542876C1		1	PACKAGE,SERVICE, Rod and Buffer Seal; Incl. Ref 7, 8; Not Serviced Separately; Order 1543269C1 Seal Kit
7		NSS		1	NOT SERVICED SEPARATELY, Rod Seal; Order 1543269C1 Seal Kit
8		NSS		1	NOT SERVICED SEPARATELY, Buffer Seal; Order 1543269C1 Seal Kit
9		238-5239		1	O-RING, -239, 70 Duro, 3.609" ID x .139" Thk
10		G109299		1	RING, Backup
11		276-2446		1	SCREW, SELF TAP, Hex Hd, #8 x 3/8"
12		123726A1		1	ROD, PISTON, 51 mm (2 in) dia
13		G108123		1	PISTON
14		G102285		1	SEAL
15		G100440		1	RING
16		G100448		1	RING
17		219-1		1	NIPPLE, LUBE, 1/8"-27 x .66 lg
18		86982440		1	BOLT, SPECIAL, 1,25 x 2,75; Incl. Washer

08-62		p1	11/07

CYLINDER ASSY - BACKHOE SWING

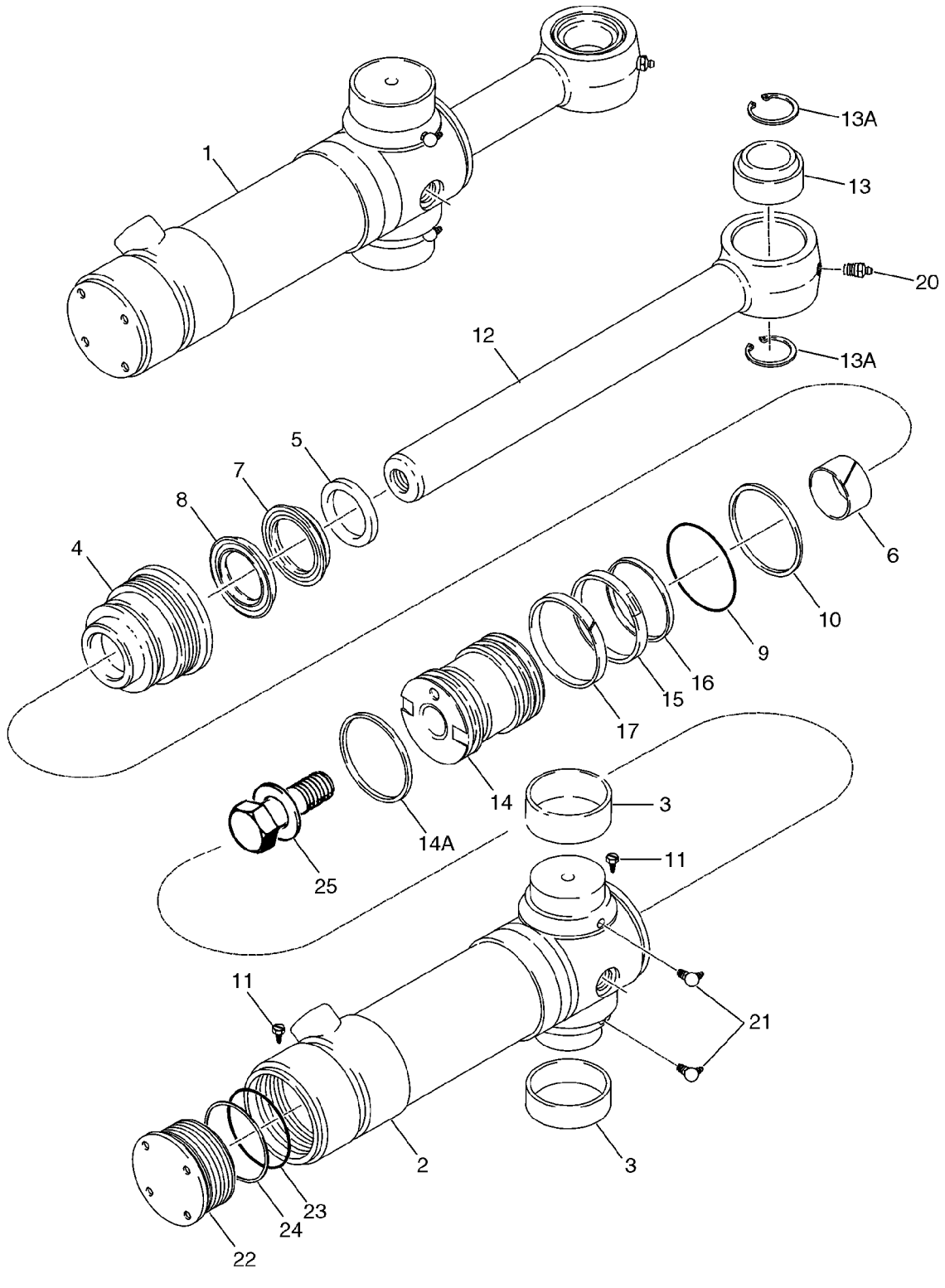

CYLINDER ASSY - BACKHOE SWING

REF	FN	PART NUMBER	YR/SN	QTY	DESCRIPTION
1		188027A2		2	CYLINDER ASSY., 95 ID x 292 mm strk, Incl. Ref 2 - 25
2		220165A2		1	TUBE, Incl. Ref 2, 3, 11, 22 - 24; Not Available As An Assembly; Order Components
2		188028A2		1	TUBE ASSY., Incl. Ref 3
3		124568A2		2	RING, Bushing
4		188032A2		1	GLAND
		191747A1		1	SEAL, KIT, Incl. Ref 5 - 10, 14A - 17, 23, 24
5		D95144		1	SEALRING, WIPER
6		G101533		1	RING, WEAR
		1542876C1		1	PACKAGE,SERVICE, Rod and Buffer Seal; Incl. Ref 7, 8; Not Serviced Separately; Order 191747A1 Seal Kit
7		NSS		1	NOT SERVICED SEPARATELY, Rod Seal; Order 191747A1 Seal Kit
8		NSS		1	NOT SERVICED SEPARATELY, Buffer Seal; Order 191747A1 Seal Kit
9		238-5237		1	O-RING, -237, 70 Duro, 3.359" ID x .139" Thk
10		G32126		1	RING, Backup
11		86642312		2	SCREW, SELF TAP, Hex Hd, #8 x 3/8"
12		87413722		1	ROD, PISTON, 51 mm (2 in) dia, Incl. Ref 13, 13A
13		137248A1		1	RING
13A		100-21315		2	RING, SNAP, 3.156", Int, #315
14		188034A3		1	PISTON
14A		191252A1		1	SEAL, OIL, Cast Iron
15		1340764C1		1	SEAL ASSY.
16		1340763C1		1	RING
17		1980245C1		1	SEAL, OIL
20		219-1		1	NIPPLE, LUBE, 1/8"-27 x .66 lg
21		219-55		2	NIPPLE, LUBE, 90Ü, 1/8" NPT x .84" lg
		188035A1		1	CAP CYLINDER END, Incl. Ref 22 - 24; Not Available As An Assembly, Order Components
22		188036A1		1	CAP, End
23		238-5239		1	O-RING, -239, 70 Duro, 3.609" ID x .139" Thk
24		G109299		1	RING, Backup

CYLINDER ASSY - BACKHOE SWING

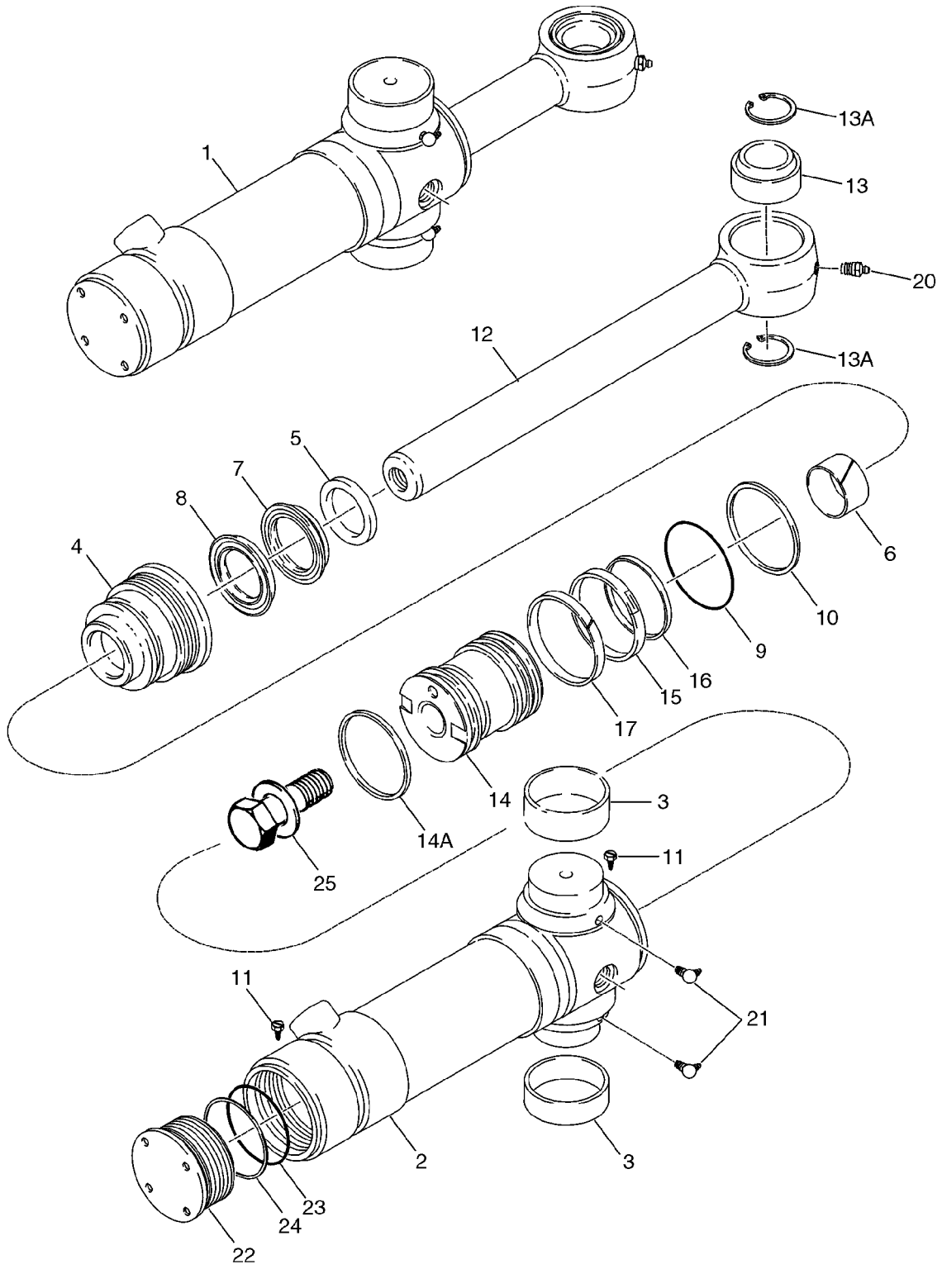

CYLINDER ASSY - BACKHOE SWING

REF	FN	PART NUMBER	YR/SN	QTY	DESCRIPTION
25		86982439		1	BOLT, SPECIAL, 1 x 4,0; Incl. Washer

08-63		p1	11/07

CYLINDER ASSY - BACKHOE BOOM

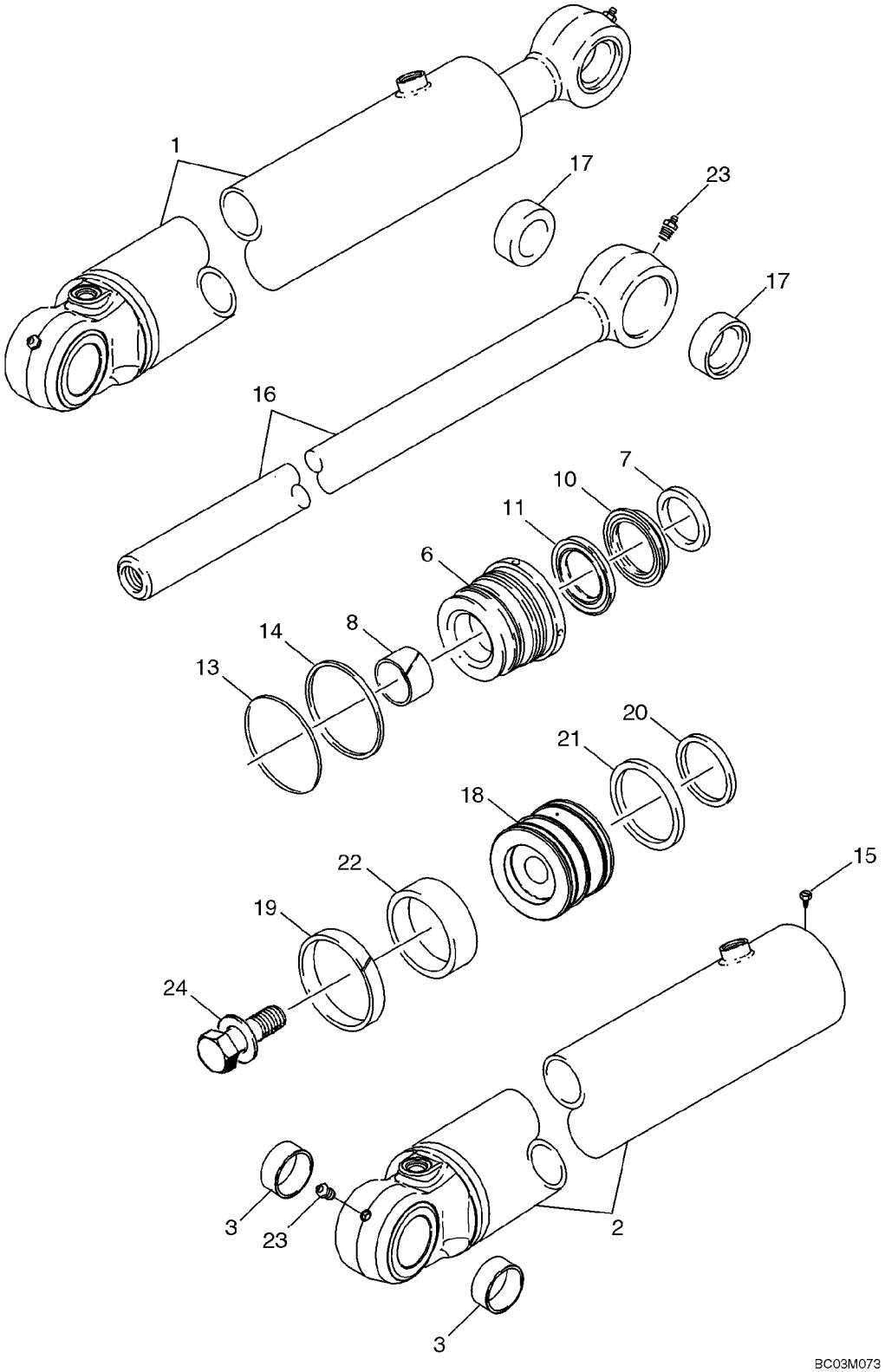

CYLINDER ASSY - BACKHOE BOOM

REF	FN	PART NUMBER	YR/SN	QTY	DESCRIPTION
1		189653A2		1	CYLINDER ASSY., 114 ID x 982 mm strk, Incl. Ref 2 - 24
2		397080A1		1	SLEEVE, HYD CYL, Incl. Ref 3
3		D149079		2	BUSHING, 50 x 34 mm lg
6		127862A2		1	CAP CYLINDER END, GLAND
		182218A1		1	PACKAGE, SEALS, Incl. Ref 7 - 14, 19 - 22
7		D95145		1	SEAL
8		G102426		1	BUSHING, LARGE
		1542877C1		1	KIT, SEALS, Rod and Buffer Seal; Incl. Ref 10, 11; Not Serviced Separately; Order 182218A1 Seal Kit
10		NSS		1	NOT SERVICED SEPARATELY, Rod Seal; Order 182218A1 Seal Kit
11		NSS		1	NOT SERVICED SEPARATELY, Buffer Seal; Order 182218A1 Seal Kit
13		238-5243		1	O-RING, -243, 70 Duro, 4.109" ID x .139" Thk
14		G109300		1	RING, Backup
15		86642312		1	SCREW, SELF TAP, Hex Hd, #8 x 3/8"
16		182109A1		1	ROD, PISTON, 57 mm (2-1/4 in) dia, Incl. Ref 17
17		D149079		2	BUSHING, 50 x 34 mm lg
18		189657A2		1	JACK PISTON
19		182116A1		1	RING, Cast Iron
20		G101995		1	SEALRING
21		G101994		2	SEAL
22		G101996		1	RING, WEAR
23		219-1		2	NIPPLE, LUBE, 1/8"-27 x .66 lg
24		86982442		1	BOLT, SPECIAL, 1,25 x 3,25; Incl. Washer

08-64		p1	11/07

CYLINDER ASSY - BACKHOE DIPPER

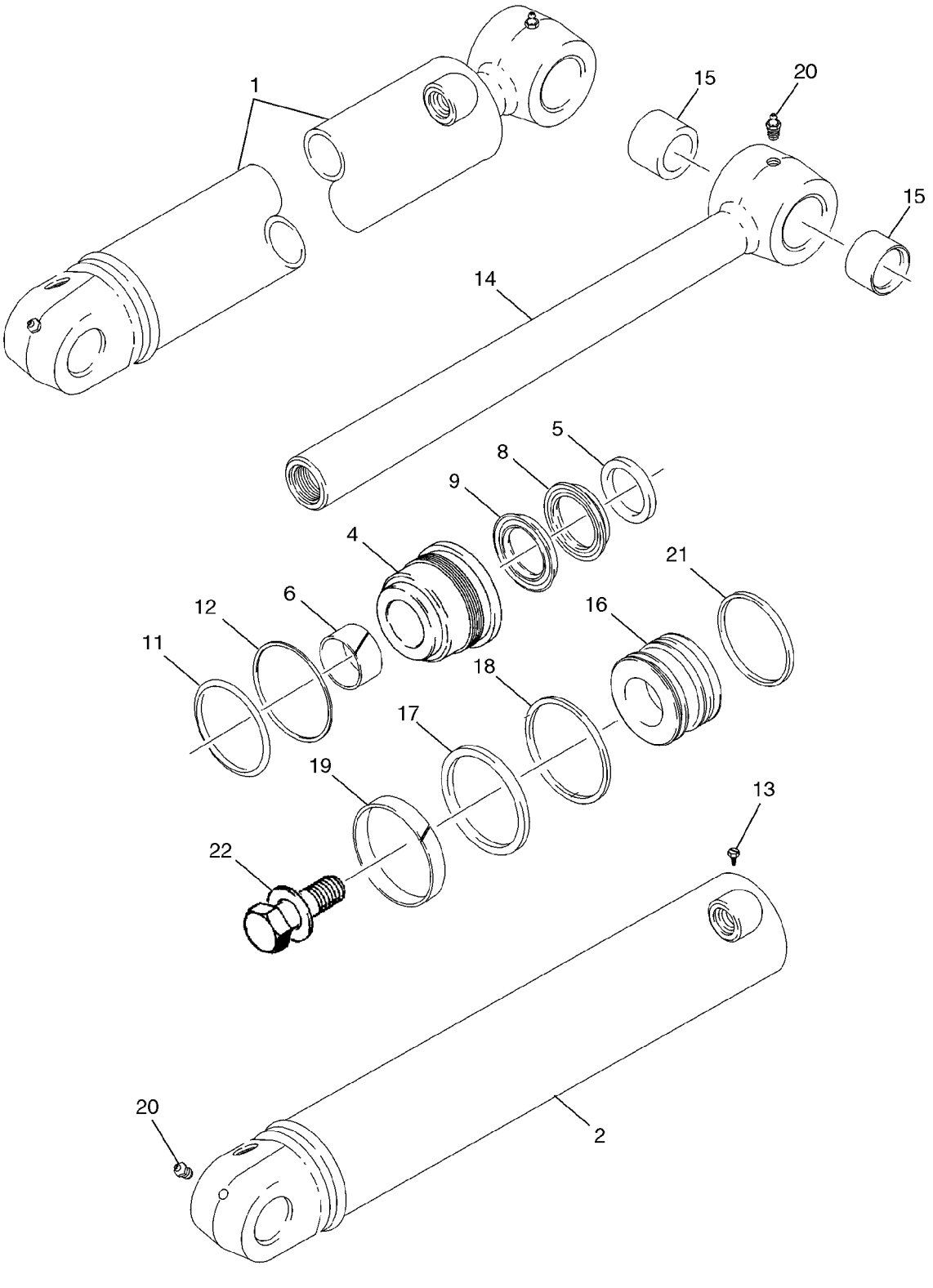

CYLINDER ASSY - BACKHOE DIPPER

REF	FN	PART NUMBER	YR/SN	QTY	DESCRIPTION
1		233114A2		1	CYLINDER ASSY., 108 ID x 686 mm strk, Incl. Ref 2 - 22
2		297952A1		1	PIPE, TUBE
4		234141A2		1	CAP CYLINDER END, GLAND
		234844A1		1	KIT, GASKET, Incl. Ref 5 - 12, 17 - 19, 21
5		D95145		1	SEAL
6		G102426		1	BUSHING, LARGE
		1542877C1		1	KIT, SEALS, Rod and Buffer Seal; Incl. Ref 8, 9; Not Serviced Separately; Order 234844A1 Seal Kit
8		NSS		1	NOT SERVICED SEPARATELY, Rod Seal; Order 234844A1 Seal Kit
9		NSS		1	NOT SERVICED SEPARATELY, Buffer Seal; Order 234844A1 Seal Kit
11		238-5241		1	O-RING, -241, 70 Duro, 3.859" ID x .139" Thk
12		G32176		1	RING, Backup
13		86642312		1	SCREW, SELF TAP, Hex Hd, #8 x 3/8"
14		175778A1		1	ROD, PISTON, 57 mm (2-1/4 in) dia, Incl. Ref 15
15		D149079		2	BUSHING
16		233110A2		1	PISTON
17		G110531		1	SEAL
18		G110529		1	RING
19		G110530		1	RING
20		219-1		2	NIPPLE, LUBE, 1/8"-27 x .66 lg
21		233104A1		1	RING, Cast Iron
22		86982443		1	BOLT, SPECIAL, 1-3/8 x 3,5; Incl. Washer

08-65		p1	11/07

CYLINDER ASSY - BACKHOE BUCKET

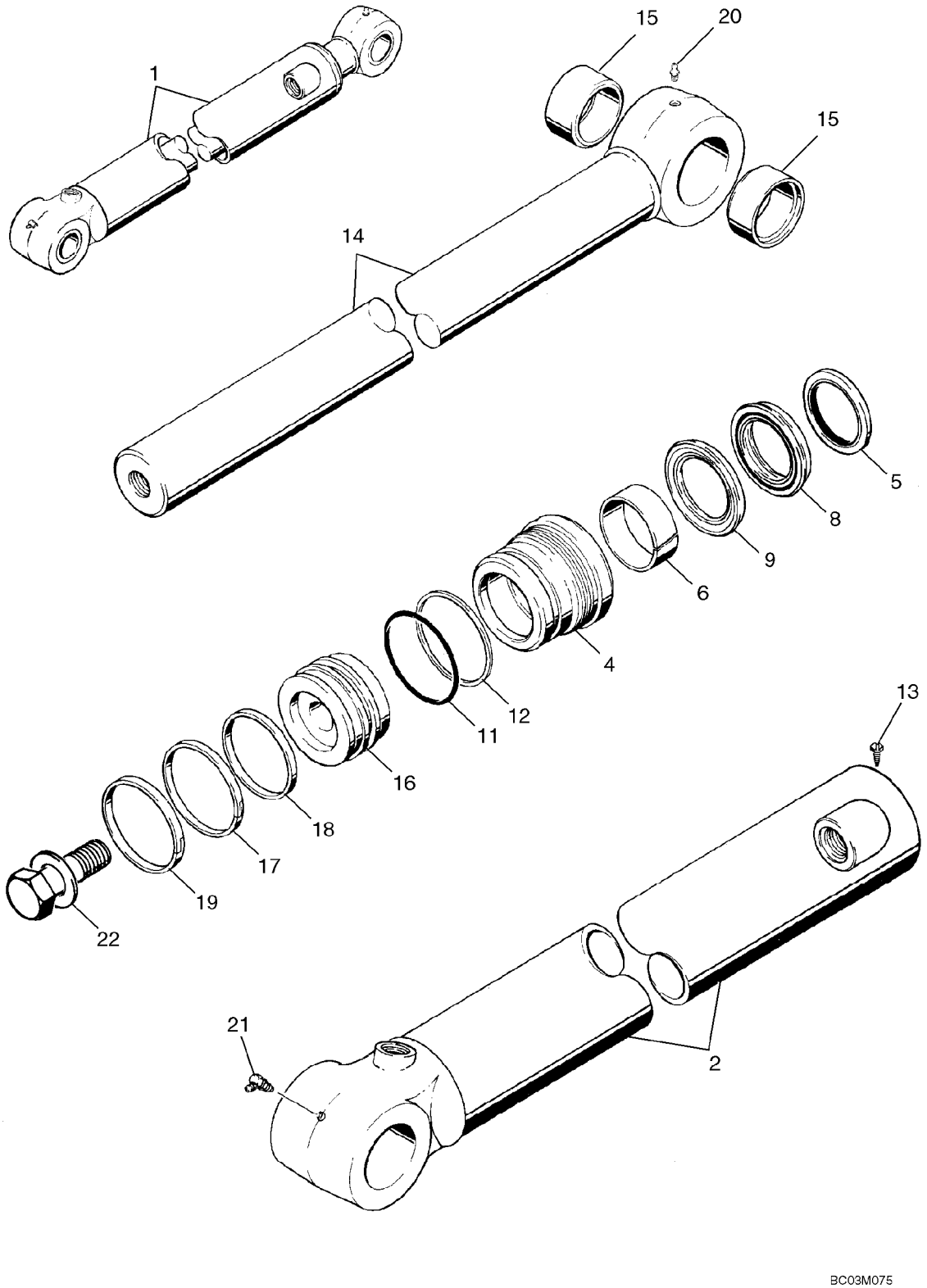

CYLINDER ASSY - BACKHOE BUCKET

REF	FN	PART NUMBER	YR/SN	QTY	DESCRIPTION
1		128760A1		1	CYLINDER ASSY., 83 ID x 872 mm strk, Incl. Ref 2 - 22
2		128761A1		1	SLEEVE, HYD CYL, TUBE
4		128770A2		1	CAP CYLINDER END, GLAND
		131750A2		1	KIT, GASKET, Seal, Incl. Ref 5 - 12, 17 - 19
5		D95145		1	SEAL
6		1346476C1		1	RING
		1542877C1		1	KIT, SEALS, Rod and Buffer Seal; Incl. Ref 8, 9; Not Serviced Separately; Order 131750A2 Seal Kit
8		NSS		1	NOT SERVICED SEPARATELY, Rod Seal; Order 131750A2 Seal Kit
9		NSS		1	NOT SERVICED SEPARATELY, Buffer Seal; Order 131750A2 Seal Kit
11		238-5233		1	O-RING, -233, 70 Duro, 2.859" ID x .139" Thk
12		G32122		1	RING, Backup
13		86642312		1	SCREW, SELF TAP, Hex Hd, #8 x 3/8"
14		198033A1		1	ROD, PISTON, 57 mm (2-1/4 in) dia, Incl. Ref 15
15		D140029		2	BUSHING, LARGE
16		128772A1		1	PISTON
17		G102287		1	SEAL
18		S109444		1	RING
19		S109445		1	RING
20		219-1		1	NIPPLE, LUBE, 1/8"-27 x .66 lg
21		219-36		1	NIPPLE, LUBE, 45Ü, 1/8" NPT x 7/8" lg
22		86982441		1	BOLT, SPECIAL, 1,25 x 3,00; Incl. Washer

CYLINDER ASSY - BACKHOE EXTENDABLE DIPPER

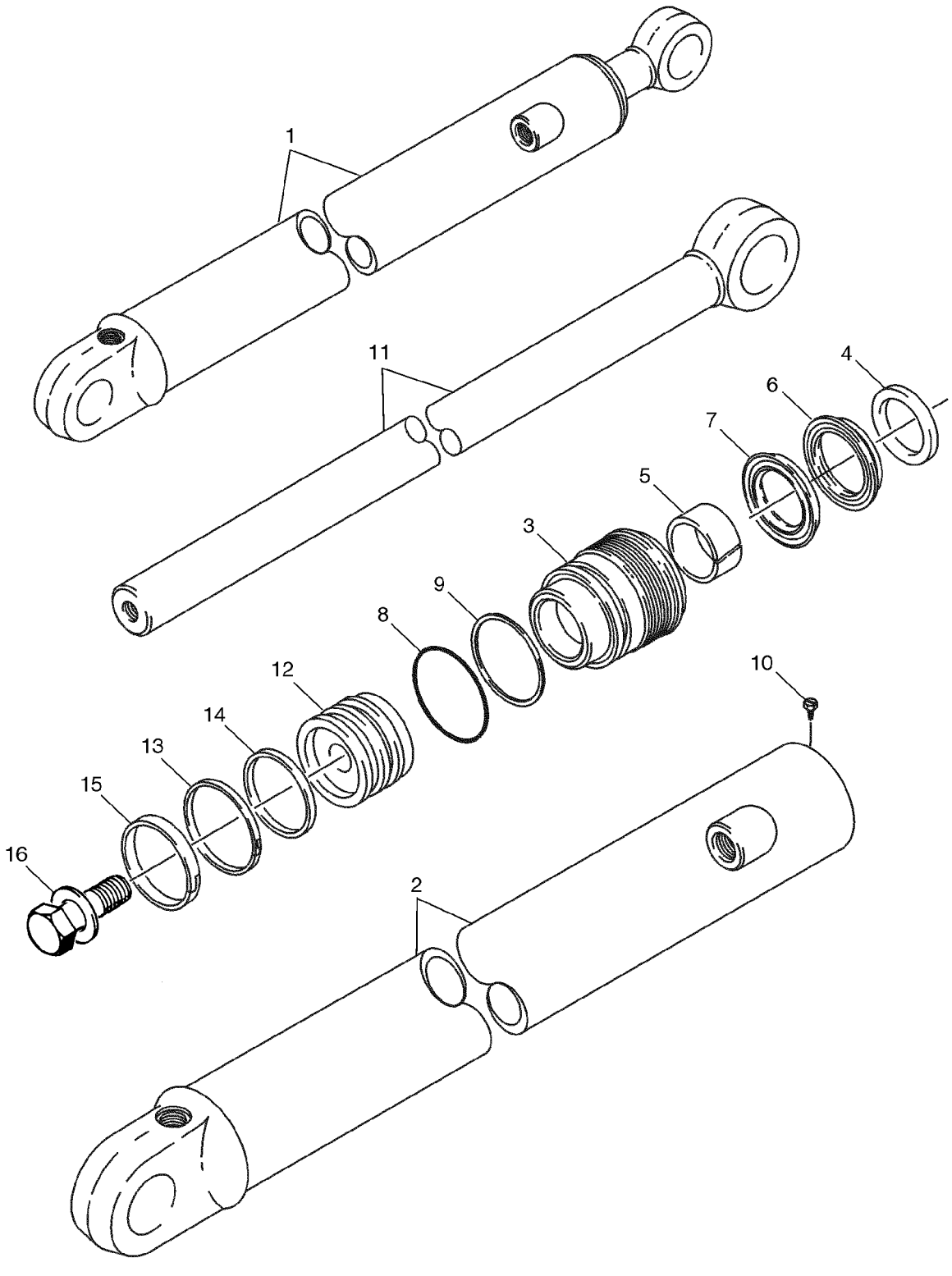

CYLINDER ASSY - BACKHOE EXTENDABLE DIPPER

REF	FN	PART NUMBER	YR/SN	QTY	DESCRIPTION
1		1340969C2		1	CYLINDER ASSY., 76 ID x 1068 mm strk; Incl. Ref 2 - 16
2		1340970C1		1	SLEEVE, HYD CYL, TUBE
3		297281A1		1	CAP CYLINDER END, GLAND
		1543267C1		1	KIT, GASKET, Seal; Incl. Ref 4 - 9, 13 - 15
4		D95143		1	SEAL, WIPER
5		G102425		1	BUSHING
		1542875C1		1	KIT, SEALS, Rod and Buffer Seal; Incl. Ref 6, 7; Not Serviced Separately; Order 1543267C1 Seal Kit
6		NSS		1	NOT SERVICED SEPARATELY, Rod Seal; Order 1543267C1 Seal Kit
7		NSS		1	NOT SERVICED SEPARATELY, Buffer Seal; Order 1543267C1 Seal Kit
8		238-5231		1	O-RING, -231, 70 Duro, 2.609" ID x .139" Thk
9		G109298		1	RING, Backup
10		276-2446		1	SCREW, SELF TAP, Hex Hd, #8 x 3/8"
11		1980296C1		1	ROD, PISTON, 44 mm (1-3/4 in) dia
12		G107277		1	PISTON
13		G102288		1	SEAL ASSY.
14		G100444		1	SEAL
15		G100449		1	RING, WEAR
16		86982435		1	BOLT, SPECIAL, 3/4 x 2,5 in, Incl. Washer

NOTES

SECTION INDEX
Chassis/Attachments

09-01	CONTROLS - LOADER LIFT AND BUCKET
09-01A	HANDLE, LOADER CONTROL - TRANSMISSION ASSY, 2WD, 4WD
09-02	CONTROLS - LOADER CLAM
09-03	CONTROLS - LOADER SELF-LEVELING
09-04	FRAME - LOADER LIFT
09-05	FRAME - LOADER LINKAGE
09-06	BUCKETS, LOADER LONG LIP (82 IN)
09-07	BUCKET, LOADER LONG LIP (93 IN)
09-08	BUCKET, LOADER CLAM
09-09	GUARD - VALVE, LOADER
09-10	COUPLER, TOOL QUICK
09-11	COVERS - BACKHOE CONTROL TOWER, WITHOUT PILOT CONTROLS
09-12	BACKHOE CONTROL TOWER SUPPORT AND SEALS, WITHOUT PILOT CONTROLS
09-13	BACKHOE CONTROL TOWER SUPPORT, WITH PILOT CONTROLS
09-14	BACKHOE CONTROL TOWER BOOTS AND SEALS, WITH PILOT CONTROLS
09-15	BACKHOE CONTROL TOWER LEVERS (BOOM LATCH), WITH PILOT CONTROLS
09-16	CONTROLS - BACKHOE, WITH FOOT SWING (MODELS WITH OR WITHOUT EXTENDABLE DIPPER)
09-17	CONTROLS - BACKHOE, WITH FOOT SWING (MODELS WITH EXTENDABLE DIPPER)
09-18	CONTROLS - BACKHOE, WITH HAND SWING (MODELS WITH OR WITHOUT EXTENDABLE DIPPER)
09-19	CONTROLS - BACKHOE, WITH HAND SWING (MODELS WITH OR WITHOUT EXTENDABLE DIPPER)
09-19A	CONTROLS - BACKHOE, EXCAVATOR CONTROL PATTERN
09-20	CONTROLS - BACKHOE, WITH HAND SWING (MODELS WITH EXTENDABLE DIPPER)
09-21	CONTROLS - BACKHOE AUXILIARY HYDRAULICS, WITHOUT PILOT CONTROLS
09-22	BACKHOE - STABILIZERS, PLATES AND PADS
09-23	BACKHOE - SWING TOWER AND SWING CYLINDERS
09-24	BACKHOE - BOOM AND SWING TOWER
09-24A	BOOM GUARD
09-25	BOOM LATCH (WITHOUT PILOT CONTROLS)
09-25A	BOOM LATCH (WITH PILOT CONTROLS)
09-26	BACKHOE - DIPPER AND BUCKET
09-27	BACKHOE - DIPPER, EXTENDABLE
09-28	BUCKET, UNIVERSAL BACKHOE (305 MM (12 INCH) WIDE)
09-29	BUCKET, UNIVERSAL BACKHOE (406 MM (16 INCH) WIDE)
09-30	BUCKET, UNIVERSAL BACKHOE (457 MM (18 INCH) WIDE)
09-31	BUCKET, BACKHOE (457 MM (18 INCH) WIDE)
09-32	BUCKET, UNIVERSAL BACKHOE (610 MM (24 INCH) / 762 MM (30 INCH) WIDE)
09-33	BUCKET, BACKHOE (610 MM (24 INCH) WIDE)
09-34	BUCKET, UNIVERSAL BACKHOE (914 MM (36 INCH) WIDE)
09-35	BUCKET, UNIVERSAL BACKHOE (610 MM (24 INCH) WIDE)
09-35A	FROST POINT ASSEMBLY
09-36	COUNTERWEIGHT, FRONT
09-37	CHASSIS / MOUNTS, POD - SCREEN, AIR INLET
09-38	TANK, OIL - BOX, BATTERY AND TOOL
09-39	RADIATOR WRAPPER
09-40	HOOD - PANELS, SIDE
09-41	HOOD - GRILLE

SECTION INDEX
Chassis/Attachments

09-42	PLATES, FLOOR - FLOORMATS
09-43	FENDER COVER, LEFT-HAND - PANEL, REAR CLOSURE (STORAGE TRAY WITH CUP HOLDER)
09-44	FENDER EXTENSIONS
09-45	GUARD, MUD
09-46	SEAT ASSY - MOUNTING (SEARS, STANDARD)
09-47	SEAT - MOUNTING (SEARS MECHANICAL SUSPENSION)
09-48	SEAT ASSY, MECHANICAL SUSPENSION (SEARS)
09-49	SEAT - MOUNTING (AIR SUSPENSION)
09-53	CAB - GLASS, MIRROR AND HOLD OPEN
09-54	CAB - FRAME AND COVERS
09-55	CAB - DOORS
09-56	CAB - DOOR MOUNTING
09-57	CAB - WINDOW, RIGHT-HAND, FOR SINGLE DOOR CAB FRAMES
09-58	CAB - WINDOW, REAR
09-59	CAB - WASHER, WINDSHIELD
09-60	CAB - WIPERS
09-61	CAB HEADLINER - FILTER, LOUVERS, DOME LAMP
09-62	CAB - FILTER, AIR
09-63	CAB - BLOWER HOUSING, VENTILATION DUCTS, DRAIN LINES
09-64	CAB - HEATER
09-65	CAB - AIR CONDITIONING LINES, EVAPORATOR CORE
09-66	CAB - AIR CONDITIONING, CONDENSER, RECEIVER-DRIER
09-67	CAB - AIR CONDITIONING COMPRESSOR
09-68	CANOPY, ROPS - FRAME, COVERS, MIRROR, VISOR
09-69	CANOPY, ROPS - GLASS
09-70	CANOPY, ROPS - WIPER, FRONT AND WINDSHIELD WASHER
09-71	MIRROR, REAR VIEW - MOUNTING, CAB MODELS
09-72	SLOW MOVING VEHICLE EMBLEM
09-73	DECALS
09-74	DECALS
09-75	DECALS
09-76	DECALS - ENGLISH
09-77	DECALS - LATIN AMERICAN SPANISH
09-78	DECALS - CANADIAN FRENCH
09-79	DECALS - ENGLISH
09-80	DECALS - LATIN AMERICAN SPANISH
09-81	DECALS - CANADIAN FRENCH

NOTES

09-01		p1	11/07

CONTROLS - LOADER LIFT AND BUCKET

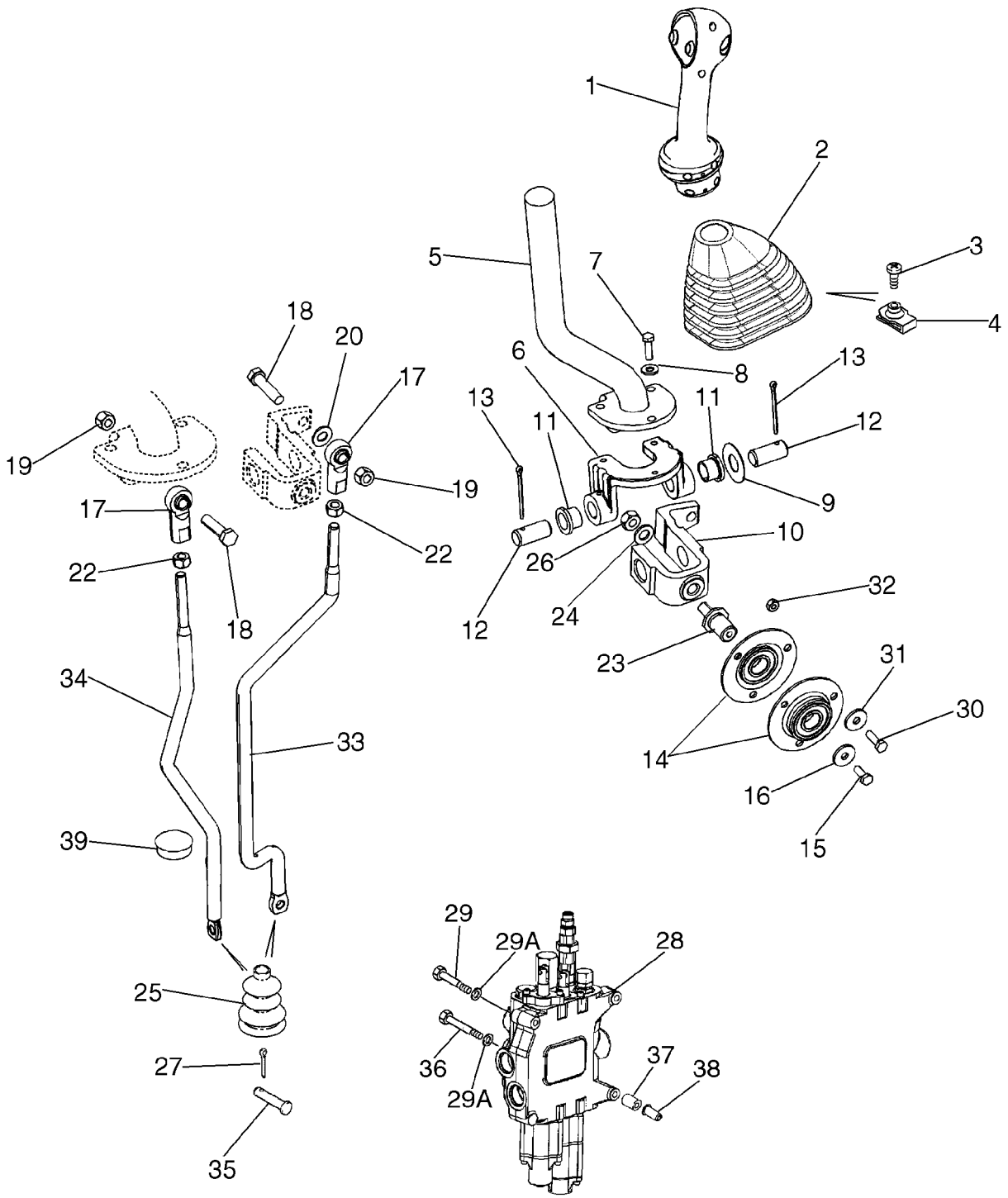

CONTROLS - LOADER LIFT AND BUCKET

REF	FN	PART NUMBER	YR/SN	QTY	DESCRIPTION
1		87638046		1	HANDLE, Loader Control Lever; Two Button, Declutch and Differential Lock Switches; 2 Spool With Standard Transmission; See Figure 09-01A
		256347A1		1	CONNECTOR
		258616A1		1	LOCK
		298176A1		1	PLUG
		87301351		AR	ADHESIVE, Permabond Adhesive, F246, 1 ml With No. 5 Initiator
2		87632920		1	BOOT
3		140-107		1	SCREW, Cross Pan Hd, #10-24 x 3/4"
4		131-121		1	NUT, Tinn, U, #10-24
5		87708015		1	HANDLED SHAFT
6		87681261		1	U-BRACKET
7		614-6020		3	BOLT, Hex, M6 x 20, 8.8
8		495-11028		3	WASHER, 1/4", SAE
9		495-81184		1	WASHER, 21/32" x 1 1/2" x .030"
10		87586156		1	YOKE, LINKAGE
11		108088A1		2	BUSHING
12		102761A1		2	PIN, LARGE
13		432-828		2	PIN, SPLIT (COTTER), 1/8" x 1 3/4"
14		112380A1		2	BEARING, Incl. Ref 14A
14A		362804		1	BEARING ASSY, Not Illustrated
15		614-6016		1	BOLT, Hex, M6 x 16, 8.8
16		396-41028		1	WASHER, .281" x 7/8" x .098", HDN
17		87382812		2	BEARING ASSY, BALLJOINT; 3/8 NF
18		413-624		1	BOLT, Hex, 3/8"-16 x 1 1/2", G5
19		232-4246		2	NUT, LOCK, 3/8"-16, GC
20		496-11041		1	WASHER, 13/32" x 13/16" x .065", HDN
22		425-116		2	NUT, 3/8"-24, G5
23		176309A1		1	SHAFT
24		895-11010		1	WASHER, M10 x 20 x 2
25		132931A1		1	BELLOWS
		189109A1		2	SPRING
26		829-1410		1	NUT, M10, Cl 10
27		432-612		2	PIN, SPLIT (COTTER), 3/32" x 3/4"

CONTROLS - LOADER LIFT AND BUCKET

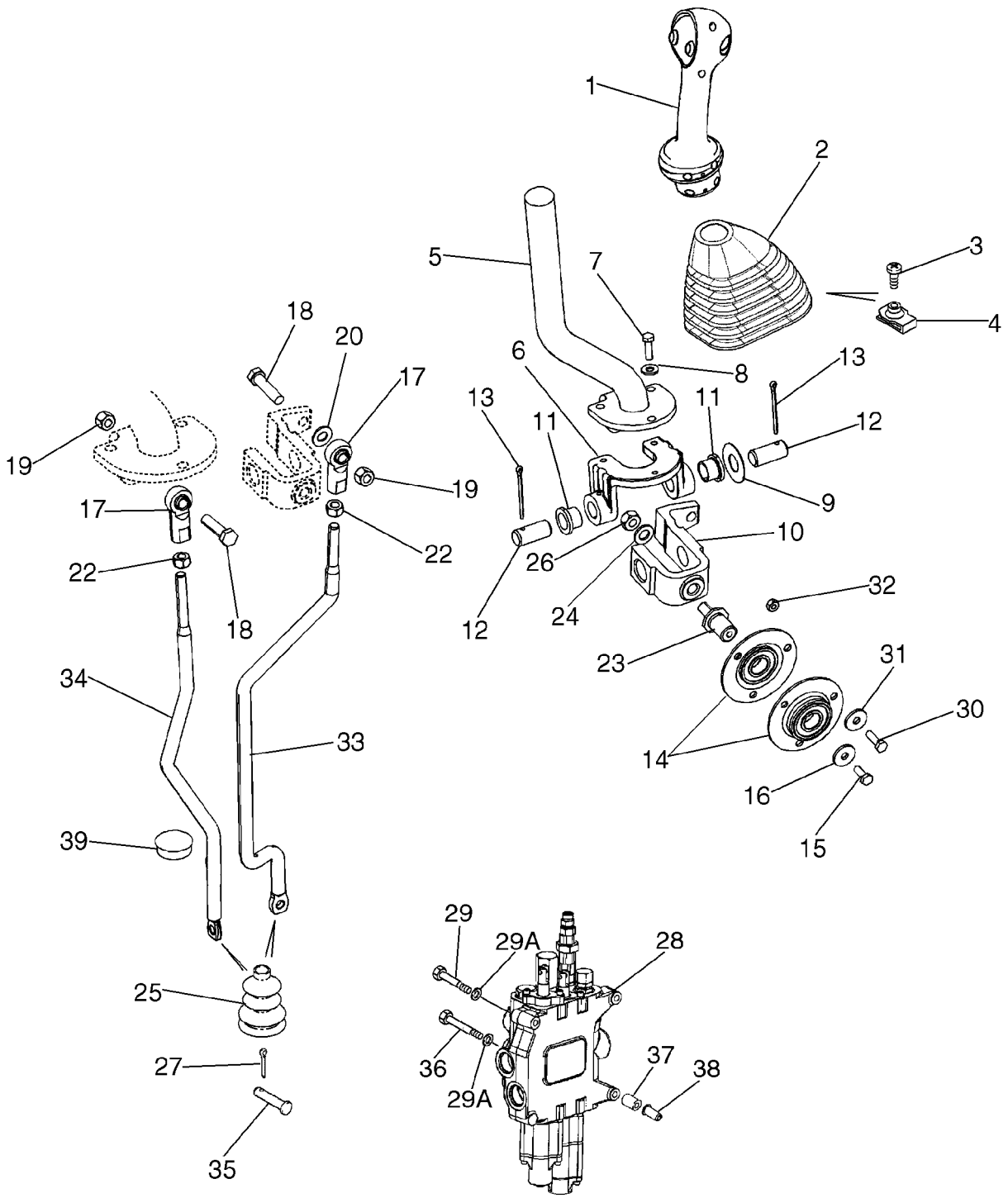

CONTROLS - LOADER LIFT AND BUCKET

REF	FN	PART NUMBER	YR/SN	QTY	DESCRIPTION
28		REF		1	INSTRUCTION, LOADER CONTROL VALVE; Two Spool, See Figure 08-30 for Two Spool Valve Options
29		814-10090		2	BOLT, Hex, M10 x 90, 8.8
29A		896-11010		3	WASHER, M10 x 21.5 x 2.5, HT
30		614-6020		3	BOLT, Hex, M6 x 20, 8.8
31		396-41028		3	WASHER, .281" x 7/8" x .098", HDN
32		829-1406		3	NUT, M6, Cl 10
33		87664425		1	ROD, CONNECTING, Bucket Control Rod
34		87664422		1	ROD, CONNECTING, Lift Control Rod
35		D149287		2	PIN, LARGE
36		814-10110		1	BOLT, Hex, M10 x 110, 8.8
37		87417599		3	SPACER
38		87417721		3	INSERT, THREADED, M10
39		353-422		1	PLUG, Dome, 1.250" hole, Nylon

09-01A		p1	02/08

HANDLE, LOADER CONTROL - TRANSMISSION ASSY, 2WD, 4WD

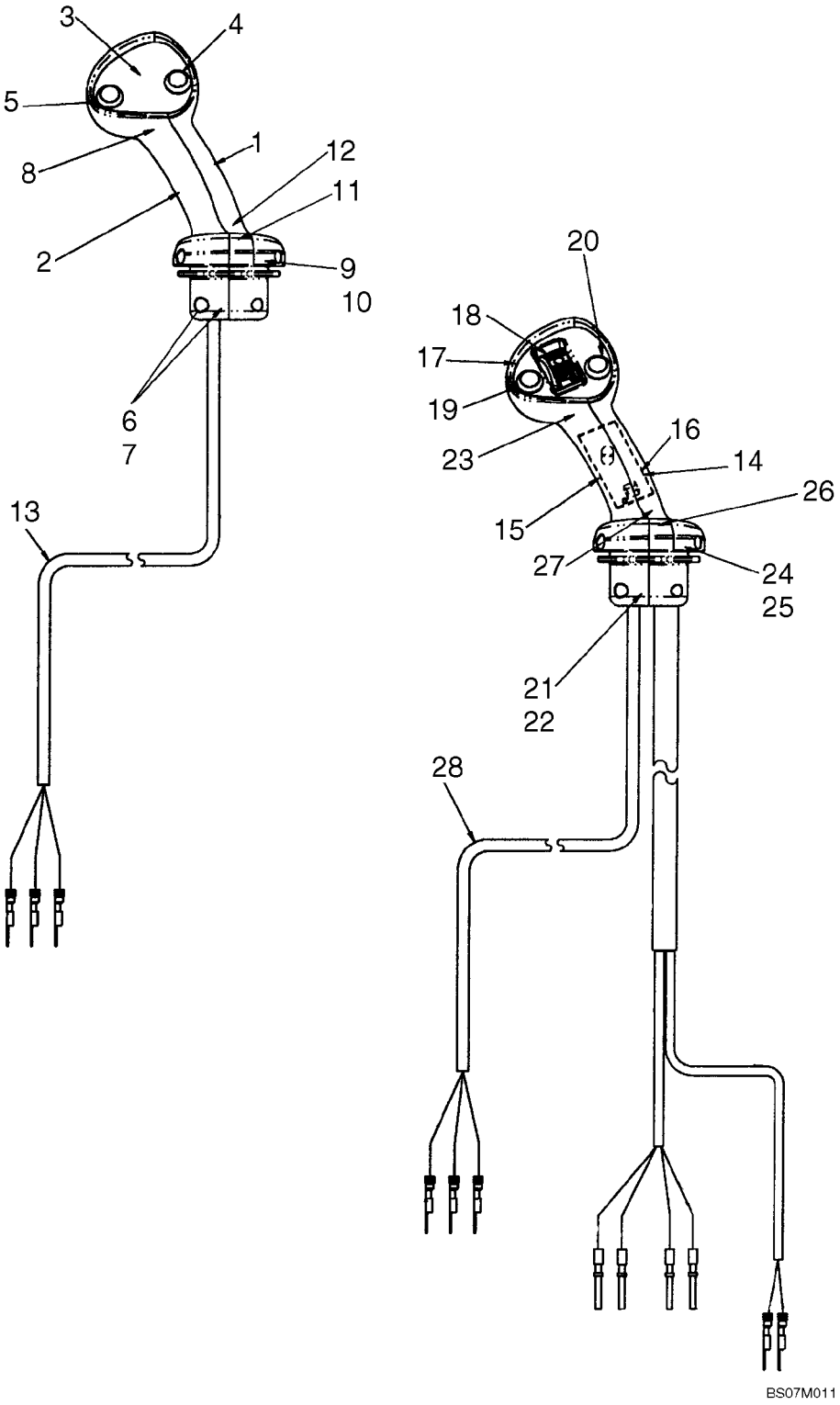

HANDLE, LOADER CONTROL - TRANSMISSION ASSY, 2WD, 4WD

REF	FN	PART NUMBER	YR/SN	QTY	DESCRIPTION
		87638046		1	HANDLE, Loader Control Lever, Two Button, DeClutch and Differential Lock Switches; 2 Spool With Standard Transmission; Incl. 1 - 13
1		87623338		1	HANDLE GRIP, Loader Control, RH Half
2		87623339		1	HANDLE GRIP, Loader Control, LH Half
3		NSS		1	NOT SERVICED SEPARATELY, Bezel, Switch Mounting
4		NSS		1	NOT SERVICED SEPARATELY, Switch, Push Button, Differential Lock
5		NSS		1	NOT SERVICED SEPARATELY, Switch, Push Button, De-Clutch
6		825-1404		4	NUT, M4, Cl 8
7		86639294		4	SCREW, Hex Soc Hd, M4 x 20, 8.8
8		260-16312		2	SCREW, SELF TAP
9		87019103		2	SET SCREW
10		87638350		2	NUT
11		87689189		1	STRAP, CABLE
12		87689338		1	SCREW
13		NSS		1	NOT SERVICED SEPARATELY, Harness, Differential Lock and De-Clutch
		87638047		1	HANDLE, Loader Control Lever, Two Button, DeClutch and Differential Lock, Prop Roller With Detent; 3 Spool With Standard Transmission; Incl. 14 - 28
14		87623338		1	HANDLE GRIP
15		87623339		1	HANDLE GRIP
16		NSS		1	NOT SERVICED SEPARATELY, Circuit Board With Harness; Bi-Directional PWM Driver
17		NSS		1	NOT SERVICED SEPARATELY, Bezel, Switch Mounting
18		NSS		1	NOT SERVICED SEPARATELY, Switch, Prop Roller With Detent
19		NSS		1	NOT SERVICED SEPARATELY, Switch, Push Button, De-Clutch

HANDLE, LOADER CONTROL - TRANSMISSION ASSY, 2WD, 4WD

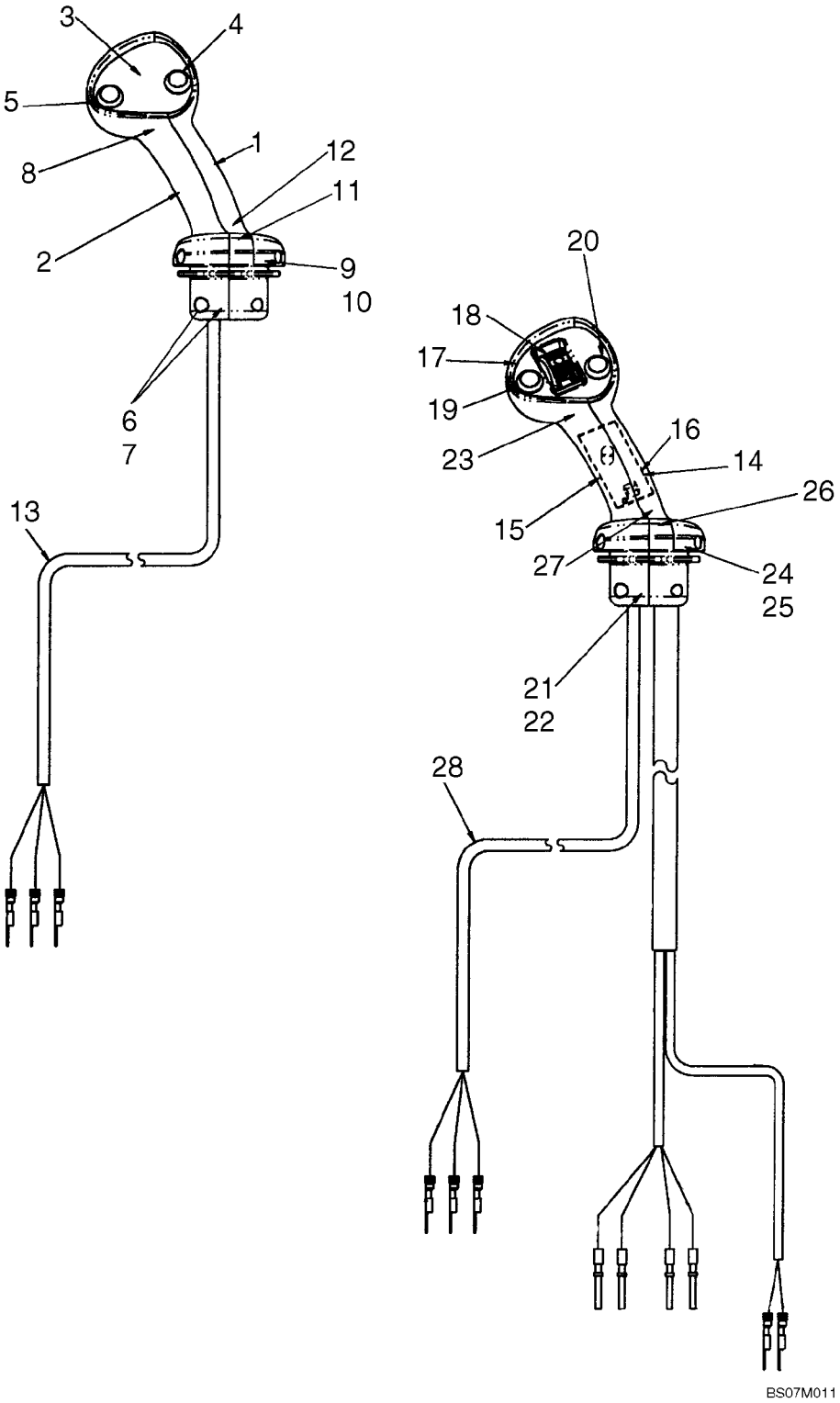

HANDLE, LOADER CONTROL - TRANSMISSION ASSY, 2WD, 4WD

REF	FN	PART NUMBER	YR/SN	QTY	DESCRIPTION
20		NSS		1	NOT SERVICED SEPARATELY, Switch, Push Button, Differential Lock
21		825-1404		4	NUT, M4, Cl 8
22		86639294		4	SCREW, Hex Soc Hd, M4 x 20, 8.8
23		260-16312		2	SCREW, SELF TAP
24		87019103		2	SET SCREW
25		87638350		2	NUT
26		87689189		1	STRAP, CABLE
27		87689338		1	SCREW
28		NSS		1	NOT SERVICED SEPARATELY, Harness, Differential Lock and De-Clutch

09-02		p1	01/08

CONTROLS - LOADER CLAM

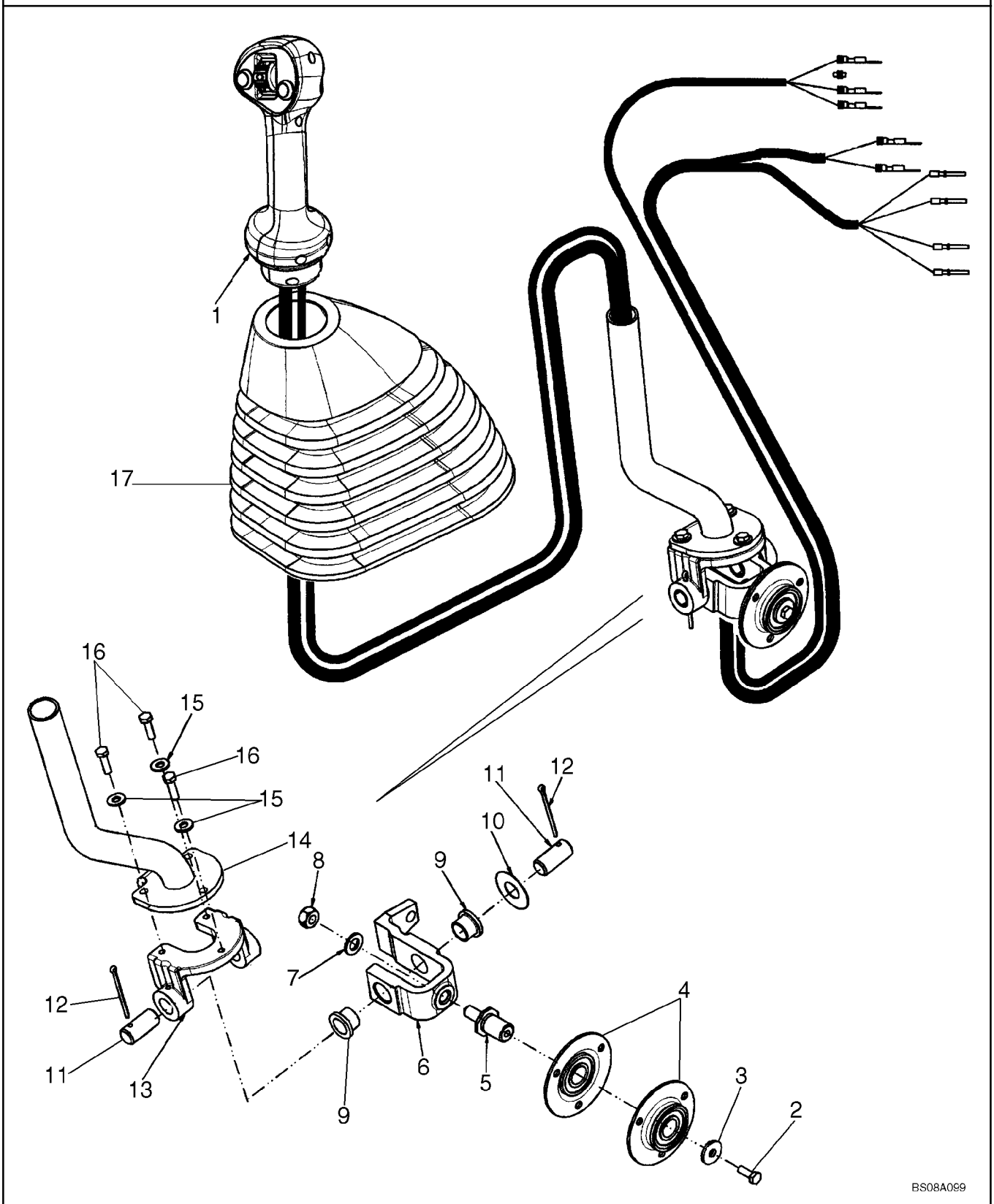

CONTROLS - LOADER CLAM

REF	FN	PART NUMBER	YR/SN	QTY	DESCRIPTION
1		87638047		1	HANDLE, Loader Control Lever, Two Button, DeClutch and Differential Lock, Prop Roller With Detent; 3 Spool; See Figure 09-01A
		256347A1		1	CONNECTOR
		258616A1		1	LOCK
		298176A1		1	PLUG
2		614-6016		1	BOLT, Hex, M6 x 16, 8.8
3		396-41028		1	WASHER, .281" x 7/8" x .098", HDN
4		112380A1		2	BEARING
5		176309A1		1	SHAFT
6		87586156		1	YOKE, LINKAGE
7		895-11010		1	WASHER, M10 x 20 x 2
8		829-1410		1	NUT, M10, Cl 10
9		108088A1		2	BUSHING
10		495-81184		1	WASHER, 21/32" x 1 1/2" x .030"
11		102761A1		2	PIN, LARGE
12		432-828		2	PIN, SPLIT (COTTER), 1/8" x 1 3/4"
13		87681261		1	U-BRACKET
14		87708015		1	HANDLED SHAFT
15		495-11028		3	WASHER, 1/4", SAE
16		614-6020		3	BOLT, Hex, M6 x 20, 8.8
17		87632920		1	BOOT

09-03		p1	09/07

CONTROLS - LOADER SELF-LEVELING

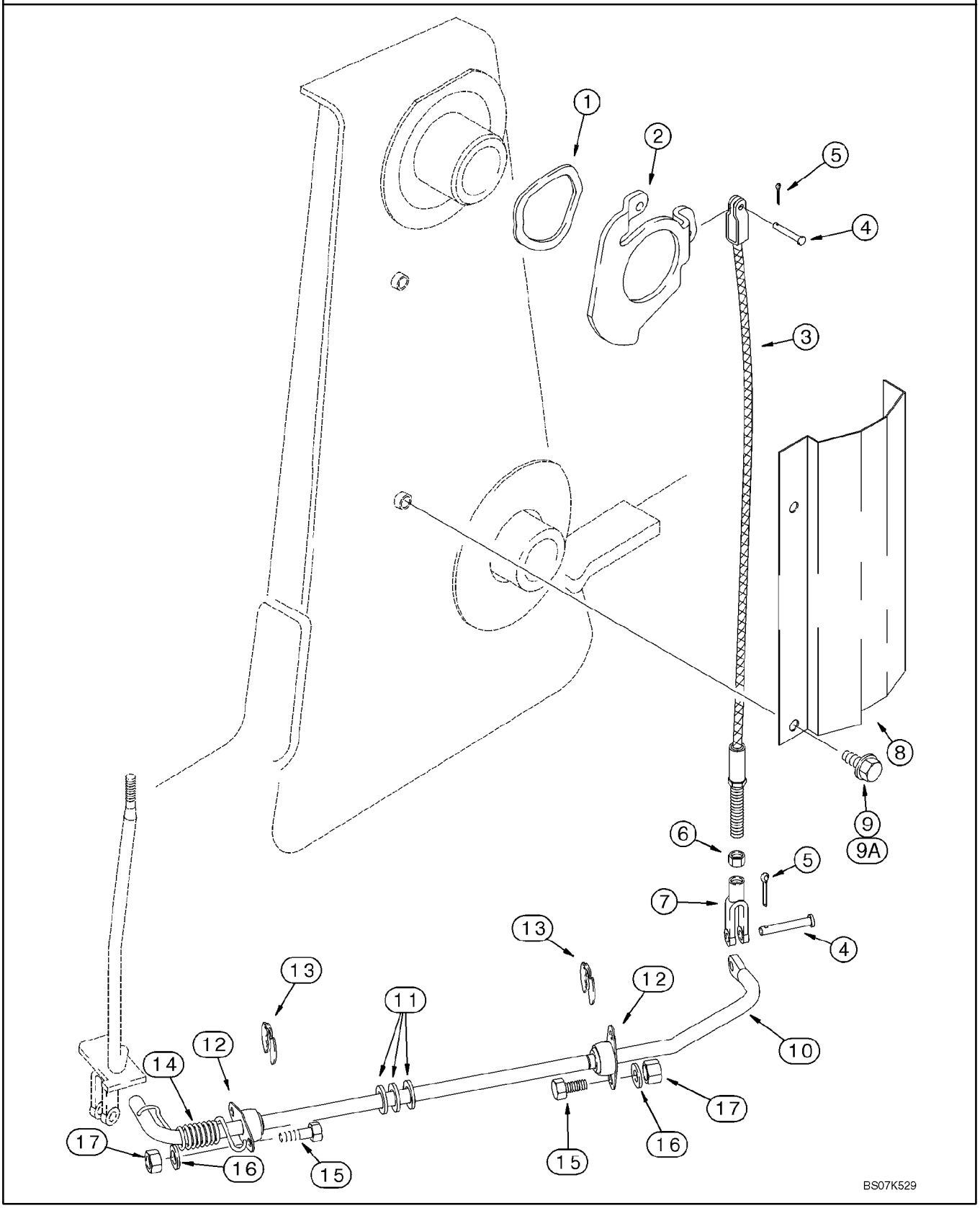

CONTROLS - LOADER SELF-LEVELING

REF	FN	PART NUMBER	YR/SN	QTY	DESCRIPTION
1		137283A1		1	WASHER
2		142404A1		1	CAM
3		87428645		1	CABLE, Self-Leveling
4		D149287		2	PIN, LARGE
5		432-612		2	PIN, SPLIT (COTTER), 3/32" x 3/4"
6		425-115		1	NUT, 5/16"-24, G5
7		239406A1		1	CLEVIS, 5/16
8		139865A1		1	PROTECTOR
9		614-10020		2	BOLT, Hex, M10 x 20, 8.8, Full Thd
9A		895-11010		2	WASHER, M10 x 20 x 2
		87417601		1	ROD ASSY., Incl. Ref 10 - 12
10		NSS		1	NOT SERVICED SEPARATELY, Rod
11		A30881		3	WASHER
12		L15401		2	BEARING
13		D95096		2	RING
14		124721A1		1	SPRING
15		614-8025		4	BOLT, Hex, M8 x 25, 8.8
16		895-11008		4	WASHER, M8 x 16 x 1.6
17		829-1408		4	NUT, M8, Cl 10

09-04		p1	02/08

FRAME - LOADER LIFT

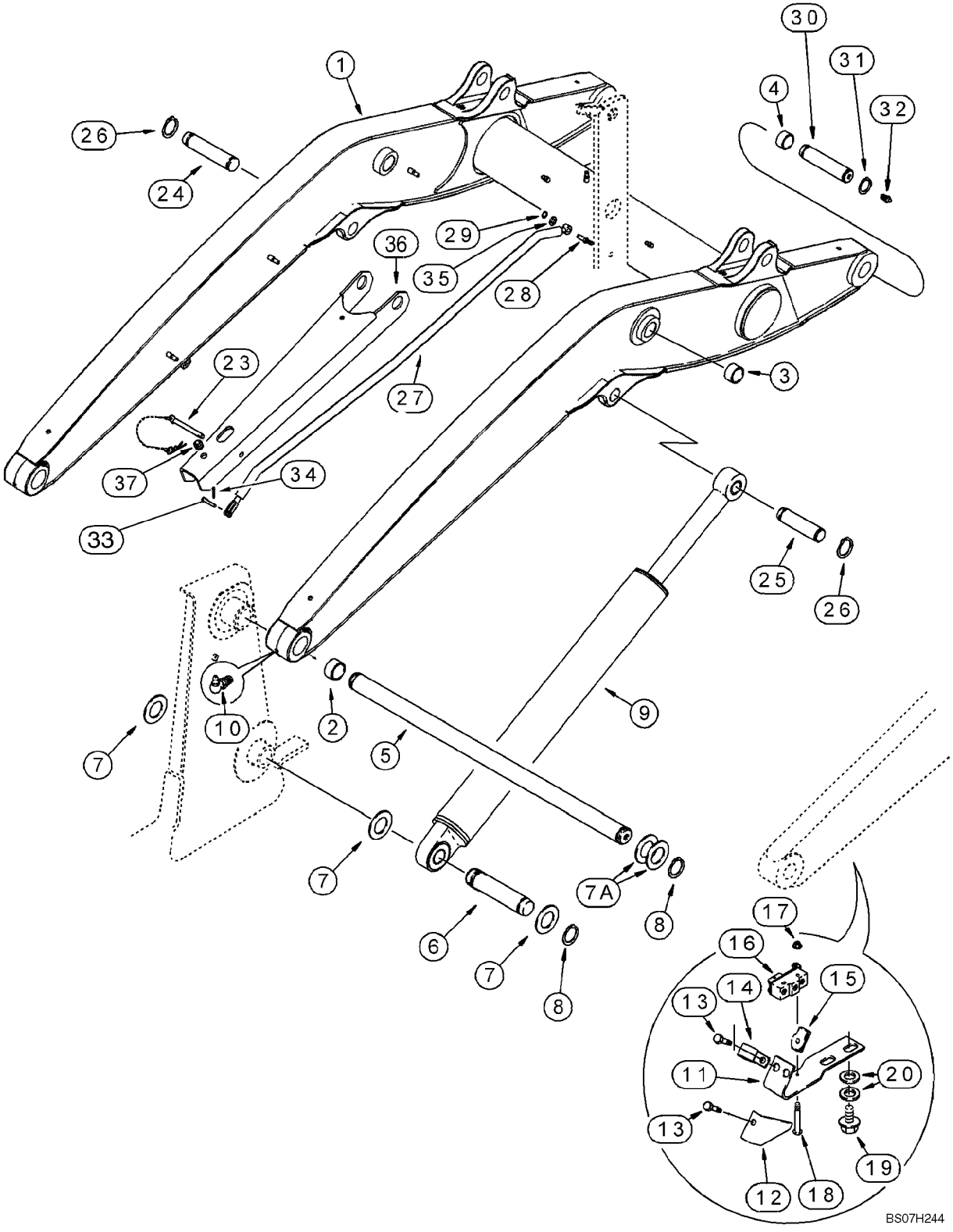

FRAME - LOADER LIFT

REF	FN	PART NUMBER	YR/SN	QTY	DESCRIPTION
		REF			INSTRUCTION, LIFT CYLINDER, SUPPORT STRUT, RETURN-TO-DIG AND ANTIROLLBACK
1		87566994		1	ARM, LIFT, Loader; Incl. Ref 2, 4
2		D127542		4	BUSHING
3		100696A1		4	BUSHING, LARGE, Bucket Cylinder Link Pivot; Not Included With Frame; Purchase Separately
4		109268A1		4	BUSHING
5		111522A1		1	PIN, SHAFT
6		335177A1		2	PIN
7		495-81282		6	WASHER, 2 1/16" x 3" x .109"
7A		181842A1		AR	WASHER
8		800-44050		6	RING, SNAP, M50, Ext
9		384240A1		2	CYLINDER ASSY., 82.6 ID x 766 mm strk; Loader Lift; See Figure 08-58
10		219-55		2	NIPPLE, LUBE, 90Ü, 1/8" NPT x .84" lg
11		128818A1		1	SUPPORT, Return-To-Dig
12		142524A1		1	PROTECTOR
13		614-6016		2	BOLT, Hex, M6 x 16, 8.8
14		515-2179		1	CLAMP, 5/16", Insul, 1/4" Bolt
15		833-40406		2	NUT, M6, U
16		D137363		1	SWITCH, Return-To-Dig
17		193-1003		2	NUT, Keps, w/LW,#6-32
18		440-10616		2	SCREW, Cross Pan Hd, #6-32 x 1"
19		128312A1		2	BOLT, M10 x 15
20		895-11010		4	WASHER, M10 x 20 x 2
23		104824A1		1	PIN, LARGE
24		118900A1		1	PIN, LARGE
25		87623771		1	PIN, GROOVED
26		800-44040		4	RING, SNAP, M40, Ext
27		87614481		1	ROD, Anti-Rollback
28		192815A1		1	PIN
29		103-3350		1	RING, LOCKING, #50, .392" Dia, E-Type
30		118901A1		2	PIN, LARGE
31		800-44040		4	RING, SNAP, M40, Ext
32		219-1		2	NIPPLE, LUBE, 1/8"-27 x .66 lg

09-04		p2	02/08

FRAME - LOADER LIFT

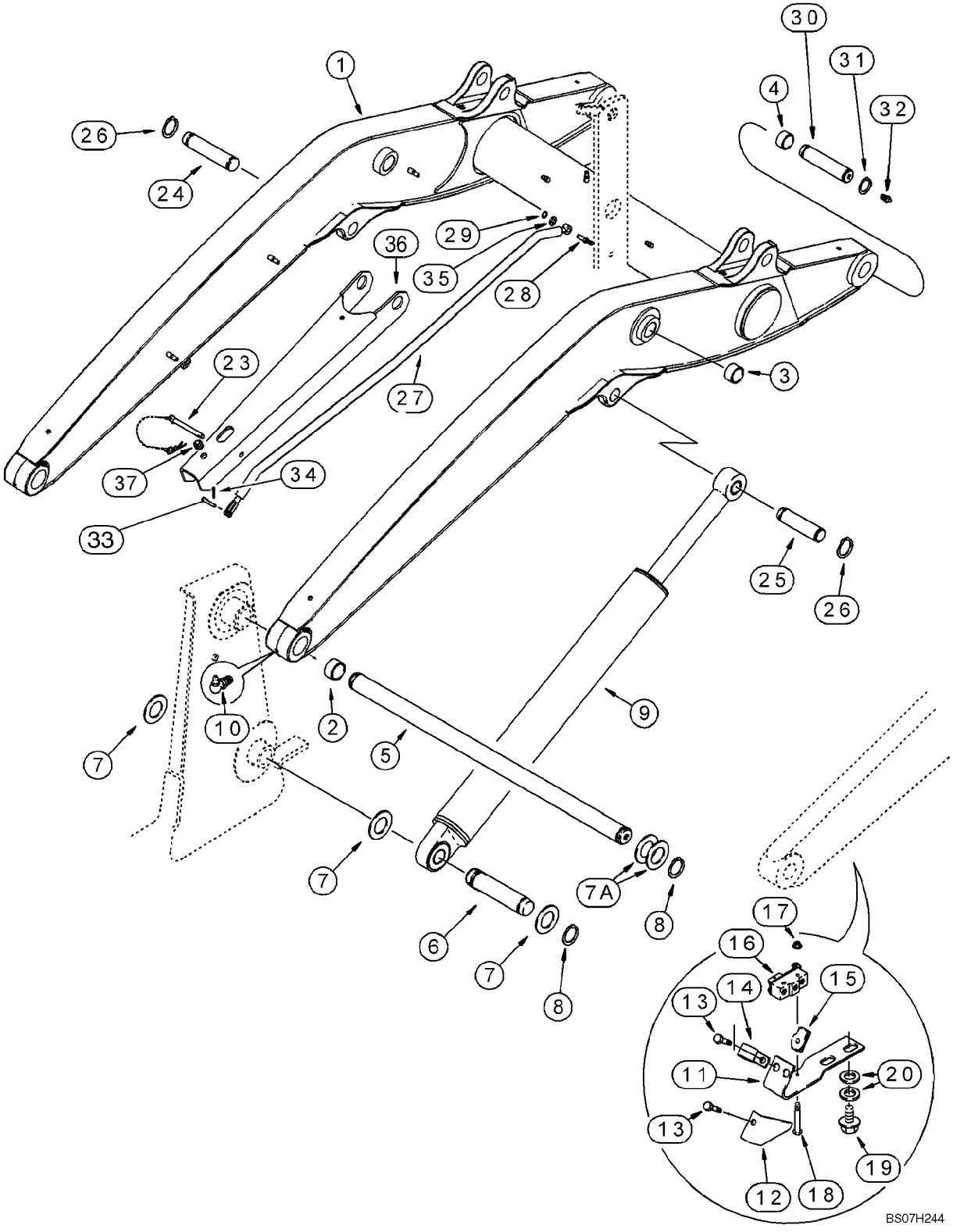

FRAME - LOADER LIFT

REF	FN	PART NUMBER	YR/SN	QTY	DESCRIPTION
33		427-6100		1	PIN, CLEVIS, 3/8" x 1"
34		432-612		1	PIN, SPLIT (COTTER), 3/32" x 3/4"
35		495-11053		1	WASHER, 1/2", SAE
36		341564A2		1	STRUT
37		344892A1		1	GROMMET

09-05		p1	12/07

FRAME - LOADER LINKAGE

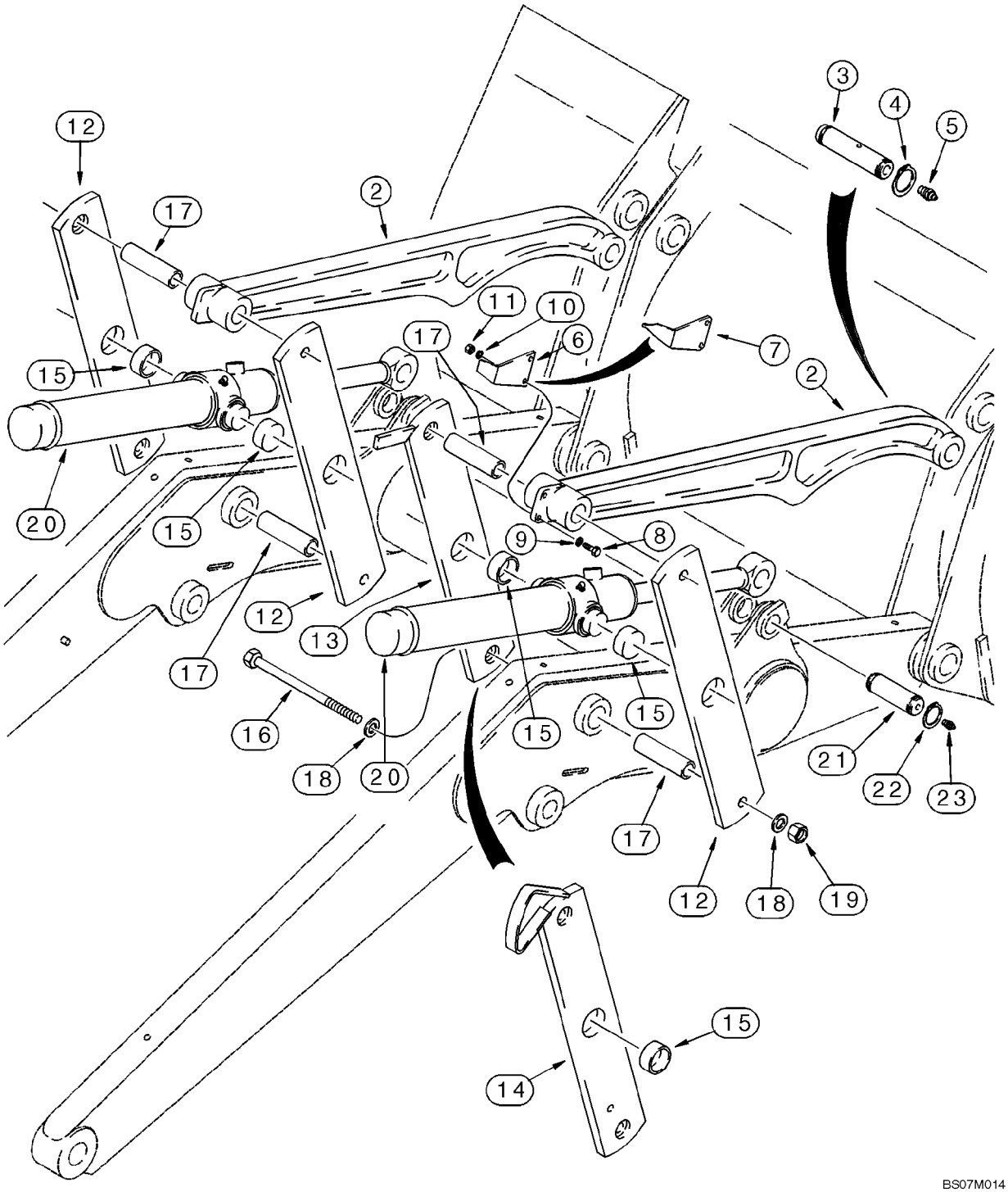

FRAME - LOADER LINKAGE

REF	FN	PART NUMBER	YR/SN	QTY	DESCRIPTION
2		331620A1		2	PITMAN, Bucket, Left-Hand and Right-Hand
3		118901A1		2	PIN, LARGE
4		800-44040		4	RING, SNAP, M40, Ext
5		219-1		2	NIPPLE, LUBE, 1/8"-27 x .66 lg
6		D121194		1	POINTER, Models Without Clam Bucket
7		250851A1		1	POINTER, Models With Clam Bucket
8		614-8030		2	BOLT, Hex, M8 x 30, 8.8
9		895-11008		2	WASHER, M8 x 16 x 1.6
10		892-11008		2	WASHER, LOCK, M8
11		829-1408		2	NUT, M8, Cl 10
12		139180A1		3	LINK ASSY., Bucket Cylinder, Outer Right-Hand; Inner and Outer Left-Hand; Incl. Ref 15
13		139235A1		1	PITMAN, Bucket Cylinder, Inner Right-Hand; With Extra Hole For Antirollback Rod; Models Without Clam Bucket; Incl. Ref 15
14		139195A1		1	PITMAN, Bucket Cylinder, Inner Right-Hand; With Extra Hole For Antirollback Rod; Models With Clam Bucket; Incl. Ref 15
15		D151034		1	BUSHING, LARGE
16		827-20190		4	BOLT, Hex, M20 x 190, 10.9
17		D132076		4	SPACER
18		896-11020		8	WASHER, M20 x 37.5 x 4, HT
19		829-1420		4	NUT, M20, Cl 10
20		87609669		2	HYDRAULIC CYLINDER, 76 ID x 522 mm strk; Loader Bucket Cylinder; See Figure 08-59
21		87724438		2	PIN, GROOVED
22		800-44040		4	RING, SNAP, M40, Ext
23		219-1		2	NIPPLE, LUBE, 1/8"-27 x .66 lg

09-06		p1	10/07

BUCKETS, LOADER LONG LIP (82 IN)

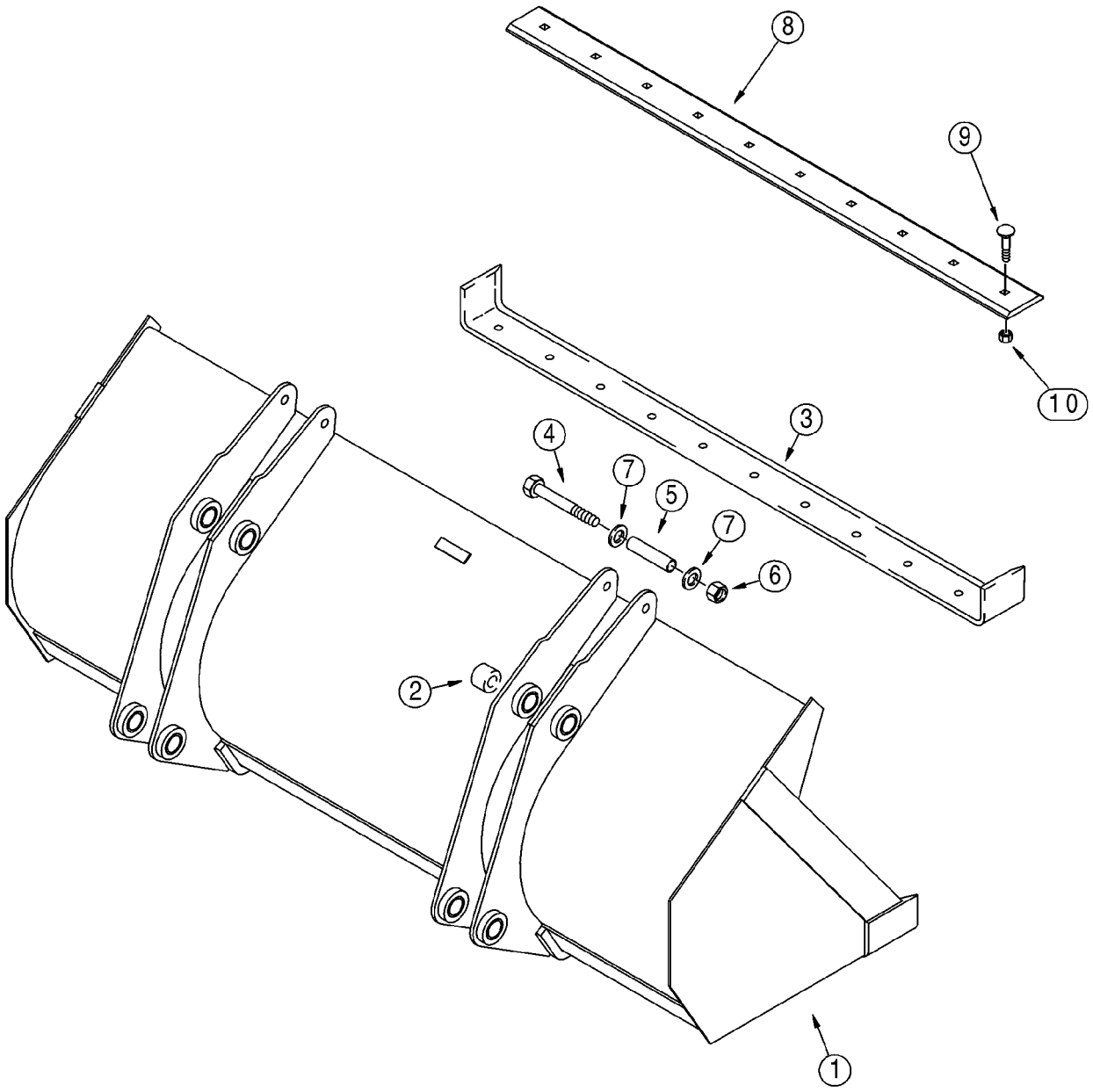

BUCKETS, LOADER LONG LIP (82 IN)

REF	FN	PART NUMBER	YR/SN	QTY	DESCRIPTION
		87368702		1	BUCKET, ASSEMBLY, 2083 mm (82 in); Assembly Does Not Include Bolt-On Cutting Edge; Without Bucket Teeth; Incl. Ref 1 - 7; Order Through Parts Marketing; Replaces 385588A1 Bucket
1		NSS		1	NOT SERVICED SEPARATELY, Bucket; Incl. Ref 2, 3
2		D129264		8	BUSHING
3		132988A1		1	EDGE, Welded-On
4		828-20160		2	BOLT, Hex, M20 x 160, 10.9, M20 x 160; 10.9
5		142538A1		2	SPACER
6		832-10420		2	NUT, LOCK, M20 x 2.5, Cl 8
7		896-11020		4	WASHER, M20 x 37.5 x 4, HT
8		411661A1		1	EDGE, CUTTING, Bolt-On; Unpainted; For Painted Edge, Order 112946A1 Edge
8		112946A1		1	EDGE, CUTTING, Bolt-On; Tan; Not Included In 385588A1or 87368702 Bucket Assembly, Purchase Separately
9		420-21232		10	BOLT, CARRIAGE, 3/4"-10 x 2", G5
10		429-1012		10	NUT, 3/4"-10, G8
		87577141		1	BUCKET, ASSEMBLY, 2083 mm (82 in); Assembly Includes 87365015 Bucket Assy; Ref 1 - 10; Order Through Parts Marketing
		87365015		1	BUCKET, ASSEMBLY, 2083 mm (82 in); Assembly Includes 87368737 Bucket and 411661A1 Bolt-On Cutting Edge; Incl. Ref 1 - 10; Order Through Parts Marketing
1		NSS		1	NOT SERVICED SEPARATELY, Bucket; Incl. Ref 2, 3
2		D129264		8	BUSHING
3		132988A1		1	EDGE, Weld-On
4		828-20160		2	BOLT, Hex, M20 x 160, 10.9, M20 x 160; 10.9
5		142538A1		2	SPACER
6		832-10420		2	NUT, LOCK, M20 x 2.5, Cl 8
7		896-11020		4	WASHER, M20 x 37.5 x 4, HT
8		411661A1		1	EDGE, CUTTING, Bolt-On; Unpainted; For Painted Edge, Order 112946A1 Edge

09-06		p2	10/07

BUCKETS, LOADER LONG LIP (82 IN)

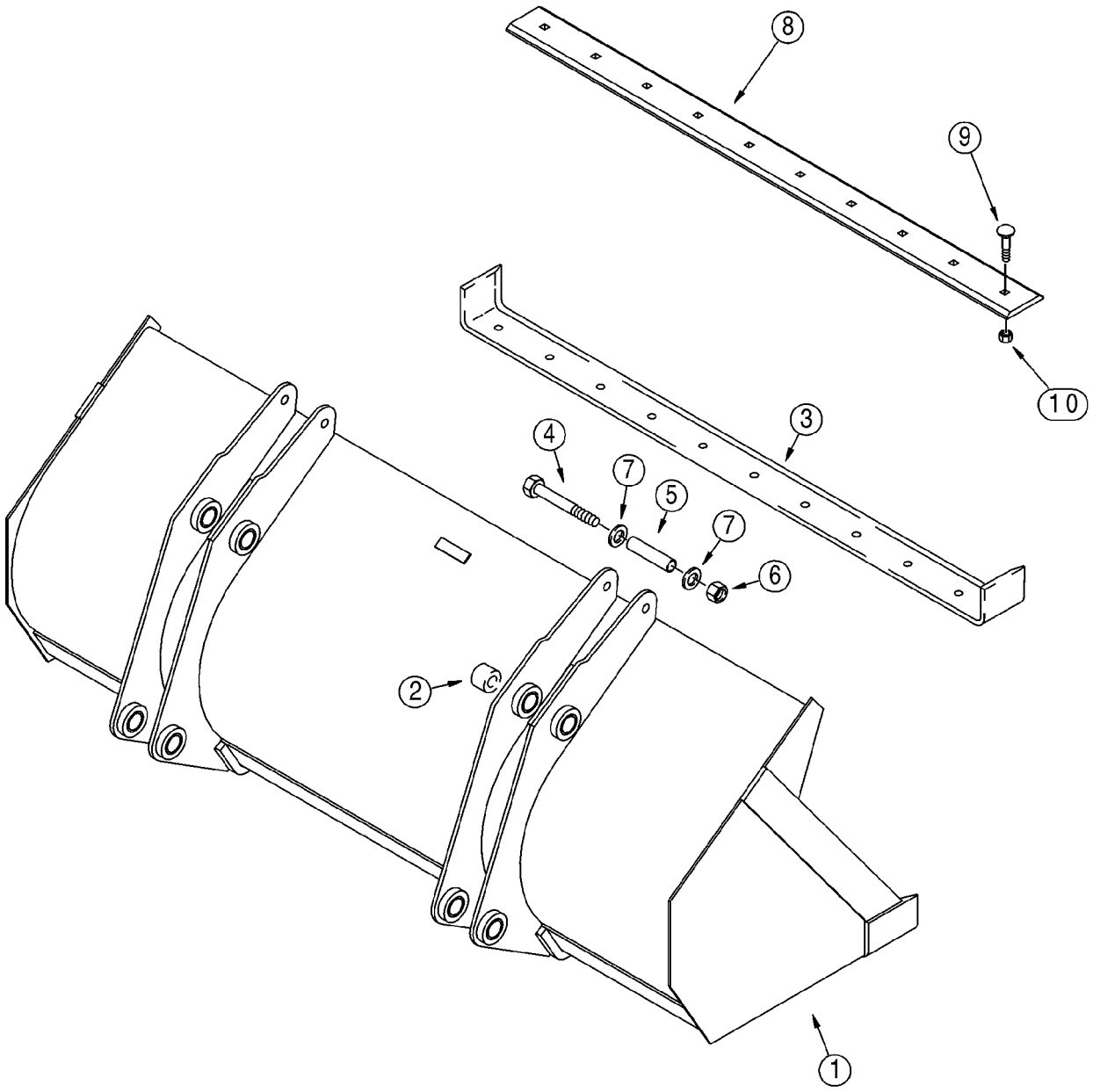

BUCKETS, LOADER LONG LIP (82 IN)

REF	FN	PART NUMBER	YR/SN	QTY	DESCRIPTION
9		20-21232		10	BOLT, CARRIAGE, 3/4"-10 x 2", G8, Non-Plated; Replaces 420-21232 Plated Bolt Used On Some Models
10		29-1012		10	NUT, 3/4"-10, G8, 3/4; 8; Non-Plated; Replaces 429-1012 Plated Nut Used On Some Models

09-07		p1	10/07

BUCKET, LOADER LONG LIP (93 IN)

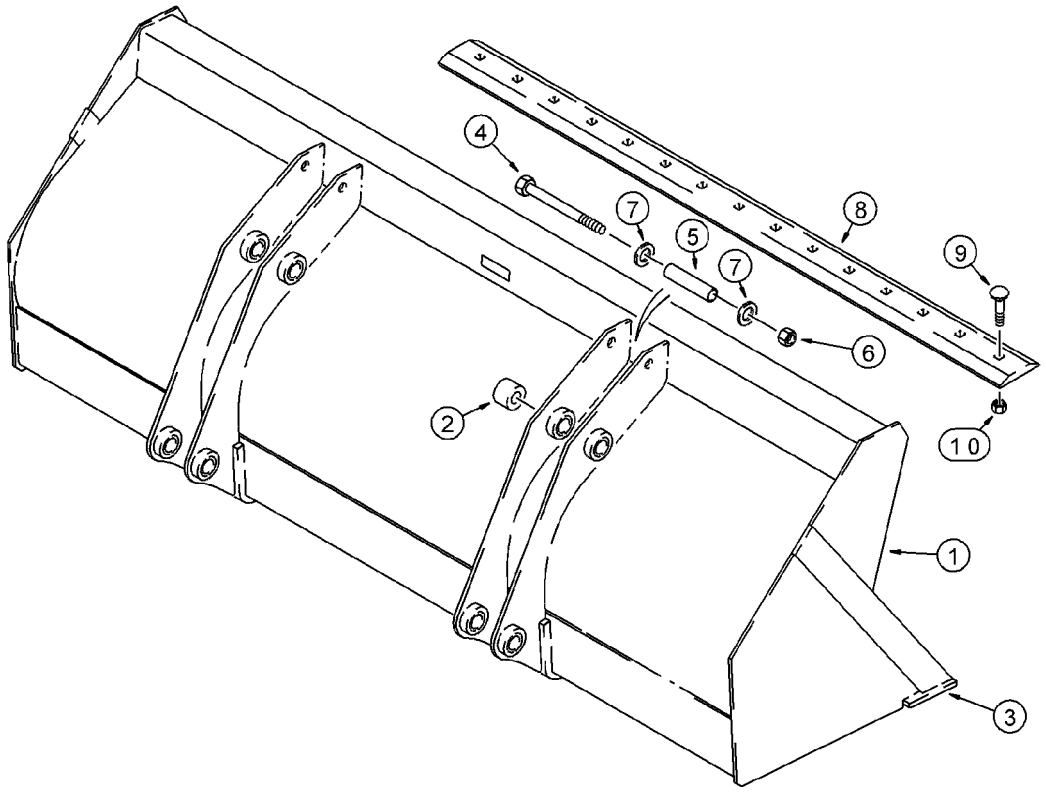

BS00C247

BUCKET, LOADER LONG LIP (93 IN)

REF	FN	PART NUMBER	YR/SN	QTY	DESCRIPTION
		87368710		1	BUCKET, 2362 mm (93 in), Without Bucket Teeth; Assembly Includes Bolt-On Cutting Edge; Incl. Ref 1 - 10; Order Through Parts Marketing
1		NSS		1	NOT SERVICED SEPARATELY, Bucket, Incl. Ref 2, 3
2		D129264		8	BUSHING
3		134844A1		1	PLATE, LARGE, Weld-On
4		828-20160		2	BOLT, Hex, M20 x 160, 10.9
5		142538A1		2	SPACER
6		832-10420		2	NUT, LOCK, M20 x 2.5, Cl 8
7		896-11020		4	WASHER, M20 x 37.5 x 4, HT
8		87375240		1	EDGE, Bolt-On Blade, Unpainted;Production Only; For Service Order 185506A1 Blade
8		185506A1		1	EDGE, Bolt-On Blade, Tan
9		20-21232		10	BOLT, CARRIAGE, 3/4"-10 x 2", G8
10		429-1012		10	NUT, 3/4"-10, G8

09-08		p1	10/07

BUCKET, LOADER CLAM

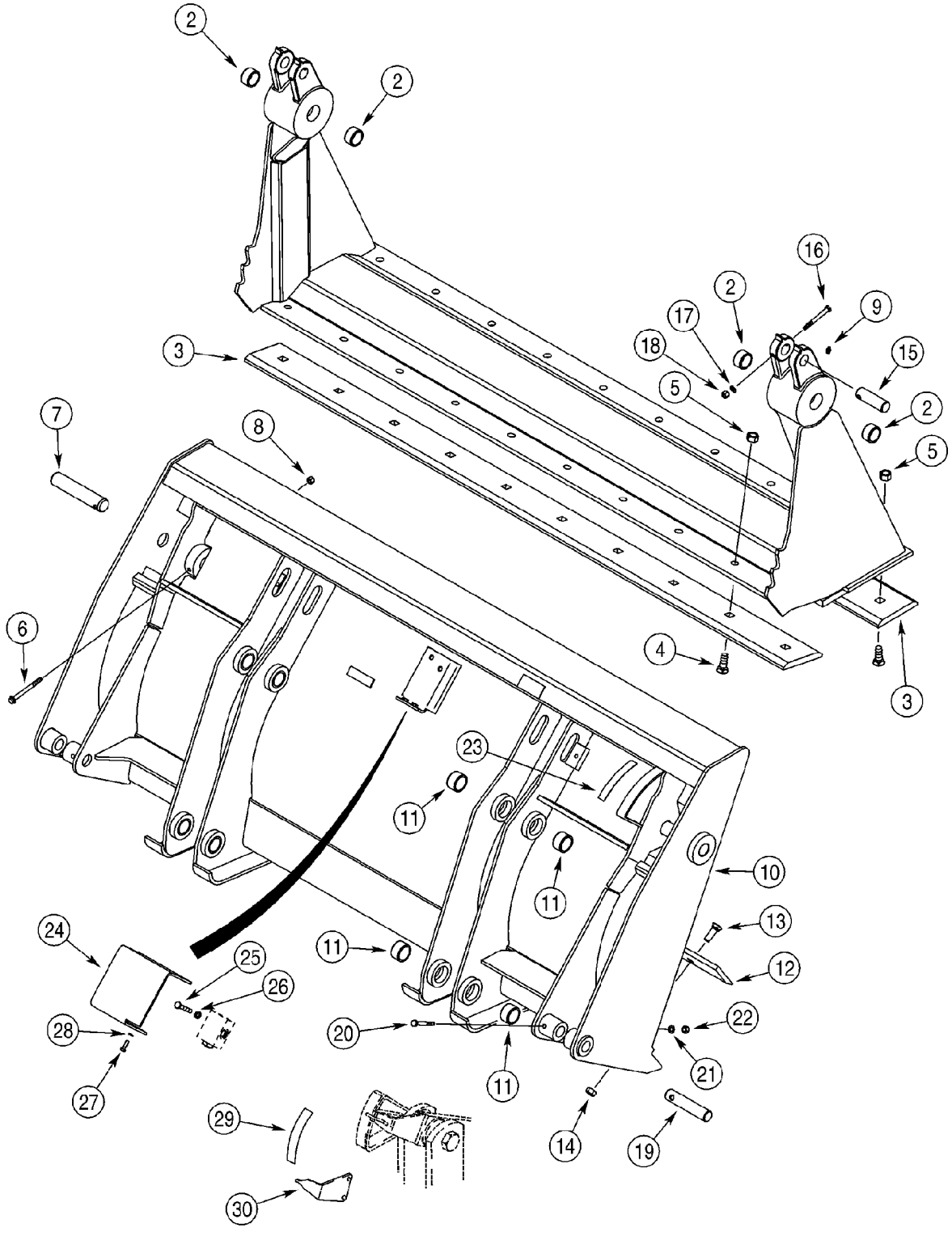

BUCKET, LOADER CLAM

REF	FN	PART NUMBER	YR/SN	QTY	DESCRIPTION
		87455509		1	BUCKET, ASSEMBLY; 2083 mm (82 in); With Hydraulics; Includes 376288A2 Bucket Assembly, Ref 1 - 28; Also Includes Hydraulics on Figure 08-07, Ref 1 - 29; Order Through Parts Marketing
		{}		1	376288A2 BUCKET ASSEMBLY; 2083 mm (82 in); Without Hydraulics; Includes 411668A1 Bucket and (2) Ref 7 Pins; Order Through Parts Marketing
		411668A1		1	BUCKET, BUCKET ASSEMBLY; 2083 mm (82 in); Without Hydraulics; Incl. Ref 1 - 6, 8 - 14
		175156A1		1	SHELL, CLAM, Incl. Ref 1, 2
1		NSS		1	NOT SERVICED SEPARATELY, Clam Assy
2		D31140		4	BUSHING
3		142300A1		2	BLADE, HALF
4		20-21232		20	BOLT, CARRIAGE, 3/4"-10 x 2", G8
5		29-1012		20	NUT, 3/4"-10, G8
6		844-10110		2	BOLT, Hex Flg, M10 x 110, 8.8
7		D51391		2	PIN, LARGE
8		832-10410		2	NUT, LOCK, M10 x 1.5, Cl 8
9		219-1		2	NIPPLE, LUBE, 1/8"-27 x .66 lg
		376286A2		1	BUCKET, BLADE, Incl. Ref 10, 11
10		NSS		1	NOT SERVICED SEPARATELY, Blade Assy, Dozer
11		D129264		8	BUSHING
12		121920A1		1	EDGE, Cutting
13		20-21032		10	BOLT, CARRIAGE, 5/8"-11 x 2", G8, Full Thd
14		29-1010		10	NUT, 5/8"-11, G8
15		D51392		2	PIN
16		814-10090		2	BOLT, Hex, M10 x 90, 8.8
17		895-11010		2	WASHER, M10 x 20 x 2
18		832-10410		2	NUT, LOCK, M10 x 1.5, Cl 8
19		D51393		2	PIN, LARGE
20		814-10080		2	BOLT, Hex, M10 x 80, 8.8
21		895-11010		2	WASHER, M10 x 20 x 2
22		832-10410		2	NUT, LOCK, M10 x 1.5, Cl 8
23		321-1708		1	DECAL
24		388848A1		1	GUARD, Pilot Operated Check Valve

09-08		p2	10/07

BUCKET, LOADER CLAM

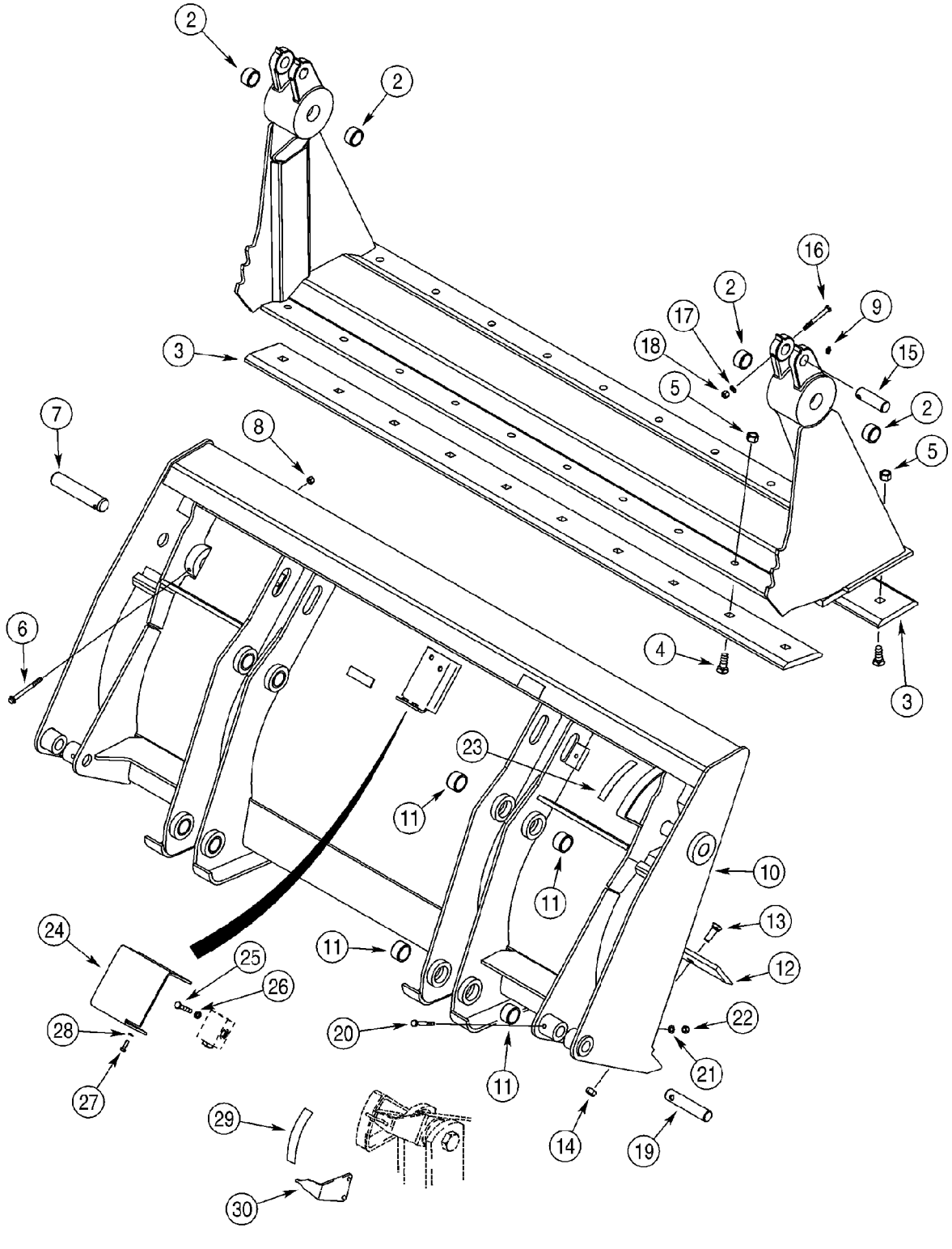

BUCKET, LOADER CLAM

REF	FN	PART NUMBER	YR/SN	QTY	DESCRIPTION
25		814-10060		2	BOLT, Hex, M10 x 60, 8.8
26		892-11010		2	WASHER, LOCK, M10
27		614-8025		2	BOLT, Hex, M8 x 25, 8.8
28		892-11008		2	WASHER, LOCK, M8
29		321-1707		1	DECAL
30		250851A1		1	POINTER

09-09		p1	01/08

GUARD - VALVE, LOADER

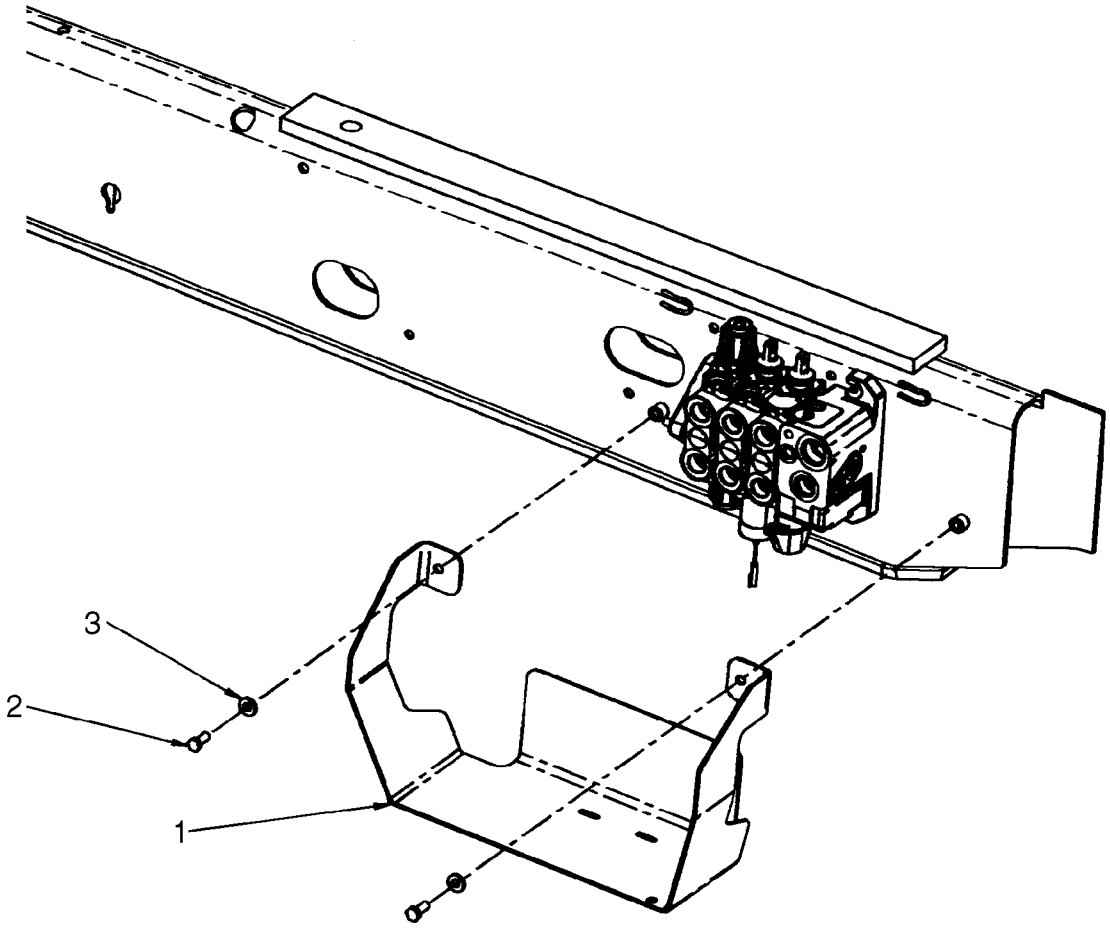

BS07M540

GUARD - VALVE, LOADER

REF	FN	PART NUMBER	YR/SN	QTY	DESCRIPTION
1		87630445		1	GUARD, Loader Valve
2		614-10025		2	BOLT, Hex, M10 x 25, 8.8, Full Thd
3		896-15010		2	WASHER, M10 x 24.5 x 3, HT

09-10		p1	01/08

COUPLER, TOOL QUICK

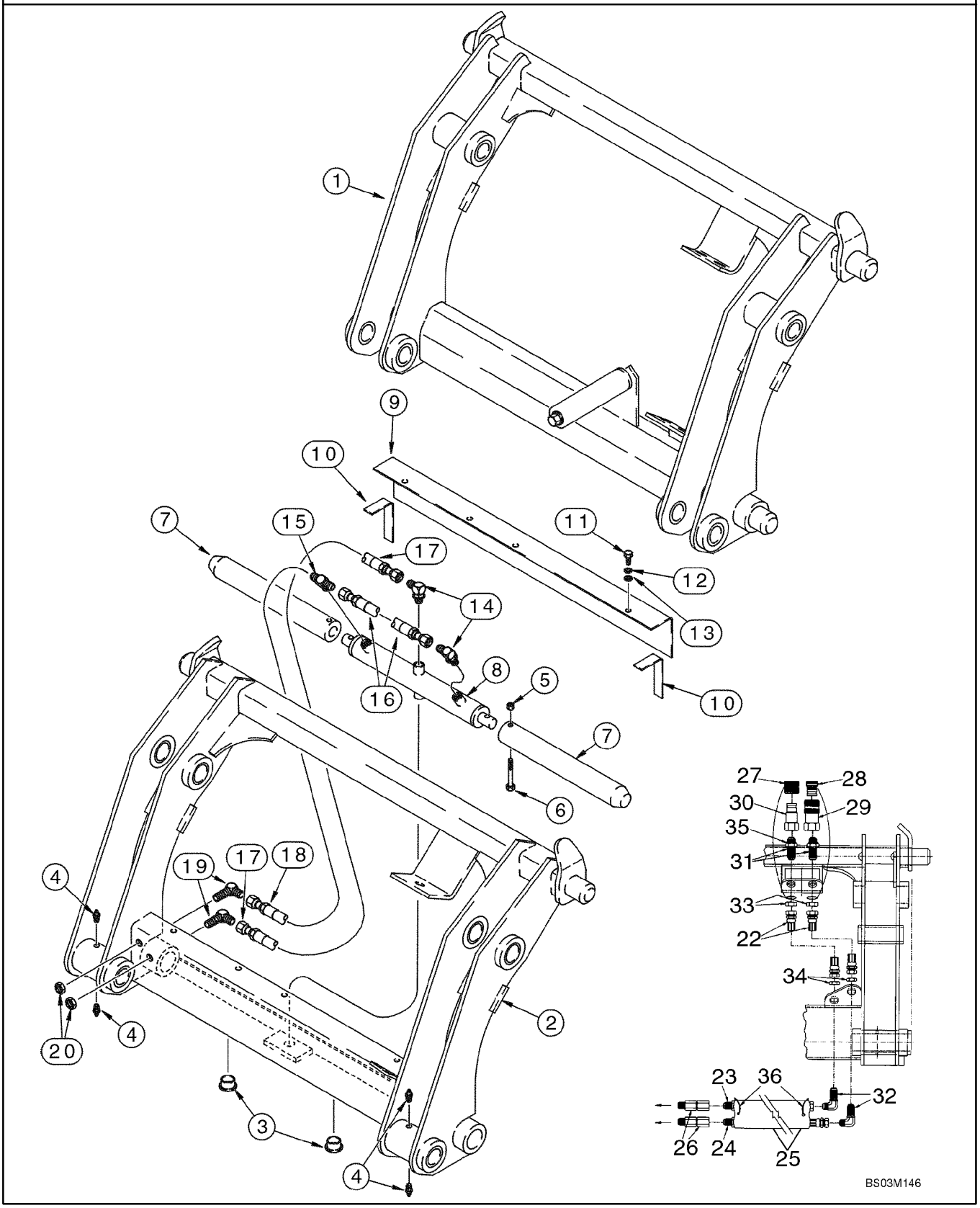

COUPLER, TOOL QUICK

REF	FN	PART NUMBER	YR/SN	QTY	DESCRIPTION
		87602620		1	COUPLING, Loader; Incl. Ref 2 - 35; With Auxiliary Hydraulics; For Complete Assembly, Order From Machinery Price List; Category III; For Hydraulic Tool Quick Coupler Hydraulics, See Figure 08-26, 08-27
2		NSS		1	NOT SERVICED SEPARATELY, Frame
3		305497A1		2	PLUG, 1-1/4 ID x 1/2 in OD; Plastic
4		219-87		4	NIPPLE, LUBE, 1/4"-28 x .56" lg, Self-Tap
5		231-4246		2	NUT, LOCK, 3/8"-16, GB
6		326-640		2	BOLT, Hex, 3/8"-16 x 2 1/2", G8
7		305496A1		2	PIN, 1-15/16 OD x 15 in lg
8		305499A1		1	CYLINDER ASSY., Double Acting; Component Parts Not Serviced Separately
9		305495A1		1	COVER
10		NSS		2	NOT SERVICED SEPARATELY, Seal; Foam
11		413-516		3	BOLT, Hex, 5/16"-18 x 1", G5, Full Thd
12		492-11031		3	WASHER, LOCK, 5/16"
13		495-11034		3	WASHER, 5/16", SAE
14		218-5105		2	ELBOW, 90Ü, 9/16"-18, 37Ü x 9/16"-18, O-Ring, Includes 237-6006 O-Ring
		237-6006		1	O-RING, 6-1, 90 Duro, .468" ID x .078" Thk
15		218-5182		1	TEE, 9/16"-18, 37Ü x 9/16"-18, O-Ring Br, Includes 237-6006 O-Ring
		237-6006		1	O-RING, 6-1, 90 Duro, .468" ID x .078" Thk
16		305492A1		1	HOSE ASSY., 260 mm (10-1/4 in)
17		305494A1		1	HOSE ASSY., 387 mm (15-1/4 in)
18		305493A1		1	HOSE ASSY., 235 mm (9-1/4 in)
19		218-693		2	ELBOW, 90Ü Blkhd, 9/16"-18, 37Ü x 9/16"-18, 37Ü
20		218-1254		2	NUT, LOCK, Blkhd, 9/16"-18
21		305508A1		1	KIT, Decal; Includes Four Decals; Not Illustrated
22		307385A1		2	HOSE ASSY., 387 mm (15-1/4 in)
23		307386A1		1	HOSE ASSY., 629 mm (24-3/4 in)
24		307387A1		1	HOSE ASSY., 718 mm (28-1/4 in)
25		307388A1		1	HOSE, SLEEVE, 660 mm (26 in)
26		307389A1		2	PIVOT, Swivel

09-10		p2	01/08

COUPLER, TOOL QUICK

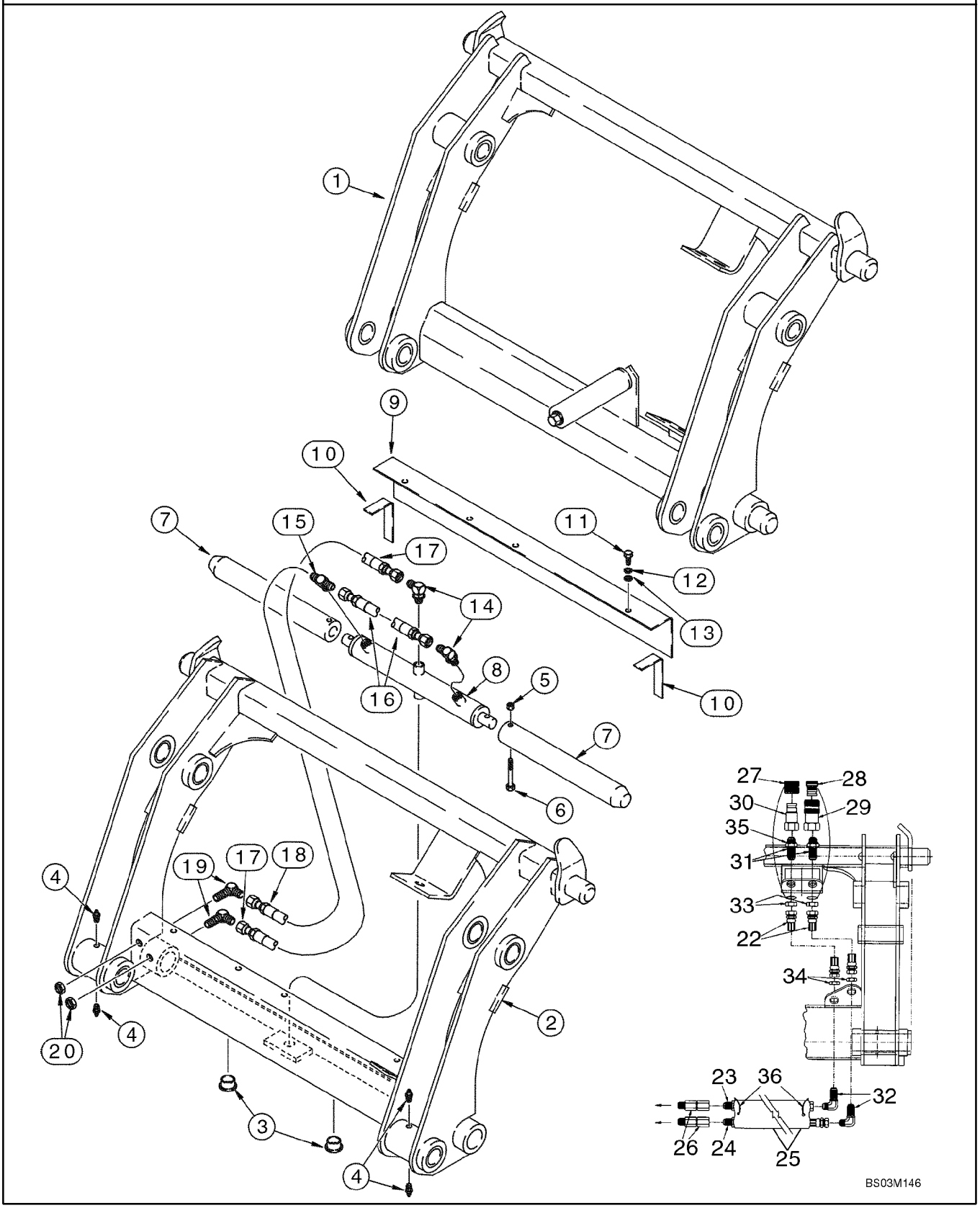

COUPLER, TOOL QUICK

REF	FN	PART NUMBER	YR/SN	QTY	DESCRIPTION
27		137344A1		1	PLUG, Male Coupling
28		137343A1		1	PLUG, Female Coupling
29		123537A1		1	FITTING, Quick Disconnect; Female
30		245423A1		1	FITTING
31		126155A1		2	FITTING, 1-1/16 blkhd fl x Or
32		218-695		2	ELBOW, 90Ü Blkhd, 7/8"-14, 37Ü x 7/8"-14, 37Ü
33		218-1256		2	NUT, LOCK, Blkhd, 1 1/16"-12
34		218-1279		2	NUT, LOCK, Blkhd, 7/8"-14
35		237-6012		2	O-RING, 12-1, 90 Duro, .924 ID x .118" Thk
36		L18337		2	STRAP, CABLE, 9.95"-12.1" lg

09-11		p1	02/08

COVERS - BACKHOE CONTROL TOWER, WITHOUT PILOT CONTROLS

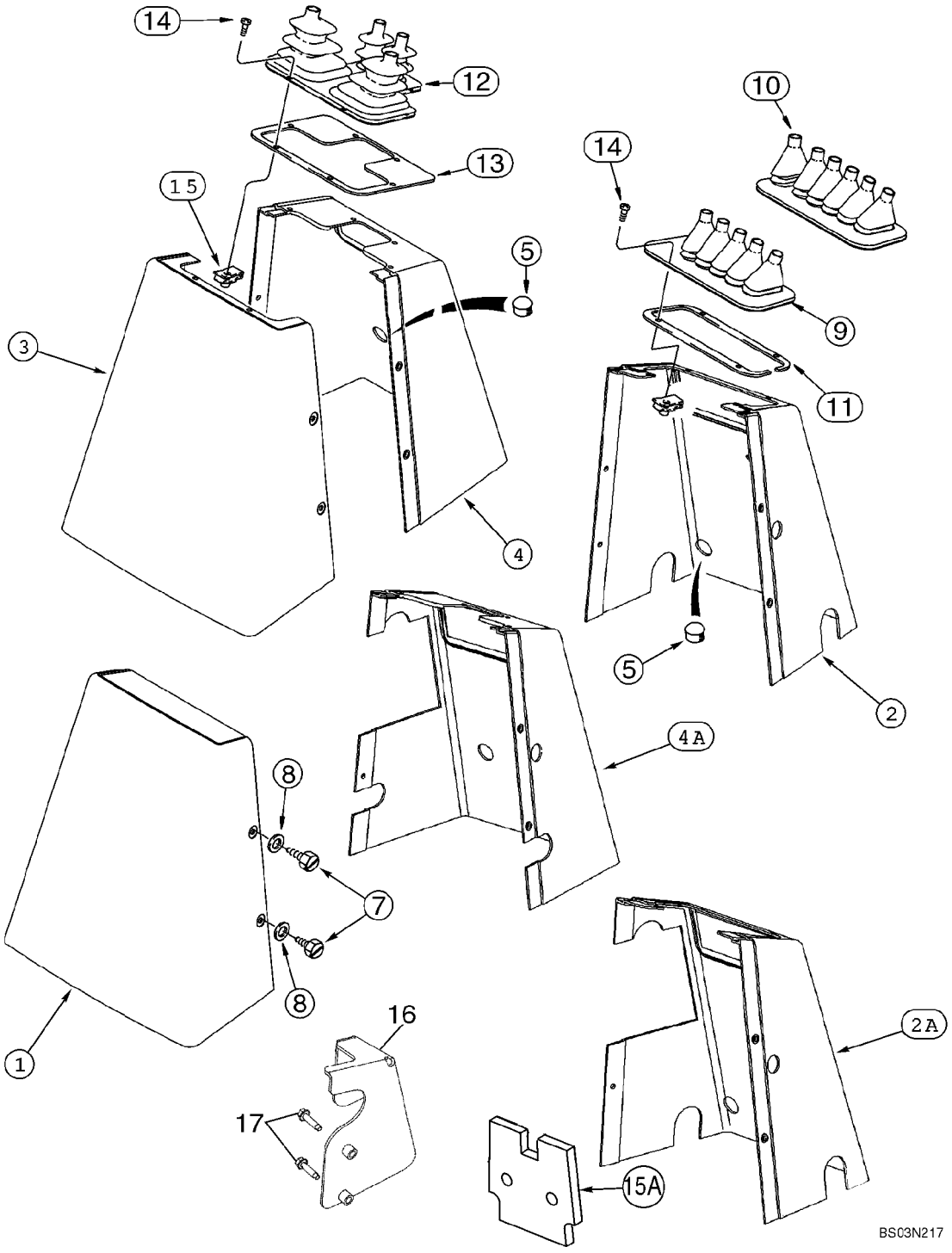

COVERS - BACKHOE CONTROL TOWER, WITHOUT PILOT CONTROLS

REF	FN	PART NUMBER	YR/SN	QTY	DESCRIPTION
1		390759A1		1	COVER, PROTECTIVE, Rear; All Models With Foot Swing
2		390760A1		1	COVER, PROTECTIVE, Front; Foot Swing; Without Auxiliary Hydraulics
2A		87411083		1	COVER, PROTECTIVE, Front; Foot Swing; With Auxiliary Hydraulics
3		390758A1		1	COVER, PROTECTIVE, Rear; All Models With Hand Swing
4		390690A1		1	COVER, PROTECTIVE, Front; Hand Swing; Without Auxiliary Hydraulics
4A		87411084		1	COVER, PROTECTIVE, Front; Hand Swing; With Auxiliary Hydraulics
5		353-411		1-2	PLUG, Dome, 1.000" hole, Nylon
7		87310156		5	SCREW, M6.3 x 16 st, Stainless Steel
8		87310139		5	WASHER, 9/32 ID x 5/8 OD x 1/16 thk, Stainless Steel
9		D149866		1	BOOT, 5 Control Levers
10		D149867		1	BOOT, 6 Control Levers
11		136822A1		1	RING, SPECIAL
12		D149868		1	BELLOWS, 4 Control Levers
13		136824A1		1	PLATE, LARGE, Used With Ref 12 Only
14		87310124		4	SCREW, No. 10 x 1/2, Stainless Steel
14		87310126		6	SCREW, No. 10 x 3/4, Stainless Steel; Used With Ref 13 Retainer; Replaces 140-107 Non-Stainless Steel Screw Used On Some Models
15		131-861		4-6	NUT, Tinn, U, #10-24, Used With Ref 11 Retainer; (6) Used With Ref 13 Retainer
15A		397870A3		2	SEAL, Front and Rear Console Covers; Noise Barrier; Adhesive Back
16		87425122		1	BRACKET, Models With Backhoe Auxiliary Hydraulics
		87430677		1	DECAL, Auxiliary Hydraulics
17		281-14716		2	SCREW, SELF TAP, Hex Wash Hd, 1/4" x 1"

09-12		p1	09/07

BACKHOE CONTROL TOWER SUPPORT AND SEALS, WITHOUT PILOT CONTROLS

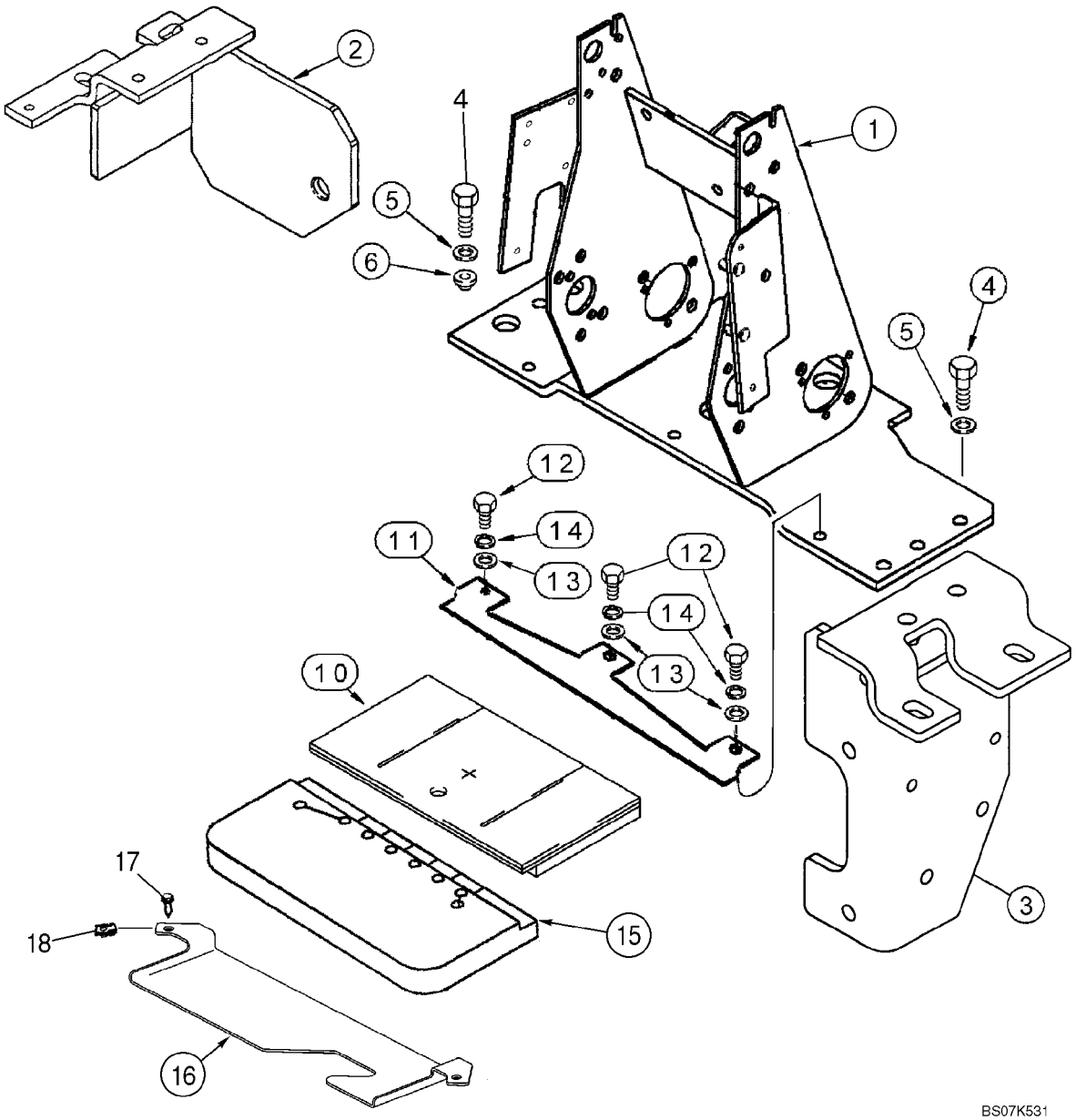

BACKHOE CONTROL TOWER SUPPORT AND SEALS, WITHOUT PILOT CONTROLS

REF	FN	PART NUMBER	YR/SN	QTY	DESCRIPTION
1		87418516		1	BRACKET, SUPPORTING
2		87448059		1	BRACKET, SUPPORTING, LH
3		87452627		1	BRACKET, SUPPORTING, RH
4		614-10035		8	BOLT, Hex, M10 x 35, 8.8, Full Thd
5		496-41041		8	WASHER, 13/32" x 1 1/8" x .134"
6		179956A1		2	SHOCK ABSORBER
10		400069A1		1	FOAM
11		87418518		1	BRACKET, SUPPORTING
12		614-8020		3	BOLT, Hex, M8 x 20, 8.8
13		895-11008		3	WASHER, M8 x 16 x 1.6
14		892-11008		3	WASHER, LOCK, M8
15		87439210		1	FOAM
16		397911A1		1	BRACKET
17		87310096		2	BOLT, M6 x 25, Includes Washer, Stainless Steel
18		833-40406		2	NUT, M6, U

09-13		p1	12/07

BACKHOE CONTROL TOWER SUPPORT, WITH PILOT CONTROLS

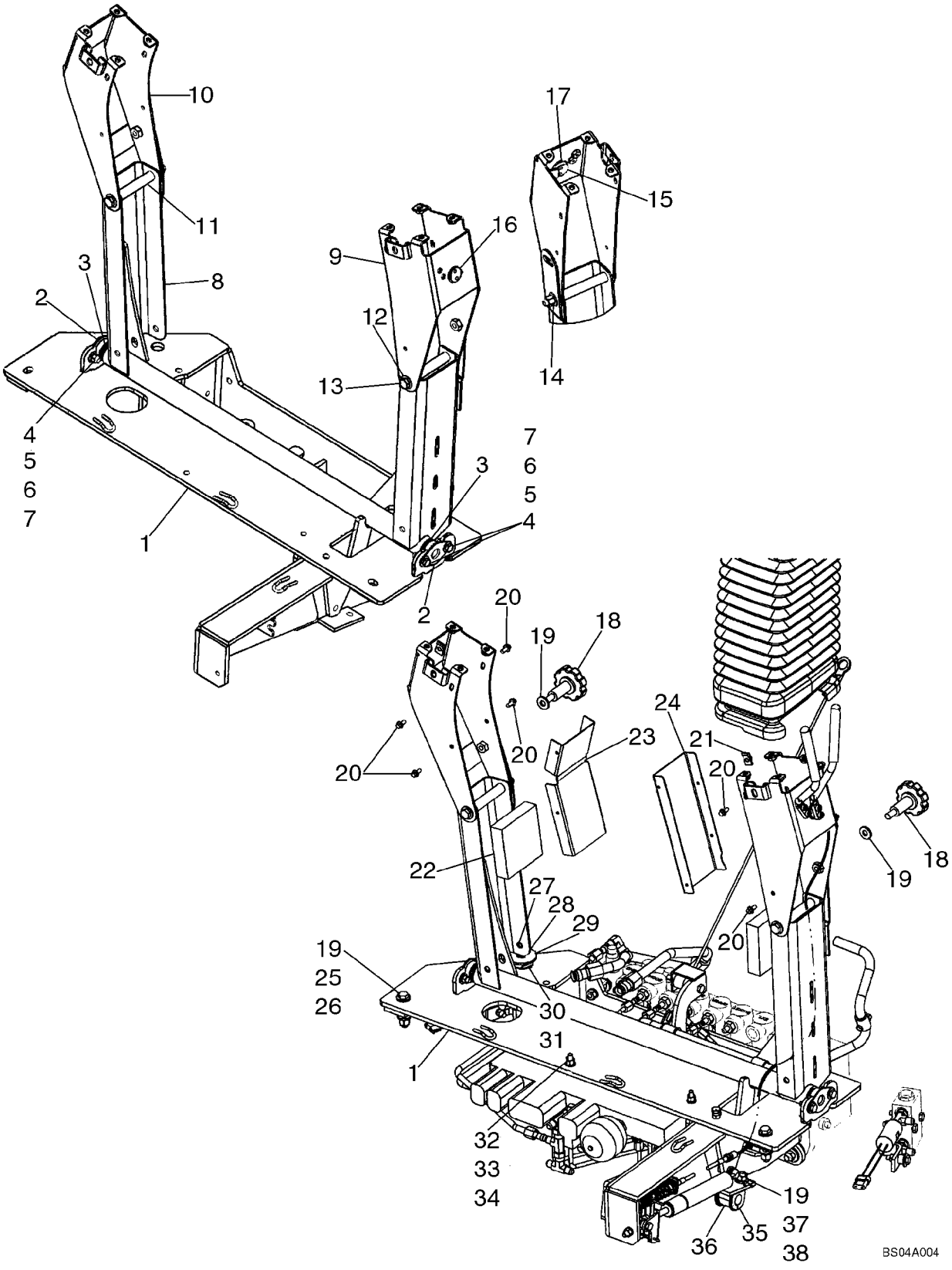

BACKHOE CONTROL TOWER SUPPORT, WITH PILOT CONTROLS

REF	FN	PART NUMBER	YR/SN	QTY	DESCRIPTION
		87440711		1	TOWER, Tower Assembly; Pilot Controls; Includes Ref 1 - 17
1		87440710		1	BRACKET, SUPPORTING, Tower
2		D148993		2	BEARING
3		A30881		4	WASHER, Seal
4		895-15008		8	WASHER, M8 x 20 x 1.6
5		614-8025		4	BOLT, Hex, M8 x 25, 8.8
6		892-11008		4	WASHER, LOCK, M8
7		829-1408		4	NUT, M8, Cl 10
8		87435275		1	PIVOT ASSY.
9		87440704		1	BRACKET, SUPPORTING, Right-Hand Joystick Mounting
10		87440706		1	BRACKET, SUPPORTING, Left-Hand Joystick Mounting
11		87329475		2	SPACER
12		895-15010		4	WASHER, M11 x 24 x 2
13		814-10130		2	BOLT, Hex, M10 x 130, 8.8
14		832-10410		2	NUT, LOCK, M10 x 1.5, Cl 8
15		87431529		1	LEVER ASSY., Control Tower Release
16		103-11100		1	RING, SNAP, #100, .925", Ext
17		87405706		1	WASHER, Wave, 1 inch
18		87437688		2	KNOB, Lateral Adjustment Pilot Control Tower
19		896-15010		8	WASHER, M10 x 24.5 x 3, HT
20		781-24613		8	SCREW, SELF TAP, Hex Flg Hd, M6 x 13
21		833-40406		2	NUT, M6, U
22		87425696		2	SEAL, RUBBER
23		87431301		1	SHIELD, Shield, Left-Hand
24		87431300		1	GUARD, Shield, Right-Hand
25		814-10060		2	BOLT, Hex, M10 x 60, 8.8
26		832-10410		2	NUT, LOCK, M10 x 1.5, Cl 8
27		87450914		2	BOLT, Locking, M10 x 40
28		892-11010		2	WASHER, LOCK, M10
29		496-81018		1	WASHER, 17/32 x 2 x 1/8
30		D148962		1	WASHER, Belleville
31		87440381		1	SPACER

09-13		p2	12/07

BACKHOE CONTROL TOWER SUPPORT, WITH PILOT CONTROLS

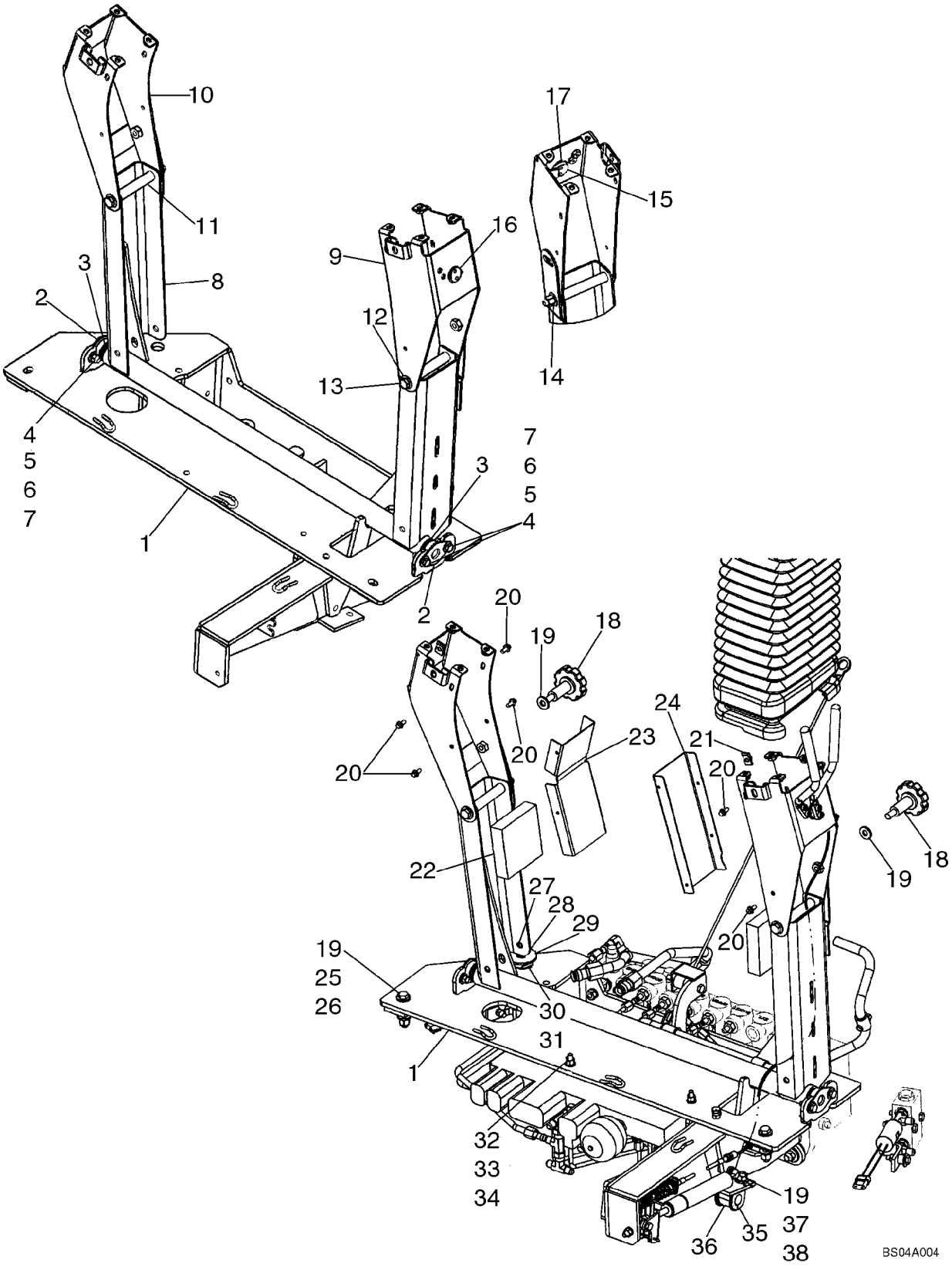

BACKHOE CONTROL TOWER SUPPORT, WITH PILOT CONTROLS

REF	FN	PART NUMBER	YR/SN	QTY	DESCRIPTION
32		896-11008		2	WASHER, M8 x 17.5 x 2, HT
33		832-10408		2	NUT, LOCK, M8 x 1.25, Cl 8
34		864-8055		2	SCREW, Hex Soc Hd, M8 x 55, 8.8
35		D143411		1	CLAMP
36		D74182		1	GROMMET, Isolation Block
37		829-1410		1	NUT, M10, Cl 10
38		614-10025		1	BOLT, Hex, M10 x 25, 8.8, Full Thd

09-14		p1	02/08

BACKHOE CONTROL TOWER BOOTS AND SEALS, WITH PILOT CONTROLS

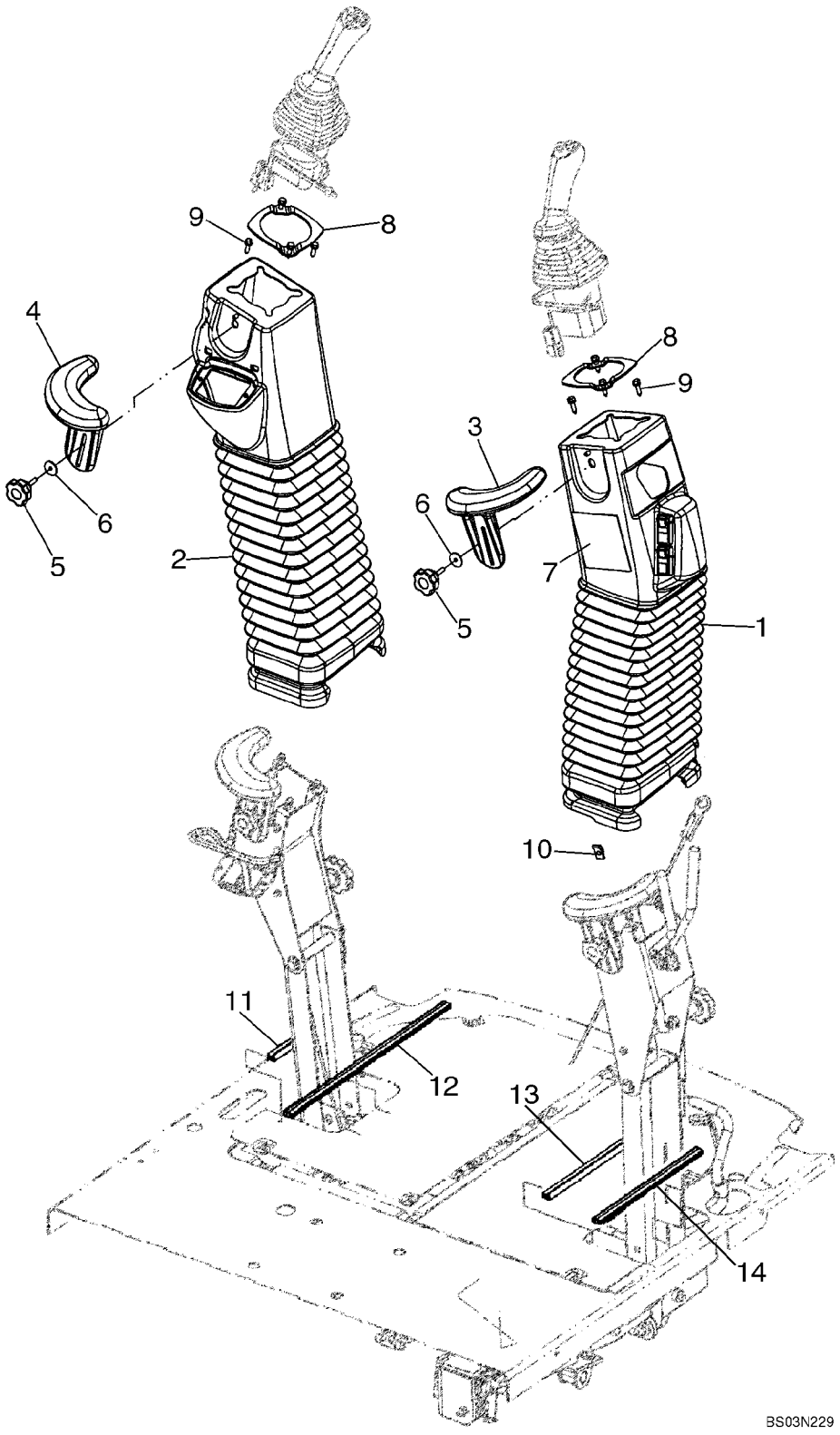

BACKHOE CONTROL TOWER BOOTS AND SEALS, WITH PILOT CONTROLS

REF	FN	PART NUMBER	YR/SN	QTY	DESCRIPTION
1		87309924		1	BOOT
2		87309923		1	BOOT
3		87437366		1	ARMREST, Wrist, RH
4		87437369		1	ARMREST, Wrist, LH
5		87437689		2	KNOB
6		87310186		2	WASHER, 6.6 ID x 25 OD x 1.6 mm thk, Stainless Steel
7		87305413		1	DECAL, Pattern Selecting; With Backhoe/Excavator Black Silhouette on Decal; Not Illustrated
8		87435372		2	PLATE, RETAINING
9		87608777		8	BOLT
10		833-40406		2	NUT, M6, U
11		87433008		1	SEAL, RUBBER, 183 mm (7-1/4 in); Cut From 87438002
12		87433006		1	SEAL, RUBBER, 428 mm (16-7/8 in); Cut From 87438002
13		87433005		1	SEAL, RUBBER, 335 mm (13-3/16 in); Cut From 87438002
14		87433007		1	SEAL, RUBBER, 275 mm (10-7/8 in); Cut From 87438002

09-15		p1	12/07

BACKHOE CONTROL TOWER LEVERS (BOOM LATCH), WITH PILOT CONTROLS

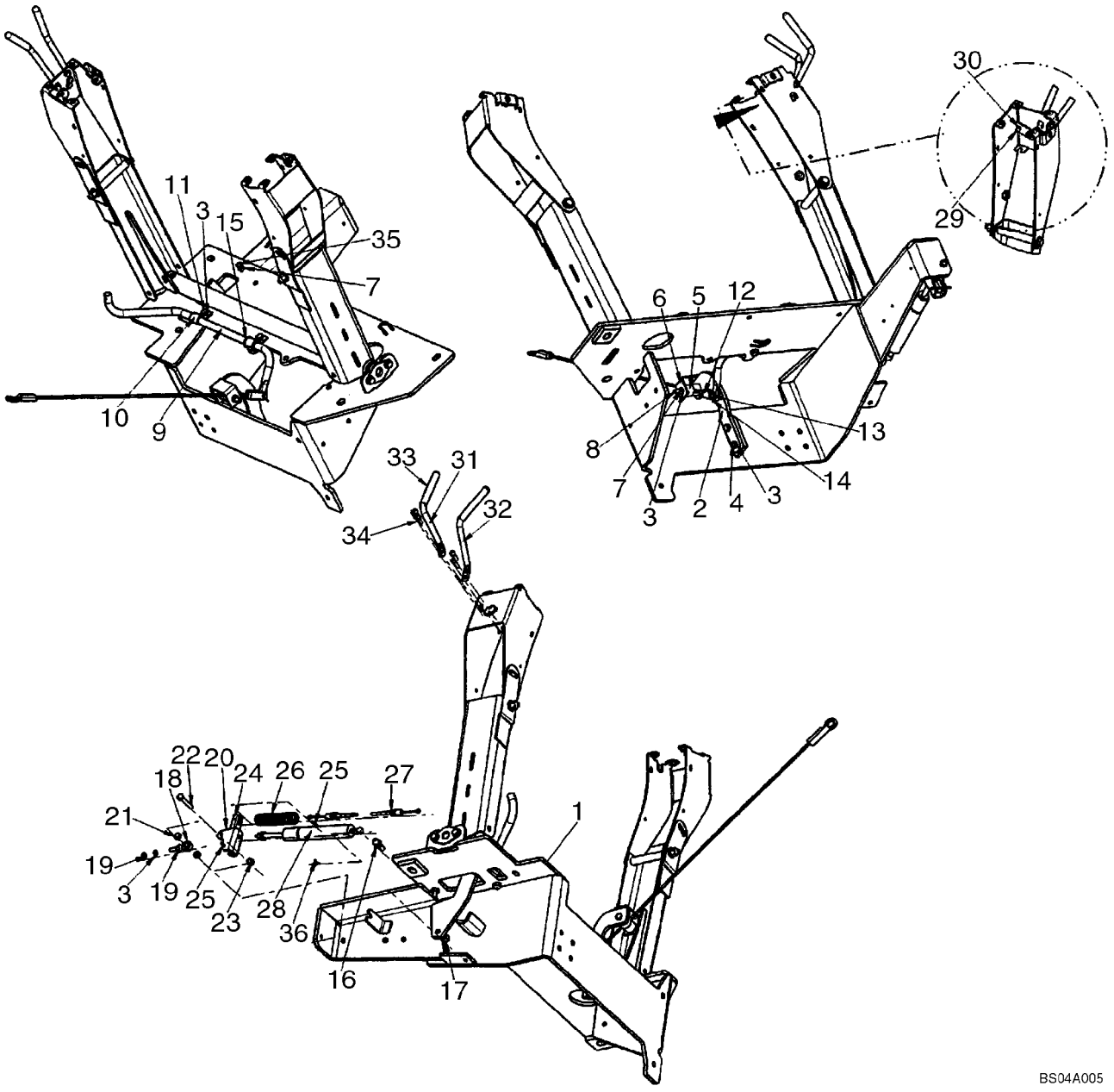

BACKHOE CONTROL TOWER LEVERS (BOOM LATCH), WITH PILOT CONTROLS

REF	FN	PART NUMBER	YR/SN	QTY	DESCRIPTION
1		87440711		1	TOWER, Pilot Control Tower Assembly; See Figure 09-13
2		86984544		1	BRACKET, Roller Mounting
3		892-11008		6	WASHER, LOCK, M8
4		614-8030		2	BOLT, Hex, M8 x 30, 8.8
5		86984547		2	GUIDE
6		86984545		1	BRACKET
7		829-1408		2	NUT, M8, Cl 10
8		814-8070		1	BOLT, Hex, M8 x 70, 8.8
9		87441850		1	ROD, Boom Latch Release
10		D143723		2	SHIN, Clamp
11		614-8025		2	BOLT, Hex, M8 x 25, 8.8
12		87435924		1	CABLE, Boom Latch
13		427-5094		1	PIN, CLEVIS, 5/16" x .940"
		895-11008		1	WASHER, M8 x 16 x 1.6, Used with Ref 13 and 14
14		432-612		1	PIN, SPLIT (COTTER), 3/32" x 3/4"
15		D143591		2	SNAP RING
16		85824067		1	PIN, BALL, Stud
17		832-10410		1	NUT, LOCK, M10 x 1.5, Cl 8
18		85824081		1	BALL JOINT
19		425-115		2	NUT, 5/16"-24, G5
20		85824080		1	BRACKET
21		85821520		2	SPACER
22		413-528		1	BOLT, Hex, 5/16"-18 x 1 3/4", G5
23		231-1445		1	NUT, LOCK, 5/16"-18, GB
24		86984549		1	CHANNEL
25		432-828		2	PIN, SPLIT (COTTER), 1/8" x 1 3/4"
26		87443692		1	SPRING
27		87437806		1	CABLE, FLEXIBLE, Pilot Control Positioner
28		86989616		1	GAS STRUT, Cylinder
29		140-108		1	SCREW, Cross Pan Hd, #10-24 x 3/4"
30		231-14409		1	NUT, LOCK, #10-24, GB
31		87418368		1	ROD, Tower Stationary
32		87418369		1	ROD, Tower Position
33		87442409		2	GRIP

09-15		p2	12/07

BACKHOE CONTROL TOWER LEVERS (BOOM LATCH), WITH PILOT CONTROLS

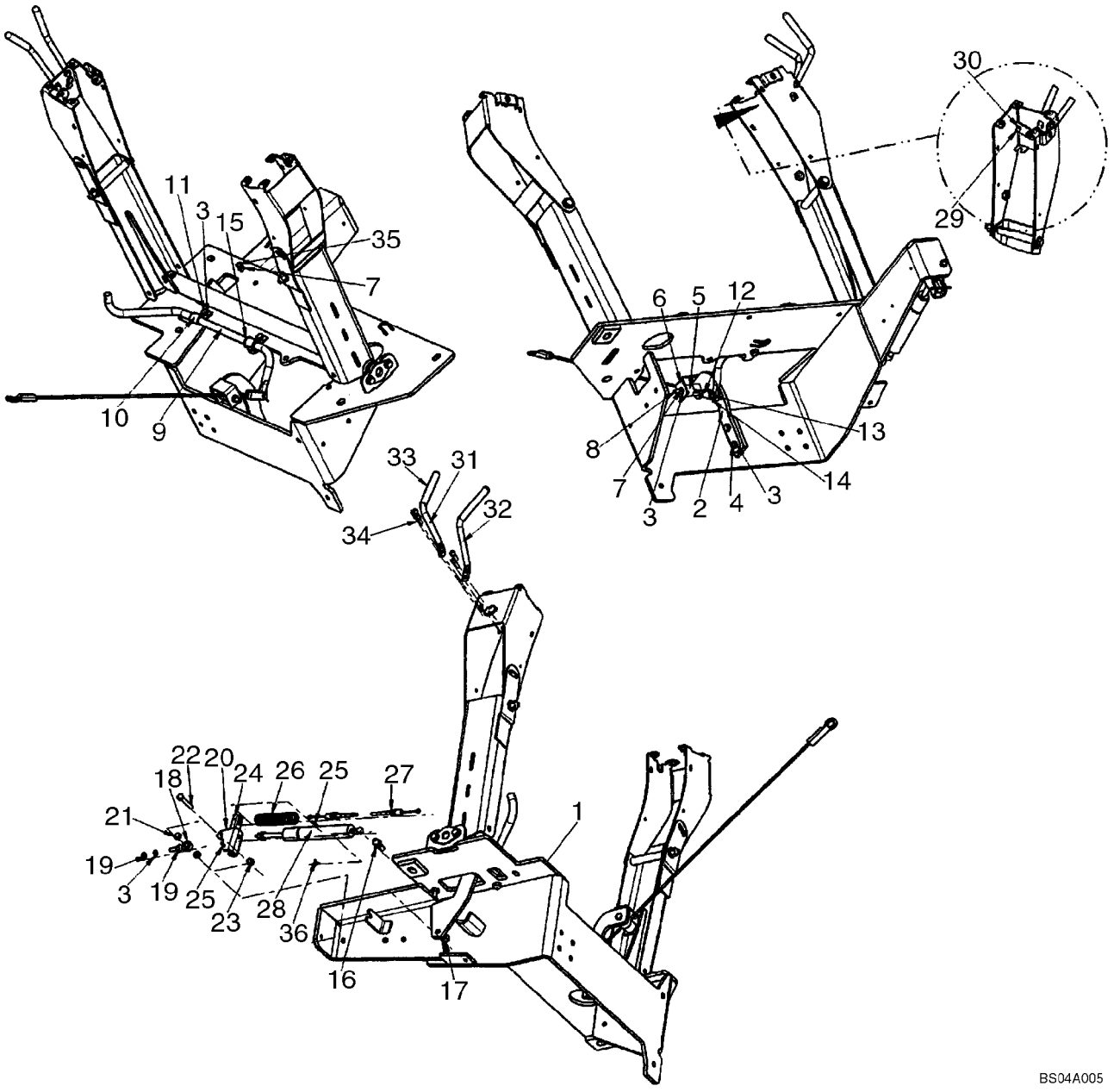

BACKHOE CONTROL TOWER LEVERS (BOOM LATCH), WITH PILOT CONTROLS

REF	FN	PART NUMBER	YR/SN	QTY	DESCRIPTION
34		87310098		4	BOLT, Hex Flange, M6 x 20, Black Oxide
35		614-8050		1	BOLT, Hex, M8 x 50, 8.8, Full Thd
36		3233348R1		1	CLIP

09-16		p1	09/07

CONTROLS - BACKHOE, WITH FOOT SWING (MODELS WITH OR WITHOUT EXTENDABLE DIPPER)

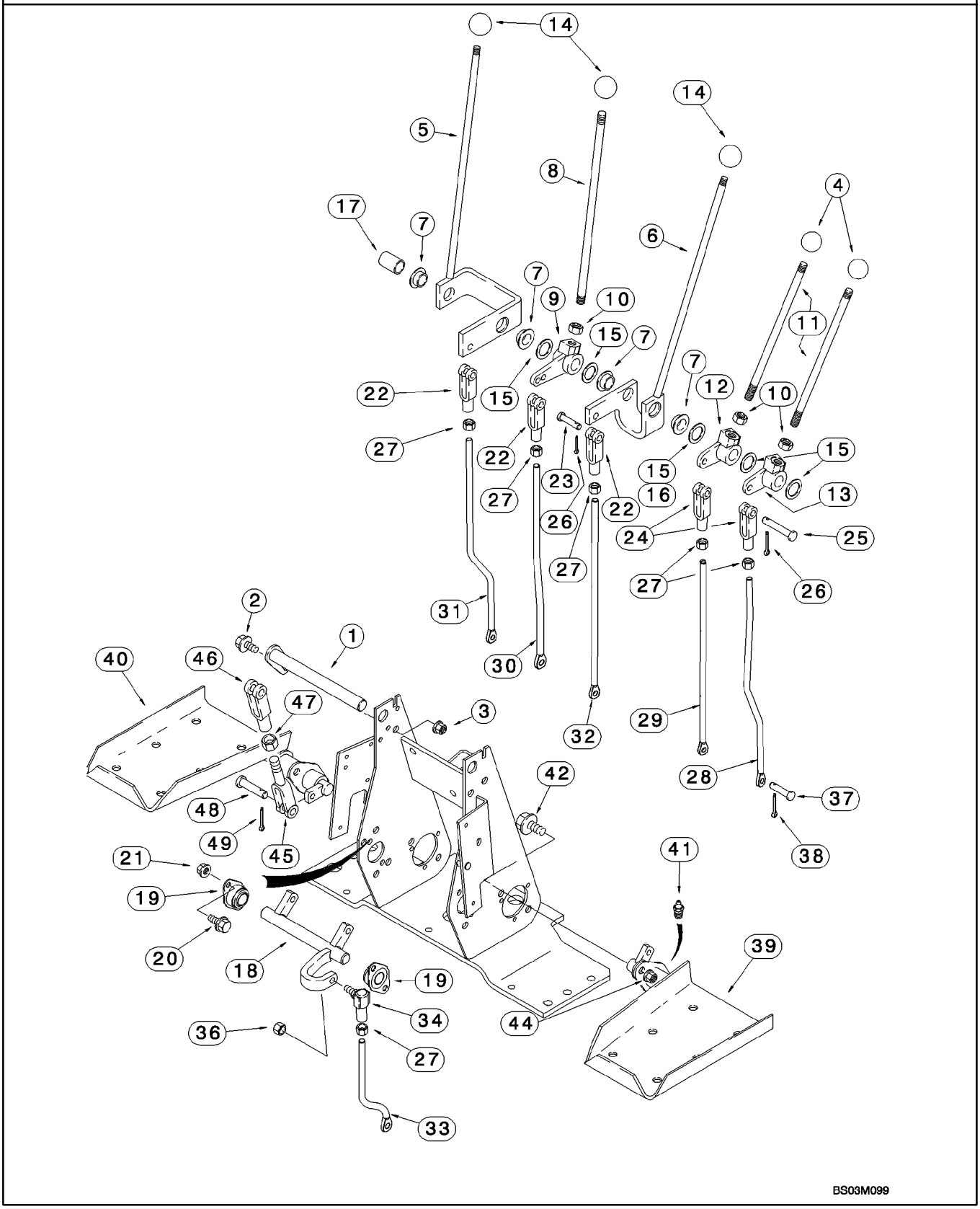

BS03M099

CONTROLS - BACKHOE, WITH FOOT SWING (MODELS WITH OR WITHOUT EXTENDABLE DIPPER)

REF	FN	PART NUMBER	YR/SN	QTY	DESCRIPTION
1		87401203		1	SHAFT ASSY.
2		614-8025		1	BOLT, Hex, M8 x 25, 8.8
3		832-10408		1	NUT, LOCK, M8 x 1.25, Cl 8
4		D59912		2	KNOB, Stabilizer Control Levers
5		136267A1		1	LEVER, Boom; Incl. Ref 7
6		136269A1		1	LEVER, Bucket; Incl. Ref 7
7		D148992		2	BUSHING, LARGE
8		136263A1		1	ROD, Dipper
9		D150397		1	LEVER, CRANK, Dipper
10		425-118		3	NUT, 1/2"-20, G5
11		136261A1		2	THREADED ROD, Stabilizer
12		D150435		1	LEVER, CRANK, Right-Hand Stabilizer Control
13		D150434		1	LEVER, CRANK, Left-Hand Stabilizer Control
14		L54563		3	KNOB, Boom, Dipper, and Bucket
15		A30881		AR	WASHER, 49/64 x 1-15/64 x 1/32; Used As A Shim
16		D34666		1	WASHER, 25/32 x 1-3/8 x 9/64; May Be Used In Place Of Ref 15
17		D150486		1	SPACER, Not Used On Models With Extendable Dipper
18		D148994		1	SHAFT, Swing
19		D139039		2	BEARING
20		614-8025		4	BOLT, Hex, M8 x 25, 8.8
21		832-10408		4	NUT, LOCK, M8 x 1.25, Cl 8
22		213-126		3	CLEVIS, ADJUSTABLE, 3/8"-24 x 2 1/2"
23		D149288		3	PIN, LARGE, Special
24		D150493		2	CLEVIS
25		427-6088		2	PIN, CLEVIS, 3/8" x 3/4"
26		432-612		5	PIN, SPLIT (COTTER), 3/32" x 3/4"
27		425-156		6	NUT, Jam, 3/8"-24, G5
28		87422243		1	ROD, THREADED, Left-Hand Stabilizer Control
29		87422245		1	ROD, THREADED, Right-Hand Stabilizer Control
30		87422247		1	ROD, THREADED, Dipper
31		87422241		1	ROD, THREADED, Boom
32		87422249		1	ROD, THREADED, Bucket
33		87422239		1	ROD, THREADED, Swing

CONTROLS - BACKHOE, WITH FOOT SWING (MODELS WITH OR WITHOUT EXTENDABLE DIPPER)

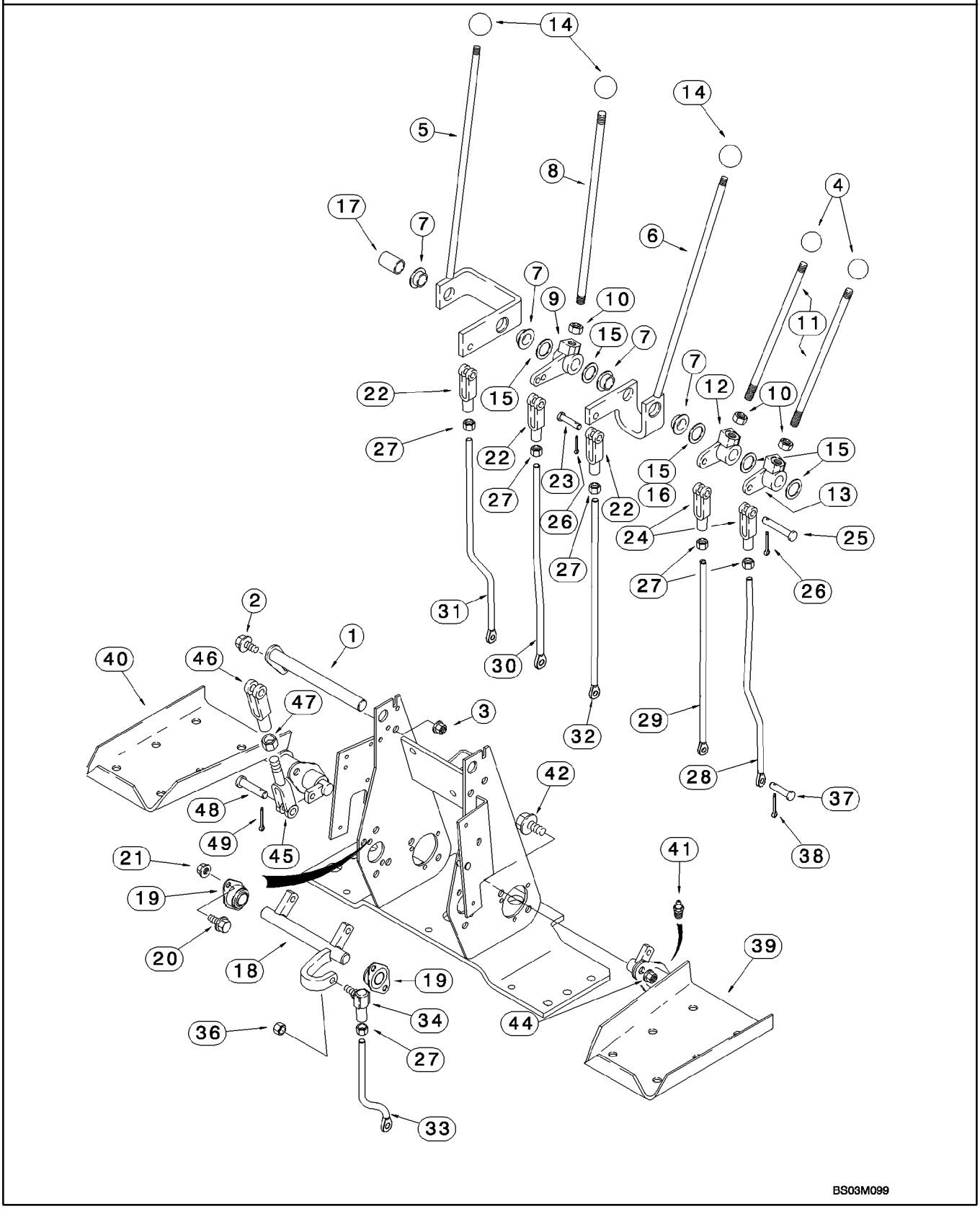

CONTROLS - BACKHOE, WITH FOOT SWING (MODELS WITH OR WITHOUT EXTENDABLE DIPPER)

REF	FN	PART NUMBER	YR/SN	QTY	DESCRIPTION
34		D149295		1	BALL JOINT, 3/8
36		425-116		1	NUT, 3/8"-24, G5
37		D149287		6	PIN, LARGE, 5/16
38		432-612		6	PIN, SPLIT (COTTER), 3/32" x 3/4"
39		136271A2		1	PEDAL ASSY., Left-Hand Swing; Without Pilot Controls
40		136270A2		1	PEDAL ASSY., Right-Hand Swing; Without Pilot Controls
41		219-4		2	NIPPLE, LUBE, 1/8"-27 NPTF, Short
42		614-10025		4	BOLT, Hex, M10 x 25, 8.8, Full Thd
44		832-10410		4	NUT, LOCK, M10 x 1.5, Cl 8
45		D150503		2	END, Yoke
46		D149262		2	CLEVIS, 3/8
47		425-156		2	NUT, Jam, 3/8"-24, G5
48		D149288		4	PIN, LARGE, 3/8
49		432-612		4	PIN, SPLIT (COTTER), 3/32" x 3/4"

CONTROLS - BACKHOE, WITH FOOT SWING (MODELS WITH EXTENDABLE DIPPER)

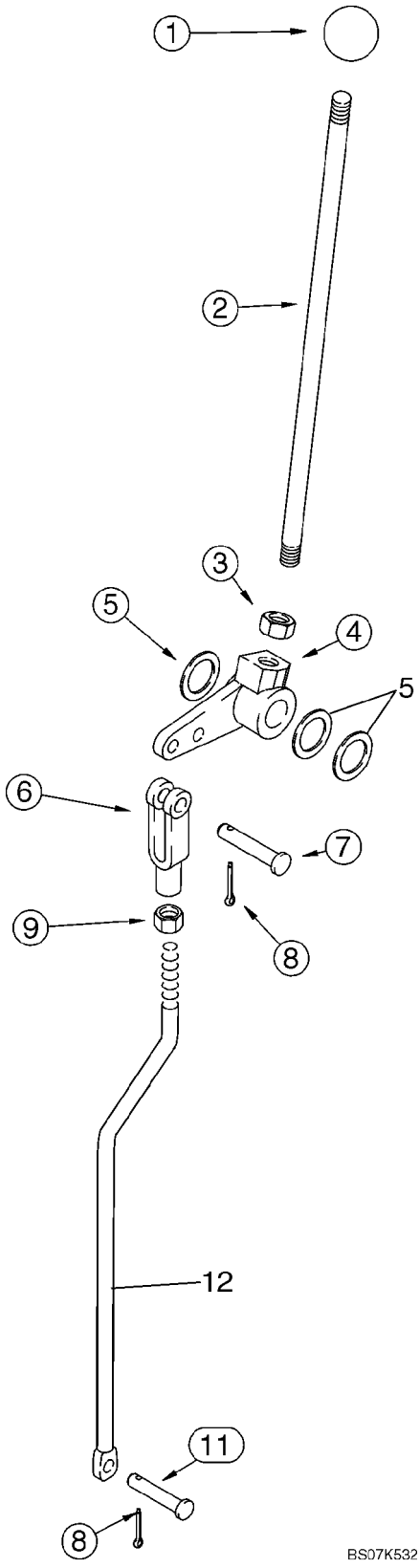

CONTROLS - BACKHOE, WITH FOOT SWING (MODELS WITH EXTENDABLE DIPPER)

REF	FN	PART NUMBER	YR/SN	QTY	DESCRIPTION
1		L54563		1	KNOB, Extendahoe
2		136263A1		1	ROD, Extendahoe
3		425-118		1	NUT, 1/2"-20, G5
4		182006A1		1	LEVER, Bellcrank
5		A30881		AR	WASHER
6		213-126		1	CLEVIS, ADJUSTABLE, 3/8"-24 x 2 1/2"
7		427-6088		1	PIN, CLEVIS, 3/8" x 3/4"
8		432-612		2	PIN, SPLIT (COTTER), 3/32" x 3/4"
9		425-156		1	NUT, Jam, 3/8"-24, G5
11		D149287		1	PIN, LARGE
12		87446113		1	ROD, THREADED, Extendahoe; Mounts In Inner Bellcrank Lever Hole

09-18		p1	09/07

CONTROLS - BACKHOE, WITH HAND SWING (MODELS WITH OR WITHOUT EXTENDABLE DIPPER)

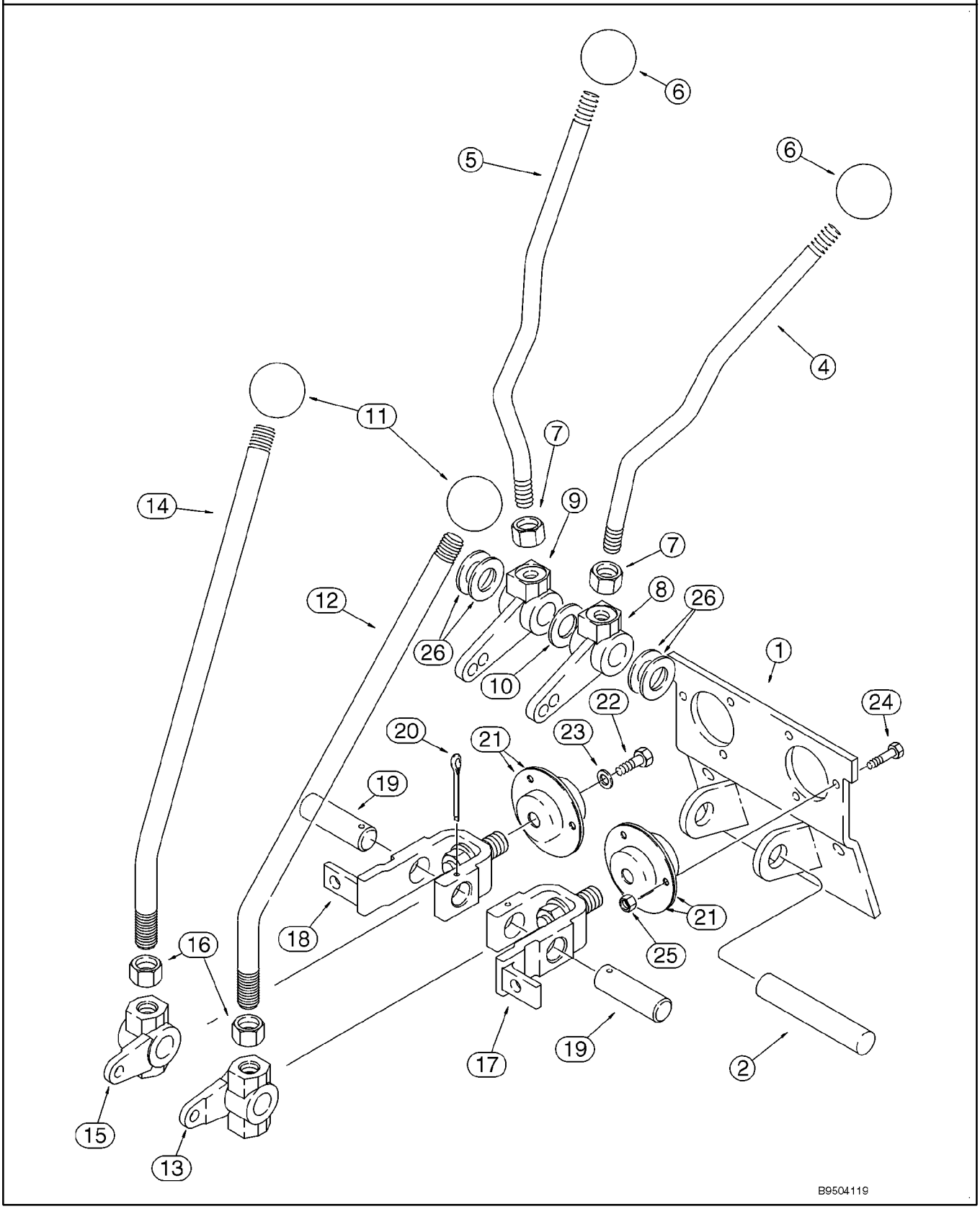

CONTROLS - BACKHOE, WITH HAND SWING (MODELS WITH OR WITHOUT EXTENDABLE DIPPER)

REF	FN	PART NUMBER	YR/SN	QTY	DESCRIPTION
		REF			INSTRUCTION, UPPER CONTROL LEVERS
1		108864A1		1	SUPPORT
2		D148947		1	PIN, LARGE, Stabilizer
4		409672A1		1	LEVER, Left-Hand; Stabilizer
5		409673A1		1	LEVER, Right-Hand; Stabilizer
6		D59912		2	KNOB, Stabilizer
7		425-118		2	NUT, 1/2"-20, G5
8		108924A1		1	LEVER
9		108923A1		1	LEVER
10		495-11081		1	WASHER, 3/4", SAE
11		D39118		2	KNOB
12		125113A1		1	LEVER, Boom and Swing
13		106989A1		1	LEVER, Left-Hand Boom and Swing Lever
14		125113A1		1	LEVER, Bucket and Dipper
15		106990A1		1	LEVER, Right-Hand Bucket and Dipper Lever
16		425-1110		2	NUT, 5/8"-18, G5
17		178006A1		1	LEVER, Boom and Swing
18		178004A1		1	LEVER, Bucket and Dipper
19		102765A1		2	PIN, LARGE, Bellcrank
20		432-828		2	PIN, SPLIT (COTTER), 1/8" x 1 3/4"
21		112380A1		4	BEARING
22		614-6016		2	BOLT, Hex, M6 x 16, 8.8
23		396-41028		2	WASHER, .281" x 7/8" x .098", HDN
24		614-6020		6	BOLT, Hex, M6 x 20, 8.8
25		829-1406		6	NUT, M6, Cl 10
26		A30881		AR	WASHER, 49/64 x 1-15/64 x 1/32

09-19		p1	09/07

CONTROLS - BACKHOE, WITH HAND SWING (MODELS WITH OR WITHOUT EXTENDABLE DIPPER)

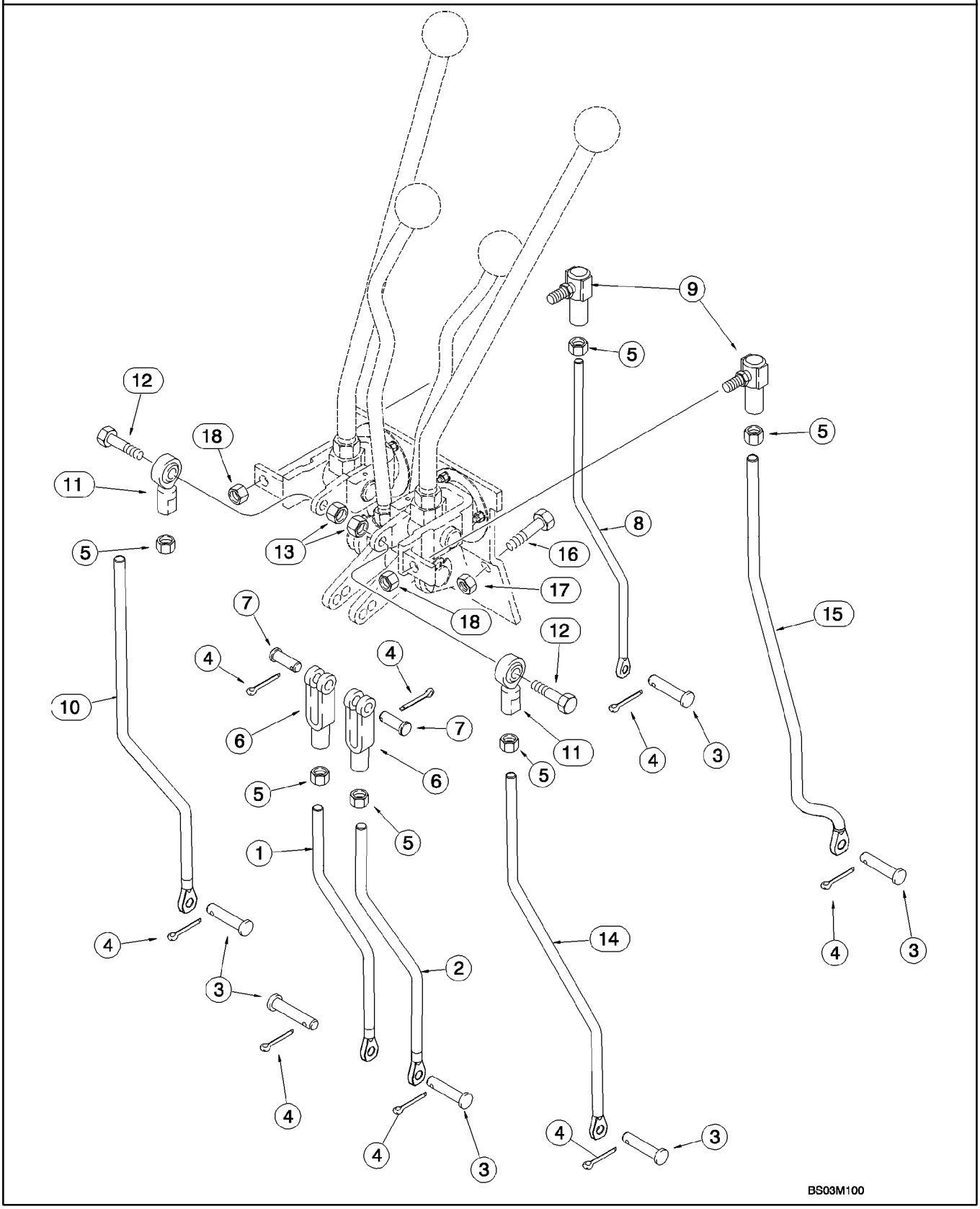

CONTROLS - BACKHOE, WITH HAND SWING (MODELS WITH OR WITHOUT EXTENDABLE DIPPER)

REF	FN	PART NUMBER	YR/SN	QTY	DESCRIPTION
		REF			INSTRUCTION, LOWER CONTROL LEVERS
1		87452406		1	ROD, THREADED, Right-Hand; Stabilizer; 286.6 mm (11-9/32 in) Long
2		87452404		1	ROD, THREADED, Left-Hand; Stabilizer; 286.6 mm (11-9/32 in) Long
3		D149287		6	PIN, LARGE
4		432-612		8	PIN, SPLIT (COTTER), 3/32" x 3/4"
5		425-116		6	NUT, 3/8"-24, G5
6		213-126		2	CLEVIS, ADJUSTABLE, 3/8"-24 x 2 1/2"
7		D149288		2	PIN, LARGE, Special
8		87422264		1	ROD, THREADED, Bucket
9		D149295		2	BALL JOINT
10		87422262		1	ROD, THREADED, Dipper
11		87382812		2	BEARING ASSY, BALLJOINT; 3/8NF
12		413-624		2	BOLT, Hex, 3/8"-16 x 1 1/2", G5
13		425-106		2	NUT, 3/8"-16, G5
14		87422256		1	ROD, THREADED, Boom
15		87422253		1	ROD, THREADED, Swing
16		614-10025		2	BOLT, Hex, M10 x 25, 8.8, Full Thd
17		832-10410		2	NUT, LOCK, M10 x 1.5, Cl 8
18		231-2446		2	NUT, LOCK, 3/8"-24, GB

CONTROLS - BACKHOE, EXCAVATOR CONTROL PATTERN

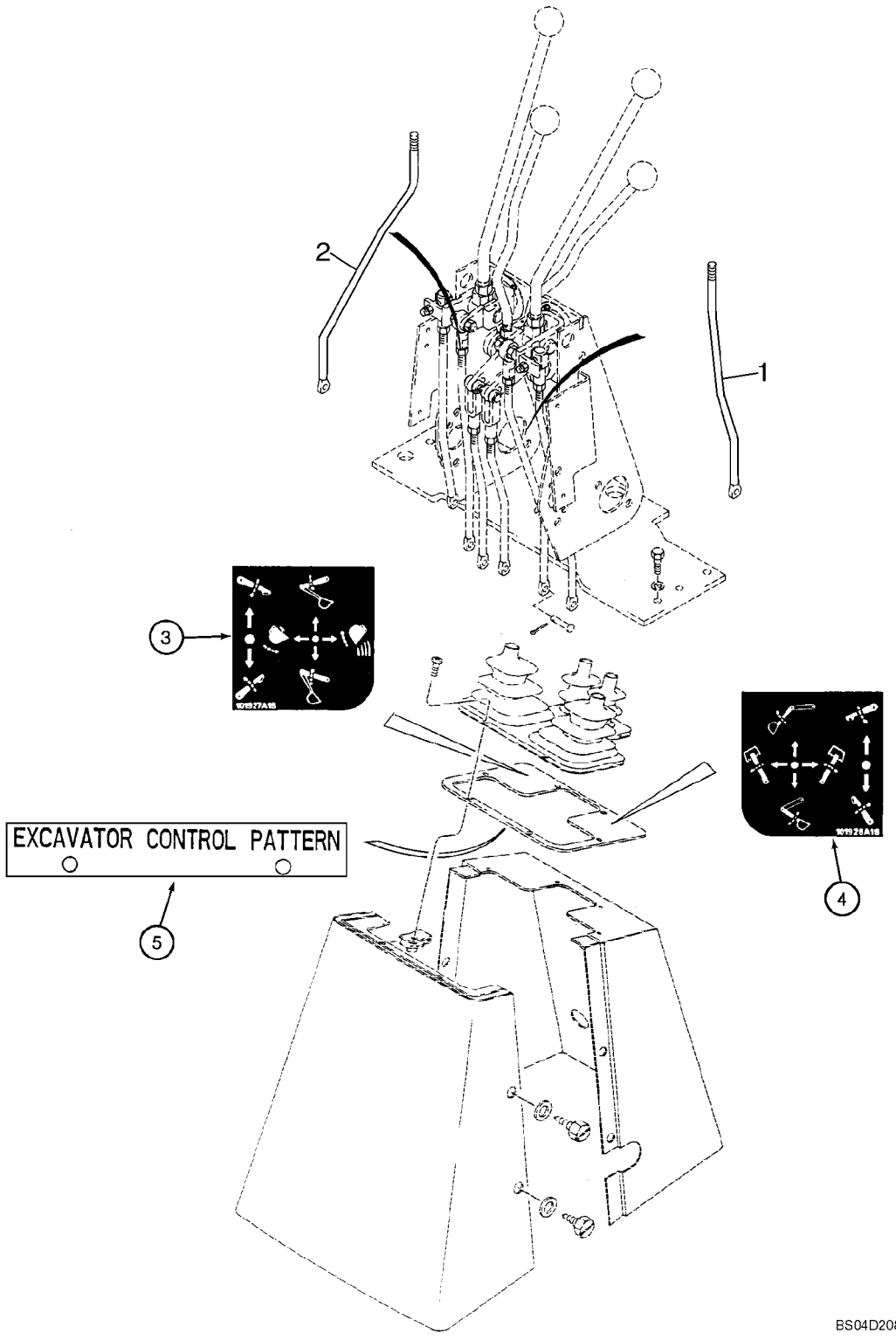

CONTROLS - BACKHOE, EXCAVATOR CONTROL PATTERN

REF	FN	PART NUMBER	YR/SN	QTY	DESCRIPTION
		87447088		1	KIT, SERVICE, Excavator Control Pattern; Incl. Ref 1 - 5; Purchase From Parts and Components; Machine Must Be Equipped With Hand Swing Controls; If Machine Is Equipped With Foot Swing Controls, Foot Swing to Hand Swing Controls Kit Must Be Ordered and Installed First
1		87422272		1	ROD, THREADED, Dipper; Replaces Existing Boom Control Rod; Right-Hand Control Lever Which Used To Control The Dipper, Now Controls The Boom
2		87422270		1	ROD, THREADED, Boom; Replaces Existing Dipper Control Rod; The Left-Hand Control Lever Which Used To Control The Boom, Now Controls The Dipper
3		E49498		1	DECAL, Control; Right-Hand
4		E49497		1	DECAL, Control; Left-Hand
5		198410A1		1	PLATE, LARGE, Excavator Control Pattern

CONTROLS - BACKHOE, WITH HAND SWING (MODELS WITH EXTENDABLE DIPPER)

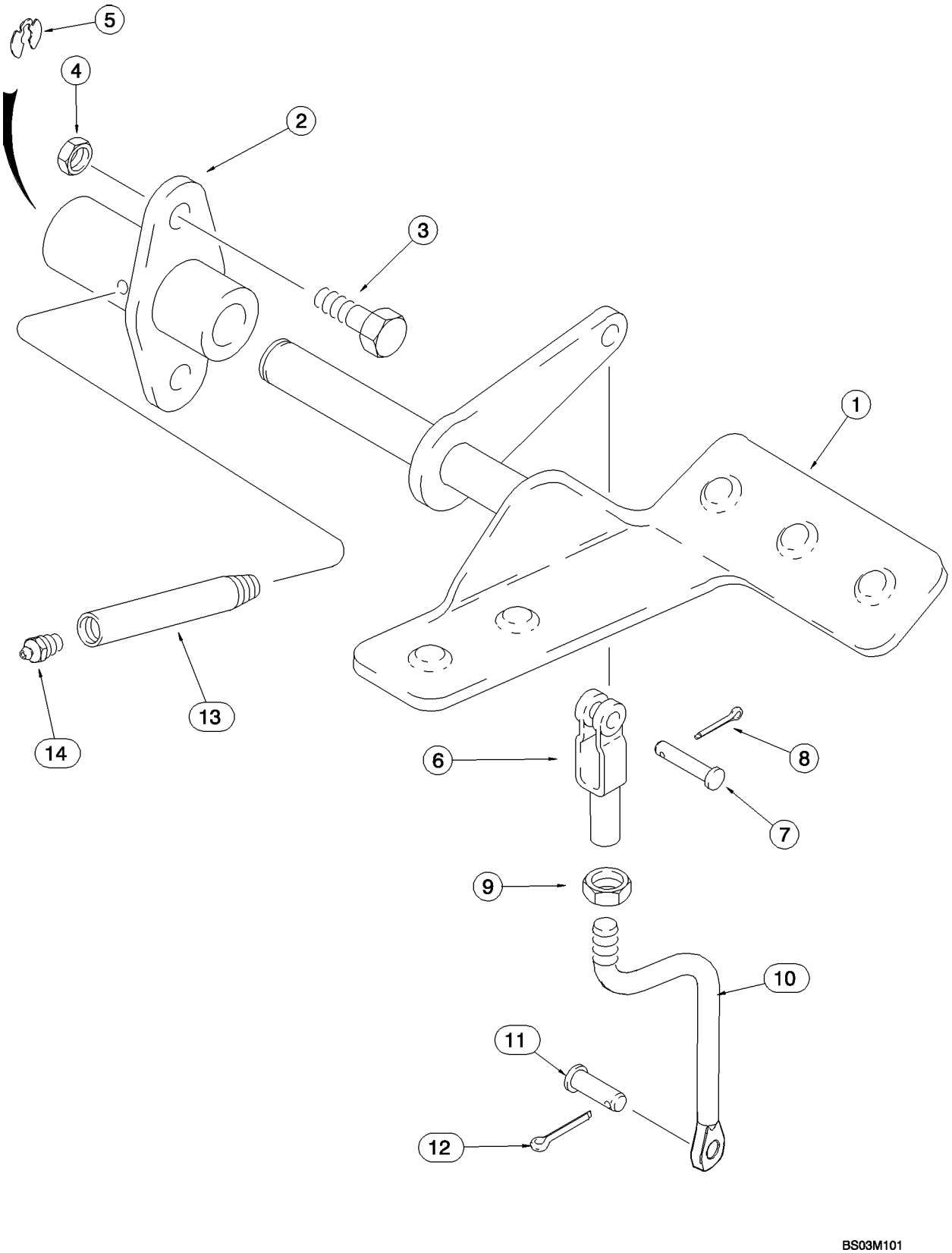

CONTROLS - BACKHOE, WITH HAND SWING (MODELS WITH EXTENDABLE DIPPER)

REF	FN	PART NUMBER	YR/SN	QTY	DESCRIPTION
1		179029A1		1	PEDAL, Right-Hand; Extendahoe
2		126918A1		1	SUPPORT ASSY.
3		614-10025		2	BOLT, Hex, M10 x 25, 8.8, Full Thd
4		832-10410		2	NUT, LOCK, M10 x 1.5, Cl 8
5		D143416		1	SNAP RING
6		D134900		1	CLEVIS
7		427-6088		1	PIN, CLEVIS, 3/8" x 3/4"
8		432-612		1	PIN, SPLIT (COTTER), 3/32" x 3/4"
9		425-156		1	NUT, Jam, 3/8"-24, G5
10		87440058		1	ROD, THREADED, Extendahoe Rod
11		D149287		1	PIN, LARGE
12		432-612		1	PIN, SPLIT (COTTER), 3/32" x 3/4"
13		D150032		1	TUBE, Lube
14		219-1		1	NIPPLE, LUBE, 1/8"-27 x .66 lg

CONTROLS - BACKHOE AUXILIARY HYDRAULICS, WITHOUT PILOT CONTROLS

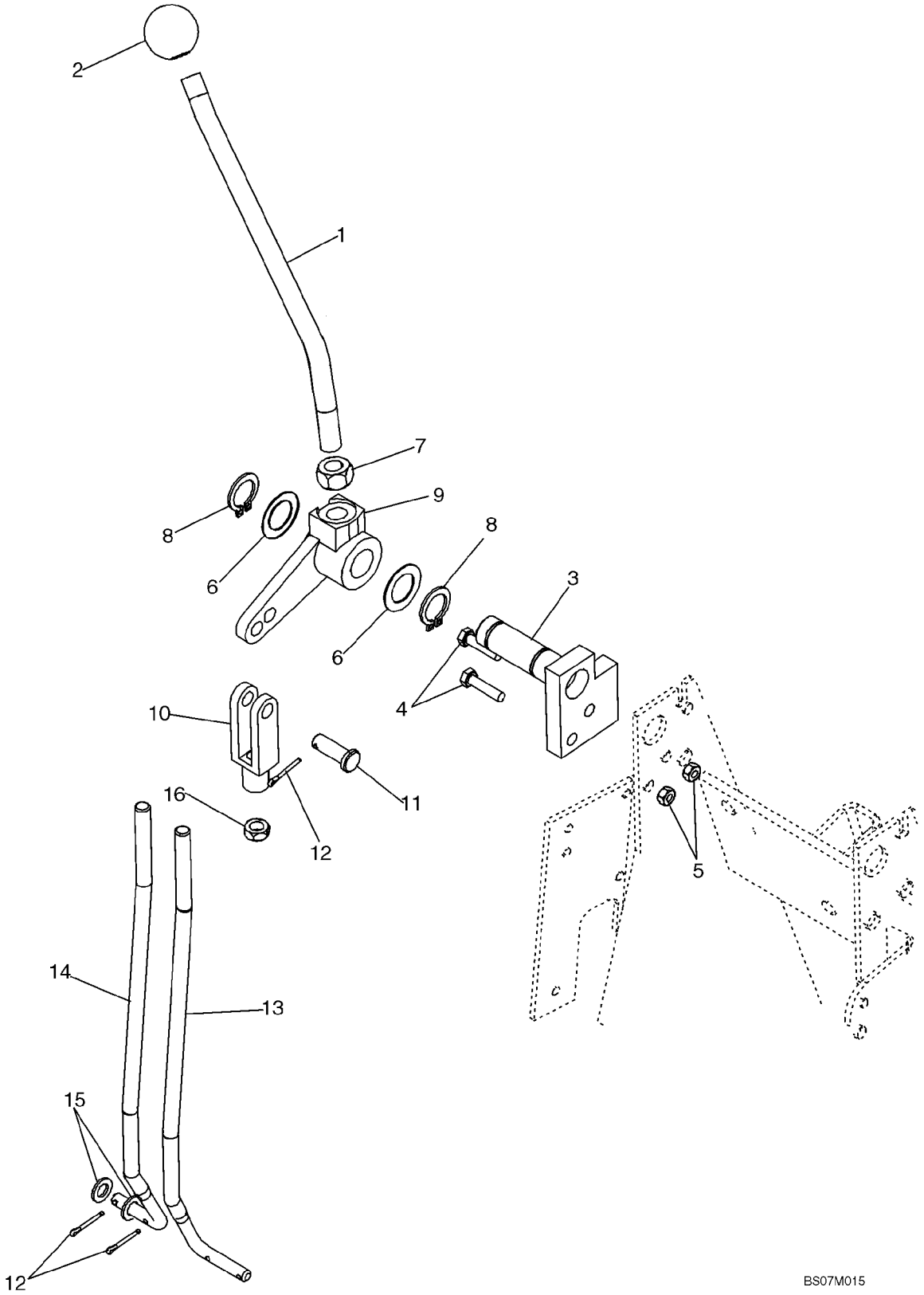

CONTROLS - BACKHOE AUXILIARY HYDRAULICS, WITHOUT PILOT CONTROLS

REF	FN	PART NUMBER	YR/SN	QTY	DESCRIPTION
1		221477A1		1	THREADED ROD, Auxiliary Control; 250 mm (9-27/32 in) long
2		D59912		1	KNOB
3		87425117		1	PIVOT ASSY., 7 or 8 Spool Valve
4		614-6025		2	BOLT, Hex, M6 x 25, 8.8
5		829-1406		2	NUT, M6, Cl 10
6		A30881		2	WASHER, Used As A Shim
7		425-118		1	NUT, 1/2"-20, G5
8		103-1475		2	RING, SNAP, #75, Ext
9		182006A1		1	LEVER
10		213-126		1	CLEVIS, ADJUSTABLE, 3/8"-24 x 2 1/2"
11		D149288		1	PIN, LARGE
12		432-612		3	PIN, SPLIT (COTTER), 3/32" x 3/4"
13		87439135		1	ROD, THREADED, 7 Spool Valve; If Used
14		87438157		1	ROD, THREADED, 8 Spool Valve; If Used
15		895-11008		2	WASHER, M8 x 16 x 1.6
16		425-156		1	NUT, Jam, 3/8"-24, G5

09-22		p1	12/07

BACKHOE - STABILIZERS, PLATES AND PADS

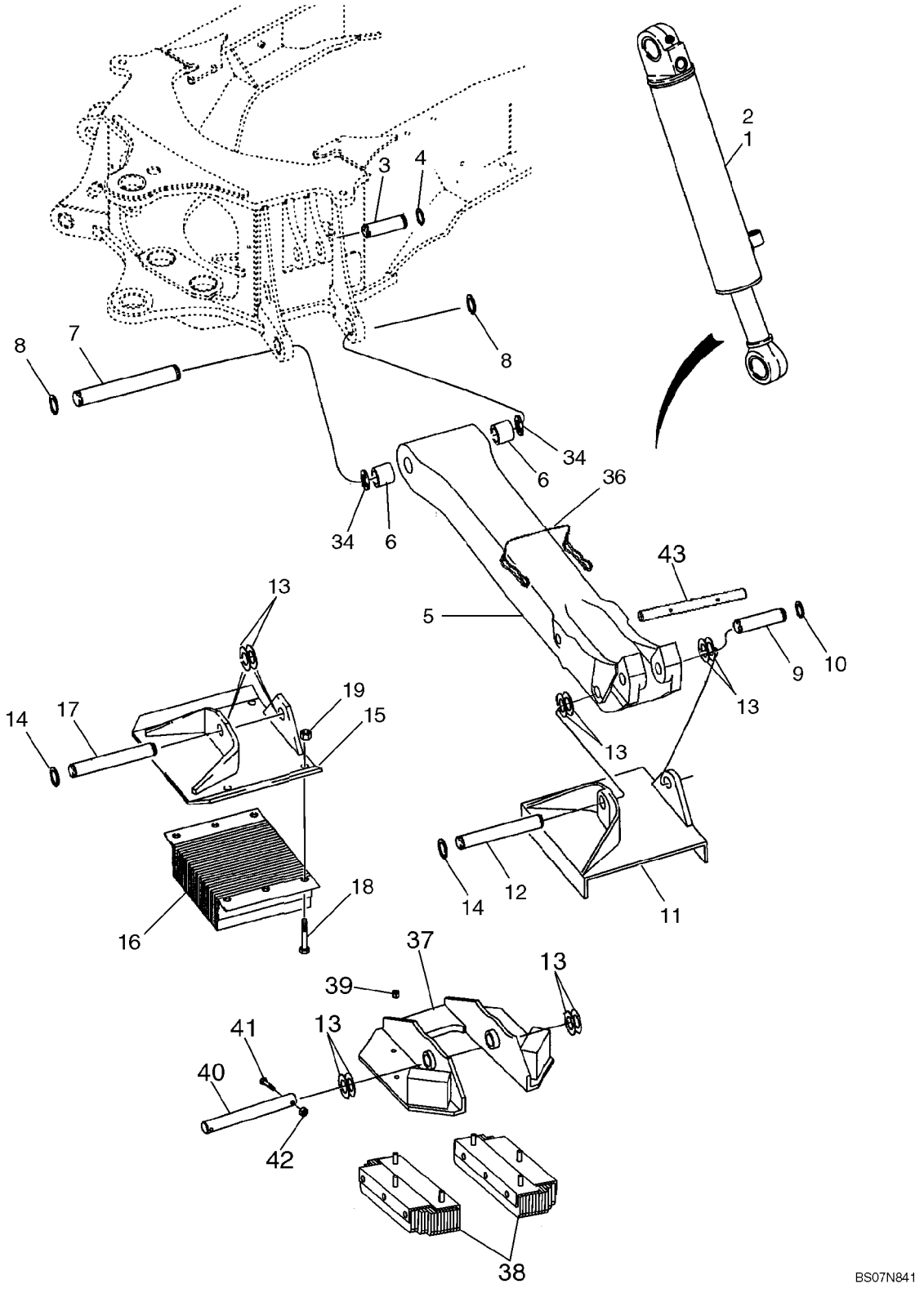

BACKHOE - STABILIZERS, PLATES AND PADS

REF	FN	PART NUMBER	YR/SN	QTY	DESCRIPTION
1		195503A1		1	CYLINDER ASSY., 102 ID x 553 mm strk; Stabilizer; Right-Hand; See Figure 08-61
2		195504A1		1	CYLINDER, 102 ID x 553 mm strk; Stabilizer; Left-Hand; See Figure 08-61
3		D38907		2	PIN, Stabilizer Cylinder to Chassis
4		103-16175		4	RING, SNAP, #175, Ext
5		446222A1		2	STABILIZER, 1135 mm (44-11/16 in), Leg; Incl. Ref 6
6		D50146		2	BUSHING, 1.760" x 2.250" x 1.50"
7		121665A1		2	PIN, LARGE, Stabilizer Leg to Chassis
8		103-16175		4	RING, SNAP, #175, Ext
9		D26002		2	PIN, Stabilizer Cylinder
10		D25279		4	SNAP RING
11		87456199		2	PAD, Plate; Cleated, Tan
12		D28648		2	PIN, Plate/Pad to Leg
13		D143406		AR	WASHER, Used as a Spacer
14		D25279		4	SNAP RING
15		87389813		2	PAD, Street or Cemetery, If Used
16		D61368		2	SHOCK ABSORBER, Rubber, If Used
17		D53812		2	PIN, PIVOT, 10-9/64 in Long; Plate to Leg
18		413-1228		8	BOLT, Hex, 3/4"-10 x 1 3/4", G5
19		425-1012		8	NUT, 3/4"-10, G5
34		495-81226		AR	WASHER, 1 13/16" x 2 1/2" x .109"
36		446454A1		2	PIN, LOCK
37		386000A2		2	PAD, Anti-Flipover
38		395753A2		4	PAD, RUBBER
39		231-4247		12	NUT, LOCK, 7/16"-14, GB
40		D149033		2	PIN, LARGE
41		814-10050		2	BOLT, Hex, M10 x 50, 8.8
42		832-10410		2	NUT, LOCK, M10 x 1.5, Cl 8
43		87436782		2	PIN, PIVOT

09-23		p1	11/07

BACKHOE - SWING TOWER AND SWING CYLINDERS

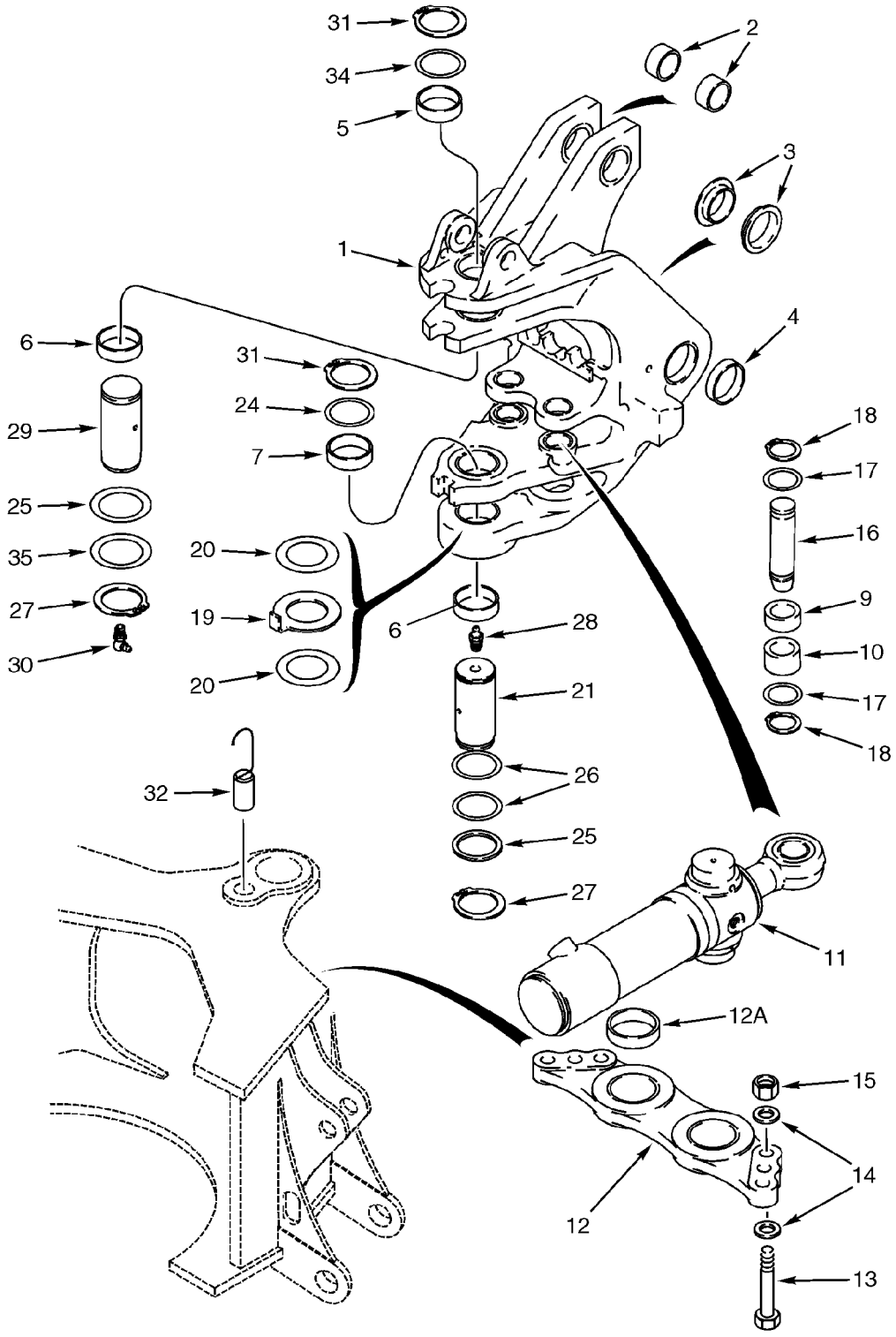

BACKHOE - SWING TOWER AND SWING CYLINDERS

REF	FN	PART NUMBER	YR/SN	QTY	DESCRIPTION
1		326806A1		1	TOWER, Swing Tower; Incl. Ref 2 - 10
2		D149079		2	BUSHING, 50 x 34 mm wide
3		121778A1		2	BUSHING
4		329998A1		2	BUSHING
5		D135557		1	BUSHING
6		D135559		2	BUSHING, 70.22 ID x 86 OD x 28 mm wide
7		D138042		1	BUSHING, LARGE, 70.22 ID x 86 OD x 34 mm wide
9		135249A1		2	BUSHING, 28.6 mm wide
10		135248A1		2	BUSHING, 38.1 mm wide
11		188027A2		2	CYLINDER ASSY., 95 ID x 292 mm strk; Swing; See Figure 08-62
12		198976A1		1	PLATE, LARGE, Incl. Ref 12A
12A		114318A1		2	BUSHING, 80 x 90 x 29.3 mm
13		827-20075		6	BOLT, Hex, M20 x 75, 10.9, Full Thd
14		896-11020		12	WASHER, M20 x 37.5 x 4, HT
15		829-1420		6	NUT, M20, Cl 10
16		386092A2		2	PIN, LARGE
17		495-81227		4	WASHER, 2 1/16" x 2 15/16" x .060"
18		103-16200		4	RING, SNAP, #200, Ext
19		243084A1		1	WASHER, 5 mm thk
20		134167A1		AR	SHIM, 2.05 mm (.08 in) thk
21		D151065		1	PIN, LARGE
24		D136392		AR	SHIM, 72 x 89 x 3.0 mm
25		D136700		2	SHIM, 67 x 83 x 2.0 mm
26		D136391		AR	SHIM, 72 x 89 x 1.6 mm
27		800-40065		2	RING, SNAP, M65, Ext
28		219-1		1	NIPPLE, LUBE, 1/8"-27 x .66 lg
29		292385A1		1	PIN, LARGE
30		219-55		1	NIPPLE, LUBE, 90Ü, 1/8" NPT x .84" lg
31		800-40070		2	RING, SNAP, M70 Ext
32		384815A1		1	PIN ASSY., Swing Stop
34		293636A1		1	WASHER, Upper
35		D144423		AR	WASHER, 2-5/8 x 3-3/8 x 1/8; Used As A Shim

09-24		p1	11/07

BACKHOE - BOOM AND SWING TOWER

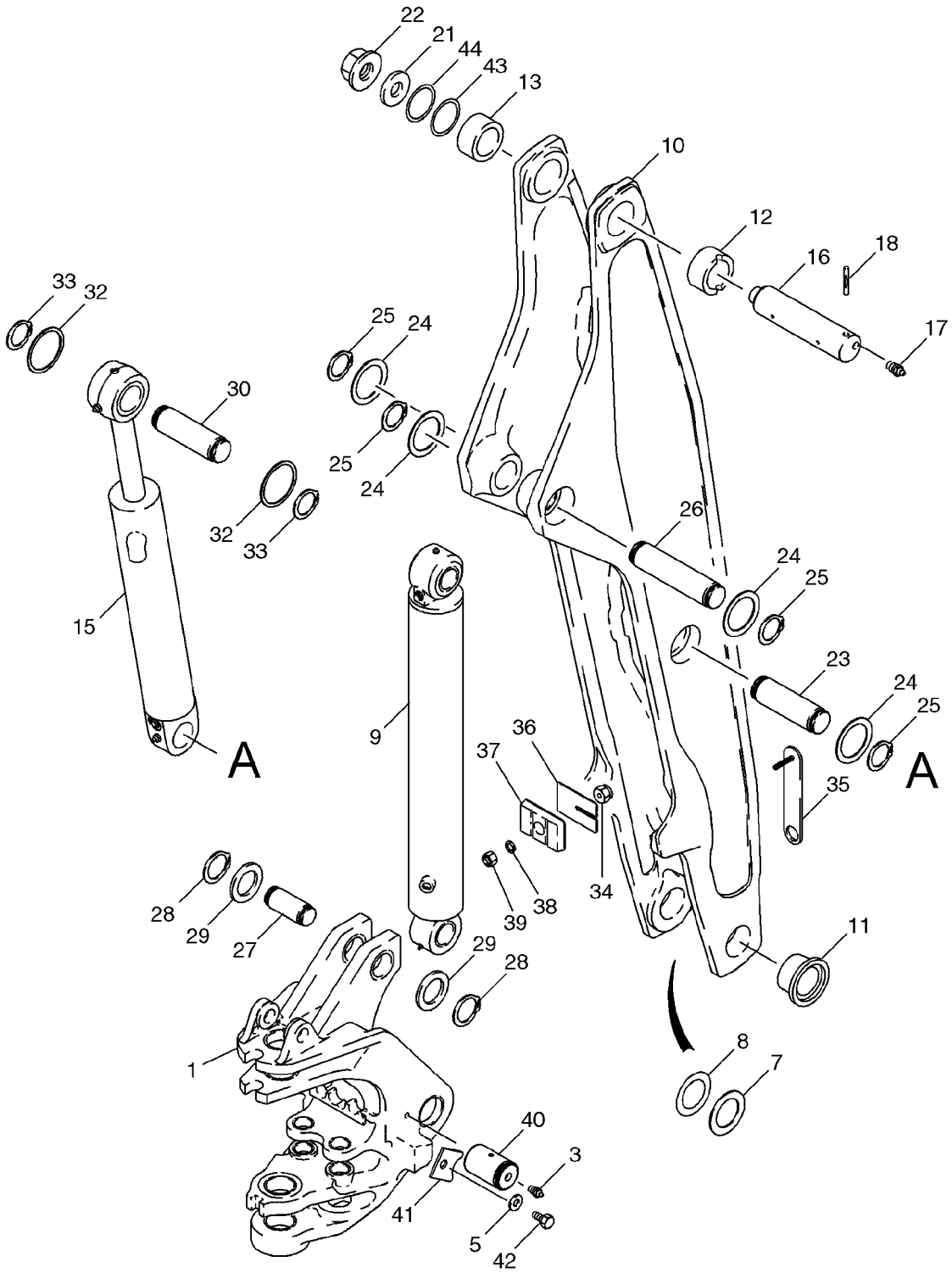

BACKHOE - BOOM AND SWING TOWER

REF	FN	PART NUMBER	YR/SN	QTY	DESCRIPTION
1		326806A1		1	TOWER, Swing Tower; See Figure 09-23 For Bushings
3		219-1		2	NIPPLE, LUBE, 1/8"-27 x .66 lg
5		896-11020		2	WASHER, M20 x 37.5 x 4, HT, 22 x 37 x 4 mm
7		H71514		AR	WASHER
8		R32119		AR	WASHER, 71 ID x 114 mm
9		189653A2		1	CYLINDER ASSY., 114 ID x 982 mm strk; Boom; See Figure 08-63
10		129883A1		1	BOOM, Incl. Ref 11 - 13
11		D151071		2	BUSHING, 70 ID x 34 mm lg
12		D135739		1	BUSHING, 70 ID x 44 mm lg; With Slot For Groove Pin; Right-Hand Side
13		D137218		1	BUSHING, 70 ID x 44 mm lg; Without Slot For Groove Pin; Left-Hand Side
15		233114A2		1	CYLINDER ASSY., 108 ID x 686 mm strk; Dipper; See Figure 08-64
16		D132494		1	PIN, LARGE
17		219-1		2	NIPPLE, LUBE, 1/8"-27 x .66 lg
18		135-51652		1	PIN, GROOVED, 1/2" x 3 1/4"
21		D133632		1	WASHER
22		181042A1		1	NUT, Flange, Special
23		129040A1		1	PIN, LARGE
24		495-81226		4	WASHER, 1 13/16" x 2 1/2" x .109"
25		103-16175		4	RING, SNAP, #175, Ext
26		129040A1		1	PIN, LARGE
27		142842A1		1	PIN, LARGE
28		800-44050		2	RING, SNAP, M50, Ext
29		495-81227		AR	WASHER, 2 1/16" x 2 15/16" x .060"
30		129041A1		1	PIN, LARGE
32		495-81226		AR	WASHER, 1 13/16" x 2 1/2" x .109"
33		103-16175		2	RING, SNAP, #175, Ext
34		87592819		1	PLUG, Boom Bumper Plug; 11.04 ID x 25.4 OD x 14.5 wide; Headless
35		184723A1		1	BRACKET, SUPPORTING
36		138624A1		AR	BLOCK, 1.5 mm thk Shim

09-24		p2	11/07

BACKHOE - BOOM AND SWING TOWER

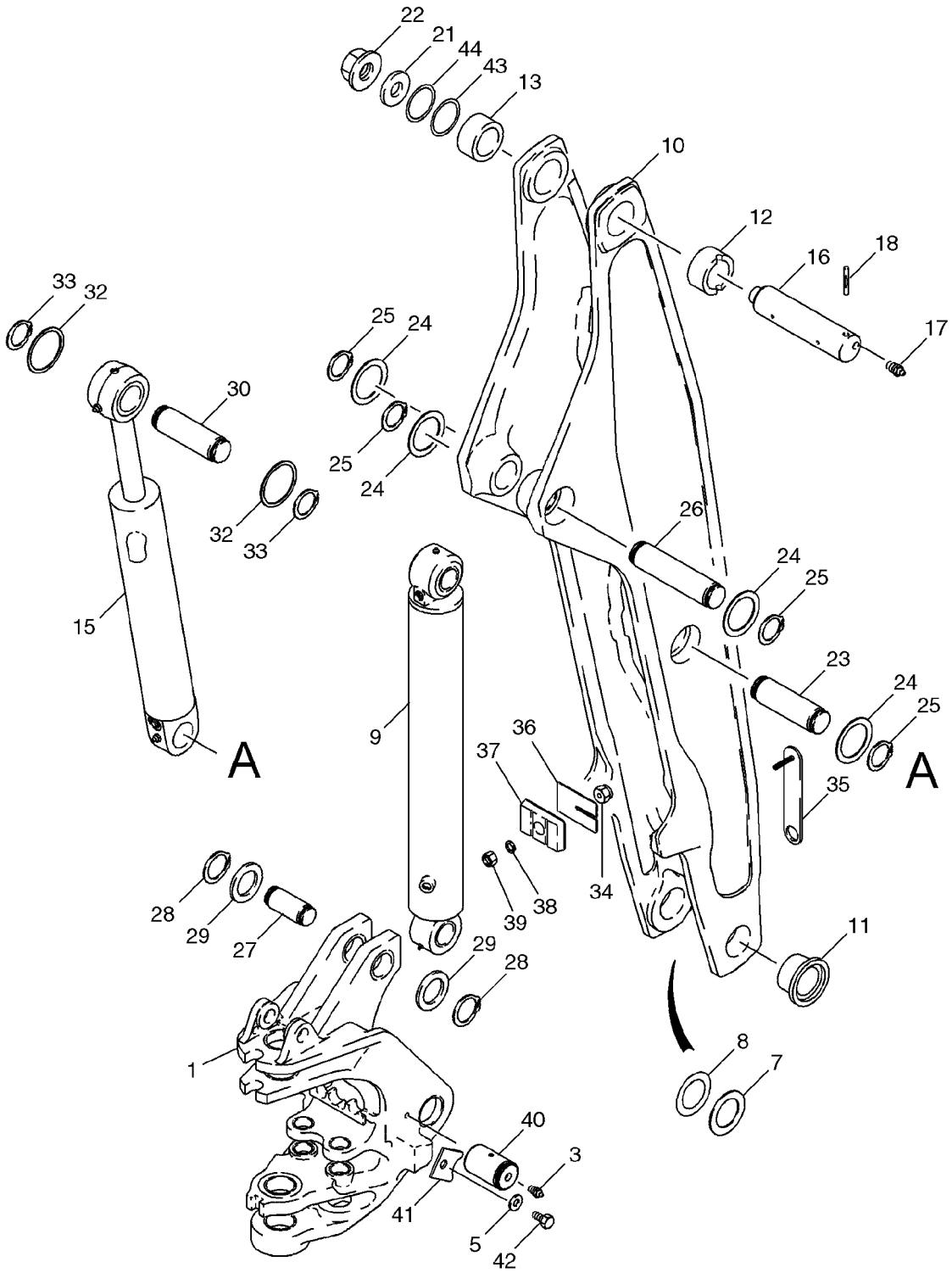

BACKHOE - BOOM AND SWING TOWER

REF	FN	PART NUMBER	YR/SN	QTY	DESCRIPTION
37		87371132		1	BUMPER, Bumper
38		496-81018		1	WASHER, Flat
39		829-1410		1	NUT, M10, Cl 10
40		87326813		2	PIN, GROOVED
41		303646A1		2	BRACKET
42		604-20035		2	BOLT, Hex, Lock, M20 x 35, Cl 8.8
43		404834A1		AR	SHIM, 5 mm thk, Concave
44		404835A1		AR	SHIM, 5 mm thk, Concave

09-24A		p1	01/08

BOOM GUARD

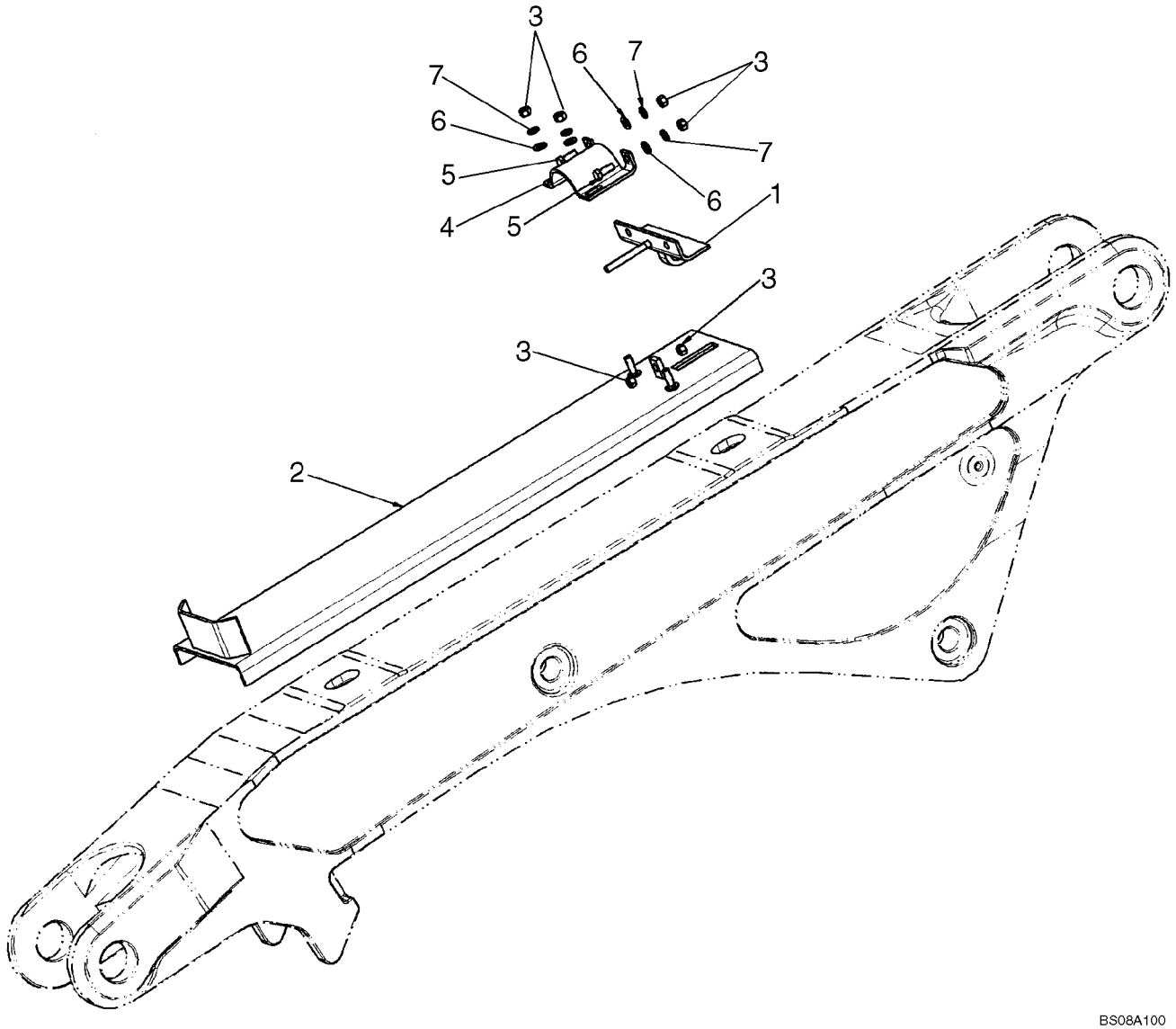

BOOM GUARD

REF	FN	PART NUMBER	YR/SN	QTY	DESCRIPTION
		87537209		1	GUARD, Boom; Incl. 1 - 7
1		87537207		1	GUARD, Clevis
2		87537201		1	GUARD, Boom
3		829-1412		6	NUT, M12, Cl 10
4		87537208		1	GUARD, Cover
5		614-12030		2	BOLT, Hex, M12 x 30, 8.8
6		896-11012		4	WASHER, M13.5 x 24.5 x 3, HT
7		892-11012		4	WASHER, LOCK, M12

09-25		p1	10/07

BOOM LATCH (WITHOUT PILOT CONTROLS)

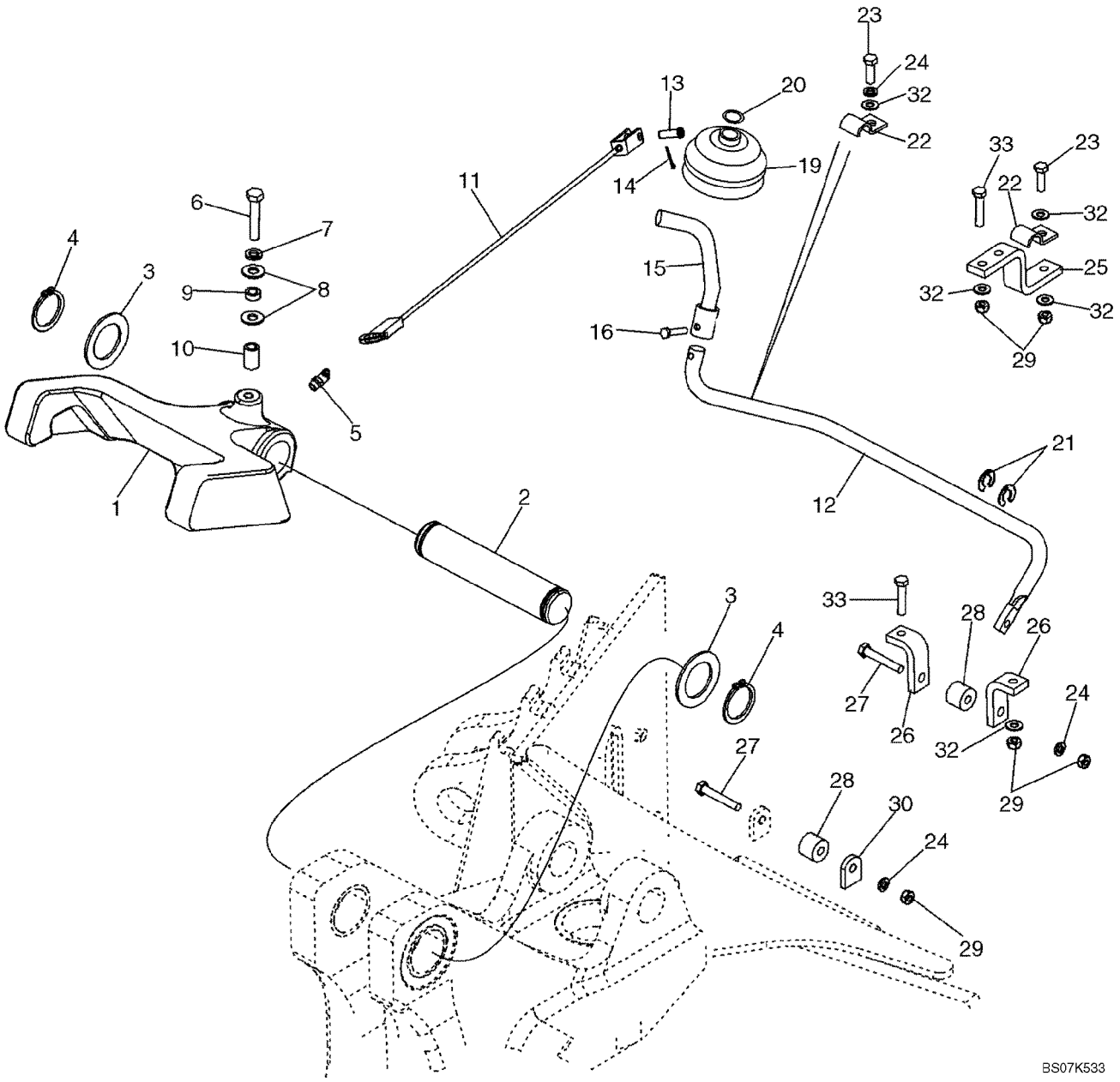

BOOM LATCH (WITHOUT PILOT CONTROLS)

REF	FN	PART NUMBER	YR/SN	QTY	DESCRIPTION
1		379941A1		1	LATCH
2		D129227		1	PIN, LARGE
3		D144592		2	WASHER
4		800-44040		2	RING, SNAP, M40, Ext
5		219-55		1	NIPPLE, LUBE, 90Ü, 1/8" NPT x .84" lg
6		614-10050		1	BOLT, Hex, M10 x 50, 8.8, Full Thd
7		892-11010		1	WASHER, LOCK, M10
8		895-15010		2	WASHER, M11 x 24 x 2
9		87445245		1	SPACER, 15.88 OD x 6.4 W x 2.41 mm thick wall
10		396092A1		1	SPACER
11		87435924		1	CABLE
12		87441850		1	ROD, Boom Latch Release; 6.0 mm Mounting Hole
13		427-5094		1	PIN, CLEVIS, 5/16" x .940"
14		432-612		1	PIN, SPLIT (COTTER), 3/32" x 3/4"
15		87444149		1	ROD ASSY.
16		87041331		4	BOLT, Hex, Lock, M6 x 16, Cl 8.8
19		D86664		1	BOOT
20		D143735		1	CLAMP, Ring
21		D143591		2	SNAP RING, 5/8 dia
22		D143723		2	SHIN, CLAMP, 5/8
23		614-8025		2	BOLT, Hex, M8 x 25, 8.8
24		892-11008		3	WASHER, LOCK, M8
25		87449995		1	BRACKET, Rod
26		87449996		2	BRACKET, Cable
27		814-8050		2	BOLT, Hex, M8 x 50, 8.8
28		86984547		2	GUIDE, Roller, Cable Guide
29		829-1408		7	NUT, M8, Cl 10
30		87432811		1	BRACKET
32		895-11008		7	WASHER, M8 x 16 x 1.6
33		614-8030		4	BOLT, Hex, M8 x 30, 8.8

09-25A		p1	10/07

BOOM LATCH (WITH PILOT CONTROLS)

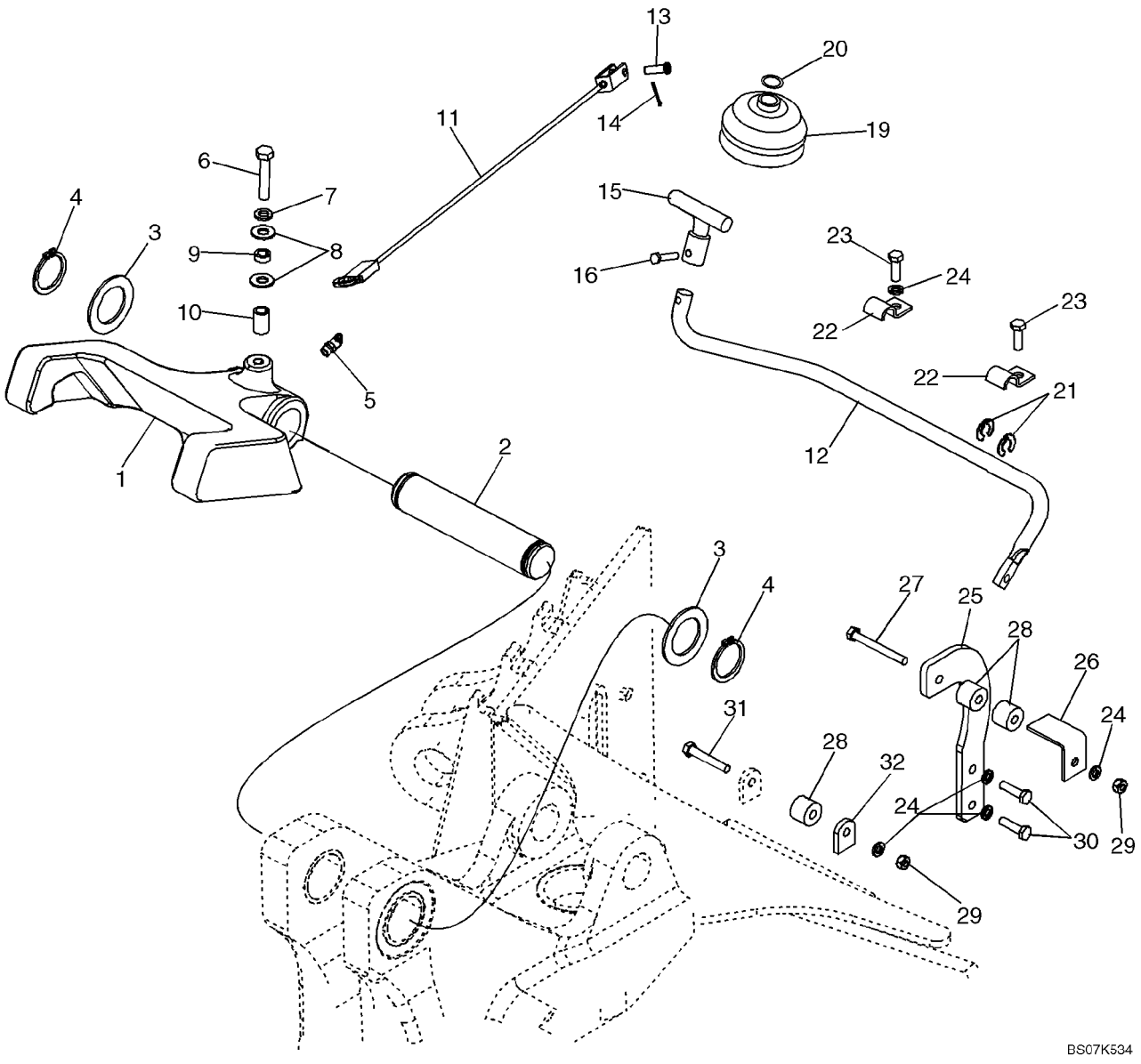

BOOM LATCH (WITH PILOT CONTROLS)

REF	FN	PART NUMBER	YR/SN	QTY	DESCRIPTION
1		379941A1		1	LATCH
2		D129227		1	PIN, LARGE
3		D144592		2	WASHER
4		800-44040		2	RING, SNAP, M40, Ext
5		219-55		1	NIPPLE, LUBE, 90Ü, 1/8" NPT x .84" lg
6		614-10050		1	BOLT, Hex, M10 x 50, 8.8, Full Thd
7		892-11010		1	WASHER, LOCK, M10
8		895-15010		2	WASHER, M11 x 24 x 2
9		87445245		1	SPACER
10		396092A1		1	SPACER
11		87435924		1	CABLE
12		87441850		1	ROD, Boom Latch Release
13		427-5094		1	PIN, CLEVIS, 5/16" x .940"
14		432-612		1	PIN, SPLIT (COTTER), 3/32" x 3/4"
15		87427775		1	ROD ASSY.
16		87041331		1	BOLT, Hex, Lock, M6 x 16, Cl 8.8
19		D86664		1	BOOT
20		D143735		1	CLAMP, Ring
21		D143591		2	SNAP RING
22		D143723		2	SHIN, CLAMP, 5/8
23		614-8025		2	BOLT, Hex, M8 x 25, 8.8
24		892-11008		5	WASHER, LOCK, M8
25		86984544		1	BRACKET, Roller Mounting
26		86984545		1	BRACKET, Cable
27		814-8070		1	BOLT, Hex, M8 x 70, 8.8
28		86984547		3	GUIDE, Roller, Cable Guide
29		829-1408		2	NUT, M8, Cl 10
30		614-8030		2	BOLT, Hex, M8 x 30, 8.8
31		814-8050		1	BOLT, Hex, M8 x 50, 8.8
32		87432811		1	BRACKET

09-26		p1	11/07

BACKHOE - DIPPER AND BUCKET

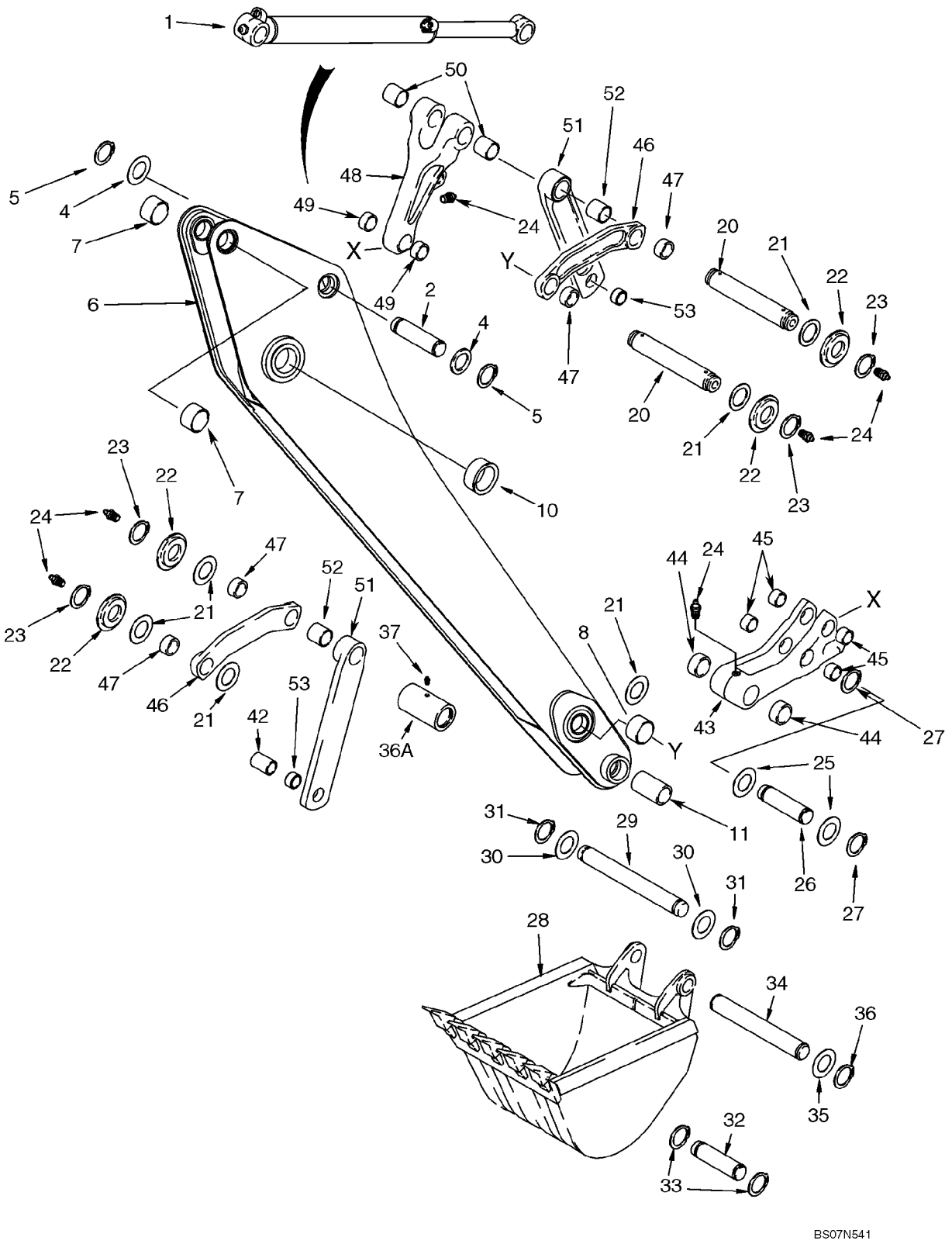

BACKHOE - DIPPER AND BUCKET

REF	FN	PART NUMBER	YR/SN	QTY	DESCRIPTION
1		128760A1		1	CYLINDER ASSY., 83 ID x 872 mm strk; Bucket; See Figure 08-65
2		129041A1		1	PIN, LARGE
4		495-81226		AR	WASHER, 1 13/16" x 2 1/2" x .109"
5		103-16175		2	RING, SNAP, #175, Ext
		129884A2		1	DIPPER, Incl. Ref 6 - 10
6		NSS		1	NOT SERVICED SEPARATELY, Dipper
7		D145978		2	BUSHING, LARGE
8		D140029		2	BUSHING, LARGE, 50 x 60 x 25.5 mm lg
10		D150121		2	BUSHING, 70 ID x 36 mm lg
11		87451279		2	BUSHING, 44.6 (1-3/4) ID x 57.15 (2-1/4) OD x 68 mm (2-11/16 in) long; Not Included In Assembly; Purchase Separately
20		D141142		2	PIN, LARGE, 306 mm lg, Guide Link
21		495-81282		AR	WASHER, 2 1/16" x 3" x .109"
22		D141164		4	SPACER
23		103-16175		4	RING, SNAP, #175, Ext
24		219-1		6	NIPPLE, LUBE, 1/8"-27 x .66 lg
25		495-81226		2	WASHER, 1 13/16" x 2 1/2" x .109"
26		D146288		1	PIN, LARGE
27		103-16175		2	RING, SNAP, #175, Ext
28		REF		1	INSTRUCTION, Bucket; See Figure(s) 09-28 - 09-35
29		D37614		1	PIN
30		D143324		2	WASHER
31		D25279		2	SNAP RING
32		D149298		1	PIN, 305 mm (12 inch) Universal Bucket Only
33		103-16175		2	RING, SNAP, #175, Ext
34		D150619		1	PIN, LARGE, All Buckets Except 12 Inch (305 mm) Buckets
35		495-81226		AR	WASHER, 1 13/16" x 2 1/2" x .109"
36		103-16175		2	RING, SNAP, #175, Ext
36A		87451280		1	SPACER, 67 (2-5/8) OD x 138 mm (5-7/16 in) long
37		219-1		1	NIPPLE, LUBE, 1/8"-27 x .66 lg
42		D141075		1	SPACER, 40 (1-9/16) ID x 47 (1-27/32) OD x 71 mm (2-51/64 in) long

09-26		p2	11/07

BACKHOE - DIPPER AND BUCKET

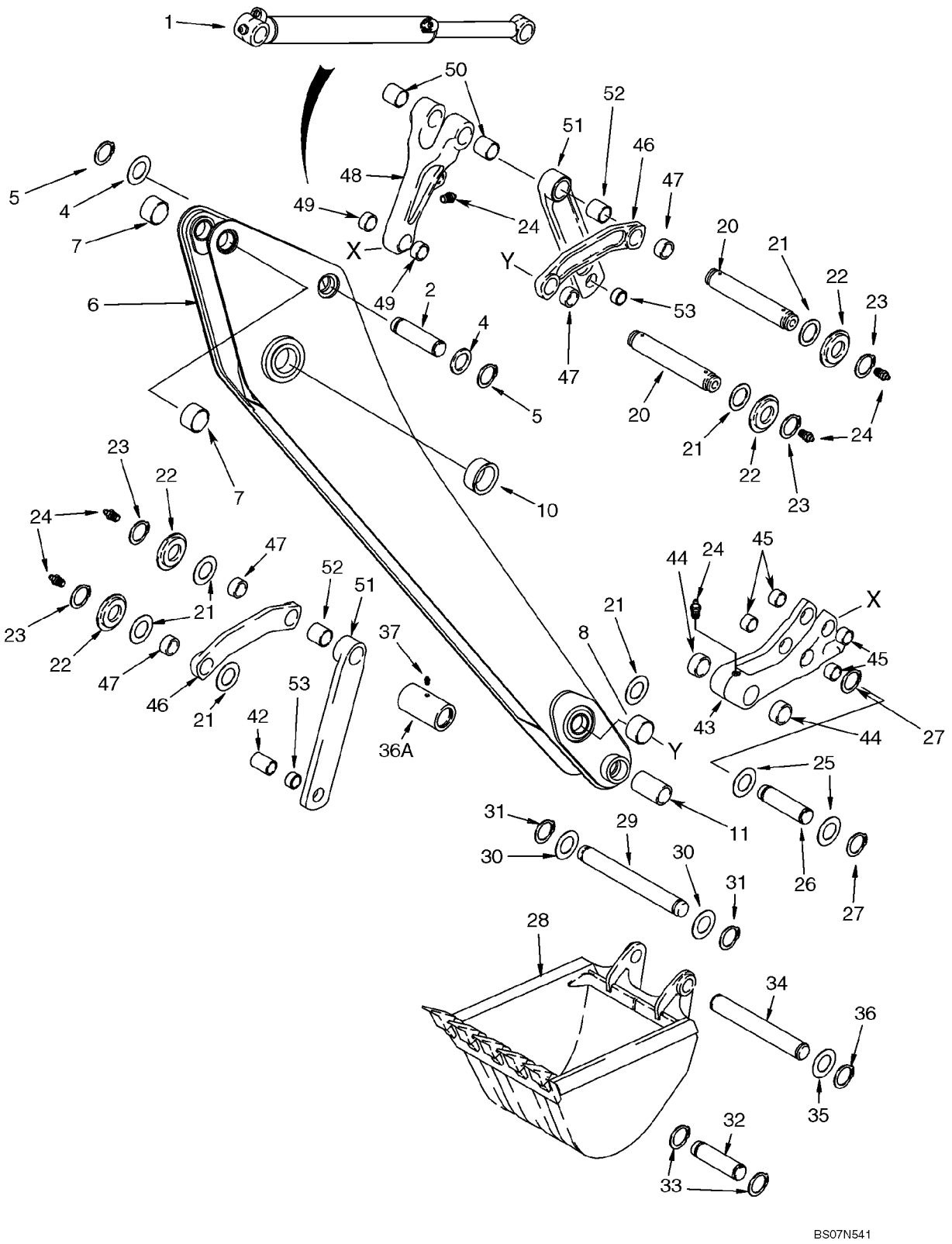

BACKHOE - DIPPER AND BUCKET

REF	FN	PART NUMBER	YR/SN	QTY	DESCRIPTION
		281185A1		1	COUPLING, Bucket, Incl. Ref 43 - 45
43		NSS		1	NOT SERVICED SEPARATELY, Coupler, Quick
44		D127167		2	BUSHING, 30 mm lg
45		107124A1		4	BUSHING, 29 mm lg
46		348706A1		2	LINK ASSY., Bucket Guide, Incl. Ref 47
47		D149079		2	BUSHING, 50 x 34 mm lg
48		400398A1		1	LINK ASSY., Bucket Dump, Incl. Ref 49, 50
49		107124A1		2	BUSHING
50		D138047		2	BUSHING, 54 mm (2-1/8 in) lg
51		244790A1		2	LINK ASSY., Standard Equipment; Bucket Dump; Incl. Ref 52, 53
52		D138047		1	BUSHING, 54 mm (2-1/8 in) lg
53		D31140		1	BUSHING

09-27		p1	02/08

BACKHOE - DIPPER, EXTENDABLE

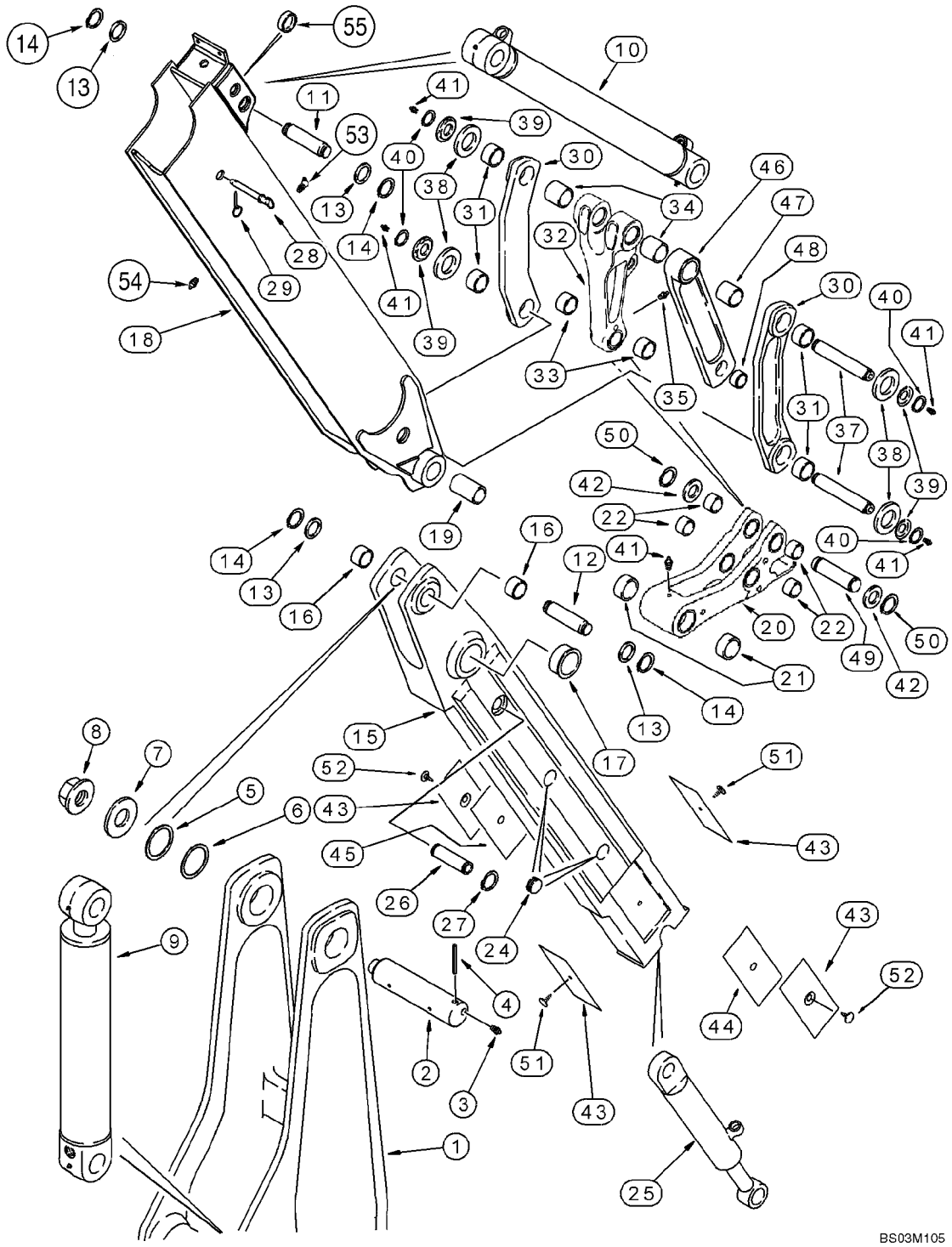

BACKHOE - DIPPER, EXTENDABLE

REF	FN	PART NUMBER	YR/SN	QTY	DESCRIPTION
1		129883A1		1	BOOM, See Figure 09-24
2		D132494		1	PIN, LARGE
3		219-1		2	NIPPLE, LUBE, 1/8"-27 x .66 lg
4		135-51652		1	PIN, GROOVED, 1/2" x 3 1/4"
5		404834A1		AR	SHIM
6		404835A1		AR	SHIM
7		D133632		1	WASHER
8		181042A1		1	NUT, Flange, Special
9		233114A2		1	CYLINDER ASSY., 108 ID x 686 mm strk, Dipper; See Figure 08-64
10		128760A1		1	CYLINDER ASSY., 83 ID x 872 mm strk, Bucket; See Figure 08-65
11		D141666		1	PIN, LARGE
12		129041A1		1	PIN, LARGE
13		495-81282		2	WASHER, 2 1/16" x 3" x .109"
14		103-16175		4	RING, SNAP, #175, Ext
		122503A1		1	DIPPER, Inner; Incl. Ref 15 - 17
15		NSS		1	NOT SERVICED SEPARATELY, Dipper
16		D145978		2	BUSHING, LARGE
17		D150121		2	BUSHING, 70 ID x 36 mm lg
18		87619781		1	DIPPER, Outer Dipper; Incl. Ref 53, 54; Replaces 87436235
19		307186A1		2	BUSHING, 104 mm lg
		281185A1		1	COUPLING, Bucket; Incl. Ref 20 - 22
20		NSS		1	NOT SERVICED SEPARATELY, Coupler, Quick
21		D127167		2	BUSHING, 30 mm lg
22		107124A1		4	BUSHING, 29 mm lg
24		D133865		4	PLUG
25		1340969C2		1	CYLINDER ASSY., 76 ID x 1068 mm strk, Extendable Dipper; See Figure 08-66
26		300588A1		1	PIN, LARGE
27		800-44040		2	RING, SNAP, M40, Ext
28		D140247		1	PIN, LARGE, Lock, Transport
29		A33509		1	PIN, LARGE
30		348706A1		2	LINK ASSY., Bucket Guide, Incl. Ref 31

09-27		p2	02/08

BACKHOE - DIPPER, EXTENDABLE

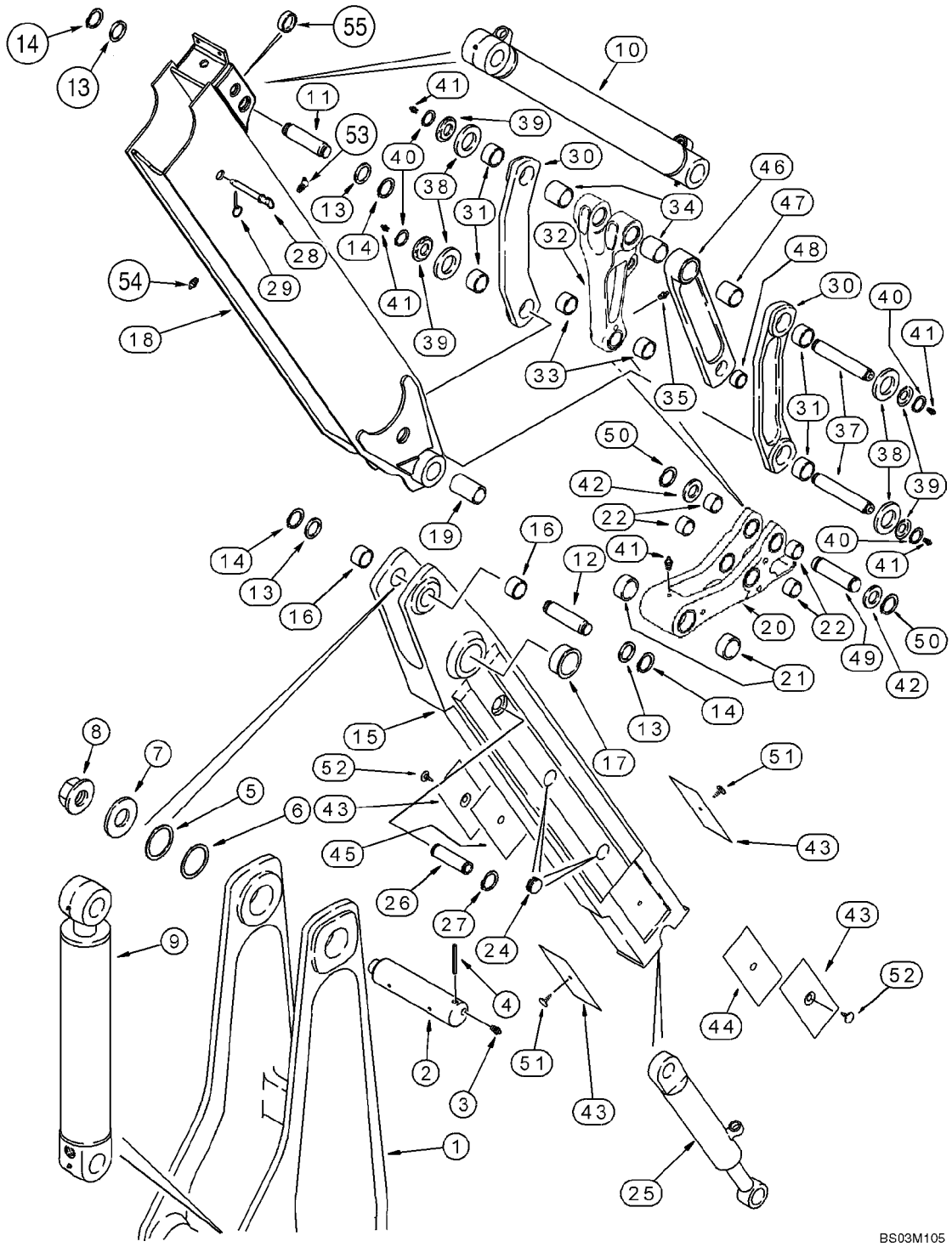

BACKHOE - DIPPER, EXTENDABLE

REF	FN	PART NUMBER	YR/SN	QTY	DESCRIPTION
31		D149079		2	BUSHING, 50 x 34 mm lg
32		400398A1		1	LINK ASSY., Bucket Dump, Incl. Ref 33, 34
33		107124A1		2	BUSHING
34		D138047		2	BUSHING, 54 mm (2-1/8 in) lg
35		219-1		1	NIPPLE, LUBE, 1/8"-27 x .66 lg
37		D141142		2	PIN, LARGE, 306 mm lg
38		495-81282		4	WASHER, 2 1/16" x 3" x .109"
39		D141164		4	SPACER
40		103-16175		4	RING, SNAP, #175, Ext
41		219-1		5	NIPPLE, LUBE, 1/8"-27 x .66 lg
42		495-81226		2	WASHER, 1 13/16" x 2 1/2" x .109"
43		451384A1		4	PLATE, WEAR
44		132844A1		1	SHIM, 0.8 mm thk
45		132842A1		1	SHIM, 1.6 mm thk
46		244790A1		2	LINK ASSY., Bucket Dump; Standard Equipment; Incl. Ref 47, 48
47		D138047		1	BUSHING, 54 mm (2-1/8 in) lg
48		D31140		1	BUSHING
49		D146288		1	PIN, LARGE
50		103-16175		2	RING, SNAP, #175, Ext
51		183443A1		2	PIN, LARGE
52		183509A1		2	PIN, LARGE
53		219-89		1	NIPPLE, LUBE, 45Ü, 1/8" NPT x .78" lg, Drive
54		219-86		1	NIPPLE, LUBE, 1/8" x .62" lg, Drive
55		396483A1		2	SPACER

09-28		p1	12/07

BUCKET, UNIVERSAL BACKHOE (305 MM (12 INCH) WIDE)

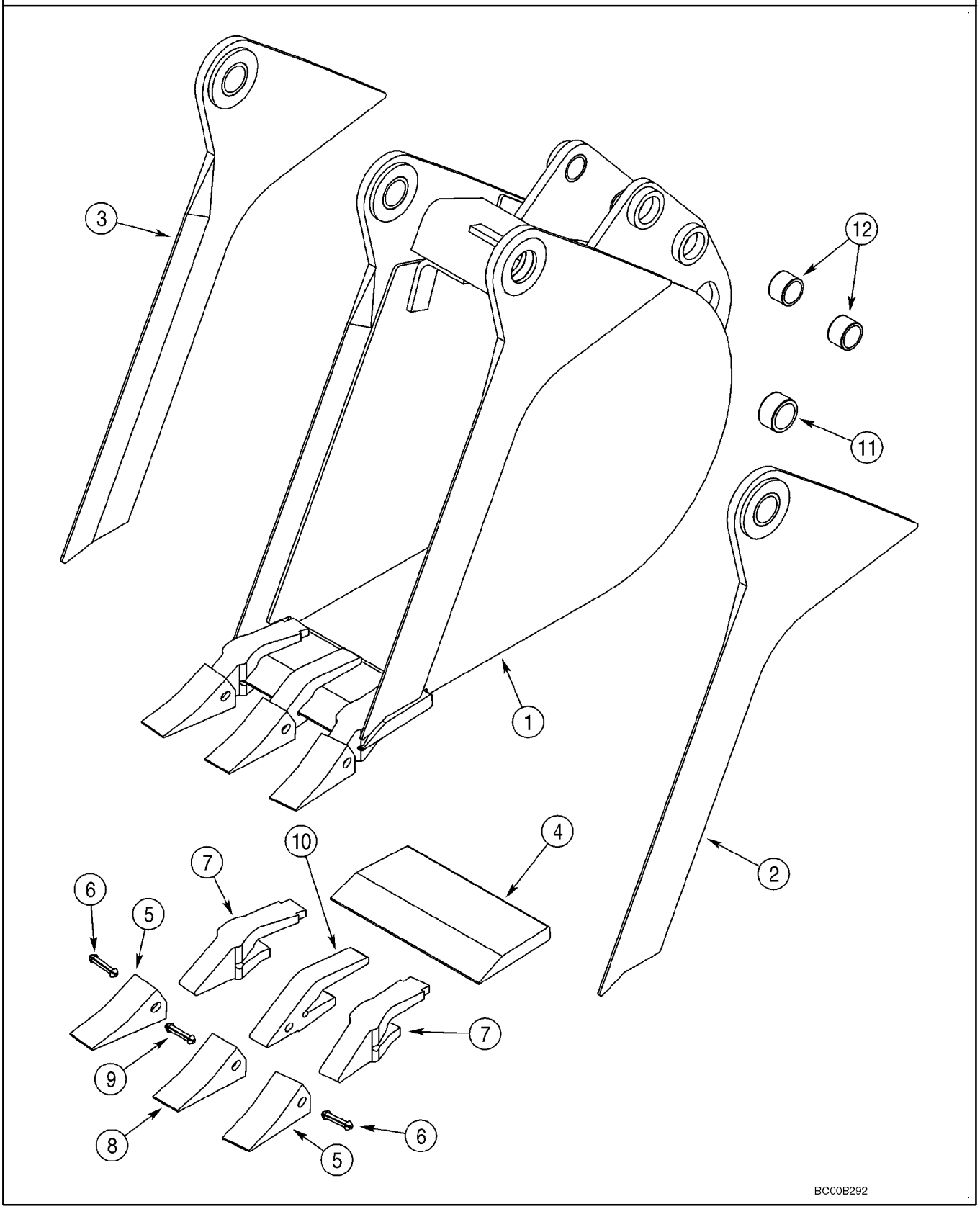

BUCKET, UNIVERSAL BACKHOE (305 MM (12 INCH) WIDE)

REF	FN	PART NUMBER	YR/SN	QTY	DESCRIPTION
1		381488A4		1	BUCKET, 305 mm (12 in); With 3 Teeth; Order Through Parts Marketing; Incl. Ref 2 - 12
2		NSS		1	NOT SERVICED SEPARATELY, Edge, Right-Hand; Incl. Ref 11
3		NSS		1	NOT SERVICED SEPARATELY, Edge, Left-Hand; Incl. Ref 11
4		D147409		1	EDGE, CUTTING
		D139851		2	TOOTH, Outer; Incl. Ref 5 - 7
5		D51750		1	POINT
6		245466A1		1	SPLIT PIN/SAFETY PIN
7		D138157		1	SHANK
		D139849		1	TOOTH, Center; Incl. Ref 8 - 10; Order Ref 8 - 10
8		D51750		1	POINT
9		245466A1		1	SPLIT PIN/SAFETY PIN
10		D48212		1	SHANK
11		D43940		2	BUSHING, 1-3/4 x 2-1/4 x 1
12		D30933		4	BUSHING

09-29		p1	12/07

BUCKET, UNIVERSAL BACKHOE (406 MM (16 INCH) WIDE)

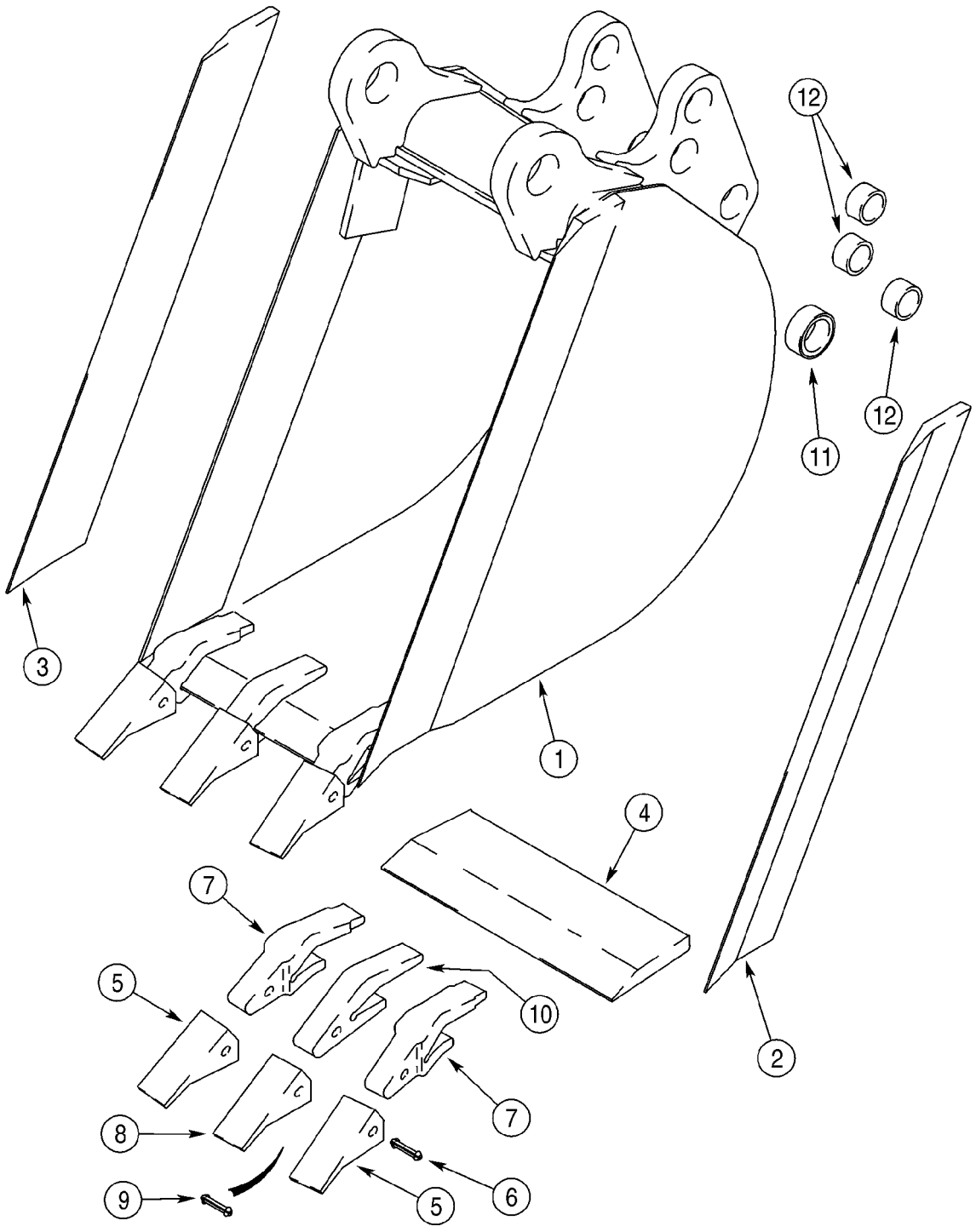

BUCKET, UNIVERSAL BACKHOE (406 MM (16 INCH) WIDE)

REF	FN	PART NUMBER	YR/SN	QTY	DESCRIPTION
1		388843A1		1	BUCKET, 406 mm (16 in); With 3 Teeth; Order Through Parts Marketing; Incl. Ref 2 - 12
2		D146421		1	EDGE, CUTTING, Right-Hand
3		D146420		1	EDGE, CUTTING, Left-Hand
4		D147249		1	EDGE
		D139851		2	TOOTH, Outer; Incl. Ref 5 - 7
5		D51750		1	POINT
6		245466A1		1	SPLIT PIN/SAFETY PIN
7		D138157		1	SHANK
		D139849		1	TOOTH, Center; Incl. Ref 8 - 10; Order Ref 8 - 10
8		D51750		1	POINT
9		245466A1		1	SPLIT PIN/SAFETY PIN
10		D48212		1	SHANK
11		D37495		2	BUSHING
12		D30933		6	BUSHING

09-30		p1	12/07

BUCKET, UNIVERSAL BACKHOE (457 MM (18 INCH) WIDE)

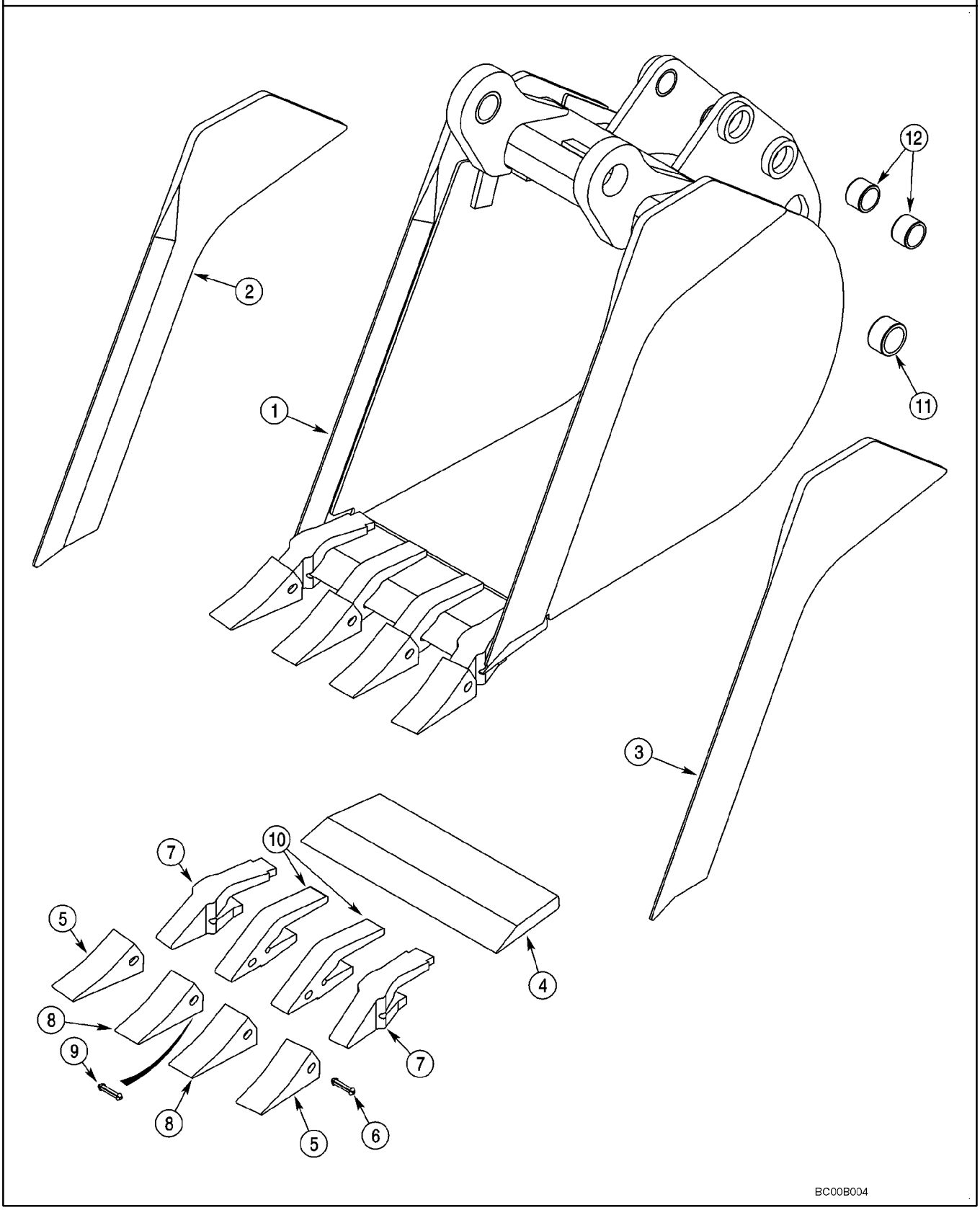

BUCKET, UNIVERSAL BACKHOE (457 MM (18 INCH) WIDE)

REF	FN	PART NUMBER	YR/SN	QTY	DESCRIPTION
1		376384A1		1	BUCKET, 457 mm (18 in); With 4 Teeth; Order Through Parts Marketing; Incl. Ref 2 - 12
2		NSS		1	NOT SERVICED SEPARATELY, Edge, Right-Hand
3		NSS		1	NOT SERVICED SEPARATELY, Edge, Left-Hand
4		NSS		1	NOT SERVICED SEPARATELY, Edge
		D139851		2	TOOTH, Outer; Incl. Ref 5 - 7
5		D51750		1	POINT
6		245466A1		1	SPLIT PIN/SAFETY PIN
7		D138157		1	SHANK
		D139849		2	TOOTH, Center; Incl. Ref 8 - 10; Order Ref 8 - 10
8		D51750		1	POINT
9		245466A1		1	SPLIT PIN/SAFETY PIN
10		D48212		1	SHANK
11		D37495		2	BUSHING
12		D30933		4	BUSHING

09-31		p1	12/07

BUCKET, BACKHOE (457 MM (18 INCH) WIDE)

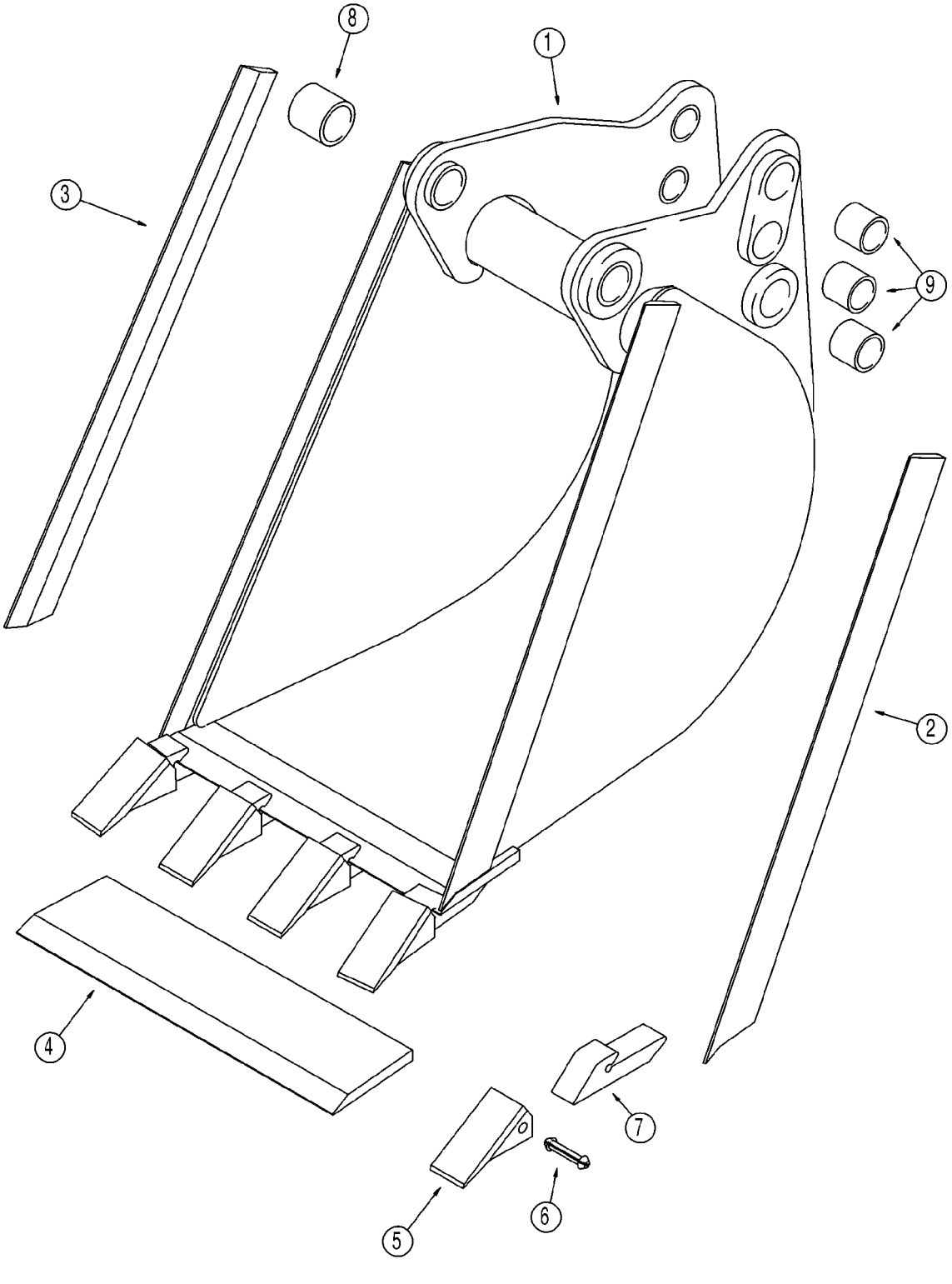

BUCKET, BACKHOE (457 MM (18 INCH) WIDE)

REF	FN	PART NUMBER	YR/SN	QTY	DESCRIPTION
1		183808A1		1	BUCKET, 457 mm (18 in); With 4 Teeth; Order Through Parts Marketing; Incl. Ref 2 - 9
2		129894A1		1	EDGE, Right-Hand
3		129893A1		1	EDGE, Left-Hand
4		183810A1		1	EDGE
		D41659		4	TOOTH, Incl. Ref 5 - 7
5		D51750		1	POINT
6		245466A1		1	SPLIT PIN/SAFETY PIN
7		NSS		1	NOT SERVICED SEPARATELY, Shank
8		D37495		2	BUSHING
9		D30933		6	BUSHING

09-32		p1	12/07

BUCKET, UNIVERSAL BACKHOE (610 MM (24 INCH) / 762 MM (30 INCH) WIDE)

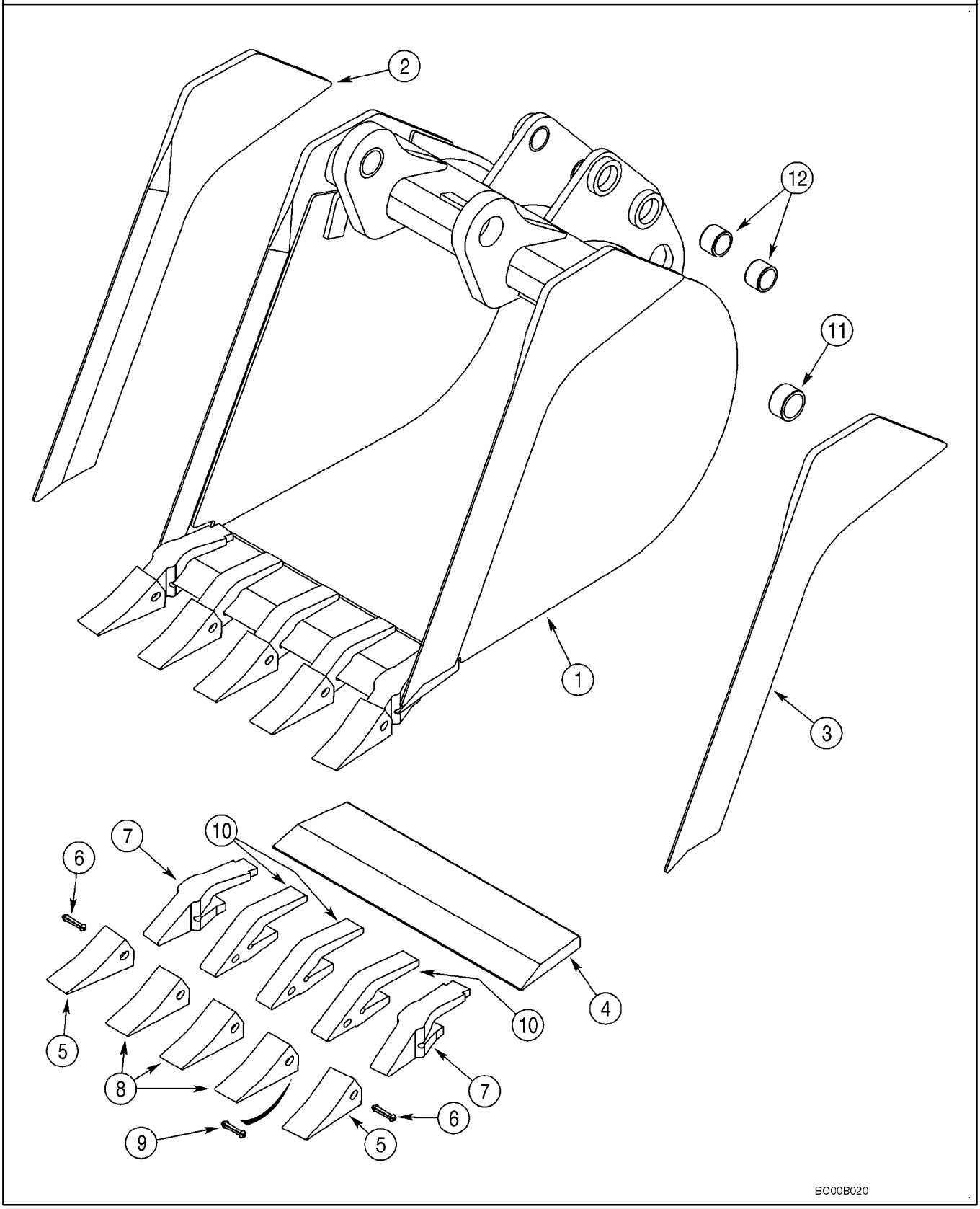

BUCKET, UNIVERSAL BACKHOE (610 MM (24 INCH) / 762 MM (30 INCH) WIDE)

REF	FN	PART NUMBER	YR/SN	QTY	DESCRIPTION
1		365328A1		1	BUCKET, 610 mm (24 in); With 5 Teeth; Order Through Parts Marketing; Incl. Ref 2 - 12
2		NSS		1	NOT SERVICED SEPARATELY, Edge, Right-Hand
3		NSS		1	NOT SERVICED SEPARATELY, Edge, Left-Hand
4		NSS		1	NOT SERVICED SEPARATELY, Edge
		D139851		2	TOOTH, Outer; Incl. Ref 5 - 7
5		D51750		1	POINT
6		245466A1		1	SPLIT PIN/SAFETY PIN
7		D138157		1	SHANK
		D139849		3	TOOTH, Center; Incl. Ref 8 - 10; Order Ref 8 - 10
8		D51750		1	POINT
9		245466A1		1	SPLIT PIN/SAFETY PIN
10		D48212		1	SHANK
11		D37495		2	BUSHING
12		D30933		4	BUSHING
1		376385A1		1	BUCKET, 762 mm (30 in); With 6 Teeth; Not Illustrated; Order Through Parts Marketing; Incl. Ref 2 - 12
2		NSS		1	NOT SERVICED SEPARATELY, Edge, Right-Hand
3		NSS		1	NOT SERVICED SEPARATELY, Edge, Left-Hand
4		NSS		1	NOT SERVICED SEPARATELY, Edge
		D139851		2	TOOTH, Outer; Incl. Ref 5 - 7
5		D51750		1	POINT
6		245466A1		1	SPLIT PIN/SAFETY PIN
7		D138157		1	SHANK
		D139849		4	TOOTH, Center; Incl. Ref 8 - 10; Order Ref 8 - 10
8		D51750		1	POINT
9		245466A1		1	SPLIT PIN/SAFETY PIN
10		D48212		1	SHANK
11		D37495		2	BUSHING
12		D30933		4	BUSHING

09-33		p1	12/07

BUCKET, BACKHOE (610 MM (24 INCH) WIDE)

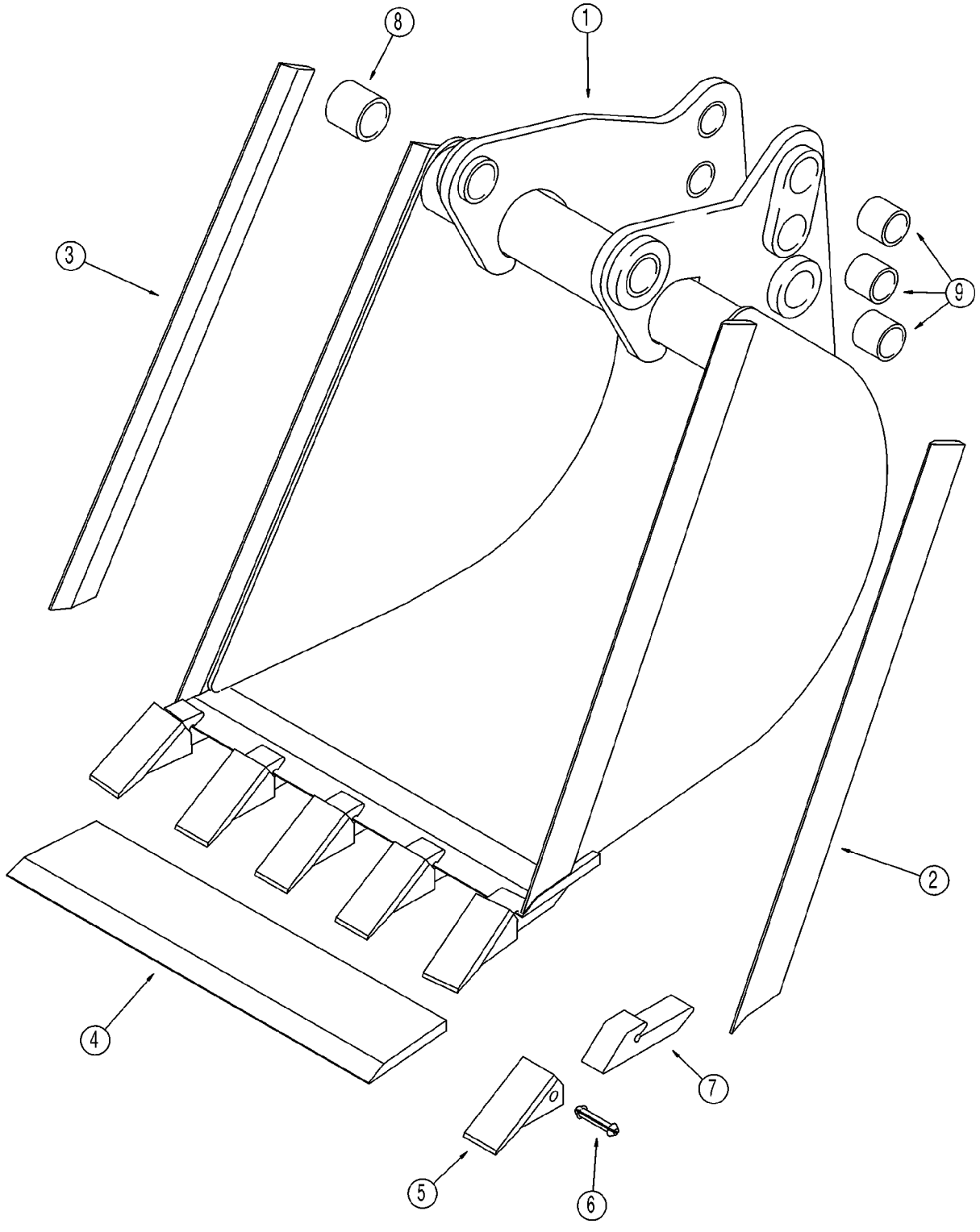

BUCKET, BACKHOE (610 MM (24 INCH) WIDE)

REF	FN	PART NUMBER	YR/SN	QTY	DESCRIPTION
1		129885A1		1	BUCKET, 610 mm (24 in); With 5 Teeth; Order Through Parts Marketing; Incl. Ref 2 - 9
2		129894A1		1	EDGE, Right-Hand
3		129893A1		1	EDGE, Left-Hand
4		129944A1		1	SUPPORT
		D41659		5	TOOTH, Incl. Ref 5 - 7
5		D51750		1	POINT
6		245466A1		1	SPLIT PIN/SAFETY PIN
7		NSS		1	NOT SERVICED SEPARATELY, Shank
8		D37495		2	BUSHING
9		D30933		6	BUSHING

09-34		p1	12/07

BUCKET, UNIVERSAL BACKHOE (914 MM (36 INCH) WIDE)

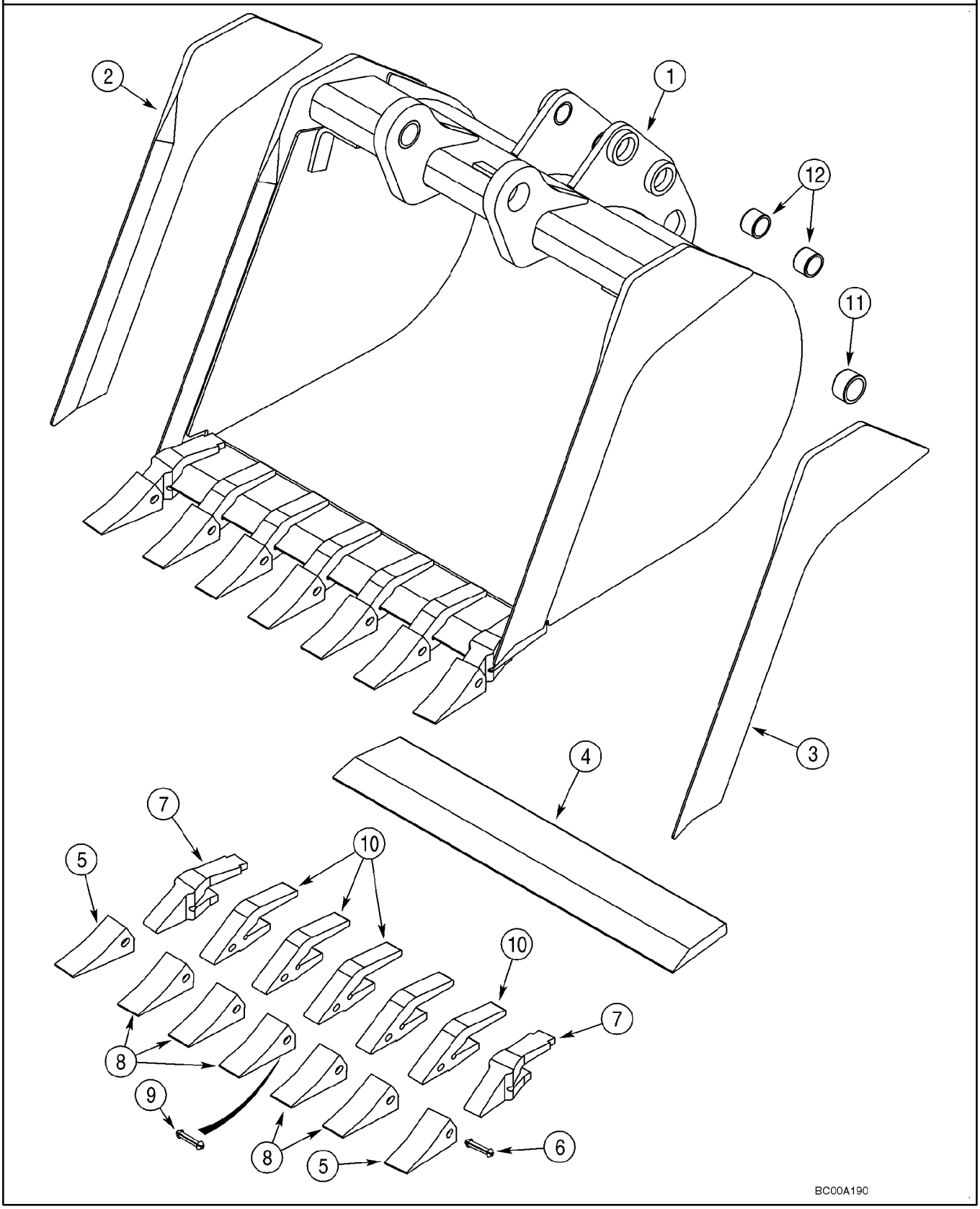

BUCKET, UNIVERSAL BACKHOE (914 MM (36 INCH) WIDE)

REF	FN	PART NUMBER	YR/SN	QTY	DESCRIPTION
1		376386A1		1	BUCKET, 914 mm (36 in); With 7 Teeth; Order Through Parts Marketing; Incl. Ref 2 - 12
2		365941A1		1	EDGE, CUTTING, Edge, Left-Hand
3		365942A1		1	EDGE, CUTTING, Edge, Right-Hand
		370747A1		1	TOOTH, BUCKET, CUTTING EDGE ASSEMBLY; With Teeth; Incl Ref 4 - 10
4		NSS		1	NOT SERVICED SEPARATELY, Edge
		D139851		2	TOOTH, Outer; Incl. Ref 5 - 7
5		D51750		1	POINT
6		245466A1		1	SPLIT PIN/SAFETY PIN
7		D138157		1	SHANK
		D139849		5	TOOTH, Center; Incl. Ref 8 - 10; Order Ref 8 - 10
8		D51750		1	POINT
9		245466A1		1	SPLIT PIN/SAFETY PIN
10		D48212		1	SHANK
11		D37495		2	BUSHING
12		D30933		4	BUSHING

09-35		p1	12/07

BUCKET, UNIVERSAL BACKHOE (610 MM (24 INCH) WIDE)

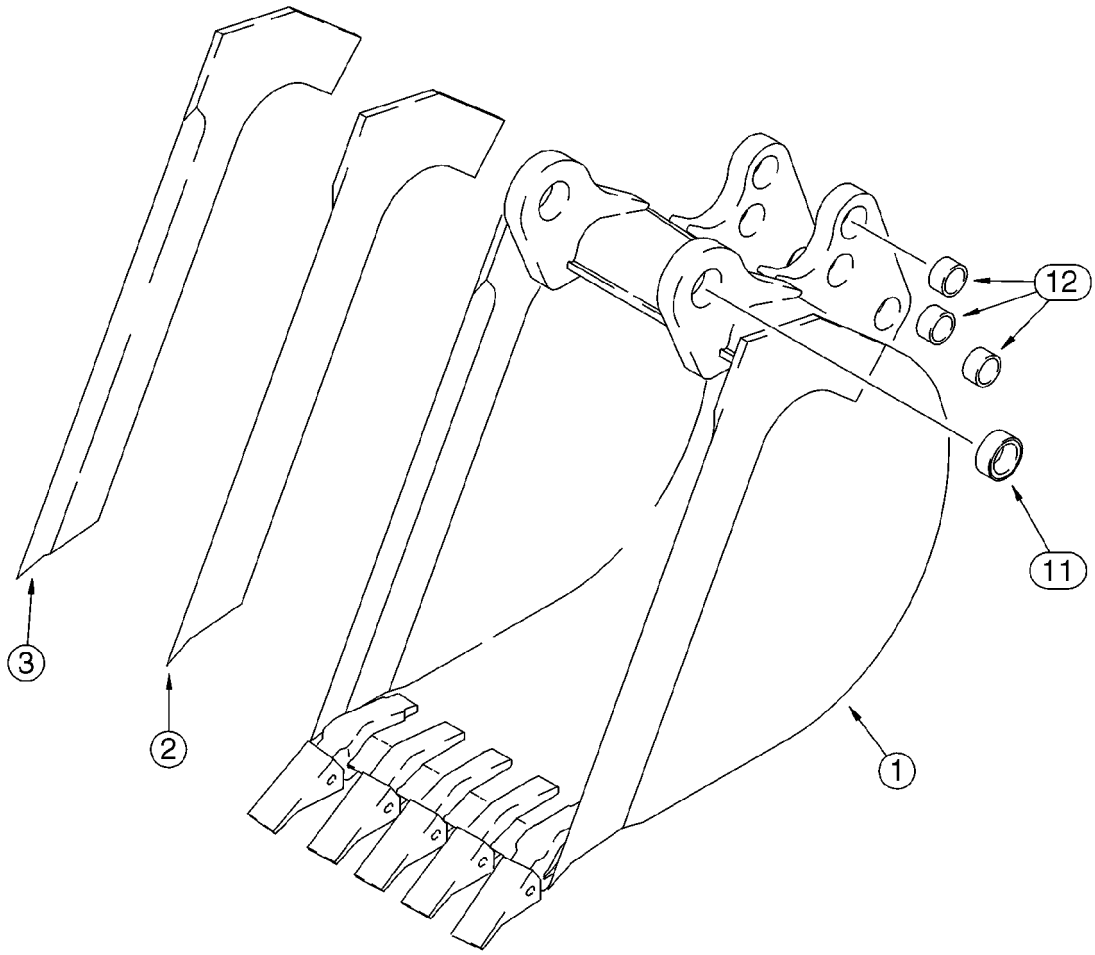

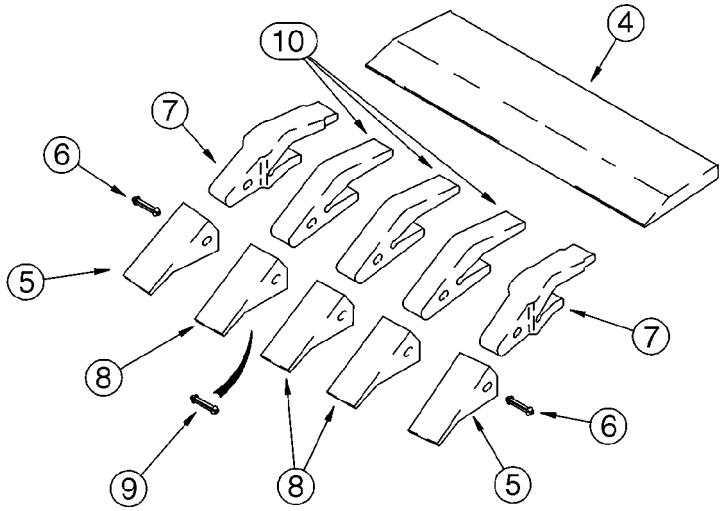

B9405159

BUCKET, UNIVERSAL BACKHOE (610 MM (24 INCH) WIDE)

REF	FN	PART NUMBER	YR/SN	QTY	DESCRIPTION
1		141232A2		1	BUCKET, 610 mm (24 in); With 5 Teeth; Order Through Parts Marketing; Incl. Ref 2 - 12
2		141234A1		1	EDGE, CUTTING, Right-Hand
3		141233A1		1	EDGE, CUTTING, Left-Hand
4		D142012		1	EDGE, CUTTING
		D139851		2	TOOTH, Outer; Incl. Ref 5 - 7
5		D51750		1	POINT
6		245466A1		1	SPLIT PIN/SAFETY PIN
7		D138157		1	SHANK
		D139849		3	TOOTH, Center; Incl. Ref 8 - 10; Order Ref 8 - 10
8		D51750		1	POINT
9		245466A1		1	SPLIT PIN/SAFETY PIN
10		D48212		1	SHANK
11		D37495		2	BUSHING
12		D30933		6	BUSHING

09-35A		p1	12/07

FROST POINT ASSEMBLY

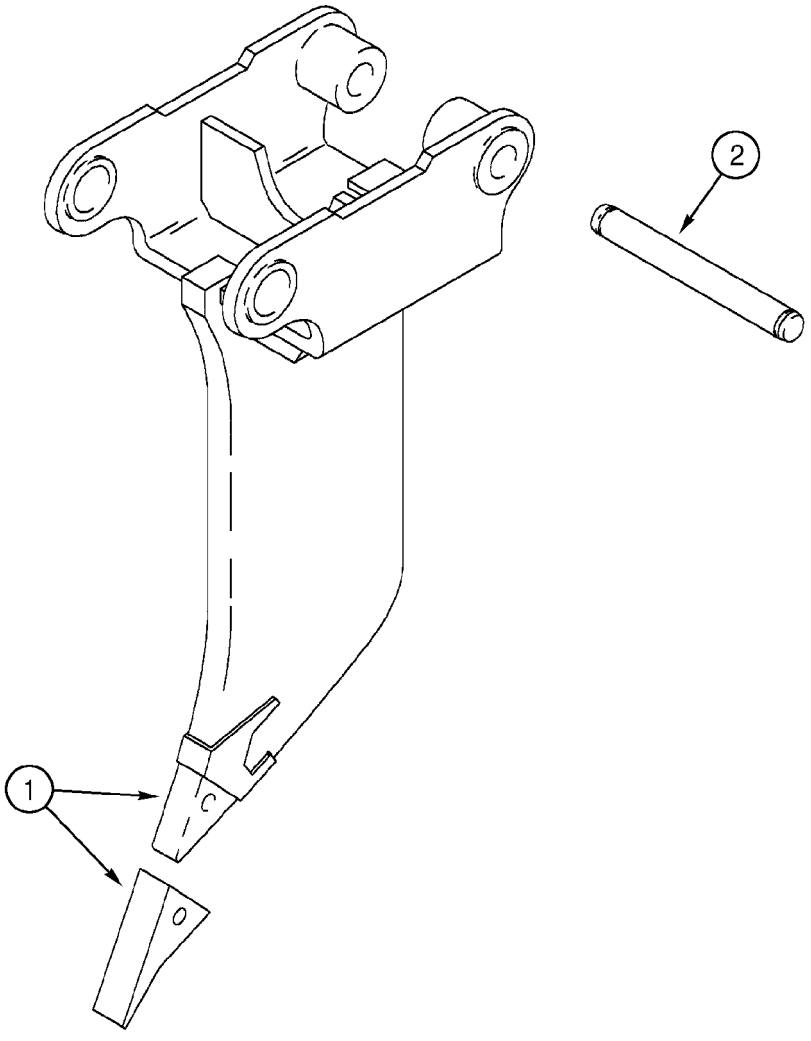

BS00H128

FROST POINT ASSEMBLY

REF	FN	PART NUMBER	YR/SN	QTY	DESCRIPTION
1		319467A1		1	POINT, Frost Point Assembly; Includes (2) Pin Retaining Bolts; Component Parts Not Serviced Separately
2		D50696		1	PIN

09-36		p1	07/07

COUNTERWEIGHT, FRONT

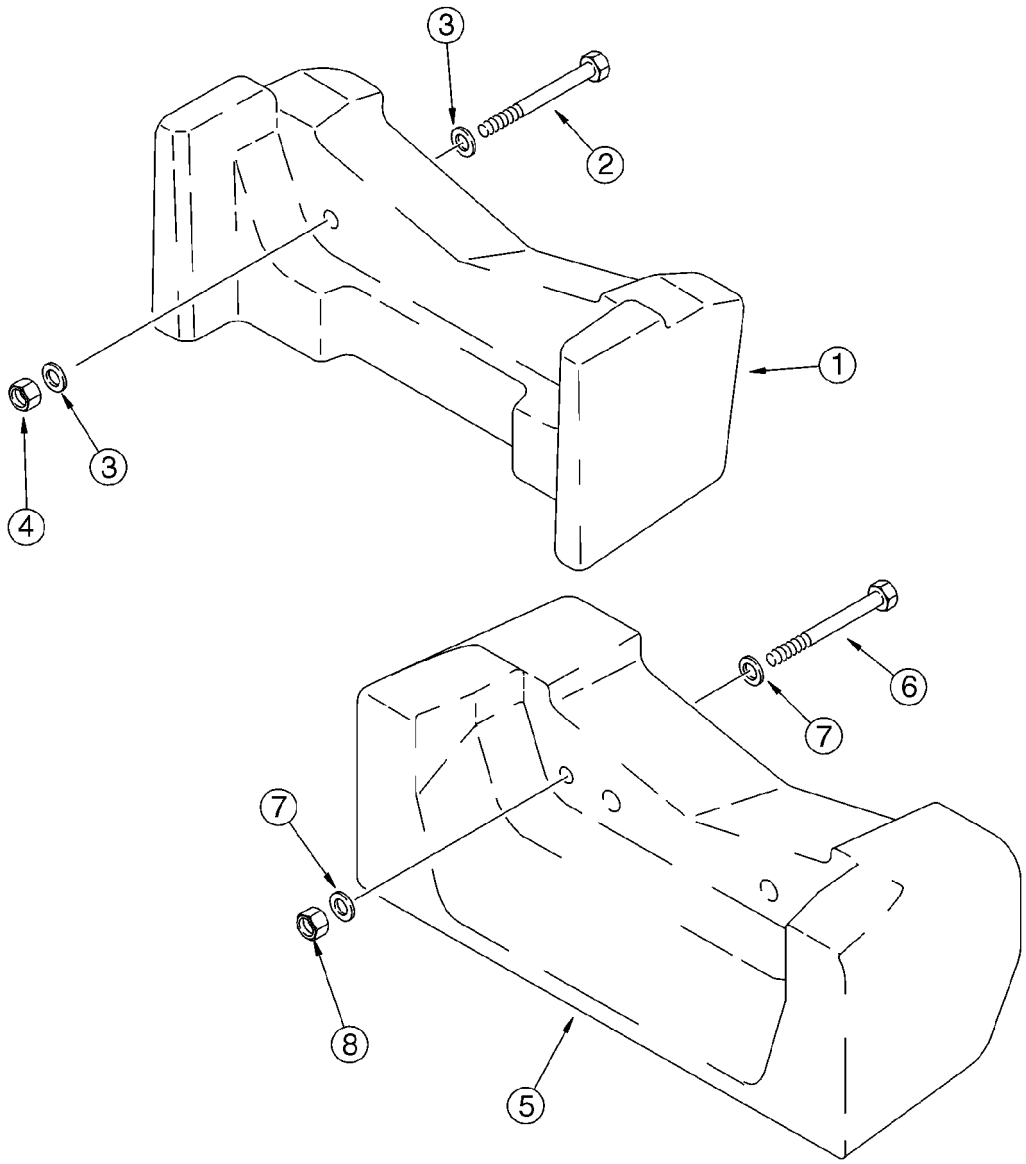

BT97N084

COUNTERWEIGHT, FRONT

REF	FN	PART NUMBER	YR/SN	QTY	DESCRIPTION
1		360867A1		1	WEIGHT, 200 kg (441 lbs); If Used
2		827-20170		2	BOLT, Hex, M20 x 170, 10.9
3		896-11020		4	WASHER, M20 x 37.5 x 4, HT
4		829-1420		2	NUT, M20, Cl 10
5		87425456		1	BALANCER, 408 kg (900 lbs); If Used
6		827-20170		2	BOLT, Hex, M20 x 170, 10.9
7		896-11020		4	WASHER, M20 x 37.5 x 4, HT
8		829-1420		2	NUT, M20, Cl 10

09-37		p1	02/08

CHASSIS / MOUNTS, POD - SCREEN, AIR INLET

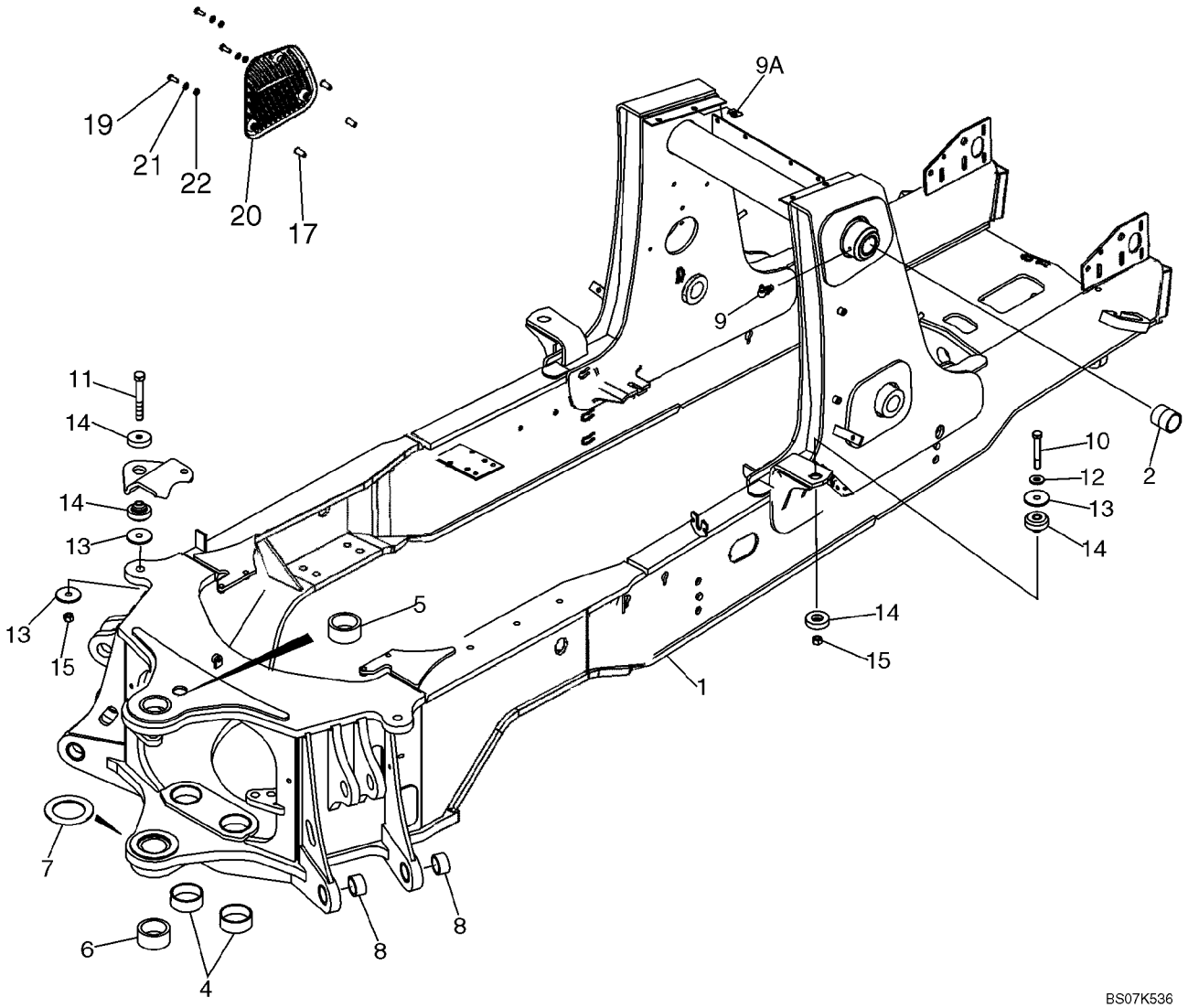

CHASSIS / MOUNTS, POD - SCREEN, AIR INLET

REF	FN	PART NUMBER	YR/SN	QTY	DESCRIPTION
1		87716973		1	FRAMEWORK, Chassis, Incl. Ref 2 - 8
2		180427A1		2	BUSHING
4		114318A1		2	BUSHING, 80 x 5 x 28.8
5		D151069		1	BUSHING, 70 x 10 x 32 mm
6		D151070		1	BUSHING, 70 x 10 x 38 mm
7		220413A1		1	SPACER, 93 x 135 x 5 mm; Welded-On
8		107124A1		4	BUSHING
9		219-55		2	NIPPLE, LUBE, 90Ü, 1/8" NPT x .84" lg
9A		833-40310		4	NUT, M10, U
10		827-16085		2	BOLT, Hex, M16 x 85, 10.9
11		827-16100		2	BOLT, Hex, M16 x 100, 10.9
12		896-11016		2	WASHER, M17.5 x 30 x 4, HT
13		186977A1		6	WASHER, 4,5 mm thick
14		411892A1		4	MOUNT, RUBBER, M16; Operator Compartment Pod Mounts
15		829-1416		4	NUT, M16, Cl 10
17		87417383		3	INSERT, THREADED
19		614-8030		3	BOLT, Hex, M8 x 30, 8.8
20		87324160		1	SCREEN, Air Inlet, Plastic, With Slots
21		895-15008		3	WASHER, M8 x 20 x 1.6
22		87310109		3	SPACER, 9.5 ID x 15 OD x 3.0 mm thk

09-38		p1	01/08

TANK, OIL - BOX, BATTERY AND TOOL

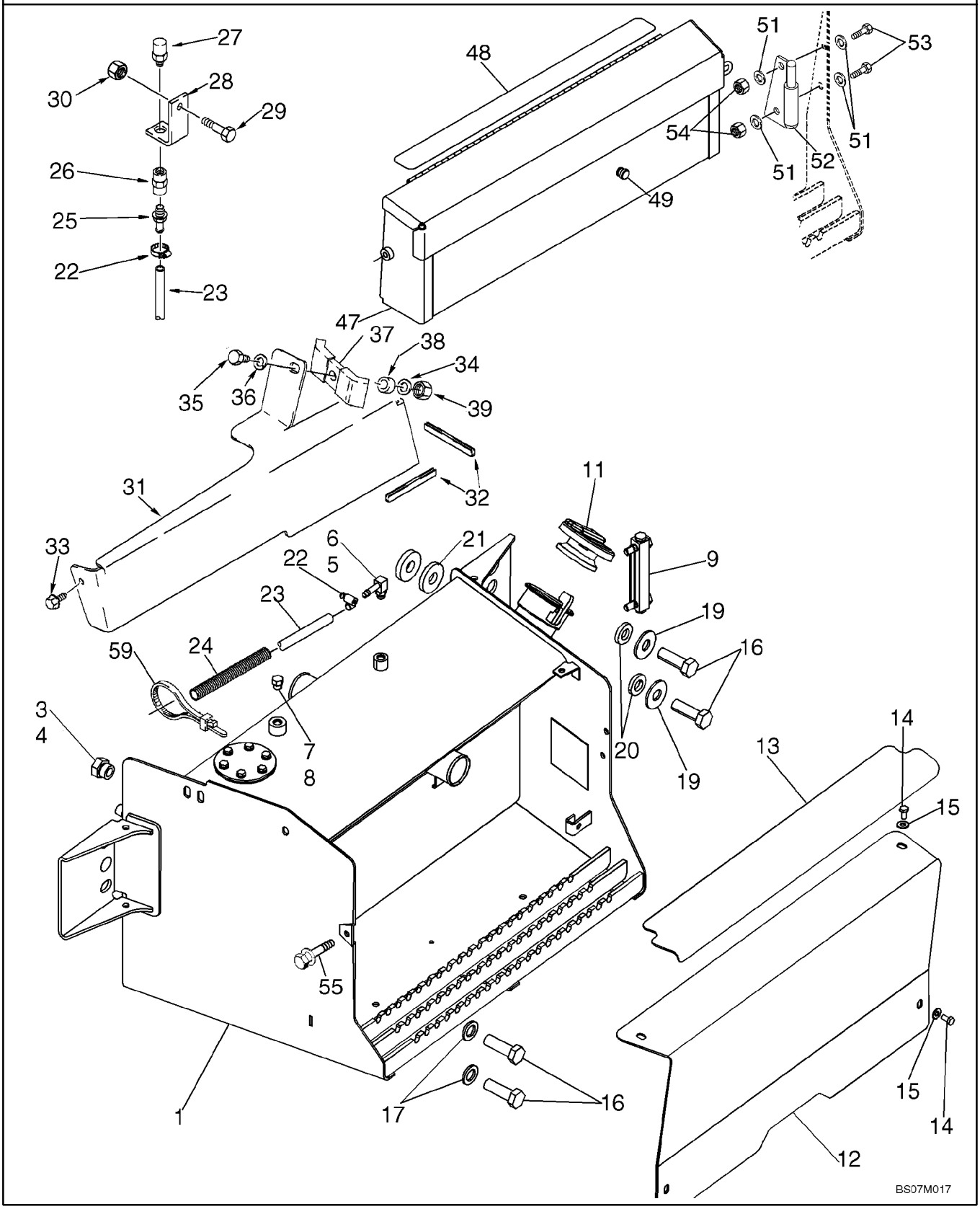

TANK, OIL - BOX, BATTERY AND TOOL

REF	FN	PART NUMBER	YR/SN	QTY	DESCRIPTION
		87651830		1	RESERVOIR, HYDRAULIC OIL, ASSEMBLY; Incl. Ref 1 - 11
1		87651790		1	RESERVOIR, HYDRAULIC OIL, Right-Hand Side of Chassis
2		321-229		1	DECAL, Not Illustrated
3		218-5158		1	PLUG, Hex Hd, 1 1/16"-12 ORB, Incl. 4
4		237-6012		1	O-RING, 12-1, 90 Duro, .924 ID x .118" Thk
5		217-347		1	FITTING, 90Ü, 3/8" Hose x 9/16"-18 ORB Beaded, Incl. 6
6		237-6006		1	O-RING, 6-1, 90 Duro, .468" ID x .078" Thk
7		218-5155		1	PLUG, Hex Hd, 9/16"-18 ORB, Incl. 8
8		237-6006		1	O-RING, 6-1, 90 Duro, .468" ID x .078" Thk
9		226456A1		1	GAUGE, Aluminum; Includes (2) Hollow Head Bolts and (4) O-Rings; Component Parts Not Serviced Separately, Used With Ref 10
9A		87673270		1	ADHESIVE STRIP, Adhesive Backed; Not Illustrated
10		345-49		1	LOCTITE, 242; 1 ml; Not Illustrated
11		138595A1		1	CAP, FILLER, CAP
12		87348192		1	COVER, Battery
13		87719444		1	STRIP, ANTI-SKID
14		614-8016		4	BOLT, Hex, M8 x 16, 8.8
15		895-15008		4	WASHER, M8 x 20 x 1.6
16		443375A1		4	BOLT, M20 x 60; 10.9; Thread to Head
17		896-11020		2	WASHER, M20 x 37.5 x 4, HT
19		302358A1		2	WASHER
20		185926A1		2	SPACER
21		87360280		1	SPACER
22		214-1406		2	CLAMP, HOSE, #06, .44/.78 Type F Worm
23		87363421		1	HOSE (METRES), 912 mm (35-29/32 in); Vent
24		87452021		1	TUBE, PLASTIC-RUBBER, 650 mm (25-19/32 in)
25		217-380		1	FITTING, 3/8" Hose X 3/8" NPTF Beaded, 3/8 stem x PT; Use With 345-147 Sealant
26		217-1102		1	CONNECTOR, HYD., 3/8"-18 NPTF, Female
27		87674850		1	BREATHER, Use With 345-147 Sealant
28		122603A1		1	SUPPORT

09-38		p2	01/08

TANK, OIL - BOX, BATTERY AND TOOL

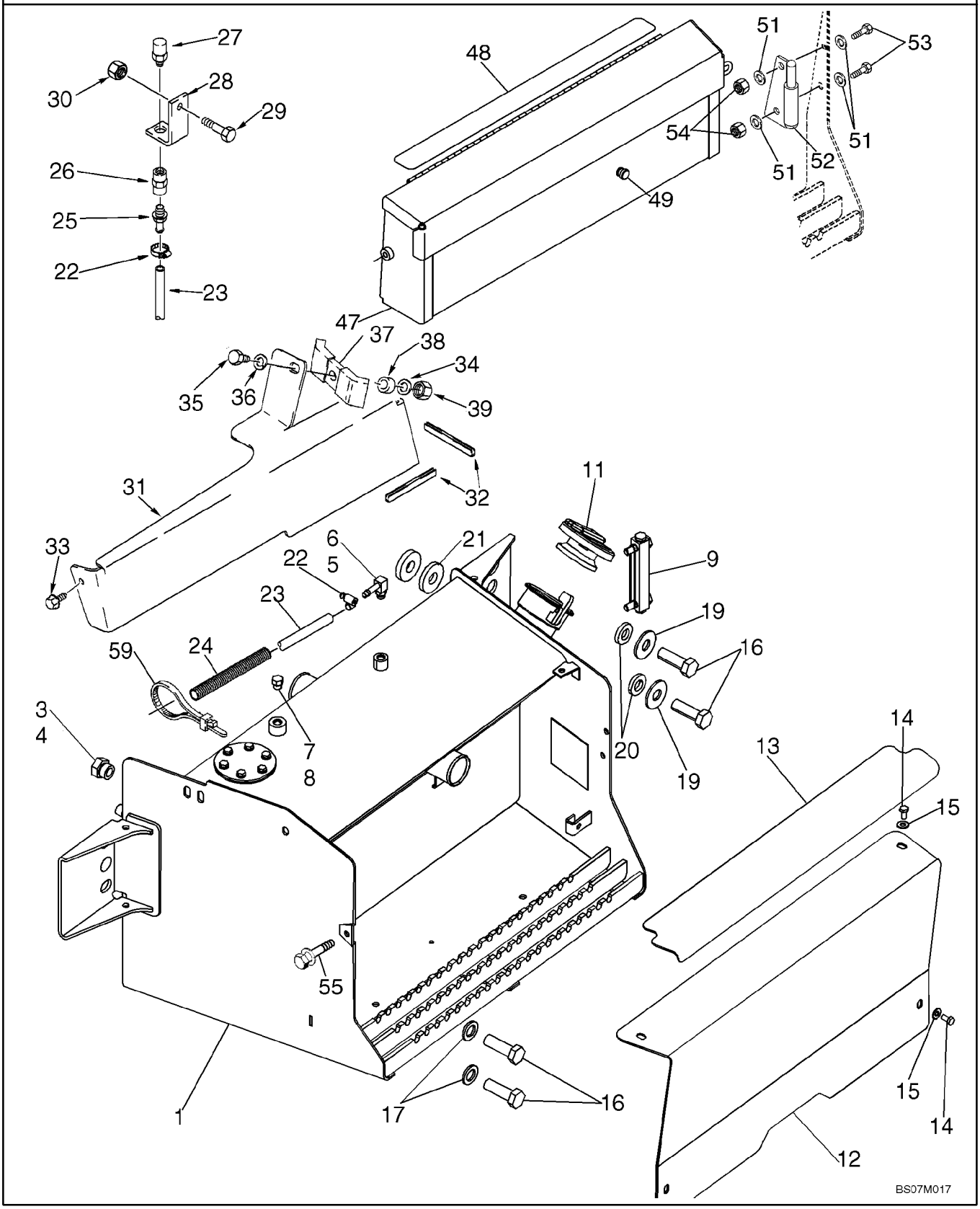

TANK, OIL - BOX, BATTERY AND TOOL

REF	FN	PART NUMBER	YR/SN	QTY	DESCRIPTION
29		711-10030		1	BOLT, CARRIAGE, Short NK, M10 x 30, Cl8.8, Full Thd
30		829-1410		1	NUT, M10, Cl 10
31		399959A2		1	COVER
32		191047A1		1	MOLDING, 305 mm (12 in) lg; Apply 65 mm (2-9/16 in) Of Trim To Front Lower Edge and 240 mm (9-1/2 in) Of Trim To Outisde Lower Edge of Cover
33		307577A1		1	BOLT, With Washer, M8 x 20
34		895-11010		1	WASHER, M10 x 20 x 2
35		814-10045		1	BOLT, Hex, M10 x 45, 8.8
36		892-11010		1	WASHER, LOCK, M10
37		D138055		1	CLAMP
38		120303A1		1	SPACER
39		829-1410		1	NUT, M10, Cl 10
47		380807A4		1	BOX, TOOL
48		87694065		1	STRIP, ANTI-SKID
49		L60224		1	BUMPER, 1/2 in Hole
51		895-11010		4	WASHER, M10 x 20 x 2
52		382202A2		1	HINGE
53		614-10025		2	BOLT, Hex, M10 x 25, 8.8, Full Thd
54		829-1410		2	NUT, M10, Cl 10
55		121856A1		1	SCREW, Hex Wash Hd, M10 x 1.5 x 30, 10.9, Includes Washer
59		L18337		2	STRAP, CABLE, 9.95"-12.1" lg

09-39		p1	12/07

RADIATOR WRAPPER

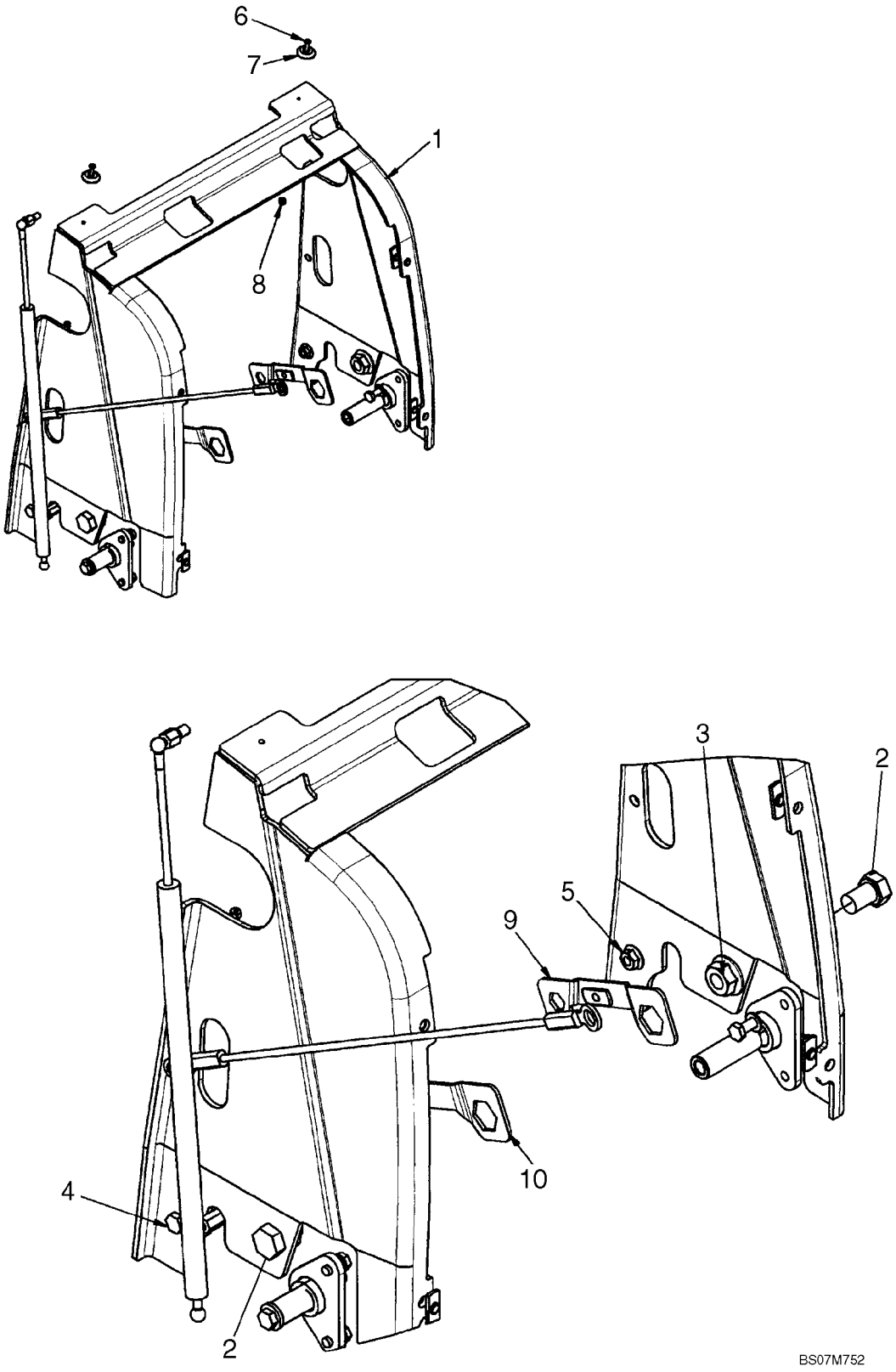

RADIATOR WRAPPER

REF	FN	PART NUMBER	YR/SN	QTY	DESCRIPTION
1		87719412		1	PLATE, FIXING, Wrapper
2		614-20030		2	BOLT, Hex, M20 x 30, 8.8, Full Thd, M20 x 30
3		829-2420		2	NUT, M20 x 2.5, Flg, Cl 10
4		614-12030		2	BOLT, Hex, M12 x 30, 8.8
5		829-2412		2	NUT, M12 x 1.75, Flg, Cl 10
6		440-11012		2	SCREW, Cross Pan Hd, #10-24 x 3/4", No. 10 x 5/8
7		109879A1		2	SPACER, Hood; Plastic
8		231-14109		2	NUT, LOCK, #10-24, GB
9		87725886		1	RETAINER, Retainer
10		87725883		1	RETAINER, Retainer

09-40		p1	11/07

HOOD - PANELS, SIDE

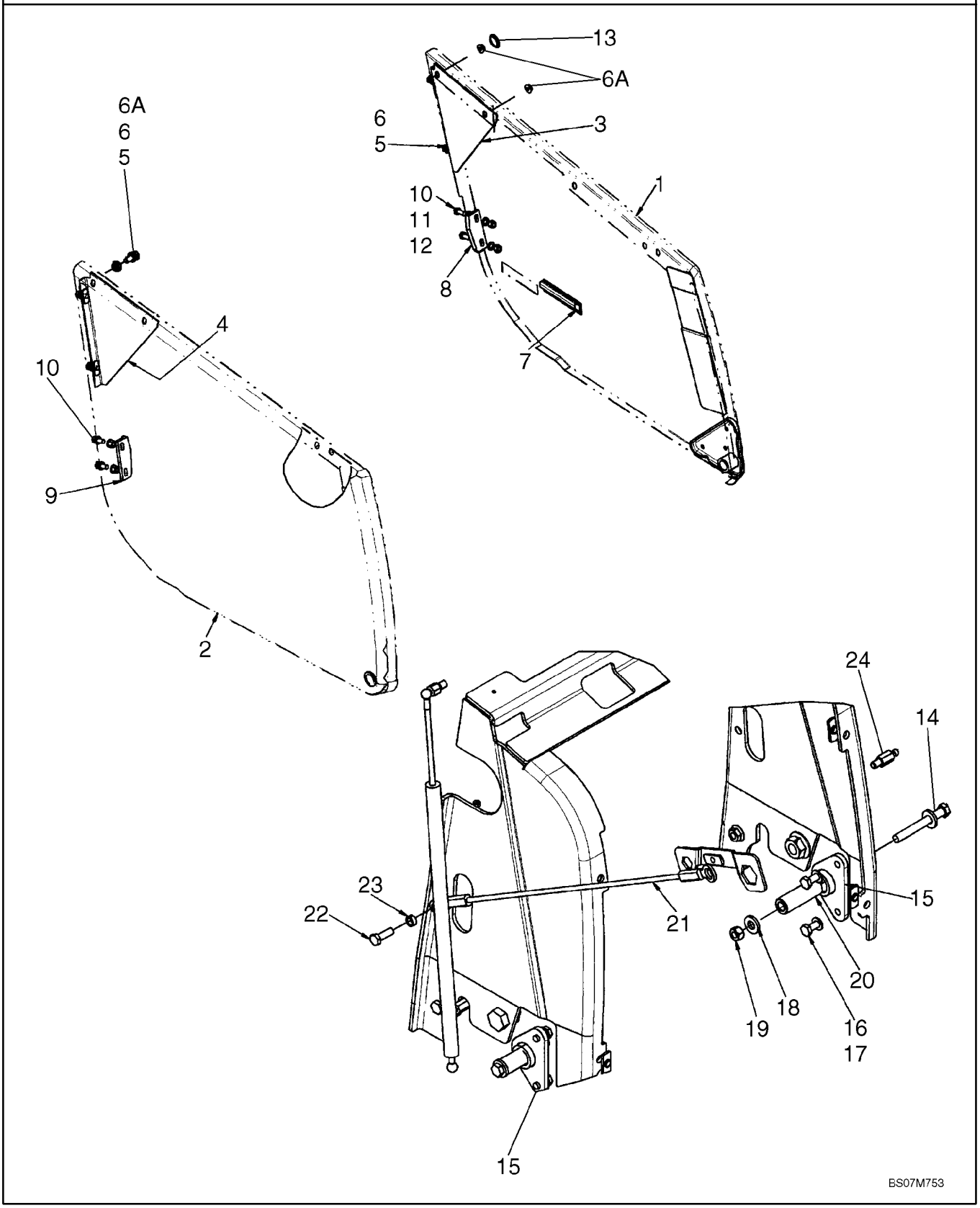

HOOD - PANELS, SIDE

REF	FN	PART NUMBER	YR/SN	QTY	DESCRIPTION
1		87444148		1	PANEL, SIDE, Left-Hand Side
2		87444147		1	PANEL, SIDE, Right-Hand Side
3		362609A1		1	BRACE, Left-Hand
4		362607A1		1	BRACE, Right-Hand
5		614-10025		8	BOLT, Hex, M10 x 25, 8.8, Full Thd
6		895-11010		8	WASHER, M10 x 20 x 2
6A		825-2410		4	NUT, M10 x 1.5, Flg, Cl 8
7		183168A1		1	HANDLE, Left-Hand
8		D143715		1	SUPPORT, Guide, Left-Hand
9		D143714		1	SUPPORT, Guide, Right-Hand
10		614-10025		4	BOLT, Hex, M10 x 25, 8.8, Full Thd
11		895-11010		8	WASHER, M10 x 20 x 2
12		832-10410		4	NUT, LOCK, M10 x 1.5, Cl 8
13		D140267		2	PLUG
14		814-12100		2	BOLT, Hex, M12 x 100, 8.8
15		87606502		2	PIVOT
16		614-10020		4	BOLT, Hex, M10 x 20, 8.8, Full Thd
17		895-11010		4	WASHER, M10 x 20 x 2
18		896-15012		4	WASHER, M12 x 28.5 x 4, HT
19		829-1412		2	NUT, M12, Cl 10
20		87412060		2	TUBE
21		144908A2		1	CABLE
22		614-10030		1	BOLT, Hex, M10 x 30, 8.8
23		D143417		1	SPACER
24		87561131		2	BALL JOINT

09-41		p1	01/08

HOOD - GRILLE

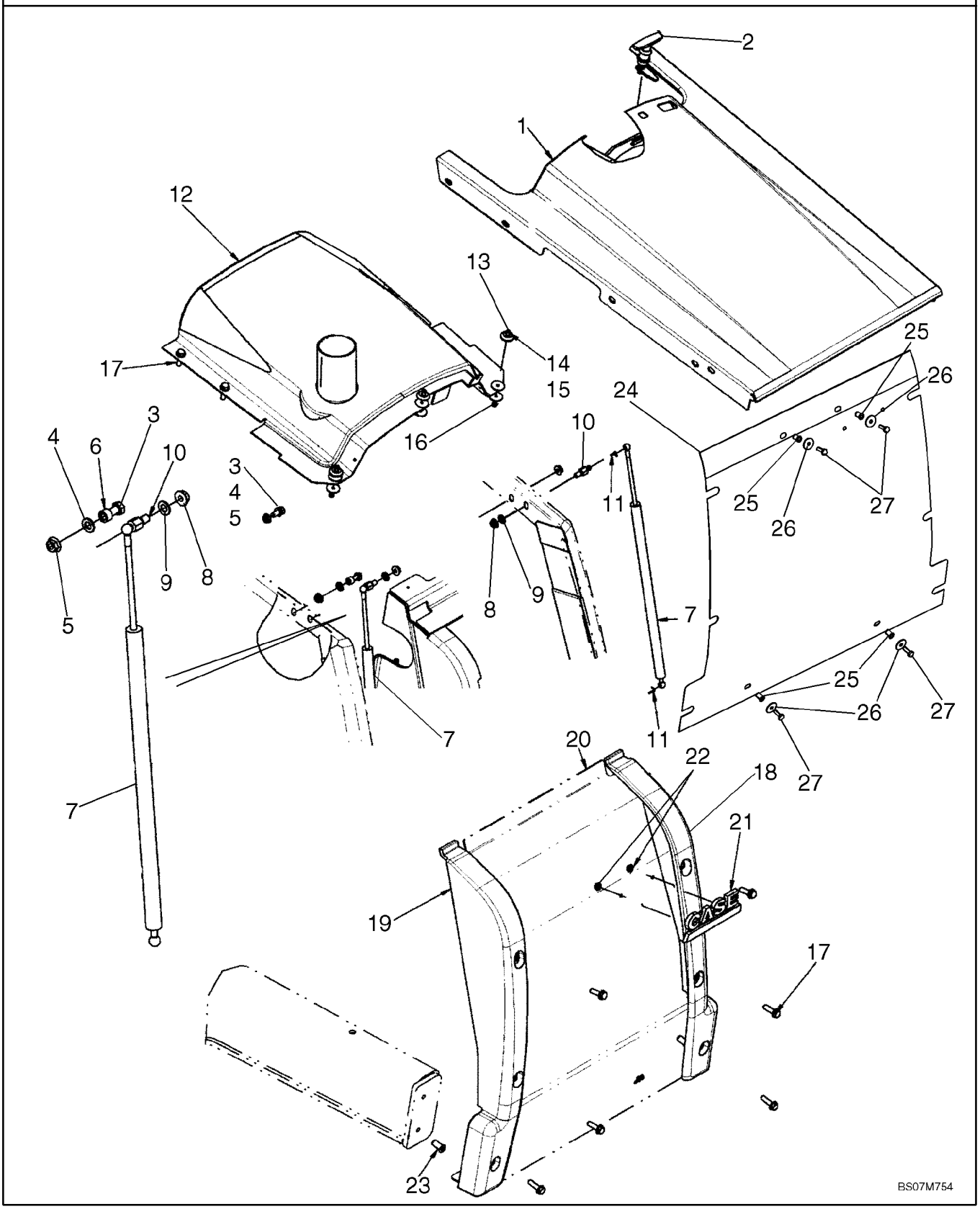

HOOD - GRILLE

REF	FN	PART NUMBER	YR/SN	QTY	DESCRIPTION
1		87594903		1	HOOD, ENGINE, Engine; Tilt
2		175599A1		1	LATCH
3		614-10025		4	BOLT, Hex, M10 x 25, 8.8, Full Thd
4		895-11010		4	WASHER, M10 x 20 x 2
5		825-2410		4	NUT, M10 x 1.5, Flg, Cl 8
6		396605A1		1	SPACER
7		114980A1		2	SHOCK ABSORBER, Spring; Counterbalance
8		825-2410		2	NUT, M10 x 1.5, Flg, Cl 8
9		895-11010		2	WASHER, M10 x 20 x 2
10		139363A1		2	BALL JOINT, Stud
11		F44883		4	CLIP
12		87545557		1	PLATE, FIXING, Fixed Hood
13		440-11012		3	SCREW, Cross Pan Hd, #10-24 x 3/4"
14		109879A1		3	SPACER
15		185325A1		8	SPACER
16		231-14109		3	NUT, LOCK, #10-24, GB
17		392828A2		10	BOLT, With Washer, M10 x 40
18		87719497		1	BUMPER, LH Front
19		87719495		1	BUMPER, RH Front
20		87585167		1	SCREEN, Front Grille
21		186989A1		1	EMBLEM, CASE Medallion
22		131-431		2	NUT, LOCK, Self, Threading, 1/4"
23		87417721		2	INSERT, THREADED
24		87726055		1	SCREEN, Screen, Chaff
25		255447A1		4	RIVET, Insert, Threaded
26		257382A1		4	WASHER, 6.6 x 25 x 1.6 mm
27		257381A1		4	SCREW, 1/4 NF x 3/4

09-42		p1	01/08

PLATES, FLOOR - FLOORMATS

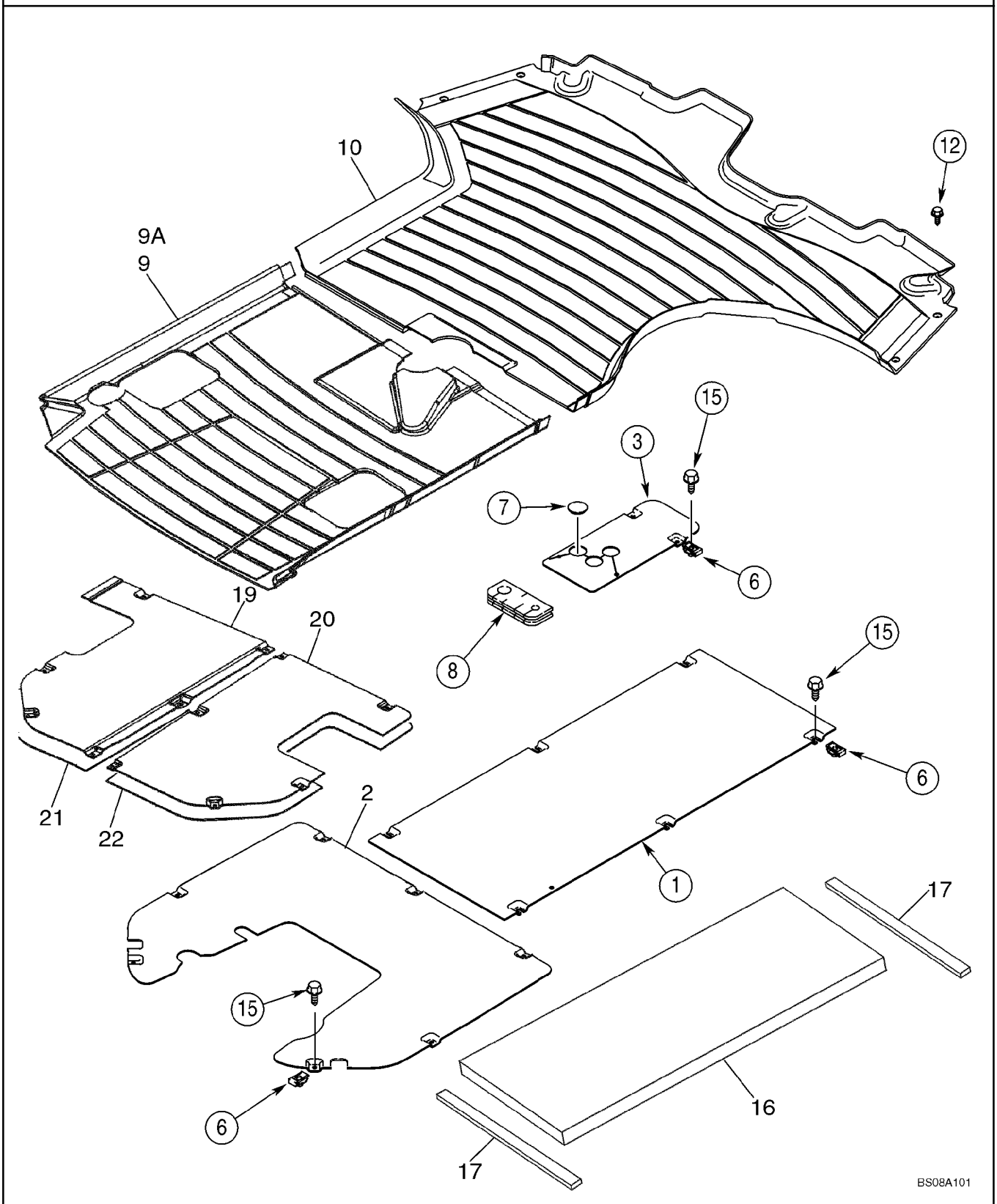

PLATES, FLOOR - FLOORMATS

REF	FN	PART NUMBER	YR/SN	QTY	DESCRIPTION
1		355984A2		1	PLATE, LARGE, Front
2		86983190		1	PLATE, COVER, Rear; Without Pilot Controls
3		87436076		1	PLATE, COVER, Loader Control Lever
6		833-40406		16-17	NUT, M6, U
7		353-422		1	PLUG, Dome, 1.250" hole, Nylon, Models Without Clam Bucket
8		393623A1		1	BLOCK, Floor
9		86983325		1	MAT, FLOOR, Rear, Canopy Models, Without Pilot Controls
9A		86983269		1	MAT, FLOOR, Rear, Canopy Models, With Pilot Controls; Not Illustrated
10		390551A2		1	MAT, FLOOR, Front, Cab or Canopy Models
12		87310085		4	SCREW, SELF TAP, Hex Washer Head, No. 10 x 1, Self-Tapping, Stainless Steel
15		87310096		16-17	BOLT, M6 x 25, Includes Washer, Stainless Steel
16		411074A1		1	SEAL, Cab Models
17		181981A1		2	STRIP, SEALING, Foam; Adhesive Back; Cab Models
19		87434049		1	PLATE, COVER, Rear, With Pilot Controls
20		87434050		1	PLATE, COVER, Rear, With Pilot Controls
21		87442376		1	INSULATION, FOAM, Heat Barrier, Left-Hand, Canopy Models With Pilot Controls
22		87442377		1	INSULATION, FOAM, Heat Barrier, Right-Hand, Canopy Models With Pilot Controls

09-43		p1	12/07

FENDER COVER, LEFT-HAND - PANEL, REAR CLOSURE (STORAGE TRAY WITH CUP HOLDER)

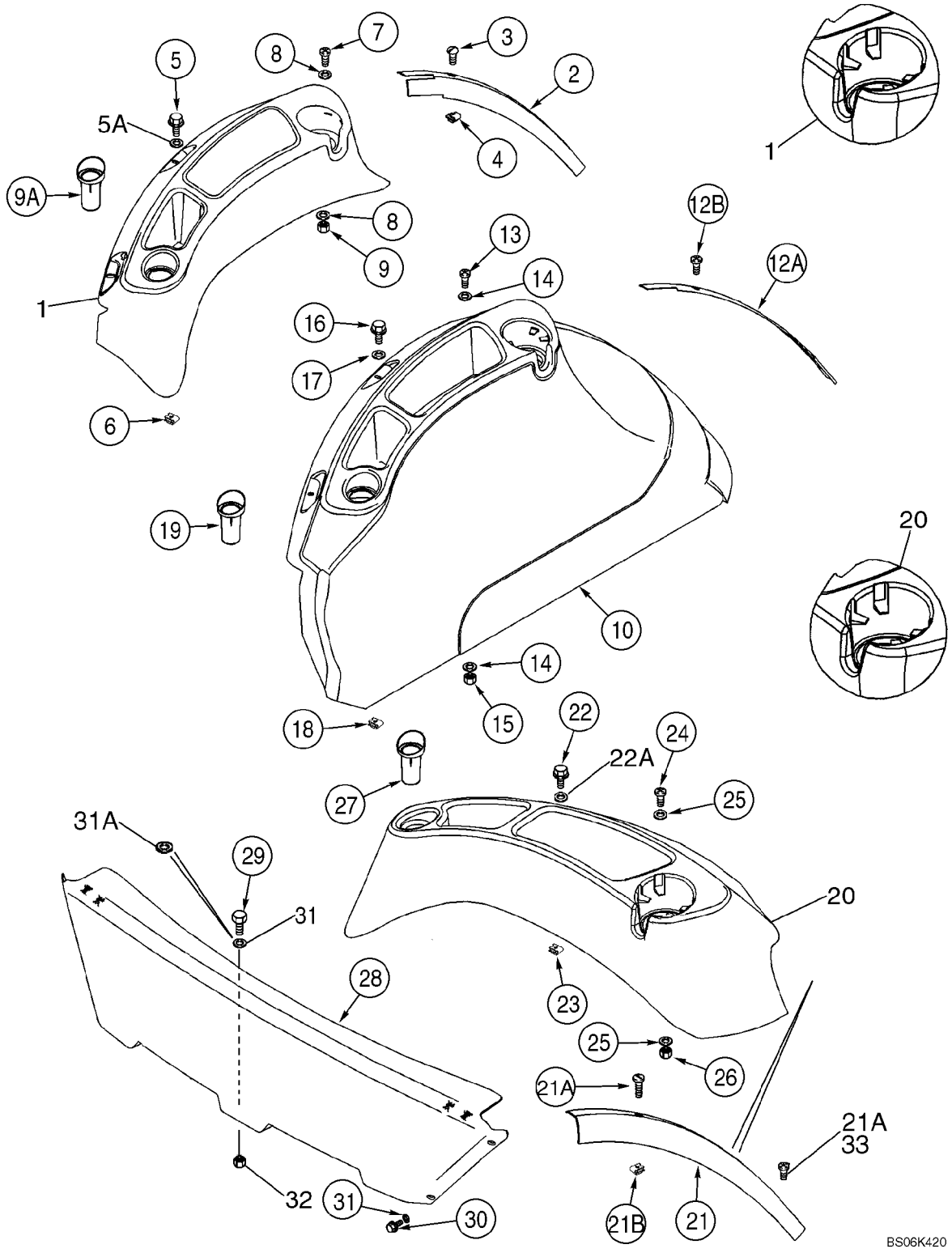

FENDER COVER, LEFT-HAND - PANEL, REAR CLOSURE (STORAGE TRAY WITH CUP HOLDER)

REF	FN	PART NUMBER	YR/SN	QTY	DESCRIPTION
1		86992247		1	TRAY, Cab Models, With Standard Interior; Includes 86992284, 400077A1
		NSS		1	NOT SERVICED SEPARATELY, Tray
		86992284		4	BUMPER
		400077A1		1	STRIP, METRES, 1300 mm (51-3/16 in); Cut From 1977224C1
2		397026A3		1	STRIP, PROTECTION, Trim, Left-Hand Fender, Cab Models With Standard Interior
3		87310088		3	SCREW, No. 10 x 3/4, Stainless Steel
4		131-869		3	NUT, Ret, J, #10-24
5		87310098		2	BOLT, Flange, M6 x 20, Stainless Steel
5A		87310186		2	WASHER, 6.6 ID x 25 OD x 1.6 mm thk, Stainless Steel
6		833-40406		2	NUT, M6, U
7		87310127		2	SCREW, No. 10 x 1, Stainless Steel
8		87310146		4	WASHER, 13/64 x 3/4 x 1/16, Stainless Steel
9		86625057		2	NUT, LOCK, #10-24, GB
9A		378742A3		1	INSERT, Swing Pin Holder
10		86992245		1	COVER ASSY, Cab Models With Deluxe Interior; Includes (4) 86992284 Bumpers
12A		397774A3		1	STRIP, Deluxe Interior
12B		87310088		3	SCREW, No. 10 x 3/4, Stainless Steel
13		87310127		2	SCREW, No. 10 x 1, Stainless Steel
14		87310146		4	WASHER, 13/64 x 3/4 x 1/16, Stainless Steel
15		86625057		2	NUT, LOCK, #10-24, GB
16		87310098		2	BOLT, Flange, M6 x 20, Stainless Steel
17		87310186		2	WASHER, 6.6 ID x 25 OD x 1.6 mm thk, Stainless Steel
18		833-40406		2	NUT, M6, U
19		378742A3		1	INSERT, Swing Pin Holder
20		86992243		1	TRAY ASSY., Canopy Models; Includes 86992284, 4000077A1
		NSS		1	NOT SERVICED SEPARATELY, Tray
		86992284		4	BUMPER

FENDER COVER, LEFT-HAND - PANEL, REAR CLOSURE (STORAGE TRAY WITH CUP HOLDER)

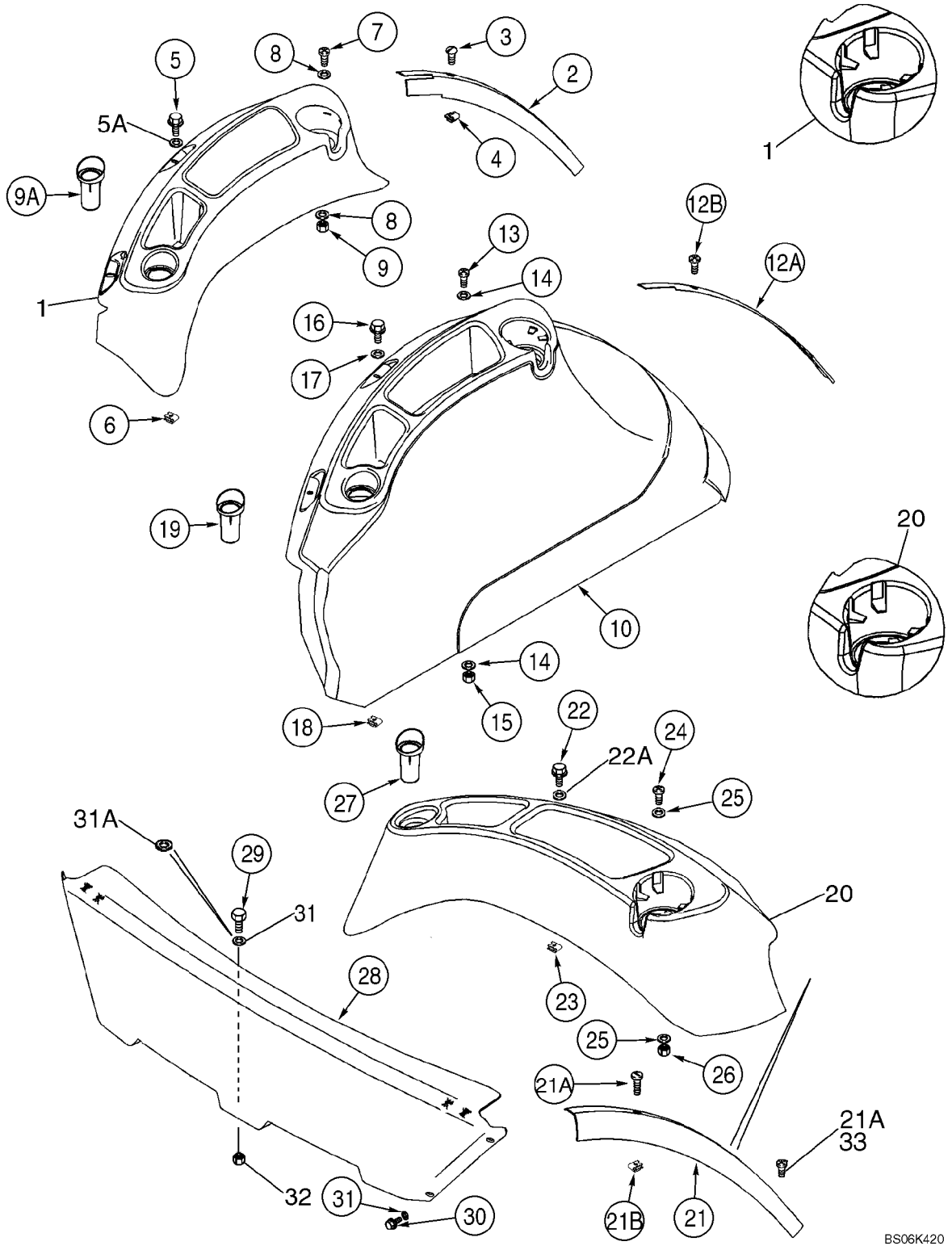

FENDER COVER, LEFT-HAND - PANEL, REAR CLOSURE (STORAGE TRAY WITH CUP HOLDER)

REF	FN	PART NUMBER	YR/SN	QTY	DESCRIPTION
		400077A1		1	STRIP, METRES, 1300 mm (51-3/16 in); Cut From 1977224C1
21		397025A2		1	STRIP, PROTECTION, Trim, Canopy Models
21A		87534992		2-3	SCREW, SELF TAP, Pan Hd Slotted Rec, #10 x 1 SST
21B		131-869		3	NUT, Ret, J, #10-24
22		87310098		2	BOLT, Flange, M6 x 20, Stainless Steel
22A		87310186		2	WASHER, 6.6 ID x 25 OD x 1.6 mm thk, Stainless Steel
23		833-40406		2	NUT, M6, U
24		87310127		2	SCREW, No. 10 x 1, Stainless Steel
25		87310146		4	WASHER, 13/64 x 3/4 x 1/16, Stainless Steel
26		86625057		2	NUT, LOCK, #10-24, GB
27		378742A3		1	INSERT, Swing Pin Holder
28		86992977		1	PANEL, Rear Closure Panel; Canopy Models
29		87310154		1	BOLT, M8 x 25, Stainless Steel
30		781-24820		4	SCREW, SELF TAP, Hex Flg Hd, M8 x 20
31		895-15008		4-5	WASHER, M8 x 20 x 1.6
31A		87310185		1	WASHER, 9 x 20 x 1,6 mm, Stainless Steel
32		832-10408		1	NUT, LOCK, M8 x 1.25, Cl 8
33		87310126		1	SCREW, Pan Hd Cross Rec, No. 10 x 3/4 Stainless Steel

09-44		p1	12/07

FENDER EXTENSIONS

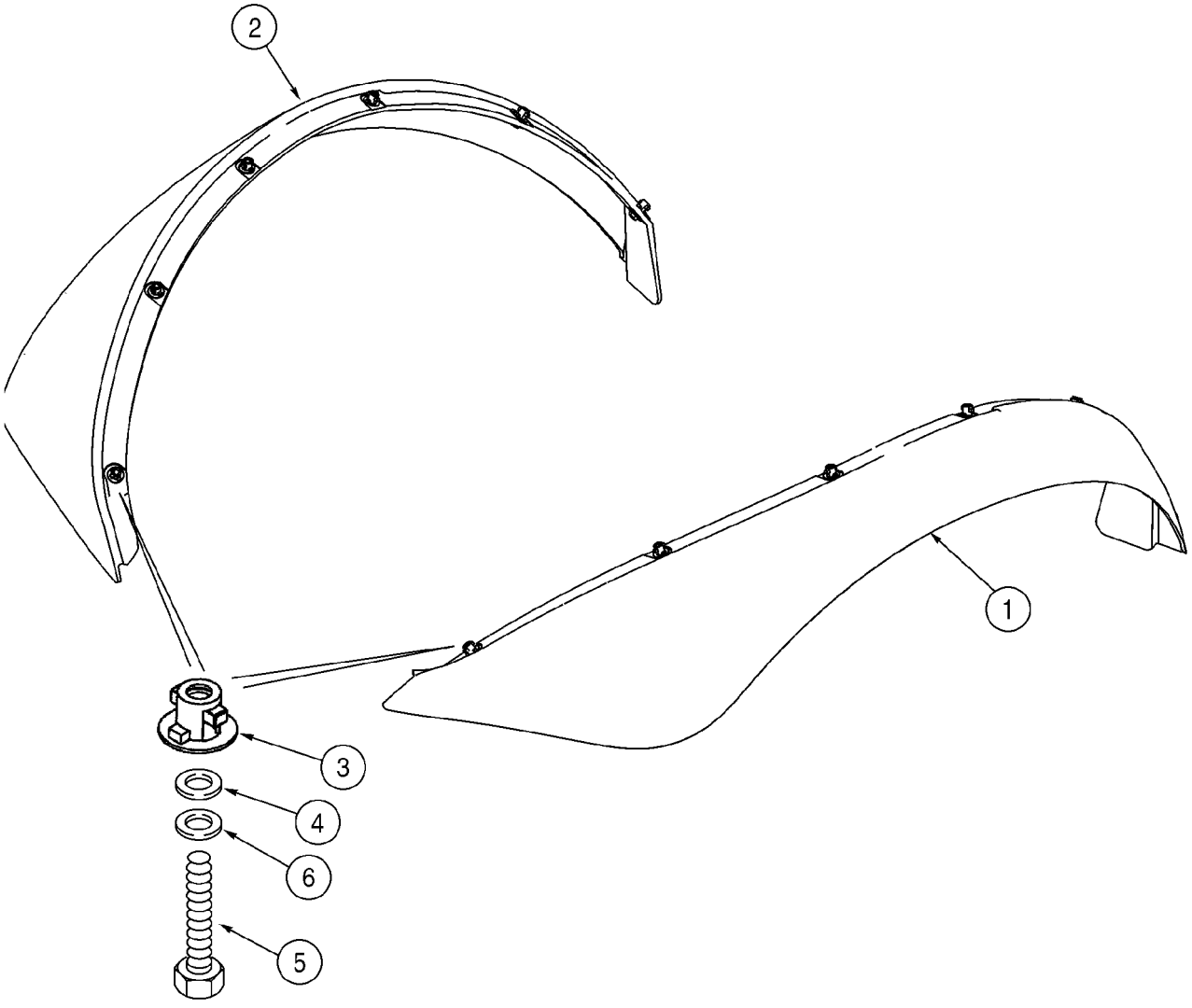

BC00F002

FENDER EXTENSIONS

REF	FN	PART NUMBER	YR/SN	QTY	DESCRIPTION
1		340998A3		1	FENDER, Right-Hand
2		340997A3		1	FENDER, Left-Hand
3		345231A1		12	FASTENER
4		496-41041		12	WASHER, 13/32" x 1 1/8" x .134"
5		614-8030		12	BOLT, Hex, M8 x 30, 8.8
6		892-11008		12	WASHER, LOCK, M8

09-45		p1	02/08

GUARD, MUD

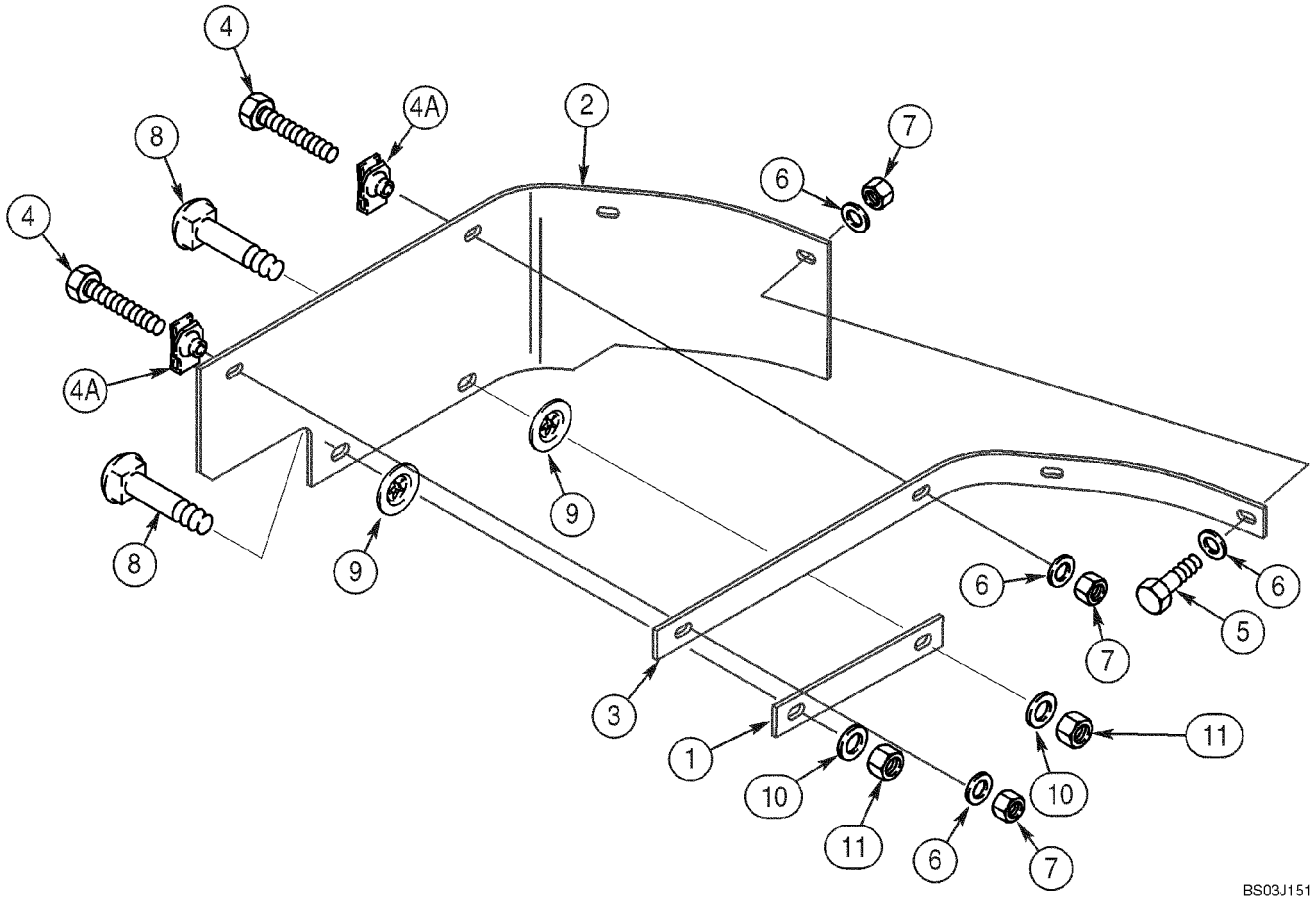

GUARD, MUD

REF	FN	PART NUMBER	YR/SN	QTY	DESCRIPTION
1		362557A1		1	STRIP, Plate
2		362556A2		1	GUARD, Mounts At Right-Hand Fender
3		362558A1		1	STRIP, Angle
4		614-8040		2	BOLT, Hex, M8 x 40, 8.8, Full Thd
4A		833-40408		2	NUT, M8, U
5		614-8030		2	BOLT, Hex, M8 x 30, 8.8
6		495-21038		6	WASHER, 5/16"
7		832-10408		4	NUT, LOCK, M8 x 1.25, Cl 8
8		711-10040		2	BOLT, CARRIAGE, Short NK, M10 x 40, Cl8.8, Full Thd
9		368417A1		2	WASHER
10		895-11010		2	WASHER, M10 x 20 x 2
11		832-10410		2	NUT, LOCK, M10 x 1.5, Cl 8

09-46		p1	01/08

SEAT ASSY - MOUNTING (SEARS, STANDARD)

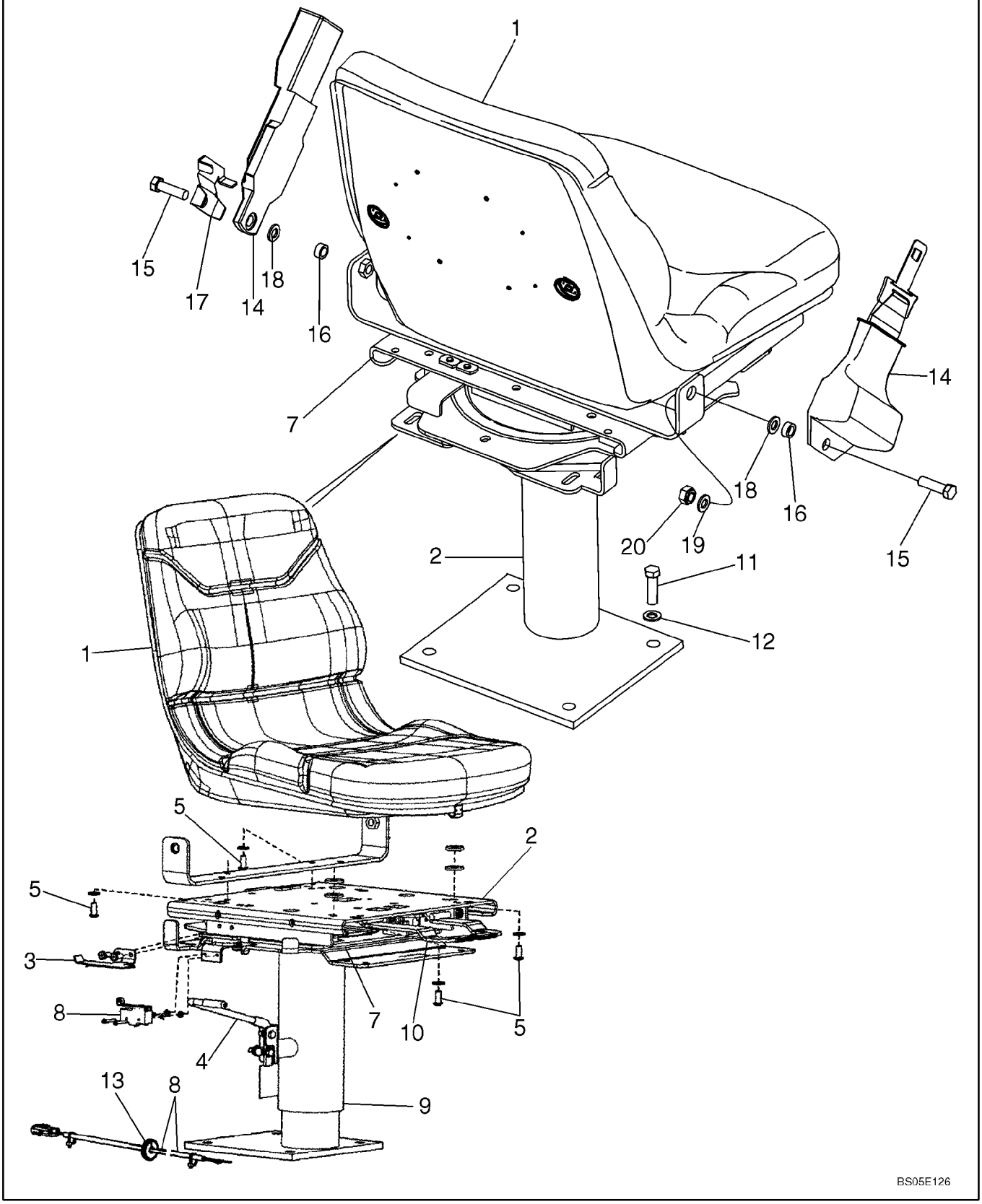

SEAT ASSY - MOUNTING (SEARS, STANDARD)

REF	FN	PART NUMBER	YR/SN	QTY	DESCRIPTION
		87454292		1	SEAT ASSY., Standard, Vinyl, Without Armrest, Sears Brand; Includes Seat, Swivel and Pedestal, and Swivel Bearing Kit, Ref 1 - 10
1		87338681		1	SEAT, BACK, Seat Only
2		87346606		1	SEAT ACCESSORY, Swivel and Pedestal; Component Parts Not Serviced Separately
3		87346607		1	SEAT ACCESSORY, Lever, Switch Actuator
4		87346611		1	SEAT ACCESSORY, Handle, Height Adjustment
5		87346612		4	SEAT ACCESSORY, Button Head Screw, 5/16 x 3/4
6		87346615		1	SEAT ACCESSORY, Spring Not Illustrated
7		87308132		1	BEARING ASSY, Swivel Bearing Kit; Includes (1) Bolt, (8) Bearings, (1) Clip, (1) Nut, (1) Cotter Pin, (1) Plastic Washer, (1) Ball Retainer; Component Parts Not Serviced Separately
8		87346625		1	SEAT ACCESSORY, Kit, Switch/Harness, Adj. Height
9		87346633		1	SEAT ACCESSORY, Kit, Pedestal
10		87346634		1	SEAT ACCESSORY, Kit, Slide/Swivel
11		604-12030		4	BOLT, Hex, Lock, M10 x 30, Cl 8.8, Locking, M12 x 30
12		896-15012		4	WASHER, M12 x 28.5 x 4, HT, 13.5 x 28 x 4 mm
13		248-2373		1	GROMMET, 1/2" ID x 1 1/4" Groove Dia, Str Cut, Rubber, 1/2 ID
14		87408888		1	SEAT BELT, 76 mm (3 in); Retractable, If Used
14		87408889		1	SEAT BELT, 51 mm (2 in), Retractable, If Used
15		414-724		2	BOLT, Hex, 7/16"-20 x 1 1/2", G5
16		87311572		2	SPACER
17		87310149		1	BRACKET, Left-Hand; Seat Belt Mounting/Standard Seat
18		495-81169		2	WASHER, 17/32" x 2 1/2" x .120"
19		496-81010		4	WASHER
20		232-4617		2	NUT, LOCK, 7/16"-20, GC

SEAT - MOUNTING (SEARS MECHANICAL SUSPENSION)

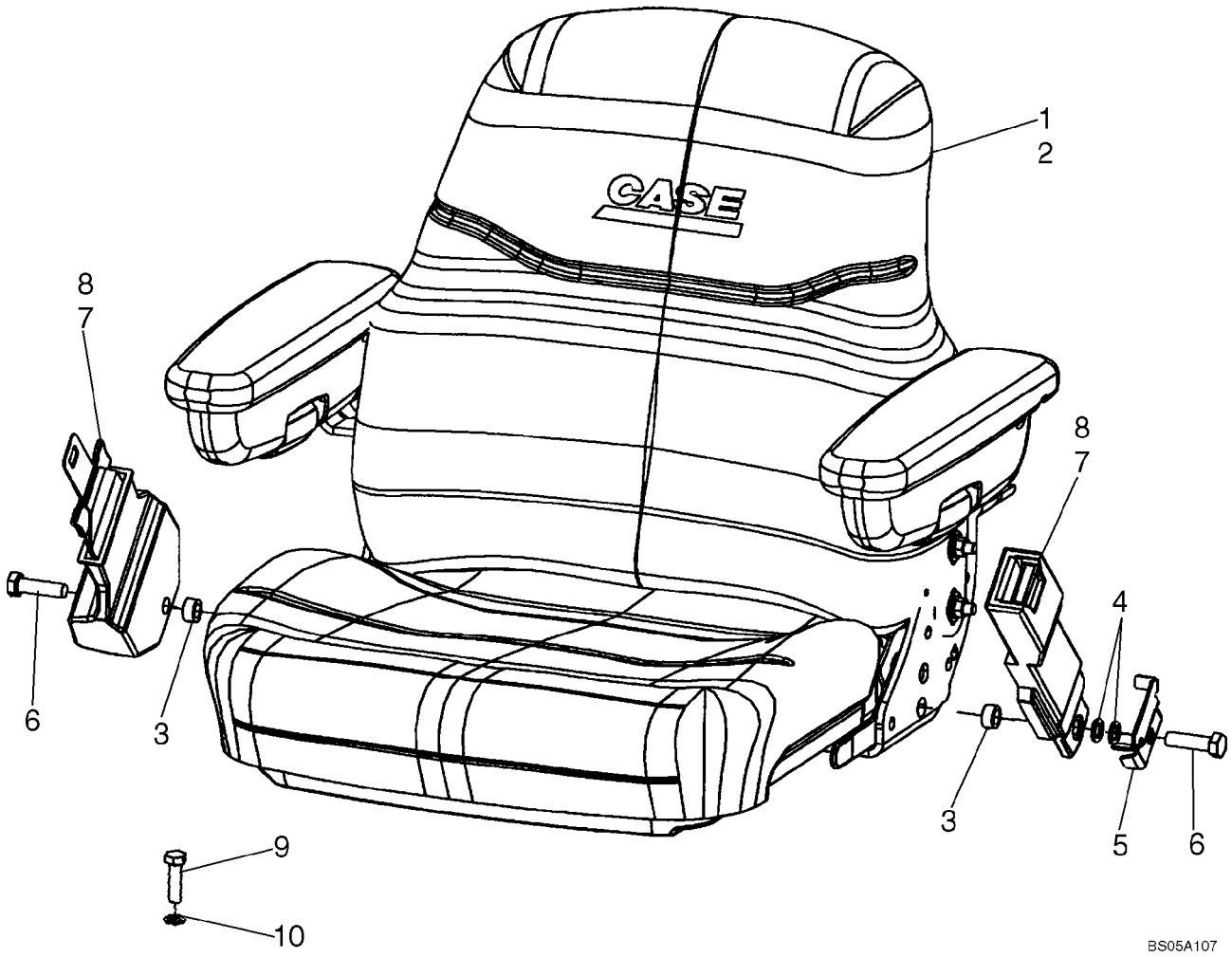

SEAT - MOUNTING (SEARS MECHANICAL SUSPENSION)

REF	FN	PART NUMBER	YR/SN	QTY	DESCRIPTION
1		87399492		1	SEAT ASSY., Mechanical Suspension, Sears, Vinyl, With Armrests; This Seat is Located 19 mm (3/4 in) Farther Forward From Center of Pedestal; See Figure 09-48
2		87399491		1	SEAT ASSY., Mechanical Suspension, Sears, Cloth, With Armrests; This Seat is Located 19 mm (3/4 in) Farther Forward From Center of Pedestal; See Figure 09-48
3		87311572		2	SPACER
4		895-18012		2	WASHER, M12 x 20 x 2, Left-Hand Side
5		87310149		1	BRACKET, Belt Mounting
6		614-12040		2	BOLT, Hex, M12 x 40, 8.8, Full Thd
7		87408888		1	SEAT BELT, 76 mm (3 in), Retractable, If Used
8		87408889		1	SEAT BELT, 51 mm (2 in), If Used
9		604-12030		4	BOLT, Hex, Lock, M10 x 30, Cl 8.8, Seat Pedestal to Floor
10		896-15012		4	WASHER, M12 x 28.5 x 4, HT

09-48		p1	01/08

SEAT ASSY, MECHANICAL SUSPENSION (SEARS)

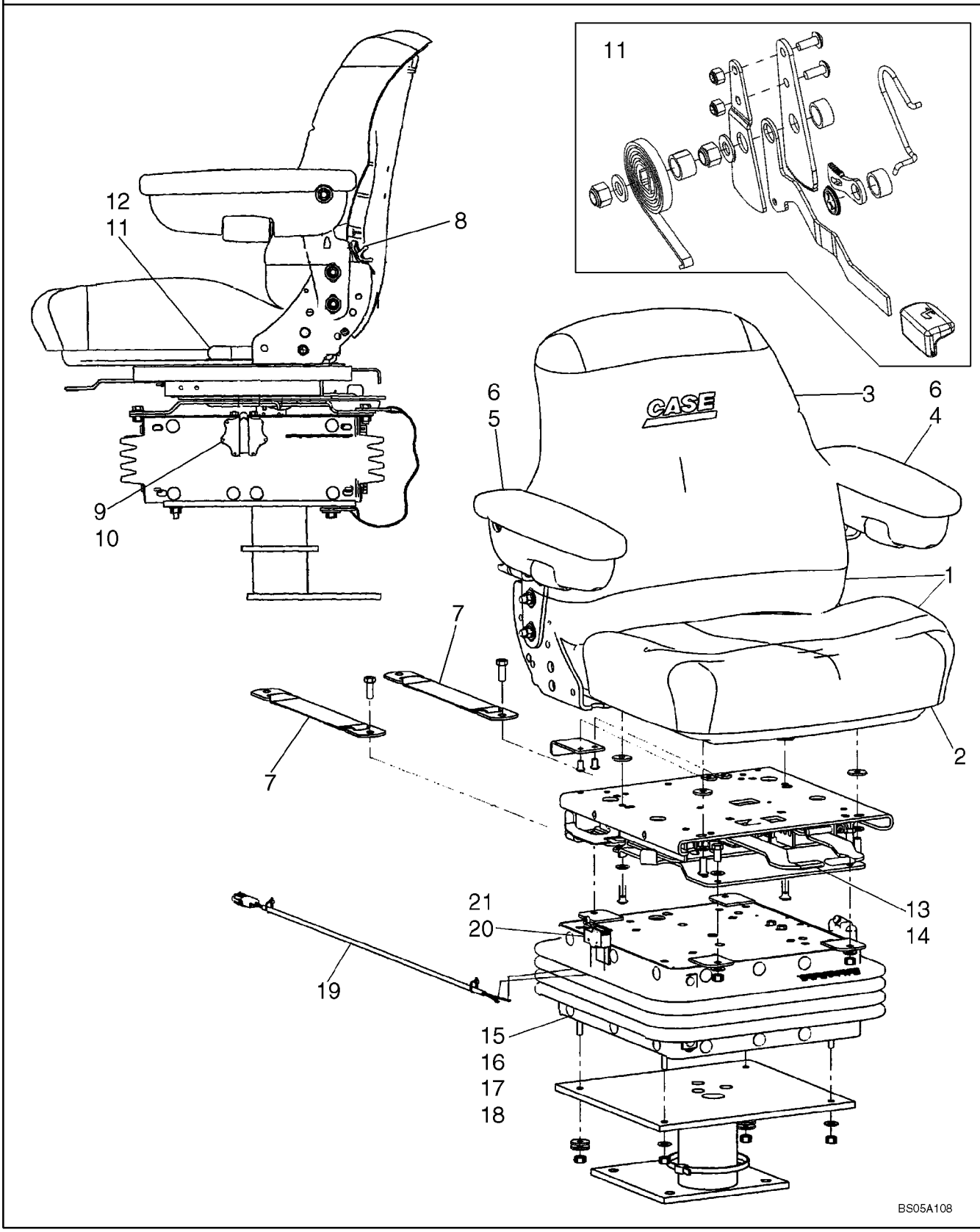

SEAT ASSY, MECHANICAL SUSPENSION (SEARS)

REF	FN	PART NUMBER	YR/SN	QTY	DESCRIPTION
		87399492		1	SEAT ASSY., Vinyl, Mechanical Suspension, Sears; This Seat is Located 19 mm (3/4 in) Farther Forward From Center of Pedestal; Incl. Ref 1 - 21; Also Includes 87555125 Pedestal Assy; Replaces 87454295 Seat Assy, Which Included 87349995 Pedestal
		87399491		1	SEAT ASSY., Cloth, Mechanical Suspension, Sears; This Seat is Located 19 mm (3/4 in) Farther Forward From Center of Pedestal; Incl. Ref 1 - 21; Also Includes 87555125 Pedestal Assy; Replaces 87454294 Seat Assy, Which Included 87349995 Pedestal
		87555125		1	SEAT ACCESSORY, Pedestal Assembly
1		87308118		1	SEAT, BACK, Seat Top Assy, Vinyl; Includes Back and Seat Cushions
1		87308157		1	SEAT, BACK, Seat Top Assy, Cloth; Includes Back and Seat Cushions
2		87308119		1	CUSHION, SEAT, Vinyl
2		87308158		1	CUSHION, SEAT, Cloth
3		87308127		1	SEAT, BACK, Vinyl
3		87308159		1	SEAT, BACK, Cloth
4		87308153		1	ARM ASSY., Left-Hand
5		87308152		1	ARM ASSY., Right-Hand
6		87308154		2	SEAT ACCESSORY, Kit, Arm Pad; Includes (1) Arm Pad, (1) Screw
7		87308128		1	SEAT ACCESSORY, Kit, Tether Belt; Includes (2) Tether Belts, (2) Bolts, (4) Washers, (2) Lock Nuts
8		87037462		1	SEAT BACK ADJUST. DEVICE, Lumbar Knob Kit; Includes Knob, 1/8 x 5/8 Roll Pin
		87308130		1	SEAT BACK ADJUST. DEVICE, Kit, Lumbar; Includes (2) Screws, (2) Rivets, (1) Back Support, (1) Lumbar Shaft Yoke
9		123969A1		1	BUTTON, Kit, Height/Weight Adjustment; Includes (1) Knob, (1) Shaft, (1) 5/32 x 1 in Roll Pin
10		38-11016		1	PIN, LOCK, 5/32" x 1", Slotted

09-48		p2	01/08

SEAT ASSY, MECHANICAL SUSPENSION (SEARS)

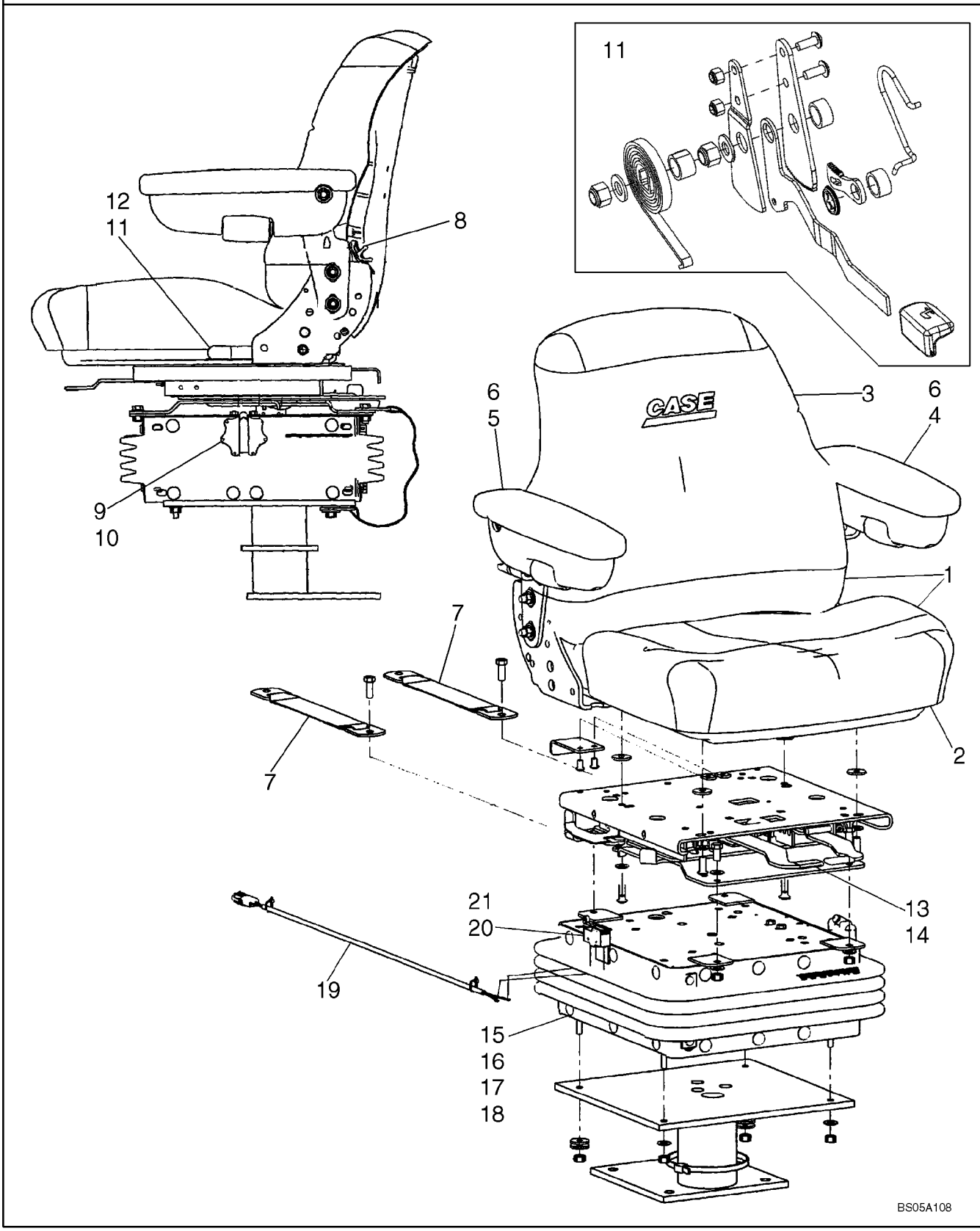

SEAT ASSY, MECHANICAL SUSPENSION (SEARS)

REF	FN	PART NUMBER	YR/SN	QTY	DESCRIPTION
		130674A1		1	SET, Kit, Weight Adjustment; Includes (1) Thrust Washer, (2) Shaft and Gear
		87308145		1	WASHER, THRUST, 2 OD x .6 in ID
11		86994165		1	SEAT ACCESSORY, Recliner Kit; Includes (2) Brackets, (3) Spacers, (2) Springs, Knob, Latch, Lever, (2) Bolts, (2) Washers, (5) Nuts
12		87416475		1	KNOB, Recliner Cap
		87308143		1	SUPPORT, SEAT, Upper Housing, Boxed
		1977725C1		1	SLIDER, Kit, Bearing, Slider Block; Includes (4) Tube Bearings, (1) Ride Indicator, (1) A45512 Slider Block, (1) A45515 Slider Block, (1) A45516 Slider Block, (1) NSS Slider Block
13		87308131		1	SEAT ACCESSORY, Swivel Assembly
14		87308132		1	BEARING ASSY, Kit, Swivel Bearing; Includes (1) Bolt, (8) Ball Bearings, (1) Clip, (1) Nut, (1) Cotter Pin, (1) Plastic Washer, (1) Ball Retainer
15		87308141		1	SUPPORT, SEAT, Kit, Suspension Assembly, Boxed
16		87308144		1	SUPPORT, SEAT, Suspension Arm, Boxed
17		87308146		1	SEAT ACCESSORY, Kit, Spring, Suspension
18		87308147		1	SEAT ACCESSORY, Kit, Boot, Suspension, Boxed; Includes (1) Boot, (26) Buttons
		87308148		1	SEAT ACCESSORY, Kit, Shock Absorber, Boxed; Includes (1) Shock Absorber, (2) Bushings
		51200906		1	BRACKET, Shaft, Suspension
		112884A1		2	SHAFT, Bearing Shaft Weldment, Boxed
		A45504		1	WASHER, Spring, Square, With Weldnut
		A45505		1	GEAR, Large Gear and Shaft Weldment
		A45513		1	GEAR, Gear and Shaft Weldment
		A45054		2	BUMPER, Rubber, Black
		87308142		1	SUPPORT, SEAT, Lower Housing, Boxed
19		87308149		1	HARNESS, WIRE
20		87308150		1	SWITCH, Seat
21		87308151		1	SEAT ACCESSORY, Kit, Switch and Actuator Lever; Includes Switch, Actuator, (4) Screws, (2) Lock Washers, (2) Nuts

SEAT - MOUNTING (AIR SUSPENSION)

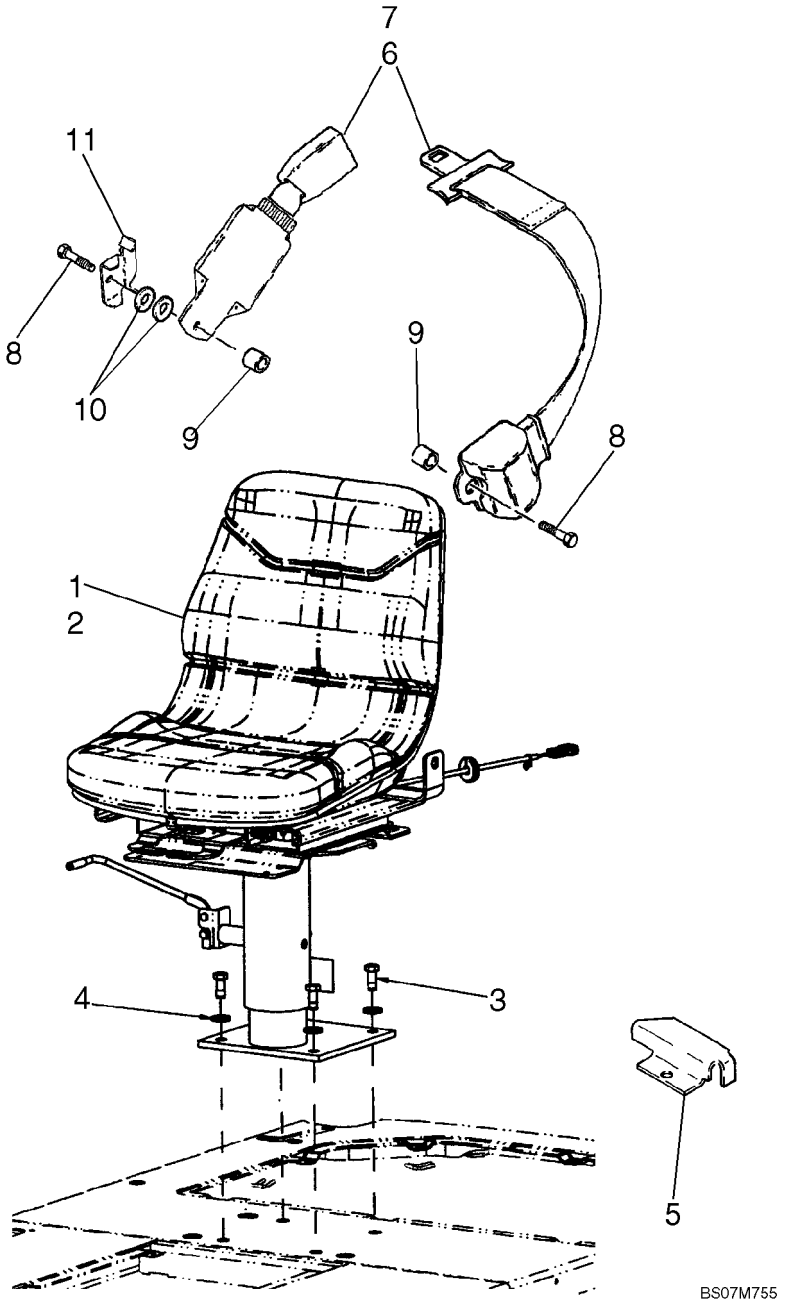

SEAT - MOUNTING (AIR SUSPENSION)

REF	FN	PART NUMBER	YR/SN	QTY	DESCRIPTION
1		87578905		1	SEAT, Air Suspension, Vinyl; Component Parts Not Available At Time Of Printing
2		87578904		1	SEAT, Air Suspension, Cloth; Component Parts Not Available At Time Of Printing; Not Illustrated
3		604-12030		4	BOLT, Hex, Lock, M10 x 30, Cl 8.8
4		896-15012		4	WASHER, M12 x 28.5 x 4, HT
5		186351A1		1	GUARD, Harness
6		87408889		1	SEAT BELT, 51 mm (2 in), If Used; Suspension Seat Belt Mounting
7		87408888		1	SEAT BELT, 76 mm (3 in), Retractable, If Used; Suspension Seat Belt Mounting
8		614-12040		2	BOLT, Hex, M12 x 40, 8.8, Full Thd
9		87311572		2	SPACER
10		895-18012		2	WASHER, M12 x 20 x 2
11		87310149		1	BRACKET

09-53		p1	12/07

CAB - GLASS, MIRROR AND HOLD OPEN

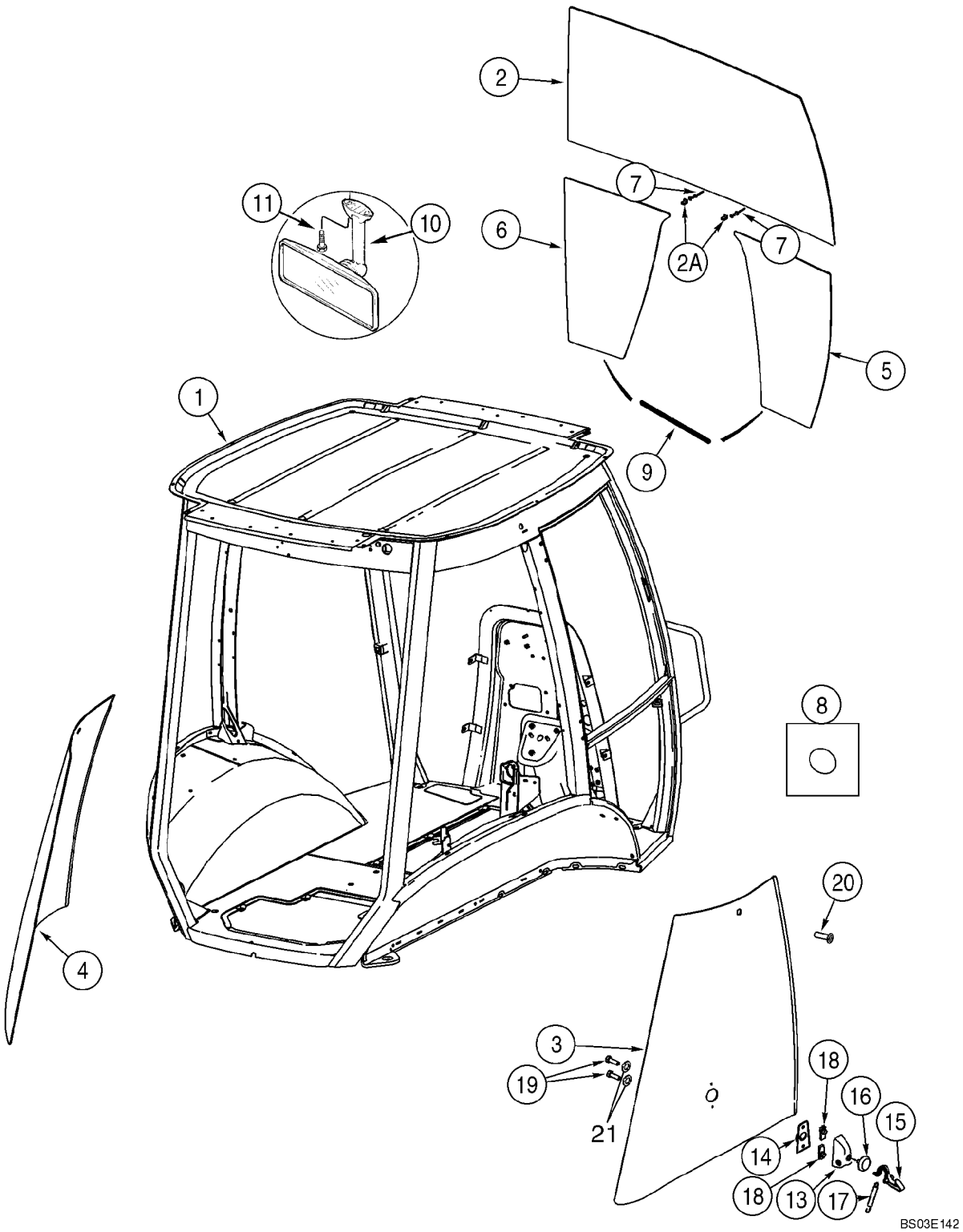

CAB - GLASS, MIRROR AND HOLD OPEN

REF	FN	PART NUMBER	YR/SN	QTY	DESCRIPTION
1		87636560		1	CAB, Single Door; Includes Frame, Left-Hand Door, All Glass, Front and Rear Wipers and Exterior Lamps; Order From Machinery Price List
1		87636562		1	CAB, Two Door; Includes Frame, Left-Hand Door, All Glass, Front and Rear Wipers and Exterior Lamps; Order From Machinery Price List
2		448607A1		1	WINDSHIELD
2A		279482A1		2	CLAMP, Windshield
3		338425A1		1	WINDOW, Right Rear Quarter Panel
4		338424A1		1	WINDOW, Left Rear Quarter Panel
5		448609A1		1	WINDSHIELD, Lower Right-Hand
6		448608A1		1	WINDSHIELD, Lower Left-Hand
7		151-516		2	RIVET, Pop, 1/8" x .775"
8		391827A1		36	SPACER
9		395793A1		2	STRIP, PROTECTION
10		87406924		1	MIRROR, REAR-VIEW, Interior
11		286-56520		2	SCREW, Cross Fil Hd, #10-24 x 1 1/4"
13		405740A1		2	COVER
14		405739A1		2	BODY
15		405738A1		2	LEVER, Hold Open
16		400573A1		2	GROMMET
17		405741A1		2	SPRING, COIL, Latch Back
18		405742A1		4	NUT, M8
19		400572A1		4	BOLT, M8; Nylon
20		400571A2		2	BUMPER
21		431801A1		4	WASHER, Black Nylon

09-54		p1	12/07

CAB - FRAME AND COVERS

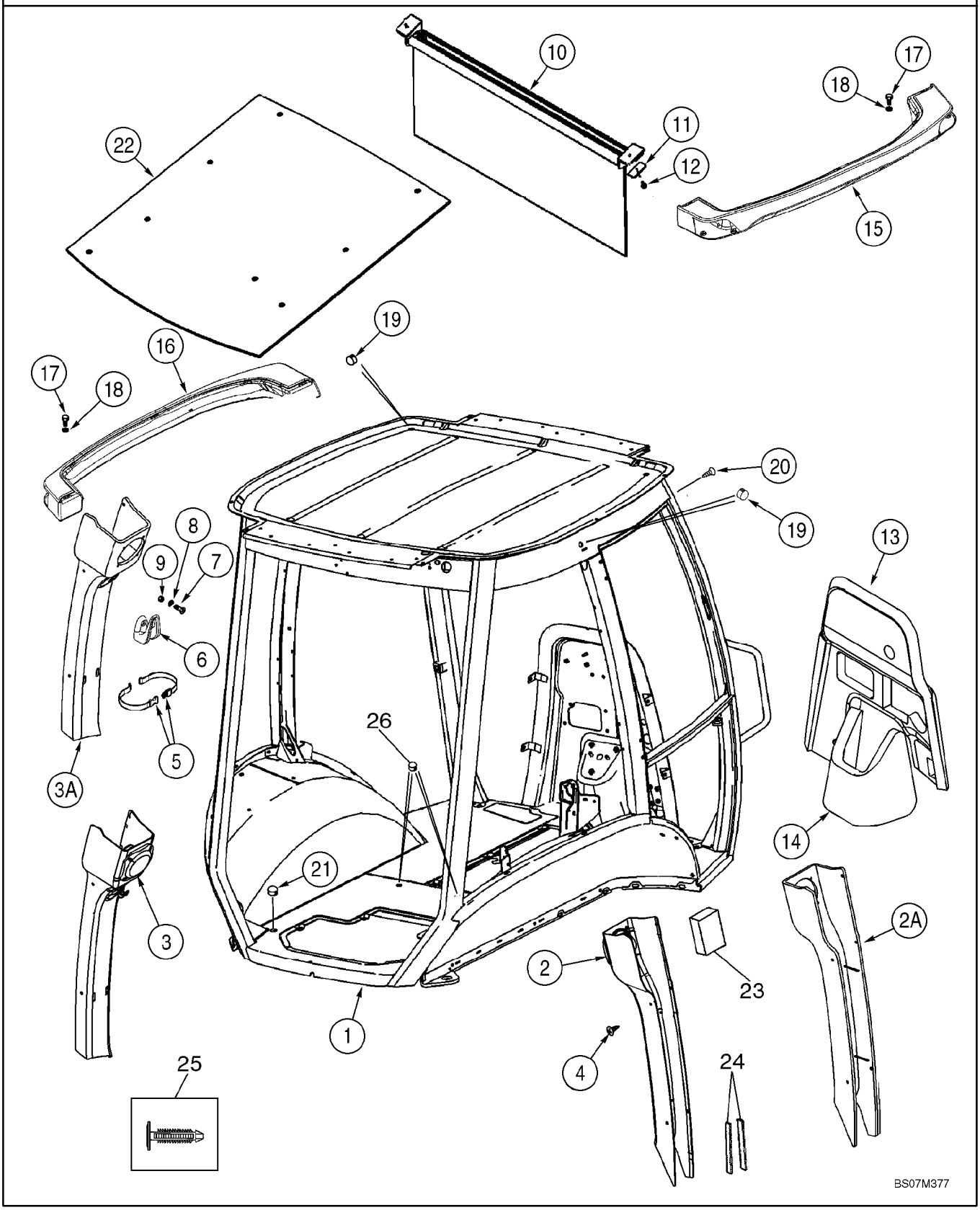

CAB - FRAME AND COVERS

REF	FN	PART NUMBER	YR/SN	QTY	DESCRIPTION
1		87636561		1	FRAME, CAB, Single Door
1		87636563		1	FRAME, CAB, Two Door
2		87657149		1	COVER, Plastic; Right-Hand Post; Standard Interior
2A		379425A3		1	COVER, Vinyl; Right-Hand Post; Deluxe Interior
3		87657148		1	COVER, Plastic; Left-Hand Post; Standard Interior
3A		379424A2		1	COVER, Vinyl; Left-Hand Post; Deluxe Interior
4		401949A1		10	FASTENER
5		378227A1		1	STRAP, Garment
6		114549A1		1	COAT HOOK
7		87310147		2	SCREW, M4 x 16, Stainless Steel
8		895-11004		2	WASHER, M4
9		832-10404		2	NUT, LOCK, M4 x .7, Cl 8
10		364180A1		1	VISOR, SUN
11		409618A1		2	PLATE, 1/4 in Mounting Hole
12		396516A1		3	SCREW, POINTED, No. 10 x 1; With Washer; Phillips
13		87704851		1	COVER, PROTECTIVE, Firewall, Upper
14		87440283		1	COVER, PROTECTIVE, Firewall, Lower
15		360247A3		1	LIGHT ASSY., Right-Hand
16		360246A3		1	LIGHT ASSY., Left-Hand
17		394863A1		10	SCREW, M6 x 20
18		395387A1		10	WASHER, 6.4 ID; Nylon
19		395388A1		3	PLUG
		353-415		1	PLUG, Dome, 1.500" hole, Nylon, Cab Roof; Models Without Radio Antenna
		353-410		1	PLUG, Dome, .875" hole, Nylon, Upper Windshield Frame; Models Without Radio Antenna
		353-407		1	PLUG, Dome, .687" hole, Nylon, Rear Filter Plate On Models Without Windshield Washer
		353-425		2	PLUG, 7/16 in dia
		353-421		1	PLUG, Dome, .187" hole, Nylon
		353-405		1	PLUG, Dome, .562" hole, Nylon
		353-408		1	PLUG, Dome, .750" hole, Nylon
20		402610A1		8	FASTENER, Cab Frame; Models Without Exterior Mirrors
21		382298A1		2	PLUG

09-54		p2	12/07

CAB - FRAME AND COVERS

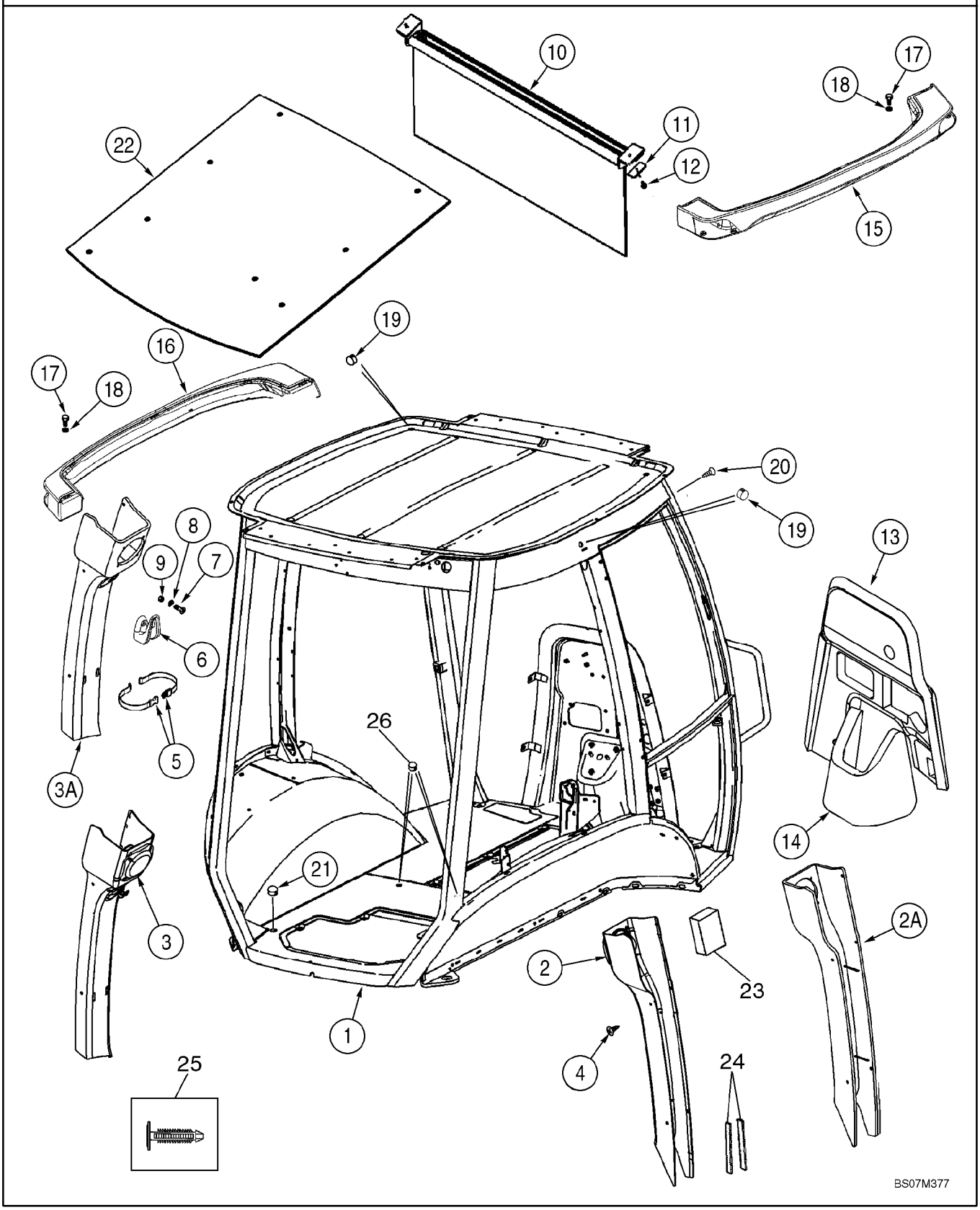

CAB - FRAME AND COVERS

REF	FN	PART NUMBER	YR/SN	QTY	DESCRIPTION
22		368809A1		1	INSULATOR, Insulation
23		412285A1		1	STRIP, Foam; Adhesive Back; B-Post
24		414939A1		2	STRIP, SEALING, Adhesive Back; B Post
25		411399A1		1	FASTENER, For 1/4 in dia Hole; Christmas Tree Clip
26		D140267		2	PLUG, 1-3/16 Hole Size; Brake Bleeder

09-55		p1	12/07

CAB - DOORS

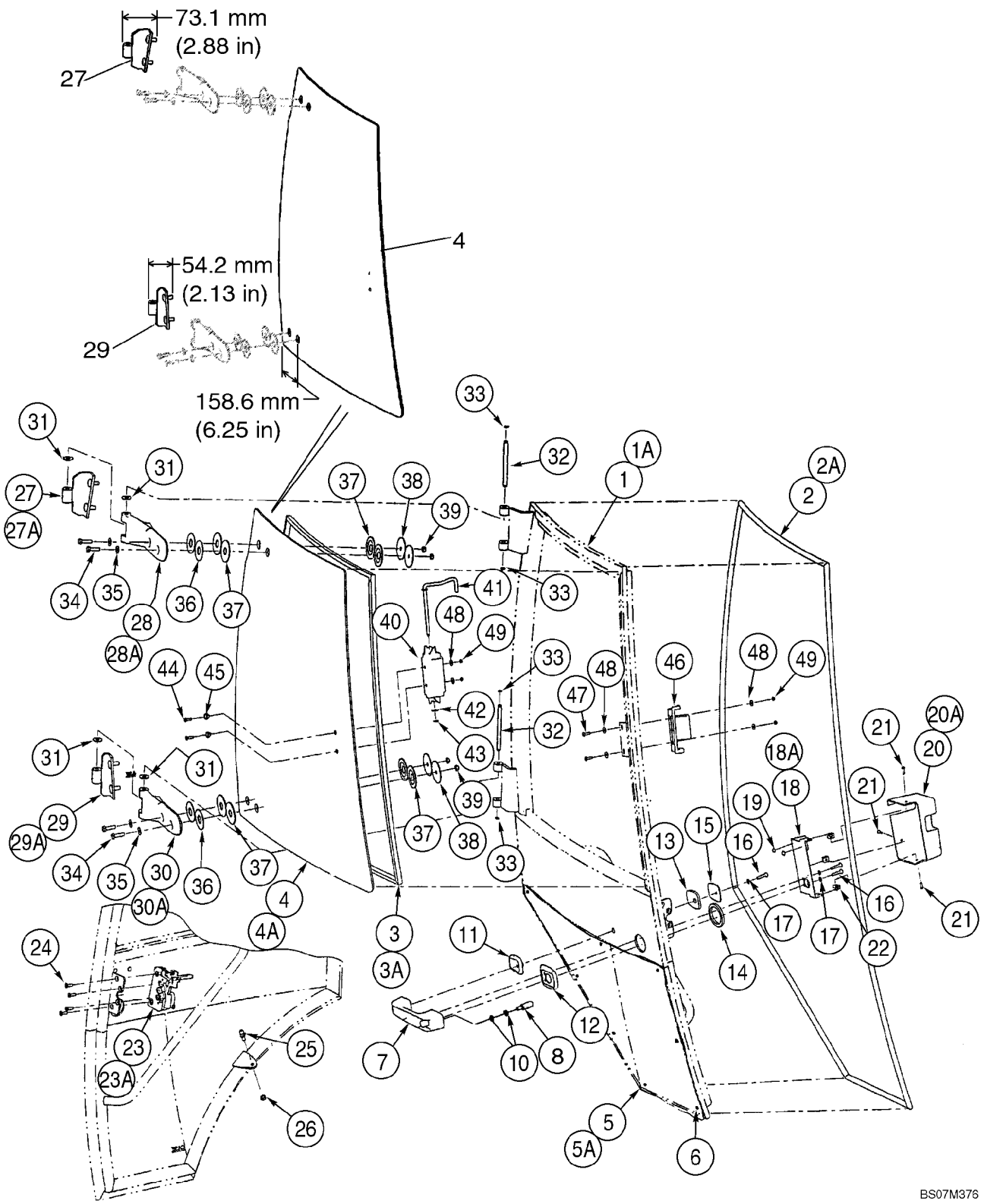

CAB - DOORS

REF	FN	PART NUMBER	YR/SN	QTY	DESCRIPTION
		REF			INSTRUCTION, Left-Hand and Right-Hand Cab Doors; Left-Hand Door Not Illustrated
		87439726		1	CAB DOOR, RH, Right-Hand Door; Incl. Ref 1 - 49, Except Where Noted For Left-Hand Door
		341743A3		1	CAB DOOR, LH, Left-Hand Door; Incl. Ref 1A - 49, Except Where Noted For Right-Hand Door
1		87439728		1	FRAME ASSY, Right-Hand Door
1A		87443691		1	FRAME ASSY, Left-Hand Door
2		394707A1		1	STRIP, RUBBER, Right-Hand Door
2A		390838A1		1	STRIP, RUBBER, Left-Hand Door
3		394708A1		1	SEAL, WINDOW, Upper; Right-Hand Door
3A		391850A1		1	SEAL, WINDOW, Upper; Left-Hand Door
		87448199		1	WINDOW ASSY, SERVICE KIT, Right-Hand Door Window and Hinges; Includes Ref 4, 27, 29, Plus Instructions
4		87439725		1	GLASS, Upper; Right-Hand Door
4A		338429A1		1	GLASS, Upper; Left-Hand Door
5		338427A1		1	GLASS, CAB, Lower; Right-Hand Door
5A		338426A1		1	GLASS, CAB, Lower; Left-Hand Door
6		391827A1		4	SPACER, 4 Per Door; Cut Bumpers In Half For 8 Locations
7		60-7083T1		1	HANDLE, Outer
8		442718A1		1	BUTTON, Release
10		895-11006		1	WASHER, M6
11		315276A1		1	BEZEL, Small
12		315273A1		1	BEZEL, Large
13		391847A1		1	GASKET, Small
14		391838A1		1	GASKET, Large
15		391848A1		1	PLATE, BACK
16		393203A1		3	SCREW
17		393202A1		3	WASHER, 6 mm
18		394704A1		1	BRACKET, Cover Mounting; Right-Hand Door
18A		391841A1		1	BRACKET, Cover Mounting; Left-Hand Door
19		391827A1		2	SPACER
20		394705A1		1	COVER, Latch; Right-Hand Door

CAB - DOORS

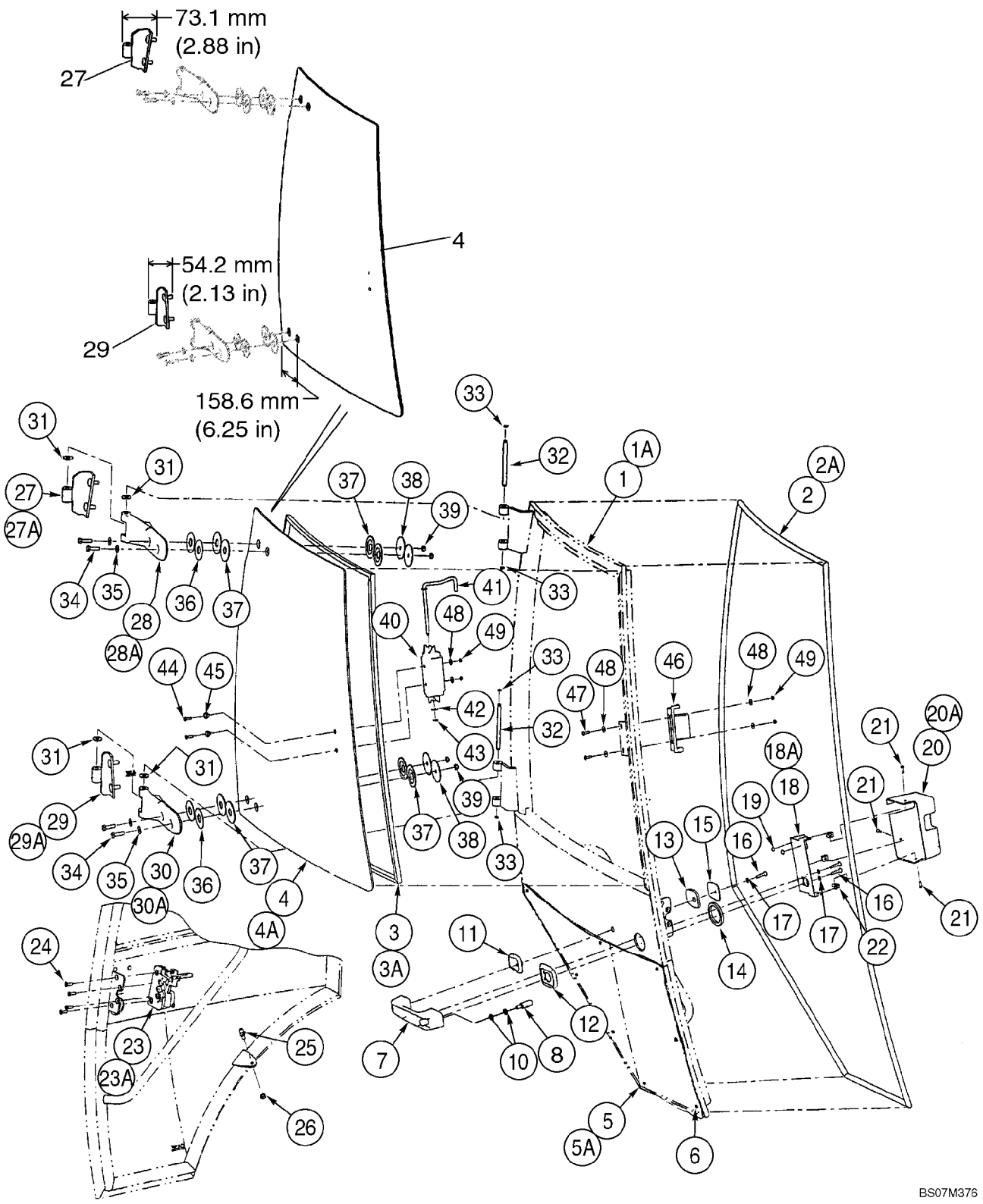

CAB - DOORS

REF	FN	PART NUMBER	YR/SN	QTY	DESCRIPTION
20A		391842A1		1	COVER, Latch; Left-Hand Door
21		390-100		3	SCREW, Cross Pan Hd, #10-32 x 5/8"
22		393209A1		3	NUT, SPECIAL
23		382777A1		1	LATCH, Right-Hand Door
23A		382775A1		1	LATCH, Left-Hand Door
24		569-4		4	SCREW, Hex Soc Flat Hd, M6 x 20, 8.8
25		3234063R1		1	BALL JOINT, M10
26		832-10410		1	NUT, LOCK, M10 x 1.5, Cl 8
27		87439722		1	HINGE, Upper; Right-Hand Door
27A		390840A1		1	HINGE, Upper; Left-Hand Door
28		364134A2		1	HINGE, Plastic; Upper; Right-Hand Door
28A		364132A2		1	HINGE, Plastic; Upper; Left-Hand Door
29		87439723		1	HINGE, Lower; Right-Hand Door
29A		390841A1		1	HINGE, Lower; Left-Hand Door
30		364135A2		1	HINGE, Plastic; Lower; Right-Hand Door
30A		364133A2		1	HINGE, Plastic; Lower; Left-Hand Door
31		391845A1		4	WASHER, Nylon
32		391843A1		2	PIN
33		442773A1		4	CIRCLIP
34		514-633		4	BOLT, Hex, M8 x 30, 8.8, Full Thd
35		895-30107		4	WASHER, M8 x 20 x 2
36		376334A1		4	WASHER, 55 mm OD; Yellow
37		376336A1		8	WASHER, RUBBER
38		376332A1		4	WASHER, 60 mm OD; Black
39		832-10508		4	NUT, LOCK, M8 x 1.25, Cl 8
40		87344860		1	HANDLE, Slam Latch
41		87534372		1	ROD
42		906086R1		1	WASHER, M8.4 ID x 16 OD x 1.6 Thk
43		100-39001		1	RING, LOCKING, #X31, Ext, E-Type
44		140-104		2	SCREW, Cross Pan Hd, #8-32 x 3/4"
45		F64198		2	SPACER, Nylon
46		87344859		1	LATCH, Slam Latch
47		142-103		2	SCREW, Cross Oval Hd, #10-24 x 3/4"
48		195-81023		6	WASHER, #12
49		F45165		4	SAFETY NUT, No. 10

09-56		p1	12/07

CAB - DOOR MOUNTING

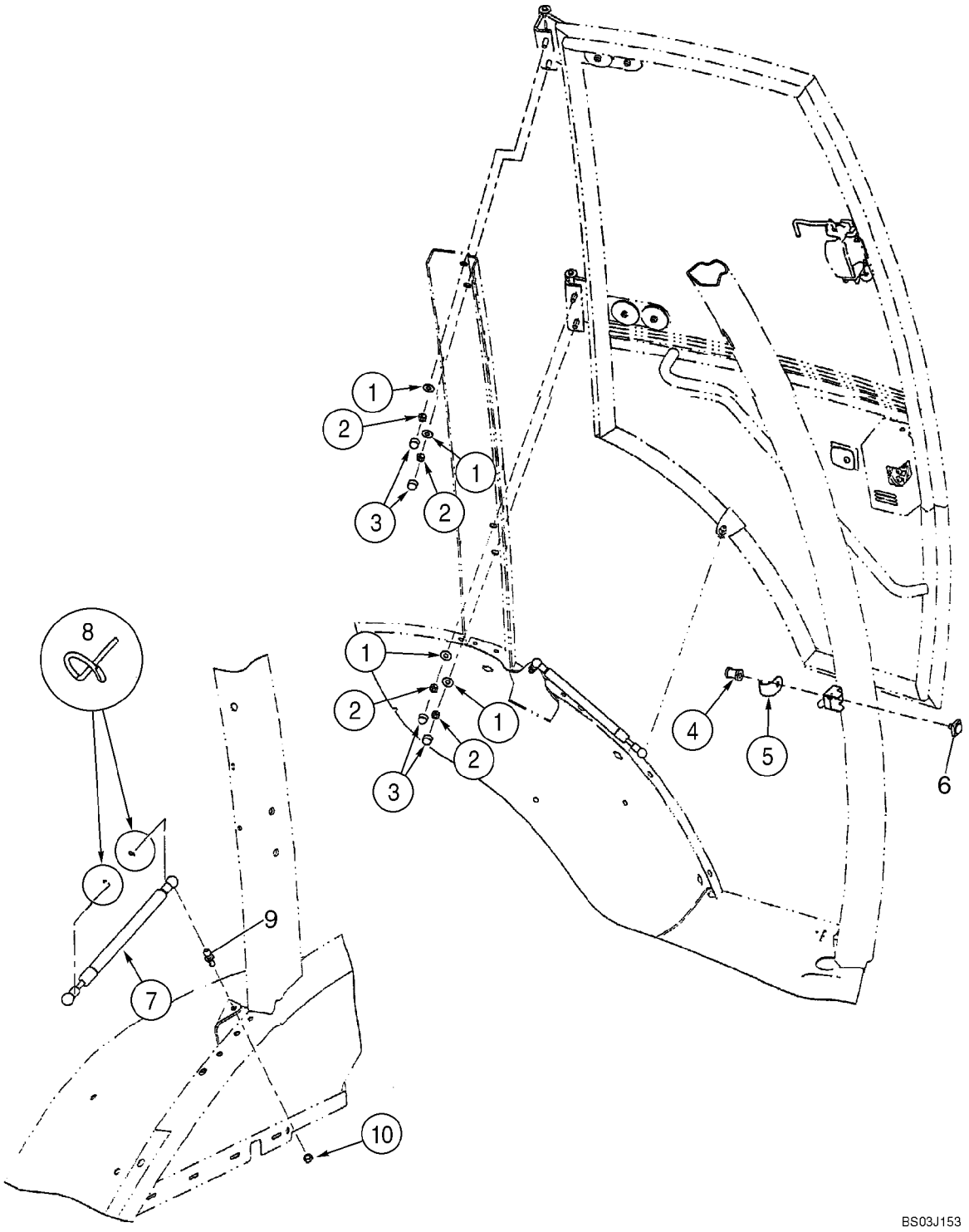

CAB - DOOR MOUNTING

REF	FN	PART NUMBER	YR/SN	QTY	DESCRIPTION
		REF			INSTRUCTION, Left-Hand and Right-Hand Cab Doors; Left-Hand Cab Door Shown
1		397064A1		4-8	WASHER, SPECIAL, 3/8 x 7/8 x 1/16 thk
2		232-1446		4-8	NUT, LOCK, 3/8"-16, GC
3		396841A1		4-8	CAP
4		87411108		1-2	BOLT, SPECIAL, Striker
5		393211A1		1-2	GUARD
6		442842A1		1-2	BLOCK ASSY., Striker
7		394800A1		1-2	SPRING, Gas Spring
8		3233348R1		2-4	CLIP
9		432431A1		1-2	STUD, Ball
10		832-10408		1-2	NUT, LOCK, M8 x 1.25, Cl 8

09-57		p1	12/07

CAB - WINDOW, RIGHT-HAND, FOR SINGLE DOOR CAB FRAMES

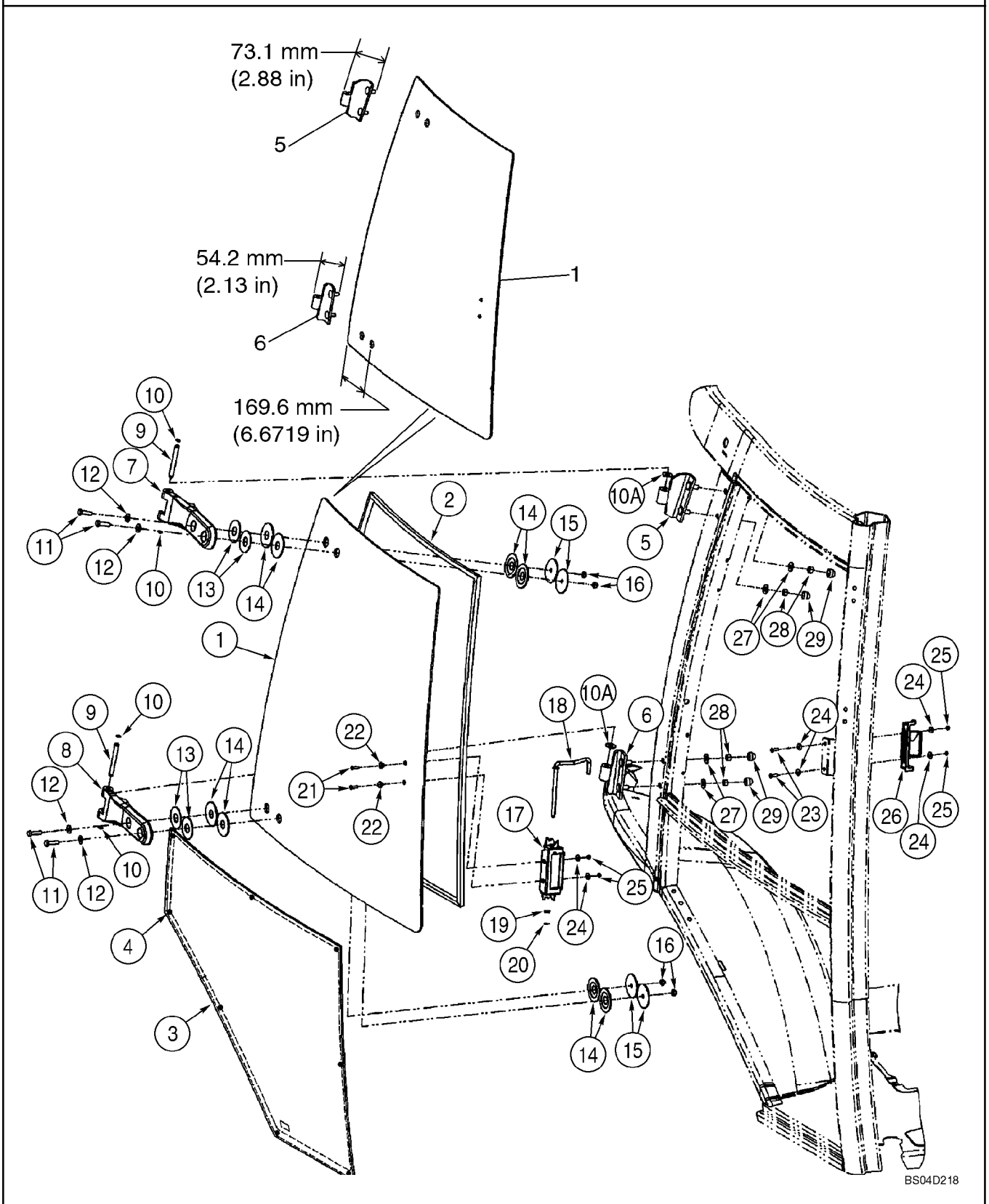

CAB - WINDOW, RIGHT-HAND, FOR SINGLE DOOR CAB FRAMES

REF	FN	PART NUMBER	YR/SN	QTY	DESCRIPTION
		{}		1	87442204 Window Assy; Right-Hand; Incl. Ref 1 - 29; Not Available As An Assembly, Order Components
		87448198		1	WINDOW ASSY, SERVICE KIT, Right-Hand Window and Hinges; Incl. Ref 1, 5, 6, Plus Instructions
1		87439724		1	GLASS, CAB, Upper
2		394864A1		1	SEAL, WINDOW
3		338428A1		1	WINDOW ASSY, Lower
4		391827A1		4	SPACER, Cut Bumpers In Half For 8 Locations
5		87439722		1	HINGE, Upper
6		87439723		1	HINGE, Lower
7		364134A2		1	HINGE, Plastic; Upper
8		364135A2		1	HINGE, Plastic; Lower
9		394865A1		2	PIN
10		393330A1		4	RING
10A		391845A1		4	WASHER, Nylon
11		514-633		4	BOLT, Hex, M8 x 30, 8.8, Full Thd
12		895-30107		4	WASHER, M8 x 20 x 2
13		376334A1		4	WASHER, 55 mm OD; Yellow
14		376336A1		8	WASHER, RUBBER, Rubber
15		376332A1		4	WASHER, 60 mm OD; Black
16		832-10508		4	NUT, LOCK, M8 x 1.25, Cl 8
17		87344860		1	HANDLE, Slam Latch
18		87534372		1	ROD
19		906086R1		1	WASHER, M8.4 ID x 16 OD x 1.6 Thk
20		100-39001		1	RING, LOCKING, #X31, Ext, E-Type
21		140-104		2	SCREW, Cross Pan Hd, #8-32 x 3/4"
22		F64198		2	SPACER, Nylon
23		142-103		2	SCREW, Cross Oval Hd, #10-24 x 3/4"
24		195-81023		6	WASHER, #12
25		F45165		4	SAFETY NUT, No. 10
26		87344859		1	LATCH, Slam
27		397064A1		4	WASHER, SPECIAL, 3/8 x 7/8 x 1/16 thk
28		232-1446		4	NUT, LOCK, 3/8"-16, GC
29		396841A1		4	CAP

09-58		p1	01/08

CAB - WINDOW, REAR

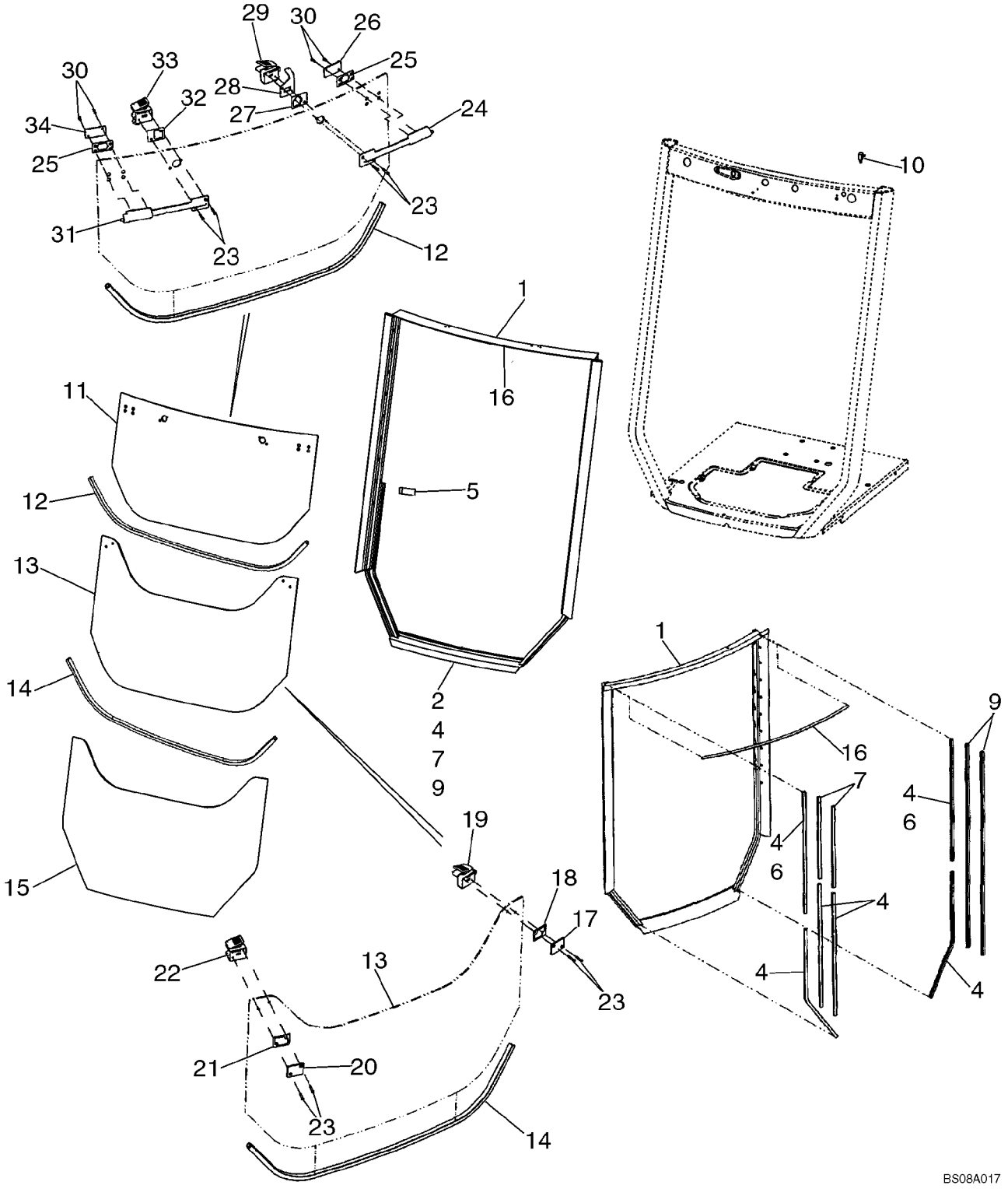

CAB - WINDOW, REAR

REF	FN	PART NUMBER	YR/SN	QTY	DESCRIPTION
		411850A1		1	KIT, Frame and Seal; Incl. 1, 4, 7, 9, 16
1		87435929		1	FRAME ASSY, Included in 411850A1 Frame and Seal Kit
2		410867A1		1	GASKET, Rubber Seal; Bulb Type
		411851A1		1	KIT, Seal; Incl. 4, 7, 9, 16
4		404228A1		6	SEAL, 760 mm (29-15/16 in), Flocked Channel Seals; Cut From 402852A1; Included in 411851A1 Seal Kit and 411850A1 Frame and Seal Kit
5		400200A1		2	STRIP, RUBBER, Stop
6		404226A1		2	SEAL, 787 mm (31 in), Flocked Channel Seals; Cut From 402852A1
7		404229A1		2	SEAL, 508 mm (20 in), Flocked Channel Seals; Cut From 402852A1; Included In 411851A1 Seal Kit and 411850A1 Frame and Seal Kit
9		404227A1		2	SEAL, 1270 mm (50 in), Flocked Channel Seals; Cut From 402852A1; Included in 411851A1 Seal Kit and 411850A1 Frame and Seal Kit
10		A187714		1	SWITCH, Rear Wiper Cutout
11		352208A1		1	GLASS, CAB, Upper
12		395348A1		1	STRIP, ORNAMENTAL, 1210 mm (47-21/32 in), Lower Glass Edge; Cut From 404426A1
		87434783		1	WINDOW ASSY, Center; Includes Ref 13, 19, 22, 23; Plus (1) 87426969 Backing Plate and (4) Backing Plates and (4) Grommets Which Are Not Serviced Separately; Includes Instructions
13		352209A1		1	GLASS, CAB, Center
14		395348A1		1	STRIP, ORNAMENTAL, 1210 mm (47-21/32 in), Lower Glass Edge; Cut From 404426A1
15		352210A1		1	GLASS, CAB, Lower
16		400494A1		1	SEAL, 1095 mm (43-1/8 in), Hollow Seal; Cut From 404231A1; Included in 411851A1 Seal Kit and 411850A1 Frame and Seal Kit
17		411917A1		1	PLATE, BACK, Kit; Includes 1 Each 402849A1 Plate, 411942A1 Gasket Pad
18		402847A1		1	PLATE, PLASTIC, Bushing

09-58		p2	01/08

CAB - WINDOW, REAR

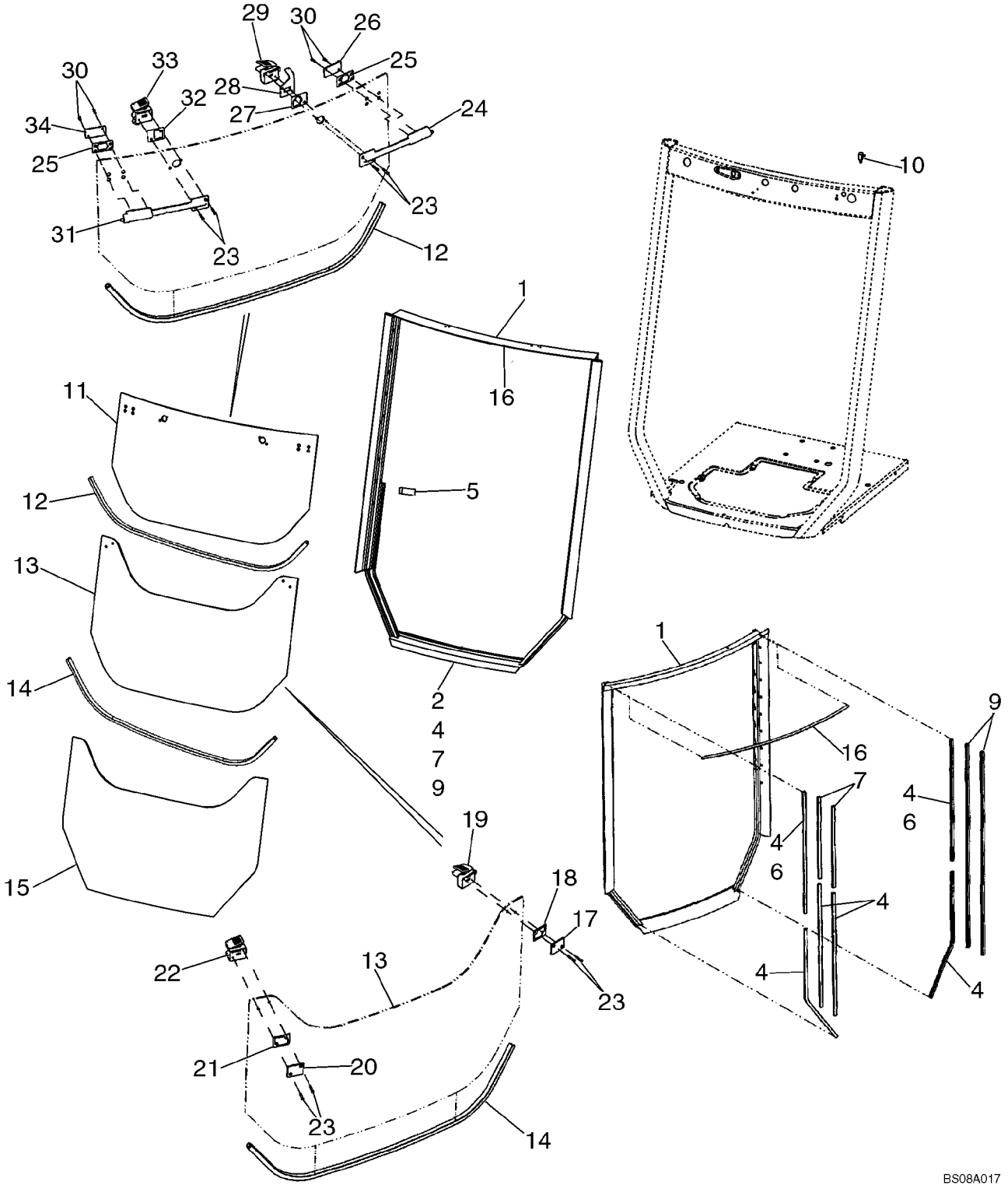

CAB - WINDOW, REAR

REF	FN	PART NUMBER	YR/SN	QTY	DESCRIPTION
19		411909A1		1	LATCH, Kit, Includes 1 Each 402868A1 Cover, 402867A1 Lever, 402833A1 Plunger, 402831A1 Housing, 402830A1 Bushing, 402870A1 Spring, 402869A1 Rivet, 402865A1 Bumper
20		411916A1		1	PLATE, BACK, Kit; Includes 1 Each 402848A1 Plate, 411942A1 Gasket Pad
21		402846A1		1	PLATE, PLASTIC, Bushing
22		411908A1		1	LATCH, Kit, Includes 1 Each 402871A1 Cover, 402872A1 Lever, 402873A1 Plunger, 402832A1 Housing, 402830A1 Bushing, 402870A1 Spring, 402869A1 Rivet, 402865A1 Bumper
23		87435453		8	SCREW, Flat Head Socket, M5 x 25
24		411910A1		1	LATCH, Kit, Bolt Assy; Includes 1 Each 402860A1 Housing, 402840A1 Gasket, 402837A1 Bolt, 402861A1 Insert, 402838A1 Rod, 402856A1 Spring
25		402843A1		2	PLATE, PLASTIC
26		87423503		1	PLATE, BACK, Backing Plate
27		402844A1		1	PLATE, PLASTIC
28		402836A1		1	BRACKET, Rear Wiper Cutout Switch
29		411914A1		1	LATCH, Kit, Includes 1 Each 402831A1 Housing, 402866A1 Bumper, 402830A1 Bushing, 402833A1 Plunger, 402867A1 Lever, 402868A1 Cover
30		87445051		4	SCREW, Flat Head Socket, M5 x 16
31		411911A1		1	LATCH, Kit, Bolt Assy; Includes 1 Each 402863A1 Housing, 402851A1 Gasket, 402856A1 Spring, 402841A1 Bolt, 402861A1 Insert, 402838A1 Rod
32		402845A1		1	PLATE, PLASTIC
33		411912A1		1	LATCH, Kit, Includes 1 Each 402832A1 Housing, 402866A1 Bumper, 402830A1 Bushing, 402873A1 Plunger, 402872A1 Lever, 402871A1 Cover
34		87423502		1	PLATE, BACK, Backing Plate

09-59		p1	02/08

CAB - WASHER, WINDSHIELD

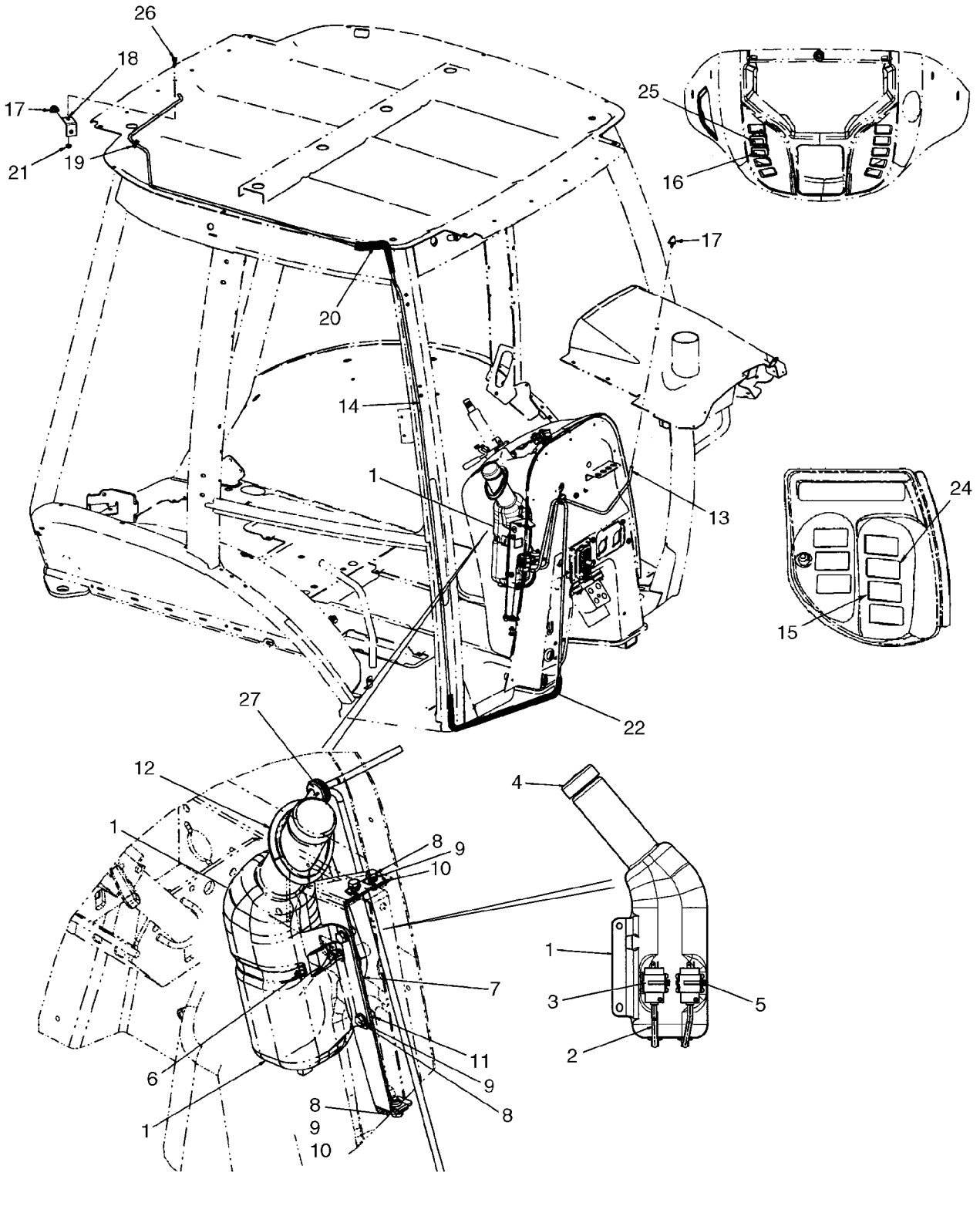

CAB - WASHER, WINDSHIELD

REF	FN	PART NUMBER	YR/SN	QTY	DESCRIPTION
1		87675208		1	RESERVOIR, WINDSH. WASH, RESERVOIR; Window Washing Fluid
2		87700794		2	HOSE (METRES), Washer Bottle
3		86507198		2	PUMP, SMALL, Window Washer
4		87711985		1	CAP, FILLER, Cap; Washer Bottle
5		L11541		2	STRAP, CABLE
6		214-3180		1	CLAMP, HOSE, 4.25/5.125 HD Worm
7		87676276		2	BRACKET, SUPPORTING
8		614-8020		5	BOLT, Hex, M8 x 20, 8.8
9		895-11008		5	WASHER, M8 x 16 x 1.6
10		833-40408		3	NUT, M8, U
11		832-10408		2	NUT, LOCK, M8 x 1.25, Cl 8
12		87694565		1	STRIP, SEALING
13		87699640		1	HOSE (METRES), Front Washer; 700 mm, Cut From 87282056
14		87741446		1	HOSE, Hose, Rear Washer; 5500 mm; Cut From 1968141CX
15		386788A1		1	SWITCH, Rocker; Rear Washer
16		386787A1		1	SWITCH, Rocker; Front Washer
17		E43769		2	SPRAY, Nozzle, Windshield Spray
18		386720A1		1	BRACKET, Washer Nozzle, Rear
19		87442441		1	GROMMET, Washer Hose, Rear
20		408965A1		1	GUARD, 550 mm, Rear Washer Hose, Cut From 397155A2
21		825-2408		1	NUT, M8 x 1.25, Flg, Cl 8
22		87741447		1	HOSE, PROTECTION, Guard; 1800 mm, Front Washer Hose, Cut From 397155A2
24		386786A1		1	SWITCH, Rocker; Windshield Wiper, Rear
25		386785A1		1	SWITCH, Rocker; Windshield Wiper, Front
26		614-8020		1	BOLT, Hex, M8 x 20, 8.8
27		87637384		1	GROMMET, Washer Hose

09-60		p1	12/07

CAB - WIPERS

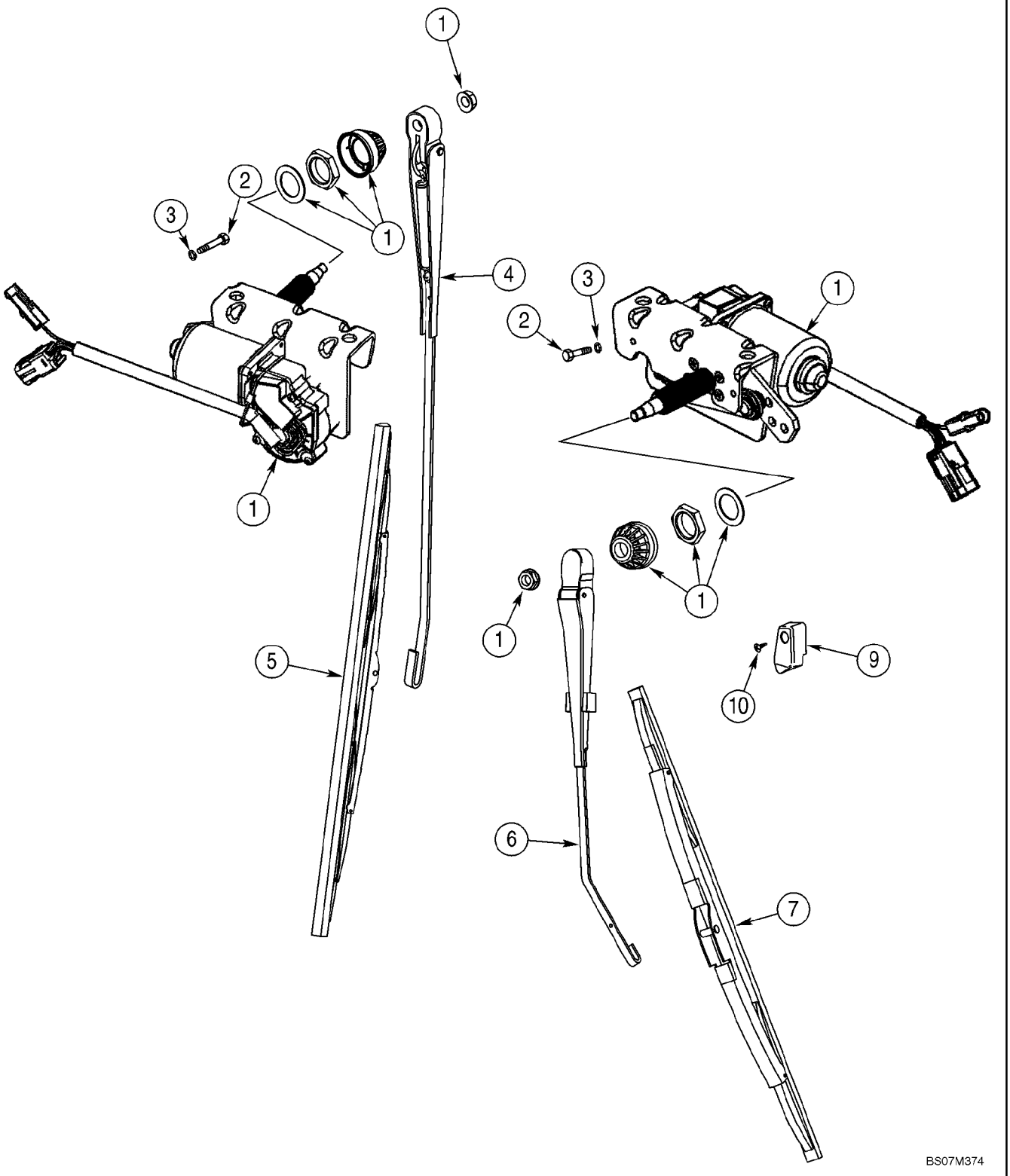

CAB - WIPERS

REF	FN	PART NUMBER	YR/SN	QTY	DESCRIPTION
1		87669381		2	WIPER MOTOR, 12V
		404617A1		1	HARNESS, Front Lamps and Wiper
		396018A3		1	HARNESS, Cab, B-Post, Rear Wiper, Radio, Blower, Dome Lamp
		386786A1		1	SWITCH, Rear Wiper
		386785A1		1	SWITCH, Front Wiper
		A187714		1	SWITCH, Rear Wiper Cutout Switch
		495-11047		2	WASHER, 7/16", SAE
		425-147		1	NUT, Jam, 7/16"-14, G5
2		814-6050		4	BOLT, Hex, M6 x 50, 8.8
3		892-11006		4	WASHER, LOCK, M6
4		87669391		1	WIPER ARM, Front Wiper
5		87669761		1	WIPER BLADE, Front Wiper
6		87669712		1	WIPER ARM, Rear Wiper
7		87669401		1	WIPER BLADE, Rear Wiper
9		395026A1		1	RAMP, Block
10		395389A1		1	SCREW, M6

09-61		p1	12/07

CAB HEADLINER - FILTER, LOUVERS, DOME LAMP

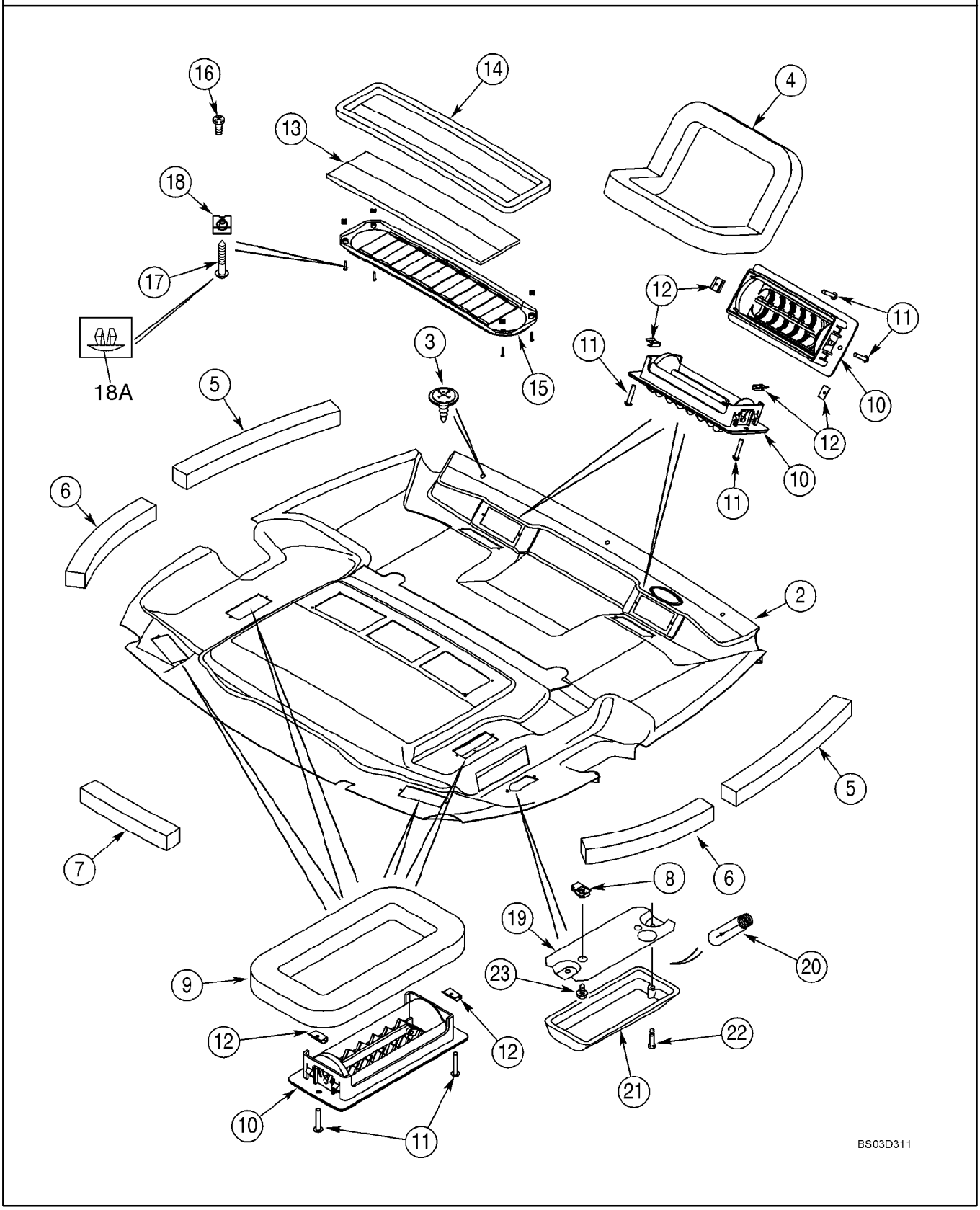

CAB HEADLINER - FILTER, LOUVERS, DOME LAMP

REF	FN	PART NUMBER	YR/SN	QTY	DESCRIPTION
		{87653246}		1	HEADLINER ASSY, Standard Interior; Incl. Ref 1, 4 - 18A
		360272A6		1	LINING, ROOF, HEADLINER ASSY, Deluxe Interior; Incl. Ref 2, 4 - 18A
1		87653245		1	LINER, Shell; Standard Interior; Not Illustrated
2		381696A5		1	LINING, ROOF, Shell With Foam and Fabric Covering; Deluxe Interior
3		396516A1		3	SCREW, POINTED
4		368813A2		2	SEAL, Defrost
5		379160A1		2	SEAL, 494 mm; Foam; Adhesive Back; Front
6		379161A1		2	SEAL, 379 mm; Foam; Adhesive Back; Rear
7		379209A1		1	SEAL, 303 mm; Foam; Adhesive Back, Center, Rear
8		131-861		2	NUT, Tinn, U, #10-24, Dome Lamp
9		377194A1		4	SEAL, Heat and Air
10		363883A1		8	GRILLE ASSY
11		140-103		16	SCREW, Cross Pan Hd, #6-32 x 3/4"
12		125749A1		16	NUT, J-Type, No. 6
13		377594A5		1	FILTER, Air Recirculation
14		381972A1		1	SEAL
15		369450A1		1	GRILLE, Air Recirculation; Incl. Ref 16
16		260-1436		2	SCREW, SELF TAP, Cross Pan Hd, #6 x 3/8"
17		414600A1		4	SCREW
18		177269A1		4	NUT
18A		409723A1		4	PLUG, Plastic; Fits 5,5 mm Hole
		380719A2		1	LIGHT, INTERIOR, Dome Lamp; Incl. Ref 19 - 21
19		NSS		1	NOT SERVICED SEPARATELY, Base
20		N14466		1	BULB
21		NSS		1	NOT SERVICED SEPARATELY, Lens; With Switch
22		440-1088		2	SCREW, Cross Pan Hd, #8-32 x 1/2", Base To Lens
23		281-54512		2	SCREW, Hex Wash Hd, #10-24 x 3/4", Lamp To Headliner

09-62		p1	12/07

CAB - FILTER, AIR

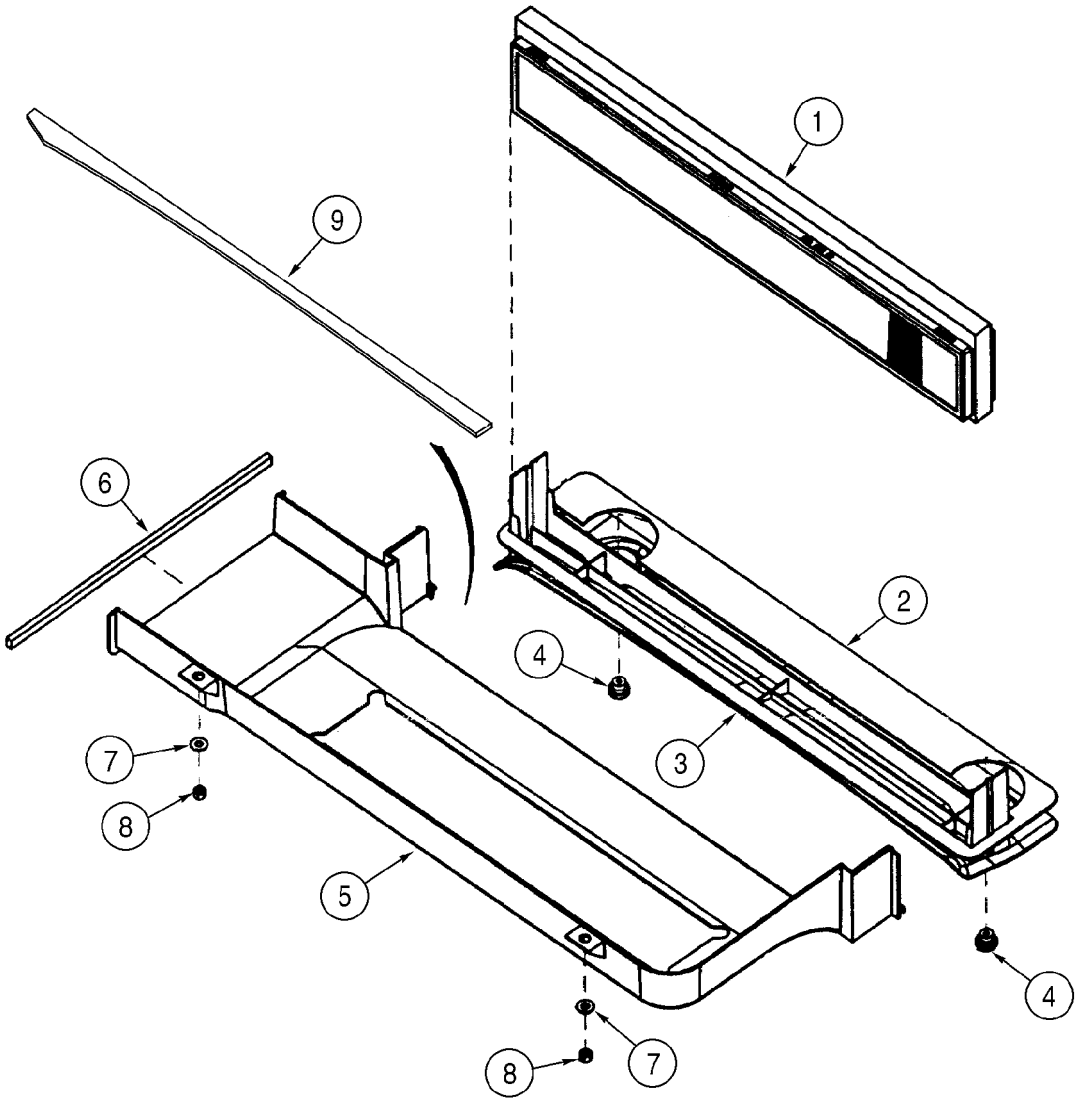

BSC0F073

CAB - FILTER, AIR

REF	FN	PART NUMBER	YR/SN	QTY	DESCRIPTION
1		360260A2		1	FILTER, ELEMENT, Includes Foam Seal
2		382770A2		1	SEAL
3		360261A1		1	TRAY
4		398738A1		2	KNOB, Fresh Air Duct Retainer
5		360252A2		1	DUCT, Fresh Air Intake
6		368990A1		1	SEAL
7		895-15008		2	WASHER, M8 x 20 x 1.6
8		832-10408		2	NUT, LOCK, M8 x 1.25, Cl 8
9		403271A1		1	SEAL, 882 mm; Adhesive Back

09-63		p1	12/07

CAB - BLOWER HOUSING, VENTILATION DUCTS, DRAIN LINES

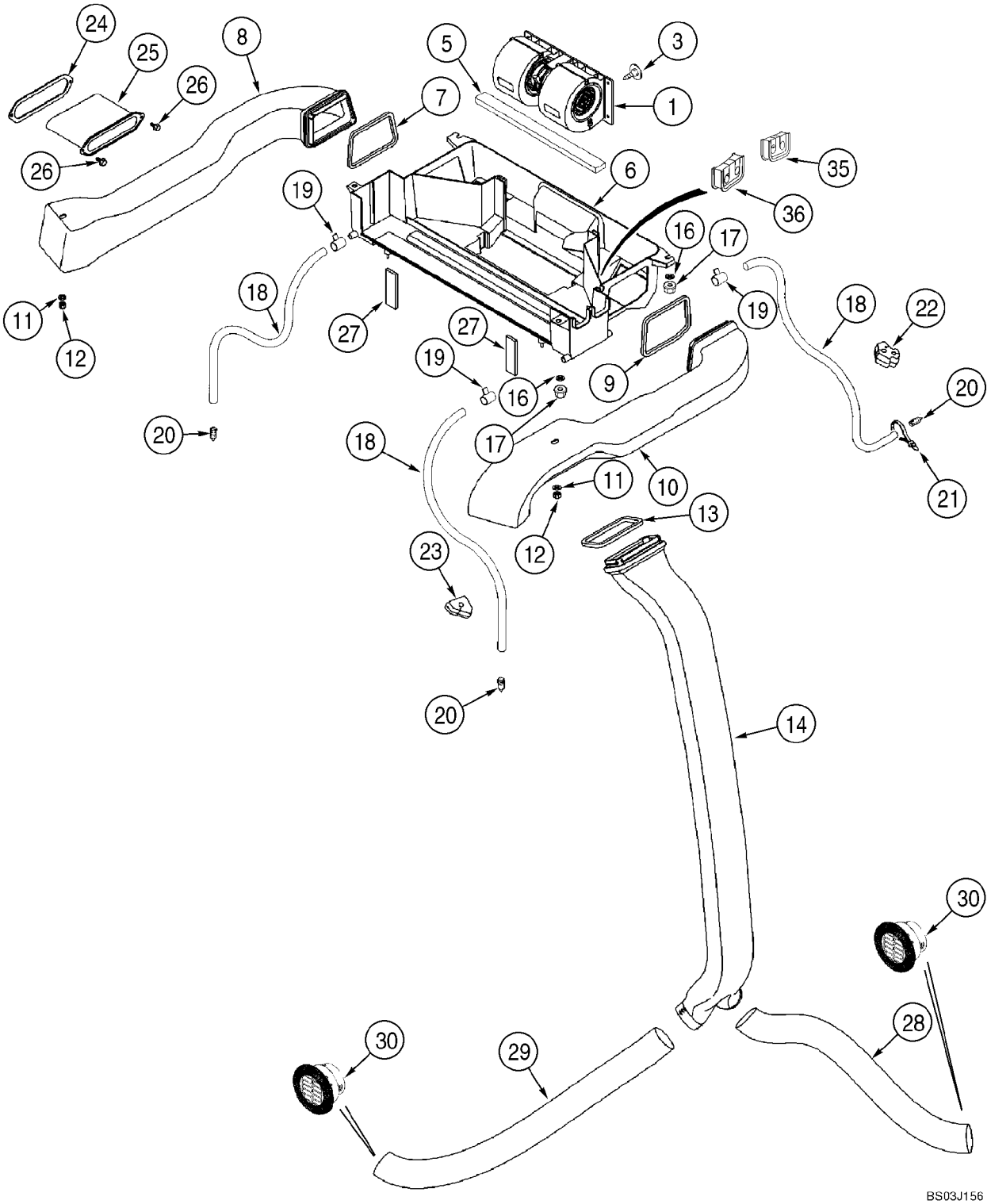

CAB - BLOWER HOUSING, VENTILATION DUCTS, DRAIN LINES

REF	FN	PART NUMBER	YR/SN	QTY	DESCRIPTION
1		377220A2		1	BLOWER ASSY., Component Parts Not Serviced Separately; Kysor/Westran Brand; If Used; For Blower Switch, See Figure 04-10
1		377241A2		1	BLOWER ASSY., Component Parts Not Serviced Separately; Aurora Brand; If Used; For Blower Switch, See Figure 04-10
3		182697A1		1	CLASP
5		181981A1		1	STRIP, SEALING, 6 x 20 x 355 mm; Adhesive Back; Under Blower
6		360251A3		1	HOUSING ASSY., Heat and Air; Includes 373995A1
		373995A1		2	INSERT
7		368805A1		1	SEAL, Left-Hand Duct
8		360253A3		1	DUCT, Left-Hand
9		369249A1		1	SEAL, Right-Hand Duct
10		360254A3		1	DUCT, Right-Hand
11		895-15010		2	WASHER, M11 x 24 x 2
12		832-10408		2	NUT, LOCK, M8 x 1.25, Cl 8
13		368807A1		1	SEAL
14		360255A1		1	DUCT
16		895-15008		4	WASHER, M8 x 20 x 1.6
17		832-10408		4	NUT, LOCK, M8 x 1.25, Cl 8
18		87615800		4	HOSE, 3050 mm; Drain
19		214-1406		4	CLAMP, HOSE, #06, .44/.78 Type F Worm
20		365789A1		4	VALVE, DRAIN, Drain
21		L18337		2	STRAP, CABLE, 9.95"-12.1" lg
22		383794A2		2	PLUG
23		383795A2		2	PLUG
24		381113A2		1	SEAL
25		381111A2		1	SLEEVE
26		281-18712		2	SCREW, SELF TAP, Hex Wash Hd, 1/4" x 3/4"
27		377230A3		2	SEAL, 16 mm thk; Fresh Air Duct To Ventilation Housing
28		375392A1		1	HOSE, LARGE, 750 mm; Cut From 236559A1
29		368818A1		1	HOSE, LARGE, 1015 mm; Cut From 236559A1
30		398986A1		2	VENT

09-63		p2	12/07

CAB - BLOWER HOUSING, VENTILATION DUCTS, DRAIN LINES

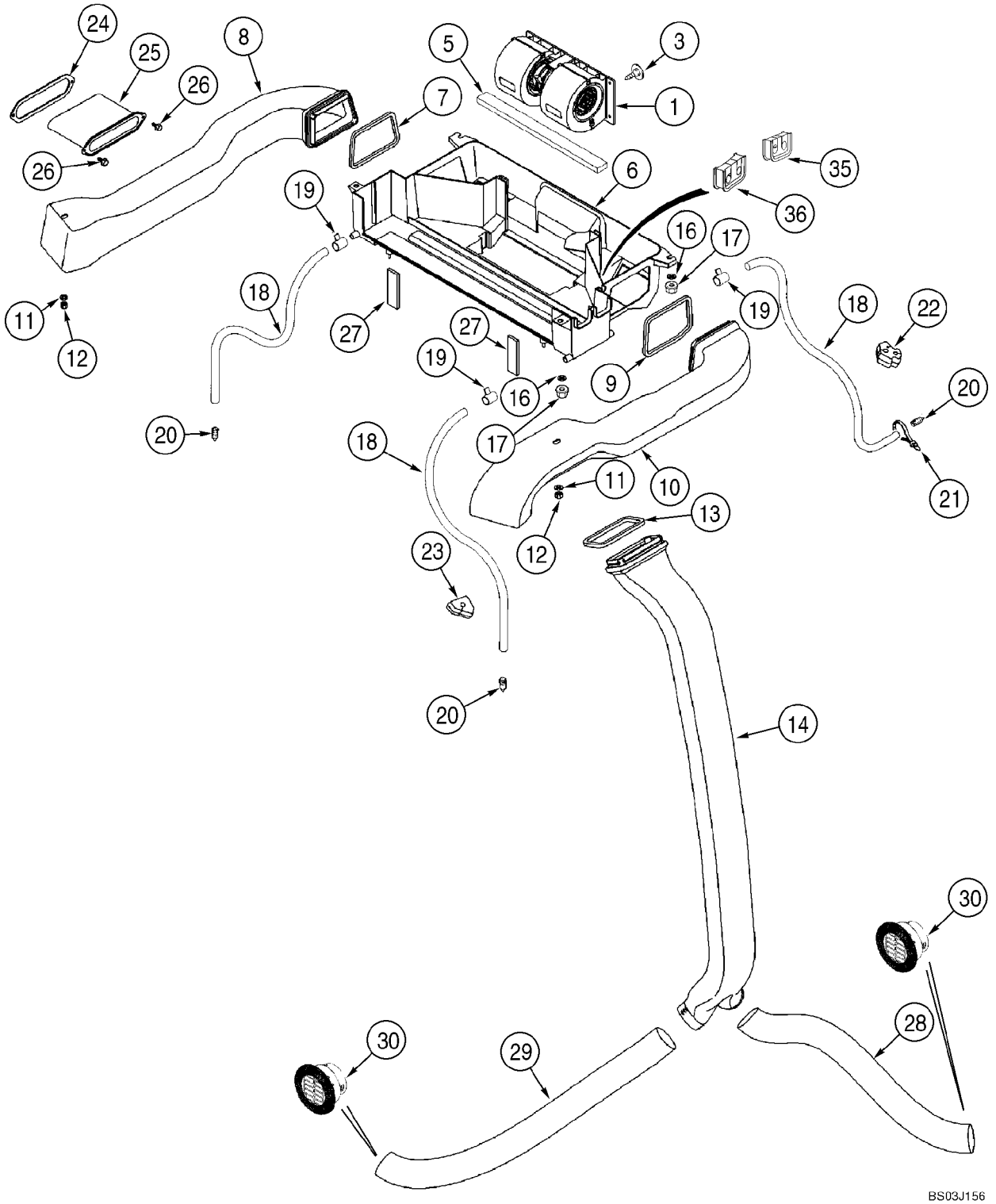

CAB - BLOWER HOUSING, VENTILATION DUCTS, DRAIN LINES

REF	FN	PART NUMBER	YR/SN	QTY	DESCRIPTION
32		D88052		2	CLAMP, Not Illustrated
35		403225A1		1	SEAL, Heater Tubes At Housing
36		403193A1		1	SEAL, Air Conditioning Tubes At Housing

09-64		p1	12/07

CAB - HEATER

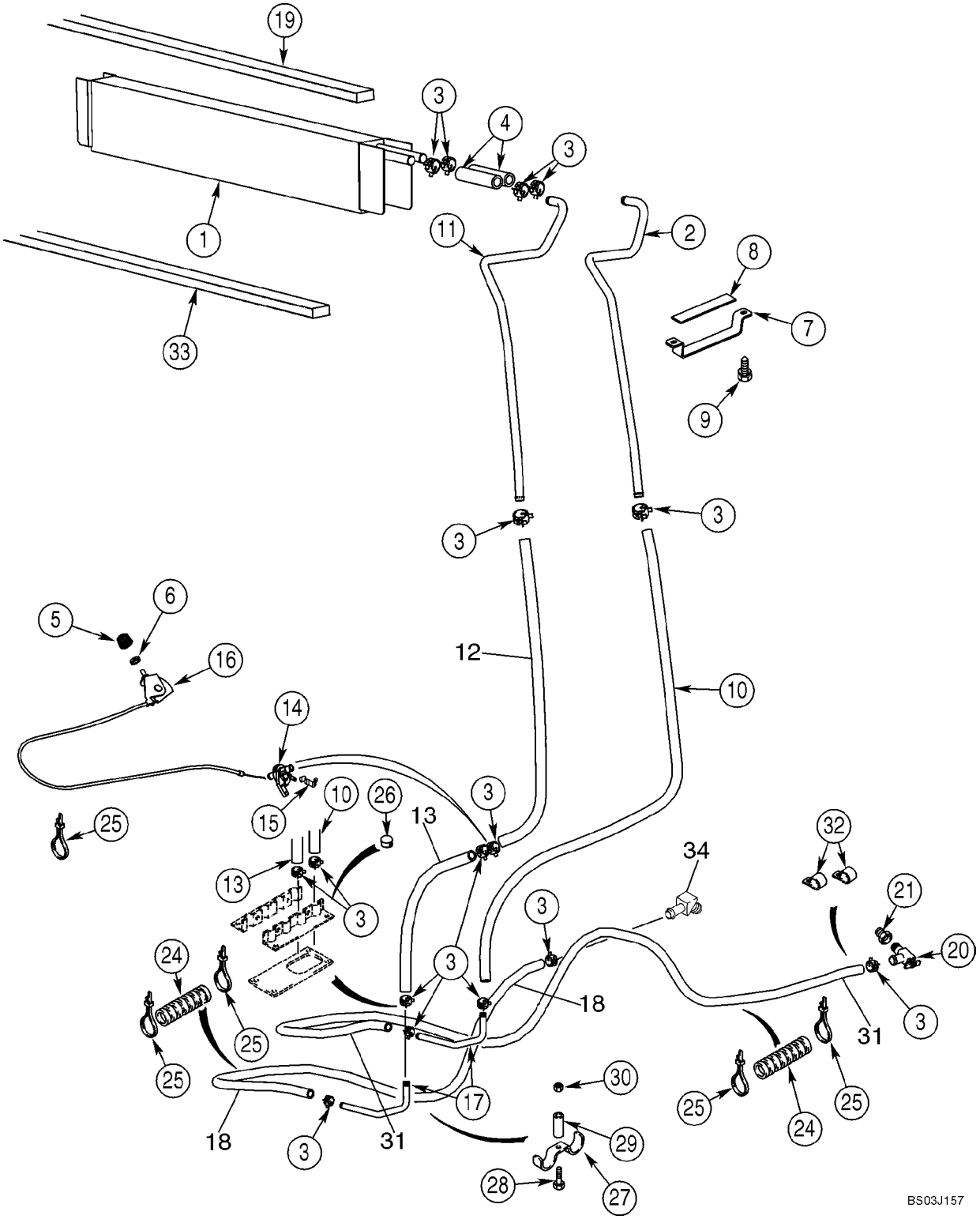

CAB - HEATER

REF	FN	PART NUMBER	YR/SN	QTY	DESCRIPTION
1		360262A2		1	HEAT-EXCHANGER, Core, Mounts In Blower Housing Box; Seal Mounts On Top Of Core On Models With Heat Only
2		400282A1		1	TUBE, Front
3		1954736C1		14	CLAMP, HOSE, No. 24
4		377222A1		2	HOSE, 100 mm; Cut From 97252CX
5		400379A1		1	KNOB, 23 mm
6		A42561		1	NUT
7		388762A1		1	BRACKET
8		389402A1		1	SEAL
9		281-14520		2	SCREW, SELF TAP, Hex Wash Hd, #10 x 1/4"
10		368801A2		1	HOSE, 1361 mm; Cut From 97252CX
11		400280A1		1	TUBE, Rear
12		448428A1		1	HOSE (METRES), 1175 mm (46-1/4 in); Heater Valve To Core; Cut From 97252CX
13		448429A1		1	HOSE (METRES), 150 mm (5-29/32 in) Floor To Valve; Cut From 97252CX
14		1331087C1		1	VALVE, CONTROL, Heater
15		1954626C1		1	CLAMP
16		1999666C1		1	CONTROL, Heater; Includes 1999667C1, 1999668C1
		1999667C1		1	CONTROL
		1999668C1		1	CABLE
17		190675A1		2	PIPE
18		377232A2		1	HOSE, LARGE, 2650 mm (104-21/64 in); Heater; Return To Water Pump; Cut From 97252CX
19		406287A1		1	SEAL, 19 x 19 x 736 mm; Location Of Seal On Models With Heat Only; On Models With Air Conditioning, Seal Is Located On Evaporator Cor
20		87686604		1	VALVE, SHUT-OFF
21		221-89		1	REDUCER, Hex, 1/2" x 3/8" NPT
24		D132982		7	LOOM, Sleeve, 400 mm (15-3/4 in)
25		L18337		6	STRAP, CABLE, 9.95"-12.1" lg
26		353-410		2	PLUG, Dome, .875" hole, Nylon, Models With Heat Only
27		D143427		1	CLAMP

CAB - HEATER

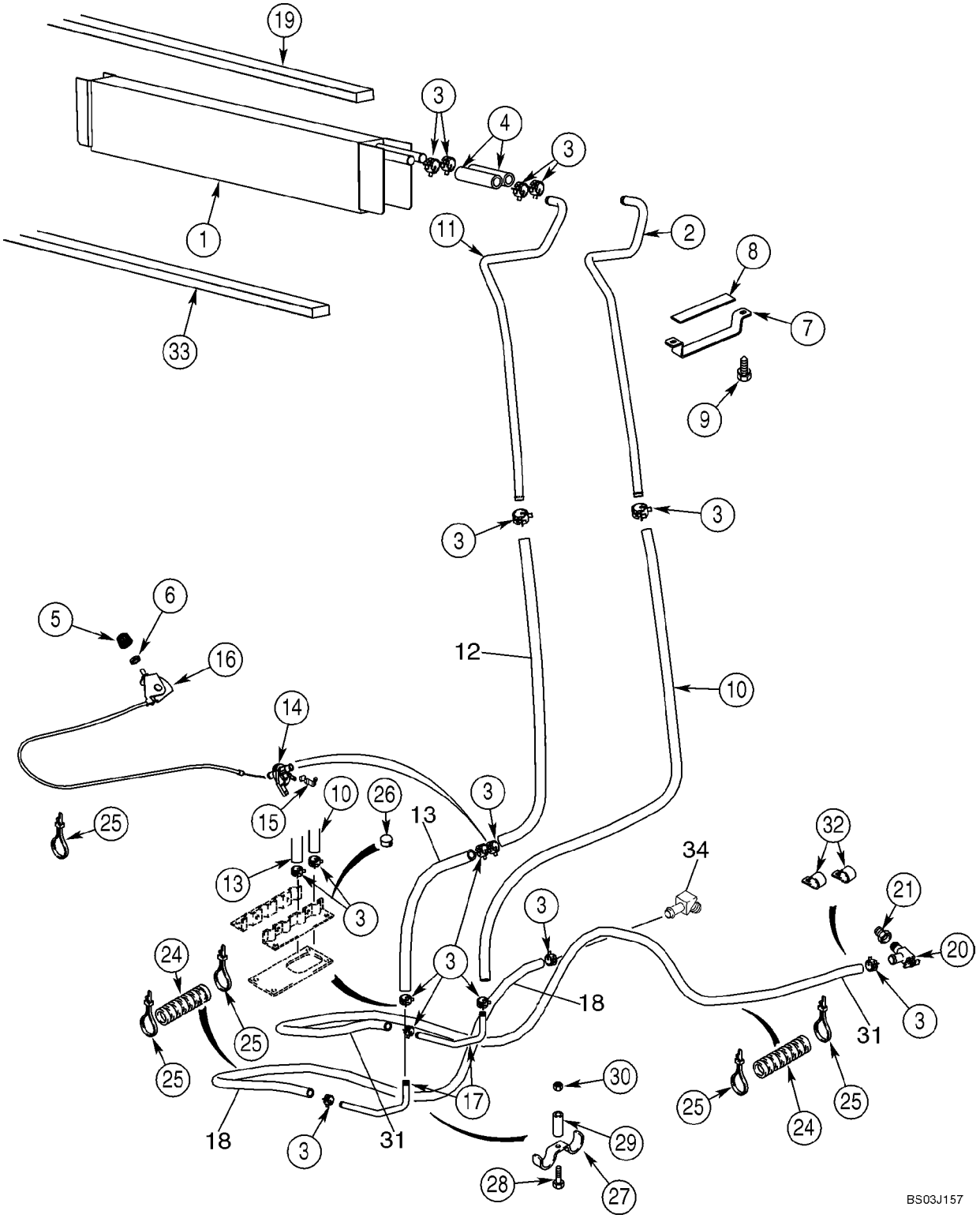
19
3
4
3
1
11
2
8
7
33
9
3
3
6
5
16
12
10
14
15
10
26
3
13
25
13
3
32
34
21
20
3
24
25
3
18
31
25
25
24
25
18
3
31
17
30
29
28
27
BS03J157

CAB - HEATER

REF	FN	PART NUMBER	YR/SN	QTY	DESCRIPTION
28		614-8030		1	BOLT, Hex, M8 x 30, 8.8
29		D143417		1	SPACER
30		825-2408		1	NUT, M8 x 1.25, Flg, Cl 8
31		377233A2		1	HOSE, LARGE, 1830 mm (72-3/64 in); Heater; Inlet From Engine; Cut From 97252CX
32		D88052		2	CLAMP
33		1987096C1		1	PLATE, LARGE, Seal, Below Heater Core; Location Of Seal On Models With Heat Only; On Models With Air Conditioning, Seal Is Located At Rear Of Housing
34		217-425		1	FITTING, 45Ü, 5/8" Hose x 3/4" NPTF Beaded

09-65		p1	12/07

CAB - AIR CONDITIONING LINES, EVAPORATOR CORE

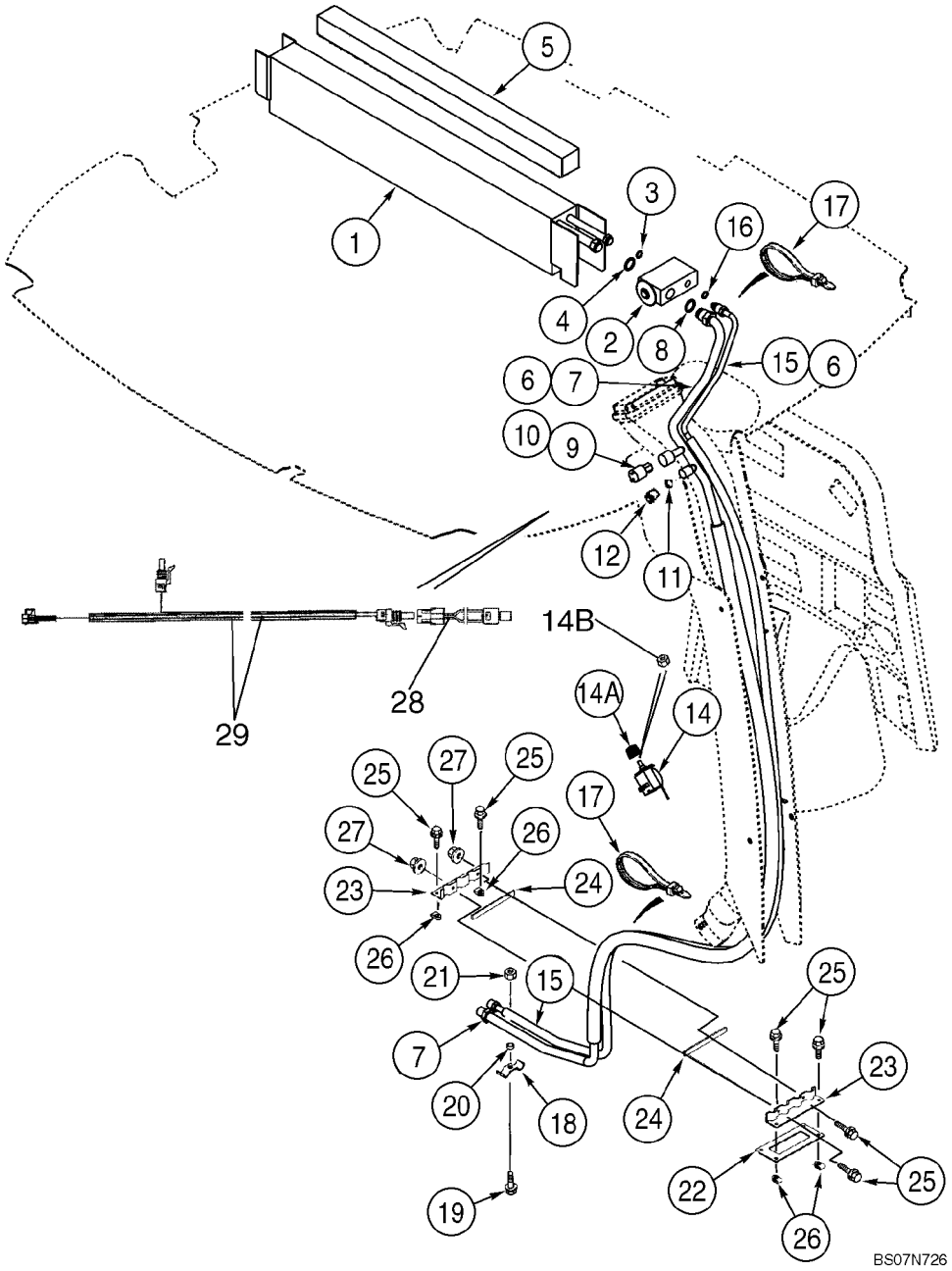

CAB - AIR CONDITIONING LINES, EVAPORATOR CORE

REF	FN	PART NUMBER	YR/SN	QTY	DESCRIPTION
		363832A5		1	EVAPORATOR, Incl. Ref 1 - 4; Not Available as An Assembly; Order Components
1		360263A4		1	EVAPORATOR, Core
2		386535A1		1	VALVE
3		128484A1		1	O-RING, 7/16 ID x 1/16
4		128485A1		1	O-RING, 9/16 ID x 1/16
		83822C1		3	TAPE, ADHESIVE, Insulation; 63,5 (2-1/2 in) x 610 mm (24-1/64 in)
5		406287A1		1	SEAL, 19 x 19 x 736 mm; Adhesive Back; Models With Heat and Air, Locate Seal On Top Of Core
		345-621		2	TAPE, ADHESIVE, 2 x 6 in
7		360257A1		1	TUBE, PLASTIC-RUBBER, Suction; Incl. Ref 8 - 12
8		128485A1		1	O-RING, 9/16 ID x 1/16
9		128483A1		1	O-RING, 5/16 ID x 1/16; Valve Core
10		1250594C1		1	CORE, Low Pressure Switch
11		1250594C1		1	CORE, Low Side Service Port
12		122553A1		1	CAP
14		370381A1		1	SWITCH, Temperature Control; Air Conditioning
14A		400379A1		1	KNOB, 23 mm
14B		A42561		1	NUT, 7/16
15		360256A1		1	TUBE, PLASTIC-RUBBER, Pressure; Incl. Ref 16
16		128483A1		1	O-RING, 5/16 ID x 1/16
17		L18337		4	STRAP, CABLE, 9.95"-12.1" lg
18		D143427		1	CLAMP
19		614-8030		1	BOLT, Hex, M8 x 30, 8.8
20		D143417		1	SPACER
21		825-2408		1	NUT, M8 x 1.25, Flg, Cl 8
22		124011A1		1	GASKET
23		123980A1		2	SHIN, CLAMP, Heater and Air Conditioning Hoses
24		181979A1		2	STRIP, SEALING
25		845-6020		6	BOLT, Hex Flg, M6 x 20, 8.8, Full Thd
26		833-40406		4	NUT, M6, U
27		825-2406		2	NUT, M6 x 1, Flg, Cl 8
28		87000228		1	SWITCH, PRESSURE, A/C Low Pressure; Blue Wire

CAB - AIR CONDITIONING LINES, EVAPORATOR CORE

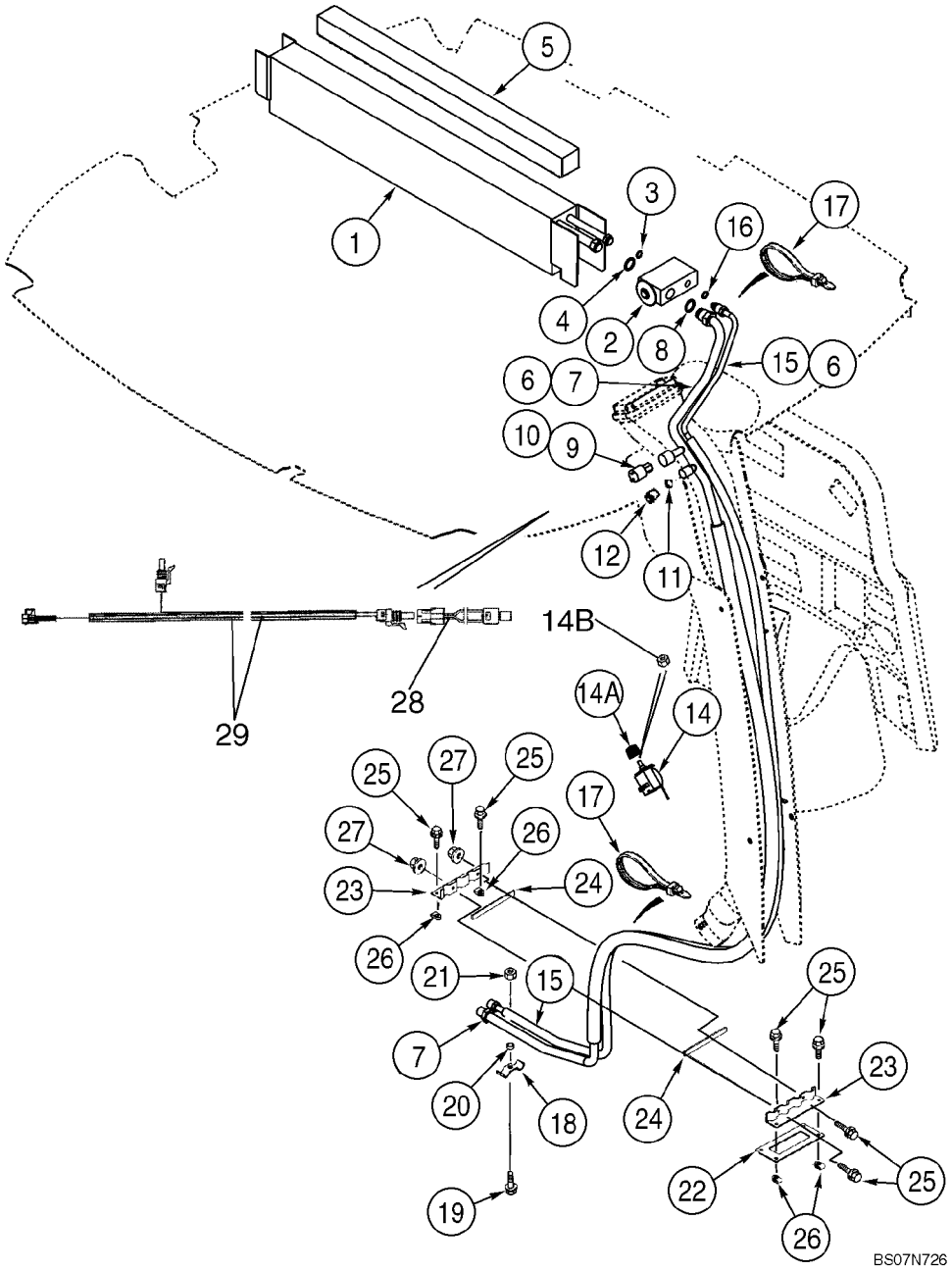

CAB - AIR CONDITIONING LINES, EVAPORATOR CORE

REF	FN	PART NUMBER	YR/SN	QTY	DESCRIPTION
29		87538167		1	HARNESS, WIRE, Service; A/C Low Pressure Switch; Connects to A/C Compressor and A/C Relay
30		401949A1		5	FASTENER, Xmas Tree Clips; B Post Cover; Not Illustrated
31		L11541		10	STRAP, CABLE, Tie; Not Illustrated

09-66		p1	01/08

CAB - AIR CONDITIONING, CONDENSER, RECEIVER-DRIER

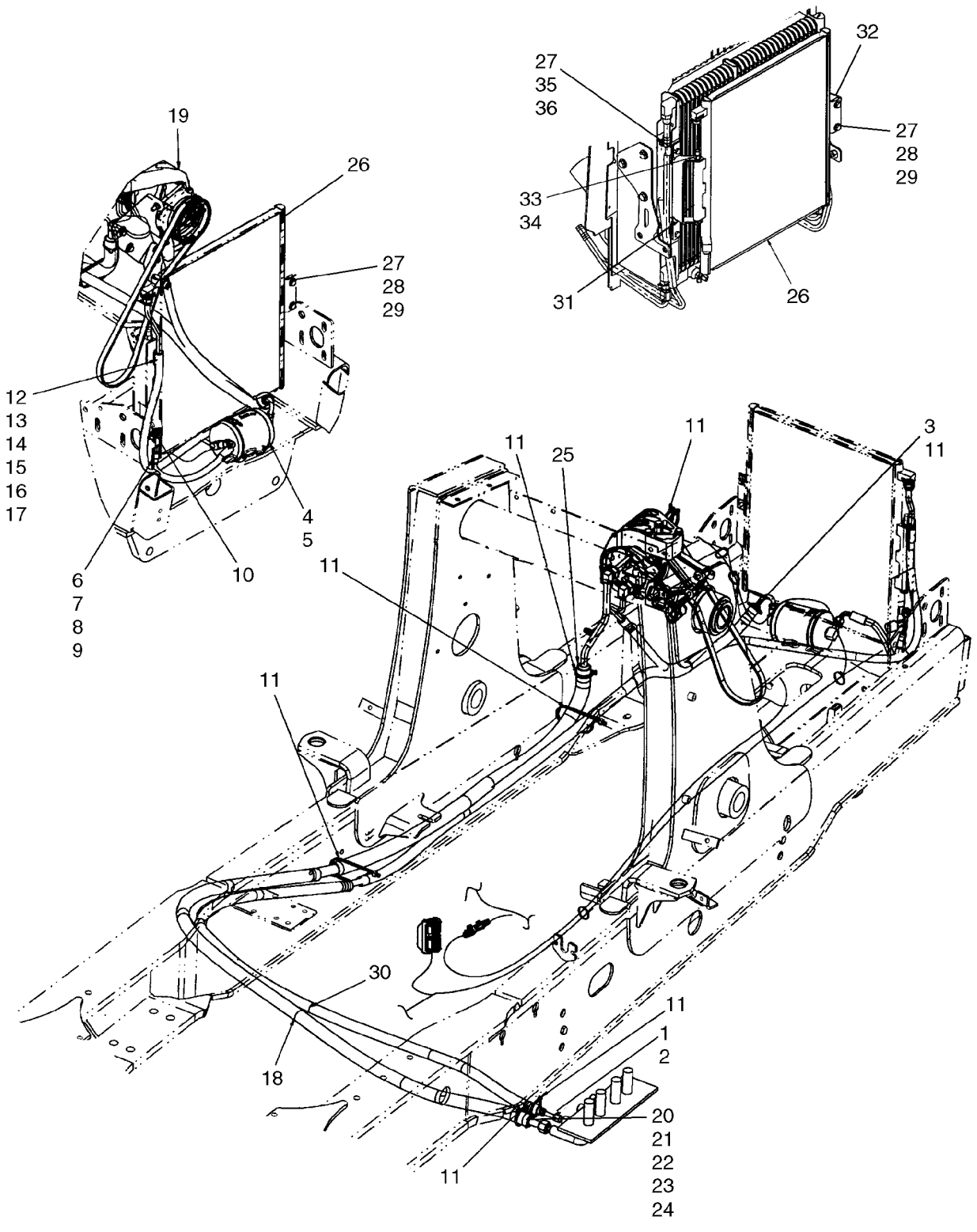

CAB - AIR CONDITIONING, CONDENSER, RECEIVER-DRIER

REF	FN	PART NUMBER	YR/SN	QTY	DESCRIPTION
1		87630219		1	HOSE ASSY., 2930 mm, Receiver Drier to Cab; Incl. Ref 2
2		128483A1		2	O-RING, 5/16 ID x 1/16
3		191704A1		2	LOOM, 460 mm (18-1/8 in)
4		86984155		1	RECEIVER-DRYER
5		214-1464		2	CLAMP, HOSE, #64, 3.56/4.50 Type F Worm
6		87630218		1	HOSE ASSY., 340 mm, Condenser to Drier; Incl. Ref 7 - 9
7		128483A1		3	O-RING, 5/16 ID x 1/16
8		1250594C1		1	CORE, Valve, High Pressure Switch
9		122081A1		1	FITTING, Switch
10		232948A1		1	SWITCH, PRESSURE, High Pressure
11		L18337		10	STRAP, CABLE, 9.95"-12.1" lg
12		87590156		1	HOSE ASSY., 1350 mm; Compressor to Condenser; Incl. Ref 13 - 17
13		128484A1		1	O-RING, 7/16 D x 1/16
14		128485A1		1	O-RING, 9/16 ID x 1/16
15		1999926C1		1	FITTING, PIPE
16		1250594C1		1	CORE, Valve
17		122554A1		1	CAP, Sealing Cap
18		87726951		1	HOSE, PROTECTION, Guard, 1200 mm (47-1/4 in)
19		87430122		1	COMPRESSOR, AIRCOND, Component Parts Not Serviced Separately, See Figure 09-66 for Mounting
20		87630220		1	HOSE ASSY., 2425 mm, Cab to Compressor; Incl. Ref 21 - 24
21		128485A1		2	O-RING, 9/16 ID x 1/16
22		1999927C1		1	FITTING, PIPE
23		1250594C1		1	CORE, Valve
24		122553A1		1	CAP, Sealing
25		191703A1		1	LOOM, Sleeve, 400 mm (15-3/4 in)
26		87546291		1	CONDENSER
27		614-8020		6	BOLT, Hex, M8 x 20, 8.8
28		895-15008		2	WASHER, M8 x 20 x 1.6
29		833-40408		2	NUT, M8, U
30		87726950		1	HOSE, PROTECTION, Guard, 1200 mm (47-1/4 in)

09-66		p2	01/08

CAB - AIR CONDITIONING, CONDENSER, RECEIVER-DRIER

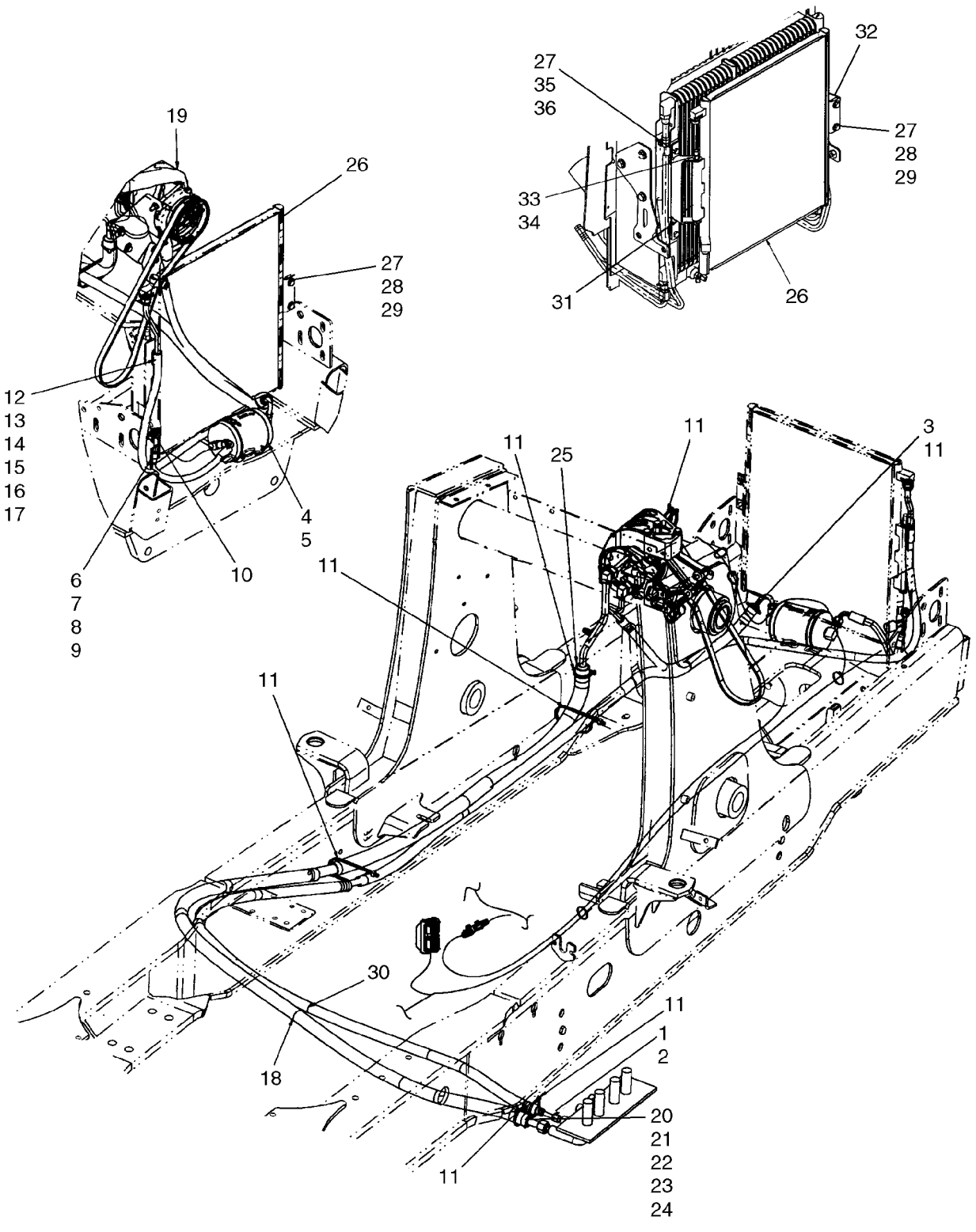

CAB - AIR CONDITIONING, CONDENSER, RECEIVER-DRIER

REF	FN	PART NUMBER	YR/SN	QTY	DESCRIPTION
31		87598501		1	BRACKET, PIVOT
32		87589025		1	BRACKET, SUPPORTING
33		814-10220		1	BOLT, Hex, M10 x 220, 8.8
34		832-10410		1	NUT, LOCK, M10 x 1.5, Cl 8
35		829-1408		4	NUT, M8, Cl 10
36		895-11008		6	WASHER, M8 x 16 x 1.6

CAB - AIR CONDITIONING COMPRESSOR

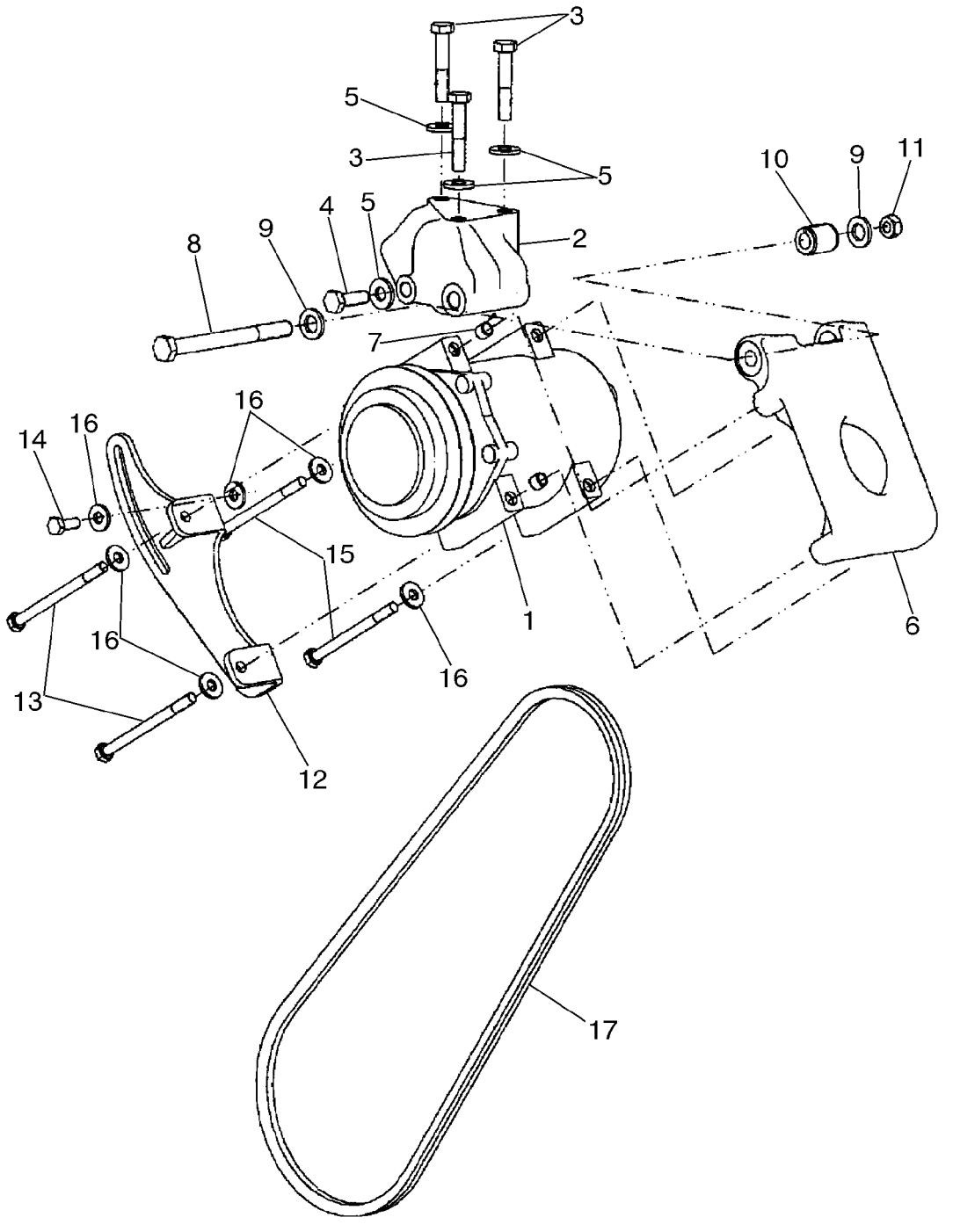

CAB - AIR CONDITIONING COMPRESSOR

REF	FN	PART NUMBER	YR/SN	QTY	DESCRIPTION
1		87430122		1	COMPRESSOR, AIRCOND, Compressor Component Parts Not Serviced Separately
2		87429950		1	SUPPORT, Mounting Support
3		814-10055		3	BOLT, Hex, M10 x 55, 8.8
4		614-10030		1	BOLT, Hex, M10 x 30, 8.8
5		896-15010		4	WASHER, M10 x 24.5 x 3, HT
6		87429948		1	SUPPORT
7		87429952		2	RING
8		814-12130		1	BOLT, Hex, M12 x 130, 8.8
9		896-11012		2	WASHER, M13.5 x 24.5 x 3, HT
10		87429951		1	SPACER, Pivot
11		829-1412		1	NUT, M12, Cl 10
12		87429949		1	BRACKET, SUPPORTING
13		814-8110		2	BOLT, Hex, M8 x 110, 8.8
14		614-8020		1	BOLT, Hex, M8 x 20, 8.8
15		814-8100		2	BOLT, Hex, M8 x 100, 8.8
16		896-15008		6	WASHER, M8 x 21.5 x 2.5, HT
17		87393292		1	BELT, TRANSMISSION, V-Belt

09-68		p1	01/08

CANOPY, ROPS - FRAME, COVERS, MIRROR, VISOR

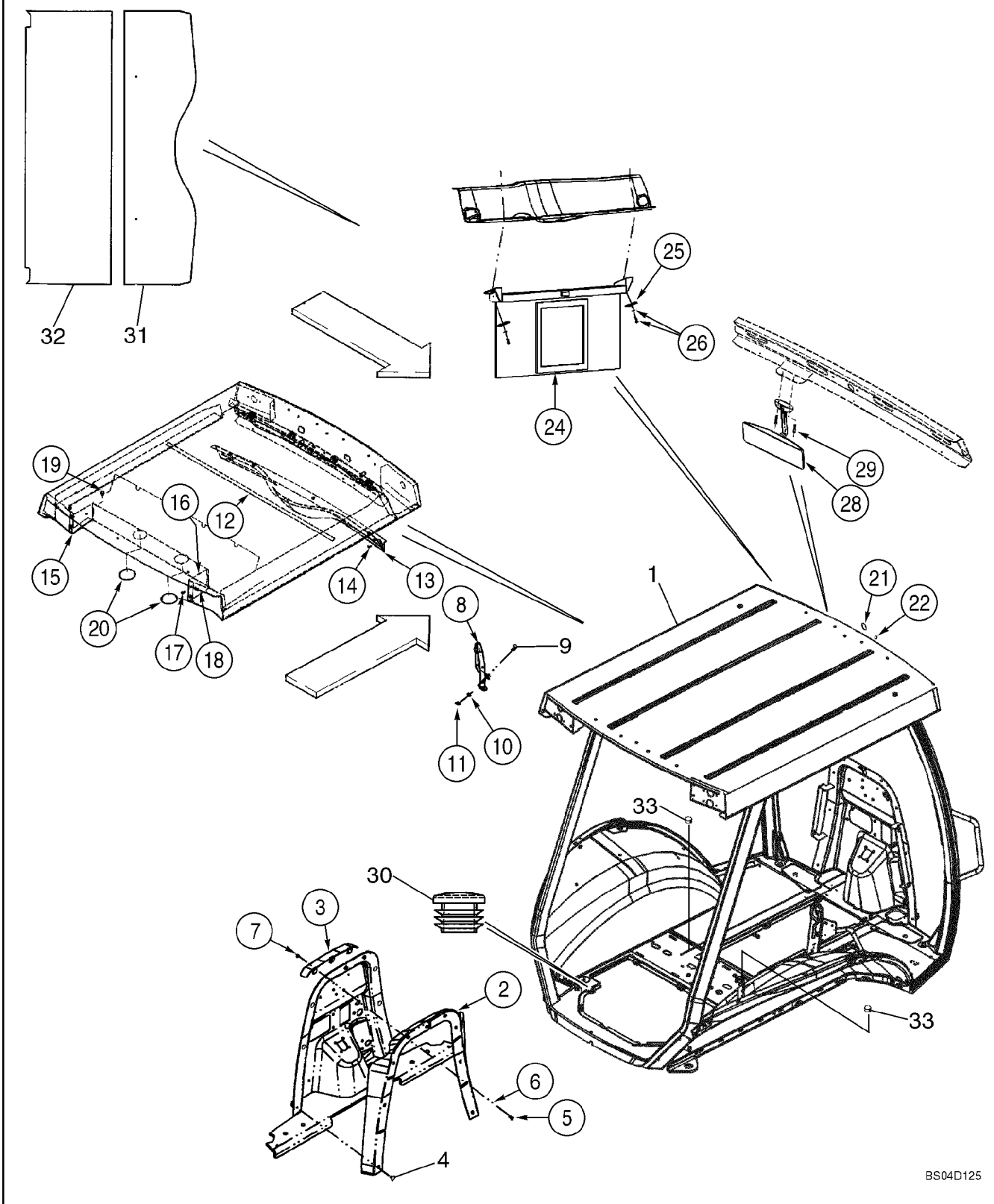

CANOPY, ROPS - FRAME, COVERS, MIRROR, VISOR

REF	FN	PART NUMBER	YR/SN	QTY	DESCRIPTION
		87636559		1	ROPS, ASSEMBLY, Includes 87636554 Frame, Glass, Wiper and Roof Foam Panels
1		87636554		1	ROPS, Canopy Frame; Order From Machinery Price List
2		396938A3		1	MOLDING, Firewall
3		395478A3		1	BRACKET
4		D143242		6	PLUG, Push-In Fastener
5		614-8020		3	BOLT, Hex, M8 x 20, 8.8
6		495-81001		3	WASHER, 5/16"
7		832-10408		3	NUT, LOCK, M8 x 1.25, Cl 8
8		87627072		1	GRAB RAIL
9		87310177		2	BOLT, M10 x 25; 8.8, Round Head Square Neck, Stainless Steel
10		495-81267		2	WASHER, .469" x 1 1/2" x .134"
11		832-10410		2	NUT, LOCK, M10 x 1.5, Cl 8
12		385506A1		1	STRIP, PROTECTION, 127 mm; Foam; Adhesive Back
13		367712A3		1	COVER, Harness
14		F64519		5	SCREW, SELF TAP, Cross Wash Hd, #10-16 x 3/4", For Service, Order 265-16512, F64315
15		357099A1		1	COVER, Left-Hand
16		357100A1		1	COVER, Right-Hand
17		87310098		4	BOLT, Flange, M6 x 20, Stainless Steel
18		833-40406		4	NUT, M6, U
19		353-402		4	PLUG, Dome, .375" hole, Nylon, Models With 4 Lamps; Not Used On Models With 8 Lamps
20		1302758C1		2	PLUG, 3 in
		353-410		1	PLUG, Dome, .875" hole, Nylon
21		411549A1		1	PLUG, 1 in; Windshield Frame
22		353-421		2	PLUG, Dome, .187" hole, Nylon, Upper Windshield Frame
24		364180A1		1	VISOR, SUN
25		409618A1		2	PLATE, 1/4 in Mounting Hole
26		396516A1		2	SCREW, POINTED, No 10 x 1 st; With Washer; Phillips

CANOPY, ROPS - FRAME, COVERS, MIRROR, VISOR

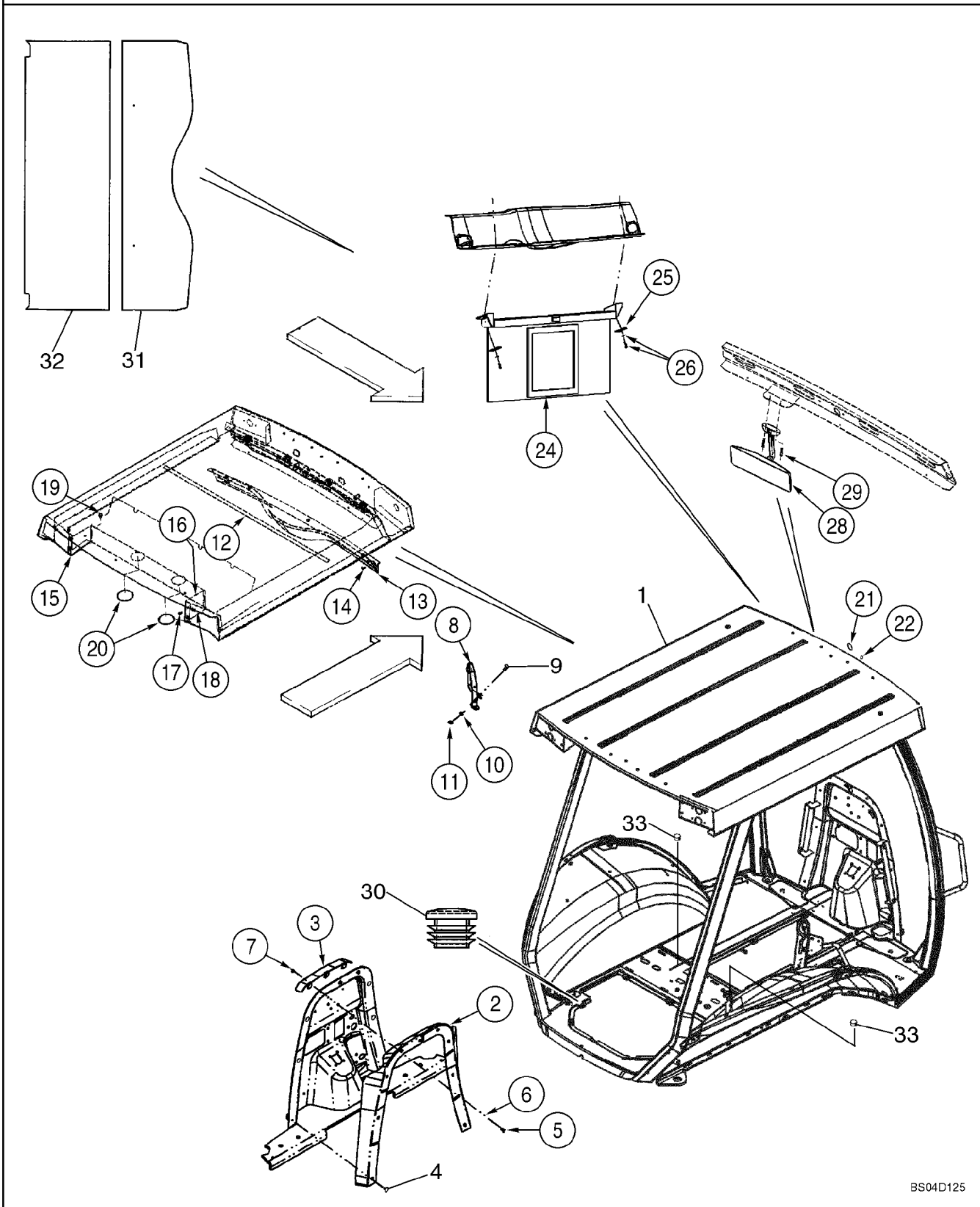

CANOPY, ROPS - FRAME, COVERS, MIRROR, VISOR

REF	FN	PART NUMBER	YR/SN	QTY	DESCRIPTION
28		87406924		1	MIRROR, REAR-VIEW
29		286-56520		2	SCREW, Cross Fil Hd, #10-24 x 1 1/4"
30		382298A1		2	PLUG, 7/8 in
31		431583A1		1	PANEL, Foam; Roof Front
32		431584A1		1	PANEL, Foam: Roof Rear
33		353-413		2	PLUG, Dome, 1.187" hole, Nylon, 1-3/16 Hole Size, Black Nylon; Brake Bleeder

09-69		p1	12/07

CANOPY, ROPS - GLASS

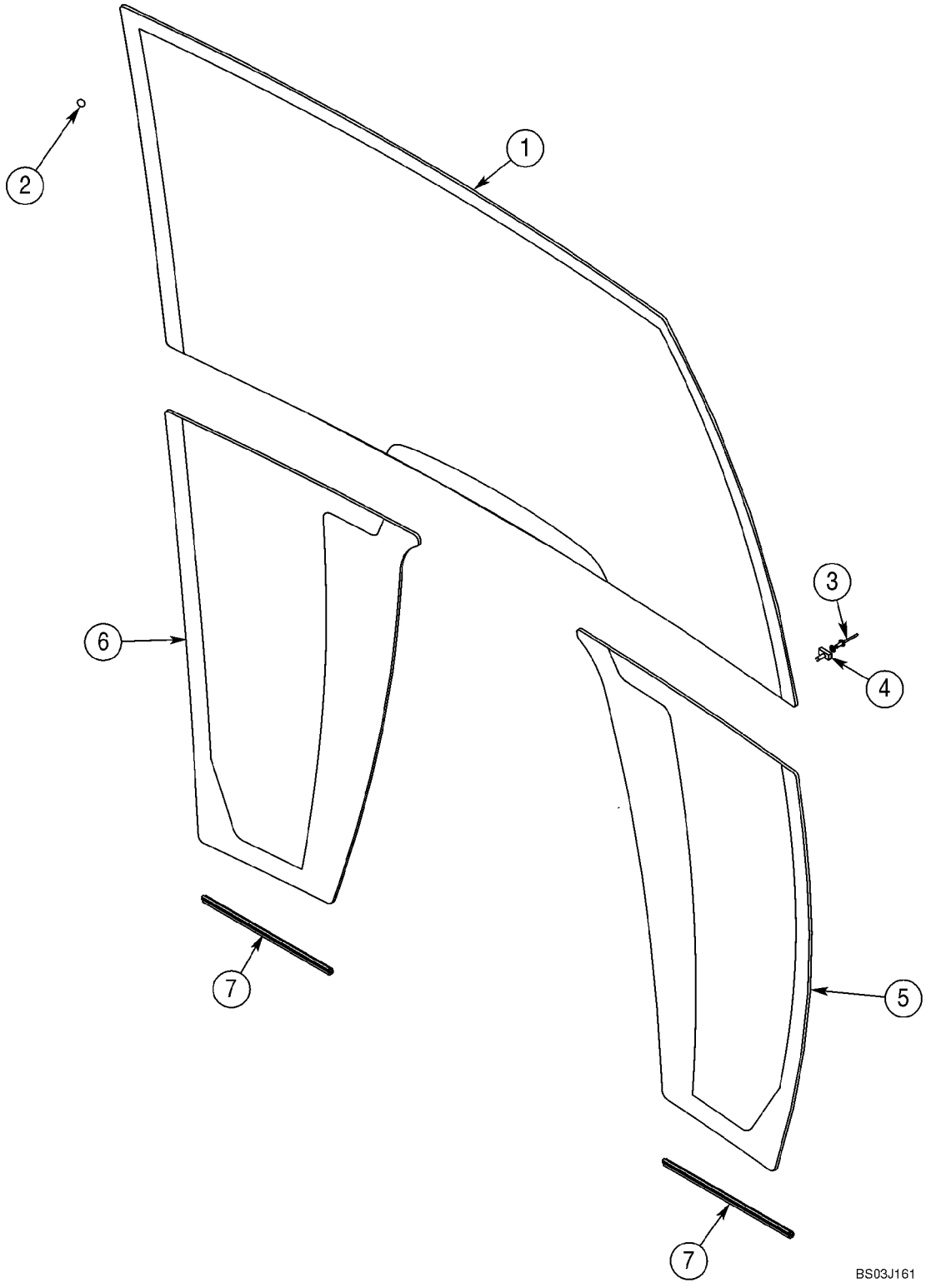

CANOPY, ROPS - GLASS

REF	FN	PART NUMBER	YR/SN	QTY	DESCRIPTION
1		448607A1		1	WINDSHIELD
2		391827A1		28	SPACER
3		151-516		2	RIVET, Pop, 1/8" x .775"
4		279482A1		2	CLAMP
5		448609A1		1	WINDSHIELD, Lower; Right-Hand
6		448608A1		1	WINDSHIELD, Lower; Left-Hand
7		395793A1		2	STRIP, PROTECTION, Lower Glass Trim

09-70		p1	12/07

CANOPY, ROPS - WIPER, FRONT AND WINDSHIELD WASHER

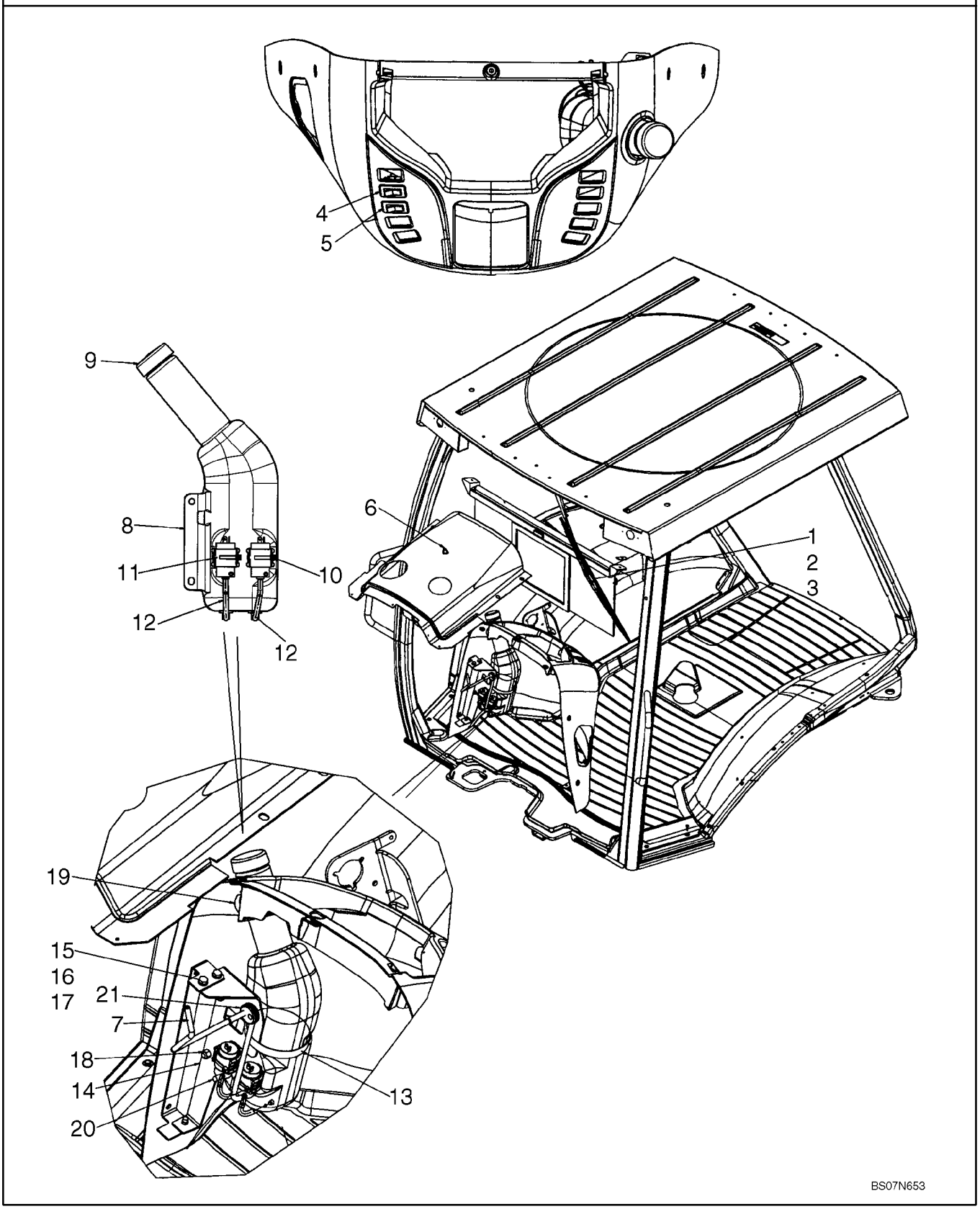

CANOPY, ROPS - WIPER, FRONT AND WINDSHIELD WASHER

REF	FN	PART NUMBER	YR/SN	QTY	DESCRIPTION
1		450037A1		1	WIPER MOTOR, 12V
		814-6050		2	BOLT, Hex, M6 x 50, 8.8, Wiper Motor Mounting
		892-11006		2	WASHER, LOCK, M6
2		D128745		1	WIPER ARM
3		414426A1		1	BLADE, WIPER, 600 mm
4		386785A1		1	SWITCH, Front Wiper
5		386787A1		1	SWITCH, Windshield Washer
6		E43769		1	SPRAY, NOZZLE; Front; Includes Rubber Gasket; Plastic
7		87699640		1	HOSE (METRES), 700 mm (27-1/2 in); Cut From 87282056
8		87675208		1	RESERVOIR, WINDSH. WASH, RESERVOIR; Window Washing Fluid
9		87711985		1	CAP, FILLER, Cap; Washer Bottle
10		L11541		2	STRAP, CABLE
11		86507198		2	PUMP, SMALL, Window Washer
12		87700794		2	HOSE (METRES), Washer Bottle
13		214-3180		1	CLAMP, HOSE, 4.25/5.125 HD Worm
14		87676276		2	BRACKET, SUPPORTING
15		614-8020		5	BOLT, Hex, M8 x 20, 8.8
16		895-11008		5	WASHER, M8 x 16 x 1.6
17		833-40408		3	NUT, M8, U
18		832-10408		2	NUT, LOCK, M8 x 1.25, Cl 8
19		87694565		1	STRIP, SEALING
20		87441758		1	CAP, WASHER, Reservoir
21		87637384		1	GROMMET, Washer Hose
		404617A1		1	HARNESS, Front Lamps and Wiper
		87726574		1	HARNESS, WIRE, Front Console Options; Includes (1) L71879 Diode
		87726573		1	HARNESS, WIRE, Chassis Options; Includes (4) L71879 Diodes; Not Illustrated]

MIRROR, REAR VIEW - MOUNTING, CAB MODELS

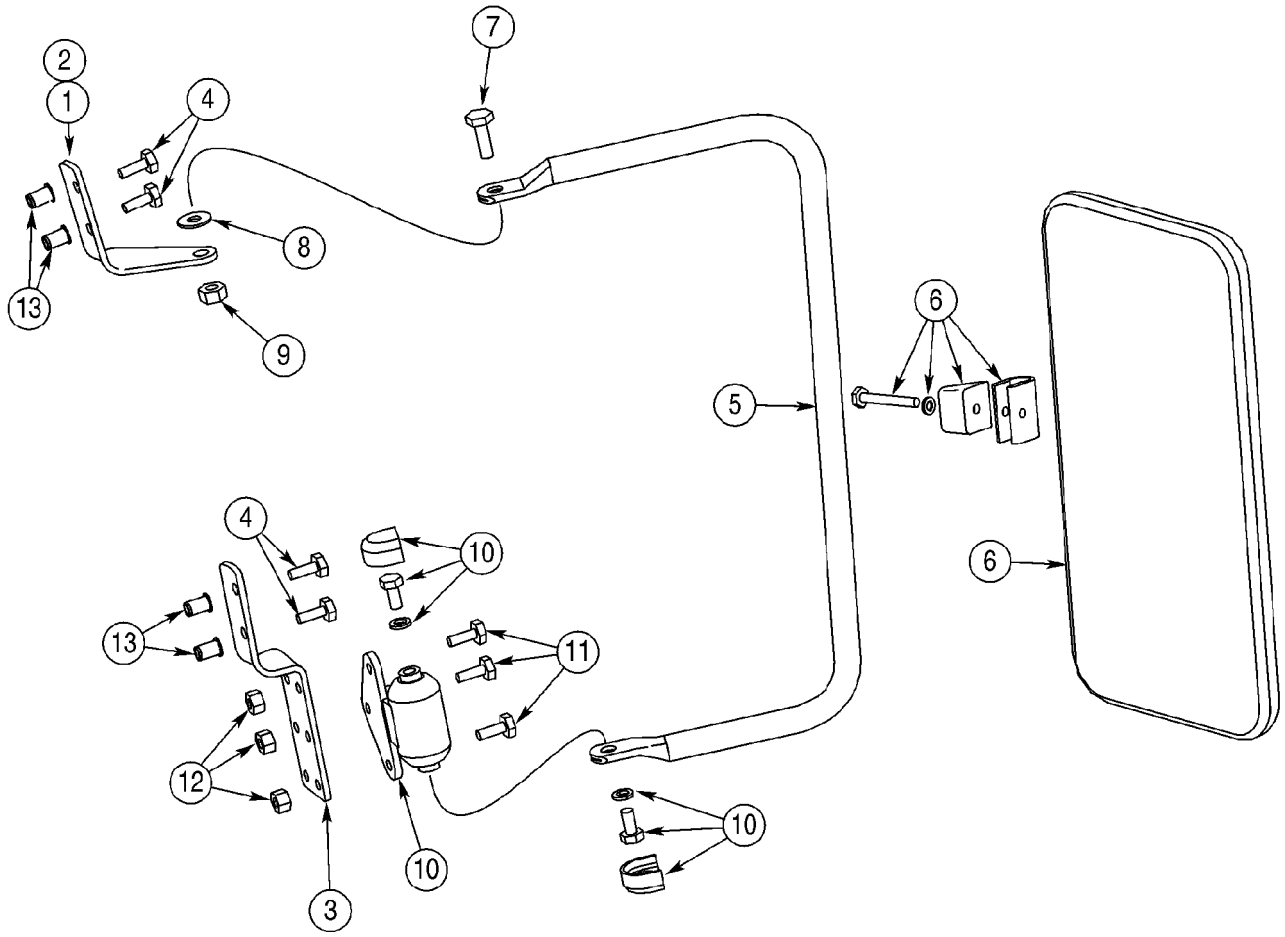

MIRROR, REAR VIEW - MOUNTING, CAB MODELS

REF	FN	PART NUMBER	YR/SN	QTY	DESCRIPTION
		397974A1		1	KIT, Outside Mirror; Incl. Ref 1 - 14 and Instructions
1		402933A1		1	BRACKET, Upper; Right-Hand
2		402934A1		1	BRACKET, Upper; Left-Hand; Not Illustrated
3		402936A1		2	BRACKET, Lower
4		413-412		8	BOLT, Hex, 1/4"-20 x 3/4", G5, Full Thd
5		402935A1		2	TUBE, SUPPORT
6		R54682		2	MIRROR, Exterior
7		413-516		2	BOLT, Hex, 5/16"-18 x 1", G5, Full Thd, 5/16 x 1
8		A167037		2	WASHER
9		231-4115		2	NUT, LOCK, 5/16"-18, GB, 5/16
10		D142144		2	KNUCKLE, STEERING, Includes Hardware
11		413-412		6	BOLT, Hex, 1/4"-20 x 3/4", G5, Full Thd
12		231-1444		6	NUT, LOCK, 1/4"-20, GB
13		255447A1		10	RIVET, Threaded Insert; Cab Front ROPS Post
14		NSS		1	NOT SERVICED SEPARATELY, Tool, Insert Nut; Not Illustrated

09-72		p1	01/08

SLOW MOVING VEHICLE EMBLEM

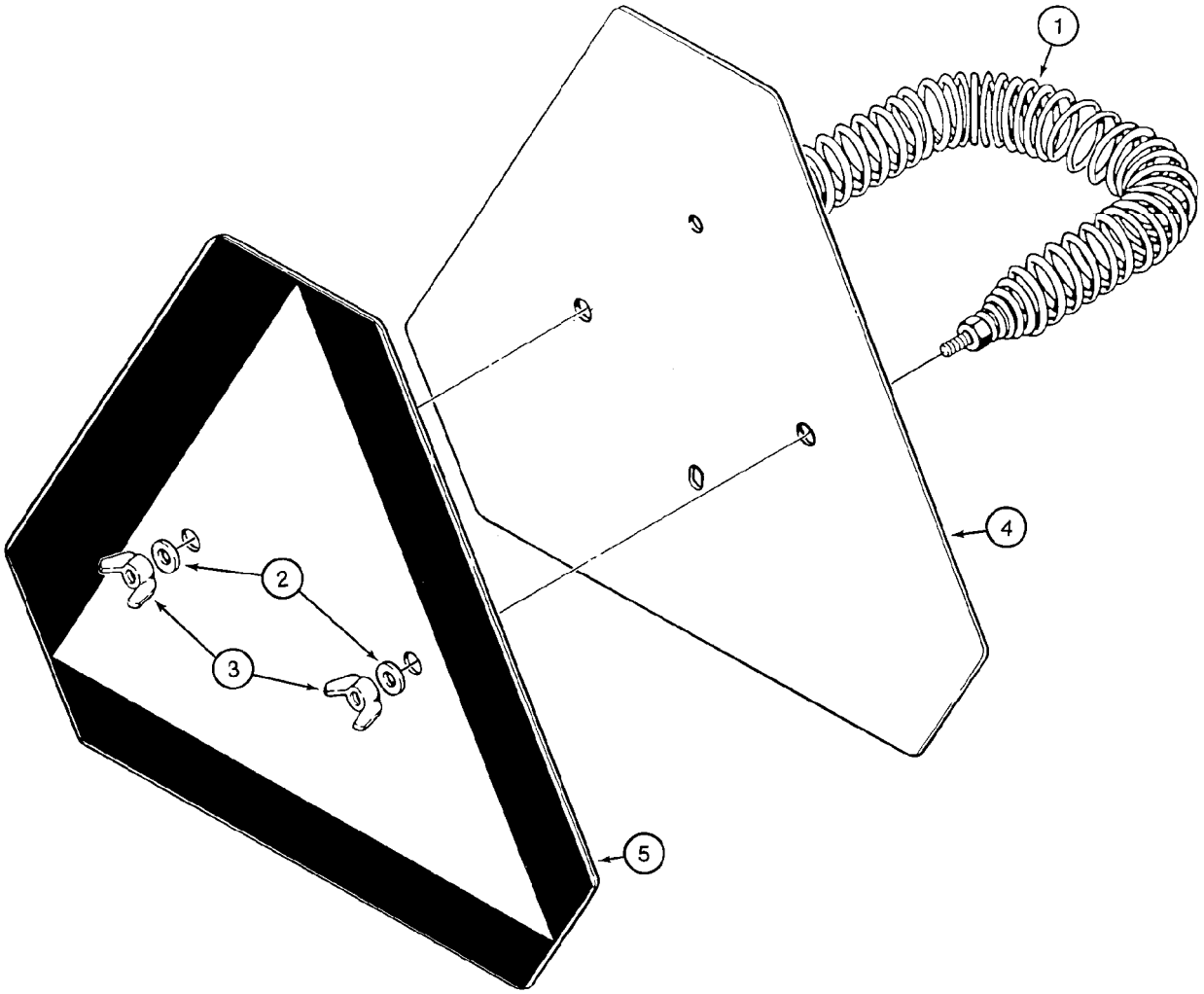

B9409034

SLOW MOVING VEHICLE EMBLEM

REF	FN	PART NUMBER	YR/SN	QTY	DESCRIPTION
1		D52564		1	SPRING
2		495-11028		2	WASHER, 1/4", SAE, 9/32 x 5/8 x 1/16
3		126177		2	DISC, 1/4
4		86547710		1	WARNING TRIANGLE, Incl. Ref 5
5		321-4311		1	DECAL, Slow Moving Vehicle

DECALS



1

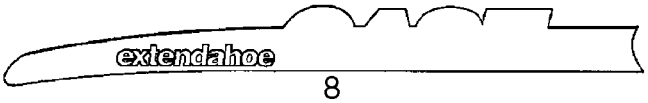

8



1B

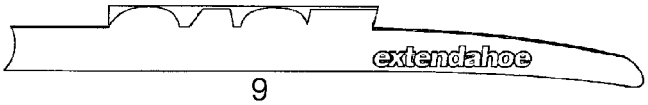

9



2
3

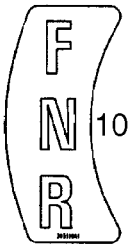

10



11

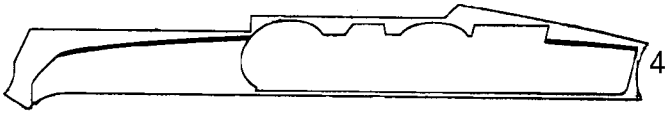
4



12

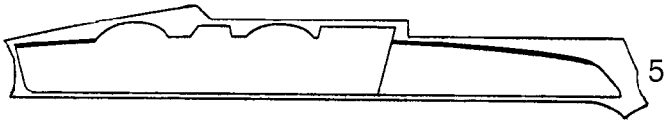
5

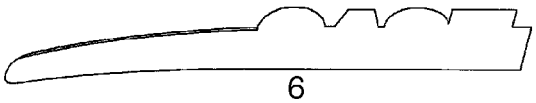
6



13


14

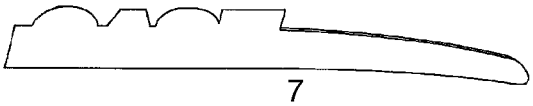
7



15

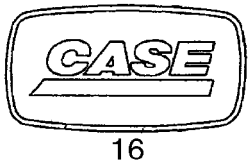

16

BS08A289

DECALS

REF	FN	PART NUMBER	YR/SN	QTY	DESCRIPTION
1		{87754369}		2	580M Model Designation
1B		87412815		2	DECAL, Series 3
2		401457A1		2	DECAL, 525 mm (20-11/16 in) Wide; Case Logo; Loader Arm
3		401458A1		4	DECAL, 655 mm (25-13/16 in) Wide, Case Logo; Backhoe Dipper
4		{87751884}		1	Case, Loader Arm Pin Stripe, Left-Hand Stripe
5		{87751885}		1	Case, Loader Arm Pin Stripe, Right-Hand Stripe
6		407009A2		1	DECAL, Case, Standard Dipper, Left-Hand Stripe
7		407010A2		1	DECAL, Case, Standard Dipper, Right-Hand Stripe
8		373698A2		1	DECAL, Case, Extendahoe Dipper, Left-Hand Stripe
9		373699A2		1	DECAL, Case, Extendahoe Dipper, Right-Hand Stripe
10		395910A2		1	DECAL, FNR (Forward/Neutral/Reverse); Shuttle Shift Lever Control Pattern
11		321-1708		1	DECAL, 0-2-4, Clam Bucket Opening Indicator
12		87435569		1	EMBLEM, Insert, Case; Steering Wheel
13		186989A1		1	EMBLEM, Case
14		131-431		2	NUT, LOCK, Self, Threading, 1/4"
15		87415931		2	DECAL, Case, 37 x 70 mm; Located On Engine Filters
16		87429186		1	EMBLEM, Case, 37 x 70 mm; Located On Engine

DECALS

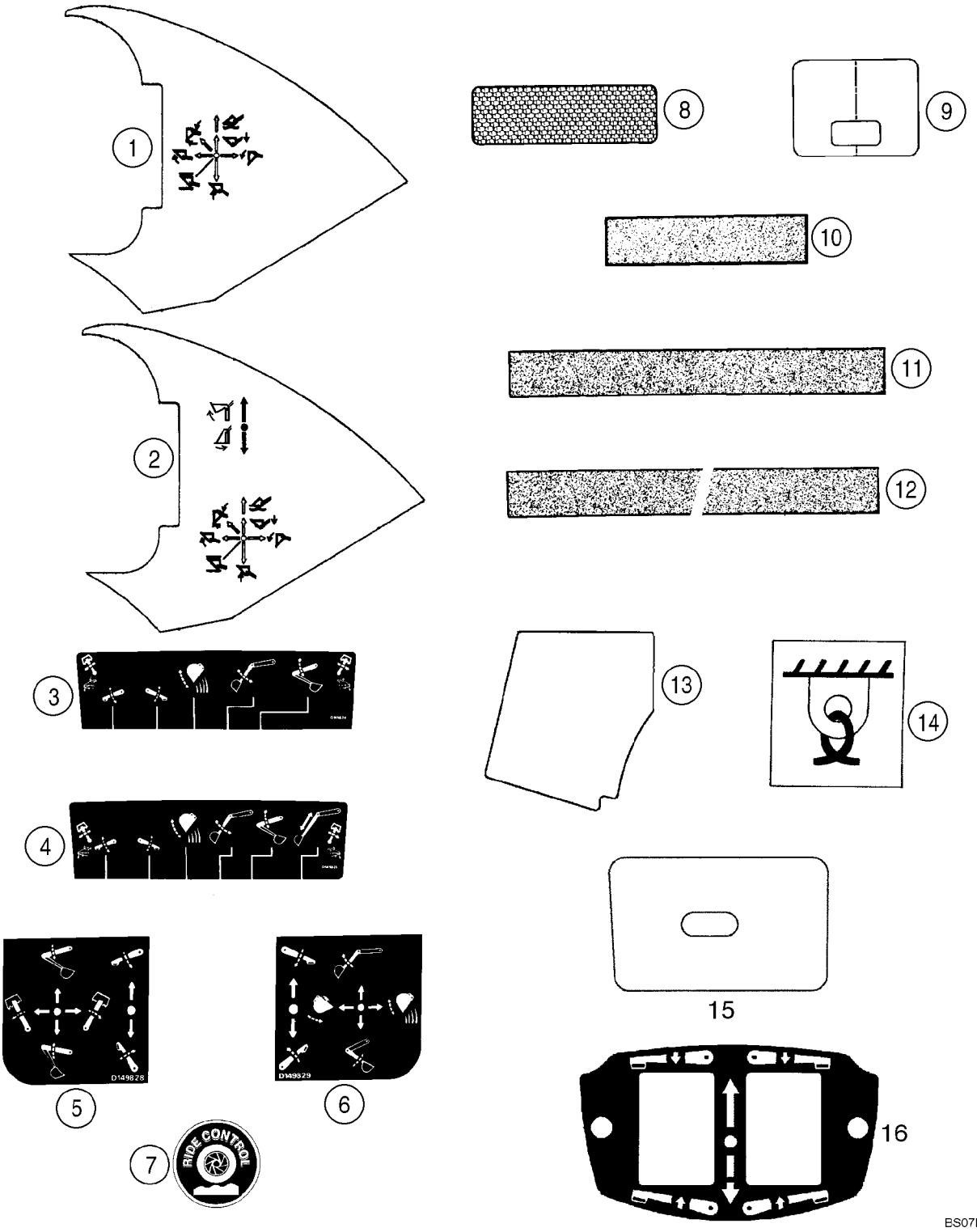

DECALS

REF	FN	PART NUMBER	YR/SN	QTY	DESCRIPTION
1		87702261		1	DECAL, Two Function Loader Control
2		{87480903}		1	Decal; Three Function Loader Control
3		D149824		1	DECAL, Upper; Standard Backhoe Control Pattern
4		D149825		1	DECAL, Upper; Extendahoe Control Pattern; With Foot Swing
5		D149828		1	DECAL, Upper; Standard Backhoe Control Pattern; With Hand Swing; Left-Hand Side Of Console
6		D149829		1	DECAL, Upper; Standard Backhoe Control Pattern; With Hand Swing; Right-Hand Side Of Console
7		304083A1		2	DECAL, Ride Control
8		449842A1		2	DECAL, 2 x 6-5/16 in; Red, Reflector
9		192450A1		1	DECAL, Clear Vinyl; Hood
10		D55216		2-11	STRIP, ANTI-SKID, 2 x 9 in; Anti-Skid
11		D80270		3-4	STRIP, 635 mm (25 in); Anti-Skid
12		307348A1		2	STRIP, 700 mm (27-9/16 in); Anti-Skid; 40 gallon fuel tank
13		367848A2		1	PAD, Anti-Skid; Canopy Models
14		87626017		4	DECAL, Tie Down; Replaces 139728A1
15		406723A1		1	DECAL, Poly Film; Lockup Cover; Canopy Models
16		87423812		1	DECAL, Stabilizer Switch; Models With Pilot Controls
17		T41159		1	TAPE, ADHESIVE, Not Illustrated

DECALS

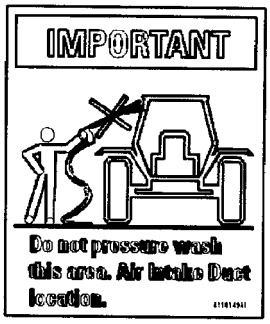

2

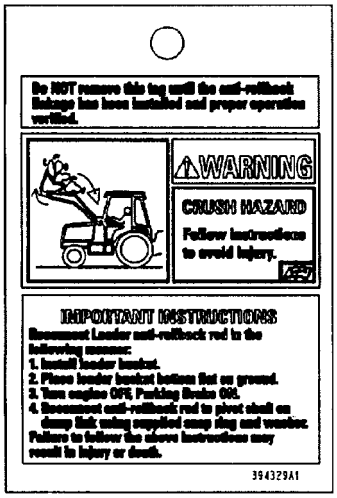

3

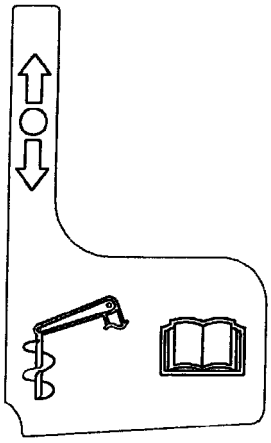

4

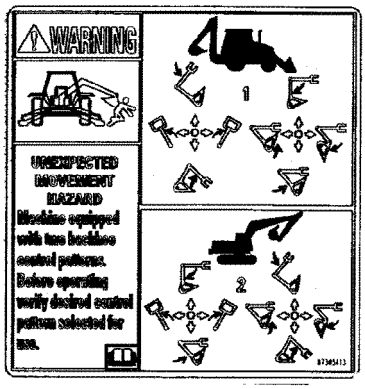

5

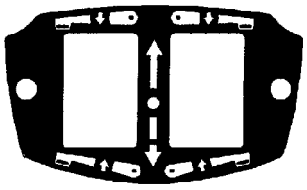

6

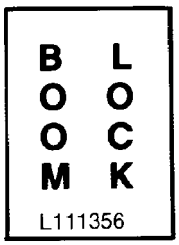

7



8



9

BS07M814

DECALS

REF	FN	PART NUMBER	YR/SN	QTY	DESCRIPTION
2		411049A1		1	DECAL, Important; Do Not Pressure Wash This Area
3		394329A1		1	TAG, Warning; Anti-Rollback Hazard; English
3		430309A1		1	TAG, Warning; Anti-Rollback Hazard; Latin American Spanish
3		430310A1		1	TAG, Warning; Anti-Rollback Hazard; Canadian French
4		87430677		1	DECAL, Auxiliary Hydraulics
5		87305413		1	DECAL, Warning, Unexpected Movement; Pattern Selecting; English
5		87336843		1	DECAL, Warning, Unexpected Movement; Pattern Selecting; Latin American Spanish
5		87336844		1	DECAL, Warning, Unexpected Movement; Pattern Selecting; French Canadian
6		87423812		1	DECAL, Stabilizer Control Switch
7		L111356		1	DECAL, Boom Lock; Included In 399221A1 Backhoe Boom Lock Kit
8		321-6046		2	DECAL, Warning, If You Use The Backhoe To Lift A Load That Is Too Heavy; Included With 189957A1 Boom Lock Valve Used In 399221A1 Backhoe Boom Lock Kit
9		87444776		1	DECAL, Warning, Crush Hazard; When Changing A Machine to Foot Swing Controls; English
9		87307893		1	DECAL, Warning, Crush Hazard; When Changing A Machine to Foot Swing Controls; Latin American spanish
9		87307896		1	DECAL, Warning, Crush Hazard; When Changing A Machine to Foot Swing Controls; Canadian French

DECALS - ENGLISH

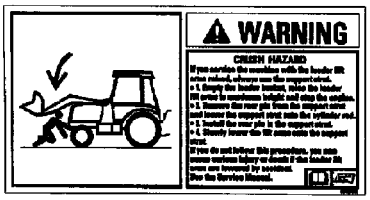

1

FUSES 87652902			
SPARE	....	....	....
SPARE	POWER OUTLET 30A	SPARE	PILOT CONTROLS BH AUX (OPT) 15AMP
FRONT WORK LIGHTS 20A	POWER OUTLET 30A	AIR SUSP. SEAT-AIR COMP. (OPT) 20A	RETURN TO DIG 10A
REAR WORK LIGHTS 20A	PWRSHIFT CTRL, COMFORT STEER (OPT) 10A	SPARE	DRIVING LIGHTS 15A
FUEL SHUTOFF 10A	BLOWER 25A	DOME LIGHT 10A	ROTATING BEACON (OPT) 10A
INSTRUMENTS ALARMS SYS. 10A	SIGNAL LIGHTS PARK BRAKE 20A	HORN 10A	4WD (OPT) 10A
STARTING TRANSMISSION CONTROL 10A	RADIO, RIDE CONTROL, QUICK COUPLER 15A	RADIO (BATT) (OPT) 10A	WIPERS 15A

8

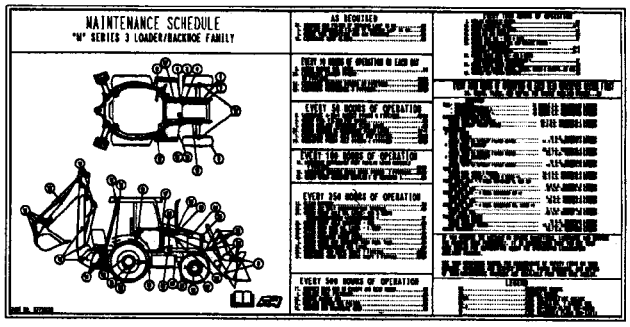

2

POWER RELAY #1	POWER RELAY #4	FLASHER RELAY	STARTER RELAY
POWER RELAY #2	LDR LVR DIFF LK RELAY	SHUTTLE INTLK TIMING RELAY	NEUTRAL RELAY
POWER RELAY #3	CLUTCH RELAY	SHUTTLE INTLK RELAY	FORWARD RELAY
PARK BRAKE RELAY	....	....	REVERSE RELAY
		AC RELAY (OPT)	....
COMFORT STEER POWER (OPT)	COMFORT STEER CUTOUT (OPT)		

RELAYS

9



3

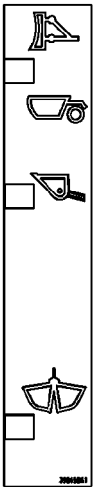

5

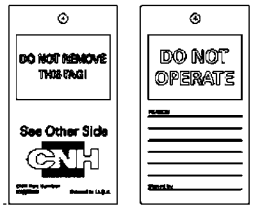

11

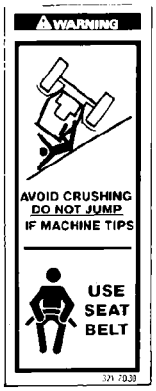

10



12

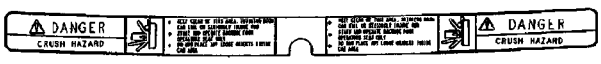

4

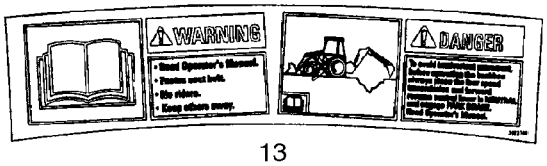

13

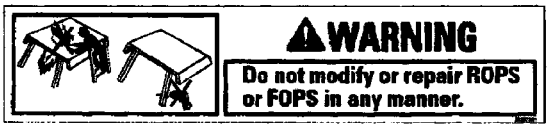

6

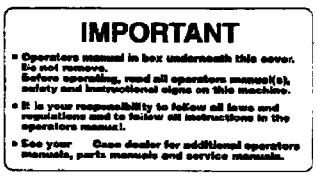

7



14

BS08A110

DECALS - ENGLISH

REF	FN	PART NUMBER	YR/SN	QTY	DESCRIPTION
1		384264A1		1	DECAL, Warning; Crush Hazard; Loader Arm Support Strut
2		87735103		1	DECAL, Maintenance Schedule; Supplied by Parts and Components
3		8603092		1	DECAL, WARNING, Warning; Explosion Hazard, Do Not Use Ether
4		86992976		1	DECAL, Danger; Crush Hazard
5		398658A1		1	DECAL, Clam Bucket Position
6		383972A1		1	DECAL, Warning; Do Not Modify or Repair ROPS or FOPS In Any Manner
7		144193A3		1	DECAL, Important; Operator's Manual In Box Underneath This Cover; Glove Box Lid
8		87652902		1	DECAL, Fuse Location
9		87647001		1	DECAL, Relay
10		321-7030		2	DECAL, Warning; Avoid Crushing; Do Not Jump / Use Seat Belt
11		87358697		1	TAG, TAG, Do Not Operate
12		86992975		2	DECAL, Warning; No Step/Not An Exit; Canopy
13		392374A1		1	DECAL, Warning/Danger; Read the Operator's Manual
14		87702297		1	DECAL, Parking Brake

DECALS - LATIN AMERICAN SPANISH

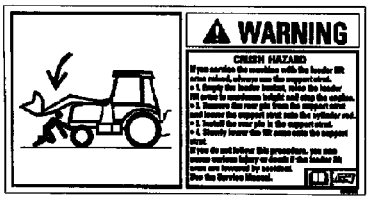

1

FUSES 87652902			
SPARE	....	....	....
SPARE	POWER OUTLET 30A	SPARE	PILOT CONTROLS BH AUX (OPT) 15AMP
FRONT WORK LIGHTS 20A	POWER OUTLET 30A	AIR SUSP. SEAT-AIR COMP. (OPT) 20A	RETURN TO DIG 10A
REAR WORK LIGHTS 20A	PWRSHIFT CTRL, COMFORT STEER (OPT) 10A	SPARE	DRIVING LIGHTS 15A
FUEL SHUTOFF 10A	BLOWER 25A	DOME LIGHT 10A	ROTATING BEACON (OPT) 10A
INSTRUMENTS ALARMS SYS. 10A	SIGNAL LIGHTS PARK BRAKE 20A	HORN 10A	4WD (OPT) 10A
STARTING TRANSMISSION CONTROL 10A	RADIO, RIDE CONTROL, QUICK COUPLER 15A	RADIO (BATT) (OPT) 10A	WIPERS 15A

8

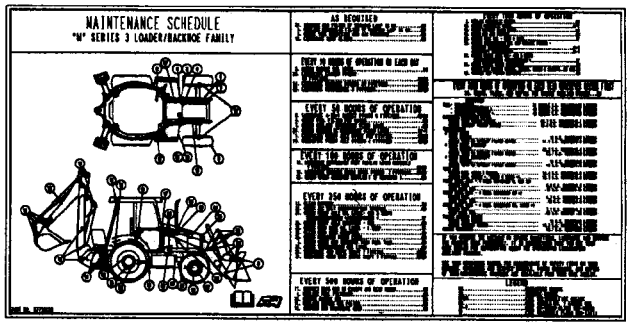

2

POWER RELAY #1	POWER RELAY #4	FLASHER RELAY	STARTER RELAY
POWER RELAY #2	LDR LVR DIFF LK RELAY	SHUTTLE INTLK TIMING RELAY	NEUTRAL RELAY
POWER RELAY #3	CLUTCH RELAY	SHUTTLE INTLK RELAY	FORWARD RELAY
PARK BRAKE RELAY	....	....	REVERSE RELAY
		AC RELAY (OPT)	....
COMFORT STEER POWER (OPT)	COMFORT STEER CUTOUT (OPT)		

RELAYS

9



3

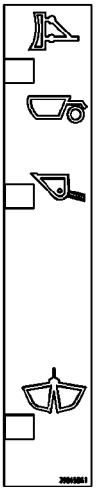

5

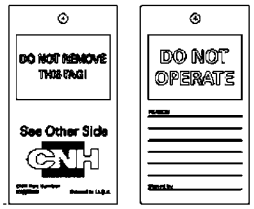

11

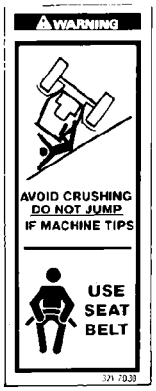

10



12

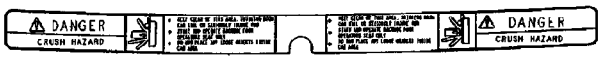

4

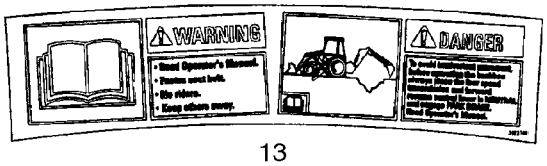

13

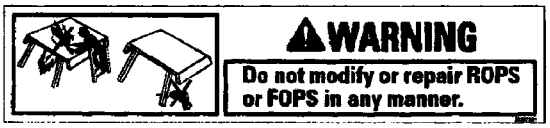

6

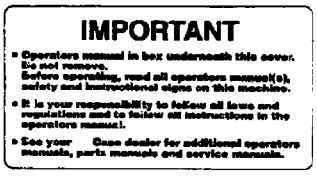

7

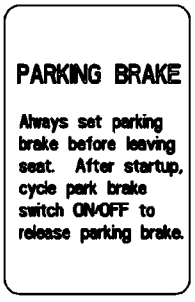

14

BS08A110

DECALS - LATIN AMERICAN SPANISH

REF	FN	PART NUMBER	YR/SN	QTY	DESCRIPTION
		87307893		1	DECAL, Warning, Crush Hazard; When Changing A Machine to Foot Swing Controls; For Illustration See Ref 9 On Figure 09-75
1		398576A1		1	DECAL, Warning; Crush Hazard; Loader Arm Support Strut
2		87735105		1	DECAL, Maintenance Schedule; Supplied by Parts and Components
3		8603094		1	DECAL, Warning; Explosion Hazard, Do Not Use Ether
4		86992981		1	DECAL, Danger; Crush Hazard
5		398658A1		1	DECAL, Clam Bucket Position
6		389729A1		1	DECAL, Warning; Do Not Modify or Repair ROPS or FOPS In Any Manner
7		398662A1		1	DECAL, Important; Operator's Manual In Box Underneath This Cover; Glove Box Lid
8		87706237		1	DECAL, Fuse Location
9		87706250		1	DECAL, Relay
10		398672A1		2	DECAL, Warning; Avoid Crushing; Do Not Jump / Use Seat Belt
11		87380559		1	TAG, Do Not Operate
12		86992980		2	DECAL, Warning; No Step/Not An Exit; Canopy
13		398598A1		1	DECAL, Warning/Danger; Read the Operator's Manual
14		87708227		1	DECAL, Parking Brake
15		148093A1		1	DECAL, Important; Lubrication; Not Illustrated
16		148095A1		1	DECAL, Attention; Welding; Not Illustrated

DECALS - CANADIAN FRENCH

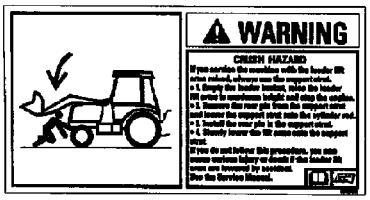

1

FUSES 87652902			
SPARE	....	....	....
SPARE	POWER OUTLET 30A	SPARE	PILOT CONTROLS BH AUX (OPT) 15AMP
FRONT WORK LIGHTS 20A	POWER OUTLET 30A	AIR SUSP. SEAT-AIR COMP. (OPT) 20A	RETURN TO DIG 10A
REAR WORK LIGHTS 20A	PWRSHIFT CTRL, COMFORT STEER (OPT) 10A	SPARE	DRIVING LIGHTS 15A
FUEL SHUTOFF 10A	BLOWER 25A	DOME LIGHT 10A	ROTATING BEACON (OPT) 10A
INSTRUMENTS ALARMS SYS. 10A	SIGNAL LIGHTS PARK BRAKE 20A	HORN 10A	4WD (OPT) 10A
STARTING TRANSMISSION CONTROL 10A	RADIO, RIDE CONTROL, QUICK COUPLER 15A	RADIO (BATT) (OPT) 10A	WIPERS 15A

8

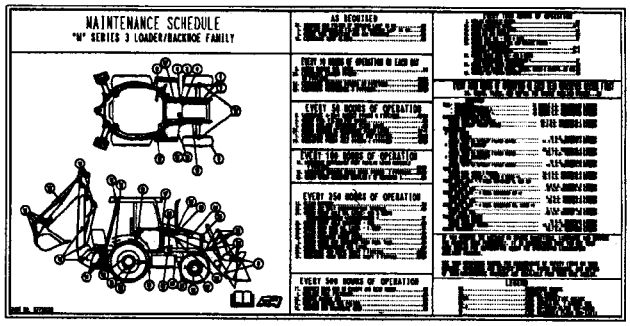

2

POWER RELAY #1	POWER RELAY #4	FLASHER RELAY	STARTER RELAY
POWER RELAY #2	LDR LVR DIFF LK RELAY	SHUTTLE INTLK TIMING RELAY	NEUTRAL RELAY
POWER RELAY #3	CLUTCH RELAY	SHUTTLE INTLK RELAY	FORWARD RELAY
PARK BRAKE RELAY	....	....	REVERSE RELAY
		AC RELAY (OPT)	....
COMFORT STEER POWER (OPT)	COMFORT STEER CUTOUT (OPT)		

RELAYS

9



3

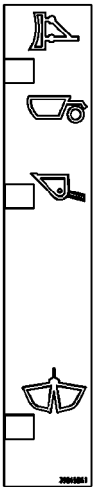

5

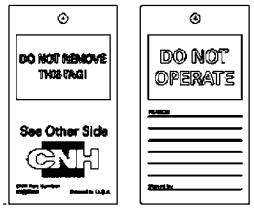

11

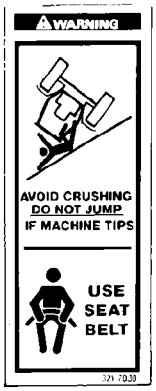

10



12

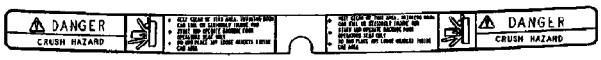

4

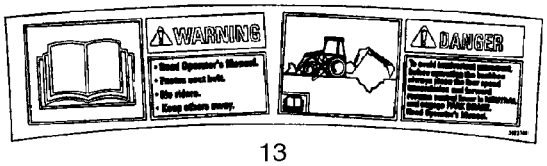

13

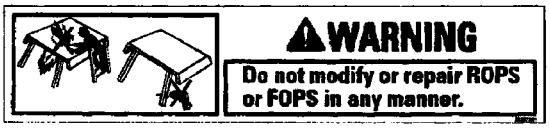

6

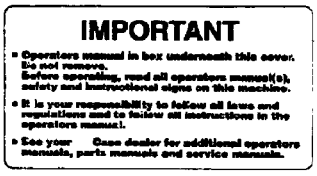

7

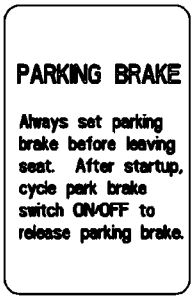

14

BS08A110

DECALS - CANADIAN FRENCH

REF	FN	PART NUMBER	YR/SN	QTY	DESCRIPTION
		87307896		1	DECAL, Warning, Crush Hazard; When Changing A Machine to Foot Swing Controls; For Illustration See Ref 9 On Figure 09-75
1		398577A1		1	DECAL, Warning; Crush Hazard; Loader Arm Support Strut
2		{877355104}		1	Maintenance Schedule; Supplied by Parts and Components
3		8603093		1	DECAL, Warning; Explosion Hazard, Do Not Use Ether
4		86992979		1	DECAL, Danger; Crush Hazard
5		398658A1		1	DECAL, Clam Bucket Position
6		389730A1		1	DECAL, Warning; Do Not Modify or Repair ROPS or FOPS In Any Manner
7		398663A1		1	DECAL, Important; Operator's Manual In Box Underneath This Cover; Glove Box Lid
8		87706239		1	DECAL, Fuse Location
9		87706251		1	DECAL, Relay
10		398673A1		2	DECAL, Warning; Avoid Crushing; Do Not Jump / Use Seat Belt
11		87380558		1	TAG, TAG, Do Not Operate
12		86992978		2	DECAL, Warning; No Step/Not An Exit; Canopy
13		398599A1		1	DECAL, Warning/Danger; Read the Operator's Manual
16		87708242		1	DECAL, Parking Brake

DECALS - ENGLISH

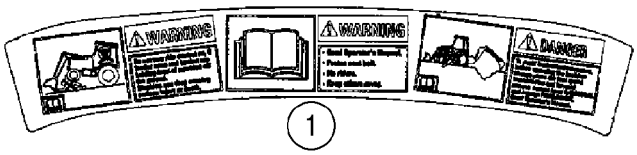

1



2

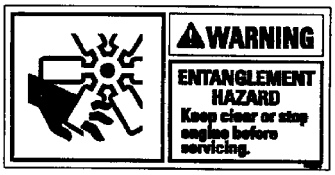

3

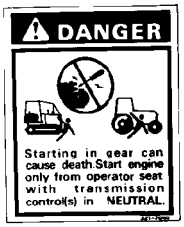

4



5

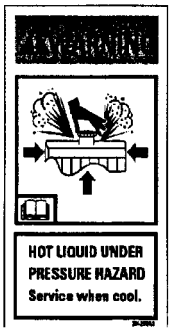

6



7



8



8A



13



9



10



11

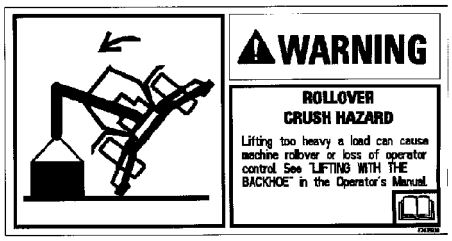

12

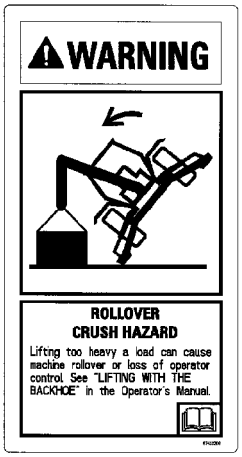

12A



14



15

BS07M816

DECALS - ENGLISH

REF	FN	PART NUMBER	YR/SN	QTY	DESCRIPTION
1		392375A1		1	DECAL, Warning/Warning/Danger; Front, With Ride Control; Do Not Turn Ride Control On/Read Operator's Manual/To Avoid Inadvertent Movement
2		384265A1		1	DECAL, Warning; Crush Hazard; Keep Clear; Support Loader Lift Arms During Maintenance
3		384267A1		2	DECAL, Warning; Entanglement Hazard, Fan; Keep Clear or Stop Engine Before Servicing
4		321-7040		1	DECAL, Danger; Starting In Gear
5		384269A1		2	DECAL, Danger; Jump Start
6		384258A1		1	DECAL, Warning; Hot Liquid Under Pressure
7		321-230		1	DECAL, Diesel Fuel
8		321-229		1	DECAL, Hydraulic Fluid; Used In Production; For Service, Order 321-6376, English Decal Only
8A		321-6376		1	DECAL, Hydraulic Fluid
9		384260A1		1	DECAL, Warning; Ride Control Accumulator
10		D149826		1	DECAL, Caution/Important; For All Models With Foot Swing Backhoe Controls and Standard Backhoe Models With Hand Swing
11		D149827		1	DECAL, Caution/Important; Extendahoe Backhoe Models With Hand Swing
12		87435938		1	DECAL, Warning; Rollover Crush Hazard; Lifting Too Heavy A Load; Models Without Pilot Controls
12A		87433209		1	DECAL, Warning; Rollover Crush Hazard; Lifting Too Heavy A Load; Models With Pilot Controls
13		321-6774		1	DECAL, Warning; Seat Spring
14		87423813		2	DECAL, Warning; Unexpected Movement Hazard; Before Adjusting Windows
15		87581010		1	DECAL, Warning; Pressurized System Hazard

DECALS - LATIN AMERICAN SPANISH

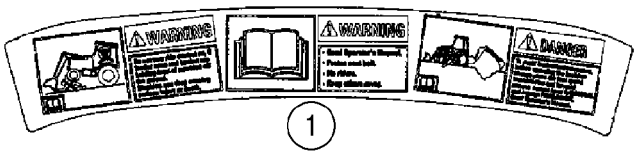

1



2

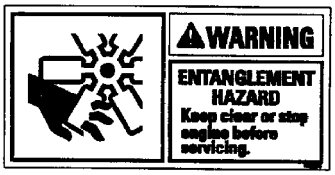

3

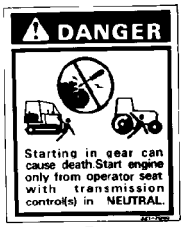

4



5

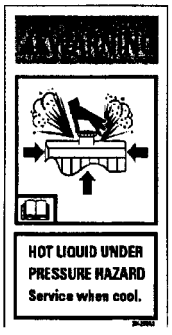

6

DIESEL FUEL

7

HYDRAULIC FLUID

8



8A

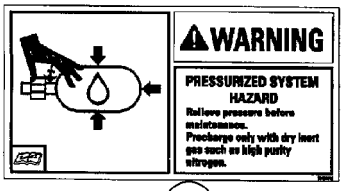

9



10



11

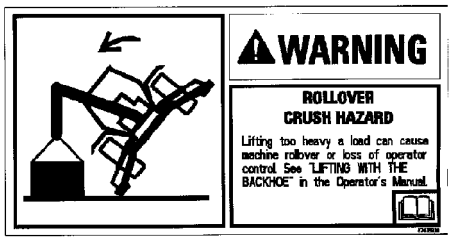

12

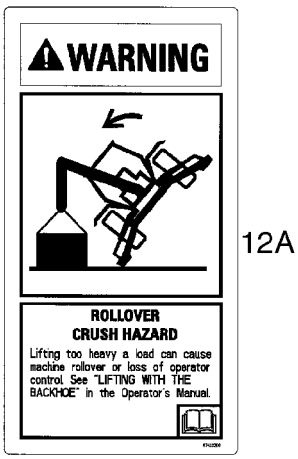

12A



14



13

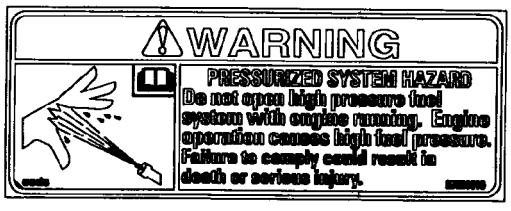

15

BS07M816

DECALS - LATIN AMERICAN SPANISH

REF	FN	PART NUMBER	YR/SN	QTY	DESCRIPTION
1		398600A1		1	DECAL, Warning/Warning/Danger; Front, With Ride Control; Do Not Turn Ride Control On/Read Operator's Manual/To Avoid Inadvertent Movement
2		398578A1		1	DECAL, Warning; Crush Hazard; Keep Clear; Support Loader Lift Arms During Maintenance
3		398580A1		2	DECAL, Warning; Entanglement Hazard, Fan; Keep Clear or Stop Engine Before Servicing
4		398674A1		1	DECAL, Danger; Starting In Gear
5		398582A1		2	DECAL, Danger; Jump Start
6		398570A1		1	DECAL, Warning; Hot Liquid Under Pressure
7		398667A1		1	DECAL, Diesel Fuel
8		398665A1		1	DECAL, Hydraulic Fluid
8A		321-6376		1	DECAL, Hydraulic Fluid, English Decal Only
9		398572A1		1	DECAL, Warning; Ride Control Accumulator
10		398677A1		1	DECAL, Caution/Important; For All Models With Foot Swing Backhoe Controls and Standard Backhoe Models With Hand Swing
11		398669A1		1	DECAL, Caution/Important; Extendahoe Backhoe Models With Hand Swing
12		87435939		1	DECAL, Warning; Rollover Crush Hazard; Lifting Too Heavy A Load; Models Without Pilot Controls
12A		87434771		1	DECAL, Warning; Rollover Crush Hazard; Lifting Too Heavy A Load; Models With Pilot Controls
13		398670A1		1	DECAL, Warning; Seat Spring
14		87429163		2	DECAL, Warning; Unexpected Movement Hazard; Before Adjusting Windows
15		87622505		1	DECAL, Warning; Pressurized System Hazard

DECALS - CANADIAN FRENCH

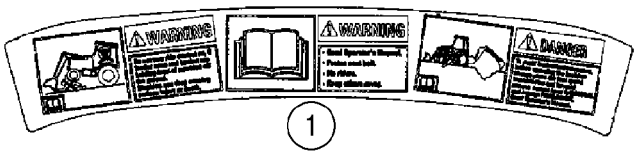

1



2

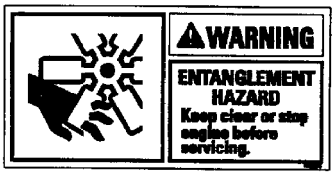

3

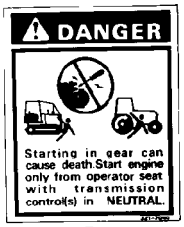

4



5

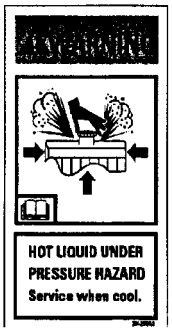

6



7



8



8A



13



9



10



11

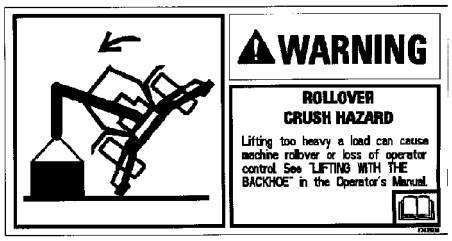

12

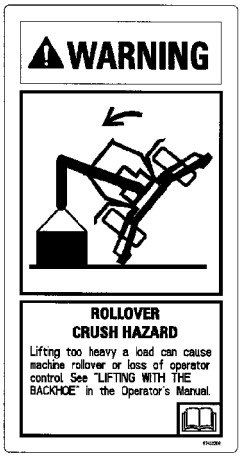

12A



14



15

BS07M816

DECALS - CANADIAN FRENCH

REF	FN	PART NUMBER	YR/SN	QTY	DESCRIPTION
1		398601A1		1	DECAL, Warning/Warning/Danger; Front, With Ride Control; Do Not Turn Ride Control On/Read Operator's Manual/To Avoid Inadvertent Movement
2		398579A1		1	DECAL, Warning; Crush Hazard; Keep Clear; Support Loader Lift Arms During Maintenance
3		398581A1		2	DECAL, Warning; Entanglement Hazard, Fan; Keep Clear or Stop Engine Before Servicing
4		398676A1		1	DECAL, Danger; Starting In Gear
5		398583A1		2	DECAL, Danger; Jump Start
6		398571A1		1	DECAL, Warning; Hot Liquid Under Pressure
7		398668A1		1	DECAL, Diesel Fuel
8		398666A1		1	DECAL, Hydraulic Fluid
8A		321-6376		1	DECAL, Hydraulic Fluid, English Decal Only
9		398573A1		1	DECAL, Warning; Ride Control Accumulator
10		398656A1		1	DECAL, Caution/Important; For All Models With Foot Swing Backhoe Controls and Standard Backhoe Models With Hand Swing
11		398654A1		1	DECAL, Caution/Important; Extendahoe Backhoe Models With Hand Swing
12		87435940		1	DECAL, Warning; Rollover Crush Hazard; Lifting Too Heavy A Load; Models Without Pilot Controls
12A		87434772		1	DECAL, Warning; Rollover Crush Hazard; Lifting Too Heavy A Load; Models With Pilot Controls
13		398671A1		1	DECAL, Warning; Seat Spring
14		87429164		2	DECAL, Warning; Unexpected Movement Hazard; Before Adjusting Windows
15		87622506		1	DECAL, Warning; Pressurized System Hazard

Number	Figure	Sequence	Ref.
{ 2854866}	02-14		12
{}	02-25		4
	09-08		
	09-57		
{2853815}	02-21		4
{2853816}	02-21		3
{2855183}	02-28		7
{2855380}	02-25		
{2855381}	02-25		3
{2856271}	02-21		1
{2856309}	02-22		4
{2856436}	03-05		
{434746A1}	06-33		5
{452140A1}	06-37		8
{87478483}	08-06		23
	08-26		48
{87480903}	09-74		2
{87521766}	04-09		14
	04-12		
{87578867}	06-15		1A
	06-23		1A
{87653246}	09-61		
{87701053}	06-21		4
{87701253}	06-13		4
{87701255}	06-13		5
{87701257}	06-13		11
	06-21		11
{87701258}	06-13		18
	06-21		22
{87701260}	06-13		22
{87701269}	06-13		26
	06-21		27
{87701270}	06-13		27
	06-21		26
{87701275}	06-17		28
	06-25		28
{87701276}	06-16		4
	06-24		4
{87701278}	06-18		4
	06-26		4
{87701293}	06-18		16
	06-26		16
{87701294}	06-18		27
{87701309}	07-01		1
	07-01	01	1
{87701310}	07-01		2
	07-01	01	2
{87701313}	07-01		4
	07-01	01	4
{87701315}	07-01		5
	07-01	01	5
{87701317}	07-01		6
	07-01	01	6
{87701318}	07-01		7
	07-01	01	7
{87701320}	07-01		8
	07-01	01	8
{87701321}	07-01		9
	07-01	01	9
{87701323}	07-01		10
	07-01	01	10
{87701324}	07-01		11
	07-01	01	11
{87701325}	07-01		12
	07-01	01	12
{87701327}	07-01		13
	07-01	01	13
{87701328}	07-01		14
	07-01	01	14
{87701329}	07-01		15
	07-01	01	15
{87701330}	07-01		16
	07-01	01	16
{87701331}	07-01		17
	07-01	01	17
{87701332}	07-01		18
	07-01	01	18
{87701333}	07-01		19
{87701333}	07-01	01	19
{87701775}	06-26		27
{87701777}	06-21		5
{87702570}	06-13		20
	06-21		18
{87704971}	06-27		1
{87708390}	06-33		1
{87708391}	06-33		9
{87708392}	06-33		10
{87708393}	06-35		1
{87708394}	06-34		1
{87708395}	06-34		2
{87708396}	06-34		4
{87708397}	06-34		6
{87708398}	06-34		7
{87708399}	06-34		8
{87708400}	06-34		9
{87708401}	06-34		11
{87708402}	06-34		14
{87708403}	06-34		15
{87708408}	06-34		16
{87708409}	06-34		17
{87708411}	06-34		18
{87708413}	06-36		1
{87708415}	06-36		2
{87708417}	06-36		5
{87708420}	06-36		6
{87708422}	06-36		8
{87708424}	06-36		9
{87708427}	06-36		10
{87708431}	07-02		1
{87708432}	07-02		1
{87708433}	07-02		2
{87708434}	07-02		3
{87708435}	07-02		4
{87708436}	07-02		6
{87708438}	07-02		7
{87708440}	07-02		9
{87708441}	07-02		12
{87708442}	07-02		13
{87708443}	06-37		2
{87708444}	06-37		3
{87708445}	06-37		6
{87708447}	06-37		9
{87708452}	06-37		10
{87708453}	06-37		11
{87708454}	06-37		12
{87708466}	06-37		17
{87708467}	06-37		18
{87710131}	06-02		
{87710137}	06-04		9
{87710141}	06-04		8
{87710142}	06-04		6
{87710143}	06-04		7
{87710144}	06-04		
{87710156}	06-03		1
{87710158}	06-04		5
{87710159}	06-03		2
{87711038}	06-37		15
{877355104}	09-78		2
{87746673}	08-15		2
	08-16		2
	08-17		2
	08-18		5
{87751884}	09-73		4
{87751885}	09-73		5
{87754369}	09-73		1
{87757931}	08-31		17
{87757932}	08-31		18
{P1139855X}	06-35		7
100-21315	08-62		13A
100-39001	09-55		43
	09-57		20
100016	04-01		39
100520A1	06-02		12
100532A1	06-03		3
100533A1	05-06		11
	06-03		8

Number	Figure	Sequence	Ref.	Number	Figure	Sequence	Ref.
100552A1	06-06		5	116425A1	06-06		12
100553A1	06-06			116426A1	06-06		7
100554A1	06-06			116427A1	06-06		8
100555A1	06-06		18	118900A1	09-04		24
100556A1	06-06		4	118901A1	09-04		30
100557A1	06-06		22		09-05		3
	06-13		3	119241A1	06-30		1
	06-21		3	119243A1	05-09		4
	06-33		6	120303A1	05-02		25
100559A1	06-06		6		08-04		10
100561A1	06-06		13		08-05		8
100562A1	06-06		19		08-06		8
100696A1	09-04		3		08-26		32
100748A1	06-12		9		08-26		43
	06-20		9		08-27		14
100753A1	06-27		17		09-38		38
100760A1	07-01		22	121412A1	04-07		2
	07-01	01	22		04-09		
101479A1	08-13		24		04-17		16
101531A1	04-17		9	121413A1	04-07		3
102-1387	05-03		4		04-09		
102-23206	08-29		5		04-19		1
102761A1	09-01		12		04-20		13
	09-02		11	121414A1	04-07		4
102765A1	09-18		19	121415A1	04-09		
103-11100	09-13		16	121416A1	04-07		5
103-1475	09-21		8	121665A1	09-22		7
103-1518	03-03		7	121778A1	09-23		3
103-16175	09-22		4	121856A1	09-38		55
	09-22		8	121920A1	09-08		12
	09-24		25	122081A1	09-66		9
	09-24		33	122259A1	05-06		10
	09-26		23	122261A1	05-05		9
	09-26		27	122264A1	06-03		10
	09-26		33	122265A1	05-06		9
	09-26		36		06-03		9
	09-26		5	122268A1	06-02		13
	09-27		14	122270A1	05-05		5
	09-27		40		06-02		7
	09-27		50	122503A1	09-27		
103-16200	09-23		18	122553A1	09-65		12
103-3350	09-04		29		09-66		24
103670A1	08-24		18	122554A1	09-66		17
104824A1	09-04		23	122603A1	09-38		28
104907A1	06-30		1	123537A1	09-10		29
106989A1	09-18		13	123726A1	08-61		12
106990A1	09-18		15	123809A2	04-04		31
107124A1	09-26		45		04-07		30
	09-26		49		06-11		43
	09-27		22	123969A1	09-48		9
	09-27		33	123980A1	09-65		23
	09-37		8	124011A1	09-65		22
108088A1	09-01		11	124568A2	08-62		3
	09-02		9	124721A1	09-03		14
108366A1	04-17		4	1250594C1	09-65		10
108864A1	09-18		1		09-65		11
108923A1	09-18		9		09-66		16
108924A1	09-18		8		09-66		23
109268A1	09-04		4		09-66		8
109879A1	09-39		7	125113A1	09-18		12
	09-41		14		09-18		14
111522A1	09-04		5	125749A1	09-61		12
112380A1	09-01		14	126-116	06-11		12
	09-02		4	126155A1	09-10		31
	09-18		21	126177	09-72		3
112486A1	06-07		10	12644301	07-06		5
112509A1	05-06		5	126918A1	09-20		2
	06-04		3	127009A1	04-10		6
112517A1	06-27		4	127158A1	04-17		6
112884A1	09-48			127862A2	08-63		6
112946A1	09-06		8	128135A2	08-61		4
113135A2	08-59		2	128312A1	04-04		38
114295A1	06-06		20		04-08		3
114318A1	09-23		12A		04-13		13
	09-37		4		04-14		3
114549A1	09-54		6		09-04		19
114882A2	05-01		2	128483A1	09-65		16
114980A1	09-41		7		09-65		9

Number	Figure	Sequence	Ref.
128483A1	09-66		2
	09-66		7
128484A1	09-65		3
	09-66		13
128485A1	09-65		4
	09-65		8
	09-66		14
	09-66		21
128570A1	06-08		11
	06-35		11
128760A1	08-12		19
	08-13		30
	08-65		1
	09-26		1
	09-27		10
128761A1	08-65		2
128770A2	08-65		4
128772A1	08-65		16
128818A1	09-04		11
129-667	08-57		2
129040A1	09-24		23
	09-24		26
129041A1	09-24		30
	09-26		2
	09-27		12
129883A1	09-24		10
	09-27		1
129884A2	09-26		
129885A1	09-33		1
129893A1	09-31		3
	09-33		3
129894A1	09-31		2
	09-33		2
129944A1	09-33		4
130047A1	03-01		15
1302758C1	04-11		35
	09-68		20
130674A1	09-48		
131-121	04-10		15
	09-01		4
131-431	09-41		22
	09-73		14
131-619	04-11		17
	04-11		20
131-861	04-10		7
	09-11		15
	09-61		8
131-869	09-43		21B
	09-43		4
1312210C2	04-13		
	04-13		
131750A2	08-65		
132842A1	09-27		45
132844A1	09-27		44
132931A1	03-03		2
	09-01		25
132988A1	09-06		3
	09-06		3
133083A1	08-58		12
1331087C1	09-64		14
133715A1	04-09		17
1340763C1	08-62		16
1340764C1	08-62		15
1340798C1	08-60		15
1340969C2	08-14		17
	08-66		1
	09-27		25
1340970C1	08-66		2
134167A1	09-23		20
1346195C1	08-60		13
1346476C1	08-65		6
134844A1	09-07		3
1349058C1	06-08		5
1349059C1	06-08		6
	06-35		2
135-51652	09-24		18
	09-27		4
135161A1	08-58		13
135248A1	09-23		10
135249A1	09-23		9
136-54	04-17		14
136261A1	09-16		11
136263A1	09-16		8
	09-17		2
136267A1	09-16		5
136269A1	09-16		6
136270A2	09-16		40
136271A2	09-16		39
136822A1	09-11		11
136824A1	09-11		13
137219A1	04-19		3
137223A2	06-01		13
137248A1	08-62		13
137283A1	09-03		1
137343A1	09-10		28
137344A1	09-10		27
138595A1	09-38		11
138624A1	09-24		36
139180A1	09-05		12
139195A1	09-05		14
139235A1	09-05		13
139294A1	07-02		5
139312A1	06-17		20A
	06-25		20A
	07-01		20
	07-01	01	20
139363A1	09-41		10
139865A1	09-03		8
140-103	09-61		11
140-104	09-55		44
	09-57		21
140-107	09-01		3
140-108	09-15		29
140-119	04-09		15
140943A1	06-08		7
140944A1	06-08		7
140945A1	06-08		7
140946A1	06-08		7
140947A1	06-08		7
140948A1	06-08		7
140949A1	06-08		7
140951A1	06-08		7
140953A1	06-08		7
140954A1	06-08		7
141232A2	09-35		1
141233A1	09-35		3
141234A1	09-35		2
142-103	09-55		47
	09-57		23
142300A1	09-08		3
142404A1	09-03		2
142524A1	09-04		12
142538A1	09-06		5
	09-06		5
	09-07		5
142842A1	09-24		27
14302921	08-47		5
	08-48		5
	08-49		6
14304021	08-47		1
143219A1	08-21		
143400A1	08-13		15
14358921	08-48		1
144173A1	08-29		7
144193A3	09-76		7
144457A1	06-04		
144460A1	06-08		
144461A1	06-05		
144462A1	06-05		1
144463A1	06-05		5
144465A1	06-05		4
144466A1	06-06		
144477A1	08-23		14
	08-23		7
	08-23B		14
	08-23B		7

Number	Figure	Sequence	Ref.
144479A1	08-23		8
	08-23B		8
144908A2	09-40		21
148093A1	09-77		15
148095A1	09-77		16
151-516	09-53		7
	09-69		3
1530028C1	06-13		6
	06-21		6
1542830C2	08-55		
1542874C1	08-59		
1542875C1	08-58		
	08-60		
	08-66		
1542876C1	08-61		
	08-62		
1542877C1	08-63		
	08-64		
	08-65		
1543256C1	08-59		
1543260C1	08-58		
1543267C1	08-60		
	08-66		
1543269C1	08-61		
15687475	08-50		9
	08-51		9
	08-52		9
	08-53		7
	08-54		9
16586225	02-33		14
16673635	02-11		1
168-71	04-17		7
16882515	02-12		4
175156A1	09-08		
175599A1	09-41		2
175778A1	08-64		14
175957A1	06-35		3
175966A1	06-36		7
176309A1	09-01		23
	09-02		5
177269A1	04-18		14
	09-61		18
178004A1	09-18		18
178006A1	09-18		17
178051A1	08-29		8
178951A1	08-10		12
	08-11		11
	08-12		11
	08-13		10
178952A1	08-10		13
	08-11		12
	08-12		12
	08-13		11
179029A1	09-20		1
17916280	02-34		6
179956A1	09-12		6
180427A1	09-37		2
181042A1	09-24		22
	09-27		8
181100A1	06-13		8
	06-15		24
	06-21		8
	06-23		24
	06-29		5
181101A1	06-13		23
	06-21		19
181105A1	06-13		14
	06-21		14
181108A1	06-17		24
	06-18		26
	06-25		24
	06-26		26
181111A1	06-17		13
	06-25		13
181116A1	06-17		9
	06-25		9
181118A1	06-18		1
	06-26		1
181122A1	06-27		5
181123A1	06-18		31
	06-26		31
181126A1	06-16		3
	06-24		3
	06-27		9
181128A1	06-17		3
	06-25		3
181130A1	06-18		30
	06-26		30
181132A1	06-16		5
	06-18		2
	06-24		5
	06-26		2
181138A1	06-15		12
	06-23		12
181139A1	06-15		5
	06-23		5
181141A1	06-13		17
	06-21		17
181142A1	06-14		19
	06-22		19
181144A1	06-18		33
	06-26		33
181158A1	06-17		12
	06-25		12
181159A1	06-17		11
	06-25		11
181161A1	06-17		14
	06-25		14
181165A1	06-18		34
	06-26		34
181171A1	06-15		7
	06-23		7
181173A1	06-15		16
	06-23		16
181174A2	06-15		22
	06-23		22
181175A1	06-15		18
	06-23		18
181176A1	06-21		13
181177A1	06-15		11
	06-23		11
181179A1	06-13		15
	06-21		15
181198A1	06-27		3
181202A1	06-12		13
	06-20		13
181203A1	06-15		21
	06-23		21
181207A1	06-19		24
	06-28		24
181219A1	06-12		10
	06-20		10
181232A1	06-13		16
	06-21		16
181245A2	06-15		1
	06-23		1
181251A1	06-19		9
	06-28		9
181274A1	06-12		3
	06-20		3
181842A1	09-04		7A
181979A1	09-65		24
181981A1	09-42		17
	09-63		5
182006A1	09-17		4
	09-21		9
182109A1	08-63		16
182116A1	08-63		19
182218A1	08-63		
182594A1	04-11		11
182697A1	09-63		3
182721A2	04-18		11
183168A1	09-40		7
183443A1	09-27		51
183509A1	09-27		52
183736A1	08-13		29

Number	Figure	Sequence	Ref.
183808A1	09-31		1
183810A1	09-31		4
184297A1	08-13		22
184616A1	08-14		13
184617A1	08-14		12
184723A1	09-24		35
184726A1	04-11		10
185325A1	09-41		15
185377A1	02-01		29
185506A1	09-07		8
185926A1	03-01		4
	09-38		20
186351A1	09-49		5
186977A1	09-37		13
186989A1	09-41		21
	09-73		13
187281A1	04-18		12
187612A1	08-10A		25
187714A1	06-11		1
187715A1	06-11		2
188009A3	03-01		29A
188027A2	08-09		13
	08-09A		13
	08-62		1
	09-23		11
188028A2	08-62		2
188032A2	08-62		4
188034A3	08-62		14
188035A1	08-62		
188036A1	08-62		22
189103A1	08-10A		20
189109A1	03-03		2A
	09-01		
189263A1	08-10A		21
189414A1	08-10A		33
189602A3	03-01		29
189653A2	08-10		21
	08-63		1
	09-24		9
189657A2	08-63		18
189957A1	08-10A		1
	08-55A		
190427A1	06-18		
	06-26		
190428A3	06-15		8
	06-23		8
190431A1	06-29		10
190442A1	06-19		3
	06-28		3
190506A1	06-35		6
190508A1	06-35		6
190509A1	06-35		6
190510A1	06-35		6
190511A1	06-35		6
190512A1	06-35		6
190513A1	06-35		6
190514A1	06-35		6
190515A1	06-35		6
190516A1	06-35		6
190675A1	09-64		17
190682A1	06-06		10
190684A1	06-06		9
191046A1	03-01		30
191047A1	09-38		32
191063A1	08-10A		10
191252A1	08-62		14A
191703A1	08-21		
	08-21		
	09-66		25
191704A1	03-01		23
	06-32		2
	07-05		12
	07-06		10
	08-07B		31
	09-66		3
191747A1	08-62		
191756A1	08-10A		9
191790A1	08-10A		12
191796A1	05-04		2
	06-01		8
192345A1	08-07		4
192352A1	08-07		3
192450A1	09-74		9
192815A1	09-04		28
192834A1	05-02		31
	08-26		51
192895A1	08-56		2
192971A1	08-09		15
	08-09A		15
193-1000	04-04		3
	04-07		
193-1003	09-04		17
195-81023	09-55		48
	09-57		24
1954626C1	09-64		15
1954736C1	09-64		3
195503A1	08-08		30
	08-08A		30
	08-61		1
	09-22		1
195504A1	08-08		29
	08-08A		29
	08-61		1
	09-22		2
195505A1	08-61		2
195506A1	08-61		2
195552A1	04-18		3
1959509C1	05-01		4
196096A1	06-19		21A
	06-28		21A
196454A1	06-18		3A
	06-26		3A
1964831C2	04-09		4
1966136C1	06-02		16
1966138C1	06-02		17
	06-33		7
1966149C1	06-33		2
1966149C2	06-02		5
1966169C1	06-06		2
1966186C1	06-02		10
1966993C1	06-15		4
	06-23		4
1967003C1	06-07		4
1967581C1	06-15		10
	06-23		10
1967585C1	06-15		9
	06-23		9
196813A1	08-05		25
196815A1	08-05		24
1976955C1	08-55		2A
197745A1	04-18		4
197771A1	05-09		1
1977725C1	09-48		
1978141C1	08-56		8
1978142C1	08-56		
1978143C1	08-56		5
1978144C1	08-56		6
1978158C1	08-56		7
1980245C1	08-62		17
1980296C1	08-66		11
1980321C3	08-58		4
198033A1	08-65		14
198410A1	09-19A		5
1987096C1	09-64		33
198976A1	09-23		12
1999528C1	08-10A		29
1999666C1	09-64		16
1999667C1	09-64		
1999668C1	09-64		
1999926C1	09-66		15
1999927C1	09-66		22
20-21032	09-08		13
20-21232	09-06		9
	09-07		9
	09-08		4
201-101	07-05		1

Number	Figure	Sequence	Ref.
201-304	07-05		4
213-123	03-02		14
	03-03		17
213-126	09-16		22
	09-17		6
	09-19		6
	09-21		10
214-1406	09-38		22
	09-63		19
214-1412	02-04		5
	06-10		7
214-1416	02-02		8
	02-06		15
	03-03		33
214-1436	02-06		16
214-1440	02-01		17
214-1456	02-04		9
214-1464	02-04		8
	08-05		40
	08-07		21
	08-12		20
	08-13		33
	08-14		22
	09-66		5
214-1472	08-04		21
214-1488	08-10		25
	08-11		27
214-1492	08-09		22
	08-09A		22
214-1704	02-02		5
	03-01		8
214-1706	03-01		7
214-31104	08-10A		16
214-3132	08-13		23
	08-24		19
214-3180	09-59		6
	09-70		13
214-3188	08-08		28
	08-08A		28
217-1102	09-38		26
217-117	03-01		9
217-314	06-10		15
217-347	09-38		5
217-349	06-10		22
	08-03		9
217-380	09-38		25
217-425	09-64		34
218-1023	06-21		2
218-1254	09-10		20
218-1256	08-24		22
	09-10		33
218-1279	09-10		34
218-335	08-01		19
	08-23		30
	08-23B		30
	08-24		23
	08-25		24
218-459	06-11		38
218-5027	05-02		3
218-5034	08-01		51
218-5050	08-23		24
218-5053	08-07A		5
	08-07B		5
	08-17		5
	08-18		7
	08-19		7
	08-20		7
	08-22		38
	08-26		23
218-5056	08-26		25
218-5057	05-02		15
	05-02A		5
	08-08		5
	08-21		1
	08-22		33
	08-23B		25
	08-26		13
218-5059	05-02		8
218-5059	08-07		23
	08-08		11
	08-08		33
	08-08A		11
218-5062	06-10		4
	08-04		2
	08-05		28
	08-09		8
	08-09A		8
	08-11		25
	08-12		17
	08-13		31
	08-14		19
218-5063	08-09A		29
	08-09A		6
	08-10		8
	08-11		8
	08-12		8
	08-13		8
	08-14		8
	08-22		7
218-5064	08-01		22
	08-01		49
	08-02		19
	08-23		28
	08-23		42
	08-23B		27
	08-23B		42
218-5069	08-02		4
218-5070	08-08A		36
218-5086	08-03		20
218-5089	08-07A		17
	08-07B		17
	08-17		4
	08-18		4
	08-19		5
	08-20		5
	08-21		2
	08-22		1
218-5103	05-04		8
	06-01		33
218-5105	05-02A		15
	06-32		4
	08-07A		21
	08-07A		24
	08-07B		24
	08-08		8
	08-08A		8
	08-21		3
	08-22		39
	08-22		5
	08-26		11
	09-10		14
218-5106	05-02		6
	08-09		11
	08-09		24
	08-09A		11
	08-09A		24
218-5107	08-01		45
	08-04		16
	08-05		2
	08-05		32
	08-06		2
	08-07		18
	08-09		27
	08-09A		27
	08-10		19
	08-10		22
	08-11		19
	08-12		22
	08-13		35
	08-14		15
	08-22		3
218-5108	08-23B		29A
218-5110	08-02		14
218-5117	08-25		11
218-5118	08-10A		7
218-5119	08-09		19

Number	Figure	Sequence	Ref.
218-5119	08-09A		19
218-5121	08-08		20
	08-08A		20
218-5135	08-08A		5
218-5136	05-02		11
	08-08		35
218-5137	08-07		16
218-5140	08-01		24
218-5155	09-38		7
218-5156	08-07A		12
	08-07B		12
218-5158	08-23B		35
	09-38		3
218-5182	08-07B		21
	08-22		49
	09-10		15
218-5183	08-26		20
218-5213	08-29		16
218-5216	08-23		34
	08-23B		34
218-5220	08-05		18
218-5222	08-22		34
	08-23B		45
218-5228	05-02		2
218-5230	08-23B		33
218-5231	08-23B		29
218-5232	08-04		26
	08-04		29
	08-22		8
	08-25		23
218-5239	08-01		12
218-5242	08-07		25
218-5243	08-22		32
218-5280	05-02		19
	08-08		37
	08-23		26
218-5283	08-07A		2
	08-07B		2
	08-10A		13
218-5351	05-04		14
	06-01		4
	08-23B		31
	08-26		9
218-5359	08-10A		18
218-5365	08-22		4
218-5382	08-10A		23
218-5411	08-07A		20
	08-07B		20
218-5486	05-02A		20
218-5490	08-03		6
218-5511	08-23		44
218-5529	06-01		5
218-5584	08-01		27
	08-02		1
	08-02		10
	08-03		4
218-5600	08-25		18
218-5650	08-07		28
218-595	08-04		22
218-655	08-25		15
218-676	08-24		21
218-693	09-10		19
218-695	09-10		32
218-754	08-22		50
218-756	08-01		20
218-765	08-01		41
218-836	08-22		35
218-840	08-07		27
218-845	05-02		30
	05-02A		3
	08-26		22
	08-26		50
218-980	08-01		44
	08-22		6
	08-23B		24
219-1	06-01		6
	08-04		27
	08-58		17
219-1	08-60		21
	08-61		17
	08-62		20
	08-63		23
	08-64		20
	08-65		20
	09-04		32
	09-05		23
	09-05		5
	09-08		9
	09-20		14
	09-23		28
	09-24		17
	09-24		3
	09-26		24
	09-26		37
	09-27		3
	09-27		35
	09-27		41
219-10	06-09		8
219-36	08-65		21
219-4	09-16		41
219-55	08-04		28
	08-05		41
	08-59		17
	08-60		22
	08-62		21
	09-04		10
	09-23		30
	09-25		5
	09-25A		5
	09-37		9
219-86	09-27		54
219-87	09-10		4
219-89	09-27		53
220165A2	08-62		2
220276A1	08-10A		28
220413A1	09-37		7
221-89	09-64		21
221168A1	08-55A		15
221477A1	09-21		1
224057A1	08-10		27
225-14210	03-02		13
	03-03		20
225315C1	08-50		6
	08-51		6
	08-52		6
225318C1	08-50		7
	08-51		7
	08-52		7
225350C1	08-52		14
	08-54		6
225353C1	08-52		15
	08-54		7
226456A1	09-38		9
226582A1	08-10A		27
227389A1	04-18		2
228133A2	02-01		29
230973A1	07-03		25
231-14109	09-39		8
	09-41		16
231-14409	09-15		30
231-1444	09-71		12
231-1445	09-15		23
231-1446	08-10A		6
231-24409	04-06A		37
	04-07		12
	04-08		25
231-2446	09-19		18
231-4115	09-71		9
231-4246	09-10		5
231-4247	09-22		39
231397A1	06-07		
232-1446	09-56		2
	09-57		28
232-4246	09-01		19
232-4617	09-46		20
232948A1	09-66		10

Number	Figure	Sequence	Ref.
233104A1	08-64		21
233110A2	08-64		16
233114A2	08-11		18
	08-64		1
	09-24		15
	09-27		9
233284A1	06-18		32
	06-26		32
234141A2	08-64		4
234412A1	08-25		9
	08-56		
234844A1	08-64		
235002A1	04-09		13
	08-25		26
237-6002	08-55		14
237-6004	05-02		4
	05-04		8A
	06-01		34
	08-07A		6
	08-07B		6
	08-17		
	08-18		
	08-19		
	08-20		
	08-26		24
	08-55		11A
237-6005	08-26		26
237-6006	05-02		16
	05-02		18
	05-02		20
	05-02A		16
	05-02A		6
	05-04		14A
	06-01		4A
	06-01		5A
	06-32		5
	07-05		2
	07-05		6
	07-06		3
	08-07		29
	08-07A		18
	08-07A		22
	08-07A		25
	08-07A		3
	08-07B		18
	08-07B		22
	08-07B		25
	08-07B		3
	08-08		38
	08-08		6
	08-08		9
	08-08A		6
	08-08A		9
	08-10A		14
	08-17		
	08-18		
	08-19		
	08-20		
	08-23		27
	08-23		45
	08-23B		26
	08-23B		32
	08-26		10
	08-26		12
	08-26		14
	08-26		19
	08-55		8
	08-57		4
	09-10		
	09-10		
	09-38		6
	09-38		8
237-6008	05-02		12
	05-02		7
	05-02		9
	06-19		18
	06-28		18
	08-07		24
237-6008	08-07		26
	08-07A		13
	08-07B		13
	08-08		12
	08-08		21
	08-08		34
	08-08		36
	08-08A		12
	08-08A		21
	08-09		12
	08-09		25
	08-09A		12
	08-09A		25
	08-10A		19
	08-25		12
	08-25		19
	08-26		21
	08-55		6
237-6010	03-01		6A
	06-10		16
	06-10		23
	06-10		5
	08-01		46
	08-01		48
	08-03		10
	08-04		17
	08-04		26A
	08-04		3
	08-04		30
	08-05		29
	08-05		3
	08-05		33
	08-06		3
	08-07		17
	08-07		19
	08-09		28
	08-09		9
	08-09A		28
	08-09A		9
	08-10		20
	08-10		23
	08-10A		11
	08-10A		34
	08-11		20
	08-11		26
	08-12		18
	08-12		23
	08-13		32
	08-13		36
	08-14		16
	08-14		20
	08-27		11
237-6012	05-02A		21
	08-01		13
	08-01		23
	08-01		50
	08-02		20
	08-08A		37
	08-09		20
	08-09A		20
	08-09A		30
	08-09A		7
	08-10		9
	08-11		9
	08-12		9
	08-13		9
	08-14		9
	08-23		25
	08-23		29
	08-23		43
	08-23B		28
	08-23B		29B
	08-23B		36
	08-23B		43
	08-55A		13
	09-10		35
	09-38		4
237-6014	08-29		11

Number	Figure	Sequence	Ref.
237-6014	08-29		17
237-6016	08-01		18
	08-01		25
	08-01		28
	08-01		52
	08-02		11
	08-02		15
	08-02		17
	08-02		2
	08-02		5
	08-02		8
	08-03		5
	08-10A		24
	08-10A		8
237-6020	08-03		21
237582A1	04-16		1
238-5005	04-17		8
238-5011	04-06A		5
	08-25		8A
	08-57		5
238-5013	06-19		20
	06-28		20
238-5014	06-19		19
	06-28		19
238-5152	06-08		10
238-5227	05-01		3
238-5228	08-01		7
238-5230	08-57		9
238-5231	08-59		9
	08-60		10
	08-66		8
238-5233	08-58		9
	08-65		11
238-5237	08-62		9
238-5239	08-61		9
	08-62		23
238-5241	08-64		11
238-5243	08-63		13
238-6012	06-01		13A
	07-04		10
	07-04		14
	07-04		16
	07-05		3
	07-05		5
	07-06		2
238-6018	08-55A		3
238-6121	06-06		22A
	06-13		
	06-21		
238-8217	06-27		22
239406A1	09-03		7
239408A1	04-09		12
239606A1	06-21		20
242459A1	08-24		5
	08-24		9
243084A1	09-23		19
243298A1	08-24		4
243300A1	08-24		1
243398A1	08-24		8
243404A1	08-24		2
243679A2	08-24		14
244109A1	06-18		6
	06-26		6
244790A1	09-26		51
	09-27		46
245258A1	04-09		7
245423A1	09-10		30
245466A1	09-28		6
	09-28		9
	09-29		6
	09-29		9
	09-30		6
	09-30		9
	09-31		6
	09-32		6
	09-32		6
	09-32		9
	09-32		9
245466A1	09-33		6
	09-34		6
	09-34		9
	09-35		6
	09-35		9
246151A1	08-24		17
246526A1	04-04		31A
248-2373	09-46		13
250851A1	09-05		7
	09-08		30
254686A2	06-12		1
	06-20		1
255447A1	09-41		25
	09-71		13
256210A2	08-24		14A
256347A1	09-01		
	09-02		
256776A1	03-03		5
257381A1	09-41		27
257382A1	09-41		26
258616A1	09-01		
	09-02		
259044A1	08-01		1
260-1436	09-61		16
260-16312	09-01A		23
	09-01A		8
261-14310	04-15		11
	04-15		4
27549R1	06-30		2
	06-30		2
276-2446	08-61		11
	08-66		10
276-2456	08-56		3
276-26512	04-18		10
276498A1	04-13		
	04-14		
277800A1	02-01		39
278316A2	04-10		9
278328A1	04-07		27
278532A1	06-15		14
	06-23		14
278533A1	06-15		13
	06-23		13
278534A1	06-12		8
	06-20		8
279039A1	06-15		15
	06-23		15
279223A1	04-14		6
279224A1	04-14		5
279265A2	04-14		15
279482A1	09-53		2A
	09-69		4
279916A1	04-14		16
280136	08-39		11
281-14520	09-64		9
281-14716	09-11		17
281-18712	09-63		26
281-54512	09-61		23
281185A1	09-26		
	09-27		
282-16512	04-18		7
282038A2	06-01		18
282242A1	03-03		1
282428A1	05-02		17
	08-26		18
282775A1	04-09		
282842A1	08-23		9A
	08-23B		9A
2830082	02-09		1
2830156	03-09		2
2830158	02-23		4
2830266	03-09		1
2830281	02-17		2
2830411	03-08		7
2830433	02-26		7
2830559	02-34		10
2830769	02-17		8
2830775	02-17		5

Number	Figure	Sequence	Ref.
2830784	02-17		7
2830919	02-16		15
2830920	02-16		15
2830948	02-26		16
2831031	02-26		8
2831203	02-20		1
2831297	02-22		3
2831298	02-22		1
2831305	02-26		14
2831354	02-26		9
283779A1	04-09		22
283781A1	04-09		23
2852011	02-11		4
2852012	02-11		7
2852013	02-11		9
2852016	02-11		8
2852028	02-15		2
2852029	02-19		3
2852030	02-19		6
2852032	02-17		4
2852033	02-17		6
2852037	02-23		4
2852044	02-19		1
2852047	02-35		2
2852049	02-24		1
2852051	02-24		2
2852057	03-06		8
2852059	03-06		5
2852062	02-28		2
2852065	03-11		3
2852075	03-07		
2852088	03-04		3
2852089	03-04		4
2852098	03-08		1
2852101	02-33		13
2852102	02-33		10
2852105	03-10		1
2852111	03-10		3
2852114	02-35		1
2852122	02-30		1
2852125	02-30		2
2852127	02-30		6
2852134	02-30		9
2852135	02-30		8
2852145	02-36		3
2852151	02-37		1
2852153	02-37		2
2852155	02-37		1
2852157	02-37		6
2852161	02-38		2
2852162	02-38		3
2852163	02-38		1
2852170	02-39		3
2852171	02-39		4
2852172	02-39		5
2852180	02-42		2
	04-03		14
2852181	02-42		1
	04-03		16
2852183	02-41		1
2852195	02-33		8
2852196	02-33		15
2852197	02-33		12
2852202	02-10		10
2852294	03-06		3
2852473	02-37		
2852507	02-29		3
2852509	02-29		5
2852510	02-29		4
2852511	02-36		5
2852519	02-12		7
2852521	03-11		4
2852531	02-15		1
2852594	03-10		2
2852743	02-20		2
2852834	02-20		3
2852865	02-14		2
2852866	02-18		3
2852871	03-07		1
2852872	03-07		2
2852873	03-07		3
2852874	03-07		4
2852875	03-07		5
2852876	03-07		6
2852877	03-07		7
2852878	03-07		8
2852879	03-07		9
2852880	03-07		10
2852881	03-07		11
2852882	03-07		12
2852883	03-07		13
2852884	03-07		14
2852885	03-06		2
2852889	02-10		3
2852894	02-17		11
2852978	02-11		5
2853133	02-37		4
2853135	02-37		5
2853407	02-30		10
2853410	02-30		7
2853412	02-30		11
2853414	02-31		1
2853671	02-12		5
2853722	02-34		9
2853781	02-34		3
2853782	02-34		
2854030	02-23		3
2854072	02-36		2
2854073	02-14		6
2854075	02-14		3
2854340	03-06		1
2854493	02-33		6
2854603	02-23		4
2854611	02-38		
2855103	03-08		2
2855178	02-14		9
2855273	02-29		9
2855287	02-12		9
2855531	02-23		1
2855622	02-38		2
2855743	02-26		
2855746	02-26		15
2855747	02-26		3
2855748	02-26		5
2855750	02-26		4
2855753	02-26		2
2855894	02-37		3
	02-41		3
2855903	03-11		6
2856017	02-16		3
2856086	02-11		6
2856170	02-28		5
2856255	03-05		1
2856263	02-19		4
2856350	03-04		2
2856352	03-04		1
2856462	02-19		1
286-56520	09-53		11
	09-68		29
29-1010	09-08		14
29-1012	09-06		10
	09-08		5
291010A1	04-18		6
292207A1	06-34		12
292208A1	06-34		13
292210A1	06-36		3
292212A1	06-36		4
292385A1	09-23		29
293636A1	09-23		34
294933A1	06-07		
297280A1	08-59		4
297281A1	08-60		4
	08-66		3
297952A1	08-64		2
298176A1	09-01		
	09-02		

Number	Figure	Sequence	Ref.
298614A1	06-19		22
	06-28		22
300030A1	04-19		4
300588A1	09-27		26
300996A3	08-27		3
302358A1	03-01		3
	09-38		19
302820A2	08-27		5
303192A1	02-01		36
303465A2	04-10		10B
303466A1	04-10		10C
303467A1	04-10		10D
303646A1	09-24		41
304083A1	09-74		7
304424A1	08-27		9
304890A1	08-27		10
305492A1	09-10		16
305493A1	09-10		18
305494A1	09-10		17
305495A1	09-10		9
305496A1	09-10		7
305497A1	09-10		3
305499A1	09-10		8
305508A1	09-10		21
30634	08-60		14
307186A1	09-27		19
307277A1	08-27		17
307348A1	09-74		12
307385A1	09-10		22
307386A1	09-10		23
307387A1	09-10		24
307388A1	09-10		25
307389A1	09-10		26
307577A1	03-01		31
	09-38		33
309674A1	08-27		11A
309747A1	06-11		
310519A1	06-17		8
	06-25		8
310772A1	06-13		12
	06-21		12
311569A1	05-08		1
	06-06		1
313648A1	08-02		3
314319A1	08-24		27
314320A1	08-24		28
315273A1	09-55		12
315276A1	09-55		11
319467A1	09-35A		1
321-1707	09-08		29
321-1708	09-08		23
	09-73		11
321-229	09-38		2
	09-79		8
321-230	09-79		7
321-4311	09-72		5
321-6046	08-55A		16
	09-75		8
321-6376	09-79		8A
	09-80		8A
	09-81		8A
321-6774	09-79		13
321-7030	09-76		10
321-7040	09-79		4
321204	05-06		12
	06-03		7
321428A1	06-29		8
322357	04-06A		19
322860A1	03-03		4
3233348R1	09-15		36
	09-56		8
3234063R1	09-55		25
324213A1	05-08		2
325465A2	08-07		22
326-640	09-10		6
326806A1	09-23		1
	09-24		1
326865A1	06-18		13
326865A1	06-26		13
328186A1	06-10		21
	08-03		11
329032A1	04-13		3
329483A1	05-02A		
329797A1	08-23		5
	08-23B		5
329799A1	08-23		4
	08-23B		4
329998A1	09-23		4
331620A1	09-05		2
335177A1	09-04		6
338424A1	09-53		4
338425A1	09-53		3
338426A1	09-55		5A
338427A1	09-55		5
338428A1	09-57		3
338429A1	09-55		4A
340997A3	09-44		2
340998A3	09-44		1
341564A2	09-04		36
341743A3	09-55		
344892A1	09-04		37
345-49	09-38		10
345-621	09-65		
345231A1	09-44		3
347706A3	04-07		7
348706A1	09-26		46
	09-27		30
348794A1	05-01		18
	05-03		
349291A1	06-19		21
	06-28		21
349292A1	06-19		23
	06-28		23
349295A1	06-19		17
	06-28		17
352208A1	09-58		11
352209A1	09-58		13
352210A1	09-58		15
352401A1	05-01		7
352569A4	05-01		6
	05-03		10
352727A1	05-01		23
353-402	09-68		19
353-405	09-54		
353-407	09-54		
353-408	09-54		
353-410	09-54		
	09-64		26
	09-68		
353-411	09-11		5
353-413	09-68		33
353-415	09-54		
353-421	09-54		
	09-68		22
353-422	09-01		39
	09-42		7
353-425	09-54		
353068A2	04-11		18
353103A1	08-07		5A
353167A1	08-07		5
355198A2	04-11		1A
355827A2	04-10		1
355984A2	09-42		1
356743A1	08-07		12
357099A1	09-68		15
357100A1	09-68		16
357278A1	04-08		23
357469A1	08-11		16
357470A1	08-12		16
	08-13		34
357471A1	08-10		24
357540A1	04-14		7
357541A1	04-14		8
357966A1	04-08		22
358282A1	06-18		19
	06-26		19

Number	Figure	Sequence	Ref.
358283A1	06-18		28
	06-26		28
358632A1	06-17		7
	06-25		7
358633A1	06-17		6
	06-25		6
358635A1	06-17		4
	06-25		4
358636A1	06-16		2
	06-24		2
358637A1	06-17		15
	06-25		15
358638A1	06-17		21
	06-25		21
358639A1	06-18		29
	06-26		29
358640A1	06-17		10
	06-25		10
358641A1	06-17		16
	06-25		16
358642A1	06-17		19
	06-25		19
358643A1	06-17		18
	06-25		18
358644A1	06-17		17
	06-25		17
358645A1	06-17		1
	06-17		29
	06-25		1
	06-25		29
	06-27		7
358649A1	06-18		3
	06-26		3
358650A1	06-18		3A
	06-26		3A
358651A1	06-18		3A
	06-26		3A
358652A1	06-18		3A
	06-26		3A
358654A1	06-26		37
358655A1	06-26		39
358656A1	06-26		38
360242A2	04-10		10A
360243A2	04-10		11
360244A1	04-10		4
360245A2	04-10		8
360246A3	09-54		16
360247A3	09-54		15
360250A2	04-11		1
360251A3	09-63		6
360252A2	09-62		5
360253A3	09-63		8
360254A3	09-63		10
360255A1	09-63		14
360256A1	09-65		15
360257A1	09-65		7
360260A2	09-62		1
360261A1	09-62		3
360262A2	09-64		1
360263A4	09-65		1
360272A6	09-61		
360867A1	09-36		1
361900A1	04-07		9
362556A2	09-45		2
362557A1	09-45		1
362558A1	09-45		3
362607A1	09-40		4
362609A1	09-40		3
362804	09-01		14A
362930A2	04-08		13
363485A1	07-01		3
	07-01	01	3
363832A5	09-65		
363883A1	09-61		10
364132A2	09-55		28A
364133A2	09-55		30A
364134A2	09-55		28
	09-57		7
364135A2	09-55		30
	09-57		8
364180A1	09-54		10
	09-68		24
365309A1	08-13		14
365328A1	09-32		1
365789A1	09-63		20
365941A1	09-34		2
365942A1	09-34		3
366230A1	06-27		13
366231A1	06-27		18
366232A1	06-27		15
366234A1	06-27		11
366235A1	06-27		12
366236A1	06-27		14
366632A2	04-11		21
366633A3	04-11		25
366889A2	04-07		28
366910A1	06-29		9
367352A1	08-07		5B
367712A3	09-68		13
367848A2	09-74		13
368417A1	09-45		9
368801A2	09-64		10
368805A1	09-63		7
368807A1	09-63		13
368809A1	09-54		22
368813A2	09-61		4
368818A1	09-63		29
368990A1	09-62		6
369249A1	09-63		9
369372A1	08-55		3
369450A1	09-61		15
370381A1	09-65		14
370747A1	09-34		
371031A1	08-05		26
371144A1	07-02		8
371145A1	07-02		11
372167A3	04-11		1B
373689A2	04-10		10
373693A1	04-10		10E
373698A2	09-73		8
373699A2	09-73		9
373995A1	09-63		
375112A1	04-11		26
375392A1	09-63		28
376286A2	09-08		
376332A1	09-55		38
	09-57		15
376334A1	09-55		36
	09-57		13
376336A1	09-55		37
	09-57		14
376384A1	09-30		1
376385A1	09-32		1
376386A1	09-34		1
377194A1	09-61		9
377220A2	09-63		1
377222A1	09-64		4
377230A3	09-63		27
377232A2	09-64		18
377233A2	09-64		31
377241A2	09-63		1
377594A5	09-61		13
378227A1	09-54		5
378742A3	09-43		19
	09-43		27
	09-43		9A
378955A1	03-03		8A
378956A3	03-03		15
378957A3	03-02		17
378958A1	03-03		13
379160A1	09-61		5
379161A1	09-61		6
379209A1	09-61		7
379314A4	06-11		6
379424A2	09-54		3A
379425A3	09-54		2A

Number	Figure	Sequence	Ref.
379846A1	05-01		14
	05-01		22
379941A1	09-25		1
	09-25A		1
38-11016	09-48		10
380483A2	03-03		12
380537A2	06-11		13
380719A2	09-61		
380807A4	09-38		47
381111A2	09-63		25
381113A2	09-63		24
381488A4	09-28		1
381659A1	04-18		5
381696A5	09-61		2
381972A1	09-61		14
382202A2	09-38		52
382298A1	09-54		21
	09-68		30
382664A2	04-18		1
382770A2	09-62		2
382775A1	09-55		23A
382777A1	09-55		23
383794A2	09-63		22
383795A2	09-63		23
383972A1	09-76		6
384240A1	08-04		18
	08-58		1
	09-04		9
384241A1	08-58		2
384258A1	09-79		6
384260A1	09-79		9
384264A1	09-76		1
384265A1	09-79		2
384267A1	09-79		3
384269A1	09-79		5
384769A1	06-18		14
	06-26		14
384773A1	06-18		9
	06-26		9
384815A1	09-23		32
385506A1	09-68		12
385614A4	04-11		31
386000A2	09-22		37
386092A2	09-23		16
386368A2	04-11		29
386369A2	04-11		28
386502A1	04-11		
386535A1	09-65		2
386720A1	09-59		18
386785A1	04-07		22
	09-59		25
	09-60		
	09-70		4
386786A1	04-09		21
	09-59		24
	09-60		
386787A1	04-07		23
	09-59		16
	09-70		5
386788A1	04-09		20
	09-59		15
386789A2	04-09		19
386849A1	04-07		18
386850A1	04-07		19
386851A1	04-07		20
	04-17		15
386852A2	04-09		18
386927A1	04-18		9
387897R91	05-09		3
	05-09		6
387940A1	04-17		
388116A2	05-01		8
388712A2	08-55		9
388713A1	08-55		
388762A1	09-64		7
388843A1	09-29		1
388848A1	09-08		24
388881A1	08-55		4
389402A1	09-64		8
389487A1	04-07		13
389541A1	08-55		12
389729A1	09-77		6
389730A1	09-78		6
390-100	09-55		21
390029A1	06-05		2
390255A2	04-11		15A
390258A1	04-11		
	04-11		
390551A2	09-42		10
390690A1	09-11		4
390758A1	09-11		3
390759A1	09-11		1
390760A1	09-11		2
390838A1	09-55		2A
390840A1	09-55		27A
390841A1	09-55		29A
391818A2	04-11		15
391827A1	09-53		8
	09-55		19
	09-55		6
	09-57		4
	09-69		2
391838A1	09-55		14
391841A1	09-55		18A
391842A1	09-55		20A
391843A1	09-55		32
391845A1	09-55		31
	09-57		10A
391847A1	09-55		13
391848A1	09-55		15
391850A1	09-55		3A
392353A1	04-08		14
392374A1	09-76		13
392375A1	09-79		1
392828A2	09-41		17
393202A1	09-55		17
393203A1	09-55		16
393209A1	09-55		22
393211A1	09-56		5
393231A1	06-09		
393330A1	09-57		10
393354A1	08-14		10
393357A1	08-14		11
393360A1	08-12		21
393361A1	08-13		16
393362A1	08-13		17
393369A1	08-10		18
393371A1	08-11		17
393623A1	09-42		8
394329A1	09-75		3
394704A1	09-55		18
394705A1	09-55		20
394707A1	09-55		2
394708A1	09-55		3
394800A1	09-56		7
394863A1	04-14		9
	09-54		17
394864A1	09-57		2
394865A1	09-57		9
395026A1	09-60		9
395189A2	03-02		1
395348A1	09-58		12
	09-58		14
395387A1	09-54		18
395388A1	09-54		19
395389A1	09-60		10
395478A3	09-68		3
395753A2	09-22		38
395793A1	09-53		9
	09-69		7
395910A2	09-73		10
396-41028	09-01		16
	09-01		31
	09-02		3
	09-18		23
396018A3	04-14		13

Number	Figure	Sequence	Ref.
396018A3	09-60		
396023A2	04-13		10
396092A1	09-25		10
	09-25A		10
396339A1	08-12		16
	08-13		34
396422A2	08-55		10
396483A1	09-27		55
396516A1	09-54		12
	09-61		3
	09-68		26
396592A1	05-02		
	05-02A		
396593A1	05-02		
396605A1	09-41		6
396841A1	09-56		3
	09-57		29
396938A3	09-68		2
397025A2	09-43		21
397026A3	09-43		2
397064A1	09-56		1
	09-57		27
397065A2	03-03		22
397080A1	08-63		2
397548A4	03-01		40
397569A1	04-09		5
397570A1	04-09		6
397774A3	09-43		12A
397786A1	08-10		11
397787A1	08-11		21
397788A1	08-12		10
397870A3	09-11		15A
397876A1	04-08		19
397911A1	09-12		16
397974A1	09-71		
397990A1	04-07		29
398380A3	04-14		12
398570A1	09-80		6
398571A1	09-81		6
398572A1	09-80		9
398573A1	09-81		9
398576A1	09-77		1
398577A1	09-78		1
398578A1	09-80		2
398579A1	09-81		2
398580A1	09-80		3
398581A1	09-81		3
398582A1	09-80		5
398583A1	09-81		5
398598A1	09-77		13
398599A1	09-78		13
398600A1	09-80		1
398601A1	09-81		1
398654A1	09-81		11
398656A1	09-81		10
398658A1	09-76		5
	09-77		5
	09-78		5
398662A1	09-77		7
398663A1	09-78		7
398665A1	09-80		8
398666A1	09-81		8
398667A1	09-80		7
398668A1	09-81		7
398669A1	09-80		11
398670A1	09-80		13
398671A1	09-81		13
398672A1	09-77		10
398673A1	09-78		10
398674A1	09-80		4
398675A2	04-07		24
	08-26		34
398676A1	09-81		4
398677A1	09-80		10
398738A1	09-62		4
398847A3	04-13		8
	04-14		2
398986A1	09-63		30
399004A1	08-21		
399227A1	08-10A		
399246A1	08-10A		32
399959A2	09-38		31
399963A1	08-07		
400016A1	08-10A		30
400069A1	09-12		10
400077A1	09-43		
	09-43		
400200A1	09-58		5
400280A1	09-64		11
400282A1	09-64		2
400296A2	08-55		11
400379A1	04-09		9
	09-64		5
	09-65		14A
400398A1	09-26		48
	09-27		32
400494A1	09-58		16
400571A2	09-53		20
400572A1	09-53		19
400573A1	09-53		16
400588A2	06-11		7
400657A1	08-55		13
401052A1	05-06		
401054A1	05-06		3
401055A1	05-06		7
	05-07		1
401059A1	05-06		13
401060A1	05-06		14
401061A1	05-07		4
401062A1	05-07		3
401063A1	05-07		5
401064A1	05-07		6
401065A1	05-08		3
401066A1	05-08		4
401067A1	05-08		5
401457A1	09-73		2
401458A1	09-73		3
401949A1	09-54		4
	09-65		30
402610A1	09-54		20
402836A1	09-58		28
402843A1	09-58		25
402844A1	09-58		27
402845A1	09-58		32
402846A1	09-58		21
402847A1	09-58		18
402933A1	09-71		1
402934A1	09-71		2
402935A1	09-71		5
402936A1	09-71		3
403193A1	09-63		36
403225A1	09-63		35
403271A1	09-62		9
403955A1	06-37		14
404226A1	09-58		6
404227A1	09-58		9
404228A1	09-58		4
404229A1	09-58		7
404617A1	04-13		12
	04-14		10
	09-60		
	09-70		
404816A1	04-07		14
404834A1	09-24		43
	09-27		5
404835A1	09-24		44
	09-27		6
404907A1	08-10A		28A
405738A1	09-53		15
405739A1	09-53		14
405740A1	09-53		13
405741A1	09-53		17
405742A1	09-53		18
406287A1	09-64		19
	09-65		5
406723A1	09-74		15

Number	Figure	Sequence	Ref.
407009A2	09-73		6
407010A2	09-73		7
407660A1	04-11		8A
407962A1	02-01		11
	04-06A		4
408965A1	09-59		20
409025A1	08-55		5
409618A1	09-54		11
	09-68		25
409672A1	09-18		4
409673A1	09-18		5
409723A1	09-61		18A
410561A1	06-11		44
410867A1	09-58		2
411049A1	09-75		2
411074A1	09-42		16
411399A1	09-54		25
411549A1	09-68		21
411661A1	09-06		8
	09-06		8
411668A1	09-08		
411850A1	09-58		
411851A1	09-58		
411892A1	09-37		14
411908A1	09-58		22
411909A1	09-58		19
411910A1	09-58		24
411911A1	09-58		31
411912A1	09-58		33
411914A1	09-58		29
411916A1	09-58		20
411917A1	09-58		17
412285A1	09-54		23
412510A1	04-11		40
413-1228	09-22		18
413-412	09-71		11
	09-71		4
413-516	09-10		11
	09-71		7
413-528	09-15		22
413-624	09-01		18
	09-19		12
413-648	08-10A		4
413778A1	08-23		9
	08-23B		9
414-724	09-46		15
414033A1	04-10		18
414034A1	04-10		17
414071A1	04-11		39
414092A1	04-11		38
414426A1	09-70		3
414572A1	04-10		16
414600A1	09-61		17
414939A1	09-54		24
420-21232	09-06		9
425-1012	09-22		19
425-106	04-08		2
	04-08		26
	09-19		13
425-1110	09-18		16
425-115	09-03		6
	09-15		19
425-116	09-01		22
	09-16		36
	09-19		5
425-118	09-16		10
	09-17		3
	09-18		7
	09-21		7
425-147	09-60		
425-155	08-55A		12
425-156	09-16		27
	09-16		47
	09-17		9
	09-20		9
	09-21		16
427-3058	03-02		15
	03-03		18
427-5094	09-15		13
	09-25		13
	09-25A		13
427-6088	09-16		25
	09-17		7
	09-20		7
427-6100	09-04		33
427-6106	07-03		4
427107A1	06-02		1
429-1012	09-06		10
	09-07		10
429230A1	05-05		1
429231A1	05-06		1
429232A1	05-06		2
430309A1	09-75		3
430310A1	09-75		3
430471A1	04-11		37
431583A1	09-68		31
431584A1	09-68		32
431801A1	09-53		21
432-48	03-02		10
	03-02		16
	03-03		19
432-612	07-03		5
	09-01		27
	09-03		5
	09-04		34
	09-15		14
	09-16		26
	09-16		38
	09-16		49
	09-17		8
	09-19		4
	09-20		12
	09-20		8
	09-21		12
	09-25		14
	09-25A		14
432-828	09-01		13
	09-02		12
	09-15		25
	09-18		20
432431A1	09-56		9
440-10616	09-04		18
440-1066	04-11		27
440-1088	09-61		22
440-11012	09-39		6
	09-41		13
440038A1	04-06A		9
442718A1	09-55		8
442773A1	09-55		33
442842A1	09-56		6
443375A1	03-01		2
	09-38		16
443432A1	08-55		
445720A1	06-35		10
446222A1	09-22		5
446454A1	09-22		36
448284A1	08-25		9
448428A1	09-64		12
448429A1	09-64		13
448607A1	09-53		2
	09-69		1
448608A1	09-53		6
	09-69		6
448609A1	09-53		5
	09-69		5
449842A1	09-74		8
450037A1	09-70		1
451384A1	09-27		43
47132002	04-06A		8
47132347	02-05		3
484-43120	08-55A		11
484-6316	06-11		3
4890343	02-01		44
4890732	02-39		8
4890832	02-13		4
4890833	02-14		8

Number	Figure	Sequence	Ref.	Number	Figure	Sequence	Ref.
4890964	03-09		4	4895414	02-21		3
4891209	02-13		5	4895489	02-11		2
4891252	02-35		1	4895538	02-11		10
4891353	02-09		6		02-42		6
4892426	02-39		7	4895586	02-26		6
4892708	02-22		2	4895610	02-30		5
4892712	02-23		2	4895623	02-10		14
4892713	02-23		3		02-36		8
4892715	02-22		4	4895625	02-10		15
4892732	02-39		6		02-36		9
4892859	02-16		2	4895641	02-19		8
4892860	02-18		4	4895919	02-09		
4892861	02-16		1	4895921	02-09		
4892867	02-25		2	4896153	02-10		13
4892915	02-14		2	4896404	02-34		4
4893036	02-14		12	4896409	02-34		11
4893386	02-21		2	4896410	02-34		7
4893391	02-34		8	4896770	03-06		7
4893518	03-06		6	4896773	02-25		1
4894095	03-10		4	4896884	03-07		15
4894218	02-10		1	4896947	02-26		5
4894641	02-24		3	4897024	02-13		1
4894721	03-09		5	4897048	02-26		4
4895017	02-21		4	4897125	02-26		1
4895038	02-09		4	4897178	02-16		13
4895039	02-09		3	4897179	02-16		14
4895040	02-09		7	4897330	02-30		4
4895045	02-34		5	4897457	02-28		4
4895049	02-10		8	4897480	02-31		1
4895078	02-16		16	4897934	02-26		11
4895085	02-16		17	4898301	02-11		3
4895107	02-33		2	4898482	02-29		6
4895133	02-29		2	4899003	03-06		4
4895155	02-14		10	4899009	02-10		4
4895164	02-33		1		02-16		10
4895166	02-42		5	4899019	02-34		1
	03-08		5	4899020	02-14		7
4895179	02-16		12	4899026	02-09		2
4895180	02-10		9		02-12		1
4895183	02-16		4		02-14		1
4895184	02-16		9	4899027	02-26		17
4895187	02-16		6	4899031	02-42		4
4895188	02-16		5		03-09		3
4895195	02-18		1	4899039	02-19		2
4895196	02-18		7	4899046	02-21		5
4895198	02-18		9	4899053	02-39		1
4895199	02-18		10	4899063	02-13		3
4895200	02-18		11	4899068	02-14		11
4895202	02-17		9		02-28		3
4895204	02-18		12		03-08		3
4895214	02-17		3	4899072	02-10		5
4895215	02-16		8		02-16		11
4895228	02-09		5	4899073	02-12		3
4895244	03-11		1		02-41		2
4895291	02-39		2	4899074	02-14		2
	02-42		3	4899076	02-14		2
	04-03		12	4899078	02-13		2
4895294	02-19		7	4899079	02-35		3
4895296	02-17		10		02-38		5
4895297	03-05		2	4899080	02-28		6
4895301	02-39		10	4899090	02-31		2
4895305	03-11		2	4899091	02-11		2
4895323	02-28		1		02-12		2
4895347	02-16		7	4899092	02-15		3
4895355	02-12		8	4899093	02-12		3
4895360	02-17		1	4899106	02-33		7
4895361	02-18		2	4899107	02-33		3
4895363	02-18		5	4899108	02-33		4
4895364	02-18		6	4899109	02-14		2
4895365	02-18		8		02-26		11
4895378	02-14		4		02-36		1
4895379	02-14		5		02-38		6
4895392	02-10		6	4899110	02-15		3
	02-36			4899115	02-12		
4895393	02-10		7	4899118	02-29		1
	02-36		7	4899143	02-14		2
4895394	02-36		6	4899467	02-33		5
4895406	02-30		3	4899519	02-33		6

Number	Figure	Sequence	Ref.
4899643	02-34		2
4899849	03-08		4
4899859	02-20		4
	02-29		8
4899921	02-19		5
490-11012	04-07		
	04-08		24
492-11031	09-10		12
493-11026	04-17		2
493-21020	08-57		3
493-21033	04-04		7
493-41020	06-11		5
495-11028	09-01		8
	09-02		15
	09-72		2
495-11034	09-10		13
495-11041	08-10A		5
495-11047	05-04		11
	06-01		30
	09-60		
495-11053	09-04		35
495-11081	09-18		10
495-21031	04-17		3
495-21038	09-45		6
495-31022	03-02		9
	04-13		4
495-81001	02-04		12
	09-68		6
495-81025	06-01		15
	06-01		20
495-81169	09-46		18
495-81184	09-01		9
	09-02		10
495-81226	09-22		34
	09-24		24
	09-24		32
	09-26		25
	09-26		35
	09-26		4
	09-27		42
495-81227	09-23		17
	09-24		29
495-81261	07-03		17
495-81267	09-68		10
495-81282	09-04		7
	09-26		21
	09-27		13
	09-27		38
496-11041	09-01		20
496-21041	02-01		31
	06-11		17
496-41041	08-10		6
	08-11		6
	08-12		6
	08-13		6
	08-14		6
	08-22		12
	09-12		5
	09-44		4
496-81000	05-09		9
	06-01		3
	06-06		24
496-81010	09-46		19
496-81018	03-02		7
	09-13		29
	09-24		38
496-81028	05-01		11
	08-08		
	08-08		3
	08-08A		
	08-08A		3
	08-22		21
51200906	09-48		
5135738	02-33		9
514-633	09-55		34
	09-57		11
514-832	08-01		8
514-847	03-02		3
515-2179	09-04		14
515-22127	02-02		16
	08-22		53
515-22190	04-06A		2
	08-07B		27
515-22254	02-02		17
515-2295	08-22		29
515-23127	03-01		16
	04-04		13
	04-04		15
515-23143	02-02		18
515-23159	05-02		23
515-23254	08-10		28
515-23444	04-09		27
515-2379	07-04		5
515-25190	04-06A		31
	06-10		27
	07-05		7
	08-10A		22
515-25254	08-07		13
5194169	06-02		18
5194190	06-07		11
5194191	06-07		9
5194194	06-07		3
5194264	06-03		6
561201	06-07		12
569-4	09-55		24
60-7083T1	09-55		7
604-12030	09-46		11
	09-47		9
	09-49		3
604-20035	09-24		42
604-20045	08-23		6
	08-23B		6
614-10020	02-01		20
	03-01		38
	03-01		41
	05-01		19
	05-01		9
	06-11		26
	07-06		4
	08-03		2
	09-03		9
	09-40		16
614-10025	07-03		15
	08-23		11
	08-23B		11
	09-09		2
	09-13		38
	09-16		42
	09-19		16
	09-20		3
	09-38		53
	09-40		10
	09-40		5
	09-41		3
614-10030	02-01		37
	04-04		18
	04-16		6
	05-02A		9
	06-13		10
	06-21		10
	08-13		28
	08-22		15
	09-40		22
	09-67		4
614-10035	03-03		23
	05-01		20
	08-10		29
	08-10		5
	08-11		5
	08-12		5
	08-13		5
	08-14		5
	08-26		2
	09-12		4
614-10040	08-04		9
	08-06		5

Number	Figure	Sequence	Ref.
614-10040	08-07		8
	08-23		10
	08-23B		10
	08-24		29
614-10045	08-04		11
	08-05		7
	08-06		6
614-10050	09-25		6
	09-25A		6
614-10080	02-06		3
614-12016	06-15		2
	06-23		2
614-12025	04-06A		32
	05-04		6
	06-01		32
	07-05		9
614-12030	09-24A		5
	09-39		4
614-12035	02-07		3
	06-11		27
614-12040	02-07		10
	09-47		6
	09-49		8
614-18035	08-09		6
614-20030	09-39		2
614-6016	03-03		32
	09-01		15
	09-02		2
	09-04		13
	09-18		22
614-6020	04-06A		13
	04-17		13
	09-01		30
	09-01		7
	09-02		16
	09-18		24
614-6025	04-06		6
	09-21		4
614-6035	04-06A		11
614-8012	06-10		2
614-8016	02-01		40
	09-38		14
614-8018	06-12		11
	06-20		11
614-8020	02-04		2
	03-03		9A
	04-08		15
	04-16		3
	07-03		28
	07-04		8
	09-12		12
	09-59		26
	09-59		8
	09-66		27
	09-67		14
	09-68		5
	09-70		15
614-8022	06-27		2
614-8025	02-01		22
	02-02		12
	04-03		4
	04-08		16
	08-07B		29
	08-22		28
	09-03		15
	09-08		27
	09-13		5
	09-15		11
	09-16		2
	09-16		20
	09-25		23
	09-25A		23
614-8030	02-01		9
	03-01		17
	04-09		28
	09-05		8
	09-15		4
	09-25		33
614-8030	09-25A		30
	09-37		19
	09-44		5
	09-45		5
	09-64		28
	09-65		19
614-8040	02-02		21
	04-06A		3
	09-45		4
614-8050	09-15		35
627-10030	02-06		11
	06-11		16
627-12025	03-03		26
637-63113	07-04		11
	07-04		17
637-63153	07-04		13
700-101	07-04		9
700-304	07-04		15
	07-06		1
700-345	07-04		12
711-10030	09-38		29
711-10040	09-45		8
711-10050	05-02		24
761-17325	04-18		13
781-24613	04-08		21
	09-13		20
781-24820	09-43		30
79081900	02-05		5
800-1130	06-17		31
	06-25		31
800-1134	06-06		17
800-1150	06-17		26
	06-25		26
	06-37		1
800-40065	09-23		27
800-40070	09-23		31
800-44040	09-04		26
	09-04		31
	09-05		22
	09-05		4
	09-25		4
	09-25A		4
	09-27		27
800-44050	05-04		5
	06-01		7
	09-04		8
	09-24		28
800-5145	06-27		19
806-8016	02-01		27
806-8025	02-04		11
8093883	02-26		3
811-6016	04-06A		16
814-10040	08-09		3
	08-25		6
814-10045	03-01		38
	08-09A		3
	08-13		25
	08-22		9
	09-38		35
814-10050	05-01		10
	08-24		10
	09-22		41
814-10055	08-12		27
	09-67		3
814-10060	08-22		10
	08-24		6
	08-26		6
	09-08		25
	09-13		25
814-10070	08-08		22
	08-08A		22
814-10080	08-10		2
	08-11		2
	08-12		2
	08-13		2
	08-14		2
	08-25		2
	09-08		20

Number	Figure	Sequence	Ref.
814-10090	02-01		30
	08-26		29
	08-26		46
	08-27		13
	09-01		29
	09-08		16
814-10110	09-01		36
814-10120	08-10		14
	08-11		13
	08-12		13
	08-13		12
814-10130	09-13		13
814-10150	06-13		1
814-10220	09-66		33
814-12050	08-23		17
	08-23B		17
814-12080	02-07		5
	06-11		31
814-12100	09-40		14
814-12130	09-67		8
814-6050	05-02A		12
	09-60		2
	09-70		
814-6090	08-07A		10
	08-07B		10
814-8035	07-03		18
	08-08A		2A
	08-22		20
814-8050	09-25		27
	09-25A		31
814-8055	08-08A		2
	08-22		19
814-8060	06-14		16
	06-22		16
	06-29		7
	07-04		7
	08-08		2
814-8070	08-23		21
	08-23B		21
	09-15		8
	09-25A		27
814-8100	09-67		15
814-8110	09-67		13
81465471	02-01		13
81868381	08-30		8
	08-31		9
	08-32		18
	08-33		18
	08-34		19
	08-35		19
82017872	04-06A		26
82026949	04-07		35
	04-08		8
	07-03		21
824-1405	04-19		7
825-11412	03-02		8
825-11418	05-09		8
	06-01		2
	06-06		25
825-1404	09-01A		21
	09-01A		6
825-2406	09-65		27
825-2408	09-59		21
	09-64		30
	09-65		21
825-2410	09-40		6A
	09-41		5
	09-41		8
827-10045	02-06		19
827-10130	04-03		15
827-12060	06-01		14
	06-01		21
827-12065	06-11		9
827-16085	09-37		10
827-16100	09-37		11
827-20075	09-23		13
827-20170	09-36		2
	09-36		6
827-20190	09-05		16
827-20200	06-31		4
828-20160	09-06		4
	09-06		4
	09-07		4
829-1406	04-06A		20
	08-07A		16
	08-07B		16
	09-01		32
	09-18		25
	09-21		5
829-1408	03-03		11A
	04-04		8
	04-05		9
	04-06		18
	04-06A		18
	04-08		18
	04-09		31
	04-16		5
	07-03		8
	08-07B		30
	08-08		4
	08-08A		4
	08-22		23
	08-23		23
	08-23B		23
	09-03		17
	09-05		11
	09-13		7
	09-15		7
	09-25		29
	09-25A		29
	09-66		35
829-1410	02-06		13
	02-06		6
	03-01		35
	03-01		43
	04-05		11
	04-06		13
	04-07		38
	05-02		27
	05-02A		11
	06-10		25
	07-07		3
	08-03		25
	08-04		13
	08-05		11
	08-06		10
	08-06		15
	08-08		26
	08-08A		26
	08-09		5
	08-09A		5
	08-10		32
	08-10		4
	08-11		4
	08-12		4
	08-13		4
	08-14		4
	08-22		41
	08-23		13
	08-23B		13
	08-24		13
	08-24		7
	08-26		8
	08-27		16
	08-27		7
	09-01		26
	09-02		8
	09-13		37
	09-24		39
	09-38		30
	09-38		39
	09-38		54
829-1412	06-01		22
	08-23		19
	08-23B		19
	09-24A		3

Number	Figure	Sequence	Ref.
829-1412	09-40		19
	09-67		11
829-1416	09-37		15
829-1420	06-31		7
	09-05		19
	09-23		15
	09-36		4
	09-36		8
829-2412	09-39		5
829-2420	09-39		3
832-10404	04-11		14
	07-03		24
	09-54		9
832-10406	04-06		8
	04-06A		15
	04-07		34
	04-09		33
	04-11		9
	05-02A		14
832-10408	02-01		24
	02-02		14
	02-02		25
	04-05		10
	04-06		5
	04-11		34
	05-01		17
	05-01		25
	07-03		19
	07-03		3
	09-13		33
	09-16		21
	09-16		3
	09-43		32
	09-45		7
	09-56		10
	09-59		11
	09-62		8
	09-63		12
	09-63		17
	09-68		7
	09-70		18
832-10410	04-03		18
	05-01		13
	07-03		27
	08-07		15
	08-10		15
	08-11		14
	08-12		14
	08-12		28
	08-13		13
	08-13		27
	08-24		26
	08-26		33
	08-26		45
	09-08		18
	09-08		22
	09-08		8
	09-13		14
	09-13		26
	09-15		17
	09-16		44
	09-19		17
	09-20		4
	09-22		42
	09-40		12
	09-45		11
	09-55		26
	09-66		34
	09-68		11
832-10412	02-07		9
	06-11		11
	06-11		34
832-10420	09-06		6
	09-06		6
	09-07		6
832-10508	09-55		39
	09-57		16
833-40310	09-37		9A
833-40406	04-10		3
	04-11		23
	04-11		4
	04-16		11
	09-04		15
	09-12		18
	09-13		21
	09-14		10
	09-42		6
	09-43		18
	09-43		23
	09-43		6
	09-65		26
	09-68		18
833-40408	02-04		13
	09-45		4A
	09-59		10
	09-66		29
	09-70		17
838-3640	03-03		16
83822C1	09-65		
83931335	08-26		37
	08-26		40
83981068	08-31		19
	08-33		21I
	08-33		22
	08-34		20
	08-35		20
	08-35		25I
840-1416	04-20		12
	08-15		
	08-16		
	08-17		
	08-18		
	08-19		
	08-20		
	08-22		37
843-1516	04-19		5
844-10020	04-04		16
	04-09		34
	04-14		11
844-10025	04-05		13
	04-06		19
844-10035	04-03		2
844-10110	09-08		6
844-6025	04-07		33
	04-09		32
	04-11		7
	04-16		10
844-8025	04-07		36
845-6020	09-65		25
85801585	02-07		6
	06-11		32
85802618	02-07		8
	06-11		32A
85802820	08-08		1
	08-08A		1
85803019	02-02		
85805986	06-03		5
85811933	08-40		8
	08-41		8
	08-43		8
	08-44		8
	08-45		7
	08-46		8
85811934	08-40		7
	08-41		7
	08-43		7
	08-44		7
	08-46		7
85811935	08-41		7
	08-43		7
	08-44		7
	08-46		7
85811937	08-45		6
85811938	08-40		4
	08-41		4
	08-43		4

Number	Figure	Sequence	Ref.
85811938	08-44		4
	08-45		4
	08-46		4
85812114	08-40		6
85812115	08-41		6
	08-46		6
85812116	08-43		6
	08-44		6
85819148	08-40		9
	08-41		9
	08-43		9
	08-44		9
	08-45		8
	08-46		9
85819378	08-41		3
	08-44		3
	08-45		3
	08-46		3
85820159	08-08		
	08-08A		
85820160	08-08		
	08-08A		
85821126	08-08		
	08-08A		
85821520	09-15		21
85824067	09-15		16
85824080	09-15		20
85824081	09-15		18
85824281	08-41		10
	08-43		10
	08-44		10
	08-45		9
	08-46		10
85824282	08-40		10
85825473	08-42		5
85826230	02-01		33
85826337	08-36		3
	08-37		3
	08-38		3
	08-39		3
	08-41		
85826338	08-36		5
	08-37		5
	08-38		5
	08-39		5
	08-43		
85826339	08-36		2
	08-37		2
	08-38		2
	08-39		2
	08-40		
85826341	08-37		7
	08-39		7
	08-45		
85826342	08-38		7
	08-39		8
	08-46		
85826343	08-43		6A
85826344	08-40		5
	08-41		5
	08-42		4
	08-43		5
	08-44		5
	08-45		5
	08-46		5
85826345	08-40		3
	08-43		3
85826346	08-41		6A
85826365	08-36		6
	08-37		6
	08-38		6
	08-39		6
	08-44		
85826905	08-44		6A
85827471	08-17		3
	08-18		6
	08-19		6
	08-48		
85827472	08-15		5
	08-16		5
	08-47		
85827991	08-47		2
85827992	08-47		4
	08-48		4
	08-49		5
85827993	08-47		6
	08-48		6
	08-49		7
85827994	08-47		7
	08-48		7
	08-49		8
85827995	08-47		8
	08-48		8
	08-49		9
85827996	08-47		9
	08-48		9
	08-49		10
85827997	08-47		10
	08-48		10
	08-49		11
85827998	08-47		12
	08-48		12
	08-49		13
85827999	08-47		13
	08-48		13
	08-49		14
85828000	08-47		14
	08-48		14
	08-49		15
85828001	08-47		15
	08-48		15
	08-49		16
85828002	08-47		16
	08-48		16
	08-49		17
85828003	08-47		17
	08-48		17
	08-49		18
85828004	08-48		2
85828005	08-47		11
	08-48		11
	08-49		12
85828013	08-47		3
85828015	08-48		3
	08-49		3
85828048	08-49		2
85828054	08-49		4
85828061	08-49		1
86000535	04-07		17
	04-09		10
	04-09		16
86014151	04-06A		27
8603092	09-76		3
8603093	09-78		3
8603094	09-77		3
863-16070	05-06		8
864-10025	06-15		17
	06-23		17
864-12030	08-01		6
864-6025	06-33		8
864-8025	06-15		6
	06-23		6
864-8055	09-13		34
86507198	09-59		3
	09-70		11
86512512	08-01		47
86547710	09-72		4
86596853	08-22		31
86616248	04-17		10
86619908	04-06A		7
86625057	09-43		15
	09-43		26
	09-43		9
86625112	07-03		13
86625128	08-50		13
	08-51		13

Number	Figure	Sequence	Ref.
86625128	08-53		10
86625138	03-01		6
86639294	09-01A		22
	09-01A		7
86642312	08-58		11
	08-59		11
	08-60		12
	08-62		11
	08-63		15
	08-64		13
	08-65		13
86976679	02-05		4
86982435	08-59		18
	08-66		16
86982437	08-58		18
	08-60		23
86982439	08-62		25
86982440	08-61		18
86982441	08-65		22
86982442	08-63		24
86982443	08-64		22
86983190	09-42		2
86983269	09-42		9A
86983325	09-42		9
86984155	09-66		4
86984544	09-15		2
	09-25A		25
86984545	09-15		6
	09-25A		26
86984547	09-15		5
	09-25		28
	09-25A		28
86984549	09-15		24
86988086	04-20		1
86989616	09-15		28
86989676	03-01		10
86990837	05-04		1
	05-05		
	05-06		
	05-07		
	05-08		
86992243	09-43		20
86992245	09-43		10
86992247	09-43		1
86992284	09-43		
	09-43		
86992395	04-01		
	04-03		1
86992557	08-08A		38
86992975	09-76		12
86992976	09-76		4
86992977	09-43		28
86992978	09-78		12
86992979	09-78		4
86992980	09-77		12
86992981	09-77		4
86993546	06-11		23
86994165	09-48		11
87000228	09-65		28
87000312	08-50		17
	08-52		19
	08-54		15
87016468	07-03		22
87019103	09-01A		24
	09-01A		9
87019767	06-11		23A
87020181	06-11		4
87037462	09-48		8
87037944	08-50		4
	08-51		4
	08-52		4
	08-53		4
	08-54		4
87041331	09-25		16
	09-25A		16
87301325	02-02		4
87301351	09-01		
87301355	02-01		5
87301356	02-01		8
87301687	04-06A		36
	04-07		11
87303784	04-20		3
87305413	09-14		7
	09-75		5
87307656	04-20		5
87307893	09-75		9
	09-77		
87307896	09-75		9
	09-78		
87308118	09-48		1
87308119	09-48		2
87308127	09-48		3
87308128	09-48		7
87308130	09-48		
87308131	09-48		13
87308132	09-46		7
	09-48		14
87308141	09-48		15
87308142	09-48		
87308143	09-48		
87308144	09-48		16
87308145	09-48		
87308146	09-48		17
87308147	09-48		18
87308148	09-48		
87308149	09-48		19
87308150	09-48		20
87308151	09-48		21
87308152	09-48		5
87308153	09-48		4
87308154	09-48		6
87308157	09-48		1
87308158	09-48		2
87308159	09-48		3
87308838	08-50		8
	08-51		8
	08-52		8
	08-53		5
	08-54		8
87308839	08-50		10
	08-51		10
	08-52		10
	08-53		6
	08-54		10
87309656	02-06		1
87309923	09-14		2
87309924	09-14		1
87310085	04-20		6
	09-42		12
87310086	04-10		5
87310088	09-43		12B
	09-43		3
87310096	06-11		8
	09-12		17
	09-42		15
87310098	04-11		22
	04-11		3
	09-15		34
	09-43		16
	09-43		22
	09-43		5
	09-68		17
87310109	09-37		22
87310124	04-10		12
	04-10		13
	09-11		14
87310126	04-11		16A
	04-11		19
	09-11		14
	09-43		33
87310127	09-43		13
	09-43		24
	09-43		7
87310128	04-11		16
	04-11		30
87310139	09-11		8

Number	Figure	Sequence	Ref.	Number	Figure	Sequence	Ref.
87310144	04-11		36	87382812	09-19		11
87310146	09-43		14	87389813	09-22		15
	09-43		25	87393292	09-67		17
	09-43		8	87395300	06-11		14
87310147	09-54		7		06-12		
87310149	09-46		17		06-13		
	09-47		5		06-14		
	09-49		11		06-15		
87310152	04-10		2		06-16		
	04-11		6		06-17		
87310154	09-43		29		06-18		
87310156	09-11		7		06-19		
87310176	04-11		32		07-01		
87310177	09-68		9	87395301	06-11		15
87310184	04-11		12		06-20		
87310185	04-11		33		06-21		
	09-43		31A		06-22		
87310186	09-14		6		06-23		
	09-43		17		06-24		
	09-43		22A		06-25		
	09-43		5A		06-26		
87311219	06-10		8		06-27		
87311572	09-46		16		06-28		
	09-47		3		06-29		
	09-49		9		07-01	01	
87312712	04-04		32	87395365	06-01		1
	04-07		31		06-02		
	06-11		42		06-03		
87313544	06-31		3		06-04		
87316049	08-05		27		06-05		
87316264	08-05		31		06-06		
87316270	08-05		30		06-07		
87324160	09-37		20		06-08		
87326813	09-24		40	87395372	06-31		1
87329475	09-13		11		06-33		
87335469	03-01		5		06-34		
87336843	09-75		5		06-35		
87336844	09-75		5		06-36		
87338681	09-46		1		06-37		
87340008	02-01		42		07-02		
87340753	03-02		11	87396228	04-06A		24
87340754	03-03		21	87397601	04-06A		1
87343247	04-13		5	87399491	09-47		2
	04-14		1		09-48		
87344859	09-55		46	87399492	09-47		1
	09-57		26		09-48		
87344860	09-55		40	87400286	05-05		7
	09-57		17		06-02		9
87345006	03-03		8	87401203	09-16		1
87346606	09-46		2	87403835	04-05		1
87346607	09-46		3		04-06		1
87346611	09-46		4	87404197	05-04		4
87346612	09-46		5		06-01		9
87346615	09-46		6	87405706	09-13		17
87346625	09-46		8	87406924	09-53		10
87346633	09-46		9		09-68		28
87346634	09-46		10	87406934	06-11		22
87348192	09-38		12	87408480	03-01		11
87348571	05-02A			87408888	09-46		14
87351494	08-30				09-47		7
87351498	08-30				09-49		7
87352590	08-22		52	87408889	09-46		14
87353191	02-01		32		09-47		8
87358697	09-76		11		09-49		6
87360280	03-01		4A	87409201	06-11		24
	09-38		21	87410105	04-20		9
87363421	09-38		23	87410265	04-06A		21
87365015	09-06			87410602	04-06A		10
87367622	02-02		7A	87411083	09-11		2A
87368702	09-06			87411084	09-11		4A
87368710	09-07			87411108	09-56		4
87371132	09-24		37	87411319	02-07		1
87375240	09-07		8		02-07		2
87378776	03-03		9	87412060	09-40		20
87380558	09-78		11	87412815	09-73		1B
87380559	09-77		11	87413722	08-62		12
87382811	05-02A		7	87414237	04-06A		12
87382812	09-01		17	87414560	03-01		45

Number	Figure	Sequence	Ref.
87415774	02-01		43
87415931	09-73		15
87416475	09-48		12
87416966	02-07		7
87416967	06-11		33
87416977	06-11		29
87416978	06-11		30
87417383	03-01		18
	04-06A		6
	09-37		17
87417599	09-01		37
87417601	09-03		
87417721	04-16		8
	08-25		8
	08-26		4
	09-01		38
	09-41		23
87418360	02-02		22
87418368	09-15		31
87418369	09-15		32
87418516	09-12		1
87418518	09-12		11
87419229	04-04		23
87419455	08-19		2
	08-20		2
87419615	04-06A		23
87419634	05-02		14
87420672	08-08		25
	08-08A		25
87420673	08-08		23
	08-08A		23
87420696	08-25		17
87421213	08-25		4
87421807	03-03		28
87421832	08-23A		2
	08-23C		2
87421836	08-23		20
	08-23A		
87421918	08-05		4
87421920	08-05		5
87422239	09-16		33
87422241	09-16		31
87422243	09-16		28
87422245	09-16		29
87422247	09-16		30
87422249	09-16		32
87422253	09-19		15
87422256	09-19		14
87422262	09-19		10
87422264	09-19		8
87422270	09-19A		2
87422272	09-19A		1
87422597	06-10		12
87422598	06-10		13
87422777	04-02		
	04-03		3
87422948	08-23		35
87422977	08-23		38
87423033	08-08A		39
	08-22		24
87423067	08-25		5
87423356	08-09		10
	08-09		14
87423401	08-22		2
87423496	04-16		2
87423502	09-58		34
87423503	09-58		26
87423531	02-06		9
87423802	04-20		8
87423812	04-20		4
	09-74		16
	09-75		6
87423813	09-79		14
87423926	04-04		6
87423969	08-23		40
	08-23B		40
87423970	08-23		41
	08-23B		41
87424267	08-50		14
	08-51		15
	08-52		16
	08-54		13
87425117	09-21		3
87425122	09-11		16
87425225	08-07A		9
	08-07B		9
	08-22		36
87425456	09-36		5
87425631	04-19		2
87425635	04-19		8
87425636	04-20		10
87425696	09-13		22
87426227	08-30		9
	08-31		10
87426233	08-30		5
	08-31		6
87426235	08-30		11A
	08-31		12A
87426238	08-30		15
	08-31		16
	08-32		21
	08-33		23
	08-34		8
	08-35		8
87426241	08-32		7
	08-32		8A
	08-33		7
	08-33		8A
	08-34		10A
	08-34		11
	08-35		10A
	08-35		11
87426488	08-22		16
87426716	08-30		12
	08-31		13
87426717	08-30		11
	08-31		12
87427537	08-26		28
	08-26		39
87427539	08-26		27
	08-26		38
87427775	09-25A		15
87427948	08-22		17
87428023	08-50		3
	08-51		3
	08-52		3
	08-53		3
	08-54		2
87428140	08-09		2
87428158	08-09		26
87428476	08-33		13
	08-35		22
87428477	08-33		14
	08-35		23
87428486	08-32		22
	08-33		24
	08-34		9
	08-35		9
87428490	08-32		19
	08-33		19
	08-34		17
	08-35		17
87428491	08-32		13
	08-34		23
87428492	08-32		14
	08-34		24
87428495	08-32		12
	08-33		12
	08-33		21F
	08-34		21
	08-35		21
	08-35		25F
87428497	08-32		9
	08-33		9
	08-34		12
	08-35		12

Number	Figure	Sequence	Ref.
87428500	08-32		8
	08-33		8
	08-34		10
	08-35		10
87428501	08-33		21
	08-35		25
87428645	09-03		3
87428814	08-23		39
87429150	08-33		21D
	08-35		25D
87429163	09-80		14
87429164	09-81		14
87429186	09-73		16
87429287	08-05		12
	08-06		11
87429310	03-01		1
87429314	03-01		1A
87429382	05-02		10
87429387	08-23		2
	08-23B		2
87429584	08-08		19
	08-08A		19
87429654	08-08		32
87429948	09-67		6
87429949	09-67		12
87429950	09-67		2
87429951	09-67		10
87429952	09-67		7
87429970	06-14		1
	06-22		1
87429971	06-14		15
	06-22		15
87429974	06-18		
	06-26		
87429978	06-29		
87429982	06-13		28
	06-21		28
87429983	06-17		30
	06-25		30
87429984	06-17		27
	06-25		27
87429985	06-13		19
	06-15		23
	06-21		25
	06-23		23
87429994	06-15		3
	06-23		3
87430122	09-66		19
	09-67		1
87430677	09-11		
	09-75		4
87430972	08-23		1
	08-23B		1
87431300	09-13		24
87431301	09-13		23
87431529	09-13		15
87431630	08-23		3
	08-23B		3
87431701	06-32		1
87431799	02-07		11
87432811	09-25		30
	09-25A		32
87433005	09-14		13
87433006	09-14		12
87433007	09-14		14
87433008	09-14		11
87433028	08-33		21A
	08-35		25A
87433029	08-32		10
	08-33		10
	08-34		13
	08-35		13
87433030	08-32		23
	08-33		25
	08-34		22
	08-35		26
87433209	09-79		12A
87433240	08-25		1
87433401	04-03		6
87434049	09-42		19
87434050	09-42		20
87434070	08-29		
87434075	08-29		2
87434076	08-29		3
87434077	08-29		4
87434265	08-26		15
87434621	08-20		6
	08-49		
87434672	08-01		11
	08-29		
87434771	09-80		12A
87434772	09-81		12A
87434777	08-22		26
87434783	09-58		
87434978	02-01		12
87435076	06-10		9
87435078	06-10		6
87435080	06-10		10
87435082	06-10		11
87435242	08-53		9
	08-54		11
87435243	08-50		11
	08-51		11
	08-52		11
87435275	09-13		8
87435372	09-14		8
87435381	04-20		2
87435453	09-58		23
87435506	08-50		15
	08-51		16
	08-52		17
	08-53		12
	08-54		14
87435569	05-01		1
	09-73		12
87435909	08-26		5
	08-28		
87435924	09-15		12
	09-25		11
	09-25A		11
87435929	09-58		1
87435938	09-79		12
87435939	09-80		12
87435940	09-81		12
87436066	08-01		17
	08-02		16
	08-02		7
	08-25		25
87436076	09-42		3
87436225	08-50		2
	08-51		2
	08-52		2
	08-53		2
	08-54		3
87436782	09-22		43
87436836	04-06A		35
	04-07		15
	04-07		8
	04-20		11
87437231	08-02		18
	08-02		6
	08-23		37
87437232	08-02		18
	08-02		6
	08-23		36
87437263	08-26		1
87437366	09-14		3
87437369	09-14		4
87437371	08-52		13
	08-54		12
87437372	08-50		12
	08-51		12
	08-52		12
87437373	08-51		14
87437441	08-02		6
87437621	08-22		45

Number	Figure	Sequence	Ref.
87437623	08-22		30
87437625	08-22		47
87437627	08-22		43
87437629	08-22		46
87437633	08-17		6
	08-18		8
	08-20		8
87437635	08-17		7
	08-18		9
	08-20		9
87437655	08-01		39
87437657	08-01		39
87437688	09-13		18
87437689	09-14		5
87437804	02-06		2
87437806	09-15		27
87437840	08-08		
	08-08A		4A
	08-22		21A
87437899	08-29		10
87437905	08-29		12
87437906	08-29		13
87437914	08-29		14
87437923	08-21		6
87437924	08-21		5
87437925	08-21		7
87437926	08-21		9
87437927	08-21		4
87437928	08-21		8
87437929	08-21		10
87437930	08-21		11
87437933	08-21		12
87437935	08-21		13
87437938	08-08A		33
87437939	08-08A		32
87437940	08-08A		35
87437941	08-08A		34
87437980	08-01		42
87437982	08-01		43
87438012	08-19		8
87438015	08-19		9
87438021	08-28		2
87438022	08-28		
87438023	08-28		
87438024	08-28		
87438025	08-28		3
87438026	08-28		
87438027	08-28		
87438028	08-28		
	08-28		
87438029	08-28		4
87438031	08-28		5
87438032	08-28		
87438045	08-29		
87438046	08-50		16
	08-52		18
	08-54		
87438157	09-21		14
87438925	04-01		3
87438926	04-01		4
87438927	04-01		5
87438928	04-01		6
87438929	04-01		8
87438930	04-01		9
87438931	04-01		10
87438932	04-01		11
87438933	04-01		12
87438935	04-01		13
87438937	04-01		14
87438940	04-01		15
87438941	04-01		16
87438942	04-01		17
87438944	04-01		18
87438946	04-01		19
87438948	04-01		20
87438950	04-01		22
87438951	04-01		32
87438954	04-01		36
87438956	04-01		38
87438960	04-02		1
87438963	04-02		2
87438965	04-02		3
87438967	04-02		4
87438969	04-02		5
87438970	04-02		6
87438971	04-02		7
87438972	04-02		8
87438973	04-02		9
87438974	04-02		10
87438975	04-02		11
87438976	04-02		12
87438977	04-02		13
87438978	04-02		14
87438979	04-02		15
87438980	04-02		16
87438981	04-02		17
87438982	04-02		18
87438983	04-02		19
87438984	04-02		20
87438985	04-02		21
87438986	04-02		22
87438987	04-02		23
87438989	04-02		24
87438992	04-01		1
87438993	04-01		2
87438994	04-01		
87438995	04-01		21
87438996	04-01		23
87438997	04-01		24
87438999	04-01		25
87439000	04-01		26
87439001	04-01		27
87439002	04-01		28
87439003	04-01		29
87439004	04-01		30
87439005	04-01		31
87439006	04-01		33
87439007	04-01		34
87439008	04-01		35
87439009	04-01		37
87439010	04-01		41
87439011	04-01		43
87439032	08-21		14
87439033	08-21		15
87439061	04-01		42
87439135	09-21		13
87439136	05-02		13
87439137	05-02		1
87439138	05-02		5
87439210	09-12		15
87439213	08-22		48
87439215	08-22		40
87439306	08-08		10
	08-08A		10
87439537	08-14		18
87439665	08-08		24
	08-08A		24
87439722	09-55		27
	09-57		5
87439723	09-55		29
	09-57		6
87439724	09-57		1
87439725	09-55		4
87439726	09-55		
87439728	09-55		1
87440045	05-02		22
	08-03		1
	08-57		
87440058	09-20		10
87440283	09-54		14
87440381	09-13		31
87440694	08-23		16
	08-23B		16
87440704	09-13		9
87440706	09-13		10
87440710	09-13		1

Number	Figure	Sequence	Ref.
87440711	09-13		
	09-15		1
87440712	08-22		14
87440812	08-09A		10
87440814	08-30		14
	08-31		15
	08-32		17
	08-33		17
	08-34		15
	08-35		15
87440815	08-30		13
	08-31		14
	08-32		16
	08-33		16
	08-34		14
	08-35		14
87440835	08-20		10
87440837	08-20		11
87441076	08-09		23
	08-09A		23
87441495	08-36		1
	08-37		1
	08-38		1
	08-39		1
87441758	09-70		20
87441850	09-15		9
	09-25		12
	09-25A		12
87441876	06-10		1
87442357	02-06		20
87442376	09-42		21
87442377	09-42		22
87442409	09-15		33
87442419	02-01		45
87442441	09-59		19
87443052	08-23B		39
87443080	04-13		8
	04-14		2
87443149	08-04		15
87443150	08-04		14
87443691	09-55		1A
87443692	09-15		26
87443721	08-50		5
	08-51		5
	08-52		5
	08-54		5
87443722	08-53		8
87444147	09-40		2
87444148	09-40		1
87444149	09-25		15
87444776	09-75		9
87445051	09-58		30
87445245	09-25		9
	09-25A		9
87445557	08-22		44
87445794	08-23B		44
87446081	02-01		7
87446082	02-01		6
87446113	09-17		12
87447088	09-19A		
87447450	05-01		12
87447477	08-39		10
87448059	09-12		2
87448198	09-57		
87448199	09-55		
87448990	08-22		39A
87448993	08-23B		20
	08-23C		
87449373	08-09		1
	08-09A		1
	08-55		
87449374	08-55		2
87449440	08-06		24
	08-26		49
87449579	07-04		4
87449995	09-25		25
87449996	09-25		26
87450318	08-08A		1A
87450318	08-22		18
87450456	08-02		13
87450698	08-09A		14
87450914	09-13		27
87450978	08-30		7
	08-31		8
	08-32		11A
	08-33		11A
	08-34		16A
	08-35		16A
87450979	08-32		11B
	08-33		11B
	08-34		16B
	08-35		16B
87450980	08-32		11C
	08-33		11C
	08-34		16C
	08-35		16C
87451167	02-06		10
87451279	09-26		11
87451280	09-26		36A
87451448	08-53		11
87452021	08-07A		27
	08-07B		33
	09-38		24
87452399	08-01		16
87452400	08-01		26
87452402	08-26		16
87452403	08-26		17
87452404	09-19		2
87452405	08-21		16
87452406	09-19		1
87452511	04-20		15
87452627	09-12		3
87452823	03-03		29
87454016	08-07		1
	08-60		1
87454017	08-07		2
	08-60		1
87454292	09-46		
87454376	02-02		7
87454377	02-01		14
87454378	02-01		16
87454545	05-02		
	05-02A		
87454547	08-33		21B
	08-35		25B
87454548	08-33		21C
	08-35		25C
87454907	08-60		2
87454908	08-60		2
87455509	09-08		
87455541	08-33		21E
	08-35		25E
87455564	08-33		21G
	08-35		25G
87455565	08-33		21H
	08-35		25H
87455832	08-02		18
	08-23B		37
87455961	08-13		18
87456199	09-22		11
87456900	06-19		4
	06-28		4
87456901	06-29		11
87456968	06-19		1
	06-28		1
87456969	06-29		12
87515955	08-30		6
	08-31		7
87518479	08-23B		38
87522766	04-05		4
	04-06		3
87524409	06-19		
	06-28		
87524432	06-19		14
	06-28		14
87524433	06-19		13

Number	Figure	Sequence	Ref.
87524433	06-28		13
87524435	06-19		16
	06-28		16
87524436	06-19		5
	06-28		5
87524437	06-19		11
	06-28		11
87524438	06-19		12
	06-28		12
87524439	06-19		10
	06-28		10
87524440	06-19		15
	06-28		15
87524441	06-19		8
	06-28		8
87525756	06-19		
	06-28		
87525849	06-17		20
	06-25		20
87527167	04-09		35
87528887	04-16		9
87530365	06-19		7
	06-28		7
87534372	09-55		41
	09-57		18
87534992	09-43		21A
87537201	09-24A		2
87537207	09-24A		1
87537208	09-24A		4
87537209	09-24A		
87538167	09-65		29
87538515	06-09		12
	06-11		40
	06-38		2
87539792	04-09		36
87540980	04-10		14
87545557	09-41		12
87545561	02-04		6
87546291	09-66		26
87552560	08-08A		38
	08-22		25
87555125	09-48		
87555499	08-32		
87555505	08-32		
87555519	08-34		
87555524	08-34		
87555530	08-33		
87555536	08-33		
87555567	08-35		
87555570	08-35		
87557237	02-02		6
87559003	02-01		2
87560507	05-02A		19
87560508	05-02A		4
87561131	09-40		24
87566237	08-32		20
	08-33		20
	08-34		18
	08-35		18
87566480	08-07A		8
	08-07B		8
87566994	09-04		1
87572760	05-04		9
	06-01		35
87576643	02-01		1
87577141	09-06		
87577343	08-15		1
	08-16		1
	08-36		
87577346	08-17		1
	08-18		1
	08-37		
87577348	08-19		1
	08-38		
87577349	08-20		1
	08-39		
87578455	04-07		6
87578904	09-49		2
87578905	09-49		1
87578910	05-02A		
87579286	05-02A		1
87581010	09-79		15
87584645	04-05		16
87585167	09-41		20
87585817	04-07		21
87586156	09-01		10
	09-02		6
87586776	08-50		
87589025	09-66		32
87590156	09-66		12
87592658	08-01		5
87592819	09-24		34
87593381	08-31		
87593382	08-31		
87593642	03-03		3
87594363	08-22		2
87594364	08-22		30
	08-22		45
87594903	09-41		1
87598501	09-66		31
87601338	06-11		39
87601345	06-11		20
87601612	04-06A		28
87602620	09-10		
87603511	07-06		9
87603513	07-05		10
87603514	07-05		11
87603948	02-07		
	02-08		1
87606502	09-40		15
87608352	04-06A		22
87608368	02-01		18
87608370	02-01		19
87608777	09-14		9
87609666	08-59		12
87609669	08-05		34
	08-59		1
	09-05		20
87610318	05-02A		8
87610338	02-04		1
	02-05		
87610679	04-05		8
	04-06		17
87610680	04-05		7
	04-06		16
87610681	04-06		15
87610682	04-06		14
87611852	02-06		17
87613159	05-02A		
87613161	05-02A		
87613924	06-11		35
	06-38		1
87614481	09-04		27
87614808	04-09		11
87615800	09-63		18
87616934	02-02		2
87617576	02-06		7
87617618	08-36		4
	08-37		4
	08-38		4
	08-39		4
	08-42		
87617655	08-42		3
87617657	08-42		6
87618533	06-31		6
87619415	05-02A		
87619781	09-27		18
87622505	09-80		15
87622506	09-81		15
87622714	08-04		6
87622718	08-04		4
87623338	09-01A		1
	09-01A		14
87623339	09-01A		15
	09-01A		2
87623771	09-04		25

Number	Figure	Sequence	Ref.	Number	Figure	Sequence	Ref.
87625976	08-04		23	87668167	08-07B		23
87626017	09-74		14	87669381	09-60		1
87627072	09-68		8	87669391	09-60		4
87627903	08-01		3	87669401	09-60		7
87628308	02-01		4	87669712	09-60		6
87628324	02-01		3	87669761	09-60		5
87630218	09-66		6	87671746	04-06		9
87630219	09-66		1	87671893	05-02A		18
87630220	09-66		20	87673270	09-38		9A
87630445	09-09		1	87674844	02-02		1
87632870	02-02		9	87674850	09-38		27
87632920	09-01		2	87675026	08-25		13
	09-02		17	87675071	08-25		20
87633581	04-11		2	87675074	08-25		22
87636554	09-68		1	87675208	09-59		1
87636559	09-68				09-70		8
87636560	09-53		1	87675513	08-04		24
87636561	09-54		1	87676276	09-59		7
87636562	09-53		1		09-70		14
87636563	09-54		1	87679228	03-01		39
87637384	09-59		27	87681261	09-01		6
	09-70		21		09-02		13
87638046	09-01		1	87682197	04-05		5
	09-01A				04-06		10
87638047	09-01A			87682993	02-05		2
	09-02		1	87685948	08-15		3
87638350	09-01A		10		08-17		8
	09-01A		25		08-50		
87642364	07-03		11	87685952	08-19		3
87642365	07-03		10		08-20		3
87642370	07-03		6		08-52		
87642658	08-04		7	87685953	08-16		3
87644495	07-03		7		08-18		2
87644497	07-03		9		08-51		
87647001	09-76		9	87685954	08-15		4
87647029	02-01		15		08-16		4
87648733	03-03		25		08-19		4
87649398	06-01		12		08-53		
87649405	04-08		27	87685955	08-17		9
87650602	08-07A		23		08-18		3
	08-07B		32		08-20		4
87651790	09-38		1		08-54		
87651830	09-38			87686604	09-64		20
87651975	08-07A		26	87687141	08-50		1
	08-07B		26		08-51		1
87652272	02-04		10		08-52		1
87652902	09-76		8		08-53		1
87653245	09-61		1		08-54		1
87653377	04-05		3	87689189	09-01A		11
	04-06		2		09-01A		26
87656128	04-05		6	87689338	09-01A		12
	04-06		11		09-01A		27
87656146	03-01		14	87690874	03-01		28
87656501	03-01		25	87693492	03-01		12
	08-03		12	87694065	09-38		48
87657148	09-54		3	87694305	04-10		1
87657149	09-54		2	87694565	09-59		12
87658696	03-01		26		09-70		19
87659604	08-03		7	87694656	06-01		11
87659610	05-03				06-09		
87659611	05-03			87697589	07-04		2
87659612	05-03			87697590	07-04		3
87659613	05-02A		2	87699640	09-59		13
	08-03		22		09-70		7
87659616	05-03			87699880	06-01		19
87659784	08-03		8	87699881	07-06		8
87662928	08-07A		7	87700144	04-09		30
	08-07B		7	87700794	09-59		2
87662930	08-07A		4		09-70		12
	08-07B		4	87702194	06-11		21
87662932	08-07A		19	87702261	09-74		1
	08-07B		19	87702297	09-76		14
87663365	05-02A		17	87704851	09-54		13
87664021	04-05		2	87704858	02-06		14
	04-06		20	87706237	09-77		8
87664422	09-01		34	87706239	09-78		8
87664425	09-01		33	87706250	09-77		9
87666451	02-04		7	87706251	09-78		9

Number	Figure	Sequence	Ref.
87708015	09-01		5
	09-02		14
87708227	09-77		14
87708242	09-78		16
87710145	06-03		4
87710155	06-02		11
87711985	09-59		4
	09-70		9
87712299	08-04		5
87714038	07-03		1
	07-04		1
	07-07		
87715487	02-02		3
87716480	08-05		13
87716482	08-05		14
87716484	08-27		8
87716486	08-06		12
87716488	08-06		13
87716490	08-27		1
87716492	08-27		2
87716823	06-09		7
87716824	06-09		6
87716969	07-07		1
87716970	07-07		2
87716973	09-37		1
87719412	09-39		1
87719444	09-38		13
87719495	09-41		19
87719497	09-41		18
87724438	09-05		21
87725883	09-39		10
87725886	09-39		9
87726055	09-41		24
87726573	04-09		
	09-70		
87726574	04-07		16
	04-09		24
	09-70		
87726576	04-07		32
87726584	04-04		1
	04-08		20
87726592	04-07		1
	04-08		1
87726595	04-09		1
87726617	04-20		7
87726950	09-66		30
87726951	09-66		18
87735103	09-76		2
87735105	09-77		2
87741446	09-59		14
87741447	09-59		22
87803194	03-08		6
87803261	02-32		1
892-11005	03-03		30
	04-19		6
892-11006	03-03		31
	08-07A		15
	08-07B		15
	09-60		3
	09-70		
892-11008	02-01		41
	03-01		17A
	03-03		10
	04-03		5
	04-06A		17
	04-08		17
	04-16		4
	08-23		22
	08-23B		22
	09-05		10
	09-08		28
	09-12		14
	09-13		6
	09-15		3
	09-25		24
	09-25A		24
	09-44		6
892-11010	02-06		5
892-11010	03-01		32
	03-03		24
	04-01		40
	05-02		26
	08-04		12
	08-05		10
	08-06		16
	08-06		9
	08-07		9
	08-10		31
	08-22		42
	08-23		12
	08-23B		12
	08-24		12
	08-26		35
	08-26		41
	08-27		15
	08-27		6
	09-08		26
	09-13		28
	09-25		7
	09-25A		7
	09-38		36
892-11012	09-24A		7
893-11005	04-18		8
895-11004	04-11		13
	07-03		23
	09-54		8
895-11005	03-03		6
895-11006	04-06		7
	04-06A		14
	05-02A		13
	09-55		10
895-11008	02-01		10
	02-01		23
	02-01		28
	02-02		13
	02-02		23
	02-04		3
	03-03		11
	04-05		14
	04-06		4
	06-10		3
	07-03		2
	07-03		29
	07-04		6
	08-07B		28
	08-08A		3A
	08-22		22
	09-03		16
	09-05		9
	09-12		13
	09-15		
	09-21		15
	09-25		32
	09-59		9
	09-66		36
	09-70		16
895-11010	03-01		34
	03-01		42
	04-04		19
	04-05		12
	04-06		12
	04-16		7
	05-02A		10
	07-03		26
	08-03		3
	08-07		14
	08-08		31
	08-08A		31
	08-09		4
	08-09A		4
	08-10		30
	08-10		33
	08-11		28
	08-12		25
	08-13		26
	08-13		37

Number	Figure	Sequence	Ref.
895-11010	08-24		11
	08-25		3
	09-01		24
	09-02		7
	09-03		9A
	09-04		20
	09-08		17
	09-08		21
	09-38		34
	09-38		51
	09-40		11
	09-40		17
	09-40		6
	09-41		4
	09-41		9
	09-45		10
895-11018	08-09		7
895-15006	04-11		8
895-15008	04-09		29
	05-01		16
	05-01		24
	09-13		4
	09-37		21
	09-38		15
	09-43		31
	09-62		7
	09-63		16
	09-66		28
895-15010	02-01		21
	04-07		37
	05-01		21
	08-25		7
	09-13		12
	09-25		8
	09-25A		8
	09-63		11
895-18012	09-47		4
	09-49		10
895-25006	08-07A		14
	08-07B		14
895-30107	09-55		35
	09-57		12
896-11008	09-13		32
896-11010	02-01		38
	02-06		18
	04-03		17
	08-10		3
	08-11		3
	08-12		3
	08-13		3
	08-14		3
	08-24		25
	08-26		3
	08-26		36
	08-26		44
	08-26		7
	09-01		29A
896-11012	04-06A		33
	06-11		10
	08-23		18
	08-23B		18
	09-24A		6
	09-67		9
896-11016	09-37		12
896-11020	03-01		3A
	06-31		5
	09-05		18
	09-06		7
	09-06		7
	09-07		7
	09-23		14
	09-24		5
	09-36		3
	09-36		7
	09-38		17
896-15008	09-67		16
896-15010	02-06		12
	02-06		4
896-15010	06-11		25
	08-22		11
	09-09		3
	09-13		19
	09-67		5
896-15012	02-07		4
	03-03		27
	06-11		28
	07-05		8
	09-40		18
	09-46		12
	09-47		10
	09-49		4
90-6682T1	06-01		16
905794R1	06-15		20
	06-23		20
905839R1	05-06		6
	06-04		4
906086R1	09-55		42
	09-57		19
933781R1	07-01		24
	07-01	01	24
934667R1	06-13		7
	06-21		7
	06-29		6
934727R1	05-06		4
	06-04		2
9625178	06-37		4
	08-55		7
9637611	06-01		17
	06-09		13
	06-11		41
	06-38		3
9703399	04-14		
	04-14		
9827902	04-04		17
9966352	06-07		8
9966356	06-07		13
9968031	06-08		3
9970178	08-23A		3
	08-23C		3
9970179	08-23A		4
	08-23C		4
9970180	08-23A		6
	08-23C		6
9970181	08-23A		1
	08-23C		1
9970384	08-23A		5
	08-23C		5
A13240	08-25		10
A156873	06-02		6
	06-33		3
A166057	04-04		2
A167037	09-71		8
A170467	02-06		8
A177435	03-02		2
A187542	04-17		5
A187575	04-17		11
A187714	09-58		10
	09-60		
A23870	04-17		1
A30881	09-03		11
	09-13		3
	09-16		15
	09-17		5
	09-18		26
	09-21		6
A33509	09-27		29
A38208	05-04		15
	05-09		7
A41264	04-15		9
A42561	04-09		8
	09-64		6
	09-65		14B
A45054	09-48		
A45504	09-48		
A45505	09-48		
A45513	09-48		

Number	Figure	Sequence	Ref.
A48041	06-06		11
	06-16		6
	06-17		2
	06-24		6
	06-25		2
A65544	05-01		5
A77310	07-03		20
D121152	04-13		2
	04-15		
D121194	09-05		6
D123684	05-04		3
	06-01		10
D124529	07-03		16
D124530	07-03		12
D125223	05-09		1
D127167	09-26		44
	09-27		21
D127335	04-11		24
D127542	09-04		2
D128745	09-70		2
D129227	09-25		2
	09-25A		2
D129264	09-06		2
	09-06		2
	09-07		2
	09-08		11
D132076	09-05		17
D132494	09-24		16
	09-27		2
D132982	06-10		26
	09-64		24
D133632	09-24		21
	09-27		7
D133865	09-27		24
D134900	09-20		6
D135384	04-13		1
	04-15		
D135557	09-23		5
D135559	09-23		6
D135739	09-24		12
D136391	09-23		26
D136392	09-23		24
D136700	09-23		25
D137218	09-24		13
D137363	04-04		12
	09-04		16
D137625	08-01		14
D138042	09-23		7
D138047	09-26		50
	09-26		52
	09-27		34
	09-27		47
D138055	08-04		8
	08-05		6
	08-06		14
	08-06		7
	08-26		31
	08-26		42
	08-27		12
	09-38		37
D138157	09-28		7
	09-29		7
	09-30		7
	09-32		7
	09-32		7
	09-34		7
	09-35		7
D138380	06-30		4
D138492	06-30		5
	06-31		2
D139039	09-16		19
D139225	03-01		27
D139849	09-28		
	09-29		
	09-30		
	09-32		
	09-32		
	09-34		
D139849	09-35		
D139851	09-28		
	09-29		
	09-30		
	09-32		
	09-32		
	09-34		
	09-35		
D140029	08-65		15
	09-26		8
D140035	07-03		14
D140247	09-27		28
D140267	09-40		13
	09-54		26
D141075	09-26		42
D141142	09-26		20
	09-27		37
D141164	09-26		22
	09-27		39
D141666	09-27		11
D142012	09-35		4
D142144	09-71		10
D142787	08-04		20
	08-08		27
	08-08A		27
	08-09		21
	08-09A		21
D142890	07-02		10
D142898	05-08		6
	06-27		16
	06-34		3
D142986	06-37		7
D143242	09-68		4
D143324	09-26		30
D143406	09-22		13
D143411	09-13		35
D143416	09-20		5
D143417	09-40		23
	09-64		29
	09-65		20
D143427	09-64		27
	09-65		18
D143591	09-15		15
	09-25		21
	09-25A		21
D143714	09-40		9
D143715	09-40		8
D143723	09-15		10
	09-25		22
	09-25A		22
D143735	09-25		20
	09-25A		20
D143846	08-07		6
	08-12		26
	08-26		31A
	08-26		47
D144423	09-23		35
D144592	09-25		3
	09-25A		3
D145978	09-26		7
	09-27		16
D146288	09-26		26
	09-27		49
D146420	09-29		3
D146421	09-29		2
D147249	09-29		4
D147409	09-28		4
D147773	08-10A		26
D148947	09-18		2
D148962	03-02		6
	09-13		30
D148992	09-16		7
D148993	09-13		2
D148994	09-16		18
D149033	09-22		40
D149079	08-63		17
	08-63		3
	08-64		15

Number	Figure	Sequence	Ref.
D149079	09-23		2
	09-26		47
	09-27		31
D149262	09-16		46
D149287	09-01		35
	09-03		4
	09-16		37
	09-17		11
	09-19		3
	09-20		11
D149288	09-16		23
	09-16		48
	09-19		7
	09-21		11
D149295	09-16		34
	09-19		9
D149298	09-26		32
D149309	08-24		3
D149725	05-05		4
	06-02		2
D149726	05-05		3
	06-02		4
D149824	09-74		3
D149825	09-74		4
D149826	09-79		10
D149827	09-79		11
D149828	09-74		5
D149829	09-74		6
D149860	06-09		
D149866	09-11		9
D149867	09-11		10
D149868	09-11		12
D150032	09-20		13
D150053	08-10A		3
D150054	08-10A		2
D150121	09-26		10
	09-27		17
D150214	05-06		11A
D150397	09-16		9
D150434	09-16		13
D150435	09-16		12
D150486	09-16		17
D150493	09-16		24
D150503	09-16		45
D150619	09-26		34
D150781	08-55A		
D150810	08-55A		
D151034	09-05		15
D151065	09-23		21
D151069	09-37		5
D151070	09-37		6
D151071	09-24		11
D25279	09-22		10
	09-22		14
	09-26		31
D26002	09-22		9
D28648	09-22		12
D30933	09-28		12
	09-29		12
	09-30		12
	09-31		9
	09-32		12
	09-32		12
	09-33		9
	09-34		12
	09-35		12
D31140	09-08		2
	09-26		53
	09-27		48
D34666	09-16		16
D37495	09-29		11
	09-30		11
	09-31		8
	09-32		11
	09-32		11
	09-33		8
	09-34		11
	09-35		11
D37614	09-26		29
D38648	08-07		20
	08-14		21
D38907	09-22		3
D39118	09-18		11
D39696	06-10		24
	08-03		18
D41659	09-31		
	09-33		
D43940	09-28		11
D48212	09-28		10
	09-29		10
	09-30		10
	09-32		10
	09-32		10
	09-34		10
	09-35		10
D50146	09-22		6
D50696	09-35A		2
D51391	09-08		7
D51392	09-08		15
D51393	09-08		19
D51750	09-28		5
	09-28		8
	09-29		5
	09-29		8
	09-30		5
	09-30		8
	09-31		5
	09-32		5
	09-32		5
	09-32		8
	09-32		8
	09-33		5
	09-34		5
	09-34		8
	09-35		5
	09-35		8
D52276	08-10		7
	08-11		7
	08-12		7
	08-13		7
	08-14		7
	08-22		13
D52564	09-72		1
D53812	09-22		17
D55216	09-74		10
D59912	09-16		4
	09-18		6
	09-21		2
D61368	09-22		16
D74182	09-13		36
D80270	09-74		11
D86664	09-25		19
	09-25A		19
D88052	09-63		32
	09-64		32
D95096	09-03		13
D95142	08-59		5
D95143	08-58		5
	08-60		5
	08-66		4
D95144	08-61		5
	08-62		5
D95145	08-63		7
	08-64		5
	08-65		5
E135777	06-34		5
E135785	06-34		10
E135809	06-13		21
	06-21		1
	06-32		6
	07-01		23
	07-01	01	23
E135810	06-37		16
E43769	09-59		17
	09-70		6
E49497	09-19A		4

Number	Figure	Sequence	Ref.
F49498	09-19A		3
F22426	04-11		
F44883	09-41		11
F45165	09-55		49
	09-57		25
F53473	05-04		10
	06-01		36
F64198	09-55		45
	09-57		22
F64519	09-68		14
G100440	08-61		15
G100444	08-59		15
	08-60		17
	08-66		14
G100448	08-61		16
G100449	08-59		16
	08-60		18
	08-66		15
G101533	08-61		6
	08-62		6
G101994	08-63		21
G101995	08-63		20
G101996	08-63		22
G102285	08-61		14
G102287	08-58		14
	08-65		17
G102288	08-59		14
	08-60		16
	08-66		13
G102424	08-59		6
G102425	08-58		6
	08-60		6
	08-66		5
G102426	08-63		8
	08-64		6
G107277	08-66		12
G108123	08-61		13
G108512	08-59		3
G108518	08-59		13
G109298	08-59		10
	08-60		11
	08-66		9
G109299	08-61		10
	08-62		24
G109300	08-63		14
G110077	08-55A		
G110467	08-55A		
G110529	08-64		18
G110530	08-64		19
G110531	08-64		17
G32122	08-58		10
	08-65		12
G32126	08-62		10
G32176	08-64		12
G35540	08-55A		4
H434163	05-02		32
	08-01		15
	08-26		52
H71514	09-24		7
K260177	06-13		9
	06-21		9
K261014	06-08		4
	06-35		5
K262143	06-08		9
	06-35		9
K395082	06-06		23
K395090	06-08		8
	06-35		8
K395091	06-06		21
K395093	06-06		16
	06-37		5
K395101	06-37		13
L111356	08-10A		31
	09-75		7
L11541	05-02		33
	08-51		18
	09-59		5
	09-65		31
L11541	09-70		10
L15401	09-03		12
L17985	02-04		4
L18331	04-18		15
	08-51		17
L18337	02-02		24
	03-01		24
	03-02		12
	04-04		28
	04-05		15
	04-06		21
	04-06A		25
	04-07		26
	04-13		11
	04-14		14
	04-20		14
	06-10		14
	06-32		7
	08-03		16
	08-09		29
	08-10		16
	08-10		26
	08-10A		17
	08-11		15
	08-11		24
	08-12		15
	08-13		19
	08-14		14
	08-21		
	08-23		15
	08-23B		15
	08-27		18
	09-10		36
	09-38		59
	09-63		21
	09-64		25
	09-65		17
	09-66		11
L32100	08-29		9
L32418	08-29		1
L54563	09-16		14
	09-17		1
L60224	04-11		5
	09-38		49
L71879	04-07		
	04-07		10
L79937	08-05		39
N13505	05-06		12A
	06-03		11
	08-29		6
N13582	04-15		10
N14283	05-05		2
N14367	06-02		3
	05-05		8
N14373	06-05		3
N14410	09-61		20
N14466	08-57		
N6755	04-15		3
N6836	08-57		
N6941	06-35		4
N7536	08-57		
N9025	02-05		1
NSS	02-26		10
	02-33		11
	02-36		4
	02-39		9
	03-11		5
	04-04		31B
	04-09		2
	04-09		25
	04-09		3
	04-12		1
	04-12		2
	04-12		3
	04-12		4
	04-12		5
	04-12		6
	04-12		7

Number	Figure	Sequence	Ref.
NSS	04-15		1
	04-15		5
	04-15		6
	04-15		7
	04-15		8
	04-17		12
	05-02A		22
	05-02A		23
	05-02A		24
	05-03		1
	05-03		3
	05-03		5
	05-03		6
	05-07		2
	06-02		14
	06-04		1
	06-04		10
	06-04		11
	06-06		14
	06-06		15
	06-06		3
	06-07		1
	06-07		2
	06-07		5
	06-07		6
	06-07		7
	06-08		1
	06-08		2
	06-09		10
	06-09		11
	06-09		2
	06-09		3
	06-09		4
	06-09		9
	06-11		
	06-13		13
	06-13		2
	06-13		24
	06-13		25
	06-14		10
	06-14		11
	06-14		12
	06-14		13
	06-14		14
	06-14		17
	06-14		18
	06-14		2
	06-14		20
	06-14		21
	06-14		3
	06-14		3A
	06-14		4
	06-14		5
	06-14		6
	06-14		7
	06-14		8
	06-14		9
	06-18		10
	06-18		11
	06-18		12
	06-18		15
	06-18		20
	06-18		21
	06-18		22
	06-18		23
	06-18		24
	06-18		25
	06-18		25A
	06-18		7
	06-18		8
	06-19		2
	06-21		21
	06-21		23
	06-21		24
	06-22		10
	06-22		11
	06-22		12
	06-22		13
NSS	06-22		14
	06-22		17
	06-22		18
	06-22		2
	06-22		20
	06-22		21
	06-22		3
	06-22		3A
	06-22		4
	06-22		5
	06-22		6
	06-22		7
	06-22		8
	06-22		9
	06-26		10
	06-26		11
	06-26		12
	06-26		15
	06-26		20
	06-26		21
	06-26		22
	06-26		23
	06-26		24
	06-26		25
	06-26		25A
	06-26		7
	06-26		8
	06-28		2
	06-29		1
	06-29		2
	06-29		3
	06-29		4
	07-01		21
	07-01	01	21
	08-28		1
	08-30		1
	08-30		2
	08-30		3
	08-30		4
	08-31		1
	08-31		2
	08-31		3
	08-31		4
	08-31		5
	08-32		1
	08-32		2
	08-32		3
	08-32		4
	08-32		5
	08-32		6
	08-33		1
	08-33		2
	08-33		3
	08-33		4
	08-33		5
	08-33		6
	08-34		1
	08-34		2
	08-34		3
	08-34		4
	08-34		5
	08-34		6
	08-34		7
	08-35		1
	08-35		2
	08-35		3
	08-35		4
	08-35		5
	08-35		6
	08-35		7
	08-36		7
	08-36		8
	08-36		9
	08-37		10
	08-37		8
	08-37		9
	08-38		10
	08-38		8

Number	Figure	Sequence	Ref.	Number	Figure	Sequence	Ref.
NSS	08-38		9	NSS	09-28		3
	08-39		9		09-30		2
	08-40		1		09-30		3
	08-40		2		09-30		4
	08-41		1		09-31		7
	08-41		2		09-32		2
	08-42		1		09-32		2
	08-42		2		09-32		3
	08-43		1		09-32		3
	08-43		2		09-32		4
	08-44		1		09-32		4
	08-44		2		09-33		7
	08-45		1		09-34		4
	08-45		2		09-43		
	08-46		1		09-43		
	08-46		2		09-61		19
	08-55		1		09-61		21
	08-55A		1		09-71		14
	08-55A		10	P2745466	06-27		21
	08-55A		14	P2745478	06-27		10
	08-55A		2	P3533055	06-18		35
	08-55A		5		06-26		35
	08-55A		6		06-27		20
	08-55A		7	R24840	08-10		28
	08-55A		8	R32119	09-24		8
	08-55A		9	R46493	08-07		7
	08-56		1	R54682	09-71		6
	08-56		10	REF	02-10		11
	08-56		11		02-10		12
	08-56		12		02-15		4
	08-56		13		02-29		
	08-56		4		02-29		7
	08-56		9		02-38		10
	08-57		1		02-38		4
	08-57		6		02-38		7
	08-57		7		02-38		8
	08-57		8		02-38		9
	08-58		7		02-39		11
	08-58		8		03-04		5
	08-59		7		03-06		9
	08-59		8		05-02A		
	08-60		8		05-09		2
	08-60		9		05-09		5
	08-61		7		06-30		3
	08-61		8		06-30		3
	08-62		7		08-02		
	08-62		8		08-02		
	08-63		10		08-03		13
	08-63		11		08-04		1
	08-64		8		08-05		1
	08-64		9		08-06		1
	08-65		8		08-07A		1
	08-65		9		08-07B		1
	08-66		6		08-08		
	08-66		7		08-08A		
	09-01A		13		08-09		
	09-01A		16		08-09A		
	09-01A		17		08-10		1
	09-01A		18		08-11		1
	09-01A		19		08-12		1
	09-01A		20		08-13		1
	09-01A		28		08-14		1
	09-01A		3		08-15		
	09-01A		4		08-16		
	09-01A		5		08-17		
	09-03		10		08-18		
	09-06		1		08-19		
	09-06		1		08-20		
	09-07		1		08-24		
	09-08		1		08-25		
	09-08		10		08-26		
	09-10		10		08-26		
	09-10		2		08-27		
	09-26		43		08-27		4
	09-26		6		08-32		
	09-27		15		08-33		
	09-27		20		08-34		
	09-28		2		08-35		

Number	Figure	Sequence	Ref.	Number	Figure	Sequence	Ref.
REF	09-01		28				
	09-04						
	09-18						
	09-19						
	09-26		28				
	09-55						
	09-56						
S109444	08-58		15				
	08-65		18				
S109445	08-58		16				
	08-65		19				
S115351	05-03		2				
S301064	06-33		4				
S301065	06-02		15				
ST205A	06-16		1				
	06-24		1				
	06-27		6				
ST264	06-17		23				
	06-25		23				
T34857	04-15		2				
T41159	09-74		17				

CATALOGUE DES PIÉCES

CHARGEUSE PELLETEUSE

580M SERIES 3



BD08B046

Bur • Publication 01Mar 08
Imprimé aux États-Unis • Réf. Catalogue/formulaire 87632283 FC
Copyright © 2007. CNH America, LLC. Tous droits réservés.

La société CNH America LLC se réserve le droit de modifier sans préavis la conception ou les caractéristiques de ses machines, et ce sans encourir d'obligation quelconque de mettre en place les nouvelles caractéristiques sur des machines déjà en service.

Toutes les informations fournies dans ce manuel sont susceptibles de varier selon les besoins de la production. Les dimensions et les masses indiquées sont approximatives. Les illustrations ne montrent pas nécessairement les produits en état standard. Pour obtenir des données précises au sujet d'un modèle de machine particulier, consulter un concessionnaire.

LISTE DE RÉVISIONS			
Publication	Date de publication	Machines concernées	Remarques
Première édition	01Mar 08	580M Series 3	87632283 FC

L'utilisation du texte ou des images de ce manuel est strictement interdite sans l'autorisation écrite de
CNH America LLC. Carol Stream, IL 60188 États-Unis

TABLE OF CONTENTS

02-01	RADIATEUR - SUPPORT
02-02	SYSTEME DE PURGE D AIR - SUPPORT
02-04	FILTRE A AIR - PIÊCES DE LA PRISE D'AIR
02-05	FILTRE A AIR
02-06	SILENCIEUX, ASPIRATEUR - £CHAPPEMENT
02-07	MOTEUR - SUPPORT
02-08	MOTEUR
02-09	BLOC CYLINDRES
02-10	BLOC CYLINDRES
02-11	POMPE ê HUILE, CARTER
02-12	COUVERCLES DE BATI
02-13	BLOC CYLINDRES - COUVERCLES
02-14	COUVERCLES DE BATI
02-15	RENIFLARD - MOTEUR
02-16	CULASSE DE CYLINDRE
02-17	CACHE CULBUTEUR
02-18	CULASSE DE CYLINDRE - M£CANISME DU DISTRIBUTEUR
02-19	COLLECTEURS
02-20	CONDUIT D'ECHAPPEMENT
02-21	VILEBREQUIN
02-22	BIELLE
02-23	PISTON - MOTEUR
02-24	VOLANT - MOTEUR
02-25	POULIE - VILEBREQUIN
02-26	MASSELOTTE, ENGRENAGES ET ARBRES
02-28	ARBRE ê CAMES
02-29	TURBOCOMPRESSEUR
02-30	JAUGE DE NIVEAU - HUILE MOTEUR
02-31	POMPE A HUILE - MOTEUR
02-32	FILTRE A HUILE - MOTEUR
02-33	TUYAUTERIES - HUILE DU MOTEUR
02-34	EXCHANGEUR DE TEMPERATURE - MOTEUR
02-35	POMPE A EAU
02-36	CIRCUIT DE REFROIDISSEMENT - MOTEUR
02-37	THERMOSTAT - REFROIDISSEMENT MOTEUR
02-38	POMPE A EAU - COMMANDE
02-39	COMMANDE DE VENTILATEUR
02-41	MOTEUR - CROCHET DE LEVAGE
02-42	ALTERNATEUR
03-01	TUYAUTERIE D'ESSENCE, RESERVOIR
03-02	COMMANDES - MANETTE DES GAZ
03-03	COMMANDES - P£DALE D'ACC£L£RATION
03-04	POMPE DINJECTION
03-05	SYSTÊME D'INJECTION
03-06	SYSTÊME D'INJECTION
03-07	GROUPE D'INJECTION - TUYAUTERIE
03-08	FILTRE COMBUSTIBLE
03-09	POMPE D'ALIMENTATION
03-10	TUYAUTERIES - COMBUSTIBLE
03-11	SYSTÊME D'INJECTION
04-01	D£MARREUR

TABLE OF CONTENTS

04-02	ALTERNATEUR
04-03	SUPPORT DU D£MARREUR - MONTAGE DE L'ALTERNATEUR
04-04	FAISCEAU, MOTEUR - MONTAGE ET CONNEXIONS
04-05	BATTERIE SIMPLE
04-06	BATTERIE DOUBLE - DEMARRAGE PAR TEMPS FROID
04-06A	£L£MENT CHAUFFANT DE CALANDRE POUR D£MARRAGE ê FROID
04-07	FAISCEAU, TABLEAU DE BORD AVANT - CONTACTEURS
04-08	FAISCEAU, TABLEAU DE BORD AVANT - SUPPORT
04-09	FAISCEAU, TABLEAU DE BORD LAT£RAL - CONTACTEURS
04-10	TABLEAU DE BORD, AVANT - COUVERCLES
04-11	TABLEAU DE BORD, LAT£RAL - COUVERCLES (CĎT£ DROIT)
04-12	APPAREILS DE CONTROLE
04-13	SYSTÊME £LECTRIQUE - ECLAIRAGE, TOIT ROPS
04-14	SYSTÊME £LECTRIQUE - ECLAIRAGE, CABINE ROPS
04-15	£CLAIRAGE (MODÊLES AVEC STRUCTURE ROPS)
04-16	AVERTISSEUR SONORE - ALARME DE RECUL
04-17	GYROPHARE (MODÊLES DE CABINES OU DE TOIT)
04-18	ANTENNE, RADIO - FAISCEAU, RADIO
04-19	SYSTÊME £LECTRIQUE - CIRCUIT HYDRAULIQUE AUXILIAIRE POUR LA PELLE RETRO
04-20	SYSTÊME £LECTRIQUE - CIRCUIT HYDRAULIQUE AUXILIAIRE POUR LA PELLE RETRO, AVEC DE COMMANDE PILOTE
05-01	VOLANT - COLONNE
05-02	SYSTEME HYDRAULIQUE - DIRECTION
05-02A	SYSTEME HYDRAULIQUE - DIRECTION (AVEC SYSTÊME DôAIDE AU CHANGEMENT DE DIRECTION)
05-03	COLONNE DE DIRECTION
05-04	ESSIEU, AVANT (86990837) - SUPPORT
05-05	ESSIEU, AVANT (86990837) - BOĊTIER
05-06	ESSIEU, AVANT (86990837) - LOGEMENT DU PIVOT
05-07	ESSIEU, AVANT (86990837) - VERIN DE DIRECTION
05-08	ESSIEU, AVANT (86990837) - MOYEU ET ROULEMENTS
05-09	ROUES AVANT - NEUS
06-01	ESSIEU, TRACTION AVANT - SUPPORT
06-02	ESSIEU, TRACTION AVANT - BOĊTIER
06-03	ESSIEU, TRACTION AVANT - LOGEMENT DU PIVOT
06-04	ESSIEU, TRACTION AVANT - VERIN DE DIRECTION
06-05	ESSIEU, TRACTION AVANT - ARBRES, ESSIEU
06-06	ESSIEU, TRACTION AVANT - SATELLITE
06-07	ESSIEU, TRACTION AVANT - DIFFERENTIEL
06-08	ESSIEU, TRACTION AVANT - COURONNE ET PIGNON
06-09	ARBRE DE TRANSMISSION, ESSIEU AVANT
06-10	SYSTÊME DE REFROIDISSEMENT - TRANSMISSION
06-11	TRANSMISSION - SUPPORT
06-12	TRANSMISSION, 2WD - FILTRE ê HUILE
06-13	TRANSMISSION, 2WD - BOĊTIER
06-14	TRANSMISSION, 2WD - POMPE A HUILE
06-15	TRANSMISSION, 2WD - M£CANISME DU CHANGEMENT DE VITESSE
06-16	TRANSMISSION, 2WD - ARBRE, MARCHE ARRIÊRE & PRIMAIRE
06-17	TRANSMISSION, 2WD - ARBRE, ENTR£E & PRISE DE FORCE
06-18	TRANSMISSION, 2WD - ARBRE, SECONDAIRE

TABLE OF CONTENTS

06-19		TRANSMISSION, 2WD - DISTRIBUTEUR
06-20		TRANSMISSION, 4WD - FILTRE ê HUILE
06-21		TRANSMISSION, 4WD - BOĊTIER
06-22		TRANSMISSION, 4WD - POMPE A HUILE
06-23		TRANSMISSION, 4WD - M£CANISME DU CHANGEMENT DE VITESSE
06-24		TRANSMISSION, 4WD - ARBRE, MARCHE ARRIĈRE & PRIMAIRE
06-25		TRANSMISSION, 4WD - ARBRE, ENTR£E & PRISE DE FORCE
06-26		TRANSMISSION, 4WD - ARBRE, SECONDAIRE
06-27		TRANSMISSION, 4WD - ARBRE DE SORTIE
06-28		TRANSMISSION, 4WD - DISTRIBUTEUR
06-29		TRANSMISSION, 4WD - ELECTROVANNE
06-30		ROUES, ARRIĈRE - PNEUS
06-31		ESSIEU, PROPULSION ARRIĈRE - SUPPORT
06-32		ESSIEU ARRIĈRE - BLOCAGE DU DIFFERENTIEL
06-33		87395372 ESSIEU, PROPULSION ARRIĈRE - BOĊTIER
06-34		87395372 ESSIEU, PROPULSION ARRIĈRE - DIFFERENTIEL
06-35		87395372 ESSIEU, PROPULSION ARRIĈRE - COURONNE ET PIGNON
06-36		87395372 ESSIEU, PROPULSION ARRIĈRE - BLOCAGE DU DIFFERENTIEL
06-37		87395372 ESSIEU, PROPULSION ARRIĈRE - SATELLITE
06-38		ARBRE DE TRANSMISSION, ESSIEU ARRIĈRE
07-01		TRANSMISSION, 2WD - FREIN DE STATIONNEMENT
07-01	01	TRANSMISSION, 4WD - FREIN DE STATIONNEMENT
07-02		ESSIEU, PROPULSION ARRIĈRE - FREIN, DIFFERENTIEL
07-03		FREINS - P£DALES
07-04		SYSTEME HYDRAULIQUE - MAITRE-CYLINDRE DE FREIN
07-05		CONDUITES DE FREINAGE VERS LA TRANSMISSION
07-06		CONDUITES DE FREINAGE VERS ESSIEU
07-07		VERIN - MAITRE FREIN
08-01		SYSTEME HYDRAULIQUE - POMPE, FILTRE ET DISTRIBUTEUR DE CHARGEUSE
08-02		SYSTEME HYDRAULIQUE - DU DISTRIBUTEUR DU CHARGEUR AU FILTRE AU DISTRIBUTEUR DE LA PELLE RETRO
08-03		SYSTEME HYDRAULIQUE - REFROIDISSEUR, CONDUITES DE RETOUR ET FILTRE
08-04		SYSTEME HYDRAULIQUE - VERIN DE RELEVAGE DES BRAS DE RELEVAGE
08-05		SYSTEME HYDRAULIQUE - VERIN, GODET DE LA CHARGEUSE
08-06		SYSTEME HYDRAULIQUE - VERIN, BENNE DE LA CHARGEUSE
08-07		SYSTEME HYDRAULIQUE - VERIN, BENNE DE LA CHARGEUSE
08-07A		SYSTEME HYDRAULIQUE - BENNE DE LA CHARGEUSE, AVEC £LECTRIQUE
08-07B		SYSTEME HYDRAULIQUE - BENNE DE LA CHARGEUSE, AVEC £LECTRIQUE (MODĈLES AVEC COMMANDE PILOTE)
08-08		SYSTEME HYDRAULIQUE - VERIN, STABILISATEUR DE LA PELLE RETRO EUROPA (SANS DE COMMANDE PILOTE)
08-08A		SYSTEME HYDRAULIQUE - VERIN, STABILISATEUR DE LA PELLE RETRO EUROPA (AVEC DE COMMANDE PILOTE)
08-09		SYSTEME HYDRAULIQUE - VERIN, DEBATTEMENT DE LA PELLE RETRO (SANS DE COMMANDE PILOTE)
08-09A		SYSTEME HYDRAULIQUE - VERIN, DEBATTEMENT DE LA PELLE RETRO (AVEC DE COMMANDE PILOTE)
08-10		SYSTEME HYDRAULIQUE - VERIN, FLECHE DE LA PELLE RETRO
08-10A		SYSTEME HYDRAULIQUE - LE LOQUET DE BOOM DE BACKHOE ET LE CIRCUIT ELECTRIQUE
08-11		SYSTEME HYDRAULIQUE - VERIN, BALANCIER DE LA PELLE RETRO

TABLE OF CONTENTS

08-12	SYSTEME HYDRAULIQUE - VERIN, GODET DE LA PELLE RETRO (MODÊLES SANS BALANCIER EXTENSIBLE)
08-13	SYSTEME HYDRAULIQUE - VERIN, GODET DE LA PELLE RETRO (MODÊLES AVEC BALANCIER EXTENSIBLE)
08-14	SYSTEME HYDRAULIQUE - VERIN, BALANCIER EXTENSIBLE DE LA PELLE RETRO
08-15	SYSTEME HYDRAULIQUE - DISTRIBUTEUR, COMMANDE PILOTE DE LEVIER DE COMMANDE (6 SPOOL, W/O EXT DIPPER,
08-16	SYSTEME HYDRAULIQUE - DISTRIBUTEUR, COMMANDE PILOTE DE LEVIER DE COMMANDE (6 SPOOL, W/O EXT DIPPER,
08-17	SYSTEME HYDRAULIQUE - DISTRIBUTEUR, COMMANDE PILOTE DE LEVIER DE COMMANDE (7 SPOOL, W/ EXT DIPPER,
08-18	SYSTEME HYDRAULIQUE - DISTRIBUTEUR, COMMANDE PILOTE DE LEVIER DE COMMANDE (7 SPOOL, W/ EXT DIPPER,
08-19	SYSTEME HYDRAULIQUE - DISTRIBUTEUR, COMMANDE PILOTE DE LEVIER DE COMMANDE (7 SPOOL, W/O EXT DIPPER,
08-20	SYSTEME HYDRAULIQUE - DISTRIBUTEUR, COMMANDE PILOTE DE LEVIER DE COMMANDE (8 SPOOL, W/ EXT DIPPER,
08-21	SYSTEME HYDRAULIQUE - COMMANDE PILOTE DE LEVIER DE COMMANDE
08-22	SYSTEME HYDRAULIQUE - COMMANDE PILOTE
08-23	SYSTEME HYDRAULIQUE - CIRCUIT AUXILIAIRE DE LA PELLE RETRO (SANS DE COMMANDE PILOTE)
08-23A	DISTRIBUTEUR - AUXILIAIRE UNIDIRECTIONNEL (SANS DE COMMANDE PILOTE)
08-23B	SYSTEME HYDRAULIQUE - CIRCUIT AUXILIAIRE DE LA PELLE RETRO (AVEC DE COMMANDE PILOTE)
08-23C	DISTRIBUTEUR - AUXILIAIRE UNIDIRECTIONNEL (AVEC DE COMMANDE PILOTE)
08-24	SYSTEME HYDRAULIQUE - CIRCUIT AUXILIAIRE DE LA PELLE RETRO, AU BRAS DE RELEVAGE ET AU BALANCIER
08-25	SYSTEME HYDRAULIQUE - SYSTEME ANTI-TANGAGE
08-26	SYSTEME HYDRAULIQUE - COUPLEUR, OUTIL DE CHARGEUSE, DE S£CURIT£
08-27	SYSTEME HYDRAULIQUE - COUPLEUR, OUTIL DE CHARGEUSE, DE S£CURIT£, AU CADRE DU CHARGEUR EN OPTION
08-28	DISTRIBUTEUR DU COUPLEUR - OUTIL DE CHARGEUSE, DE S£CURIT£
08-29	POMPE, £QUIPEMENT HYDRAULIQUE
08-30	DISTRIBUTEUR - COMMANDE DU CHARGEUR, DEUX TIROIRS
08-31	DISTRIBUTEUR - COMMANDE DU CHARGEUR, TROIS TIROIRS
08-32	DISTRIBUTEUR - COMMANDE DE LA PELLE RETRO, 6 TIROIRS (SANS BALANCIER EXTENSIBLE ET SANS CIRCUIT HYD)
08-33	DISTRIBUTEUR - COMMANDE DE LA PELLE RETRO, 7 TIROIRS (SANS BALANCIER EXTENSIBLE ET AVEC CIRCUIT HYD)
08-34	DISTRIBUTEUR - COMMANDE DE LA PELLE RETRO, 7 TIROIRS (AVEC BALANCIER EXTENSIBLE ET SANS CIRCUIT HYD)
08-35	DISTRIBUTEUR - COMMANDE DE LA PELLE RETRO, 8 TIROIRS (AVEC BALANCIER EXTENSIBLE ET SANS CIRCUIT HYD)
08-36	DISTRIBUTEUR - COMMANDE DE LA PELLE RETRO, 6 TIROIRS
08-37	DISTRIBUTEUR - COMMANDE DE LA PELLE RETRO, 7 TIROIRS
08-38	DISTRIBUTEUR - COMMANDE DE LA PELLE RETRO, 7 TIROIRS
08-39	DISTRIBUTEUR - COMMANDE DE LA PELLE RETRO, 8 TIROIRS
08-40	CIRCUIT - DEBATTEMENT DE LA RETROPELLE (AVEC DE COMMANDE PILOTE)
08-41	CIRCUIT - FLECHE DE LA RETROPELLE (AVEC DE COMMANDE PILOTE)
08-42	CIRCUIT - STABILISATEUR DE LA PELLE RETRO (AVEC DE COMMANDE PILOTE)
08-43	CIRCUIT - BRAS DE LA RETROPELLE (AVEC DE COMMANDE PILOTE)

TABLE OF CONTENTS

08-44	CIRCUIT - GODET DE LA RETROPELLE (AVEC DE COMMANDE PILOTE)
08-45	CIRCUIT - BALANCIER EXTENSIBLE (AVEC DE COMMANDE PILOTE)
08-46	CIRCUIT - OPTIONS, CIRCUIT HYDRAULIQUE AUXILIAIRE (AVEC DE COMMANDE PILOTE)
08-47	DISTRIBUTEUR, SOUPAPE DE REDUCTION PRESSION (2 SPOOL) (AVEC DE COMMANDE PILOTE)
08-48	DISTRIBUTEUR, SOUPAPE DE REDUCTION PRESSION (3 SPOOL) (AVEC DE COMMANDE PILOTE)
08-49	DISTRIBUTEUR, SOUPAPE DE REDUCTION PRESSION (4 SPOOL) (AVEC DE COMMANDE PILOTE)
08-50	DISTRIBUTEUR, LEVIER DE COMMANDE (COMMANDE PILOTE) (GAUCHE) AVERTISSEUR SONORE
08-51	DISTRIBUTEUR, LEVIER DE COMMANDE (COMMANDE PILOTE) (GAUCHE) AVERTISSEUR SONORE & UNI-DIR
08-52	DISTRIBUTEUR, LEVIER DE COMMANDE (COMMANDE PILOTE) (GAUCHE) AVERTISSEUR SONORE & BI-DIR
08-53	DISTRIBUTEUR, LEVIER DE COMMANDE (COMMANDE PILOTE) (DROIT) SANS BALANCIER EXTENSIBLE
08-54	DISTRIBUTEUR, LEVIER DE COMMANDE (COMMANDE PILOTE) (DROIT) AVEC BALANCIER EXTENSIBLE
08-55	DISTRIBUTEUR - AMORTISSEUR DE DEBATTEMENT
08-55A	ELECTROVANNE - VERROUILLAGE DE LA FLECHE
08-56	ACCUMULATEUR ASS. - SYSTEME ANTI-TANGAGE
08-57	FILTRE A HUILE
08-58	VERIN - RELEVAGE DE LA CHARGEUSE
08-59	VERIN - GODET DE LA CHARGEUSE
08-60	VERIN - BENNE DE CHARGEUSE
08-61	VERIN - STABILISATEUR DE LA PELLE RETRO
08-62	VERIN - DEBATTEMENT DE LA RETROPELLE
08-63	VERIN - FLECHE DE LA RETROPELLE
08-64	VERIN - BRAS DE LA RETROPELLE
08-65	VERIN - GODET DE LA RETROPELLE
08-66	VERIN - BALANCIER EXTENSIBLE DE LA PELLE RETRO
09-01	COMMANDES - RELEVAGE ET GODET DES BRAS DE RELEVAGE
09-01A	POIGNEE, COMMANDE DU CHARGEUR - TRANSMISSION, 2WD, 4WD
09-02	COMMANDES - BENNE DE CHARGEUSE
09-03	COMMANDES - ASSIETTE AUTOMATIQUE DES BRAS DE RELEVAGE
09-04	CADRE - RELEVAGE DE LA CHARGEUSE
09-05	CADRE - TRINGLERIE DES BRAS DE RELEVAGE
09-06	GODETS, CHARGEUSE ê LONGUE LĈVRE (82 IN)
09-07	GODET, CHARGEUSE ê LONGUE LĈVRE (93 IN)
09-08	GODET, BENNE DE CHARGEUSE
09-09	GARANT - DISTRIBUTEUR, BRAS DE RELEVAGE
09-10	COUPLEUR, OUTIL, DE S£CURIT£
09-11	COUVERCLES - TOURELLE DE LA PELLE RETRO, SANS DE COMMANDE PILOTE
09-12	SUPPORT DE TOUR DE CONTRĎLE ET JOINTS DE PELLE R£TRO, SANS DE COMMANDE PILOTE
09-13	TOURELLE DE LA PELLE RETRO SUPPORT, AVEC DE COMMANDE PILOTE
09-14	TOURELLE DE LA PELLE RETRO SOUFFLET DE JOINT, AVEC DE COMMANDE PILOTE

TABLE OF CONTENTS

09-15	TOURELLE DE LA PELLE RETRO LEVIER (VERROU DE MAINTIEN DE BRAS DE RELEVAGE), AVEC DE COMMANDE PILOTE
09-16	COMMANDES - PELLE RETRO, AVEC D£BATTEMENT AU PIED (MODÔLES AVEC OU SANS BALANCIER EXTENSIBLE)
09-17	COMMANDES - PELLE RETRO, AVEC D£BATTEMENT AU PIED (MODÔLES AVEC BALANCIER EXTENSIBLE)
09-18	COMMANDES - PELLE RETRO, AVEC D£BATTEMENT A LA MAIN (MODÔLES AVEC OU SANS BALANCIER EXTENSIBLE)
09-19	COMMANDES - PELLE RETRO, AVEC D£BATTEMENT A LA MAIN (MODÔLES AVEC OU SANS BALANCIER EXTENSIBLE)
09-19A	COMMANDES - PELLE RETRO, SCHEMA DE CONTROLE DE L'EXCAVATRICE
09-20	COMMANDES - PELLE RETRO, AVEC D£BATTEMENT A LA MAIN (MODÔLES AVEC BALANCIER EXTENSIBLE)
09-21	COMMANDES - CIRCUIT HYDRAULIQUE AUXILIAIRE POUR LA PELLE RETRO, SANS DE COMMANDE PILOTE
09-22	RETROPELLE - STABILISATEURS, PLAQUES ET PATINS
09-23	RETROPELLE - TOURELLE ET VERINS DE DEBATTEMENT
09-24	RETROPELLE - FLECHE ET TOURELLE DE DEBATTEMENT
09-24A	FLECHE GARANT
09-25	VERROU DE MAINTIEN DE BRAS DE RELEVAGE (SANS DE COMMANDE PILOTE)
09-25A	VERROU DE MAINTIEN DE BRAS DE RELEVAGE (AVEC DE COMMANDE PILOTE)
09-26	RETROPELLE - BALANCIER ET GODET
09-27	RETROPELLE - BALANCIER EXTENSIBLE
09-28	GODET, PELLE R£TRO UNIVERSELLE (305 MM (12 INCH) WIDE)
09-29	GODET, PELLE R£TRO UNIVERSELLE (406 MM (16 INCH) WIDE)
09-30	GODET, PELLE R£TRO UNIVERSELLE (457 MM (18 INCH) WIDE)
09-31	GODET, PELLE R£TRO (457 MM (18 INCH) WIDE)
09-32	GODET, PELLE R£TRO UNIVERSELLE (610 MM (24 INCH) / 762 MM (30 INCH) WIDE)
09-33	GODET, PELLE R£TRO (610 MM (24 INCH) WIDE)
09-34	GODET, PELLE R£TRO UNIVERSELLE (914 MM (36 INCH) WIDE)
09-35	GODET, PELLE R£TRO UNIVERSELLE (610 MM (24 INCH) WIDE)
09-35A	ENSEMBLE DE POINT DE GEL
09-36	CONTREPOIDS AVANT
09-37	CHASSIS / MONTAGES, COSSE - GRILLE, ADMISSION D'AIR
09-38	R£SERVOIR, HUILE - COMPARTIMENT DE BATTERIES ET BOITE A OUTILS
09-39	BOĊTIER DE RADIATEUR
09-40	CAPOT - PANNEAUX LATERAUX
09-41	CAPOT - CALANDRE
09-42	PLAQUES, PLANCHER - TAPIS DE SOL
09-43	GARDE-BOUE, GAUCHE - PANNEAU, FERMETURE ARRIERE (VIDE-POCHES AVEC PORTE-GOBELET)
09-44	EXTENSION DE GARDE BOUE
09-45	GARDE-BOUE
09-46	SIEGE (SEARS, STANDARD)
09-47	SIEGE - SUPPORT (SEARS SUSPENSION M£CANIQUE)
09-48	SIĈGE, SUSPENSION M£CANIQUE (SEARS)
09-49	SIEGE - SUPPORT (SUSPENSION PNEUMATIQUE)
09-53	CABINE - FENETRE, RETROVISEUR ET OUVERTURE
09-54	CABINE - CHASSIS ET COUVERCLES
09-55	CABINE - PORTES
09-56	CABINE - MONTAGE DE PORTIĈRE

TABLE OF CONTENTS

09-57	CABINE - FENąTRE DROITE, POUR CADRES DE CABINE ê UNE SEULE PORTIÊRE
09-58	CABINE - VITRE, ARRIÊRE
09-59	CABINE - LAVE-GLACE
09-60	CABINE - ESSUIE-GLACE
09-61	GARNITURE DE LA CABINE - FILTRE, DEFLECTEUR, PLAFONNIER
09-62	CABINE - FILTRE A AIR
09-63	CABINE - CARTER DE LA SOUFFLANTE, DURITS DE VENTILATION, CONDUITES DE PURGE
09-64	CABINE - CHAUFFAGE
09-65	CABINE - CONDUITES DE LA CLIMATISATION, RADIATEUR D'EVAPORATION
09-66	CABINE - CLIMATISATION, CONDENSATEUR, DESSICCATEUR
09-67	CABINE - COMPRESSEUR DE LA CLIMATISATION
09-68	STRUCTURE ROPS - CADRE, COUVERCLES, RETROVISEUR, VISIERE-ECRAN
09-69	STRUCTURE ROPS - VITRE
09-70	STRUCTURE ROPS - ESSUIE-GLACE AVANT ET LAVE-GLACE
09-71	R£TROVISSEUR - SUPPORT, MODÊLE DE CABINE
09-72	TRIANGLE V£HICULE LENT
09-73	AUTOCOLLANTS
09-74	AUTOCOLLANTS
09-75	AUTOCOLLANTS
09-76	AUTOCOLLANTS - ANGLAIS
09-77	AUTOCOLLANTS - ESPAGNOL D'AM£RIQUE LATINE
09-78	AUTOCOLLANTS - FRAN¢AIS CANADIEN
09-79	AUTOCOLLANTS - ANGLAIS
09-80	AUTOCOLLANTS - ESPAGNOL D'AM£RIQUE LATINE
09-81	AUTOCOLLANTS - FRAN¢AIS CANADIEN

NOTES

GÉNÉRALITÉS

AVIS DE PROPRIÉTÉ

Les données contenues dans ce manuel constituent la propriété de cette société. Toute reproduction ou utilisation de toute partie de ce manuel à d'autres fins que l'utilisation et l'entretien de notre matériel ne sont permises que si elles sont expressément autorisées par écrit.

Des copies supplémentaires peuvent être obtenues auprès du concessionnaire. Pour obtenir des exemplaires supplémentaires, s'adresser au concessionnaire et donner en référence le numéro de publication imprimé au bas de la couverture arrière de ce manuel ou sur la page de titre.

POLITIQUE DE LA SOCIÉTÉ

L'entreprise, dont la politique est fondée sur le progrès constant, se réserve le droit de changer ses prix et d'apporter des modifications à la conception et aux caractéristiques du matériel à tout moment, sans préavis et sans obligation de modifier les machines précédemment fabriquées.

Toutes les données qui apparaissent dans le présent manuel peuvent faire l'objet de variations dues aux contraintes de production. Les dimensions et les mesures de poids ne sont qu'approximatives et les machines illustrées ne sont pas nécessairement en état standard. Pour des données précises au sujet d'un modèle de machine en particulier, consulter un concessionnaire agréé.

PIÈCES ET ACCESSOIRES

Des pièces et des accessoires d'origine ont été conçus spécifiquement pour ces machines.

New Holland souhaite préciser que les pièces et accessoires « non originaux » n'ont PAS été examinés et mis en vente par la société. La pose et l'utilisation de ces produits pourraient s'avérer néfaste pour la conception de la machine et donc altérer ses caractéristiques de sécurité. La compagnie ne peut être tenue responsable des dégâts résultant de l'utilisation de pièces et d'accessoires « non originaux ».

AMÉLIORATIONS

Nous nous efforçons de sans cesse continuer à améliorer nos produits. Nous nous réservons le droit d'apporter des améliorations ou modifications dès qu'elles s'avèrent pratiques et possibles, sans engagement ni obligation d'apporter des modifications ou des ajouts sur les équipements vendus auparavant.

CODES DE MODÈLES

Les machines énumérées ne sont peut-être pas toutes disponibles dans tous les pays ou sur tous les marchés ; en conséquence, pour obtenir les informations les plus récentes, consulter le concessionnaire.

ASSISTANCE AU PROPRIÉTAIRE

Nous souhaitons que vous soyez entièrement satisfait de votre investissement. Tous les problèmes rencontrés lors de l'utilisation de l'équipement sont normalement gérés par le service Entretien des concessionnaires, mais il est possible que des malentendus aient lieu. Si le problème n'a pas été géré de façon satisfaisante, procéder comme suit.

1. Contacter le propriétaire ou le directeur de la concession, expliquer le problème et demander de l'aide. En cas de besoin d'assistance supplémentaire, le concessionnaire peut contacter directement nos bureaux.
2. Fournir au concessionnaire les renseignements suivants :
   - Nom, adresse et numéro de téléphone
   - Modèle de la machine et numéro de série
   - Nom et adresse du concessionnaire
   - Date d'achat et nombre d'heures d'utilisation
   - Nature du problème

Garder à l'esprit le fait que le problème sera très certainement réglé au sein de la concession, à l'aide des infrastructures, des équipements et du personnel du concessionnaire. C'est pourquoi il est important que le premier contact se situe au niveau du concessionnaire.

PIÈCES DÉTACHÉES

Pour maintenir un fonctionnement efficace, utiliser des pièces détachées d'origine.

Lors de la commande de pièces, fournir les informations suivantes.

- Modèle de la machine
- Numéros de série de la machine et du moteur
- Référence de la pièce du catalogue de pièces détachées

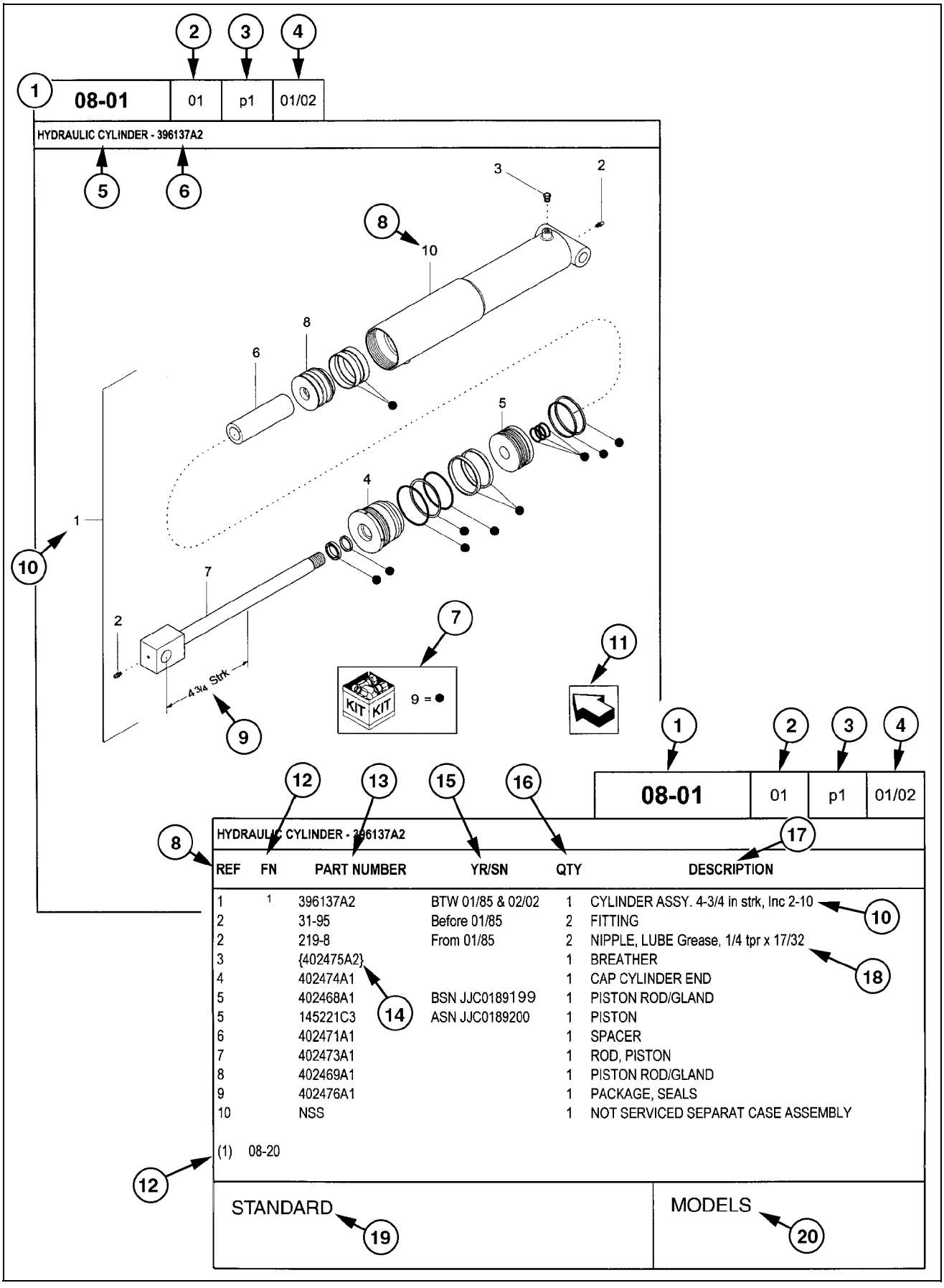
1
2
3
4
08-01
01
p1
01/02
HYDRAULIC CYLINDER - 396137A2
5
6
8
10
KIT
KIT
9 = ●
11
7
9
Strk
12
13
15
16
17
08-01
01
p1
01/02
HYDRAULIC CYLINDER - 396137A2
8
REF FN PART NUMBER YR/SN QTY DESCRIPTION
1 1 396137A2 BTW 01/85 & 02/02 1 CYLINDER ASSY. 4-3/4 in strk, Inc 2-10
2 31-95 Before 01/85 2 FITTING
2 219-8 From 01/85 2 NIPPLE, LUBE Grease, 1/4 tpr x 17/32
3 {402475A2} 1 BREATHER
4 402474A1 1 CAP CYLINDER END
5 402468A1 BSN JJC0189199 1 PISTON ROD/GLAND
5 145221C3 ASN JJC0189200 1 PISTON
6 402471A1 1 SPACER
7 402473A1 1 ROD, PISTON
8 402469A1 1 PISTON ROD/GLAND
9 402476A1 1 PACKAGE, SEALS
10 NSS 1 NOT SERVICED SEPARAT CASE ASSEMBLY
(1) 08-20
14
18
12
STANDARD
19
MODELS
20

UTILISATION DU CATALOGUE DE PIÈCES

1. Numéro de la figure
2. Code de séquence dans le numéro de la figure
3. Numéro de la page dans le code de séquence
4. Date d'impression (mois/année)
5. Description de la figure
6. Informations générales relatives à la figure
7. Pièces fournies dans les kits de réparation selon référence de symbole
8. Chiffre-référence de la référence
9. Caractéristiques techniques relatives à la pièce indiquée
10. Le chiffre-référence de la figure inclut des articles entre crochets, les articles inclus peuvent aussi être énumérés dans la zone de description additionnelle
11. Orientation – La flèche indique l'avant de la machine
12. Note de pied de page – Informations supplémentaires relatives à la référence. Dans cet exemple, 08-20 correspond à une autre figure où cette pièce est illustrée
13. Référence
    NSS = pièces sans entretien
    Numéros entre parenthèses = localement non disponibles comme pièces détachées
14. Localement non disponible comme pièce détachée
15. Année/N° de série

    Année
    Avant 01/85 = pièce valable pour la production de janvier 1985 et antérieure
    À partir de 01/85 = pièce valable pour la production de janvier 1985 et postérieure
    Entre 01/85 et 02/02 = pièce valable pour les machines produites entre janvier 1985 et février 2002

    Numéro de série (P.I.N.)
    BSN JJC0268800 = pièce valable pour les numéros de série JJC0268800 et inférieurs
    ASN JJC0268800 = pièce valable pour les numéros de série JJC0268800 et supérieurs
    Entre JJC0178000 et JJC0179000 = pièce valable pour les numéros de série compris entre JJC0178000 et JJC0179000
16. La quantité totale de pièces auxquelles il est fait référence dans cette page. La quantité peut être remplacée par les indications suivantes :
    AR = Selon besoin
    X = Selon le besoin
17. Description
18. Description complémentaire de la pièce pour faciliter la confirmation de l'identification
19. Notes de la figure
20. Numéro(s) de modèle

GAUCHE ET DROIT

La référence aux côtés gauche et droit dans ce catalogue est identifiée par l'opérateur debout à l'arrière de l'unité de base (sans outil arrière), regardant vers l'avant de la machine (en marche avant normale).

Pour les pages concernant les outils de la machine, les côtés droit et gauche sont définis par l'opérateur assis en position correcte de commande de l'outil.

DIMENSIONS

Les dimensions impériales et métriques ne montrent pas les désignations numériques du filetage standard. Un chiffre suivant un point virgule (;) est la classe ou le grade de la visserie. Une virgule (,) représente le point séparateur décimal (.) du système impérial.

SIGNIFICATION DES ABRÉVIATIONS

AC	courant alternatif
adj	réglable
amp	ampère
AR	selon le besoin
ASN	numéro de série et supérieur P.I.N. et supérieur
blkhd	cloison
br	branche
BSN	avant numéro de série avant P.I.N.
BTW	entre
cc	centimètre cube
cl	classe
cmprsn	compression
cn pt	bout pointu
cp pt	bout cuvette
CRS	acier en alliage de chrome
CST	acier au carbone
cu yd	verge cube
DC	courant continu
deg	degré
dg pt	bout cylindrique long
dia	diamètre
dr type	type de transmission
fc	face
fc sl	joint à face
fem	femelle
fem PT	filetage de tube femelle
fl	évasement
flat pt	bout plat
ft	pied(s)
ga	jauge
gal	gallon(s)
gpm	gallons par minute
gr	grade
hd	tête
hdg pt	bout cylindrique court
hp	chevaux
ID	diamètre intérieur
in	pouce(s)
Incl.	comprend
inv fl	évasement inversé
K	kilo
kg	kilogramme
km/h	kilomètres/heure
L	litre
lb	livre
lb-ft	livre/pied
lg	long
LH	côté gauche
LH thd	filetage à gauche
M	(préfixe) taille métrique du filetage
m	mètre
ml	millilitre
mm	millimètre
NF	National Fine
No.	n°
NPT	pas de tuyauterie
NS	National Super Fine
OD	diamètre extérieur
ohm	ohm
Or	joint torique
ORB	bossage de joint torique
ORFS	joint torique à face
ov cntr	hypercentrique
ov pt	bout ovale
oz	once
P	pas
psi	livre par pouce carré
pt	pinte
PT	filetage de tuyau
rd	rond
rd holes	trous ronds
RH	droit
RH thd	filetage à droite
rpm	tr/mn
sl	autobloquant
sq	carré
SST	acier inoxydable
st	à auto-taraudage
strk	course
sw	pivot
T	dent
thk	épais
tpr	conique
tube OD	diamètre extérieur de tube
V	volt(s)
W	watt(s)
X	selon le besoin
yd	yard

SECTION INDEX
Moteur

02-01	RADIATEUR - SUPPORT
02-02	SYSTEME DE PURGE D AIR - SUPPORT
02-04	FILTRE A AIR - PIÊCES DE LA PRISE D'AIR
02-05	FILTRE A AIR
02-06	SILENCIEUX, ASPIRATEUR - £CHAPPEMENT
02-07	MOTEUR - SUPPORT
02-08	MOTEUR
02-09	BLOC CYLINDRES
02-10	BLOC CYLINDRES
02-11	POMPE ê HUILE, CARTER
02-12	COUVERCLES DE BATI
02-13	BLOC CYLINDRES - COUVERCLES
02-14	COUVERCLES DE BATI
02-15	RENIFLARD - MOTEUR
02-16	CULASSE DE CYLINDRE
02-17	CACHE CULBUTEUR
02-18	CULASSE DE CYLINDRE - M£CANISME DU DISTRIBUTEUR
02-19	COLLECTEURS
02-20	CONDUIT D'ECHAPPEMENT
02-21	VILEBREQUIN
02-22	BIELLE
02-23	PISTON - MOTEUR
02-24	VOLANT - MOTEUR
02-25	POULIE - VILEBREQUIN
02-26	MASSELOTTE, ENGRENAGES ET ARBRES
02-28	ARBRE ê CAMES
02-29	TURBOCOMPRESSEUR
02-30	JAUGE DE NIVEAU - HUILE MOTEUR
02-31	POMPE A HUILE - MOTEUR
02-32	FILTRE A HUILE - MOTEUR
02-33	TUYAUTERIES - HUILE DU MOTEUR
02-34	EXCHANGEUR DE TEMPERATURE - MOTEUR
02-35	POMPE A EAU
02-36	CIRCUIT DE REFROIDISSEMENT - MOTEUR
02-37	THERMOSTAT - REFROIDISSEMENT MOTEUR
02-38	POMPE A EAU - COMMANDE
02-39	COMMANDE DE VENTILATEUR
02-41	MOTEUR - CROCHET DE LEVAGE
02-42	ALTERNATEUR

02-01		p1	12/07

RADIATEUR - SUPPORT

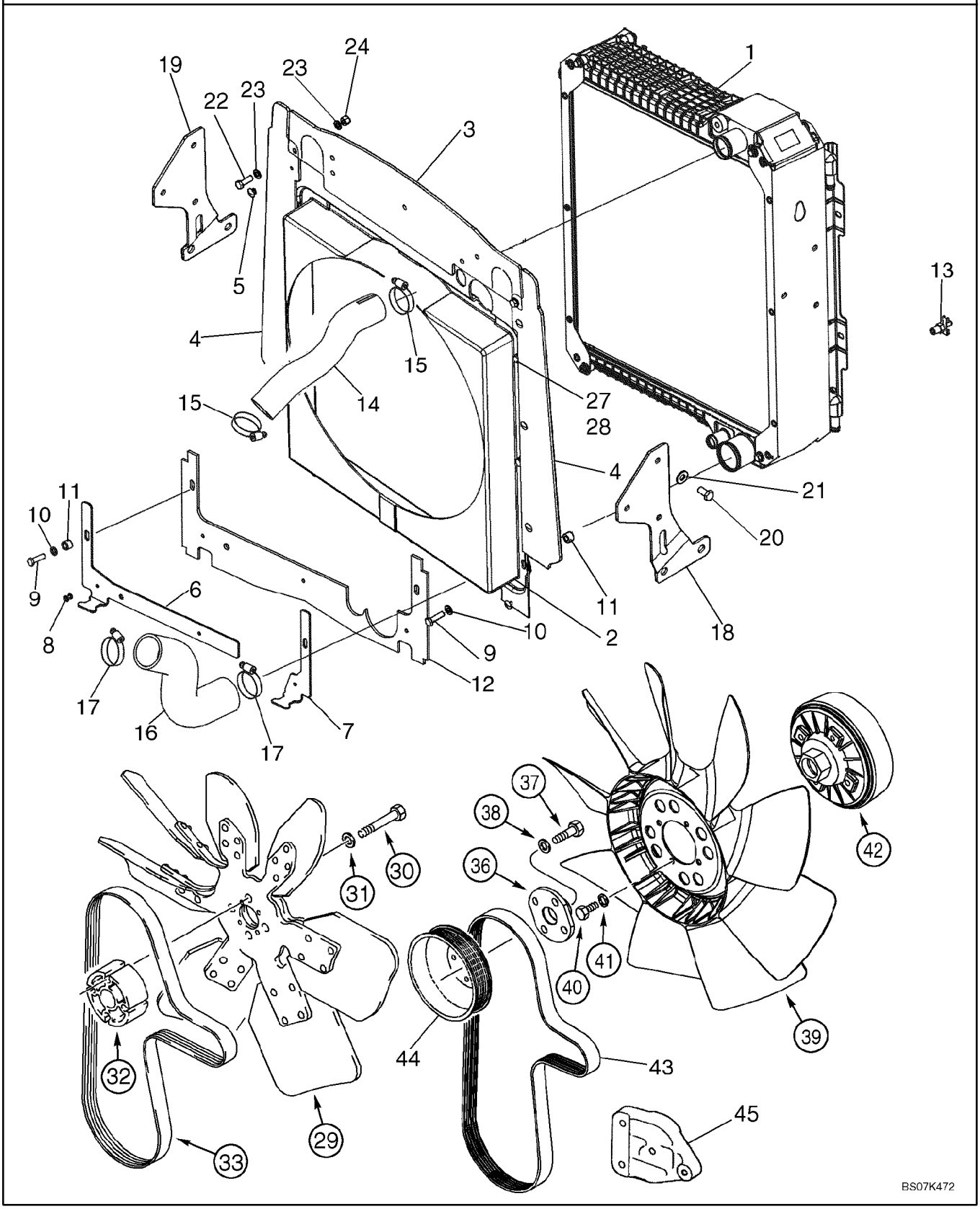

RADIATEUR - SUPPORT

REF	FN	PART NUMBER	YR/SN	QTY	DESCRIPTION
1		87576643		1	RADIATEUR, 3 Row Radiator, Models With Or Without Air Conditioning; Component Parts Not Available At Time Of Printing
2		87559003		1	BUSE, Fan
3		87628324		1	JOINT, CAOUTCHOUC, Top
4		87628308		2	JOINT, CAOUTCHOUC, Sides
5		87301355		6	RIVET, Pop, 3/16" x .575"
6		87446082		1	PLAQUE DE SERRAGE, Lower Left-Hand Shroud
7		87446081		1	PLAQUE DE SERRAGE, Lower Right-Hand Shroud; 195 mm (7-11/16 in) Long
8		87301356		3	RIVET, Pop, 3/16" x .700"
9		614-8030		2	BOULON, Hex, M8 x 30, 8.8
10		895-11008		2	RONDELLE, M8 x 16 x 1.6
11		407962A1		2	ENTRETOISE
12		87434978		1	JOINT, CAOUTCHOUC, Lower Seal
13		81465471		1	ROBINET, Drain, 1/4
14		87454377		1	DURITE, Upper
15		87647029		2	BRIDE, FLEXIBLE
16		87454378		1	DURITE, Lower; 5.6 mm (7/32 in) Thick
17		214-1440		2	BRIDE, FLEXIBLE, #40, 2.06/3.00 Type F Worm
18		87608368		1	EQUERRE, Radiator, RH
19		87608370		1	EQUERRE, Radiator, LH
20		614-10020		6	BOULON, Hex, M10 x 20, 8.8, Full Thd
21		895-15010		6	RONDELLE, M11 x 24 x 2
22		614-8025		2	BOULON, Hex, M8 x 25, 8.8
23		895-11008		4	RONDELLE, M8 x 16 x 1.6
24		832-10408		2	CONTRE-ECROU, M8 x 1.25, Cl 8
27		806-8016		4	BOULON, Hex, Lock, M8 x 16, Cl 10.9
28		895-11008		4	RONDELLE, M8 x 16 x 1.6
29		228133A2		1	VENTILATEUR, 39 Degrees; With White Identification Dot; Standard Fan Drive; With Air Conditioning; With Turbo
29		185377A1		1	VENTILATEUR, 33 Degrees; Standard Fan Drive; Without Air Conditioning; With Or Without Turbo
30		814-10090		4	BOULON, Hex, M10 x 90, 8.8

02-01		p2	12/07

RADIATEUR - SUPPORT

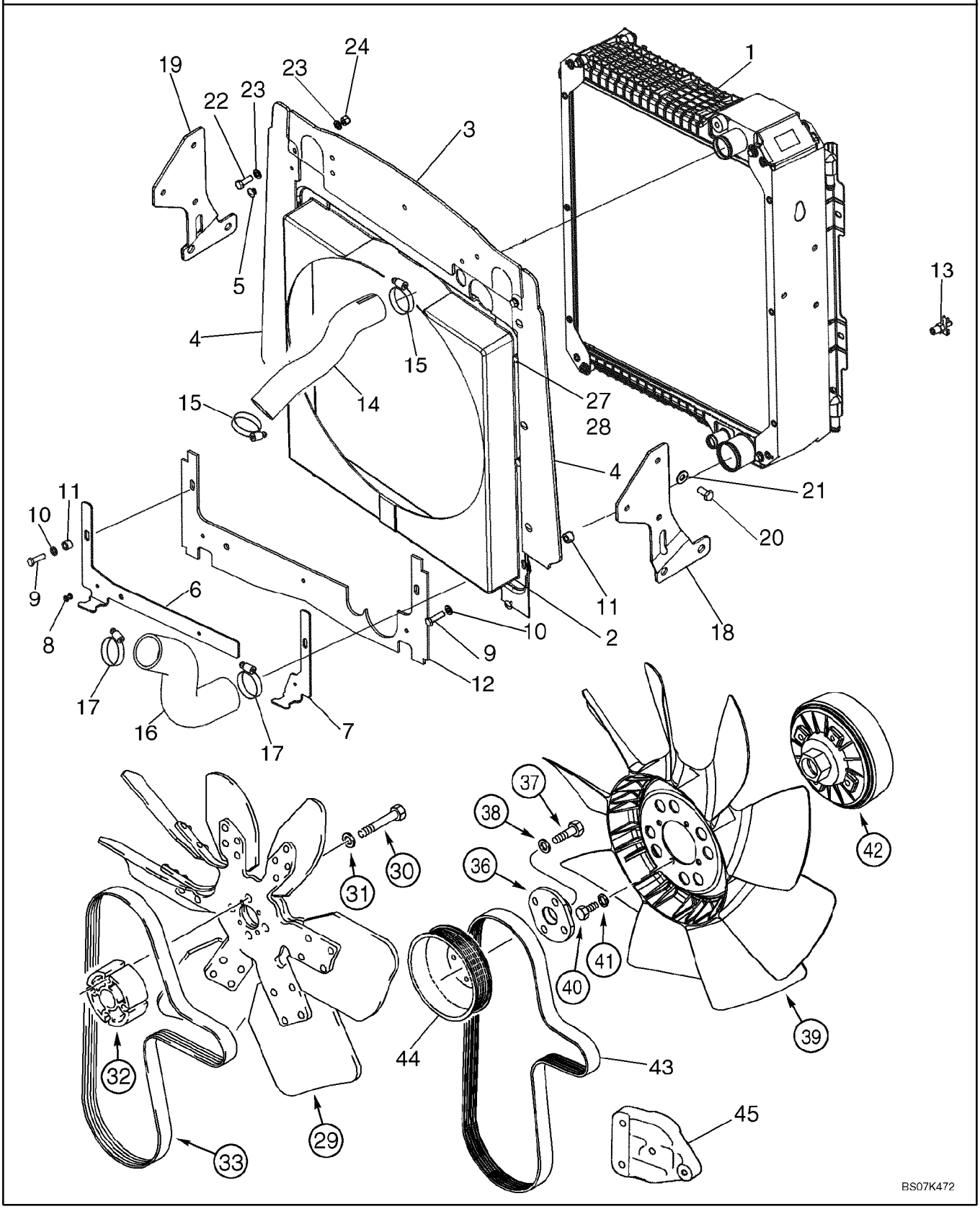

RADIATEUR - SUPPORT

REF	FN	PART NUMBER	YR/SN	QTY	DESCRIPTION
31		496-21041		4	RONDELLE, 13/32" x 13/16" x .089", HDN
32		87353191		1	ENTRETOISE, 59 mm Long, Standard Fan Drive; With Or Without Air Conditioning; With Or Without Turbo; Replaces 85826229 Aluminium 59 mm Long Spacer that has Part Number Stamped On Spacer Used On Some Models
33		85826230		1	COURROIE, V-Type, Standard Fan Drive; With Or Without Air Conditioning; With Or Without Turbo
36		303192A1		1	ADAPTEUR, Viscous Fan Drive, With Air Conditioning; With Turbo
37		614-10030		4	BOULON, Hex, M10 x 30, 8.8
38		896-11010		4	RONDELLE, M10 x 21.5 x 2.5, HT
39		277800A1		1	VENTILATEUR, 9 Blade, Viscous Fan Drive; With Air Conditioning; With Turbo
40		614-8016		4	BOULON, Hex, M8 x 16, 8.8
41		892-11008		4	RONDELLE FREIN, M8
42		87340008		1	COMMANDE-ENTRAINEM., Fan Drive; Component Parts Not Serviced Separately; Viscous Fan Drive; With Air Conditioning; With Turbo
43		87415774		1	COURROIE, V-Type; Viscous Fan Drive, With Air Conditioning; With Turbo
44		4890343		1	POULIE
45		87442419		1	PATTE FIXATION, Pulley Tensioner Support, Painted

02-02		p1	12/07

SYSTEME DE PURGE D AIR - SUPPORT

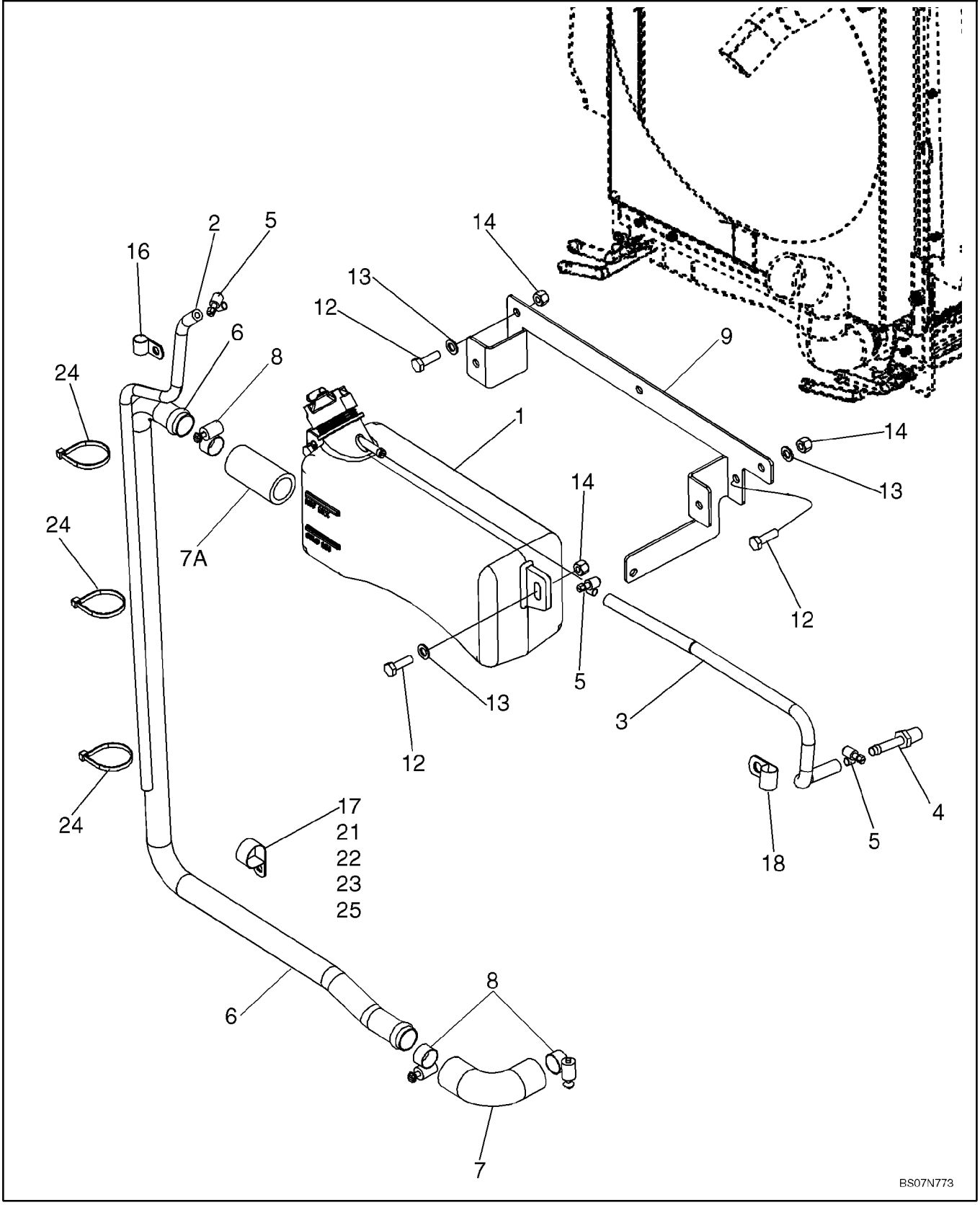

SYSTEME DE PURGE D AIR - SUPPORT

REF	FN	PART NUMBER	YR/SN	QTY	DESCRIPTION
1		87674844		1	RESERVOIR DEPRESSEUR, Deaeration Reservoir, 3.0 Liters; Includes 85803019 Cap
		85803019		1	BOUCHON DE REMPL., 13 psi
2		87616934		1	FLEXIBLE, Overflow Hose; 750 mm
3		87715487		1	FLEXIBLE, Recovery, 440 mm; Reservoir to Radiator
4		87301325		1	RACCORD, 5/16" Hose X 1/4" NPTF Beaded
5		214-1704		3	BRIDE, FLEXIBLE, #4, 0.25/0.62 Type M Worm
6		87557237		1	TUYAU RIGIDE
7		87454376		1	FLEXIBLE
7A		87367622		1	FLEXIBLE
8		214-1416		4	BRIDE, FLEXIBLE, #16, 0.81/1.50 Type F Worm
9		87632870		1	EQUERRE, Bottle Retaining
12		614-8025		7	BOULON, Hex, M8 x 25, 8.8
13		895-11008		7	RONDELLE, M8 x 16 x 1.6
14		832-10408		7	CONTRE-ECROU, M8 x 1.25, Cl 8
16		515-22127		1	BRIDE, 1/2", Insul, 5/16" Bolt
17		515-22254		1	BRIDE, 1", Insul, 5/16" Bolt
18		515-23143		1	BRIDE, 9/16", Insul, 3/8" Bolt
21		614-8040		1	BOULON, Hex, M8 x 40, 8.8, Full Thd
22		87418360		1	ENTRETOISE, 8 x 16 mm
23		895-11008		1	RONDELLE, M8 x 16 x 1.6
24		L18337		3	SERRE-CABLE, 9.95"-12.1" lg
25		832-10408		1	CONTRE-ECROU, M8 x 1.25, Cl 8

02-04		p1	11/07

FILTRE A AIR - PIÈCES DE LA PRISE D'AIR

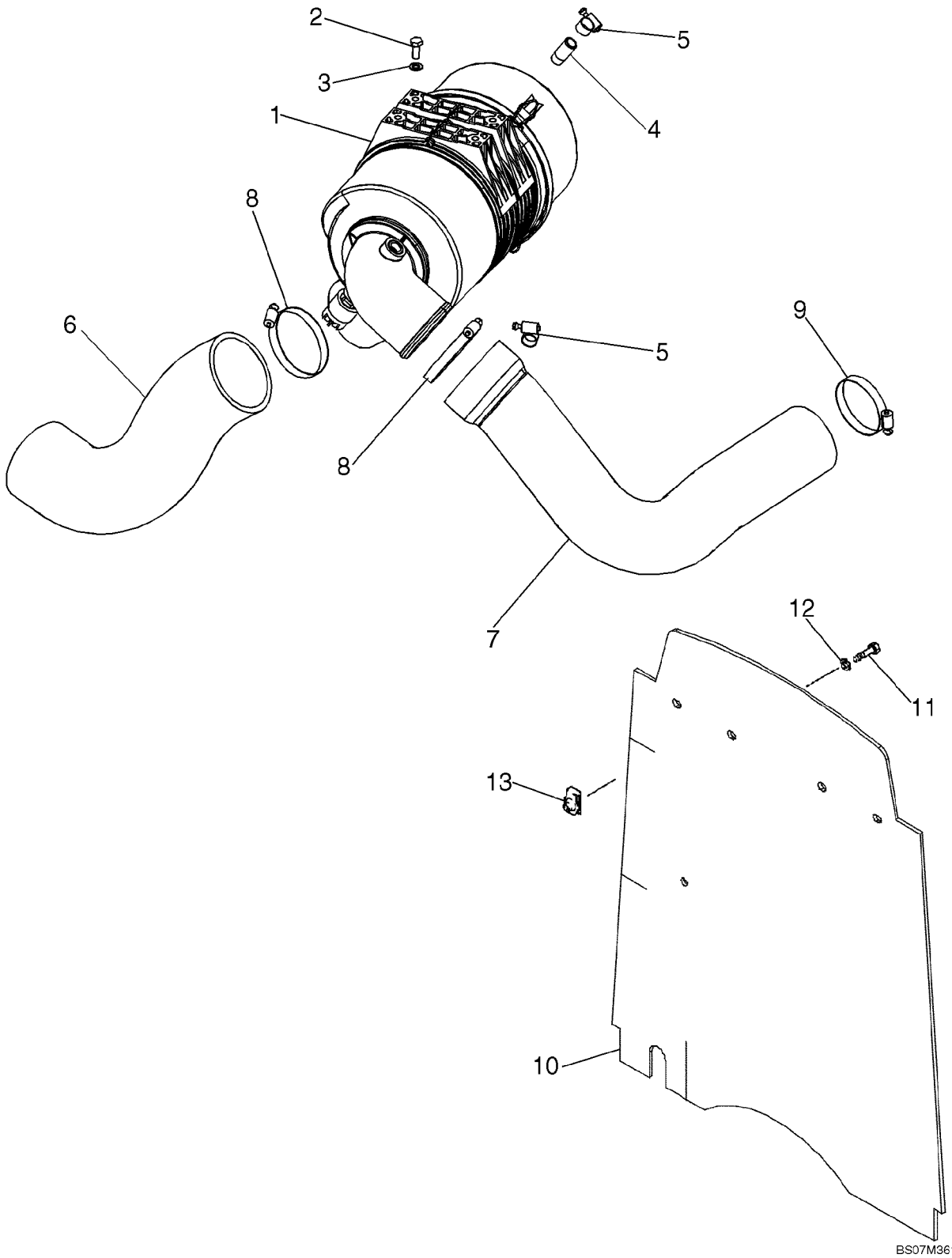

FILTRE A AIR - PIôCES DE LA PRISE D'AIR

REF	FN	PART NUMBER	YR/SN	QTY	DESCRIPTION
1		87610338		1	FILTER A AIR, See Figure 02-05
2		614-8020		4	BOULON, Hex, M8 x 20, 8.8
3		895-11008		4	RONDELLE, M8 x 16 x 1.6
4		L17985		1	RACCORD
5		214-1412		2	BRIDE, FLEXIBLE, #12, 0.69/1.25 Type F Worm
6		87545561		1	DURITE, Inlet
7		87666451		1	DURITE, To Turbocharger
8		214-1464		2	BRIDE, FLEXIBLE, #64, 3.56/4.50 Type F Worm
9		214-1456		1	BRIDE, FLEXIBLE, #56, 3.06/4.00 Type F Worm
10		87652272		1	RIDEAU, Barrier, Heat and Noise Reduction
11		806-8025		4	BOULON, Hex, Lock, M8 x 25, Cl 10.9
12		495-81001		4	RONDELLE, 5/16"
13		833-40408		4	ECROU, M8, U

02-05		p1	11/07

FILTRE A AIR

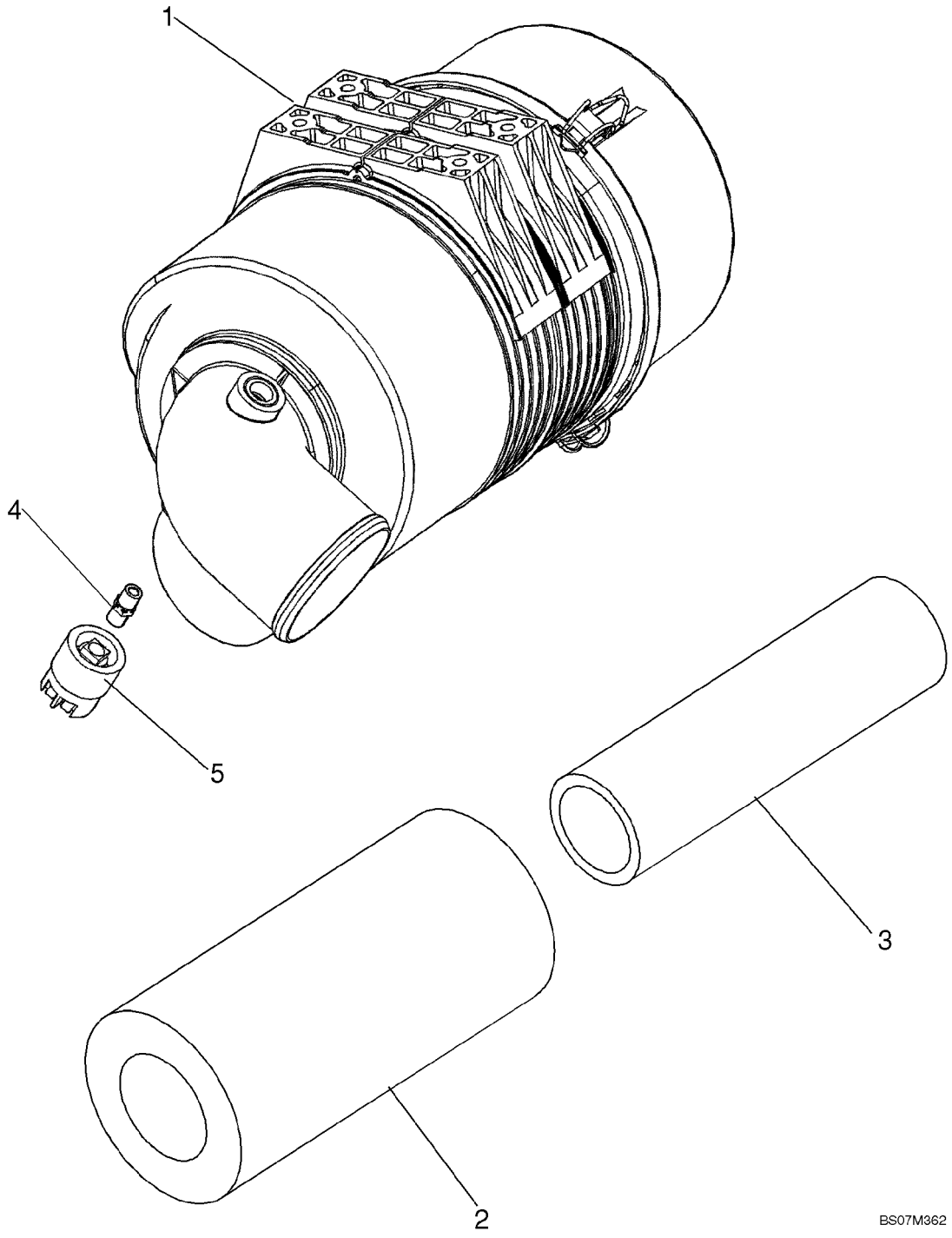

FILTRE A AIR

REF	FN	PART NUMBER	YR/SN	QTY	DESCRIPTION
		87610338		1	FILTER A AIR, Air Cleaner; Incl. Ref 1 - 5
1		NSS		1	NON FOURNI SEPAREMENT, Body
2		87682993		1	FILTRE A AIR, Primary
3		47132347		1	FILTRE A AIR, Secondary
4		86976679		1	ADAPTEUR
5		79081900		1	PRESSOSTAT, Air Restriction

02-06		p1	11/07

SILENCIEUX, ASPIRATEUR - £CHAPPEMENT

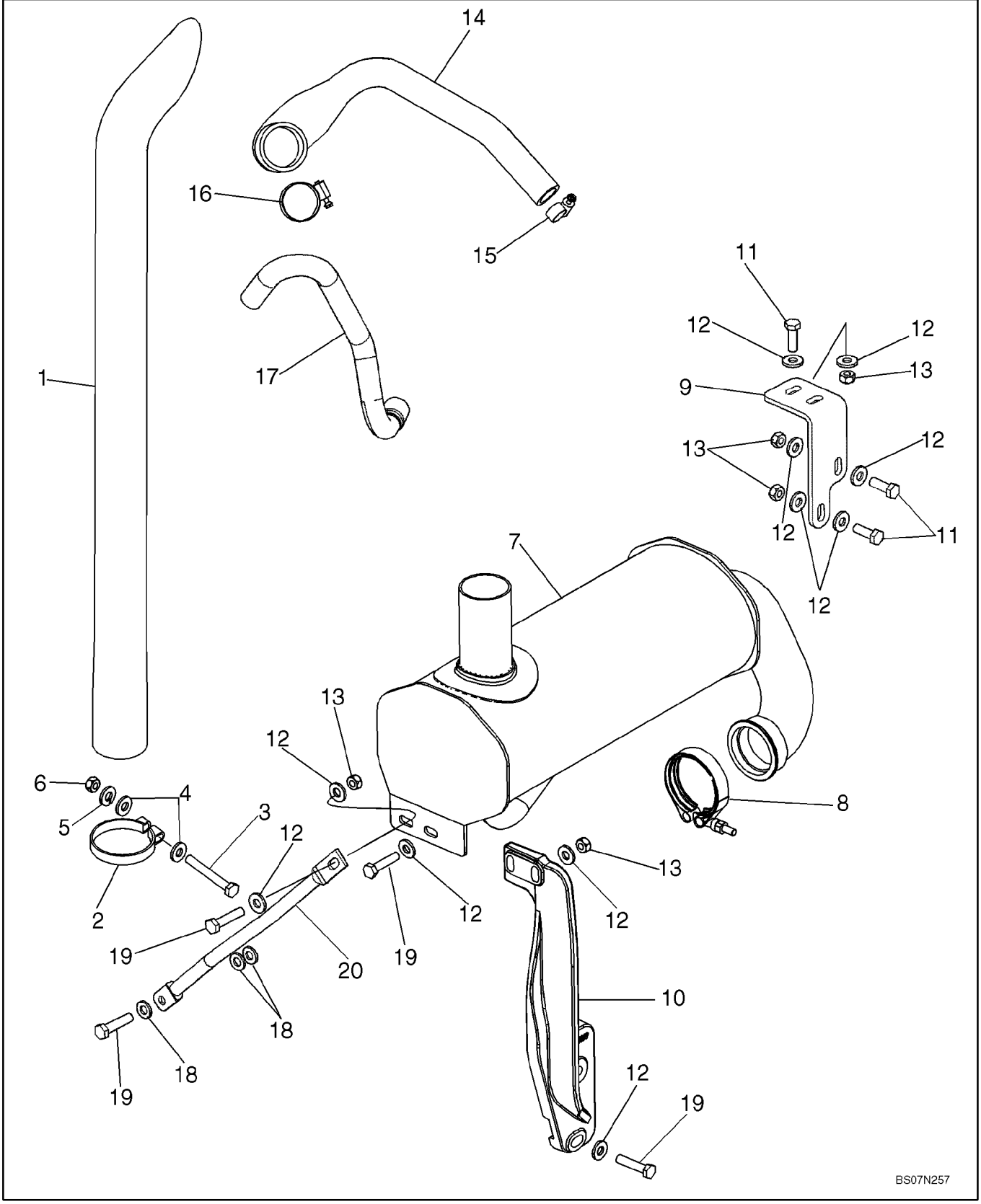

SILENCIEUX, ASPIRATEUR - £CHAPPEMENT

REF	FN	PART NUMBER	YR/SN	QTY	DESCRIPTION
1		87309656		1	TUBE D'ECHAPPEMENT VERTIC, 844 mm (33-1/4 in) Long Exhaust Stack
2		87437804		1	CAVALIER-SERRE-TUBE, Stack Clamp
3		614-10080		1	BOULON, Hex, M10 x 80, 8.8, Full Thd
4		896-15010		2	RONDELLE, M10 x 24.5 x 3, HT
5		892-11010		1	RONDELLE FREIN, M10
6		829-1410		1	ECROU, M10, Cl 10
7		87617576		1	SILENCIEUX, Aspirated
8		A170467		1	COLLIER, Includes Hardware
9		87423531		1	EQUERRE, Front Support
10		87451167		1	EQUERRE, Rear Support
11		627-10030		4	BOULON, Hex, M10 x 30, 10.9, Full Thd
12		896-15010		14	RONDELLE, M10 x 24.5 x 3, HT
13		829-1410		6	ECROU, M10, Cl 10
14		87704858		1	DURITE, Aspiration Hose
15		214-1416		1	BRIDE, FLEXIBLE, #16, 0.81/1.50 Type F Worm
16		214-1436		1	BRIDE, FLEXIBLE, #36, 1.81/2.75 Type F Worm
17		87611852		1	DURITE
18		896-11010		3	RONDELLE, M10 x 21.5 x 2.5, HT
19		827-10045		5	BOULON, Hex, M10 x 45, 10.9
20		87442357		1	JAMBE-DE-FORCE

MOTEUR - SUPPORT

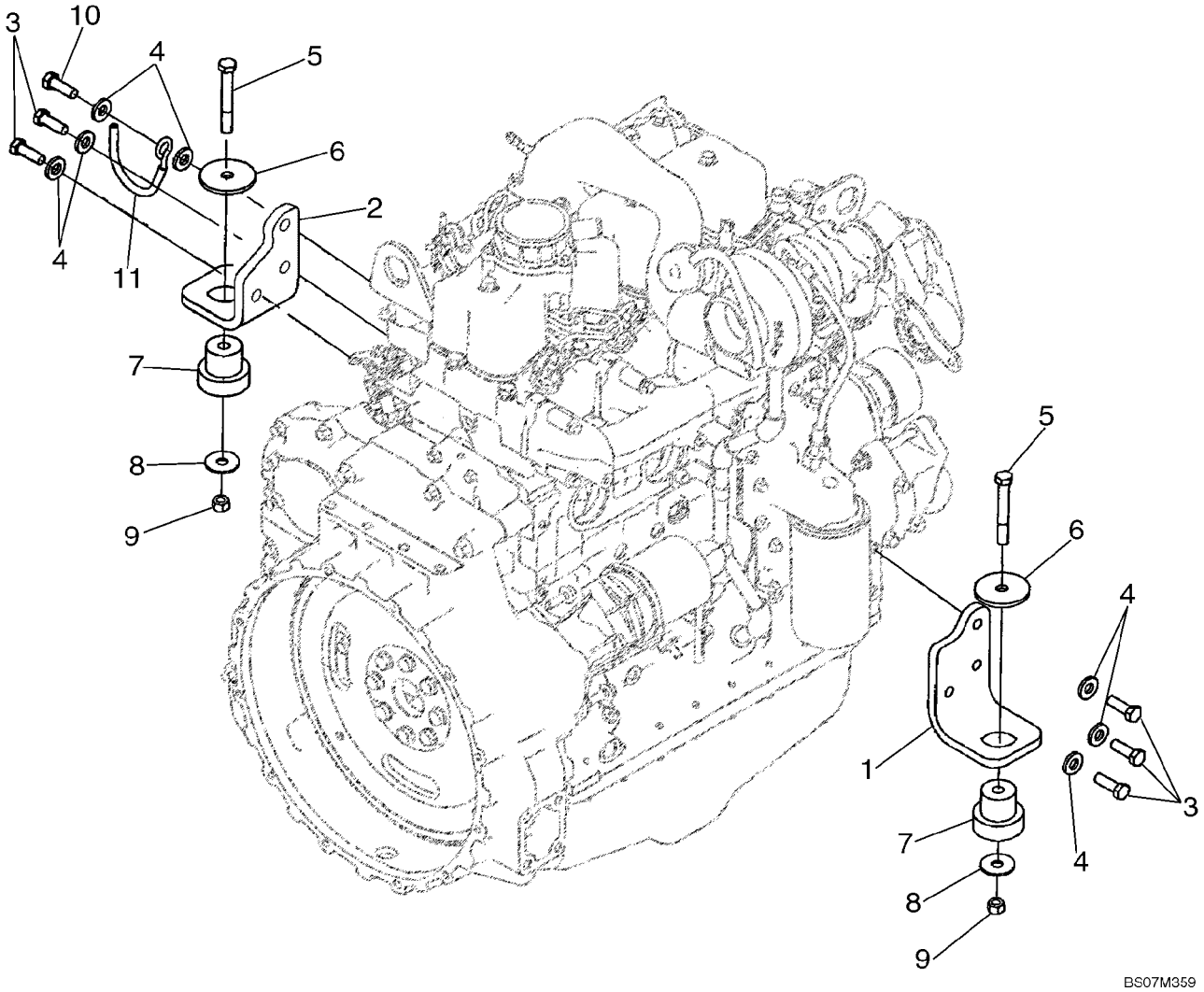

MOTEUR - SUPPORT

REF	FN	PART NUMBER	YR/SN	QTY	DESCRIPTION
		87603948		1	MOTEUR, 85 hp, Internal Intake EGR; Bosch Injection Pump; Turbocharged Engine; Includes Parts On Figures 02-08 - 02-42, 03-04 - 03-11
1		87411319		1	PATTE FIXATION, Right-Hand
2		87411319		1	PATTE FIXATION, Left-Hand
3		614-12035		5	BOULON, Hex, M12 x 35, 8.8, Full Thd
4		896-15012		7	RONDELLE, M12 x 28.5 x 4, HT
5		814-12080		2	BOULON, Hex, M12 x 80, 8.8
6		85801585		2	RONDELLE D'ETANCHEITE
7		87416966		2	ISOLATEUR, Insulator, Rubber Mount
8		85802618		2	RONDELLE D'ETANCHEITE
9		832-10412		2	CONTRE-ECROU, M12 x 1.75, Cl 8
10		614-12040		1	BOULON, Hex, M12 x 40, 8.8, Full Thd
11		87431799		1	SUPPORT, Hose Support

MOTEUR

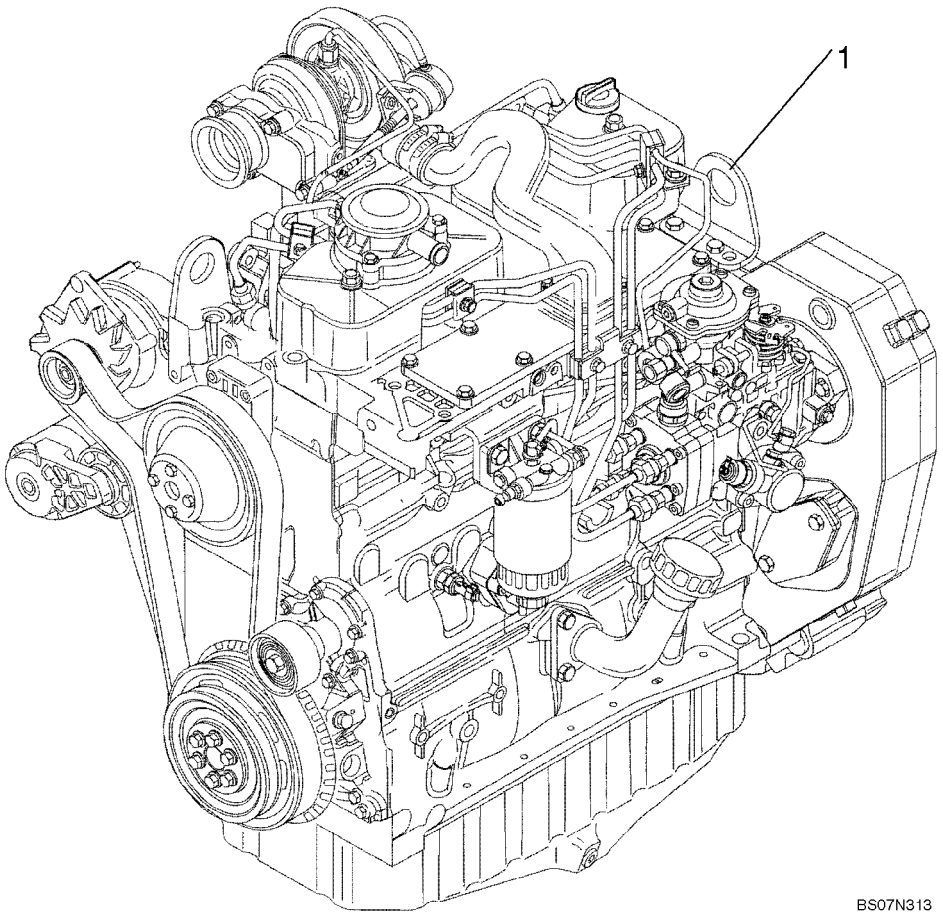

MOTEUR

REF	FN	PART NUMBER	YR/SN	QTY	DESCRIPTION
1		87603948		1	MOTEUR, 85 hp, Internal Intake EGR; Bosch Injection Pump; Turbocharged Engine; Includes Parts On Figures 02-08 - 02-42, 03-04 - 03-11

BLOC CYLINDRES

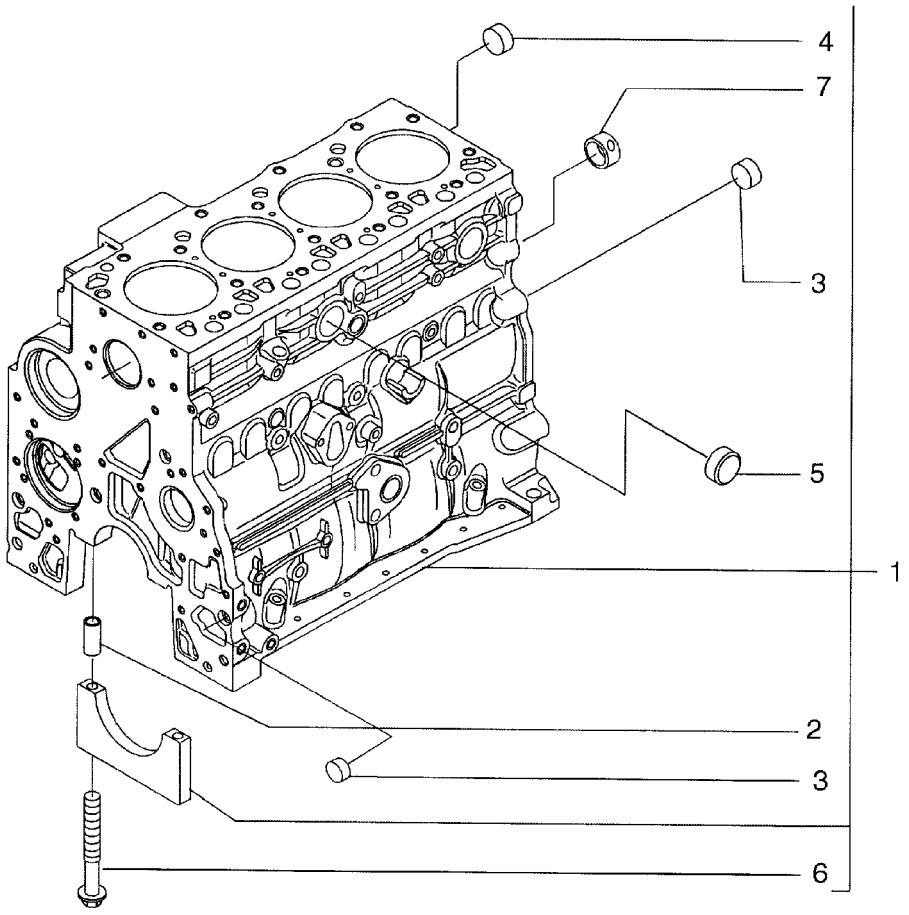

BS04A024

BLOC CYLINDRES

REF	FN	PART NUMBER	YR/SN	QTY	DESCRIPTION
1		2830082		1	BLOC MOTEUR, - ASSY; Incl. Ref 2 - 7, Plus Main Bearing Caps
		4895919		4	COUSSINET VILEBREQUI, Main Bearing Cap; Not Serviced Separately
		4895921		1	COUSSINET VILEBREQUI, Main Bearing Cap; Not Serviced Separately
2		4899026		10	PION
3		4895039		3	BOUCHON
4		4895038		4	BOUCHON
5		4895228		2	BOUCHON
6		4891353		10	VIS, Flg Hd, M12 x 1.5 x 120
7		4895040		1	BAGUE

BLOC CYLINDRES

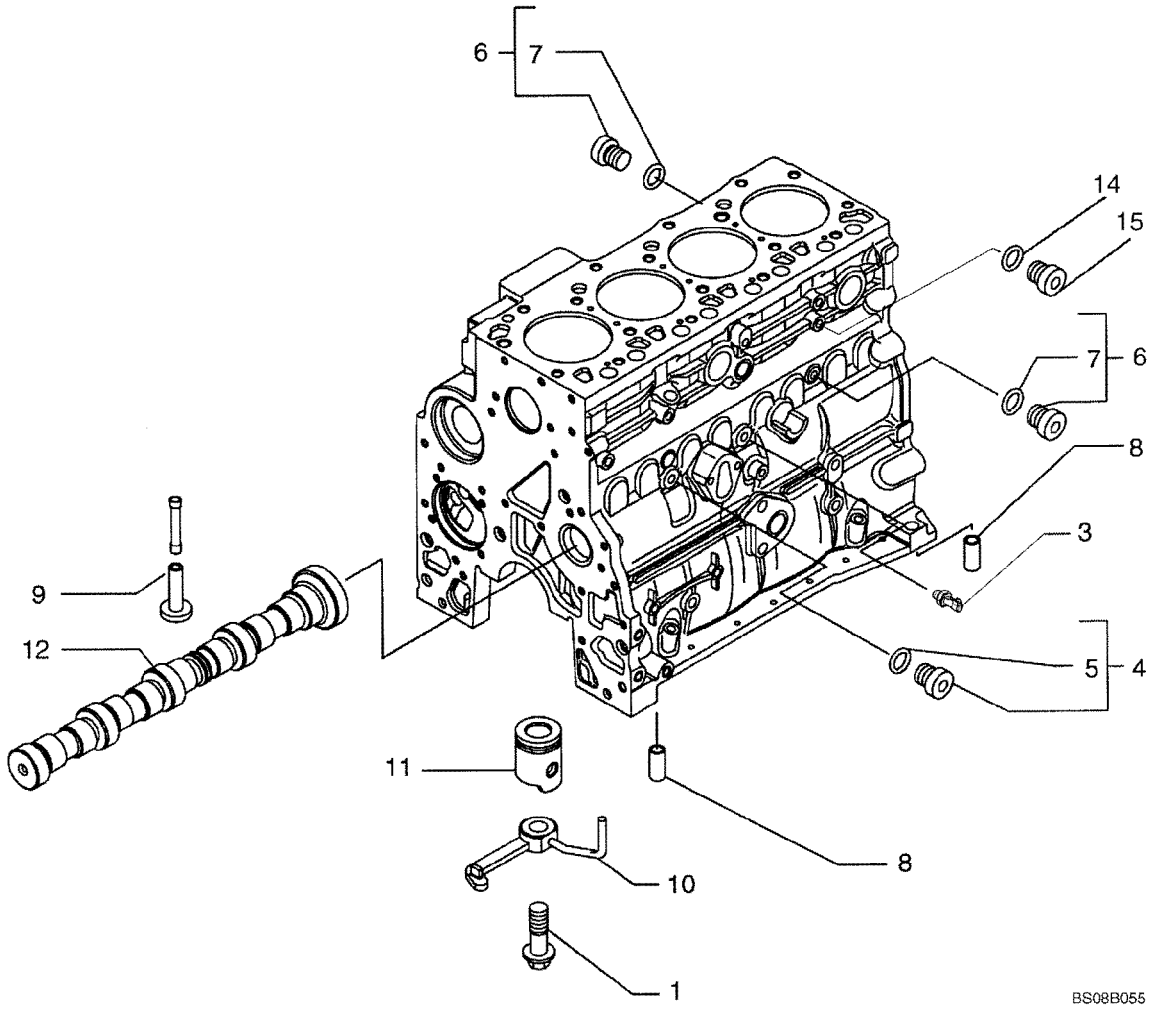

BLOC CYLINDRES

REF	FN	PART NUMBER	YR/SN	QTY	DESCRIPTION
1		4894218		4	VIS
3		2852889		1	PRESSOSTAT
4		4899009		1	BOUCHON, M10 x 1; Incl. Ref 5
5		4899072		1	JOINT THORIQUE
6		4895392		2	BOUCHON, 18 x 1.5; Incl. Ref 7
7		4895393		1	JOINT THORIQUE
8		4895049		2	PION
9		4895180		8	POUSSOIR
10		2852202		4	GICLEUR, Incl. Ref 1
11		REF		1	NOTICE, PISTON; See Figure 02-23
12		REF		1	NOTICE, CAMSHAFT; See Figure 02-28
13		4896153		1	BOUCHON, Piston Cooling, M6.08 OD x 30 lg; If Used
14		4895623		1	BOUCHON
15		4895625		1	JOINT THORIQUE

POMPE ë HUILE, CARTER

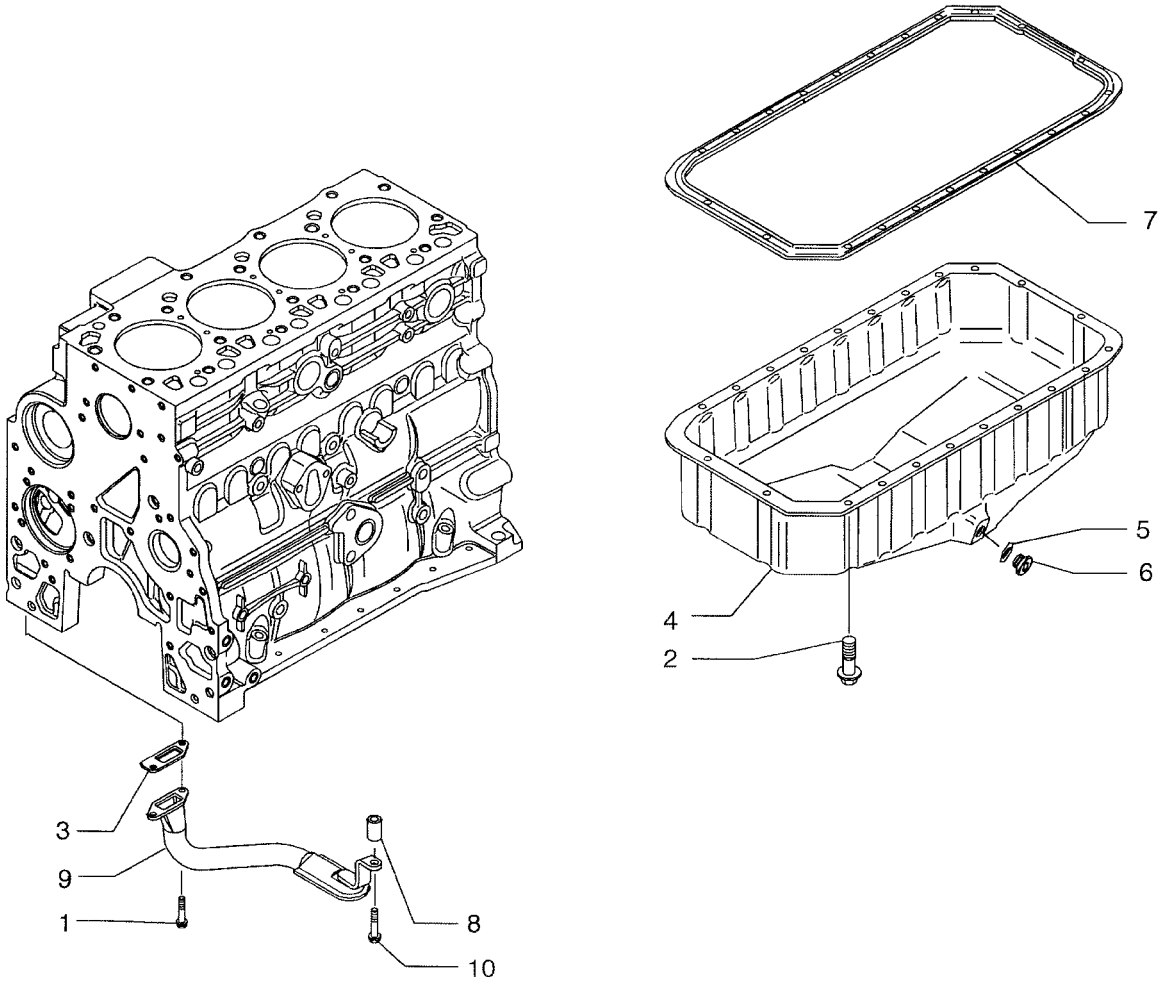

POMPE ë HUILE, CARTER

REF	FN	PART NUMBER	YR/SN	QTY	DESCRIPTION
1		16673635		2	VIS, M8 x 20mm
2		4899091		22	VIS, Hex Flg, M8 x 1.25 x 40
2		4895489		2	VIS, Flange, M8 x 110
3		4898301		1	JOINT
4		2852011		1	CARTER D'HUILE
5		2852978		1	JOINT THORIQUE, Seal
6		2856086		1	BOUCHON, 22 x 1.5; Does Not Include Seal, Purchase Seal Separately
7		2852012		1	JOINT
8		2852016		1	ENTRETOISE
9		2852013		1	TAMIS DE CR£PINE, Tube; Oil Suction, Includes Screen Which Is Not Serviced Separately
10		4895538		1	VIS, Flange, M10 x 120

02-12		p1	02/08

COUVERCLES DE BATI

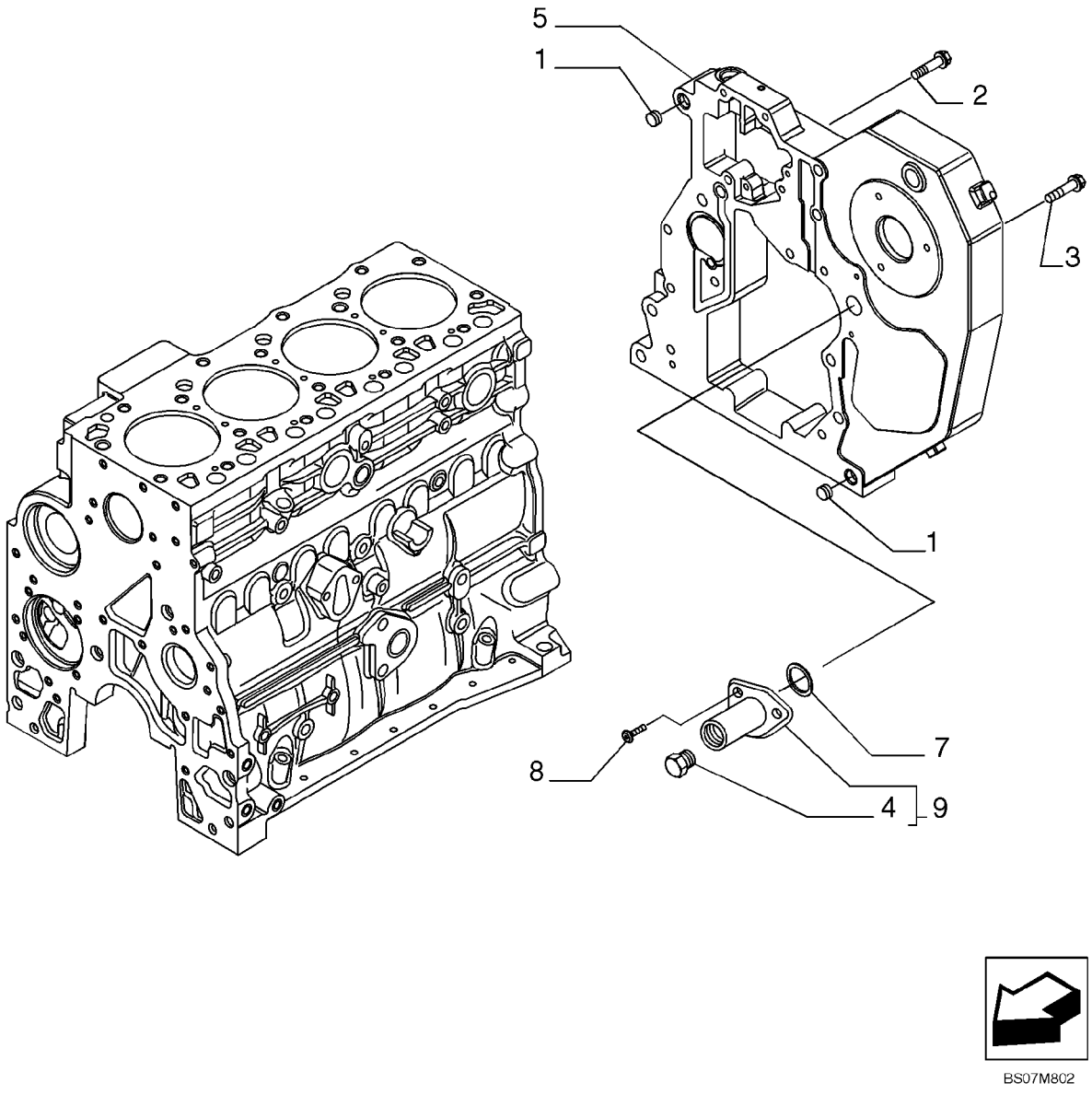

COUVERCLES DE BATI

REF	FN	PART NUMBER	YR/SN	QTY	DESCRIPTION
1		4899026		2	PION
2		4899091		4	VIS, Hex Flg, M8 x 1.25 x 40
3		4899093		5	VIS, Hex Flg, M10 x 1.5 x 30
3		4899073		1	VIS, Hex Flg, M12 x 1.75 x 30
4		16882515		1	BOUCHON, Plug
		4899115		1	JOINT THORIQUE, (Part of 16882515), Not Shown
5		2853671		1	CARTER
7		2852519		1	JOINT THORIQUE
8		4895355		2	VIS, Torx Rd Hd, M5 x .8 x 17
9		2855287		1	CARTER, - ASSY

BLOC CYLINDRES - COUVERCLES

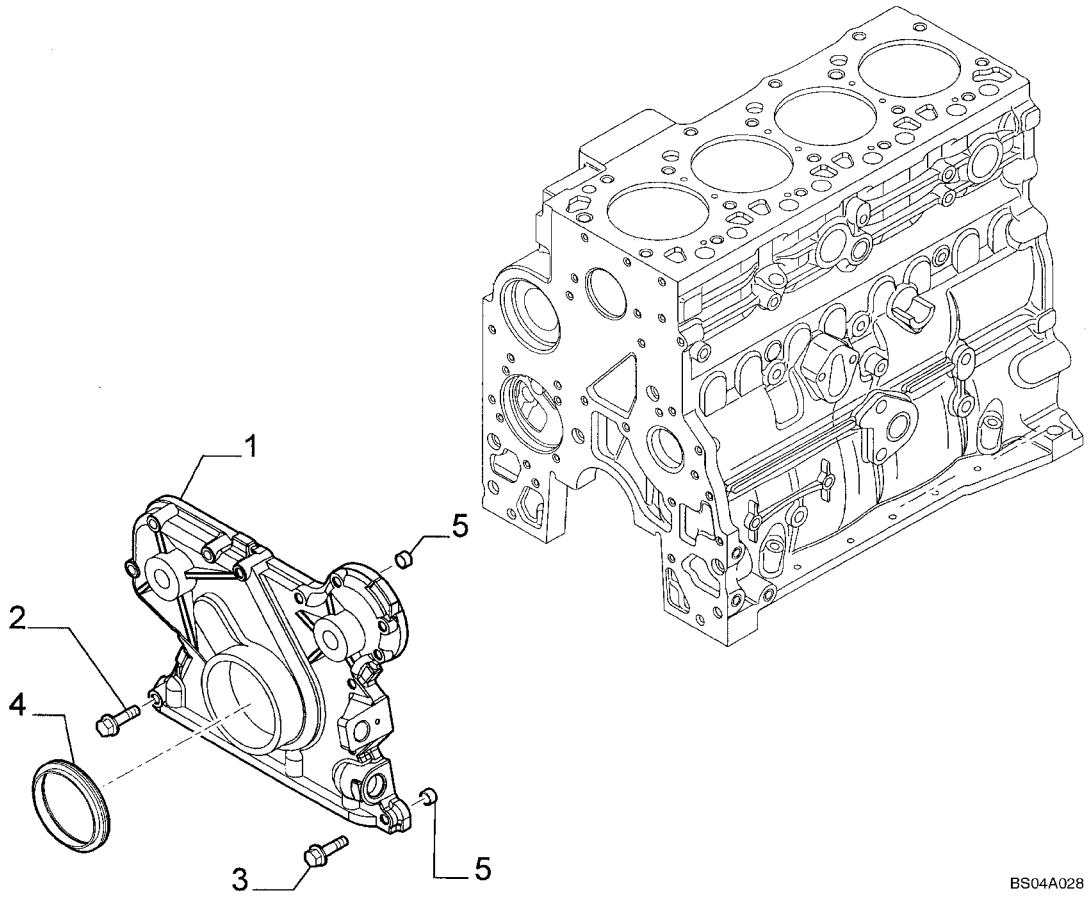

BLOC CYLINDRES - COUVERCLES

REF	FN	PART NUMBER	YR/SN	QTY	DESCRIPTION
1		4897024		1	COUVERCLE, Front Gear
2		4899078		5	VIS, Hex Flg, M8 x 1.25 x 45
3		4899063		8	VIS, Hex Flg, M8 x 1.25 x 30
4		4890832		1	JOINT
5		4891209		2	PION

02-14		p1	02/08

COUVERCLES DE BATI

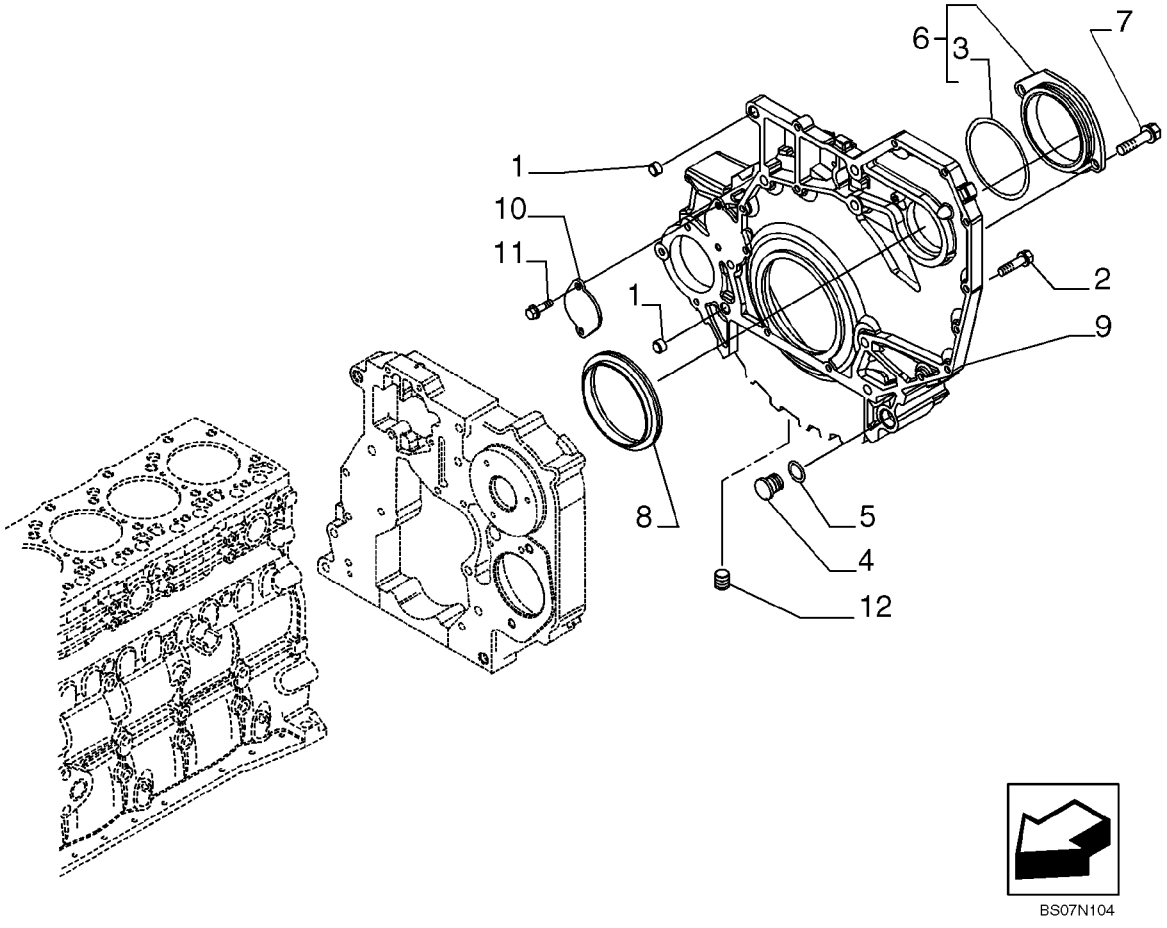

COUVERCLES DE BATI

REF	FN	PART NUMBER	YR/SN	QTY	DESCRIPTION
1		4899026		2	PION
2		4899109		3	VIS, Hex, M10 x 1.5 x 80
2		4892915		7	VIS, M10 x1.5 x 40
2		4899076		5	VIS, Hex Flg, M12 x 1.75 x 80
2		4899074		2	VIS, Hex Flg, M12 x 1.75 x 120
2		4899143		1	VIS, Hex Flg, M10 x 1.5 x 140
2		2852865		2	VIS
3		2854075		1	JOINT THORIQUE
4		4895378		2	BOUCHON
5		4895379		2	JOINT THORIQUE, M21.82 ID x 3.53 Thk
6		2854073		1	COUVERCLE
7		4899020		2	VIS
8		4890833		1	JOINT
9		2855178		1	CARTER
10		4895155		1	COUVERCLE
11		4899068		2	VIS, Hex Flg, M8 x 1.25 x 16
12		4893036		1	BOUCHON, Alternate part to 2854866
12		{ 2854866}		1	Plug, Alternate part to 4893036

RENIFLARD - MOTEUR

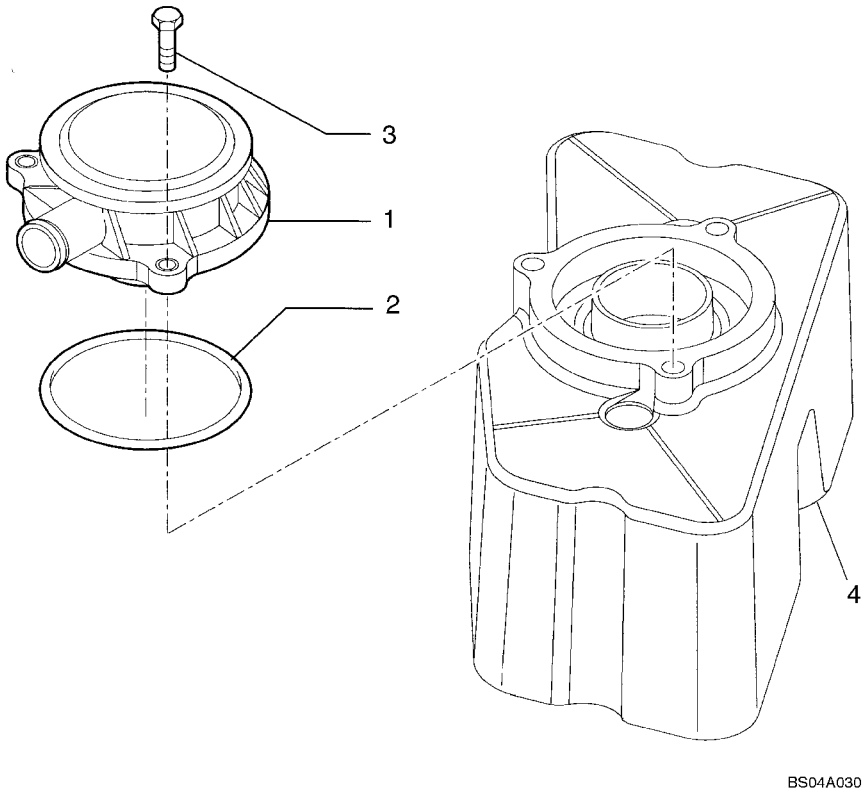

RENIFLARD - MOTEUR

REF	FN	PART NUMBER	YR/SN	QTY	DESCRIPTION
1		2852531		1	RENIFLARD
2		2852028		1	JOINT
3		4899110		3	VIS, Hex Flg, M6 x 1 x 20, Alternate Part to 4899092
3		4899092		3	VIS, Hex Flg, M6 x 1 x 25, Alternate Part to 4899110
4		REF		1	NOTICE, COVER; See Figure 02-17

02-16		p1	02/08

CULASSE DE CYLINDRE

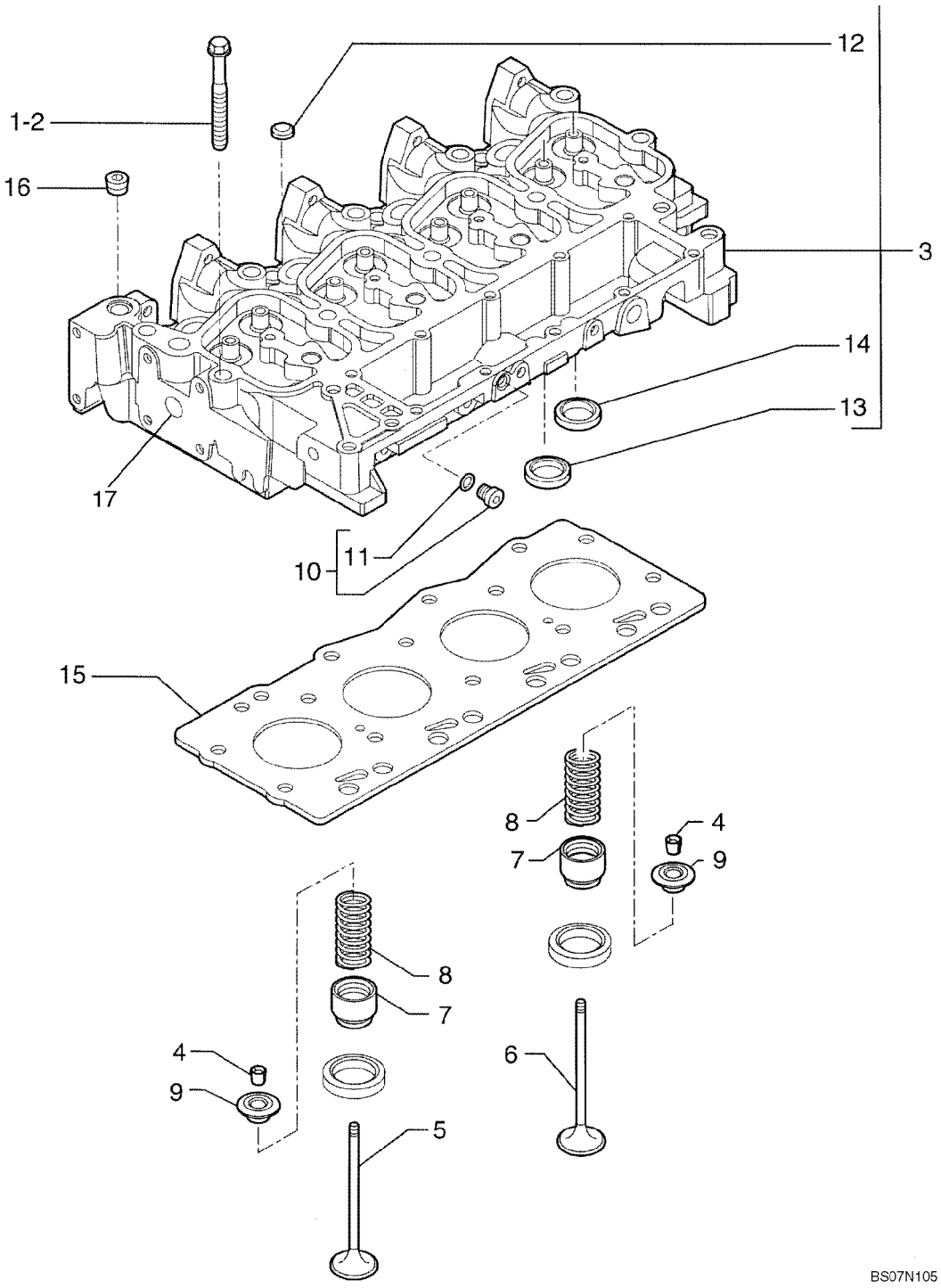

CULASSE DE CYLINDRE

REF	FN	PART NUMBER	YR/SN	QTY	DESCRIPTION
1		4892861		4	VIS, Wash Hd, M12 x 1.25 x 73
2		4892859		10	VIS, Wash Hd, M12 x 1.25 x 143
3		2856017		1	CULASSE, Incl. Ref 12 - 14, 17
4		4895183		16	DOUILLE
5		4895188		4	SOUPAPE D'ECHAPPEMENT
6		4895187		4	SOUPAPE D'ADMISSION
7		4895347		8	JOINT
8		4895215		8	RESSORT, SOUPAPE
9		4895184		8	RETENEUR
10		4899009		1	BOUCHON, M10 x 1; Incl. Ref 11
11		4899072		1	JOINT THORIQUE
12		4895179		3	BOUCHON
13		4897178		4	SIEGE DE SOUPAPE, Intake
14		4897179		4	SIEGE DE SOUPAPE, Exhaust
15		2830919		1	JOINT DE CULASSE, SP=1.25
15		2830920		1	JOINT DE CULASSE, SP=1.15
16		4895078		5	BOUCHON
17		4895085		1	BOUCHON, 25.74mm

02-17		p1	02/08

CACHE CULBUTEUR

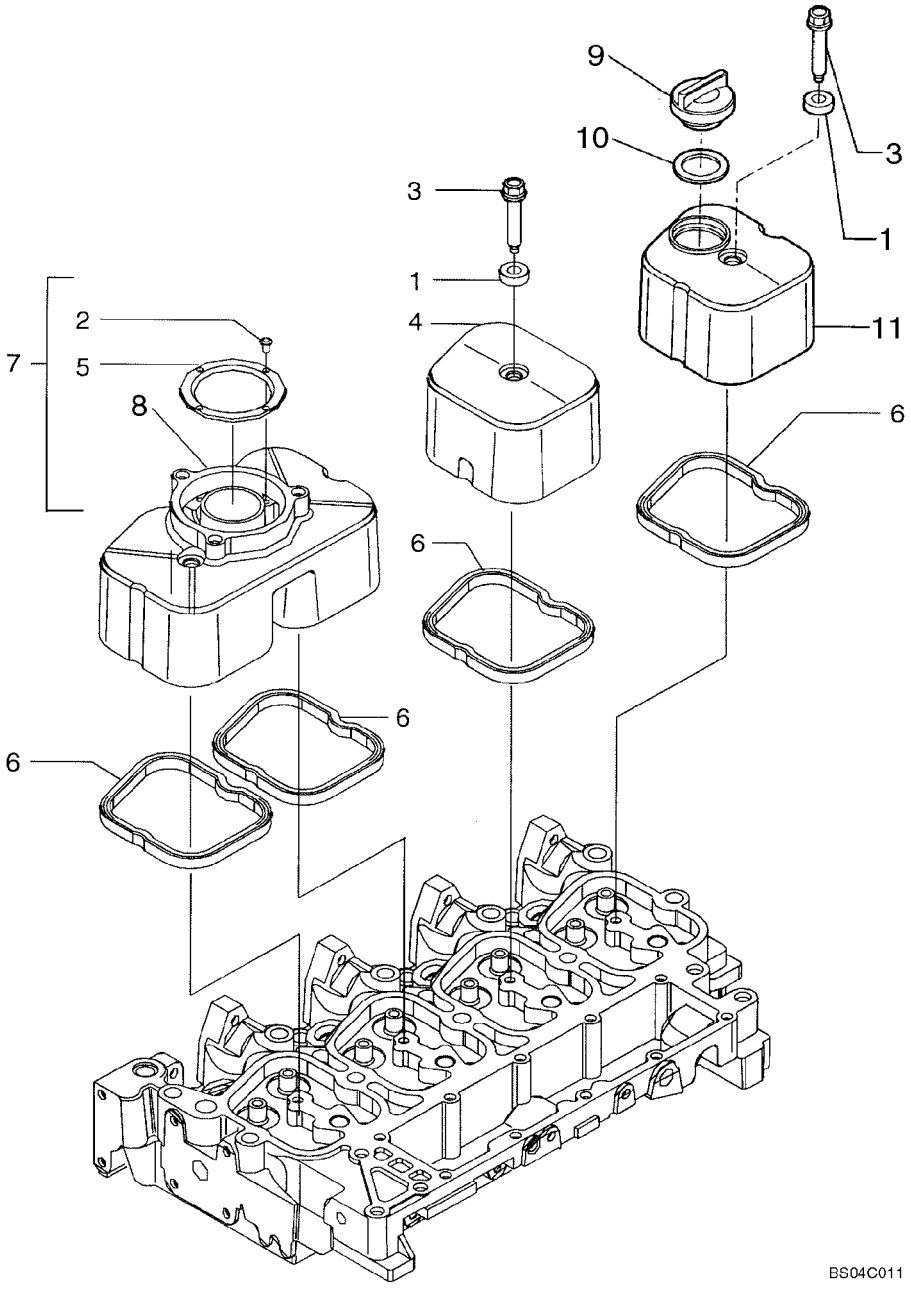

CACHE CULBUTEUR

REF	FN	PART NUMBER	YR/SN	QTY	DESCRIPTION
1		4895360		4	ISOLATEUR
2		2830281		4	VIS AUTO-TARAUDEUSE
3		4895214		4	VIS, Flange
4		2852032		1	COUVERCLE
5		2830775		1	CHICANE
6		2852033		4	JOINT
7		2830784		1	CACHE-CULBUTEURS, Incl. Ref 2, 5
8		2830769		1	COUVERCLE
9		4895202		1	BOUCHON DE REMPL.
10		4895296		1	JOINT
11		2852894		1	COUVERCLE

CULASSE DE CYLINDRE - M£CANISME DU DISTRIBUTEUR

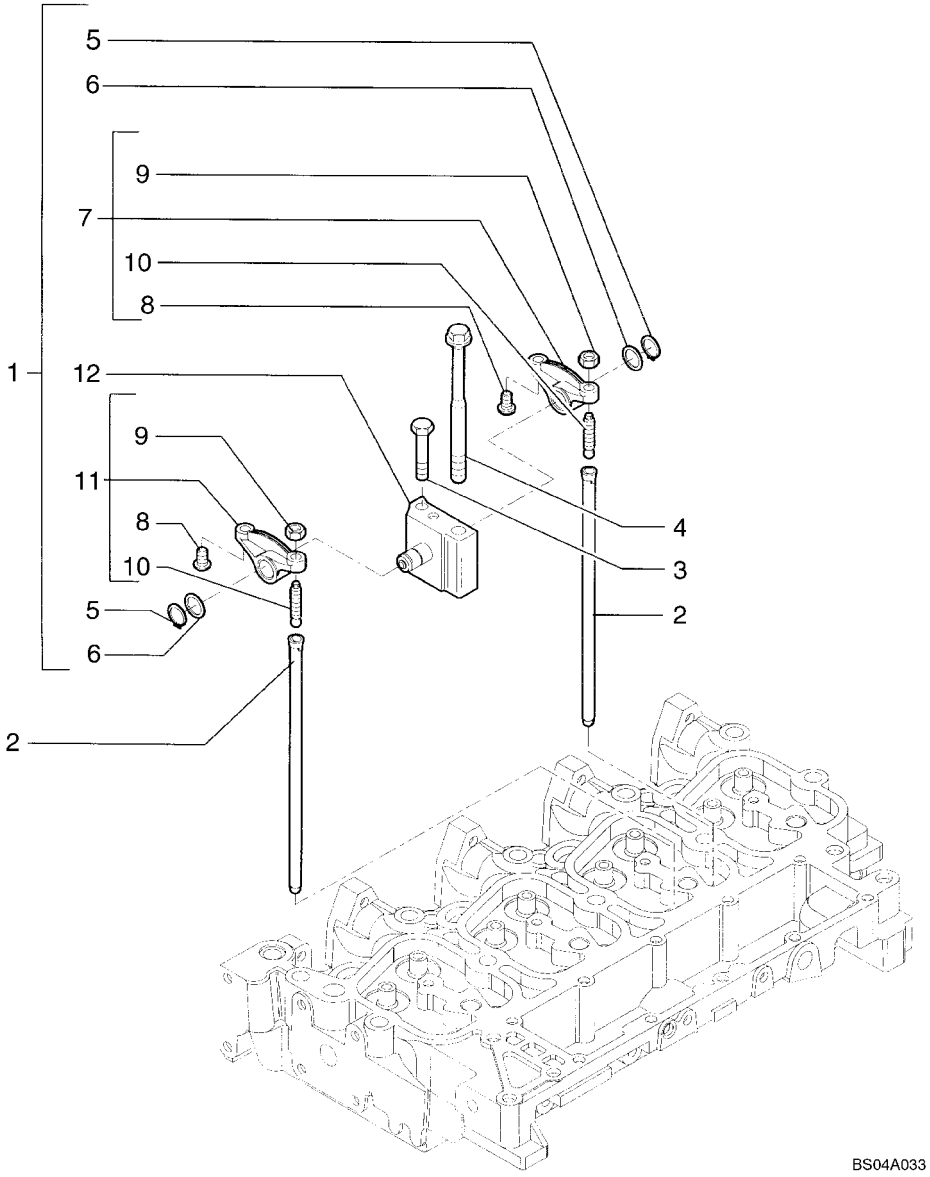

CULASSE DE CYLINDRE - M£CANISME DU DISTRIBUTEUR

REF	FN	PART NUMBER	YR/SN	QTY	DESCRIPTION
1		4895195		4	CULBUTEUR, Incl. Ref 5 - 12
2		4895361		8	TIGE DE CULBUTEUR
3		2852866		4	VIS, Hex
4		4892860		4	VIS, Wash Hd, M12 x 1.25 x 183
5		4895363		2	ANNEAU D'ARRąT
6		4895364		2	RONDELLE
7		4895196		1	CULBUTEUR, Incl. Ref 8 - 10
8		4895365		2	INSERT
9		4895198		2	ECROU
10		4895199		2	VIS
11		4895200		1	CULBUTEUR, Incl. Ref 8 - 10
12		4895204		1	SUPPORT

COLLECTEURS

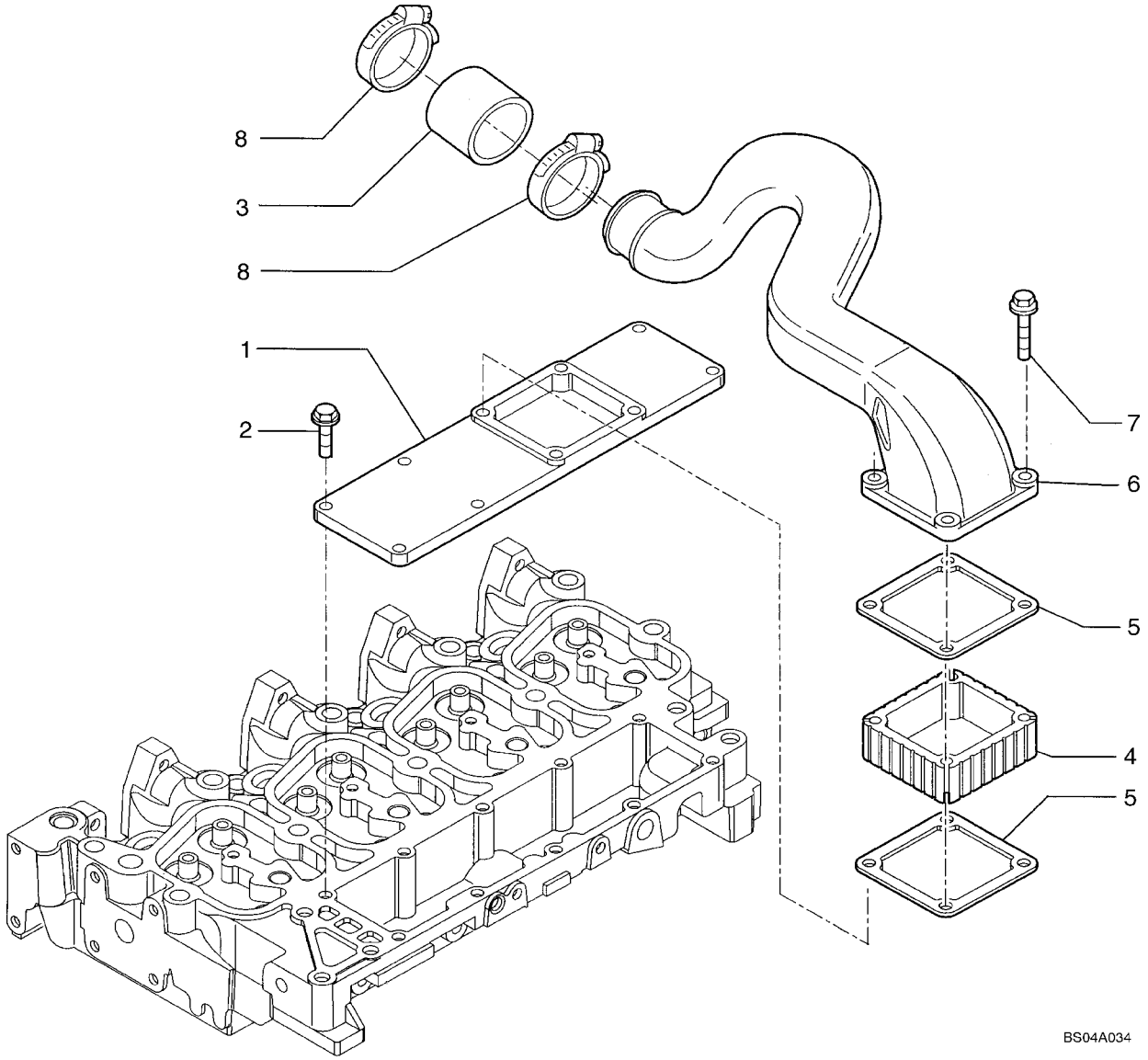

COLLECTEURS

REF	FN	PART NUMBER	YR/SN	QTY	DESCRIPTION
1		2852044		1	COUVERCLE, Manifold Inlet; Aluminum; If Used
1		2856462		1	CONDUIT D'ADMISSION, COVER, Plastic; If Used
2		4899039		6	VIS, Hex Flg, M8 x 1.25 x 25
3		2852029		1	MANCHON
4		2856263		1	ENTRETOISE, Intake
5		4899921		2	JOINT
6		2852030		1	TUYAUTERIE D'ASPIRAT
7		4895294		4	VIS, Flange, M8 x 80
8		4895641		2	COLLIER-DE-SERRAGE

02-20		p1	02/08

CONDUIT D'ECHAPPEMENT

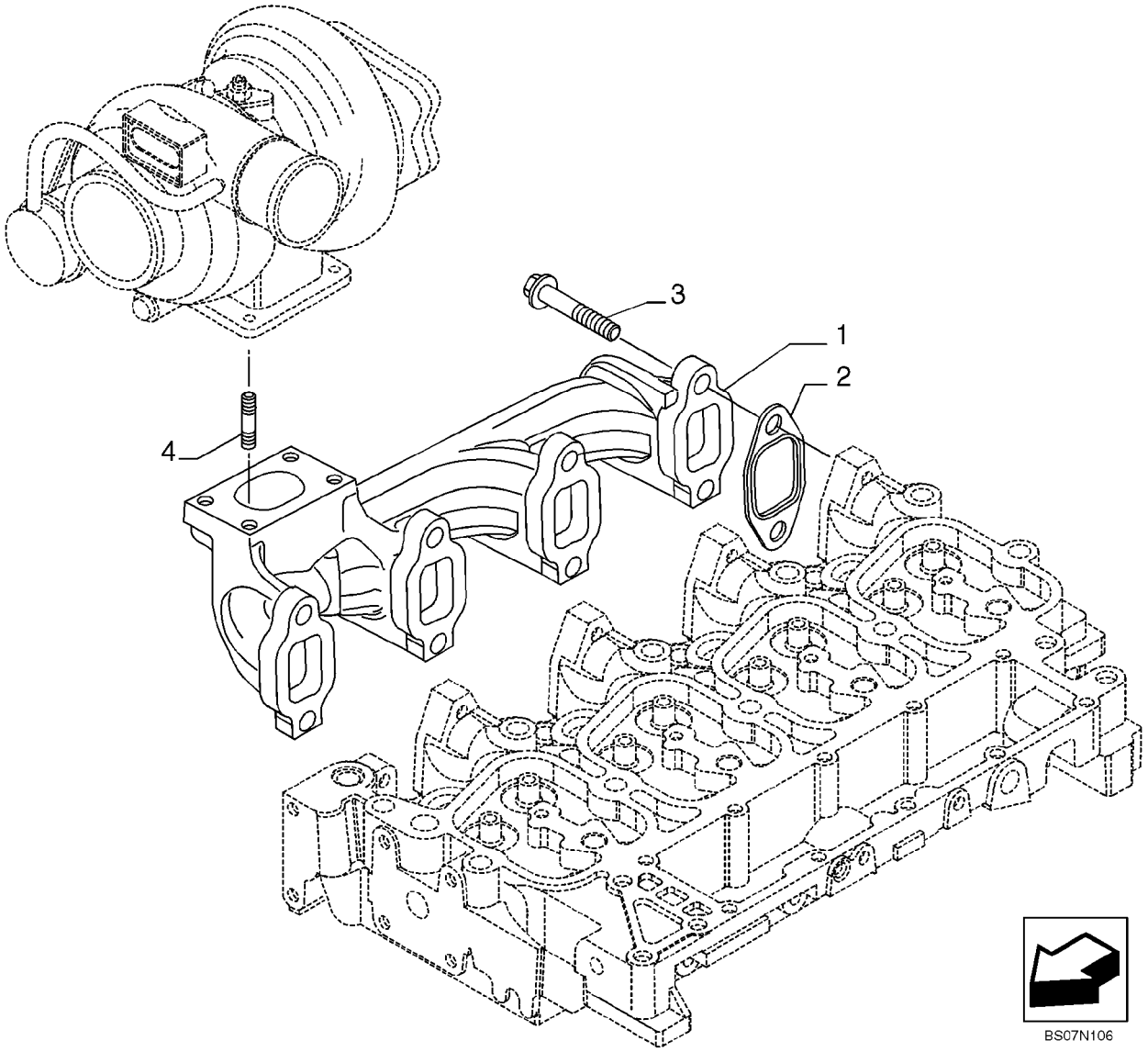

CONDUIT D'ECHAPPEMENT

REF	FN	PART NUMBER	YR/SN	QTY	DESCRIPTION
1		2831203		1	CONDUIT D'ECHAPPEMENT
2		2852743		4	JOINT
3		2852834		8	VIS
4		4899859		4	GOUJON

VILEBREQUIN

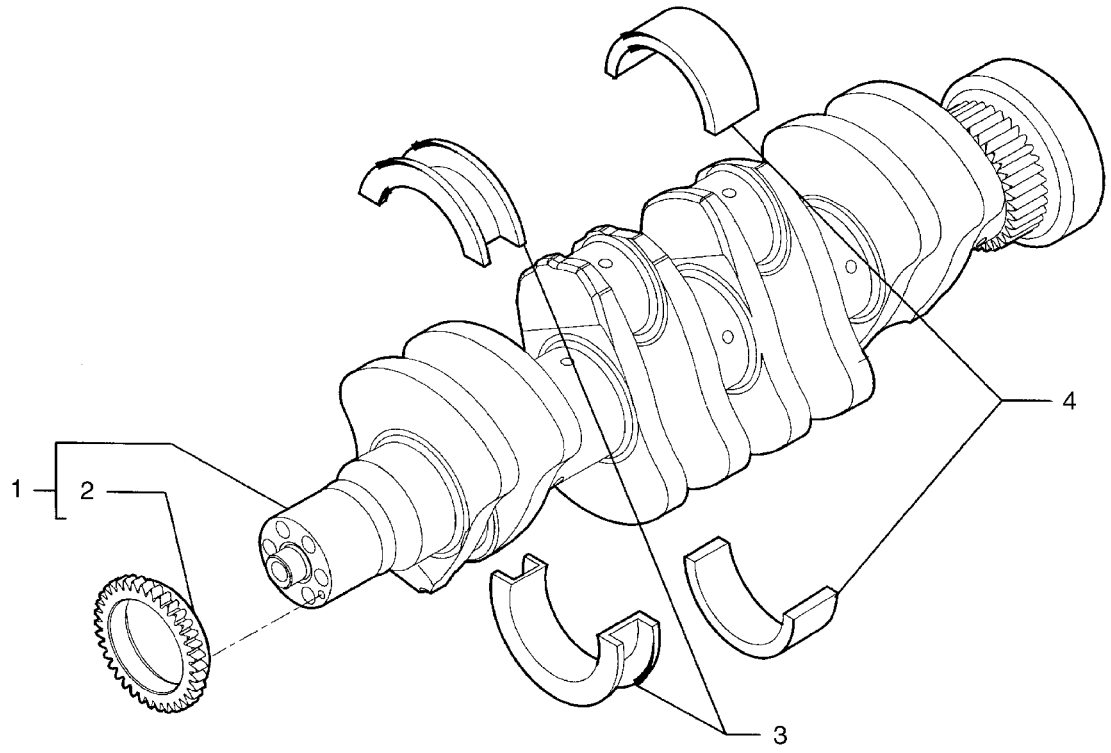

BS04A036

VILEBREQUIN

REF	FN	PART NUMBER	YR/SN	QTY	DESCRIPTION
1		{2856271}		1	Crankshaft Assembly, Incls. Refs. 2
2		4893386		1	PIGNON
3		{2853816}		1	Set, Thrust Washers (Standard)
3		4895414		1	BUT£E A BILLES
4		{2853815}		4	Set, Main Bearings (Standard)
4		4895017		4	COUSSINET VILEBREQUI
5		4899046		1	PION

BIELLE

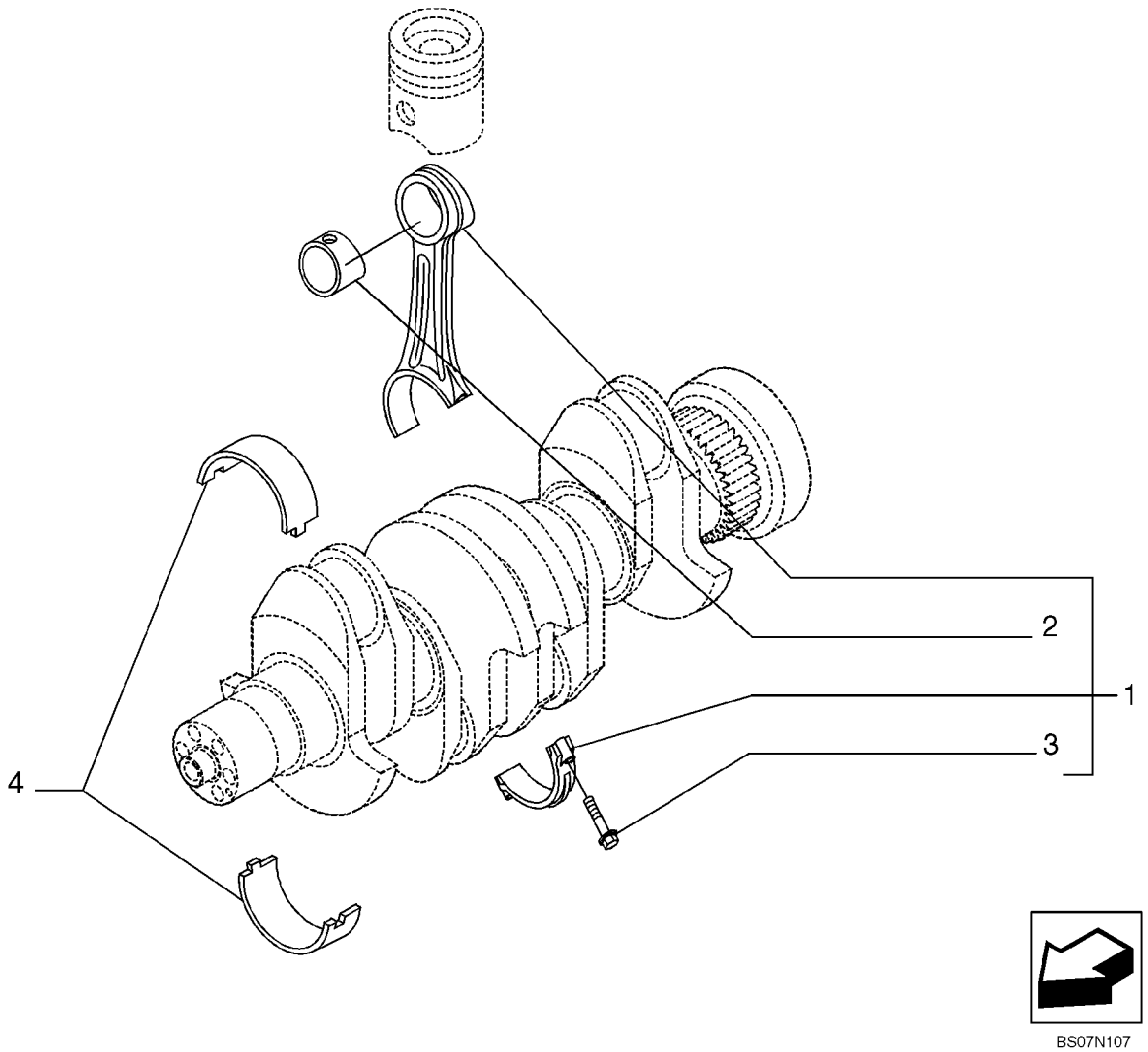

BIELLE

REF	FN	PART NUMBER	YR/SN	QTY	DESCRIPTION
1		2831298		4	BIELLE
2		4892708		1	BAGUE
3		2831297		2	VIS
4		4892715		4	COUSSINET DE BIELLE
4		{2856309}		4	Bearing, Crankshaft

PISTON - MOTEUR

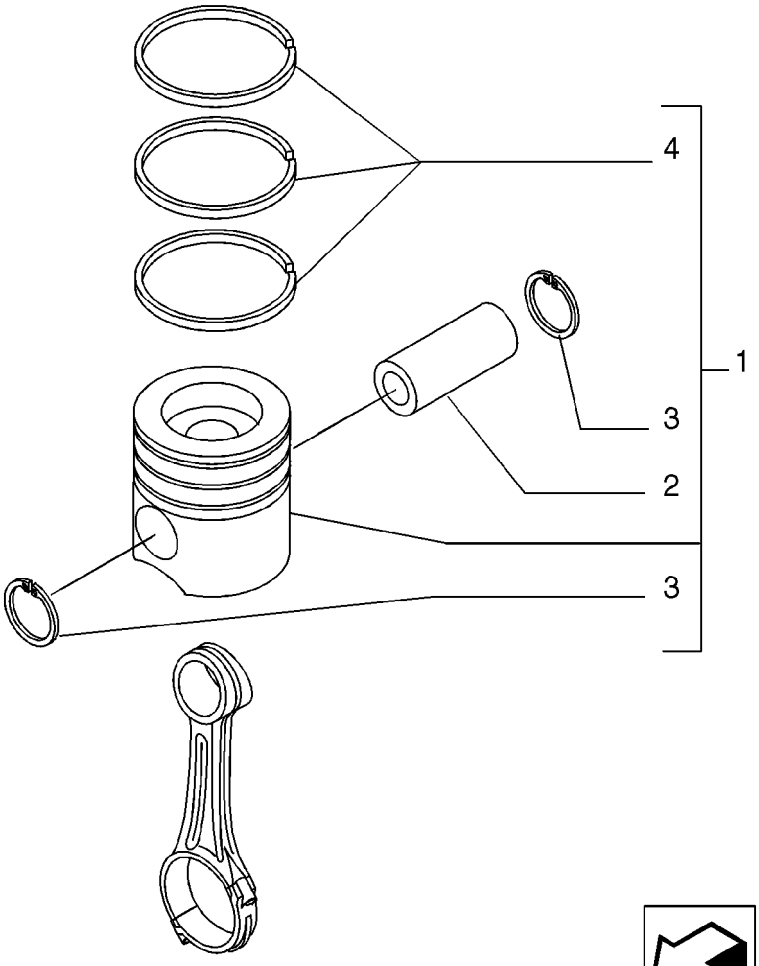

BS07N108

PISTON - MOTEUR

REF	FN	PART NUMBER	YR/SN	QTY	DESCRIPTION
1		2855531		4	PISTON COMPLET, (Standard)
2		4892712		4	AXE DE PISTON
3		2854030		8	ANNEAU D'ARRąT
3		4892713		8	ANNEAU D'ARRąT, Alternate with 2854030
4		2830158		1	SEGMENT DE PISTON, (Standard)
4		2852037		1	SEGMENT RACLEUR
4		2854603		1	KIT, Piston seal

VOLANT - MOTEUR

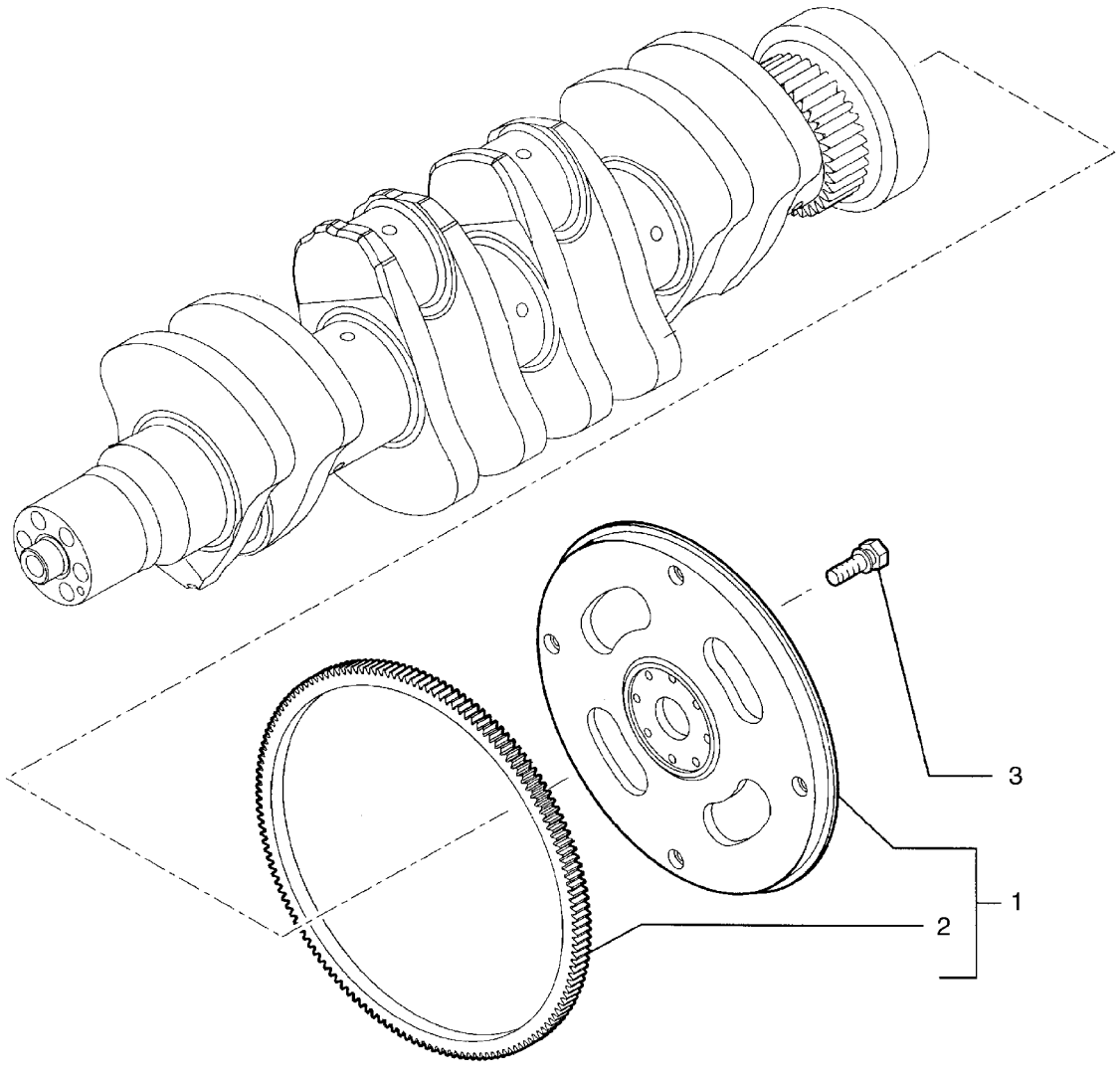

VOLANT - MOTEUR

REF	FN	PART NUMBER	YR/SN	QTY	DESCRIPTION
1		2852049		1	VOLANT DU MOTEUR, - ASSY; Incl. Ref 2
2		2852051		1	COURONNE DENT£E
3		4894641		8	VIS, Wash Hd, M12 x 1.25 x 31

POULIE - VILEBREQUIN

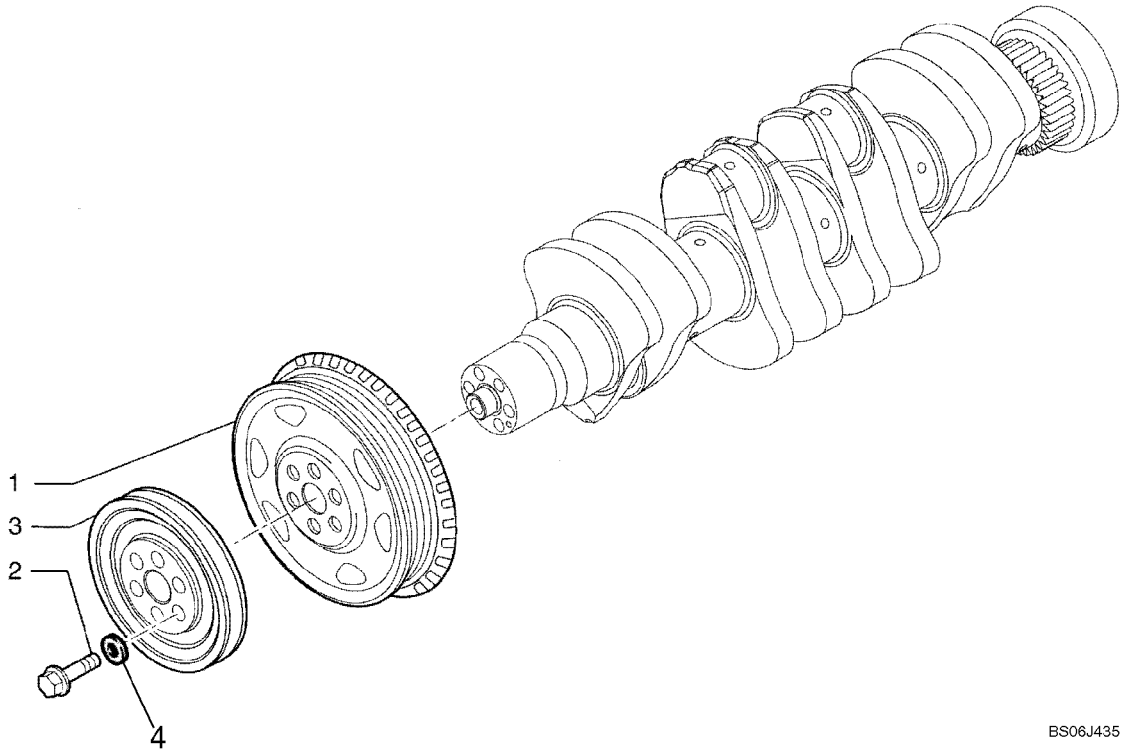

POULIE - VILEBREQUIN

REF	FN	PART NUMBER	YR/SN	QTY	DESCRIPTION
		{2855380}		1	Pulley Assembly, Incls. Refs. 1 - 3
1		4896773		1	POULIE
2		4892867		6	VIS, Torx Wash Hd, M12 x 1.25 x 78.5
3		{2855381}		1	Pulley
4		{}		6	Washer, (Part of 4892867)

MASSELOTTE, ENGRENAGES ET ARBRES

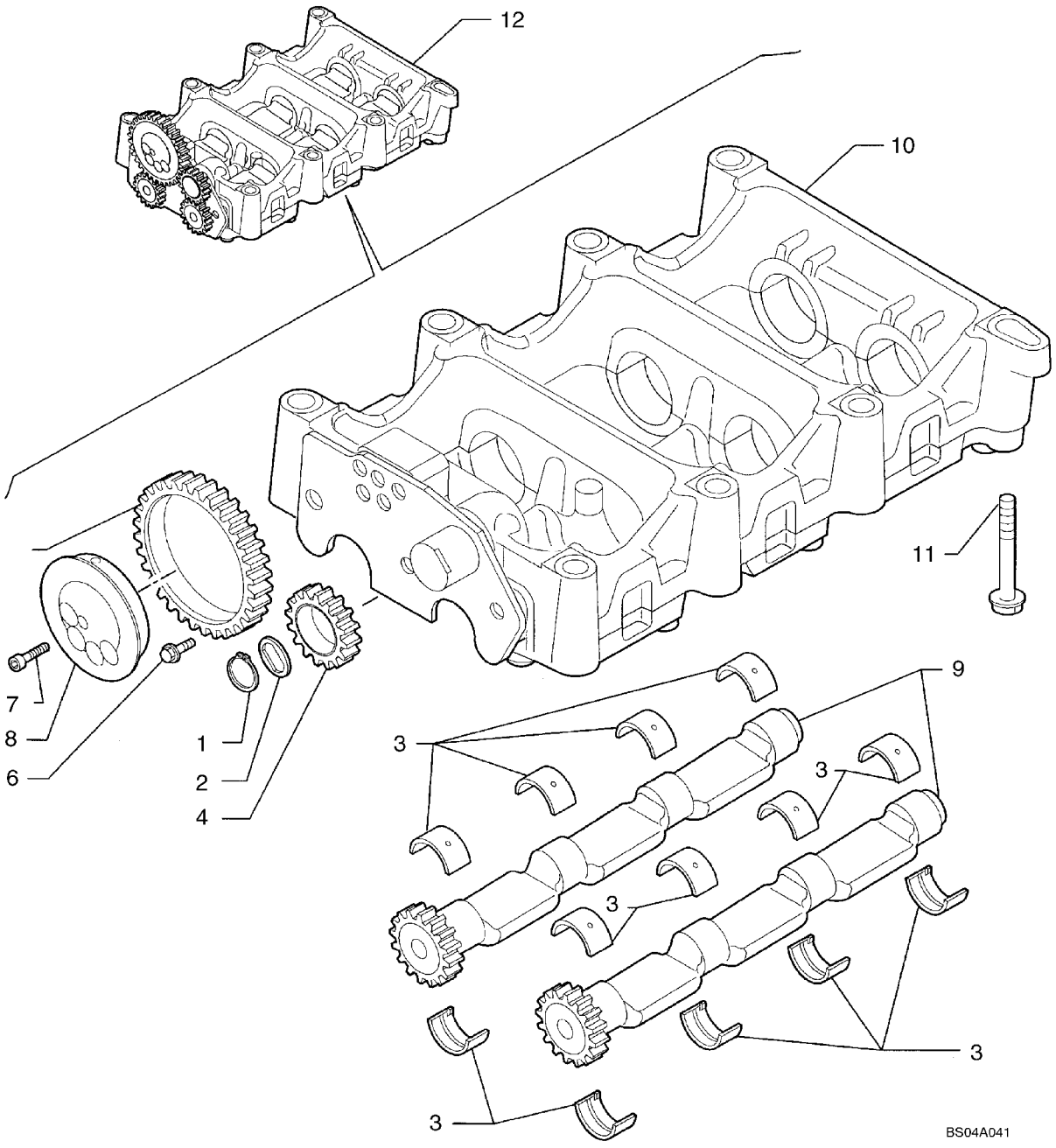

MASSELOTTE, ENGRENAGES ET ARBRES

REF	FN	PART NUMBER	YR/SN	QTY	DESCRIPTION
		2855743		1	MASSELOTTE, Assembly, Incl. Ref 1 - 10
1		4897125		1	ANNEAU D'ARRąT
2		2855753		1	PLATEAU DE PRESSION
3		8093883		16	POCHET.DEMI-COUSSINETS, Replaces 4897071
3		2855747		16	BAGUE
4		4897048		1	PIGNON FOU
4		2855750		1	PIGNON FOU, Gear Assembly; Alternate Part to 4897048, 4897001
5		4896947		1	PIGNON FOU
5		2855748		1	PIGNON FOU, Gear Assembly; Alternate Part to 4896947
6		4895586		3	VIS, Flange, M8 x 16
7		2830433		5-4	VIS, Socket; (4) Used With 2830953 Balancer Assy
8		2831031		1	ARBRE DE RENVOI
9		2831354		2	ARBRE
10		NSS		1	NON FOURNI SEPAREMENT, Housing
11		4899109		6-7	VIS, Hex, M10 x 1.5 x 80, Flange
11		4897934		1	VIS, Flange, M10 x 100
14		2831305		1	PION
15		2855746		1	PLATEAU DE PRESSION
16		2830948		1	ARBRE DE RENVOI
17		4899027		2	PION, Ring

ARBRE ë CAMES

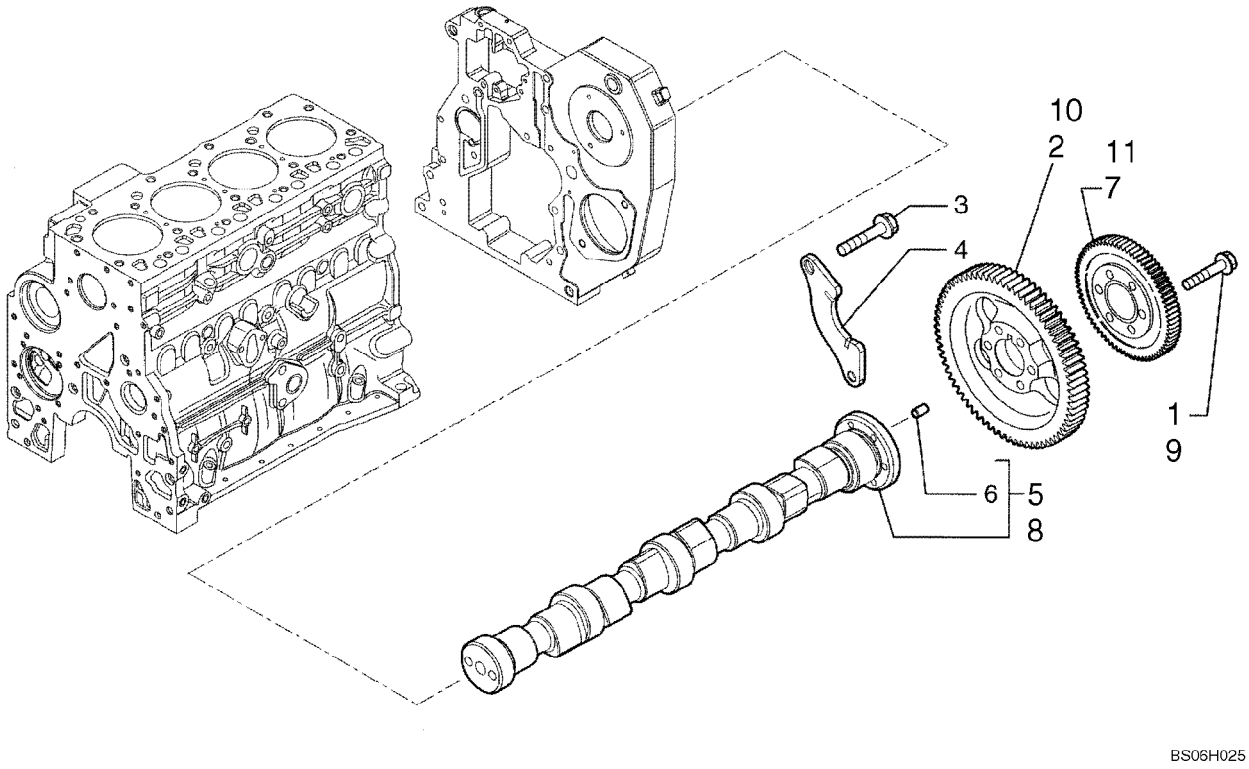

ARBRE ë CAMES

REF	FN	PART NUMBER	YR/SN	QTY	DESCRIPTION
1		4895323		6	VIS, M8 x 1.25 x 40mm Long
2		2852062		1	PIGNON
3		4899068		2	VIS, Hex Flg, M8 x 1.25 x 16
4		4897457		1	SUPPORT
5		2856170		1	ARBRE A CAMES
6		4899080		1	PION, Pin
7		{2855183}		1	Gear

02-29		p1	12/07

TURBOCOMPRESSEUR

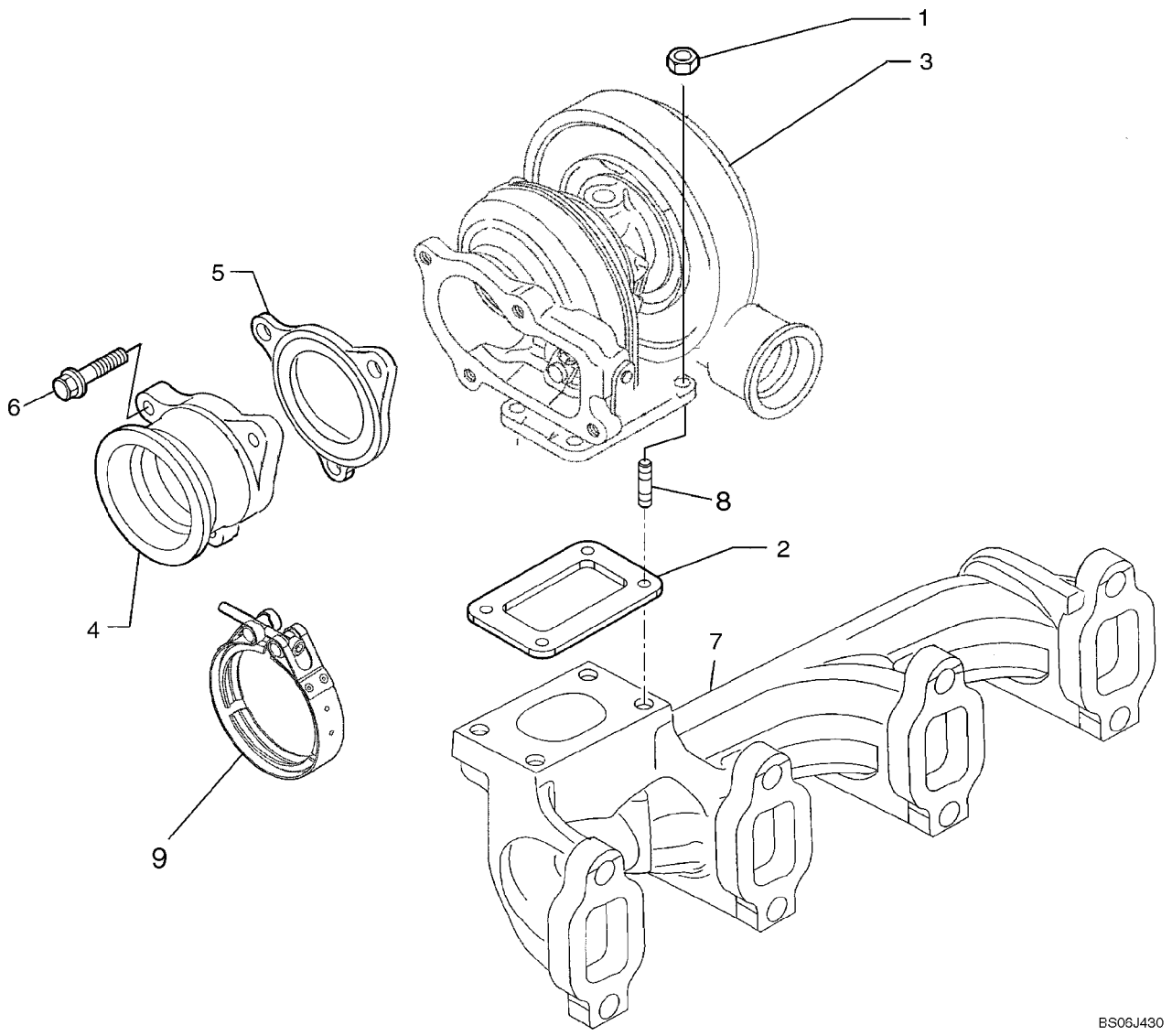

TURBOCOMPRESSEUR

REF	FN	PART NUMBER	YR/SN	QTY	DESCRIPTION
		REF		1	NOTICE, MODELS WITH TURBOCHARGED ENGINE ONLY
1		4899118		4	ECROU, Flange, M8
2		4895133		1	JOINT
3		2852507		1	TURBOCOMPRESSEUR, Assembly
4		2852510		1	TUYAU RIGIDE, Exhaust Manifold
5		2852509		1	JOINT DE COLLECTEUR
6		4898482		3	VIS, Flg Hd, M8 x 1.25 x 30
7		REF		1	NOTICE, EXHAUST MANIFOLD; See Figure 02-20
8		4899859		4	GOUJON
9		2855273		1	COLLIER, Screw

02-30		p1	02/08

JAUGE DE NIVEAU - HUILE MOTEUR

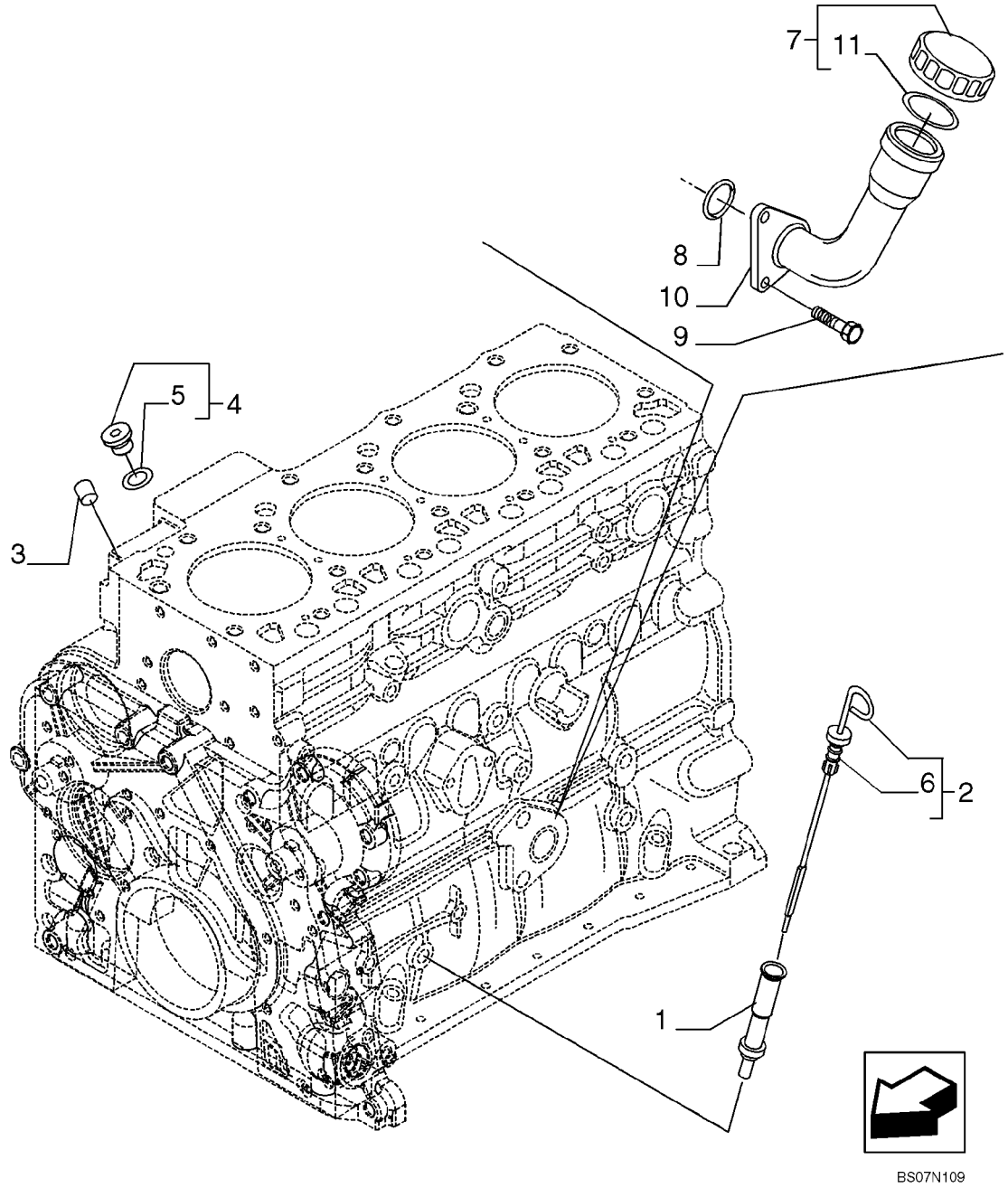

JAUGE DE NIVEAU - HUILE MOTEUR

REF	FN	PART NUMBER	YR/SN	QTY	DESCRIPTION
1		2852122		1	TUBE, - OIL LEVEL
2		2852125		1	JAUGE DE NIVEAU, - ASSY
3		4895406		1	BOUCHON, 9.8mm OD
4		4897330		2	BOUCHON, - ASSY
5		4895610		1	JOINT THORIQUE
6		2852127		1	JOINT
7		2853410		1	BOUCHON DE REMPLISSAGE, - ASSY
8		2852135		1	JOINT
9		2852134		2	VIS
10		2853407		1	GOULOT REMPLISSAGE
11		2853412		1	JOINT THORIQUE

POMPE A HUILE - MOTEUR

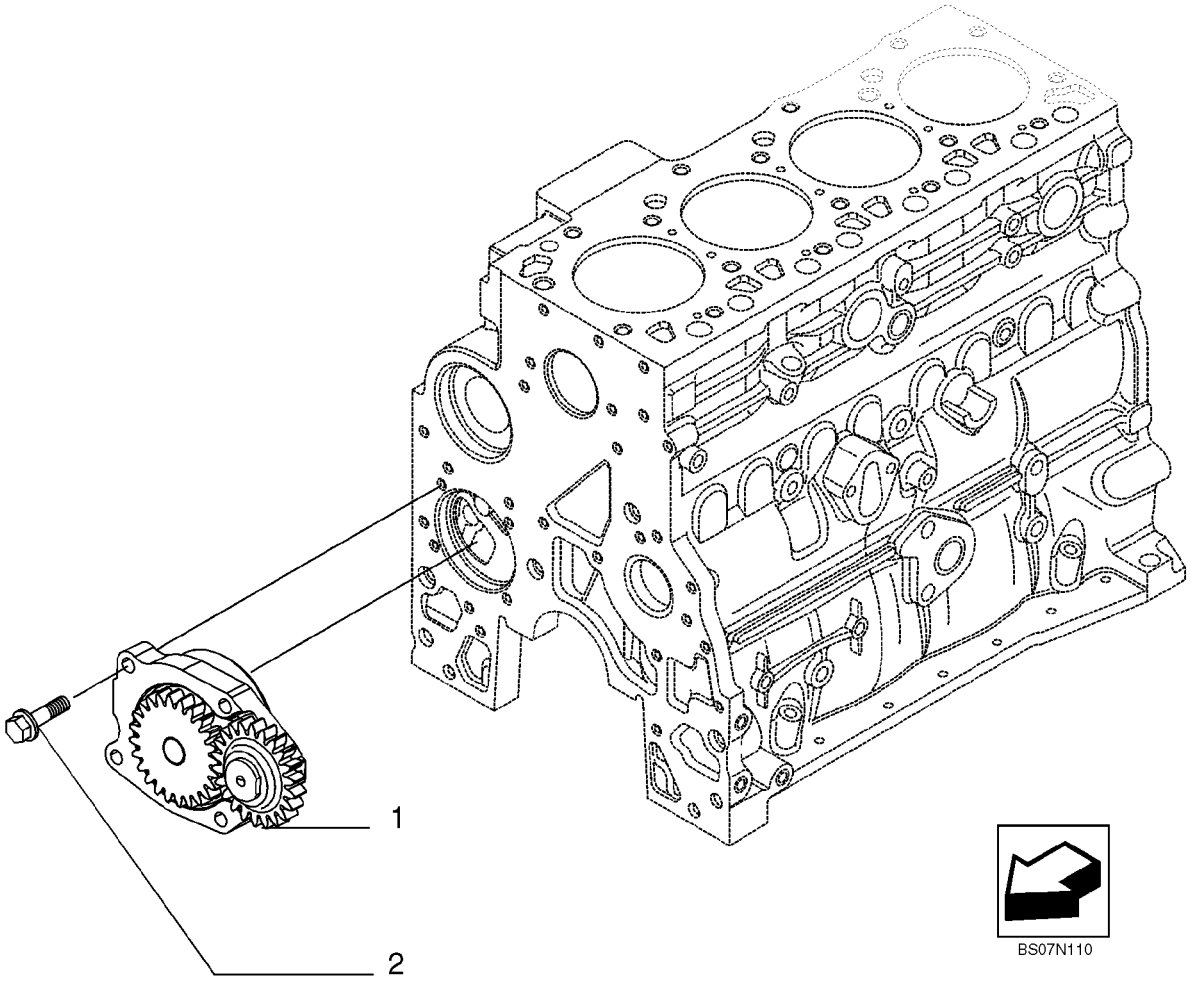

POMPE A HUILE - MOTEUR

REF	FN	PART NUMBER	YR/SN	QTY	DESCRIPTION
1		4897480		1	POMPE A HUILE, IN ALTERNATIVE
1		2853414		1	POMPE A HUILE, IN ALTERNATIVE
2		4899090		4	VIS, Hex Flg, M8 x 1.25 x 30

02-32		p1	02/08

FILTRE A HUILE - MOTEUR

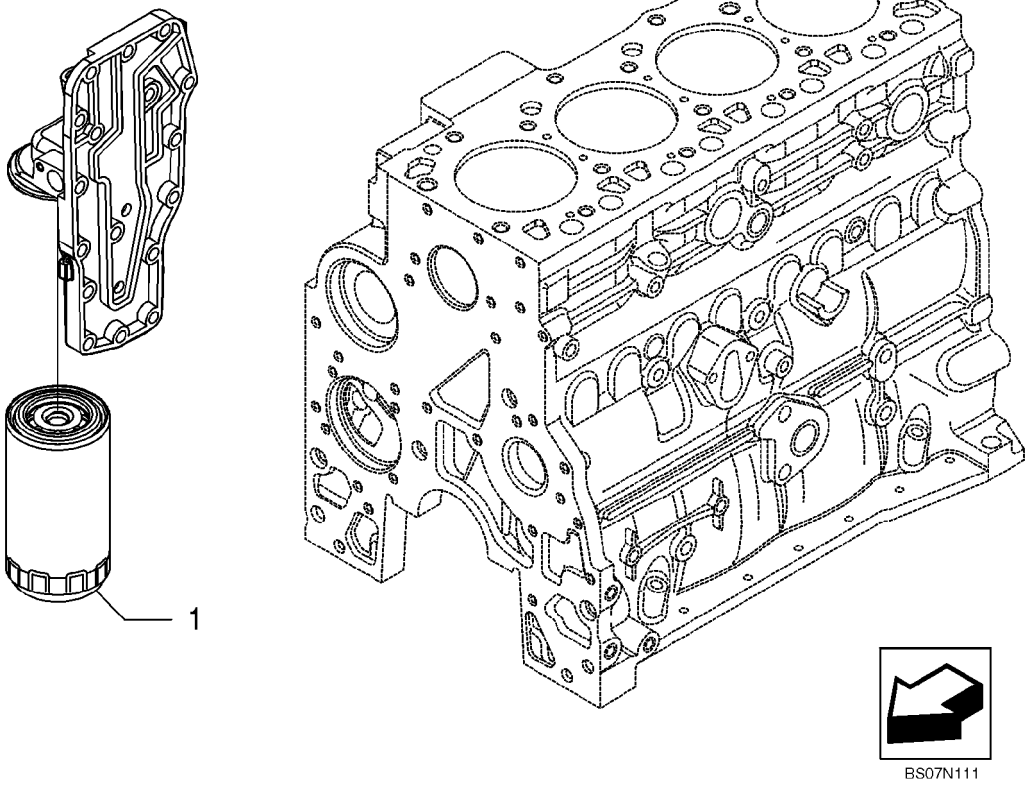

FILTRE A HUILE - MOTEUR

REF	FN	PART NUMBER	YR/SN	QTY	DESCRIPTION
1		87803261		1	FILTRE A HUILE MOTEUR, 2/4V

TUYAUTERIES - HUILE DU MOTEUR

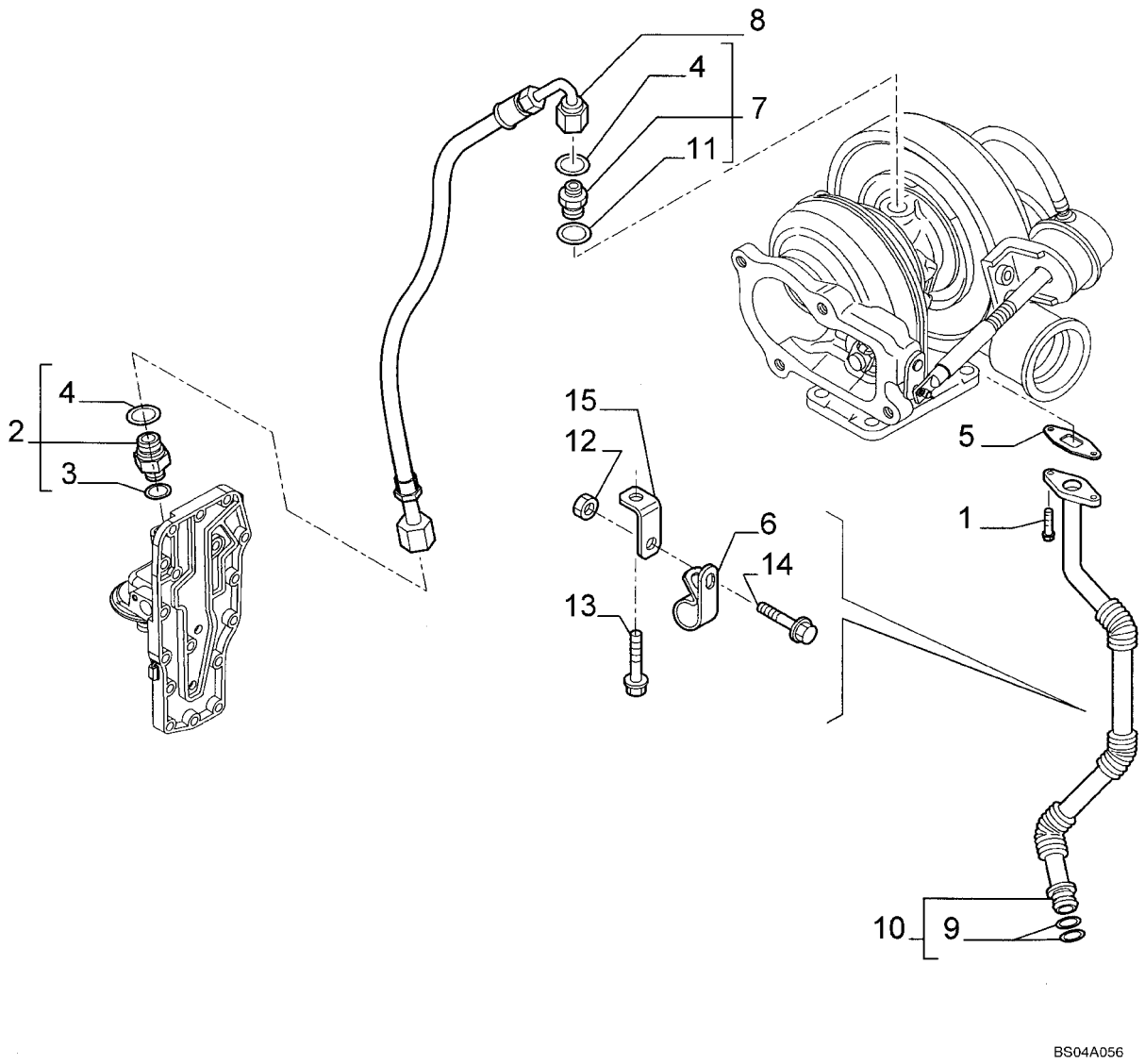

TUYAUTERIES - HUILE DU MOTEUR

REF	FN	PART NUMBER	YR/SN	QTY	DESCRIPTION
1		4895164		2	VIS, Flange, M6 x 16
2		4895107		1	RACCORD, Incl. Ref 3, 4
3		4899107		1	JOINT THORIQUE
4		4899108		1	JOINT THORIQUE
5		4899467		1	JOINT, Oil Drain
6		4899519		1	BRIDE, Clamp
6		2854493		1	CLIP, Alternate Part To 4899519, Bracket Clamp
7		4899106		1	RACCORD, Incl. Ref 4, 11
8		2852195		1	FLEXIBLE
9		5135738		2	JOINT THORIQUE, -115, Cl 9, .674" ID x .103" Thk
10		2852102		1	TUYAU, Tube; Incl. Ref 9
11		NSS		1	NON FOURNI SEPAREMENT, Washer
12		2852197		1	ECROU, Flange, M6
13		2852101		1	VIS, Flange; M6 x 16
14		16586225		1	VIS, Flange; M8 x 16
15		2852196		1	PATTE FIXATION

02-34		p1	02/08

EXCHANGEUR DE TEMPERATURE - MOTEUR

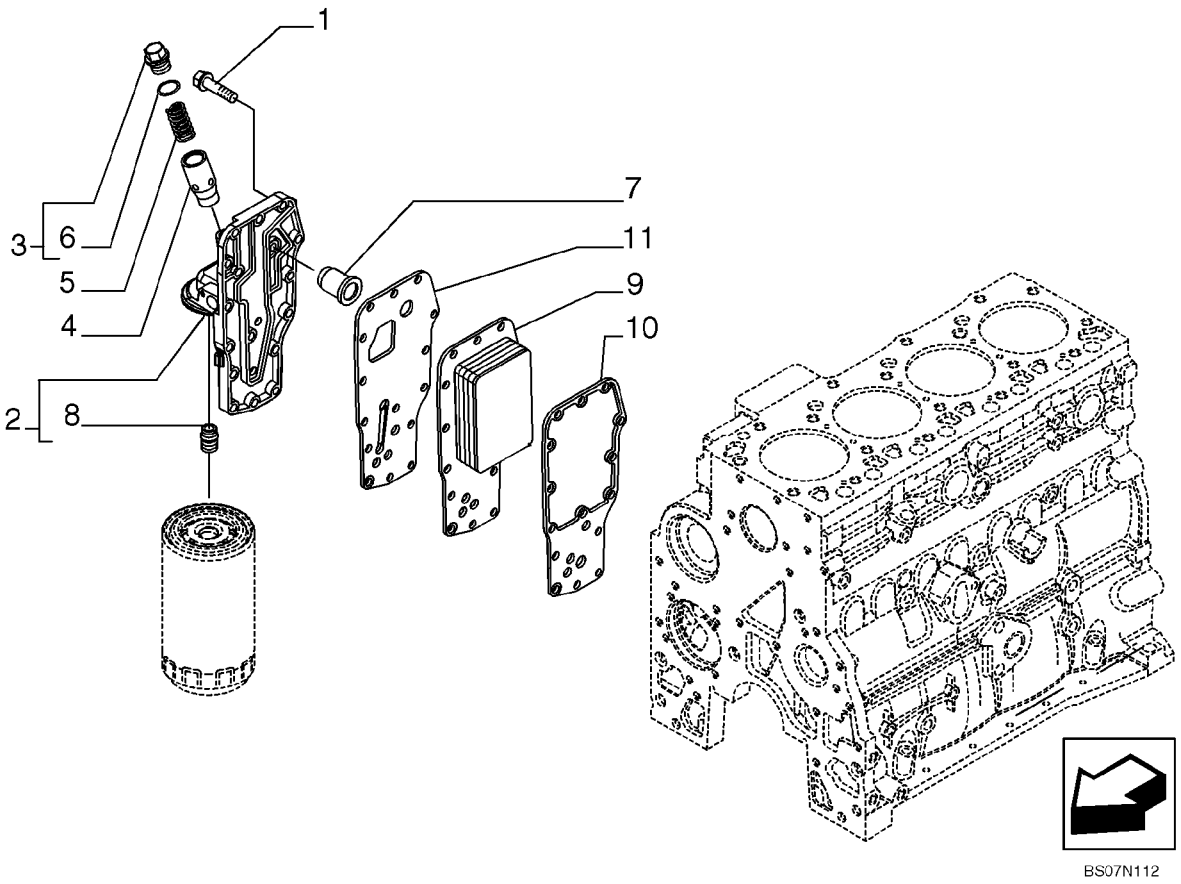

EXCHANGEUR DE TEMPERATURE - MOTEUR

REF	FN	PART NUMBER	YR/SN	QTY	DESCRIPTION
1		4899019		15	VIS, Hex Flg, M8 x 1.25 x 35
		2853782		1	TETE DE FILTRE, Incls. Refs. 2, 4, 5, 7, 8
2		4899643		1	TETE DE FILTRE
3		2853781		1	BOUCHON
4		4896404		1	PLONGEUR
5		4895045		1	RESSORT
6		17916280		1	JOINT, M18.39 ID x 2.69 Thk
7		4896410		1	SOUPAPE, D£CHARGE
8		4893391		1	ADAPTEUR
9		2853722		1	REFROIDISSEUR D'HUILE
10		2830559		1	JOINT
11		4896409		1	JOINT

POMPE A EAU

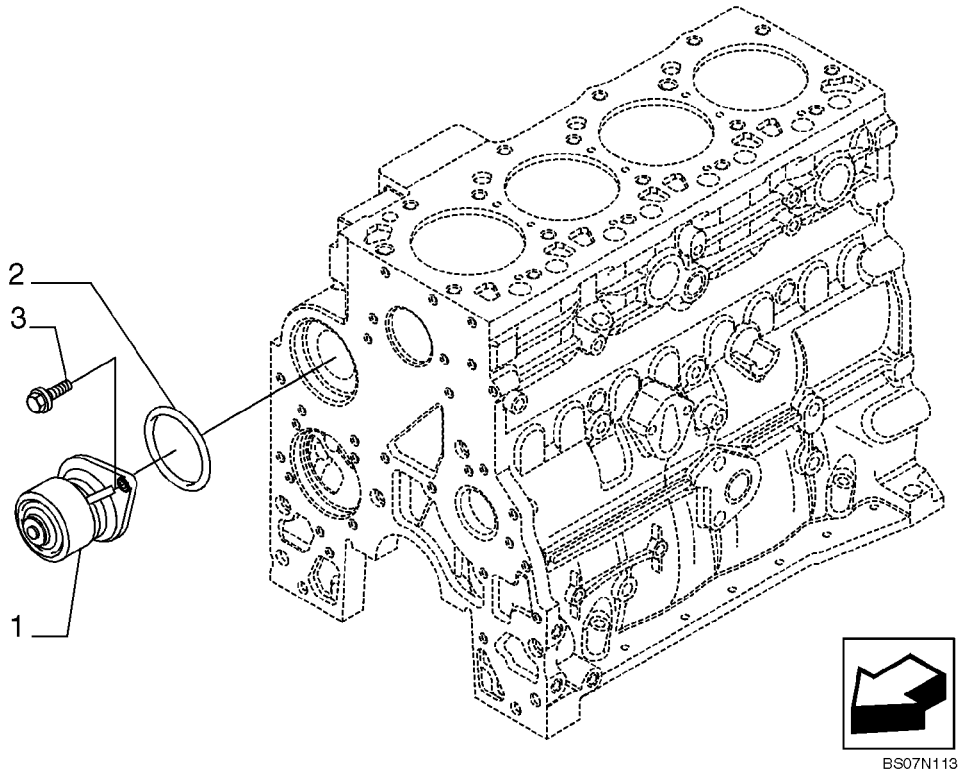

POMPE A EAU

REF	FN	PART NUMBER	YR/SN	QTY	DESCRIPTION
1		2852114		1	POMPE A EAU, -ASSY IN ALTERNATIVE
1		4891252		1	POMPE A EAU, -ASSY IN ALTERNATIVE
2		2852047		1	JOINT ANNULAIRE
3		4899079		2	VIS, Hex Flg, M8 x 1.25 x 25

CIRCUIT DE REFROIDISSEMENT - MOTEUR

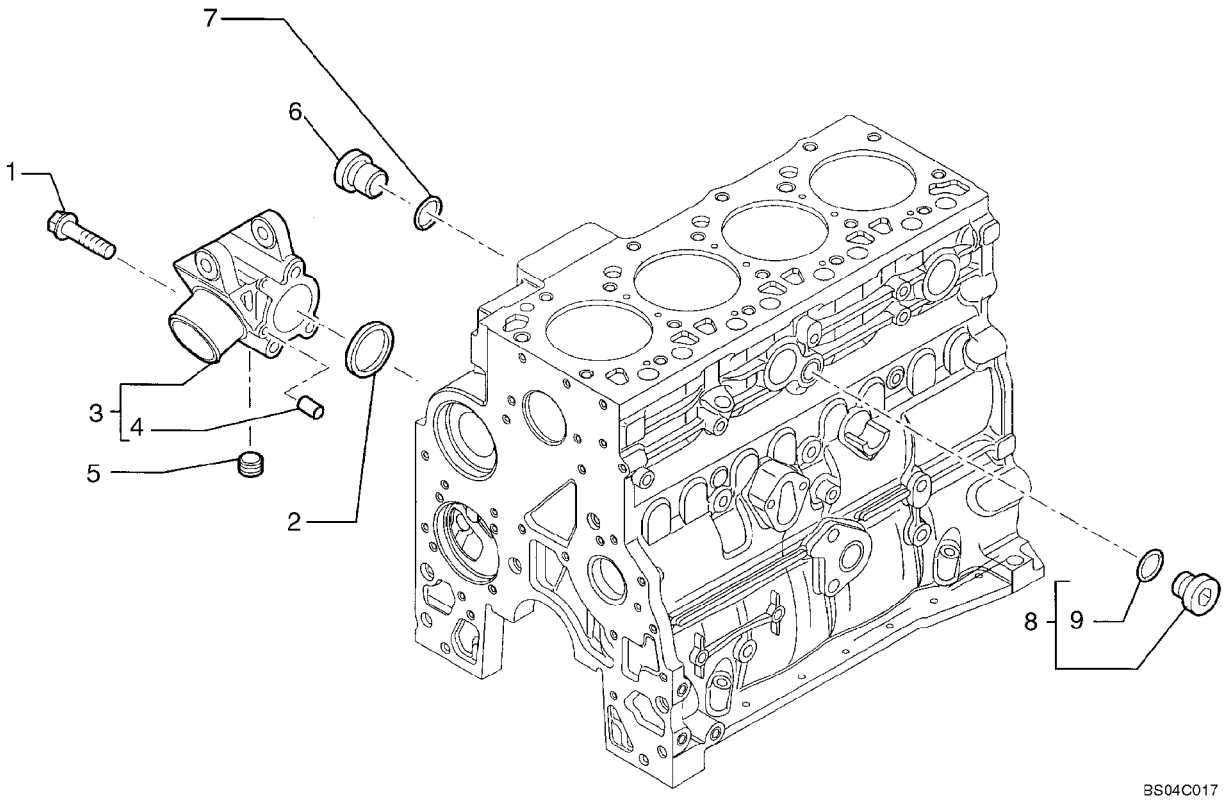

CIRCUIT DE REFROIDISSEMENT - MOTEUR

REF	FN	PART NUMBER	YR/SN	QTY	DESCRIPTION
1		4899109		3	VIS, Hex, M10 x 1.5 x 80
2		2854072		1	JOINT THORIQUE
3		2852145		1	SUPPORT, Incl. Ref 4
4		NSS		2	NON FOURNI SEPAREMENT, Dowel
5		2852511		1	BOUCHON
		4895392		1	BOUCHON, M18; Torque Converter Oil; Incl. Ref 6, 7
6		4895394		1	BOUCHON
7		4895393		1	JOINT THORIQUE
8		4895623		1	BOUCHON, Compressor Plumbing; Incl. Ref 9
9		4895625		1	JOINT THORIQUE

02-37		p1	11/07

THERMOSTAT - REFROIDISSEMENT MOTEUR

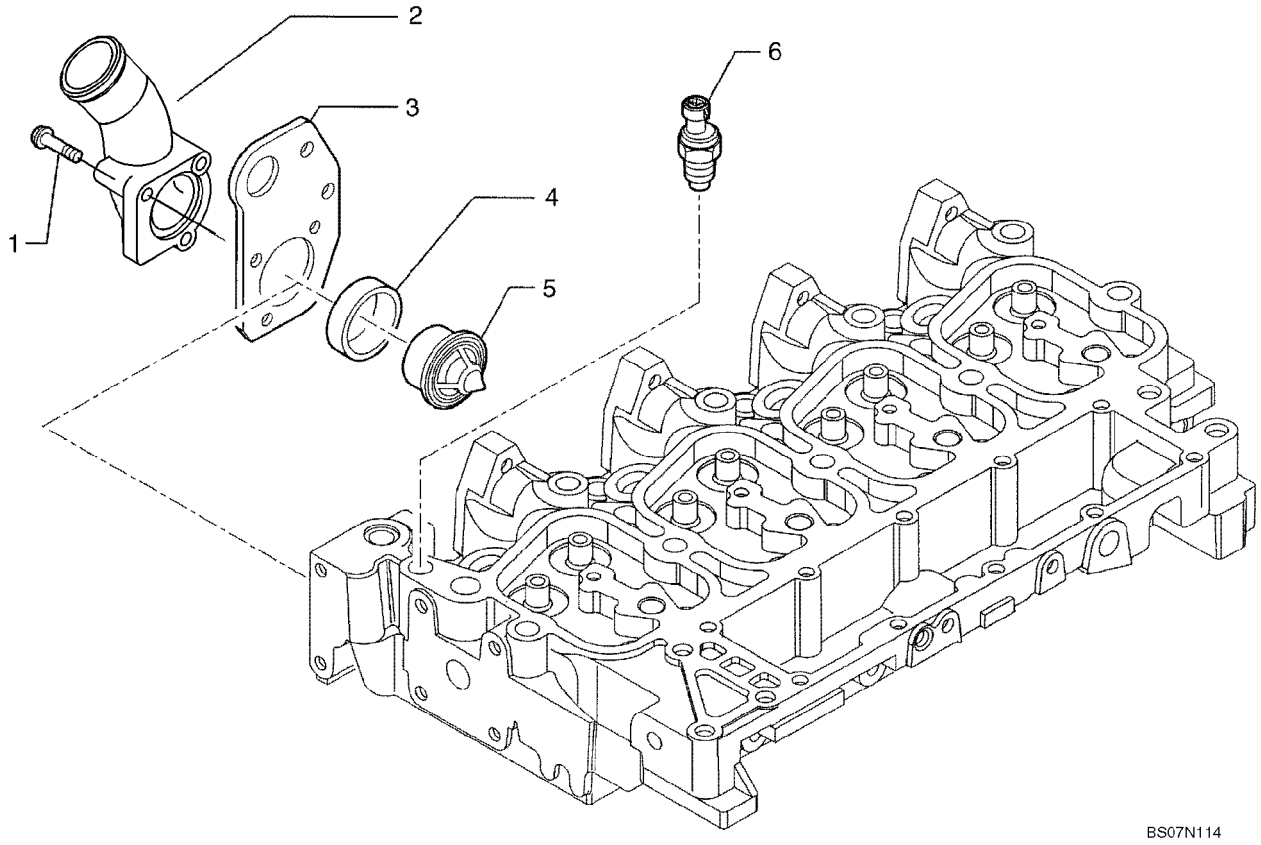

THERMOSTAT - REFROIDISSEMENT MOTEUR

REF	FN	PART NUMBER	YR/SN	QTY	DESCRIPTION
1		2852151		1	VIS, Flange; M8 x 35
1		2852155		2	VIS, Flange; M8 x 80
2		2852153		1	COUDE, Thermostat Housing
3		2855894		1	PATTE FIXATION
4		2853133		1	JOINT
5		2853135		1	THERMOSTAT, Kit
		2852473		1	JOINT, (Part of 2853135)
6		2852157		1	THERMO SONDE, Water; Grid Heater

POMPE A EAU - COMMANDE

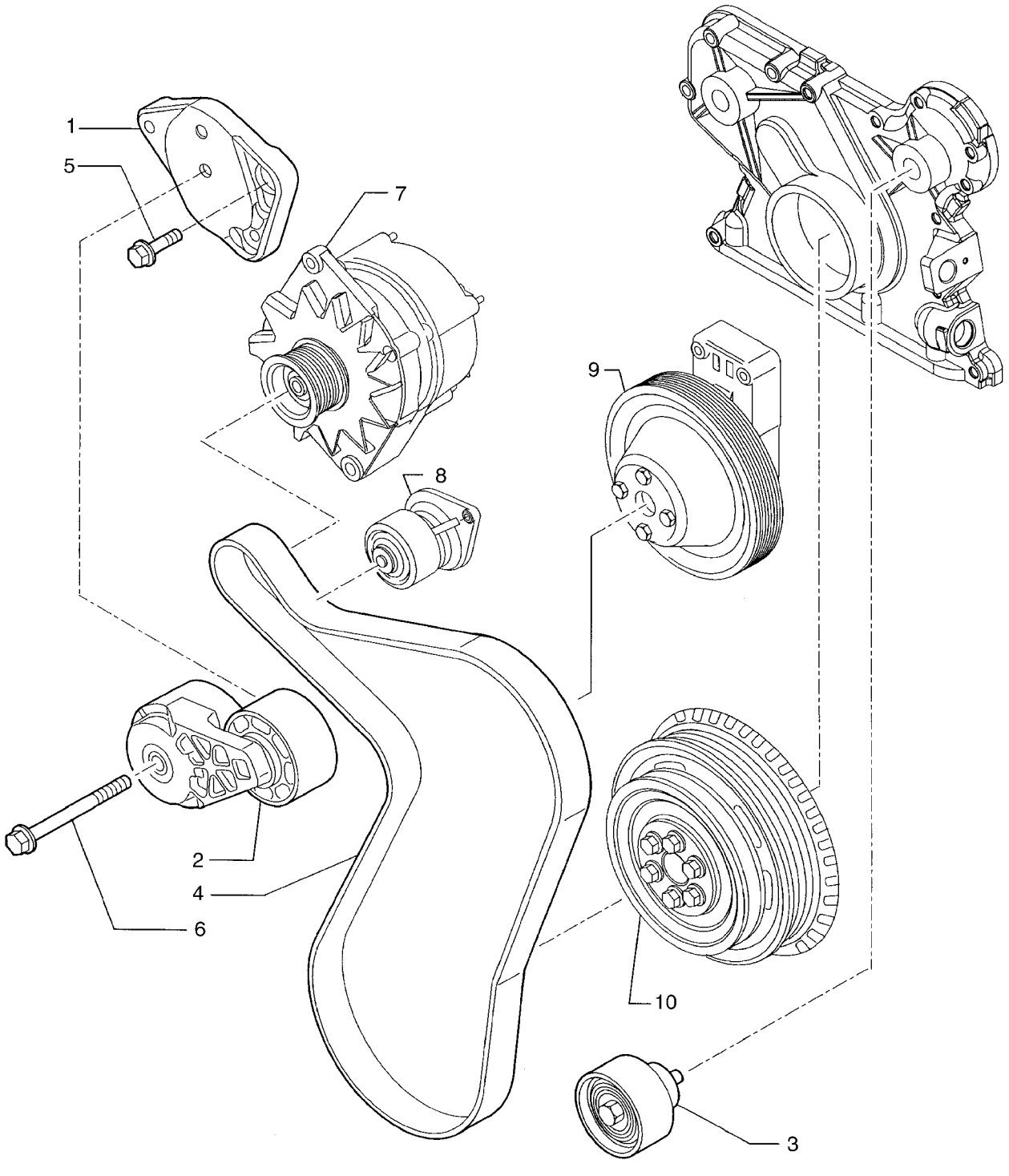

POMPE A EAU - COMMANDE

REF	FN	PART NUMBER	YR/SN	QTY	DESCRIPTION
		2854611		1	POULIE, Incls. 1,2,3,5 & 6
1		2852163		1	PATTE FIXATION, Support
2		2852161		1	TENDEUR DE COURROIE
2		2855622		1	TENDEUR DE COURROIE, Alternate Part To 2852161
3		2852162		1	POULIE, Pulley
4		REF		1	NOTICE, BELT; See Figure 02-01
5		4899079		2	VIS, Hex Flg, M8 x 1.25 x 25
6		4899109		1	VIS, Hex, M10 x 1.5 x 80
7		REF		1	NOTICE, ALTERNATOR; See Figure 04-02
8		REF		1	NOTICE, WATER PUMP; See Figure 02-35
9		REF		1	NOTICE, FAN DRIVE; See Figure 02-39
10		REF		1	NOTICE, CRANKSHAFT PULLEY; See Figure 02-25

COMMANDE DE VENTILATEUR

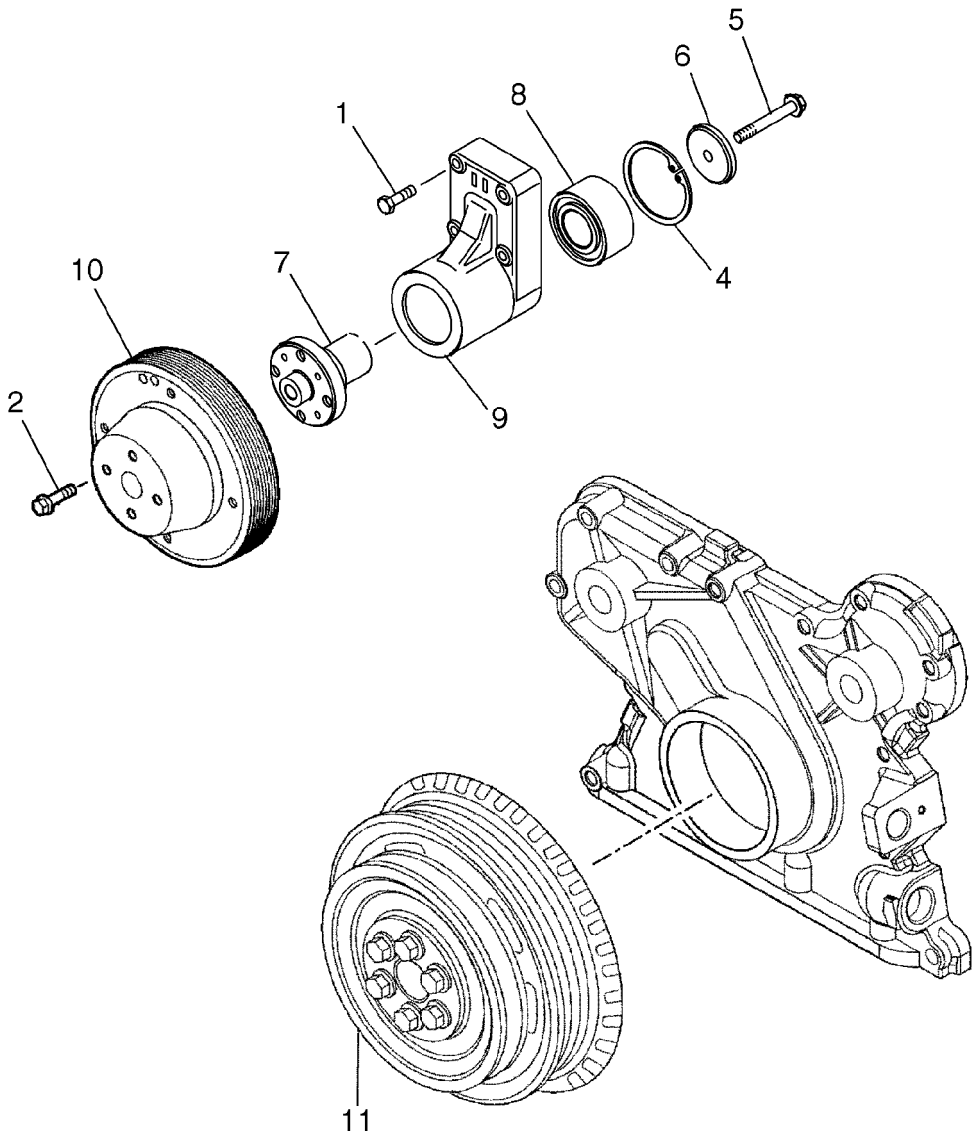

BS07N115

COMMANDE DE VENTILATEUR

REF	FN	PART NUMBER	YR/SN	QTY	DESCRIPTION
1		4899053		4	VIS, Hex Flg, M8 x 45
2		4895291		4	VIS, Hex Flg, M10 x 1.5 x 20
3		2852170		1	SUPPORT, Incls. Refs. 4 - 9
4		2852171		1	CIRCLIP
5		2852172		1	VIS
6		4892732		1	ROULEMENT A BILLES
7		4892426		1	MOYEU
8		4890732		1	RETENEUR, Hub
9		NSS		1	NON FOURNI SEPAREMENT, Support
10		4895301		1	POULIE
11		REF		1	NOTICE, CRANKSHAFT PULLEY; See Figure 02-25

MOTEUR - CROCHET DE LEVAGE

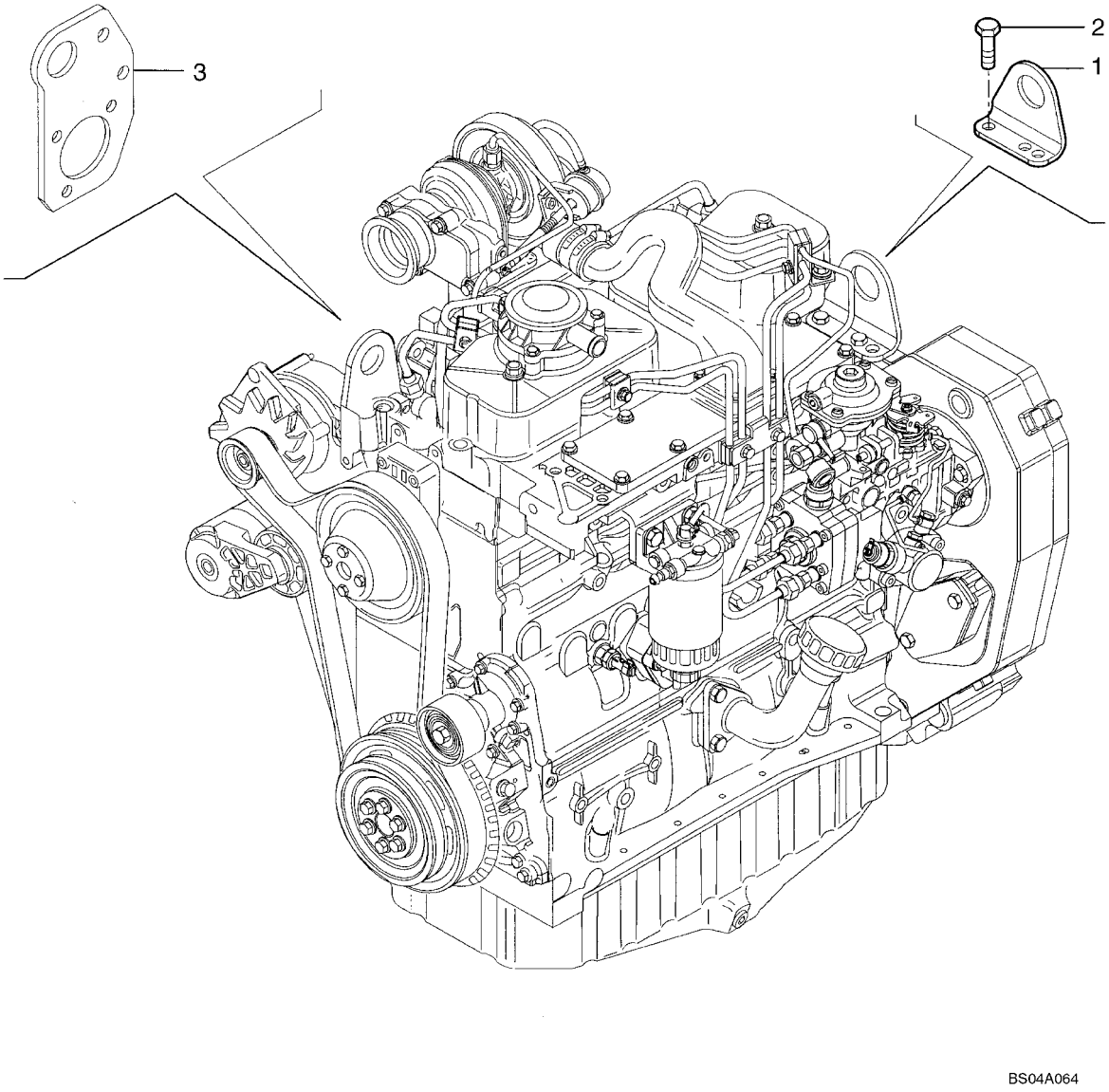

MOTEUR - CROCHET DE LEVAGE

REF	FN	PART NUMBER	YR/SN	QTY	DESCRIPTION
1		2852183		1	ANNEAU DE LEVAGE
2		4899073		2	VIS, Hex Flg, M12 x 1.75 x 30
3		2855894		1	PATTE FIXATION, Lift Hook; See Figure 02-37

ALTERNATEUR

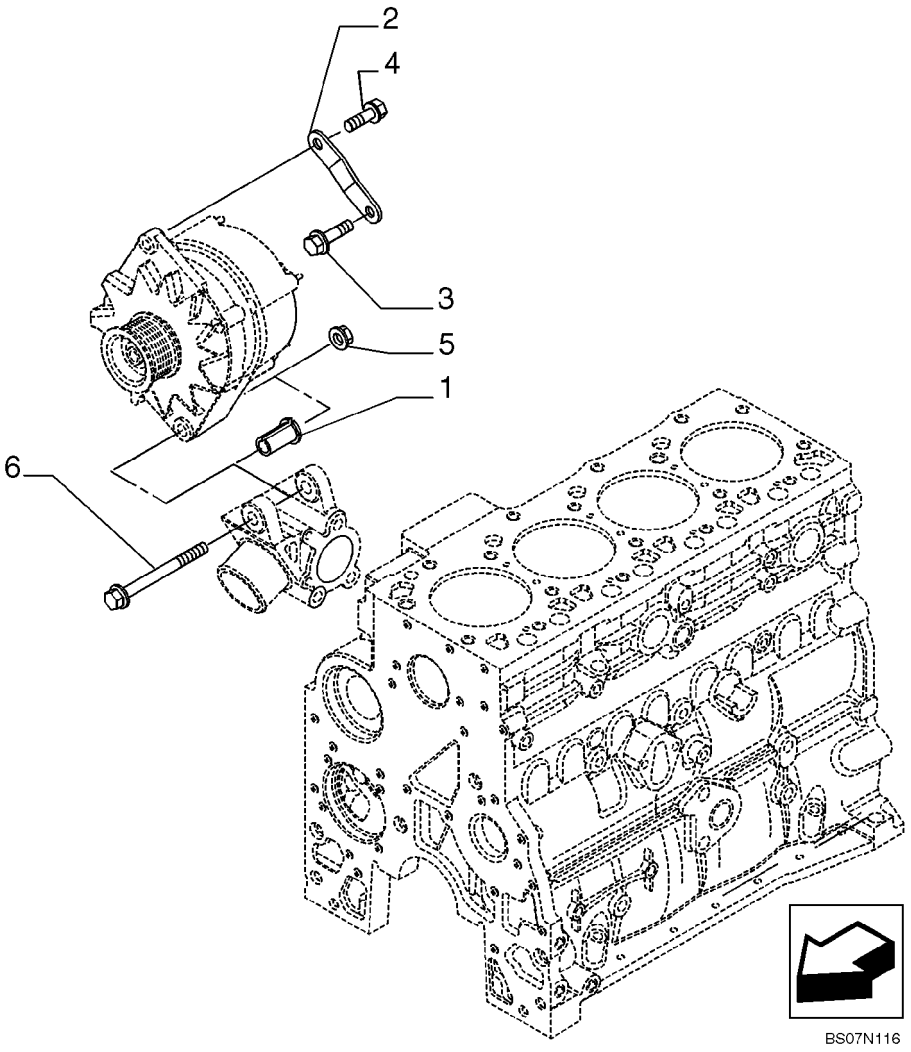

ALTERNATEUR

REF	FN	PART NUMBER	YR/SN	QTY	DESCRIPTION
1		2852181		1	ENTRETOISE
2		2852180		1	PATTE FIXATION
3		4895291		1	VIS, Hex Flg, M10 x 1.5 x 20
4		4899031		1	VIS, Hex Flg, M8 x 1.25 x 25
5		4895166		1	ECROU, M10 x 1.5
6		4895538		1	VIS

NOTES

SECTION INDEX
Circuit de Carburant

03-01	TUYAUTERIE D'ESSENCE, RESERVOIR
03-02	COMMANDES - MANETTE DES GAZ
03-03	COMMANDES - P£DALE D'ACC£L£RATION
03-04	POMPE DINJECTION
03-05	SYSTÔME D'INJECTION
03-06	SYSTÔME D'INJECTION
03-07	GROUPE D'INJECTION - TUYAUTERIE
03-08	FILTRE COMBUSTIBLE
03-09	POMPE D'ALIMENTATION
03-10	TUYAUTERIES - COMBUSTIBLE
03-11	SYSTÔME D'INJECTION

03-01		p1	02/08

TUYAUTERIE D'ESSENCE, RESERVOIR

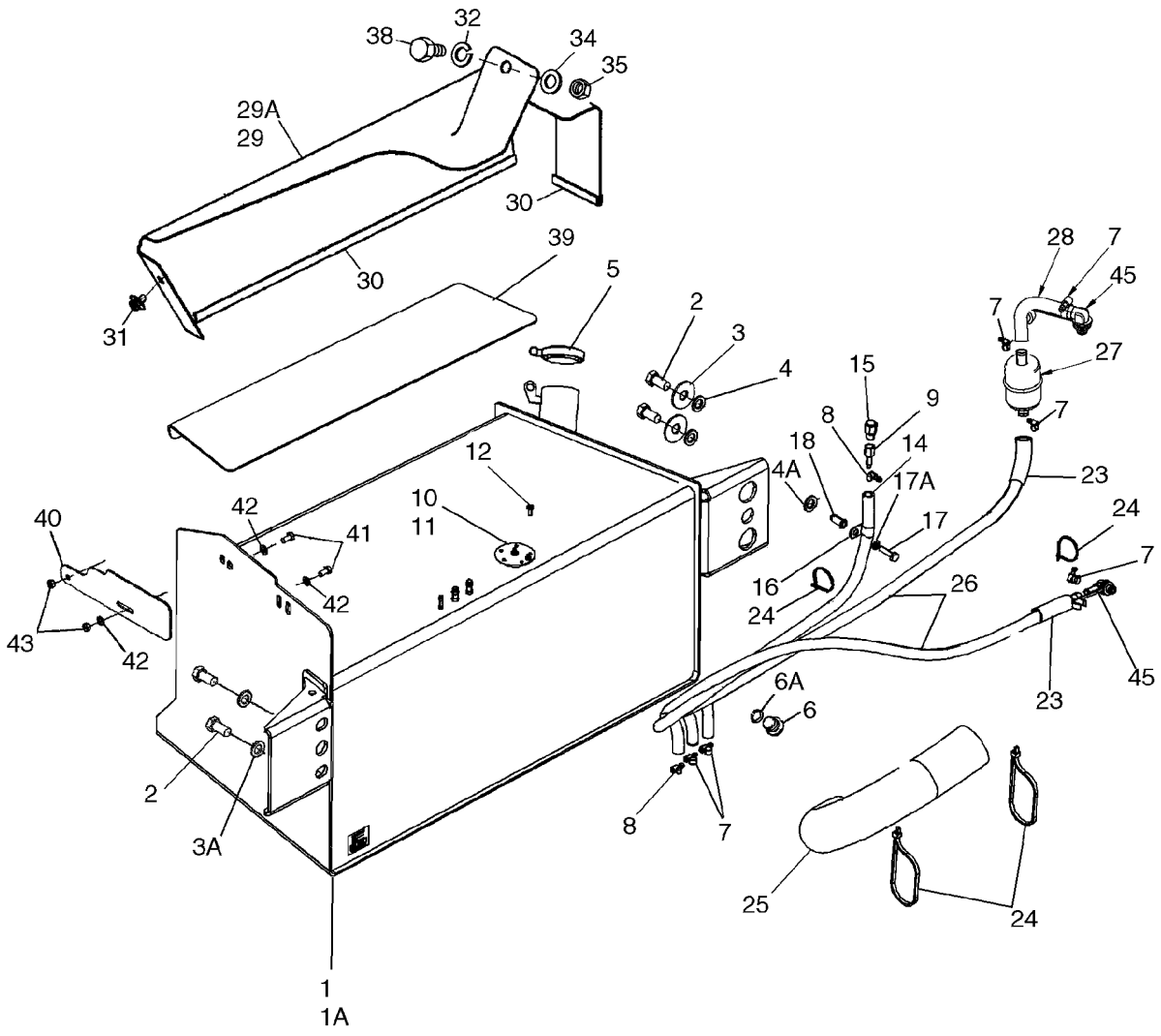

BS07N507

TUYAUTERIE D'ESSENCE, RESERVOIR

REF	FN	PART NUMBER	YR/SN	QTY	DESCRIPTION
1		87429310		1	RESERVOIR DE COMBUSTIBLE, 31 gal; Incl. Ref 6; With Welded Fuel Sender Tubes; Includes Left Hand Steps, Mounts to Left Hand Side of Chassis
1A		87429314		1	RESERVOIR DE COMBUSTIBLE, 40 gal; Incl. Ref 6; Optional; With Welded Fuel Sender Tubes; Includes Left Hand Steps, Mounts to Left Hand Side of Chassis; If Used
2		443375A1		4	BOULON, M20 x 60; With Loctite
3		302358A1		2	RONDELLE
3A		896-11020		2	RONDELLE, M20 x 37.5 x 4, HT
4		185926A1		2	ENTRETOISE, 21 ID x 40 OD x 6.6 mm thk
4A		87360280		1	ENTRETOISE
5		87335469		1	BOUCHON DE RESERVOIR+CLE
6		86625138		1	BOUCHON, Hex Soc, 7/8"-14 ORB, Drain, Includes Ref. 6A; Included with Ref 1, 1A
6A		237-6010		1	JOINT THORIQUE, 10-1, 90 Duro, .755" ID x .097" Thk
7		214-1706		6	BRIDE, FLEXIBLE, #6, 0.44/0.78 Type M Worm
8		214-1704		2	BRIDE, FLEXIBLE, #4, 0.25/0.62 Type M Worm
9		217-117		1	RACCORD, 1/4" Hose x 1/4" NPTF, Fem, Barbed, Brass
10		86989676		1	TRANSMETTEUR ASSY, Fuel Level, 31 Gallon Tank, Without Tubes, Includes Seal and Grounding Hardware, If Used
11		87408480		1	TRANSMETTEUR ASSY, Fuel Level, 40 Gallon Tank, Without Tubes, Includes Seal and Grounding Hardware, If Used
12		87693492		5	VIS
14		87656146		1	FLEXIBLE, 880 mm (34-5/8 in), Vent
15		130047A1		1	RENIFLARD (ASSEMBLE), Vent
16		515-23127		1	BRIDE, 1/2", Insul, 3/8" Bolt
17		614-8030		1	BOULON, Hex, M8 x 30, 8.8
17A		892-11008		1	RONDELLE FREIN, M8
18		87417383		1	INSERT FILETE, M8 Nut
23		191704A1		2	GAINE

03-01		p2	02/08

TUYAUTERIE D'ESSENCE, RESERVOIR

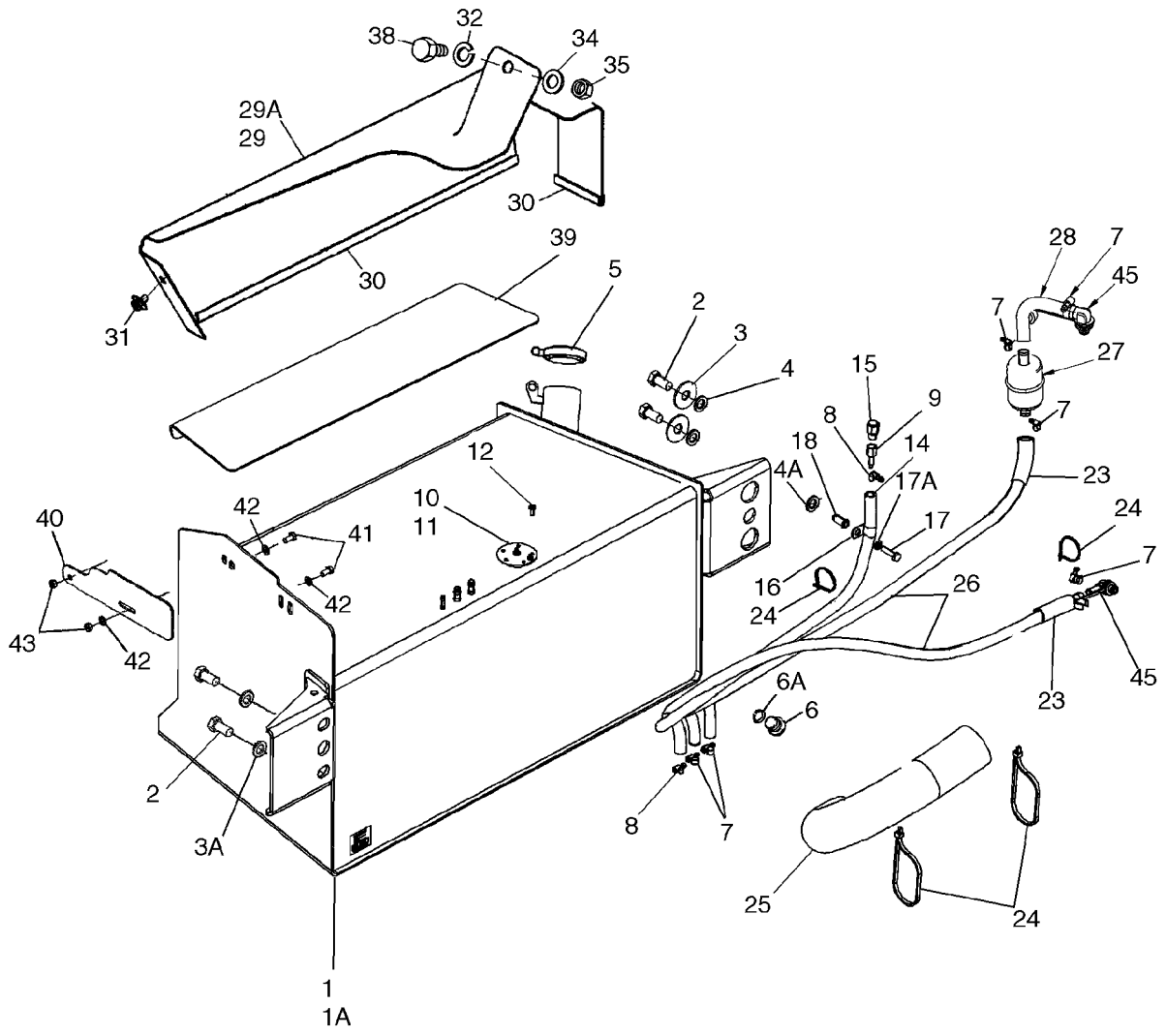

BS07N507

TUYAUTERIE D'ESSENCE, RESERVOIR

REF	FN	PART NUMBER	YR/SN	QTY	DESCRIPTION
24		L18337		5	SERRE-CABLE, 9.95"-12.1" lg
25		87656501		1	PROTECTEUR DE TUYAU
26		87658696		1	FLEXIBLE, 1350 mm (53-1/8 in); Inlet and Return
27		D139225		1	FILTRE A COMBUSTIBLE, Inline
28		87690874		1	FLEXIBLE, 170 mm (6-11/16 in)
29		189602A3		1	COUVERCLE, Mounted Above Fuel Reservoir; Models With Two Spool Loader Valve
29A		188009A3		1	COUVERCLE, Mounted Above Fuel Reservoir, Models With Three Spool Loader Valve
30		191046A1		1	BANDE, ENJOLIVEUR, Trim, 650 mm (25-5/8 in), Cut From A165860; Apply 65 mm (2-9/16 in) of Trim to Front Lower Edge and 575 mm (22-11/16 in) of Trim to Outside Lower Edge of Cover
31		307577A1		1	BOULON, Special, M8 x 20
32		892-11010		1	RONDELLE FREIN, M10
34		895-11010		1	RONDELLE, M10 x 20 x 2
35		829-1410		1	ECROU, M10, Cl 10
38		814-10045		1	BOULON, Hex, M10 x 45, 8.8, Models With Three Spool Loader Valve
38		614-10020		1	BOULON, Hex, M10 x 20, 8.8, Full Thd, Models with Two Spool Loader Valve
39		87679228		1	BANDE ANTI-DERAPANTE
40		397548A4		1	PLAQUE, Mud
41		614-10020		2	BOULON, Hex, M10 x 20, 8.8, Full Thd
42		895-11010		3	RONDELLE, M10 x 20 x 2
43		829-1410		2	ECROU, M10, Cl 10
45		87414560		3	RACCORD

COMMANDES - MANETTE DES GAZ

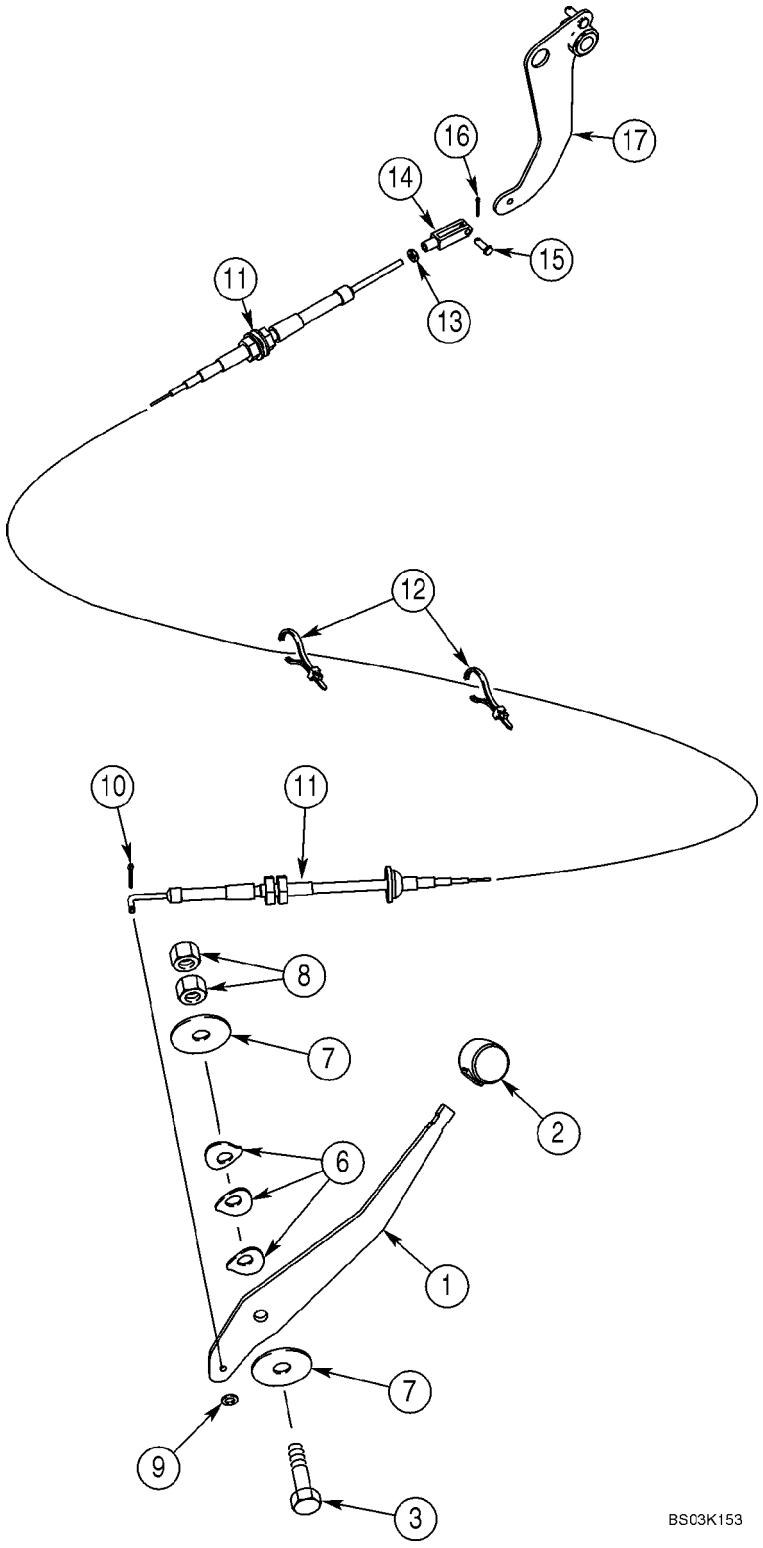

COMMANDES - MANETTE DES GAZ

REF	FN	PART NUMBER	YR/SN	QTY	DESCRIPTION
1		395189A2		1	LEVIER
2		A177435		1	BOULE, Lever
3		514-847		1	BOULON, Hex, M12 x 1.25 x 50, 8.8
6		D148962		3	RONDELLE
7		496-81018		2	RONDELLE, 33/64 x 2 x 1/8
8		825-11412		2	ECROU, M12 x 1.25, Cl 8
9		495-31022		1	RONDELLE, #10
10		432-48		1	GOUPILLE, 1/16" x 1/2"
11		87340753		1	CABLE, Replaces 350014A3; 87330322
12		L18337		4	SERRE-CABLE, 9.95"-12.1" lg, Nylon, Retaining
13		225-14210		1	ECROU, #10-32
14		213-123		1	CHAPE DE R£GLAGE, #10-32 x 1 9/16"
15		427-3058		1	AXE DE CHAPE, 3/16" x .580"
16		432-48		1	GOUPILLE, 1/16" x 1/2"
17		378957A3		1	LEVIER (ASSEMBLE)

03-03		p1	12/07

COMMANDES - P£DALE D'ACC£L£RATION

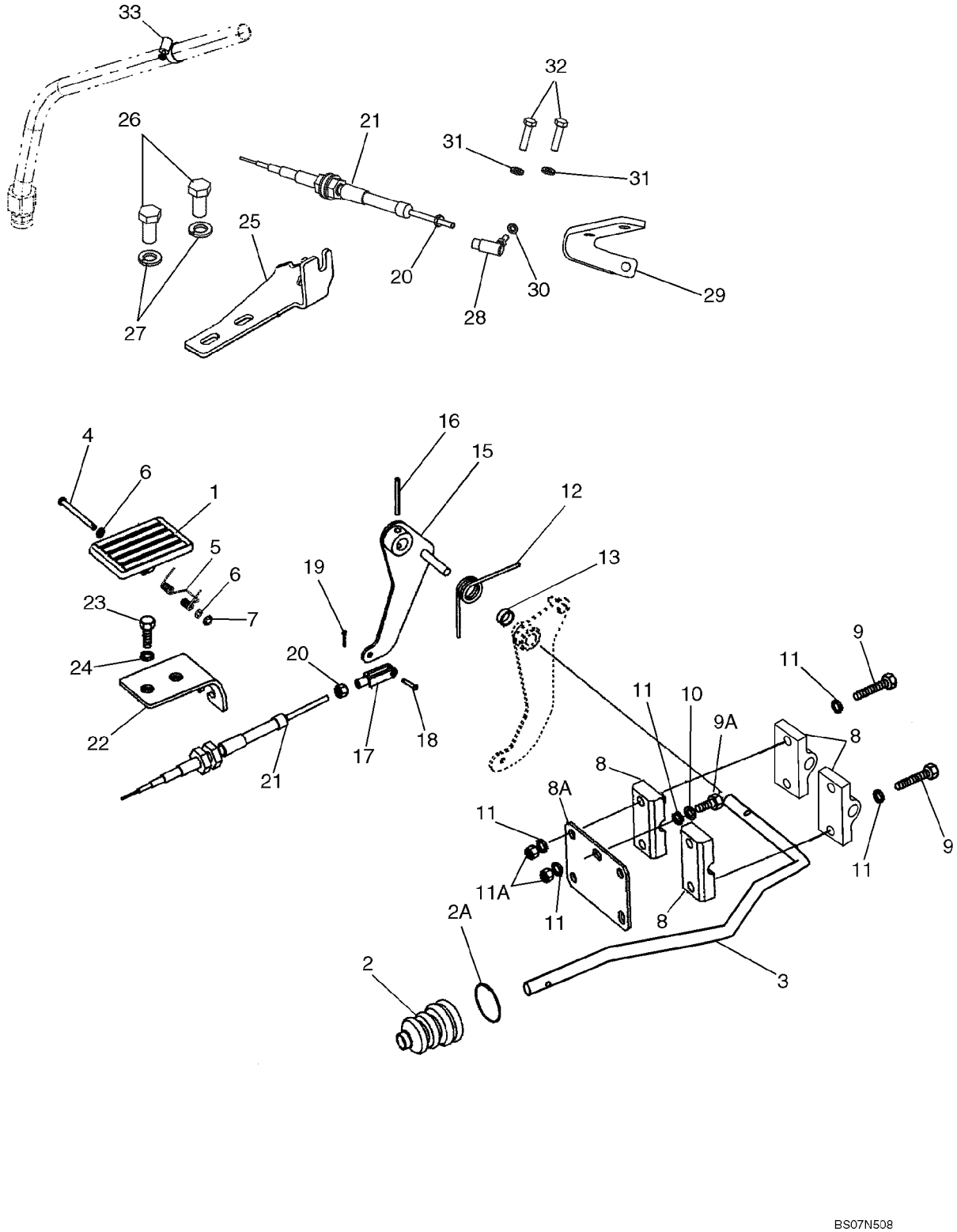

BS07N508

COMMANDES - P£DALE D'ACC£L£RATION

REF	FN	PART NUMBER	YR/SN	QTY	DESCRIPTION
1		282242A1		1	PEDALE, Plastic
2		132931A1		1	SOUFFLET, Boot, Accelerator Pedal Rod
2A		189109A1		1	RESSORT, Retainer
3		87593642		1	TRINGLE
4		322860A1		1	AXE, GROS
5		256776A1		1	RESSORT
6		895-11005		2	RONDELLE, M5 x 10 x 1
7		103-1518		1	ANNEAU D'ARRąT, #18, Ext
8		87345006		1	BLOC, Throttle Pivot
8A		378955A1		1	PLAQUE
9		87378776		4	BOULON, Special; M8 x 30
9A		614-8020		1	BOULON, Hex, M8 x 20, 8.8
10		892-11008		1	RONDELLE FREIN, M8
11		895-11008		7	RONDELLE, M8 x 16 x 1.6
11A		829-1408		2	ECROU, M8, Cl 10
12		380483A2		1	RESSORT
13		378958A1		1	BAGUE D'EPAISSEUR
15		378956A3		1	LEVIER (ASSEMBLE)
16		838-3640		1	AXE, M6 x 40, Coiled
17		213-123		1	CHAPE DE R£GLAGE, #10-32 x 1 9/16"
18		427-3058		1	AXE DE CHAPE, 3/16" x .580"
19		432-48		1	GOUPILLE, 1/16" x 1/2"
20		225-14210		2-3	ECROU, #10-32
21		87340754		1	CABLE, To Injection Pump
22		397065A2		1	PATTE FIXATION
23		614-10035		2	BOULON, Hex, M10 x 35, 8.8, Full Thd
24		892-11010		2	RONDELLE FREIN, M10
25		87648733		1	EQUERRE
26		627-12025		2	BOULON, Hex, M12 x 25, 10.9
27		896-15012		2	RONDELLE, M12 x 28.5 x 4, HT
28		87421807		1	JOINT-CARDAN ASS.
29		87452823		1	BLOC (ASSEMBLE), BRACKET, Throttle Cable
30		892-11005		1	RONDELLE FREIN, M5
31		892-11006		2	RONDELLE FREIN, M6
32		614-6016		2	BOULON, Hex, M6 x 16, 8.8

03-03		p2	12/07

COMMANDES - P£DALE D'ACC£L£RATION

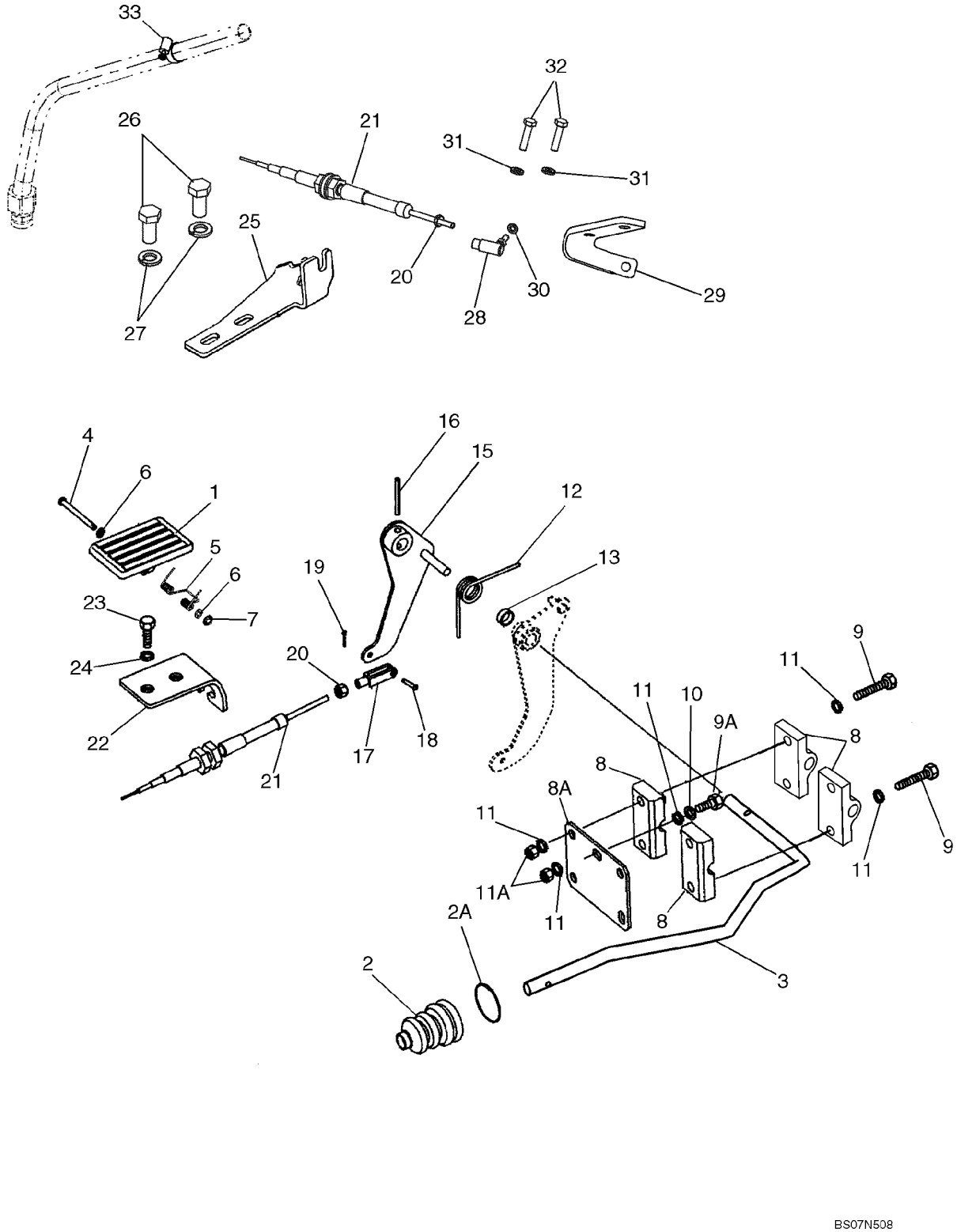

COMMANDES - P£DALE D'ACC£L£RATION

REF	FN	PART NUMBER	YR/SN	QTY	DESCRIPTION
33		214-1416		1	BRIDE, FLEXIBLE, #16, 0.81/1.50 Type F Worm, Throttle Cable (Ref 21) To Transmission Dipstick

POMPE DINJECTION

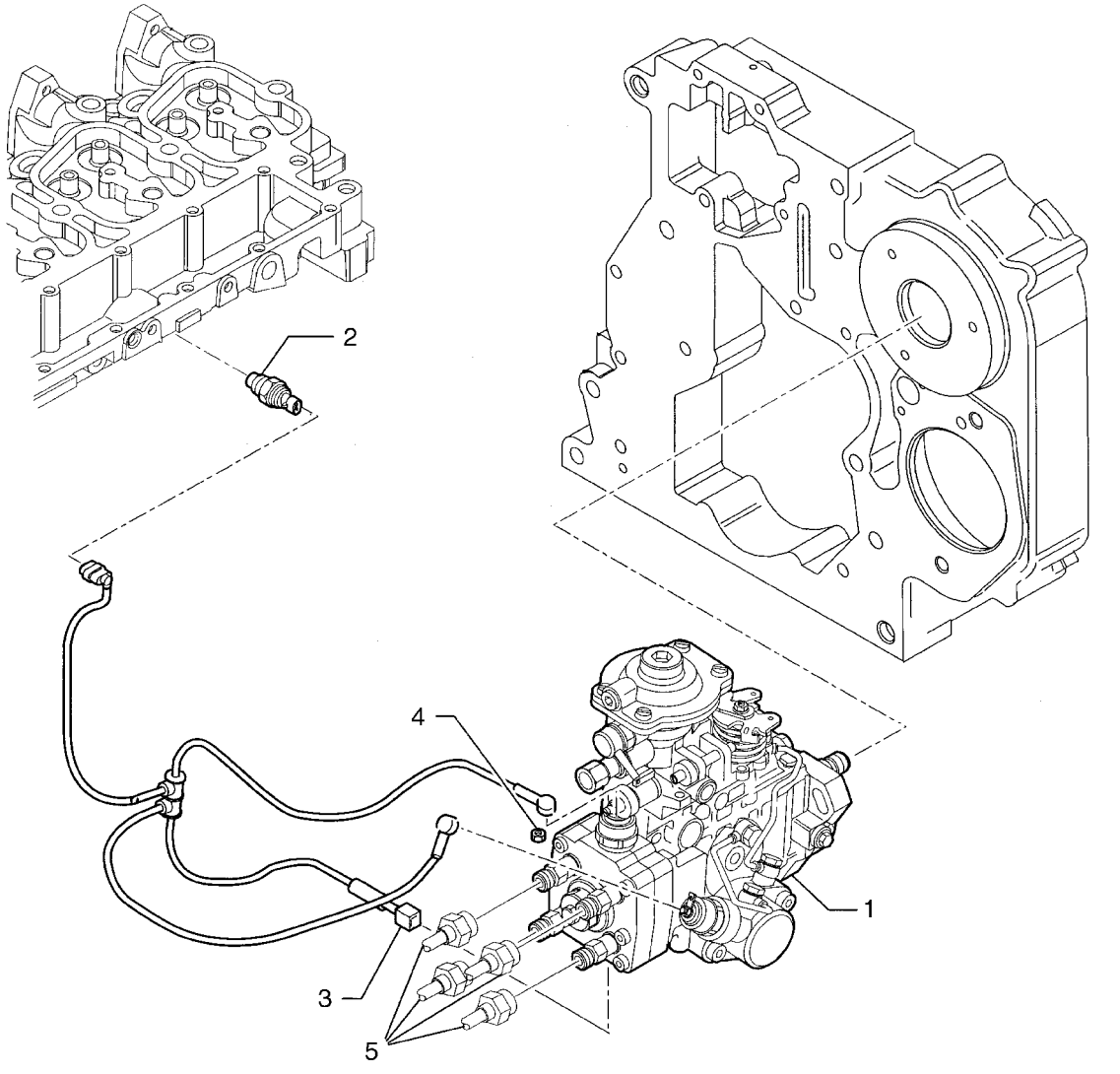

POMPE DINJECTION

REF	FN	PART NUMBER	YR/SN	QTY	DESCRIPTION
1		2856352		1	POMPE INJECTION
2		2856350		1	CAPTEUR, Water Temperature
3		2852088		1	FIL DE CONNECTION
4		2852089		2	ECROU, Lock
5		REF		1	NOTICE, TUBE; See Figure 03-07 for Tube Kit

SYSTÊME D'INJECTION

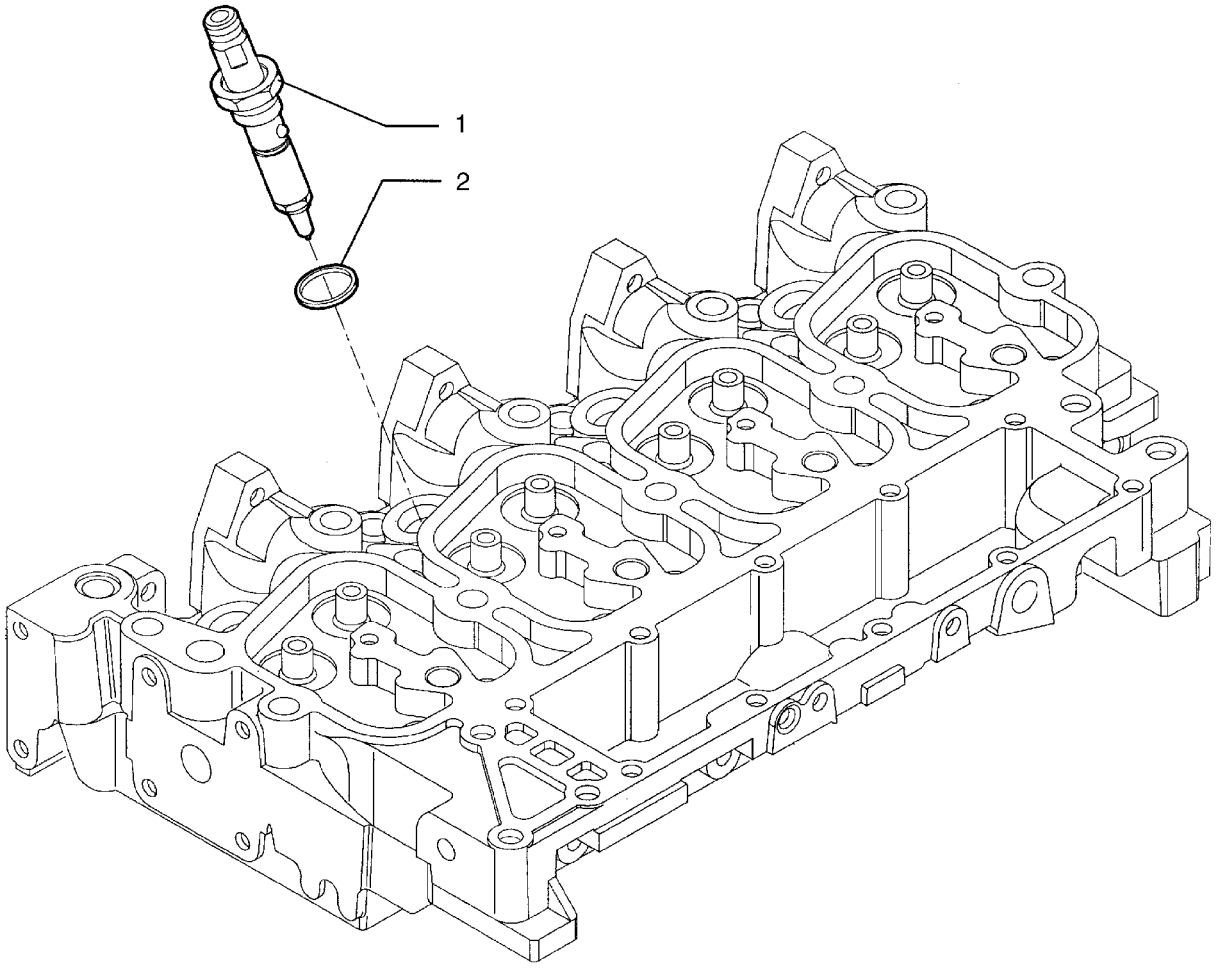

BS04A045

SYSTÂME D'INJECTION

REF	FN	PART NUMBER	YR/SN	QTY	DESCRIPTION
1		2856255		4	INJECTEUR, Fuel Injector Assembly
		{2856436}		1	Washer (Part of 2856255), Not Shown
2		4895297		4	JOINT ANNULAIRE

SYSTèME D'INJECTION

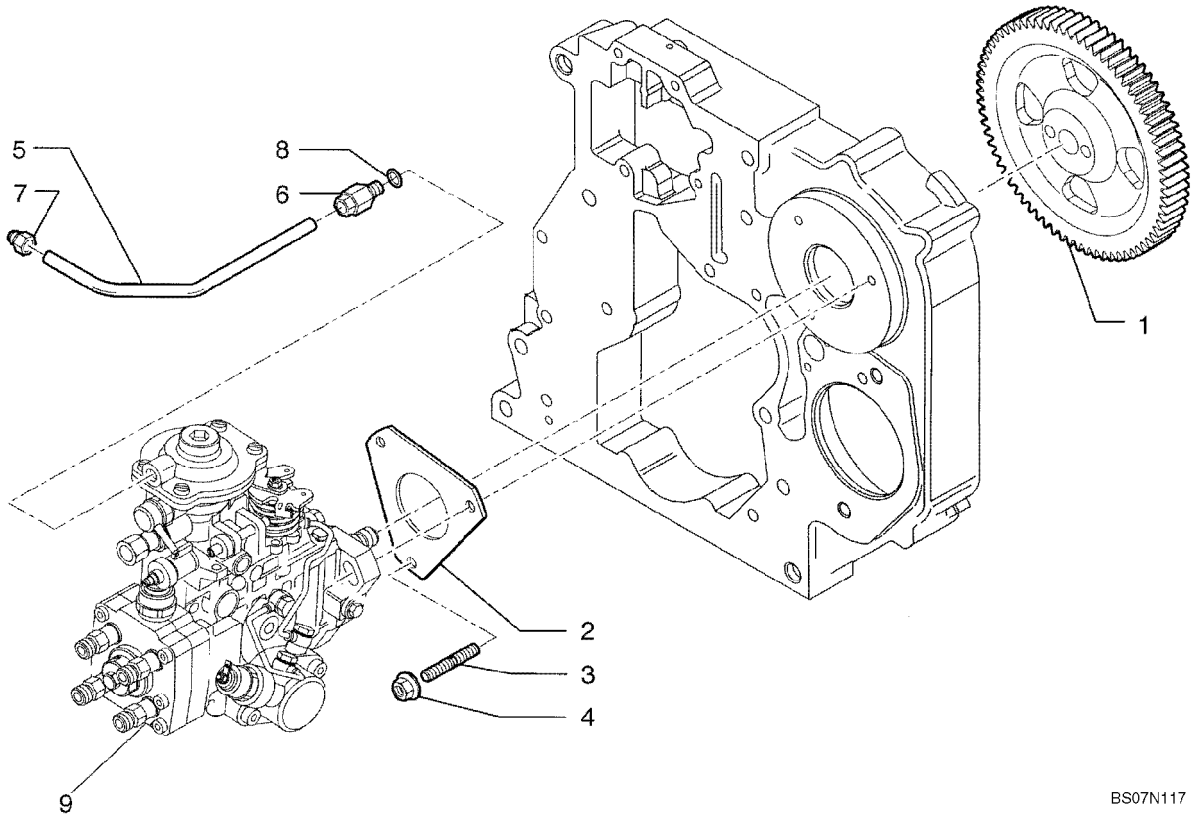

SYSTÂME D'INJECTION

REF	FN	PART NUMBER	YR/SN	QTY	DESCRIPTION
1		2854340		1	PIGNON
2		2852885		1	JOINT
3		2852294		3	GOUJON, M8 x 30
4		4899003		3	ECROU, Flange, M8
5		2852059		1	TUYAU RIGIDE
6		4893518		1	RACCORD, 8 x 1
7		4896770		1	RACCORD, 10 x 1
8		2852057		1	JOINT
9		REF		1	NOTICE, INJECTION PUMP; See Figure 03-04

GROUPE D'INJECTION - TUYAUTERIE

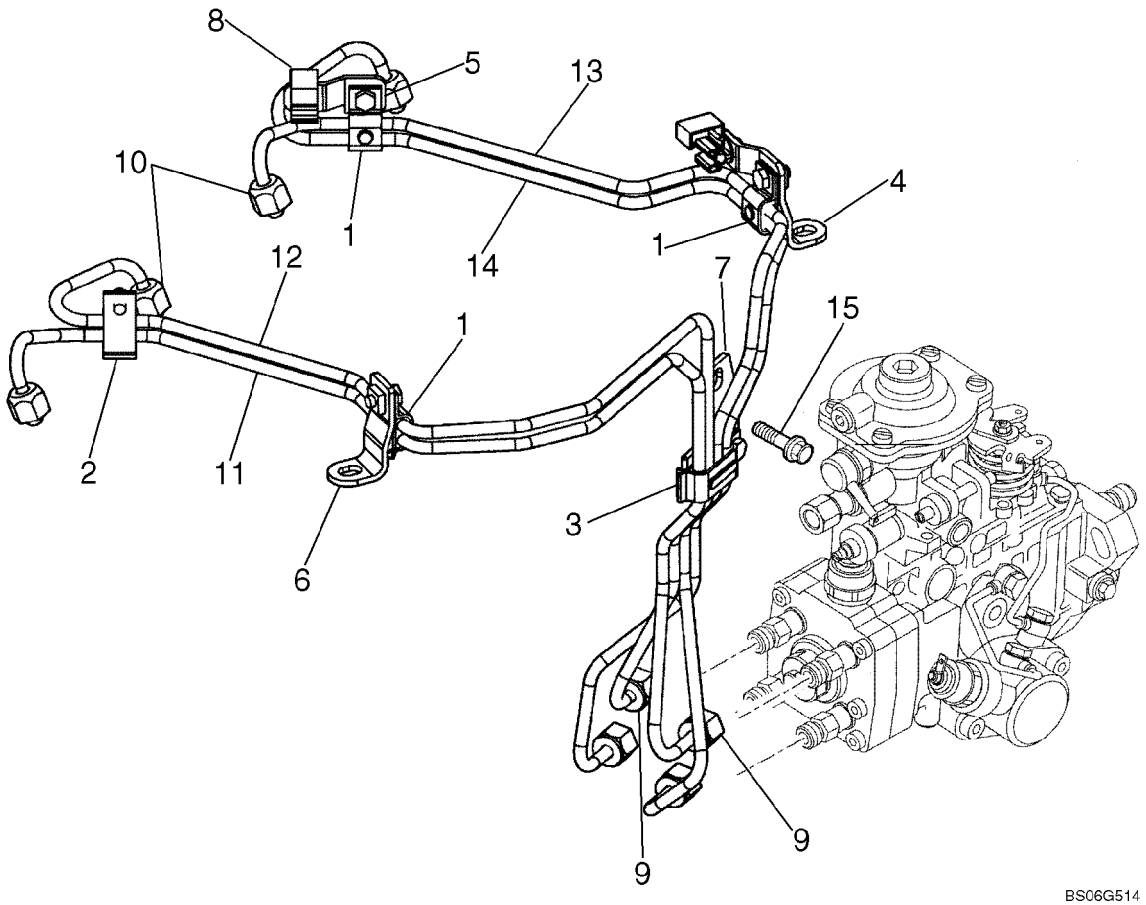

GROUPE D'INJECTION - TUYAUTERIE

REF	FN	PART NUMBER	YR/SN	QTY	DESCRIPTION
		2852075		1	KIT, Fuel Injection Tube; Incl Ref 2 - 15
1		2852871		3	PATTE FIXATION, Fuel Injection Pipe
2		2852872		1	PATTE FIXATION, Fuel Injection Pipe
3		2852873		1	PATTE FIXATION, Fuel Injection Pipe
4		2852874		1	PATTE FIXATION, Fuel Injection Pipe
5		2852875		1	PATTE FIXATION, Fuel Injection Pipe
6		2852876		1	PATTE FIXATION, Fuel Injection Pipe
7		2852877		1	PATTE FIXATION, Fuel Injection Pipe
8		2852878		2	BRIDE DE FIXATION
9		2852879		4	ECROU
10		2852880		4	ECROU
11		2852881		1	TUBE D'INJECTION
12		2852882		1	TUBE D'INJECTION
13		2852883		1	TUBE D'INJECTION
14		2852884		1	TUBE D'INJECTION
15		4896884		1	VIS, M8 x 1.25 x 16mm

03-08		p1	02/08

FILTRE COMBUSTIBLE

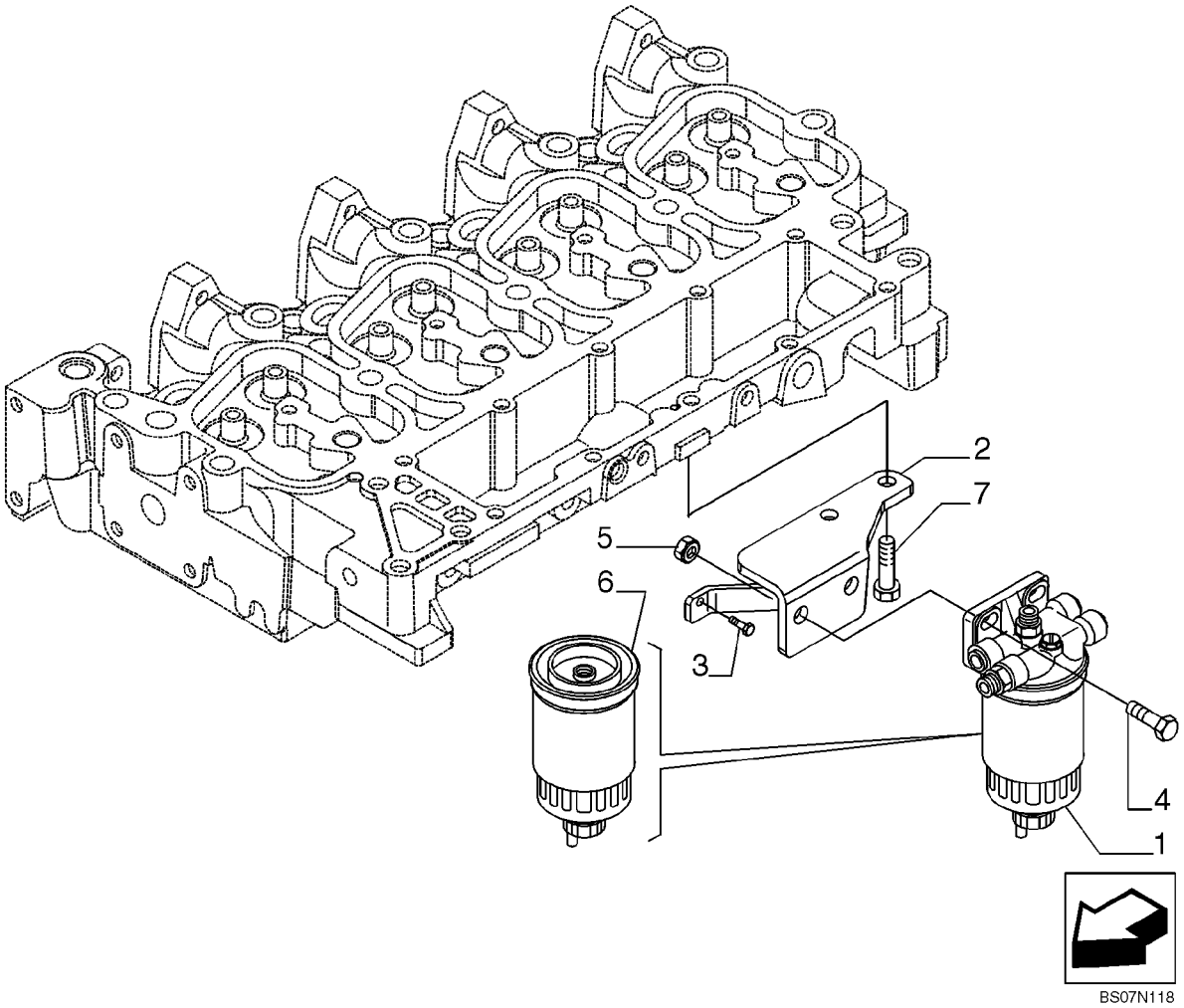

FILTRE COMBUSTIBLE

REF	FN	PART NUMBER	YR/SN	QTY	DESCRIPTION
1		2852098		1	FILTRE ASSY
2		2855103		1	SUPPORT
3		4899068		1	VIS, Hex Flg, M8 x 1.25 x 16
4		4899849		2	VIS, M10 x 1.5 x 35mm Long
5		4895166		2	ECROU, M10 x 1.5 mm
6		87803194		1	FILTRE A COMBUSTIBLE
7		2830411		2	VIS, M08 x 1.25 x 30mm Long

POMPE D'ALIMENTATION

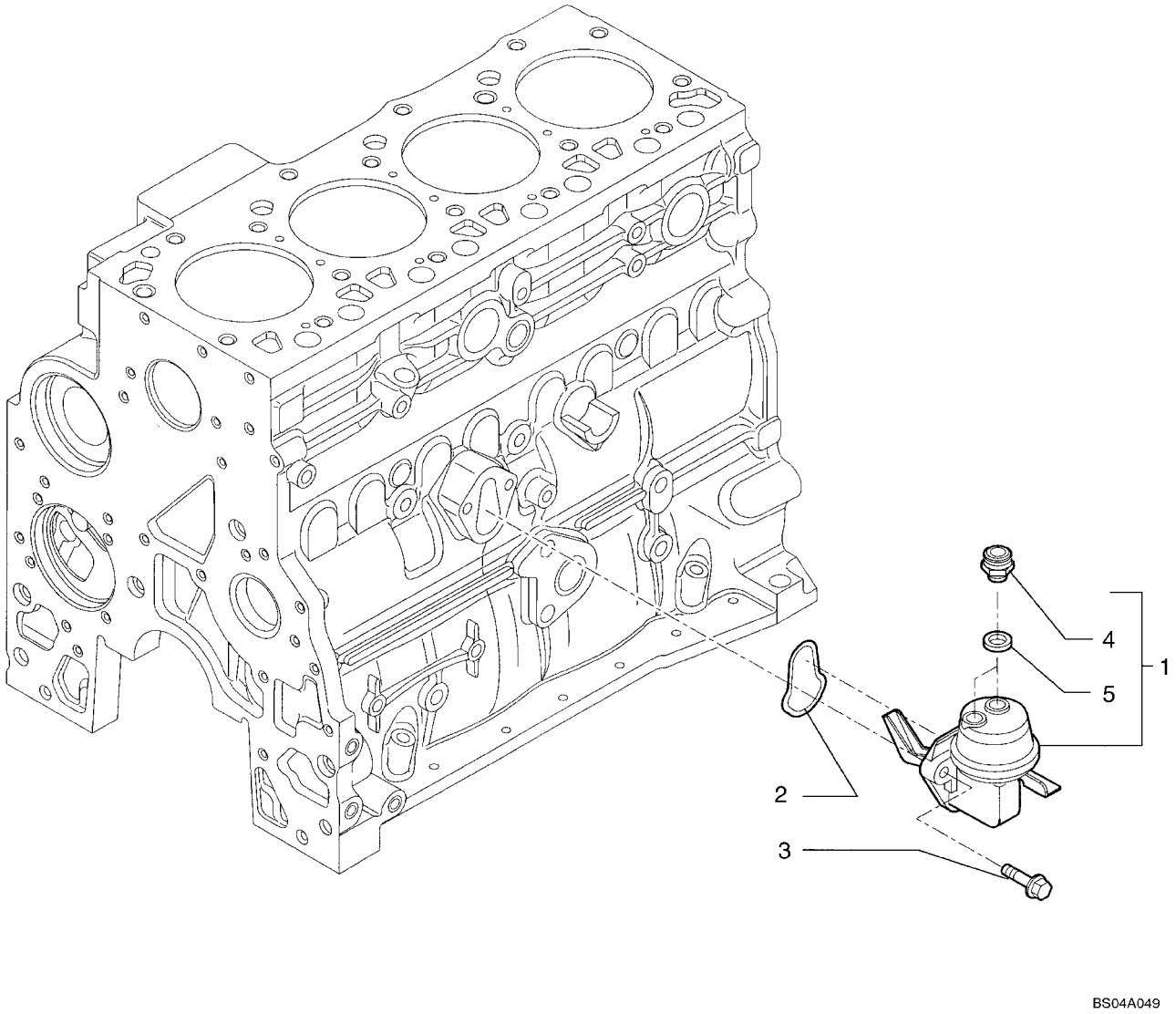

POMPE D'ALIMENTATION

REF	FN	PART NUMBER	YR/SN	QTY	DESCRIPTION
1		2830266		1	POMPE D'ALIMENTATION, Fuel Transfer; Incl. Ref 4, 5
2		2830156		1	JOINT
3		4899031		2	VIS, Hex Flg, M8 x 1.25 x 25
4		4890964		2	RACCORD
5		4894721		2	RONDELLE D'ETANCHEITE

TUYAUTERIES - COMBUSTIBLE

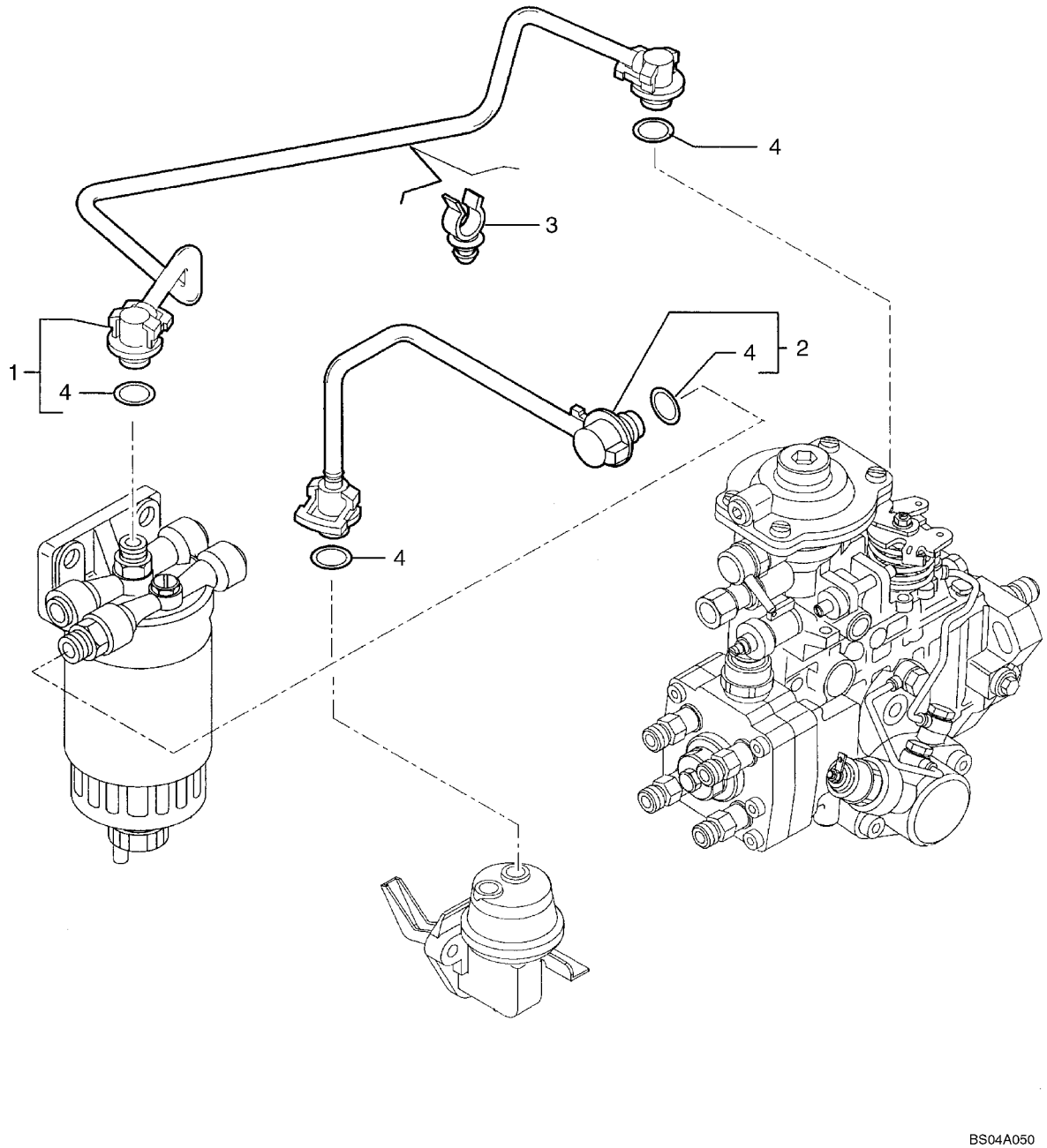

TUYAUTERIES - COMBUSTIBLE

REF	FN	PART NUMBER	YR/SN	QTY	DESCRIPTION
1		2852105		1	TUBE, Incl. Ref 4
2		2852594		1	TUBE, Incl. Ref 4
3		2852111		1	BRIDE
4		4894095		2	JOINT THORIQUE

SYSTÈME D'INJECTION

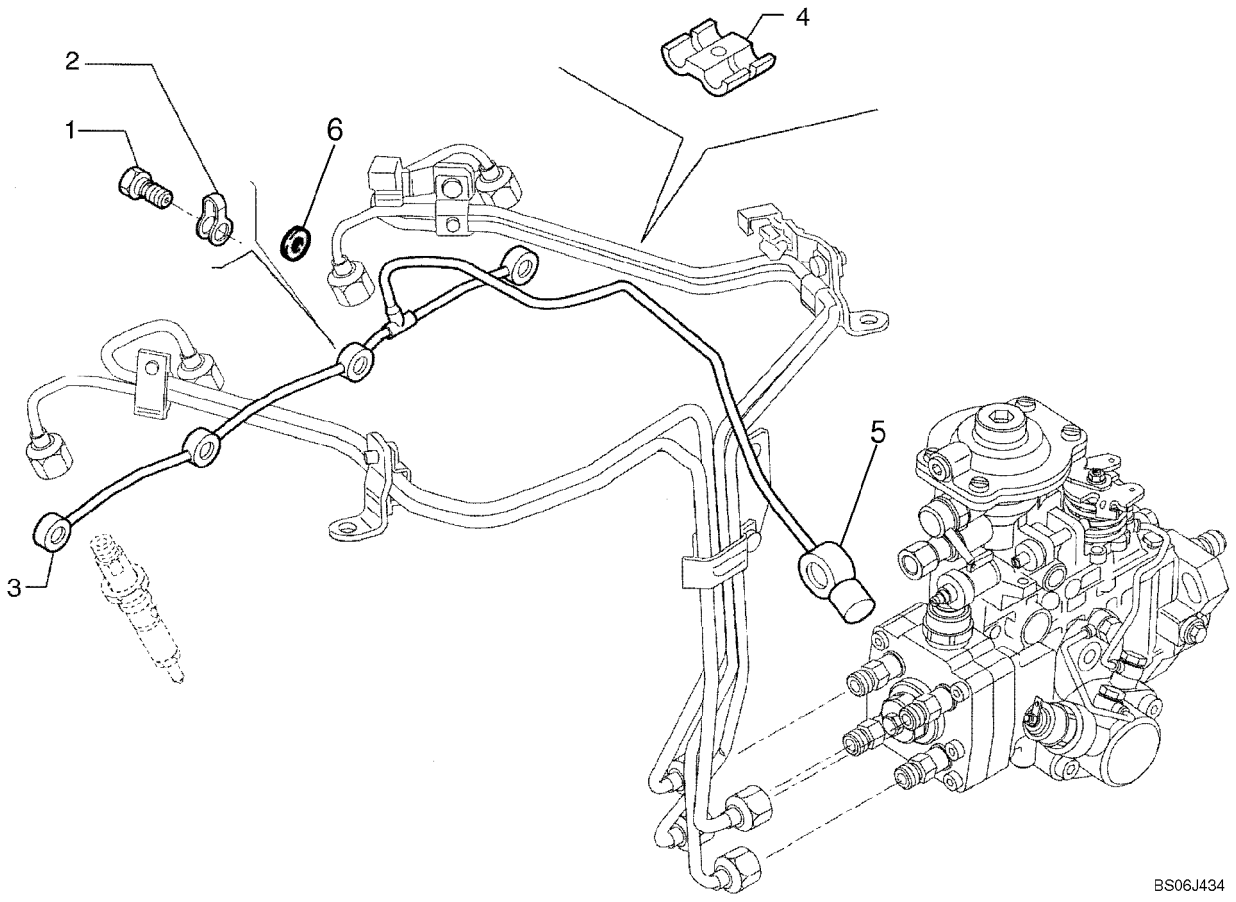

SYSTâME D'INJECTION

REF	FN	PART NUMBER	YR/SN	QTY	DESCRIPTION
1		4895244		4	VIS-RACCORD
2		4895305		4	JOINT, If Used
3		2852065		1	TUYAU RIGIDE
4		2852521		1	ATTACHE A RESSORT
5		NSS		1	NON FOURNI SEPAREMENT, Banjo Connector Assy; Order 2852065 Tube, Ref 3
6		2855903		8	RONDELLE D'ETANCHEITE, If Used

NOTES

SECTION INDEX
Circuit électrique

04-01	D£MARREUR
04-02	ALTERNATEUR
04-03	SUPPORT DU D£MARREUR - MONTAGE DE L'ALTERNATEUR
04-04	FAISCEAU, MOTEUR - MONTAGE ET CONNEXIONS
04-05	BATTERIE SIMPLE
04-06	BATTERIE DOUBLE - DEMARRAGE PAR TEMPS FROID
04-06A	£L£MENT CHAUFFANT DE CALANDRE POUR D£MARRAGE ê FROID
04-07	FAISCEAU, TABLEAU DE BORD AVANT - CONTACTEURS
04-08	FAISCEAU, TABLEAU DE BORD AVANT - SUPPORT
04-09	FAISCEAU, TABLEAU DE BORD LAT£RAL - CONTACTEURS
04-10	TABLEAU DE BORD, AVANT - COUVERCLES
04-11	TABLEAU DE BORD, LAT£RAL - COUVERCLES (CĎT£ DROIT)
04-12	APPAREILS DE CONTROLE
04-13	SYSTÊME £LECTRIQUE - ECLAIRAGE, TOIT ROPS
04-14	SYSTÊME £LECTRIQUE - ECLAIRAGE, CABINE ROPS
04-15	£CLAIRAGE (MODÊLES AVEC STRUCTURE ROPS)
04-16	AVERTISSEUR SONORE - ALARME DE RECUL
04-17	GYROPHARE (MODÊLES DE CABINES OU DE TOIT)
04-18	ANTENNE, RADIO - FAISCEAU, RADIO
04-19	SYSTÊME £LECTRIQUE - CIRCUIT HYDRAULIQUE AUXILIAIRE POUR LA PELLE RETRO
04-20	SYSTÊME £LECTRIQUE - CIRCUIT HYDRAULIQUE AUXILIAIRE POUR LA PELLE RETRO, AVEC DE COMMANDE PILOTE

04-01		p1	11/07

D£MARREUR

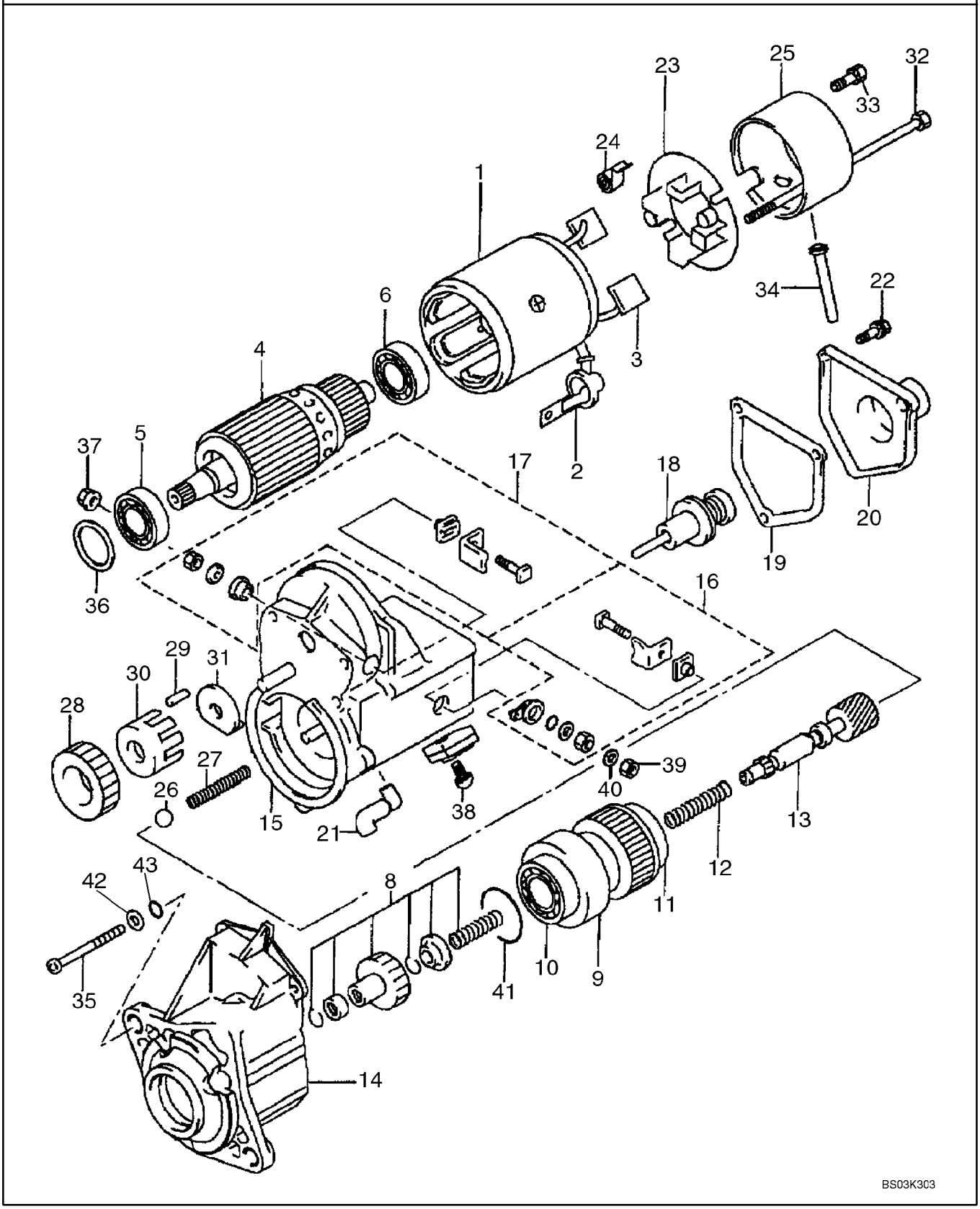

D£MARREUR

REF	FN	PART NUMBER	YR/SN	QTY	DESCRIPTION
		86992395		1	DEMARREUR, 12 V, 2.7 kw; Incl. Ref 1 - 43
1		87438992		1	MACHOIRE, Housing, Yoke; Incl. Ref 2, 3
2		87438993		1	COUVERCLE (ASSEMBLE)
3		87438925		2	BALAI
4		87438926		1	INDUIT, Incl. Ref 5, 6
5		87438927		1	ROULEMENT A BILLES, 35 mm OD
6		87438928		1	ROULEMENT A BILLES, 30 mm OD
		87438994		1	EMBRAYAGE ASSEMBLE, Incl. Ref 8 - 13
8		87438929		1	KIT REPAR.DEMARREUR, Clutch Pinion Kit
9		87438930		1	KIT REPAR.DEMARREUR, Clutch Assembly; Incl. Ref 10, 11
10		87438931		1	ROULEMENT A BILLES, 47 mm OD
11		87438932		1	ROULEMENT A BILLES, 47 mm OD
12		87438933		1	RESSORT DE COMPRESS.
13		87438935		1	ARBRE, Clutch
14		87438937		1	CARTER
15		87438940		1	INTERRUPTEUR COMPLET, Magnetic; Incl. Ref 16 - 22
16		87438941		1	KIT REPAR.DEMARREUR, Kit, Terminal M
17		87438942		1	KIT REPAR.DEMARREUR, Kit, Terminal C
18		87438944		1	PLONGEUR, PISTON ASS
19		87438946		1	JOINT, Solenoid Switch
20		87438948		1	COUVERCLE, Solenoid
21		87438995		1	BAGUE, Drain
22		87438950		3	BOULON, With Washer; M5 x 14
23		87438996		1	SUPPORT, Brush; Incl. Ref 24
24		87438997		4	RESSORT, Brush Tension
25		87438999		1	CHASSIS
26		87439000		1	BILLE
27		87439001		1	RESSORT DE COMPRESS.
28		87439002		1	PIGNON, Gear
29		87439003		5	ROULEAU, Clutch
30		87439004		1	RETENEUR
31		87439005		1	RETENEUR
32		87438951		2	BOULON

04-01		p2	11/07

D£MARREUR

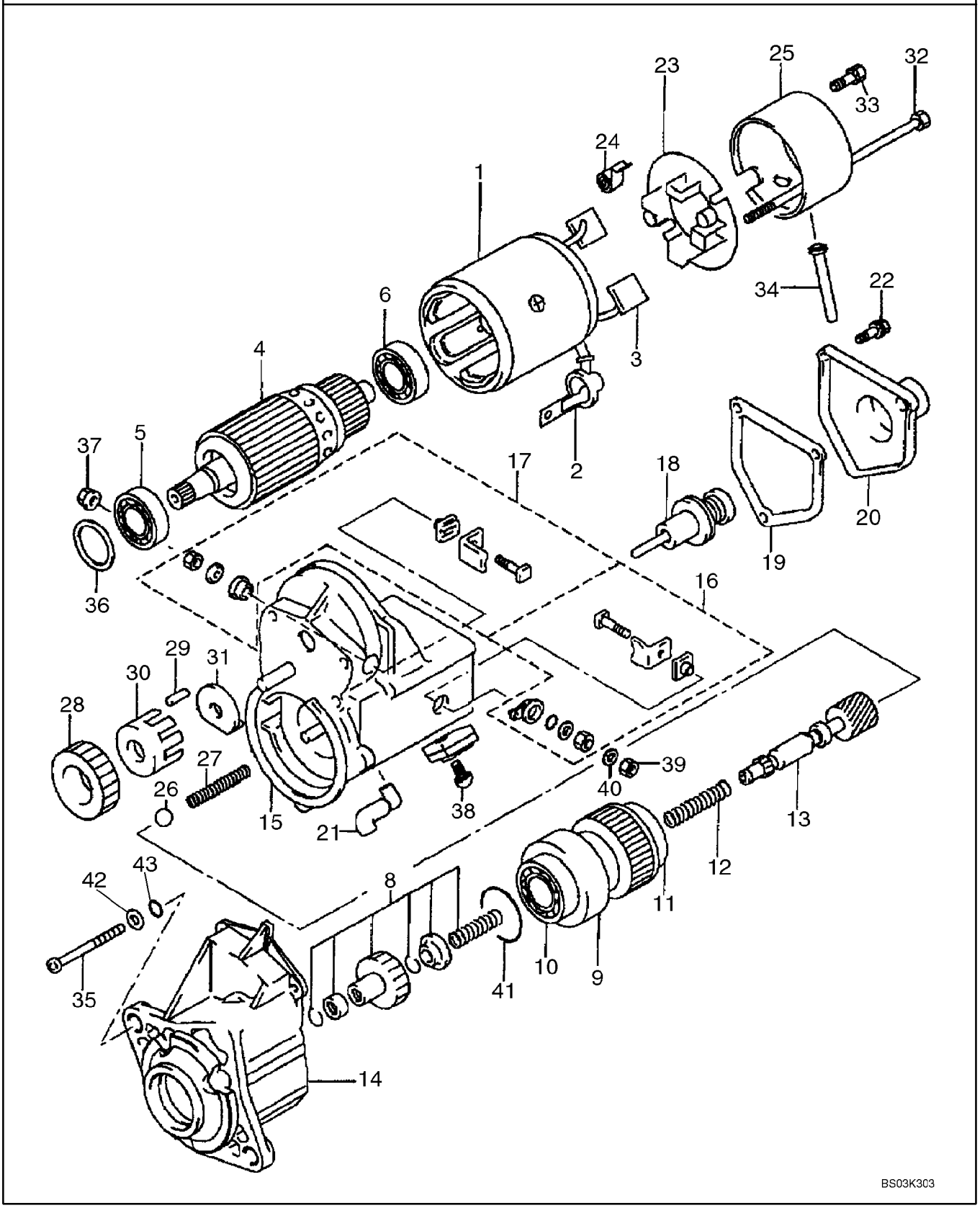

D£MARREUR

REF	FN	PART NUMBER	YR/SN	QTY	DESCRIPTION
33		87439006		2	VIS, M5 x 9.4
34		87439007		1	BAGUE, Drain
35		87439008		3	VIS, M6 x 70
36		87438954		1	RONDELLE, Felt
37		87439009		1	ECROU, M10
38		87438956		1	BOULON, M5 x 10
39		100016		1	ECROU, M10, Cl 8
40		892-11010		1	RONDELLE FREIN, M10
41		87439010		1	JOINT
42		87439061		3	RONDELLE, 9/32 x 1/2 x 3/64
43		87439011		3	JOINT THORIQUE, 4.8 ID

04-02		p1	11/07

ALTERNATEUR

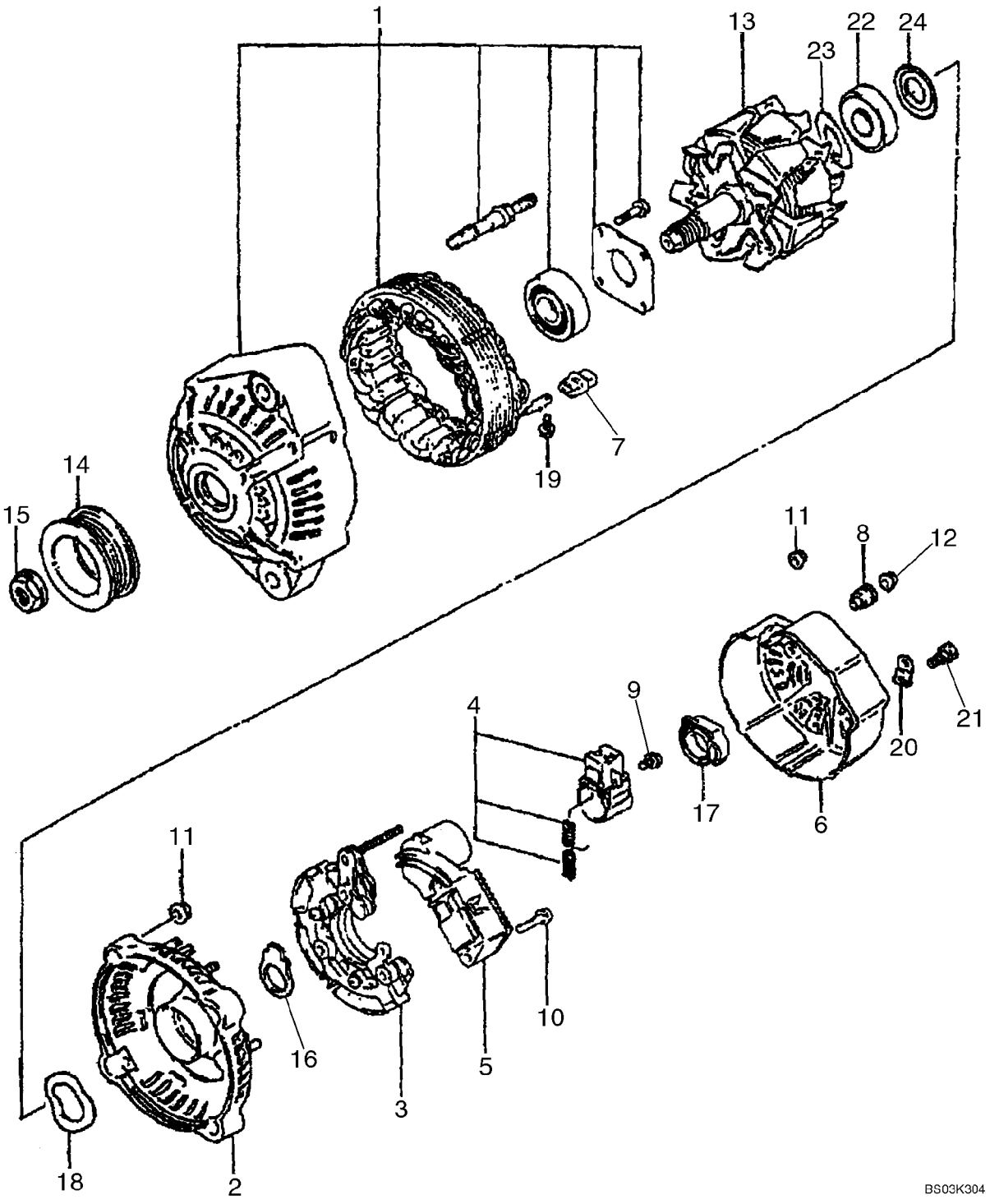

ALTERNATEUR

REF	FN	PART NUMBER	YR/SN	QTY	DESCRIPTION
		87422777		1	ALTERNATEUR, 12V, 90 amp; Incl. Ref 1 - 24; Connector on 87433543 Engine Harness Attaching to Alternator is (1) 382203A1 3-Pin Plug Connector, (3) 382204A1 Terminal, (3) 382207A1 Seal
1		87438960		1	BATI (ASSEMBLE), Drive End, Includes Stator
2		87438963		1	CHASSIS
3		87438965		1	SUPPORT, Rectifier
4		87438967		1	SUPPORT, Brush
5		87438969		1	REGULATEUR TENSION
6		87438970		1	COUVERCLE ARRIERE
7		87438971		4	BAGUE, Insulation
8		87438972		1	BAGUE, Insulation
9		87438973		3	VIS
10		87438974		2	VIS
11		87438975		7	ECROU
12		87438976		1	ECROU
13		87438977		1	ROTOR (ASSEMBLE)
14		87438978		1	POULIE
15		87438979		1	ECROU
16		87438980		1	JOINT ANNULAIRE
17		87438981		1	JOINT ANNULAIRE
18		87438982		1	RONDELLE
19		87438983		4	VIS
20		87438984		1	PLAQUE, Terminal
21		87438985		1	VIS
22		87438986		1	ROULEMENT A BILLES
23		87438987		1	COUVERTURE, Bearing
24		87438989		1	COUVERTURE, Bearing

04-03		p1	11/07

SUPPORT DU D£MARREUR - MONTAGE DE L'ALTERNATEUR

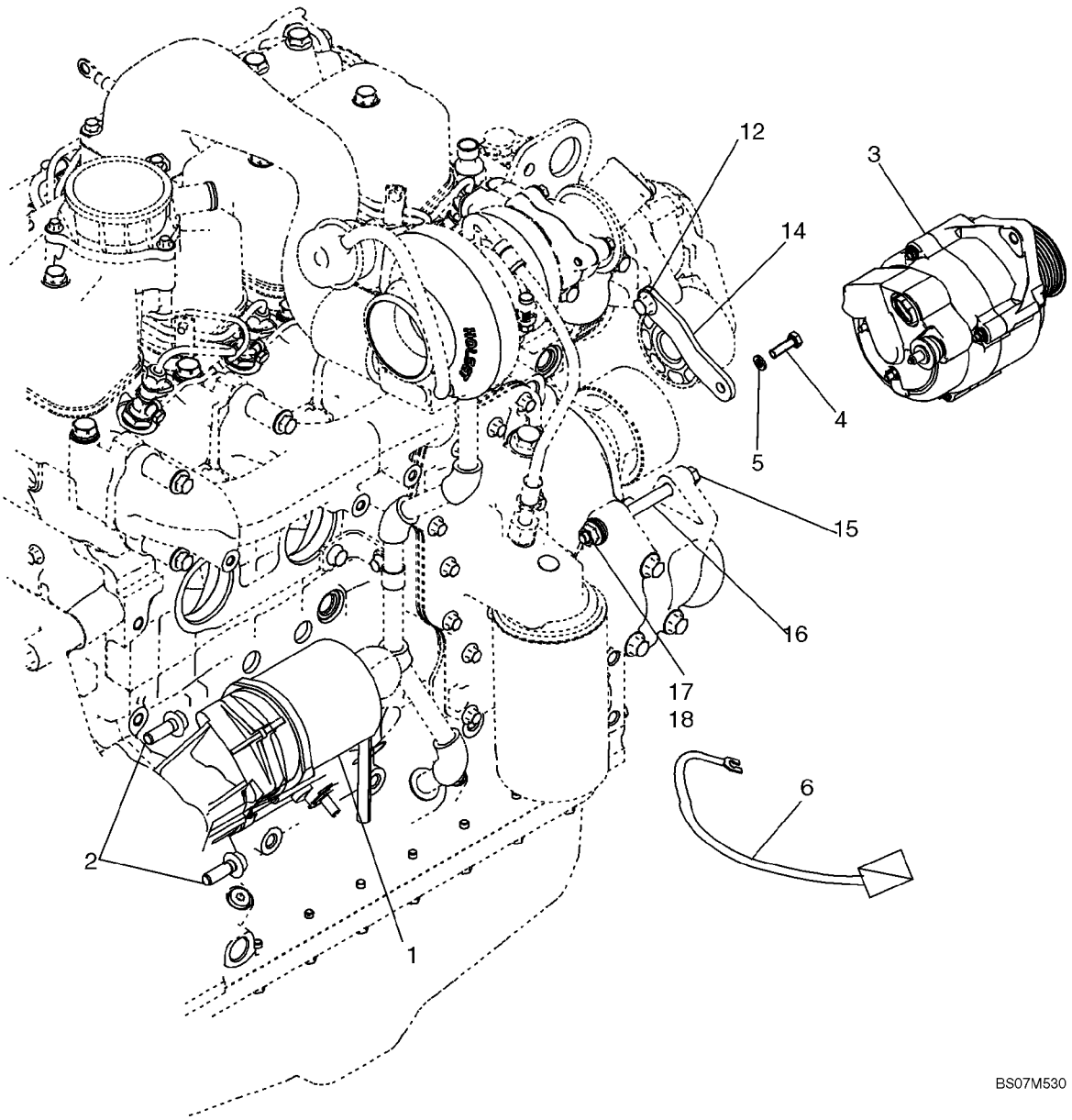

SUPPORT DU D£MARREUR - MONTAGE DE L'ALTERNATEUR

REF	FN	PART NUMBER	YR/SN	QTY	DESCRIPTION
1		86992395		1	DEMARREUR, See Figure 04-01
2		844-10035		2	BOULON, Hex Flg, M10 x 35, 8.8
3		87422777		1	ALTERNATEUR, See Figure 04-02; Mounting Hardware Included With 87584965 Engine Assembly; See Ref. 12, 14, 16
4		614-8025		1	BOULON, Hex, M8 x 25, 8.8
5		892-11008		1	RONDELLE FREIN, M8
6		87433401		1	CABLE ELECTRIQUE, Starter Solenoid Jumper Cable
12		4895291		1	VIS, Hex Flg, M10 x 1.5 x 20, Included With 87584965 Engine Assy
14		2852180		1	PATTE FIXATION, Included With 87584965 Engine Assy
15		827-10130		1	BOULON, Hex, M10 x 130, 10.9
16		2852181		1	ENTRETOISE, Included With 87584965 Engine Assy
17		896-11010		2	RONDELLE, M10 x 21.5 x 2.5, HT
18		832-10410		1	CONTRE-ECROU, M10 x 1.5, Cl 8

04-04		p1	12/07

FAISCEAU, MOTEUR - MONTAGE ET CONNEXIONS

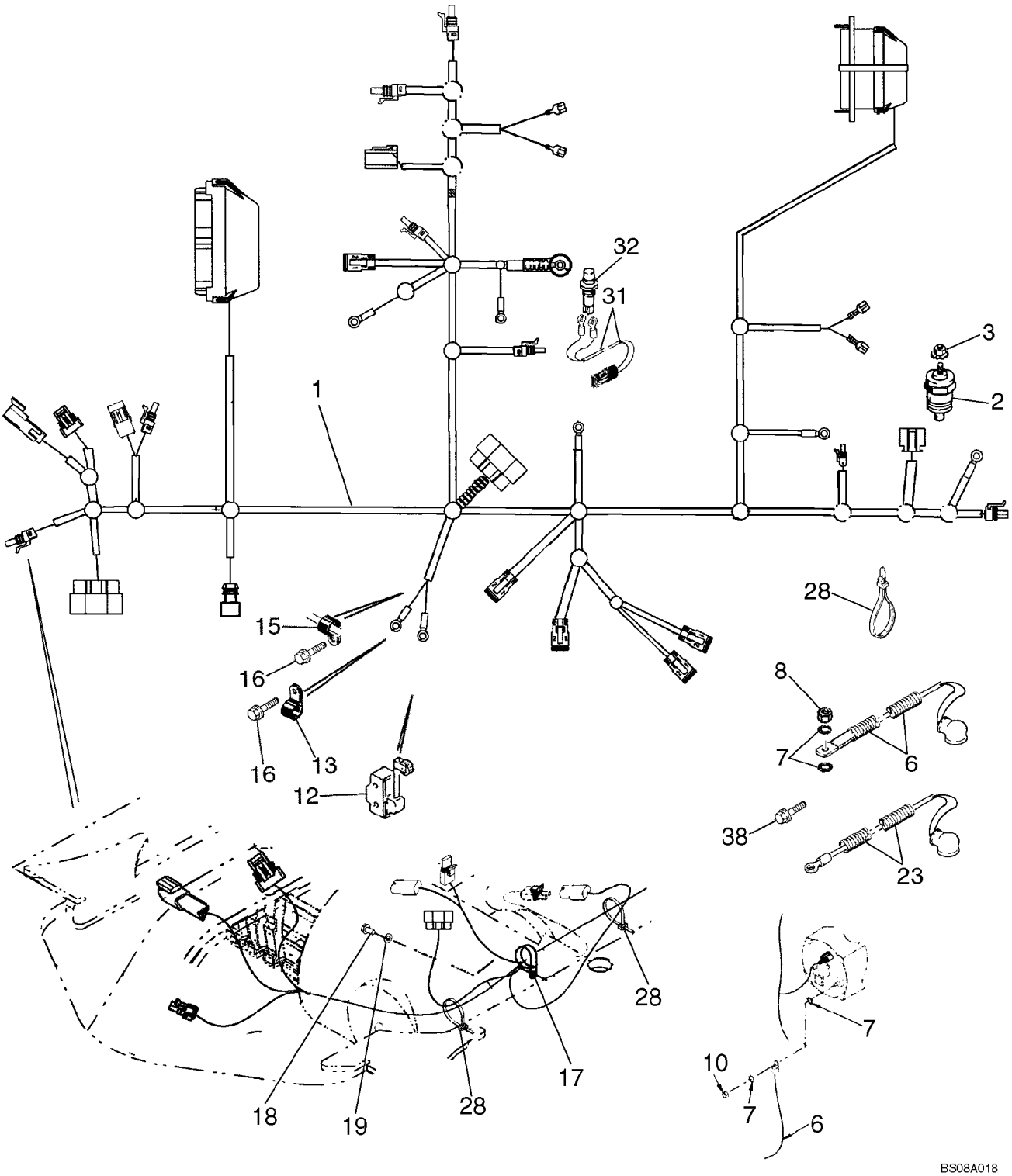

FAISCEAU, MOTEUR - MONTAGE ET CONNEXIONS

REF	FN	PART NUMBER	YR/SN	QTY	DESCRIPTION
1		87726584		1	FAISCEAU COMPLET, Main Chassis
2		A166057		1	THERMO SONDE, Engine Water Coolant Temperature
3		193-1000		1	ECROU, Keps, w/LW,#10-32
6		87423926		1	CABLE, Alternator Cable
7		493-21033		2	RONDELLE FREIN, Int Tooth, 5/16"
8		829-1408		1	ECROU, M8, Cl 10
12		D137363		1	CONTACTEUR, Return To Dig; For Mounting; See Figure 09-04
13		515-23127		1	BRIDE, 1/2", Insul, 3/8" Bolt
15		515-23127		1	BRIDE, 1/2", Insul, 3/8" Bolt
16		844-10020		2	BOULON, Hex Flg, M10 x 20, 8.8
17		9827902		1	BRIDE, 1", Insul, 3/8" Bolt
18		614-10030		1	BOULON, Hex, M10 x 30, 8.8
19		895-11010		1	RONDELLE, M10 x 20 x 2
23		87419229		1	FAISCEAU COMPLET, Power Wire
28		L18337		AR	SERRE-CABLE, 9.95"-12.1" lg
31		123809A2		1	FAISCEAU, Clutch Cutout; Transmission Gear Shift Lever; Incl. Ref 31A, 31B
31A		246526A1		1	CONNECTEUR, Not Illustrated
31B		NSS		2	NON FOURNI SEPAREMENT, Eye; Not Illustrated
32		87312712		1	CONTACTEUR, Push Button; Clutch Cutout; Transmission Gear Shift Lever; For Lever and Knob, See Figure 06-12;
38		128312A1		1	BOULON

04-05		p1	02/08

BATTERIE SIMPLE

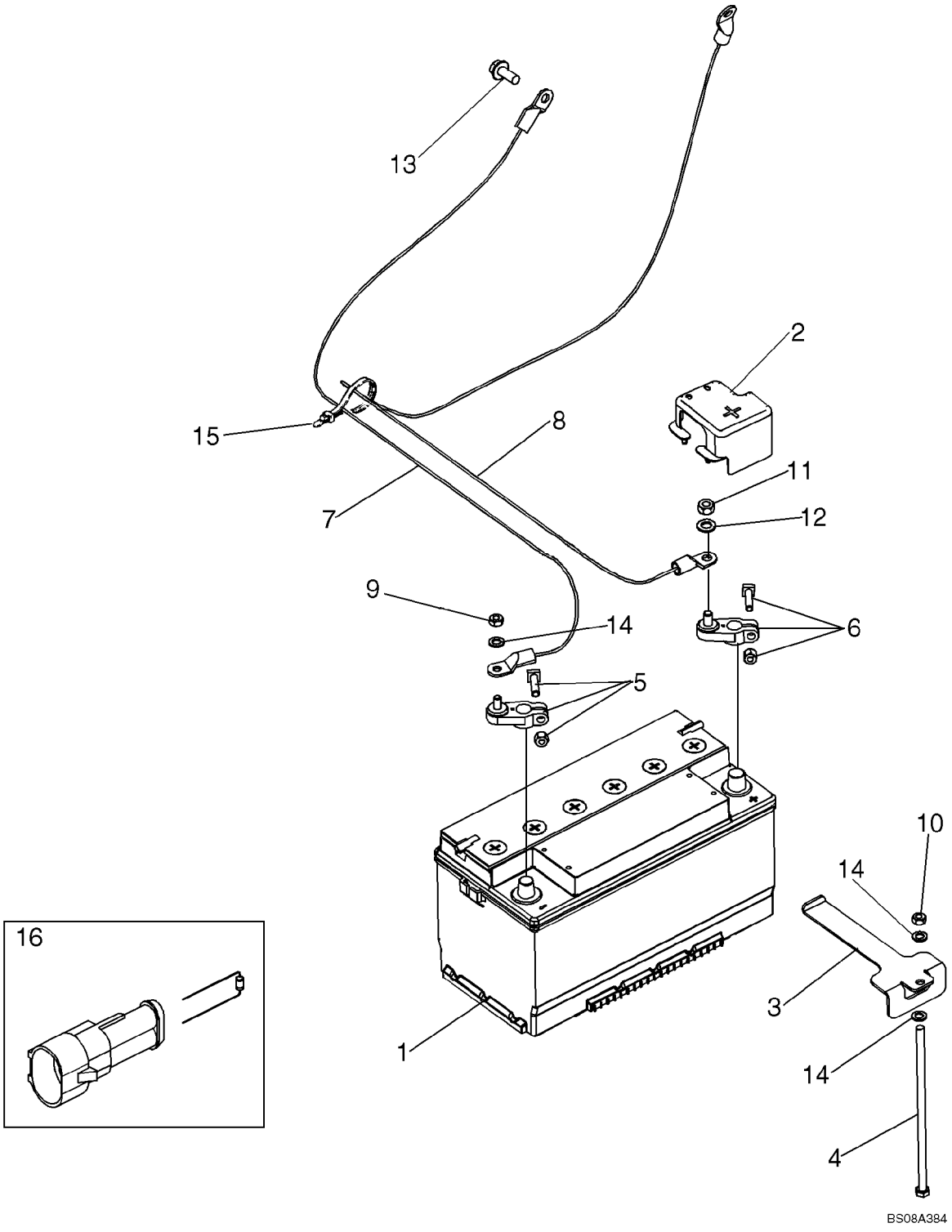

BATTERIE SIMPLE

REF	FN	PART NUMBER	YR/SN	QTY	DESCRIPTION
1		87403835		1	BATTERIE HUMIDE, 12V; Used In Production, For Service Order B4960W Through Ship Direct
2		87664021		1	COUVERTURE, Protective; Battery Positive
3		87653377		1	PATTE FIXATION, Tie Down
4		87522766		1	BOULON
5		87682197		1	BRIDE, Battery Cable Negative
6		87656128		1	BRIDE, Battery Cable Positive
7		87610680		1	JARRETIERE, Battery Negative
8		87610679		1	CABLE ELECTRIQUE, Battery Positive
9		829-1408		1	ECROU, M8, Cl 10
10		832-10408		1	CONTRE-ECROU, M8 x 1.25, Cl 8
11		829-1410		1	ECROU, M10, Cl 10
12		895-11010		1	RONDELLE, M10 x 20 x 2
13		844-10025		2	BOULON, Hex Flg, M10 x 25, 8.8, Full Thd
14		895-11008		3	RONDELLE, M8 x 16 x 1.6
15		L18337		2	SERRE-CABLE, 9.95"-12.1" lg
16		87584645		1	RESISTANCE, Grid Heater

04-06		p1	02/08

BATTERIE DOUBLE - DEMARRAGE PAR TEMPS FROID

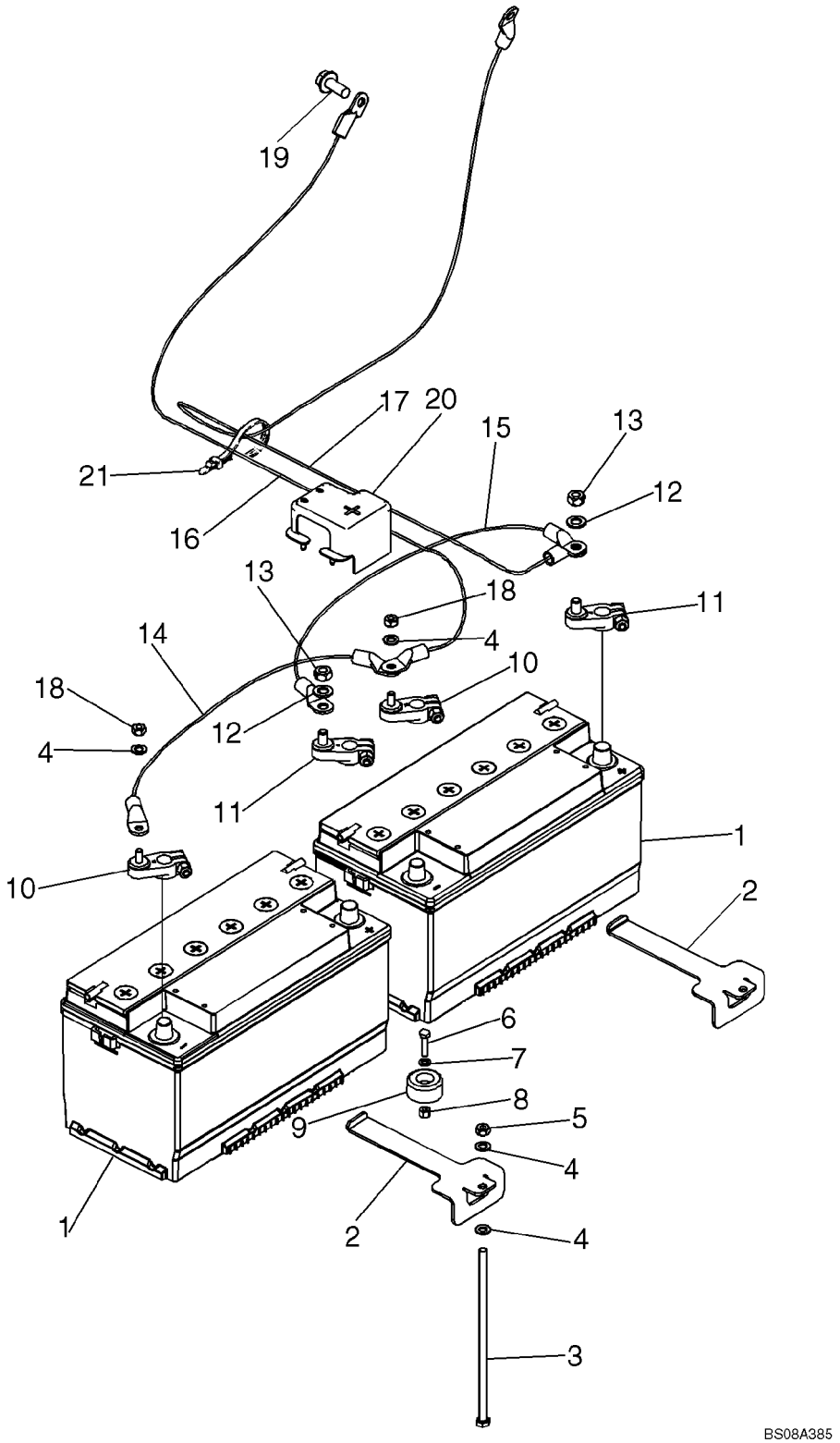

BATTERIE DOUBLE - DEMARRAGE PAR TEMPS FROID

REF	FN	PART NUMBER	YR/SN	QTY	DESCRIPTION
1		87403835		2	BATTERIE HUMIDE, 12V; Used In Production, For Service Order B4960W Through Ship Direct
2		87653377		2	PATTE FIXATION, Tie Down
3		87522766		2	BOULON, M8 x 220
4		895-11008		6	RONDELLE, M8 x 16 x 1.6
5		832-10408		2	CONTRE-ECROU, M8 x 1.25, Cl 8
6		614-6025		1	BOULON, Hex, M6 x 25, 8.8
7		895-11006		1	RONDELLE, M6
8		832-10406		1	CONTRE-ECROU, M6 x 1, Cl 8
9		87671746		1	PARE-CHOCS
10		87682197		2	BRIDE, Battery Cable Stud, Negative
11		87656128		2	BRIDE, Battery Cable Stud, Positive
12		895-11010		2	RONDELLE, M10 x 20 x 2
13		829-1410		2	ECROU, M10, Cl 10
14		87610682		1	CABLE ELECTRIQUE, Negative Jumper
15		87610681		1	CABLE ELECTRIQUE, Postivie Jumper
16		87610680		1	JARRETIERE, Negative
17		87610679		1	CABLE ELECTRIQUE, Positive
18		829-1408		2	ECROU, M8, Cl 10
19		844-10025		2	BOULON, Hex Flg, M10 x 25, 8.8, Full Thd
20		87664021		2	COUVERTURE, Protective; Positive Battery
21		L18337		3	SERRE-CABLE, 9.95"-12.1" lg

04-06A		p1	12/07

£L£MENT CHAUFFANT DE CALANDRE POUR D£MARRAGE ë FROID

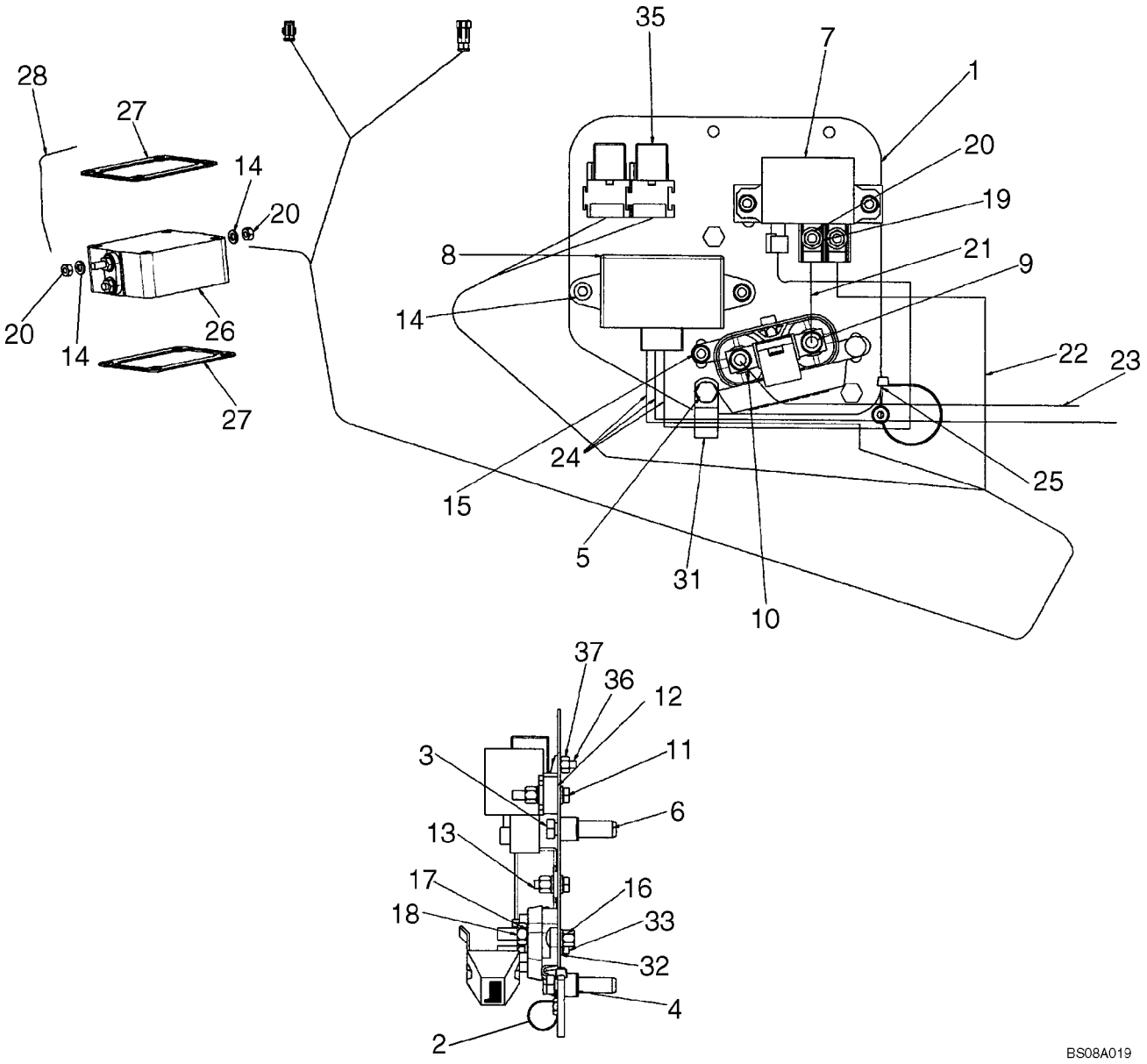

£L£MENT CHAUFFANT DE CALANDRE POUR D£MARRAGE ë FROID

REF	FN	PART NUMBER	YR/SN	QTY	DESCRIPTION
1		87397601		1	EQUERRE, Cold Start Plate
2		515-22190		1	BRIDE, 3/4", Insul, 5/16" Bolt
3		614-8040		3	BOULON, Hex, M8 x 40, 8.8, Full Thd
4		407962A1		3	ENTRETOISE
5		238-5011		3	JOINT THORIQUE, -011, 70 Duro, .301" ID x .070" Thk
6		87417383		3	INSERT FILETE, M8 x 1-1/4
7		86619908		1	RELAIS, Cold Start
8		47132002		1	BOITIER ELECTRONIQUE, Electronic Unit Controller, Grid Heater
9		440038A1		1	BLOC-CROIX, Fuse Block
10		87410602		1	FUSIBLE, 300 amp Fuse
11		614-6035		2	BOULON, Hex, M6 x 35, 8.8, Full Thd
12		87414237		1	PLAQUE, 10 mm Thick Spacer Bar
13		614-6020		3	BOULON, Hex, M6 x 20, 8.8
14		895-11006		13	RONDELLE, M6
15		832-10406		6	CONTRE-ECROU, M6 x 1, Cl 8
16		811-6016		1	BOULON TETE BOMBEE, Short NK, M6 x 16, Cl8.8, Full Thd
17		892-11008		5	RONDELLE FREIN, M8
18		829-1408		2	ECROU, M8, Cl 10
19		322357		2	RONDELLE BELLEVILLE, Belleville, M6
20		829-1406		4	ECROU, M6, Cl 10
21		87410265		1	RELAIS, 90 mm Jumper Wire; Fuse to Relay
22		87608352		1	CABLE ELECTRIQUE, 650 mm Wire; Relay to Grid Heater
23		87419615		1	CABLE (ASSEMBLE), 1250 mm Wire; Starter to Fuse Block
24		87396228		1	FAISCEAU COMPLET, Cold Start Control
25		L18337		1	SERRE-CABLE, 9.95"-12.1" lg
26		82017872		1	RECHAUFFEUR, Grid
27		86014151		2	JOINT
28		87601612		1	CABLE, MASSE, 240 mm, Grid Heater Ground
31		515-25190		1	BRIDE, 3/4", Insul, 1/2" Bolt
32		614-12025		1	BOULON, Hex, M12 x 25, 8.8

04-06A		p2	12/07

£L£MENT CHAUFFANT DE CALANDRE POUR D£MARRAGE ë FROID

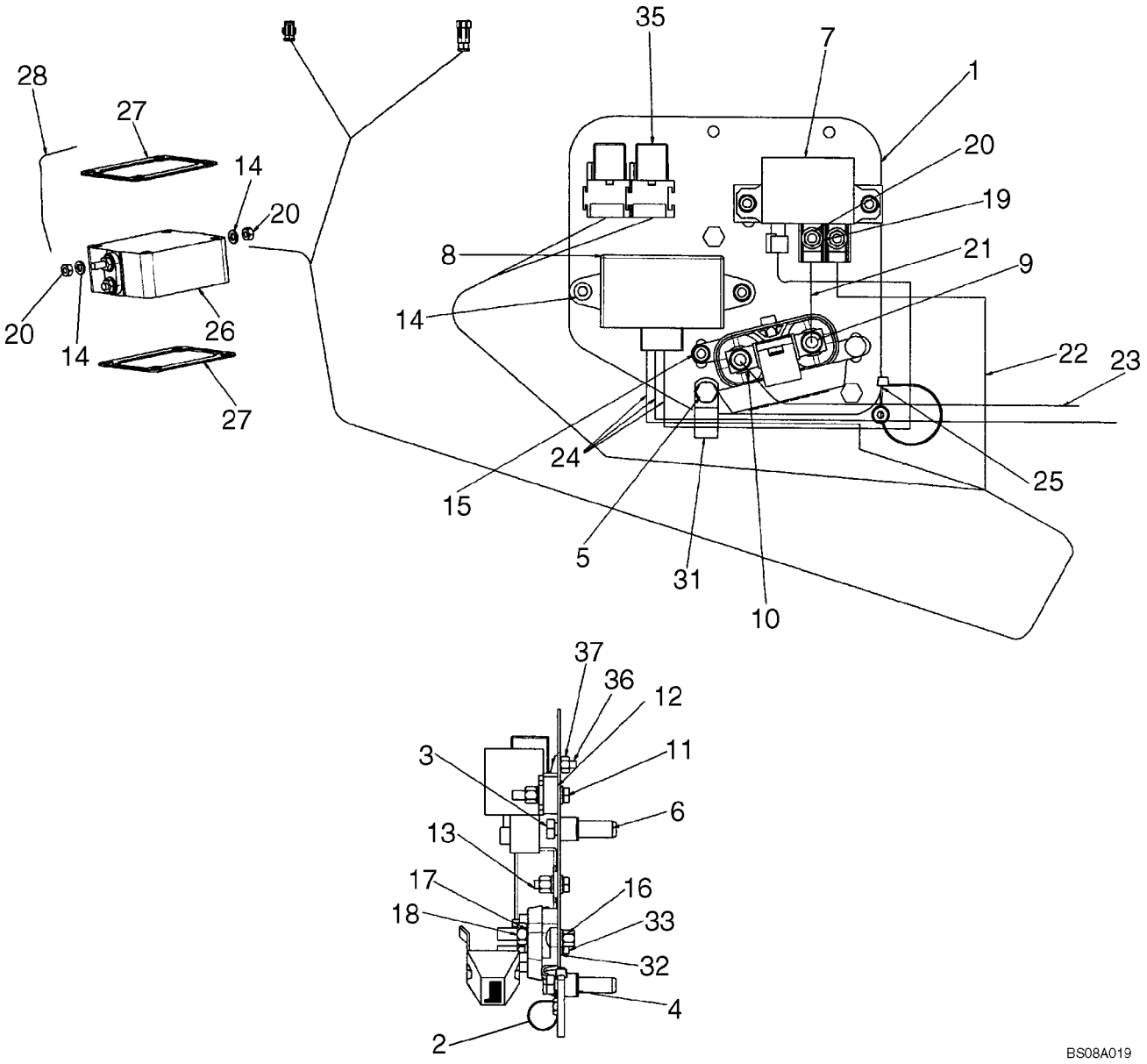

£L£MENT CHAUFFANT DE CALANDRE POUR D£MARRAGE ë FROID

REF	FN	PART NUMBER	YR/SN	QTY	DESCRIPTION
33		896-11012		1	RONDELLE, M13.5 x 24.5 x 3, HT
35		87436836		2	RELAIS, Mini, 12V, 40A; Engine Crank
36		87301687		2	VIS, Hex Wash Hd, #10-32 x 1/2"
37		231-24409		2	CONTRE-ECROU, #10-32

04-07		p1	01/08

FAISCEAU, TABLEAU DE BORD AVANT - CONTACTEURS

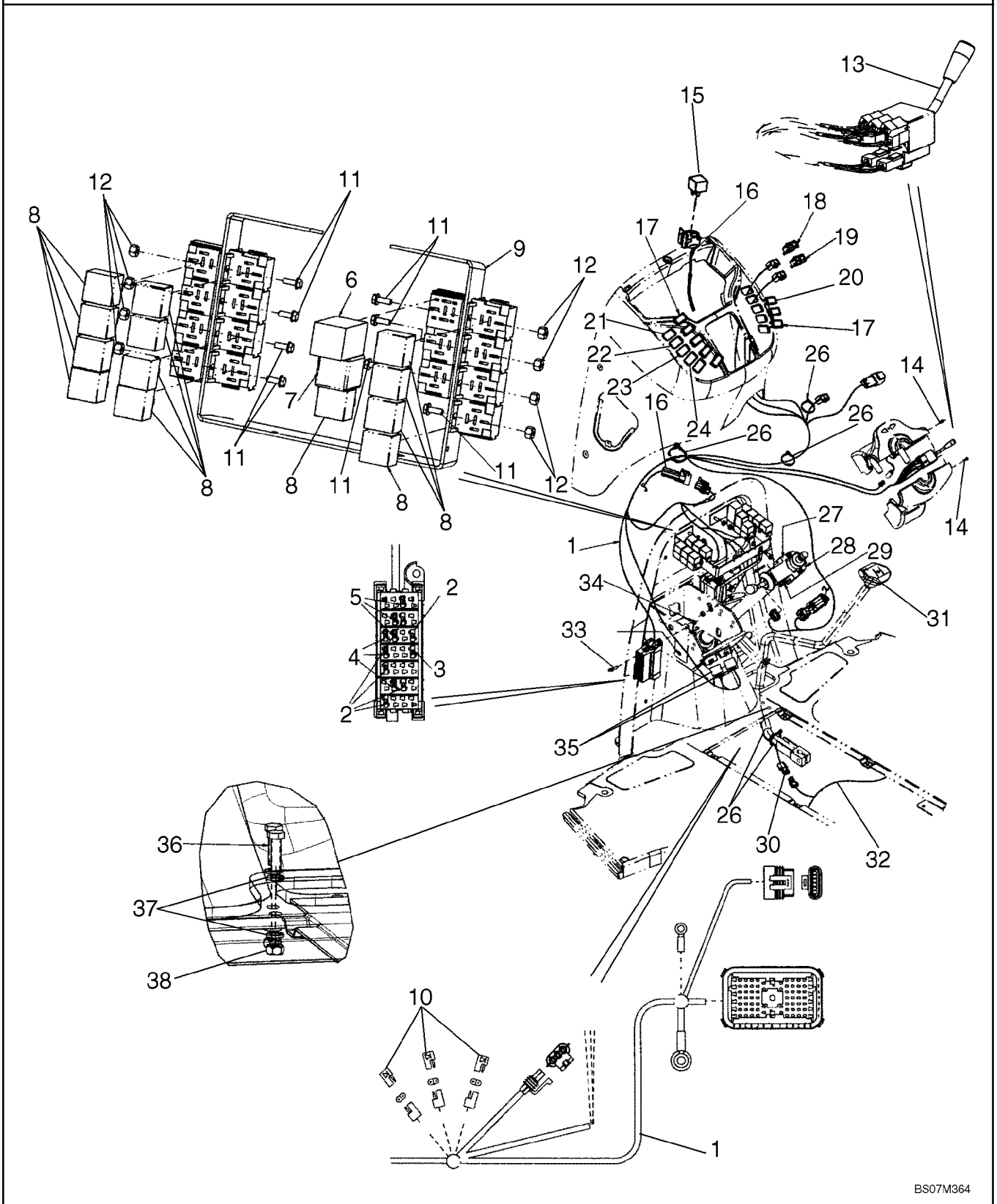

FAISCEAU, TABLEAU DE BORD AVANT - CONTACTEURS

REF	FN	PART NUMBER	YR/SN	QTY	DESCRIPTION
1		87726592		1	FAISCEAU COMPLET, Front Console Harness
2		121412A1		5-6	FUSIBLE, 10 amp; Mini, Red
3		121413A1		2-3	FUSIBLE, 15 amp; Mini, Blue
4		121414A1		3	FUSIBLE, 20 amp; Mini, Yellow
5		121416A1		2	FUSIBLE, 30 amp; Mini, Green
6		87578455		1	CLIGNOTANT, Relay, Flasher, Hazard; Turn Signal
7		347706A3		1	RELAIS, Sealed Time Delay, Shuttle Interlock Timing Relay, Forward Reverse Control
8		87436836		13	RELAIS, 40 amp, 12V
9		361900A1		1	PATTE FIXATION, Relay Mounting
10		L71879		3	SUPPORT-DE-DIODES
11		87301687		8	VIS, Hex Wash Hd, #10-32 x 1/2"
12		231-24409		8	CONTRE-ECROU, #10-32
13		389487A1		1	COMM. LUMIERES, Turn Signal/Driving Lamp High/Low Beam
14		404816A1		2	VIS, M4 x 12
15		87436836		1	RELAIS, 40 amp, 12V; Air Conditioning; Attaches To Front Console Options Harness
16		87726574		1	FAISCEAU COMPLET, Front console Options, Includes (1) L71879 Diode
		L71879		1	SUPPORT-DE-DIODES
		490-11012		1	VIS, Cross Pan Hd, #10-32 x 3/4", Mounts Relay Recepticle
		193-1000		1	ECROU, Keps, w/LW,#10-32, Mounts Relay Recepticle
17		86000535		2-8	BOUCHON, 1.427" x .62", Plastic, Accessory; If used
18		386849A1		1	CONTACTEUR, Front Work Lamps
19		386850A1		1	CONTACTEUR, Hazard Lamps
20		386851A1		1	CONTACTEUR, Rotating Beacon; If Used
21		87585817		1	INTERRUPTEUR COMPLET, Comfort Steer Switch; If Used
22		386785A1		1	CONTACTEUR, Front Wiper; If Used
23		386787A1		1	CONTACTEUR, Front Windshield Washer; If Used
24		398675A2		1	CONTACTEUR, Loader Tool Quick Coupler; If Used
26		L18337		4	SERRE-CABLE, 9.95"-12.1" lg, 15 in

04-07		p2	01/08

FAISCEAU, TABLEAU DE BORD AVANT - CONTACTEURS

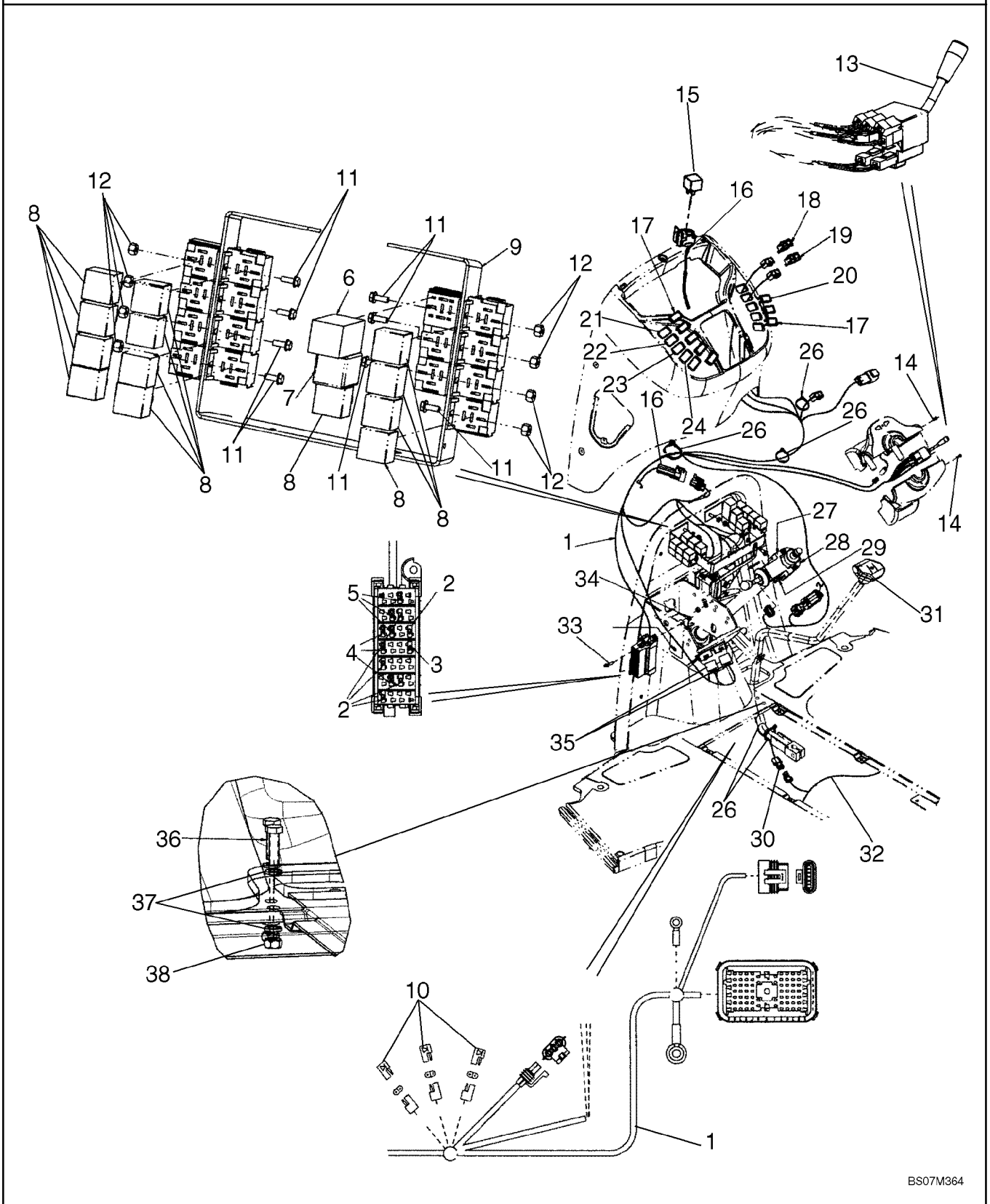

FAISCEAU, TABLEAU DE BORD AVANT - CONTACTEURS

REF	FN	PART NUMBER	YR/SN	QTY	DESCRIPTION
27		278328A1		1	CONTACTEUR, Shuttle Shift; Transmission Forward/Neutral/Reverse Switch
28		366889A2		1	DEMI-COLLIER, Shuttle Lever; Includes Threaded Insert
29		397990A1		2	VIS, M5 x 35
30		123809A2		1	FAISCEAU, Clutch Cutout; Transmission Gear Shift Lever; For Lever, See Figure 06-12
31		87312712		1	CONTACTEUR, Clutch Cutout; For Lever and Knob, See Figure 06-12; Otto 21649 Marking; If Used
32		87726576		1	FAISCEAU COMPLET, Engine, Main Chassis
33		844-6025		1	BOULON, Hex Flg, M6 x 25, 8.8
34		832-10406		1	CONTRE-ECROU, M6 x 1, Cl 8
35		82026949		2	CONTACTEUR, Brake Lamp; Includes Hardware; For Mounting, See Figure 07-03
36		844-8025		2	BOULON, Hex Flg, M8 x 25, 8.8
37		895-15010		4	RONDELLE, M11 x 24 x 2
38		829-1410		2	ECROU, M10, Cl 10

04-08		p1	12/07

FAISCEAU, TABLEAU DE BORD AVANT - SUPPORT

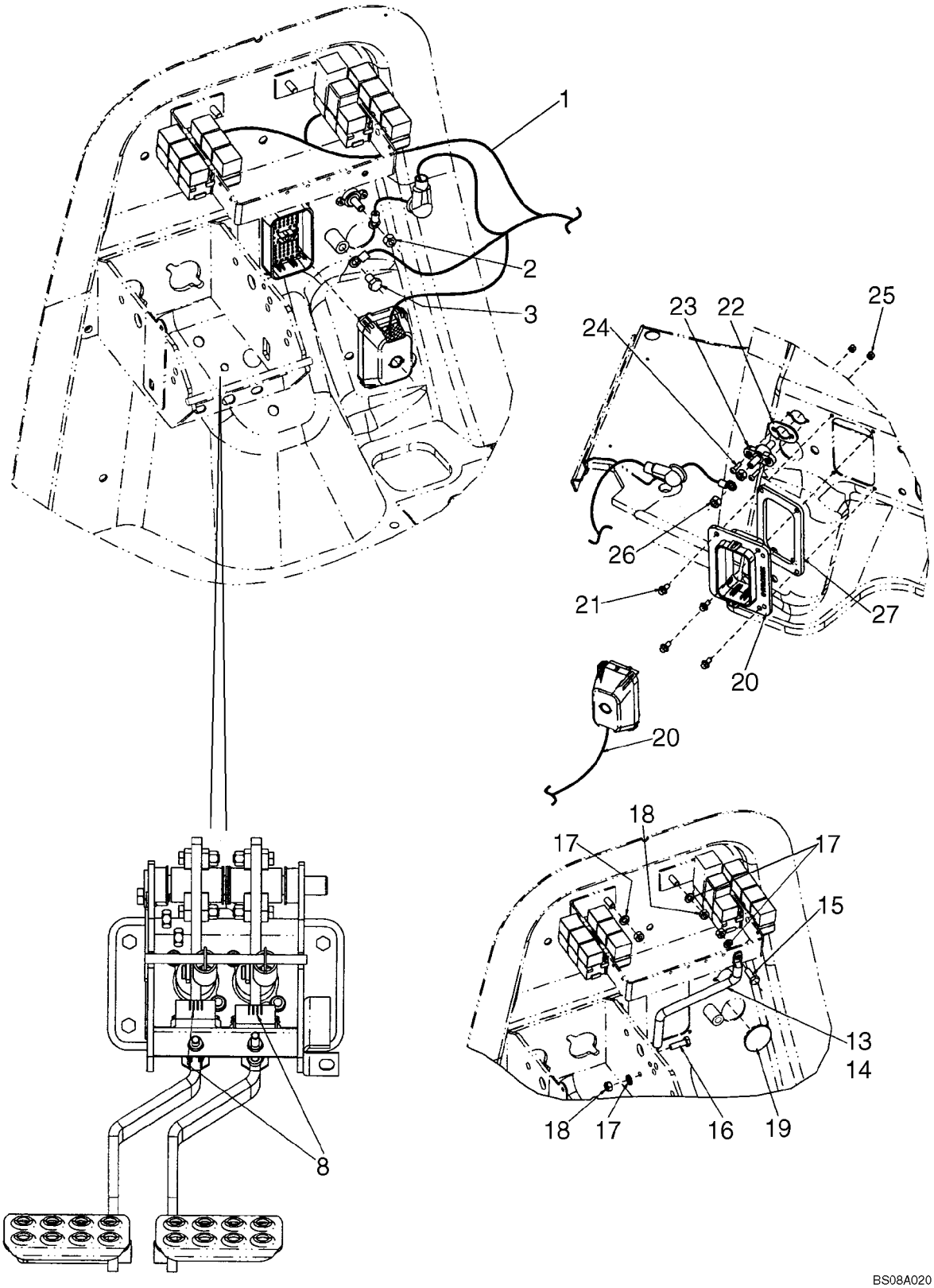

FAISCEAU, TABLEAU DE BORD AVANT - SUPPORT

REF	FN	PART NUMBER	YR/SN	QTY	DESCRIPTION
1		87726592		1	FAISCEAU COMPLET, Front Console Harness; Mounts To Front Firewall
2		425-106		1	ECROU, 3/8"-16, G5
3		128312A1		1	BOULON, M10 x 15; Mounts To Front Firewall
8		82026949		2	CONTACTEUR, Brake
13		362930A2		1	JAMBE-DE-FORCE, Relay Mounting
14		392353A1		1	CONDUIT
15		614-8020		1	BOULON, Hex, M8 x 20, 8.8
16		614-8025		1	BOULON, Hex, M8 x 25, 8.8
17		892-11008		4	RONDELLE FREIN, M8
18		829-1408		4	ECROU, M8, Cl 10
19		397876A1		1	BOUCHON, 1-5/8 in, Button
20		87726584		1	FAISCEAU COMPLET, Engine, Main Chassis
21		781-24613		4	VIS AUTO-TARAUDEUSE, Hex Flg Hd, M6 x 13
22		357966A1		1	JOINT
23		357278A1		1	BLOC-CROIX, Positive Battery
24		490-11012		2	VIS, Cross Pan Hd, #10-32 x 3/4"
25		231-24409		2	CONTRE-ECROU, #10-32
26		425-106		2	ECROU, 3/8"-16, G5
27		87649405		1	JOINT

04-09		p1	02/08

FAISCEAU, TABLEAU DE BORD LAT£RAL - CONTACTEURS

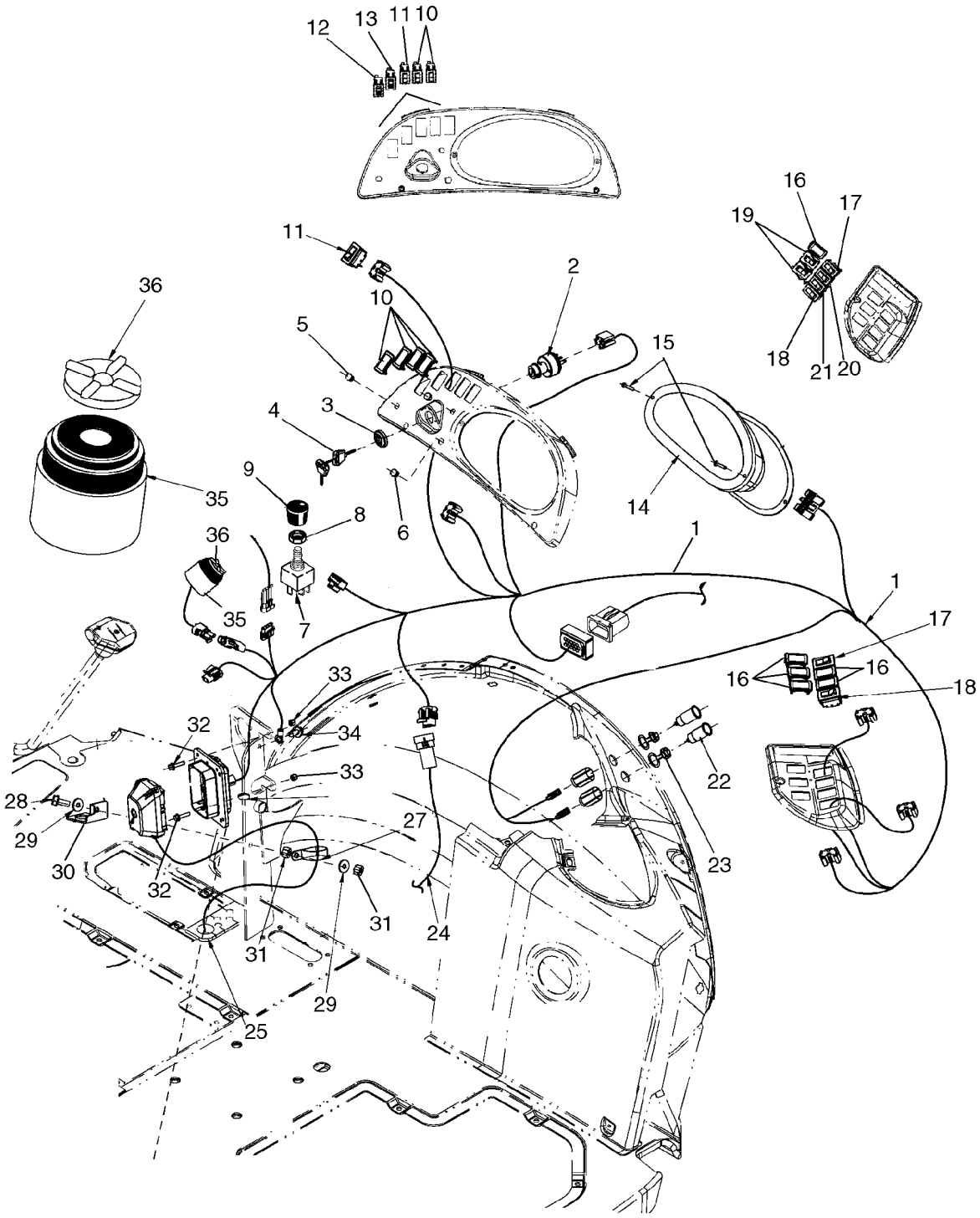

FAISCEAU, TABLEAU DE BORD LAT£RAL - CONTACTEURS

REF	FN	PART NUMBER	YR/SN	QTY	DESCRIPTION
1		87726595		1	FAISCEAU COMPLET, Side Console Harness
		282775A1		1	COMMUTATEUR, DEM., Incl. Ref 2 - 4
2		NSS		1	NON FOURNI SEPAREMENT, Switch, Without Keys
3		NSS		1	NON FOURNI SEPAREMENT, Nut
4		1964831C2		1	JEU DE 2 CLES, Padded
5		397569A1		2	BOUCHON, 7/16 in, Dome, If Used; For Air Conditioning Switch and Knob; See Figure 09-65
6		397570A1		1	BOUCHON, 1/2 in, Dome, If Used; For Heater Switch and Knob; See Figure 09-64
7		245258A1		1	CONTACTEUR, Blower
		121415A1		1	FUSIBLE, 25 amp, Blower
8		A42561		1	ECROU
9		400379A1		1	PLAQUE
10		86000535		2-4	BOUCHON, 1.427" x .62", Plastic, If Used
11		87614808		1	CONTACTEUR, Parking Brake
12		239408A1		1	CONTACTEUR, Four Wheel Drive, If Used
		121412A1		1	FUSIBLE, 10 Amp; Four Wheel Drive
13		235002A1		1	CONTACTEUR, Ride Control, If Used
		121413A1		1	FUSIBLE, 15 Amp, Ride Control
14		{87521766}		1	Instrument Cluster; See Figure 04-12
15		140-119		2	VIS, Cross Pan Hd, #10-24 x 1 1/4"
16		86000535		1-5	BOUCHON, 1.427" x .62", Plastic, If Used
17		133715A1		1	CONTACTEUR, Rear Work Lights
18		386852A2		1	CONTACTEUR, Rear Horn
19		386789A2		2	CONTACTEUR, Backhoe Quick Coupler, If Used
20		386788A1		1	CONTACTEUR, Rear Wndshield Washer; If Used
21		386786A1		1	CONTACTEUR, Rear Wiper; If Used
22		283779A1		2	SORTIE, Power Plug Outlet, 30 amp Maximum
23		283781A1		2	CHAPEAU, Power Plug Outlet
24		87726574		1	FAISCEAU COMPLET, Side Options Harness
25		NSS		1	NON FOURNI SEPAREMENT, Harness, Loader Control Lever; Included In Loader Control Lever Handle
27		515-23444		1	BRIDE, 1 3/4", Insul, 3/8" Bolt
28		614-8030		1	BOULON, Hex, M8 x 30, 8.8

04-09		p2	02/08

FAISCEAU, TABLEAU DE BORD LAT£RAL - CONTACTEURS

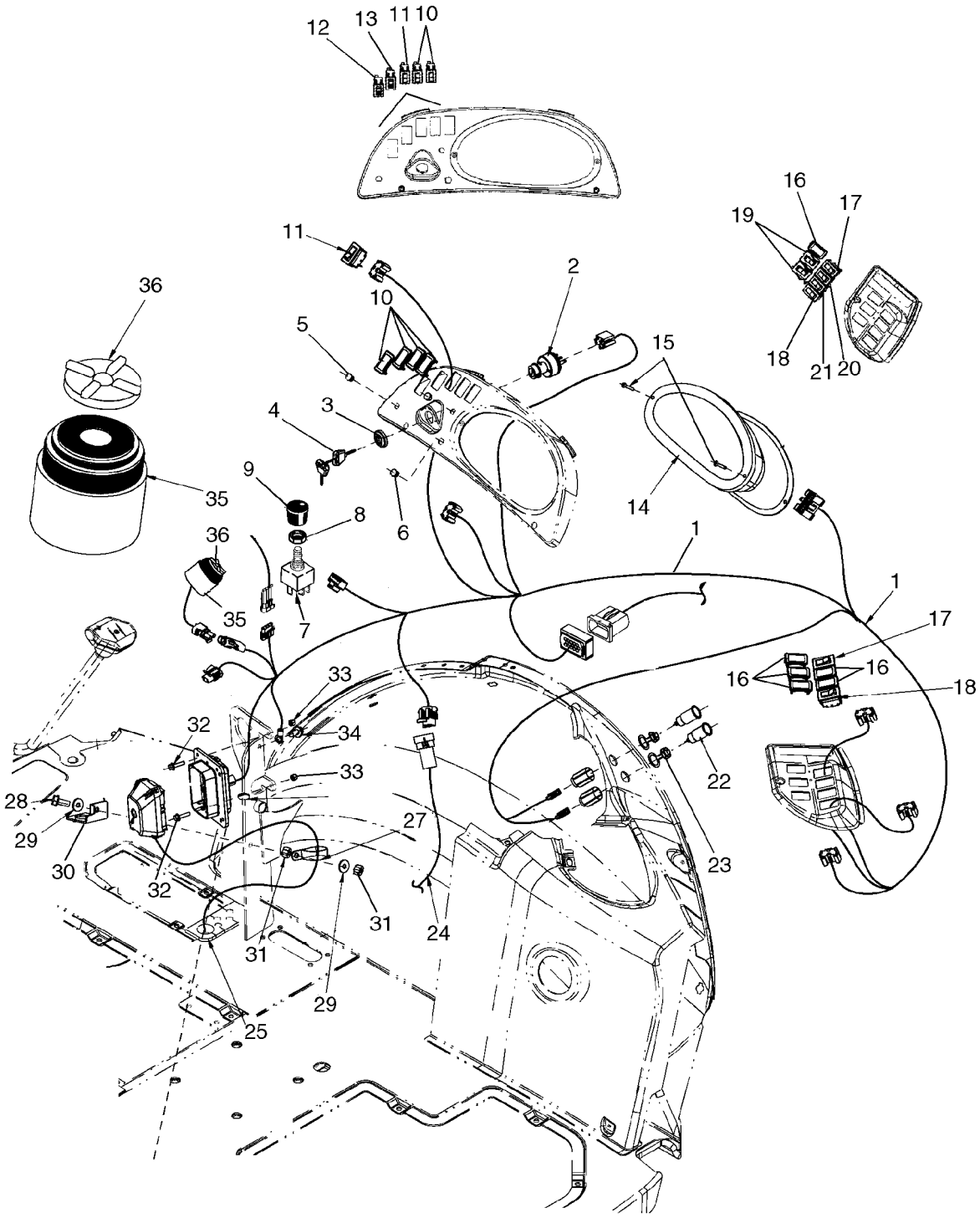

FAISCEAU, TABLEAU DE BORD LAT£RAL - CONTACTEURS

REF	FN	PART NUMBER	YR/SN	QTY	DESCRIPTION
29		895-15008		2	RONDELLE, M8 x 20 x 1.6
30		87700144		2	EQUERRE, Alarm
31		829-1408		2	ECROU, M8, Cl 10
32		844-6025		2	BOULON, Hex Flg, M6 x 25, 8.8
33		832-10406		2	CONTRE-ECROU, M6 x 1, Cl 8
34		844-10020		1	BOULON, Hex Flg, M10 x 20, 8.8
35		87527167		1	AVERTISSEUR, Alarm, Warning
36		87539792		1	COUVERCLE, For Muting Audible Alarm, Cab Models Only
		87726573		1	FAISCEAU COMPLET, Chassis Options Harness

04-10		p1	01/08

TABLEAU DE BORD, AVANT - COUVERCLES

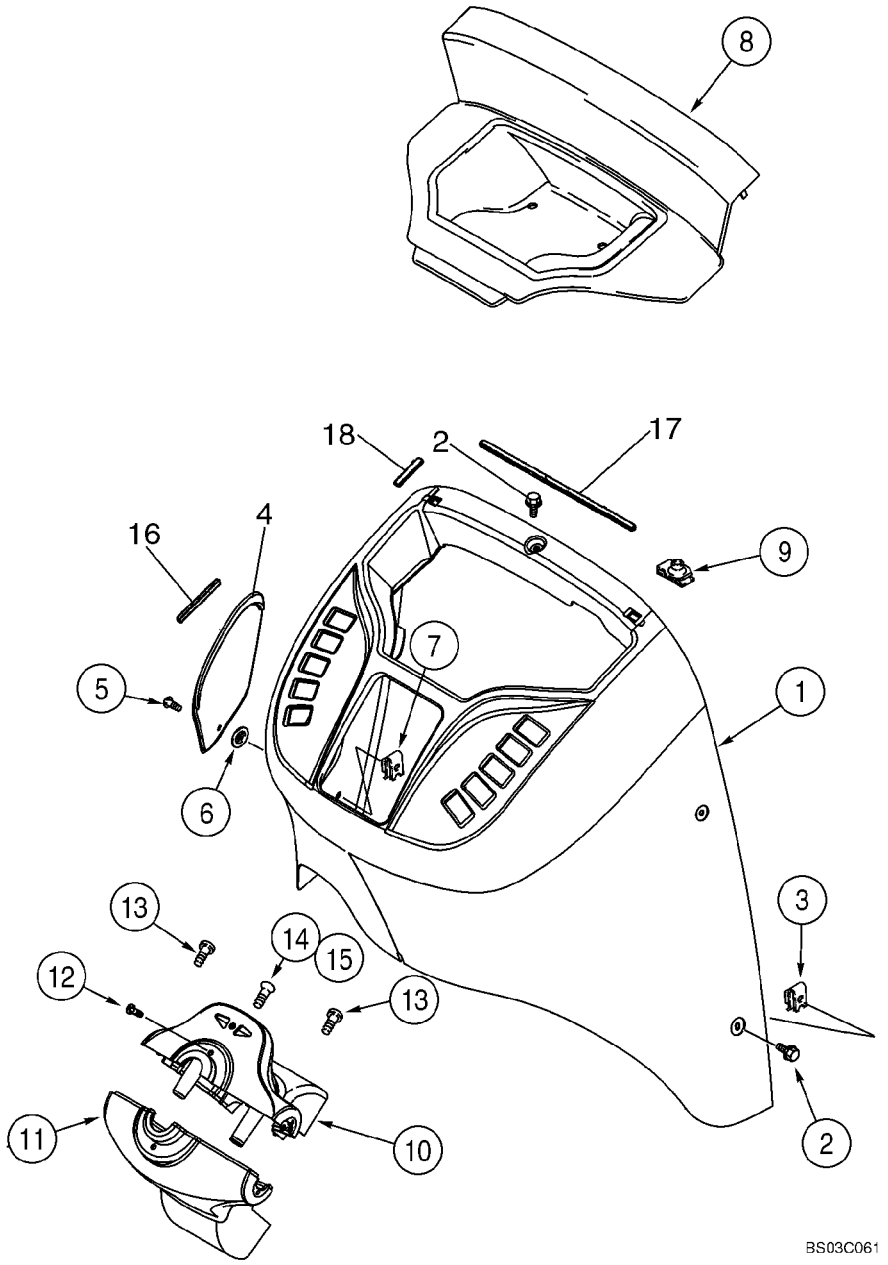

TABLEAU DE BORD, AVANT - COUVERCLES

REF	FN	PART NUMBER	YR/SN	QTY	DESCRIPTION
1		355827A2		1	COUVERCLE, Front; Standard; If Used
1		87694305		1	CONSOLE, Front; Deluxe Cab; If Used
2		87310152		6	BOULON, Hex Flange, M6 x 16, Stainless Steel
3		833-40406		6	ECROU, M6, U
4		360244A1		1	COUVERCLE, Fuse Access
5		87310086		1	VIS, Includes Washer, Stainless Steel
6		127009A1		1	CLIP
7		131-861		1	ECROU, Tinn, U, #10-24
8		360245A2		1	COUVERCLE, Relay Access
9		278316A2		2	CLIP
10		373689A2		1	COUVERCLE (ASSEMBLE), Steering Column, Upper; Incl. Ref 10A - 10E; Components Not Illustrated
10A		360242A2		1	COUVERCLE
10B		303465A2		1	LAMPE, Blinker
10C		303466A1		1	SYMBOLE, Right Flasher
10D		303467A1		1	SYMBOLE, Left Flasher
10E		373693A1		1	VIS, Flat Head, No. 8 x 7/16
11		360243A2		1	COUVERCLE, Steering Column, Lower
12		87310124		2	VIS, No. 10 x 1/2, Stainless Steel
13		87310124		2	VIS, No. 10 x 1/2, Stainless Steel
14		87540980		1	VIS, No. 10-16 x 1/2, High Grade Stainless Steel
15		131-121		1	ECROU, Tinn, U, #10-24
16		414572A1		1	RUBAN, 100 mm, Adhesive Back
17		414034A1		1	RUBAN, 330 mm, Adhesive Back
18		414033A1		4	RUBAN, 60 mm, Adhesive Back

04-11		p1	01/08

TABLEAU DE BORD, LAT£RAL - COUVERCLES (Cd'T£ DROIT)

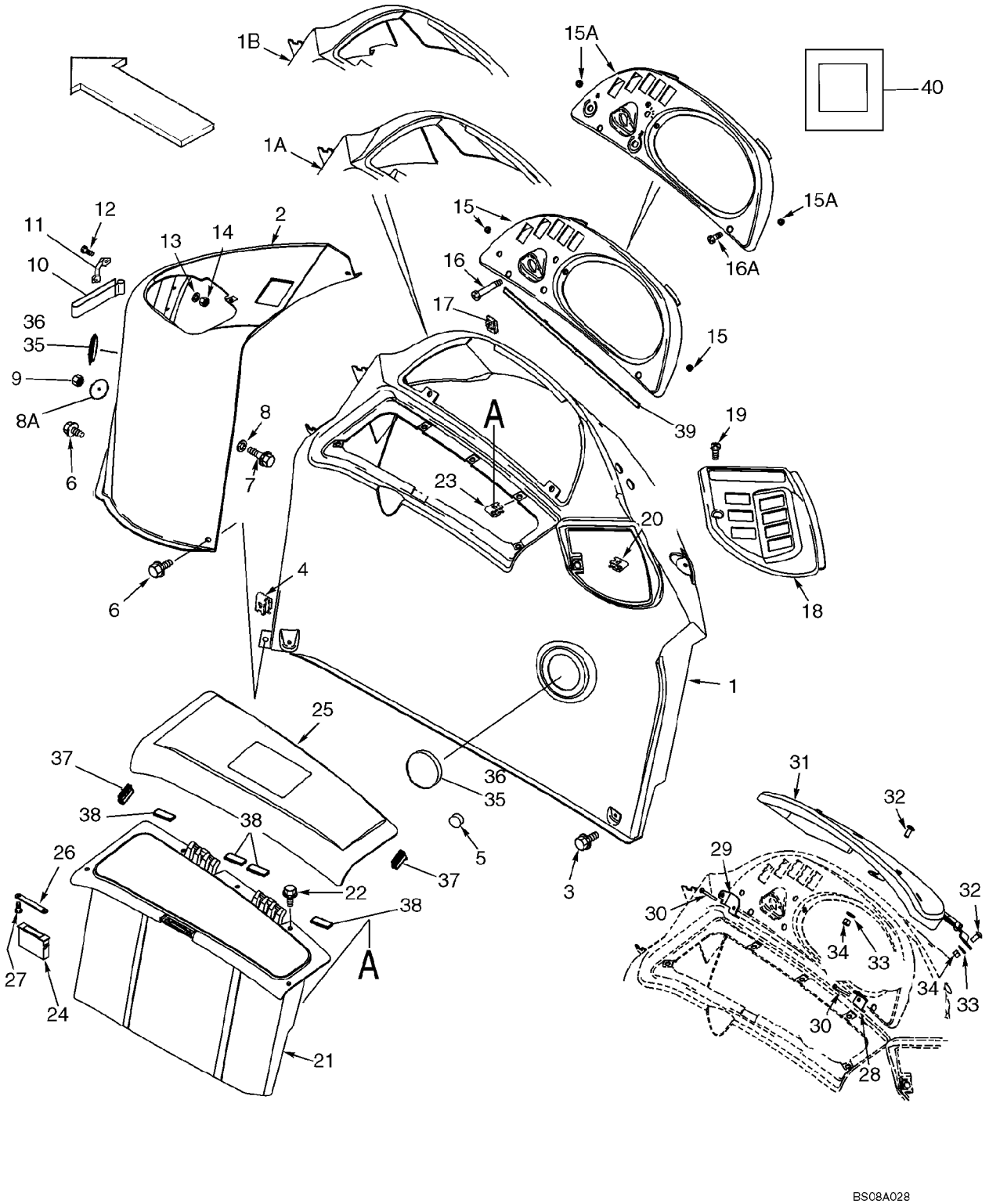

TABLEAU DE BORD, LAT£RAL - COUVERCLES (Cd'T£ DROIT)

REF	FN	PART NUMBER	YR/SN	QTY	DESCRIPTION
1		360250A2		1	CONSOLE, Canopy Models
1A		355198A2		1	CONSOLE, Cab, Single Door
1B		372167A3		1	CONSOLE, Cab, Two Door
2		87633581		1	CONSOLE, Loader Control
3		87310098		6	BOULON, Flange, M6 x 20, Stainless Steel
4		833-40406		5	ECROU, M6, U
5		L60224		1	PARE-CHOCS, Rubber
6		87310152		2	BOULON, Flange, M6 x 16, Stainless Steel
7		844-6025		1	BOULON, Hex Flg, M6 x 25, 8.8
8		895-15006		1	RONDELLE, M6 x 25 x 1.6
8A		407660A1		1	RONDELLE, 7 mm ID x 50 mm OD
9		832-10406		1	CONTRE-ECROU, M6 x 1, Cl 8
10		184726A1		1	BANDE DE FIXATION, Velcro
11		182594A1		2	POIGN£E, Velcro Retainer
12		87310184		4	VIS, M4 x 16; 4.8, Stainless Steel
13		895-11004		4	RONDELLE, M4, 4,3 x 9 x 0,8 mm
14		832-10404		4	CONTRE-ECROU, M4 x .7, Cl 8
15		391818A2		1	ENCADREMENT, Instrument Cluster Mounting; Canopy Models; Includes 390258A1
		390258A1		2	INSERT, No. 10, Threaded Insert
15A		390255A2		1	ENCADREMENT, Instrument Cluster Mounting; Cab Models; Includes 390258A1
		390258A1		2	INSERT, No. 10, Threaded Insert
16		87310128		2	VIS, No. 10 x 2-1/4, Stainless Steel; Canopy Models
16A		87310126		2	VIS, No. 10 x 3/4, Stainless Steel; Cab Models
17		131-619		2	ECROU, J, Ret, #10-24, Cab or Canopy
18		353068A2		1	ENCADREMENT, Rear Switches
19		87310126		1	VIS, No. 10 x 3/4, Stainless Steel
20		131-619		1	ECROU, J, Ret, #10-24
21		366632A2		1	CAISSE A OUTILS, Right-Hand
22		87310098		5	BOULON, Flange, M6 x 20, Stainless Steel
23		833-40406		5	ECROU, M6, U
24		D127335		1	RETENEUR, Magnetic Catch
25		366633A3		1	VOLET, Storage Box
26		375112A1		1	GĄCHE, Striker

TABLEAU DE BORD, LAT£RAL - COUVERCLES (Cd'T£ DROIT)

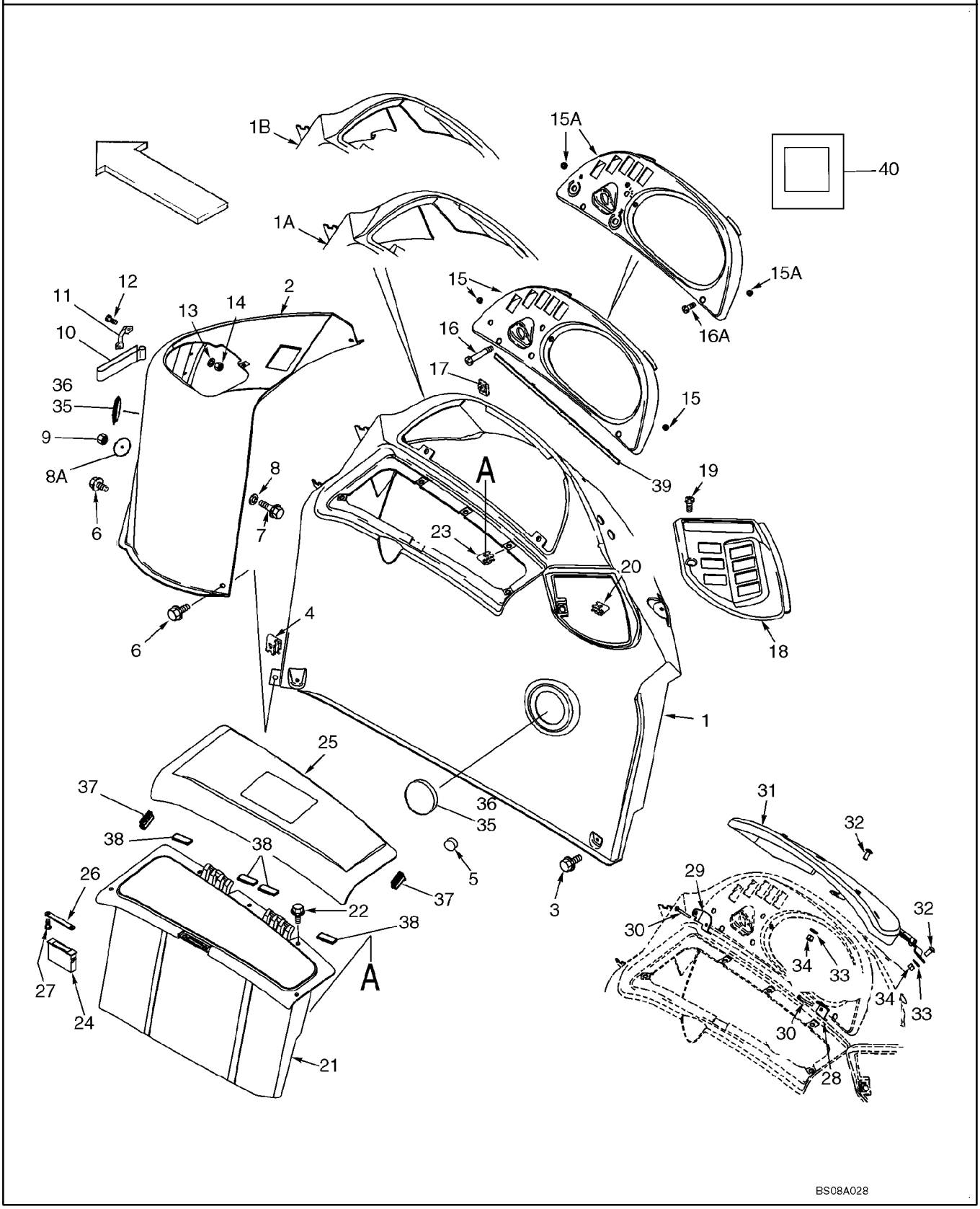

TABLEAU DE BORD, LAT£RAL - COUVERCLES (Cd'T£ DROIT)

REF	FN	PART NUMBER	YR/SN	QTY	DESCRIPTION
27		440-1066		2	VIS, Cross Pan Hd, #6-32 x 3/8"
28		386369A2		1	PATTE FIXATION
29		386368A2		1	PATTE FIXATION
30		87310128		2	VIS, No. 10 x 2-1/4, Stainless Steel
31		385614A4		1	COUVERCLE (ASSEMBLE), Instrument Cluster; Anti-Vandalism, Canopy Models; Includes 386502A1, F22426
		386502A1		2	PARE-CHOCS
		F22426		3	BUT£E
32		87310176		2	BOULON, Round Head, M8 x 20, Stainless Steel
33		87310185		2	RONDELLE, 9 x 20 x 1,6 mm, Stainless Steel
34		832-10408		2	CONTRE-ECROU, M8 x 1.25, Cl 8
35		1302758C1		2	BOUCHON, 3 inch
36		87310144		4	VIS AUTO-TARAUDEUSE, No. 6 x 1/2, Stainless Steel
37		430471A1		2	JOINT, Bulb, 40 mm; Storage Lid Bumper
38		414092A1		4	RUBAN, 50 mm, Adhesive Back; Storage Box
39		414071A1		1	BANDE D'ETANCHEITE, 480 mm, Adhesive Back
40		412510A1		1	JOINT, 25 x 25 x 3 mm, Adhesive Back; Console To Fender

APPAREILS DE CONTROLE

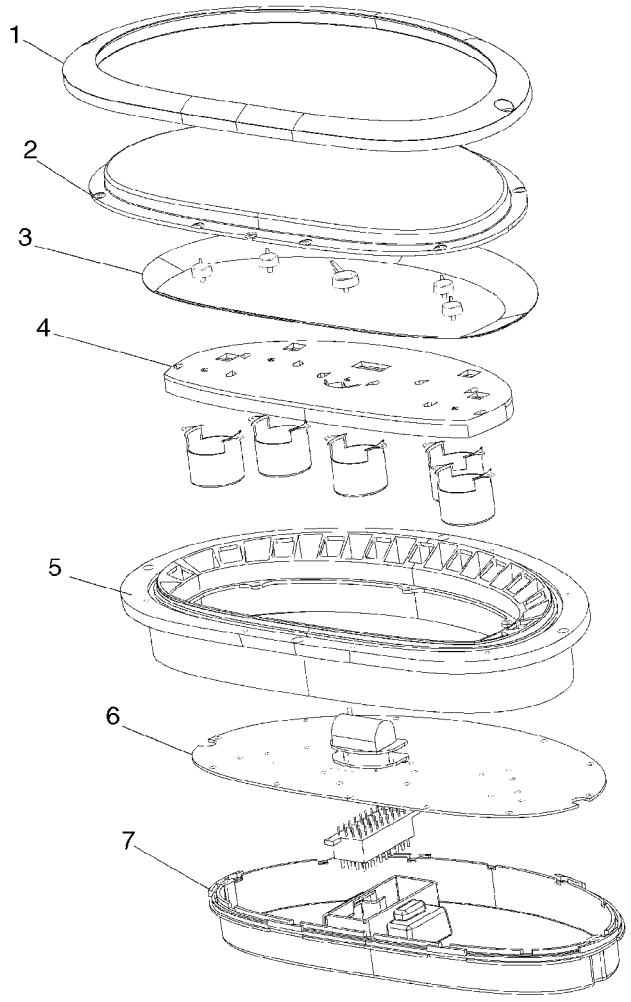

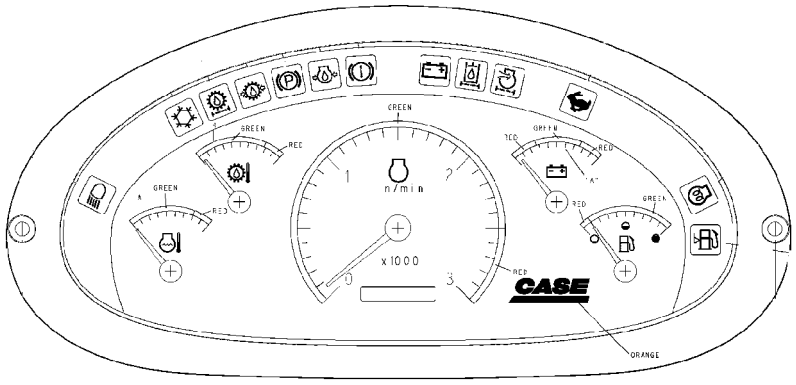

BS08A027

APPAREILS DE CONTROLE

REF	FN	PART NUMBER	YR/SN	QTY	DESCRIPTION
		{87521766}		1	Instrument Cluster; Component Parts Not Available At Printing
1		NSS		1	NON FOURNI SEPAREMENT, Bezel
2		NSS		1	NON FOURNI SEPAREMENT, Lens
3		NSS		1	NON FOURNI SEPAREMENT, Overlay
4		NSS		1	NON FOURNI SEPAREMENT, Lightpipe
5		NSS		1	NON FOURNI SEPAREMENT, Frame
6		NSS		1	NON FOURNI SEPAREMENT, PCB
7		NSS		1	NON FOURNI SEPAREMENT, Rear Cover

04-13		p1	12/07

SYSTèME £LECTRIQUE - ECLAIRAGE, TOIT ROPS

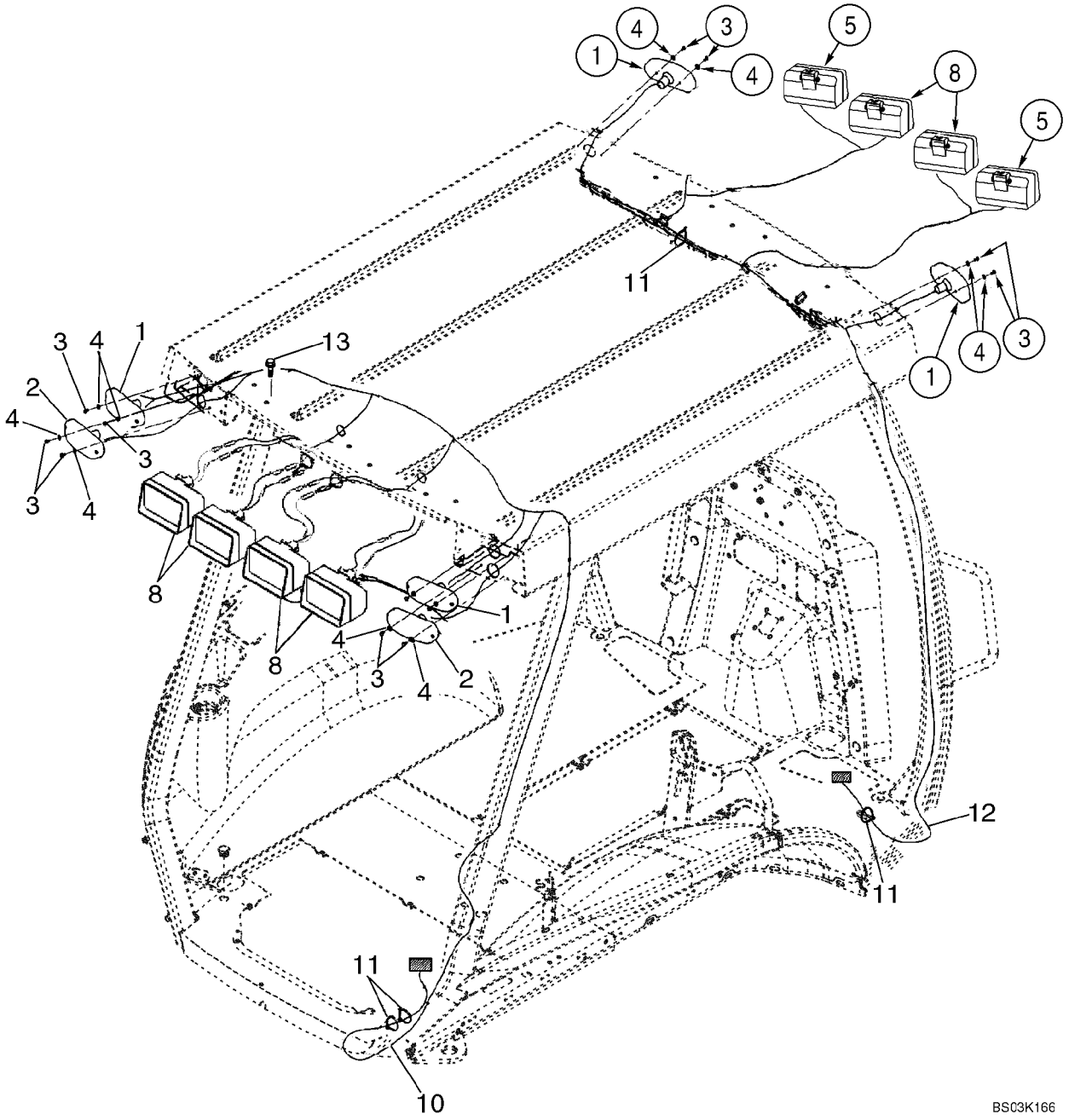

SYSTÔME ÉLECTRIQUE - ECLAIRAGE, TOIT ROPS

REF	FN	PART NUMBER	YR/SN	QTY	DESCRIPTION
1		D135384		4	LANTERNE, Turn Signal and Flasher; See Figure 04-15
2		D121152		2	LAMPE, Stop And Tail; See Figure 04-15
3		329032A1		12	VIS, No. 10 x 3/8
4		495-31022		12	RONDELLE, #10
5		87343247		2	FEU (ASSEMBLE), Front Driving; Outer; Incl. 1312210C2 Bulb; Cobo Brand; If Used
		1312210C2		1	AMPOULE, 12V, 55W, H3
8		398847A3		6	FEU (ASSEMBLE), Front and Rear Flood and Work Lamps; Includes 1312210C2, 276498A1; ABL Brand, If Used
8		87443080		6	FEU (ASSEMBLE), Front and Rear Flood and Work Lamps; Includes 1312210C2 Bulb; Cobo Brand, If Used
		1312210C2		1	AMPOULE, 12V, 55W, H3
		276498A1		1	CABOCHON, With Hardened Glass; Replaces 1964801C1 Non-Hardened Lens Used In Production
10		396023A2		1	FAISCEAU, Canopy Lamps; Rear
11		L18337		AR	SERRE-CABLE, 9.95"-12.1" lg
12		404617A1		1	FAISCEAU, Canopy Lamps and Wiper; Front
13		128312A1		8	BOULON, Flange, M10 x 15

SYSTêME £LECTRIQUE - ECLAIRAGE, CABINE ROPS

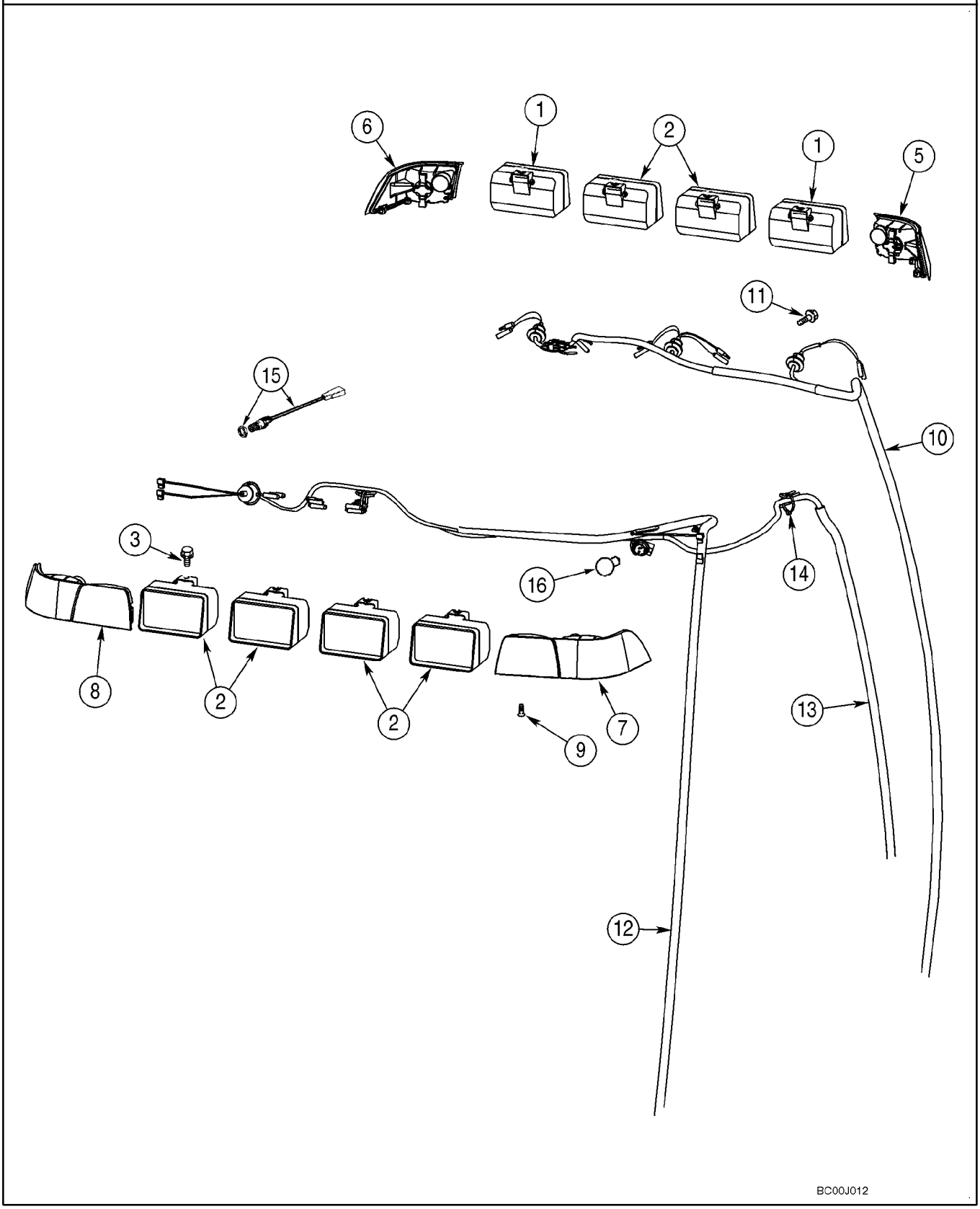

SYSTâME £LECTRIQUE - ECLAIRAGE, CABINE ROPS

REF	FN	PART NUMBER	YR/SN	QTY	DESCRIPTION
1		87343247		2	FEU (ASSEMBLE), Front Driving; Outer; Incl. 9703399 Bulb; Cobo Brand; If Used
		9703399		1	AMPOULE, 12V, 55W, H3
2		398847A3		6	FEU (ASSEMBLE), Front and Rear Flood and Work Lamps; Includes 9703399, 276498A1; ABL Brand, If Used
2		87443080		6	FEU (ASSEMBLE), Front and Rear Flood and Work Lamps; Includes 9703399 Bulb; Cobo Brand, If Used
		9703399		1	AMPOULE, 12V, 55W, H3
		276498A1		1	CABOCHON, With Hardened Glass
3		128312A1		8	BOULON, M10 x 15
5		279224A1		1	LAMPE-ADVERTISSEMENT, Amber; Right Front Corner; Includes 87517414 Bulb Holder
6		279223A1		1	LAMPE-ADVERTISSEMENT, Amber; Left Front Corner; Incl. 87517414 Bulb Holder
7		357540A1		1	FEU ARRIERE, Amber and Red; Right Rear Corner
8		357541A1		1	FEU ARRIERE, Amber and Red; Left Rear Corner
9		394863A1		10	VIS, M6 x 20
10		404617A1		1	FAISCEAU, Front
11		844-10020		2	BOULON, Hex Flg, M10 x 20, 8.8
12		398380A3		1	FAISCEAU, Rear
13		396018A3		1	FAISCEAU, B-Post, Dome Lamp, Radio, Rear Wiper
14		L18337		5	SERRE-CABLE, 9.95"-12.1" lg
15		279265A2		1	CONTACTEUR, Dome Lamp
16		279916A1		2	AMPOULE

£CLAIRAGE (MODôLES AVEC STRUCTURE ROPS)

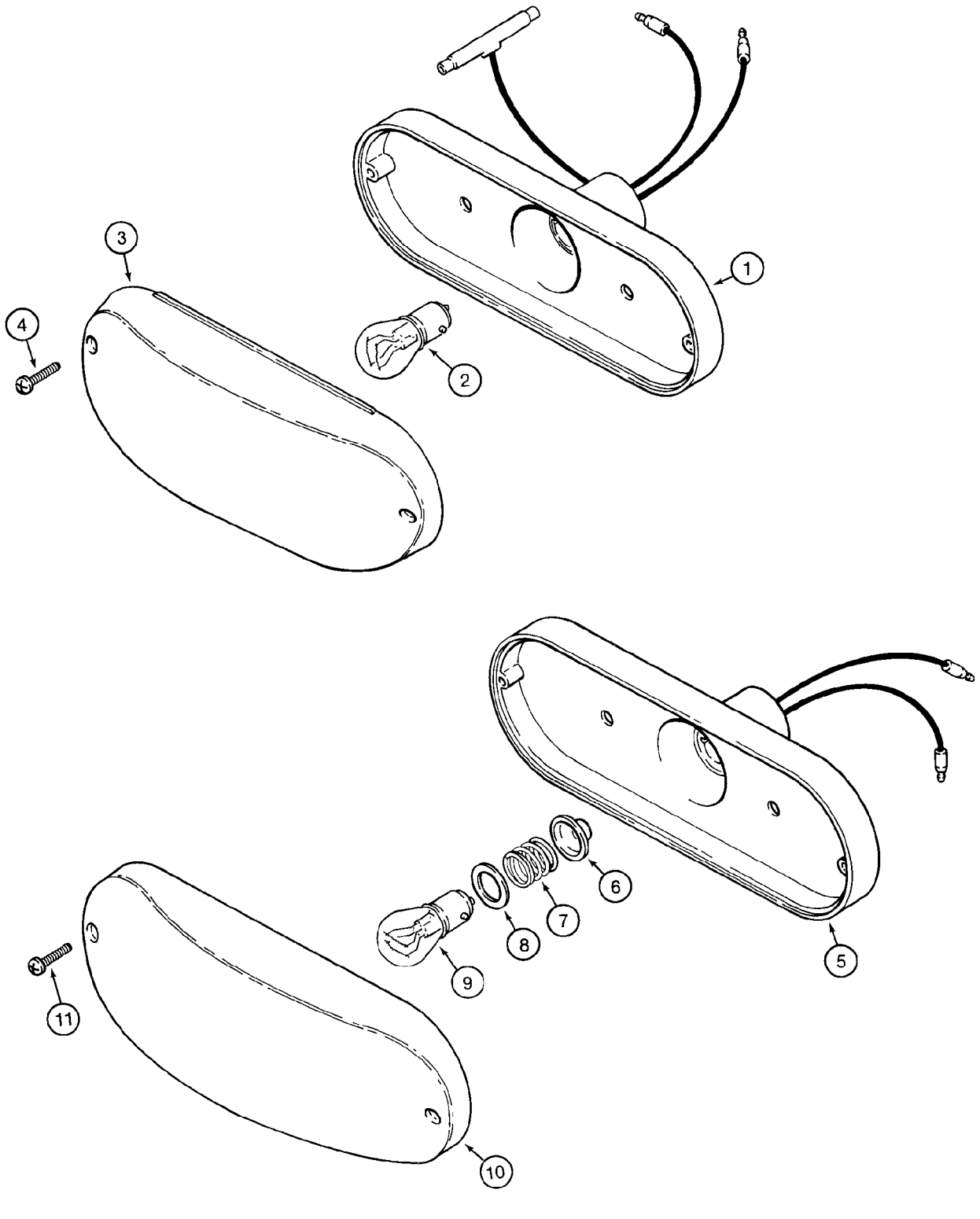

£CLAIRAGE (MODêLES AVEC STRUCTURE ROPS)

REF	FN	PART NUMBER	YR/SN	QTY	DESCRIPTION
		D121152		2	LAMPE, Stop And Tail Lamp; Red; Incl. Ref 1 - 4
1		NSS		1	NON FOURNI SEPAREMENT, Housing
2		T34857		1	AMPOULE, C6, #1157, 12.8V
3		N6836		1	CABOCHON, Red
4		261-14310		2	VIS AUTO-TARAUDEUSE, Cross Pan Hd, #6 x 5/8"
		D135384		4	LANTERNE, Turn Signal and Flasher; Amber; Incl. Ref 5 - 11
5		NSS		1	NON FOURNI SEPAREMENT, Housing
6		NSS		1	NON FOURNI SEPAREMENT, Seal
7		NSS		1	NON FOURNI SEPAREMENT, Spring
8		NSS		1	NON FOURNI SEPAREMENT, Insulator
9		A41264		1	AMPOULE, #1156, 12V
10		N14283		1	CABOCHON, Amber
11		261-14310		2	VIS AUTO-TARAUDEUSE, Cross Pan Hd, #6 x 5/8"

04-16		p1	01/08

AVERTISSEUR SONORE - ALARME DE RECUL

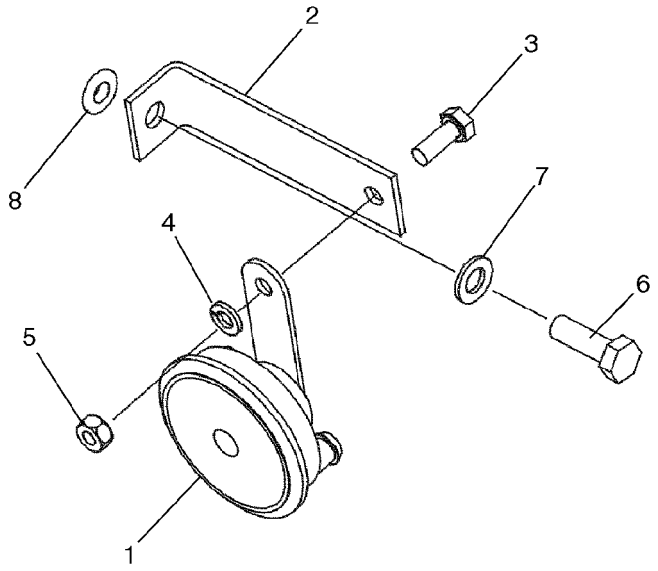

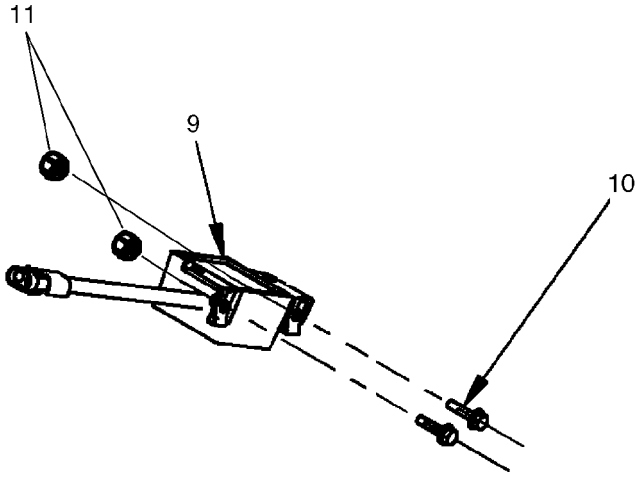

BS08A029

AVERTISSEUR SONORE - ALARME DE RECUL

REF	FN	PART NUMBER	YR/SN	QTY	DESCRIPTION
1		237582A1		1	AVERTISSEUR, Black
2		87423496		1	PATTE FIXATION
3		614-8020		1	BOULON, Hex, M8 x 20, 8.8
4		892-11008		1	RONDELLE FREIN, M8
5		829-1408		1	ECROU, M8, Cl 10
6		614-10030		1	BOULON, Hex, M10 x 30, 8.8
7		895-11010		1	RONDELLE, M10 x 20 x 2
8		87417721		1	INSERT FILETE, M10
9		87528887		1	ALARME, Backup; Includes Wire
10		844-6025		2	BOULON, Hex Flg, M6 x 25, 8.8
11		833-40406		2	ECROU, M6, U

04-17		p1	01/08

GYROPHARE (MODÔLES DE CABINES OU DE TOIT)

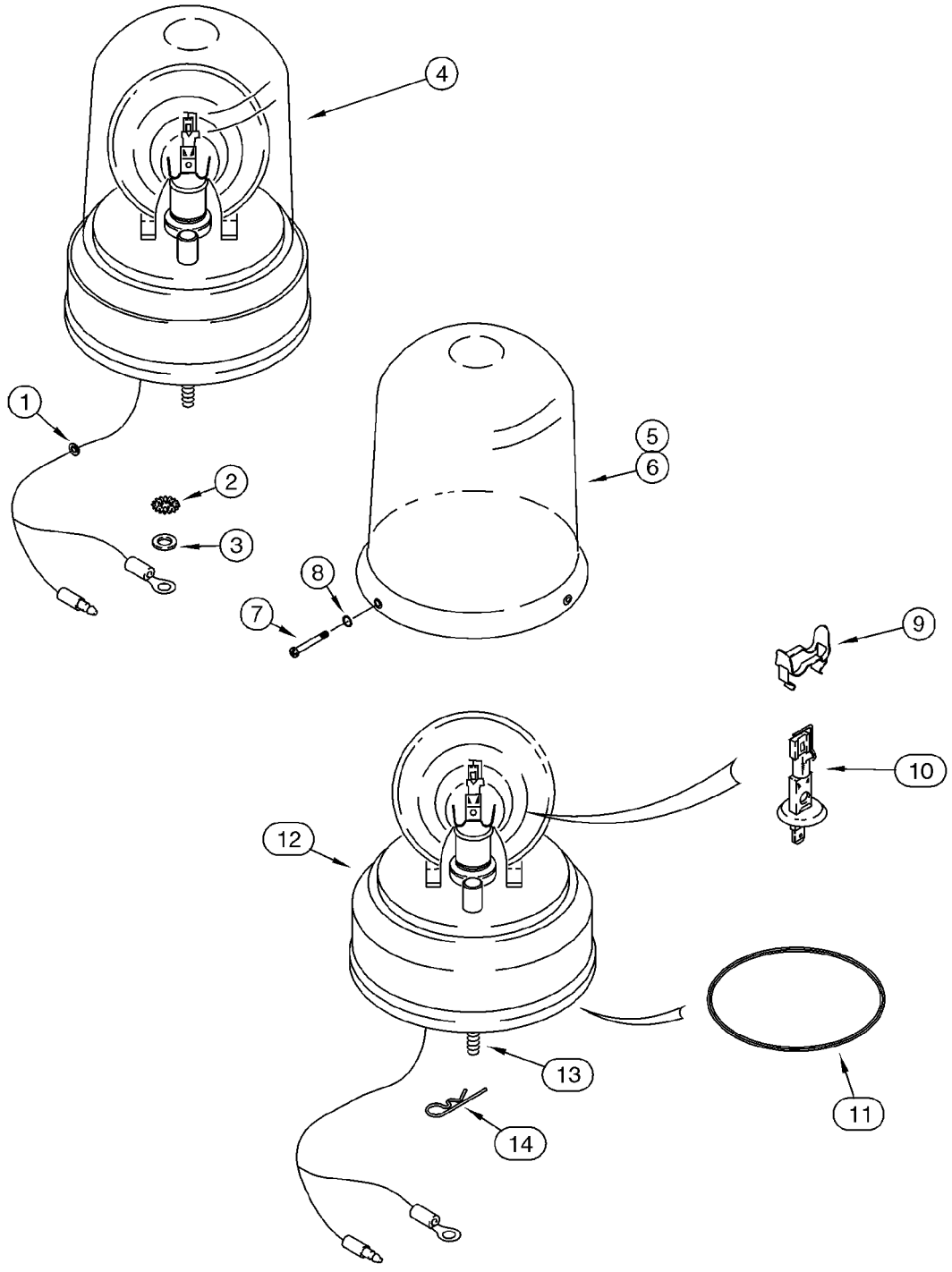

GYROPHARE (MODôLES DE CABINES OU DE TOIT)

REF	FN	PART NUMBER	YR/SN	QTY	DESCRIPTION
		387940A1		1	POCHETTE, Rotating Beacon; Amber, 12V; Incl. Ref 1 - 5, 7 - 16 and Instructions
1		A23870		1	PASSE-FIL
2		493-11026		1	RONDELLE FREIN, Ext-Int Tooth, 1/4", Ground
3		495-21031		1	RONDELLE, 1/4"
4		108366A1		1	FEU DE SIGNALISATION, Rotating Beacon Assembly; Amber, 12V; Incl. Ref 5, 7 - 14
5		A187542		1	CABOCHON, Amber; If Used
6		127158A1		1	CABOCHON, Blue; Optional; Not Included In Kit, Purchase Separately; If Used
7		168-71		3	VIS, Drive, #8 x 1/2"
8		238-5005		3	JOINT THORIQUE, -005, 70 Duro, .101" ID x .070" Thk
9		101531A1		1	CLIP
10		86616248		1	AMPOULE, #HI, 55w
11		A187575		1	COURROIE, Drive Motor
12		NSS		1	NON FOURNI SEPAREMENT, Base; With Drive Motor
13		614-6020		3	BOULON, Hex, M6 x 20, 8.8
14		136-54		3	AXE, 1/4 x 11/16
15		386851A1		1	CONTACTEUR, Rotating Beacon; Not Illustrated
16		121412A1		1	FUSIBLE, Fuse, 10 amp; Not Illustrated

04-18		p1	01/08

ANTENNE, RADIO - FAISCEAU, RADIO

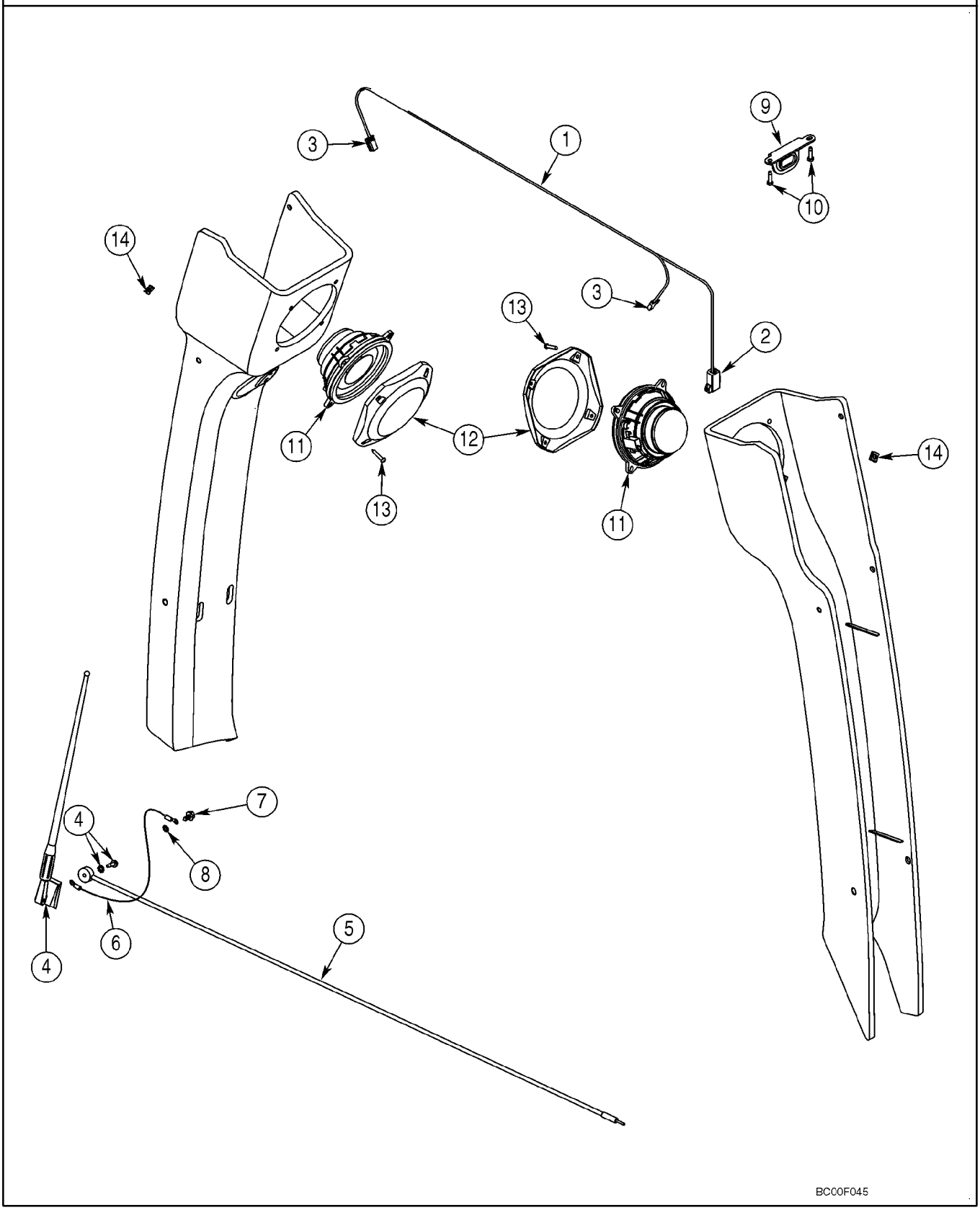

ANTENNE, RADIO - FAISCEAU, RADIO

REF	FN	PART NUMBER	YR/SN	QTY	DESCRIPTION
1		382664A2		1	FAISCEAU, Speaker; Incl. Ref 2, 3
2		227389A1		1	CONNECTEUR, To Cab Harness
3		195552A1		2	RACCORD, Speaker
4		197745A1		1	ANTENNE, Radio; Includes Flat Washer and Nut Which Are Not Serviced Separately
5		381659A1		1	CABLE (ASSEMBLE)
6		291010A1		1	FIL, Ground
7		282-16512		2	VIS, Hex Wash Hd, #10-16 x 3/4"
8		893-11005		1	RONDELLE FREIN, Ext Tooth, M5
9		386927A1		1	PATTE FIXATION, Radio Mounting
10		276-26512		2	VIS AUTO-TARAUDEUSE, Hex Hd, #10 x 3/4"
11		182721A2		2	HAUT-PARLEUR
12		187281A1		2	COUVERCLE
13		761-17325		8	VIS AUTO-TARAUDEUSE, Pan Hd, M4.2 x 25
14		177269A1		8	ECROU, Spring
15		L18331		1	SERRE-CABLE, Tie; Not Illustrated

SYST¢ME £LECTRIQUE - CIRCUIT HYDRAULIQUE AUXILIAIRE POUR LA PELLE RETRO

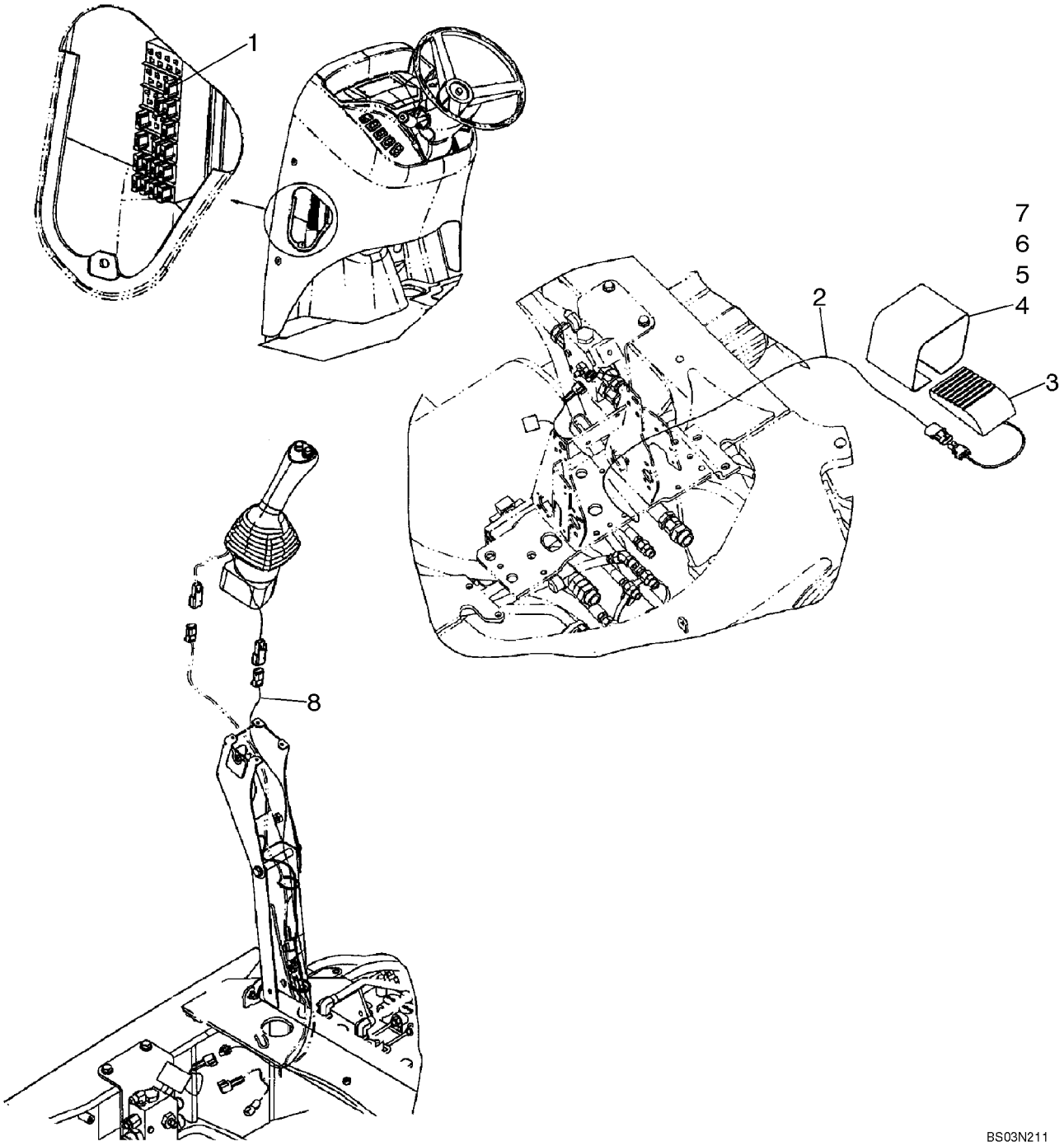

SYSTÊME ÉLECTRIQUE - CIRCUIT HYDRAULIQUE AUXILIAIRE POUR LA PELLE RETRO

REF	FN	PART NUMBER	YR/SN	QTY	DESCRIPTION
1		121413A1		1	FUSIBLE, 15 amp
2		87425631		1	FAISCEAU COMPLET, Auxiliary Hydraulic Harness, Uni-Directional; Models Without Pilot Controls
3		137219A1		1	CONTACTEUR, Foot; Without Pilot Controls
4		300030A1		1	COUVERCLE, Without Pilot Controls
5		843-1516		2	VIS, Hex Flat Hd, M5 x 16, 4.8
6		892-11005		2	RONDELLE FREIN, M5
7		824-1405		2	ECROU, M5, Cl 5
8		87425635		1	FAISCEAU COMPLET, Auxiliary Hydraulic; Uni-Directional; Models With Pilot Controls

04-20		p1	01/08

SYST¢ME £LECTRIQUE - CIRCUIT HYDRAULIQUE AUXILIAIRE POUR LA PELLE RETRO, AVEC DE COMMANDE PILOTE

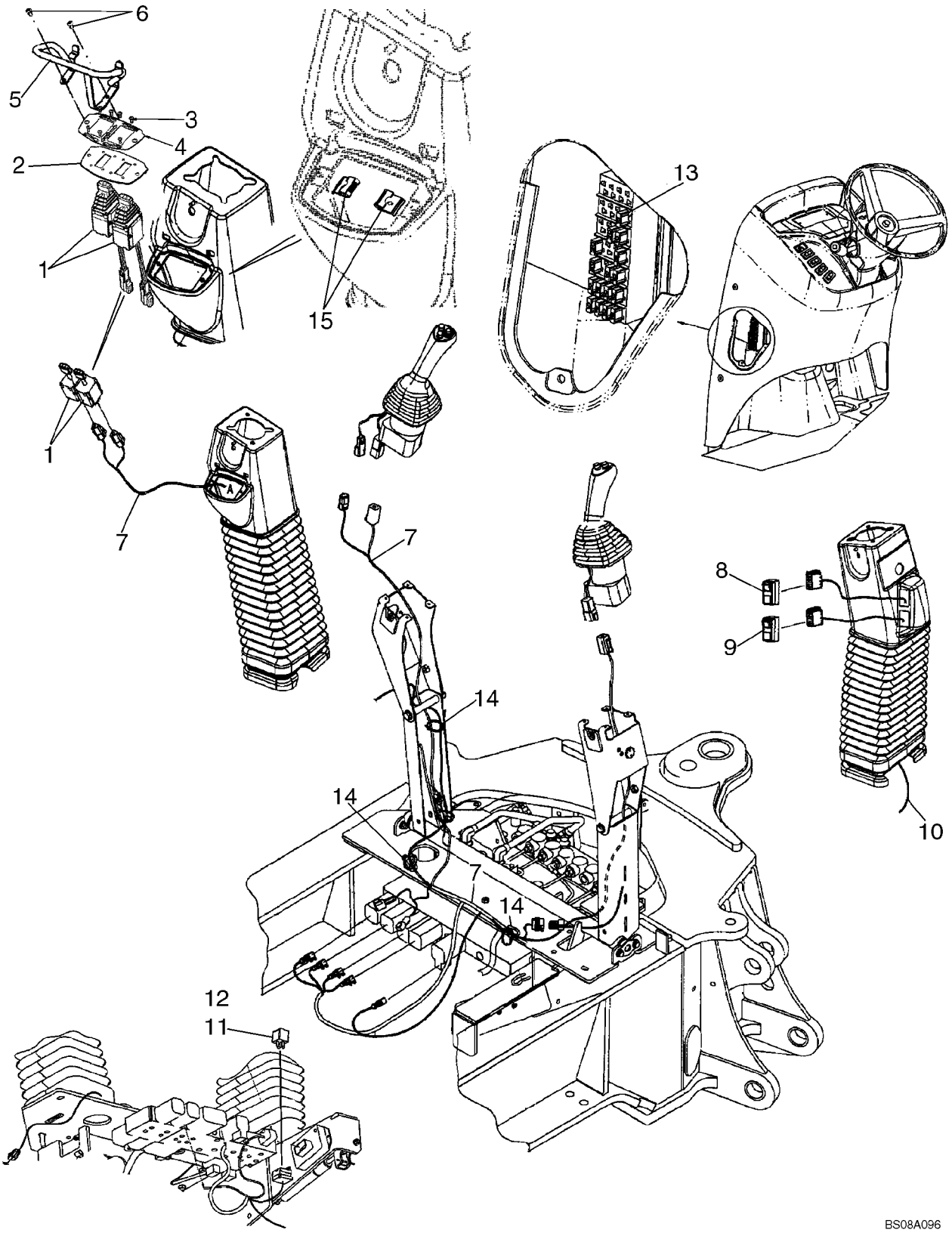

SYSTâME £LECTRIQUE - CIRCUIT HYDRAULIQUE AUXILIAIRE POUR LA PELLE RETRO, AVEC DE COMMANDE PILOTE

REF	FN	PART NUMBER	YR/SN	QTY	DESCRIPTION
1		86988086		2	JOYSTICK, Stabilizer
2		87435381		1	PANOPLIE
3		87303784		8	VIS, Cross Pan Hd, M3 x 8
4		87423812		1	DECALCOMANIE, Stabilizer Switch
5		87307656		1	GARANT, Stabilizer Switch Guard
6		87310085		2	VIS AUTO-TARAUDEUSE, Hex Washer Head, No. 10-16 x 1, Full Thread
7		87726617		1	FAISCEAU COMPLET, Pilot Control Joystick, Left-Hand
8		87423802		1	CONTACTEUR, Pilot Control, On/Off
9		87410105		1	CONTACTEUR, Pilot Control Pattern Selection
10		87425636		1	FAISCEAU COMPLET, Pilot Control Joystick, Right-Hand
11		87436836		1	RELAIS, Mini, 12V, 40 amp
12		840-1416		3	VIS, Cross Pan Hd, M4 x 16
13		121413A1		1	FUSIBLE, Mini, 15 amp
14		L18337		6	SERRE-CABLE, 9.95"-12.1" lg
15		87452511		2	ECROU, J-Type Nut; If Used

NOTES

SECTION INDEX
Direction

05-01	VOLANT - COLONNE
05-02	SYSTEME HYDRAULIQUE - DIRECTION
05-02A	SYSTEME HYDRAULIQUE - DIRECTION (AVEC SYSTÊME DôAIDE AU CHANGEMENT DE DIRECTION)
05-03	COLONNE DE DIRECTION
05-04	ESSIEU, AVANT (86990837) - SUPPORT
05-05	ESSIEU, AVANT (86990837) - BOĊTIER
05-06	ESSIEU, AVANT (86990837) - LOGEMENT DU PIVOT
05-07	ESSIEU, AVANT (86990837) - VERIN DE DIRECTION
05-08	ESSIEU, AVANT (86990837) - MOYEU ET ROULEMENTS
05-09	ROUES AVANT - NEUS

05-01		p1	01/08

VOLANT - COLONNE

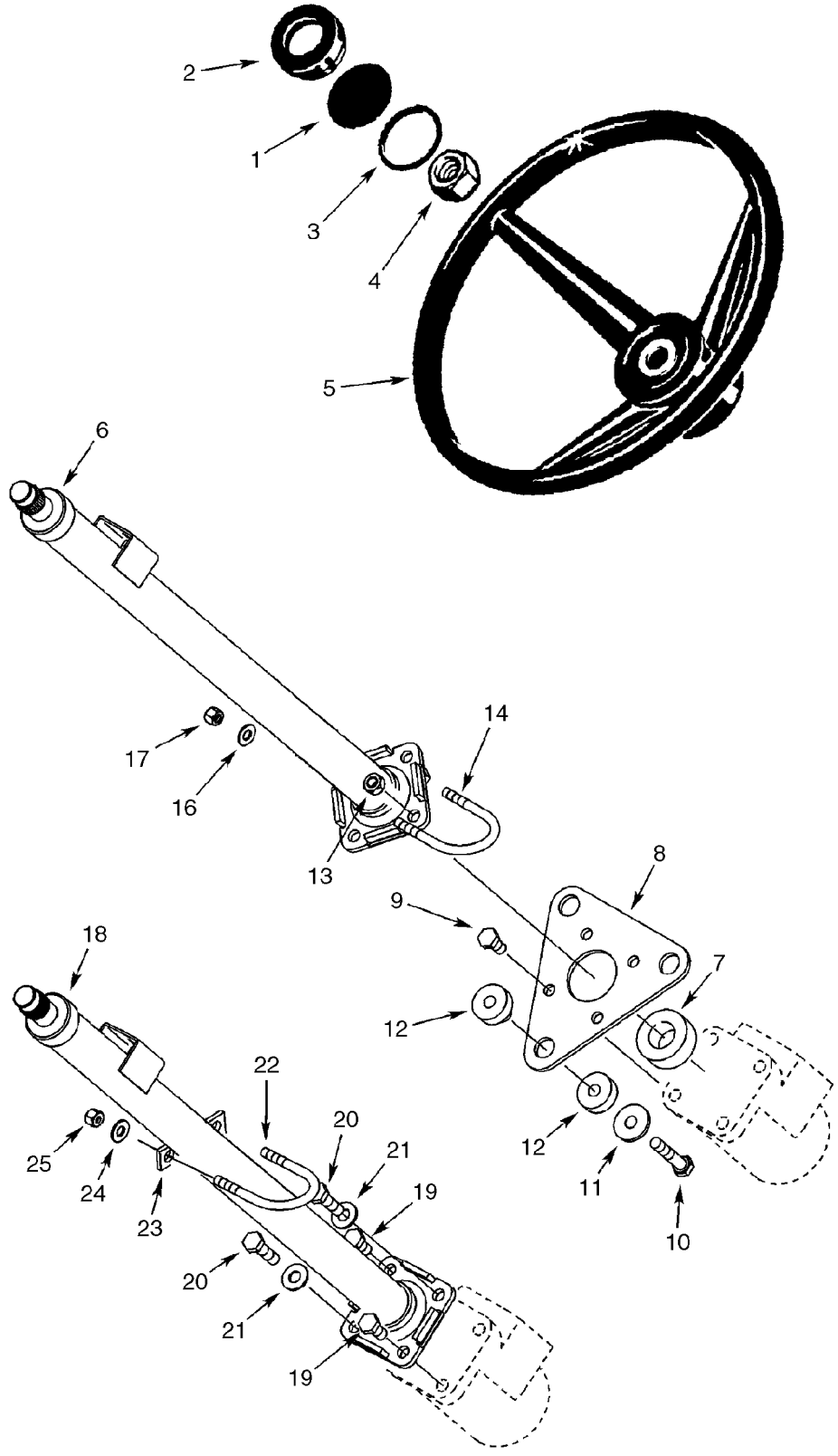

VOLANT - COLONNE

REF	FN	PART NUMBER	YR/SN	QTY	DESCRIPTION
1		87435569		1	EMBLÊME, Insert, Case
2		114882A2		1	CHAPEAU
3		238-5227		1	JOINT THORIQUE, -227, 70 Duro, 2.109" ID x .139" Thk
4		1959509C1		1	ECROU
5		A65544		1	VOLANT-DE-DIRECTION
6		352569A4		1	COLONNE DE DIRECTION, Cab Models, With Tilt Steering, 712 mm Long, See Figure 05-03
7		352401A1		1	JOINT, 25 x 40 x 19 mm, Sound Insulation
8		388116A2		1	PLAQUE
9		614-10020		4	BOULON, Hex, M10 x 20, 8.8, Full Thd
10		814-10050		3	BOULON, Hex, M10 x 50, 8.8
11		496-81028		3	RONDELLE, 13/32" x 1 1/4" x .134", HDN
12		87447450		3	ISOLATEUR, 10 mm Hole
13		832-10410		2	CONTRE-ECROU, M10 x 1.5, Cl 8
14		379846A1		1	CAVALIER
16		895-15008		2	RONDELLE, M8 x 20 x 1.6
17		832-10408		2	CONTRE-ECROU, M8 x 1.25, Cl 8
18		348794A1		1	COLONNE DE DIRECTION, Canopy Models, See Figure 05-03
19		614-10020		2	BOULON, Hex, M10 x 20, 8.8, Full Thd
20		614-10035		2	BOULON, Hex, M10 x 35, 8.8, Full Thd
21		895-15010		2	RONDELLE, M11 x 24 x 2
22		379846A1		1	CAVALIER
23		352727A1		1	ENTRETOISE
24		895-15008		2	RONDELLE, M8 x 20 x 1.6
25		832-10408		2	CONTRE-ECROU, M8 x 1.25, Cl 8

05-02		p1	10/07

SYSTEME HYDRAULIQUE - DIRECTION

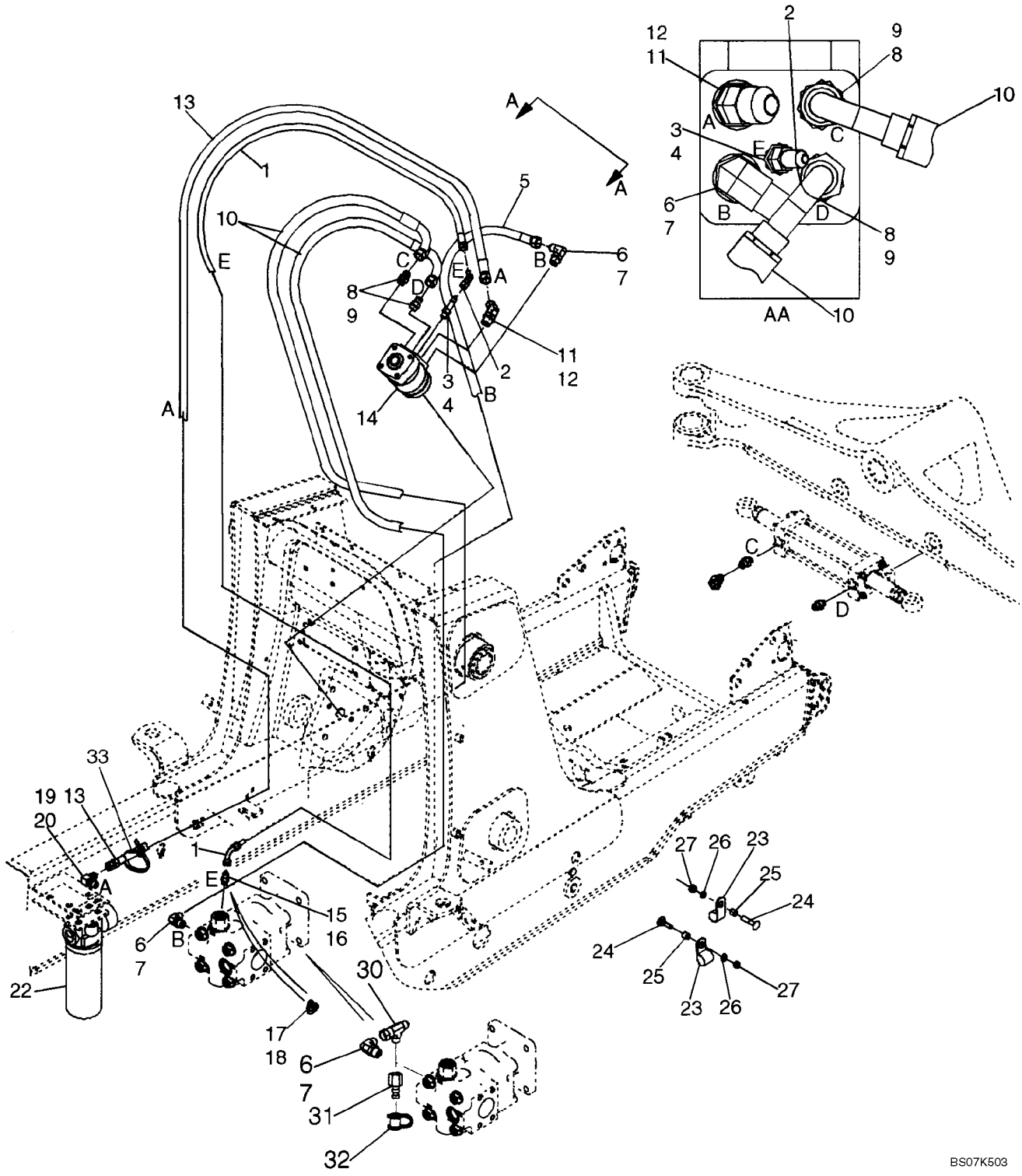

SYSTEME HYDRAULIQUE - DIRECTION

REF	FN	PART NUMBER	YR/SN	QTY	DESCRIPTION
1		87439137		1	FLEXIBLE (ASSEMBLE), 1675 mm (66 in), Steering Pilot Hose
2		218-5228		1	COUDE, 90Ü, 7/16"-20, 37Ü x 7/16"-20, 37Ü Fem Sw
3		218-5027		1	RACCORD, 1/4", Tube x 1/4", NPTF, 37Ü, Incl. Ref 4
4		237-6004		1	JOINT THORIQUE, 4-1, 90 Duro, .351" ID x .072" Thk
5		87439138		1	FLEXIBLE (ASSEMBLE), 1600 mm (63 in), Steering Pressure
6		218-5106		2	COUDE, 90Ü, 3/4"-16, 37Ü x 3/4"-16, O-Ring, Incl. Ref 7
7		237-6008		1	JOINT THORIQUE, 8-1, 90 Duro, .644" ID x .087" Thk
8		218-5059		2	RACCORD, 3/4"-16, 37Ü x 3/4"-16, O-Ring, Incl. Ref 9
9		237-6008		1	JOINT THORIQUE, 8-1, 90 Duro, .644" ID x .087" Thk
10		87429382		2	FLEXIBLE (ASSEMBLE), 1520 mm (59-7/8 in), To Steering Cylinder
11		218-5136		1	COUDE, 45Ü, 3/4"-16, 37Ü x 3/4"-16, O-Ring, Incl. Ref 12
12		237-6008		1	JOINT THORIQUE, 8-1, 90 Duro, .644" ID x .087" Thk
13		87439136		1	FLEXIBLE (ASSEMBLE), 1550 mm (61-1/16 in), Return
14		87419634		1	POMPE, Steering Control Valve; Includes 87454545 Seal Kit, 396592A1 Anti-Cavitation Valve Kit, 396593A1 Bolt Kit
		87454545		1	POCHETTE DE JOINTS, Seal; Includes (2) Seals, (8) O-Rings
		396592A1		1	POCHETTE, Anti-Cavitation Valve; Includes (2) Balls, (4) Springs, (2) Retainers
		396593A1		1	POCHETTE, Bolt; Includes (7) Bolts
15		218-5057		1	RACCORD, 9/16"-18, 37Ü x 9/16"-18, O-Ring, Incl. Ref 16, Standard Equipment, Models Without Auxiliary Hydraulics
16		237-6006		1	JOINT THORIQUE, 6-1, 90 Duro, .468" ID x .078" Thk
17		282428A1		1	CLAPET, CHECK, Tee, 9/16; Incl. Ref 18; Models With Auxiliary Hydraulics
18		237-6006		1	JOINT THORIQUE, 6-1, 90 Duro, .468" ID x .078" Thk

SYSTEME HYDRAULIQUE - DIRECTION

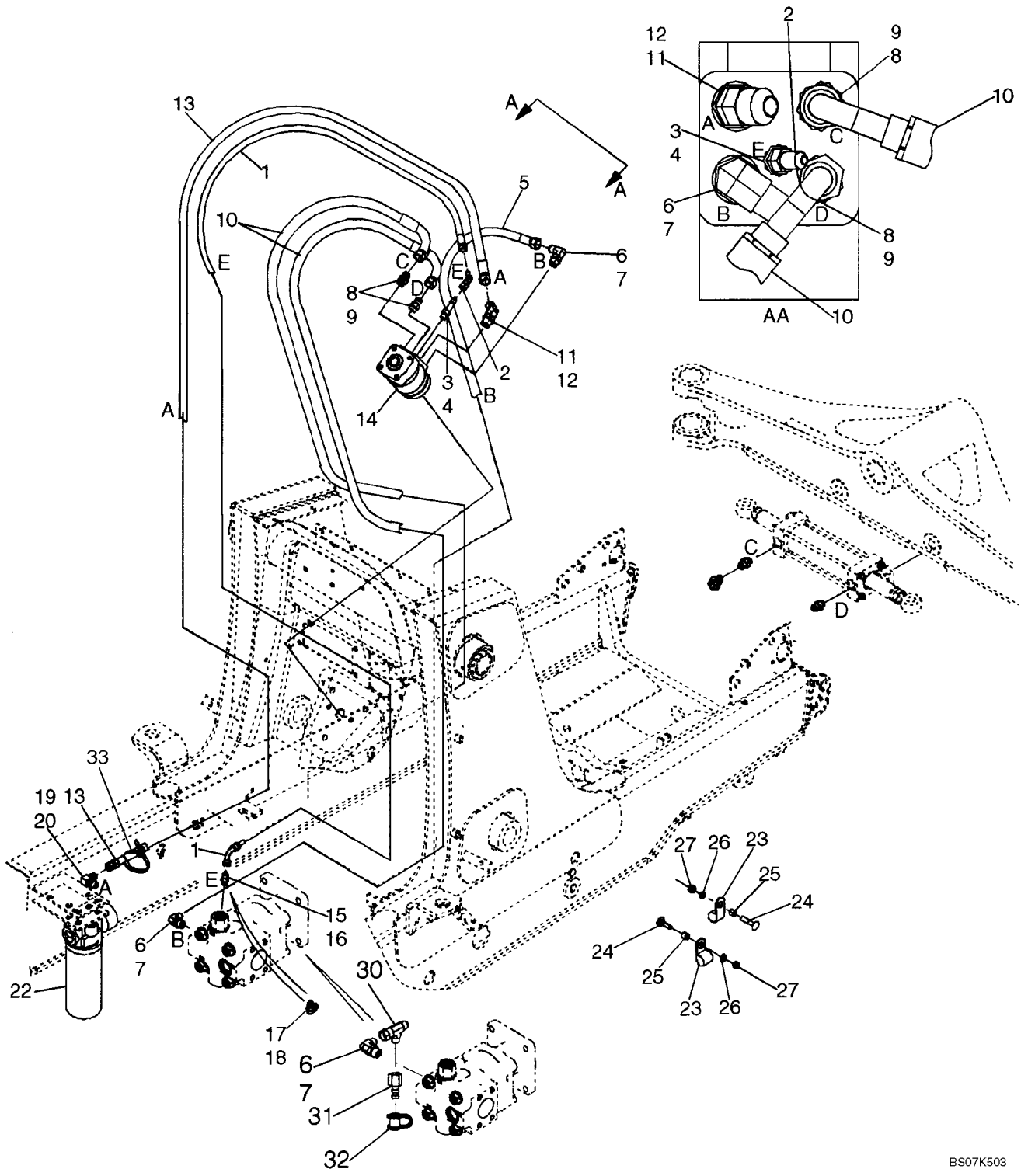

SYSTEME HYDRAULIQUE - DIRECTION

REF	FN	PART NUMBER	YR/SN	QTY	DESCRIPTION
19		218-5280		1	COUDE, 90Ü, 3/4"-16, 37Ü x 9/16"-18, O-Ring, Incl. Ref 20
20		237-6006		1	JOINT THORIQUE, 6-1, 90 Duro, .468" ID x .078" Thk
22		87440045		1	FILTRE ASSY, Hydraulic Oil, See Figure 08-57
23		515-23159		2	BRIDE, 5/8", Insul, 3/8" Bolt, P-Type
24		711-10050		2	BOULON TETE BOMBEE, Short NK, M10 x 50, Cl8.8
25		120303A1		2	ENTRETOISE
26		892-11010		2	RONDELLE FREIN, M10
27		829-1410		2	ECROU, M10, Cl 10
30		218-845		1	TE, 37Ü, 3/4"-16 x 3/4"-16, Fem Sw Run
31		192834A1		1	CARDAN, Diagnostic
32		H434163		1	CACHE-POUSSIERE, Dust
33		L11541		1	SERRE-CABLE

05-02A		p1	02/08

SYSTEME HYDRAULIQUE - DIRECTION (AVEC SYSTèME DõAIDE AU CHANGEMENT DE DIRECTION)

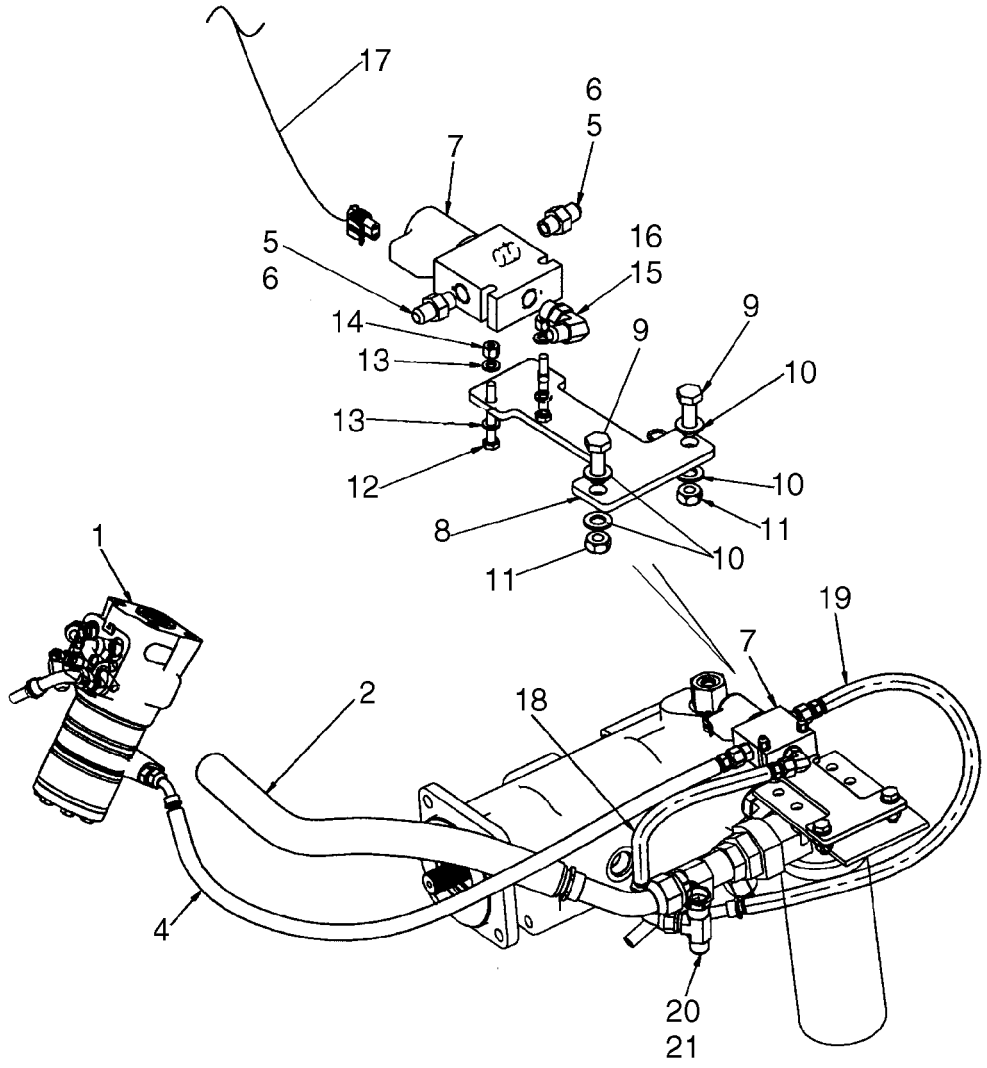

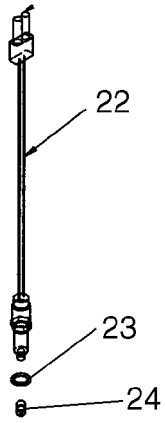

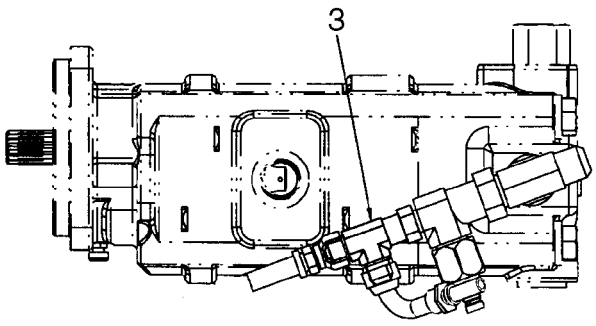

BS07N728

SYSTEME HYDRAULIQUE - DIRECTION (AVEC SYSTôME DõAIDE AU CHANGEMENT DE DIRECTION)

REF	FN	PART NUMBER	YR/SN	QTY	DESCRIPTION
		REF			NOTICE, For Comfort Steer Electrical, See Figure 04-09A; For Steering Common Parts, See Figure 05-02
1		87579286		1	POMPE HYDRAULIQUE, Steering Control Valve Pump, Dual Speed Steering; Includes 87454545, 396592A1, 87619415; For Attaching Fittings and Hoses, See Figure 05-02
		87454545		1	POCHETTE DE JOINTS, Seal Kit; Includes (2) Seals, (8) O-Rings, Instructions
		396592A1		1	POCHETTE, Anti-Cavitation; Includes (2) Balls, (4) Springs, (2) Retainers
		87619415		1	KIT DE VIS, Bolt Kit Includes (7) Capscrews
2		87659613		1	FLEXIBLE (ASSEMBLE), Return Tube, Filter to Tank; For Fitting at Filter, See Figure 08-03
3		218-845		1	TE, 37Ü, 3/4"-16 x 3/4"-16, Fem Sw Run, Used In Addition to Existing Fittings
4		87560508		1	FLEXIBLE (ASSEMBLE), 1580 mm (62-7/32 in) long Hose; Pilot; Dual Speed
5		218-5057		2	RACCORD, 9/16"-18, 37Ü x 9/16"-18, O-Ring, Incl. Ref 6
6		237-6006		1	JOINT THORIQUE, 6-1, 90 Duro, .468" ID x .078" Thk
7		87382811		1	ELECTRO-VALVE, Two-Position Three-Way Solenoid Valve; Includes 87348571, 329483A1, 87613159, 87613161
		87348571		1	ECROU, Hex, 1/2-20 NF; Coil
		329483A1		1	POCHETTE DE JOINTS
		87613159		1	ELECTRO-VALVE, Cartridge, Valve
		87613161		1	SOLENOIDE, Coil
8		87610318		1	PANOPLIE, Solenoid Mount Bracket, Painted Tan
9		614-10030		2	BOULON, Hex, M10 x 30, 8.8
10		895-11010		4	RONDELLE, M10 x 20 x 2
11		829-1410		2	ECROU, M10, Cl 10
12		814-6050		2	BOULON, Hex, M6 x 50, 8.8
13		895-11006		4	RONDELLE, M6
14		832-10406		2	CONTRE-ECROU, M6 x 1, Cl 8

SYSTEME HYDRAULIQUE - DIRECTION (AVEC SYSTèME DõAIDE AU CHANGEMENT DE DIRECTION)

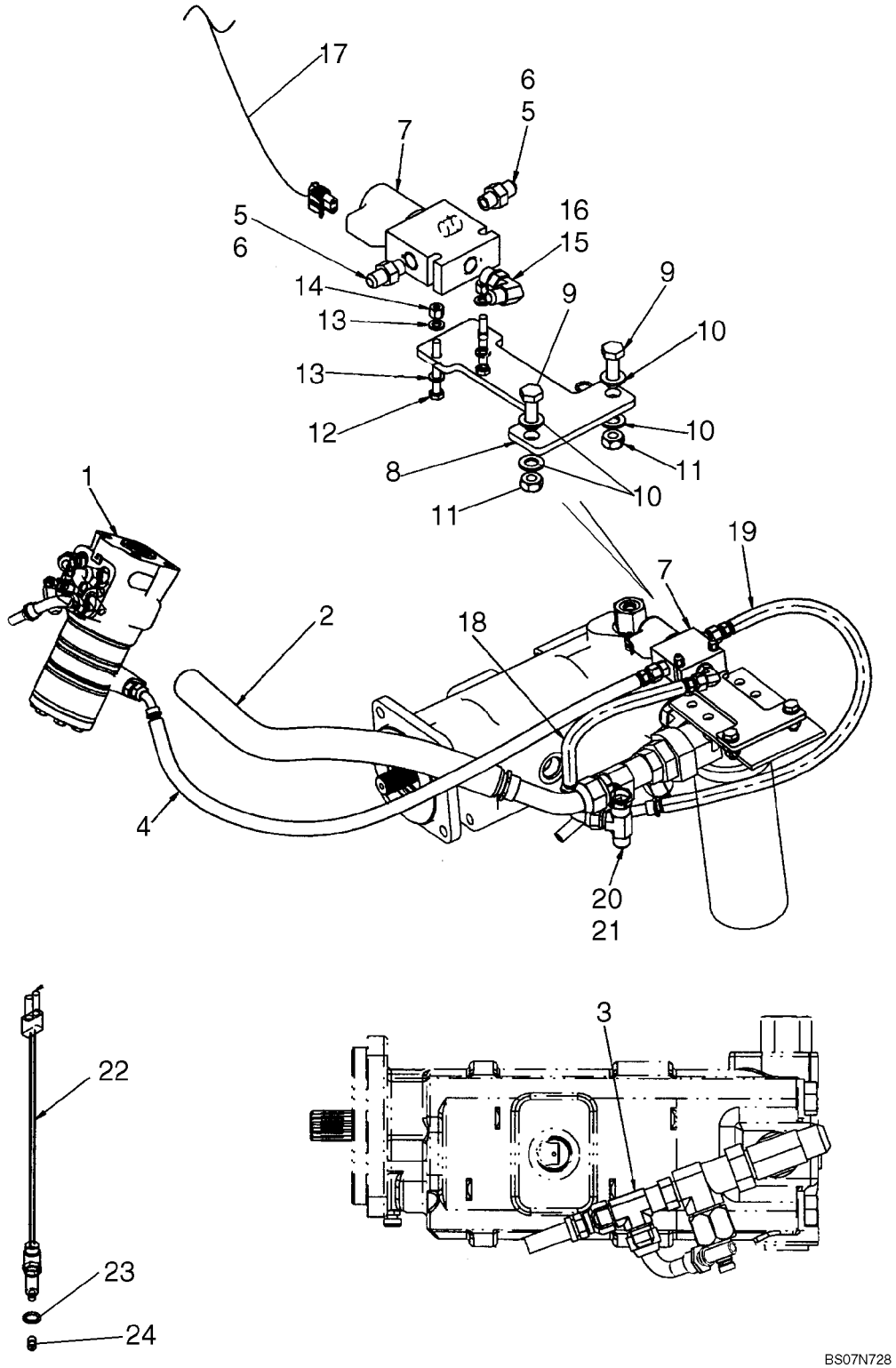

SYSTEME HYDRAULIQUE - DIRECTION (AVEC SYSTôME DõAIDE AU CHANGEMENT DE DIRECTION)

REF	FN	PART NUMBER	YR/SN	QTY	DESCRIPTION
15		218-5105		1	COUDE, 90Ü, 9/16"-18, 37Ü x 9/16"-18, O-Ring, Incl. Ref 16
16		237-6006		1	JOINT THORIQUE, 6-1, 90 Duro, .468" ID x .078" Thk
17		87663365		1	FAISCEAU COMPLET, Comfort Steer Jumper
18		87671893		1	FLEXIBLE (ASSEMBLE), 315 mm (12-3/8 in) long Hose; Dual Speed To Tank
19		87560507		1	FLEXIBLE (ASSEMBLE), 705 mm (27-25/32 in) long Hose; Pressure; Dual Speed
20		218-5486		1	TE, 37Ü, 7/8"-14 x 7/8"-14, Fem Sw Run x 3/4"-16 Br
21		237-6012		1	JOINT THORIQUE, 12-1, 90 Duro, .924 ID x .118" Thk
		87578910		1	CAPTEUR, Position; Modesl With Standard Transmission Only; Attaches To Chassis Option Harness; Incl. 25 - 27
22		NSS		1	NON FOURNI SEPAREMENT, Switch
23		NSS		1	NON FOURNI SEPAREMENT, O-Ring
24		NSS		1	NON FOURNI SEPAREMENT, Pin

COLONNE DE DIRECTION

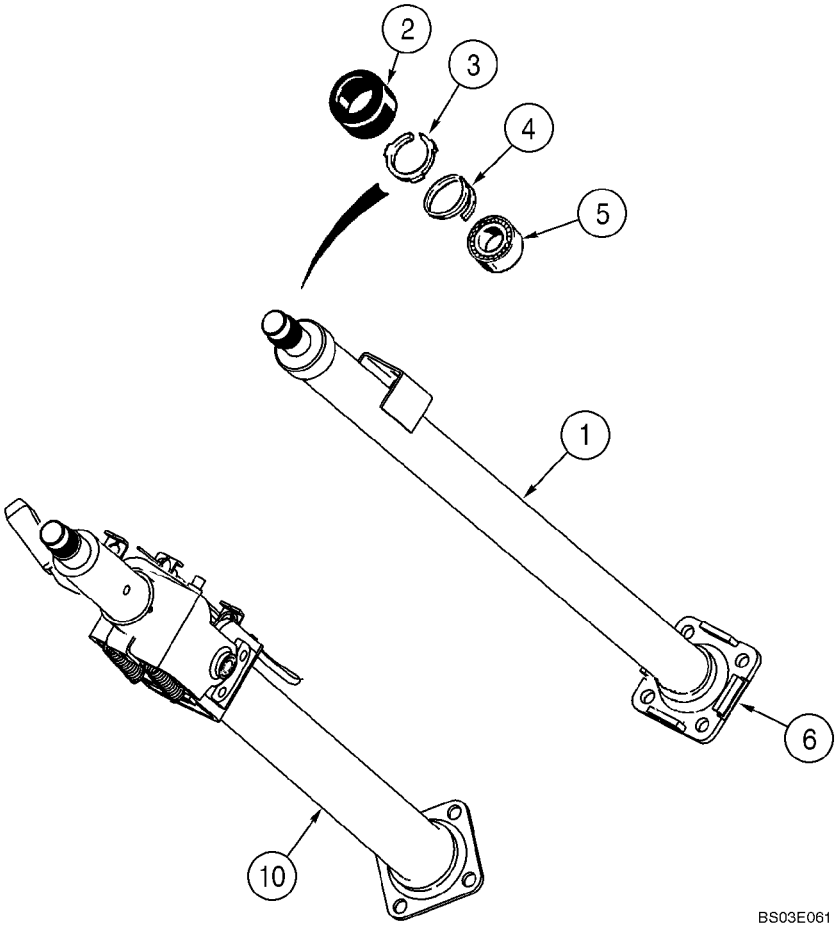

COLONNE DE DIRECTION

REF	FN	PART NUMBER	YR/SN	QTY	DESCRIPTION
		348794A1		1	COLONNE DE DIRECTION, Canopy Models, Incl. Ref 1 - 6
1		NSS		1	NON FOURNI SEPAREMENT, Column
2		S115351		1	CHAPEAU
3		NSS		1	NON FOURNI SEPAREMENT, Retainer
4		102-1387		1	ANNEAU D'ARRąT, #87, Ext, Spiral
5		NSS		1	NON FOURNI SEPAREMENT, Bearing
6		NSS		1	NON FOURNI SEPAREMENT, Flange
10		352569A4		1	COLONNE DE DIRECTION, 712 mm Long, Cab Models, With Tilt Steering, Includes 87659610, 87659611, 87659612, 87659616
		87659610		1	LOT DE PIECES, Spring Set, Tilt Column, SVC
		87659611		1	LOT DE PIECES, Segment Set, Tilt Column SVC
		87659612		1	LOT DE PIECES, Lever Set, Tilt Column SVC
		87659616		1	LOT DE PIECES, Cable, Tilt Column SVC

ESSIEU, AVANT (86990837) - SUPPORT

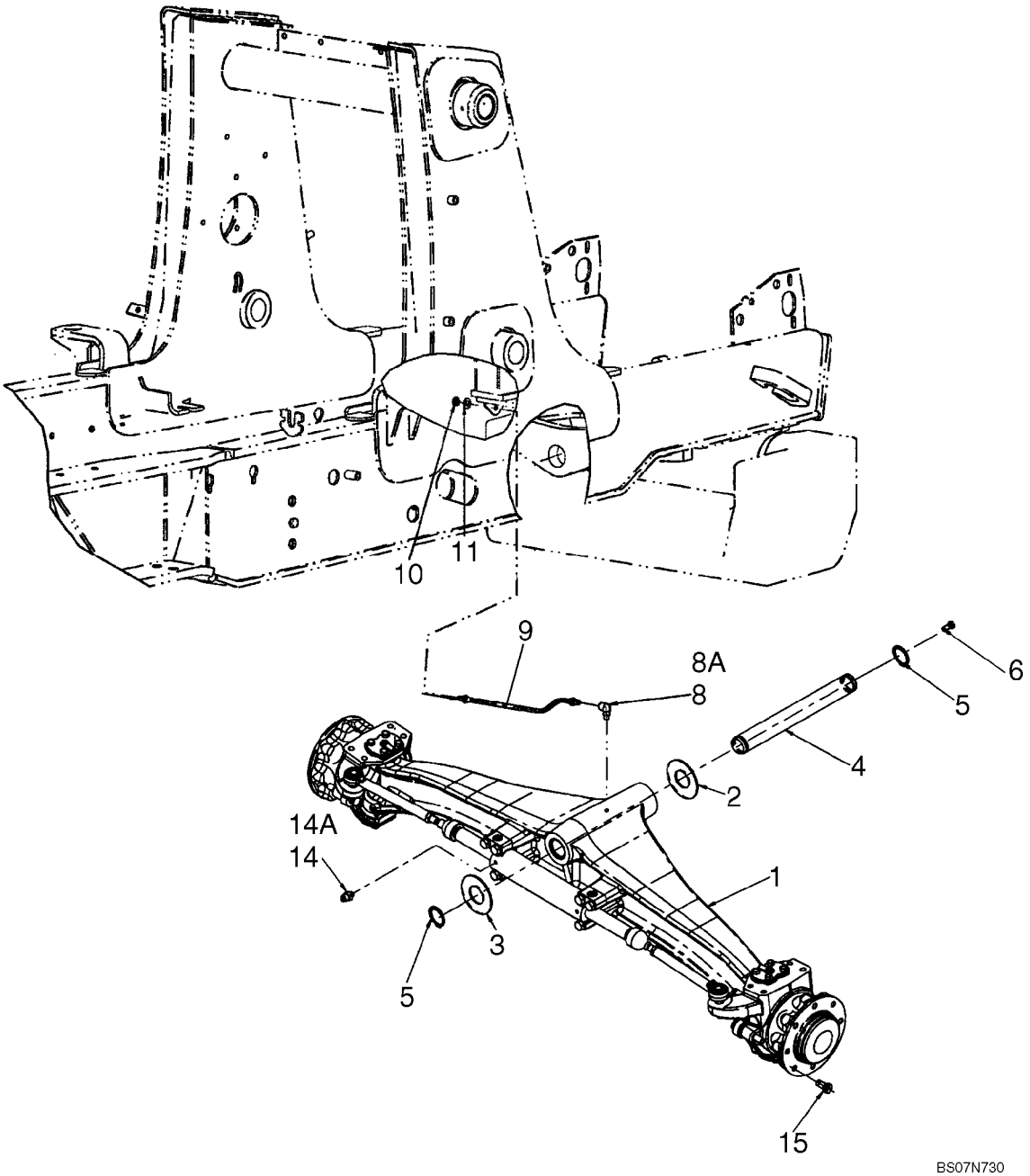

ESSIEU, AVANT (86990837) - SUPPORT

REF	FN	PART NUMBER	YR/SN	QTY	DESCRIPTION
1		86990837		1	ESSIEU DIRECTEUR, Front, Two Wheel Drive, See Figures 05-05 - 05-08
2		191796A1		AR	RONDELLE, 2 x 4 x 1/16
3		D123684		1	RONDELLE, Thrust, 2-1/2 x 4-1/2 x 3/16
4		87404197		1	CHEVILLE PIVOT
5		800-44050		2	ANNEAU D'ARRąT, M50, Ext
6		614-12025		1	BOULON, Hex, M12 x 25, 8.8
8		218-5103		1	COUDE, 90Ü, 7/16"-20, 37Ü x 7/16"-20, O-Ring, Incl. Ref 8A
8A		237-6004		1	JOINT THORIQUE, 4-1, 90 Duro, .351" ID x .072" Thk
9		87572760		1	FLEXIBLE (ASSEMBLE), 533 mm (21 in), Lubrication Line
10		F53473		1	ECROU
11		495-11047		1	RONDELLE, 7/16", SAE
14		218-5351		2	RACCORD, 3/4"-16, 37Ü x 9/16"-18, O-Ring, Incl. Ref 14A
14A		237-6006		1	JOINT THORIQUE, 6-1, 90 Duro, .468" ID x .078" Thk
15		A38208		16	BOULON, Wheel Bolt

ESSIEU, AVANT (86990837) - BOćTIER

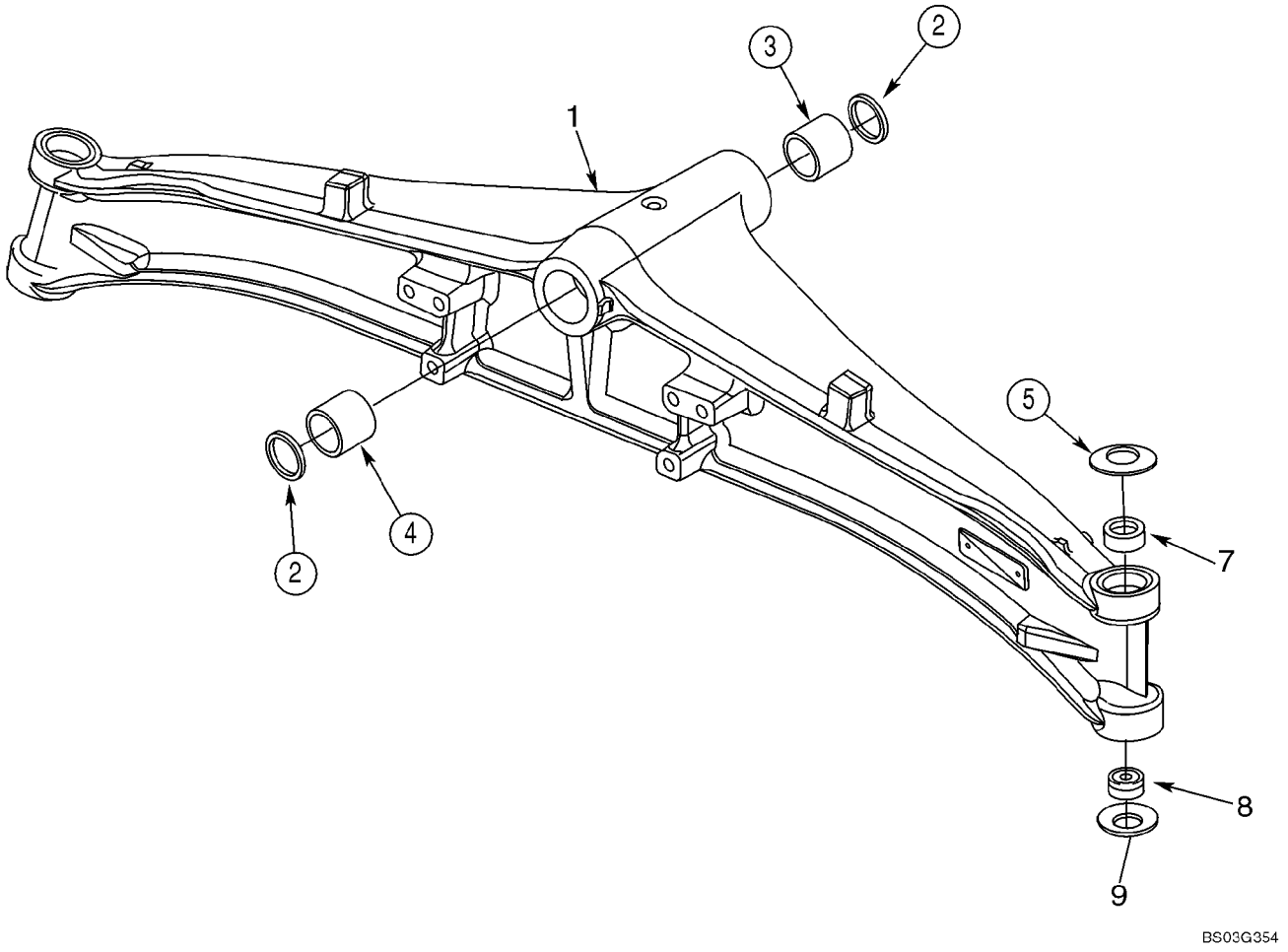

ESSIEU, AVANT (86990837) - BOćTIER

REF	FN	PART NUMBER	YR/SN	QTY	DESCRIPTION
		86990837		1	ESSIEU DIRECTEUR, Front, Two Wheel Drive, Incl. 1 - 9; Also Includes Parts On Figures 05-05 - 05-08
1		429230A1		1	CARTER DE PONT
2		N14367		2	JOINT
3		D149726		1	BAGUE, Front
4		D149725		1	BAGUE, Rear
5		122270A1		2	RONDELLE, Belleville
7		87400286		2	BAGUE
8		N14373		2	BAGUE, Bushing; Two Piece; 28 ID x 50 OD x 16
9		122261A1		2	RONDELLE, Belleville

ESSIEU, AVANT (86990837) - LOGEMENT DU PIVOT

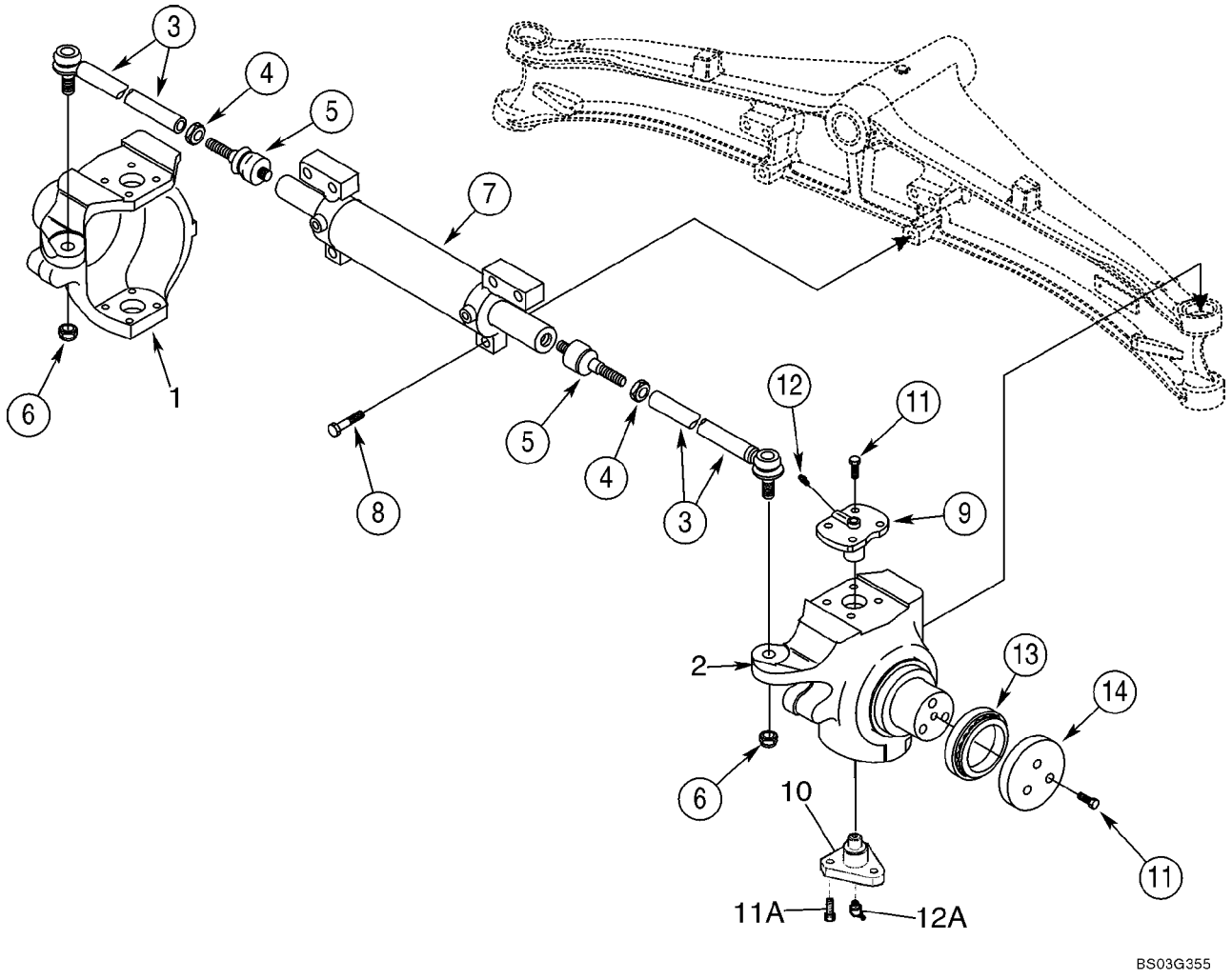

ESSIEU, AVANT (86990837) - LOGEMENT DU PIVOT

REF	FN	PART NUMBER	YR/SN	QTY	DESCRIPTION
		86990837		1	ESSIEU DIRECTEUR, Front, Two Wheel Drive, Incl. 1 - 14; Also Includes Parts On Figures 05-05 - 05-08
1		429231A1		1	CARTER, Swivel, Left-Hand
2		429232A1		1	CARTER, Swivel, Right-Hand
		401052A1		2	DIRECTION (ASSY), Arm, Incl. Ref 3 - 5
3		401054A1		1	TIRANT
4		934727R1		1	ECROU, Thin, M18 x 1.5, Cl 04
5		112509A1		1	ROTULE
6		905839R1		2	CONTRE-ECROU, M18 x 1.5, Thin
7		401055A1		1	V£RIN DE DIRECTION, See Figure 05-07
8		863-16070		6	VIS, Hex Soc Hd, M16 x 70, 12.9
9		122265A1		2	AXE, GROS, King Pin, Upper
10		122259A1		2	PIVOT, King Pin, Lower; Triangular Shape
11		100533A1		14	BOULON, Lock, M12 x 30
11A		D150214		6	VIS, Lock, M14 x 35; Lower King Pin
12		321204		2	GRAISSEUR, M6 x 1, 16mm lg
12A		N13505		2	GRAISSEUR, 45Ü, M6 x 1, Lower King Pin
13		401059A1		2	ROULEMENT A ROULEAU, Thrust
14		401060A1		2	RONDELLE DE BUTEE

ESSIEU, AVANT (86990837) - VERIN DE DIRECTION

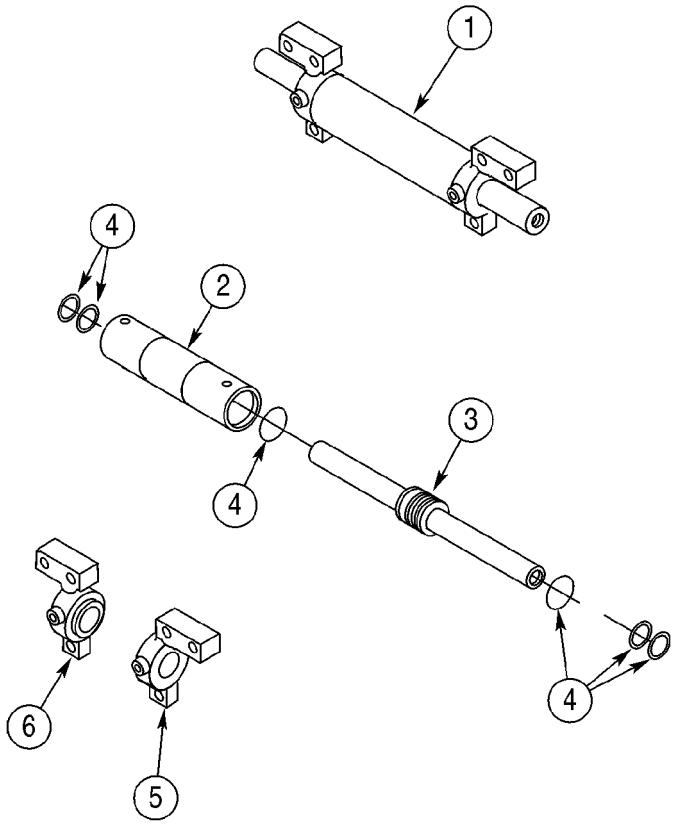

BC00G065

ESSIEU, AVANT (86990837) - VERIN DE DIRECTION

REF	FN	PART NUMBER	YR/SN	QTY	DESCRIPTION
		86990837		1	ESSIEU DIRECTEUR, Front, Two Wheel Drive, Incl. 1 - 6; Also Includes Parts On Figures 05-05 - 05-08
1		401055A1		1	V£RIN DE DIRECTION, Incl. Ref 2 - 6
2		NSS		1	NON FOURNI SEPAREMENT, Tube, Cylinder
3		401062A1		1	TIGE DE VERIN
4		401061A1		1	POCHETTE-JOINTS, Seal, Component Parts Not Serviced Separately
5		401063A1		1	TETE (ASSEMBLEE), Right-Hand
6		401064A1		1	TETE (ASSEMBLEE), Left-Hand

ESSIEU, AVANT (86990837) - MOYEU ET ROULEMENTS

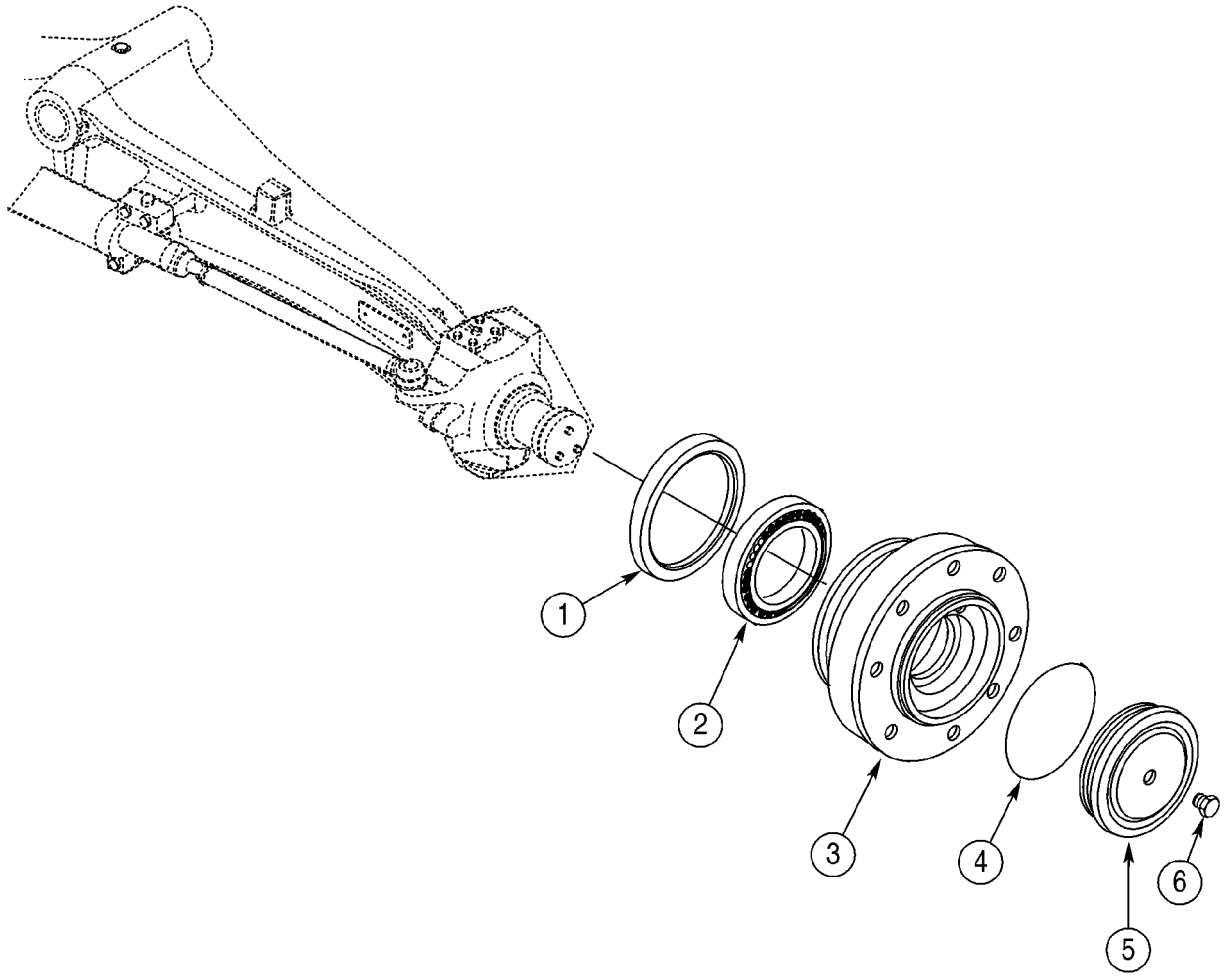

BC00G066

ESSIEU, AVANT (86990837) - MOYEU ET ROULEMENTS

REF	FN	PART NUMBER	YR/SN	QTY	DESCRIPTION
		86990837		1	ESSIEU DIRECTEUR, Front, Two Wheel Drive; Incl. 1 - 6; Also Includes Parts On Figures 05-05 - 05-08
1		311569A1		2	JOINT D'HUILE
2		324213A1		2	ROULEMENT
3		401065A1		2	MOYEU
4		401066A1		2	JOINT TORIQUE
5		401067A1		2	COUVERCLE
6		D142898		2	BOUCHON, 10 x 1 mm

ROUES AVANT - NEUS

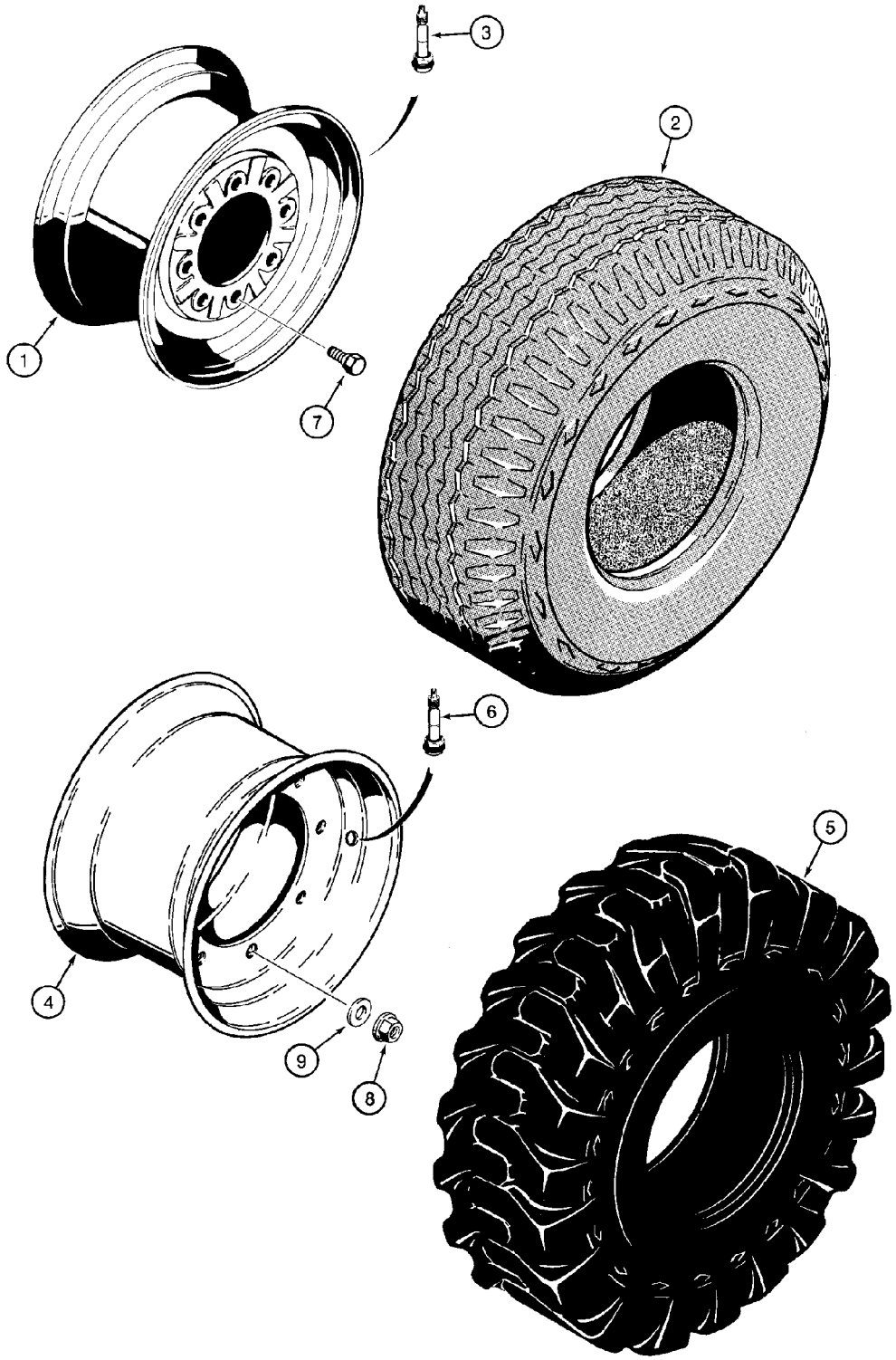

ROUES AVANT - NEUS

REF	FN	PART NUMBER	YR/SN	QTY	DESCRIPTION
1		D125223		2	JANTE, For 11L x 16 - 10 PR F3 Tires; Two Wheel or Four Wheel Drive Models
1		197771A1		2	ROUE, For 11L x 16 - 10 PR F3 Tires; Two Wheel or Four Wheel Drive Models
2		REF		2	NOTICE, Tire, Purchase Locally
3		387897R91		2	TIGE DE SOUPAPE
4		119243A1		2	JANTE, For 12 x 16.5 - 8 or 10 Ply Tires; Two Wheel or Four Wheel Drive Models
5		REF		2	NOTICE, Tire, Purchase Locally
6		387897R91		2	TIGE DE SOUPAPE
7		A38208		16	BOULON, Wheel Bolts; Two Wheel Drive Models
8		825-11418		16	ECROU, M18 x 1.5, Cl 8, Wheel Nuts; Four Wheel Drive Models
9		496-81000		16	RONDELLE, 25/32" x 1 3/8" x .134", HDN, Wheel Nuts; Four Wheel Drive Models

NOTES

SECTION INDEX
Chaîne cinématique

06-01	ESSIEU, TRACTION AVANT - SUPPORT
06-02	ESSIEU, TRACTION AVANT - BOĊTIER
06-03	ESSIEU, TRACTION AVANT - LOGEMENT DU PIVOT
06-04	ESSIEU, TRACTION AVANT - VERIN DE DIRECTION
06-05	ESSIEU, TRACTION AVANT - ARBRES, ESSIEU
06-06	ESSIEU, TRACTION AVANT - SATELLITE
06-07	ESSIEU, TRACTION AVANT - DIFFERENTIEL
06-08	ESSIEU, TRACTION AVANT - COURONNE ET PIGNON
06-09	ARBRE DE TRANSMISSION, ESSIEU AVANT
06-10	SYSTĈME DE REFROIDISSEMENT - TRANSMISSION
06-11	TRANSMISSION - SUPPORT
06-12	TRANSMISSION, 2WD - FILTRE ê HUILE
06-13	TRANSMISSION, 2WD - BOĊTIER
06-14	TRANSMISSION, 2WD - POMPE A HUILE
06-15	TRANSMISSION, 2WD - M£CANISME DU CHANGEMENT DE VITESSE
06-16	TRANSMISSION, 2WD - ARBRE, MARCHE ARRIĈRE & PRIMAIRE
06-17	TRANSMISSION, 2WD - ARBRE, ENTR£E & PRISE DE FORCE
06-18	TRANSMISSION, 2WD - ARBRE, SECONDAIRE
06-19	TRANSMISSION, 2WD - DISTRIBUTEUR
06-20	TRANSMISSION, 4WD - FILTRE ê HUILE
06-21	TRANSMISSION, 4WD - BOĊTIER
06-22	TRANSMISSION, 4WD - POMPE A HUILE
06-23	TRANSMISSION, 4WD - M£CANISME DU CHANGEMENT DE VITESSE
06-24	TRANSMISSION, 4WD - ARBRE, MARCHE ARRIĈRE & PRIMAIRE
06-25	TRANSMISSION, 4WD - ARBRE, ENTR£E & PRISE DE FORCE
06-26	TRANSMISSION, 4WD - ARBRE, SECONDAIRE
06-27	TRANSMISSION, 4WD - ARBRE DE SORTIE
06-28	TRANSMISSION, 4WD - DISTRIBUTEUR
06-29	TRANSMISSION, 4WD - ELECTROVANNE
06-30	ROUES, ARRIĈRE - PNEUS
06-31	ESSIEU, PROPULSION ARRIĈRE - SUPPORT
06-32	ESSIEU ARRIĈRE - BLOCAGE DU DIFFERENTIEL
06-33	87395372 ESSIEU, PROPULSION ARRIĈRE - BOĊTIER
06-34	87395372 ESSIEU, PROPULSION ARRIĈRE - DIFFERENTIEL
06-35	87395372 ESSIEU, PROPULSION ARRIĈRE - COURONNE ET PIGNON
06-36	87395372 ESSIEU, PROPULSION ARRIĈRE - BLOCAGE DU DIFFERENTIEL
06-37	87395372 ESSIEU, PROPULSION ARRIĈRE - SATELLITE
06-38	ARBRE DE TRANSMISSION, ESSIEU ARRIĈRE

06-01		p1	02/08

ESSIEU, TRACTION AVANT - SUPPORT

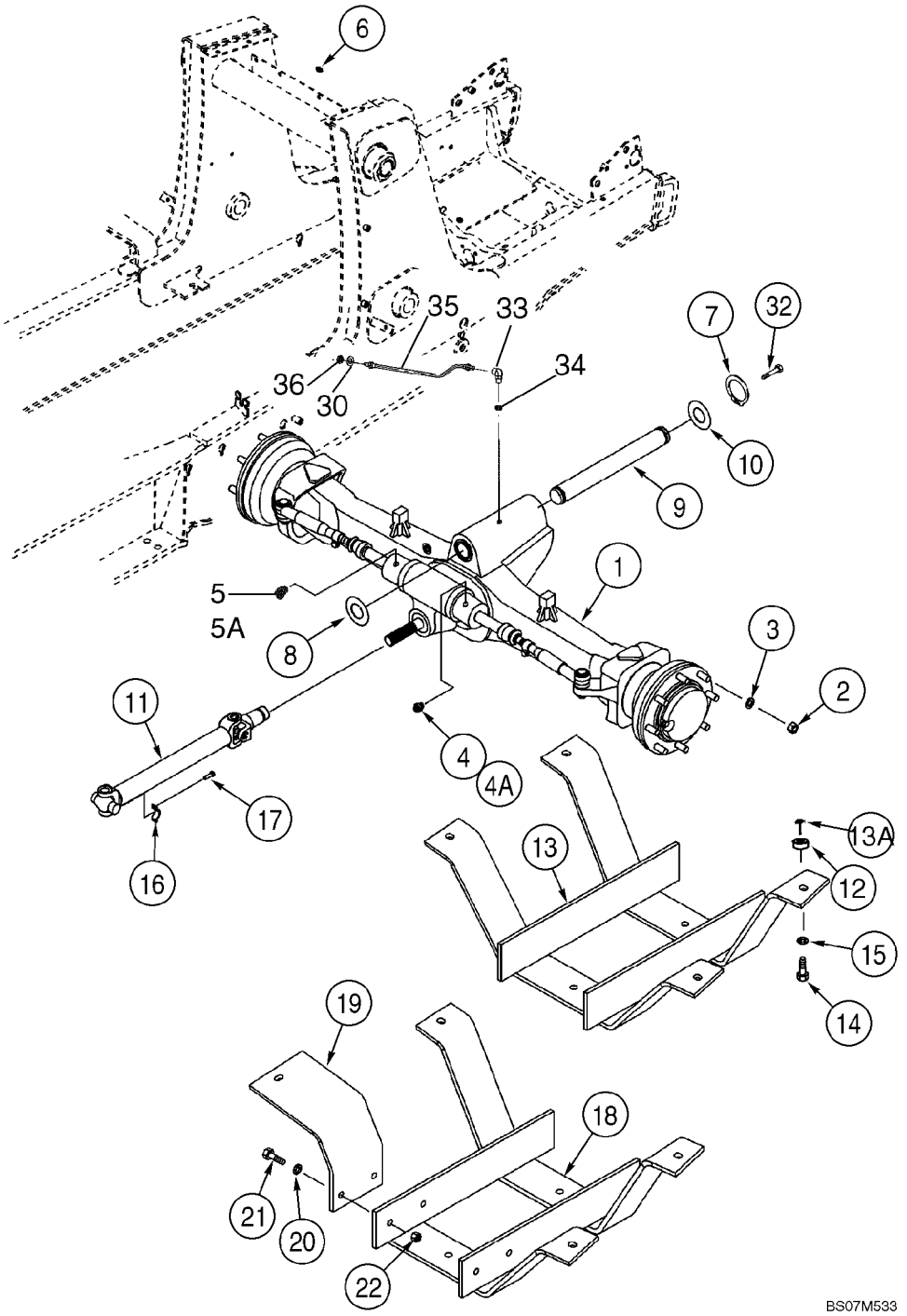

ESSIEU, TRACTION AVANT - SUPPORT

REF	FN	PART NUMBER	YR/SN	QTY	DESCRIPTION
1		87395365		1	PONT AVANT, Front; See Figures 06-02 - 06-08
2		825-11418		16	ECROU, M18 x 1.5, Cl 8
3		496-81000		16	RONDELLE, 25/32" x 1 3/8" x .134", HDN
4		218-5351		1	RACCORD, 3/4"-16, 37Ü x 9/16"-18, O-Ring, Incl. Ref 4A
4A		237-6006		1	JOINT THORIQUE, 6-1, 90 Duro, .468" ID x .078" Thk
5		218-5529		1	COUDE, 45Ü, 3/4"-16, 37Ü x 9/16"-18, O-Ring, Incl. Ref 5A
5A		237-6006		1	JOINT THORIQUE, 6-1, 90 Duro, .468" ID x .078" Thk
6		219-1		1	GRAISSEUR, 1/8"-27 x .66 lg
7		800-44050		2	ANNEAU D'ARRąT, M50, Ext
8		191796A1		AR	RONDELLE, 2 x 4 x 1/16
9		87404197		1	CHEVILLE PIVOT, Pivot Pin
10		D123684		1	RONDELLE, Thrust, 2-1/2 x 4-1/2 x 3/16
11		87694656		1	ARBRE D'ENTRAINEMENT, See Figure 06-09
12		87649398		4	ENTRETOISE
13		137223A2		1	GARANT, Drive Shaft, Used On Models With 31 Gallon Fuel Tank
13A		238-6012		4	JOINT THORIQUE, -012, 90 Duro, .364" ID x .070" Thk
14		1637759		4	BOULON, Hex, M12 x 60, 10.9, Full Thd
15		495-81025		4	RONDELLE, 17/32" x 1 1/4" x .179"
16		90-6682T1		2	COLLIER
17		9637611		4	VIS, Hex Flange Head, Locking, Special, 5/16 - 24 UNF x 1-1/16; Replaces D137627 Bolt
18		282038A2		1	GARANT (ASSEMBLE), Drive Shaft, Used On Models With 40 Gallon Fuel Tank
19		87699880		1	EQUERRE
20		495-81025		8	RONDELLE, 17/32" x 1 1/4" x .179"
21		827-12060		6	BOULON, Hex, M12 x 60, 10.9
22		829-1412		2	ECROU, M12, Cl 10
30		495-11047		1	RONDELLE, 7/16", SAE
32		614-12025		1	BOULON, Hex, M12 x 25, 8.8
33		218-5103		1	COUDE, 90Ü, 7/16"-20, 37Ü x 7/16"-20, O-Ring, Incl. Ref 34

ESSIEU, TRACTION AVANT - SUPPORT

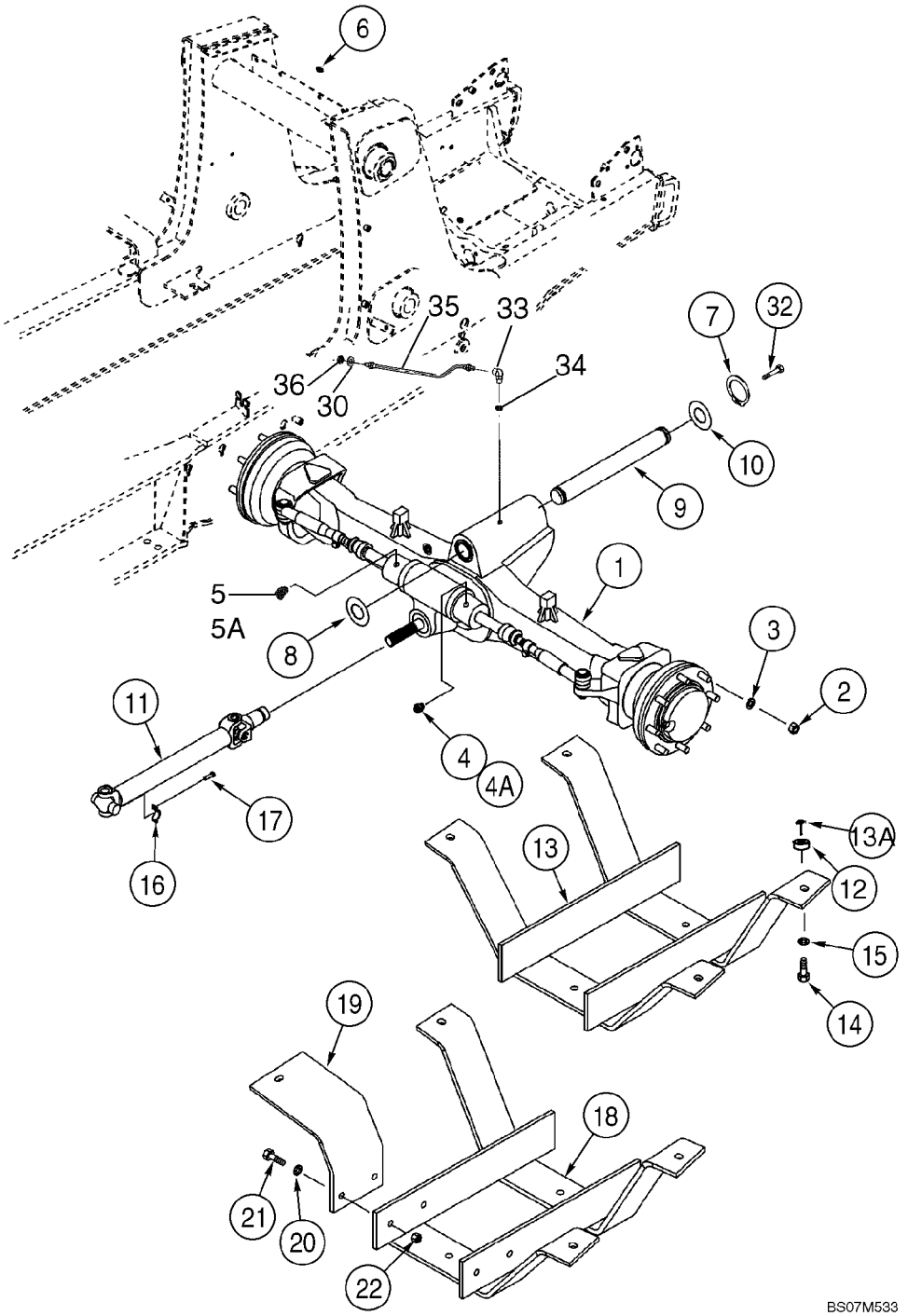

ESSIEU, TRACTION AVANT - SUPPORT

REF	FN	PART NUMBER	YR/SN	QTY	DESCRIPTION
34		237-6004		1	JOINT THORIQUE, 4-1, 90 Duro, .351" ID x .072" Thk
35		87572760		1	FLEXIBLE (ASSEMBLE), 7/16-20 Fem Swivel x 1/8 NPSN x 21 inch; Remote Lube; Includes Grease Fitting
36		F53473		1	ECROU, Hex

ESSIEU, TRACTION AVANT - BOćTIER

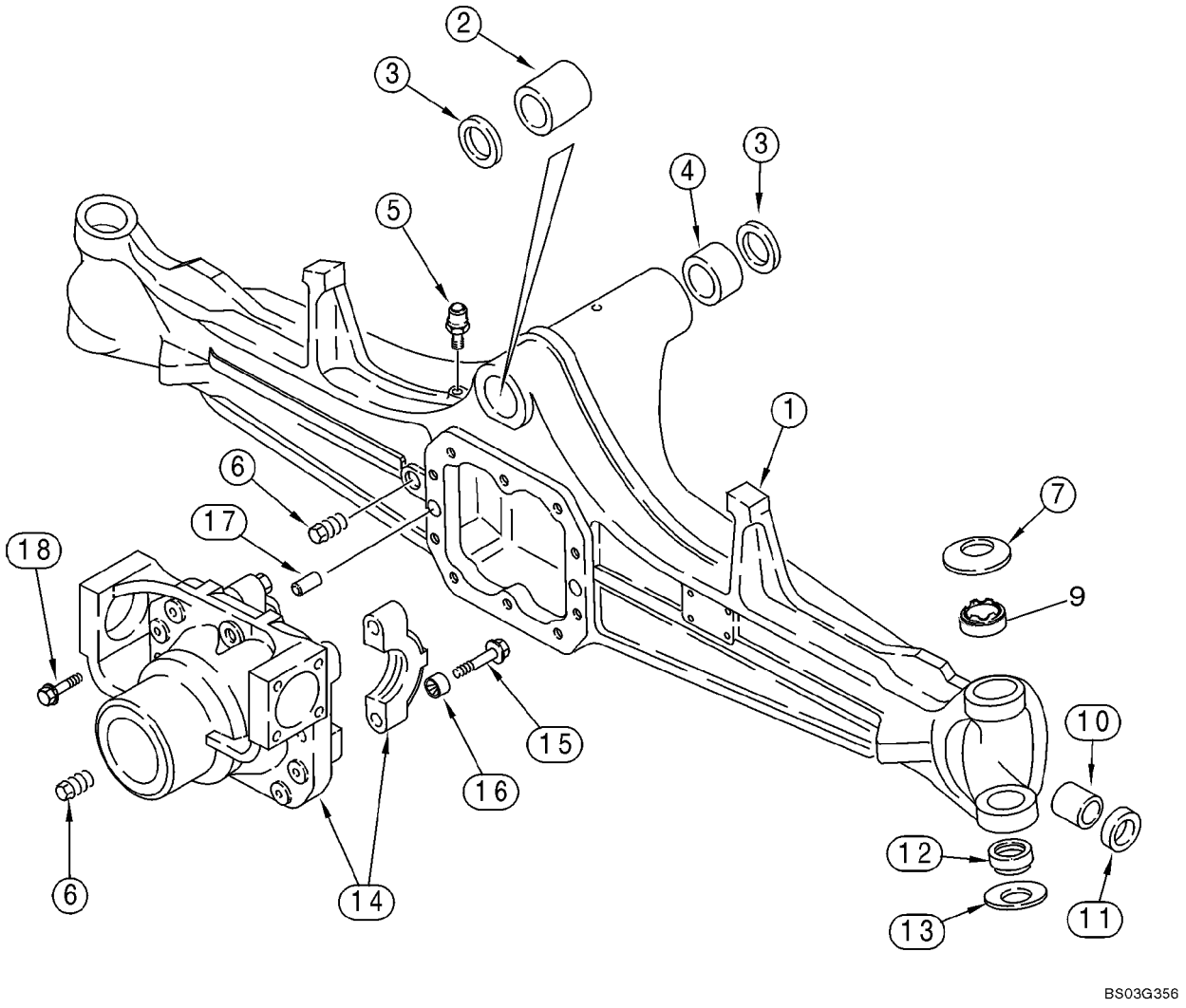

ESSIEU, TRACTION AVANT - BOćTIER

REF	FN	PART NUMBER	YR/SN	QTY	DESCRIPTION
		87395365		1	PONT AVANT, Front, Incl. Ref 1 - 18; Also Includes Parts On Figures 06-02 - 06-08
1		427107A1		1	CARTER DE PONT
2		D149725		1	BAGUE
3		N14367		2	JOINT
4		D149726		1	BAGUE
5		1966149C2		1	RENIFLARD
6		A156873		2	BOUCHON DE VIDANGE, 22 mm
7		122270A1		2	RONDELLE, Belleville
9		87400286		2	BAGUE
10		1966186C1		2	BAGUE
11		87710155		2	JOINT ANNULAIRE, SEAL
12		100520A1		2	ROTULE, Bushing, Two Piece
13		122268A1		2	RONDELLE, Belleville
		{87710131}		1	Differential Carrier; Incl. Ref 14 - 16
14		NSS		1	NON FOURNI SEPAREMENT, Carrier
15		S301065		4	VIS, Hex Flg, M14 x 75, 12.9
16		1966136C1		4	BAGUE
17		1966138C1		2	PION
18		5194169		10	VIS, Hex Flg, M12 x 33, 12.9

ESSIEU, TRACTION AVANT - LOGEMENT DU PIVOT

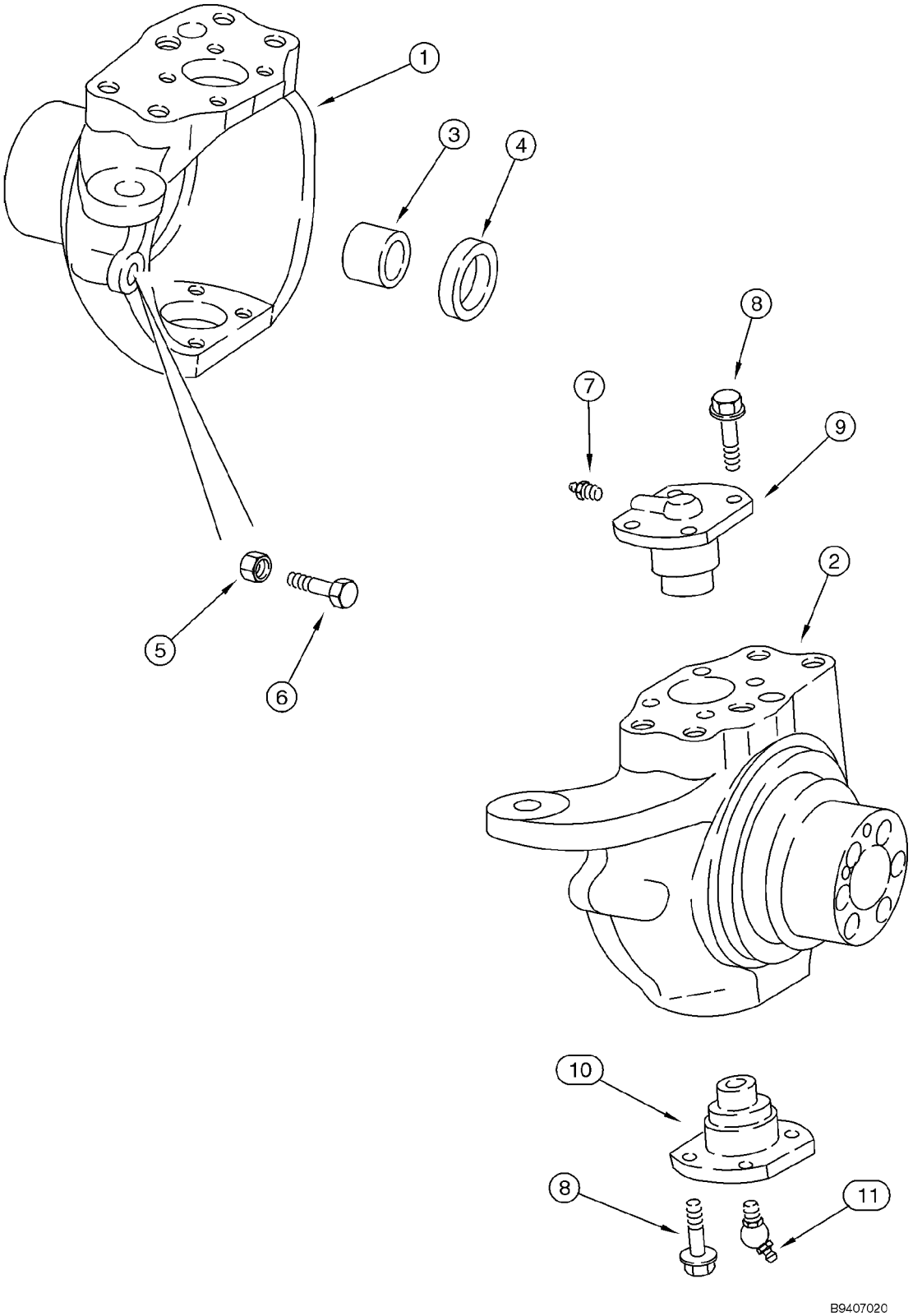

ESSIEU, TRACTION AVANT - LOGEMENT DU PIVOT

REF	FN	PART NUMBER	YR/SN	QTY	DESCRIPTION
		87395365		1	PONT AVANT, Front, Incl. Ref 1 - 11; Also Includes Parts On Figures 06-02 - 06-08
1		{87710156}		1	HOUSING, AXLE, Left-Hand
2		{87710159}		1	HOUSING, AXLE, Right-Hand
3		100532A1		2	BAGUE, Used With Right-Hand or Left-Hand Swivel Housing, Not Included With Housing, Purchase Separately
4		87710145		2	JOINT ANNULAIRE
5		85805986		2	ECROU, M16
6		5194264		2	VIS, M16 X 75
7		321204		2	GRAISSEUR, M6 x 1, 16mm lg
8		100533A1		16	BOULON, M12 x 30
9		122265A1		2	AXE, GROS, King Pin
10		122264A1		2	AXE, GROS, King Pin
11		N13505		2	GRAISSEUR, 45Ü, M6 x 1

ESSIEU, TRACTION AVANT - VERIN DE DIRECTION

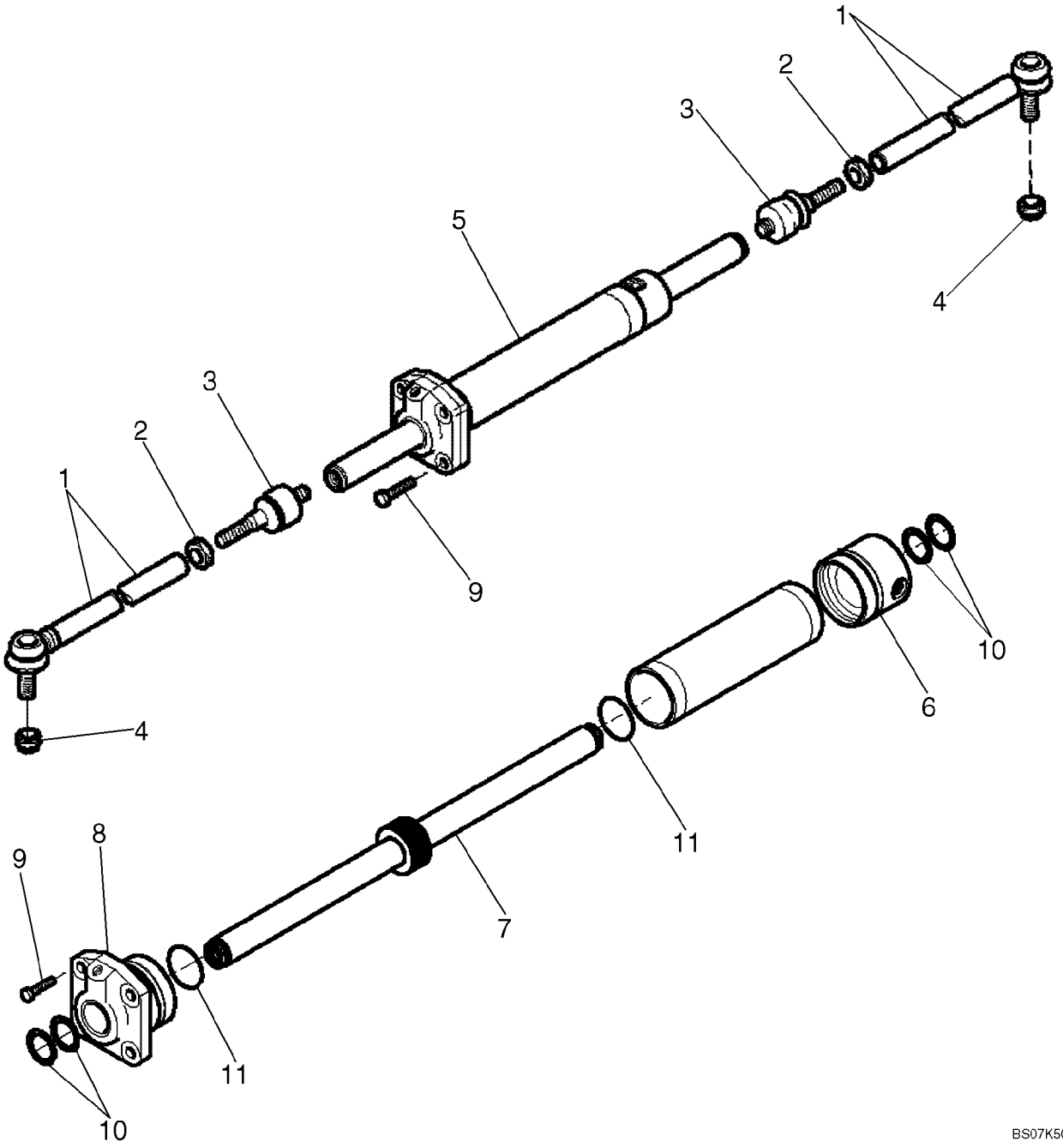

ESSIEU, TRACTION AVANT - VERIN DE DIRECTION

REF	FN	PART NUMBER	YR/SN	QTY	DESCRIPTION
		87395365		1	PONT AVANT, Front, Incl. Ref 1 - 11; Also Includes Parts On Figures 06-02 - 06-08
		144457A1		2	BRAS, Incl. Ref 1 - 3
1		NSS		1	NON FOURNI SEPAREMENT, Ball Joint
2		934727R1		1	ECROU, Thin, M18 x 1.5, Cl 04
3		112509A1		1	ROTULE
4		905839R1		2	CONTRE-ECROU, M18 x 1.5, Thin, M18
5		{87710158}		1	CYLINDER, Steering, Incl. Ref 6 - 16, Order 87710144 Kit to Service Seals
6		{87710142}		1	Cylinder Head
7		{87710143}		1	Rod
8		{87710141}		1	Gland
9		{87710137}		4	Bolt; M12 x 35
10		NSS		4	NON FOURNI SEPAREMENT, Seal, Wiper
11		NSS		2	NON FOURNI SEPAREMENT, O-Ring
		{87710144}		1	Seal Kit; Incl. Ref 10, 11

ESSIEU, TRACTION AVANT - ARBRES, ESSIEU

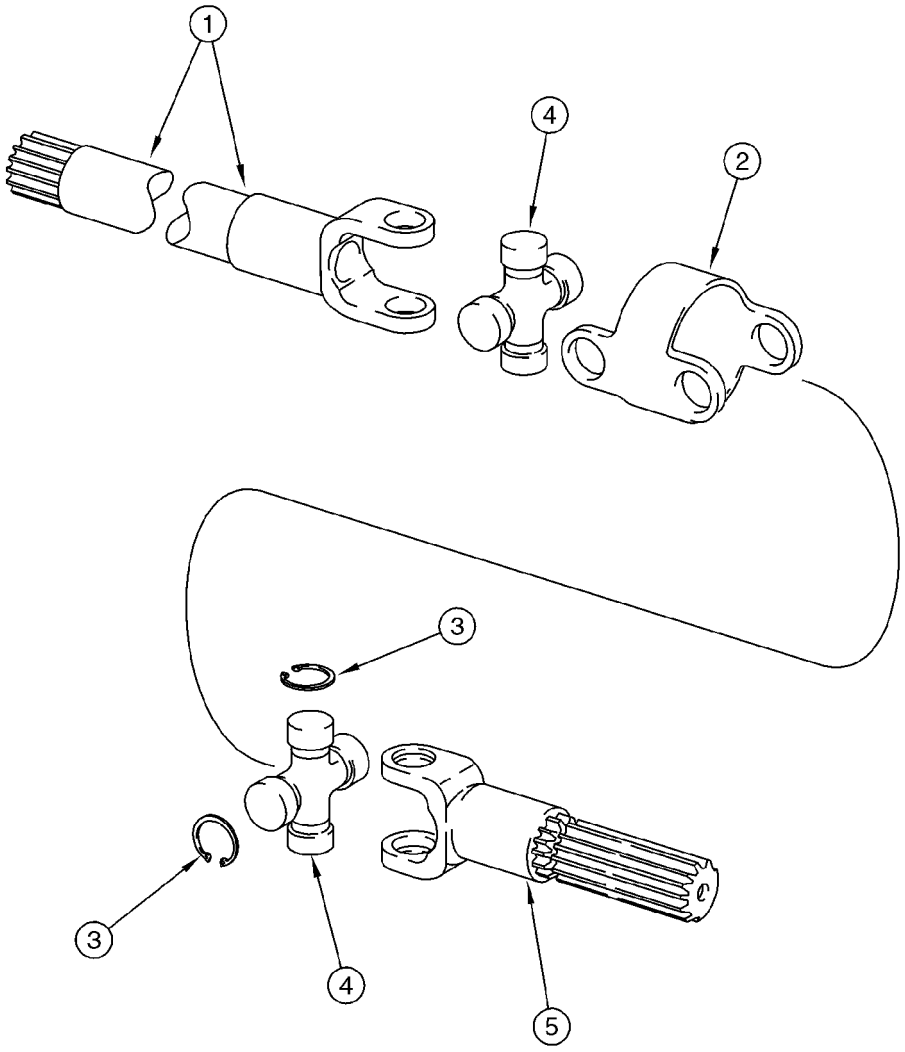

B9407022

ESSIEU, TRACTION AVANT - ARBRES, ESSIEU

REF	FN	PART NUMBER	YR/SN	QTY	DESCRIPTION
		87395365		1	PONT AVANT, Front, Incl. Ref 1 - 5; Also Includes Parts On Figures 06-02 - 06-08
		144461A1		2	DEMI-ARBRE, Incl. Ref 1 - 5
1		144462A1		2	FOURCHE, Shaft, Long, Differential Side
2		390029A1		2	CORPS
3		N14410		16	ANNEAU
4		144465A1		4	CROISILLON DE CARDAN, Incl. Ref 3
5		144463A1		2	ARBRE, Short, Wheel Side

06-06		p1	11/07

ESSIEU, TRACTION AVANT - SATELLITE

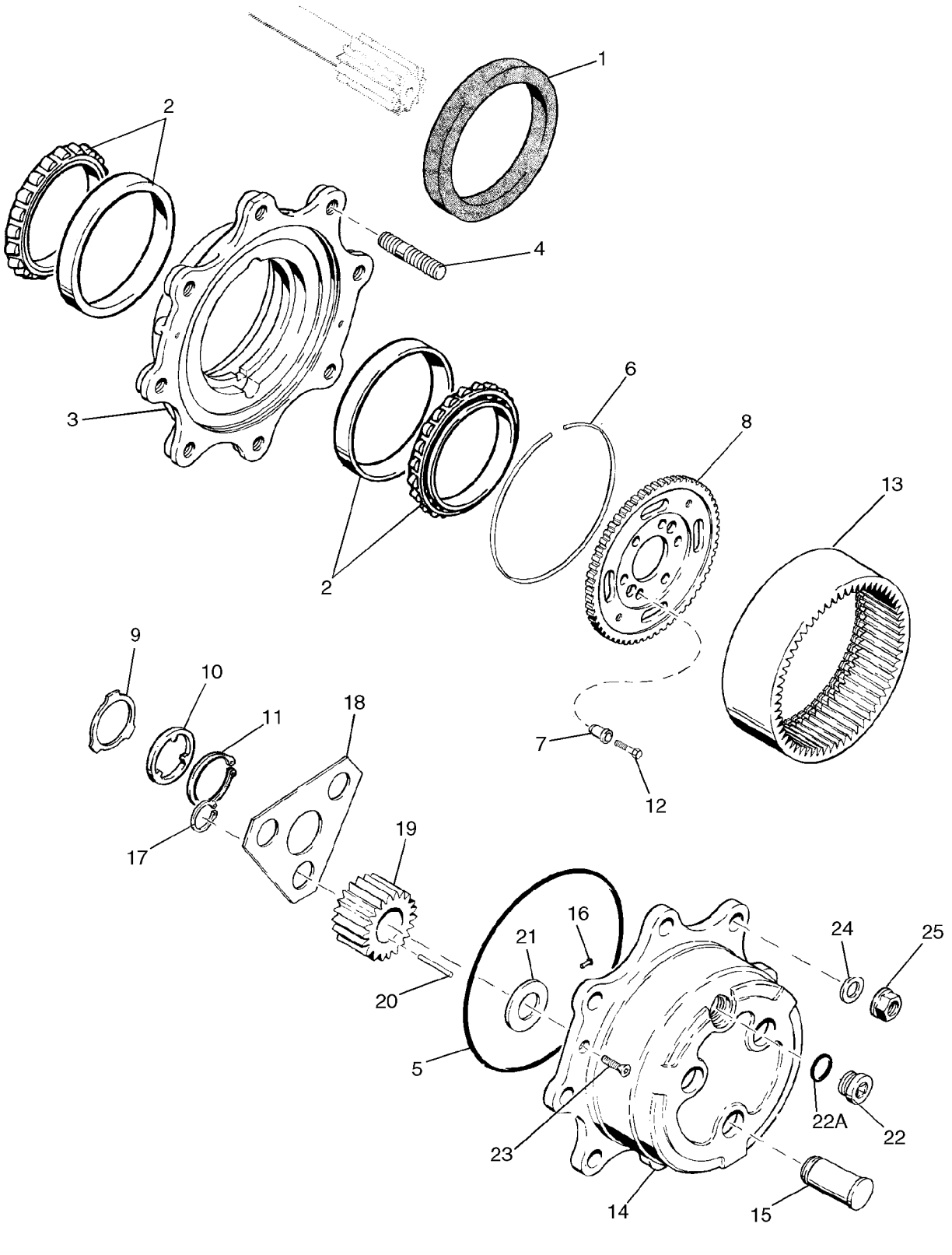

ESSIEU, TRACTION AVANT - SATELLITE

REF	FN	PART NUMBER	YR/SN	QTY	DESCRIPTION
		87395365		1	PONT AVANT, Front, Incl. Ref 1 - 23; Also Includes Parts On Figures 06-02 - 06-08
1		311569A1		2	JOINT D'HUILE, Triple Lip
2		1966169C1		4	CONE DE ROULEMENT
		144466A1		2	MOYEU, Incl. Ref 3, 4
3		NSS		1	NON FOURNI SEPAREMENT, Hub
4		100556A1		8	GOUJON
5		100552A1		2	JOINT TORIQUE
6		100559A1		2	JONC
7		116426A1		12	BAGUE
8		116427A1		2	PIGNON, CARRIER, Ring Gear
9		190684A1		2	RONDELLE, Thrust
10		190682A1		2	RONDELLE, Thrust
11		A48041		2	CIRCLIP
12		116425A1		12	VIS
13		100561A1		2	PIGNON, Ring
		100554A1		2	PORTE-SATELLITES, PLANETARY, Includes 100553A1, Ref 14 - 22A
		100553A1		2	CARTER (ASSEMBLE), Carrier, Incl. Ref 14 - 16
14		NSS		1	NON FOURNI SEPAREMENT, Carrier
15		NSS		3	NON FOURNI SEPAREMENT, Shaft, Pinion
16		K395093		1	AXE A TąTE, Lock
17		800-1134		6	ANNEAU D'ARRąT, M34, Ext
18		100555A1		2	PLAQUE, GRANDE, Retainer
19		100562A1		6	PLANETAIRE, Pinion Gear
20		114295A1		9	JEU DE 10 AIGUILLES
21		K395091		6	RONDELLE, Thrust
22		100557A1		2	BOUCHON DE VIDANGE, Incl. Ref 22A
22A		238-6121		1	JOINT THORIQUE, -121, 90 Duro, 1.049" ID x .103" Thk
23		K395082		4	VIS, M8 x 20
24		496-81000		16	RONDELLE, 25/32" x 1 3/8" x .134", HDN, Not Included In Assembly, Purchase Separately
25		825-11418		16	ECROU, M18 x 1.5, Cl 8, Not Included In Assembly, Purchase Separately

ESSIEU, TRACTION AVANT - DIFFERENTIEL

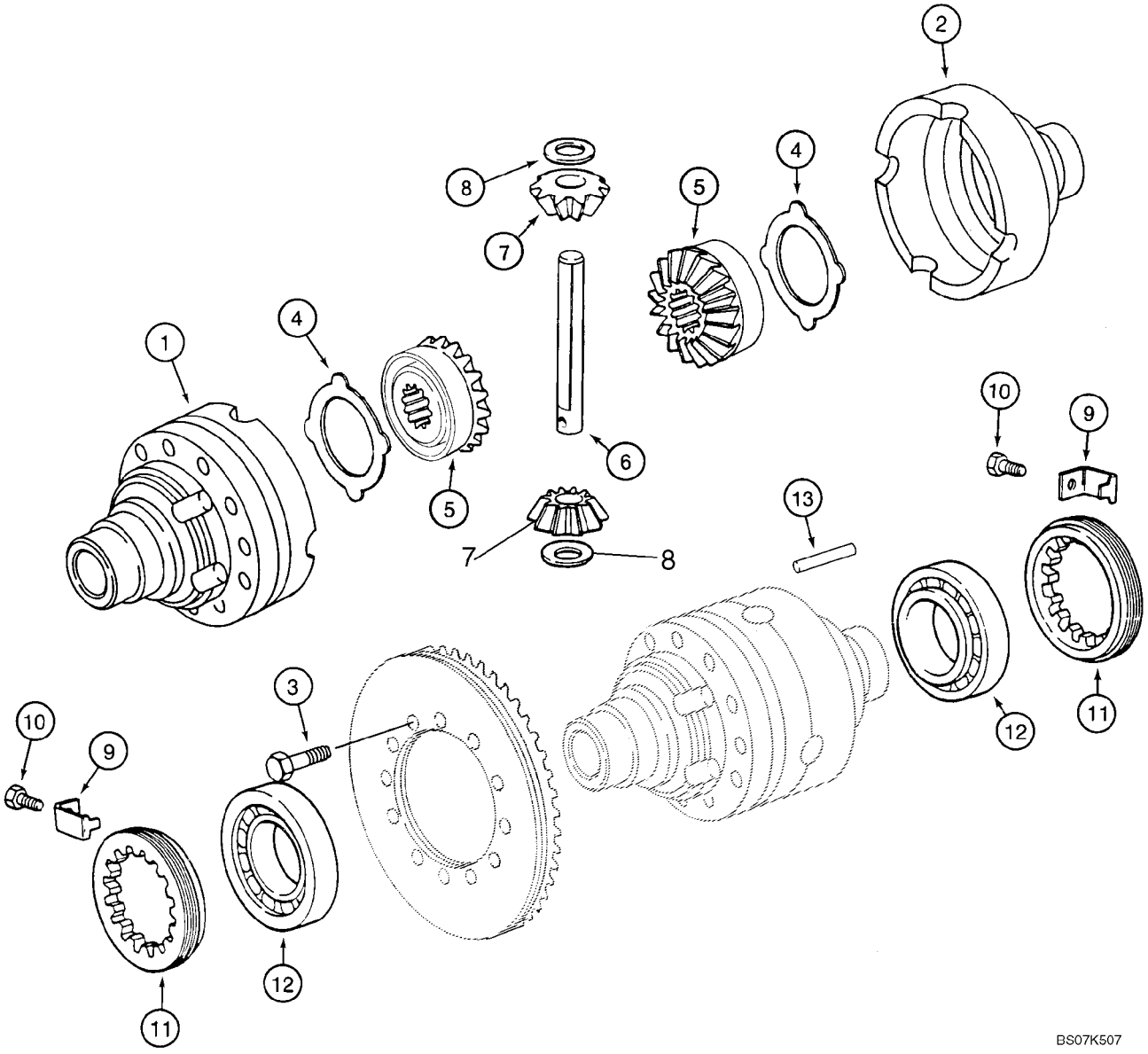

ESSIEU, TRACTION AVANT - DIFFERENTIEL

REF	FN	PART NUMBER	YR/SN	QTY	DESCRIPTION
		87395365		1	PONT AVANT, Front, Incl. Ref 1 - 13; Also Includes Parts On Figures 06-02 - 06-08
		294933A1		1	SUPPORT (ASSEMBLE), Differential Housing, Incl. Ref 1, 2
1		NSS		1	NON FOURNI SEPAREMENT, Housing, Flange Half
2		NSS		1	NON FOURNI SEPAREMENT, Housing, Plain Half
3		5194194		12	VIS, M10 x 75
4		1967003C1		2	RONDELLE DE BUTEE
		231397A1		1	LOT DE PIECES, Differential Gear Set, Service Replacement, Incl. Ref 5 - 8
5		NSS		2	NON FOURNI SEPAREMENT, Gear, Side
6		NSS		1	NON FOURNI SEPAREMENT, Shaft, Pinion Gear
7		NSS		2	NON FOURNI SEPAREMENT, Pinion Gear
8		9966352		2	RONDELLE DE BUT£E
9		5194191		2	CLIP, Bracket
10		112486A1		2	FREIN-D'ECROU, Hex, M6 x 12
11		5194190		2	VIROLE, Locking Ring
12		561201		2	ROULEMENT
13		9966356		1	GOUPILLE ELASTIQUE

ESSIEU, TRACTION AVANT - COURONNE ET PIGNON

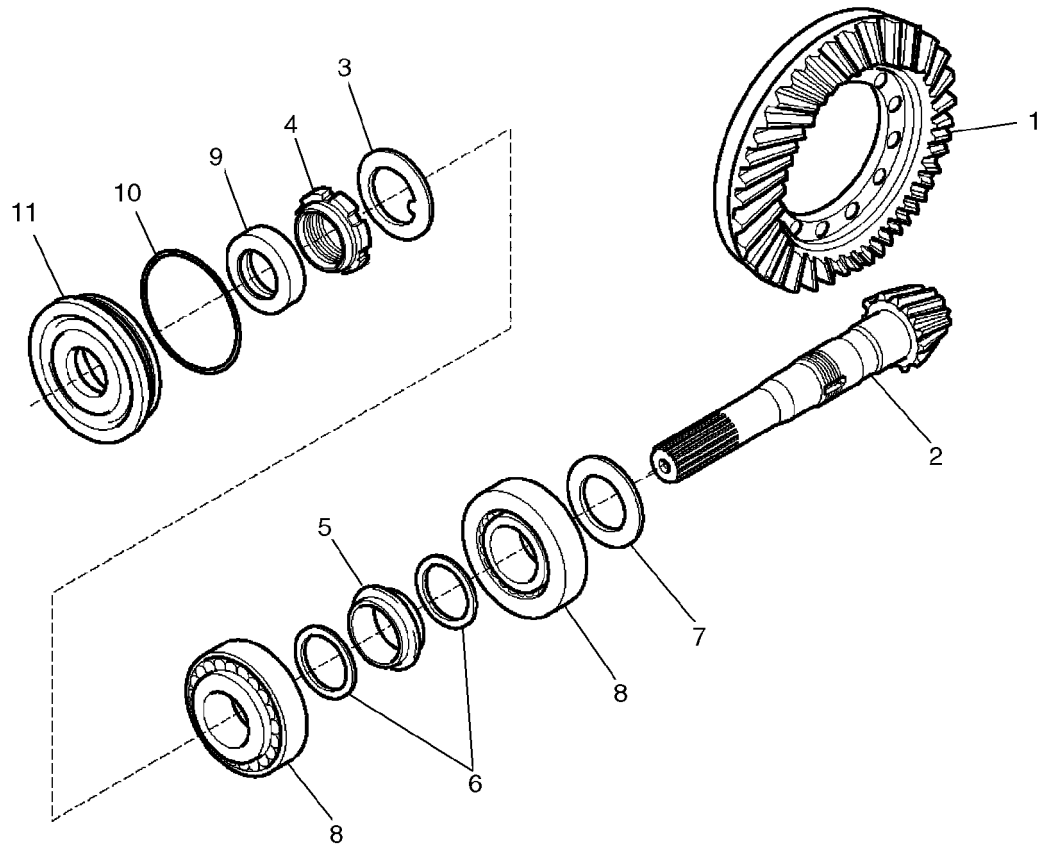

ESSIEU, TRACTION AVANT - COURONNE ET PIGNON

REF	FN	PART NUMBER	YR/SN	QTY	DESCRIPTION
		87395365		1	PONT AVANT, Front, Incl. Ref 1 - 11; Also Includes Parts On Figures 06-02 - 06-08
		144460A1		1	POCHETTE, Ring and Pinion Gear Set, Incl. Ref 1 - 6
1		NSS		1	NON FOURNI SEPAREMENT, Ring, Gear
2		NSS		1	NON FOURNI SEPAREMENT, Pinion Gear
3		9968031		1	RONDELLE FREIN
4		K261014		1	ECROU, Ring
5		1349058C1		1	ENTRETOISE, Collapsible
6		1349059C1		2	RONDELLE
7		140954A1		AR	CALE D'EPAISSEUR, 2,5 mm (0,098 in)
7		140953A1		AR	CALE D'EPAISSEUR, 2,6 mm (0,102 in)
7		140951A1		AR	CALE D'EPAISSEUR, 2,7 mm (0,106 in)
7		140949A1		AR	CALE D'EPAISSEUR, 2,8 mm (0,110 in)
7		140948A1		AR	CALE D'EPAISSEUR, 2,9 mm (0,114 in)
7		140943A1		AR	CALE D'EPAISSEUR, 3,0 mm (0,118 in)
7		140944A1		AR	CALE D'EPAISSEUR, 3,1 mm (0,122 in)
7		140945A1		AR	CALE D'EPAISSEUR, 3,2 mm (0,125 in)
7		140946A1		AR	CALE D'EPAISSEUR, 3,3 mm (0,129 in)
7		140947A1		AR	CALE D'EPAISSEUR, 3,4 mm (0,133 in)
8		K395090		2	ROULEMENT A BILLES
9		K262143		1	JOINT, Oil
10		238-5152		1	JOINT THORIQUE, -152, 70 Duro, 3.237" ID x .103" Thk
11		128570A1		1	FLASQUE, Cover, Differential

ARBRE DE TRANSMISSION, ESSIEU AVANT

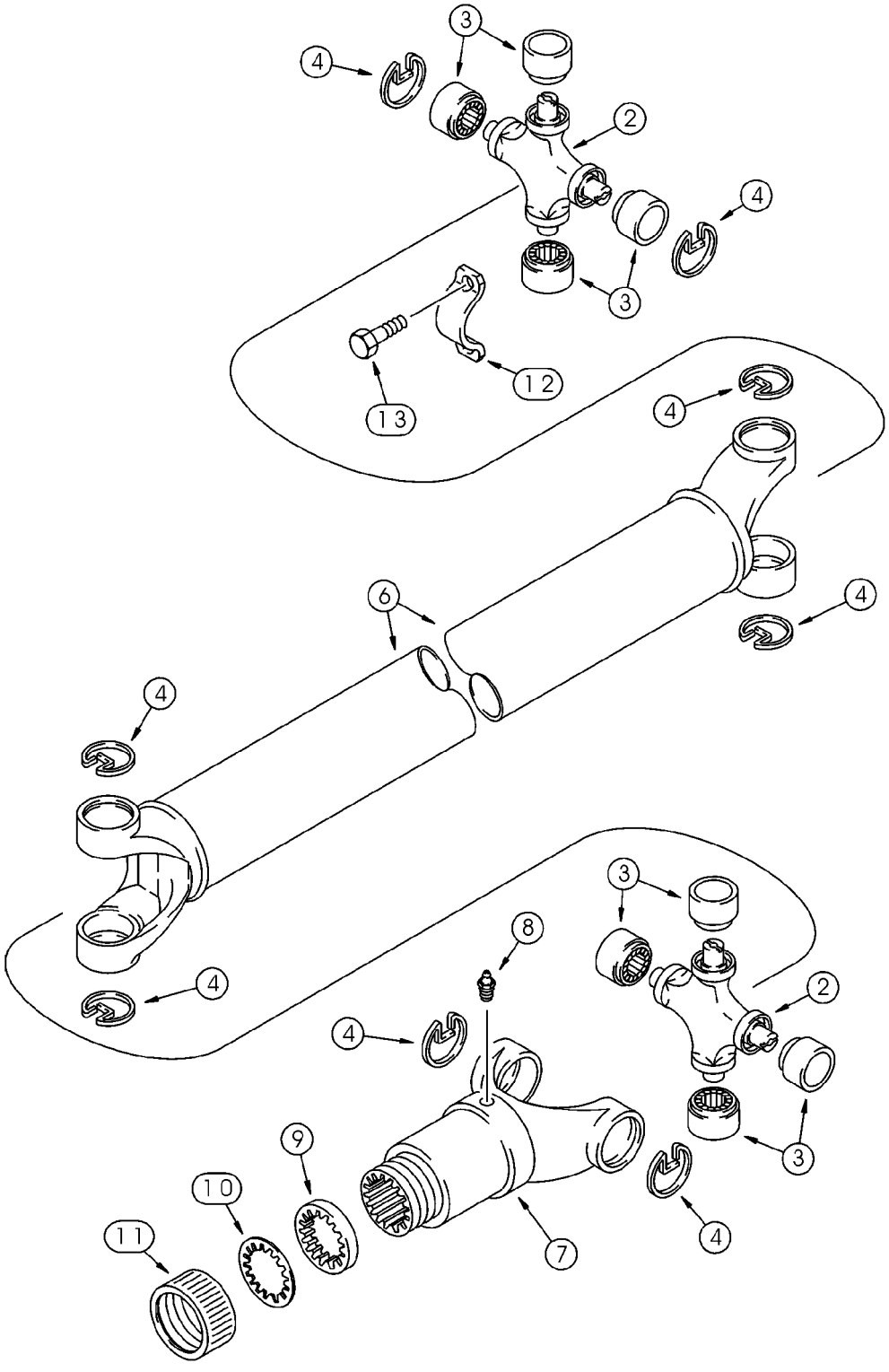

ARBRE DE TRANSMISSION, ESSIEU AVANT

REF	FN	PART NUMBER	YR/SN	QTY	DESCRIPTION
		87694656		1	ARBRE D'ENTRAINEMENT, With or Without Powershift Transmission, Incl. 393231A1, Ref 2 - 11
		393231A1		2	POCHETTE, Universal Joint, Incl. Ref 2 - 4
2		NSS		1	NON FOURNI SEPAREMENT, Joint, Universal
3		NSS		4	NON FOURNI SEPAREMENT, Bearing, Journal
4		NSS		4	NON FOURNI SEPAREMENT, Ring, Retaining
6		87716824		1	CHAPEAU
7		87716823		1	MACHOIRE
8		219-10		1	GRAISSEUR, 1/4"-28 NPT x .68" lg
		D149860		1	COLIS POUR RECHANGE, Incl. Ref 9 - 11
9		NSS		1	NON FOURNI SEPAREMENT, Washer, Cork
10		NSS		1	NON FOURNI SEPAREMENT, Washer, Steel
11		NSS		1	NON FOURNI SEPAREMENT, Cap
12		87538515		2	RETENEUR
13		9637611		4	VIS, Hex Flange Head, Locking, Special, 5/16 - 24 UNF x 1-1/16

SYSTèME DE REFROIDISSEMENT - TRANSMISSION

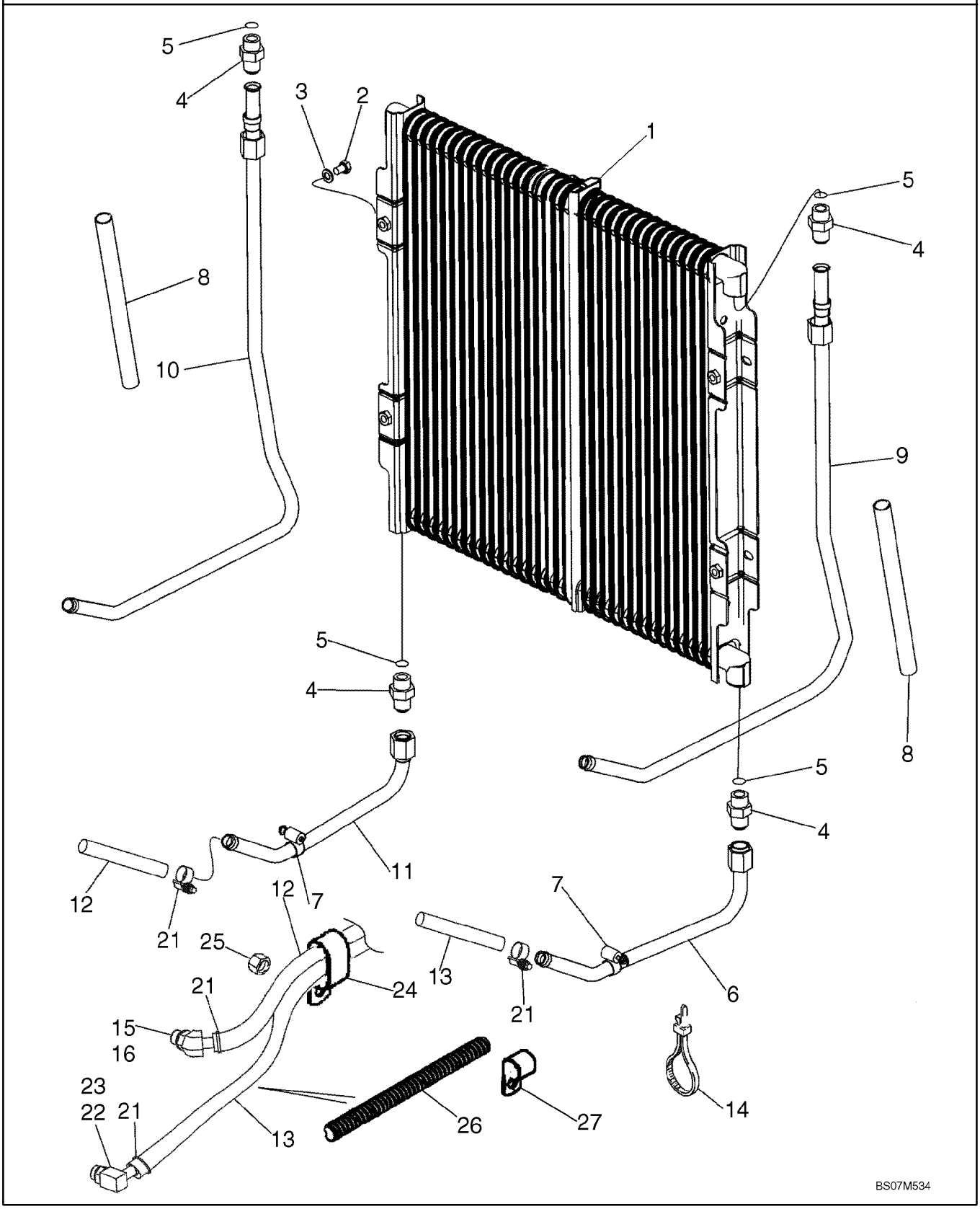

SYSTâME DE REFROIDISSEMENT - TRANSMISSION

REF	FN	PART NUMBER	YR/SN	QTY	DESCRIPTION
1		87441876		1	REFROIDISSEUR D'HUILE, Hydraulic
2		614-8012		4	BOULON, Hex, M8 x 12, 8.8, Full Thd
3		895-11008		4	RONDELLE, M8 x 16 x 1.6
4		218-5062		4	RACCORD, 7/8"-14, 37Ü x 7/8"-14, O-Ring, Incl. Ref 5
5		237-6010		1	JOINT THORIQUE, 10-1, 90 Duro, .755" ID x .097" Thk
6		87435078		1	TUBE, Lower Right-Hand Tube
7		214-1412		2	BRIDE, FLEXIBLE, #12, 0.69/1.25 Type F Worm
8		87311219		2	GAINE PLASTIQUE, 250 mm (9-7/8 in) Sleeve
9		87435076		1	TUBE, Right-Hand Upper Cooler
10		87435080		1	TUBE, Left-Hand Upper Cooler
11		87435082		1	TUBE, Left-Hand Lower
12		87422597		1	FLEXIBLE (ASSEMBLE), 975 mm (38-13/32 in), Transmission to Cooler Inlet
13		87422598		1	FLEXIBLE (ASSEMBLE), 1225 mm (48-1/4 in), Cooler Outlet to Transmission
14		L18337		1	SERRE-CABLE, 9.95"-12.1" lg
15		217-314		1	RACCORD, 45Ü, 5/8" Hose x 7/8"-14 ORB Beaded, Incl. Ref 16
16		237-6010		1	JOINT THORIQUE, 10-1, 90 Duro, .755" ID x .097" Thk
21		328186A1		4	BRIDE, FLEXIBLE
22		217-349		1	RACCORD, 90Ü, 5/8" Hose x 7/8"-14 ORB Beaded, Incl. Ref 23
23		237-6010		1	JOINT THORIQUE, 10-1, 90 Duro, .755" ID x .097" Thk
24		D39696		1	COLLIER, Double P
25		829-1410		1	ECROU, M10, Cl 10
26		D132982		1	GAINE
27		515-25190		2	BRIDE, 3/4", Insul, 1/2" Bolt

TRANSMISSION - SUPPORT

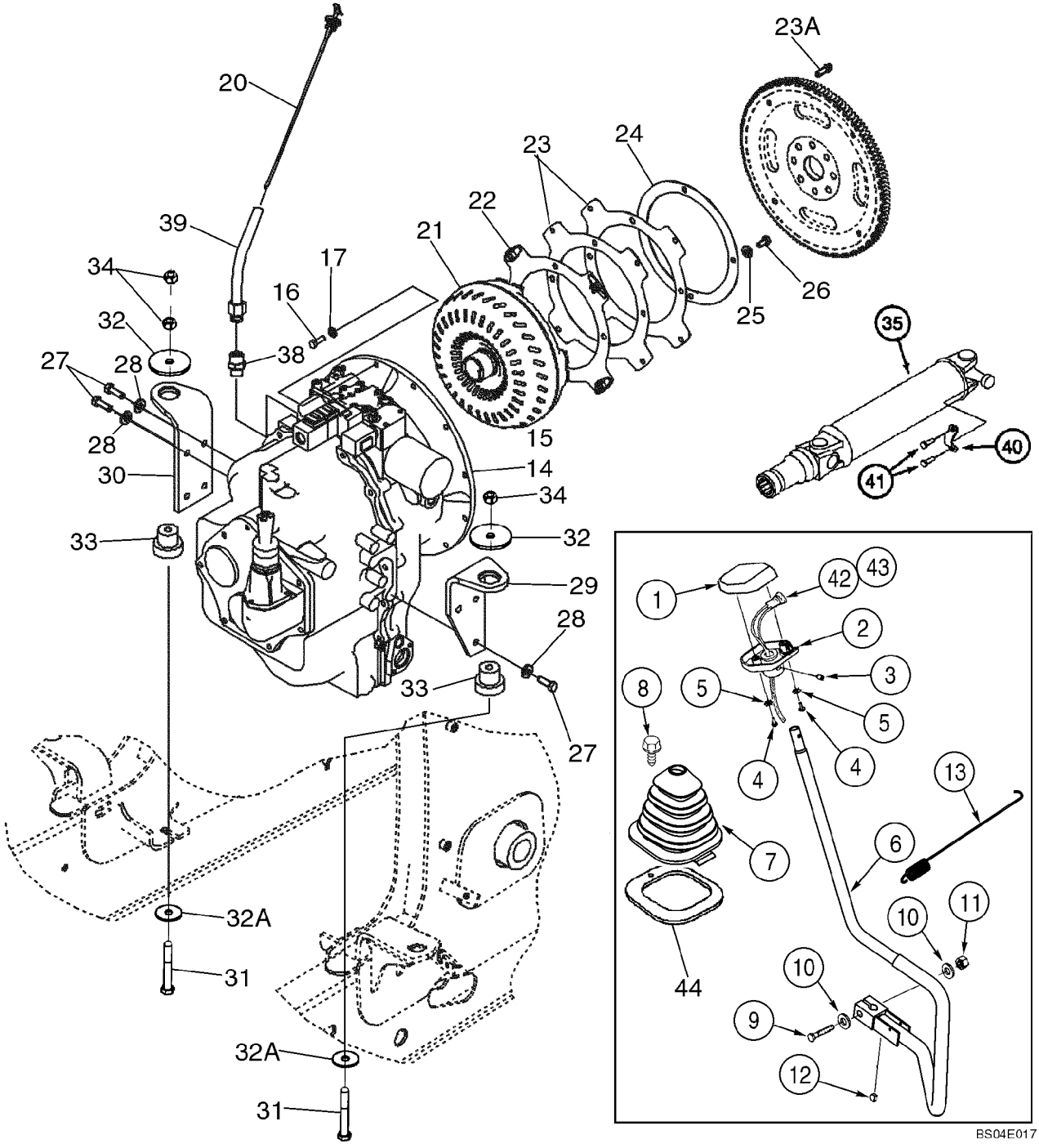

TRANSMISSION - SUPPORT

REF	FN	PART NUMBER	YR/SN	QTY	DESCRIPTION
		309747A1		1	PLAQUE, Gear Shift Lever, Includes NSS Gasket, Incl. Ref 1, 2, 4, 5
		NSS		2	NON FOURNI SEPAREMENT, GASKET, Knob
1		187714A1		1	BOUTON, Knob, Upper
2		187715A1		1	BOUTON, Knob, Lower
3		484-6316		1	VIS DE R£GLAGE, Hex Soc, 5/16"-24 x 3/8"
4		87020181		2	VIS, No. 10 NF x 7/8
5		493-41020		2	RONDELLE FREIN, Ext Tooth, #10
6		379314A4		1	LEVIER (ASSEMBLE), Gear Shift Lever
7		400588A2		1	MANCHETTE
8		87310096		1	BOULON, M6 x 25, Includes Washer, Stainless Steel
9		827-12065		1	BOULON, Hex, M12 x 65, 10.9
10		896-11012		2	RONDELLE, M13.5 x 24.5 x 3, HT
11		832-10412		1	CONTRE-ECROU, M12 x 1.75, Cl 8
12		126-116		1	CLAVETTE DEMI-LUNE, #9, 3/16" x 3/4", HT
13		380537A2		1	RESSORT
14		87395300		1	TRANSMISSION, Two Wheel Drive Models, See Figure 06-12 - 06-19, 07-01
15		87395301		1	TRANSMISSION, Four Wheel Drive Models, See Figure 06-19(00) - 06-19(10), 07-01(01)
16		627-10030		12	BOULON, Hex, M10 x 30, 10.9, Full Thd
17		496-21041		12	RONDELLE, 13/32" x 13/16" x .089", HDN
20		87601345		1	JAUGE DE NIVEAU
21		87702194		1	CONVERTISSEUR DE COUPLE, Torque Converter, New
22		87406934		1	PLAQUE, Flex Plate, With Caged Nuts
23		86993546		2	PLAQUE, Flex Plate
23A		87019767		4	VIS, 12 Pt Hd, M10 x 1.25 x 30, 12.9
24		87409201		1	PLAQUE D"APPUI
25		896-15010		4	RONDELLE, M10 x 24.5 x 3, HT
26		614-10020		4	BOULON, Hex, M10 x 20, 8.8, Full Thd
27		614-12035		7	BOULON, Hex, M12 x 35, 8.8, Full Thd
28		896-15012		7	RONDELLE, M12 x 28.5 x 4, HT
29		87416977		1	SUPPORT, Right-Hand Bracket
30		87416978		1	SUPPORT, Left-Hand Bracket

TRANSMISSION - SUPPORT

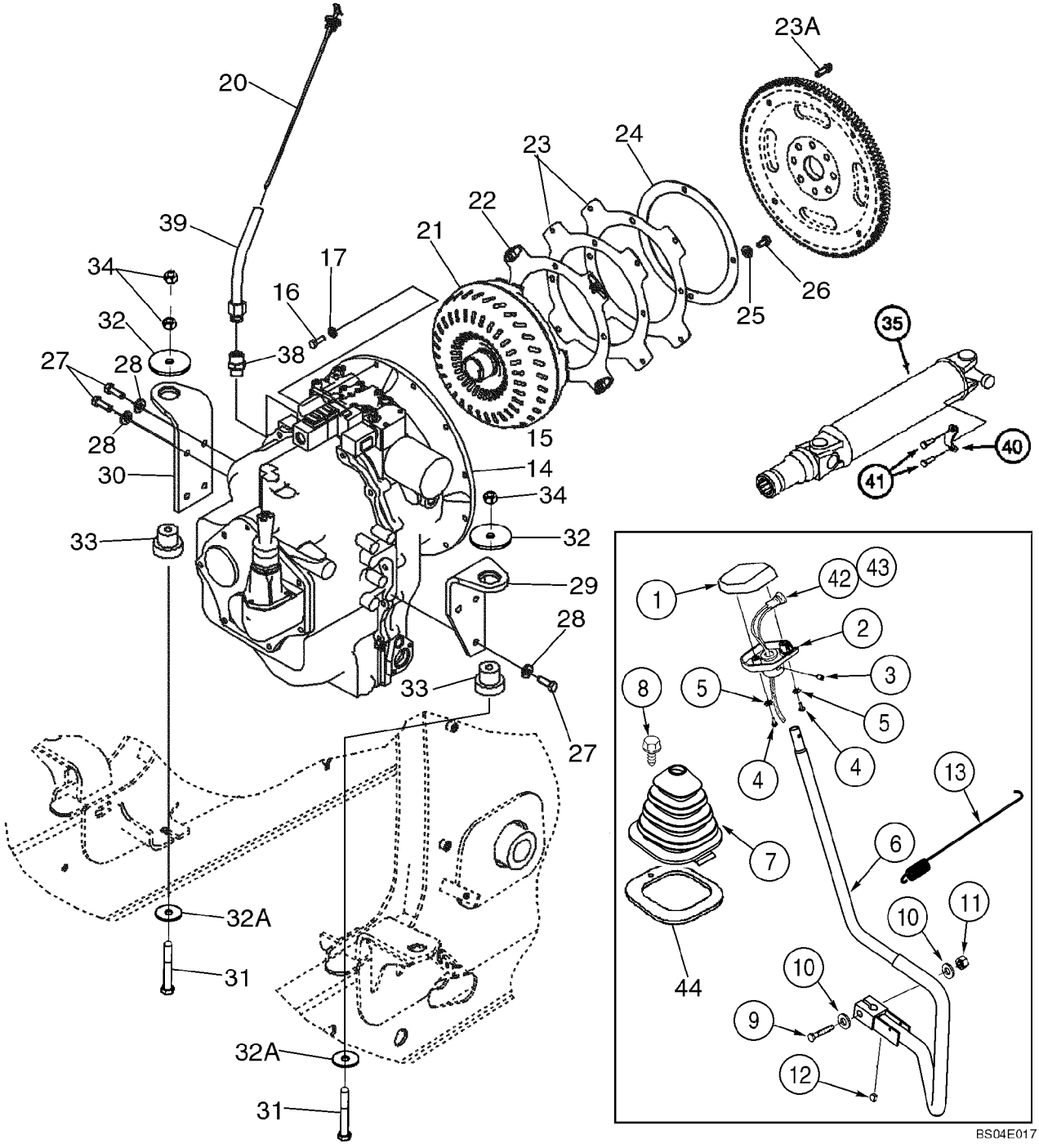

TRANSMISSION - SUPPORT

REF	FN	PART NUMBER	YR/SN	QTY	DESCRIPTION
31		814-12080		2	BOULON, Hex, M12 x 80, 8.8
32		85801585		2	RONDELLE D'ETANCHEITE, Special
32A		85802618		2	RONDELLE D'ETANCHEITE
33		87416967		2	SUPPORT
34		832-10412		3	CONTRE-ECROU, M12 x 1.75, Cl 8
35		87613924		1	ARBRE D'ENTRAINEMENT, Transmission to Rear Axle; Component Parts Not Available; See Figure 06-47
38		218-459		1	RACCORD, 1 5/16"-12, 37Ü x 3/4"-14, NPTF
39		87601338		1	TUBE, Dipstick
40		87538515		2	RETENEUR
41		9637611		4	VIS, Hex Flange Head, Locking, Special, 5/16 - 24 UNF x 1-1/16
42		87312712		1	CONTACTEUR, Push Button, Clutch Cutout
43		123809A2		1	FAISCEAU, Clutch Cutout, Transmission Gear Shift Lever
44		410561A1		1	JOINT, Shift Lever Boot, Cab Models

TRANSMISSION, 2WD - FILTRE ë HUILE

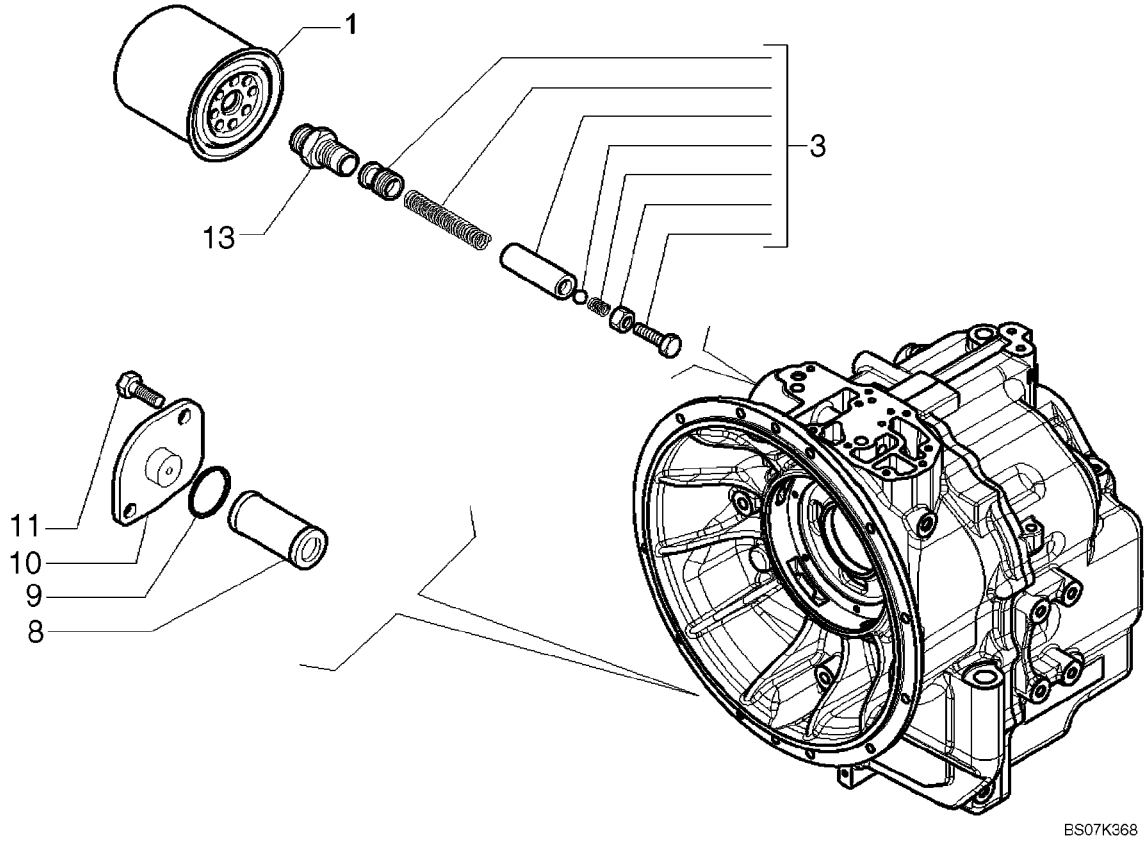

TRANSMISSION, 2WD - FILTRE ë HUILE

REF	FN	PART NUMBER	YR/SN	QTY	DESCRIPTION
		87395300		1	TRANSMISSION, Two Wheel Drive, Incl. Ref 1 - 13; Also Includes Parts On Figures 06-12 - 06-19, 07-01
1		254686A2		1	FILTRE, Oil
3		181274A1		1	LOT DE PIECES, Valve
8		278534A1		1	TAMIS-FILTRE, Oil
9		100748A1		1	JOINT TORIQUE
10		181219A1		1	COUVERCLE
11		614-8018		2	BOULON, Hex, M8 x 18, 8.8, Full Thd
13		181202A1		1	RACCORD

TRANSMISSION, 2WD - BOćTIER

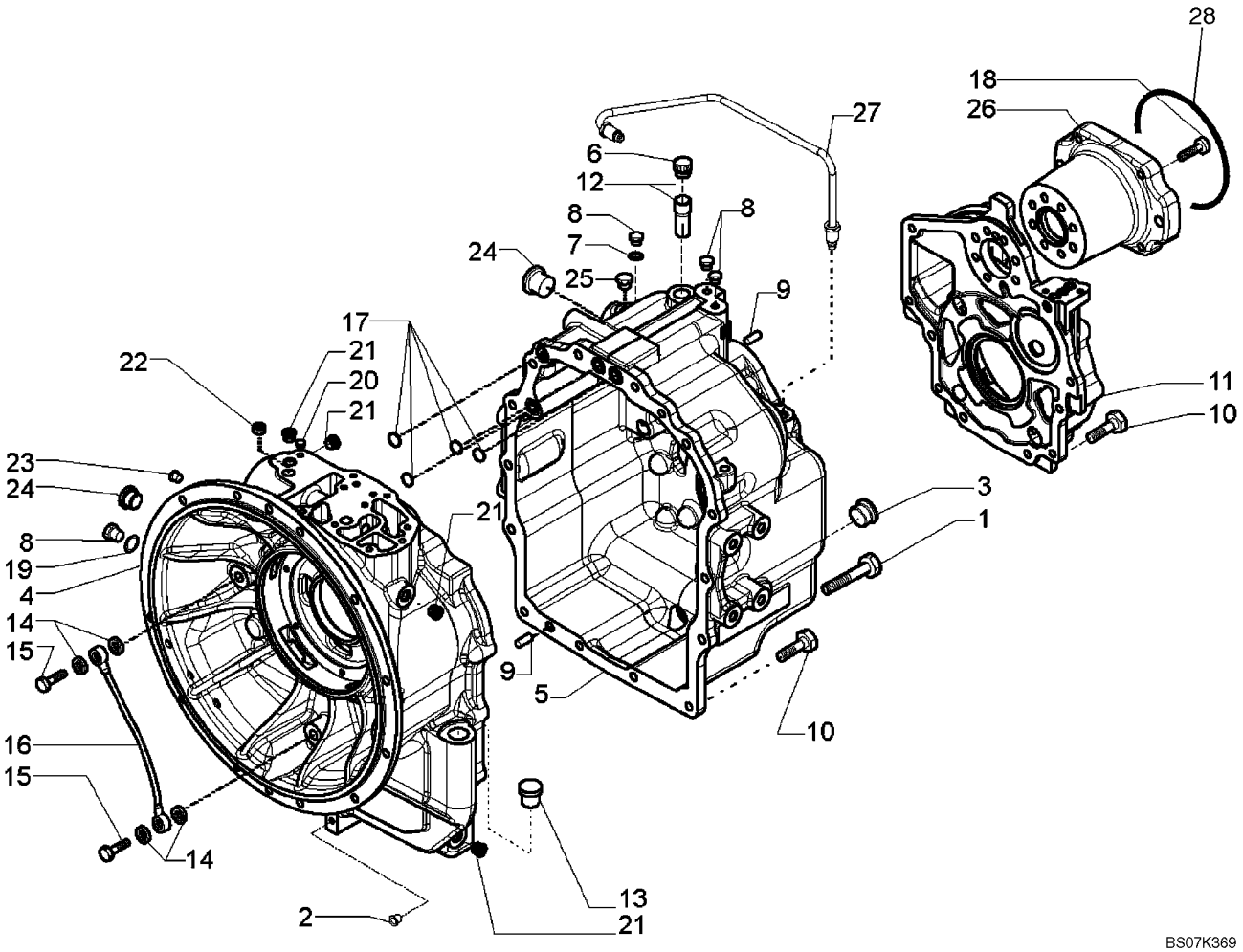

TRANSMISSION, 2WD - BOćTIER

REF	FN	PART NUMBER	YR/SN	QTY	DESCRIPTION
		87395300		1	TRANSMISSION, Two Wheel Drive, Incl. Ref 1 - 28; Also Includes Parts On Figures 06-12 - 06-19, 07-01
1		814-10150		2	BOULON, Hex, M10 x 150, 8.8
2		NSS		1	NON FOURNI SEPAREMENT, PLUG, Shipping Plug
3		100557A1		1	BOUCHON DE VIDANGE, M30 x 2; Incl 238-6121 O-Ring
		238-6121		1	JOINT THORIQUE, -121, 90 Duro, 1.049" ID x .103" Thk
4		{87701253}		1	Front Housing
5		{87701255}		1	Rear Housing
6		1530028C1		1	RENIFLARD (ASSEMBLE)
7		934667R1		4	RONDELLE D'ETANCHEITE, M10 x 14 x 1
8		181100A1		4	BOUCHON
9		K260177		3	AXE, 10 x 25
10		614-10030		17	BOULON, Hex, M10 x 30, 8.8
11		{87701257}		1	Cover
12		310772A1		1	TUYAU, Breather
13		NSS		1	NON FOURNI SEPAREMENT, PLUG, Shipping Plug
14		181105A1		4	RONDELLE CUIVRE
15		181179A1		2	VIS CREUSE, M14 x 1.5
16		181232A1		1	TUYAU, Lubrication
17		181141A1		4	JOINT TORIQUE
18		{87701258}		7	M10 x 45 Bolt
19		87429985		1	RONDELLE D'ETANCHEITE, Copper, 10 x 18 x 1.5 mm
20		{87702570}		1	Plug
21		E135809		4	BOUCHON, 9/16
22		{87701260}		1	M16 x 1.5 Plug
23		181101A1		1	BOUCHON, M14 x 1.5
24		NSS		1	NON FOURNI SEPAREMENT, PLUG, Shipping Plug
25		NSS		1	NON FOURNI SEPAREMENT, PLUG, Shipping Plug
26		{87701269}		1	PTO Flange
27		{87701270}		1	Oil Tube
28		87429982		1	JOINT THORIQUE, Pump Mounting

TRANSMISSION, 2WD - POMPE A HUILE

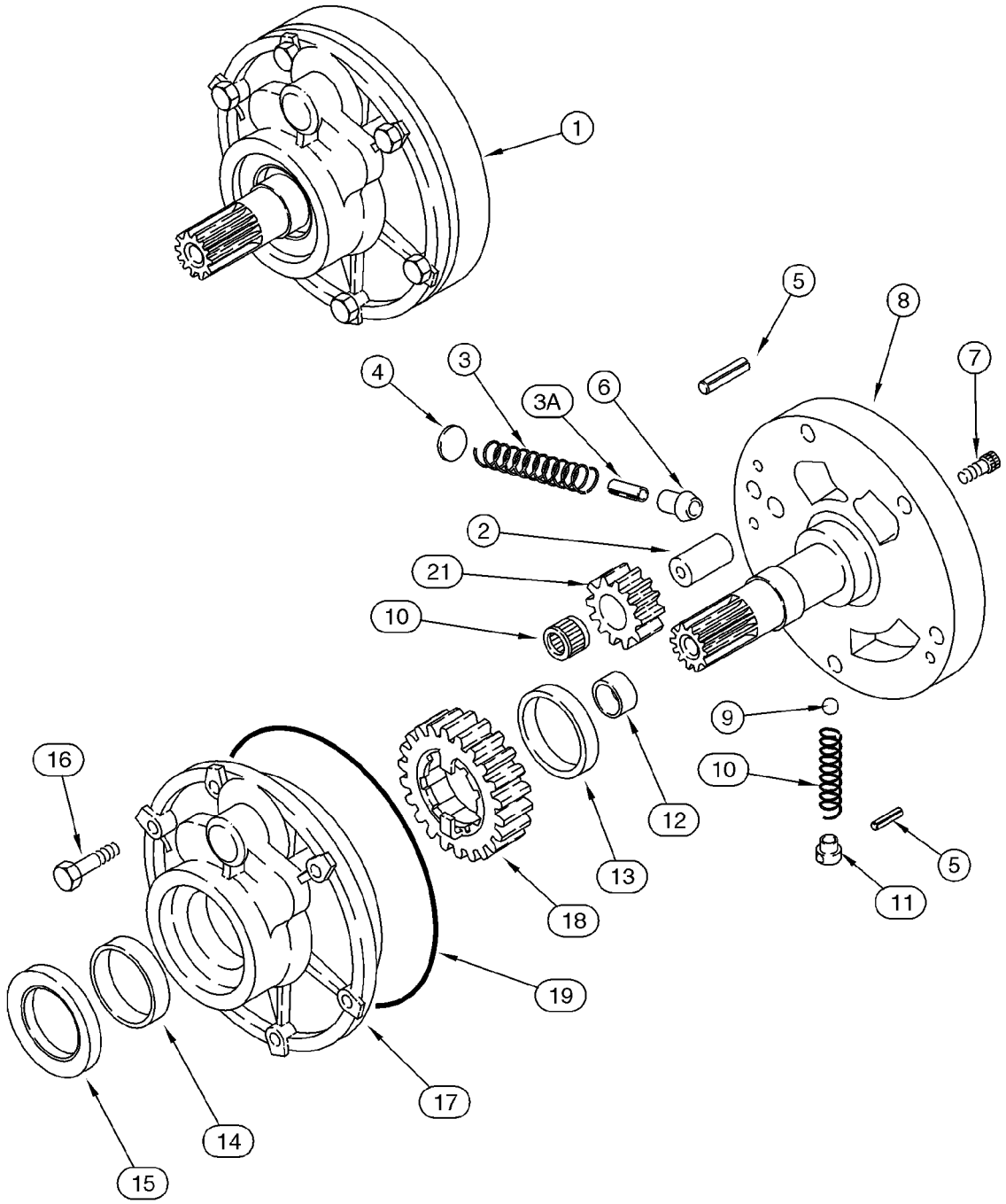

TRANSMISSION, 2WD - POMPE A HUILE

REF	FN	PART NUMBER	YR/SN	QTY	DESCRIPTION
		87395300		1	TRANSMISSION, Two Wheel Drive, Incl. Ref 1 - 21; Also Includes Parts On Figures 06-12 - 06-19, 07-01
1		87429970		1	POMPE, Charge, Incl. Ref 2 - 21
2		NSS		1	NON FOURNI SEPAREMENT, Shaft
3		NSS		1	NON FOURNI SEPAREMENT, Spring
3A		NSS		1	NON FOURNI SEPAREMENT, Pin
4		NSS		1	NON FOURNI SEPAREMENT, Stop
5		NSS		2	NON FOURNI SEPAREMENT, Pin, Roll
6		NSS		1	NON FOURNI SEPAREMENT, Piston
7		NSS		2	NON FOURNI SEPAREMENT, Bolt
8		NSS		1	NON FOURNI SEPAREMENT, Support
9		NSS		1	NON FOURNI SEPAREMENT, Ball
10		NSS		1	NON FOURNI SEPAREMENT, Spring
11		NSS		1	NON FOURNI SEPAREMENT, Guide
12		NSS		1	NON FOURNI SEPAREMENT, Bushing
13		NSS		1	NON FOURNI SEPAREMENT, Bushing
14		NSS		1	NON FOURNI SEPAREMENT, Bushing
15		87429971		1	JOINT D'HUILE, Oil Seal
16		814-8060		6	BOULON, Hex, M8 x 60, 8.8
17		NSS		1	NON FOURNI SEPAREMENT, Housing
18		NSS		1	NON FOURNI SEPAREMENT, Gear, 23T
19		181142A1		1	JOINT TORIQUE
20		NSS		1	NON FOURNI SEPAREMENT, Bearing, Needle
21		NSS		1	NON FOURNI SEPAREMENT, Gear, 12T

TRANSMISSION, 2WD - M£CANISME DU CHANGEMENT DE VITESSE

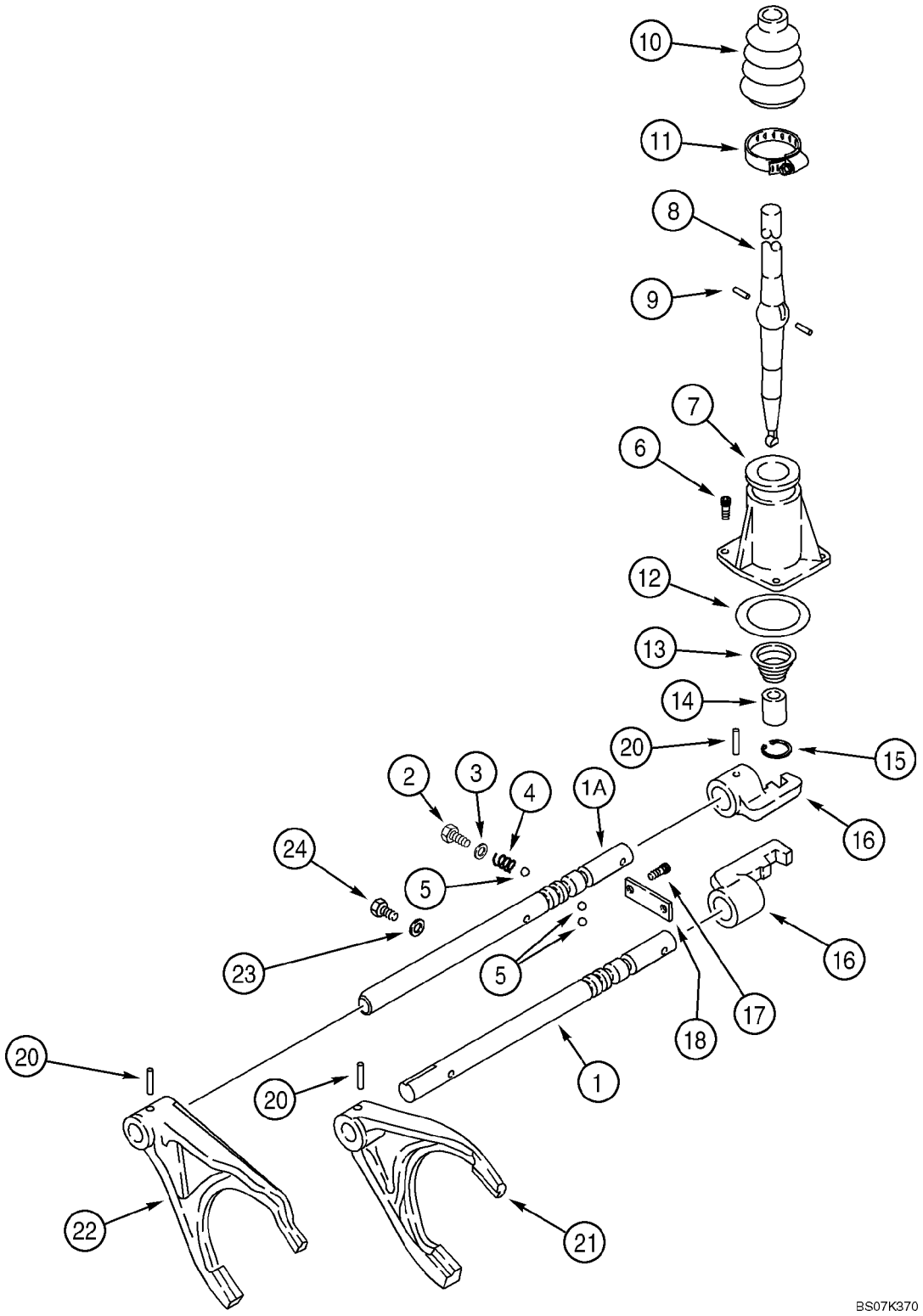

TRANSMISSION, 2WD - M£CANISME DU CHANGEMENT DE VITESSE

REF	FN	PART NUMBER	YR/SN	QTY	DESCRIPTION
		87395300		1	TRANSMISSION, Two Wheel Drive, Incl. Ref 1 - 24; Also Includes Parts On Figures 06-12 - 06-19, 07-01
1		181245A2		1	TRINGLE, Shifter Fork Rail; First and Second
1A		{87578867}		1	Shifter Fork Rail; Third and Fourth
2		614-12016		2	BOULON, Hex, M12 x 16, 8.8, Full Thd
3		87429994		2	RONDELLE D'ETANCHEITE, 12 x 20 x 1.5 mm
4		1966993C1		2	RESSORT
5		181139A1		4	BILLE
6		864-8025		3	VIS, Hex Soc Hd, M8 x 25, 8.8
7		181171A1		1	COUVERCLE
8		190428A3		1	LEVIER DE COMMANDE
9		1967585C1		2	AXE, Pin
10		1967581C1		1	COIFFE
11		181177A1		1	COLLIER
12		181138A1		1	JOINT TORIQUE
13		278533A1		1	RESSORT
14		278532A1		1	BAGUE
15		279039A1		1	ANNEAU-D'ARRET
16		181173A1		2	S£LECTEUR, Shifter
17		864-10025		2	VIS, Hex Soc Hd, M10 x 25, 8.8
18		181175A1		1	PLAQUE, GRANDE
20		905794R1		4	AXE, M6 x 30, Coiled
21		181203A1		1	FOURCHETTE, First and Second
22		181174A2		1	FOURCHETTE, Third and Fourth
23		87429985		1	RONDELLE D'ETANCHEITE, Washer
24		181100A1		1	BOUCHON, M10 x 23

TRANSMISSION, 2WD - ARBRE, MARCHE ARRIÊRE & PRIMAIRE

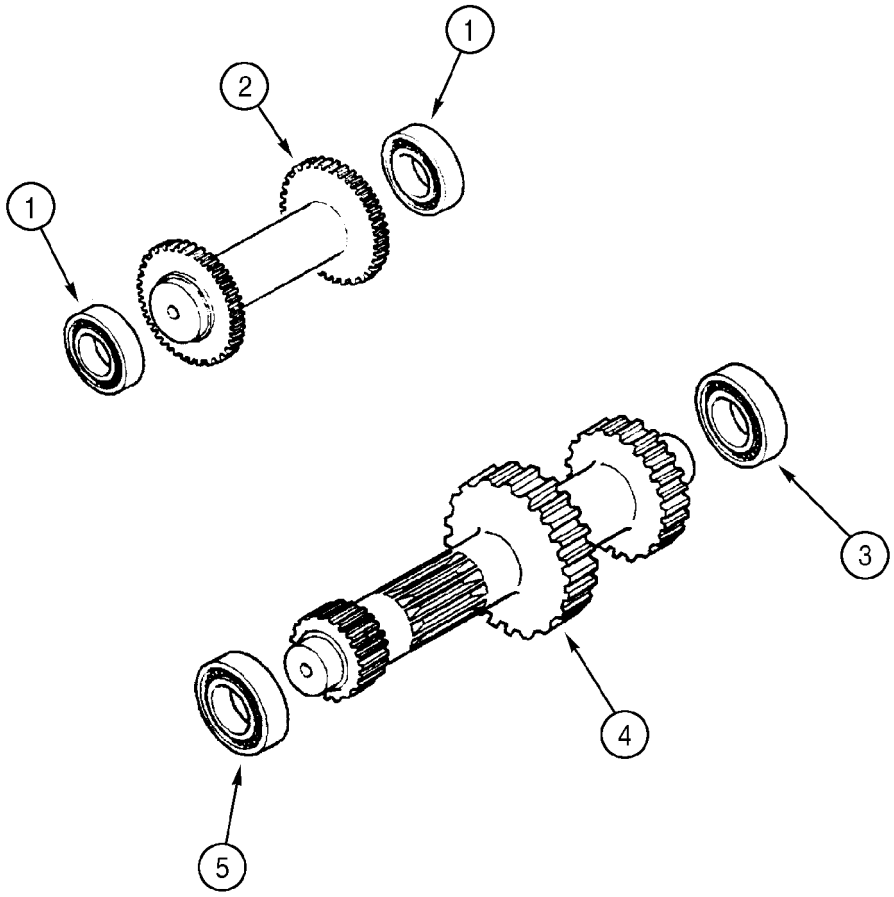

BS99H168

TRANSMISSION, 2WD - ARBRE, MARCHE ARRIêRE & PRIMAIRE

REF	FN	PART NUMBER	YR/SN	QTY	DESCRIPTION
		87395300		1	TRANSMISSION, Two Wheel Drive, Incl. Ref 1 - 6; Also Includes Parts On Figures 06-12 - 06-19, 07-01
1		ST205A		2	ROULEMENT A BILLES
2		358636A1		1	ARBRE, Idler/Reverse Shaft
3		181126A1		1	ROULEMENT A BILLES
4		{87701276}		1	Primary Shaft
5		181132A1		1	ROULEMENT A BILLES
6		A48041		1	CIRCLIP, Bearing to Axle Housing; Not Illustrated

TRANSMISSION, 2WD - ARBRE, ENTRÉE & PRISE DE FORCE

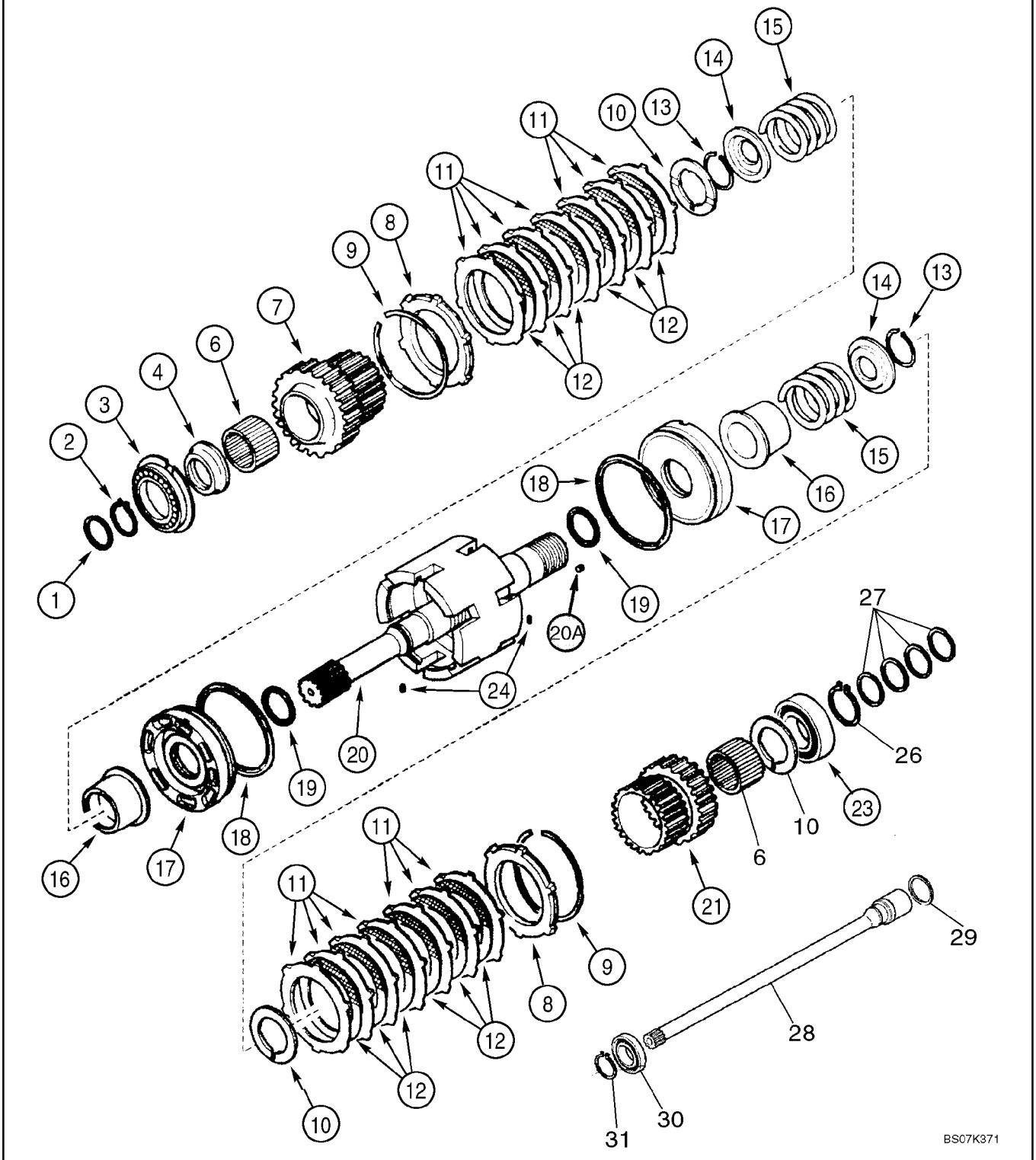

TRANSMISSION, 2WD - ARBRE, ENTR£E & PRISE DE FORCE

REF	FN	PART NUMBER	YR/SN	QTY	DESCRIPTION
		87395300		1	TRANSMISSION, Two Wheel Drive, Incl. Ref 1 - 31; Also Includes Parts On Figures 06-12 - 06-19, 07-01
1		358645A1		1	JOINT D'HUILE
2		A48041		1	CIRCLIP
3		181128A1		1	ROULEMENT A BILLES
4		358635A1		1	ENTRETOISE, 68 x 45 x 105 mm
6		358633A1		2	ROULEMENT A AIGUILLES
7		358632A1		1	PIGNON, Gear, 35T
8		310519A1		2	PLAQUE
9		181116A1		2	JONC D'ARRET
10		358640A1		3	RONDELLE, Thrust
11		181159A1		14	DISQUE, Plate
12		181158A1		12	DISQUE-D'EMBRAYAGE, Plate
13		181111A1		2	JONC D'ARRET
14		181161A1		2	PLATEAU DE PRESSION, Pressure
15		358637A1		2	RESSORT
16		358641A1		2	MANCHON
17		358644A1		2	PISTON
18		358643A1		2	ANNEAU-D'ARRET
19		358642A1		2	JOINT ANNULAIRE
20		87525849		1	COLIS DE R£PARATION, Input Shaft, Incl Ref 20A (4) 139312A1 Rivets; Also Incl (1) 87429973 Input Shaft Which Is Not Serviced Separately
20A		139312A1		4	BOUCHON, Rivet
21		358638A1		1	PIGNON, Gear, 29T
23		ST264		1	ROULEMENT A BILLES
24		181108A1		2	GOUPILLE-V
26		800-1150		1	ANNEAU D'ARRąT, M50, Ext
27		87429984		4	ANNEAU, Seal Ring
28		{87701275}		1	Shaft
29		358645A1		1	JOINT D'HUILE
30		87429983		1	ROULEMENT A BILLES
31		800-1130		1	ANNEAU D'ARRąT, M30, Ext

TRANSMISSION, 2WD - ARBRE, SECONDAIRE

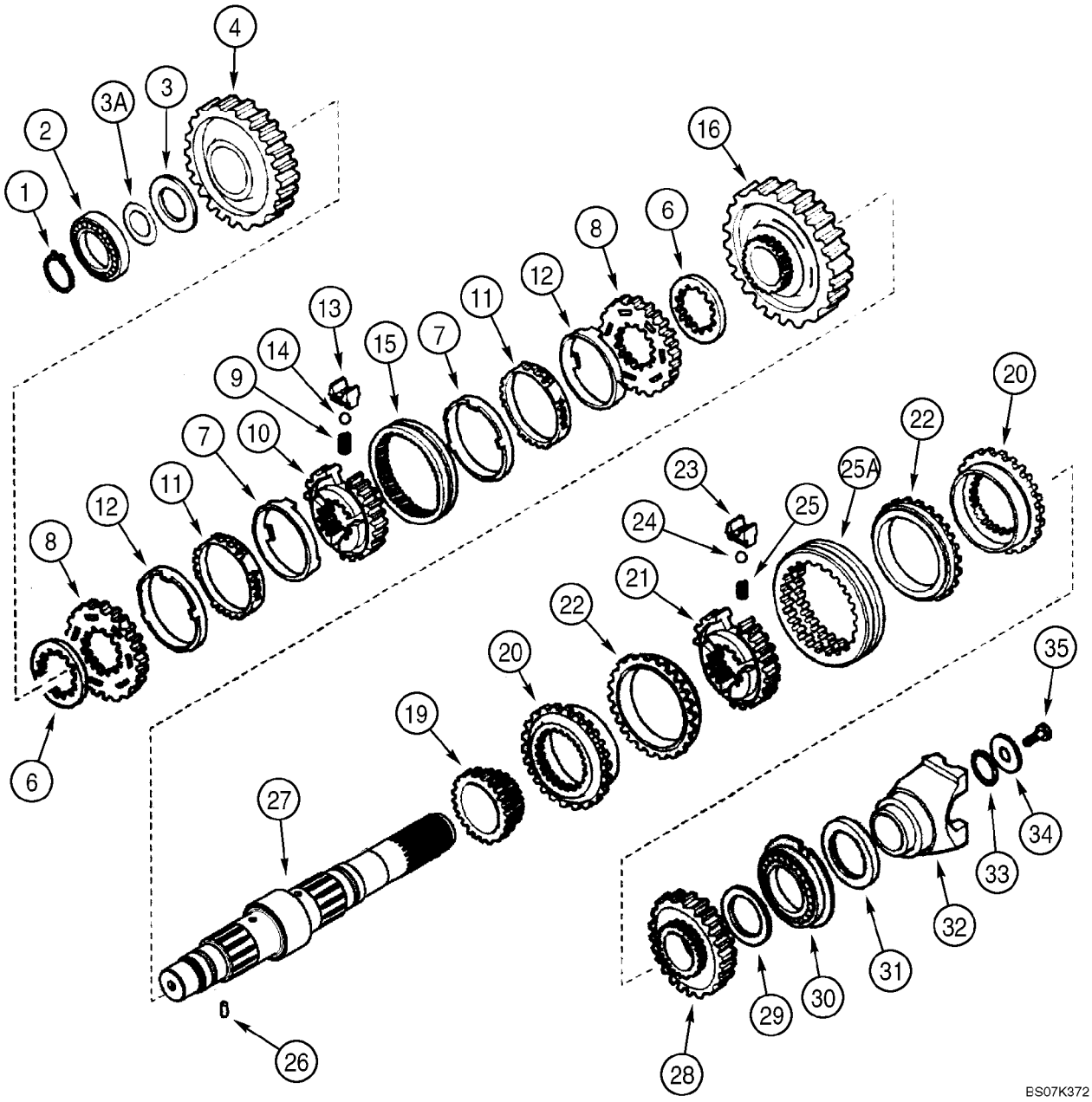

TRANSMISSION, 2WD - ARBRE, SECONDAIRE

REF	FN	PART NUMBER	YR/SN	QTY	DESCRIPTION
		87395300		1	TRANSMISSION, Two Wheel Drive, Incl. Ref 1 - 35; Also Includes Parts On Figures 06-12 - 06-19, 07-01
1		181118A1		1	JONC D'ARRET
2		181132A1		1	ROULEMENT A BILLES
3		358649A1		1	RONDELLE, Thrust
3A		358650A1		AR	CALE D'EPAISSEUR, 0,05 mm
3A		358651A1		AR	CALE D'EPAISSEUR, 0,10 mm
3A		358652A1		AR	CALE D'EPAISSEUR, 0,30 mm
3A		196454A1		AR	CALE D'EPAISSEUR, 0,50 mm
4		{87701278}		1	Gear, Driven, Second, 44T Pinion Gear
6		244109A1		2	ENTRETOISE
		190427A1		1	SYNCHRO, Synchronizing Service Kit, Incl. Ref 7 - 15
7		NSS		2	NON FOURNI SEPAREMENT, Ring
8		NSS		2	NON FOURNI SEPAREMENT, Ring
9		384773A1		3	RESSORT H£LICOċDAL
10		NSS		1	NON FOURNI SEPAREMENT, Hub
11		NSS		2	NON FOURNI SEPAREMENT, Ring
12		NSS		2	NON FOURNI SEPAREMENT, Ring
13		326865A1		3	PLAQUETTE
14		384769A1		3	BILLE
15		NSS		1	NON FOURNI SEPAREMENT, Sleeve
16		{87701293}		1	Gear, Driven, First, 50T Pinion Gear
19		358282A1		1	PIGNON, Driven, Fourth, 23T
		87429974		1	SYNCHRONISEUR, Synchronizing Service Kit, Incl. Ref 20 - 25A
20		NSS		2	NON FOURNI SEPAREMENT, Ring
21		NSS		1	NON FOURNI SEPAREMENT, Hub
22		NSS		2	NON FOURNI SEPAREMENT, Ring
23		NSS		3	NON FOURNI SEPAREMENT, Plate
24		NSS		3	NON FOURNI SEPAREMENT, Ball
25		NSS		3	NON FOURNI SEPAREMENT, Spring
25A		NSS		1	NON FOURNI SEPAREMENT, Sleeve
26		181108A1		1	GOUPILLE-V
27		{87701294}		1	Shaft, Secondary
28		358283A1		1	PIGNON, Gear, Driven, Third, 33T

TRANSMISSION, 2WD - ARBRE, SECONDAIRE

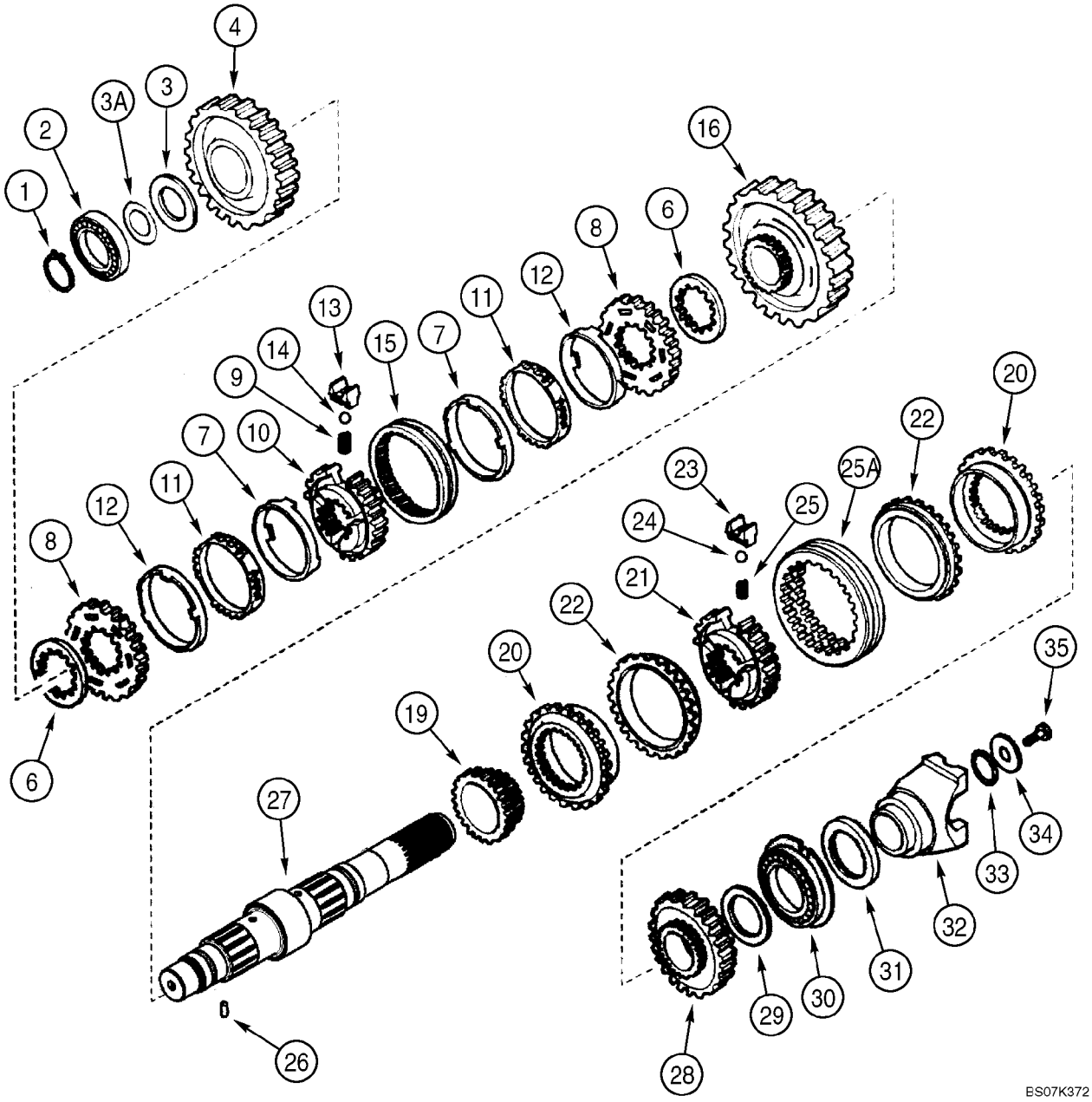

TRANSMISSION, 2WD - ARBRE, SECONDAIRE

REF	FN	PART NUMBER	YR/SN	QTY	DESCRIPTION
29		358639A1		1	RONDELLE, Thrust, 68 x 45 x 4 mm
30		181130A1		1	ROULEMENT A BILLES
31		181123A1		1	JOINT D'HUILE, 60 x 75 x 8 mm
32		233284A1		1	FOURCHE, Yoke
33		181144A1		1	JOINT TORIQUE
34		181165A1		1	RONDELLE, 52 x 12.5 x 5 mm
35		P3533055		1	VIS, 12 x 25 mm

TRANSMISSION, 2WD - DISTRIBUTEUR

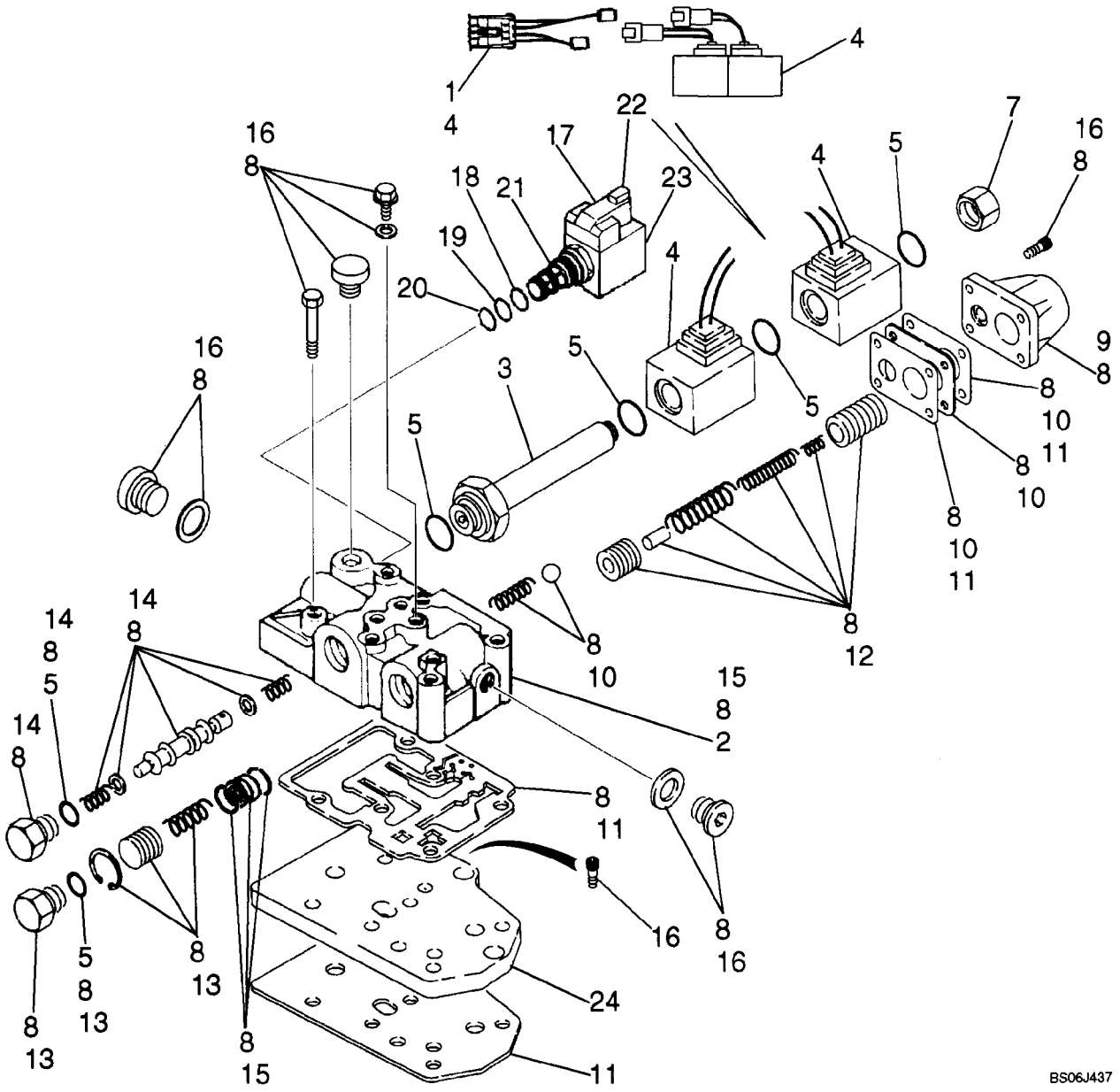

TRANSMISSION, 2WD - DISTRIBUTEUR

REF	FN	PART NUMBER	YR/SN	QTY	DESCRIPTION
		87395300		1	TRANSMISSION, Two Wheel Drive, Incl. Ref 1 - 23; Also Includes Parts On Figures 06-12 - 06-19, 07-01
		87525756		1	COLIS DE R£PARATION, Transmission Control Valve With Jumper Harness; Includes (1) 87456968 Forward/Reverse Jumper Harness, Ref 1; Plus (1) 87524409 Control Valve, Ref 1 - 23
1		87456968		1	FAISCEAU COMPLET, Jumper; If Used; Required On Transmissions Prior To Ones With Deutsch Connector Type Solenoids
		87524409		1	DISTRIBUTEUR, Transmission Control, With Improved Snap Ring at Flow Divider Area; Incl. Ref 2 - 23
2		NSS		1	NON FOURNI SEPAREMENT, Housing
3		190442A1		1	PLONGEUR
4		87456900		1	KIT ASSISTANCE, Solenoid; Includes (2) Solenoids, (1) Jumper Wire Used For Transmissions Prior to Ones With The Solenoids With Plastic Connections
5		87524436		1	COLIS DE R£PARATION, Seal; Includes (6) O-Rings; Component Parts Not Serviced Separately
7		87530365		1	BOUCHON
8		87524441		1	ENSEMBLE, Valve Body Kit; Component Parts Not Serviced Separately
9		181251A1		1	COUVERCLE, Modulation
10		87524439		1	COLIS DE R£PARATION, Plate; Includes (1) Plate, (2) Gasket, (1) Ball, (1) Spring; Component Parts Not Serviced Separately
11		87524437		1	COLIS DE R£PARATION, Gasket; Includes (4) Gasket Plates; Component Parts Not Serviced Separately
12		87524438		1	COLIS DE R£PARATION, Modulation Valve; Includes (2) Piston, (1) Pin, (3) Spring; Component Parts Not Serviced Separately
13		87524433		1	COLIS DE R£PARATION, Flow Divider Piston; Includes (1 each) Plug, O-Ring, Spring, Piston, Snap Ring; Component Parts Not Serviced Separately

TRANSMISSION, 2WD - DISTRIBUTEUR

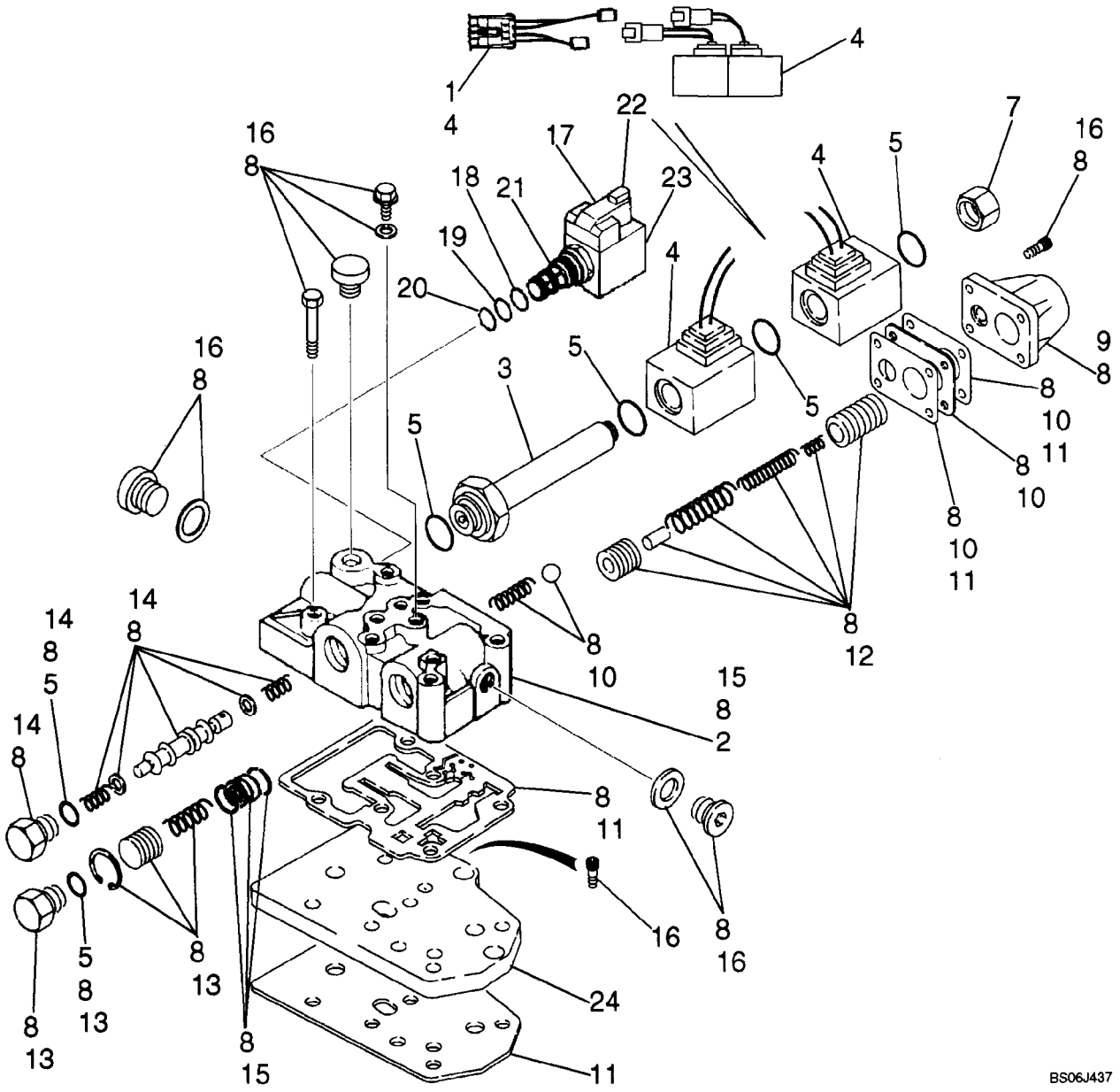

TRANSMISSION, 2WD - DISTRIBUTEUR

REF	FN	PART NUMBER	YR/SN	QTY	DESCRIPTION
14		87524432		1	COLIS DE R£PARATION, Forward/Reverse Spool; Includes (1) O-Ring, (2) Washer, (1) Plug, (1) Piston Spool, (2) Spring; Component Parts Not Serviced Separately
15		87524440		1	COLIS DE R£PARATION, Control Valve Body/Housing; Includes (1) Housing, Plus (1) Bushing, (2) Snap Rings at Flow Divider; Component Parts Not Serviced Separately
16		87524435		1	COLIS DE R£PARATION, Bolt; Includes (7) Plugs, (13) Bolts, (6) Copper Washers; Component Parts Not Serviced Separately
17		349295A1		1	SOLENOIDE, Differential Lock Solenoid Valve; Incl. Ref 18 - 23
18		237-6008		1	JOINT THORIQUE, 8-1, 90 Duro, .644" ID x .087" Thk
19		238-5014		1	JOINT THORIQUE, -014, 70 Duro, .489" ID x .070" Thk
20		238-5013		1	JOINT THORIQUE, -013, 70 Duro, .426" ID x .070" Thk
21		349291A1		1	CARTOUCHE, Valve, Cartridge, Component Parts Not Serviced Separately
21A		196096A1		1	TAMIS, Relief Valve, Internal; Not Illustrated
22		298614A1		1	SOLENOIDE
23		349292A1		1	ECROU
24		181207A1		1	PLAQUE, GRANDE, Feeding; Not Included In Assembly, Purchase Separately

TRANSMISSION, 4WD - FILTRE ë HUILE

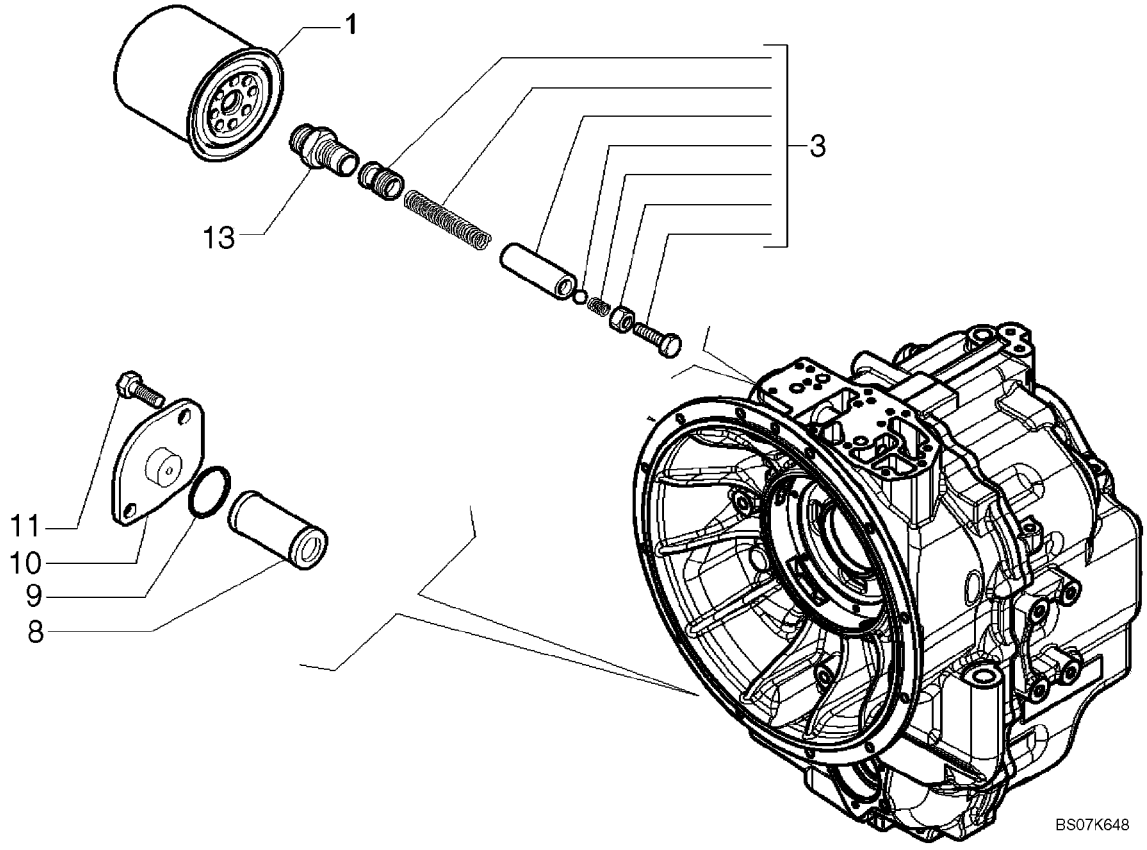

TRANSMISSION, 4WD - FILTRE ë HUILE

REF	FN	PART NUMBER	YR/SN	QTY	DESCRIPTION
		87395301		1	TRANSMISSION, Four Wheel Drive, Incl. Ref 1 - 13; Also Includes Parts On Figures 06-20 - 06-29, 07-01(01)
1		254686A2		1	FILTRE, Oil
3		181274A1		1	LOT DE PIECES, Valve
8		278534A1		1	TAMIS-FILTRE, Oil
9		100748A1		1	JOINT TORIQUE
10		181219A1		1	COUVERCLE
11		614-8018		2	BOULON, Hex, M8 x 18, 8.8, Full Thd
13		181202A1		1	RACCORD

TRANSMISSION, 4WD - BOćTIER

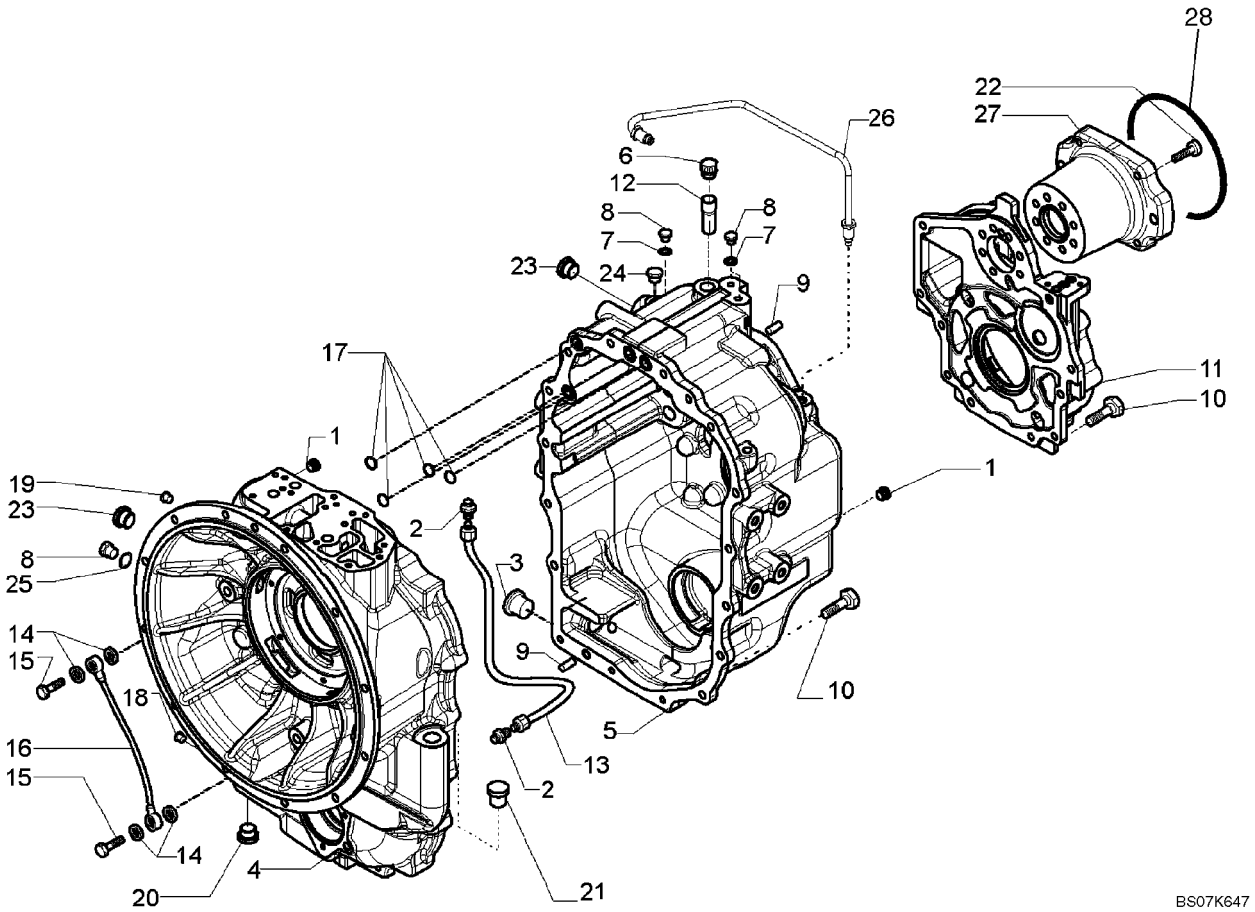

TRANSMISSION, 4WD - BOćTIER

REF	FN	PART NUMBER	YR/SN	QTY	DESCRIPTION
		87395301		1	TRANSMISSION, Four Wheel Drive, Incl. Ref 1 - 28; Also Includes Parts On Figures 06-20 - 06-29, 07-01(01)
1		E135809		2	BOUCHON, 9/16
2		218-1023		2	RACCORD, 1/2"-20, 37Ü x 1/4"-18, NPTF
3		100557A1		1	BOUCHON DE VIDANGE, M30 x 2; Incl 238-6121 O-Ring
		238-6121		1	JOINT THORIQUE, -121, 90 Duro, 1.049" ID x .103" Thk
4		{87701053}		1	Front Housing
5		{87701777}		1	Rear Housing
6		1530028C1		1	RENIFLARD (ASSEMBLE)
7		934667R1		4	RONDELLE D'ETANCHEITE, M10 x 14 x 1
8		181100A1		4	BOUCHON
9		K260177		3	AXE, 10 x 25
10		614-10030		21	BOULON, Hex, M10 x 30, 8.8
11		{87701257}		1	Cover
12		310772A1		1	TUYAU, Breather
13		181176A1		1	TUYAU, Oil Tube
14		181105A1		4	RONDELLE CUIVRE
15		181179A1		2	VIS CREUSE, M14 x 1.5
16		181232A1		1	TUYAU, Lubrication
17		181141A1		4	JOINT TORIQUE
18		{87702570}		1	Plug
19		181101A1		1	BOUCHON, M14 x 1.5
20		239606A1		1	BOUCHON
21		NSS		1	NON FOURNI SEPAREMENT, PLUG, Shipping Plug
22		{87701258}		7	M10 x 45 Bolt
23		NSS		1	NON FOURNI SEPAREMENT, PLUG, Shipping Plug
24		NSS		1	NON FOURNI SEPAREMENT, PLUG, Shipping Plug
25		87429985		1	RONDELLE D'ETANCHEITE, Copper, 10 x 18 x 1.5 mm
26		{87701270}		1	Oil Tube
27		{87701269}		1	PTO Flange
28		87429982		1	JOINT THORIQUE, Pump Mounting

TRANSMISSION, 4WD - POMPE A HUILE

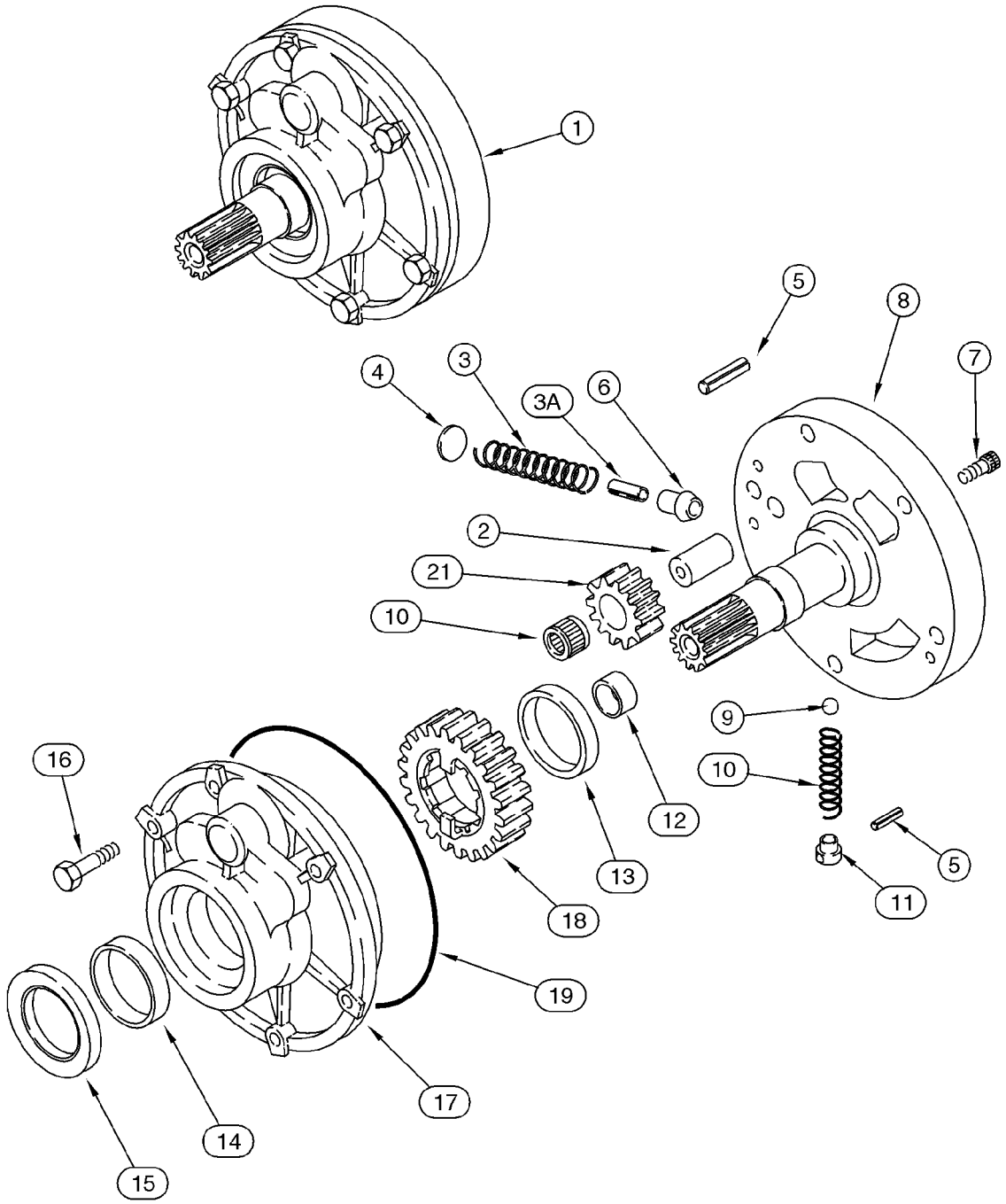

TRANSMISSION, 4WD - POMPE A HUILE

REF	FN	PART NUMBER	YR/SN	QTY	DESCRIPTION
		87395301		1	TRANSMISSION, Four Wheel Drive, Incl. Ref 1 - 21; Also Includes Parts On Figures 06-20 - 06-29, 07-01(01)
1		87429970		1	POMPE, Charge, Incl. Ref 2 - 21
2		NSS		1	NON FOURNI SEPAREMENT, Shaft
3		NSS		1	NON FOURNI SEPAREMENT, Spring
3A		NSS		1	NON FOURNI SEPAREMENT, Pin
4		NSS		1	NON FOURNI SEPAREMENT, Stop
5		NSS		2	NON FOURNI SEPAREMENT, Pin, Roll
6		NSS		1	NON FOURNI SEPAREMENT, Piston
7		NSS		2	NON FOURNI SEPAREMENT, Bolt
8		NSS		1	NON FOURNI SEPAREMENT, Support
9		NSS		1	NON FOURNI SEPAREMENT, Ball
10		NSS		1	NON FOURNI SEPAREMENT, Spring
11		NSS		1	NON FOURNI SEPAREMENT, Guide
12		NSS		1	NON FOURNI SEPAREMENT, Bushing
13		NSS		1	NON FOURNI SEPAREMENT, Bushing
14		NSS		1	NON FOURNI SEPAREMENT, Bushing
15		87429971		1	JOINT D'HUILE, Oil Seal
16		814-8060		6	BOULON, Hex, M8 x 60, 8.8
17		NSS		1	NON FOURNI SEPAREMENT, Housing
18		NSS		1	NON FOURNI SEPAREMENT, Gear, 23T
19		181142A1		1	JOINT TORIQUE
20		NSS		1	NON FOURNI SEPAREMENT, Bearing, Needle
21		NSS		1	NON FOURNI SEPAREMENT, Gear, 12T

TRANSMISSION, 4WD - M£CANISME DU CHANGEMENT DE VITESSE

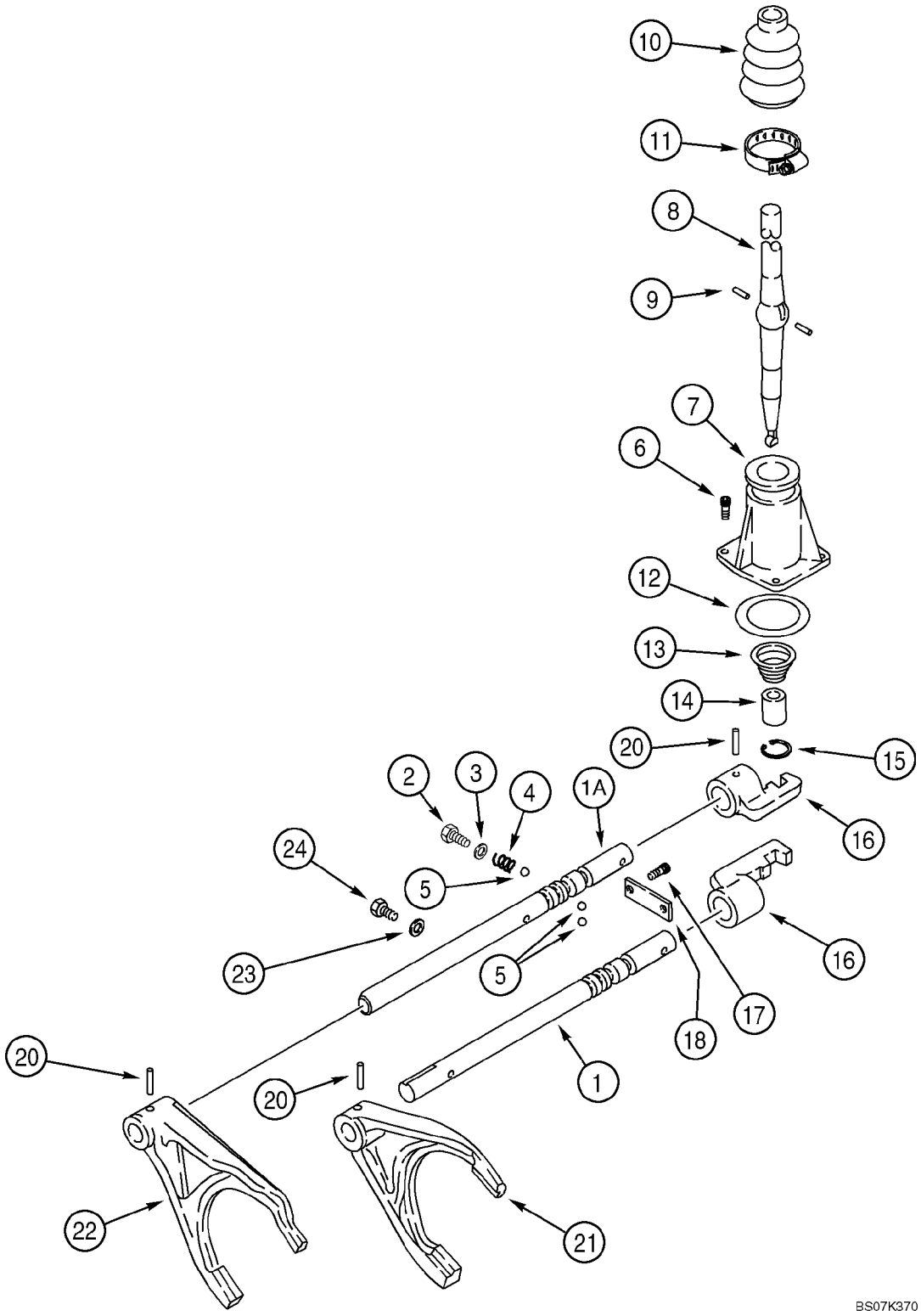

TRANSMISSION, 4WD - M£CANISME DU CHANGEMENT DE VITESSE

REF	FN	PART NUMBER	YR/SN	QTY	DESCRIPTION
		87395301		1	TRANSMISSION, Four Wheel Drive, Incl. Ref 1 - 24; Also Includes Parts On Figures 06-20 - 06-29, 07-01(01)
1		181245A2		1	TRINGLE, Shifter Fork Rail; First and Second
1A		{87578867}		1	Shifter Fork Rail; Third and Fourth
2		614-12016		2	BOULON, Hex, M12 x 16, 8.8, Full Thd
3		87429994		2	RONDELLE D'ETANCHEITE, 12 x 20 x 1.5 mm
4		1966993C1		2	RESSORT
5		181139A1		4	BILLE
6		864-8025		3	VIS, Hex Soc Hd, M8 x 25, 8.8
7		181171A1		1	COUVERCLE
8		190428A3		1	LEVIER DE COMMANDE
9		1967585C1		2	AXE, Pin
10		1967581C1		1	COIFFE
11		181177A1		1	COLLIER
12		181138A1		1	JOINT TORIQUE
13		278533A1		1	RESSORT
14		278532A1		1	BAGUE
15		279039A1		1	ANNEAU-D'ARRET
16		181173A1		2	S£LECTEUR, Shifter
17		864-10025		2	VIS, Hex Soc Hd, M10 x 25, 8.8
18		181175A1		1	PLAQUE, GRANDE
20		905794R1		4	AXE, M6 x 30, Coiled
21		181203A1		1	FOURCHETTE, First and Second
22		181174A2		1	FOURCHETTE, Third and Fourth
23		87429985		1	RONDELLE D'ETANCHEITE, Washer
24		181100A1		1	BOUCHON, M10 x 23

TRANSMISSION, 4WD - ARBRE, MARCHE ARRIÊRE & PRIMAIRE

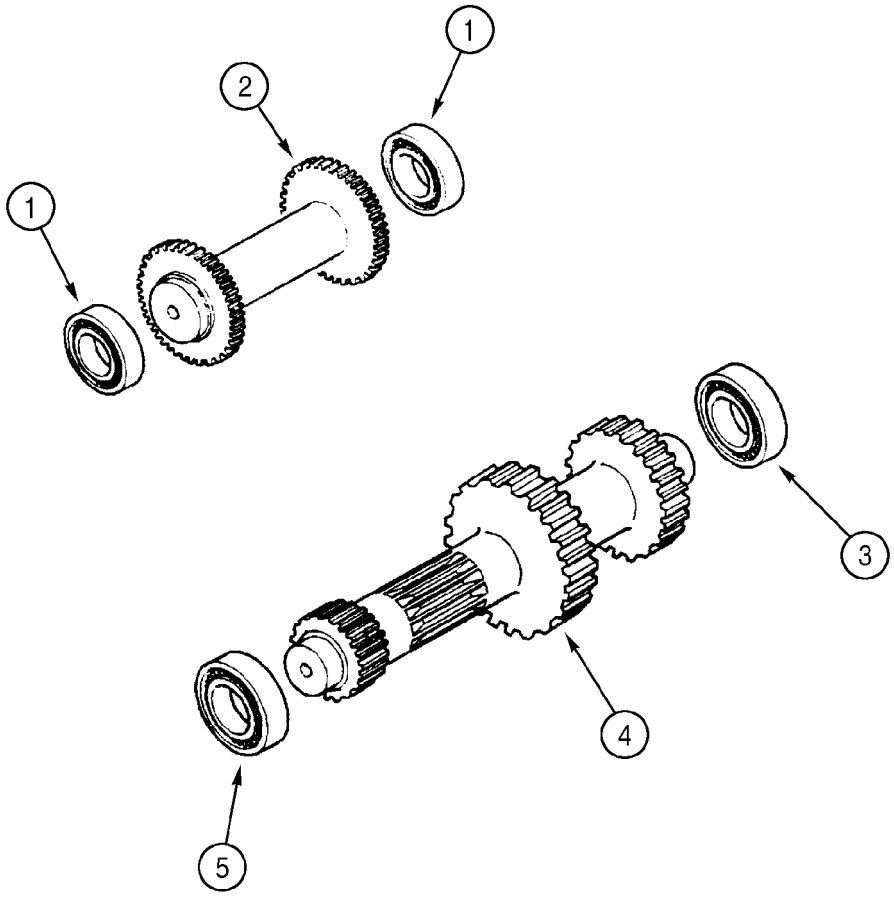

BS99H168

TRANSMISSION, 4WD - ARBRE, MARCHE ARRIêRE & PRIMAIRE

REF	FN	PART NUMBER	YR/SN	QTY	DESCRIPTION
		87395301		1	TRANSMISSION, Four Wheel Drive, Incl. Ref 1 - 6; Also Includes Parts On Figures 06-20 - 06-29, 07-01(01)
1		ST205A		2	ROULEMENT A BILLES
2		358636A1		1	ARBRE, Idler/Reverse Shaft
3		181126A1		1	ROULEMENT A BILLES
4		{87701276}		1	Primary Shaft
5		181132A1		1	ROULEMENT A BILLES
6		A48041		1	CIRCLIP, Bearing to Axle Housing; Not Illustrated

TRANSMISSION, 4WD - ARBRE, ENTRÉE & PRISE DE FORCE

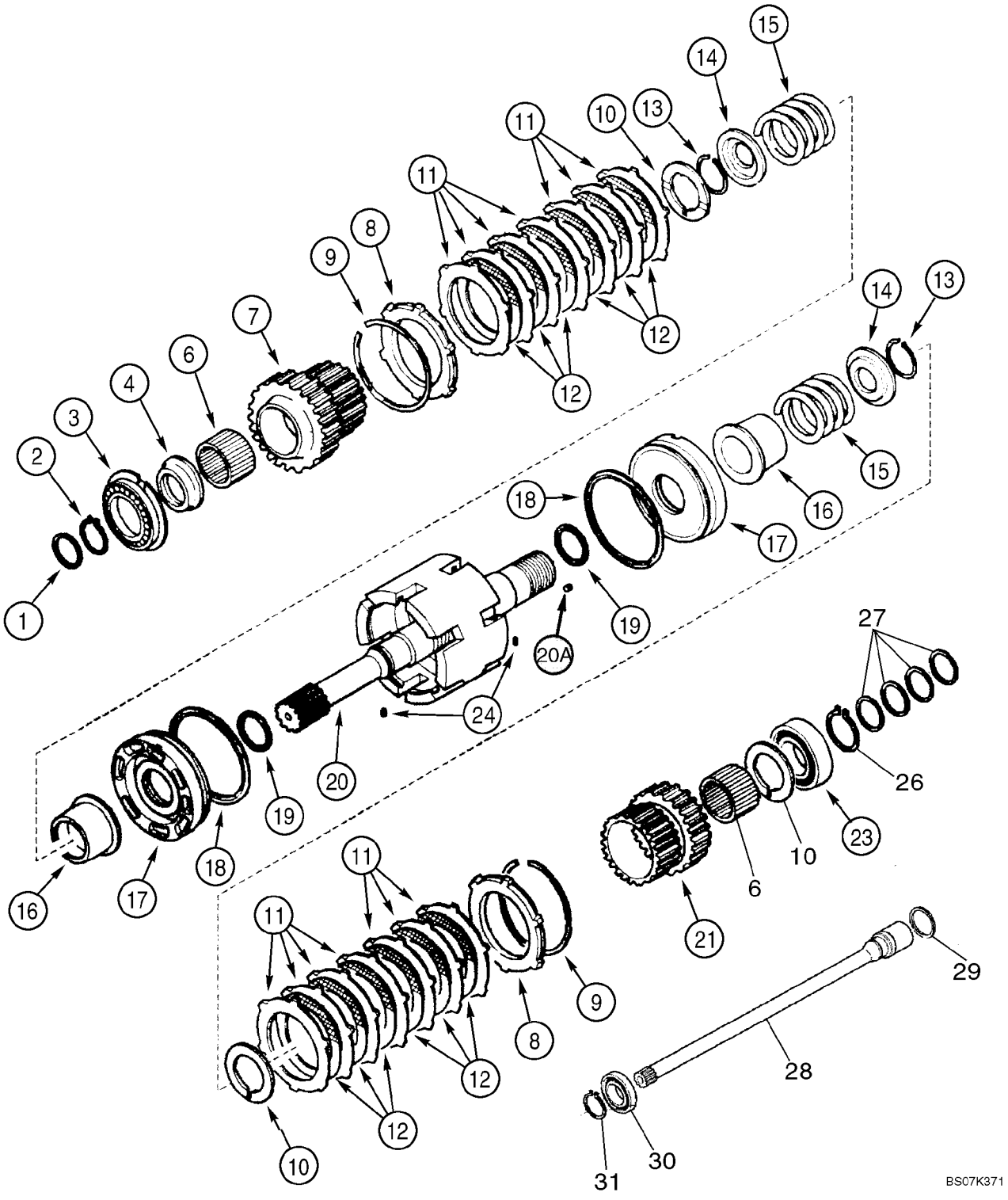

TRANSMISSION, 4WD - ARBRE, ENTR£E & PRISE DE FORCE

REF	FN	PART NUMBER	YR/SN	QTY	DESCRIPTION
		87395301		1	TRANSMISSION, Four Wheel Drive, Incl. Ref 1 - 31; Also Includes Parts On Figures 06-20 - 06-29, 07-01(01)
1		358645A1		1	JOINT D'HUILE
2		A48041		1	CIRCLIP
3		181128A1		1	ROULEMENT A BILLES
4		358635A1		1	ENTRETOISE, 68 x 45 x 105 mm
6		358633A1		2	ROULEMENT A AIGUILLES
7		358632A1		1	PIGNON, Gear, 35T
8		310519A1		2	PLAQUE
9		181116A1		2	JONC D'ARRET
10		358640A1		3	RONDELLE, Thrust
11		181159A1		14	DISQUE, Plate
12		181158A1		12	DISQUE-D'EMBRAYAGE, Plate
13		181111A1		2	JONC D'ARRET
14		181161A1		2	PLATEAU DE PRESSION, Pressure
15		358637A1		2	RESSORT
16		358641A1		2	MANCHON
17		358644A1		2	PISTON
18		358643A1		2	ANNEAU-D'ARRET
19		358642A1		2	JOINT ANNULAIRE
20		87525849		1	COLIS DE R£PARATION, Input Shaft, Incl Ref 20A (4) 139312A1 Rivets; Also Incl (1) 87429973 Input Shaft Which Is Not Serviced Separately
20A		139312A1		4	BOUCHON, Rivet
21		358638A1		1	PIGNON, Gear, 29T
23		ST264		1	ROULEMENT A BILLES
24		181108A1		2	GOUPILLE-V
26		800-1150		1	ANNEAU D'ARRąT, M50, Ext
27		87429984		4	ANNEAU, Seal Ring
28		{87701275}		1	Shaft
29		358645A1		1	JOINT D'HUILE
30		87429983		1	ROULEMENT A BILLES
31		800-1130		1	ANNEAU D'ARRąT, M30, Ext

TRANSMISSION, 4WD - ARBRE, SECONDAIRE

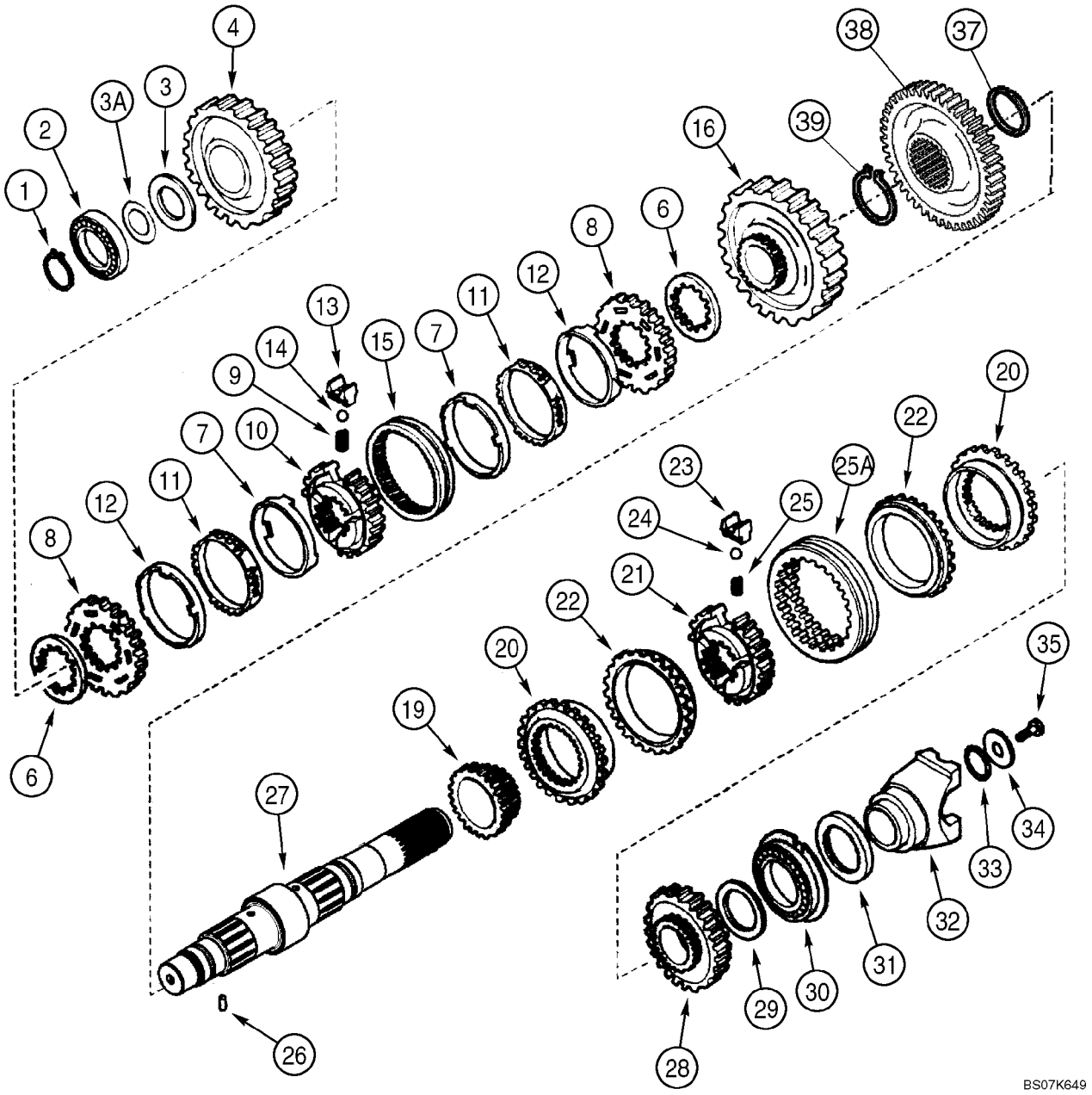

TRANSMISSION, 4WD - ARBRE, SECONDAIRE

REF	FN	PART NUMBER	YR/SN	QTY	DESCRIPTION
		87395301		1	TRANSMISSION, Four Wheel Drive, Incl. Ref 1 - 39; Also Includes Parts On Figures 06-20 - 06-29, 07-01(01)
1		181118A1		1	JONC D'ARRET
2		181132A1		1	ROULEMENT A BILLES
3		358649A1		1	RONDELLE, Thrust
3A		358650A1		AR	CALE D'EPAISSEUR, 0,05 mm
3A		358651A1		AR	CALE D'EPAISSEUR, 0,10 mm
3A		358652A1		AR	CALE D'EPAISSEUR, 0,30 mm
3A		196454A1		AR	CALE D'EPAISSEUR, 0,50 mm
4		{87701278}		1	Gear, Driven, Second, 44T Pinion Gear
6		244109A1		2	ENTRETOISE
		190427A1		1	SYNCHRO, Synchronizing Service Kit, Incl. Ref 7 - 15
7		NSS		2	NON FOURNI SEPAREMENT, Ring
8		NSS		2	NON FOURNI SEPAREMENT, Ring
9		384773A1		3	RESSORT H£LICOċDAL
10		NSS		1	NON FOURNI SEPAREMENT, Hub
11		NSS		2	NON FOURNI SEPAREMENT, Ring
12		NSS		2	NON FOURNI SEPAREMENT, Ring
13		326865A1		3	PLAQUETTE
14		384769A1		3	BILLE
15		NSS		1	NON FOURNI SEPAREMENT, Sleeve
16		{87701293}		1	Gear, Driven, First, 50T Pinion Gear
19		358282A1		1	PIGNON, Driven, Fourth, 23T
		87429974		1	SYNCHRONISEUR, Synchronizing Service Kit, Incl. Ref 20 - 25A
20		NSS		2	NON FOURNI SEPAREMENT, Ring
21		NSS		1	NON FOURNI SEPAREMENT, Hub
22		NSS		2	NON FOURNI SEPAREMENT, Ring
23		NSS		3	NON FOURNI SEPAREMENT, Plate
24		NSS		3	NON FOURNI SEPAREMENT, Ball
25		NSS		3	NON FOURNI SEPAREMENT, Spring
25A		NSS		1	NON FOURNI SEPAREMENT, Sleeve
26		181108A1		1	GOUPILLE-V
27		{87701775}		1	Shaft, Secondary, Four Wheel Drive Models

TRANSMISSION, 4WD - ARBRE, SECONDAIRE

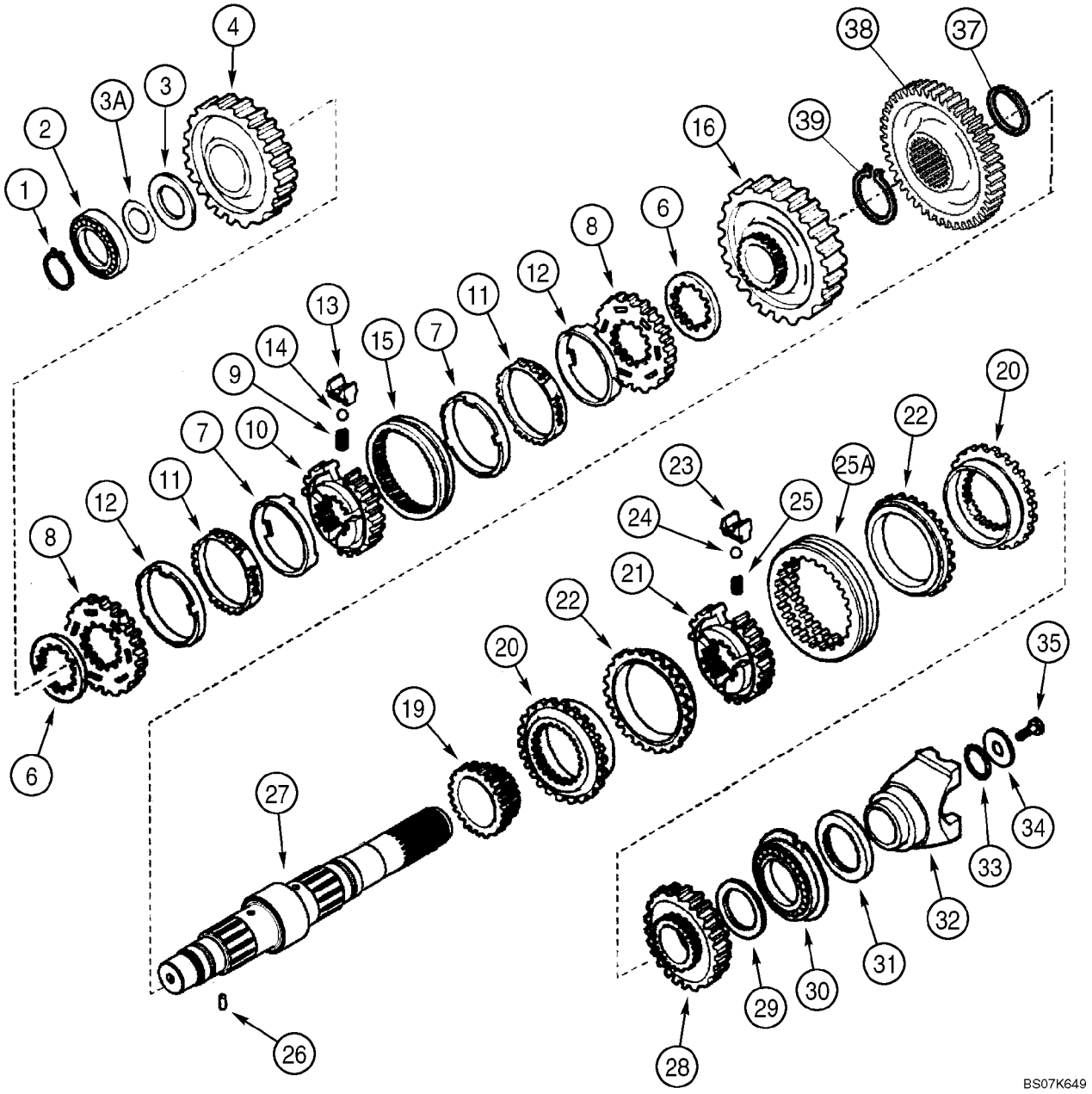

TRANSMISSION, 4WD - ARBRE, SECONDAIRE

REF	FN	PART NUMBER	YR/SN	QTY	DESCRIPTION
28		358283A1		1	PIGNON, Gear, Driven, Third, 33T
29		358639A1		1	RONDELLE, Thrust, 68 x 45 x 4 mm
30		181130A1		1	ROULEMENT A BILLES
31		181123A1		1	JOINT D'HUILE, 60 x 75 x 8 mm
32		233284A1		1	FOURCHE, Yoke
33		181144A1		1	JOINT TORIQUE
34		181165A1		1	RONDELLE, 52 x 12.5 x 5 mm
35		P3533055		1	VIS, 12 x 25 mm
37		358654A1		1	ANNEAU-D'ARRET, Four Wheel Drive Models
38		358656A1		1	PIGNON, 44T, Four Wheel Drive Models
39		358655A1		1	ANNEAU-D'ARRET, Four Wheel Drive Models

TRANSMISSION, 4WD - ARBRE DE SORTIE

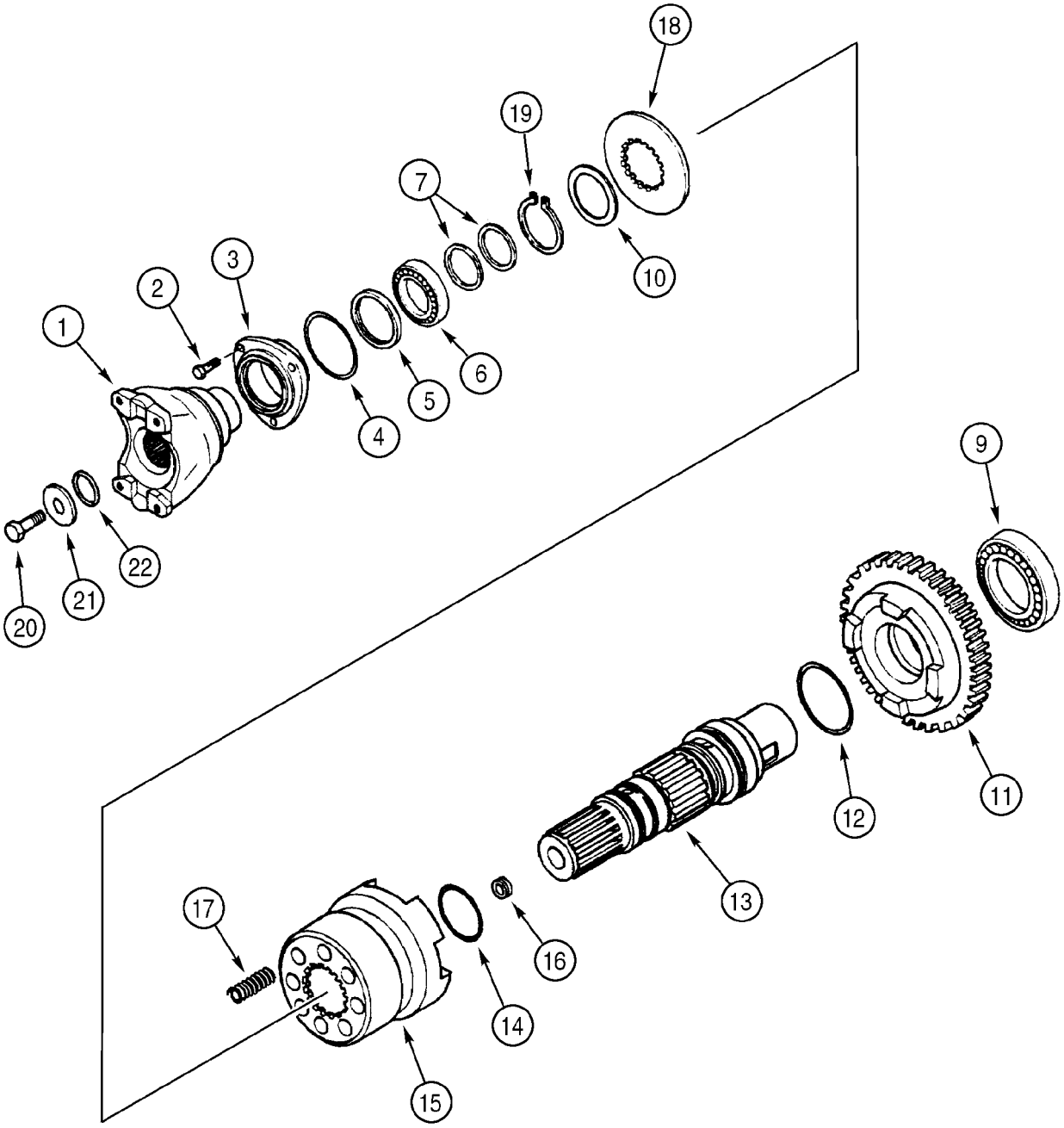

BS99H160

TRANSMISSION, 4WD - ARBRE DE SORTIE

REF	FN	PART NUMBER	YR/SN	QTY	DESCRIPTION
		87395301		1	TRANSMISSION, Four Wheel Drive, Incl. Ref 1 - 22; Also Includes Parts On Figures 06-20 - 06-29, 07-01(01)
1		{87704971}		1	Yoke, Fork, Front
2		614-8022		3	BOULON, Hex, M8 x 22, 8.8, Full Thd
3		181198A1		1	COUVERCLE
4		112517A1		1	JOINT TORIQUE
5		181122A1		1	JOINT D'HUILE, 50 x 65 x 8 mm
6		ST205A		1	ROULEMENT A BILLES
7		358645A1		2	JOINT D'HUILE
9		181126A1		1	ROULEMENT A BILLES
10		P2745478		1	RONDELLE
11		366234A1		1	PIGNON, Gear, Driven, 36T
12		366235A1		1	JOINT TORIQUE
13		366230A1		1	ARBRE, Output Shaft
14		366236A1		2	JOINT TORIQUE
15		366232A1		1	MANCHON
16		D142898		1	BOUCHON, 10 x 1 mm
17		100753A1		8	RESSORT
18		366231A1		1	RONDELLE
19		800-5145		1	ANNEAU D'ARRąT, M45, Ext
20		P3533055		1	VIS, 12 x 25 mm
21		P2745466		1	RONDELLE
22		238-8217		1	JOINT THORIQUE, -217, Cl 8, 1.171" ID x .139" Thk

TRANSMISSION, 4WD - DISTRIBUTEUR

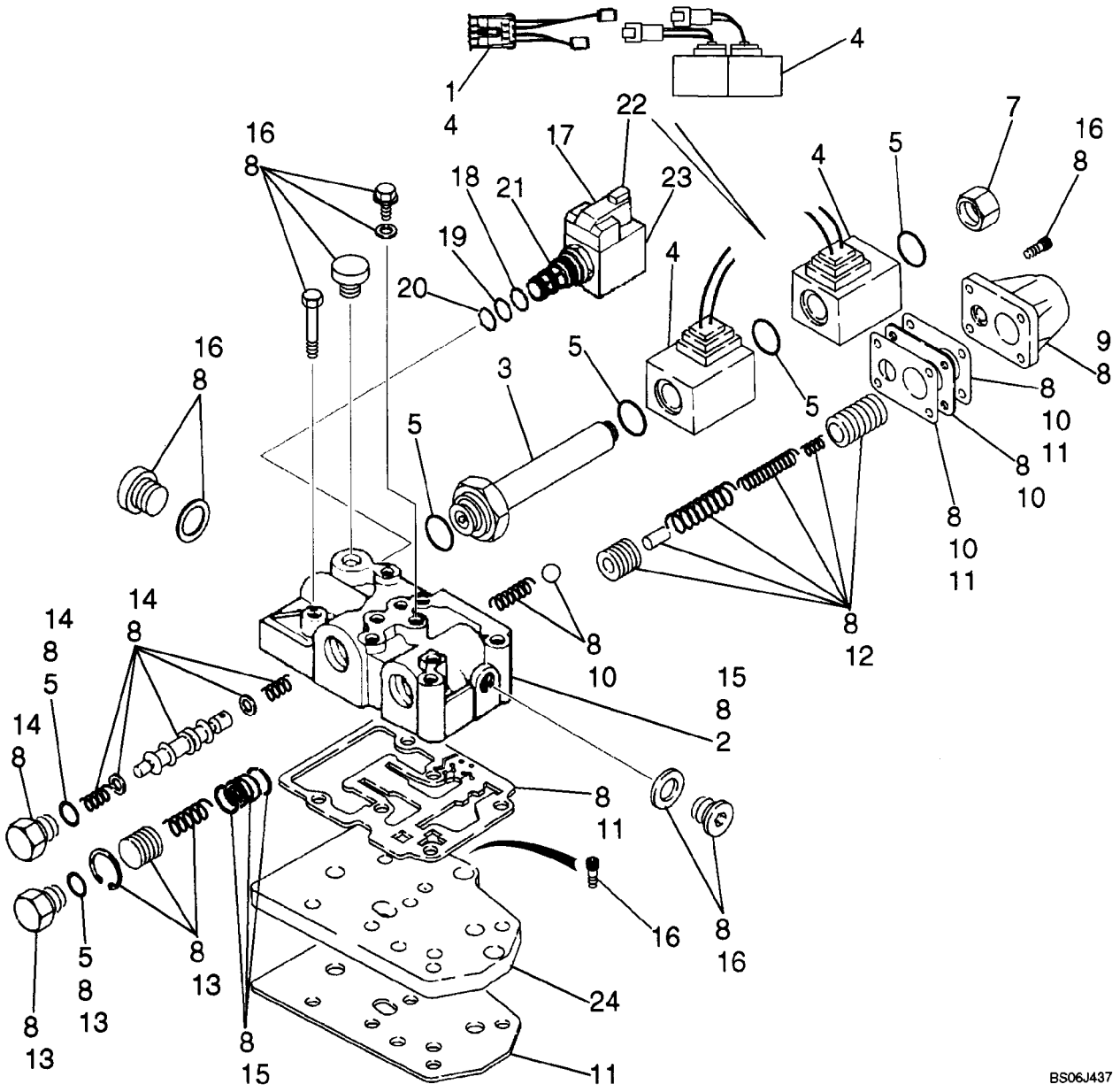

TRANSMISSION, 4WD - DISTRIBUTEUR

REF	FN	PART NUMBER	YR/SN	QTY	DESCRIPTION
		87395301		1	TRANSMISSION, Four Wheel Drive, Incl. Ref 1 - 23; Also Includes Parts On Figures 06-20 - 06-29, 07-01(01)
		87525756		1	COLIS DE R£PARATION, Transmission Control Valve With Jumper Harness; Includes (1) 87456968 Forward/Reverse Jumper Harness, Ref 1; Plus (1) 87524409 Control Valve, Ref 1 - 23
1		87456968		1	FAISCEAU COMPLET, Jumper; If Used; Required On Transmissions Prior To Ones With Deutsch Connector Type Solenoids
		87524409		1	DISTRIBUTEUR, Transmission Control, With Improved Snap Ring at Flow Divider Area; Incl. Ref 2 - 23
2		NSS		1	NON FOURNI SEPAREMENT, Housing
3		190442A1		1	PLONGEUR
4		87456900		1	KIT ASSISTANCE, Solenoid; Includes (2) Solenoids, (1) Jumper Wire Used For Transmissions Prior to Ones With The Solenoids With Plastic Connections
5		87524436		1	COLIS DE R£PARATION, Seal; Includes (6) O-Rings; Component Parts Not Serviced Separately
7		87530365		1	BOUCHON
8		87524441		1	ENSEMBLE, Valve Body Kit; Component Parts Not Serviced Separately
9		181251A1		1	COUVERCLE, Modulation
10		87524439		1	COLIS DE R£PARATION, Plate; Includes (1) Plate, (2) Gasket, (1) Ball, (1) Spring; Component Parts Not Serviced Separately
11		87524437		1	COLIS DE R£PARATION, Gasket; Includes (4) Gasket Plates; Component Parts Not Serviced Separately
12		87524438		1	COLIS DE R£PARATION, Modulation Valve; Includes (2) Piston, (1) Pin, (3) Spring; Component Parts Not Serviced Separately

TRANSMISSION, 4WD - DISTRIBUTEUR

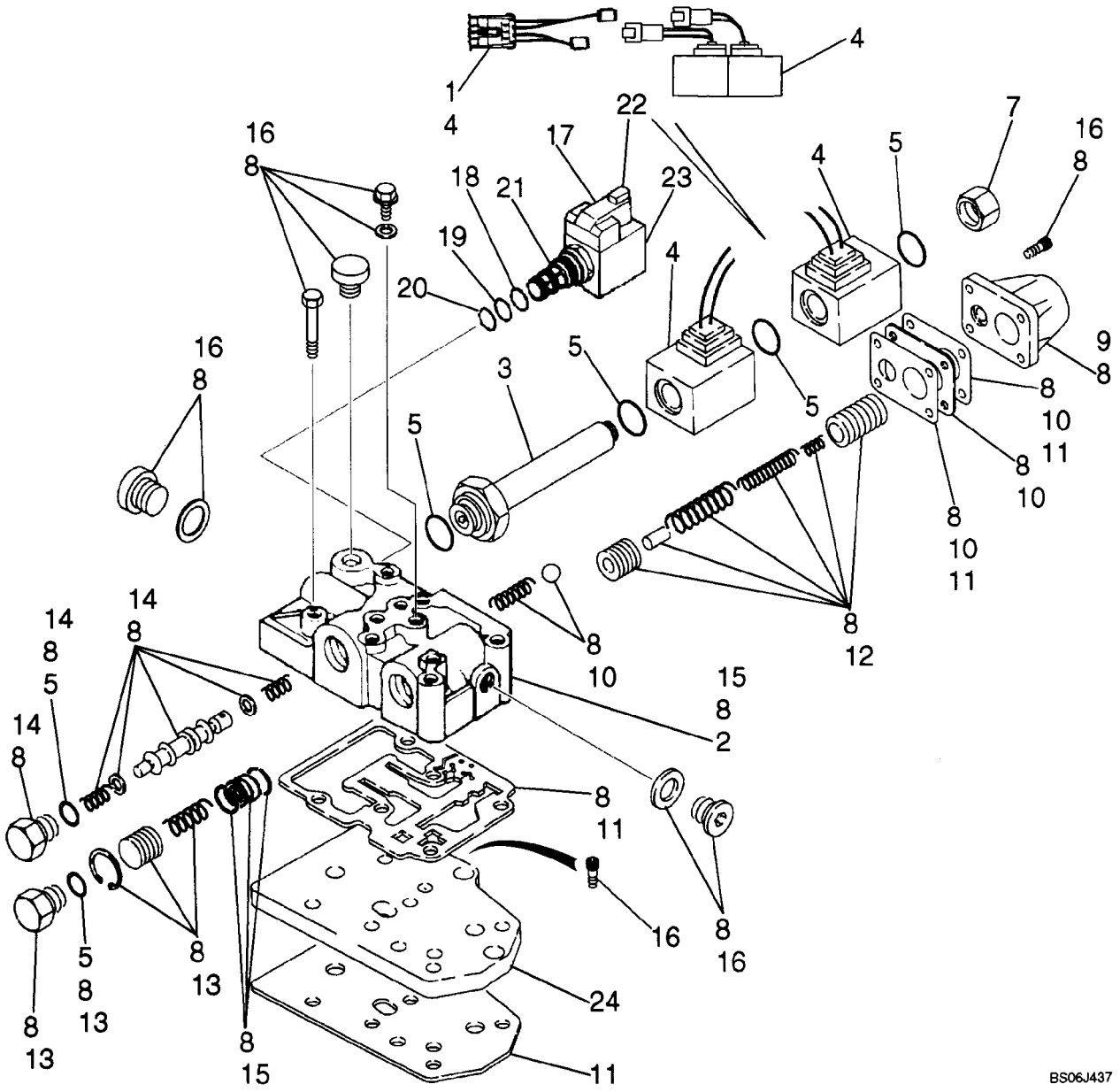

TRANSMISSION, 4WD - DISTRIBUTEUR

REF	FN	PART NUMBER	YR/SN	QTY	DESCRIPTION
13		87524433		1	COLIS DE R£PARATION, Flow Divider Piston; Includes (1 each) Plug, O-Ring, Spring, Piston, Snap Ring; Component Parts Not Serviced Separately
14		87524432		1	COLIS DE R£PARATION, Forward/Reverse Spool; Includes (1) O-Ring, (2) Washer, (1) Plug, (1) Piston Spool, (2) Spring; Component Parts Not Serviced Separately
15		87524440		1	COLIS DE R£PARATION, Control Valve Body/Housing; Includes (1) Housing, Plus (1) Bushing, (2) Snap Rings at Flow Divider; Component Parts Not Serviced Separately
16		87524435		1	COLIS DE R£PARATION, Bolt; Includes (7) Plugs, (13) Bolts, (6) Copper Washers; Component Parts Not Serviced Separately
17		349295A1		1	SOLENOIDE, Differential Lock Solenoid Valve; Incl. Ref 18 - 23
18		237-6008		1	JOINT THORIQUE, 8-1, 90 Duro, .644" ID x .087" Thk
19		238-5014		1	JOINT THORIQUE, -014, 70 Duro, .489" ID x .070" Thk
20		238-5013		1	JOINT THORIQUE, -013, 70 Duro, .426" ID x .070" Thk
21		349291A1		1	CARTOUCHE, Valve, Cartridge, Component Parts Not Serviced Separately
21A		196096A1		1	TAMIS, Relief Valve, Internal; Not Illustrated
22		298614A1		1	SOLENOIDE
23		349292A1		1	ECROU
24		181207A1		1	PLAQUE, GRANDE, Feeding; Not Included In Assembly, Purchase Separately

TRANSMISSION, 4WD - ELECTROVANNE

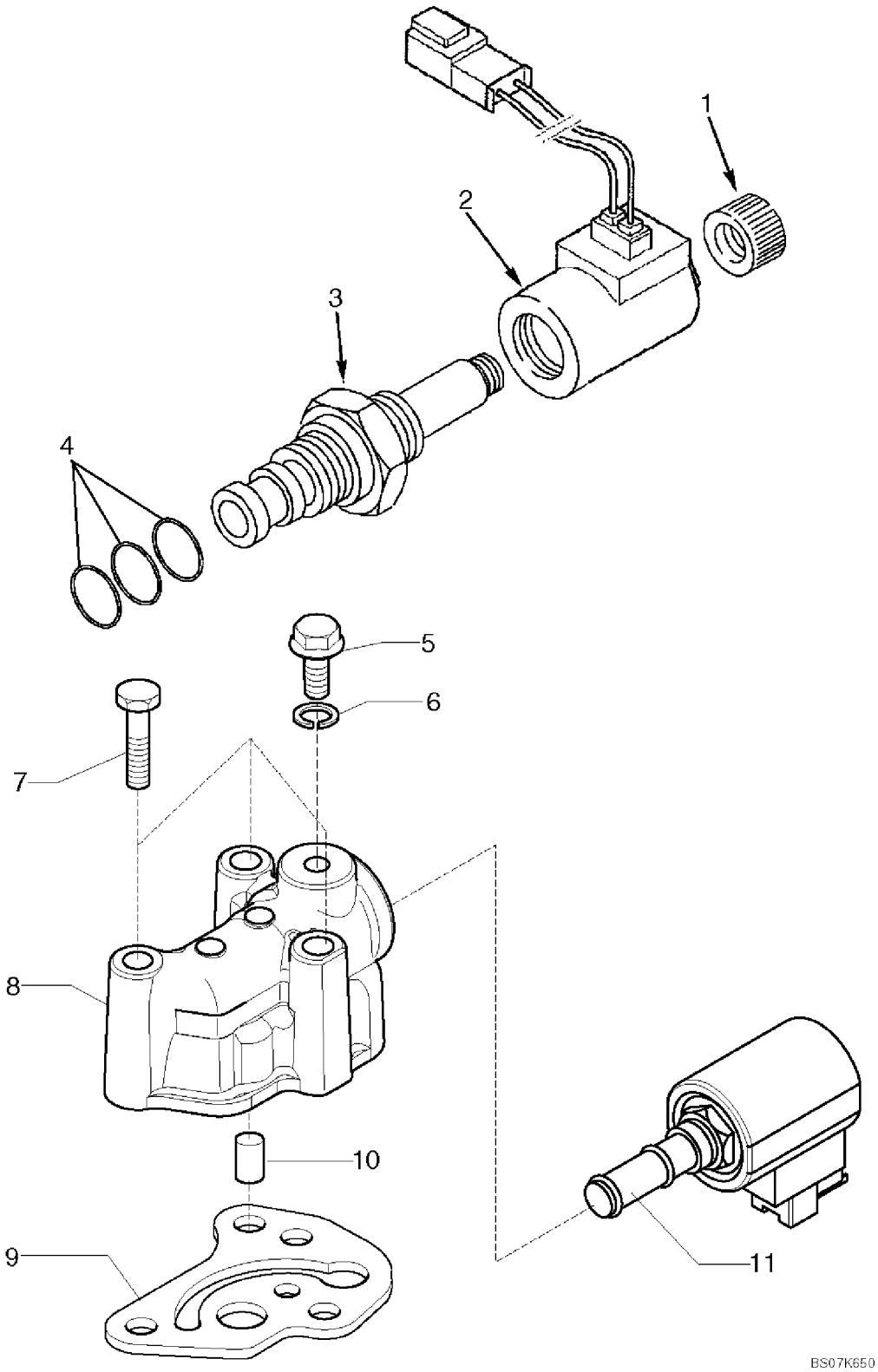

TRANSMISSION, 4WD - ELECTROVANNE

REF	FN	PART NUMBER	YR/SN	QTY	DESCRIPTION
		87395301		1	TRANSMISSION, Four Wheel Drive, Incl. Ref 1 - 10; Also Includes Parts On Figures 06-20 - 06-29, 07-01(01)
		87429978		1	ELECTRO-VALVE, Valve, Incl. Ref 1 - 4; With Deutsch Connectors
1		NSS		1	NON FOURNI SEPAREMENT, Nut
2		NSS		1	NON FOURNI SEPAREMENT, Coil
3		NSS		1	NON FOURNI SEPAREMENT, Valve, Solenoid
4		NSS		1	NON FOURNI SEPAREMENT, Kit, Seal, Includes 238-5014, 238-5015, 237-6010 O-Rings, Kit Not Serviced Separately
5		181100A1		1	BOUCHON, M10 x 23
6		934667R1		1	RONDELLE D'ETANCHEITE, M10 x 14 x 1, Copper Washer
7		814-8060		3	BOULON, Hex, M8 x 60, 8.8
8		321428A1		1	CARTER
9		366910A1		1	JOINT
10		190431A1		1	VALVE, Installed Between Ref 8 and 9
11		87456901		1	SOLENOIDE, Component Parts Not Serviced Separately; Includes Solenoid and Ref 12 Jumper Harness; Jumper Is For Coverting Transmissions Prior to Connector Change From Weather Pack to Deutsch
12		87456969		1	FAISCEAU COMPLET, Jumper; Weather Pack Connector/Deutsch Connector

ROUES, ARRIÊRE - PNEUS

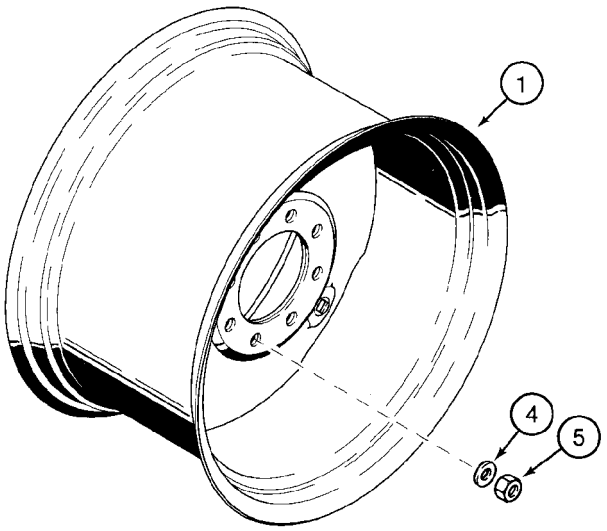

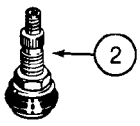

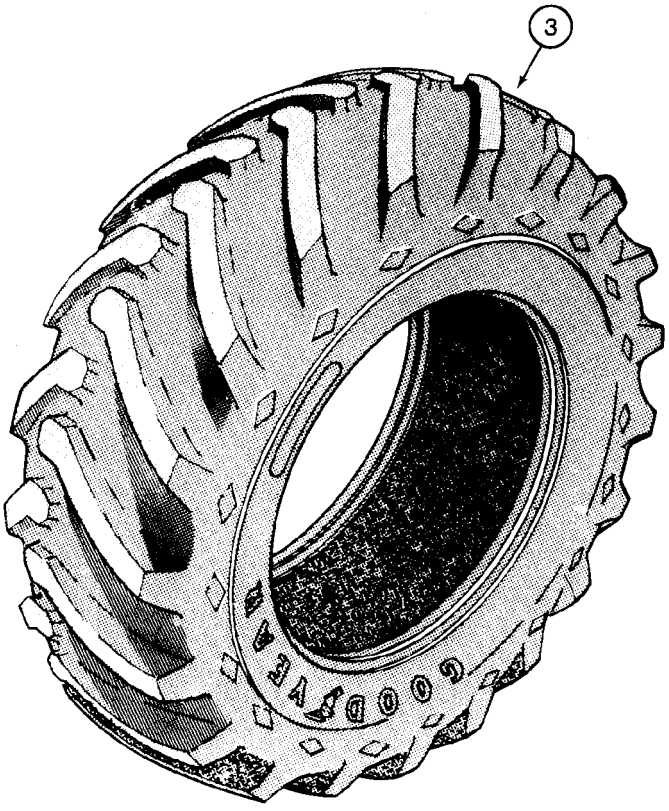

B9408129

ROUES, ARRIêRE - PNEUS

REF	FN	PART NUMBER	YR/SN	QTY	DESCRIPTION
1		104907A1		2	JANTE, 19.5L x 24 Tires - 10 PR or 14 Ply; Two Wheel or Four Wheel Drive
2		27549R1		2	VALVE
3		REF		2	NOTICE, Tire, Purchase Locally
1		119241A1		2	JANTE, 17.5L x 24 Tires - 10 PR, R4; Two Wheel or Four Wheel Drive
2		27549R1		2	VALVE
3		REF		2	NOTICE, Tire, Purchase Locally
4		D138380		20	RONDELLE, Wheel Nuts
5		D138492		20	ECROU, M22; Wheel Nuts

ESSIEU, PROPULSION ARRIêRE - SUPPORT

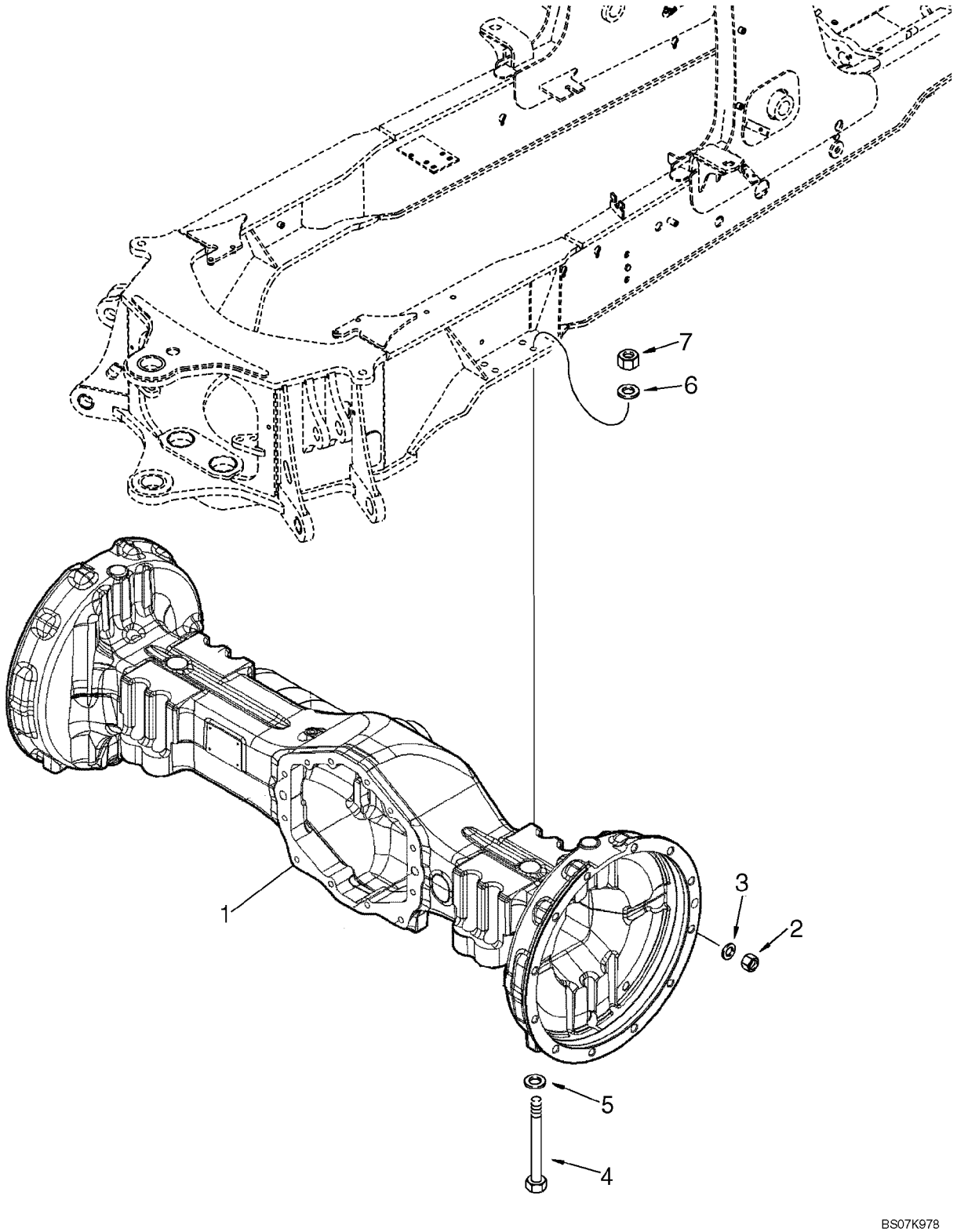

ESSIEU, PROPULSION ARRIêRE - SUPPORT

REF	FN	PART NUMBER	YR/SN	QTY	DESCRIPTION
1		87395372		1	PONT ARRIERE, See Figures 06-33 - 06-37, 07-02
2		D138492		20	ECROU, 22 mm
3		87313544		20	RONDELLE, 22.52 ID x 44.0 OD x 5.0 mm thk, Hardened
4		827-20200		8	BOULON, Hex, M20 x 200, 10.9
5		896-11020		8	RONDELLE, M20 x 37.5 x 4, HT
6		87618533		8	RONDELLE, M20
7		829-1420		8	ECROU, M20, Cl 10

ESSIEU ARRIêRE - BLOCAGE DU DIFFERENTIEL

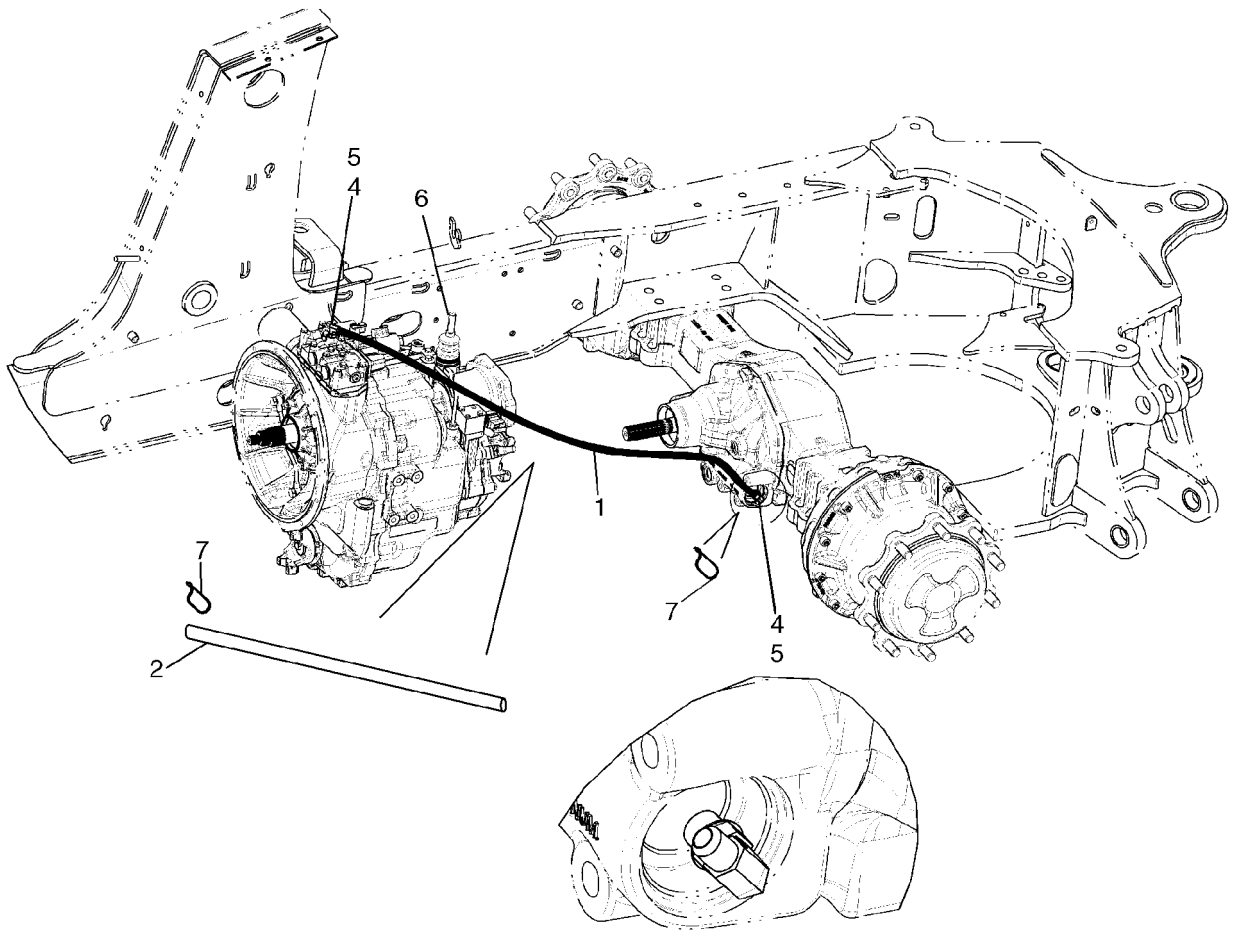

BS07N589

ESSIEU ARRIêRE - BLOCAGE DU DIFFERENTIEL

REF	FN	PART NUMBER	YR/SN	QTY	DESCRIPTION
1		87431701		1	FLEXIBLE (ASSEMBLE), 1500 mm (59-9/16 in)
2		191704A1		1	GAINE
4		218-5105		1	COUDE, 90Ü, 9/16"-18, 37Ü x 9/16"-18, O-Ring, Incl. Ref 5
5		237-6006		1	JOINT THORIQUE, 6-1, 90 Duro, .468" ID x .078" Thk
6		E135809		1	BOUCHON, If Used
7		L18337		2	SERRE-CABLE, 9.95"-12.1" lg

87395372 ESSIEU, PROPULSION ARRIÊRE - BOÎTIER

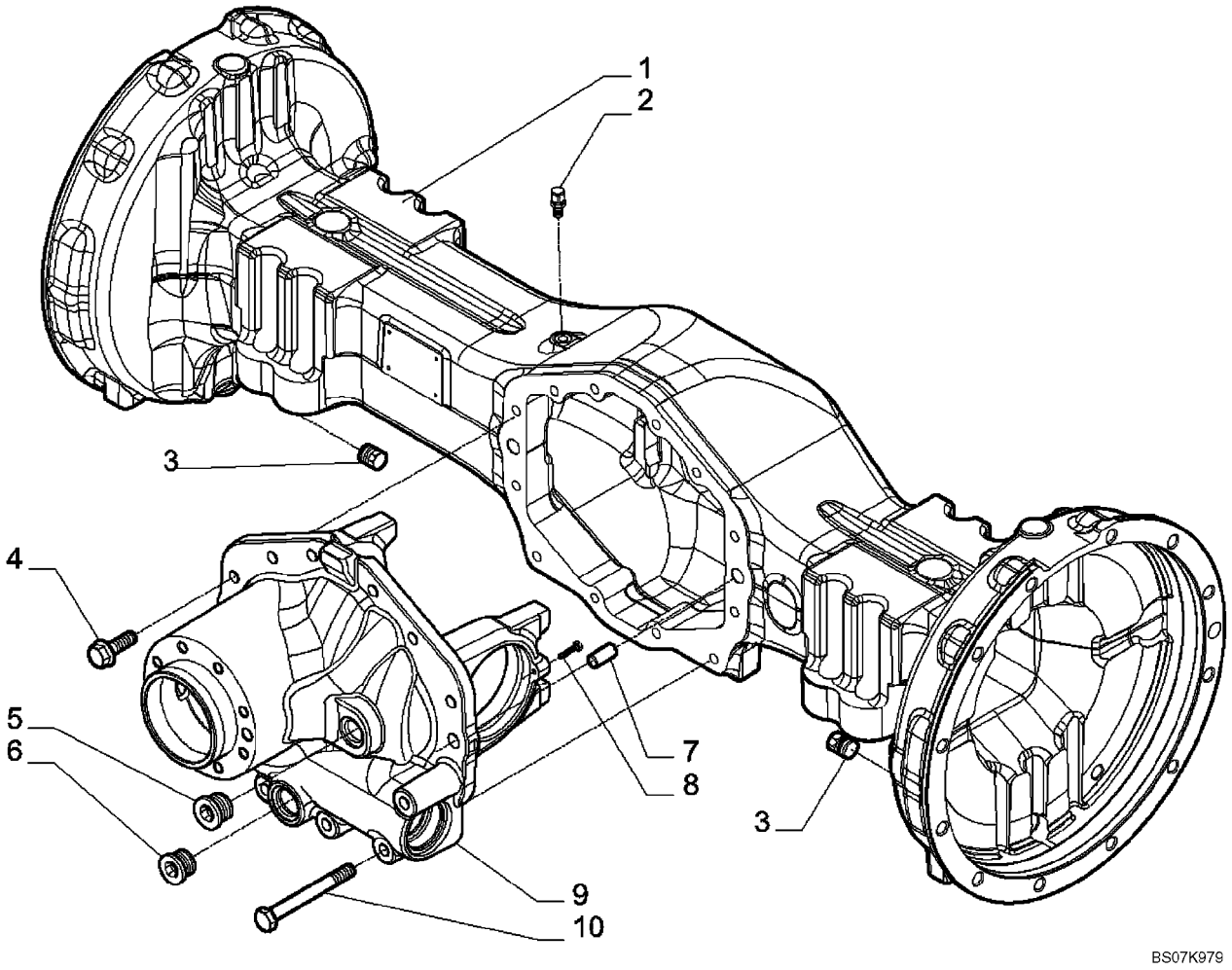

87395372 ESSIEU, PROPULSION ARRIêRE - BOćTIER

REF	FN	PART NUMBER	YR/SN	QTY	DESCRIPTION
		87395372		1	PONT ARRIERE, Incl. Ref 1 - 10; Also Includes Parts On Figures 06-33 - 06-37, 07-02
1		{87708390}		1	Housing, Axle
2		1966149C1		1	RENIFLARD, M10 x 1
3		A156873		2	BOUCHON DE VIDANGE, M22 x 1.5
4		S301064		8	VIS, M12 x 1.75
5		{434746A1}		1	Plug; M24 x 1.5
6		100557A1		1	BOUCHON DE VIDANGE, M30 x 2
7		1966138C1		2	PION
8		864-6025		2	VIS, Hex Soc Hd, M6 x 25, 8.8
9		{87708391}		1	Differential Support
10		{87708392}		4	Screw; M12 x 100

87395372 ESSIEU, PROPULSION ARRIêRE - DIFFERENTIEL

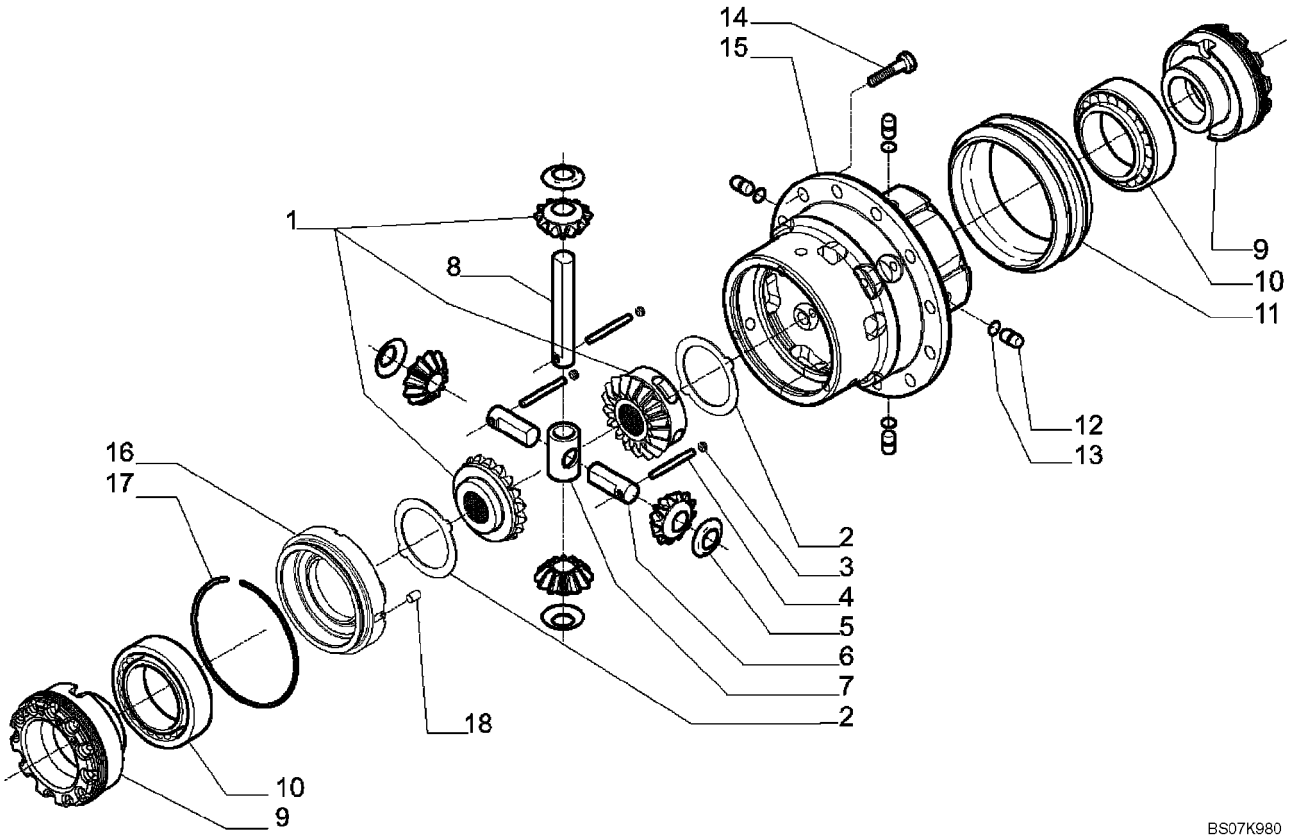

87395372 ESSIEU, PROPULSION ARRIêRE - DIFFERENTIEL

REF	FN	PART NUMBER	YR/SN	QTY	DESCRIPTION
		87395372		1	PONT ARRIERE, Incl. Ref 1 - 18; Also Includes Parts On Figures 06-33 - 06-37, 07-02
1		{87708394}		1	Kit, Differential
2		{87708395}		2	Differential Drive Plate
3		D142898		3	BOUCHON, M10 x 1
4		{87708396}		2	Pin; 9 x 45
5		E135777		4	RONDELLE, Thrust
6		{87708397}		2	Differential Pin
7		{87708398}		1	Spider Gear
8		{87708399}		1	Differential Pin
9		{87708400}		2	Ring Nut; M104 x 1.5
10		E135785		2	ROULEMENT
11		{87708401}		1	Sleeve
12		292207A1		4	AXE, GROS
13		292208A1		4	JOINT TORIQUE
14		{87708402}		12	Bolt; M12 x 25
15		{87708403}		1	Differential Housing
16		{87708408}		1	Differential Housing Cover
17		{87708409}		1	Locking Ring, Differential
18		{87708411}		1	Roller; 8 x 12

87395372 ESSIEU, PROPULSION ARRIêRE - COURONNE ET PIGNON

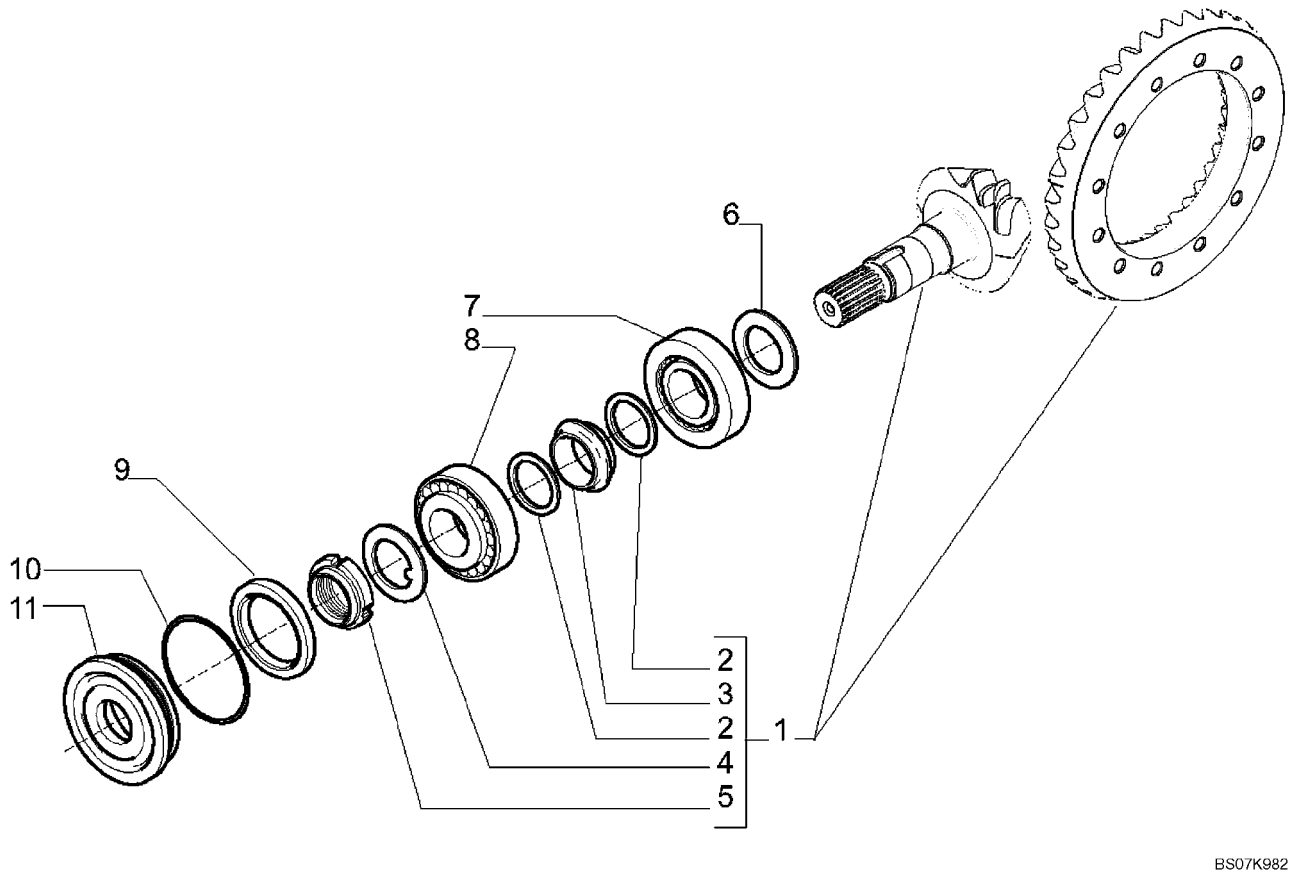

87395372 ESSIEU, PROPULSION ARRIêRE - COURONNE ET PIGNON

REF	FN	PART NUMBER	YR/SN	QTY	DESCRIPTION
		87395372		1	PONT ARRIERE, Incl. Ref 1 - 11; Also Includes Parts On Figures 06-33 - 06-37, 07-02
1		{87708393}		1	Bevel Gear Set, 14/35
2		1349059C1		2	RONDELLE, Elastic
3		175957A1		1	ENTRETOISE
4		N7536		1	RONDELLE, Lock
5		K261014		2	ECROU, Ring; M40 x 105
6		190506A1		AR	CALE D'EPAISSEUR, 2,5 mm (0,098 in)
6		190508A1		AR	CALE D'EPAISSEUR, 2,6 mm (0,102 in)
6		190509A1		AR	CALE D'EPAISSEUR, 2,7 mm (0,106 in)
6		190510A1		AR	CALE D'EPAISSEUR, 2,8 mm (0,110 in)
6		190511A1		AR	CALE D'EPAISSEUR, 2,9 mm (0,114 in)
6		190512A1		AR	CALE D'EPAISSEUR, 3,0 mm (0,118 in)
6		190513A1		AR	CALE D'EPAISSEUR, 3,1 mm (0,122 in)
6		190514A1		AR	CALE D'EPAISSEUR, 3,2 mm (0,125 in)
6		190515A1		AR	CALE D'EPAISSEUR, 3,3 mm (0,129 in)
6		190516A1		AR	CALE D'EPAISSEUR, 3,4 mm (0,133 in)
7		{P1139855X}		1	Bearing
8		K395090		1	ROULEMENT A BILLES
9		K262143		1	JOINT, Ring
10		445720A1		1	JOINT TORIQUE
11		128570A1		1	FLASQUE, Seal

06-36		p1	02/08

87395372 ESSIEU, PROPULSION ARRIêRE - BLOCAGE DU DIFFERENTIEL

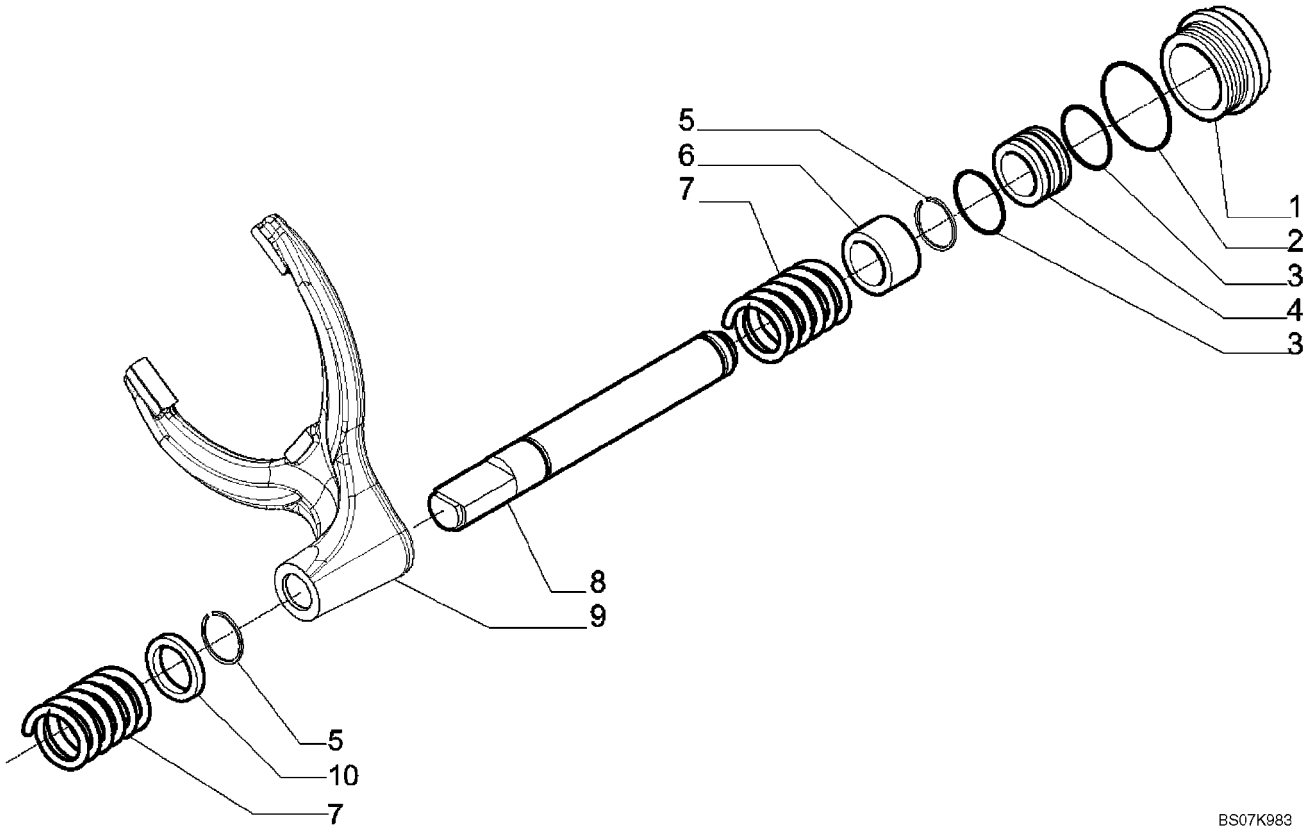

87395372 ESSIEU, PROPULSION ARRIêRE - BLOCAGE DU DIFFERENTIEL

REF	FN	PART NUMBER	YR/SN	QTY	DESCRIPTION
		87395372		1	PONT ARRIERE, Incl. Ref 1 - 10; Also Includes Parts On Figures 06-33 - 06-37, 07-02
1		{87708413}		1	Differential Lock Cylinder
2		{87708415}		1	O-Ring
3		292210A1		2	JOINT
4		292212A1		1	PISTON
5		{87708417}		2	Locking Ring
6		{87708420}		1	Bushing
7		175966A1		2	RESSORT
8		{87708422}		1	Control Piston, Differential Locking
9		{87708424}		1	Fork
10		{87708427}		1	Spacer

87395372 ESSIEU, PROPULSION ARRIÊRE - SATELLITE

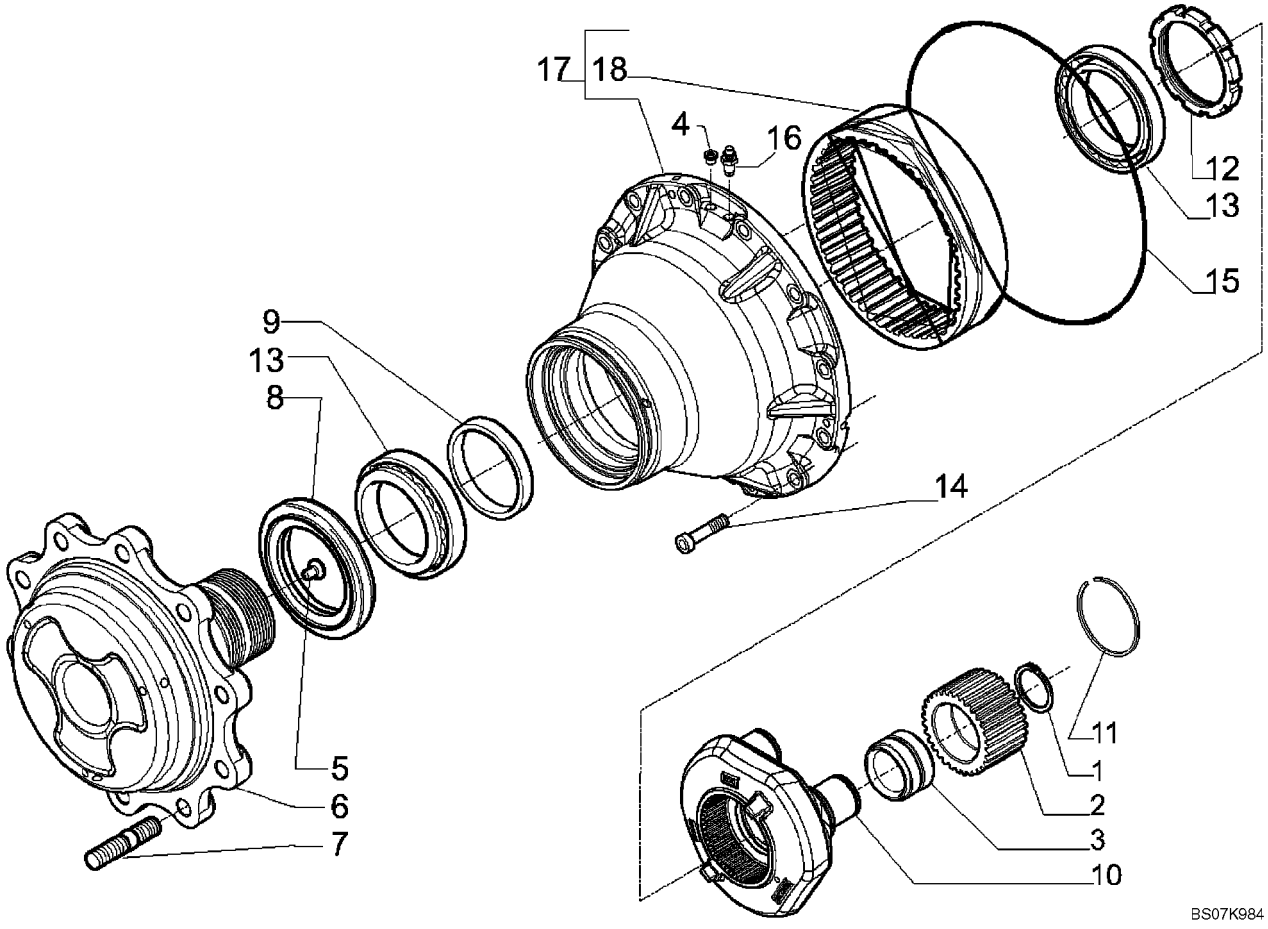

87395372 ESSIEU, PROPULSION ARRIêRE - SATELLITE

REF	FN	PART NUMBER	YR/SN	QTY	DESCRIPTION
		87395372		1	PONT ARRIERE, Incl. Ref 1 - 18; Also Includes Parts On Figures 06-33 - 06-37, 07-02
1		800-1150		6	ANNEAU D'ARRąT, M50, Ext
2		{87708443}		6	Wheel Hub Gear
3		{87708444}		6	Bearing
4		9625178		2	BOUCHON, Hex Soc, 9/16"-18 ORB
5		K395093		2	AXE A TąTE
6		{87708445}		2	Wheel Flange
7		D142986		20	GOUJON
8		{452140A1}		2	Seal Ring
9		{87708447}		2	Spacer
10		{87708452}		2	Planetary Carrier
11		{87708453}		2	Snap Ring
12		{87708454}		2	Ring Nut; M108 x 2
13		K395101		4	POUSSOIR A GALET
14		403955A1		24	BOULON, M14 x 45
15		{87711038}		2	Ring, Wheel Hub
16		E135810		2	VIS D'EVENT
17		{87708466}		2	Hub Ring Gear Kit
18		{87708467}		2	Ring Gear

ARBRE DE TRANSMISSION, ESSIEU ARRIêRE

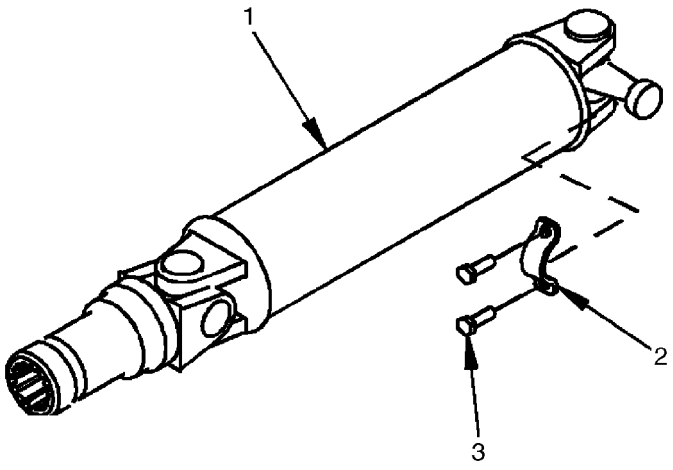

BS07N590

ARBRE DE TRANSMISSION, ESSIEU ARRIêRE

REF	FN	PART NUMBER	YR/SN	QTY	DESCRIPTION
1		87613924		1	ARBRE D'ENTRAINEMENT, Component Parts Not Available At Time Of Printing
2		87538515		2	RETENEUR
3		9637611		4	VIS, Hex Flange Head, Locking, Special, 5/16 - 24 UNF x 1-1/16

NOTES

SECTION INDEX

Freins

07-01		TRANSMISSION, 2WD - FREIN DE STATIONNEMENT
07-01	01	TRANSMISSION, 4WD - FREIN DE STATIONNEMENT
07-02		ESSIEU, PROPULSION ARRIÊRE - FREIN, DIFFERENTIEL
07-03		FREINS - P£DALES
07-04		SYSTEME HYDRAULIQUE - MAITRE-CYLINDRE DE FREIN
07-05		CONDUITES DE FREINAGE VERS LA TRANSMISSION
07-06		CONDUITES DE FREINAGE VERS ESSIEU
07-07		VERIN - MAITRE FREIN

TRANSMISSION, 2WD - FREIN DE STATIONNEMENT

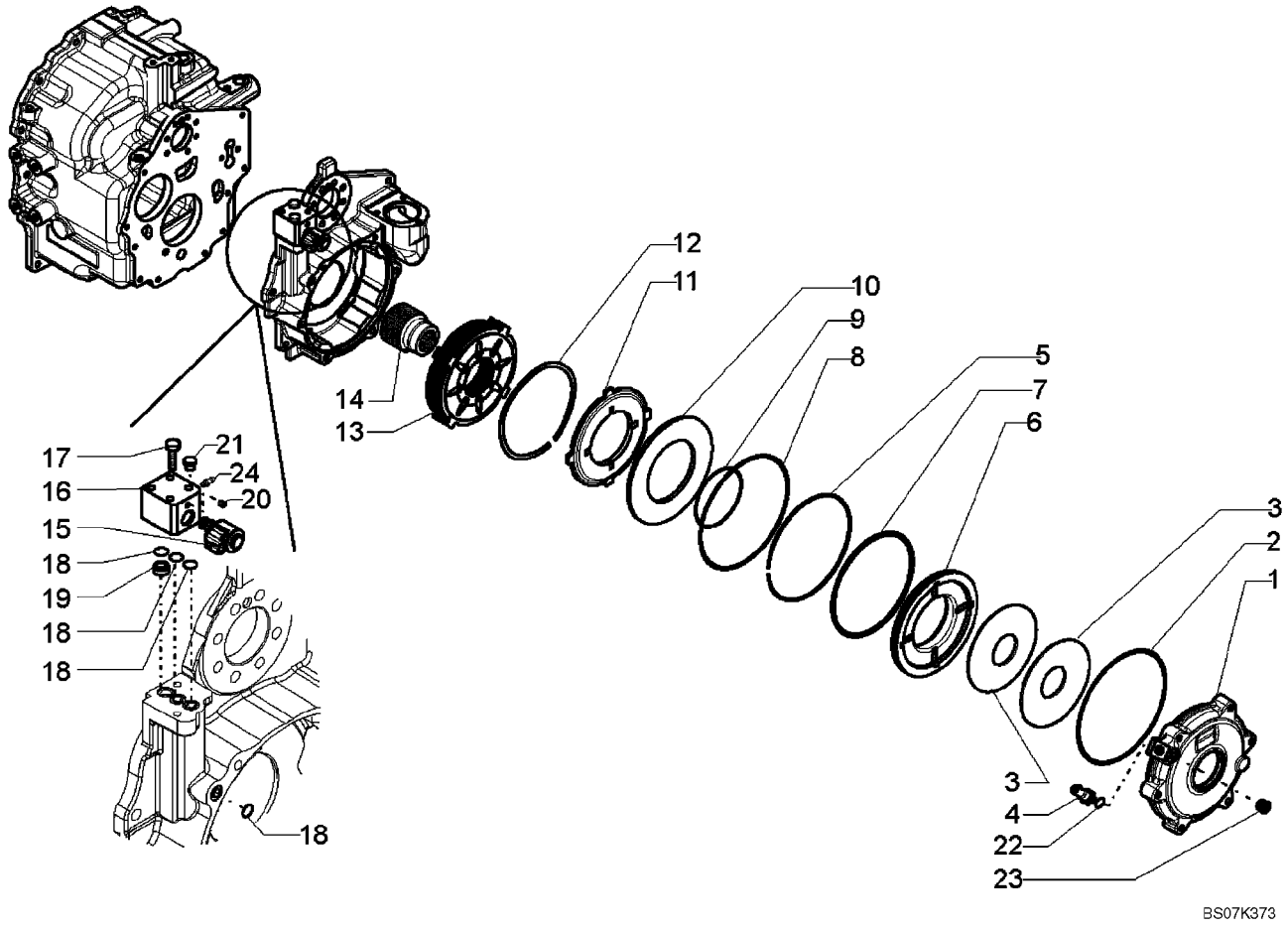

TRANSMISSION, 2WD - FREIN DE STATIONNEMENT

REF	FN	PART NUMBER	YR/SN	QTY	DESCRIPTION
		87395300		1	TRANSMISSION, Two Wheel Drive; Incl Ref 1 - 24; Also Includes Parts On Figures 06-12 - 06-19, 07-01
1		{87701309}		1	Brake Cover
2		{87701310}		1	O-Ring
3		363485A1		2	RONDELLE BELLEVILLE, Belleville Washer
4		{87701313}		1	Pressure Sensor
5		{87701315}		1	Stop Ring
6		{87701317}		1	Brake Piston
7		{87701318}		1	Seal With O-Ring
8		{87701320}		1	O-Ring
9		{87701321}		1	Seal With O-Ring
10		{87701323}		1	Retaining Plate
11		{87701324}		1	Brake Counterplate
12		{87701325}		5	Spacer
13		{87701327}		1	Brake Pack
14		{87701328}		1	Link Bushing
15		{87701329}		1	Electrovalve
16		{87701330}		1	Control Block
17		{87701331}		2	M8 x 55 Bolt
18		{87701332}		4	O-Ring
19		{87701333}		1	Bushing
20		139312A1		1	BOUCHON
21		NSS		1	NON FOURNI SEPAREMENT, PLUG, Shipping Plug
22		100760A1		1	JOINT TORIQUE
23		E135809		1	BOUCHON, 9/16
24		933781R1		1	GRAISSEUR, M10 x 1

07-01	01	p1	02/08

TRANSMISSION, 4WD - FREIN DE STATIONNEMENT

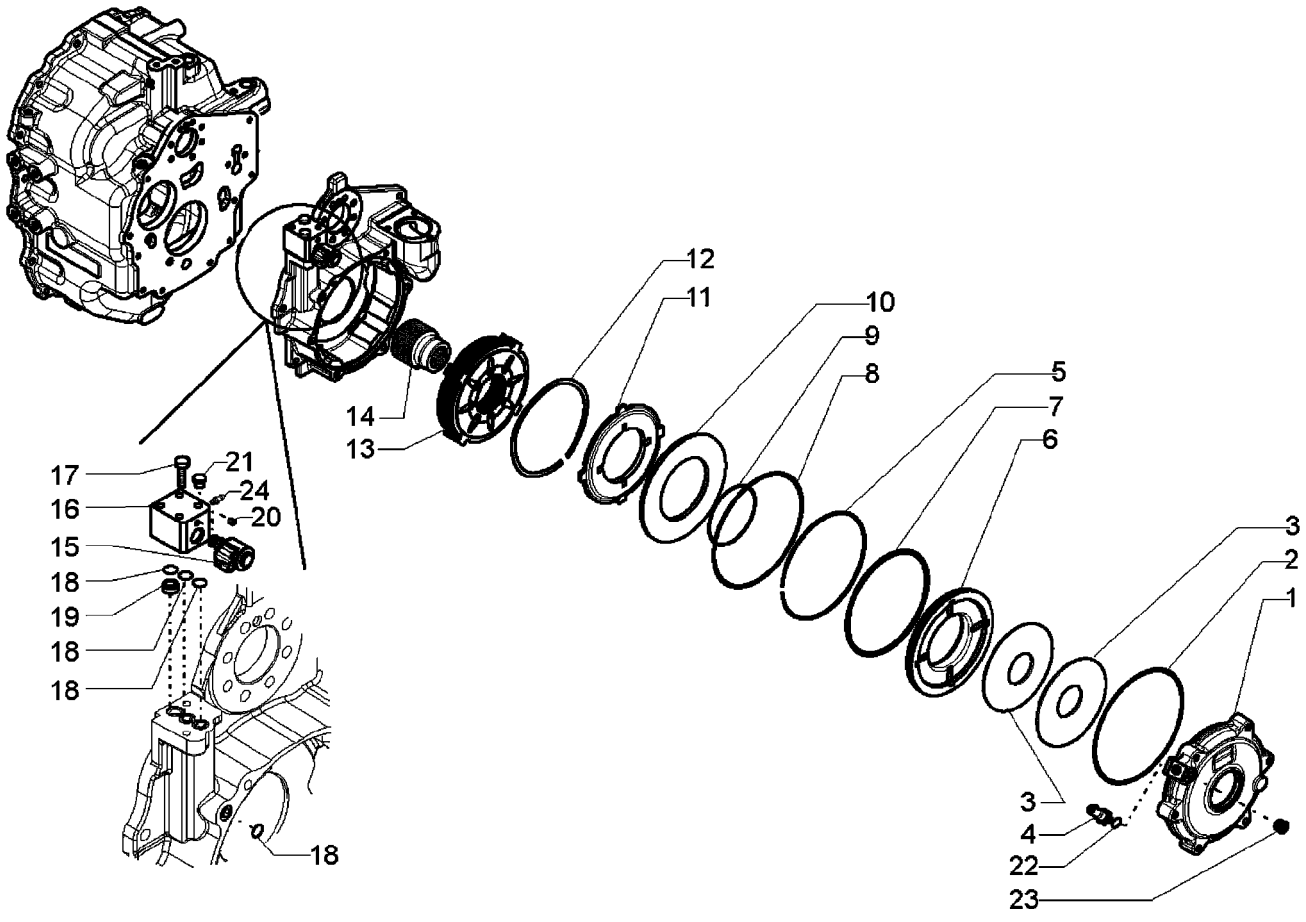

TRANSMISSION, 4WD - FREIN DE STATIONNEMENT

REF	FN	PART NUMBER	YR/SN	QTY	DESCRIPTION
		87395301		1	TRANSMISSION, Four Wheel Drive; Incl Ref 1 - 24; Also Includes Parts On Figures 06-20 - 06-29, 07-01(01)
1		{87701309}		1	Brake Cover
2		{87701310}		1	O-Ring
3		363485A1		2	RONDELLE BELLEVILLE, Belleville Washer
4		{87701313}		1	Pressure Sensor
5		{87701315}		1	Stop Ring
6		{87701317}		1	Brake Piston
7		{87701318}		1	Seal With O-Ring
8		{87701320}		1	O-Ring
9		{87701321}		1	Seal With O-Ring
10		{87701323}		1	Retaining Plate
11		{87701324}		1	Brake Counterplate
12		{87701325}		5	Spacer
13		{87701327}		1	Brake Pack
14		{87701328}		1	Link Bushing
15		{87701329}		1	Electrovalve
16		{87701330}		1	Control Block
17		{87701331}		2	M8 x 55 Bolt
18		{87701332}		4	O-Ring
19		{87701333}		1	Bushing
20		139312A1		1	BOUCHON
21		NSS		1	NON FOURNI SEPAREMENT, PLUG, Shipping Plug
22		100760A1		1	JOINT TORIQUE
23		E135809		1	BOUCHON, 9/16
24		933781R1		1	GRAISSEUR, M10 x 1

ESSIEU, PROPULSION ARRIêRE - FREIN, DIFFERENTIEL

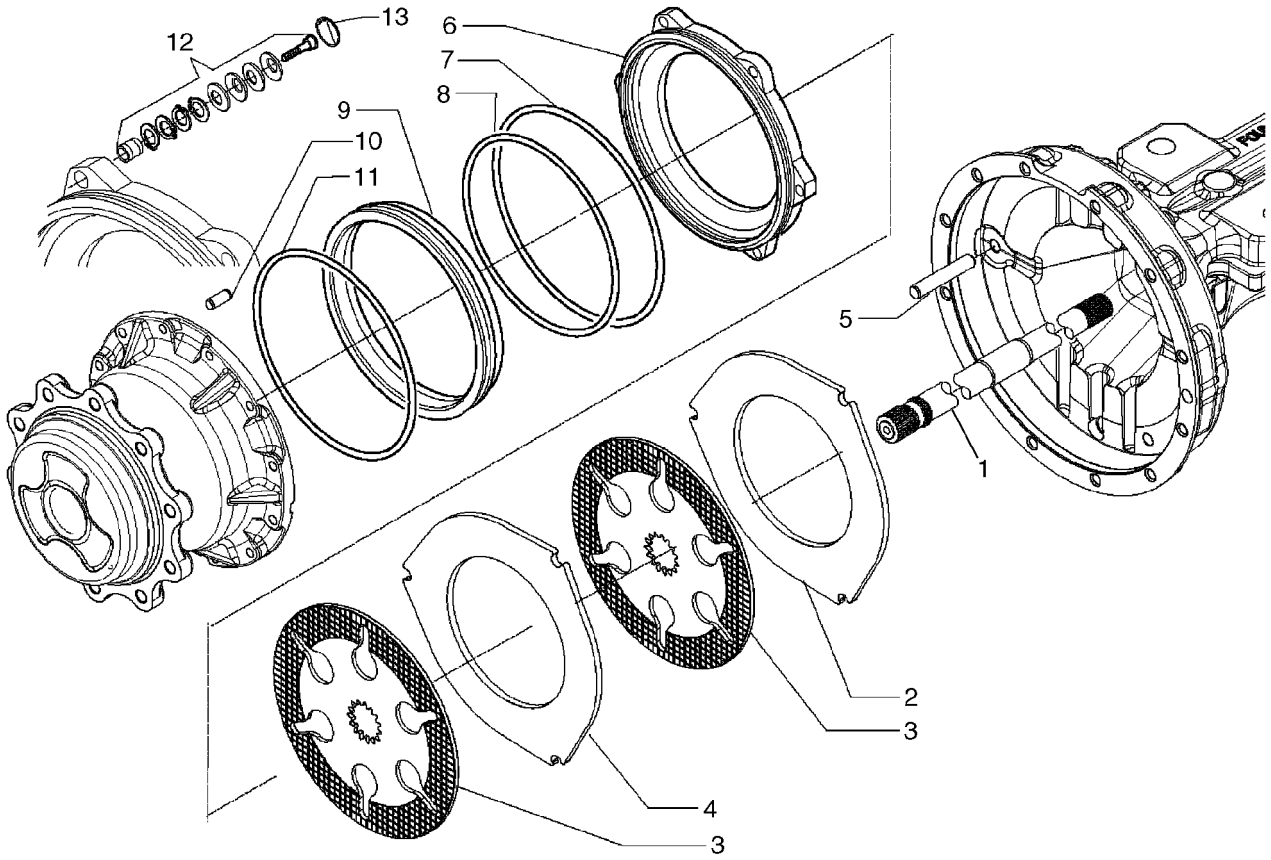

BS07N834

ESSIEU, PROPULSION ARRIêRE - FREIN, DIFFERENTIEL

REF	FN	PART NUMBER	YR/SN	QTY	DESCRIPTION
		87395372		1	PONT ARRIERE, Incl. Ref 1 - 13; Also Includes Parts On Figures 06-26 - 06-30, 07-02
1		{87708431}		1	LH Half Shaft
1		{87708432}		1	RH Half Shaft
2		{87708433}		2	Brake Separation Plate, 5 thk
3		{87708434}		4	Brake Plate
4		{87708435}		2	Brake Separation Plate, 8 thk
5		139294A1		6	GUIDE
6		{87708436}		2	Brake Piston
7		{87708438}		2	O-Ring
8		371144A1		2	JOINT TORIQUE, Piston, External
9		{87708440}		2	Brake Piston
10		D142890		2	PION
11		371145A1		2	JOINT TORIQUE, Piston Carrier
12		{87708441}		6	Kit, Rear Axle Self Adjust; 0.6 mm
13		{87708442}		6	Lock Ring

07-03		p1	11/07

FREINS - PÉDALES

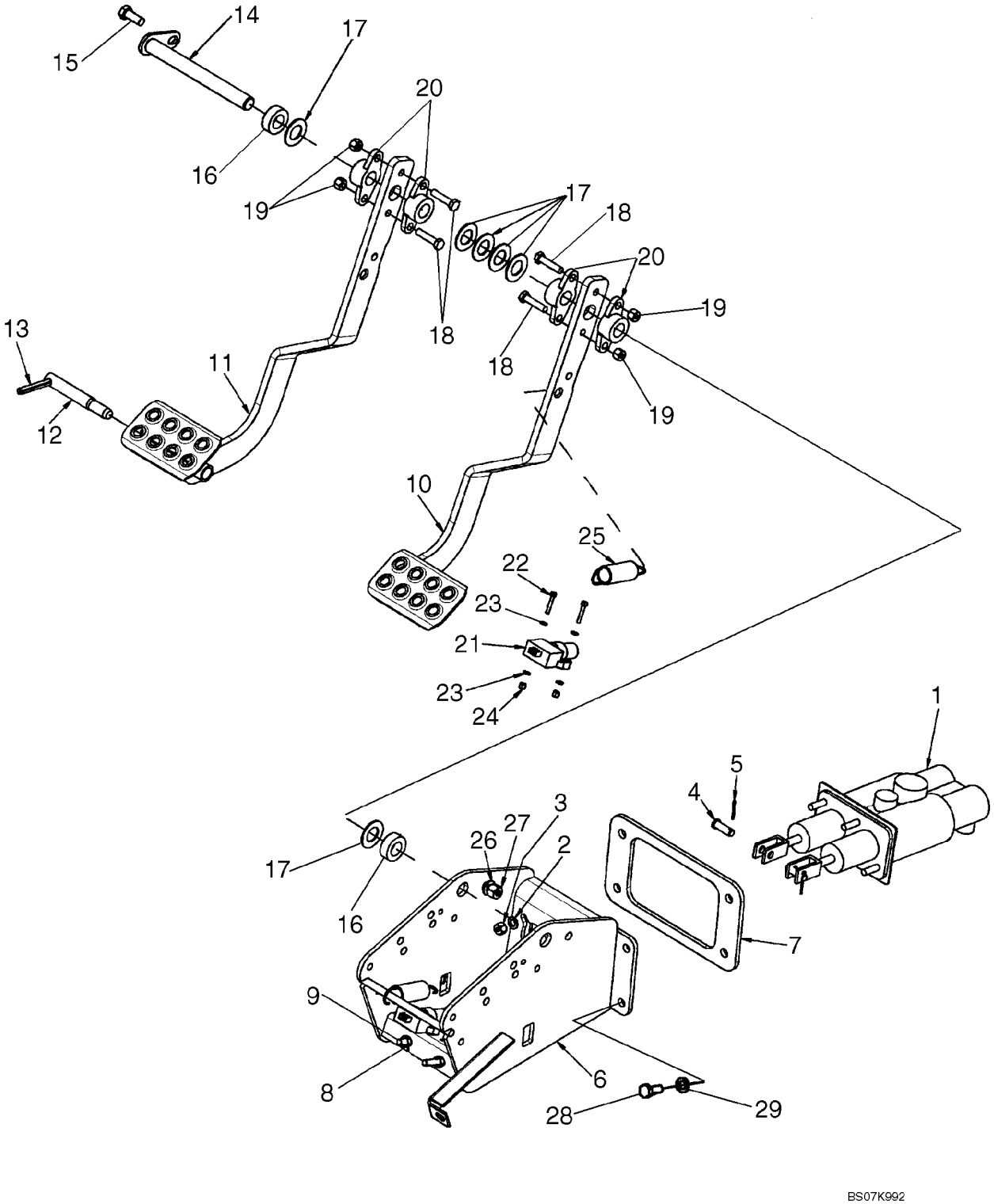

FREINS - PÉDALES

REF	FN	PART NUMBER	YR/SN	QTY	DESCRIPTION
1		87714038		1	MAITRE-CYLINDRE, See Figure 07-07
2		895-11008		4	RONDELLE, M8 x 16 x 1.6
3		832-10408		4	CONTRE-ECROU, M8 x 1.25, Cl 8
4		427-6106		2	AXE DE CHAPE, 3/8" x 1 1/16"
5		432-612		2	GOUPILLE, 3/32" x 3/4"
6		87642370		1	EQUERRE, Brake Pedal and Brake Master Cylinder Mounting
7		87644495		1	JOINT
8		829-1408		4	ECROU, M8, Cl 10
9		87644497		2	ISOLATEUR, Brake Pedal
10		87642365		1	PEDALE, Right-Hand
11		87642364		1	PEDALE, Left-Hand
12		D124530		1	AXE, Brake Pedal Lock
13		86625112		1	CHEVILLE, 5/16" x 2 1/2", Slotted
14		D140035		1	AXE, GROS, Shaft
15		614-10025		1	BOULON, Hex, M10 x 25, 8.8, Full Thd
16		D124529		2	ENTRETOISE
17		495-81261		X	RONDELLE, 13/16" x 1 1/2" x .067", HDN, Used As A Spacer
18		814-8035		4	BOULON, Hex, M8 x 35, 8.8
19		832-10408		4	CONTRE-ECROU, M8 x 1.25, Cl 8
20		A77310		4	PIVOT, Bearing
21		82026949		2	CONTACTEUR, Push Button, Brake Lamp, Attaches To Front Console Wiring Harness
22		87016468		4	VIS, Hex Soc Hd, M4 x 25, 8.8
23		895-11004		8	RONDELLE, M4
24		832-10404		4	CONTRE-ECROU, M4 x .7, Cl 8
25		230973A1		2	RESSORT
26		895-11010		1	RONDELLE, M10 x 20 x 2
27		832-10410		1	CONTRE-ECROU, M10 x 1.5, Cl 8
28		614-8020		4	BOULON, Hex, M8 x 20, 8.8
29		895-11008		4	RONDELLE, M8 x 16 x 1.6

SYSTEME HYDRAULIQUE - MAITRE-CYLINDRE DE FREIN

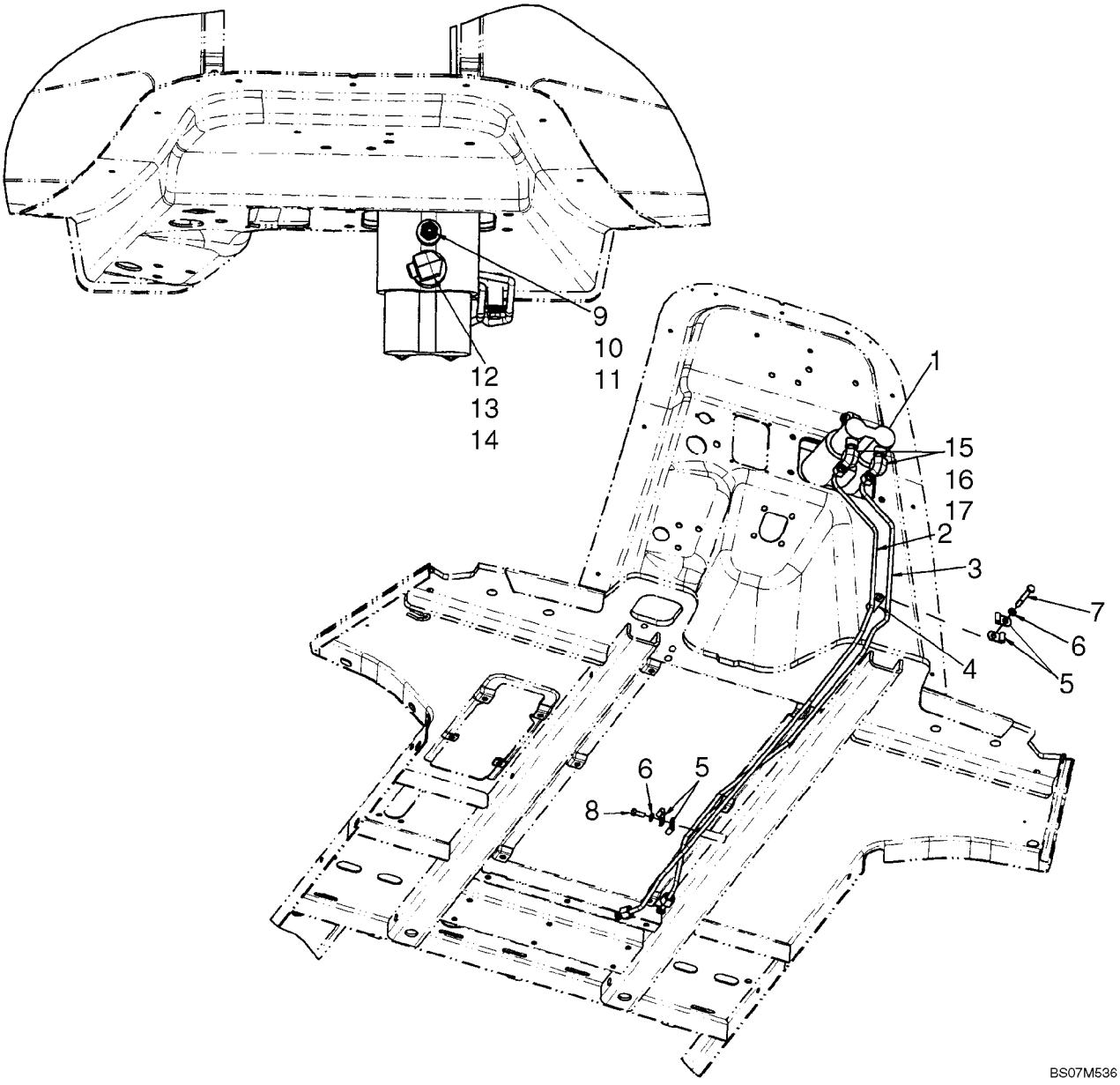

SYSTEME HYDRAULIQUE - MAITRE-CYLINDRE DE FREIN

REF	FN	PART NUMBER	YR/SN	QTY	DESCRIPTION
1		87714038		1	MAITRE-CYLINDRE, See Figure 07-07
2		87697589		1	TUYAU HYDRAULIQUE, RH Brake
3		87697590		1	TUYAU HYDRAULIQUE, LH Brake
4		87449579		1	ENTRETOISE, Brake Tube
5		515-2379		4	BRIDE, 5/16", Insul, 3/8" Bolt
6		895-11008		2	RONDELLE, M8 x 16 x 1.6
7		814-8060		1	BOULON, Hex, M8 x 60, 8.8
8		614-8020		1	BOULON, Hex, M8 x 20, 8.8
9		700-101		1	RACCORD, 11/16"-16 ORFS x M14 x 1.5 ORB, Incl. 10, 11
10		238-6012		1	JOINT THORIQUE, -012, 90 Duro, .364" ID x .070" Thk, Face Seal End
11		637-63113		1	JOINT THORIQUE, Cl 6, 11.3MM ID x 2.2 Thk
12		700-345		1	COUDE, 90Ü, 11/16"-18 ORFS x M18 x 1.5 ORB, Incl. 13, 14
13		637-63153		1	JOINT THORIQUE, Cl 6, 15.3MM ID x 2.2 Thk
14		238-6012		1	JOINT THORIQUE, -012, 90 Duro, .364" ID x .070" Thk, Face Seal End
15		700-304		2	COUDE, 90Ü, 11/16"-18 ORFS x M14 x 1.5 ORB, Incl. 16, 17
16		238-6012		1	JOINT THORIQUE, -012, 90 Duro, .364" ID x .070" Thk, Face Seal End
17		637-63113		1	JOINT THORIQUE, Cl 6, 11.3MM ID x 2.2 Thk

CONDUITES DE FREINAGE VERS LA TRANSMISSION

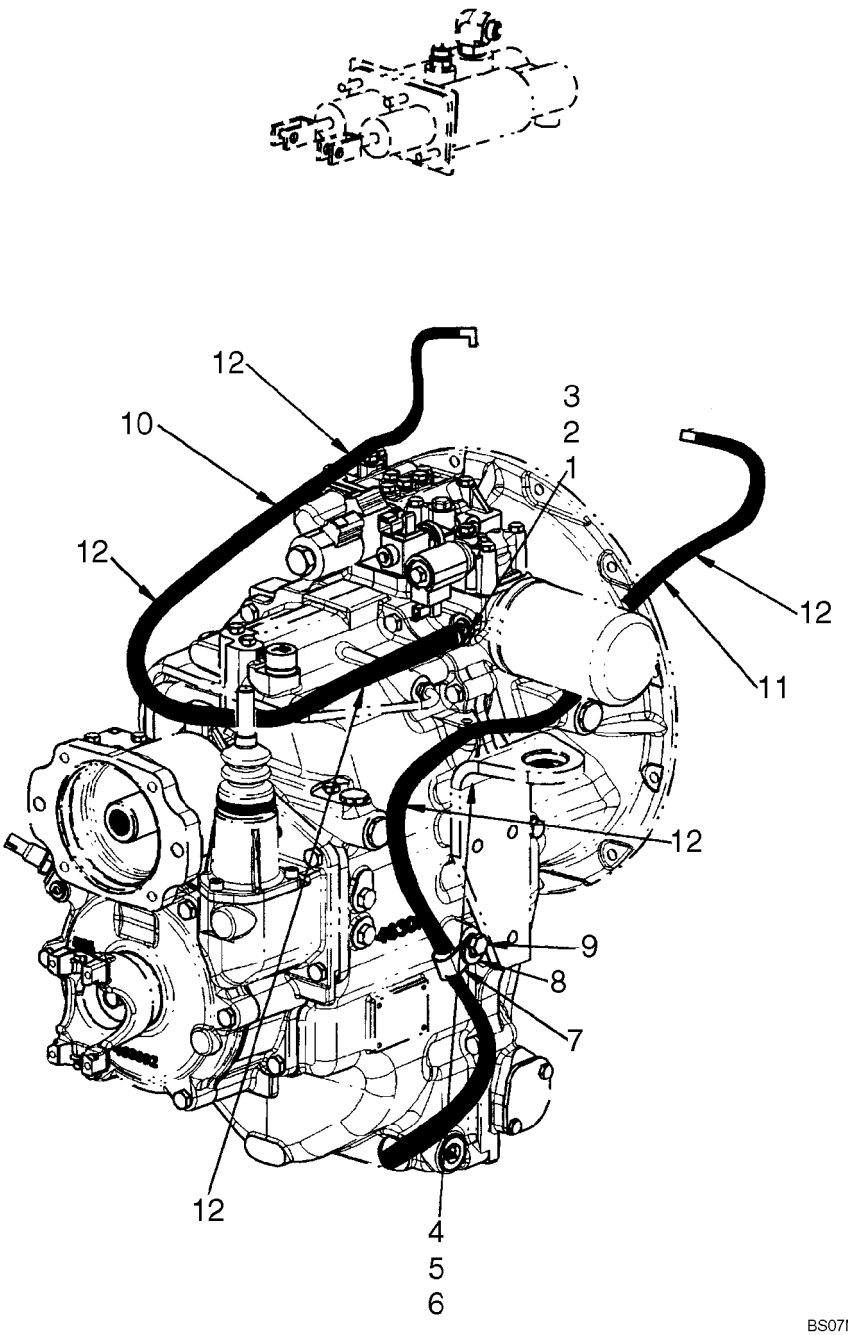

CONDUITES DE FREINAGE VERS LA TRANSMISSION

REF	FN	PART NUMBER	YR/SN	QTY	DESCRIPTION
1		201-101		1	RACCORD, 11/16"-16 ORFS x 9/16"-18 ORB, Incl. 2, 3
2		237-6006		1	JOINT THORIQUE, 6-1, 90 Duro, .468" ID x .078" Thk, Face Seal End
3		238-6012		1	JOINT THORIQUE, -012, 90 Duro, .364" ID x .070" Thk, Boss End
4		201-304		1	COUDE, 90Ü, 11/16"-16 x 9/16"-18 Adj, ORFS, Incl. 5, 6
5		238-6012		1	JOINT THORIQUE, -012, 90 Duro, .364" ID x .070" Thk, Face Seal End
6		237-6006		1	JOINT THORIQUE, 6-1, 90 Duro, .468" ID x .078" Thk, Boss End
7		515-25190		1	BRIDE, 3/4", Insul, 1/2" Bolt
8		896-15012		1	RONDELLE, M12 x 28.5 x 4, HT
9		614-12025		1	BOULON, Hex, M12 x 25, 8.8
10		87603513		1	FLEXIBLE (ASSEMBLE)
11		87603514		1	FLEXIBLE (ASSEMBLE)
12		191704A1		5	GAINE

CONDUITES DE FREINAGE VERS ESSIEU

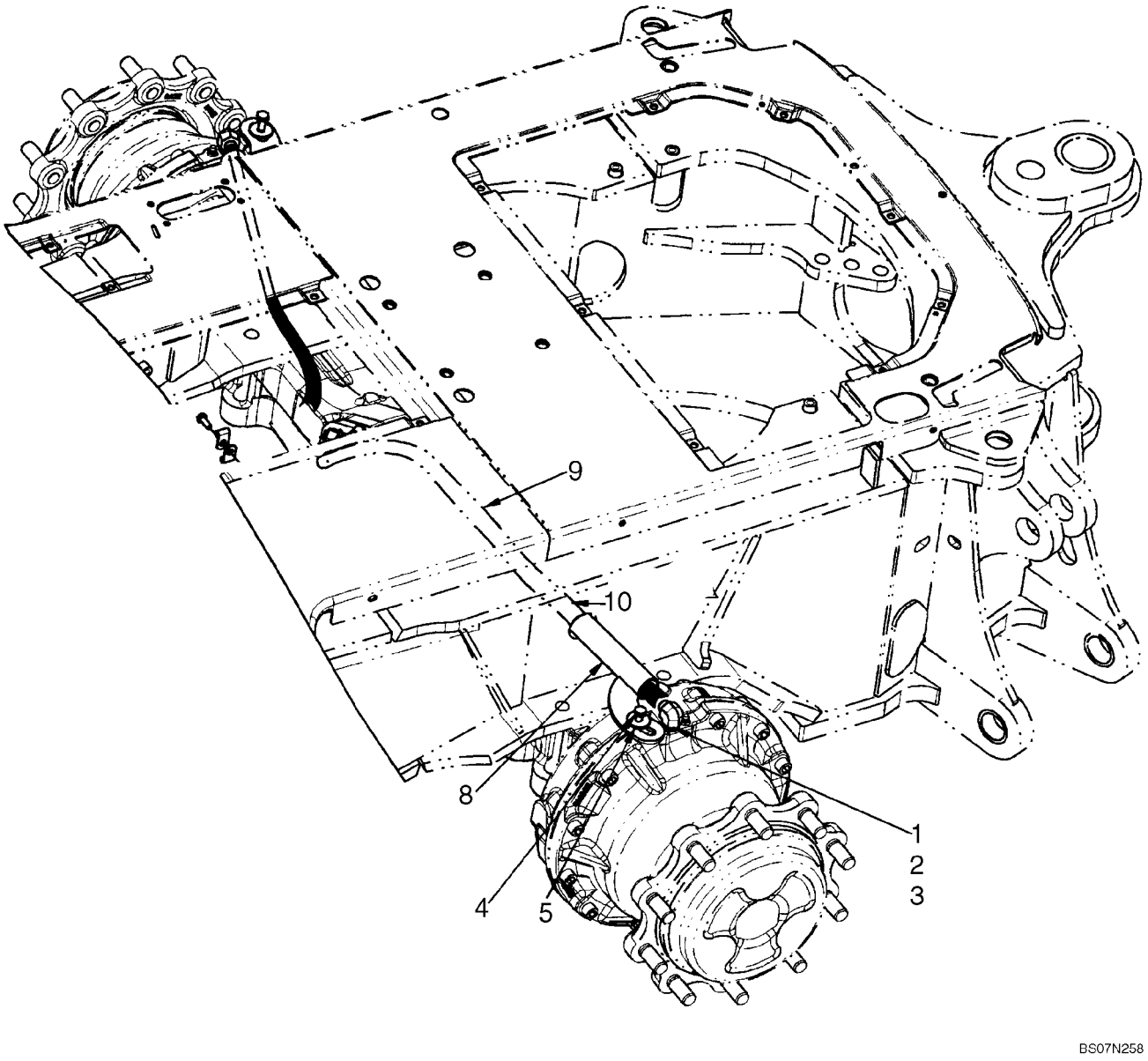

CONDUITES DE FREINAGE VERS ESSIEU

REF	FN	PART NUMBER	YR/SN	QTY	DESCRIPTION
1		700-304		2	COUDE, 90Ü, 11/16"-18 ORFS x M14 x 1.5 ORB, Incl. 2, 3
2		238-6012		1	JOINT THORIQUE, -012, 90 Duro, .364" ID x .070" Thk, Face Seal End
3		237-6006		1	JOINT THORIQUE, 6-1, 90 Duro, .468" ID x .078" Thk, Boss End
4		614-10020		2	BOULON, Hex, M10 x 20, 8.8, Full Thd
5		12644301		2	RONDELLE, M10 x 35 x 3
8		87699881		2	GARANT
9		87603511		2	FLEXIBLE (ASSEMBLE)
10		191704A1		2	GAINE

VERIN - MAITRE FREIN

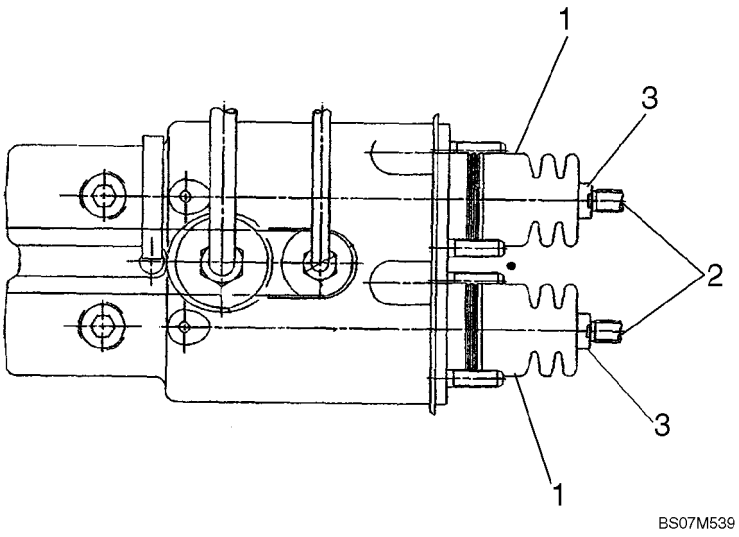

VERIN - MAITRE FREIN

REF	FN	PART NUMBER	YR/SN	QTY	DESCRIPTION
		87714038		1	MAITRE-CYLINDRE, Incl. Ref 1 - 3
1		87716969		2	RECOUVREMENT
2		87716970		2	FOURCHETTE
3		829-1410		2	ECROU, M10, Cl 10

NOTES

SECTION INDEX
Installation hydraulique

08-01	SYSTEME HYDRAULIQUE - POMPE, FILTRE ET DISTRIBUTEUR DE CHARGEUSE
08-02	SYSTEME HYDRAULIQUE - DU DISTRIBUTEUR DU CHARGEUR AU FILTRE AU DISTRIBUTEUR DE LA PELLE RETRO
08-03	SYSTEME HYDRAULIQUE - REFROIDISSEUR, CONDUITES DE RETOUR ET FILTRE
08-04	SYSTEME HYDRAULIQUE - VERIN DE RELEVAGE DES BRAS DE RELEVAGE
08-05	SYSTEME HYDRAULIQUE - VERIN, GODET DE LA CHARGEUSE
08-06	SYSTEME HYDRAULIQUE - VERIN, BENNE DE LA CHARGEUSE
08-07	SYSTEME HYDRAULIQUE - VERIN, BENNE DE LA CHARGEUSE
08-07A	SYSTEME HYDRAULIQUE - BENNE DE LA CHARGEUSE, AVEC £LECTRIQUE
08-07B	SYSTEME HYDRAULIQUE - BENNE DE LA CHARGEUSE, AVEC £LECTRIQUE (MODÊLES AVEC COMMANDE PILOTE)
08-08	SYSTEME HYDRAULIQUE - VERIN, STABILISATEUR DE LA PELLE RETRO EUROPA (SANS DE COMMANDE PILOTE)
08-08A	SYSTEME HYDRAULIQUE - VERIN, STABILISATEUR DE LA PELLE RETRO EUROPA (AVEC DE COMMANDE PILOTE)
08-09	SYSTEME HYDRAULIQUE - VERIN, DEBATTEMENT DE LA PELLE RETRO (SANS DE COMMANDE PILOTE)
08-09A	SYSTEME HYDRAULIQUE - VERIN, DEBATTEMENT DE LA PELLE RETRO (AVEC DE COMMANDE PILOTE)
08-10	SYSTEME HYDRAULIQUE - VERIN, FLECHE DE LA PELLE RETRO
08-10A	SYSTEME HYDRAULIQUE - LE LOQUET DE BOOM DE BACKHOE ET LE CIRCUIT ELECTRIQUE
08-11	SYSTEME HYDRAULIQUE - VERIN, BALANCIER DE LA PELLE RETRO
08-12	SYSTEME HYDRAULIQUE - VERIN, GODET DE LA PELLE RETRO (MODÊLES SANS BALANCIER EXTENSIBLE)
08-13	SYSTEME HYDRAULIQUE - VERIN, GODET DE LA PELLE RETRO (MODÊLES AVEC BALANCIER EXTENSIBLE)
08-14	SYSTEME HYDRAULIQUE - VERIN, BALANCIER EXTENSIBLE DE LA PELLE RETRO
08-15	SYSTEME HYDRAULIQUE - DISTRIBUTEUR, COMMANDE PILOTE DE LEVIER DE COMMANDE (6 SPOOL, W/O EXT DIPPER,
08-16	SYSTEME HYDRAULIQUE - DISTRIBUTEUR, COMMANDE PILOTE DE LEVIER DE COMMANDE (6 SPOOL, W/O EXT DIPPER,
08-17	SYSTEME HYDRAULIQUE - DISTRIBUTEUR, COMMANDE PILOTE DE LEVIER DE COMMANDE (7 SPOOL, W/ EXT DIPPER,
08-18	SYSTEME HYDRAULIQUE - DISTRIBUTEUR, COMMANDE PILOTE DE LEVIER DE COMMANDE (7 SPOOL, W/ EXT DIPPER,
08-19	SYSTEME HYDRAULIQUE - DISTRIBUTEUR, COMMANDE PILOTE DE LEVIER DE COMMANDE (7 SPOOL, W/O EXT DIPPER,
08-20	SYSTEME HYDRAULIQUE - DISTRIBUTEUR, COMMANDE PILOTE DE LEVIER DE COMMANDE (8 SPOOL, W/ EXT DIPPER,
08-21	SYSTEME HYDRAULIQUE - COMMANDE PILOTE DE LEVIER DE COMMANDE
08-22	SYSTEME HYDRAULIQUE - COMMANDE PILOTE
08-23	SYSTEME HYDRAULIQUE - CIRCUIT AUXILIAIRE DE LA PELLE RETRO (SANS DE COMMANDE PILOTE)
08-23A	DISTRIBUTEUR - AUXILIAIRE UNIDIRECTIONNEL (SANS DE COMMANDE PILOTE)
08-23B	SYSTEME HYDRAULIQUE - CIRCUIT AUXILIAIRE DE LA PELLE RETRO (AVEC DE COMMANDE PILOTE)
08-23C	DISTRIBUTEUR - AUXILIAIRE UNIDIRECTIONNEL (AVEC DE COMMANDE PILOTE)
08-24	SYSTEME HYDRAULIQUE - CIRCUIT AUXILIAIRE DE LA PELLE RETRO, AU BRAS DE RELEVAGE ET AU BALANCIER
08-25	SYSTEME HYDRAULIQUE - SYSTEME ANTI-TANGAGE

SECTION INDEX
Installation hydraulique

08-26	SYSTEME HYDRAULIQUE - COUPLEUR, OUTIL DE CHARGEUSE, DE S£CURIT£
08-27	SYSTEME HYDRAULIQUE - COUPLEUR, OUTIL DE CHARGEUSE, DE S£CURIT£, AU CADRE DU CHARGEUR EN OPTION
08-28	DISTRIBUTEUR DU COUPLEUR - OUTIL DE CHARGEUSE, DE S£CURIT£
08-29	POMPE, £QUIPEMENT HYDRAULIQUE
08-30	DISTRIBUTEUR - COMMANDE DU CHARGEUR, DEUX TIROIRS
08-31	DISTRIBUTEUR - COMMANDE DU CHARGEUR, TROIS TIROIRS
08-32	DISTRIBUTEUR - COMMANDE DE LA PELLE RETRO, 6 TIROIRS (SANS BALANCIER EXTENSIBLE ET SANS CIRCUIT HYD)
08-33	DISTRIBUTEUR - COMMANDE DE LA PELLE RETRO, 7 TIROIRS (SANS BALANCIER EXTENSIBLE ET AVEC CIRCUIT HYD)
08-34	DISTRIBUTEUR - COMMANDE DE LA PELLE RETRO, 7 TIROIRS (AVEC BALANCIER EXTENSIBLE ET SANS CIRCUIT HYD)
08-35	DISTRIBUTEUR - COMMANDE DE LA PELLE RETRO, 8 TIROIRS (AVEC BALANCIER EXTENSIBLE ET SANS CIRCUIT HYD)
08-36	DISTRIBUTEUR - COMMANDE DE LA PELLE RETRO, 6 TIROIRS
08-37	DISTRIBUTEUR - COMMANDE DE LA PELLE RETRO, 7 TIROIRS
08-38	DISTRIBUTEUR - COMMANDE DE LA PELLE RETRO, 7 TIROIRS
08-39	DISTRIBUTEUR - COMMANDE DE LA PELLE RETRO, 8 TIROIRS
08-40	CIRCUIT - DEBATTEMENT DE LA RETROPELLE (AVEC DE COMMANDE PILOTE)
08-41	CIRCUIT - FLECHE DE LA RETROPELLE (AVEC DE COMMANDE PILOTE)
08-42	CIRCUIT - STABILISATEUR DE LA PELLE RETRO (AVEC DE COMMANDE PILOTE)
08-43	CIRCUIT - BRAS DE LA RETROPELLE (AVEC DE COMMANDE PILOTE)
08-44	CIRCUIT - GODET DE LA RETROPELLE (AVEC DE COMMANDE PILOTE)
08-45	CIRCUIT - BALANCIER EXTENSIBLE (AVEC DE COMMANDE PILOTE)
08-46	CIRCUIT - OPTIONS, CIRCUIT HYDRAULIQUE AUXILIAIRE (AVEC DE COMMANDE PILOTE)
08-47	DISTRIBUTEUR, SOUPAPE DE REDUCTION PRESSION (2 SPOOL) (AVEC DE COMMANDE PILOTE)
08-48	DISTRIBUTEUR, SOUPAPE DE REDUCTION PRESSION (3 SPOOL) (AVEC DE COMMANDE PILOTE)
08-49	DISTRIBUTEUR, SOUPAPE DE REDUCTION PRESSION (4 SPOOL) (AVEC DE COMMANDE PILOTE)
08-50	DISTRIBUTEUR, LEVIER DE COMMANDE (COMMANDE PILOTE) (GAUCHE) AVERTISSEUR SONORE
08-51	DISTRIBUTEUR, LEVIER DE COMMANDE (COMMANDE PILOTE) (GAUCHE) AVERTISSEUR SONORE & UNI-DIR
08-52	DISTRIBUTEUR, LEVIER DE COMMANDE (COMMANDE PILOTE) (GAUCHE) AVERTISSEUR SONORE & BI-DIR
08-53	DISTRIBUTEUR, LEVIER DE COMMANDE (COMMANDE PILOTE) (DROIT) SANS BALANCIER EXTENSIBLE
08-54	DISTRIBUTEUR, LEVIER DE COMMANDE (COMMANDE PILOTE) (DROIT) AVEC BALANCIER EXTENSIBLE
08-55	DISTRIBUTEUR - AMORTISSEUR DE DEBATTEMENT
08-55A	ELECTROVANNE - VERROUILLAGE DE LA FLECHE
08-56	ACCUMULATEUR ASS. - SYSTEME ANTI-TANGAGE
08-57	FILTRE A HUILE
08-58	VERIN - RELEVAGE DE LA CHARGEUSE
08-59	VERIN - GODET DE LA CHARGEUSE
08-60	VERIN - BENNE DE CHARGEUSE
08-61	VERIN - STABILISATEUR DE LA PELLE RETRO

SECTION INDEX
Installation hydraulique

08-62	VERIN - DEBATTEMENT DE LA RETROPELLE
08-63	VERIN - FLECHE DE LA RETROPELLE
08-64	VERIN - BRAS DE LA RETROPELLE
08-65	VERIN - GODET DE LA RETROPELLE
08-66	VERIN - BALANCIER EXTENSIBLE DE LA PELLE RETRO

SYSTEME HYDRAULIQUE - POMPE, FILTRE ET DISTRIBUTEUR DE CHARGEUSE

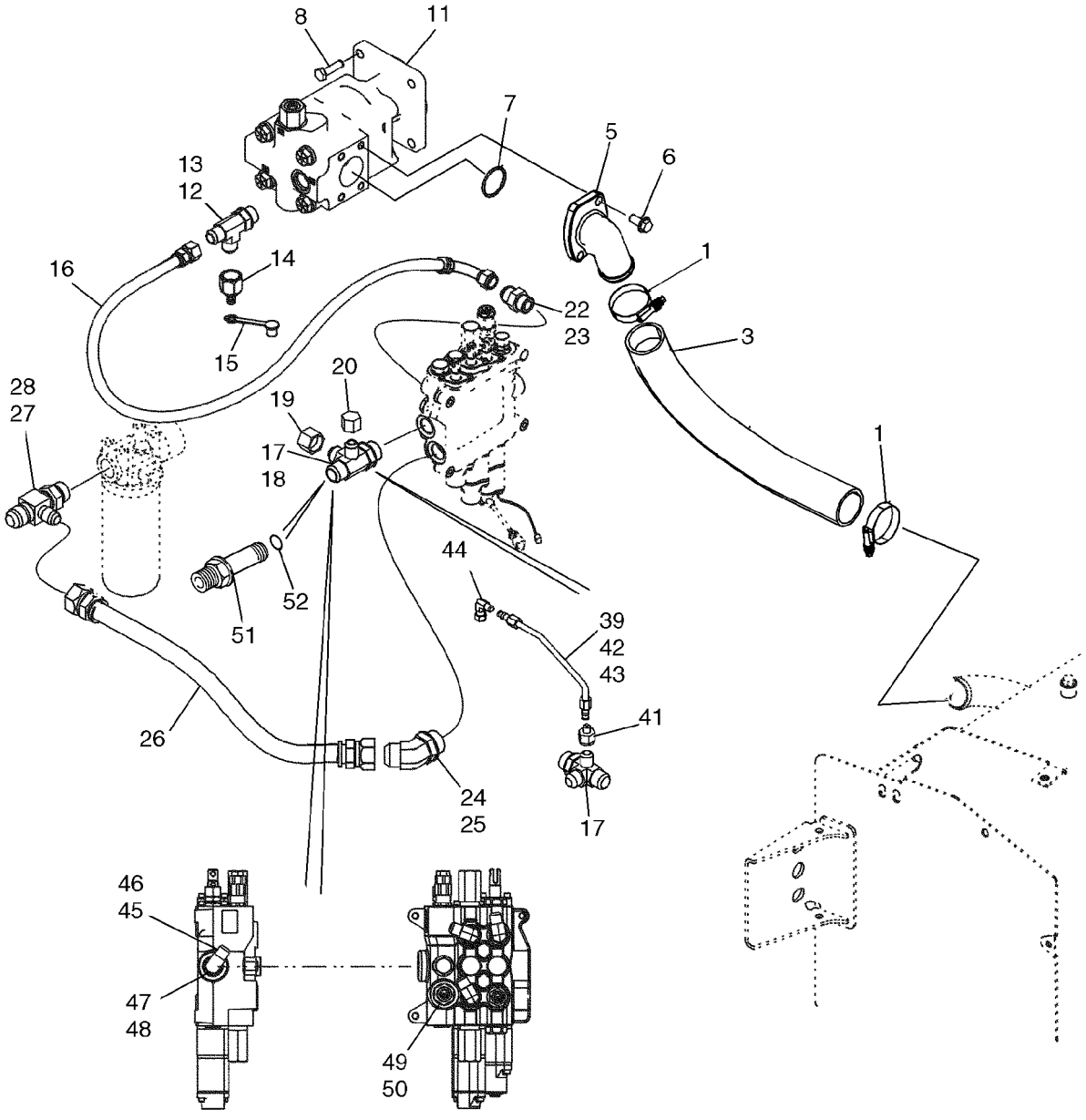

SYSTEME HYDRAULIQUE - POMPE, FILTRE ET DISTRIBUTEUR DE CHARGEUSE

REF	FN	PART NUMBER	YR/SN	QTY	DESCRIPTION
1		259044A1		2	COLLIER
3		87627903		1	DURITE, Suction
5		87592658		1	FLASQUE, Pump
6		864-12030		3	VIS, Hex Soc Hd, M12 x 30, 8.8
7		238-5228		1	JOINT THORIQUE, -228, 70 Duro, 2.234" ID x .139" Thk
8		514-832		4	BOULON, Hex, M12 x 1.25 x 35, 8.8, Full Thd
11		87434672		1	POMPE HYDRAULIQUE, Equipment, See Figure 08-29
12		218-5239		1	TE, 1 1/16"-12, 37Ü x 1 1/16"-12, O-Ring run, Incl. Ref 13
13		237-6012		1	JOINT THORIQUE, 12-1, 90 Duro, .924 ID x .118" Thk
14		D137625		1	ACCOUPLEMENT HYDR., Quick Disconnect; Includes (1) 425-1120 Nut
15		H434163		1	CACHE-POUSSIERE
16		87452399		1	FLEXIBLE (ASSEMBLE), 775 mm (30-9/16 in)
17		87436066		1	RACCORD, 4-Way Special Fitting; Incl. Ref 18; If Used
18		237-6016		1	JOINT THORIQUE, 16-1, 90 Duro, 1.171" ID x .118" Thk
19		218-335		1	CHAPEAU, 37Ü, 1 1/16"-12, Models Without Pilot Controls; If Used
20		218-756		1	CHAPEAU, 37Ü, 7/8"-14, Models Without Pilot Controls; If Used
22		218-5064		1	RACCORD, 1 1/16"-12, 37Ü x 1 1/16"-12, O-Ring, Incl. Ref 23
23		237-6012		1	JOINT THORIQUE, 12-1, 90 Duro, .924 ID x .118" Thk
24		218-5140		1	COUDE, 45Ü, 1 5/16"-12 x 1 5/16"-12, O-Ring, Incl. Ref 25
25		237-6016		1	JOINT THORIQUE, 16-1, 90 Duro, 1.171" ID x .118" Thk
26		87452400		1	FLEXIBLE (ASSEMBLE), 635 mm (25 in), Loader Valve to Filter

SYSTEME HYDRAULIQUE - POMPE, FILTRE ET DISTRIBUTEUR DE CHARGEUSE

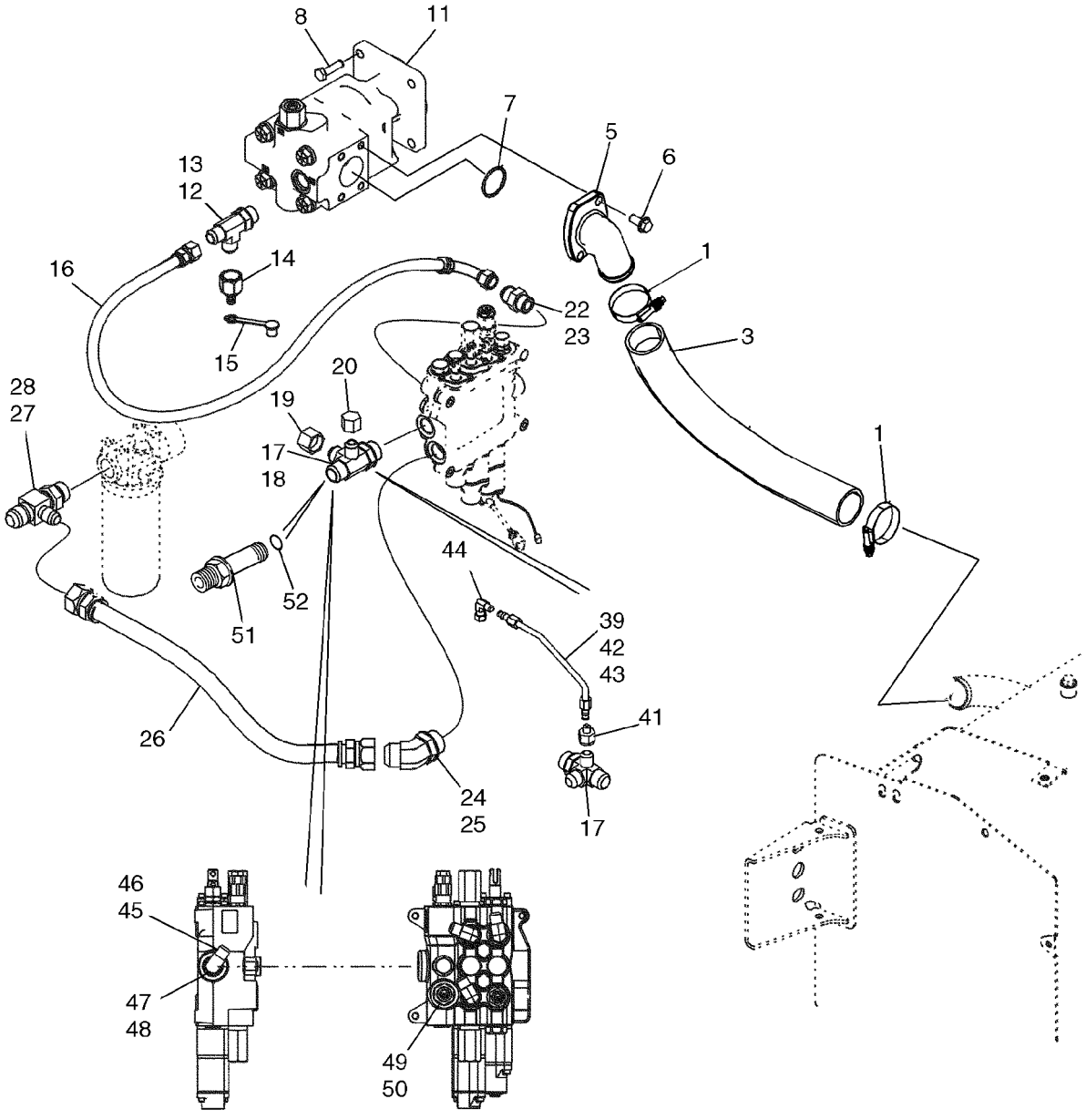

SYSTEME HYDRAULIQUE - POMPE, FILTRE ET DISTRIBUTEUR DE CHARGEUSE

REF	FN	PART NUMBER	YR/SN	QTY	DESCRIPTION
27		218-5584		1	TE, 37Ü, 1 5/16"-12, 1 5/16"-12 O-Ring Run, 1 1/16"-12, Incl. Ref 28
28		237-6016		1	JOINT THORIQUE, 16-1, 90 Duro, 1.171" ID x .118" Thk
39		87437655		1	TUYAUTERIE, Two Spool Loader Valve; Models Without Pilot Controls
39		87437657		1	TUYAUTERIE, Three Spool Loader Valve; Models Without Pilot Controls
41		218-765		1	REDUCTEUR, 37Ü, 7/8"-14, Fem x 9/16"-18 Male, Models With Pilot Controls
42		87437980		1	TUYAUTERIE, Two Spool Loader Valve; Models With Pilot Controls
43		87437982		1	TUYAUTERIE, Three Spool Loader Valve; Models With Pilot Controls
44		218-980		1	COUDE, 90Ü, 9/16"-18, 37Ü x 9/16"-18, 37Ü Fem Sw, Models With Pilot Controls
45		218-5107		1	COUDE, 90Ü, 7/8"-14, 37Ü x 7/8"-14, O-Ring, Incl. Ref 46; Models Without Pilot Controls
46		237-6010		1	JOINT THORIQUE, 10-1, 90 Duro, .755" ID x .097" Thk
47		86512512		1	BOUCHON, Hex Hd, 7/8"-14 ORB, Incl. Ref 48; Models with Pilot Controls
48		237-6010		1	JOINT THORIQUE, 10-1, 90 Duro, .755" ID x .097" Thk
49		218-5064		1	RACCORD, 1 1/16"-12, 37Ü x 1 1/16"-12, O-Ring, Incl. Ref 50
50		237-6012		1	JOINT THORIQUE, 12-1, 90 Duro, .924 ID x .118" Thk
51		218-5034		1	RACCORD, 3/8"-24, 37Ü x 3/8"-24, Pipe, Incl. Ref 52
52		237-6016		1	JOINT THORIQUE, 16-1, 90 Duro, 1.171" ID x .118" Thk

SYSTEME HYDRAULIQUE - DU DISTRIBUTEUR DU CHARGEUR AU FILTRE AU DISTRIBUTEUR DE LA PELLE RETRO

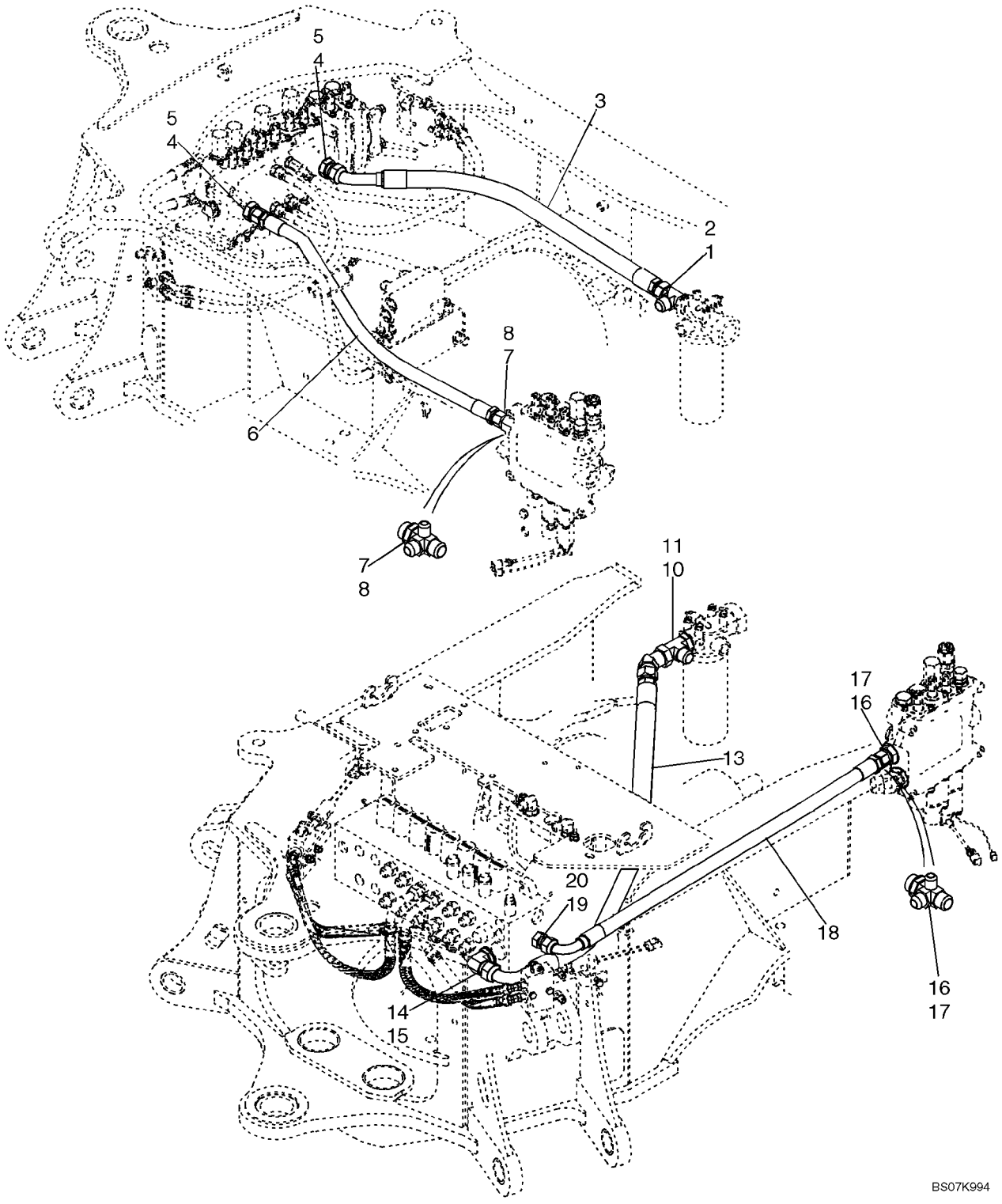

SYSTEME HYDRAULIQUE - DU DISTRIBUTEUR DU CHARGEUR AU FILTRE AU DISTRIBUTEUR DE LA PELLE RETRO

REF	FN	PART NUMBER	YR/SN	QTY	DESCRIPTION
		REF			NOTICE, MODELS WITHOUT PILOT CONTROLS
1		218-5584		1	TE, 37Ü, 1 5/16"-12, 1 5/16"-12 O-Ring Run, 1 1/16"-12, Incl. Ref 2
2		237-6016		1	JOINT THORIQUE, 16-1, 90 Duro, 1.171" ID x .118" Thk
3		313648A1		1	FLEXIBLE, 910 mm (35-7/8 in); Return; Models Without Pilot Controls
4		218-5069		2	RACCORD, 1 5/16"-12, 37Ü x 1 5/16"-12, O-Ring, Incl. Ref 5
5		237-6016		1	JOINT THORIQUE, 16-1, 90 Duro, 1.171" ID x .118" Thk
6		87437441		1	FLEXIBLE (ASSEMBLE), 1025 mm (40-3/8 in); 2 or 3 Spool Valve; Without Auxiliary Hydraulics, Without Pilot Controls; Loader Valve Power Beyond to Backhoe Valve
6		87437232		1	FLEXIBLE (ASSEMBLE), 420 mm (16-9/16 in); 2 Spool Valve; With Auxiliary Hydraulics; With or Without Pilot Controls; Loader Valve Power Beyond to Backhoe Valve
6		87437231		1	FLEXIBLE (ASSEMBLE), 370 mm (14-5/8 in); 3 Spool Valve; With Auxiliary Hydraulics; With or Without Pilot Controls; Loader Valve Power Beyond to Backhoe Valve
7		87436066		1	RACCORD, 4-Way Special Tee; Incl. Ref 8
8		237-6016		1	JOINT THORIQUE, 16-1, 90 Duro, 1.171" ID x .118" Thk
		REF			NOTICE, MODELS WITH PILOT CONTROLS
10		218-5584		1	TE, 37Ü, 1 5/16"-12, 1 5/16"-12 O-Ring Run, 1 1/16"-12, Incl. Ref 11
11		237-6016		1	JOINT THORIQUE, 16-1, 90 Duro, 1.171" ID x .118" Thk
13		87450456		1	FLEXIBLE (ASSEMBLE), 1254 mm (49-3/8 in); Return; Models With Pilot Controls
14		218-5110		1	COUDE, 90Ü, 1 5/16"-12, 37Ü x 1 5/16"-12, O-Ring, Incl. Ref 15

SYSTEME HYDRAULIQUE - DU DISTRIBUTEUR DU CHARGEUR AU FILTRE AU DISTRIBUTEUR DE LA PELLE RETRO

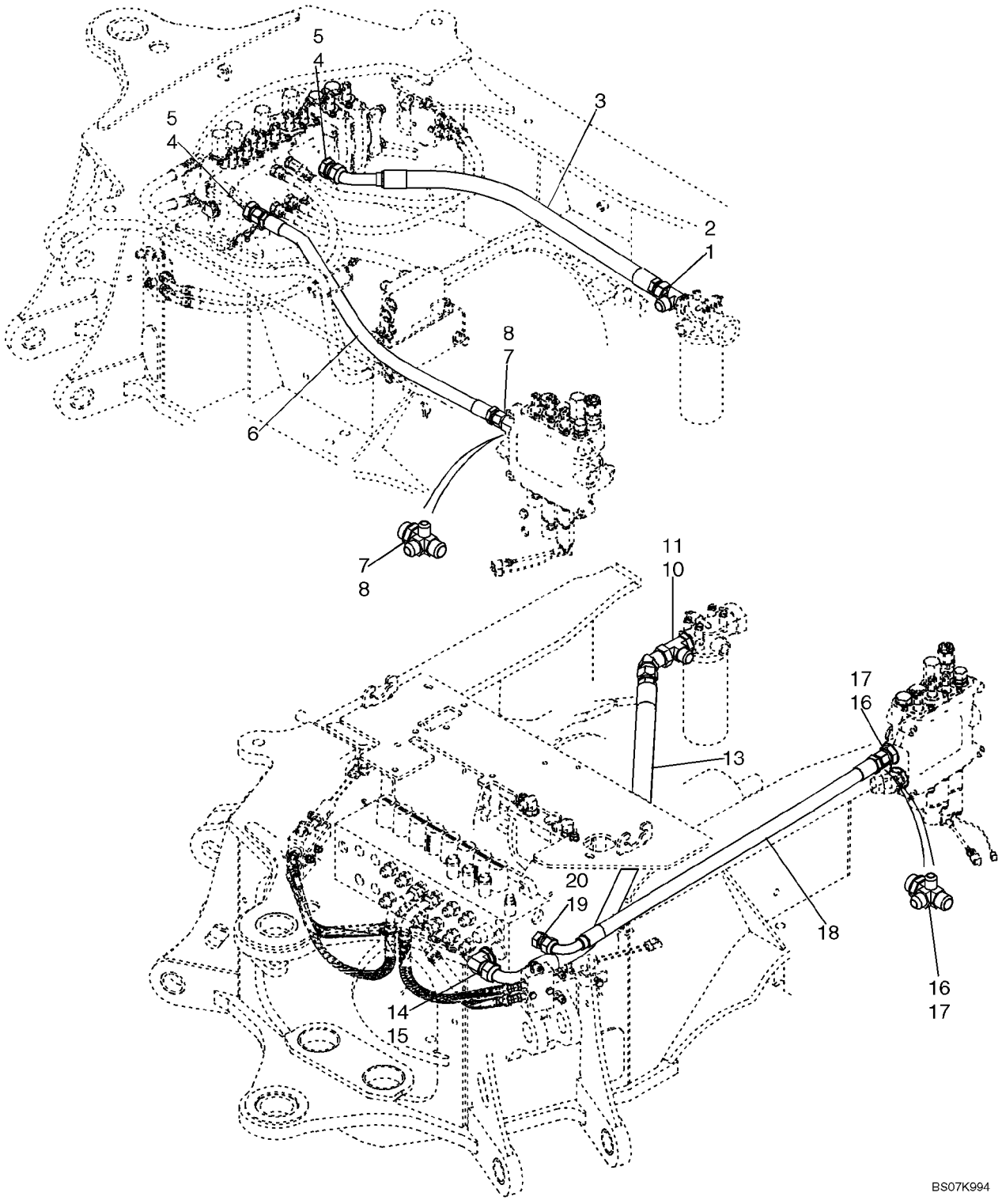

SYSTEME HYDRAULIQUE - DU DISTRIBUTEUR DU CHARGEUR AU FILTRE AU DISTRIBUTEUR DE LA PELLE RETRO

REF	FN	PART NUMBER	YR/SN	QTY	DESCRIPTION
15		237-6016		1	JOINT THORIQUE, 16-1, 90 Duro, 1.171" ID x .118" Thk
16		87436066		1	RACCORD, 4-Way Tee, Special, 1-5/16 fl x Or; Incl. Ref 17
17		237-6016		1	JOINT THORIQUE, 16-1, 90 Duro, 1.171" ID x .118" Thk
18		87455832		1	FLEXIBLE (ASSEMBLE), 1020 mm (40-5/32 in); 2 or 3 Spool Valve; Without Auxiliary Hydraulics, With Pilot Controls; Power Beyond
18		87437232		1	FLEXIBLE (ASSEMBLE), 420 mm (16-9/16 in); 2 Spool Valve; With Auxiliary Hydraulics; With or Without Pilot Controls; Loader Valve Power Beyond to Backhoe Valve
18		87437231		1	FLEXIBLE (ASSEMBLE), 370 mm (14-5/8 in); 3 Spool Valve; With Auxiliary Hydraulics; With or Without Pilot Controls; Loader Valve Power Beyond to Backhoe Valve
19		218-5064		1	RACCORD, 1 1/16"-12, 37Ü x 1 1/16"-12, O-Ring, Incl. Ref 20
20		237-6012		1	JOINT THORIQUE, 12-1, 90 Duro, .924 ID x .118" Thk

08-03		p1	02/08

SYSTEME HYDRAULIQUE - REFROIDISSEUR, CONDUITES DE RETOUR ET FILTRE

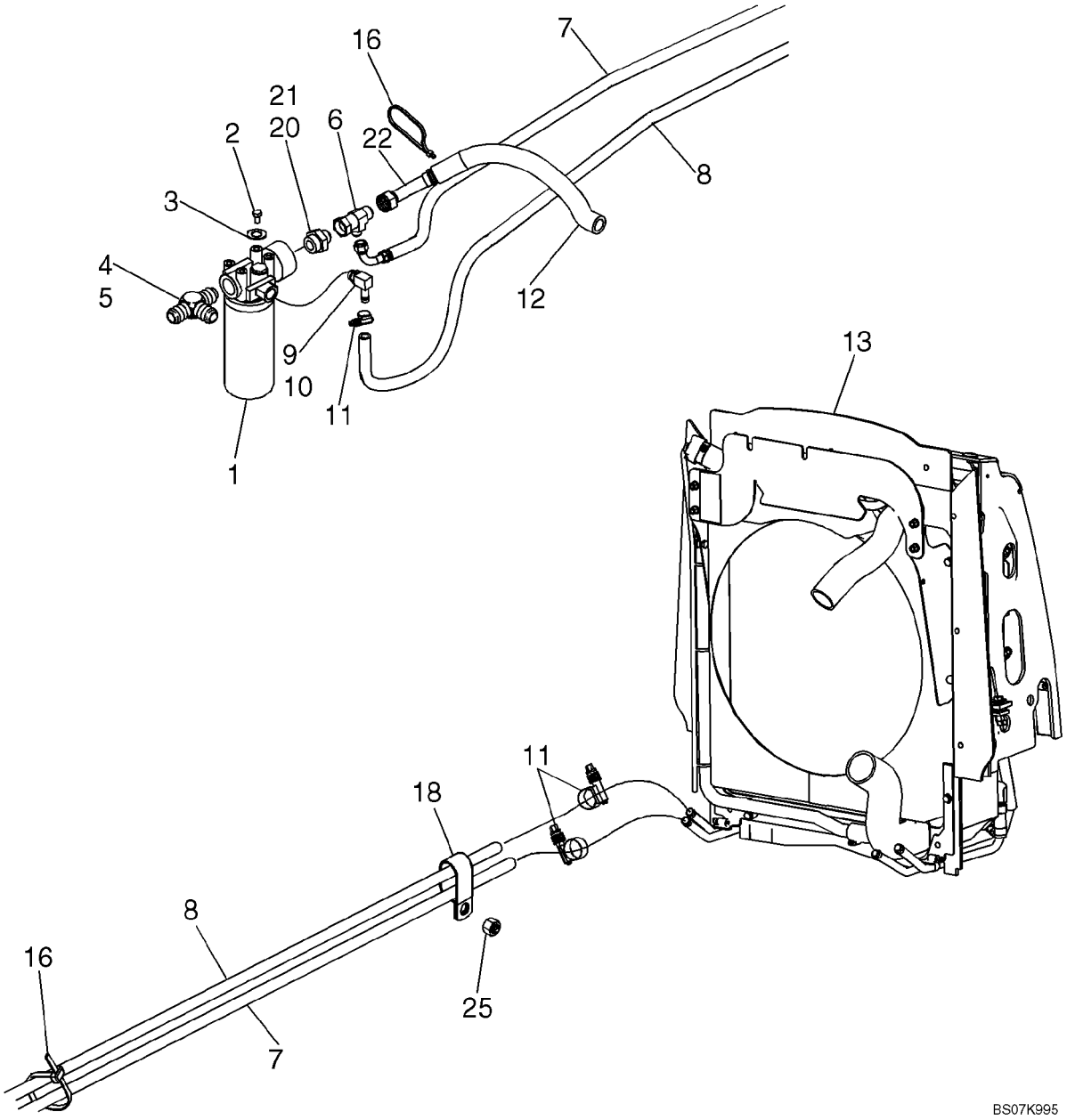

SYSTEME HYDRAULIQUE - REFROIDISSEUR, CONDUITES DE RETOUR ET FILTRE

REF	FN	PART NUMBER	YR/SN	QTY	DESCRIPTION
1		87440045		1	FILTRE ASSY, Hydraulic Oil; See Figure 08-57
2		614-10020		4	BOULON, Hex, M10 x 20, 8.8, Full Thd
3		895-11010		4	RONDELLE, M10 x 20 x 2
4		218-5584		1	TE, 37Ü, 1 5/16"-12, 1 5/16"-12 O-Ring Run, 1 1/16"-12, Incl. Ref 5
5		237-6016		1	JOINT THORIQUE, 16-1, 90 Duro, 1.171" ID x .118" Thk
6		218-5490		1	TE, 37Ü, 1 1/16"-12x1 1/16"-12, Fem Sw Runx7/8"-14 Br
7		87659604		1	FLEXIBLE (ASSEMBLE), Hydraulic Cooler Outlet To Filter
8		87659784		1	FLEXIBLE, Cooler Return To Filter
9		217-349		1	RACCORD, 90Ü, 5/8" Hose x 7/8"-14 ORB Beaded, Incl. Ref 10
10		237-6010		1	JOINT THORIQUE, 10-1, 90 Duro, .755" ID x .097" Thk
11		328186A1		3	BRIDE, FLEXIBLE
12		87656501		1	PROTECTEUR DE TUYAU
13		REF		1	NOTICE, Hydraulic Oil Cooler; For Cooler and Attaching Parts, See Figure 06-10
16		L18337		4	SERRE-CABLE, 9.95"-12.1" lg
18		D39696		1	COLLIER, Double P-Type
20		218-5086		1	RACCORD, 1 5/16"-12, 37Ü x 1 5/8"-12, O-Ring, Incl. Ref 21
21		237-6020		1	JOINT THORIQUE, 20-1, 90 Duro, 1.475" ID x .118" Thk
22		87659613		1	FLEXIBLE (ASSEMBLE), Return To Tank
25		829-1410		1	ECROU, M10, Cl 10

08-04		p1	02/08

SYSTEME HYDRAULIQUE - VERIN DE RELEVAGE DES BRAS DE RELEVAGE

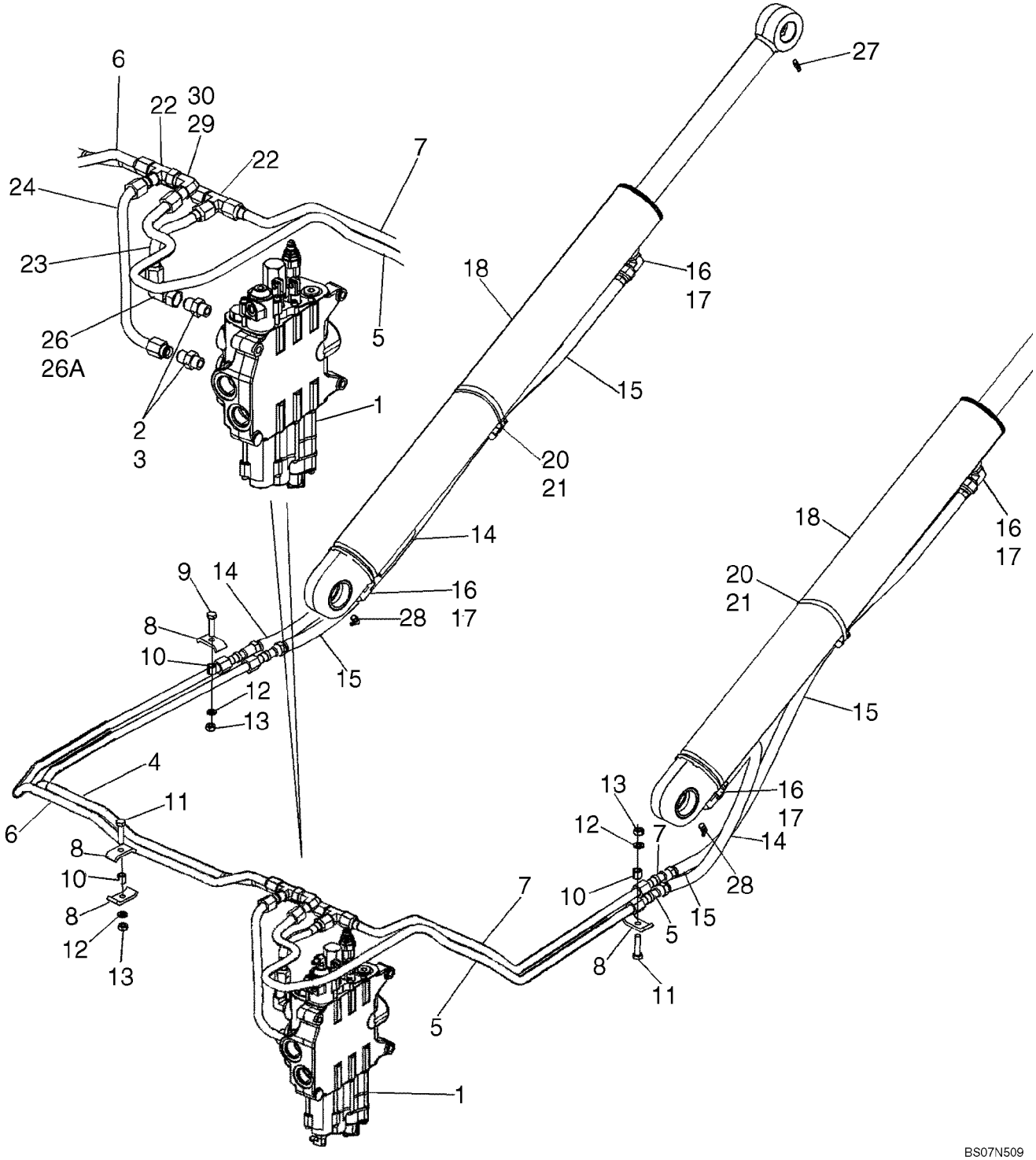

SYSTEME HYDRAULIQUE - VERIN DE RELEVAGE DES BRAS DE RELEVAGE

REF	FN	PART NUMBER	YR/SN	QTY	DESCRIPTION
1		REF		1	NOTICE, LOADER CONTROL VALVE; For Correct Assembly and Components, See Figures 08-30, 08-31; For Mounting, See Figure 09-01
2		218-5062		2	RACCORD, 7/8"-14, 37Ü x 7/8"-14, O-Ring, Incl. Ref 3
3		237-6010		1	JOINT THORIQUE, 10-1, 90 Duro, .755" ID x .097" Thk
4		87622718		1	TUYAU HYDRAULIQUE, Upper Lift Port
5		87712299		1	TUYAU HYDRAULIQUE, Lower Lift Port
6		87622714		1	TUYAU HYDRAULIQUE, Lower Lift Port
7		87642658		1	TUYAU HYDRAULIQUE, Upper Lift Port
8		D138055		5	COLLIER
9		614-10040		1	BOULON, Hex, M10 x 40, 8.8, Full Thd
10		120303A1		4	ENTRETOISE
11		614-10045		3	BOULON, Hex, M10 x 45, 8.8, Full Thd
12		892-11010		4	RONDELLE FREIN, M10
13		829-1410		4	ECROU, M10, Cl 10
14		87443150		2	FLEXIBLE (ASSEMBLE), 740 mm (29-5/32 in)
15		87443149		2	FLEXIBLE (ASSEMBLE), 1130 mm (44-1/2 in)
16		218-5107		4	COUDE, 90Ü, 7/8"-14, 37Ü x 7/8"-14, O-Ring, Incl. Ref 17
17		237-6010		1	JOINT THORIQUE, 10-1, 90 Duro, .755" ID x .097" Thk
18		384240A1		2	VERIN, 82.6 ID x 766 mm strk; Loader Lift Cylinder; See Figure 08-58
20		D142787		2	ENTRETOISE
21		214-1472		2	BRIDE, FLEXIBLE, #72, 4.06/5.00 Type F Worm
22		218-595		2	TE, 7/8"-14, 37Ü
23		87625976		1	TUYAU HYDRAULIQUE, Upper Lift Port
24		87675513		1	TUYAU HYDRAULIQUE, Lower Lift Port
26		218-5232		1	COUDE, 90Ü, 7/8"-14, 37Ü x 7/8"-14, 37Ü Fem Sw, Incl. 26A
26A		237-6010		1	JOINT THORIQUE, 10-1, 90 Duro, .755" ID x .097" Thk
27		219-1		2	GRAISSEUR, 1/8"-27 x .66 lg
28		219-55		2	GRAISSEUR, 90Ü, 1/8" NPT x .84" lg

SYSTEME HYDRAULIQUE - VERIN DE RELEVAGE DES BRAS DE RELEVAGE

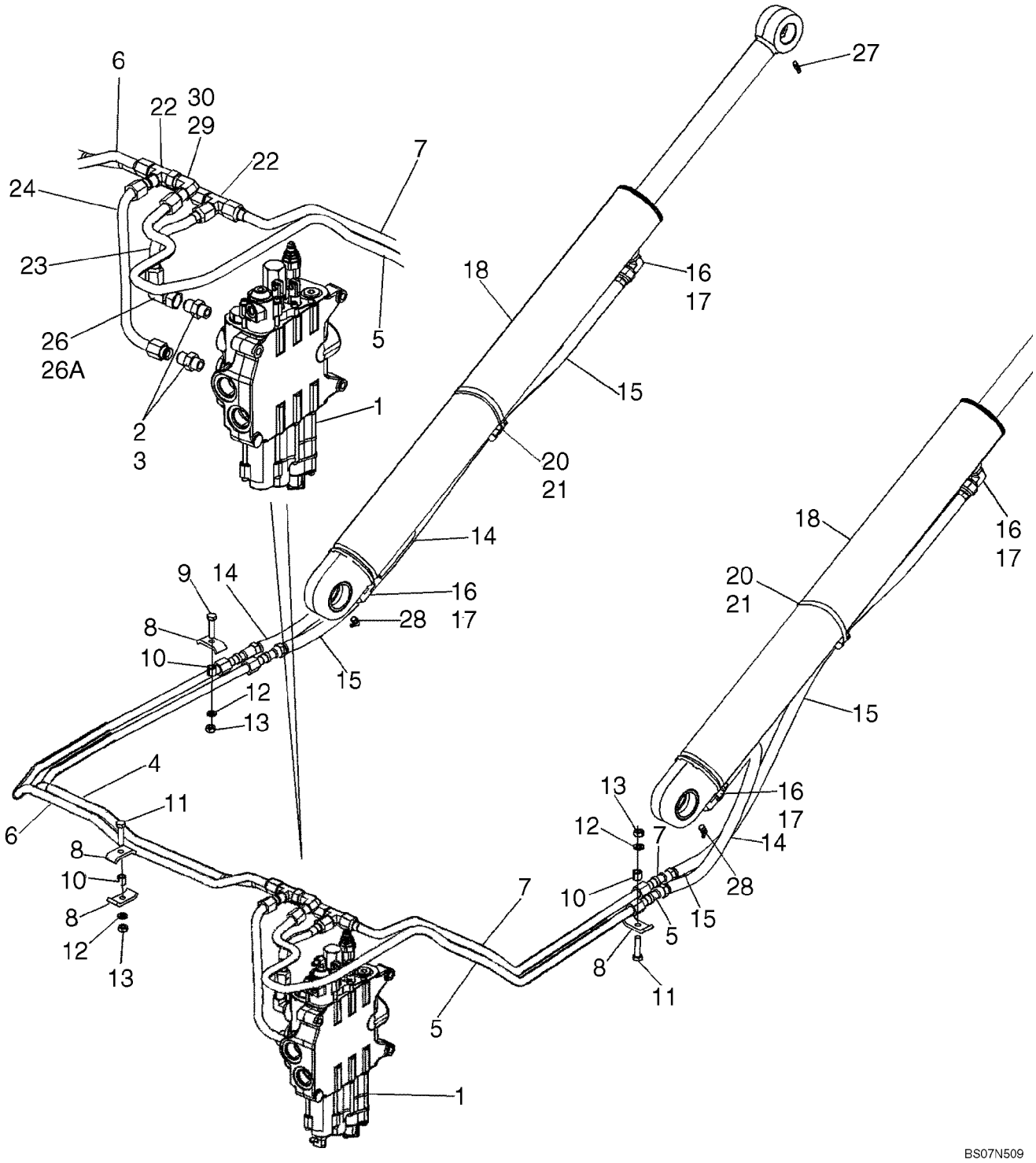

SYSTEME HYDRAULIQUE - VERIN DE RELEVAGE DES BRAS DE RELEVAGE

REF	FN	PART NUMBER	YR/SN	QTY	DESCRIPTION
29		218-5232		1	COUDE, 90Ü, 7/8"-14, 37Ü x 7/8"-14, 37Ü Fem Sw, Incl. 30
30		237-6010		1	JOINT THORIQUE, 10-1, 90 Duro, .755" ID x .097" Thk

08-05		p1	02/08

SYSTEME HYDRAULIQUE - VERIN, GODET DE LA CHARGEUSE

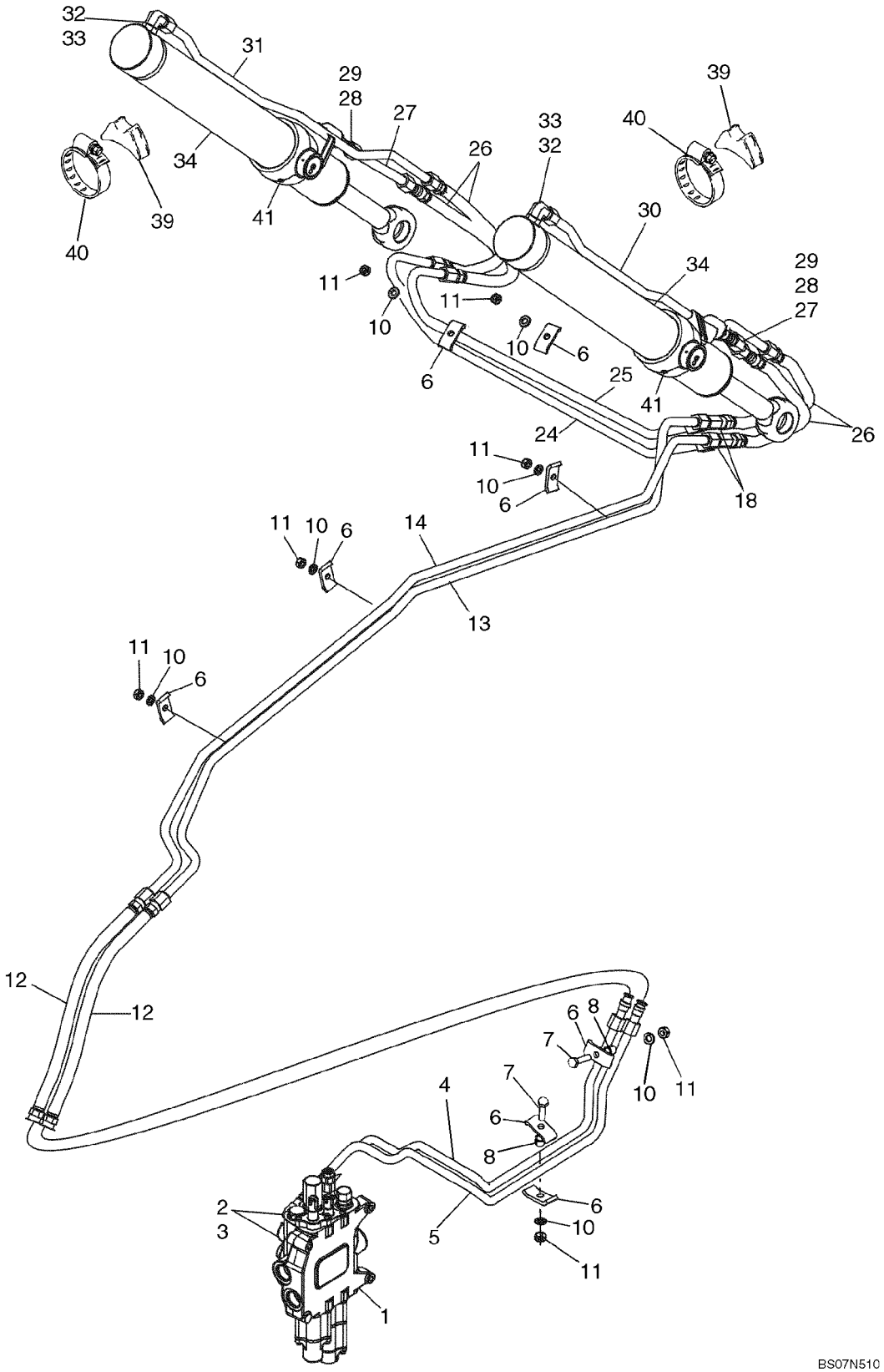

BS07N510

SYSTEME HYDRAULIQUE - VERIN, GODET DE LA CHARGEUSE

REF	FN	PART NUMBER	YR/SN	QTY	DESCRIPTION
1		REF		1	NOTICE, LOADER CONTROL VALVE; For Correct Assembly and Components, See Figures 08-30, 08-31; For Mounting, See Figure 09-01
2		218-5107		2	COUDE, 90Ü, 7/8"-14, 37Ü x 7/8"-14, O-Ring, Incl. Ref 3
3		237-6010		1	JOINT THORIQUE, 10-1, 90 Duro, .755" ID x .097" Thk, Boss Seal
4		87421918		1	TUYAUTERIE, Upper Bucket Port
5		87421920		1	TUYAUTERIE, Lower Bucket Port
6		D138055		8	COLLIER
7		614-10045		2	BOULON, Hex, M10 x 45, 8.8, Full Thd
8		120303A1		2	ENTRETOISE
10		892-11010		7	RONDELLE FREIN, M10
11		829-1410		7	ECROU, M10, Cl 10
12		87429287		2	FLEXIBLE (ASSEMBLE), 710 mm (28 in)
13		87716480		1	TUYAU HYDRAULIQUE, To Upper Port
14		87716482		1	TUYAU HYDRAULIQUE
18		218-5220		2	TE, 37Ü, 7/8"-14 x 7/8"-14, Fem Sw Run
24		196815A1		1	TUYAU, Rear
25		196813A1		1	TUYAU, Front
26		371031A1		4	FLEXIBLE (ASSEMBLE), 840 mm (33 in)
27		87316049		2	TUYAUTERIE, Bucket Cylinder Rod End
28		218-5062		2	RACCORD, 7/8"-14, 37Ü x 7/8"-14, O-Ring, Incl. Ref 29
29		237-6010		1	JOINT THORIQUE, 10-1, 90 Duro, .755" ID x .097" Thk, Boss Seal
30		87316270		1	TUYAUTERIE, Right-Hand Cylinder Closed End
31		87316264		1	TUYAUTERIE, Left-Hand Cylinder Closed End
32		218-5107		2	COUDE, 90Ü, 7/8"-14, 37Ü x 7/8"-14, O-Ring, Incl. Ref 33
33		237-6010		1	JOINT THORIQUE, 10-1, 90 Duro, .755" ID x .097" Thk, Boss Seal
34		87609669		2	VERIN HYDRAULIQUE, 76 ID x 522 mm strk; Loader Bucket Cylinder; See Figure 08-59
39		L79937		2	SELLE

08-05		p2	02/08

SYSTEME HYDRAULIQUE - VERIN, GODET DE LA CHARGEUSE

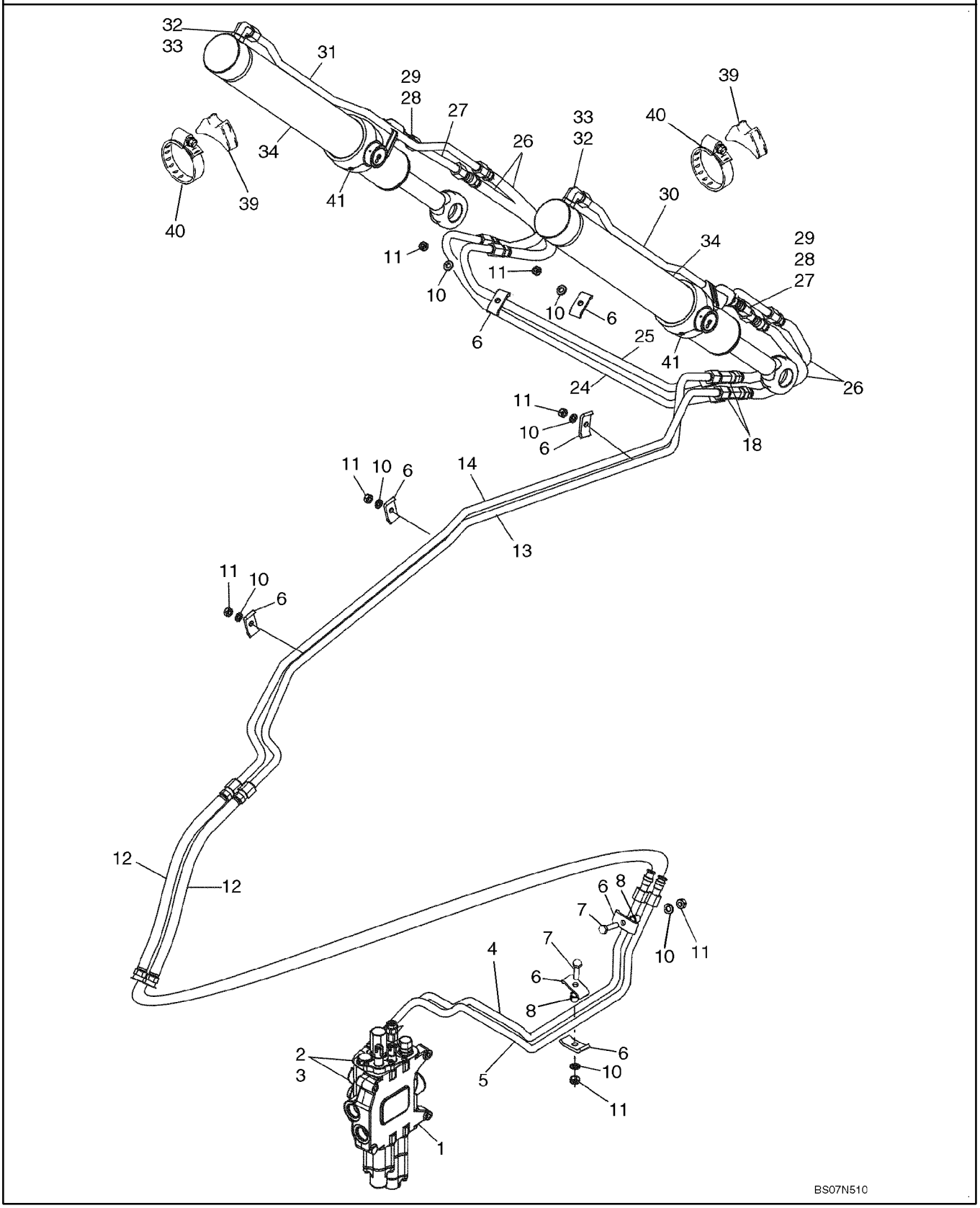

SYSTEME HYDRAULIQUE - VERIN, GODET DE LA CHARGEUSE

REF	FN	PART NUMBER	YR/SN	QTY	DESCRIPTION
40		214-1464		2	BRIDE, FLEXIBLE, #64, 3.56/4.50 Type F Worm
41		219-55		2	GRAISSEUR, 90Ü, 1/8" NPT x .84" lg

SYSTEME HYDRAULIQUE - VERIN, BENNE DE LA CHARGEUSE

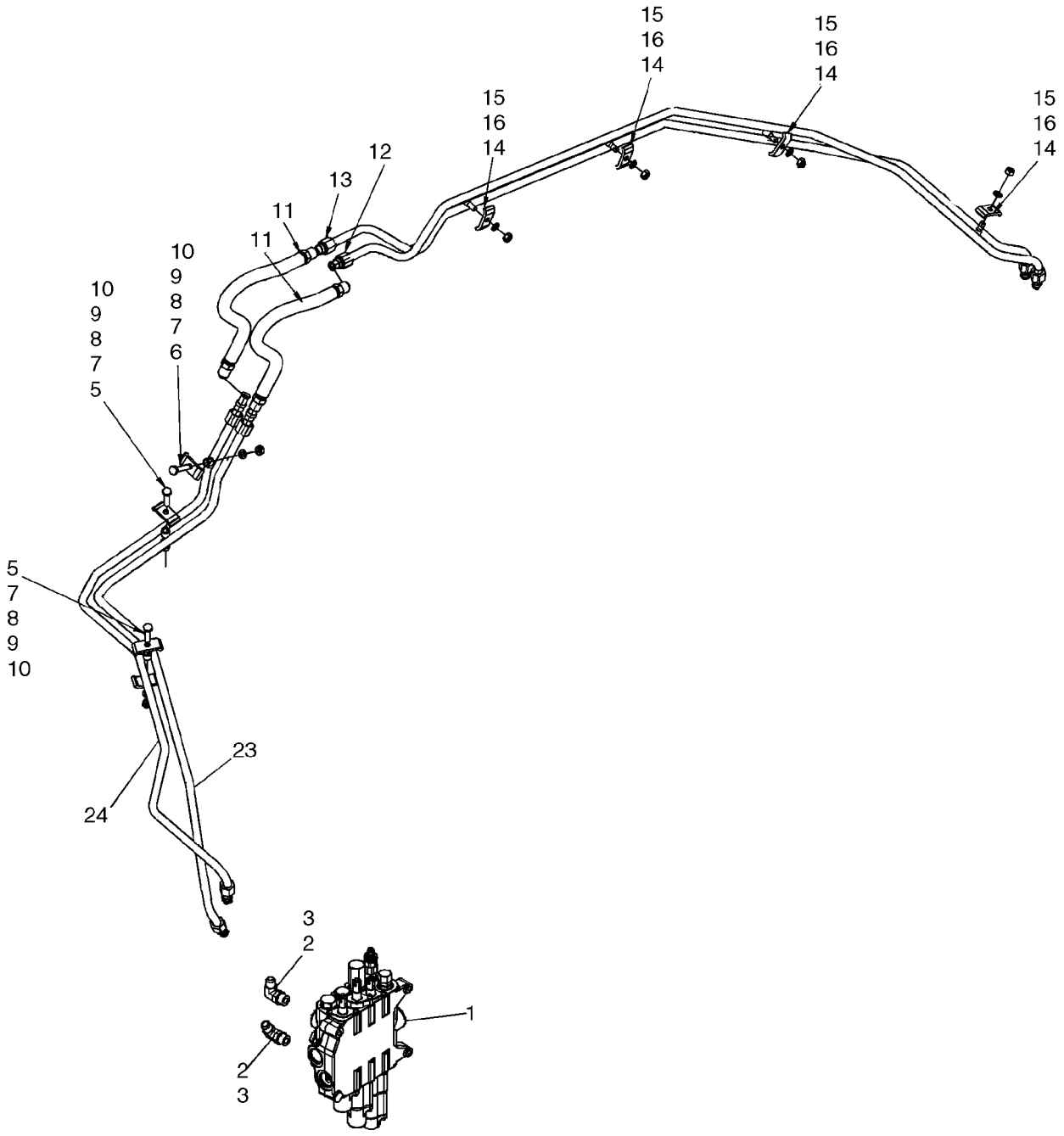

SYSTEME HYDRAULIQUE - VERIN, BENNE DE LA CHARGEUSE

REF	FN	PART NUMBER	YR/SN	QTY	DESCRIPTION
1		REF		1	NOTICE, LOADER CONTROL VALVE; Three Spool; See Figure 08-31 for Valve Options; For Mounting, See Figure 09-01
2		218-5107		2	COUDE, 90Ü, 7/8"-14, 37Ü x 7/8"-14, O-Ring, Incl. Ref 3
3		237-6010		1	JOINT THORIQUE, 10-1, 90 Duro, .755" ID x .097" Thk, Boss Seal
5		614-10040		2	BOULON, Hex, M10 x 40, 8.8, Full Thd
6		614-10045		1	BOULON, Hex, M10 x 45, 8.8, Full Thd
7		D138055		4	COLLIER
8		120303A1		3	ENTRETOISE
9		892-11010		3	RONDELLE FREIN, M10
10		829-1410		3	ECROU, M10, Cl 10
11		87429287		2	FLEXIBLE (ASSEMBLE), 710 mm (28 in)
12		87716486		1	TUYAU HYDRAULIQUE, Upper Clam Port
13		87716488			TUYAU HYDRAULIQUE, Lower Clam Port
14		D138055		4	COLLIER
15		829-1410		4	ECROU, M10, Cl 10
16		892-11010		4	RONDELLE FREIN, M10
23		{87478483}		1	Tube, Upper Clam Port
24		87449440		1	TUYAUTERIE, Lower Clam Port

08-07		p1	10/07

SYSTEME HYDRAULIQUE - VERIN, BENNE DE LA CHARGEUSE

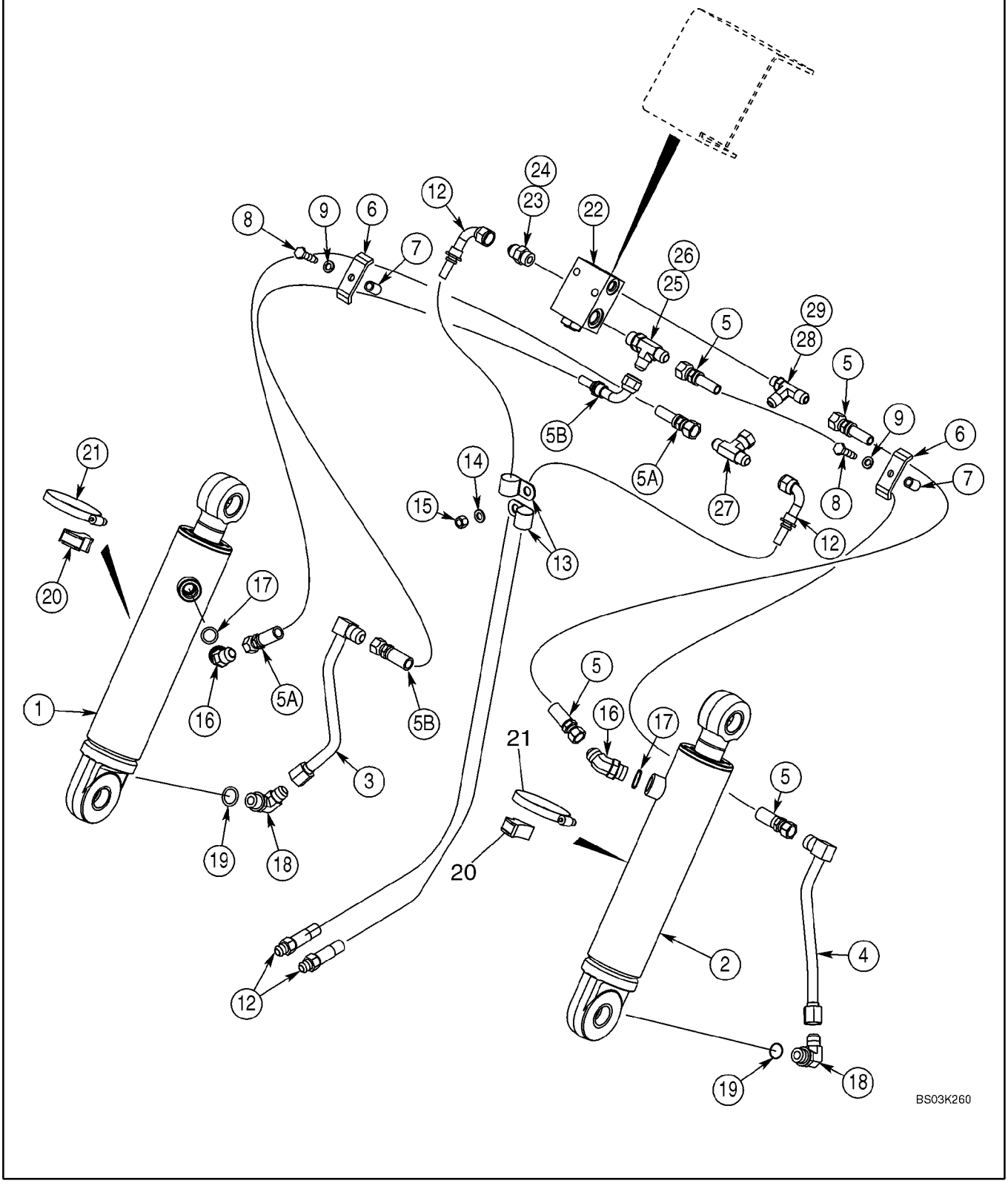

SYSTEME HYDRAULIQUE - VERIN, BENNE DE LA CHARGEUSE

REF	FN	PART NUMBER	YR/SN	QTY	DESCRIPTION
1		87454016		1	VERIN, 76 ID x 231 mm strk: Loader Clam Cylinder; Left-Hand; See Figure 08-60
2		87454017		1	VERIN, 76 ID x 231 mm strk; Loader Clam Cylinder; Right-Hand; See Figure 08-60
3		192352A1		1	TUYAU, LH Cylinder
4		192345A1		1	TUYAU, RH Cylinder
5		353167A1		2	FLEXIBLE (ASSEMBLE), 1100 mm (43-5/16 in); Right-Hand Cylinder
5A		353103A1		1	FLEXIBLE (ASSEMBLE), 1200 mm (47-1/4 in); Left-Hand Cylinder
5B		367352A1		1	FLEXIBLE (ASSEMBLE), 1200 mm (47-1/4 in); Left-Hand Cylinder
6		D143846		2	BRIDE, CLAMP
7		R46493		2	ENTRETOISE
8		614-10040		2	BOULON, Hex, M10 x 40, 8.8, Full Thd
9		892-11010		2	RONDELLE FREIN, M10
12		356743A1		2	FLEXIBLE (ASSEMBLE), 1170 mm (46-1/16 in); Lift Frame
13		515-25254		2	BRIDE, 1", Insul, 1/2" Bolt
14		895-11010		1	RONDELLE, M10 x 20 x 2
15		832-10410		1	CONTRE-ECROU, M10 x 1.5, Cl 8
16		218-5137		2	COUDE, 45Ü, 7/8"-14 x 7/8"-14, O-Ring, Incl. Ref 17
17		237-6010		1	JOINT THORIQUE, 10-1, 90 Duro, .755" ID x .097" Thk, Boss Seal
18		218-5107		2	COUDE, 90Ü, 7/8"-14, 37Ü x 7/8"-14, O-Ring, Incl. Ref 19
19		237-6010		1	JOINT THORIQUE, 10-1, 90 Duro, .755" ID x .097" Thk, Boss Seal
20		D38648		2	BLOC
21		214-1464		2	BRIDE, FLEXIBLE, #64, 3.56/4.50 Type F Worm
22		325465A2		1	SOUPAPE ANTI RETOUR, Pilot Operated Check Valve; For Mounting, See Figure 09-08
		399963A1		1	POCHETTE, Seal; For Use With 325465A2 Valve; Includes (1) Piston, (1) Backup Ring, (2) O-Rings and Instructions

SYSTEME HYDRAULIQUE - VERIN, BENNE DE LA CHARGEUSE

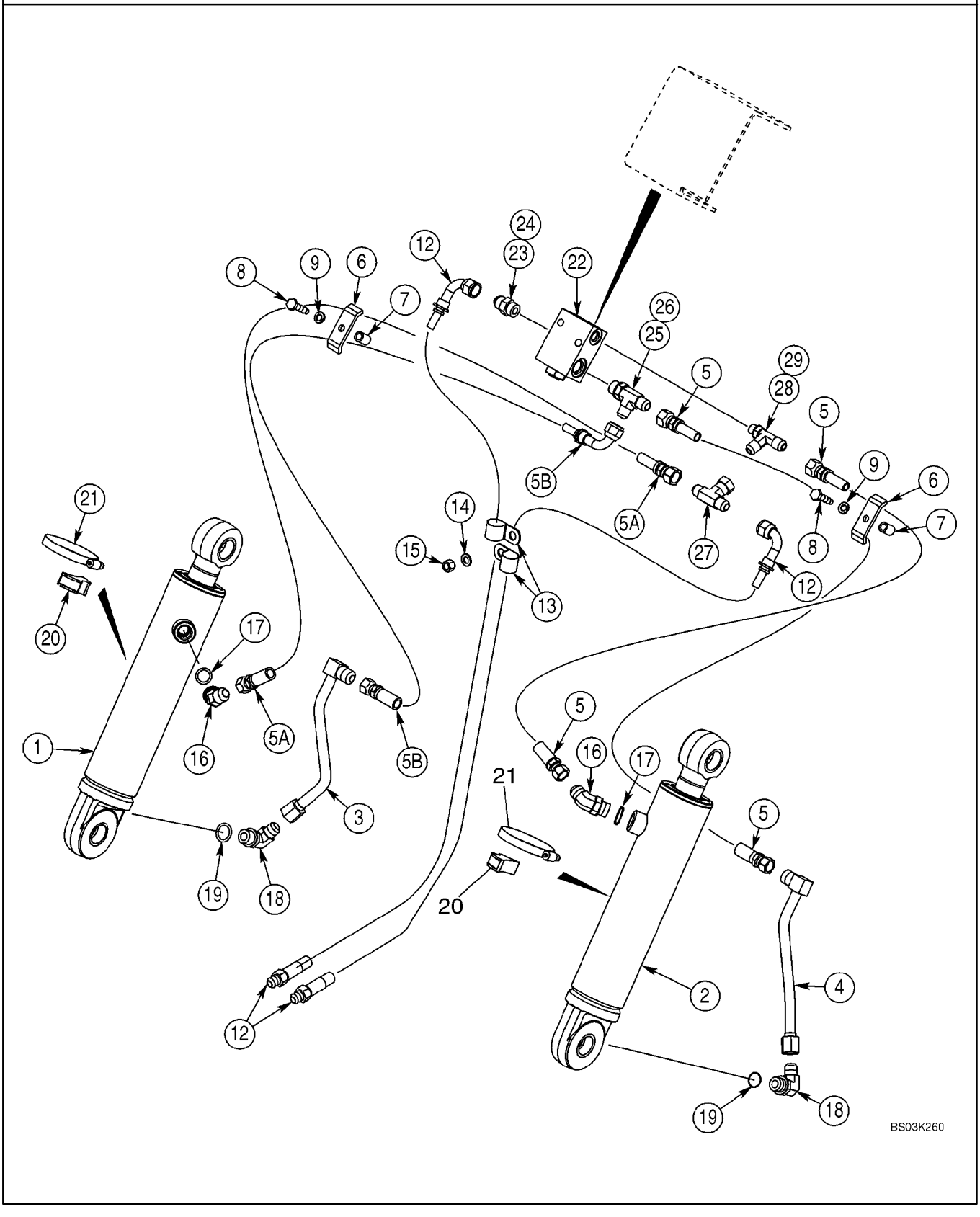

SYSTEME HYDRAULIQUE - VERIN, BENNE DE LA CHARGEUSE

REF	FN	PART NUMBER	YR/SN	QTY	DESCRIPTION
23		218-5059		1	RACCORD, 3/4"-16, 37Ü x 3/4"-16, O-Ring, Incl. Ref 24
24		237-6008		1	JOINT THORIQUE, 8-1, 90 Duro, .644" ID x .087" Thk, Boss seal
25		218-5242		1	TE, 3/4"-16, 37Ü x 3/4"-18, O-Ring Run, Incl. Ref 26
26		237-6008		1	JOINT THORIQUE, 8-1, 90 Duro, .644" ID x .087" Thk, Boss seal
27		218-840		1	TE, 37Ü, 3/4"-16 x 3/4"-16, Fem Sw Br
28		218-5650		1	TE, 37Ü, 3/4"-16, 9/16"-18 O-Ring Run, 3/4"-16, Incl. Ref 29
29		237-6006		1	JOINT THORIQUE, 6-1, 90 Duro, .468" ID x .078" Thk, Boss seal

08-07A		p1	02/08

SYSTEME HYDRAULIQUE - BENNE DE LA CHARGEUSE, AVEC £LECTRIQUE

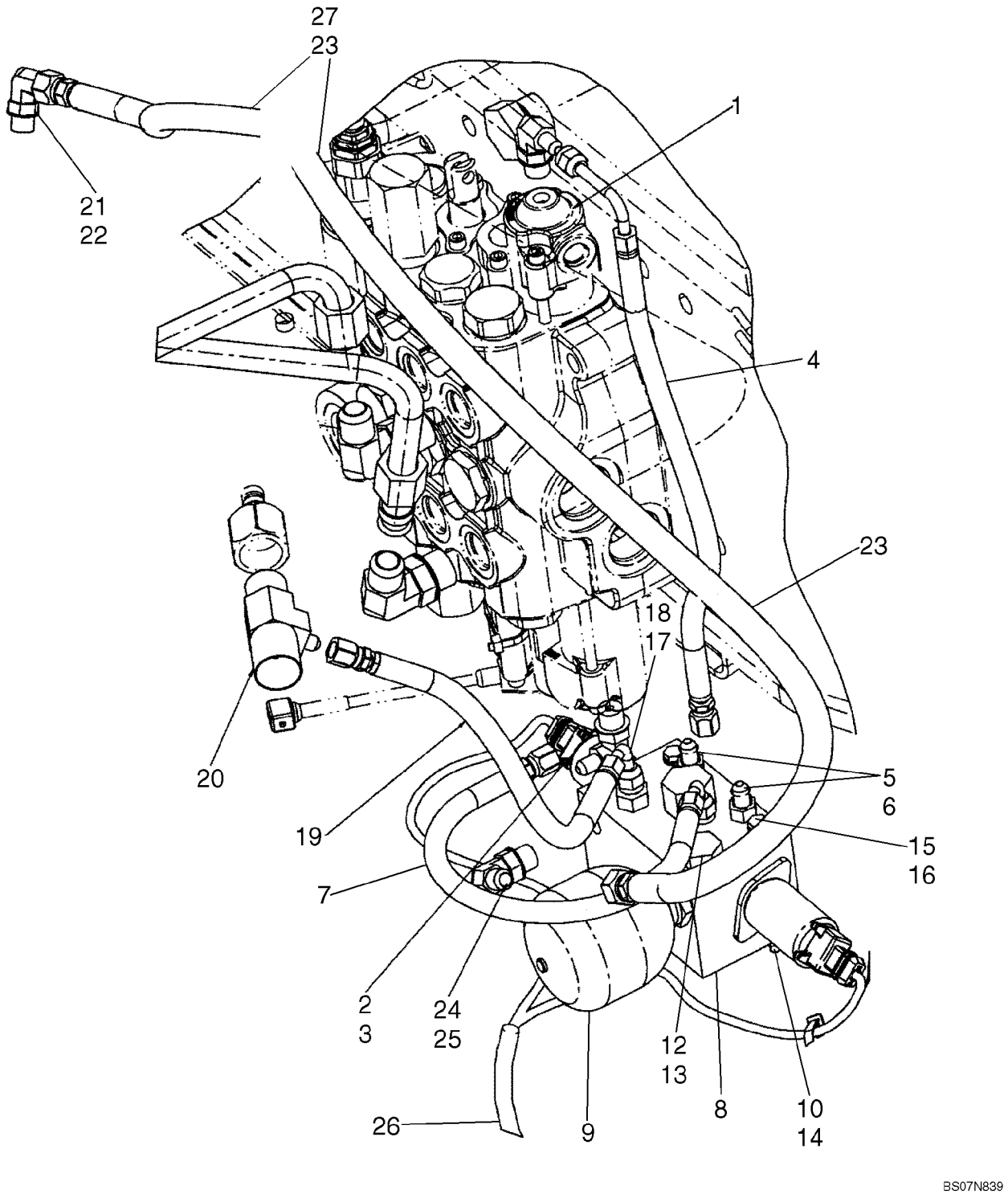

SYSTEME HYDRAULIQUE - BENNE DE LA CHARGEUSE, AVEC £LECTRIQUE

REF	FN	PART NUMBER	YR/SN	QTY	DESCRIPTION
1		REF		1	NOTICE, LOADER CONTROL VALVE; Three Spool; See Figure 08-31; For Mounting, See Figure 09-01
2		218-5283		2	COUDE, 90Ü, 7/16"-20, 37Ü x 9/16"-18, O-Ring, Incl. 3
3		237-6006		1	JOINT THORIQUE, 6-1, 90 Duro, .468" ID x .078" Thk
4		87662930		1	FLEXIBLE (ASSEMBLE), Loader Control Valve To Proportional Control Valve
5		218-5053		2	RACCORD, 7/16"-20, 37Ü x 7/16"-20, O-Ring, Incl. 6
6		237-6004		1	JOINT THORIQUE, 4-1, 90 Duro, .351" ID x .072" Thk
7		87662928		1	FLEXIBLE (ASSEMBLE), Proportional Control Valve
8		87566480		1	SOUPAPE, Proportional Control; Component Parts Not Available At Time Of Printing
9		87425225		1	ACCUMULATEUR, Includes 237-6008 O-Ring
10		814-6090		2	BOULON, Hex, M6 x 90, 8.8
12		218-5156		1	BOUCHON, Hex Hd, 3/4"-16 ORB, Incl. 13
13		237-6008		1	JOINT THORIQUE, 8-1, 90 Duro, .644" ID x .087" Thk
14		895-25006		2	RONDELLE, M6 x 18 x 1.6
15		892-11006		2	RONDELLE FREIN, M6
16		829-1406		2	ECROU, M6, Cl 10
17		218-5089		1	RACCORD, 7/16"-20, 37Ü x 9/16"-18, O-Ring, Incl. 18
18		237-6006		1	JOINT THORIQUE, 6-1, 90 Duro, .468" ID x .078" Thk
19		87662932		1	FLEXIBLE (ASSEMBLE), Proportional Control Valve To Pump
20		218-5411		1	TE, 37Ü, 7/8"-14 x 3/4"-16, Fem Sw Run x 7/16"-20 Br
21		218-5105		1	COUDE, 90Ü, 9/16"-18, 37Ü x 9/16"-18, O-Ring, Incl. 22
22		237-6006		1	JOINT THORIQUE, 6-1, 90 Duro, .468" ID x .078" Thk
23		87650602		1	FLEXIBLE (ASSEMBLE), Proportional Control Valve To Tank
24		218-5105		1	COUDE, 90Ü, 9/16"-18, 37Ü x 9/16"-18, O-Ring, Incl. 25
25		237-6006		1	JOINT THORIQUE, 6-1, 90 Duro, .468" ID x .078" Thk
26		87651975		1	FAISCEAU COMPLET, Jumper
27		87452021		1	GAINE PLASTIQUE, 650 mm; Hose Guard

08-07B		p1	02/08

SYSTEME HYDRAULIQUE - BENNE DE LA CHARGEUSE, AVEC £LECTRIQUE (MODêLES AVEC COMMANDE PILOTE)

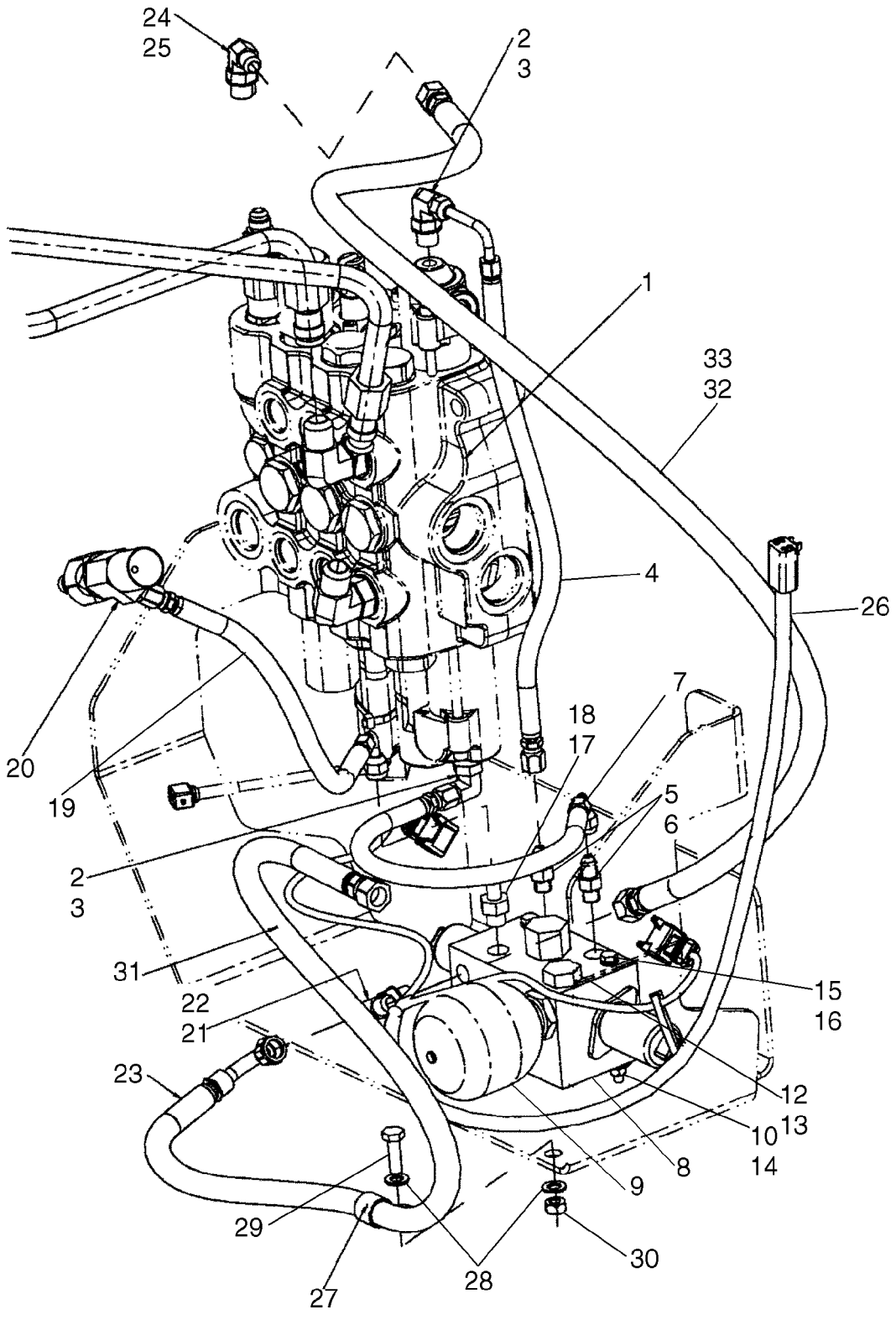

SYSTEME HYDRAULIQUE - BENNE DE LA CHARGEUSE, AVEC £LECTRIQUE (MODôLES AVEC COMMANDE PILOTE)

REF	FN	PART NUMBER	YR/SN	QTY	DESCRIPTION
1		REF		1	NOTICE, LOADER CONTROL VALVE; Three Spool; See Figure 08-31; For Mounting, See Figure 09-01
2		218-5283		2	COUDE, 90Ü, 7/16"-20, 37Ü x 9/16"-18, O-Ring, Incl. 3
3		237-6006		1	JOINT THORIQUE, 6-1, 90 Duro, .468" ID x .078" Thk
4		87662930		1	FLEXIBLE (ASSEMBLE), Loader Control Valve To Proportional Control Valve
5		218-5053		2	RACCORD, 7/16"-20, 37Ü x 7/16"-20, O-Ring, Incl. 6
6		237-6004		1	JOINT THORIQUE, 4-1, 90 Duro, .351" ID x .072" Thk
7		87662928		1	FLEXIBLE (ASSEMBLE), Proportional Control Valve
8		87566480		1	SOUPAPE, Proportional Control; Component Parts Not Available At Time Of Printing
9		87425225		1	ACCUMULATEUR
10		814-6090		2	BOULON, Hex, M6 x 90, 8.8
12		218-5156		1	BOUCHON, Hex Hd, 3/4"-16 ORB, Incl. 13
13		237-6008		1	JOINT THORIQUE, 8-1, 90 Duro, .644" ID x .087" Thk
14		895-25006		2	RONDELLE, M6 x 18 x 1.6
15		892-11006		2	RONDELLE FREIN, M6
16		829-1406		2	ECROU, M6, Cl 10
17		218-5089		1	RACCORD, 7/16"-20, 37Ü x 9/16"-18, O-Ring, Incl. 18
18		237-6006		1	JOINT THORIQUE, 6-1, 90 Duro, .468" ID x .078" Thk
19		87662932		1	FLEXIBLE (ASSEMBLE), Proportional Control Valve To Pump
20		218-5411		1	TE, 37Ü, 7/8"-14 x 3/4"-16, Fem Sw Run x 7/16"-20 Br
21		218-5182		1	TE, 9/16"-18, 37Ü x 9/16"-18, O-Ring Br, Incl. 22
22		237-6006		1	JOINT THORIQUE, 6-1, 90 Duro, .468" ID x .078" Thk
23		87668167		1	FLEXIBLE (ASSEMBLE), Proportional Control Valve To Tank
24		218-5105		1	COUDE, 90Ü, 9/16"-18, 37Ü x 9/16"-18, O-Ring, Incl. 25
25		237-6006		1	JOINT THORIQUE, 6-1, 90 Duro, .468" ID x .078" Thk
26		87651975		1	FAISCEAU COMPLET, Jumper
27		515-22190		1	BRIDE, 3/4", Insul, 5/16" Bolt
28		895-11008		2	RONDELLE, M8 x 16 x 1.6
29		614-8025		1	BOULON, Hex, M8 x 25, 8.8
30		829-1408		1	ECROU, M8, Cl 10

08-07B		p2	02/08

SYSTEME HYDRAULIQUE - BENNE DE LA CHARGEUSE, AVEC £LECTRIQUE (MODêLES AVEC COMMANDE PILOTE)

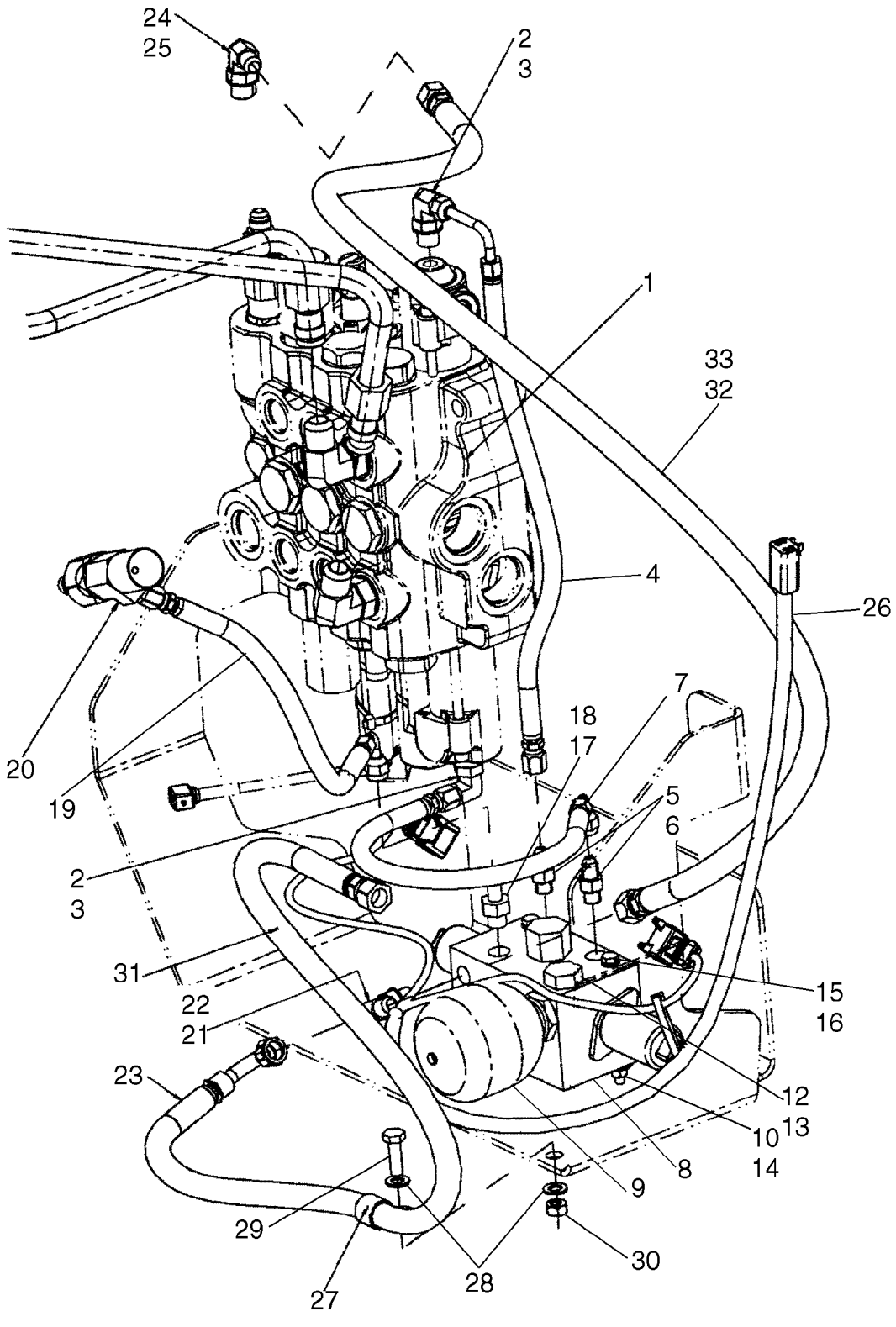

SYSTEME HYDRAULIQUE - BENNE DE LA CHARGEUSE, AVEC £LECTRIQUE (MODôLES AVEC COMMANDE PILOTE)

REF	FN	PART NUMBER	YR/SN	QTY	DESCRIPTION
31		191704A1		1	GAINE
32		87650602		1	FLEXIBLE (ASSEMBLE)
33		87452021		1	GAINE PLASTIQUE, 650 mm; Hose Guard

08-08		p1	02/08

SYSTEME HYDRAULIQUE - VERIN, STABILISATEUR DE LA PELLE RETRO EUROPA (SANS DE COMMANDE PILOTE)

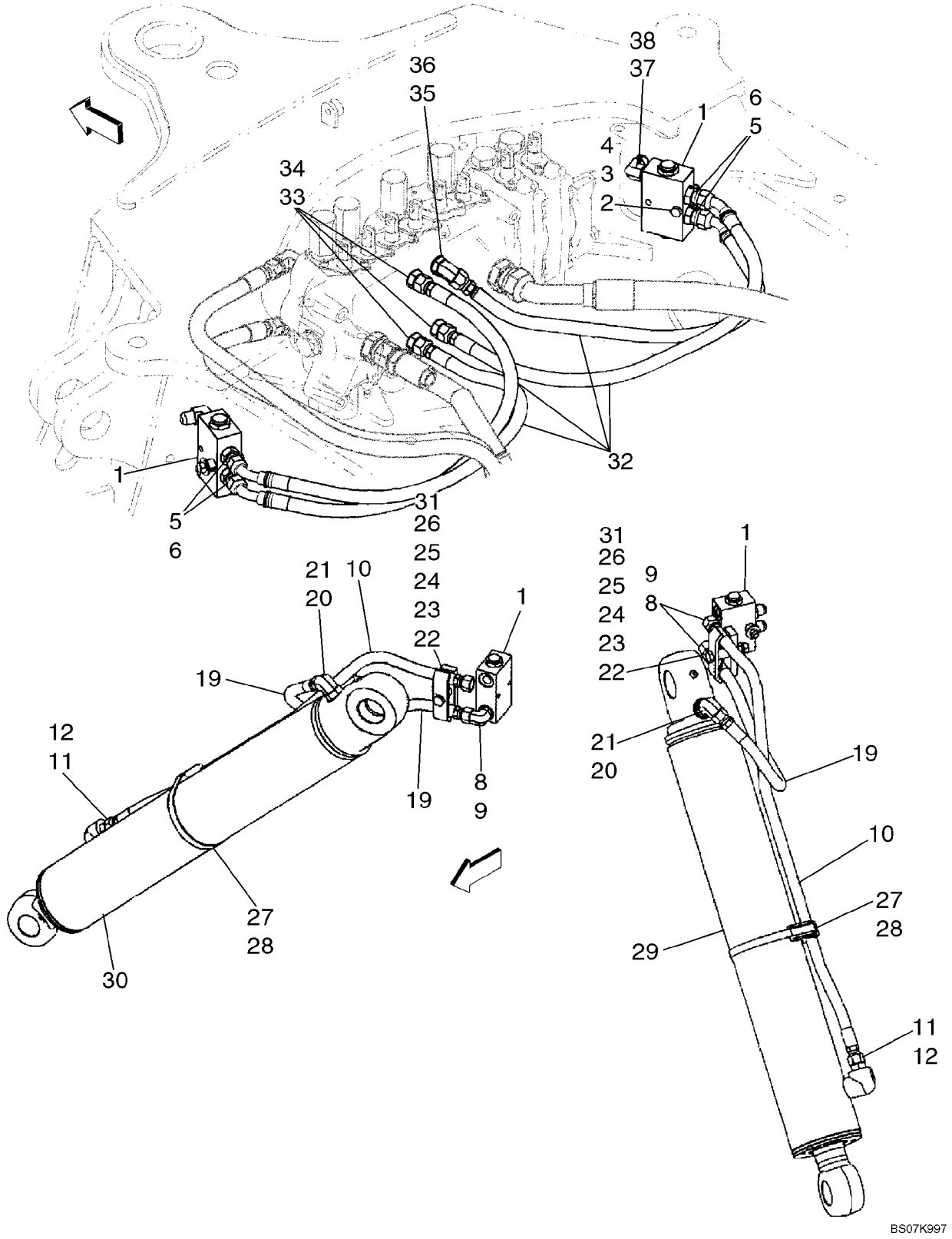

SYSTEME HYDRAULIQUE - VERIN, STABILISATEUR DE LA PELLE RETRO EUROPA (SANS DE COMMANDE PILOTE)

REF	FN	PART NUMBER	YR/SN	QTY	DESCRIPTION
		REF			NOTICE, MODELS WITHOUT PILOT CONTROLS
1		85802820		2	CLAPET ANTI-RETOUR, Load Check; Includes 85820159, 85820160, 85821126
		85820159		1	PLONGEUR
		85820160		1	SOUPAPE HYDRAULIQUE
		85821126		1	KIT
2		814-8060		2	BOULON, Hex, M8 x 60, 8.8
		87437840		2	ENTRETOISE
4		829-1408		2	ECROU, M8, Cl 10
3		496-81028		2	RONDELLE, 13/32" x 1 1/4" x .134", HDN
5		218-5057		4	RACCORD, 9/16"-18, 37Ü x 9/16"-18, O-Ring, Incl. Ref 6
6		237-6006		1	JOINT THORIQUE, 6-1, 90 Duro, .468" ID x .078" Thk
8		218-5105		4	COUDE, 90Ü, 9/16"-18, 37Ü x 9/16"-18, O-Ring, Incl. Ref 9
9		237-6006		1	JOINT THORIQUE, 6-1, 90 Duro, .468" ID x .078" Thk
10		87439306		2	FLEXIBLE (ASSEMBLE), 830 mm (32-11/16 in)
19		87429584		2	FLEXIBLE (ASSEMBLE), 500 mm (19-11/16 in) Hose
11		218-5059		2	RACCORD, 3/4"-16, 37Ü x 3/4"-16, O-Ring, Incl. Ref 12
20		218-5121		2	COUDE, 90Ü, 3/4"-16, 37Ü x 7/8"-14, O-Ring, Incl. Ref 21
12		237-6008		1	JOINT THORIQUE, 8-1, 90 Duro, .644" ID x .087" Thk
21		237-6008		1	JOINT THORIQUE, 8-1, 90 Duro, .644" ID x .087" Thk
22		814-10070		2	BOULON, Hex, M10 x 70, 8.8
24		87439665		2	ENTRETOISE
23		87420673		2	BRIDE, FLEXIBLE
25		87420672		2	ENTRETOISE
		496-81028		2	RONDELLE, 13/32" x 1 1/4" x .134", HDN
26		829-1410		2	ECROU, M10, Cl 10
27		D142787		2	ENTRETOISE
28		214-3188		2	BRIDE, FLEXIBLE, 4.75/5.625 HD Worm
29		195504A1		1	VERIN, 102 ID x 553 mm strk; Stabilizer Cylinder; Left-Hand; See Figure 08-61

08-08		p2	02/08

SYSTEME HYDRAULIQUE - VERIN, STABILISATEUR DE LA PELLE RETRO EUROPA (SANS DE COMMANDE PILOTE)

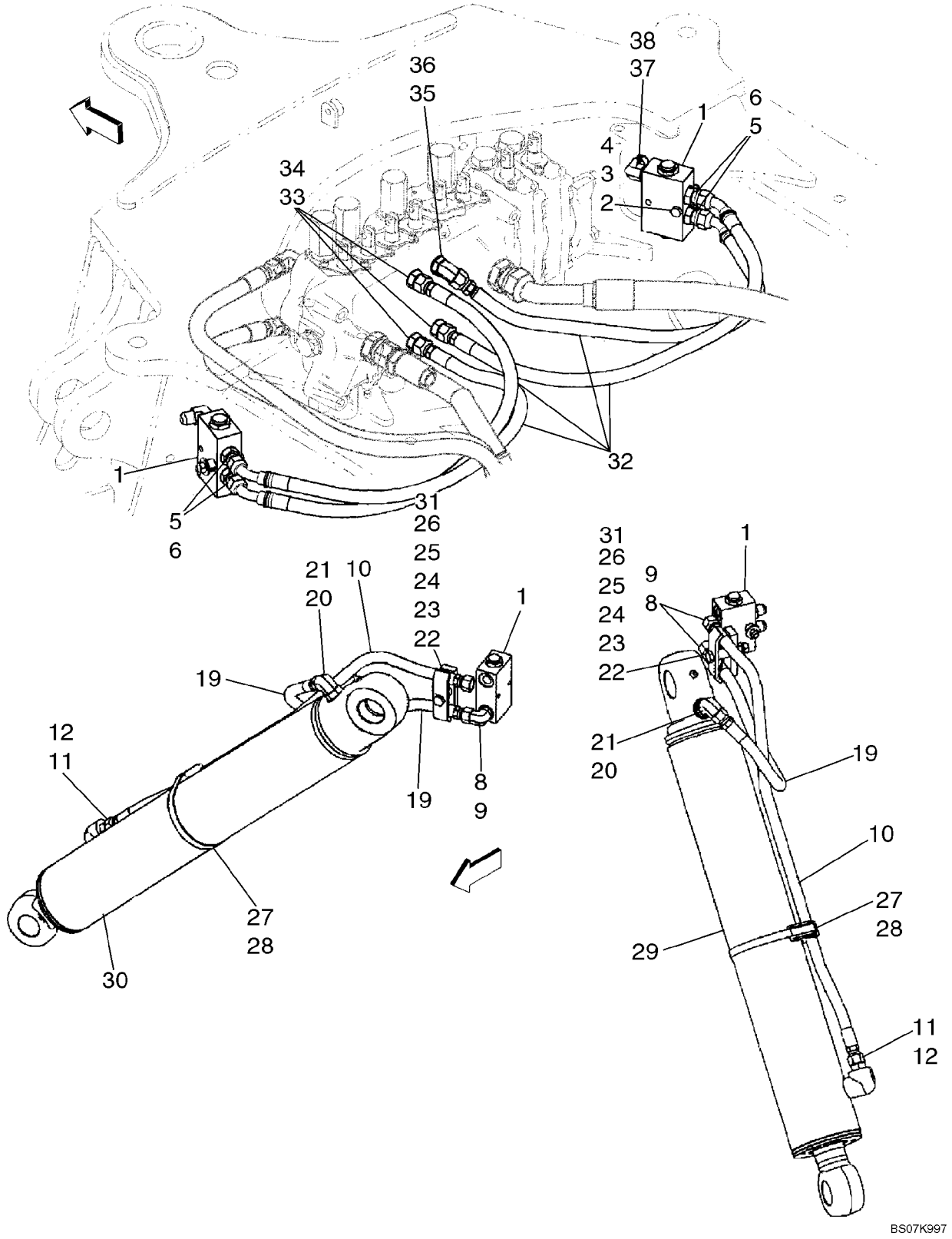

SYSTEME HYDRAULIQUE - VERIN, STABILISATEUR DE LA PELLE RETRO EUROPA (SANS DE COMMANDE PILOTE)

REF	FN	PART NUMBER	YR/SN	QTY	DESCRIPTION
30		195503A1		1	VERIN, 102 ID x 553 mm strk; Stabilizer Cylinder; Right-Hand; See Figure 08-61
31		895-11010		2	RONDELLE, M10 x 20 x 2
32		87429654		4	FLEXIBLE (ASSEMBLE), 720 mm (28-3/8 in)
33		218-5059		3	RACCORD, 3/4"-16, 37Ü x 3/4"-16, O-Ring, Incl. Ref 34
34		237-6008		1	JOINT THORIQUE, 8-1, 90 Duro, .644" ID x .087" Thk
35		218-5136		1	COUDE, 45Ü, 3/4"-16, 37Ü x 3/4"-16, O-Ring, Incl. Ref 36
36		237-6008		1	JOINT THORIQUE, 8-1, 90 Duro, .644" ID x .087" Thk
37		218-5280		2	COUDE, 90Ü, 3/4"-16, 37Ü x 9/16"-18, O-Ring, Incl. Ref 38
38		237-6006		1	JOINT THORIQUE, 6-1, 90 Duro, .468" ID x .078" Thk

08-08A		p1	02/08

SYSTEME HYDRAULIQUE - VERIN, STABILISATEUR DE LA PELLE RETRO EUROPA (AVEC DE COMMANDE PILOTE)

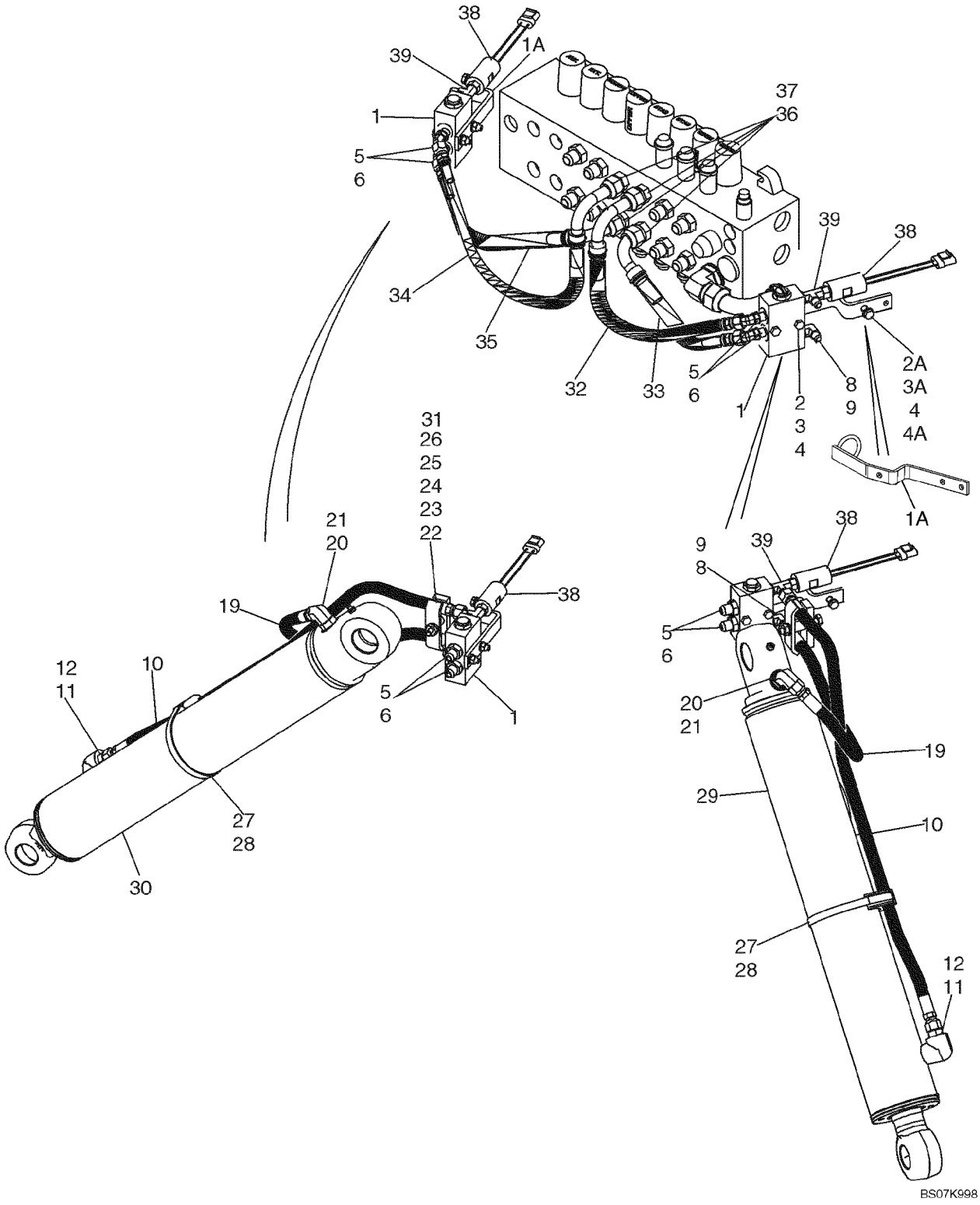

SYSTEME HYDRAULIQUE - VERIN, STABILISATEUR DE LA PELLE RETRO EUROPA (AVEC DE COMMANDE PILOTE)

REF	FN	PART NUMBER	YR/SN	QTY	DESCRIPTION
		REF			NOTICE, MODELS WITH PILOT CONTROLS
1		85802820		2	CLAPET ANTI-RETOUR, Load Check; Includes 85820159, 85820160, 85821126
		85820159		1	PLONGEUR
		85820160		1	SOUPAPE HYDRAULIQUE
		85821126		1	KIT
1A		87450318		2	EQUERRE
2		814-8055		4	BOULON, Hex, M8 x 55, 8.8
2A		814-8035		2	BOULON, Hex, M8 x 35, 8.8
3		496-81028		2	RONDELLE, 13/32" x 1 1/4" x .134", HDN
3A		895-11008		6	RONDELLE, M8 x 16 x 1.6
4		829-1408		6	ECROU, M8, Cl 10
4A		87437840		2	ENTRETOISE
5		218-5135		4	COUDE, 45Ü, 9/16"-18, 37Ü x 9/16"-18, O-Ring, Incl. Ref 6
6		237-6006		1	JOINT THORIQUE, 6-1, 90 Duro, .468" ID x .078" Thk
8		218-5105		2-4	COUDE, 90Ü, 9/16"-18, 37Ü x 9/16"-18, O-Ring, Incl. Ref 9; (2) Used On Models With Auto-Up; (4) Used On Models Without Auto-Up
9		237-6006		1	JOINT THORIQUE, 6-1, 90 Duro, .468" ID x .078" Thk
10		87439306		2	FLEXIBLE (ASSEMBLE), 830 mm (32-11/16 in)
11		218-5059		2	RACCORD, 3/4"-16, 37Ü x 3/4"-16, O-Ring, Incl. Ref 12
12		237-6008		1	JOINT THORIQUE, 8-1, 90 Duro, .644" ID x .087" Thk
19		87429584		2	FLEXIBLE (ASSEMBLE), 500 mm (19-11/16 in) Hose
20		218-5121		2	COUDE, 90Ü, 3/4"-16, 37Ü x 7/8"-14, O-Ring, Incl. Ref 21
21		237-6008		1	JOINT THORIQUE, 8-1, 90 Duro, .644" ID x .087" Thk
22		814-10070		2	BOULON, Hex, M10 x 70, 8.8
23		87420673		2	BRIDE, FLEXIBLE, Clamp
		496-81028		2	RONDELLE, 13/32" x 1 1/4" x .134", HDN
24		87439665		2	ENTRETOISE
25		87420672		2	ENTRETOISE, Clamp
26		829-1410		2	ECROU, M10, Cl 10
27		D142787		2	ENTRETOISE

SYSTEME HYDRAULIQUE - VERIN, STABILISATEUR DE LA PELLE RETRO EUROPA (AVEC DE COMMANDE PILOTE)

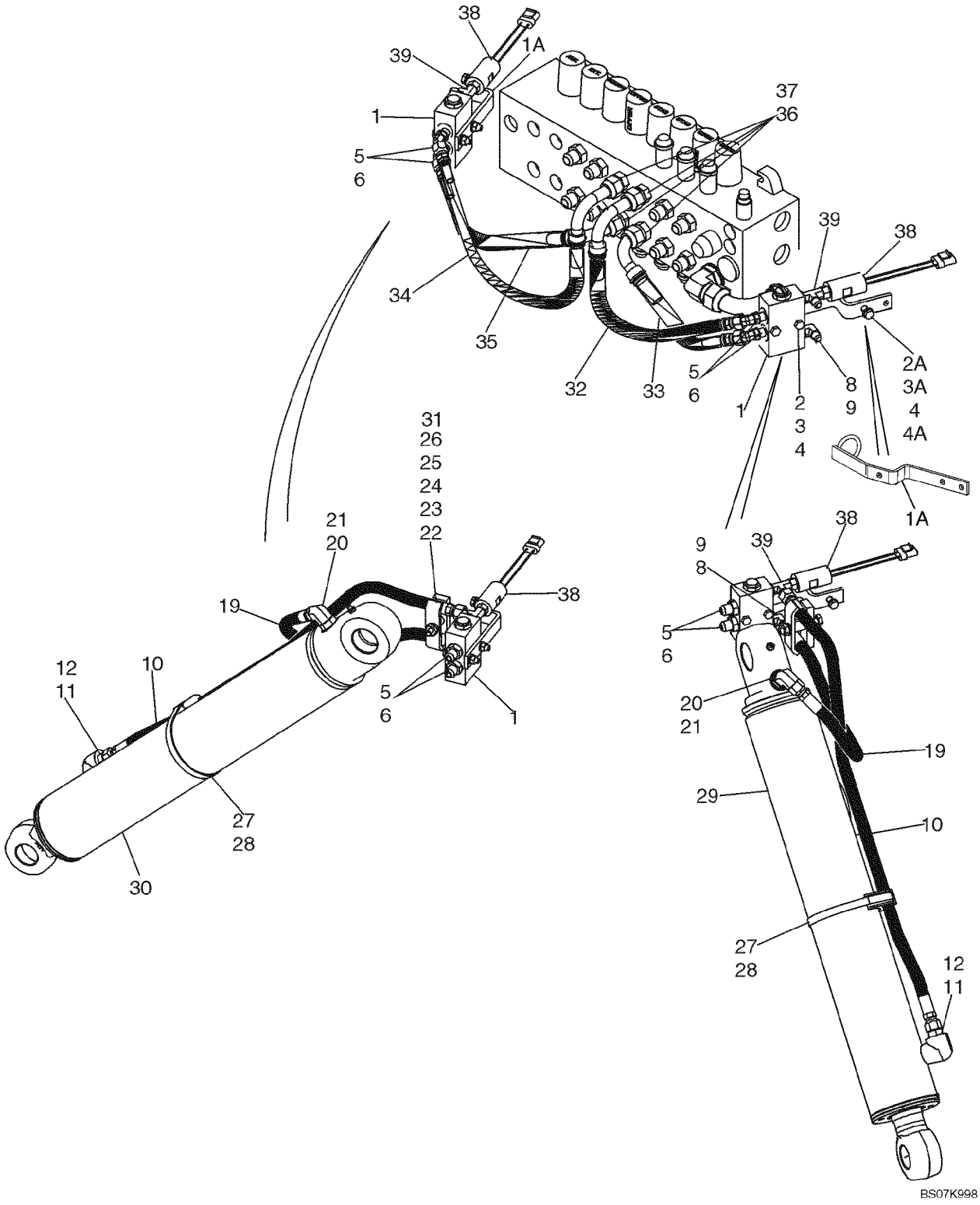

SYSTEME HYDRAULIQUE - VERIN, STABILISATEUR DE LA PELLE RETRO EUROPA (AVEC DE COMMANDE PILOTE)

REF	FN	PART NUMBER	YR/SN	QTY	DESCRIPTION
28		214-3188		2	BRIDE, FLEXIBLE, 4.75/5.625 HD Worm
29		195504A1		1	VERIN, 102 ID x 553 mm strk; Stabilizer Cylinder; Left-Hand; See Figure 08-61
30		195503A1		1	VERIN, 102 ID x 553 mm strk; Stabilizer Cylinder; Right-Hand; See Figure 08-61
31		895-11010		2	RONDELLE, M10 x 20 x 2
32		87437939		1	FLEXIBLE (ASSEMBLE), 440 mm (17-3/8 in)
33		87437938		1	FLEXIBLE (ASSEMBLE), 350 mm (13-13/16 in)
34		87437941		1	FLEXIBLE (ASSEMBLE), 485 mm (19-1/8 in)
35		87437940		1	FLEXIBLE (ASSEMBLE), 400 mm (15-3/4 in)
36		218-5070		4	RACCORD, 3/4"-16, 37Ü x 1 1/16"-12, O-Ring, Incl. Ref 37
37		237-6012		1	JOINT THORIQUE, 12-1, 90 Duro, .924 ID x .118" Thk
38		87552560		2	PRESSOSTAT, Pilot Control; Includes 237-6004 O-Ring; Used On Models With Auto-Up; 12 inch Wire Lead; With Rubber Snubbing; CNH Part Number Stamped On Body Of Switch; North American Models; Replaces 87439163 Switch
38		86992557		2	PRESSOSTAT, Pilot Control; Includes 237-6004 O-Ring; Used On Models With Auto-Up; 6 inch Wire Lead; CNH Part Number Stamped On Body Of Switch; European Models
39		87423033		2	TE, 9/16 x 9/16 Or x 7/16 Or; Includes 237-6004, 237-6006 O-Ring; Used On Models With Auto-Up

08-09		p1	02/08

SYSTEME HYDRAULIQUE - VERIN, DEBATTEMENT DE LA PELLE RETRO (SANS DE COMMANDE PILOTE)

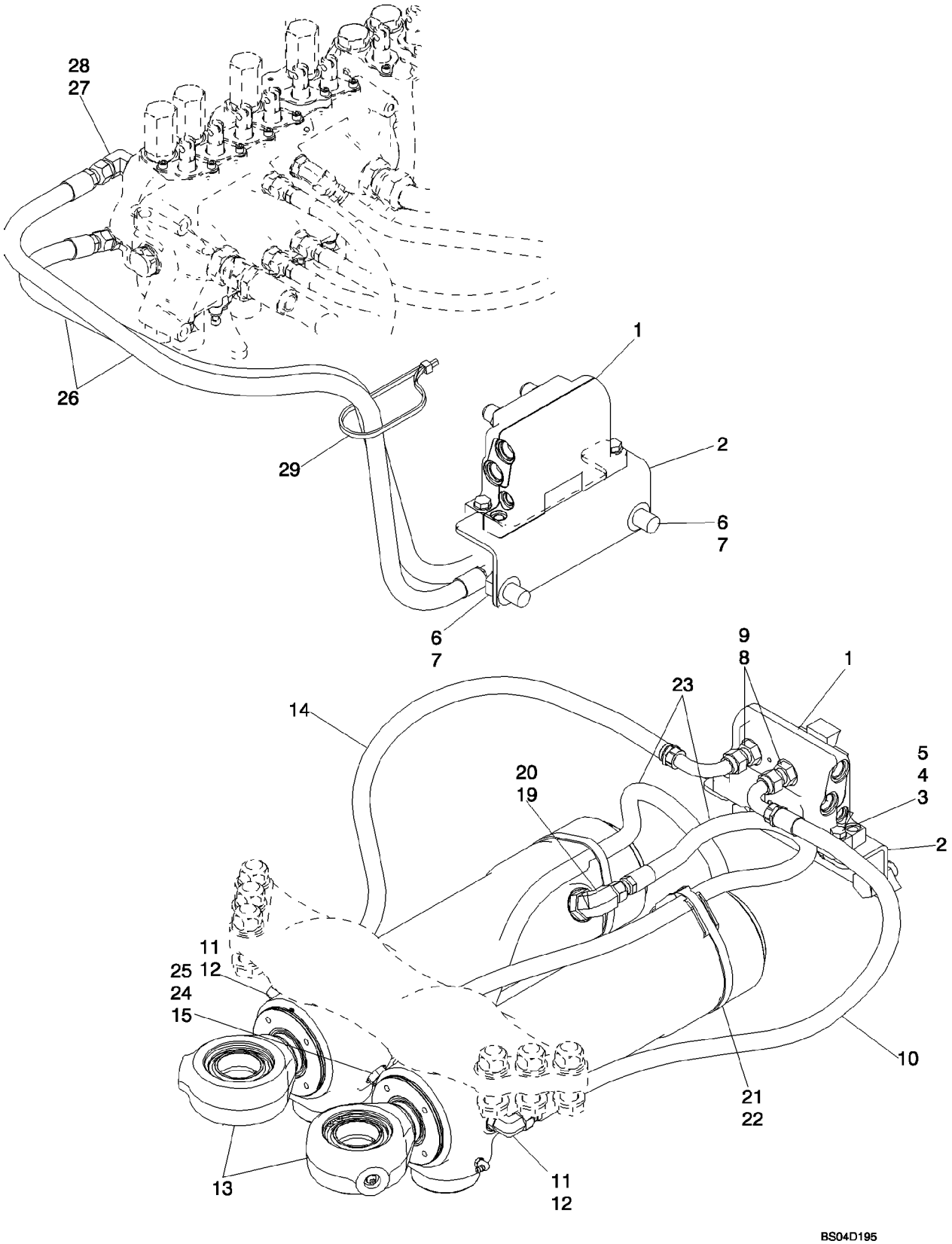

SYSTEME HYDRAULIQUE - VERIN, DEBATTEMENT DE LA PELLE RETRO (SANS DE COMMANDE PILOTE)

REF	FN	PART NUMBER	YR/SN	QTY	DESCRIPTION
		REF			NOTICE, MODELS WITHOUT PILOT CONTROLS
1		87449373		1	SOUPAPE HYDRAULIQUE, Swing Cushion; See Figure 08-55
2		87428140		1	EQUERRE, Valve Bracket
3		814-10040		2	BOULON, Hex, M10 x 40, 8.8, Full Thd
4		895-11010		4	RONDELLE, M10 x 20 x 2
5		829-1410		2	ECROU, M10, Cl 10
6		614-18035		2	BOULON, Hex, M18 x 35, 8.8, Full Thd
7		895-11018		4	RONDELLE, M18 x 34 x 3
8		218-5062		4	RACCORD, 7/8"-14, 37Ü x 7/8"-14, O-Ring, Incl. Ref 9
9		237-6010		1	JOINT THORIQUE, 10-1, 90 Duro, .755" ID x .097" Thk
10		87423356		1	FLEXIBLE (ASSEMBLE), 850 mm (33-1/2 in)
11		218-5106		2	COUDE, 90Ü, 3/4"-16, 37Ü x 3/4"-16, O-Ring, Incl. Ref 12
12		237-6008		1	JOINT THORIQUE, 8-1, 90 Duro, .644" ID x .087" Thk, Boss seal
13		188027A2		2	VERIN, 95 ID x 292 mm strk; Swing Cylinder, See Figure 08-62
14		87423356		1	FLEXIBLE (ASSEMBLE), 850 mm (33-1/2 in)
15		192971A1		2	ORIFICE, Restrictor
19		218-5119		2	COUDE, 90Ü, 7/8"-14, 37Ü x 1 1/16"-12, O-Ring, Incl. Ref 20
20		237-6012		1	JOINT THORIQUE, 12-1, 90 Duro, .924 ID x .118" Thk, Boss Seal
21		D142787		2	ENTRETOISE
22		214-1492		2	BRIDE, FLEXIBLE, #92, 5.38/6.25 Type F Worm, W/liner
23		87441076		2	FLEXIBLE (ASSEMBLE), 802 mm (31-19/32 in)
24		218-5106		2	COUDE, 90Ü, 3/4"-16, 37Ü x 3/4"-16, O-Ring, Incl. Ref 25
25		237-6008		1	JOINT THORIQUE, 8-1, 90 Duro, .644" ID x .087" Thk, Boss seal
26		87428158		2	FLEXIBLE (ASSEMBLE), 1194 mm (47 in)

08-09		p2	02/08

SYSTEME HYDRAULIQUE - VERIN, DEBATTEMENT DE LA PELLE RETRO (SANS DE COMMANDE PILOTE)

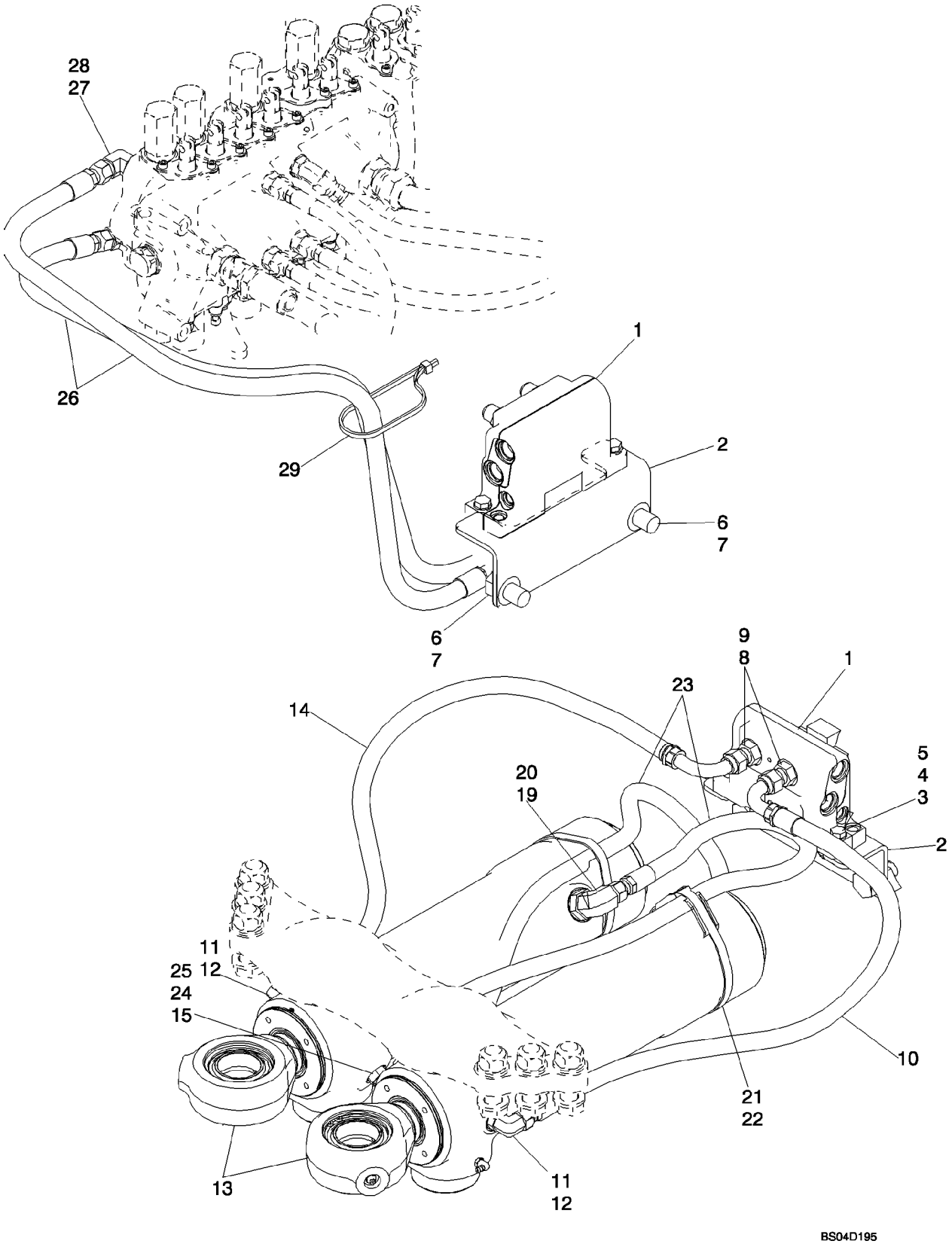

SYSTEME HYDRAULIQUE - VERIN, DEBATTEMENT DE LA PELLE RETRO (SANS DE COMMANDE PILOTE)

REF	FN	PART NUMBER	YR/SN	QTY	DESCRIPTION
27		218-5107		2	COUDE, 90Ü, 7/8"-14, 37Ü x 7/8"-14, O-Ring, Incl. Ref 28
28		237-6010		1	JOINT THORIQUE, 10-1, 90 Duro, .755" ID x .097" Thk
29		L18337		1	SERRE-CABLE, 9.95"-12.1" lg

08-09A		p1	02/08

SYSTEME HYDRAULIQUE - VERIN, DEBATTEMENT DE LA PELLE RETRO (AVEC DE COMMANDE PILOTE)

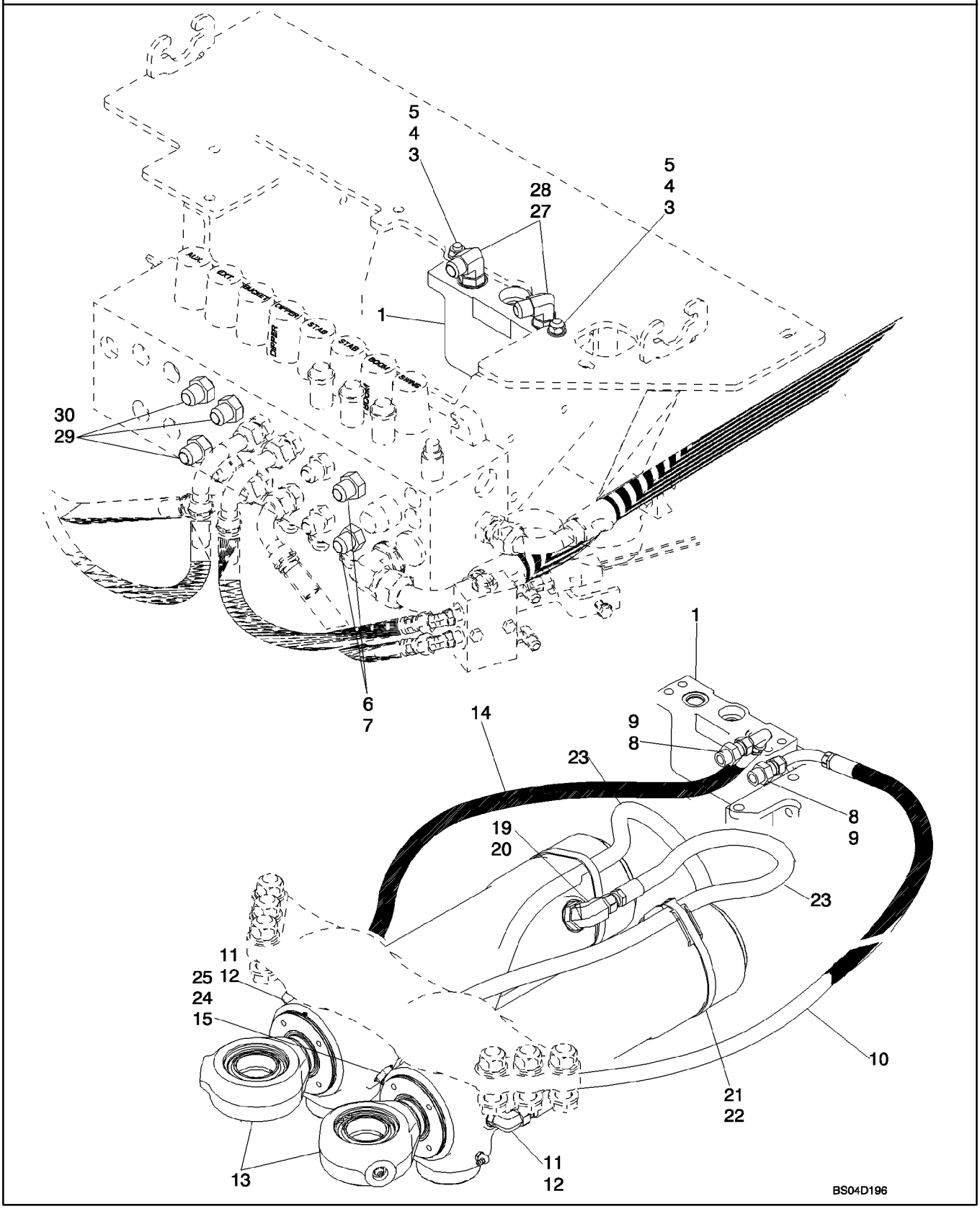

SYSTEME HYDRAULIQUE - VERIN, DEBATTEMENT DE LA PELLE RETRO (AVEC DE COMMANDE PILOTE)

REF	FN	PART NUMBER	YR/SN	QTY	DESCRIPTION
		REF			NOTICE, MODELS WITH PILOT CONTROLS
1		87449373		1	SOUPAPE HYDRAULIQUE, Swing Cushion; See Figure 08-55
3		814-10045		2	BOULON, Hex, M10 x 45, 8.8
4		895-11010		4	RONDELLE, M10 x 20 x 2
5		829-1410		2	ECROU, M10, Cl 10
6		218-5063		2	RACCORD, 7/8"-14, 37Ü x 1 1/16"-12, O-Ring, Incl. Ref 7
7		237-6012		1	JOINT THORIQUE, 12-1, 90 Duro, .924 ID x .118" Thk
8		218-5062		2	RACCORD, 7/8"-14, 37Ü x 7/8"-14, O-Ring, Incl. Ref 9
9		237-6010		1	JOINT THORIQUE, 10-1, 90 Duro, .755" ID x .097" Thk
10		87440812		1	FLEXIBLE (ASSEMBLE), 950 mm (37-13/32 in)
11		218-5106		2	COUDE, 90Ü, 3/4"-16, 37Ü x 3/4"-16, O-Ring, Incl. Ref 12
12		237-6008		1	JOINT THORIQUE, 8-1, 90 Duro, .644" ID x .087" Thk, Boss seal
13		188027A2		2	VERIN, 95 ID x 292 mm strk; Swing Cylinder, See Figure 08-62
14		87450698		1	FLEXIBLE (ASSEMBLE), 1285 mm (50-19/32 in)
15		192971A1		2	ORIFICE, Restrictor
19		218-5119		2	COUDE, 90Ü, 7/8"-14, 37Ü x 1 1/16"-12, O-Ring, Incl. Ref 20
20		237-6012		1	JOINT THORIQUE, 12-1, 90 Duro, .924 ID x .118" Thk, Boss Seal
21		D142787		2	ENTRETOISE
22		214-1492		2	BRIDE, FLEXIBLE, #92, 5.38/6.25 Type F Worm, W/liner
23		87441076		2	FLEXIBLE (ASSEMBLE), 802 mm (31-19/32 in)
24		218-5106		2	COUDE, 90Ü, 3/4"-16, 37Ü x 3/4"-16, O-Ring, Incl. Ref 25
25		237-6008		1	JOINT THORIQUE, 8-1, 90 Duro, .644" ID x .087" Thk, Boss seal

08-09A		p2	02/08

SYSTEME HYDRAULIQUE - VERIN, DEBATTEMENT DE LA PELLE RETRO (AVEC DE COMMANDE PILOTE)

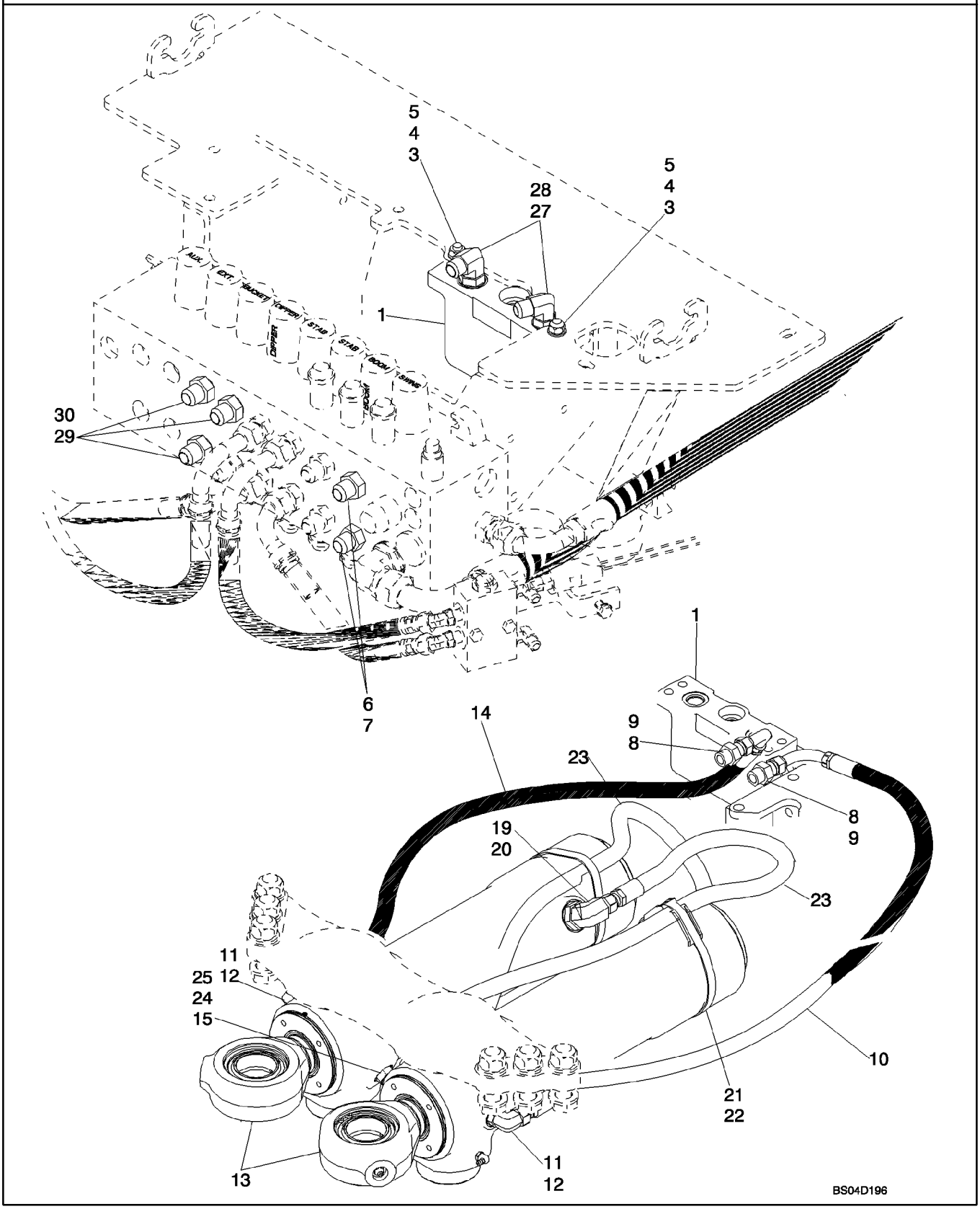

SYSTEME HYDRAULIQUE - VERIN, DEBATTEMENT DE LA PELLE RETRO (AVEC DE COMMANDE PILOTE)

REF	FN	PART NUMBER	YR/SN	QTY	DESCRIPTION
27		218-5107		2	COUDE, 90Ü, 7/8"-14, 37Ü x 7/8"-14, O-Ring, Incl. Ref 28
28		237-6010		1	JOINT THORIQUE, 10-1, 90 Duro, .755" ID x .097" Thk
29		218-5063		6	RACCORD, 7/8"-14, 37Ü x 1 1/16"-12, O-Ring, Incl. Ref 30
30		237-6012		1	JOINT THORIQUE, 12-1, 90 Duro, .924 ID x .118" Thk

08-10		p1	01/08

SYSTEME HYDRAULIQUE - VERIN, FLECHE DE LA PELLE RETRO

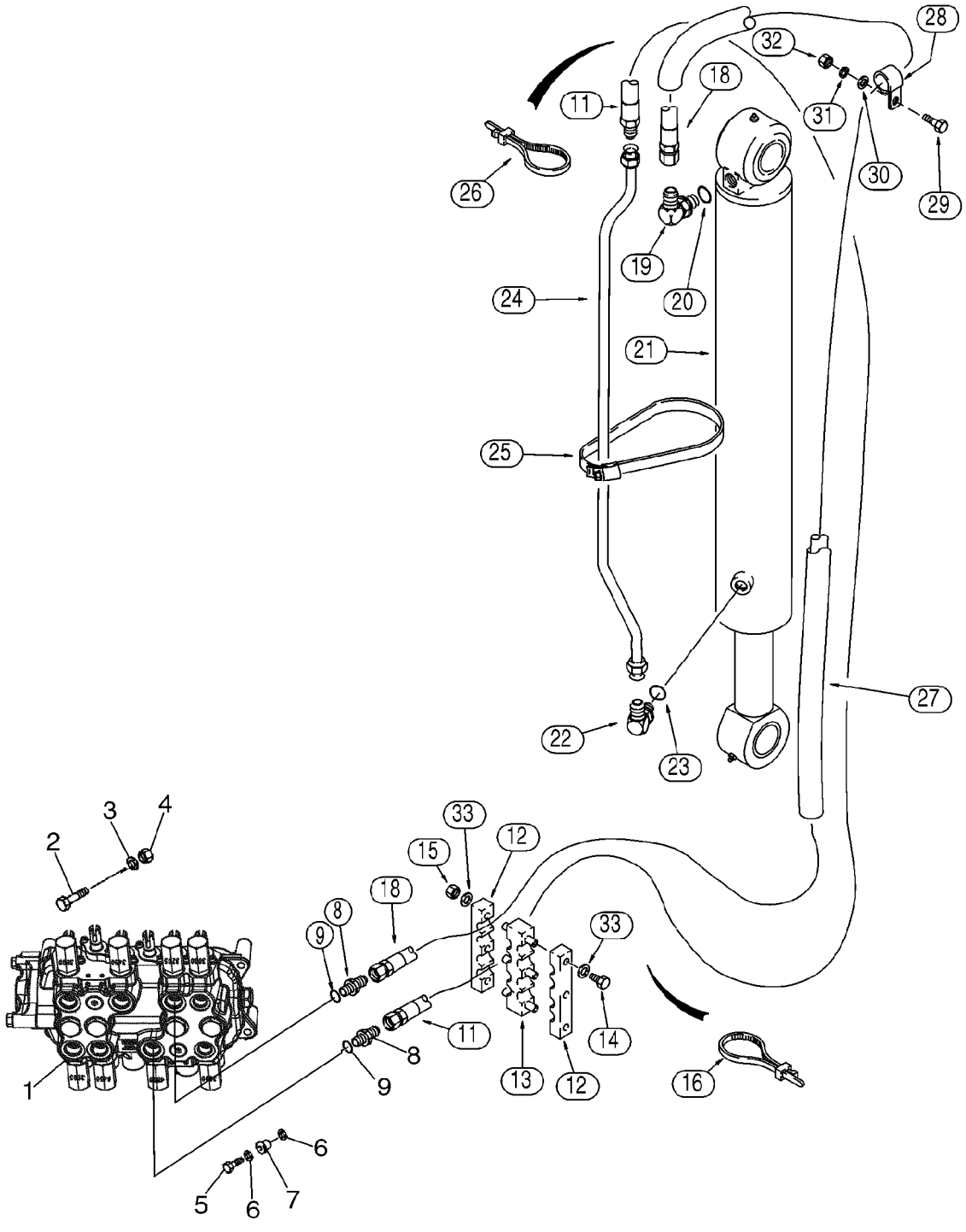

SYSTEME HYDRAULIQUE - VERIN, FLECHE DE LA PELLE RETRO

REF	FN	PART NUMBER	YR/SN	QTY	DESCRIPTION
1		REF		1	NOTICE, Valve Assy, Control; Backhoe Control Valve; For Correct Assembly and Components, See Figures 08-32 - 08-39
2		814-10080		2	BOULON, Hex, M10 x 80, 8.8
3		896-11010		2	RONDELLE, M10 x 21.5 x 2.5, HT
4		829-1410		2	ECROU, M10, Cl 10
5		614-10035		1	BOULON, Hex, M10 x 35, 8.8, Full Thd
6		496-41041		2	RONDELLE, 13/32" x 1 1/8" x .134"
7		D52276		1	ISOLATEUR
8		218-5063		2	RACCORD, 7/8"-14, 37Ü x 1 1/16"-12, O-Ring, Incl. Ref 9
9		237-6012		1	JOINT THORIQUE, 12-1, 90 Duro, .924 ID x .118" Thk, Boss Seal
11		397786A1		1	FLEXIBLE (ASSEMBLE), 3470 mm (136-5/8 in), Lower Valve Port
12		178951A1		2	ATTACHE ASSEMBLEE
13		178952A1		1	ATTACHE ASSEMBLEE
14		814-10120		3	BOULON, Hex, M10 x 120, 8.8
15		832-10410		3	CONTRE-ECROU, M10 x 1.5, Cl 8
16		L18337		4	SERRE-CABLE, 9.95"-12.1" lg
18		393369A1		1	FLEXIBLE (ASSEMBLE), 3495 mm (137-5/8 in)
19		218-5107		1	COUDE, 90Ü, 7/8"-14, 37Ü x 7/8"-14, O-Ring, Incl. Ref 20
20		237-6010		1	JOINT THORIQUE, 10-1, 90 Duro, .755" ID x .097" Thk, Boss Seal
21		189653A2		1	VERIN, 114 ID x 982 mm strk, Boom Cylinder, See Figure 08-63
22		218-5107		1	COUDE, 90Ü, 7/8"-14, 37Ü x 7/8"-14, O-Ring, Incl. Ref 23
23		237-6010		1	JOINT THORIQUE, 10-1, 90 Duro, .755" ID x .097" Thk, Boss Seal
24		357471A1		1	TUYAUTERIE
25		214-1488		2	BRIDE, FLEXIBLE, #88, 5.12/6.00 Type F Worm
26		L18337		4	SERRE-CABLE, 9.95"-12.1" lg
27		224057A1		2	MANCHON, 946 mm (37-15/64 in)

SYSTEME HYDRAULIQUE - VERIN, FLECHE DE LA PELLE RETRO

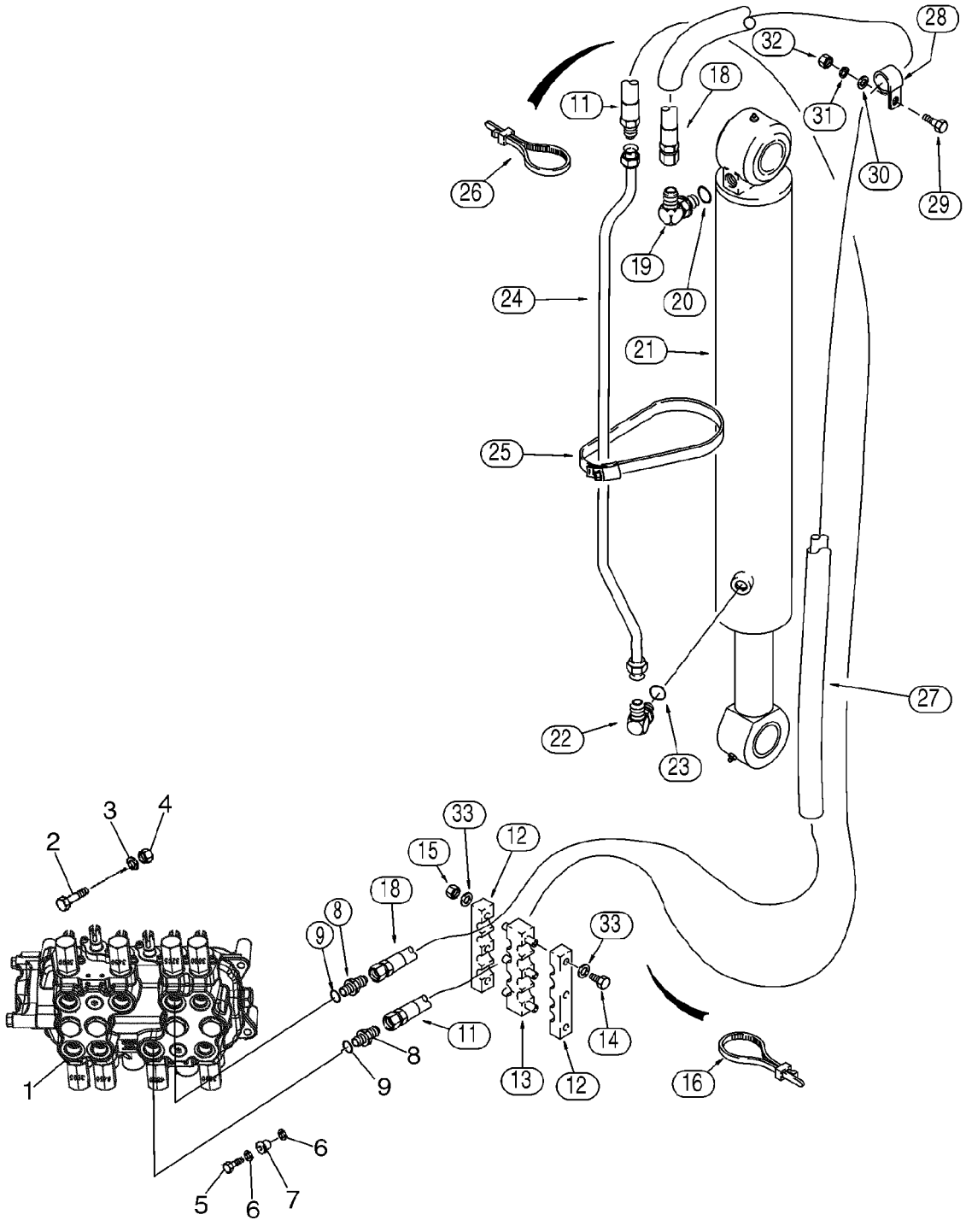

SYSTEME HYDRAULIQUE - VERIN, FLECHE DE LA PELLE RETRO

REF	FN	PART NUMBER	YR/SN	QTY	DESCRIPTION
28		515-23254		1	BRIDE, 1", Insul, 3/8" Bolt
28		R24840		1	COLLIER, 1-1/8 in ID
29		614-10035		2	BOULON, Hex, M10 x 35, 8.8, Full Thd
30		895-11010		2	RONDELLE, M10 x 20 x 2
31		892-11010		2	RONDELLE FREIN, M10
32		829-1410		2	ECROU, M10, Cl 10
33		895-11010		6	RONDELLE, M10 x 20 x 2

08-10A		p1	01/08

SYSTEME HYDRAULIQUE - LE LOQUET DE BOOM DE BACKHOE ET LE CIRCUIT ELECTRIQUE

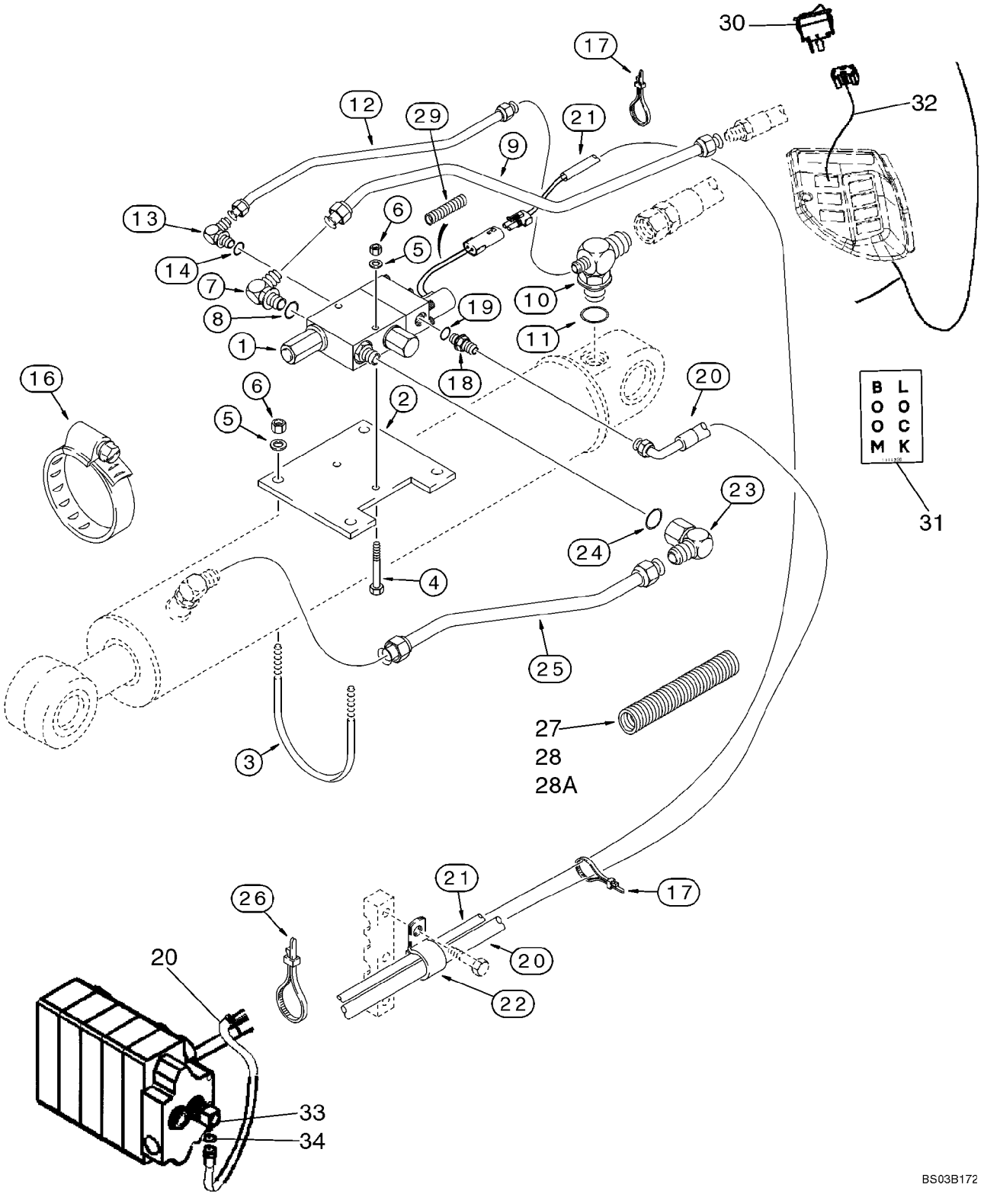

SYSTEME HYDRAULIQUE - LE LOQUET DE BOOM DE BACKHOE ET LE CIRCUIT ELECTRIQUE

REF	FN	PART NUMBER	YR/SN	QTY	DESCRIPTION
		399227A1		1	POCHETTE, Backhoe Boom Lock, Incl. Ref 1 - 34 and an Instruction Sheet; Also Includes Boom Lock Valve On Figure 08-55A
1		189957A1		1	VALVE, Solenoid, Backhoe Boom Lock, Incl. (2) 321-6046 Warning Decals; See Figure 08-55A
2		D150054		1	PLAQUE, GRANDE, Valve Mounting
3		D150053		2	BOULON, 3/8 in
4		413-648		2	BOULON, Hex, 3/8"-16 x 3", G5
5		495-11041		6	RONDELLE, 3/8", SAE
6		231-1446		6	CONTRE-ECROU, 3/8"-16, GB
7		218-5118		1	COUDE, 90Ü, 1 1/16"-12, 37Ü x 1 5/16"-12, O-Ring, Incl. Ref 8
8		237-6016		1	JOINT THORIQUE, 16-1, 90 Duro, 1.171" ID x .118" Thk, Boss Seal
9		191756A1		1	TUBE, Valve Port; Attaches to Ref 11 Hose on Figure 08-10
10		191063A1		1	RACCORD, Reducer, Boom Cylinder Closed End; Attaches to Ref 18 Hose, Figure 08-10
11		237-6010		1	JOINT THORIQUE, 10-1, 90 Duro, .755" ID x .097" Thk, Boss Seal
12		191790A1		1	TUBE, Pilot Port
13		218-5283		1	COUDE, 90Ü, 7/16"-20, 37Ü x 9/16"-18, O-Ring, Incl. Ref 14
14		237-6006		1	JOINT THORIQUE, 6-1, 90 Duro, .468" ID x .078" Thk, Boss Seal
16		214-31104		1	BRIDE, FLEXIBLE, 5.75/6.625 HD Worm
17		L18337		15	SERRE-CABLE, 9.95"-12.1" lg
18		218-5359		1	RACCORD, 7/16"-20, 37Ü x 3/4"-16, O-Ring, Incl. Ref 19
19		237-6008		1	JOINT THORIQUE, 8-1, 90 Duro, .644" ID x .087" Thk, Boss seal
20		189103A1		1	FLEXIBLE, 3700 mm (145-11/16 in), Return; Attaches to Elbow at Backhoe Valve
21		189263A1		1	FAISCEAU, Boom Lock Valve to Control Tower Harness

08-10A		p2	01/08

SYSTEME HYDRAULIQUE - LE LOQUET DE BOOM DE BACKHOE ET LE CIRCUIT ELECTRIQUE

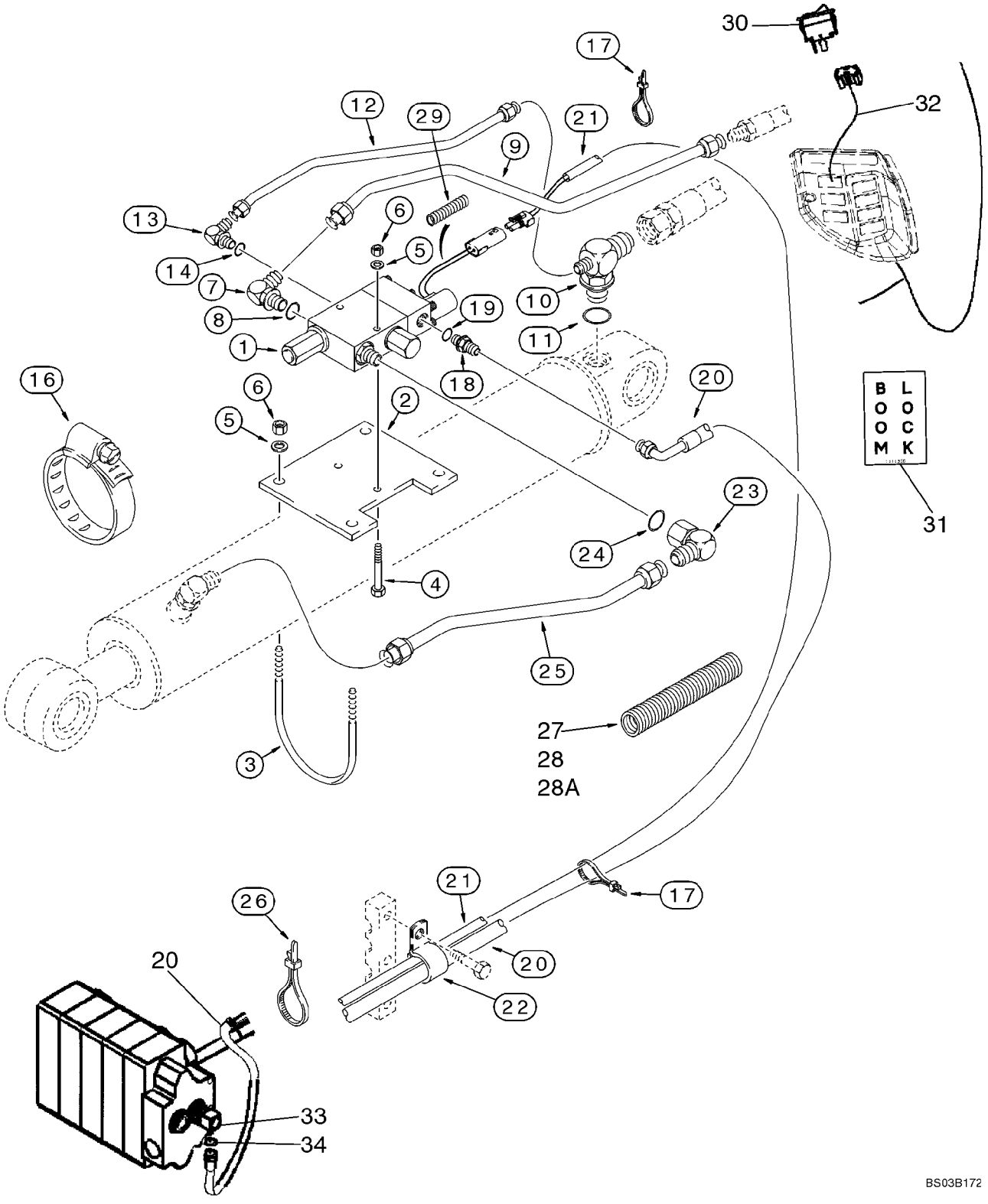

SYSTEME HYDRAULIQUE - LE LOQUET DE BOOM DE BACKHOE ET LE CIRCUIT ELECTRIQUE

REF	FN	PART NUMBER	YR/SN	QTY	DESCRIPTION
22		515-25190		1	BRIDE, 3/4", Insul, 1/2" Bolt, Return Hose
23		218-5382		1	COUDE, 90Ü, 1 1/16"-12, 37Ü x 1 5/16"-12, 37Ü Fem Sw, Incl. Ref 24
24		237-6016		1	JOINT THORIQUE, 16-1, 90 Duro, 1.171" ID x .118" Thk, Boss Seal
25		187612A1		1	TUBE, Boom Lock Valve to Boom Cylinder Rod End, See Figure 08-10, Ref 22 for Elbow
26		D147773		1	COLLIER, Tie, 11 in
27		226582A1		1	PROTECTEUR, 1850 mm lg, Harness Guard, Below Floor Plate
28		220276A1		1	MANCHON, 610 mm lg, Harness Ahead of Swing Tower Opening
28A		404907A1		1	MANCHON, 740 mm lg, Harness Behind Swing Tower Opening
29		1999528C1		1	GAINE DE CABLE, 455 mm lg, Solenoid Wire
30		400016A1		1	CONTACTEUR, Rocker, Boom Lock
31		L111356		1	DECALCOMANIE, Boom Lock
32		399246A1		1	FAISCEAU, Cab To Solenoid
33		189414A1		1	COUDE, 90 deg, Incl. Ref 34
34		237-6010		1	JOINT THORIQUE, 10-1, 90 Duro, .755" ID x .097" Thk, Boss Seal

SYSTEME HYDRAULIQUE - VERIN, BALANCIER DE LA PELLE RETRO

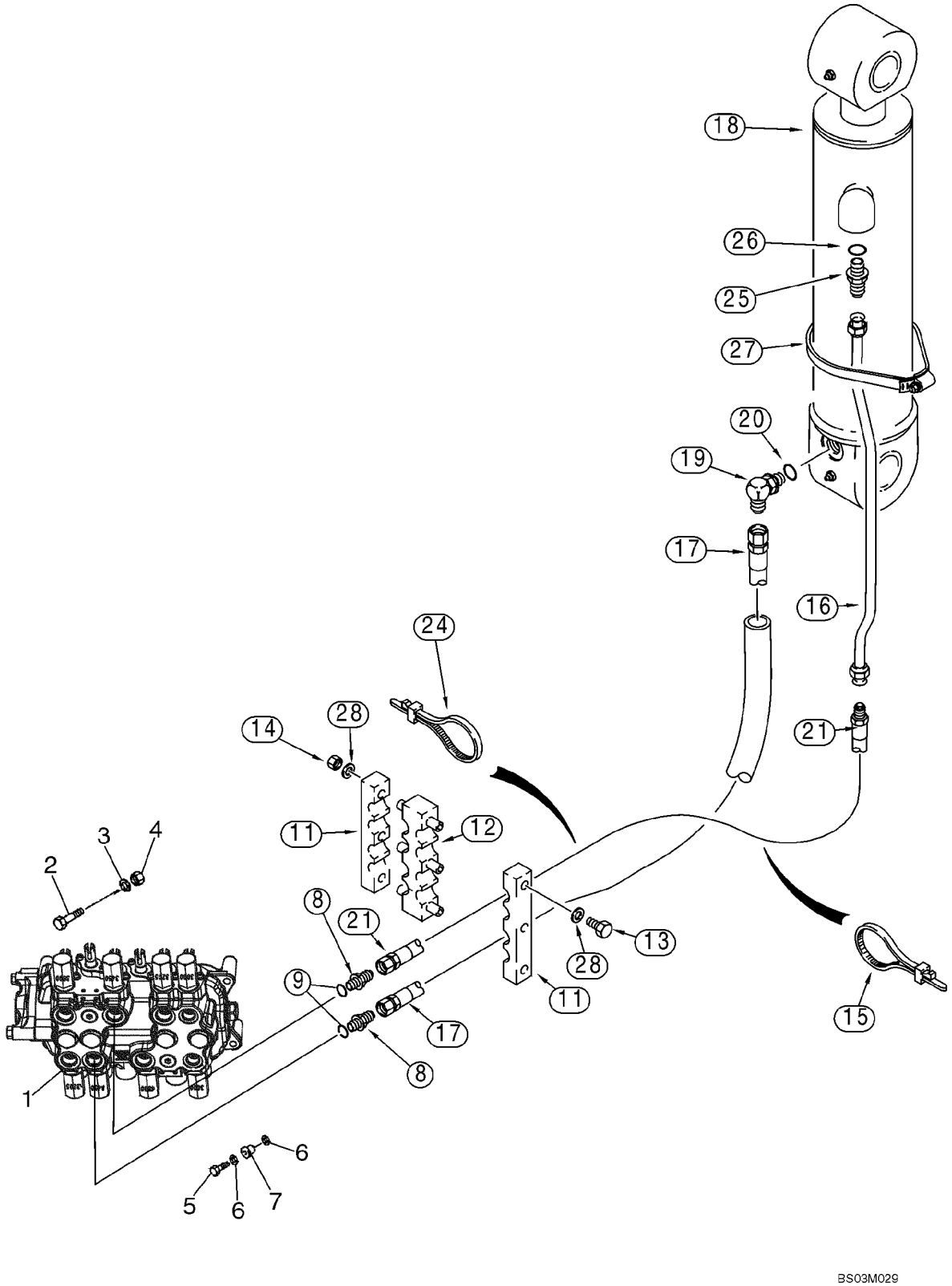

SYSTEME HYDRAULIQUE - VERIN, BALANCIER DE LA PELLE RETRO

REF	FN	PART NUMBER	YR/SN	QTY	DESCRIPTION
1		REF		1	NOTICE, Valve Assy, Control; Backhoe Control Valve; For Correct Assembly and Components, See Figures 08-32 - 08-39
2		814-10080		2	BOULON, Hex, M10 x 80, 8.8
3		896-11010		2	RONDELLE, M10 x 21.5 x 2.5, HT
4		829-1410		2	ECROU, M10, Cl 10
5		614-10035		1	BOULON, Hex, M10 x 35, 8.8, Full Thd
6		496-41041		2	RONDELLE, 13/32" x 1 1/8" x .134"
7		D52276		1	ISOLATEUR
8		218-5063		2	RACCORD, 7/8"-14, 37Ü x 1 1/16"-12, O-Ring, Incl. Ref 9
9		237-6012		1	JOINT THORIQUE, 12-1, 90 Duro, .924 ID x .118" Thk, Boss Seal
11		178951A1		2	ATTACHE ASSEMBLEE
12		178952A1		1	ATTACHE ASSEMBLEE
13		814-10120		3	BOULON, Hex, M10 x 120, 8.8
14		832-10410		3	CONTRE-ECROU, M10 x 1.5, Cl 8
15		L18337		4	SERRE-CABLE, 9.95"-12.1" lg
16		357469A1		1	TUYAUTERIE
17		393371A1		1	FLEXIBLE (ASSEMBLE), 2025 mm (79-3/4 in), Lower Valve Port
18		233114A2		1	VERIN, 108 ID x 686 mm strk; Dipper Cylinder, See Figure 08-64
19		218-5107		1	COUDE, 90Ü, 7/8"-14, 37Ü x 7/8"-14, O-Ring, Incl. Ref 20
20		237-6010		1	JOINT THORIQUE, 10-1, 90 Duro, .755" ID x .097" Thk, Boss Seal
21		397787A1		1	FLEXIBLE (ASSEMBLE), 2025 mm (79-3/4 in), Upper Valve Port
24		L18337		2-4	SERRE-CABLE, 9.95"-12.1" lg
25		218-5062		1	RACCORD, 7/8"-14, 37Ü x 7/8"-14, O-Ring, Incl. Ref 26
26		237-6010		1	JOINT THORIQUE, 10-1, 90 Duro, .755" ID x .097" Thk
27		214-1488		1	BRIDE, FLEXIBLE, #88, 5.12/6.00 Type F Worm

SYSTEME HYDRAULIQUE - VERIN, BALANCIER DE LA PELLE RETRO

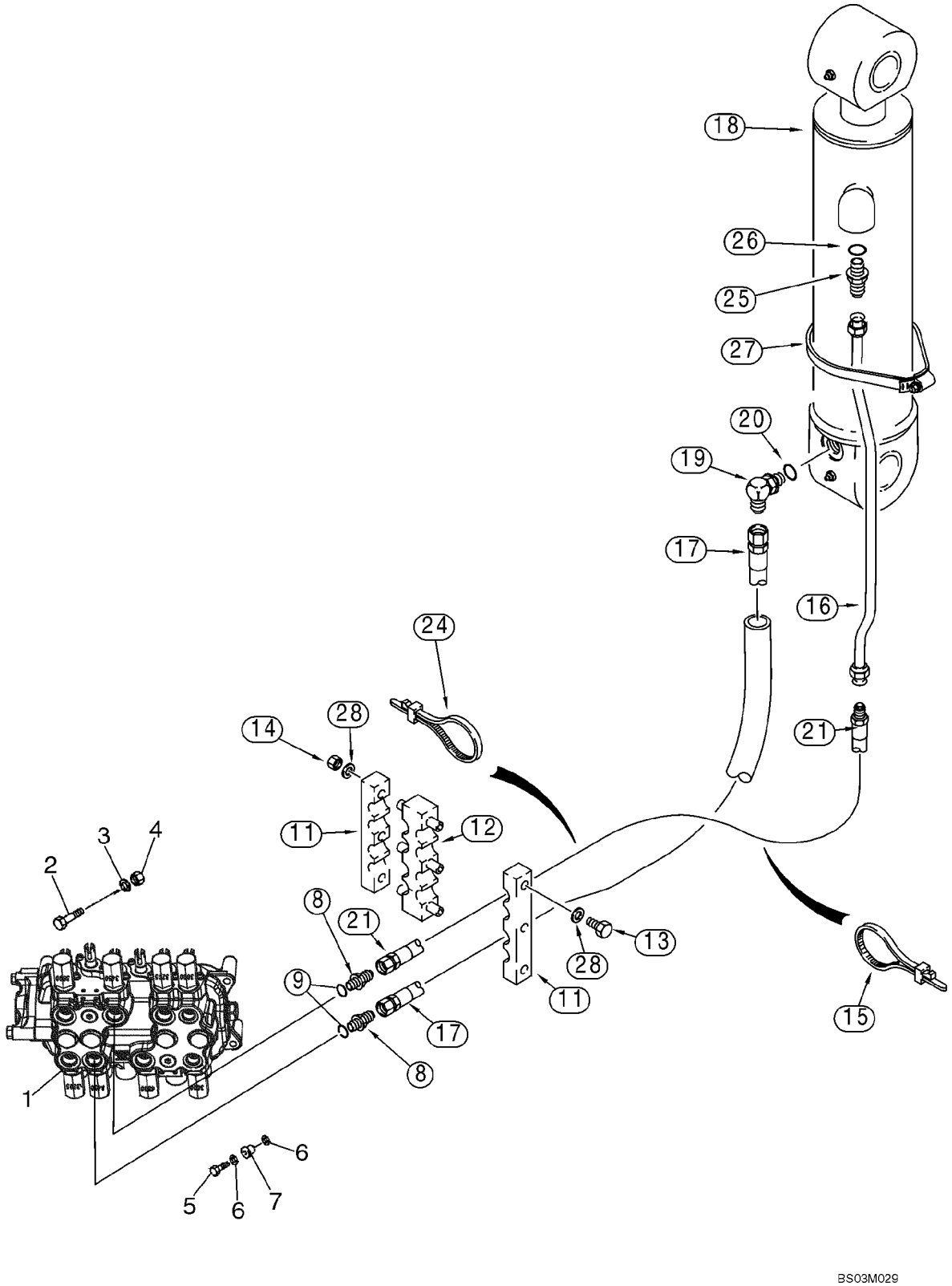

SYSTEME HYDRAULIQUE - VERIN, BALANCIER DE LA PELLE RETRO

REF	FN	PART NUMBER	YR/SN	QTY	DESCRIPTION
28		895-11010		6	RONDELLE, M10 x 20 x 2

SYSTEME HYDRAULIQUE - VERIN, GODET DE LA PELLE RETRO (MODèLES SANS BALANCIER EXTENSIBLE)

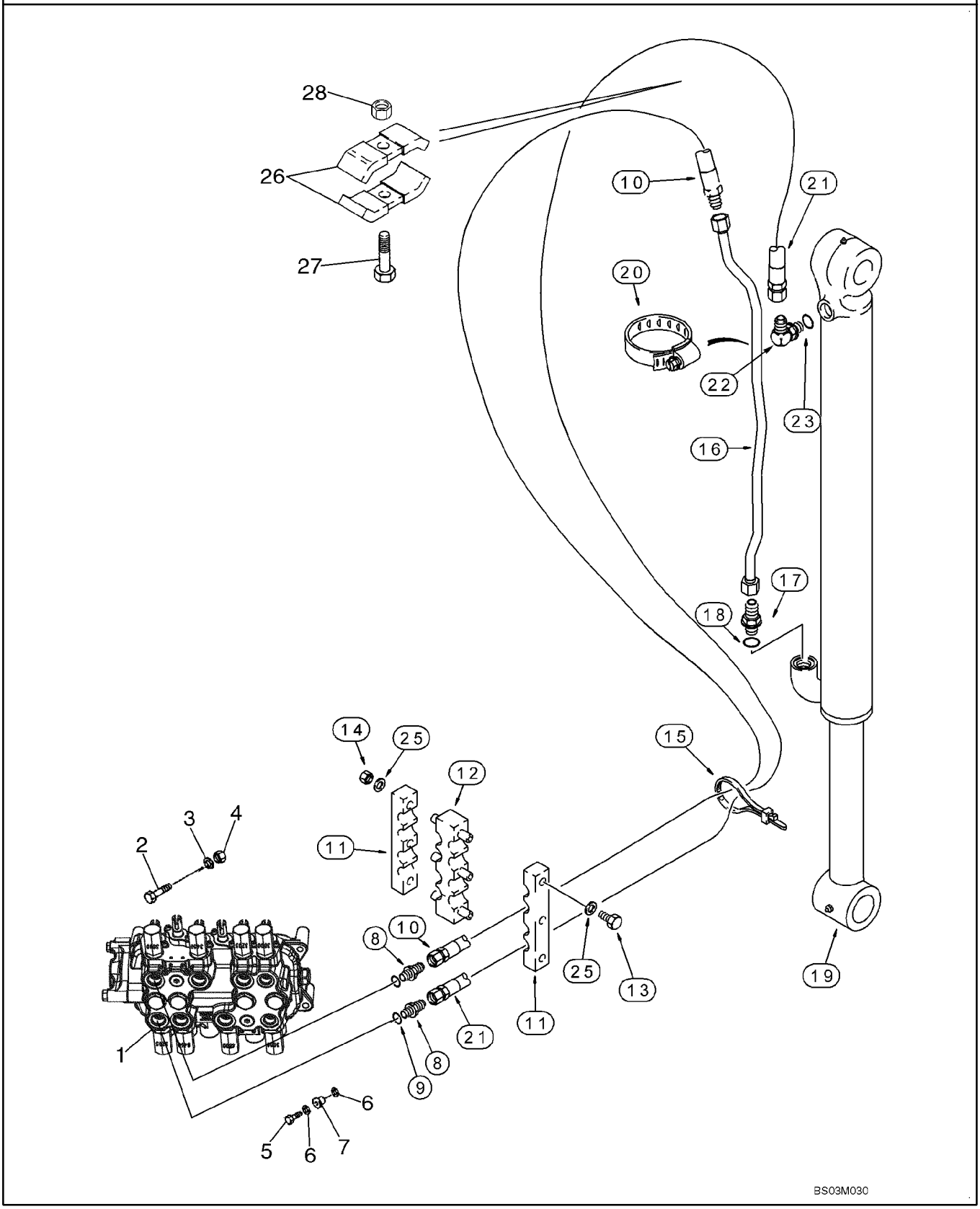

SYSTEME HYDRAULIQUE - VERIN, GODET DE LA PELLE RETRO (MODôLES SANS BALANCIER EXTENSIBLE)

REF	FN	PART NUMBER	YR/SN	QTY	DESCRIPTION
1		REF		1	NOTICE, Valve Assy, Control; Backhoe Control Valve; For Correct Assembly and Components, See Figures 08-32, 08-33, 08-36, 08-38
2		814-10080		2	BOULON, Hex, M10 x 80, 8.8
3		896-11010		2	RONDELLE, M10 x 21.5 x 2.5, HT
4		829-1410		2	ECROU, M10, Cl 10
5		614-10035		1	BOULON, Hex, M10 x 35, 8.8, Full Thd
6		496-41041		2	RONDELLE, 13/32" x 1 1/8" x .134"
7		D52276		1	ISOLATEUR
8		218-5063		2	RACCORD, 7/8"-14, 37Ü x 1 1/16"-12, O-Ring, Incl. Ref 9
9		237-6012		1	JOINT THORIQUE, 12-1, 90 Duro, .924 ID x .118" Thk, Boss Seal
10		397788A1		1	FLEXIBLE (ASSEMBLE), 3860 mm (152 in)
11		178951A1		2	ATTACHE ASSEMBLEE
12		178952A1		1	ATTACHE ASSEMBLEE
13		814-10120		3	BOULON, Hex, M10 x 120, 8.8
14		832-10410		3	CONTRE-ECROU, M10 x 1.5, Cl 8
15		L18337		2-4	SERRE-CABLE, 9.95"-12.1" lg
16		396339A1		1	TUYAUTERIE, Models Without Backhoe Auxiliary Hydraulics
16		357470A1		1	TUYAUTERIE, Models With Backhoe Auxiliary Hydraulics
17		218-5062		1	RACCORD, 7/8"-14, 37Ü x 7/8"-14, O-Ring, Incl. Ref 18
18		237-6010		1	JOINT THORIQUE, 10-1, 90 Duro, .755" ID x .097" Thk, Boss Seal
19		128760A1		1	VERIN, 83 ID x 872 mm strk; Bucket Cylinder, See Figure 08-65
20		214-1464		1	BRIDE, FLEXIBLE, #64, 3.56/4.50 Type F Worm
21		393360A1		1	FLEXIBLE (ASSEMBLE), 3860 mm (152 in)
22		218-5107		1	COUDE, 90Ü, 7/8"-14, 37Ü x 7/8"-14, O-Ring, Incl. Ref 23
23		237-6010		1	JOINT THORIQUE, 10-1, 90 Duro, .755" ID x .097" Thk

SYSTEME HYDRAULIQUE - VERIN, GODET DE LA PELLE RETRO (MODèLES SANS BALANCIER EXTENSIBLE)

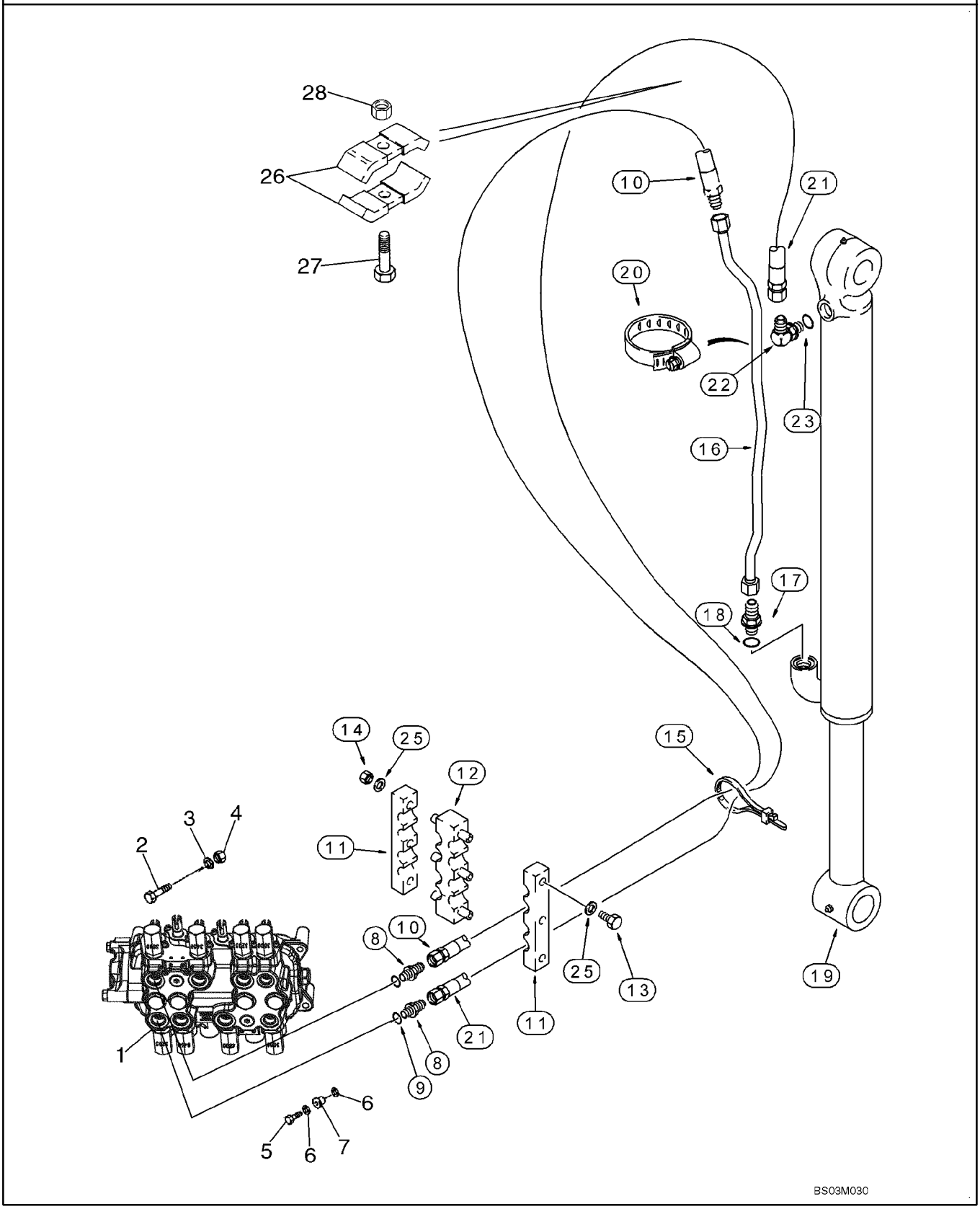

SYSTEME HYDRAULIQUE - VERIN, GODET DE LA PELLE RETRO (MODôLES SANS BALANCIER EXTENSIBLE)

REF	FN	PART NUMBER	YR/SN	QTY	DESCRIPTION
25		895-11010		6	RONDELLE, M10 x 20 x 2
26		D143846		2	BRIDE, Clamp
27		814-10055		1	BOULON, Hex, M10 x 55, 8.8
28		832-10410		1	CONTRE-ECROU, M10 x 1.5, Cl 8

SYSTEME HYDRAULIQUE - VERIN, GODET DE LA PELLE RETRO (MODèLES AVEC BALANCIER EXTENSIBLE)

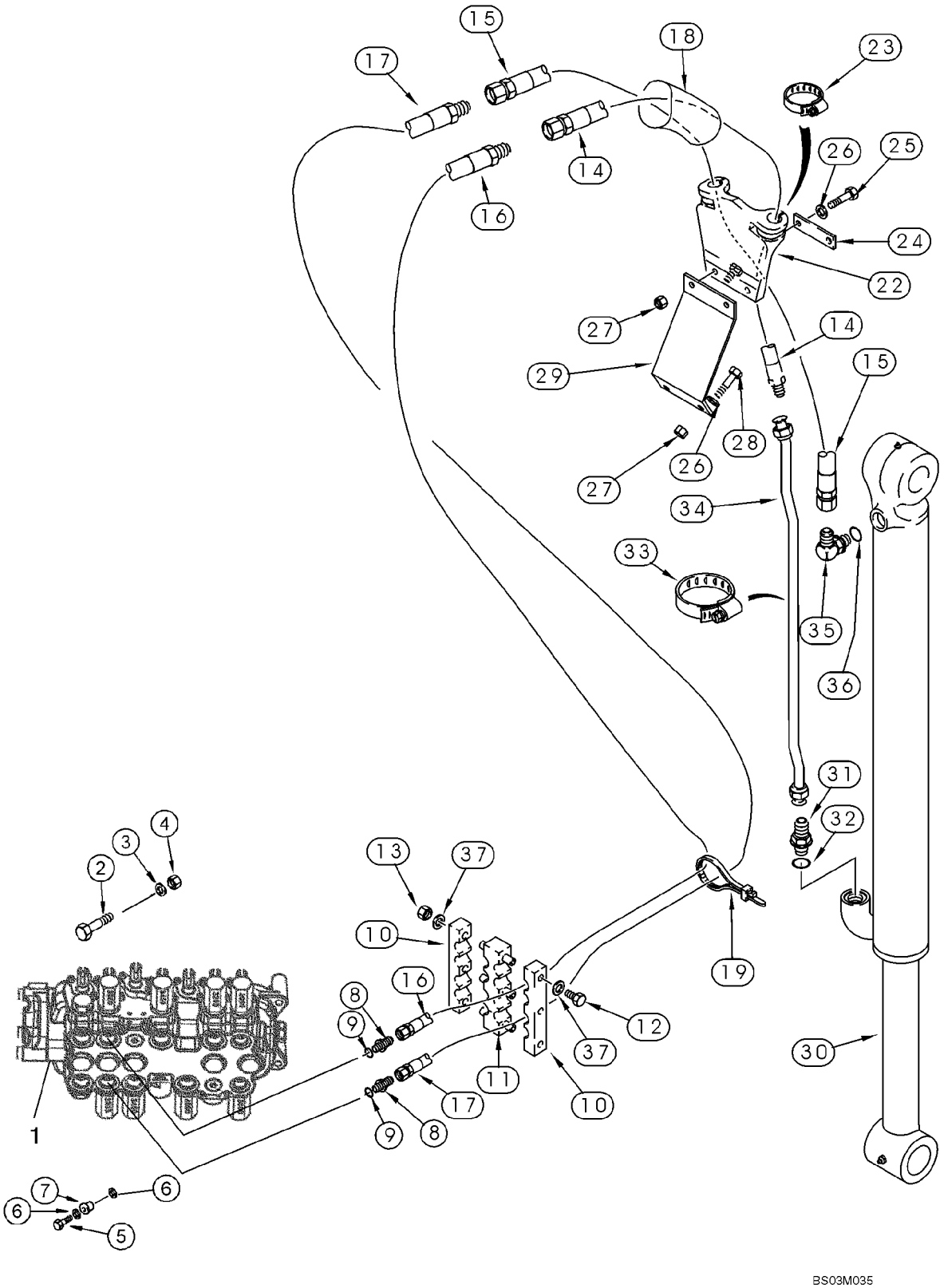

SYSTEME HYDRAULIQUE - VERIN, GODET DE LA PELLE RETRO (MODôLES AVEC BALANCIER EXTENSIBLE)

REF	FN	PART NUMBER	YR/SN	QTY	DESCRIPTION
1		REF		1	NOTICE, Valve Assy, Control; Backhoe Control Valve; For Correct Assembly and Components, See Figures 08-34, 08-35, 08-37, 08-39
2		814-10080		2	BOULON, Hex, M10 x 80, 8.8
3		896-11010		2	RONDELLE, M10 x 21.5 x 2.5, HT
4		829-1410		2	ECROU, M10, Cl 10
5		614-10035		1	BOULON, Hex, M10 x 35, 8.8, Full Thd
6		496-41041		2	RONDELLE, 13/32" x 1 1/8" x .134"
7		D52276		1	ISOLATEUR
8		218-5063		2	RACCORD, 7/8"-14, 37Ü x 1 1/16"-12, O-Ring, Incl. Ref 9
9		237-6012		1	JOINT THORIQUE, 12-1, 90 Duro, .924 ID x .118" Thk
10		178951A1		2	ATTACHE ASSEMBLEE
11		178952A1		1	ATTACHE ASSEMBLEE
12		814-10120		3	BOULON, Hex, M10 x 120, 8.8
13		832-10410		3	CONTRE-ECROU, M10 x 1.5, Cl 8
14		365309A1		1	FLEXIBLE (ASSEMBLE), 2052 mm (80-3/4 in)
15		143400A1		1	FLEXIBLE, 2052 mm (80-3/4 in)
16		393361A1		1	FLEXIBLE (ASSEMBLE), 3048 mm (120 in)
17		393362A1		1	FLEXIBLE (ASSEMBLE), 3048 mm (120 in)
18		87455961		1	GAINE PLASTIQUE, Sleeve; 87.4 Flat ID x 2000 mm
19		L18337		2-5	SERRE-CABLE, 9.95"-12.1" lg
22		184297A1		1	SUPPORT
23		214-3132		2	BRIDE, FLEXIBLE, 1.25/2.125 HD Worm
24		101479A1		1	SUPPORT
25		814-10045		2	BOULON, Hex, M10 x 45, 8.8
26		895-11010		4	RONDELLE, M10 x 20 x 2
27		832-10410		4	CONTRE-ECROU, M10 x 1.5, Cl 8
28		614-10030		2	BOULON, Hex, M10 x 30, 8.8
29		183736A1		1	SUPPORT
30		128760A1		1	VERIN, 83 ID x 872 mm strk; Bucket Cylinder, See Figure 08-65
31		218-5062		1	RACCORD, 7/8"-14, 37Ü x 7/8"-14, O-Ring, Incl. Ref 32

SYSTEME HYDRAULIQUE - VERIN, GODET DE LA PELLE RETRO (MODèLES AVEC BALANCIER EXTENSIBLE)

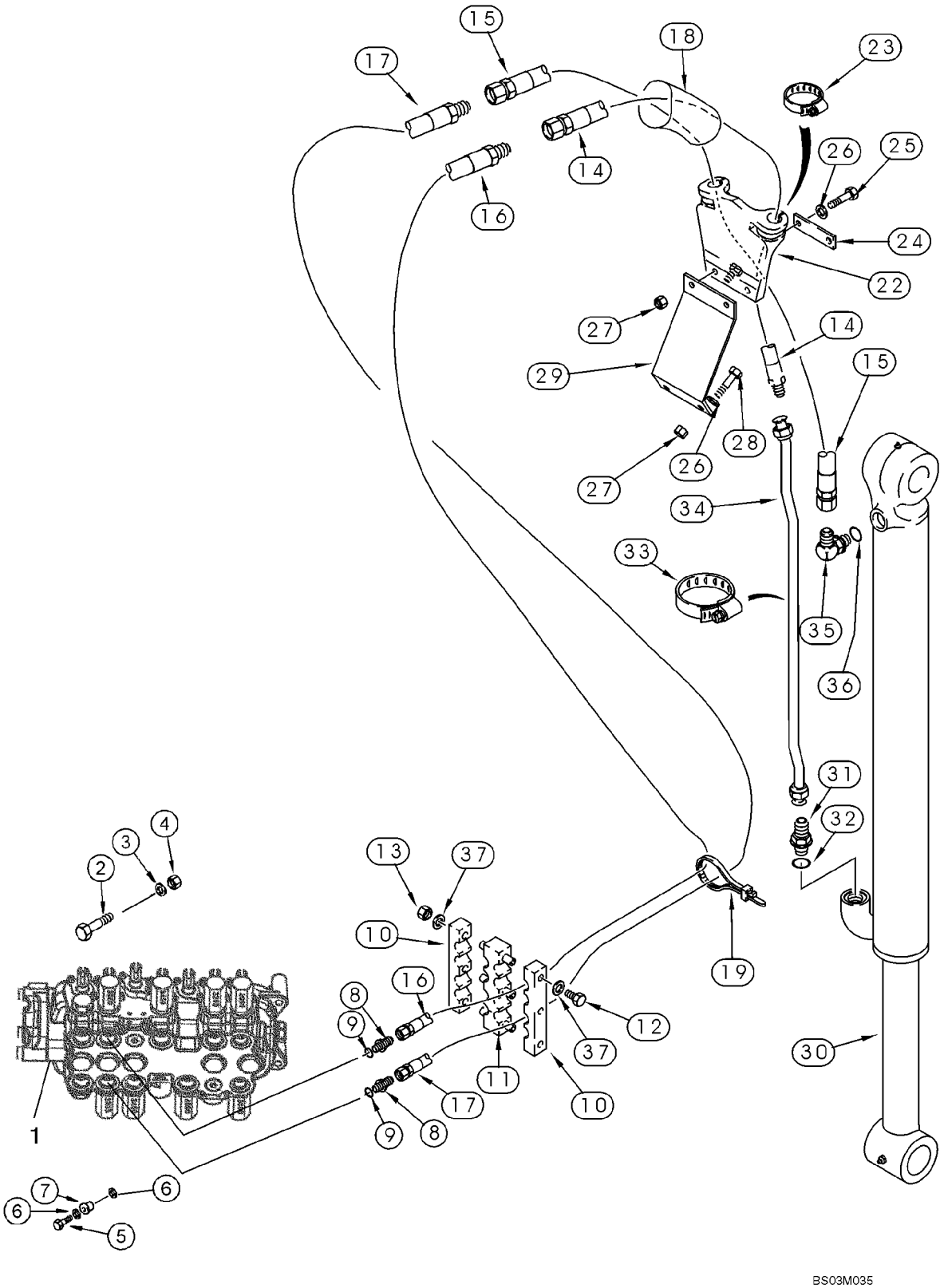

SYSTEME HYDRAULIQUE - VERIN, GODET DE LA PELLE RETRO (MODôLES AVEC BALANCIER EXTENSIBLE)

REF	FN	PART NUMBER	YR/SN	QTY	DESCRIPTION
32		237-6010		1	JOINT THORIQUE, 10-1, 90 Duro, .755" ID x .097" Thk
33		214-1464		2	BRIDE, FLEXIBLE, #64, 3.56/4.50 Type F Worm
34		396339A1		1	TUYAUTERIE, Models Without Auxiliary Hydraulics
34		357470A1		1	TUYAUTERIE, Models With Auxiliary Hydraulics
35		218-5107		1	COUDE, 90Ü, 7/8"-14, 37Ü x 7/8"-14, O-Ring, Incl. Ref 36
36		237-6010		1	JOINT THORIQUE, 10-1, 90 Duro, .755" ID x .097" Thk
37		895-11010		6	RONDELLE, M10 x 20 x 2

08-14		p1	02/08

SYSTEME HYDRAULIQUE - VERIN, BALANCIER EXTENSIBLE DE LA PELLE RETRO

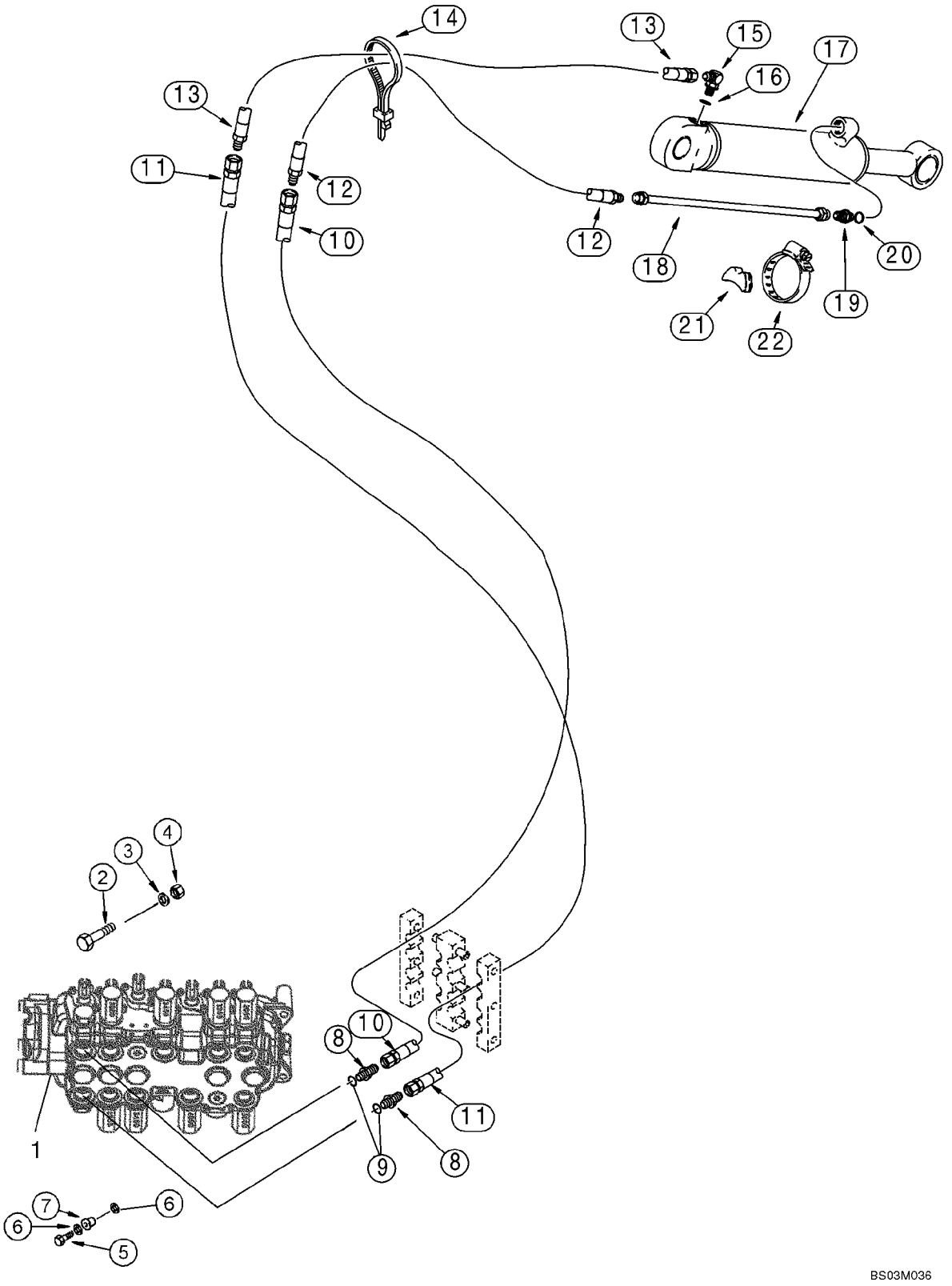

SYSTEME HYDRAULIQUE - VERIN, BALANCIER EXTENSIBLE DE LA PELLE RETRO

REF	FN	PART NUMBER	YR/SN	QTY	DESCRIPTION
1		REF		1	NOTICE, Valve Assy, Control; Backhoe Control Valve; For Correct Assembly and Components, See Figures 08-34, 08-35, 08-37, 08-39
2		814-10080		2	BOULON, Hex, M10 x 80, 8.8
3		896-11010		2	RONDELLE, M10 x 21.5 x 2.5, HT
4		829-1410		2	ECROU, M10, Cl 10
5		614-10035		1	BOULON, Hex, M10 x 35, 8.8, Full Thd
6		496-41041		2	RONDELLE, 13/32" x 1 1/8" x .134"
7		D52276		1	ISOLATEUR
8		218-5063		2	RACCORD, 7/8"-14, 37Ü x 1 1/16"-12, O-Ring, Incl. Ref 9
9		237-6012		1	JOINT THORIQUE, 12-1, 90 Duro, .924 ID x .118" Thk
10		393354A1		1	FLEXIBLE (ASSEMBLE), 3073 mm (121 in)
11		393357A1		1	FLEXIBLE (ASSEMBLE), 3073 mm (121 in)
12		184617A1		1	FLEXIBLE, 850 mm (33-1/2 in)
13		184616A1		1	FLEXIBLE, 700 mm (27-9/16 in)
14		L18337		4	SERRE-CABLE, 9.95"-12.1" lg
15		218-5107		1	COUDE, 90Ü, 7/8"-14, 37Ü x 7/8"-14, O-Ring, Incl. Ref 16
16		237-6010		1	JOINT THORIQUE, 10-1, 90 Duro, .755" ID x .097" Thk
17		1340969C2		1	VERIN, 76 ID x 1068 mm strk; Extendable Dipper Cylinder, See Figure 08-66
18		87439537		1	TUYAUTERIE
19		218-5062		1	RACCORD, 7/8"-14, 37Ü x 7/8"-14, O-Ring, Incl. Ref 20
20		237-6010		1	JOINT THORIQUE, 10-1, 90 Duro, .755" ID x .097" Thk
21		D38648		1	BLOC
22		214-1464		1	BRIDE, FLEXIBLE, #64, 3.56/4.50 Type F Worm

08-15		p1	02/08

SYSTEME HYDRAULIQUE - DISTRIBUTEUR, COMMANDE PILOTE DE LEVIER DE COMMANDE (6 SPOOL, W/O EXT DIPPER,

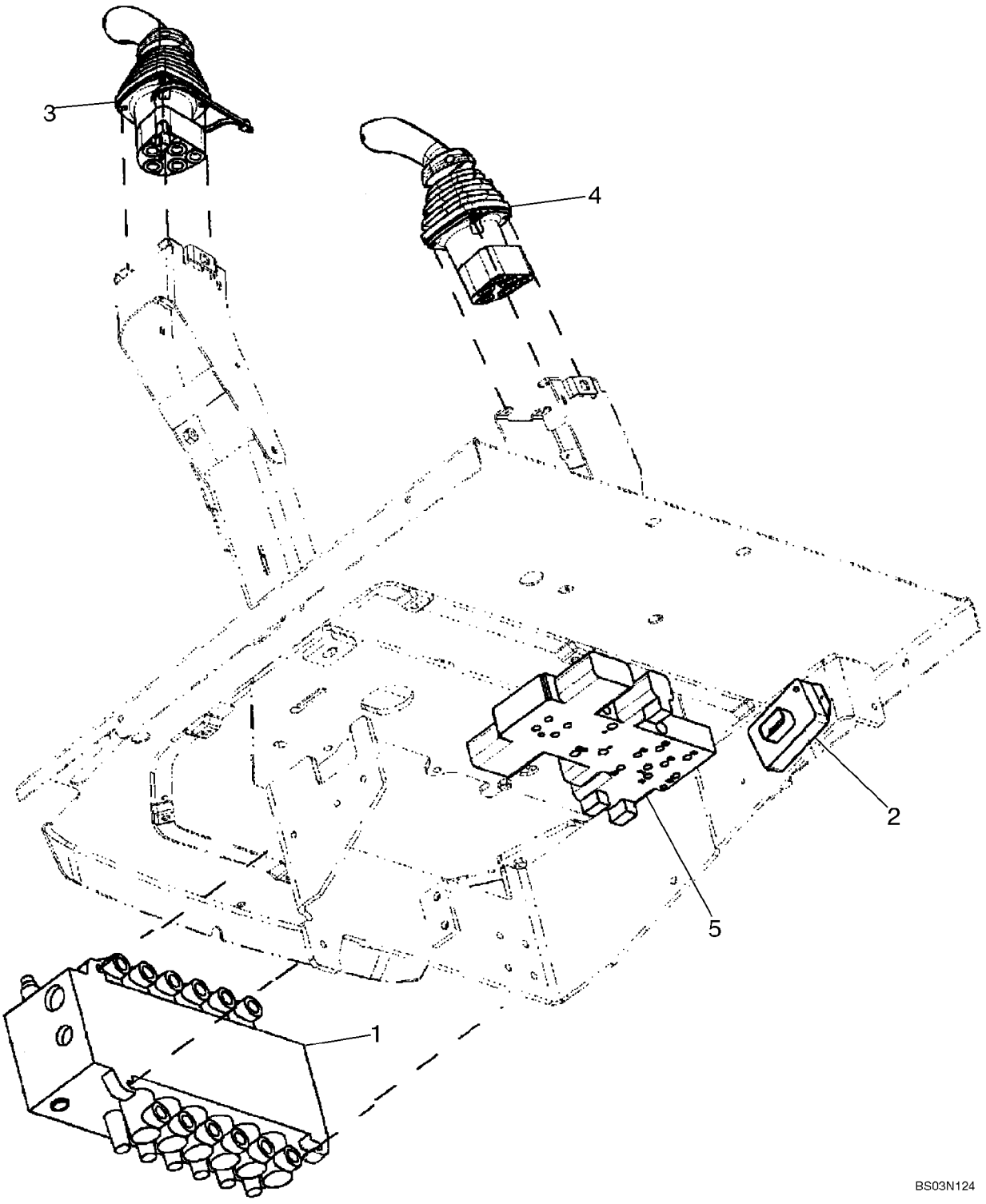

SYSTEME HYDRAULIQUE - DISTRIBUTEUR, COMMANDE PILOTE DE LEVIER DE COMMANDE (6 SPOOL, W/O EXT DIPPER,

REF	FN	PART NUMBER	YR/SN	QTY	DESCRIPTION
		REF			NOTICE, SIX SPOOL VALVE WITHOUT EXTENDABLE DIPPER; WITH AUTO-UP; WITHOUT AUXILIARY HYDRAULICS, WITHOUT UNI-DIRECTIONAL OR BI-DIRECTIONAL
1		87577343		1	DISTRIBUTEUR, Backhoe, 6 Spool; Rexroth No. 08 403 273; See Figure 08-36; For Mounting See Figure 08-22
2		{87746673}		1	Box; Pilot Control Power Supply Module
		840-1416		2	VIS, Cross Pan Hd, M4 x 16
3		87685948		1	DISTRIBUTEUR, LH; With Horn Button; See Figure 08-50
4		87685954		1	DISTRIBUTEUR, RH; See Figure 08-53
5		85827472		1	SOUPAPE HYDRAULIQUE, Pressure Reducing, 2 Spool; See Figure 08-47

08-16		p1	02/08

SYSTEME HYDRAULIQUE - DISTRIBUTEUR, COMMANDE PILOTE DE LEVIER DE COMMANDE (6 SPOOL, W/O EXT DIPPER,

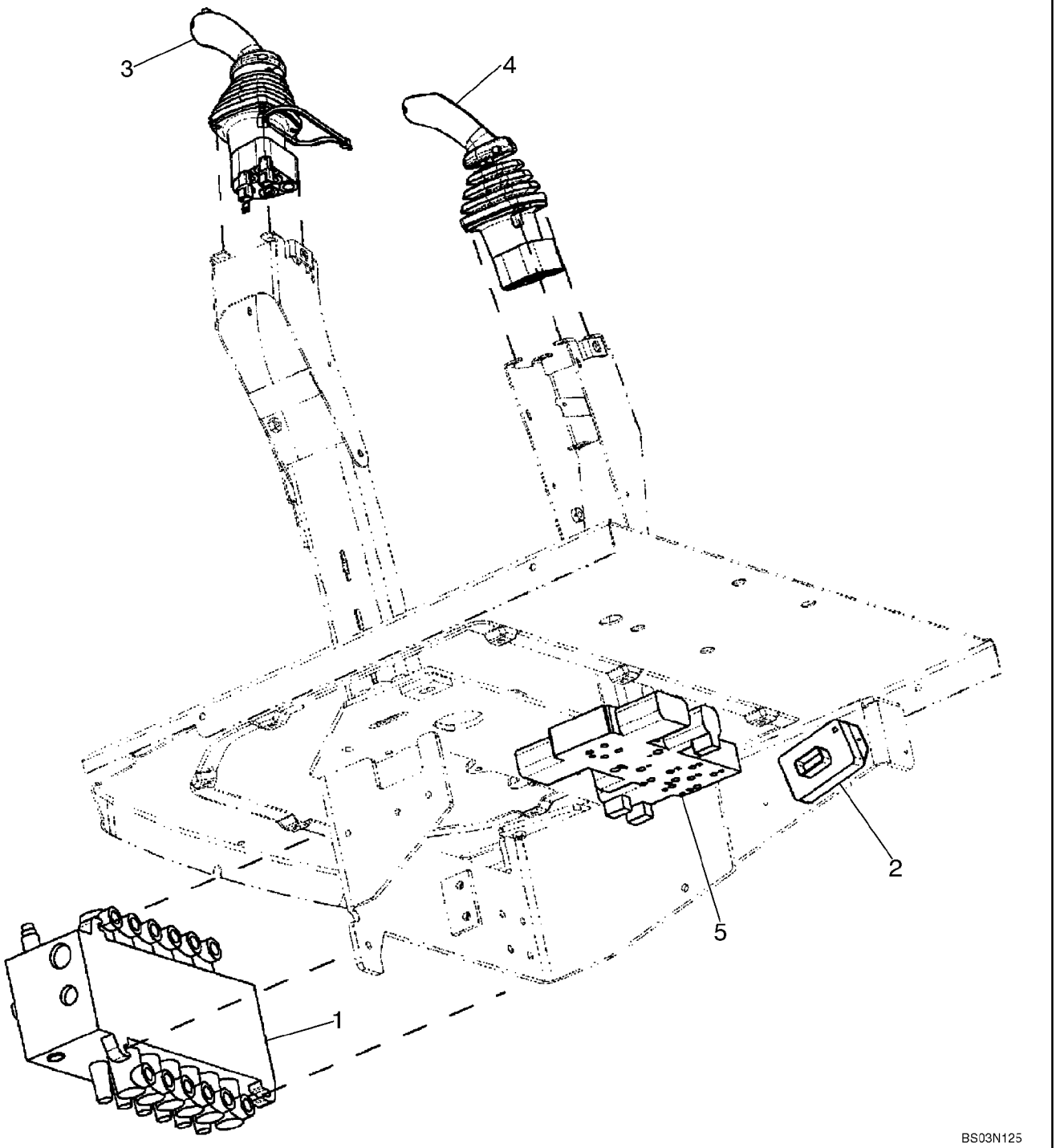

SYSTEME HYDRAULIQUE - DISTRIBUTEUR, COMMANDE PILOTE DE LEVIER DE COMMANDE (6 SPOOL, W/O EXT DIPPER,

REF	FN	PART NUMBER	YR/SN	QTY	DESCRIPTION
		REF			NOTICE, SIX SPOOL VALVE WITHOUT EXTENDABLE DIPPER; WITH AUTO-UP; WITH AUXILIARY HYDRAULICS, WITH UNI-DIRECTIONAL
1		87577343		1	DISTRIBUTEUR, Backhoe, 6 Spool; Rexroth No. 08 403 273; See Figure 08-36; For Mounting See Figure 08-22
2		{87746673}		1	Box; Pilot Control Power Supply Module
		840-1416		2	VIS, Cross Pan Hd, M4 x 16
3		87685953		1	DISTRIBUTEUR, LH; With Horn and Uni-Directional Buttons; See Figure 08-51
4		87685954		1	DISTRIBUTEUR, RH; See Figure 08-53
5		85827472		1	SOUPAPE HYDRAULIQUE, Pressure Reducing, 2 Spool; See Figure 08-47

08-17		p1	02/08

SYSTEME HYDRAULIQUE - DISTRIBUTEUR, COMMANDE PILOTE DE LEVIER DE COMMANDE (7 SPOOL, W/ EXT DIPPER,

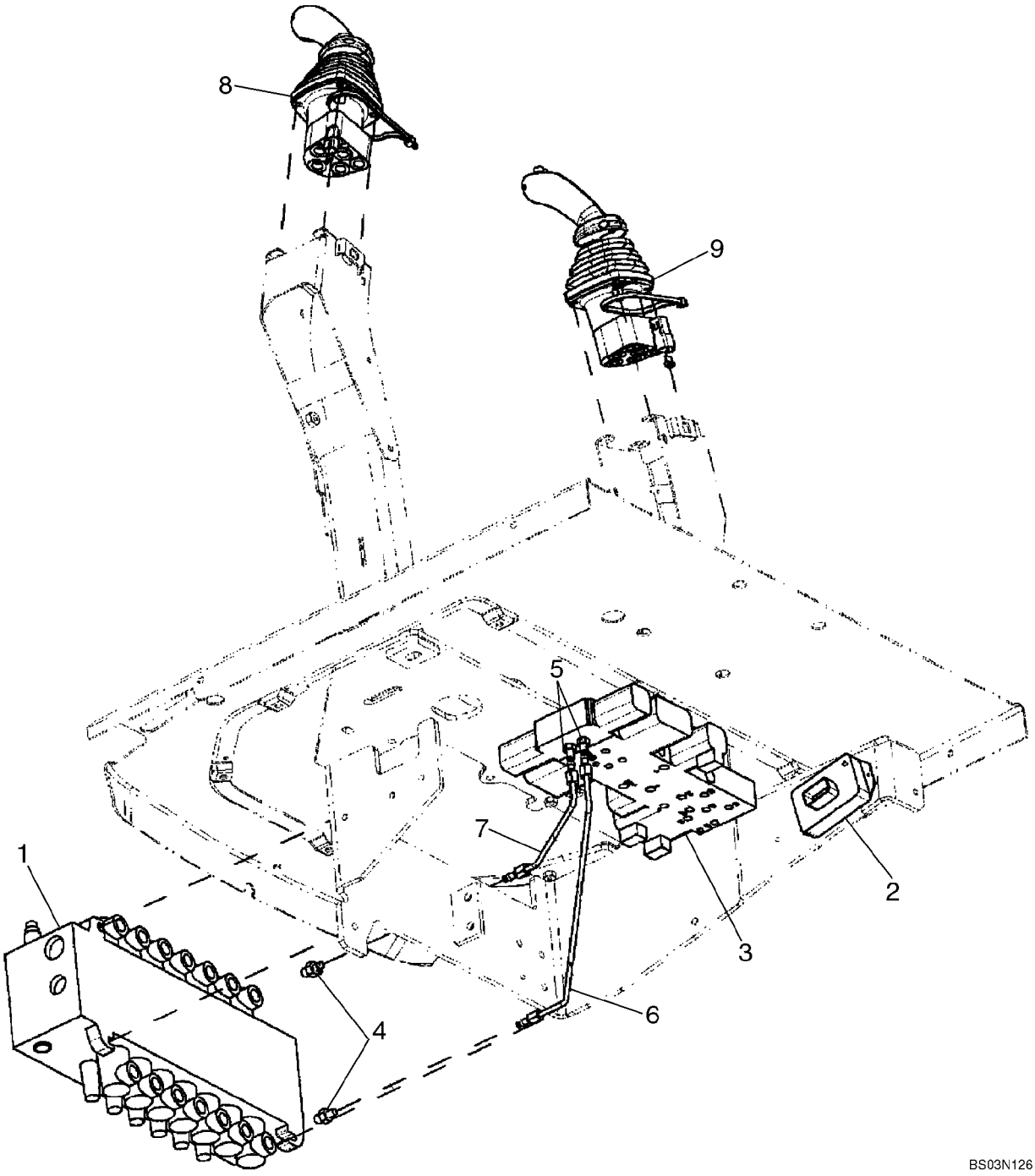

SYSTEME HYDRAULIQUE - DISTRIBUTEUR, COMMANDE PILOTE DE LEVIER DE COMMANDE (7 SPOOL, W/ EXT DIPPER,

REF	FN	PART NUMBER	YR/SN	QTY	DESCRIPTION
		REF			NOTICE, SEVEN SPOOL VALVE WITH EXTENDABLE DIPPER; WITHOUT AUXILIARY HYDRAULICS; WITH AUTO-UP; WITHOUT UNI-DIRECTIONAL OR BI-DIRECTIONAL
1		87577346		1	DISTRIBUTEUR, Backhoe, 7 Spool; Rexroth No. 08 402 663; See Figure 08-37; For Mounting See Figure 08-22
2		{87746673}		1	Box; Pilot Control Power Supply Module
		840-1416		2	VIS, Cross Pan Hd, M4 x 16
3		85827471		1	SOUPAPE HYDRAULIQUE, Pressure Reducing, 3 Spool; See Figure 08-48
4		218-5089		2	RACCORD, 7/16"-20, 37Ü x 9/16"-18, O-Ring, Includes 237-6006 O-Ring
		237-6006		1	JOINT THORIQUE, 6-1, 90 Duro, .468" ID x .078" Thk
5		218-5053		2	RACCORD, 7/16"-20, 37Ü x 7/16"-20, O-Ring, Incl. 237-6004 O-Ring
		237-6004		1	JOINT THORIQUE, 4-1, 90 Duro, .351" ID x .072" Thk
6		87437633		1	TUYAUTERIE, To Lower Extendable Dipper Port
7		87437635		1	TUYAUTERIE, To Upper Extendable Dipper Port
8		87685948		1	DISTRIBUTEUR, LH; With Horn Button; See Figure 08-50
9		87685955		1	DISTRIBUTEUR, RH; See Figure 08-54

08-18		p1	02/08

SYSTEME HYDRAULIQUE - DISTRIBUTEUR, COMMANDE PILOTE DE LEVIER DE COMMANDE (7 SPOOL, W/ EXT DIPPER,

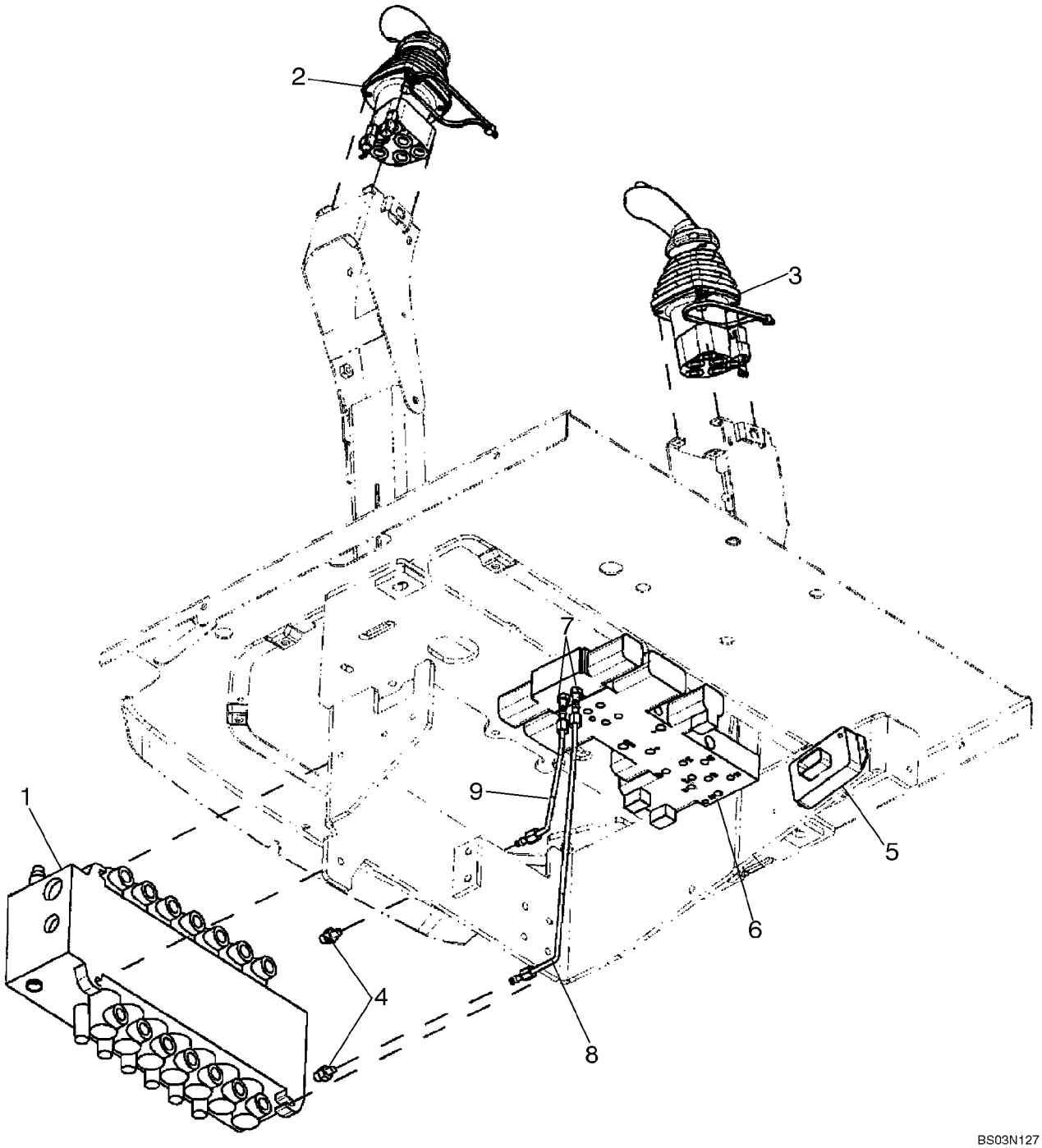

SYSTEME HYDRAULIQUE - DISTRIBUTEUR, COMMANDE PILOTE DE LEVIER DE COMMANDE (7 SPOOL, W/ EXT DIPPER,

REF	FN	PART NUMBER	YR/SN	QTY	DESCRIPTION
		REF			NOTICE, SEVEN SPOOL VALVE WITH EXTENDABLE DIPPER; WITH AUXILIARY HYDRAULICS; WITH AUTO-UP; WITH UNI-DIRECTIONAL
1		87577346		1	DISTRIBUTEUR, Backhoe, 7 Spool; Rexroth No. 08 402 663; See Figure 08-37; For Mounting See Figure 08-22
2		87685953		1	DISTRIBUTEUR, LH; With Horn and Uni-Directional Buttons; See Figure 08-51
3		87685955		1	DISTRIBUTEUR, RH; See Figure 08-54
4		218-5089		2	RACCORD, 7/16"-20, 37Ü x 9/16"-18, O-Ring, Includes 237-6006 O-Ring
		237-6006		1	JOINT THORIQUE, 6-1, 90 Duro, .468" ID x .078" Thk
5		{87746673}		1	Box; Pilot Control Power Supply Module
		840-1416		2	VIS, Cross Pan Hd, M4 x 16
6		85827471		1	SOUPAPE HYDRAULIQUE, Pressure Reducing, 3 Spool; See Figure 08-48
7		218-5053		2	RACCORD, 7/16"-20, 37Ü x 7/16"-20, O-Ring, Incl. 237-6004 O-Ring
		237-6004		1	JOINT THORIQUE, 4-1, 90 Duro, .351" ID x .072" Thk
8		87437633		1	TUYAUTERIE, To Lower Extendable Dipper Port
9		87437635		1	TUYAUTERIE, To Upper Extendable Dipper Port

08-19		p1	02/08

SYSTEME HYDRAULIQUE - DISTRIBUTEUR, COMMANDE PILOTE DE LEVIER DE COMMANDE (7 SPOOL, W/O EXT DIPPER,

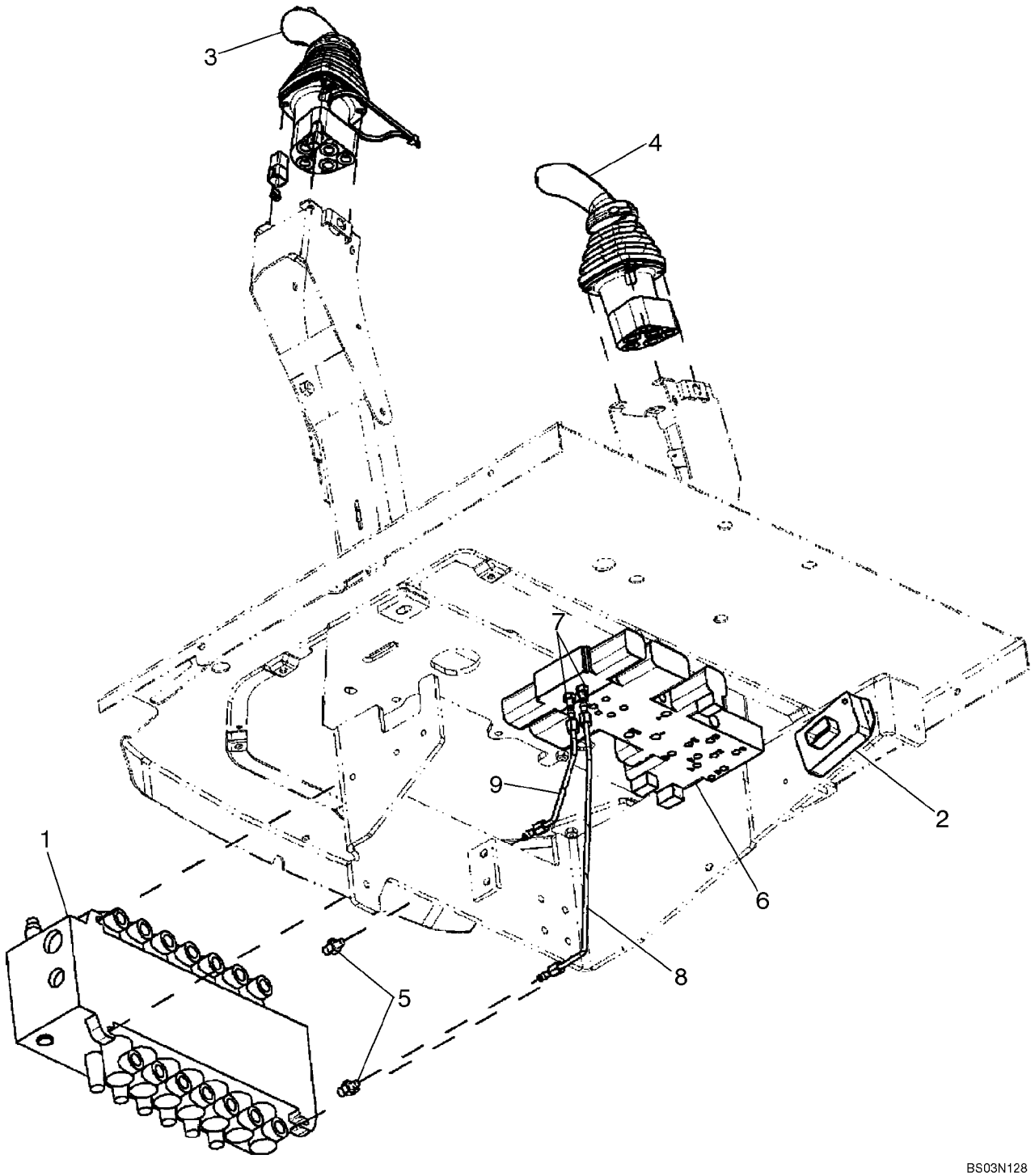

SYSTEME HYDRAULIQUE - DISTRIBUTEUR, COMMANDE PILOTE DE LEVIER DE COMMANDE (7 SPOOL, W/O EXT DIPPER,

REF	FN	PART NUMBER	YR/SN	QTY	DESCRIPTION
		REF			NOTICE, SEVEN SPOOL VALVE WITHOUT EXTENDABLE DIPPER; WITH AUXILIARY HYDRAULICS; WITH AUTO-UP; WITH BI-DIRECTIONAL
1		87577348		1	DISTRIBUTEUR, Backhoe, 7 Spool; Rexroth No. 08 403 27; See Figure 08-38; For Mounting See Figure 08-22
2		{87746674}		1	Box; Pilot Control Power Supply Module
		840-1416		2	VIS, Cross Pan Hd, M4 x 16
3		87685952		1	DISTRIBUTEUR, LH; With Horn and Bi-Directional Buttons; See Figure 08-52
4		87685954		1	DISTRIBUTEUR, RH; See Figure 08-53
5		218-5089		2	RACCORD, 7/16"-20, 37Ü x 9/16"-18, O-Ring, Includes 237-6006 O-Ring
		237-6006		1	JOINT THORIQUE, 6-1, 90 Duro, .468" ID x .078" Thk
6		85827471		1	SOUPAPE HYDRAULIQUE, Pressure Reducing, 3 Spool; See Figure 08-48
7		218-5053		2	RACCORD, 7/16"-20, 37Ü x 7/16"-20, O-Ring, Incl. 237-6004 O-Ring
		237-6004		1	JOINT THORIQUE, 4-1, 90 Duro, .351" ID x .072" Thk
8		87438012		1	TUYAUTERIE, To Lower Auxiliary Port
9		87438015		1	TUYAUTERIE, To Upper Auxiliary Port

08-20		p1	02/08

SYSTEME HYDRAULIQUE - DISTRIBUTEUR, COMMANDE PILOTE DE LEVIER DE COMMANDE (8 SPOOL, W/ EXT DIPPER,

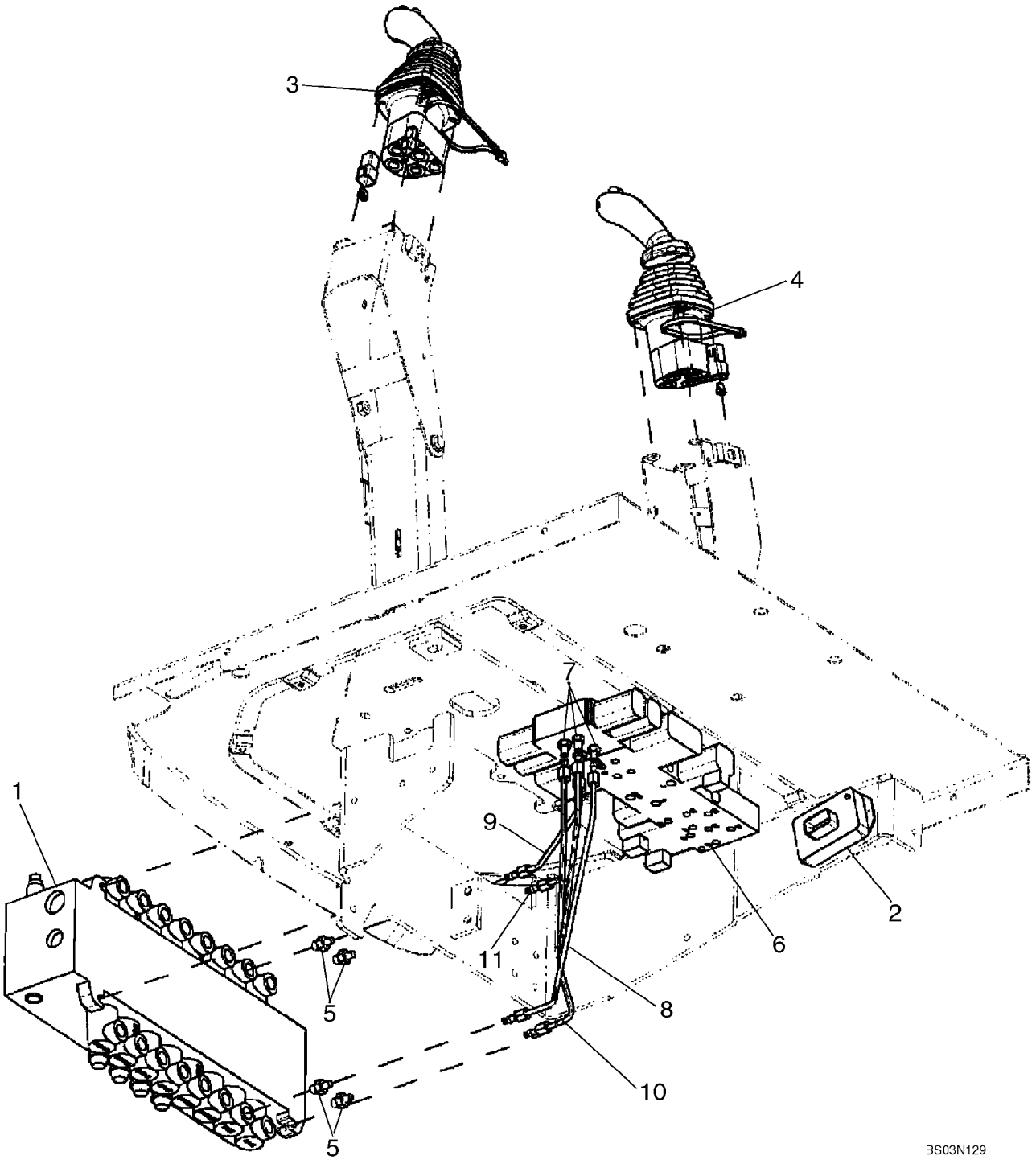

SYSTEME HYDRAULIQUE - DISTRIBUTEUR, COMMANDE PILOTE DE LEVIER DE COMMANDE (8 SPOOL, W/ EXT DIPPER,

REF	FN	PART NUMBER	YR/SN	QTY	DESCRIPTION
		REF			NOTICE, EIGHT SPOOL VALVE WITH EXTENDABLE DIPPER; WITH AUXILIARY HYDRAULICS; WITH AUTO-UP; WITH BI-DIRECTIONAL
1		87577349		1	DISTRIBUTEUR, Backhoe, 8 Spool; Rexroth No. 08 403 271; See Figure 08-39; For Mounting See Figure 08-22
2		{87746674}		1	Box; Pilot Control Power Supply Module
		840-1416		2	VIS, Cross Pan Hd, M4 x 16
3		87685952		1	DISTRIBUTEUR, LH; With Horn and Bi-Directional Buttons; See Figure 08-52
4		87685955		1	DISTRIBUTEUR, RH; See Figure 08-54
5		218-5089		4	RACCORD, 7/16"-20, 37Ü x 9/16"-18, O-Ring, Includes 237-6006 O-Ring
		237-6006		1	JOINT THORIQUE, 6-1, 90 Duro, .468" ID x .078" Thk
6		87434621		1	DISTRIBUTEUR, Pressure Reducing, 4 Spool; See Figure 08-49
7		218-5053		4	RACCORD, 7/16"-20, 37Ü x 7/16"-20, O-Ring, Incl. 237-6004 O-Ring
		237-6004		1	JOINT THORIQUE, 4-1, 90 Duro, .351" ID x .072" Thk
8		87437633		1	TUYAUTERIE, To Lower Extendable Dipper Port
9		87437635		1	TUYAUTERIE, To Upper Extendable Dipper Port
10		87440835		1	TUYAUTERIE, Tube, To Lower Auxiliary Port
11		87440837		1	TUYAUTERIE, Tube, To Upper Auxiliary Port

SYSTEME HYDRAULIQUE - COMMANDE PILOTE DE LEVIER DE COMMANDE

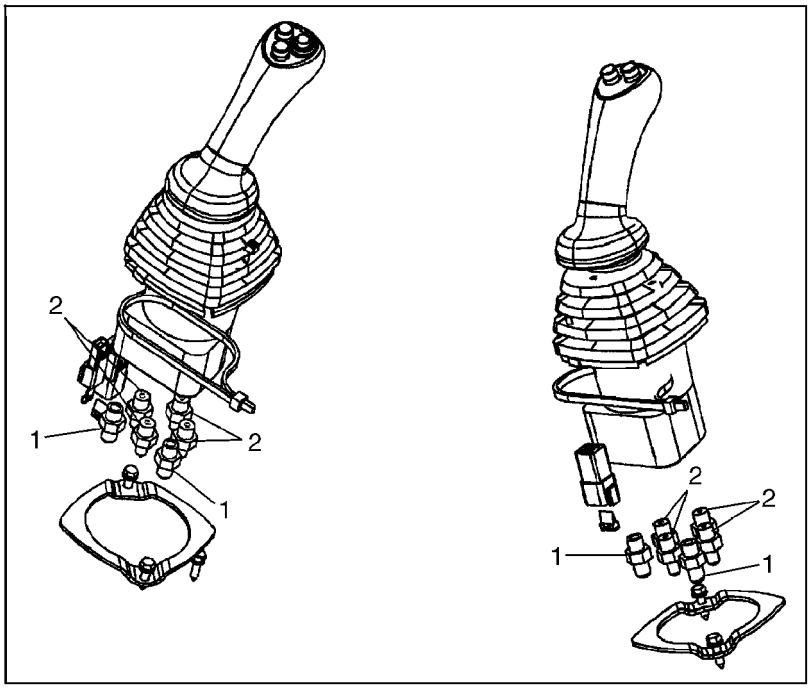

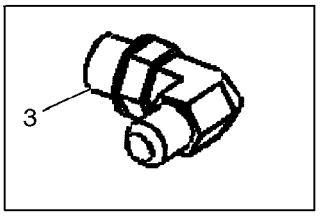

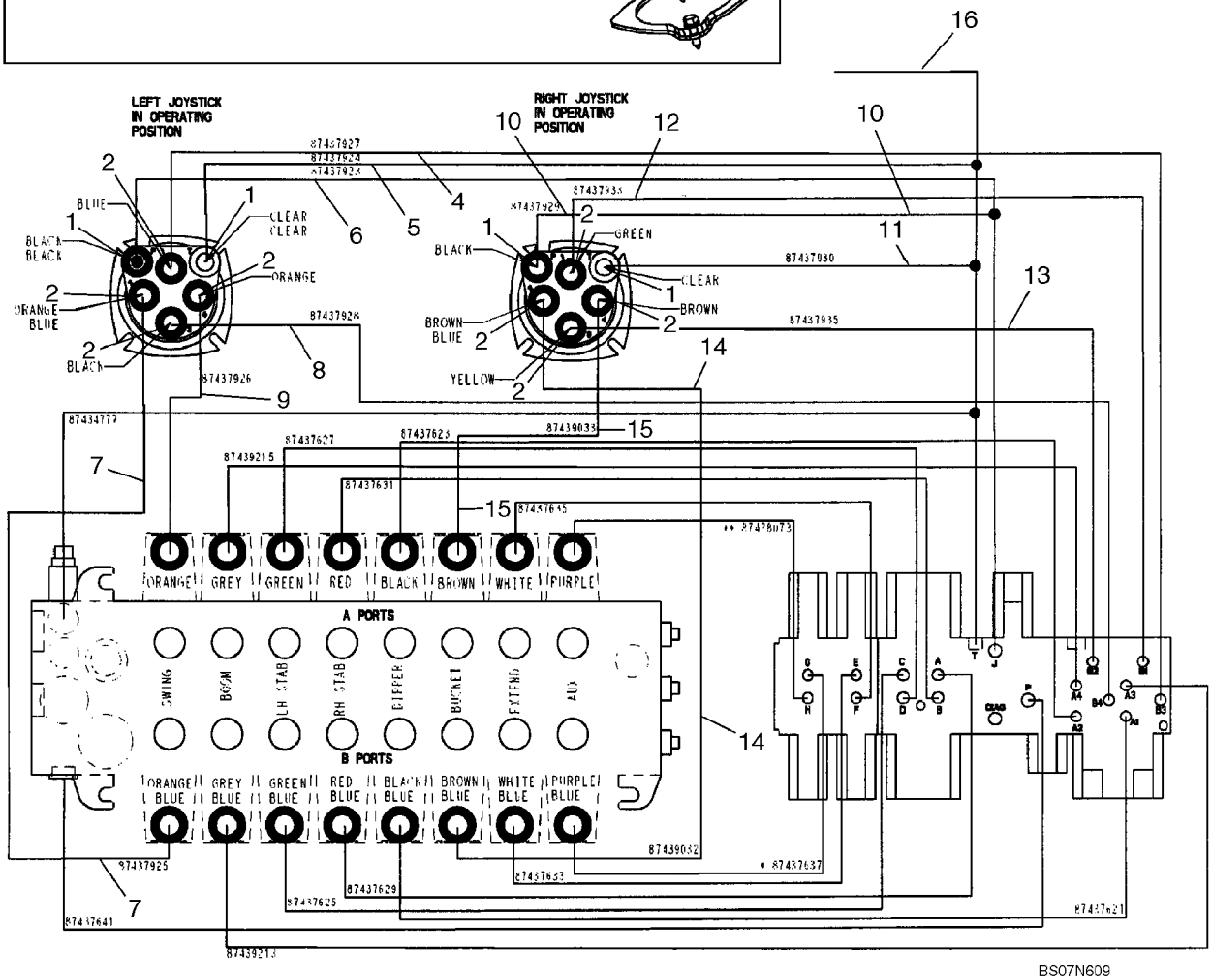

SYSTEME HYDRAULIQUE - COMMANDE PILOTE DE LEVIER DE COMMANDE

REF	FN	PART NUMBER	YR/SN	QTY	DESCRIPTION
1		218-5057		4	RACCORD, 9/16"-18, 37Ü x 9/16"-18, O-Ring, Incl. 237-6006 O-Ring
2		218-5089		8	RACCORD, 7/16"-20, 37Ü x 9/16"-18, O-Ring, Includes 237-6006 O-Ring
3		218-5105		1	COUDE, 90Ü, 9/16"-18, 37Ü x 9/16"-18, O-Ring, Includes 237-6006; Installs in Hydraulic Tank for Pilot Return
4		87437927		1	FLEXIBLE (ASSEMBLE), 1295 mm (51 in); LH Joystick No. 1 to Selector Valve B3
5		87437924		1	FLEXIBLE (ASSEMBLE), 1000 mm (39-3/8 in); LH Joystick Tank to Pressure Reducing Valve T
6		87437923		1	FLEXIBLE (ASSEMBLE), 1035 mm (40-3/4 in); LH Joystick Pressure to Pressure Reducing Valve J
7		87437925		1	FLEXIBLE (ASSEMBLE), 1075 mm (42-3/8 in); LH Joystick No. 2 to Swing Port B
8		87437928		1	FLEXIBLE (ASSEMBLE), 1270 mm (50 in); LH Joystick No. 3 to Selector Valve B4
		399004A1		1	GARANT, Hose, 38.9 ID x 270 mm long; Used With Ref 4 - 8
9		87437926		1	FLEXIBLE (ASSEMBLE), 825 mm (32-1/2 in); LH Joystick No. 4 to Swing Port A
10		87437929		1	FLEXIBLE (ASSEMBLE), 1105 mm (43-1/2 in); RH Joystick Pressure to Pressure Reducing Valve J
11		87437930		1	FLEXIBLE (ASSEMBLE), 1345 mm (53 in); RH Joystick Tank to Pressure Reducing Valve T
		191703A1		1	GAINE, Hose Guard, 28 ID x 400 mm long; Used With Ref 10, 11
12		87437933		1	FLEXIBLE (ASSEMBLE), 1185 mm (46-11/16 in); RH Joystick No. 1 to Selector Valve B1
13		87437935		1	FLEXIBLE (ASSEMBLE), 1175 mm (46-5/16 in); RH Joystick No. 3 to Selector Valve B2
14		87439032		1	FLEXIBLE (ASSEMBLE), 1090 mm (42-15/16 in); RH Joystick No. 2 to Bucket Port B
15		87439033		1	FLEXIBLE (ASSEMBLE), 915 mm (36-1/32 in); RH Joystick No. 4 to Bucket Port A

SYSTEME HYDRAULIQUE - COMMANDE PILOTE DE LEVIER DE COMMANDE

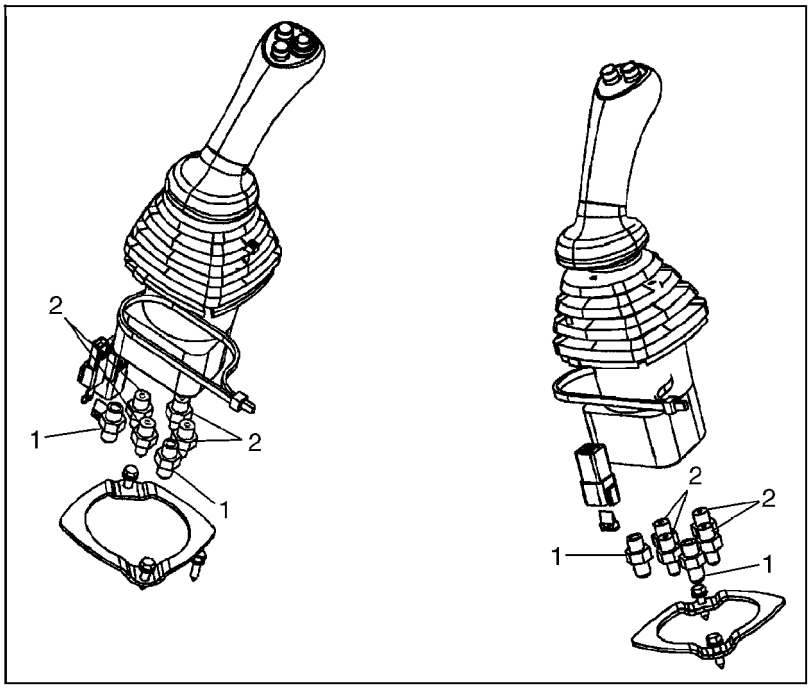

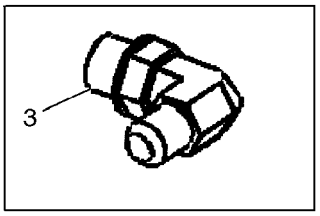

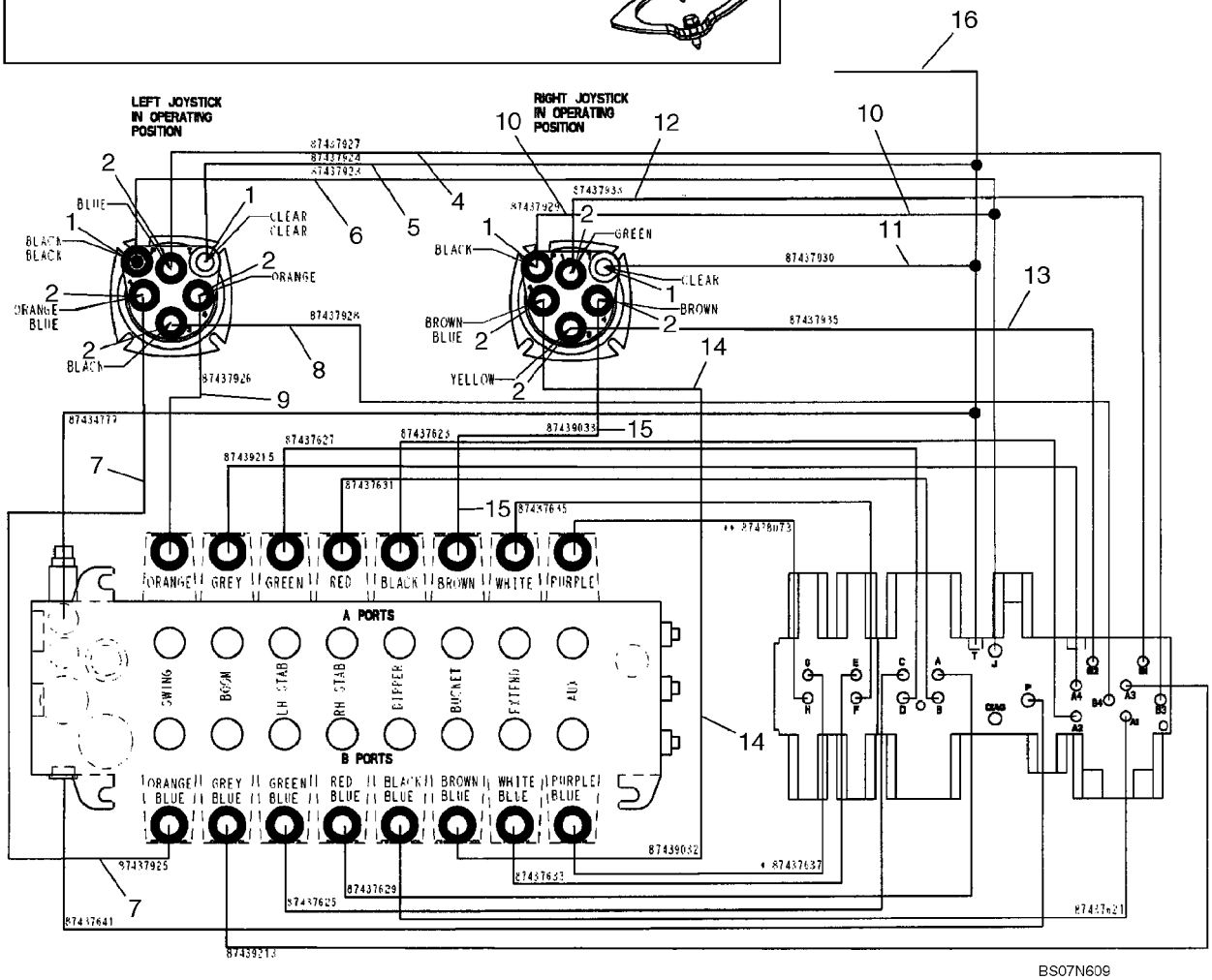

SYSTEME HYDRAULIQUE - COMMANDE PILOTE DE LEVIER DE COMMANDE

REF	FN	PART NUMBER	YR/SN	QTY	DESCRIPTION
		191703A1		1	GAINE, Hose Guard, 28 ID x 400 mm long; Used With Ref 12 - 15
16		87452405		1	FLEXIBLE (ASSEMBLE), 1520 mm (59-7/8 in); Pressure Reducing Valve T to Tank; Replaces 87435073
		143219A1		1	PROTECTEUR, HOSE GUARD, 19 ID x 450 mm long; Used With Ref 16
		L18337		AR	SERRE-CABLE, 9.95"-12.1" lg

08-22		p1	02/08

SYSTEME HYDRAULIQUE - COMMANDE PILOTE

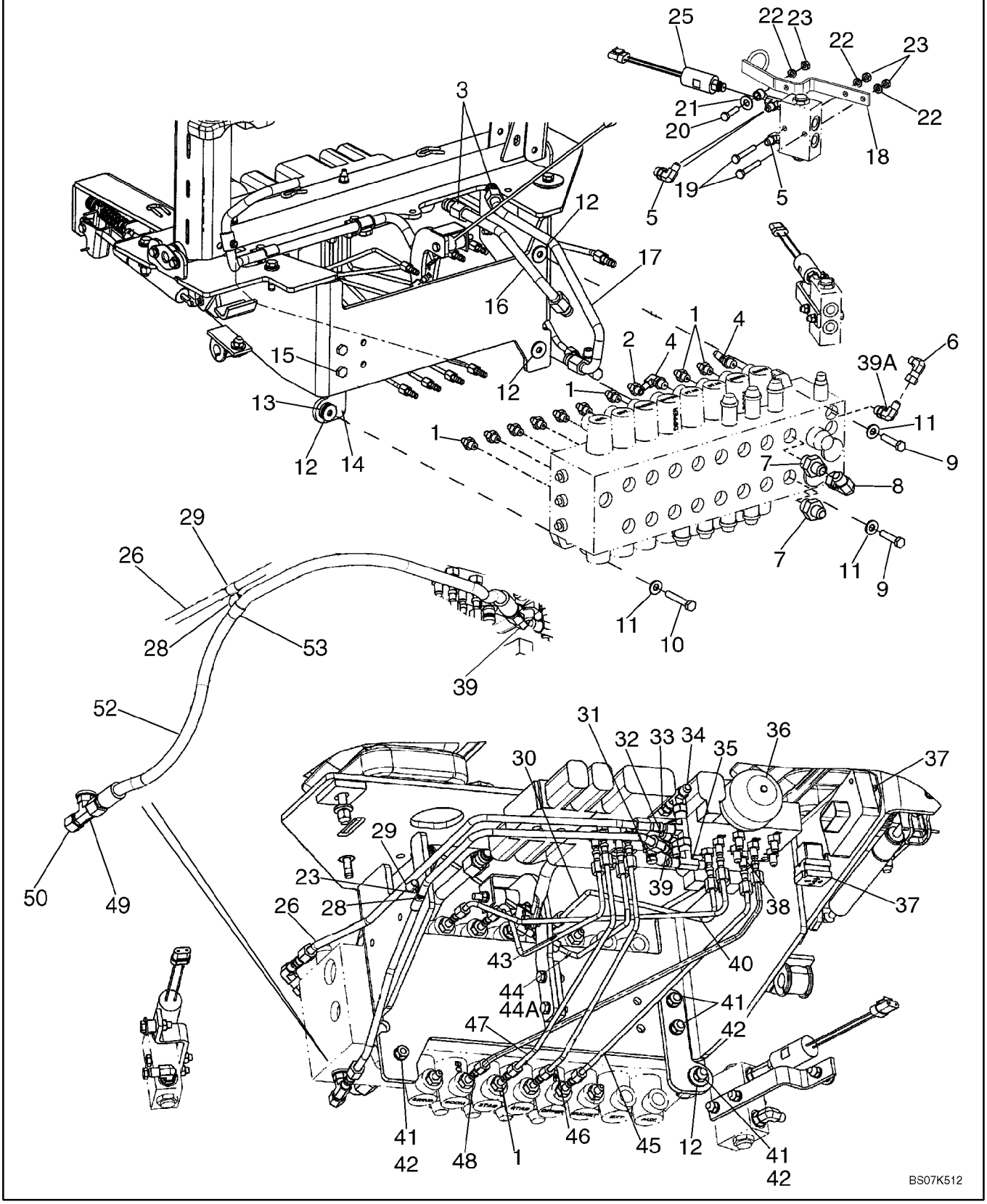

SYSTEME HYDRAULIQUE - COMMANDE PILOTE

REF	FN	PART NUMBER	YR/SN	QTY	DESCRIPTION
1		218-5089		9	RACCORD, 7/16"-20, 37Ü x 9/16"-18, O-Ring, Includes 237-6006 O-Ring
2		87423401		1	RACCORD, Special Orifice; 7/16 fl x 9/16 Or; Incl. 237-6006 O-Ring; If Unit Experiences Dipper Stuttering, As Dipper Is Moving Toward the Unit, Replace Ref 2 Fitting & Ref 30 & 45 Tubes, With (1) 87594363 Snubber, (2) 87594364 Hoses
2		87594363		1	SOUPAPE, AMORTISSEMENT, Snubber Fitting; Incl. 237-6006 O-ring; Used In Place of 87423401 Fitting On Models With Dipper Stuttering
3		218-5107		1	COUDE, 90Ü, 7/8"-14, 37Ü x 7/8"-14, O-Ring, Includes 237-6010 O-Ring
4		218-5365		2	COUDE, 45Ü, 7/16"-20, 37Ü x 9/16"-18, O-Ring, Includes 237-6006 O-Ring
5		218-5105		2-4	COUDE, 90Ü, 9/16"-18, 37Ü x 9/16"-18, O-Ring, Includes 237-6006; 2 Used on Models With Auto Up; 4 Used on Models Without Auto Up
6		218-980		1	COUDE, 90Ü, 9/16"-18, 37Ü x 9/16"-18, 37Ü Fem Sw
7		218-5063		2	RACCORD, 7/8"-14, 37Ü x 1 1/16"-12, O-Ring, Includes 237-6012 O-Ring
8		218-5232		1	COUDE, 90Ü, 7/8"-14, 37Ü x 7/8"-14, 37Ü Fem Sw
9		814-10045		2	BOULON, Hex, M10 x 45, 8.8
10		814-10060		1	BOULON, Hex, M10 x 60, 8.8
11		896-15010		3	RONDELLE, M10 x 24.5 x 3, HT
12		496-41041		5	RONDELLE, 13/32" x 1 1/8" x .134"
13		D52276		1	ISOLATEUR, Mount
14		87440712		1	EQUERRE, Valve Mounting Bracket
15		614-10030		2	BOULON, Hex, M10 x 30, 8.8
16		87426488		1	TUYAUTERIE, Swing Dampening Upper Port
17		87427948		1	TUYAUTERIE, Swing Dampening Lower Port
18		87450318		2	EQUERRE
19		814-8055		4	BOULON, Hex, M8 x 55, 8.8
20		814-8035		2	BOULON, Hex, M8 x 35, 8.8
21		496-81028		2	RONDELLE, 13/32" x 1 1/4" x .134", HDN
21A		87437840		2	ENTRETOISE, Not Illustrated

08-22		p2	02/08

SYSTEME HYDRAULIQUE - COMMANDE PILOTE

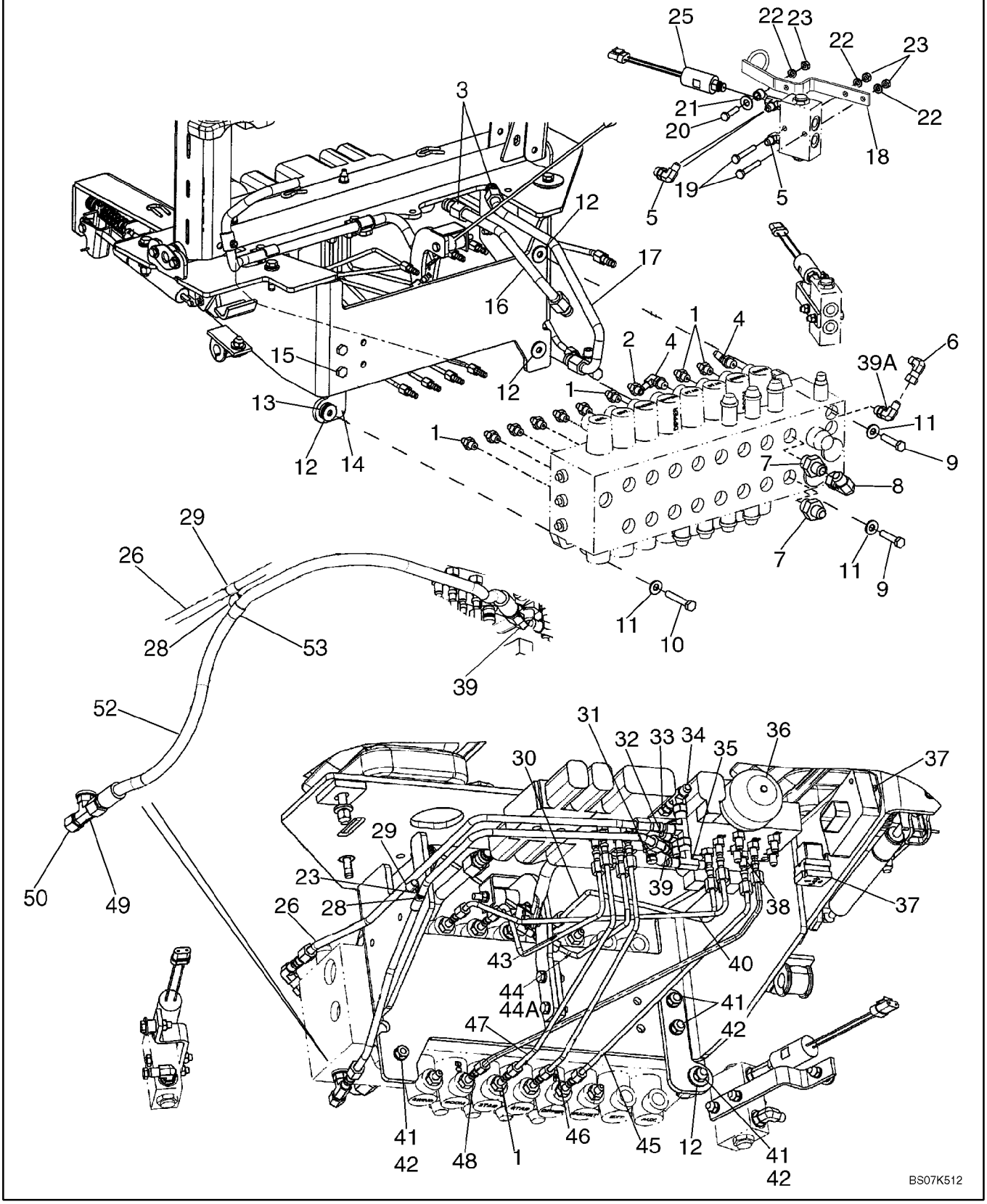

SYSTEME HYDRAULIQUE - COMMANDE PILOTE

REF	FN	PART NUMBER	YR/SN	QTY	DESCRIPTION
22		895-11008		6	RONDELLE, M8 x 16 x 1.6
23		829-1408		7	ECROU, M8, Cl 10
24		87423033		2	TE, Includes 237-6004 O-Ring, 237-6006 O-Ring; Models With Auto Up, If Used
25		87552560		2	PRESSOSTAT, Includes 237-6004 O-Ring; Models With Auto Up, 12 inch Wire Lead; With Rubber Snubbing; CNH Part Number Stamped On Body Of Switch; North American Models; Replaces 87439163 Switch
26		87434777		1	TUYAUTERIE, Reducing Valve Tank to Backhoe Valve
28		614-8025		1	BOULON, Hex, M8 x 25, 8.8
29		515-2295		1-2	BRIDE, 3/8", Insul, 5/16" Bolt
30		87437623		1	TUYAUTERIE, Selector A2 to Dipper Port A; If Unit Experiences Dipper Stuttering, As Dipper Is Moving Toward the Unit, Replace Ref 2 Fitting & Ref 30 & 45 Tubes, With (1) 87594363 Snubber, (2) 87594364 Hoses
30		87594364		1	FLEXIBLE (ASSEMBLE), 550 mm (21-21/32 in); Used in Place of 87437623 Tube On Models With Dipper Stuttering
31		86596853		1	ACCOUPLEMANT RAP MALE, Includes 9617873 O-Ring
32		218-5243		1	TE, 9/16"-18, 37Ü x 9/16"-18, O-Ring Run, Includes 237-6006 O-Ring
33		218-5057		1	RACCORD, 9/16"-18, 37Ü x 9/16"-18, O-Ring, Incl. 237-6006 O-Ring
34		218-5222		2	TE, 37Ü, 9/16"-18, x 9/16"-18, Fem Sw Run
35		218-836		1	TE, 37Ü, 9/16"-18 x 9/16"-18, Fem Sw Br
36		87425225		1	ACCUMULATEUR, Includes 237-6008 O-Ring
37		840-1416		3	VIS, Cross Pan Hd, M4 x 16, See Figure 08-15 - 08-20 For Pilot Control Power Supply Control Unit; See Figure 04-20 For Relay
38		218-5053		12	RACCORD, 7/16"-20, 37Ü x 7/16"-20, O-Ring, Incl. 237-6004 O-Ring

08-22		p3	02/08

SYSTEME HYDRAULIQUE - COMMANDE PILOTE

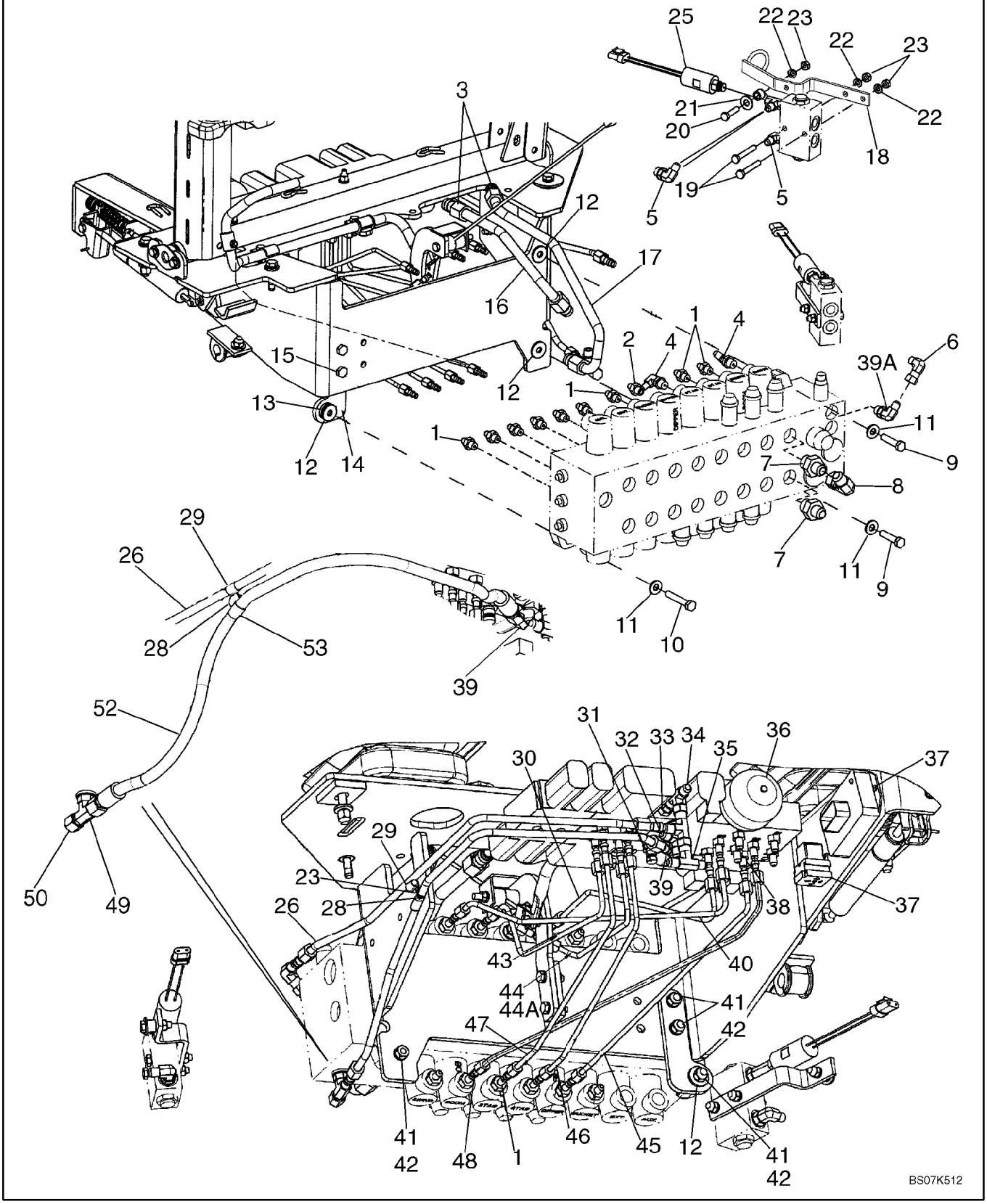

SYSTEME HYDRAULIQUE - COMMANDE PILOTE

REF	FN	PART NUMBER	YR/SN	QTY	DESCRIPTION
39		218-5105		2	COUDE, 90Ü, 9/16"-18, 37Ü x 9/16"-18, O-Ring, Includes 237-6006 O-Ring
39A		87448990		1	COUDE, Includes Orifice; Includes 237-6006 O-Ring
40		87439215		1	TUYAUTERIE, Selector A4 to Boom Port A
41		829-1410		5	ECROU, M10, Cl 10
42		892-11010		4	RONDELLE FREIN, M10
43		87437627		1	TUYAUTERIE, Reducing Valve to Left-Hand Stabilizer Port A
44		87445557		1	TUYAUTERIE, Reducing Valve to Right-Hand Stabilizer Port A; Used With 45 deg Elbow, Ref 44B
45		87437621		1	TUYAUTERIE, Selector A1 to Dipper Port B; If Unit Experiences Dipper Stuttering, As Dipper Is Moving Toward the Unit, Replace Ref 2 Fitting & Ref 30 & 45 Tubes, With (1) 87594363 Snubber, (2) 87594364 Hoses
45		87594364		1	FLEXIBLE (ASSEMBLE), 550 mm (21-21/32 in); Used in Place of 87437621 Tube On Models With Dipper Stuttering
46		87437629		1	TUYAUTERIE, Reducing Valve to Right-Hand Stabilizer Port B
47		87437625		1	TUYAUTERIE, Reducing Valve to Left-Hand Stabilizer Port B
48		87439213		1	TUYAUTERIE, Selector A3 to Boom Port B
49		218-5182		1	TE, 9/16"-18, 37Ü x 9/16"-18, O-Ring Br, Includes 237-6006 O-Ring
50		218-754		1	CHAPEAU, 37Ü, 9/16"-18
52		87352590		1	FLEXIBLE (ASSEMBLE), 809 mm (31-7/8 in); Reducing Valve Pressure to Backhoe Valve
53		515-22127		1	BRIDE, 1/2", Insul, 5/16" Bolt

08-23		p1	01/08

SYSTEME HYDRAULIQUE - CIRCUIT AUXILIAIRE DE LA PELLE RETRO (SANS DE COMMANDE PILOTE)

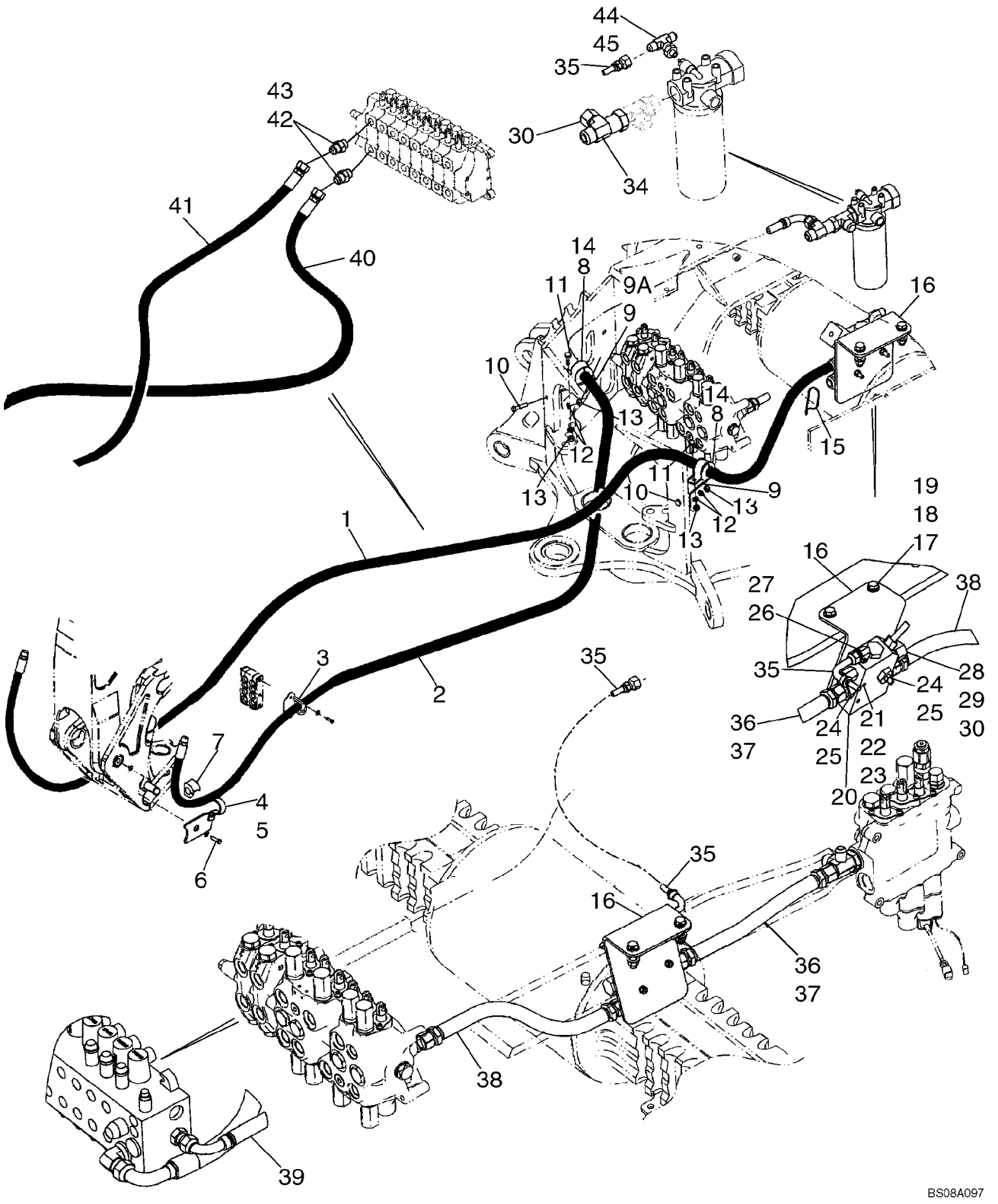

SYSTEME HYDRAULIQUE - CIRCUIT AUXILIAIRE DE LA PELLE RETRO (SANS DE COMMANDE PILOTE)

REF	FN	PART NUMBER	YR/SN	QTY	DESCRIPTION
1		87430972		1	FLEXIBLE (ASSEMBLE), 2467 mm (97-1/8 in) Hose; Models With Uni-Directional
2		87429387		1	FLEXIBLE (ASSEMBLE), 2890 mm (113-13/16 in) Hose; Models With Uni-Directional
3		87431630		2	PATTE FIXATION
4		329799A1		1	SUPPORT, LH
5		329797A1		1	SUPPORT, RH
6		604-20045		2	BOULON, Hex, Lock, M20 x 45, Cl 8.8
7		144477A1		2	SILENTBLOC
8		144479A1		2	COLLIER
9		413778A1		1-2	PATTE FIXATION, 45 degree Bend
9A		282842A1		1	PATTE FIXATION, 90 degree Bend
10		614-10040		2	BOULON, Hex, M10 x 40, 8.8, Full Thd
11		614-10025		2	BOULON, Hex, M10 x 25, 8.8, Full Thd
12		892-11010		4	RONDELLE FREIN, M10
13		829-1410		4	ECROU, M10, Cl 10
14		144477A1		2	SILENTBLOC
15		L18337		1	SERRE-CABLE, 9.95"-12.1" lg
16		87440694		1	EQUERRE
17		814-12050		2	BOULON, Hex, M12 x 50, 8.8
18		896-11012		4	RONDELLE, M13.5 x 24.5 x 3, HT
19		829-1412		2	ECROU, M12, Cl 10
20		87421836		1	SOUPAPE HYDRAULIQUE, Auxiliary Uni-Directional Valve; See Figure 08-23A
21		814-8070		2	BOULON, Hex, M8 x 70, 8.8
22		892-11008		2	RONDELLE FREIN, M8
23		829-1408		2	ECROU, M8, Cl 10
24		218-5050		2	RACCORD, 1 5/16"-12, 37Ü x 1 1/16"-12, O-Ring, Incl. Ref 25
25		237-6012		1	JOINT THORIQUE, 12-1, 90 Duro, .924 ID x .118" Thk
26		218-5280		1	COUDE, 90Ü, 3/4"-16, 37Ü x 9/16"-18, O-Ring, Incl. Ref 27
27		237-6006		1	JOINT THORIQUE, 6-1, 90 Duro, .468" ID x .078" Thk

08-23		p2	01/08

SYSTEME HYDRAULIQUE - CIRCUIT AUXILIAIRE DE LA PELLE RETRO (SANS DE COMMANDE PILOTE)

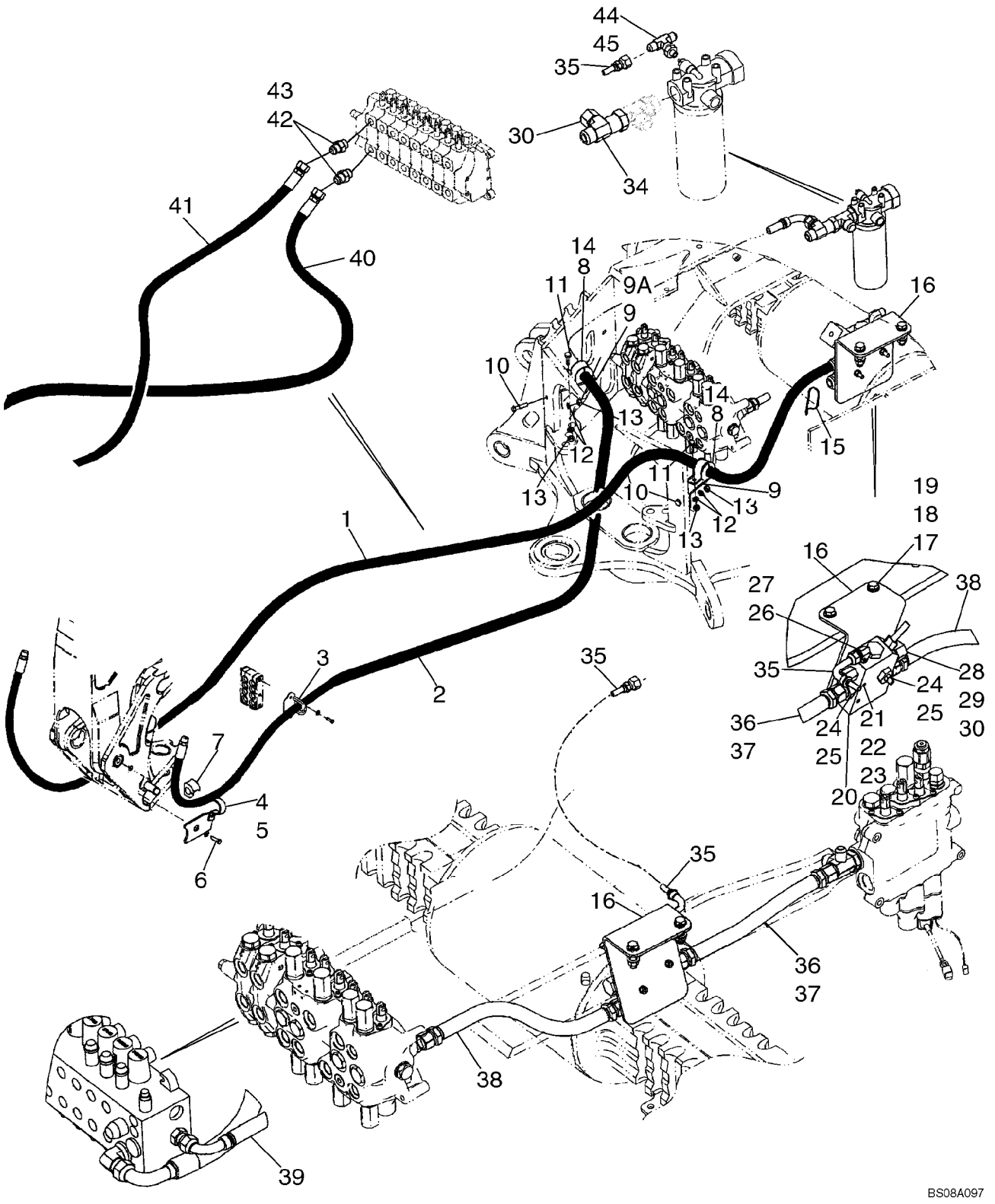

SYSTEME HYDRAULIQUE - CIRCUIT AUXILIAIRE DE LA PELLE RETRO (SANS DE COMMANDE PILOTE)

REF	FN	PART NUMBER	YR/SN	QTY	DESCRIPTION
28		218-5064		1	RACCORD, 1 1/16"-12, 37Ü x 1 1/16"-12, O-Ring, Incl. Ref 29
29		237-6012		1	JOINT THORIQUE, 12-1, 90 Duro, .924 ID x .118" Thk
30		218-335		2	CHAPEAU, 37Ü, 1 1/16"-12
34		218-5216		1	TE, 37Ü, 1 1/16"-12x1 1/16"-12, Fem Sw Runx1 1/16"-12
35		87422948		1	FLEXIBLE (ASSEMBLE), 930 mm (36-5/8 in)
36		87437232		1	FLEXIBLE (ASSEMBLE), 420 mm (16-9/16 in); Two Spool Loader Valve
37		87437231		1	FLEXIBLE (ASSEMBLE), 370 mm (14-19/32 in); Three Spool Loader Valve
38		87422977		1	FLEXIBLE (ASSEMBLE), 465 mm (18-5/16 in); Power Beyond; Models Without Pilot Controls; Hose Lengthened to 485 mm (19-3/32 in)
39		87428814		1	FLEXIBLE (ASSEMBLE), 458 mm (18-1/32 in); Power Beyond; Models With Pilot Controls
40		87423969		1	FLEXIBLE (ASSEMBLE), 1500 mm (59-1/16 in); Models With Bi-Directional
41		87423970		1	FLEXIBLE (ASSEMBLE), 1725 mm (67-15/16 in); Models With Bi Directional
42		218-5064		2	RACCORD, 1 1/16"-12, 37Ü x 1 1/16"-12, O-Ring, Incl. Ref 43
43		237-6012		1	JOINT THORIQUE, 12-1, 90 Duro, .924 ID x .118" Thk
44		218-5511		1	TE, 37Ü, 3/4"-16 x 9/16"-18, O-Ring Br, Incl. Ref 45
45		237-6006		1	JOINT THORIQUE, 6-1, 90 Duro, .468" ID x .078" Thk

DISTRIBUTEUR - AUXILIAIRE UNIDIRECTIONNEL (SANS DE COMMANDE PILOTE)

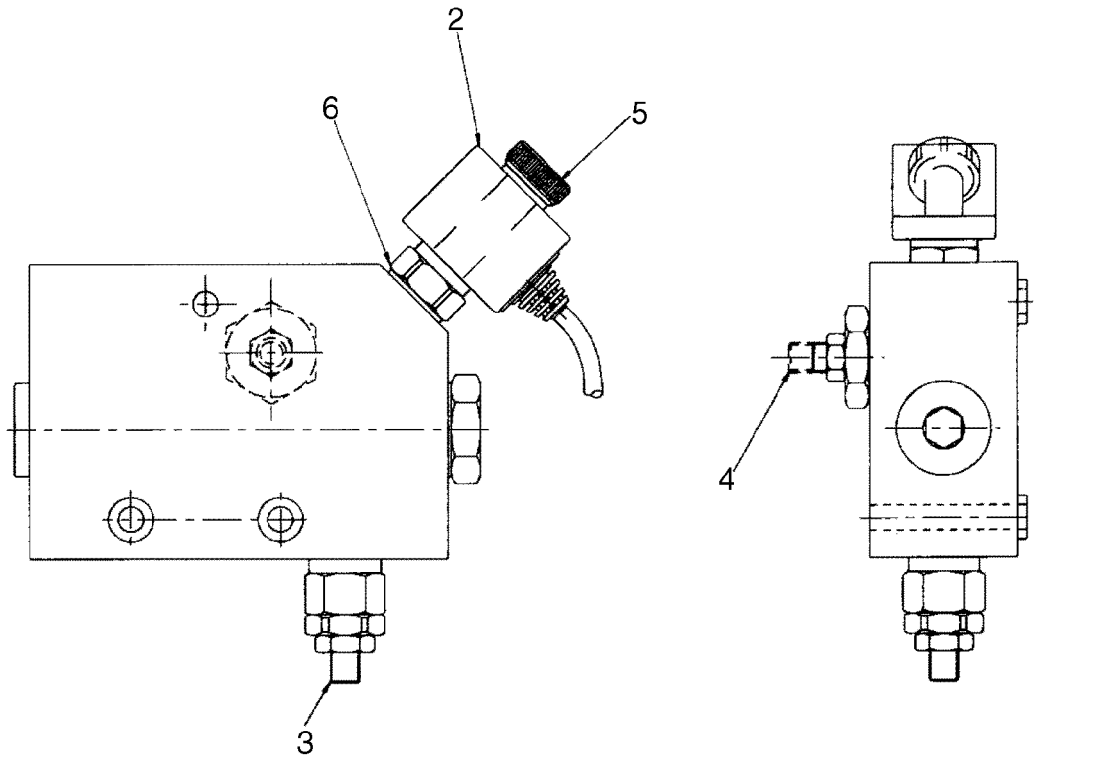

BS07E500

DISTRIBUTEUR - AUXILIAIRE UNIDIRECTIONNEL (SANS DE COMMANDE PILOTE)

REF	FN	PART NUMBER	YR/SN	QTY	DESCRIPTION
		87421836		1	SOUPAPE HYDRAULIQUE, Auxiliary Uni-Directional Valve; Incl. 1 - 6
1		9970181		1	POCHETTE DE JOINTS, Miscellaneous Gaskets; Not Illustrated
2		87421832		1	BOBINE, Solenoid With Connector
3		9970178		1	SOUPAPE, D£CHARGE
4		9970179		1	REGULATEUR, Voltage Assy
5		9970384		1	ECROU, Ring
6		9970180		1	ELECTRO-VALVE

08-23B		p1	01/08

SYSTEME HYDRAULIQUE - CIRCUIT AUXILIAIRE DE LA PELLE RETRO (AVEC DE COMMANDE PILOTE)

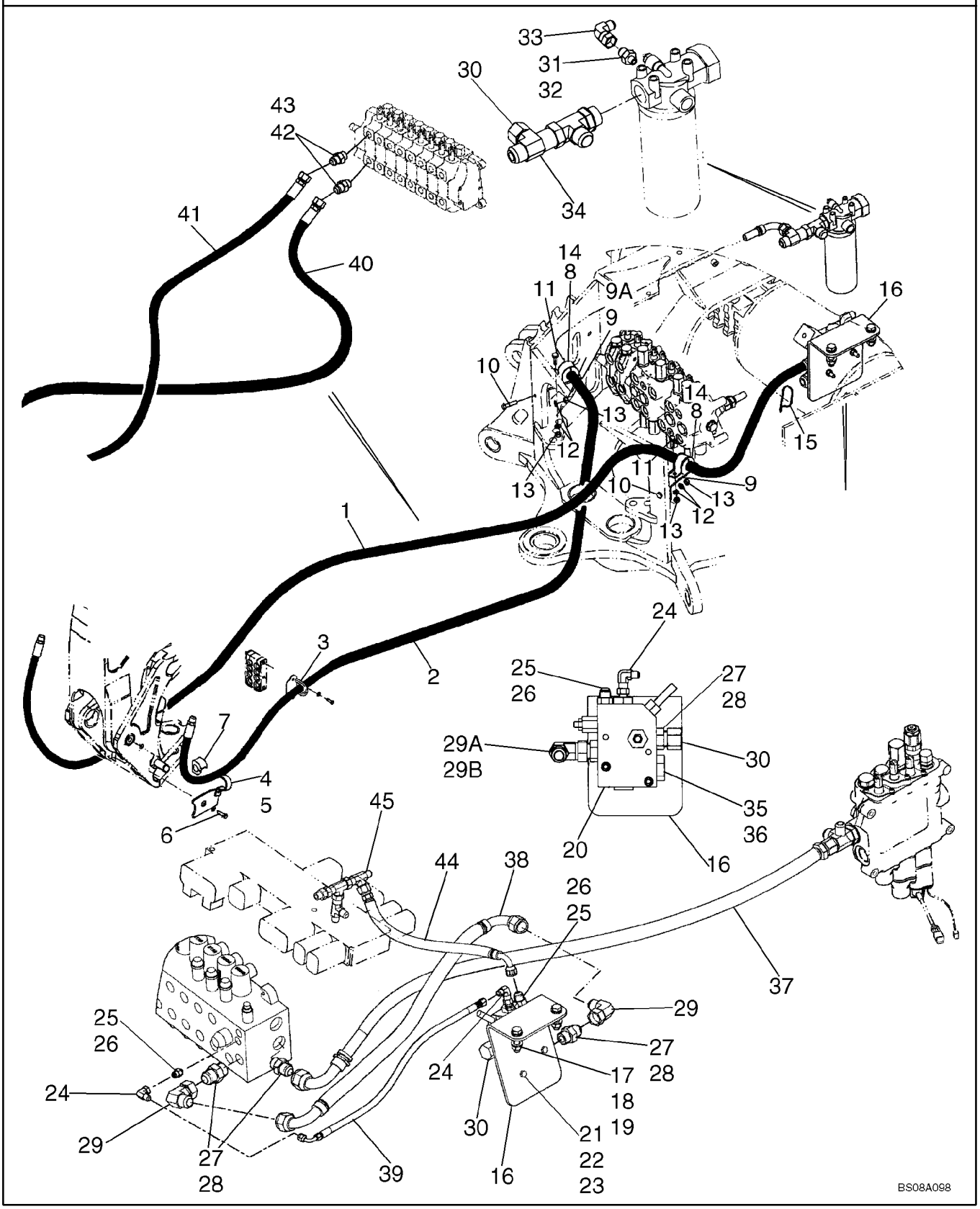

SYSTEME HYDRAULIQUE - CIRCUIT AUXILIAIRE DE LA PELLE RETRO (AVEC DE COMMANDE PILOTE)

REF	FN	PART NUMBER	YR/SN	QTY	DESCRIPTION
1		87430972		1	FLEXIBLE (ASSEMBLE), 2467 mm (97-1/8 in) Hose; Models With Uni-Directional
2		87429387		1	FLEXIBLE (ASSEMBLE), 2890 mm (113-13/16 in) Hose; Models With Uni-Directional
3		87431630		2	PATTE FIXATION
4		329799A1		1	SUPPORT, LH
5		329797A1		1	SUPPORT, RH
6		604-20045		2	BOULON, Hex, Lock, M20 x 45, Cl 8.8
7		144477A1		2	SILENTBLOC
8		144479A1		2	COLLIER
9		413778A1		1-2	PATTE FIXATION, 45 degree Bend
9A		282842A1		1	PATTE FIXATION, 90 degree Bend
10		614-10040		2	BOULON, Hex, M10 x 40, 8.8, Full Thd
11		614-10025		2	BOULON, Hex, M10 x 25, 8.8, Full Thd
12		892-11010		4	RONDELLE FREIN, M10
13		829-1410		4	ECROU, M10, Cl 10
14		144477A1		2	SILENTBLOC
15		L18337		1	SERRE-CABLE, 9.95"-12.1" lg
16		87440694		1	EQUERRE
17		814-12050		2	BOULON, Hex, M12 x 50, 8.8
18		896-11012		4	RONDELLE, M13.5 x 24.5 x 3, HT
19		829-1412		2	ECROU, M12, Cl 10
20		87448993		1	SOUPAPE HYDRAULIQUE, Auxiliary Hammer Uni-Directional Valve; See Figure 08-23C
21		814-8070		2	BOULON, Hex, M8 x 70, 8.8
22		892-11008		2	RONDELLE FREIN, M8
23		829-1408		2	ECROU, M8, Cl 10
24		218-980		2	COUDE, 90Ü, 9/16"-18, 37Ü x 9/16"-18, 37Ü Fem Sw
25		218-5057		2	RACCORD, 9/16"-18, 37Ü x 9/16"-18, O-Ring, Incl. Ref 26
26		237-6006		1	JOINT THORIQUE, 6-1, 90 Duro, .468" ID x .078" Thk
27		218-5064		4	RACCORD, 1 1/16"-12, 37Ü x 1 1/16"-12, O-Ring, Incl. Ref 28
28		237-6012		1	JOINT THORIQUE, 12-1, 90 Duro, .924 ID x .118" Thk

08-23B		p2	01/08

SYSTEME HYDRAULIQUE - CIRCUIT AUXILIAIRE DE LA PELLE RETRO (AVEC DE COMMANDE PILOTE)

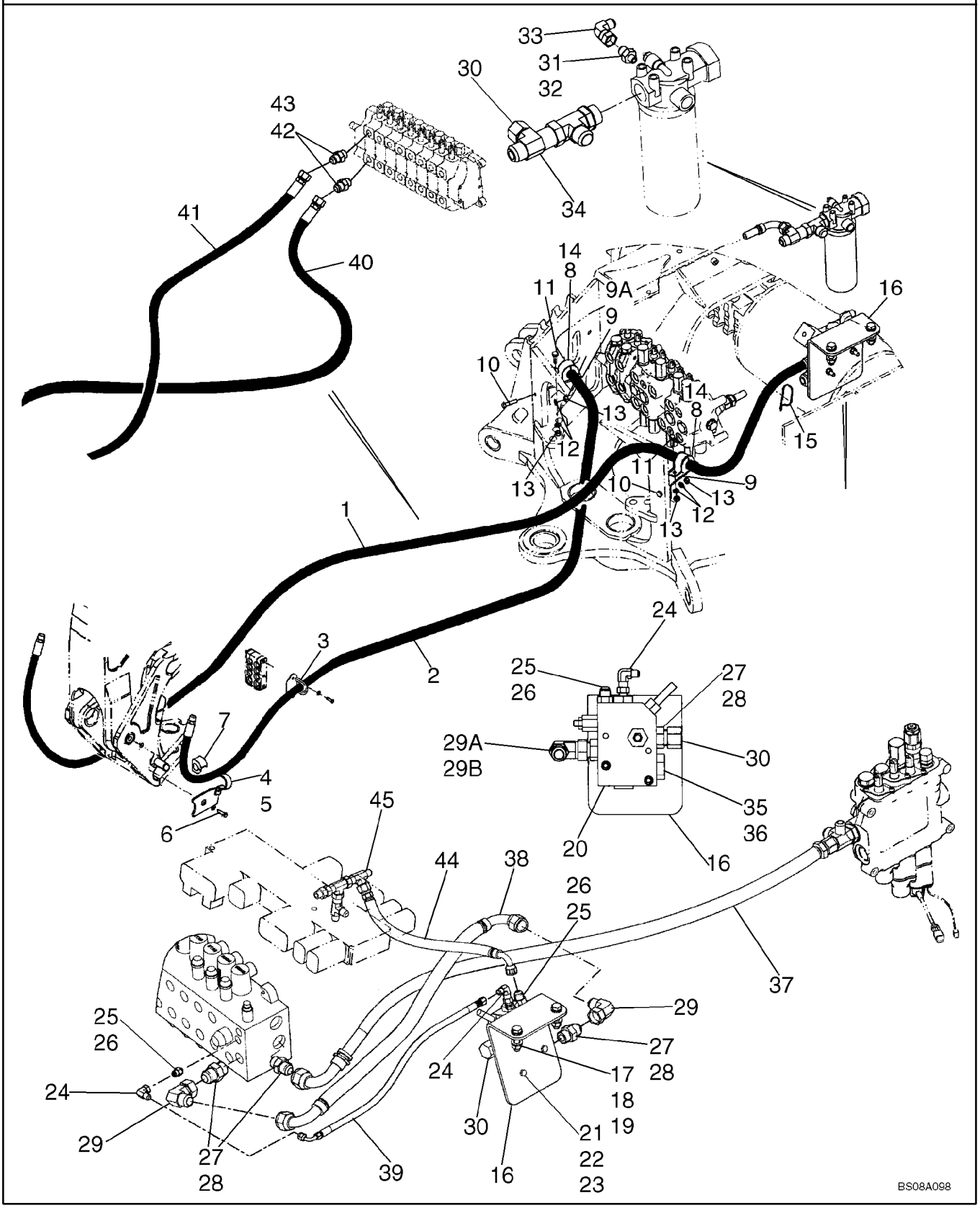

SYSTEME HYDRAULIQUE - CIRCUIT AUXILIAIRE DE LA PELLE RETRO (AVEC DE COMMANDE PILOTE)

REF	FN	PART NUMBER	YR/SN	QTY	DESCRIPTION
29		218-5231		1	COUDE, 90Ü, 1 1/16"-12, 37Ü x 1 1/16"-12, 37Ü Fem Sw
29A		218-5108		1	COUDE, 90Ü, 1 1/16"-12, 37Ü x 1 1/16"-12, O-Ring
30		218-335		2	CHAPEAU, 37Ü, 1 1/16"-12
29B		237-6012		1	JOINT THORIQUE, 12-1, 90 Duro, .924 ID x .118" Thk
32		237-6006		1	JOINT THORIQUE, 6-1, 90 Duro, .468" ID x .078" Thk
31		218-5351		1	RACCORD, 3/4"-16, 37Ü x 9/16"-18, O-Ring, Incl. Ref 32
33		218-5230		1	COUDE, 90Ü, 3/4"-16, 37Ü x 3/4"-16, 37Ü Fem Sw
34		218-5216		1	TE, 37Ü, 1 1/16"-12x1 1/16"-12, Fem Sw Runx1 1/16"-12
35		218-5158		1	BOUCHON, Hex Hd, 1 1/16"-12 ORB, Incl. Ref 36
36		237-6012		1	JOINT THORIQUE, 12-1, 90 Duro, .924 ID x .118" Thk
37		87455832		1	FLEXIBLE (ASSEMBLE), 1020 mm (40-3/16 in); Loader Valve to Backhoe Valve; Power Beyond
38		87518479		1	FLEXIBLE (ASSEMBLE), 770 mm (30-11/32 in); 'E' Port Auxiliary Hammer Uni-Directional Valve to Backhoe Valve
39		87443052		1	FLEXIBLE (ASSEMBLE), 715 mm (28-5/32 in); 'LS' Port Auxiliary Hammer Uni-Direction Valve to Backhoe Valve
40		87423969		1	FLEXIBLE (ASSEMBLE), 1500 mm (59-1/16 in); Models With Bi-Directional
41		87423970		1	FLEXIBLE (ASSEMBLE), 1725 mm (67-15/16 in); Models With Bi Directional
42		218-5064		2	RACCORD, 1 1/16"-12, 37Ü x 1 1/16"-12, O-Ring, Incl. Ref 43
43		237-6012		1	JOINT THORIQUE, 12-1, 90 Duro, .924 ID x .118" Thk
44		87445794		1	FLEXIBLE (ASSEMBLE), 375 mm (14-13/16 in)
45		218-5222		1	TE, 37Ü, 9/16"-18, x 9/16"-18, Fem Sw Run

DISTRIBUTEUR - AUXILIAIRE UNIDIRECTIONNEL (AVEC DE COMMANDE PILOTE)

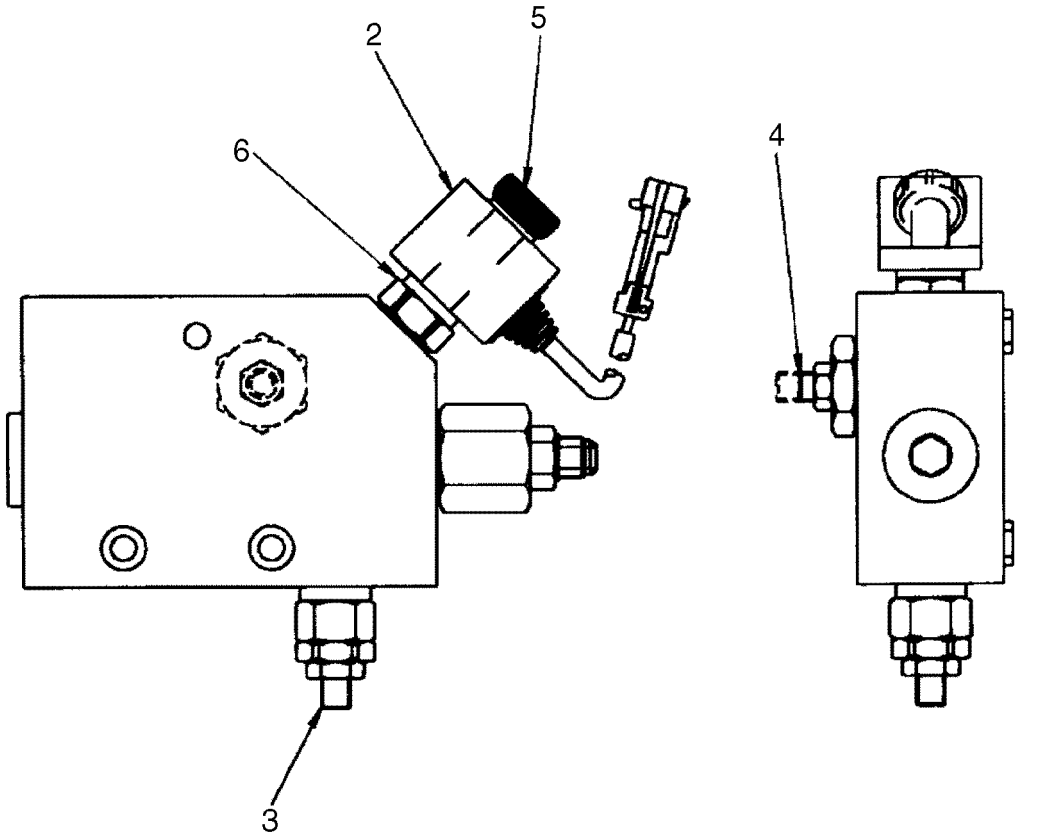

BS07E499

DISTRIBUTEUR - AUXILIAIRE UNIDIRECTIONNEL (AVEC DE COMMANDE PILOTE)

REF	FN	PART NUMBER	YR/SN	QTY	DESCRIPTION
		87448993		1	SOUPAPE HYDRAULIQUE, Auxiliary Uni-Directional Valve; Incl. 1 - 6
1		9970181		1	POCHETTE DE JOINTS, Miscellaneous Gaskets; Not Illustrated
2		87421832		1	BOBINE, Solenoid With Connector
3		9970178		1	SOUPAPE, D£CHARGE
4		9970179		1	REGULATEUR, Voltage Assy
5		9970384		1	ECROU, Ring
6		9970180		1	ELECTRO-VALVE

08-24		p1	02/08

SYSTEME HYDRAULIQUE - CIRCUIT AUXILIAIRE DE LA PELLE RETRO, AU BRAS DE RELEVAGE ET AU BALANCIER

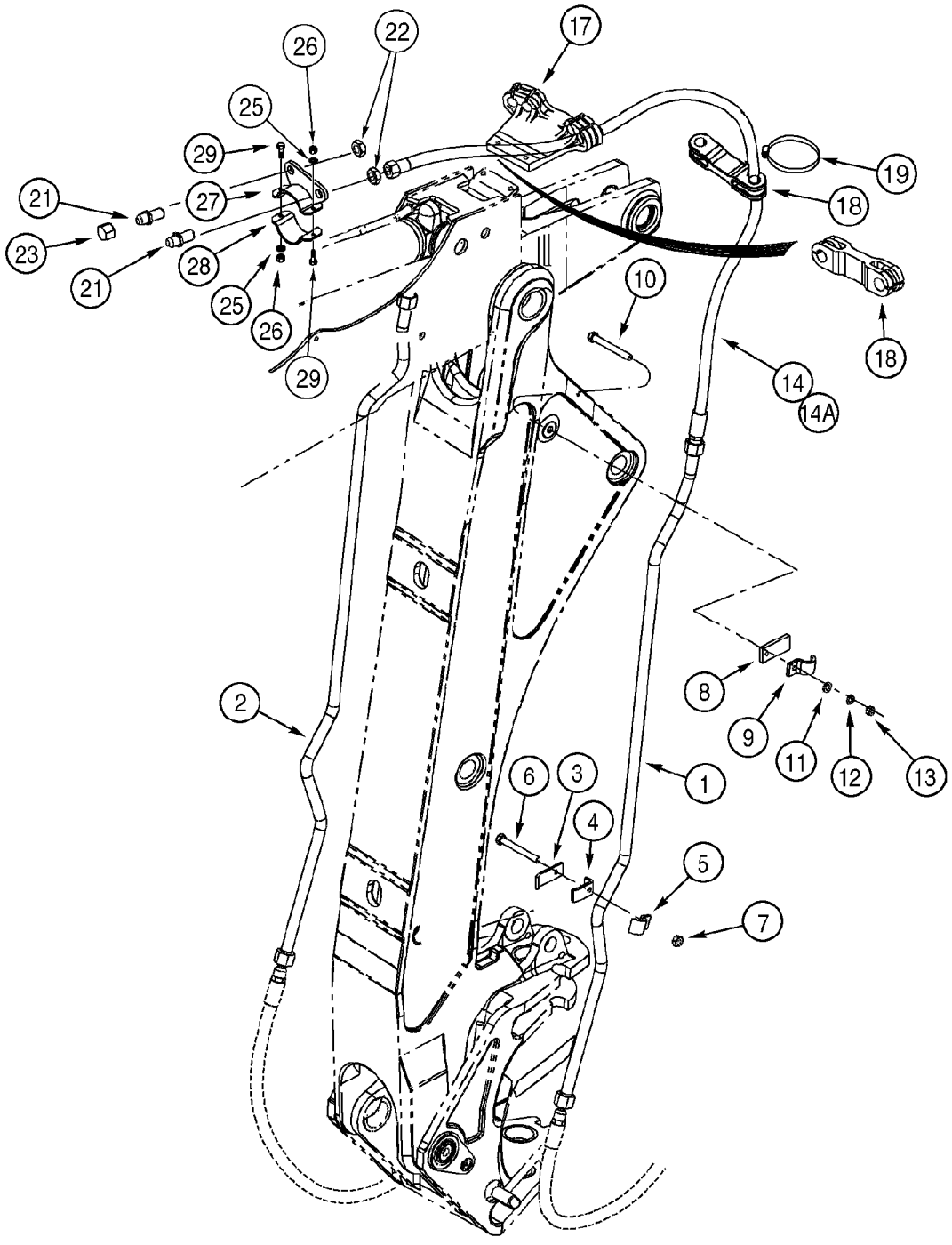

BS07K514

SYSTEME HYDRAULIQUE - CIRCUIT AUXILIAIRE DE LA PELLE RETRO, AU BRAS DE RELEVAGE ET AU BALANCIER

REF	FN	PART NUMBER	YR/SN	QTY	DESCRIPTION
		REF			NOTICE, AT BOOM AND DIPPER
1		243300A1		1	TUYAU, Tube
2		243404A1		1	TUYAU, Tube
3		D149309		2	COLLIER
4		243298A1		2	COLLIER
5		242459A1		2	BRIDE, Clamp
6		814-10060		2	BOULON, Hex, M10 x 60, 8.8
7		829-1410		2	ECROU, M10, Cl 10
8		243398A1		2	SUPPORT
9		242459A1		2	BRIDE, Clamp
10		814-10050		2	BOULON, Hex, M10 x 50, 8.8, Not Required With Standard Dipper
11		895-11010		2	RONDELLE, M10 x 20 x 2
12		892-11010		2	RONDELLE FREIN, M10
13		829-1410		2	ECROU, M10, Cl 10
14		243679A2		2	FLEXIBLE, 2665 mm (104-15/16 in); Models With Extendable Dipper
14A		256210A2		2	FLEXIBLE, 1285 mm (50-19/32 in); Models Without Extendable Dipper
17		246151A1		1	SUPPORT, Models With Extendable Dipper; Used With (2) 214-3156 Clamps
18		103670A1		2	BRIDE, FLEXIBLE, Rubber
19		214-3132		4	BRIDE, FLEXIBLE, 1.25/2.125 HD Worm
21		218-676		2	RACCORD, Blkhd, 1 1/16"-12, 37Ü x 1 1/16"-12, 37Ü
22		218-1256		2	CONTRE-ECROU, Blkhd, 1 1/16"-12
23		218-335		2	CHAPEAU, 37Ü, 1 1/16"-12
25		896-11010		2	RONDELLE, M10 x 21.5 x 2.5, HT
26		832-10410		2	CONTRE-ECROU, M10 x 1.5, Cl 8
27		314319A1		1	PONTET
28		314320A1		1	PONTET
29		614-10040		2	BOULON, Hex, M10 x 40, 8.8, Full Thd

SYSTEME HYDRAULIQUE - SYSTEME ANTI-TANGAGE

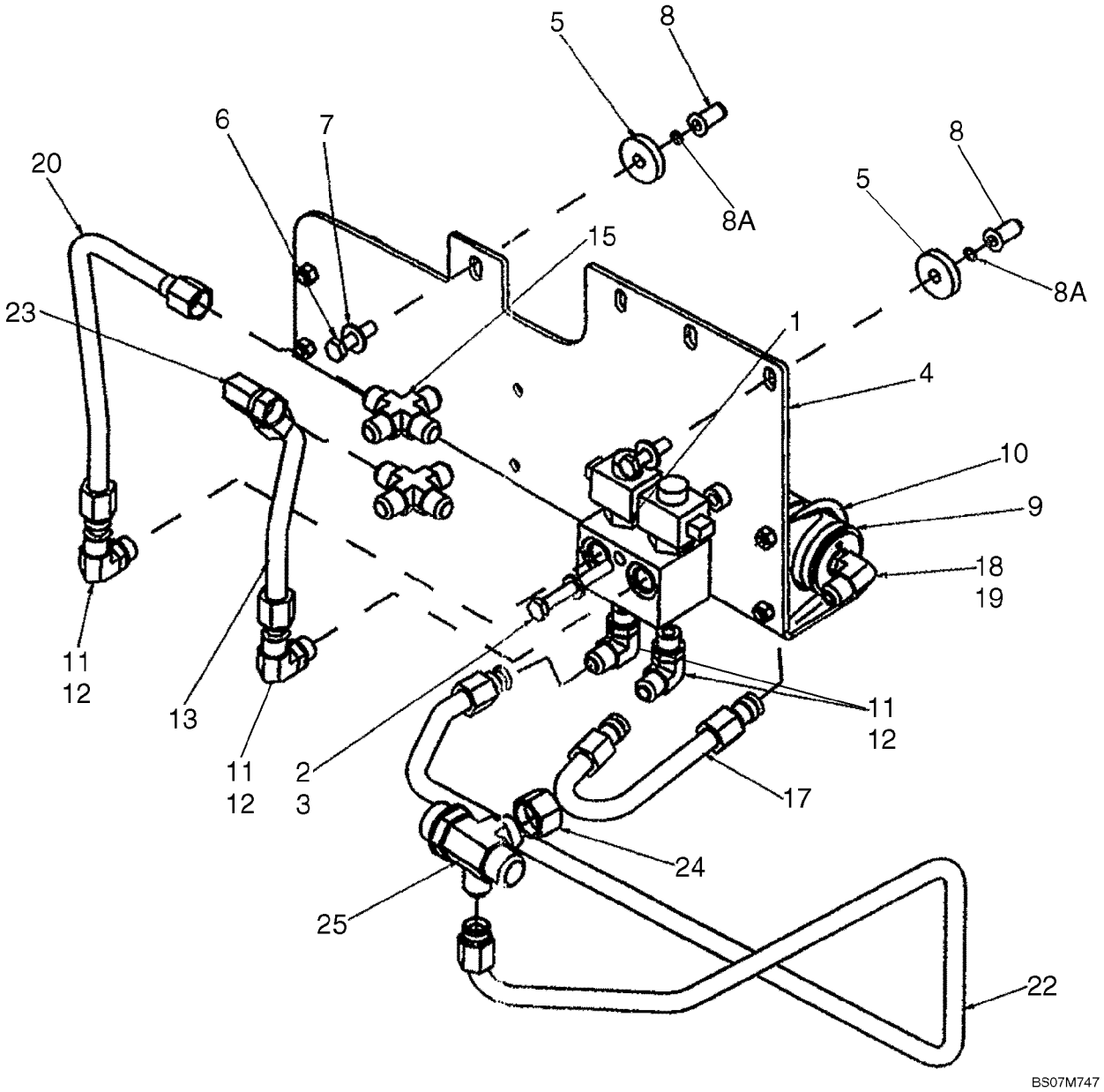

SYSTEME HYDRAULIQUE - SYSTEME ANTI-TANGAGE

REF	FN	PART NUMBER	YR/SN	QTY	DESCRIPTION
		REF			NOTICE, RIDE CONTROL HYDRAULIC AND ELECTRICAL CIRCUIT
1		87433240		1	ELECTRO-VALVE, Ride Control; Component Parts Not Available At Time Of Printing
2		814-10080		1	BOULON, Hex, M10 x 80, 8.8
3		895-11010		1	RONDELLE, M10 x 20 x 2
4		87421213		1	EQUERRE
5		87423067		2	ENTRETOISE
6		814-10040		2	BOULON, Hex, M10 x 40, 8.8, Full Thd
7		895-15010		2	RONDELLE, M11 x 24 x 2
8		87417721		2	INSERT FILETE, M10
8A		238-5011		2	JOINT THORIQUE, -011, 70 Duro, .301" ID x .070" Thk
9		448284A1		1	ACCUMULATEUR, Ride Control; Component Parts Not Serviced Separately; Used In Production, For Service, Order 234412A1 Accumulator
9		234412A1		1	ACCUMULATEUR, Ride Control; See Figure 08-60
10		A13240		2	COLLIER, Two Piece; Includes Hardware
11		218-5117		4	COUDE, 90Ü, 7/8"-14, 37Ü x 3/4"-16, O-Ring, Incl. Ref 12
12		237-6008		1	JOINT THORIQUE, 8-1, 90 Duro, .644" ID x .087" Thk
13		87675026		1	TUYAU HYDRAULIQUE, Solenoid Valve to Loader Control Valve Lower Lift Section Port
15		218-655		2	RACCORD A 4 VOIES, 7/8"-14, 37Ü
17		87420696		1	TUYAUTERIE, Accumulator to Solenoid Valve
18		218-5600		1	COUDE, 90Ü, 7/8"-14, 37Ü x 3/4"-16, O-Ring, Incl. Ref 19
19		237-6008		1	JOINT THORIQUE, 8-1, 90 Duro, .644" ID x .087" Thk
20		87675071		1	TUYAU HYDRAULIQUE, Solenoid Valve To Loader Control Valve Upper Lift Section Port
22		87675074		1	TUYAU HYDRAULIQUE, Solenoid Valve To Filter
23		218-5232		1	COUDE, 90Ü, 7/8"-14, 37Ü x 7/8"-14, 37Ü Fem Sw
24		218-335		1	CHAPEAU, 37Ü, 1 1/16"-12
25		87436066		1	RACCORD

SYSTEME HYDRAULIQUE - SYSTEME ANTI-TANGAGE

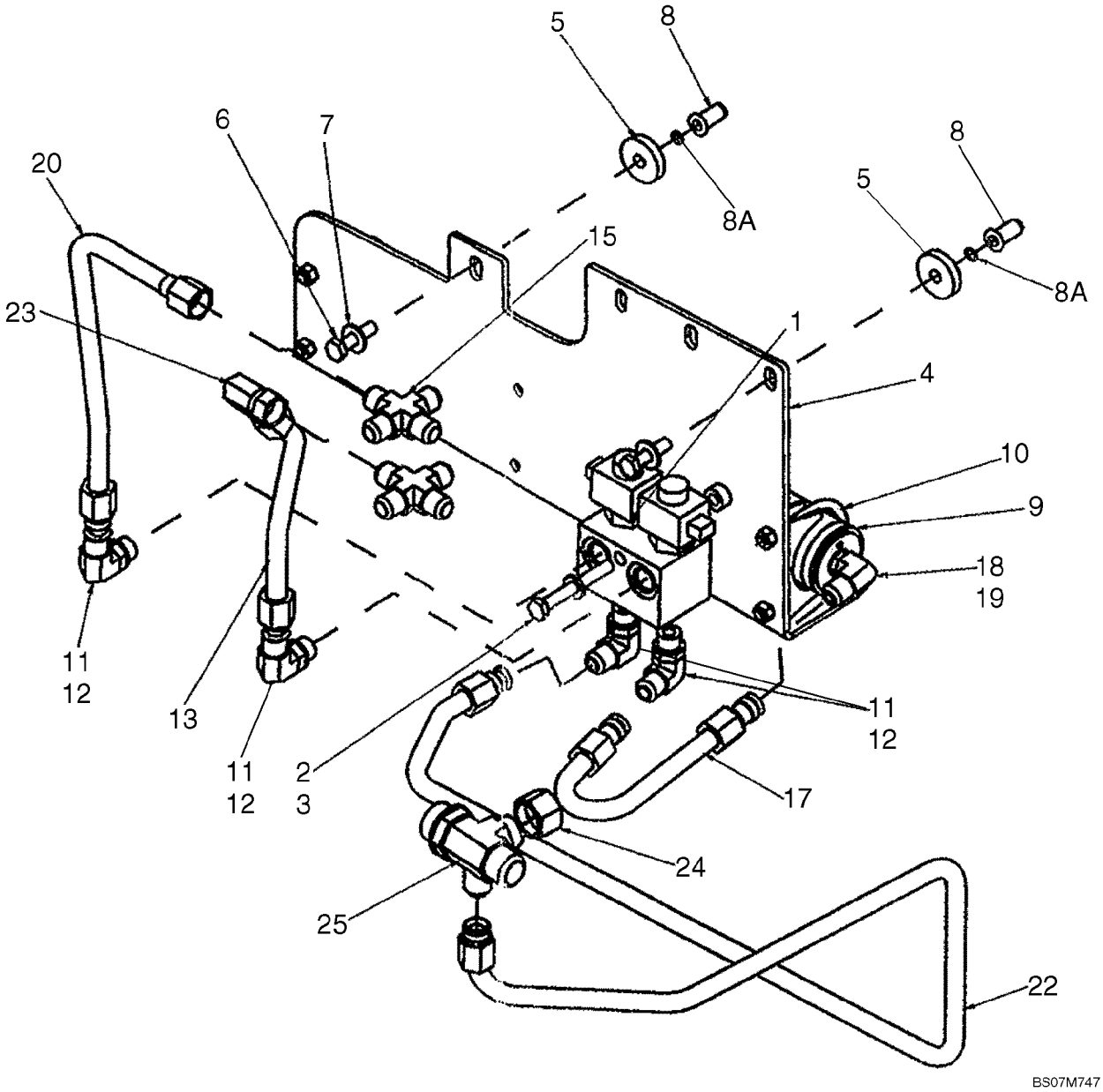

SYSTEME HYDRAULIQUE - SYSTEME ANTI-TANGAGE

REF	FN	PART NUMBER	YR/SN	QTY	DESCRIPTION
26		235002A1		1	CONTACTEUR, Ride Control; Not Illustrated; See Figure 04-10

08-26		p1	02/08

SYSTEME HYDRAULIQUE - COUPLEUR, OUTIL DE CHARGEUSE, DE S£CURIT£

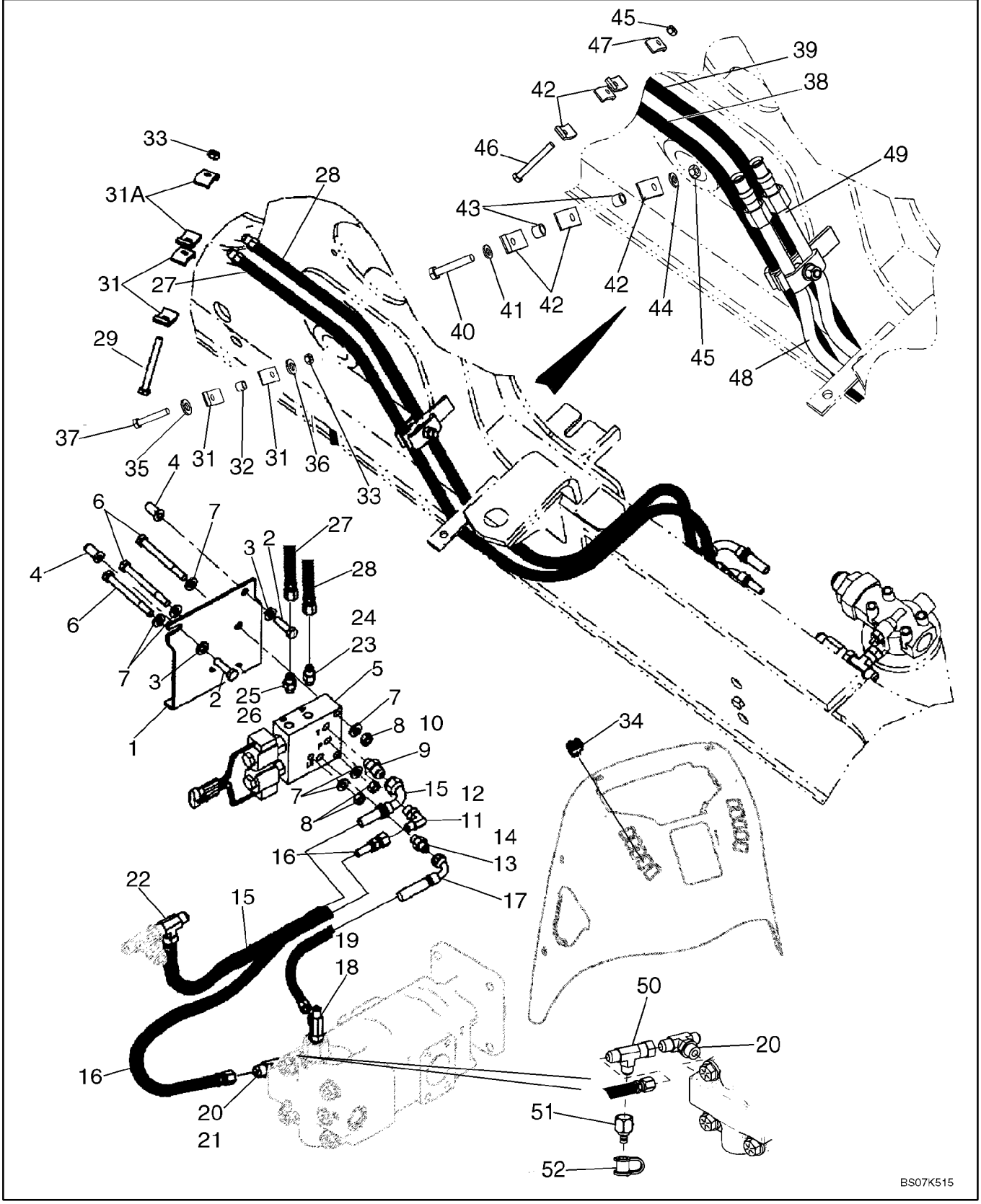

SYSTEME HYDRAULIQUE - COUPLEUR, OUTIL DE CHARGEUSE, DE S£CURIT£

REF	FN	PART NUMBER	YR/SN	QTY	DESCRIPTION
1		87437263		1	EQUERRE, Coupler Valve Mounting
2		614-10035		2	BOULON, Hex, M10 x 35, 8.8, Full Thd
3		896-11010		2	RONDELLE, M10 x 21.5 x 2.5, HT
4		87417721		2	INSERT FILETE, M10
5		87435909		1	ELECTRO-VALVE, Coupler; Loader Tool; See Figure 08-28
6		814-10060		3	BOULON, Hex, M10 x 60, 8.8
7		896-11010		6	RONDELLE, M10 x 21.5 x 2.5, HT
8		829-1410		3	ECROU, M10, Cl 10
9		218-5351		1	RACCORD, 3/4"-16, 37Ü x 9/16"-18, O-Ring, Incl. Ref 10
10		237-6006		1	JOINT THORIQUE, 6-1, 90 Duro, .468" ID x .078" Thk
11		218-5105		1	COUDE, 90Ü, 9/16"-18, 37Ü x 9/16"-18, O-Ring, Incl. Ref 12
12		237-6006		1	JOINT THORIQUE, 6-1, 90 Duro, .468" ID x .078" Thk
13		218-5057		1	RACCORD, 9/16"-18, 37Ü x 9/16"-18, O-Ring, Incl. Ref 14
14		237-6006		1	JOINT THORIQUE, 6-1, 90 Duro, .468" ID x .078" Thk
15		87434265		1	FLEXIBLE (ASSEMBLE), 500 mm (19-11/16 in); Coupler Valve to Filter
16		87452402		1	FLEXIBLE (ASSEMBLE), 830 mm (32-11/16 in); Pump to Coupler Pressure Port
17		87452403		1	FLEXIBLE (ASSEMBLE), 600 mm (23-5/8 in); Pump to Coupler Valve Load Sense Port
18		282428A1		1	CLAPET, Check Tee; Incl. Ref 19
19		237-6006		1	JOINT THORIQUE, 6-1, 90 Duro, .468" ID x .078" Thk
20		218-5183		1	TE, 3/4"-16, 37Ü x 3/4"-16, O-Ring Br, Incl. Ref 21; Replaces Standard Steering Fitting
21		237-6008		1	JOINT THORIQUE, 8-1, 90 Duro, .644" ID x .087" Thk
22		218-845		1	TE, 37Ü, 3/4"-16 x 3/4"-16, Fem Sw Run, Attaches to Tee At Back Of Filter
23		218-5053		1	RACCORD, 7/16"-20, 37Ü x 7/16"-20, O-Ring, Incl. Ref 24
24		237-6004		1	JOINT THORIQUE, 4-1, 90 Duro, .351" ID x .072" Thk

08-26		p2	02/08

SYSTEME HYDRAULIQUE - COUPLEUR, OUTIL DE CHARGEUSE, DE S£CURIT£

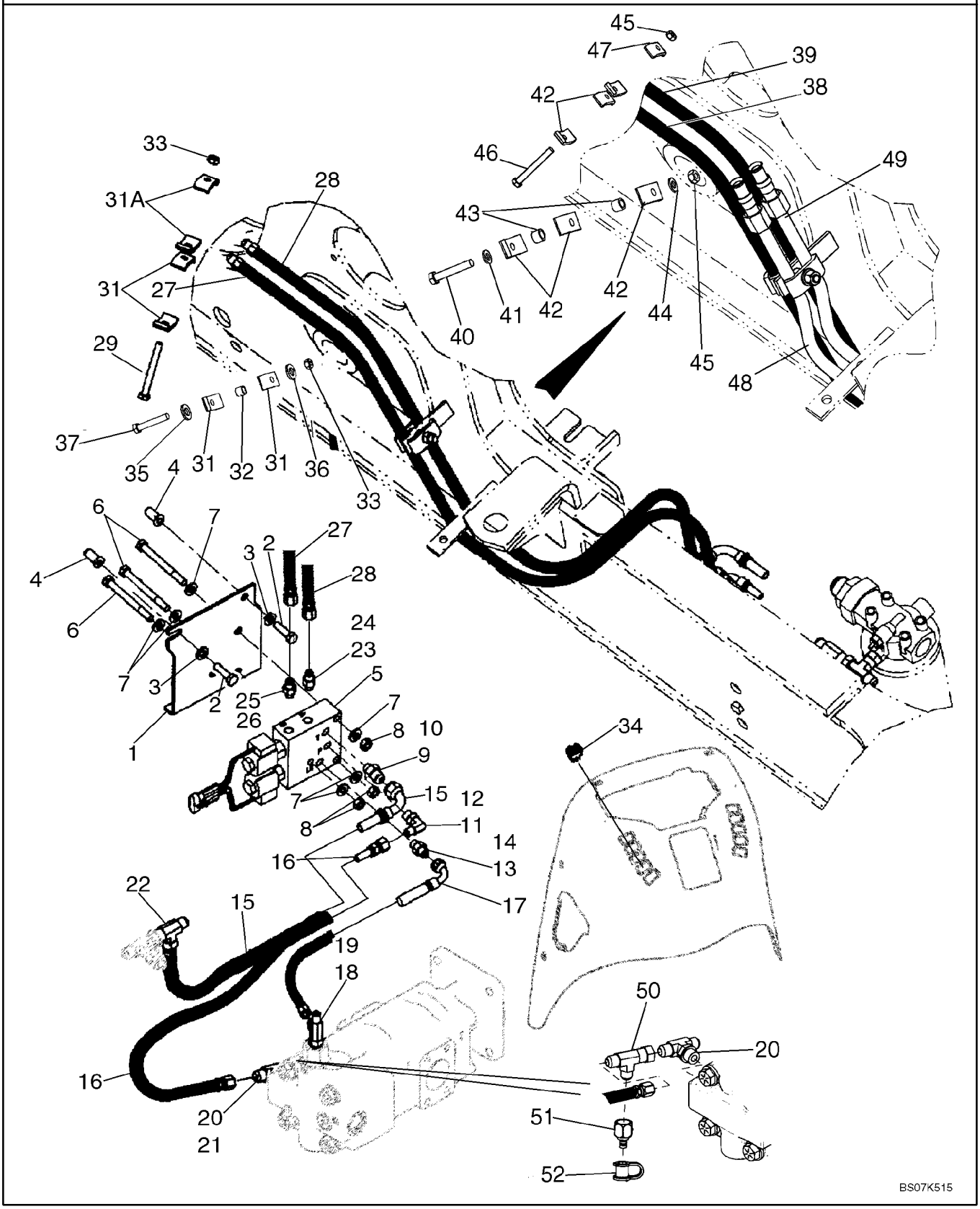

SYSTEME HYDRAULIQUE - COUPLEUR, OUTIL DE CHARGEUSE, DE S£CURIT£

REF	FN	PART NUMBER	YR/SN	QTY	DESCRIPTION
25		218-5056		1	RACCORD, 1/2"-20, 37Ü x 1/2"-20, O-Ring, Incl. Ref 26
26		237-6005		1	JOINT THORIQUE, 5-1, 90 Duro, .414" ID x .072" Thk
		REF			NOTICE, COUPLER ONLY (SEE REF 38-49 FOR CLAMPING ON MODELS WITH COUPLER AND 3-SPOOL LOADER VALVE)
27		87427539		1	FLEXIBLE (ASSEMBLE), 1815 mm (71-1/2 in); B Port
28		87427537		1	FLEXIBLE (ASSEMBLE), 1815 mm (71-1/2 in); A Port
29		814-10090		1	BOULON, Hex, M10 x 90, 8.8
31		D138055		5	COLLIER
31A		D143846		2	BRIDE, CLAMP
32		120303A1		1	ENTRETOISE
33		832-10410		2	CONTRE-ECROU, M10 x 1.5, Cl 8
34		398675A2		1	CONTACTEUR, Loader Tool Quick Coupler
35		892-11010		1	RONDELLE FREIN, M10
36		896-11010		1	RONDELLE, M10 x 21.5 x 2.5, HT
37		83931335		1	BOULON, Hex, M10 x 75, 8.8
		REF			NOTICE, COUPLER AND 3-SPOOL LOADER VALVE (SEE REF 27-37 FOR CLAMPING ON MODELS WITH COUPLER ONLY)
38		87427539		1	FLEXIBLE (ASSEMBLE), 1815 mm (71-1/2 in); B Port
39		87427537		1	FLEXIBLE (ASSEMBLE), 1815 mm (71-1/2 in); A Port
40		83931335		1	BOULON, Hex, M10 x 75, 8.8
41		892-11010		1	RONDELLE FREIN, M10
42		D138055		5	COLLIER
43		120303A1		2	ENTRETOISE
44		896-11010		1	RONDELLE, M10 x 21.5 x 2.5, HT
45		832-10410		2	CONTRE-ECROU, M10 x 1.5, Cl 8
46		814-10090		1	BOULON, Hex, M10 x 90, 8.8
47		D143846		2	BRIDE, Clamp
48		{87478483}		1	Tube, Loader Clam; A Port

08-26		p3	02/08

SYSTEME HYDRAULIQUE - COUPLEUR, OUTIL DE CHARGEUSE, DE S£CURIT£

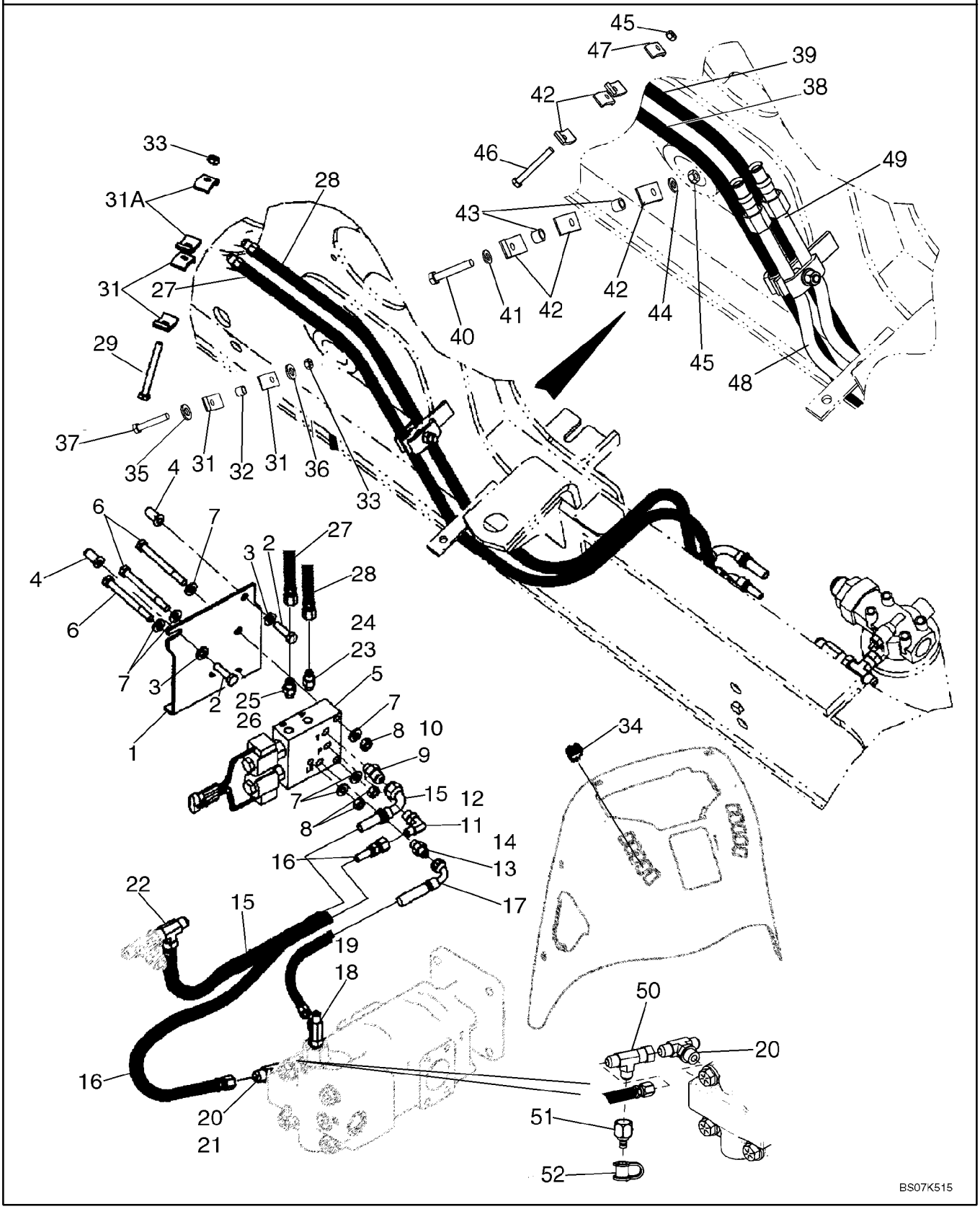

SYSTEME HYDRAULIQUE - COUPLEUR, OUTIL DE CHARGEUSE, DE S£CURIT£

REF	FN	PART NUMBER	YR/SN	QTY	DESCRIPTION
49		87449440		1	TUYAUTERIE, Loader Clam; B Port
50		218-845		1	TE, 37Ü, 3/4"-16 x 3/4"-16, Fem Sw Run
51		192834A1		1	CARDAN, Diagnostic
52		H434163		1	CACHE-POUSSIERE

SYSTEME HYDRAULIQUE - COUPLEUR, OUTIL DE CHARGEUSE, DE S£CURIT£, AU CADRE DU CHARGEUR EN OPTION

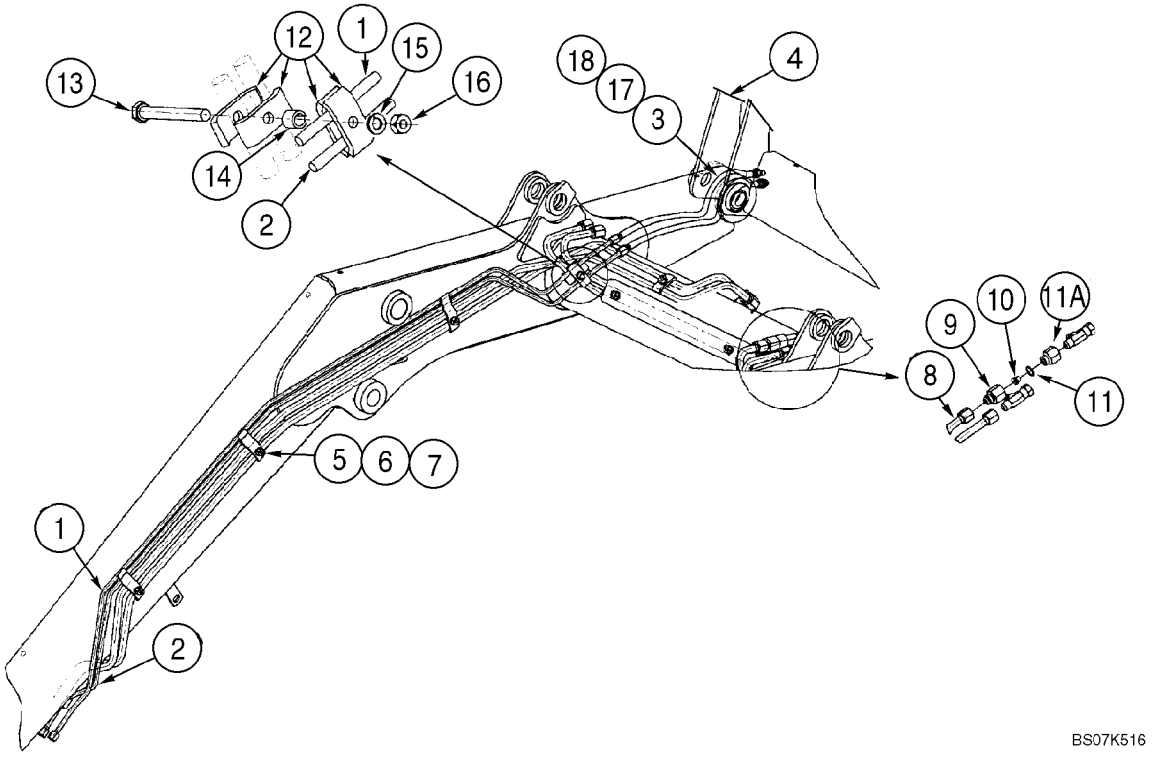

SYSTEME HYDRAULIQUE - COUPLEUR, OUTIL DE CHARGEUSE, DE S£CURIT£, AU CADRE DU CHARGEUR EN OPTION

REF	FN	PART NUMBER	YR/SN	QTY	DESCRIPTION
		REF			NOTICE, AT LOADER LIFT FRAME
1		87716490		1	TUYAU HYDRAULIQUE
2		87716492		1	TUYAU HYDRAULIQUE
3		300996A3		2	FLEXIBLE (ASSEMBLE), 772 mm (30-13/32 in)
4		REF		1	NOTICE, Coupler, Hydr., Loader Tool Quick Coupler; For Complete Assembly, See Figure 09-10; Order From Machinery Price List; Use Standard Loader Bucket Pins To Mount Coupler
5		302820A2		3	COLLIER
6		892-11010		3	RONDELLE FREIN, M10
7		829-1410		3	ECROU, M10, Cl 10
8		87716484		1	TUYAU HYDRAULIQUE
9		304424A1		1	CONNECTEUR
10		304890A1		1	R£DUCTION
11		237-6010		1	JOINT THORIQUE, 10-1, 90 Duro, .755" ID x .097" Thk
11A		309674A1		1	CONNECTEUR, 7/8 male x 7/8 female
12		D138055		4	COLLIER
13		814-10090		1	BOULON, Hex, M10 x 90, 8.8
14		120303A1		1	ENTRETOISE
15		892-11010		1	RONDELLE FREIN, M10
16		829-1410		1	ECROU, M10, Cl 10
17		307277A1		1	MANCHON
18		L18337		2	SERRE-CABLE, 9.95"-12.1" lg

DISTRIBUTEUR DU COUPLEUR - OUTIL DE CHARGEUSE, DE S£CURIT£

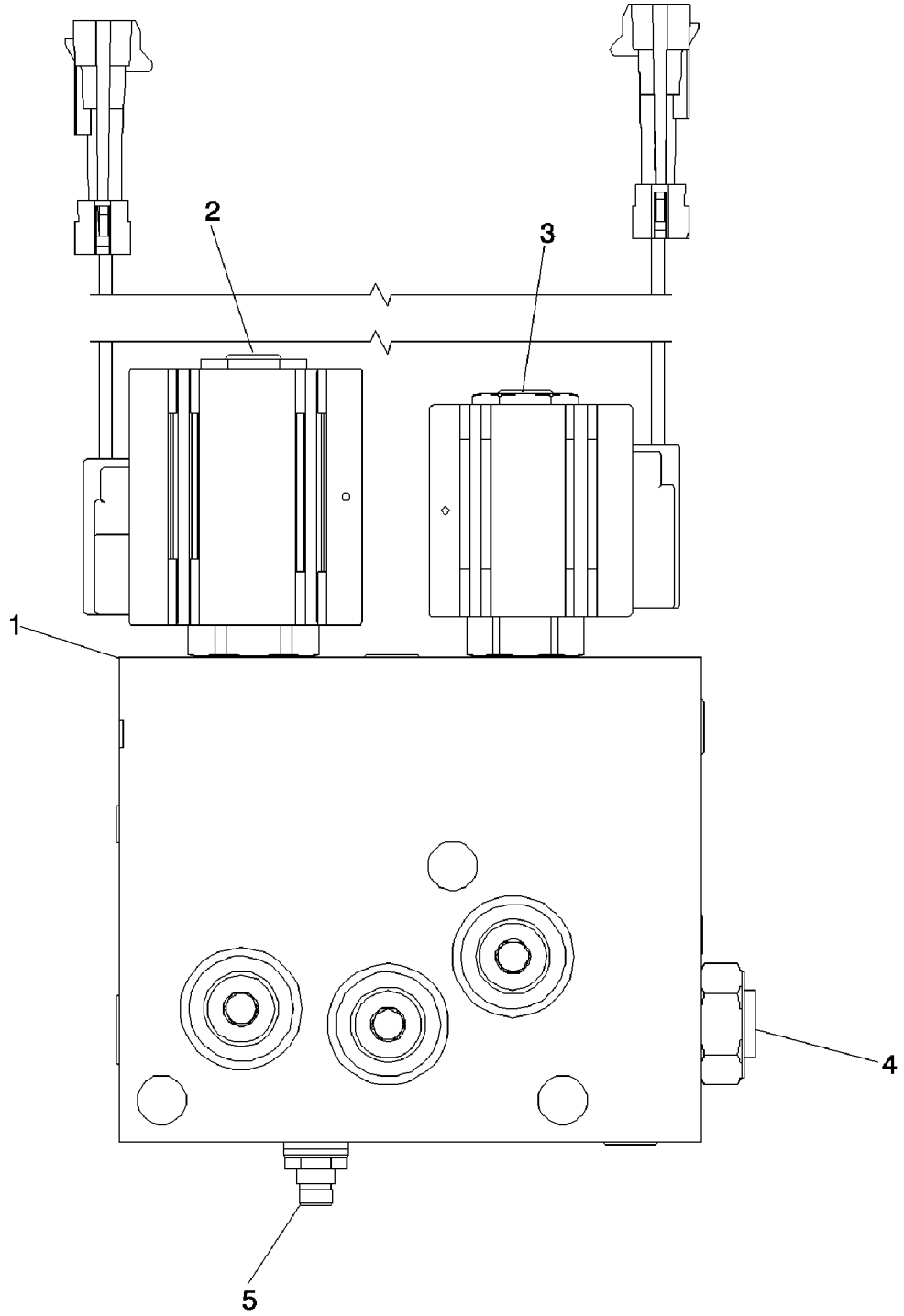

BS03M143

DISTRIBUTEUR DU COUPLEUR - OUTIL DE CHARGEUSE, DE S£CURIT£

REF	FN	PART NUMBER	YR/SN	QTY	DESCRIPTION
		87435909		1	ELECTRO-VALVE, Incl. Ref 1 - 5
1		NSS		1	NON FOURNI SEPAREMENT, Body
2		87438021		1	ELECTRO-VALVE, 4-Way Cartridge With Coil; Includes 87438022, 87438023, 87438024
		87438022		1	SOUPAPE HYDRAULIQUE, Cartridge
		87438023		1	BOBINE, Solenoid
		87438024		1	POCHETTE DE JOINTS, 4-Way Solenoid
3		87438025		1	ELECTRO-VALVE, 2-Way 2-Position Cartridge With Coil; Includes 87438026, 87438027, 87438028
		87438026		1	SOUPAPE HYDRAULIQUE, Cartridge
		87438027		1	BOBINE, Solenoid
		87438028		1	POCHETTE DE JOINTS, 2-Way Solenoid
4		87438029		1	SOUPAPE ANTI RETOUR, Includes 87438028 Seal Kit
		87438028		1	POCHETTE DE JOINTS, 2-Way Solenoid
5		87438031		1	SOUPAPE, D£CHARGE, Includes 87438032
		87438032		1	POCHETTE DE JOINTS, Relief Valve

POMPE, £QUIPEMENT HYDRAULIQUE

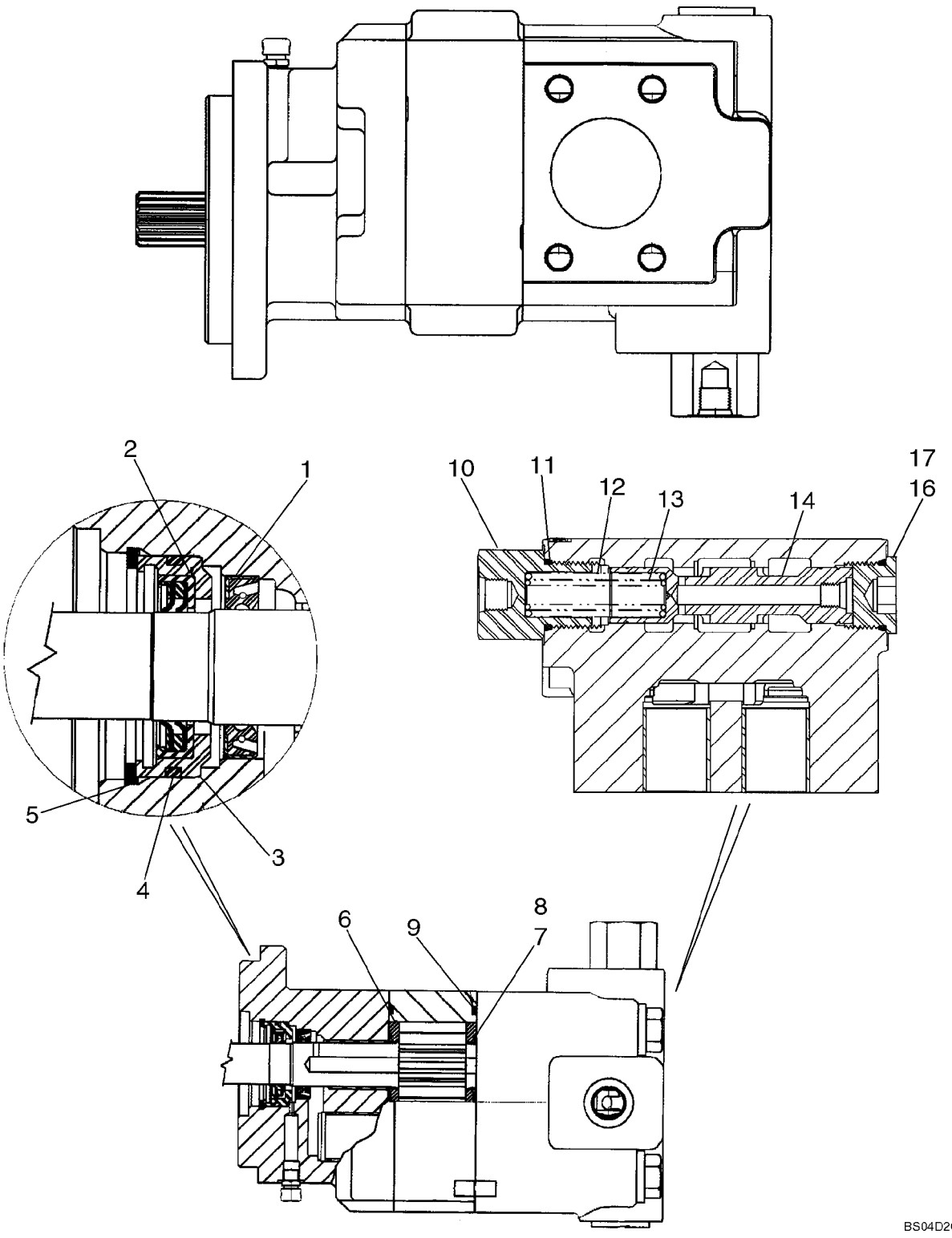

POMPE, £QUIPEMENT HYDRAULIQUE

REF	FN	PART NUMBER	YR/SN	QTY	DESCRIPTION
		87434672		1	POMPE HYDRAULIQUE, Component Parts Not Serviced Separately, Except for 87434070 and 87438045 Service Kits, Ref 1 - 17, See Below
		87434070		1	KIT REPAR.POMPE HYDRAU, Pump Service Kit, Single Section; Incl. Ref 1 - 9
1		L32418		1	JOINT, Double Lip
2		87434075		1	JOINT, Lip Seal
3		87434076		1	RETENEUR DE JOINT
4		87434077		1	JOINT ANNULAIRE
5		102-23206		1	ANNEAU D'ARRąT, #206, 2.190", Int, Spiral
6		N13582		2	PLAQUE, Thrust
7		144173A1		2	JOINT
8		178051A1		2	CONTRE-JOINT
9		L32100		2	JOINT, Gear Housing Gasket
		87438045		1	KIT REPAR.POMPE HYDRAU, Priority Valve Service Kit, Single; Incl. Ref 10 - 17
10		87437899		1	BOUCHON, Load Sense
11		237-6014		1	JOINT THORIQUE, 14-1, 90 Duro, 1.048" ID x .118" Thk
12		87437905		1	RESSORT DE MAINTIEN, Spool Spring, 100 psi
13		87437906		1	RESSORT DE MAINTIEN, Spool Spring, 50 psi
14		87437914		1	TIROIR, Priority Valve Spool
16		218-5213		1	BOUCHON, Hex Soc, 1 3/16"-12 ORB, Incl. Ref 17
17		237-6014		1	JOINT THORIQUE, 14-1, 90 Duro, 1.048" ID x .118" Thk

DISTRIBUTEUR - COMMANDE DU CHARGEUR, DEUX TIROIRS

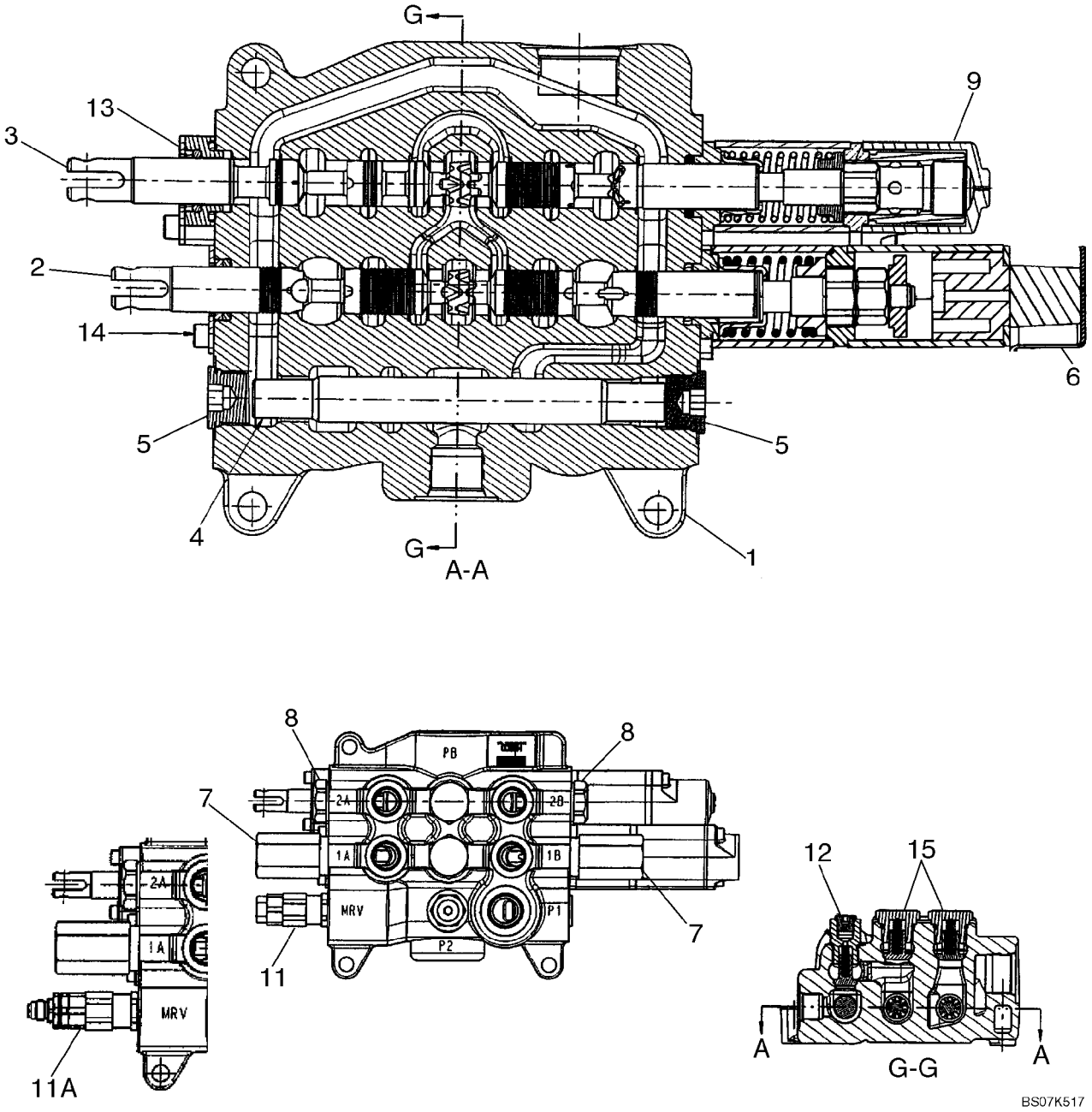

DISTRIBUTEUR - COMMANDE DU CHARGEUR, DEUX TIROIRS

REF	FN	PART NUMBER	YR/SN	QTY	DESCRIPTION
		87351494		1	SOUPAPE HYDRAULIQUE, Two Spool Loader Valve, Used On Models Without Pilot Controls; Incl. Ref 1 - 11, 12 - 15
		87351498		1	SOUPAPE HYDRAULIQUE, Two Spool Loader Valve, Used On Models With Pilot Controls; Incl. Ref 1 - 9, 11A - 15
1		NSS		1	NON FOURNI SEPAREMENT, HOUSING
2		NSS		1	NON FOURNI SEPAREMENT, SPOOL, Bucket
3		NSS		1	NON FOURNI SEPAREMENT, SPOOL, Lift
4		NSS		1	NON FOURNI SEPAREMENT, SPOOL
5		87426233		2	BOUCHON, 7/8 - 14 NF Plug, Includes Serviceable (1) 87455974 O-Ring
6		87515955		1	D£TENTE, Magnetic Detent Kit, Bucket; Some Component Parts Not Serviced Separately; Serviceable Includes (1) 87454547 O-Ring, (1) 87515957 Magnet, (2) 87310278 Screw
7		87450978		2	SOUPAPE, D£CHARGE, Component Parts Not Serviced Separately; Serviceable Includes (1) 87455549 Seal Kit
8		81868381		2	SOUPAPE ANTI RETOUR, Load Check Valve, Anti-Void; Component Parts Not Serviced Separately; Includes Serviceable 87455580 Seal Kit
9		87426227		1	D£TENTE, Manual Detent Assembly, Lift; Some Component Parts Not Serviced Separately; Serviceable Includes (1) 87454547 O-Ring, (2) 87310275 Screw, (4) 87310276 Ball Bearing
11		87426717		1	SOUPAPE, D£CHARGE, Main Relief Valve Assembly, Single Stage; 87351494 Loader Valve, Models Without Pilot Controls; Component Parts Not Serviced Separately; Includes Serviceable 87455551 Seal Kit

DISTRIBUTEUR - COMMANDE DU CHARGEUR, DEUX TIROIRS

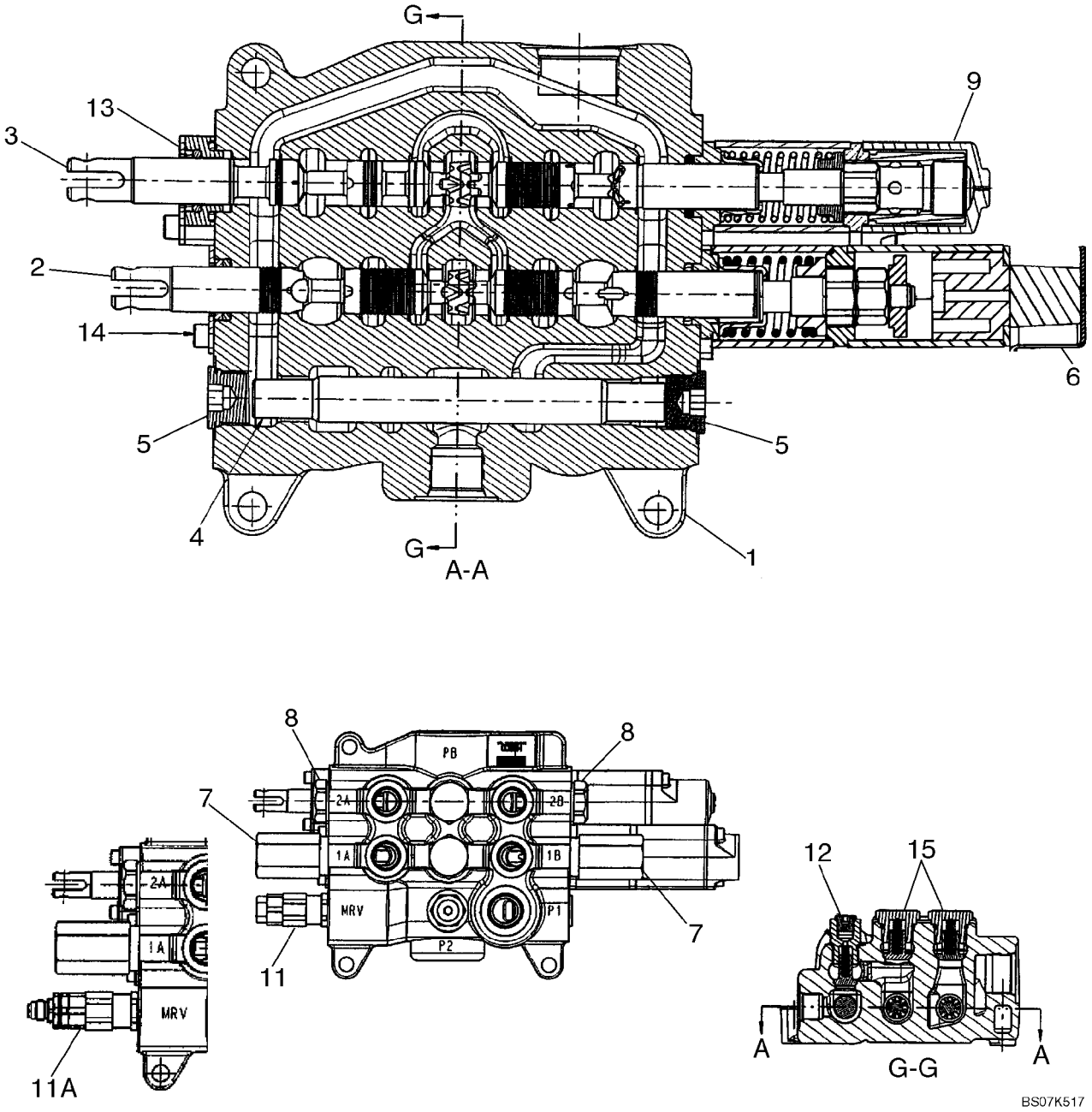

DISTRIBUTEUR - COMMANDE DU CHARGEUR, DEUX TIROIRS

REF	FN	PART NUMBER	YR/SN	QTY	DESCRIPTION
11A		87426235		1	SOUPAPE, D£CHARGE, Main Relief Valve Assembly, Two Stage; 87351498 Loader Valve, Models With Pilot Controls; Component Parts Not Serviced Separately; Includes Serviceable 87455550 Seal Kit
12		87426716		1	SOUPAPE ANTI RETOUR, Check Valve; Some Component Parts Not Serviced Separately; Serviceable Includes (1) 87455974 O-Ring, (1) 87309001 O-Ring, (1) 87446002 Poppet, (1) 87446003 Spring
13		87440815		1	PLAQUE (ASSEMBLEE), Lift Spool Plate and Seal Assembly; Some Component Parts Not Serviced Separately; Serviceable Includes (1) 87454547 O-Ring, (1) 87454548 Seal, (1) 87455538 O-Ring, (2) 87455534 Screw
14		87440814		1	PLAQUE (ASSEMBLEE), Bucket Spool Plate and Seal Assembly; Some Component Parts Not Serviced Separately; Serviceable Includes (1) 87454547 O-Ring, (1) 87454548 Seal, (2) 87455540 Screw
15		87426238		2	SOUPAPE ANTI RETOUR, Check Valve; Some Component Parts Not Serviced Separately; Serviceable Includes (1) 87455975 O-Ring

DISTRIBUTEUR - COMMANDE DU CHARGEUR, TROIS TIROIRS

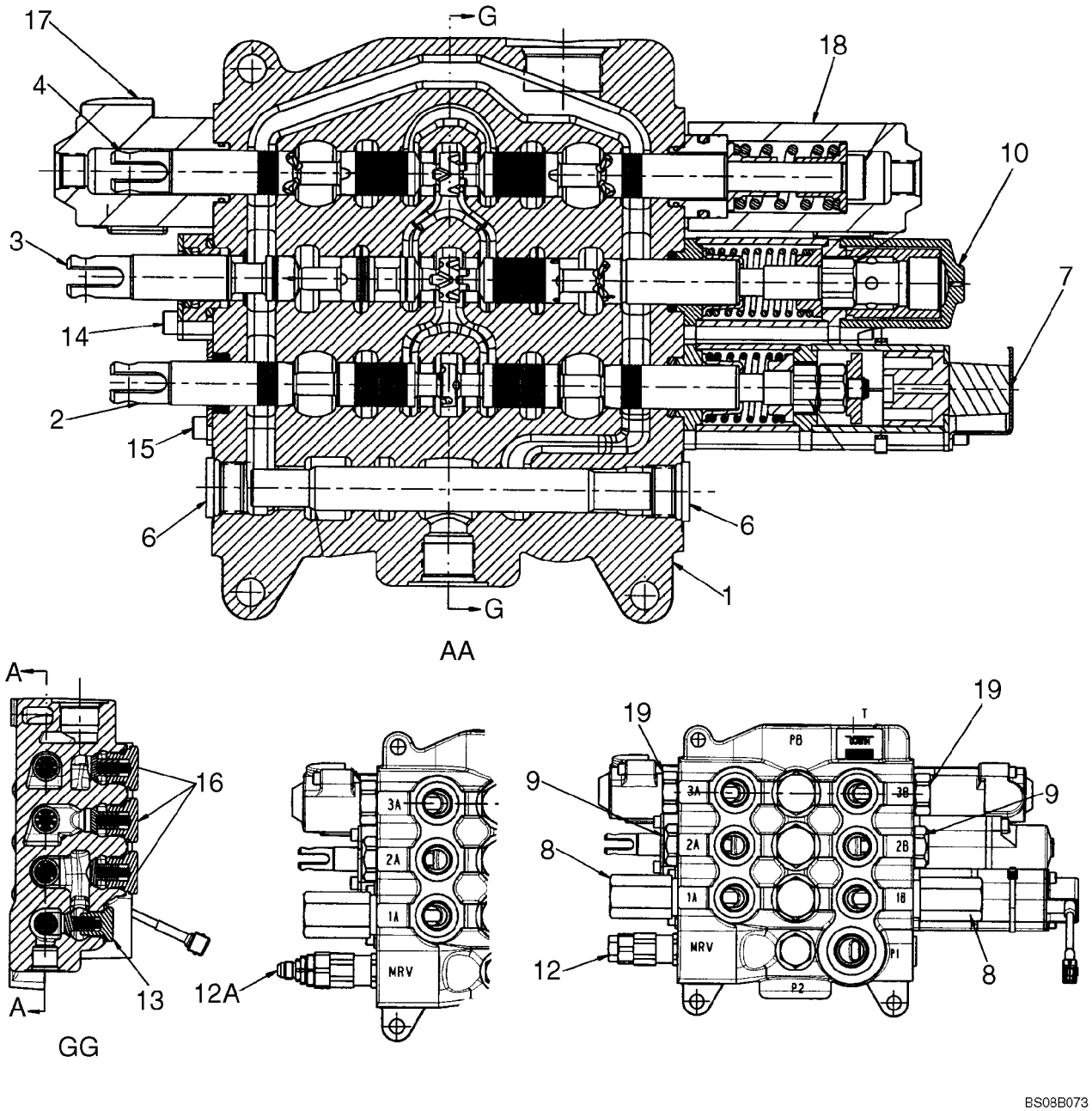

DISTRIBUTEUR - COMMANDE DU CHARGEUR, TROIS TIROIRS

REF	FN	PART NUMBER	YR/SN	QTY	DESCRIPTION
		87593382		1	DISTRIBUTEUR, Three Spool Loader Valve, Used On Models Without Pilot Controls; Component Parts Not Available At Time Of Printing
		87593381		1	DISTRIBUTEUR, Three Spool Loader Valve, Used On Models With Pilot Controls; Component Parts Not Available At Time Of Printing
1		NSS		1	NON FOURNI SEPAREMENT, Housing
2		NSS		1	NON FOURNI SEPAREMENT, Spool, Bucket
3		NSS		1	NON FOURNI SEPAREMENT, Spool, Lift
4		NSS		1	NON FOURNI SEPAREMENT, Spool, Clam
5		NSS		1	NON FOURNI SEPAREMENT, Spool
6		87426233		1	BOUCHON, 7/8 - 14 NF Plug, Serviceable Includes (1) 87455974 O-Ring
7		87515955		1	D£TENTE, Magnetic Detent Kit, Bucket; Included In 87351496 or 87351501 Valve, Some Component Parts Not Serviced Separately; Serviceable Includes (1) 87454547 O-Ring, (1) 87515957 Magnet, (2) 87310278 Screw
8		87450978		2	SOUPAPE, D£CHARGE, Relief Valve Assembly; Some Component Parts Not Serviced Separately; Includes Serviceable 87455549 Seal Kit
9		81868381		2	SOUPAPE ANTI RETOUR, Load Check Valve, Anti-Void; Component Parts Not Serviced Separately; Includes Serviceable 87455580 Seal Kit
10		87426227		1	D£TENTE, Manual Detent Assembly, Lift; Some Component Parts Not Serviced Separately; Serviceable Includes (1) 87454547 O-Ring, (2) 87310275 Screw, (4) 87310276 Ball Bearing
12		87426717		1	SOUPAPE, D£CHARGE, Main Relief Valve Assembly, Single Stage; 87434767 or 87351496Loader Valve, Models Without Pilot Controls; Component Parts Not Serviced Separately; Includes Serviceable 87455551 Seal Kit

DISTRIBUTEUR - COMMANDE DU CHARGEUR, TROIS TIROIRS

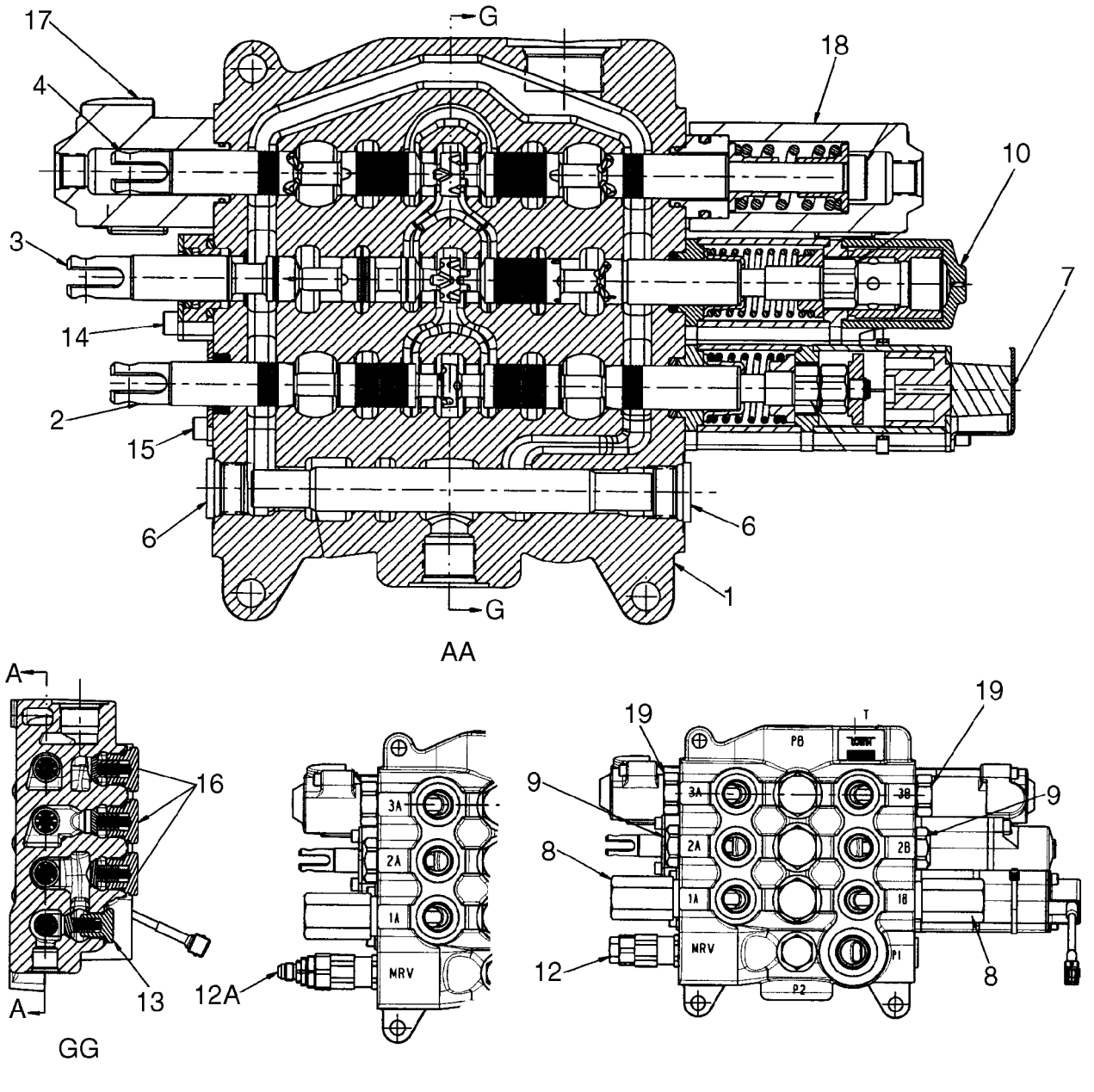

DISTRIBUTEUR - COMMANDE DU CHARGEUR, TROIS TIROIRS

REF	FN	PART NUMBER	YR/SN	QTY	DESCRIPTION
12A		87426235		1	SOUPAPE, D£CHARGE, Main Relief Valve Assembly, Two Stage; 87434769 or 87351501 Loader Valve, Models With Pilot Controls; Component Parts Not Serviced Separately; Includes Serviceable 87455550 Seal Kit
13		87426716		1	SOUPAPE ANTI RETOUR, Some Component Parts Not Serviced Separately; Serviceable Includes (1) 87455974 O-Ring, (1) 87309001 O-Ring, (1) 87446002 Poppet, (1) 87446003 Spring
14		87440815		1	PLAQUE (ASSEMBLEE), Lift Spool Plate and Seal Assembly; Some Component Parts Not Serviced Separately; Serviceable Includes (1) 87454547 O-Ring, (1) 87454548 Seal, (1) 87455538 O-Ring, (2) 87455534 Screw
15		87440814		2	PLAQUE (ASSEMBLEE), Bucket and Clam Spool Plate and Seal Assembly; Some Component Parts Not Serviced Separately; Serviceable Includes (1) 87454547 O-Ring, (1) 87454548 Seal, (2) 87455540 Screw
16		87426238		3	SOUPAPE ANTI RETOUR, Component Parts Not Serviced Separately; Includes Serviceable 87455975 O-Ring
17		{87757931}		1	End Cap; Clam Spool; Component Parts Not Available At Time Of Printing
18		{87757932}		1	End Cap; Clam Spool; Component Parts Not Available At Time Of Printing
19		83981068		2	BOUCHON DE FERMETUREE, Shut-Off Plug Assembly Includes Seal; Component Parts Not Serviced Separately

DISTRIBUTEUR - COMMANDE DE LA PELLE RETRO, 6 TIROIRS (SANS BALANCIER EXTENSIBLE ET SANS CIRCUIT HYD)

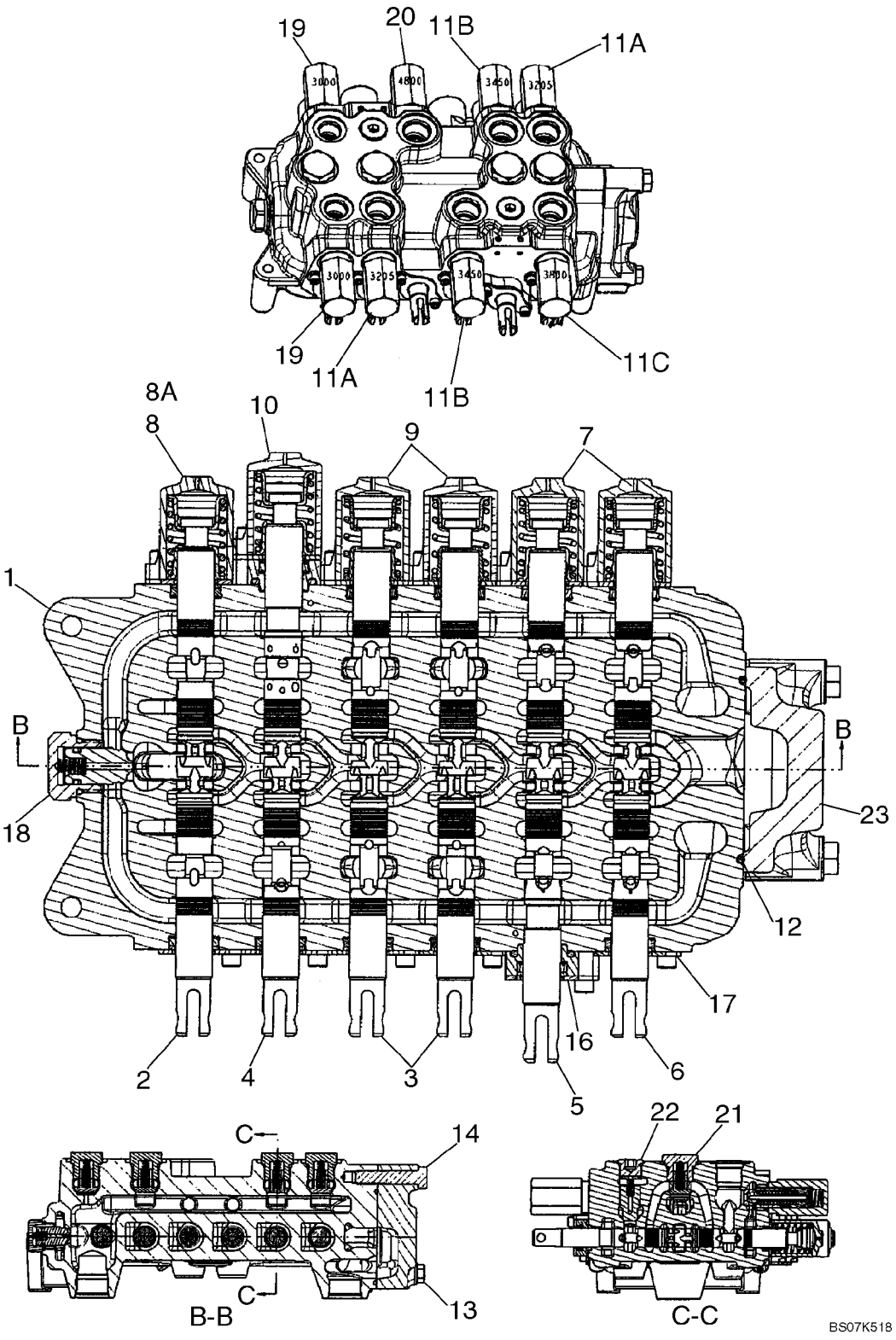

DISTRIBUTEUR - COMMANDE DE LA PELLE RETRO, 6 TIROIRS (SANS BALANCIER EXTENSIBLE ET SANS CIRCUIT HYD)

REF	FN	PART NUMBER	YR/SN	QTY	DESCRIPTION
		REF			NOTICE, MODELS WITHOUT EXTENDABLE DIPPER, WITHOUT AUXILIARY HYDRAULICS, WITHOUT PILOT CONTROLS
		87555499		1	SOUPAPE HYDRAULIQUE, 6 Spool, Foot Swing; Incl. Ref 1 - 8, 9 - 23; If Used
		87555505		1	SOUPAPE HYDRAULIQUE, 6 Spool, Hand Swing; Incl. Ref 1 - 7, 8A, 9 - 23; If Used
1		NSS		1	NON FOURNI SEPAREMENT, HOUSING
2		NSS		1	NON FOURNI SEPAREMENT, SPOOL, SWING
3		NSS		2	NON FOURNI SEPAREMENT, SPOOL, STABILIZER, Right-hand and Left-Hand
4		NSS		1	NON FOURNI SEPAREMENT, SPOOL, BOOM
5		NSS		1	NON FOURNI SEPAREMENT, SPOOL, DIPPER
6		NSS		1	NON FOURNI SEPAREMENT, SPOOL, BUCKET
7		87426241		2	EXTREMITE ASSEMBLEE, Cap Assembly, Bucket and Dipper Spool End; Some Component Parts Not Serviced Separately; Serviceable Includes (1) 87454547 O-Ring, (1) 87454548 Seal, (1) 87444567 Spring, (2) 87455541 Screw
8		87428500		1	EXTREMITE ASSEMBLEE, Cap Assembly, Swing Spool End; 87555499 Foot Swing Valve; Some Component Parts Not Serviced Separately; Serviceable Includes (1) 87454547 O-Ring, (1) 87454548 Seal, (1) 87429151 Centering Spring, (2) 87455541 Screw
8A		87426241		1	EXTREMITE ASSEMBLEE, Cap Assembly, Swing Spool End; 87555505 Hand Swing Valve; Some Component Parts Not Serviced Separately; Serviceable Includes (1) 87454547 O-Ring, (1) 87454548 Seal, (1) 87444567 Spring, (2) 87455541 Screw

DISTRIBUTEUR - COMMANDE DE LA PELLE RETRO, 6 TIROIRS (SANS BALANCIER EXTENSIBLE ET SANS CIRCUIT HYD)

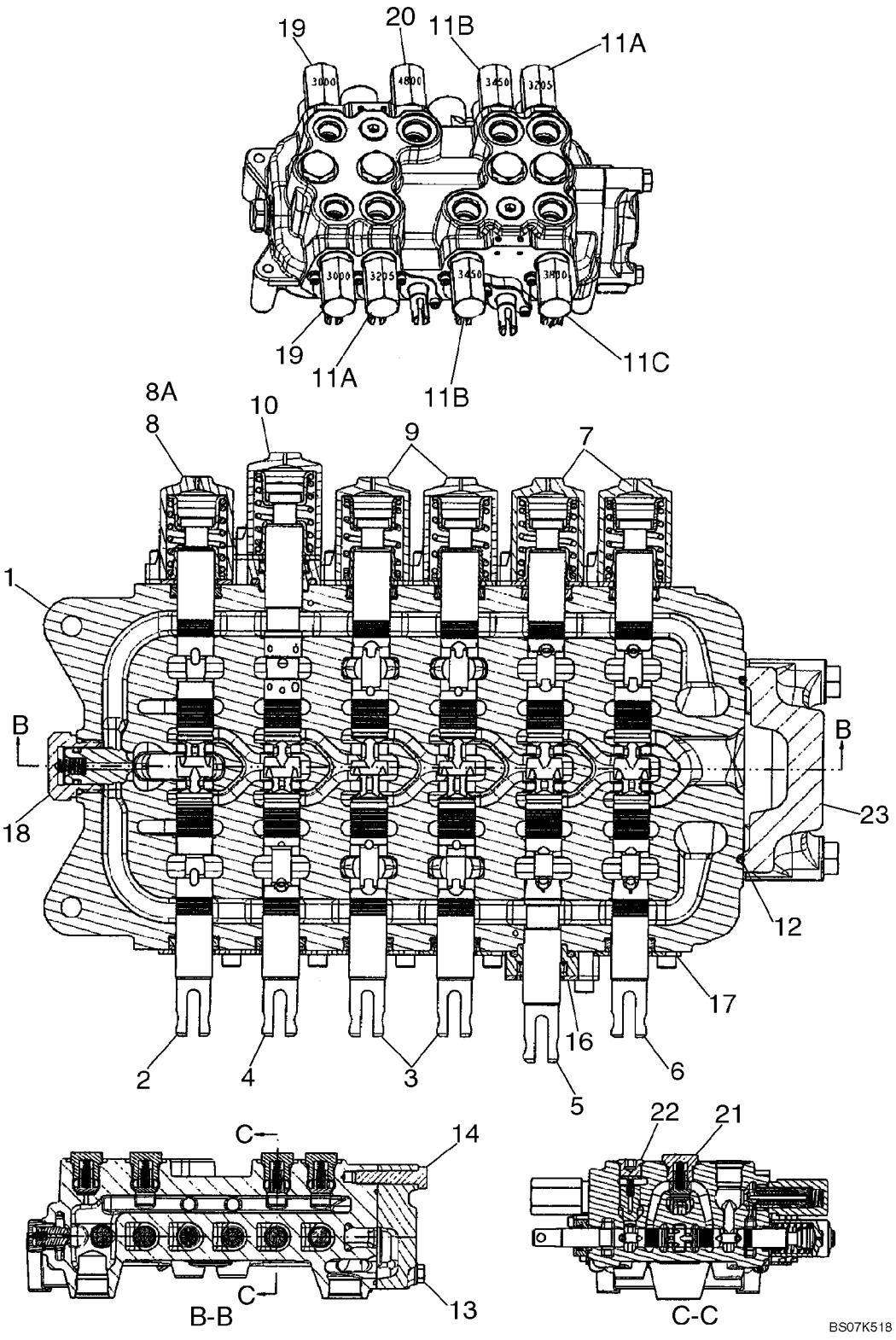

DISTRIBUTEUR - COMMANDE DE LA PELLE RETRO, 6 TIROIRS (SANS BALANCIER EXTENSIBLE ET SANS CIRCUIT HYD)

REF	FN	PART NUMBER	YR/SN	QTY	DESCRIPTION
9		87428497		2	EXTREMITE ASSEMBLEE, Cap Assembly, Stabilizer Spool Ends; Some Component Parts Not Serviced Separately; Serviceable Includes (1) 87454547 O-Rings, (1) 87454548 Seal, (1) 87455533 Spring, (2) 87455541 Screw
10		87433029		1	EXTREMITE ASSEMBLEE, Cap Assembly, Boom Spool End; Some Component Parts Not Serviced Separately; Serviceable Includes (1) 87454547 O-Ring, (1) 87454548 Seal, (1) 87444567 Spring, (1) 87455538 O-Ring, (2) 87455545 Screw
11A		87450978		2	SOUPAPE, D£CHARGE, Circuit; 3205 psi; Component Parts Not Serviced Separately; Includes 87455549 Seal Kit
11B		87450979		2	SOUPAPE, D£CHARGE, Circuit; 3450 psi; Component Parts Not Serviced Separately; Includes 87455549 Seal Kit
11C		87450980		1	SOUPAPE, D£CHARGE, Circuit; 3800 psi; Component Parts Not Serviced Separately; Includes 87455549 Seal Kit
12		87428495		1	JOINT THORIQUE, O-Ring Seal, Outlet Section
13		87428491		2	VIS, Bolt
14		87428492		1	VIS, Bolt
16		87440815		1	PLAQUE (ASSEMBLEE), Seal Plate Assembly, Dipper Spool; Some Component Parts Not Serviced Separately; Serviceable Includes (1) 87454547 O-Ring, (1) 87454548 Seal, (1) 87455538 O-Ring, (2) 87455534 Screw
17		87440814		5	PLAQUE (ASSEMBLEE), Seal Plate Assembly; Some Component Parts Not Serviced Separately; Serviceable Includes (1) 87454547 O-Ring, (1) 87454548 Seal, (2) 87455540 Screw
18		81868381		1	SOUPAPE ANTI RETOUR, Anti-Void Valve; Component Parts Not Serviced Separately; Includes 87455580 Seal Kit

DISTRIBUTEUR - COMMANDE DE LA PELLE RETRO, 6 TIROIRS (SANS BALANCIER EXTENSIBLE ET SANS CIRCUIT HYD)

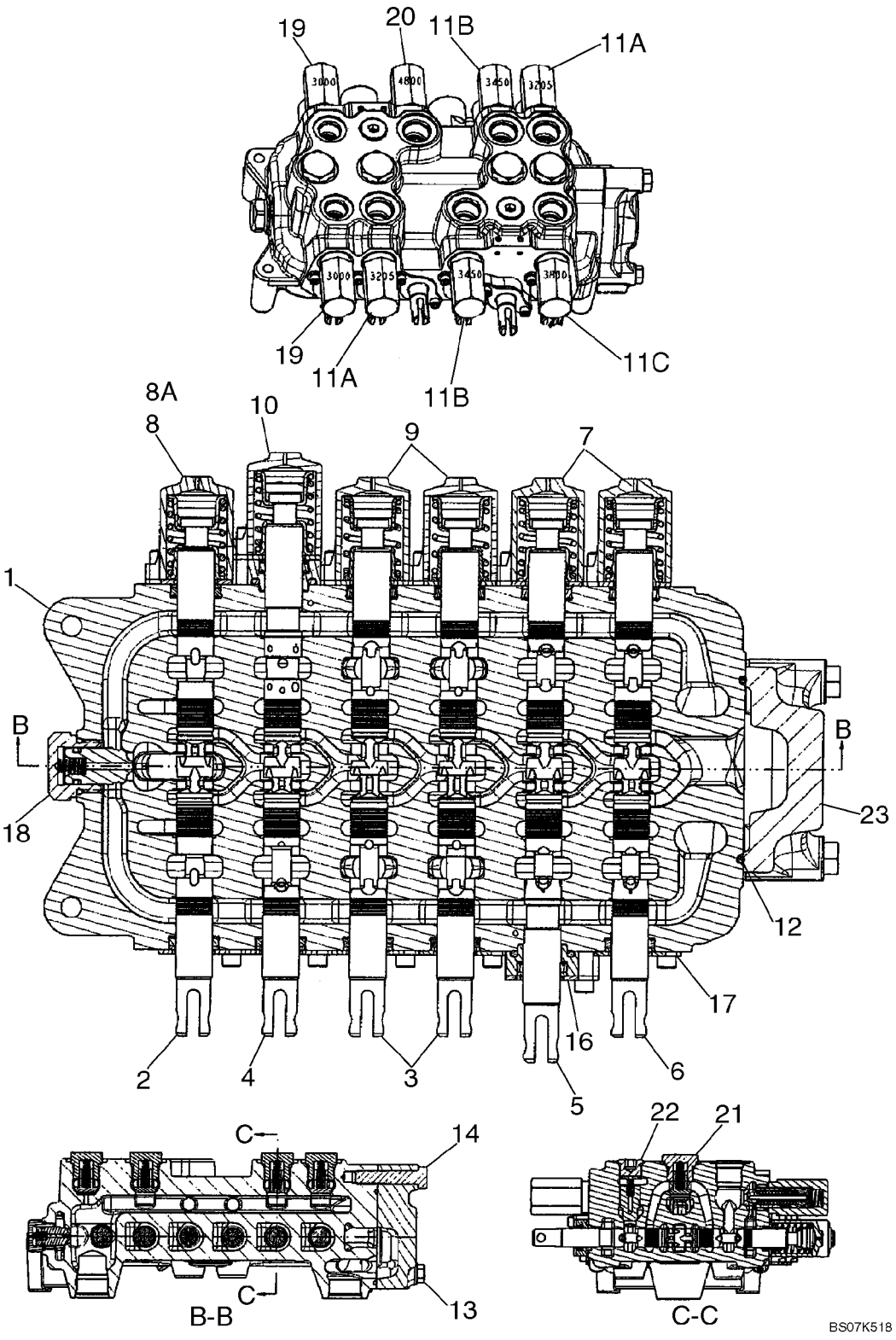

DISTRIBUTEUR - COMMANDE DE LA PELLE RETRO, 6 TIROIRS (SANS BALANCIER EXTENSIBLE ET SANS CIRCUIT HYD)

REF	FN	PART NUMBER	YR/SN	QTY	DESCRIPTION
19		87428490		2	SOUPAPE, D£CHARGE, Relief Valve Assembly; 3000 psi; Component Parts Not Serviced Separately; Includes 87455549 Seal Kit
20		87566237		1	SOUPAPE, D£CHARGE, Relief Valve Assembly; 4800 psi; Component Parts Not Serviced Separately; Includes 87455549 Seal Kit
21		87426238		4	SOUPAPE ANTI RETOUR, Check Valve Assembly; Hex Head; Component Parts Not Serviced Separately; Includes (1) 87455975 O-Ring
22		87428486		2	SOUPAPE ANTI RETOUR, Check Valve Assembly; Hex Socket Head; Component Parts Not Serviced Separately; Includes (1) 87455974 O-Ring
23		87433030		1	ELEMENT DISTR HYDR, Outlet Section Assembly; Component Parts Not Serviced Separately

DISTRIBUTEUR - COMMANDE DE LA PELLE RETRO, 7 TIROIRS (SANS BALANCIER EXTENSIBLE ET AVEC CIRCUIT HYD)

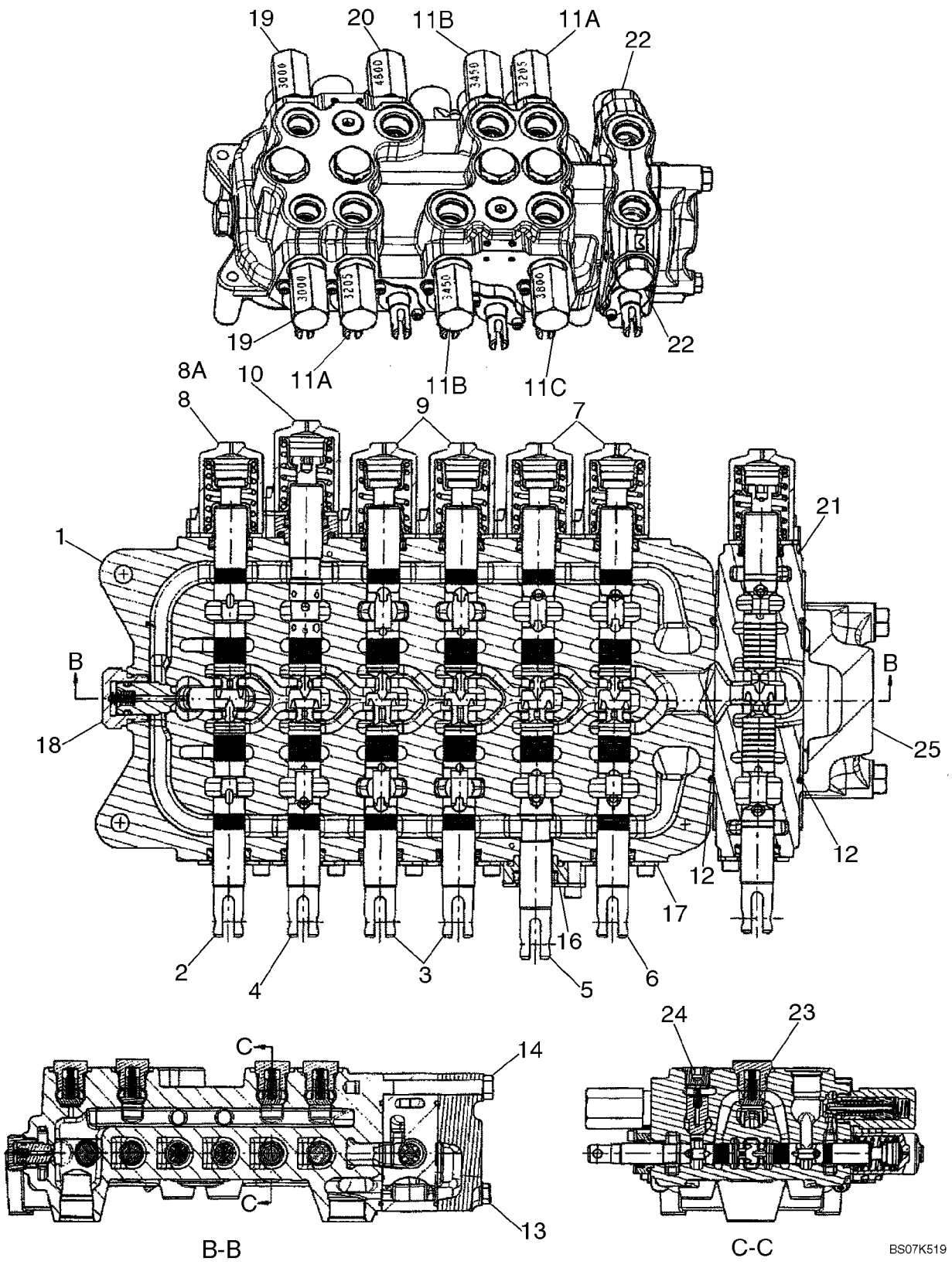

DISTRIBUTEUR - COMMANDE DE LA PELLE RETRO, 7 TIROIRS (SANS BALANCIER EXTENSIBLE ET AVEC CIRCUIT HYD)

REF	FN	PART NUMBER	YR/SN	QTY	DESCRIPTION
		REF			NOTICE, MODELS WITHOUT EXTENDABLE DIPPER, WITH AUXILIARY HYDRAULICS, WITHOUT PILOT CONTROLS
		87555536		1	SOUPAPE HYDRAULIQUE, 7 Spool, Foot Swing; Incl. Ref 1 - 8, 9 - 25; If Used
		87555530		1	SOUPAPE HYDRAULIQUE, 7 Spool, Hand Swing; Incl. Ref 1 - 7, 8A, 9 - 24, 25A; If Used
1		NSS		1	NON FOURNI SEPAREMENT, HOUSING
2		NSS		1	NON FOURNI SEPAREMENT, SPOOL, SWING
3		NSS		2	NON FOURNI SEPAREMENT, SPOOL, STABILIZER, Left-Hand and Right-Hand
4		NSS		1	NON FOURNI SEPAREMENT, SPOOL, BOOM
5		NSS		1	NON FOURNI SEPAREMENT, SPOOL, DIPPER
6		NSS		1	NON FOURNI SEPAREMENT, SPOOL, BUCKET
7		87426241		2	EXTREMITE ASSEMBLEE, Cap Assembly, Bucket and Dipper Spool End; Some Component Parts Not Serviced Separately; Serviceable Includes (1) 87454547 O-Ring, (1) 87454548 Seal, (1) 87444567 Spring, (2) 87455541 Screw
8		87428500		1	EXTREMITE ASSEMBLEE, Cap Assembly, Swing Spool End; 87555536 Foot Swing Valve; Some Component Parts Not Serviced Separately; Serviceable Includes (1) 87454547 O-Ring, (1) 87454548 Seal, (1) 87429151 Centering Spring, (2) 87455541 Screw
8A		87426241		1	EXTREMITE ASSEMBLEE, Cap Assembly, Swing Spool End; 87555530 Hand Swing Valve; Some Component Parts Not Serviced Separately; Serviceable Includes (1) 87454547 O-Ring, (1) 87454548 Seal, (1) 87444567 Spring, (2) 87455541 Screw

DISTRIBUTEUR - COMMANDE DE LA PELLE RETRO, 7 TIROIRS (SANS BALANCIER EXTENSIBLE ET AVEC CIRCUIT HYD)

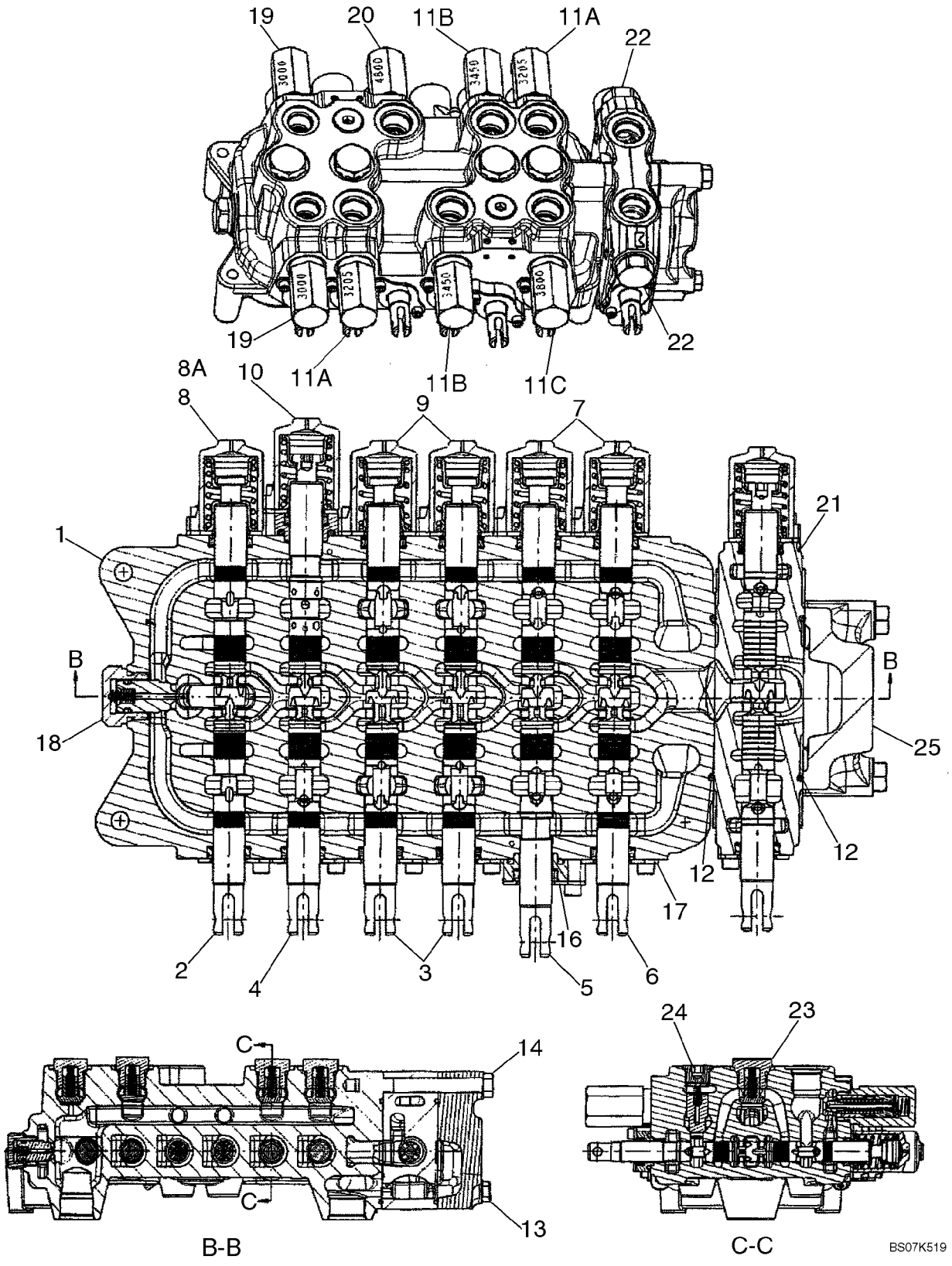

DISTRIBUTEUR - COMMANDE DE LA PELLE RETRO, 7 TIROIRS (SANS BALANCIER EXTENSIBLE ET AVEC CIRCUIT HYD)

REF	FN	PART NUMBER	YR/SN	QTY	DESCRIPTION
9		87428497		2	EXTREMITE ASSEMBLEE, Cap Assembly, Stabilizer Spool Ends; Some Component Parts Not Serviced Separately; Serviceable Includes (2) 87454547 O-Ring, (1) 87454548 Seal, (1) 87455533 Spring, (2) 87455541 Screw
10		87433029		1	EXTREMITE ASSEMBLEE, Cap Assembly, Boom Spool End; Some Component Parts Not Serviced Separately; Serviceable Includes (1) 87454547 O-Ring, (1) 87454548 Seal, (1) 87444567 Spring, (1) 87455538 O-Ring, (2) 87455545 Screw
11A		87450978		2	SOUPAPE, D£CHARGE, Circuit; 3205 psi; Component Parts Not Serviced Separately; Includes 87455549 Seal Kit
11B		87450979		2	SOUPAPE, D£CHARGE, Circuit; 3450 psi; Component Parts Not Serviced Separately; Includes 87455549 Seal Kit
11C		87450980		1	SOUPAPE, D£CHARGE, Circuit; 3800 psi; Component Parts Not Serviced Separately; Includes 87455549 Seal Kit
12		87428495		2	JOINT THORIQUE, Auxiliary/Outlet Section
13		87428476		2	VIS
14		87428477		1	VIS
16		87440815		1	PLAQUE (ASSEMBLEE), Seal, Dipper Spool; Some Component Parts Not Serviced Separately; Serviceable Includes (1) 87454547 O-Ring, (1) 87454548 Seal, (1) 87455538 O-Ring, (2) 87455534 Screw
17		87440814		5	PLAQUE (ASSEMBLEE), Seal; Some Component Parts Not Serviced Separately; Serviceable Includes (1) 87454547 O-Ring, (1) 87454548 Seal, (2) 87455540 Screw
18		81868381		1	SOUPAPE ANTI RETOUR, Anti-Void Valve; Component Parts Not Serviced Separately; Includes 87455580 Seal Kit

DISTRIBUTEUR - COMMANDE DE LA PELLE RETRO, 7 TIROIRS (SANS BALANCIER EXTENSIBLE ET AVEC CIRCUIT HYD)

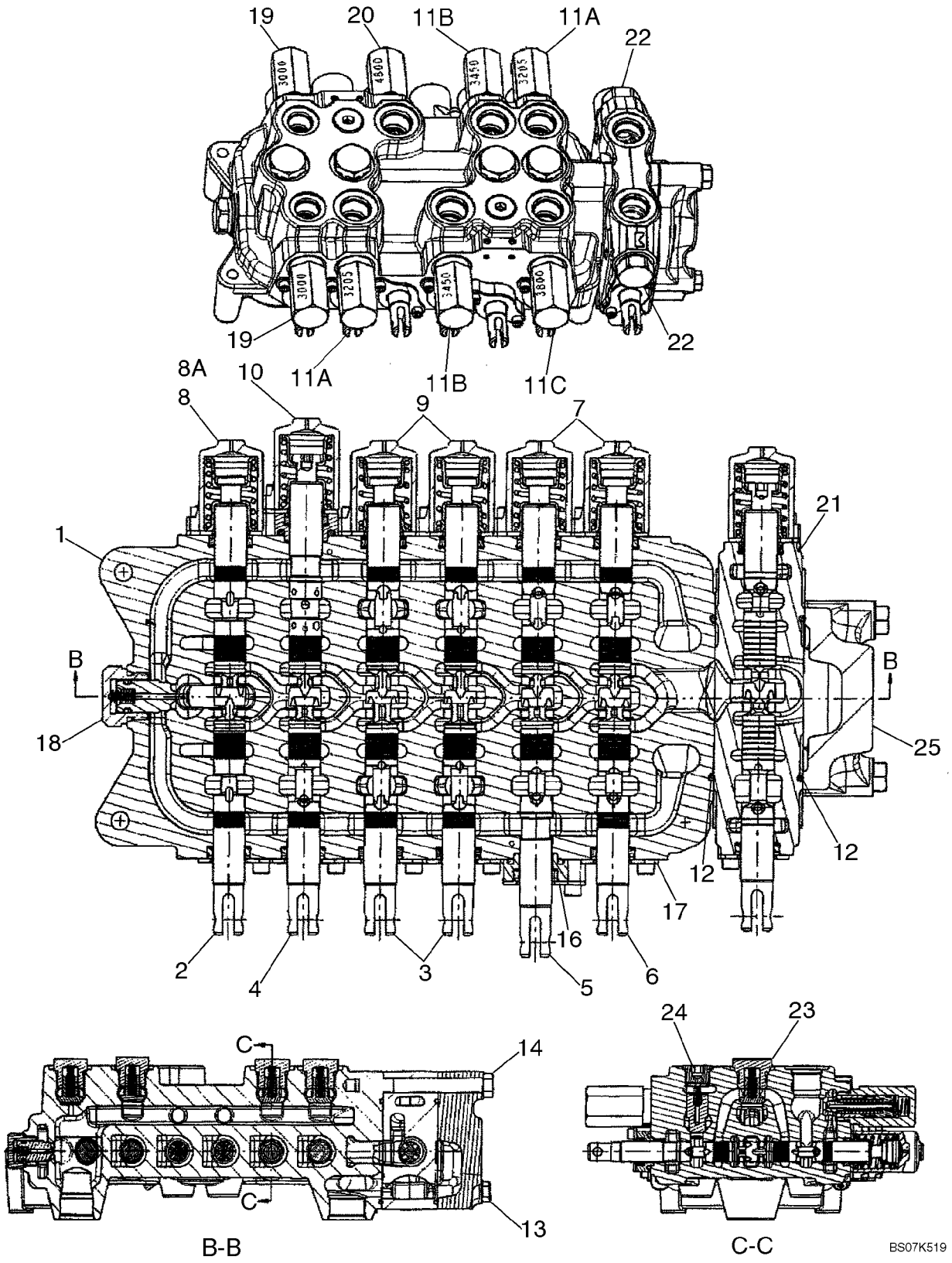

DISTRIBUTEUR - COMMANDE DE LA PELLE RETRO, 7 TIROIRS (SANS BALANCIER EXTENSIBLE ET AVEC CIRCUIT HYD)

REF	FN	PART NUMBER	YR/SN	QTY	DESCRIPTION
19		87428490		2	SOUPAPE, D£CHARGE, 3000 psi; Component Parts Not Serviced Separately; Includes 87455549 Seal Kit
20		87566237		1	SOUPAPE, D£CHARGE, 4800 psi; Component Parts Not Serviced Separately; Includes 87455549 Seal Kit
21		87428501		1	ELEMENT DISTR HYDR, Spool Section Assembly; Auxiliary Hydraulics; Incl. Ref 21A - 21I, Which Are Not Illustrated; Remainder Component Parts Not Serviced Separately
21A		87433028		1	EXTREMITE ASSEMBLEE, Spool; Incl. Ref 21B - 21E, Which Are Not Illustrated; Remainder Components Not Serviced Separately
21B		87454547		1	JOINT THORIQUE
21C		87454548		1	JOINT, Wiper
21D		87429150		1	RESSORT, SOUPAPE
21E		87455541		2	VIS
21F		87428495		1	JOINT THORIQUE
21G		87455564		1	CLAPET, Load Check
21H		87455565		1	RESSORT, SOUPAPE, Load Check
21I		83981068		2	BOUCHON DE FERMETUREE
22		83981068		2	BOUCHON DE FERMETUREE, Component Parts Not Serviced Separately; Now Included With Ref 21
23		87426238		4	SOUPAPE ANTI RETOUR, Hex Head; Component Parts Not Serviced Separately; Includes (1) 87455975 O-Ring
24		87428486		2	SOUPAPE ANTI RETOUR, Hex Socket Head; Component Parts Not Serviced Separately; Includes (1) 87455974 O-Ring
25		87433030		1	ELEMENT DISTR HYDR, Outlet Section Assembly; Component Parts Not Serviced Separately

DISTRIBUTEUR - COMMANDE DE LA PELLE RETRO, 7 TIROIRS (AVEC BALANCIER EXTENSIBLE ET SANS CIRCUIT HYD)

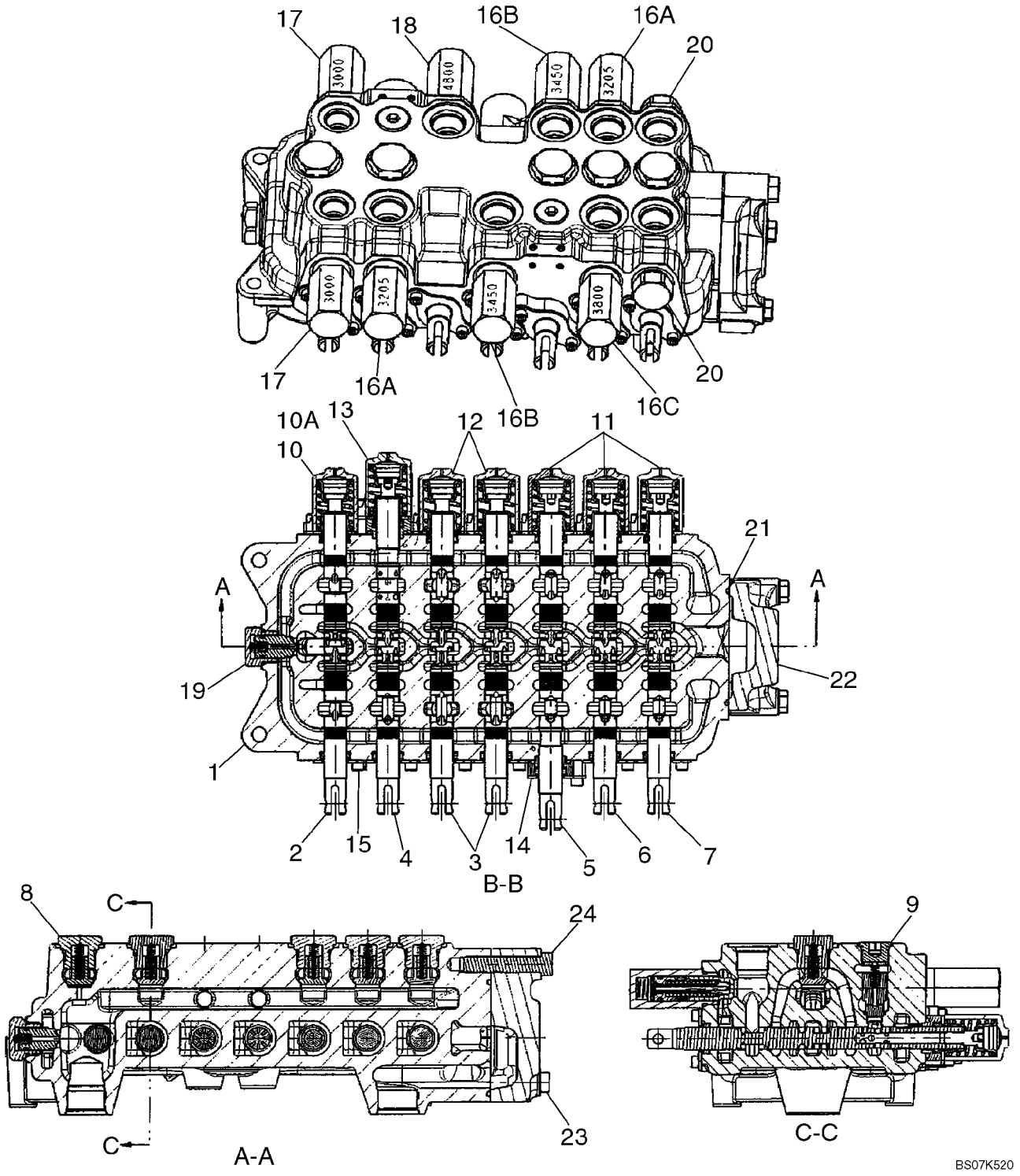

DISTRIBUTEUR - COMMANDE DE LA PELLE RETRO, 7 TIROIRS (AVEC BALANCIER EXTENSIBLE ET SANS CIRCUIT HYD)

REF	FN	PART NUMBER	YR/SN	QTY	DESCRIPTION
		REF			NOTICE, MODELS WITH EXTENDABLE DIPPER, WITHOUT AUXILIARY HYDRAULICS, WITHOUT PILOT CONTROLS
		87555524		1	SOUPAPE HYDRAULIQUE, 7 Spool, Foot Swing; Incl. Ref 1 - 10, 11 - 24; If Used
		87555519		1	SOUPAPE HYDRAULIQUE, 7 Spool, Hand Swing; Incl. Ref 1 - 9, 10A, 11 - 24; If Used
1		NSS		1	NON FOURNI SEPAREMENT, HOUSING
2		NSS		1	NON FOURNI SEPAREMENT, SPOOL, SWING
3		NSS		2	NON FOURNI SEPAREMENT, SPOOL, STABILIZER, Right-Hand and Left-Hand
4		NSS		1	NON FOURNI SEPAREMENT, SPOOL, BOOM
5		NSS		1	NON FOURNI SEPAREMENT, SPOOL, DIPPER
6		NSS		1	NON FOURNI SEPAREMENT, SPOOL, BUCKET
7		NSS		1	NON FOURNI SEPAREMENT, SPOOL, EXTENDABLE DIPPER
8		87426238		5	SOUPAPE ANTI RETOUR, Hex Head; Component Parts Not Serviced Separately; Includes (1) 87455975 O-Ring
9		87428486		2	SOUPAPE ANTI RETOUR, Hex Socket Head; Component Parts Not Serviced Separately; Includes (1) 87455974 O-Ring
10		87428500		1	EXTREMITE ASSEMBLEE, Cap Assembly, Swing Spool End; 87555524 Foot Swing Valve; Some Component Parts Not Serviced Separately; Serviceable Includes (1) 87454547 O-Ring, (1) 87454548 Seal, (1) 87429151 Centering Spring, (2)
10A		87426241		1	EXTREMITE ASSEMBLEE, Cap Assembly, Swing Spool End; 87555519 Hand Swing Valve; Some Component Parts Not Serviced Separately; Serviceable Includes (1) 87454547 O-Ring, (1) 87454548 Seal, (1) 87444567 Spring, (2) 87455541 Screw

DISTRIBUTEUR - COMMANDE DE LA PELLE RETRO, 7 TIROIRS (AVEC BALANCIER EXTENSIBLE ET SANS CIRCUIT HYD)

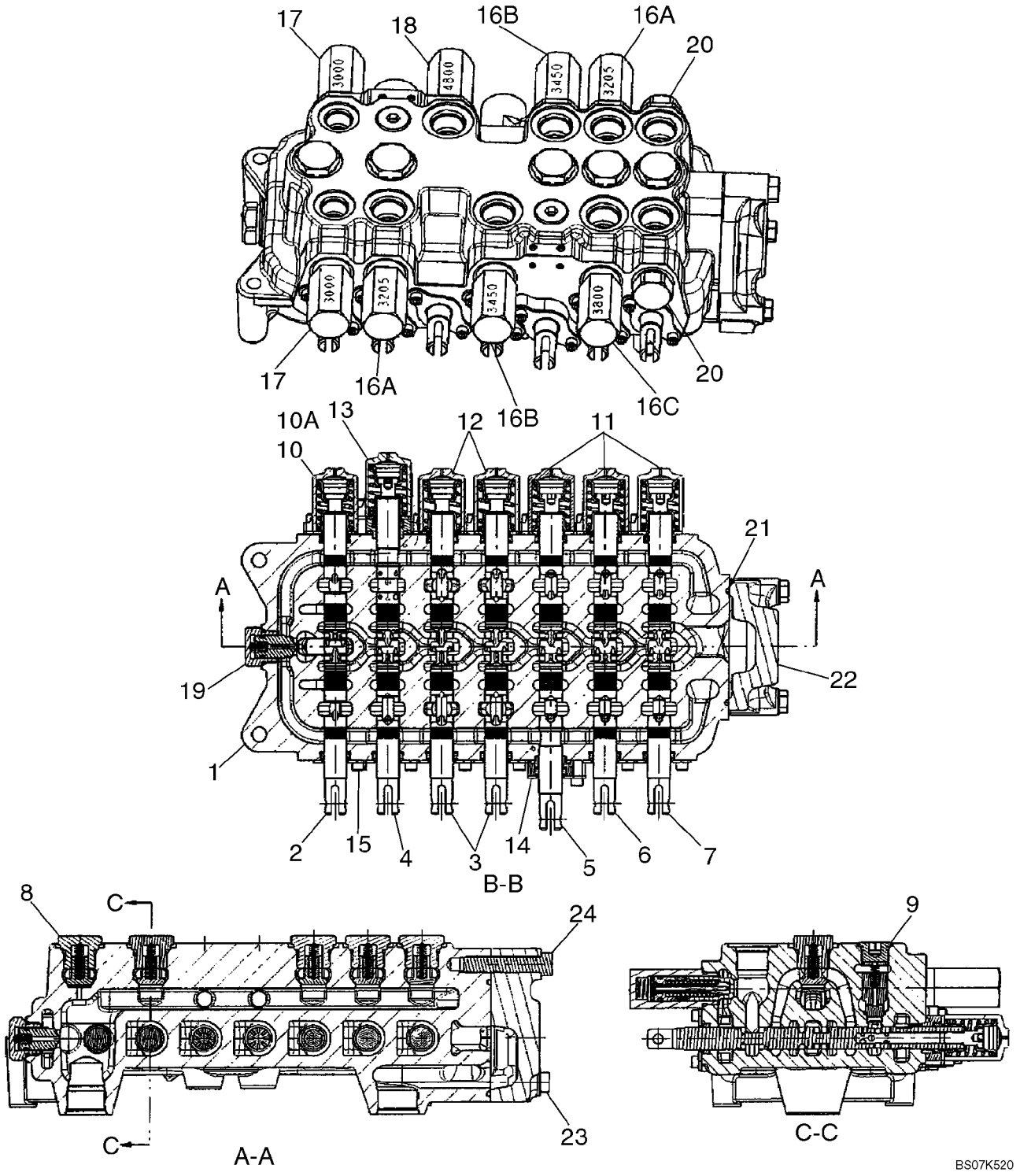

DISTRIBUTEUR - COMMANDE DE LA PELLE RETRO, 7 TIROIRS (AVEC BALANCIER EXTENSIBLE ET SANS CIRCUIT HYD)

REF	FN	PART NUMBER	YR/SN	QTY	DESCRIPTION
11		87426241		3	EXTREMITE ASSEMBLEE, Cap Assembly, Bucket, Dipper, and Extendahoe Spool End; Some Component Parts Not Serviced Separately; Serviceable Includes (1) 87454547 O-Ring, (1) 87454548 Seal, (1) 87444567 Spring, (2) 87455541 Screw
12		87428497		2	EXTREMITE ASSEMBLEE, Cap Assembly, Stabilizer Spool Ends; Some Component Parts Not Serviced Separately; Serviceable Includes (1) 87454547 O-Ring, (1) 87454548 Seal, (1) 87455533 Spring, (2) 87455541 Screw
13		87433029		1	EXTREMITE ASSEMBLEE, Cap Assembly, Boom Spool End; Some Component Parts Not Serviced Separately; Serviceable Includes (1) 87454547 O-Ring, (1) 87454548 Seal, (1) 87444567 Spring, (1) 87455538 O-Ring, (2) 87455545 Screw
14		87440815		1	PLAQUE (ASSEMBLEE), Seal, Dipper Spool; Some Component Parts Not Serviced Separately; Serviceable Includes (1) 87454547 O-Ring, (1) 87454548 Seal, (1) 87455538 O-Ring, (2) 87455534 Screw
15		87440814		6	PLAQUE (ASSEMBLEE), Seal; Some Component Parts Not Serviced Separately; Serviceable Includes (1) 87454547 O-Ring, (1) 87454548 Seal, (2) 87455540 Screw
16A		87450978		2	SOUPAPE, D£CHARGE, Circuit; 3205 psi; Component Parts Not Serviced Separately; Includes 87455549 Seal Kit
16B		87450979		2	SOUPAPE, D£CHARGE, Circuit; 3450 psi; Component Parts Not Serviced Separately; Includes 87455549 Seal Kit
16C		87450980		1	SOUPAPE, D£CHARGE, Circuit; 3800 psi; Component Parts Not Serviced Separately; Includes 87455549 Seal Kit

DISTRIBUTEUR - COMMANDE DE LA PELLE RETRO, 7 TIROIRS (AVEC BALANCIER EXTENSIBLE ET SANS CIRCUIT HYD)

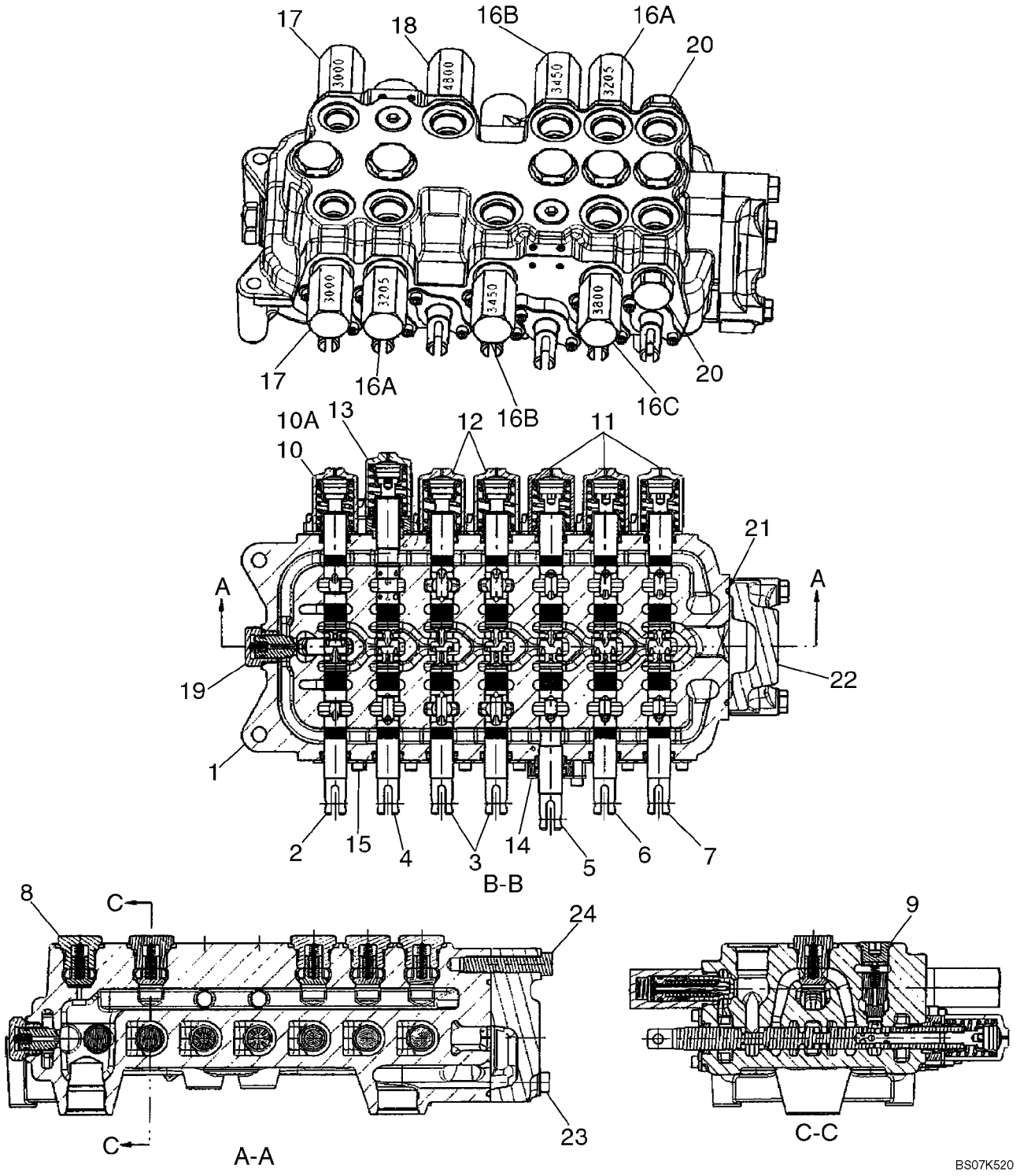

DISTRIBUTEUR - COMMANDE DE LA PELLE RETRO, 7 TIROIRS (AVEC BALANCIER EXTENSIBLE ET SANS CIRCUIT HYD)

REF	FN	PART NUMBER	YR/SN	QTY	DESCRIPTION
17		87428490		2	SOUPAPE, D£CHARGE, 3000 psi; Component Parts Not Serviced Separately; Includes 87455549 Seal Kit
18		87566237		1	SOUPAPE, D£CHARGE, 4800 psi; Component Parts Not Serviced Separately; Includes 87455549 Seal Kit
19		81868381		1	SOUPAPE ANTI RETOUR, Anti-Void Plug; Component Parts Not Serviced Separately; Includes 87455580 Seal Kit
20		83981068		2	BOUCHON DE FERMETUREE, Component Parts Not Serviced Separately
21		87428495		1	JOINT THORIQUE, Outlet Section
22		87433030		1	ELEMENT DISTR HYDR, Outlet Section Assembly; Component Parts Not Serviced Separately
23		87428491		2	VIS
24		87428492		1	VIS

DISTRIBUTEUR - COMMANDE DE LA PELLE RETRO, 8 TIROIRS (AVEC BALANCIER EXTENSIBLE ET SANS CIRCUIT HYD)

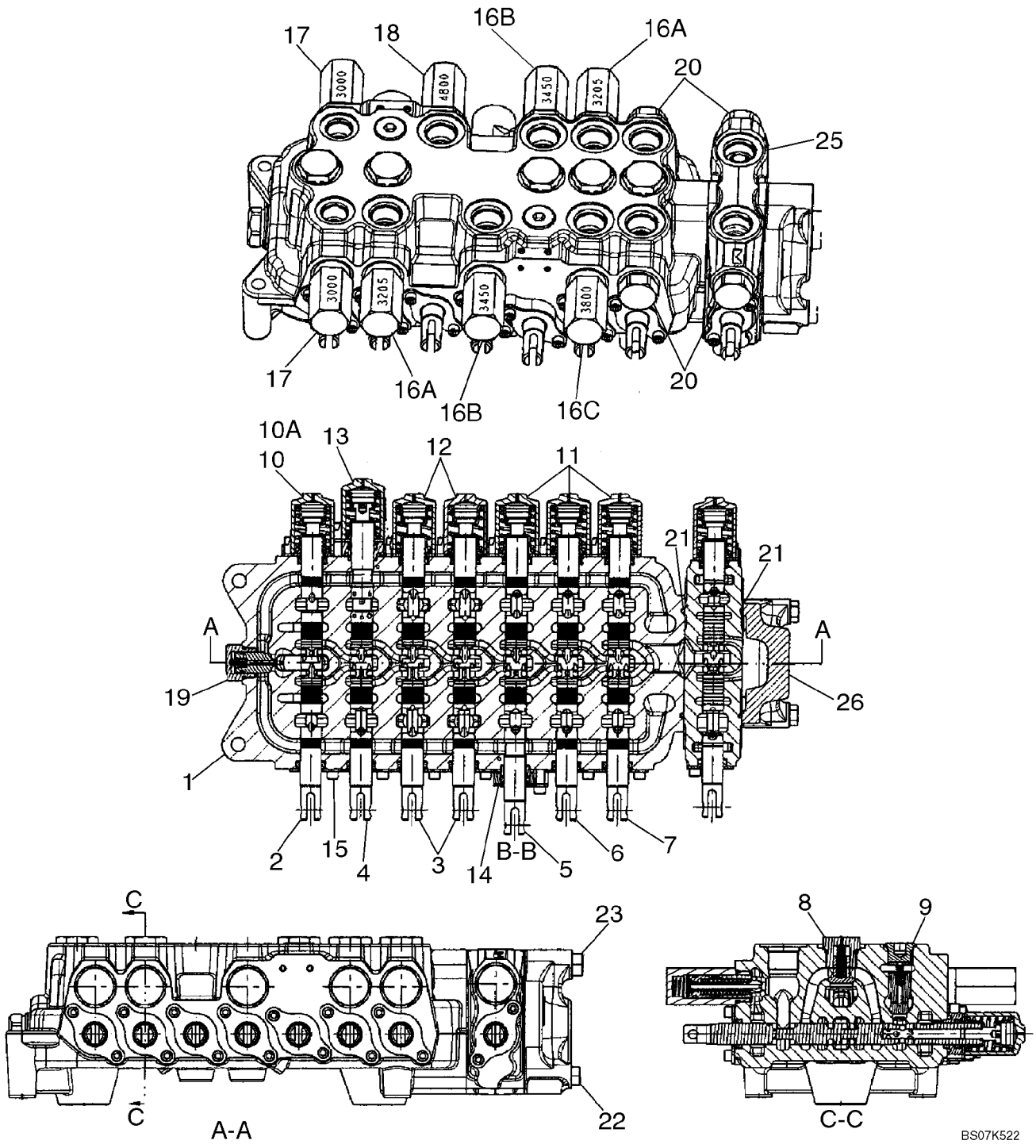

DISTRIBUTEUR - COMMANDE DE LA PELLE RETRO, 8 TIROIRS (AVEC BALANCIER EXTENSIBLE ET SANS CIRCUIT HYD)

REF	FN	PART NUMBER	YR/SN	QTY	DESCRIPTION
		REF			NOTICE, MODELS WITH EXTENDABLE DIPPER, WITH AUXILIARY HYDRAULICS, WITHOUT PILOT CONTROLS
		87555570		1	SOUPAPE HYDRAULIQUE, 8 Spool, Foot Swing; Incl. Ref 1 - 10, 12 - 26; If Used
		87555567		1	SOUPAPE HYDRAULIQUE, 8 Spool, Hand Swing; Incl. Ref 1 - 9, 10A, 11 - 25, 26A; If Used
1		NSS		1	NON FOURNI SEPAREMENT, HOUSING
2		NSS		1	NON FOURNI SEPAREMENT, SPOOL, SWING
3		NSS		2	NON FOURNI SEPAREMENT, SPOOL, STABILIZER, Right-Hand and Left-Hand
4		NSS		1	NON FOURNI SEPAREMENT, SPOOL, BOOM
5		NSS		1	NON FOURNI SEPAREMENT, SPOOL, DIPPER
6		NSS		1	NON FOURNI SEPAREMENT, SPOOL, BUCKET
7		NSS		1	NON FOURNI SEPAREMENT, SPOOL, EXTENDABLE DIPPER
8		87426238		5	SOUPAPE ANTI RETOUR, Hex Head; Component Parts Not Serviced Separately; Includes (1) 87455975 O-Ring
9		87428486		2	SOUPAPE ANTI RETOUR, Hex Socket Head; Component Parts Not Serviced Separately; Includes (1) 87455974 O-Ring
10		87428500		1	EXTREMITE ASSEMBLEE, Cap Assembly, Swing Spool End; 87555570 Foot Swing Valve; Component Parts Not Serviced Separately; Includes 87429151 Centering Spring
10A		87426241		1	EXTREMITE ASSEMBLEE, Cap Assembly, Swing Spool End; 87555567 Hand Swing Valve; Some Component Parts Not Serviced Separately; Serviceable Includes (1) 87454547 O-Ring, (1) 87454548 Seal, (1) 87444567 Spring, (2) 87455541 Screw

DISTRIBUTEUR - COMMANDE DE LA PELLE RETRO, 8 TIROIRS (AVEC BALANCIER EXTENSIBLE ET SANS CIRCUIT HYD)

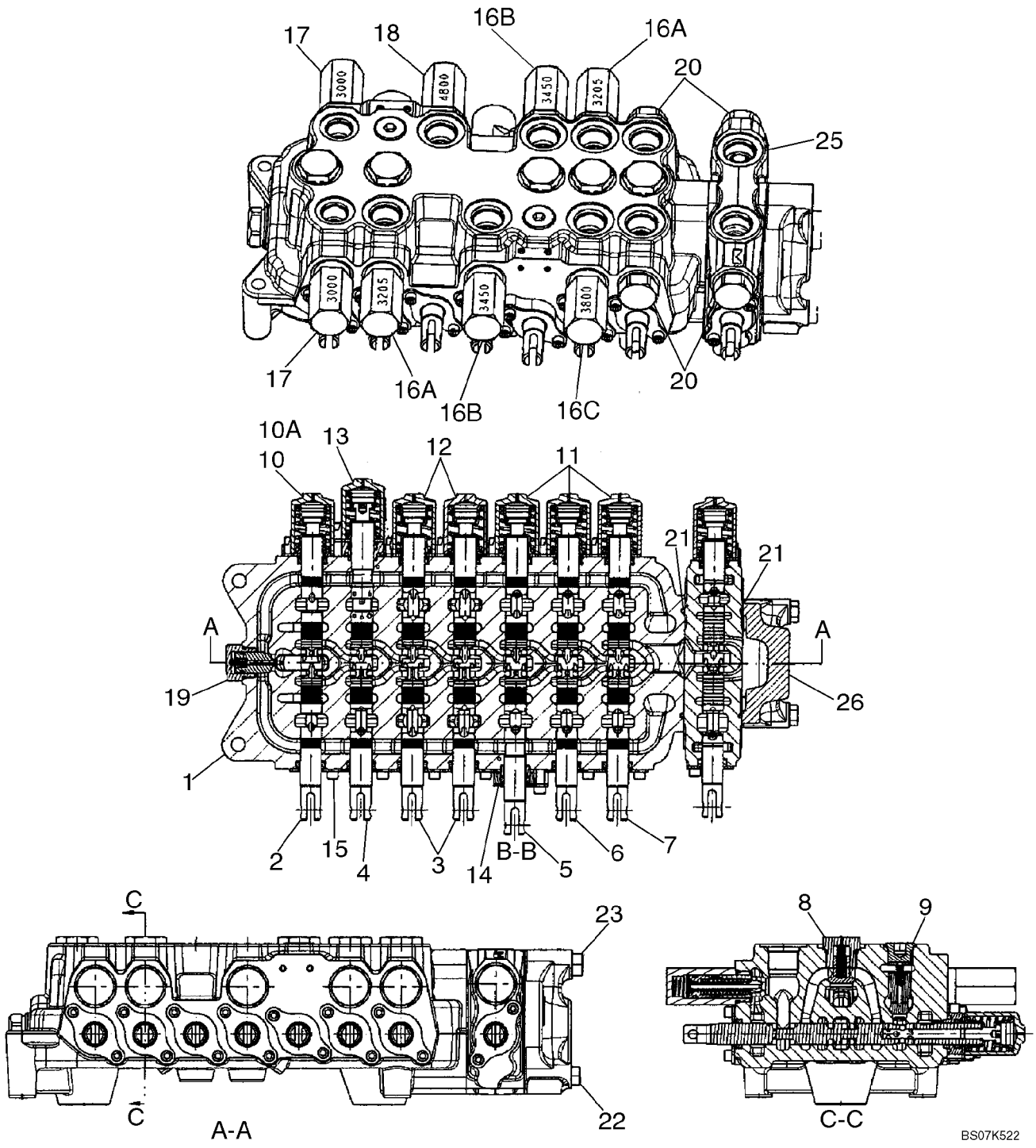

DISTRIBUTEUR - COMMANDE DE LA PELLE RETRO, 8 TIROIRS (AVEC BALANCIER EXTENSIBLE ET SANS CIRCUIT HYD)

REF	FN	PART NUMBER	YR/SN	QTY	DESCRIPTION
11		87426241		3	EXTREMITE ASSEMBLEE, Cap Assembly, Bucket, Dipper and Extendahoe Spool Ends; Some Component Parts Not Serviced Separately; Serviceable Includes (1) 87454547 O-Ring, (1) 87454548 Seal, (1) 87444567 Spring, (2) 87455541 Screw
12		87428497		2	EXTREMITE ASSEMBLEE, Cap Assembly, Stabilizer Spool Ends; Some Component Parts Not Serviced Separately; Serviceable Includes (1) 87454547 O-Ring, (1) 87454548 Seal, (1) 87455533 Spring, (2) 87455541 Screw
13		87433029		1	EXTREMITE ASSEMBLEE, Cap Assembly, Boom Spool End; Some Component Parts Not Serviced Separately; Serviceable Includes (1) 87454547 O-Ring, (1) 87454548 Seal, (1) 87444567 Spring, (1) 87455538 O-Ring, (2) 87455545 Screw
14		87440815		1	PLAQUE (ASSEMBLEE), Seal, Dipper Spool; Some Component Parts Not Serviced Separately; Serviceable Includes (1) 87454547 O-Ring, (1) 87454548 Seal, (1) 87455538 O-Ring, (2) 87455534 Screw
15		87440814		6	PLAQUE (ASSEMBLEE), Seal; Some Component Parts Not Serviced Separately; Serviceable Includes (1) 87454547 O-Ring, (1) 87454548 Seal, (2) 87455540 Screw
16A		87450978		2	SOUPAPE, D£CHARGE, Circuit; 3205 psi; Component Parts Not Serviced Separately; Includes 87455549 Seal Kit
16B		87450979		2	SOUPAPE, D£CHARGE, Circuit; 3450 psi; Component Parts Not Serviced Separately; Includes 87455549 Seal Kit
16C		87450980		1	SOUPAPE, D£CHARGE, Circuit; 3800 psi; Component Parts Not Serviced Separately; Includes 87455549 Seal Kit

DISTRIBUTEUR - COMMANDE DE LA PELLE RETRO, 8 TIROIRS (AVEC BALANCIER EXTENSIBLE ET SANS CIRCUIT HYD)

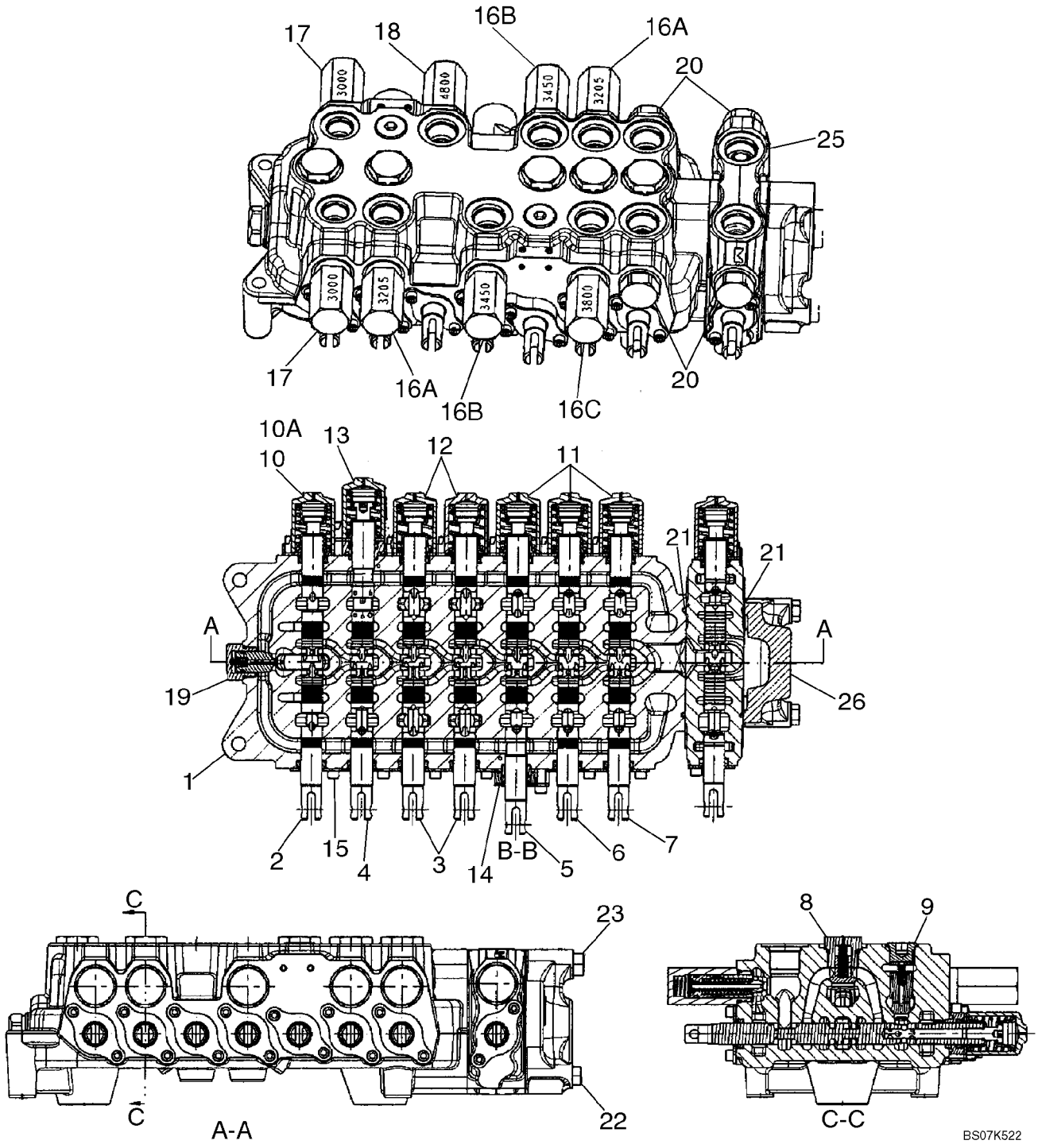

DISTRIBUTEUR - COMMANDE DE LA PELLE RETRO, 8 TIROIRS (AVEC BALANCIER EXTENSIBLE ET SANS CIRCUIT HYD)

REF	FN	PART NUMBER	YR/SN	QTY	DESCRIPTION
17		87428490		2	SOUPAPE, D£CHARGE, 3000 psi; Component Parts Not Serviced Separately; Includes 87455549 Seal Kit
18		87566237		1	SOUPAPE, D£CHARGE, 4800 psi; Component Parts Not Serviced Separately; Includes 87455549 Seal Kit
19		81868381		1	SOUPAPE ANTI RETOUR, Anti-Void Valve; Component Parts Not Serviced Separately; Includes 87455580 Seal Kit
20		83981068		4	BOUCHON DE FERMETUREE, Component Parts Not Serviced Separately; (2) Are Now Included With Ref 25
21		87428495		2	JOINT THORIQUE, Auxiliary/Outlet Section
22		87428476		2	VIS
23		87428477		1	VIS
25		87428501		1	ELEMENT DISTR HYDR, Spool Section Assembly; Auxiliary Hydraulics; Includes Ref 25A - 25I, Which Are Not Illustrated; Remainder Component Parts Not Serviced Separately
25A		87433028		1	EXTREMITE ASSEMBLEE, Spool; Incl. Ref 25B - 25E, Which Are Not Illustrated; Remainder Component Parts Not Serviced Separately
25B		87454547		1	JOINT THORIQUE
25C		87454548		1	JOINT, Wiper
25D		87429150		1	RESSORT, SOUPAPE
25E		87455541		2	VIS
25F		87428495		1	JOINT THORIQUE
25G		87455564		1	CLAPET, Load Check
25H		87455565		1	RESSORT, SOUPAPE, Load Check
25I		83981068		2	BOUCHON DE FERMETUREE
26		87433030		1	ELEMENT DISTR HYDR, Outlet Section Assembly; Component Parts Not Serviced Separately

DISTRIBUTEUR - COMMANDE DE LA PELLE RETRO, 6 TIROIRS

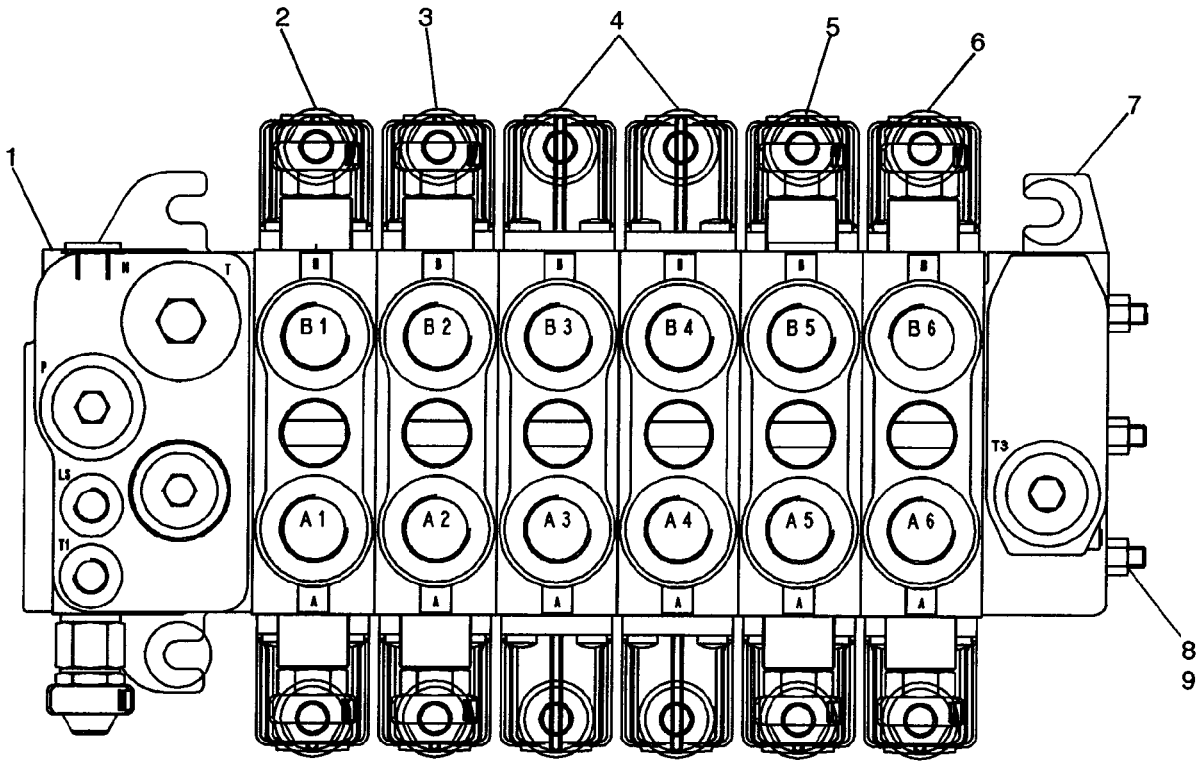

BS07K523

DISTRIBUTEUR - COMMANDE DE LA PELLE RETRO, 6 TIROIRS

REF	FN	PART NUMBER	YR/SN	QTY	DESCRIPTION
		87577343		1	DISTRIBUTEUR, Backhoe 6 Spool; Rexroth No. 08 403 273; Check Data Plate On Valve For Part Number; Incl. Ref 1 - 9
1		87441495		1	ELEMENT DISTR HYDR, Inlet Section; With Orifice Threaded In LS Cavity; See Figure 08-39A
2		85826339		1	ELEMENT DISTR HYDR, Swing Section; See Figure 08-40
3		85826337		1	ELEMENT DISTR HYDR, Boom Section; See Figure 08-41
4		87617618		2	ELEMENT DISTR HYDR, Stabilizer Section; Without Flow Sharing to Provide Open Center Performance; See Figure 08-42
5		85826338		1	ELEMENT DISTR HYDR, Dipper Section; See Figure 08-43
6		85826365		1	ELEMENT DISTR HYDR, Bucket Section; See Figure 08-44
7		NSS		1	NON FOURNI SEPAREMENT, Outlet Section
8		NSS		3	NON FOURNI SEPAREMENT, Tie Bolt
9		NSS		3	NON FOURNI SEPAREMENT, Nut

DISTRIBUTEUR - COMMANDE DE LA PELLE RETRO, 7 TIROIRS

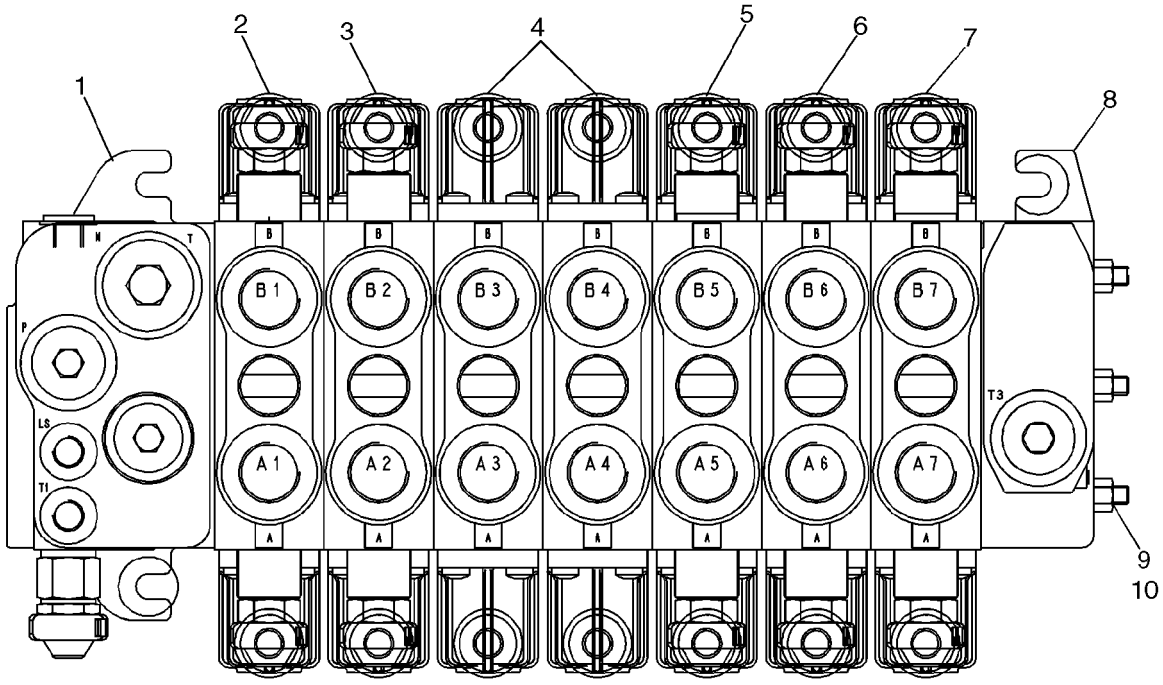

BS07K524

DISTRIBUTEUR - COMMANDE DE LA PELLE RETRO, 7 TIROIRS

REF	FN	PART NUMBER	YR/SN	QTY	DESCRIPTION
		87577346		1	DISTRIBUTEUR, Backhoe 7 Spool; Rexroth No. 08 402 663; Check Data Plate On Valve For Part Number; Incl. Ref 1 - 10;
1		87441495		1	ELEMENT DISTR HYDR, Inlet Section; With Orifice Threaded In LS Cavity; See Figure 08-39A
2		85826339		1	ELEMENT DISTR HYDR, Swing Section; See Figure 08-40
3		85826337		1	ELEMENT DISTR HYDR, Boom Section; See Figure 08-41
4		87617618		2	ELEMENT DISTR HYDR, Stabilizer Section; Without Flow Sharing to Provide Open Center Performance; 87577346 Valve; See Figure 08-42
5		85826338		1	ELEMENT DISTR HYDR, Dipper Section; See Figure 08-43
6		85826365		1	ELEMENT DISTR HYDR, Bucket Section; See Figure 08-44
7		85826341		1	ELEMENT DISTR HYDR, Extendable Dipper Section; See Figure 08-45
8		NSS		1	NON FOURNI SEPAREMENT, Outlet Section
9		NSS		3	NON FOURNI SEPAREMENT, Tie Bolt
10		NSS		3	NON FOURNI SEPAREMENT, Nut

DISTRIBUTEUR - COMMANDE DE LA PELLE RETRO, 7 TIROIRS

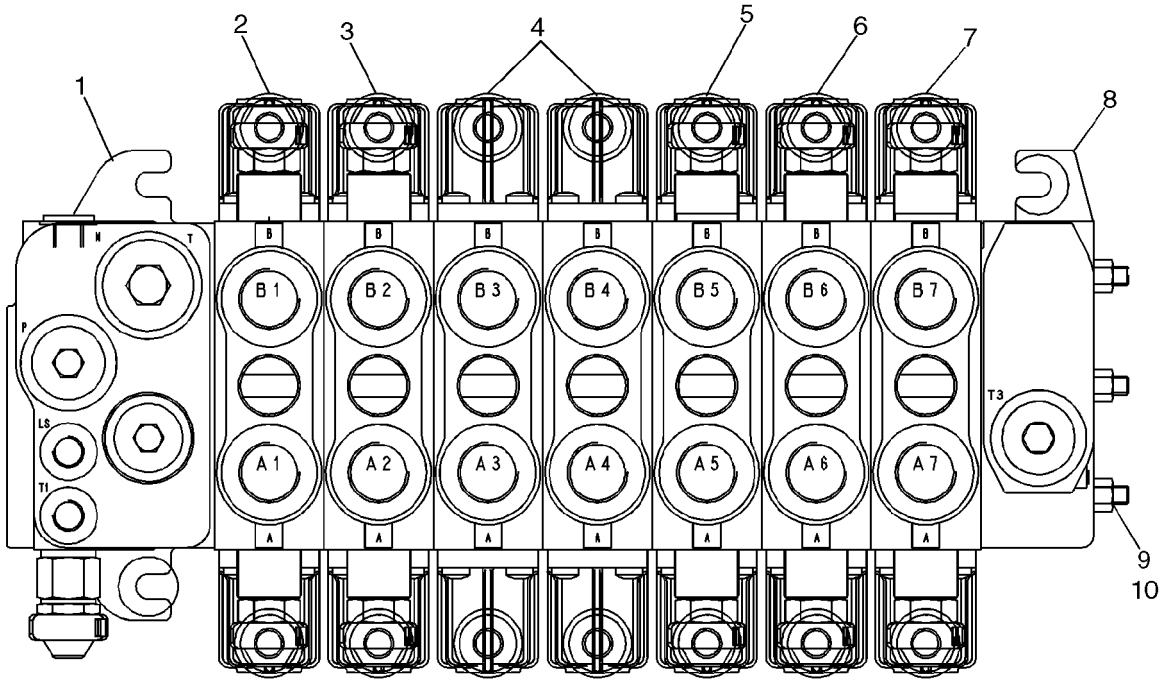

BS07K524

DISTRIBUTEUR - COMMANDE DE LA PELLE RETRO, 7 TIROIRS

REF	FN	PART NUMBER	YR/SN	QTY	DESCRIPTION
		87577348		1	DISTRIBUTEUR, Backhoe 7 Spool; Rexroth No. 08 403 272; Check Data Plate On Valve For Part Number; Incl. Ref 1 - 10
1		87441495		1	ELEMENT DISTR HYDR, Inlet Section; With Orifice Threaded In LS Cavity; See Figure 08-39A
2		85826339		1	ELEMENT DISTR HYDR, Swing Section; See Figure 08-40
3		85826337		1	ELEMENT DISTR HYDR, Boom Section; See Figure 08-41
4		87617618		2	ELEMENT DISTR HYDR, Stabilizer Section; Without Flow Sharing to Provide Open Center Performance; See Figure 08-42
5		85826338		1	ELEMENT DISTR HYDR, Dipper Section; See Figure 08-43
6		85826365		1	ELEMENT DISTR HYDR, Bucket Section; See Figure 08-44
7		85826342		1	ELEMENT DISTR HYDR, Auxiliary Section; See Figure 08-46
8		NSS		1	NON FOURNI SEPAREMENT, Outlet Section
9		NSS		3	NON FOURNI SEPAREMENT, Tie Bolt
10		NSS		3	NON FOURNI SEPAREMENT, Nut

DISTRIBUTEUR - COMMANDE DE LA PELLE RETRO, 8 TIROIRS

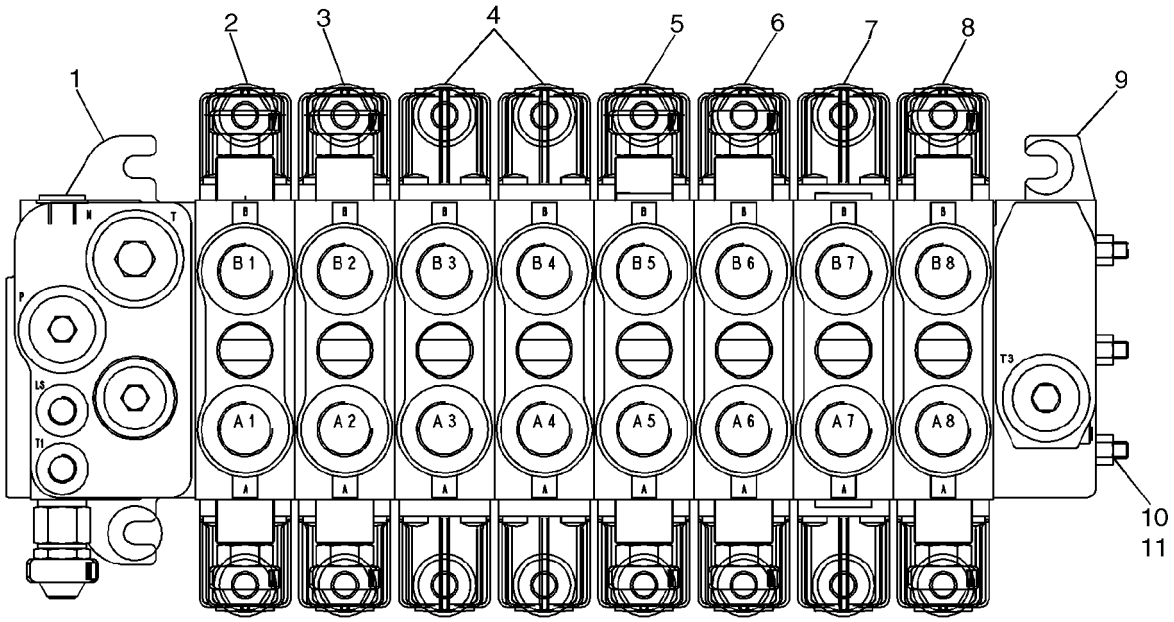

BS07M008

DISTRIBUTEUR - COMMANDE DE LA PELLE RETRO, 8 TIROIRS

REF	FN	PART NUMBER	YR/SN	QTY	DESCRIPTION
		87577349		1	DISTRIBUTEUR, Backhoe 8 Spool; Rexroth No. 08 403 271; Check Data Plate On Valve For Part Number; Incl. Ref 1 - 11
1		87441495		1	ELEMENT DISTR HYDR, Inlet Section; With Orifice Threaded In LS Cavity; See Figure 08-43A
2		85826339		1	ELEMENT DISTR HYDR, Swing Section; See Figure 08-44
3		85826337		1	ELEMENT DISTR HYDR, Boom Section; See Figure 08-45
4		87617618		2	ELEMENT DISTR HYDR, Stabilizer Section; Without Flow Sharing to Provide Open Center Performance; 87577349 Valve; See Figure 08-46; If Used
5		85826338		1	ELEMENT DISTR HYDR, Dipper Section; See Figure 08-47
6		85826365		1	ELEMENT DISTR HYDR, Bucket Section; See Figure 08-48
7		85826341		1	ELEMENT DISTR HYDR, Extendable Dipper Section; See Figure 08-49
8		85826342		1	ELEMENT DISTR HYDR, Auxiliary Section; See Figure 08-50
9		NSS		1	NON FOURNI SEPAREMENT, Outlet Section
10		87447477		3	LOT DE PIECES, Tie Bolt
11		280136		3	ECROU, 3/8"-16, G8

08-40		p1	09/07

CIRCUIT - DEBATTEMENT DE LA RETROPELLE (AVEC DE COMMANDE PILOTE)

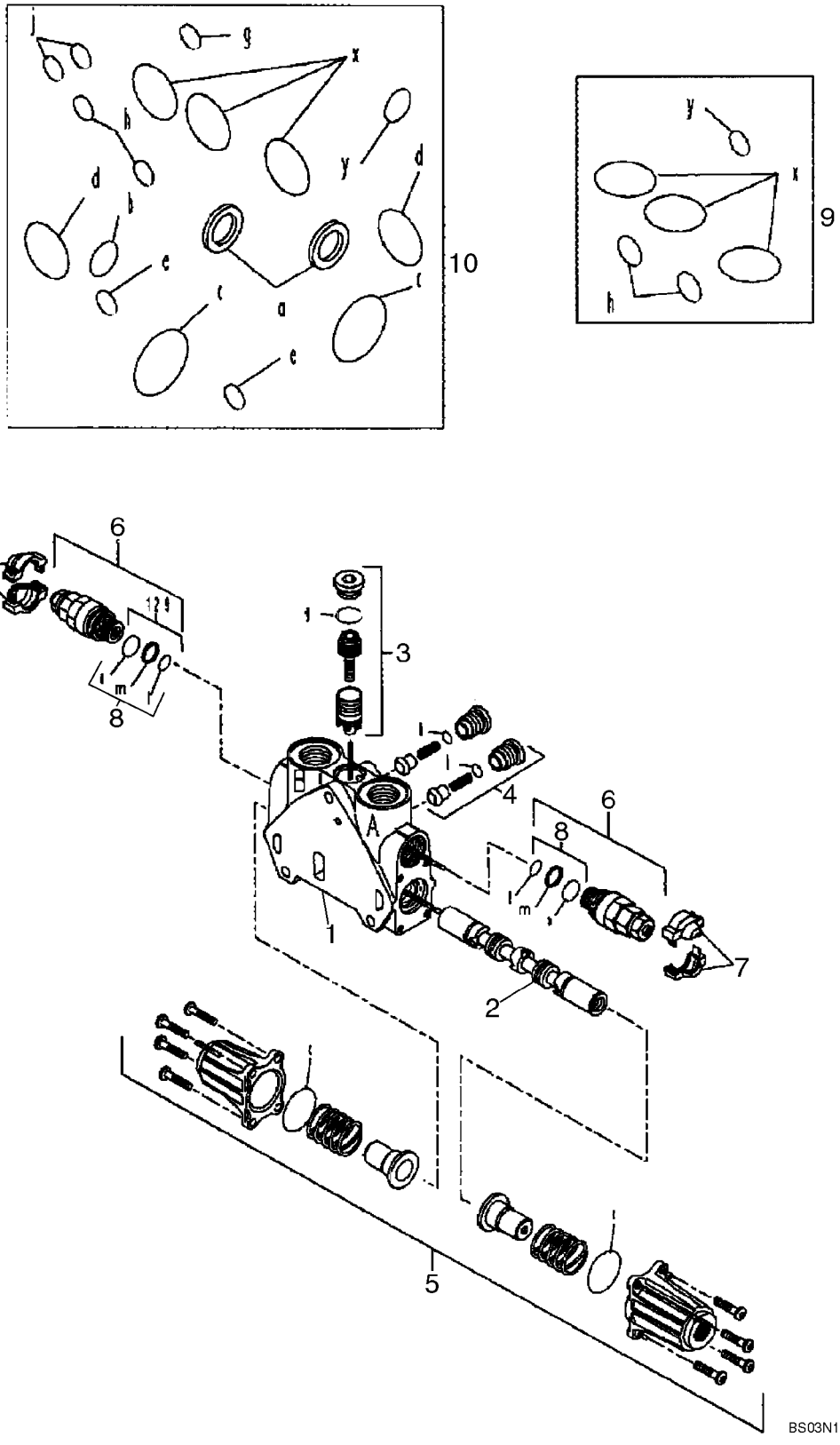

CIRCUIT - DEBATTEMENT DE LA RETROPELLE (AVEC DE COMMANDE PILOTE)

REF	FN	PART NUMBER	YR/SN	QTY	DESCRIPTION
		85826339		1	ELEMENT DISTR HYDR, Swing; Incl. Ref 1 - 10
1		NSS		1	NON FOURNI SEPAREMENT, HOUSING
2		NSS		1	NON FOURNI SEPAREMENT, SPOOL
3		85826345		1	KIT, Pressure Compensator; Component Parts Not Serviced Separately
4		85811938		2	CLAPET ANTI-RETOUR, Component Parts Not Serviced Separately
5		85826344		1	KIT, End Cap; Component Parts Not Serviced Separately
6		85812114		2	SOUPAPE HYDRAULIQUE, Pressure Relief Valve; Some Component Parts Not Serviced Separately; Serviceable Includes 85811933, Ref 8 Kit
7		85811934		2	KIT, Cover, Orange
8		85811933		2	POCHETTE DE JOINTS, Includes (2) O-Rings, (1) Thrust Ring; Component Parts Not Serviced Separately
9		85819148		1	POCHETTE DE JOINTS, Includes (6) O-Rings; Component Parts Not Serviced Separately
10		85824282		1	KIT, Seal, Includes (15) O-Rings, (2) Lip Seals; Component Parts Not Serviced Separately

CIRCUIT - FLECHE DE LA RETROPELLE (AVEC DE COMMANDE PILOTE)

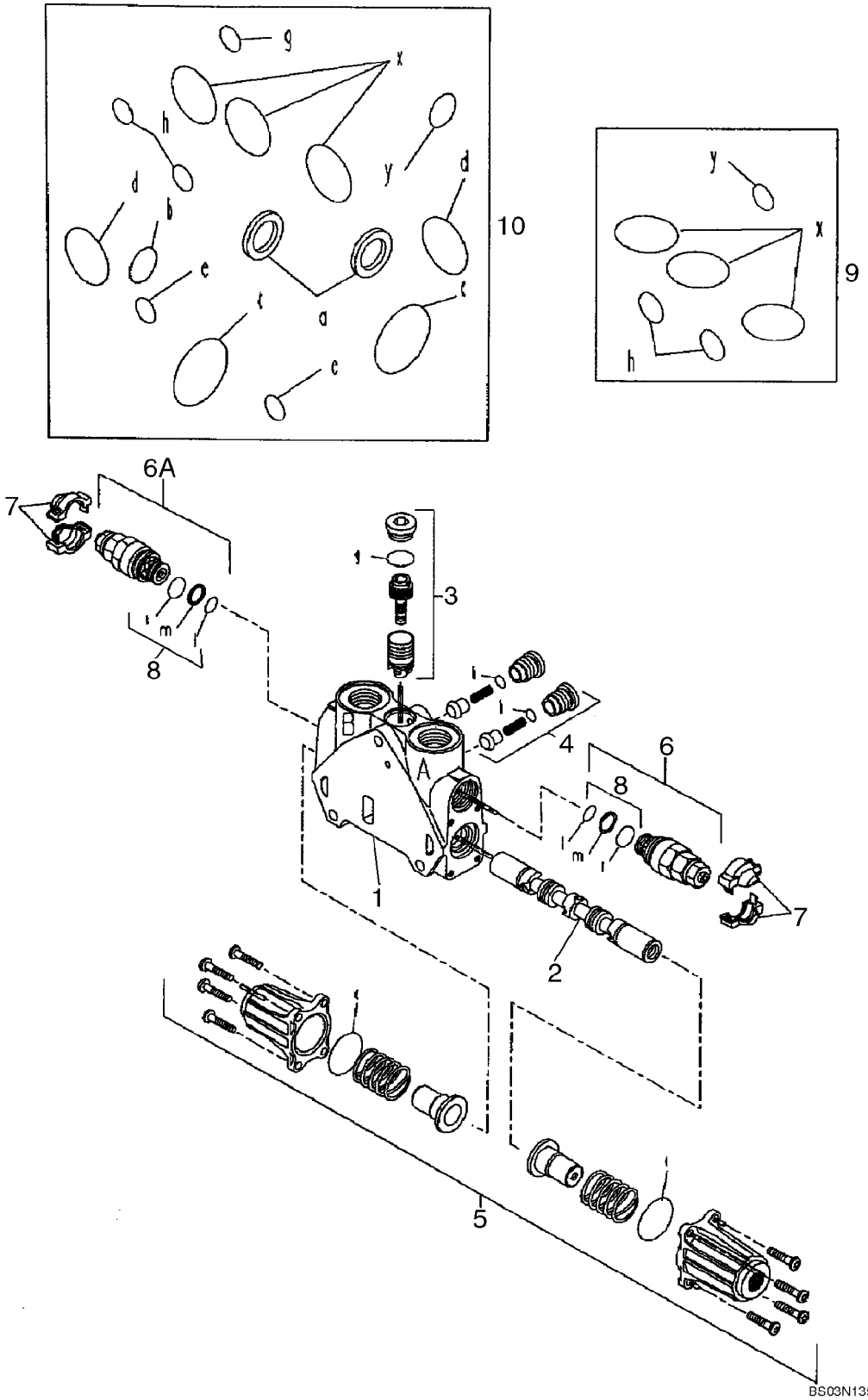

CIRCUIT - FLECHE DE LA RETROPELLE (AVEC DE COMMANDE PILOTE)

REF	FN	PART NUMBER	YR/SN	QTY	DESCRIPTION
		85826337		1	ELEMENT DISTR HYDR, Boom; Incl. Ref 1 - 10
1		NSS		1	NON FOURNI SEPAREMENT, HOUSING
2		NSS		1	NON FOURNI SEPAREMENT, SPOOL
3		85819378		1	POCHETTE DE JOINTS, Pressure Compensator; Component Parts Not Serviced Separately
4		85811938		2	CLAPET ANTI-RETOUR, Component Parts Not Serviced Separately
5		85826344		1	KIT, End Cap; Component Parts Not Serviced Separately
6		85812115		1	SOUPAPE HYDRAULIQUE, Pressure Relief Valve Kit; Side A; Some Component Parts Not Serviced Separately; Serviceable Includes 85811933, Ref 8 Kit
6A		85826346		1	SOUPAPE, D£CHARGE, Pressure Relief Valve Kit; Side B; Component Parts Not Serviced Separately
7		85811934		2	KIT, Cover, Orange
7		85811935		2	KIT, Cover, Blue
8		85811933		2	POCHETTE DE JOINTS, Seal Kit Includes (2) O-Rings, (1) Thrust Ring; Component Parts Not Serviced Separately
9		85819148		1	POCHETTE DE JOINTS, Seal Kit Includes (6) O-Rings; Component Parts Not Serviced Separately
10		85824281		1	POCHETTE DE JOINTS, Seal Kit Includes (13) O-Rings, (2) Lip Seals; Component Parts Not Serviced Separately

CIRCUIT - STABILISATEUR DE LA PELLE RETRO (AVEC DE COMMANDE PILOTE)

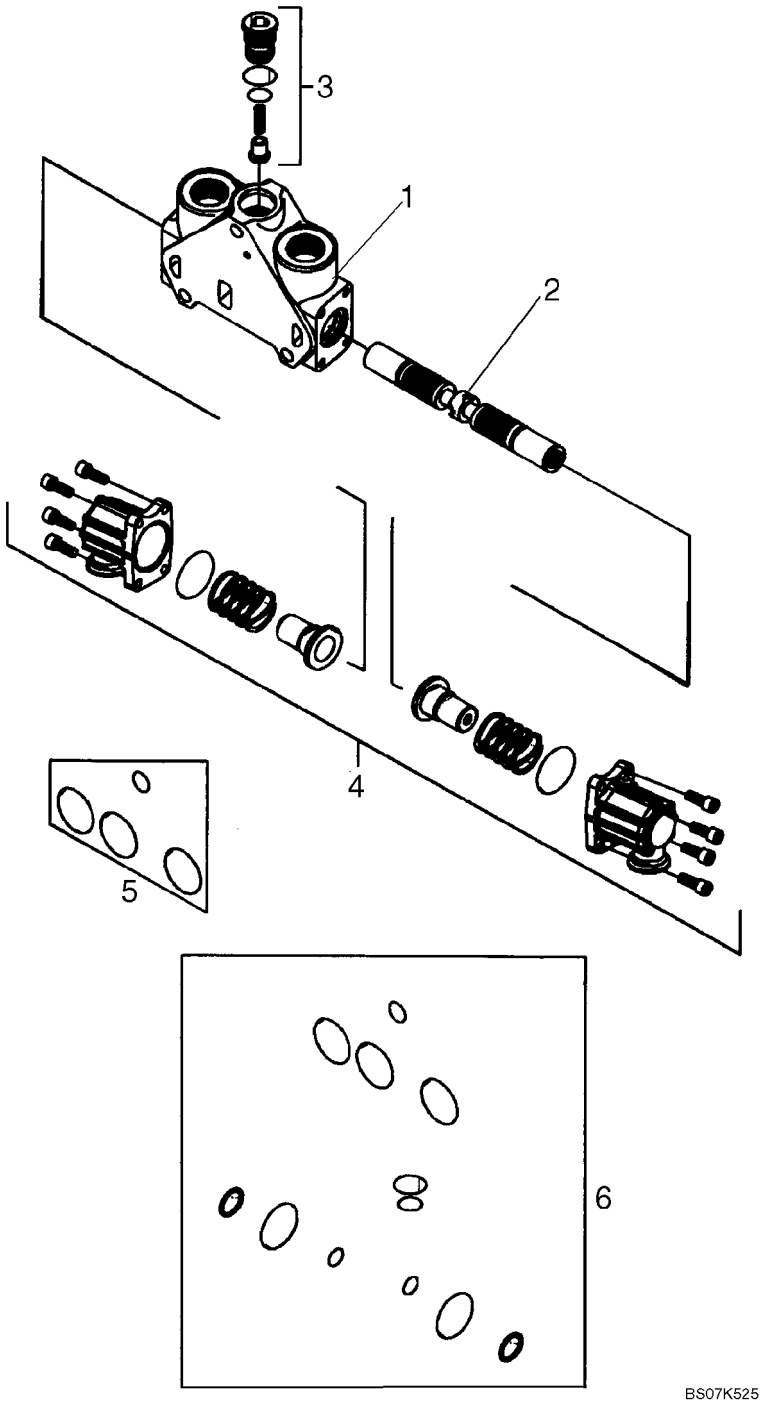

CIRCUIT - STABILISATEUR DE LA PELLE RETRO (AVEC DE COMMANDE PILOTE)

REF	FN	PART NUMBER	YR/SN	QTY	DESCRIPTION
		87617618		2	ELEMENT DISTR HYDR, Stabilizer; Left-Hand and Right-Hand; Without Flow Sharing to Provide Open Center Performance; Incl. Ref 1 - 6
1		NSS		1	NON FOURNI SEPAREMENT, HOUSING
2		NSS		1	NON FOURNI SEPAREMENT, SPOOL
3		87617655		1	CLAPET ANTI-RETOUR, Kit; Component Parts Not Serviced Separately
4		85826344		1	KIT, End Cap; Component Parts Not Serviced Separately
5		85825473		1	POCHETTE DE JOINTS, Includes (4) O-Rings; Component Parts Not Serviced Separately
6		87617657		1	POCHETTE DE JOINT THORIQUE, Includes (12) Seals; Component Parts Not Serviced Separately

08-43		p1	09/07

CIRCUIT - BRAS DE LA RETROPELLE (AVEC DE COMMANDE PILOTE)

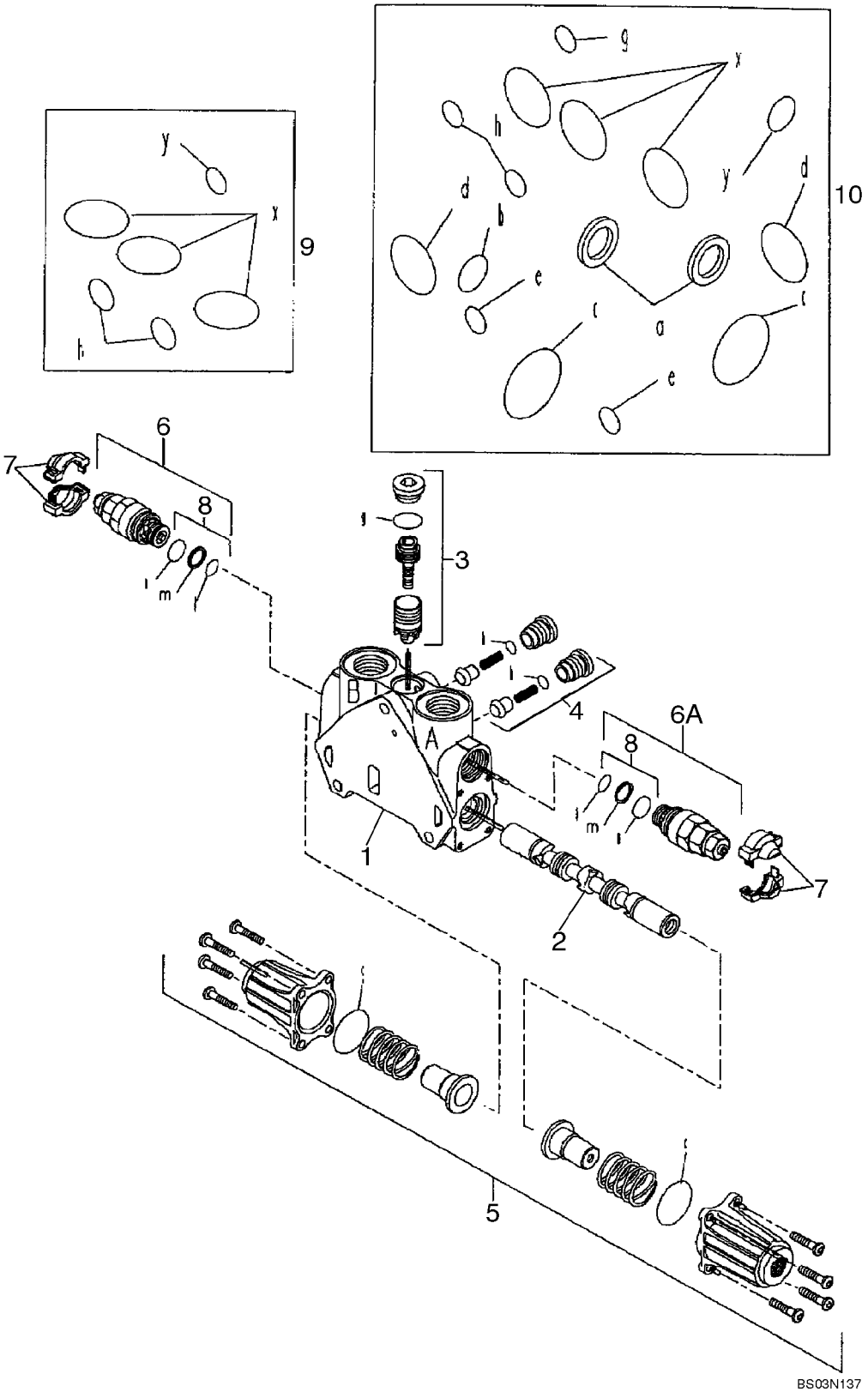

CIRCUIT - BRAS DE LA RETROPELLE (AVEC DE COMMANDE PILOTE)

REF	FN	PART NUMBER	YR/SN	QTY	DESCRIPTION
		85826338		1	ELEMENT DISTR HYDR, Dipper; Incl. Ref 1 - 10
1		NSS		1	NON FOURNI SEPAREMENT, HOUSING
2		NSS		1	NON FOURNI SEPAREMENT, SPOOL
3		85826345		1	KIT, Pressure Compensator; Component Parts Not Serviced Separately
4		85811938		2	CLAPET ANTI-RETOUR, Kit; Component Parts Not Serviced Separately
5		85826344		1	KIT, End Cap; Component Parts Not Serviced Separately
6		85812116		1	SOUPAPE, D£CHARGE, Side B; Some Component Parts Not Serviced Separately; Serviceable Includes 85811933, Ref 8 Kit
6A		85826343		1	SOUPAPE, D£CHARGE, Side A; Component Parts Not Serviced Separately
7		85811934		2	KIT, Cover, Orange
7		85811935		2	KIT, Cover, Blue
8		85811933		2	POCHETTE DE JOINTS, Includes (2) O-Rings, (1) Thrust Ring; Component Parts Not Serviced Separately
9		85819148		1	POCHETTE DE JOINTS, Includes (6) O-Rings; Component Parts Not Serviced Separately
10		85824281		1	POCHETTE DE JOINTS, Includes (13) O-Rings, (2) Lip Seals; Component Parts Not Serviced Separately

08-44		p1	09/07

CIRCUIT - GODET DE LA RETROPELLE (AVEC DE COMMANDE PILOTE)

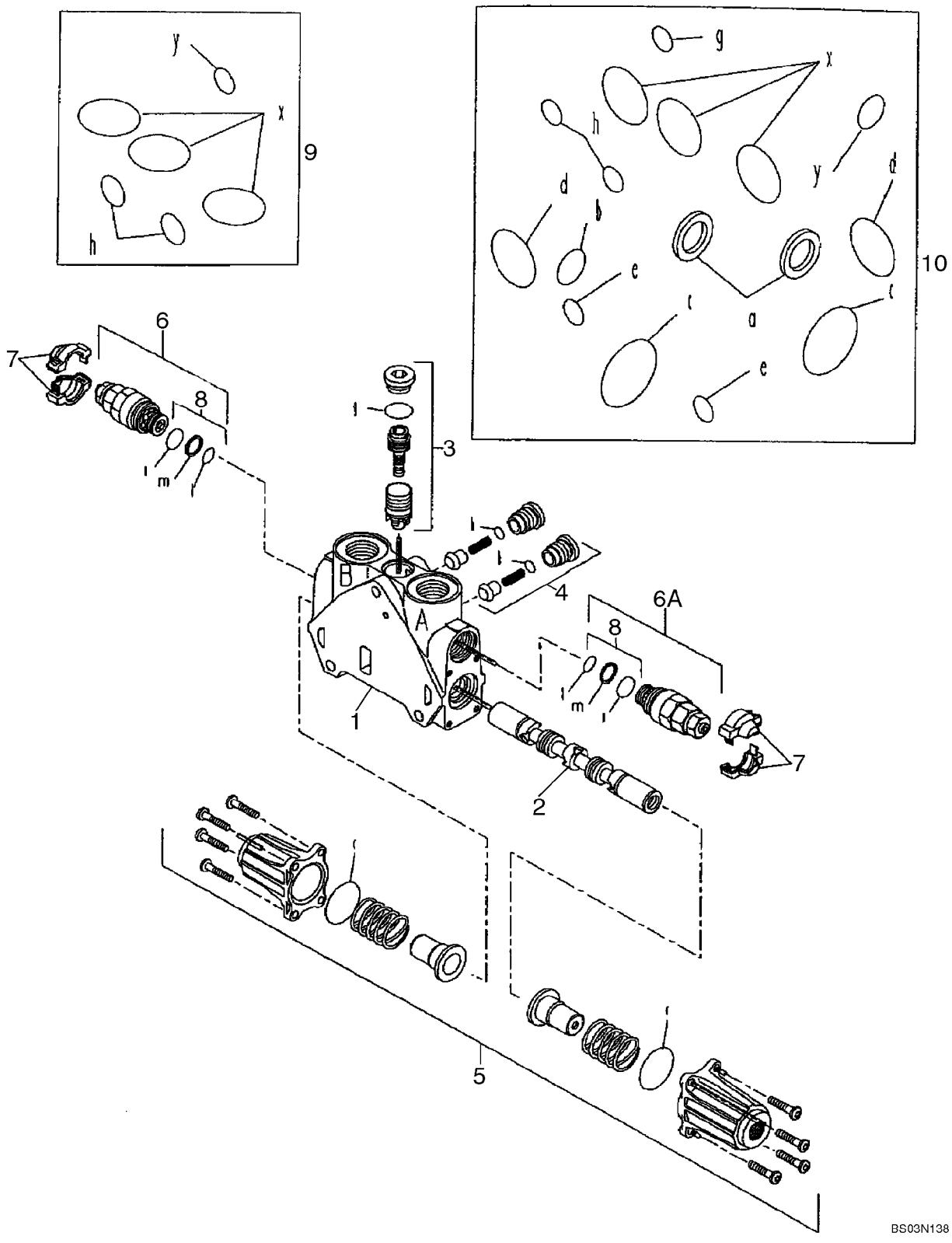

CIRCUIT - GODET DE LA RETROPELLE (AVEC DE COMMANDE PILOTE)

REF	FN	PART NUMBER	YR/SN	QTY	DESCRIPTION
		85826365		1	ELEMENT DISTR HYDR, Bucket; Incl. Ref 1 - 10
1		NSS		1	NON FOURNI SEPAREMENT, HOUSING
2		NSS		1	NON FOURNI SEPAREMENT, SPOOL
3		85819378		1	POCHETTE DE JOINTS, Pressure Compensator; Component Parts Not Serviced Separately
4		85811938		2	CLAPET ANTI-RETOUR, Kit; Component Parts Not Serviced Separately
5		85826344		1	KIT, End Cap; Component Parts Not Serviced Separately
6		85812116		1	SOUPAPE, D£CHARGE, Side B; Some Component Parts Not Serviced Separately; Serviceable Includes 85811933, Ref 8 Kit
6A		85826905		1	SOUPAPE, D£CHARGE, Side A; Some Component Parts Not Serviced Separately; Serviceable Includes 85811933, Ref 8 Kit
7		85811934		2	KIT, Cover, Orange
7		85811935		2	KIT, Cover, Blue
8		85811933		2	POCHETTE DE JOINTS, Includes (2) O-Rings, (1) Thrust Ring; Component Parts Not Serviced Separately
9		85819148		1	POCHETTE DE JOINTS, Includes (6) O-Rings; Component Parts Not Serviced Separately
10		85824281		1	POCHETTE DE JOINTS, Includes (13) O-Rings, (2) Lip Seals; Component Parts Not Serviced Separately

CIRCUIT - BALANCIER EXTENSIBLE (AVEC DE COMMANDE PILOTE)

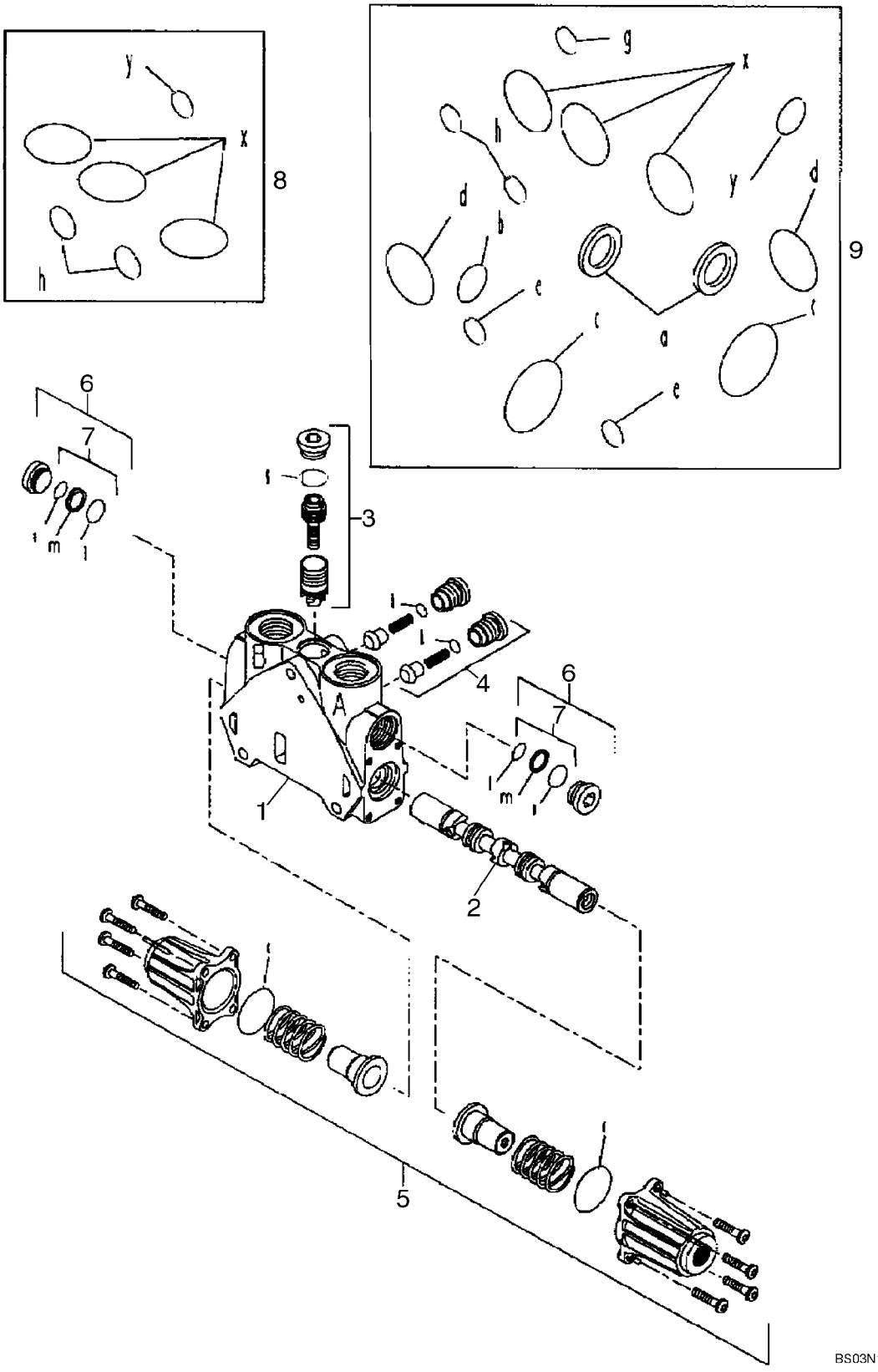

CIRCUIT - BALANCIER EXTENSIBLE (AVEC DE COMMANDE PILOTE)

REF	FN	PART NUMBER	YR/SN	QTY	DESCRIPTION
		85826341		1	ELEMENT DISTR HYDR, Extendable Dipper; Incl. Ref 1 - 9
1		NSS		1	NON FOURNI SEPAREMENT, HOUSING
2		NSS		1	NON FOURNI SEPAREMENT, SPOOL
3		85819378		1	POCHETTE DE JOINTS, Pressure Compensator Kit; Component Parts Not Serviced Separately
4		85811938		2	CLAPET ANTI-RETOUR, Check Valve Kit; Component Parts Not Serviced Separately
5		85826344		1	KIT, End Cap Kit; Component Parts Not Serviced Separately
6		85811937		2	BOUCHON, Plug Assembly Kit; Some Component Parts Not Serviced Separately; Serviceable Includes 85811933, Ref 7 Kit
7		85811933		2	POCHETTE DE JOINTS, Seal Kit Includes (2) O-Rings, (1) Thrust Ring; Component Parts Not Serviced Separately
8		85819148		1	POCHETTE DE JOINTS, Seal Kit Includes (6) O-Rings; Component Parts Not Serviced Separately
9		85824281		1	POCHETTE DE JOINTS, Seal Kit Includes (13) O-Rings, (2) Lip Seals; Component Parts Not Serviced Separately

CIRCUIT - OPTIONS, CIRCUIT HYDRAULIQUE AUXILIAIRE (AVEC DE COMMANDE PILOTE)

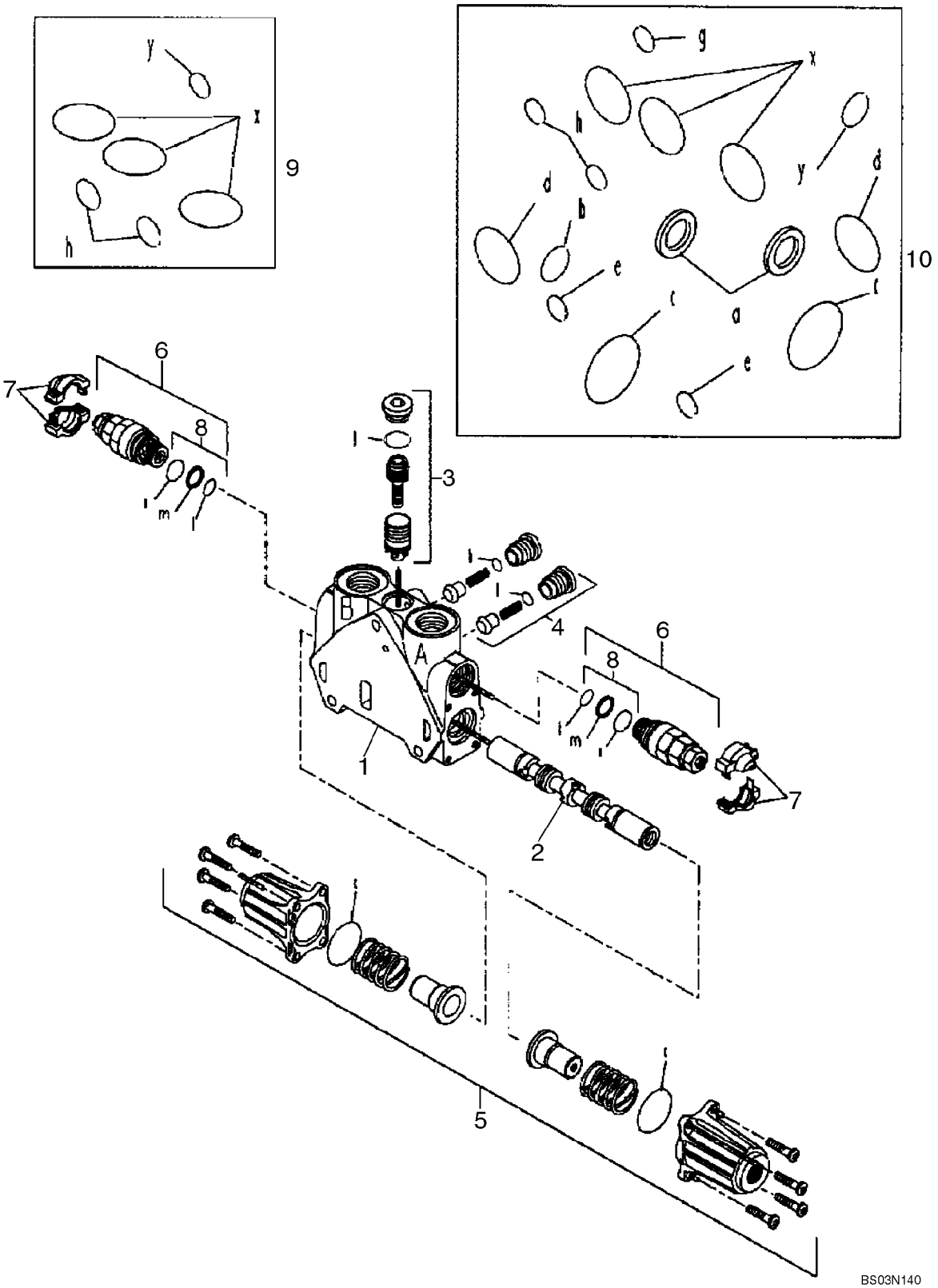

CIRCUIT - OPTIONS, CIRCUIT HYDRAULIQUE AUXILIAIRE (AVEC DE COMMANDE PILOTE)

REF	FN	PART NUMBER	YR/SN	QTY	DESCRIPTION
		85826342		1	ELEMENT DISTR HYDR, Options, Auxiliary Hydraulics; Incl. Ref 1 - 10
1		NSS		1	NON FOURNI SEPAREMENT, HOUSING
2		NSS		1	NON FOURNI SEPAREMENT, SPOOL
3		85819378		1	POCHETTE DE JOINTS, Pressure Compensator Kit; Component Parts Not Serviced Separately
4		85811938		2	CLAPET ANTI-RETOUR, Check Valve Kit; Component Parts Not Serviced Separately
5		85826344		1	KIT, End Cap Kit; Component Parts Not Serviced Separately
6		85812115		2	SOUPAPE HYDRAULIQUE, Pressure Relief Valve; Some Component Parts Not Serviced Separately; Serviceable Includes 85811933, Ref 8 Kit
7		85811934		2	KIT, Cover, Orange
7		85811935		2	KIT, Cover, Blue
8		85811933		2	POCHETTE DE JOINTS, Seal Kit Includes (2) O-Rings, (1) Thrust Ring; Component Parts Not Serviced Separately
9		85819148		1	POCHETTE DE JOINTS, Seal Kit Includes (6) O-Rings; Component Parts Not Serviced Separately
10		85824281		1	POCHETTE DE JOINTS, Seal Kit Includes (13) O-Rings, (2) LIp Seals; Component Parts Not Serviced Separately

DISTRIBUTEUR, SOUPAPE DE REDUCTION PRESSION (2 SPOOL) (AVEC DE COMMANDE PILOTE)

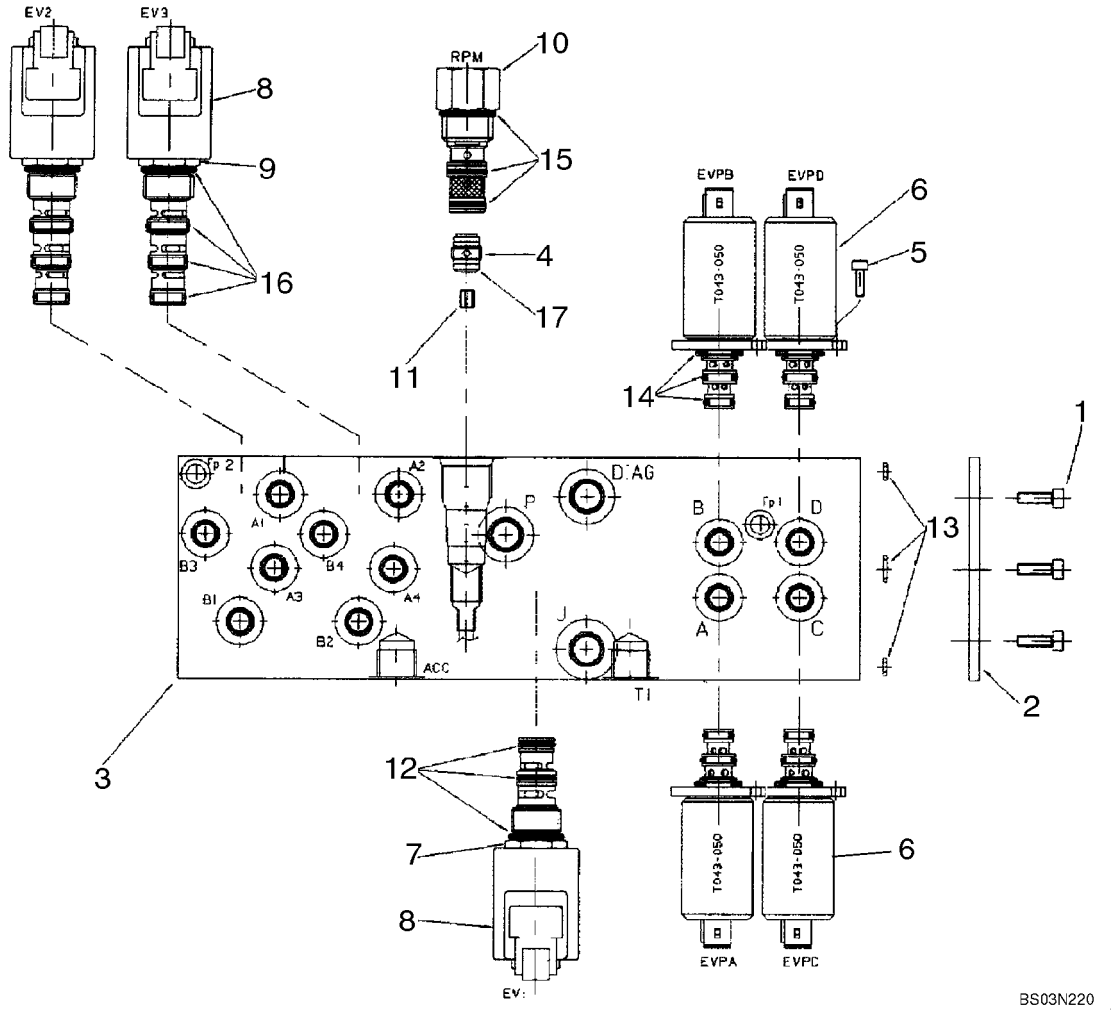

DISTRIBUTEUR, SOUPAPE DE REDUCTION PRESSION (2 SPOOL) (AVEC DE COMMANDE PILOTE)

REF	FN	PART NUMBER	YR/SN	QTY	DESCRIPTION
		85827472		1	SOUPAPE HYDRAULIQUE, Pressure Reducing, Two Spool, Pilot Controls; Incl. Ref 1 - 17
1		14304021		3	VIS, Hex Soc Hd, M5 x 10, 8.8
2		85827991		1	PLAQUE, Sealing
3		85828013		1	CORPS, Manifold Block
4		85827992		1	CLAPET ANTI-RETOUR, Incl. 17
5		14302921		8	BOULON, Hex, M4 x 10, 8.8, Full Thd
6		85827993		4	SOLENOIDE, Pressure Reducing Valve; Incl. 14
7		85827994		1	SOLENOIDE, Valve Cartridge, 3 Way, 2 Position; Incl. Ref 8, 12
8		85827995		3	BOBINE, With Diode
9		85827996		2	SOLENOIDE, Valve Cartridge, 4 Way, 2 Position; Incl. Ref 8, 16
10		85827997		1	SOUPAPE, Mechanical Pressure Reducing Valve With Fixed Setting; Incl. 15
11		85828005		1	ORIFICE, 1.8 mm
12		85827998		1	POCHETTE DE JOINTS
13		85827999		1	POCHETTE DE JOINTS
14		85828000		4	POCHETTE DE JOINTS
15		85828001		1	POCHETTE DE JOINTS
16		85828002		2	POCHETTE DE JOINTS
17		85828003		1	JOINT THORIQUE, D9x1

08-48		p1	09/07

DISTRIBUTEUR, SOUPAPE DE REDUCTION PRESSION (3 SPOOL) (AVEC DE COMMANDE PILOTE)

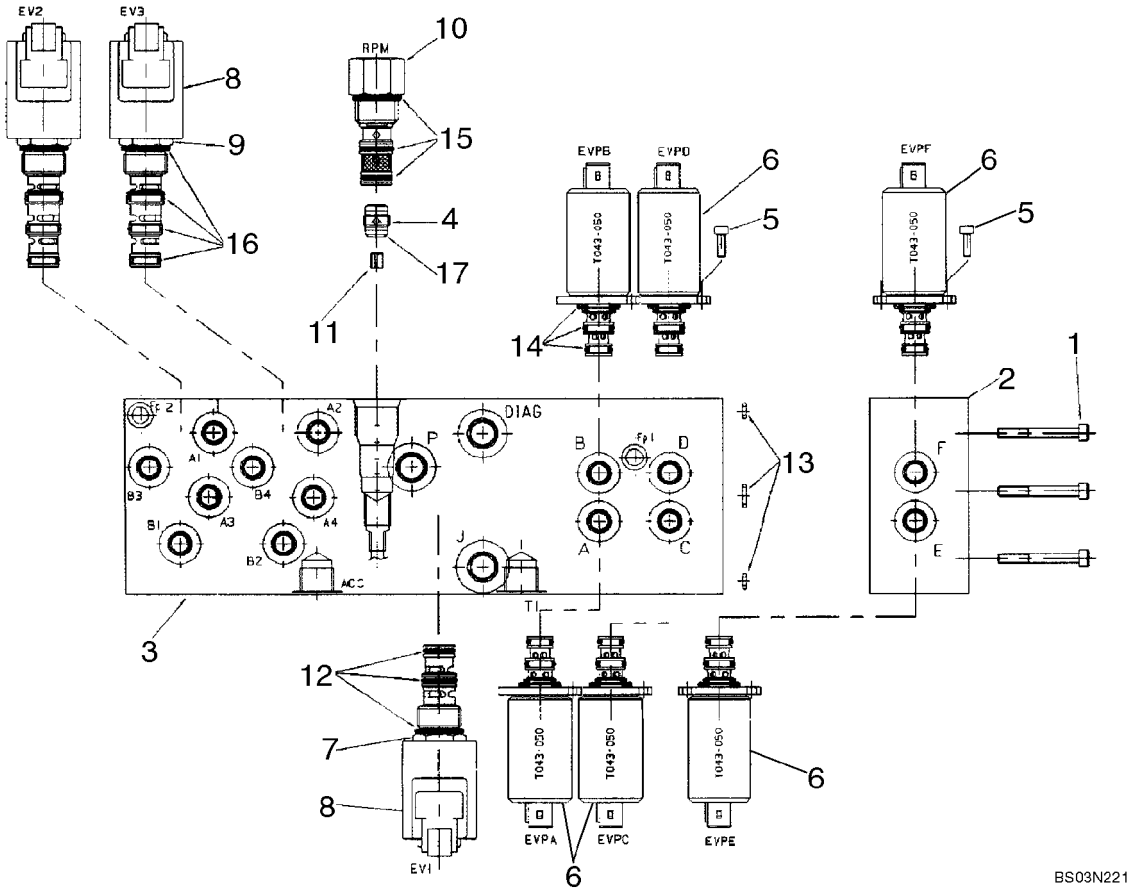

DISTRIBUTEUR, SOUPAPE DE REDUCTION PRESSION (3 SPOOL) (AVEC DE COMMANDE PILOTE)

REF	FN	PART NUMBER	YR/SN	QTY	DESCRIPTION
		85827471		1	SOUPAPE HYDRAULIQUE, Pressure Reducing, Three Spool, Pilot Controls; Incl. Ref 1 - 17
1		14358921		3	VIS, Hex Soc Hd, M5 x 45, 10.9
2		85828004		1	CORPS, One Function Add-On Manifold Block; Incl. 1, 5, 6
3		85828015		1	CORPS, Manifold Block
4		85827992		1	CLAPET ANTI-RETOUR, Incl. 17
5		14302921		12	BOULON, Hex, M4 x 10, 8.8, Full Thd
6		85827993		6	SOLENOIDE, Pressure Reducing Valve; Incl. 14
7		85827994		1	SOLENOIDE, Valve Cartridge, 3 Way, 2 Position; Incl. Ref 8, 12
8		85827995		3	BOBINE, With Diode
9		85827996		2	SOLENOIDE, Valve Cartridge, 4 Way, 2 Position; Incl. Ref 8, 16
10		85827997		1	SOUPAPE, Mechanical Pressure Reducing Valve With Fixed Setting; Incl. 15
11		85828005		1	ORIFICE, 1.8 mm
12		85827998		1	POCHETTE DE JOINTS
13		85827999		1	POCHETTE DE JOINTS
14		85828000		6	POCHETTE DE JOINTS
15		85828001		1	POCHETTE DE JOINTS
16		85828002		2	POCHETTE DE JOINTS
17		85828003		1	JOINT THORIQUE, D9x1

DISTRIBUTEUR, SOUPAPE DE REDUCTION PRESSION (4 SPOOL) (AVEC DE COMMANDE PILOTE)

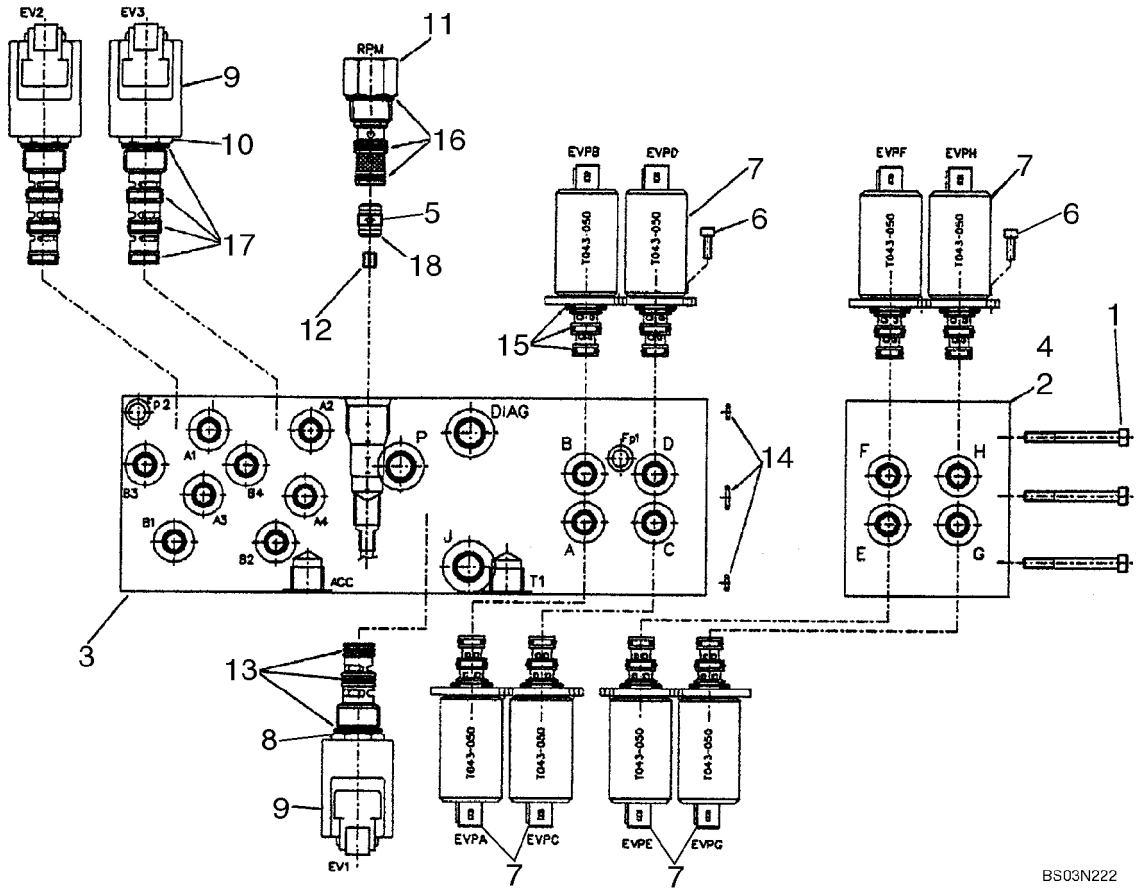

DISTRIBUTEUR, SOUPAPE DE REDUCTION PRESSION (4 SPOOL) (AVEC DE COMMANDE PILOTE)

REF	FN	PART NUMBER	YR/SN	QTY	DESCRIPTION
		87434621		1	DISTRIBUTEUR, Pressure Reducing, Four Spool, Pilot Controls; Incl. Ref 1 - 18
1		85828061		3	VIS, M5 x 80
2		85828048		1	BLOC COLLECTEUR, Manifold Block
3		85828015		1	CORPS, Manifold Block
4		85828054		1	BLOC COLLECTEUR, Manifold Block
5		85827992		1	CLAPET ANTI-RETOUR
6		14302921		16	BOULON, Hex, M4 x 10, 8.8, Full Thd
7		85827993		8	SOLENOIDE, Pressure Reducing Valve
8		85827994		1	SOLENOIDE, Valve Cartridge, 3 Way, 2 Position; Incl. Ref 9, 13
9		85827995		3	BOBINE, With Diode
10		85827996		2	SOLENOIDE, Valve Cartridge, 4 Way, 2 Position; Incl. Ref 9, 17
11		85827997		1	SOUPAPE, Mechanical Pressure Reducing Valve With Fixed Setting
12		85828005		1	ORIFICE, 1.8 mm
13		85827998		1	POCHETTE DE JOINTS
14		85827999		1	POCHETTE DE JOINTS
15		85828000		8	POCHETTE DE JOINTS
16		85828001		1	POCHETTE DE JOINTS
17		85828002		2	POCHETTE DE JOINTS
18		85828003		1	JOINT THORIQUE, D9x1

08-50		p1	02/08

DISTRIBUTEUR, LEVIER DE COMMANDE (COMMANDE PILOTE) (GAUCHE) AVERTISSEUR SONORE

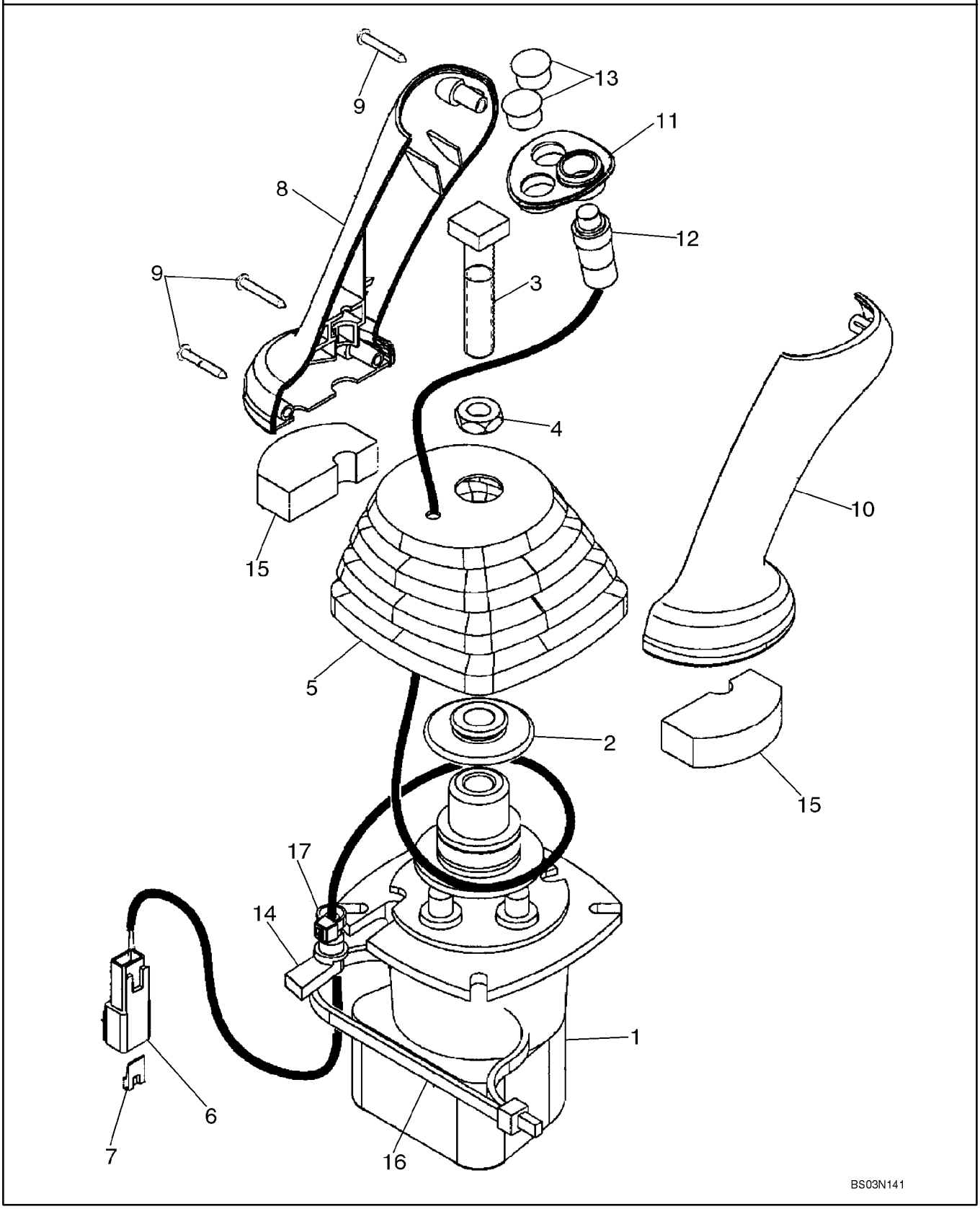

DISTRIBUTEUR, LEVIER DE COMMANDE (COMMANDE PILOTE) (GAUCHE) AVERTISSEUR SONORE

REF	FN	PART NUMBER	YR/SN	QTY	DESCRIPTION
		87685948		1	DISTRIBUTEUR, Pilot Controls, LH; With Horn Button; Incl. Ref 1 - 17; Part Number Stamped On Valve Base
1		87687141		1	VALVE DE PILOTAGE, Pilot Control Joystick Valve; Component Parts Not Serviced Separately
		87586776		1	POIGN£E, Incl. Ref 2 - 17
2		87436225		1	RETENEUR, Control Boot Retainer
3		87428023		1	BOULON, Square Head Bolt
4		87037944		1	ECROU, Thin, M12 x 1.75, Cl 05
5		87443721		1	COIFFE, Control Handle
6		225315C1		1	CONNECTEUR
7		225318C1		1	CALE DE BLOCAGE, Connector
8		87308838		1	POMMEAU, Joystick Control Handle
9		15687475		3	VIS AUTO-TARAUDEUSE, Pan Hd, M3.5 x 25, Stainless
10		87308839		1	POMMEAU, Joystick Control Handle
11		87435243		1	ENCADREMENT, Switch Mounting
12		87437372		1	CONTACTEUR, Push Button Horn
13		86625128		2	BOUCHON, Dome, .562" hole, Nylon
14		87424267		1	PASSE-FIL, Wire
15		87435506		2	JOINT, Pilot Control Handle Seal, Lower
16		87438046		1	SERRE-CABLE
17		87000312		1	SERRE-CABLE

08-51		p1	10/07

DISTRIBUTEUR, LEVIER DE COMMANDE (COMMANDE PILOTE) (GAUCHE) AVERTISSEUR SONORE & UNI-DIR

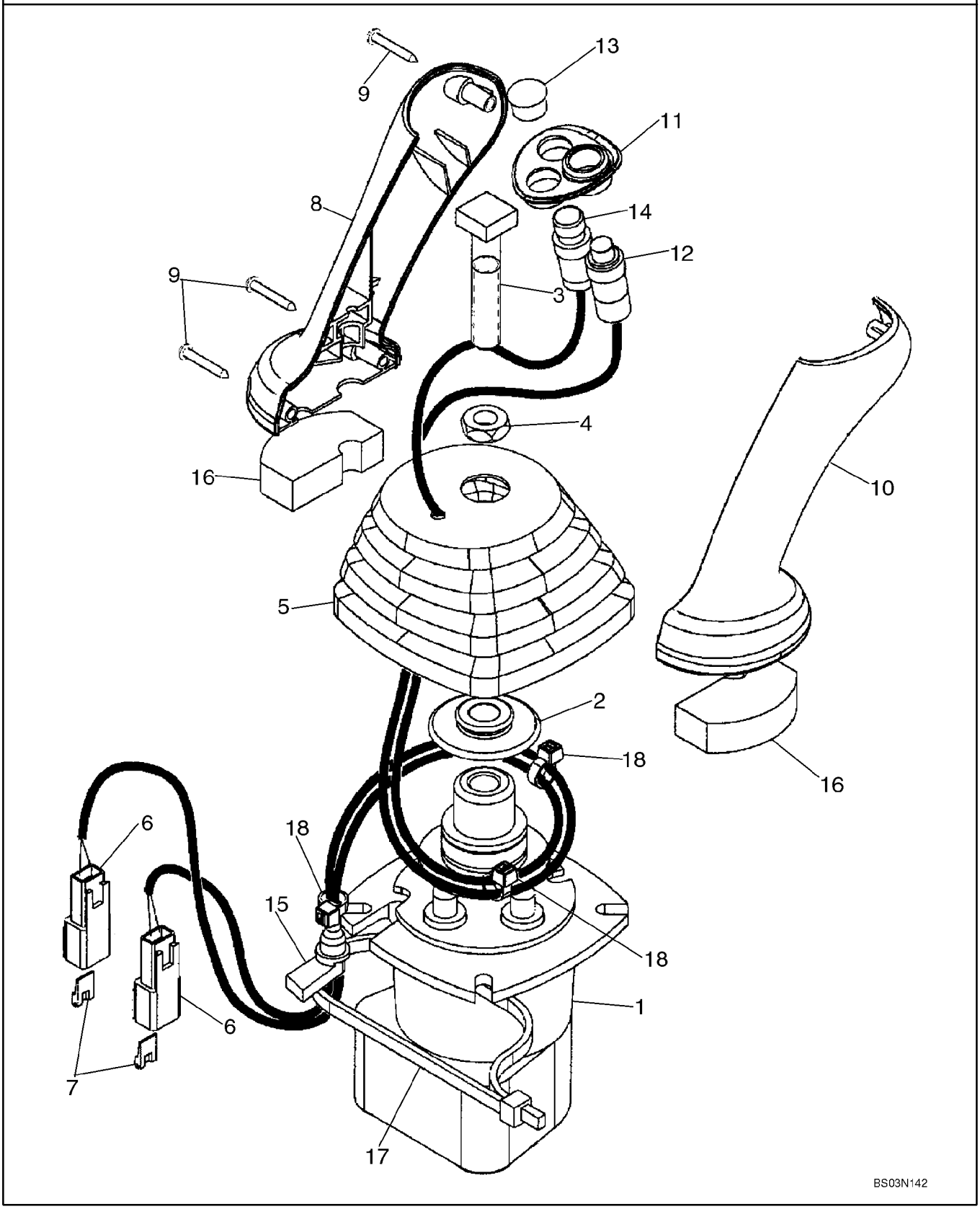

DISTRIBUTEUR, LEVIER DE COMMANDE (COMMANDE PILOTE) (GAUCHE) AVERTISSEUR SONORE & UNI-DIR

REF	FN	PART NUMBER	YR/SN	QTY	DESCRIPTION
		87685953		1	DISTRIBUTEUR, Pilot Controls, LH; With Horn and Uni-Directional Buttons; Incl. Ref 1 - 18; Part Number Stamped On Valve Base
1		87687141		1	VALVE DE PILOTAGE, Pilot Control Joystick Valve; Component Parts Not Serviced Separately
2		87436225		1	RETENEUR, Control Boot
3		87428023		1	BOULON, Square Head
4		87037944		1	ECROU, Thin, M12 x 1.75, Cl 05
5		87443721		1	COIFFE, Control Handle
6		225315C1		2	CONNECTEUR
7		225318C1		2	CALE DE BLOCAGE, Connector
8		87308838		1	POMMEAU, Joystick Control Handle
9		15687475		3	VIS AUTO-TARAUDEUSE, Pan Hd, M3.5 x 25, Stainless
10		87308839		1	POMMEAU, Joystick Control Handle
11		87435243		1	ENCADREMENT, Switch Mounting
12		87437372		1	CONTACTEUR, Push Button Horn
13		86625128		1	BOUCHON, Dome, .562" hole, Nylon
14		87437373		1	INTERRUPTEUR COMPLET, Push Button Uni-Directional Auxiliary Hydraulic Switch
15		87424267		1	PASSE-FIL, Wire
16		87435506		2	JOINT, Pilot Control Handle Seal, Lower
17		L18331		1	SERRE-CABLE
18		L11541		3	SERRE-CABLE

08-52		p1	10/07

DISTRIBUTEUR, LEVIER DE COMMANDE (COMMANDE PILOTE) (GAUCHE) AVERTISSEUR SONORE & BI-DIR

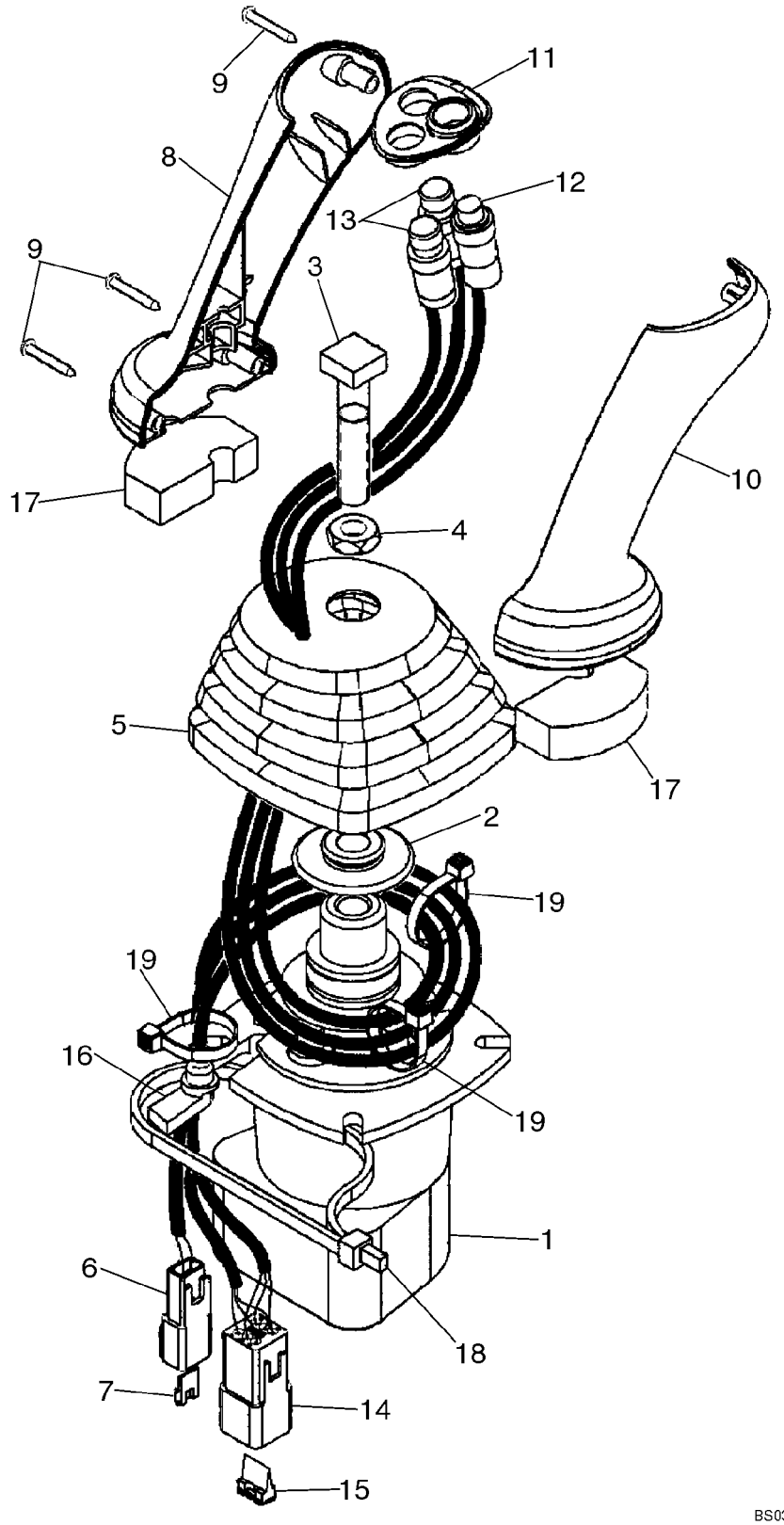

DISTRIBUTEUR, LEVIER DE COMMANDE (COMMANDE PILOTE) (GAUCHE) AVERTISSEUR SONORE & BI-DIR

REF	FN	PART NUMBER	YR/SN	QTY	DESCRIPTION
		87685952		1	DISTRIBUTEUR, Pilot Controls, LH; With Horn and Bi-Directional Buttons; Incl. Ref 1 - 19; Part Number Stamped On Valve Base
1		87687141		1	VALVE DE PILOTAGE, Pilot Control Joystick Valve; Component Parts Not Serviced Separately
2		87436225		1	RETENEUR, Control Boot
3		87428023		1	BOULON, Square Head
4		87037944		1	ECROU, Thin, M12 x 1.75, Cl 05
5		87443721		1	COIFFE, Control Handle
6		225315C1		1	CONNECTEUR
7		225318C1		1	CALE DE BLOCAGE, Connector
8		87308838		1	POMMEAU, Joystick Control Handle
9		15687475		3	VIS AUTO-TARAUDEUSE, Pan Hd, M3.5 x 25, Stainless
10		87308839		1	POMMEAU, Joystick Control Handle
11		87435243		1	ENCADREMENT, Switch Mounting
12		87437372		1	CONTACTEUR, Push Button Horn
13		87437371		2	INTERRUPTEUR COMPLET, Push Button Bi-Directional Auxiliary Hydraulic
14		225350C1		1	CONNECTEUR
15		225353C1		1	CALE DE BLOCAGE, Connector
16		87424267		1	PASSE-FIL, Wire
17		87435506		2	JOINT, Pilot Control Handle Seal, Lower
18		87438046		1	SERRE-CABLE
19		87000312		3	SERRE-CABLE, Black

08-53		p1	10/07

DISTRIBUTEUR, LEVIER DE COMMANDE (COMMANDE PILOTE) (DROIT) SANS BALANCIER EXTENSIBLE

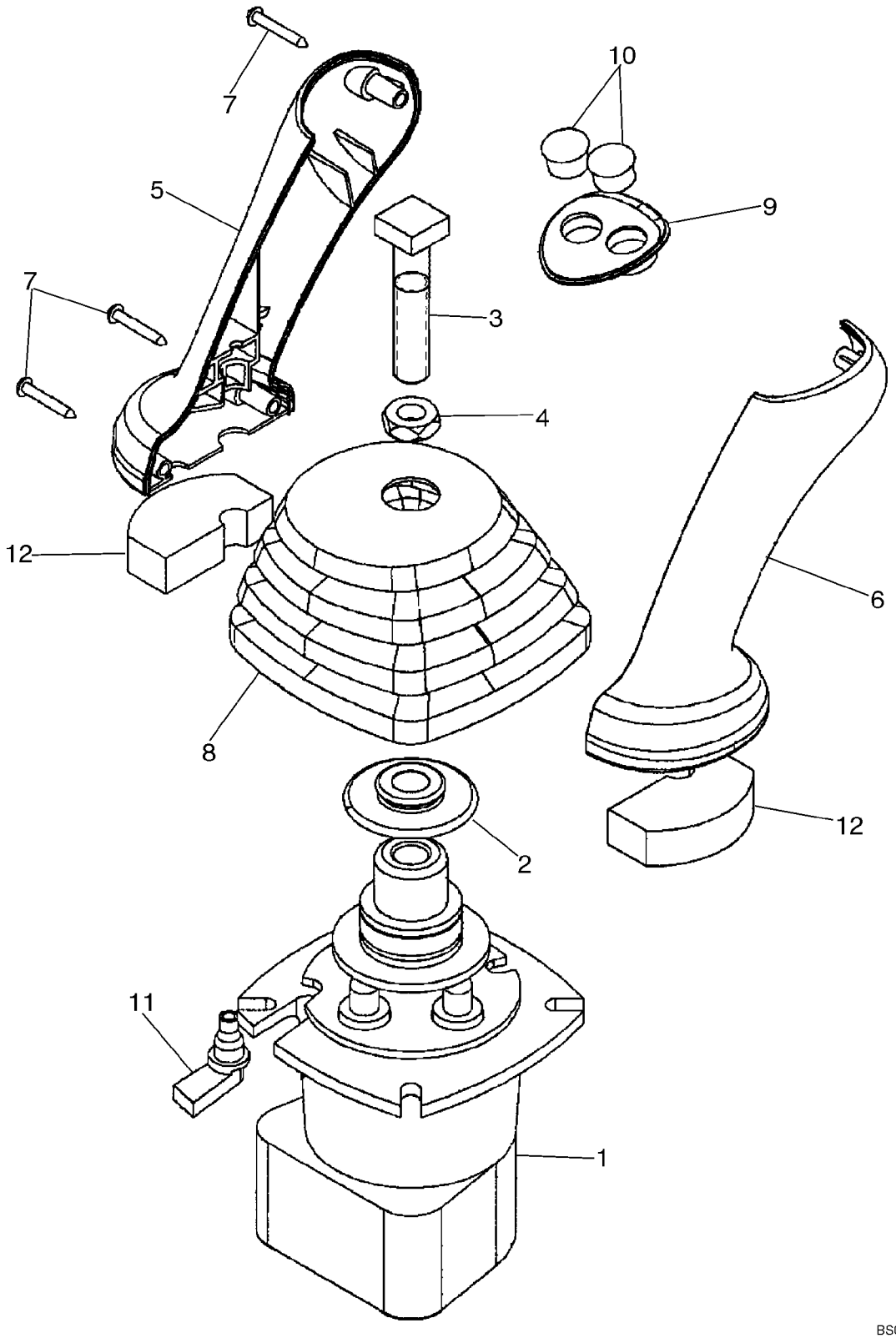

DISTRIBUTEUR, LEVIER DE COMMANDE (COMMANDE PILOTE) (DROIT) SANS BALANCIER EXTENSIBLE

REF	FN	PART NUMBER	YR/SN	QTY	DESCRIPTION
		87685954		1	DISTRIBUTEUR, Pilot Controls, RH; Without Extendable Dipper; Incl. Ref 1 - 12; Part Number Stamped On Valve Base
1		87687141		1	VALVE DE PILOTAGE, Pilot Control Joystick Valve; Component Parts Not Serviced Separately
2		87436225		1	RETENEUR, Control Boot
3		87428023		1	BOULON, Square Head
4		87037944		1	ECROU, Thin, M12 x 1.75, Cl 05
5		87308838		1	POMMEAU, Joystick Control Handle
6		87308839		1	POMMEAU, Joystick Control Handle
7		15687475		3	VIS AUTO-TARAUDEUSE, Pan Hd, M3.5 x 25, Stainless
8		87443722		1	COIFFE, Joystick Control
9		87435242		1	ENCADREMENT, Switch Mounting
10		86625128		2	BOUCHON, Dome, .562" hole, Nylon
11		87451448		1	PASSE-FIL, Wire
12		87435506		2	JOINT, Pilot Control Handle, Lower

08-54		p1	10/07

DISTRIBUTEUR, LEVIER DE COMMANDE (COMMANDE PILOTE) (DROIT) AVEC BALANCIER EXTENSIBLE

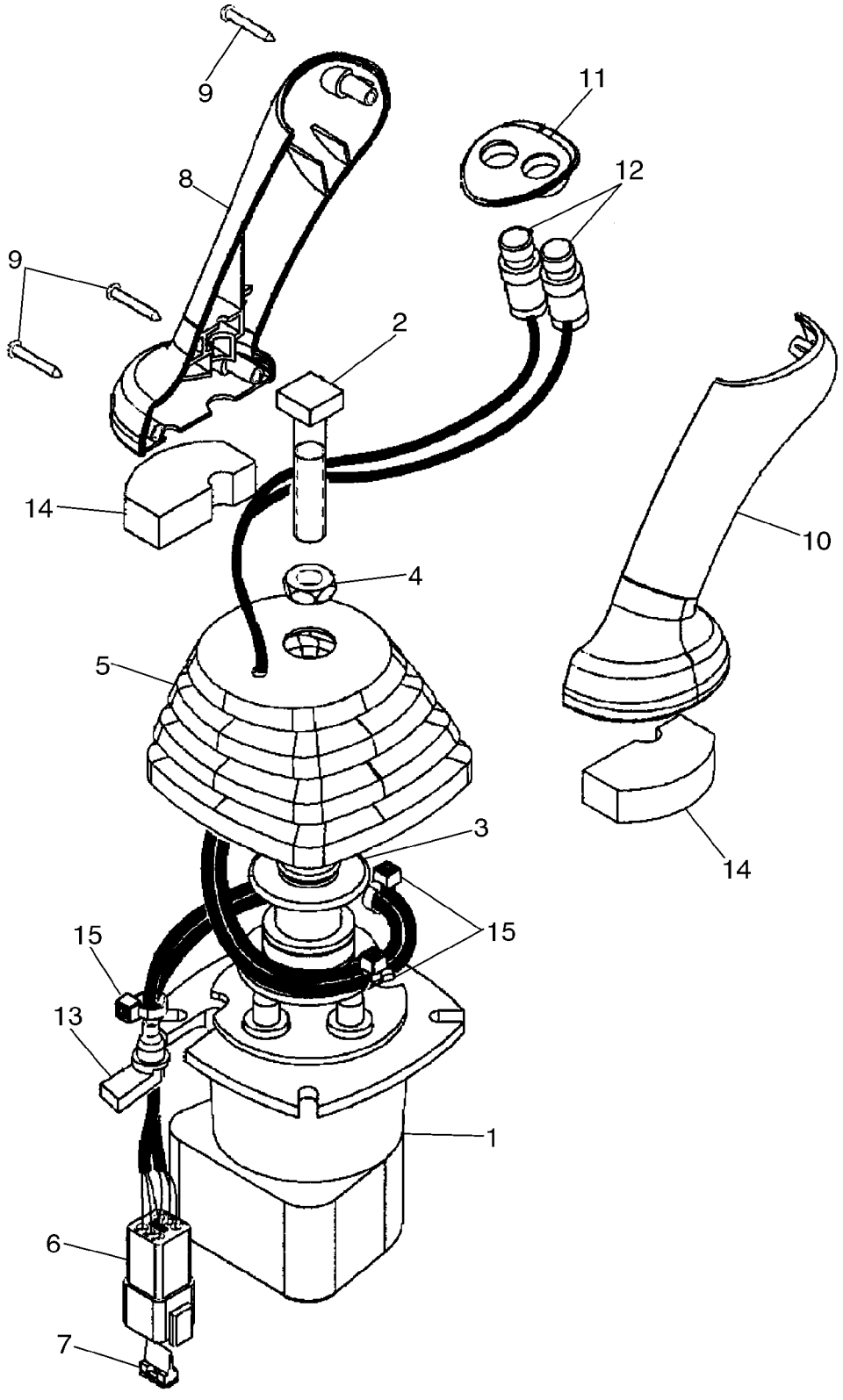

DISTRIBUTEUR, LEVIER DE COMMANDE (COMMANDE PILOTE) (DROIT) AVEC BALANCIER EXTENSIBLE

REF	FN	PART NUMBER	YR/SN	QTY	DESCRIPTION
		87685955		1	DISTRIBUTEUR, Pilot Controls, RH; With Extendable Dipper; Includes 87398960 Base Valve; Incl. Ref 1 - 15; Part Number Stamped On Valve Base
1		87687141		1	VALVE DE PILOTAGE, Pilot Control Joystick Valve; Component Parts Not Serviced Separately
2		87428023		1	BOULON, Square Head
3		87436225		1	RETENEUR, Control Boot
4		87037944		1	ECROU, Thin, M12 x 1.75, Cl 05
5		87443721		1	COIFFE, Joystick Control
6		225350C1		1	CONNECTEUR
7		225353C1		1	CALE DE BLOCAGE, Connector
8		87308838		1	POMMEAU, Joystick Control Handle
9		15687475		3	VIS AUTO-TARAUDEUSE, Pan Hd, M3.5 x 25, Stainless
10		87308839		1	POMMEAU, Joystick Control Handle
11		87435242		1	ENCADREMENT, Switch Mounting
12		87437371		2	INTERRUPTEUR COMPLET, Push Button Retract and Extendahoe
13		87424267		1	PASSE-FIL, Wire
14		87435506		2	JOINT, Pilot Control Handle Seal, Lower
15		87000312		3	SERRE-CABLE
		87438046		1	SERRE-CABLE

DISTRIBUTEUR - AMORTISSEUR DE DEBATTEMENT

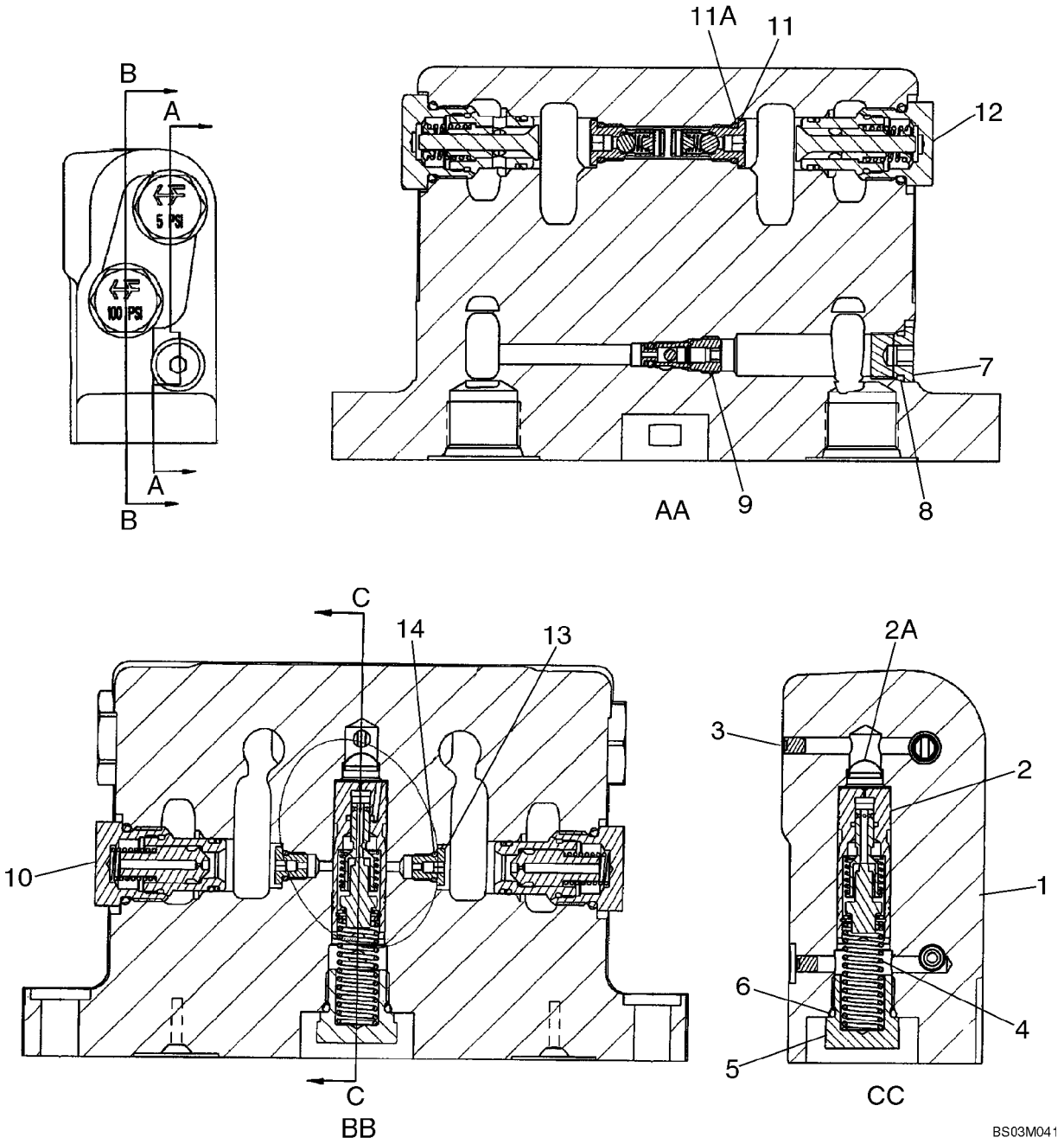

DISTRIBUTEUR - AMORTISSEUR DE DEBATTEMENT

REF	FN	PART NUMBER	YR/SN	QTY	DESCRIPTION
		87449373		1	SOUPAPE HYDRAULIQUE, Swing Cushion; Incl. Ref 1 - 14
1		NSS		1	NON FOURNI SEPAREMENT, Housing
2		87449374		1	TIROIR, Thermal Compensating; Component Parts Not Serviced Separately; Replaces 388876A6 Spool
2A		1976955C1		1	CARTOUCHE-FILTRE, Screen, Filter
3		369372A1		2	BOUCHON, M5; Plug, Expansion
4		388881A1		1	RESSORT H£LICOċDAL
5		409025A1		1	BOUCHON, Relief Check; Incl. Ref 6
6		237-6008		1	JOINT THORIQUE, 8-1, 90 Duro, .644" ID x .087" Thk, Boss seal
7		9625178		1	BOUCHON, Hex Soc, 9/16"-18 ORB, Includes Ref 8
8		237-6006		1	JOINT THORIQUE, 6-1, 90 Duro, .468" ID x .078" Thk, Boss seal
9		388712A2		1	VALVE, Bi-Directional Check Valve; Includes 388713A1 Seal Kit
		388713A1		1	POCHETTE, Seal; Includes An O-Ring and Backup Ring; Component Parts Not Serviced Separately
10		396422A2		2	SOUPAPE ANTI RETOUR, 100 psi, Orifice Check Valve; Component Parts Not Serviced Separately; Order 1542830C2 Seal Kit To Service External Seals
		443432A1		1	POCHETTE DE JOINTS, For Servicing External Seals on Ref 9, 10, 11 or 12 Valve; If Used
11		400296A2		2	SOUPAPE ANTI RETOUR, In-Line Check Valve; Component Parts Not Serviced Separately; Incl. Ref 11A
11A		237-6004		1	JOINT THORIQUE, 4-1, 90 Duro, .351" ID x .072" Thk, Boss seal
12		389541A1		2	SOUPAPE ANTI RETOUR, 5 psi; Component Parts Not Serviced Separately; Order 1542830C2 Seal Kit To Service External Seals
13		400657A1		2	BOUCHON, Orifice 1.85 mm; Incl. Ref 14
		1542830C2		1	JEU JOINTS ETANCHEITE, For Servicing External Seals on Ref 10 or 12 Valve
14		237-6002		1	JOINT THORIQUE, 2-1, .239" ID x .064" Thk

08-55A		p1	12/07

ELECTROVANNE - VERROUILLAGE DE LA FLECHE

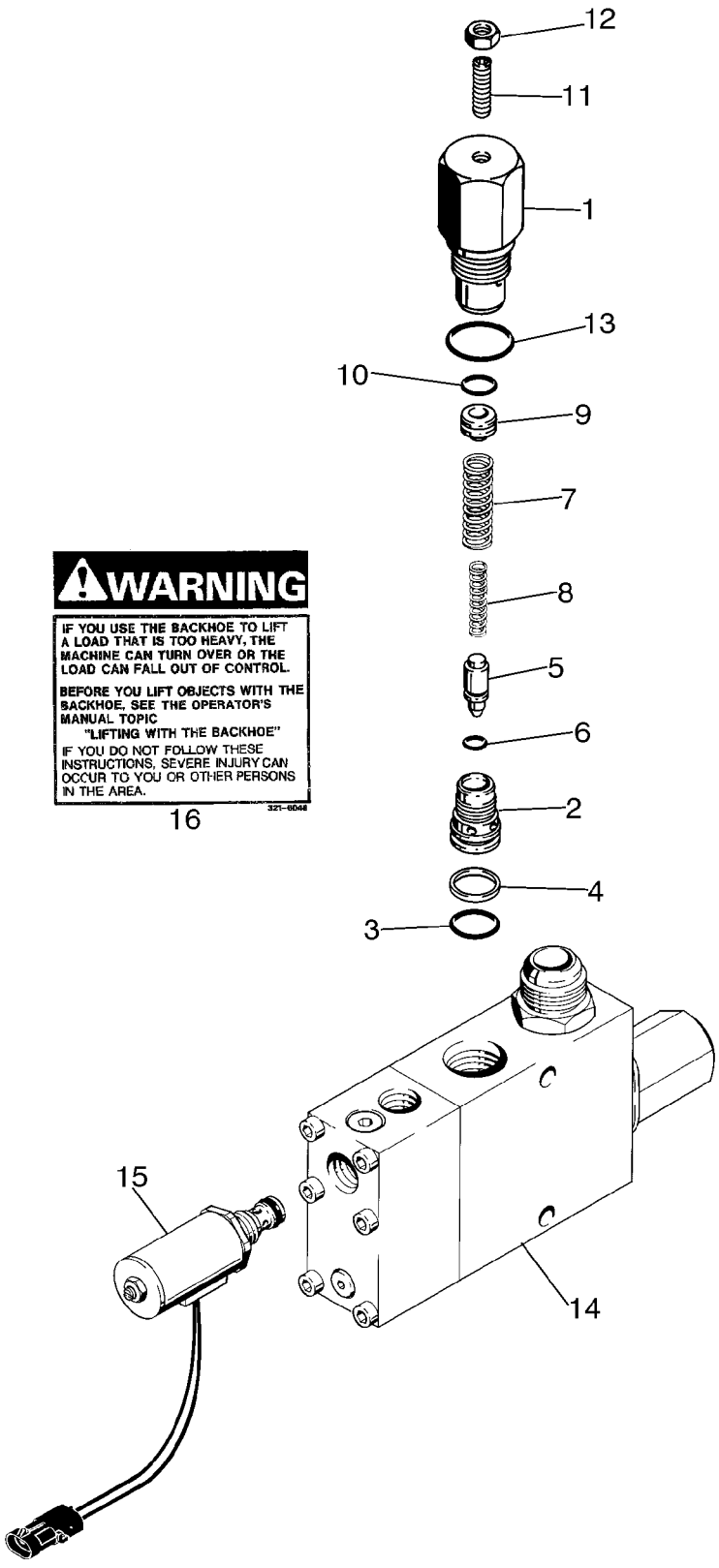

BS03B174

ELECTROVANNE - VERROUILLAGE DE LA FLECHE

REF	FN	PART NUMBER	YR/SN	QTY	DESCRIPTION
		189957A1		1	VALVE, Solenoid, Backhoe Boom Lock; Incl. Ref 1 - 16; Included In 399227A1 Backhoe Boom Lock Kit
		G110467		1	SOUPAPE, D£CHARGE, Circuit, Solenoid; Used In Production; Order G110077, Kit For Service
1		NSS		1	NON FOURNI SEPAREMENT, Body, Relief Valve
2		NSS		1	NON FOURNI SEPAREMENT, Seat, Relief Valve
3		238-6018		1	JOINT THORIQUE, -018, 90 Duro, .739" ID x .070" Thk, Face Seal
4		G35540		1	ANNEAU, Backup, Seat
5		NSS		1	NON FOURNI SEPAREMENT, Poppet
6		NSS		1	NON FOURNI SEPAREMENT, O-Ring
7		NSS		1	NON FOURNI SEPAREMENT, Spring, Relief, Outer
8		NSS		1	NON FOURNI SEPAREMENT, Spring, Relief, Inner
9		NSS		1	NON FOURNI SEPAREMENT, Piston
10		NSS		1	NON FOURNI SEPAREMENT, O-Ring
11		484-43120		1	VIS DE R£GLAGE, Hex Soc, 5/16"-24 x 1 1/4"
12		425-155		1	ECROU, Jam, 5/16"-24, G5
13		237-6012		1	JOINT THORIQUE, 12-1, 90 Duro, .924 ID x .118" Thk, Boss Seal
14		NSS		1	NON FOURNI SEPAREMENT, Body, Solenoid
15		221168A1		1	SOLENOIDE, 12 Volt; Relief, With Connector
		D150781		1	POCHETTE, Repair; Incl. (3) Springs, (1) Ball, (1) Poppet, (1) Plug; Not Serviced Separately; and D150810 Seal Kit, Not Shown
		D150810		1	JOINT, Kit, Incl. (8) O-Rings and (2) Backup Rings; Which Are Not Serviced Separately, Not Shown
		G110077		1	POCHETTE, Service For G110467, Circuit Relief Valve; Incl. G110078, Circuit Relief Valve Assembly (Ref. 1 - 13), Instruction Sheet
16		321-6046		2	DECALCOMANIE, Warning, If You Use The Backhoe To Lift A Load That Is Too Heavy

ACCUMULATEUR ASS. - SYSTEME ANTI-TANGAGE

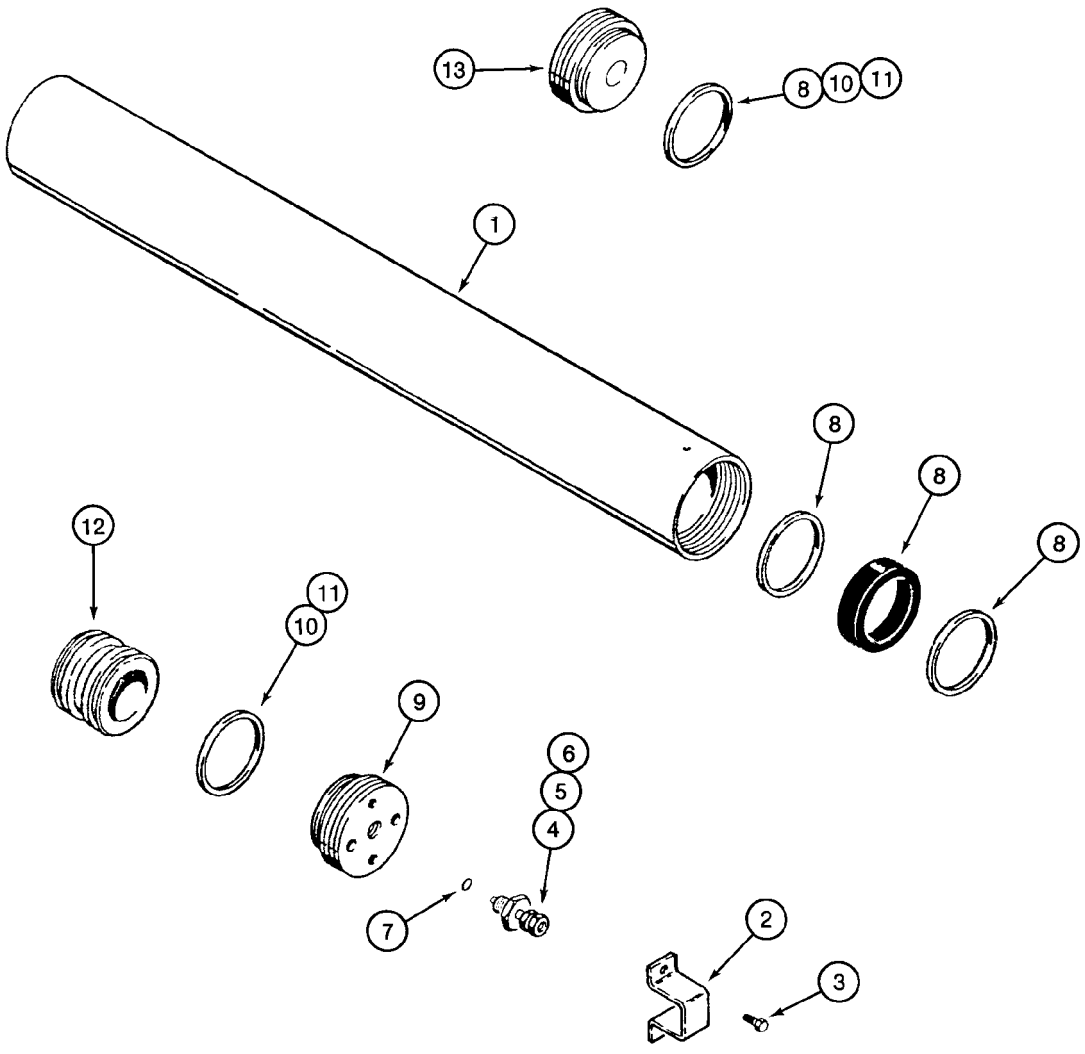

BS97C154

ACCUMULATEUR ASS. - SYSTEME ANTI-TANGAGE

REF	FN	PART NUMBER	YR/SN	QTY	DESCRIPTION
		234412A1		1	ACCUMULATEUR, Incl. Ref 1 - 13
1		NSS		1	NON FOURNI SEPAREMENT, Body
2		192895A1		1	PROTECTEUR
3		276-2456		2	VIS AUTO-TARAUDEUSE, Hex Hd, #10 x 3/8"
		1978142C1		1	VALVE, Incl. Ref 4 - 6
4		NSS		1	NON FOURNI SEPAREMENT, Valve, Pressure
5		1978143C1		1	PISTON
6		1978144C1		1	CHAPEAU
7		1978158C1		1	JOINT THORIQUE
8		1978141C1		1	POCHETTE-JOINTS, Includes (1) V-Type O-Ring, (2) Teflon Bearing Rings and (1) Body End Seal Ring; Component Parts Not Serviced Separately
9		NSS		1	NON FOURNI SEPAREMENT, Gland, Cylinder
10		NSS		2	NON FOURNI SEPAREMENT, O-Ring
11		NSS		2	NON FOURNI SEPAREMENT, Ring, Backup, If Used
12		NSS		1	NON FOURNI SEPAREMENT, Piston
13		NSS		1	NON FOURNI SEPAREMENT, Cap

FILTRE A HUILE

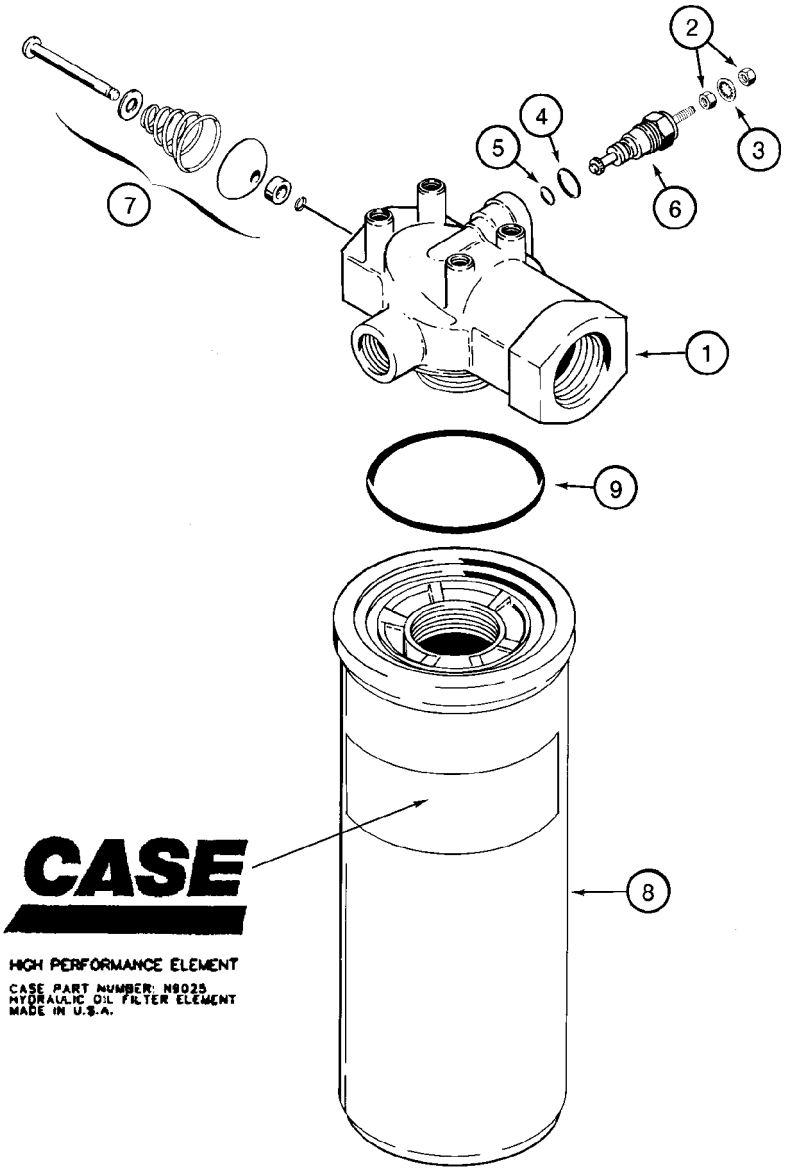

BS00D009

FILTRE A HUILE

REF	FN	PART NUMBER	YR/SN	QTY	DESCRIPTION
		87440045		1	FILTRE ASSY, Hydraulic Oil Filter; Incl. Ref 1 - 9
1		NSS		1	NON FOURNI SEPAREMENT, Head, Filter
		N6755		1	INDICATEUR, Restriction; Includes N6941, Ref 6
		N6941		1	POCHETTE, Restriction Indicator Repair; Incl. Ref 2 - 5; Order Ref 2 - 5
2		129-667		2	ECROU, #10-32, LH
3		493-21020		1	RONDELLE FREIN, Int Tooth, #10
4		237-6006		1	JOINT THORIQUE, 6-1, 90 Duro, .468" ID x .078" Thk, Boss Seal
5		238-5011		1	JOINT THORIQUE, -011, 70 Duro, .301" ID x .070" Thk
6		NSS		1	NON FOURNI SEPAREMENT, Indicator
7		NSS		1	NON FOURNI SEPAREMENT, Valve, By-Pass
		N9025		1	EL£MENT FILTRANT, Incl. Ref 8, 9
8		NSS		1	NON FOURNI SEPAREMENT, Element
9		238-5230		1	JOINT THORIQUE, -230, 70 Duro, 2.484" ID x .139" Thk

08-58		p1	07/07

VERIN - RELEVAGE DE LA CHARGEUSE

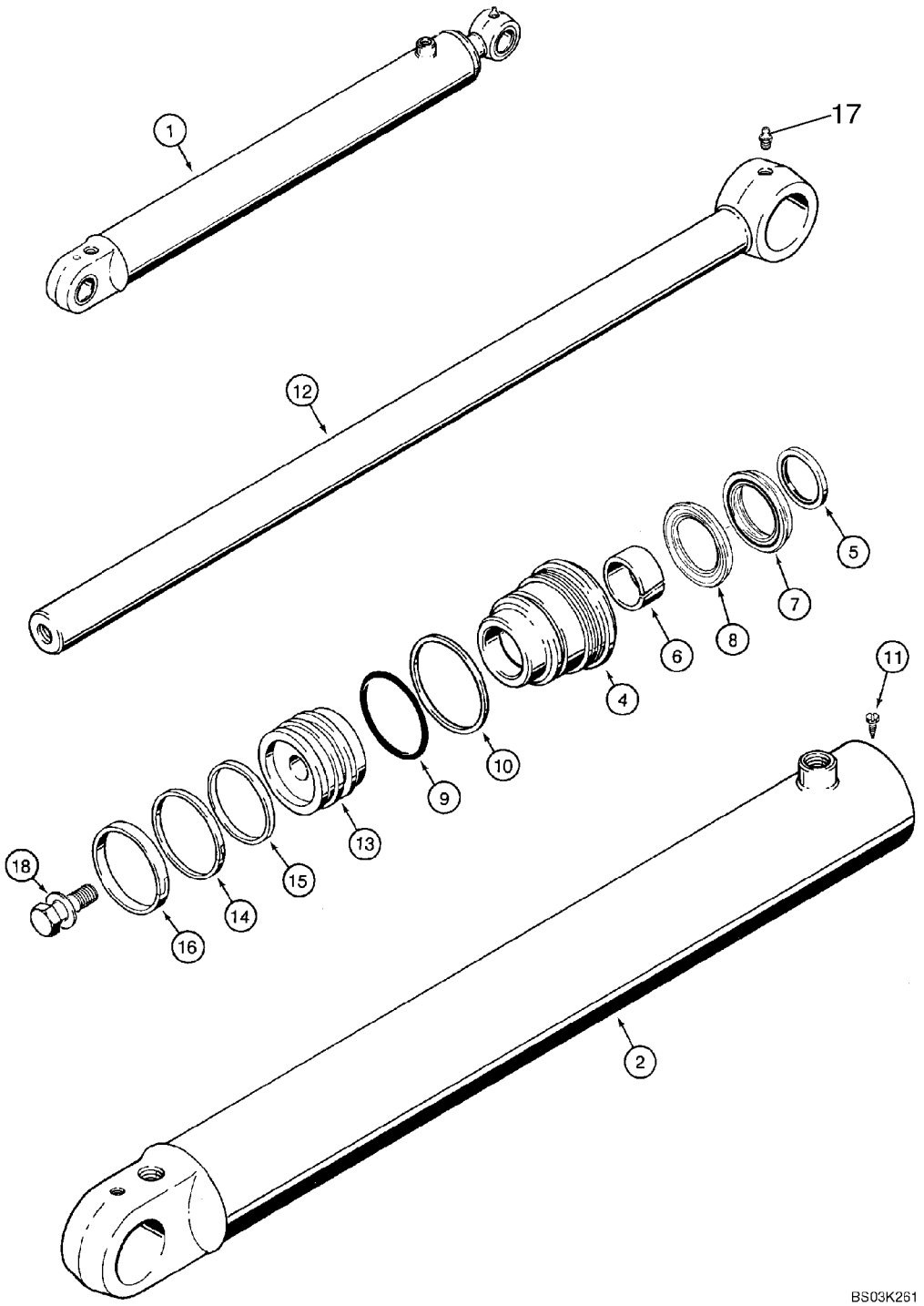

VERIN - RELEVAGE DE LA CHARGEUSE

REF	FN	PART NUMBER	YR/SN	QTY	DESCRIPTION
1		384240A1		2	VERIN, 82.6 ID x 766 mm strk; Loader Lift; Incl. Ref 2 - 18
2		384241A1		1	TUBE DE VERIN, TUBE, Without Bushings
4		1980321C3		1	PRESSE-ETOUPE
		1543260C1		1	JEU JOINTS ETANCHEITE, Seal Repair, Incl. Ref 5 - 10, 14 - 16
5		D95143		1	JOINT, Wiper
6		G102425		1	BAGUE
		1542875C1		1	POCHETTE DE JOINTS, Rod and Buffer Seal Kit; Incl. Ref 7, 8
7		NSS		1	NON FOURNI SEPAREMENT, Rod Seal
8		NSS		1	NON FOURNI SEPAREMENT, Buffer Seal
9		238-5233		1	JOINT THORIQUE, -233, 70 Duro, 2.859" ID x .139" Thk
10		G32122		1	ANNEAU
11		86642312		1	VIS AUTO-TARAUDEUSE, Hex Hd, #8 x 3/8"
12		133083A1		1	TIGE DE VERIN, 44 mm (1-3/4 in) dia
13		135161A1		1	PISTON
14		G102287		1	JOINT
15		S109444		1	ANNEAU
16		S109445		1	ANNEAU
17		219-1		1	GRAISSEUR, 1/8"-27 x .66 lg
18		86982437		1	BOULON SPECIAL, 1 x 2,5 in; Includes Washer

08-59		p1	09/07

VERIN - GODET DE LA CHARGEUSE

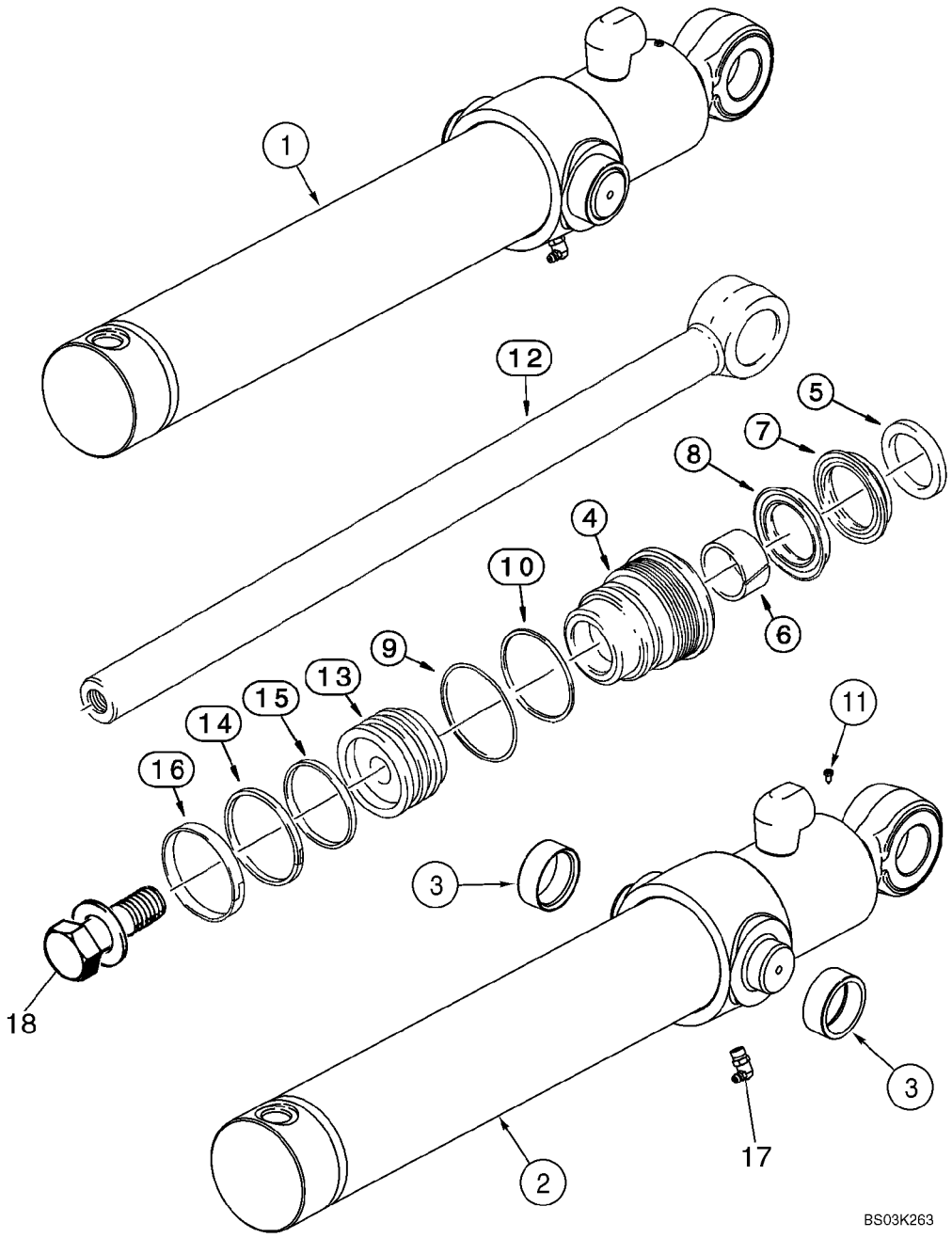

VERIN - GODET DE LA CHARGEUSE

REF	FN	PART NUMBER	YR/SN	QTY	DESCRIPTION
1		87609669		2	VERIN HYDRAULIQUE, 76 ID x 522 mm strk; Loader Bucket; Incl. Ref 2- 18
2		113135A2		1	TUBE DE VERIN, TUBE, Incl. Ref 3
3		G108512		2	BAGUE
4		297280A1		1	PRESSE-ETOUPE
		1543256C1		1	JEU JOINTS ETANCHEITE, Seal Repair; Incl. Ref 5 - 10, 14 - 16
5		D95142		1	JOINT, Wiper
6		G102424		1	BAGUE
		1542874C1		1	COLIS, Rod and Buffer Seal Kit; Incl. Ref 7, 8; Not Serviced Separately; Order 1543256C1 Seal Kit
7		NSS		1	NON FOURNI SEPAREMENT, Rod Seal; Order 1543256C1 Seal Kit
8		NSS		1	NON FOURNI SEPAREMENT, Buffer Seal; Order 1543256C1 Seal Kit
9		238-5231		1	JOINT THORIQUE, -231, 70 Duro, 2.609" ID x .139" Thk
10		G109298		1	ANNEAU
11		86642312		1	VIS AUTO-TARAUDEUSE, Hex Hd, #8 x 3/8", No. 8 x 3/8, self-tapping
12		87609666		1	TIGE DE VERIN, Rod, Piston; 38 mm (1-1/2 in) dia
13		G108518		1	PISTON
14		G102288		1	JOINT-D'ETANCH. ASS.
15		G100444		1	JOINT
16		G100449		1	BAGUE D"USURE
17		219-55		1	GRAISSEUR, 90Ü, 1/8" NPT x .84" lg, 90 deg, 1/8 PT x 27/32
18		86982435		1	BOULON SPECIAL, 3/4 x 2,5 in, Includes Washer

08-60		p1	10/07

VERIN - BENNE DE CHARGEUSE

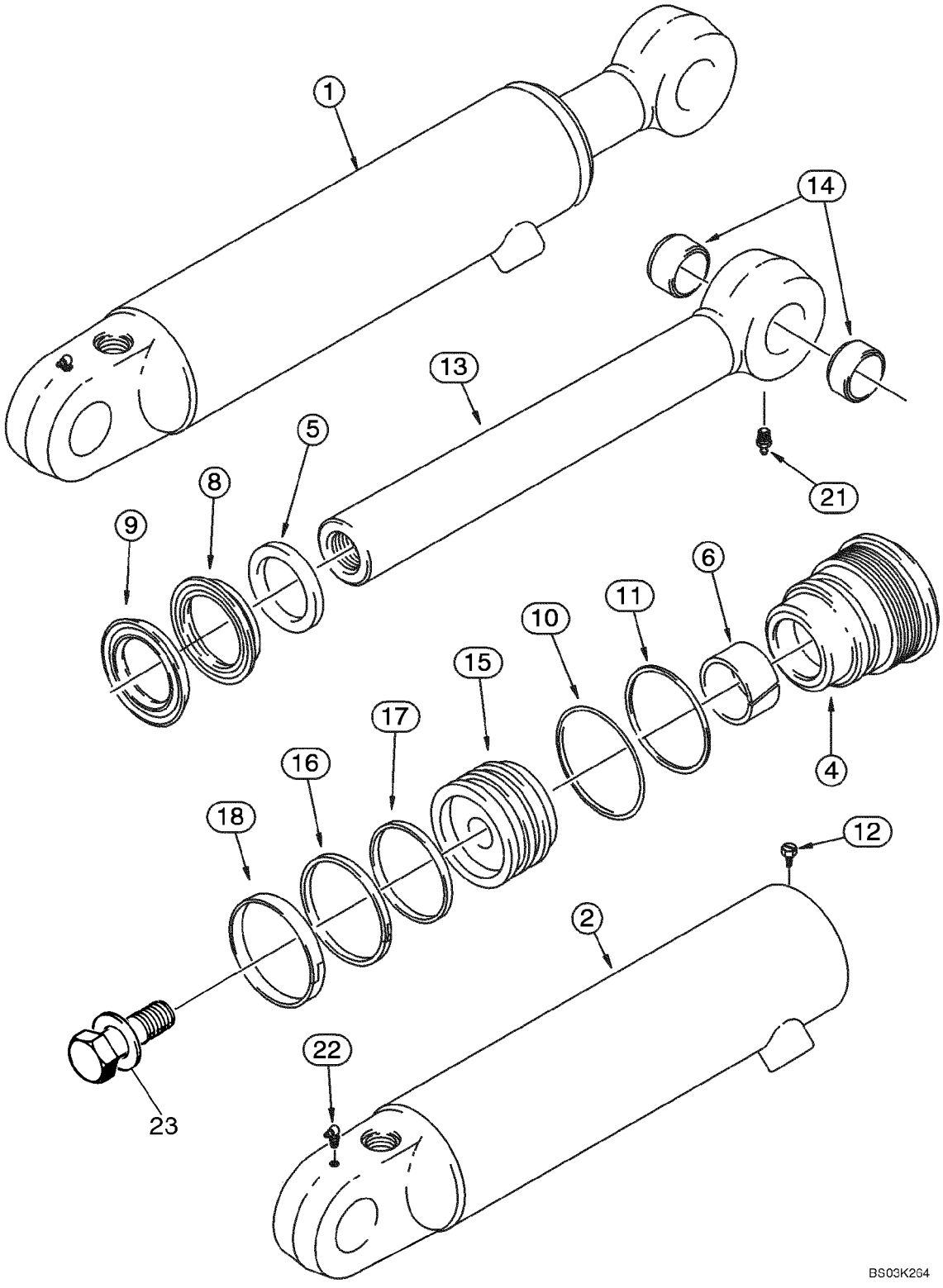

VERIN - BENNE DE CHARGEUSE

REF	FN	PART NUMBER	YR/SN	QTY	DESCRIPTION
1		87454017		1	VERIN, 76 ID x 231 mm strk; RH; Incl. Ref 2 - 23
1		87454016		1	VERIN, 76 ID x 231 mm strk; LH; Incl. Ref 2 - 23
2		87454907		1	TUYAUTERIE, RH; 87454017 Cylinder; Includes (2) 30634 Bushings, Ref 14
2		87454908		1	TUYAUTERIE, LH; 87454016 Cylinder; Includes (2) 30634 Bushings, Ref 14
4		297281A1		1	PALIER DE VERIN, Gland
		1543267C1		1	JEU JOINTS ETANCHEITE, Seal Repair; Incl. Ref 5 - 11, 16 - 18
5		D95143		1	JOINT
6		G102425		1	BAGUE
		1542875C1		1	POCHETTE DE JOINTS, Rod and Buffer Seal; Incl. Ref 8, 9; Not Serviced Separately; Order 1543267C1 Seal Kit
8		NSS		1	NON FOURNI SEPAREMENT, Rod Seal; Order 1543267C1 Seal Kit
9		NSS		1	NON FOURNI SEPAREMENT, Buffer Seal; Order 1543267C1 Seal Kit
10		238-5231		1	JOINT THORIQUE, -231, 70 Duro, 2.609" ID x .139" Thk
11		G109298		1	ANNEAU
12		86642312		1	VIS AUTO-TARAUDEUSE, Hex Hd, #8 x 3/8"
13		1346195C1		1	TIGE DE VERIN, 44 mm (1-3/4 in) dia; Incl. Ref 14
14		30634		2	BAGUE
15		1340798C1		1	PISTON
16		G102288		1	JOINT-D'ETANCH. ASS.
17		G100444		1	JOINT
18		G100449		1	BAGUE D"USURE
21		219-1		1	GRAISSEUR, 1/8"-27 x .66 lg
22		219-55		1	GRAISSEUR, 90Ü, 1/8" NPT x .84" lg
23		86982437		1	BOULON SPECIAL, 1,0 x 2,5 in, Includes Washer

08-61		p1	01/08

VERIN - STABILISATEUR DE LA PELLE RETRO

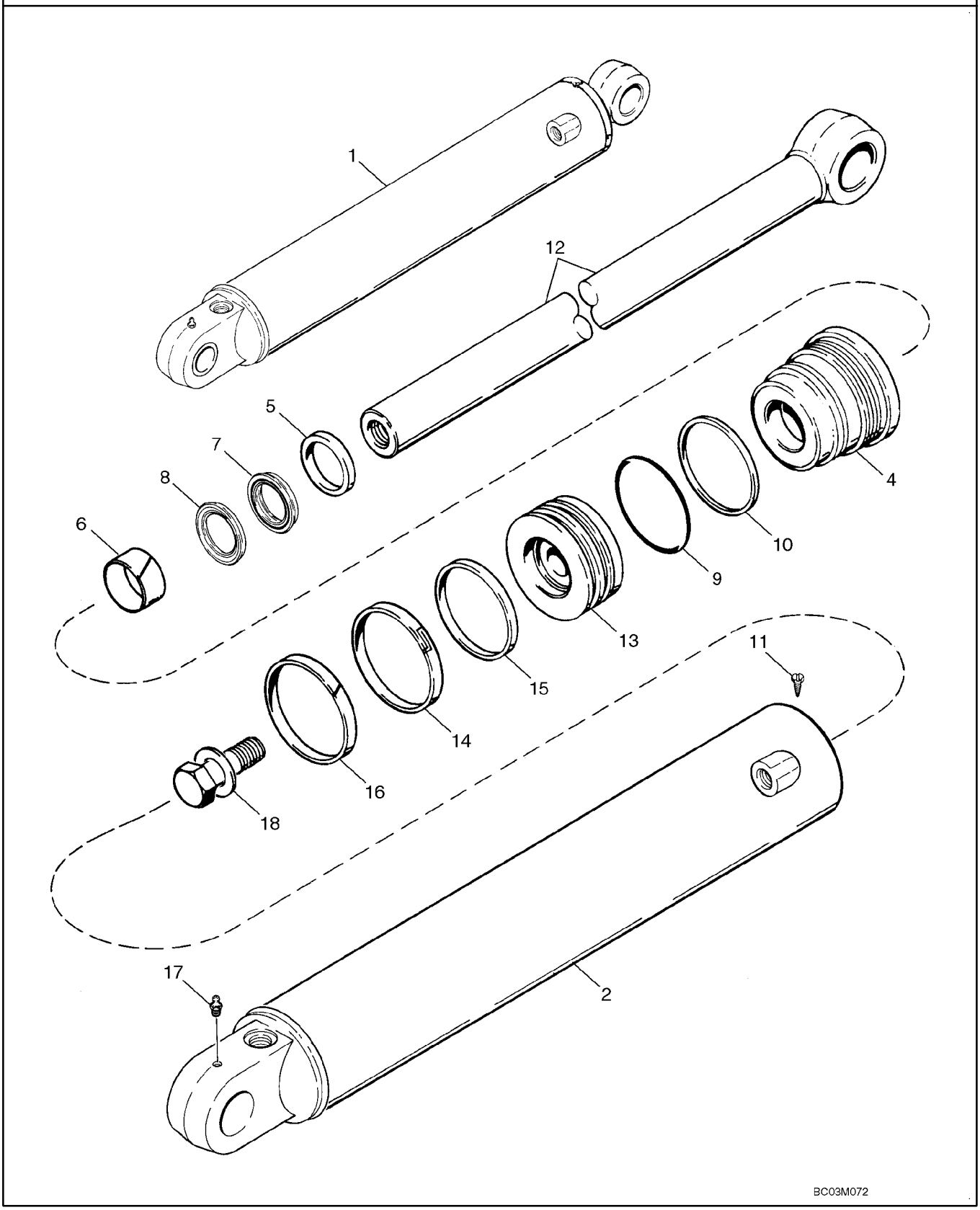

VERIN - STABILISATEUR DE LA PELLE RETRO

REF	FN	PART NUMBER	YR/SN	QTY	DESCRIPTION
1		195503A1		1	VERIN, 102 ID x 553 mm strk, RH, Incl. Ref 2 - 18
1		195504A1		1	VERIN, 102 ID x 553 mm strk, LH, Incl. Ref 2 - 18
2		195505A1		1	TUBE, RH
2		195506A1		1	TUBE, LH
4		128135A2		1	PRESSE-ETOUPE
		1543269C1		1	JEU JOINTS ETANCHEITE, Seal, Incl. Ref 5 - 10, 14 - 16
5		D95144		1	JOINT ANNULAIRE, WIPER
6		G101533		1	BAGUE D"USURE
		1542876C1		1	COLIS POUR RECHANGE, Rod and Buffer Seal; Incl. Ref 7, 8; Not Serviced Separately; Order 1543269C1 Seal Kit
7		NSS		1	NON FOURNI SEPAREMENT, Rod Seal; Order 1543269C1 Seal Kit
8		NSS		1	NON FOURNI SEPAREMENT, Buffer Seal; Order 1543269C1 Seal Kit
9		238-5239		1	JOINT THORIQUE, -239, 70 Duro, 3.609" ID x .139" Thk
10		G109299		1	ANNEAU, Backup
11		276-2446		1	VIS AUTO-TARAUDEUSE, Hex Hd, #8 x 3/8"
12		123726A1		1	TIGE DE VERIN, 51 mm (2 in) dia
13		G108123		1	PISTON
14		G102285		1	JOINT
15		G100440		1	ANNEAU
16		G100448		1	ANNEAU
17		219-1		1	GRAISSEUR, 1/8"-27 x .66 lg
18		86982440		1	BOULON SPECIAL, 1,25 x 2,75; Incl. Washer

08-62		p1	11/07

VERIN - DEBATTEMENT DE LA RETROPELLE

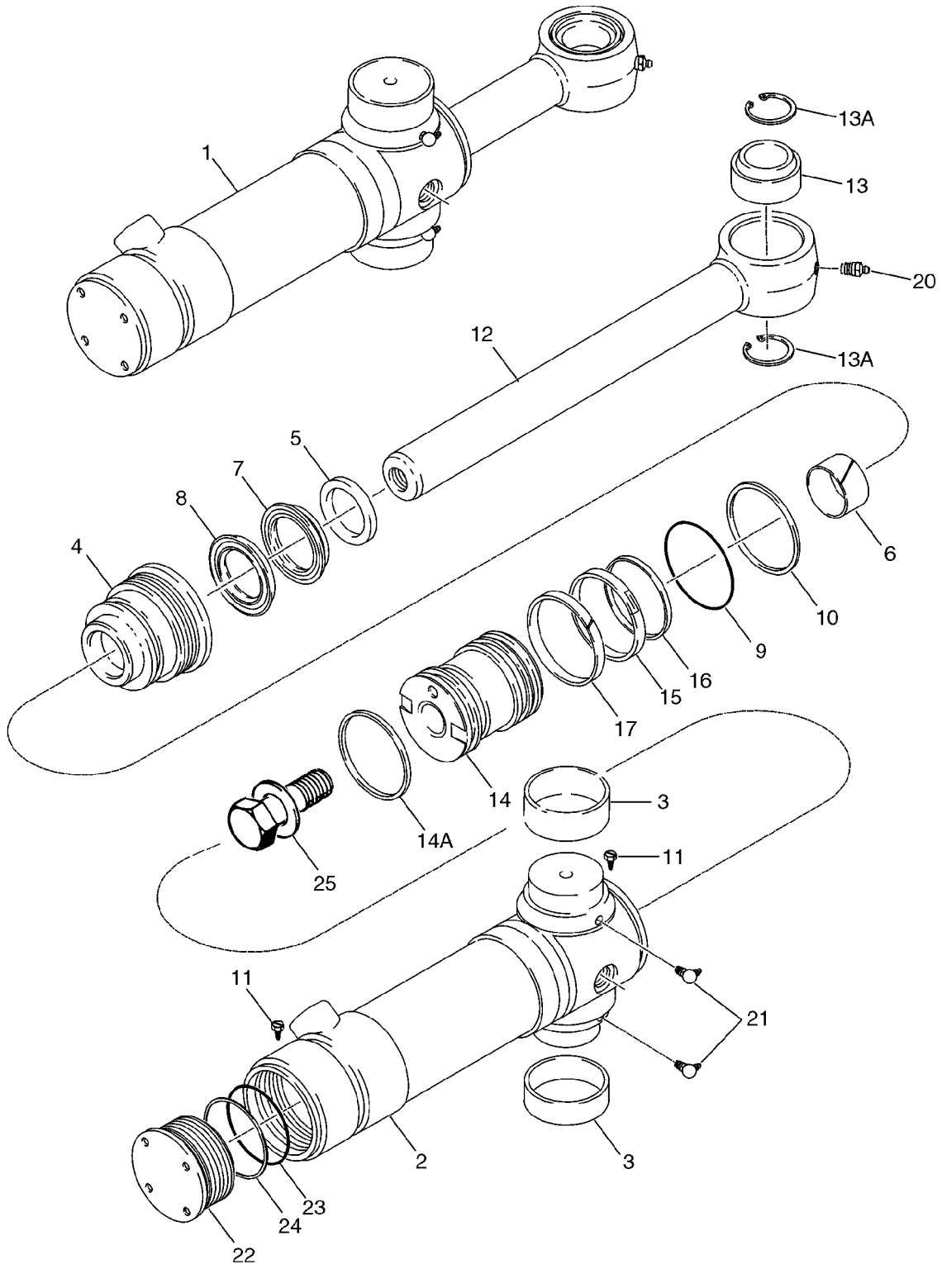

VERIN - DEBATTEMENT DE LA RETROPELLE

REF	FN	PART NUMBER	YR/SN	QTY	DESCRIPTION
1		188027A2		2	VERIN, 95 ID x 292 mm strk, Incl. Ref 2 - 25
2		220165A2		1	TUBE, Incl. Ref 2, 3, 11, 22 - 24; Not Available As An Assembly; Order Components
2		188028A2		1	TUYAUTERIE, Incl. Ref 3
3		124568A2		2	ANNEAU, Bushing
4		188032A2		1	PRESSE-ETOUPE
		191747A1		1	JOINT, KIT, Incl. Ref 5 - 10, 14A - 17, 23, 24
5		D95144		1	JOINT ANNULAIRE, WIPER
6		G101533		1	BAGUE D"USURE
		1542876C1		1	COLIS POUR RECHANGE, Rod and Buffer Seal; Incl. Ref 7, 8; Not Serviced Separately; Order 191747A1 Seal Kit
7		NSS		1	NON FOURNI SEPAREMENT, Rod Seal; Order 191747A1 Seal Kit
8		NSS		1	NON FOURNI SEPAREMENT, Buffer Seal; Order 191747A1 Seal Kit
9		238-5237		1	JOINT THORIQUE, -237, 70 Duro, 3.359" ID x .139" Thk
10		G32126		1	ANNEAU, Backup
11		86642312		2	VIS AUTO-TARAUDEUSE, Hex Hd, #8 x 3/8"
12		87413722		1	TIGE DE VERIN, 51 mm (2 in) dia, Incl. Ref 13, 13A
13		137248A1		1	ANNEAU
13A		100-21315		2	ANNEAU D'ARRąT, 3.156", Int, #315
14		188034A3		1	PISTON
14A		191252A1		1	JOINT D'HUILE, Cast Iron
15		1340764C1		1	JOINT-D'ETANCH. ASS.
16		1340763C1		1	ANNEAU
17		1980245C1		1	JOINT D'HUILE
20		219-1		1	GRAISSEUR, 1/8"-27 x .66 lg
21		219-55		2	GRAISSEUR, 90Ü, 1/8" NPT x .84" lg
		188035A1		1	PALIER DE VERIN, Incl. Ref 22 - 24; Not Available As An Assembly, Order Components
22		188036A1		1	CHAPEAU, End
23		238-5239		1	JOINT THORIQUE, -239, 70 Duro, 3.609" ID x .139" Thk

VERIN - DEBATTEMENT DE LA RETROPELLE

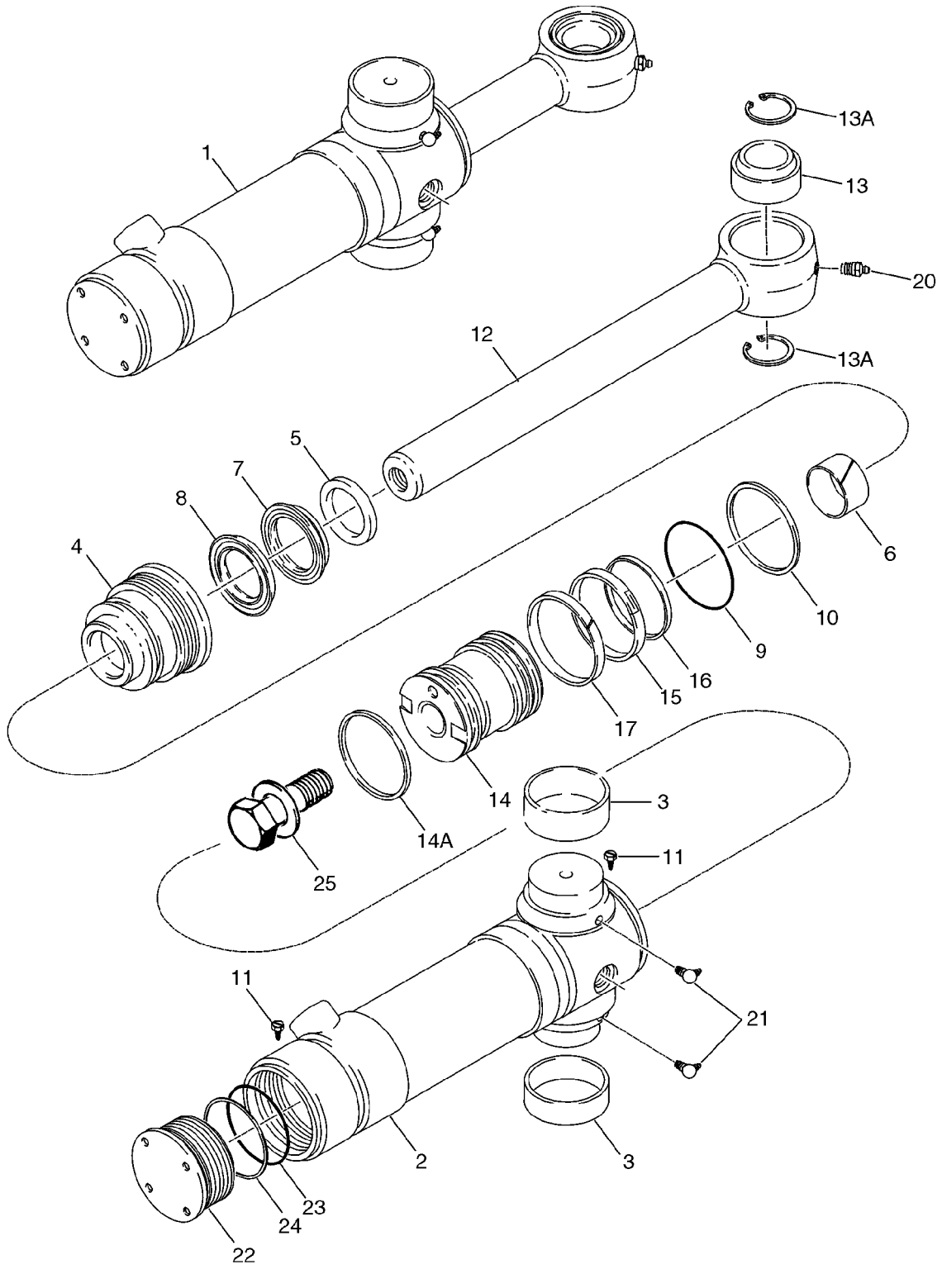

VERIN - DEBATTEMENT DE LA RETROPELLE

REF	FN	PART NUMBER	YR/SN	QTY	DESCRIPTION
24		G109299		1	ANNEAU, Backup
25		86982439		1	BOULON SPECIAL, 1 x 4,0; Incl. Washer

VERIN - FLECHE DE LA RETROPELLE

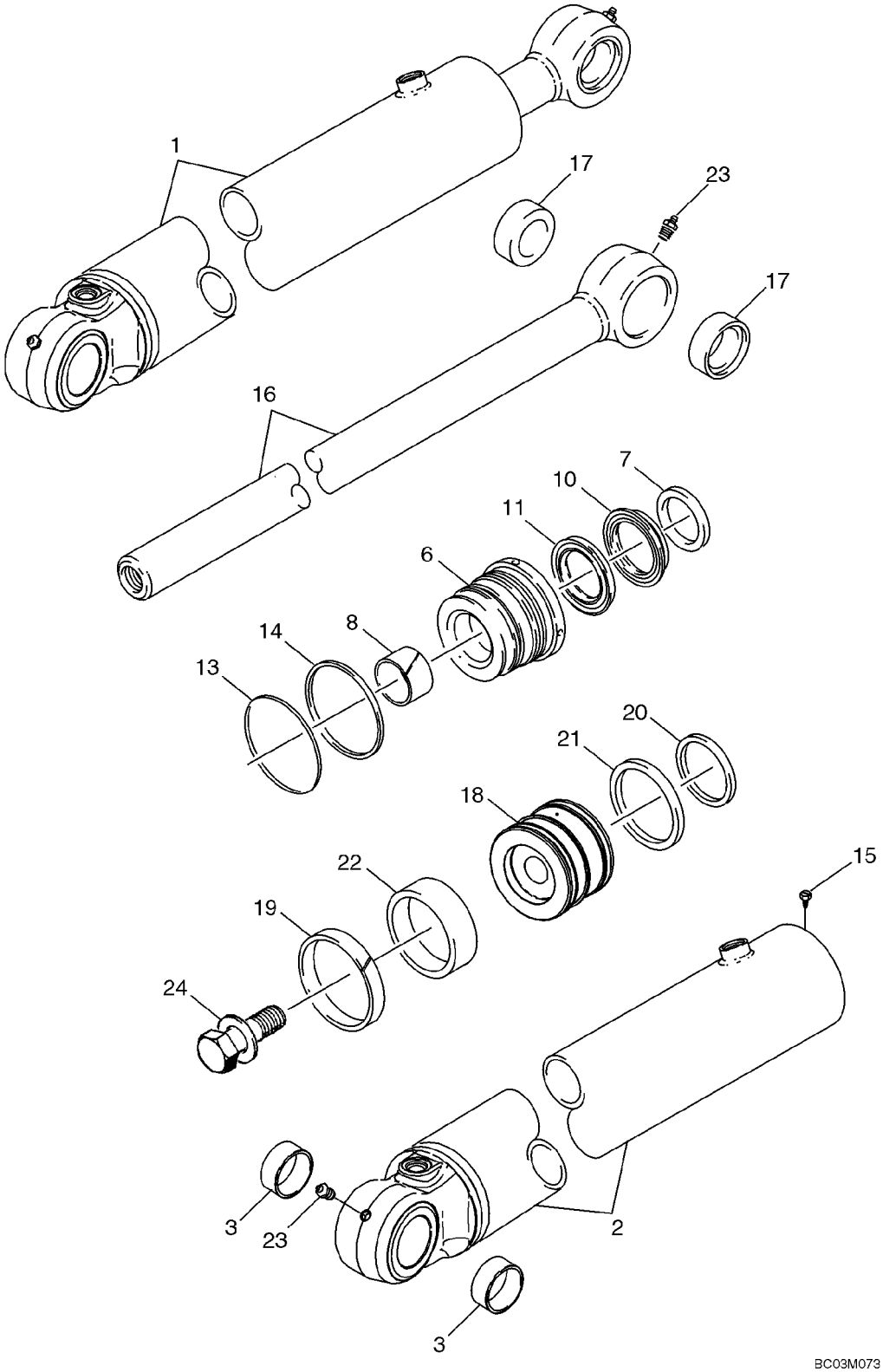

VERIN - FLECHE DE LA RETROPELLE

REF	FN	PART NUMBER	YR/SN	QTY	DESCRIPTION
1		189653A2		1	VERIN, 114 ID x 982 mm strk, Incl. Ref 2 - 24
2		397080A1		1	TUBE DE VERIN, Incl. Ref 3
3		D149079		2	BAGUE, 50 x 34 mm lg
6		127862A2		1	PALIER DE VERIN, GLAND
		182218A1		1	POCHETTE-JOINTS, Incl. Ref 7 - 14, 19 - 22
7		D95145		1	JOINT
8		G102426		1	BAGUE
		1542877C1		1	POCHETTE DE JOINTS, Rod and Buffer Seal; Incl. Ref 10, 11; Not Serviced Separately; Order 182218A1 Seal Kit
10		NSS		1	NON FOURNI SEPAREMENT, Rod Seal; Order 182218A1 Seal Kit
11		NSS		1	NON FOURNI SEPAREMENT, Buffer Seal; Order 182218A1 Seal Kit
13		238-5243		1	JOINT THORIQUE, -243, 70 Duro, 4.109" ID x .139" Thk
14		G109300		1	ANNEAU, Backup
15		86642312		1	VIS AUTO-TARAUDEUSE, Hex Hd, #8 x 3/8"
16		182109A1		1	TIGE DE VERIN, 57 mm (2-1/4 in) dia, Incl. Ref 17
17		D149079		2	BAGUE, 50 x 34 mm lg
18		189657A2		1	PISTON-DE-VERIN
19		182116A1		1	ANNEAU, Cast Iron
20		G101995		1	JOINT ANNULAIRE
21		G101994		2	JOINT
22		G101996		1	BAGUE D"USURE
23		219-1		2	GRAISSEUR, 1/8"-27 x .66 lg
24		86982442		1	BOULON SPECIAL, 1,25 x 3,25; Incl. Washer

08-64		p1	11/07

VERIN - BRAS DE LA RETROPELLE

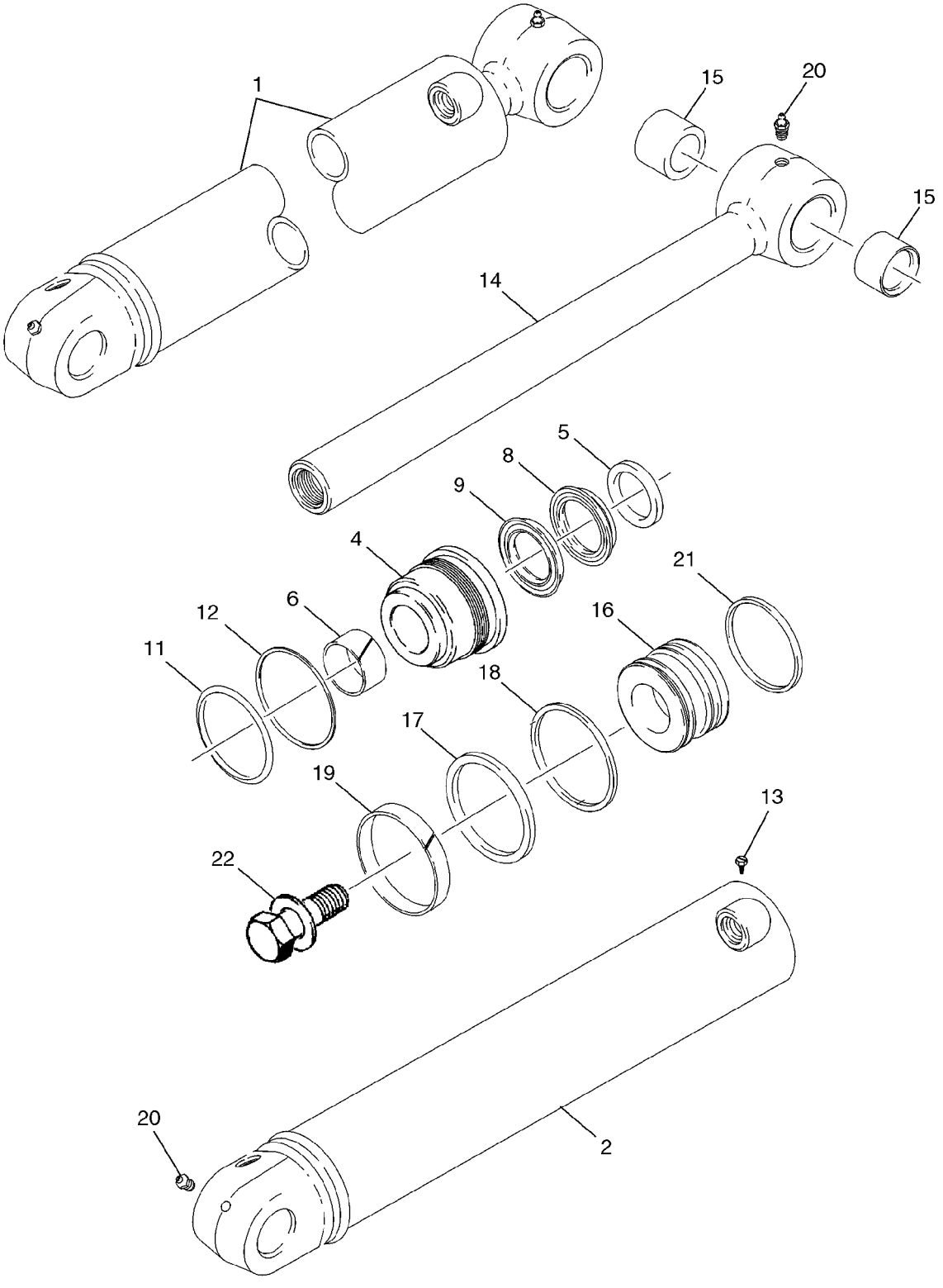

VERIN - BRAS DE LA RETROPELLE

REF	FN	PART NUMBER	YR/SN	QTY	DESCRIPTION
1		233114A2		1	VERIN, 108 ID x 686 mm strk, Incl. Ref 2 - 22
2		297952A1		1	TUYAU, TUBE
4		234141A2		1	PALIER DE VERIN, GLAND
		234844A1		1	JEU JOINTS ETANCHEITE, Incl. Ref 5 - 12, 17 - 19, 21
5		D95145		1	JOINT
6		G102426		1	BAGUE
		1542877C1		1	POCHETTE DE JOINTS, Rod and Buffer Seal; Incl. Ref 8, 9; Not Serviced Separately; Order 234844A1 Seal Kit
8		NSS		1	NON FOURNI SEPAREMENT, Rod Seal; Order 234844A1 Seal Kit
9		NSS		1	NON FOURNI SEPAREMENT, Buffer Seal; Order 234844A1 Seal Kit
11		238-5241		1	JOINT THORIQUE, -241, 70 Duro, 3.859" ID x .139" Thk
12		G32176		1	ANNEAU, Backup
13		86642312		1	VIS AUTO-TARAUDEUSE, Hex Hd, #8 x 3/8"
14		175778A1		1	TIGE DE VERIN, 57 mm (2-1/4 in) dia, Incl. Ref 15
15		D149079		2	BAGUE
16		233110A2		1	PISTON
17		G110531		1	JOINT
18		G110529		1	ANNEAU
19		G110530		1	ANNEAU
20		219-1		2	GRAISSEUR, 1/8"-27 x .66 lg
21		233104A1		1	ANNEAU, Cast Iron
22		86982443		1	BOULON SPECIAL, 1-3/8 x 3,5; Incl. Washer

08-65		p1	11/07

VERIN - GODET DE LA RETROPELLE

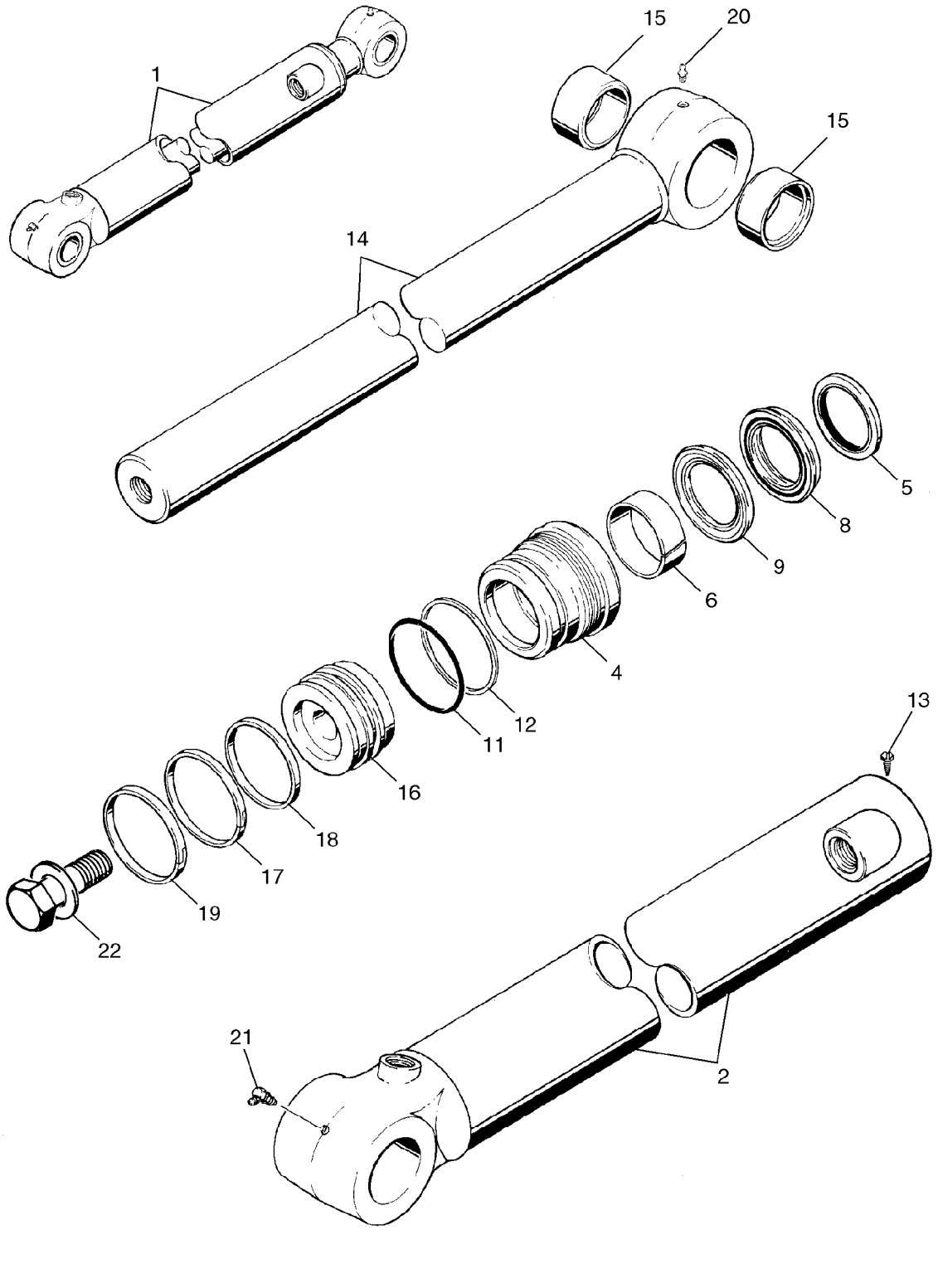

VERIN - GODET DE LA RETROPELLE

REF	FN	PART NUMBER	YR/SN	QTY	DESCRIPTION
1		128760A1		1	VERIN, 83 ID x 872 mm strk, Incl. Ref 2 - 22
2		128761A1		1	TUBE DE VERIN, TUBE
4		128770A2		1	PALIER DE VERIN, GLAND
		131750A2		1	JEU JOINTS ETANCHEITE, Seal, Incl. Ref 5 - 12, 17 - 19
5		D95145		1	JOINT
6		1346476C1		1	ANNEAU
		1542877C1		1	POCHETTE DE JOINTS, Rod and Buffer Seal; Incl. Ref 8, 9; Not Serviced Separately; Order 131750A2 Seal Kit
8		NSS		1	NON FOURNI SEPAREMENT, Rod Seal; Order 131750A2 Seal Kit
9		NSS		1	NON FOURNI SEPAREMENT, Buffer Seal; Order 131750A2 Seal Kit
11		238-5233		1	JOINT THORIQUE, -233, 70 Duro, 2.859" ID x .139" Thk
12		G32122		1	ANNEAU, Backup
13		86642312		1	VIS AUTO-TARAUDEUSE, Hex Hd, #8 x 3/8"
14		198033A1		1	TIGE DE VERIN, 57 mm (2-1/4 in) dia, Incl. Ref 15
15		D140029		2	BAGUE
16		128772A1		1	PISTON
17		G102287		1	JOINT
18		S109444		1	ANNEAU
19		S109445		1	ANNEAU
20		219-1		1	GRAISSEUR, 1/8"-27 x .66 lg
21		219-36		1	GRAISSEUR, 45Ü, 1/8" NPT x 7/8" lg
22		86982441		1	BOULON SPECIAL, 1,25 x 3,00; Incl. Washer

08-66		p1	12/07

VERIN - BALANCIER EXTENSIBLE DE LA PELLE RETRO

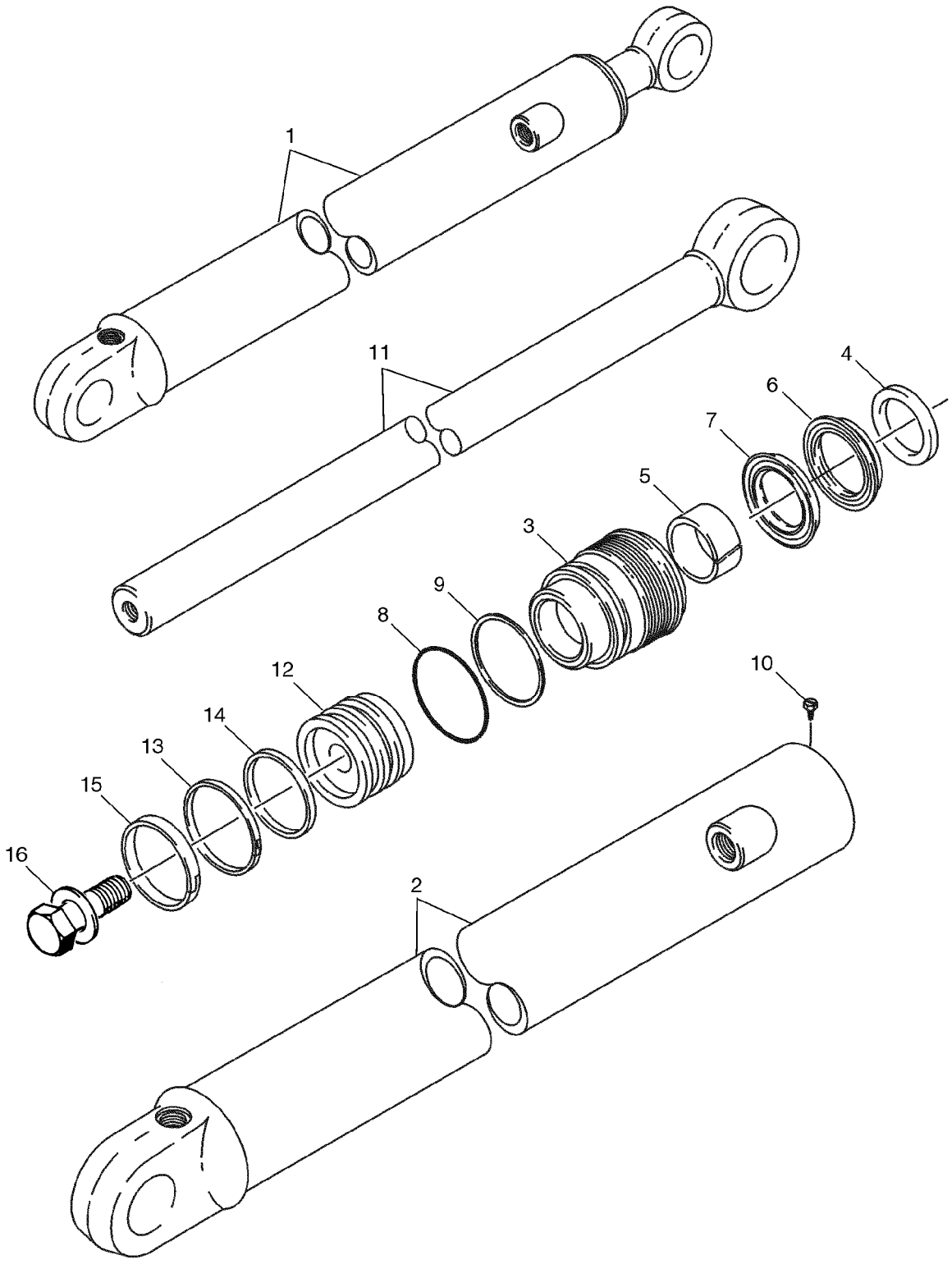

VERIN - BALANCIER EXTENSIBLE DE LA PELLE RETRO

REF	FN	PART NUMBER	YR/SN	QTY	DESCRIPTION
1		1340969C2		1	VERIN, 76 ID x 1068 mm strk; Incl. Ref 2 - 16
2		1340970C1		1	TUBE DE VERIN, TUBE
3		297281A1		1	PALIER DE VERIN, GLAND
		1543267C1		1	JEU JOINTS ETANCHEITE, Seal; Incl. Ref 4 - 9, 13 - 15
4		D95143		1	JOINT, WIPER
5		G102425		1	BAGUE
		1542875C1		1	POCHETTE DE JOINTS, Rod and Buffer Seal; Incl. Ref 6, 7; Not Serviced Separately; Order 1543267C1 Seal Kit
6		NSS		1	NON FOURNI SEPAREMENT, Rod Seal; Order 1543267C1 Seal Kit
7		NSS		1	NON FOURNI SEPAREMENT, Buffer Seal; Order 1543267C1 Seal Kit
8		238-5231		1	JOINT THORIQUE, -231, 70 Duro, 2.609" ID x .139" Thk
9		G109298		1	ANNEAU, Backup
10		276-2446		1	VIS AUTO-TARAUDEUSE, Hex Hd, #8 x 3/8"
11		1980296C1		1	TIGE DE VERIN, 44 mm (1-3/4 in) dia
12		G107277		1	PISTON
13		G102288		1	JOINT-D'ETANCH. ASS.
14		G100444		1	JOINT
15		G100449		1	BAGUE D"USURE
16		86982435		1	BOULON SPECIAL, 3/4 x 2,5 in, Incl. Washer

NOTES

SECTION INDEX
Châssis/Accessoires

09-01	COMMANDES - RELEVAGE ET GODET DES BRAS DE RELEVAGE
09-01A	POIGNEE, COMMANDE DU CHARGEUR - TRANSMISSION, 2WD, 4WD
09-02	COMMANDES - BENNE DE CHARGEUSE
09-03	COMMANDES - ASSIETTE AUTOMATIQUE DES BRAS DE RELEVAGE
09-04	CADRE - RELEVAGE DE LA CHARGEUSE
09-05	CADRE - TRINGLERIE DES BRAS DE RELEVAGE
09-06	GODETS, CHARGEUSE ê LONGUE LÔVRE (82 IN)
09-07	GODET, CHARGEUSE ê LONGUE LÔVRE (93 IN)
09-08	GODET, BENNE DE CHARGEUSE
09-09	GARANT - DISTRIBUTEUR, BRAS DE RELEVAGE
09-10	COUPLEUR, OUTIL, DE S£CURIT£
09-11	COUVERCLES - TOURELLE DE LA PELLE RETRO, SANS DE COMMANDE PILOTE
09-12	SUPPORT DE TOUR DE CONTRĎLE ET JOINTS DE PELLE R£TRO, SANS DE COMMANDE PILOTE
09-13	TOURELLE DE LA PELLE RETRO SUPPORT, AVEC DE COMMANDE PILOTE
09-14	TOURELLE DE LA PELLE RETRO SOUFFLET DE JOINT, AVEC DE COMMANDE PILOTE
09-15	TOURELLE DE LA PELLE RETRO LEVIER (VERROU DE MAINTIEN DE BRAS DE RELEVAGE), AVEC DE COMMANDE PILOTE
09-16	COMMANDES - PELLE RETRO, AVEC D£BATTEMENT AU PIED (MODÔLES AVEC OU SANS BALANCIER EXTENSIBLE)
09-17	COMMANDES - PELLE RETRO, AVEC D£BATTEMENT AU PIED (MODÔLES AVEC BALANCIER EXTENSIBLE)
09-18	COMMANDES - PELLE RETRO, AVEC D£BATTEMENT A LA MAIN (MODÔLES AVEC OU SANS BALANCIER EXTENSIBLE)
09-19	COMMANDES - PELLE RETRO, AVEC D£BATTEMENT A LA MAIN (MODÔLES AVEC OU SANS BALANCIER EXTENSIBLE)
09-19A	COMMANDES - PELLE RETRO, SCHEMA DE CONTROLE DE L'EXCAVATRICE
09-20	COMMANDES - PELLE RETRO, AVEC D£BATTEMENT A LA MAIN (MODÔLES AVEC BALANCIER EXTENSIBLE)
09-21	COMMANDES - CIRCUIT HYDRAULIQUE AUXILIAIRE POUR LA PELLE RETRO, SANS DE COMMANDE PILOTE
09-22	RETROPELLE - STABILISATEURS, PLAQUES ET PATINS
09-23	RETROPELLE - TOURELLE ET VERINS DE DEBATTEMENT
09-24	RETROPELLE - FLECHE ET TOURELLE DE DEBATTEMENT
09-24A	FLECHE GARANT
09-25	VERROU DE MAINTIEN DE BRAS DE RELEVAGE (SANS DE COMMANDE PILOTE)
09-25A	VERROU DE MAINTIEN DE BRAS DE RELEVAGE (AVEC DE COMMANDE PILOTE)
09-26	RETROPELLE - BALANCIER ET GODET
09-27	RETROPELLE - BALANCIER EXTENSIBLE
09-28	GODET, PELLE R£TRO UNIVERSELLE (305 MM (12 INCH) WIDE)
09-29	GODET, PELLE R£TRO UNIVERSELLE (406 MM (16 INCH) WIDE)
09-30	GODET, PELLE R£TRO UNIVERSELLE (457 MM (18 INCH) WIDE)
09-31	GODET, PELLE R£TRO (457 MM (18 INCH) WIDE)
09-32	GODET, PELLE R£TRO UNIVERSELLE (610 MM (24 INCH) / 762 MM (30 INCH) WIDE)
09-33	GODET, PELLE R£TRO (610 MM (24 INCH) WIDE)
09-34	GODET, PELLE R£TRO UNIVERSELLE (914 MM (36 INCH) WIDE)
09-35	GODET, PELLE R£TRO UNIVERSELLE (610 MM (24 INCH) WIDE)
09-35A	ENSEMBLE DE POINT DE GEL
09-36	CONTREPOIDS AVANT
09-37	CHASSIS / MONTAGES, COSSE - GRILLE, ADMISSION D'AIR

SECTION INDEX
Châssis/Accessoires

09-38	R£SERVOIR, HUILE - COMPARTIMENT DE BATTERIES ET BOITE A OUTILS
09-39	BOĊTIER DE RADIATEUR
09-40	CAPOT - PANNEAUX LATERAUX
09-41	CAPOT - CALANDRE
09-42	PLAQUES, PLANCHER - TAPIS DE SOL
09-43	GARDE-BOUE, GAUCHE - PANNEAU, FERMETURE ARRIERE (VIDE-POCHES AVEC PORTE-GOBELET)
09-44	EXTENSION DE GARDE BOUE
09-45	GARDE-BOUE
09-46	SIEGE (SEARS, STANDARD)
09-47	SIEGE - SUPPORT (SEARS SUSPENSION M£CANIQUE)
09-48	SIĈGE, SUSPENSION M£CANIQUE (SEARS)
09-49	SIEGE - SUPPORT (SUSPENSION PNEUMATIQUE)
09-53	CABINE - FENETRE, RETROVISEUR ET OUVERTURE
09-54	CABINE - CHASSIS ET COUVERCLES
09-55	CABINE - PORTES
09-56	CABINE - MONTAGE DE PORTIĈRE
09-57	CABINE - FENąTRE DROITE, POUR CADRES DE CABINE ê UNE SEULE PORTIĈRE
09-58	CABINE - VITRE, ARRIĈRE
09-59	CABINE - LAVE-GLACE
09-60	CABINE - ESSUIE-GLACE
09-61	GARNITURE DE LA CABINE - FILTRE, DEFLECTEUR, PLAFONNIER
09-62	CABINE - FILTRE A AIR
09-63	CABINE - CARTER DE LA SOUFFLANTE, DURITS DE VENTILATION, CONDUITES DE PURGE
09-64	CABINE - CHAUFFAGE
09-65	CABINE - CONDUITES DE LA CLIMATISATION, RADIATEUR D'EVAPORATION
09-66	CABINE - CLIMATISATION, CONDENSATEUR, DESSICCATEUR
09-67	CABINE - COMPRESSEUR DE LA CLIMATISATION
09-68	STRUCTURE ROPS - CADRE, COUVERCLES, RETROVISEUR, VISIERE-ECRAN
09-69	STRUCTURE ROPS - VITRE
09-70	STRUCTURE ROPS - ESSUIE-GLACE AVANT ET LAVE-GLACE
09-71	R£TROVISSEUR - SUPPORT, MODĈLE DE CABINE
09-72	TRIANGLE V£HICULE LENT
09-73	AUTOCOLLANTS
09-74	AUTOCOLLANTS
09-75	AUTOCOLLANTS
09-76	AUTOCOLLANTS - ANGLAIS
09-77	AUTOCOLLANTS - ESPAGNOL D'AM£RIQUE LATINE
09-78	AUTOCOLLANTS - FRAN¢AIS CANADIEN
09-79	AUTOCOLLANTS - ANGLAIS
09-80	AUTOCOLLANTS - ESPAGNOL D'AM£RIQUE LATINE
09-81	AUTOCOLLANTS - FRAN¢AIS CANADIEN

NOTES

09-01		p1	11/07

COMMANDES - RELEVAGE ET GODET DES BRAS DE RELEVAGE

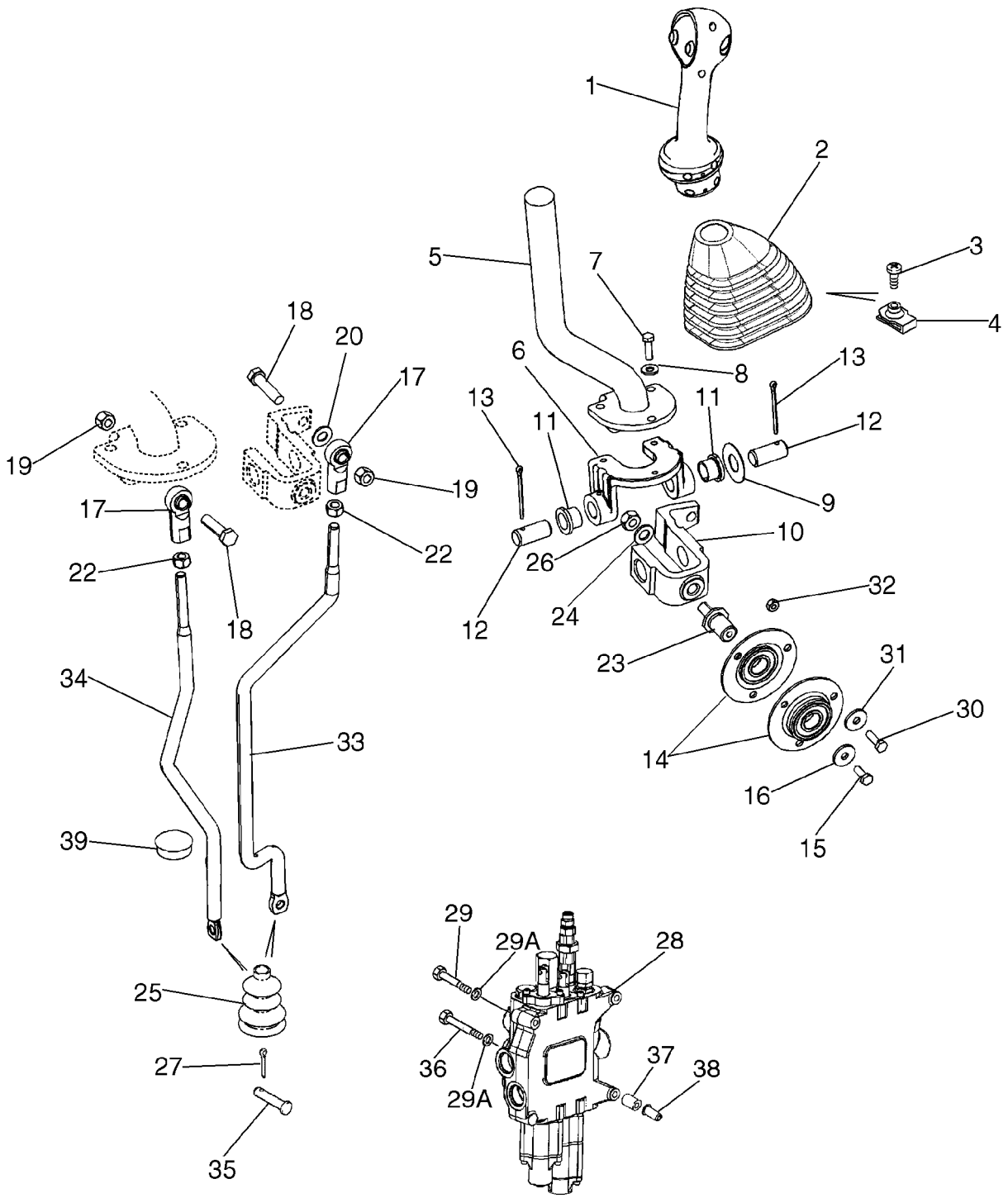

COMMANDES - RELEVAGE ET GODET DES BRAS DE RELEVAGE

REF	FN	PART NUMBER	YR/SN	QTY	DESCRIPTION
1		87638046		1	POIGN£E, Loader Control Lever; Two Button, Declutch and Differential Lock Switches; 2 Spool With Standard Transmission; See Figure 09-01A
		256347A1		1	CONNECTEUR
		258616A1		1	SERRURE
		298176A1		1	BOUCHON
		87301351		AR	MASTIC, Permabond Adhesive, F246, 1 ml With No. 5 Initiator
2		87632920		1	COIFFE
3		140-107		1	VIS, Cross Pan Hd, #10-24 x 3/4"
4		131-121		1	ECROU, Tinn, U, #10-24
5		87708015		1	AXE-A-PATTE
6		87681261		1	ETRIER PROFILE EN U
7		614-6020		3	BOULON, Hex, M6 x 20, 8.8
8		495-11028		3	RONDELLE, 1/4", SAE
9		495-81184		1	RONDELLE, 21/32" x 1 1/2" x .030"
10		87586156		1	PALONNIER
11		108088A1		2	BAGUE
12		102761A1		2	AXE, GROS
13		432-828		2	GOUPILLE, 1/8" x 1 3/4"
14		112380A1		2	ROULEMENT, Incl. Ref 14A
14A		362804		1	ROULEMENT, Not Illustrated
15		614-6016		1	BOULON, Hex, M6 x 16, 8.8
16		396-41028		1	RONDELLE, .281" x 7/8" x .098", HDN
17		87382812		2	ROULEMENT, BALLJOINT; 3/8 NF
18		413-624		1	BOULON, Hex, 3/8"-16 x 1 1/2", G5
19		232-4246		2	CONTRE-ECROU, 3/8"-16, GC
20		496-11041		1	RONDELLE, 13/32" x 13/16" x .065", HDN
22		425-116		2	ECROU, 3/8"-24, G5
23		176309A1		1	ARBRE
24		895-11010		1	RONDELLE, M10 x 20 x 2
25		132931A1		1	SOUFFLET
		189109A1		2	RESSORT
26		829-1410		1	ECROU, M10, Cl 10
27		432-612		2	GOUPILLE, 3/32" x 3/4"

COMMANDES - RELEVAGE ET GODET DES BRAS DE RELEVAGE

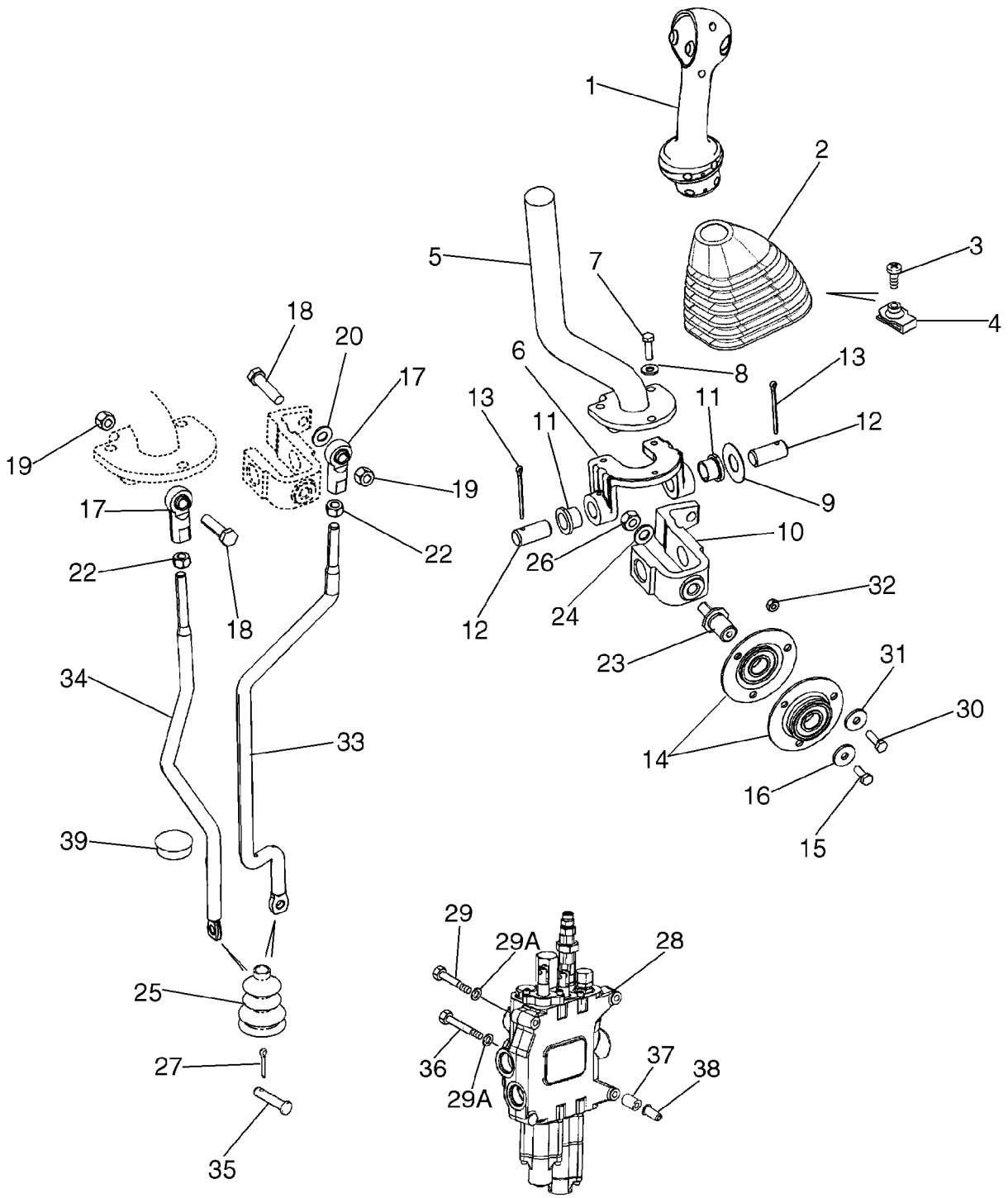

COMMANDES - RELEVAGE ET GODET DES BRAS DE RELEVAGE

REF	FN	PART NUMBER	YR/SN	QTY	DESCRIPTION
28		REF		1	NOTICE, LOADER CONTROL VALVE; Two Spool, See Figure 08-30 for Two Spool Valve Options
29		814-10090		2	BOULON, Hex, M10 x 90, 8.8
29A		896-11010		3	RONDELLE, M10 x 21.5 x 2.5, HT
30		614-6020		3	BOULON, Hex, M6 x 20, 8.8
31		396-41028		3	RONDELLE, .281" x 7/8" x .098", HDN
32		829-1406		3	ECROU, M6, Cl 10
33		87664425		1	BIELLE, Bucket Control Rod
34		87664422		1	BIELLE, Lift Control Rod
35		D149287		2	AXE, GROS
36		814-10110		1	BOULON, Hex, M10 x 110, 8.8
37		87417599		3	ENTRETOISE
38		87417721		3	INSERT FILETE, M10
39		353-422		1	BOUCHON, Dome, 1.250" hole, Nylon

09-01A		p1	02/08

POIGNEE, COMMANDE DU CHARGEUR - TRANSMISSION, 2WD, 4WD

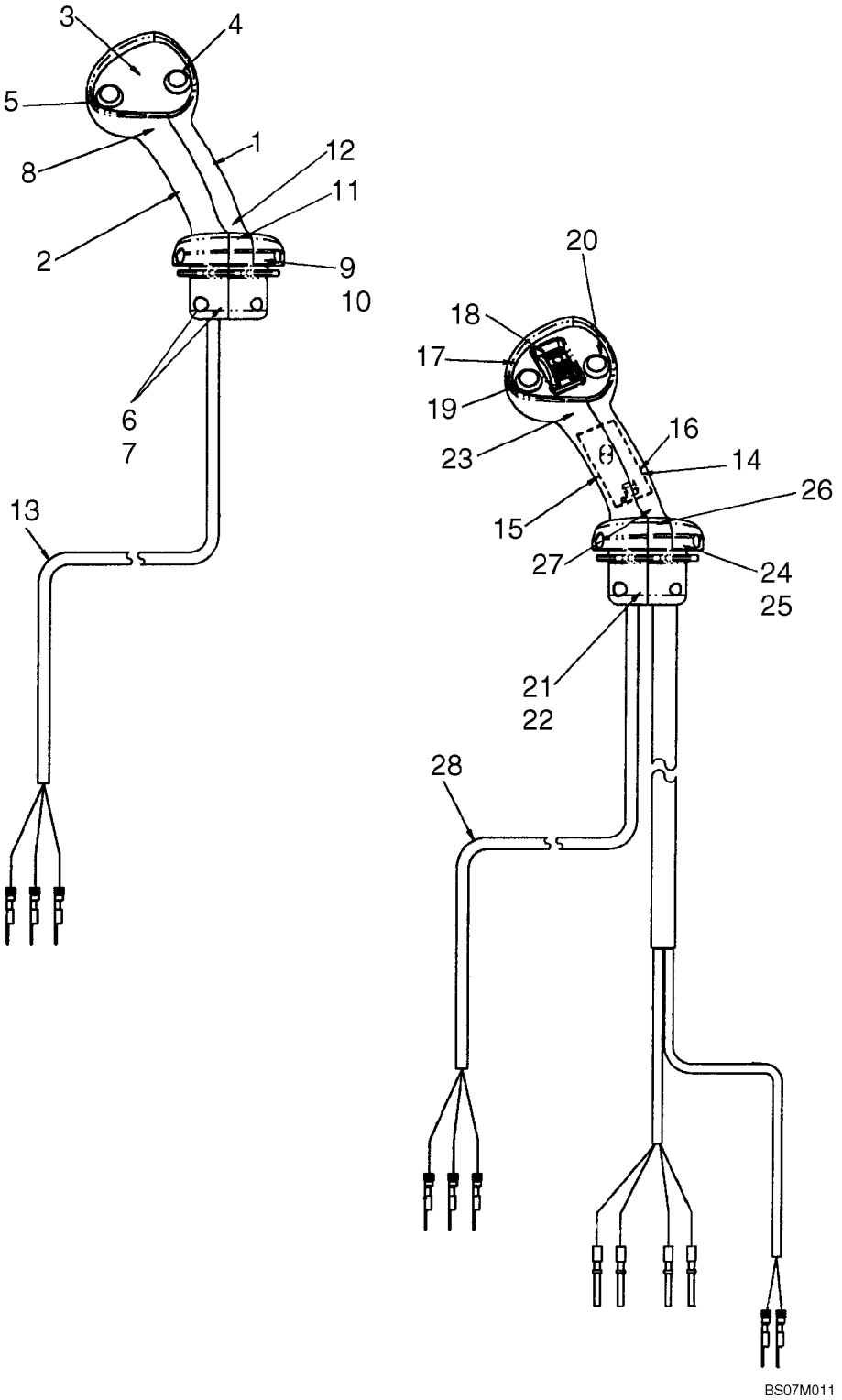

POIGNEE, COMMANDE DU CHARGEUR - TRANSMISSION, 2WD, 4WD

REF	FN	PART NUMBER	YR/SN	QTY	DESCRIPTION
		87638046		1	POIGN£E, Loader Control Lever, Two Button, DeClutch and Differential Lock Switches; 2 Spool With Standard Transmission; Incl. 1 - 13
1		87623338		1	POMMEAU, Loader Control, RH Half
2		87623339		1	POMMEAU, Loader Control, LH Half
3		NSS		1	NON FOURNI SEPAREMENT, Bezel, Switch Mounting
4		NSS		1	NON FOURNI SEPAREMENT, Switch, Push Button, Differential Lock
5		NSS		1	NON FOURNI SEPAREMENT, Switch, Push Button, De-Clutch
6		825-1404		4	ECROU, M4, Cl 8
7		86639294		4	VIS, Hex Soc Hd, M4 x 20, 8.8
8		260-16312		2	VIS AUTO-TARAUDEUSE
9		87019103		2	VIS DE R£GLAGE
10		87638350		2	ECROU
11		87689189		1	SERRE-CABLE
12		87689338		1	VIS
13		NSS		1	NON FOURNI SEPAREMENT, Harness, Differential Lock and De-Clutch
		87638047		1	POIGN£E, Loader Control Lever, Two Button, DeClutch and Differential Lock, Prop Roller With Detent; 3 Spool With Standard Transmission; Incl. 14 - 28
14		87623338		1	POMMEAU
15		87623339		1	POMMEAU
16		NSS		1	NON FOURNI SEPAREMENT, Circuit Board With Harness; Bi-Directional PWM Driver
17		NSS		1	NON FOURNI SEPAREMENT, Bezel, Switch Mounting
18		NSS		1	NON FOURNI SEPAREMENT, Switch, Prop Roller With Detent
19		NSS		1	NON FOURNI SEPAREMENT, Switch, Push Button, De-Clutch

09-01A		p2	02/08

POIGNEE, COMMANDE DU CHARGEUR - TRANSMISSION, 2WD, 4WD

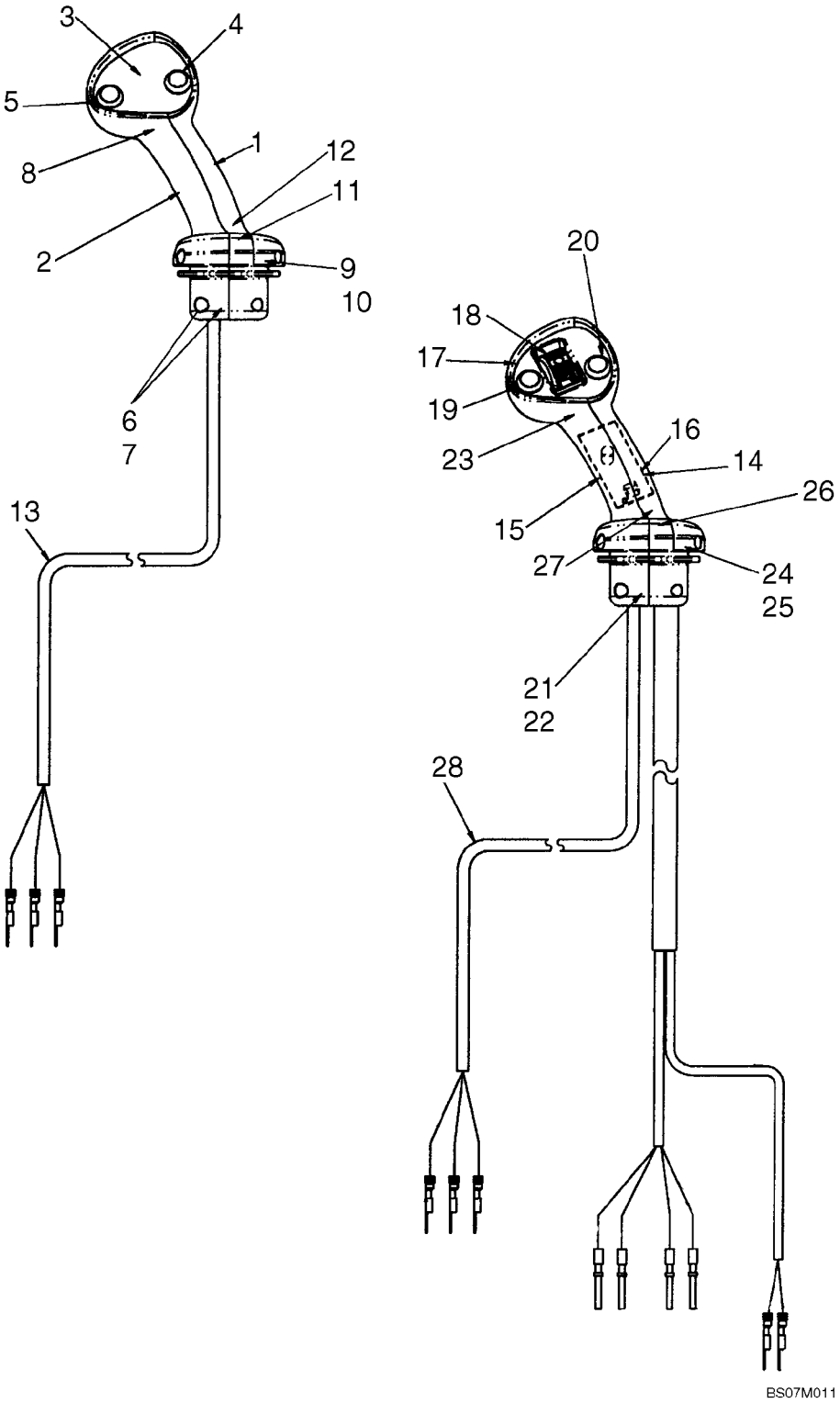

POIGNEE, COMMANDE DU CHARGEUR - TRANSMISSION, 2WD, 4WD

REF	FN	PART NUMBER	YR/SN	QTY	DESCRIPTION
20		NSS		1	NON FOURNI SEPAREMENT, Switch, Push Button, Differential Lock
21		825-1404		4	ECROU, M4, Cl 8
22		86639294		4	VIS, Hex Soc Hd, M4 x 20, 8.8
23		260-16312		2	VIS AUTO-TARAUDEUSE
24		87019103		2	VIS DE R£GLAGE
25		87638350		2	ECROU
26		87689189		1	SERRE-CABLE
27		87689338		1	VIS
28		NSS		1	NON FOURNI SEPAREMENT, Harness, Differential Lock and De-Clutch

09-02		p1	01/08

COMMANDES - BENNE DE CHARGEUSE

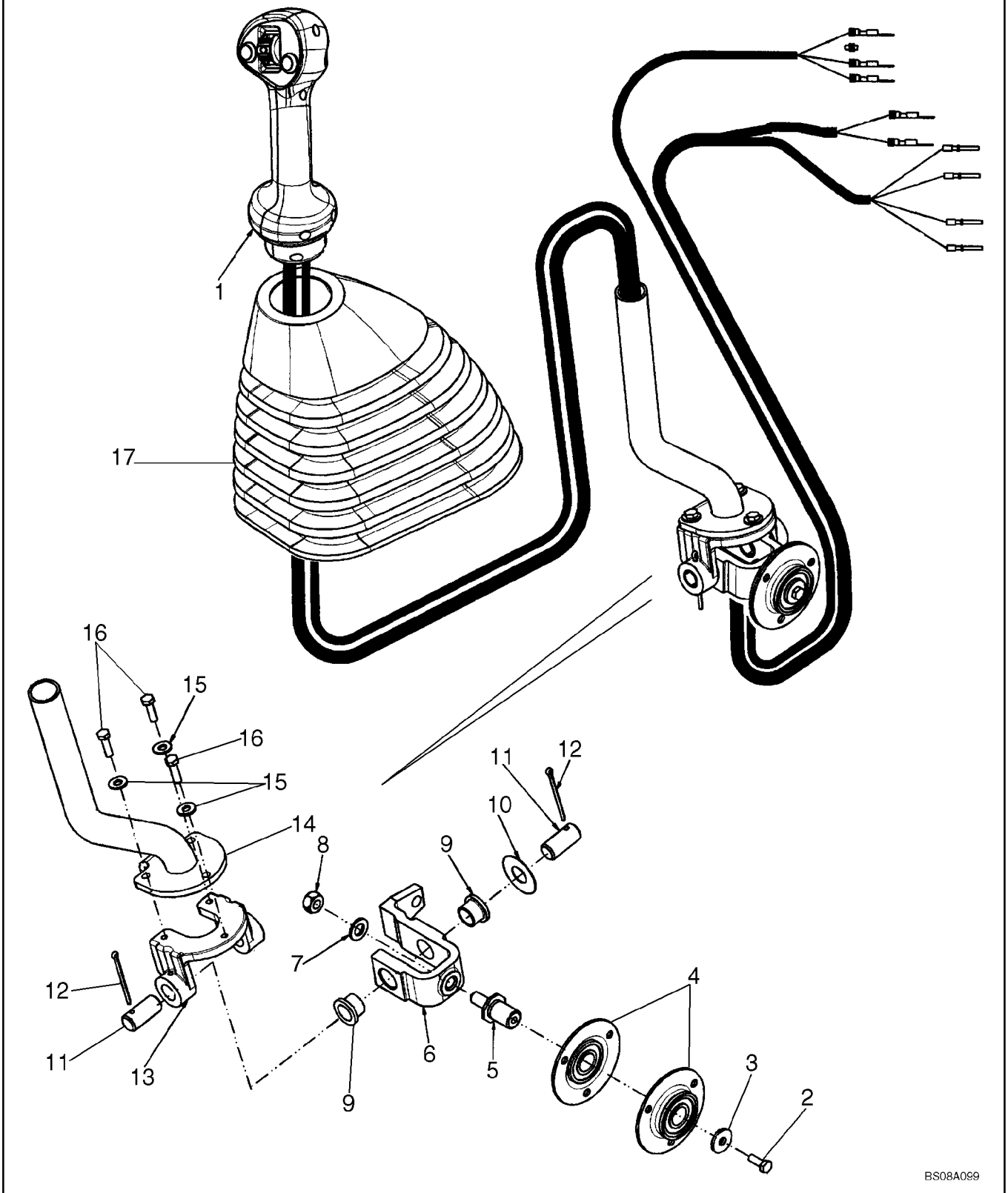

COMMANDES - BENNE DE CHARGEUSE

REF	FN	PART NUMBER	YR/SN	QTY	DESCRIPTION
1		87638047		1	POIGN£E, Loader Control Lever, Two Button, DeClutch and Differential Lock, Prop Roller With Detent; 3 Spool; See Figure 09-01A
		256347A1		1	CONNECTEUR
		258616A1		1	SERRURE
		298176A1		1	BOUCHON
2		614-6016		1	BOULON, Hex, M6 x 16, 8.8
3		396-41028		1	RONDELLE, .281" x 7/8" x .098", HDN
4		112380A1		2	ROULEMENT
5		176309A1		1	ARBRE
6		87586156		1	PALONNIER
7		895-11010		1	RONDELLE, M10 x 20 x 2
8		829-1410		1	ECROU, M10, Cl 10
9		108088A1		2	BAGUE
10		495-81184		1	RONDELLE, 21/32" x 1 1/2" x .030"
11		102761A1		2	AXE, GROS
12		432-828		2	GOUPILLE, 1/8" x 1 3/4"
13		87681261		1	ETRIER PROFILE EN U
14		87708015		1	AXE-A-PATTE
15		495-11028		3	RONDELLE, 1/4", SAE
16		614-6020		3	BOULON, Hex, M6 x 20, 8.8
17		87632920		1	COIFFE

09-03		p1	09/07

COMMANDES - ASSIETTE AUTOMATIQUE DES BRAS DE RELEVAGE

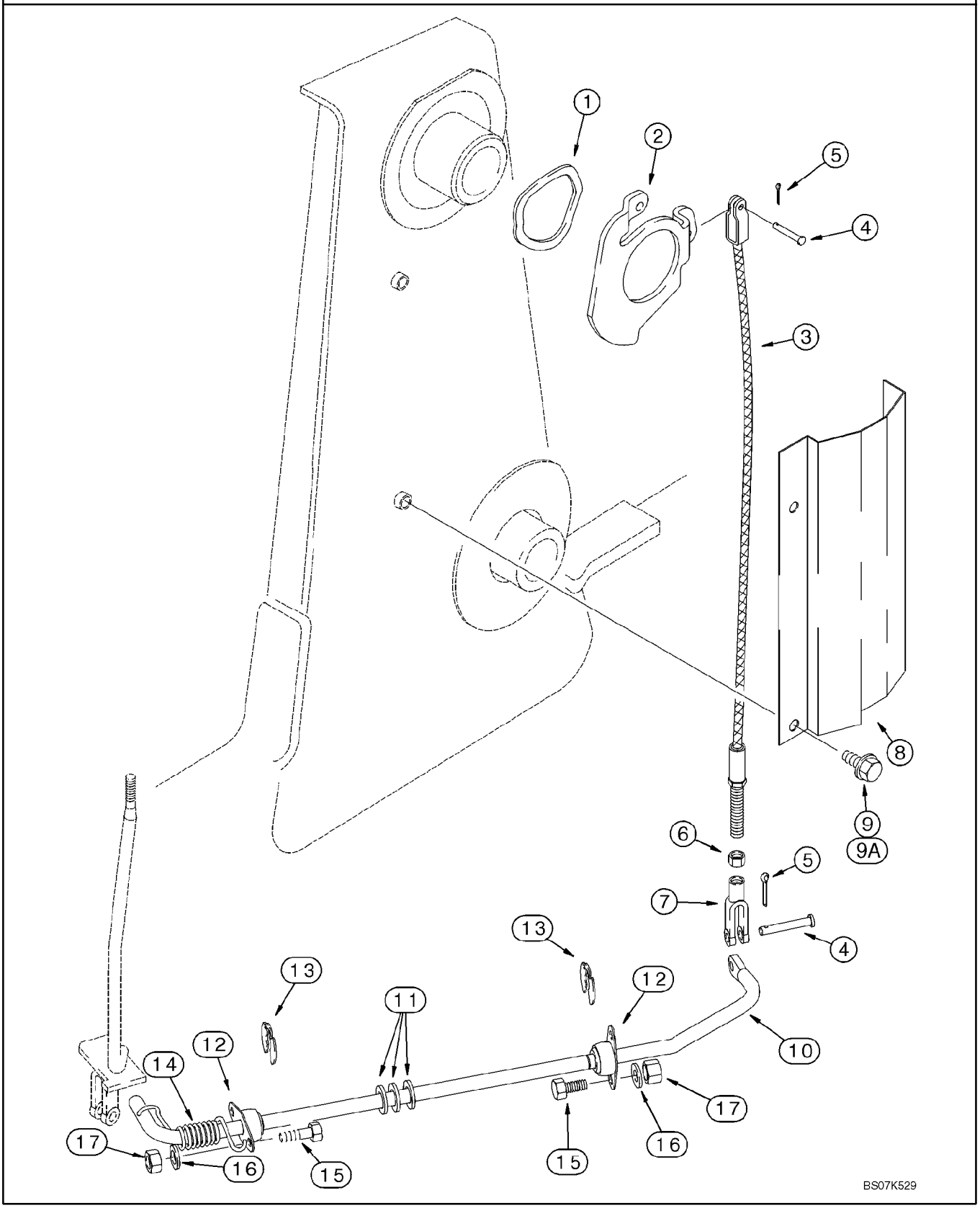

COMMANDES - ASSIETTE AUTOMATIQUE DES BRAS DE RELEVAGE

REF	FN	PART NUMBER	YR/SN	QTY	DESCRIPTION
1		137283A1		1	RONDELLE
2		142404A1		1	CAME
3		87428645		1	CABLE, Self-Leveling
4		D149287		2	AXE, GROS
5		432-612		2	GOUPILLE, 3/32" x 3/4"
6		425-115		1	ECROU, 5/16"-24, G5
7		239406A1		1	FOURCHETTE, 5/16
8		139865A1		1	PROTECTEUR
9		614-10020		2	BOULON, Hex, M10 x 20, 8.8, Full Thd
9A		895-11010		2	RONDELLE, M10 x 20 x 2
		87417601		1	TRINGLE (ASSEMBLEE), Incl. Ref 10 - 12
10		NSS		1	NON FOURNI SEPAREMENT, Rod
11		A30881		3	RONDELLE
12		L15401		2	ROULEMENT
13		D95096		2	ANNEAU
14		124721A1		1	RESSORT
15		614-8025		4	BOULON, Hex, M8 x 25, 8.8
16		895-11008		4	RONDELLE, M8 x 16 x 1.6
17		829-1408		4	ECROU, M8, Cl 10

09-04		p1	02/08

CADRE - RELEVAGE DE LA CHARGEUSE

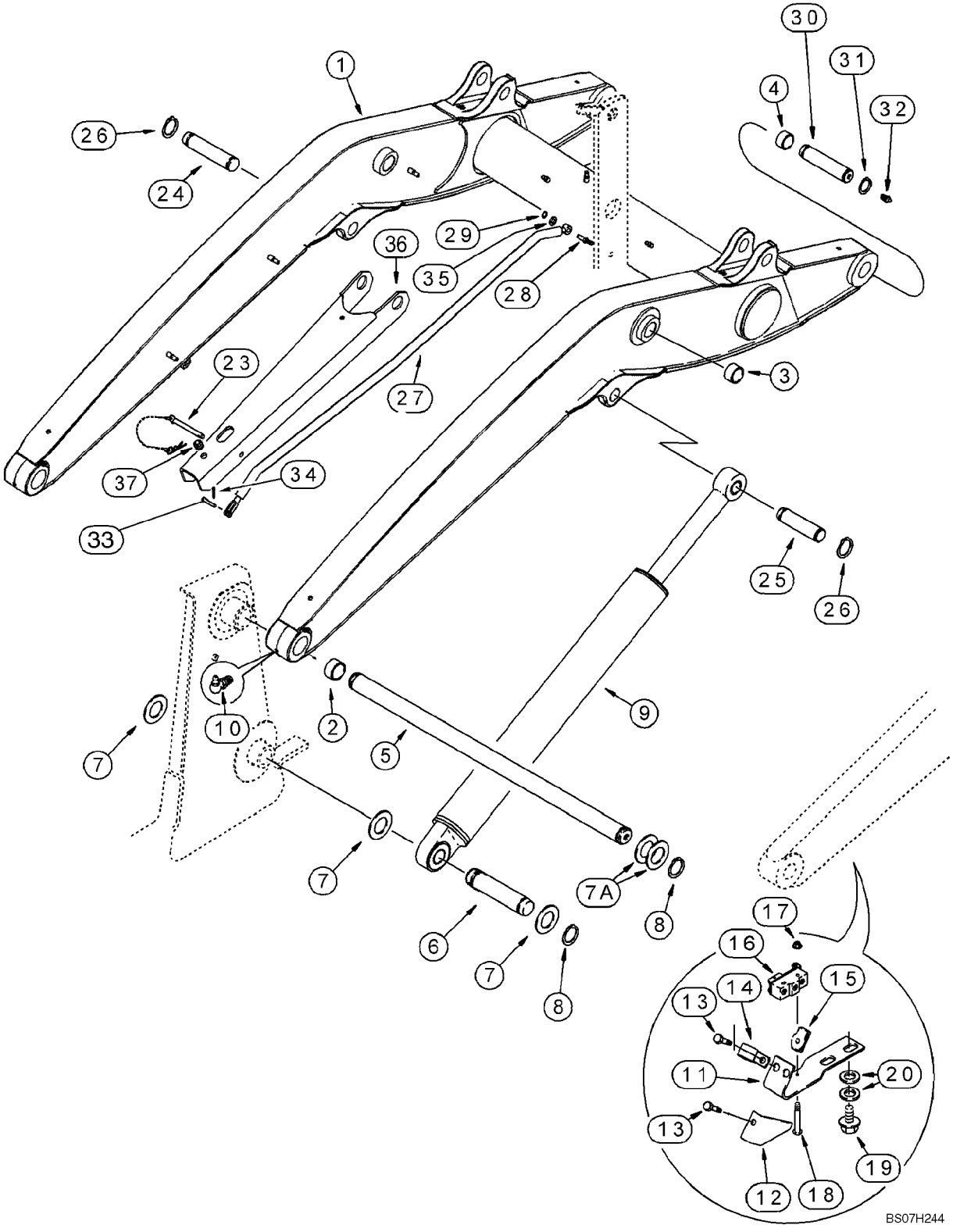

CADRE - RELEVAGE DE LA CHARGEUSE

REF	FN	PART NUMBER	YR/SN	QTY	DESCRIPTION
		REF			NOTICE, LIFT CYLINDER, SUPPORT STRUT, RETURN-TO-DIG AND ANTIROLLBACK
1		87566994		1	BRAS DE LEVAGE, Loader; Incl. Ref 2, 4
2		D127542		4	BAGUE
3		100696A1		4	BAGUE, Bucket Cylinder Link Pivot; Not Included With Frame; Purchase Separately
4		109268A1		4	BAGUE
5		111522A1		1	AXE, SHAFT
6		335177A1		2	AXE
7		495-81282		6	RONDELLE, 2 1/16" x 3" x .109"
7A		181842A1		AR	RONDELLE
8		800-44050		6	ANNEAU D'ARRąT, M50, Ext
9		384240A1		2	VERIN, 82.6 ID x 766 mm strk; Loader Lift; See Figure 08-58
10		219-55		2	GRAISSEUR, 90Ü, 1/8" NPT x .84" lg
11		128818A1		1	SUPPORT, Return-To-Dig
12		142524A1		1	PROTECTEUR
13		614-6016		2	BOULON, Hex, M6 x 16, 8.8
14		515-2179		1	BRIDE, 5/16", Insul, 1/4" Bolt
15		833-40406		2	ECROU, M6, U
16		D137363		1	CONTACTEUR, Return-To-Dig
17		193-1003		2	ECROU, Keps, w/LW,#6-32
18		440-10616		2	VIS, Cross Pan Hd, #6-32 x 1"
19		128312A1		2	BOULON, M10 x 15
20		895-11010		4	RONDELLE, M10 x 20 x 2
23		104824A1		1	AXE, GROS
24		118900A1		1	AXE, GROS
25		87623771		1	GOUPILLE CANNEL£ES
26		800-44040		4	ANNEAU D'ARRąT, M40, Ext
27		87614481		1	TRINGLE, Anti-Rollback
28		192815A1		1	AXE
29		103-3350		1	JONC D'ARRET, #50, .392" Dia, E-Type
30		118901A1		2	AXE, GROS
31		800-44040		4	ANNEAU D'ARRąT, M40, Ext
32		219-1		2	GRAISSEUR, 1/8"-27 x .66 lg

09-04		p2	02/08

CADRE - RELEVAGE DE LA CHARGEUSE

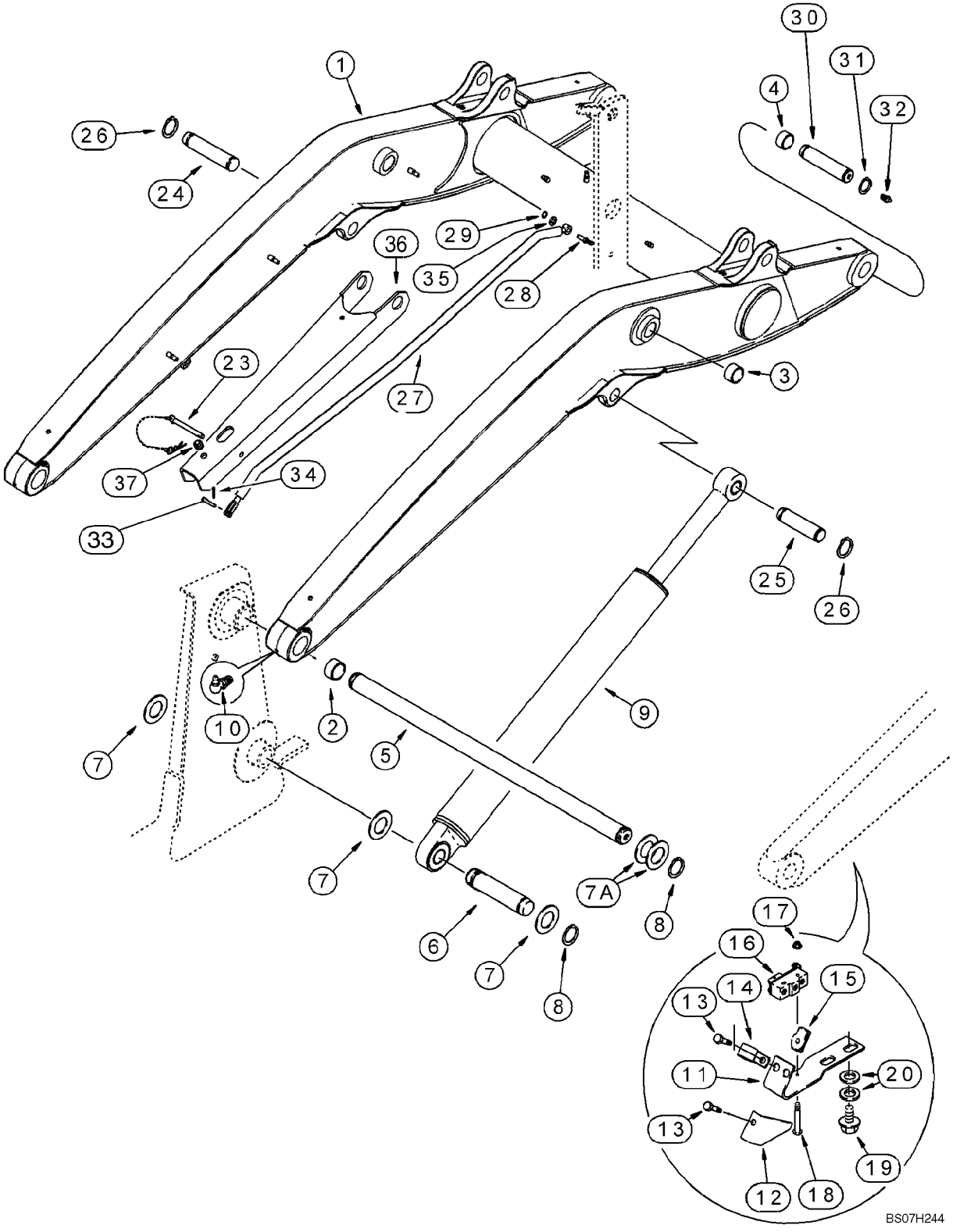

CADRE - RELEVAGE DE LA CHARGEUSE

REF	FN	PART NUMBER	YR/SN	QTY	DESCRIPTION
33		427-6100		1	AXE DE CHAPE, 3/8" x 1"
34		432-612		1	GOUPILLE, 3/32" x 3/4"
35		495-11053		1	RONDELLE, 1/2", SAE
36		341564A2		1	PILIER-SUPPORT
37		344892A1		1	PASSE-FIL

09-05		p1	12/07

CADRE - TRINGLERIE DES BRAS DE RELEVAGE

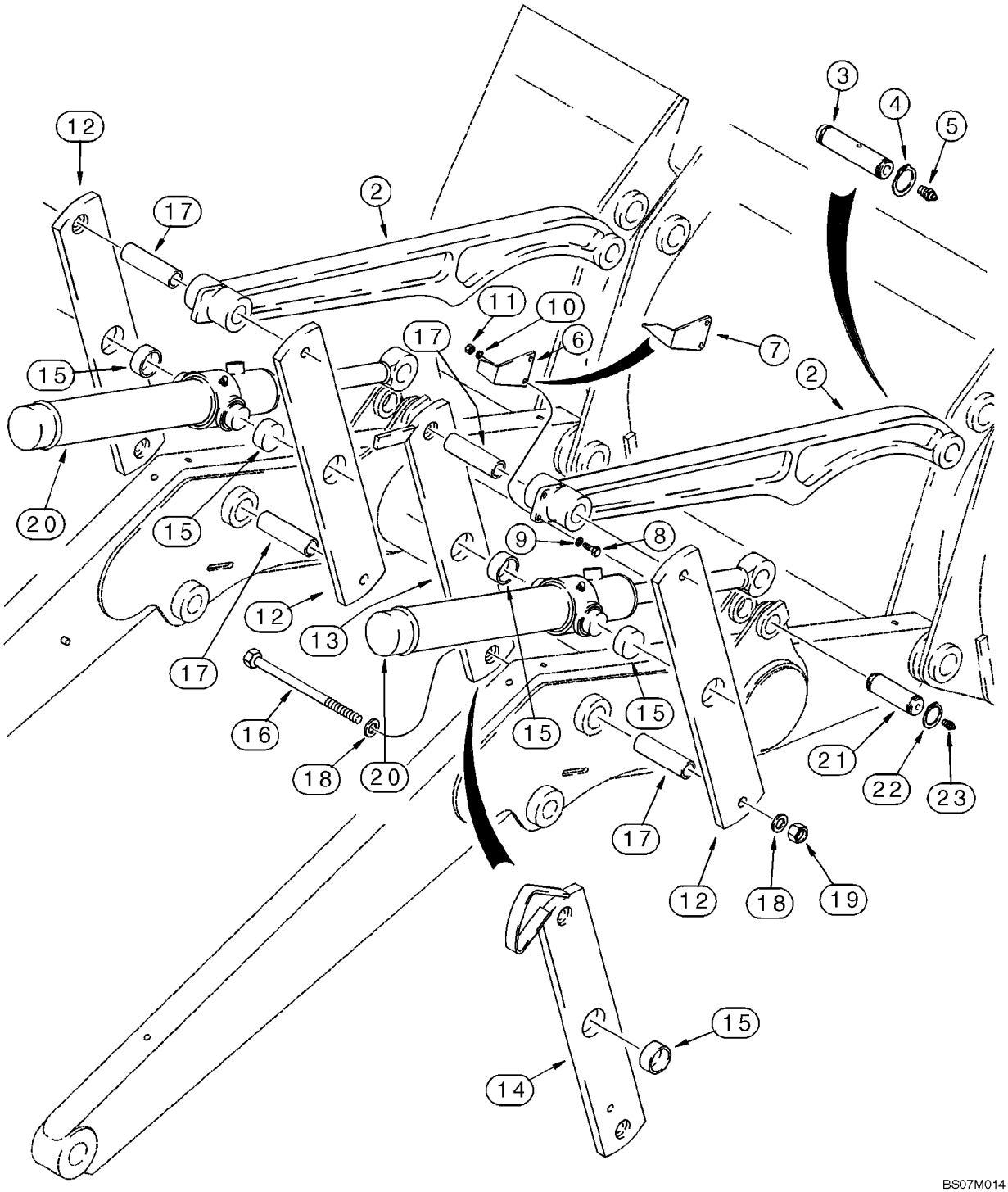

CADRE - TRINGLERIE DES BRAS DE RELEVAGE

REF	FN	PART NUMBER	YR/SN	QTY	DESCRIPTION
2		331620A1		2	BIELLETTE, Bucket, Left-Hand and Right-Hand
3		118901A1		2	AXE, GROS
4		800-44040		4	ANNEAU D'ARRąT, M40, Ext
5		219-1		2	GRAISSEUR, 1/8"-27 x .66 lg
6		D121194		1	PALPEUR, Models Without Clam Bucket
7		250851A1		1	PALPEUR, Models With Clam Bucket
8		614-8030		2	BOULON, Hex, M8 x 30, 8.8
9		895-11008		2	RONDELLE, M8 x 16 x 1.6
10		892-11008		2	RONDELLE FREIN, M8
11		829-1408		2	ECROU, M8, Cl 10
12		139180A1		3	MAILLON (ASSEMBLE), Bucket Cylinder, Outer Right-Hand; Inner and Outer Left-Hand; Incl. Ref 15
13		139235A1		1	BIELLETTE, Bucket Cylinder, Inner Right-Hand; With Extra Hole For Antirollback Rod; Models Without Clam Bucket; Incl. Ref 15
14		139195A1		1	BIELLETTE, Bucket Cylinder, Inner Right-Hand; With Extra Hole For Antirollback Rod; Models With Clam Bucket; Incl. Ref 15
15		D151034		1	BAGUE
16		827-20190		4	BOULON, Hex, M20 x 190, 10.9
17		D132076		4	ENTRETOISE
18		896-11020		8	RONDELLE, M20 x 37.5 x 4, HT
19		829-1420		4	ECROU, M20, Cl 10
20		87609669		2	VERIN HYDRAULIQUE, 76 ID x 522 mm strk; Loader Bucket Cylinder; See Figure 08-59
21		87724438		2	GOUPILLE CANNEL£ES
22		800-44040		4	ANNEAU D'ARRąT, M40, Ext
23		219-1		2	GRAISSEUR, 1/8"-27 x .66 lg

09-06		p1	10/07

GODETS, CHARGEUSE ë LONGUE LêVRE (82 IN)

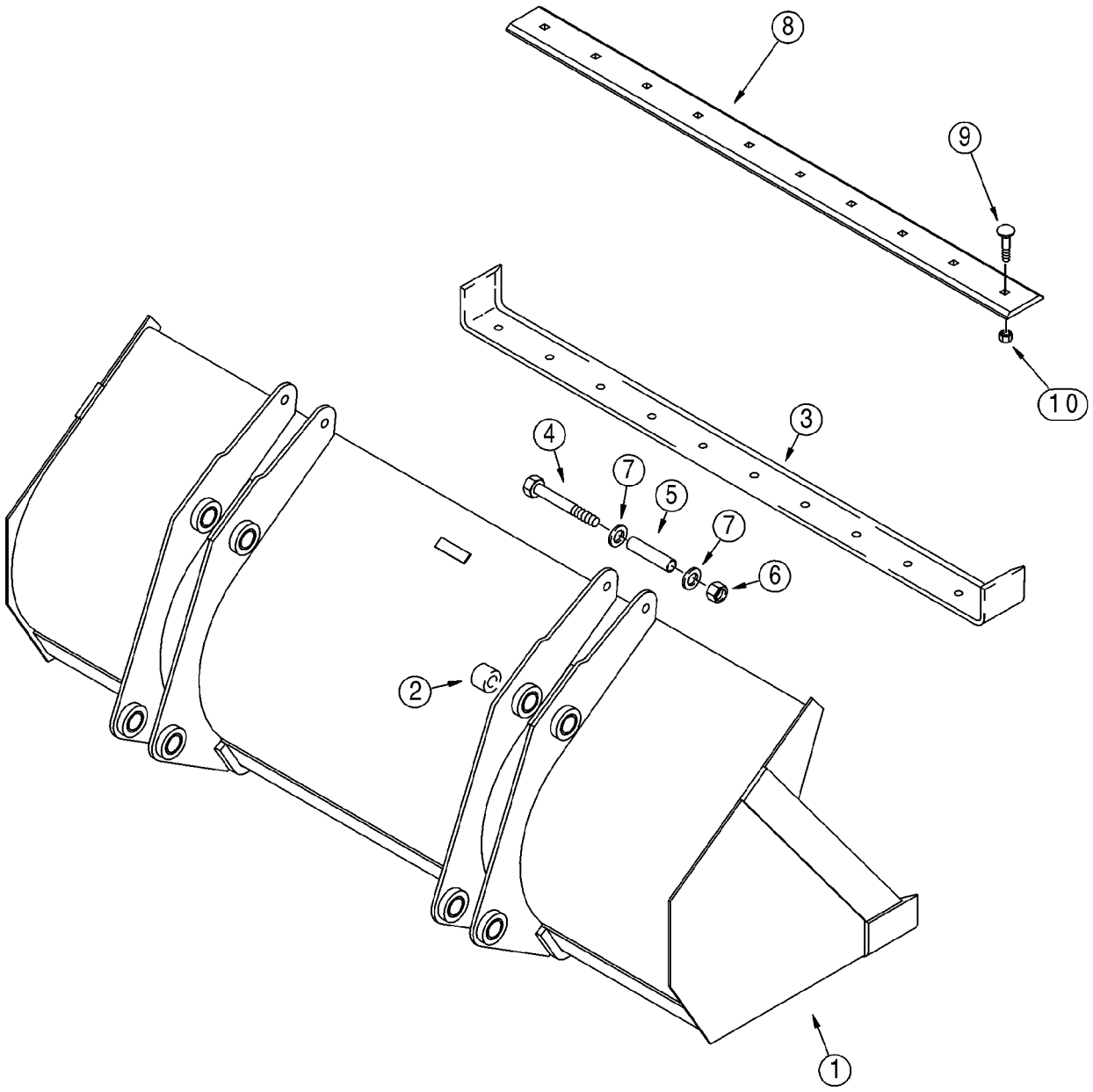

GODETS, CHARGEUSE ë LONGUE LêVRE (82 IN)

REF	FN	PART NUMBER	YR/SN	QTY	DESCRIPTION
		87368702		1	GODET, ASSEMBLY, 2083 mm (82 in); Assembly Does Not Include Bolt-On Cutting Edge; Without Bucket Teeth; Incl. Ref 1 - 7; Order Through Parts Marketing; Replaces 385588A1 Bucket
1		NSS		1	NON FOURNI SEPAREMENT, Bucket; Incl. Ref 2, 3
2		D129264		8	BAGUE
3		132988A1		1	BORD, Welded-On
4		828-20160		2	BOULON, Hex, M20 x 160, 10.9, M20 x 160; 10.9
5		142538A1		2	ENTRETOISE
6		832-10420		2	CONTRE-ECROU, M20 x 2.5, Cl 8
7		896-11020		4	RONDELLE, M20 x 37.5 x 4, HT
8		411661A1		1	LAME D'ATTAQUE, Bolt-On; Unpainted; For Painted Edge, Order 112946A1 Edge
8		112946A1		1	LAME D'ATTAQUE, Bolt-On; Tan; Not Included In 385588A1or 87368702 Bucket Assembly, Purchase Separately
9		420-21232		10	BOULON TETE BOMBEE, 3/4"-10 x 2", G5
10		429-1012		10	ECROU, 3/4"-10, G8
		87577141		1	GODET, ASSEMBLY, 2083 mm (82 in); Assembly Includes 87365015 Bucket Assy; Ref 1 - 10; Order Through Parts Marketing
		87365015		1	GODET, ASSEMBLY, 2083 mm (82 in); Assembly Includes 87368737 Bucket and 411661A1 Bolt-On Cutting Edge; Incl. Ref 1 - 10; Order Through Parts Marketing
1		NSS		1	NON FOURNI SEPAREMENT, Bucket; Incl. Ref 2, 3
2		D129264		8	BAGUE
3		132988A1		1	BORD, Weld-On
4		828-20160		2	BOULON, Hex, M20 x 160, 10.9, M20 x 160; 10.9
5		142538A1		2	ENTRETOISE
6		832-10420		2	CONTRE-ECROU, M20 x 2.5, Cl 8
7		896-11020		4	RONDELLE, M20 x 37.5 x 4, HT
8		411661A1		1	LAME D'ATTAQUE, Bolt-On; Unpainted; For Painted Edge, Order 112946A1 Edge

09-06		p2	10/07

GODETS, CHARGEUSE ë LONGUE LêVRE (82 IN)

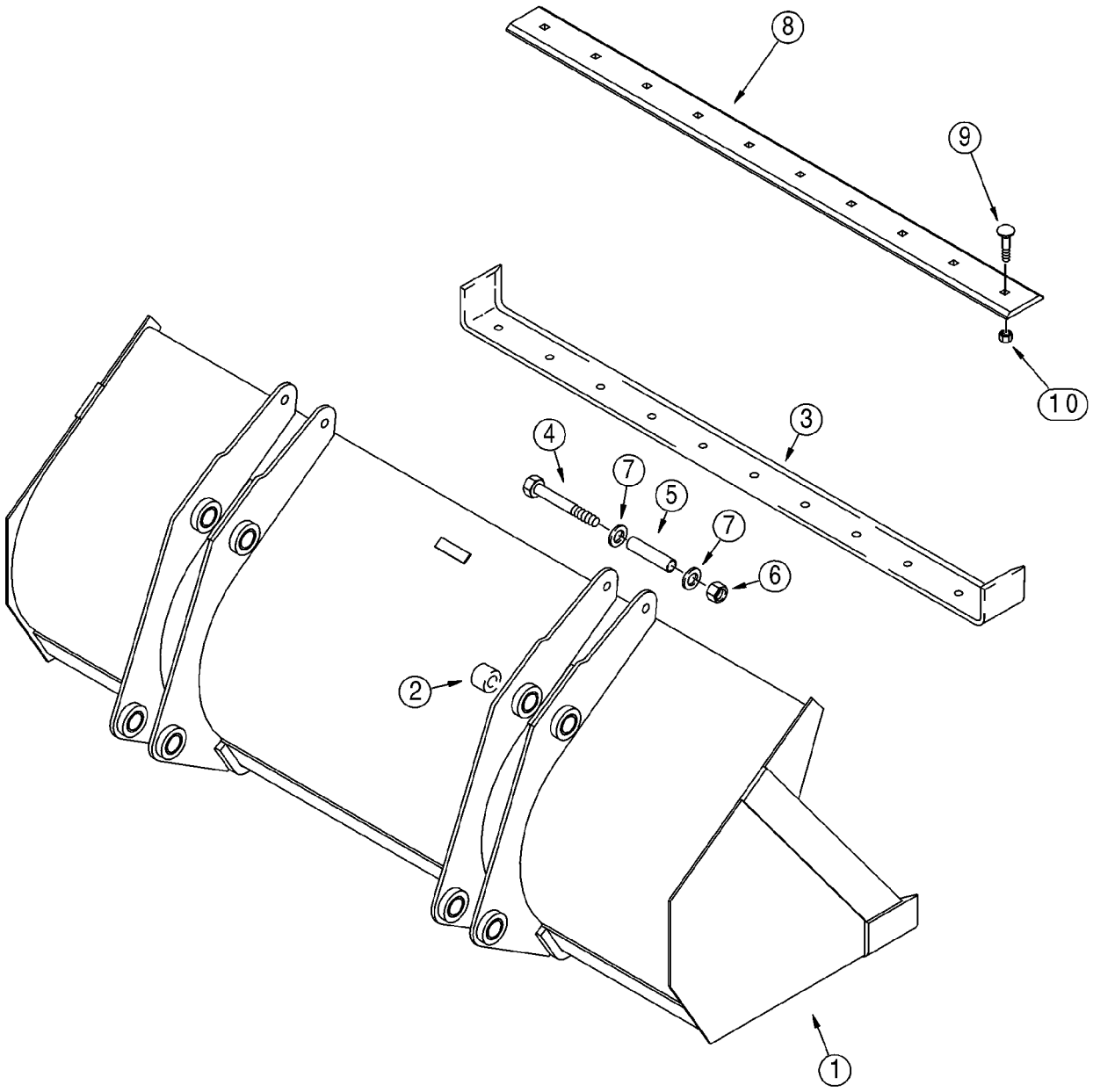

GODETS, CHARGEUSE ë LONGUE LêVRE (82 IN)

REF	FN	PART NUMBER	YR/SN	QTY	DESCRIPTION
9		20-21232		10	BOULON TETE BOMBEE, 3/4"-10 x 2", G8, Non-Plated; Replaces 420-21232 Plated Bolt Used On Some Models
10		29-1012		10	ECROU, 3/4"-10, G8, 3/4; 8; Non-Plated; Replaces 429-1012 Plated Nut Used On Some Models

09-07		p1	10/07

GODET, CHARGEUSE ë LONGUE LêVRE (93 IN)

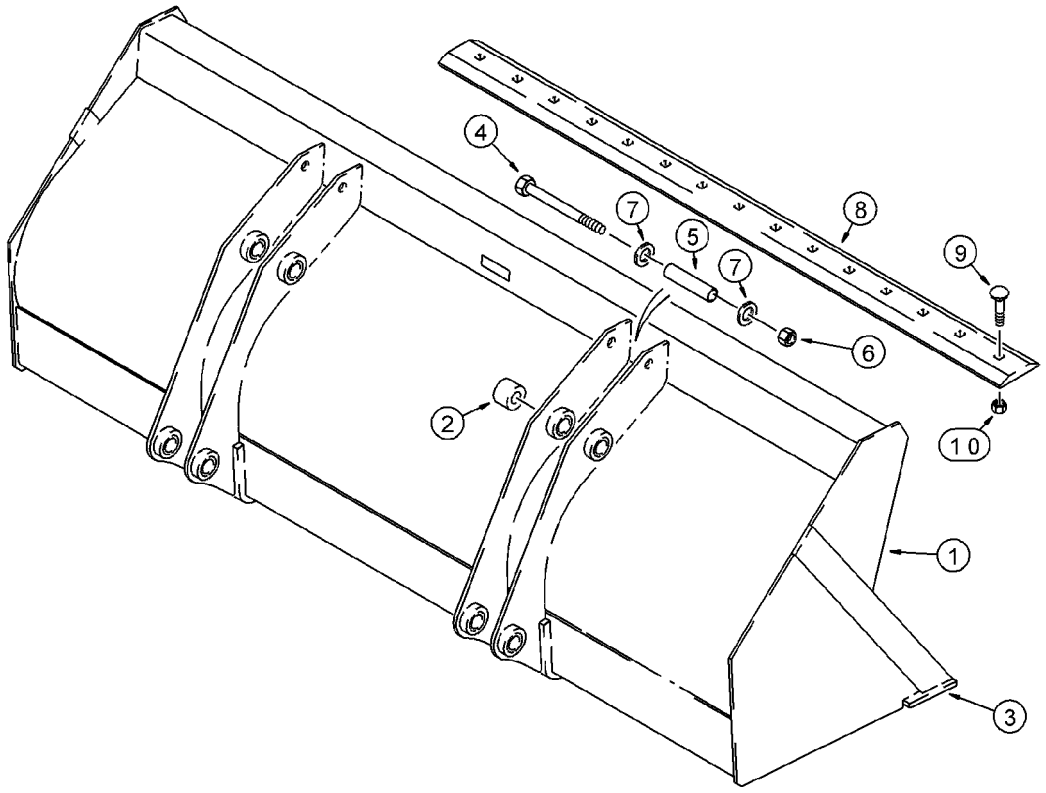

BS00C247

GODET, CHARGEUSE ë LONGUE LĉVRE (93 IN)

REF	FN	PART NUMBER	YR/SN	QTY	DESCRIPTION
		87368710		1	GODET, 2362 mm (93 in), Without Bucket Teeth; Assembly Includes Bolt-On Cutting Edge; Incl. Ref 1 - 10; Order Through Parts Marketing
1		NSS		1	NON FOURNI SEPAREMENT, Bucket, Incl. Ref 2, 3
2		D129264		8	BAGUE
3		134844A1		1	PLAQUE, GRANDE, Weld-On
4		828-20160		2	BOULON, Hex, M20 x 160, 10.9
5		142538A1		2	ENTRETOISE
6		832-10420		2	CONTRE-ECROU, M20 x 2.5, Cl 8
7		896-11020		4	RONDELLE, M20 x 37.5 x 4, HT
8		87375240		1	BORD, Bolt-On Blade, Unpainted;Production Only; For Service Order 185506A1 Blade
8		185506A1		1	BORD, Bolt-On Blade, Tan
9		20-21232		10	BOULON TETE BOMBEE, 3/4"-10 x 2", G8
10		429-1012		10	ECROU, 3/4"-10, G8

09-08		p1	10/07

GODET, BENNE DE CHARGEUSE

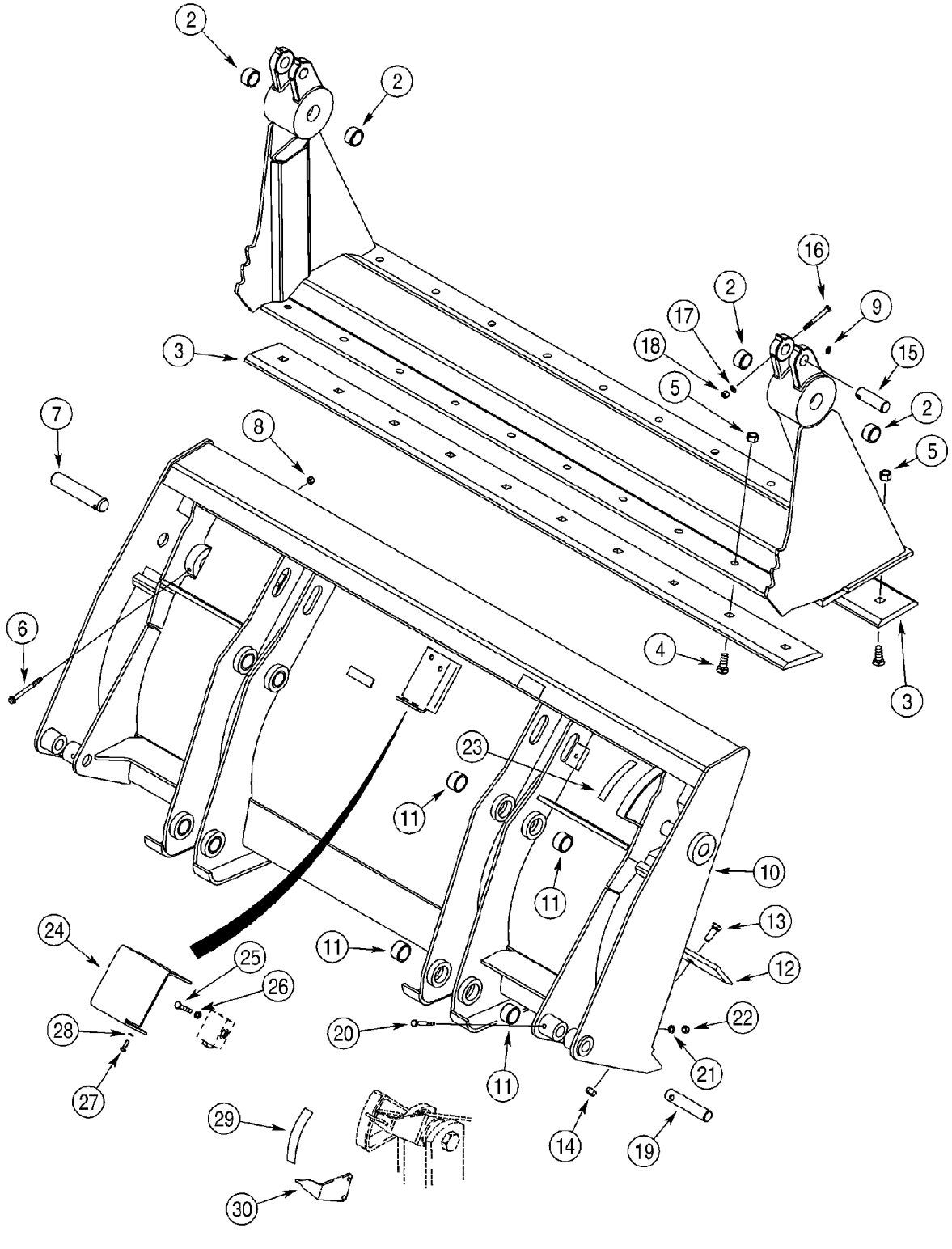

GODET, BENNE DE CHARGEUSE

REF	FN	PART NUMBER	YR/SN	QTY	DESCRIPTION
		87455509		1	GODET, ASSEMBLY; 2083 mm (82 in); With Hydraulics; Includes 376288A2 Bucket Assembly, Ref 1 - 28; Also Includes Hydraulics on Figure 08-07, Ref 1 - 29; Order Through Parts Marketing
		{}		1	376288A2 BUCKET ASSEMBLY; 2083 mm (82 in); Without Hydraulics; Includes 411668A1 Bucket and (2) Ref 7 Pins; Order Through Parts Marketing
		411668A1		1	GODET, BUCKET ASSEMBLY; 2083 mm (82 in); Without Hydraulics; Incl. Ref 1 - 6, 8 - 14
		175156A1		1	COQUILLE, CLAM, Incl. Ref 1, 2
1		NSS		1	NON FOURNI SEPAREMENT, Clam Assy
2		D31140		4	BAGUE
3		142300A1		2	DEMI-LAME
4		20-21232		20	BOULON TETE BOMBEE, 3/4"-10 x 2", G8
5		29-1012		20	ECROU, 3/4"-10, G8
6		844-10110		2	BOULON, Hex Flg, M10 x 110, 8.8
7		D51391		2	AXE, GROS
8		832-10410		2	CONTRE-ECROU, M10 x 1.5, Cl 8
9		219-1		2	GRAISSEUR, 1/8"-27 x .66 lg
		376286A2		1	GODET, BLADE, Incl. Ref 10, 11
10		NSS		1	NON FOURNI SEPAREMENT, Blade Assy, Dozer
11		D129264		8	BAGUE
12		121920A1		1	BORD, Cutting
13		20-21032		10	BOULON TETE BOMBEE, 5/8"-11 x 2", G8, Full Thd
14		29-1010		10	ECROU, 5/8"-11, G8
15		D51392		2	AXE
16		814-10090		2	BOULON, Hex, M10 x 90, 8.8
17		895-11010		2	RONDELLE, M10 x 20 x 2
18		832-10410		2	CONTRE-ECROU, M10 x 1.5, Cl 8
19		D51393		2	AXE, GROS
20		814-10080		2	BOULON, Hex, M10 x 80, 8.8
21		895-11010		2	RONDELLE, M10 x 20 x 2
22		832-10410		2	CONTRE-ECROU, M10 x 1.5, Cl 8
23		321-1708		1	DECALCOMANIE
24		388848A1		1	GARANT, Pilot Operated Check Valve

09-08		p2	10/07

GODET, BENNE DE CHARGEUSE

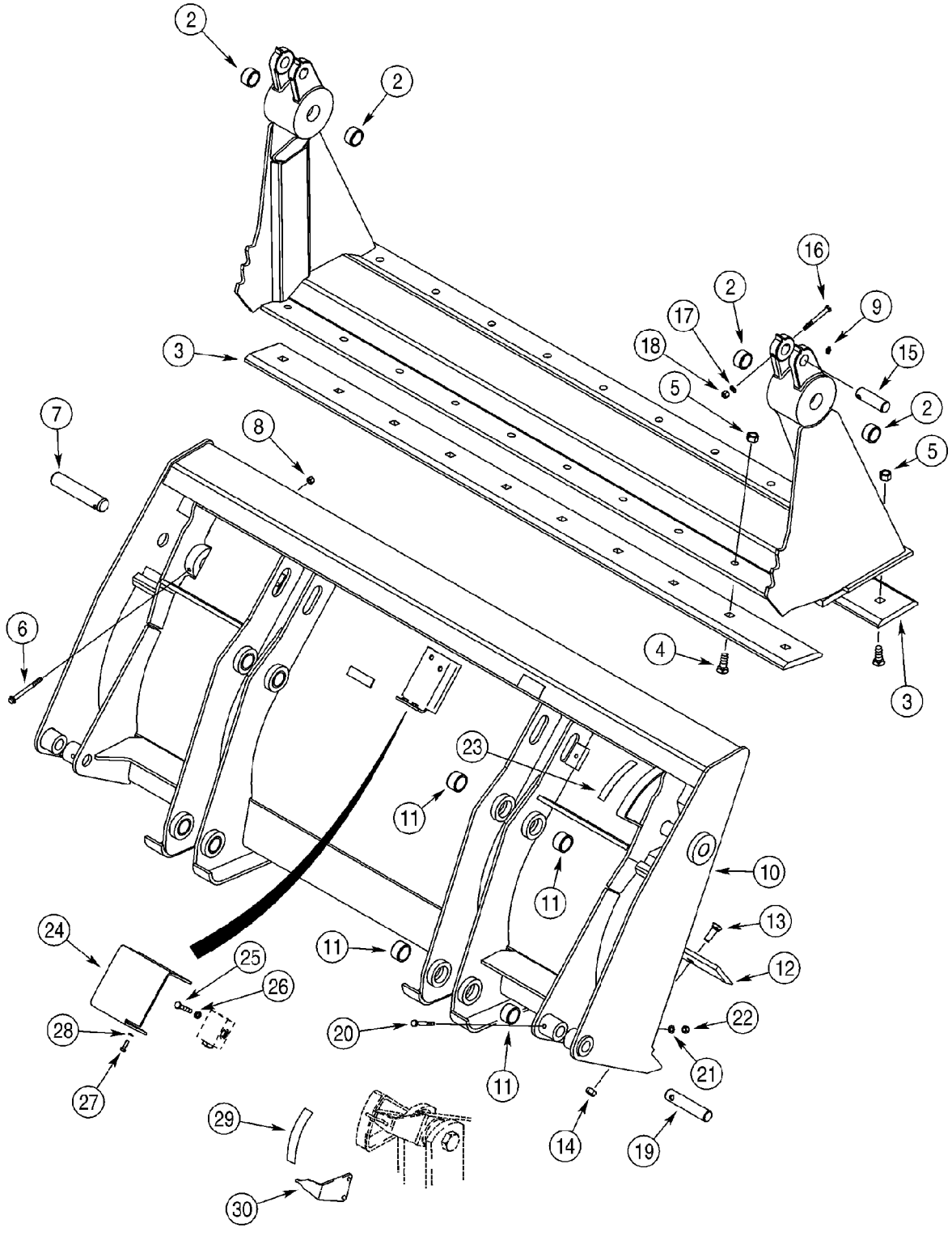

GODET, BENNE DE CHARGEUSE

REF	FN	PART NUMBER	YR/SN	QTY	DESCRIPTION
25		814-10060		2	BOULON, Hex, M10 x 60, 8.8
26		892-11010		2	RONDELLE FREIN, M10
27		614-8025		2	BOULON, Hex, M8 x 25, 8.8
28		892-11008		2	RONDELLE FREIN, M8
29		321-1707		1	DECALCOMANIE
30		250851A1		1	PALPEUR

09-09		p1	01/08

GARANT - DISTRIBUTEUR, BRAS DE RELEVAGE

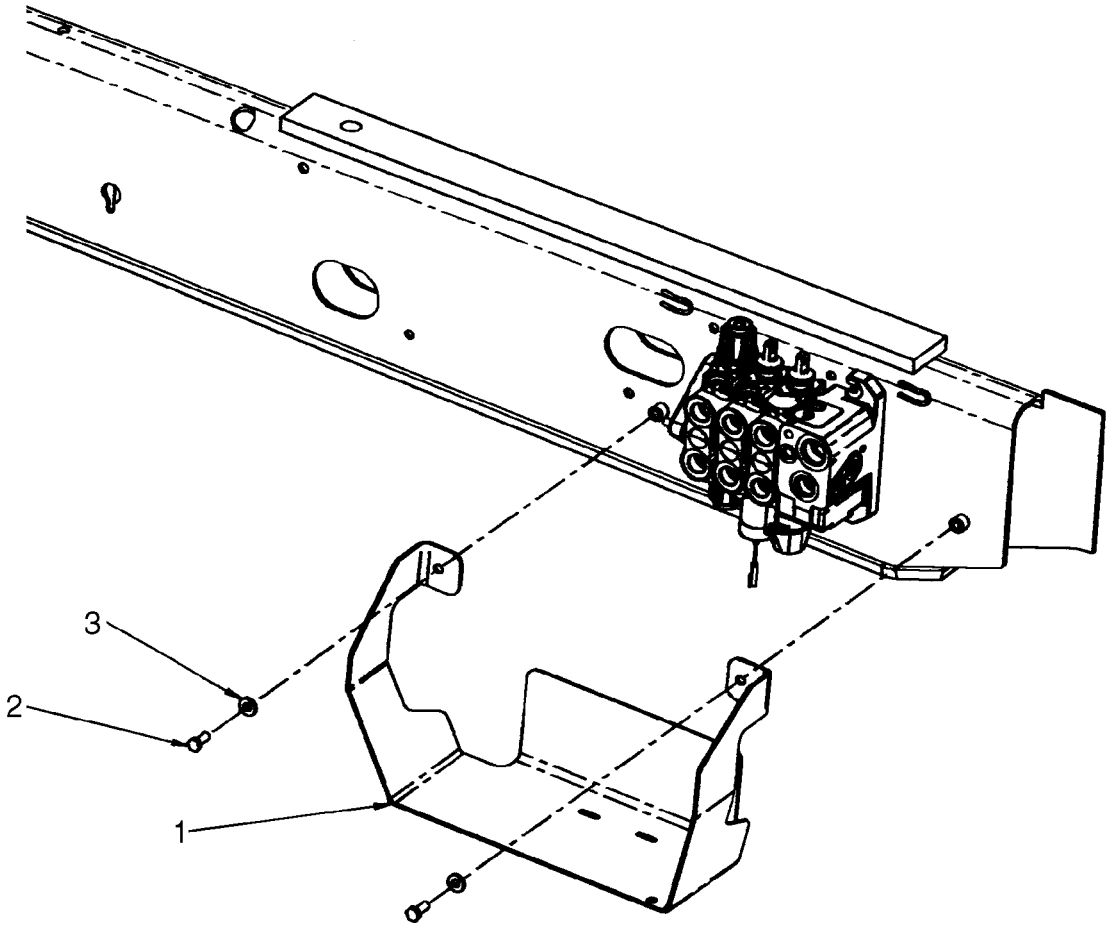

BS07M540

GARANT - DISTRIBUTEUR, BRAS DE RELEVAGE

REF	FN	PART NUMBER	YR/SN	QTY	DESCRIPTION
1		87630445		1	GARANT, Loader Valve
2		614-10025		2	BOULON, Hex, M10 x 25, 8.8, Full Thd
3		896-15010		2	RONDELLE, M10 x 24.5 x 3, HT

09-10		p1	01/08

COUPLEUR, OUTIL, DE S£CURIT£

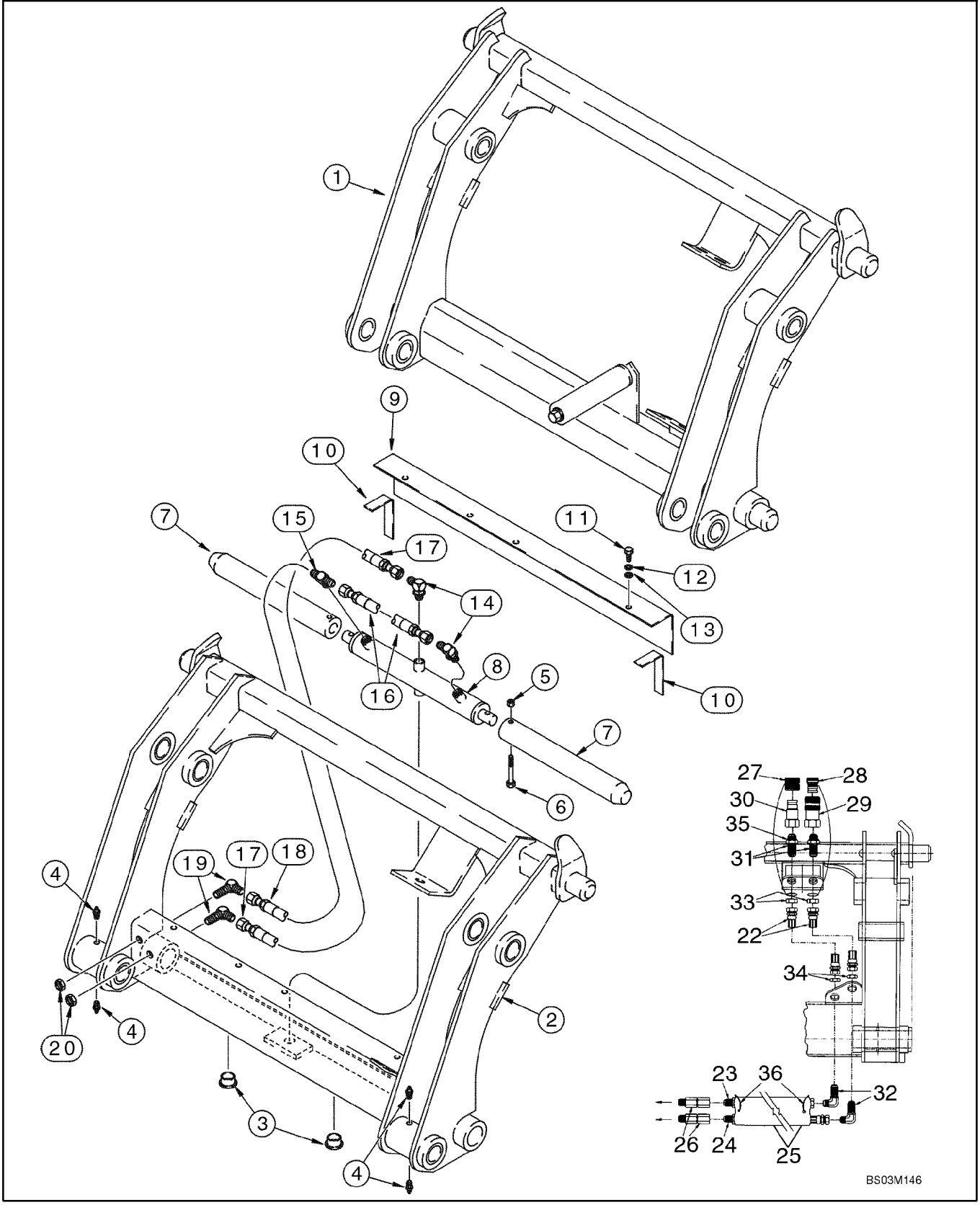

COUPLEUR, OUTIL, DE S£CURIT£

REF	FN	PART NUMBER	YR/SN	QTY	DESCRIPTION
		87602620		1	CHAPE, Loader; Incl. Ref 2 - 35; With Auxiliary Hydraulics; For Complete Assembly, Order From Machinery Price List; Category III; For Hydraulic Tool Quick Coupler Hydraulics, See Figure 08-26, 08-27
2		NSS		1	NON FOURNI SEPAREMENT, Frame
3		305497A1		2	BOUCHON, 1-1/4 ID x 1/2 in OD; Plastic
4		219-87		4	GRAISSEUR, 1/4"-28 x .56" lg, Self-Tap
5		231-4246		2	CONTRE-ECROU, 3/8"-16, GB
6		326-640		2	BOULON, Hex, 3/8"-16 x 2 1/2", G8
7		305496A1		2	AXE, 1-15/16 OD x 15 in lg
8		305499A1		1	VERIN, Double Acting; Component Parts Not Serviced Separately
9		305495A1		1	COUVERCLE
10		NSS		2	NON FOURNI SEPAREMENT, Seal; Foam
11		413-516		3	BOULON, Hex, 5/16"-18 x 1", G5, Full Thd
12		492-11031		3	RONDELLE FREIN, 5/16"
13		495-11034		3	RONDELLE, 5/16", SAE
14		218-5105		2	COUDE, 90Ü, 9/16"-18, 37Ü x 9/16"-18, O-Ring, Includes 237-6006 O-Ring
		237-6006		1	JOINT THORIQUE, 6-1, 90 Duro, .468" ID x .078" Thk
15		218-5182		1	TE, 9/16"-18, 37Ü x 9/16"-18, O-Ring Br, Includes 237-6006 O-Ring
		237-6006		1	JOINT THORIQUE, 6-1, 90 Duro, .468" ID x .078" Thk
16		305492A1		1	FLEXIBLE (ASSEMBLE), 260 mm (10-1/4 in)
17		305494A1		1	FLEXIBLE (ASSEMBLE), 387 mm (15-1/4 in)
18		305493A1		1	FLEXIBLE (ASSEMBLE), 235 mm (9-1/4 in)
19		218-693		2	COUDE, 90Ü Blkhd, 9/16"-18, 37Ü x 9/16"-18, 37Ü
20		218-1254		2	CONTRE-ECROU, Blkhd, 9/16"-18
21		305508A1		1	POCHETTE, Decal; Includes Four Decals; Not Illustrated
22		307385A1		2	FLEXIBLE (ASSEMBLE), 387 mm (15-1/4 in)
23		307386A1		1	FLEXIBLE (ASSEMBLE), 629 mm (24-3/4 in)
24		307387A1		1	FLEXIBLE (ASSEMBLE), 718 mm (28-1/4 in)
25		307388A1		1	FLEXIBLE, SLEEVE, 660 mm (26 in)

09-10		p2	01/08

COUPLEUR, OUTIL, DE S£CURIT£

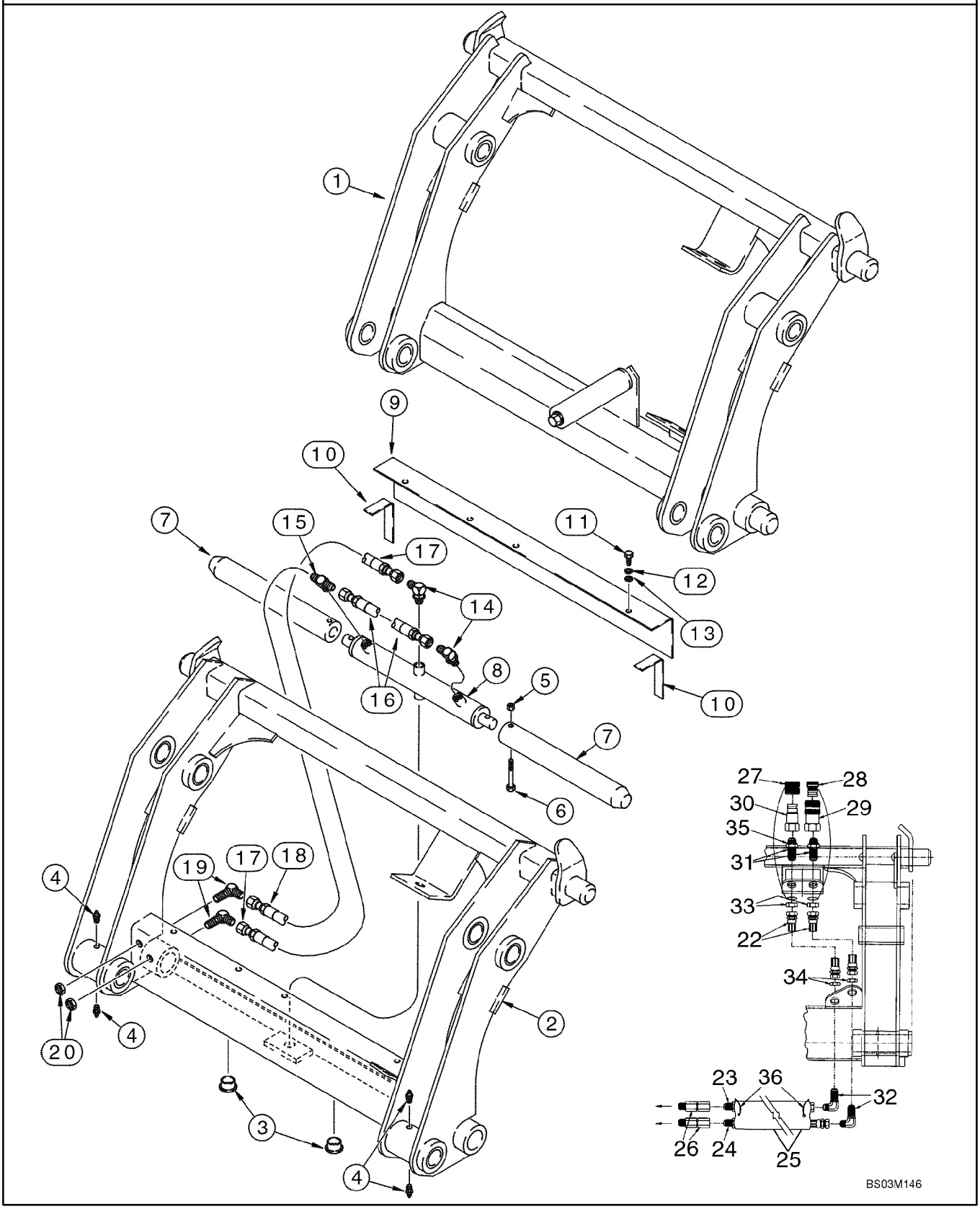

COUPLEUR, OUTIL, DE S£CURIT£

REF	FN	PART NUMBER	YR/SN	QTY	DESCRIPTION
26		307389A1		2	PIVOT, Swivel
27		137344A1		1	BOUCHON, Male Coupling
28		137343A1		1	BOUCHON, Female Coupling
29		123537A1		1	RACCORD, Quick Disconnect; Female
30		245423A1		1	RACCORD
31		126155A1		2	RACCORD, 1-1/16 blkhd fl x Or
32		218-695		2	COUDE, 90Ü Blkhd, 7/8"-14, 37Ü x 7/8"-14, 37Ü
33		218-1256		2	CONTRE-ECROU, Blkhd, 1 1/16"-12
34		218-1279		2	CONTRE-ECROU, Blkhd, 7/8"-14
35		237-6012		2	JOINT THORIQUE, 12-1, 90 Duro, .924 ID x .118" Thk
36		L18337		2	SERRE-CABLE, 9.95"-12.1" lg

09-11		p1	02/08

COUVERCLES - TOURELLE DE LA PELLE RETRO, SANS DE COMMANDE PILOTE

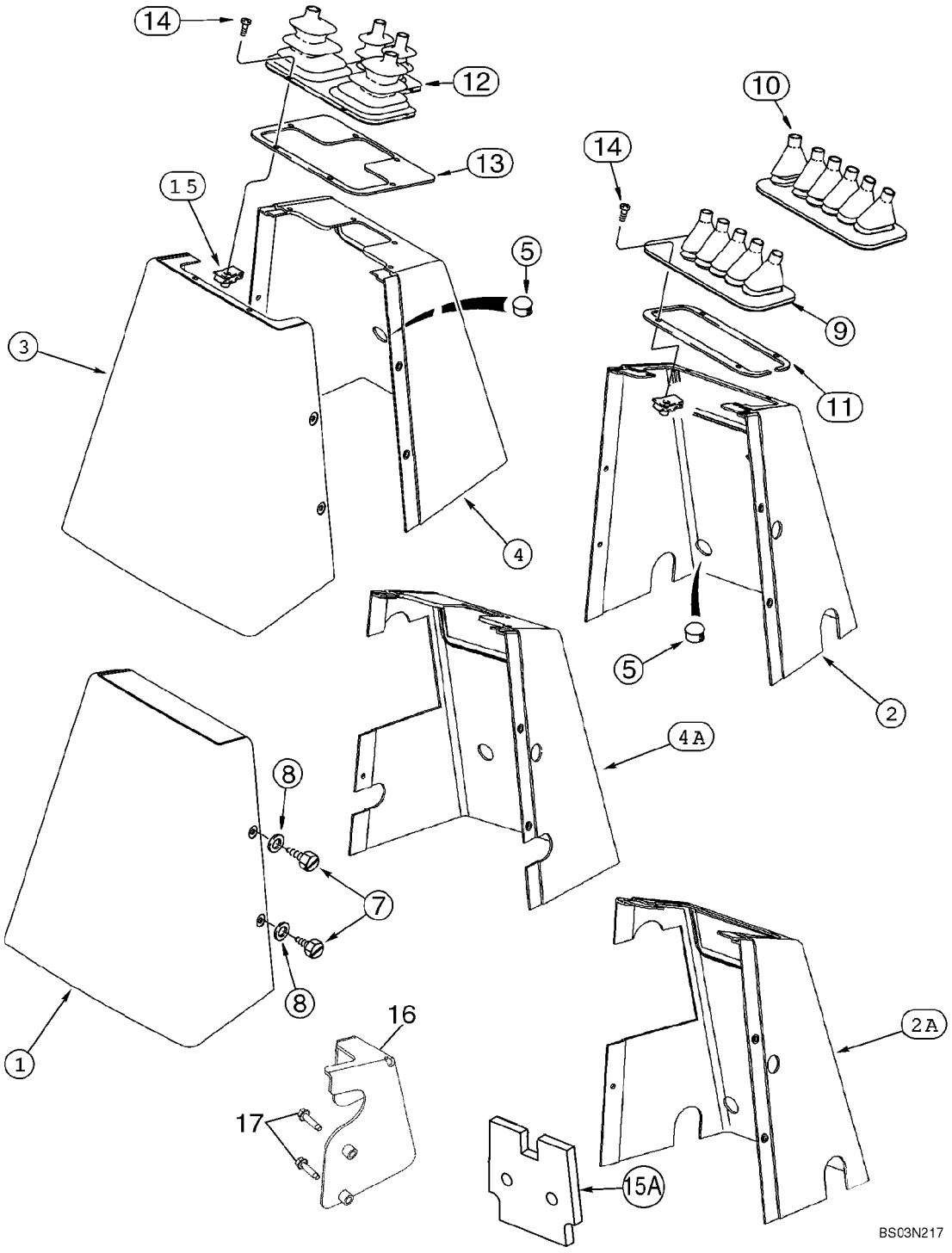

COUVERCLES - TOURELLE DE LA PELLE RETRO, SANS DE COMMANDE PILOTE

REF	FN	PART NUMBER	YR/SN	QTY	DESCRIPTION
1		390759A1		1	RECOUVREMENT, Rear; All Models With Foot Swing
2		390760A1		1	RECOUVREMENT, Front; Foot Swing; Without Auxiliary Hydraulics
2A		87411083		1	RECOUVREMENT, Front; Foot Swing; With Auxiliary Hydraulics
3		390758A1		1	RECOUVREMENT, Rear; All Models With Hand Swing
4		390690A1		1	RECOUVREMENT, Front; Hand Swing; Without Auxiliary Hydraulics
4A		87411084		1	RECOUVREMENT, Front; Hand Swing; With Auxiliary Hydraulics
5		353-411		1-2	BOUCHON, Dome, 1.000" hole, Nylon
7		87310156		5	VIS, M6.3 x 16 st, Stainless Steel
8		87310139		5	RONDELLE, 9/32 ID x 5/8 OD x 1/16 thk, Stainless Steel
9		D149866		1	MANCHETTE, 5 Control Levers
10		D149867		1	MANCHETTE, 6 Control Levers
11		136822A1		1	JONC
12		D149868		1	SOUFFLET, 4 Control Levers
13		136824A1		1	PLAQUE, GRANDE, Used With Ref 12 Only
14		87310124		4	VIS, No. 10 x 1/2, Stainless Steel
14		87310126		6	VIS, No. 10 x 3/4, Stainless Steel; Used With Ref 13 Retainer; Replaces 140-107 Non-Stainless Steel Screw Used On Some Models
15		131-861		4-6	ECROU, Tinn, U, #10-24, Used With Ref 11 Retainer; (6) Used With Ref 13 Retainer
15A		397870A3		2	JOINT, Front and Rear Console Covers; Noise Barrier; Adhesive Back
16		87425122		1	PATTE FIXATION, Models With Backhoe Auxiliary Hydraulics
		87430677		1	DECALCOMANIE, Auxiliary Hydraulics
17		281-14716		2	VIS AUTO-TARAUDEUSE, Hex Wash Hd, 1/4" x 1"

09-12		p1	09/07

SUPPORT DE TOUR DE CONTRd'LE ET JOINTS DE PELLE R£TRO, SANS DE COMMANDE PILOTE

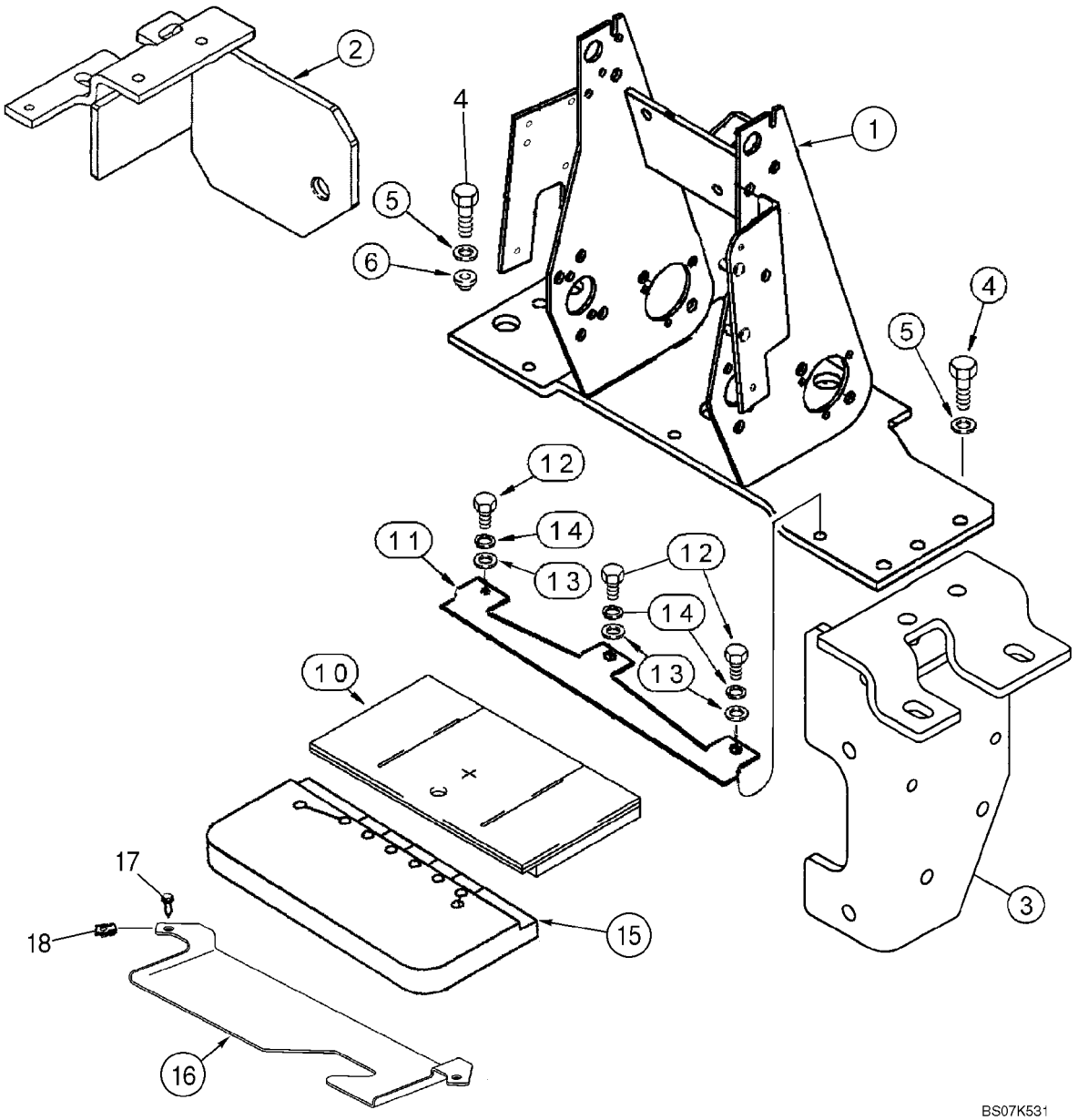

SUPPORT DE TOUR DE CONTRôLE ET JOINTS DE PELLE RÉTRO, SANS DE COMMANDE PILOTE

REF	FN	PART NUMBER	YR/SN	QTY	DESCRIPTION
1		87418516		1	EQUERRE
2		87448059		1	EQUERRE, LH
3		87452627		1	EQUERRE, RH
4		614-10035		8	BOULON, Hex, M10 x 35, 8.8, Full Thd
5		496-41041		8	RONDELLE, 13/32" x 1 1/8" x .134"
6		179956A1		2	SILENTBLOC
10		400069A1		1	MOUSSE
11		87418518		1	EQUERRE
12		614-8020		3	BOULON, Hex, M8 x 20, 8.8
13		895-11008		3	RONDELLE, M8 x 16 x 1.6
14		892-11008		3	RONDELLE FREIN, M8
15		87439210		1	MOUSSE
16		397911A1		1	PATTE FIXATION
17		87310096		2	BOULON, M6 x 25, Includes Washer, Stainless Steel
18		833-40406		2	ECROU, M6, U

09-13		p1	12/07

TOURELLE DE LA PELLE RETRO SUPPORT, AVEC DE COMMANDE PILOTE

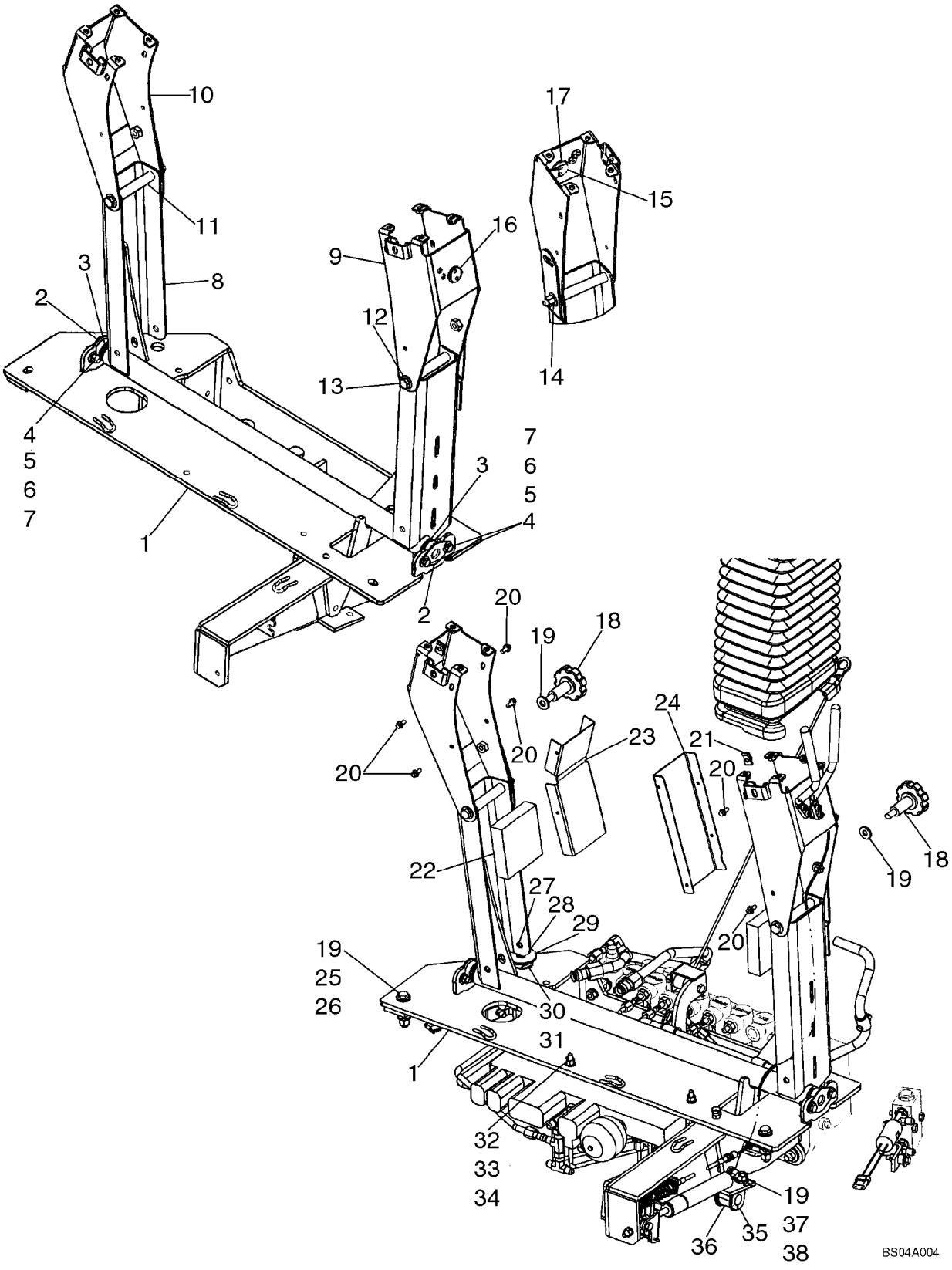

TOURELLE DE LA PELLE RETRO SUPPORT, AVEC DE COMMANDE PILOTE

REF	FN	PART NUMBER	YR/SN	QTY	DESCRIPTION
		87440711		1	TOURELLE, Tower Assembly; Pilot Controls; Includes Ref 1 - 17
1		87440710		1	EQUERRE, Tower
2		D148993		2	ROULEMENT
3		A30881		4	RONDELLE, Seal
4		895-15008		8	RONDELLE, M8 x 20 x 1.6
5		614-8025		4	BOULON, Hex, M8 x 25, 8.8
6		892-11008		4	RONDELLE FREIN, M8
7		829-1408		4	ECROU, M8, Cl 10
8		87435275		1	PIVOT (ASSEMBLE)
9		87440704		1	EQUERRE, Right-Hand Joystick Mounting
10		87440706		1	EQUERRE, Left-Hand Joystick Mounting
11		87329475		2	ENTRETOISE
12		895-15010		4	RONDELLE, M11 x 24 x 2
13		814-10130		2	BOULON, Hex, M10 x 130, 8.8
14		832-10410		2	CONTRE-ECROU, M10 x 1.5, Cl 8
15		87431529		1	LEVIER (ASSEMBLE), Control Tower Release
16		103-11100		1	ANNEAU D'ARRąT, #100, .925", Ext
17		87405706		1	RONDELLE, Wave, 1 inch
18		87437688		2	POMMEAU, Lateral Adjustment Pilot Control Tower
19		896-15010		8	RONDELLE, M10 x 24.5 x 3, HT
20		781-24613		8	VIS AUTO-TARAUDEUSE, Hex Flg Hd, M6 x 13
21		833-40406		2	ECROU, M6, U
22		87425696		2	JOINT, CAOUTCHOUC
23		87431301		1	PROTECTION, Shield, Left-Hand
24		87431300		1	GARANT, Shield, Right-Hand
25		814-10060		2	BOULON, Hex, M10 x 60, 8.8
26		832-10410		2	CONTRE-ECROU, M10 x 1.5, Cl 8
27		87450914		2	BOULON, Locking, M10 x 40
28		892-11010		2	RONDELLE FREIN, M10
29		496-81018		1	RONDELLE, 17/32 x 2 x 1/8
30		D148962		1	RONDELLE, Belleville
31		87440381		1	ENTRETOISE
32		896-11008		2	RONDELLE, M8 x 17.5 x 2, HT
33		832-10408		2	CONTRE-ECROU, M8 x 1.25, Cl 8

09-13		p2	12/07

TOURELLE DE LA PELLE RETRO SUPPORT, AVEC DE COMMANDE PILOTE

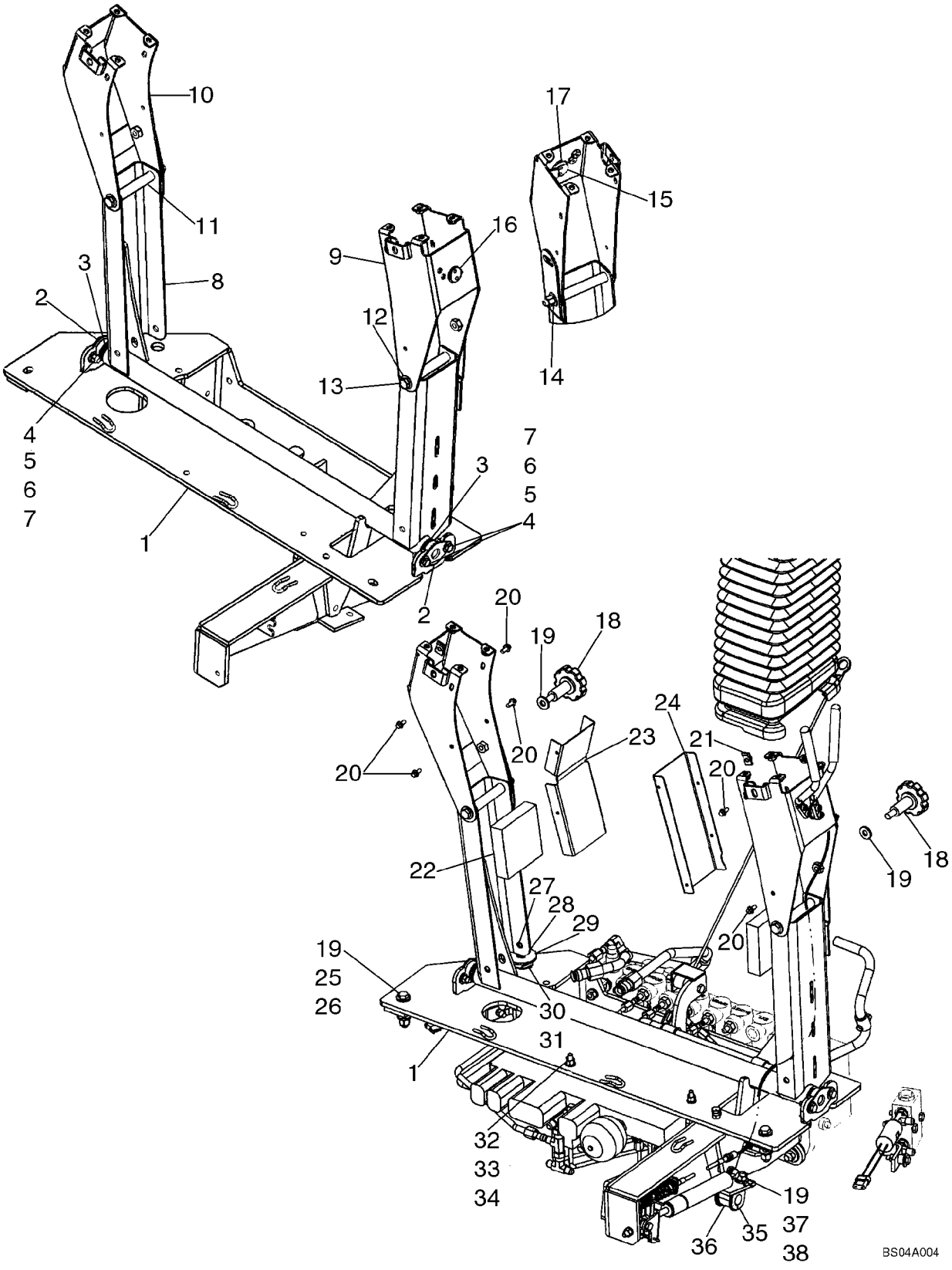

TOURELLE DE LA PELLE RETRO SUPPORT, AVEC DE COMMANDE PILOTE

REF	FN	PART NUMBER	YR/SN	QTY	DESCRIPTION
34		864-8055		2	VIS, Hex Soc Hd, M8 x 55, 8.8
35		D143411		1	COLLIER
36		D74182		1	PASSE-FIL, Isolation Block
37		829-1410		1	ECROU, M10, Cl 10
38		614-10025		1	BOULON, Hex, M10 x 25, 8.8, Full Thd

09-14		p1	02/08

TOURELLE DE LA PELLE RETRO SOUFFLET DE JOINT, AVEC DE COMMANDE PILOTE

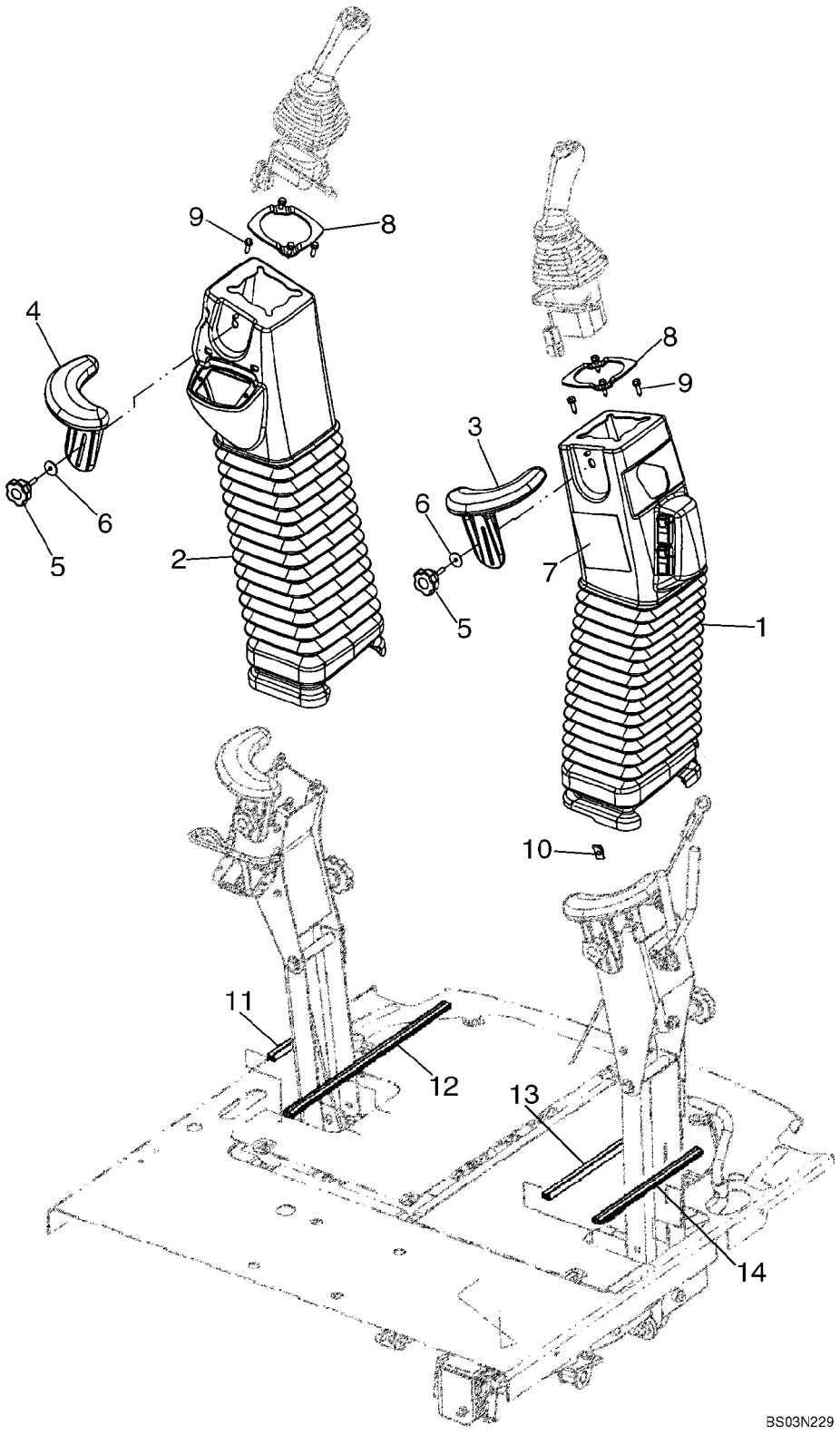

TOURELLE DE LA PELLE RETRO SOUFFLET DE JOINT, AVEC DE COMMANDE PILOTE

REF	FN	PART NUMBER	YR/SN	QTY	DESCRIPTION
1		87309924		1	COIFFE
2		87309923		1	COIFFE
3		87437366		1	ACCOUDOIR, Wrist, RH
4		87437369		1	ACCOUDOIR, Wrist, LH
5		87437689		2	POMMEAU
6		87310186		2	RONDELLE, 6.6 ID x 25 OD x 1.6 mm thk, Stainless Steel
7		87305413		1	DECALCOMANIE, Pattern Selecting; With Backhoe/Excavator Black Silhouette on Decal; Not Illustrated
8		87435372		2	PLAQUE DE SERRAGE
9		87608777		8	BOULON
10		833-40406		2	ECROU, M6, U
11		87433008		1	JOINT, CAOUTCHOUC, 183 mm (7-1/4 in); Cut From 87438002
12		87433006		1	JOINT, CAOUTCHOUC, 428 mm (16-7/8 in); Cut From 87438002
13		87433005		1	JOINT, CAOUTCHOUC, 335 mm (13-3/16 in); Cut From 87438002
14		87433007		1	JOINT, CAOUTCHOUC, 275 mm (10-7/8 in); Cut From 87438002

09-15		p1	12/07

TOURELLE DE LA PELLE RETRO LEVIER (VERROU DE MAINTIEN DE BRAS DE RELEVAGE), AVEC DE COMMANDE PILOTE

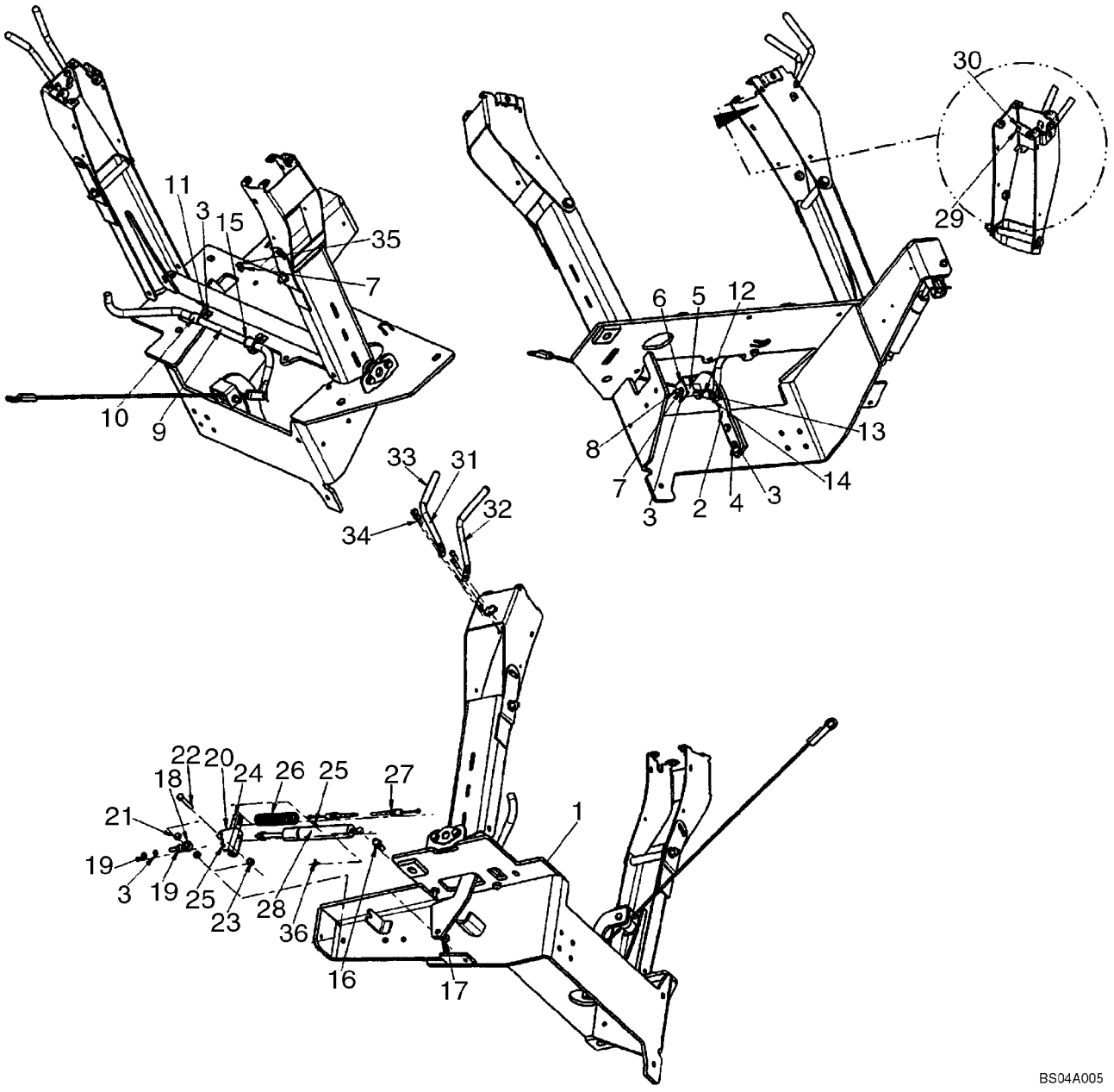

TOURELLE DE LA PELLE RETRO LEVIER (VERROU DE MAINTIEN DE BRAS DE RELEVAGE), AVEC DE COMMANDE PILOTE

REF	FN	PART NUMBER	YR/SN	QTY	DESCRIPTION
1		87440711		1	TOURELLE, Pilot Control Tower Assembly; See Figure 09-13
2		86984544		1	PATTE FIXATION, Roller Mounting
3		892-11008		6	RONDELLE FREIN, M8
4		614-8030		2	BOULON, Hex, M8 x 30, 8.8
5		86984547		2	GUIDE
6		86984545		1	PATTE FIXATION
7		829-1408		2	ECROU, M8, Cl 10
8		814-8070		1	BOULON, Hex, M8 x 70, 8.8
9		87441850		1	TRINGLE, Boom Latch Release
10		D143723		2	BRIDE, Clamp
11		614-8025		2	BOULON, Hex, M8 x 25, 8.8
12		87435924		1	CABLE, Boom Latch
13		427-5094		1	AXE DE CHAPE, 5/16" x .940"
		895-11008		1	RONDELLE, M8 x 16 x 1.6, Used with Ref 13 and 14
14		432-612		1	GOUPILLE, 3/32" x 3/4"
15		D143591		2	ANNEAU-D'ARRET
16		85824067		1	AXE ROTULE, Stud
17		832-10410		1	CONTRE-ECROU, M10 x 1.5, Cl 8
18		85824081		1	ROTULE
19		425-115		2	ECROU, 5/16"-24, G5
20		85824080		1	PATTE FIXATION
21		85821520		2	ENTRETOISE
22		413-528		1	BOULON, Hex, 5/16"-18 x 1 3/4", G5
23		231-1445		1	CONTRE-ECROU, 5/16"-18, GB
24		86984549		1	CANAL
25		432-828		2	GOUPILLE, 1/8" x 1 3/4"
26		87443692		1	RESSORT
27		87437806		1	CABLE FLEXIBLE, Pilot Control Positioner
28		86989616		1	COMPAS, Cylinder
29		140-108		1	VIS, Cross Pan Hd, #10-24 x 3/4"
30		231-14409		1	CONTRE-ECROU, #10-24, GB
31		87418368		1	TRINGLE, Tower Stationary
32		87418369		1	TRINGLE, Tower Position
33		87442409		2	POIGNEE DE MANETTE

09-15		p2	12/07

TOURELLE DE LA PELLE RETRO LEVIER (VERROU DE MAINTIEN DE BRAS DE RELEVAGE), AVEC DE COMMANDE PILOTE

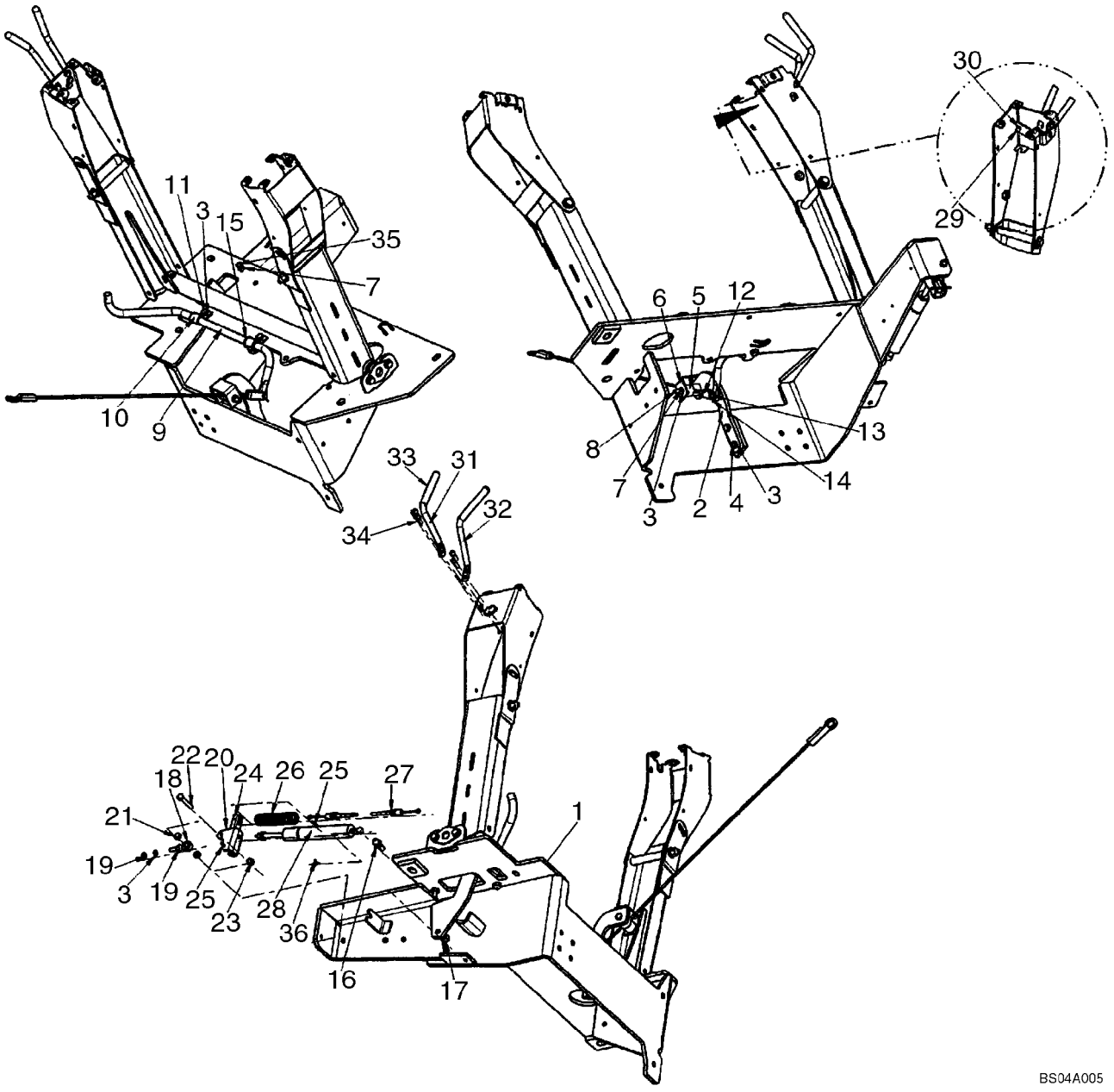

TOURELLE DE LA PELLE RETRO LEVIER (VERROU DE MAINTIEN DE BRAS DE RELEVAGE), AVEC DE COMMANDE PILOTE

REF	FN	PART NUMBER	YR/SN	QTY	DESCRIPTION
34		87310098		4	BOULON, Hex Flange, M6 x 20, Black Oxide
35		614-8050		1	BOULON, Hex, M8 x 50, 8.8, Full Thd
36		3233348R1		1	CLIP

09-16		p1	09/07

COMMANDES - PELLE RETRO, AVEC D£BATTEMENT AU PIED (MODêLES AVEC OU SANS BALANCIER EXTENSIBLE)

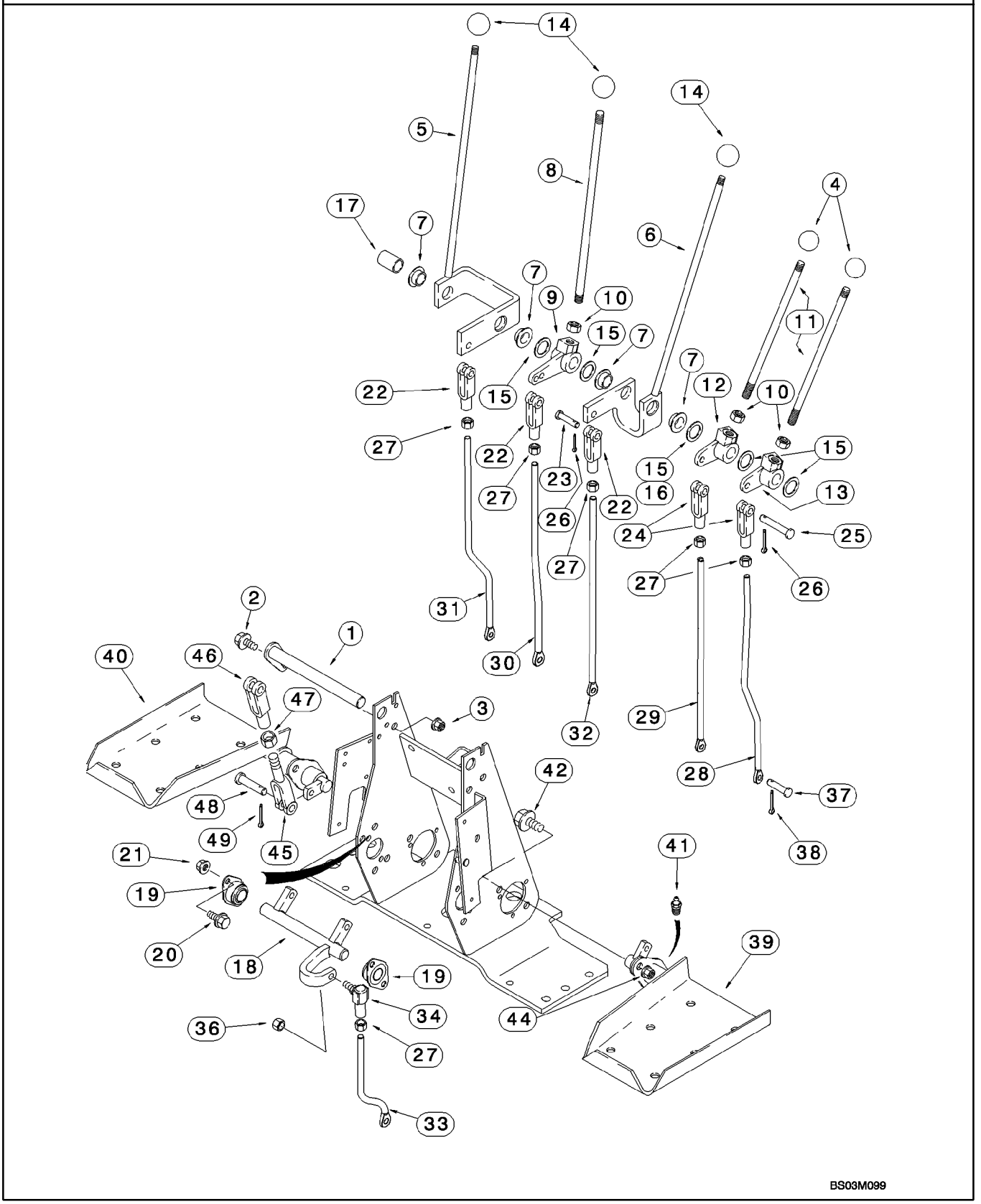

COMMANDES - PELLE RETRO, AVEC D£BATTEMENT AU PIED (MODêLES AVEC OU SANS BALANCIER EXTENSIBLE)

REF	FN	PART NUMBER	YR/SN	QTY	DESCRIPTION
1		87401203		1	ARBRE (ASSEMBLE)
2		614-8025		1	BOULON, Hex, M8 x 25, 8.8
3		832-10408		1	CONTRE-ECROU, M8 x 1.25, Cl 8
4		D59912		2	PLAQUE, Stabilizer Control Levers
5		136267A1		1	LEVIER, Boom; Incl. Ref 7
6		136269A1		1	LEVIER, Bucket; Incl. Ref 7
7		D148992		2	BAGUE
8		136263A1		1	TRINGLE, Dipper
9		D150397		1	RENVOI, Dipper
10		425-118		3	ECROU, 1/2"-20, G5
11		136261A1		2	TIGE-DE-COMMANDE, Stabilizer
12		D150435		1	RENVOI, Right-Hand Stabilizer Control
13		D150434		1	RENVOI, Left-Hand Stabilizer Control
14		L54563		3	PLAQUE, Boom, Dipper, and Bucket
15		A30881		AR	RONDELLE, 49/64 x 1-15/64 x 1/32; Used As A Shim
16		D34666		1	RONDELLE, 25/32 x 1-3/8 x 9/64; May Be Used In Place Of Ref 15
17		D150486		1	ENTRETOISE, Not Used On Models With Extendable Dipper
18		D148994		1	ARBRE, Swing
19		D139039		2	ROULEMENT
20		614-8025		4	BOULON, Hex, M8 x 25, 8.8
21		832-10408		4	CONTRE-ECROU, M8 x 1.25, Cl 8
22		213-126		3	CHAPE DE R£GLAGE, 3/8"-24 x 2 1/2"
23		D149288		3	AXE, GROS, Special
24		D150493		2	FOURCHETTE
25		427-6088		2	AXE DE CHAPE, 3/8" x 3/4"
26		432-612		5	GOUPILLE, 3/32" x 3/4"
27		425-156		6	ECROU, Jam, 3/8"-24, G5
28		87422243		1	TIGE FILET£E, Left-Hand Stabilizer Control
29		87422245		1	TIGE FILET£E, Right-Hand Stabilizer Control
30		87422247		1	TIGE FILET£E, Dipper
31		87422241		1	TIGE FILET£E, Boom
32		87422249		1	TIGE FILET£E, Bucket
33		87422239		1	TIGE FILET£E, Swing

09-16		p2	09/07

COMMANDES - PELLE RETRO, AVEC D£BATTEMENT AU PIED (MODêLES AVEC OU SANS BALANCIER EXTENSIBLE)

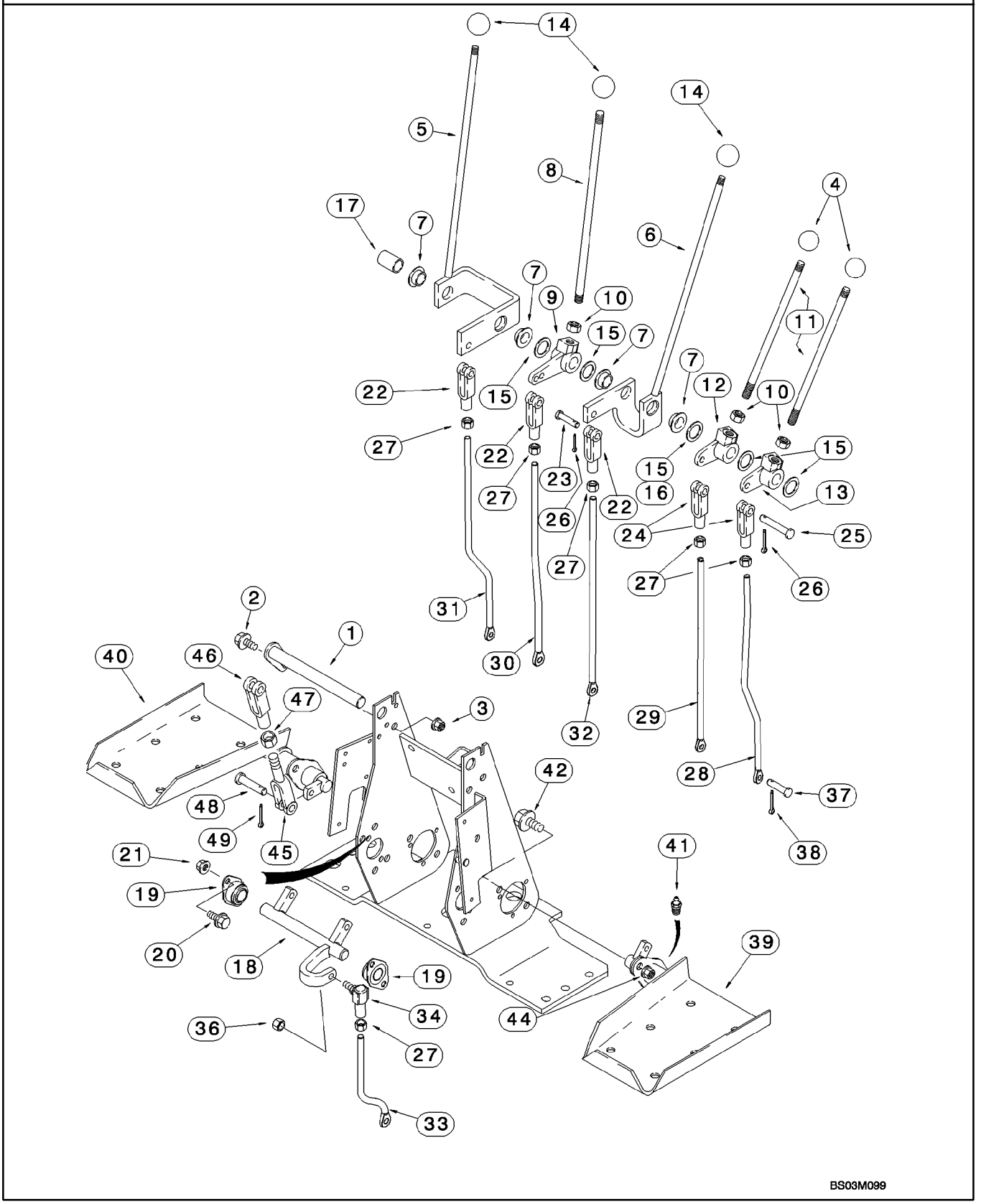

BS03M099

COMMANDES - PELLE RETRO, AVEC D£BATTEMENT AU PIED (MODêLES AVEC OU SANS BALANCIER EXTENSIBLE)

REF	FN	PART NUMBER	YR/SN	QTY	DESCRIPTION
34		D149295		1	ROTULE, 3/8
36		425-116		1	ECROU, 3/8"-24, G5
37		D149287		6	AXE, GROS, 5/16
38		432-612		6	GOUPILLE, 3/32" x 3/4"
39		136271A2		1	PEDALE (ASSEMBLEE), Left-Hand Swing; Without Pilot Controls
40		136270A2		1	PEDALE (ASSEMBLEE), Right-Hand Swing; Without Pilot Controls
41		219-4		2	GRAISSEUR, 1/8"-27 NPTF, Short
42		614-10025		4	BOULON, Hex, M10 x 25, 8.8, Full Thd
44		832-10410		4	CONTRE-ECROU, M10 x 1.5, Cl 8
45		D150503		2	EXTR£MIT£, Yoke
46		D149262		2	FOURCHETTE, 3/8
47		425-156		2	ECROU, Jam, 3/8"-24, G5
48		D149288		4	AXE, GROS, 3/8
49		432-612		4	GOUPILLE, 3/32" x 3/4"

COMMANDES - PELLE RETRO, AVEC D£BATTEMENT AU PIED (MODôLES AVEC BALANCIER EXTENSIBLE)

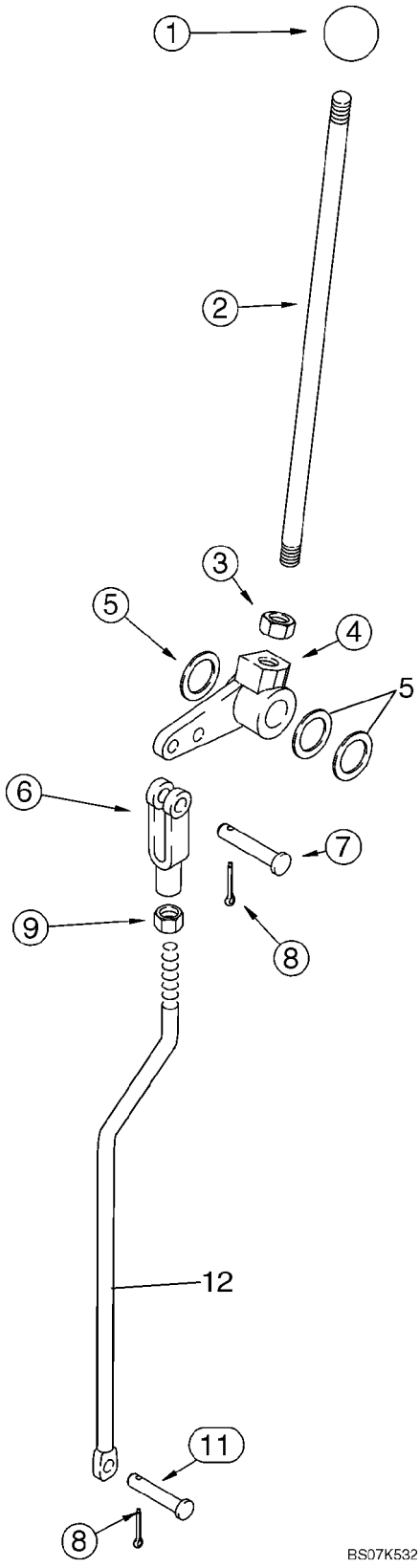

COMMANDES - PELLE RETRO, AVEC D£BATTEMENT AU PIED (MODêLES AVEC BALANCIER EXTENSIBLE)

REF	FN	PART NUMBER	YR/SN	QTY	DESCRIPTION
1		L54563		1	PLAQUE, Extendahoe
2		136263A1		1	TRINGLE, Extendahoe
3		425-118		1	ECROU, 1/2"-20, G5
4		182006A1		1	LEVIER, Bellcrank
5		A30881		AR	RONDELLE
6		213-126		1	CHAPE DE R£GLAGE, 3/8"-24 x 2 1/2"
7		427-6088		1	AXE DE CHAPE, 3/8" x 3/4"
8		432-612		2	GOUPILLE, 3/32" x 3/4"
9		425-156		1	ECROU, Jam, 3/8"-24, G5
11		D149287		1	AXE, GROS
12		87446113		1	TIGE FILET£E, Extendahoe; Mounts In Inner Bellcrank Lever Hole

09-18		p1	09/07

COMMANDES - PELLE RETRO, AVEC D£BATTEMENT A LA MAIN (MODôLES AVEC OU SANS BALANCIER EXTENSIBLE)

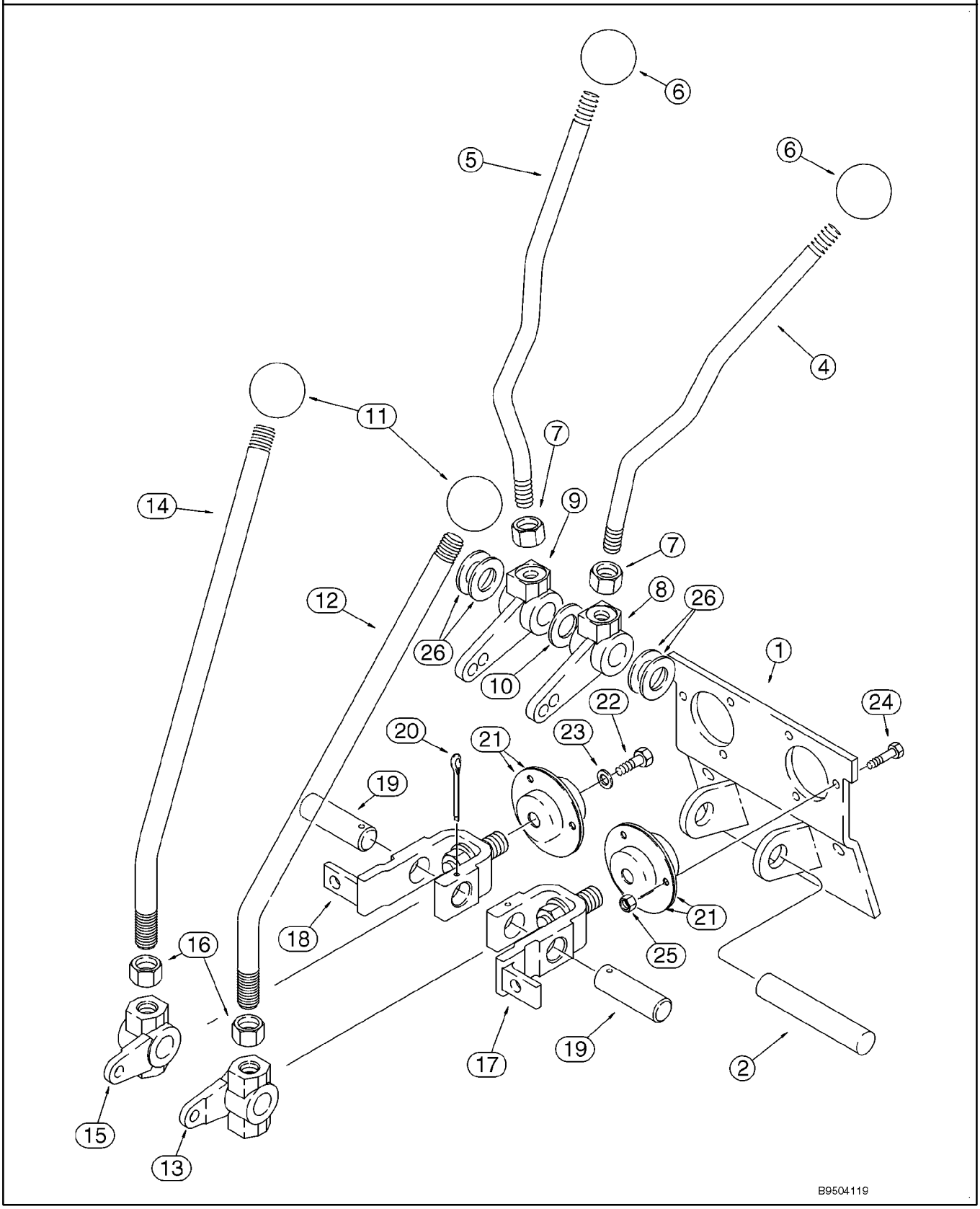

COMMANDES - PELLE RETRO, AVEC D£BATTEMENT A LA MAIN (MODĉLES AVEC OU SANS BALANCIER EXTENSIBLE)

REF	FN	PART NUMBER	YR/SN	QTY	DESCRIPTION
		REF			NOTICE, UPPER CONTROL LEVERS
1		108864A1		1	SUPPORT
2		D148947		1	AXE, GROS, Stabilizer
4		409672A1		1	LEVIER, Left-Hand; Stabilizer
5		409673A1		1	LEVIER, Right-Hand; Stabilizer
6		D59912		2	PLAQUE, Stabilizer
7		425-118		2	ECROU, 1/2"-20, G5
8		108924A1		1	LEVIER
9		108923A1		1	LEVIER
10		495-11081		1	RONDELLE, 3/4", SAE
11		D39118		2	PLAQUE
12		125113A1		1	LEVIER, Boom and Swing
13		106989A1		1	LEVIER, Left-Hand Boom and Swing Lever
14		125113A1		1	LEVIER, Bucket and Dipper
15		106990A1		1	LEVIER, Right-Hand Bucket and Dipper Lever
16		425-1110		2	ECROU, 5/8"-18, G5
17		178006A1		1	LEVIER, Boom and Swing
18		178004A1		1	LEVIER, Bucket and Dipper
19		102765A1		2	AXE, GROS, Bellcrank
20		432-828		2	GOUPILLE, 1/8" x 1 3/4"
21		112380A1		4	ROULEMENT
22		614-6016		2	BOULON, Hex, M6 x 16, 8.8
23		396-41028		2	RONDELLE, .281" x 7/8" x .098", HDN
24		614-6020		6	BOULON, Hex, M6 x 20, 8.8
25		829-1406		6	ECROU, M6, Cl 10
26		A30881		AR	RONDELLE, 49/64 x 1-15/64 x 1/32

09-19		p1	09/07

COMMANDES - PELLE RETRO, AVEC D£BATTEMENT A LA MAIN (MODôLES AVEC OU SANS BALANCIER EXTENSIBLE)

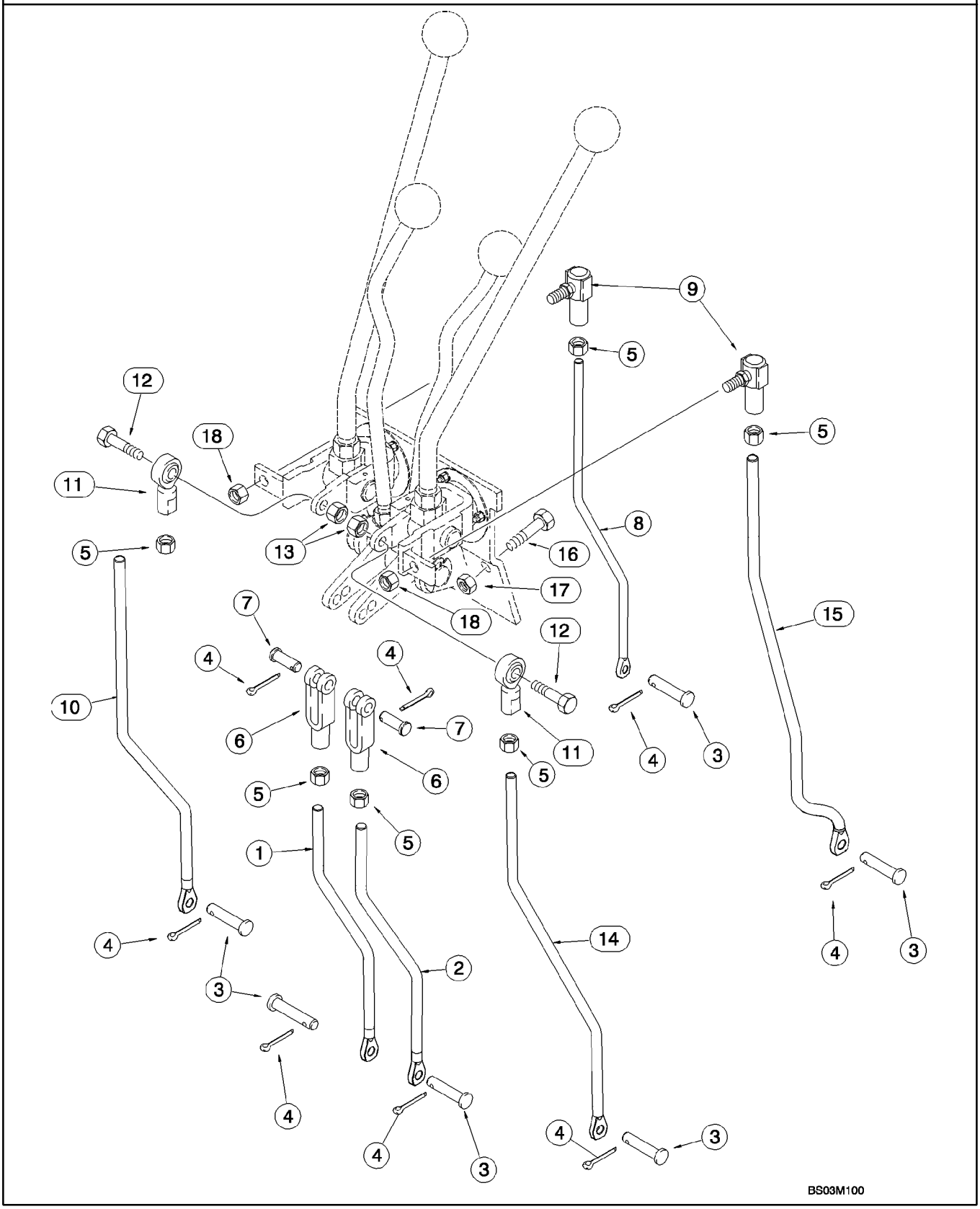

COMMANDES - PELLE RETRO, AVEC D£BATTEMENT A LA MAIN (MODĉLES AVEC OU SANS BALANCIER EXTENSIBLE)

REF	FN	PART NUMBER	YR/SN	QTY	DESCRIPTION
		REF			NOTICE, LOWER CONTROL LEVERS
1		87452406		1	TIGE FILET£E, Right-Hand; Stabilizer; 286.6 mm (11-9/32 in) Long
2		87452404		1	TIGE FILET£E, Left-Hand; Stabilizer; 286.6 mm (11-9/32 in) Long
3		D149287		6	AXE, GROS
4		432-612		8	GOUPILLE, 3/32" x 3/4"
5		425-116		6	ECROU, 3/8"-24, G5
6		213-126		2	CHAPE DE R£GLAGE, 3/8"-24 x 2 1/2"
7		D149288		2	AXE, GROS, Special
8		87422264		1	TIGE FILET£E, Bucket
9		D149295		2	ROTULE
10		87422262		1	TIGE FILET£E, Dipper
11		87382812		2	ROULEMENT, BALLJOINT; 3/8NF
12		413-624		2	BOULON, Hex, 3/8"-16 x 1 1/2", G5
13		425-106		2	ECROU, 3/8"-16, G5
14		87422256		1	TIGE FILET£E, Boom
15		87422253		1	TIGE FILET£E, Swing
16		614-10025		2	BOULON, Hex, M10 x 25, 8.8, Full Thd
17		832-10410		2	CONTRE-ECROU, M10 x 1.5, Cl 8
18		231-2446		2	CONTRE-ECROU, 3/8"-24, GB

COMMANDES - PELLE RETRO, SCHEMA DE CONTROLE DE L'EXCAVATRICE

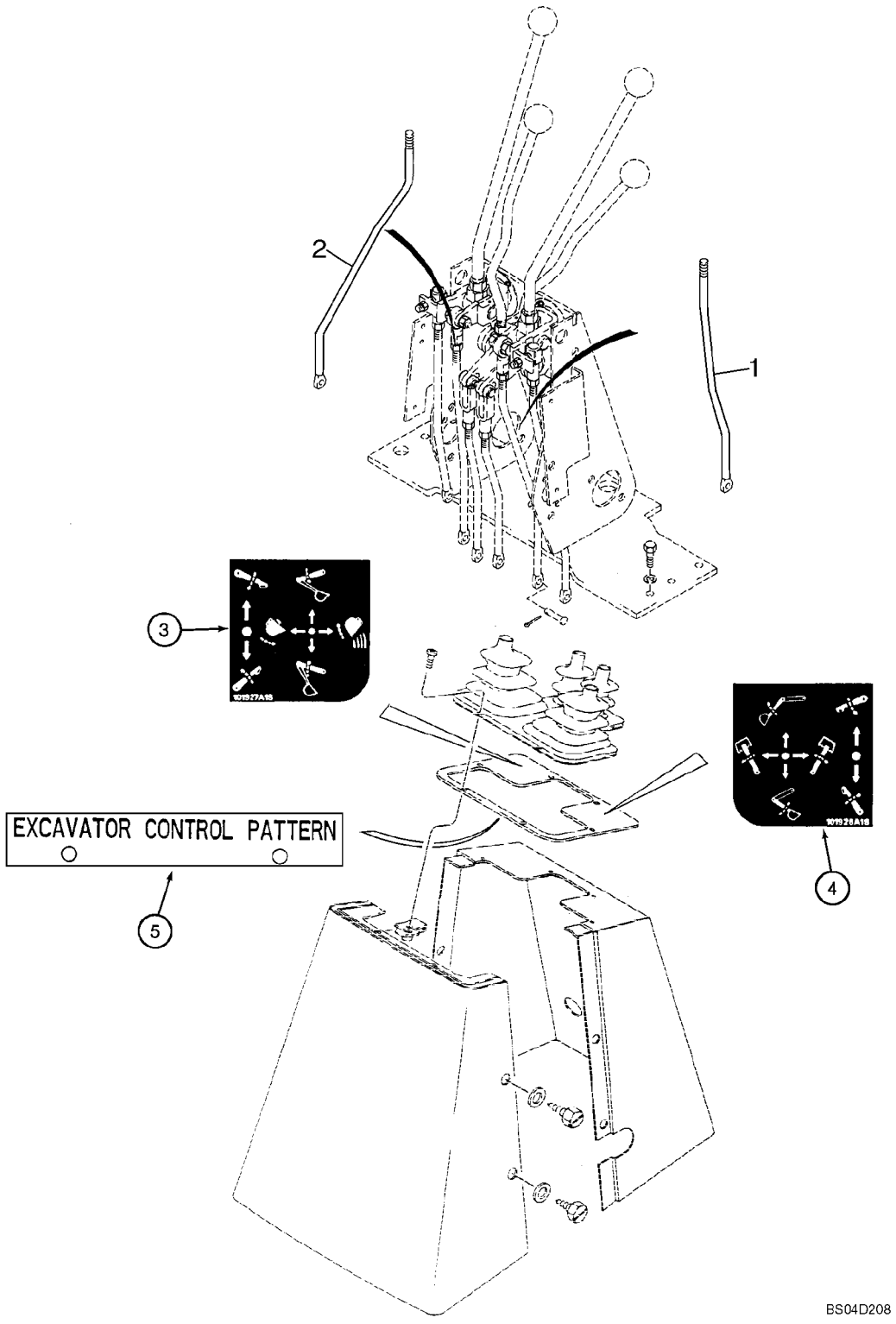

COMMANDES - PELLE RETRO, SCHEMA DE CONTROLE DE L'EXCAVATRICE

REF	FN	PART NUMBER	YR/SN	QTY	DESCRIPTION
		87447088		1	KIT ASSISTANCE, Excavator Control Pattern; Incl. Ref 1 - 5; Purchase From Parts and Components; Machine Must Be Equipped With Hand Swing Controls; If Machine Is Equipped With Foot Swing Controls, Foot Swing to Hand Swing Controls Kit Must Be Ordered and Installed First
1		87422272		1	TIGE FILET£E, Dipper; Replaces Existing Boom Control Rod; Right-Hand Control Lever Which Used To Control The Dipper, Now Controls The Boom
2		87422270		1	TIGE FILET£E, Boom; Replaces Existing Dipper Control Rod; The Left-Hand Control Lever Which Used To Control The Boom, Now Controls The Dipper
3		E49498		1	DECALCOMANIE, Control; Right-Hand
4		E49497		1	DECALCOMANIE, Control; Left-Hand
5		198410A1		1	PLAQUE, GRANDE, Excavator Control Pattern

09-20		p1	09/07

COMMANDES - PELLE RETRO, AVEC D£BATTEMENT A LA MAIN (MODôLES AVEC BALANCIER EXTENSIBLE)

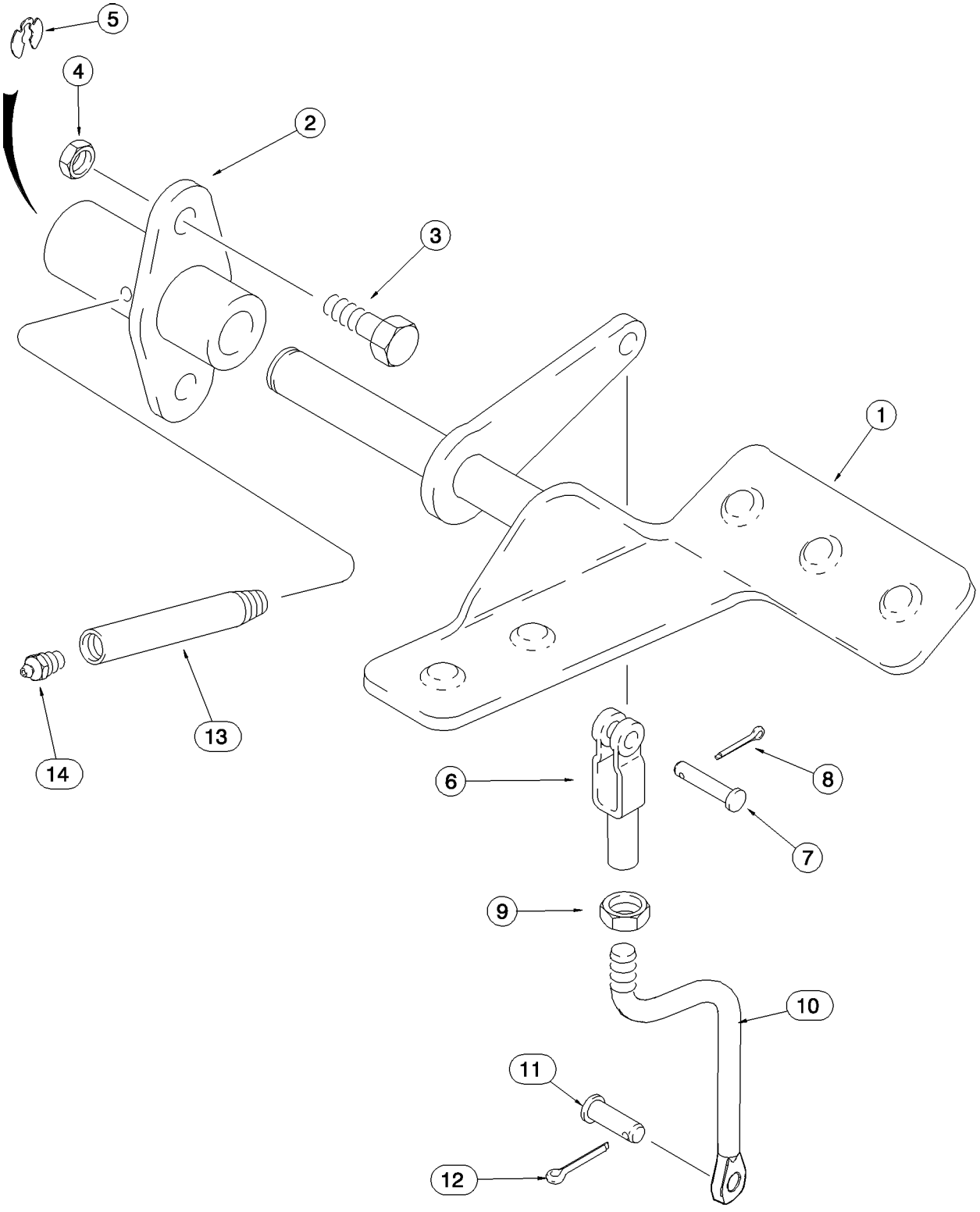

COMMANDES - PELLE RETRO, AVEC D£BATTEMENT A LA MAIN (MODĉLES AVEC BALANCIER EXTENSIBLE)

REF	FN	PART NUMBER	YR/SN	QTY	DESCRIPTION
1		179029A1		1	PEDALE, Right-Hand; Extendahoe
2		126918A1		1	SUPPORT (ASSEMBLE)
3		614-10025		2	BOULON, Hex, M10 x 25, 8.8, Full Thd
4		832-10410		2	CONTRE-ECROU, M10 x 1.5, Cl 8
5		D143416		1	ANNEAU-D'ARRET
6		D134900		1	FOURCHETTE
7		427-6088		1	AXE DE CHAPE, 3/8" x 3/4"
8		432-612		1	GOUPILLE, 3/32" x 3/4"
9		425-156		1	ECROU, Jam, 3/8"-24, G5
10		87440058		1	TIGE FILET£E, Extendahoe Rod
11		D149287		1	AXE, GROS
12		432-612		1	GOUPILLE, 3/32" x 3/4"
13		D150032		1	TUBE, Lube
14		219-1		1	GRAISSEUR, 1/8"-27 x .66 lg

09-21		p1	12/07

COMMANDES - CIRCUIT HYDRAULIQUE AUXILIAIRE POUR LA PELLE RETRO, SANS DE COMMANDE PILOTE

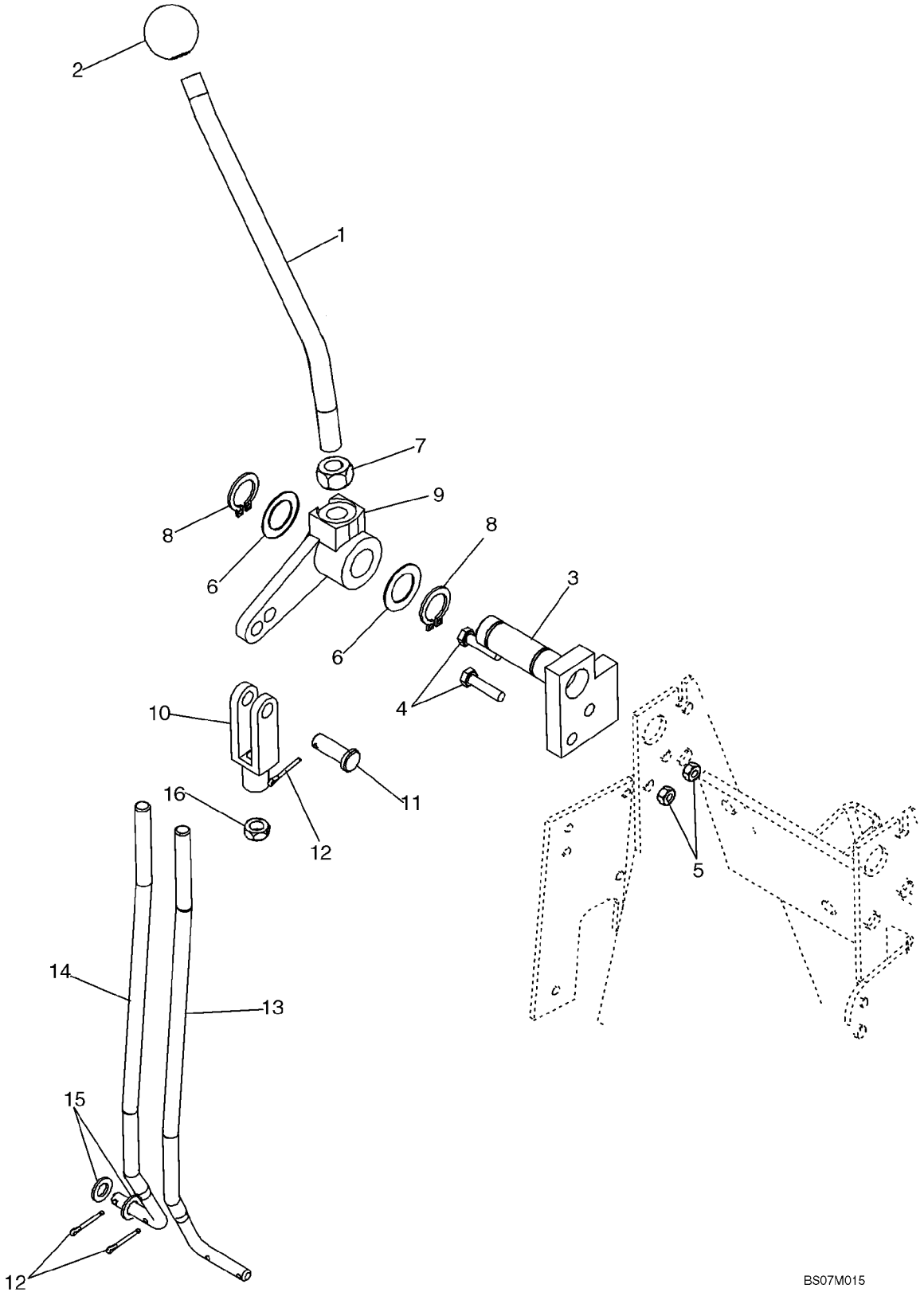

COMMANDES - CIRCUIT HYDRAULIQUE AUXILIAIRE POUR LA PELLE RETRO, SANS DE COMMANDE PILOTE

REF	FN	PART NUMBER	YR/SN	QTY	DESCRIPTION
1		221477A1		1	TIGE-DE-COMMANDE, Auxiliary Control; 250 mm (9-27/32 in) long
2		D59912		1	PLAQUE
3		87425117		1	PIVOT (ASSEMBLE), 7 or 8 Spool Valve
4		614-6025		2	BOULON, Hex, M6 x 25, 8.8
5		829-1406		2	ECROU, M6, Cl 10
6		A30881		2	RONDELLE, Used As A Shim
7		425-118		1	ECROU, 1/2"-20, G5
8		103-1475		2	ANNEAU D'ARRąT, #75, Ext
9		182006A1		1	LEVIER
10		213-126		1	CHAPE DE R£GLAGE, 3/8"-24 x 2 1/2"
11		D149288		1	AXE, GROS
12		432-612		3	GOUPILLE, 3/32" x 3/4"
13		87439135		1	TIGE FILET£E, 7 Spool Valve; If Used
14		87438157		1	TIGE FILET£E, 8 Spool Valve; If Used
15		895-11008		2	RONDELLE, M8 x 16 x 1.6
16		425-156		1	ECROU, Jam, 3/8"-24, G5

09-22		p1	12/07

RETROPELLE - STABILISATEURS, PLAQUES ET PATINS

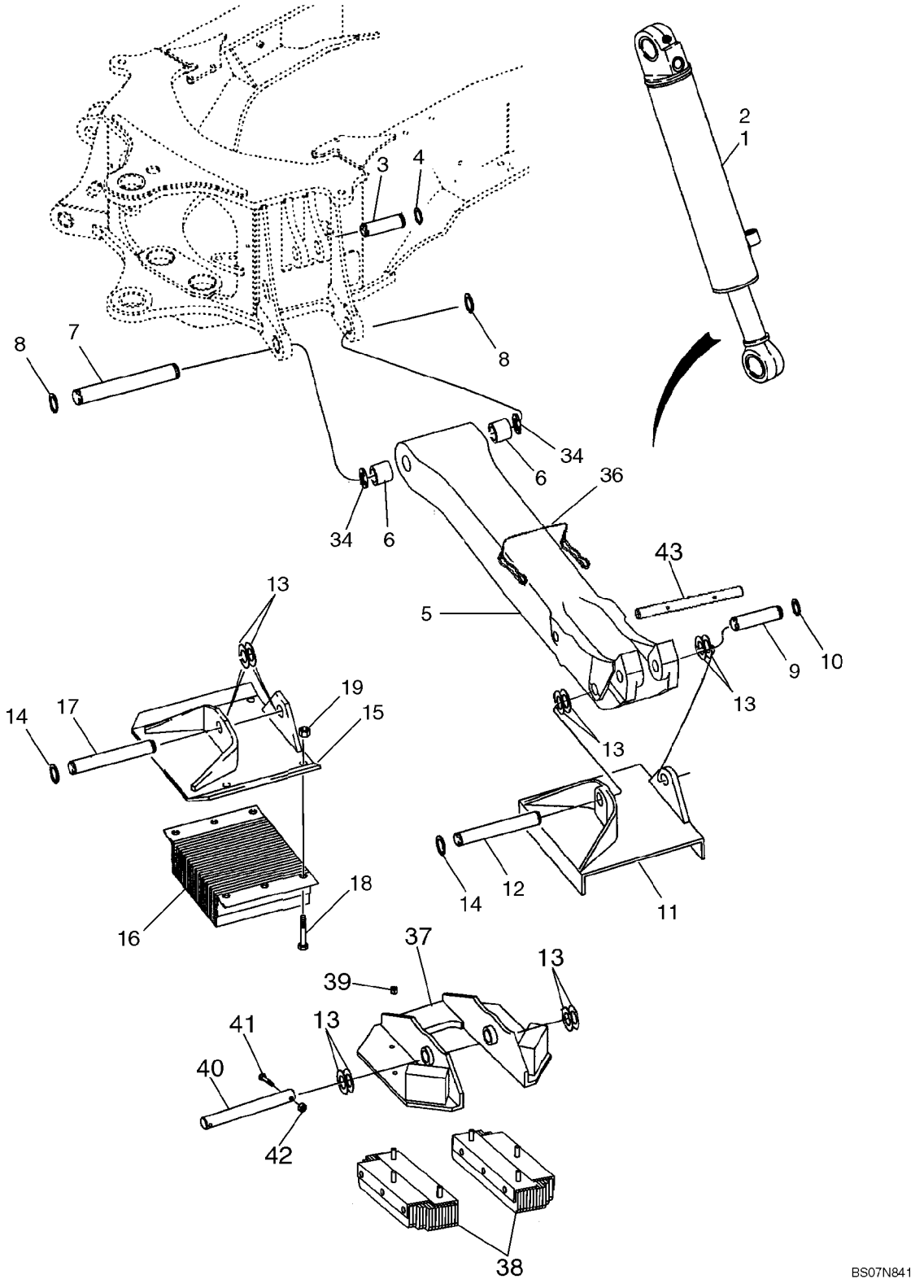

RETROPELLE - STABILISATEURS, PLAQUES ET PATINS

REF	FN	PART NUMBER	YR/SN	QTY	DESCRIPTION
1		195503A1		1	VERIN, 102 ID x 553 mm strk; Stabilizer; Right-Hand; See Figure 08-61
2		195504A1		1	VERIN, 102 ID x 553 mm strk; Stabilizer; Left-Hand; See Figure 08-61
3		D38907		2	AXE, Stabilizer Cylinder to Chassis
4		103-16175		4	ANNEAU D'ARRąT, #175, Ext
5		446222A1		2	STABILISATEUR, 1135 mm (44-11/16 in), Leg; Incl. Ref 6
6		D50146		2	BAGUE, 1.760" x 2.250" x 1.50"
7		121665A1		2	AXE, GROS, Stabilizer Leg to Chassis
8		103-16175		4	ANNEAU D'ARRąT, #175, Ext
9		D26002		2	AXE, Stabilizer Cylinder
10		D25279		4	ANNEAU-D'ARRET
11		87456199		2	TAMPON, Plate; Cleated, Tan
12		D28648		2	AXE, Plate/Pad to Leg
13		D143406		AR	RONDELLE, Used as a Spacer
14		D25279		4	ANNEAU-D'ARRET
15		87389813		2	TAMPON, Street or Cemetery, If Used
16		D61368		2	SILENTBLOC, Rubber, If Used
17		D53812		2	CHEVILLE PIVOT, 10-9/64 in Long; Plate to Leg
18		413-1228		8	BOULON, Hex, 3/4"-10 x 1 3/4", G5
19		425-1012		8	ECROU, 3/4"-10, G5
34		495-81226		AR	RONDELLE, 1 13/16" x 2 1/2" x .109"
36		446454A1		2	CHEVILLE
37		386000A2		2	PLAQUE DE GARNISSAGE, Anti-Flipover
38		395753A2		4	PLAQUE CAOUTCHOUC
39		231-4247		12	CONTRE-ECROU, 7/16"-14, GB
40		D149033		2	AXE, GROS
41		814-10050		2	BOULON, Hex, M10 x 50, 8.8
42		832-10410		2	CONTRE-ECROU, M10 x 1.5, Cl 8
43		87436782		2	CHEVILLE PIVOT

09-23		p1	11/07

RETROPELLE - TOURELLE ET VERINS DE DEBATTEMENT

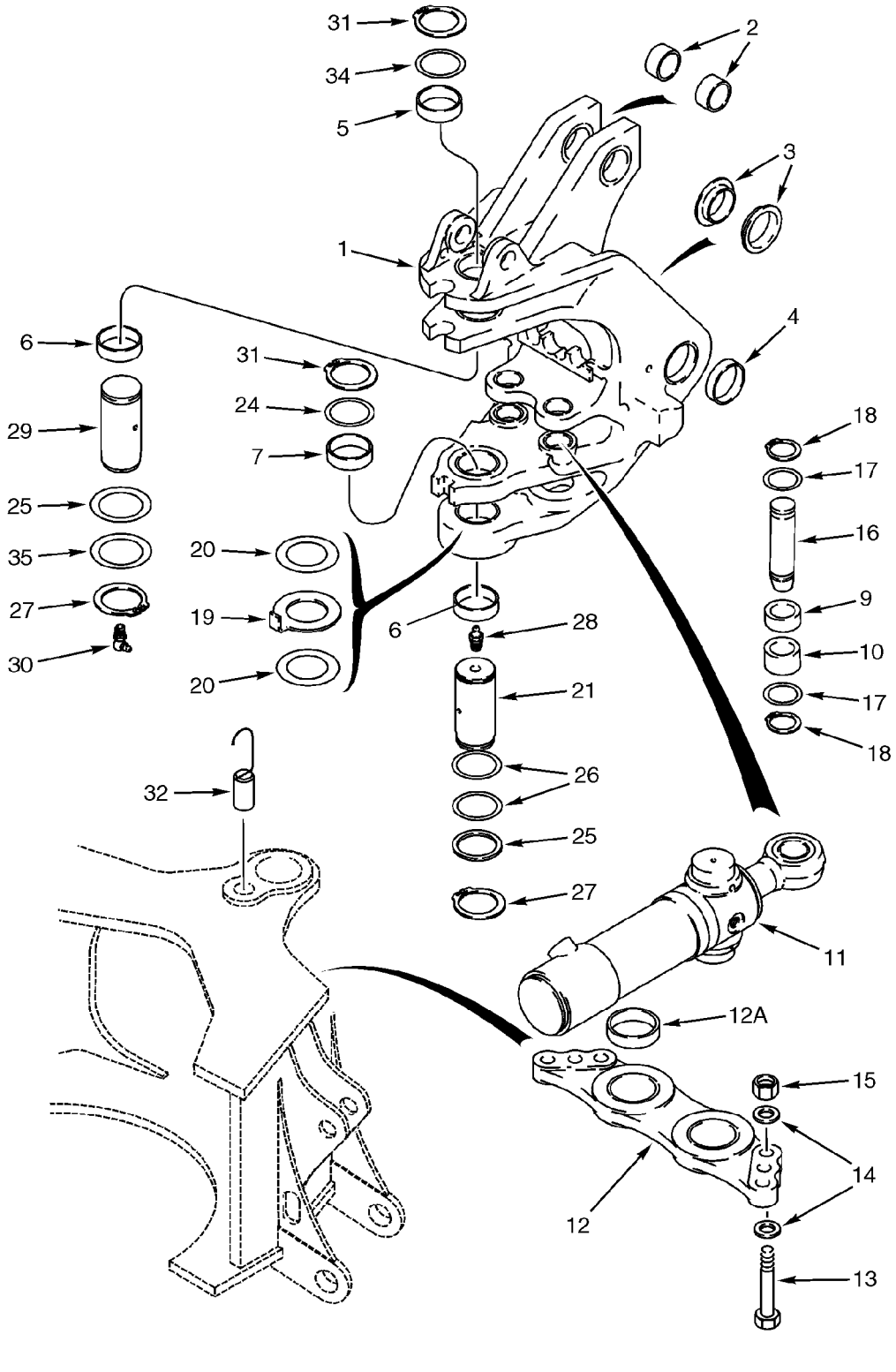

RETROPELLE - TOURELLE ET VERINS DE DEBATTEMENT

REF	FN	PART NUMBER	YR/SN	QTY	DESCRIPTION
1		326806A1		1	TOURELLE, Swing Tower; Incl. Ref 2 - 10
2		D149079		2	BAGUE, 50 x 34 mm wide
3		121778A1		2	BAGUE
4		329998A1		2	BAGUE
5		D135557		1	BAGUE
6		D135559		2	BAGUE, 70.22 ID x 86 OD x 28 mm wide
7		D138042		1	BAGUE, 70.22 ID x 86 OD x 34 mm wide
9		135249A1		2	BAGUE, 28.6 mm wide
10		135248A1		2	BAGUE, 38.1 mm wide
11		188027A2		2	VERIN, 95 ID x 292 mm strk; Swing; See Figure 08-62
12		198976A1		1	PLAQUE, GRANDE, Incl. Ref 12A
12A		114318A1		2	BAGUE, 80 x 90 x 29.3 mm
13		827-20075		6	BOULON, Hex, M20 x 75, 10.9, Full Thd
14		896-11020		12	RONDELLE, M20 x 37.5 x 4, HT
15		829-1420		6	ECROU, M20, Cl 10
16		386092A2		2	AXE, GROS
17		495-81227		4	RONDELLE, 2 1/16" x 2 15/16" x .060"
18		103-16200		4	ANNEAU D'ARRąT, #200, Ext
19		243084A1		1	RONDELLE, 5 mm thk
20		134167A1		AR	CALE D'EPAISSEUR, 2.05 mm (.08 in) thk
21		D151065		1	AXE, GROS
24		D136392		AR	CALE D'EPAISSEUR, 72 x 89 x 3.0 mm
25		D136700		2	CALE D'EPAISSEUR, 67 x 83 x 2.0 mm
26		D136391		AR	CALE D'EPAISSEUR, 72 x 89 x 1.6 mm
27		800-40065		2	ANNEAU D'ARRąT, M65, Ext
28		219-1		1	GRAISSEUR, 1/8"-27 x .66 lg
29		292385A1		1	AXE, GROS
30		219-55		1	GRAISSEUR, 90Ü, 1/8" NPT x .84" lg
31		800-40070		2	ANNEAU D'ARRąT, M70 Ext
32		384815A1		1	CHEVILLE (ASSEMBLEE), Swing Stop
34		293636A1		1	RONDELLE, Upper
35		D144423		AR	RONDELLE, 2-5/8 x 3-3/8 x 1/8; Used As A Shim

09-24		p1	11/07

RETROPELLE - FLECHE ET TOURELLE DE DEBATTEMENT

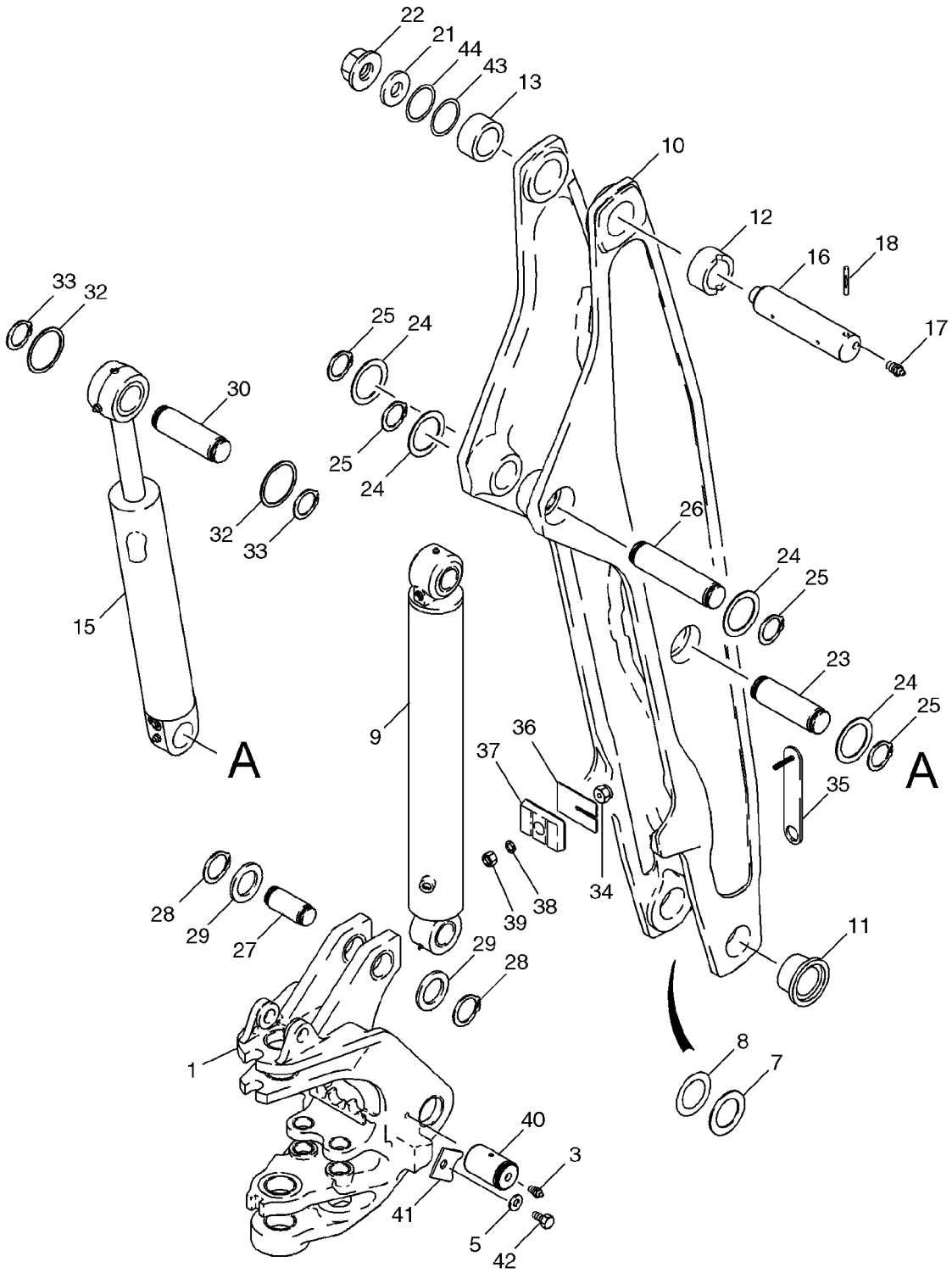

RETROPELLE - FLECHE ET TOURELLE DE DEBATTEMENT

REF	FN	PART NUMBER	YR/SN	QTY	DESCRIPTION
1		326806A1		1	TOURELLE, Swing Tower; See Figure 09-23 For Bushings
3		219-1		2	GRAISSEUR, 1/8"-27 x .66 lg
5		896-11020		2	RONDELLE, M20 x 37.5 x 4, HT, 22 x 37 x 4 mm
7		H71514		AR	RONDELLE
8		R32119		AR	RONDELLE, 71 ID x 114 mm
9		189653A2		1	VERIN, 114 ID x 982 mm strk; Boom; See Figure 08-63
10		129883A1		1	FLECHE, Incl. Ref 11 - 13
11		D151071		2	BAGUE, 70 ID x 34 mm lg
12		D135739		1	BAGUE, 70 ID x 44 mm lg; With Slot For Groove Pin; Right-Hand Side
13		D137218		1	BAGUE, 70 ID x 44 mm lg; Without Slot For Groove Pin; Left-Hand Side
15		233114A2		1	VERIN, 108 ID x 686 mm strk; Dipper; See Figure 08-64
16		D132494		1	AXE, GROS
17		219-1		2	GRAISSEUR, 1/8"-27 x .66 lg
18		135-51652		1	GOUPILLE CANNEL£ES, 1/2" x 3 1/4"
21		D133632		1	RONDELLE
22		181042A1		1	ECROU, Flange, Special
23		129040A1		1	AXE, GROS
24		495-81226		4	RONDELLE, 1 13/16" x 2 1/2" x .109"
25		103-16175		4	ANNEAU D'ARRąT, #175, Ext
26		129040A1		1	AXE, GROS
27		142842A1		1	AXE, GROS
28		800-44050		2	ANNEAU D'ARRąT, M50, Ext
29		495-81227		AR	RONDELLE, 2 1/16" x 2 15/16" x .060"
30		129041A1		1	AXE, GROS
32		495-81226		AR	RONDELLE, 1 13/16" x 2 1/2" x .109"
33		103-16175		2	ANNEAU D'ARRąT, #175, Ext
34		87592819		1	BOUCHON, Boom Bumper Plug; 11.04 ID x 25.4 OD x 14.5 wide; Headless
35		184723A1		1	EQUERRE
36		138624A1		AR	BLOC, 1.5 mm thk Shim

09-24		p2	11/07

RETROPELLE - FLECHE ET TOURELLE DE DEBATTEMENT

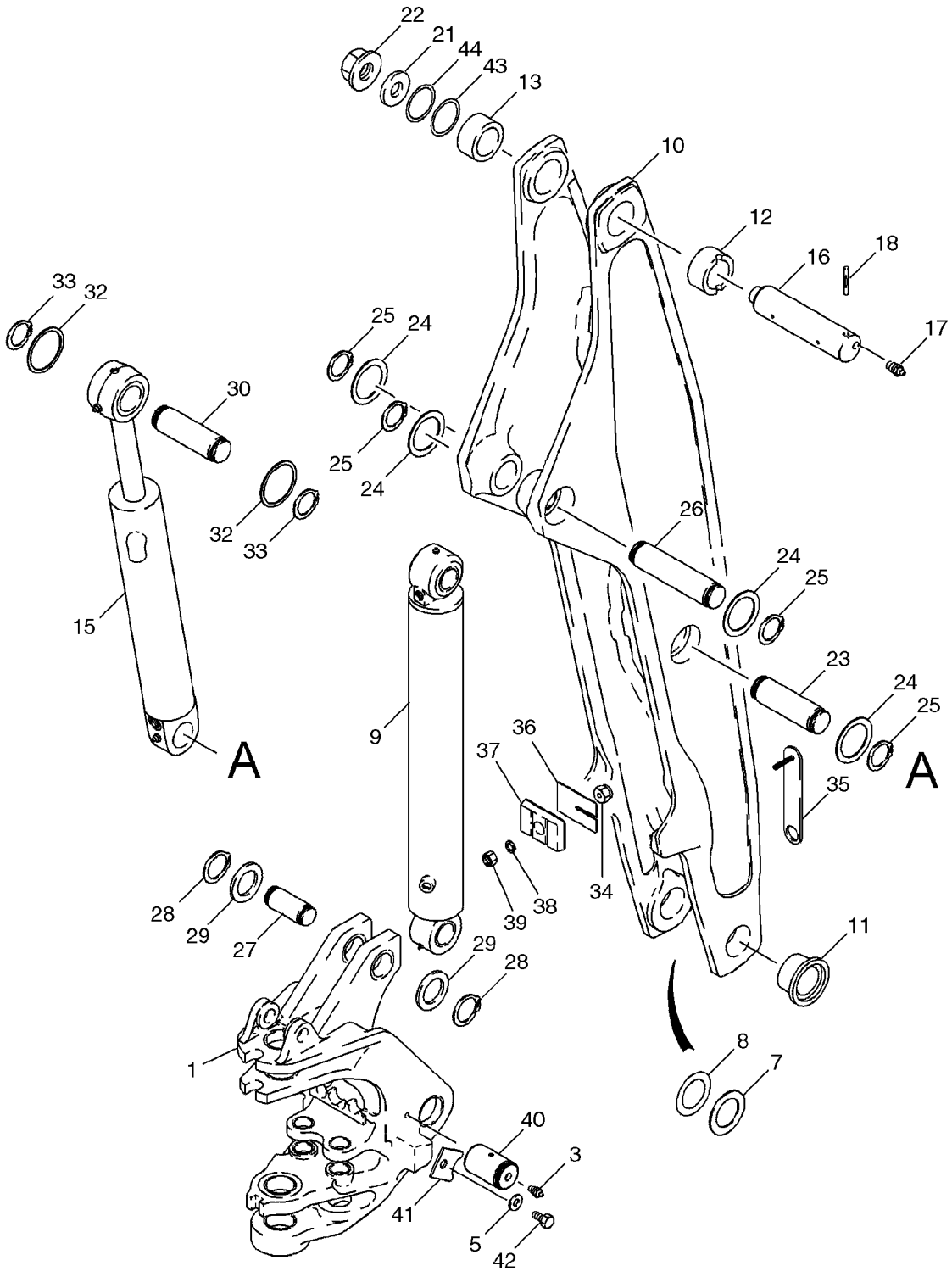

RETROPELLE - FLECHE ET TOURELLE DE DEBATTEMENT

REF	FN	PART NUMBER	YR/SN	QTY	DESCRIPTION
37		87371132		1	PARE-CHOCS, Bumper
38		496-81018		1	RONDELLE, Flat
39		829-1410		1	ECROU, M10, Cl 10
40		87326813		2	GOUPILLE CANNEL£ES
41		303646A1		2	PATTE FIXATION
42		604-20035		2	BOULON, Hex, Lock, M20 x 35, Cl 8.8
43		404834A1		AR	CALE D'EPAISSEUR, 5 mm thk, Concave
44		404835A1		AR	CALE D'EPAISSEUR, 5 mm thk, Concave

09-24A		p1	01/08

FLECHE GARANT

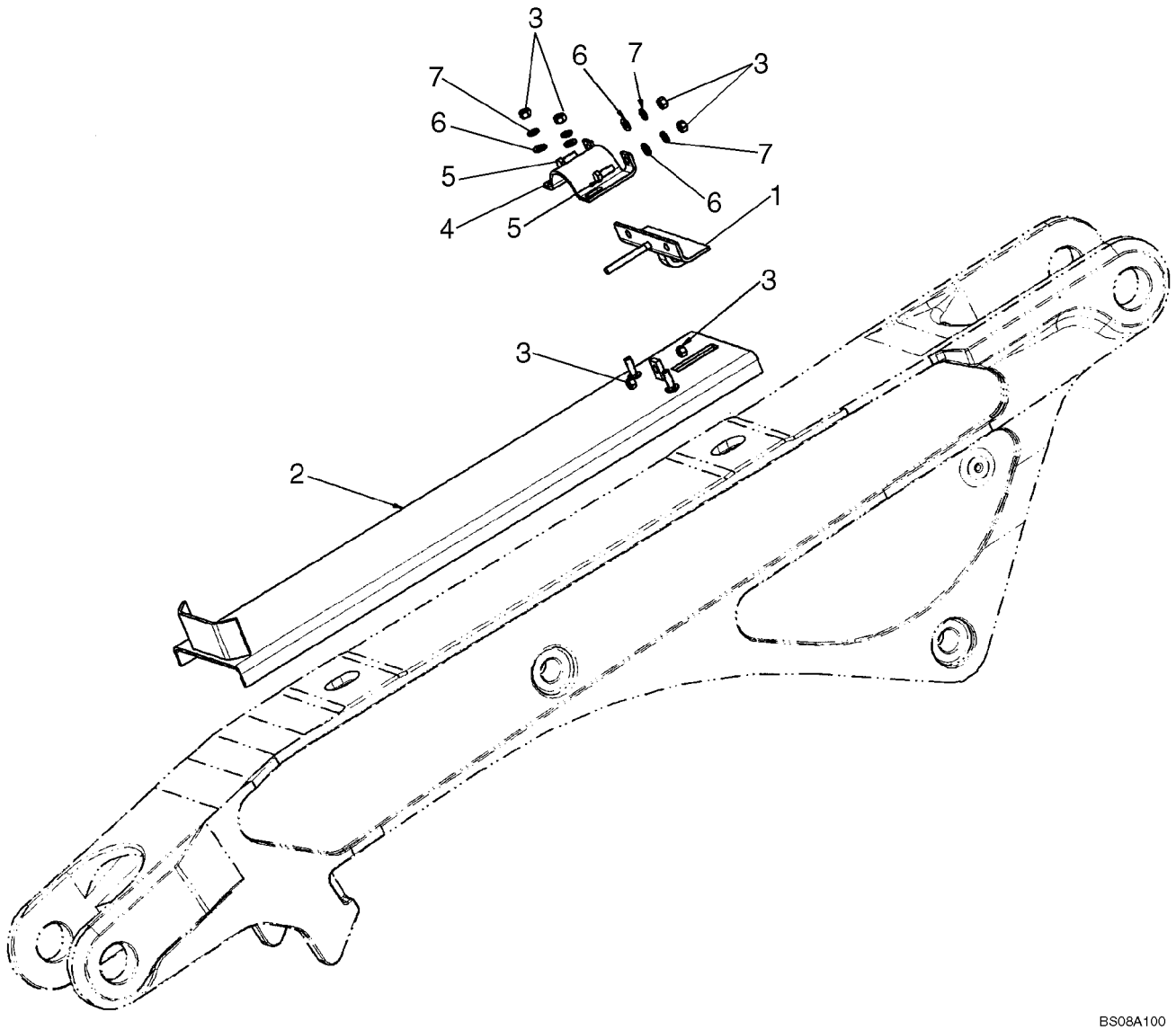

FLECHE GARANT

REF	FN	PART NUMBER	YR/SN	QTY	DESCRIPTION
		87537209		1	GARANT, Boom; Incl. 1 - 7
1		87537207		1	GARANT, Clevis
2		87537201		1	GARANT, Boom
3		829-1412		6	ECROU, M12, Cl 10
4		87537208		1	GARANT, Cover
5		614-12030		2	BOULON, Hex, M12 x 30, 8.8
6		896-11012		4	RONDELLE, M13.5 x 24.5 x 3, HT
7		892-11012		4	RONDELLE FREIN, M12

09-25		p1	10/07

VERROU DE MAINTIEN DE BRAS DE RELEVAGE (SANS DE COMMANDE PILOTE)

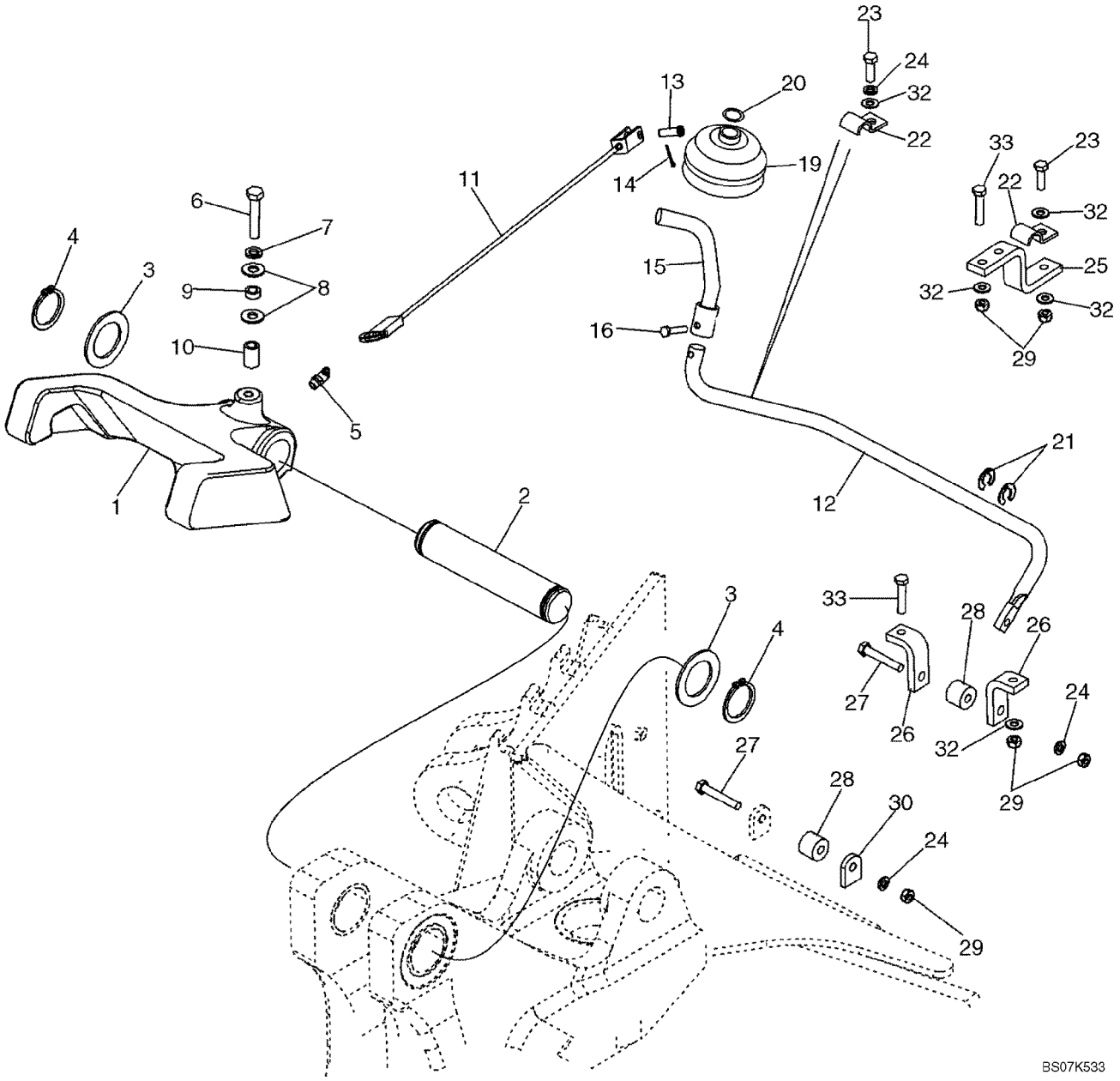

09-25		p1	10/07

VERROU DE MAINTIEN DE BRAS DE RELEVAGE (SANS DE COMMANDE PILOTE)

REF	FN	PART NUMBER	YR/SN	QTY	DESCRIPTION
1		379941A1		1	LOQUET
2		D129227		1	AXE, GROS
3		D144592		2	RONDELLE
4		800-44040		2	ANNEAU D'ARRąT, M40, Ext
5		219-55		1	GRAISSEUR, 90Ü, 1/8" NPT x .84" lg
6		614-10050		1	BOULON, Hex, M10 x 50, 8.8, Full Thd
7		892-11010		1	RONDELLE FREIN, M10
8		895-15010		2	RONDELLE, M11 x 24 x 2
9		87445245		1	ENTRETOISE, 15.88 OD x 6.4 W x 2.41 mm thick wall
10		396092A1		1	ENTRETOISE
11		87435924		1	CABLE
12		87441850		1	TRINGLE, Boom Latch Release; 6.0 mm Mounting Hole
13		427-5094		1	AXE DE CHAPE, 5/16" x .940"
14		432-612		1	GOUPILLE, 3/32" x 3/4"
15		87444149		1	TRINGLE (ASSEMBLEE)
16		87041331		4	BOULON, Hex, Lock, M6 x 16, Cl 8.8
19		D86664		1	MANCHETTE
20		D143735		1	COLLIER, Ring
21		D143591		2	ANNEAU-D'ARRET, 5/8 dia
22		D143723		2	BRIDE, CLAMP, 5/8
23		614-8025		2	BOULON, Hex, M8 x 25, 8.8
24		892-11008		3	RONDELLE FREIN, M8
25		87449995		1	PATTE FIXATION, Rod
26		87449996		2	PATTE FIXATION, Cable
27		814-8050		2	BOULON, Hex, M8 x 50, 8.8
28		86984547		2	GUIDE, Roller, Cable Guide
29		829-1408		7	ECROU, M8, Cl 10
30		87432811		1	PATTE FIXATION
32		895-11008		7	RONDELLE, M8 x 16 x 1.6
33		614-8030		4	BOULON, Hex, M8 x 30, 8.8

09-25A		p1	10/07

VERROU DE MAINTIEN DE BRAS DE RELEVAGE (AVEC DE COMMANDE PILOTE)

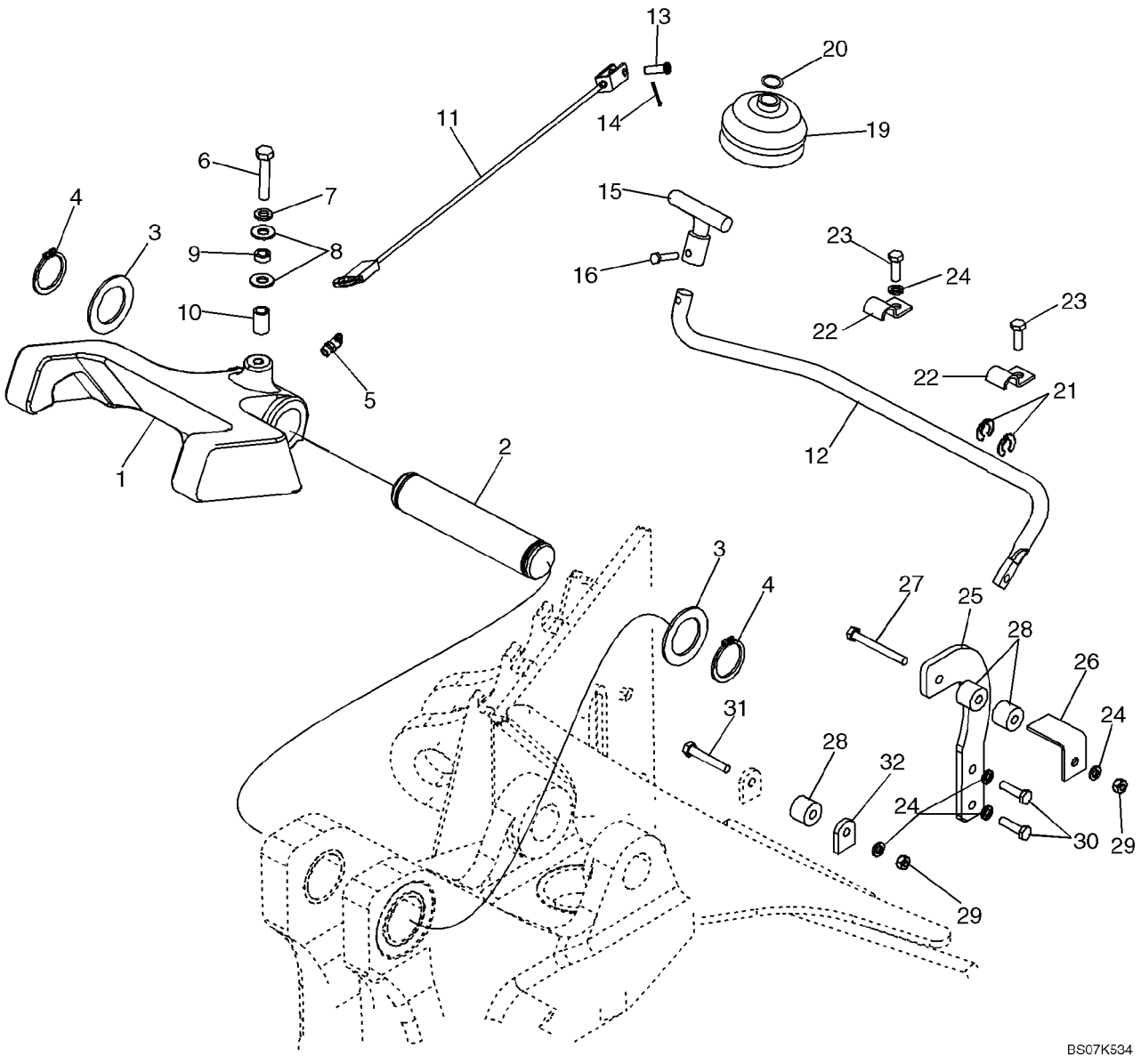

VERROU DE MAINTIEN DE BRAS DE RELEVAGE (AVEC DE COMMANDE PILOTE)

REF	FN	PART NUMBER	YR/SN	QTY	DESCRIPTION
1		379941A1		1	LOQUET
2		D129227		1	AXE, GROS
3		D144592		2	RONDELLE
4		800-44040		2	ANNEAU D'ARRąT, M40, Ext
5		219-55		1	GRAISSEUR, 90Ü, 1/8" NPT x .84" lg
6		614-10050		1	BOULON, Hex, M10 x 50, 8.8, Full Thd
7		892-11010		1	RONDELLE FREIN, M10
8		895-15010		2	RONDELLE, M11 x 24 x 2
9		87445245		1	ENTRETOISE
10		396092A1		1	ENTRETOISE
11		87435924		1	CABLE
12		87441850		1	TRINGLE, Boom Latch Release
13		427-5094		1	AXE DE CHAPE, 5/16" x .940"
14		432-612		1	GOUPILLE, 3/32" x 3/4"
15		87427775		1	TRINGLE (ASSEMBLEE)
16		87041331		1	BOULON, Hex, Lock, M6 x 16, Cl 8.8
19		D86664		1	MANCHETTE
20		D143735		1	COLLIER, Ring
21		D143591		2	ANNEAU-D'ARRET
22		D143723		2	BRIDE, CLAMP, 5/8
23		614-8025		2	BOULON, Hex, M8 x 25, 8.8
24		892-11008		5	RONDELLE FREIN, M8
25		86984544		1	PATTE FIXATION, Roller Mounting
26		86984545		1	PATTE FIXATION, Cable
27		814-8070		1	BOULON, Hex, M8 x 70, 8.8
28		86984547		3	GUIDE, Roller, Cable Guide
29		829-1408		2	ECROU, M8, Cl 10
30		614-8030		2	BOULON, Hex, M8 x 30, 8.8
31		814-8050		1	BOULON, Hex, M8 x 50, 8.8
32		87432811		1	PATTE FIXATION

09-26		p1	11/07

RETROPELLE - BALANCIER ET GODET

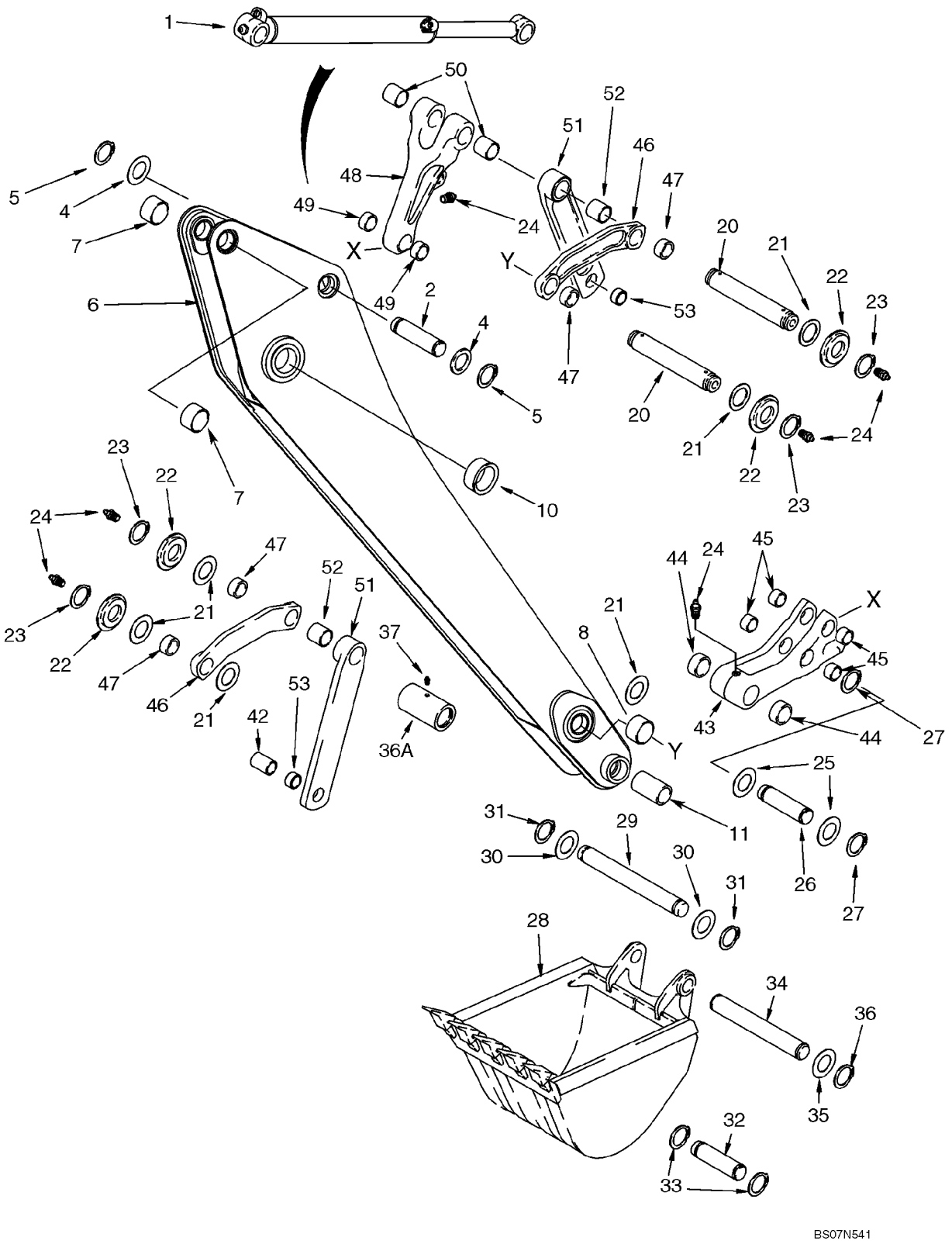

RETROPELLE - BALANCIER ET GODET

REF	FN	PART NUMBER	YR/SN	QTY	DESCRIPTION
1		128760A1		1	VERIN, 83 ID x 872 mm strk; Bucket; See Figure 08-65
2		129041A1		1	AXE, GROS
4		495-81226		AR	RONDELLE, 1 13/16" x 2 1/2" x .109"
5		103-16175		2	ANNEAU D'ARRąT, #175, Ext
		129884A2		1	BALANCêN, Incl. Ref 6 - 10
6		NSS		1	NON FOURNI SEPAREMENT, Dipper
7		D145978		2	BAGUE
8		D140029		2	BAGUE, 50 x 60 x 25.5 mm lg
10		D150121		2	BAGUE, 70 ID x 36 mm lg
11		87451279		2	BAGUE, 44.6 (1-3/4) ID x 57.15 (2-1/4) OD x 68 mm (2-11/16 in) long; Not Included In Assembly; Purchase Separately
20		D141142		2	AXE, GROS, 306 mm lg, Guide Link
21		495-81282		AR	RONDELLE, 2 1/16" x 3" x .109"
22		D141164		4	ENTRETOISE
23		103-16175		4	ANNEAU D'ARRąT, #175, Ext
24		219-1		6	GRAISSEUR, 1/8"-27 x .66 lg
25		495-81226		2	RONDELLE, 1 13/16" x 2 1/2" x .109"
26		D146288		1	AXE, GROS
27		103-16175		2	ANNEAU D'ARRąT, #175, Ext
28		REF		1	NOTICE, Bucket; See Figure(s) 09-28 - 09-35
29		D37614		1	AXE
30		D143324		2	RONDELLE
31		D25279		2	ANNEAU-D'ARRET
32		D149298		1	AXE, 305 mm (12 inch) Universal Bucket Only
33		103-16175		2	ANNEAU D'ARRąT, #175, Ext
34		D150619		1	AXE, GROS, All Buckets Except 12 Inch (305 mm) Buckets
35		495-81226		AR	RONDELLE, 1 13/16" x 2 1/2" x .109"
36		103-16175		2	ANNEAU D'ARRąT, #175, Ext
36A		87451280		1	ENTRETOISE, 67 (2-5/8) OD x 138 mm (5-7/16 in) long
37		219-1		1	GRAISSEUR, 1/8"-27 x .66 lg

09-26		p2	11/07

RETROPELLE - BALANCIER ET GODET

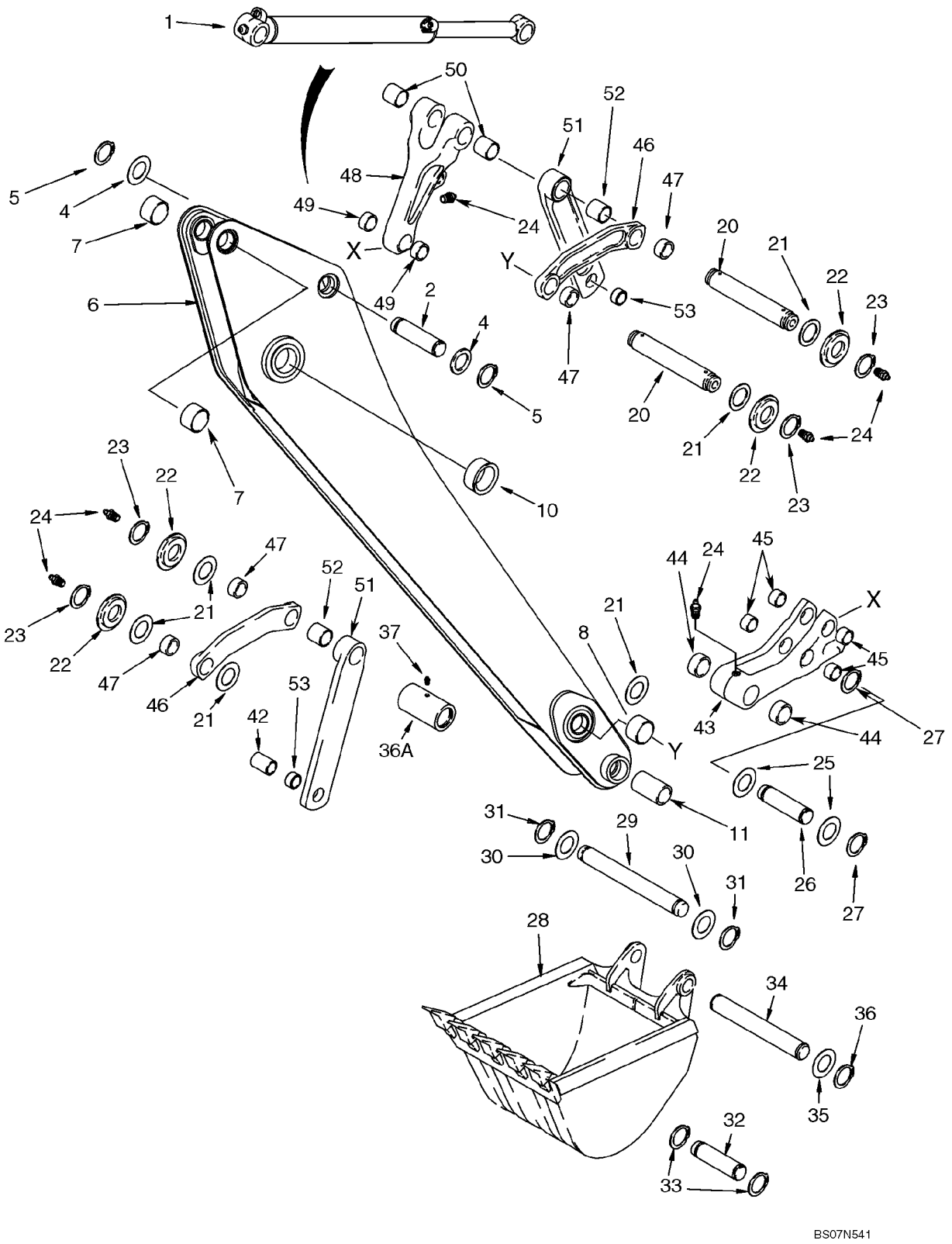

RETROPELLE - BALANCIER ET GODET

REF	FN	PART NUMBER	YR/SN	QTY	DESCRIPTION
42		D141075		1	ENTRETOISE, 40 (1-9/16) ID x 47 (1-27/32) OD x 71 mm (2-51/64 in) long
		281185A1		1	CHAPE, Bucket, Incl. Ref 43 - 45
43		NSS		1	NON FOURNI SEPAREMENT, Coupler, Quick
44		D127167		2	BAGUE, 30 mm lg
45		107124A1		4	BAGUE, 29 mm lg
46		348706A1		2	MAILLON (ASSEMBLE), Bucket Guide, Incl. Ref 47
47		D149079		2	BAGUE, 50 x 34 mm lg
48		400398A1		1	MAILLON (ASSEMBLE), Bucket Dump, Incl. Ref 49, 50
49		107124A1		2	BAGUE
50		D138047		2	BAGUE, 54 mm (2-1/8 in) lg
51		244790A1		2	MAILLON (ASSEMBLE), Standard Equipment; Bucket Dump; Incl. Ref 52, 53
52		D138047		1	BAGUE, 54 mm (2-1/8 in) lg
53		D31140		1	BAGUE

09-27		p1	02/08

RETROPELLE - BALANCIER EXTENSIBLE

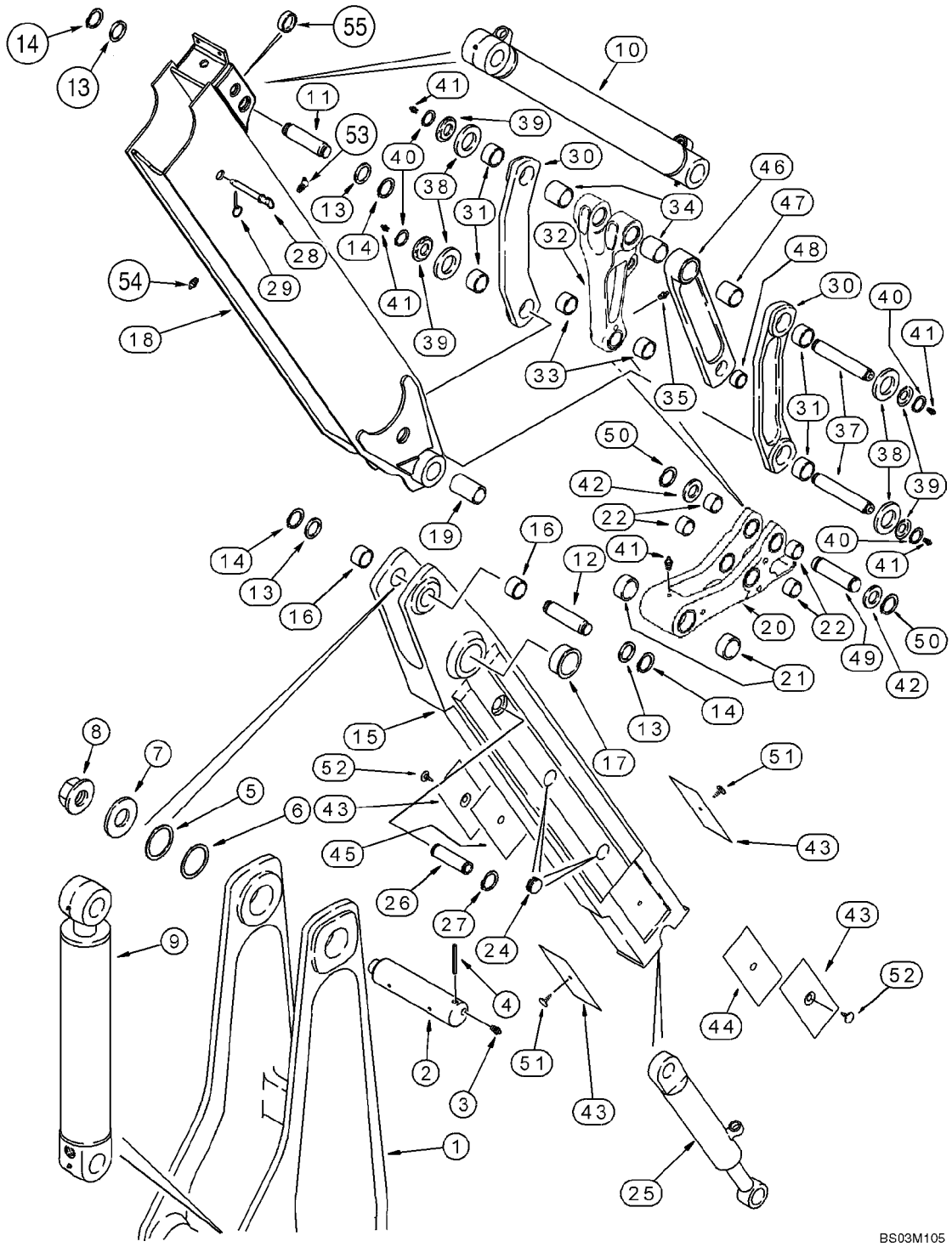

RETROPELLE - BALANCIER EXTENSIBLE

REF	FN	PART NUMBER	YR/SN	QTY	DESCRIPTION
1		129883A1		1	FLECHE, See Figure 09-24
2		D132494		1	AXE, GROS
3		219-1		2	GRAISSEUR, 1/8"-27 x .66 lg
4		135-51652		1	GOUPILLE CANNEL£ES, 1/2" x 3 1/4"
5		404834A1		AR	CALE D'EPAISSEUR
6		404835A1		AR	CALE D'EPAISSEUR
7		D133632		1	RONDELLE
8		181042A1		1	ECROU, Flange, Special
9		233114A2		1	VERIN, 108 ID x 686 mm strk, Dipper; See Figure 08-64
10		128760A1		1	VERIN, 83 ID x 872 mm strk, Bucket; See Figure 08-65
11		D141666		1	AXE, GROS
12		129041A1		1	AXE, GROS
13		495-81282		2	RONDELLE, 2 1/16" x 3" x .109"
14		103-16175		4	ANNEAU D'ARRąT, #175, Ext
		122503A1		1	BALANCêN, Inner; Incl. Ref 15 - 17
15		NSS		1	NON FOURNI SEPAREMENT, Dipper
16		D145978		2	BAGUE
17		D150121		2	BAGUE, 70 ID x 36 mm lg
18		87619781		1	BALANCêN, Outer Dipper; Incl. Ref 53, 54; Replaces 87436235
19		307186A1		2	BAGUE, 104 mm lg
		281185A1		1	CHAPE, Bucket; Incl. Ref 20 - 22
20		NSS		1	NON FOURNI SEPAREMENT, Coupler, Quick
21		D127167		2	BAGUE, 30 mm lg
22		107124A1		4	BAGUE, 29 mm lg
24		D133865		4	BOUCHON
25		1340969C2		1	VERIN, 76 ID x 1068 mm strk, Extendable Dipper; See Figure 08-66
26		300588A1		1	AXE, GROS
27		800-44040		2	ANNEAU D'ARRąT, M40, Ext
28		D140247		1	AXE, GROS, Lock, Transport
29		A33509		1	AXE, GROS
30		348706A1		2	MAILLON (ASSEMBLE), Bucket Guide, Incl. Ref 31

09-27		p2	02/08

RETROPELLE - BALANCIER EXTENSIBLE

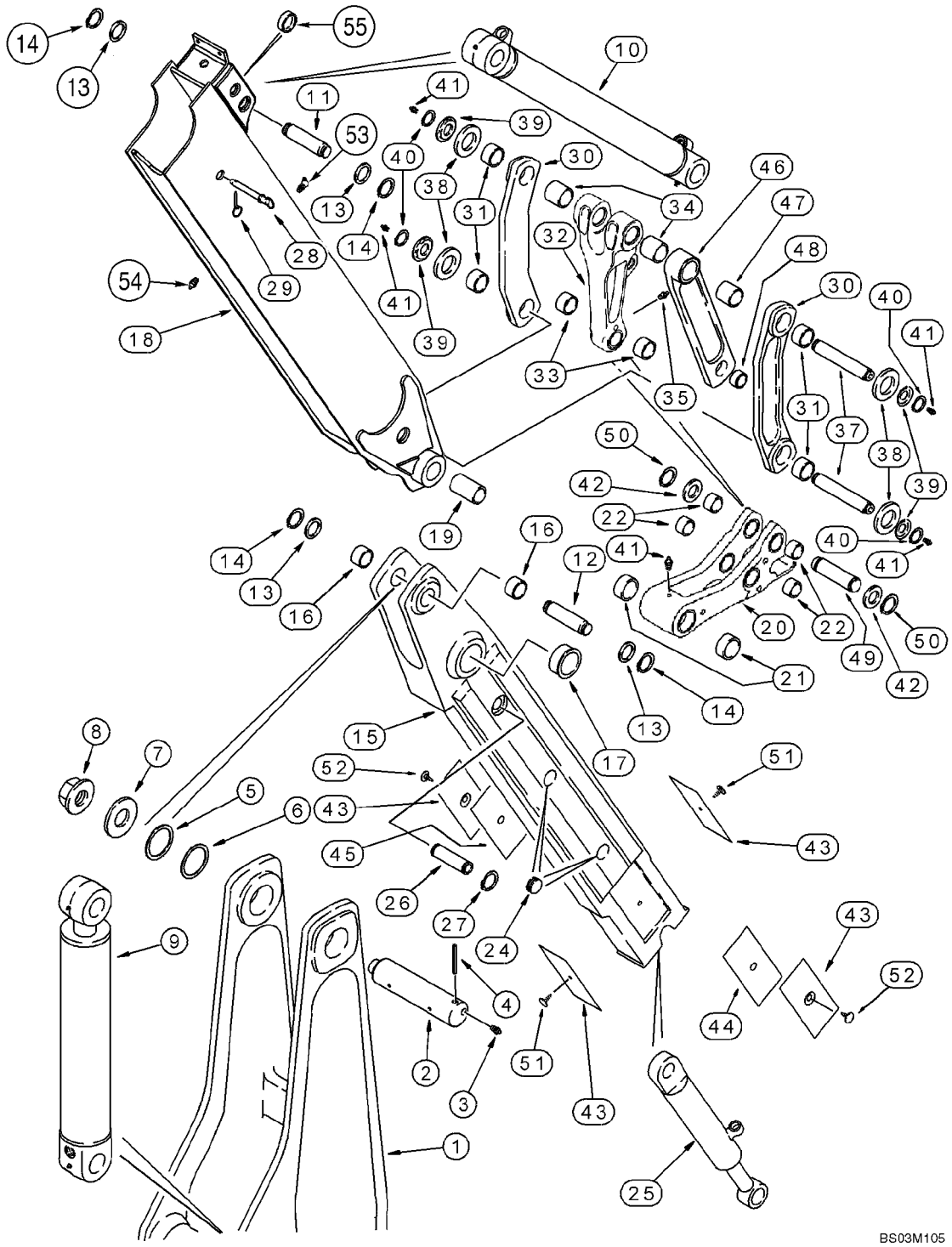

RETROPELLE - BALANCIER EXTENSIBLE

REF	FN	PART NUMBER	YR/SN	QTY	DESCRIPTION
31		D149079		2	BAGUE, 50 x 34 mm lg
32		400398A1		1	MAILLON (ASSEMBLE), Bucket Dump, Incl. Ref 33, 34
33		107124A1		2	BAGUE
34		D138047		2	BAGUE, 54 mm (2-1/8 in) lg
35		219-1		1	GRAISSEUR, 1/8"-27 x .66 lg
37		D141142		2	AXE, GROS, 306 mm lg
38		495-81282		4	RONDELLE, 2 1/16" x 3" x .109"
39		D141164		4	ENTRETOISE
40		103-16175		4	ANNEAU D'ARRąT, #175, Ext
41		219-1		5	GRAISSEUR, 1/8"-27 x .66 lg
42		495-81226		2	RONDELLE, 1 13/16" x 2 1/2" x .109"
43		451384A1		4	PLAQUE D'USURE
44		132844A1		1	CALE D'EPAISSEUR, 0.8 mm thk
45		132842A1		1	CALE D'EPAISSEUR, 1.6 mm thk
46		244790A1		2	MAILLON (ASSEMBLE), Bucket Dump; Standard Equipment; Incl. Ref 47, 48
47		D138047		1	BAGUE, 54 mm (2-1/8 in) lg
48		D31140		1	BAGUE
49		D146288		1	AXE, GROS
50		103-16175		2	ANNEAU D'ARRąT, #175, Ext
51		183443A1		2	AXE, GROS
52		183509A1		2	AXE, GROS
53		219-89		1	GRAISSEUR, 45Ü, 1/8" NPT x .78" lg, Drive
54		219-86		1	GRAISSEUR, 1/8" x .62" lg, Drive
55		396483A1		2	ENTRETOISE

09-28		p1	12/07

GODET, PELLE R£TRO UNIVERSELLE (305 MM (12 INCH) WIDE)

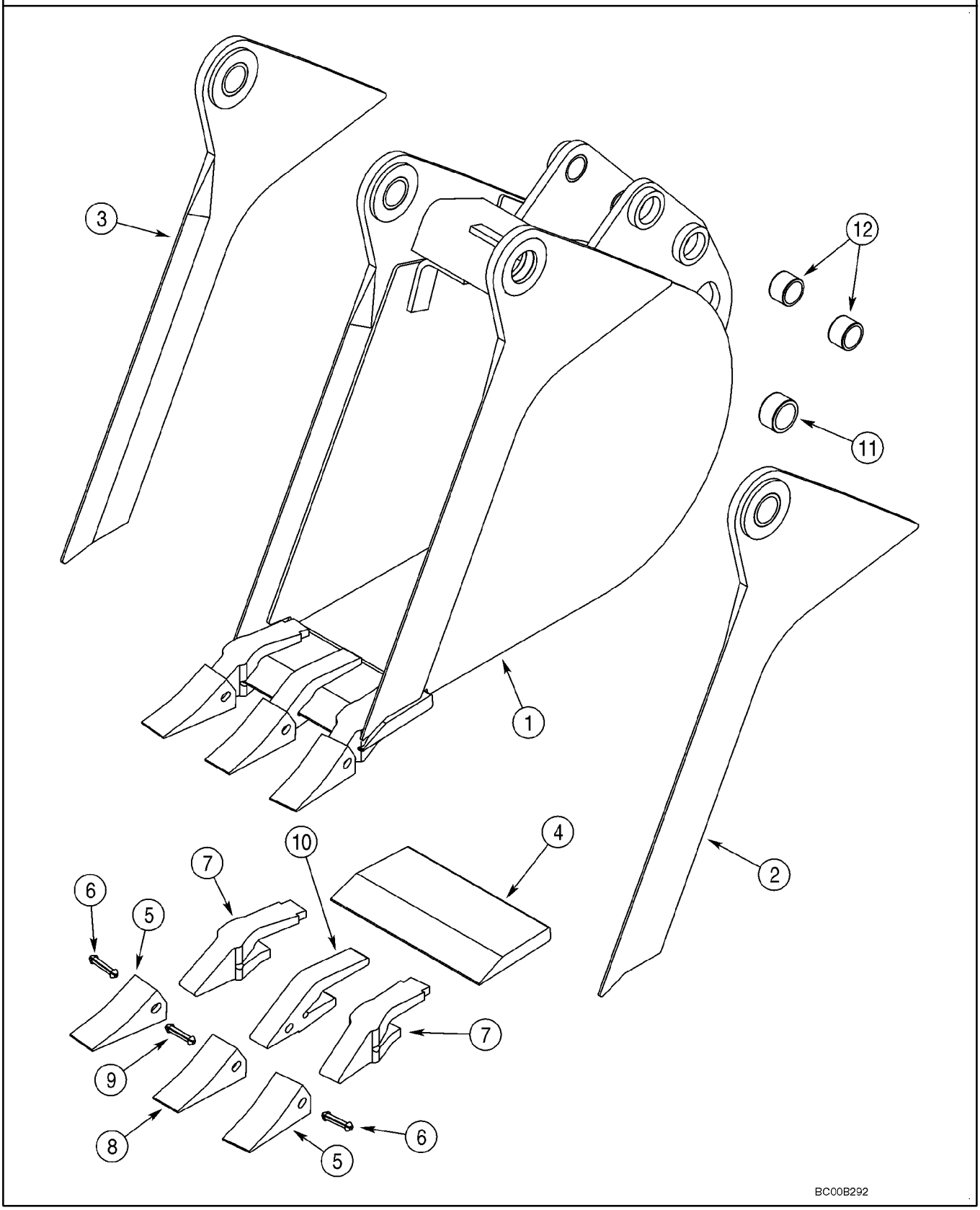

GODET, PELLE R£TRO UNIVERSELLE (305 MM (12 INCH) WIDE)

REF	FN	PART NUMBER	YR/SN	QTY	DESCRIPTION
1		381488A4		1	GODET, 305 mm (12 in); With 3 Teeth; Order Through Parts Marketing; Incl. Ref 2 - 12
2		NSS		1	NON FOURNI SEPAREMENT, Edge, Right-Hand; Incl. Ref 11
3		NSS		1	NON FOURNI SEPAREMENT, Edge, Left-Hand; Incl. Ref 11
4		D147409		1	LAME D'ATTAQUE
		D139851		2	DENT, Outer; Incl. Ref 5 - 7
5		D51750		1	POINTE
6		245466A1		1	GOUPILLE
7		D138157		1	JAMBE
		D139849		1	DENT, Center; Incl. Ref 8 - 10; Order Ref 8 - 10
8		D51750		1	POINTE
9		245466A1		1	GOUPILLE
10		D48212		1	JAMBE
11		D43940		2	BAGUE, 1-3/4 x 2-1/4 x 1
12		D30933		4	BAGUE

09-29		p1	12/07

GODET, PELLE R£TRO UNIVERSELLE (406 MM (16 INCH) WIDE)

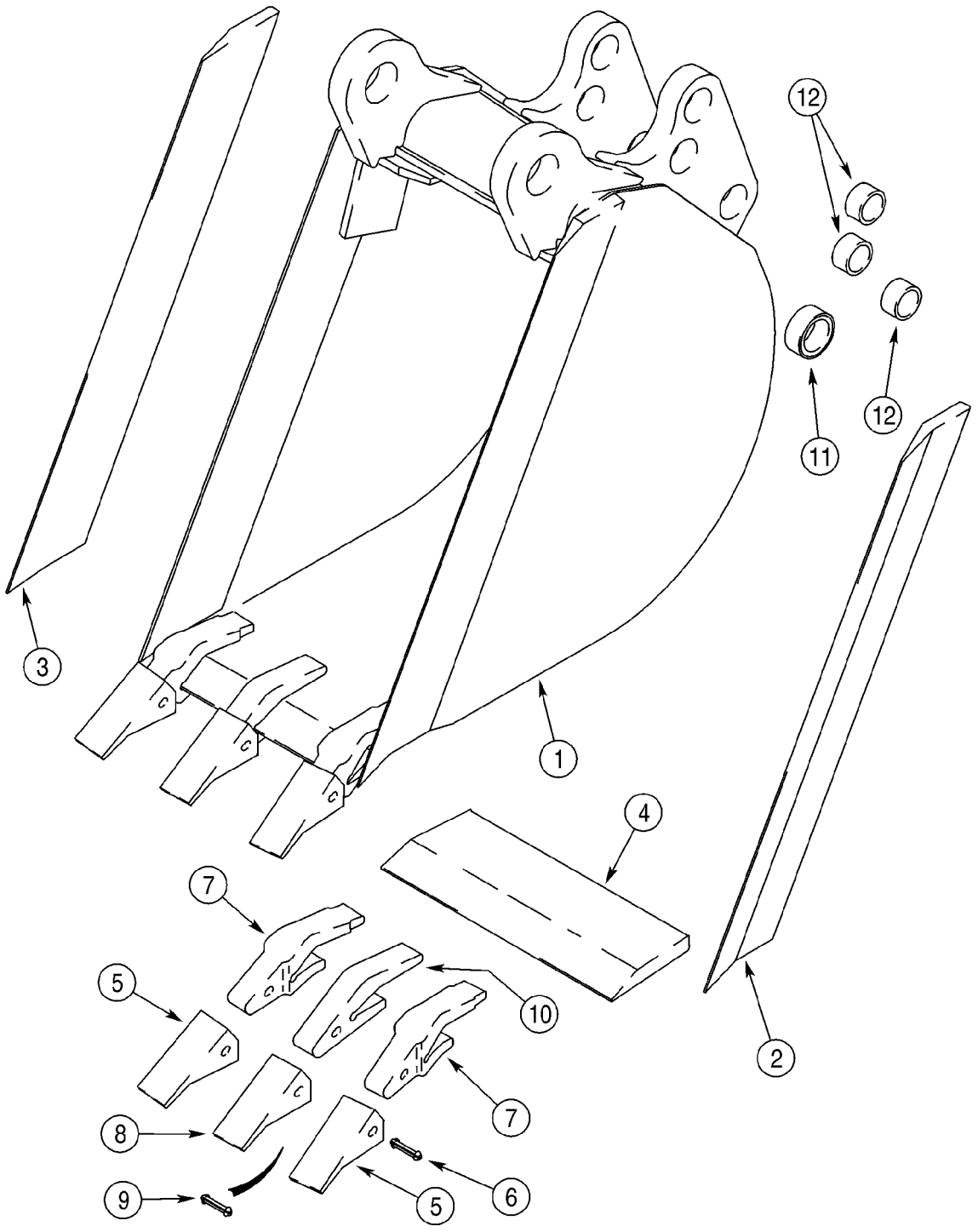

GODET, PELLE R£TRO UNIVERSELLE (406 MM (16 INCH) WIDE)

REF	FN	PART NUMBER	YR/SN	QTY	DESCRIPTION
1		388843A1		1	GODET, 406 mm (16 in); With 3 Teeth; Order Through Parts Marketing; Incl. Ref 2 - 12
2		D146421		1	LAME D'ATTAQUE, Right-Hand
3		D146420		1	LAME D'ATTAQUE, Left-Hand
4		D147249		1	BORD
		D139851		2	DENT, Outer; Incl. Ref 5 - 7
5		D51750		1	POINTE
6		245466A1		1	GOUPILLE
7		D138157		1	JAMBE
		D139849		1	DENT, Center; Incl. Ref 8 - 10; Order Ref 8 - 10
8		D51750		1	POINTE
9		245466A1		1	GOUPILLE
10		D48212		1	JAMBE
11		D37495		2	BAGUE
12		D30933		6	BAGUE

09-30		p1	12/07

GODET, PELLE R£TRO UNIVERSELLE (457 MM (18 INCH) WIDE)

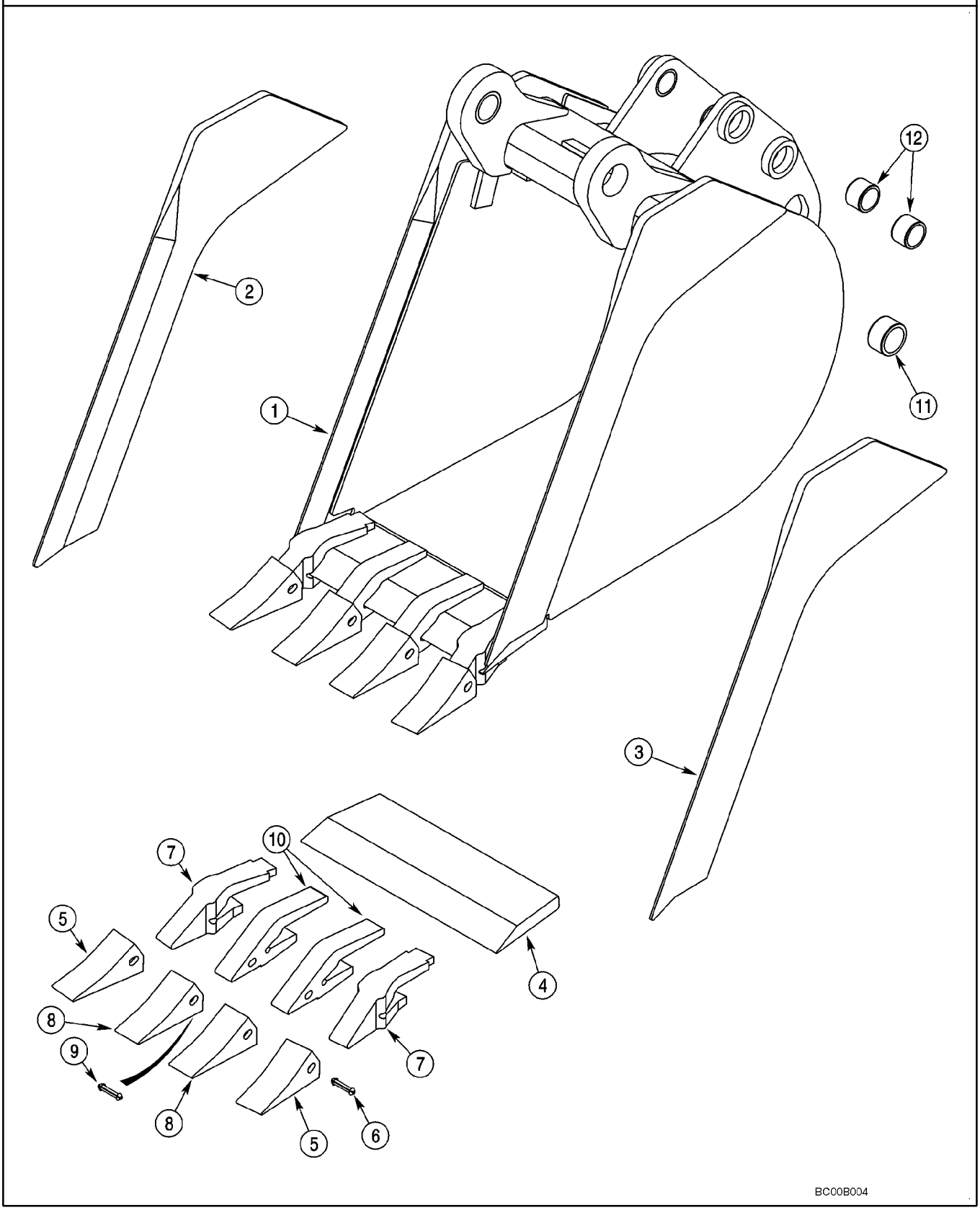

GODET, PELLE R£TRO UNIVERSELLE (457 MM (18 INCH) WIDE)

REF	FN	PART NUMBER	YR/SN	QTY	DESCRIPTION
1		376384A1		1	GODET, 457 mm (18 in); With 4 Teeth; Order Through Parts Marketing; Incl. Ref 2 - 12
2		NSS		1	NON FOURNI SEPAREMENT, Edge, Right-Hand
3		NSS		1	NON FOURNI SEPAREMENT, Edge, Left-Hand
4		NSS		1	NON FOURNI SEPAREMENT, Edge
		D139851		2	DENT, Outer; Incl. Ref 5 - 7
5		D51750		1	POINTE
6		245466A1		1	GOUPILLE
7		D138157		1	JAMBE
		D139849		2	DENT, Center; Incl. Ref 8 - 10; Order Ref 8 - 10
8		D51750		1	POINTE
9		245466A1		1	GOUPILLE
10		D48212		1	JAMBE
11		D37495		2	BAGUE
12		D30933		4	BAGUE

09-31		p1	12/07

GODET, PELLE R£TRO (457 MM (18 INCH) WIDE)

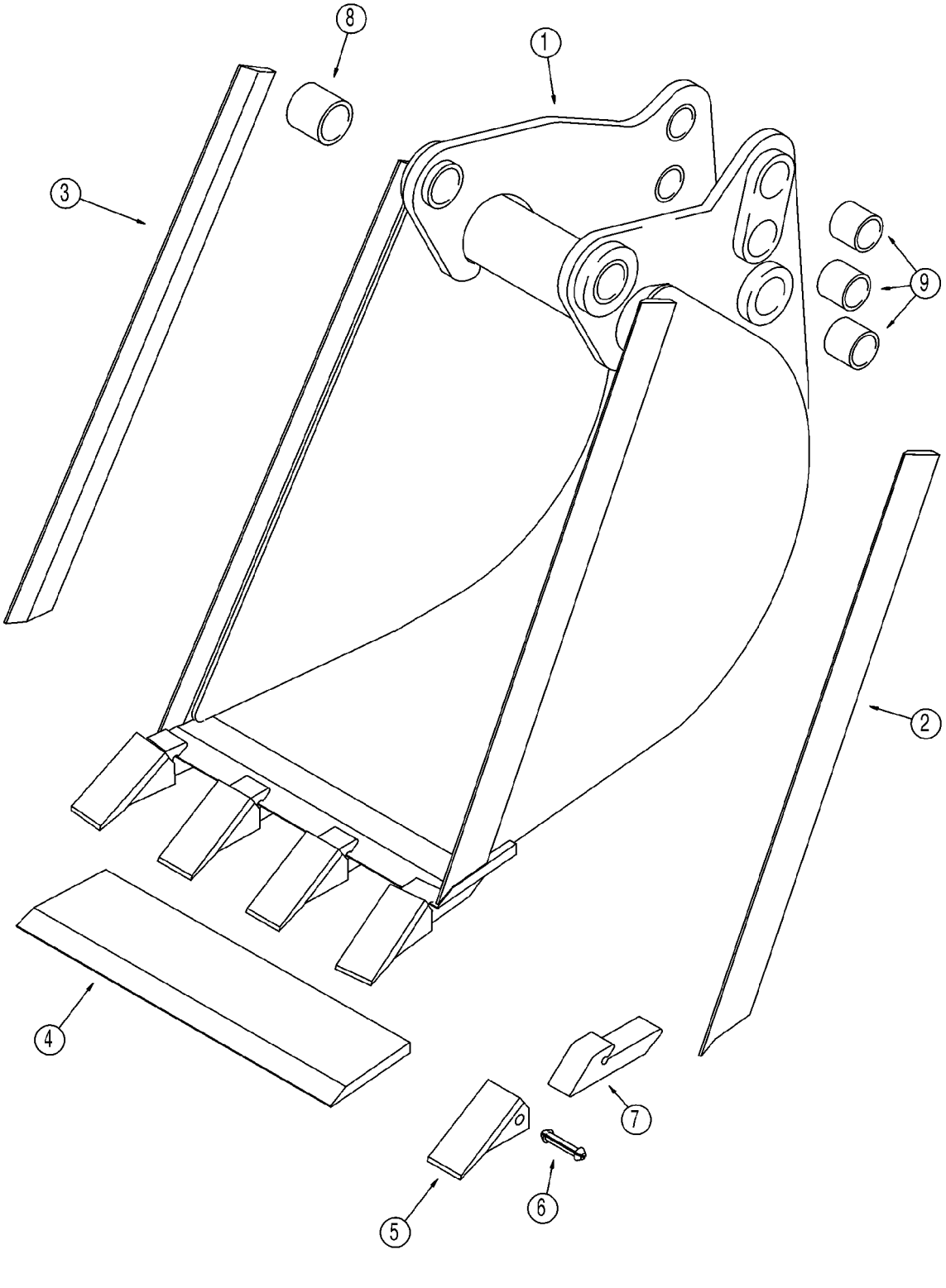

GODET, PELLE R£TRO (457 MM (18 INCH) WIDE)

REF	FN	PART NUMBER	YR/SN	QTY	DESCRIPTION
1		183808A1		1	GODET, 457 mm (18 in); With 4 Teeth; Order Through Parts Marketing; Incl. Ref 2 - 9
2		129894A1		1	BORD, Right-Hand
3		129893A1		1	BORD, Left-Hand
4		183810A1		1	BORD
		D41659		4	DENT, Incl. Ref 5 - 7
5		D51750		1	POINTE
6		245466A1		1	GOUPILLE
7		NSS		1	NON FOURNI SEPAREMENT, Shank
8		D37495		2	BAGUE
9		D30933		6	BAGUE

09-32		p1	12/07

GODET, PELLE R£TRO UNIVERSELLE (610 MM (24 INCH) / 762 MM (30 INCH) WIDE)

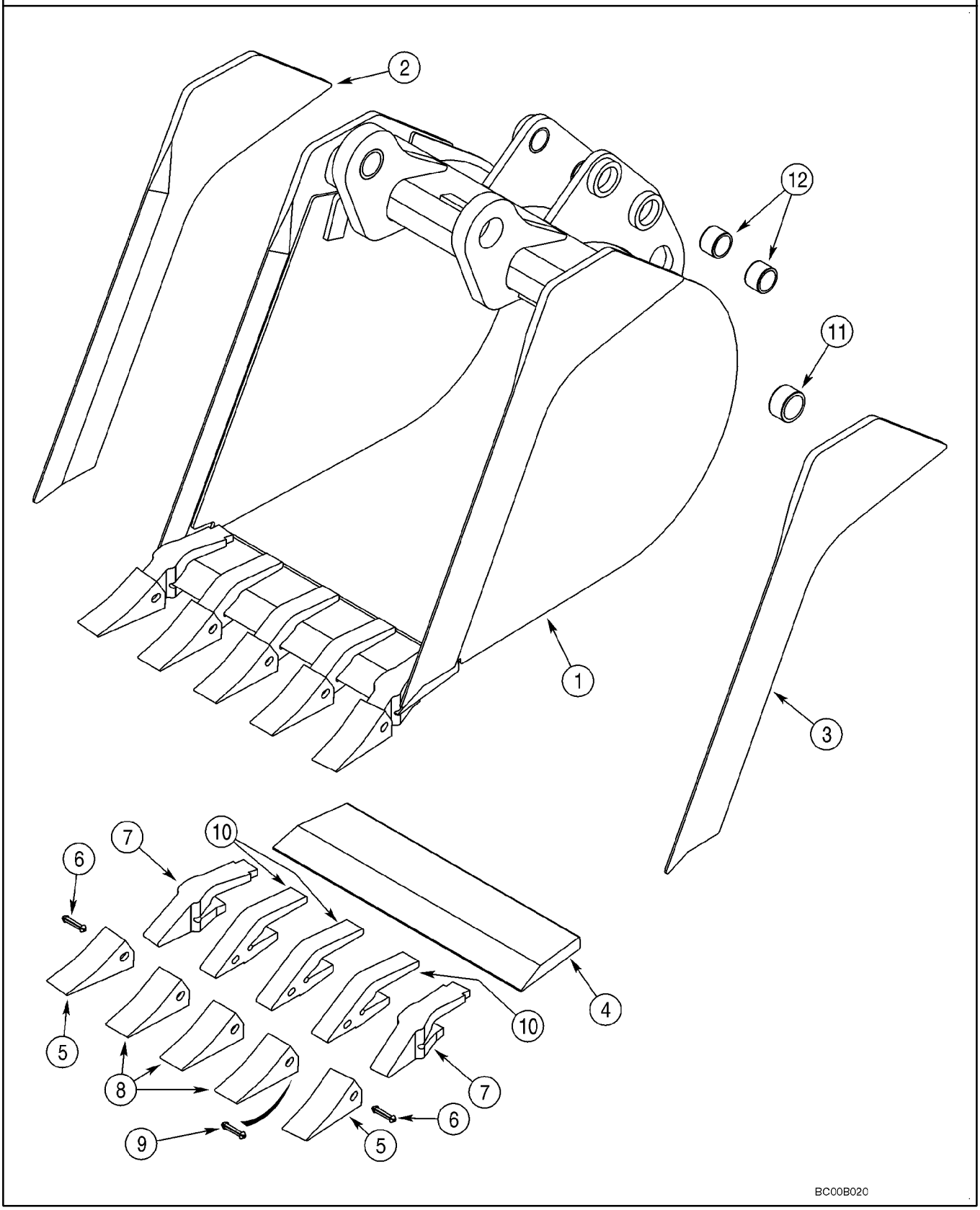

GODET, PELLE R£TRO UNIVERSELLE (610 MM (24 INCH) / 762 MM (30 INCH) WIDE)

REF	FN	PART NUMBER	YR/SN	QTY	DESCRIPTION
1		365328A1		1	GODET, 610 mm (24 in); With 5 Teeth; Order Through Parts Marketing; Incl. Ref 2 - 12
2		NSS		1	NON FOURNI SEPAREMENT, Edge, Right-Hand
3		NSS		1	NON FOURNI SEPAREMENT, Edge, Left-Hand
4		NSS		1	NON FOURNI SEPAREMENT, Edge
		D139851		2	DENT, Outer; Incl. Ref 5 - 7
5		D51750		1	POINTE
6		245466A1		1	GOUPILLE
7		D138157		1	JAMBE
		D139849		3	DENT, Center; Incl. Ref 8 - 10; Order Ref 8 - 10
8		D51750		1	POINTE
9		245466A1		1	GOUPILLE
10		D48212		1	JAMBE
11		D37495		2	BAGUE
12		D30933		4	BAGUE
1		376385A1		1	GODET, 762 mm (30 in); With 6 Teeth; Not Illustrated; Order Through Parts Marketing; Incl. Ref 2 - 12
2		NSS		1	NON FOURNI SEPAREMENT, Edge, Right-Hand
3		NSS		1	NON FOURNI SEPAREMENT, Edge, Left-Hand
4		NSS		1	NON FOURNI SEPAREMENT, Edge
		D139851		2	DENT, Outer; Incl. Ref 5 - 7
5		D51750		1	POINTE
6		245466A1		1	GOUPILLE
7		D138157		1	JAMBE
		D139849		4	DENT, Center; Incl. Ref 8 - 10; Order Ref 8 - 10
8		D51750		1	POINTE
9		245466A1		1	GOUPILLE
10		D48212		1	JAMBE
11		D37495		2	BAGUE
12		D30933		4	BAGUE

09-33		p1	12/07

GODET, PELLE R£TRO (610 MM (24 INCH) WIDE)

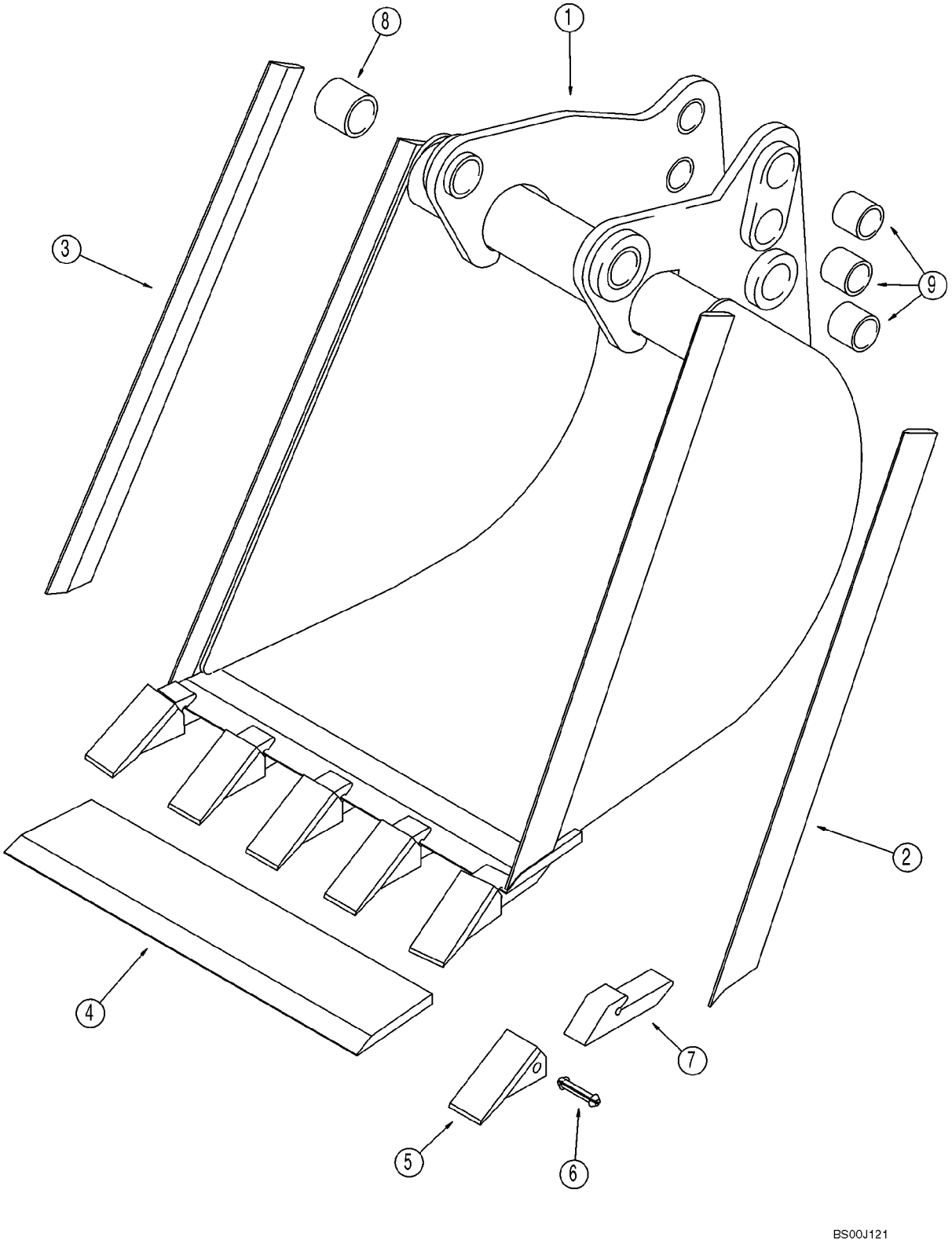

GODET, PELLE R£TRO (610 MM (24 INCH) WIDE)

REF	FN	PART NUMBER	YR/SN	QTY	DESCRIPTION
1		129885A1		1	GODET, 610 mm (24 in); With 5 Teeth; Order Through Parts Marketing; Incl. Ref 2 - 9
2		129894A1		1	BORD, Right-Hand
3		129893A1		1	BORD, Left-Hand
4		129944A1		1	SUPPORT
		D41659		5	DENT, Incl. Ref 5 - 7
5		D51750		1	POINTE
6		245466A1		1	GOUPILLE
7		NSS		1	NON FOURNI SEPAREMENT, Shank
8		D37495		2	BAGUE
9		D30933		6	BAGUE

09-34		p1	12/07

GODET, PELLE R£TRO UNIVERSELLE (914 MM (36 INCH) WIDE)

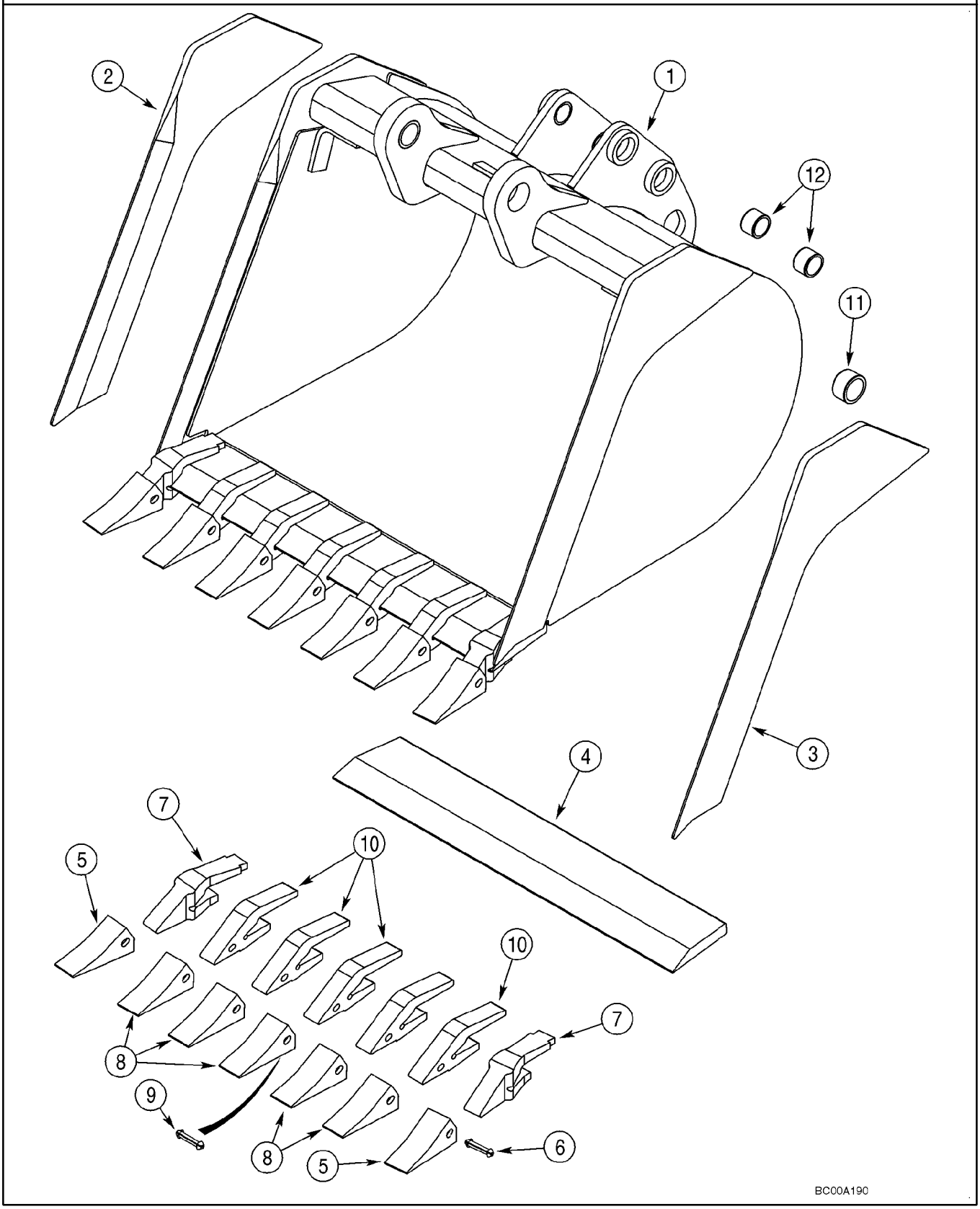

GODET, PELLE R£TRO UNIVERSELLE (914 MM (36 INCH) WIDE)

REF	FN	PART NUMBER	YR/SN	QTY	DESCRIPTION
1		376386A1		1	GODET, 914 mm (36 in); With 7 Teeth; Order Through Parts Marketing; Incl. Ref 2 - 12
2		365941A1		1	LAME D'ATTAQUE, Edge, Left-Hand
3		365942A1		1	LAME D'ATTAQUE, Edge, Right-Hand
		370747A1		1	DENT DE GODET, CUTTING EDGE ASSEMBLY; With Teeth; Incl Ref 4 - 10
4		NSS		1	NON FOURNI SEPAREMENT, Edge
		D139851		2	DENT, Outer; Incl. Ref 5 - 7
5		D51750		1	POINTE
6		245466A1		1	GOUPILLE
7		D138157		1	JAMBE
		D139849		5	DENT, Center; Incl. Ref 8 - 10; Order Ref 8 - 10
8		D51750		1	POINTE
9		245466A1		1	GOUPILLE
10		D48212		1	JAMBE
11		D37495		2	BAGUE
12		D30933		4	BAGUE

09-35		p1	12/07

GODET, PELLE R£TRO UNIVERSELLE (610 MM (24 INCH) WIDE)

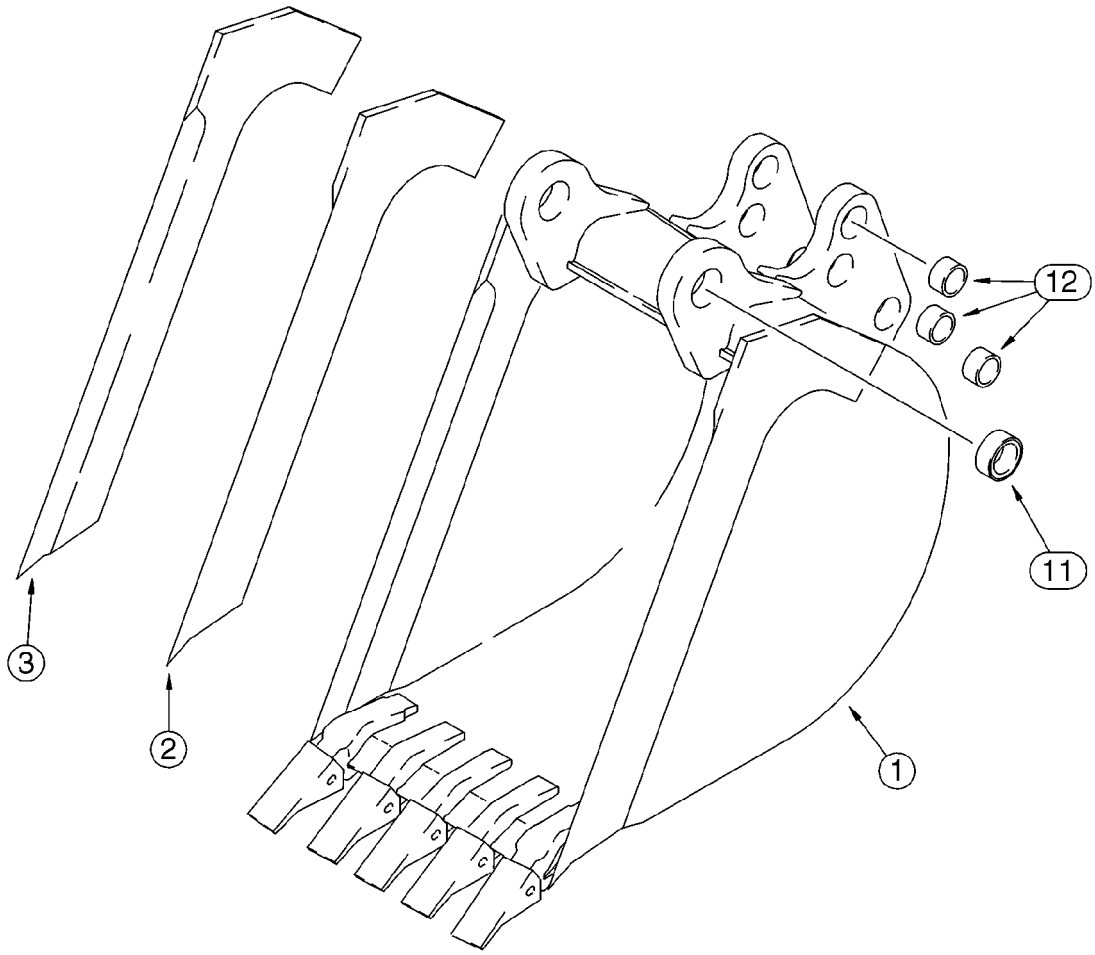

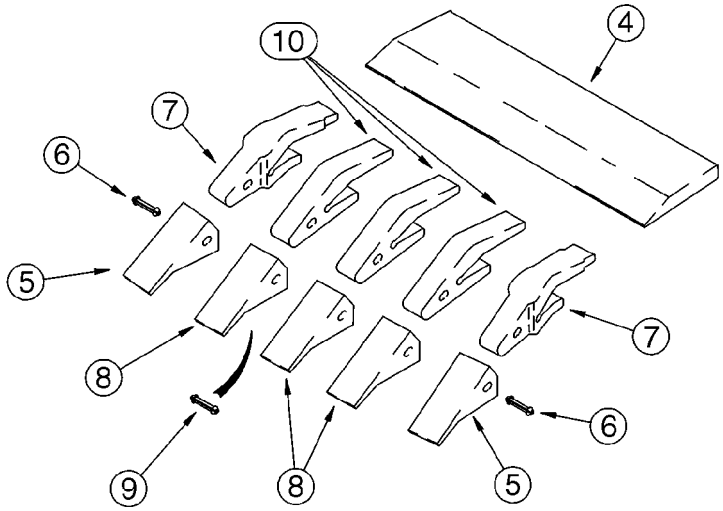

B9405159

GODET, PELLE R£TRO UNIVERSELLE (610 MM (24 INCH) WIDE)

REF	FN	PART NUMBER	YR/SN	QTY	DESCRIPTION
1		141232A2		1	GODET, 610 mm (24 in); With 5 Teeth; Order Through Parts Marketing; Incl. Ref 2 - 12
2		141234A1		1	LAME D'ATTAQUE, Right-Hand
3		141233A1		1	LAME D'ATTAQUE, Left-Hand
4		D142012		1	LAME D'ATTAQUE
		D139851		2	DENT, Outer; Incl. Ref 5 - 7
5		D51750		1	POINTE
6		245466A1		1	GOUPILLE
7		D138157		1	JAMBE
		D139849		3	DENT, Center; Incl. Ref 8 - 10; Order Ref 8 - 10
8		D51750		1	POINTE
9		245466A1		1	GOUPILLE
10		D48212		1	JAMBE
11		D37495		2	BAGUE
12		D30933		6	BAGUE

ENSEMBLE DE POINT DE GEL

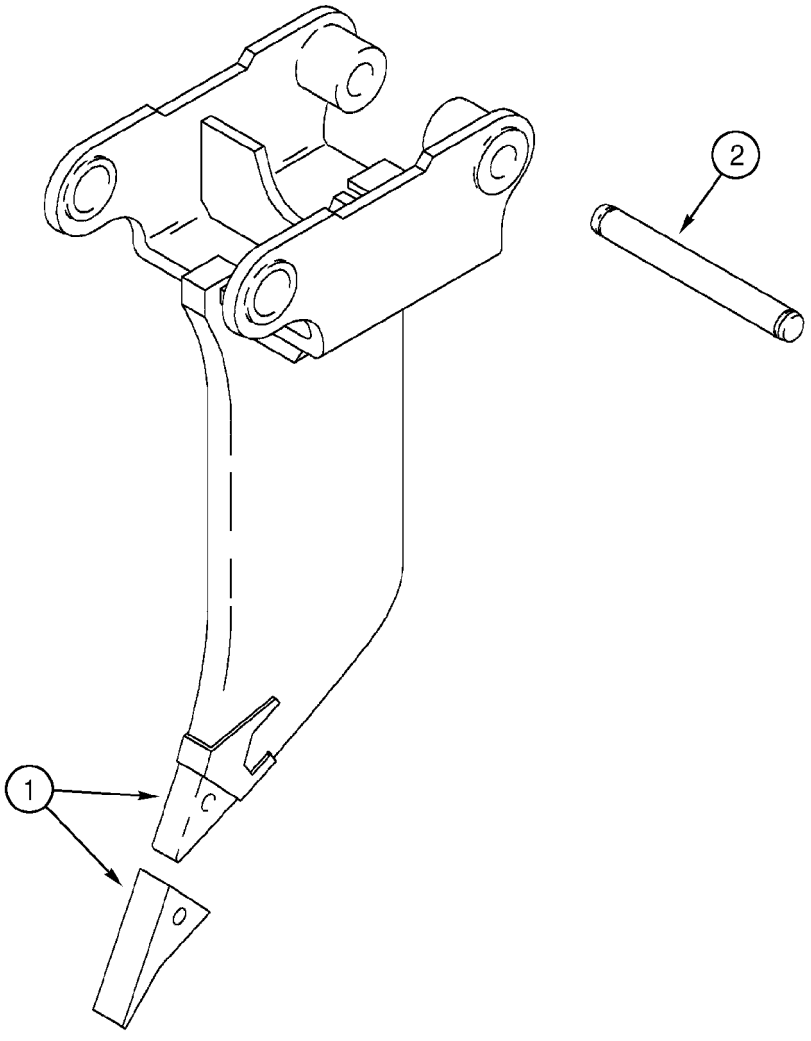

BS00H128

ENSEMBLE DE POINT DE GEL

REF	FN	PART NUMBER	YR/SN	QTY	DESCRIPTION
1		319467A1		1	POINTE, Frost Point Assembly; Includes (2) Pin Retaining Bolts; Component Parts Not Serviced Separately
2		D50696		1	AXE

09-36		p1	07/07

CONTREPOIDS AVANT

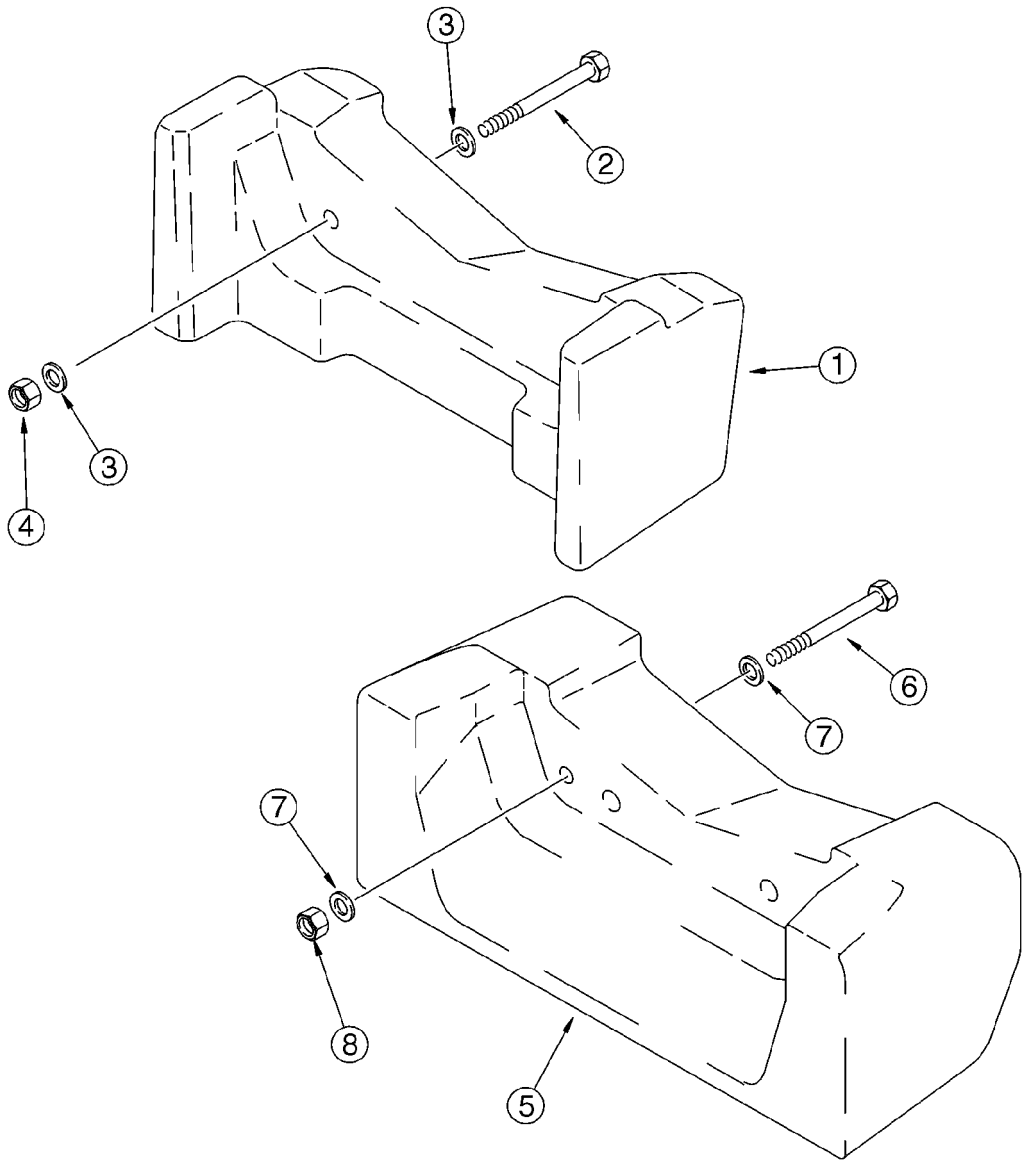

BT97N084

CONTREPOIDS AVANT

REF	FN	PART NUMBER	YR/SN	QTY	DESCRIPTION
1		360867A1		1	POIDS, 200 kg (441 lbs); If Used
2		827-20170		2	BOULON, Hex, M20 x 170, 10.9
3		896-11020		4	RONDELLE, M20 x 37.5 x 4, HT
4		829-1420		2	ECROU, M20, Cl 10
5		87425456		1	MASSELOTTE, 408 kg (900 lbs); If Used
6		827-20170		2	BOULON, Hex, M20 x 170, 10.9
7		896-11020		4	RONDELLE, M20 x 37.5 x 4, HT
8		829-1420		2	ECROU, M20, Cl 10

09-37		p1	02/08

CHASSIS / MONTAGES, COSSE - GRILLE, ADMISSION D'AIR

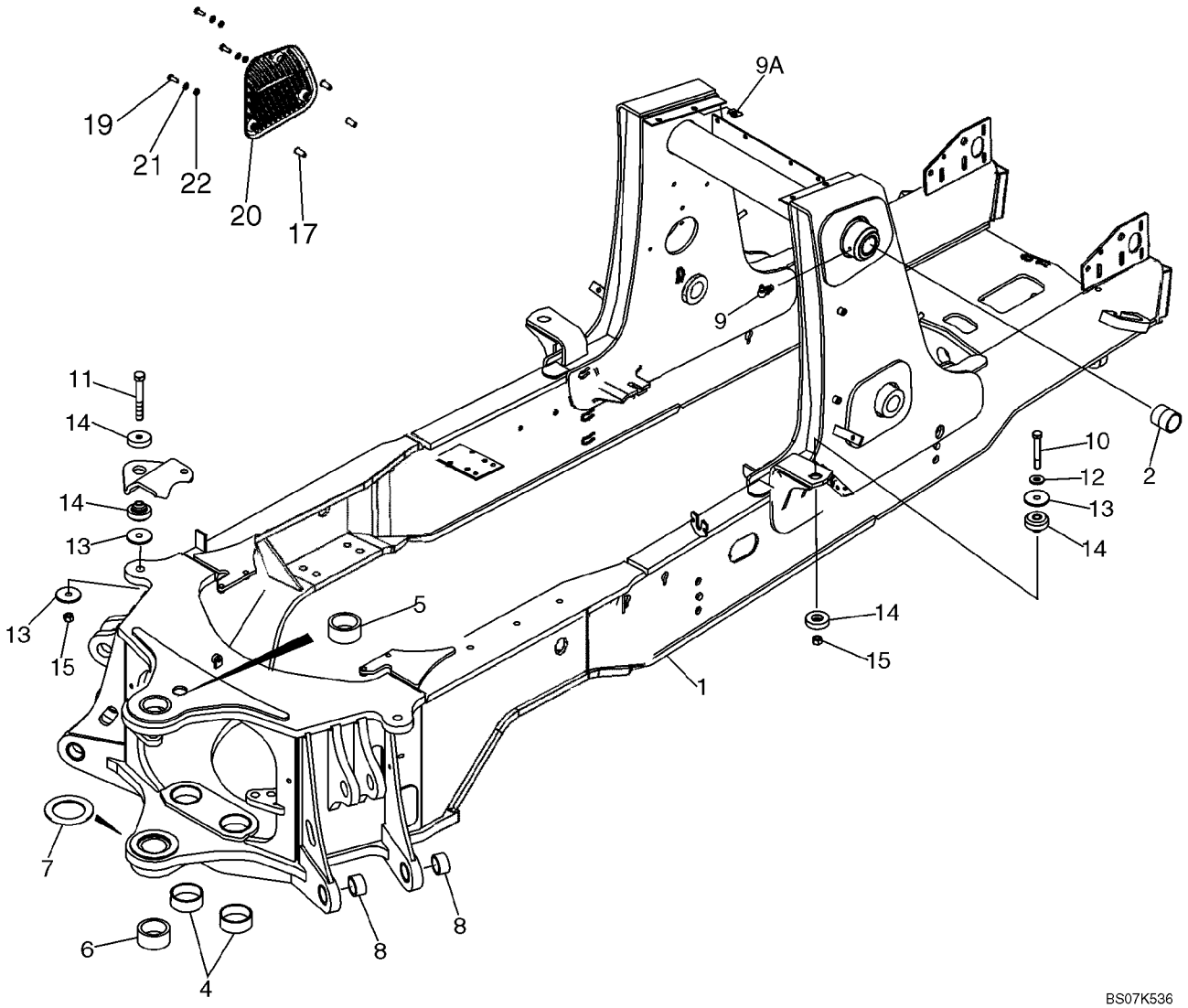

CHASSIS / MONTAGES, COSSE - GRILLE, ADMISSION D'AIR

REF	FN	PART NUMBER	YR/SN	QTY	DESCRIPTION
1		87716973		1	CARCASSE, Chassis, Incl. Ref 2 - 8
2		180427A1		2	BAGUE
4		114318A1		2	BAGUE, 80 x 5 x 28.8
5		D151069		1	BAGUE, 70 x 10 x 32 mm
6		D151070		1	BAGUE, 70 x 10 x 38 mm
7		220413A1		1	ENTRETOISE, 93 x 135 x 5 mm; Welded-On
8		107124A1		4	BAGUE
9		219-55		2	GRAISSEUR, 90Ü, 1/8" NPT x .84" lg
9A		833-40310		4	ECROU, M10, U
10		827-16085		2	BOULON, Hex, M16 x 85, 10.9
11		827-16100		2	BOULON, Hex, M16 x 100, 10.9
12		896-11016		2	RONDELLE, M17.5 x 30 x 4, HT
13		186977A1		6	RONDELLE, 4,5 mm thick
14		411892A1		4	PALIER CAOUTCHOUC, M16; Operator Compartment Pod Mounts
15		829-1416		4	ECROU, M16, Cl 10
17		87417383		3	INSERT FILETE
19		614-8030		3	BOULON, Hex, M8 x 30, 8.8
20		87324160		1	ECRAN, Air Inlet, Plastic, With Slots
21		895-15008		3	RONDELLE, M8 x 20 x 1.6
22		87310109		3	ENTRETOISE, 9.5 ID x 15 OD x 3.0 mm thk

09-38		p1	01/08

R£SERVOIR, HUILE - COMPARTIMENT DE BATTERIES ET BOITE A OUTILS

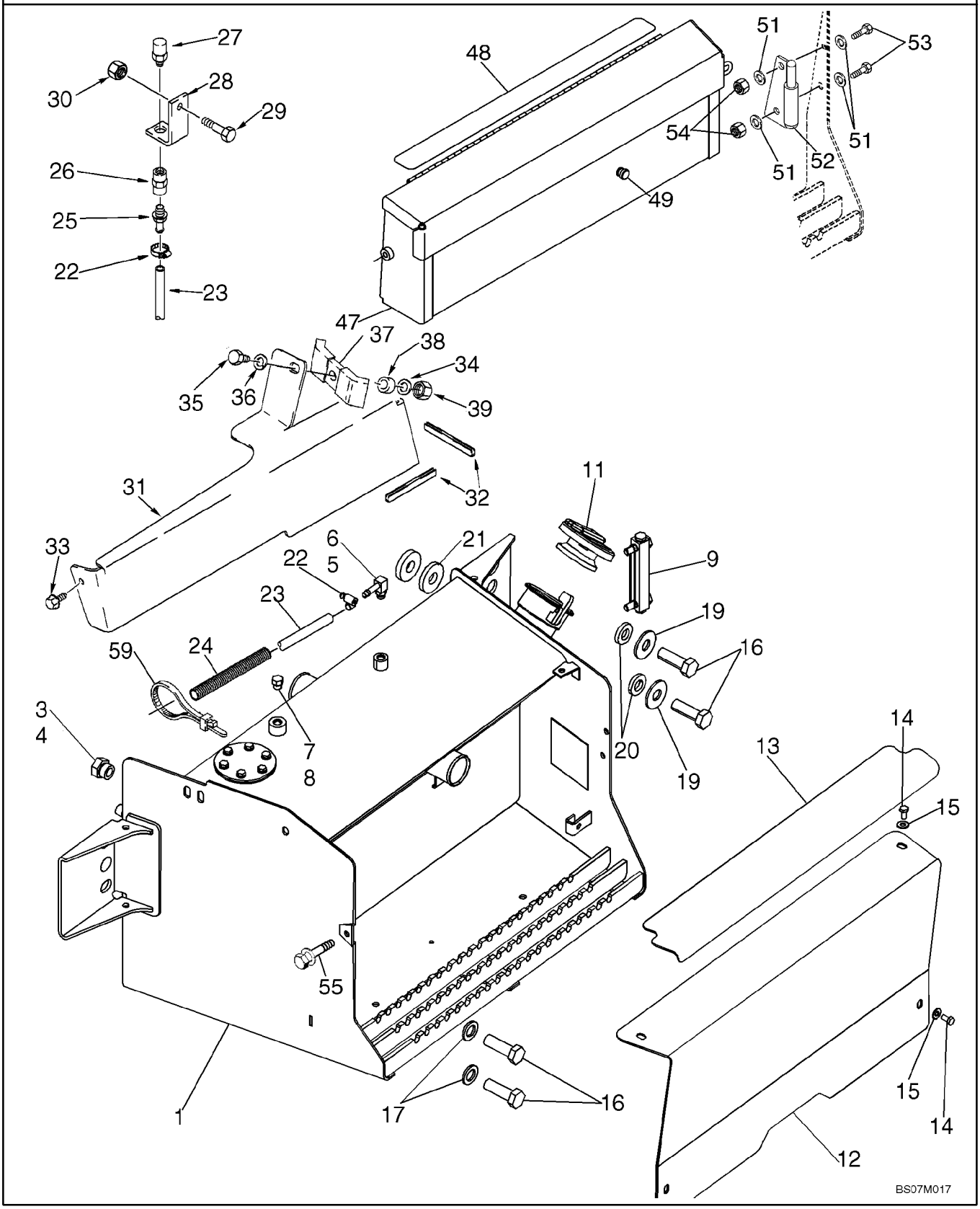

R£SERVOIR, HUILE - COMPARTIMENT DE BATTERIES ET BOITE A OUTILS

REF	FN	PART NUMBER	YR/SN	QTY	DESCRIPTION
		87651830		1	RESERVOIR D'HUILE, ASSEMBLY; Incl. Ref 1 - 11
1		87651790		1	RESERVOIR D'HUILE, Right-Hand Side of Chassis
2		321-229		1	DECALCOMANIE, Not Illustrated
3		218-5158		1	BOUCHON, Hex Hd, 1 1/16"-12 ORB, Incl. 4
4		237-6012		1	JOINT THORIQUE, 12-1, 90 Duro, .924 ID x .118" Thk
5		217-347		1	RACCORD, 90Ü, 3/8" Hose x 9/16"-18 ORB Beaded, Incl. 6
6		237-6006		1	JOINT THORIQUE, 6-1, 90 Duro, .468" ID x .078" Thk
7		218-5155		1	BOUCHON, Hex Hd, 9/16"-18 ORB, Incl. 8
8		237-6006		1	JOINT THORIQUE, 6-1, 90 Duro, .468" ID x .078" Thk
9		226456A1		1	JAUGE, Aluminum; Includes (2) Hollow Head Bolts and (4) O-Rings; Component Parts Not Serviced Separately, Used With Ref 10
9A		87673270		1	BANDE ADH£SIVE, Adhesive Backed; Not Illustrated
10		345-49		1	LOCTITE, 242; 1 ml; Not Illustrated
11		138595A1		1	BOUCHON DE REMPL., CAP
12		87348192		1	COUVERTURE, Battery
13		87719444		1	BANDE ANTI-DERAPANTE
14		614-8016		4	BOULON, Hex, M8 x 16, 8.8
15		895-15008		4	RONDELLE, M8 x 20 x 1.6
16		443375A1		4	BOULON, M20 x 60; 10.9; Thread to Head
17		896-11020		2	RONDELLE, M20 x 37.5 x 4, HT
19		302358A1		2	RONDELLE
20		185926A1		2	ENTRETOISE
21		87360280		1	ENTRETOISE
22		214-1406		2	BRIDE, FLEXIBLE, #06, .44/.78 Type F Worm
23		87363421		1	FLEXIBLE AU METRE, 912 mm (35-29/32 in); Vent
24		87452021		1	GAINE PLASTIQUE, 650 mm (25-19/32 in)
25		217-380		1	RACCORD, 3/8" Hose X 3/8" NPTF Beaded, 3/8 stem x PT; Use With 345-147 Sealant
26		217-1102		1	RACCORD, 3/8"-18 NPTF, Female
27		87674850		1	RENIFLARD, Use With 345-147 Sealant
28		122603A1		1	SUPPORT

09-38		p2	01/08

R£SERVOIR, HUILE - COMPARTIMENT DE BATTERIES ET BOITE A OUTILS

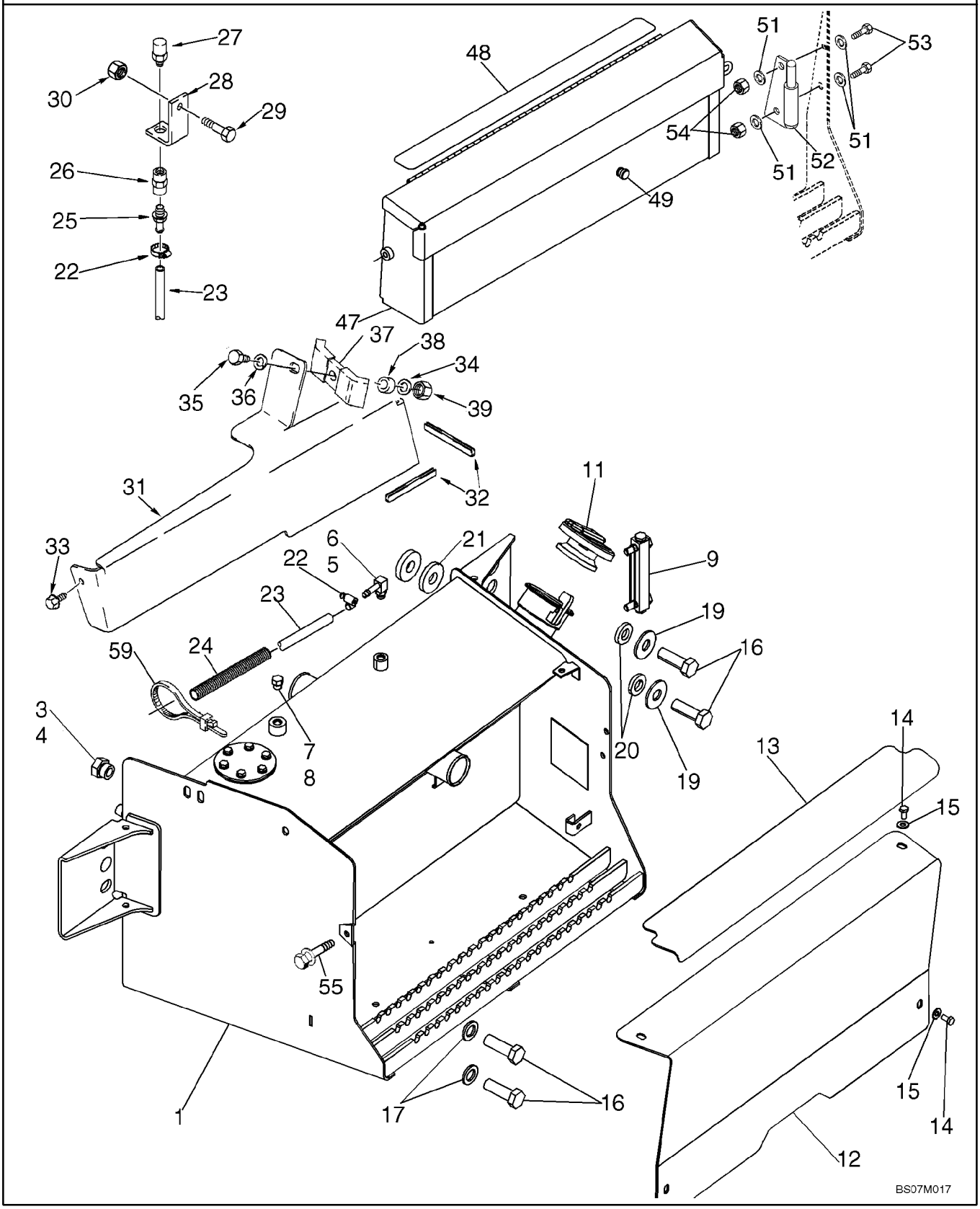

R£SERVOIR, HUILE - COMPARTIMENT DE BATTERIES ET BOITE A OUTILS

REF	FN	PART NUMBER	YR/SN	QTY	DESCRIPTION
29		711-10030		1	BOULON TETE BOMBEE, Short NK, M10 x 30, Cl8.8, Full Thd
30		829-1410		1	ECROU, M10, Cl 10
31		399959A2		1	COUVERCLE
32		191047A1		1	MOULURE, 305 mm (12 in) lg; Apply 65 mm (2-9/16 in) Of Trim To Front Lower Edge and 240 mm (9-1/2 in) Of Trim To Outisde Lower Edge of Cover
33		307577A1		1	BOULON, With Washer, M8 x 20
34		895-11010		1	RONDELLE, M10 x 20 x 2
35		814-10045		1	BOULON, Hex, M10 x 45, 8.8
36		892-11010		1	RONDELLE FREIN, M10
37		D138055		1	COLLIER
38		120303A1		1	ENTRETOISE
39		829-1410		1	ECROU, M10, Cl 10
47		380807A4		1	CAISSE A OUTILS
48		87694065		1	BANDE ANTI-DERAPANTE
49		L60224		1	PARE-CHOCS, 1/2 in Hole
51		895-11010		4	RONDELLE, M10 x 20 x 2
52		382202A2		1	CHARNIERE
53		614-10025		2	BOULON, Hex, M10 x 25, 8.8, Full Thd
54		829-1410		2	ECROU, M10, Cl 10
55		121856A1		1	VIS, Hex Wash Hd, M10 x 1.5 x 30, 10.9, Includes Washer
59		L18337		2	SERRE-CABLE, 9.95"-12.1" lg

09-39		p1	02/08

BOčTIER DE RADIATEUR

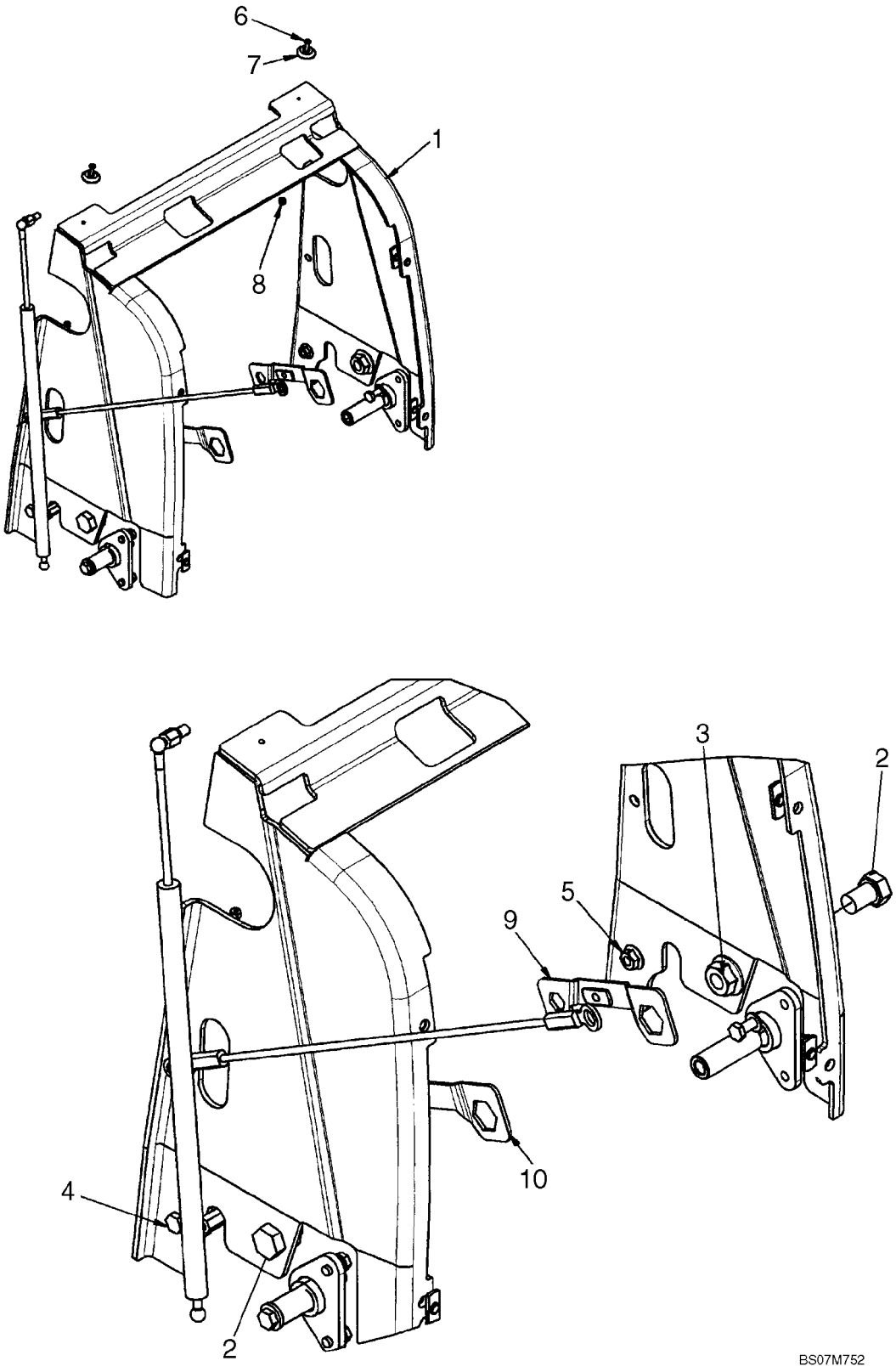

BOćTIER DE RADIATEUR

REF	FN	PART NUMBER	YR/SN	QTY	DESCRIPTION
1		87719412		1	TAQUET DE FIXATION, Wrapper
2		614-20030		2	BOULON, Hex, M20 x 30, 8.8, Full Thd
3		829-2420		2	ECROU, M20 x 2.5, Flg, Cl 10
4		614-12030		2	BOULON, Hex, M12 x 30, 8.8
5		829-2412		2	ECROU, M12 x 1.75, Flg, Cl 10
6		440-11012		2	VIS, Cross Pan Hd, #10-24 x 3/4"
7		109879A1		2	ENTRETOISE, Hood; Plastic
8		231-14109		2	CONTRE-ECROU, #10-24, GB
9		87725886		1	RETENEUR
10		87725883		1	RETENEUR

09-40		p1	11/07

CAPOT - PANNEAUX LATERAUX

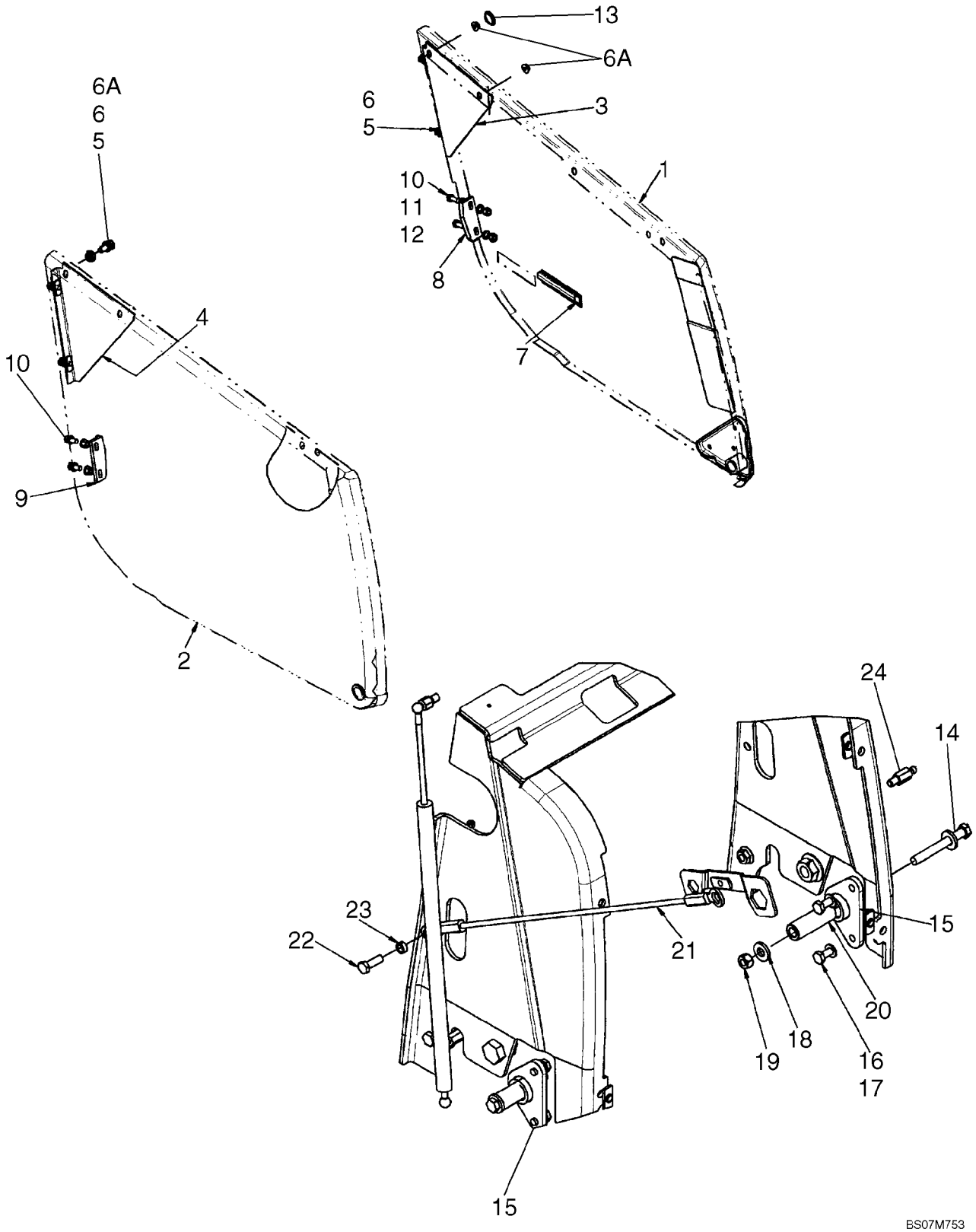

CAPOT - PANNEAUX LATERAUX

REF	FN	PART NUMBER	YR/SN	QTY	DESCRIPTION
1		87444148		1	PANNEAU LAT£RAL, Left-Hand Side
2		87444147		1	PANNEAU LAT£RAL, Right-Hand Side
3		362609A1		1	JAMBE-DE-FORCE, Left-Hand
4		362607A1		1	JAMBE-DE-FORCE, Right-Hand
5		614-10025		8	BOULON, Hex, M10 x 25, 8.8, Full Thd
6		895-11010		8	RONDELLE, M10 x 20 x 2
6A		825-2410		4	ECROU, M10 x 1.5, Flg, Cl 8
7		183168A1		1	POIGN£E, Left-Hand
8		D143715		1	SUPPORT, Guide, Left-Hand
9		D143714		1	SUPPORT, Guide, Right-Hand
10		614-10025		4	BOULON, Hex, M10 x 25, 8.8, Full Thd
11		895-11010		8	RONDELLE, M10 x 20 x 2
12		832-10410		4	CONTRE-ECROU, M10 x 1.5, Cl 8
13		D140267		2	BOUCHON
14		814-12100		2	BOULON, Hex, M12 x 100, 8.8
15		87606502		2	PIVOT
16		614-10020		4	BOULON, Hex, M10 x 20, 8.8, Full Thd
17		895-11010		4	RONDELLE, M10 x 20 x 2
18		896-15012		4	RONDELLE, M12 x 28.5 x 4, HT
19		829-1412		2	ECROU, M12, Cl 10
20		87412060		2	TUBE
21		144908A2		1	CABLE
22		614-10030		1	BOULON, Hex, M10 x 30, 8.8
23		D143417		1	ENTRETOISE
24		87561131		2	ROTULE

09-41		p1	01/08

CAPOT - CALANDRE

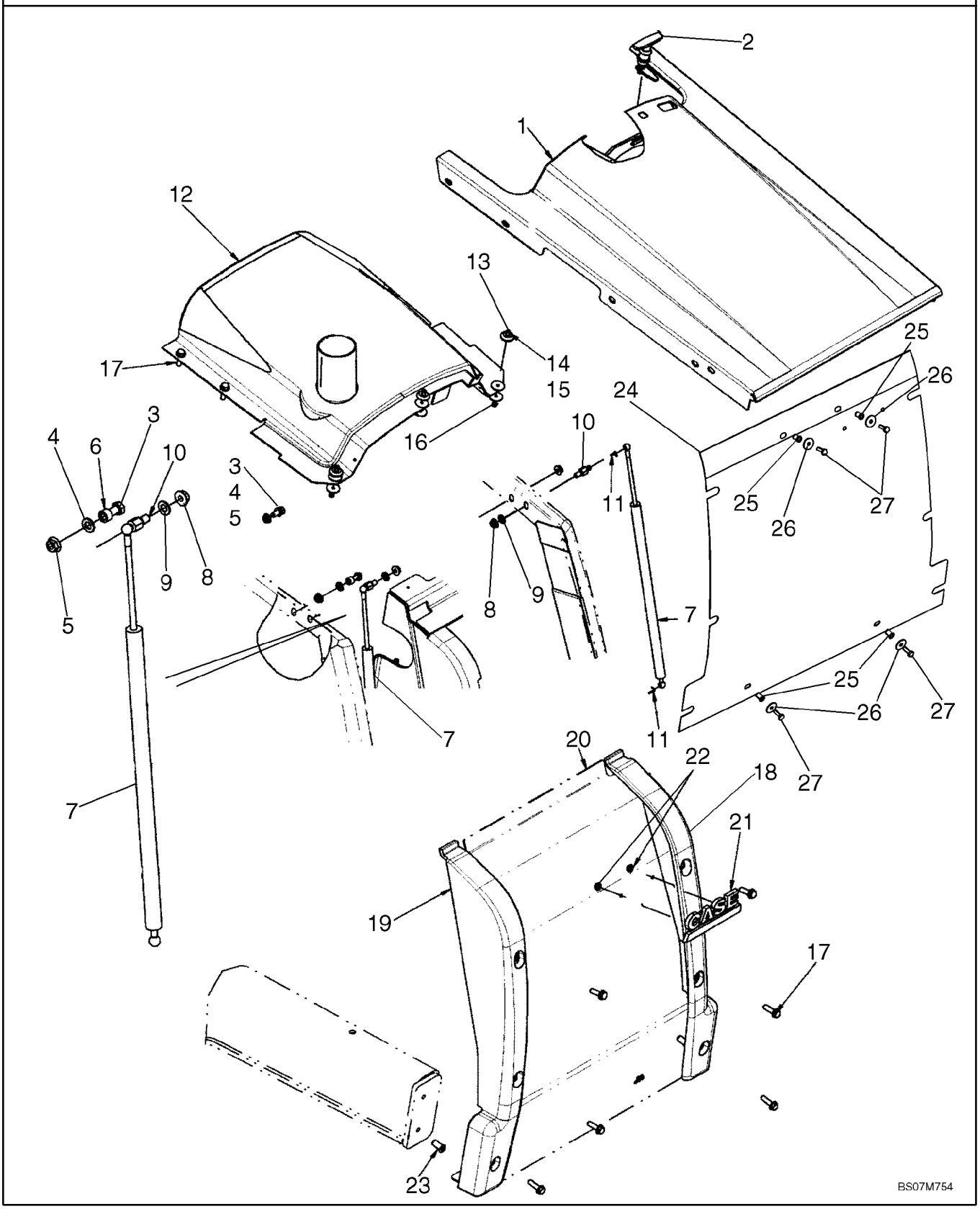

CAPOT - CALANDRE

REF	FN	PART NUMBER	YR/SN	QTY	DESCRIPTION
1		87594903		1	CAPOT MOTEUR, Engine; Tilt
2		175599A1		1	LOQUET
3		614-10025		4	BOULON, Hex, M10 x 25, 8.8, Full Thd
4		895-11010		4	RONDELLE, M10 x 20 x 2
5		825-2410		4	ECROU, M10 x 1.5, Flg, Cl 8
6		396605A1		1	ENTRETOISE
7		114980A1		2	AMORTISSEUR, Spring; Counterbalance
8		825-2410		2	ECROU, M10 x 1.5, Flg, Cl 8
9		895-11010		2	RONDELLE, M10 x 20 x 2
10		139363A1		2	ROTULE, Stud
11		F44883		4	CLIP
12		87545557		1	TAQUET DE FIXATION, Fixed Hood
13		440-11012		3	VIS, Cross Pan Hd, #10-24 x 3/4"
14		109879A1		3	ENTRETOISE
15		185325A1		8	ENTRETOISE
16		231-14109		3	CONTRE-ECROU, #10-24, GB
17		392828A2		10	BOULON, With Washer, M10 x 40
18		87719497		1	PARE-CHOCS, LH Front
19		87719495		1	PARE-CHOCS, RH Front
20		87585167		1	ECRAN, Front Grille
21		186989A1		1	EMBLĈME, CASE Medallion
22		131-431		2	CONTRE-ECROU, Self, Threading, 1/4"
23		87417721		2	INSERT FILETE
24		87726055		1	ECRAN, Screen, Chaff
25		255447A1		4	RIVET, Insert, Threaded
26		257382A1		4	RONDELLE, 6.6 x 25 x 1.6 mm
27		257381A1		4	VIS, 1/4 NF x 3/4

09-42		p1	01/08

PLAQUES, PLANCHER - TAPIS DE SOL

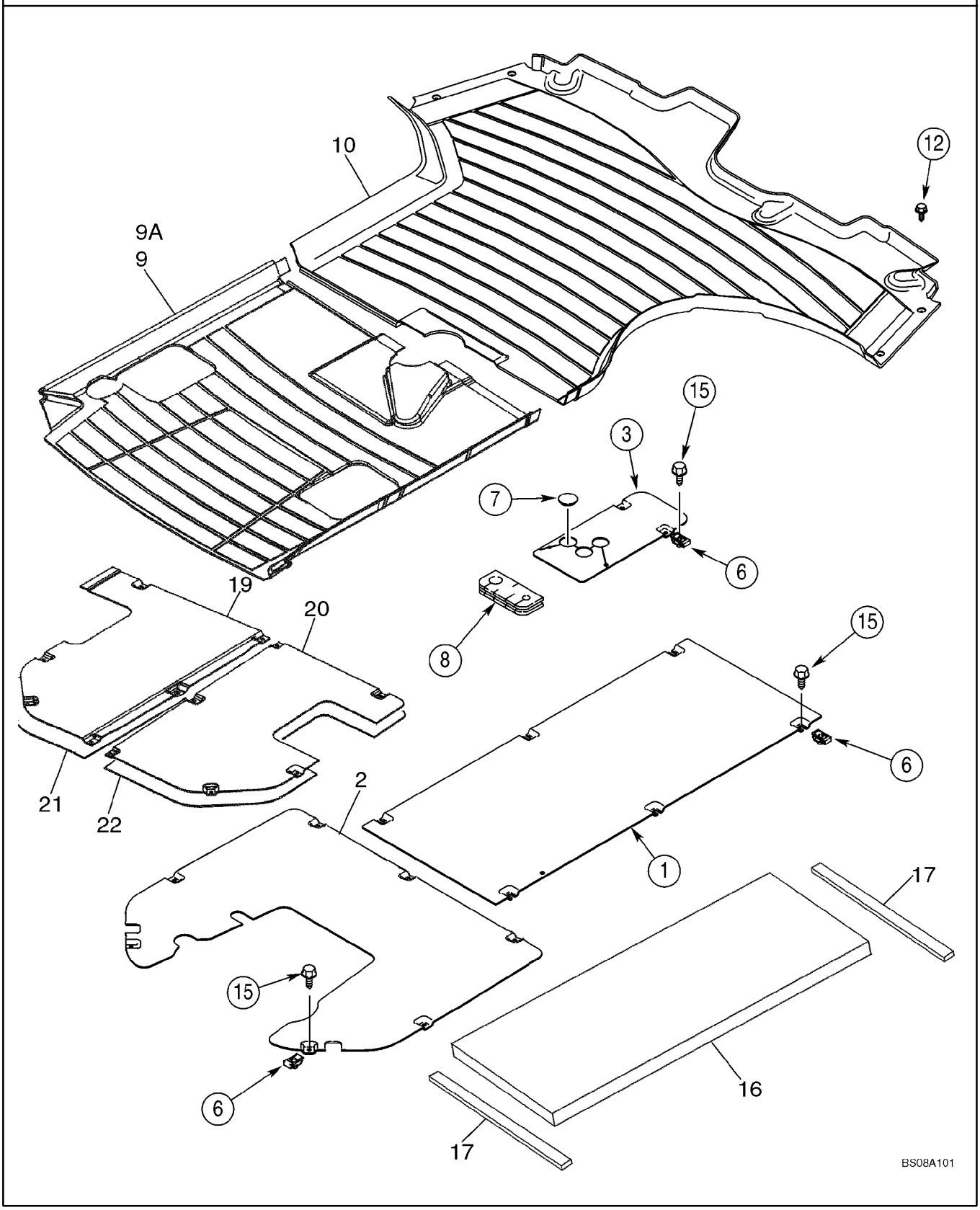

PLAQUES, PLANCHER - TAPIS DE SOL

REF	FN	PART NUMBER	YR/SN	QTY	DESCRIPTION
1		355984A2		1	PLAQUE, GRANDE, Front
2		86983190		1	PLAQUETTE, Rear; Without Pilot Controls
3		87436076		1	PLAQUETTE, Loader Control Lever
6		833-40406		16-17	ECROU, M6, U
7		353-422		1	BOUCHON, Dome, 1.250" hole, Nylon, Models Without Clam Bucket
8		393623A1		1	BLOC, Floor
9		86983325		1	TAPIS DE PLANCHER, Rear, Canopy Models, Without Pilot Controls
9A		86983269		1	TAPIS DE PLANCHER, Rear, Canopy Models, With Pilot Controls; Not Illustrated
10		390551A2		1	TAPIS DE PLANCHER, Front, Cab or Canopy Models
12		87310085		4	VIS AUTO-TARAUDEUSE, Hex Washer Head, No. 10 x 1, Self-Tapping, Stainless Steel
15		87310096		16-17	BOULON, M6 x 25, Includes Washer, Stainless Steel
16		411074A1		1	JOINT, Cab Models
17		181981A1		2	BANDE D'ETANCHEITE, Foam; Adhesive Back; Cab Models
19		87434049		1	PLAQUETTE, Rear, With Pilot Controls
20		87434050		1	PLAQUETTE, Rear, With Pilot Controls
21		87442376		1	MOUSSE ISOLANTE, Heat Barrier, Left-Hand, Canopy Models With Pilot Controls
22		87442377		1	MOUSSE ISOLANTE, Heat Barrier, Right-Hand, Canopy Models With Pilot Controls

09-43		p1	12/07

GARDE-BOUE, GAUCHE - PANNEAU, FERMETURE ARRIERE (VIDE-POCHES AVEC PORTE-GOBELET)

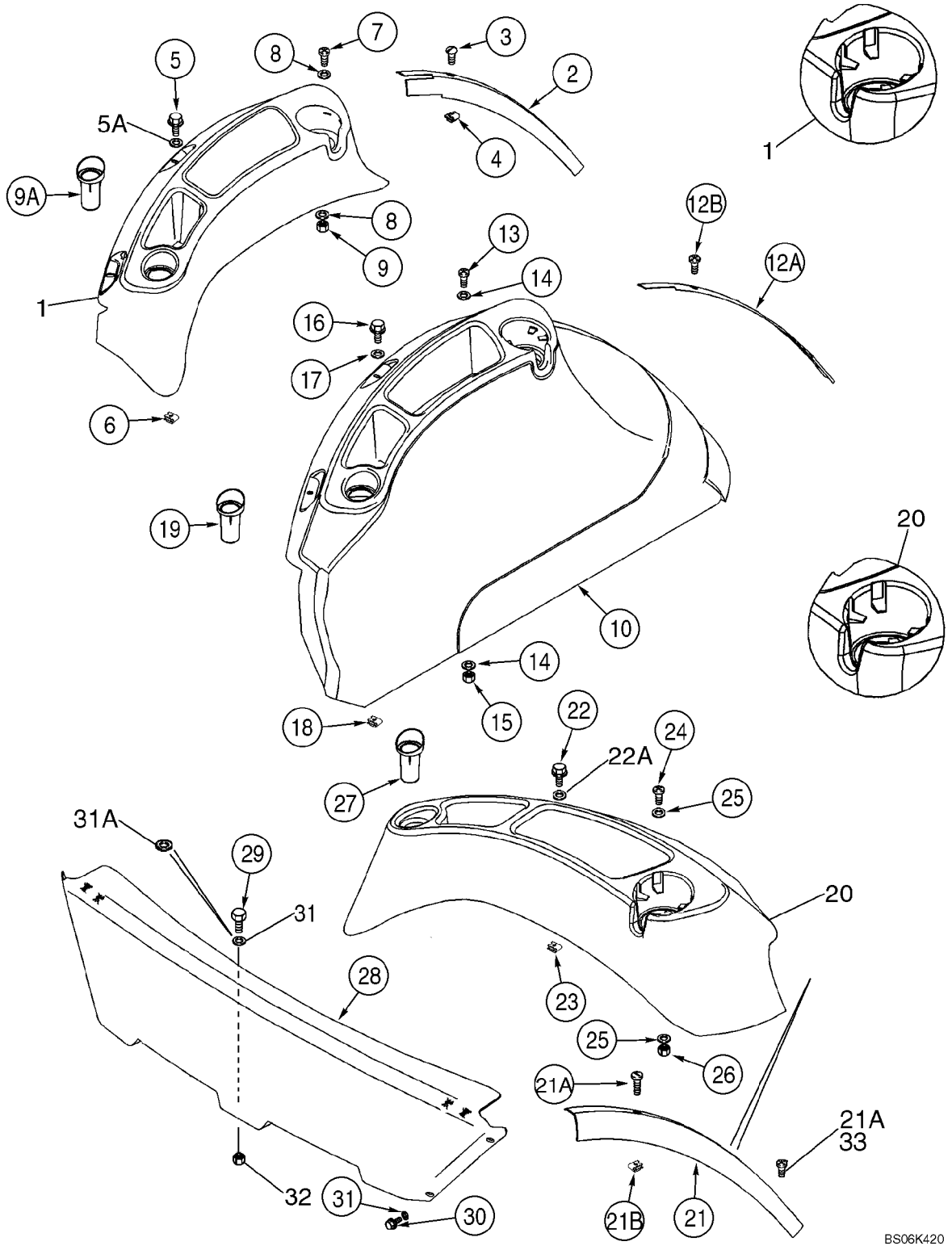

GARDE-BOUE, GAUCHE - PANNEAU, FERMETURE ARRIERE (VIDE-POCHES AVEC PORTE-GOBELET)

REF	FN	PART NUMBER	YR/SN	QTY	DESCRIPTION
1		86992247		1	PLATEAU, Cab Models, With Standard Interior; Includes 86992284, 400077A1
		NSS		1	NON FOURNI SEPAREMENT, Tray
		86992284		4	PARE-CHOCS
		400077A1		1	MARCHANDISE AU METRE, 1300 mm (51-3/16 in); Cut From 1977224C1
2		397026A3		1	PROFIL PROTECTEUR, Trim, Left-Hand Fender, Cab Models With Standard Interior
3		87310088		3	VIS, No. 10 x 3/4, Stainless Steel
4		131-869		3	ECROU, Ret, J, #10-24
5		87310098		2	BOULON, Flange, M6 x 20, Stainless Steel
5A		87310186		2	RONDELLE, 6.6 ID x 25 OD x 1.6 mm thk, Stainless Steel
6		833-40406		2	ECROU, M6, U
7		87310127		2	VIS, No. 10 x 1, Stainless Steel
8		87310146		4	RONDELLE, 13/64 x 3/4 x 1/16, Stainless Steel
9		86625057		2	CONTRE-ECROU, #10-24, GB
9A		378742A3		1	INSERT, Swing Pin Holder
10		86992245		1	COUVERCLE (ASSEMBLE), Cab Models With Deluxe Interior; Includes (4) 86992284 Bumpers
12A		397774A3		1	RUBAN, Deluxe Interior
12B		87310088		3	VIS, No. 10 x 3/4, Stainless Steel
13		87310127		2	VIS, No. 10 x 1, Stainless Steel
14		87310146		4	RONDELLE, 13/64 x 3/4 x 1/16, Stainless Steel
15		86625057		2	CONTRE-ECROU, #10-24, GB
16		87310098		2	BOULON, Flange, M6 x 20, Stainless Steel
17		87310186		2	RONDELLE, 6.6 ID x 25 OD x 1.6 mm thk, Stainless Steel
18		833-40406		2	ECROU, M6, U
19		378742A3		1	INSERT, Swing Pin Holder
20		86992243		1	PLATEAU (ASSEMBLE), Canopy Models; Includes 86992284, 4000077A1
		NSS		1	NON FOURNI SEPAREMENT, Tray
		86992284		4	PARE-CHOCS

GARDE-BOUE, GAUCHE - PANNEAU, FERMETURE ARRIERE (VIDE-POCHES AVEC PORTE-GOBELET)

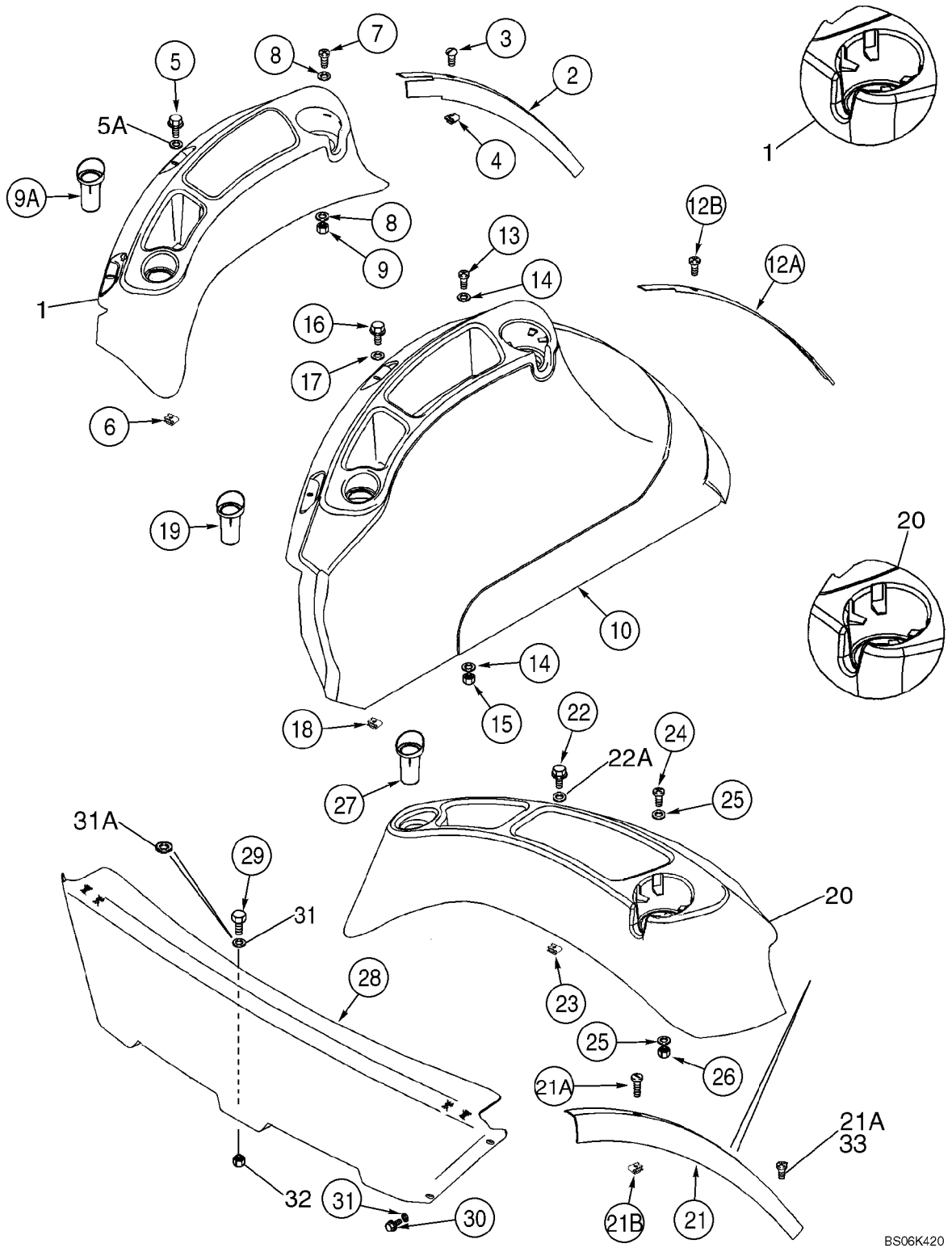

GARDE-BOUE, GAUCHE - PANNEAU, FERMETURE ARRIERE (VIDE-POCHES AVEC PORTE-GOBELET)

REF	FN	PART NUMBER	YR/SN	QTY	DESCRIPTION
		400077A1		1	MARCHANDISE AU METRE, 1300 mm (51-3/16 in); Cut From 1977224C1
21		397025A2		1	PROFIL PROTECTEUR, Trim, Canopy Models
21A		87534992		2-3	VIS AUTO-TARAUDEUSE, Pan Hd Slotted Rec, #10 x 1 SST
21B		131-869		3	ECROU, Ret, J, #10-24
22		87310098		2	BOULON, Flange, M6 x 20, Stainless Steel
22A		87310186		2	RONDELLE, 6.6 ID x 25 OD x 1.6 mm thk, Stainless Steel
23		833-40406		2	ECROU, M6, U
24		87310127		2	VIS, No. 10 x 1, Stainless Steel
25		87310146		4	RONDELLE, 13/64 x 3/4 x 1/16, Stainless Steel
26		86625057		2	CONTRE-ECROU, #10-24, GB
27		378742A3		1	INSERT, Swing Pin Holder
28		86992977		1	PANNEAU, Rear Closure Panel; Canopy Models
29		87310154		1	BOULON, M8 x 25, Stainless Steel
30		781-24820		4	VIS AUTO-TARAUDEUSE, Hex Flg Hd, M8 x 20
31		895-15008		4-5	RONDELLE, M8 x 20 x 1.6
31A		87310185		1	RONDELLE, 9 x 20 x 1,6 mm, Stainless Steel
32		832-10408		1	CONTRE-ECROU, M8 x 1.25, Cl 8
33		87310126		1	VIS, Pan Hd Cross Rec, No. 10 x 3/4 Stainless Steel

09-44		p1	12/07

EXTENSION DE GARDE BOUE

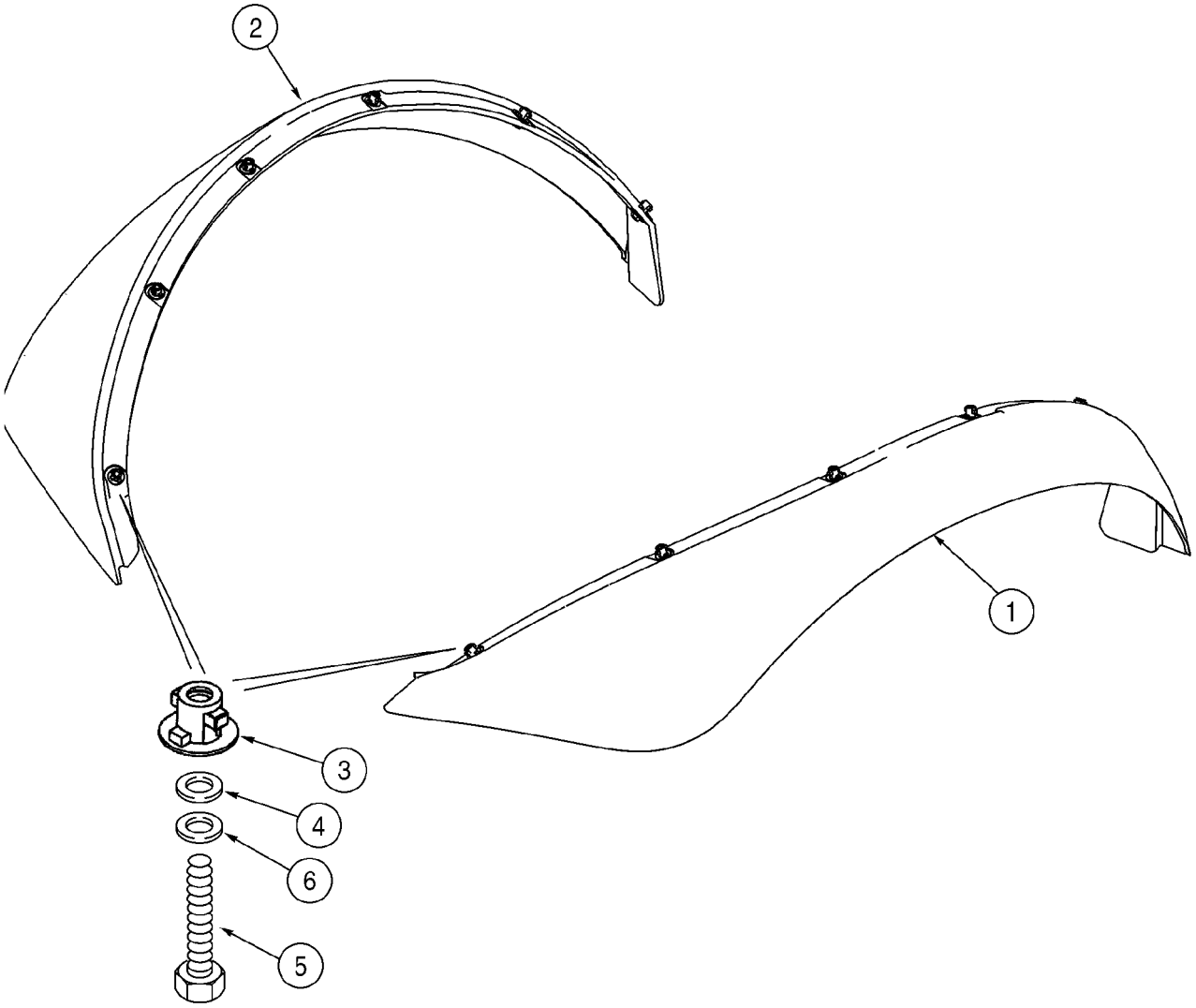

BC00F002

EXTENSION DE GARDE BOUE

REF	FN	PART NUMBER	YR/SN	QTY	DESCRIPTION
1		340998A3		1	GARDE-BOUE, Right-Hand
2		340997A3		1	GARDE-BOUE, Left-Hand
3		345231A1		12	ATTACHE
4		496-41041		12	RONDELLE, 13/32" x 1 1/8" x .134"
5		614-8030		12	BOULON, Hex, M8 x 30, 8.8
6		892-11008		12	RONDELLE FREIN, M8

09-45		p1	02/08

GARDE-BOUE

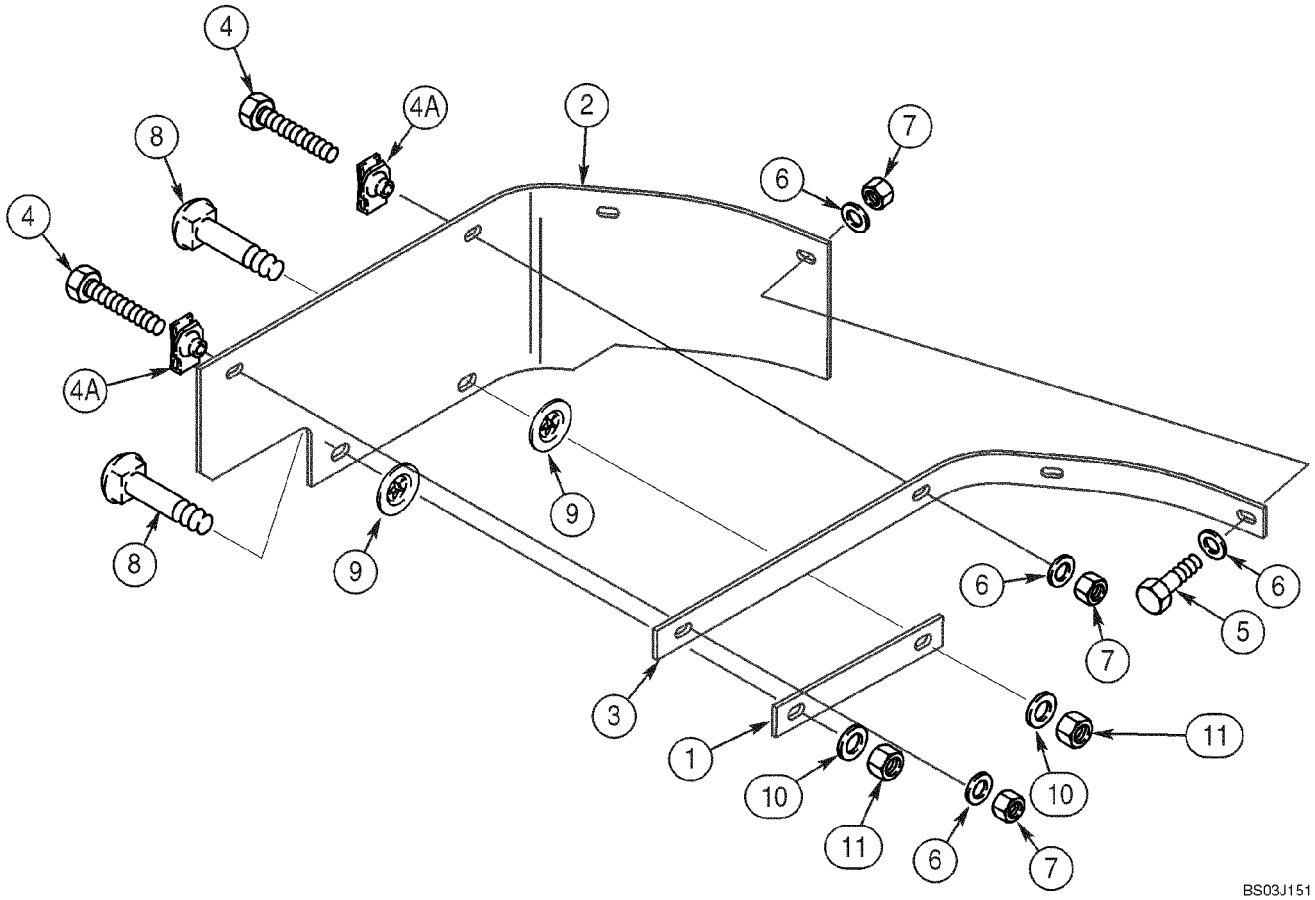

09-45		p1	02/08

GARDE-BOUE

REF	FN	PART NUMBER	YR/SN	QTY	DESCRIPTION
1		362557A1		1	RUBAN, Plate
2		362556A2		1	GARANT, Mounts At Right-Hand Fender
3		362558A1		1	RUBAN, Angle
4		614-8040		2	BOULON, Hex, M8 x 40, 8.8, Full Thd
4A		833-40408		2	ECROU, M8, U
5		614-8030		2	BOULON, Hex, M8 x 30, 8.8
6		495-21038		6	RONDELLE, 5/16"
7		832-10408		4	CONTRE-ECROU, M8 x 1.25, Cl 8
8		711-10040		2	BOULON TETE BOMBEE, Short NK, M10 x 40, Cl8.8, Full Thd
9		368417A1		2	RONDELLE
10		895-11010		2	RONDELLE, M10 x 20 x 2
11		832-10410		2	CONTRE-ECROU, M10 x 1.5, Cl 8

09-46		p1	01/08

SIEGE (SEARS, STANDARD)

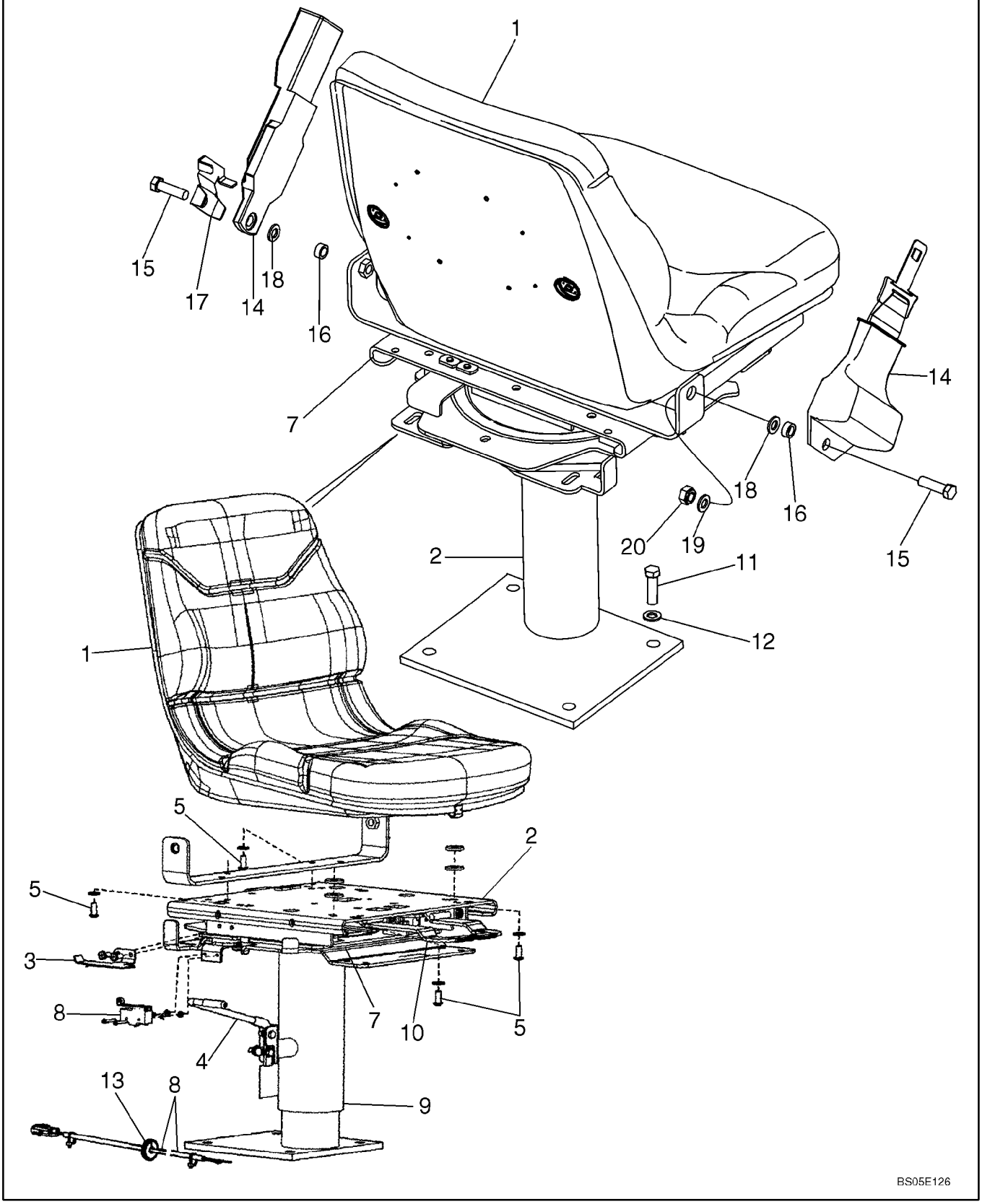

SIEGE (SEARS, STANDARD)

REF	FN	PART NUMBER	YR/SN	QTY	DESCRIPTION
		87454292		1	SIEGE (ASSEMBLE), Standard, Vinyl, Without Armrest, Sears Brand; Includes Seat, Swivel and Pedestal, and Swivel Bearing Kit, Ref 1 - 10
1		87338681		1	SIEGE, COMPOSANTS, Seat Only
2		87346606		1	SIEGE, ACCESSOIRES, Swivel and Pedestal; Component Parts Not Serviced Separately
3		87346607		1	SIEGE, ACCESSOIRES, Lever, Switch Actuator
4		87346611		1	SIEGE, ACCESSOIRES, Handle, Height Adjustment
5		87346612		4	SIEGE, ACCESSOIRES, Button Head Screw, 5/16 x 3/4
6		87346615		1	SIEGE, ACCESSOIRES, Spring Not Illustrated
7		87308132		1	ROULEMENT, Swivel Bearing Kit; Includes (1) Bolt, (8) Bearings, (1) Clip, (1) Nut, (1) Cotter Pin, (1) Plastic Washer, (1) Ball Retainer; Component Parts Not Serviced Separately
8		87346625		1	SIEGE, ACCESSOIRES, Kit, Switch/Harness, Adj. Height
9		87346633		1	SIEGE, ACCESSOIRES, Kit, Pedestal
10		87346634		1	SIEGE, ACCESSOIRES, Kit, Slide/Swivel
11		604-12030		4	BOULON, Hex, Lock, M10 x 30, Cl 8.8, Locking, M12 x 30
12		896-15012		4	RONDELLE, M12 x 28.5 x 4, HT, 13.5 x 28 x 4 mm
13		248-2373		1	PASSE-FIL, 1/2" ID x 1 1/4" Groove Dia, Str Cut, Rubber, 1/2 ID
14		87408888		1	CEINTURE DE S£CURIT£, 76 mm (3 in); Retractable, If Used
14		87408889		1	CEINTURE DE S£CURIT£, 51 mm (2 in), Retractable, If Used
15		414-724		2	BOULON, Hex, 7/16"-20 x 1 1/2", G5
16		87311572		2	ENTRETOISE
17		87310149		1	PATTE FIXATION, Left-Hand; Seat Belt Mounting/Standard Seat
18		495-81169		2	RONDELLE, 17/32" x 2 1/2" x .120"
19		496-81010		4	RONDELLE
20		232-4617		2	CONTRE-ECROU, 7/16"-20, GC

09-47		p1	02/08

SIEGE - SUPPORT (SEARS SUSPENSION M£CANIQUE)

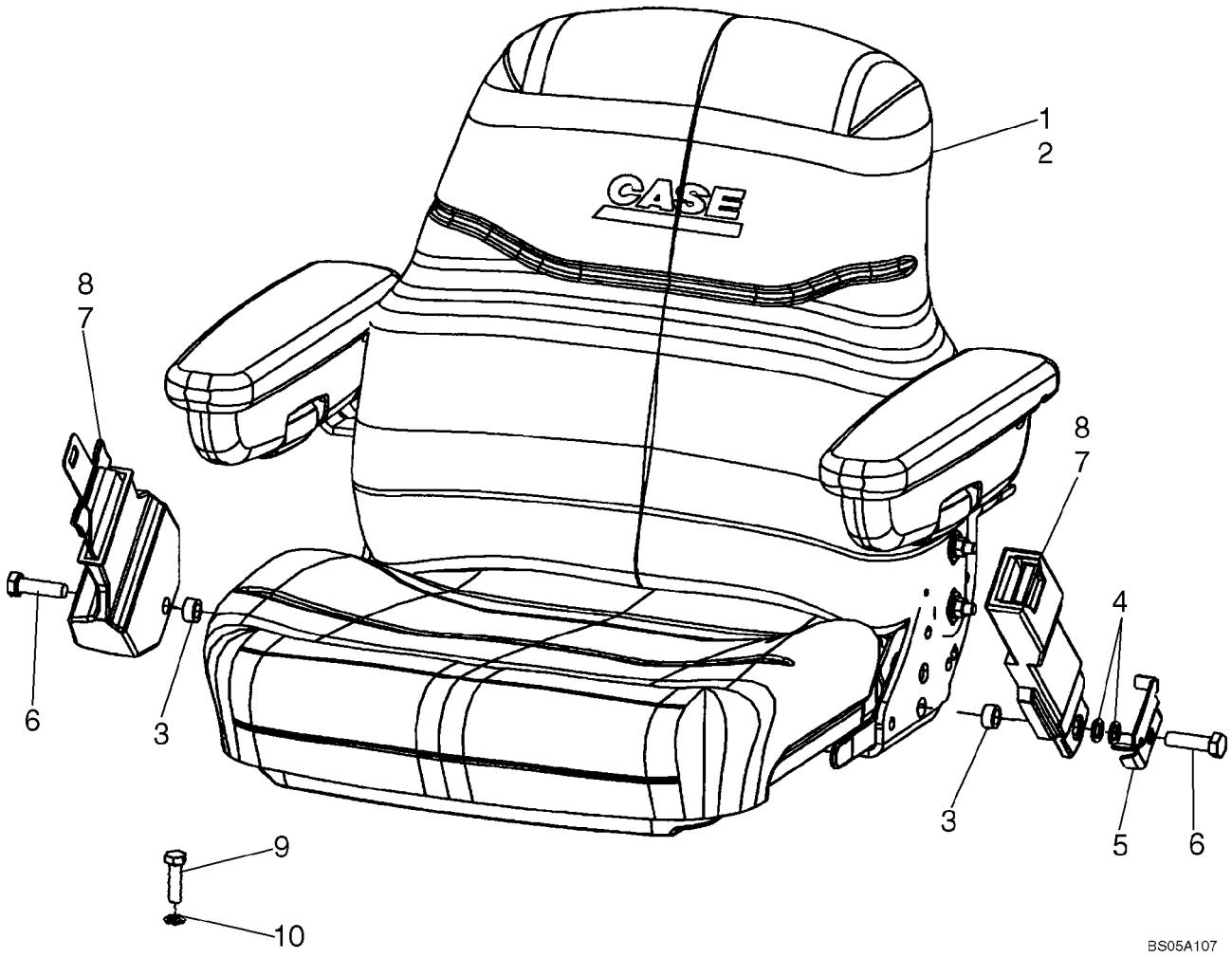

SIEGE - SUPPORT (SEARS SUSPENSION M£CANIQUE)

REF	FN	PART NUMBER	YR/SN	QTY	DESCRIPTION
1		87399492		1	SIEGE (ASSEMBLE), Mechanical Suspension, Sears, Vinyl, With Armrests; This Seat is Located 19 mm (3/4 in) Farther Forward From Center of Pedestal; See Figure 09-48
2		87399491		1	SIEGE (ASSEMBLE), Mechanical Suspension, Sears, Cloth, With Armrests; This Seat is Located 19 mm (3/4 in) Farther Forward From Center of Pedestal; See Figure 09-48
3		87311572		2	ENTRETOISE
4		895-18012		2	RONDELLE, M12 x 20 x 2, Left-Hand Side
5		87310149		1	PATTE FIXATION, Belt Mounting
6		614-12040		2	BOULON, Hex, M12 x 40, 8.8, Full Thd
7		87408888		1	CEINTURE DE S£CURIT£, 76 mm (3 in), Retractable, If Used
8		87408889		1	CEINTURE DE S£CURIT£, 51 mm (2 in), If Used
9		604-12030		4	BOULON, Hex, Lock, M10 x 30, Cl 8.8, Seat Pedestal to Floor
10		896-15012		4	RONDELLE, M12 x 28.5 x 4, HT

09-48		p1	01/08

SIêGE, SUSPENSION M£CANIQUE (SEARS)

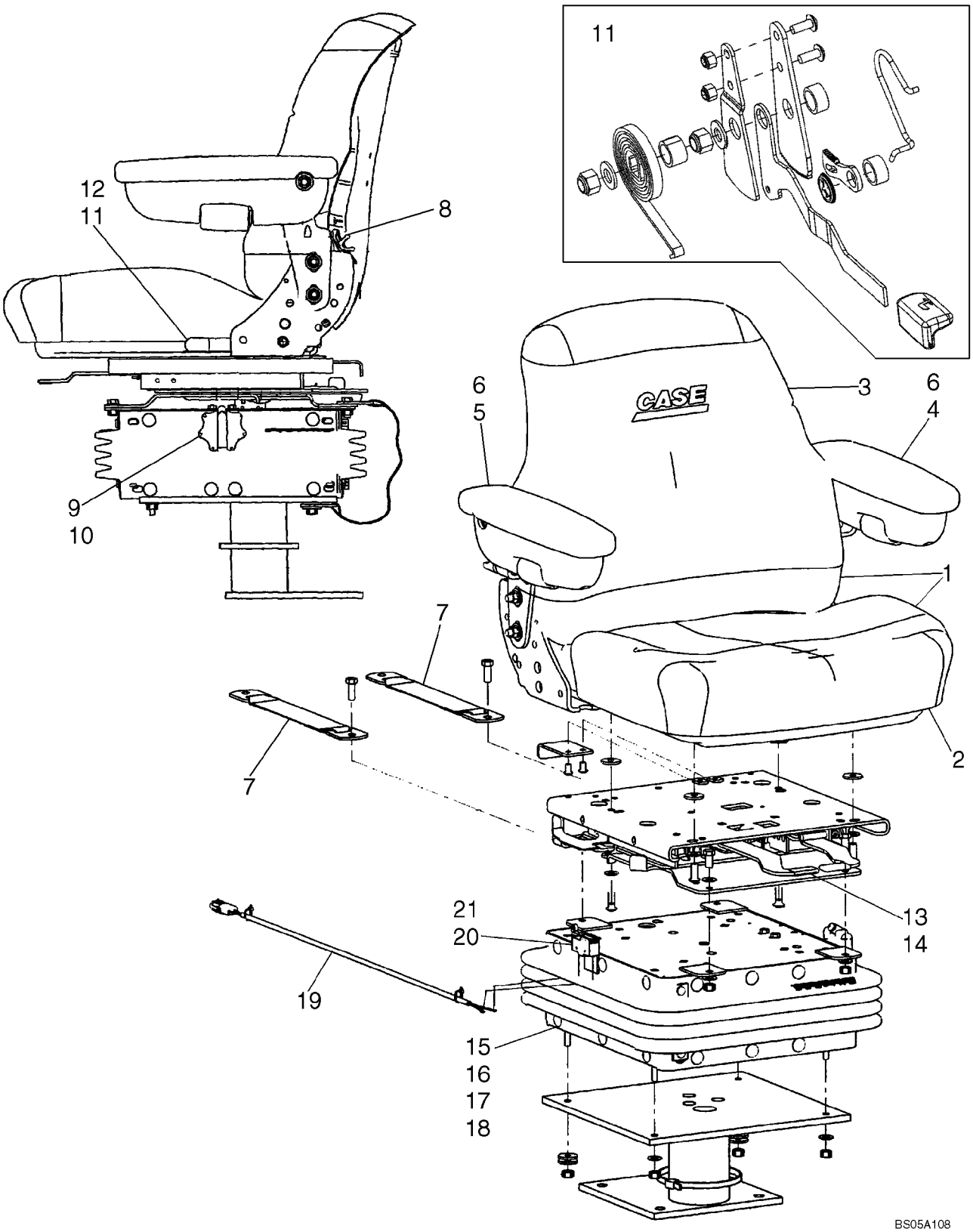

SIÇGE, SUSPENSION M£CANIQUE (SEARS)

REF	FN	PART NUMBER	YR/SN	QTY	DESCRIPTION
		87399492		1	SIEGE (ASSEMBLE), Vinyl, Mechanical Suspension, Sears; This Seat is Located 19 mm (3/4 in) Farther Forward From Center of Pedestal; Incl. Ref 1 - 21; Also Includes 87555125 Pedestal Assy; Replaces 87454295 Seat Assy, Which Included 87349995 Pedestal
		87399491		1	SIEGE (ASSEMBLE), Cloth, Mechanical Suspension, Sears; This Seat is Located 19 mm (3/4 in) Farther Forward From Center of Pedestal; Incl. Ref 1 - 21; Also Includes 87555125 Pedestal Assy; Replaces 87454294 Seat Assy, Which Included 87349995 Pedestal
		87555125		1	SIEGE, ACCESSOIRES, Pedestal Assembly
1		87308118		1	SIEGE, COMPOSANTS, Seat Top Assy, Vinyl; Includes Back and Seat Cushions
1		87308157		1	SIEGE, COMPOSANTS, Seat Top Assy, Cloth; Includes Back and Seat Cushions
2		87308119		1	COUSSIN DE SIEGE, Vinyl
2		87308158		1	COUSSIN DE SIEGE, Cloth
3		87308127		1	SIEGE, COMPOSANTS, Vinyl
3		87308159		1	SIEGE, COMPOSANTS, Cloth
4		87308153		1	BRAS (ASSEMBLE), Left-Hand
5		87308152		1	BRAS (ASSEMBLE), Right-Hand
6		87308154		2	SIEGE, ACCESSOIRES, Kit, Arm Pad; Includes (1) Arm Pad, (1) Screw
7		87308128		1	SIEGE, ACCESSOIRES, Kit, Tether Belt; Includes (2) Tether Belts, (2) Bolts, (4) Washers, (2) Lock Nuts
8		87037462		1	DISP.DE REGLAGE DOSSIER, Lumbar Knob Kit; Includes Knob, 1/8 x 5/8 Roll Pin
		87308130		1	DISP.DE REGLAGE DOSSIER, Kit, Lumbar; Includes (2) Screws, (2) Rivets, (1) Back Support, (1) Lumbar Shaft Yoke
9		123969A1		1	BOUTON, Kit, Height/Weight Adjustment; Includes (1) Knob, (1) Shaft, (1) 5/32 x 1 in Roll Pin
10		38-11016		1	CHEVILLE, 5/32" x 1", Slotted

09-48		p2	01/08

SIÊGE, SUSPENSION M£CANIQUE (SEARS)

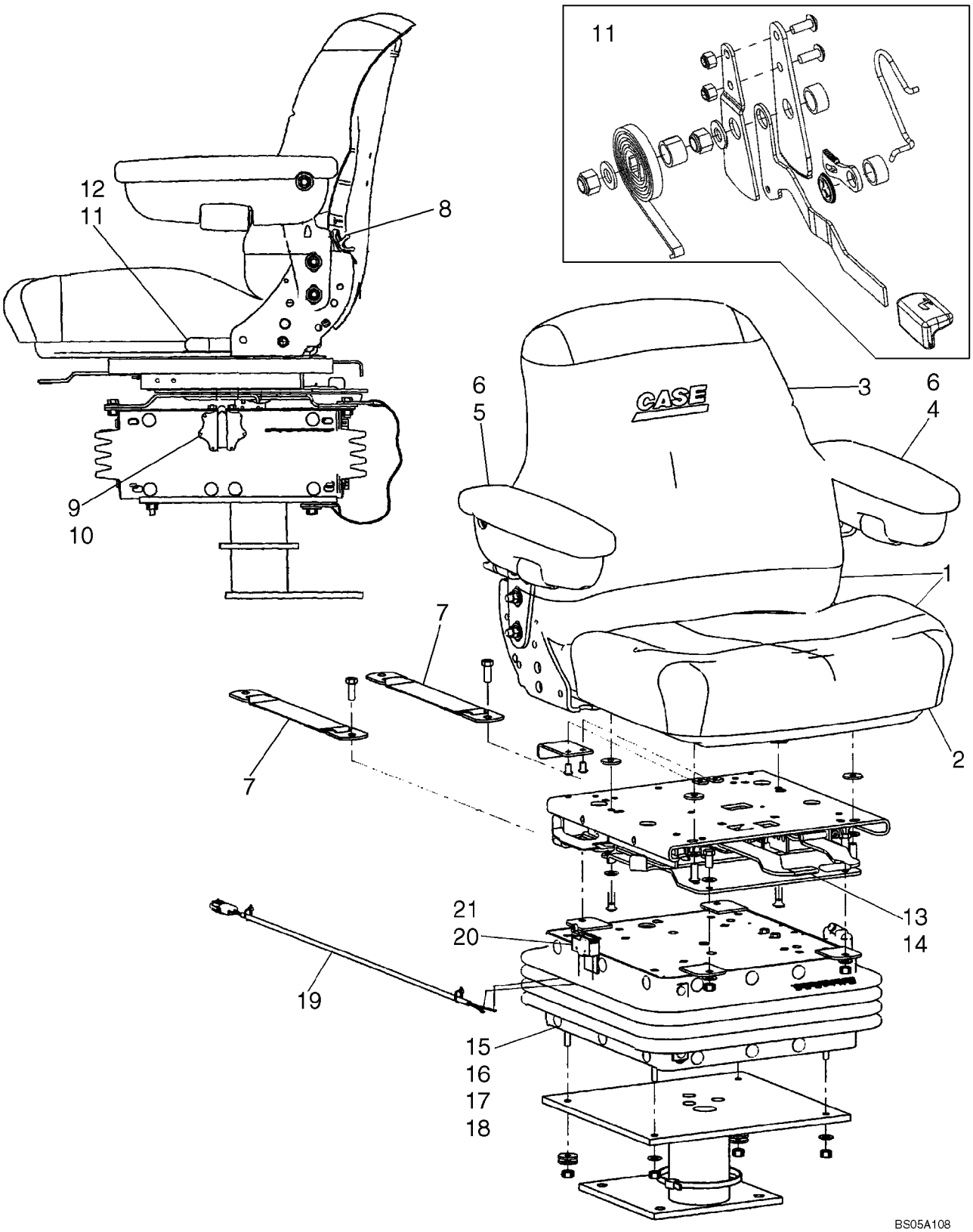

SIÊGE, SUSPENSION MÉCANIQUE (SEARS)

REF	FN	PART NUMBER	YR/SN	QTY	DESCRIPTION
		130674A1		1	JEU, Kit, Weight Adjustment; Includes (1) Thrust Washer, (2) Shaft and Gear
		87308145		1	RONDELLE DE BUTÉE, 2 OD x .6 in ID
11		86994165		1	SIEGE, ACCESSOIRES, Recliner Kit; Includes (2) Brackets, (3) Spacers, (2) Springs, Knob, Latch, Lever, (2) Bolts, (2) Washers, (5) Nuts
12		87416475		1	POMMEAU, Recliner Cap
		87308143		1	SUPPORT DE SIÊGE, Upper Housing, Boxed
		1977725C1		1	REGLETTE, Kit, Bearing, Slider Block; Includes (4) Tube Bearings, (1) Ride Indicator, (1) A45512 Slider Block, (1) A45515 Slider Block, (1) A45516 Slider Block, (1) NSS Slider Block
13		87308131		1	SIEGE, ACCESSOIRES, Swivel Assembly
14		87308132		1	ROULEMENT, Kit, Swivel Bearing; Includes (1) Bolt, (8) Ball Bearings, (1) Clip, (1) Nut, (1) Cotter Pin, (1) Plastic Washer, (1) Ball Retainer
15		87308141		1	SUPPORT DE SIÊGE, Kit, Suspension Assembly, Boxed
16		87308144		1	SUPPORT DE SIÊGE, Suspension Arm, Boxed
17		87308146		1	SIEGE, ACCESSOIRES, Kit, Spring, Suspension
18		87308147		1	SIEGE, ACCESSOIRES, Kit, Boot, Suspension, Boxed; Includes (1) Boot, (26) Buttons
		87308148		1	SIEGE, ACCESSOIRES, Kit, Shock Absorber, Boxed; Includes (1) Shock Absorber, (2) Bushings
		51200906		1	PATTE FIXATION, Shaft, Suspension
		112884A1		2	ARBRE, Bearing Shaft Weldment, Boxed
		A45504		1	RONDELLE, Spring, Square, With Weldnut
		A45505		1	PIGNON, Large Gear and Shaft Weldment
		A45513		1	PIGNON, Gear and Shaft Weldment
		A45054		2	PARE-CHOCS, Rubber, Black
		87308142		1	SUPPORT DE SIÊGE, Lower Housing, Boxed
19		87308149		1	FAISCEAU COMPLET
20		87308150		1	CONTACTEUR, Seat

09-48		p3	01/08

SIêGE, SUSPENSION M£CANIQUE (SEARS)

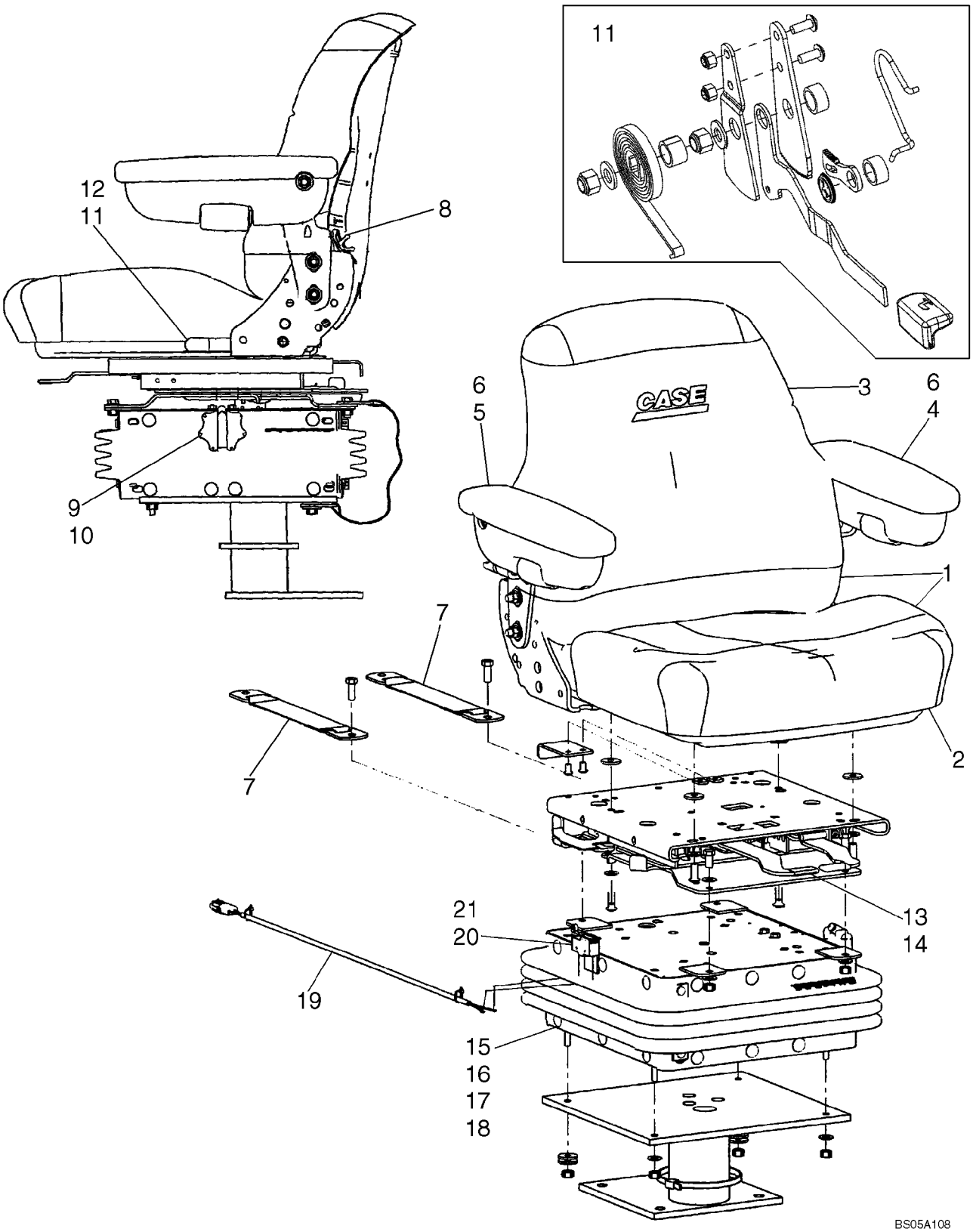

SIÇGE, SUSPENSION M£CANIQUE (SEARS)

REF	FN	PART NUMBER	YR/SN	QTY	DESCRIPTION
21		87308151		1	SIEGE, ACCESSOIRES, Kit, Switch and Actuator Lever; Includes Switch, Actuator, (4) Screws, (2) Lock Washers, (2) Nuts

SIEGE - SUPPORT (SUSPENSION PNEUMATIQUE)

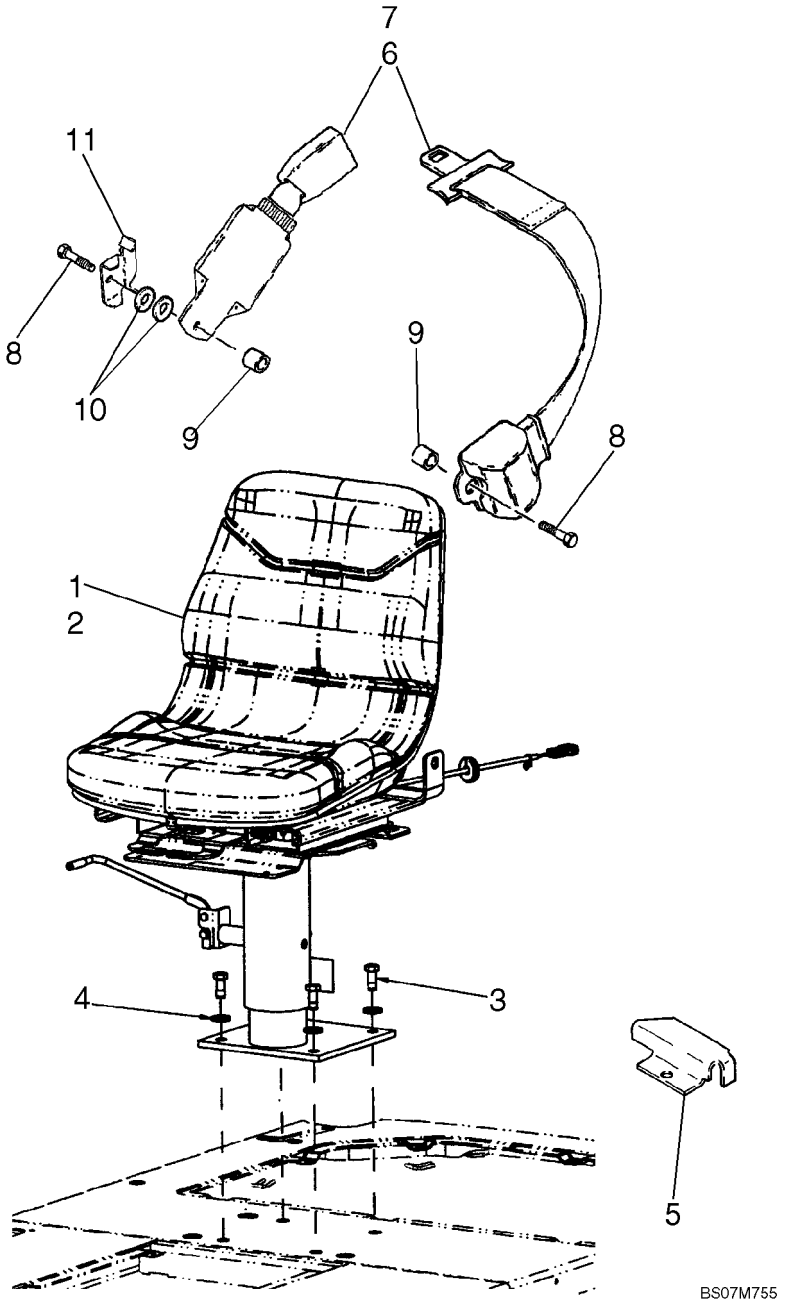

SIEGE - SUPPORT (SUSPENSION PNEUMATIQUE)

REF	FN	PART NUMBER	YR/SN	QTY	DESCRIPTION
1		87578905		1	SIÊGE, Air Suspension, Vinyl; Component Parts Not Available At Time Of Printing
2		87578904		1	SIÊGE, Air Suspension, Cloth; Component Parts Not Available At Time Of Printing; Not Illustrated
3		604-12030		4	BOULON, Hex, Lock, M10 x 30, Cl 8.8
4		896-15012		4	RONDELLE, M12 x 28.5 x 4, HT
5		186351A1		1	GARANT, Harness
6		87408889		1	CEINTURE DE S£CURIT£, 51 mm (2 in), If Used; Suspension Seat Belt Mounting
7		87408888		1	CEINTURE DE S£CURIT£, 76 mm (3 in), Retractable, If Used; Suspension Seat Belt Mounting
8		614-12040		2	BOULON, Hex, M12 x 40, 8.8, Full Thd
9		87311572		2	ENTRETOISE
10		895-18012		2	RONDELLE, M12 x 20 x 2
11		87310149		1	PATTE FIXATION

09-53		p1	12/07

CABINE - FENETRE, RETROVISEUR ET OUVERTURE

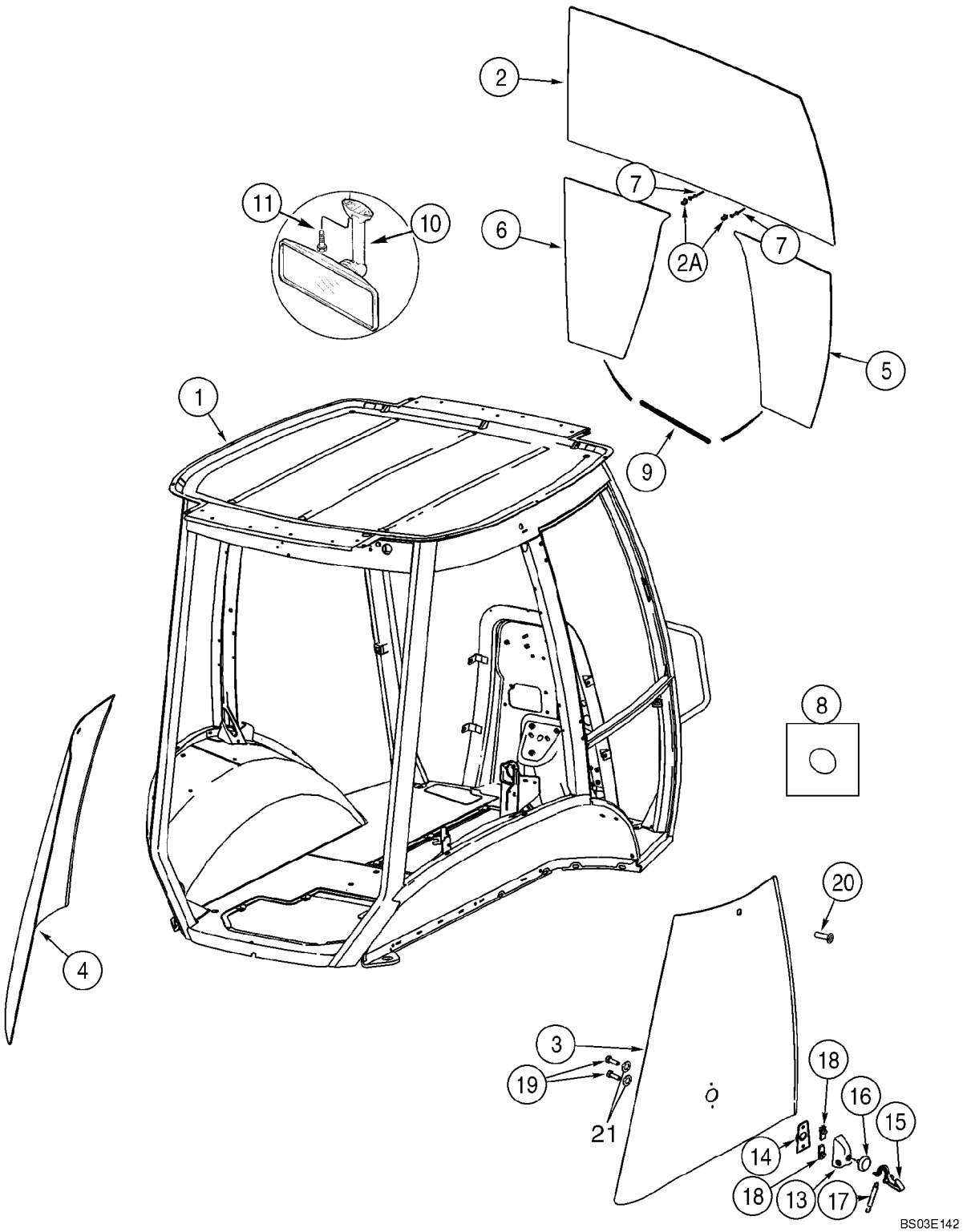

CABINE - FENETRE, RETROVISEUR ET OUVERTURE

REF	FN	PART NUMBER	YR/SN	QTY	DESCRIPTION
1		87636560		1	CABINE, Single Door; Includes Frame, Left-Hand Door, All Glass, Front and Rear Wipers and Exterior Lamps; Order From Machinery Price List
1		87636562		1	CABINE, Two Door; Includes Frame, Left-Hand Door, All Glass, Front and Rear Wipers and Exterior Lamps; Order From Machinery Price List
2		448607A1		1	PARE-BRISE
2A		279482A1		2	ATTACHE ASSEMBLEE, Windshield
3		338425A1		1	FENETRE, Right Rear Quarter Panel
4		338424A1		1	FENETRE, Left Rear Quarter Panel
5		448609A1		1	PARE-BRISE, Lower Right-Hand
6		448608A1		1	PARE-BRISE, Lower Left-Hand
7		151-516		2	RIVET, Pop, 1/8" x .775"
8		391827A1		36	ENTRETOISE
9		395793A1		2	PROFIL PROTECTEUR
10		87406924		1	R£TROVISEUR, Interior
11		286-56520		2	VIS, Cross Fil Hd, #10-24 x 1 1/4"
13		405740A1		2	COUVERCLE
14		405739A1		2	CORPS
15		405738A1		2	LEVIER, Hold Open
16		400573A1		2	PASSE-FIL
17		405741A1		2	RESSORT H£LICOċDAL, Latch Back
18		405742A1		4	ECROU, M8
19		400572A1		4	BOULON, M8; Nylon
20		400571A2		2	PARE-CHOCS
21		431801A1		4	RONDELLE, Black Nylon

09-54		p1	12/07

CABINE - CHASSIS ET COUVERCLES

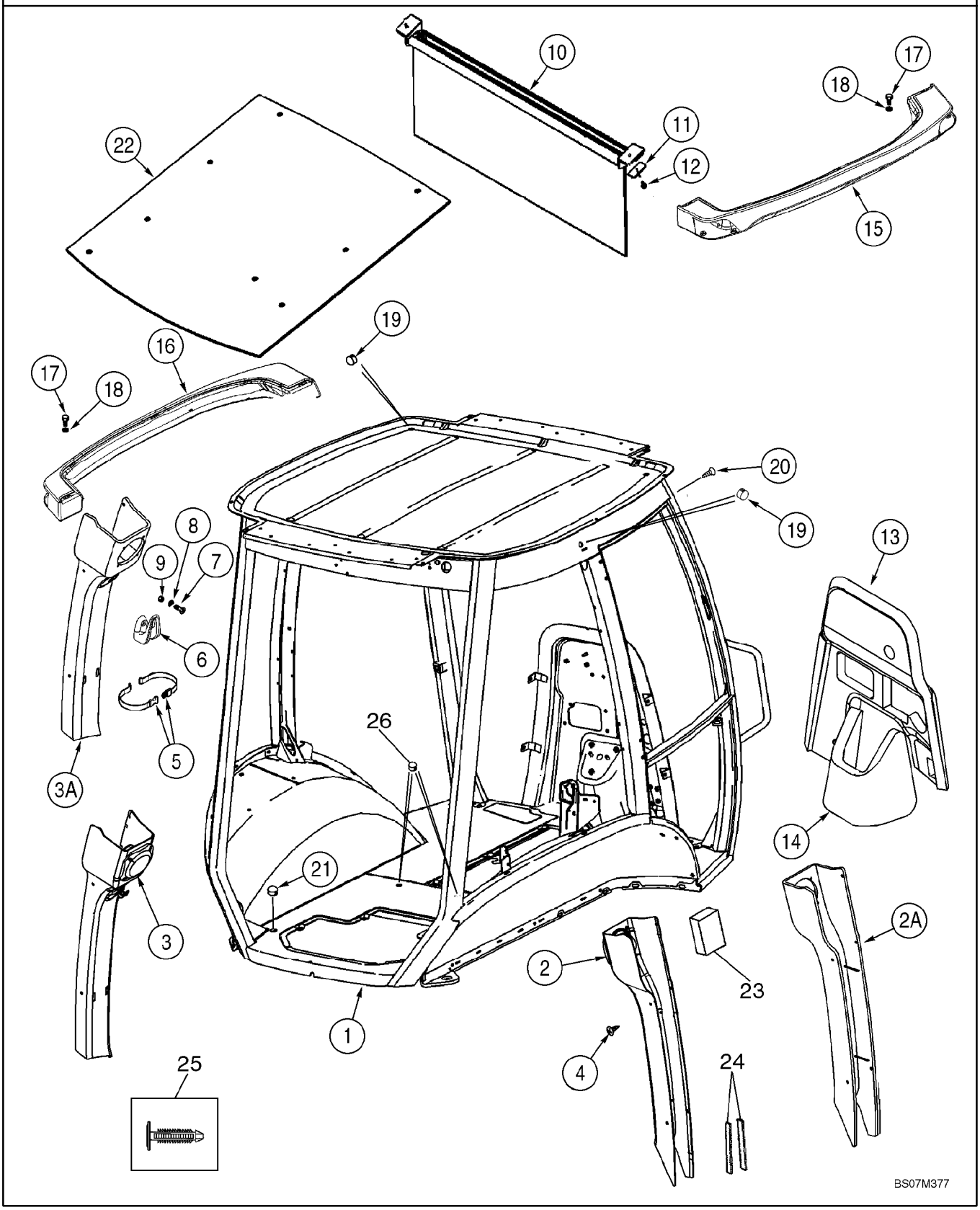

CABINE - CHASSIS ET COUVERCLES

REF	FN	PART NUMBER	YR/SN	QTY	DESCRIPTION
1		87636561		1	CABINE-CHASSIS, Single Door
1		87636563		1	CABINE-CHASSIS, Two Door
2		87657149		1	COUVERCLE, Plastic; Right-Hand Post; Standard Interior
2A		379425A3		1	COUVERCLE, Vinyl; Right-Hand Post; Deluxe Interior
3		87657148		1	COUVERCLE, Plastic; Left-Hand Post; Standard Interior
3A		379424A2		1	COUVERCLE, Vinyl; Left-Hand Post; Deluxe Interior
4		401949A1		10	ATTACHE
5		378227A1		1	SANGLE, Garment
6		114549A1		1	PORTE-MANTEAU
7		87310147		2	VIS, M4 x 16, Stainless Steel
8		895-11004		2	RONDELLE, M4
9		832-10404		2	CONTRE-ECROU, M4 x .7, Cl 8
10		364180A1		1	PARE-SOLEIL
11		409618A1		2	PLAQUE, 1/4 in Mounting Hole
12		396516A1		3	POINTEAU, No. 10 x 1; With Washer; Phillips
13		87704851		1	RECOUVREMENT, Firewall, Upper
14		87440283		1	RECOUVREMENT, Firewall, Lower
15		360247A3		1	FEU (ASSEMBLE), Right-Hand
16		360246A3		1	FEU (ASSEMBLE), Left-Hand
17		394863A1		10	VIS, M6 x 20
18		395387A1		10	RONDELLE, 6.4 ID; Nylon
19		395388A1		3	BOUCHON
		353-415		1	BOUCHON, Dome, 1.500" hole, Nylon, Cab Roof; Models Without Radio Antenna
		353-410		1	BOUCHON, Dome, .875" hole, Nylon, Upper Windshield Frame; Models Without Radio Antenna
		353-407		1	BOUCHON, Dome, .687" hole, Nylon, Rear Filter Plate On Models Without Windshield Washer
		353-425		2	BOUCHON, 7/16 in dia
		353-421		1	BOUCHON, Dome, .187" hole, Nylon
		353-405		1	BOUCHON, Dome, .562" hole, Nylon
		353-408		1	BOUCHON, Dome, .750" hole, Nylon

09-54		p2	12/07

CABINE - CHASSIS ET COUVERCLES

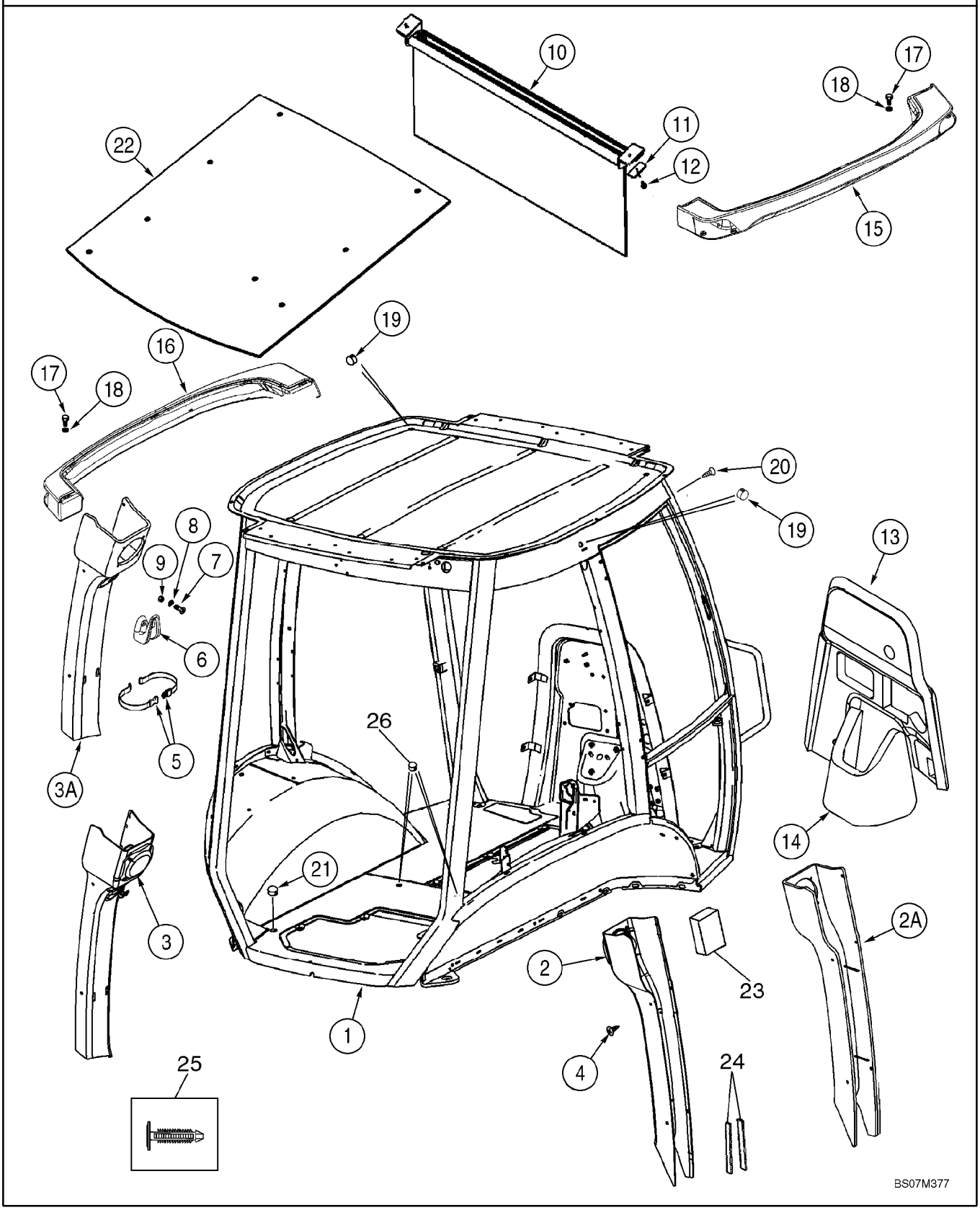

CABINE - CHASSIS ET COUVERCLES

REF	FN	PART NUMBER	YR/SN	QTY	DESCRIPTION
20		402610A1		8	ATTACHE, Cab Frame; Models Without Exterior Mirrors
21		382298A1		2	BOUCHON
22		368809A1		1	ISOLANT, Insulation
23		412285A1		1	RUBAN, Foam; Adhesive Back; B-Post
24		414939A1		2	BANDE D'ETANCHEITE, Adhesive Back; B Post
25		411399A1		1	ATTACHE, For 1/4 in dia Hole; Christmas Tree Clip
26		D140267		2	BOUCHON, 1-3/16 Hole Size; Brake Bleeder

09-55		p1	12/07

CABINE - PORTES

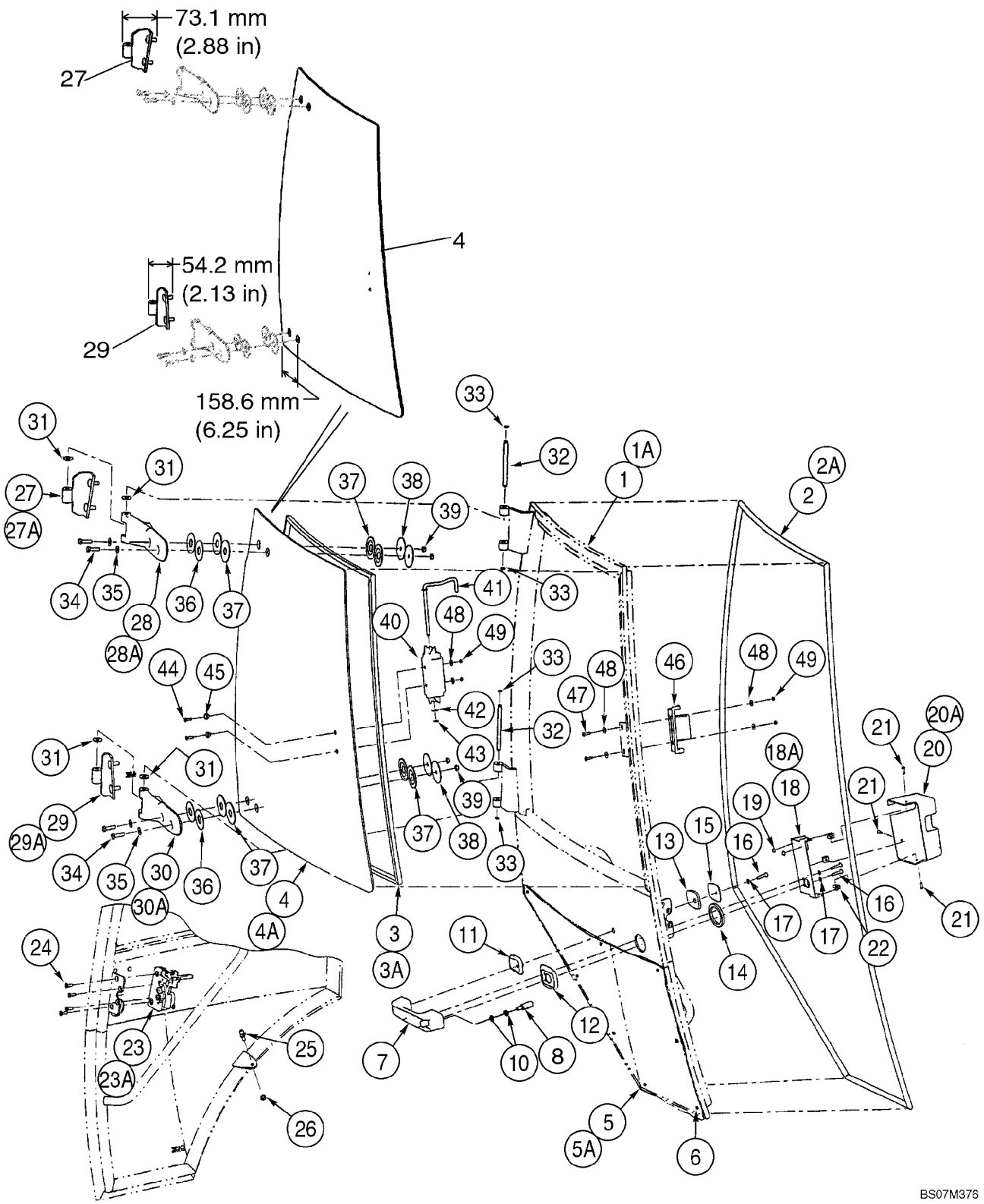

CABINE - PORTES

REF	FN	PART NUMBER	YR/SN	QTY	DESCRIPTION
		REF			NOTICE, Left-Hand and Right-Hand Cab Doors; Left-Hand Door Not Illustrated
		87439726		1	PORTE CABINE, DROITE, Right-Hand Door; Incl. Ref 1 - 49, Except Where Noted For Left-Hand Door
		341743A3		1	PORTE CABINE, GAUCHE, Left-Hand Door; Incl. Ref 1A - 49, Except Where Noted For Right-Hand Door
1		87439728		1	BATI (ASSEMBLE), Right-Hand Door
1A		87443691		1	BATI (ASSEMBLE), Left-Hand Door
2		394707A1		1	PROFILE CAOUTCHOUC, Right-Hand Door
2A		390838A1		1	PROFILE CAOUTCHOUC, Left-Hand Door
3		394708A1		1	JOINT-DE-GLACE, Upper; Right-Hand Door
3A		391850A1		1	JOINT-DE-GLACE, Upper; Left-Hand Door
		87448199		1	FENETRE (ASSEMBLEE), SERVICE KIT, Right-Hand Door Window and Hinges; Includes Ref 4, 27, 29, Plus Instructions
4		87439725		1	VITRE, Upper; Right-Hand Door
4A		338429A1		1	VITRE, Upper; Left-Hand Door
5		338427A1		1	VITRE DE CABINE, Lower; Right-Hand Door
5A		338426A1		1	VITRE DE CABINE, Lower; Left-Hand Door
6		391827A1		4	ENTRETOISE, 4 Per Door; Cut Bumpers In Half For 8 Locations
7		60-7083T1		1	POIGN£E, Outer
8		442718A1		1	BOUTON, Release
10		895-11006		1	RONDELLE, M6
11		315276A1		1	ENCADREMENT, Small
12		315273A1		1	ENCADREMENT, Large
13		391847A1		1	JOINT, Small
14		391838A1		1	JOINT, Large
15		391848A1		1	PLAQUE DORSALE
16		393203A1		3	VIS
17		393202A1		3	RONDELLE, 6 mm
18		394704A1		1	PATTE FIXATION, Cover Mounting; Right-Hand Door
18A		391841A1		1	PATTE FIXATION, Cover Mounting; Left-Hand Door
19		391827A1		2	ENTRETOISE

CABINE - PORTES

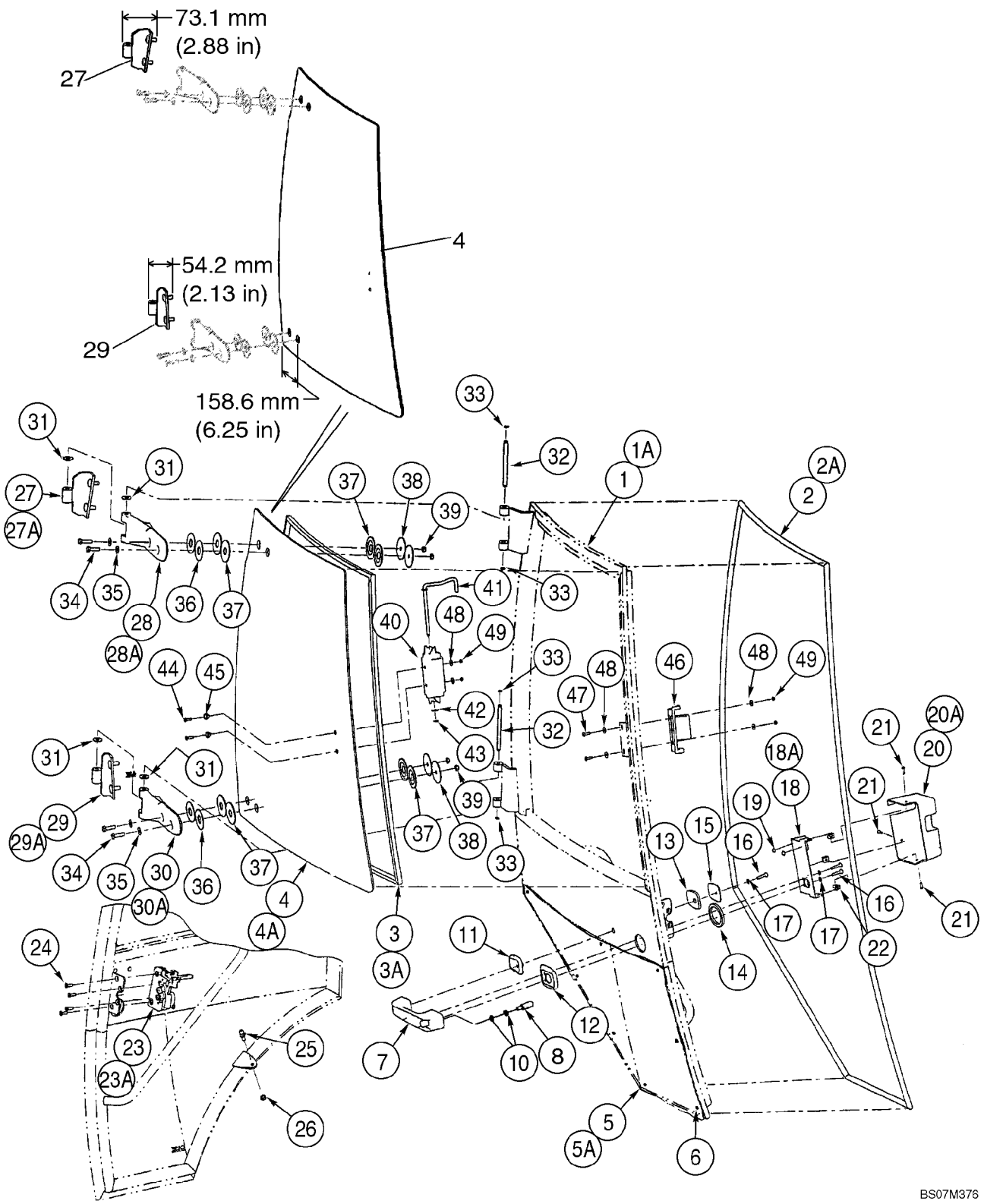

CABINE - PORTES

REF	FN	PART NUMBER	YR/SN	QTY	DESCRIPTION
20		394705A1		1	COUVERCLE, Latch; Right-Hand Door
20A		391842A1		1	COUVERCLE, Latch; Left-Hand Door
21		390-100		3	VIS, Cross Pan Hd, #10-32 x 5/8"
22		393209A1		3	DOUILLE DE CENTRAGE
23		382777A1		1	LOQUET, Right-Hand Door
23A		382775A1		1	LOQUET, Left-Hand Door
24		569-4		4	VIS, Hex Soc Flat Hd, M6 x 20, 8.8
25		3234063R1		1	ROTULE, M10
26		832-10410		1	CONTRE-ECROU, M10 x 1.5, Cl 8
27		87439722		1	CHARNIERE, Upper; Right-Hand Door
27A		390840A1		1	CHARNIERE, Upper; Left-Hand Door
28		364134A2		1	CHARNIERE, Plastic; Upper; Right-Hand Door
28A		364132A2		1	CHARNIERE, Plastic; Upper; Left-Hand Door
29		87439723		1	CHARNIERE, Lower; Right-Hand Door
29A		390841A1		1	CHARNIERE, Lower; Left-Hand Door
30		364135A2		1	CHARNIERE, Plastic; Lower; Right-Hand Door
30A		364133A2		1	CHARNIERE, Plastic; Lower; Left-Hand Door
31		391845A1		4	RONDELLE, Nylon
32		391843A1		2	AXE
33		442773A1		4	CIRCLIP
34		514-633		4	BOULON, Hex, M8 x 30, 8.8, Full Thd
35		895-30107		4	RONDELLE, M8 x 20 x 2
36		376334A1		4	RONDELLE, 55 mm OD; Yellow
37		376336A1		8	RONDELLE ELASTIQUE
38		376332A1		4	RONDELLE, 60 mm OD; Black
39		832-10508		4	CONTRE-ECROU, M8 x 1.25, Cl 8
40		87344860		1	POIGN£E, Slam Latch
41		87534372		1	TRINGLE
42		906086R1		1	RONDELLE, M8.4 ID x 16 OD x 1.6 Thk
43		100-39001		1	JONC D'ARRET, #X31, Ext, E-Type
44		140-104		2	VIS, Cross Pan Hd, #8-32 x 3/4"
45		F64198		2	ENTRETOISE, Nylon
46		87344859		1	LOQUET, Slam Latch
47		142-103		2	VIS, Cross Oval Hd, #10-24 x 3/4"
48		195-81023		6	RONDELLE, #12

CABINE - PORTES

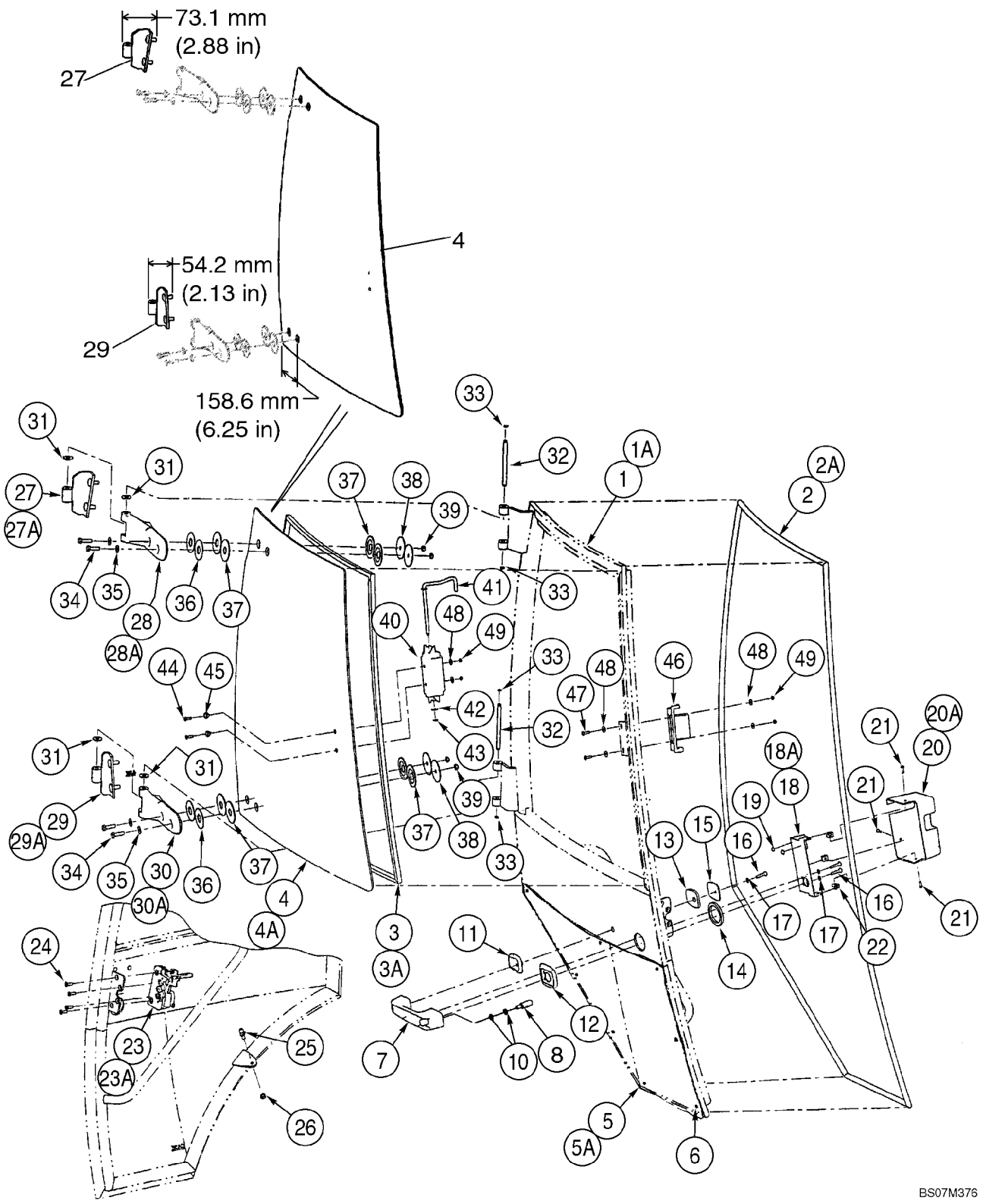

CABINE - PORTES

REF	FN	PART NUMBER	YR/SN	QTY	DESCRIPTION
49		F45165		4	ECROU-DE-SECURITE, No. 10

09-56		p1	12/07

CABINE - MONTAGE DE PORTIêRE

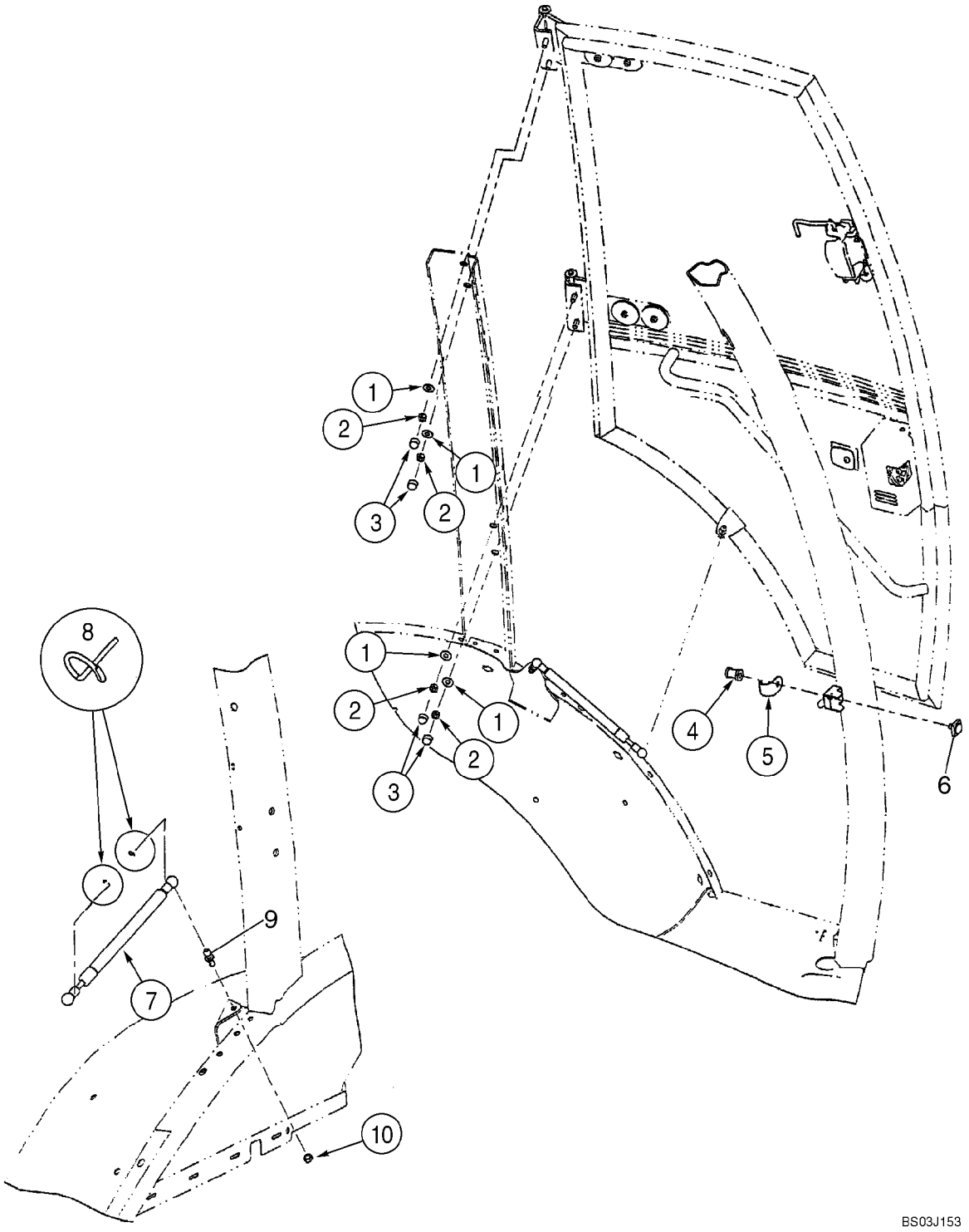

CABINE - MONTAGE DE PORTIêRE

REF	FN	PART NUMBER	YR/SN	QTY	DESCRIPTION
		REF			NOTICE, Left-Hand and Right-Hand Cab Doors; Left-Hand Cab Door Shown
1		397064A1		4-8	RONDELLE SP£CIALE, 3/8 x 7/8 x 1/16 thk
2		232-1446		4-8	CONTRE-ECROU, 3/8"-16, GC
3		396841A1		4-8	CHAPEAU
4		87411108		1-2	BOULON SPECIAL, Striker
5		393211A1		1-2	GARANT
6		442842A1		1-2	BLOC (ASSEMBLE), Striker
7		394800A1		1-2	RESSORT, Gas Spring
8		3233348R1		2-4	CLIP
9		432431A1		1-2	GOUJON, Ball
10		832-10408		1-2	CONTRE-ECROU, M8 x 1.25, Cl 8

09-57		p1	12/07

CABINE - FENĆTRE DROITE, POUR CADRES DE CABINE ë UNE SEULE PORTIĉRE

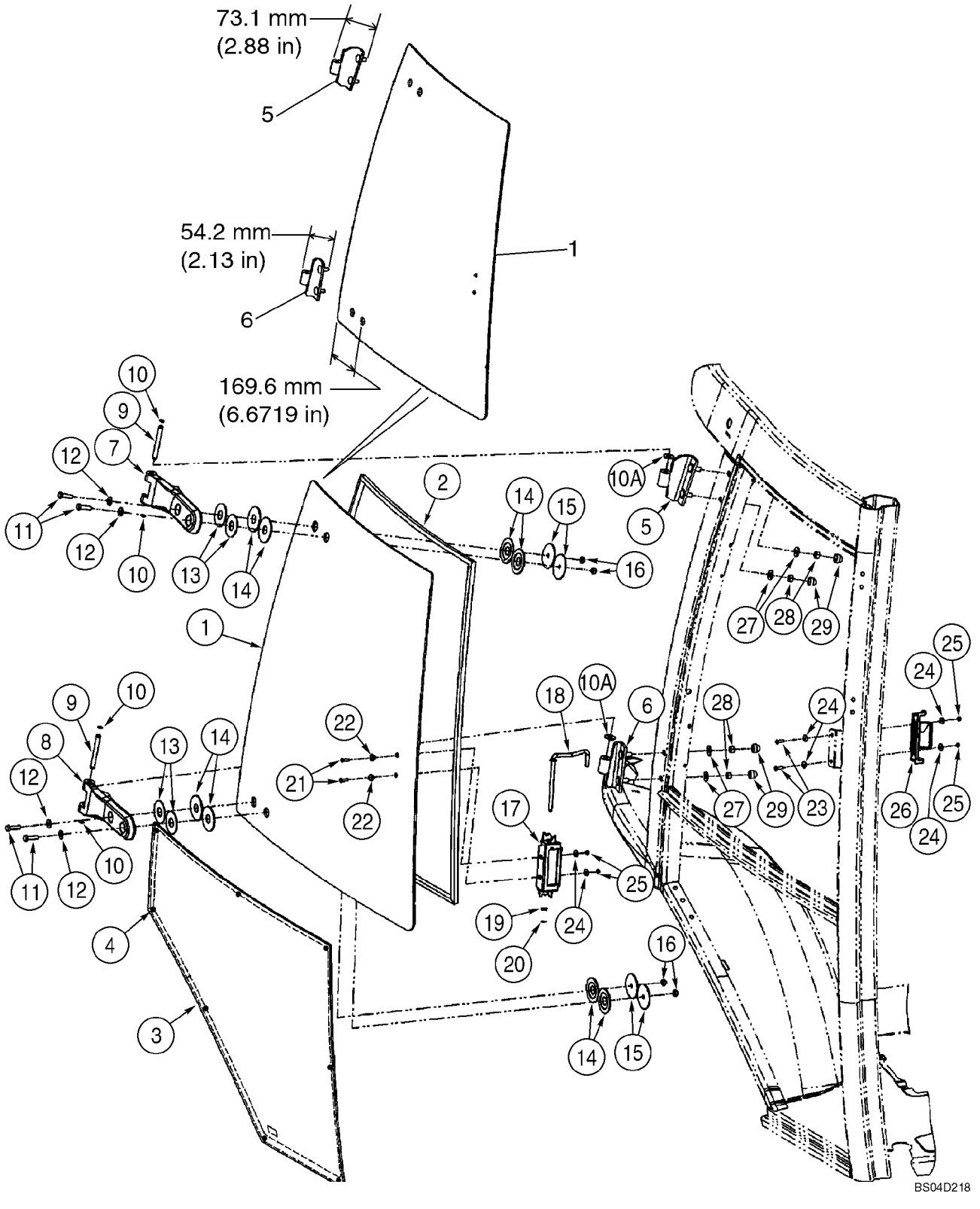

CABINE - FENĆTRE DROITE, POUR CADRES DE CABINE ë UNE SEULE PORTIćRE

REF	FN	PART NUMBER	YR/SN	QTY	DESCRIPTION
		{}		1	87442204 Window Assy; Right-Hand; Incl. Ref 1 - 29; Not Available As An Assembly, Order Components
		87448198		1	FENETRE (ASSEMBLEE), SERVICE KIT, Right-Hand Window and Hinges; Incl. Ref 1, 5, 6, Plus Instructions
1		87439724		1	VITRE DE CABINE, Upper
2		394864A1		1	JOINT-DE-GLACE
3		338428A1		1	FENETRE (ASSEMBLEE), Lower
4		391827A1		4	ENTRETOISE, Cut Bumpers In Half For 8 Locations
5		87439722		1	CHARNIERE, Upper
6		87439723		1	CHARNIERE, Lower
7		364134A2		1	CHARNIERE, Plastic; Upper
8		364135A2		1	CHARNIERE, Plastic; Lower
9		394865A1		2	AXE
10		393330A1		4	ANNEAU
10A		391845A1		4	RONDELLE, Nylon
11		514-633		4	BOULON, Hex, M8 x 30, 8.8, Full Thd
12		895-30107		4	RONDELLE, M8 x 20 x 2
13		376334A1		4	RONDELLE, 55 mm OD; Yellow
14		376336A1		8	RONDELLE ELASTIQUE, Rubber
15		376332A1		4	RONDELLE, 60 mm OD; Black
16		832-10508		4	CONTRE-ECROU, M8 x 1.25, Cl 8
17		87344860		1	POIGN£E, Slam Latch
18		87534372		1	TRINGLE
19		906086R1		1	RONDELLE, M8.4 ID x 16 OD x 1.6 Thk
20		100-39001		1	JONC D'ARRET, #X31, Ext, E-Type
21		140-104		2	VIS, Cross Pan Hd, #8-32 x 3/4"
22		F64198		2	ENTRETOISE, Nylon
23		142-103		2	VIS, Cross Oval Hd, #10-24 x 3/4"
24		195-81023		6	RONDELLE, #12
25		F45165		4	ECROU-DE-SECURITE, No. 10
26		87344859		1	LOQUET, Slam
27		397064A1		4	RONDELLE SP£CIALE, 3/8 x 7/8 x 1/16 thk
28		232-1446		4	CONTRE-ECROU, 3/8"-16, GC
29		396841A1		4	CHAPEAU

09-58		p1	01/08

CABINE - VITRE, ARRIÈRE

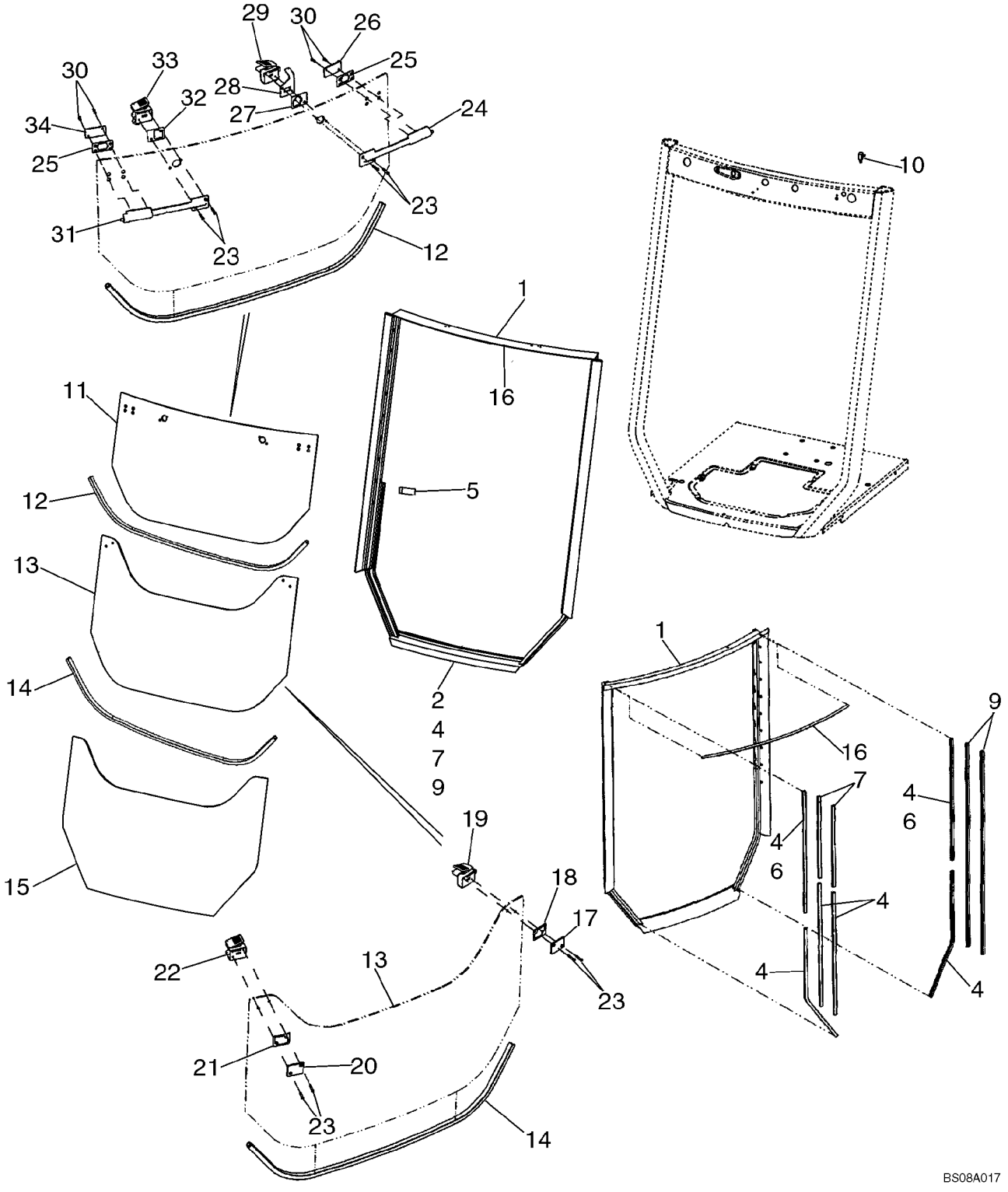

CABINE - VITRE, ARRIêRE

REF	FN	PART NUMBER	YR/SN	QTY	DESCRIPTION
		411850A1		1	POCHETTE, Frame and Seal; Incl. 1, 4, 7, 9, 16
1		87435929		1	BATI (ASSEMBLE), Included in 411850A1 Frame and Seal Kit
2		410867A1		1	JOINT, Rubber Seal; Bulb Type
		411851A1		1	POCHETTE, Seal; Incl. 4, 7, 9, 16
4		404228A1		6	JOINT, 760 mm (29-15/16 in), Flocked Channel Seals; Cut From 402852A1; Included in 411851A1 Seal Kit and 411850A1 Frame and Seal Kit
5		400200A1		2	PROFILE CAOUTCHOUC, Stop
6		404226A1		2	JOINT, 787 mm (31 in), Flocked Channel Seals; Cut From 402852A1
7		404229A1		2	JOINT, 508 mm (20 in), Flocked Channel Seals; Cut From 402852A1; Included In 411851A1 Seal Kit and 411850A1 Frame and Seal Kit
9		404227A1		2	JOINT, 1270 mm (50 in), Flocked Channel Seals; Cut From 402852A1; Included in 411851A1 Seal Kit and 411850A1 Frame and Seal Kit
10		A187714		1	CONTACTEUR, Rear Wiper Cutout
11		352208A1		1	VITRE DE CABINE, Upper
12		395348A1		1	BANDE, ENJOLIVEUR, 1210 mm (47-21/32 in), Lower Glass Edge; Cut From 404426A1
		87434783		1	FENETRE (ASSEMBLEE), Center; Includes Ref 13, 19, 22, 23; Plus (1) 87426969 Backing Plate and (4) Backing Plates and (4) Grommets Which Are Not Serviced Separately; Includes Instructions
13		352209A1		1	VITRE DE CABINE, Center
14		395348A1		1	BANDE, ENJOLIVEUR, 1210 mm (47-21/32 in), Lower Glass Edge; Cut From 404426A1
15		352210A1		1	VITRE DE CABINE, Lower
16		400494A1		1	JOINT, 1095 mm (43-1/8 in), Hollow Seal; Cut From 404231A1; Included in 411851A1 Seal Kit and 411850A1 Frame and Seal Kit
17		411917A1		1	PLAQUE DORSALE, Kit; Includes 1 Each 402849A1 Plate, 411942A1 Gasket Pad
18		402847A1		1	PLAQUE PLASTIQUE, Bushing

09-58		p2	01/08

CABINE - VITRE, ARRIÈRE

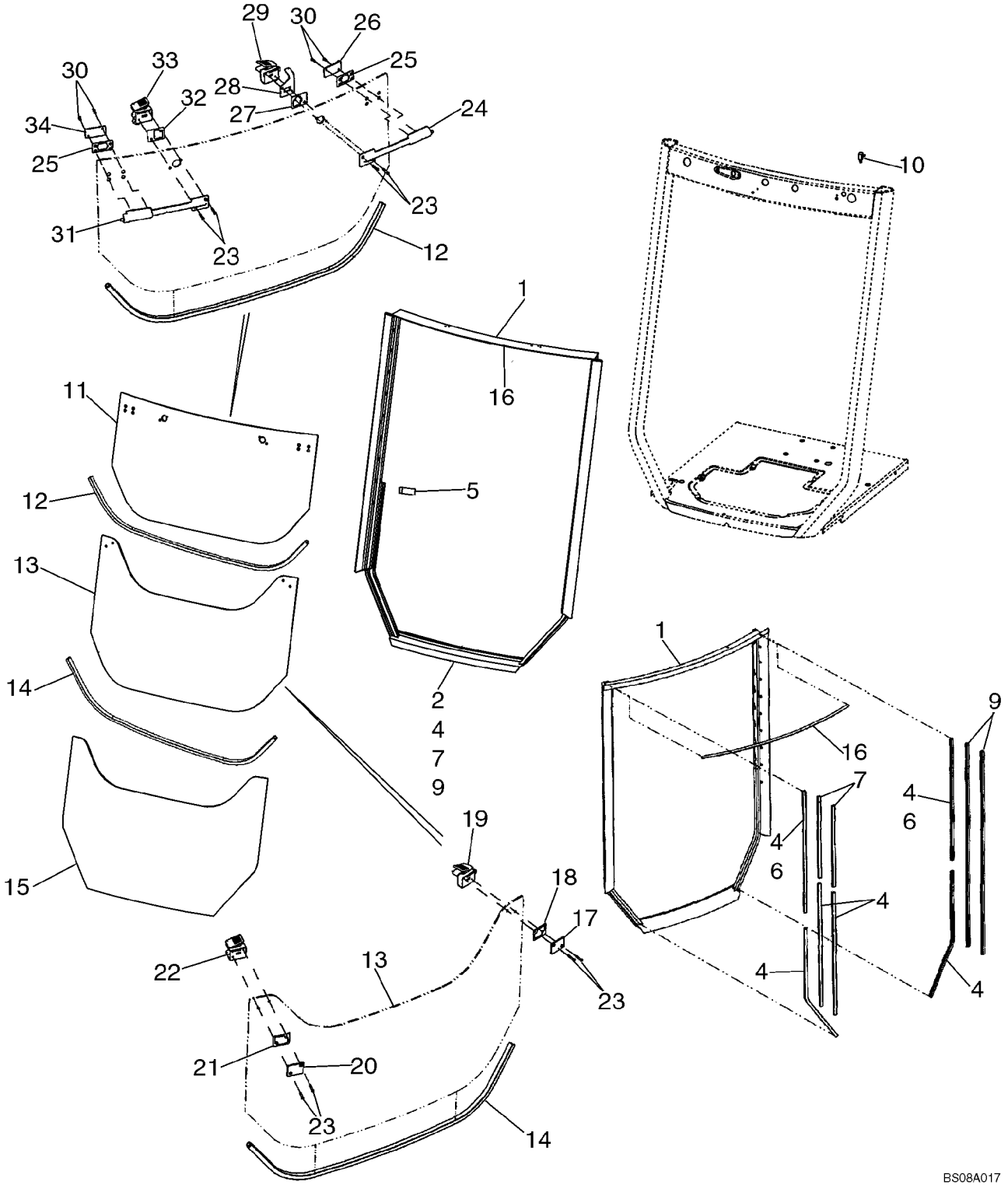

CABINE - VITRE, ARRIêRE

REF	FN	PART NUMBER	YR/SN	QTY	DESCRIPTION
19		411909A1		1	LOQUET, Kit, Includes 1 Each 402868A1 Cover, 402867A1 Lever, 402833A1 Plunger, 402831A1 Housing, 402830A1 Bushing, 402870A1 Spring, 402869A1 Rivet, 402865A1 Bumper
20		411916A1		1	PLAQUE DORSALE, Kit; Includes 1 Each 402848A1 Plate, 411942A1 Gasket Pad
21		402846A1		1	PLAQUE PLASTIQUE, Bushing
22		411908A1		1	LOQUET, Kit, Includes 1 Each 402871A1 Cover, 402872A1 Lever, 402873A1 Plunger, 402832A1 Housing, 402830A1 Bushing, 402870A1 Spring, 402869A1 Rivet, 402865A1 Bumper
23		87435453		8	VIS, Flat Head Socket, M5 x 25
24		411910A1		1	LOQUET, Kit, Bolt Assy; Includes 1 Each 402860A1 Housing, 402840A1 Gasket, 402837A1 Bolt, 402861A1 Insert, 402838A1 Rod, 402856A1 Spring
25		402843A1		2	PLAQUE PLASTIQUE
26		87423503		1	PLAQUE DORSALE, Backing Plate
27		402844A1		1	PLAQUE PLASTIQUE
28		402836A1		1	PATTE FIXATION, Rear Wiper Cutout Switch
29		411914A1		1	LOQUET, Kit, Includes 1 Each 402831A1 Housing, 402866A1 Bumper, 402830A1 Bushing, 402833A1 Plunger, 402867A1 Lever, 402868A1 Cover
30		87445051		4	VIS, Flat Head Socket, M5 x 16
31		411911A1		1	LOQUET, Kit, Bolt Assy; Includes 1 Each 402863A1 Housing, 402851A1 Gasket, 402856A1 Spring, 402841A1 Bolt, 402861A1 Insert, 402838A1 Rod
32		402845A1		1	PLAQUE PLASTIQUE
33		411912A1		1	LOQUET, Kit, Includes 1 Each 402832A1 Housing, 402866A1 Bumper, 402830A1 Bushing, 402873A1 Plunger, 402872A1 Lever, 402871A1 Cover
34		87423502		1	PLAQUE DORSALE, Backing Plate

09-59		p1	02/08

CABINE - LAVE-GLACE

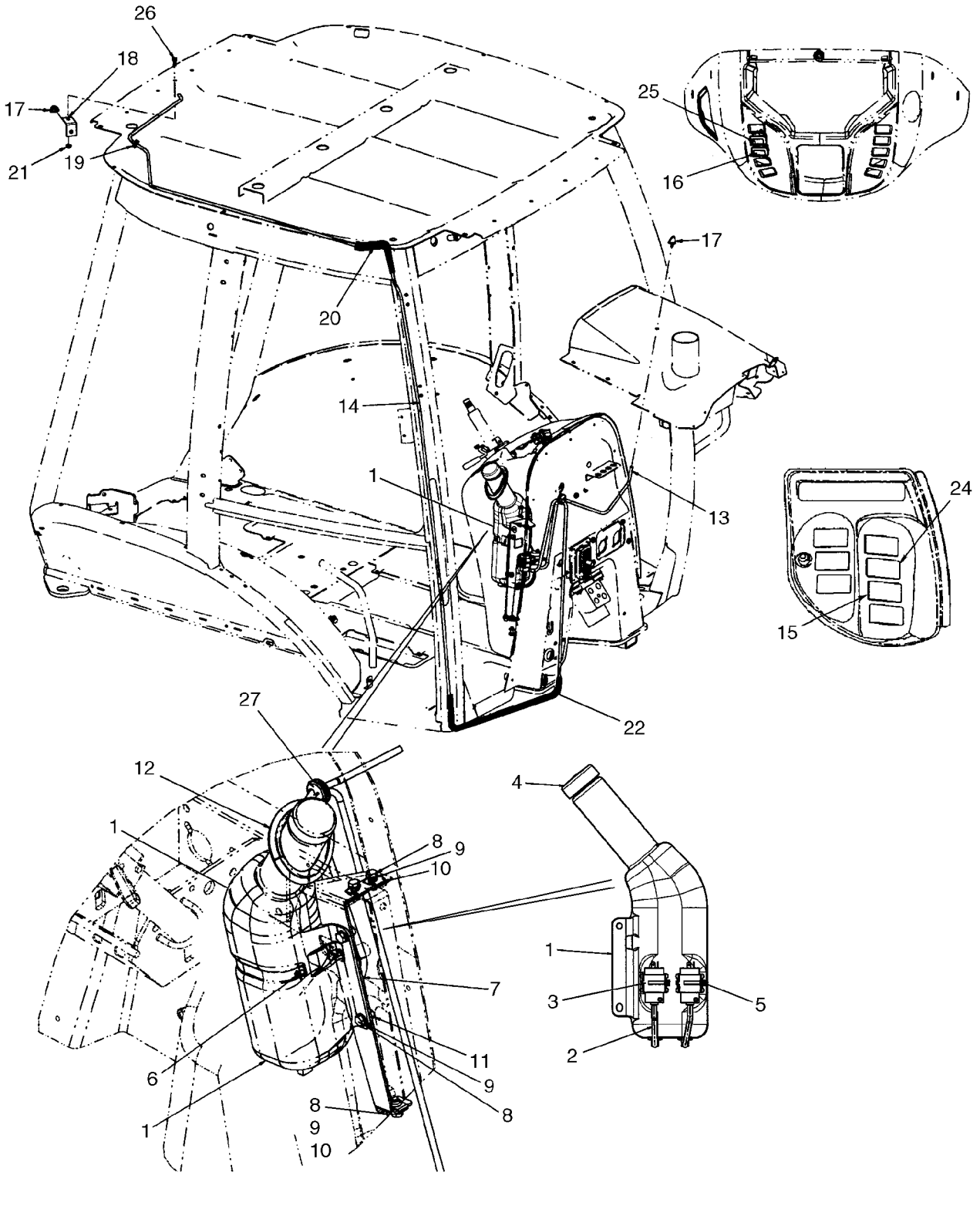

CABINE - LAVE-GLACE

REF	FN	PART NUMBER	YR/SN	QTY	DESCRIPTION
1		87675208		1	RESERVOIR DE LAVE-GLACE, RESERVOIR; Window Washing Fluid
2		87700794		2	FLEXIBLE AU METRE, Washer Bottle
3		86507198		2	POMPE-PETITE, Window Washer
4		87711985		1	BOUCHON DE REMPL., Cap; Washer Bottle
5		L11541		2	SERRE-CABLE
6		214-3180		1	BRIDE, FLEXIBLE, 4.25/5.125 HD Worm
7		87676276		2	EQUERRE
8		614-8020		5	BOULON, Hex, M8 x 20, 8.8
9		895-11008		5	RONDELLE, M8 x 16 x 1.6
10		833-40408		3	ECROU, M8, U
11		832-10408		2	CONTRE-ECROU, M8 x 1.25, Cl 8
12		87694565		1	BANDE D'ETANCHEITE, 268 mm (10-1/2 in); Cut To Length From 87438002
13		87699640		1	FLEXIBLE AU METRE, Front Washer; 700 mm, Cut From 87282056
14		87741446		1	FLEXIBLE, Hose, Rear Washer; 5500 mm; Cut From 1968141CX
15		386788A1		1	CONTACTEUR, Rocker; Rear Washer
16		386787A1		1	CONTACTEUR, Rocker; Front Washer
17		E43769		2	VAPORISATEUR, Nozzle, Windshield Spray
18		386720A1		1	PATTE FIXATION, Washer Nozzle, Rear
19		87442441		1	PASSE-FIL, Washer Hose, Rear
20		408965A1		1	GARANT, 550 mm, Rear Washer Hose, Cut From 397155A2
21		825-2408		1	ECROU, M8 x 1.25, Flg, Cl 8
22		87741447		1	PROTECTEUR DE TUYAU, Guard; 1800 mm, Front Washer Hose, Cut From 397155A2
24		386786A1		1	CONTACTEUR, Rocker; Windshield Wiper, Rear
25		386785A1		1	CONTACTEUR, Rocker; Windshield Wiper, Front
26		614-8020		1	BOULON, Hex, M8 x 20, 8.8
27		87637384		1	PASSE-FIL, Washer Hose

09-60		p1	12/07

CABINE - ESSUIE-GLACE

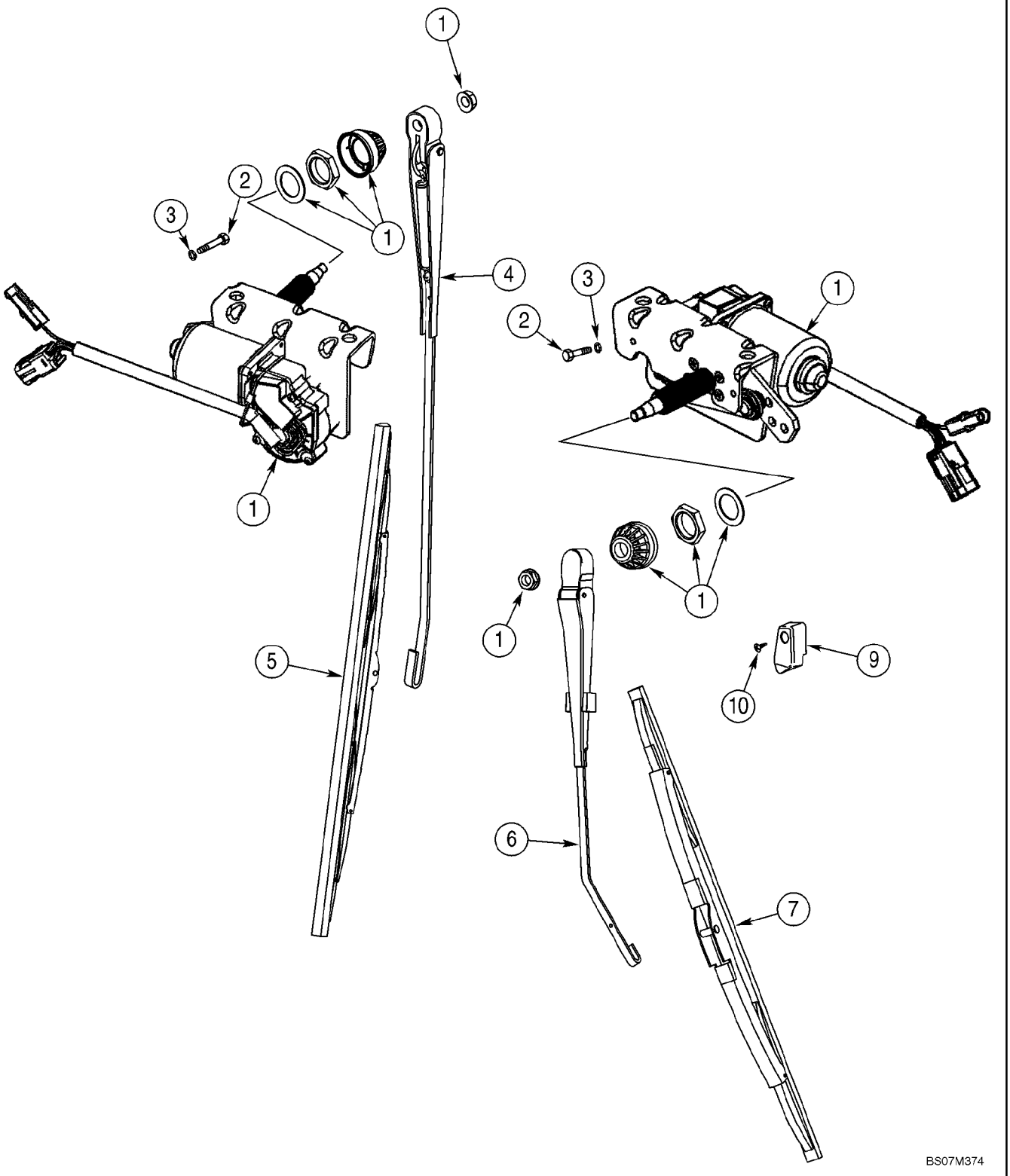

CABINE - ESSUIE-GLACE

REF	FN	PART NUMBER	YR/SN	QTY	DESCRIPTION
1		87669381		2	MOTEUR D'ESSUIE-GLACE, 12V
		404617A1		1	FAISCEAU, Front Lamps and Wiper
		396018A3		1	FAISCEAU, Cab, B-Post, Rear Wiper, Radio, Blower, Dome Lamp
		386786A1		1	CONTACTEUR, Rear Wiper
		386785A1		1	CONTACTEUR, Front Wiper
		A187714		1	CONTACTEUR, Rear Wiper Cutout Switch
		495-11047		2	RONDELLE, 7/16", SAE
		425-147		1	ECROU, Jam, 7/16"-14, G5
2		814-6050		4	BOULON, Hex, M6 x 50, 8.8
3		892-11006		4	RONDELLE FREIN, M6
4		87669391		1	BRAS D'ESSUIE-GLACE, Front Wiper
5		87669761		1	BALAI D'ESSUIE-GLACE, Front Wiper
6		87669712		1	BRAS D'ESSUIE-GLACE, Rear Wiper
7		87669401		1	BALAI D'ESSUIE-GLACE, Rear Wiper
9		395026A1		1	RAMPE, Block
10		395389A1		1	VIS, M6

09-61		p1	12/07

GARNITURE DE LA CABINE - FILTRE, DEFLECTEUR, PLAFONNIER

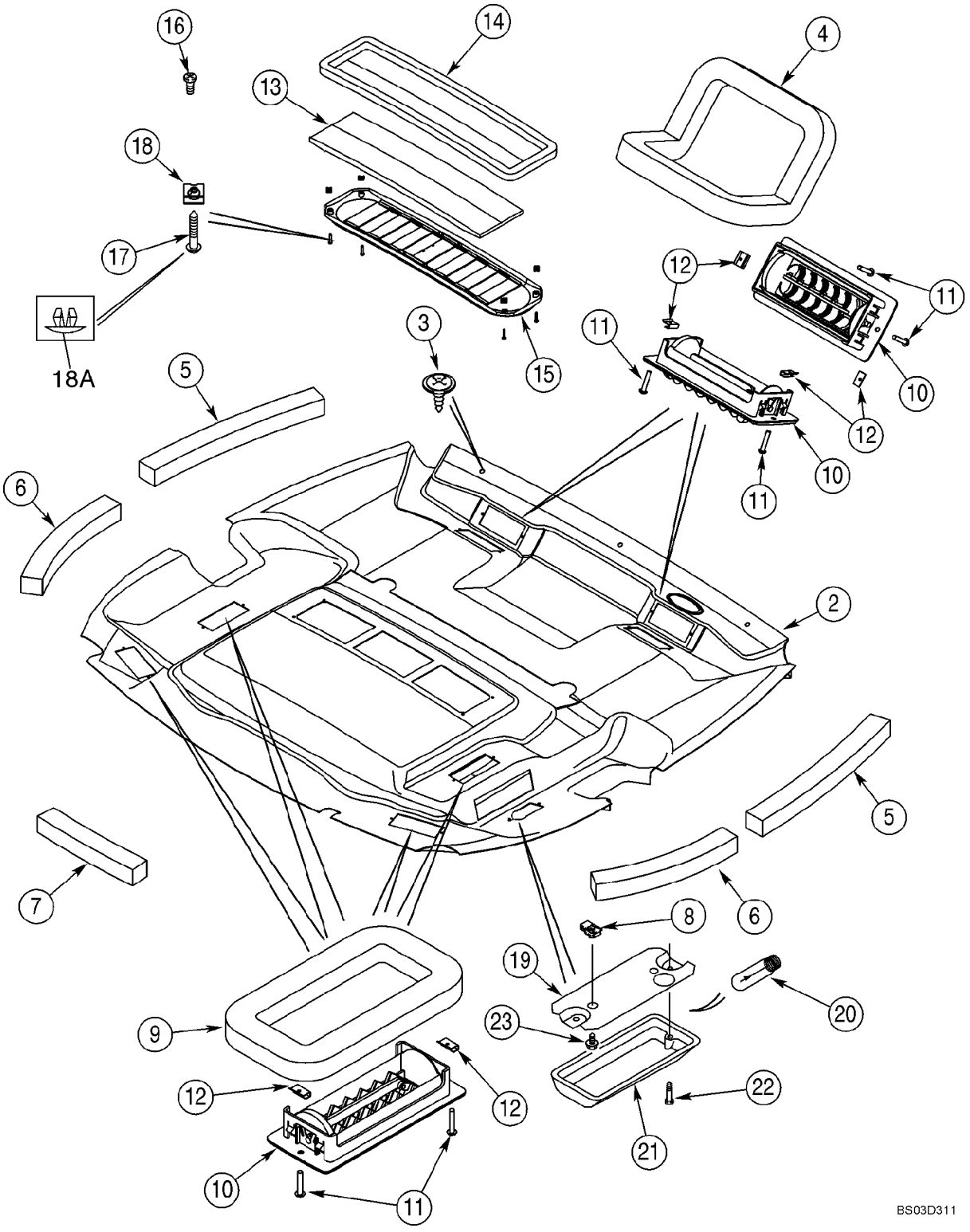

GARNITURE DE LA CABINE - FILTRE, DEFLECTEUR, PLAFONNIER

REF	FN	PART NUMBER	YR/SN	QTY	DESCRIPTION
		{87653246}		1	HEADLINER ASSY, Standard Interior; Incl. Ref 1, 4 - 18A
		360272A6		1	HABILLEMENT DE TOIT, HEADLINER ASSY, Deluxe Interior; Incl. Ref 2, 4 - 18A
1		87653245		1	TUBE ISOLANT, Shell; Standard Interior; Not Illustrated
2		381696A5		1	HABILLEMENT DE TOIT, Shell With Foam and Fabric Covering; Deluxe Interior
3		396516A1		3	POINTEAU
4		368813A2		2	JOINT, Defrost
5		379160A1		2	JOINT, 494 mm; Foam; Adhesive Back; Front
6		379161A1		2	JOINT, 379 mm; Foam; Adhesive Back; Rear
7		379209A1		1	JOINT, 303 mm; Foam; Adhesive Back, Center, Rear
8		131-861		2	ECROU, Tinn, U, #10-24, Dome Lamp
9		377194A1		4	JOINT, Heat and Air
10		363883A1		8	GRILLE (ASSEMBLEE)
11		140-103		16	VIS, Cross Pan Hd, #6-32 x 3/4"
12		125749A1		16	ECROU, J-Type, No. 6
13		377594A5		1	FILTRE, Air Recirculation
14		381972A1		1	JOINT
15		369450A1		1	CALANDRE, Air Recirculation; Incl. Ref 16
16		260-1436		2	VIS AUTO-TARAUDEUSE, Cross Pan Hd, #6 x 3/8"
17		414600A1		4	VIS
18		177269A1		4	ECROU
18A		409723A1		4	BOUCHON, Plastic; Fits 5,5 mm Hole
		380719A2		1	ECLAIRAGE INTERIEUR, Dome Lamp; Incl. Ref 19 - 21
19		NSS		1	NON FOURNI SEPAREMENT, Base
20		N14466		1	AMPOULE
21		NSS		1	NON FOURNI SEPAREMENT, Lens; With Switch
22		440-1088		2	VIS, Cross Pan Hd, #8-32 x 1/2", Base To Lens
23		281-54512		2	VIS, Hex Wash Hd, #10-24 x 3/4", Lamp To Headliner

09-62		p1	12/07

CABINE - FILTRE A AIR

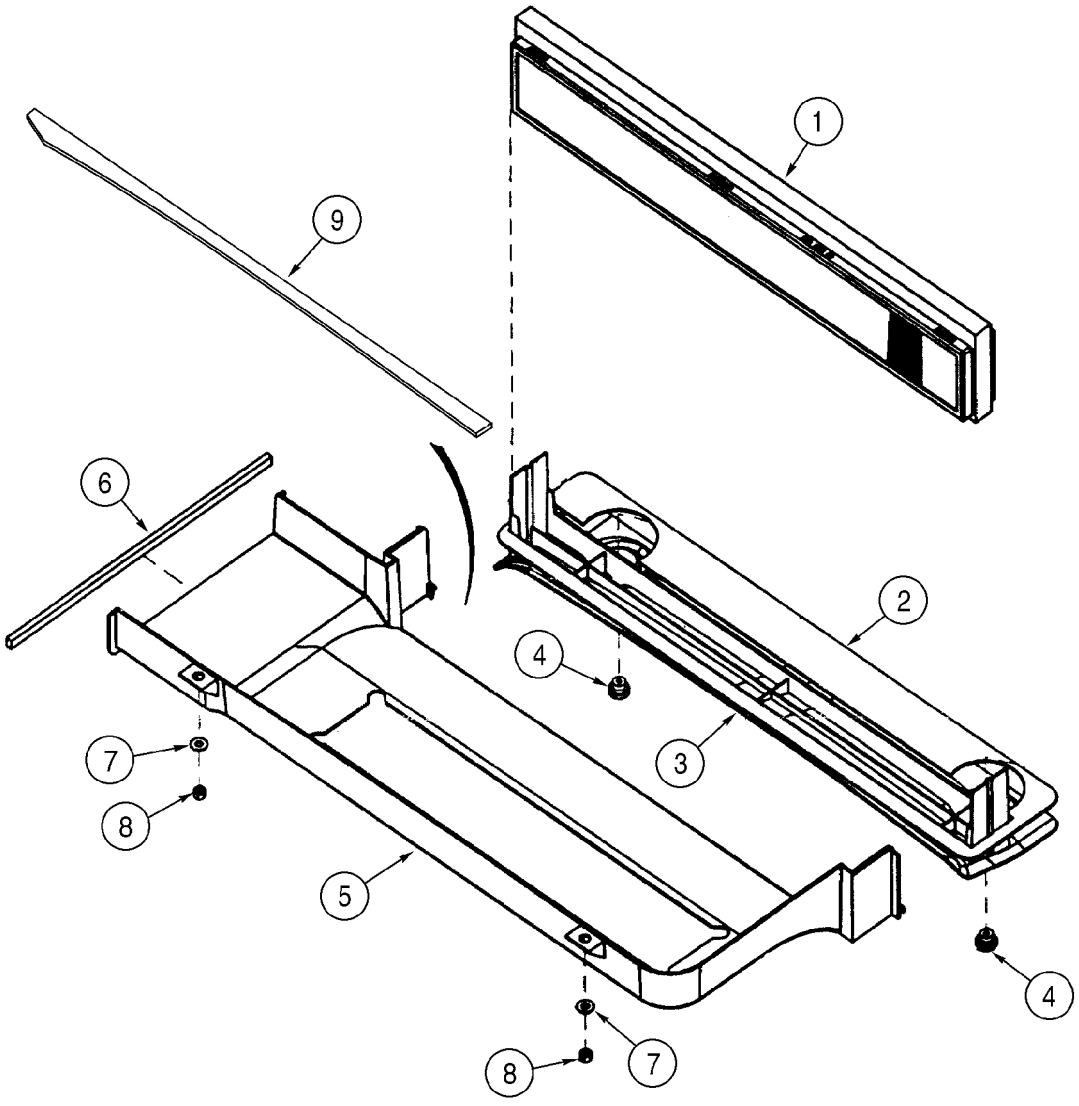

BS0F073

CABINE - FILTRE A AIR

REF	FN	PART NUMBER	YR/SN	QTY	DESCRIPTION
1		360260A2		1	EL£MENT FILTRANT, Includes Foam Seal
2		382770A2		1	JOINT
3		360261A1		1	PLATEAU
4		398738A1		2	PLAQUE, Fresh Air Duct Retainer
5		360252A2		1	CONDUIT, Fresh Air Intake
6		368990A1		1	JOINT
7		895-15008		2	RONDELLE, M8 x 20 x 1.6
8		832-10408		2	CONTRE-ECROU, M8 x 1.25, Cl 8
9		403271A1		1	JOINT, 882 mm; Adhesive Back

09-63		p1	12/07

CABINE - CARTER DE LA SOUFFLANTE, DURITS DE VENTILATION, CONDUITES DE PURGE

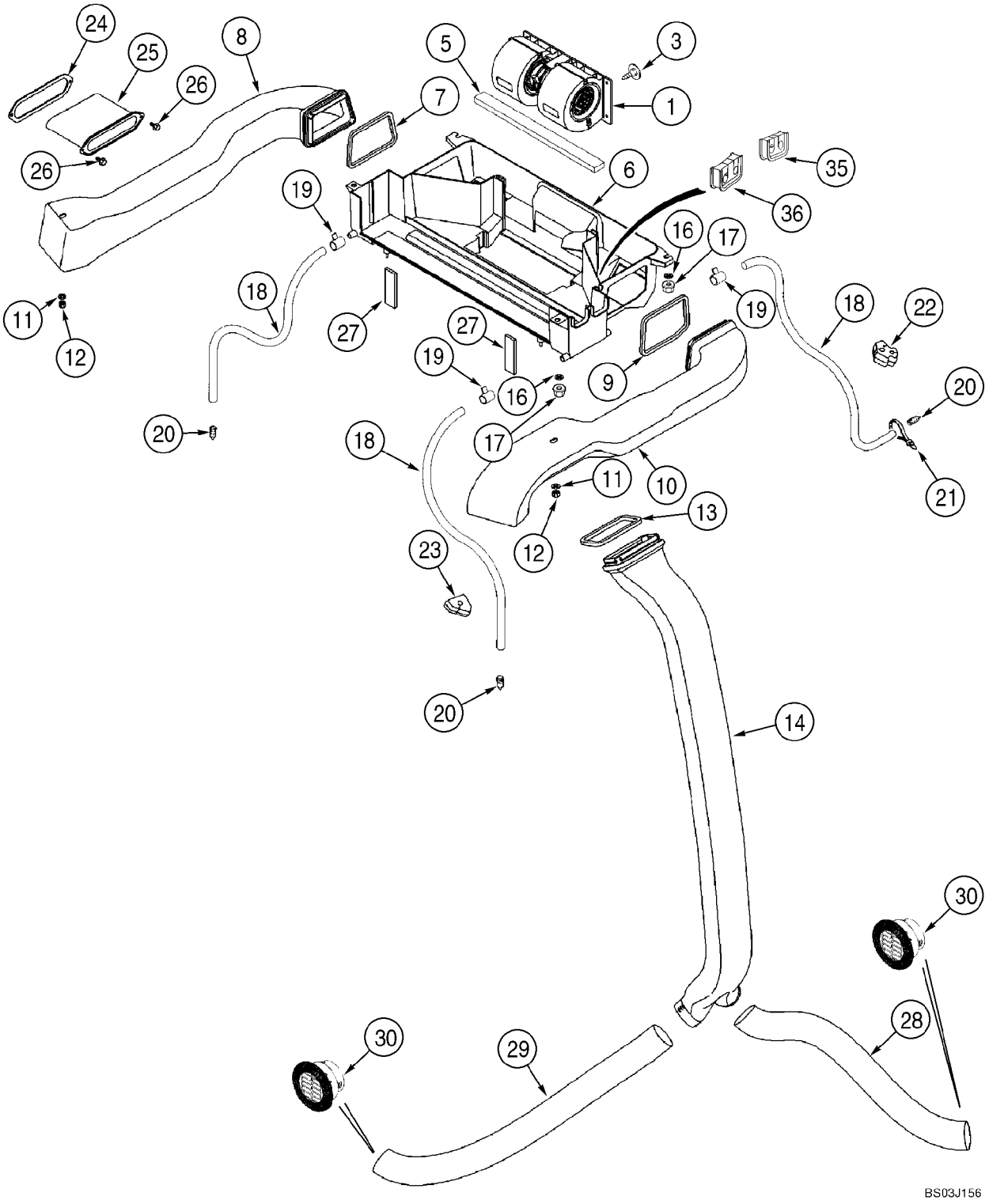

CABINE - CARTER DE LA SOUFFLANTE, DURITS DE VENTILATION, CONDUITES DE PURGE

REF	FN	PART NUMBER	YR/SN	QTY	DESCRIPTION
1		377220A2		1	SOUFFLERIE ASSEMBLEE, Component Parts Not Serviced Separately; Kysor/Westran Brand; If Used; For Blower Switch, See Figure 04-10
1		377241A2		1	SOUFFLERIE ASSEMBLEE, Component Parts Not Serviced Separately; Aurora Brand; If Used; For Blower Switch, See Figure 04-10
3		182697A1		1	AGRAFE
5		181981A1		1	BANDE D'ETANCHEITE, 6 x 20 x 355 mm; Adhesive Back; Under Blower
6		360251A3		1	CARTER (ASSEMBLE), Heat and Air; Includes 373995A1
		373995A1		2	INSERT
7		368805A1		1	JOINT, Left-Hand Duct
8		360253A3		1	CONDUIT, Left-Hand
9		369249A1		1	JOINT, Right-Hand Duct
10		360254A3		1	CONDUIT, Right-Hand
11		895-15010		2	RONDELLE, M11 x 24 x 2
12		832-10408		2	CONTRE-ECROU, M8 x 1.25, Cl 8
13		368807A1		1	JOINT
14		360255A1		1	CONDUIT
16		895-15008		4	RONDELLE, M8 x 20 x 1.6
17		832-10408		4	CONTRE-ECROU, M8 x 1.25, Cl 8
18		87615800		4	FLEXIBLE, 3050 mm; Drain
19		214-1406		4	BRIDE, FLEXIBLE, #06, .44/.78 Type F Worm
20		365789A1		4	SOUPAPE DE VIDANGE, Drain
21		L18337		2	SERRE-CABLE, 9.95"-12.1" lg
22		383794A2		2	BOUCHON
23		383795A2		2	BOUCHON
24		381113A2		1	JOINT
25		381111A2		1	MANCHON
26		281-18712		2	VIS AUTO-TARAUDEUSE, Hex Wash Hd, 1/4" x 3/4"
27		377230A3		2	JOINT, 16 mm thk; Fresh Air Duct To Ventilation Housing
28		375392A1		1	DURITE, 750 mm; Cut From 236559A1
29		368818A1		1	DURITE, 1015 mm; Cut From 236559A1

09-63		p2	12/07

CABINE - CARTER DE LA SOUFFLANTE, DURITS DE VENTILATION, CONDUITES DE PURGE

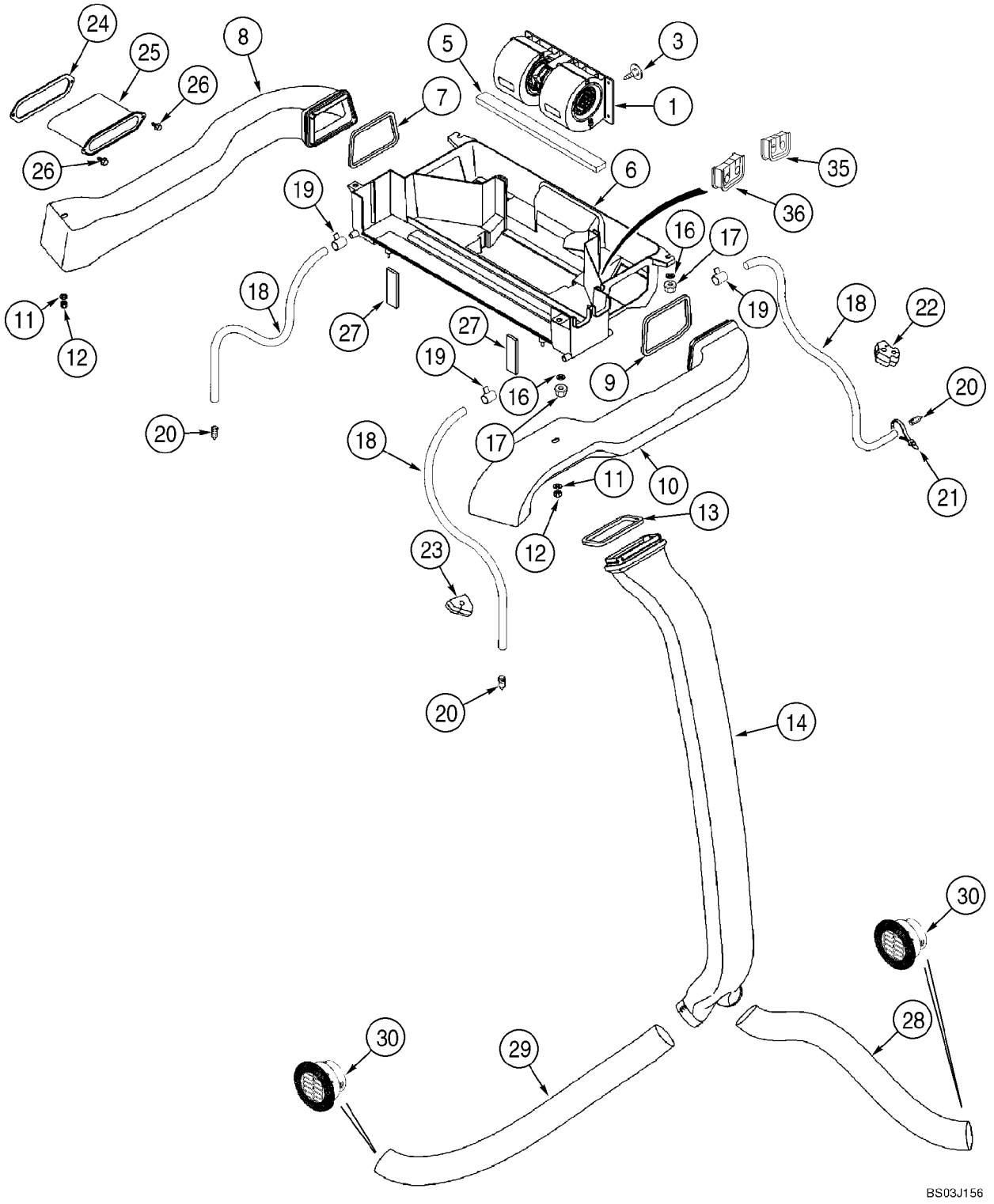

CABINE - CARTER DE LA SOUFFLANTE, DURITS DE VENTILATION, CONDUITES DE PURGE

REF	FN	PART NUMBER	YR/SN	QTY	DESCRIPTION
30		398986A1		2	BUSE D'A£RATION
32		D88052		2	COLLIER, Not Illustrated
35		403225A1		1	JOINT, Heater Tubes At Housing
36		403193A1		1	JOINT, Air Conditioning Tubes At Housing

09-64		p1	12/07

CABINE - CHAUFFAGE

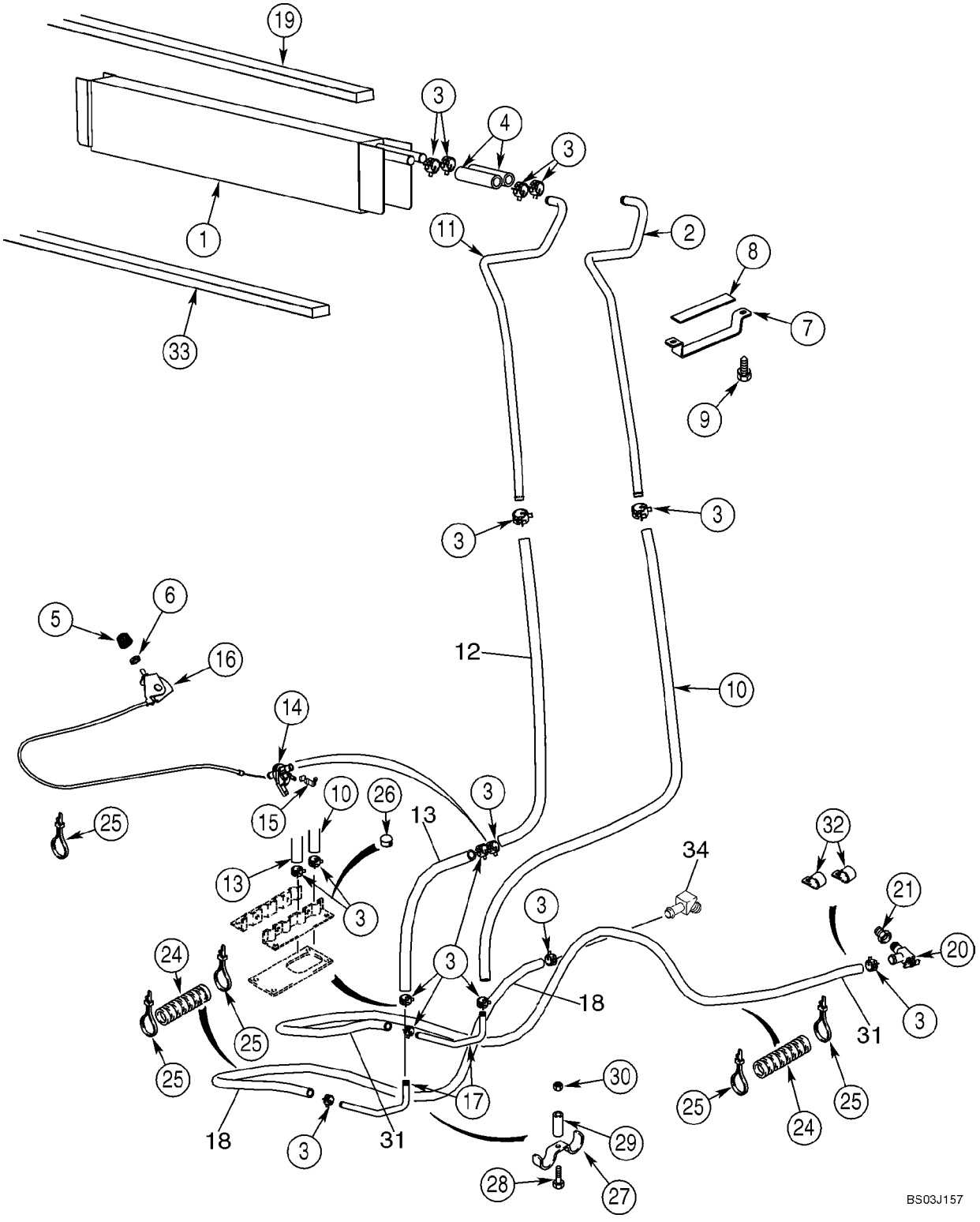

CABINE - CHAUFFAGE

REF	FN	PART NUMBER	YR/SN	QTY	DESCRIPTION
1		360262A2		1	ECHANGEUR DE CHALEUR, Core, Mounts In Blower Housing Box; Seal Mounts On Top Of Core On Models With Heat Only
2		400282A1		1	TUBE, Front
3		1954736C1		14	BRIDE, FLEXIBLE, No. 24
4		377222A1		2	FLEXIBLE, 100 mm; Cut From 97252CX
5		400379A1		1	PLAQUE, 23 mm
6		A42561		1	ECROU
7		388762A1		1	PATTE FIXATION
8		389402A1		1	JOINT
9		281-14520		2	VIS AUTO-TARAUDEUSE, Hex Wash Hd, #10 x 1/4"
10		368801A2		1	FLEXIBLE, 1361 mm; Cut From 97252CX
11		400280A1		1	TUBE, Rear
12		448428A1		1	FLEXIBLE AU METRE, 1175 mm (46-1/4 in); Heater Valve To Core; Cut From 97252CX
13		448429A1		1	FLEXIBLE AU METRE, 150 mm (5-29/32 in) Floor To Valve; Cut From 97252CX
14		1331087C1		1	DISTRIBUTEUR, Heater
15		1954626C1		1	COLLIER
16		1999666C1		1	COMMANDE, Heater; Includes 1999667C1, 1999668C1
		1999667C1		1	COMMANDE
		1999668C1		1	CABLE
17		190675A1		2	TUYAU
18		377232A2		1	DURITE, 2650 mm (104-21/64 in); Heater; Return To Water Pump; Cut From 97252CX
19		406287A1		1	JOINT, 19 x 19 x 736 mm; Location Of Seal On Models With Heat Only; On Models With Air Conditioning, Seal Is Located On Evaporator Cor
20		87686604		1	VALVE D'ARRET
21		221-89		1	REDUCTEUR, Hex, 1/2" x 3/8" NPT
24		D132982		7	GAINE, Sleeve, 400 mm (15-3/4 in)
25		L18337		6	SERRE-CABLE, 9.95"-12.1" lg
26		353-410		2	BOUCHON, Dome, .875" hole, Nylon, Models With Heat Only

CABINE - CHAUFFAGE

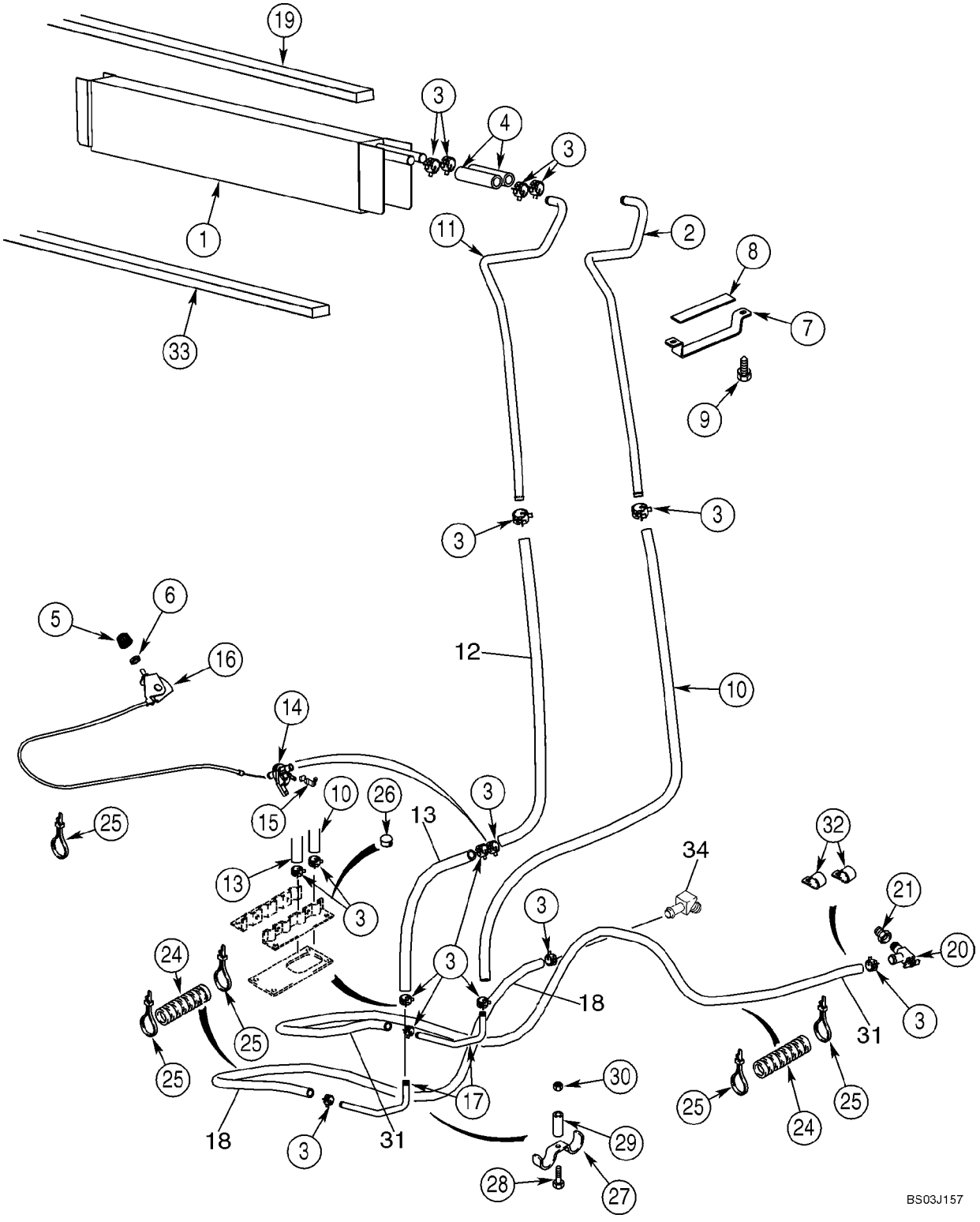

CABINE - CHAUFFAGE

REF	FN	PART NUMBER	YR/SN	QTY	DESCRIPTION
27		D143427		1	COLLIER
28		614-8030		1	BOULON, Hex, M8 x 30, 8.8
29		D143417		1	ENTRETOISE
30		825-2408		1	ECROU, M8 x 1.25, Flg, Cl 8
31		377233A2		1	DURITE, 1830 mm (72-3/64 in); Heater; Inlet From Engine; Cut From 97252CX
32		D88052		2	COLLIER
33		1987096C1		1	PLAQUE, GRANDE, Seal, Below Heater Core; Location Of Seal On Models With Heat Only; On Models With Air Conditioning, Seal Is Located At Rear Of Housing
34		217-425		1	RACCORD, 45Ü, 5/8" Hose x 3/4" NPTF Beaded

09-65		p1	12/07

CABINE - CONDUITES DE LA CLIMATISATION, RADIATEUR D'EVAPORATION

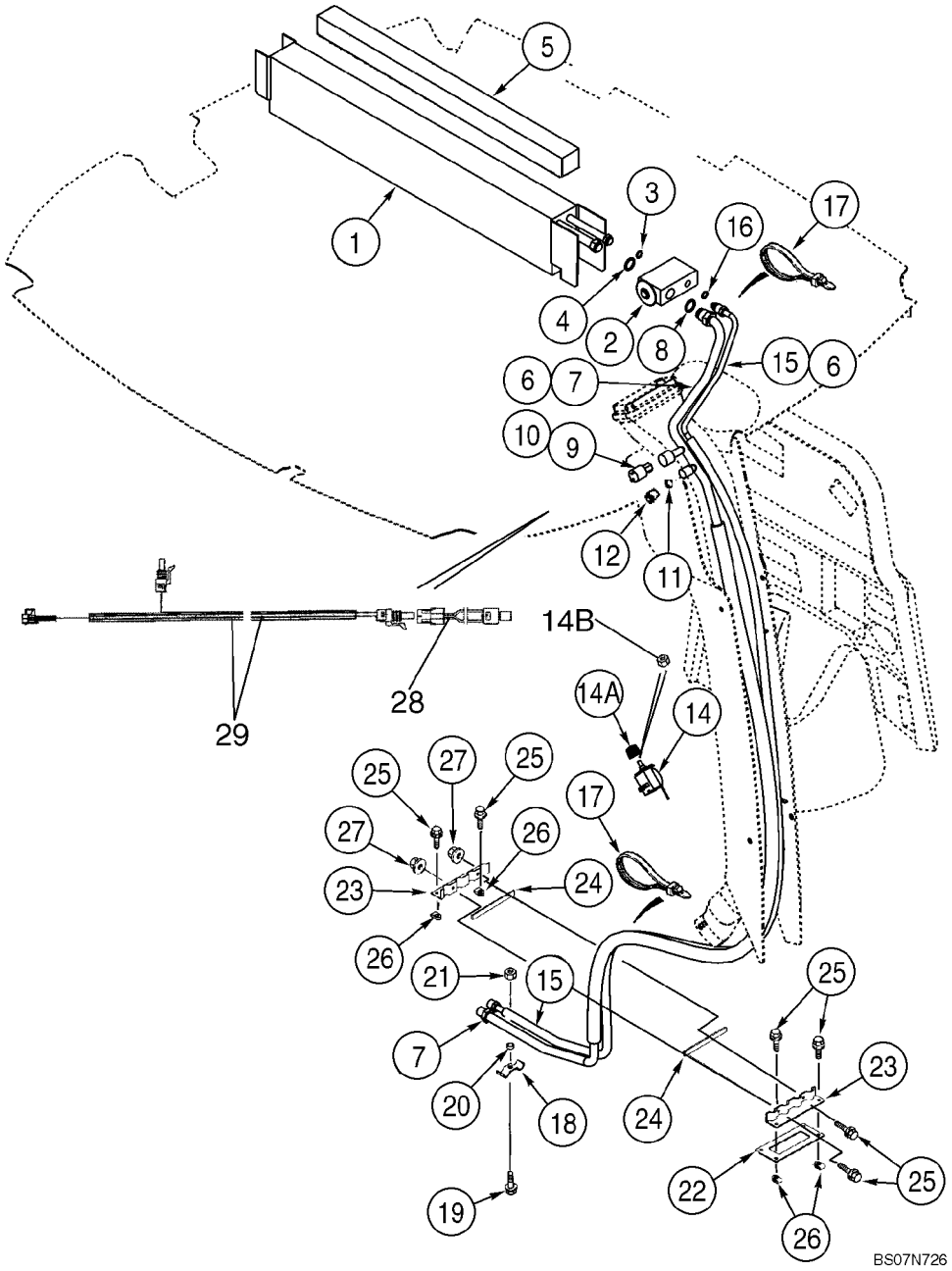

CABINE - CONDUITES DE LA CLIMATISATION, RADIATEUR D'EVAPORATION

REF	FN	PART NUMBER	YR/SN	QTY	DESCRIPTION
		363832A5		1	EVAPORATEUR, Incl. Ref 1 - 4; Not Available as An Assembly; Order Components
1		360263A4		1	EVAPORATEUR, Core
2		386535A1		1	SOUPAPE
3		128484A1		1	JOINT THORIQUE, 7/16 ID x 1/16
4		128485A1		1	JOINT THORIQUE, 9/16 ID x 1/16
		83822C1		3	RUBAN ADHESIF, Insulation; 63,5 (2-1/2 in) x 610 mm (24-1/64 in)
5		406287A1		1	JOINT, 19 x 19 x 736 mm; Adhesive Back; Models With Heat and Air, Locate Seal On Top Of Core
		345-621		2	RUBAN ADHESIF, 2 x 6 in
7		360257A1		1	GAINE PLASTIQUE, Suction; Incl. Ref 8 - 12
8		128485A1		1	JOINT THORIQUE, 9/16 ID x 1/16
9		128483A1		1	JOINT THORIQUE, 5/16 ID x 1/16; Valve Core
10		1250594C1		1	NOYAU, Low Pressure Switch
11		1250594C1		1	NOYAU, Low Side Service Port
12		122553A1		1	CHAPEAU
14		370381A1		1	CONTACTEUR, Temperature Control; Air Conditioning
14A		400379A1		1	PLAQUE, 23 mm
14B		A42561		1	ECROU, 7/16
15		360256A1		1	GAINE PLASTIQUE, Pressure; Incl. Ref 16
16		128483A1		1	JOINT THORIQUE, 5/16 ID x 1/16
17		L18337		4	SERRE-CABLE, 9.95"-12.1" lg
18		D143427		1	COLLIER
19		614-8030		1	BOULON, Hex, M8 x 30, 8.8
20		D143417		1	ENTRETOISE
21		825-2408		1	ECROU, M8 x 1.25, Flg, Cl 8
22		124011A1		1	JOINT
23		123980A1		2	BRIDE, CLAMP, Heater and Air Conditioning Hoses
24		181979A1		2	BANDE D'ETANCHEITE
25		845-6020		6	BOULON, Hex Flg, M6 x 20, 8.8, Full Thd
26		833-40406		4	ECROU, M6, U
27		825-2406		2	ECROU, M6 x 1, Flg, Cl 8
28		87000228		1	PRESSOSTAT, A/C Low Pressure; Blue Wire

09-65		p2	12/07

CABINE - CONDUITES DE LA CLIMATISATION, RADIATEUR D'EVAPORATION

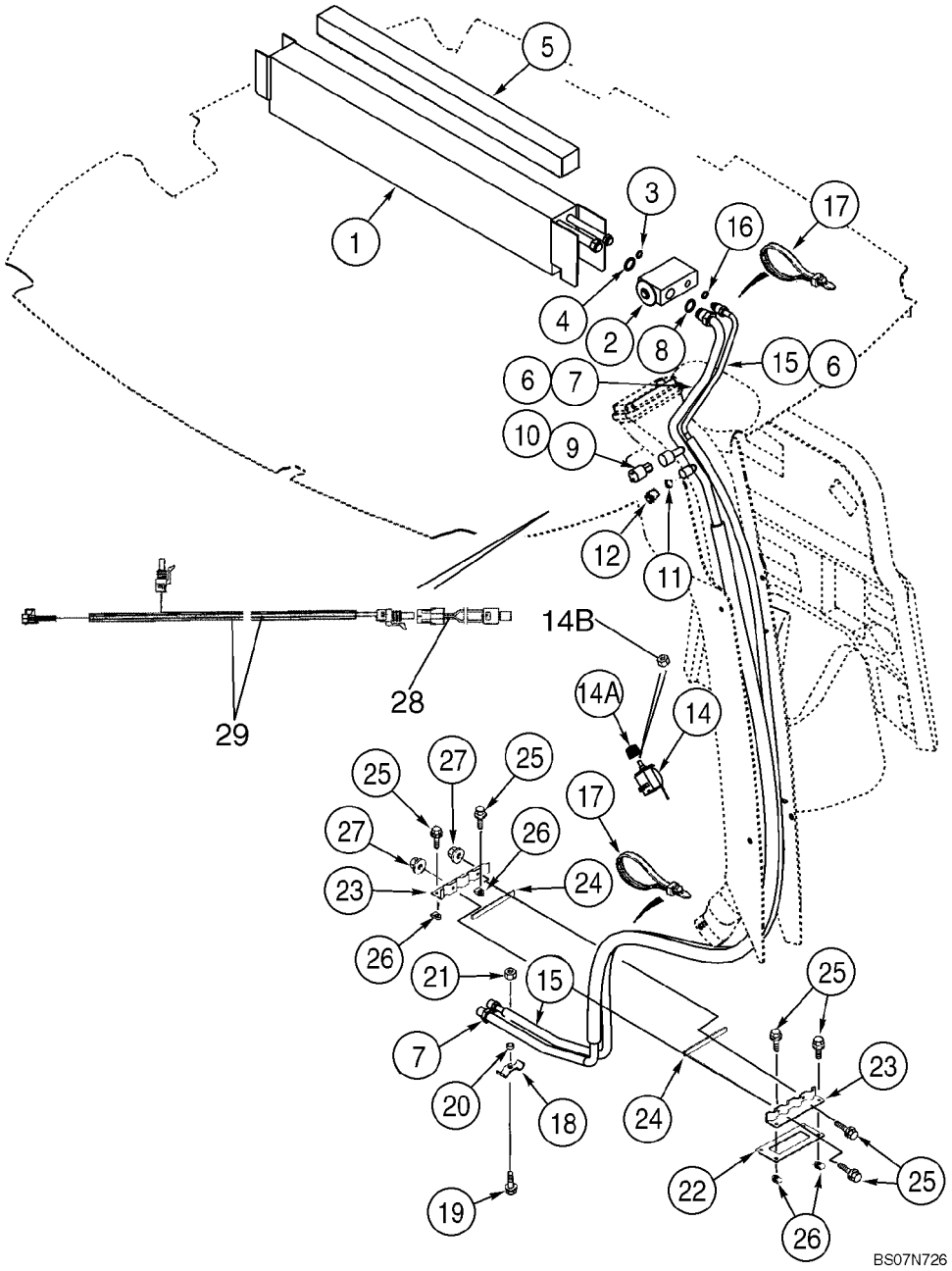

CABINE - CONDUITES DE LA CLIMATISATION, RADIATEUR D'EVAPORATION

REF	FN	PART NUMBER	YR/SN	QTY	DESCRIPTION
29		87538167		1	FAISCEAU COMPLET, Service; A/C Low Pressure Switch; Connects to A/C Compressor and A/C Relay
30		401949A1		5	ATTACHE, Xmas Tree Clips; B Post Cover; Not Illustrated
31		L11541		10	SERRE-CABLE, Tie; Not Illustrated

09-66		p1	01/08

CABINE - CLIMATISATION, CONDENSATEUR, DESSICCATEUR

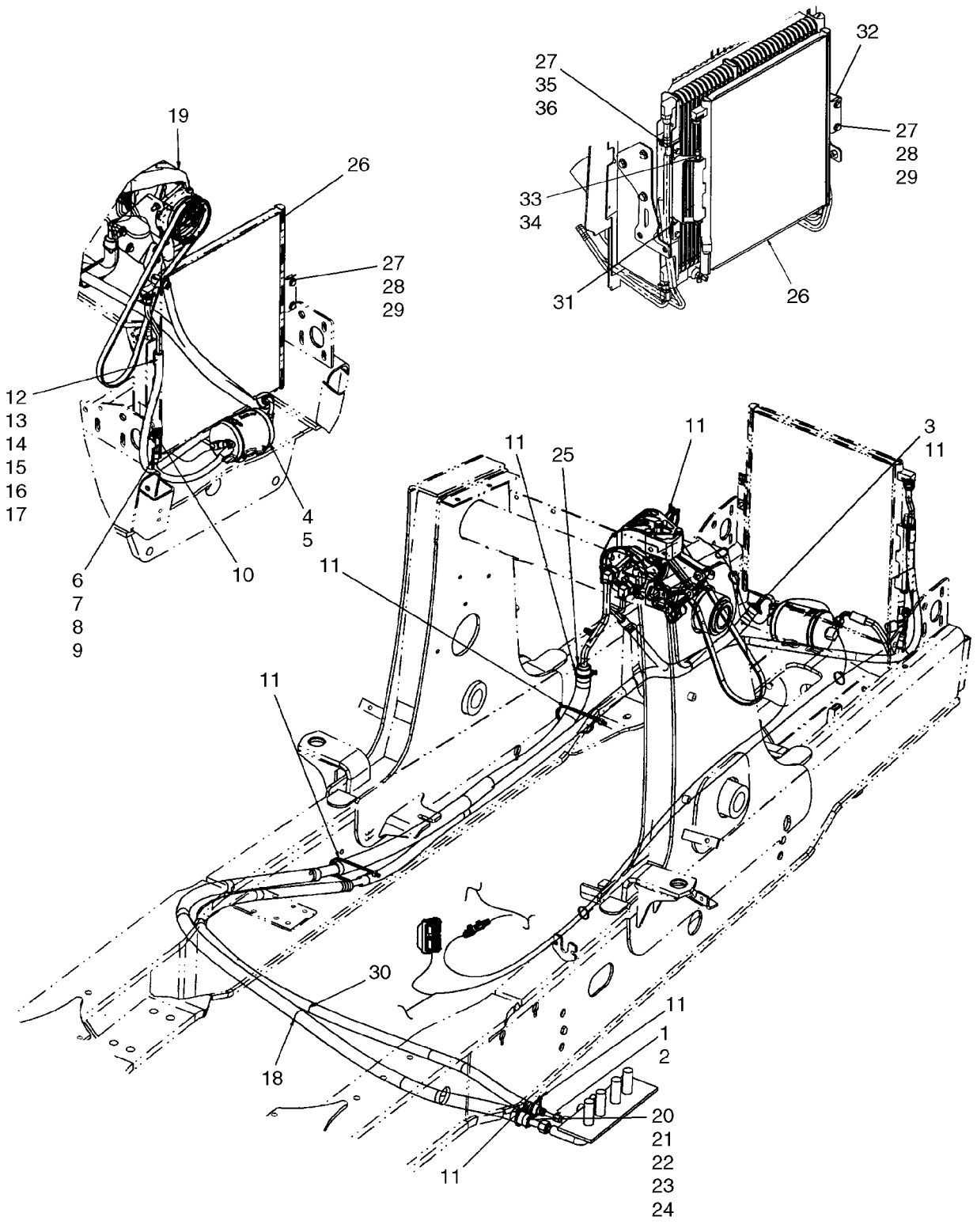

CABINE - CLIMATISATION, CONDENSATEUR, DESSICCATEUR

REF	FN	PART NUMBER	YR/SN	QTY	DESCRIPTION
1		87630219		1	FLEXIBLE (ASSEMBLE), 2930 mm, Receiver Drier to Cab; Incl. Ref 2
2		128483A1		2	JOINT THORIQUE, 5/16 ID x 1/16
3		191704A1		2	GAINE, 460 mm (18-1/8 in)
4		86984155		1	RECEVEUR-D£SHYDRAT.
5		214-1464		2	BRIDE, FLEXIBLE, #64, 3.56/4.50 Type F Worm
6		87630218		1	FLEXIBLE (ASSEMBLE), 340 mm, Condenser to Drier; Incl. Ref 7 - 9
7		128483A1		3	JOINT THORIQUE, 5/16 ID x 1/16
8		1250594C1		1	NOYAU, Valve, High Pressure Switch
9		122081A1		1	RACCORD, Switch
10		232948A1		1	PRESSOSTAT, High Pressure
11		L18337		10	SERRE-CABLE, 9.95"-12.1" lg
12		87590156		1	FLEXIBLE (ASSEMBLE), 1350 mm; Compressor to Condenser; Incl. Ref 13 - 17
13		128484A1		1	JOINT THORIQUE, 7/16 D x 1/16
14		128485A1		1	JOINT THORIQUE, 9/16 ID x 1/16
15		1999926C1		1	EMBOUT DE TUYAUTERIE
16		1250594C1		1	NOYAU, Valve
17		122554A1		1	CHAPEAU, Sealing Cap
18		87726951		1	PROTECTEUR DE TUYAU, Guard, 1200 mm (47-1/4 in)
19		87430122		1	COMPRESSEUR CLIMATIS., Component Parts Not Serviced Separately, See Figure 09-66 for Mounting
20		87630220		1	FLEXIBLE (ASSEMBLE), 2425 mm, Cab to Compressor; Incl. Ref 21 - 24
21		128485A1		2	JOINT THORIQUE, 9/16 ID x 1/16
22		1999927C1		1	EMBOUT DE TUYAUTERIE
23		1250594C1		1	NOYAU, Valve
24		122553A1		1	CHAPEAU, Sealing
25		191703A1		1	GAINE, Sleeve, 400 mm (15-3/4 in)
26		87546291		1	CONDENSATEUR
27		614-8020		6	BOULON, Hex, M8 x 20, 8.8
28		895-15008		2	RONDELLE, M8 x 20 x 1.6
29		833-40408		2	ECROU, M8, U

CABINE - CLIMATISATION, CONDENSATEUR, DESSICCATEUR

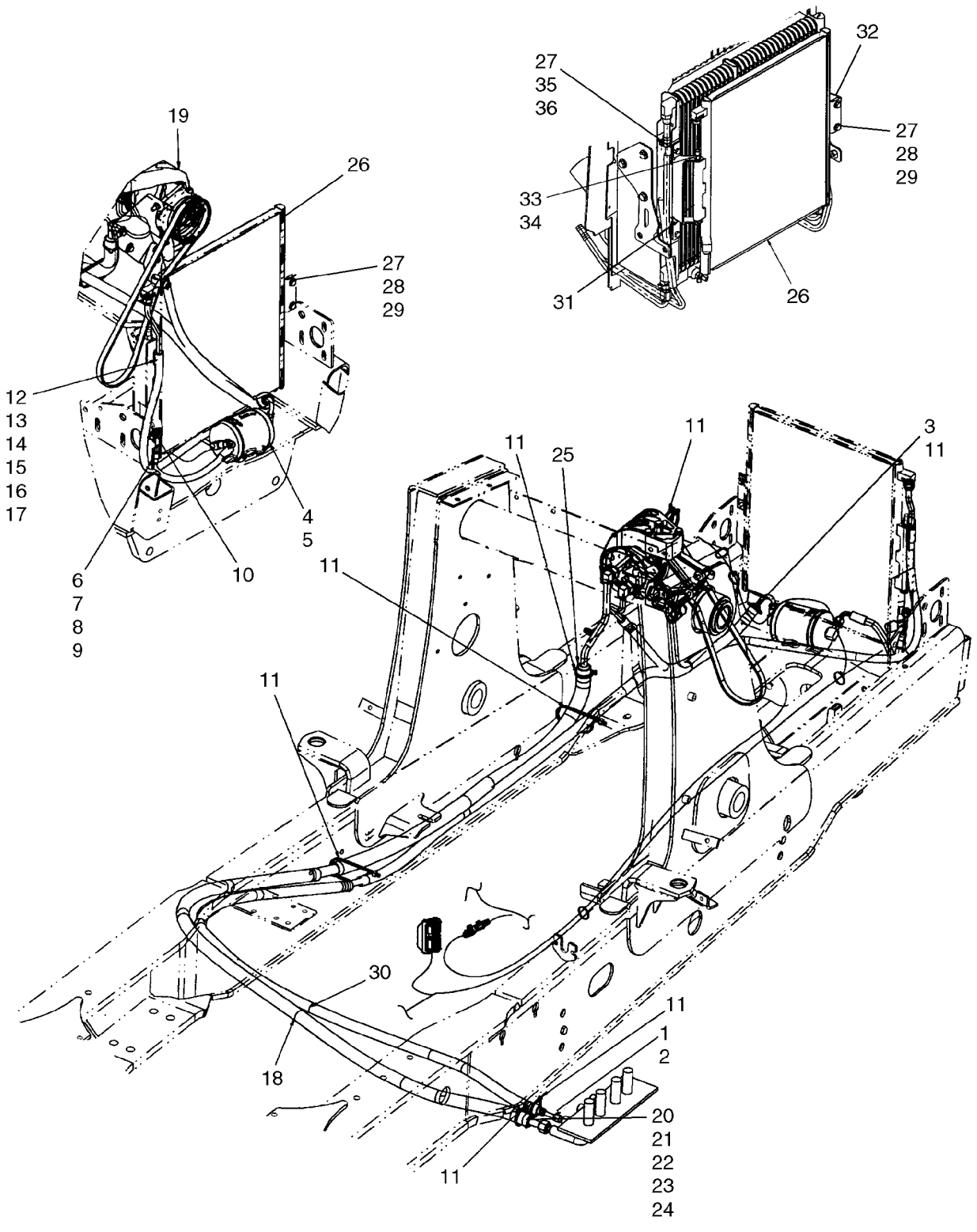

CABINE - CLIMATISATION, CONDENSATEUR, DESSICCATEUR

REF	FN	PART NUMBER	YR/SN	QTY	DESCRIPTION
30		87726950		1	PROTECTEUR DE TUYAU, Guard, 1200 mm (47-1/4 in)
31		87598501		1	PIVOT JOINT TOURNANT
32		87589025		1	EQUERRE
33		814-10220		1	BOULON, Hex, M10 x 220, 8.8
34		832-10410		1	CONTRE-ECROU, M10 x 1.5, Cl 8
35		829-1408		4	ECROU, M8, Cl 10
36		895-11008		6	RONDELLE, M8 x 16 x 1.6

CABINE - COMPRESSEUR DE LA CLIMATISATION

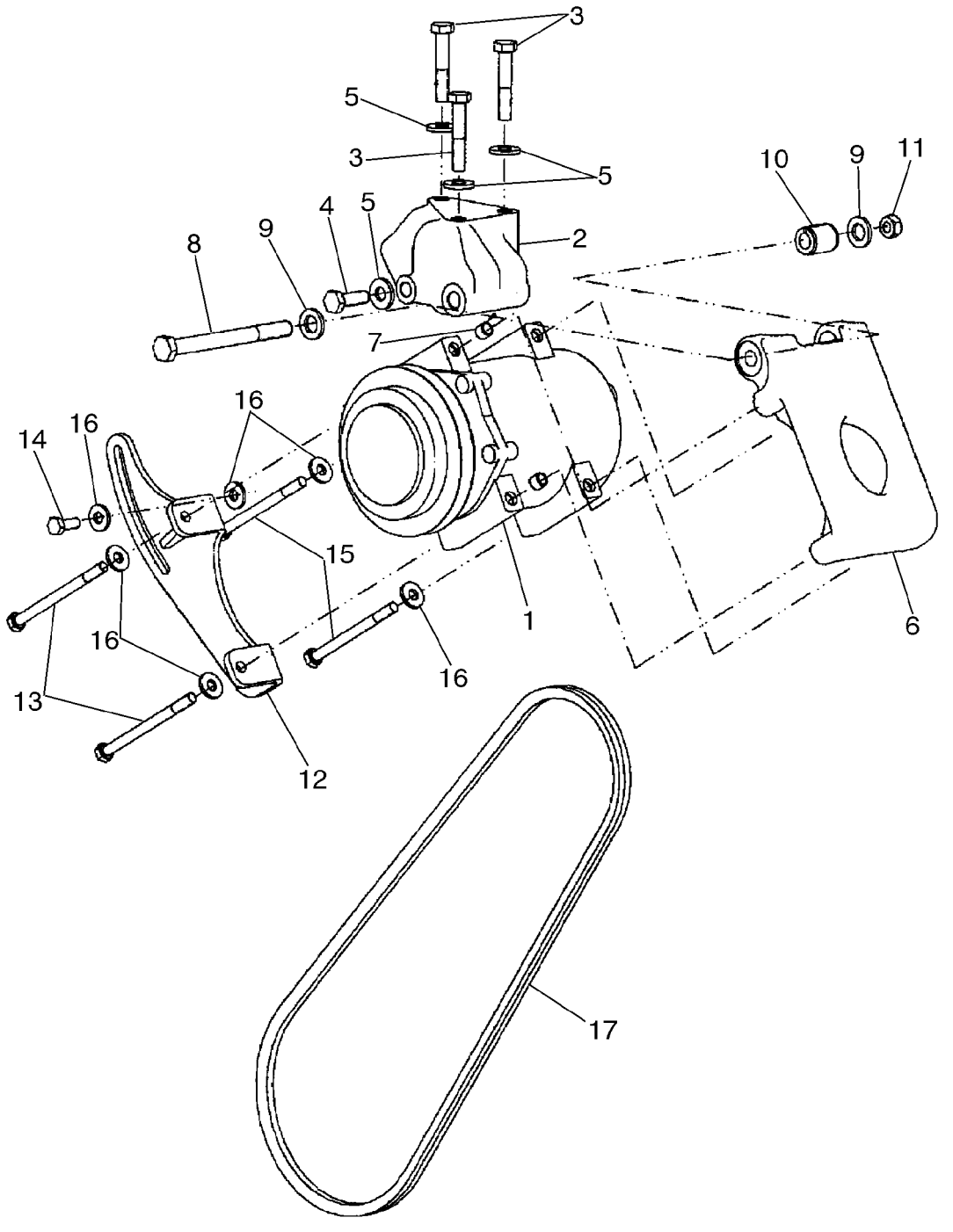

CABINE - COMPRESSEUR DE LA CLIMATISATION

REF	FN	PART NUMBER	YR/SN	QTY	DESCRIPTION
1		87430122		1	COMPRESSEUR CLIMATIS., Compressor Component Parts Not Serviced Separately
2		87429950		1	SUPPORT, Mounting Support
3		814-10055		3	BOULON, Hex, M10 x 55, 8.8
4		614-10030		1	BOULON, Hex, M10 x 30, 8.8
5		896-15010		4	RONDELLE, M10 x 24.5 x 3, HT
6		87429948		1	SUPPORT
7		87429952		2	ANNEAU
8		814-12130		1	BOULON, Hex, M12 x 130, 8.8
9		896-11012		2	RONDELLE, M13.5 x 24.5 x 3, HT
10		87429951		1	ENTRETOISE, Pivot
11		829-1412		1	ECROU, M12, Cl 10
12		87429949		1	EQUERRE
13		814-8110		2	BOULON, Hex, M8 x 110, 8.8
14		614-8020		1	BOULON, Hex, M8 x 20, 8.8
15		814-8100		2	BOULON, Hex, M8 x 100, 8.8
16		896-15008		6	RONDELLE, M8 x 21.5 x 2.5, HT
17		87393292		1	COURROIE DE TRANSMISS., V-Belt

09-68		p1	01/08

STRUCTURE ROPS - CADRE, COUVERCLES, RETROVISEUR, VISIERE-ECRAN

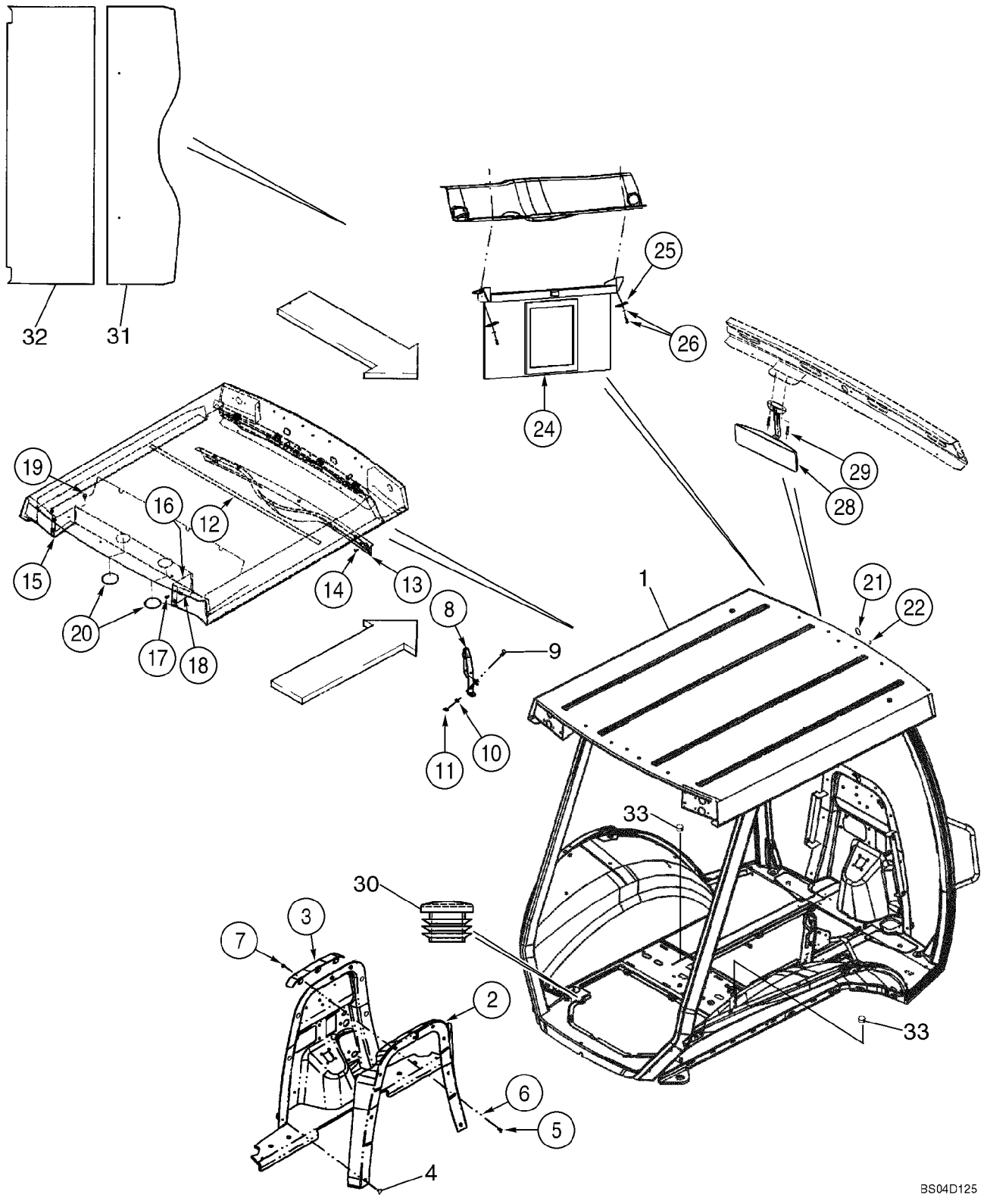

STRUCTURE ROPS - CADRE, COUVERCLES, RETROVISEUR, VISIERE-ECRAN

REF	FN	PART NUMBER	YR/SN	QTY	DESCRIPTION
		87636559		1	CHASSIS DE SECURITE, ASSEMBLY, Includes 87636554 Frame, Glass, Wiper and Roof Foam Panels
1		87636554		1	CHASSIS DE SECURITE, Canopy Frame; Order From Machinery Price List
2		396938A3		1	MOULURE, Firewall
3		395478A3		1	PATTE FIXATION
4		D143242		6	BOUCHON, Push-In Fastener
5		614-8020		3	BOULON, Hex, M8 x 20, 8.8
6		495-81001		3	RONDELLE, 5/16"
7		832-10408		3	CONTRE-ECROU, M8 x 1.25, Cl 8
8		87627072		1	RAMBARDE
9		87310177		2	BOULON, M10 x 25; 8.8, Round Head Square Neck, Stainless Steel
10		495-81267		2	RONDELLE, .469" x 1 1/2" x .134"
11		832-10410		2	CONTRE-ECROU, M10 x 1.5, Cl 8
12		385506A1		1	PROFIL PROTECTEUR, 127 mm; Foam; Adhesive Back
13		367712A3		1	COUVERCLE, Harness
14		F64519		5	VIS AUTO-TARAUDEUSE, Cross Wash Hd, #10-16 x 3/4", For Service, Order 265-16512, F64315
15		357099A1		1	COUVERCLE, Left-Hand
16		357100A1		1	COUVERCLE, Right-Hand
17		87310098		4	BOULON, Flange, M6 x 20, Stainless Steel
18		833-40406		4	ECROU, M6, U
19		353-402		4	BOUCHON, Dome, .375" hole, Nylon, Models With 4 Lamps; Not Used On Models With 8 Lamps
20		1302758C1		2	BOUCHON, 3 in
		353-410		1	BOUCHON, Dome, .875" hole, Nylon
21		411549A1		1	BOUCHON, 1 in; Windshield Frame
22		353-421		2	BOUCHON, Dome, .187" hole, Nylon, Upper Windshield Frame
24		364180A1		1	PARE-SOLEIL
25		409618A1		2	PLAQUE, 1/4 in Mounting Hole
26		396516A1		2	POINTEAU, No 10 x 1 st; With Washer; Phillips

09-68		p2	01/08

STRUCTURE ROPS - CADRE, COUVERCLES, RETROVISEUR, VISIERE-ECRAN

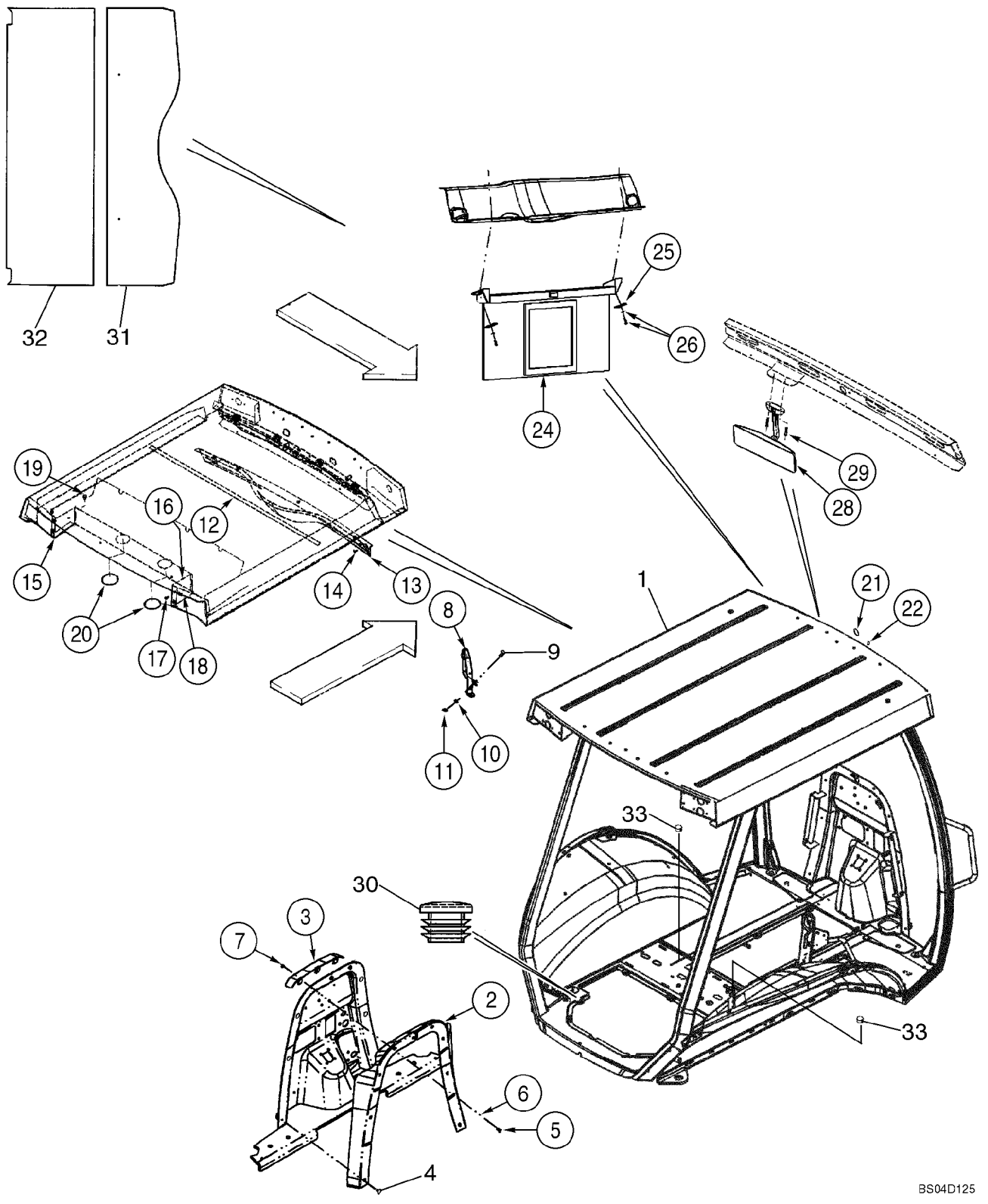

STRUCTURE ROPS - CADRE, COUVERCLES, RETROVISEUR, VISIERE-ECRAN

REF	FN	PART NUMBER	YR/SN	QTY	DESCRIPTION
28		87406924		1	R£TROVISEUR
29		286-56520		2	VIS, Cross Fil Hd, #10-24 x 1 1/4"
30		382298A1		2	BOUCHON, 7/8 in
31		431583A1		1	PANNEAU, Foam; Roof Front
32		431584A1		1	PANNEAU, Foam: Roof Rear
33		353-413		2	BOUCHON, Dome, 1.187" hole, Nylon, 1-3/16 Hole Size, Black Nylon; Brake Bleeder

STRUCTURE ROPS - VITRE

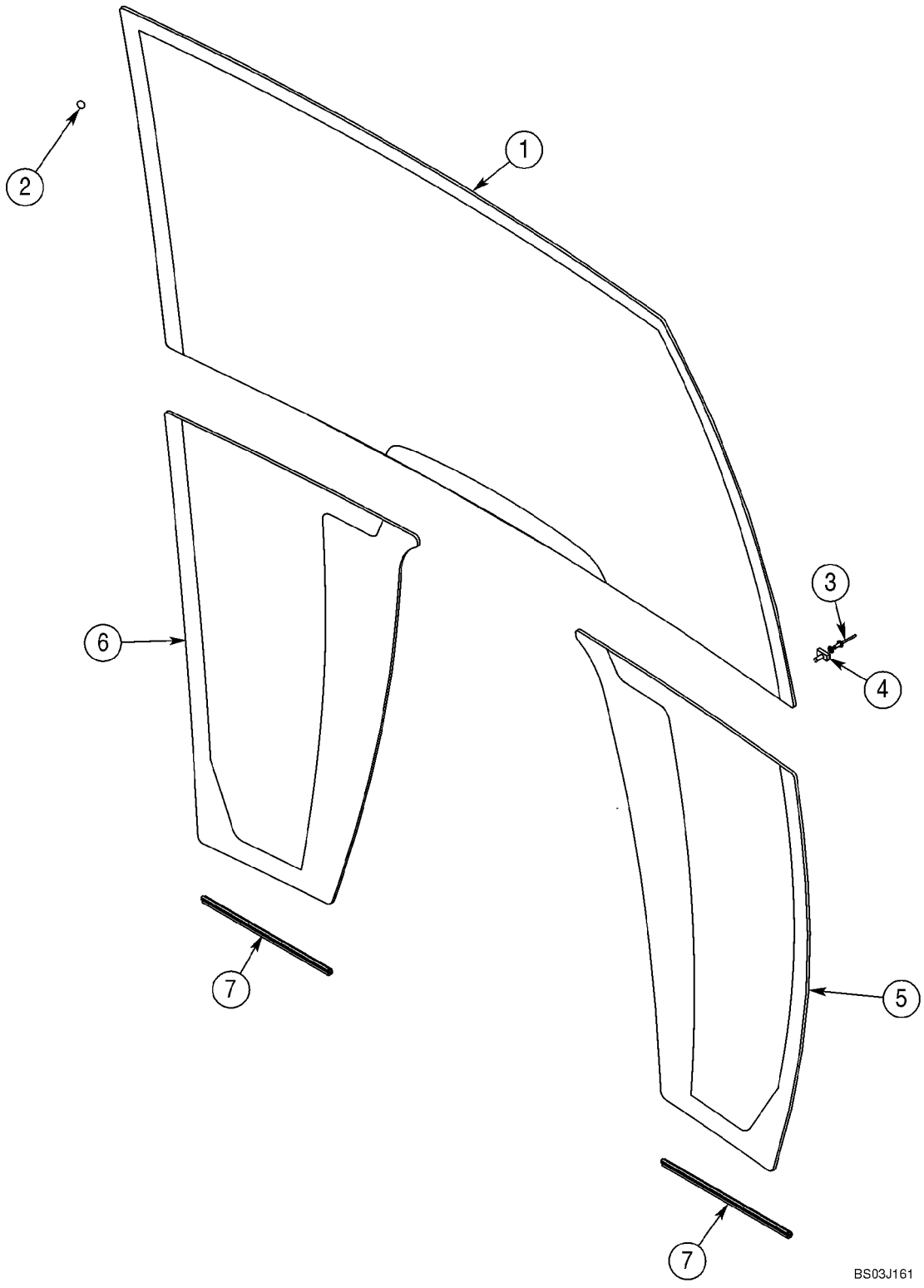

STRUCTURE ROPS - VITRE

REF	FN	PART NUMBER	YR/SN	QTY	DESCRIPTION
1		448607A1		1	PARE-BRISE
2		391827A1		28	ENTRETOISE
3		151-516		2	RIVET, Pop, 1/8" x .775"
4		279482A1		2	ATTACHE ASSEMBLEE
5		448609A1		1	PARE-BRISE, Lower; Right-Hand
6		448608A1		1	PARE-BRISE, Lower; Left-Hand
7		395793A1		2	PROFIL PROTECTEUR, Lower Glass Trim

09-70		p1	02/08

STRUCTURE ROPS - ESSUIE-GLACE AVANT ET LAVE-GLACE

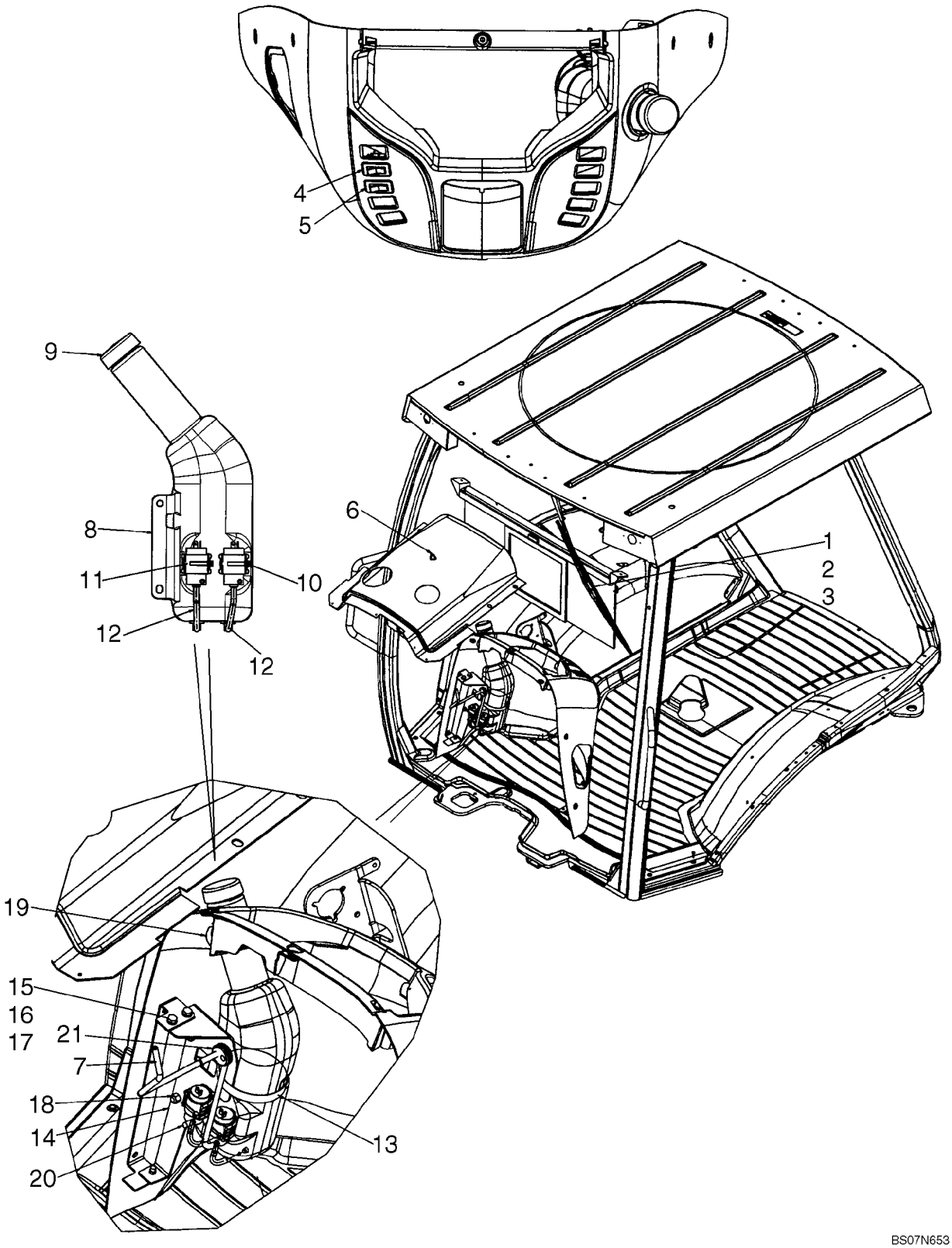

STRUCTURE ROPS - ESSUIE-GLACE AVANT ET LAVE-GLACE

REF	FN	PART NUMBER	YR/SN	QTY	DESCRIPTION
1		450037A1		1	MOTEUR ESSUIE-GLACE, 12V
		814-6050		2	BOULON, Hex, M6 x 50, 8.8, Wiper Motor Mounting
		892-11006		2	RONDELLE FREIN, M6
2		D128745		1	BRAS D'ESSUIE-GLACE
3		414426A1		1	BALAI D'ESSUIE-GLACE, 600 mm
4		386785A1		1	CONTACTEUR, Front Wiper
5		386787A1		1	CONTACTEUR, Windshield Washer
6		E43769		1	VAPORISATEUR, NOZZLE; Front; Includes Rubber Gasket; Plastic
7		87699640		1	FLEXIBLE AU METRE, 700 mm (27-1/2 in); Cut From 87282056
8		87675208		1	RESERVOIR DE LAVE-GLACE, RESERVOIR; Window Washing Fluid
9		87711985		1	BOUCHON DE REMPL., Cap; Washer Bottle
10		L11541		2	SERRE-CABLE
11		86507198		2	POMPE-PETITE, Window Washer
12		87700794		2	FLEXIBLE AU METRE, Washer Bottle
13		214-3180		1	BRIDE, FLEXIBLE, 4.25/5.125 HD Worm
14		87676276		2	EQUERRE
15		614-8020		5	BOULON, Hex, M8 x 20, 8.8
16		895-11008		5	RONDELLE, M8 x 16 x 1.6
17		833-40408		3	ECROU, M8, U
18		832-10408		2	CONTRE-ECROU, M8 x 1.25, Cl 8
19		87694565		1	BANDE D'ETANCHEITE, 268 mm (10-1/2 in); Cut To Length From 87438002
20		87441758		1	COUPELLE, Reservoir
21		87637384		1	PASSE-FIL, Washer Hose
		404617A1		1	FAISCEAU, Front Lamps and Wiper
		87726574		1	FAISCEAU COMPLET, Front Console Options; Includes (1) L71879 Diode
		87726573		1	FAISCEAU COMPLET, Chassis Options; Includes (4) L71879 Diodes; Not Illustrated]

R£TROVISSEUR - SUPPORT, MODêLE DE CABINE

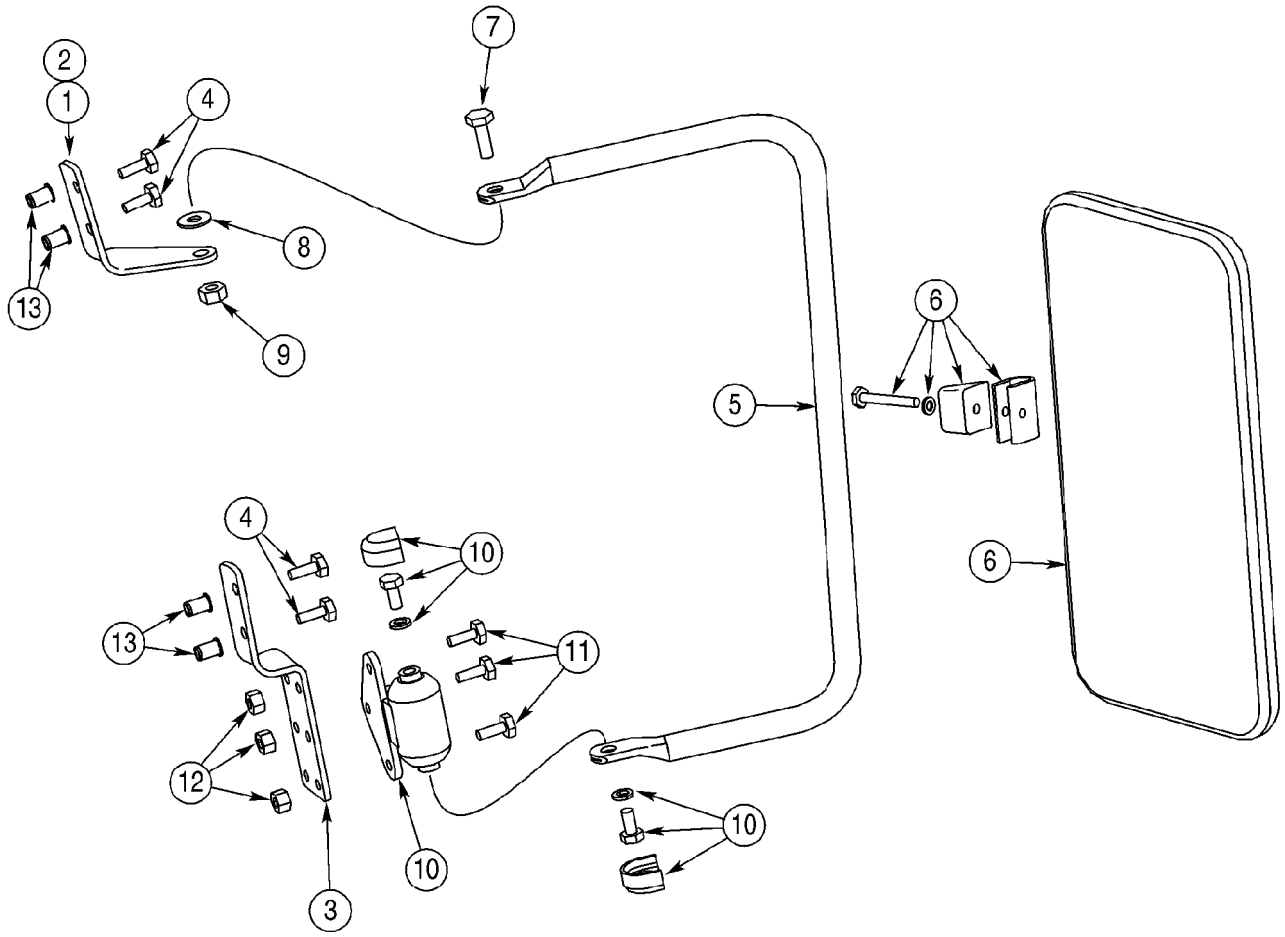

R£TROVISSEUR - SUPPORT, MODôLE DE CABINE

REF	FN	PART NUMBER	YR/SN	QTY	DESCRIPTION
		397974A1		1	POCHETTE, Outside Mirror; Incl. Ref 1 - 14 and Instructions
1		402933A1		1	PATTE FIXATION, Upper; Right-Hand
2		402934A1		1	PATTE FIXATION, Upper; Left-Hand; Not Illustrated
3		402936A1		2	PATTE FIXATION, Lower
4		413-412		8	BOULON, Hex, 1/4"-20 x 3/4", G5, Full Thd
5		402935A1		2	TUBE PORTEUR
6		R54682		2	RETROVISEUR, Exterior
7		413-516		2	BOULON, Hex, 5/16"-18 x 1", G5, Full Thd, 5/16 x 1
8		A167037		2	RONDELLE
9		231-4115		2	CONTRE-ECROU, 5/16"-18, GB, 5/16
10		D142144		2	FUSEE, Includes Hardware
11		413-412		6	BOULON, Hex, 1/4"-20 x 3/4", G5, Full Thd
12		231-1444		6	CONTRE-ECROU, 1/4"-20, GB
13		255447A1		10	RIVET, Threaded Insert; Cab Front ROPS Post
14		NSS		1	NON FOURNI SEPAREMENT, Tool, Insert Nut; Not Illustrated

09-72		p1	01/08

TRIANGLE V£HICULE LENT

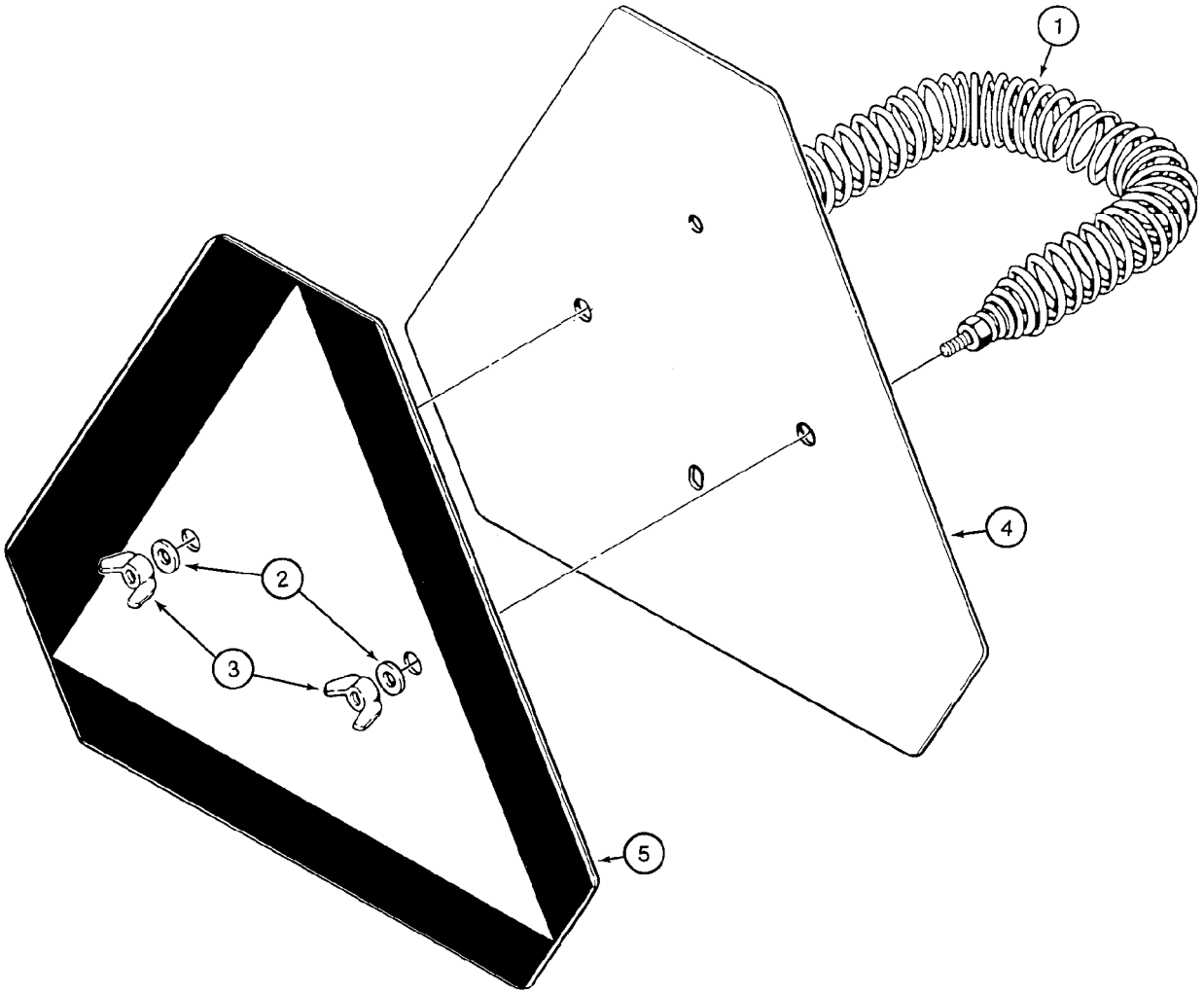

B9409034

TRIANGLE V£HICULE LENT

REF	FN	PART NUMBER	YR/SN	QTY	DESCRIPTION
1		D52564		1	RESSORT
2		495-11028		2	RONDELLE, 1/4", SAE, 9/32 x 5/8 x 1/16
3		126177		2	DISQUE, 1/4
4		86547710		1	TRIANGLE DE SIGNALISATIO, Incl. Ref 5
5		321-4311		1	DECALCOMANIE, Slow Moving Vehicle

AUTOCOLLANTS



1

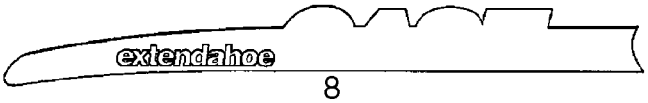

8



1B

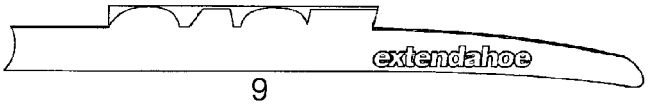

9



2
3

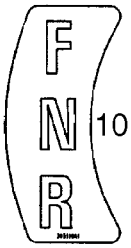

10



11

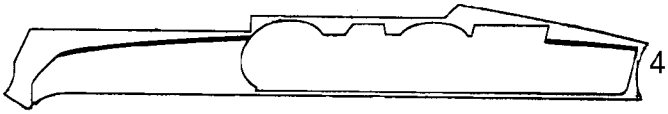
4



12

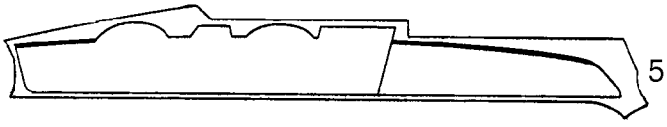
5

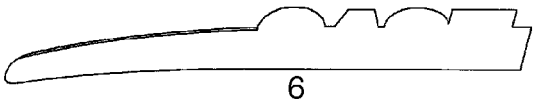
6



13


14

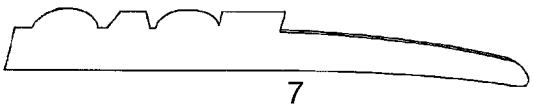
7



15



16

BS08A289

AUTOCOLLANTS

REF	FN	PART NUMBER	YR/SN	QTY	DESCRIPTION
1		{87754369}		2	580M Model Designation
1B		87412815		2	DECALCOMANIE, Series 3
2		401457A1		2	DECALCOMANIE, 525 mm (20-11/16 in) Wide; Case Logo; Loader Arm
3		401458A1		4	DECALCOMANIE, 655 mm (25-13/16 in) Wide, Case Logo; Backhoe Dipper
4		{87751884}		1	Case, Loader Arm Pin Stripe, Left-Hand Stripe
5		{87751885}		1	Case, Loader Arm Pin Stripe, Right-Hand Stripe
6		407009A2		1	DECALCOMANIE, Case, Standard Dipper, Left-Hand Stripe
7		407010A2		1	DECALCOMANIE, Case, Standard Dipper, Right-Hand Stripe
8		373698A2		1	DECALCOMANIE, Case, Extendahoe Dipper, Left-Hand Stripe
9		373699A2		1	DECALCOMANIE, Case, Extendahoe Dipper, Right-Hand Stripe
10		395910A2		1	DECALCOMANIE, FNR (Forward/Neutral/Reverse); Shuttle Shift Lever Control Pattern
11		321-1708		1	DECALCOMANIE, 0-2-4, Clam Bucket Opening Indicator
12		87435569		1	EMBLÇME, Insert, Case; Steering Wheel
13		186989A1		1	EMBLÇME, Case
14		131-431		2	CONTRE-ECROU, Self, Threading, 1/4"
15		87415931		2	DECALCOMANIE, Case, 37 x 70 mm; Located On Engine Filters
16		87429186		1	EMBLÇME, Case, 37 x 70 mm; Located On Engine

AUTOCOLLANTS

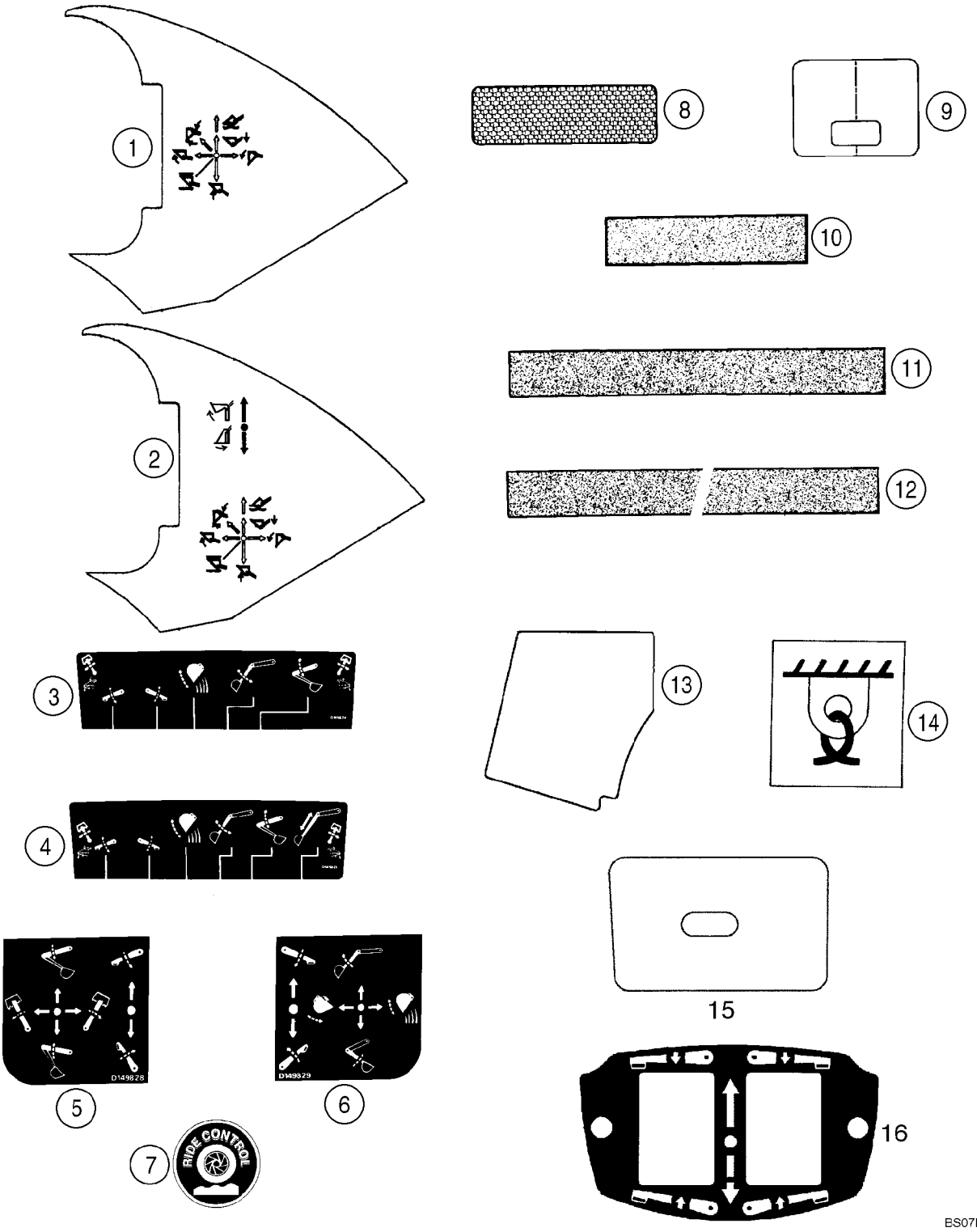

AUTOCOLLANTS

REF	FN	PART NUMBER	YR/SN	QTY	DESCRIPTION
1		87702261		1	DECALCOMANIE, Two Function Loader Control
2		{87480903}		1	Decal; Three Function Loader Control
3		D149824		1	DECALCOMANIE, Upper; Standard Backhoe Control Pattern
4		D149825		1	DECALCOMANIE, Upper; Extendahoe Control Pattern; With Foot Swing
5		D149828		1	DECALCOMANIE, Upper; Standard Backhoe Control Pattern; With Hand Swing; Left-Hand Side Of Console
6		D149829		1	DECALCOMANIE, Upper; Standard Backhoe Control Pattern; With Hand Swing; Right-Hand Side Of Console
7		304083A1		2	DECALCOMANIE, Ride Control
8		449842A1		2	DECALCOMANIE, 2 x 6-5/16 in; Red, Reflector
9		192450A1		1	DECALCOMANIE, Clear Vinyl; Hood
10		D55216		2-11	BANDE ANTI-DERAPANTE, 2 x 9 in; Anti-Skid
11		D80270		3-4	RUBAN, 635 mm (25 in); Anti-Skid
12		307348A1		2	RUBAN, 700 mm (27-9/16 in); Anti-Skid; 40 gallon fuel tank
13		367848A2		1	PLAQUE DE GARNISSAGE, Anti-Skid; Canopy Models
14		87626017		4	DECALCOMANIE, Tie Down; Replaces 139728A1
15		406723A1		1	DECALCOMANIE, Poly Film; Lockup Cover; Canopy Models
16		87423812		1	DECALCOMANIE, Stabilizer Switch; Models With Pilot Controls
17		T41159		1	RUBAN ADHESIF, Not Illustrated

AUTOCOLLANTS

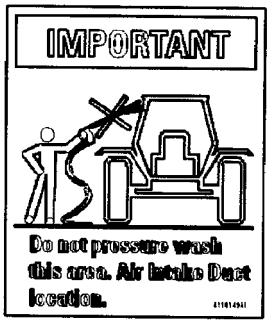

2

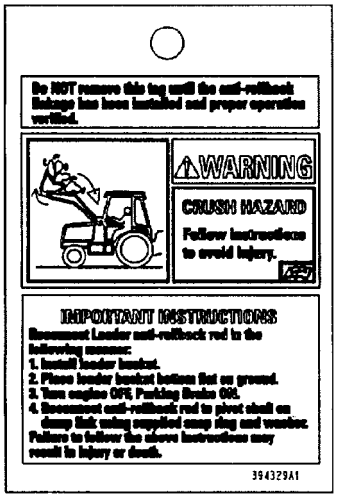

3

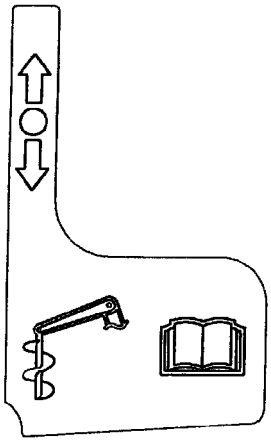

4

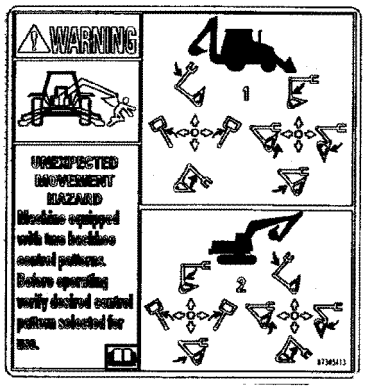

5

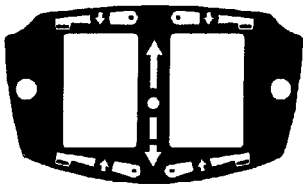

6

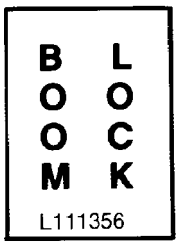

7



8



9

BS07M814

AUTOCOLLANTS

REF	FN	PART NUMBER	YR/SN	QTY	DESCRIPTION
2		411049A1		1	DECALCOMANIE, Important; Do Not Pressure Wash This Area
3		394329A1		1	ETIQUETTE, Warning; Anti-Rollback Hazard; English
3		430309A1		1	ETIQUETTE, Warning; Anti-Rollback Hazard; Latin American Spanish
3		430310A1		1	ETIQUETTE, Warning; Anti-Rollback Hazard; Canadian French
4		87430677		1	DECALCOMANIE, Auxiliary Hydraulics
5		87305413		1	DECALCOMANIE, Warning, Unexpected Movement; Pattern Selecting; English
5		87336843		1	DECALCOMANIE, Warning, Unexpected Movement; Pattern Selecting; Latin American Spanish
5		87336844		1	DECALCOMANIE, Warning, Unexpected Movement; Pattern Selecting; French Canadian
6		87423812		1	DECALCOMANIE, Stabilizer Control Switch
7		L111356		1	DECALCOMANIE, Boom Lock; Included In 399221A1 Backhoe Boom Lock Kit
8		321-6046		2	DECALCOMANIE, Warning, If You Use The Backhoe To Lift A Load That Is Too Heavy; Included With 189957A1 Boom Lock Valve Used In 399221A1 Backhoe Boom Lock Kit
9		87444776		1	DECALCOMANIE, Warning, Crush Hazard; When Changing A Machine to Foot Swing Controls; English
9		87307893		1	DECALCOMANIE, Warning, Crush Hazard; When Changing A Machine to Foot Swing Controls; Latin American spanish
9		87307896		1	DECALCOMANIE, Warning, Crush Hazard; When Changing A Machine to Foot Swing Controls; Canadian French

AUTOCOLLANTS - ANGLAIS

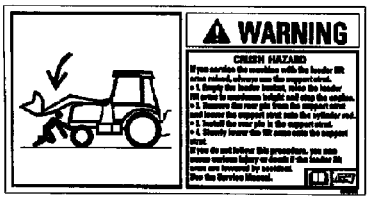

1

FUSES 87652902			
SPARE	....	....	....
SPARE	POWER OUTLET 30A	SPARE	PILOT CONTROLS BH AUX (OPT) 15AMP
FRONT WORK LIGHTS 20A	POWER OUTLET 30A	AIR SUSP. SEAT-AIR COMP. (OPT) 20A	RETURN TO DIG 10A
REAR WORK LIGHTS 20A	PWRSHIFT CTRL, COMFORT STEER (OPT) 10A	SPARE	DRIVING LIGHTS 15A
FUEL SHUTOFF 10A	BLOWER 25A	DOME LIGHT 10A	ROTATING BEACON (OPT) 10A
INSTRUMENTS ALARMS SYS. 10A	SIGNAL LIGHTS PARK BRAKE 20A	HORN 10A	4WD (OPT) 10A
STARTING TRANSMISSION CONTROL 10A	RADIO, RIDE CONTROL, QUICK COUPLER 15A	RADIO (BATT) (OPT) 10A	WIPERS 15A

8

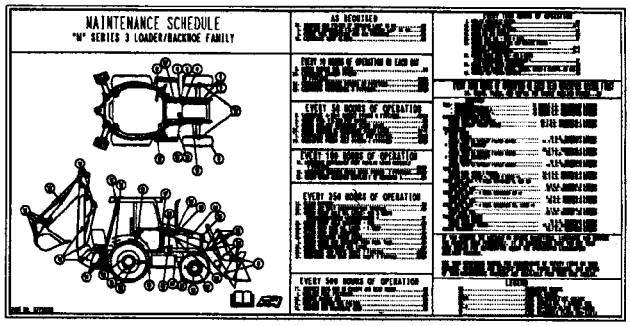

2

POWER RELAY #1	POWER RELAY #4	FLASHER RELAY	STARTER RELAY
POWER RELAY #2	LDR LVR DIFF LK RELAY	SHUTTLE INTLK TIMING RELAY	NEUTRAL RELAY
POWER RELAY #3	CLUTCH RELAY	SHUTTLE INTLK RELAY	FORWARD RELAY
PARK BRAKE RELAY	....	....	REVERSE RELAY
		AC RELAY (OPT)	....
COMFORT STEER POWER (OPT)	COMFORT STEER CUTOUT (OPT)		

RELAYS

9



3

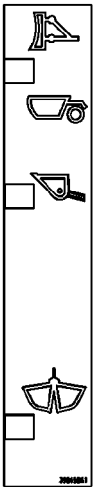

5

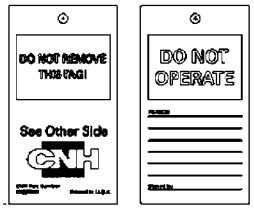

11

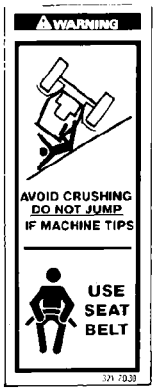

10



12

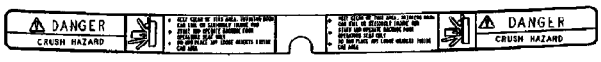

4

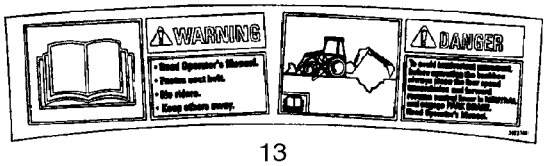

13

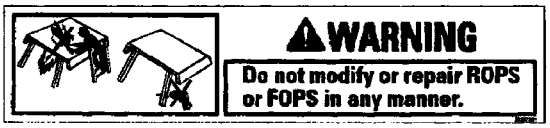

6

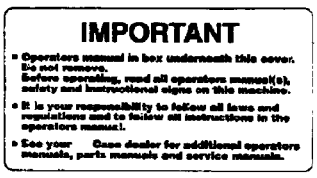

7



14

BS08A110

AUTOCOLLANTS - ANGLAIS

REF	FN	PART NUMBER	YR/SN	QTY	DESCRIPTION
1		384264A1		1	DECALCOMANIE, Warning; Crush Hazard; Loader Arm Support Strut
2		87735103		1	DECALCOMANIE, Maintenance Schedule; Supplied by Parts and Components
3		8603092		1	ETIQUETTE ALARME, Warning; Explosion Hazard, Do Not Use Ether
4		86992976		1	DECALCOMANIE, Danger; Crush Hazard
5		398658A1		1	DECALCOMANIE, Clam Bucket Position
6		383972A1		1	DECALCOMANIE, Warning; Do Not Modify or Repair ROPS or FOPS In Any Manner
7		144193A3		1	DECALCOMANIE, Important; Operator's Manual In Box Underneath This Cover; Glove Box Lid
8		87652902		1	DECALCOMANIE, Fuse Location
9		87647001		1	DECALCOMANIE, Relay
10		321-7030		2	DECALCOMANIE, Warning; Avoid Crushing; Do Not Jump / Use Seat Belt
11		87358697		1	ETIQUETTE, TAG, Do Not Operate
12		86992975		2	DECALCOMANIE, Warning; No Step/Not An Exit; Canopy
13		392374A1		1	DECALCOMANIE, Warning/Danger; Read the Operator's Manual
14		87702297		1	DECALCOMANIE, Parking Brake

AUTOCOLLANTS - ESPAGNOL D'AM£RIQUE LATINE

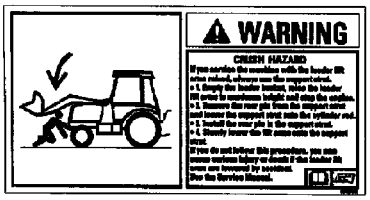

1

FUSES 87652902			
SPARE	....	....	....
SPARE	POWER OUTLET 30A	SPARE	PILOT CONTROLS BH AUX (OPT) 15AMP
FRONT WORK LIGHTS 20A	POWER OUTLET 30A	AIR SUSP. SEAT-AIR COMP. (OPT) 20A	RETURN TO DIG 10A
REAR WORK LIGHTS 20A	PWRSHIFT CTRL, COMFORT STEER (OPT) 10A	SPARE	DRIVING LIGHTS 15A
FUEL SHUTOFF 10A	BLOWER 25A	DOME LIGHT 10A	ROTATING BEACON (OPT) 10A
INSTRUMENTS ALARMS SYS. 10A	SIGNAL LIGHTS PARK BRAKE 20A	HORN 10A	4WD (OPT) 10A
STARTING TRANSMISSION CONTROL 10A	RADIO, RIDE CONTROL, QUICK COUPLER 15A	RADIO (BATT) (OPT) 10A	WIPERS 15A

8

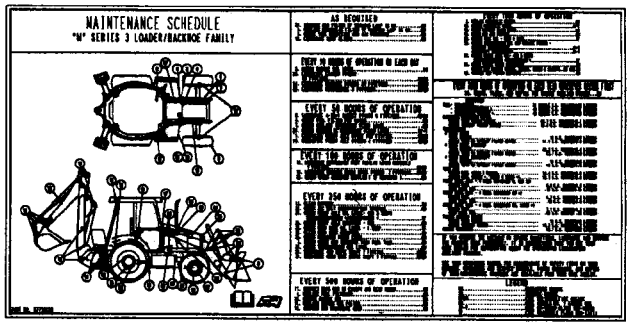

2

POWER RELAY #1	POWER RELAY #4	FLASHER RELAY	STARTER RELAY
POWER RELAY #2	LDR LVR DIFF LK RELAY	SHUTTLE INTLK TIMING RELAY	NEUTRAL RELAY
POWER RELAY #3	CLUTCH RELAY	SHUTTLE INTLK RELAY	FORWARD RELAY
PARK BRAKE RELAY	....	....	REVERSE RELAY
		AC RELAY (OPT)	....
COMFORT STEER POWER (OPT)	COMFORT STEER CUTOUT (OPT)		

RELAYS

9



3

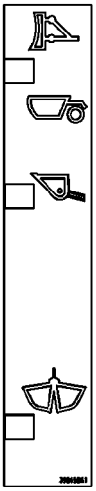

5

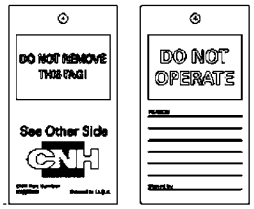

11

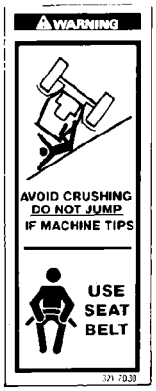

10



12

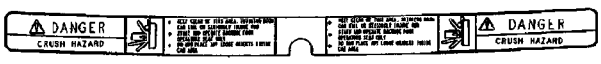

4

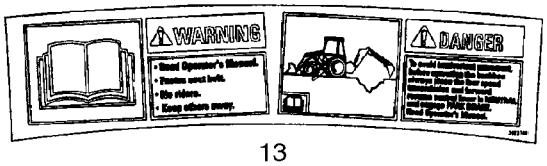

13

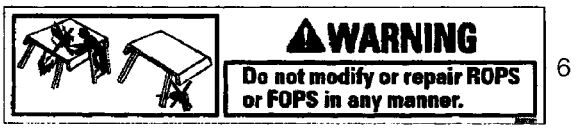

6

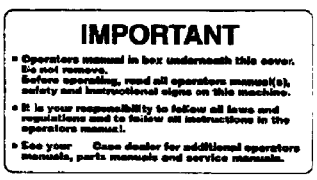

7

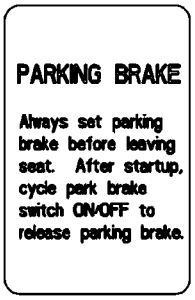

14

BS08A110

AUTOCOLLANTS - ESPAGNOL D'AM£RIQUE LATINE

REF	FN	PART NUMBER	YR/SN	QTY	DESCRIPTION
		87307893		1	DECALCOMANIE, Warning, Crush Hazard; When Changing A Machine to Foot Swing Controls; For Illustration See Ref 9 On Figure 09-75
1		398576A1		1	DECALCOMANIE, Warning; Crush Hazard; Loader Arm Support Strut
2		87735105		1	DECALCOMANIE, Maintenance Schedule; Supplied by Parts and Components
3		8603094		1	DECALCOMANIE, Warning; Explosion Hazard, Do Not Use Ether
4		86992981		1	DECALCOMANIE, Danger; Crush Hazard
5		398658A1		1	DECALCOMANIE, Clam Bucket Position
6		389729A1		1	DECALCOMANIE, Warning; Do Not Modify or Repair ROPS or FOPS In Any Manner
7		398662A1		1	DECALCOMANIE, Important; Operator's Manual In Box Underneath This Cover; Glove Box Lid
8		87706237		1	DECALCOMANIE, Fuse Location
9		87706250		1	DECALCOMANIE, Relay
10		398672A1		2	DECALCOMANIE, Warning; Avoid Crushing; Do Not Jump / Use Seat Belt
11		87380559		1	ETIQUETTE, Do Not Operate
12		86992980		2	DECALCOMANIE, Warning; No Step/Not An Exit; Canopy
13		398598A1		1	DECALCOMANIE, Warning/Danger; Read the Operator's Manual
14		87708227		1	DECALCOMANIE, Parking Brake
15		148093A1		1	DECALCOMANIE, Important; Lubrication; Not Illustrated
16		148095A1		1	DECALCOMANIE, Attention; Welding; Not Illustrated

AUTOCOLLANTS - FRANÇAIS CANADIEN

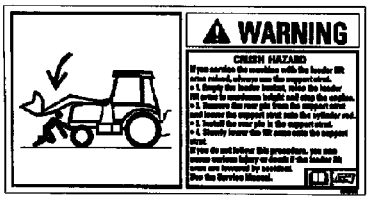

1

FUSES 87652902			
SPARE	....	....	....
SPARE	POWER OUTLET 30A	SPARE	PILOT CONTROLS BH AUX (OPT) 15AMP
FRONT WORK LIGHTS 20A	POWER OUTLET 30A	AIR SUSP. SEAT-AIR COMP. (OPT) 20A	RETURN TO DIG 10A
REAR WORK LIGHTS 20A	PWRSHIFT CTRL, COMFORT STEER (OPT) 10A	SPARE	DRIVING LIGHTS 15A
FUEL SHUTOFF 10A	BLOWER 25A	DOME LIGHT 10A	ROTATING BEACON (OPT) 10A
INSTRUMENTS ALARMS SYS. 10A	SIGNAL LIGHTS PARK BRAKE 20A	HORN 10A	4WD (OPT) 10A
STARTING TRANSMISSION CONTROL 10A	RADIO, RIDE CONTROL, QUICK COUPLER 15A	RADIO (BATT) (OPT) 10A	WIPERS 15A

8

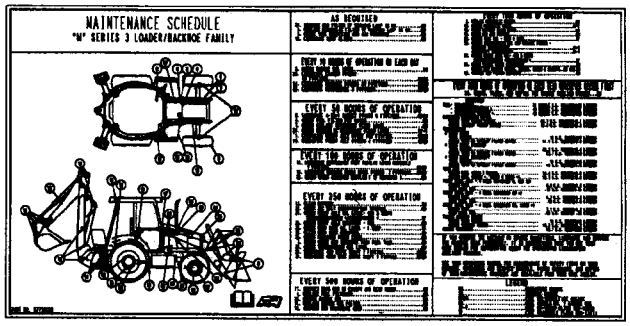

2

POWER RELAY #1	POWER RELAY #4	FLASHER RELAY	STARTER RELAY
POWER RELAY #2	LDR LVR DIFF LK RELAY	SHUTTLE INTLK TIMING RELAY	NEUTRAL RELAY
POWER RELAY #3	CLUTCH RELAY	SHUTTLE INTLK RELAY	FORWARD RELAY
PARK BRAKE RELAY	....	....	REVERSE RELAY
		AC RELAY (OPT)	....
COMFORT STEER POWER (OPT)	COMFORT STEER CUTOUT (OPT)		

RELAYS

9



3

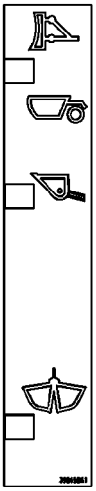

5

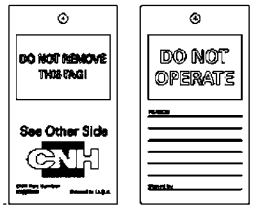

11

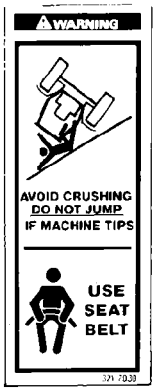

10



12

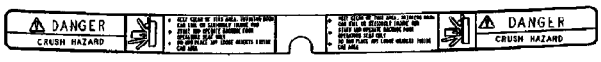

4

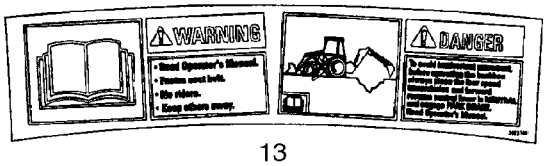

13

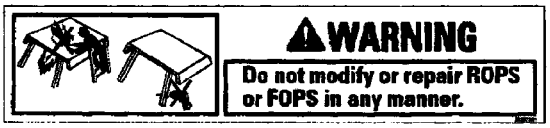

6

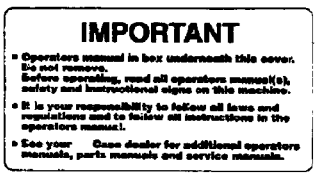

7

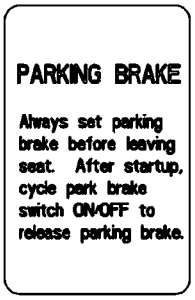

14

BS08A110

AUTOCOLLANTS - FRAN¢AIS CANADIEN

REF	FN	PART NUMBER	YR/SN	QTY	DESCRIPTION
		87307896		1	DECALCOMANIE, Warning, Crush Hazard; When Changing A Machine to Foot Swing Controls; For Illustration See Ref 9 On Figure 09-75
1		398577A1		1	DECALCOMANIE, Warning; Crush Hazard; Loader Arm Support Strut
2		{877355104}		1	Maintenance Schedule; Supplied by Parts and Components
3		8603093		1	DECALCOMANIE, Warning; Explosion Hazard, Do Not Use Ether
4		86992979		1	DECALCOMANIE, Danger; Crush Hazard
5		398658A1		1	DECALCOMANIE, Clam Bucket Position
6		389730A1		1	DECALCOMANIE, Warning; Do Not Modify or Repair ROPS or FOPS In Any Manner
7		398663A1		1	DECALCOMANIE, Important; Operator's Manual In Box Underneath This Cover; Glove Box Lid
8		87706239		1	DECALCOMANIE, Fuse Location
9		87706251		1	DECALCOMANIE, Relay
10		398673A1		2	DECALCOMANIE, Warning; Avoid Crushing; Do Not Jump / Use Seat Belt
11		87380558		1	ETIQUETTE, TAG, Do Not Operate
12		86992978		2	DECALCOMANIE, Warning; No Step/Not An Exit; Canopy
13		398599A1		1	DECALCOMANIE, Warning/Danger; Read the Operator's Manual
16		87708242		1	DECALCOMANIE, Parking Brake

AUTOCOLLANTS - ANGLAIS

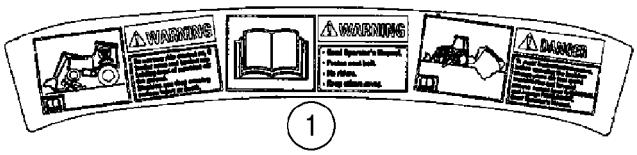

1



2

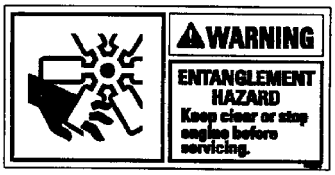

3

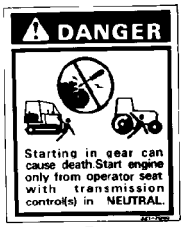

4



5

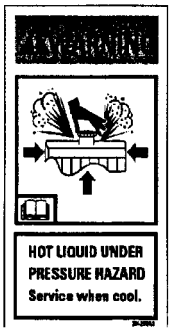

6



7



8



8A



13



9



10



11

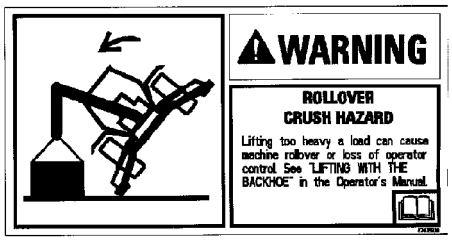

12

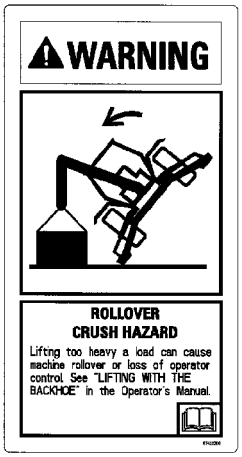

12A



14



15

BS07M816

AUTOCOLLANTS - ANGLAIS

REF	FN	PART NUMBER	YR/SN	QTY	DESCRIPTION
1		392375A1		1	DECALCOMANIE, Warning/Warning/Danger; Front, With Ride Control; Do Not Turn Ride Control On/Read Operator's Manual/To Avoid Inadvertent Movement
2		384265A1		1	DECALCOMANIE, Warning; Crush Hazard; Keep Clear; Support Loader Lift Arms During Maintenance
3		384267A1		2	DECALCOMANIE, Warning; Entanglement Hazard, Fan; Keep Clear or Stop Engine Before Servicing
4		321-7040		1	DECALCOMANIE, Danger; Starting In Gear
5		384269A1		2	DECALCOMANIE, Danger; Jump Start
6		384258A1		1	DECALCOMANIE, Warning; Hot Liquid Under Pressure
7		321-230		1	DECALCOMANIE, Diesel Fuel
8		321-229		1	DECALCOMANIE, Hydraulic Fluid; Used In Production; For Service, Order 321-6376, English Decal Only
8A		321-6376		1	DECALCOMANIE, Hydraulic Fluid
9		384260A1		1	DECALCOMANIE, Warning; Ride Control Accumulator
10		D149826		1	DECALCOMANIE, Caution/Important; For All Models With Foot Swing Backhoe Controls and Standard Backhoe Models With Hand Swing
11		D149827		1	DECALCOMANIE, Caution/Important; Extendahoe Backhoe Models With Hand Swing
12		87435938		1	DECALCOMANIE, Warning; Rollover Crush Hazard; Lifting Too Heavy A Load; Models Without Pilot Controls
12A		87433209		1	DECALCOMANIE, Warning; Rollover Crush Hazard; Lifting Too Heavy A Load; Models With Pilot Controls
13		321-6774		1	DECALCOMANIE, Warning; Seat Spring
14		87423813		2	DECALCOMANIE, Warning; Unexpected Movement Hazard; Before Adjusting Windows
15		87581010		1	DECALCOMANIE, Warning; Pressurized System Hazard

AUTOCOLLANTS - ESPAGNOL D'AM£RIQUE LATINE

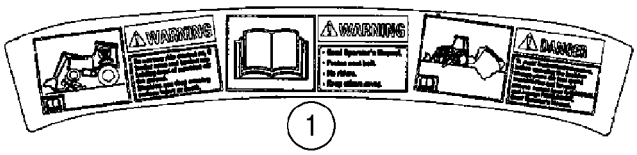

1



2

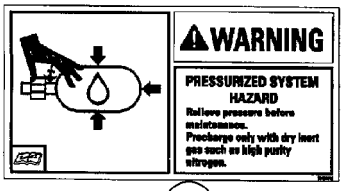

9



10



11

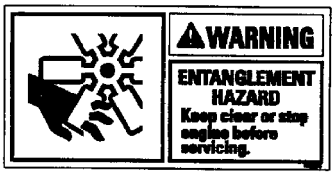

3

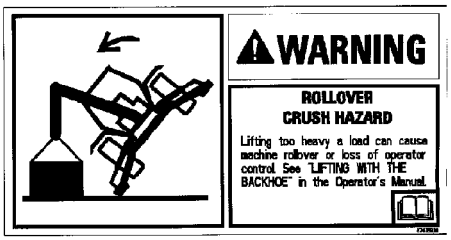

12

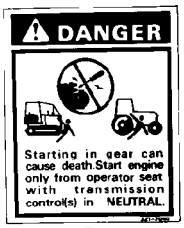

4



5

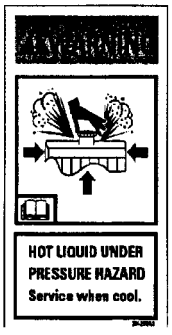

6

DIESEL FUEL

7

HYDRAULIC FLUID

8

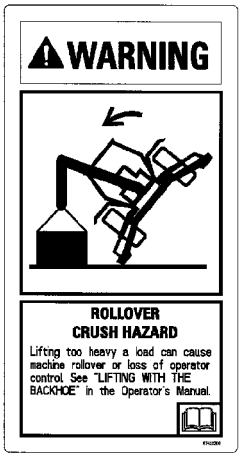

12A



14



8A



13



15

BS07M816

AUTOCOLLANTS - ESPAGNOL D'AM£RIQUE LATINE

REF	FN	PART NUMBER	YR/SN	QTY	DESCRIPTION
1		398600A1		1	DECALCOMANIE, Warning/Warning/Danger; Front, With Ride Control; Do Not Turn Ride Control On/Read Operator's Manual/To Avoid Inadvertent Movement
2		398578A1		1	DECALCOMANIE, Warning; Crush Hazard; Keep Clear; Support Loader Lift Arms During Maintenance
3		398580A1		2	DECALCOMANIE, Warning; Entanglement Hazard, Fan; Keep Clear or Stop Engine Before Servicing
4		398674A1		1	DECALCOMANIE, Danger; Starting In Gear
5		398582A1		2	DECALCOMANIE, Danger; Jump Start
6		398570A1		1	DECALCOMANIE, Warning; Hot Liquid Under Pressure
7		398667A1		1	DECALCOMANIE, Diesel Fuel
8		398665A1		1	DECALCOMANIE, Hydraulic Fluid
8A		321-6376		1	DECALCOMANIE, Hydraulic Fluid, English Decal Only
9		398572A1		1	DECALCOMANIE, Warning; Ride Control Accumulator
10		398677A1		1	DECALCOMANIE, Caution/Important; For All Models With Foot Swing Backhoe Controls and Standard Backhoe Models With Hand Swing
11		398669A1		1	DECALCOMANIE, Caution/Important; Extendahoe Backhoe Models With Hand Swing
12		87435939		1	DECALCOMANIE, Warning; Rollover Crush Hazard; Lifting Too Heavy A Load; Models Without Pilot Controls
12A		87434771		1	DECALCOMANIE, Warning; Rollover Crush Hazard; Lifting Too Heavy A Load; Models With Pilot Controls
13		398670A1		1	DECALCOMANIE, Warning; Seat Spring
14		87429163		2	DECALCOMANIE, Warning; Unexpected Movement Hazard; Before Adjusting Windows
15		87622505		1	DECALCOMANIE, Warning; Pressurized System Hazard

AUTOCOLLANTS - FRAN¢AIS CANADIEN

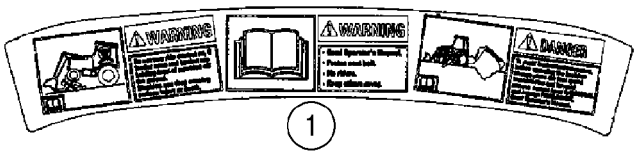

1



2

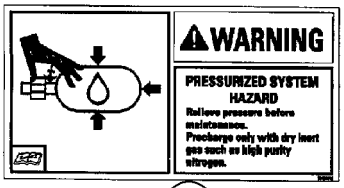

9



10



11

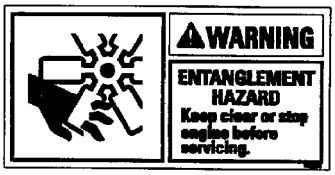

3

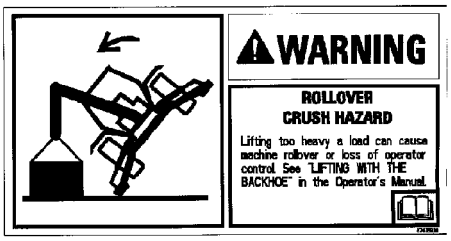

12

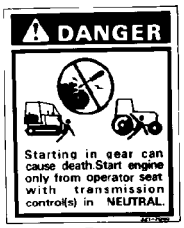

4



5

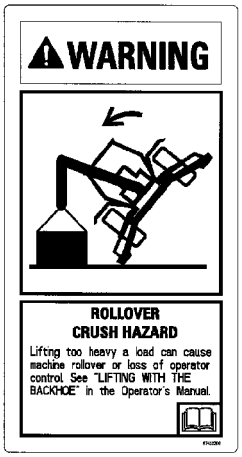

12A



14

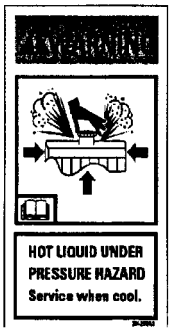

6

DIESEL FUEL

7

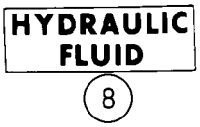

8

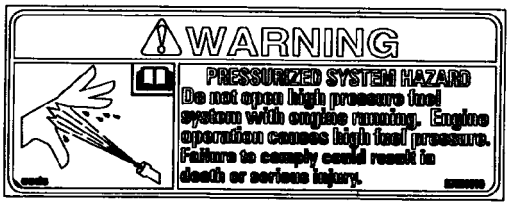

15



8A



13

BS07M816

AUTOCOLLANTS - FRAN¢AIS CANADIEN

REF	FN	PART NUMBER	YR/SN	QTY	DESCRIPTION
1		398601A1		1	DECALCOMANIE, Warning/Warning/Danger; Front, With Ride Control; Do Not Turn Ride Control On/Read Operator's Manual/To Avoid Inadvertent Movement
2		398579A1		1	DECALCOMANIE, Warning; Crush Hazard; Keep Clear; Support Loader Lift Arms During Maintenance
3		398581A1		2	DECALCOMANIE, Warning; Entanglement Hazard, Fan; Keep Clear or Stop Engine Before Servicing
4		398676A1		1	DECALCOMANIE, Danger; Starting In Gear
5		398583A1		2	DECALCOMANIE, Danger; Jump Start
6		398571A1		1	DECALCOMANIE, Warning; Hot Liquid Under Pressure
7		398668A1		1	DECALCOMANIE, Diesel Fuel
8		398666A1		1	DECALCOMANIE, Hydraulic Fluid
8A		321-6376		1	DECALCOMANIE, Hydraulic Fluid, English Decal Only
9		398573A1		1	DECALCOMANIE, Warning; Ride Control Accumulator
10		398656A1		1	DECALCOMANIE, Caution/Important; For All Models With Foot Swing Backhoe Controls and Standard Backhoe Models With Hand Swing
11		398654A1		1	DECALCOMANIE, Caution/Important; Extendahoe Backhoe Models With Hand Swing
12		87435940		1	DECALCOMANIE, Warning; Rollover Crush Hazard; Lifting Too Heavy A Load; Models Without Pilot Controls
12A		87434772		1	DECALCOMANIE, Warning; Rollover Crush Hazard; Lifting Too Heavy A Load; Models With Pilot Controls
13		398671A1		1	DECALCOMANIE, Warning; Seat Spring
14		87429164		2	DECALCOMANIE, Warning; Unexpected Movement Hazard; Before Adjusting Windows
15		87622506		1	DECALCOMANIE, Warning; Pressurized System Hazard

Number	Figure	Sequence	Ref.
{ 2854866}	02-14		12
{}	02-25		4
	09-08		
	09-57		
{2853815}	02-21		4
{2853816}	02-21		3
{2855183}	02-28		7
{2855380}	02-25		
{2855381}	02-25		3
{2856271}	02-21		1
{2856309}	02-22		4
{2856436}	03-05		
{434746A1}	06-33		5
{452140A1}	06-37		8
{87478483}	08-06		23
	08-26		48
{87480903}	09-74		2
{87521766}	04-09		14
	04-12		
{87578867}	06-15		1A
	06-23		1A
{87653246}	09-61		
{87701053}	06-21		4
{87701253}	06-13		4
{87701255}	06-13		5
{87701257}	06-13		11
	06-21		11
{87701258}	06-13		18
	06-21		22
{87701260}	06-13		22
{87701269}	06-13		26
	06-21		27
{87701270}	06-13		27
	06-21		26
{87701275}	06-17		28
	06-25		28
{87701276}	06-16		4
	06-24		4
{87701278}	06-18		4
	06-26		4
{87701293}	06-18		16
	06-26		16
{87701294}	06-18		27
{87701309}	07-01		1
	07-01	01	1
{87701310}	07-01		2
	07-01	01	2
{87701313}	07-01		4
	07-01	01	4
{87701315}	07-01		5
	07-01	01	5
{87701317}	07-01		6
	07-01	01	6
{87701318}	07-01		7
	07-01	01	7
{87701320}	07-01		8
	07-01	01	8
{87701321}	07-01		9
	07-01	01	9
{87701323}	07-01		10
	07-01	01	10
{87701324}	07-01		11
	07-01	01	11
{87701325}	07-01		12
	07-01	01	12
{87701327}	07-01		13
	07-01	01	13
{87701328}	07-01		14
	07-01	01	14
{87701329}	07-01		15
	07-01	01	15
{87701330}	07-01		16
	07-01	01	16
{87701331}	07-01		17
	07-01	01	17
{87701332}	07-01		18
	07-01	01	18
{87701333}	07-01		19
{87701333}	07-01	01	19
{87701775}	06-26		27
{87701777}	06-21		5
{87702570}	06-13		20
	06-21		18
{87704971}	06-27		1
{87708390}	06-33		1
{87708391}	06-33		9
{87708392}	06-33		10
{87708393}	06-35		1
{87708394}	06-34		1
{87708395}	06-34		2
{87708396}	06-34		4
{87708397}	06-34		6
{87708398}	06-34		7
{87708399}	06-34		8
{87708400}	06-34		9
{87708401}	06-34		11
{87708402}	06-34		14
{87708403}	06-34		15
{87708408}	06-34		16
{87708409}	06-34		17
{87708411}	06-34		18
{87708413}	06-36		1
{87708415}	06-36		2
{87708417}	06-36		5
{87708420}	06-36		6
{87708422}	06-36		8
{87708424}	06-36		9
{87708427}	06-36		10
{87708431}	07-02		1
{87708432}	07-02		1
{87708433}	07-02		2
{87708434}	07-02		3
{87708435}	07-02		4
{87708436}	07-02		6
{87708438}	07-02		7
{87708440}	07-02		9
{87708441}	07-02		12
{87708442}	07-02		13
{87708443}	06-37		2
{87708444}	06-37		3
{87708445}	06-37		6
{87708447}	06-37		9
{87708452}	06-37		10
{87708453}	06-37		11
{87708454}	06-37		12
{87708466}	06-37		17
{87708467}	06-37		18
{87710131}	06-02		
{87710137}	06-04		9
{87710141}	06-04		8
{87710142}	06-04		6
{87710143}	06-04		7
{87710144}	06-04		
{87710156}	06-03		1
{87710158}	06-04		5
{87710159}	06-03		2
{87711038}	06-37		15
{877355104}	09-78		2
{87746673}	08-15		2
	08-16		2
	08-17		2
	08-18		5
{87746674}	08-19		2
	08-20		2
{87751884}	09-73		4
{87751885}	09-73		5
{87754369}	09-73		1
{87757931}	08-31		17
{87757932}	08-31		18
{P1139855X}	06-35		7
100-21315	08-62		13A
100-39001	09-55		43
	09-57		20
100016	04-01		39
100520A1	06-02		12
100532A1	06-03		3

Number	Figure	Sequence	Ref.
100533A1	05-06		11
	06-03		8
100552A1	06-06		5
100553A1	06-06		
100554A1	06-06		
100555A1	06-06		18
100556A1	06-06		4
100557A1	06-06		22
	06-13		3
	06-21		3
	06-33		6
100559A1	06-06		6
100561A1	06-06		13
100562A1	06-06		19
100696A1	09-04		3
100748A1	06-12		9
	06-20		9
100753A1	06-27		17
100760A1	07-01		22
	07-01	01	22
101479A1	08-13		24
101531A1	04-17		9
102-1387	05-03		4
102-23206	08-29		5
102761A1	09-01		12
	09-02		11
102765A1	09-18		19
103-11100	09-13		16
103-1475	09-21		8
103-1518	03-03		7
103-16175	09-22		4
	09-22		8
	09-24		25
	09-24		33
	09-26		23
	09-26		27
	09-26		33
	09-26		36
	09-26		5
	09-27		14
	09-27		40
	09-27		50
103-16200	09-23		18
103-3350	09-04		29
103670A1	08-24		18
104824A1	09-04		23
104907A1	06-30		1
106989A1	09-18		13
106990A1	09-18		15
107124A1	09-26		45
	09-26		49
	09-27		22
	09-27		33
	09-37		8
108088A1	09-01		11
	09-02		9
108366A1	04-17		4
108864A1	09-18		1
108923A1	09-18		9
108924A1	09-18		8
109268A1	09-04		4
109879A1	09-39		7
	09-41		14
111522A1	09-04		5
112380A1	09-01		14
	09-02		4
	09-18		21
112486A1	06-07		10
112509A1	05-06		5
	06-04		3
112517A1	06-27		4
112884A1	09-48		
112946A1	09-06		8
113135A2	08-59		2
114295A1	06-06		20
114318A1	09-23		12A
	09-37		4
114549A1	09-54		6
114882A2	05-01		2
114980A1	09-41		7
116425A1	06-06		12
116426A1	06-06		7
116427A1	06-06		8
118900A1	09-04		24
118901A1	09-04		30
	09-05		3
119241A1	06-30		1
119243A1	05-09		4
120303A1	05-02		25
	08-04		10
	08-05		8
	08-06		8
	08-26		32
	08-26		43
	08-27		14
	09-38		38
121412A1	04-07		2
	04-09		
	04-17		16
121413A1	04-07		3
	04-09		
	04-19		1
	04-20		13
121414A1	04-07		4
121415A1	04-09		
121416A1	04-07		5
121665A1	09-22		7
121778A1	09-23		3
121856A1	09-38		55
121920A1	09-08		12
122081A1	09-66		9
122259A1	05-06		10
122261A1	05-05		9
122264A1	06-03		10
122265A1	05-06		9
	06-03		9
122268A1	06-02		13
122270A1	05-05		5
	06-02		7
122503A1	09-27		
122553A1	09-65		12
	09-66		24
122554A1	09-66		17
122603A1	09-38		28
123537A1	09-10		29
123726A1	08-61		12
123809A2	04-04		31
	04-07		30
	06-11		43
123969A1	09-48		9
123980A1	09-65		23
124011A1	09-65		22
124568A2	08-62		3
124721A1	09-03		14
1250594C1	09-65		10
	09-65		11
	09-66		16
	09-66		23
	09-66		8
125113A1	09-18		12
	09-18		14
125749A1	09-61		12
126-116	06-11		12
126155A1	09-10		31
126177	09-72		3
12644301	07-06		5
126918A1	09-20		2
127009A1	04-10		6
127158A1	04-17		6
127862A2	08-63		6
128135A2	08-61		4
128312A1	04-04		38
	04-08		3
	04-13		13
	04-14		3
	09-04		19

Number	Figure	Sequence	Ref.
128483A1	09-65		16
	09-65		9
	09-66		2
	09-66		7
128484A1	09-65		3
	09-66		13
128485A1	09-65		4
	09-65		8
	09-66		14
	09-66		21
128570A1	06-08		11
	06-35		11
128760A1	08-12		19
	08-13		30
	08-65		1
	09-26		1
	09-27		10
128761A1	08-65		2
128770A2	08-65		4
128772A1	08-65		16
128818A1	09-04		11
129-667	08-57		2
129040A1	09-24		23
	09-24		26
129041A1	09-24		30
	09-26		2
	09-27		12
129883A1	09-24		10
	09-27		1
129884A2	09-26		
129885A1	09-33		1
129893A1	09-31		3
	09-33		3
129894A1	09-31		2
	09-33		2
129944A1	09-33		4
130047A1	03-01		15
1302758C1	04-11		35
	09-68		20
130674A1	09-48		
131-121	04-10		15
	09-01		4
131-431	09-41		22
	09-73		14
131-619	04-11		17
	04-11		20
131-861	04-10		7
	09-11		15
	09-61		8
131-869	09-43		21B
	09-43		4
1312210C2	04-13		
	04-13		
131750A2	08-65		
132842A1	09-27		45
132844A1	09-27		44
132931A1	03-03		2
	09-01		25
132988A1	09-06		3
	09-06		3
133083A1	08-58		12
1331087C1	09-64		14
133715A1	04-09		17
1340763C1	08-62		16
1340764C1	08-62		15
1340798C1	08-60		15
1340969C2	08-14		17
	08-66		1
	09-27		25
1340970C1	08-66		2
134167A1	09-23		20
1346195C1	08-60		13
1346476C1	08-65		6
134844A1	09-07		3
1349058C1	06-08		5
1349059C1	06-08		6
	06-35		2
135-51652	09-24		18
135-51652	09-27		4
135161A1	08-58		13
135248A1	09-23		10
135249A1	09-23		9
136-54	04-17		14
136261A1	09-16		11
136263A1	09-16		8
	09-17		2
136267A1	09-16		5
136269A1	09-16		6
136270A2	09-16		40
136271A2	09-16		39
136822A1	09-11		11
136824A1	09-11		13
137219A1	04-19		3
137223A2	06-01		13
137248A1	08-62		13
137283A1	09-03		1
137343A1	09-10		28
137344A1	09-10		27
138595A1	09-38		11
138624A1	09-24		36
139180A1	09-05		12
139195A1	09-05		14
139235A1	09-05		13
139294A1	07-02		5
139312A1	06-17		20A
	06-25		20A
	07-01		20
	07-01	01	20
139363A1	09-41		10
139865A1	09-03		8
140-103	09-61		11
140-104	09-55		44
	09-57		21
140-107	09-01		3
140-108	09-15		29
140-119	04-09		15
140943A1	06-08		7
140944A1	06-08		7
140945A1	06-08		7
140946A1	06-08		7
140947A1	06-08		7
140948A1	06-08		7
140949A1	06-08		7
140951A1	06-08		7
140953A1	06-08		7
140954A1	06-08		7
141232A2	09-35		1
141233A1	09-35		3
141234A1	09-35		2
142-103	09-55		47
	09-57		23
142300A1	09-08		3
142404A1	09-03		2
142524A1	09-04		12
142538A1	09-06		5
	09-06		5
	09-07		5
142842A1	09-24		27
14302921	08-47		5
	08-48		5
	08-49		6
14304021	08-47		1
143219A1	08-21		
143400A1	08-13		15
14358921	08-48		1
144173A1	08-29		7
144193A3	09-76		7
144457A1	06-04		
144460A1	06-08		
144461A1	06-05		
144462A1	06-05		1
144463A1	06-05		5
144465A1	06-05		4
144466A1	06-06		
144477A1	08-23		14
	08-23		7

Number	Figure	Sequence	Ref.
144477A1	08-23B		14
	08-23B		7
144479A1	08-23		8
	08-23B		8
144908A2	09-40		21
148093A1	09-77		15
148095A1	09-77		16
151-516	09-53		7
	09-69		3
1530028C1	06-13		6
	06-21		6
1542830C2	08-55		
1542874C1	08-59		
1542875C1	08-58		
	08-60		
	08-66		
1542876C1	08-61		
	08-62		
1542877C1	08-63		
	08-64		
	08-65		
1543256C1	08-59		
1543260C1	08-58		
1543267C1	08-60		
	08-66		
1543269C1	08-61		
15687475	08-50		9
	08-51		9
	08-52		9
	08-53		7
	08-54		9
1637759	06-01		14
16586225	02-33		14
16673635	02-11		1
168-71	04-17		7
16882515	02-12		4
175156A1	09-08		
175599A1	09-41		2
175778A1	08-64		14
175957A1	06-35		3
175966A1	06-36		7
176309A1	09-01		23
	09-02		5
177269A1	04-18		14
	09-61		18
178004A1	09-18		18
178006A1	09-18		17
178051A1	08-29		8
178951A1	08-10		12
	08-11		11
	08-12		11
	08-13		10
178952A1	08-10		13
	08-11		12
	08-12		12
	08-13		11
179029A1	09-20		1
17916280	02-34		6
179956A1	09-12		6
180427A1	09-37		2
181042A1	09-24		22
	09-27		8
181100A1	06-13		8
	06-15		24
	06-21		8
	06-23		24
	06-29		5
181101A1	06-13		23
	06-21		19
181105A1	06-13		14
	06-21		14
181108A1	06-17		24
	06-18		26
	06-25		24
	06-26		26
181111A1	06-17		13
	06-25		13
181116A1	06-17		9
181116A1	06-25		9
181118A1	06-18		1
	06-26		1
181122A1	06-27		5
181123A1	06-18		31
	06-26		31
181126A1	06-16		3
	06-24		3
	06-27		9
181128A1	06-17		3
	06-25		3
181130A1	06-18		30
	06-26		30
181132A1	06-16		5
	06-18		2
	06-24		5
	06-26		2
181138A1	06-15		12
	06-23		12
181139A1	06-15		5
	06-23		5
181141A1	06-13		17
	06-21		17
181142A1	06-14		19
	06-22		19
181144A1	06-18		33
	06-26		33
181158A1	06-17		12
	06-25		12
181159A1	06-17		11
	06-25		11
181161A1	06-17		14
	06-25		14
181165A1	06-18		34
	06-26		34
181171A1	06-15		7
	06-23		7
181173A1	06-15		16
	06-23		16
181174A2	06-15		22
	06-23		22
181175A1	06-15		18
	06-23		18
181176A1	06-21		13
181177A1	06-15		11
	06-23		11
181179A1	06-13		15
	06-21		15
181198A1	06-27		3
181202A1	06-12		13
	06-20		13
181203A1	06-15		21
	06-23		21
181207A1	06-19		24
	06-28		24
181219A1	06-12		10
	06-20		10
181232A1	06-13		16
	06-21		16
181245A2	06-15		1
	06-23		1
181251A1	06-19		9
	06-28		9
181274A1	06-12		3
	06-20		3
181842A1	09-04		7A
181979A1	09-65		24
181981A1	09-42		17
	09-63		5
182006A1	09-17		4
	09-21		9
182109A1	08-63		16
182116A1	08-63		19
182218A1	08-63		
182594A1	04-11		11
182697A1	09-63		3
182721A2	04-18		11
183168A1	09-40		7

Number	Figure	Sequence	Ref.
183443A1	09-27		51
183509A1	09-27		52
183736A1	08-13		29
183808A1	09-31		1
183810A1	09-31		4
184297A1	08-13		22
184616A1	08-14		13
184617A1	08-14		12
184723A1	09-24		35
184726A1	04-11		10
185325A1	09-41		15
185377A1	02-01		29
185506A1	09-07		8
185926A1	03-01		4
	09-38		20
186351A1	09-49		5
186977A1	09-37		13
186989A1	09-41		21
	09-73		13
187281A1	04-18		12
187612A1	08-10A		25
187714A1	06-11		1
187715A1	06-11		2
188009A3	03-01		29A
188027A2	08-09		13
	08-09A		13
	08-62		1
	09-23		11
188028A2	08-62		2
188032A2	08-62		4
188034A3	08-62		14
188035A1	08-62		
188036A1	08-62		22
189103A1	08-10A		20
189109A1	03-03		2A
	09-01		
189263A1	08-10A		21
189414A1	08-10A		33
189602A3	03-01		29
189653A2	08-10		21
	08-63		1
	09-24		9
189657A2	08-63		18
189957A1	08-10A		1
	08-55A		
190427A1	06-18		
	06-26		
190428A3	06-15		8
	06-23		8
190431A1	06-29		10
190442A1	06-19		3
	06-28		3
190506A1	06-35		6
190508A1	06-35		6
190509A1	06-35		6
190510A1	06-35		6
190511A1	06-35		6
190512A1	06-35		6
190513A1	06-35		6
190514A1	06-35		6
190515A1	06-35		6
190516A1	06-35		6
190675A1	09-64		17
190682A1	06-06		10
190684A1	06-06		9
191046A1	03-01		30
191047A1	09-38		32
191063A1	08-10A		10
191252A1	08-62		14A
191703A1	08-21		
	08-21		
	09-66		25
191704A1	03-01		23
	06-32		2
	07-05		12
	07-06		10
	08-07B		31
	09-66		3
191747A1	08-62		
191756A1	08-10A		9
191790A1	08-10A		12
191796A1	05-04		2
	06-01		8
192345A1	08-07		4
192352A1	08-07		3
192450A1	09-74		9
192815A1	09-04		28
192834A1	05-02		31
	08-26		51
192895A1	08-56		2
192971A1	08-09		15
	08-09A		15
193-1000	04-04		3
	04-07		
193-1003	09-04		17
195-81023	09-55		48
	09-57		24
1954626C1	09-64		15
1954736C1	09-64		3
195503A1	08-08		30
	08-08A		30
	08-61		1
	09-22		1
195504A1	08-08		29
	08-08A		29
	08-61		1
	09-22		2
195505A1	08-61		2
195506A1	08-61		2
195552A1	04-18		3
1959509C1	05-01		4
196096A1	06-19		21A
	06-28		21A
196454A1	06-18		3A
	06-26		3A
1964831C2	04-09		4
1966136C1	06-02		16
1966138C1	06-02		17
	06-33		7
1966149C1	06-33		2
1966149C2	06-02		5
1966169C1	06-06		2
1966186C1	06-02		10
1966993C1	06-15		4
	06-23		4
1967003C1	06-07		4
1967581C1	06-15		10
	06-23		10
1967585C1	06-15		9
	06-23		9
196813A1	08-05		25
196815A1	08-05		24
1976955C1	08-55		2A
197745A1	04-18		4
197771A1	05-09		1
1977725C1	09-48		
1978141C1	08-56		8
1978142C1	08-56		
1978143C1	08-56		5
1978144C1	08-56		6
1978158C1	08-56		7
1980245C1	08-62		17
1980296C1	08-66		11
1980321C3	08-58		4
198033A1	08-65		14
198410A1	09-19A		5
1987096C1	09-64		33
198976A1	09-23		12
1999528C1	08-10A		29
1999666C1	09-64		16
1999667C1	09-64		
1999668C1	09-64		
1999926C1	09-66		15
1999927C1	09-66		22
20-21032	09-08		13
20-21232	09-06		9

Number	Figure	Sequence	Ref.
20-21232	09-07		9
	09-08		4
201-101	07-05		1
201-304	07-05		4
213-123	03-02		14
	03-03		17
213-126	09-16		22
	09-17		6
	09-19		6
	09-21		10
214-1406	09-38		22
	09-63		19
214-1412	02-04		5
	06-10		7
214-1416	02-02		8
	02-06		15
	03-03		33
214-1436	02-06		16
214-1440	02-01		17
214-1456	02-04		9
214-1464	02-04		8
	08-05		40
	08-07		21
	08-12		20
	08-13		33
	08-14		22
	09-66		5
214-1472	08-04		21
214-1488	08-10		25
	08-11		27
214-1492	08-09		22
	08-09A		22
214-1704	02-02		5
	03-01		8
214-1706	03-01		7
214-31104	08-10A		16
214-3132	08-13		23
	08-24		19
214-3180	09-59		6
	09-70		13
214-3188	08-08		28
	08-08A		28
217-1102	09-38		26
217-117	03-01		9
217-314	06-10		15
217-347	09-38		5
217-349	06-10		22
	08-03		9
217-380	09-38		25
217-425	09-64		34
218-1023	06-21		2
218-1254	09-10		20
218-1256	08-24		22
	09-10		33
218-1279	09-10		34
218-335	08-01		19
	08-23		30
	08-23B		30
	08-24		23
	08-25		24
218-459	06-11		38
218-5027	05-02		3
218-5034	08-01		51
218-5050	08-23		24
218-5053	08-07A		5
	08-07B		5
	08-17		5
	08-18		7
	08-19		7
	08-20		7
	08-22		38
	08-26		23
218-5056	08-26		25
218-5057	05-02		15
	05-02A		5
	08-08		5
	08-21		1
	08-22		33
218-5057	08-23B		25
	08-26		13
218-5059	05-02		8
	08-07		23
	08-08		11
	08-08		33
	08-08A		11
218-5062	06-10		4
	08-04		2
	08-05		28
	08-09		8
	08-09A		8
	08-11		25
	08-12		17
	08-13		31
	08-14		19
218-5063	08-09A		29
	08-09A		6
	08-10		8
	08-11		8
	08-12		8
	08-13		8
	08-14		8
	08-22		7
218-5064	08-01		22
	08-01		49
	08-02		19
	08-23		28
	08-23		42
	08-23B		27
	08-23B		42
218-5069	08-02		4
218-5070	08-08A		36
218-5086	08-03		20
218-5089	08-07A		17
	08-07B		17
	08-17		4
	08-18		4
	08-19		5
	08-20		5
	08-21		2
	08-22		1
218-5103	05-04		8
	06-01		33
218-5105	05-02A		15
	06-32		4
	08-07A		21
	08-07A		24
	08-07B		24
	08-08		8
	08-08A		8
	08-21		3
	08-22		39
	08-22		5
	08-26		11
	09-10		14
218-5106	05-02		6
	08-09		11
	08-09		24
	08-09A		11
	08-09A		24
218-5107	08-01		45
	08-04		16
	08-05		2
	08-05		32
	08-06		2
	08-07		18
	08-09		27
	08-09A		27
	08-10		19
	08-10		22
	08-11		19
	08-12		22
	08-13		35
	08-14		15
	08-22		3
218-5108	08-23B		29A
218-5110	08-02		14

Number	Figure	Sequence	Ref.
218-5117	08-25		11
218-5118	08-10A		7
218-5119	08-09		19
	08-09A		19
218-5121	08-08		20
	08-08A		20
218-5135	08-08A		5
218-5136	05-02		11
	08-08		35
218-5137	08-07		16
218-5140	08-01		24
218-5155	09-38		7
218-5156	08-07A		12
	08-07B		12
218-5158	08-23B		35
	09-38		3
218-5182	08-07B		21
	08-22		49
	09-10		15
218-5183	08-26		20
218-5213	08-29		16
218-5216	08-23		34
	08-23B		34
218-5220	08-05		18
218-5222	08-22		34
	08-23B		45
218-5228	05-02		2
218-5230	08-23B		33
218-5231	08-23B		29
218-5232	08-04		26
	08-04		29
	08-22		8
	08-25		23
218-5239	08-01		12
218-5242	08-07		25
218-5243	08-22		32
218-5280	05-02		19
	08-08		37
	08-23		26
218-5283	08-07A		2
	08-07B		2
	08-10A		13
218-5351	05-04		14
	06-01		4
	08-23B		31
	08-26		9
218-5359	08-10A		18
218-5365	08-22		4
218-5382	08-10A		23
218-5411	08-07A		20
	08-07B		20
218-5486	05-02A		20
218-5490	08-03		6
218-5511	08-23		44
218-5529	06-01		5
218-5584	08-01		27
	08-02		1
	08-02		10
	08-03		4
218-5600	08-25		18
218-5650	08-07		28
218-595	08-04		22
218-655	08-25		15
218-676	08-24		21
218-693	09-10		19
218-695	09-10		32
218-754	08-22		50
218-756	08-01		20
218-765	08-01		41
218-836	08-22		35
218-840	08-07		27
218-845	05-02		30
	05-02A		3
	08-26		22
	08-26		50
218-980	08-01		44
	08-22		6
	08-23B		24
219-1	06-01		6
	08-04		27
	08-58		17
	08-60		21
	08-61		17
	08-62		20
	08-63		23
	08-64		20
	08-65		20
	09-04		32
	09-05		23
	09-05		5
	09-08		9
	09-20		14
	09-23		28
	09-24		17
	09-24		3
	09-26		24
	09-26		37
	09-27		3
	09-27		35
	09-27		41
219-10	06-09		8
219-36	08-65		21
219-4	09-16		41
219-55	08-04		28
	08-05		41
	08-59		17
	08-60		22
	08-62		21
	09-04		10
	09-23		30
	09-25		5
	09-25A		5
	09-37		9
219-86	09-27		54
219-87	09-10		4
219-89	09-27		53
220165A2	08-62		2
220276A1	08-10A		28
220413A1	09-37		7
221-89	09-64		21
221168A1	08-55A		15
221477A1	09-21		1
224057A1	08-10		27
225-14210	03-02		13
	03-03		20
225315C1	08-50		6
	08-51		6
	08-52		6
225318C1	08-50		7
	08-51		7
	08-52		7
225350C1	08-52		14
	08-54		6
225353C1	08-52		15
	08-54		7
226456A1	09-38		9
226582A1	08-10A		27
227389A1	04-18		2
228133A2	02-01		29
230973A1	07-03		25
231-14109	09-39		8
	09-41		16
231-14409	09-15		30
231-1444	09-71		12
231-1445	09-15		23
231-1446	08-10A		6
231-24409	04-06A		37
	04-07		12
	04-08		25
231-2446	09-19		18
231-4115	09-71		9
231-4246	09-10		5
231-4247	09-22		39
231397A1	06-07		
232-1446	09-56		2
	09-57		28

Number	Figure	Sequence	Ref.
232-4246	09-01		19
232-4617	09-46		20
232948A1	09-66		10
233104A1	08-64		21
233110A2	08-64		16
233114A2	08-11		18
	08-64		1
	09-24		15
	09-27		9
233284A1	06-18		32
	06-26		32
234141A2	08-64		4
234412A1	08-25		9
	08-56		
234844A1	08-64		
235002A1	04-09		13
	08-25		26
237-6002	08-55		14
237-6004	05-02		4
	05-04		8A
	06-01		34
	08-07A		6
	08-07B		6
	08-17		
	08-18		
	08-19		
	08-20		
	08-26		24
	08-55		11A
237-6005	08-26		26
237-6006	05-02		16
	05-02		18
	05-02		20
	05-02A		16
	05-02A		6
	05-04		14A
	06-01		4A
	06-01		5A
	06-32		5
	07-05		2
	07-05		6
	07-06		3
	08-07		29
	08-07A		18
	08-07A		22
	08-07A		25
	08-07A		3
	08-07B		18
	08-07B		22
	08-07B		25
	08-07B		3
	08-08		38
	08-08		6
	08-08		9
	08-08A		6
	08-08A		9
	08-10A		14
	08-17		
	08-18		
	08-19		
	08-20		
	08-23		27
	08-23		45
	08-23B		26
	08-23B		32
	08-26		10
	08-26		12
	08-26		14
	08-26		19
	08-55		8
	08-57		4
	09-10		
	09-10		
	09-38		6
	09-38		8
237-6008	05-02		12
	05-02		7
	05-02		9
237-6008	06-19		18
	06-28		18
	08-07		24
	08-07		26
	08-07A		13
	08-07B		13
	08-08		12
	08-08		21
	08-08		34
	08-08		36
	08-08A		12
	08-08A		21
	08-09		12
	08-09		25
	08-09A		12
	08-09A		25
	08-10A		19
	08-25		12
	08-25		19
	08-26		21
	08-55		6
237-6010	03-01		6A
	06-10		16
	06-10		23
	06-10		5
	08-01		46
	08-01		48
	08-03		10
	08-04		17
	08-04		26A
	08-04		3
	08-04		30
	08-05		29
	08-05		3
	08-05		33
	08-06		3
	08-07		17
	08-07		19
	08-09		28
	08-09		9
	08-09A		28
	08-09A		9
	08-10		20
	08-10		23
	08-10A		11
	08-10A		34
	08-11		20
	08-11		26
	08-12		18
	08-12		23
	08-13		32
	08-13		36
	08-14		16
	08-14		20
	08-27		11
237-6012	05-02A		21
	08-01		13
	08-01		23
	08-01		50
	08-02		20
	08-08A		37
	08-09		20
	08-09A		20
	08-09A		30
	08-09A		7
	08-10		9
	08-11		9
	08-12		9
	08-13		9
	08-14		9
	08-23		25
	08-23		29
	08-23		43
	08-23B		28
	08-23B		29B
	08-23B		36
	08-23B		43
	08-55A		13

Number	Figure	Sequence	Ref.
237-6012	09-10		35
	09-38		4
237-6014	08-29		11
	08-29		17
237-6016	08-01		18
	08-01		25
	08-01		28
	08-01		52
	08-02		11
	08-02		15
	08-02		17
	08-02		2
	08-02		5
	08-02		8
	08-03		5
	08-10A		24
	08-10A		8
237-6020	08-03		21
237582A1	04-16		1
238-5005	04-17		8
238-5011	04-06A		5
	08-25		8A
	08-57		5
238-5013	06-19		20
	06-28		20
238-5014	06-19		19
	06-28		19
238-5152	06-08		10
238-5227	05-01		3
238-5228	08-01		7
238-5230	08-57		9
238-5231	08-59		9
	08-60		10
	08-66		8
238-5233	08-58		9
	08-65		11
238-5237	08-62		9
238-5239	08-61		9
	08-62		23
238-5241	08-64		11
238-5243	08-63		13
238-6012	06-01		13A
	07-04		10
	07-04		14
	07-04		16
	07-05		3
	07-05		5
	07-06		2
238-6018	08-55A		3
238-6121	06-06		22A
	06-13		
	06-21		
238-8217	06-27		22
239406A1	09-03		7
239408A1	04-09		12
239606A1	06-21		20
242459A1	08-24		5
	08-24		9
243084A1	09-23		19
243298A1	08-24		4
243300A1	08-24		1
243398A1	08-24		8
243404A1	08-24		2
243679A2	08-24		14
244109A1	06-18		6
	06-26		6
244790A1	09-26		51
	09-27		46
245258A1	04-09		7
245423A1	09-10		30
245466A1	09-28		6
	09-28		9
	09-29		6
	09-29		9
	09-30		6
	09-30		9
	09-31		6
	09-32		6
245466A1	09-32		6
	09-32		9
	09-32		9
	09-33		6
	09-34		6
	09-34		9
	09-35		6
	09-35		9
246151A1	08-24		17
246526A1	04-04		31A
248-2373	09-46		13
250851A1	09-05		7
	09-08		30
254686A2	06-12		1
	06-20		1
255447A1	09-41		25
	09-71		13
256210A2	08-24		14A
256347A1	09-01		
	09-02		
256776A1	03-03		5
257381A1	09-41		27
257382A1	09-41		26
258616A1	09-01		
	09-02		
259044A1	08-01		1
260-1436	09-61		16
260-16312	09-01A		23
	09-01A		8
261-14310	04-15		11
	04-15		4
27549R1	06-30		2
	06-30		2
276-2446	08-61		11
	08-66		10
276-2456	08-56		3
276-26512	04-18		10
276498A1	04-13		
	04-14		
277800A1	02-01		39
278316A2	04-10		9
278328A1	04-07		27
278532A1	06-15		14
	06-23		14
278533A1	06-15		13
	06-23		13
278534A1	06-12		8
	06-20		8
279039A1	06-15		15
	06-23		15
279223A1	04-14		6
279224A1	04-14		5
279265A2	04-14		15
279482A1	09-53		2A
	09-69		4
279916A1	04-14		16
280136	08-39		11
281-14520	09-64		9
281-14716	09-11		17
281-18712	09-63		26
281-54512	09-61		23
281185A1	09-26		
	09-27		
282-16512	04-18		7
282038A2	06-01		18
282242A1	03-03		1
282428A1	05-02		17
	08-26		18
282775A1	04-09		
282842A1	08-23		9A
	08-23B		9A
2830082	02-09		1
2830156	03-09		2
2830158	02-23		4
2830266	03-09		1
2830281	02-17		2
2830411	03-08		7
2830433	02-26		7

Number	Figure	Sequence	Ref.	Number	Figure	Sequence	Ref.
2830559	02-34		10	2852834	02-20		3
2830769	02-17		8	2852865	02-14		2
2830775	02-17		5	2852866	02-18		3
2830784	02-17		7	2852871	03-07		1
2830919	02-16		15	2852872	03-07		2
2830920	02-16		15	2852873	03-07		3
2830948	02-26		16	2852874	03-07		4
2831031	02-26		8	2852875	03-07		5
2831203	02-20		1	2852876	03-07		6
2831297	02-22		3	2852877	03-07		7
2831298	02-22		1	2852878	03-07		8
2831305	02-26		14	2852879	03-07		9
2831354	02-26		9	2852880	03-07		10
283779A1	04-09		22	2852881	03-07		11
283781A1	04-09		23	2852882	03-07		12
2852011	02-11		4	2852883	03-07		13
2852012	02-11		7	2852884	03-07		14
2852013	02-11		9	2852885	03-06		2
2852016	02-11		8	2852889	02-10		3
2852028	02-15		2	2852894	02-17		11
2852029	02-19		3	2852978	02-11		5
2852030	02-19		6	2853133	02-37		4
2852032	02-17		4	2853135	02-37		5
2852033	02-17		6	2853407	02-30		10
2852037	02-23		4	2853410	02-30		7
2852044	02-19		1	2853412	02-30		11
2852047	02-35		2	2853414	02-31		1
2852049	02-24		1	2853671	02-12		5
2852051	02-24		2	2853722	02-34		9
2852057	03-06		8	2853781	02-34		3
2852059	03-06		5	2853782	02-34		
2852062	02-28		2	2854030	02-23		3
2852065	03-11		3	2854072	02-36		2
2852075	03-07			2854073	02-14		6
2852088	03-04		3	2854075	02-14		3
2852089	03-04		4	2854340	03-06		1
2852098	03-08		1	2854493	02-33		6
2852101	02-33		13	2854603	02-23		4
2852102	02-33		10	2854611	02-38		
2852105	03-10		1	2855103	03-08		2
2852111	03-10		3	2855178	02-14		9
2852114	02-35		1	2855273	02-29		9
2852122	02-30		1	2855287	02-12		9
2852125	02-30		2	2855531	02-23		1
2852127	02-30		6	2855622	02-38		2
2852134	02-30		9	2855743	02-26		
2852135	02-30		8	2855746	02-26		15
2852145	02-36		3	2855747	02-26		3
2852151	02-37		1	2855748	02-26		5
2852153	02-37		2	2855750	02-26		4
2852155	02-37		1	2855753	02-26		2
2852157	02-37		6	2855894	02-37		3
2852161	02-38		2		02-41		3
2852162	02-38		3	2855903	03-11		6
2852163	02-38		1	2856017	02-16		3
2852170	02-39		3	2856086	02-11		6
2852171	02-39		4	2856170	02-28		5
2852172	02-39		5	2856255	03-05		1
2852180	02-42		2	2856263	02-19		4
	04-03		14	2856350	03-04		2
2852181	02-42		1	2856352	03-04		1
	04-03		16	2856462	02-19		1
2852183	02-41		1	286-56520	09-53		11
2852195	02-33		8		09-68		29
2852196	02-33		15	29-1010	09-08		14
2852197	02-33		12	29-1012	09-06		10
2852202	02-10		10		09-08		5
2852294	03-06		3	291010A1	04-18		6
2852473	02-37			292207A1	06-34		12
2852507	02-29		3	292208A1	06-34		13
2852509	02-29		5	292210A1	06-36		3
2852510	02-29		4	292212A1	06-36		4
2852511	02-36		5	292385A1	09-23		29
2852519	02-12		7	293636A1	09-23		34
2852521	03-11		4	294933A1	06-07		
2852531	02-15		1	297280A1	08-59		4
2852594	03-10		2	297281A1	08-60		4
2852743	02-20		2		08-66		3

Number	Figure	Sequence	Ref.
297952A1	08-64		2
298176A1	09-01		
	09-02		
298614A1	06-19		22
	06-28		22
300030A1	04-19		4
300588A1	09-27		26
300996A3	08-27		3
302358A1	03-01		3
	09-38		19
302820A2	08-27		5
303192A1	02-01		36
303465A2	04-10		10B
303466A1	04-10		10C
303467A1	04-10		10D
303646A1	09-24		41
304083A1	09-74		7
304424A1	08-27		9
304890A1	08-27		10
305492A1	09-10		16
305493A1	09-10		18
305494A1	09-10		17
305495A1	09-10		9
305496A1	09-10		7
305497A1	09-10		3
305499A1	09-10		8
305508A1	09-10		21
30634	08-60		14
307186A1	09-27		19
307277A1	08-27		17
307348A1	09-74		12
307385A1	09-10		22
307386A1	09-10		23
307387A1	09-10		24
307388A1	09-10		25
307389A1	09-10		26
307577A1	03-01		31
	09-38		33
309674A1	08-27		11A
309747A1	06-11		
310519A1	06-17		8
	06-25		8
310772A1	06-13		12
	06-21		12
311569A1	05-08		1
	06-06		1
313648A1	08-02		3
314319A1	08-24		27
314320A1	08-24		28
315273A1	09-55		12
315276A1	09-55		11
319467A1	09-35A		1
321-1707	09-08		29
321-1708	09-08		23
	09-73		11
321-229	09-38		2
	09-79		8
321-230	09-79		7
321-4311	09-72		5
321-6046	08-55A		16
	09-75		8
321-6376	09-79		8A
	09-80		8A
	09-81		8A
321-6774	09-79		13
321-7030	09-76		10
321-7040	09-79		4
321204	05-06		12
	06-03		7
321428A1	06-29		8
322357	04-06A		19
322860A1	03-03		4
3233348R1	09-15		36
	09-56		8
3234063R1	09-55		25
324213A1	05-08		2
325465A2	08-07		22
326-640	09-10		6
326806A1	09-23		1
	09-24		1
326865A1	06-18		13
	06-26		13
328186A1	06-10		21
	08-03		11
329032A1	04-13		3
329483A1	05-02A		
329797A1	08-23		5
	08-23B		5
329799A1	08-23		4
	08-23B		4
329998A1	09-23		4
331620A1	09-05		2
335177A1	09-04		6
338424A1	09-53		4
338425A1	09-53		3
338426A1	09-55		5A
338427A1	09-55		5
338428A1	09-57		3
338429A1	09-55		4A
340997A3	09-44		2
340998A3	09-44		1
341564A2	09-04		36
341743A3	09-55		
344892A1	09-04		37
345-49	09-38		10
345-621	09-65		
345231A1	09-44		3
347706A3	04-07		7
348706A1	09-26		46
	09-27		30
348794A1	05-01		18
	05-03		
349291A1	06-19		21
	06-28		21
349292A1	06-19		23
	06-28		23
349295A1	06-19		17
	06-28		17
352208A1	09-58		11
352209A1	09-58		13
352210A1	09-58		15
352401A1	05-01		7
352569A4	05-01		6
	05-03		10
352727A1	05-01		23
353-402	09-68		19
353-405	09-54		
353-407	09-54		
353-408	09-54		
353-410	09-54		
	09-64		26
	09-68		
353-411	09-11		5
353-413	09-68		33
353-415	09-54		
353-421	09-54		
	09-68		22
353-422	09-01		39
	09-42		7
353-425	09-54		
353068A2	04-11		18
353103A1	08-07		5A
353167A1	08-07		5
355198A2	04-11		1A
355827A2	04-10		1
355984A2	09-42		1
356743A1	08-07		12
357099A1	09-68		15
357100A1	09-68		16
357278A1	04-08		23
357469A1	08-11		16
357470A1	08-12		16
	08-13		34
357471A1	08-10		24
357540A1	04-14		7
357541A1	04-14		8

Number	Figure	Sequence	Ref.
357966A1	04-08		22
358282A1	06-18		19
	06-26		19
358283A1	06-18		28
	06-26		28
358632A1	06-17		7
	06-25		7
358633A1	06-17		6
	06-25		6
358635A1	06-17		4
	06-25		4
358636A1	06-16		2
	06-24		2
358637A1	06-17		15
	06-25		15
358638A1	06-17		21
	06-25		21
358639A1	06-18		29
	06-26		29
358640A1	06-17		10
	06-25		10
358641A1	06-17		16
	06-25		16
358642A1	06-17		19
	06-25		19
358643A1	06-17		18
	06-25		18
358644A1	06-17		17
	06-25		17
358645A1	06-17		1
	06-17		29
	06-25		1
	06-25		29
	06-27		7
358649A1	06-18		3
	06-26		3
358650A1	06-18		3A
	06-26		3A
358651A1	06-18		3A
	06-26		3A
358652A1	06-18		3A
	06-26		3A
358654A1	06-26		37
358655A1	06-26		39
358656A1	06-26		38
360242A2	04-10		10A
360243A2	04-10		11
360244A1	04-10		4
360245A2	04-10		8
360246A3	09-54		16
360247A3	09-54		15
360250A2	04-11		1
360251A3	09-63		6
360252A2	09-62		5
360253A3	09-63		8
360254A3	09-63		10
360255A1	09-63		14
360256A1	09-65		15
360257A1	09-65		7
360260A2	09-62		1
360261A1	09-62		3
360262A2	09-64		1
360263A4	09-65		1
360272A6	09-61		
360867A1	09-36		1
361900A1	04-07		9
362556A2	09-45		2
362557A1	09-45		1
362558A1	09-45		3
362607A1	09-40		4
362609A1	09-40		3
362804	09-01		14A
362930A2	04-08		13
363485A1	07-01		3
	07-01	01	3
363832A5	09-65		
363883A1	09-61		10
364132A2	09-55		28A
364133A2	09-55		30A
364134A2	09-55		28
	09-57		7
364135A2	09-55		30
	09-57		8
364180A1	09-54		10
	09-68		24
365309A1	08-13		14
365328A1	09-32		1
365789A1	09-63		20
365941A1	09-34		2
365942A1	09-34		3
366230A1	06-27		13
366231A1	06-27		18
366232A1	06-27		15
366234A1	06-27		11
366235A1	06-27		12
366236A1	06-27		14
366632A2	04-11		21
366633A3	04-11		25
366889A2	04-07		28
366910A1	06-29		9
367352A1	08-07		5B
367712A3	09-68		13
367848A2	09-74		13
368417A1	09-45		9
368801A2	09-64		10
368805A1	09-63		7
368807A1	09-63		13
368809A1	09-54		22
368813A2	09-61		4
368818A1	09-63		29
368990A1	09-62		6
369249A1	09-63		9
369372A1	08-55		3
369450A1	09-61		15
370381A1	09-65		14
370747A1	09-34		
371031A1	08-05		26
371144A1	07-02		8
371145A1	07-02		11
372167A3	04-11		1B
373689A2	04-10		10
373693A1	04-10		10E
373698A2	09-73		8
373699A2	09-73		9
373995A1	09-63		
375112A1	04-11		26
375392A1	09-63		28
376286A2	09-08		
376332A1	09-55		38
	09-57		15
376334A1	09-55		36
	09-57		13
376336A1	09-55		37
	09-57		14
376384A1	09-30		1
376385A1	09-32		1
376386A1	09-34		1
377194A1	09-61		9
377220A2	09-63		1
377222A1	09-64		4
377230A3	09-63		27
377232A2	09-64		18
377233A2	09-64		31
377241A2	09-63		1
377594A5	09-61		13
378227A1	09-54		5
378742A3	09-43		19
	09-43		27
	09-43		9A
378955A1	03-03		8A
378956A3	03-03		15
378957A3	03-02		17
378958A1	03-03		13
379160A1	09-61		5
379161A1	09-61		6
379209A1	09-61		7

Number	Figure	Sequence	Ref.
379314A4	06-11		6
379424A2	09-54		3A
379425A3	09-54		2A
379846A1	05-01		14
	05-01		22
379941A1	09-25		1
	09-25A		1
38-11016	09-48		10
380483A2	03-03		12
380537A2	06-11		13
380719A2	09-61		
380807A4	09-38		47
381111A2	09-63		25
381113A2	09-63		24
381488A4	09-28		1
381659A1	04-18		5
381696A5	09-61		2
381972A1	09-61		14
382202A2	09-38		52
382298A1	09-54		21
	09-68		30
382664A2	04-18		1
382770A2	09-62		2
382775A1	09-55		23A
382777A1	09-55		23
383794A2	09-63		22
383795A2	09-63		23
383972A1	09-76		6
384240A1	08-04		18
	08-58		1
	09-04		9
384241A1	08-58		2
384258A1	09-79		6
384260A1	09-79		9
384264A1	09-76		1
384265A1	09-79		2
384267A1	09-79		3
384269A1	09-79		5
384769A1	06-18		14
	06-26		14
384773A1	06-18		9
	06-26		9
384815A1	09-23		32
385506A1	09-68		12
385614A4	04-11		31
386000A2	09-22		37
386092A2	09-23		16
386368A2	04-11		29
386369A2	04-11		28
386502A1	04-11		
386535A1	09-65		2
386720A1	09-59		18
386785A1	04-07		22
	09-59		25
	09-60		
	09-70		4
386786A1	04-09		21
	09-59		24
	09-60		
386787A1	04-07		23
	09-59		16
	09-70		5
386788A1	04-09		20
	09-59		15
386789A2	04-09		19
386849A1	04-07		18
386850A1	04-07		19
386851A1	04-07		20
	04-17		15
386852A2	04-09		18
386927A1	04-18		9
387897R91	05-09		3
	05-09		6
387940A1	04-17		
388116A2	05-01		8
388712A2	08-55		9
388713A1	08-55		
388762A1	09-64		7
388843A1	09-29		1
388848A1	09-08		24
388881A1	08-55		4
389402A1	09-64		8
389487A1	04-07		13
389541A1	08-55		12
389729A1	09-77		6
389730A1	09-78		6
390-100	09-55		21
390029A1	06-05		2
390255A2	04-11		15A
390258A1	04-11		
	04-11		
390551A2	09-42		10
390690A1	09-11		4
390758A1	09-11		3
390759A1	09-11		1
390760A1	09-11		2
390838A1	09-55		2A
390840A1	09-55		27A
390841A1	09-55		29A
391818A2	04-11		15
391827A1	09-53		8
	09-55		19
	09-55		6
	09-57		4
	09-69		2
391838A1	09-55		14
391841A1	09-55		18A
391842A1	09-55		20A
391843A1	09-55		32
391845A1	09-55		31
	09-57		10A
391847A1	09-55		13
391848A1	09-55		15
391850A1	09-55		3A
392353A1	04-08		14
392374A1	09-76		13
392375A1	09-79		1
392828A2	09-41		17
393202A1	09-55		17
393203A1	09-55		16
393209A1	09-55		22
393211A1	09-56		5
393231A1	06-09		
393330A1	09-57		10
393354A1	08-14		10
393357A1	08-14		11
393360A1	08-12		21
393361A1	08-13		16
393362A1	08-13		17
393369A1	08-10		18
393371A1	08-11		17
393623A1	09-42		8
394329A1	09-75		3
394704A1	09-55		18
394705A1	09-55		20
394707A1	09-55		2
394708A1	09-55		3
394800A1	09-56		7
394863A1	04-14		9
	09-54		17
394864A1	09-57		2
394865A1	09-57		9
395026A1	09-60		9
395189A2	03-02		1
395348A1	09-58		12
	09-58		14
395387A1	09-54		18
395388A1	09-54		19
395389A1	09-60		10
395478A3	09-68		3
395753A2	09-22		38
395793A1	09-53		9
	09-69		7
395910A2	09-73		10
396-41028	09-01		16
	09-01		31

Number	Figure	Sequence	Ref.
396-41028	09-02		3
	09-18		23
396018A3	04-14		13
	09-60		
396023A2	04-13		10
396092A1	09-25		10
	09-25A		10
396339A1	08-12		16
	08-13		34
396422A2	08-55		10
396483A1	09-27		55
396516A1	09-54		12
	09-61		3
	09-68		26
396592A1	05-02		
	05-02A		
396593A1	05-02		
396605A1	09-41		6
396841A1	09-56		3
	09-57		29
396938A3	09-68		2
397025A2	09-43		21
397026A3	09-43		2
397064A1	09-56		1
	09-57		27
397065A2	03-03		22
397080A1	08-63		2
397548A4	03-01		40
397569A1	04-09		5
397570A1	04-09		6
397774A3	09-43		12A
397786A1	08-10		11
397787A1	08-11		21
397788A1	08-12		10
397870A3	09-11		15A
397876A1	04-08		19
397911A1	09-12		16
397974A1	09-71		
397990A1	04-07		29
398380A3	04-14		12
398570A1	09-80		6
398571A1	09-81		6
398572A1	09-80		9
398573A1	09-81		9
398576A1	09-77		1
398577A1	09-78		1
398578A1	09-80		2
398579A1	09-81		2
398580A1	09-80		3
398581A1	09-81		3
398582A1	09-80		5
398583A1	09-81		5
398598A1	09-77		13
398599A1	09-78		13
398600A1	09-80		1
398601A1	09-81		1
398654A1	09-81		11
398656A1	09-81		10
398658A1	09-76		5
	09-77		5
	09-78		5
398662A1	09-77		7
398663A1	09-78		7
398665A1	09-80		8
398666A1	09-81		8
398667A1	09-80		7
398668A1	09-81		7
398669A1	09-80		11
398670A1	09-80		13
398671A1	09-81		13
398672A1	09-77		10
398673A1	09-78		10
398674A1	09-80		4
398675A2	04-07		24
	08-26		34
398676A1	09-81		4
398677A1	09-80		10
398738A1	09-62		4
398847A3	04-13		8
	04-14		2
398986A1	09-63		30
399004A1	08-21		
399227A1	08-10A		
399246A1	08-10A		32
399959A2	09-38		31
399963A1	08-07		
400016A1	08-10A		30
400069A1	09-12		10
400077A1	09-43		
	09-43		
400200A1	09-58		5
400280A1	09-64		11
400282A1	09-64		2
400296A2	08-55		11
400379A1	04-09		9
	09-64		5
	09-65		14A
400398A1	09-26		48
	09-27		32
400494A1	09-58		16
400571A2	09-53		20
400572A1	09-53		19
400573A1	09-53		16
400588A2	06-11		7
400657A1	08-55		13
401052A1	05-06		
401054A1	05-06		3
401055A1	05-06		7
	05-07		1
401059A1	05-06		13
401060A1	05-06		14
401061A1	05-07		4
401062A1	05-07		3
401063A1	05-07		5
401064A1	05-07		6
401065A1	05-08		3
401066A1	05-08		4
401067A1	05-08		5
401457A1	09-73		2
401458A1	09-73		3
401949A1	09-54		4
	09-65		30
402610A1	09-54		20
402836A1	09-58		28
402843A1	09-58		25
402844A1	09-58		27
402845A1	09-58		32
402846A1	09-58		21
402847A1	09-58		18
402933A1	09-71		1
402934A1	09-71		2
402935A1	09-71		5
402936A1	09-71		3
403193A1	09-63		36
403225A1	09-63		35
403271A1	09-62		9
403955A1	06-37		14
404226A1	09-58		6
404227A1	09-58		9
404228A1	09-58		4
404229A1	09-58		7
404617A1	04-13		12
	04-14		10
	09-60		
	09-70		
404816A1	04-07		14
404834A1	09-24		43
	09-27		5
404835A1	09-24		44
	09-27		6
404907A1	08-10A		28A
405738A1	09-53		15
405739A1	09-53		14
405740A1	09-53		13
405741A1	09-53		17
405742A1	09-53		18

Number	Figure	Sequence	Ref.
406287A1	09-64		19
	09-65		5
406723A1	09-74		15
407009A2	09-73		6
407010A2	09-73		7
407660A1	04-11		8A
407962A1	02-01		11
	04-06A		4
408965A1	09-59		20
409025A1	08-55		5
409618A1	09-54		11
	09-68		25
409672A1	09-18		4
409673A1	09-18		5
409723A1	09-61		18A
410561A1	06-11		44
410867A1	09-58		2
411049A1	09-75		2
411074A1	09-42		16
411399A1	09-54		25
411549A1	09-68		21
411661A1	09-06		8
	09-06		8
411668A1	09-08		
411850A1	09-58		
411851A1	09-58		
411892A1	09-37		14
411908A1	09-58		22
411909A1	09-58		19
411910A1	09-58		24
411911A1	09-58		31
411912A1	09-58		33
411914A1	09-58		29
411916A1	09-58		20
411917A1	09-58		17
412285A1	09-54		23
412510A1	04-11		40
413-1228	09-22		18
413-412	09-71		11
	09-71		4
413-516	09-10		11
	09-71		7
413-528	09-15		22
413-624	09-01		18
	09-19		12
413-648	08-10A		4
413778A1	08-23		9
	08-23B		9
414-724	09-46		15
414033A1	04-10		18
414034A1	04-10		17
414071A1	04-11		39
414092A1	04-11		38
414426A1	09-70		3
414572A1	04-10		16
414600A1	09-61		17
414939A1	09-54		24
420-21232	09-06		9
425-1012	09-22		19
425-106	04-08		2
	04-08		26
	09-19		13
425-1110	09-18		16
425-115	09-03		6
	09-15		19
425-116	09-01		22
	09-16		36
	09-19		5
425-118	09-16		10
	09-17		3
	09-18		7
	09-21		7
425-147	09-60		
425-155	08-55A		12
425-156	09-16		27
	09-16		47
	09-17		9
	09-20		9
425-156	09-21		16
427-3058	03-02		15
	03-03		18
427-5094	09-15		13
	09-25		13
	09-25A		13
427-6088	09-16		25
	09-17		7
	09-20		7
427-6100	09-04		33
427-6106	07-03		4
427107A1	06-02		1
429-1012	09-06		10
	09-07		10
429230A1	05-05		1
429231A1	05-06		1
429232A1	05-06		2
430309A1	09-75		3
430310A1	09-75		3
430471A1	04-11		37
431583A1	09-68		31
431584A1	09-68		32
431801A1	09-53		21
432-48	03-02		10
	03-02		16
	03-03		19
432-612	07-03		5
	09-01		27
	09-03		5
	09-04		34
	09-15		14
	09-16		26
	09-16		38
	09-16		49
	09-17		8
	09-19		4
	09-20		12
	09-20		8
	09-21		12
	09-25		14
	09-25A		14
432-828	09-01		13
	09-02		12
	09-15		25
	09-18		20
432431A1	09-56		9
440-10616	09-04		18
440-1066	04-11		27
440-1088	09-61		22
440-11012	09-39		6
	09-41		13
440038A1	04-06A		9
442718A1	09-55		8
442773A1	09-55		33
442842A1	09-56		6
443375A1	03-01		2
	09-38		16
443432A1	08-55		
445720A1	06-35		10
446222A1	09-22		5
446454A1	09-22		36
448284A1	08-25		9
448428A1	09-64		12
448429A1	09-64		13
448607A1	09-53		2
	09-69		1
448608A1	09-53		6
	09-69		6
448609A1	09-53		5
	09-69		5
449842A1	09-74		8
450037A1	09-70		1
451384A1	09-27		43
47132002	04-06A		8
47132347	02-05		3
484-43120	08-55A		11
484-6316	06-11		3
4890343	02-01		44

Number	Figure	Sequence	Ref.	Number	Figure	Sequence	Ref.
4890732	02-39		8	4895393	02-36		7
4890832	02-13		4	4895394	02-36		6
4890833	02-14		8	4895406	02-30		3
4890964	03-09		4	4895414	02-21		3
4891209	02-13		5	4895489	02-11		2
4891252	02-35		1	4895538	02-11		10
4891353	02-09		6		02-42		6
4892426	02-39		7	4895586	02-26		6
4892708	02-22		2	4895610	02-30		5
4892712	02-23		2	4895623	02-10		14
4892713	02-23		3		02-36		8
4892715	02-22		4	4895625	02-10		15
4892732	02-39		6		02-36		9
4892859	02-16		2	4895641	02-19		8
4892860	02-18		4	4895919	02-09		
4892861	02-16		1	4895921	02-09		
4892867	02-25		2	4896153	02-10		13
4892915	02-14		2	4896404	02-34		4
4893036	02-14		12	4896409	02-34		11
4893386	02-21		2	4896410	02-34		7
4893391	02-34		8	4896770	03-06		7
4893518	03-06		6	4896773	02-25		1
4894095	03-10		4	4896884	03-07		15
4894218	02-10		1	4896947	02-26		5
4894641	02-24		3	4897024	02-13		1
4894721	03-09		5	4897048	02-26		4
4895017	02-21		4	4897125	02-26		1
4895038	02-09		4	4897178	02-16		13
4895039	02-09		3	4897179	02-16		14
4895040	02-09		7	4897330	02-30		4
4895045	02-34		5	4897457	02-28		4
4895049	02-10		8	4897480	02-31		1
4895078	02-16		16	4897934	02-26		11
4895085	02-16		17	4898301	02-11		3
4895107	02-33		2	4898482	02-29		6
4895133	02-29		2	4899003	03-06		4
4895155	02-14		10	4899009	02-10		4
4895164	02-33		1		02-16		10
4895166	02-42		5	4899019	02-34		1
	03-08		5	4899020	02-14		7
4895179	02-16		12	4899026	02-09		2
4895180	02-10		9		02-12		1
4895183	02-16		4		02-14		1
4895184	02-16		9	4899027	02-26		17
4895187	02-16		6	4899031	02-42		4
4895188	02-16		5		03-09		3
4895195	02-18		1	4899039	02-19		2
4895196	02-18		7	4899046	02-21		5
4895198	02-18		9	4899053	02-39		1
4895199	02-18		10	4899063	02-13		3
4895200	02-18		11	4899068	02-14		11
4895202	02-17		9		02-28		3
4895204	02-18		12		03-08		3
4895214	02-17		3	4899072	02-10		5
4895215	02-16		8		02-16		11
4895228	02-09		5	4899073	02-12		3
4895244	03-11		1		02-41		2
4895291	02-39		2	4899074	02-14		2
	02-42		3	4899076	02-14		2
	04-03		12	4899078	02-13		2
4895294	02-19		7	4899079	02-35		3
4895296	02-17		10		02-38		5
4895297	03-05		2	4899080	02-28		6
4895301	02-39		10	4899090	02-31		2
4895305	03-11		2	4899091	02-11		2
4895323	02-28		1		02-12		2
4895347	02-16		7	4899092	02-15		3
4895355	02-12		8	4899093	02-12		3
4895360	02-17		1	4899106	02-33		7
4895361	02-18		2	4899107	02-33		3
4895363	02-18		5	4899108	02-33		4
4895364	02-18		6	4899109	02-14		2
4895365	02-18		8		02-26		11
4895378	02-14		4		02-36		1
4895379	02-14		5		02-38		6
4895392	02-10		6	4899110	02-15		3
	02-36			4899115	02-12		
4895393	02-10		7	4899118	02-29		1

Number	Figure	Sequence	Ref.
4899143	02-14		2
4899467	02-33		5
4899519	02-33		6
4899643	02-34		2
4899849	03-08		4
4899859	02-20		4
	02-29		8
4899921	02-19		5
490-11012	04-07		
	04-08		24
492-11031	09-10		12
493-11026	04-17		2
493-21020	08-57		3
493-21033	04-04		7
493-41020	06-11		5
495-11028	09-01		8
	09-02		15
	09-72		2
495-11034	09-10		13
495-11041	08-10A		5
495-11047	05-04		11
	06-01		30
	09-60		
495-11053	09-04		35
495-11081	09-18		10
495-21031	04-17		3
495-21038	09-45		6
495-31022	03-02		9
	04-13		4
495-81001	02-04		12
	09-68		6
495-81025	06-01		15
	06-01		20
495-81169	09-46		18
495-81184	09-01		9
	09-02		10
495-81226	09-22		34
	09-24		24
	09-24		32
	09-26		25
	09-26		35
	09-26		4
	09-27		42
495-81227	09-23		17
	09-24		29
495-81261	07-03		17
495-81267	09-68		10
495-81282	09-04		7
	09-26		21
	09-27		13
	09-27		38
496-11041	09-01		20
496-21041	02-01		31
	06-11		17
496-41041	08-10		6
	08-11		6
	08-12		6
	08-13		6
	08-14		6
	08-22		12
	09-12		5
	09-44		4
496-81000	05-09		9
	06-01		3
	06-06		24
496-81010	09-46		19
496-81018	03-02		7
	09-13		29
	09-24		38
496-81028	05-01		11
	08-08		
	08-08		3
	08-08A		
	08-08A		3
	08-22		21
51200906	09-48		
5135738	02-33		9
514-633	09-55		34
514-633	09-57		11
514-832	08-01		8
514-847	03-02		3
515-2179	09-04		14
515-22127	02-02		16
	08-22		53
515-22190	04-06A		2
	08-07B		27
515-22254	02-02		17
515-2295	08-22		29
515-23127	03-01		16
	04-04		13
	04-04		15
515-23143	02-02		18
515-23159	05-02		23
515-23254	08-10		28
515-23444	04-09		27
515-2379	07-04		5
515-25190	04-06A		31
	06-10		27
	07-05		7
	08-10A		22
515-25254	08-07		13
5194169	06-02		18
5194190	06-07		11
5194191	06-07		9
5194194	06-07		3
5194264	06-03		6
561201	06-07		12
569-4	09-55		24
60-7083T1	09-55		7
604-12030	09-46		11
	09-47		9
	09-49		3
604-20035	09-24		42
604-20045	08-23		6
	08-23B		6
614-10020	02-01		20
	03-01		38
	03-01		41
	05-01		19
	05-01		9
	06-11		26
	07-06		4
	08-03		2
	09-03		9
	09-40		16
614-10025	07-03		15
	08-23		11
	08-23B		11
	09-09		2
	09-13		38
	09-16		42
	09-19		16
	09-20		3
	09-38		53
	09-40		10
	09-40		5
	09-41		3
614-10030	02-01		37
	04-04		18
	04-16		6
	05-02A		9
	06-13		10
	06-21		10
	08-13		28
	08-22		15
	09-40		22
	09-67		4
614-10035	03-03		23
	05-01		20
	08-10		29
	08-10		5
	08-11		5
	08-12		5
	08-13		5
	08-14		5
	08-26		2

Number	Figure	Sequence	Ref.
614-10035	09-12		4
614-10040	08-04		9
	08-06		5
	08-07		8
	08-23		10
	08-23B		10
	08-24		29
614-10045	08-04		11
	08-05		7
	08-06		6
614-10050	09-25		6
	09-25A		6
614-10080	02-06		3
614-12016	06-15		2
	06-23		2
614-12025	04-06A		32
	05-04		6
	06-01		32
	07-05		9
614-12030	09-24A		5
	09-39		4
614-12035	02-07		3
	06-11		27
614-12040	02-07		10
	09-47		6
	09-49		8
614-18035	08-09		6
614-20030	09-39		2
614-6016	03-03		32
	09-01		15
	09-02		2
	09-04		13
	09-18		22
614-6020	04-06A		13
	04-17		13
	09-01		30
	09-01		7
	09-02		16
	09-18		24
614-6025	04-06		6
	09-21		4
614-6035	04-06A		11
614-8012	06-10		2
614-8016	02-01		40
	09-38		14
614-8018	06-12		11
	06-20		11
614-8020	02-04		2
	03-03		9A
	04-08		15
	04-16		3
	07-03		28
	07-04		8
	09-12		12
	09-59		26
	09-59		8
	09-66		27
	09-67		14
	09-68		5
	09-70		15
614-8022	06-27		2
614-8025	02-01		22
	02-02		12
	04-03		4
	04-08		16
	08-07B		29
	08-22		28
	09-03		15
	09-08		27
	09-13		5
	09-15		11
	09-16		2
	09-16		20
	09-25		23
	09-25A		23
614-8030	02-01		9
	03-01		17
	04-09		28
614-8030	09-05		8
	09-15		4
	09-25		33
	09-25A		30
	09-37		19
	09-44		5
	09-45		5
	09-64		28
	09-65		19
614-8040	02-02		21
	04-06A		3
	09-45		4
614-8050	09-15		35
627-10030	02-06		11
	06-11		16
627-12025	03-03		26
637-63113	07-04		11
	07-04		17
637-63153	07-04		13
700-101	07-04		9
700-304	07-04		15
	07-06		1
700-345	07-04		12
711-10030	09-38		29
711-10040	09-45		8
711-10050	05-02		24
761-17325	04-18		13
781-24613	04-08		21
	09-13		20
781-24820	09-43		30
79081900	02-05		5
800-1130	06-17		31
	06-25		31
800-1134	06-06		17
800-1150	06-17		26
	06-25		26
	06-37		1
800-40065	09-23		27
800-40070	09-23		31
800-44040	09-04		26
	09-04		31
	09-05		22
	09-05		4
	09-25		4
	09-25A		4
	09-27		27
800-44050	05-04		5
	06-01		7
	09-04		8
	09-24		28
800-5145	06-27		19
806-8016	02-01		27
806-8025	02-04		11
8093883	02-26		3
811-6016	04-06A		16
814-10040	08-09		3
	08-25		6
814-10045	03-01		38
	08-09A		3
	08-13		25
	08-22		9
	09-38		35
814-10050	05-01		10
	08-24		10
	09-22		41
814-10055	08-12		27
	09-67		3
814-10060	08-22		10
	08-24		6
	08-26		6
	09-08		25
	09-13		25
814-10070	08-08		22
	08-08A		22
814-10080	08-10		2
	08-11		2
	08-12		2
	08-13		2

Number	Figure	Sequence	Ref.
814-10080	08-14		2
	08-25		2
	09-08		20
814-10090	02-01		30
	08-26		29
	08-26		46
	08-27		13
	09-01		29
	09-08		16
814-10110	09-01		36
814-10120	08-10		14
	08-11		13
	08-12		13
	08-13		12
814-10130	09-13		13
814-10150	06-13		1
814-10220	09-66		33
814-12050	08-23		17
	08-23B		17
814-12080	02-07		5
	06-11		31
814-12100	09-40		14
814-12130	09-67		8
814-6050	05-02A		12
	09-60		2
	09-70		
814-6090	08-07A		10
	08-07B		10
814-8035	07-03		18
	08-08A		2A
	08-22		20
814-8050	09-25		27
	09-25A		31
814-8055	08-08A		2
	08-22		19
814-8060	06-14		16
	06-22		16
	06-29		7
	07-04		7
	08-08		2
814-8070	08-23		21
	08-23B		21
	09-15		8
	09-25A		27
814-8100	09-67		15
814-8110	09-67		13
81465471	02-01		13
81868381	08-30		8
	08-31		9
	08-32		18
	08-33		18
	08-34		19
	08-35		19
82017872	04-06A		26
82026949	04-07		35
	04-08		8
	07-03		21
824-1405	04-19		7
825-11412	03-02		8
825-11418	05-09		8
	06-01		2
	06-06		25
825-1404	09-01A		21
	09-01A		6
825-2406	09-65		27
825-2408	09-59		21
	09-64		30
	09-65		21
825-2410	09-40		6A
	09-41		5
	09-41		8
827-10045	02-06		19
827-10130	04-03		15
827-12060	06-01		21
827-12065	06-11		9
827-16085	09-37		10
827-16100	09-37		11
827-20075	09-23		13
827-20170	09-36		2
	09-36		6
827-20190	09-05		16
827-20200	06-31		4
828-20160	09-06		4
	09-06		4
	09-07		4
829-1406	04-06A		20
	08-07A		16
	08-07B		16
	09-01		32
	09-18		25
	09-21		5
829-1408	03-03		11A
	04-04		8
	04-05		9
	04-06		18
	04-06A		18
	04-08		18
	04-09		31
	04-16		5
	07-03		8
	08-07B		30
	08-08		4
	08-08A		4
	08-22		23
	08-23		23
	08-23B		23
	09-03		17
	09-05		11
	09-13		7
	09-15		7
	09-25		29
	09-25A		29
	09-66		35
829-1410	02-06		13
	02-06		6
	03-01		35
	03-01		43
	04-05		11
	04-06		13
	04-07		38
	05-02		27
	05-02A		11
	06-10		25
	07-07		3
	08-03		25
	08-04		13
	08-05		11
	08-06		10
	08-06		15
	08-08		26
	08-08A		26
	08-09		5
	08-09A		5
	08-10		32
	08-10		4
	08-11		4
	08-12		4
	08-13		4
	08-14		4
	08-22		41
	08-23		13
	08-23B		13
	08-24		13
	08-24		7
	08-26		8
	08-27		16
	08-27		7
	09-01		26
	09-02		8
	09-13		37
	09-24		39
	09-38		30
	09-38		39
	09-38		54
829-1412	06-01		22
	08-23		19

Number	Figure	Sequence	Ref.
829-1412	08-23B		19
	09-24A		3
	09-40		19
	09-67		11
829-1416	09-37		15
829-1420	06-31		7
	09-05		19
	09-23		15
	09-36		4
	09-36		8
829-2412	09-39		5
829-2420	09-39		3
832-10404	04-11		14
	07-03		24
	09-54		9
832-10406	04-06		8
	04-06A		15
	04-07		34
	04-09		33
	04-11		9
	05-02A		14
832-10408	02-01		24
	02-02		14
	02-02		25
	04-05		10
	04-06		5
	04-11		34
	05-01		17
	05-01		25
	07-03		19
	07-03		3
	09-13		33
	09-16		21
	09-16		3
	09-43		32
	09-45		7
	09-56		10
	09-59		11
	09-62		8
	09-63		12
	09-63		17
	09-68		7
	09-70		18
832-10410	04-03		18
	05-01		13
	07-03		27
	08-07		15
	08-10		15
	08-11		14
	08-12		14
	08-12		28
	08-13		13
	08-13		27
	08-24		26
	08-26		33
	08-26		45
	09-08		18
	09-08		22
	09-08		8
	09-13		14
	09-13		26
	09-15		17
	09-16		44
	09-19		17
	09-20		4
	09-22		42
	09-40		12
	09-45		11
	09-55		26
	09-66		34
	09-68		11
832-10412	02-07		9
	06-11		11
	06-11		34
832-10420	09-06		6
	09-06		6
	09-07		6
832-10508	09-55		39
832-10508	09-57		16
833-40310	09-37		9A
833-40406	04-10		3
	04-11		23
	04-11		4
	04-16		11
	09-04		15
	09-12		18
	09-13		21
	09-14		10
	09-42		6
	09-43		18
	09-43		23
	09-43		6
	09-65		26
	09-68		18
833-40408	02-04		13
	09-45		4A
	09-59		10
	09-66		29
	09-70		17
838-3640	03-03		16
83822C1	09-65		
83931335	08-26		37
	08-26		40
83981068	08-31		19
	08-33		21I
	08-33		22
	08-34		20
	08-35		20
	08-35		25I
840-1416	04-20		12
	08-15		
	08-16		
	08-17		
	08-18		
	08-19		
	08-20		
	08-22		37
843-1516	04-19		5
844-10020	04-04		16
	04-09		34
	04-14		11
844-10025	04-05		13
	04-06		19
844-10035	04-03		2
844-10110	09-08		6
844-6025	04-07		33
	04-09		32
	04-11		7
	04-16		10
844-8025	04-07		36
845-6020	09-65		25
85801585	02-07		6
	06-11		32
85802618	02-07		8
	06-11		32A
85802820	08-08		1
	08-08A		1
85803019	02-02		
85805986	06-03		5
85811933	08-40		8
	08-41		8
	08-43		8
	08-44		8
	08-45		7
	08-46		8
85811934	08-40		7
	08-41		7
	08-43		7
	08-44		7
	08-46		7
85811935	08-41		7
	08-43		7
	08-44		7
	08-46		7
85811937	08-45		6
85811938	08-40		4

Number	Figure	Sequence	Ref.
85811938	08-41		4
	08-43		4
	08-44		4
	08-45		4
	08-46		4
85812114	08-40		6
85812115	08-41		6
	08-46		6
85812116	08-43		6
	08-44		6
85819148	08-40		9
	08-41		9
	08-43		9
	08-44		9
	08-45		8
	08-46		9
85819378	08-41		3
	08-44		3
	08-45		3
	08-46		3
85820159	08-08		
	08-08A		
85820160	08-08		
	08-08A		
85821126	08-08		
	08-08A		
85821520	09-15		21
85824067	09-15		16
85824080	09-15		20
85824081	09-15		18
85824281	08-41		10
	08-43		10
	08-44		10
	08-45		9
	08-46		10
85824282	08-40		10
85825473	08-42		5
85826230	02-01		33
85826337	08-36		3
	08-37		3
	08-38		3
	08-39		3
	08-41		
85826338	08-36		5
	08-37		5
	08-38		5
	08-39		5
	08-43		
85826339	08-36		2
	08-37		2
	08-38		2
	08-39		2
	08-40		
85826341	08-37		7
	08-39		7
	08-45		
85826342	08-38		7
	08-39		8
	08-46		
85826343	08-43		6A
85826344	08-40		5
	08-41		5
	08-42		4
	08-43		5
	08-44		5
	08-45		5
	08-46		5
85826345	08-40		3
	08-43		3
85826346	08-41		6A
85826365	08-36		6
	08-37		6
	08-38		6
	08-39		6
	08-44		
85826905	08-44		6A
85827471	08-17		3
	08-18		6
85827471	08-19		6
	08-48		
85827472	08-15		5
	08-16		5
	08-47		
85827991	08-47		2
85827992	08-47		4
	08-48		4
	08-49		5
85827993	08-47		6
	08-48		6
	08-49		7
85827994	08-47		7
	08-48		7
	08-49		8
85827995	08-47		8
	08-48		8
	08-49		9
85827996	08-47		9
	08-48		9
	08-49		10
85827997	08-47		10
	08-48		10
	08-49		11
85827998	08-47		12
	08-48		12
	08-49		13
85827999	08-47		13
	08-48		13
	08-49		14
85828000	08-47		14
	08-48		14
	08-49		15
85828001	08-47		15
	08-48		15
	08-49		16
85828002	08-47		16
	08-48		16
	08-49		17
85828003	08-47		17
	08-48		17
	08-49		18
85828004	08-48		2
85828005	08-47		11
	08-48		11
	08-49		12
85828013	08-47		3
85828015	08-48		3
	08-49		3
85828048	08-49		2
85828054	08-49		4
85828061	08-49		1
86000535	04-07		17
	04-09		10
	04-09		16
86014151	04-06A		27
8603092	09-76		3
8603093	09-78		3
8603094	09-77		3
863-16070	05-06		8
864-10025	06-15		17
	06-23		17
864-12030	08-01		6
864-6025	06-33		8
864-8025	06-15		6
	06-23		6
864-8055	09-13		34
86507198	09-59		3
	09-70		11
86512512	08-01		47
86547710	09-72		4
86596853	08-22		31
86616248	04-17		10
86619908	04-06A		7
86625057	09-43		15
	09-43		26
	09-43		9
86625112	07-03		13

Number	Figure	Sequence	Ref.	Number	Figure	Sequence	Ref.
86625128	08-50		13	87301351	09-01		
	08-51		13	87301355	02-01		5
	08-53		10	87301356	02-01		8
86625138	03-01		6	87301687	04-06A		36
86639294	09-01A		22		04-07		11
	09-01A		7	87303784	04-20		3
86642312	08-58		11	87305413	09-14		7
	08-59		11		09-75		5
	08-60		12	87307656	04-20		5
	08-62		11	87307893	09-75		9
	08-63		15		09-77		
	08-64		13	87307896	09-75		9
	08-65		13		09-78		
86976679	02-05		4	87308118	09-48		1
86982435	08-59		18	87308119	09-48		2
	08-66		16	87308127	09-48		3
86982437	08-58		18	87308128	09-48		7
	08-60		23	87308130	09-48		
86982439	08-62		25	87308131	09-48		13
86982440	08-61		18	87308132	09-46		7
86982441	08-65		22		09-48		14
86982442	08-63		24	87308141	09-48		15
86982443	08-64		22	87308142	09-48		
86983190	09-42		2	87308143	09-48		
86983269	09-42		9A	87308144	09-48		16
86983325	09-42		9	87308145	09-48		
86984155	09-66		4	87308146	09-48		17
86984544	09-15		2	87308147	09-48		18
	09-25A		25	87308148	09-48		
86984545	09-15		6	87308149	09-48		19
	09-25A		26	87308150	09-48		20
86984547	09-15		5	87308151	09-48		21
	09-25		28	87308152	09-48		5
	09-25A		28	87308153	09-48		4
86984549	09-15		24	87308154	09-48		6
86988086	04-20		1	87308157	09-48		1
86989616	09-15		28	87308158	09-48		2
86989676	03-01		10	87308159	09-48		3
86990837	05-04		1	87308838	08-50		8
	05-05				08-51		8
	05-06				08-52		8
	05-07				08-53		5
	05-08				08-54		8
86992243	09-43		20	87308839	08-50		10
86992245	09-43		10		08-51		10
86992247	09-43		1		08-52		10
86992284	09-43				08-53		6
	09-43				08-54		10
86992395	04-01			87309656	02-06		1
	04-03		1	87309923	09-14		2
86992557	08-08A		38	87309924	09-14		1
86992975	09-76		12	87310085	04-20		6
86992976	09-76		4		09-42		12
86992977	09-43		28	87310086	04-10		5
86992978	09-78		12	87310088	09-43		12B
86992979	09-78		4		09-43		3
86992980	09-77		12	87310096	06-11		8
86992981	09-77		4		09-12		17
86993546	06-11		23		09-42		15
86994165	09-48		11	87310098	04-11		22
87000228	09-65		28		04-11		3
87000312	08-50		17		09-15		34
	08-52		19		09-43		16
	08-54		15		09-43		22
87016468	07-03		22		09-43		5
87019103	09-01A		24		09-68		17
	09-01A		9	87310109	09-37		22
87019767	06-11		23A	87310124	04-10		12
87020181	06-11		4		04-10		13
87037462	09-48		8		09-11		14
87037944	08-50		4	87310126	04-11		16A
	08-51		4		04-11		19
	08-52		4		09-11		14
	08-53		4		09-43		33
	08-54		4	87310127	09-43		13
87041331	09-25		16		09-43		24
	09-25A		16		09-43		7
87301325	02-02		4	87310128	04-11		16

Number	Figure	Sequence	Ref.	Number	Figure	Sequence	Ref.
87310128	04-11		30	87382811	05-02A		7
87310139	09-11		8	87382812	09-01		17
87310144	04-11		36		09-19		11
87310146	09-43		14	87389813	09-22		15
	09-43		25	87393292	09-67		17
	09-43		8	87395300	06-11		14
87310147	09-54		7		06-12		
87310149	09-46		17		06-13		
	09-47		5		06-14		
	09-49		11		06-15		
87310152	04-10		2		06-16		
	04-11		6		06-17		
87310154	09-43		29		06-18		
87310156	09-11		7		06-19		
87310176	04-11		32		07-01		
87310177	09-68		9	87395301	06-11		15
87310184	04-11		12		06-20		
87310185	04-11		33		06-21		
	09-43		31A		06-22		
87310186	09-14		6		06-23		
	09-43		17		06-24		
	09-43		22A		06-25		
	09-43		5A		06-26		
87311219	06-10		8		06-27		
87311572	09-46		16		06-28		
	09-47		3		06-29		
	09-49		9		07-01	01	
87312712	04-04		32	87395365	06-01		1
	04-07		31		06-02		
	06-11		42		06-03		
87313544	06-31		3		06-04		
87316049	08-05		27		06-05		
87316264	08-05		31		06-06		
87316270	08-05		30		06-07		
87324160	09-37		20		06-08		
87326813	09-24		40	87395372	06-31		1
87329475	09-13		11		06-33		
87335469	03-01		5		06-34		
87336843	09-75		5		06-35		
87336844	09-75		5		06-36		
87338681	09-46		1		06-37		
87340008	02-01		42		07-02		
87340753	03-02		11	87396228	04-06A		24
87340754	03-03		21	87397601	04-06A		1
87343247	04-13		5	87399491	09-47		2
	04-14		1		09-48		
87344859	09-55		46	87399492	09-47		1
	09-57		26		09-48		
87344860	09-55		40	87400286	05-05		7
	09-57		17		06-02		9
87345006	03-03		8	87401203	09-16		1
87346606	09-46		2	87403835	04-05		1
87346607	09-46		3		04-06		1
87346611	09-46		4	87404197	05-04		4
87346612	09-46		5		06-01		9
87346615	09-46		6	87405706	09-13		17
87346625	09-46		8	87406924	09-53		10
87346633	09-46		9		09-68		28
87346634	09-46		10	87406934	06-11		22
87348192	09-38		12	87408480	03-01		11
87348571	05-02A			87408888	09-46		14
87351494	08-30				09-47		7
87351498	08-30				09-49		7
87352590	08-22		52	87408889	09-46		14
87353191	02-01		32		09-47		8
87358697	09-76		11		09-49		6
87360280	03-01		4A	87409201	06-11		24
	09-38		21	87410105	04-20		9
87363421	09-38		23	87410265	04-06A		21
87365015	09-06			87410602	04-06A		10
87367622	02-02		7A	87411083	09-11		2A
87368702	09-06			87411084	09-11		4A
87368710	09-07			87411108	09-56		4
87371132	09-24		37	87411319	02-07		1
87375240	09-07		8		02-07		2
87378776	03-03		9	87412060	09-40		20
87380558	09-78		11	87412815	09-73		1B
87380559	09-77		11	87413722	08-62		12

Number	Figure	Sequence	Ref.
87414237	04-06A		12
87414560	03-01		45
87415774	02-01		43
87415931	09-73		15
87416475	09-48		12
87416966	02-07		7
87416967	06-11		33
87416977	06-11		29
87416978	06-11		30
87417383	03-01		18
	04-06A		6
	09-37		17
87417599	09-01		37
87417601	09-03		
87417721	04-16		8
	08-25		8
	08-26		4
	09-01		38
	09-41		23
87418360	02-02		22
87418368	09-15		31
87418369	09-15		32
87418516	09-12		1
87418518	09-12		11
87419229	04-04		23
87419615	04-06A		23
87419634	05-02		14
87420672	08-08		25
	08-08A		25
87420673	08-08		23
	08-08A		23
87420696	08-25		17
87421213	08-25		4
87421807	03-03		28
87421832	08-23A		2
	08-23C		2
87421836	08-23		20
	08-23A		
87421918	08-05		4
87421920	08-05		5
87422239	09-16		33
87422241	09-16		31
87422243	09-16		28
87422245	09-16		29
87422247	09-16		30
87422249	09-16		32
87422253	09-19		15
87422256	09-19		14
87422262	09-19		10
87422264	09-19		8
87422270	09-19A		2
87422272	09-19A		1
87422597	06-10		12
87422598	06-10		13
87422777	04-02		
	04-03		3
87422948	08-23		35
87422977	08-23		38
87423033	08-08A		39
	08-22		24
87423067	08-25		5
87423356	08-09		10
	08-09		14
87423401	08-22		2
87423496	04-16		2
87423502	09-58		34
87423503	09-58		26
87423531	02-06		9
87423802	04-20		8
87423812	04-20		4
	09-74		16
	09-75		6
87423813	09-79		14
87423926	04-04		6
87423969	08-23		40
	08-23B		40
87423970	08-23		41
	08-23B		41
87424267	08-50		14
	08-51		15
	08-52		16
	08-54		13
87425117	09-21		3
87425122	09-11		16
87425225	08-07A		9
	08-07B		9
	08-22		36
87425456	09-36		5
87425631	04-19		2
87425635	04-19		8
87425636	04-20		10
87425696	09-13		22
87426227	08-30		9
	08-31		10
87426233	08-30		5
	08-31		6
87426235	08-30		11A
	08-31		12A
87426238	08-30		15
	08-31		16
	08-32		21
	08-33		23
	08-34		8
	08-35		8
87426241	08-32		7
	08-32		8A
	08-33		7
	08-33		8A
	08-34		10A
	08-34		11
	08-35		10A
	08-35		11
87426488	08-22		16
87426716	08-30		12
	08-31		13
87426717	08-30		11
	08-31		12
87427537	08-26		28
	08-26		39
87427539	08-26		27
	08-26		38
87427775	09-25A		15
87427948	08-22		17
87428023	08-50		3
	08-51		3
	08-52		3
	08-53		3
	08-54		2
87428140	08-09		2
87428158	08-09		26
87428476	08-33		13
	08-35		22
87428477	08-33		14
	08-35		23
87428486	08-32		22
	08-33		24
	08-34		9
	08-35		9
87428490	08-32		19
	08-33		19
	08-34		17
	08-35		17
87428491	08-32		13
	08-34		23
87428492	08-32		14
	08-34		24
87428495	08-32		12
	08-33		12
	08-33		21F
	08-34		21
	08-35		21
	08-35		25F
87428497	08-32		9
	08-33		9
	08-34		12
	08-35		12

Number	Figure	Sequence	Ref.
87428500	08-32		8
	08-33		8
	08-34		10
	08-35		10
87428501	08-33		21
	08-35		25
87428645	09-03		3
87428814	08-23		39
87429150	08-33		21D
	08-35		25D
87429163	09-80		14
87429164	09-81		14
87429186	09-73		16
87429287	08-05		12
	08-06		11
87429310	03-01		1
87429314	03-01		1A
87429382	05-02		10
87429387	08-23		2
	08-23B		2
87429584	08-08		19
	08-08A		19
87429654	08-08		32
87429948	09-67		6
87429949	09-67		12
87429950	09-67		2
87429951	09-67		10
87429952	09-67		7
87429970	06-14		1
	06-22		1
87429971	06-14		15
	06-22		15
87429974	06-18		
	06-26		
87429978	06-29		
87429982	06-13		28
	06-21		28
87429983	06-17		30
	06-25		30
87429984	06-17		27
	06-25		27
87429985	06-13		19
	06-15		23
	06-21		25
	06-23		23
87429994	06-15		3
	06-23		3
87430122	09-66		19
	09-67		1
87430677	09-11		
	09-75		4
87430972	08-23		1
	08-23B		1
87431300	09-13		24
87431301	09-13		23
87431529	09-13		15
87431630	08-23		3
	08-23B		3
87431701	06-32		1
87431799	02-07		11
87432811	09-25		30
	09-25A		32
87433005	09-14		13
87433006	09-14		12
87433007	09-14		14
87433008	09-14		11
87433028	08-33		21A
	08-35		25A
87433029	08-32		10
	08-33		10
	08-34		13
	08-35		13
87433030	08-32		23
	08-33		25
	08-34		22
	08-35		26
87433209	09-79		12A
87433240	08-25		1
87433401	04-03		6
87434049	09-42		19
87434050	09-42		20
87434070	08-29		
87434075	08-29		2
87434076	08-29		3
87434077	08-29		4
87434265	08-26		15
87434621	08-20		6
	08-49		
87434672	08-01		11
	08-29		
87434771	09-80		12A
87434772	09-81		12A
87434777	08-22		26
87434783	09-58		
87434978	02-01		12
87435076	06-10		9
87435078	06-10		6
87435080	06-10		10
87435082	06-10		11
87435242	08-53		9
	08-54		11
87435243	08-50		11
	08-51		11
	08-52		11
87435275	09-13		8
87435372	09-14		8
87435381	04-20		2
87435453	09-58		23
87435506	08-50		15
	08-51		16
	08-52		17
	08-53		12
	08-54		14
87435569	05-01		1
	09-73		12
87435909	08-26		5
	08-28		
87435924	09-15		12
	09-25		11
	09-25A		11
87435929	09-58		1
87435938	09-79		12
87435939	09-80		12
87435940	09-81		12
87436066	08-01		17
	08-02		16
	08-02		7
	08-25		25
87436076	09-42		3
87436225	08-50		2
	08-51		2
	08-52		2
	08-53		2
	08-54		3
87436782	09-22		43
87436836	04-06A		35
	04-07		15
	04-07		8
	04-20		11
87437231	08-02		18
	08-02		6
	08-23		37
87437232	08-02		18
	08-02		6
	08-23		36
87437263	08-26		1
87437366	09-14		3
87437369	09-14		4
87437371	08-52		13
	08-54		12
87437372	08-50		12
	08-51		12
	08-52		12
87437373	08-51		14
87437441	08-02		6
87437621	08-22		45

Number	Figure	Sequence	Ref.
87437623	08-22		30
87437625	08-22		47
87437627	08-22		43
87437629	08-22		46
87437633	08-17		6
	08-18		8
	08-20		8
87437635	08-17		7
	08-18		9
	08-20		9
87437655	08-01		39
87437657	08-01		39
87437688	09-13		18
87437689	09-14		5
87437804	02-06		2
87437806	09-15		27
87437840	08-08		
	08-08A		4A
	08-22		21A
87437899	08-29		10
87437905	08-29		12
87437906	08-29		13
87437914	08-29		14
87437923	08-21		6
87437924	08-21		5
87437925	08-21		7
87437926	08-21		9
87437927	08-21		4
87437928	08-21		8
87437929	08-21		10
87437930	08-21		11
87437933	08-21		12
87437935	08-21		13
87437938	08-08A		33
87437939	08-08A		32
87437940	08-08A		35
87437941	08-08A		34
87437980	08-01		42
87437982	08-01		43
87438012	08-19		8
87438015	08-19		9
87438021	08-28		2
87438022	08-28		
87438023	08-28		
87438024	08-28		
87438025	08-28		3
87438026	08-28		
87438027	08-28		
87438028	08-28		
	08-28		
87438029	08-28		4
87438031	08-28		5
87438032	08-28		
87438045	08-29		
87438046	08-50		16
	08-52		18
	08-54		
87438157	09-21		14
87438925	04-01		3
87438926	04-01		4
87438927	04-01		5
87438928	04-01		6
87438929	04-01		8
87438930	04-01		9
87438931	04-01		10
87438932	04-01		11
87438933	04-01		12
87438935	04-01		13
87438937	04-01		14
87438940	04-01		15
87438941	04-01		16
87438942	04-01		17
87438944	04-01		18
87438946	04-01		19
87438948	04-01		20
87438950	04-01		22
87438951	04-01		32
87438954	04-01		36
87438956	04-01		38
87438960	04-02		1
87438963	04-02		2
87438965	04-02		3
87438967	04-02		4
87438969	04-02		5
87438970	04-02		6
87438971	04-02		7
87438972	04-02		8
87438973	04-02		9
87438974	04-02		10
87438975	04-02		11
87438976	04-02		12
87438977	04-02		13
87438978	04-02		14
87438979	04-02		15
87438980	04-02		16
87438981	04-02		17
87438982	04-02		18
87438983	04-02		19
87438984	04-02		20
87438985	04-02		21
87438986	04-02		22
87438987	04-02		23
87438989	04-02		24
87438992	04-01		1
87438993	04-01		2
87438994	04-01		
87438995	04-01		21
87438996	04-01		23
87438997	04-01		24
87438999	04-01		25
87439000	04-01		26
87439001	04-01		27
87439002	04-01		28
87439003	04-01		29
87439004	04-01		30
87439005	04-01		31
87439006	04-01		33
87439007	04-01		34
87439008	04-01		35
87439009	04-01		37
87439010	04-01		41
87439011	04-01		43
87439032	08-21		14
87439033	08-21		15
87439061	04-01		42
87439135	09-21		13
87439136	05-02		13
87439137	05-02		1
87439138	05-02		5
87439210	09-12		15
87439213	08-22		48
87439215	08-22		40
87439306	08-08		10
	08-08A		10
87439537	08-14		18
87439665	08-08		24
	08-08A		24
87439722	09-55		27
	09-57		5
87439723	09-55		29
	09-57		6
87439724	09-57		1
87439725	09-55		4
87439726	09-55		
87439728	09-55		1
87440045	05-02		22
	08-03		1
	08-57		
87440058	09-20		10
87440283	09-54		14
87440381	09-13		31
87440694	08-23		16
	08-23B		16
87440704	09-13		9
87440706	09-13		10
87440710	09-13		1

Number	Figure	Sequence	Ref.
87440711	09-13		
	09-15		1
87440712	08-22		14
87440812	08-09A		10
87440814	08-30		14
	08-31		15
	08-32		17
	08-33		17
	08-34		15
	08-35		15
87440815	08-30		13
	08-31		14
	08-32		16
	08-33		16
	08-34		14
	08-35		14
87440835	08-20		10
87440837	08-20		11
87441076	08-09		23
	08-09A		23
87441495	08-36		1
	08-37		1
	08-38		1
	08-39		1
87441758	09-70		20
87441850	09-15		9
	09-25		12
	09-25A		12
87441876	06-10		1
87442357	02-06		20
87442376	09-42		21
87442377	09-42		22
87442409	09-15		33
87442419	02-01		45
87442441	09-59		19
87443052	08-23B		39
87443080	04-13		8
	04-14		2
87443149	08-04		15
87443150	08-04		14
87443691	09-55		1A
87443692	09-15		26
87443721	08-50		5
	08-51		5
	08-52		5
	08-54		5
87443722	08-53		8
87444147	09-40		2
87444148	09-40		1
87444149	09-25		15
87444776	09-75		9
87445051	09-58		30
87445245	09-25		9
	09-25A		9
87445557	08-22		44
87445794	08-23B		44
87446081	02-01		7
87446082	02-01		6
87446113	09-17		12
87447088	09-19A		
87447450	05-01		12
87447477	08-39		10
87448059	09-12		2
87448198	09-57		
87448199	09-55		
87448990	08-22		39A
87448993	08-23B		20
	08-23C		
87449373	08-09		1
	08-09A		1
	08-55		
87449374	08-55		2
87449440	08-06		24
	08-26		49
87449579	07-04		4
87449995	09-25		25
87449996	09-25		26
87450318	08-08A		1A
87450318	08-22		18
87450456	08-02		13
87450698	08-09A		14
87450914	09-13		27
87450978	08-30		7
	08-31		8
	08-32		11A
	08-33		11A
	08-34		16A
	08-35		16A
87450979	08-32		11B
	08-33		11B
	08-34		16B
	08-35		16B
87450980	08-32		11C
	08-33		11C
	08-34		16C
	08-35		16C
87451167	02-06		10
87451279	09-26		11
87451280	09-26		36A
87451448	08-53		11
87452021	08-07A		27
	08-07B		33
	09-38		24
87452399	08-01		16
87452400	08-01		26
87452402	08-26		16
87452403	08-26		17
87452404	09-19		2
87452405	08-21		16
87452406	09-19		1
87452511	04-20		15
87452627	09-12		3
87452823	03-03		29
87454016	08-07		1
	08-60		1
87454017	08-07		2
	08-60		1
87454292	09-46		
87454376	02-02		7
87454377	02-01		14
87454378	02-01		16
87454545	05-02		
	05-02A		
87454547	08-33		21B
	08-35		25B
87454548	08-33		21C
	08-35		25C
87454907	08-60		2
87454908	08-60		2
87455509	09-08		
87455541	08-33		21E
	08-35		25E
87455564	08-33		21G
	08-35		25G
87455565	08-33		21H
	08-35		25H
87455832	08-02		18
	08-23B		37
87455961	08-13		18
87456199	09-22		11
87456900	06-19		4
	06-28		4
87456901	06-29		11
87456968	06-19		1
	06-28		1
87456969	06-29		12
87515955	08-30		6
	08-31		7
87518479	08-23B		38
87522766	04-05		4
	04-06		3
87524409	06-19		
	06-28		
87524432	06-19		14
	06-28		14
87524433	06-19		13

Number	Figure	Sequence	Ref.
87524433	06-28		13
87524435	06-19		16
	06-28		16
87524436	06-19		5
	06-28		5
87524437	06-19		11
	06-28		11
87524438	06-19		12
	06-28		12
87524439	06-19		10
	06-28		10
87524440	06-19		15
	06-28		15
87524441	06-19		8
	06-28		8
87525756	06-19		
	06-28		
87525849	06-17		20
	06-25		20
87527167	04-09		35
87528887	04-16		9
87530365	06-19		7
	06-28		7
87534372	09-55		41
	09-57		18
87534992	09-43		21A
87537201	09-24A		2
87537207	09-24A		1
87537208	09-24A		4
87537209	09-24A		
87538167	09-65		29
87538515	06-09		12
	06-11		40
	06-38		2
87539792	04-09		36
87540980	04-10		14
87545557	09-41		12
87545561	02-04		6
87546291	09-66		26
87552560	08-08A		38
	08-22		25
87555125	09-48		
87555499	08-32		
87555505	08-32		
87555519	08-34		
87555524	08-34		
87555530	08-33		
87555536	08-33		
87555567	08-35		
87555570	08-35		
87557237	02-02		6
87559003	02-01		2
87560507	05-02A		19
87560508	05-02A		4
87561131	09-40		24
87566237	08-32		20
	08-33		20
	08-34		18
	08-35		18
87566480	08-07A		8
	08-07B		8
87566994	09-04		1
87572760	05-04		9
	06-01		35
87576643	02-01		1
87577141	09-06		
87577343	08-15		1
	08-16		1
	08-36		
87577346	08-17		1
	08-18		1
	08-37		
87577348	08-19		1
	08-38		
87577349	08-20		1
	08-39		
87578455	04-07		6
87578904	09-49		2
87578905	09-49		1
87578910	05-02A		
87579286	05-02A		1
87581010	09-79		15
87584645	04-05		16
87585167	09-41		20
87585817	04-07		21
87586156	09-01		10
	09-02		6
87586776	08-50		
87589025	09-66		32
87590156	09-66		12
87592658	08-01		5
87592819	09-24		34
87593381	08-31		
87593382	08-31		
87593642	03-03		3
87594363	08-22		2
87594364	08-22		30
	08-22		45
87594903	09-41		1
87598501	09-66		31
87601338	06-11		39
87601345	06-11		20
87601612	04-06A		28
87602620	09-10		
87603511	07-06		9
87603513	07-05		10
87603514	07-05		11
87603948	02-07		
	02-08		1
87606502	09-40		15
87608352	04-06A		22
87608368	02-01		18
87608370	02-01		19
87608777	09-14		9
87609666	08-59		12
87609669	08-05		34
	08-59		1
	09-05		20
87610318	05-02A		8
87610338	02-04		1
	02-05		
87610679	04-05		8
	04-06		17
87610680	04-05		7
	04-06		16
87610681	04-06		15
87610682	04-06		14
87611852	02-06		17
87613159	05-02A		
87613161	05-02A		
87613924	06-11		35
	06-38		1
87614481	09-04		27
87614808	04-09		11
87615800	09-63		18
87616934	02-02		2
87617576	02-06		7
87617618	08-36		4
	08-37		4
	08-38		4
	08-39		4
	08-42		
87617655	08-42		3
87617657	08-42		6
87618533	06-31		6
87619415	05-02A		
87619781	09-27		18
87622505	09-80		15
87622506	09-81		15
87622714	08-04		6
87622718	08-04		4
87623338	09-01A		1
	09-01A		14
87623339	09-01A		15
	09-01A		2
87623771	09-04		25

Number	Figure	Sequence	Ref.	Number	Figure	Sequence	Ref.
87625976	08-04		23	87668167	08-07B		23
87626017	09-74		14	87669381	09-60		1
87627072	09-68		8	87669391	09-60		4
87627903	08-01		3	87669401	09-60		7
87628308	02-01		4	87669712	09-60		6
87628324	02-01		3	87669761	09-60		5
87630218	09-66		6	87671746	04-06		9
87630219	09-66		1	87671893	05-02A		18
87630220	09-66		20	87673270	09-38		9A
87630445	09-09		1	87674844	02-02		1
87632870	02-02		9	87674850	09-38		27
87632920	09-01		2	87675026	08-25		13
	09-02		17	87675071	08-25		20
87633581	04-11		2	87675074	08-25		22
87636554	09-68		1	87675208	09-59		1
87636559	09-68				09-70		8
87636560	09-53		1	87675513	08-04		24
87636561	09-54		1	87676276	09-59		7
87636562	09-53		1		09-70		14
87636563	09-54		1	87679228	03-01		39
87637384	09-59		27	87681261	09-01		6
	09-70		21		09-02		13
87638046	09-01		1	87682197	04-05		5
	09-01A				04-06		10
87638047	09-01A			87682993	02-05		2
	09-02		1	87685948	08-15		3
87638350	09-01A		10		08-17		8
	09-01A		25		08-50		
87642364	07-03		11	87685952	08-19		3
87642365	07-03		10		08-20		3
87642370	07-03		6		08-52		
87642658	08-04		7	87685953	08-16		3
87644495	07-03		7		08-18		2
87644497	07-03		9		08-51		
87647001	09-76		9	87685954	08-15		4
87647029	02-01		15		08-16		4
87648733	03-03		25		08-19		4
87649398	06-01		12		08-53		
87649405	04-08		27	87685955	08-17		9
87650602	08-07A		23		08-18		3
	08-07B		32		08-20		4
87651790	09-38		1		08-54		
87651830	09-38			87686604	09-64		20
87651975	08-07A		26	87687141	08-50		1
	08-07B		26		08-51		1
87652272	02-04		10		08-52		1
87652902	09-76		8		08-53		1
87653245	09-61		1		08-54		1
87653377	04-05		3	87689189	09-01A		11
	04-06		2		09-01A		26
87656128	04-05		6	87689338	09-01A		12
	04-06		11		09-01A		27
87656146	03-01		14	87690874	03-01		28
87656501	03-01		25	87693492	03-01		12
	08-03		12	87694065	09-38		48
87657148	09-54		3	87694305	04-10		1
87657149	09-54		2	87694565	09-59		12
87658696	03-01		26		09-70		19
87659604	08-03		7	87694656	06-01		11
87659610	05-03				06-09		
87659611	05-03			87697589	07-04		2
87659612	05-03			87697590	07-04		3
87659613	05-02A		2	87699640	09-59		13
	08-03		22		09-70		7
87659616	05-03			87699880	06-01		19
87659784	08-03		8	87699881	07-06		8
87662928	08-07A		7	87700144	04-09		30
	08-07B		7	87700794	09-59		2
87662930	08-07A		4		09-70		12
	08-07B		4	87702194	06-11		21
87662932	08-07A		19	87702261	09-74		1
	08-07B		19	87702297	09-76		14
87663365	05-02A		17	87704851	09-54		13
87664021	04-05		2	87704858	02-06		14
	04-06		20	87706237	09-77		8
87664422	09-01		34	87706239	09-78		8
87664425	09-01		33	87706250	09-77		9
87666451	02-04		7	87706251	09-78		9

Number	Figure	Sequence	Ref.
87708015	09-01		5
	09-02		14
87708227	09-77		14
87708242	09-78		16
87710145	06-03		4
87710155	06-02		11
87711985	09-59		4
	09-70		9
87712299	08-04		5
87714038	07-03		1
	07-04		1
	07-07		
87715487	02-02		3
87716480	08-05		13
87716482	08-05		14
87716484	08-27		8
87716486	08-06		12
87716488	08-06		13
87716490	08-27		1
87716492	08-27		2
87716823	06-09		7
87716824	06-09		6
87716969	07-07		1
87716970	07-07		2
87716973	09-37		1
87719412	09-39		1
87719444	09-38		13
87719495	09-41		19
87719497	09-41		18
87724438	09-05		21
87725883	09-39		10
87725886	09-39		9
87726055	09-41		24
87726573	04-09		
	09-70		
87726574	04-07		16
	04-09		24
	09-70		
87726576	04-07		32
87726584	04-04		1
	04-08		20
87726592	04-07		1
	04-08		1
87726595	04-09		1
87726617	04-20		7
87726950	09-66		30
87726951	09-66		18
87735103	09-76		2
87735105	09-77		2
87741446	09-59		14
87741447	09-59		22
87803194	03-08		6
87803261	02-32		1
892-11005	03-03		30
	04-19		6
892-11006	03-03		31
	08-07A		15
	08-07B		15
	09-60		3
	09-70		
892-11008	02-01		41
	03-01		17A
	03-03		10
	04-03		5
	04-06A		17
	04-08		17
	04-16		4
	08-23		22
	08-23B		22
	09-05		10
	09-08		28
	09-12		14
	09-13		6
	09-15		3
	09-25		24
	09-25A		24
	09-44		6
892-11010	02-06		5
892-11010	03-01		32
	03-03		24
	04-01		40
	05-02		26
	08-04		12
	08-05		10
	08-06		16
	08-06		9
	08-07		9
	08-10		31
	08-22		42
	08-23		12
	08-23B		12
	08-24		12
	08-26		35
	08-26		41
	08-27		15
	08-27		6
	09-08		26
	09-13		28
	09-25		7
	09-25A		7
	09-38		36
892-11012	09-24A		7
893-11005	04-18		8
895-11004	04-11		13
	07-03		23
	09-54		8
895-11005	03-03		6
895-11006	04-06		7
	04-06A		14
	05-02A		13
	09-55		10
895-11008	02-01		10
	02-01		23
	02-01		28
	02-02		13
	02-02		23
	02-04		3
	03-03		11
	04-05		14
	04-06		4
	06-10		3
	07-03		2
	07-03		29
	07-04		6
	08-07B		28
	08-08A		3A
	08-22		22
	09-03		16
	09-05		9
	09-12		13
	09-15		
	09-21		15
	09-25		32
	09-59		9
	09-66		36
	09-70		16
895-11010	03-01		34
	03-01		42
	04-04		19
	04-05		12
	04-06		12
	04-16		7
	05-02A		10
	07-03		26
	08-03		3
	08-07		14
	08-08		31
	08-08A		31
	08-09		4
	08-09A		4
	08-10		30
	08-10		33
	08-11		28
	08-12		25
	08-13		26
	08-13		37

Number	Figure	Sequence	Ref.
895-11010	08-24		11
	08-25		3
	09-01		24
	09-02		7
	09-03		9A
	09-04		20
	09-08		17
	09-08		21
	09-38		34
	09-38		51
	09-40		11
	09-40		17
	09-40		6
	09-41		4
	09-41		9
	09-45		10
895-11018	08-09		7
895-15006	04-11		8
895-15008	04-09		29
	05-01		16
	05-01		24
	09-13		4
	09-37		21
	09-38		15
	09-43		31
	09-62		7
	09-63		16
	09-66		28
895-15010	02-01		21
	04-07		37
	05-01		21
	08-25		7
	09-13		12
	09-25		8
	09-25A		8
	09-63		11
895-18012	09-47		4
	09-49		10
895-25006	08-07A		14
	08-07B		14
895-30107	09-55		35
	09-57		12
896-11008	09-13		32
896-11010	02-01		38
	02-06		18
	04-03		17
	08-10		3
	08-11		3
	08-12		3
	08-13		3
	08-14		3
	08-24		25
	08-26		3
	08-26		36
	08-26		44
	08-26		7
	09-01		29A
896-11012	04-06A		33
	06-11		10
	08-23		18
	08-23B		18
	09-24A		6
	09-67		9
896-11016	09-37		12
896-11020	03-01		3A
	06-31		5
	09-05		18
	09-06		7
	09-06		7
	09-07		7
	09-23		14
	09-24		5
	09-36		3
	09-36		7
	09-38		17
896-15008	09-67		16
896-15010	02-06		12
	02-06		4
896-15010	06-11		25
	08-22		11
	09-09		3
	09-13		19
	09-67		5
896-15012	02-07		4
	03-03		27
	06-11		28
	07-05		8
	09-40		18
	09-46		12
	09-47		10
	09-49		4
90-6682T1	06-01		16
905794R1	06-15		20
	06-23		20
905839R1	05-06		6
	06-04		4
906086R1	09-55		42
	09-57		19
933781R1	07-01		24
	07-01	01	24
934667R1	06-13		7
	06-21		7
	06-29		6
934727R1	05-06		4
	06-04		2
9625178	06-37		4
	08-55		7
9637611	06-01		17
	06-09		13
	06-11		41
	06-38		3
9703399	04-14		
	04-14		
9827902	04-04		17
9966352	06-07		8
9966356	06-07		13
9968031	06-08		3
9970178	08-23A		3
	08-23C		3
9970179	08-23A		4
	08-23C		4
9970180	08-23A		6
	08-23C		6
9970181	08-23A		1
	08-23C		1
9970384	08-23A		5
	08-23C		5
A13240	08-25		10
A156873	06-02		6
	06-33		3
A166057	04-04		2
A167037	09-71		8
A170467	02-06		8
A177435	03-02		2
A187542	04-17		5
A187575	04-17		11
A187714	09-58		10
	09-60		
A23870	04-17		1
A30881	09-03		11
	09-13		3
	09-16		15
	09-17		5
	09-18		26
	09-21		6
A33509	09-27		29
A38208	05-04		15
	05-09		7
A41264	04-15		9
A42561	04-09		8
	09-64		6
	09-65		14B
A45054	09-48		
A45504	09-48		
A45505	09-48		
A45513	09-48		

Number	Figure	Sequence	Ref.
A48041	06-06		11
	06-16		6
	06-17		2
	06-24		6
	06-25		2
A65544	05-01		5
A77310	07-03		20
D121152	04-13		2
	04-15		
D121194	09-05		6
D123684	05-04		3
	06-01		10
D124529	07-03		16
D124530	07-03		12
D125223	05-09		1
D127167	09-26		44
	09-27		21
D127335	04-11		24
D127542	09-04		2
D128745	09-70		2
D129227	09-25		2
	09-25A		2
D129264	09-06		2
	09-06		2
	09-07		2
	09-08		11
D132076	09-05		17
D132494	09-24		16
	09-27		2
D132982	06-10		26
	09-64		24
D133632	09-24		21
	09-27		7
D133865	09-27		24
D134900	09-20		6
D135384	04-13		1
	04-15		
D135557	09-23		5
D135559	09-23		6
D135739	09-24		12
D136391	09-23		26
D136392	09-23		24
D136700	09-23		25
D137218	09-24		13
D137363	04-04		12
	09-04		16
D137625	08-01		14
D138042	09-23		7
D138047	09-26		50
	09-26		52
	09-27		34
	09-27		47
D138055	08-04		8
	08-05		6
	08-06		14
	08-06		7
	08-26		31
	08-26		42
	08-27		12
	09-38		37
D138157	09-28		7
	09-29		7
	09-30		7
	09-32		7
	09-32		7
	09-34		7
	09-35		7
D138380	06-30		4
D138492	06-30		5
	06-31		2
D139039	09-16		19
D139225	03-01		27
D139849	09-28		
	09-29		
	09-30		
	09-32		
	09-32		
	09-34		
D139849	09-35		
D139851	09-28		
	09-29		
	09-30		
	09-32		
	09-32		
	09-34		
	09-35		
D140029	08-65		15
	09-26		8
D140035	07-03		14
D140247	09-27		28
D140267	09-40		13
	09-54		26
D141075	09-26		42
D141142	09-26		20
	09-27		37
D141164	09-26		22
	09-27		39
D141666	09-27		11
D142012	09-35		4
D142144	09-71		10
D142787	08-04		20
	08-08		27
	08-08A		27
	08-09		21
	08-09A		21
D142890	07-02		10
D142898	05-08		6
	06-27		16
	06-34		3
D142986	06-37		7
D143242	09-68		4
D143324	09-26		30
D143406	09-22		13
D143411	09-13		35
D143416	09-20		5
D143417	09-40		23
	09-64		29
	09-65		20
D143427	09-64		27
	09-65		18
D143591	09-15		15
	09-25		21
	09-25A		21
D143714	09-40		9
D143715	09-40		8
D143723	09-15		10
	09-25		22
	09-25A		22
D143735	09-25		20
	09-25A		20
D143846	08-07		6
	08-12		26
	08-26		31A
	08-26		47
D144423	09-23		35
D144592	09-25		3
	09-25A		3
D145978	09-26		7
	09-27		16
D146288	09-26		26
	09-27		49
D146420	09-29		3
D146421	09-29		2
D147249	09-29		4
D147409	09-28		4
D147773	08-10A		26
D148947	09-18		2
D148962	03-02		6
	09-13		30
D148992	09-16		7
D148993	09-13		2
D148994	09-16		18
D149033	09-22		40
D149079	08-63		17
	08-63		3
	08-64		15

Number	Figure	Sequence	Ref.
D149079	09-23		2
	09-26		47
	09-27		31
D149262	09-16		46
D149287	09-01		35
	09-03		4
	09-16		37
	09-17		11
	09-19		3
	09-20		11
D149288	09-16		23
	09-16		48
	09-19		7
	09-21		11
D149295	09-16		34
	09-19		9
D149298	09-26		32
D149309	08-24		3
D149725	05-05		4
	06-02		2
D149726	05-05		3
	06-02		4
D149824	09-74		3
D149825	09-74		4
D149826	09-79		10
D149827	09-79		11
D149828	09-74		5
D149829	09-74		6
D149860	06-09		
D149866	09-11		9
D149867	09-11		10
D149868	09-11		12
D150032	09-20		13
D150053	08-10A		3
D150054	08-10A		2
D150121	09-26		10
	09-27		17
D150214	05-06		11A
D150397	09-16		9
D150434	09-16		13
D150435	09-16		12
D150486	09-16		17
D150493	09-16		24
D150503	09-16		45
D150619	09-26		34
D150781	08-55A		
D150810	08-55A		
D151034	09-05		15
D151065	09-23		21
D151069	09-37		5
D151070	09-37		6
D151071	09-24		11
D25279	09-22		10
	09-22		14
	09-26		31
D26002	09-22		9
D28648	09-22		12
D30933	09-28		12
	09-29		12
	09-30		12
	09-31		9
	09-32		12
	09-32		12
	09-33		9
	09-34		12
	09-35		12
D31140	09-08		2
	09-26		53
	09-27		48
D34666	09-16		16
D37495	09-29		11
	09-30		11
	09-31		8
	09-32		11
	09-32		11
	09-33		8
	09-34		11
	09-35		11
D37614	09-26		29
D38648	08-07		20
	08-14		21
D38907	09-22		3
D39118	09-18		11
D39696	06-10		24
	08-03		18
D41659	09-31		
	09-33		
D43940	09-28		11
D48212	09-28		10
	09-29		10
	09-30		10
	09-32		10
	09-32		10
	09-34		10
	09-35		10
D50146	09-22		6
D50696	09-35A		2
D51391	09-08		7
D51392	09-08		15
D51393	09-08		19
D51750	09-28		5
	09-28		8
	09-29		5
	09-29		8
	09-30		5
	09-30		8
	09-31		5
	09-32		5
	09-32		5
	09-32		8
	09-32		8
	09-33		5
	09-34		5
	09-34		8
	09-35		5
	09-35		8
D52276	08-10		7
	08-11		7
	08-12		7
	08-13		7
	08-14		7
	08-22		13
D52564	09-72		1
D53812	09-22		17
D55216	09-74		10
D59912	09-16		4
	09-18		6
	09-21		2
D61368	09-22		16
D74182	09-13		36
D80270	09-74		11
D86664	09-25		19
	09-25A		19
D88052	09-63		32
	09-64		32
D95096	09-03		13
D95142	08-59		5
D95143	08-58		5
	08-60		5
	08-66		4
D95144	08-61		5
	08-62		5
D95145	08-63		7
	08-64		5
	08-65		5
E135777	06-34		5
E135785	06-34		10
E135809	06-13		21
	06-21		1
	06-32		6
	07-01		23
	07-01	01	23
E135810	06-37		16
E43769	09-59		17
	09-70		6
E49497	09-19A		4

Number	Figure	Sequence	Ref.
F49498	09-19A		3
F22426	04-11		
F44883	09-41		11
F45165	09-55		49
	09-57		25
F53473	05-04		10
	06-01		36
F64198	09-55		45
	09-57		22
F64519	09-68		14
G100440	08-61		15
G100444	08-59		15
	08-60		17
	08-66		14
G100448	08-61		16
G100449	08-59		16
	08-60		18
	08-66		15
G101533	08-61		6
	08-62		6
G101994	08-63		21
G101995	08-63		20
G101996	08-63		22
G102285	08-61		14
G102287	08-58		14
	08-65		17
G102288	08-59		14
	08-60		16
	08-66		13
G102424	08-59		6
G102425	08-58		6
	08-60		6
	08-66		5
G102426	08-63		8
	08-64		6
G107277	08-66		12
G108123	08-61		13
G108512	08-59		3
G108518	08-59		13
G109298	08-59		10
	08-60		11
	08-66		9
G109299	08-61		10
	08-62		24
G109300	08-63		14
G110077	08-55A		
G110467	08-55A		
G110529	08-64		18
G110530	08-64		19
G110531	08-64		17
G32122	08-58		10
	08-65		12
G32126	08-62		10
G32176	08-64		12
G35540	08-55A		4
H434163	05-02		32
	08-01		15
	08-26		52
H71514	09-24		7
K260177	06-13		9
	06-21		9
K261014	06-08		4
	06-35		5
K262143	06-08		9
	06-35		9
K395082	06-06		23
K395090	06-08		8
	06-35		8
K395091	06-06		21
K395093	06-06		16
	06-37		5
K395101	06-37		13
L111356	08-10A		31
	09-75		7
L11541	05-02		33
	08-51		18
	09-59		5
	09-65		31
L11541	09-70		10
L15401	09-03		12
L17985	02-04		4
L18331	04-18		15
	08-51		17
L18337	02-02		24
	03-01		24
	03-02		12
	04-04		28
	04-05		15
	04-06		21
	04-06A		25
	04-07		26
	04-13		11
	04-14		14
	04-20		14
	06-10		14
	06-32		7
	08-03		16
	08-09		29
	08-10		16
	08-10		26
	08-10A		17
	08-11		15
	08-11		24
	08-12		15
	08-13		19
	08-14		14
	08-21		
	08-23		15
	08-23B		15
	08-27		18
	09-10		36
	09-38		59
	09-63		21
	09-64		25
	09-65		17
	09-66		11
L32100	08-29		9
L32418	08-29		1
L54563	09-16		14
	09-17		1
L60224	04-11		5
	09-38		49
L71879	04-07		
	04-07		10
L79937	08-05		39
N13505	05-06		12A
	06-03		11
	08-29		6
N13582	04-15		10
N14283	05-05		2
N14367	06-02		3
	05-05		8
N14373	06-05		3
N14410	09-61		20
N14466	08-57		
N6755	04-15		3
N6836	08-57		
N6941	06-35		4
N7536	08-57		
N9025	02-05		1
NSS	02-26		10
	02-33		11
	02-36		4
	02-39		9
	03-11		5
	04-04		31B
	04-09		2
	04-09		25
	04-09		3
	04-12		1
	04-12		2
	04-12		3
	04-12		4
	04-12		5
	04-12		6
	04-12		7

Number	Figure	Sequence	Ref.
NSS	04-15		1
	04-15		5
	04-15		6
	04-15		7
	04-15		8
	04-17		12
	05-02A		22
	05-02A		23
	05-02A		24
	05-03		1
	05-03		3
	05-03		5
	05-03		6
	05-07		2
	06-02		14
	06-04		1
	06-04		10
	06-04		11
	06-06		14
	06-06		15
	06-06		3
	06-07		1
	06-07		2
	06-07		5
	06-07		6
	06-07		7
	06-08		1
	06-08		2
	06-09		10
	06-09		11
	06-09		2
	06-09		3
	06-09		4
	06-09		9
	06-11		
	06-13		13
	06-13		2
	06-13		24
	06-13		25
	06-14		10
	06-14		11
	06-14		12
	06-14		13
	06-14		14
	06-14		17
	06-14		18
	06-14		2
	06-14		20
	06-14		21
	06-14		3
	06-14		3A
	06-14		4
	06-14		5
	06-14		6
	06-14		7
	06-14		8
	06-14		9
	06-18		10
	06-18		11
	06-18		12
	06-18		15
	06-18		20
	06-18		21
	06-18		22
	06-18		23
	06-18		24
	06-18		25
	06-18		25A
	06-18		7
	06-18		8
	06-19		2
	06-21		21
	06-21		23
	06-21		24
	06-22		10
	06-22		11
	06-22		12
	06-22		13
NSS	06-22		14
	06-22		17
	06-22		18
	06-22		2
	06-22		20
	06-22		21
	06-22		3
	06-22		3A
	06-22		4
	06-22		5
	06-22		6
	06-22		7
	06-22		8
	06-22		9
	06-26		10
	06-26		11
	06-26		12
	06-26		15
	06-26		20
	06-26		21
	06-26		22
	06-26		23
	06-26		24
	06-26		25
	06-26		25A
	06-26		7
	06-26		8
	06-28		2
	06-29		1
	06-29		2
	06-29		3
	06-29		4
	07-01		21
	07-01	01	21
	08-28		1
	08-30		1
	08-30		2
	08-30		3
	08-30		4
	08-31		1
	08-31		2
	08-31		3
	08-31		4
	08-31		5
	08-32		1
	08-32		2
	08-32		3
	08-32		4
	08-32		5
	08-32		6
	08-33		1
	08-33		2
	08-33		3
	08-33		4
	08-33		5
	08-33		6
	08-34		1
	08-34		2
	08-34		3
	08-34		4
	08-34		5
	08-34		6
	08-34		7
	08-35		1
	08-35		2
	08-35		3
	08-35		4
	08-35		5
	08-35		6
	08-35		7
	08-36		7
	08-36		8
	08-36		9
	08-37		10
	08-37		8
	08-37		9
	08-38		10
	08-38		8

Number	Figure	Sequence	Ref.	Number	Figure	Sequence	Ref.
NSS	08-38		9	NSS	09-28		3
	08-39		9		09-30		2
	08-40		1		09-30		3
	08-40		2		09-30		4
	08-41		1		09-31		7
	08-41		2		09-32		2
	08-42		1		09-32		2
	08-42		2		09-32		3
	08-43		1		09-32		3
	08-43		2		09-32		4
	08-44		1		09-32		4
	08-44		2		09-33		7
	08-45		1		09-34		4
	08-45		2		09-43		
	08-46		1		09-43		
	08-46		2		09-61		19
	08-55		1		09-61		21
	08-55A		1		09-71		14
	08-55A		10	P2745466	06-27		21
	08-55A		14	P2745478	06-27		10
	08-55A		2	P3533055	06-18		35
	08-55A		5		06-26		35
	08-55A		6		06-27		20
	08-55A		7	R24840	08-10		28
	08-55A		8	R32119	09-24		8
	08-55A		9	R46493	08-07		7
	08-56		1	R54682	09-71		6
	08-56		10	REF	02-10		11
	08-56		11		02-10		12
	08-56		12		02-15		4
	08-56		13		02-29		
	08-56		4		02-29		7
	08-56		9		02-38		10
	08-57		1		02-38		4
	08-57		6		02-38		7
	08-57		7		02-38		8
	08-57		8		02-38		9
	08-58		7		02-39		11
	08-58		8		03-04		5
	08-59		7		03-06		9
	08-59		8		05-02A		
	08-60		8		05-09		2
	08-60		9		05-09		5
	08-61		7		06-30		3
	08-61		8		06-30		3
	08-62		7		08-02		
	08-62		8		08-02		
	08-63		10		08-03		13
	08-63		11		08-04		1
	08-64		8		08-05		1
	08-64		9		08-06		1
	08-65		8		08-07A		1
	08-65		9		08-07B		1
	08-66		6		08-08		
	08-66		7		08-08A		
	09-01A		13		08-09		
	09-01A		16		08-09A		
	09-01A		17		08-10		1
	09-01A		18		08-11		1
	09-01A		19		08-12		1
	09-01A		20		08-13		1
	09-01A		28		08-14		1
	09-01A		3		08-15		
	09-01A		4		08-16		
	09-01A		5		08-17		
	09-03		10		08-18		
	09-06		1		08-19		
	09-06		1		08-20		
	09-07		1		08-24		
	09-08		1		08-25		
	09-08		10		08-26		
	09-10		10		08-26		
	09-10		2		08-27		
	09-26		43		08-27		4
	09-26		6		08-32		
	09-27		15		08-33		
	09-27		20		08-34		
	09-28		2		08-35		

Number	Figure	Sequence	Ref.	Number	Figure	Sequence	Ref.
REF	09-01		28				
	09-04						
	09-18						
	09-19						
	09-26		28				
	09-55						
	09-56						
S109444	08-58		15				
	08-65		18				
S109445	08-58		16				
	08-65		19				
S115351	05-03		2				
S301064	06-33		4				
S301065	06-02		15				
ST205A	06-16		1				
	06-24		1				
	06-27		6				
ST264	06-17		23				
	06-25		23				
T34857	04-15		2				
T41159	09-74		17				

CATÁLOGO DE PIEZAS

RETROEXCAVADORA DE LA CARGADORA

580M SERIES 3



BD08B046

Bur • Publicado en 01Mar 08
Impreso en EE.UU. • Número de libro/formulario 87632283 LAS
Copyright © 2007. CNH America, LLC. Todos los derechos reservados.

CNH America LLC se reserva el derecho a mejorar el diseño o cambiar las especificaciones en cualquier momento sin incurrir por ello en la obligación de actualizar correspondientemente las unidades vendidas previamente.

Todos los datos de esta publicación están sujetos a variaciones en la producción. Las dimensiones y los pesos son sólo aproximados. Las ilustraciones no muestran necesariamente productos con su dotación estándar. Para obtener información exacta sobre cualquier producto en particular, ponerse en contacto con el distribuidor.

HISTORIAL DE REVISIONES			
Publicación	Fecha de publicación	Máquinas aplicables	Observaciones
Primera edición	01Mar 08	580M Series 3	87632283 LAS

Se prohíbe terminantemente el uso del contenido editorial o gráfico sin el consentimiento expreso por escrito de
CNH America LLC. Carol Stream, IL 60188 EE.UU.

TABLE OF CONTENTS

02-01	RADIADOR - SOPORTE
02-02	SISTEMA DE PURGA DE AIRE - SOPORTE
02-04	FILTRO DE AIRE - PIEZAS DE ENTRADA DE AIRE
02-05	FILTRO DE AIRE
02-06	SILENCIADOR, ASPIRADOR - SISTEMA DE ESCAPE
02-07	MOTOR - SOPORTE
02-08	MOTOR
02-09	BLOQUE DE CILINDROS
02-10	BLOQUE DE CILINDROS
02-11	BOMBA DE ACEITE, BANDEJA
02-12	TAPAS DEL BLOQUE
02-13	BLOQUE DE CILINDROS - CUBIERTAS
02-14	TAPAS DEL BLOQUE
02-15	RESPIRADERO - MOTOR
02-16	CULATA DE CILINDROS
02-17	CULATA DE CILINDRO
02-18	CULATA DEL CILINDROS - MECANISMO DE LA VALVULA
02-19	COLECTOR ESCAPE
02-20	COLLECTOR DE ESCAPE
02-21	CIGUENAL
02-22	BIELA PISTON
02-23	EMBOLO - MOTOR
02-24	VOLANTE MOTOR
02-25	POLEA - CIGUENAL
02-26	EQUILIBRADOR, ENGRENAJES Y ARBOLES
02-28	EJE DE LEVAS
02-29	TURBOCOMPRESOR
02-30	VARILLA DE NIVEL - ACEITE DEL MOTOR
02-31	BOMBA DE ACEITE - MOTOR
02-32	FILTRO DE ACEITE - MOTOR
02-33	TUBERIAS - ACEITE DEL MOTOR
02-34	CAMBIADOR DE CALOR - MOTOR
02-35	BOMBA DE AGUA
02-36	SISTEMA DE REFRIGERACIčN - MOTOR
02-37	TERMOSTATO - REFRIGERACION DEL MOTOR
02-38	BOMBA DE AGUA - MANDO
02-39	POLEA DEL VENTILADOR
02-41	MOTOR - GANCHO DE ELEVACION
02-42	ALTERNADOR
03-01	CONDUCTOS DE COMBUSTIBLE, DEPčSITO
03-02	CONTROLES - ACELERADOR, MANUAL
03-03	CONTROLES - ACELERADOR, PIE
03-04	BOMBA DE INYECCION
03-05	SISTEMA DE INYECCION DE COMBUSTIBLE
03-06	SISTEMA DE INYECCION DE COMBUSTIBLE
03-07	GRUPO DE INYECCION - TUBERIAS
03-08	FILTRO COMBUSTIBLE
03-09	BOMBA DE ALIMENTACION
03-10	TUBERIAS - COMBUSTIBLE
03-11	SISTEMA DE INYECCION DE COMBUSTIBLE
04-01	MOTOR DE ARRANQUE

TABLE OF CONTENTS

04-02	ALTERNADOR
04-03	MONTAJE DEL ARRANQUE - MONTAJE DEL ALTERNADOR
04-04	MAZO DE CABLES, MOTOR - MONTAJE Y CONEXIONES
04-05	BATERĉA, ĐNICA
04-06	BATERIA, DOBLE - ARRANQUE EN FRĉO
04-06A	CALENTADOR DE REJILLA PARA ARRANQUE EN FRĉO
04-07	MAZO DE CABLES, CONSOLA FRONTAL - INTERRUPTORES
04-08	MAZO DE CABLES, CONSOLA FRONTAL - SOPORTE
04-09	MAZO DE CABLES, CONSOLA LATERAL - INTERRUPTORES
04-10	PANEL DE INSTRUMENTOS, DELANTERO - CUBIERTAS
04-11	PANEL DE INSTRUMENTOS, LATERAL - CUBIERTAS (LADO DERECHO)
04-12	VELOCIMETRO COMB.
04-13	ELECTRICO - LUCES, TECHO DE LA ROPS
04-14	ELECTRICO - LUCES, CABINA DE LA ROPS
04-15	CONJUNTO DE LA LAMPARA (MODELOS CON TECHO ROPS)
04-16	BOCINA - ALARMA, RETROCESO
04-17	FARO, GIRATORIO (MODELOS CON CABINA O CON TECHO)
04-18	ANTENA, RADIO - MAZO DE CABLES, RADIO
04-19	ELECTRICO SISTEMA - HIDRĆULICO AUXILIAR DE LA RETROEXCAVADORA
04-20	ELECTRICO SISTEMA - HIDRĆULICO AUXILIAR DE LA RETROEXCAVADORA, CON DE CONTROL PILOTO
05-01	VOLANTE - COLUMNA
05-02	HIDRAULICA - DIRECCION
05-02A	HIDRAULICA - DIRECCION (CON DIRECCIčN CčMODA)
05-03	TUBO DE LA DIRECCION
05-04	EJE, DELANTERO (86990837) - SOPORTE
05-05	EJE, DELANTERO (86990837) - ALOJAMIENTO
05-06	EJE, DELANTERO (86990837) - ALOJAMIENTO, ARTICULACIčN GIRATORIA
05-07	EJE, DELANTERO (86990837) - CILINDRO, DIRECCION
05-08	EJE, DELANTERO (86990837) - CUBO Y COJINETES
05-09	NEUMĆTICOS, FRONTALES - NEUMĆTICOS
06-01	EJE, TRANSMISIčN DELANTERA - SOPORTE
06-02	EJE, TRANSMISIčN DELANTERA - ALOJAMIENTO
06-03	EJE, TRANSMISIčN DELANTERA - ALOJAMIENTO, ARTICULACIčN GIRATORIA
06-04	EJE, TRANSMISIčN DELANTERA - CILINDRO, DIRECCION
06-05	EJE, TRANSMISIčN DELANTERA - VARILLAS, EJE
06-06	EJE, TRANSMISIčN DELANTERA - PLANETARIO
06-07	EJE, TRANSMISIčN DELANTERA - DIFERENCIAL
06-08	EJE, TRANSMISIčN DELANTERA - ANILLO Y P¤čN
06-09	EJE DE TRANSMISIčN, EJE DELANTERO
06-10	SISTEMA DE REFRIGERACIčN - TRANSMISION
06-11	TRANSMISION - SOPORTE
06-12	CONJUNTO DE LA TRANSMISION, 2WD - FILTRO, ACEITE
06-13	CONJUNTO DE LA TRANSMISION, 2WD - ALOJAMIENTO
06-14	CONJUNTO DE LA TRANSMISION, 2WD - BOMBA, ACEITE
06-15	CONJUNTO DE LA TRANSMISION, 2WD - MECANISMO DE CAMBIO
06-16	CONJUNTO DE LA TRANSMISION, 2WD - EJE, RETROCESO & PRIMARIO
06-17	CONJUNTO DE LA TRANSMISION, 2WD - EJE, ENTRADA & T.D.F.
06-18	CONJUNTO DE LA TRANSMISION, 2WD - EJE, SECUNDARIO
06-19	CONJUNTO DE LA TRANSMISION, 2WD - VALVULA, CONTROL
06-20	CONJUNTO DE LA TRANSMISION, 4WD - FILTRO, ACEITE

TABLE OF CONTENTS

06-21		CONJUNTO DE LA TRANSMISION, 4WD - ALOJAMIENTO
06-22		CONJUNTO DE LA TRANSMISION, 4WD - BOMBA, ACEITE
06-23		CONJUNTO DE LA TRANSMISION, 4WD - MECANISMO DE CAMBIO
06-24		CONJUNTO DE LA TRANSMISION, 4WD - EJE, RETROCESO & PRIMARIO
06-25		CONJUNTO DE LA TRANSMISION, 4WD - EJE, ENTRADA & T.D.F.
06-26		CONJUNTO DE LA TRANSMISION, 4WD - EJE, SECUNDARIO
06-27		CONJUNTO DE LA TRANSMISION, 4WD - EJE, SALIDA
06-28		CONJUNTO DE LA TRANSMISION, 4WD - VALVULA, CONTROL
06-29		CONJUNTO DE LA TRANSMISION, 4WD - VĆLVULA, SOLENOIDE
06-30		RUEDAS, PARTE TRASERA - NEUMĆTICOS
06-31		EJE, TRANSMISIčN TRASERA - SOPORTE
06-32		EJE, TRASERO - BLOQUEO DEL DIFERENCIAL
06-33		87395372 EJE, TRANSMISIčN TRASERA - ALOJAMIENTO
06-34		87395372 EJE, TRANSMISIčN TRASERA - DIFERENCIAL
06-35		87395372 EJE, TRANSMISIčN TRASERA - ANILLO Y PI¤čN
06-36		87395372 EJE, TRANSMISIčN TRASERA - BLOQUEO DEL DIFERENCIAL
06-37		87395372 EJE, TRANSMISIčN TRASERA - PLANETARIO
06-38		EJE DE TRANSMISIčN, EJE TRASERO
07-01		CONJUNTO DE LA TRANSMISION, 2WD - FRENO, ESTACIONAMIENTO
07-01	01	CONJUNTO DE LA TRANSMISION, 4WD - FRENO, ESTACIONAMIENTO
07-02		EJE, TRANSMISIčN TRASERA - FRENO, DIFERENCIAL
07-03		FRENO - PEDALES
07-04		HIDRAULICA - CILINDRO PRINCIPAL DEL FRENO
07-05		CONDUITES DE FREINAGE A LA TRANSMISIčN
07-06		CONDUCTOS DEL FRENO A EJE
07-07		CONJUNTO DE CILINDRO FRENO PRINCIPAL
08-01		HIDRAULICA - BOMBA, FILTRO Y VĆLVULA DE LA CARGADORA
08-02		HIDRAULICA - VĆLVULA DE LA CARGADORA AL FILTRO A LA VĆLVULA DE LA RETROEXCAVADORA
08-03		HIDRAULICA - REFRIGERADOR, LčNEAS DE RETORNO Y FILTRO
08-04		HIDRAULICA - CILINDRO, ELEVACIčN DE LA CARGADORA
08-05		HIDRAULICA - CILINDRO, CUCHARčN DE LA CARGADORA
08-06		HIDRAULICA - CILINDRO, ALMEJA DE LA CARGADORA
08-07		HIDRAULICA - CILINDRO, ALMEJA DE LA CARGADORA
08-07A		HIDRAULICA - ALMEJA DE LA CARGADORA, ACUMULADOR CON EL£CTRICO
08-07B		HIDRAULICA - ALMEJA DE LA CARGADORA, ACUMULADOR CON EL£CTRICO (MODELOS CON CONTROL PILOTO)
08-08		HIDRAULICA - CILINDRO, ESTABILIZADOR DE LA RETROEXCAVADORA (SIN DE CONTROL PILOTO)
08-08A		HIDRAULICA - CILINDRO, ESTABILIZADOR DE LA RETROEXCAVADORA (CON DE CONTROL PILOTO)
08-09		HIDRAULICA - CILINDRO, BALANCčN DE LA RETROEXCAVADORA (SIN DE CONTROL PILOTO)
08-09A		HIDRAULICA - CILINDRO, BALANCčN DE LA RETROEXCAVADORA (CON DE CONTROL PILOTO)
08-10		HIDRAULICA - CILINDRO, AGUILčN DE LA RETROEXCAVADORA
08-10A		HIDRAULICA - EL PICAPORTE DEL ESTAMPIDO DE BACKHOE Y EL CIRCUITO ELECTRICO
08-11		HIDRAULICA - CILINDRO, PALA DE LA RETROEXCAVADORA
08-12		HIDRAULICA - CILINDRO, CUCHARčN DE LA RETROEXCAVADORA (MODELOS SIN PALA EXTENDIBLE)

TABLE OF CONTENTS

08-13	HIDRAULICA - CILINDRO, CUCHARčN DE LA RETROEXCAVADORA (MODELOS CON PALA EXTENDIBLE)
08-14	HIDRAULICA - CILINDRO, PALA EXTENSIBLE DE LA RETROEXCAVADORA
08-15	HIDRAULICA - VĆLVULA, CONTROL PILOTO DE PALANCA DE CONTROL (6 SPOOL, W/O EXT DIPPER, W/O AUX HYDS)
08-16	HIDRAULICA - VĆLVULA, CONTROL PILOTO DE PALANCA DE CONTROL (6 SPOOL, W/O EXT DIPPER, W/ AUX HYDS)
08-17	HIDRAULICA - VĆLVULA, CONTROL PILOTO DE PALANCA DE CONTROL (7 SPOOL, W/ EXT DIPPER, W/O AUX HYDS)
08-18	HIDRAULICA - VĆLVULA, CONTROL PILOTO DE PALANCA DE CONTROL (7 SPOOL, W/ EXT DIPPER, W/ AUX HYDS)
08-19	HIDRAULICA - VĆLVULA, CONTROL PILOTO DE PALANCA DE CONTROL (7 SPOOL, W/O EXT DIPPER, W/ AUX HYDS)
08-20	HIDRAULICA - VĆLVULA, CONTROL PILOTO DE PALANCA DE CONTROL (8 SPOOL, W/ EXT DIPPER, W/ AUX HYDS)
08-21	HIDRAULICA - CONTROL PILOTO DE PALANCA DE CONTROL
08-22	HIDRAULICA - CONTROL PILOTO
08-23	HIDRAULICA - AUXILIAR DE LA RETROEXCAVADORA (SIN DE CONTROL PILOTO)
08-23A	CONJUNTO DE LA VALVULA - AUXILIAR UNI-DIRECCIONAL (SIN DE CONTROL PILOTO)
08-23B	HIDRAULICA - AUXILIAR DE LA RETROEXCAVADORA (CON DE CONTROL PILOTO)
08-23C	CONJUNTO DE LA VALVULA - AUXILIAR UNI-DIRECCIONAL (CON DE CONTROL PILOTO)
08-24	HIDRAULICA - AUXILIAR DE LA RETROEXCAVADORA, EN EL AGUILčN Y LA PALA
08-25	HIDRAULICA - DISPOSITIVO ANTICABECEO
08-26	HIDRAULICA - ACOPLADOR, HERRAMIENTA RĆPIDA DE LA CARGADORA
08-27	HIDRAULICA - ACOPLADOR, HERRAMIENTA RĆPIDA DE LA CARGADORA; EN EL CHASIS DE ELEVACIčN DE LA CARGADORA; EN EL CHASIS DE ELEVACIčN DE LA CARGADOR LA CARGADORA
08-28	CONJUNTO DE LA VĆLVULA DEL ACOPLADOR - HERRAMIENTA RĆPIDA DE LA CARGADORA
08-29	BOMBA, EQUIPAMIENTO HIDRĆULICO
08-30	CONJUNTO DE LA VALVULA - CONTROL DE LA CARGADORA, DOS CORREDERAS
08-31	CONJUNTO DE LA VALVULA - CONTROL DE LA CARGADORA, TRES CORREDERAS
08-32	CONJUNTO DE LA VALVULA - CONTROL DE LA RETROEXCAVADORA, 6 BOBINAS (SIN PALA EXTENSIBLE Y SIN SISTEM)
08-33	CONJUNTO DE LA VALVULA - CONTROL DE LA RETROEXCAVADORA, 7 BOBINAS (SIN PALA EXTENSIBLE Y CON SISTEM)
08-34	CONJUNTO DE LA VALVULA - CONTROL DE LA RETROEXCAVADORA, 7 BOBINAS (CON PALA EXTENSIBLE Y SIN SISTEM)
08-35	CONJUNTO DE LA VALVULA - CONTROL DE LA RETROEXCAVADORA, 8 BOBINAS (CON PALA EXTENSIBLE Y CON SISTEM)
08-36	CONJUNTO DE LA VALVULA - CONTROL DE LA RETROEXCAVADORA, 6 BOBINAS
08-37	CONJUNTO DE LA VALVULA - CONTROL DE LA RETROEXCAVADORA, 7 BOBINAS
08-38	CONJUNTO DE LA VALVULA - CONTROL DE LA RETROEXCAVADORA, 7 BOBINAS
08-39	CONJUNTO DE LA VALVULA - CONTROL DE LA RETROEXCAVADORA, 8 BOBINAS
08-40	SECCION DE LA VALVULA - DE LA RETROEXCAVADORA (CON DE CONTROL PILOTO)
08-41	SECCION DE LA VALVULA - AGUILON DE LA RETROEXCAVADORA (CON DE CONTROL PILOTO)

TABLE OF CONTENTS

08-42	SECCION DE LA VALVULA - ESTABILIZADOR DE LA RETROEXCAVADORA (CON DE CONTROL PILOTO)
08-43	SECCION DE LA VALVULA - BRAZO DE LA RETROEXCAVADORA (CON DE CONTROL PILOTO)
08-44	SECCION DE LA VALVULA - CUCHARON DE LA RETROEXCAVADORA (CON DE CONTROL PILOTO)
08-45	SECCION DE LA VALVULA - PALA EXTENSIBLE (CON DE CONTROL PILOTO)
08-46	SECCION DE LA VALVULA - OPCIONES, SISTEMA HIDRĆULICO AUXILIAR (CON DE CONTROL PILOTO)
08-47	VALVULA DE REDUCCION DEPRESION (2 SPOOL) (CON DE CONTROL PILOTO)
08-48	VALVULA DE REDUCCION DEPRESION (3 SPOOL) (CON DE CONTROL PILOTO)
08-49	VALVULA DE REDUCCION DEPRESION (4 SPOOL) (CON DE CONTROL PILOTO)
08-50	VĆLVULA, PALANCA DE CONTROL (CONTROL PILOTO) (IZQUIERDO) BOCINA
08-51	VĆLVULA, PALANCA DE CONTROL (CONTROL PILOTO) (IZQUIERDO) BOCINA & UNI-DIR
08-52	VĆLVULA, PALANCA DE CONTROL (CONTROL PILOTO) (IZQUIERDO) BOCINA & BI-DIR
08-53	VĆLVULA, PALANCA DE CONTROL (CONTROL PILOTO) (DERECHA/O) SIN PALA EXTENDIBLE
08-54	VĆLVULA, PALANCA DE CONTROL (CONTROL PILOTO) (DERECHA/O) CON PALA EXTENDIBLE
08-55	CONJUNTO DE LA VALVULA - ALMOHADILLA DE OSCILACIčN
08-55A	SOLENOIDE VALVE CONJUNTO - TRABA DEL AGUILON
08-56	ACUMULADOR CONJ. - DISPOSITIVO ANTICABECEO
08-57	FILTRO DE ACEITE
08-58	CONJUNTO DE CILINDRO - ELEVADOR DE LA CARGADORA
08-59	CONJUNTO DE CILINDRO - CUCHARON DE LA CARGADORA
08-60	CONJUNTO DE CILINDRO - ALMEJA DE LA CARGADORA
08-61	CONJUNTO DE CILINDRO - ESTABILIZADOR DE LA RETROEXCAVADORA
08-62	CONJUNTO DE CILINDRO - DE LA RETROEXCAVADORA
08-63	CONJUNTO DE CILINDRO - AGUILON DE LA RETROEXCAVADORA
08-64	CONJUNTO DE CILINDRO - BRAZO DE LA RETROEXCAVADORA
08-65	CONJUNTO DE CILINDRO - CUCHARON DE LA RETROEXCAVADORA
08-66	CONJUNTO DE CILINDRO - PALA EXTENSIBLE DE LA RETROEXCAVADORA
09-01	CONTROLES - ELEVACIčN DE LA CARGADORA Y CUCHARčN
09-01A	MANILLA, CONTROL DE LA CARGADORA - CONJUNTO DE LA TRANSMISION, 2WD, 4WD
09-02	CONTROLES - ALMEJA DE LA CARGADORA
09-03	CONTROLES - CARGADORA AUTO-NIVELADORA
09-04	MARCO - ELEVADOR DE LA CARGADORA
09-05	MARCO - VARILLAJE DE LA CARGADORA
09-06	CUCHARčN, BORDE ANCHO DE LA CARGADORA (82 IN)
09-07	CUCHARčN, BORDE ANCHO DE LA CARGADORA (93 IN)
09-08	CUCHARčN, ALMEJA DE LA CARGADORA
09-09	PROTECTOR - VĆLVULA, CARGADORA
09-10	ACOPLADOR RĆPIDO, HERRAMIENTA
09-11	CUBIERTAS - TORRE DE CONTROL DE LA RETROEXCAVADORA, SIN DE CONTROL PILOTO
09-12	APOYO DE LA TORRE DE CONTROL DE LA RETROEXCAVADORA Y JUNTAS, SIN DE CONTROL PILOTO

TABLE OF CONTENTS

09-13	TORRE DE CONTROL DE LA RETROEXCAVADORA SOPORTE, CON DE CONTROL PILOTO
09-14	TORRE DE CONTROL DE LA RETROEXCAVADORA SOPORTE DE JUNTA, CON DE CONTROL PILOTO
09-15	TORRE DE CONTROL DE LA RETROEXCAVADORA PALANCA (TRABA DEL AGUILčN), CON DE CONTROL PILOTO
09-16	CONTROLES - RETROEXCAVADORA, CON PEDAL DE OSCILACIčN (MODELOS CON O SIN PALA EXTENSIBLE)
09-17	CONTROLES - RETROEXCAVADORA, CON PEDAL DE OSCILACIčN (MODELOS CON PALA EXTENDIBLE)
09-18	CONTROLES - RETROEXCAVADORA, CON OSCILACIčN MANUAL (MODELOS CON O SIN PALA EXTENSIBLE)
09-19	CONTROLES - RETROEXCAVADORA, CON OSCILACIčN MANUAL (MODELOS CON O SIN PALA EXTENSIBLE)
09-19A	CONTROLES - RETROEXCAVADORA, PATRčN DE CONTROL DE LA EXCAVADORA
09-20	CONTROLES - RETROEXCAVADORA, CON OSCILACIčN MANUAL (MODELOS CON PALA EXTENDIBLE)
09-21	CONTROLES - SISTEMA HIDRĆULICO AUXILIAR DE LA RETROEXCAVADORA, SIN DE CONTROL PILOTO
09-22	RETROEXCAVADORA - ESTABILIZADORES, PLACAS Y ALMOHADILLAS
09-23	RETROEXCAVADORA - TORRE DE OSCILACIčN Y CILINDROS DE OSCILACIčN
09-24	RETROEXCAVADORA - AGUILčN Y TORRE DE OSCILACIčN
09-24A	PLUMA RESGUARDO
09-25	TRABA DEL AGUILčN (SIN DE CONTROL PILOTO)
09-25A	TRABA DEL AGUILčN (CON DE CONTROL PILOTO)
09-26	RETROEXCAVADORA - PALA Y CUCHARčN
09-27	RETROEXCAVADORA - PALA, EXTENSIBLE
09-28	CUCHARčN, RETROEXCAVADORA UNIVERSAL (305 MM (12 INCH) WIDE)
09-29	CUCHARčN, RETROEXCAVADORA UNIVERSAL (406 MM (16 INCH) WIDE)
09-30	CUCHARčN, RETROEXCAVADORA UNIVERSAL (457 MM (18 INCH) WIDE)
09-31	CUCHARčN, RETROEXCAVADORA (457 MM (18 INCH) WIDE)
09-32	CUCHARčN, RETROEXCAVADORA UNIVERSAL (610 MM (24 INCH) / 762 MM (30 INCH) WIDE)
09-33	CUCHARčN, RETROEXCAVADORA (610 MM (24 INCH) WIDE)
09-34	CUCHARčN, RETROEXCAVADORA UNIVERSAL (914 MM (36 INCH) WIDE)
09-35	CUCHARčN, RETROEXCAVADORA UNIVERSAL (610 MM (24 INCH) WIDE)
09-35A	CONJUNTO DEL PUNTO DE HIELO
09-36	CONTRAPESO, DELANTERO
09-37	CHASIS / SOPORTES, RECEPTĆCULO - PANTALLA, ENTRADA DE AIRE
09-38	DEPčSITO, ACEITE - CAJA, BATERĉA Y HERRAMIENTA
09-39	REVESTIMIENTO DEL RADIADOR
09-40	CAPO - PANELES, LATERALES
09-41	CAPO - PARRILLA
09-42	PLACAS, SUELO - ALFOMBRILLAS
09-43	CUBIERTA DEL GUARDABARROS, LADO IZQUIERDO - PANEL, CIERRE TRASERO (BANDEJA DE ALMACENAMIENTO CON SUJ
09-44	EXTENSIONES DEL GUARDABARROS
09-45	GUARDABARROS
09-46	ASIENTO (SEARS, ESTĆNDAR)
09-47	ASIENTO - SOPORTE (SEARS SUSPENSION MECANICA)
09-48	CONJUNTO DEL ASIENTO, SUSPENSION MECANICA (SEARS)

TABLE OF CONTENTS

09-49	ASIENTO - SOPORTE (SUSPENSIčN DE AIRE)
09-53	CABINA - CRISTAL, ESPEJO Y MANTENER ABIERTO
09-54	CABINA - CHASIS Y CUBIERTAS
09-55	CABINA - PUERTAS
09-56	CABINA - MONTAJE DE LA PUERTA
09-57	CABINA - VENTANILLA, DERECHA, PARA MARCOS DE CABINA DE PUERTA ĐNICA
09-58	CABINA - VENTANA, TRASERA
09-59	CABINA - ARANDELA, PARABRISAS
09-60	CABINA - LIMPIA PARABRISAS
09-61	REVESTIMIENTO DE LA CABINA - FILTRO, REJILLAS, LĆMPARA DEL TECHO
09-62	CABINA - FILTRO, AIRE
09-63	CABINA - ALOJAMIENTO DEL SOPLADOR, CONDUCTOS DE VENTILACIčN, TUBOS DE DRENADO
09-64	CABINA - CALENTADOR
09-65	CABINA - TUBOS DE AIRE ACONDICIONADO, NĐCLEO DEL EVAPORADOR
09-66	CABINA - AIRE ACONDICIONADOR, CONDENSADOR, RECIBIDOR-SECADOR
09-67	CABINA - COMPRESOR DEL AIRE ACONDICIONADO
09-68	TECHO Y ROPS - CHASIS, CUBIERTAS, ESPEJOS, VISOR
09-69	TECHO Y ROPS - VIDRIO
09-70	TECHO Y ROPS - LIMPIAPARABRISAS, DELANTERO Y LAVAPARABRISAS
09-71	ESPEJO, VISTA TRASERA - SOPORTE, MODELLE MIT KABINE
09-72	EMBLEMA DE VEHICULO LENTO
09-73	CALCOMANIAS
09-74	CALCOMANIAS
09-75	CALCOMANIAS
09-76	CALCOMANIAS - INGLES
09-77	CALCOMANIAS - CASTELLANO PARA LATINOAMERICA
09-78	CALCOMANIAS - FRANCES CANADIENSE
09-79	CALCOMANIAS - INGLES
09-80	CALCOMANIAS - CASTELLANO PARA LATINOAMERICA
09-81	CALCOMANIAS - FRANCES CANADIENSE

NOTAS

INFORMACIÓN GENERAL

NOTA DE PATENTE

El contenido de este manual es propiedad de esta compañía. La reproducción o el uso de cualquier parte para cualquier otro propósito que no sea el funcionamiento y mantenimiento de nuestro equipo está permitido solamente si se autoriza expresamente por escrito.

Pueden obtenerse copias adicionales en su concesionario. Dirigir sus pedidos a su concesionario y hacer referencia al número de publicación que aparece en la parte inferior de la contraportada o en la cubierta de su manual.

POLÍTICA DE LA COMPAÑÍA

La política de la compañía, de mejora continua, se reserva el derecho a cambiar los precios y a realizar cambios en el diseño y las especificaciones en cualquier momento sin previo aviso ni obligación de modificar las unidades fabricadas con anterioridad.

Todos los datos que se dan en este libro están sujetos a variaciones de producción. Las dimensiones y los pesos son aproximados solamente y las ilustraciones no muestran necesariamente las máquinas en condiciones estándar. Para información exacta sobre cualquier máquina en particular, ponerse en contacto con el concesionario.

PIEZAS Y ACCESORIOS

Se han diseñado piezas y accesorios específicamente para estas máquinas.

Quisiéramos señalar que la compañía NO ha examinado y aprobado otras piezas y accesorios “no genuinos”. La instalación y/o el uso de tales productos puede tener efectos negativos en las características de diseño de su máquina y, por lo tanto, afectar su seguridad. La compañía no se responsabiliza por los daños causados por el uso de piezas y accesorios “no genuinos”.

MEJORAS

Estamos continuamente intentando mejorar nuestros productos. Se reserva el derecho a mejorar el diseño o realizar cambios cuando resulte práctico y posible llevarlo a cabo, sin incurrir por ello en la obligación de realizar estos cambios o actualizar las unidades vendidas previamente.

CÓDIGOS DE LOS MODELOS

El rango de las máquinas que se incluyen puede que no esté disponible en todos los países o mercados. Por lo tanto, para obtener la información más actualizada consultar con su concesionario local.

AYUDA AL PROPIETARIO

Deseamos que esté completamente satisfecho con su inversión. Normalmente, cualquier problema con el equipo, será resuelto por el departamento de mantenimiento del concesionario. Sin embargo, pueden producirse malentendidos. Si el problema no ha sido resuelto a su satisfacción, le sugerimos lo siguiente:

1. Hablar con el propietario o gerente general del concesionario, explicar el problema y solicitar su ayuda. Cuando se necesite de ayuda especial, el concesionario tiene acceso directo con nuestras oficinas.
2. Proporcione al concesionario la siguiente información:
   - Su nombre, dirección y número de teléfono
   - Modelo de la máquina y número de serie
   - Nombre del concesionario y dirección
   - Fecha de compra de la máquina y tiempo de uso
   - Naturaleza del problema

Recuerde que el problema probablemente será resuelto en el concesionario, utilizando las instalaciones, equipo y personal del mismo. Así que es importante que el primer contacto sea con el concesionario.

PIEZAS DE REPUESTO

Para mantener la eficacia operativa, usar piezas de repuesto originales.

Al pedir piezas, proporcionar la siguiente información:

- Modelo de la máquina
- Números de serie de la máquina y el motor
- Número de pieza del catálogo de piezas

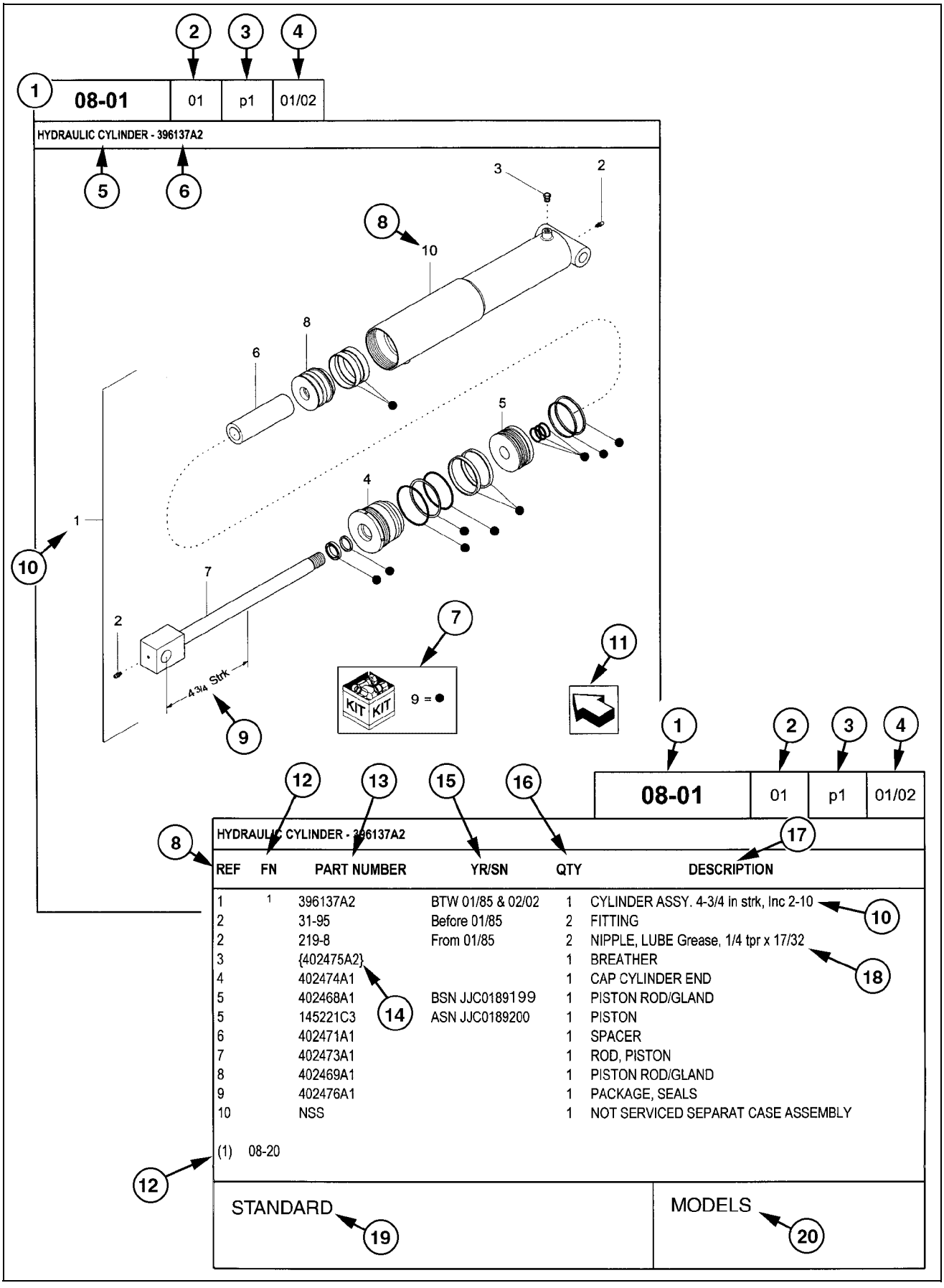
1
2
3
4
08-01
01
p1
01/02
HYDRAULIC CYLINDER - 396137A2
5
6
8
10
KIT
KIT
9 = ●
11
7
9
Strk
12
13
15
16
17
08-01
01
p1
01/02
HYDRAULIC CYLINDER - 396137A2
8
REF FN PART NUMBER YR/SN QTY DESCRIPTION
1 1 396137A2 BTW 01/85 & 02/02 1 CYLINDER ASSY. 4-3/4 in strk, Inc 2-10
2 31-95 Before 01/85 2 FITTING
2 219-8 From 01/85 2 NIPPLE, LUBE Grease, 1/4 tpr x 17/32
3 {402475A2} 1 BREATHER
4 402474A1 1 CAP CYLINDER END
5 402468A1 BSN JJC0189199 1 PISTON ROD/GLAND
5 145221C3 ASN JJC0189200 1 PISTON
6 402471A1 1 SPACER
7 402473A1 1 ROD, PISTON
8 402469A1 1 PISTON ROD/GLAND
9 402476A1 1 PACKAGE, SEALS
10 NSS 1 NOT SERVICED SEPARAT CASE ASSEMBLY
(1) 08-20
14
18
12
STANDARD
19
MODELS
20

CÓMO USAR EL CATÁLOGO DE PIEZAS

1. Número de figura
2. Código de secuencia con número de figura
3. Número de página en el código de secuencia
4. Fecha de impresión (mes/año)
5. Descripción de la figura
6. Información general sobre la figura
7. Piezas suministradas en los juegos de reparación según la referencia del símbolo
8. Leyenda de referencia del número de pieza (REF)
9. Especificaciones técnicas referentes a la pieza indicada
10. Leyenda de figura que incluye artículos en paréntesis, los artículos incluidos pueden encontrarse también en el área de descripción adicional
11. Orientación – La flecha muestra la parte delantera de la máquina.
12. Pie de página – Información adicional referente al número de pieza. En este ejemplo, 08-20 equivale a otra figura en la que se muestra esta pieza.
13. Número de pieza
    NSS = Piezas que no reciben mantenimiento por separado (piezas sin mantenimiento)
    Números en paréntesis = No disponibles como piezas de mantenimiento en este mercado
14. No disponibles como piezas de mantenimiento en este mercado
15. YR/SN

    Año
    Antes de 01/85 = Pieza en fabricación en enero de 1985 y anteriormente
    Desde 01/85 = Pieza en fabricación desde enero de 1985 y posteriormente
    BTW 01/85 & 02/02 = Pieza válida para máquinas fabricadas entre enero de 1985 y febrero de 2002

    Número de serie (N.I.P.)
    BSN JJC0268800 = Pieza válida para el número de serie JJC0268800 y anteriores
    ASN JJC0268800 = Pieza válida para el número de serie JJC0268800 y posteriores
    BTW JJC0178000 & JJC0179000 = Pieza válida para los números de serie entre JJC0178000 y JJC0179000
16. Cantidad total de piezas referidas en la página. La cantidad puede reemplazarse por las siguientes instrucciones:
    SR = Según se requiera
    X = Según se requiera
17. Descripción de la pieza
18. Información adicional sobre la pieza para ayudar a confirmar la identificación
19. Notas de figura
20. Número(s) de modelo

LADO DERECHO E IZQUIERDO

La referencia al lado derecho e izquierdo en este catálogo se identifica con el operador de pie en la parte trasera de la unidad básica (sin accesorio trasero), mirando hacia el frente de la máquina (con desplazamiento de avance normal).

Para las páginas que cubren los accesorios de la máquina, el lado derecho e izquierdo se definen con el operador sentado en la posición correcta de funcionamiento del accesorio.

DIMENSIONES

Las dimensiones métricas e imperiales de la tornillería no muestran el número de medida de roscas anchas estándares. El número después de un punto y coma (;) es la clase o el grado de la tornillería. Una coma (,) representa el punto decimal (.) usando en dimensiones imperiales (EE.UU.).

EXPLICACIÓN DE LAS ABREVIATURAS

AC	corriente alterna
adj	ajustable
amp	amperios
AR	según sea necesario
ASN	número de serie y posterior NIP y posterior
blkhd	mamparo
br	sucursal
BSN	antes del número de serie antes del NIP
BTW	entre
cc	centímetros cúbicos
cl	clase
cmprsn	compresión
cn pt	punto de cono
cp pt	punto de copa
CRS	acero de aleación de cromo
CST	acero al carbono
cu yd	yarda cúbica
DC	corriente continua
deg	grados
dg pt	punto de garra
dia	diámetro
dr type	tipo de transmisión
fc	superficie
fc sl	superficie de sellado
fem	hembra
fem PT	rosca hembra de tubería
fl	ensanche
flat pt	punto plano
ft	pies (o pie)
ga	calibre
gal	galón o galones
gpm	galones por minuto
gr	grado
hd	cabeza
hdg pt	punto de media garra
hp	potencia en C.V.
ID	diámetro interior
in	pulgada o pulgadas
Incl.	incluye
inv fl	ensanche invertido
K	kilo
kg	kilogramo
km/h	kilómetros por hora
L	litro
lb	libras
lb-ft	libra pie
lg	largo
LH	lado izquierdo
LH thd	rosca izquierda
M	(prefijo) tamaño de rosca en métrico
m	metro
ml	milímetro
mm	milímetros
NF	National Fine
No.	número
NPT	National Pipe Thread
NS	National Super Fine
OD	diámetro exterior
ohm	unidad eléctrica de resistencia
Or	junta tórica
ORB	refuerzo de junta tórica
ORFS	superficie de sellado de junta tórica
ov cntr	sobre el centro
ov pt	punto oval
oz	onza
P	pitch
psi	libras por pulgada cuadrada
pt	pinta
PT	rosca de la tubería
rd	redondo/a
rd holes	agujeros redondos
RH	lado derecho
RH thd	rosca derecha
rpm	revoluciones por minuto
sl	autobloqueante
sq	cuadrado/a
SST	acero inoxidable
st	autorroscante
strk	carrera
sw	balancín
T	dientes
thk	grueso/a
tpr	ahusado/a
tube OD	diámetro exterior del tubo
V	voltio o voltios
W	vatio o vatios
X	según sea necesario
yd	yardas

SECTION INDEX
Motor

02-01	RADIADOR - SOPORTE
02-02	SISTEMA DE PURGA DE AIRE - SOPORTE
02-04	FILTRO DE AIRE - PIEZAS DE ENTRADA DE AIRE
02-05	FILTRO DE AIRE
02-06	SILENCIADOR, ASPIRADOR - SISTEMA DE ESCAPE
02-07	MOTOR - SOPORTE
02-08	MOTOR
02-09	BLOQUE DE CILINDROS
02-10	BLOQUE DE CILINDROS
02-11	BOMBA DE ACEITE, BANDEJA
02-12	TAPAS DEL BLOQUE
02-13	BLOQUE DE CILINDROS - CUBIERTAS
02-14	TAPAS DEL BLOQUE
02-15	RESPIRADERO - MOTOR
02-16	CULATA DE CILINDROS
02-17	CULATA DE CILINDRO
02-18	CULATA DEL CILINDROS - MECANISMO DE LA VALVULA
02-19	COLECTOR ESCAPE
02-20	COLLECTOR DE ESCAPE
02-21	CIGUENAL
02-22	BIELA PISTON
02-23	EMBOLO - MOTOR
02-24	VOLANTE MOTOR
02-25	POLEA - CIGUENAL
02-26	EQUILIBRADOR, ENGRENAJES Y ARBOLES
02-28	EJE DE LEVAS
02-29	TURBOCOMPRESOR
02-30	VARILLA DE NIVEL - ACEITE DEL MOTOR
02-31	BOMBA DE ACEITE - MOTOR
02-32	FILTRO DE ACEITE - MOTOR
02-33	TUBERIAS - ACEITE DEL MOTOR
02-34	CAMBIADOR DE CALOR - MOTOR
02-35	BOMBA DE AGUA
02-36	SISTEMA DE REFRIGERACIčN - MOTOR
02-37	TERMOSTATO - REFRIGERACION DEL MOTOR
02-38	BOMBA DE AGUA - MANDO
02-39	POLEA DEL VENTILADOR
02-41	MOTOR - GANCHO DE ELEVACION
02-42	ALTERNADOR

02-01		p1	12/07

RADIADOR - SOPORTE

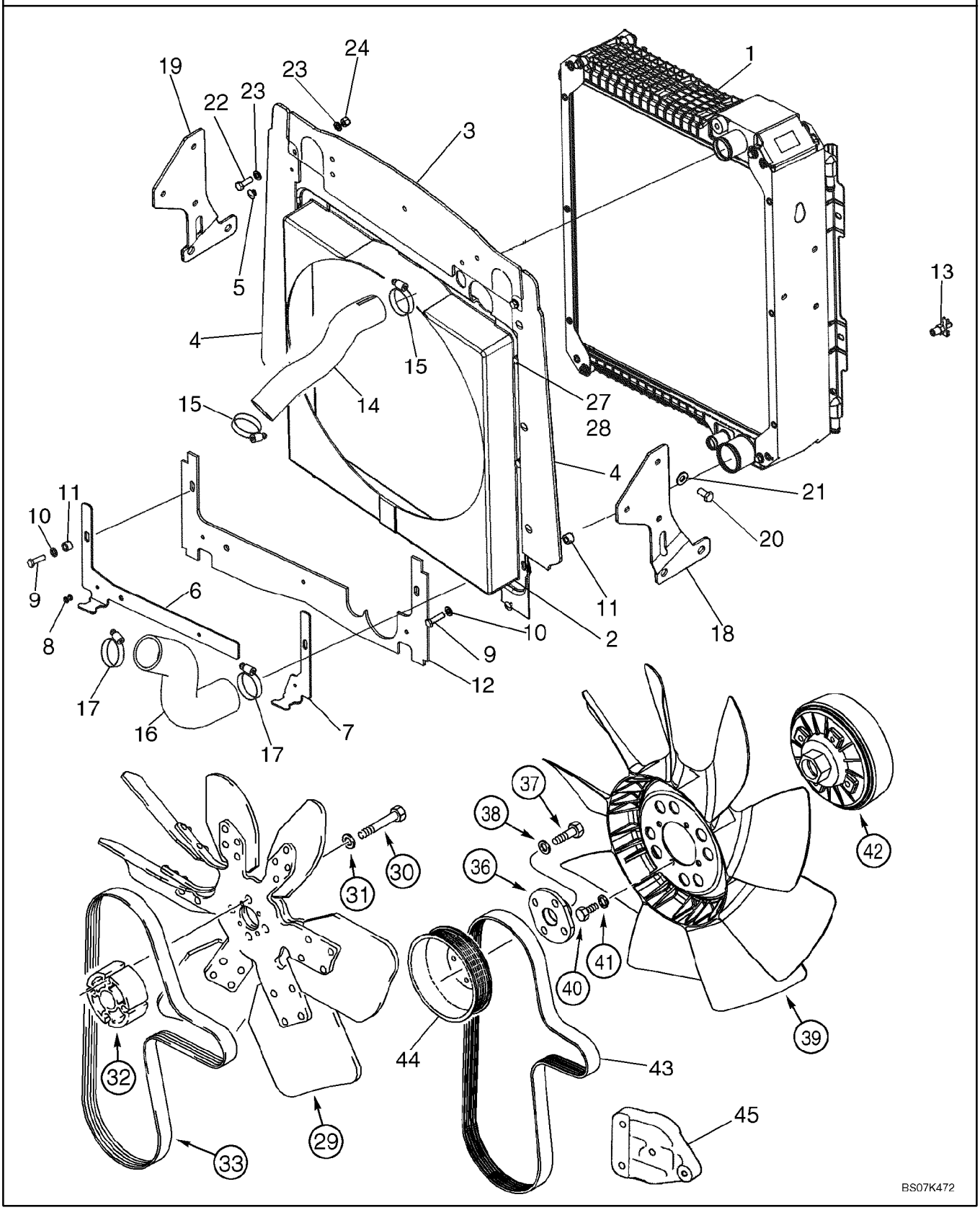

RADIADOR - SOPORTE

REF	FN	PART NUMBER	YR/SN	QTY	DENOMINACION
1		87576643		1	RADIADOR, 3 Row Radiator, Models With Or Without Air Conditioning; Component Parts Not Available At Time Of Printing
2		87559003		1	BOQUILLA, Fan
3		87628324		1	JUNTA DE CAUCHO, Top
4		87628308		2	JUNTA DE CAUCHO, Sides
5		87301355		6	REMACHE, Pop, 3/16" x .575"
6		87446082		1	PLACA DE SUJECION, Lower Left-Hand Shroud
7		87446081		1	PLACA DE SUJECION, Lower Right-Hand Shroud; 195 mm (7-11/16 in) Long
8		87301356		3	REMACHE, Pop, 3/16" x .700"
9		614-8030		2	TORNILLO, Hex, M8 x 30, 8.8
10		895-11008		2	ARANDELA, M8 x 16 x 1.6
11		407962A1		2	ESPACIADOR
12		87434978		1	JUNTA DE CAUCHO, Lower Seal
13		81465471		1	GRIFO, Drain, 1/4
14		87454377		1	MANGUITO, Upper
15		87647029		2	ABRAZADERA MANGUERA
16		87454378		1	MANGUITO, Lower; 5.6 mm (7/32 in) Thick
17		214-1440		2	ABRAZADERA MANGUERA, #40, 2.06/3.00 Type F Worm
18		87608368		1	PIEZA DE APOYO, Radiator, RH
19		87608370		1	PIEZA DE APOYO, Radiator, LH
20		614-10020		6	TORNILLO, Hex, M10 x 20, 8.8, Full Thd
21		895-15010		6	ARANDELA, M11 x 24 x 2
22		614-8025		2	TORNILLO, Hex, M8 x 25, 8.8
23		895-11008		4	ARANDELA, M8 x 16 x 1.6
24		832-10408		2	CONTRA TUERCA, M8 x 1.25, Cl 8
27		806-8016		4	TORNILLO, Hex, Lock, M8 x 16, Cl 10.9
28		895-11008		4	ARANDELA, M8 x 16 x 1.6
29		228133A2		1	VENTILADOR, 39 Degrees; With White Identification Dot; Standard Fan Drive; With Air Conditioning; With Turbo
29		185377A1		1	VENTILADOR, 33 Degrees; Standard Fan Drive; Without Air Conditioning; With Or Without Turbo

02-01		p2	12/07

RADIADOR - SOPORTE

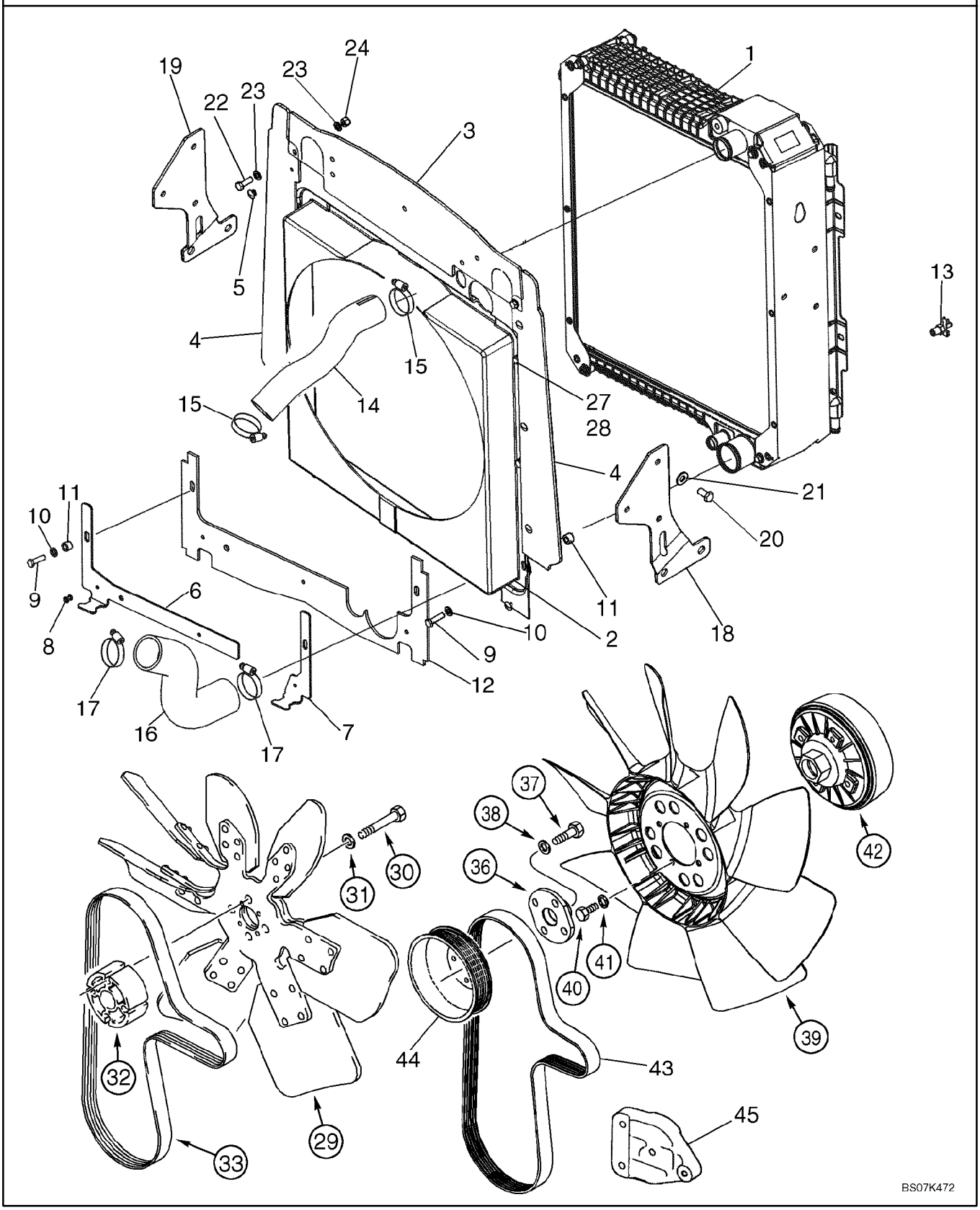

RADIADOR - SOPORTE

REF	FN	PART NUMBER	YR/SN	QTY	DENOMINACION
30		814-10090		4	TORNILLO, Hex, M10 x 90, 8.8
31		496-21041		4	ARANDELA, 13/32" x 13/16" x .089", HDN
32		87353191		1	SEPARADOR, 59 mm Long, Standard Fan Drive; With Or Without Air Conditioning; With Or Without Turbo; Replaces 85826229 Aluminium 59 mm Long Spacer that has Part Number Stamped On Spacer Used On Some Models
33		85826230		1	CORREA, V-Type, Standard Fan Drive; With Or Without Air Conditioning; With Or Without Turbo
36		303192A1		1	ADAPTOR, Viscous Fan Drive, With Air Conditioning; With Turbo
37		614-10030		4	TORNILLO, Hex, M10 x 30, 8.8
38		896-11010		4	ARANDELA, M10 x 21.5 x 2.5, HT
39		277800A1		1	VENTILADOR, 9 Blade, Viscous Fan Drive; With Air Conditioning; With Turbo
40		614-8016		4	TORNILLO, Hex, M8 x 16, 8.8
41		892-11008		4	ARANDELA DE FRENO, M8
42		87340008		1	MANDO, Fan Drive; Component Parts Not Serviced Separately; Viscous Fan Drive; With Air Conditioning; With Turbo
43		87415774		1	CORREA, V-Type; Viscous Fan Drive, With Air Conditioning; With Turbo
44		4890343		1	POLEA
45		87442419		1	PIEZA DE SOPORTE, Pulley Tensioner Support, Painted

02-02		p1	12/07

SISTEMA DE PURGA DE AIRE - SOPORTE

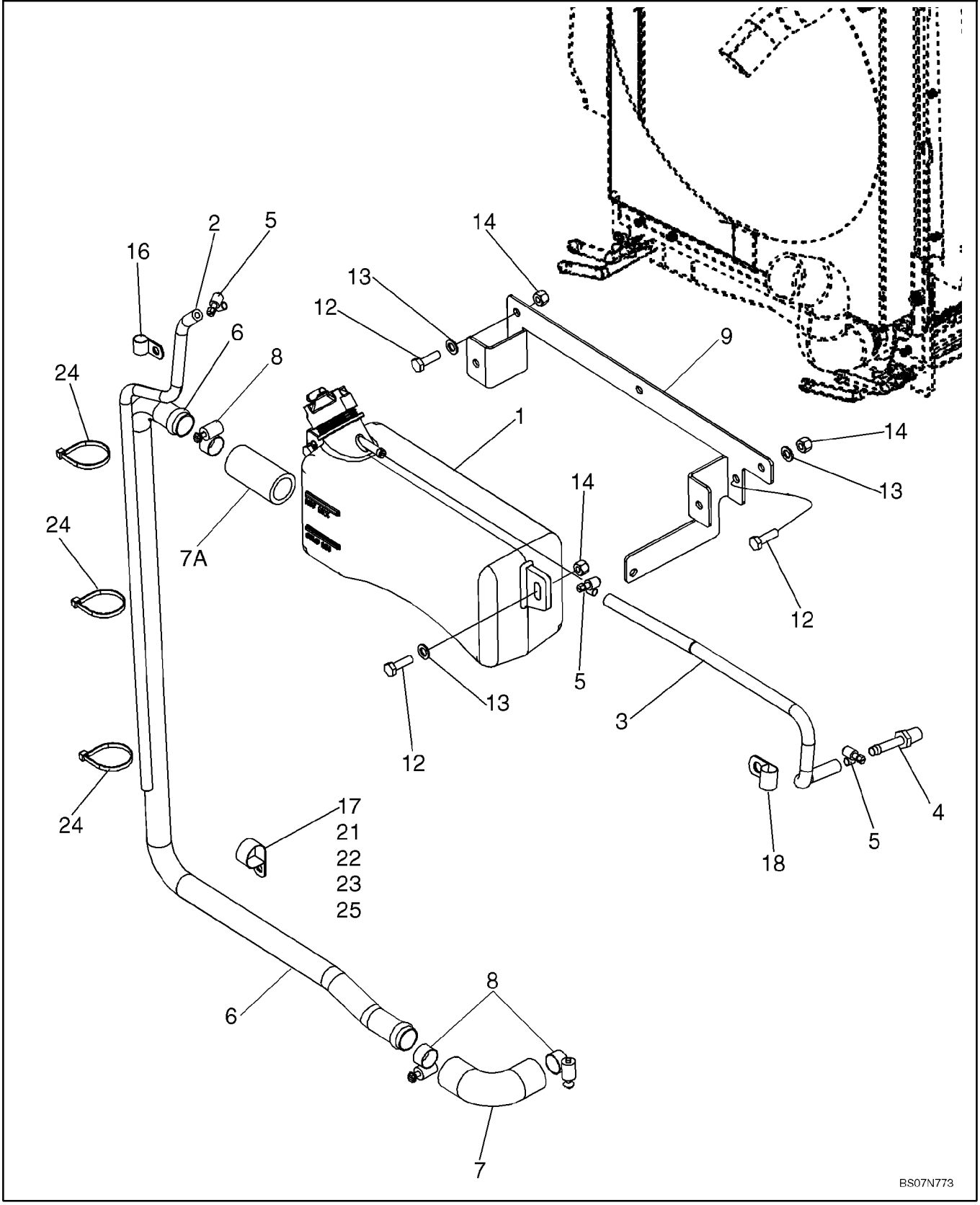

SISTEMA DE PURGA DE AIRE - SOPORTE

REF	FN	PART NUMBER	YR/SN	QTY	DENOMINACION
1		87674844		1	DEPOSITO DE VACIO, Deaeration Reservoir, 3.0 Liters; Includes 85803019 Cap
		85803019		1	TAPA DE DEPOSITO, 13 psi
2		87616934		1	MANGA, Overflow Hose; 750 mm
3		87715487		1	MANGA, Recovery, 440 mm; Reservoir to Radiator
4		87301325		1	CONEXION, 5/16" Hose X 1/4" NPTF Beaded
5		214-1704		3	ABRAZADERA MANGUERA, #4, 0.25/0.62 Type M Worm
6		87557237		1	TUBO RIGIDO
7		87454376		1	MANGA
7A		87367622		1	MANGA
8		214-1416		4	ABRAZADERA MANGUERA, #16, 0.81/1.50 Type F Worm
9		87632870		1	PIEZA DE APOYO, Bottle Retaining
12		614-8025		7	TORNILLO, Hex, M8 x 25, 8.8
13		895-11008		7	ARANDELA, M8 x 16 x 1.6
14		832-10408		7	CONTRA TUERCA, M8 x 1.25, Cl 8
16		515-22127		1	BORNE, 1/2", Insul, 5/16" Bolt
17		515-22254		1	BORNE, 1", Insul, 5/16" Bolt
18		515-23143		1	BORNE, 9/16", Insul, 3/8" Bolt
21		614-8040		1	TORNILLO, Hex, M8 x 40, 8.8, Full Thd
22		87418360		1	SEPARADOR, 8 x 16 mm
23		895-11008		1	ARANDELA, M8 x 16 x 1.6
24		L18337		3	CIERRA CABLES, 9.95"-12.1" lg
25		832-10408		1	CONTRA TUERCA, M8 x 1.25, Cl 8

02-04		p1	11/07

FILTRO DE AIRE - PIEZAS DE ENTRADA DE AIRE

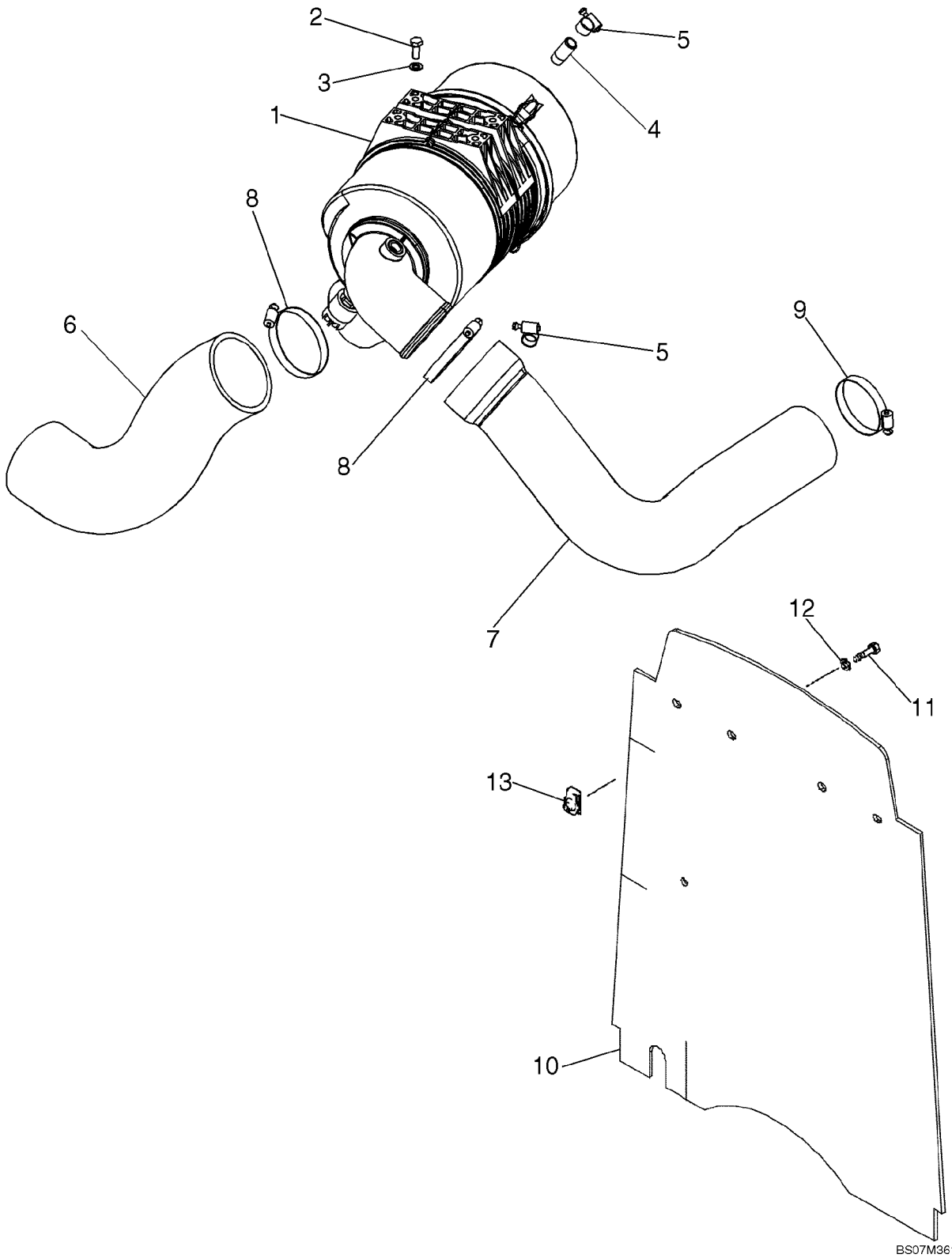

FILTRO DE AIRE - PIEZAS DE ENTRADA DE AIRE

REF	FN	PART NUMBER	YR/SN	QTY	DENOMINACION
1		87610338		1	DEPURADOR, See Figure 02-05
2		614-8020		4	TORNILLO, Hex, M8 x 20, 8.8
3		895-11008		4	ARANDELA, M8 x 16 x 1.6
4		L17985		1	CONEXION
5		214-1412		2	ABRAZADERA MANGUERA, #12, 0.69/1.25 Type F Worm
6		87545561		1	MANGUITO, Inlet
7		87666451		1	MANGUITO, To Turbocharger
8		214-1464		2	ABRAZADERA MANGUERA, #64, 3.56/4.50 Type F Worm
9		214-1456		1	ABRAZADERA MANGUERA, #56, 3.06/4.00 Type F Worm
10		87652272		1	CORTINA, Barrier, Heat and Noise Reduction
11		806-8025		4	TORNILLO, Hex, Lock, M8 x 25, Cl 10.9
12		495-81001		4	ARANDELA, 5/16"
13		833-40408		4	TUERCA, M8, U

02-05		p1	11/07

FILTRO DE AIRE

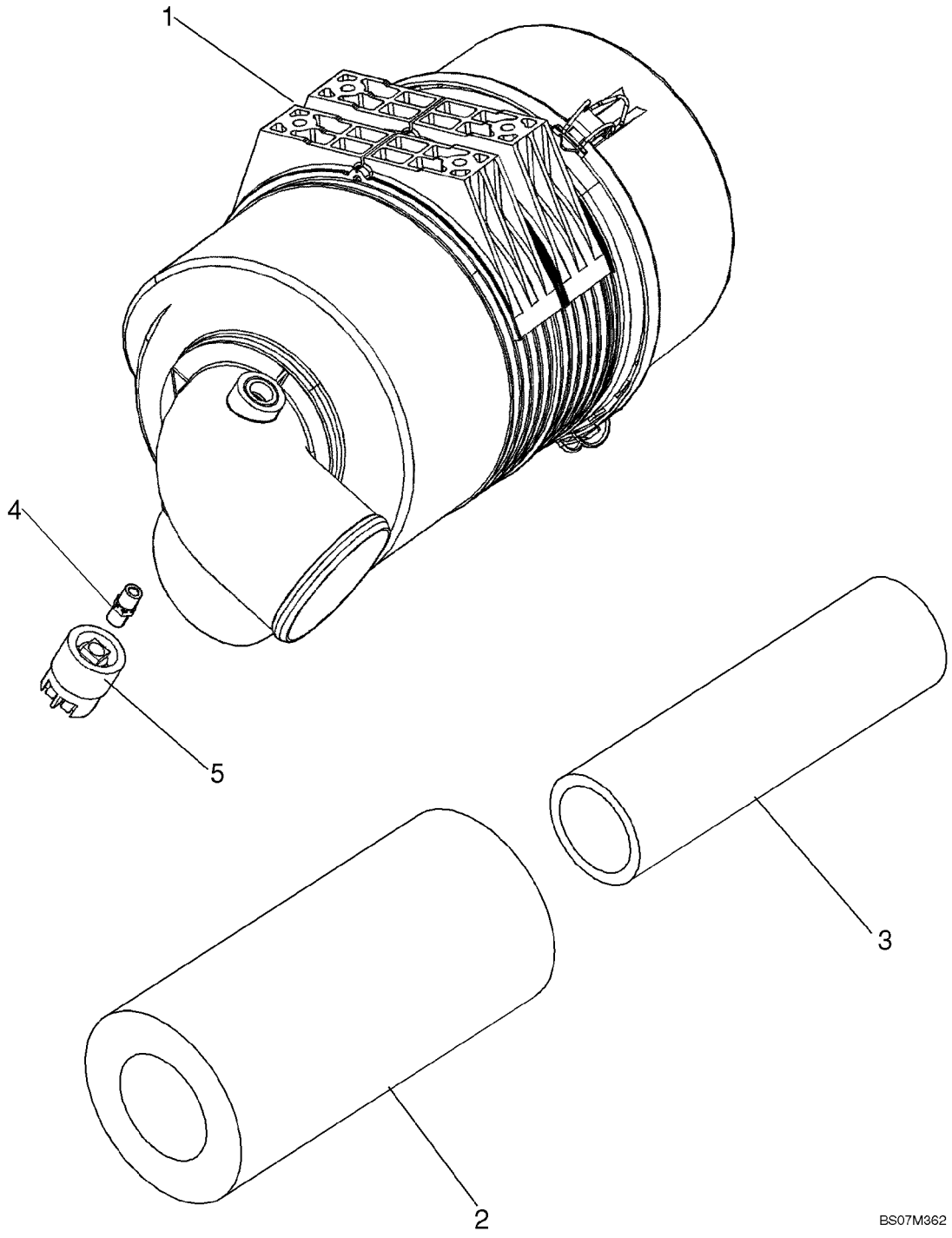

FILTRO DE AIRE

REF	FN	PART NUMBER	YR/SN	QTY	DENOMINACION
		87610338		1	DEPURADOR, Air Cleaner; Incl. Ref 1 - 5
1		NSS		1	NO SE REPARA SEPARADAM., Body
2		87682993		1	FILTRO DE AIRE, Primary
3		47132347		1	FILTRO DE AIRE, Secondary
4		86976679		1	ADAPTOR
5		79081900		1	INTERRUPTOR DE PRESION, Air Restriction

02-06		p1	11/07

SILENCIADOR, ASPIRADOR - SISTEMA DE ESCAPE

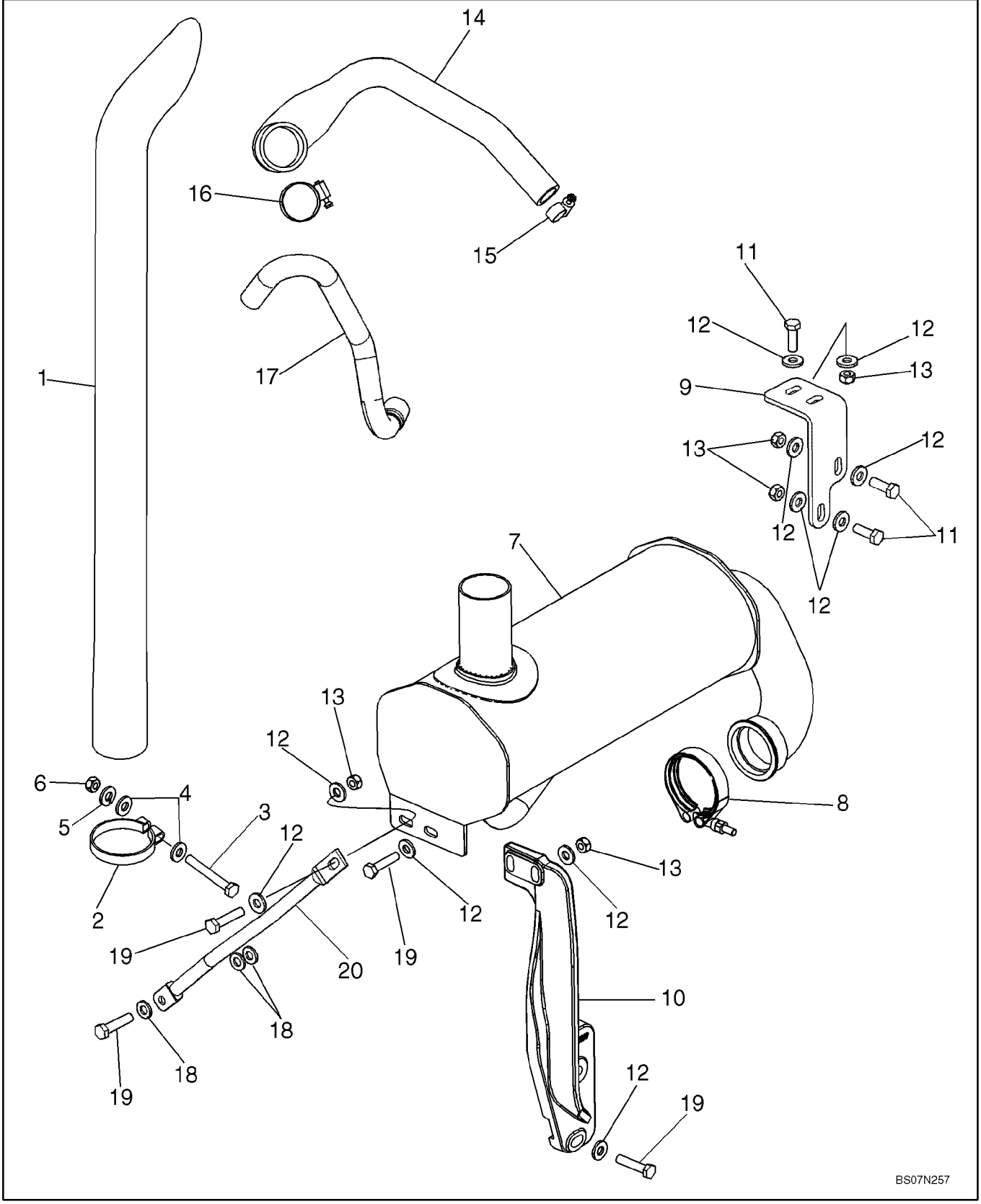

SILENCIADOR, ASPIRADOR - SISTEMA DE ESCAPE

REF	FN	PART NUMBER	YR/SN	QTY	DENOMINACION
1		87309656		1	ESCAPE VERTICAL, 844 mm (33-1/4 in) Long Exhaust Stack
2		87437804		1	SOPORTE CIERRA TUBO, Stack Clamp
3		614-10080		1	TORNILLO, Hex, M10 x 80, 8.8, Full Thd
4		896-15010		2	ARANDELA, M10 x 24.5 x 3, HT
5		892-11010		1	ARANDELA DE FRENO, M10
6		829-1410		1	TUERCA, M10, Cl 10
7		87617576		1	AUSPUFFTOPF, Aspirated
8		A170467		1	COLLAR, Includes Hardware
9		87423531		1	PIEZA DE APOYO, Front Support
10		87451167		1	PIEZA DE APOYO, Rear Support
11		627-10030		4	TORNILLO, Hex, M10 x 30, 10.9, Full Thd
12		896-15010		14	ARANDELA, M10 x 24.5 x 3, HT
13		829-1410		6	TUERCA, M10, Cl 10
14		87704858		1	MANGUITO, Aspiration Hose
15		214-1416		1	ABRAZADERA MANGUERA, #16, 0.81/1.50 Type F Worm
16		214-1436		1	ABRAZADERA MANGUERA, #36, 1.81/2.75 Type F Worm
17		87611852		1	MANGUITO
18		896-11010		3	ARANDELA, M10 x 21.5 x 2.5, HT
19		827-10045		5	TORNILLO, Hex, M10 x 45, 10.9
20		87442357		1	TENSOR

MOTOR - SOPORTE

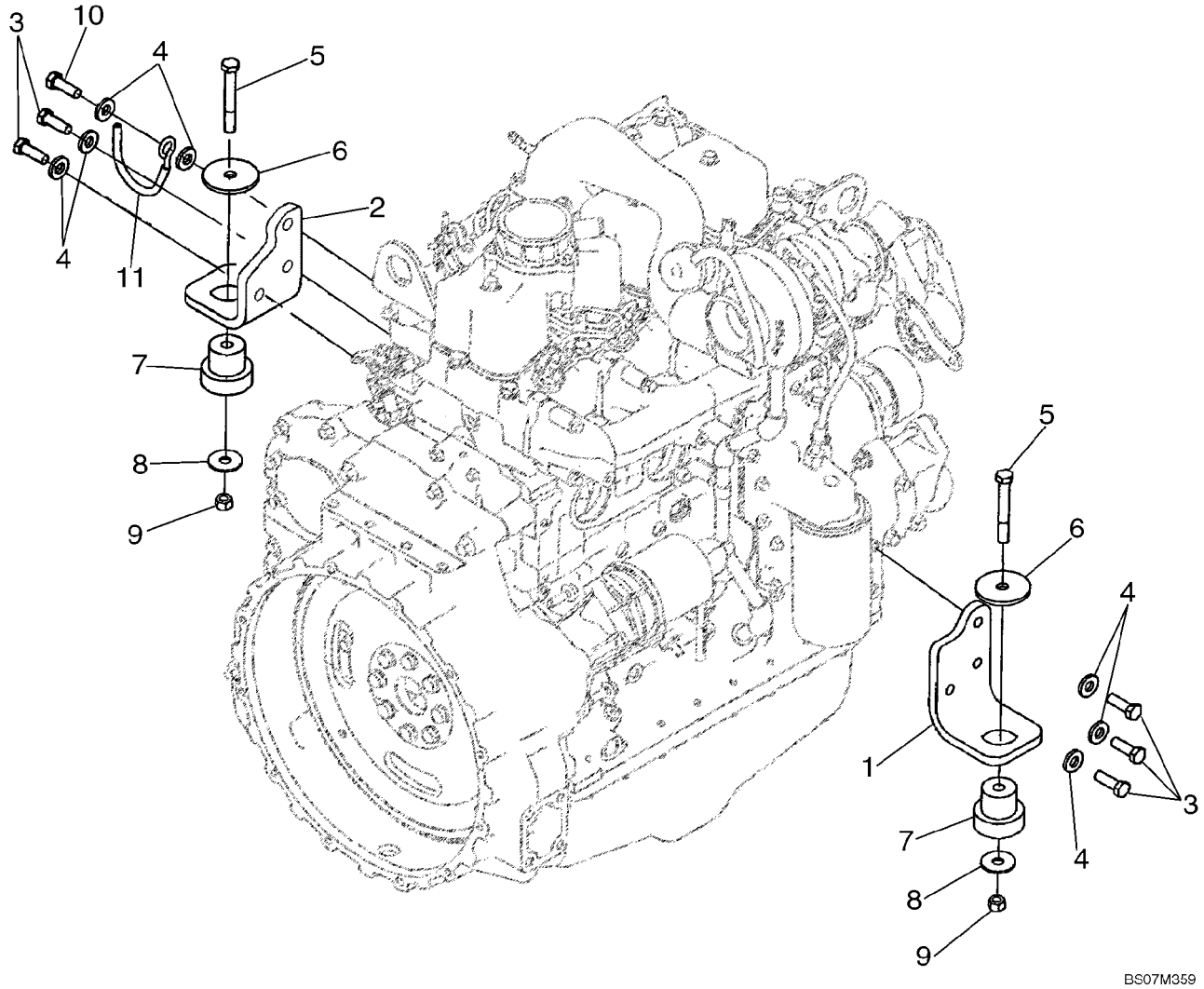

MOTOR - SOPORTE

REF	FN	PART NUMBER	YR/SN	QTY	DENOMINACION
		87603948		1	MOTOR, 85 hp, Internal Intake EGR; Bosch Injection Pump; Turbocharged Engine; Includes Parts On Figures 02-08 - 02-42, 03-04 - 03-11
1		87411319		1	PIEZA DE SOPORTE, Right-Hand
2		87411319		1	PIEZA DE SOPORTE, Left-Hand
3		614-12035		5	TORNILLO, Hex, M12 x 35, 8.8, Full Thd
4		896-15012		7	ARANDELA, M12 x 28.5 x 4, HT
5		814-12080		2	TORNILLO, Hex, M12 x 80, 8.8
6		85801585		2	JUNTA HERMETICA
7		87416966		2	AISLADOR, Insulator, Rubber Mount
8		85802618		2	JUNTA HERMETICA
9		832-10412		2	CONTRA TUERCA, M12 x 1.75, Cl 8
10		614-12040		1	TORNILLO, Hex, M12 x 40, 8.8, Full Thd
11		87431799		1	SOPORTE, Hose Support

MOTOR

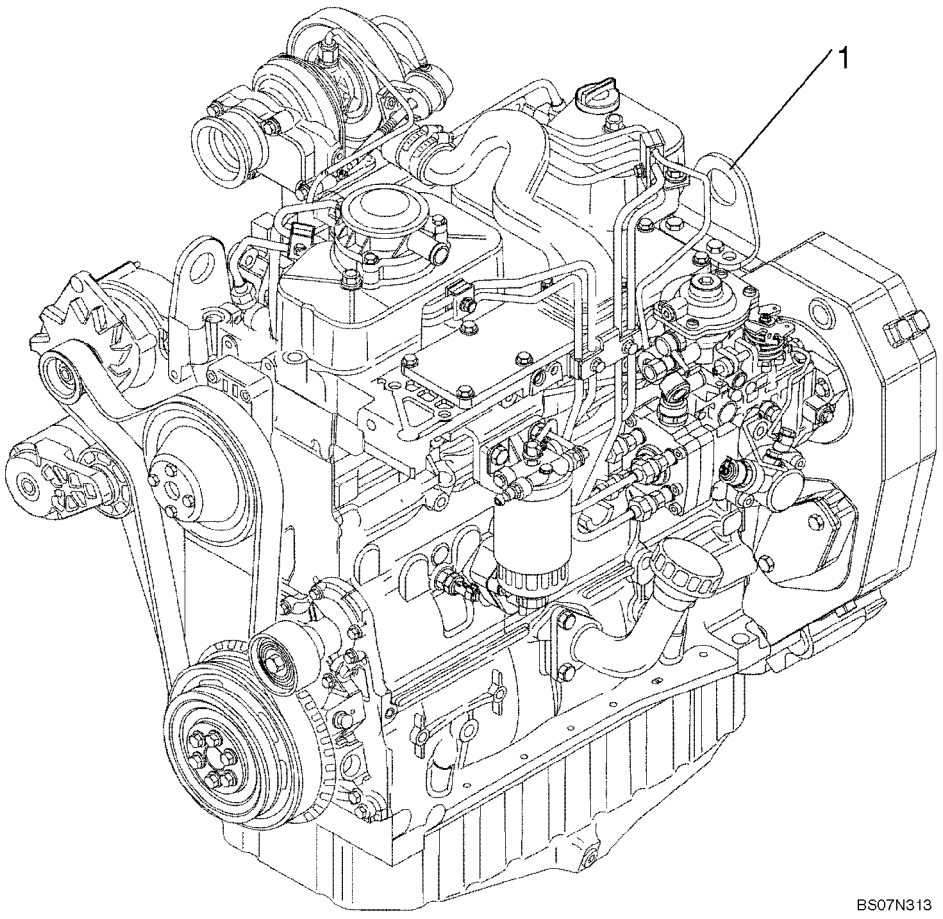

MOTOR

REF	FN	PART NUMBER	YR/SN	QTY	DENOMINACION
1		87603948		1	MOTOR, 85 hp, Internal Intake EGR; Bosch Injection Pump; Turbocharged Engine; Includes Parts On Figures 02-08 - 02-42, 03-04 - 03-11

BLOQUE DE CILINDROS

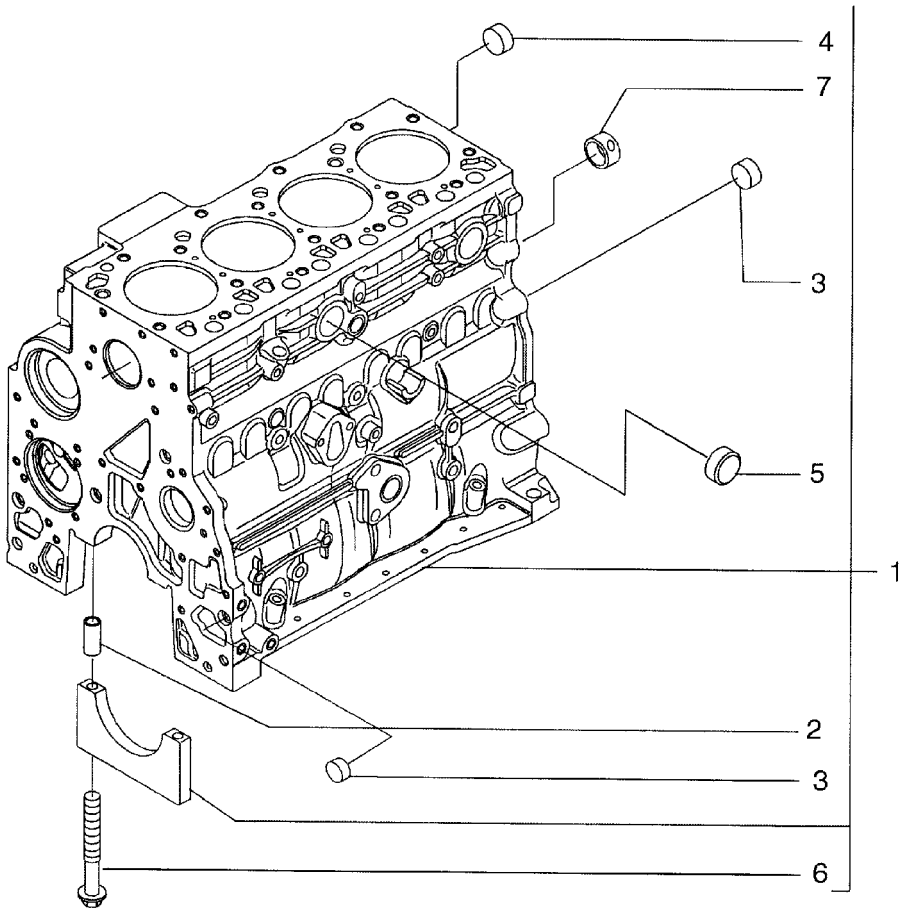

BS04A024

BLOQUE DE CILINDROS

REF	FN	PART NUMBER	YR/SN	QTY	DENOMINACION
1		2830082		1	BLOQUE DE CILINDROS, - ASSY; Incl. Ref 2 - 7, Plus Main Bearing Caps
		4895919		4	COJINETTE CIGUENAL, Main Bearing Cap; Not Serviced Separately
		4895921		1	COJINETTE CIGUENAL, Main Bearing Cap; Not Serviced Separately
2		4899026		10	PITON
3		4895039		3	TAPčN
4		4895038		4	TAPčN
5		4895228		2	TAPčN
6		4891353		10	TORNILLO, Flg Hd, M12 x 1.5 x 120
7		4895040		1	CASQUILLO

BLOQUE DE CILINDROS

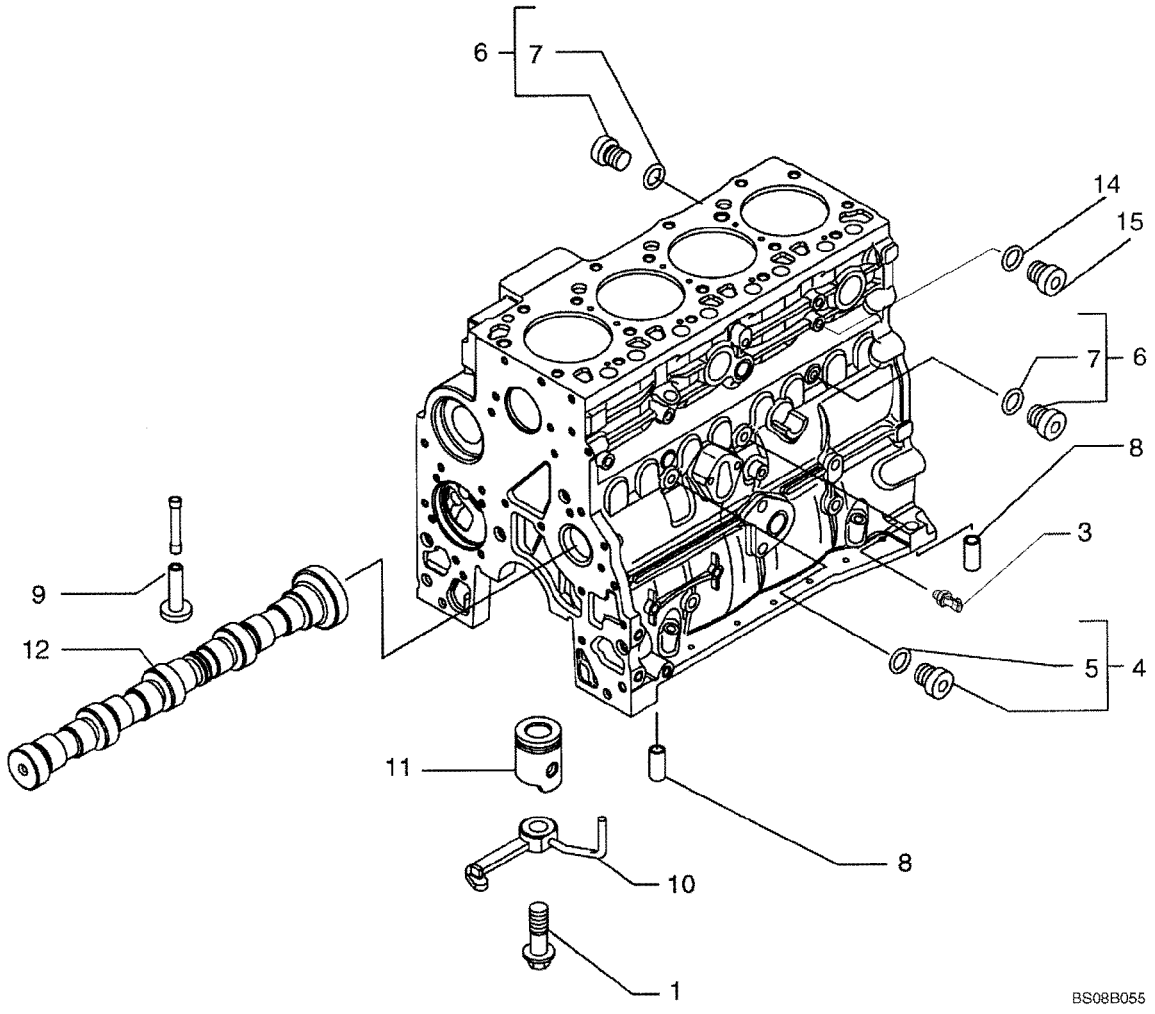

BLOQUE DE CILINDROS

REF	FN	PART NUMBER	YR/SN	QTY	DENOMINACION
1		4894218		4	TORNILLO
3		2852889		1	INTERRUPTOR DE PRESION
4		4899009		1	TAPčN, M10 x 1; Incl. Ref 5
5		4899072		1	JUNTA HERMETICA
6		4895392		2	TAPčN, 18 x 1.5; Incl. Ref 7
7		4895393		1	JUNTA HERMETICA
8		4895049		2	PITON
9		4895180		8	EMPUJADOR
10		2852202		4	TOBERA, Incl. Ref 1
11		REF		1	MANUAL, PISTON; See Figure 02-23
12		REF		1	MANUAL, CAMSHAFT; See Figure 02-28
13		4896153		1	TAPčN, Piston Cooling, M6.08 OD x 30 lg; If Used
14		4895623		1	TAPčN
15		4895625		1	JUNTA HERMETICA

BOMBA DE ACEITE, BANDEJA

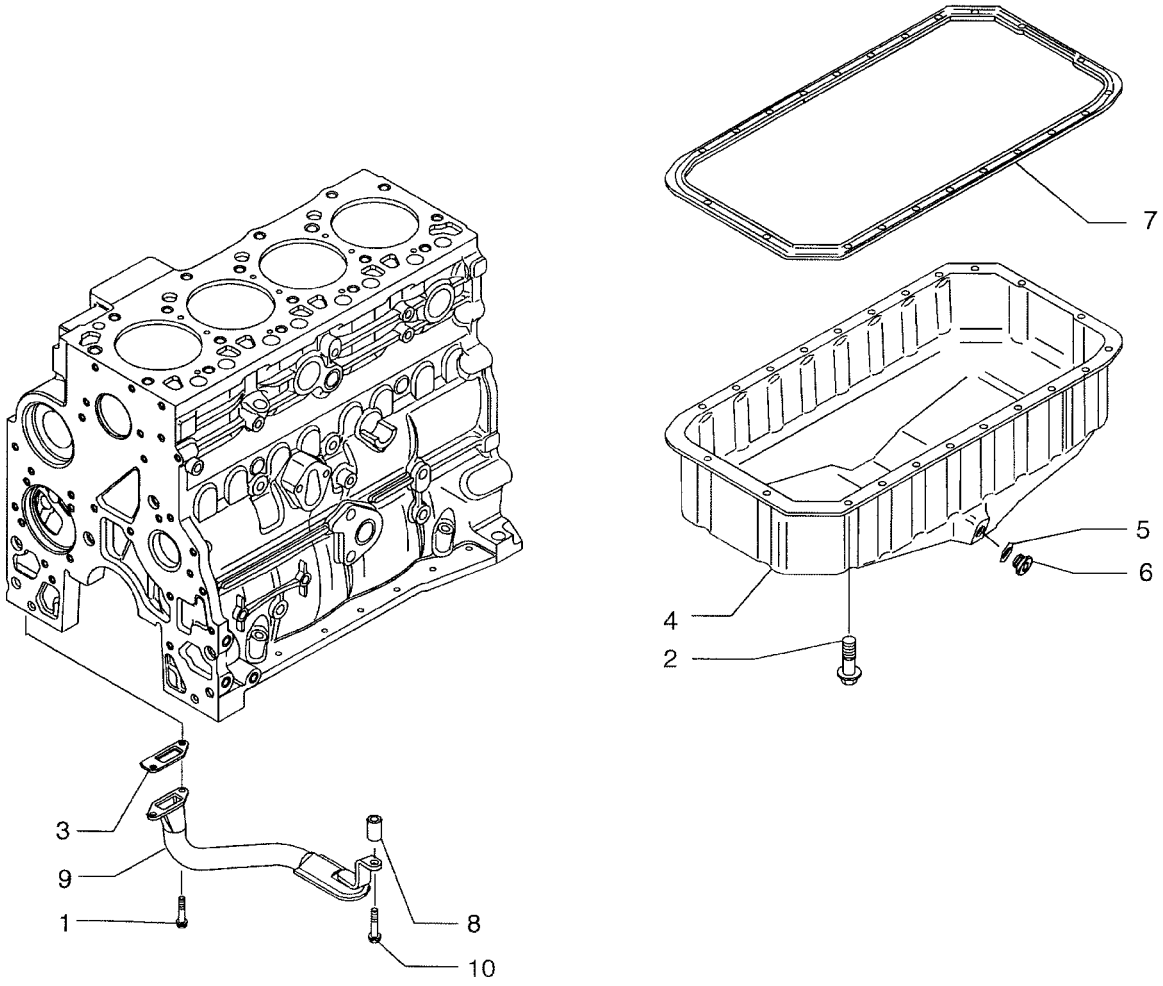

BS04A026

BOMBA DE ACEITE, BANDEJA

REF	FN	PART NUMBER	YR/SN	QTY	DENOMINACION
1		16673635		2	TORNILLO, M8 x 20mm
2		4899091		22	TORNILLO, Hex Flg, M8 x 1.25 x 40
2		4895489		2	TORNILLO, Flange, M8 x 110
3		4898301		1	JUNTA HERMETICA
4		2852011		1	CARTER DE ACEITE
5		2852978		1	JUNTA HERMETICA, Seal
6		2856086		1	TAPčN, 22 x 1.5; Does Not Include Seal, Purchase Seal Separately
7		2852012		1	JUNTA HERMETICA
8		2852016		1	SEPARADOR
9		2852013		1	TAMIZ DE ALCACHOFA, Tube; Oil Suction, Includes Screen Which Is Not Serviced Separately
10		4895538		1	TORNILLO, Flange, M10 x 120

TAPAS DEL BLOQUE

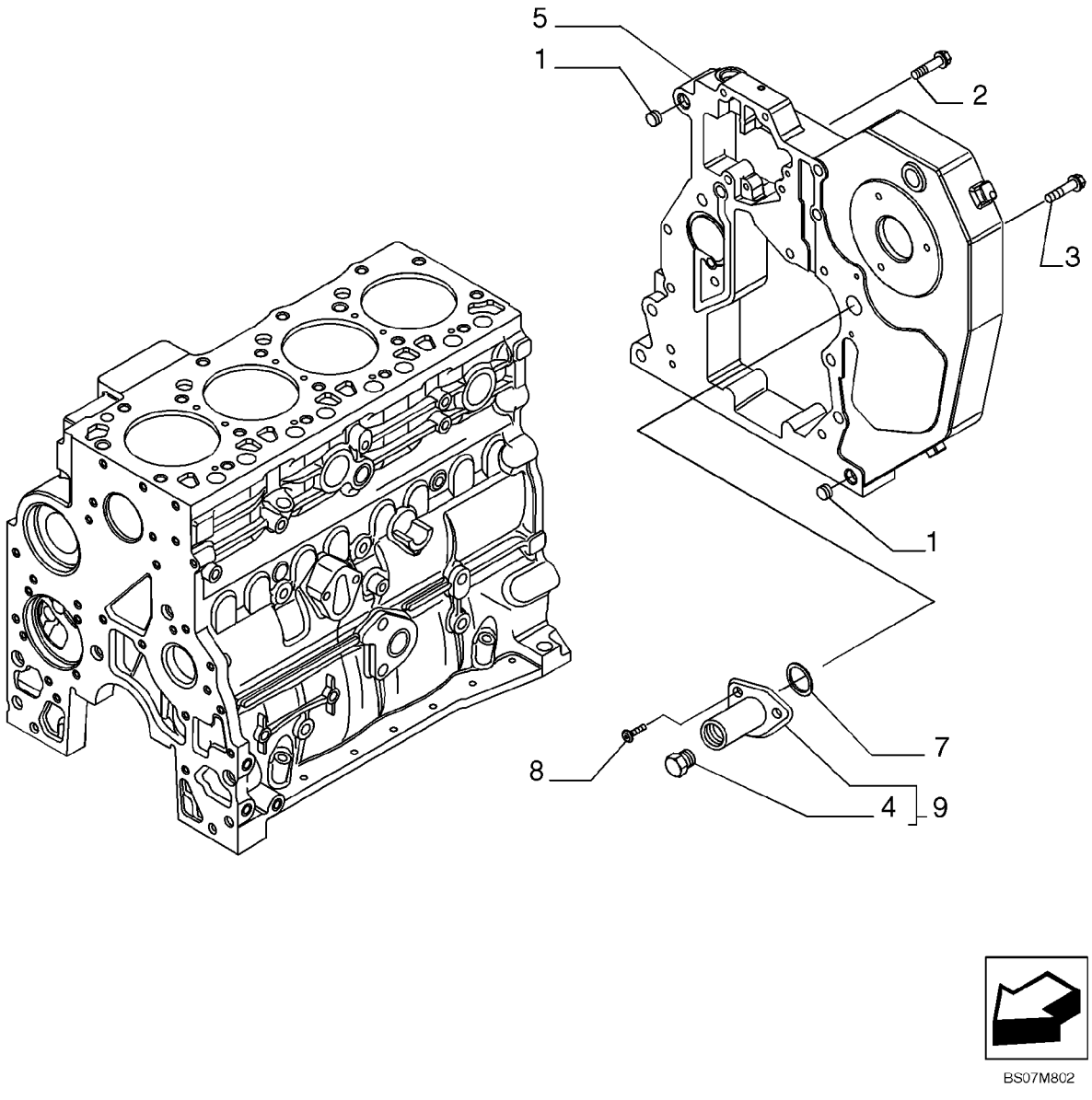

TAPAS DEL BLOQUE

REF	FN	PART NUMBER	YR/SN	QTY	DENOMINACION
1		4899026		2	PITON
2		4899091		4	TORNILLO, Hex Flg, M8 x 1.25 x 40
3		4899093		5	TORNILLO, Hex Flg, M10 x 1.5 x 30
3		4899073		1	TORNILLO, Hex Flg, M12 x 1.75 x 30
4		16882515		1	TAPčN, Plug
		4899115		1	JUNTA HERMETICA, (Part of 16882515), Not Shown
5		2853671		1	CAVIDAD
7		2852519		1	JUNTA HERMETICA
8		4895355		2	TORNILLO, Torx Rd Hd, M5 x .8 x 17
9		2855287		1	CAVIDAD, - ASSY

BLOQUE DE CILINDROS - CUBIERTAS

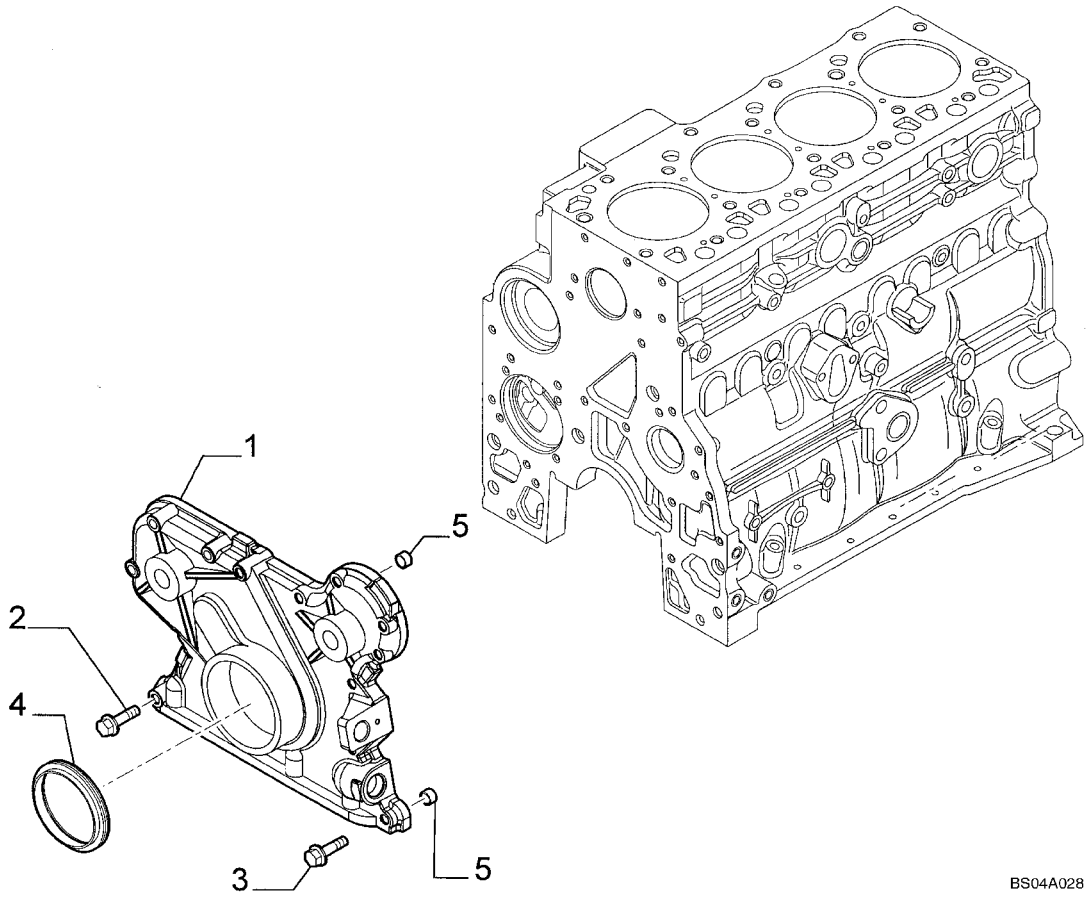

BLOQUE DE CILINDROS - CUBIERTAS

REF	FN	PART NUMBER	YR/SN	QTY	DENOMINACION
1		4897024		1	TAPADERA, Front Gear
2		4899078		5	TORNILLO, Hex Flg, M8 x 1.25 x 45
3		4899063		8	TORNILLO, Hex Flg, M8 x 1.25 x 30
4		4890832		1	ANILLO DE CIERRE
5		4891209		2	PITON

TAPAS DEL BLOQUE

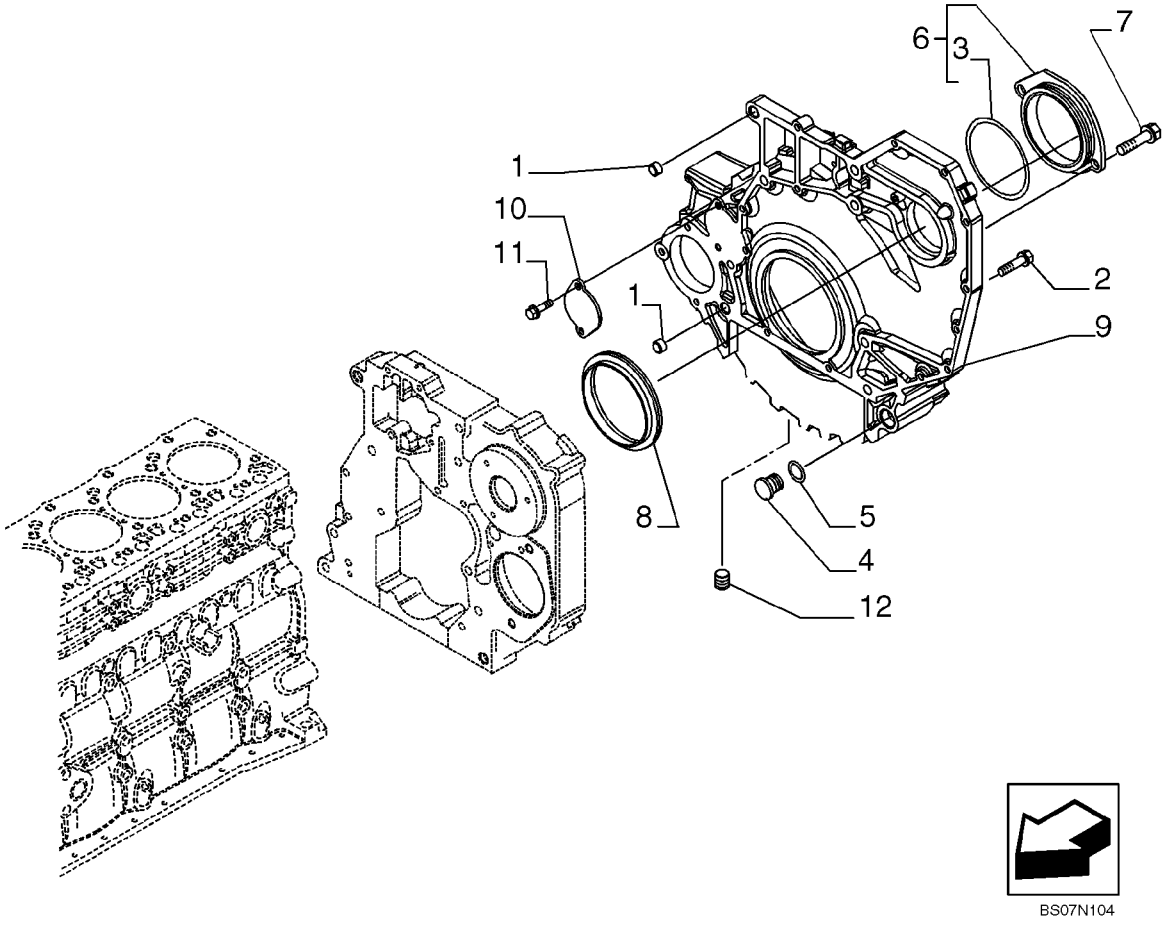

BS07N104

TAPAS DEL BLOQUE

REF	FN	PART NUMBER	YR/SN	QTY	DENOMINACION
1		4899026		2	PITON
2		4899109		3	TORNILLO, Hex, M10 x 1.5 x 80
2		4892915		7	TORNILLO, M10 x1.5 x 40
2		4899076		5	TORNILLO, Hex Flg, M12 x 1.75 x 80
2		4899074		2	TORNILLO, Hex Flg, M12 x 1.75 x 120
2		4899143		1	TORNILLO, Hex Flg, M10 x 1.5 x 140
2		2852865		2	TORNILLO
3		2854075		1	JUNTA HERMETICA
4		4895378		2	TAPčN
5		4895379		2	JUNTA HERMETICA, M21.82 ID x 3.53 Thk
6		2854073		1	TAPADERA
7		4899020		2	TORNILLO
8		4890833		1	ANILLO DE CIERRE
9		2855178		1	CAVIDAD
10		4895155		1	TAPADERA
11		4899068		2	TORNILLO, Hex Flg, M8 x 1.25 x 16
12		4893036		1	TAPčN, Alternate part to 2854866
12		{ 2854866}		1	Plug, Alternate part to 4893036

RESPIRADERO - MOTOR

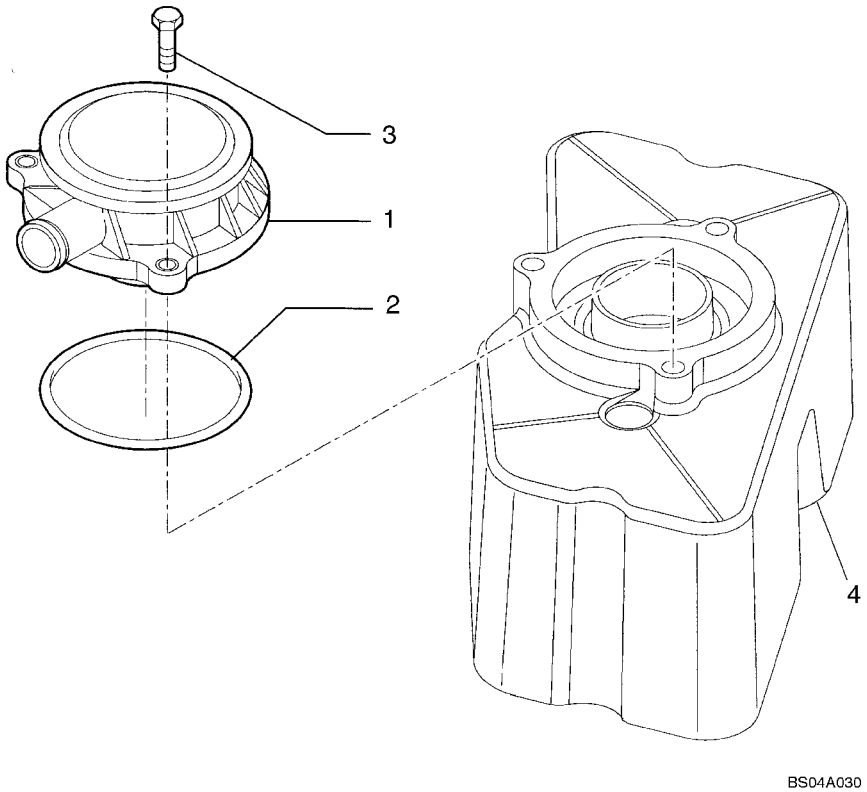

RESPIRADERO - MOTOR

REF	FN	PART NUMBER	YR/SN	QTY	DENOMINACION
1		2852531		1	RESPIRADERO
2		2852028		1	JUNTA HERMETICA
3		4899110		3	TORNILLO, Hex Flg, M6 x 1 x 20, Alternate Part to 4899092
3		4899092		3	TORNILLO, Hex Flg, M6 x 1 x 25, Alternate Part to 4899110
4		REF		1	MANUAL, COVER; See Figure 02-17

02-16		p1	02/08

CULATA DE CILINDROS

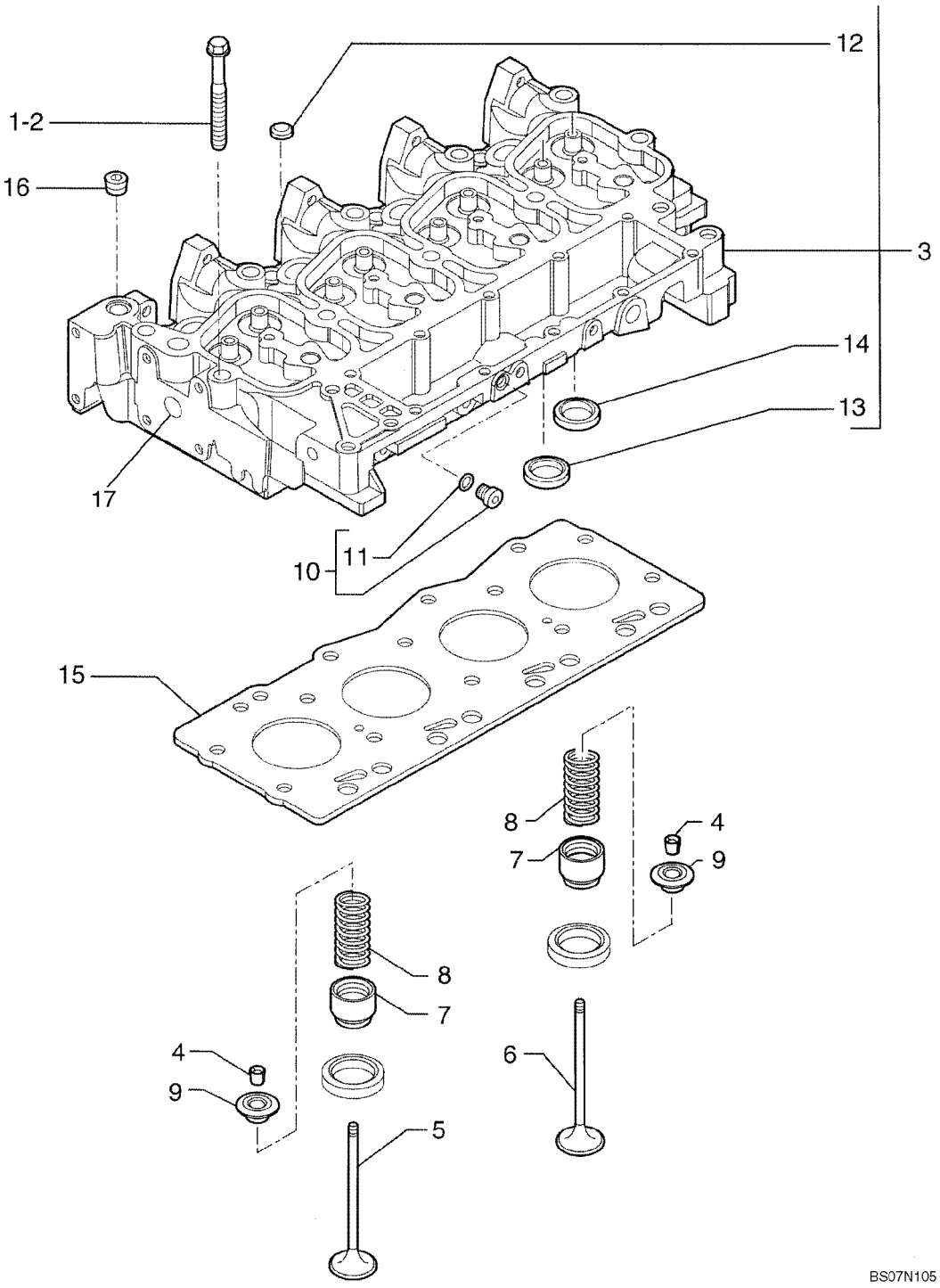

CULATA DE CILINDROS

REF	FN	PART NUMBER	YR/SN	QTY	DENOMINACION
1		4892861		4	TORNILLO, Wash Hd, M12 x 1.25 x 73
2		4892859		10	TORNILLO, Wash Hd, M12 x 1.25 x 143
3		2856017		1	CULATA, Incl. Ref 12 - 14, 17
4		4895183		16	CASQUILLO
5		4895188		4	VALVULA DE ESCAPE
6		4895187		4	VĆLVULA DE ADMISIčN
7		4895347		8	ANILLO DE CIERRE
8		4895215		8	MUELLE, VALVULA
9		4895184		8	RETENEDOR
10		4899009		1	TAPčN, M10 x 1; Incl. Ref 11
11		4899072		1	JUNTA HERMETICA
12		4895179		3	TAPčN
13		4897178		4	ASIENTO DE VALVULA, Intake
14		4897179		4	ASIENTO DE VALVULA, Exhaust
15		2830919		1	JUNTA DE CULATA, SP=1.25
15		2830920		1	JUNTA DE CULATA, SP=1.15
16		4895078		5	TAPčN
17		4895085		1	TAPčN, 25.74mm

02-17		p1	02/08

CULATA DE CILINDRO

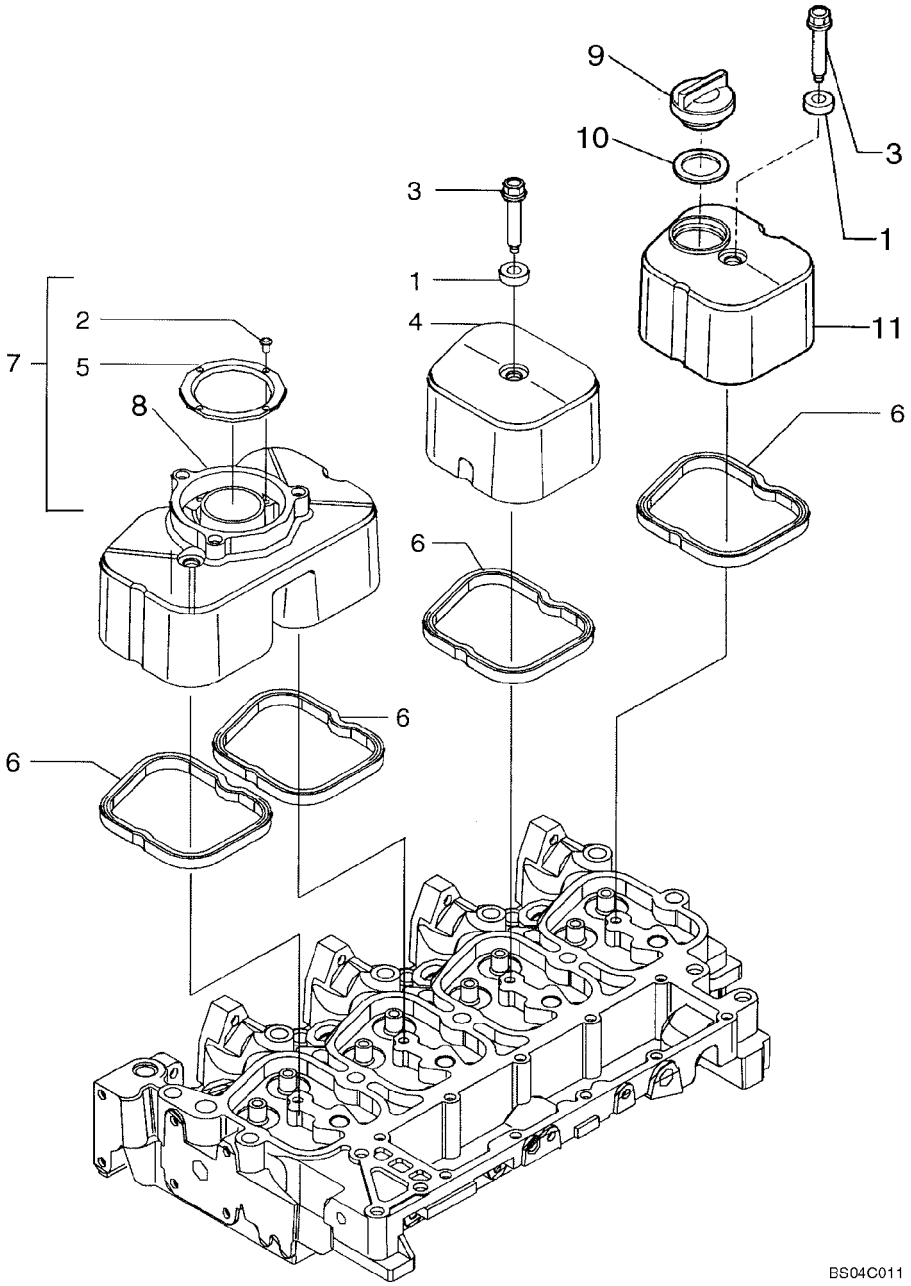

CULATA DE CILINDRO

REF	FN	PART NUMBER	YR/SN	QTY	DENOMINACION
1		4895360		4	AISLADOR
2		2830281		4	TORNILLO AUTOROSCANTE
3		4895214		4	TORNILLO, Flange
4		2852032		1	TAPADERA
5		2830775		1	DEFLECTOR
6		2852033		4	JUNTA HERMETICA
7		2830784		1	CUBRE VĆLVULA, Incl. Ref 2, 5
8		2830769		1	TAPADERA
9		4895202		1	TAPA DE DEPOSITO
10		4895296		1	ANILLO DE CIERRE
11		2852894		1	TAPADERA

CULATA DEL CILINDROS - MECANISMO DE LA VALVULA

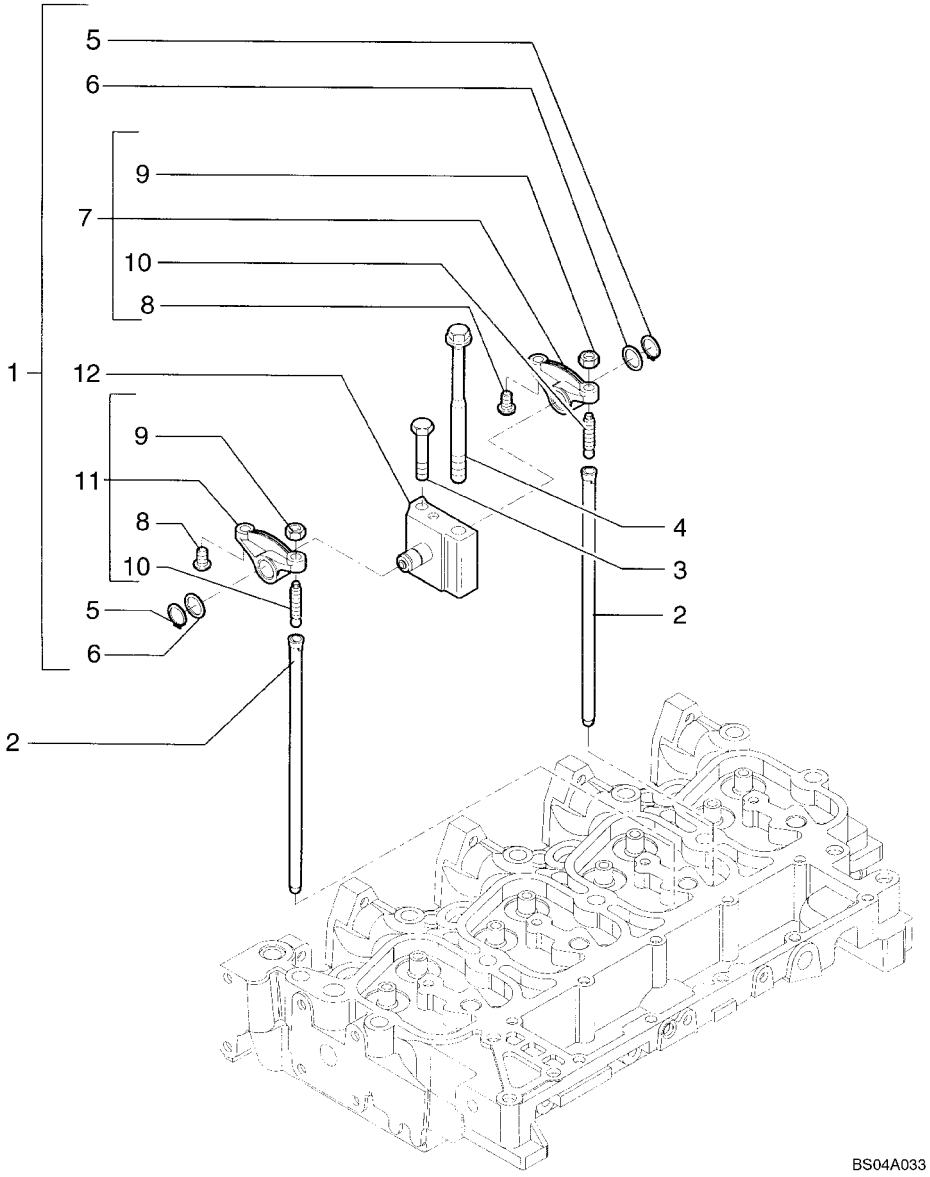

CULATA DEL CILINDROS - MECANISMO DE LA VALVULA

REF	FN	PART NUMBER	YR/SN	QTY	DENOMINACION
1		4895195		4	BALANCIN, Incl. Ref 5 - 12
2		4895361		8	VARILLA DE EMPUJE
3		2852866		4	TORNILLO, Hex
4		4892860		4	TORNILLO, Wash Hd, M12 x 1.25 x 183
5		4895363		2	ANILLO DE RESORTE
6		4895364		2	ARANDELA
7		4895196		1	BALANCIN, Incl. Ref 8 - 10
8		4895365		2	INTRODUCTOR
9		4895198		2	TUERCA
10		4895199		2	TORNILLO
11		4895200		1	BALANCIN, Incl. Ref 8 - 10
12		4895204		1	SOPORTE

02-19		p1	02/08

COLECTOR ESCAPE

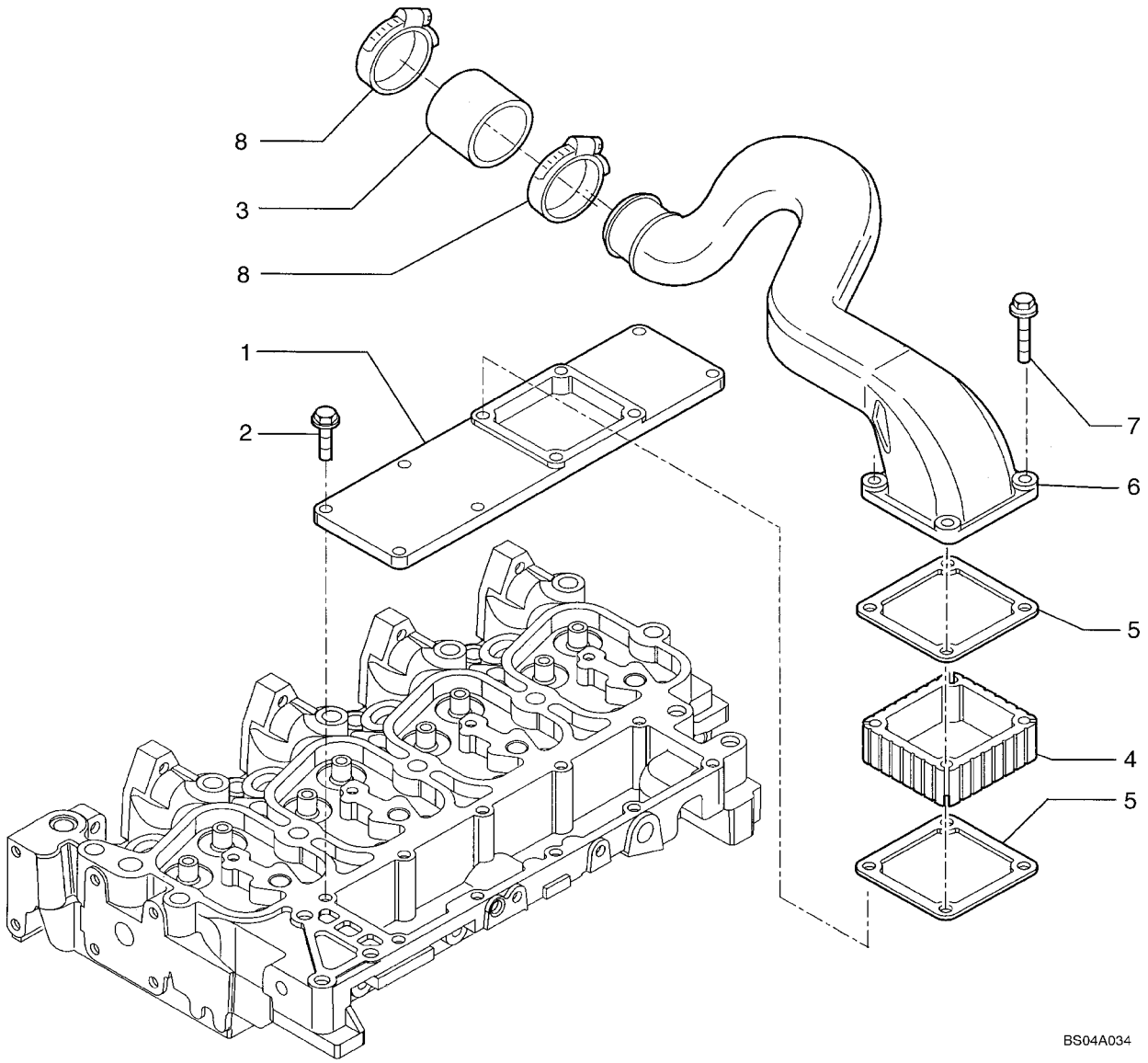

COLECTOR ESCAPE

REF	FN	PART NUMBER	YR/SN	QTY	DENOMINACION
1		2852044		1	TAPADERA, Manifold Inlet; Aluminum; If Used
1		2856462		1	COLECTOR DE ADMISION, COVER, Plastic; If Used
2		4899039		6	TORNILLO, Hex Flg, M8 x 1.25 x 25
3		2852029		1	MANGUITO
4		2856263		1	SEPARADOR, Intake
5		4899921		2	JUNTA HERMETICA
6		2852030		1	TUBO DE ASPIRACION
7		4895294		4	TORNILLO, Flange, M8 x 80
8		4895641		2	ARGOLLA DE CIERRE

COLLECTOR DE ESCAPE

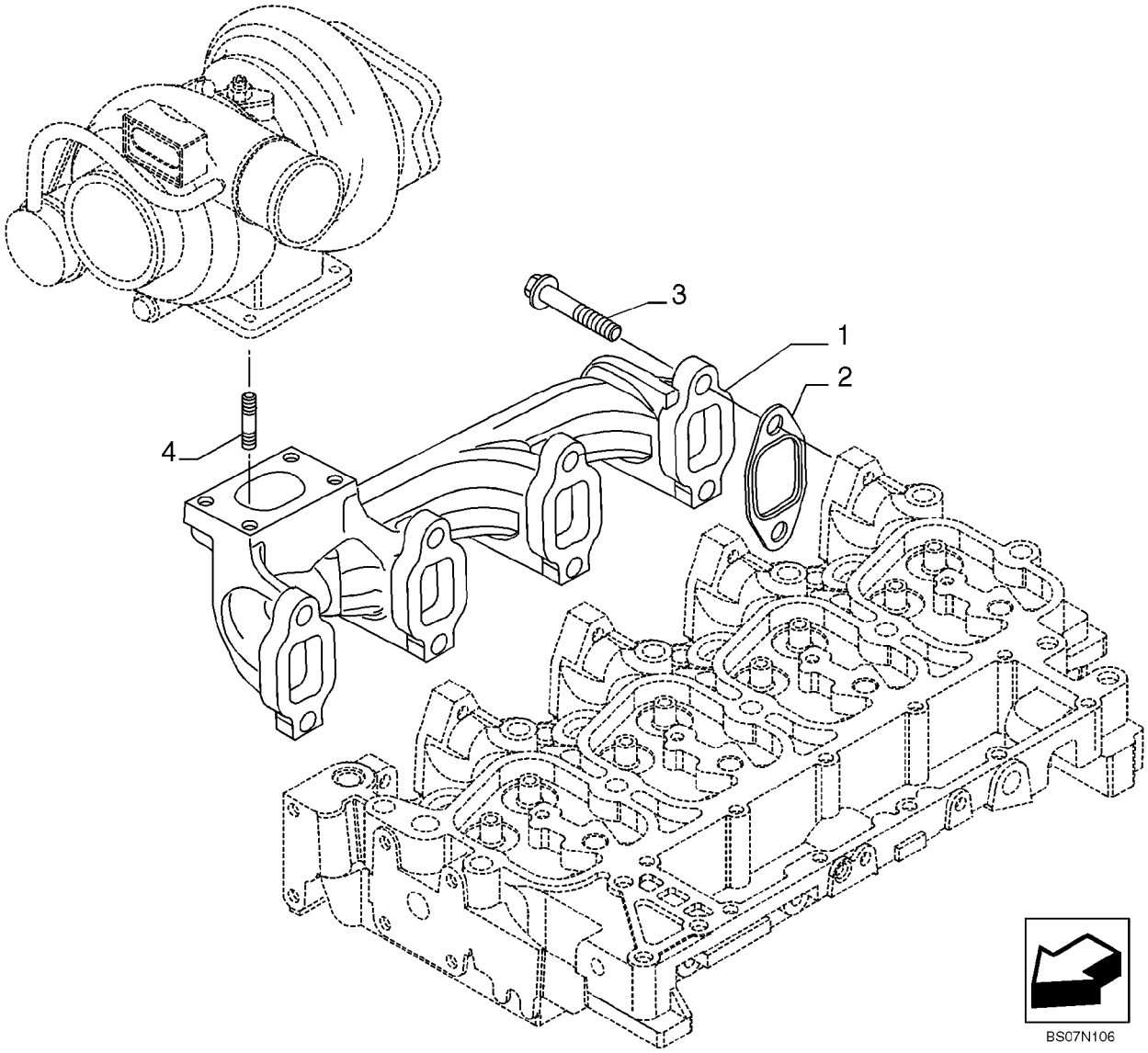

COLLECTOR DE ESCAPE

REF	FN	PART NUMBER	YR/SN	QTY	DENOMINACION
1		2831203		1	COLECTOR DE ESCAPE
2		2852743		4	JUNTA HERMETICA
3		2852834		8	TORNILLO
4		4899859		4	PRISIONERO

CIGUENAL

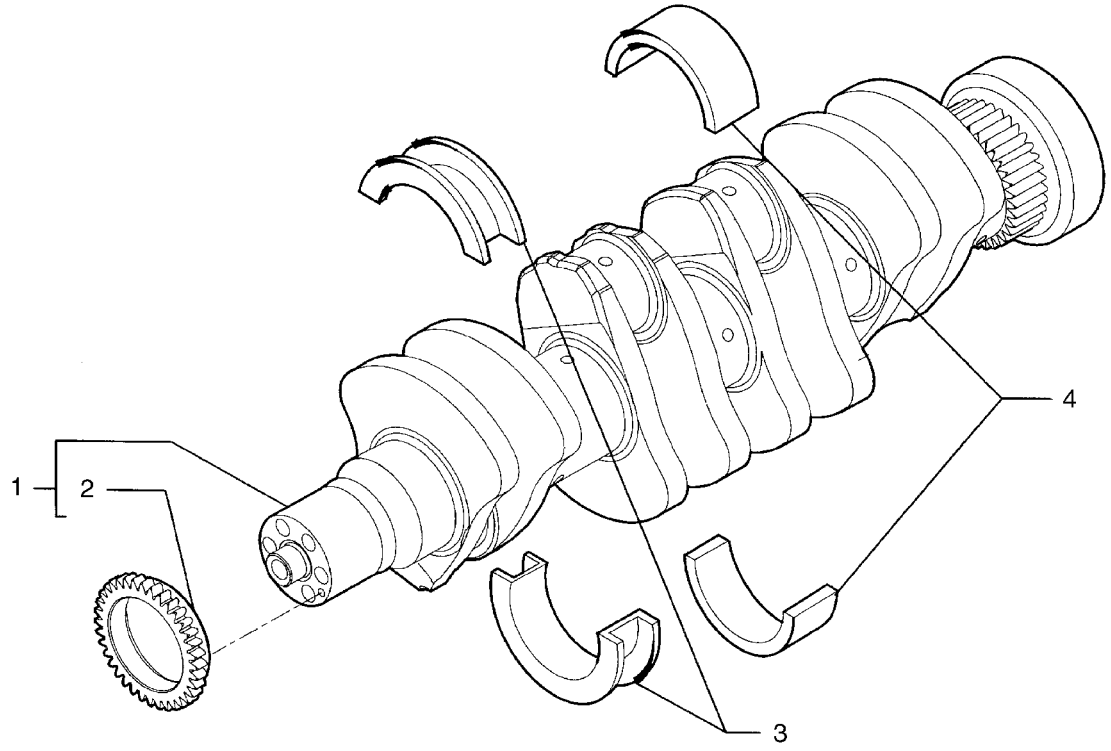

BS04A036

CIGUENAL

REF	FN	PART NUMBER	YR/SN	QTY	DENOMINACION
1		{2856271}		1	Crankshaft Assembly, Incls. Refs. 2
2		4893386		1	ENGRANAJE
3		{2853816}		1	Set, Thrust Washers (Standard)
3		4895414		1	COJINETE DE EMBRAGUE
4		{2853815}		4	Set, Main Bearings (Standard)
4		4895017		4	COJINETTE CIGUENAL
5		4899046		1	PITON

02-22		p1	02/08

BIELA PISTON

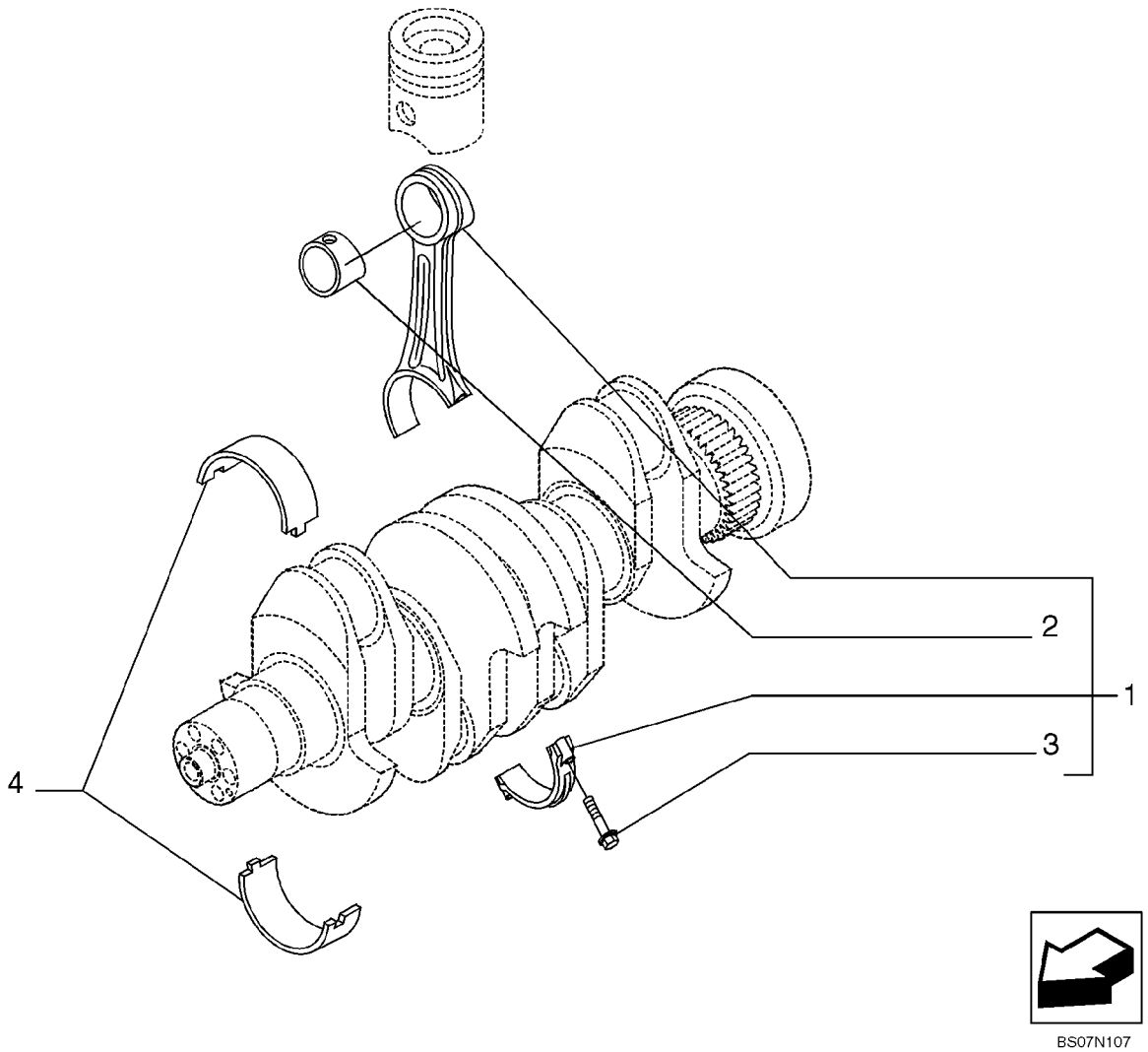

BIELA PISTON

REF	FN	PART NUMBER	YR/SN	QTY	DENOMINACION
1		2831298		4	BIELA DE EMBOLO
2		4892708		1	CASQUILLO
3		2831297		2	TORNILLO
4		4892715		4	COJINETE DE BIELA
4		{2856309}		4	Bearing, Crankshaft

EMBOLO - MOTOR

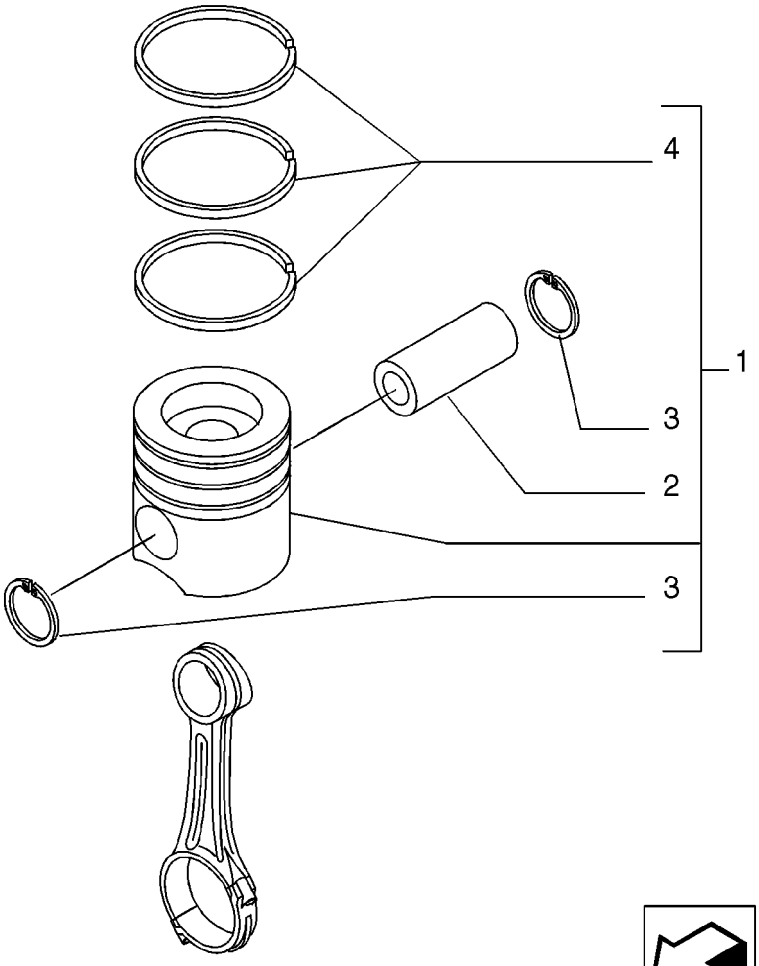

BS07N108

EMBOLO - MOTOR

REF	FN	PART NUMBER	YR/SN	QTY	DENOMINACION
1		2855531		4	EMBOLO COMPL, (Standard)
2		4892712		4	BULON DEL EMBOLO
3		2854030		8	ANILLO DE RESORTE
3		4892713		8	ANILLO DE RESORTE, Alternate with 2854030
4		2830158		1	ARO DE EMBOLO, (Standard)
4		2852037		1	ARO RASCADOR DE ACEITE
4		2854603		1	EQUIPO, Piston seal

VOLANTE MOTOR

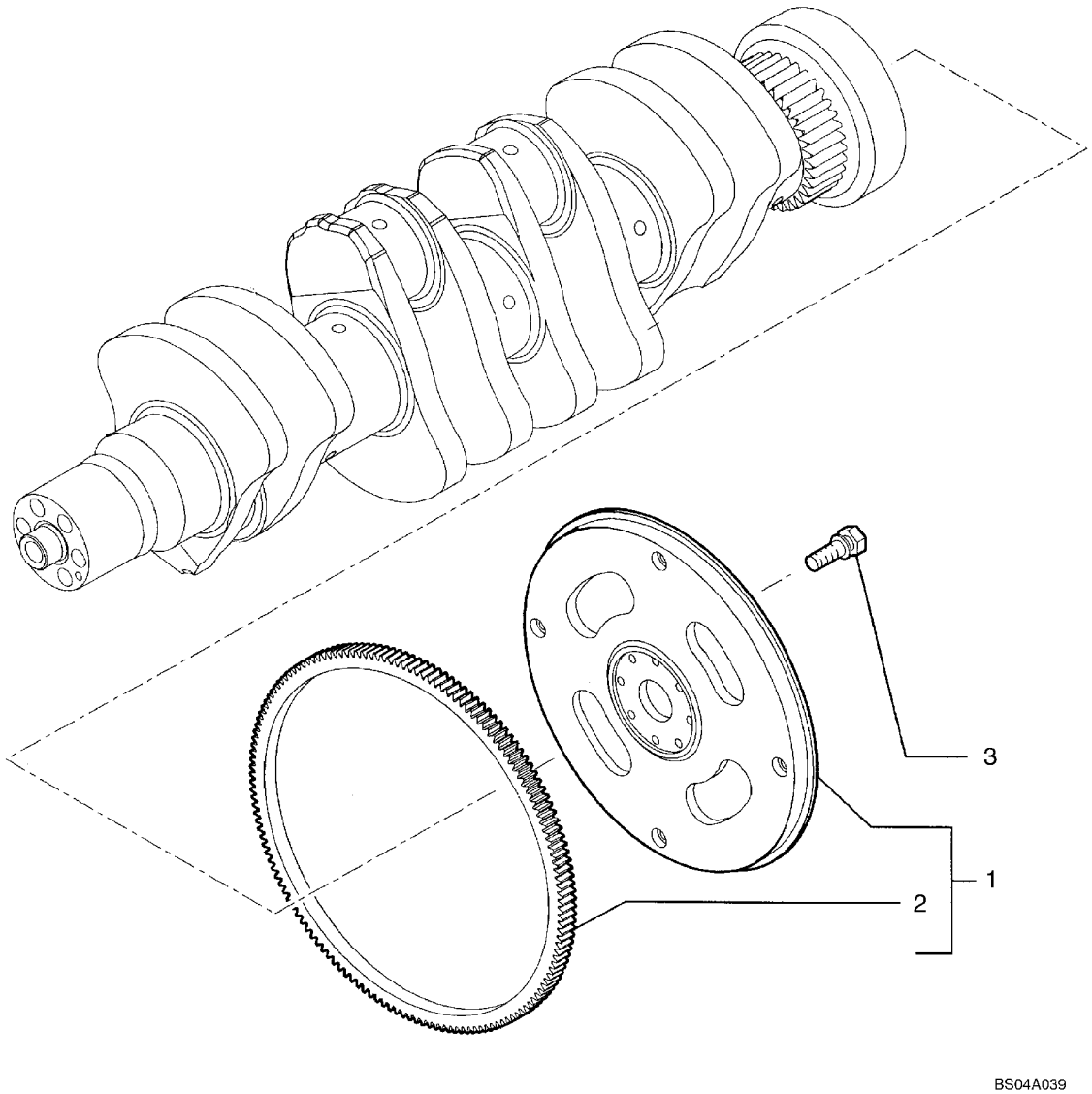

VOLANTE MOTOR

REF	FN	PART NUMBER	YR/SN	QTY	DENOMINACION
1		2852049		1	VOLANTE DEL MOTOR, - ASSY; Incl. Ref 2
2		2852051		1	CORONA DENTADA
3		4894641		8	TORNILLO, Wash Hd, M12 x 1.25 x 31

POLEA - CIGUENAL

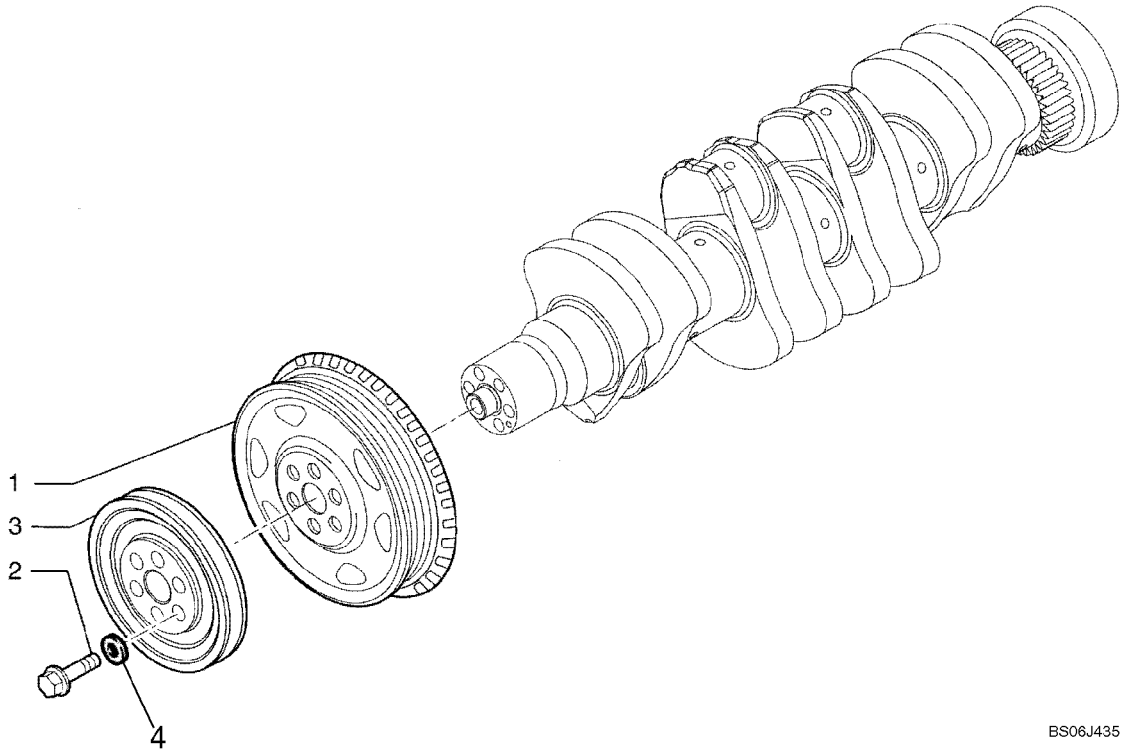

POLEA - CIGUENAL

REF	FN	PART NUMBER	YR/SN	QTY	DENOMINACION
		{2855380}		1	Pulley Assembly, Incls. Refs. 1 - 3
1		4896773		1	POLEA
2		4892867		6	TORNILLO, Torx Wash Hd, M12 x 1.25 x 78.5
3		{2855381}		1	Pulley
4		{}		6	Washer, (Part of 4892867)

EQUILIBRADOR, ENGRENAJES Y ARBOLES

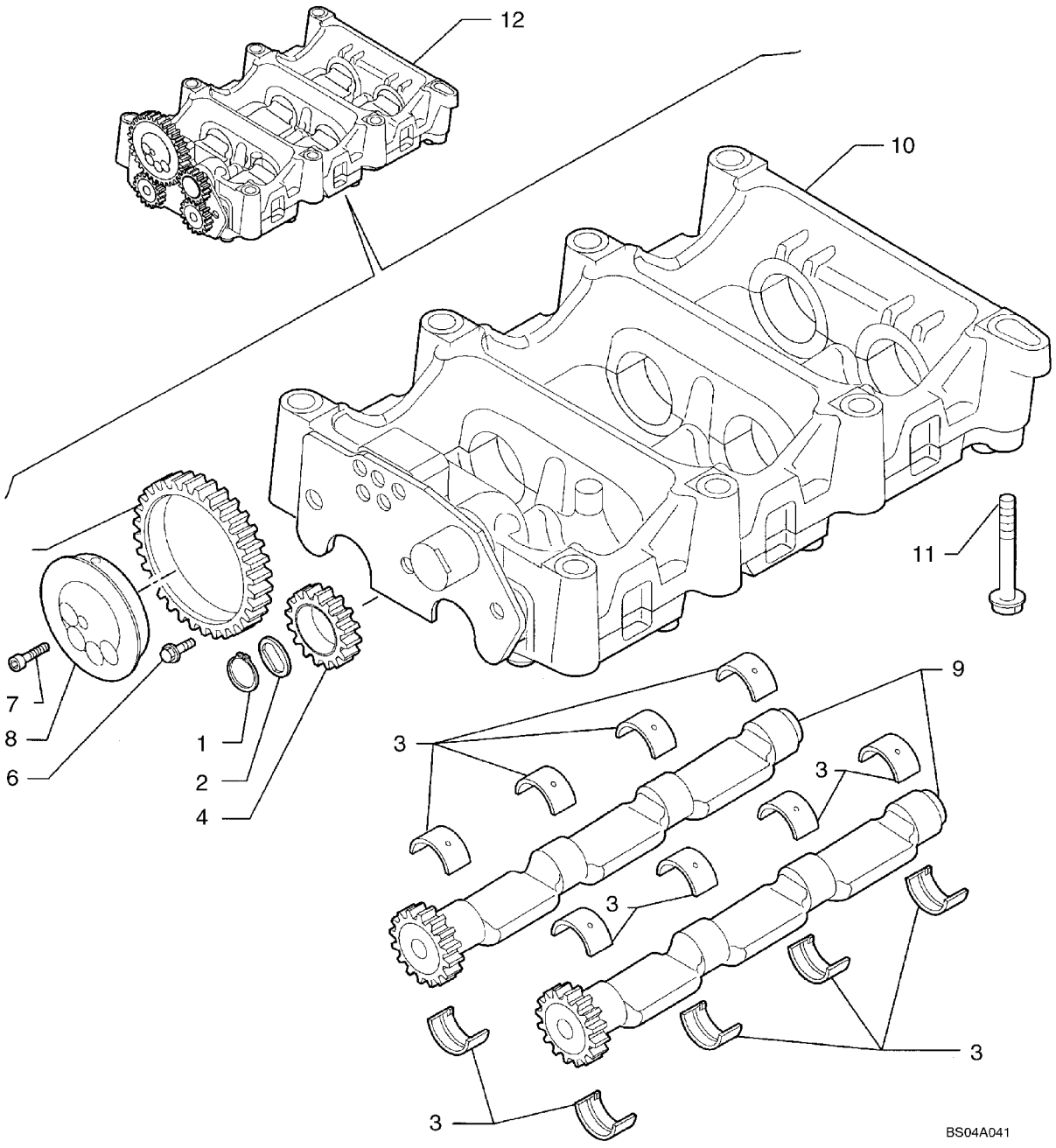

EQUILIBRADOR, ENGRENAJES Y ARBOLES

REF	FN	PART NUMBER	YR/SN	QTY	DENOMINACION
		2855743		1	EQUILIBRADOR, Assembly, Incl. Ref 1 - 10
1		4897125		1	ANILLO DE RESORTE
2		2855753		1	PLACA DE APOYO
3		8093883		16	SERIE SEMICOJENETES, Replaces 4897071
3		2855747		16	CASQUILLO
4		4897048		1	Pl¤č N LOCO
4		2855750		1	Pl¤č N LOCO, Gear Assembly; Alternate Part to 4897048, 4897001
5		4896947		1	Pl¤č N LOCO
5		2855748		1	Pl¤č N LOCO, Gear Assembly; Alternate Part to 4896947
6		4895586		3	TORNILLO, Flange, M8 x 16
7		2830433		5-4	TORNILLO, Socket; (4) Used With 2830953 Balancer Assy
8		2831031		1	ARBOL DE REENVIO
9		2831354		2	EJE
10		NSS		1	NO SE REPARA SEPARADAM., Housing
11		4899109		6-7	TORNILLO, Hex, M10 x 1.5 x 80, Flange
11		4897934		1	TORNILLO, Flange, M10 x 100
14		2831305		1	PITON
15		2855746		1	PLACA DE APOYO
16		2830948		1	ARBOL DE REENVIO
17		4899027		2	PITON, Ring

02-28		p1	02/08

EJE DE LEVAS

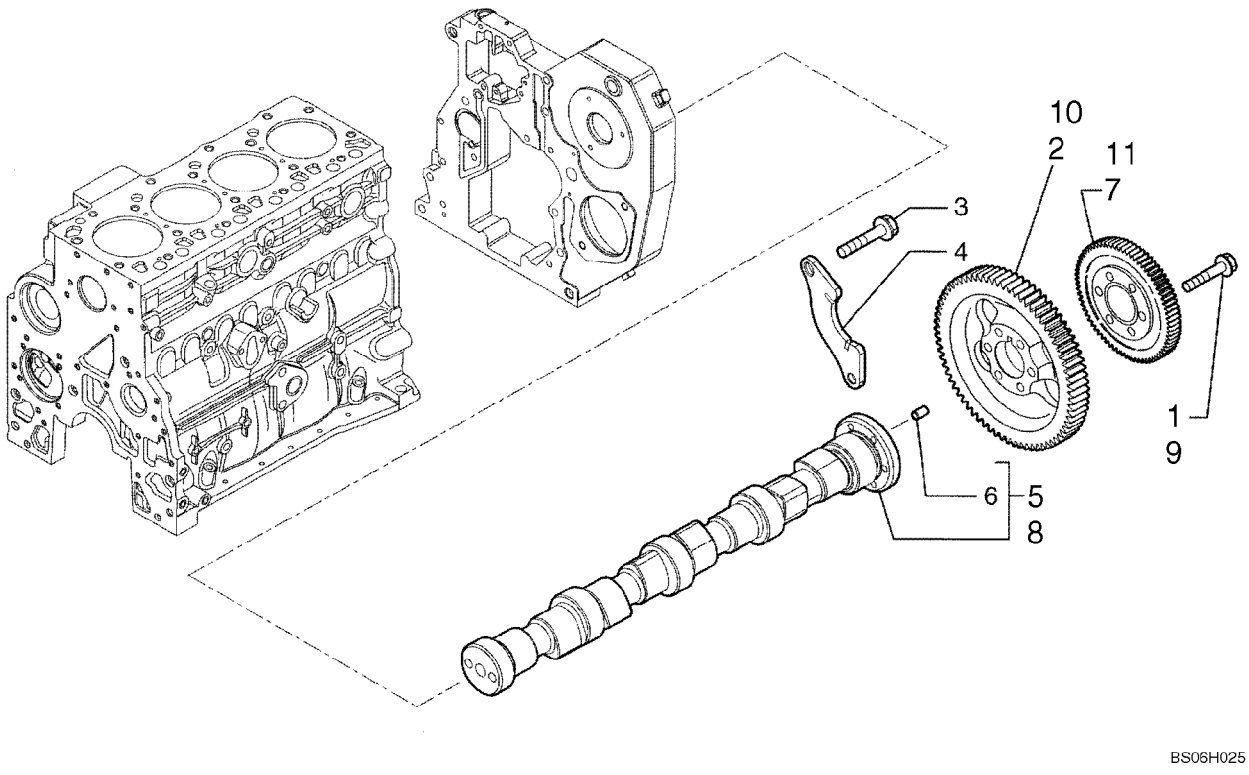

EJE DE LEVAS

REF	FN	PART NUMBER	YR/SN	QTY	DENOMINACION
1		4895323		6	TORNILLO, M8 x 1.25 x 40mm Long
2		2852062		1	ENGRANAJE
3		4899068		2	TORNILLO, Hex Flg, M8 x 1.25 x 16
4		4897457		1	SOPORTE
5		2856170		1	ARBOL DE LEVAS
6		4899080		1	PITON, Pin
7		{2855183}		1	Gear

TURBOCOMPRESOR

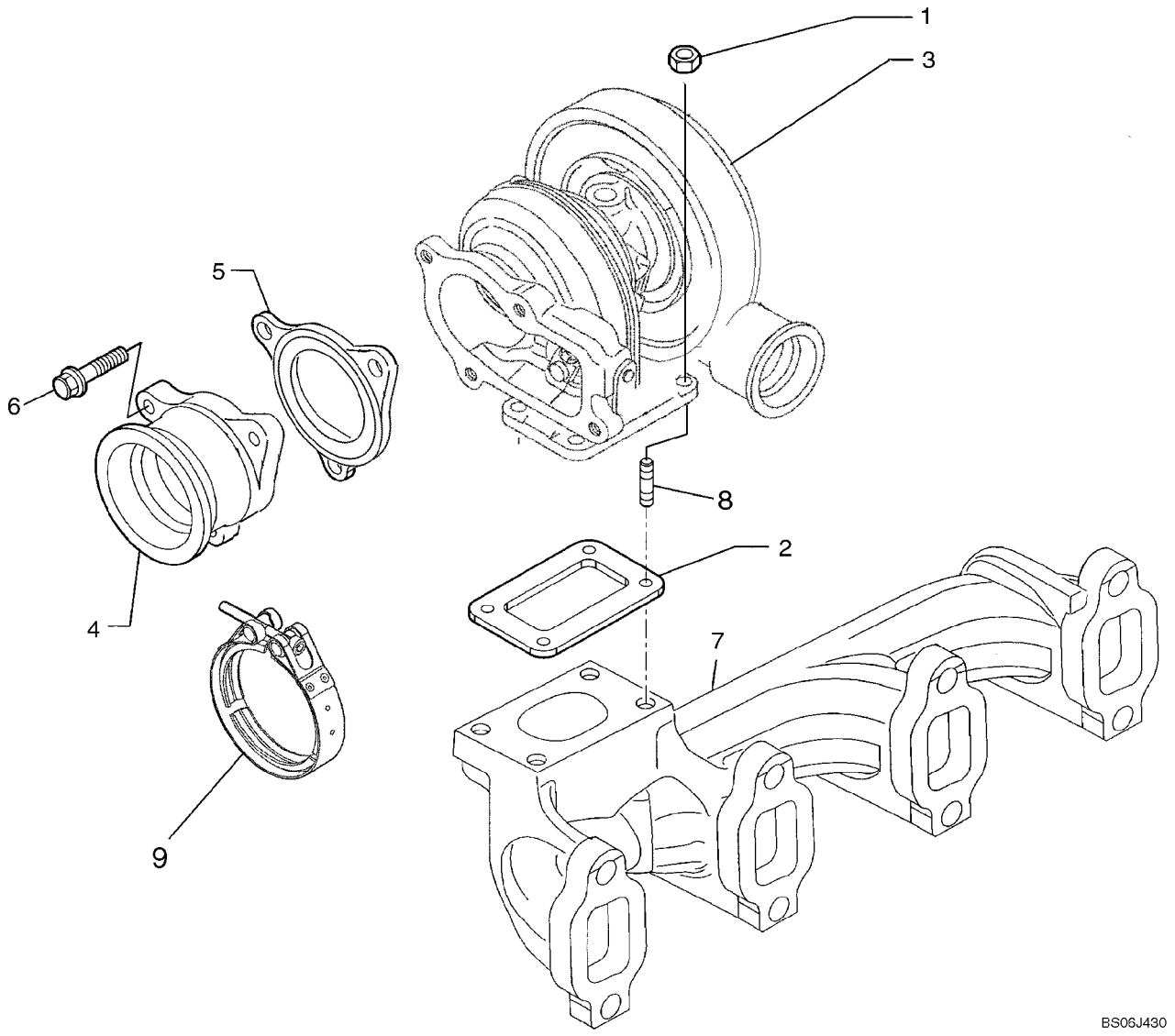

TURBOCOMPRESOR

REF	FN	PART NUMBER	YR/SN	QTY	DENOMINACION
		REF		1	MANUAL, MODELS WITH TURBOCHARGED ENGINE ONLY
1		4899118		4	TUERCA, Flange, M8
2		4895133		1	JUNTA HERMETICA
3		2852507		1	TURBOCOMPRESOR, Assembly
4		2852510		1	TUBO RIGIDO, Exhaust Manifold
5		2852509		1	JUNTA COLECTOR
6		4898482		3	TORNILLO, Flg Hd, M8 x 1.25 x 30
7		REF		1	MANUAL, EXHAUST MANIFOLD; See Figure 02-20
8		4899859		4	PRISIONERO
9		2855273		1	ABRAZADERA, Screw

02-30		p1	02/08

VARILLA DE NIVEL - ACEITE DEL MOTOR

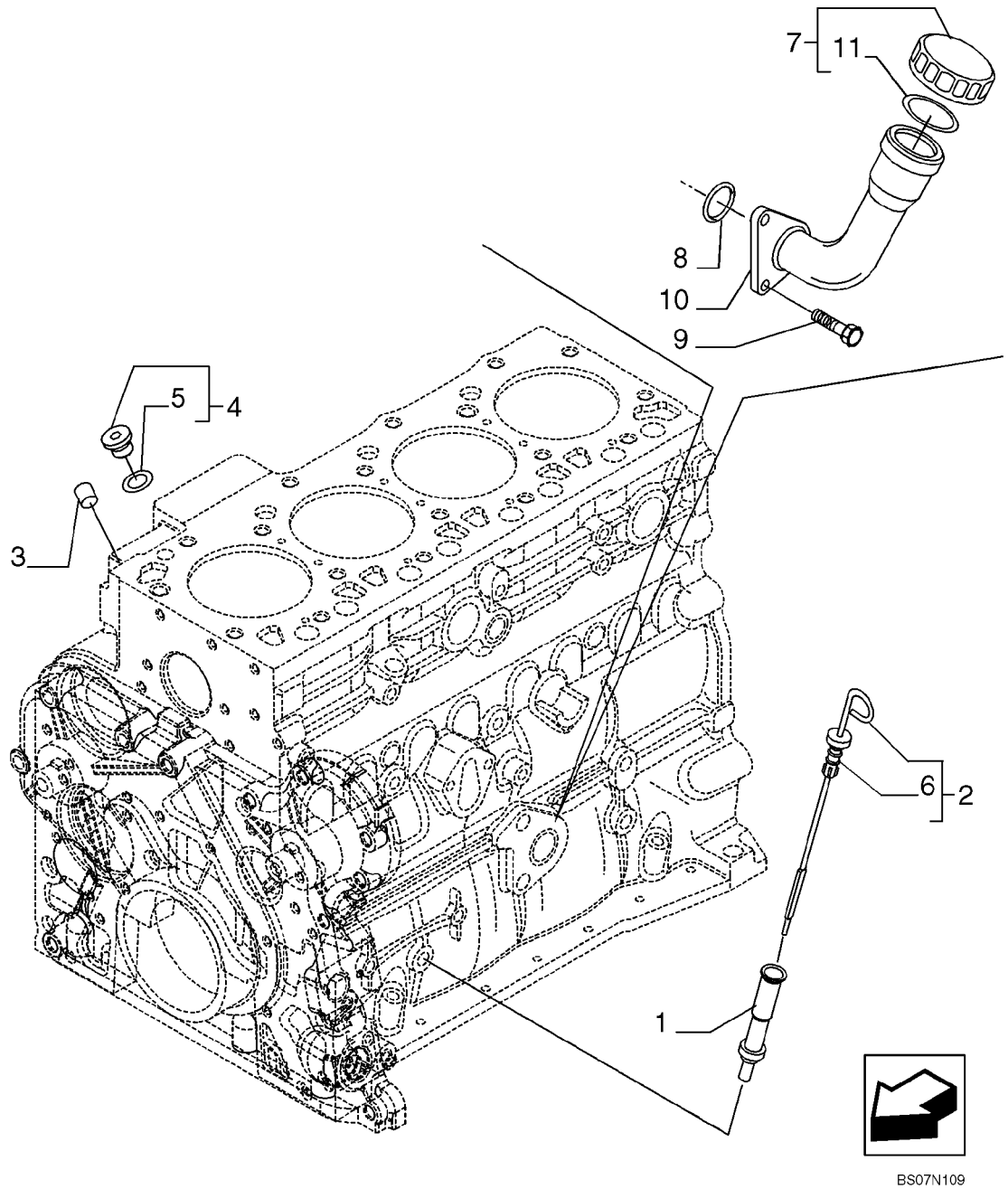

VARILLA DE NIVEL - ACEITE DEL MOTOR

REF	FN	PART NUMBER	YR/SN	QTY	DENOMINACION
1		2852122		1	TUBO, - OIL LEVEL
2		2852125		1	VARILLA DE NIVEL, - ASSY
3		4895406		1	TAPčN, 9.8mm OD
4		4897330		2	TAPčN, - ASSY
5		4895610		1	JUNTA HERMETICA
6		2852127		1	JUNTA HERMETICA
7		2853410		1	TAPON DE LLENADO, - ASSY
8		2852135		1	JUNTA HERMETICA
9		2852134		2	TORNILLO
10		2853407		1	CUELLO LIENADOR
11		2853412		1	JUNTA HERMETICA

BOMBA DE ACEITE - MOTOR

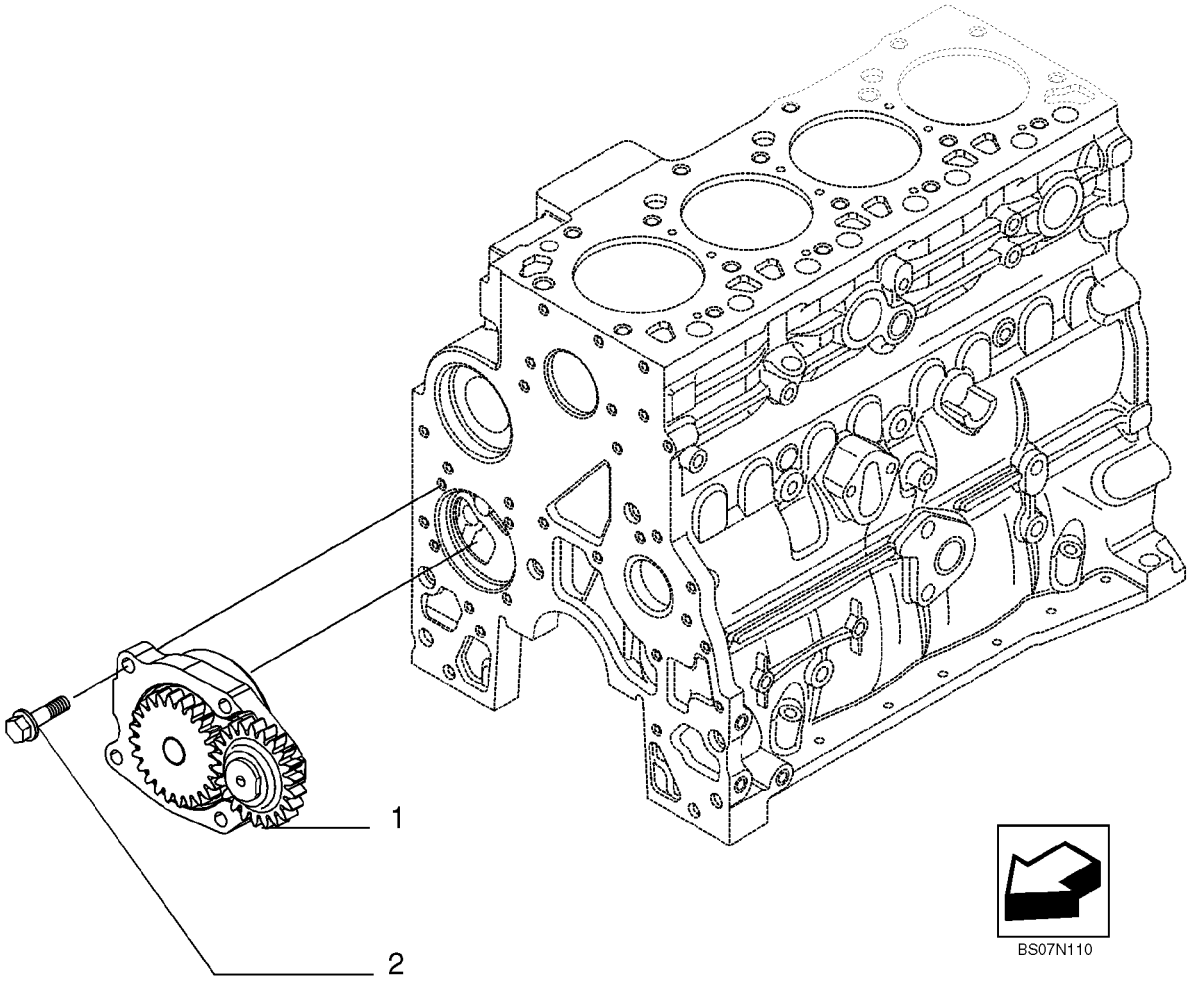

BOMBA DE ACEITE - MOTOR

REF	FN	PART NUMBER	YR/SN	QTY	DENOMINACION
1		4897480		1	BOMBA DE ACEITE, IN ALTERNATIVE
1		2853414		1	BOMBA DE ACEITE, IN ALTERNATIVE
2		4899090		4	TORNILLO, Hex Flg, M8 x 1.25 x 30

02-32		p1	02/08

FILTRO DE ACEITE - MOTOR

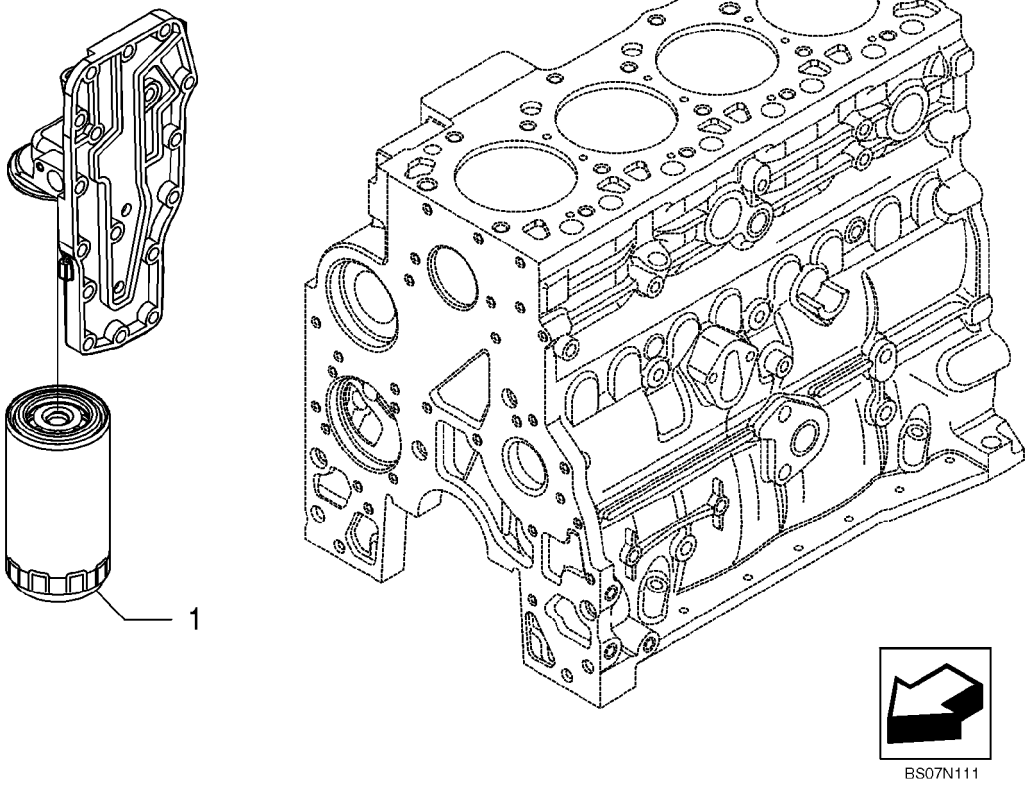

FILTRO DE ACEITE - MOTOR

REF	FN	PART NUMBER	YR/SN	QTY	DENOMINACION
1		87803261		1	FILTRO DE ACEITE, 2/4V

02-33		p1	02/08

TUBERIAS - ACEITE DEL MOTOR

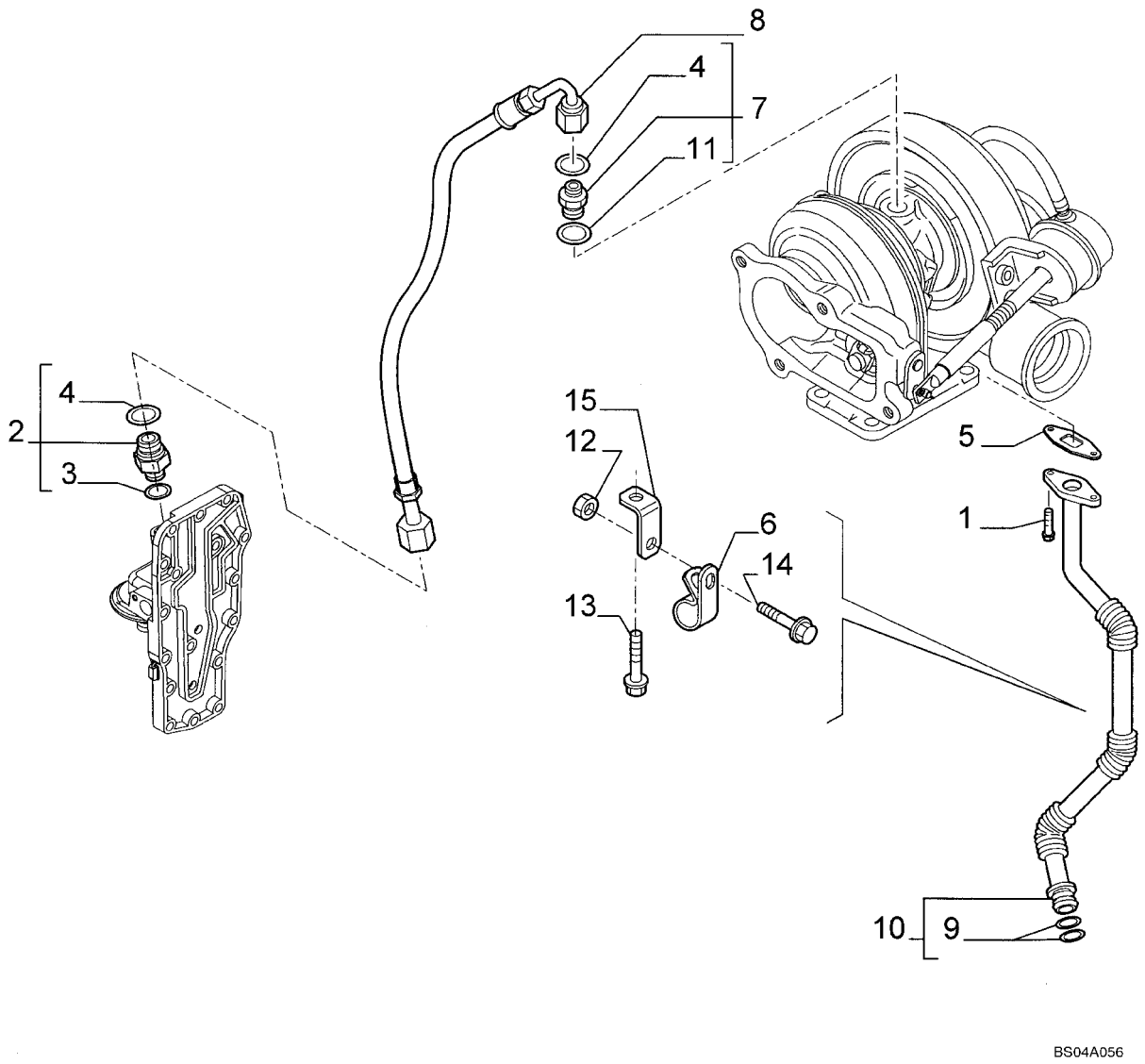

TUBERIAS - ACEITE DEL MOTOR

REF	FN	PART NUMBER	YR/SN	QTY	DENOMINACION
1		4895164		2	TORNILLO, Flange, M6 x 16
2		4895107		1	RACOR, Incl. Ref 3, 4
3		4899107		1	JUNTA HERMETICA
4		4899108		1	JUNTA HERMETICA
5		4899467		1	JUNTA HERMETICA, Oil Drain
6		4899519		1	BORNE, Clamp
6		2854493		1	SUJETADOR, Alternate Part To 4899519, Bracket Clamp
7		4899106		1	RACOR, Incl. Ref 4, 11
8		2852195		1	MANGA
9		5135738		2	JUNTA HERMETICA, -115, Cl 9, .674" ID x .103" Thk
10		2852102		1	CUELLO DE CARGA, Tube; Incl. Ref 9
11		NSS		1	NO SE REPARA SEPARADAM., Washer
12		2852197		1	TUERCA, Flange, M6
13		2852101		1	TORNILLO, Flange; M6 x 16
14		16586225		1	TORNILLO, Flange; M8 x 16
15		2852196		1	PIEZA DE SOPORTE

02-34		p1	02/08

CAMBIADOR DE CALOR - MOTOR

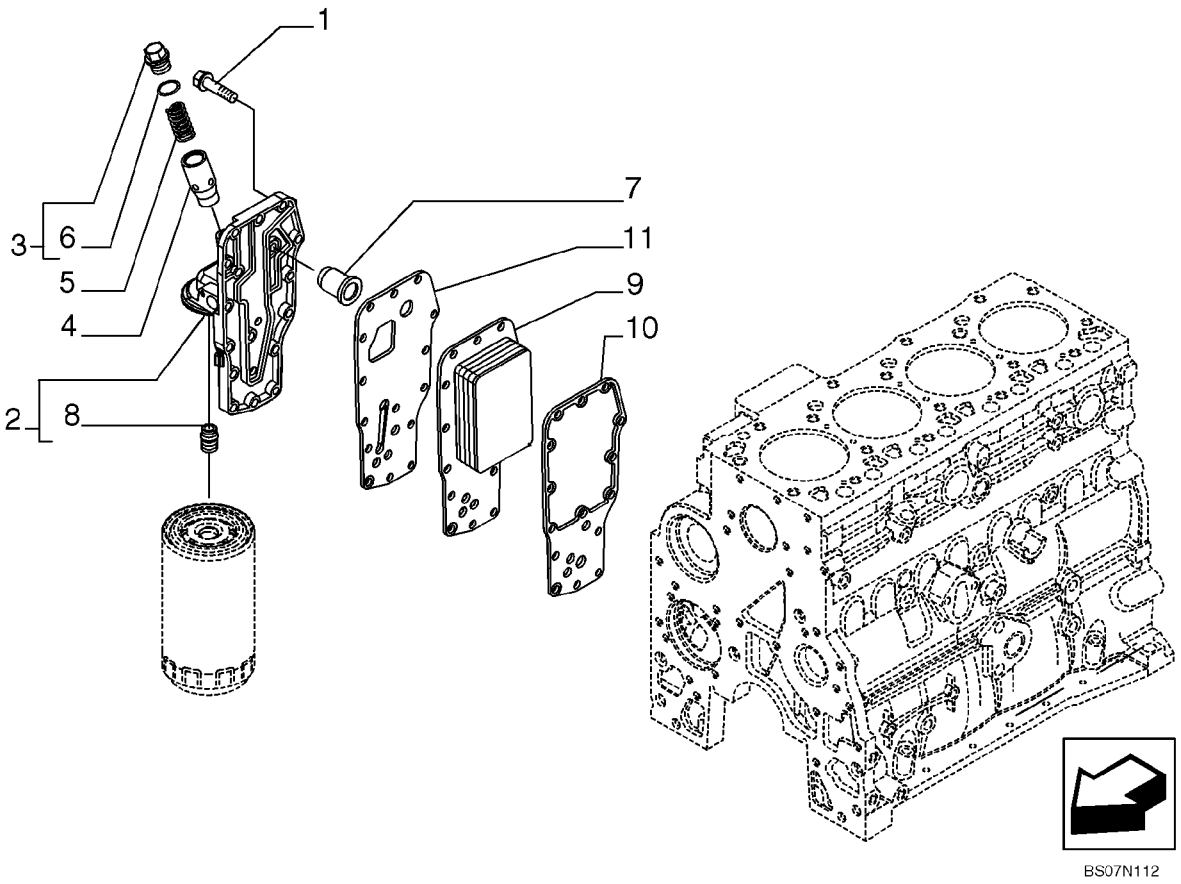

CAMBIADOR DE CALOR - MOTOR

REF	FN	PART NUMBER	YR/SN	QTY	DENOMINACION
1		4899019		15	TORNILLO, Hex Flg, M8 x 1.25 x 35
		2853782		1	CABEZA DE FILTRO, Incls. Refs. 2, 4, 5, 7, 8
2		4899643		1	CABEZA DE FILTRO
3		2853781		1	TAPčN
4		4896404		1	EMBOLO
5		4895045		1	RESORTE
6		17916280		1	JUNTA HERMETICA, M18.39 ID x 2.69 Thk
7		4896410		1	VĆLVULA, DESCARGA
8		4893391		1	ADAPTOR
9		2853722		1	RADIADOR ACEITE
10		2830559		1	JUNTA HERMETICA
11		4896409		1	JUNTA HERMETICA

02-35		p1	02/08

BOMBA DE AGUA

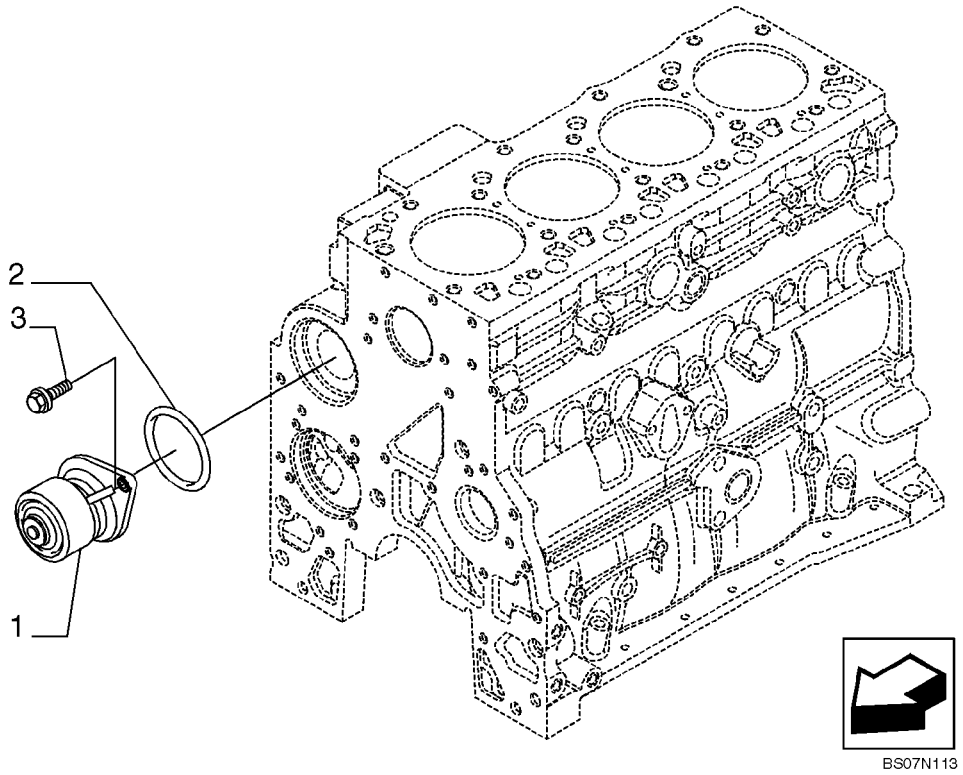

BOMBA DE AGUA

REF	FN	PART NUMBER	YR/SN	QTY	DENOMINACION
1		2852114		1	BOMBA DE AGUA, -ASSY IN ALTERNATIVE
1		4891252		1	BOMBA DE AGUA, -ASSY IN ALTERNATIVE
2		2852047		1	RETEN
3		4899079		2	TORNILLO, Hex Flg, M8 x 1.25 x 25

SISTEMA DE REFRIGERACIĎN - MOTOR

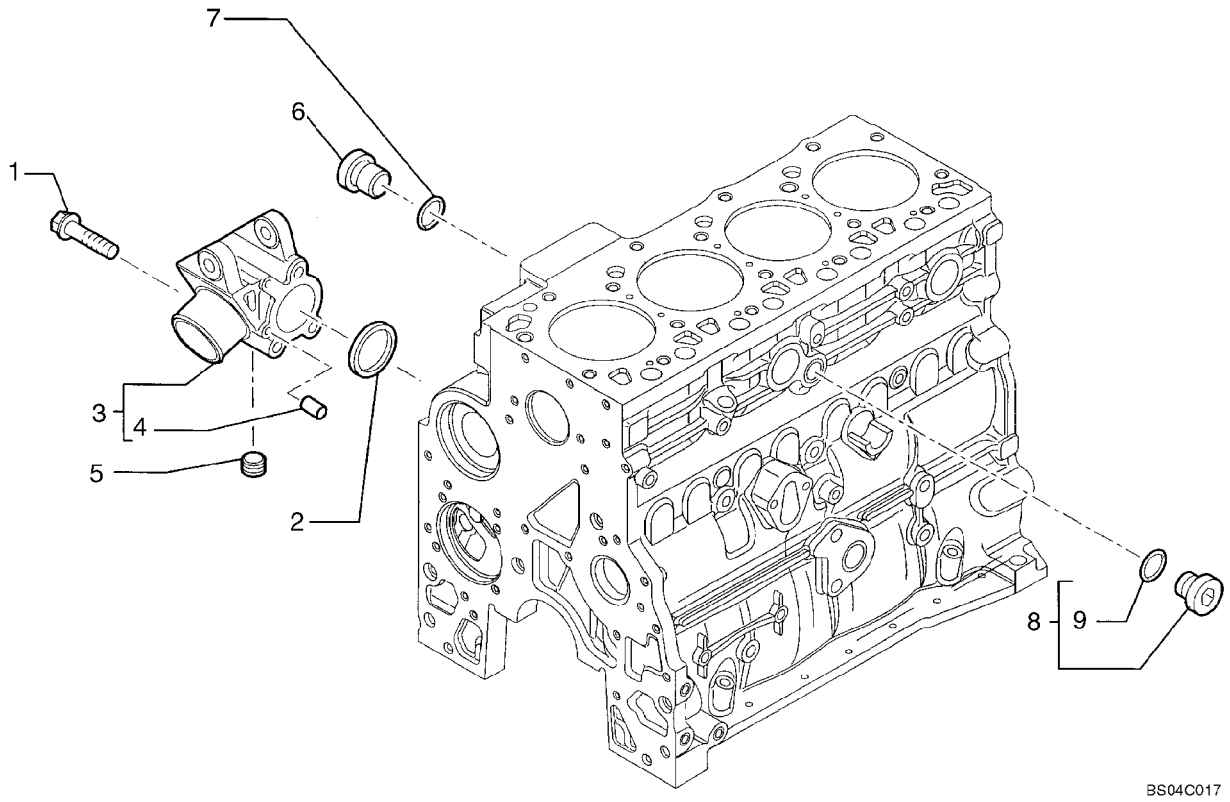

SISTEMA DE REFRIGERACIĎN - MOTOR

REF	FN	PART NUMBER	YR/SN	QTY	DENOMINACION
1		4899109		3	TORNILLO, Hex, M10 x 1.5 x 80
2		2854072		1	JUNTA HERMETICA
3		2852145		1	SOPORTE, Incl. Ref 4
4		NSS		2	NO SE REPARA SEPARADAM., Dowel
5		2852511		1	TAPčN
		4895392		1	TAPčN, M18; Torque Converter Oil; Incl. Ref 6, 7
6		4895394		1	TAPčN
7		4895393		1	JUNTA HERMETICA
8		4895623		1	TAPčN, Compressor Plumbing; Incl. Ref 9
9		4895625		1	JUNTA HERMETICA

TERMOSTATO - REFRIGERACION DEL MOTOR

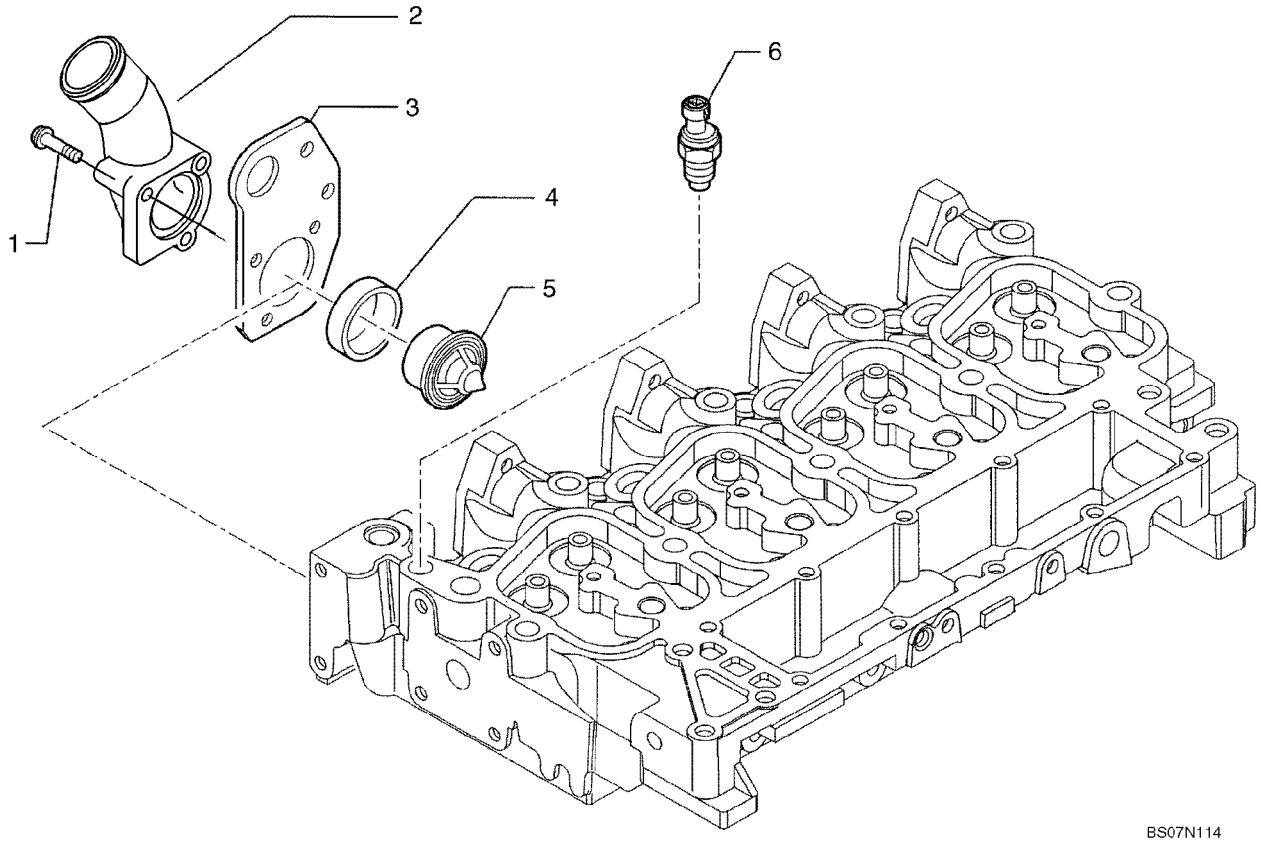

TERMOSTATO - REFRIGERACION DEL MOTOR

REF	FN	PART NUMBER	YR/SN	QTY	DENOMINACION
1		2852151		1	TORNILLO, Flange; M8 x 35
1		2852155		2	TORNILLO, Flange; M8 x 80
2		2852153		1	CODO, Thermostat Housing
3		2855894		1	PIEZA DE SOPORTE
4		2853133		1	ANILLO DE CIERRE
5		2853135		1	TERMOSTATO, Kit
		2852473		1	JUNTA HERMETICA, (Part of 2853135)
6		2852157		1	TERMOSONDA, Water; Grid Heater

02-38		p1	02/08

BOMBA DE AGUA - MANDO

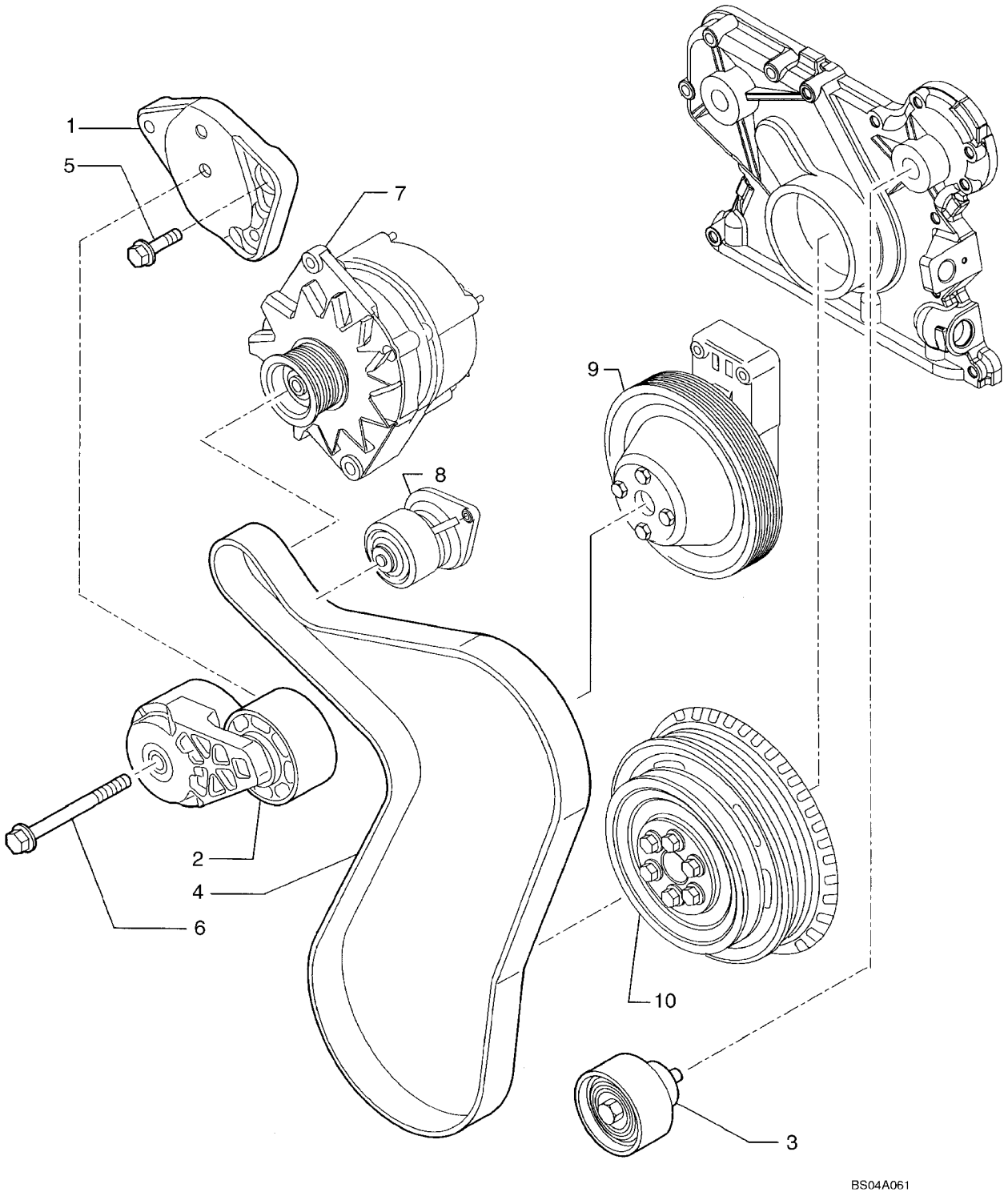

BOMBA DE AGUA - MANDO

REF	FN	PART NUMBER	YR/SN	QTY	DENOMINACION
		2854611		1	POLEA, Incls. 1,2,3,5 & 6
1		2852163		1	PIEZA DE SOPORTE, Support
2		2852161		1	TENSOR DE CORREA
2		2855622		1	TENSOR DE CORREA, Alternate Part To 2852161
3		2852162		1	POLEA, Pulley
4		REF		1	MANUAL, BELT; See Figure 02-01
5		4899079		2	TORNILLO, Hex Flg, M8 x 1.25 x 25
6		4899109		1	TORNILLO, Hex, M10 x 1.5 x 80
7		REF		1	MANUAL, ALTERNATOR; See Figure 04-02
8		REF		1	MANUAL, WATER PUMP; See Figure 02-35
9		REF		1	MANUAL, FAN DRIVE; See Figure 02-39
10		REF		1	MANUAL, CRANKSHAFT PULLEY; See Figure 02-25

02-39		p1	11/07

POLEA DEL VENTILADOR

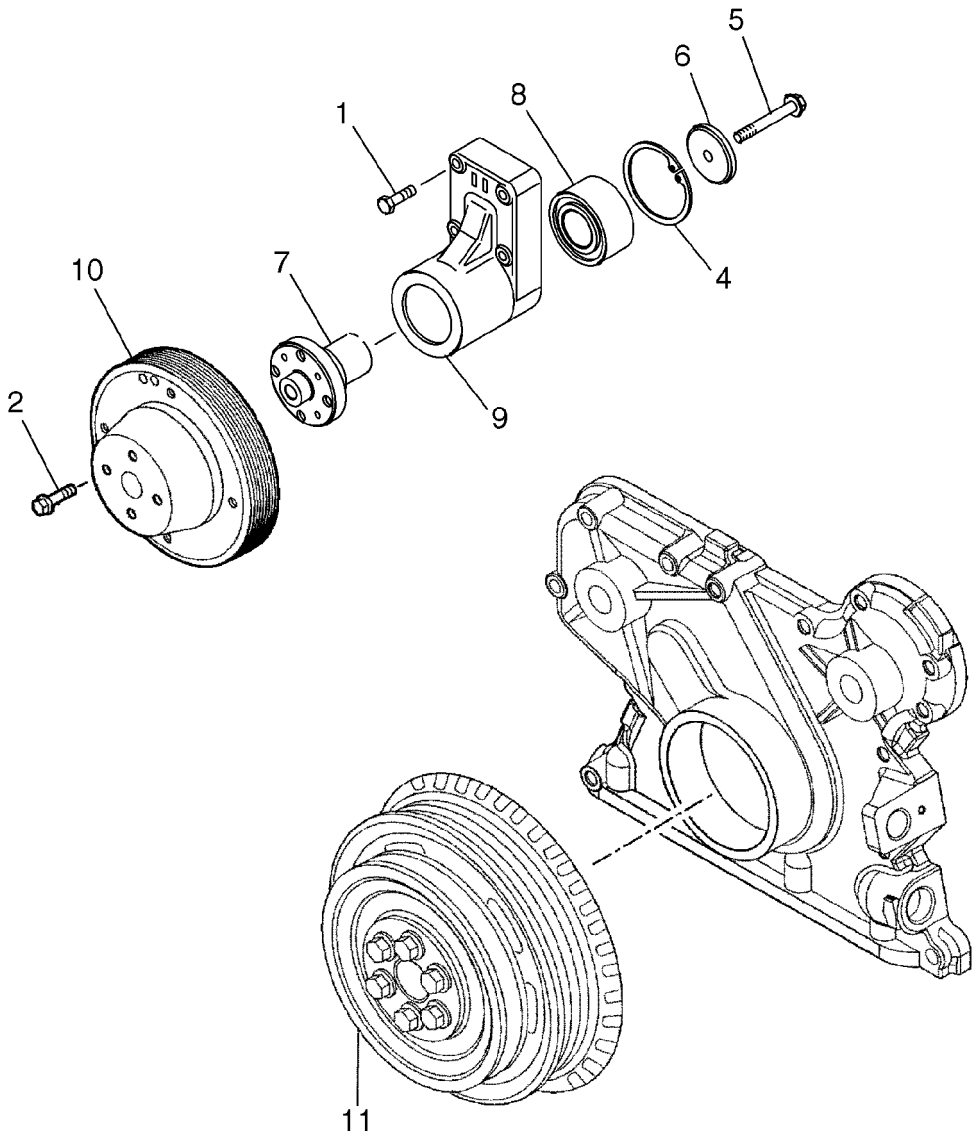

BS07N115

POLEA DEL VENTILADOR

REF	FN	PART NUMBER	YR/SN	QTY	DENOMINACION
1		4899053		4	TORNILLO, Hex Flg, M8 x 45
2		4895291		4	TORNILLO, Hex Flg, M10 x 1.5 x 20
3		2852170		1	SOPORTE, Incls. Refs. 4 - 9
4		2852171		1	RETENEDOR
5		2852172		1	TORNILLO
6		4892732		1	RODAMIENTO DE BOLAS
7		4892426		1	CUBO
8		4890732		1	RETENEDOR, Hub
9		NSS		1	NO SE REPARA SEPARADAM., Support
10		4895301		1	POLEA
11		REF		1	MANUAL, CRANKSHAFT PULLEY; See Figure 02-25

MOTOR - GANCHO DE ELEVACION

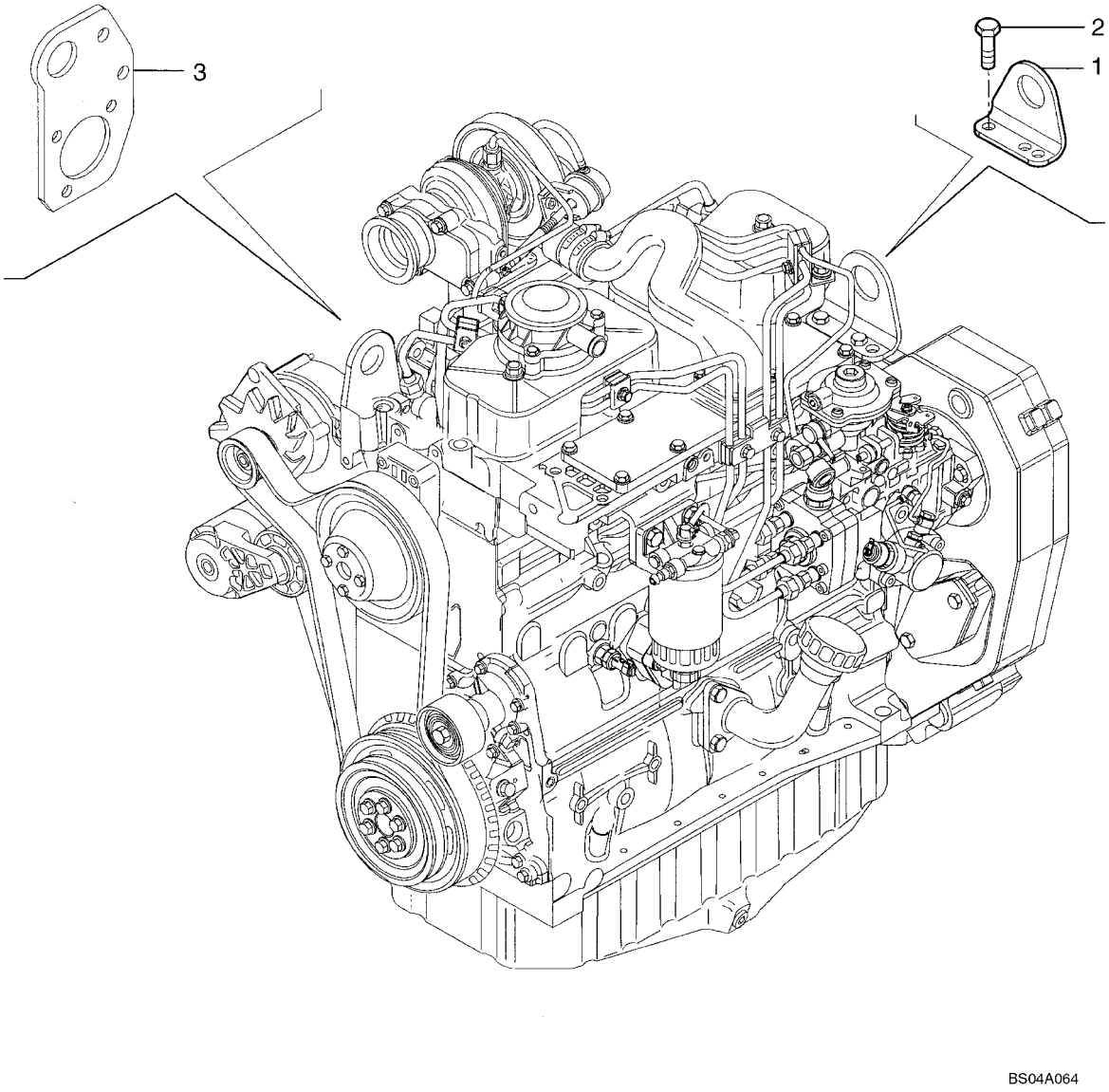

MOTOR - GANCHO DE ELEVACION

REF	FN	PART NUMBER	YR/SN	QTY	DENOMINACION
1		2852183		1	ANILLO DE ELEVACIčN
2		4899073		2	TORNILLO, Hex Flg, M12 x 1.75 x 30
3		2855894		1	PIEZA DE SOPORTE, Lift Hook; See Figure 02-37

ALTERNADOR

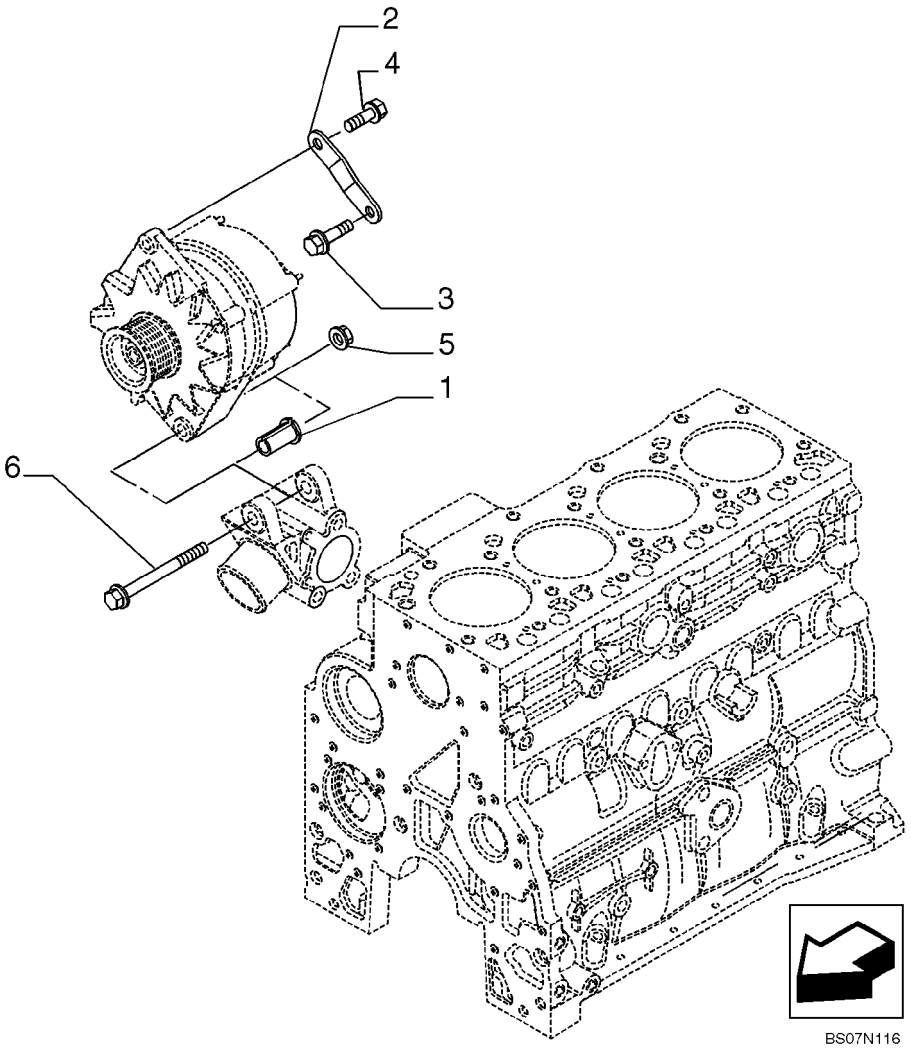

ALTERNADOR

REF	FN	PART NUMBER	YR/SN	QTY	DENOMINACION
1		2852181		1	SEPARADOR
2		2852180		1	PIEZA DE SOPORTE
3		4895291		1	TORNILLO, Hex Flg, M10 x 1.5 x 20
4		4899031		1	TORNILLO, Hex Flg, M8 x 1.25 x 25
5		4895166		1	TUERCA, M10 x 1.5
6		4895538		1	TORNILLO

NOTAS

SECTION INDEX
Sistema de Combustible

03-01	CONDUCTOS DE COMBUSTIBLE, DEPčSITO
03-02	CONTROLES - ACELERADOR, MANUAL
03-03	CONTROLES - ACELERADOR, PIE
03-04	BOMBA DE INYECCION
03-05	SISTEMA DE INYECCION DE COMBUSTIBLE
03-06	SISTEMA DE INYECCION DE COMBUSTIBLE
03-07	GRUPO DE INYECCION - TUBERIAS
03-08	FILTRO COMBUSTIBLE
03-09	BOMBA DE ALIMENTACION
03-10	TUBERIAS - COMBUSTIBLE
03-11	SISTEMA DE INYECCION DE COMBUSTIBLE

03-01		p1	02/08

CONDUCTOS DE COMBUSTIBLE, DEPĎSITO

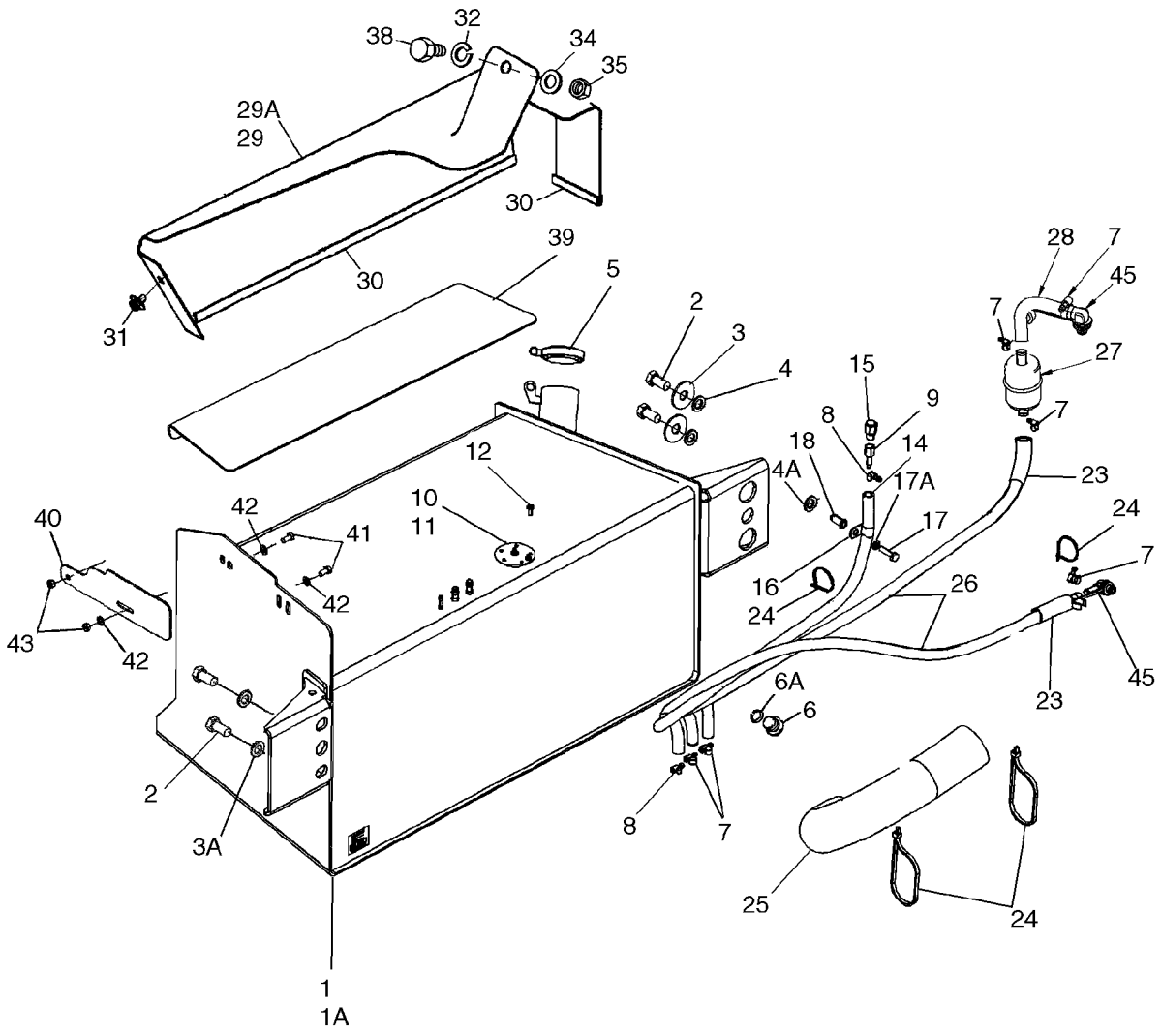

BS07N507

CONDUCTOS DE COMBUSTIBLE, DEPĎSITO

REF	FN	PART NUMBER	YR/SN	QTY	DENOMINACION
1		87429310		1	TANQUE COMBUSTIBLE, 31 gal; Incl. Ref 6; With Welded Fuel Sender Tubes; Includes Left Hand Steps, Mounts to Left Hand Side of Chassis
1A		87429314		1	TANQUE COMBUSTIBLE, 40 gal; Incl. Ref 6; Optional; With Welded Fuel Sender Tubes; Includes Left Hand Steps, Mounts to Left Hand Side of Chassis; If Used
2		443375A1		4	TORNILLO, M20 x 60; With Loctite
3		302358A1		2	ARANDELA
3A		896-11020		2	ARANDELA, M20 x 37.5 x 4, HT
4		185926A1		2	ESPACIADOR, 21 ID x 40 OD x 6.6 mm thk
4A		87360280		1	SEPARADOR
5		87335469		1	TAPON DISPOSIT. CON LLAVE
6		86625138		1	TAPčN, Hex Soc, 7/8"-14 ORB, Drain, Includes Ref. 6A; Included with Ref 1, 1A
6A		237-6010		1	JUNTA HERMETICA, 10-1, 90 Duro, .755" ID x .097" Thk
7		214-1706		6	ABRAZADERA MANGUERA, #6, 0.44/0.78 Type M Worm
8		214-1704		2	ABRAZADERA MANGUERA, #4, 0.25/0.62 Type M Worm
9		217-117		1	CONEXION, 1/4" Hose x 1/4" NPTF, Fem, Barbed, Brass
10		86989676		1	CONTACTOR, Fuel Level, 31 Gallon Tank, Without Tubes, Includes Seal and Grounding Hardware, If Used
11		87408480		1	CONTACTOR, Fuel Level, 40 Gallon Tank, Without Tubes, Includes Seal and Grounding Hardware, If Used
12		87693492		5	TORNILLO
14		87656146		1	MANGA, 880 mm (34-5/8 in), Vent
15		130047A1		1	RESPIRADERO (CONJUNT, Vent
16		515-23127		1	BORNE, 1/2", Insul, 3/8" Bolt
17		614-8030		1	TORNILLO, Hex, M8 x 30, 8.8
17A		892-11008		1	ARANDELA DE FRENO, M8

03-01		p2	02/08

CONDUCTOS DE COMBUSTIBLE, DEPĎSITO

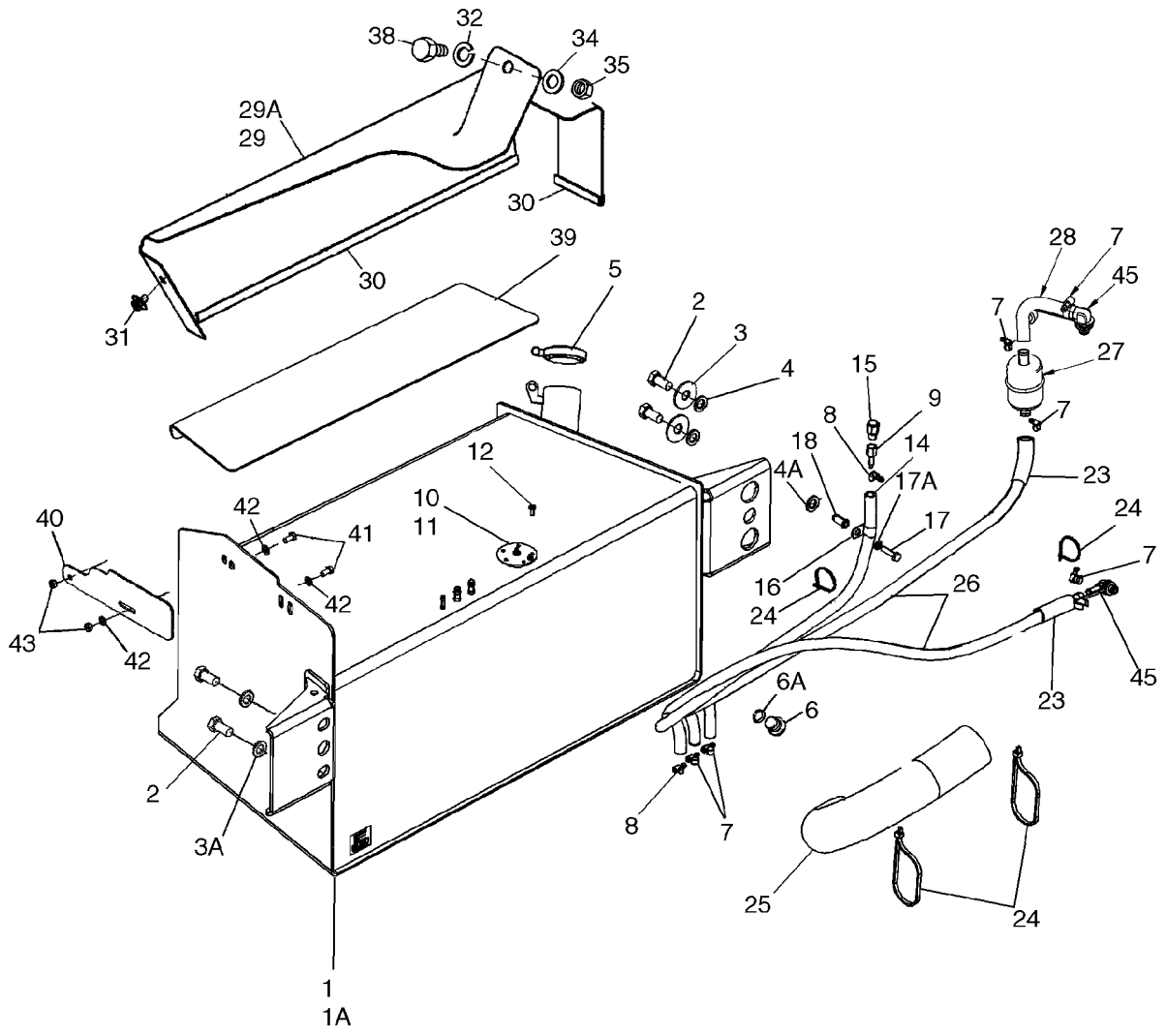

BS07N507

CONDUCTOS DE COMBUSTIBLE, DEPǑSITO

REF	FN	PART NUMBER	YR/SN	QTY	DENOMINACION
18		87417383		1	ROSCA POSTIZA, M8 Nut
23		191704A1		2	TUBO AISLANTE
24		L18337		5	CIERRA CABLES, 9.95"-12.1" lg
25		87656501		1	PROTECTOR DE TUBO
26		87658696		1	MANGA, 1350 mm (53-1/8 in); Inlet and Return
27		D139225		1	FILTRO DE COMBUSTIBLE, Inline
28		87690874		1	MANGA, 170 mm (6-11/16 in)
29		189602A3		1	TAPA, Mounted Above Fuel Reservoir; Models With Two Spool Loader Valve
29A		188009A3		1	TAPA, Mounted Above Fuel Reservoir, Models With Three Spool Loader Valve
30		191046A1		1	CINTA DE ADEREZO, Trim, 650 mm (25-5/8 in), Cut From A165860; Apply 65 mm (2-9/16 in) of Trim to Front Lower Edge and 575 mm (22-11/16 in) of Trim to Outside Lower Edge of Cover
31		307577A1		1	TORNILLO, Special, M8 x 20
32		892-11010		1	ARANDELA DE FRENO, M10
34		895-11010		1	ARANDELA, M10 x 20 x 2
35		829-1410		1	TUERCA, M10, Cl 10
38		814-10045		1	TORNILLO, Hex, M10 x 45, 8.8, Models With Three Spool Loader Valve
38		614-10020		1	TORNILLO, Hex, M10 x 20, 8.8, Full Thd, Models with Two Spool Loader Valve
39		87679228		1	TIRA CONTRA DESLIZAM.
40		397548A4		1	PLACA, Mud
41		614-10020		2	TORNILLO, Hex, M10 x 20, 8.8, Full Thd
42		895-11010		3	ARANDELA, M10 x 20 x 2
43		829-1410		2	TUERCA, M10, Cl 10
45		87414560		3	CONEXION

CONTROLES - ACELERADOR, MANUAL

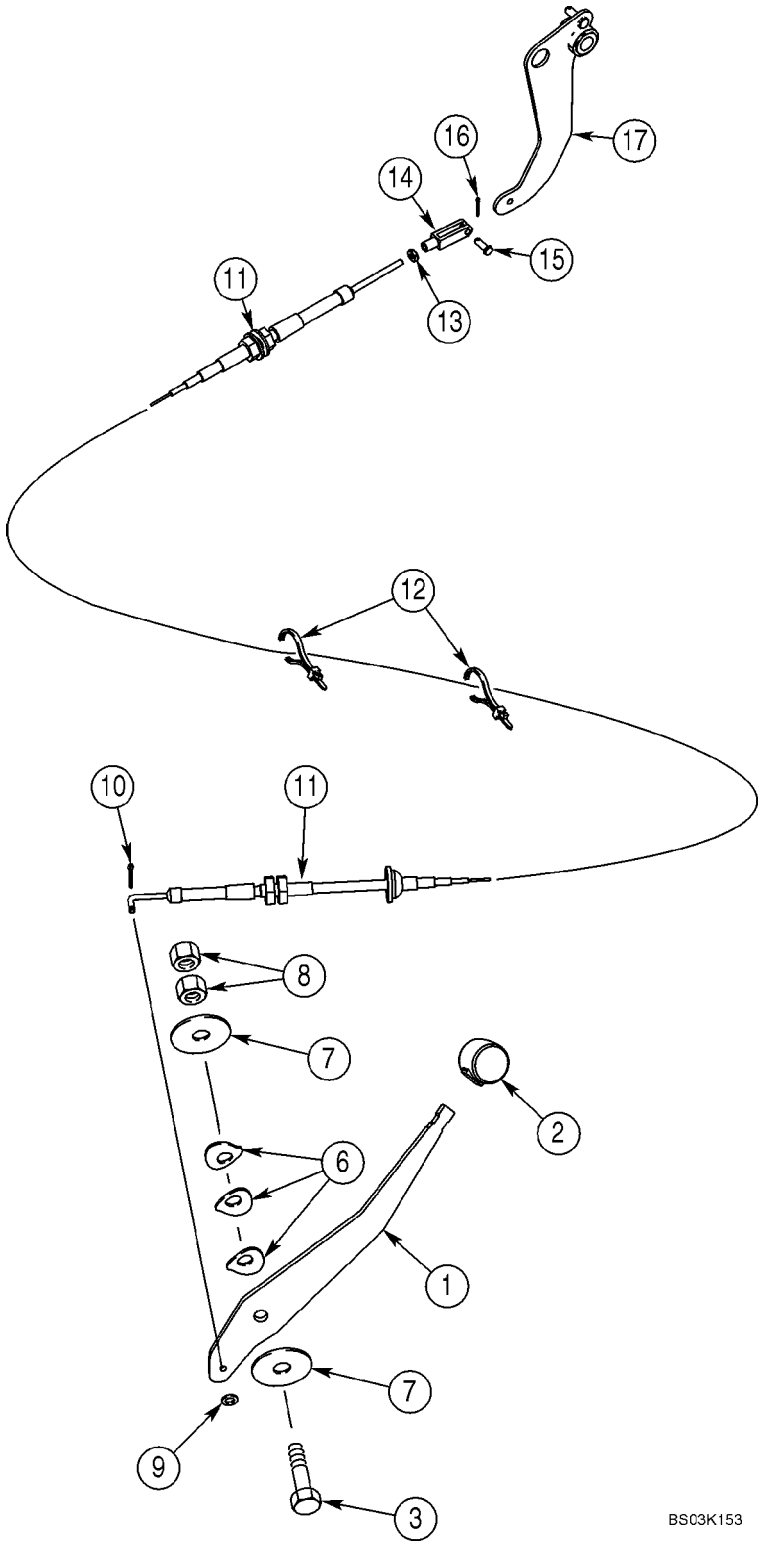

CONTROLES - ACELERADOR, MANUAL

REF	FN	PART NUMBER	YR/SN	QTY	DENOMINACION
1		395189A2		1	PALANCA
2		A177435		1	BOLA, Lever
3		514-847		1	TORNILLO, Hex, M12 x 1.25 x 50, 8.8
6		D148962		3	ARANDELA
7		496-81018		2	ARANDELA, 33/64 x 2 x 1/8
8		825-11412		2	TUERCA, M12 x 1.25, Cl 8
9		495-31022		1	ARANDELA, #10
10		432-48		1	PASADOR ABIERTO, 1/16" x 1/2"
11		87340753		1	CABLE, Replaces 350014A3; 87330322
12		L18337		4	CIERRA CABLES, 9.95"-12.1" lg, Nylon, Retaining
13		225-14210		1	TUERCA, #10-32
14		213-123		1	HORQUILLA DE AJUSTE, #10-32 x 1 9/16"
15		427-3058		1	PASADOR DE HORQUILLA, 3/16" x .580"
16		432-48		1	PASADOR ABIERTO, 1/16" x 1/2"
17		378957A3		1	PALANCA (CONJUNTO)

03-03		p1	12/07

CONTROLES - ACELERADOR, PIE

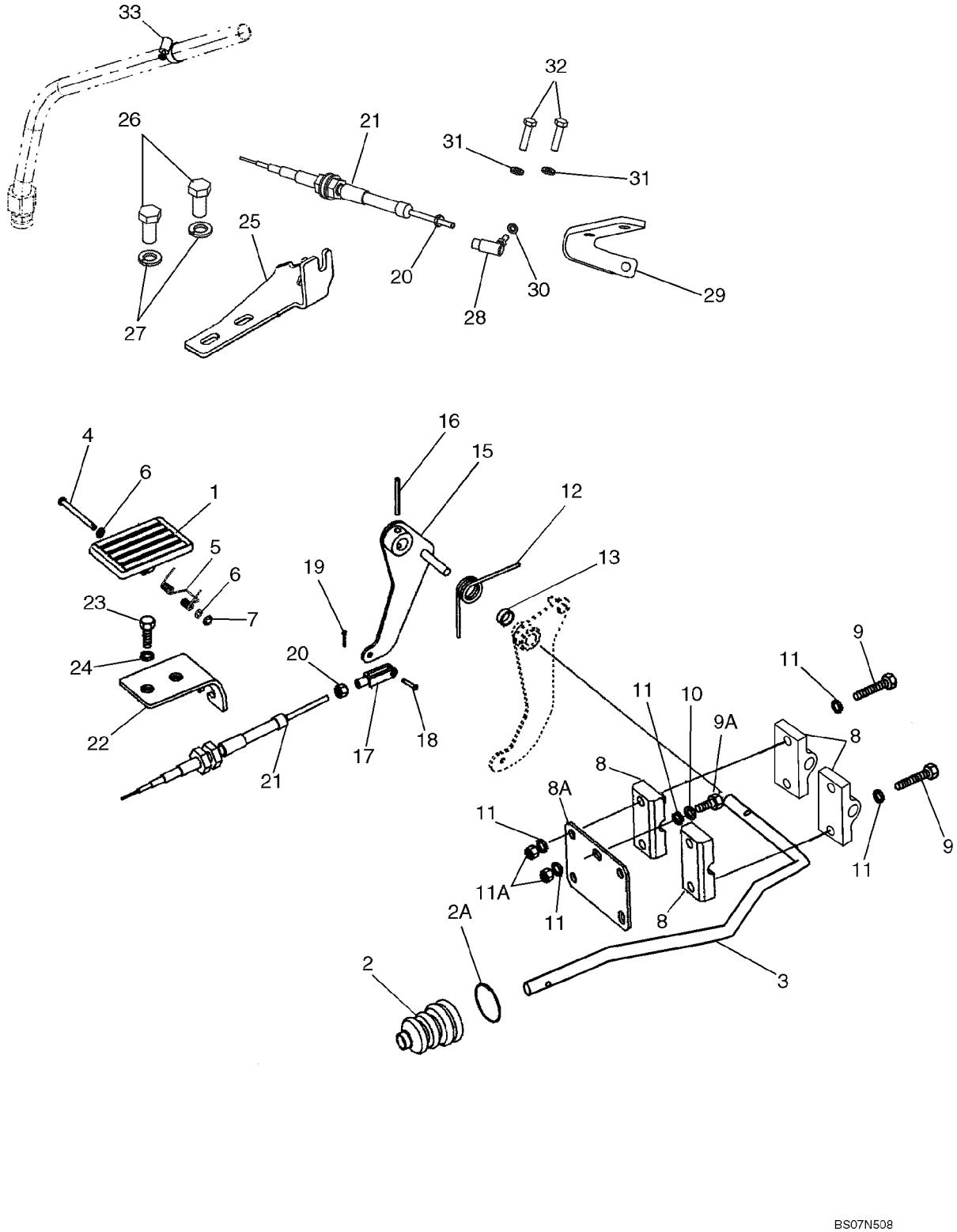

CONTROLES - ACELERADOR, PIE

REF	FN	PART NUMBER	YR/SN	QTY	DENOMINACION
1		282242A1		1	PEDAL, Plastic
2		132931A1		1	FUELLE, Boot, Accelerator Pedal Rod
2A		189109A1		1	RESORTE, Retainer
3		87593642		1	VARILLA
4		322860A1		1	BULON/PIN, LARGO
5		256776A1		1	RESORTE
6		895-11005		2	ARANDELA, M5 x 10 x 1
7		103-1518		1	ANILLO DE RESORTE, #18, Ext
8		87345006		1	BLOQUE MOTOR, Throttle Pivot
8A		378955A1		1	PLACA
9		87378776		4	TORNILLO, Special; M8 x 30
9A		614-8020		1	TORNILLO, Hex, M8 x 20, 8.8
10		892-11008		1	ARANDELA DE FRENO, M8
11		895-11008		7	ARANDELA, M8 x 16 x 1.6
11A		829-1408		2	TUERCA, M8, Cl 10
12		380483A2		1	RESORTE
13		378958A1		1	CASQUILLO ESPACIADOR
15		378956A3		1	PALANCA (CONJUNTO)
16		838-3640		1	PERNO, M6 x 40, Coiled
17		213-123		1	HORQUILLA DE AJUSTE, #10-32 x 1 9/16"
18		427-3058		1	PASADOR DE HORQUILLA, 3/16" x .580"
19		432-48		1	PASADOR ABIERTO, 1/16" x 1/2"
20		225-14210		2-3	TUERCA, #10-32
21		87340754		1	CABLE, To Injection Pump
22		397065A2		1	PIEZA DE SOPORTE
23		614-10035		2	TORNILLO, Hex, M10 x 35, 8.8, Full Thd
24		892-11010		2	ARANDELA DE FRENO, M10
25		87648733		1	PIEZA DE APOYO
26		627-12025		2	TORNILLO, Hex, M12 x 25, 10.9
27		896-15012		2	ARANDELA, M12 x 28.5 x 4, HT
28		87421807		1	UNION (CONJUNTO)
29		87452823		1	BLOQUE (CONJUNTO), BRACKET, Throttle Cable
30		892-11005		1	ARANDELA DE FRENO, M5
31		892-11006		2	ARANDELA DE FRENO, M6
32		614-6016		2	TORNILLO, Hex, M6 x 16, 8.8

03-03		p2	12/07

CONTROLES - ACELERADOR, PIE

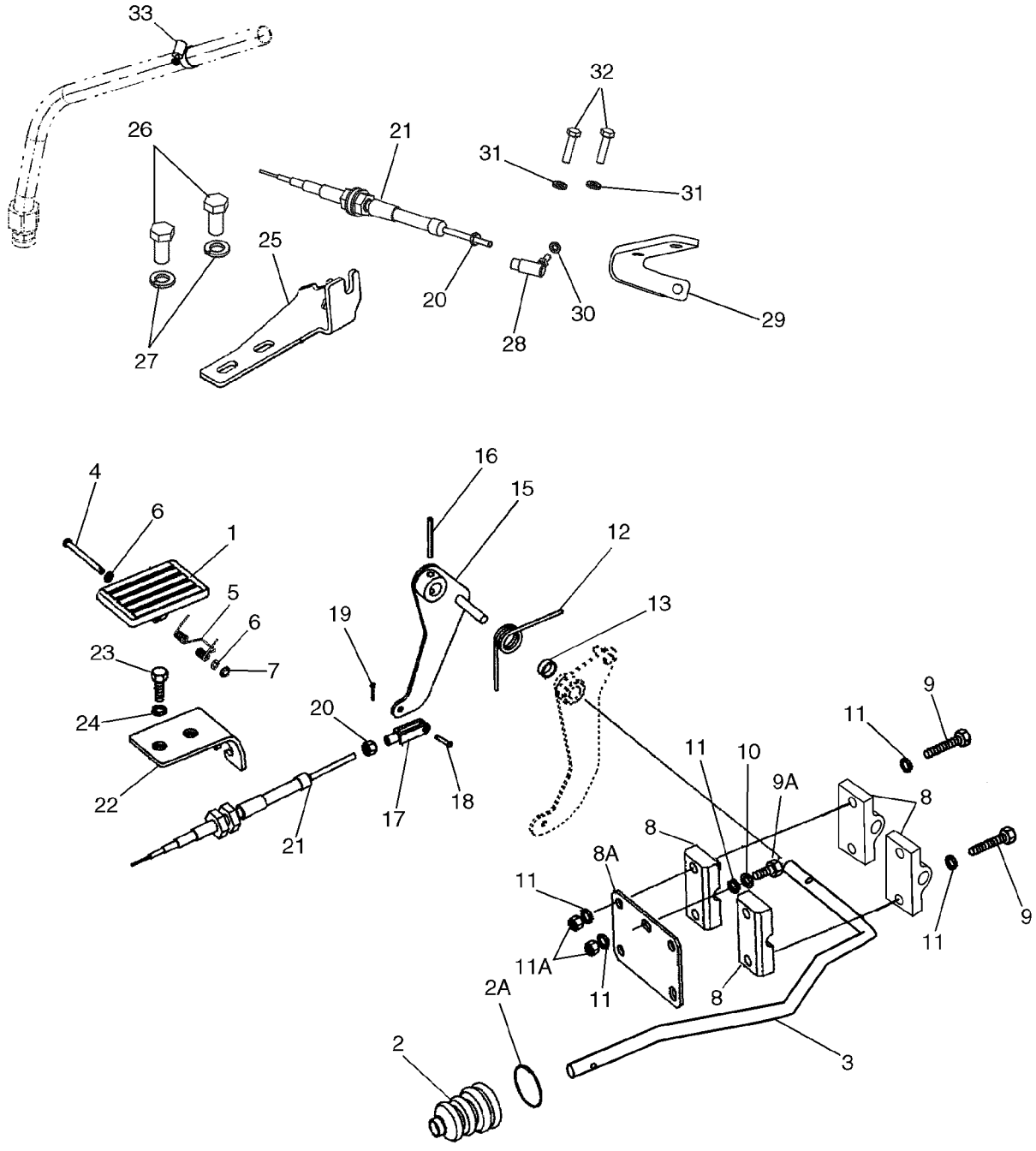

CONTROLES - ACELERADOR, PIE

REF	FN	PART NUMBER	YR/SN	QTY	DENOMINACION
33		214-1416		1	ABRAZADERA MANGUERA, #16, 0.81/1.50 Type F Worm, Throttle Cable (Ref 21) To Transmission Dipstick

BOMBA DE INYECCION

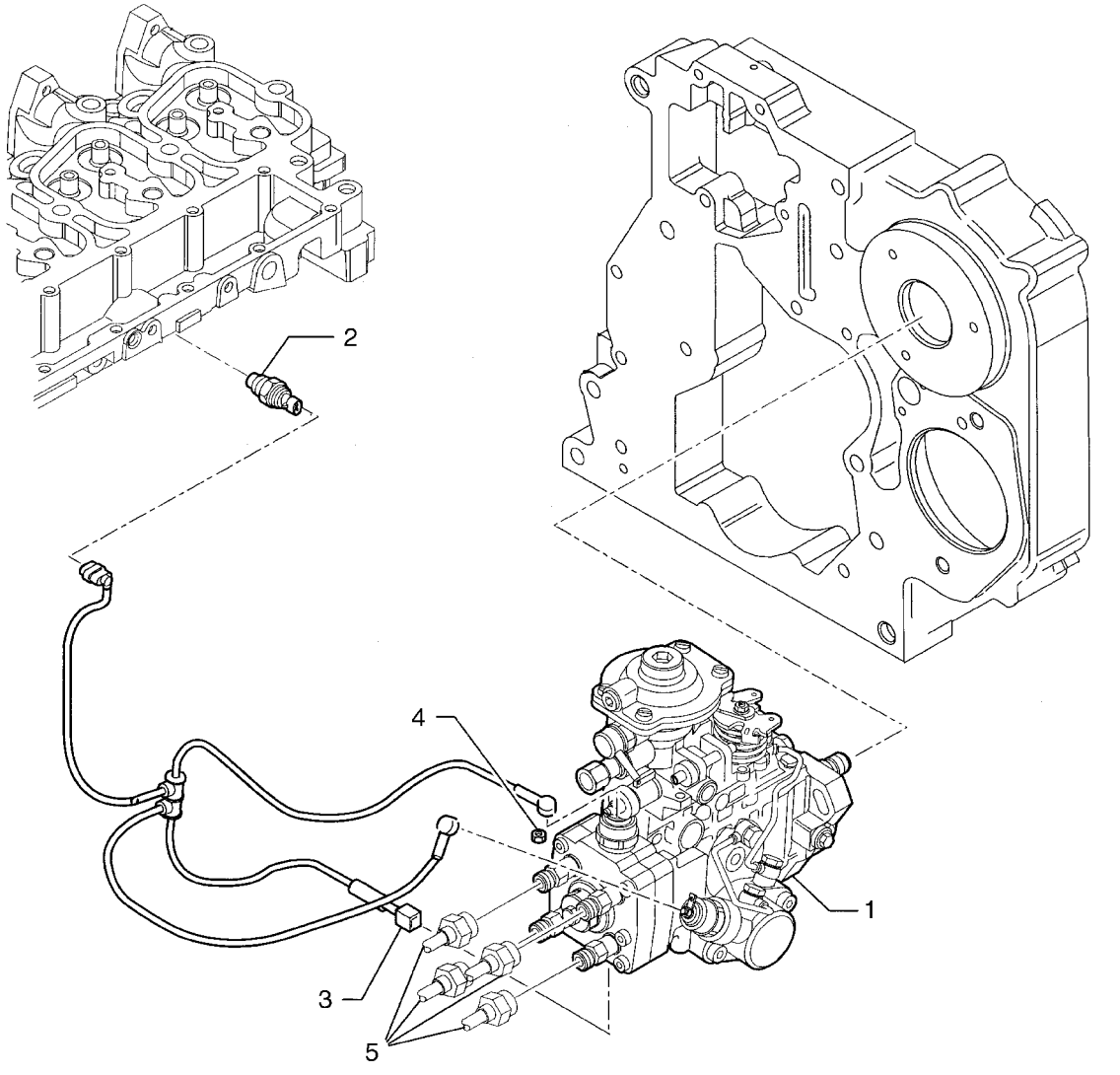

BOMBA DE INYECCION

REF	FN	PART NUMBER	YR/SN	QTY	DENOMINACION
1		2856352		1	BOMBA DE INYECCION
2		2856350		1	SENSOR, Water Temperature
3		2852088		1	CONTACTO
4		2852089		2	TUERCA, Lock
5		REF		1	MANUAL, TUBE; See Figure 03-07 for Tube Kit

SISTEMA DE INYECCION DE COMBUSTIBLE

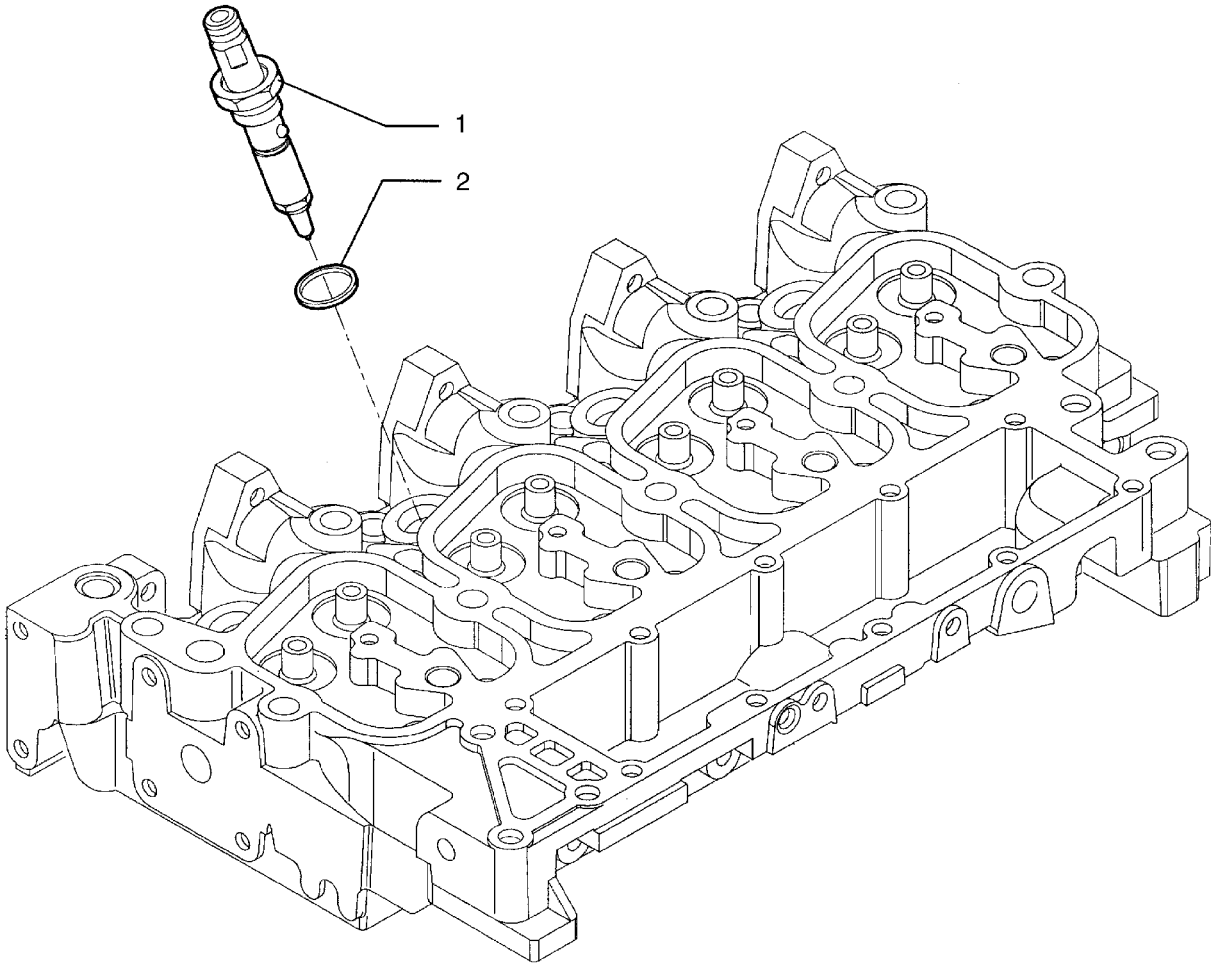

BS04A045

SISTEMA DE INYECCION DE COMBUSTIBLE

REF	FN	PART NUMBER	YR/SN	QTY	DENOMINACION
1		2856255		4	INYECTOR, Fuel Injector Assembly
		{2856436}		1	Washer (Part of 2856255), Not Shown
2		4895297		4	RETEN

SISTEMA DE INYECCION DE COMBUSTIBLE

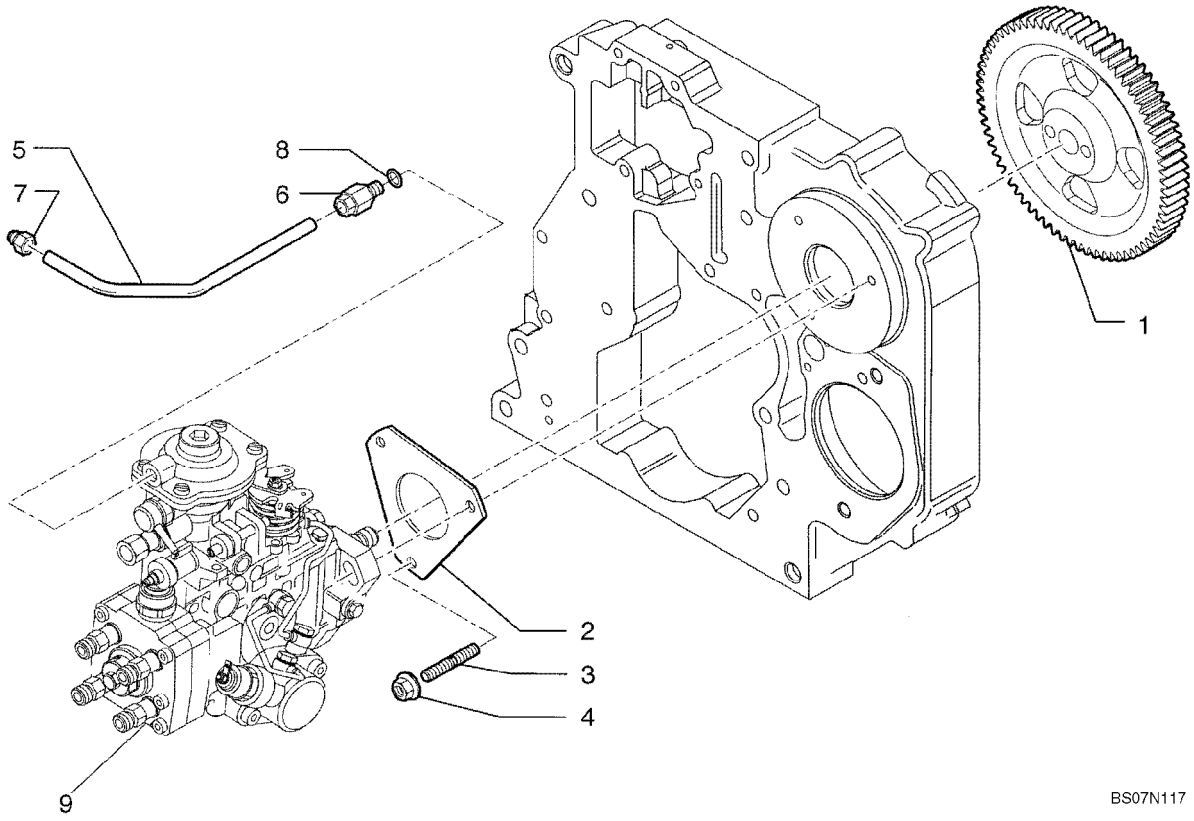

SISTEMA DE INYECCION DE COMBUSTIBLE

REF	FN	PART NUMBER	YR/SN	QTY	DENOMINACION
1		2854340		1	ENGRANAJE
2		2852885		1	JUNTA HERMETICA
3		2852294		3	PRISIONERO, M8 x 30
4		4899003		3	TUERCA, Flange, M8
5		2852059		1	TUBO RIGIDO
6		4893518		1	CONEXION, 8 x 1
7		4896770		1	CONEXION, 10 x 1
8		2852057		1	JUNTA HERMETICA
9		REF		1	MANUAL, INJECTION PUMP; See Figure 03-04

03-07		p1	02/08

GRUPO DE INYECCION - TUBERIAS

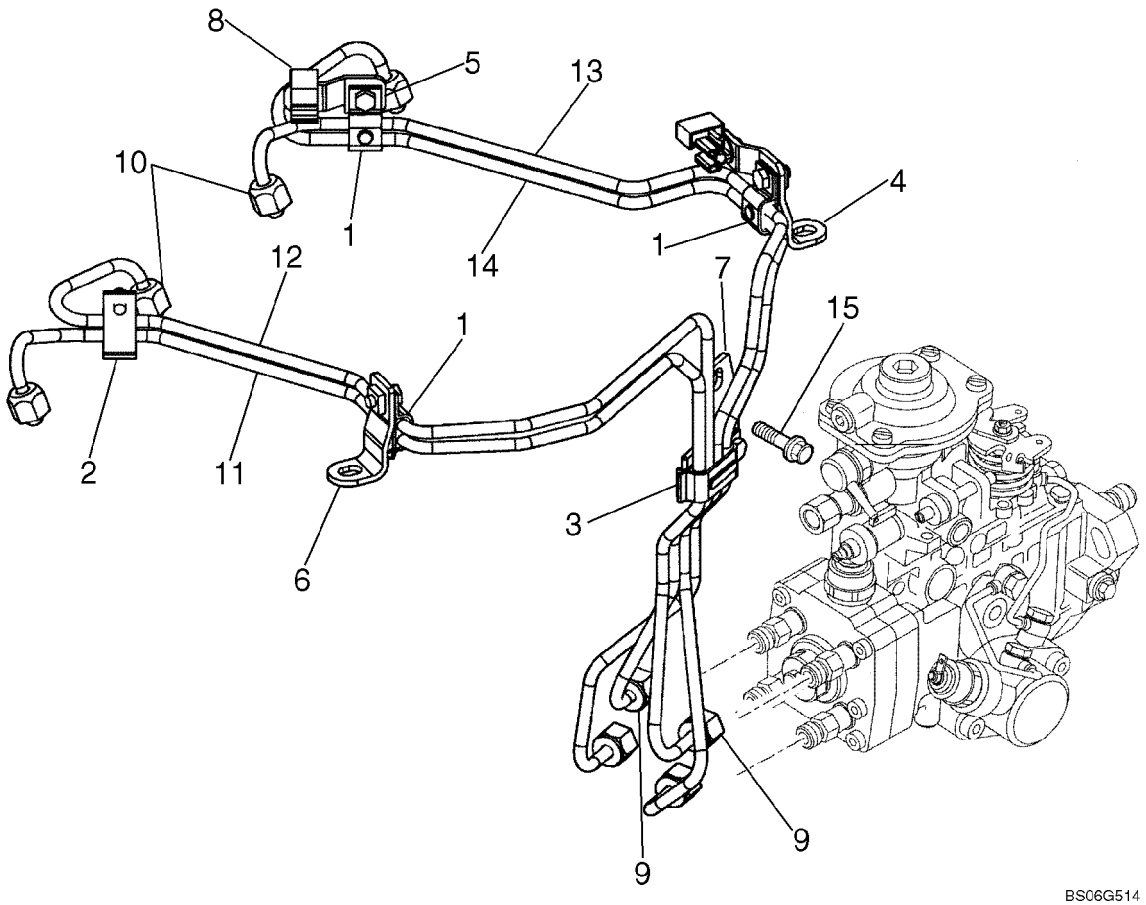

GRUPO DE INYECCION - TUBERIAS

REF	FN	PART NUMBER	YR/SN	QTY	DENOMINACION
		2852075		1	EQUIPO, Fuel Injection Tube; Incl Ref 2 - 15
1		2852871		3	PIEZA DE SOPORTE, Fuel Injection Pipe
2		2852872		1	PIEZA DE SOPORTE, Fuel Injection Pipe
3		2852873		1	PIEZA DE SOPORTE, Fuel Injection Pipe
4		2852874		1	PIEZA DE SOPORTE, Fuel Injection Pipe
5		2852875		1	PIEZA DE SOPORTE, Fuel Injection Pipe
6		2852876		1	PIEZA DE SOPORTE, Fuel Injection Pipe
7		2852877		1	PIEZA DE SOPORTE, Fuel Injection Pipe
8		2852878		2	BRIDA DE APRIETE
9		2852879		4	TUERCA
10		2852880		4	TUERCA
11		2852881		1	MANGUERA INJECCION
12		2852882		1	MANGUERA INJECCION
13		2852883		1	MANGUERA INJECCION
14		2852884		1	MANGUERA INJECCION
15		4896884		1	TORNILLO, M8 x 1.25 x 16mm

03-08		p1	02/08

FILTRO COMBUSTIBLE

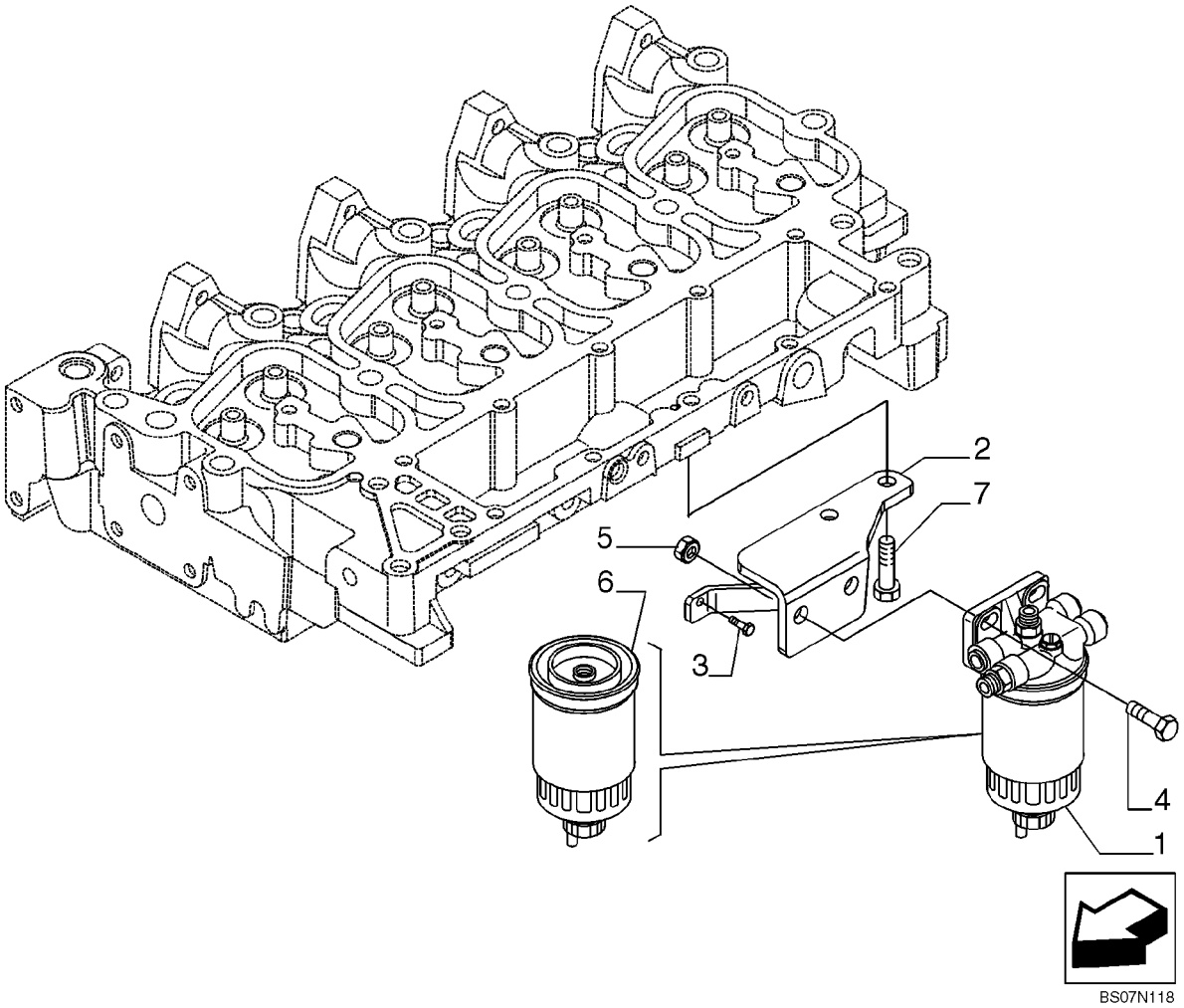

FILTRO COMBUSTIBLE

REF	FN	PART NUMBER	YR/SN	QTY	DENOMINACION
1		2852098		1	FILTRO CONJ
2		2855103		1	SOPORTE
3		4899068		1	TORNILLO, Hex Flg, M8 x 1.25 x 16
4		4899849		2	TORNILLO, M10 x 1.5 x 35mm Long
5		4895166		2	TUERCA, M10 x 1.5 mm
6		87803194		1	FILTRO DE COMBUSTIBLE
7		2830411		2	TORNILLO, M08 x 1.25 x 30mm Long

BOMBA DE ALIMENTACION

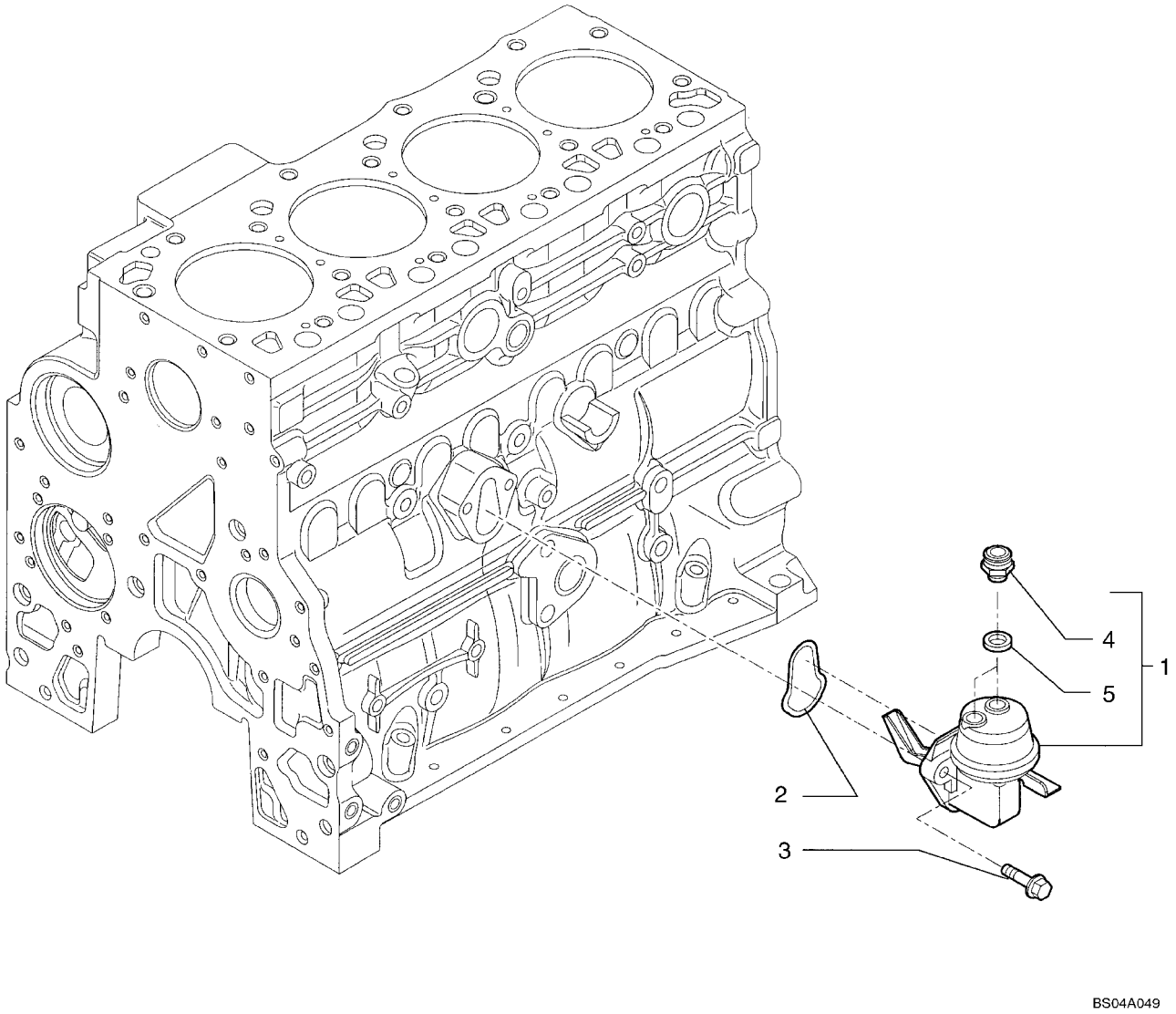

BOMBA DE ALIMENTACION

REF	FN	PART NUMBER	YR/SN	QTY	DENOMINACION
1		2830266		1	BOMBA DE ALIMENTACION, Fuel Transfer; Incl. Ref 4, 5
2		2830156		1	JUNTA HERMETICA
3		4899031		2	TORNILLO, Hex Flg, M8 x 1.25 x 25
4		4890964		2	CONEXION
5		4894721		2	JUNTA HERMETICA

03-10		p1	02/08

TUBERIAS - COMBUSTIBLE

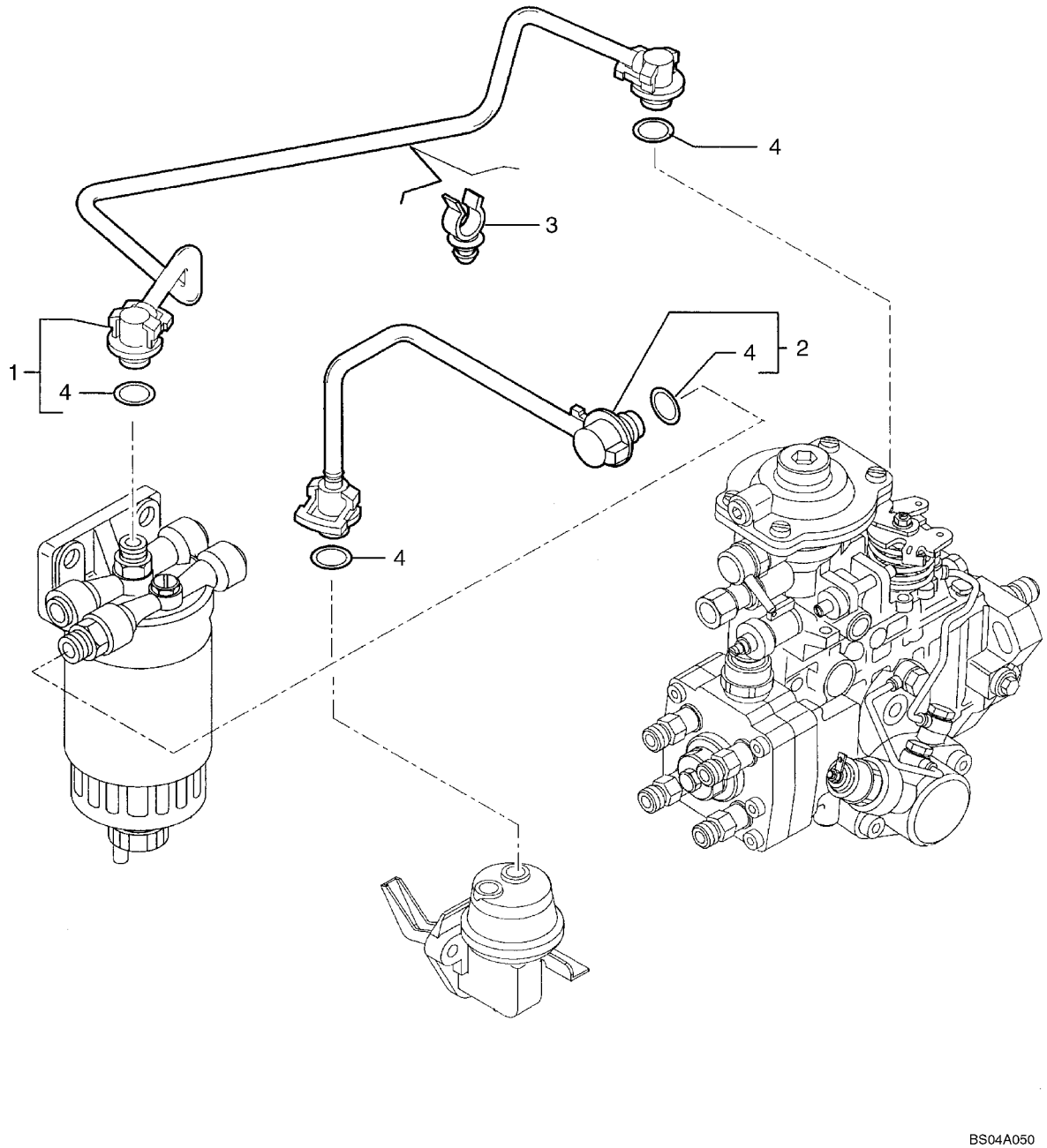

TUBERIAS - COMBUSTIBLE

REF	FN	PART NUMBER	YR/SN	QTY	DENOMINACION
1		2852105		1	TUBO, Incl. Ref 4
2		2852594		1	TUBO, Incl. Ref 4
3		2852111		1	BORNE
4		4894095		2	JUNTA HERMETICA

SISTEMA DE INYECCION DE COMBUSTIBLE

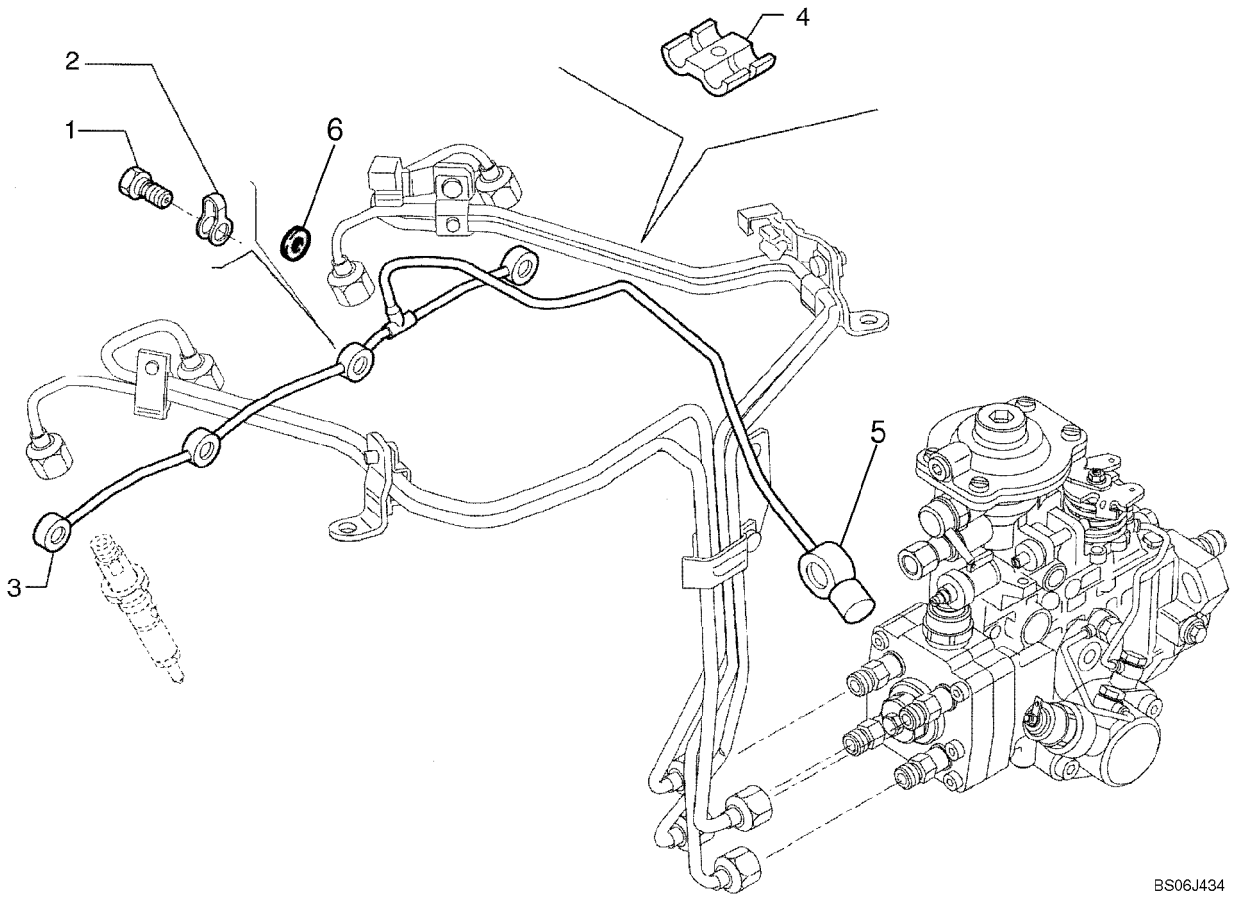

SISTEMA DE INYECCION DE COMBUSTIBLE

REF	FN	PART NUMBER	YR/SN	QTY	DENOMINACION
1		4895244		4	BOQUILLA
2		4895305		4	ANILLO DE CIERRE, If Used
3		2852065		1	TUBO RIGIDO
4		2852521		1	SUJETADOR DE RESORTE
5		NSS		1	NO SE REPARA SEPARADAM., Banjo Connector Assy; Order 2852065 Tube, Ref 3
6		2855903		8	JUNTA HERMETICA, If Used

NOTAS

SECTION INDEX
Sistema Eléctrico

04-01	MOTOR DE ARRANQUE
04-02	ALTERNADOR
04-03	MONTAJE DEL ARRANQUE - MONTAJE DEL ALTERNADOR
04-04	MAZO DE CABLES, MOTOR - MONTAJE Y CONEXIONES
04-05	BATERĉA, ĐNICA
04-06	BATERIA, DOBLE - ARRANQUE EN FRĉO
04-06A	CALENTADOR DE REJILLA PARA ARRANQUE EN FRĉO
04-07	MAZO DE CABLES, CONSOLA FRONTAL - INTERRUPTORES
04-08	MAZO DE CABLES, CONSOLA FRONTAL - SOPORTE
04-09	MAZO DE CABLES, CONSOLA LATERAL - INTERRUPTORES
04-10	PANEL DE INSTRUMENTOS, DELANTERO - CUBIERTAS
04-11	PANEL DE INSTRUMENTOS, LATERAL - CUBIERTAS (LADO DERECHO)
04-12	VELOCIMETRO COMB.
04-13	ELECTRICO - LUCES, TECHO DE LA ROPS
04-14	ELECTRICO - LUCES, CABINA DE LA ROPS
04-15	CONJUNTO DE LA LAMPARA (MODELOS CON TECHO ROPS)
04-16	BOCINA - ALARMA, RETROCESO
04-17	FARO, GIRATORIO (MODELOS CON CABINA O CON TECHO)
04-18	ANTENA, RADIO - MAZO DE CABLES, RADIO
04-19	ELECTRICO SISTEMA - HIDRĆULICO AUXILIAR DE LA RETROEXCAVADORA
04-20	ELECTRICO SISTEMA - HIDRĆULICO AUXILIAR DE LA RETROEXCAVADORA, CON DE CONTROL PILOTO

04-01		p1	11/07

MOTOR DE ARRANQUE

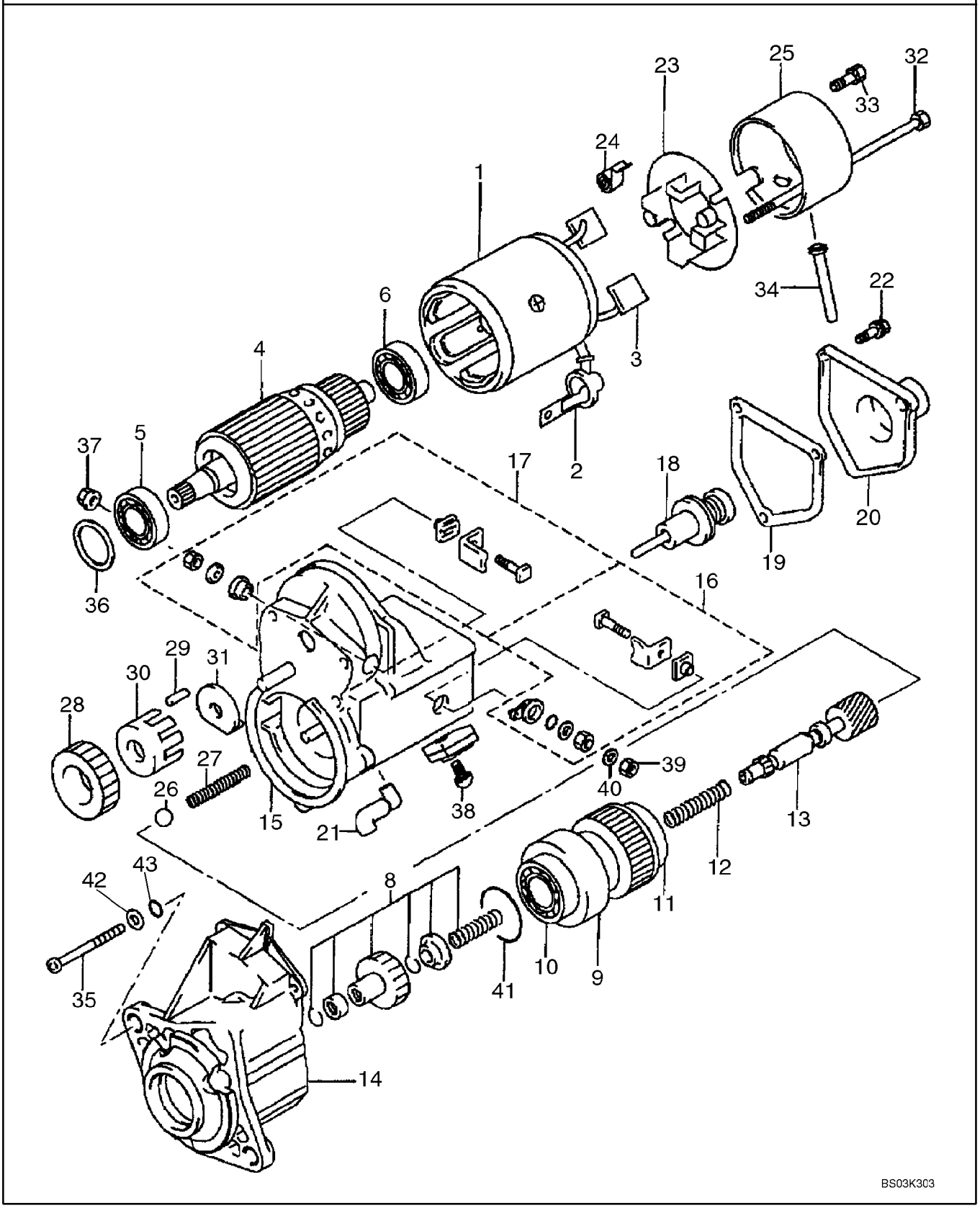

MOTOR DE ARRANQUE

REF	FN	PART NUMBER	YR/SN	QTY	DENOMINACION
		86992395		1	MOTOR DE ARRANQUE, 12 V, 2.7 kw; Incl. Ref 1 - 43
1		87438992		1	HORQUILLA, Housing, Yoke; Incl. Ref 2, 3
2		87438993		1	TABA (CONJUNTO)
3		87438925		2	ESCOBILLA
4		87438926		1	INDUCIDO, Incl. Ref 5, 6
5		87438927		1	RODAMIENTO DE BOLAS, 35 mm OD
6		87438928		1	RODAMIENTO DE BOLAS, 30 mm OD
		87438994		1	EMBRAGUE (CONJUNTO), Incl. Ref 8 - 13
8		87438929		1	JUEGO REP.MOTOR ARRANQUE, Clutch Pinion Kit
9		87438930		1	JUEGO REP.MOTOR ARRANQUE, Clutch Assembly; Incl. Ref 10, 11
10		87438931		1	RODAMIENTO DE BOLAS, 47 mm OD
11		87438932		1	RODAMIENTO DE BOLAS, 47 mm OD
12		87438933		1	MUELLE COMPRESOR
13		87438935		1	EJE, Clutch
14		87438937		1	CAVIDAD
15		87438940		1	INTERRUPTOR, Magnetic; Incl. Ref 16 - 22
16		87438941		1	JUEGO REP.MOTOR ARRANQUE, Kit, Terminal M
17		87438942		1	JUEGO REP.MOTOR ARRANQUE, Kit, Terminal C
18		87438944		1	EMBOLO BUZO
19		87438946		1	JUNTA HERMETICA, Solenoid Switch
20		87438948		1	TAPADERA, Solenoid
21		87438995		1	CASQUILLO, Drain
22		87438950		3	TORNILLO, With Washer; M5 x 14
23		87438996		1	SOPORTE, Brush; Incl. Ref 24
24		87438997		4	RESORTE, Brush Tension
25		87438999		1	BASTIDOR
26		87439000		1	BOLA
27		87439001		1	MUELLE COMPRESOR
28		87439002		1	PINON, Gear
29		87439003		5	RODILLO, Clutch
30		87439004		1	RETENEDOR
31		87439005		1	RETENEDOR
32		87438951		2	TORNILLO

04-01		p2	11/07

MOTOR DE ARRANQUE

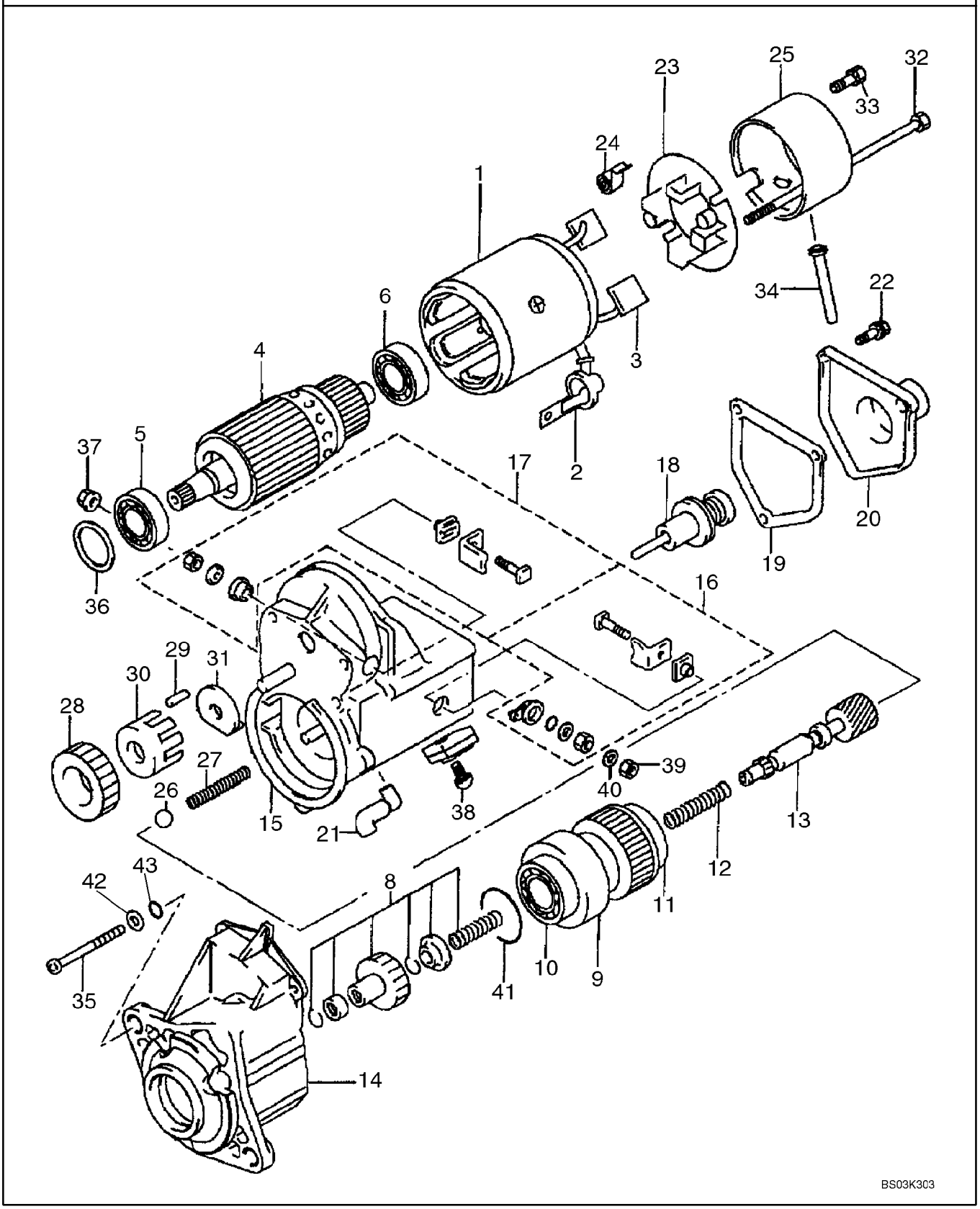

MOTOR DE ARRANQUE

REF	FN	PART NUMBER	YR/SN	QTY	DENOMINACION
33		87439006		2	TORNILLO, M5 x 9.4
34		87439007		1	CASQUILLO, Drain
35		87439008		3	TORNILLO, M6 x 70
36		87438954		1	ARANDELA, Felt
37		87439009		1	TUERCA, M10
38		87438956		1	TORNILLO, M5 x 10
39		100016		1	TUERCA, M10, Cl 8
40		892-11010		1	ARANDELA DE FRENO, M10
41		87439010		1	ANILLO DE CIERRE
42		87439061		3	ARANDELA, 9/32 x 1/2 x 3/64
43		87439011		3	JUNTA HERMETICA, 4.8 ID

04-02		p1	11/07

ALTERNADOR

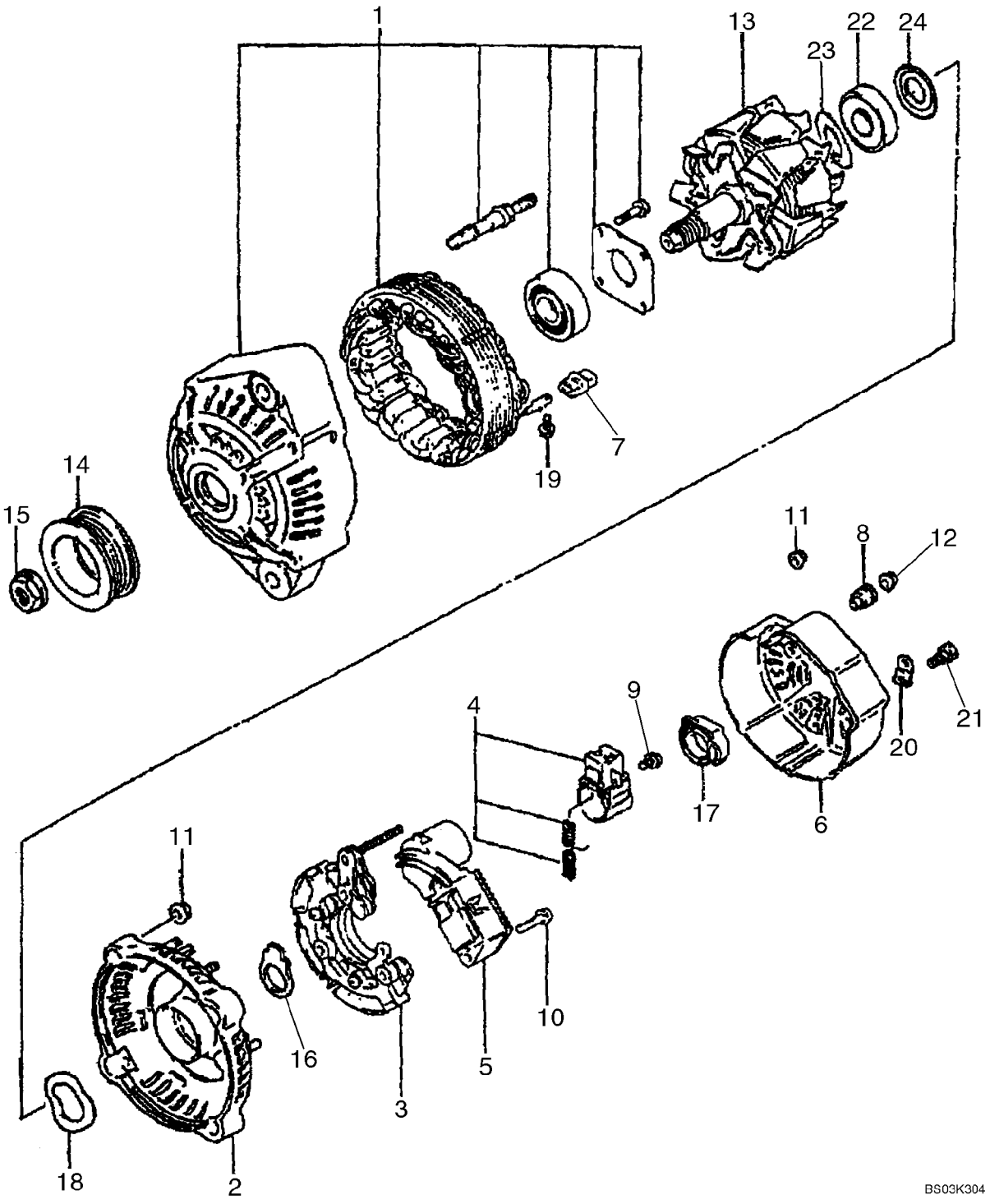

ALTERNADOR

REF	FN	PART NUMBER	YR/SN	QTY	DENOMINACION
		87422777		1	ALTERNADOR, 12V, 90 amp; Incl. Ref 1 - 24; Connector on 87433543 Engine Harness Attaching to Alternator is (1) 382203A1 3-Pin Plug Connector, (3) 382204A1 Terminal, (3) 382207A1 Seal
1		87438960		1	BASTIDOR (CONJUNTO), Drive End, Includes Stator
2		87438963		1	BASTIDOR
3		87438965		1	SOPORTE, Rectifier
4		87438967		1	SOPORTE, Brush
5		87438969		1	REGULADOR
6		87438970		1	TRASERA TAPA
7		87438971		4	CASQUILLO, Insulation
8		87438972		1	CASQUILLO, Insulation
9		87438973		3	TORNILLO
10		87438974		2	TORNILLO
11		87438975		7	TUERCA
12		87438976		1	TUERCA
13		87438977		1	ROTOR (CONJUNTO)
14		87438978		1	POLEA
15		87438979		1	TUERCA
16		87438980		1	RETEN
17		87438981		1	RETEN
18		87438982		1	ARANDELA
19		87438983		4	TORNILLO
20		87438984		1	PLACA, Terminal
21		87438985		1	TORNILLO
22		87438986		1	RODAMIENTO DE BOLAS
23		87438987		1	COBERTURA, Bearing
24		87438989		1	COBERTURA, Bearing

MONTAJE DEL ARRANQUE - MONTAJE DEL ALTERNADOR

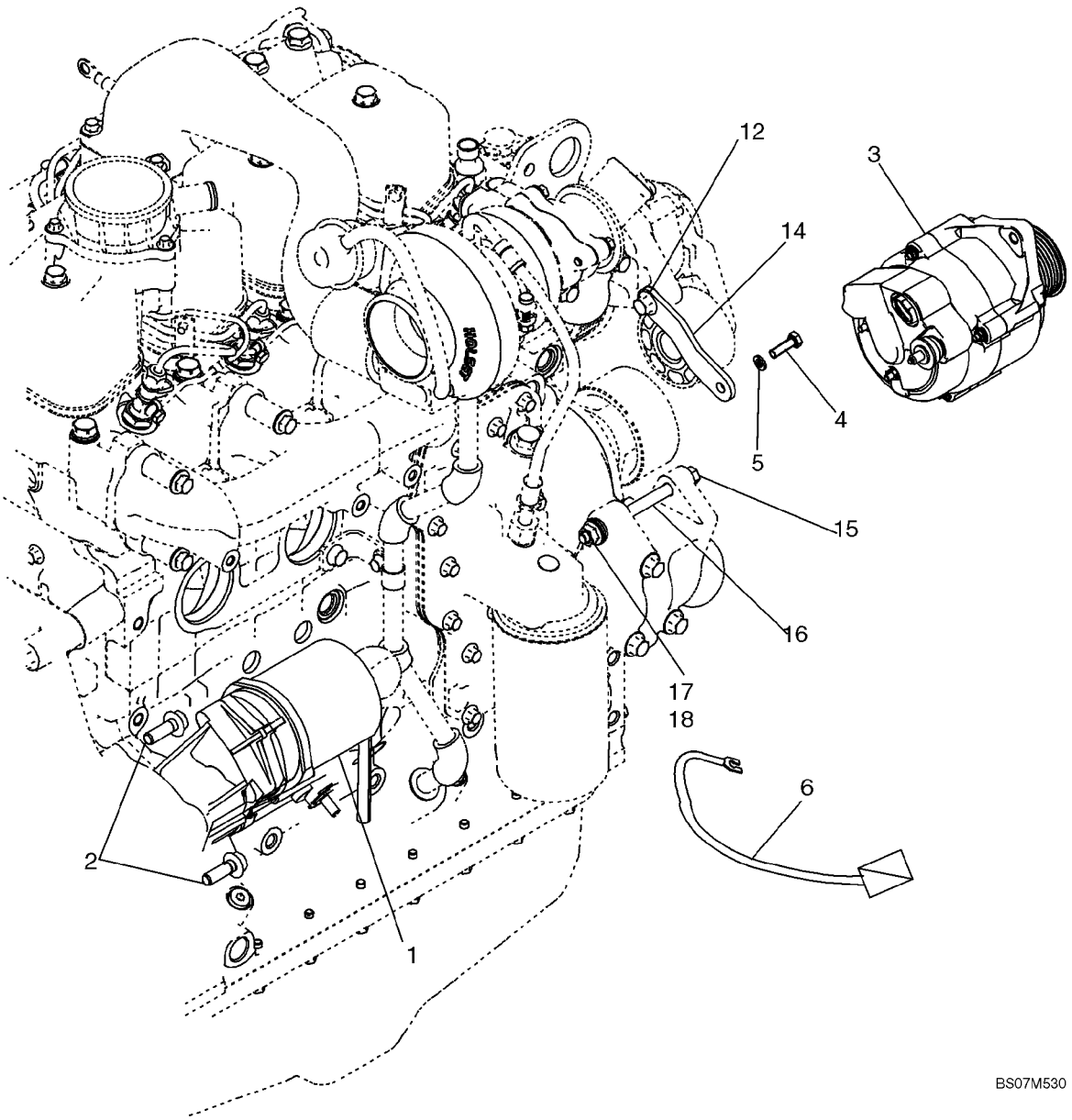

MONTAJE DEL ARRANQUE - MONTAJE DEL ALTERNADOR

REF	FN	PART NUMBER	YR/SN	QTY	DENOMINACION
1		86992395		1	MOTOR DE ARRANQUE, See Figure 04-01
2		844-10035		2	TORNILLO, Hex Flg, M10 x 35, 8.8
3		87422777		1	ALTERNADOR, See Figure 04-02; Mounting Hardware Included With 87584965 Engine Assembly; See Ref. 12, 14, 16
4		614-8025		1	TORNILLO, Hex, M8 x 25, 8.8
5		892-11008		1	ARANDELA DE FRENO, M8
6		87433401		1	CABLE ELECTRICO, Starter Solenoid Jumper Cable
12		4895291		1	TORNILLO, Hex Flg, M10 x 1.5 x 20, Included With 87584965 Engine Assy
14		2852180		1	PIEZA DE SOPORTE, Included With 87584965 Engine Assy
15		827-10130		1	TORNILLO, Hex, M10 x 130, 10.9
16		2852181		1	SEPARADOR, Included With 87584965 Engine Assy
17		896-11010		2	ARANDELA, M10 x 21.5 x 2.5, HT
18		832-10410		1	CONTRA TUERCA, M10 x 1.5, Cl 8

04-04		p1	12/07

MAZO DE CABLES, MOTOR - MONTAJE Y CONEXIONES

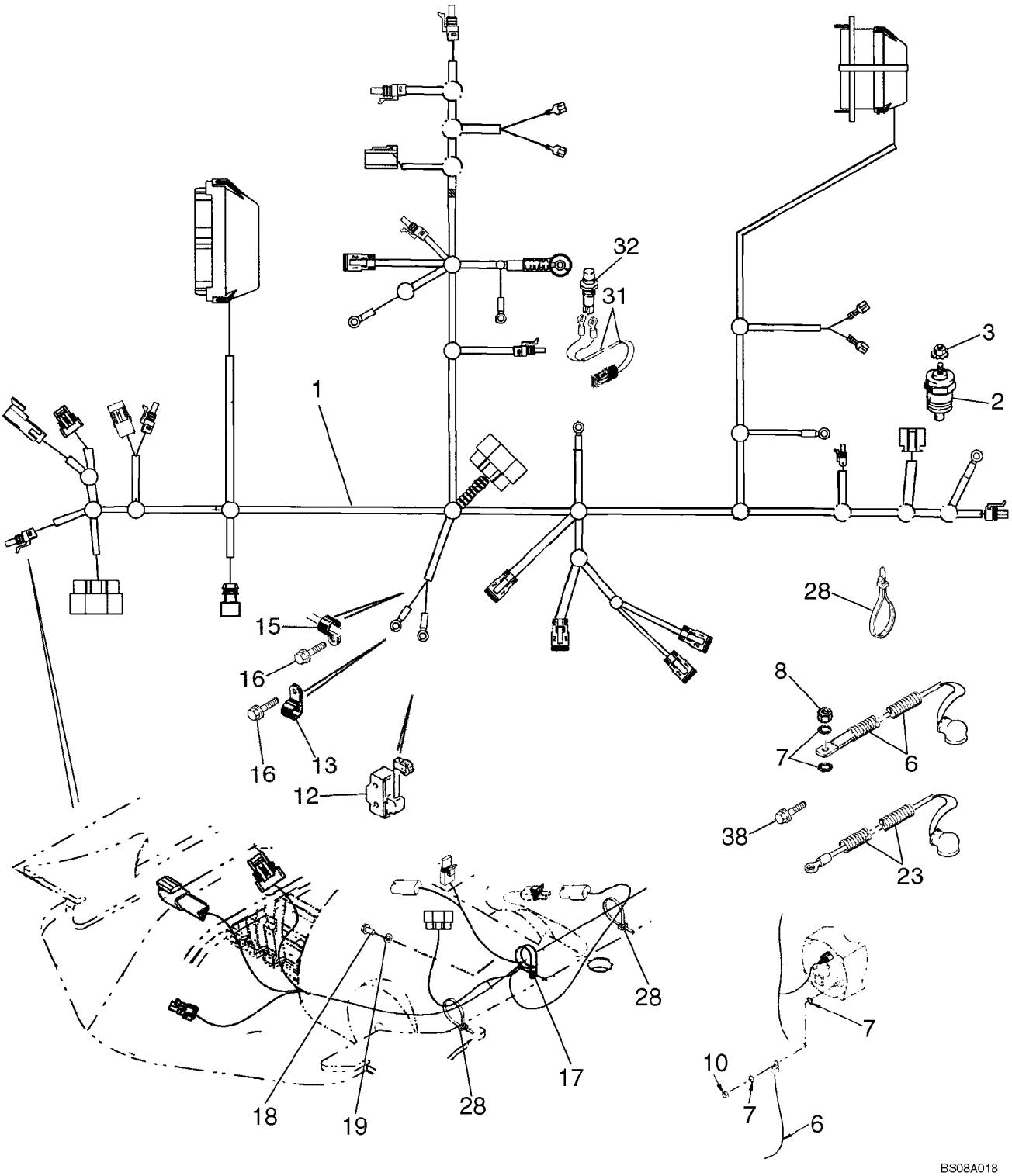

MAZO DE CABLES, MOTOR - MONTAJE Y CONEXIONES

REF	FN	PART NUMBER	YR/SN	QTY	DENOMINACION
1		87726584		1	GRUPO DE CABLES, Main Chassis
2		A166057		1	TERMOSONDA, Engine Water Coolant Temperature
3		193-1000		1	TUERCA, Keps, w/LW,#10-32
6		87423926		1	CABLE, Alternator Cable
7		493-21033		2	ARANDELA DE FRENO, Int Tooth, 5/16"
8		829-1408		1	TUERCA, M8, Cl 10
12		D137363		1	CONTACTOR, Return To Dig; For Mounting; See Figure 09-04
13		515-23127		1	BORNE, 1/2", Insul, 3/8" Bolt
15		515-23127		1	BORNE, 1/2", Insul, 3/8" Bolt
16		844-10020		2	TORNILLO, Hex Flg, M10 x 20, 8.8
17		9827902		1	BORNE, 1", Insul, 3/8" Bolt
18		614-10030		1	TORNILLO, Hex, M10 x 30, 8.8
19		895-11010		1	ARANDELA, M10 x 20 x 2
23		87419229		1	GRUPO DE CABLES, Power Wire
28		L18337		AR	CIERRA CABLES, 9.95"-12.1" lg
31		123809A2		1	HAZ, Clutch Cutout; Transmission Gear Shift Lever; Incl. Ref 31A, 31B
31A		246526A1		1	CONECTOR, Not Illustrated
31B		NSS		2	NO SE REPARA SEPARADAM., Eye; Not Illustrated
32		87312712		1	CONTACTOR, Push Button; Clutch Cutout; Transmission Gear Shift Lever; For Lever and Knob, See Figure 06-12;
38		128312A1		1	TORNILLO

04-05		p1	02/08

BATERĆA, đNICA

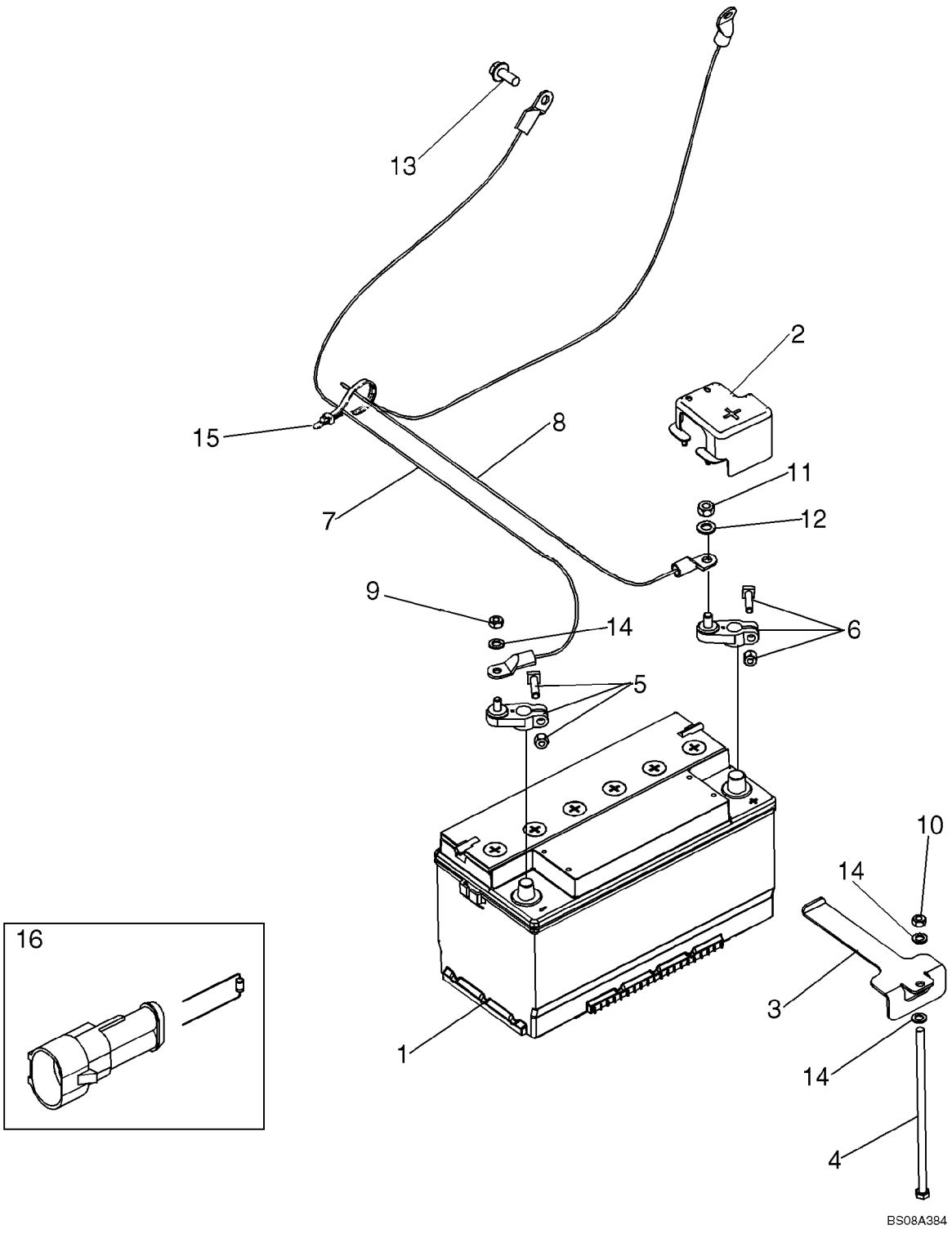

BATERĊA, đNICA

REF	FN	PART NUMBER	YR/SN	QTY	DENOMINACION
1		87403835		1	BATERIA CARGA HUMEDA, 12V; Used In Production, For Service Order B4960W Through Ship Direct
2		87664021		1	COBERTURA, Protective; Battery Positive
3		87653377		1	PIEZA DE SOPORTE, Tie Down
4		87522766		1	TORNILLO
5		87682197		1	BORNE, Battery Cable Negative
6		87656128		1	BORNE, Battery Cable Positive
7		87610680		1	ATADURA, Battery Negative
8		87610679		1	CABLE ELECTRICO, Battery Positive
9		829-1408		1	TUERCA, M8, Cl 10
10		832-10408		1	CONTRA TUERCA, M8 x 1.25, Cl 8
11		829-1410		1	TUERCA, M10, Cl 10
12		895-11010		1	ARANDELA, M10 x 20 x 2
13		844-10025		2	TORNILLO, Hex Flg, M10 x 25, 8.8, Full Thd
14		895-11008		3	ARANDELA, M8 x 16 x 1.6
15		L18337		2	CIERRA CABLES, 9.95"-12.1" lg
16		87584645		1	RESISTENCIA, Grid Heater

04-06		p1	02/08

BATERIA, DOBLE - ARRANQUE EN FRÇO

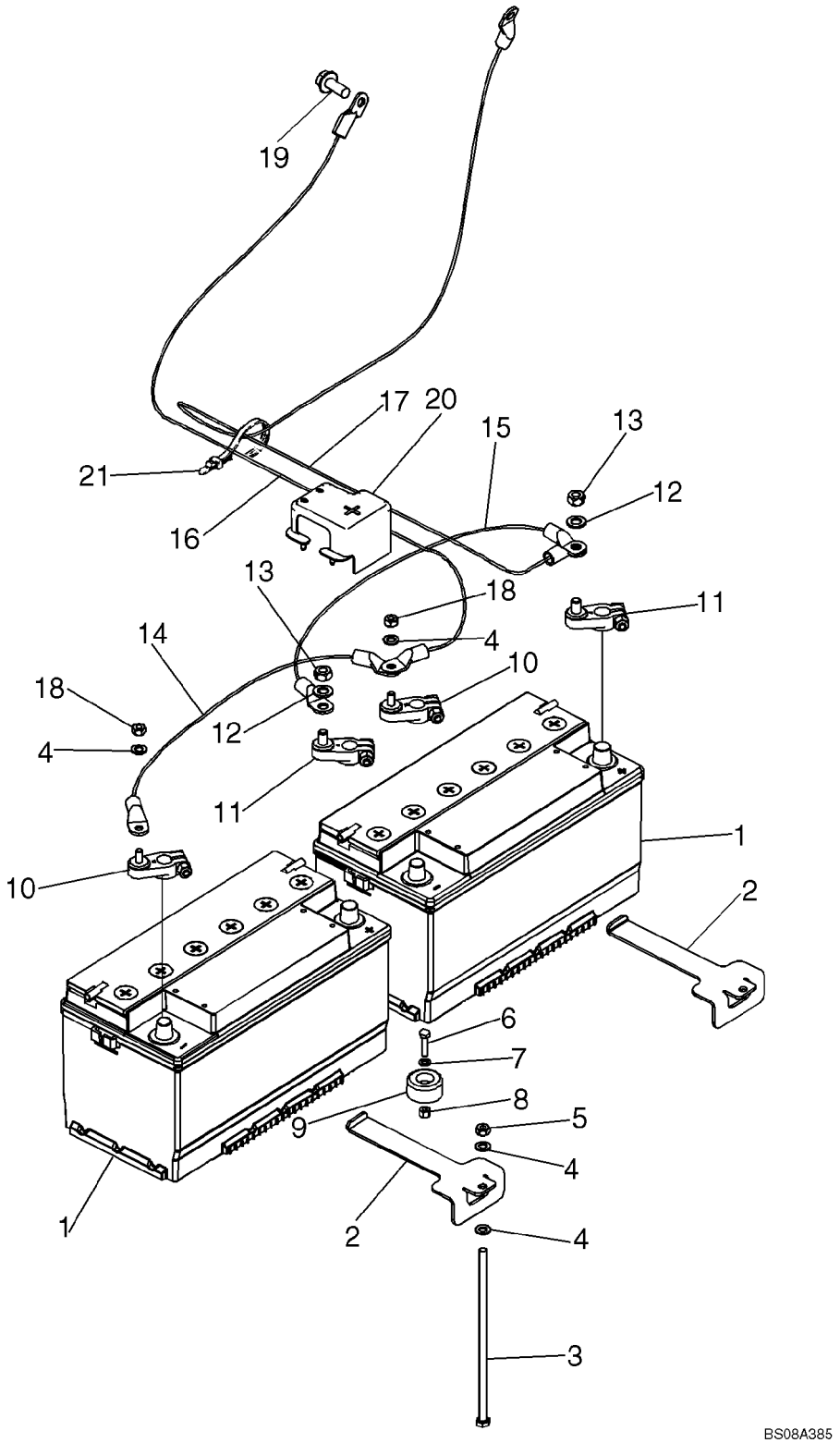

BATERIA, DOBLE - ARRANQUE EN FRĊO

REF	FN	PART NUMBER	YR/SN	QTY	DENOMINACION
1		87403835		2	BATERIA CARGA HUMEDA, 12V; Used In Production, For Service Order B4960W Through Ship Direct
2		87653377		2	PIEZA DE SOPORTE, Tie Down
3		87522766		2	TORNILLO, M8 x 220
4		895-11008		6	ARANDELA, M8 x 16 x 1.6
5		832-10408		2	CONTRA TUERCA, M8 x 1.25, Cl 8
6		614-6025		1	TORNILLO, Hex, M6 x 25, 8.8
7		895-11006		1	ARANDELA, M6
8		832-10406		1	CONTRA TUERCA, M6 x 1, Cl 8
9		87671746		1	PARACHOQUES
10		87682197		2	BORNE, Battery Cable Stud, Negative
11		87656128		2	BORNE, Battery Cable Stud, Positive
12		895-11010		2	ARANDELA, M10 x 20 x 2
13		829-1410		2	TUERCA, M10, Cl 10
14		87610682		1	CABLE ELECTRICO, Negative Jumper
15		87610681		1	CABLE ELECTRICO, Postivie Jumper
16		87610680		1	ATADURA, Negative
17		87610679		1	CABLE ELECTRICO, Positive
18		829-1408		2	TUERCA, M8, Cl 10
19		844-10025		2	TORNILLO, Hex Flg, M10 x 25, 8.8, Full Thd
20		87664021		2	COBERTURA, Protective; Positive Battery
21		L18337		3	CIERRA CABLES, 9.95"-12.1" lg

04-06A		p1	12/07

CALENTADOR DE REJILLA PARA ARRANQUE EN FRÍO

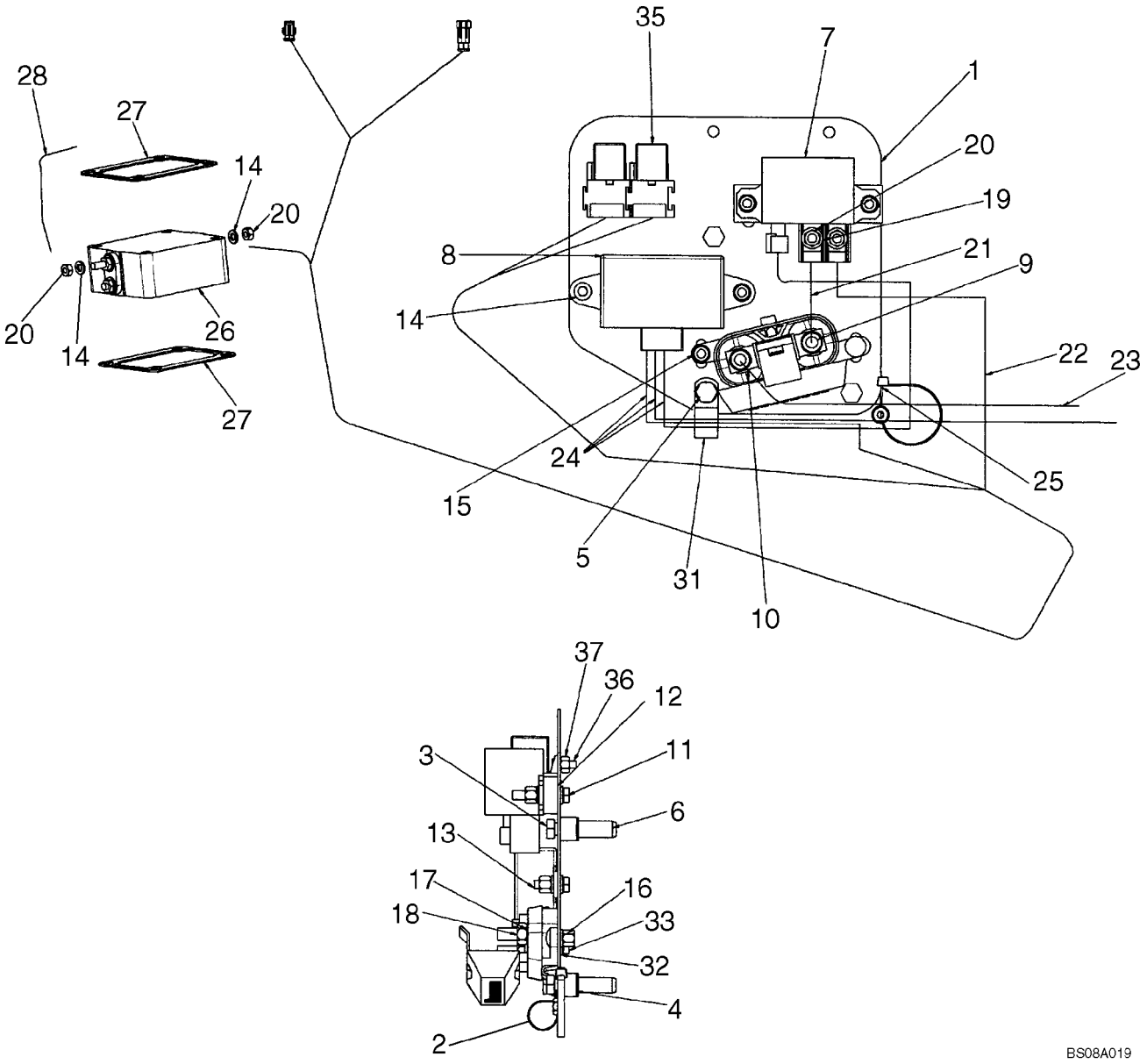

CALENTADOR DE REJILLA PARA ARRANQUE EN FRĊO

REF	FN	PART NUMBER	YR/SN	QTY	DENOMINACION
1		87397601		1	PIEZA DE APOYO, Cold Start Plate
2		515-22190		1	BORNE, 3/4", Insul, 5/16" Bolt
3		614-8040		3	TORNILLO, Hex, M8 x 40, 8.8, Full Thd
4		407962A1		3	ESPACIADOR
5		238-5011		3	JUNTA HERMETICA, -011, 70 Duro, .301" ID x .070" Thk
6		87417383		3	ROSCA POSTIZA, M8 x 1-1/4
7		86619908		1	CONECTADOR, Cold Start
8		47132002		1	CAJA ELECTRONICA, Electronic Unit Controller, Grid Heater
9		440038A1		1	RACOR, Fuse Block
10		87410602		1	FUSIBLE, 300 amp Fuse
11		614-6035		2	TORNILLO, Hex, M6 x 35, 8.8, Full Thd
12		87414237		1	PLACA, 10 mm Thick Spacer Bar
13		614-6020		3	TORNILLO, Hex, M6 x 20, 8.8
14		895-11006		13	ARANDELA, M6
15		832-10406		6	CONTRA TUERCA, M6 x 1, Cl 8
16		811-6016		1	PERNO, CABEZA RONDA, Short NK, M6 x 16, Cl8.8, Full Thd
17		892-11008		5	ARANDELA DE FRENO, M8
18		829-1408		2	TUERCA, M8, Cl 10
19		322357		2	ARANDELA ABANICO, Belleville, M6
20		829-1406		4	TUERCA, M6, Cl 10
21		87410265		1	CONECTADOR, 90 mm Jumper Wire; Fuse to Relay
22		87608352		1	CABLE ELECTRICO, 650 mm Wire; Relay to Grid Heater
23		87419615		1	CABLE (CONJUNTO), 1250 mm Wire; Starter to Fuse Block
24		87396228		1	GRUPO DE CABLES, Cold Start Control
25		L18337		1	CIERRA CABLES, 9.95"-12.1" lg
26		82017872		1	RECALENTADOR, Grid
27		86014151		2	JUNTA HERMETICA
28		87601612		1	CABLE. MASA, 240 mm, Grid Heater Ground
31		515-25190		1	BORNE, 3/4", Insul, 1/2" Bolt
32		614-12025		1	TORNILLO, Hex, M12 x 25, 8.8

CALENTADOR DE REJILLA PARA ARRANQUE EN FRÍO

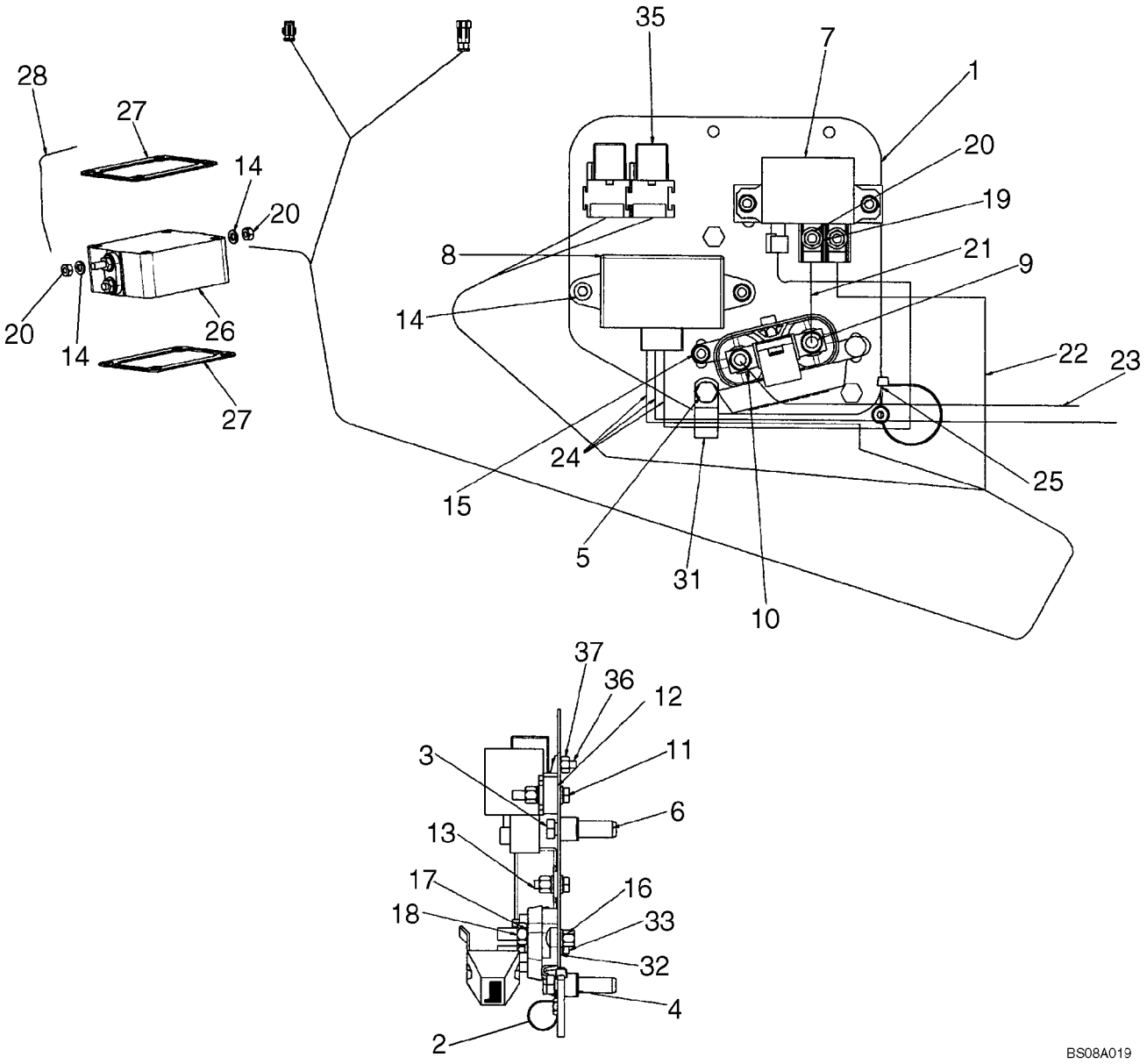

CALENTADOR DE REJILLA PARA ARRANQUE EN FRĊO

REF	FN	PART NUMBER	YR/SN	QTY	DENOMINACION
33		896-11012		1	ARANDELA, M13.5 x 24.5 x 3, HT
35		87436836		2	CONECTADOR, Mini, 12V, 40A; Engine Crank
36		87301687		2	TORNILLO, Hex Wash Hd, #10-32 x 1/2"
37		231-24409		2	CONTRA TUERCA, #10-32

04-07		p1	01/08

MAZO DE CABLES, CONSOLA FRONTAL - INTERRUPTORES

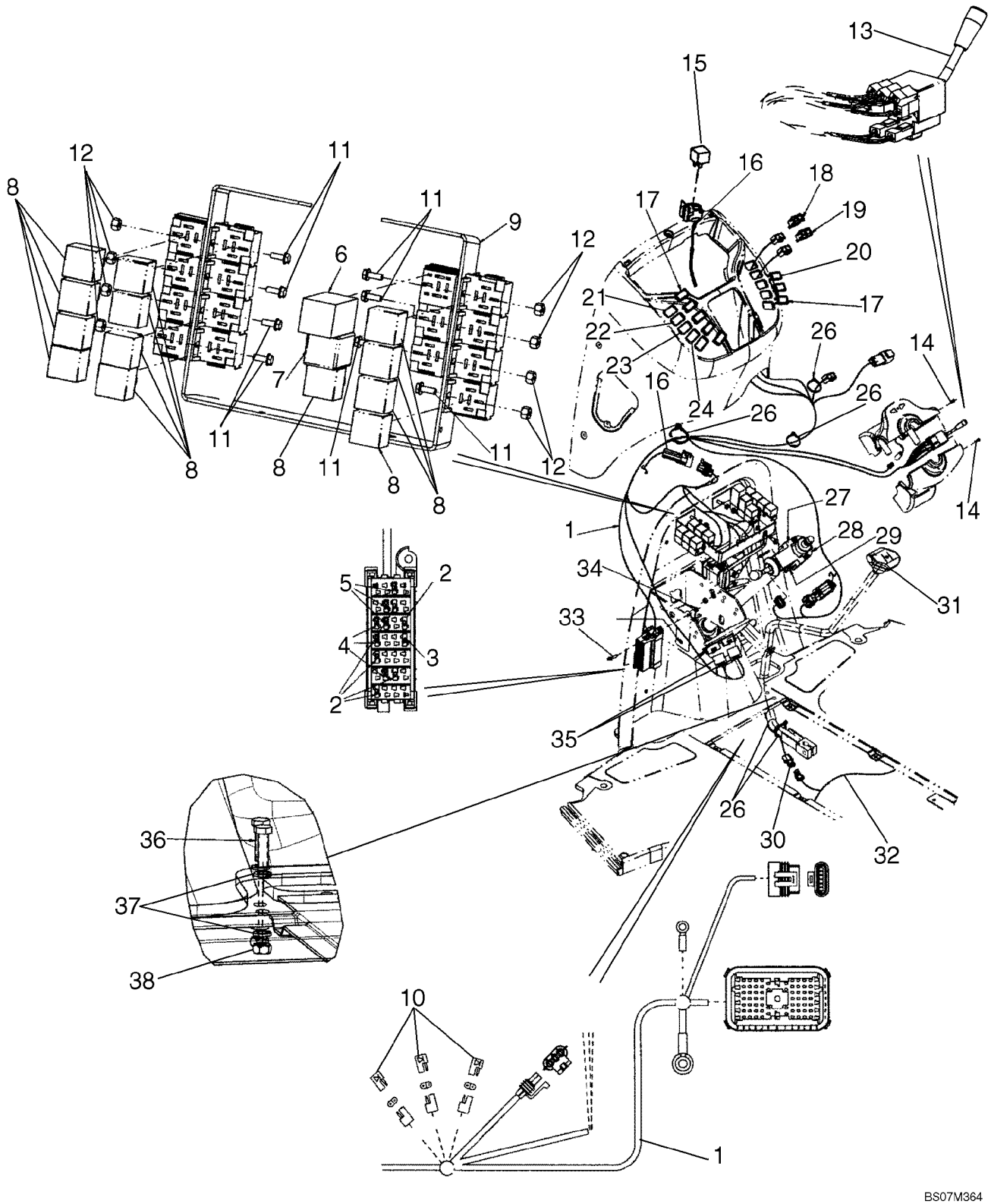

MAZO DE CABLES, CONSOLA FRONTAL - INTERRUPTORES

REF	FN	PART NUMBER	YR/SN	QTY	DENOMINACION
1		87726592		1	GRUPO DE CABLES, Front Console Harness
2		121412A1		5-6	FUSIBLE, 10 amp; Mini, Red
3		121413A1		2-3	FUSIBLE, 15 amp; Mini, Blue
4		121414A1		3	FUSIBLE, 20 amp; Mini, Yellow
5		121416A1		2	FUSIBLE, 30 amp; Mini, Green
6		87578455		1	RELE DE INTERMITENCIA, Relay, Flasher, Hazard; Turn Signal
7		347706A3		1	CONECTADOR, Sealed Time Delay, Shuttle Interlock Timing Relay, Forward Reverse Control
8		87436836		13	CONECTADOR, 40 amp, 12V
9		361900A1		1	PIEZA DE SOPORTE, Relay Mounting
10		L71879		3	SOPORTE DE DIODO
11		87301687		8	TORNILLO, Hex Wash Hd, #10-32 x 1/2"
12		231-24409		8	CONTRA TUERCA, #10-32
13		389487A1		1	INTERRUPTOR, Turn Signal/Driving Lamp High/Low Beam
14		404816A1		2	TORNILLO, M4 x 12
15		87436836		1	CONECTADOR, 40 amp, 12V; Air Conditioning; Attaches To Front Console Options Harness
16		87726574		1	GRUPO DE CABLES, Front console Options, Includes (1) L71879 Diode
		L71879		1	SOPORTE DE DIODO
		490-11012		1	TORNILLO, Cross Pan Hd, #10-32 x 3/4", Mounts Relay Recepticle
		193-1000		1	TUERCA, Keps, w/LW,#10-32, Mounts Relay Recepticle
17		86000535		2-8	TAPčN, 1.427" x .62", Plastic, Accessory; If used
18		386849A1		1	CONTACTOR, Front Work Lamps
19		386850A1		1	CONTACTOR, Hazard Lamps
20		386851A1		1	CONTACTOR, Rotating Beacon; If Used
21		87585817		1	INTERRUPTOR, Comfort Steer Switch; If Used
22		386785A1		1	CONTACTOR, Front Wiper; If Used
23		386787A1		1	CONTACTOR, Front Windshield Washer; If Used
24		398675A2		1	CONTACTOR, Loader Tool Quick Coupler; If Used
26		L18337		4	CIERRA CABLES, 9.95"-12.1" lg, 15 in

04-07		p2	01/08

MAZO DE CABLES, CONSOLA FRONTAL - INTERRUPTORES

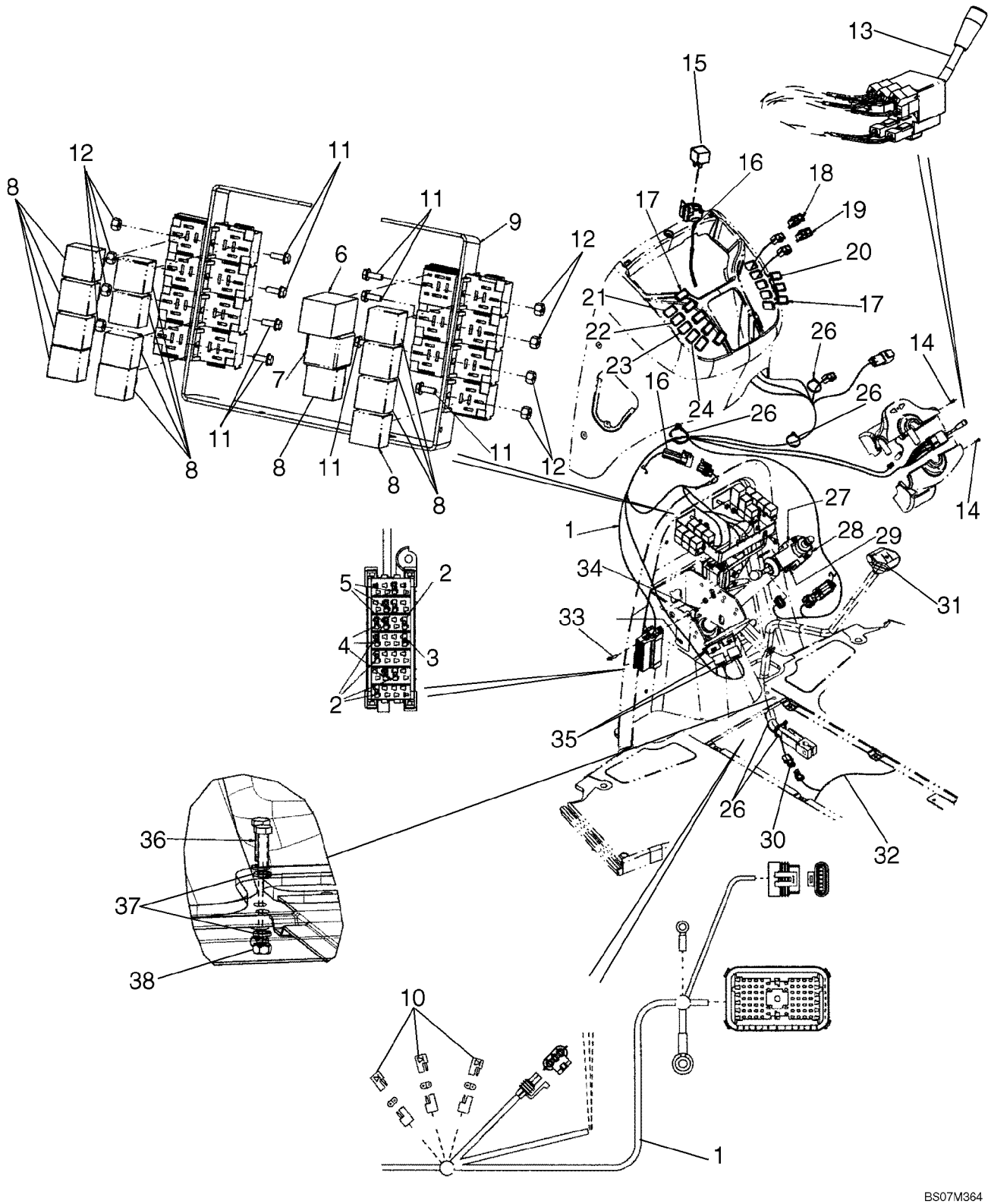

MAZO DE CABLES, CONSOLA FRONTAL - INTERRUPTORES

REF	FN	PART NUMBER	YR/SN	QTY	DENOMINACION
27		278328A1		1	CONTACTOR, Shuttle Shift; Transmission Forward/Neutral/Reverse Switch
28		366889A2		1	MEDIA ABRAZADERA, Shuttle Lever; Includes Threaded Insert
29		397990A1		2	TORNILLO, M5 x 35
30		123809A2		1	HAZ, Clutch Cutout; Transmission Gear Shift Lever; For Lever, See Figure 06-12
31		87312712		1	CONTACTOR, Clutch Cutout; For Lever and Knob, See Figure 06-12; Otto 21649 Marking; If Used
32		87726576		1	GRUPO DE CABLES, Engine, Main Chassis
33		844-6025		1	TORNILLO, Hex Flg, M6 x 25, 8.8
34		832-10406		1	CONTRA TUERCA, M6 x 1, Cl 8
35		82026949		2	CONTACTOR, Brake Lamp; Includes Hardware; For Mounting, See Figure 07-03
36		844-8025		2	TORNILLO, Hex Flg, M8 x 25, 8.8
37		895-15010		4	ARANDELA, M11 x 24 x 2
38		829-1410		2	TUERCA, M10, Cl 10

MAZO DE CABLES, CONSOLA FRONTAL - SOPORTE

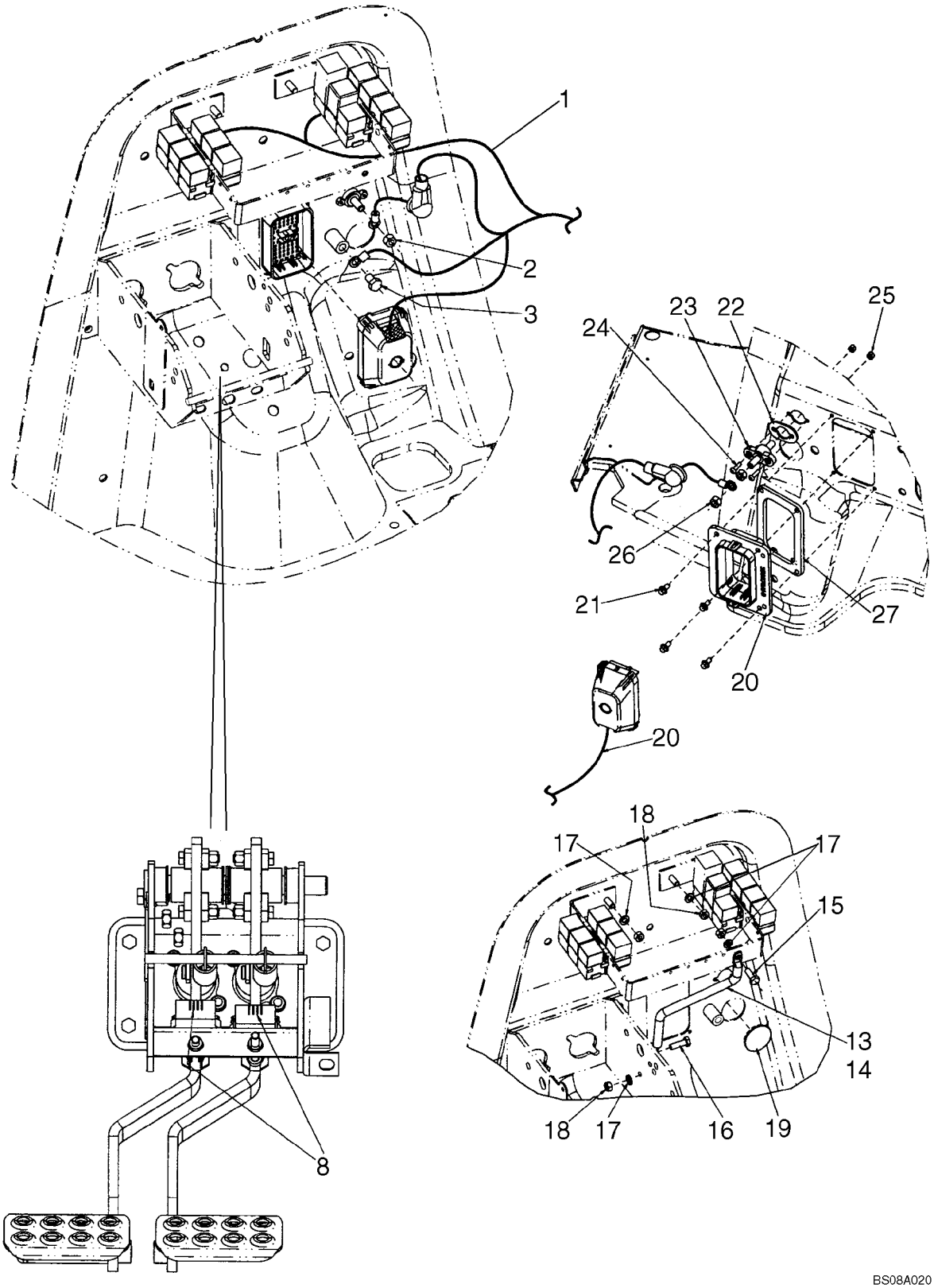

MAZO DE CABLES, CONSOLA FRONTAL - SOPORTE

REF	FN	PART NUMBER	YR/SN	QTY	DENOMINACION
1		87726592		1	GRUPO DE CABLES, Front Console Harness; Mounts To Front Firewall
2		425-106		1	TUERCA, 3/8"-16, G5
3		128312A1		1	TORNILLO, M10 x 15; Mounts To Front Firewall
8		82026949		2	CONTACTOR, Brake
13		362930A2		1	TENSOR, Relay Mounting
14		392353A1		1	TUBERIA
15		614-8020		1	TORNILLO, Hex, M8 x 20, 8.8
16		614-8025		1	TORNILLO, Hex, M8 x 25, 8.8
17		892-11008		4	ARANDELA DE FRENO, M8
18		829-1408		4	TUERCA, M8, Cl 10
19		397876A1		1	TAPčN, 1-5/8 in, Button
20		87726584		1	GRUPO DE CABLES, Engine, Main Chassis
21		781-24613		4	TORNILLO AUTOROSCANTE, Hex Flg Hd, M6 x 13
22		357966A1		1	JUNTA HERMETICA
23		357278A1		1	RACOR, Positive Battery
24		490-11012		2	TORNILLO, Cross Pan Hd, #10-32 x 3/4"
25		231-24409		2	CONTRA TUERCA, #10-32
26		425-106		2	TUERCA, 3/8"-16, G5
27		87649405		1	JUNTA HERMETICA

04-09		p1	02/08

MAZO DE CABLES, CONSOLA LATERAL - INTERRUPTORES

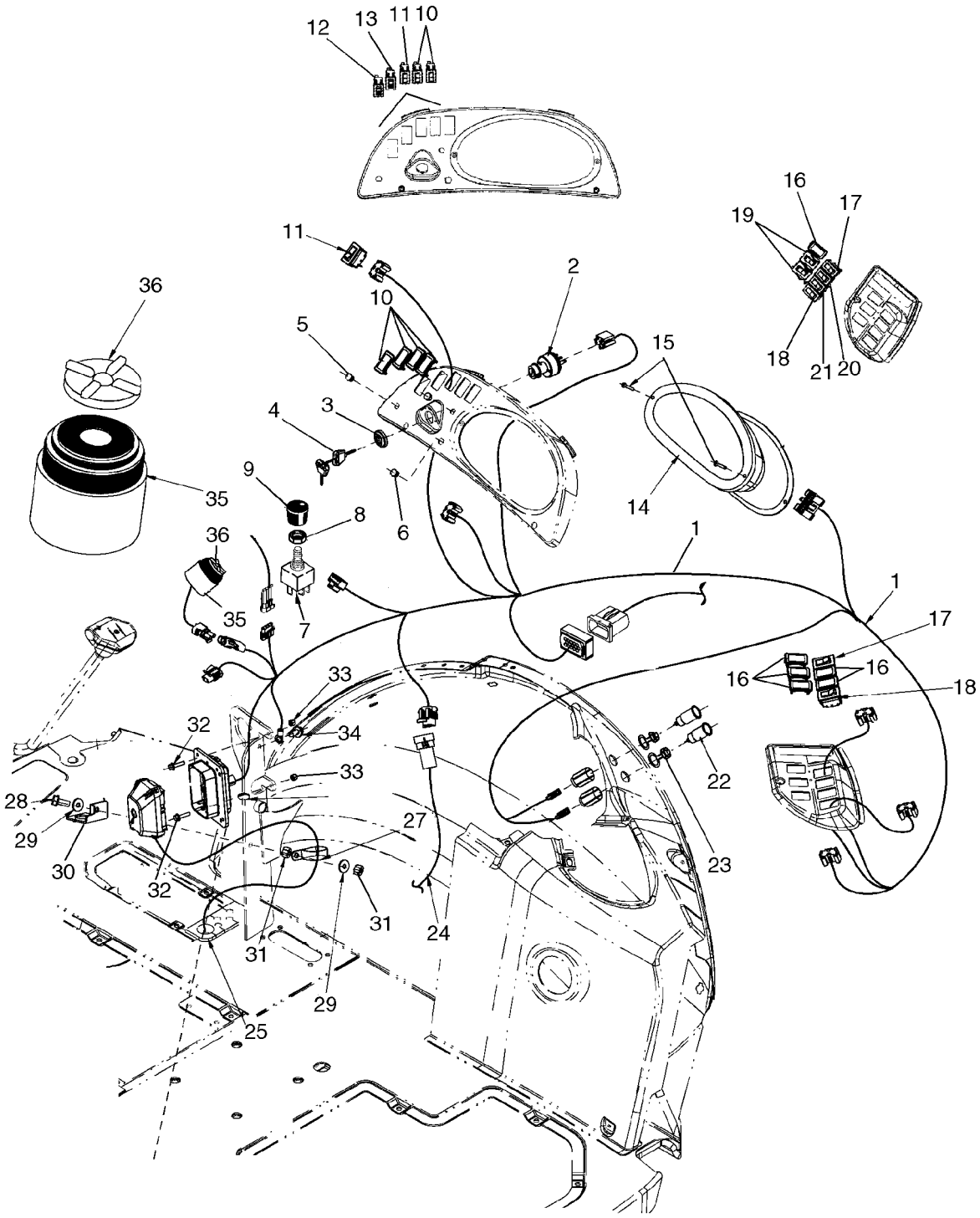

MAZO DE CABLES, CONSOLA LATERAL - INTERRUPTORES

REF	FN	PART NUMBER	YR/SN	QTY	DENOMINACION
1		87726595		1	GRUPO DE CABLES, Side Console Harness
		282775A1		1	CONMUTADOR DE ARRANQ, Incl. Ref 2 - 4
2		NSS		1	NO SE REPARA SEPARADAM., Switch, Without Keys
3		NSS		1	NO SE REPARA SEPARADAM., Nut
4		1964831C2		1	JUEGO DE 2 LLAVES, Padded
5		397569A1		2	TAPčN, 7/16 in, Dome, If Used; For Air Conditioning Switch and Knob; See Figure 09-65
6		397570A1		1	TAPčN, 1/2 in, Dome, If Used; For Heater Switch and Knob; See Figure 09-64
7		245258A1		1	CONTACTOR, Blower
		121415A1		1	FUSIBLE, 25 amp, Blower
8		A42561		1	TUERCA
9		400379A1		1	PLACA
10		86000535		2-4	TAPčN, 1.427" x .62", Plastic, If Used
11		87614808		1	CONTACTOR, Parking Brake
12		239408A1		1	CONTACTOR, Four Wheel Drive, If Used
		121412A1		1	FUSIBLE, 10 Amp; Four Wheel Drive
13		235002A1		1	CONTACTOR, Ride Control, If Used
		121413A1		1	FUSIBLE, 15 Amp, Ride Control
14		{87521766}		1	Instrument Cluster; See Figure 04-12
15		140-119		2	TORNILLO, Cross Pan Hd, #10-24 x 1 1/4"
16		86000535		1-5	TAPčN, 1.427" x .62", Plastic, If Used
17		133715A1		1	CONTACTOR, Rear Work Lights
18		386852A2		1	CONTACTOR, Rear Horn
19		386789A2		2	CONTACTOR, Backhoe Quick Coupler, If Used
20		386788A1		1	CONTACTOR, Rear Wndshield Washer; If Used
21		386786A1		1	CONTACTOR, Rear Wiper; If Used
22		283779A1		2	SALIDA, Power Plug Outlet, 30 amp Maximum
23		283781A1		2	TAPON DEL DEPOSITO, Power Plug Outlet
24		87726574		1	GRUPO DE CABLES, Side Options Harness
25		NSS		1	NO SE REPARA SEPARADAM., Harness, Loader Control Lever; Included In Loader Control Lever Handle
27		515-23444		1	BORNE, 1 3/4", Insul, 3/8" Bolt

04-09		p2	02/08

MAZO DE CABLES, CONSOLA LATERAL - INTERRUPTORES

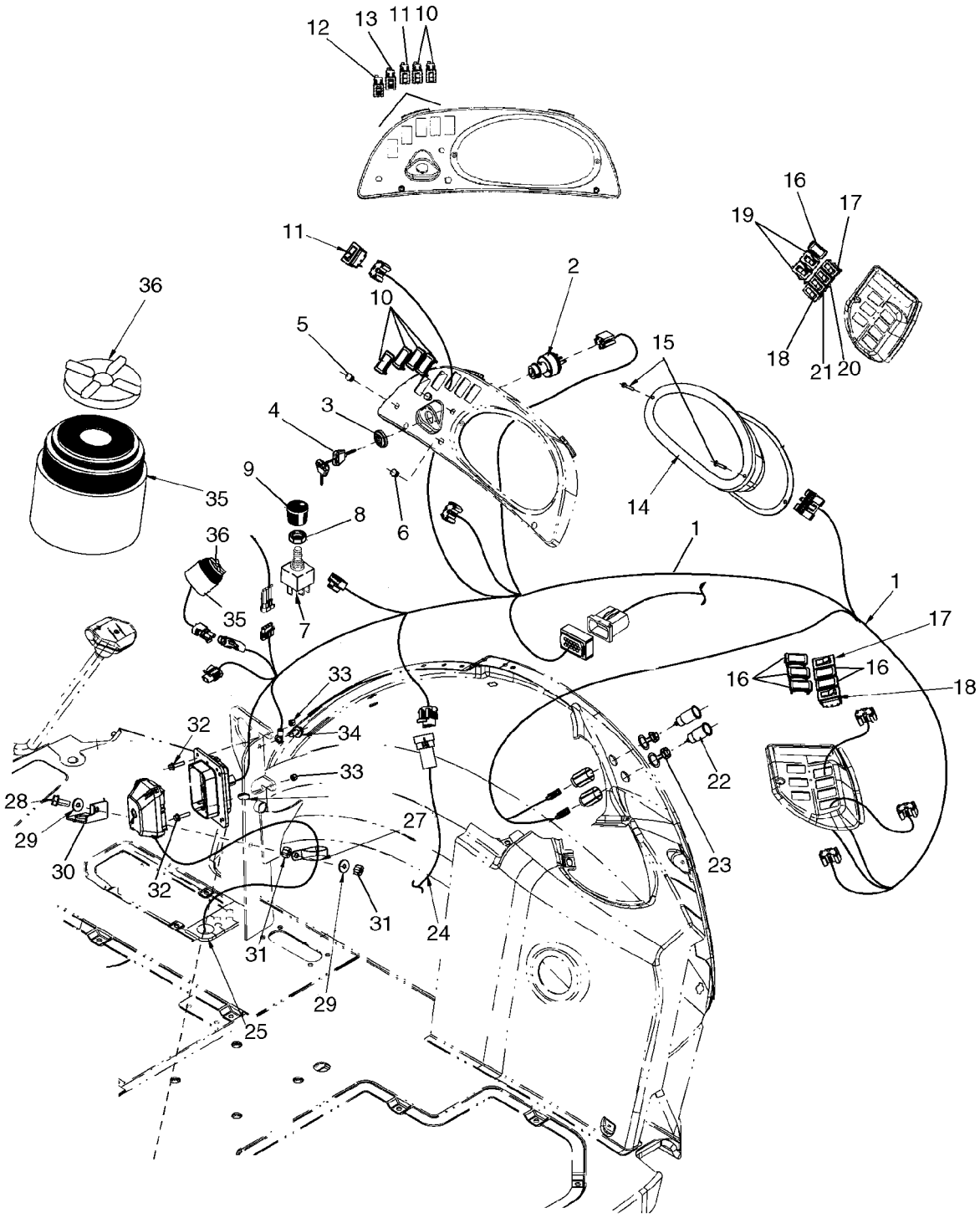

MAZO DE CABLES, CONSOLA LATERAL - INTERRUPTORES

REF	FN	PART NUMBER	YR/SN	QTY	DENOMINACION
28		614-8030		1	TORNILLO, Hex, M8 x 30, 8.8
29		895-15008		2	ARANDELA, M8 x 20 x 1.6
30		87700144		2	PIEZA DE APOYO, Alarm
31		829-1408		2	TUERCA, M8, Cl 10
32		844-6025		2	TORNILLO, Hex Flg, M6 x 25, 8.8
33		832-10406		2	CONTRA TUERCA, M6 x 1, Cl 8
34		844-10020		1	TORNILLO, Hex Flg, M10 x 20, 8.8
35		87527167		1	BOCINA, Alarm, Warning
36		87539792		1	TAPADERA, For Muting Audible Alarm, Cab Models Only
		87726573		1	GRUPO DE CABLES, Chassis Options Harness

04-10		p1	01/08

PANEL DE INSTRUMENTOS, DELANTERO - CUBIERTAS

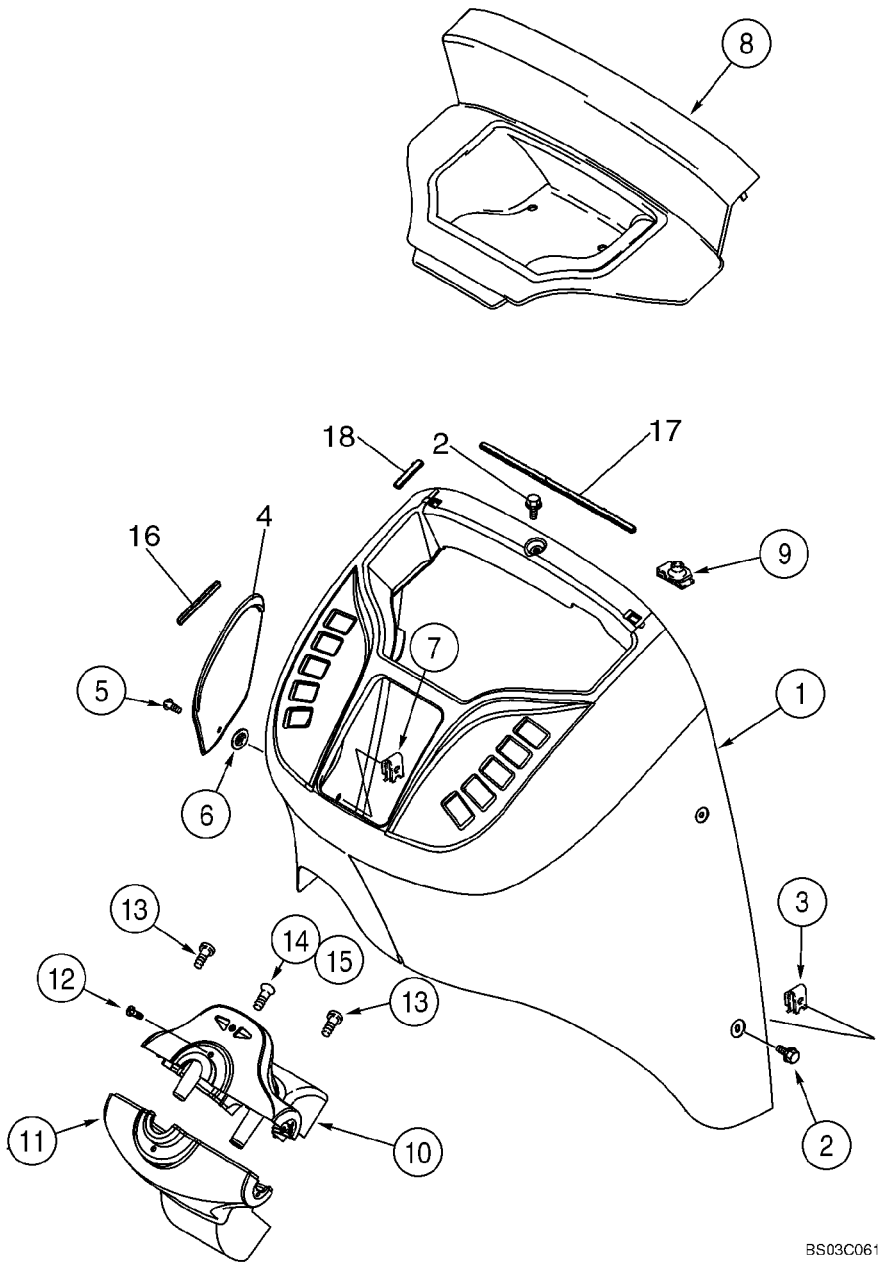

PANEL DE INSTRUMENTOS, DELANTERO - CUBIERTAS

REF	FN	PART NUMBER	YR/SN	QTY	DENOMINACION
1		355827A2		1	TAPA, Front; Standard; If Used
1		87694305		1	REPISA, Front; Deluxe Cab; If Used
2		87310152		6	TORNILLO, Hex Flange, M6 x 16, Stainless Steel
3		833-40406		6	TUERCA, M6, U
4		360244A1		1	TAPA, Fuse Access
5		87310086		1	TORNILLO, Includes Washer, Stainless Steel
6		127009A1		1	CLIP ELECTRICO
7		131-861		1	TUERCA, Tinn, U, #10-24
8		360245A2		1	TAPA, Relay Access
9		278316A2		2	SUJETADOR
10		373689A2		1	TABA (CONJUNTO), Steering Column, Upper; Incl. Ref 10A - 10E; Components Not Illustrated
10A		360242A2		1	TAPA
10B		303465A2		1	FARO, Blinker
10C		303466A1		1	IDEOGRAMA, Right Flasher
10D		303467A1		1	IDEOGRAMA, Left Flasher
10E		373693A1		1	TORNILLO, Flat Head, No. 8 x 7/16
11		360243A2		1	TAPA, Steering Column, Lower
12		87310124		2	TORNILLO, No. 10 x 1/2, Stainless Steel
13		87310124		2	TORNILLO, No. 10 x 1/2, Stainless Steel
14		87540980		1	TORNILLO, No. 10-16 x 1/2, High Grade Stainless Steel
15		131-121		1	TUERCA, Tinn, U, #10-24
16		414572A1		1	CINTA, 100 mm, Adhesive Back
17		414034A1		1	CINTA, 330 mm, Adhesive Back
18		414033A1		4	CINTA, 60 mm, Adhesive Back

04-11		p1	01/08

PANEL DE INSTRUMENTOS, LATERAL - CUBIERTAS (LADO DERECHO)

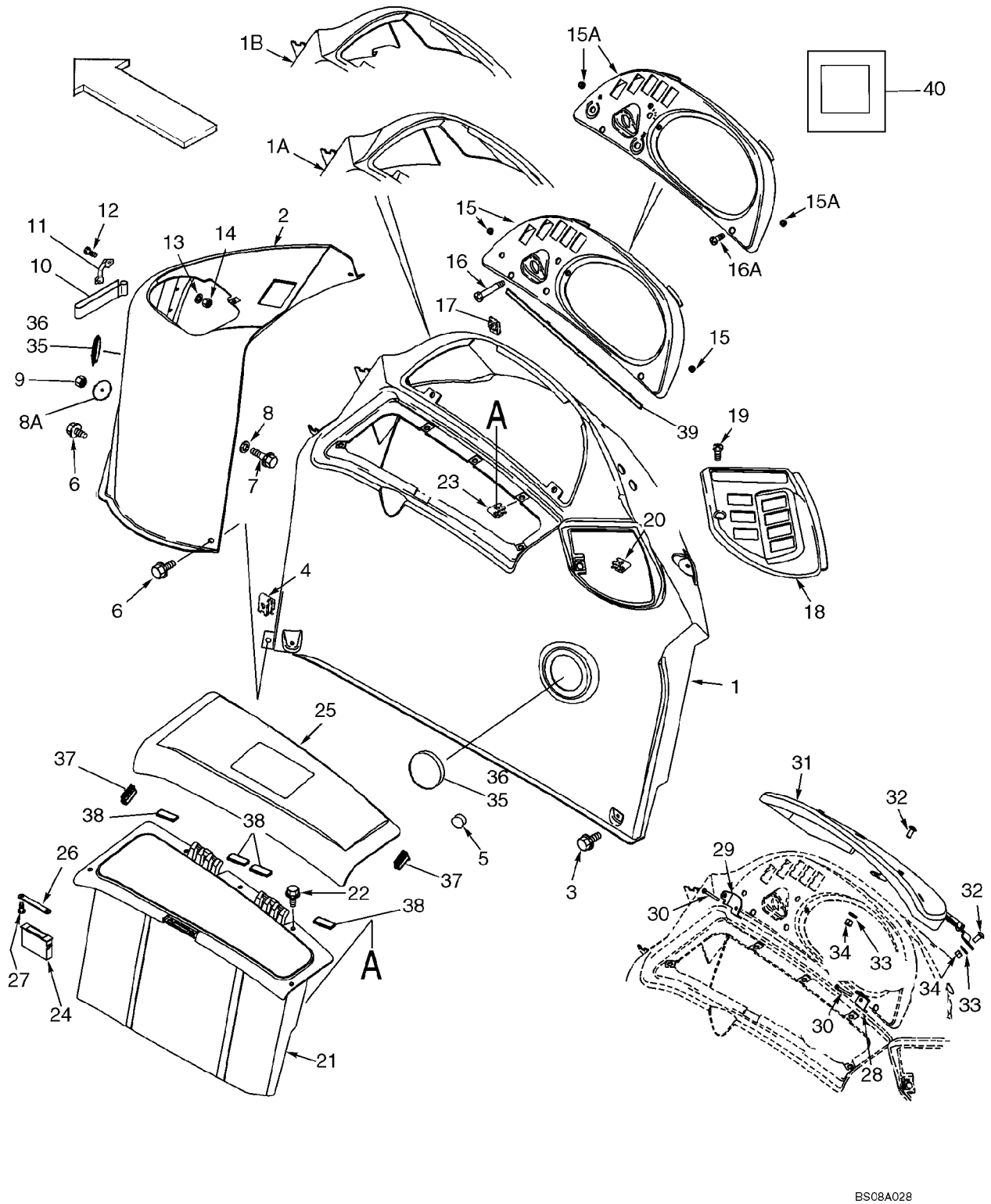

PANEL DE INSTRUMENTOS, LATERAL - CUBIERTAS (LADO DERECHO)

REF	FN	PART NUMBER	YR/SN	QTY	DENOMINACION
1		360250A2		1	REPISA, Canopy Models
1A		355198A2		1	REPISA, Cab, Single Door
1B		372167A3		1	REPISA, Cab, Two Door
2		87633581		1	REPISA, Loader Control
3		87310098		6	TORNILLO, Flange, M6 x 20, Stainless Steel
4		833-40406		5	TUERCA, M6, U
5		L60224		1	PARACHOQUES, Rubber
6		87310152		2	TORNILLO, Flange, M6 x 16, Stainless Steel
7		844-6025		1	TORNILLO, Hex Flg, M6 x 25, 8.8
8		895-15006		1	ARANDELA, M6 x 25 x 1.6
8A		407660A1		1	ARANDELA, 7 mm ID x 50 mm OD
9		832-10406		1	CONTRA TUERCA, M6 x 1, Cl 8
10		184726A1		1	BANDA DE FIJACTION, Velcro
11		182594A1		2	MANECILLA, Velcro Retainer
12		87310184		4	TORNILLO, M4 x 16; 4.8, Stainless Steel
13		895-11004		4	ARANDELA, M4, 4,3 x 9 x 0,8 mm
14		832-10404		4	CONTRA TUERCA, M4 x .7, Cl 8
15		391818A2		1	MARCO, Instrument Cluster Mounting; Canopy Models; Includes 390258A1
		390258A1		2	INTRODUCTOR, No. 10, Threaded Insert
15A		390255A2		1	MARCO, Instrument Cluster Mounting; Cab Models; Includes 390258A1
		390258A1		2	INTRODUCTOR, No. 10, Threaded Insert
16		87310128		2	TORNILLO, No. 10 x 2-1/4, Stainless Steel; Canopy Models
16A		87310126		2	TORNILLO, No. 10 x 3/4, Stainless Steel; Cab Models
17		131-619		2	TUERCA, J, Ret, #10-24, Cab or Canopy
18		353068A2		1	MARCO, Rear Switches
19		87310126		1	TORNILLO, No. 10 x 3/4, Stainless Steel
20		131-619		1	TUERCA, J, Ret, #10-24
21		366632A2		1	CAJA HERRAMIENTAS, Right-Hand
22		87310098		5	TORNILLO, Flange, M6 x 20, Stainless Steel
23		833-40406		5	TUERCA, M6, U
24		D127335		1	RETENEDOR, Magnetic Catch
25		366633A3		1	TAPA, Storage Box

04-11		p2	01/08

PANEL DE INSTRUMENTOS, LATERAL - CUBIERTAS (LADO DERECHO)

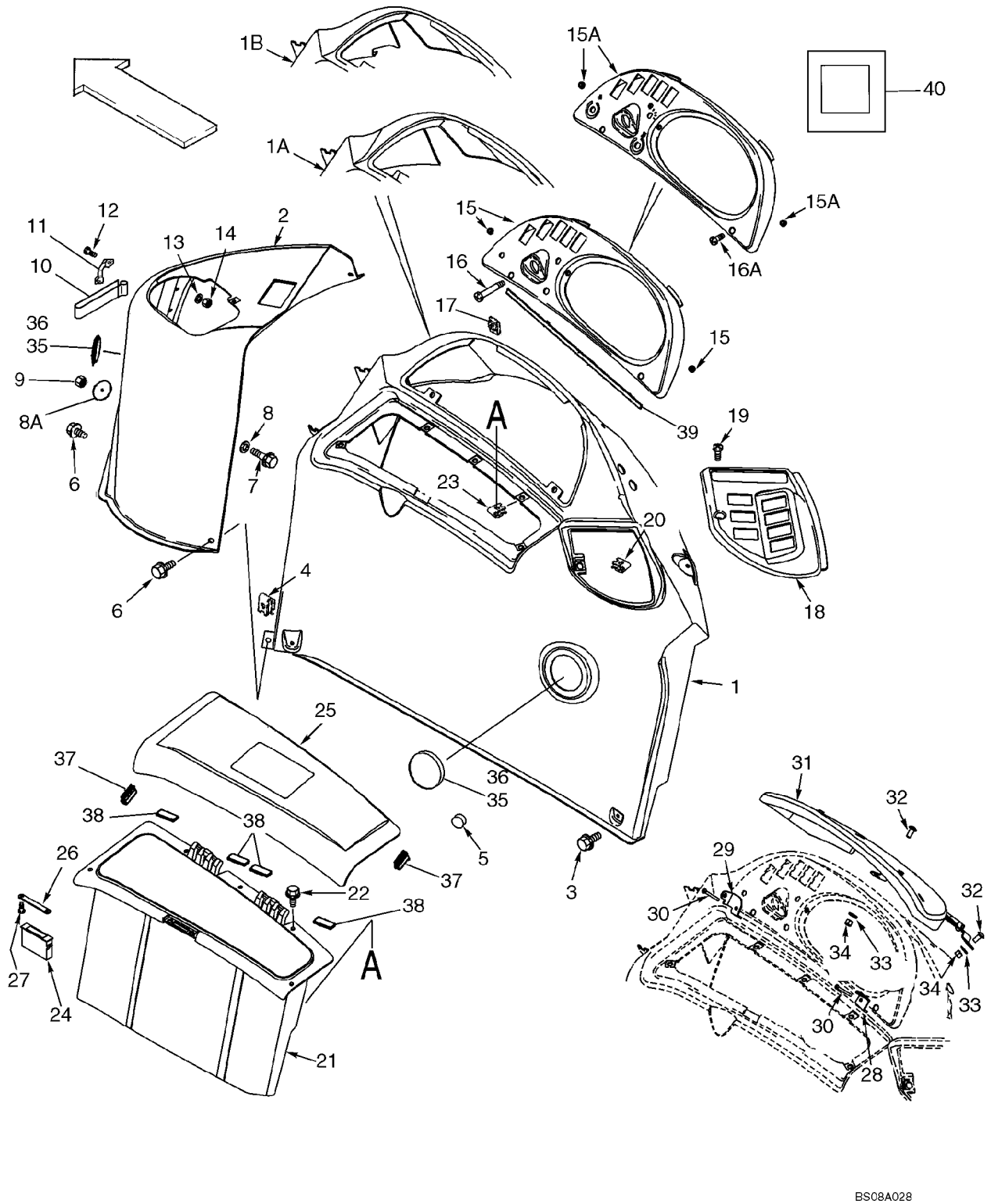

PANEL DE INSTRUMENTOS, LATERAL - CUBIERTAS (LADO DERECHO)

REF	FN	PART NUMBER	YR/SN	QTY	DENOMINACION
26		375112A1		1	CERRADERO, Striker
27		440-1066		2	TORNILLO, Cross Pan Hd, #6-32 x 3/8"
28		386369A2		1	PIEZA DE SOPORTE
29		386368A2		1	PIEZA DE SOPORTE
30		87310128		2	TORNILLO, No. 10 x 2-1/4, Stainless Steel
31		385614A4		1	TABA (CONJUNTO), Instrument Cluster; Anti-Vandalism, Canopy Models; Includes 386502A1, F22426
		386502A1		2	PARACHOQUES
		F22426		3	DISPOSITIVO DE TOPE
32		87310176		2	TORNILLO, Round Head, M8 x 20, Stainless Steel
33		87310185		2	ARANDELA, 9 x 20 x 1,6 mm, Stainless Steel
34		832-10408		2	CONTRA TUERCA, M8 x 1.25, Cl 8
35		1302758C1		2	TAPčN, 3 inch
36		87310144		4	TORNILLO AUTOROSCANTE, No. 6 x 1/2, Stainless Steel
37		430471A1		2	ANILLO DE CIERRE, Bulb, 40 mm; Storage Lid Bumper
38		414092A1		4	CINTA, 50 mm, Adhesive Back; Storage Box
39		414071A1		1	BANDA HERMETICIDAD, 480 mm, Adhesive Back
40		412510A1		1	ANILLO DE CIERRE, 25 x 25 x 3 mm, Adhesive Back; Console To Fender

04-12		p1	01/08

VELOCIMETRO COMB.

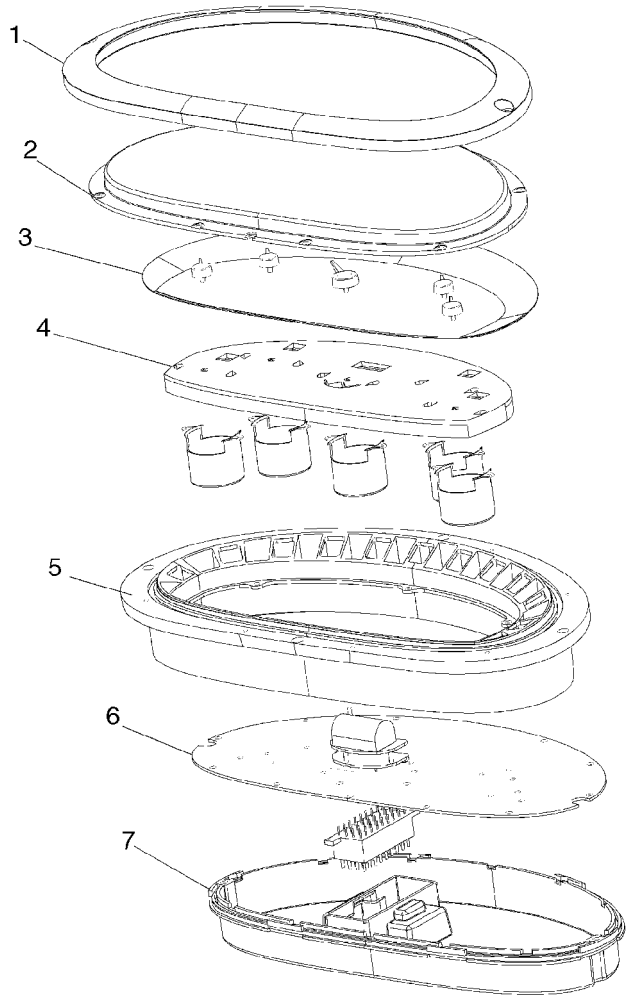

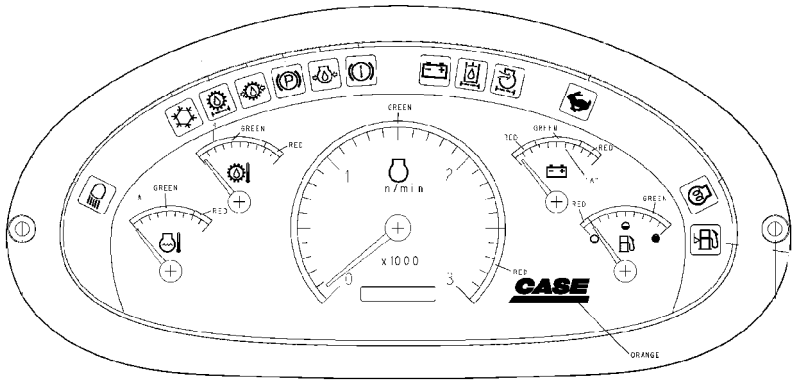

BS08A027

VELOCIMETRO COMB.

REF	FN	PART NUMBER	YR/SN	QTY	DENOMINACION
		{87521766}		1	Instrument Cluster; Component Parts Not Available At Printing
1		NSS		1	NO SE REPARA SEPARADAM., Bezel
2		NSS		1	NO SE REPARA SEPARADAM., Lens
3		NSS		1	NO SE REPARA SEPARADAM., Overlay
4		NSS		1	NO SE REPARA SEPARADAM., Lightpipe
5		NSS		1	NO SE REPARA SEPARADAM., Frame
6		NSS		1	NO SE REPARA SEPARADAM., PCB
7		NSS		1	NO SE REPARA SEPARADAM., Rear Cover

04-13		p1	12/07

ELECTRICO - LUCES, TECHO DE LA ROPS

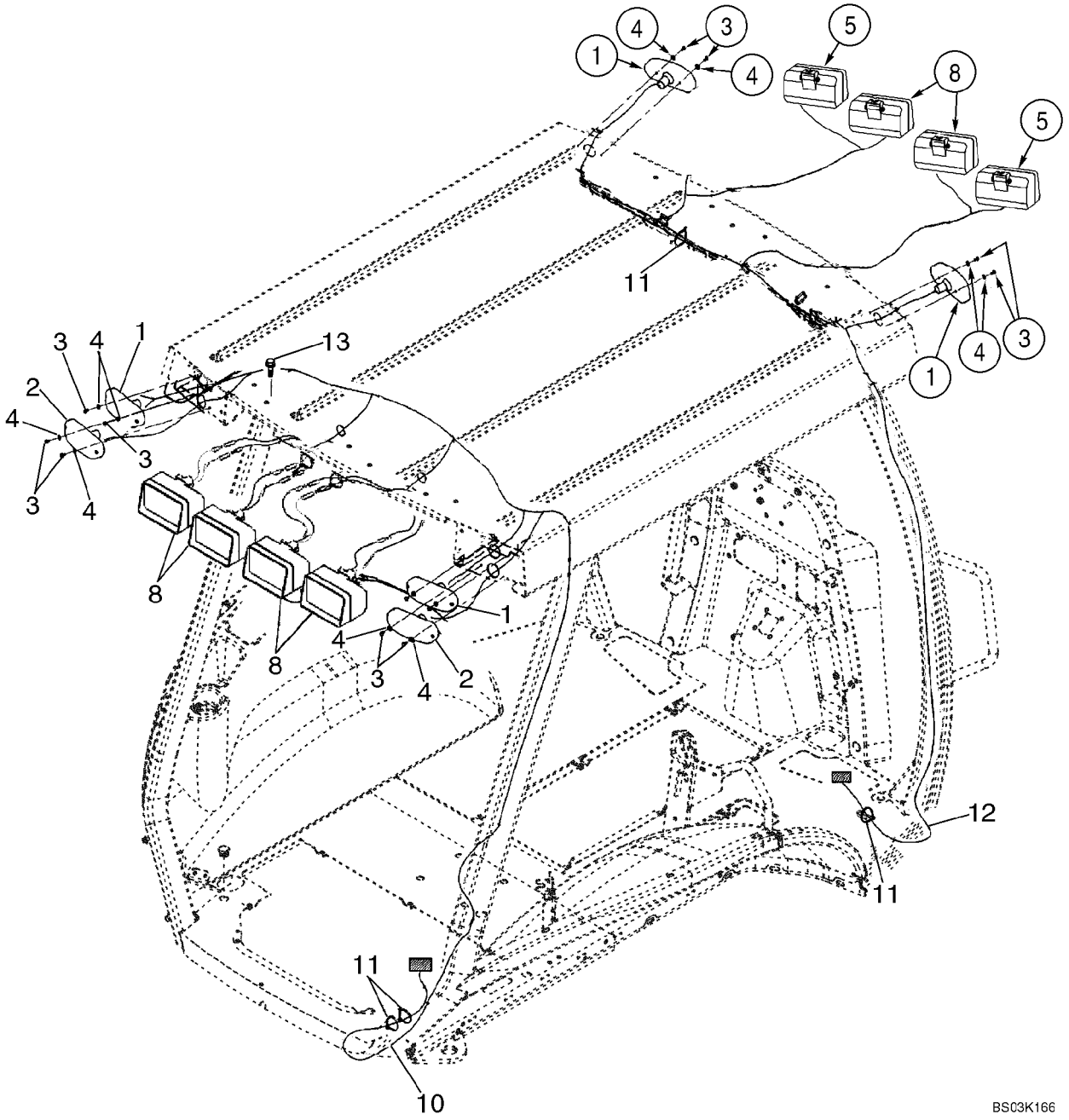

ELECTRICO - LUCES, TECHO DE LA ROPS

REF	FN	PART NUMBER	YR/SN	QTY	DENOMINACION
1		D135384		4	LAMPARA, Turn Signal and Flasher; See Figure 04-15
2		D121152		2	LAMPARA, Stop And Tail; See Figure 04-15
3		329032A1		12	TORNILLO, No. 10 x 3/8
4		495-31022		12	ARANDELA, #10
5		87343247		2	FARO (CONJ), Front Driving; Outer; Incl. 1312210C2 Bulb; Cobo Brand; If Used
		1312210C2		1	BOMBILLA, 12V, 55W, H3
8		398847A3		6	FARO (CONJ), Front and Rear Flood and Work Lamps; Includes 1312210C2, 276498A1; ABL Brand, If Used
8		87443080		6	FARO (CONJ), Front and Rear Flood and Work Lamps; Includes 1312210C2 Bulb; Cobo Brand, If Used
		1312210C2		1	BOMBILLA, 12V, 55W, H3
		276498A1		1	TAPA TRANSLUCIDA, With Hardened Glass; Replaces 1964801C1 Non-Hardened Lens Used In Production
10		396023A2		1	HAZ, Canopy Lamps; Rear
11		L18337		AR	CIERRA CABLES, 9.95"-12.1" lg
12		404617A1		1	HAZ, Canopy Lamps and Wiper; Front
13		128312A1		8	TORNILLO, Flange, M10 x 15

04-14		p1	12/07

ELECTRICO - LUCES, CABINA DE LA ROPS

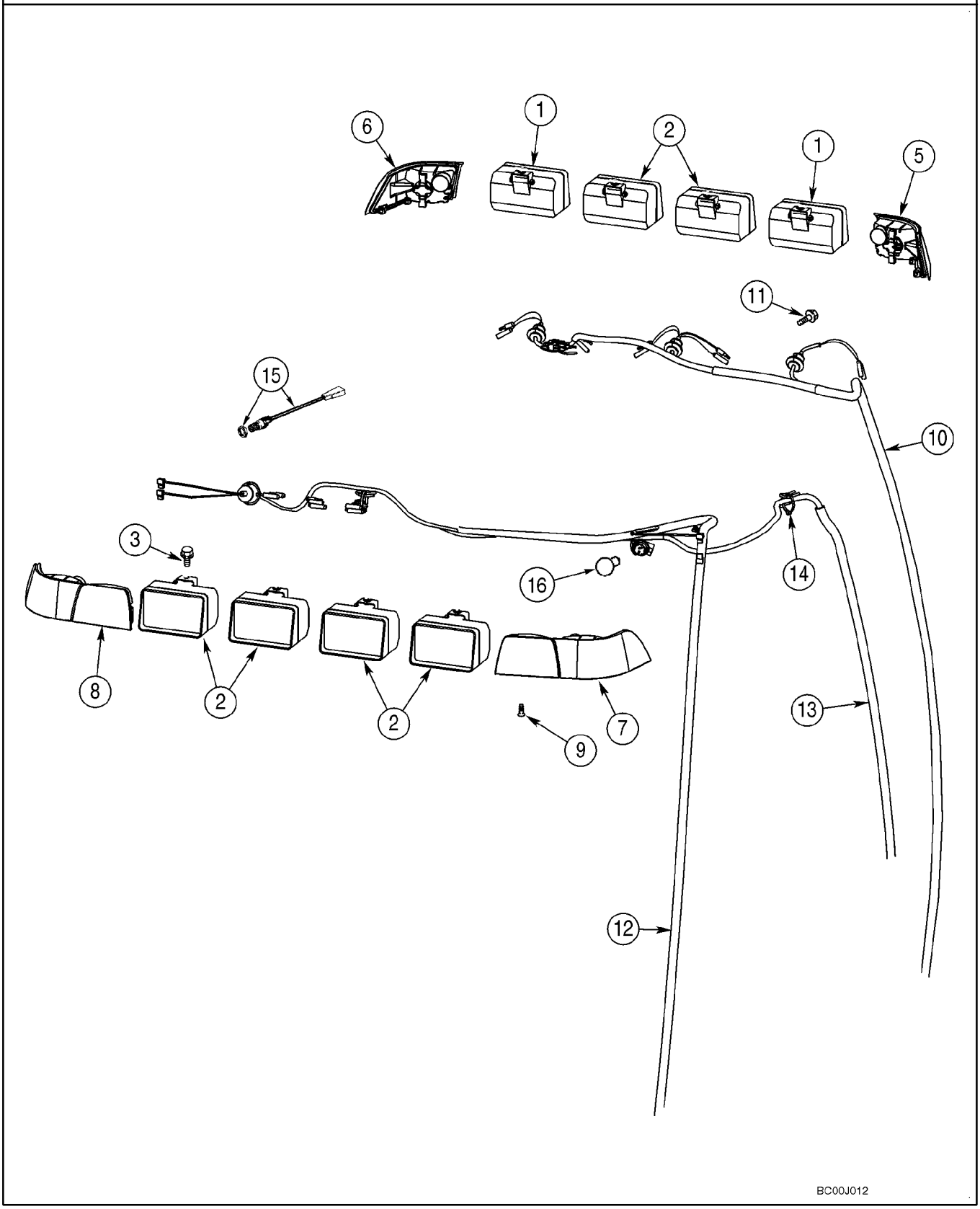

ELECTRICO - LUCES, CABINA DE LA ROPS

REF	FN	PART NUMBER	YR/SN	QTY	DENOMINACION
1		87343247		2	FARO (CONJ), Front Driving; Outer; Incl. 9703399 Bulb; Cobo Brand; If Used
		9703399		1	BOMBILLA, 12V, 55W, H3
2		398847A3		6	FARO (CONJ), Front and Rear Flood and Work Lamps; Includes 9703399, 276498A1; ABL Brand, If Used
2		87443080		6	FARO (CONJ), Front and Rear Flood and Work Lamps; Includes 9703399 Bulb; Cobo Brand, If Used
		9703399		1	BOMBILLA, 12V, 55W, H3
		276498A1		1	TAPA TRANSLUCIDA, With Hardened Glass
3		128312A1		8	TORNILLO, M10 x 15
5		279224A1		1	LAMPARA TESTIGO, Amber; Right Front Corner; Includes 87517414 Bulb Holder
6		279223A1		1	LAMPARA TESTIGO, Amber; Left Front Corner; Incl. 87517414 Bulb Holder
7		357540A1		1	LUZ POSTERIOR, Amber and Red; Right Rear Corner
8		357541A1		1	LUZ POSTERIOR, Amber and Red; Left Rear Corner
9		394863A1		10	TORNILLO, M6 x 20
10		404617A1		1	HAZ, Front
11		844-10020		2	TORNILLO, Hex Flg, M10 x 20, 8.8
12		398380A3		1	HAZ, Rear
13		396018A3		1	HAZ, B-Post, Dome Lamp, Radio, Rear Wiper
14		L18337		5	CIERRA CABLES, 9.95"-12.1" lg
15		279265A2		1	CONTACTOR, Dome Lamp
16		279916A1		2	BOMBILLA

04-15		p1	12/07

CONJUNTO DE LA LAMPARA (MODELOS CON TECHO ROPS)

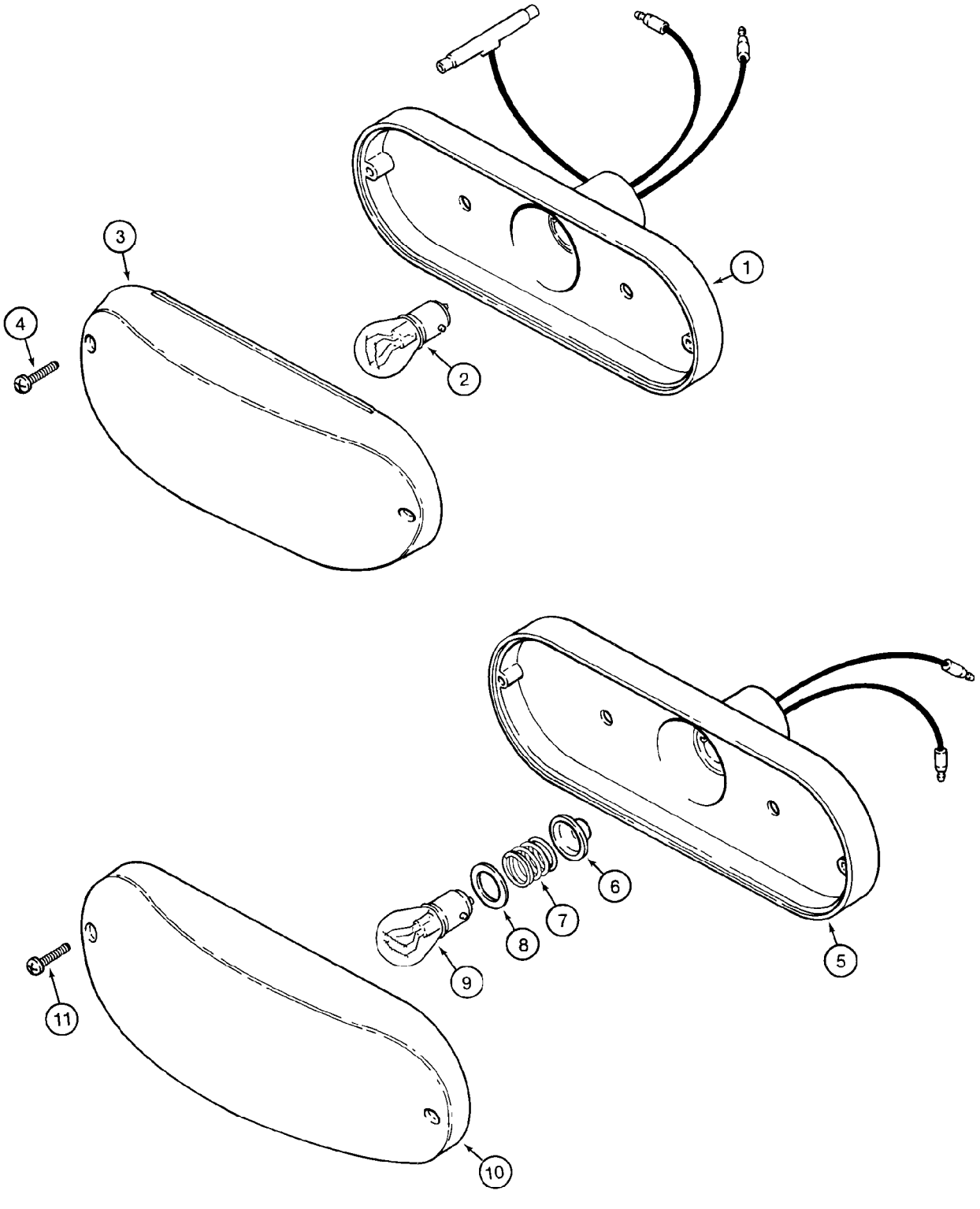

CONJUNTO DE LA LAMPARA (MODELOS CON TECHO ROPS)

REF	FN	PART NUMBER	YR/SN	QTY	DENOMINACION
		D121152		2	LAMPARA, Stop And Tail Lamp; Red; Incl. Ref 1 - 4
1		NSS		1	NO SE REPARA SEPARADAM., Housing
2		T34857		1	BOMBILLA, C6, #1157, 12.8V
3		N6836		1	TAPA TRANSLUCIDA, Red
4		261-14310		2	TORNILLO AUTOROSCANTE, Cross Pan Hd, #6 x 5/8"
		D135384		4	LAMPARA, Turn Signal and Flasher; Amber; Incl. Ref 5 - 11
5		NSS		1	NO SE REPARA SEPARADAM., Housing
6		NSS		1	NO SE REPARA SEPARADAM., Seal
7		NSS		1	NO SE REPARA SEPARADAM., Spring
8		NSS		1	NO SE REPARA SEPARADAM., Insulator
9		A41264		1	BOMBILLA, #1156, 12V
10		N14283		1	TAPA TRANSLUCIDA, Amber
11		261-14310		2	TORNILLO AUTOROSCANTE, Cross Pan Hd, #6 x 5/8"

04-16		p1	01/08

BOCINA - ALARMA, RETROCESO

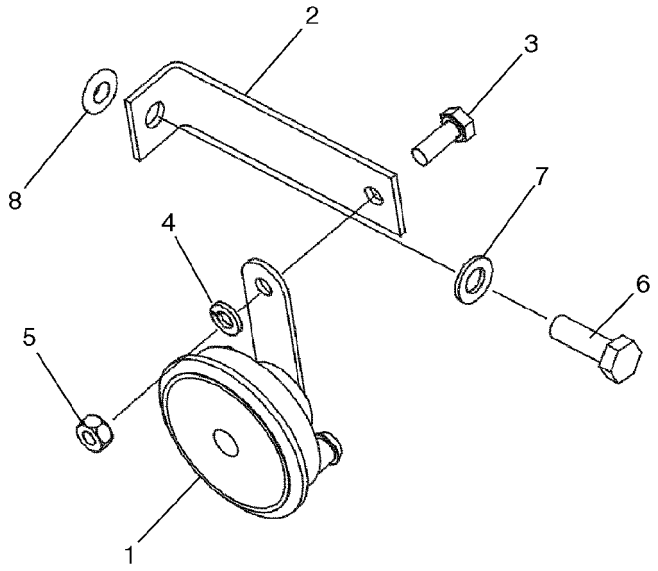

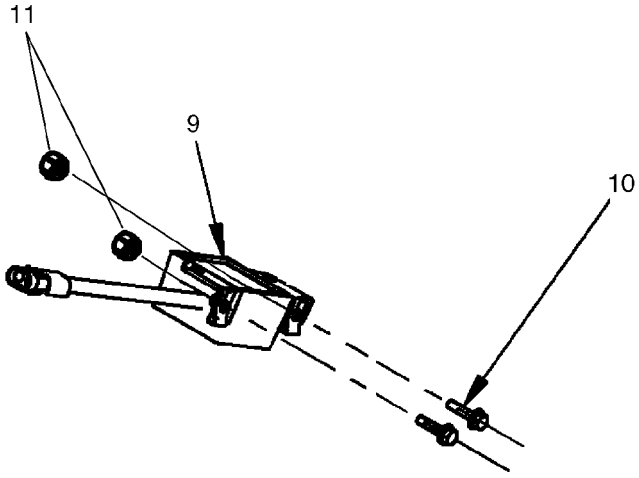

BS08A029

BOCINA - ALARMA, RETROCESO

REF	FN	PART NUMBER	YR/SN	QTY	DENOMINACION
1		237582A1		1	BOCINA, Black
2		87423496		1	PIEZA DE SOPORTE
3		614-8020		1	TORNILLO, Hex, M8 x 20, 8.8
4		892-11008		1	ARANDELA DE FRENO, M8
5		829-1408		1	TUERCA, M8, Cl 10
6		614-10030		1	TORNILLO, Hex, M10 x 30, 8.8
7		895-11010		1	ARANDELA, M10 x 20 x 2
8		87417721		1	ROSCA POSTIZA, M10
9		87528887		1	ALARMA, Backup; Includes Wire
10		844-6025		2	TORNILLO, Hex Flg, M6 x 25, 8.8
11		833-40406		2	TUERCA, M6, U

04-17		p1	01/08

FARO, GIRATORIO (MODELOS CON CABINA O CON TECHO)

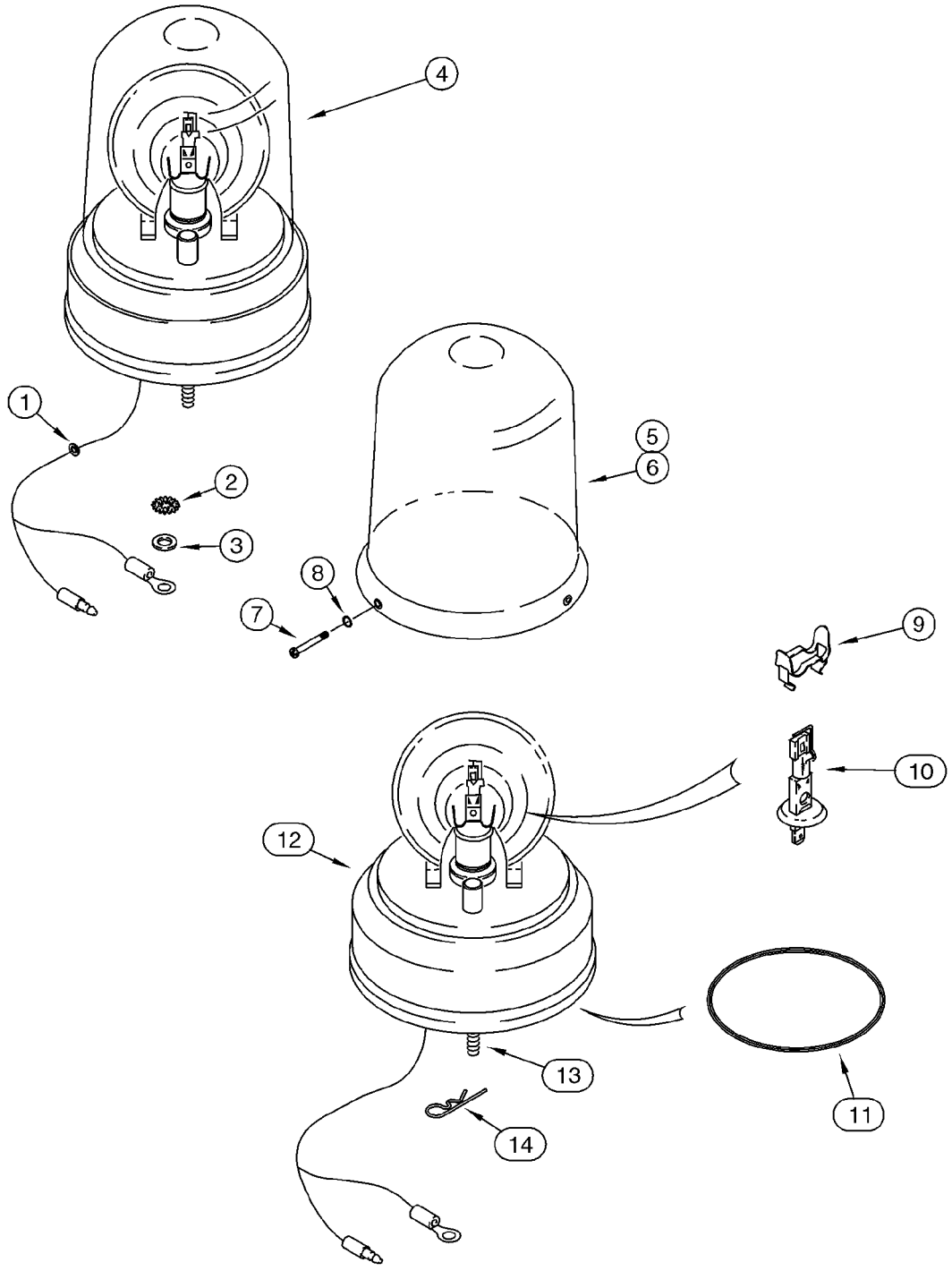

FARO, GIRATORIO (MODELOS CON CABINA O CON TECHO)

REF	FN	PART NUMBER	YR/SN	QTY	DENOMINACION
		387940A1		1	JEUGO, Rotating Beacon; Amber, 12V; Incl. Ref 1 - 5, 7 - 16 and Instructions
1		A23870		1	PASACABLES
2		493-11026		1	ARANDELA DE FRENO, Ext-Int Tooth, 1/4", Ground
3		495-21031		1	ARANDELA, 1/4"
4		108366A1		1	LAMPARA DE SENALES, Rotating Beacon Assembly; Amber, 12V; Incl. Ref 5, 7 - 14
5		A187542		1	TAPA TRANSLUCIDA, Amber; If Used
6		127158A1		1	TAPA TRANSLUCIDA, Blue; Optional; Not Included In Kit, Purchase Separately; If Used
7		168-71		3	TORNILLO, Drive, #8 x 1/2"
8		238-5005		3	JUNTA HERMETICA, -005, 70 Duro, .101" ID x .070" Thk
9		101531A1		1	SUJETADOR
10		86616248		1	BOMBILLA, #HI, 55w
11		A187575		1	CORREA, Drive Motor
12		NSS		1	NO SE REPARA SEPARADAM., Base; With Drive Motor
13		614-6020		3	TORNILLO, Hex, M6 x 20, 8.8
14		136-54		3	PERNO, 1/4 x 11/16
15		386851A1		1	CONTACTOR, Rotating Beacon; Not Illustrated
16		121412A1		1	FUSIBLE, Fuse, 10 amp; Not Illustrated

04-18		p1	01/08

ANTENA, RADIO - MAZO DE CABLES, RADIO

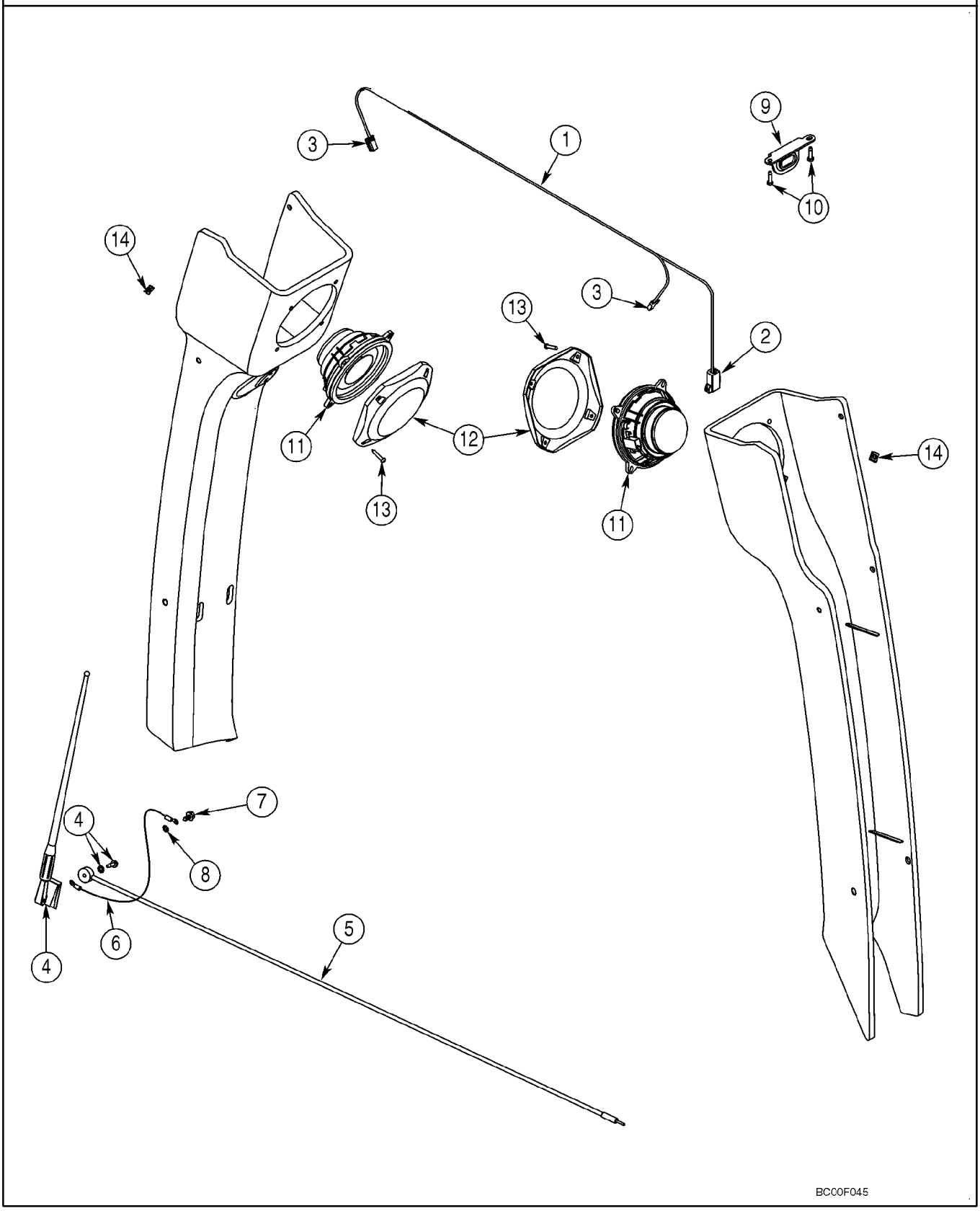

ANTENA, RADIO - MAZO DE CABLES, RADIO

REF	FN	PART NUMBER	YR/SN	QTY	DENOMINACION
1		382664A2		1	HAZ, Speaker; Incl. Ref 2, 3
2		227389A1		1	CONECTOR, To Cab Harness
3		195552A1		2	CONEXION, Speaker
4		197745A1		1	ANTENA ELECTRICA, Radio; Includes Flat Washer and Nut Which Are Not Serviced Separately
5		381659A1		1	CABLE (CONJUNTO)
6		291010A1		1	HILO, Ground
7		282-16512		2	TORNILLO, Hex Wash Hd, #10-16 x 3/4"
8		893-11005		1	ARANDELA DE FRENO, Ext Tooth, M5
9		386927A1		1	PIEZA DE SOPORTE, Radio Mounting
10		276-26512		2	TORNILLO AUTOROSCANTE, Hex Hd, #10 x 3/4"
11		182721A2		2	ALTAVOZ
12		187281A1		2	TAPA
13		761-17325		8	TORNILLO AUTOROSCANTE, Pan Hd, M4.2 x 25
14		177269A1		8	TUERCA, Spring
15		L18331		1	CIERRA CABLES, Tie; Not Illustrated

04-19		p1	01/08

ELECTRICO SISTEMA - HIDRáULICO AUXILIAR DE LA RETROEXCAVADORA

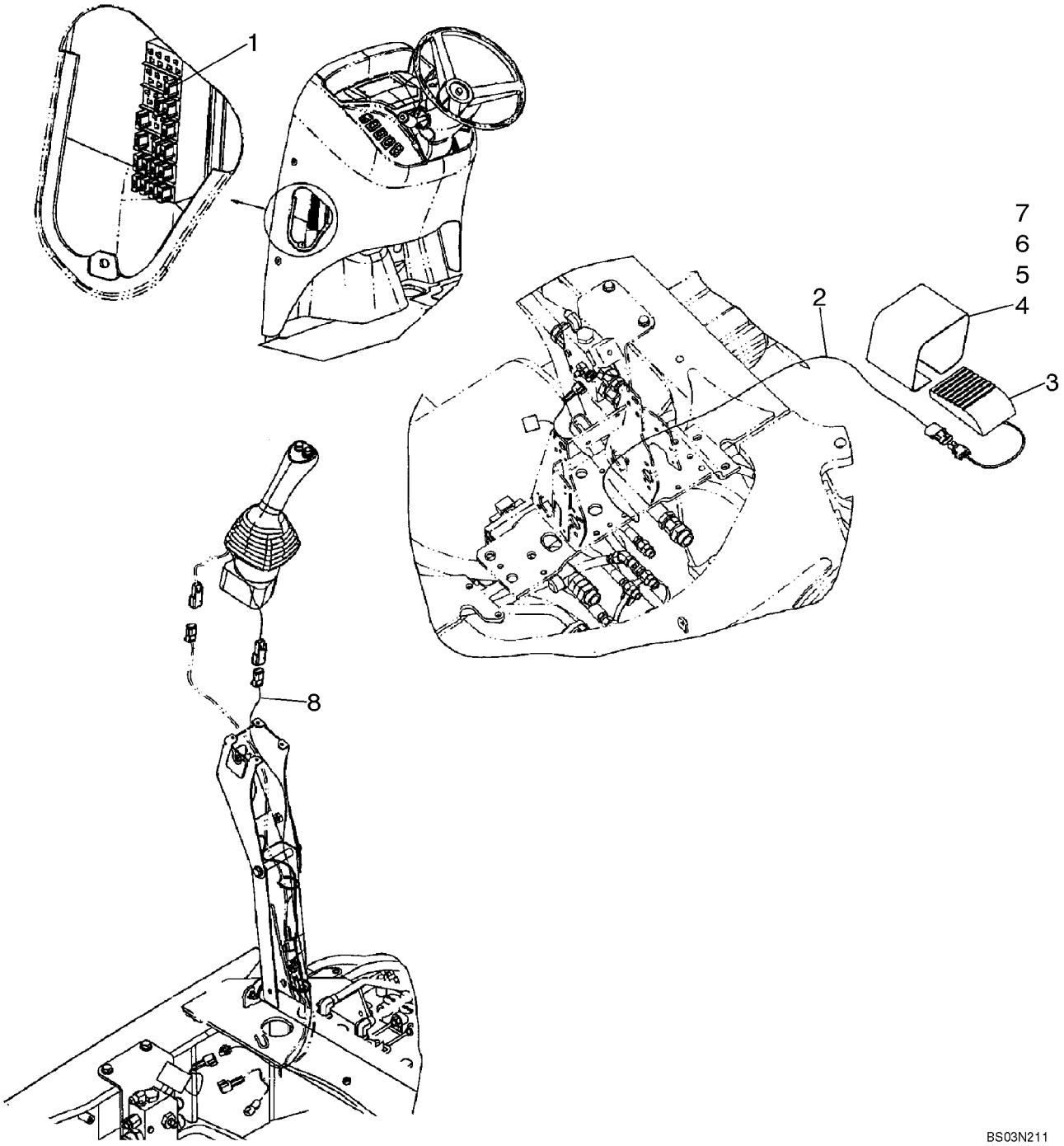

ELECTRICO SISTEMA - HIDRćULICO AUXILIAR DE LA RETROEXCAVADORA

REF	FN	PART NUMBER	YR/SN	QTY	DENOMINACION
1		121413A1		1	FUSIBLE, 15 amp
2		87425631		1	GRUPO DE CABLES, Auxiliary Hydraulic Harness, Uni-Directional; Models Without Pilot Controls
3		137219A1		1	CONTACTOR, Foot; Without Pilot Controls
4		300030A1		1	TAPA, Without Pilot Controls
5		843-1516		2	TORNILLO, Hex Flat Hd, M5 x 16, 4.8
6		892-11005		2	ARANDELA DE FRENO, M5
7		824-1405		2	TUERCA, M5, Cl 5
8		87425635		1	GRUPO DE CABLES, Auxiliary Hydraulic; Uni-Directional; Models With Pilot Controls

04-20		p1	01/08

ELECTRICO SISTEMA - HIDRáULICO AUXILIAR DE LA RETROEXCAVADORA, CON DE CONTROL PILOTO

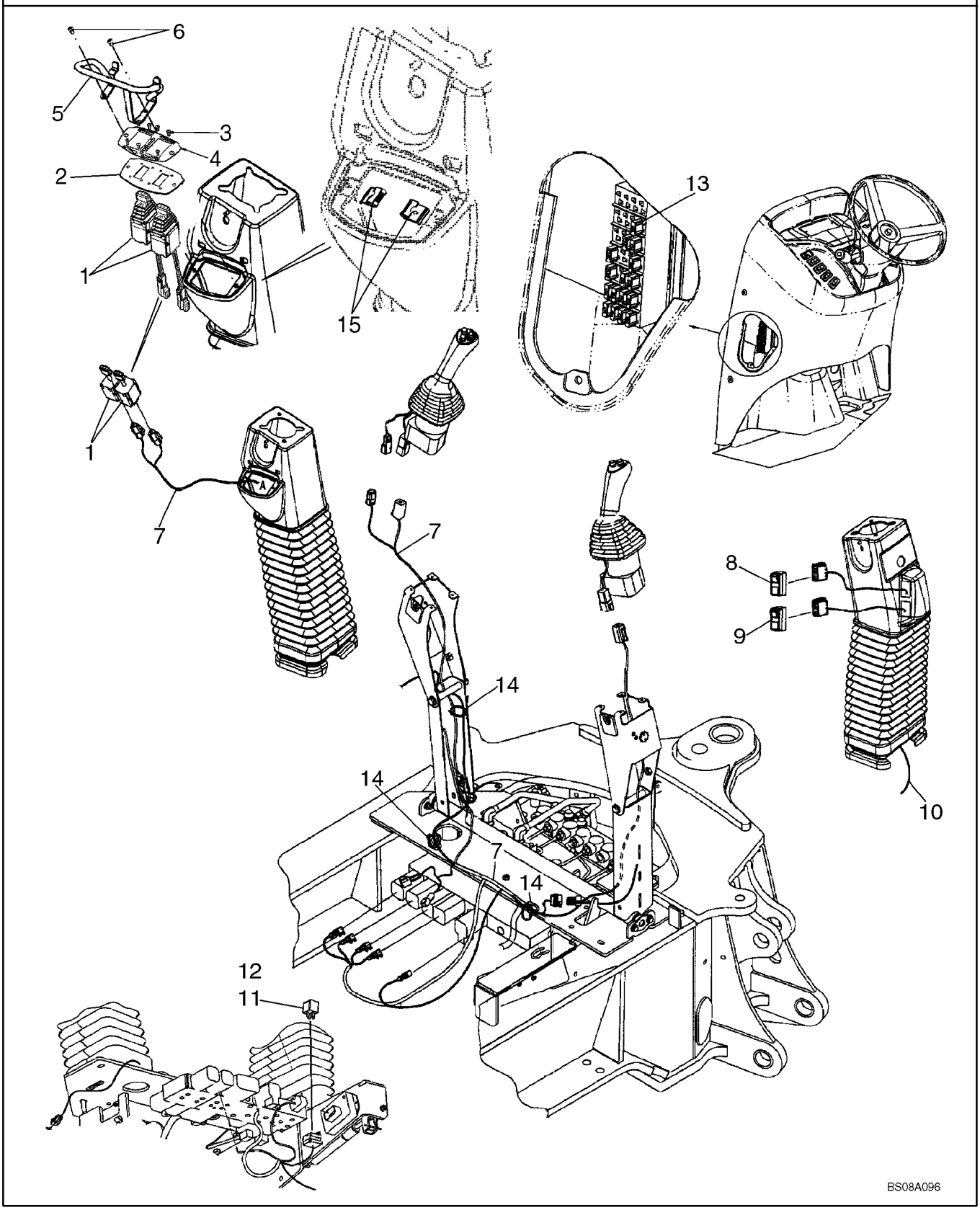

ELECTRICO SISTEMA - HIDRćULICO AUXILIAR DE LA RETROEXCAVADORA, CON DE CONTROL PILOTO

REF	FN	PART NUMBER	YR/SN	QTY	DENOMINACION
1		86988086		2	JOYSTICK, Stabilizer
2		87435381		1	PLACA DE MONTAJE
3		87303784		8	TORNILLO, Cross Pan Hd, M3 x 8
4		87423812		1	CALCOMANIA, Stabilizer Switch
5		87307656		1	DEFENSA, Stabilizer Switch Guard
6		87310085		2	TORNILLO AUTOROSCANTE, Hex Washer Head, No. 10-16 x 1, Full Thread
7		87726617		1	GRUPO DE CABLES, Pilot Control Joystick, Left-Hand
8		87423802		1	CONTACTOR, Pilot Control, On/Off
9		87410105		1	CONTACTOR, Pilot Control Pattern Selection
10		87425636		1	GRUPO DE CABLES, Pilot Control Joystick, Right-Hand
11		87436836		1	CONECTADOR, Mini, 12V, 40 amp
12		840-1416		3	TORNILLO, Cross Pan Hd, M4 x 16
13		121413A1		1	FUSIBLE, Mini, 15 amp
14		L18337		6	CIERRA CABLES, 9.95"-12.1" lg
15		87452511		2	TUERCA, J-Type Nut; If Used

NOTAS

SECTION INDEX
Dirección

05-01	VOLANTE - COLUMNA
05-02	HIDRAULICA - DIRECCION
05-02A	HIDRAULICA - DIRECCION (CON DIRECCIčN CčMODA)
05-03	TUBO DE LA DIRECCION
05-04	EJE, DELANTERO (86990837) - SOPORTE
05-05	EJE, DELANTERO (86990837) - ALOJAMIENTO
05-06	EJE, DELANTERO (86990837) - ALOJAMIENTO, ARTICULACIčN GIRATORIA
05-07	EJE, DELANTERO (86990837) - CILINDRO, DIRECCION
05-08	EJE, DELANTERO (86990837) - CUBO Y COJINETES
05-09	NEUMĆTICOS, FRONTALES - NEUMĆTICOS

05-01		p1	01/08

VOLANTE - COLUMNA

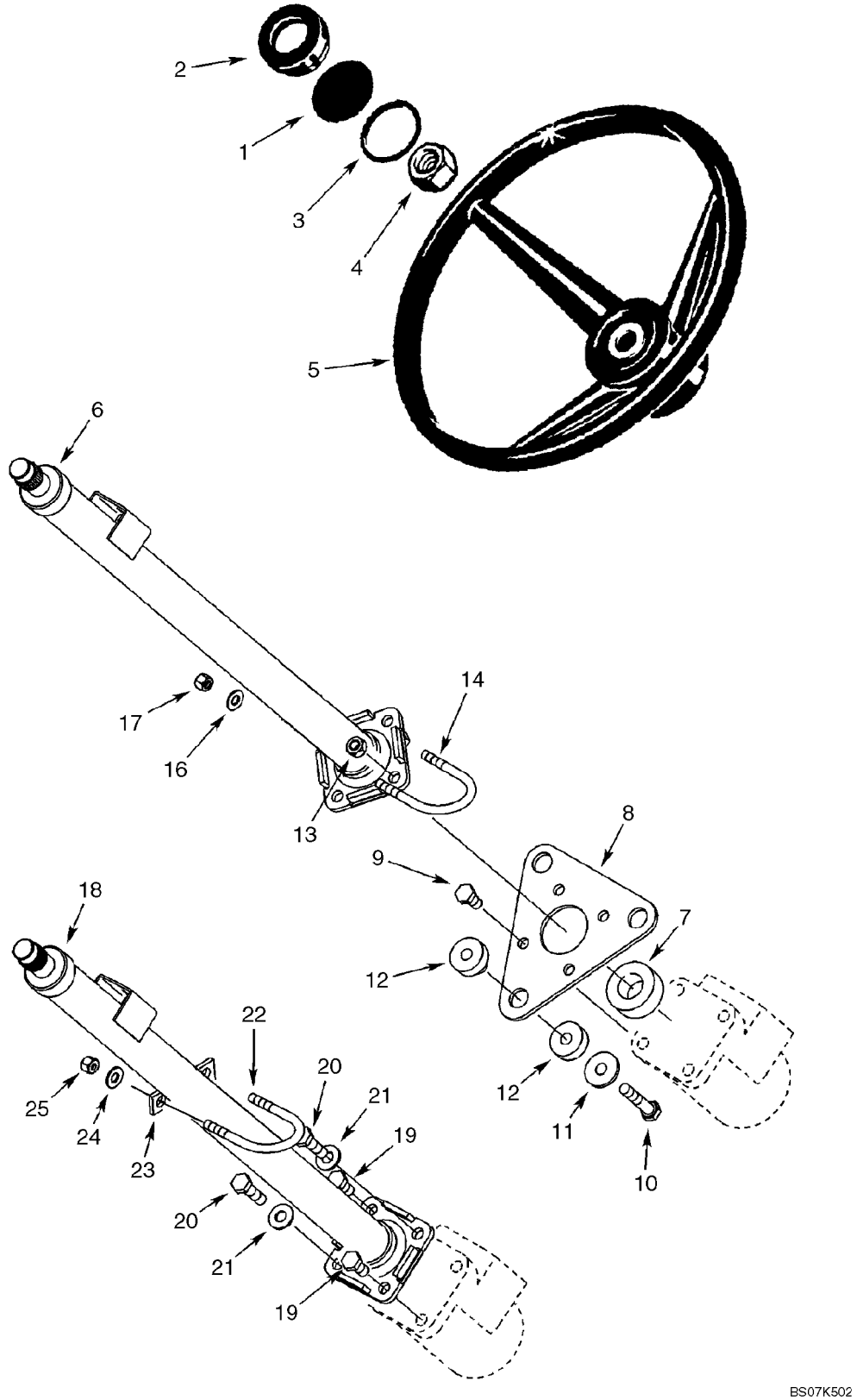

VOLANTE - COLUMNA

REF	FN	PART NUMBER	YR/SN	QTY	DENOMINACION
1		87435569		1	SIMBOLO, Insert, Case
2		114882A2		1	TAPON DEL DEPOSITO
3		238-5227		1	JUNTA HERMETICA, -227, 70 Duro, 2.109" ID x .139" Thk
4		1959509C1		1	TUERCA
5		A65544		1	VOLANTE DIRECCION
6		352569A4		1	COLUMNA DE DIRECCION, Cab Models, With Tilt Steering, 712 mm Long, See Figure 05-03
7		352401A1		1	ANILLO DE CIERRE, 25 x 40 x 19 mm, Sound Insulation
8		388116A2		1	PLACA
9		614-10020		4	TORNILLO, Hex, M10 x 20, 8.8, Full Thd
10		814-10050		3	TORNILLO, Hex, M10 x 50, 8.8
11		496-81028		3	ARANDELA, 13/32" x 1 1/4" x .134", HDN
12		87447450		3	AISLADOR, 10 mm Hole
13		832-10410		2	CONTRA TUERCA, M10 x 1.5, Cl 8
14		379846A1		1	HORQUILLA
16		895-15008		2	ARANDELA, M8 x 20 x 1.6
17		832-10408		2	CONTRA TUERCA, M8 x 1.25, Cl 8
18		348794A1		1	COLUMNA DE DIRECCION, Canopy Models, See Figure 05-03
19		614-10020		2	TORNILLO, Hex, M10 x 20, 8.8, Full Thd
20		614-10035		2	TORNILLO, Hex, M10 x 35, 8.8, Full Thd
21		895-15010		2	ARANDELA, M11 x 24 x 2
22		379846A1		1	HORQUILLA
23		352727A1		1	ESPACIADOR
24		895-15008		2	ARANDELA, M8 x 20 x 1.6
25		832-10408		2	CONTRA TUERCA, M8 x 1.25, Cl 8

05-02		p1	10/07

HIDRAULICA - DIRECCION

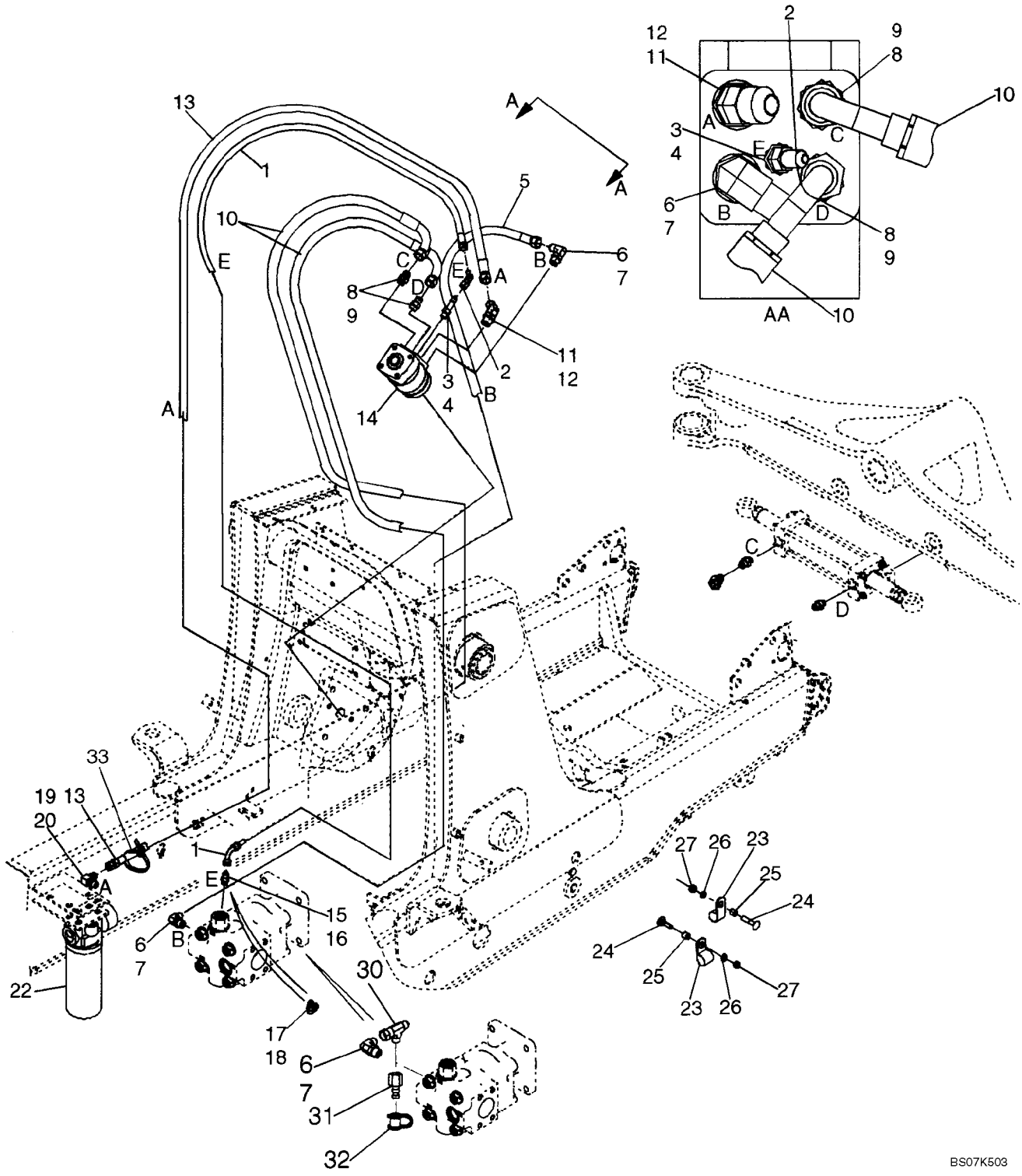

HIDRAULICA - DIRECCION

REF	FN	PART NUMBER	YR/SN	QTY	DENOMINACION
1		87439137		1	MANGUERA (CONJUNTO), 1675 mm (66 in), Steering Pilot Hose
2		218-5228		1	CODO, 90Ü, 7/16"-20, 37Ü x 7/16"-20, 37Ü Fem Sw
3		218-5027		1	RACOR, 1/4", Tube x 1/4", NPTF, 37Ü, Incl. Ref 4
4		237-6004		1	JUNTA HERMETICA, 4-1, 90 Duro, .351" ID x .072" Thk
5		87439138		1	MANGUERA (CONJUNTO), 1600 mm (63 in), Steering Pressure
6		218-5106		2	CODO, 90Ü, 3/4"-16, 37Ü x 3/4"-16, O-Ring, Incl. Ref 7
7		237-6008		1	JUNTA HERMETICA, 8-1, 90 Duro, .644" ID x .087" Thk
8		218-5059		2	RACOR, 3/4"-16, 37Ü x 3/4"-16, O-Ring, Incl. Ref 9
9		237-6008		1	JUNTA HERMETICA, 8-1, 90 Duro, .644" ID x .087" Thk
10		87429382		2	MANGUERA (CONJUNTO), 1520 mm (59-7/8 in), To Steering Cylinder
11		218-5136		1	CODO, 45Ü, 3/4"-16, 37Ü x 3/4"-16, O-Ring, Incl. Ref 12
12		237-6008		1	JUNTA HERMETICA, 8-1, 90 Duro, .644" ID x .087" Thk
13		87439136		1	MANGUERA (CONJUNTO), 1550 mm (61-1/16 in), Return
14		87419634		1	BOMBA, Steering Control Valve; Includes 87454545 Seal Kit, 396592A1 Anti-Cavitation Valve Kit, 396593A1 Bolt Kit
		87454545		1	SERIE DE JUNTAS, Seal; Includes (2) Seals, (8) O-Rings
		396592A1		1	JEUGO, Anti-Cavitation Valve; Includes (2) Balls, (4) Springs, (2) Retainers
		396593A1		1	JEUGO, Bolt; Includes (7) Bolts
15		218-5057		1	RACOR, 9/16"-18, 37Ü x 9/16"-18, O-Ring, Incl. Ref 16, Standard Equipment, Models Without Auxiliary Hydraulics
16		237-6006		1	JUNTA HERMETICA, 6-1, 90 Duro, .468" ID x .078" Thk

HIDRAULICA - DIRECCION

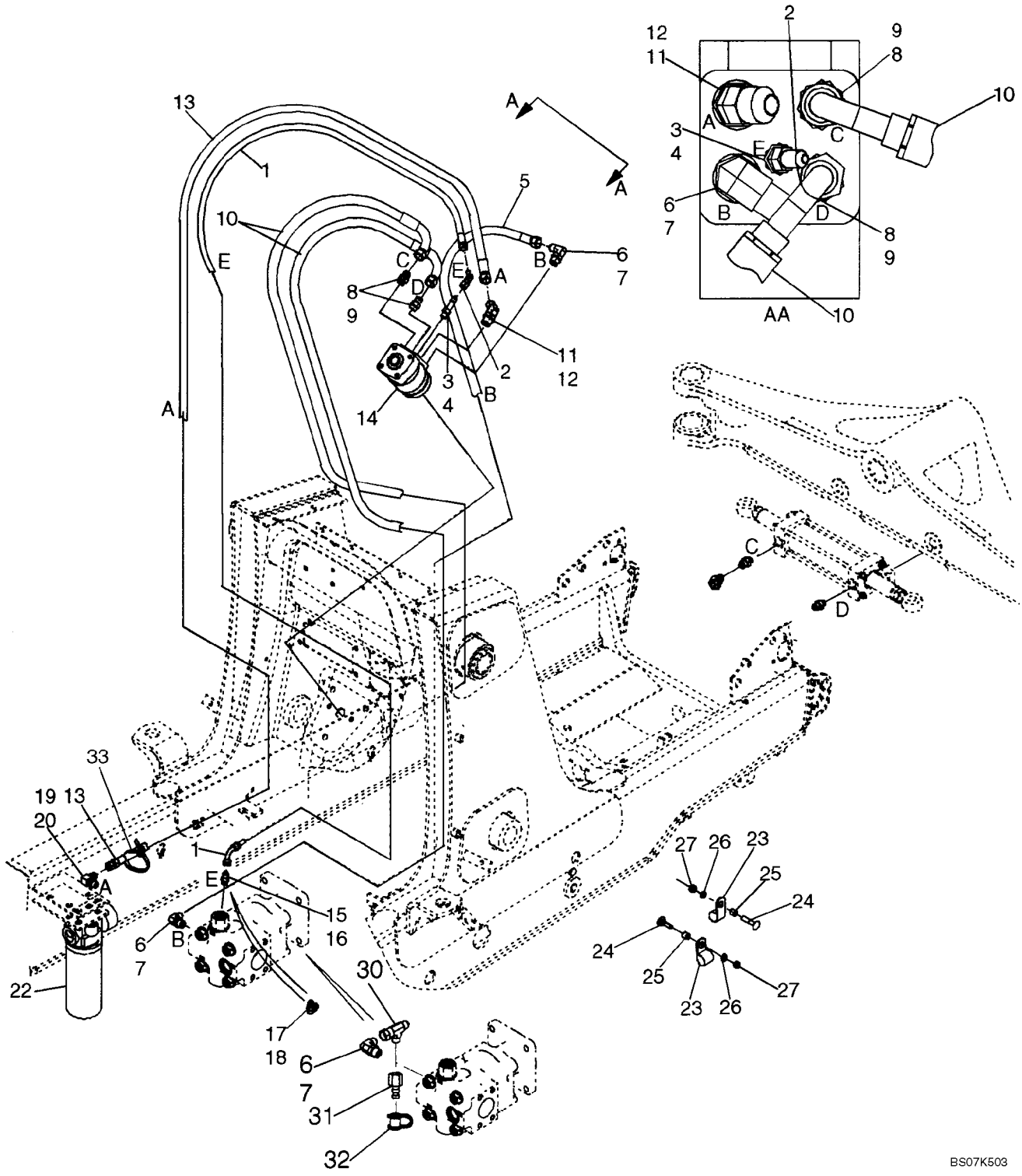

HIDRAULICA - DIRECCION

REF	FN	PART NUMBER	YR/SN	QTY	DENOMINACION
17		282428A1		1	VĆLVULA DE PASO, CHECK, Tee, 9/16; Incl. Ref 18; Models With Auxiliary Hydraulics
18		237-6006		1	JUNTA HERMETICA, 6-1, 90 Duro, .468" ID x .078" Thk
19		218-5280		1	CODO, 90Ü, 3/4"-16, 37Ü x 9/16"-18, O-Ring, Incl. Ref 20
20		237-6006		1	JUNTA HERMETICA, 6-1, 90 Duro, .468" ID x .078" Thk
22		87440045		1	FILTRO CONJ, Hydraulic Oil, See Figure 08-57
23		515-23159		2	BORNE, 5/8", Insul, 3/8" Bolt, P-Type
24		711-10050		2	PERNO, CABEZA RONDA, Short NK, M10 x 50, Cl8.8
25		120303A1		2	ESPACIADOR
26		892-11010		2	ARANDELA DE FRENO, M10
27		829-1410		2	TUERCA, M10, Cl 10
30		218-845		1	RACOR-T, 37Ü, 3/4"-16 x 3/4"-16, Fem Sw Run
31		192834A1		1	CARDAN, Diagnostic
32		H434163		1	CAPUCHON GUARDA-POLVO, Dust
33		L11541		1	CIERRA CABLES

05-02A		p1	02/08

HIDRAULICA - DIRECCION (CON DIRECCIĎN CĎMODA)

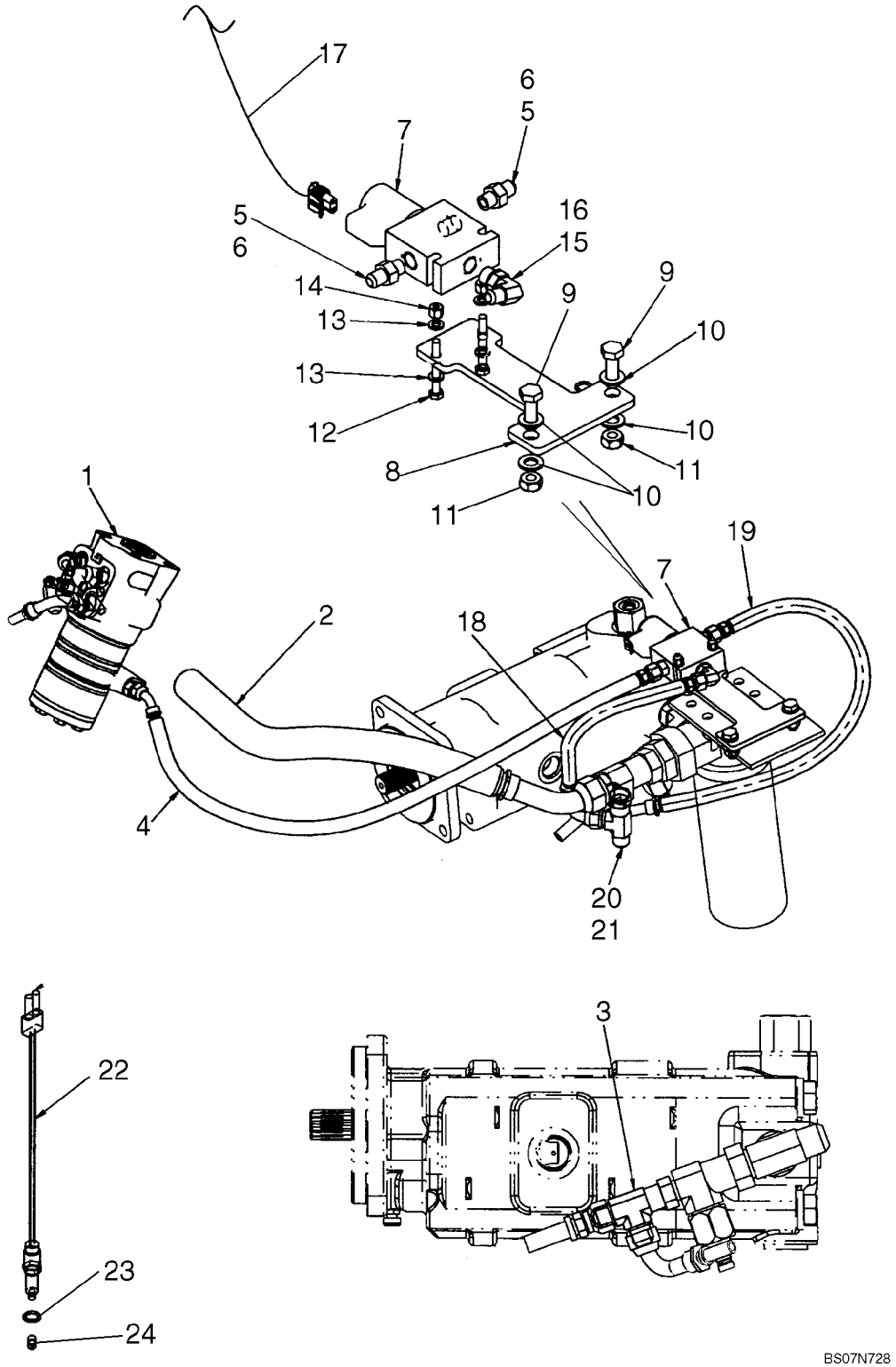

HIDRAULICA - DIRECCION (CON DIRECCIĎN CĎMODA)

REF	FN	PART NUMBER	YR/SN	QTY	DENOMINACION
		REF			MANUAL, For Comfort Steer Electrical, See Figure 04-09A; For Steering Common Parts, See Figure 05-02
1		87579286		1	BOMBA HIDRĆULICA, Steering Control Valve Pump, Dual Speed Steering; Includes 87454545, 396592A1, 87619415; For Attaching Fittings and Hoses, See Figure 05-02
		87454545		1	SERIE DE JUNTAS, Seal Kit; Includes (2) Seals, (8) O-Rings, Instructions
		396592A1		1	JEUGO, Anti-Cavitation; Includes (2) Balls, (4) Springs, (2) Retainers
		87619415		1	JUEGO DE TORNILLO, Bolt Kit Includes (7) Capscrews
2		87659613		1	MANGUERA (CONJUNTO), Return Tube, Filter to Tank; For Fitting at Filter, See Figure 08-03
3		218-845		1	RACOR-T, 37Ü, 3/4"-16 x 3/4"-16, Fem Sw Run, Used In Addition to Existing Fittings
4		87560508		1	MANGUERA (CONJUNTO), 1580 mm (62-7/32 in) long Hose; Pilot; Dual Speed
5		218-5057		2	RACOR, 9/16"-18, 37Ü x 9/16"-18, O-Ring, Incl. Ref 6
6		237-6006		1	JUNTA HERMETICA, 6-1, 90 Duro, .468" ID x .078" Thk
7		87382811		1	ELECTROVĆLVULA, Two-Position Three-Way Solenoid Valve; Includes 87348571, 329483A1, 87613159, 87613161
		87348571		1	TUERCA, Hex, 1/2-20 NF; Coil
		329483A1		1	SERIE DE JUNTAS
		87613159		1	ELECTROVĆLVULA, Cartridge, Valve
		87613161		1	SOLENOIDE, Coil
8		87610318		1	PLACA DE MONTAJE, Solenoid Mount Bracket, Painted Tan
9		614-10030		2	TORNILLO, Hex, M10 x 30, 8.8
10		895-11010		4	ARANDELA, M10 x 20 x 2
11		829-1410		2	TUERCA, M10, Cl 10
12		814-6050		2	TORNILLO, Hex, M6 x 50, 8.8

05-02A		p2	02/08

HIDRAULICA - DIRECCION (CON DIRECCIĎN CĎMODA)

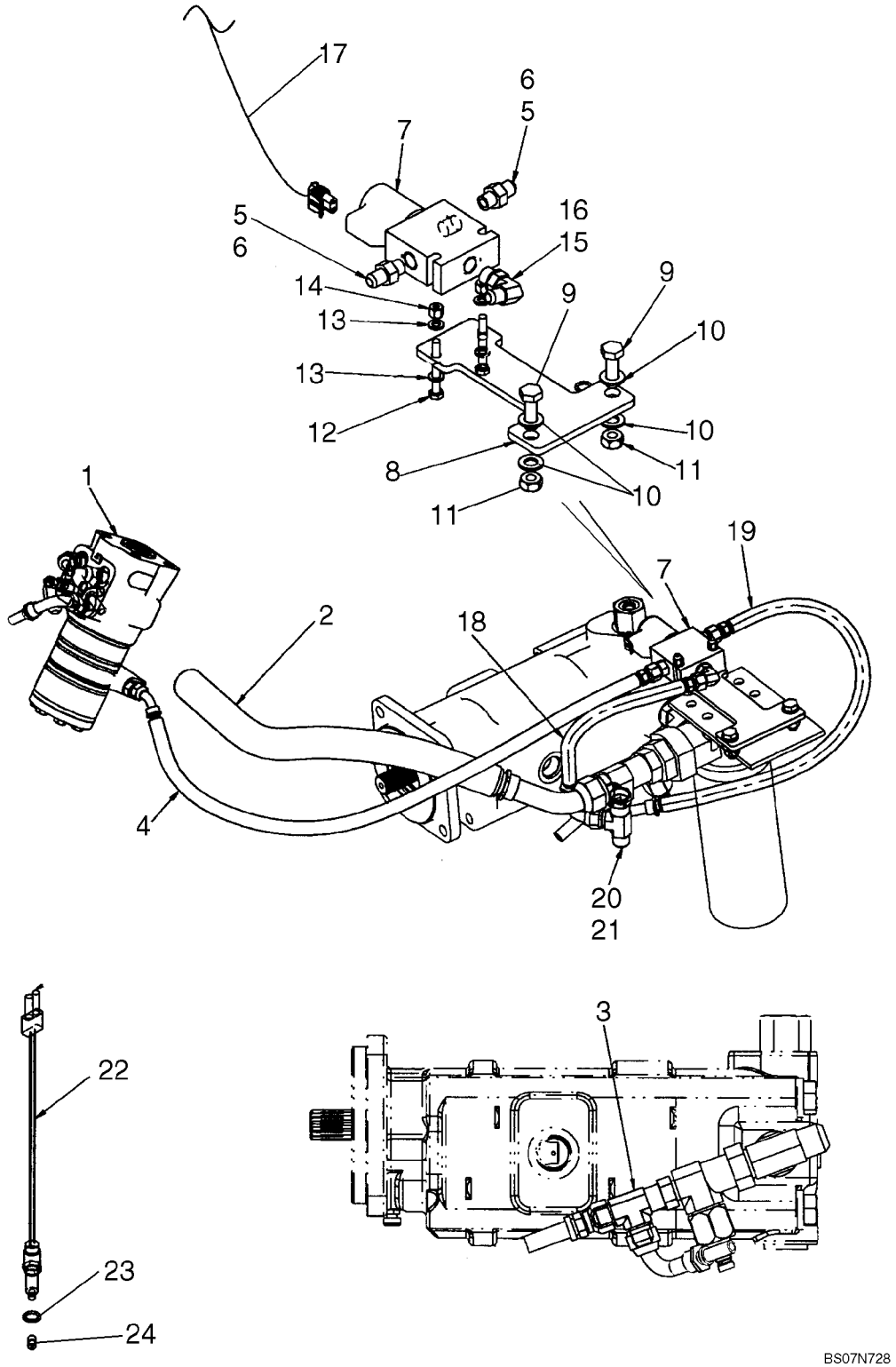

HIDRAULICA - DIRECCION (CON DIRECCIĎN CĎMODA)

REF	FN	PART NUMBER	YR/SN	QTY	DENOMINACION
13		895-11006		4	ARANDELA, M6
14		832-10406		2	CONTRA TUERCA, M6 x 1, Cl 8
15		218-5105		1	CODO, 90Ü, 9/16"-18, 37Ü x 9/16"-18, O-Ring, Incl. Ref 16
16		237-6006		1	JUNTA HERMETICA, 6-1, 90 Duro, .468" ID x .078" Thk
17		87663365		1	GRUPO DE CABLES, Comfort Steer Jumper
18		87671893		1	MANGUERA (CONJUNTO), 315 mm (12-3/8 in) long Hose; Dual Speed To Tank
19		87560507		1	MANGUERA (CONJUNTO), 705 mm (27-25/32 in) long Hose; Pressure; Dual Speed
20		218-5486		1	RACOR-T, 37Ü, 7/8"-14 x 7/8"-14, Fem Sw Run x 3/4"-16 Br
21		237-6012		1	JUNTA HERMETICA, 12-1, 90 Duro, .924 ID x .118" Thk
		87578910		1	SENSOR, Position; Modesl With Standard Transmission Only; Attaches To Chassis Option Harness; Incl. 25 - 27
22		NSS		1	NO SE REPARA SEPARADAM., Switch
23		NSS		1	NO SE REPARA SEPARADAM., O-Ring
24		NSS		1	NO SE REPARA SEPARADAM., Pin

05-03		p1	01/08

TUBO DE LA DIRECCION

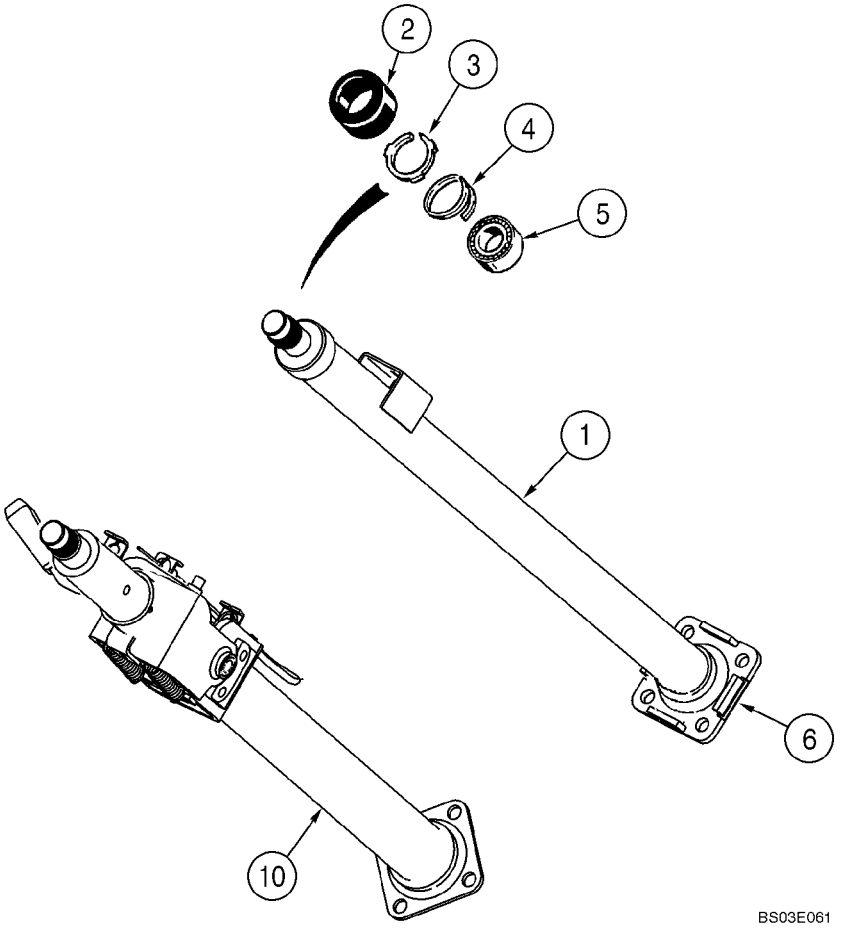

TUBO DE LA DIRECCION

REF	FN	PART NUMBER	YR/SN	QTY	DENOMINACION
		348794A1		1	COLUMNA DE DIRECCION, Canopy Models, Incl. Ref 1 - 6
1		NSS		1	NO SE REPARA SEPARADAM., Column
2		S115351		1	TAPON DEL DEPOSITO
3		NSS		1	NO SE REPARA SEPARADAM., Retainer
4		102-1387		1	ANILLO DE RESORTE, #87, Ext, Spiral
5		NSS		1	NO SE REPARA SEPARADAM., Bearing
6		NSS		1	NO SE REPARA SEPARADAM., Flange
10		352569A4		1	COLUMNA DE DIRECCION, 712 mm Long, Cab Models, With Tilt Steering, Includes 87659610, 87659611, 87659612, 87659616
		87659610		1	JUEGO DE PIEZAS, Spring Set, Tilt Column, SVC
		87659611		1	JUEGO DE PIEZAS, Segment Set, Tilt Column SVC
		87659612		1	JUEGO DE PIEZAS, Lever Set, Tilt Column SVC
		87659616		1	JUEGO DE PIEZAS, Cable, Tilt Column SVC

05-04		p1	12/07

EJE, DELANTERO (86990837) - SOPORTE

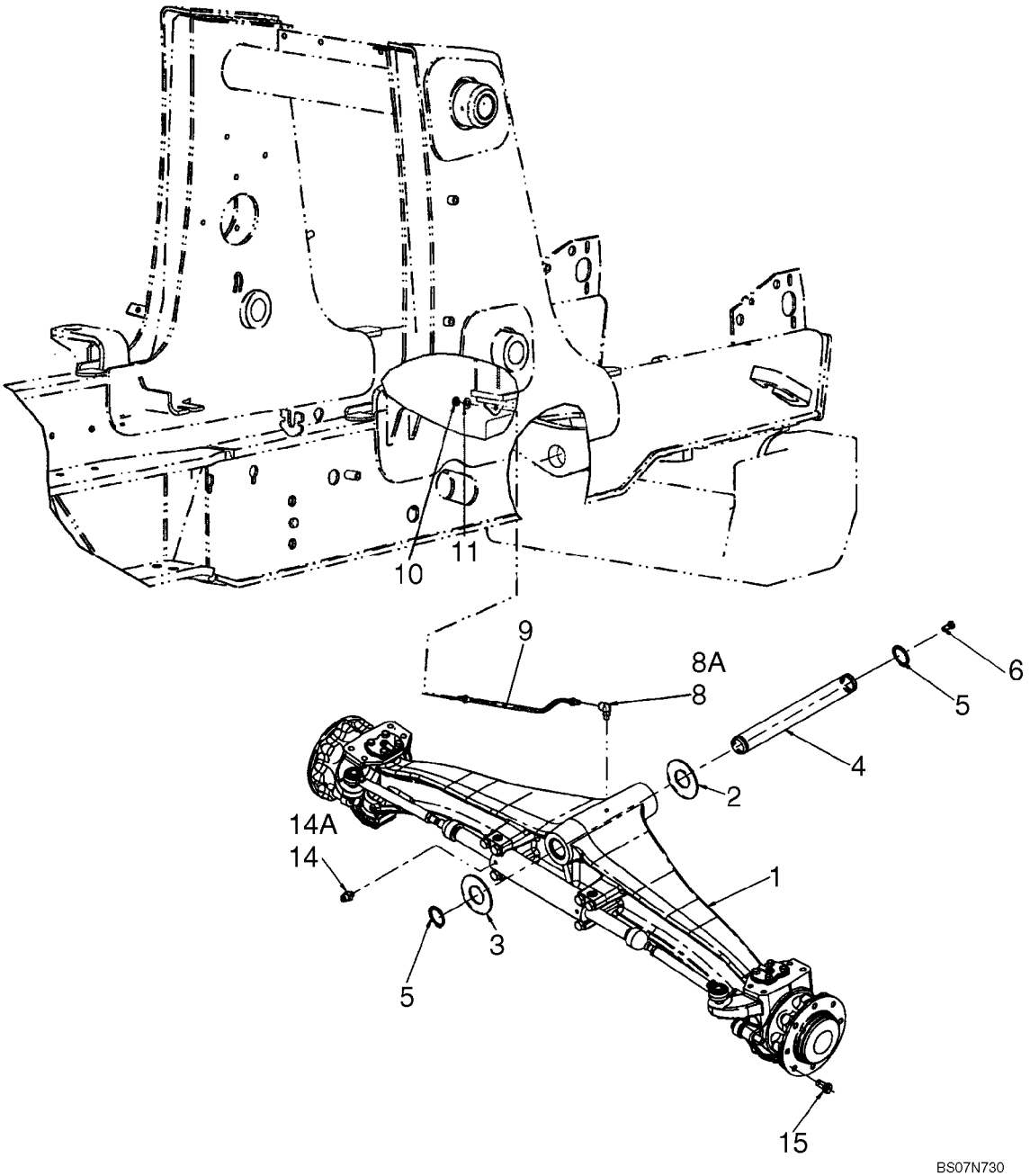

EJE, DELANTERO (86990837) - SOPORTE

REF	FN	PART NUMBER	YR/SN	QTY	DENOMINACION
1		86990837		1	EJE, DIRECTOR, Front, Two Wheel Drive, See Figures 05-05 - 05-08
2		191796A1		AR	ARANDELA, 2 x 4 x 1/16
3		D123684		1	ARANDELA, Thrust, 2-1/2 x 4-1/2 x 3/16
4		87404197		1	PERNO DE PIVOTE
5		800-44050		2	ANILLO DE RESORTE, M50, Ext
6		614-12025		1	TORNILLO, Hex, M12 x 25, 8.8
8		218-5103		1	CODO, 90Ü, 7/16"-20, 37Ü x 7/16"-20, O-Ring, Incl. Ref 8A
8A		237-6004		1	JUNTA HERMETICA, 4-1, 90 Duro, .351" ID x .072" Thk
9		87572760		1	MANGUERA (CONJUNTO), 533 mm (21 in), Lubrication Line
10		F53473		1	TUERCA
11		495-11047		1	ARANDELA, 7/16", SAE
14		218-5351		2	RACOR, 3/4"-16, 37Ü x 9/16"-18, O-Ring, Incl. Ref 14A
14A		237-6006		1	JUNTA HERMETICA, 6-1, 90 Duro, .468" ID x .078" Thk
15		A38208		16	TORNILLO, Wheel Bolt

EJE, DELANTERO (86990837) - ALOJAMIENTO

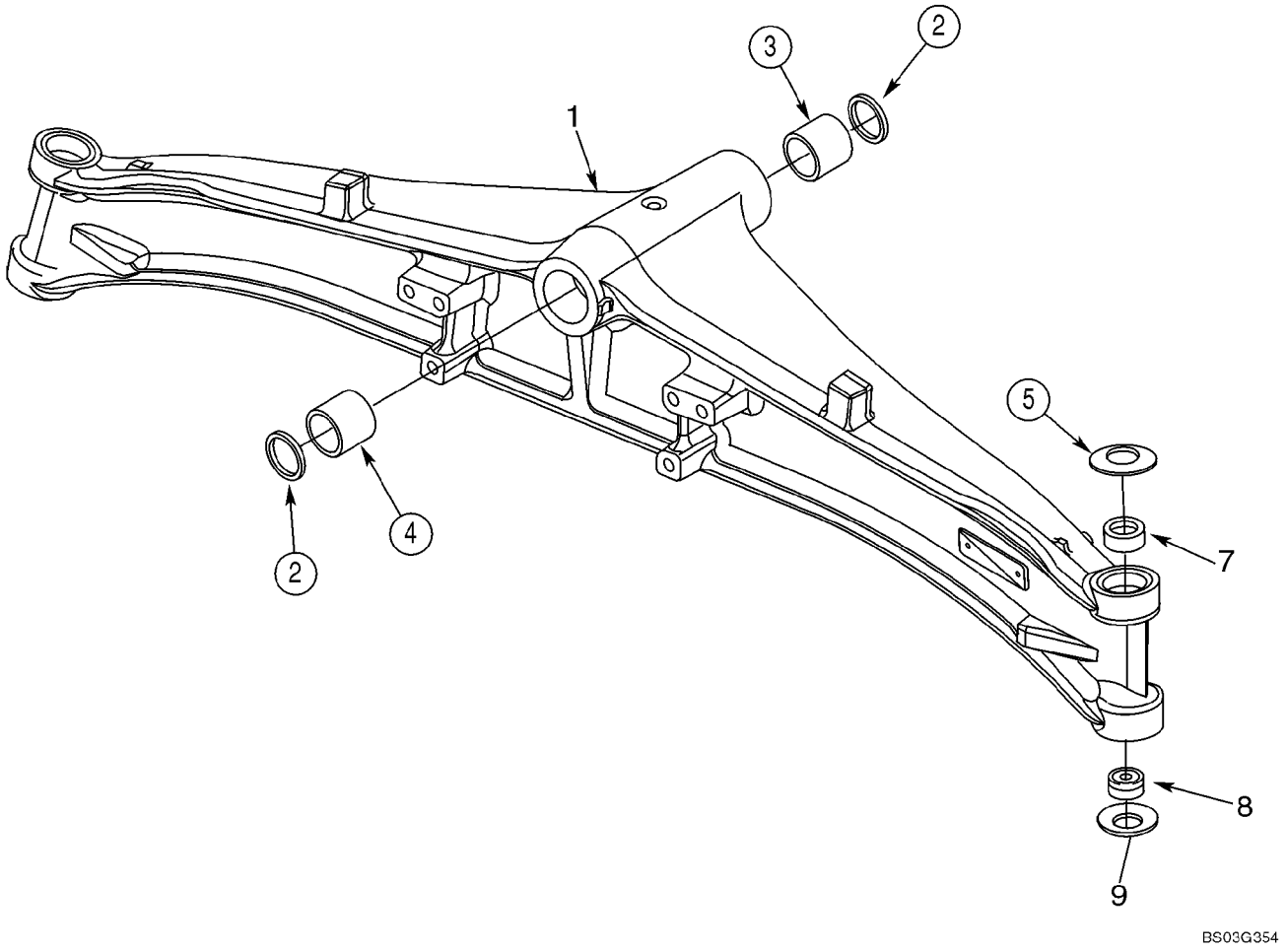

EJE, DELANTERO (86990837) - ALOJAMIENTO

REF	FN	PART NUMBER	YR/SN	QTY	DENOMINACION
		86990837		1	EJE, DIRECTOR, Front, Two Wheel Drive, Incl. 1 - 9; Also Includes Parts On Figures 05-05 - 05-08
1		429230A1		1	CĆRTER DE PUENTE
2		N14367		2	ANILLO DE CIERRE
3		D149726		1	CASQUILLO, Front
4		D149725		1	CASQUILLO, Rear
5		122270A1		2	ARANDELA, Belleville
7		87400286		2	CASQUILLO
8		N14373		2	CASQUILLO, Bushing; Two Piece; 28 ID x 50 OD x 16
9		122261A1		2	ARANDELA, Belleville

EJE, DELANTERO (86990837) - ALOJAMIENTO, ARTICULACIĎN GIRATORIA

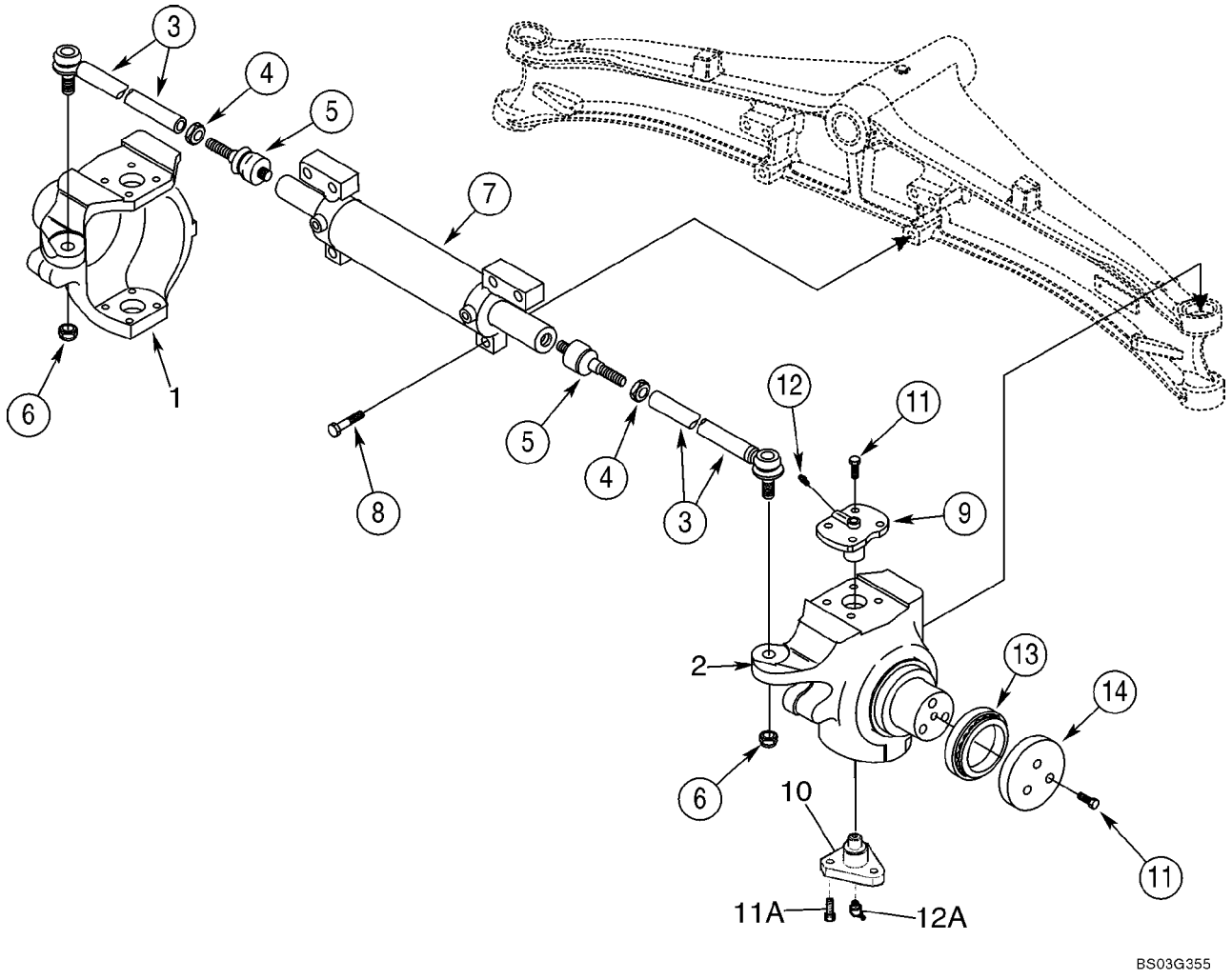

EJE, DELANTERO (86990837) - ALOJAMIENTO, ARTICULACIĎN GIRATORIA

REF	FN	PART NUMBER	YR/SN	QTY	DENOMINACION
		86990837		1	EJE, DIRECTOR, Front, Two Wheel Drive, Incl. 1 - 14; Also Includes Parts On Figures 05-05 - 05-08
1		429231A1		1	CAVIDAD, Swivel, Left-Hand
2		429232A1		1	CAVIDAD, Swivel, Right-Hand
		401052A1		2	DIRECCION (CJTO), Arm, Incl. Ref 3 - 5
3		401054A1		1	TIRANTE
4		934727R1		1	TUERCA, Thin, M18 x 1.5, Cl 04
5		112509A1		1	JUNTA DE ROTULA
6		905839R1		2	CONTRA TUERCA, M18 x 1.5, Thin
7		401055A1		1	CILINDRO DIRECTION, See Figure 05-07
8		863-16070		6	TORNILLO, Hex Soc Hd, M16 x 70, 12.9
9		122265A1		2	BULON/PIN, LARGO, King Pin, Upper
10		122259A1		2	PIVOTE, King Pin, Lower; Triangular Shape
11		100533A1		14	TORNILLO, Lock, M12 x 30
11A		D150214		6	TORNILLO, Lock, M14 x 35; Lower King Pin
12		321204		2	ENGRASADOR, M6 x 1, 16mm lg
12A		N13505		2	ENGRASADOR, 45Ü, M6 x 1, Lower King Pin
13		401059A1		2	RODAMIENTO DE RODILLOS, Thrust
14		401060A1		2	ARANDELA

05-07		p1	02/08

EJE, DELANTERO (86990837) - CILINDRO, DIRECCION

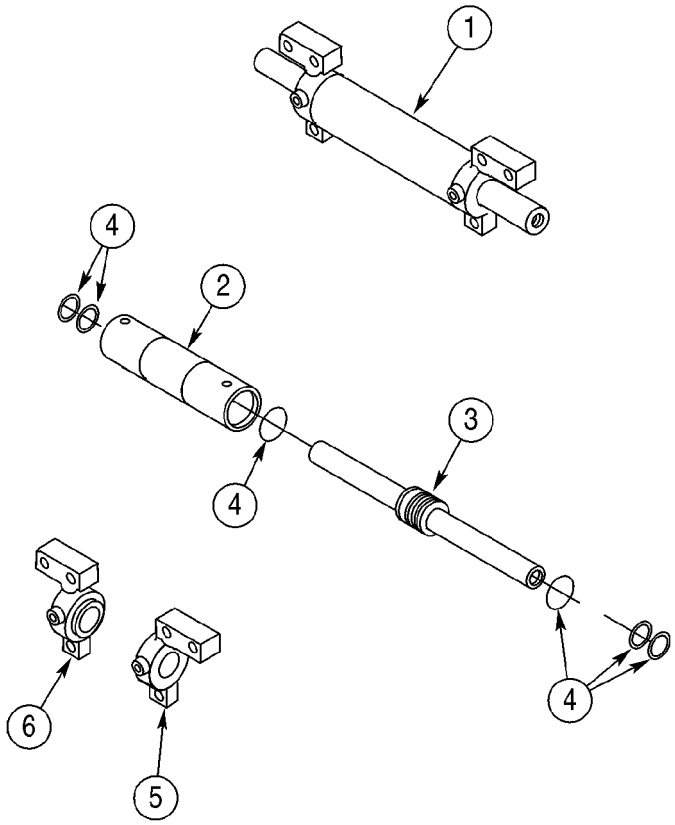

BC00G065

EJE, DELANTERO (86990837) - CILINDRO, DIRECCION

REF	FN	PART NUMBER	YR/SN	QTY	DENOMINACION
		86990837		1	EJE, DIRECTOR, Front, Two Wheel Drive, Incl. 1 - 6; Also Includes Parts On Figures 05-05 - 05-08
1		401055A1		1	CILINDRO DIRECTION, Incl. Ref 2 - 6
2		NSS		1	NO SE REPARA SEPARADAM., Tube, Cylinder
3		401062A1		1	VASTAGO CILINDRO
4		401061A1		1	JUEGO JUNTAS, Seal, Component Parts Not Serviced Separately
5		401063A1		1	CABEZA (CONJUNTO), Right-Hand
6		401064A1		1	CABEZA (CONJUNTO), Left-Hand

EJE, DELANTERO (86990837) - CUBO Y COJINETES

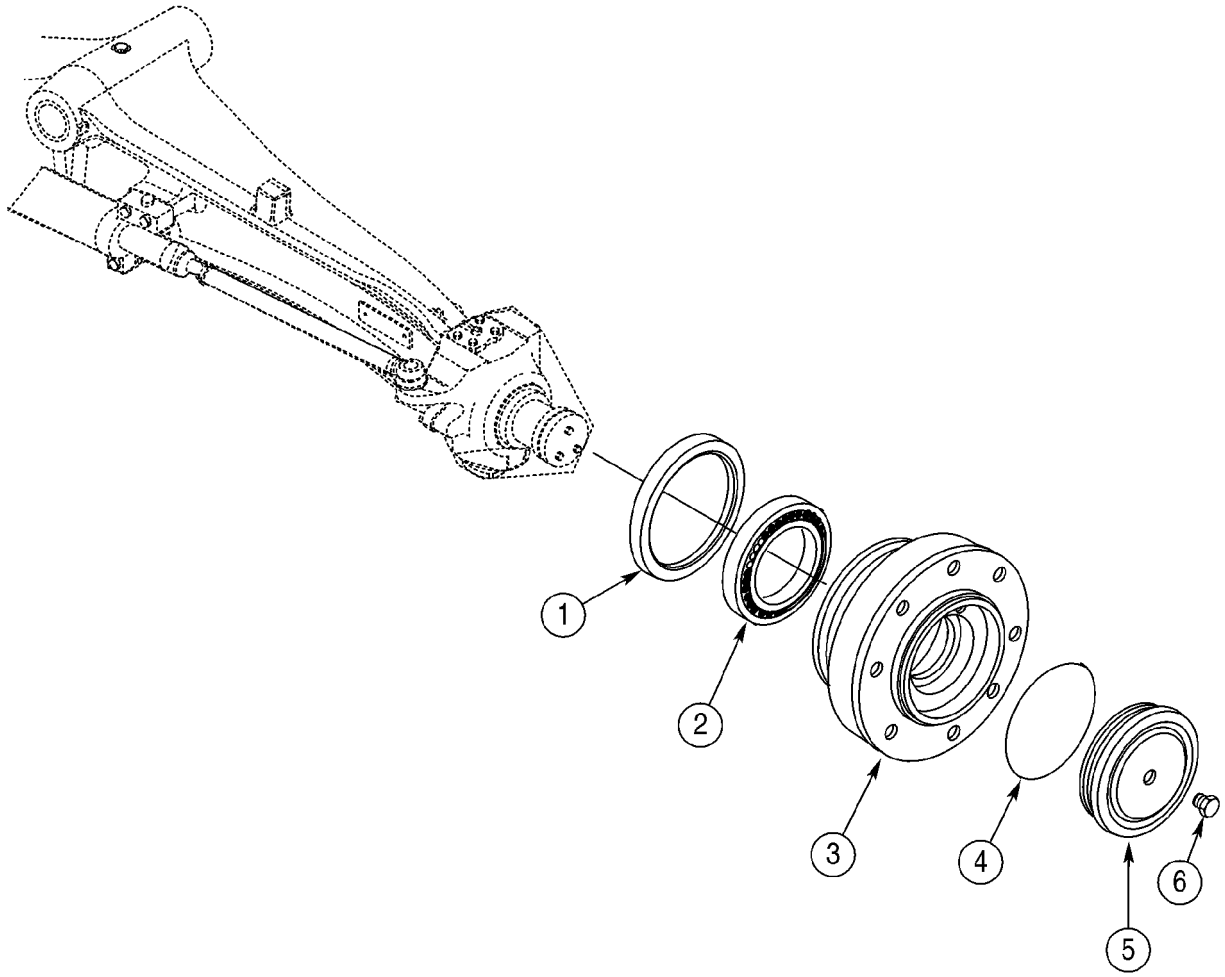

BC00G066

EJE, DELANTERO (86990837) - CUBO Y COJINETES

REF	FN	PART NUMBER	YR/SN	QTY	DENOMINACION
		86990837		1	EJE, DIRECTOR, Front, Two Wheel Drive; Incl. 1 - 6; Also Includes Parts On Figures 05-05 - 05-08
1		311569A1		2	JUNTA DE ACEITE
2		324213A1		2	COJINETE
3		401065A1		2	CUBO
4		401066A1		2	JUNTA HERMETICA
5		401067A1		2	TAPA
6		D142898		2	TAPčN, 10 x 1 mm

NEUMćTICOS, FRONTALES - NEUMćTICOS

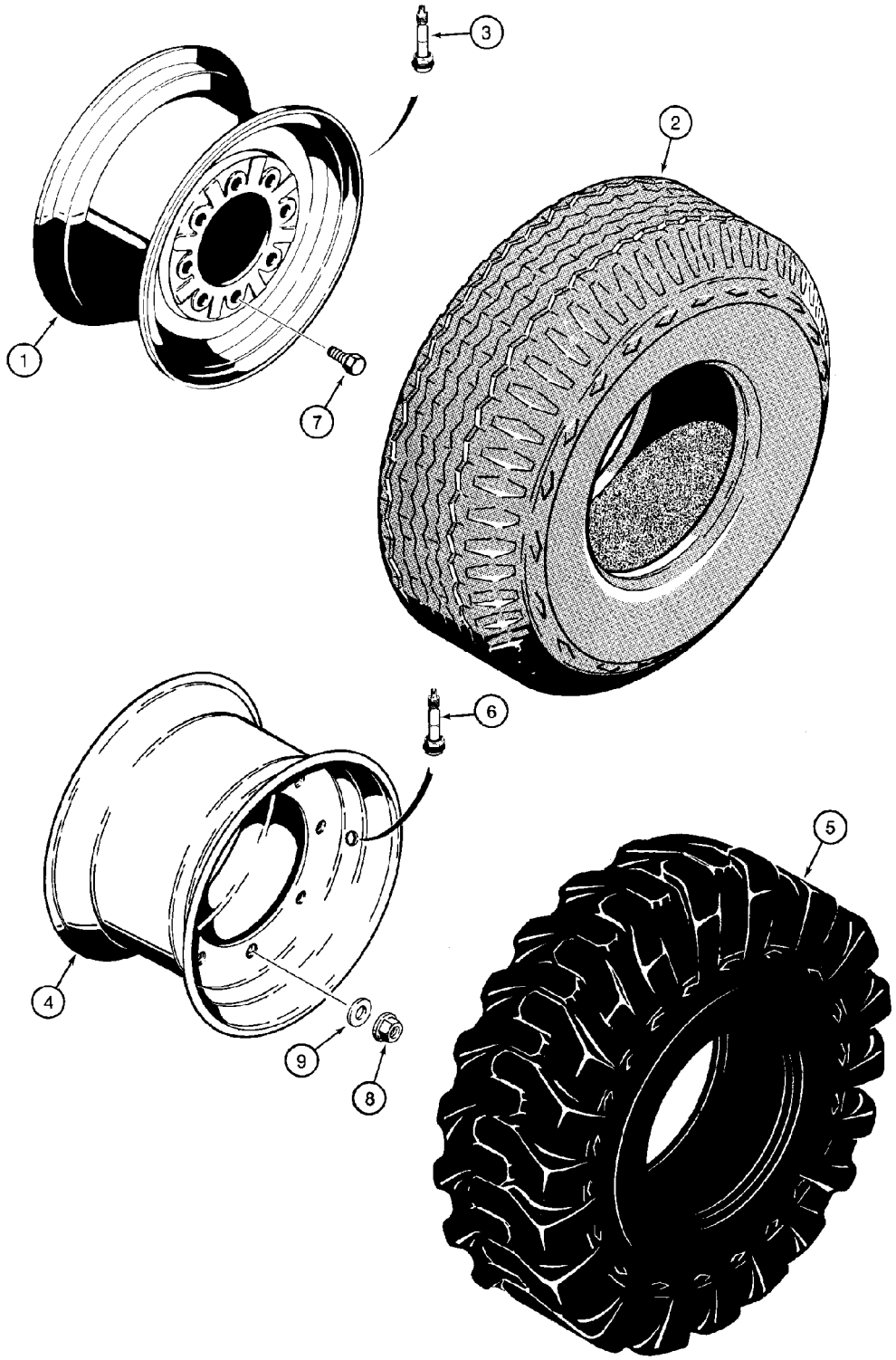

NEUMćTICOS, FRONTALES - NEUMćTICOS

REF	FN	PART NUMBER	YR/SN	QTY	DENOMINACION
1		D125223		2	RIN, For 11L x 16 - 10 PR F3 Tires; Two Wheel or Four Wheel Drive Models
1		197771A1		2	RUEDA, For 11L x 16 - 10 PR F3 Tires; Two Wheel or Four Wheel Drive Models
2		REF		2	MANUAL, Tire, Purchase Locally
3		387897R91		2	VASTAGO DE VALVULA
4		119243A1		2	RIN, For 12 x 16.5 - 8 or 10 Ply Tires; Two Wheel or Four Wheel Drive Models
5		REF		2	MANUAL, Tire, Purchase Locally
6		387897R91		2	VASTAGO DE VALVULA
7		A38208		16	TORNILLO, Wheel Bolts; Two Wheel Drive Models
8		825-11418		16	TUERCA, M18 x 1.5, Cl 8, Wheel Nuts; Four Wheel Drive Models
9		496-81000		16	ARANDELA, 25/32" x 1 3/8" x .134", HDN, Wheel Nuts; Four Wheel Drive Models

NOTAS

SECTION INDEX
Cadena Cinemática

06-01	EJE, TRANSMISIčN DELANTERA - SOPORTE
06-02	EJE, TRANSMISIčN DELANTERA - ALOJAMIENTO
06-03	EJE, TRANSMISIčN DELANTERA - ALOJAMIENTO, ARTICULACIčN GIRATORIA
06-04	EJE, TRANSMISIčN DELANTERA - CILINDRO, DIRECCION
06-05	EJE, TRANSMISIčN DELANTERA - VARILLAS, EJE
06-06	EJE, TRANSMISIčN DELANTERA - PLANETARIO
06-07	EJE, TRANSMISIčN DELANTERA - DIFERENCIAL
06-08	EJE, TRANSMISIčN DELANTERA - ANILLO Y PI¤čN
06-09	EJE DE TRANSMISIčN, EJE DELANTERO
06-10	SISTEMA DE REFRIGERACIčN - TRANSMISION
06-11	TRANSMISION - SOPORTE
06-12	CONJUNTO DE LA TRANSMISION, 2WD - FILTRO, ACEITE
06-13	CONJUNTO DE LA TRANSMISION, 2WD - ALOJAMIENTO
06-14	CONJUNTO DE LA TRANSMISION, 2WD - BOMBA, ACEITE
06-15	CONJUNTO DE LA TRANSMISION, 2WD - MECANISMO DE CAMBIO
06-16	CONJUNTO DE LA TRANSMISION, 2WD - EJE, RETROCESO & PRIMARIO
06-17	CONJUNTO DE LA TRANSMISION, 2WD - EJE, ENTRADA & T.D.F.
06-18	CONJUNTO DE LA TRANSMISION, 2WD - EJE, SECUNDARIO
06-19	CONJUNTO DE LA TRANSMISION, 2WD - VALVULA, CONTROL
06-20	CONJUNTO DE LA TRANSMISION, 4WD - FILTRO, ACEITE
06-21	CONJUNTO DE LA TRANSMISION, 4WD - ALOJAMIENTO
06-22	CONJUNTO DE LA TRANSMISION, 4WD - BOMBA, ACEITE
06-23	CONJUNTO DE LA TRANSMISION, 4WD - MECANISMO DE CAMBIO
06-24	CONJUNTO DE LA TRANSMISION, 4WD - EJE, RETROCESO & PRIMARIO
06-25	CONJUNTO DE LA TRANSMISION, 4WD - EJE, ENTRADA & T.D.F.
06-26	CONJUNTO DE LA TRANSMISION, 4WD - EJE, SECUNDARIO
06-27	CONJUNTO DE LA TRANSMISION, 4WD - EJE, SALIDA
06-28	CONJUNTO DE LA TRANSMISION, 4WD - VALVULA, CONTROL
06-29	CONJUNTO DE LA TRANSMISION, 4WD - VĆLVULA, SOLENOIDE
06-30	RUEDAS, PARTE TRASERA - NEUMĆTICOS
06-31	EJE, TRANSMISIčN TRASERA - SOPORTE
06-32	EJE, TRASERO - BLOQUEO DEL DIFERENCIAL
06-33	87395372 EJE, TRANSMISIčN TRASERA - ALOJAMIENTO
06-34	87395372 EJE, TRANSMISIčN TRASERA - DIFERENCIAL
06-35	87395372 EJE, TRANSMISIčN TRASERA - ANILLO Y PI¤čN
06-36	87395372 EJE, TRANSMISIčN TRASERA - BLOQUEO DEL DIFERENCIAL
06-37	87395372 EJE, TRANSMISIčN TRASERA - PLANETARIO
06-38	EJE DE TRANSMISIčN, EJE TRASERO

06-01		p1	02/08

EJE, TRANSMISIĎN DELANTERA - SOPORTE

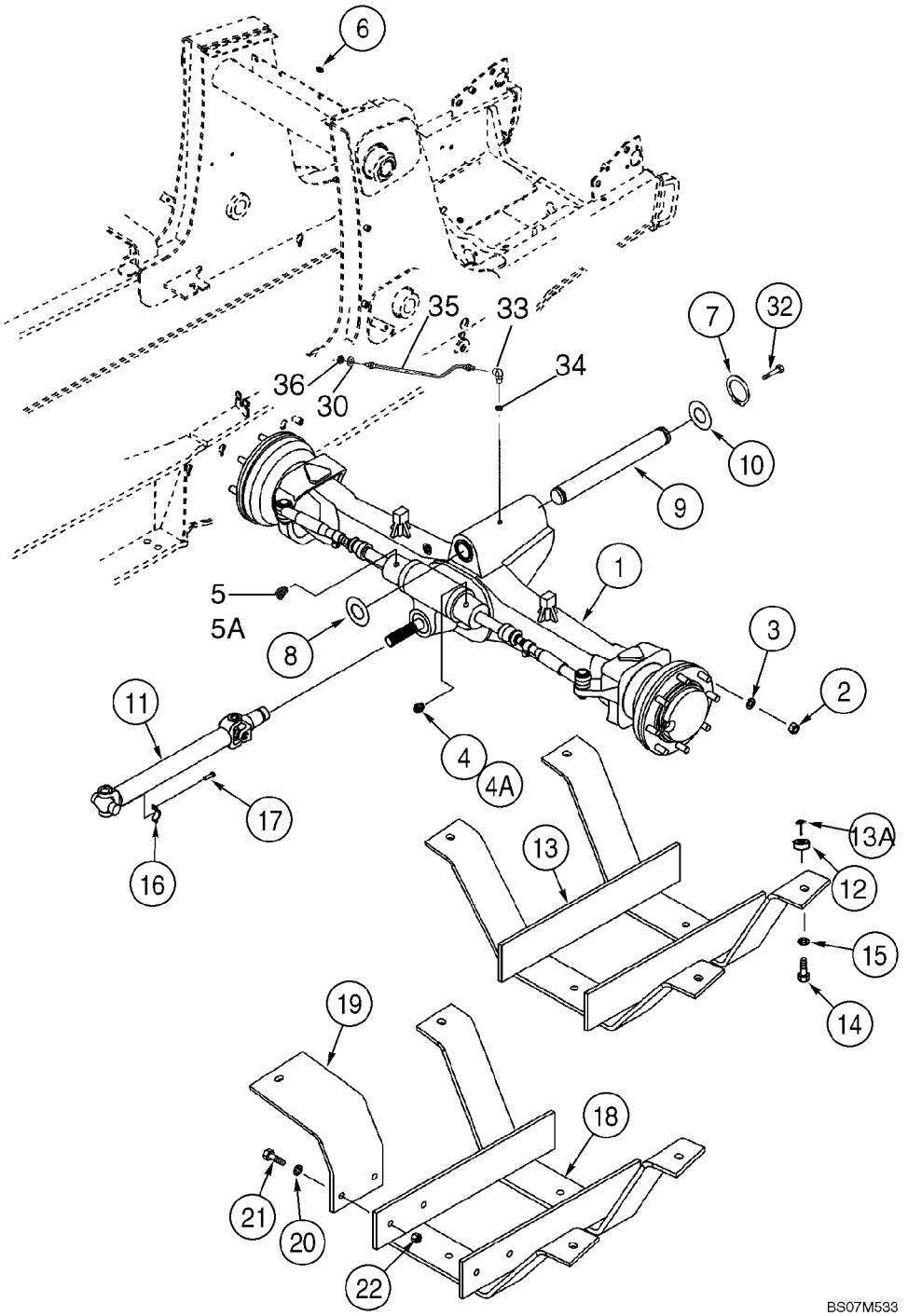

EJE, TRANSMISIĎN DELANTERA - SOPORTE

REF	FN	PART NUMBER	YR/SN	QTY	DENOMINACION
1		87395365		1	EJE (CONJUNTO), Front; See Figures 06-02 - 06-08
2		825-11418		16	TUERCA, M18 x 1.5, Cl 8
3		496-81000		16	ARANDELA, 25/32" x 1 3/8" x .134", HDN
4		218-5351		1	RACOR, 3/4"-16, 37Ü x 9/16"-18, O-Ring, Incl. Ref 4A
4A		237-6006		1	JUNTA HERMETICA, 6-1, 90 Duro, .468" ID x .078" Thk
5		218-5529		1	CODO, 45Ü, 3/4"-16, 37Ü x 9/16"-18, O-Ring, Incl. Ref 5A
5A		237-6006		1	JUNTA HERMETICA, 6-1, 90 Duro, .468" ID x .078" Thk
6		219-1		1	ENGRASADOR, 1/8"-27 x .66 lg
7		800-44050		2	ANILLO DE RESORTE, M50, Ext
8		191796A1		AR	ARANDELA, 2 x 4 x 1/16
9		87404197		1	PERNO DE PIVOTE, Pivot Pin
10		D123684		1	ARANDELA, Thrust, 2-1/2 x 4-1/2 x 3/16
11		87694656		1	ARBOL DE MANDO, See Figure 06-09
12		87649398		4	SEPARADOR
13		137223A2		1	DEFENSA, Drive Shaft, Used On Models With 31 Gallon Fuel Tank
13A		238-6012		4	JUNTA HERMETICA, -012, 90 Duro, .364" ID x .070" Thk
14		1637759		4	TORNILLO, Hex, M12 x 60, 10.9, Full Thd
15		495-81025		4	ARANDELA, 17/32" x 1 1/4" x .179"
16		90-6682T1		2	COLLAR
17		9637611		4	TORNILLO, Hex Flange Head, Locking, Special, 5/16 - 24 UNF x 1-1/16; Replaces D137627 Bolt
18		282038A2		1	GUARDA (CONJUNTO), Drive Shaft, Used On Models With 40 Gallon Fuel Tank
19		87699880		1	PIEZA DE APOYO
20		495-81025		8	ARANDELA, 17/32" x 1 1/4" x .179"
21		827-12060		6	TORNILLO, Hex, M12 x 60, 10.9
22		829-1412		2	TUERCA, M12, Cl 10
30		495-11047		1	ARANDELA, 7/16", SAE
32		614-12025		1	TORNILLO, Hex, M12 x 25, 8.8

EJE, TRANSMISIĎN DELANTERA - SOPORTE

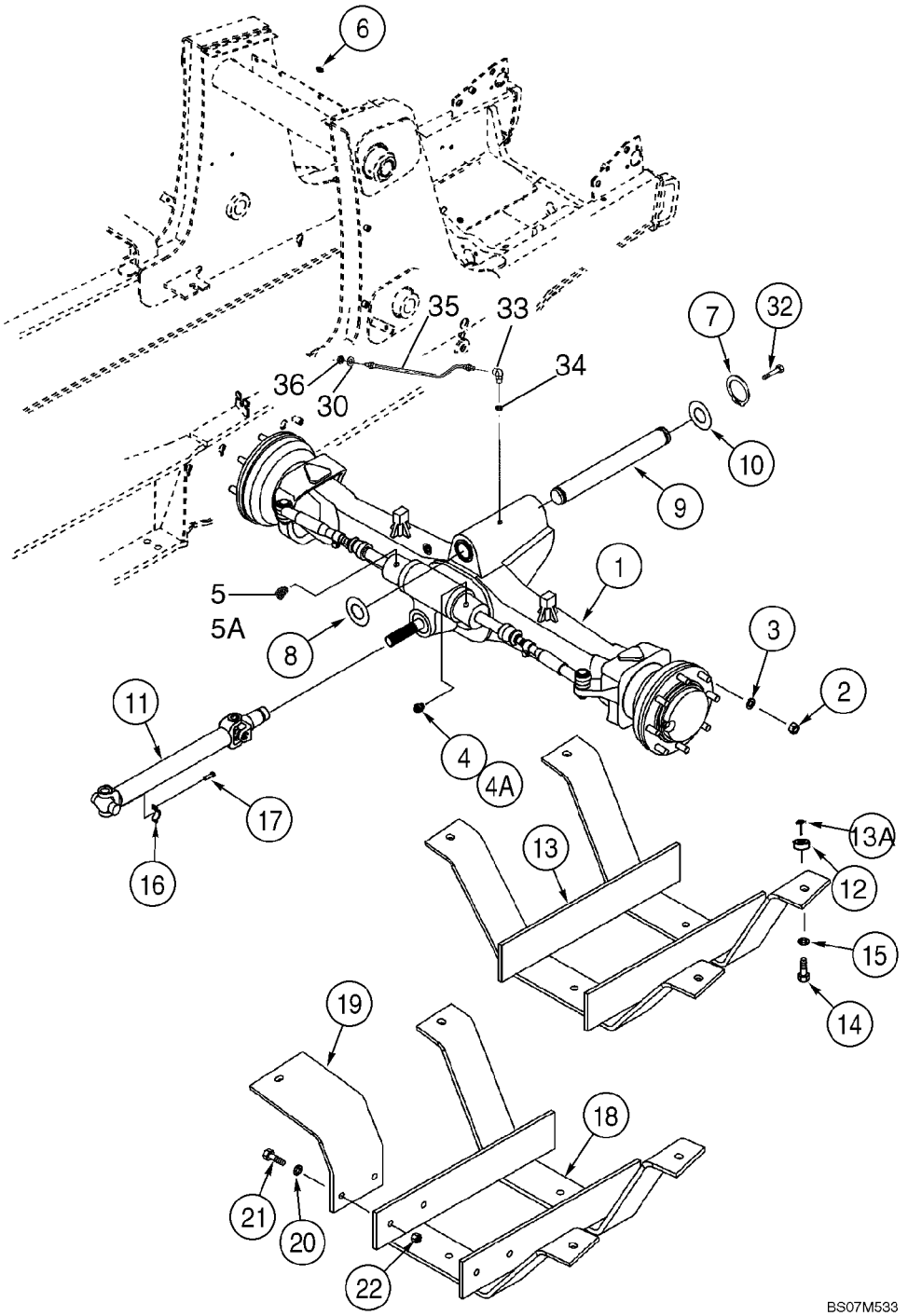

EJE, TRANSMISIĎN DELANTERA - SOPORTE

REF	FN	PART NUMBER	YR/SN	QTY	DENOMINACION
33		218-5103		1	CODO, 90Ü, 7/16"-20, 37Ü x 7/16"-20, O-Ring, Incl. Ref 34
34		237-6004		1	JUNTA HERMETICA, 4-1, 90 Duro, .351" ID x .072" Thk
35		87572760		1	MANGUERA (CONJUNTO), 7/16-20 Fem Swivel x 1/8 NPSN x 21 inch; Remote Lube; Includes Grease Fitting
36		F53473		1	TUERCA, Hex

EJE, TRANSMISIĎN DELANTERA - ALOJAMIENTO

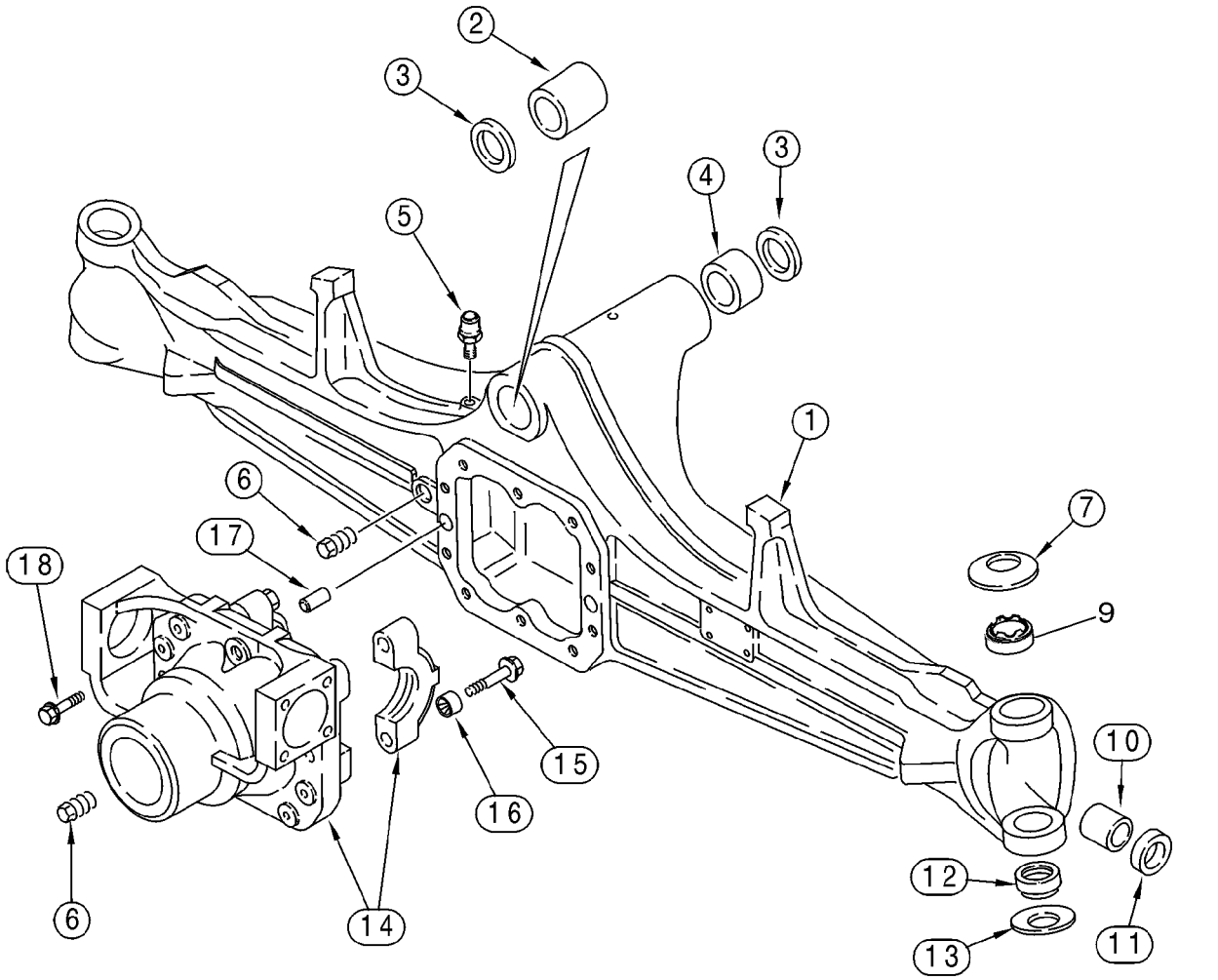

EJE, TRANSMISIĎN DELANTERA - ALOJAMIENTO

REF	FN	PART NUMBER	YR/SN	QTY	DENOMINACION
		87395365		1	EJE (CONJUNTO), Front, Incl. Ref 1 - 18; Also Includes Parts On Figures 06-02 - 06-08
1		427107A1		1	CĆRTER DE PUENTE
2		D149725		1	CASQUILLO
3		N14367		2	ANILLO DE CIERRE
4		D149726		1	CASQUILLO
5		1966149C2		1	RESPIRADERO
6		A156873		2	TAPON DE VIACIADO, 22 mm
7		122270A1		2	ARANDELA, Belleville
9		87400286		2	CASQUILLO
10		1966186C1		2	CASQUILLO
11		87710155		2	RETEN, SEAL
12		100520A1		2	JUNTA DE ROTULA, Bushing, Two Piece
13		122268A1		2	ARANDELA, Belleville
		{87710131}		1	Differential Carrier; Incl. Ref 14 - 16
14		NSS		1	NO SE REPARA SEPARADAM., Carrier
15		S301065		4	TORNILLO, Hex Flg, M14 x 75, 12.9
16		1966136C1		4	CASQUILLO
17		1966138C1		2	PITON
18		5194169		10	TORNILLO, Hex Flg, M12 x 33, 12.9

EJE, TRANSMISIĎN DELANTERA - ALOJAMIENTO, ARTICULACIĎN GIRATORIA

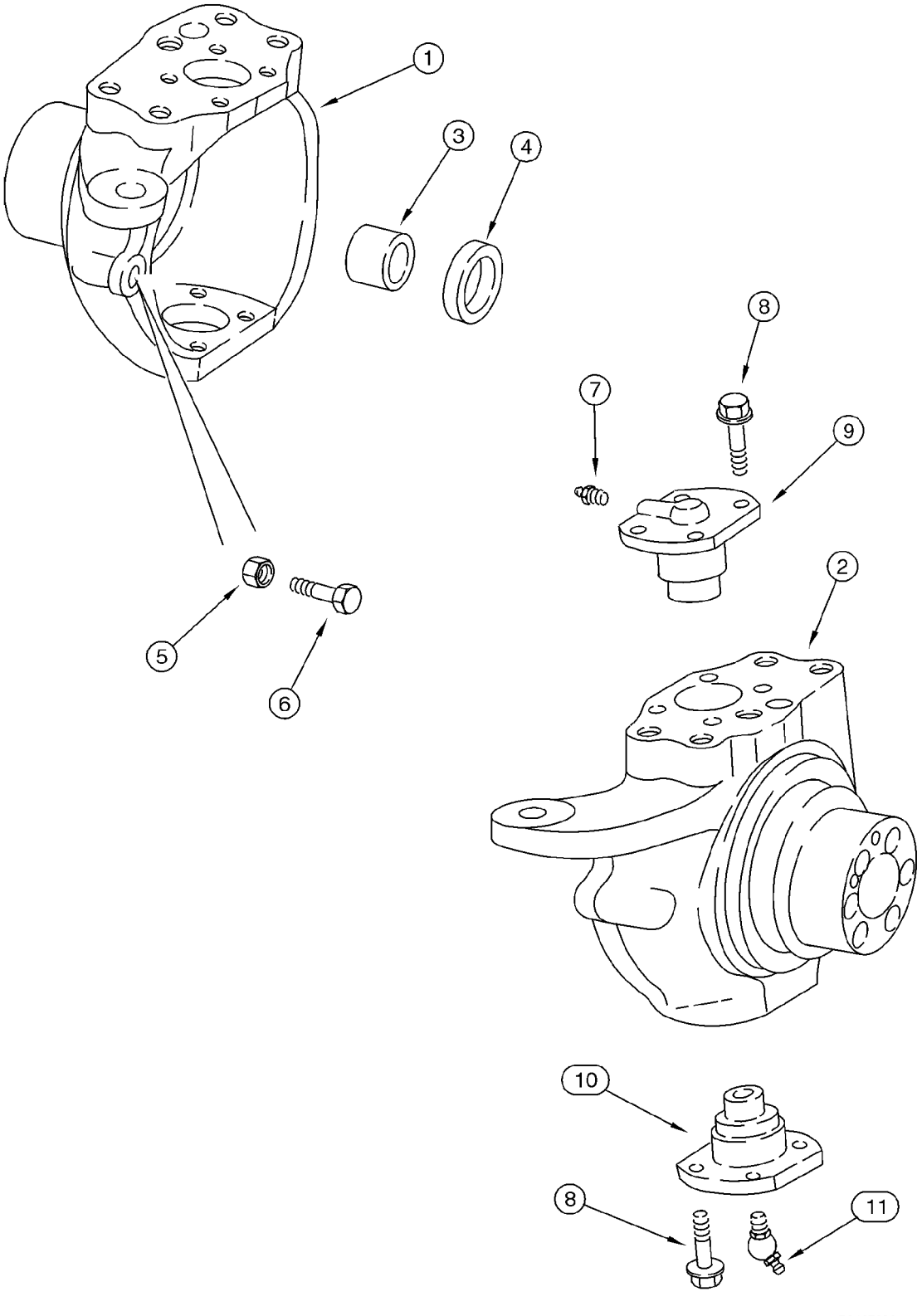

EJE, TRANSMISIĎN DELANTERA - ALOJAMIENTO, ARTICULACIĎN GIRATORIA

REF	FN	PART NUMBER	YR/SN	QTY	DENOMINACION
		87395365		1	EJE (CONJUNTO), Front, Incl. Ref 1 - 11; Also Includes Parts On Figures 06-02 - 06-08
1		{87710156}		1	HOUSING, AXLE, Left-Hand
2		{87710159}		1	HOUSING, AXLE, Right-Hand
3		100532A1		2	CASQUILLO, Used With Right-Hand or Left-Hand Swivel Housing, Not Included With Housing, Purchase Separately
4		87710145		2	RETEN
5		85805986		2	TUERCA, M16
6		5194264		2	TORNILLO, M16 X 75
7		321204		2	ENGRASADOR, M6 x 1, 16mm lg
8		100533A1		16	TORNILLO, M12 x 30
9		122265A1		2	BULON/PIN, LARGO, King Pin
10		122264A1		2	BULON/PIN, LARGO, King Pin
11		N13505		2	ENGRASADOR, 45Ü, M6 x 1

EJE, TRANSMISIĎN DELANTERA - CILINDRO, DIRECCION

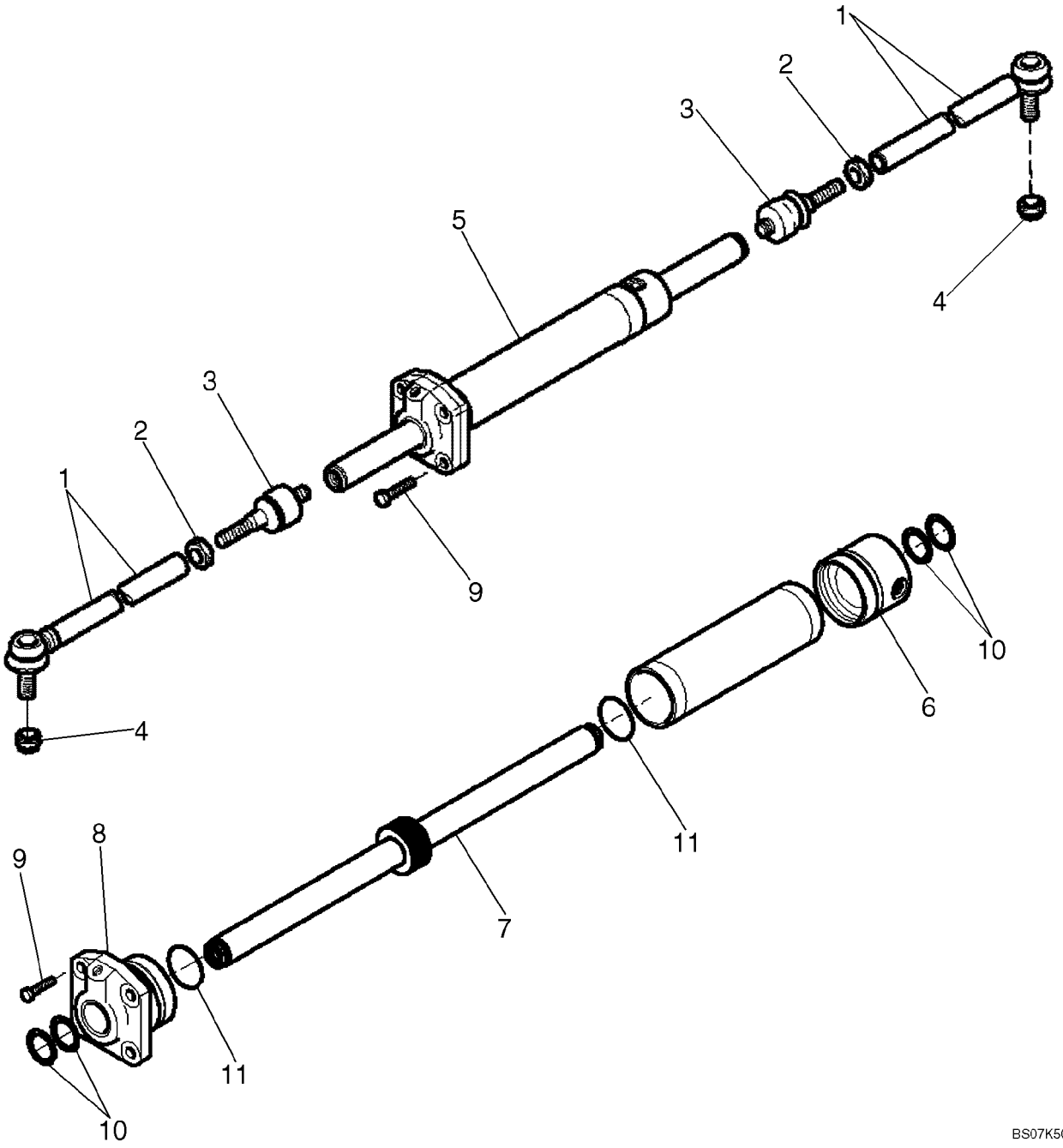

EJE, TRANSMISIĎN DELANTERA - CILINDRO, DIRECCION

REF	FN	PART NUMBER	YR/SN	QTY	DENOMINACION
		87395365		1	EJE (CONJUNTO), Front, Incl. Ref 1 - 11; Also Includes Parts On Figures 06-02 - 06-08
		144457A1		2	BRAZO, Incl. Ref 1 - 3
1		NSS		1	NO SE REPARA SEPARADAM., Ball Joint
2		934727R1		1	TUERCA, Thin, M18 x 1.5, Cl 04
3		112509A1		1	JUNTA DE ROTULA
4		905839R1		2	CONTRA TUERCA, M18 x 1.5, Thin, M18
5		{87710158}		1	CYLINDER, Steering, Incl. Ref 6 - 16, Order 87710144 Kit to Service Seals
6		{87710142}		1	Cylinder Head
7		{87710143}		1	Rod
8		{87710141}		1	Gland
9		{87710137}		4	Bolt; M12 x 35
10		NSS		4	NO SE REPARA SEPARADAM., Seal, Wiper
11		NSS		2	NO SE REPARA SEPARADAM., O-Ring
		{87710144}		1	Seal Kit; Incl. Ref 10, 11

06-05		p1	11/07

EJE, TRANSMISIĎN DELANTERA - VARILLAS, EJE

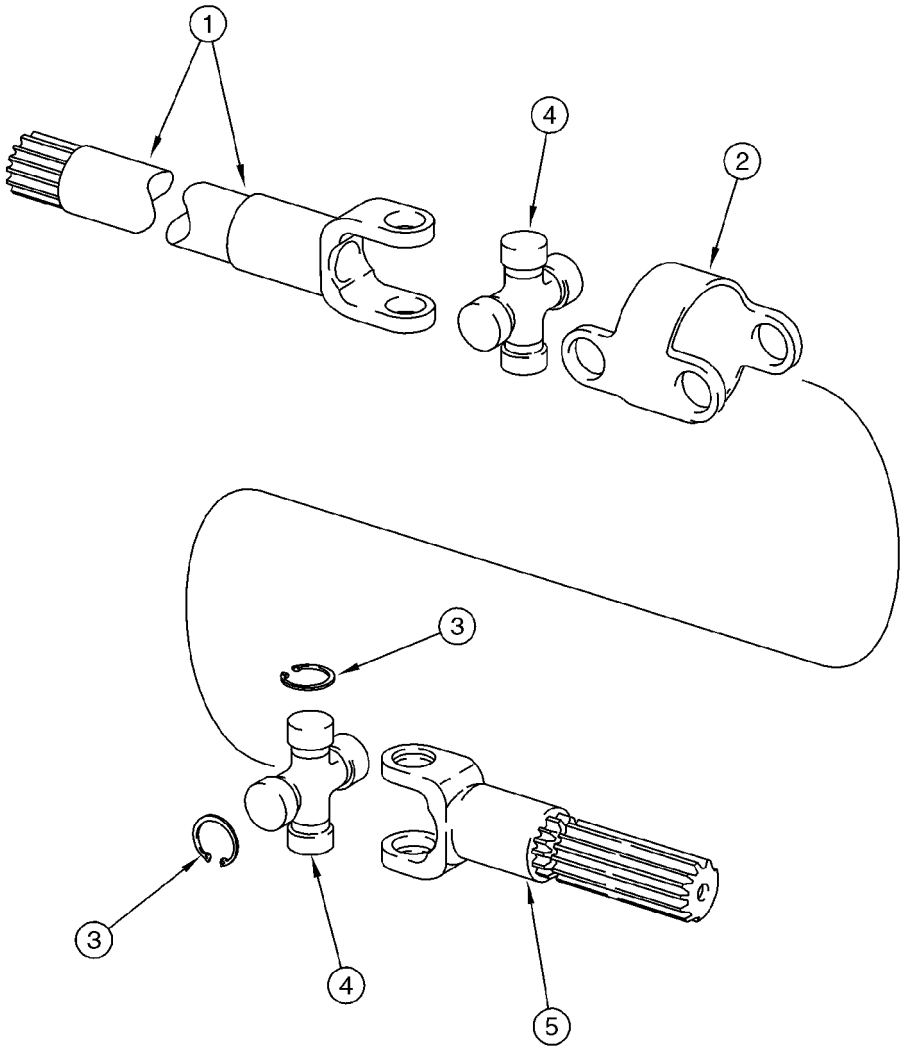

B9407022

EJE, TRANSMISIĎN DELANTERA - VARILLAS, EJE

REF	FN	PART NUMBER	YR/SN	QTY	DENOMINACION
		87395365		1	EJE (CONJUNTO), Front, Incl. Ref 1 - 5; Also Includes Parts On Figures 06-02 - 06-08
		144461A1		2	SEMIEJE, Incl. Ref 1 - 5
1		144462A1		2	HORQUETA, Shaft, Long, Differential Side
2		390029A1		2	CUERPO
3		N14410		16	ANILLO
4		144465A1		4	CRUCETA DE CARDĆN, Incl. Ref 3
5		144463A1		2	EJE, Short, Wheel Side

06-06		p1	11/07

EJE, TRANSMISIĎN DELANTERA - PLANETARIO

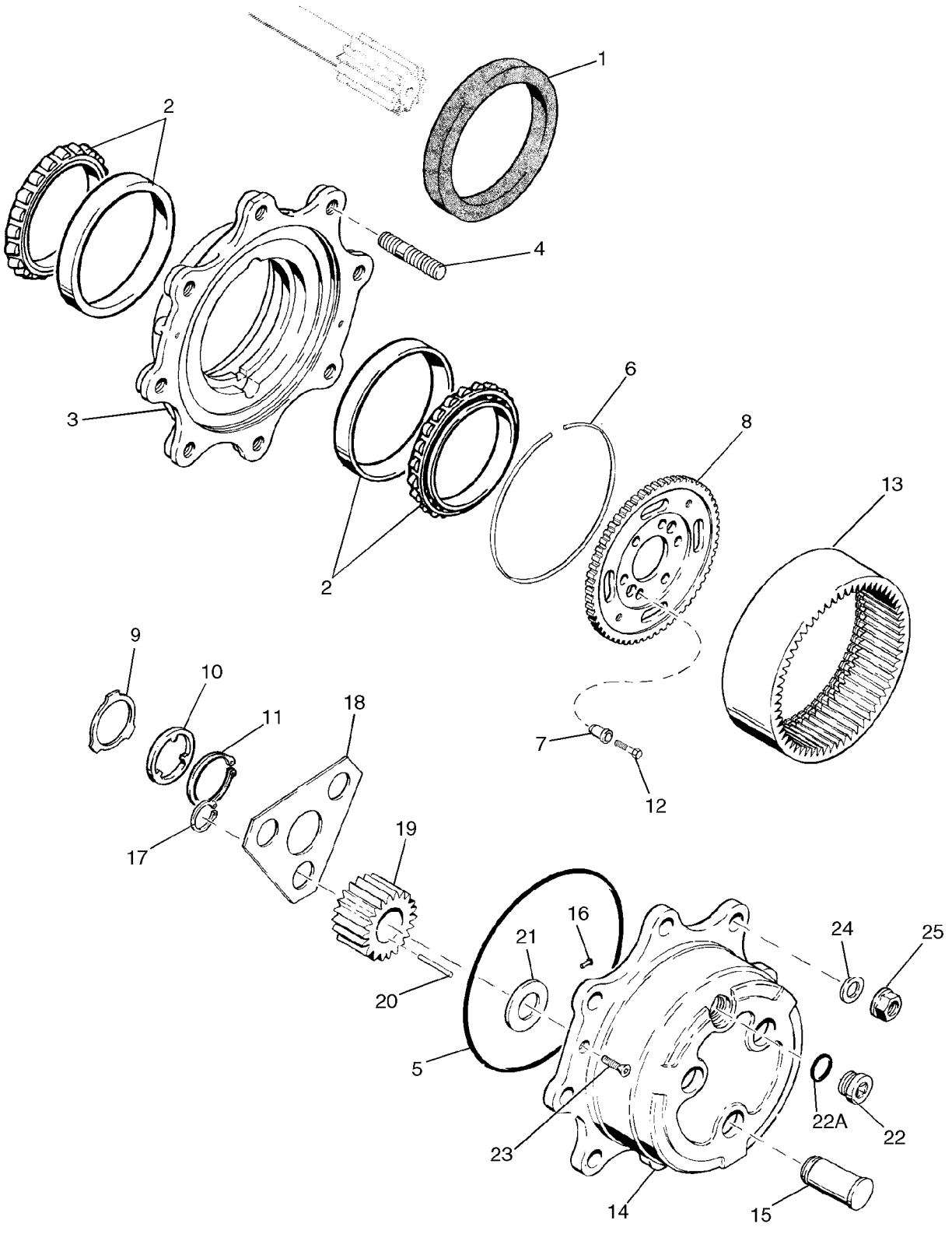

EJE, TRANSMISIĎN DELANTERA - PLANETARIO

REF	FN	PART NUMBER	YR/SN	QTY	DENOMINACION
		87395365		1	EJE (CONJUNTO), Front, Incl. Ref 1 - 23; Also Includes Parts On Figures 06-02 - 06-08
1		311569A1		2	JUNTA DE ACEITE, Triple Lip
2		1966169C1		4	CONO
		144466A1		2	CUBO, Incl. Ref 3, 4
3		NSS		1	NO SE REPARA SEPARADAM., Hub
4		100556A1		8	PRISIONERO
5		100552A1		2	JUNTA HERMETICA
6		100559A1		2	JUNQUILLO
7		116426A1		12	CASQUILLO
8		116427A1		2	ENGRANAJE, CARRIER, Ring Gear
9		190684A1		2	ARANDELA, Thrust
10		190682A1		2	ARANDELA, Thrust
11		A48041		2	RETENEDOR
12		116425A1		12	TORNILLO
13		100561A1		2	ENGRANAJE, Ring
		100554A1		2	PORTA SATELITES, PLANETARY, Includes 100553A1, Ref 14 - 22A
		100553A1		2	CUBIERTA PRINCIPAL, Carrier, Incl. Ref 14 - 16
14		NSS		1	NO SE REPARA SEPARADAM., Carrier
15		NSS		3	NO SE REPARA SEPARADAM., Shaft, Pinion
16		K395093		1	EJE CON CABEZA, Lock
17		800-1134		6	ANILLO DE RESORTE, M34, Ext
18		100555A1		2	PLACA, GRANDE, Retainer
19		100562A1		6	PINON PLANETARIO, Pinion Gear
20		114295A1		9	KIT, 10 NEEDLE BRGS
21		K395091		6	ARANDELA, Thrust
22		100557A1		2	TAPON DE VIACIADO, Incl. Ref 22A
22A		238-6121		1	JUNTA HERMETICA, -121, 90 Duro, 1.049" ID x .103" Thk
23		K395082		4	TORNILLO, M8 x 20
24		496-81000		16	ARANDELA, 25/32" x 1 3/8" x .134", HDN, Not Included In Assembly, Purchase Separately
25		825-11418		16	TUERCA, M18 x 1.5, Cl 8, Not Included In Assembly, Purchase Separately

EJE, TRANSMISIĎN DELANTERA - DIFERENCIAL

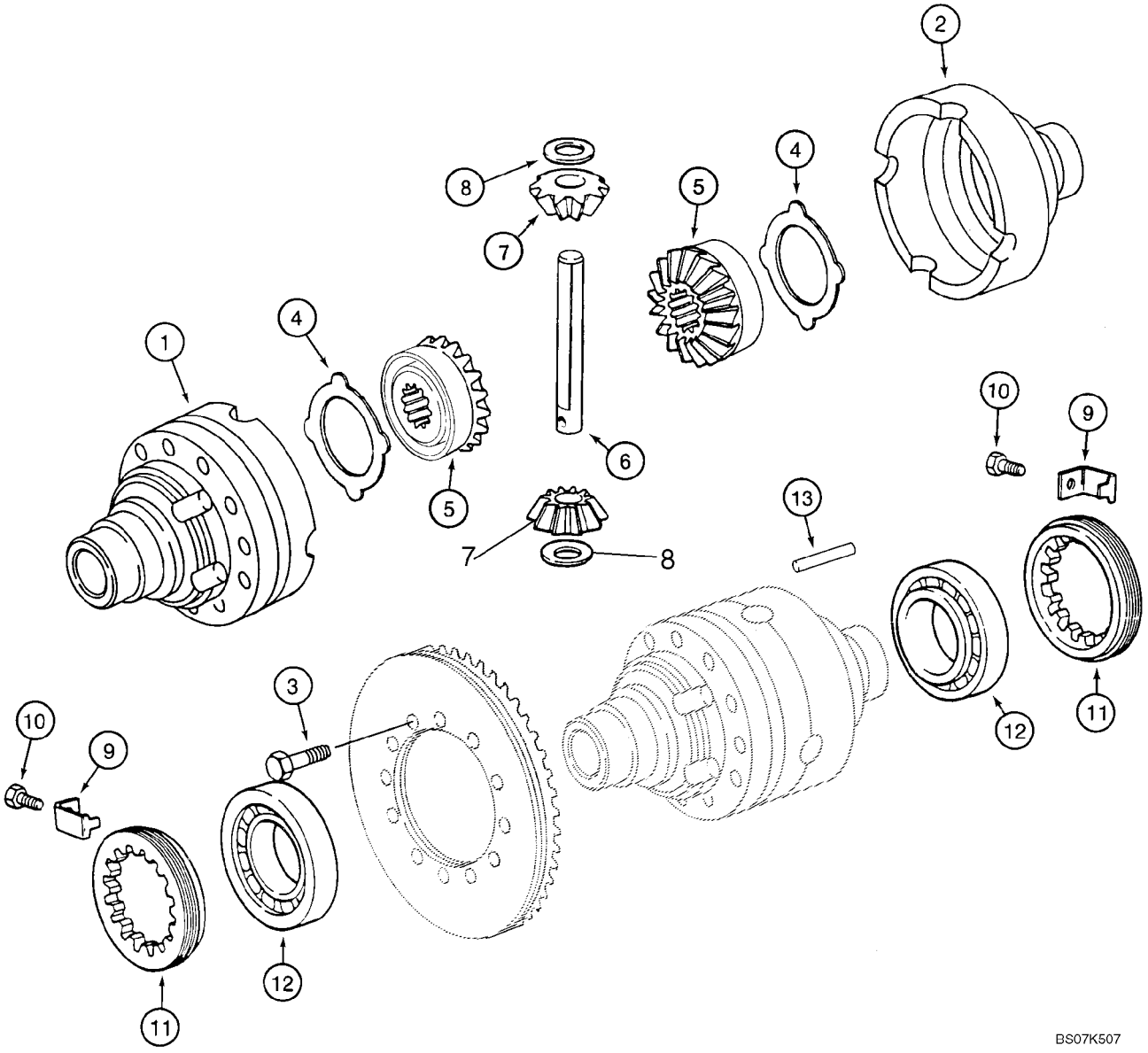

EJE, TRANSMISIĎN DELANTERA - DIFERENCIAL

REF	FN	PART NUMBER	YR/SN	QTY	DENOMINACION
		87395365		1	EJE (CONJUNTO), Front, Incl. Ref 1 - 13; Also Includes Parts On Figures 06-02 - 06-08
		294933A1		1	APOYADERO (CONJUNTO), Differential Housing, Incl. Ref 1, 2
1		NSS		1	NO SE REPARA SEPARADAM., Housing, Flange Half
2		NSS		1	NO SE REPARA SEPARADAM., Housing, Plain Half
3		5194194		12	TORNILLO, M10 x 75
4		1967003C1		2	ANILLO DE APOYO
		231397A1		1	JUEGO DE PIEZAS, Differential Gear Set, Service Replacement, Incl. Ref 5 - 8
5		NSS		2	NO SE REPARA SEPARADAM., Gear, Side
6		NSS		1	NO SE REPARA SEPARADAM., Shaft, Pinion Gear
7		NSS		2	NO SE REPARA SEPARADAM., Pinion Gear
8		9966352		2	ARANDELA DE TOPE
9		5194191		2	SUJETADOR, Bracket
10		112486A1		2	TUERCA DE FRENO, Hex, M6 x 12
11		5194190		2	VIROLA METALICA, Locking Ring
12		561201		2	COJINETE
13		9966356		1	PASADOR TUBOLAR

EJE, TRANSMISIĎN DELANTERA - ANILLO Y PI¤ĎN

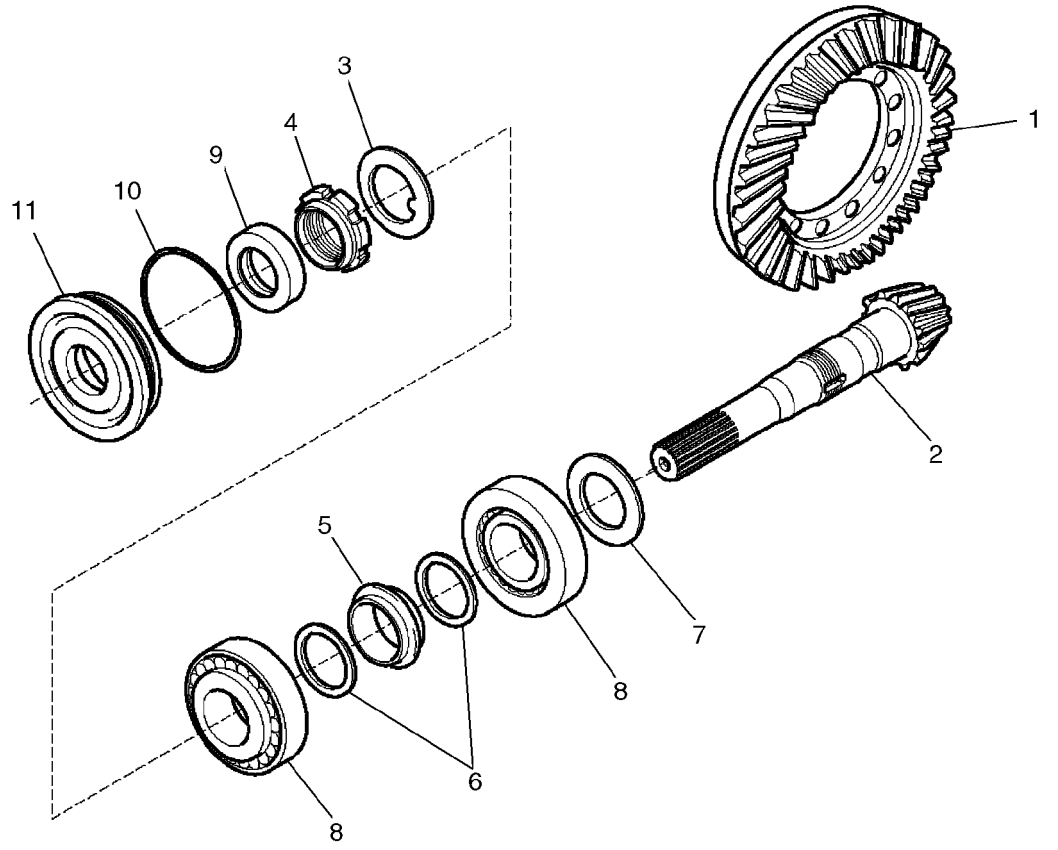

EJE, TRANSMISIĎN DELANTERA - ANILLO Y PI¤ĎN

REF	FN	PART NUMBER	YR/SN	QTY	DENOMINACION
		87395365		1	EJE (CONJUNTO), Front, Incl. Ref 1 - 11; Also Includes Parts On Figures 06-02 - 06-08
		144460A1		1	JEUGO, Ring and Pinion Gear Set, Incl. Ref 1 - 6
1		NSS		1	NO SE REPARA SEPARADAM., Ring, Gear
2		NSS		1	NO SE REPARA SEPARADAM., Pinion Gear
3		9968031		1	ARANDELA DE FRENO
4		K261014		1	TUERCA, Ring
5		1349058C1		1	SEPARADOR, Collapsible
6		1349059C1		2	ARANDELA
7		140954A1		AR	SUPLEMENTO, 2,5 mm (0,098 in)
7		140953A1		AR	SUPLEMENTO, 2,6 mm (0,102 in)
7		140951A1		AR	SUPLEMENTO, 2,7 mm (0,106 in)
7		140949A1		AR	SUPLEMENTO, 2,8 mm (0,110 in)
7		140948A1		AR	SUPLEMENTO, 2,9 mm (0,114 in)
7		140943A1		AR	SUPLEMENTO, 3,0 mm (0,118 in)
7		140944A1		AR	SUPLEMENTO, 3,1 mm (0,122 in)
7		140945A1		AR	SUPLEMENTO, 3,2 mm (0,125 in)
7		140946A1		AR	SUPLEMENTO, 3,3 mm (0,129 in)
7		140947A1		AR	SUPLEMENTO, 3,4 mm (0,133 in)
8		K395090		2	RODAMIENTO DE BOLAS
9		K262143		1	ANILLO DE CIERRE, Oil
10		238-5152		1	JUNTA HERMETICA, -152, 70 Duro, 3.237" ID x .103" Thk
11		128570A1		1	TAPA, Cover, Differential

EJE DE TRANSMISIĎN, EJE DELANTERO

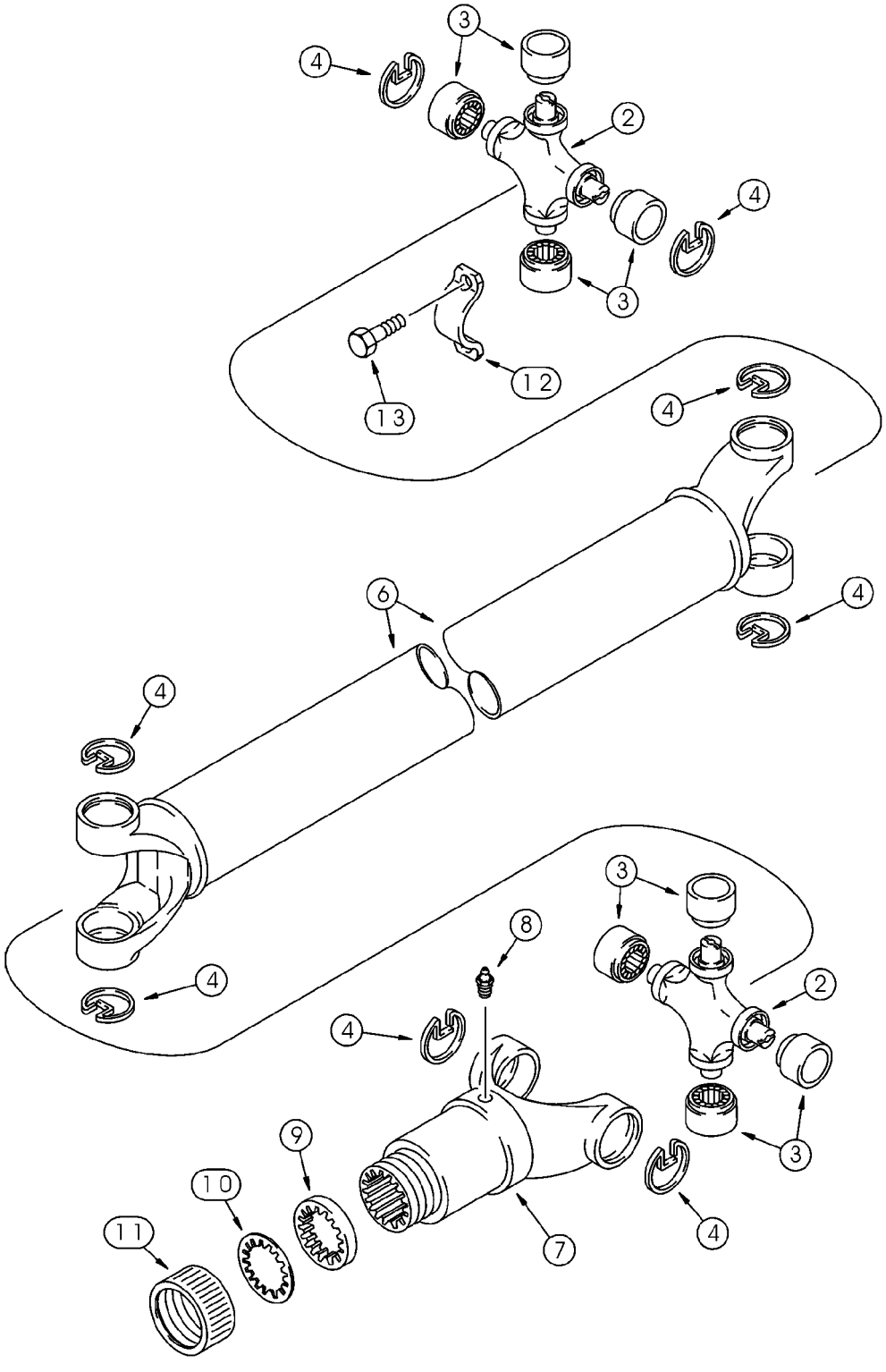

EJE DE TRANSMISIĎN, EJE DELANTERO

REF	FN	PART NUMBER	YR/SN	QTY	DENOMINACION
		87694656		1	ARBOL DE MANDO, With or Without Powershift Transmission, Incl. 393231A1, Ref 2 - 11
		393231A1		2	JEUGO, Universal Joint, Incl. Ref 2 - 4
2		NSS		1	NO SE REPARA SEPARADAM., Joint, Universal
3		NSS		4	NO SE REPARA SEPARADAM., Bearing, Journal
4		NSS		4	NO SE REPARA SEPARADAM., Ring, Retaining
6		87716824		1	TAPON DEL DEPOSITO
7		87716823		1	HORQUILLA
8		219-10		1	ENGRASADOR, 1/4"-28 NPT x .68" lg
		D149860		1	EMPAQUETADURA, Incl. Ref 9 - 11
9		NSS		1	NO SE REPARA SEPARADAM., Washer, Cork
10		NSS		1	NO SE REPARA SEPARADAM., Washer, Steel
11		NSS		1	NO SE REPARA SEPARADAM., Cap
12		87538515		2	RETENEDOR
13		9637611		4	TORNILLO, Hex Flange Head, Locking, Special, 5/16 - 24 UNF x 1-1/16

06-10		p1	02/08

SISTEMA DE REFRIGERACIĎN - TRANSMISION

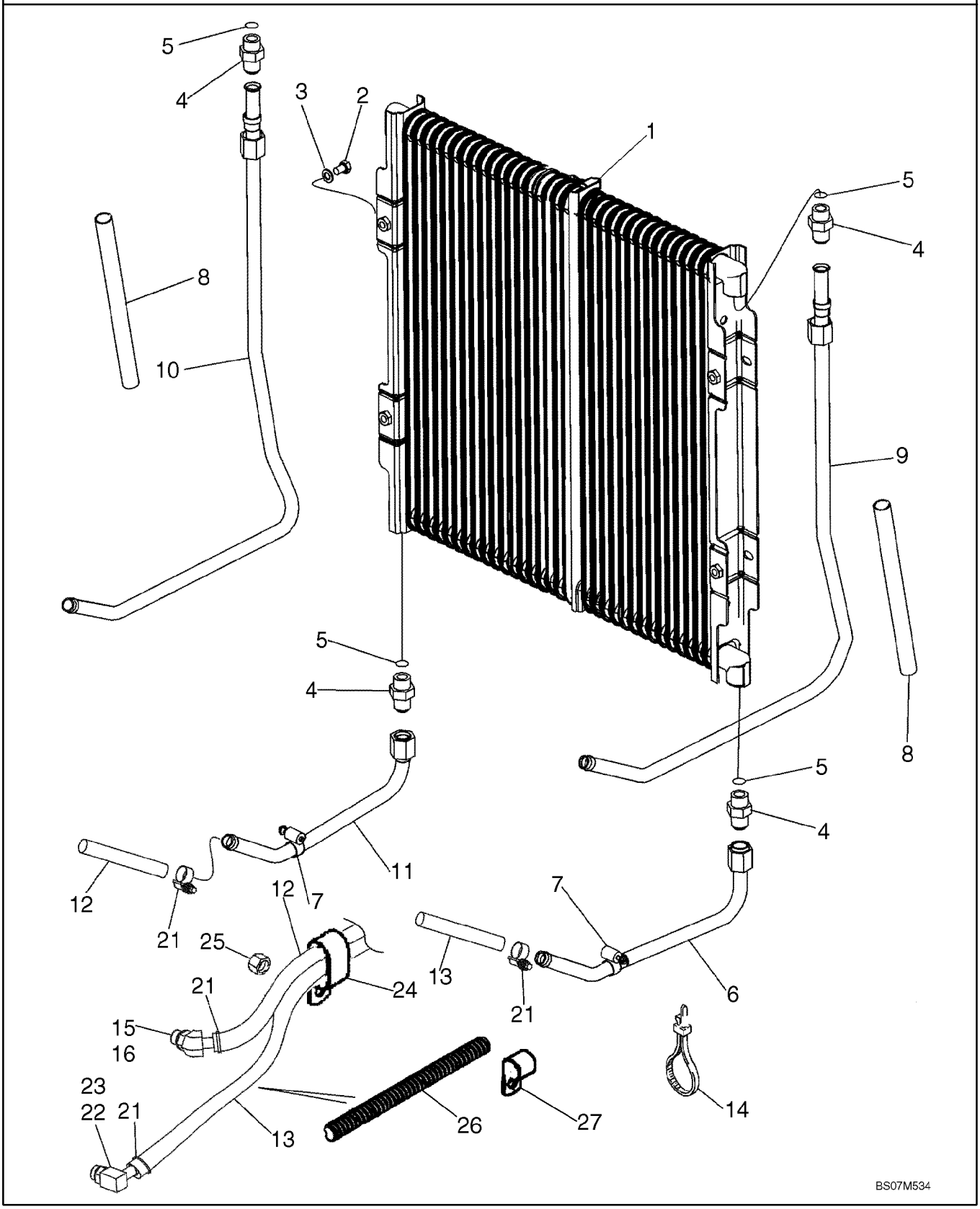

SISTEMA DE REFRIGERACIĎN - TRANSMISION

REF	FN	PART NUMBER	YR/SN	QTY	DENOMINACION
1		87441876		1	RADIADOR ACEITE, Hydraulic
2		614-8012		4	TORNILLO, Hex, M8 x 12, 8.8, Full Thd
3		895-11008		4	ARANDELA, M8 x 16 x 1.6
4		218-5062		4	RACOR, 7/8"-14, 37Ü x 7/8"-14, O-Ring, Incl. Ref 5
5		237-6010		1	JUNTA HERMETICA, 10-1, 90 Duro, .755" ID x .097" Thk
6		87435078		1	TUBO, Lower Right-Hand Tube
7		214-1412		2	ABRAZADERA MANGUERA, #12, 0.69/1.25 Type F Worm
8		87311219		2	FUNDA DE PLĆSTICO, 250 mm (9-7/8 in) Sleeve
9		87435076		1	TUBO, Right-Hand Upper Cooler
10		87435080		1	TUBO, Left-Hand Upper Cooler
11		87435082		1	TUBO, Left-Hand Lower
12		87422597		1	MANGUERA (CONJUNTO), 975 mm (38-13/32 in), Transmission to Cooler Inlet
13		87422598		1	MANGUERA (CONJUNTO), 1225 mm (48-1/4 in), Cooler Outlet to Transmission
14		L18337		1	CIERRA CABLES, 9.95"-12.1" lg
15		217-314		1	CONEXION, 45Ü, 5/8" Hose x 7/8"-14 ORB Beaded, Incl. Ref 16
16		237-6010		1	JUNTA HERMETICA, 10-1, 90 Duro, .755" ID x .097" Thk
21		328186A1		4	ABRAZADERA MANGUERA
22		217-349		1	CONEXION, 90Ü, 5/8" Hose x 7/8"-14 ORB Beaded, Incl. Ref 23
23		237-6010		1	JUNTA HERMETICA, 10-1, 90 Duro, .755" ID x .097" Thk
24		D39696		1	COLLAR, Double P
25		829-1410		1	TUERCA, M10, Cl 10
26		D132982		1	TUBO AISLANTE
27		515-25190		2	BORNE, 3/4", Insul, 1/2" Bolt

06-11		p1	12/07

TRANSMISION - SOPORTE

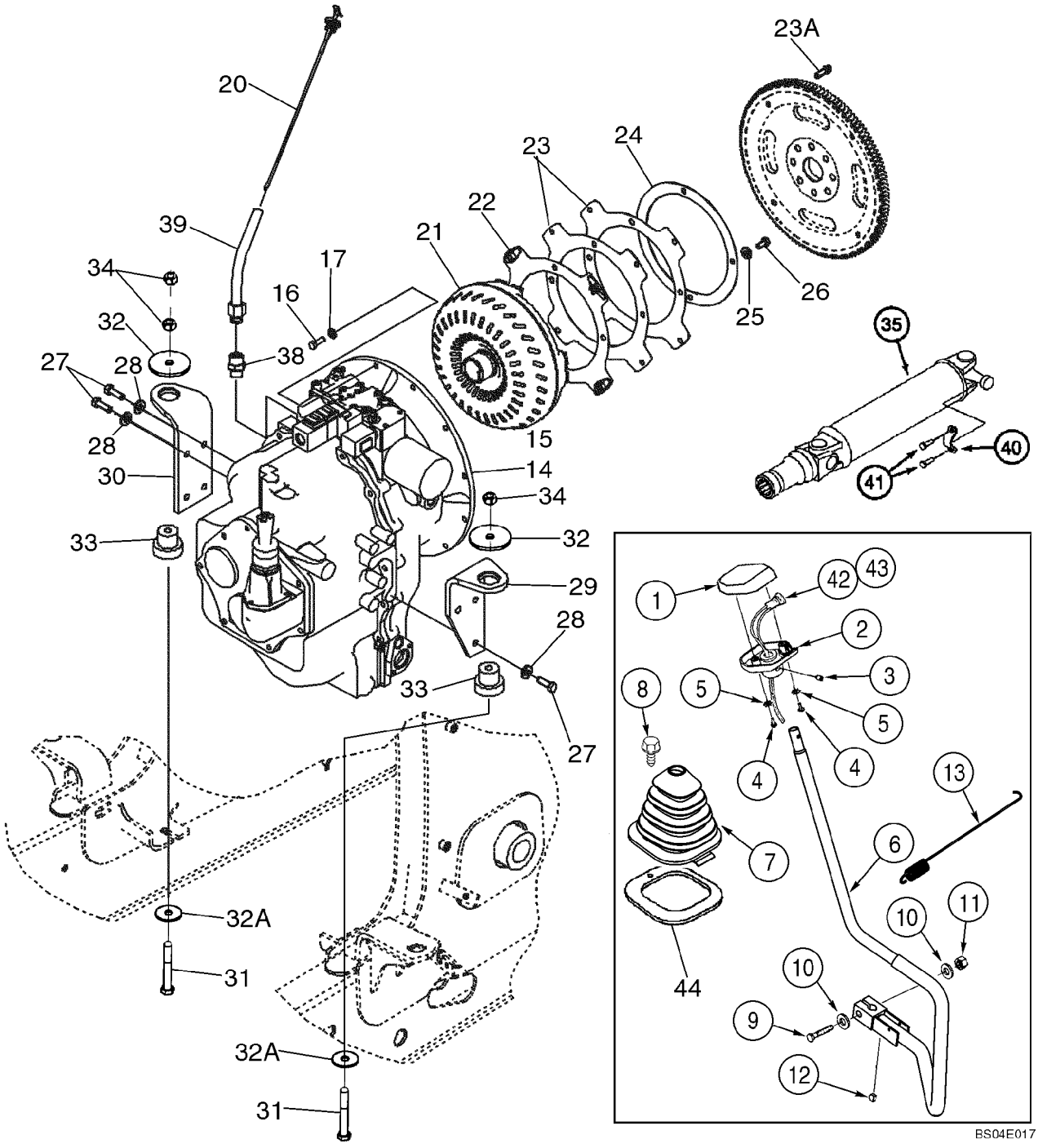

TRANSMISION - SOPORTE

REF	FN	PART NUMBER	YR/SN	QTY	DENOMINACION
		309747A1		1	PLACA, Gear Shift Lever, Includes NSS Gasket, Incl. Ref 1, 2, 4, 5
		NSS		2	NO SE REPARA SEPARADAM., GASKET, Knob
1		187714A1		1	BOTON, Knob, Upper
2		187715A1		1	BOTON, Knob, Lower
3		484-6316		1	TORNILLO DE AJUSTE, Hex Soc, 5/16"-24 x 3/8"
4		87020181		2	TORNILLO, No. 10 NF x 7/8
5		493-41020		2	ARANDELA DE FRENO, Ext Tooth, #10
6		379314A4		1	PALANCA (CONJUNTO), Gear Shift Lever
7		400588A2		1	PROTECTOR
8		87310096		1	TORNILLO, M6 x 25, Includes Washer, Stainless Steel
9		827-12065		1	TORNILLO, Hex, M12 x 65, 10.9
10		896-11012		2	ARANDELA, M13.5 x 24.5 x 3, HT
11		832-10412		1	CONTRA TUERCA, M12 x 1.75, Cl 8
12		126-116		1	CHAVETA MEDIA-LUNA, #9, 3/16" x 3/4", HT
13		380537A2		1	RESORTE
14		87395300		1	CAMBIO DE VELOCIDAD, Two Wheel Drive Models, See Figure 06-12 - 06-19, 07-01
15		87395301		1	CAMBIO DE VELOCIDAD, Four Wheel Drive Models, See Figure 06-19(00) - 06-19(10), 07-01(01)
16		627-10030		12	TORNILLO, Hex, M10 x 30, 10.9, Full Thd
17		496-21041		12	ARANDELA, 13/32" x 13/16" x .089", HDN
20		87601345		1	VARILLA DE NIVEL
21		87702194		1	CONVERTIDOR DE PAR, Torque Converter, New
22		87406934		1	PLACA, Flex Plate, With Caged Nuts
23		86993546		2	PLACA, Flex Plate
23A		87019767		4	TORNILLO, 12 Pt Hd, M10 x 1.25 x 30, 12.9
24		87409201		1	PLACA DE APOYO
25		896-15010		4	ARANDELA, M10 x 24.5 x 3, HT
26		614-10020		4	TORNILLO, Hex, M10 x 20, 8.8, Full Thd
27		614-12035		7	TORNILLO, Hex, M12 x 35, 8.8, Full Thd
28		896-15012		7	ARANDELA, M12 x 28.5 x 4, HT
29		87416977		1	SOPORTE, Right-Hand Bracket
30		87416978		1	SOPORTE, Left-Hand Bracket

06-11		p2	12/07

TRANSMISION - SOPORTE

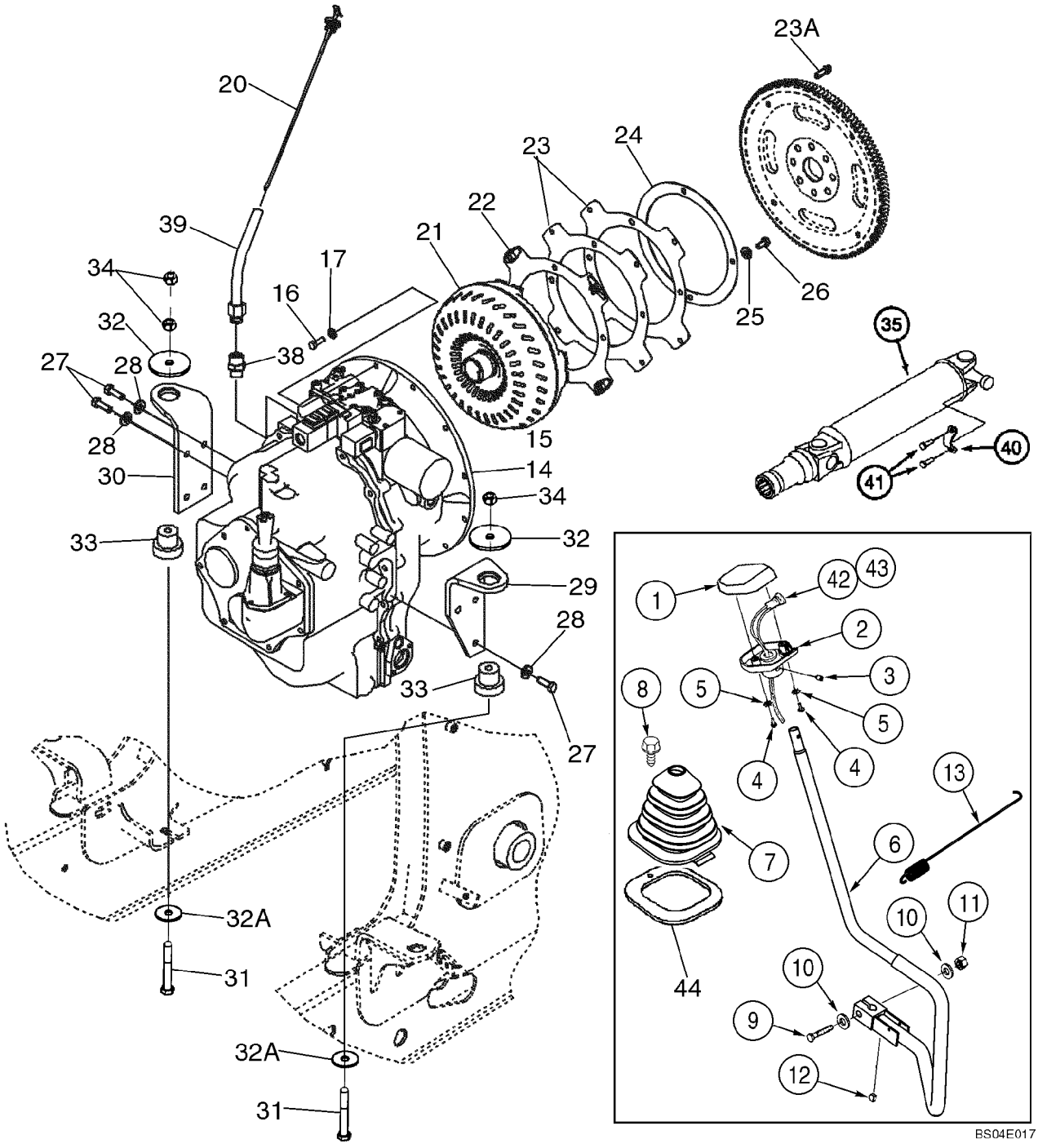

TRANSMISION - SOPORTE

REF	FN	PART NUMBER	YR/SN	QTY	DENOMINACION
31		814-12080		2	TORNILLO, Hex, M12 x 80, 8.8
32		85801585		2	JUNTA HERMETICA, Special
32A		85802618		2	JUNTA HERMETICA
33		87416967		2	SOPORTE
34		832-10412		3	CONTRA TUERCA, M12 x 1.75, Cl 8
35		87613924		1	ARBOL DE MANDO, Transmission to Rear Axle; Component Parts Not Available; See Figure 06-47
38		218-459		1	RACOR, 1 5/16"-12, 37Ü x 3/4"-14, NPTF
39		87601338		1	TUBO, Dipstick
40		87538515		2	RETENEDOR
41		9637611		4	TORNILLO, Hex Flange Head, Locking, Special, 5/16 - 24 UNF x 1-1/16
42		87312712		1	CONTACTOR, Push Button, Clutch Cutout
43		123809A2		1	HAZ, Clutch Cutout, Transmission Gear Shift Lever
44		410561A1		1	ANILLO DE CIERRE, Shift Lever Boot, Cab Models

CONJUNTO DE LA TRANSMISION, 2WD - FILTRO, ACEITE

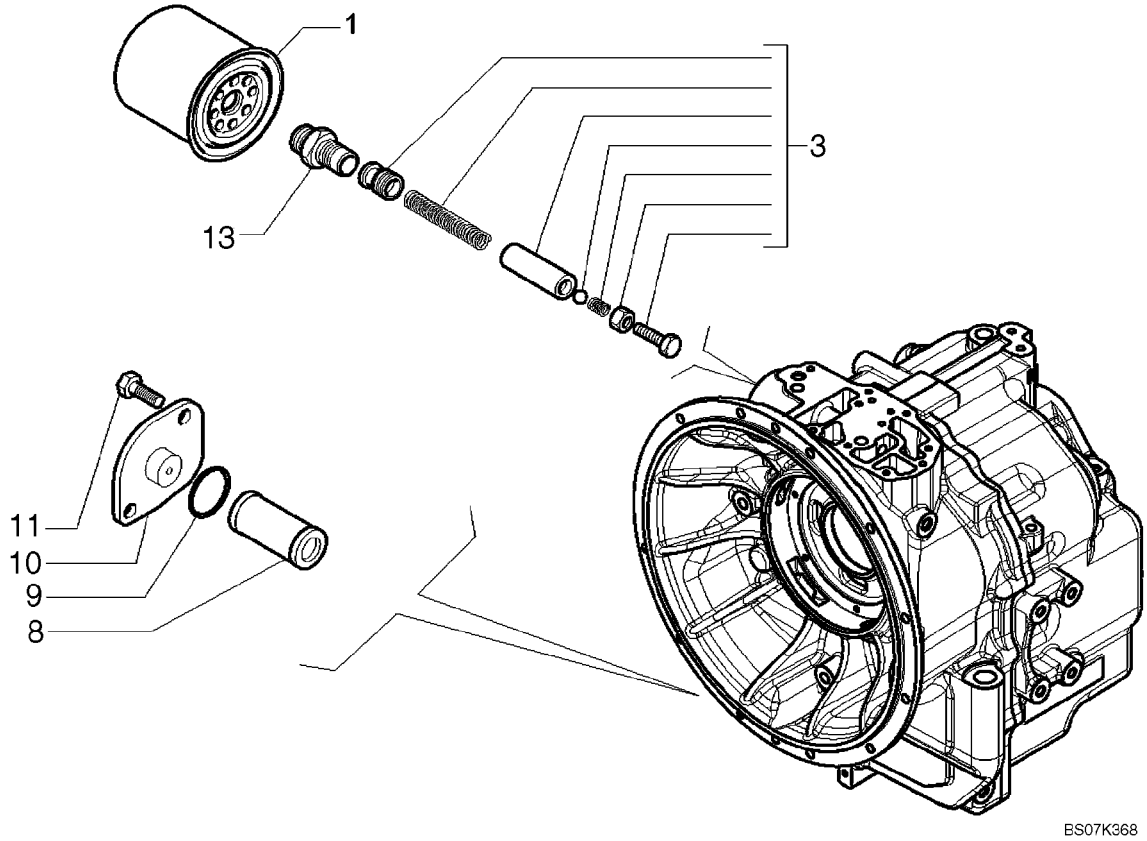

CONJUNTO DE LA TRANSMISION, 2WD - FILTRO, ACEITE

REF	FN	PART NUMBER	YR/SN	QTY	DENOMINACION
		87395300		1	CAMBIO DE VELOCIDAD, Two Wheel Drive, Incl. Ref 1 - 13; Also Includes Parts On Figures 06-12 - 06-19, 07-01
1		254686A2		1	FILTRO, Oil
3		181274A1		1	JUEGO DE PIEZAS, Valve
8		278534A1		1	REJILLA, Oil
9		100748A1		1	JUNTA HERMETICA
10		181219A1		1	TAPA
11		614-8018		2	TORNILLO, Hex, M8 x 18, 8.8, Full Thd
13		181202A1		1	CONEXION

06-13		p1	02/08

CONJUNTO DE LA TRANSMISION, 2WD - ALOJAMIENTO

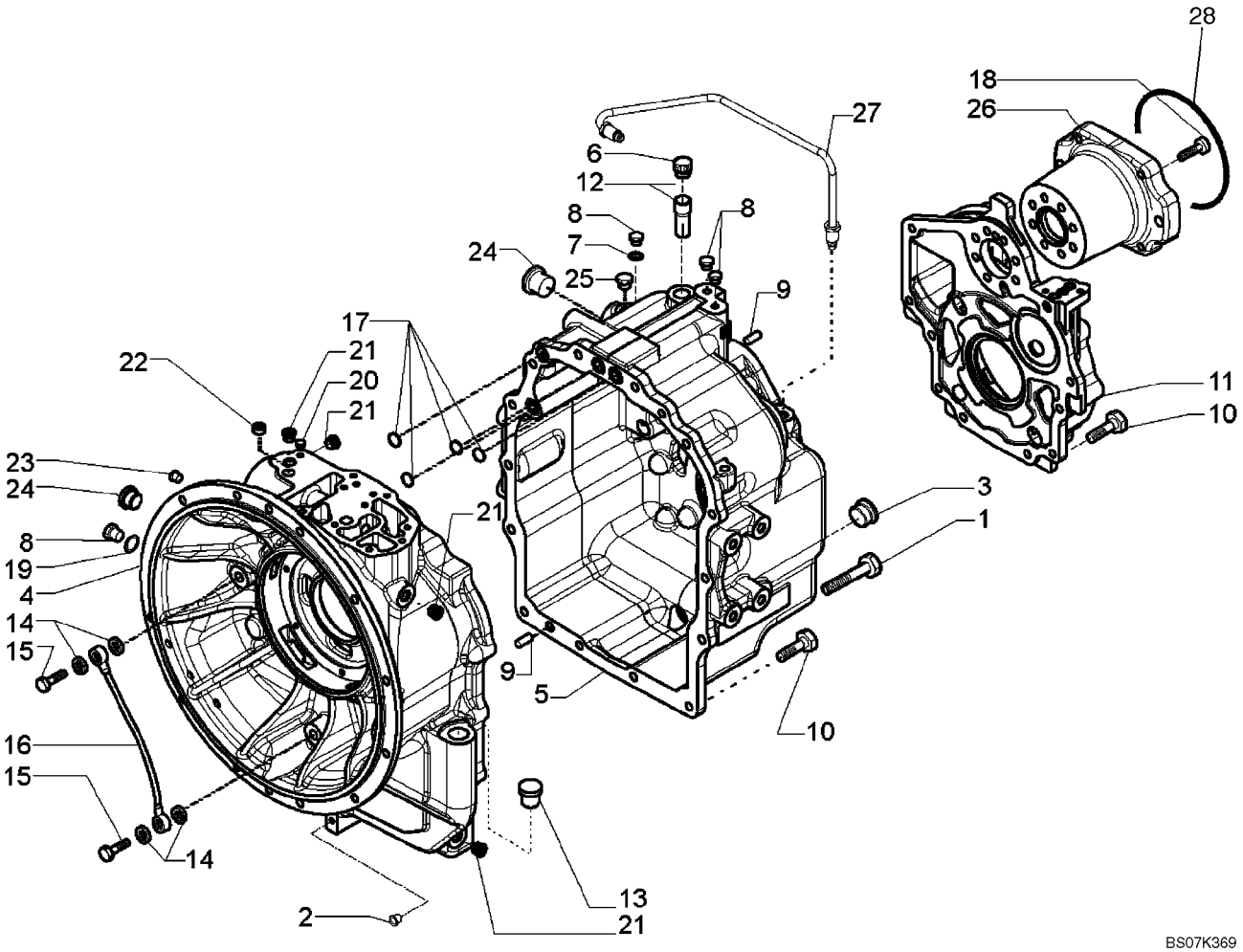

CONJUNTO DE LA TRANSMISION, 2WD - ALOJAMIENTO

REF	FN	PART NUMBER	YR/SN	QTY	DENOMINACION
		87395300		1	CAMBIO DE VELOCIDAD, Two Wheel Drive, Incl. Ref 1 - 28; Also Includes Parts On Figures 06-12 - 06-19, 07-01
1		814-10150		2	TORNILLO, Hex, M10 x 150, 8.8
2		NSS		1	NO SE REPARA SEPARADAM., PLUG, Shipping Plug
3		100557A1		1	TAPON DE VIACIADO, M30 x 2; Incl 238-6121 O-Ring
		238-6121		1	JUNTA HERMETICA, -121, 90 Duro, 1.049" ID x .103" Thk
4		{87701253}		1	Front Housing
5		{87701255}		1	Rear Housing
6		1530028C1		1	RESPIRADERO (CONJUNT
7		934667R1		4	JUNTA HERMETICA, M10 x 14 x 1
8		181100A1		4	TAPčN
9		K260177		3	PERNO, 10 x 25
10		614-10030		17	TORNILLO, Hex, M10 x 30, 8.8
11		{87701257}		1	Cover
12		310772A1		1	CUELLO DE CARGA, Breather
13		NSS		1	NO SE REPARA SEPARADAM., PLUG, Shipping Plug
14		181105A1		4	ARANDELA DE COBRE
15		181179A1		2	TORNILLO HUECO, M14 x 1.5
16		181232A1		1	CUELLO DE CARGA, Lubrication
17		181141A1		4	JUNTA HERMETICA
18		{87701258}		7	M10 x 45 Bolt
19		87429985		1	JUNTA HERMETICA, Copper, 10 x 18 x 1.5 mm
20		{87702570}		1	Plug
21		E135809		4	TAPčN, 9/16
22		{87701260}		1	M16 x 1.5 Plug
23		181101A1		1	TAPčN, M14 x 1.5
24		NSS		1	NO SE REPARA SEPARADAM., PLUG, Shipping Plug
25		NSS		1	NO SE REPARA SEPARADAM., PLUG, Shipping Plug

06-13		p2	02/08

CONJUNTO DE LA TRANSMISION, 2WD - ALOJAMIENTO

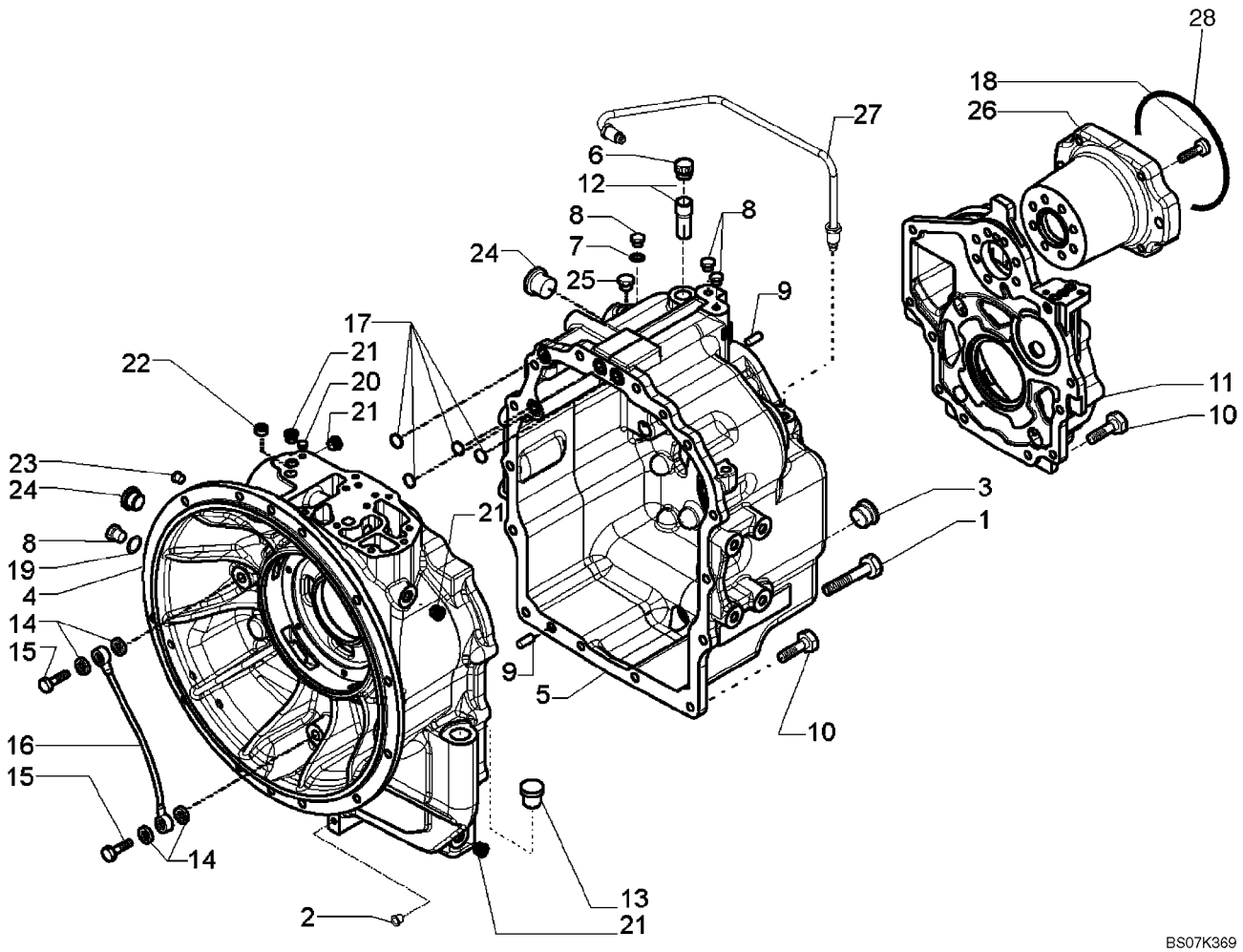

CONJUNTO DE LA TRANSMISION, 2WD - ALOJAMIENTO

REF	FN	PART NUMBER	YR/SN	QTY	DENOMINACION
26		{87701269}		1	PTO Flange
27		{87701270}		1	Oil Tube
28		87429982		1	JUNTA HERMETICA, Pump Mounting

CONJUNTO DE LA TRANSMISION, 2WD - BOMBA, ACEITE

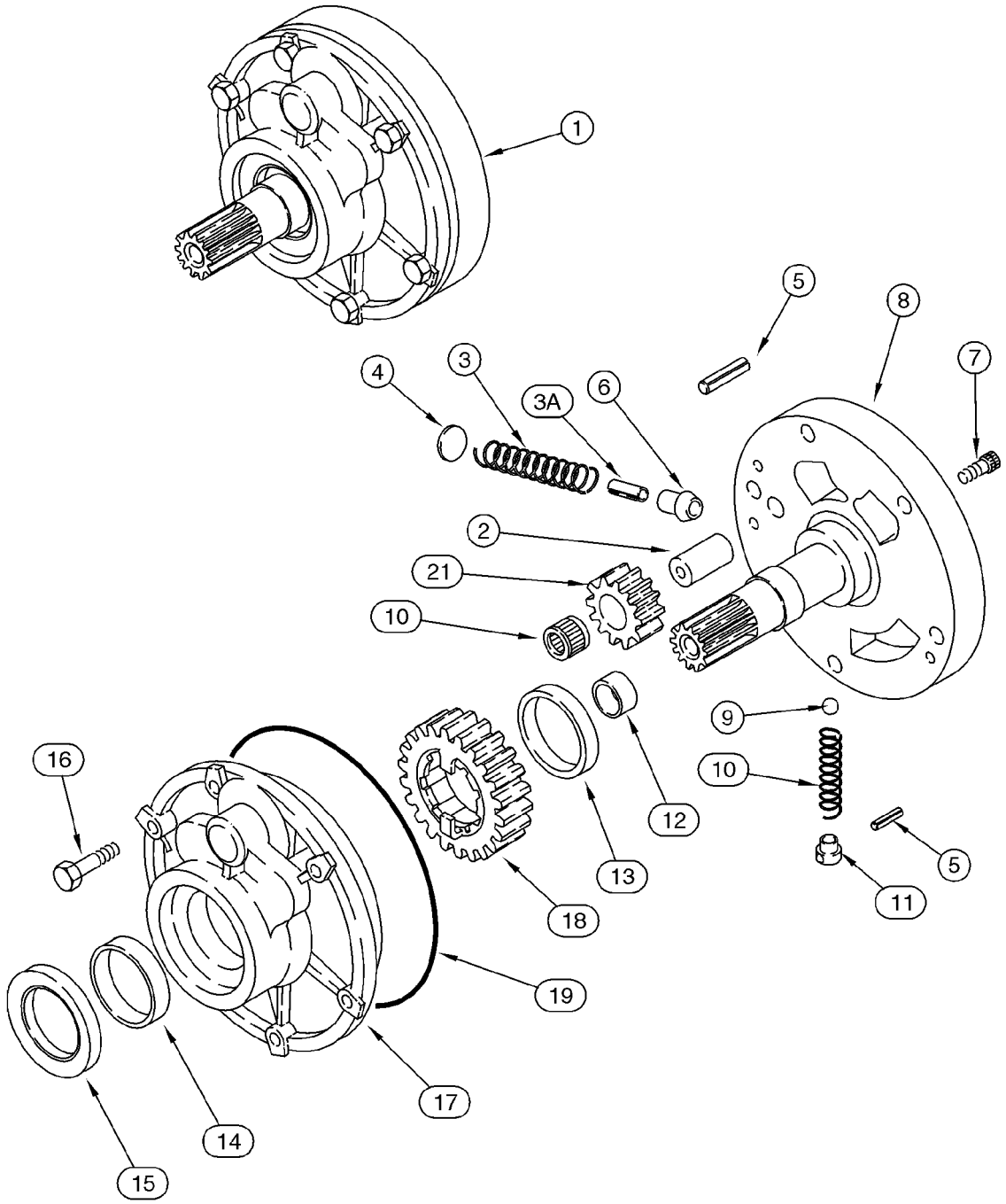

CONJUNTO DE LA TRANSMISION, 2WD - BOMBA, ACEITE

REF	FN	PART NUMBER	YR/SN	QTY	DENOMINACION
		87395300		1	CAMBIO DE VELOCIDAD, Two Wheel Drive, Incl. Ref 1 - 21; Also Includes Parts On Figures 06-12 - 06-19, 07-01
1		87429970		1	BOMBA, Charge, Incl. Ref 2 - 21
2		NSS		1	NO SE REPARA SEPARADAM., Shaft
3		NSS		1	NO SE REPARA SEPARADAM., Spring
3A		NSS		1	NO SE REPARA SEPARADAM., Pin
4		NSS		1	NO SE REPARA SEPARADAM., Stop
5		NSS		2	NO SE REPARA SEPARADAM., Pin, Roll
6		NSS		1	NO SE REPARA SEPARADAM., Piston
7		NSS		2	NO SE REPARA SEPARADAM., Bolt
8		NSS		1	NO SE REPARA SEPARADAM., Support
9		NSS		1	NO SE REPARA SEPARADAM., Ball
10		NSS		1	NO SE REPARA SEPARADAM., Spring
11		NSS		1	NO SE REPARA SEPARADAM., Guide
12		NSS		1	NO SE REPARA SEPARADAM., Bushing
13		NSS		1	NO SE REPARA SEPARADAM., Bushing
14		NSS		1	NO SE REPARA SEPARADAM., Bushing
15		87429971		1	JUNTA DE ACEITE, Oil Seal
16		814-8060		6	TORNILLO, Hex, M8 x 60, 8.8
17		NSS		1	NO SE REPARA SEPARADAM., Housing
18		NSS		1	NO SE REPARA SEPARADAM., Gear, 23T
19		181142A1		1	JUNTA HERMETICA
20		NSS		1	NO SE REPARA SEPARADAM., Bearing, Needle
21		NSS		1	NO SE REPARA SEPARADAM., Gear, 12T

CONJUNTO DE LA TRANSMISION, 2WD - MECANISMO DE CAMBIO

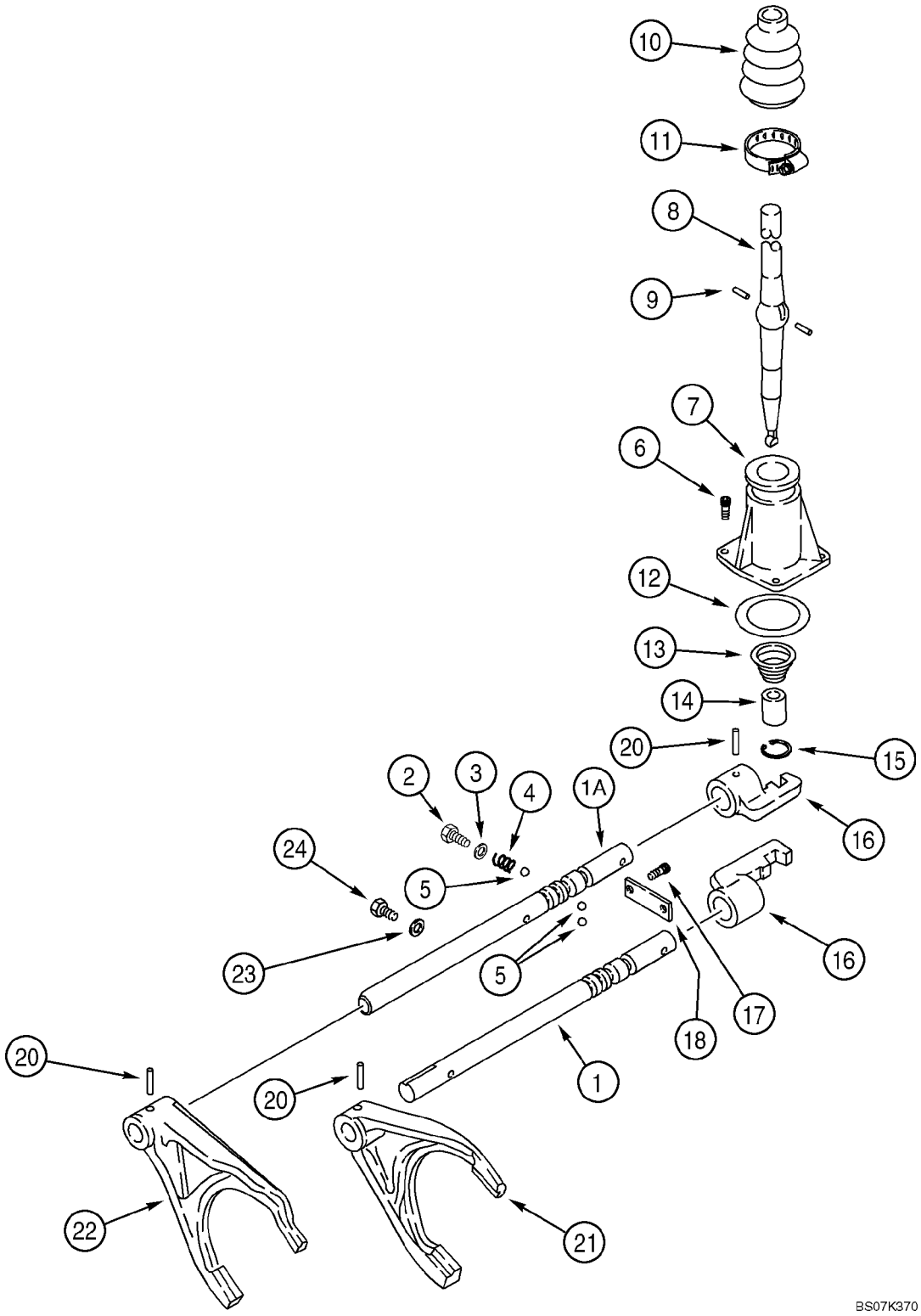

CONJUNTO DE LA TRANSMISION, 2WD - MECANISMO DE CAMBIO

REF	FN	PART NUMBER	YR/SN	QTY	DENOMINACION
		87395300		1	CAMBIO DE VELOCIDAD, Two Wheel Drive, Incl. Ref 1 - 24; Also Includes Parts On Figures 06-12 - 06-19, 07-01
1		181245A2		1	VARILLA, Shifter Fork Rail; First and Second
1A		{87578867}		1	Shifter Fork Rail; Third and Fourth
2		614-12016		2	TORNILLO, Hex, M12 x 16, 8.8, Full Thd
3		87429994		2	JUNTA HERMETICA, 12 x 20 x 1.5 mm
4		1966993C1		2	RESORTE
5		181139A1		4	BOLA
6		864-8025		3	TORNILLO, Hex Soc Hd, M8 x 25, 8.8
7		181171A1		1	TAPA
8		190428A3		1	PALANCA MANDO
9		1967585C1		2	PERNO, Pin
10		1967581C1		1	CASQUETE
11		181177A1		1	COLLAR
12		181138A1		1	JUNTA HERMETICA
13		278533A1		1	RESORTE
14		278532A1		1	CASQUILLO
15		279039A1		1	ANILLO DE CIERRE
16		181173A1		2	SELECTOR, Shifter
17		864-10025		2	TORNILLO, Hex Soc Hd, M10 x 25, 8.8
18		181175A1		1	PLACA, GRANDE
20		905794R1		4	PERNO, M6 x 30, Coiled
21		181203A1		1	HORQUILLA, First and Second
22		181174A2		1	HORQUILLA, Third and Fourth
23		87429985		1	JUNTA HERMETICA, Washer
24		181100A1		1	TAPčN, M10 x 23

CONJUNTO DE LA TRANSMISION, 2WD - EJE, RETROCESO & PRIMARIO

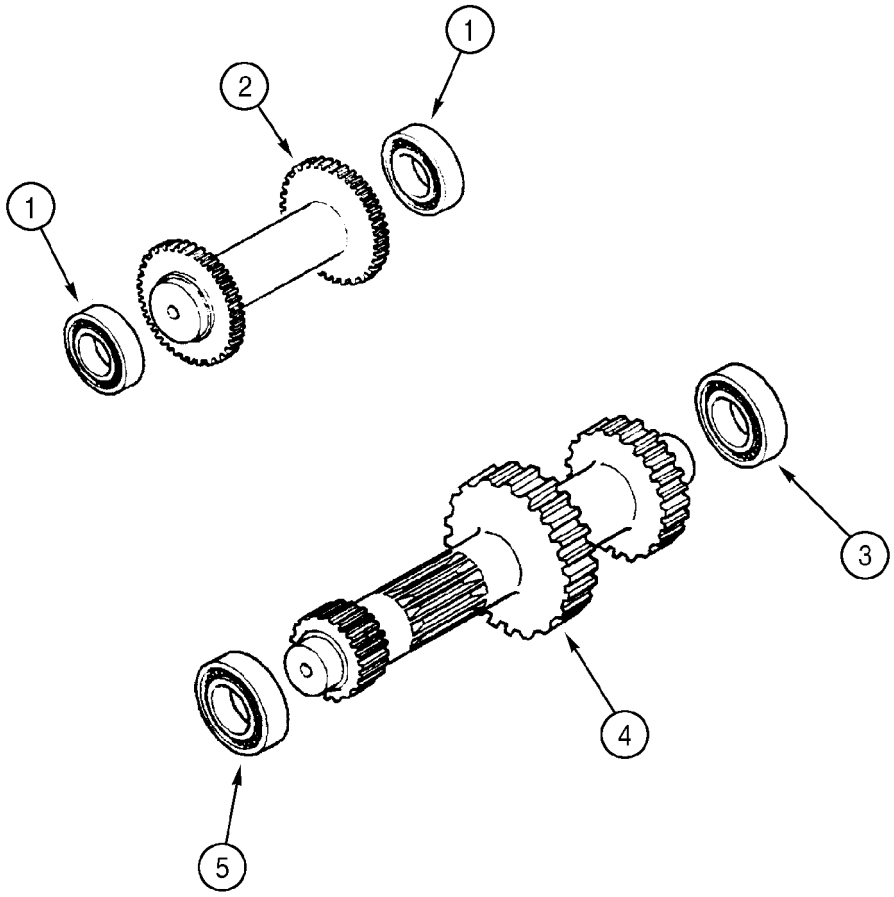

BS99H168

CONJUNTO DE LA TRANSMISION, 2WD - EJE, RETROCESO & PRIMARIO

REF	FN	PART NUMBER	YR/SN	QTY	DENOMINACION
		87395300		1	CAMBIO DE VELOCIDAD, Two Wheel Drive, Incl. Ref 1 - 6; Also Includes Parts On Figures 06-12 - 06-19, 07-01
1		ST205A		2	RODAMIENTO DE BOLAS
2		358636A1		1	EJE, Idler/Reverse Shaft
3		181126A1		1	RODAMIENTO DE BOLAS
4		{87701276}		1	Primary Shaft
5		181132A1		1	RODAMIENTO DE BOLAS
6		A48041		1	RETENEDOR, Bearing to Axle Housing; Not Illustrated

06-17		p1	10/07

CONJUNTO DE LA TRANSMISION, 2WD - EJE, ENTRADA & T.D.F.

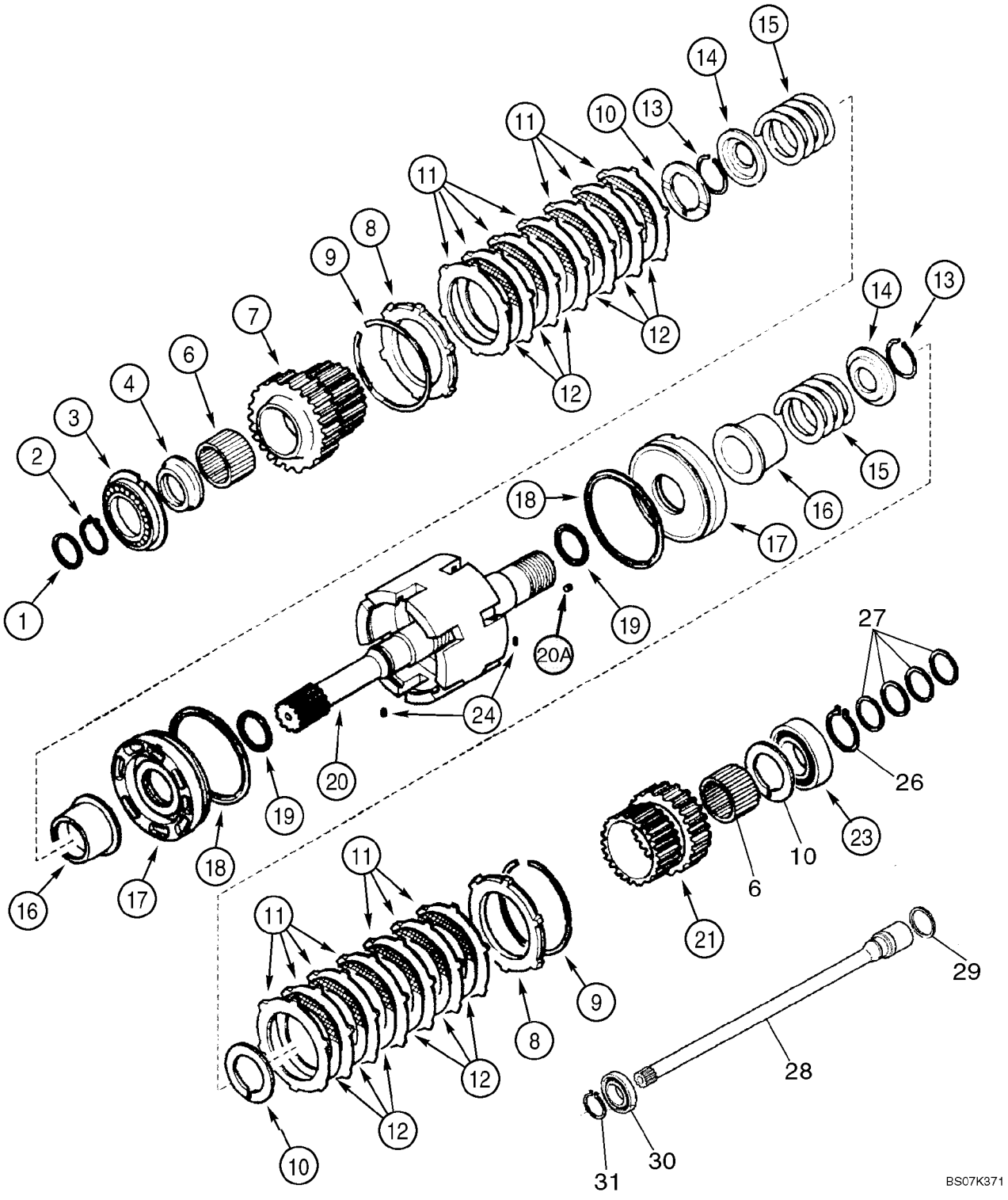

CONJUNTO DE LA TRANSMISION, 2WD - EJE, ENTRADA & T.D.F.

REF	FN	PART NUMBER	YR/SN	QTY	DENOMINACION
		87395300		1	CAMBIO DE VELOCIDAD, Two Wheel Drive, Incl. Ref 1 - 31; Also Includes Parts On Figures 06-12 - 06-19, 07-01
1		358645A1		1	JUNTA DE ACEITE
2		A48041		1	RETENEDOR
3		181128A1		1	RODAMIENTO DE BOLAS
4		358635A1		1	ESPACIADOR, 68 x 45 x 105 mm
6		358633A1		2	RODAMIENTO DE AGUJA
7		358632A1		1	PINON, Gear, 35T
8		310519A1		2	PLACA
9		181116A1		2	ANILLO DE FRENO
10		358640A1		3	ARANDELA, Thrust
11		181159A1		14	DISCO, Plate
12		181158A1		12	DISCO (CONJUNTO), Plate
13		181111A1		2	ANILLO DE FRENO
14		181161A1		2	PLACA DE APOYO, Pressure
15		358637A1		2	RESORTE
16		358641A1		2	ACOPLAMIENTO
17		358644A1		2	EMBOLO
18		358643A1		2	ANILLO DE CIERRE
19		358642A1		2	RETEN
20		87525849		1	JUEGO DE REPARACION, Input Shaft, Incl Ref 20A (4) 139312A1 Rivets; Also Incl (1) 87429973 Input Shaft Which Is Not Serviced Separately
20A		139312A1		4	TAPčN, Rivet
21		358638A1		1	PINON, Gear, 29T
23		ST264		1	RODAMIENTO DE BOLAS
24		181108A1		2	ANILLO ELASTICO
26		800-1150		1	ANILLO DE RESORTE, M50, Ext
27		87429984		4	ANILLO, Seal Ring
28		{87701275}		1	Shaft
29		358645A1		1	JUNTA DE ACEITE
30		87429983		1	RODAMIENTO DE BOLAS
31		800-1130		1	ANILLO DE RESORTE, M30, Ext

CONJUNTO DE LA TRANSMISION, 2WD - EJE, SECUNDARIO

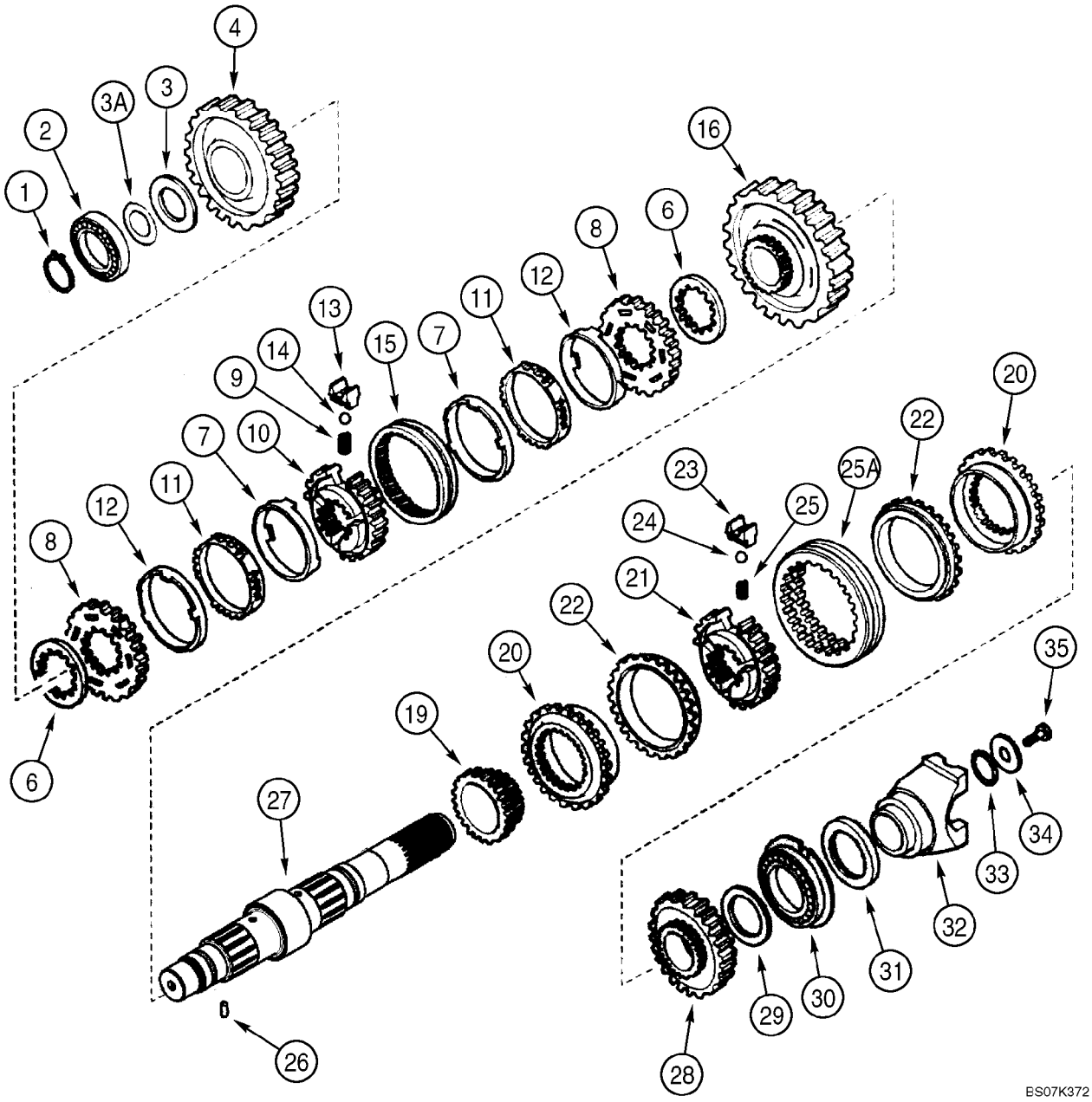

CONJUNTO DE LA TRANSMISION, 2WD - EJE, SECUNDARIO

REF	FN	PART NUMBER	YR/SN	QTY	DENOMINACION
		87395300		1	CAMBIO DE VELOCIDAD, Two Wheel Drive, Incl. Ref 1 - 35; Also Includes Parts On Figures 06-12 - 06-19, 07-01
1		181118A1		1	ANILLO DE FRENO
2		181132A1		1	RODAMIENTO DE BOLAS
3		358649A1		1	ARANDELA, Thrust
3A		358650A1		AR	SUPLEMENTO, 0,05 mm
3A		358651A1		AR	SUPLEMENTO, 0,10 mm
3A		358652A1		AR	SUPLEMENTO, 0,30 mm
3A		196454A1		AR	SUPLEMENTO, 0,50 mm
4		{87701278}		1	Gear, Driven, Second, 44T Pinion Gear
6		244109A1		2	ESPACIADOR
		190427A1		1	SINCRONIZADOR, Synchronizing Service Kit, Incl. Ref 7 - 15
7		NSS		2	NO SE REPARA SEPARADAM., Ring
8		NSS		2	NO SE REPARA SEPARADAM., Ring
9		384773A1		3	MUELLE HELICOIDAL
10		NSS		1	NO SE REPARA SEPARADAM., Hub
11		NSS		2	NO SE REPARA SEPARADAM., Ring
12		NSS		2	NO SE REPARA SEPARADAM., Ring
13		326865A1		3	PLAQUETA
14		384769A1		3	BOLA
15		NSS		1	NO SE REPARA SEPARADAM., Sleeve
16		{87701293}		1	Gear, Driven, First, 50T Pinion Gear
19		358282A1		1	ENGRANAJE, Driven, Fourth, 23T
		87429974		1	SINCRONIZADOR, Synchronizing Service Kit, Incl. Ref 20 - 25A
20		NSS		2	NO SE REPARA SEPARADAM., Ring
21		NSS		1	NO SE REPARA SEPARADAM., Hub
22		NSS		2	NO SE REPARA SEPARADAM., Ring
23		NSS		3	NO SE REPARA SEPARADAM., Plate
24		NSS		3	NO SE REPARA SEPARADAM., Ball
25		NSS		3	NO SE REPARA SEPARADAM., Spring
25A		NSS		1	NO SE REPARA SEPARADAM., Sleeve
26		181108A1		1	ANILLO ELASTICO

CONJUNTO DE LA TRANSMISION, 2WD - EJE, SECUNDARIO

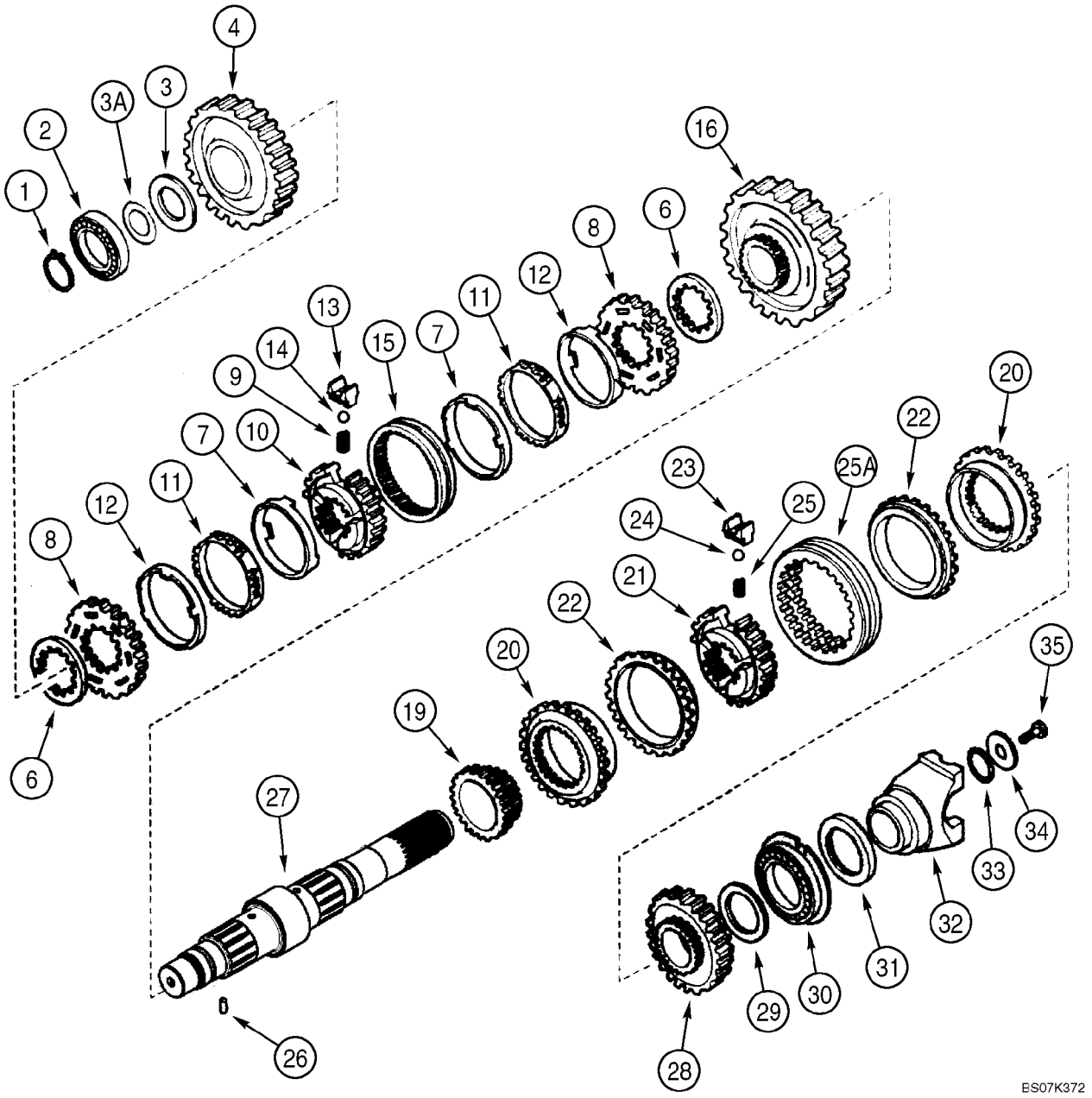

CONJUNTO DE LA TRANSMISION, 2WD - EJE, SECUNDARIO

REF	FN	PART NUMBER	YR/SN	QTY	DENOMINACION
27		{87701294}		1	Shaft, Secondary
28		358283A1		1	PINON, Gear, Driven, Third, 33T
29		358639A1		1	ARANDELA, Thrust, 68 x 45 x 4 mm
30		181130A1		1	RODAMIENTO DE BOLAS
31		181123A1		1	JUNTA DE ACEITE, 60 x 75 x 8 mm
32		233284A1		1	HORQUETA, Yoke
33		181144A1		1	JUNTA HERMETICA
34		181165A1		1	ARANDELA, 52 x 12.5 x 5 mm
35		P3533055		1	TORNILLO, 12 x 25 mm

CONJUNTO DE LA TRANSMISION, 2WD - VALVULA, CONTROL

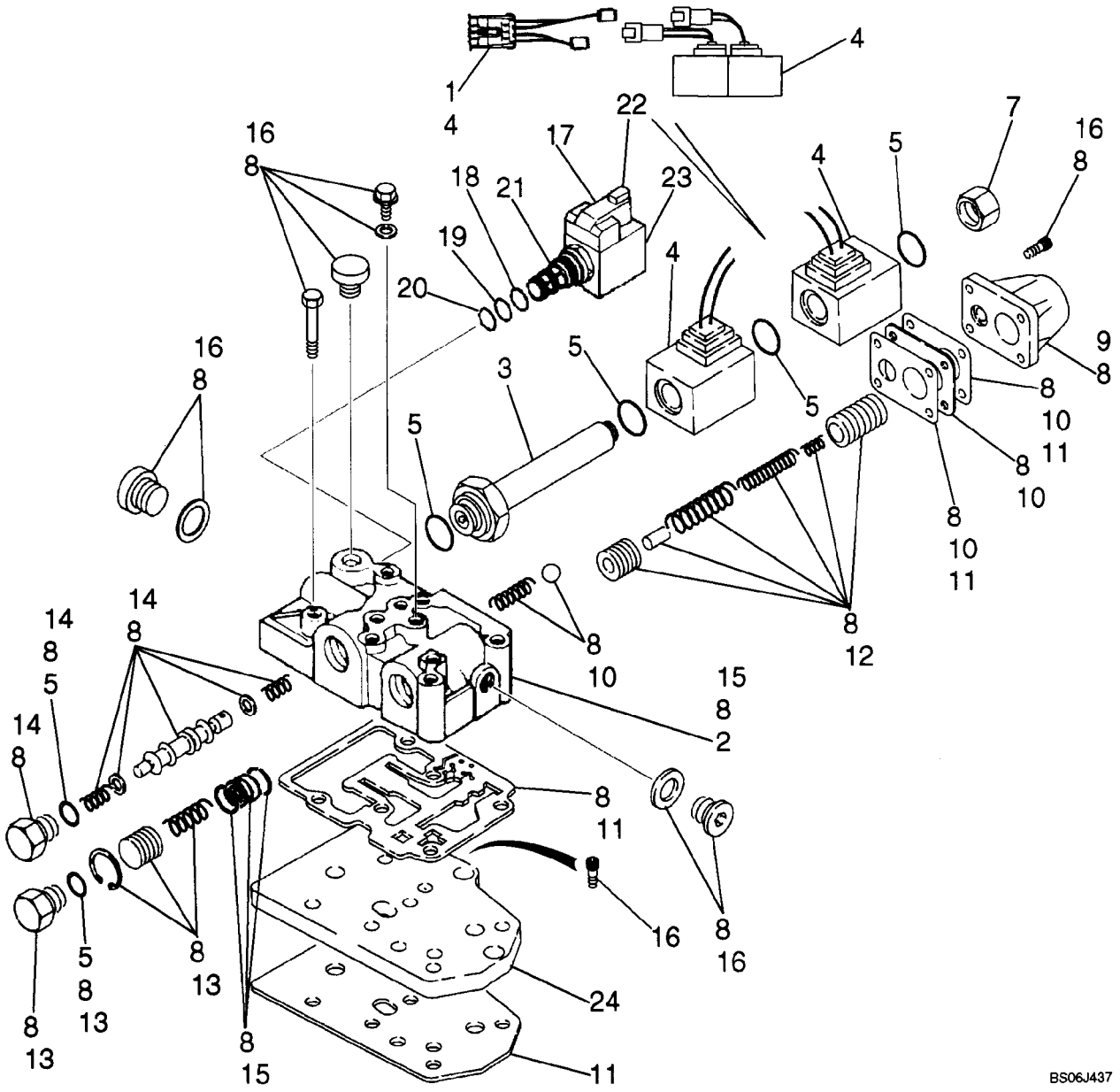

CONJUNTO DE LA TRANSMISION, 2WD - VALVULA, CONTROL

REF	FN	PART NUMBER	YR/SN	QTY	DENOMINACION
		87395300		1	CAMBIO DE VELOCIDAD, Two Wheel Drive, Incl. Ref 1 - 23; Also Includes Parts On Figures 06-12 - 06-19, 07-01
		87525756		1	JUEGO DE REPARACION, Transmission Control Valve With Jumper Harness; Includes (1) 87456968 Forward/Reverse Jumper Harness, Ref 1; Plus (1) 87524409 Control Valve, Ref 1 - 23
1		87456968		1	GRUPO DE CABLES, Jumper; If Used; Required On Transmissions Prior To Ones With Deutsch Connector Type Solenoids
		87524409		1	VALVULA DISTRIBUIDORA, Transmission Control, With Improved Snap Ring at Flow Divider Area; Incl. Ref 2 - 23
2		NSS		1	NO SE REPARA SEPARADAM., Housing
3		190442A1		1	EMBOLO
4		87456900		1	KIT, SERVICE, Solenoid; Includes (2) Solenoids, (1) Jumper Wire Used For Transmissions Prior to Ones With The Solenoids With Plastic Connections
5		87524436		1	JUEGO DE REPARACION, Seal; Includes (6) O-Rings; Component Parts Not Serviced Separately
7		87530365		1	TAPčN
8		87524441		1	CONJUNTO, Valve Body Kit; Component Parts Not Serviced Separately
9		181251A1		1	TAPA, Modulation
10		87524439		1	JUEGO DE REPARACION, Plate; Includes (1) Plate, (2) Gasket, (1) Ball, (1) Spring; Component Parts Not Serviced Separately
11		87524437		1	JUEGO DE REPARACION, Gasket; Includes (4) Gasket Plates; Component Parts Not Serviced Separately
12		87524438		1	JUEGO DE REPARACION, Modulation Valve; Includes (2) Piston, (1) Pin, (3) Spring; Component Parts Not Serviced Separately

CONJUNTO DE LA TRANSMISION, 2WD - VALVULA, CONTROL

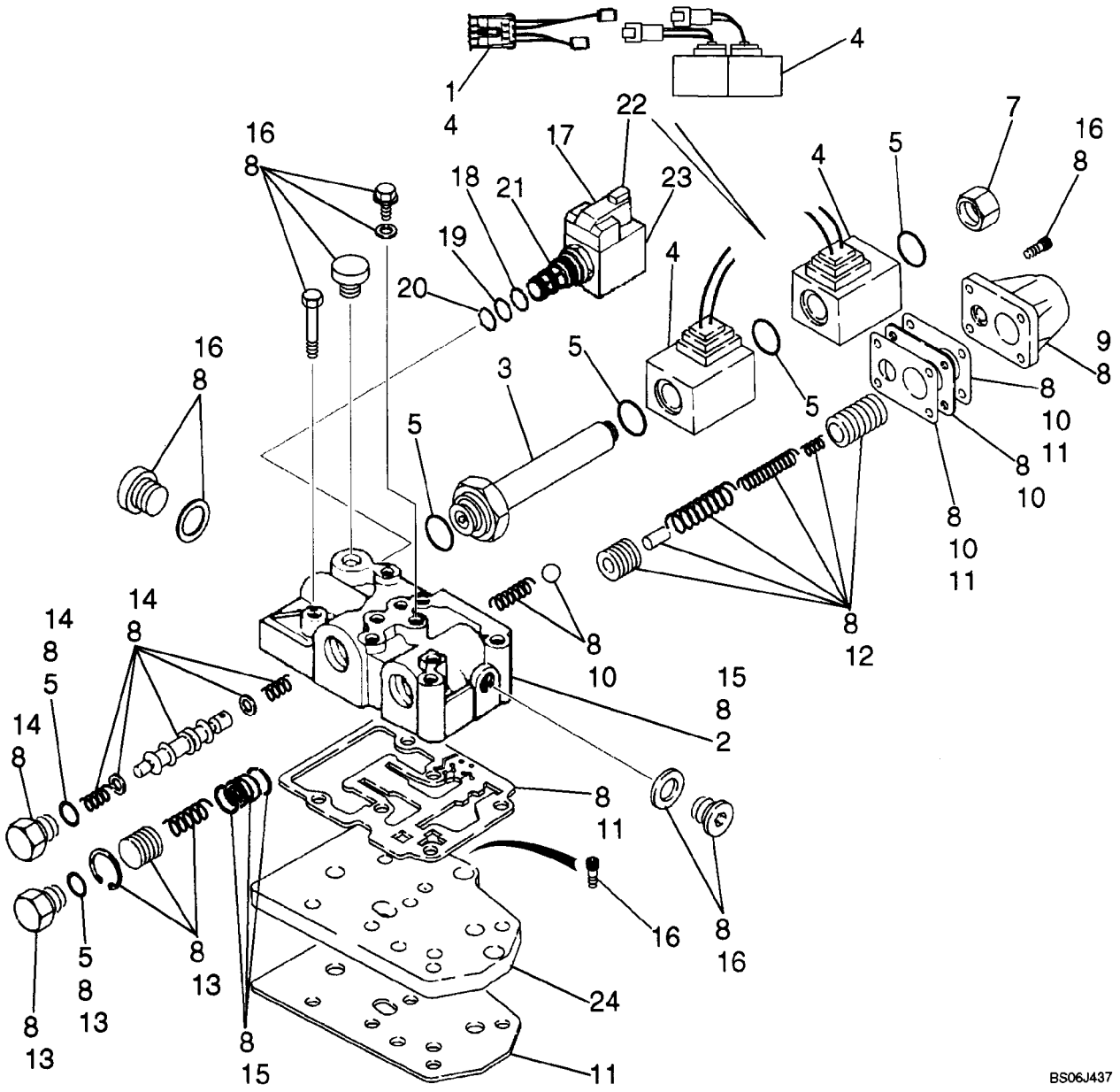

CONJUNTO DE LA TRANSMISION, 2WD - VALVULA, CONTROL

REF	FN	PART NUMBER	YR/SN	QTY	DENOMINACION
13		87524433		1	JUEGO DE REPARACION, Flow Divider Piston; Includes (1 each) Plug, O-Ring, Spring, Piston, Snap Ring; Component Parts Not Serviced Separately
14		87524432		1	JUEGO DE REPARACION, Forward/Reverse Spool; Includes (1) O-Ring, (2) Washer, (1) Plug, (1) Piston Spool, (2) Spring; Component Parts Not Serviced Separately
15		87524440		1	JUEGO DE REPARACION, Control Valve Body/Housing; Includes (1) Housing, Plus (1) Bushing, (2) Snap Rings at Flow Divider; Component Parts Not Serviced Separately
16		87524435		1	JUEGO DE REPARACION, Bolt; Includes (7) Plugs, (13) Bolts, (6) Copper Washers; Component Parts Not Serviced Separately
17		349295A1		1	SOLENOIDE, Differential Lock Solenoid Valve; Incl. Ref 18 - 23
18		237-6008		1	JUNTA HERMETICA, 8-1, 90 Duro, .644" ID x .087" Thk
19		238-5014		1	JUNTA HERMETICA, -014, 70 Duro, .489" ID x .070" Thk
20		238-5013		1	JUNTA HERMETICA, -013, 70 Duro, .426" ID x .070" Thk
21		349291A1		1	CARTUCHO, Valve, Cartridge, Component Parts Not Serviced Separately
21A		196096A1		1	CERNIDOR (CONJUNTO), Relief Valve, Internal; Not Illustrated
22		298614A1		1	SOLENOIDE
23		349292A1		1	TUERCA
24		181207A1		1	PLACA, GRANDE, Feeding; Not Included In Assembly, Purchase Separately

CONJUNTO DE LA TRANSMISION, 4WD - FILTRO, ACEITE

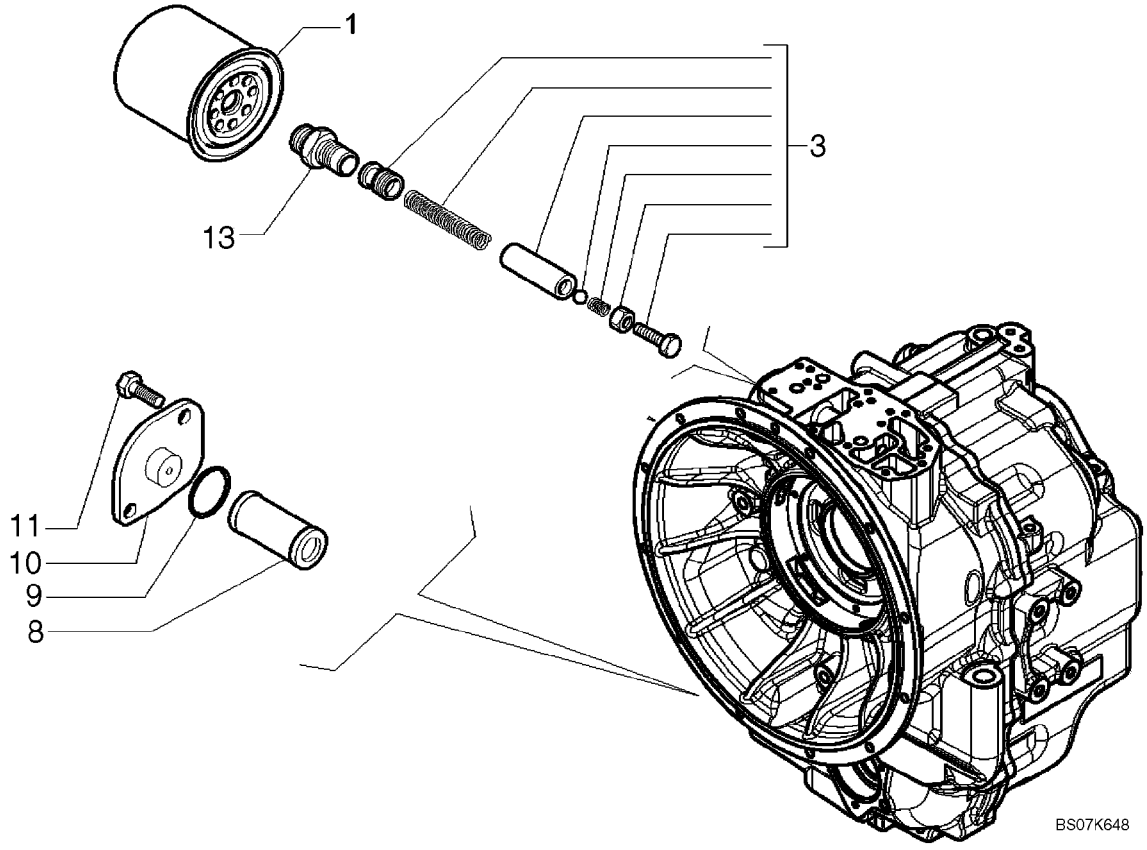

CONJUNTO DE LA TRANSMISION, 4WD - FILTRO, ACEITE

REF	FN	PART NUMBER	YR/SN	QTY	DENOMINACION
		87395301		1	CAMBIO DE VELOCIDAD, Four Wheel Drive, Incl. Ref 1 - 13; Also Includes Parts On Figures 06-20 - 06-29, 07-01(01)
1		254686A2		1	FILTRO, Oil
3		181274A1		1	JUEGO DE PIEZAS, Valve
8		278534A1		1	REJILLA, Oil
9		100748A1		1	JUNTA HERMETICA
10		181219A1		1	TAPA
11		614-8018		2	TORNILLO, Hex, M8 x 18, 8.8, Full Thd
13		181202A1		1	CONEXION

06-21		p1	02/08

CONJUNTO DE LA TRANSMISION, 4WD - ALOJAMIENTO

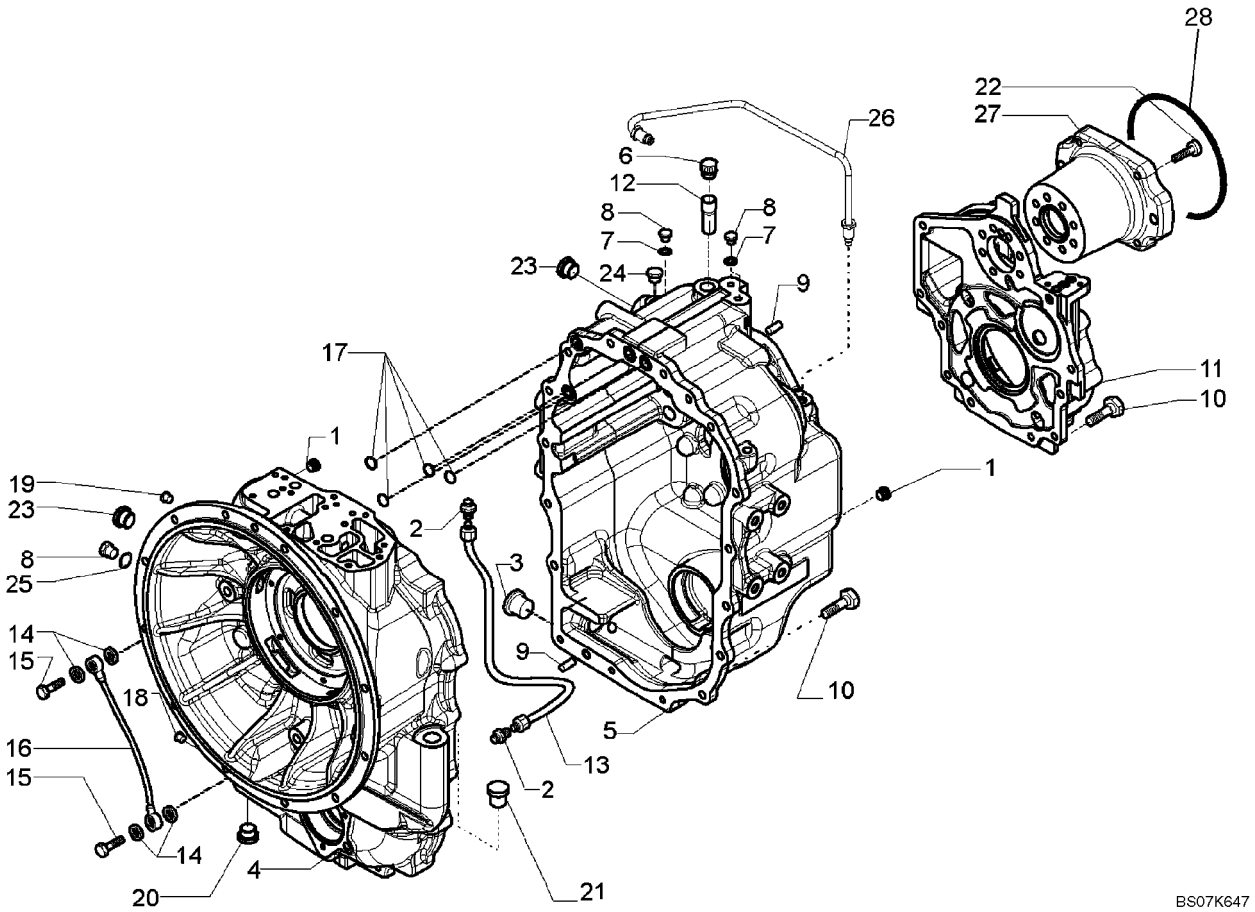

CONJUNTO DE LA TRANSMISION, 4WD - ALOJAMIENTO

REF	FN	PART NUMBER	YR/SN	QTY	DENOMINACION
		87395301		1	CAMBIO DE VELOCIDAD, Four Wheel Drive, Incl. Ref 1 - 28; Also Includes Parts On Figures 06-20 - 06-29, 07-01(01)
1		E135809		2	TAPčN, 9/16
2		218-1023		2	RACOR, 1/2"-20, 37Ü x 1/4"-18, NPTF
3		100557A1		1	TAPON DE VIACIADO, M30 x 2; Incl 238-6121 O-Ring
		238-6121		1	JUNTA HERMETICA, -121, 90 Duro, 1.049" ID x .103" Thk
4		{87701053}		1	Front Housing
5		{87701777}		1	Rear Housing
6		1530028C1		1	RESPIRADERO (CONJUNT
7		934667R1		4	JUNTA HERMETICA, M10 x 14 x 1
8		181100A1		4	TAPčN
9		K260177		3	PERNO, 10 x 25
10		614-10030		21	TORNILLO, Hex, M10 x 30, 8.8
11		{87701257}		1	Cover
12		310772A1		1	CUELLO DE CARGA, Breather
13		181176A1		1	CUELLO DE CARGA, Oil Tube
14		181105A1		4	ARANDELA DE COBRE
15		181179A1		2	TORNILLO HUECO, M14 x 1.5
16		181232A1		1	CUELLO DE CARGA, Lubrication
17		181141A1		4	JUNTA HERMETICA
18		{87702570}		1	Plug
19		181101A1		1	TAPčN, M14 x 1.5
20		239606A1		1	TAPčN
21		NSS		1	NO SE REPARA SEPARADAM., PLUG, Shipping Plug
22		{87701258}		7	M10 x 45 Bolt
23		NSS		1	NO SE REPARA SEPARADAM., PLUG, Shipping Plug
24		NSS		1	NO SE REPARA SEPARADAM., PLUG, Shipping Plug
25		87429985		1	JUNTA HERMETICA, Copper, 10 x 18 x 1.5 mm
26		{87701270}		1	Oil Tube

06-21		p2	02/08

CONJUNTO DE LA TRANSMISION, 4WD - ALOJAMIENTO

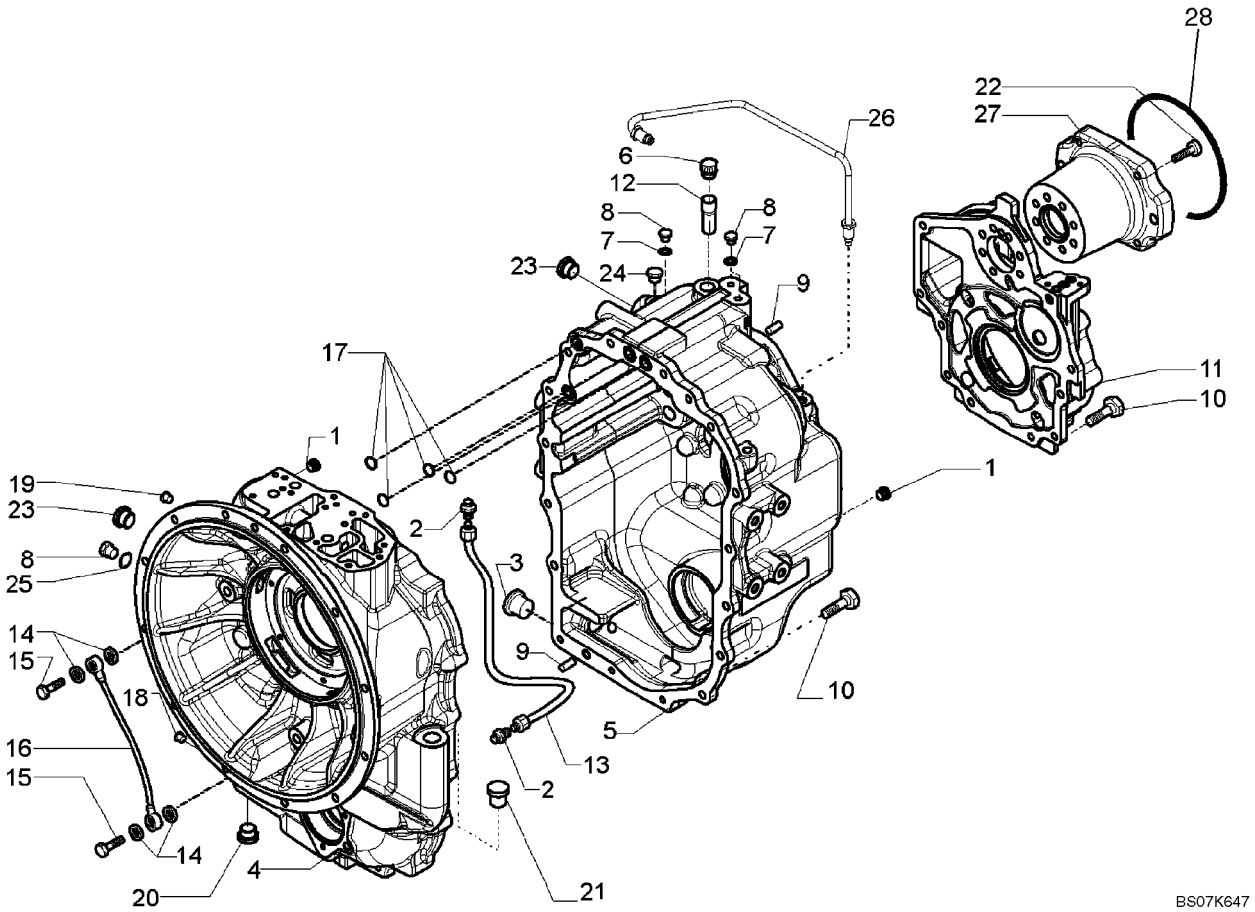

CONJUNTO DE LA TRANSMISION, 4WD - ALOJAMIENTO

REF	FN	PART NUMBER	YR/SN	QTY	DENOMINACION
27		{87701269}		1	PTO Flange
28		87429982		1	JUNTA HERMETICA, Pump Mounting

06-22		p1	02/08

CONJUNTO DE LA TRANSMISION, 4WD - BOMBA, ACEITE

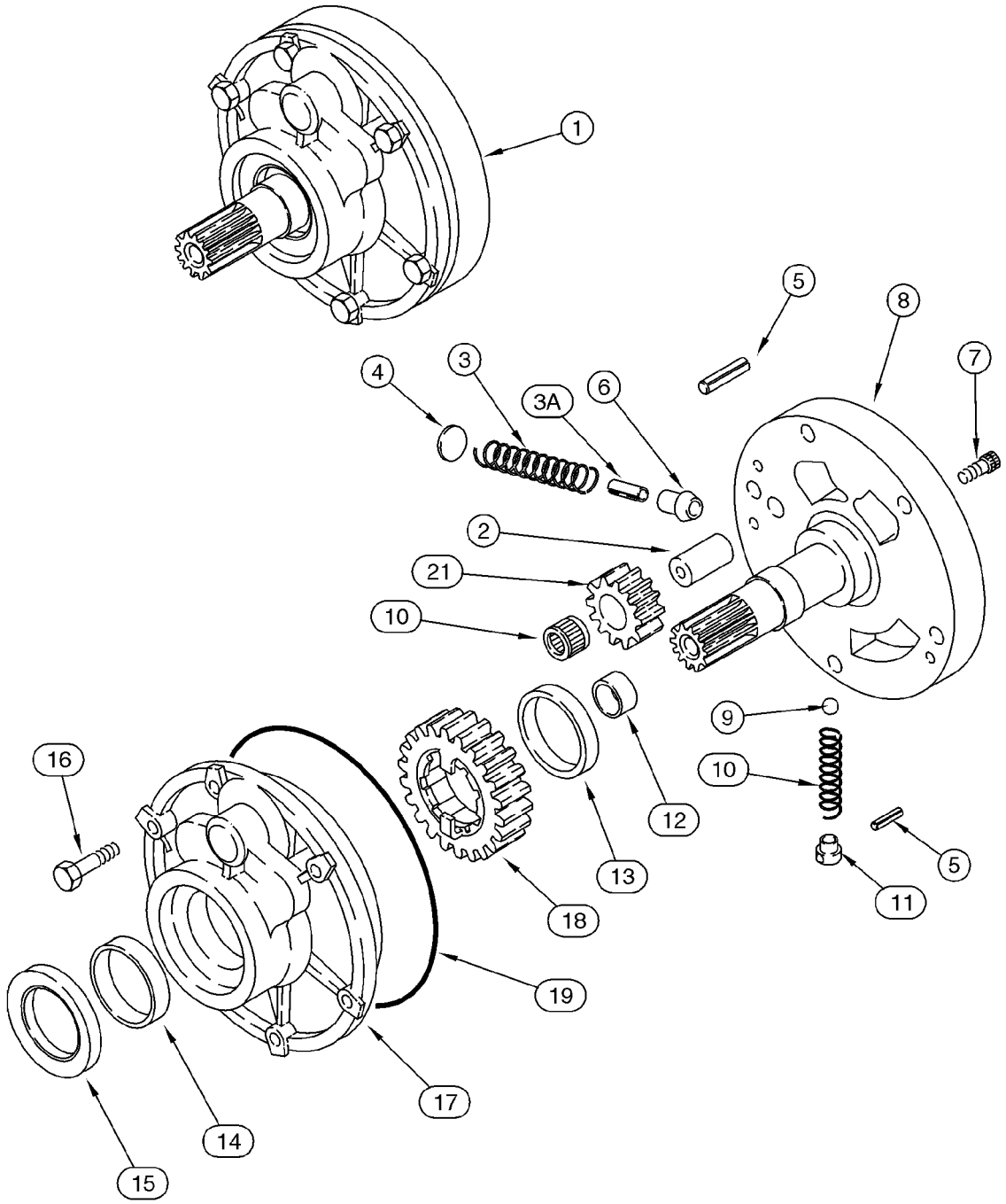

CONJUNTO DE LA TRANSMISION, 4WD - BOMBA, ACEITE

REF	FN	PART NUMBER	YR/SN	QTY	DENOMINACION
		87395301		1	CAMBIO DE VELOCIDAD, Four Wheel Drive, Incl. Ref 1 - 21; Also Includes Parts On Figures 06-20 - 06-29, 07-01(01)
1		87429970		1	BOMBA, Charge, Incl. Ref 2 - 21
2		NSS		1	NO SE REPARA SEPARADAM., Shaft
3		NSS		1	NO SE REPARA SEPARADAM., Spring
3A		NSS		1	NO SE REPARA SEPARADAM., Pin
4		NSS		1	NO SE REPARA SEPARADAM., Stop
5		NSS		2	NO SE REPARA SEPARADAM., Pin, Roll
6		NSS		1	NO SE REPARA SEPARADAM., Piston
7		NSS		2	NO SE REPARA SEPARADAM., Bolt
8		NSS		1	NO SE REPARA SEPARADAM., Support
9		NSS		1	NO SE REPARA SEPARADAM., Ball
10		NSS		1	NO SE REPARA SEPARADAM., Spring
11		NSS		1	NO SE REPARA SEPARADAM., Guide
12		NSS		1	NO SE REPARA SEPARADAM., Bushing
13		NSS		1	NO SE REPARA SEPARADAM., Bushing
14		NSS		1	NO SE REPARA SEPARADAM., Bushing
15		87429971		1	JUNTA DE ACEITE, Oil Seal
16		814-8060		6	TORNILLO, Hex, M8 x 60, 8.8
17		NSS		1	NO SE REPARA SEPARADAM., Housing
18		NSS		1	NO SE REPARA SEPARADAM., Gear, 23T
19		181142A1		1	JUNTA HERMETICA
20		NSS		1	NO SE REPARA SEPARADAM., Bearing, Needle
21		NSS		1	NO SE REPARA SEPARADAM., Gear, 12T

CONJUNTO DE LA TRANSMISION, 4WD - MECANISMO DE CAMBIO

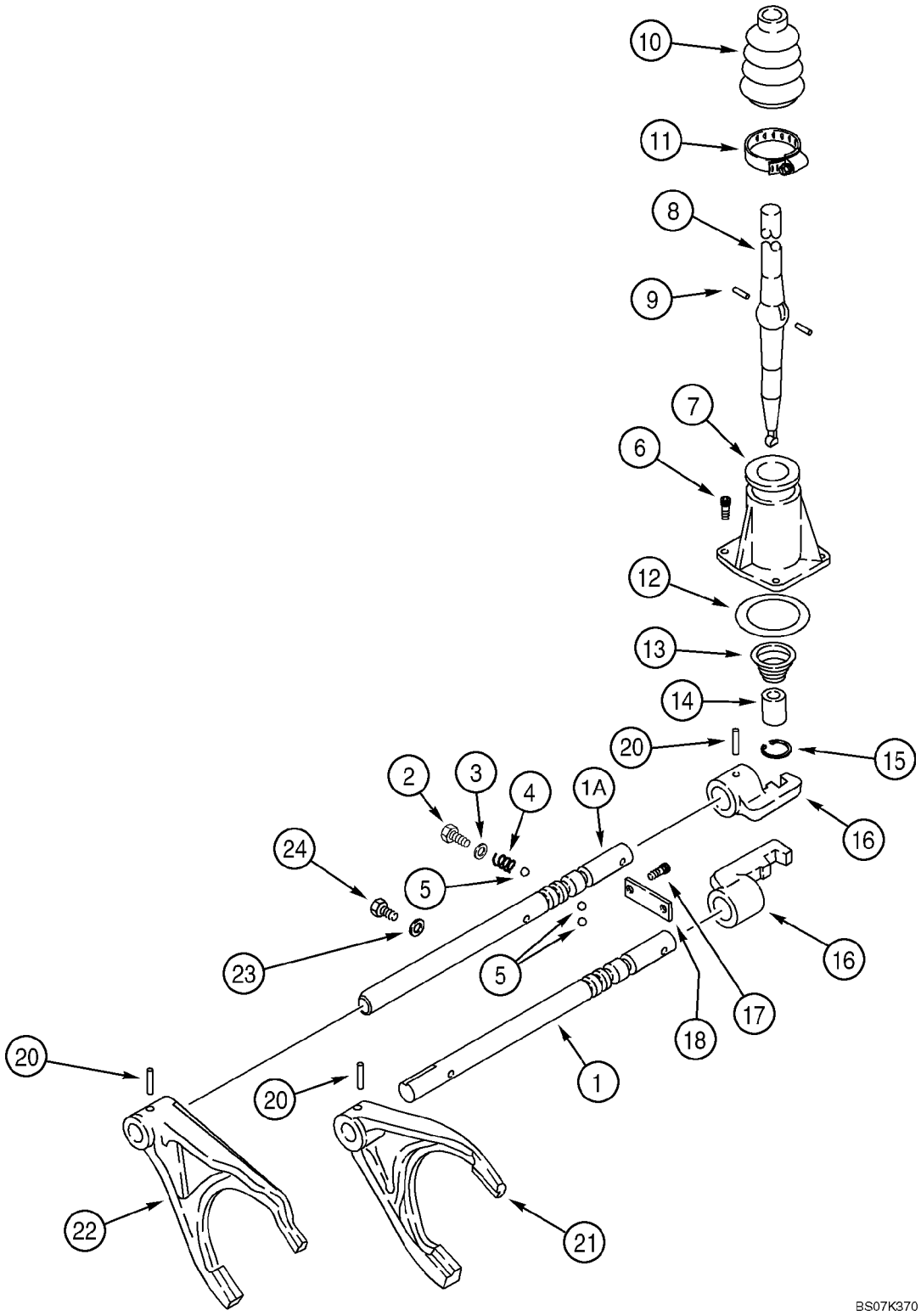

CONJUNTO DE LA TRANSMISION, 4WD - MECANISMO DE CAMBIO

REF	FN	PART NUMBER	YR/SN	QTY	DENOMINACION
		87395301		1	CAMBIO DE VELOCIDAD, Four Wheel Drive, Incl. Ref 1 - 24; Also Includes Parts On Figures 06-20 - 06-29, 07-01(01)
1		181245A2		1	VARILLA, Shifter Fork Rail; First and Second
1A		{87578867}		1	Shifter Fork Rail; Third and Fourth
2		614-12016		2	TORNILLO, Hex, M12 x 16, 8.8, Full Thd
3		87429994		2	JUNTA HERMETICA, 12 x 20 x 1.5 mm
4		1966993C1		2	RESORTE
5		181139A1		4	BOLA
6		864-8025		3	TORNILLO, Hex Soc Hd, M8 x 25, 8.8
7		181171A1		1	TAPA
8		190428A3		1	PALANCA MANDO
9		1967585C1		2	PERNO, Pin
10		1967581C1		1	CASQUETE
11		181177A1		1	COLLAR
12		181138A1		1	JUNTA HERMETICA
13		278533A1		1	RESORTE
14		278532A1		1	CASQUILLO
15		279039A1		1	ANILLO DE CIERRE
16		181173A1		2	SELECTOR, Shifter
17		864-10025		2	TORNILLO, Hex Soc Hd, M10 x 25, 8.8
18		181175A1		1	PLACA, GRANDE
20		905794R1		4	PERNO, M6 x 30, Coiled
21		181203A1		1	HORQUILLA, First and Second
22		181174A2		1	HORQUILLA, Third and Fourth
23		87429985		1	JUNTA HERMETICA, Washer
24		181100A1		1	TAPčN, M10 x 23

CONJUNTO DE LA TRANSMISION, 4WD - EJE, RETROCESO & PRIMARIO

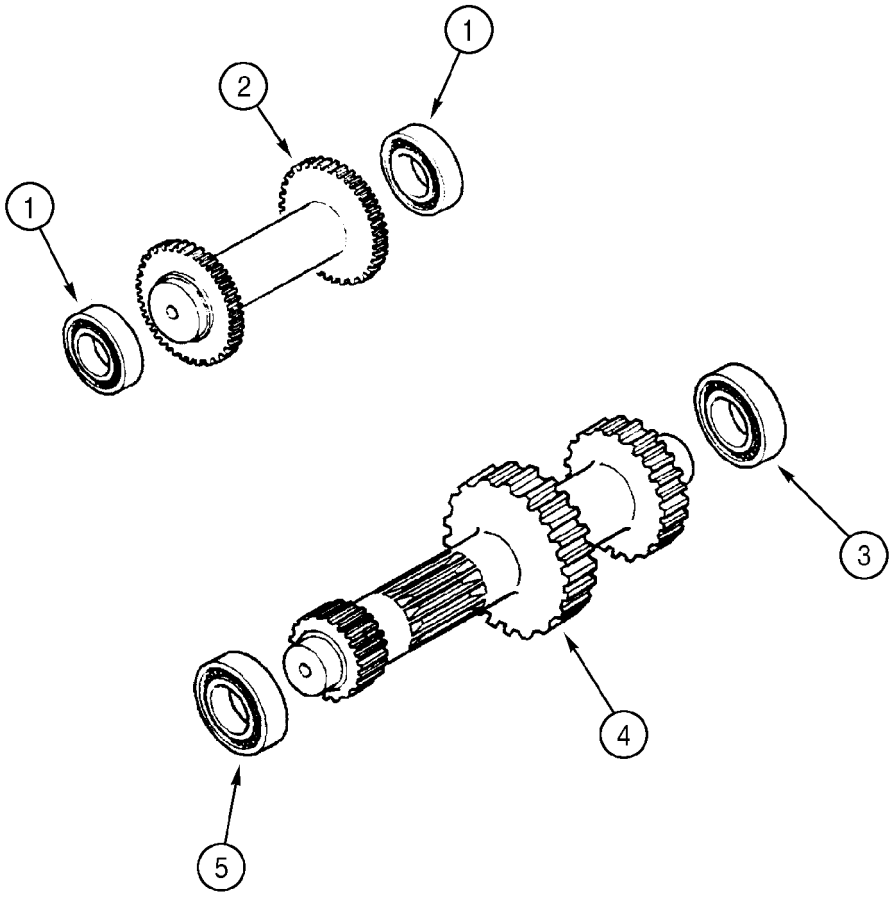

BS99H168

CONJUNTO DE LA TRANSMISION, 4WD - EJE, RETROCESO & PRIMARIO

REF	FN	PART NUMBER	YR/SN	QTY	DENOMINACION
		87395301		1	CAMBIO DE VELOCIDAD, Four Wheel Drive, Incl. Ref 1 - 6; Also Includes Parts On Figures 06-20 - 06-29, 07-01(01)
1		ST205A		2	RODAMIENTO DE BOLAS
2		358636A1		1	EJE, Idler/Reverse Shaft
3		181126A1		1	RODAMIENTO DE BOLAS
4		{87701276}		1	Primary Shaft
5		181132A1		1	RODAMIENTO DE BOLAS
6		A48041		1	RETENEDOR, Bearing to Axle Housing; Not Illustrated

06-25		p1	02/08

CONJUNTO DE LA TRANSMISION, 4WD - EJE, ENTRADA & T.D.F.

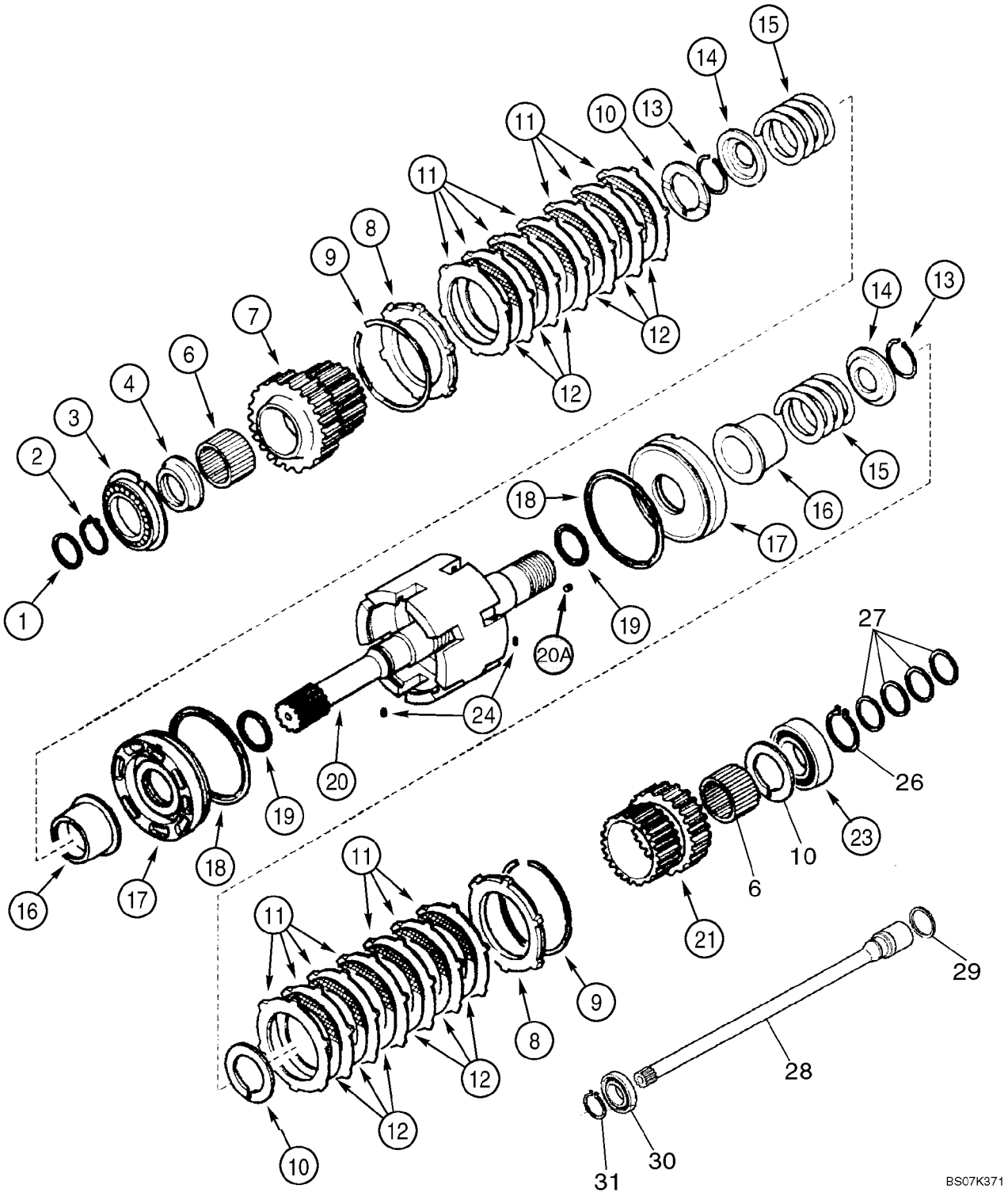

CONJUNTO DE LA TRANSMISION, 4WD - EJE, ENTRADA & T.D.F.

REF	FN	PART NUMBER	YR/SN	QTY	DENOMINACION
		87395301		1	CAMBIO DE VELOCIDAD, Four Wheel Drive, Incl. Ref 1 - 31; Also Includes Parts On Figures 06-20 - 06-29, 07-01(01)
1		358645A1		1	JUNTA DE ACEITE
2		A48041		1	RETENEDOR
3		181128A1		1	RODAMIENTO DE BOLAS
4		358635A1		1	ESPACIADOR, 68 x 45 x 105 mm
6		358633A1		2	RODAMIENTO DE AGUJA
7		358632A1		1	PINON, Gear, 35T
8		310519A1		2	PLACA
9		181116A1		2	ANILLO DE FRENO
10		358640A1		3	ARANDELA, Thrust
11		181159A1		14	DISCO, Plate
12		181158A1		12	DISCO (CONJUNTO), Plate
13		181111A1		2	ANILLO DE FRENO
14		181161A1		2	PLACA DE APOYO, Pressure
15		358637A1		2	RESORTE
16		358641A1		2	ACOPLAMIENTO
17		358644A1		2	EMBOLO
18		358643A1		2	ANILLO DE CIERRE
19		358642A1		2	RETEN
20		87525849		1	JUEGO DE REPARACION, Input Shaft, Incl Ref 20A (4) 139312A1 Rivets; Also Incl (1) 87429973 Input Shaft Which Is Not Serviced Separately
20A		139312A1		4	TAPčN, Rivet
21		358638A1		1	PINON, Gear, 29T
23		ST264		1	RODAMIENTO DE BOLAS
24		181108A1		2	ANILLO ELASTICO
26		800-1150		1	ANILLO DE RESORTE, M50, Ext
27		87429984		4	ANILLO, Seal Ring
28		{87701275}		1	Shaft
29		358645A1		1	JUNTA DE ACEITE
30		87429983		1	RODAMIENTO DE BOLAS
31		800-1130		1	ANILLO DE RESORTE, M30, Ext

CONJUNTO DE LA TRANSMISION, 4WD - EJE, SECUNDARIO

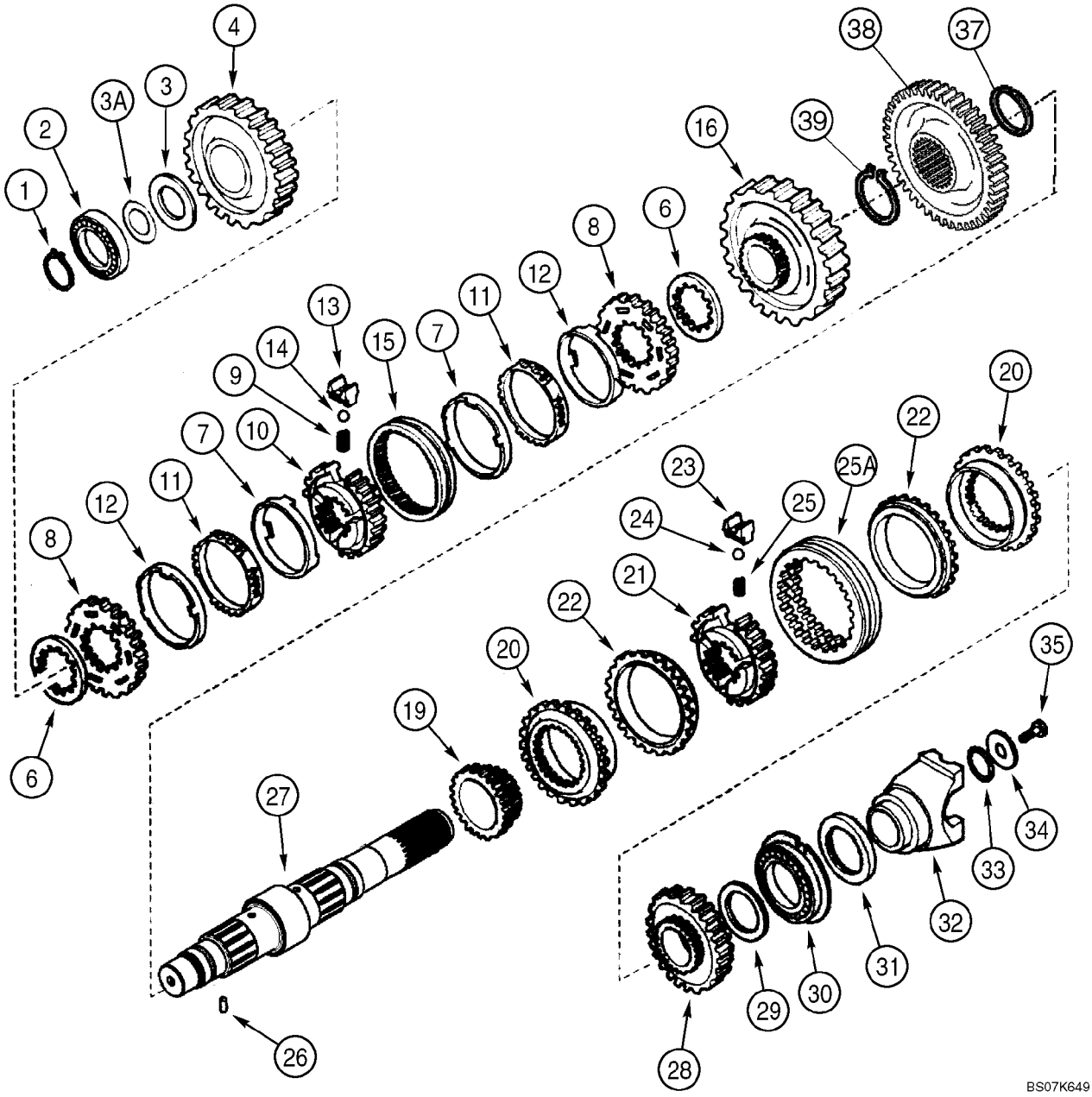

CONJUNTO DE LA TRANSMISION, 4WD - EJE, SECUNDARIO

REF	FN	PART NUMBER	YR/SN	QTY	DENOMINACION
		87395301		1	CAMBIO DE VELOCIDAD, Four Wheel Drive, Incl. Ref 1 - 39; Also Includes Parts On Figures 06-20 - 06-29, 07-01(01)
1		181118A1		1	ANILLO DE FRENO
2		181132A1		1	RODAMIENTO DE BOLAS
3		358649A1		1	ARANDELA, Thrust
3A		358650A1		AR	SUPLEMENTO, 0,05 mm
3A		358651A1		AR	SUPLEMENTO, 0,10 mm
3A		358652A1		AR	SUPLEMENTO, 0,30 mm
3A		196454A1		AR	SUPLEMENTO, 0,50 mm
4		{87701278}		1	Gear, Driven, Second, 44T Pinion Gear
6		244109A1		2	ESPACIADOR
		190427A1		1	SINCRONIZADOR, Synchronizing Service Kit, Incl. Ref 7 - 15
7		NSS		2	NO SE REPARA SEPARADAM., Ring
8		NSS		2	NO SE REPARA SEPARADAM., Ring
9		384773A1		3	MUELLE HELICOIDAL
10		NSS		1	NO SE REPARA SEPARADAM., Hub
11		NSS		2	NO SE REPARA SEPARADAM., Ring
12		NSS		2	NO SE REPARA SEPARADAM., Ring
13		326865A1		3	PLAQUETA
14		384769A1		3	BOLA
15		NSS		1	NO SE REPARA SEPARADAM., Sleeve
16		{87701293}		1	Gear, Driven, First, 50T Pinion Gear
19		358282A1		1	ENGRANAJE, Driven, Fourth, 23T
		87429974		1	SINCRONIZADOR, Synchronizing Service Kit, Incl. Ref 20 - 25A
20		NSS		2	NO SE REPARA SEPARADAM., Ring
21		NSS		1	NO SE REPARA SEPARADAM., Hub
22		NSS		2	NO SE REPARA SEPARADAM., Ring
23		NSS		3	NO SE REPARA SEPARADAM., Plate
24		NSS		3	NO SE REPARA SEPARADAM., Ball
25		NSS		3	NO SE REPARA SEPARADAM., Spring
25A		NSS		1	NO SE REPARA SEPARADAM., Sleeve
26		181108A1		1	ANILLO ELASTICO

CONJUNTO DE LA TRANSMISION, 4WD - EJE, SECUNDARIO

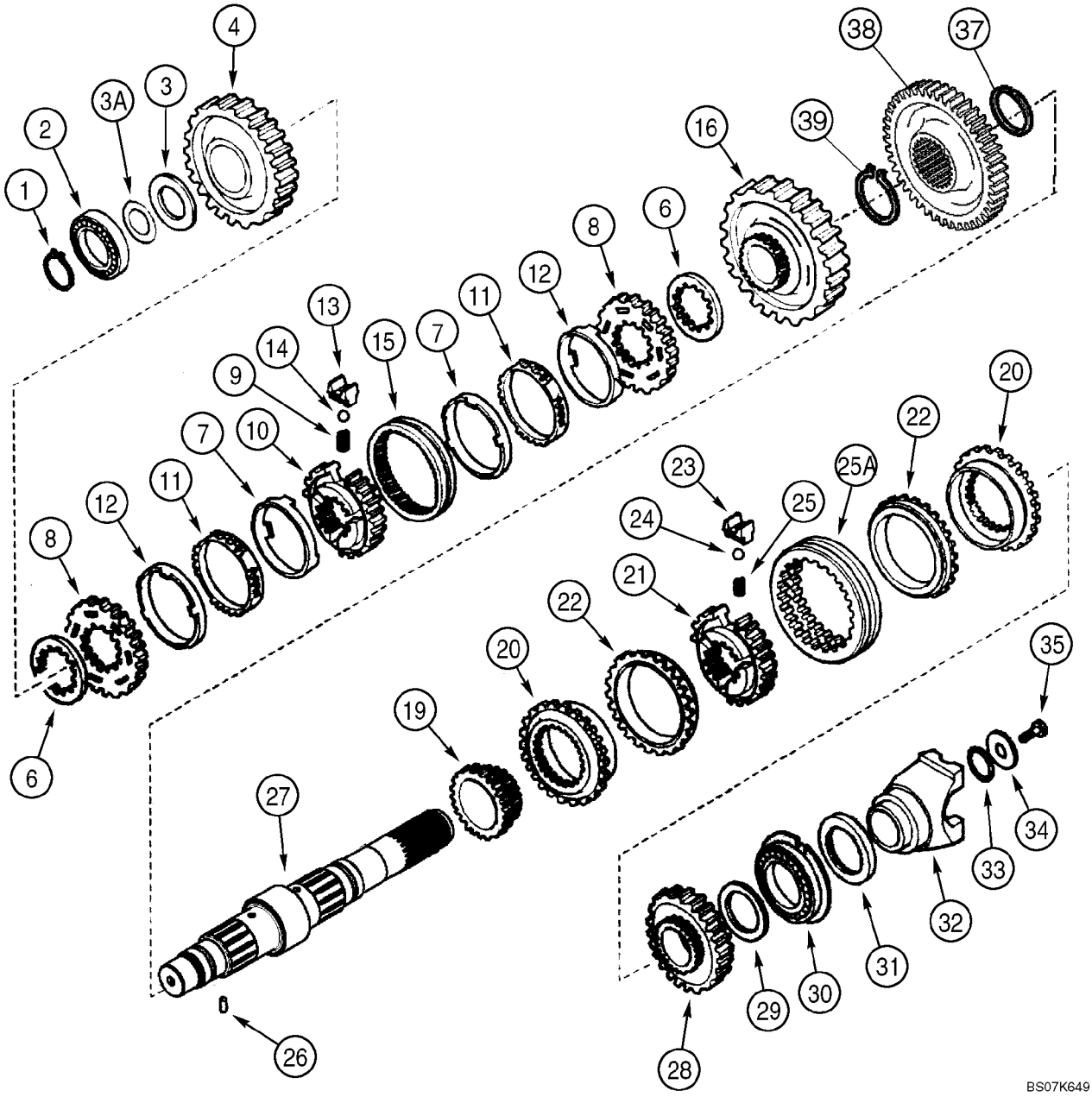

CONJUNTO DE LA TRANSMISION, 4WD - EJE, SECUNDARIO

REF	FN	PART NUMBER	YR/SN	QTY	DENOMINACION
27		{87701775}		1	Shaft, Secondary, Four Wheel Drive Models
28		358283A1		1	PINON, Gear, Driven, Third, 33T
29		358639A1		1	ARANDELA, Thrust, 68 x 45 x 4 mm
30		181130A1		1	RODAMIENTO DE BOLAS
31		181123A1		1	JUNTA DE ACEITE, 60 x 75 x 8 mm
32		233284A1		1	HORQUETA, Yoke
33		181144A1		1	JUNTA HERMETICA
34		181165A1		1	ARANDELA, 52 x 12.5 x 5 mm
35		P3533055		1	TORNILLO, 12 x 25 mm
37		358654A1		1	ANILLO DE CIERRE, Four Wheel Drive Models
38		358656A1		1	ENGRANAJE, 44T, Four Wheel Drive Models
39		358655A1		1	ANILLO DE CIERRE, Four Wheel Drive Models

CONJUNTO DE LA TRANSMISION, 4WD - EJE, SALIDA

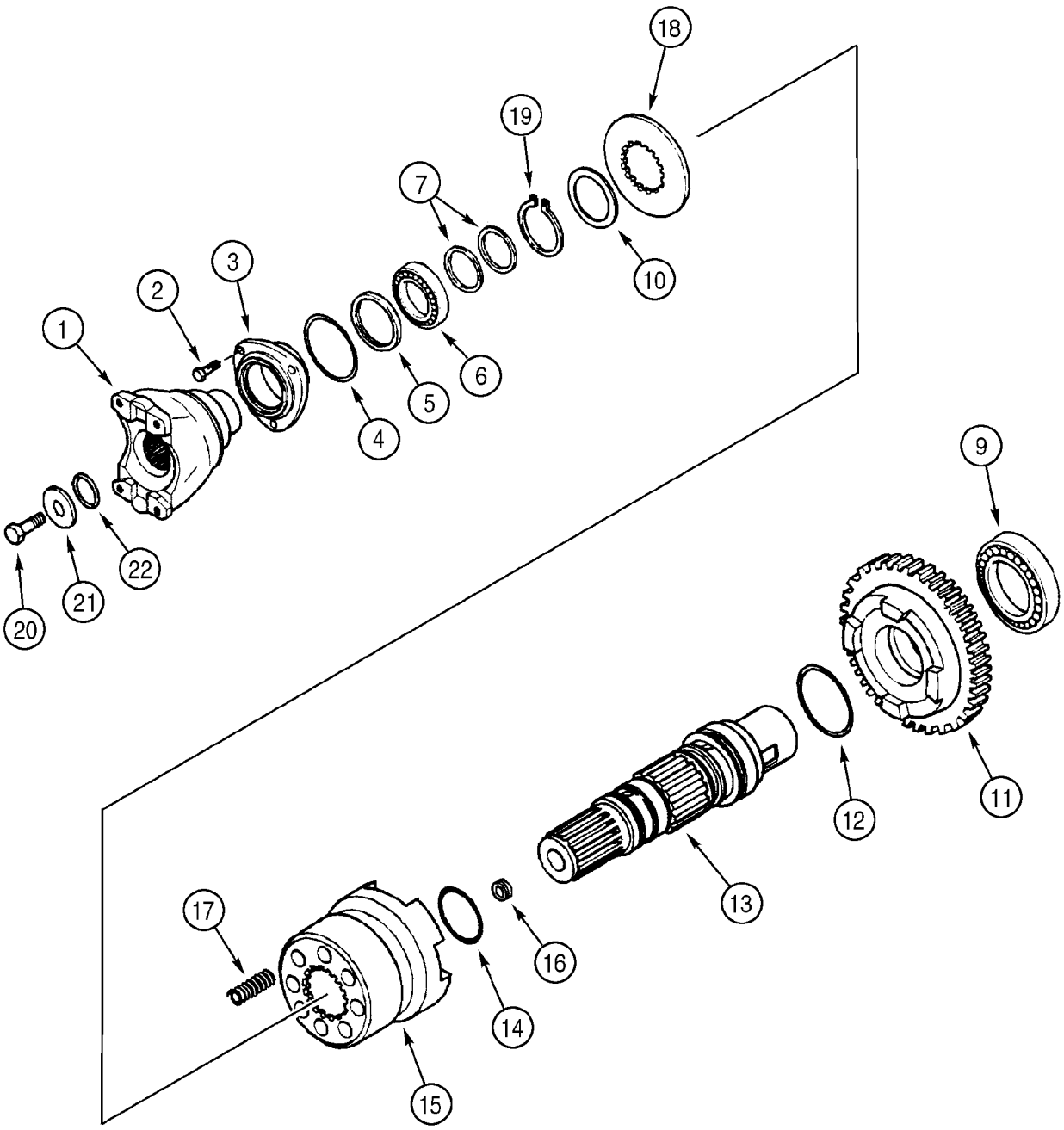

BS99H160

CONJUNTO DE LA TRANSMISION, 4WD - EJE, SALIDA

REF	FN	PART NUMBER	YR/SN	QTY	DENOMINACION
		87395301		1	CAMBIO DE VELOCIDAD, Four Wheel Drive, Incl. Ref 1 - 22; Also Includes Parts On Figures 06-20 - 06-29, 07-01(01)
1		{87704971}		1	Yoke, Fork, Front
2		614-8022		3	TORNILLO, Hex, M8 x 22, 8.8, Full Thd
3		181198A1		1	TAPA
4		112517A1		1	JUNTA HERMETICA
5		181122A1		1	JUNTA DE ACEITE, 50 x 65 x 8 mm
6		ST205A		1	RODAMIENTO DE BOLAS
7		358645A1		2	JUNTA DE ACEITE
9		181126A1		1	RODAMIENTO DE BOLAS
10		P2745478		1	ARANDELA
11		366234A1		1	PINON, Gear, Driven, 36T
12		366235A1		1	JUNTA HERMETICA
13		366230A1		1	EJE, Output Shaft
14		366236A1		2	JUNTA HERMETICA
15		366232A1		1	ACOPLAMIENTO
16		D142898		1	TAPčN, 10 x 1 mm
17		100753A1		8	RESORTE
18		366231A1		1	ARANDELA
19		800-5145		1	ANILLO DE RESORTE, M45, Ext
20		P3533055		1	TORNILLO, 12 x 25 mm
21		P2745466		1	ARANDELA
22		238-8217		1	JUNTA HERMETICA, -217, Cl 8, 1.171" ID x .139" Thk

06-28		p1	02/08

CONJUNTO DE LA TRANSMISION, 4WD - VALVULA, CONTROL

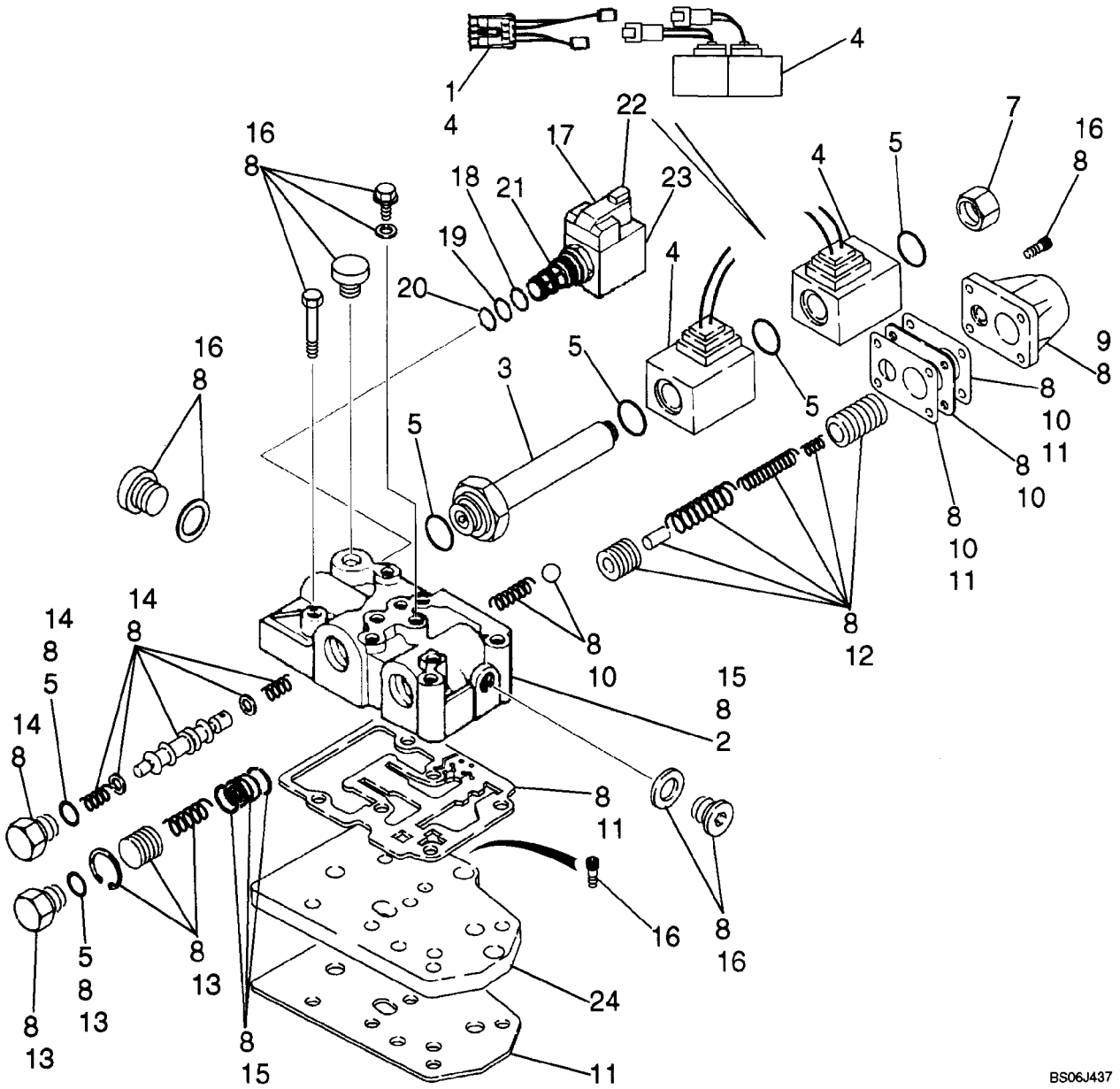

CONJUNTO DE LA TRANSMISION, 4WD - VALVULA, CONTROL

REF	FN	PART NUMBER	YR/SN	QTY	DENOMINACION
		87395301		1	CAMBIO DE VELOCIDAD, Four Wheel Drive, Incl. Ref 1 - 23; Also Includes Parts On Figures 06-20 - 06-29, 07-01(01)
		87525756		1	JUEGO DE REPARACION, Transmission Control Valve With Jumper Harness; Includes (1) 87456968 Forward/Reverse Jumper Harness, Ref 1; Plus (1) 87524409 Control Valve, Ref 1 - 23
1		87456968		1	GRUPO DE CABLES, Jumper; If Used; Required On Transmissions Prior To Ones With Deutsch Connector Type Solenoids
		87524409		1	VALVULA DISTRIBUIDORA, Transmission Control, With Improved Snap Ring at Flow Divider Area; Incl. Ref 2 - 23
2		NSS		1	NO SE REPARA SEPARADAM., Housing
3		190442A1		1	EMBOLO
4		87456900		1	KIT, SERVICE, Solenoid; Includes (2) Solenoids, (1) Jumper Wire Used For Transmissions Prior to Ones With The Solenoids With Plastic Connections
5		87524436		1	JUEGO DE REPARACION, Seal; Includes (6) O-Rings; Component Parts Not Serviced Separately
7		87530365		1	TAPčN
8		87524441		1	CONJUNTO, Valve Body Kit; Component Parts Not Serviced Separately
9		181251A1		1	TAPA, Modulation
10		87524439		1	JUEGO DE REPARACION, Plate; Includes (1) Plate, (2) Gasket, (1) Ball, (1) Spring; Component Parts Not Serviced Separately
11		87524437		1	JUEGO DE REPARACION, Gasket; Includes (4) Gasket Plates; Component Parts Not Serviced Separately
12		87524438		1	JUEGO DE REPARACION, Modulation Valve; Includes (2) Piston, (1) Pin, (3) Spring; Component Parts Not Serviced Separately

CONJUNTO DE LA TRANSMISION, 4WD - VALVULA, CONTROL

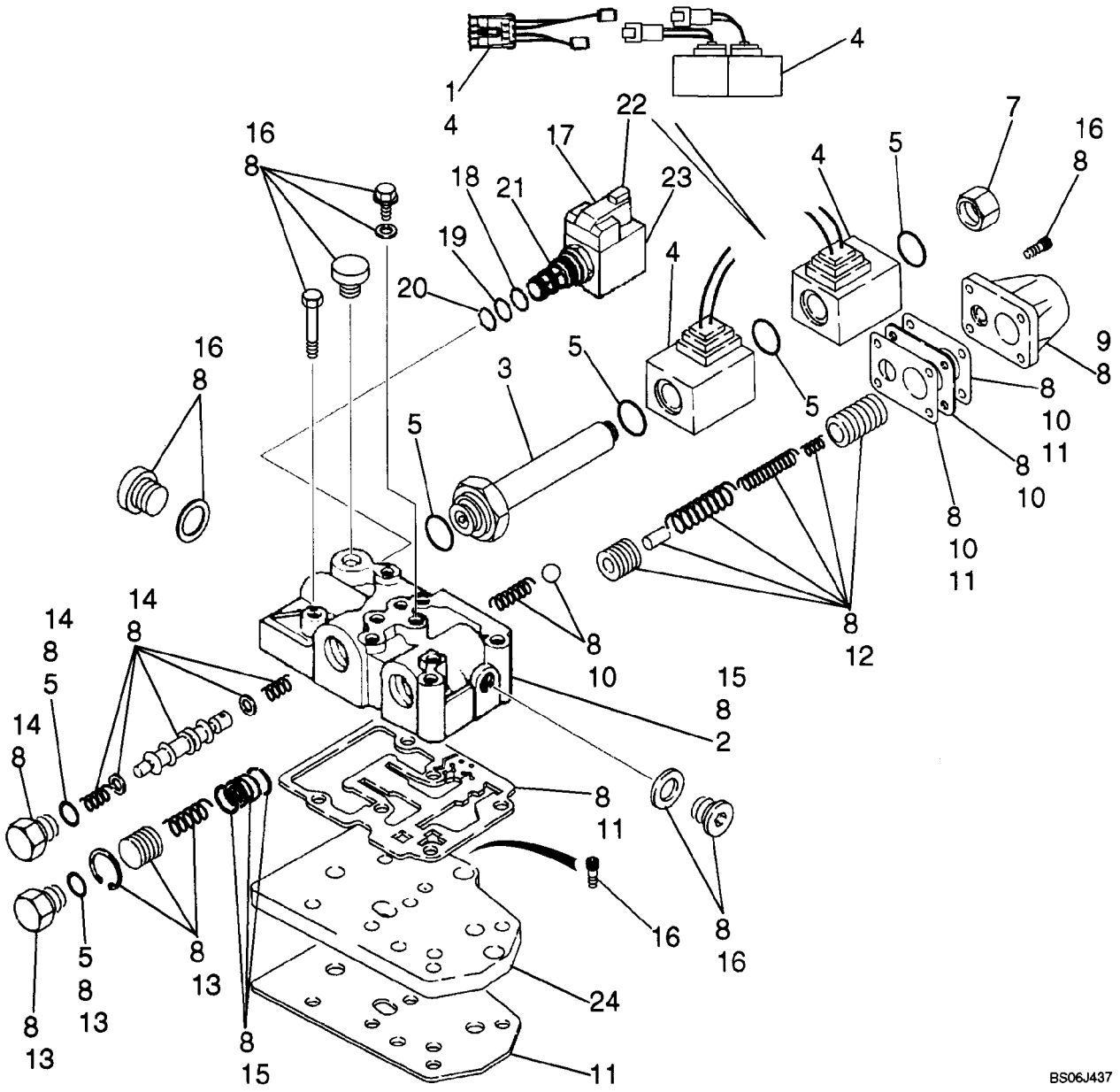

CONJUNTO DE LA TRANSMISION, 4WD - VALVULA, CONTROL

REF	FN	PART NUMBER	YR/SN	QTY	DENOMINACION
13		87524433		1	JUEGO DE REPARACION, Flow Divider Piston; Includes (1 each) Plug, O-Ring, Spring, Piston, Snap Ring; Component Parts Not Serviced Separately
14		87524432		1	JUEGO DE REPARACION, Forward/Reverse Spool; Includes (1) O-Ring, (2) Washer, (1) Plug, (1) Piston Spool, (2) Spring; Component Parts Not Serviced Separately
15		87524440		1	JUEGO DE REPARACION, Control Valve Body/Housing; Includes (1) Housing, Plus (1) Bushing, (2) Snap Rings at Flow Divider; Component Parts Not Serviced Separately
16		87524435		1	JUEGO DE REPARACION, Bolt; Includes (7) Plugs, (13) Bolts, (6) Copper Washers; Component Parts Not Serviced Separately
17		349295A1		1	SOLENOIDE, Differential Lock Solenoid Valve; Incl. Ref 18 - 23
18		237-6008		1	JUNTA HERMETICA, 8-1, 90 Duro, .644" ID x .087" Thk
19		238-5014		1	JUNTA HERMETICA, -014, 70 Duro, .489" ID x .070" Thk
20		238-5013		1	JUNTA HERMETICA, -013, 70 Duro, .426" ID x .070" Thk
21		349291A1		1	CARTUCHO, Valve, Cartridge, Component Parts Not Serviced Separately
21A		196096A1		1	CERNIDOR (CONJUNTO), Relief Valve, Internal; Not Illustrated
22		298614A1		1	SOLENOIDE
23		349292A1		1	TUERCA
24		181207A1		1	PLACA, GRANDE, Feeding; Not Included In Assembly, Purchase Separately

CONJUNTO DE LA TRANSMISION, 4WD - VóLVULA, SOLENOIDE

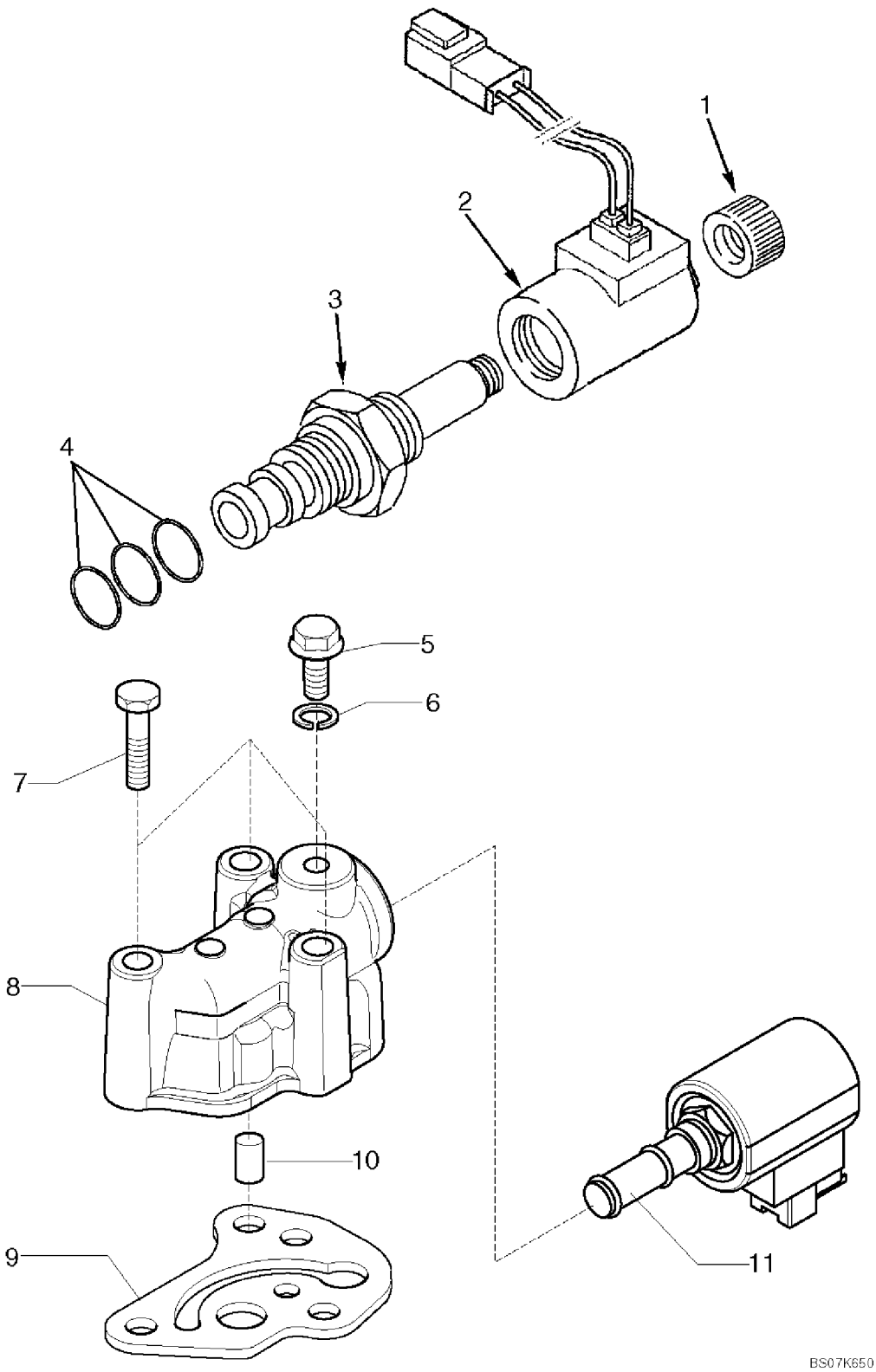

CONJUNTO DE LA TRANSMISION, 4WD - VóLVULA, SOLENOIDE

REF	FN	PART NUMBER	YR/SN	QTY	DENOMINACION
		87395301		1	CAMBIO DE VELOCIDAD, Four Wheel Drive, Incl. Ref 1 - 10; Also Includes Parts On Figures 06-20 - 06-29, 07-01(01)
		87429978		1	ELECTROVĆLVULA, Valve, Incl. Ref 1 - 4; With Deutsch Connectors
1		NSS		1	NO SE REPARA SEPARADAM., Nut
2		NSS		1	NO SE REPARA SEPARADAM., Coil
3		NSS		1	NO SE REPARA SEPARADAM., Valve, Solenoid
4		NSS		1	NO SE REPARA SEPARADAM., Kit, Seal, Includes 238-5014, 238-5015, 237-6010 O-Rings, Kit Not Serviced Separately
5		181100A1		1	TAPčN, M10 x 23
6		934667R1		1	JUNTA HERMETICA, M10 x 14 x 1, Copper Washer
7		814-8060		3	TORNILLO, Hex, M8 x 60, 8.8
8		321428A1		1	CAVIDAD
9		366910A1		1	ANILLO DE CIERRE
10		190431A1		1	VALVULA, Installed Between Ref 8 and 9
11		87456901		1	SOLENOIDE, Component Parts Not Serviced Separately; Includes Solenoid and Ref 12 Jumper Harness; Jumper Is For Coverting Transmissions Prior to Connector Change From Weather Pack to Deutsch
12		87456969		1	GRUPO DE CABLES, Jumper; Weather Pack Connector/Deutsch Connector

RUEDAS, PARTE TRASERA - NEUMćTICOS

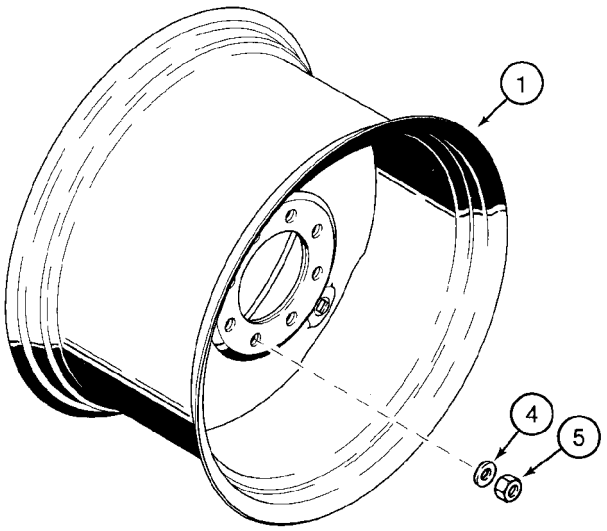

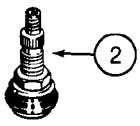

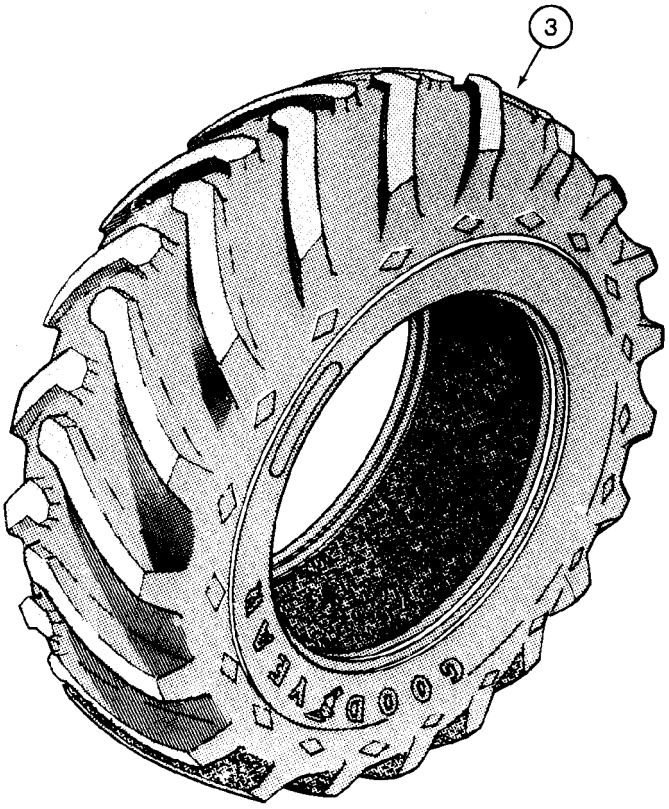

B9408129

RUEDAS, PARTE TRASERA - NEUMćTICOS

REF	FN	PART NUMBER	YR/SN	QTY	DENOMINACION
1		104907A1		2	RIN, 19.5L x 24 Tires - 10 PR or 14 Ply; Two Wheel or Four Wheel Drive
2		27549R1		2	VALVULA
3		REF		2	MANUAL, Tire, Purchase Locally
1		119241A1		2	RIN, 17.5L x 24 Tires - 10 PR, R4; Two Wheel or Four Wheel Drive
2		27549R1		2	VALVULA
3		REF		2	MANUAL, Tire, Purchase Locally
4		D138380		20	ARANDELA, Wheel Nuts
5		D138492		20	TUERCA, M22; Wheel Nuts

06-31		p1	02/08

EJE, TRANSMISIĎN TRASERA - SOPORTE

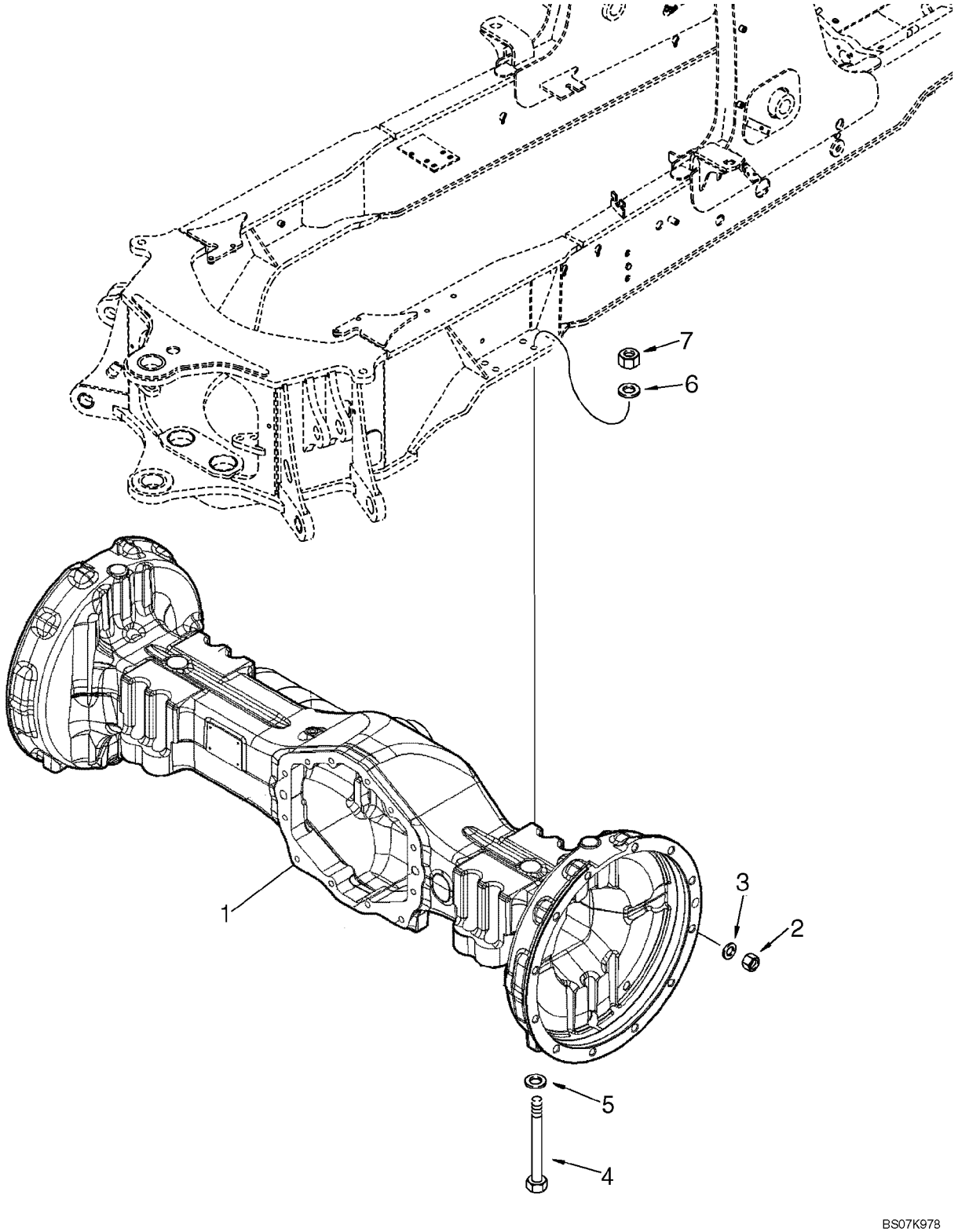

EJE, TRANSMISIĎN TRASERA - SOPORTE

REF	FN	PART NUMBER	YR/SN	QTY	DENOMINACION
1		87395372		1	PUENTE POSTERIOR, See Figures 06-33 - 06-37, 07-02
2		D138492		20	TUERCA, 22 mm
3		87313544		20	ARANDELA, 22.52 ID x 44.0 OD x 5.0 mm thk, Hardened
4		827-20200		8	TORNILLO, Hex, M20 x 200, 10.9
5		896-11020		8	ARANDELA, M20 x 37.5 x 4, HT
6		87618533		8	ARANDELA, M20
7		829-1420		8	TUERCA, M20, Cl 10

EJE, TRASERO - BLOQUEO DEL DIFERENCIAL

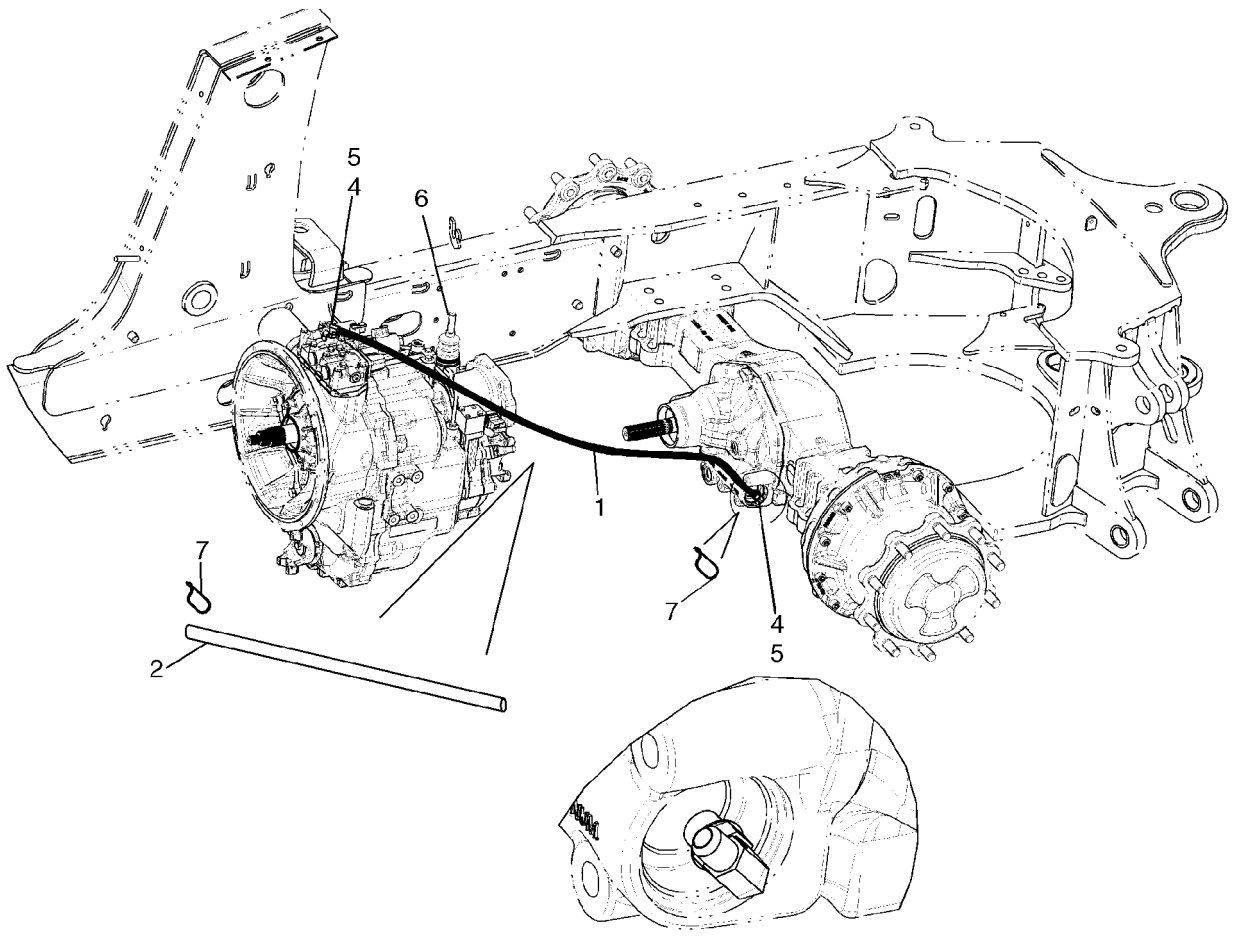

EJE, TRASERO - BLOQUEO DEL DIFERENCIAL

REF	FN	PART NUMBER	YR/SN	QTY	DENOMINACION
1		87431701		1	MANGUERA (CONJUNTO), 1500 mm (59-9/16 in)
2		191704A1		1	TUBO AISLANTE
4		218-5105		1	CODO, 90Ü, 9/16"-18, 37Ü x 9/16"-18, O-Ring, Incl. Ref 5
5		237-6006		1	JUNTA HERMETICA, 6-1, 90 Duro, .468" ID x .078" Thk
6		E135809		1	TAPčN, If Used
7		L18337		2	CIERRA CABLES, 9.95"-12.1" lg

87395372 EJE, TRANSMISIĎN TRASERA - ALOJAMIENTO

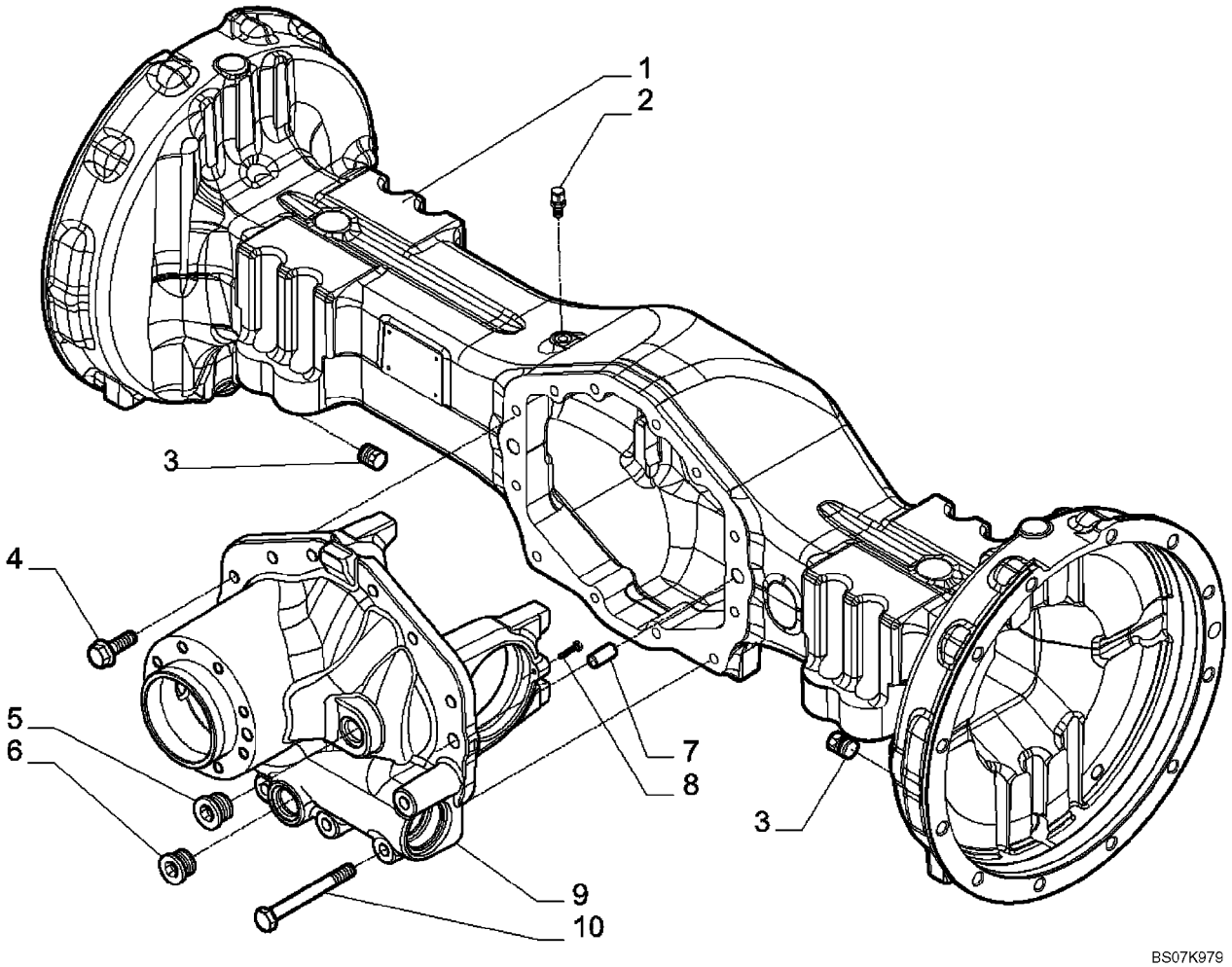

87395372 EJE, TRANSMISIĎN TRASERA - ALOJAMIENTO

REF	FN	PART NUMBER	YR/SN	QTY	DENOMINACION
		87395372		1	PUENTE POSTERIOR, Incl. Ref 1 - 10; Also Includes Parts On Figures 06-33 - 06-37, 07-02
1		{87708390}		1	Housing, Axle
2		1966149C1		1	RESPIRADERO, M10 x 1
3		A156873		2	TAPON DE VIACIADO, M22 x 1.5
4		S301064		8	TORNILLO, M12 x 1.75
5		{434746A1}		1	Plug; M24 x 1.5
6		100557A1		1	TAPON DE VIACIADO, M30 x 2
7		1966138C1		2	PITON
8		864-6025		2	TORNILLO, Hex Soc Hd, M6 x 25, 8.8
9		{87708391}		1	Differential Support
10		{87708392}		4	Screw; M12 x 100

87395372 EJE, TRANSMISIĎN TRASERA - DIFERENCIAL

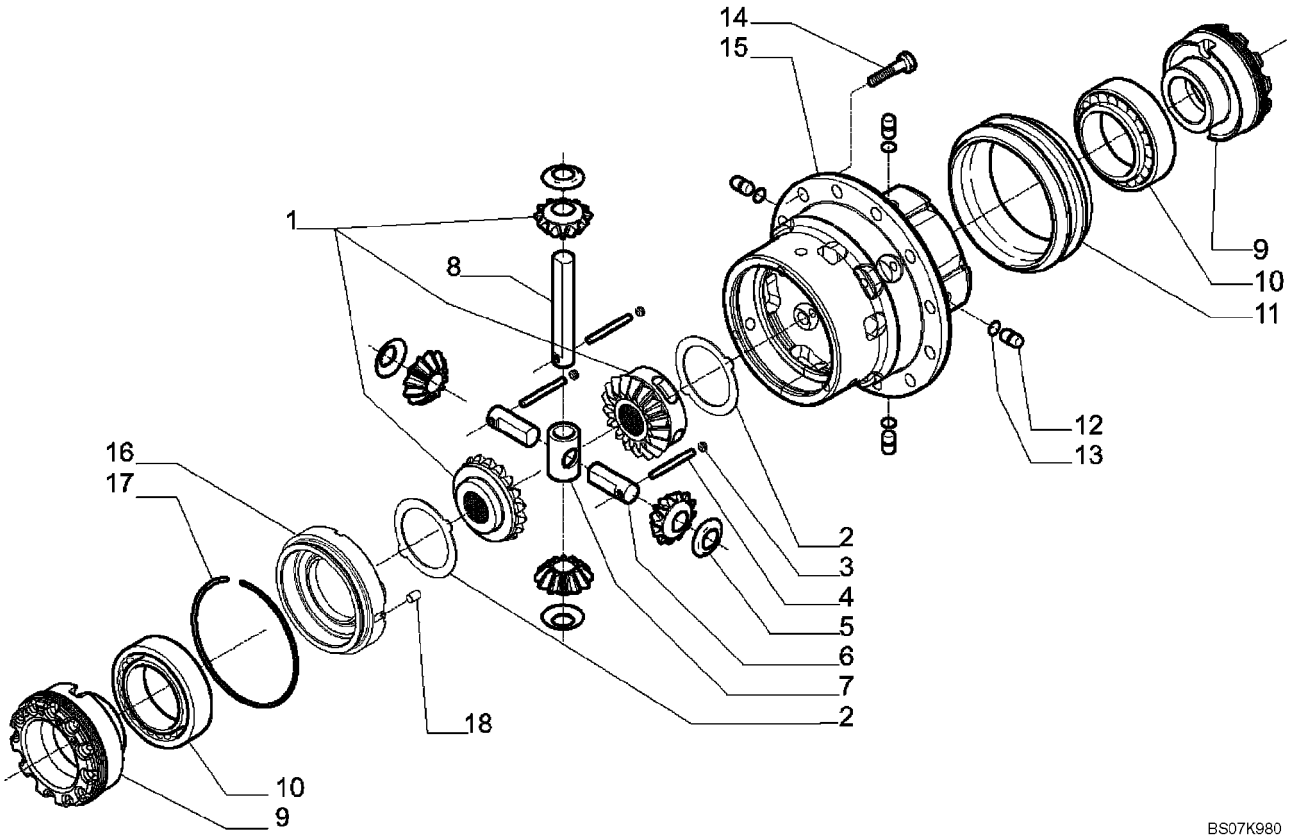

87395372 EJE, TRANSMISIĎN TRASERA - DIFERENCIAL

REF	FN	PART NUMBER	YR/SN	QTY	DENOMINACION
		87395372		1	PUENTE POSTERIOR, Incl. Ref 1 - 18; Also Includes Parts On Figures 06-33 - 06-37, 07-02
1		{87708394}		1	Kit, Differential
2		{87708395}		2	Differential Drive Plate
3		D142898		3	TAPčN, M10 x 1
4		{87708396}		2	Pin; 9 x 45
5		E135777		4	ARANDELA, Thrust
6		{87708397}		2	Differential Pin
7		{87708398}		1	Spider Gear
8		{87708399}		1	Differential Pin
9		{87708400}		2	Ring Nut; M104 x 1.5
10		E135785		2	COJINETE
11		{87708401}		1	Sleeve
12		292207A1		4	BULON/PIN, LARGO
13		292208A1		4	JUNTA HERMETICA
14		{87708402}		12	Bolt; M12 x 25
15		{87708403}		1	Differential Housing
16		{87708408}		1	Differential Housing Cover
17		{87708409}		1	Locking Ring, Differential
18		{87708411}		1	Roller; 8 x 12

87395372 EJE, TRANSMISIĎN TRASERA - ANILLO Y PI¤ĎN

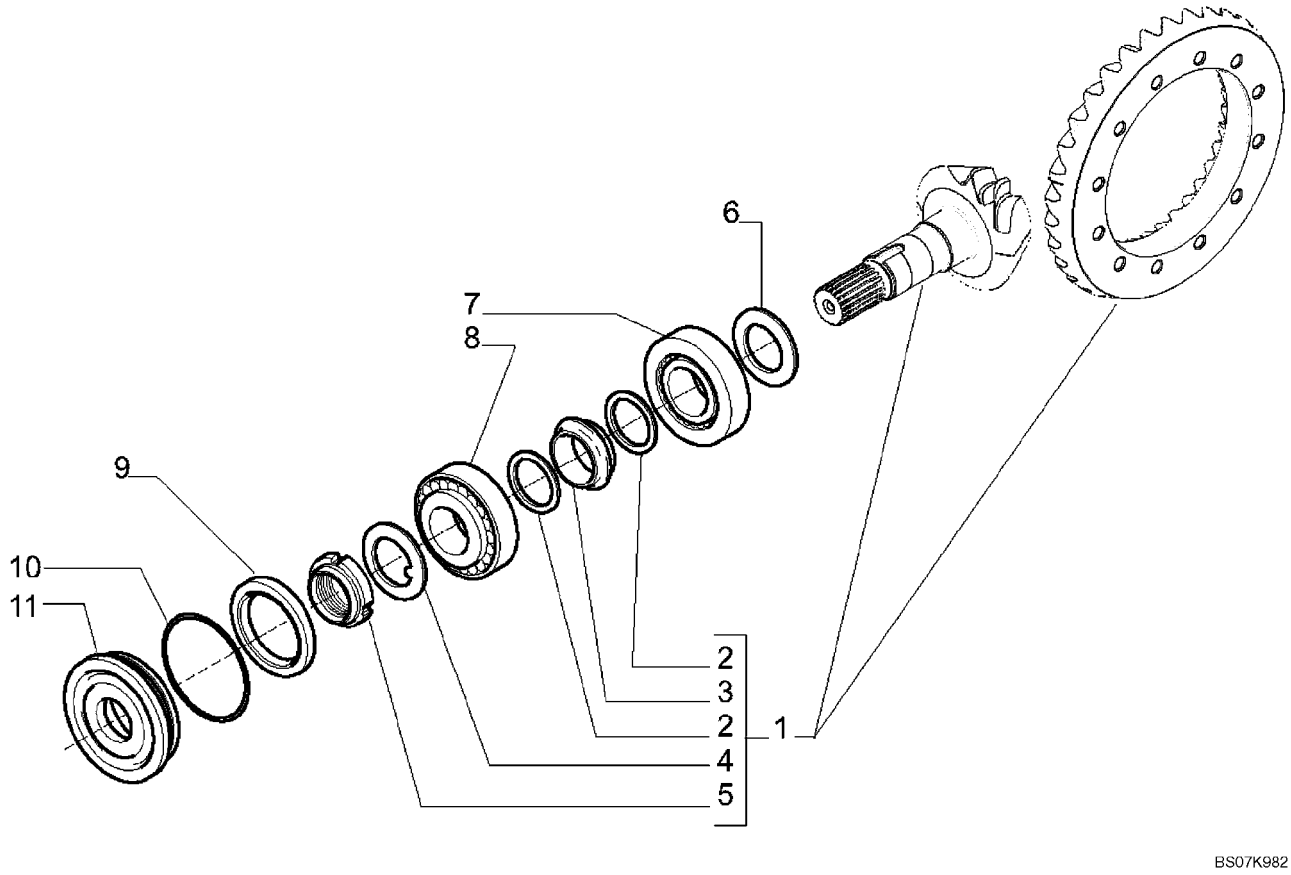

87395372 EJE, TRANSMISIÐN TRASERA - ANILLO Y PI¤ÐN

REF	FN	PART NUMBER	YR/SN	QTY	DENOMINACION
		87395372		1	PUENTE POSTERIOR, Incl. Ref 1 - 11; Also Includes Parts On Figures 06-33 - 06-37, 07-02
1		{87708393}		1	Bevel Gear Set, 14/35
2		1349059C1		2	ARANDELA, Elastic
3		175957A1		1	ESPACIADOR
4		N7536		1	ARANDELA, Lock
5		K261014		2	TUERCA, Ring; M40 x 105
6		190506A1		AR	SUPLEMENTO, 2,5 mm (0,098 in)
6		190508A1		AR	SUPLEMENTO, 2,6 mm (0,102 in)
6		190509A1		AR	SUPLEMENTO, 2,7 mm (0,106 in)
6		190510A1		AR	SUPLEMENTO, 2,8 mm (0,110 in)
6		190511A1		AR	SUPLEMENTO, 2,9 mm (0,114 in)
6		190512A1		AR	SUPLEMENTO, 3,0 mm (0,118 in)
6		190513A1		AR	SUPLEMENTO, 3,1 mm (0,122 in)
6		190514A1		AR	SUPLEMENTO, 3,2 mm (0,125 in)
6		190515A1		AR	SUPLEMENTO, 3,3 mm (0,129 in)
6		190516A1		AR	SUPLEMENTO, 3,4 mm (0,133 in)
7		{P1139855X}		1	Bearing
8		K395090		1	RODAMIENTO DE BOLAS
9		K262143		1	ANILLO DE CIERRE, Ring
10		445720A1		1	JUNTA HERMETICA
11		128570A1		1	TAPA, Seal

06-36		p1	02/08

87395372 EJE, TRANSMISIĎN TRASERA - BLOQUEO DEL DIFERENCIAL

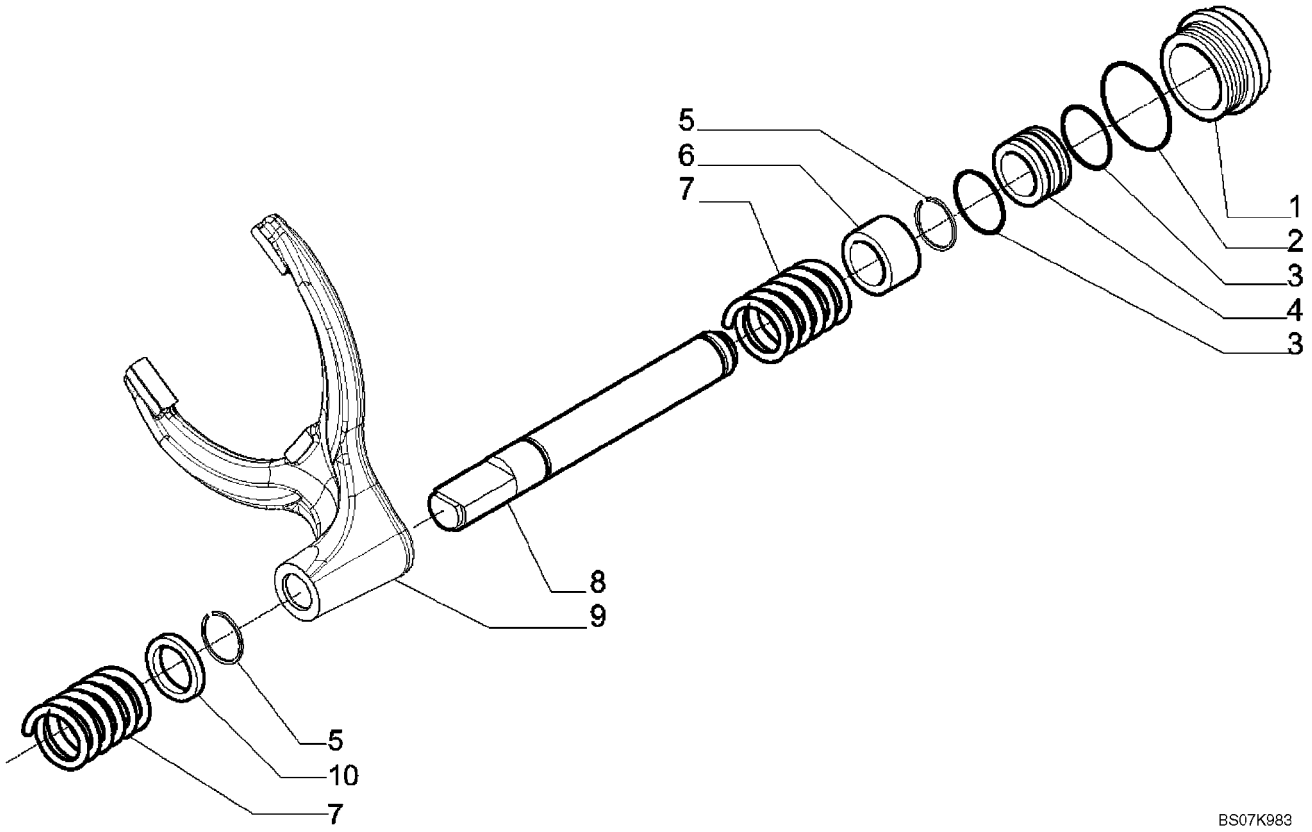

87395372 EJE, TRANSMISIĎN TRASERA - BLOQUEO DEL DIFERENCIAL

REF	FN	PART NUMBER	YR/SN	QTY	DENOMINACION
		87395372		1	PUENTE POSTERIOR, Incl. Ref 1 - 10; Also Includes Parts On Figures 06-33 - 06-37, 07-02
1		{87708413}		1	Differential Lock Cylinder
2		{87708415}		1	O-Ring
3		292210A1		2	ANILLO DE CIERRE
4		292212A1		1	EMBOLO
5		{87708417}		2	Locking Ring
6		{87708420}		1	Bushing
7		175966A1		2	RESORTE
8		{87708422}		1	Control Piston, Differential Locking
9		{87708424}		1	Fork
10		{87708427}		1	Spacer

06-37		p1	02/08

87395372 EJE, TRANSMISIĎN TRASERA - PLANETARIO

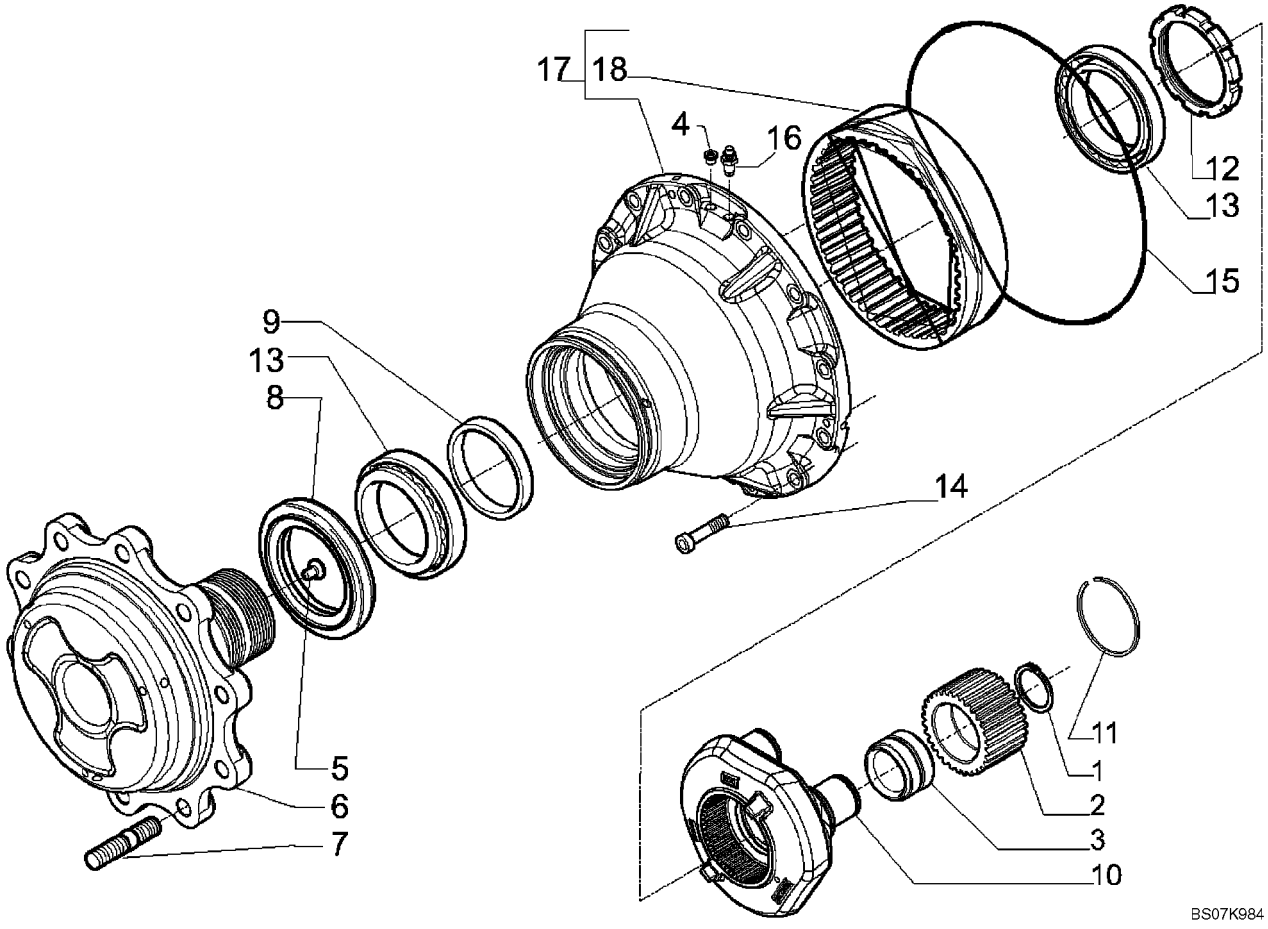

87395372 EJE, TRANSMISIĎN TRASERA - PLANETARIO

REF	FN	PART NUMBER	YR/SN	QTY	DENOMINACION
		87395372		1	PUENTE POSTERIOR, Incl. Ref 1 - 18; Also Includes Parts On Figures 06-33 - 06-37, 07-02
1		800-1150		6	ANILLO DE RESORTE, M50, Ext
2		{87708443}		6	Wheel Hub Gear
3		{87708444}		6	Bearing
4		9625178		2	TAPčN, Hex Soc, 9/16"-18 ORB
5		K395093		2	EJE CON CABEZA
6		{87708445}		2	Wheel Flange
7		D142986		20	PRISIONERO
8		{452140A1}		2	Seal Ring
9		{87708447}		2	Spacer
10		{87708452}		2	Planetary Carrier
11		{87708453}		2	Snap Ring
12		{87708454}		2	Ring Nut; M108 x 2
13		K395101		4	EMPUJADOR DE RODILLO
14		403955A1		24	TORNILLO, M14 x 45
15		{87711038}		2	Ring, Wheel Hub
16		E135810		2	TORNILLO RESPIRADERO
17		{87708466}		2	Hub Ring Gear Kit
18		{87708467}		2	Ring Gear

EJE DE TRANSMISIĎN, EJE TRASERO

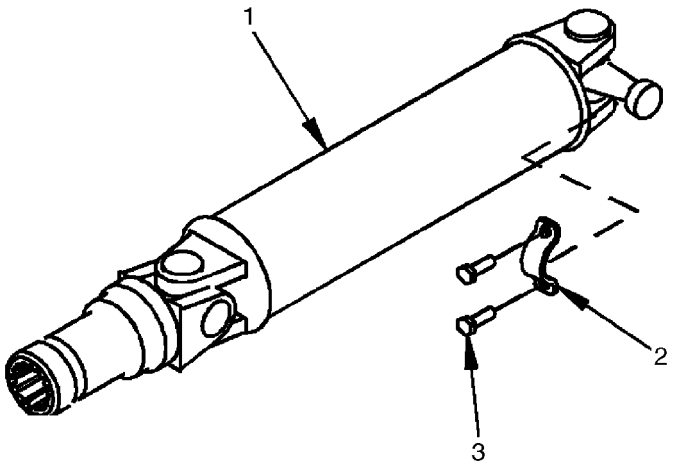

BS07N590

EJE DE TRANSMISIĎN, EJE TRASERO

REF	FN	PART NUMBER	YR/SN	QTY	DENOMINACION
1		87613924		1	ARBOL DE MANDO, Component Parts Not Available At Time Of Printing
2		87538515		2	RETENEDOR
3		9637611		4	TORNILLO, Hex Flange Head, Locking, Special, 5/16 - 24 UNF x 1-1/16

NOTAS

SECTION INDEX

Frenos

07-01		CONJUNTO DE LA TRANSMISION, 2WD - FRENO, ESTACIONAMIENTO
07-01	01	CONJUNTO DE LA TRANSMISION, 4WD - FRENO, ESTACIONAMIENTO
07-02		EJE, TRANSMISIčN TRASERA - FRENO, DIFERENCIAL
07-03		FRENO - PEDALES
07-04		HIDRAULICA - CILINDRO PRINCIPAL DEL FRENO
07-05		CONDUITES DE FREINAGE A LA TRANSMISIčN
07-06		CONDUCTOS DEL FRENO A EJE
07-07		CONJUNTO DE CILINDRO FRENO PRINCIPAL

07-01		p1	02/08

CONJUNTO DE LA TRANSMISION, 2WD - FRENO, ESTACIONAMIENTO

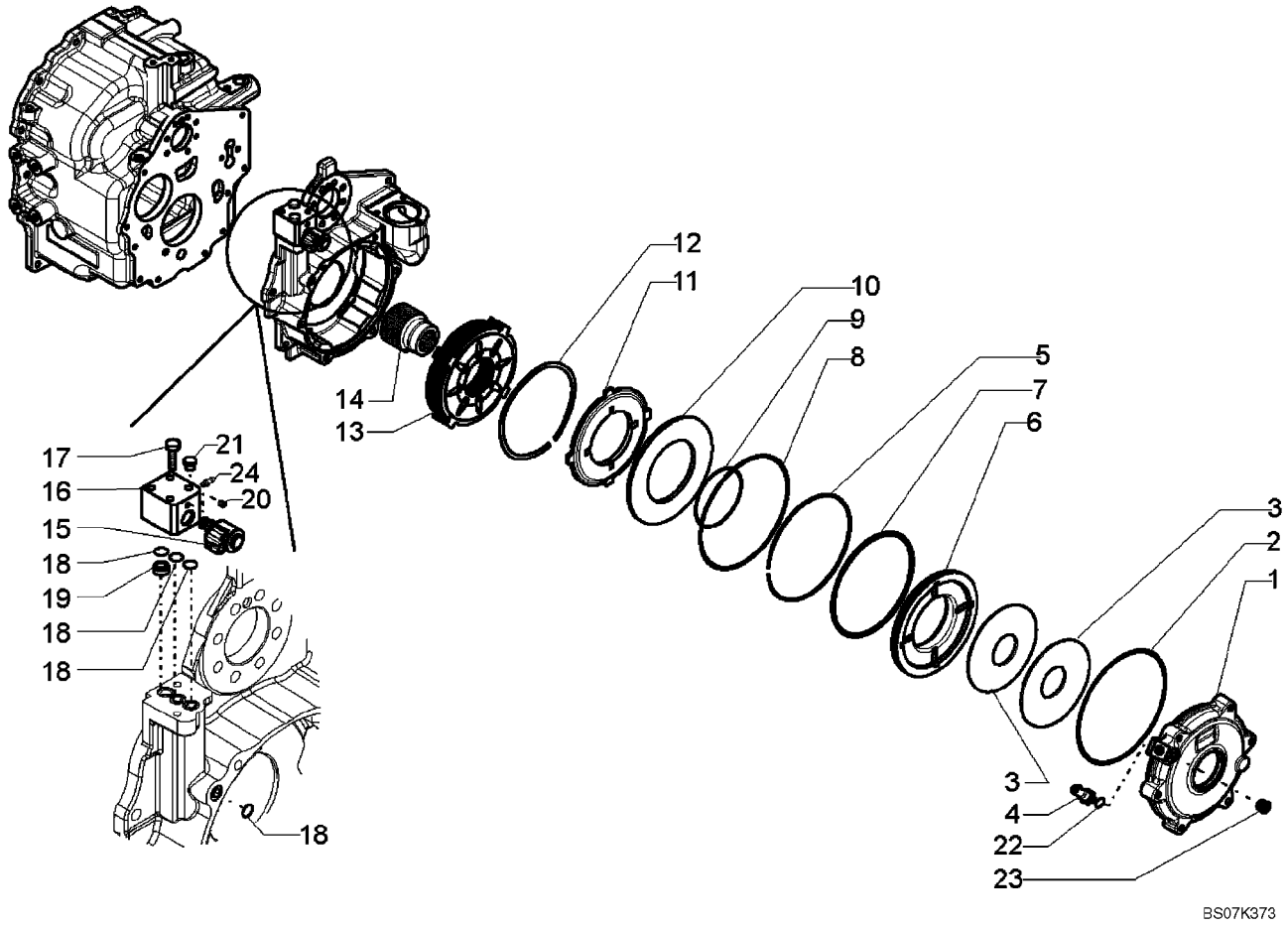

CONJUNTO DE LA TRANSMISION, 2WD - FRENO, ESTACIONAMIENTO

REF	FN	PART NUMBER	YR/SN	QTY	DENOMINACION
		87395300		1	CAMBIO DE VELOCIDAD, Two Wheel Drive; Incl Ref 1 - 24; Also Includes Parts On Figures 06-12 - 06-19, 07-01
1		{87701309}		1	Brake Cover
2		{87701310}		1	O-Ring
3		363485A1		2	ARANDELA ABANICO, Belleville Washer
4		{87701313}		1	Pressure Sensor
5		{87701315}		1	Stop Ring
6		{87701317}		1	Brake Piston
7		{87701318}		1	Seal With O-Ring
8		{87701320}		1	O-Ring
9		{87701321}		1	Seal With O-Ring
10		{87701323}		1	Retaining Plate
11		{87701324}		1	Brake Counterplate
12		{87701325}		5	Spacer
13		{87701327}		1	Brake Pack
14		{87701328}		1	Link Bushing
15		{87701329}		1	Electrovalve
16		{87701330}		1	Control Block
17		{87701331}		2	M8 x 55 Bolt
18		{87701332}		4	O-Ring
19		{87701333}		1	Bushing
20		139312A1		1	TAPčN
21		NSS		1	NO SE REPARA SEPARADAM., PLUG, Shipping Plug
22		100760A1		1	JUNTA HERMETICA
23		E135809		1	TAPčN, 9/16
24		933781R1		1	ENGRASADOR, M10 x 1

07-01	01	p1	02/08

CONJUNTO DE LA TRANSMISION, 4WD - FRENO, ESTACIONAMIENTO

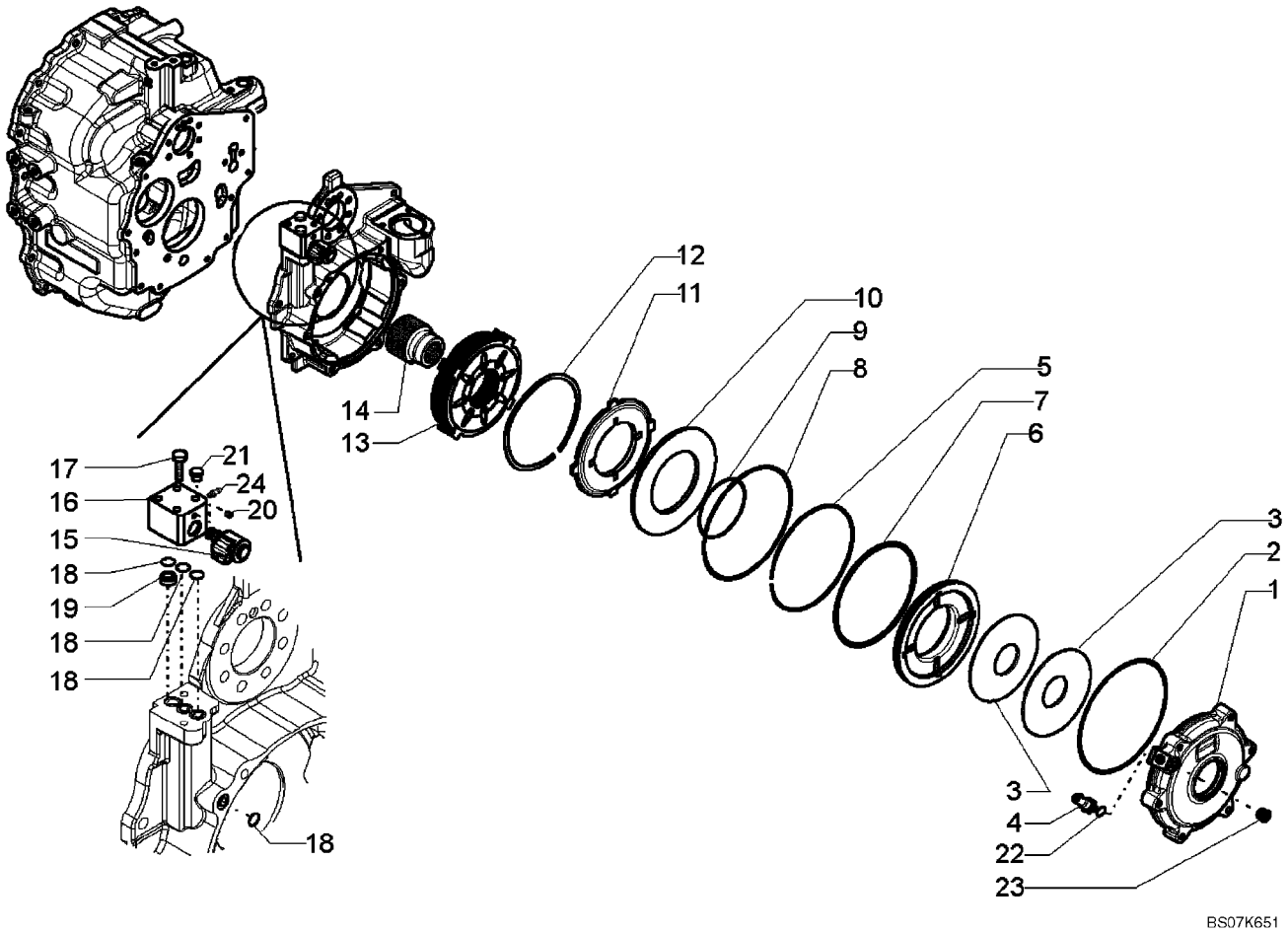

CONJUNTO DE LA TRANSMISION, 4WD - FRENO, ESTACIONAMIENTO

REF	FN	PART NUMBER	YR/SN	QTY	DENOMINACION
		87395301		1	CAMBIO DE VELOCIDAD, Four Wheel Drive; Incl Ref 1 - 24; Also Includes Parts On Figures 06-20 - 06-29, 07-01(01)
1		{87701309}		1	Brake Cover
2		{87701310}		1	O-Ring
3		363485A1		2	ARANDELA ABANICO, Belleville Washer
4		{87701313}		1	Pressure Sensor
5		{87701315}		1	Stop Ring
6		{87701317}		1	Brake Piston
7		{87701318}		1	Seal With O-Ring
8		{87701320}		1	O-Ring
9		{87701321}		1	Seal With O-Ring
10		{87701323}		1	Retaining Plate
11		{87701324}		1	Brake Counterplate
12		{87701325}		5	Spacer
13		{87701327}		1	Brake Pack
14		{87701328}		1	Link Bushing
15		{87701329}		1	Electrovalve
16		{87701330}		1	Control Block
17		{87701331}		2	M8 x 55 Bolt
18		{87701332}		4	O-Ring
19		{87701333}		1	Bushing
20		139312A1		1	TAPčN
21		NSS		1	NO SE REPARA SEPARADAM., PLUG, Shipping Plug
22		100760A1		1	JUNTA HERMETICA
23		E135809		1	TAPčN, 9/16
24		933781R1		1	ENGRASADOR, M10 x 1

EJE, TRANSMISIĎN TRASERA - FRENO, DIFERENCIAL

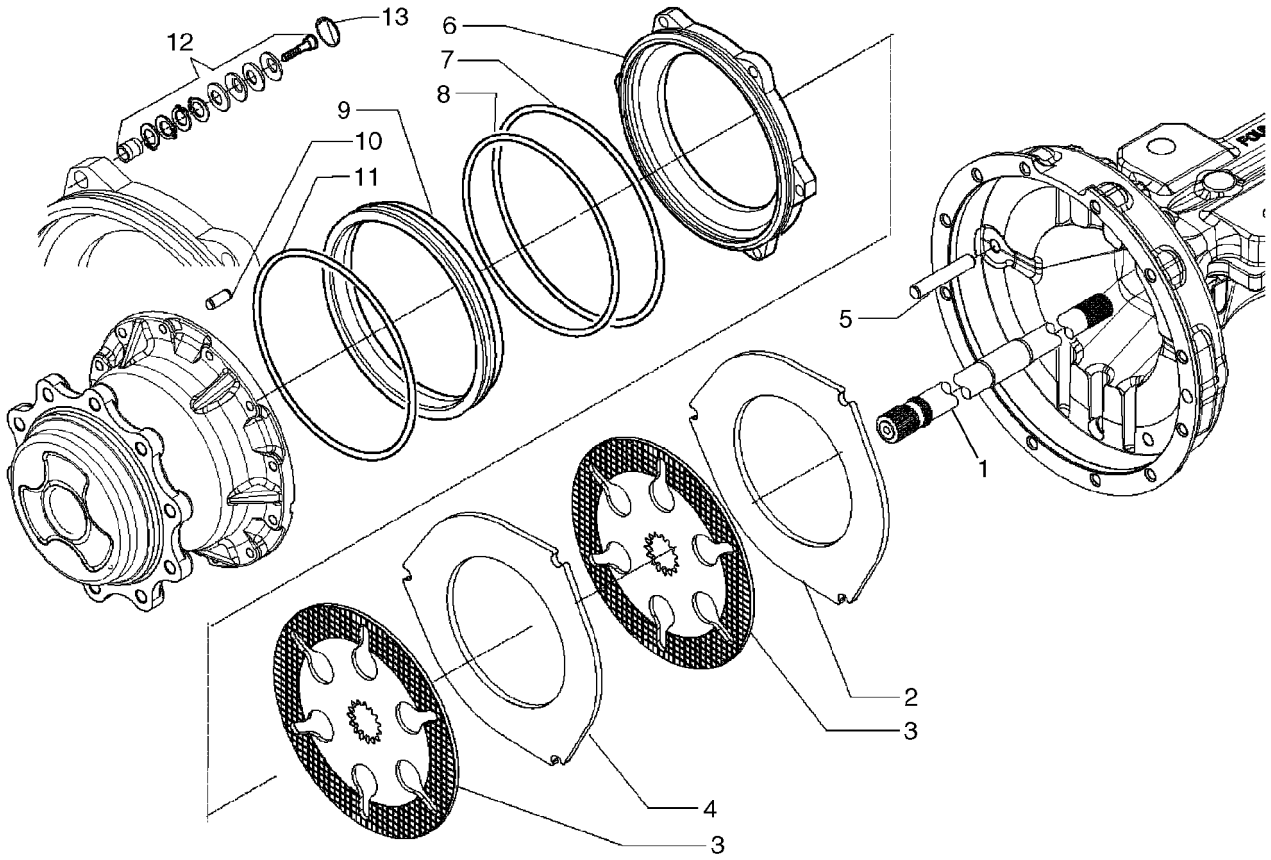

BS07N834

EJE, TRANSMISIÐN TRASERA - FRENO, DIFERENCIAL

REF	FN	PART NUMBER	YR/SN	QTY	DENOMINACION
		87395372		1	PUENTE POSTERIOR, Incl. Ref 1 - 13; Also Includes Parts On Figures 06-26 - 06-30, 07-02
1		{87708431}		1	LH Half Shaft
1		{87708432}		1	RH Half Shaft
2		{87708433}		2	Brake Separation Plate, 5 thk
3		{87708434}		4	Brake Plate
4		{87708435}		2	Brake Separation Plate, 8 thk
5		139294A1		6	GUIA
6		{87708436}		2	Brake Piston
7		{87708438}		2	O-Ring
8		371144A1		2	JUNTA HERMETICA, Piston, External
9		{87708440}		2	Brake Piston
10		D142890		2	PITON
11		371145A1		2	JUNTA HERMETICA, Piston Carrier
12		{87708441}		6	Kit, Rear Axle Self Adjust; 0.6 mm
13		{87708442}		6	Lock Ring

07-03		p1	11/07

FRENO - PEDALES

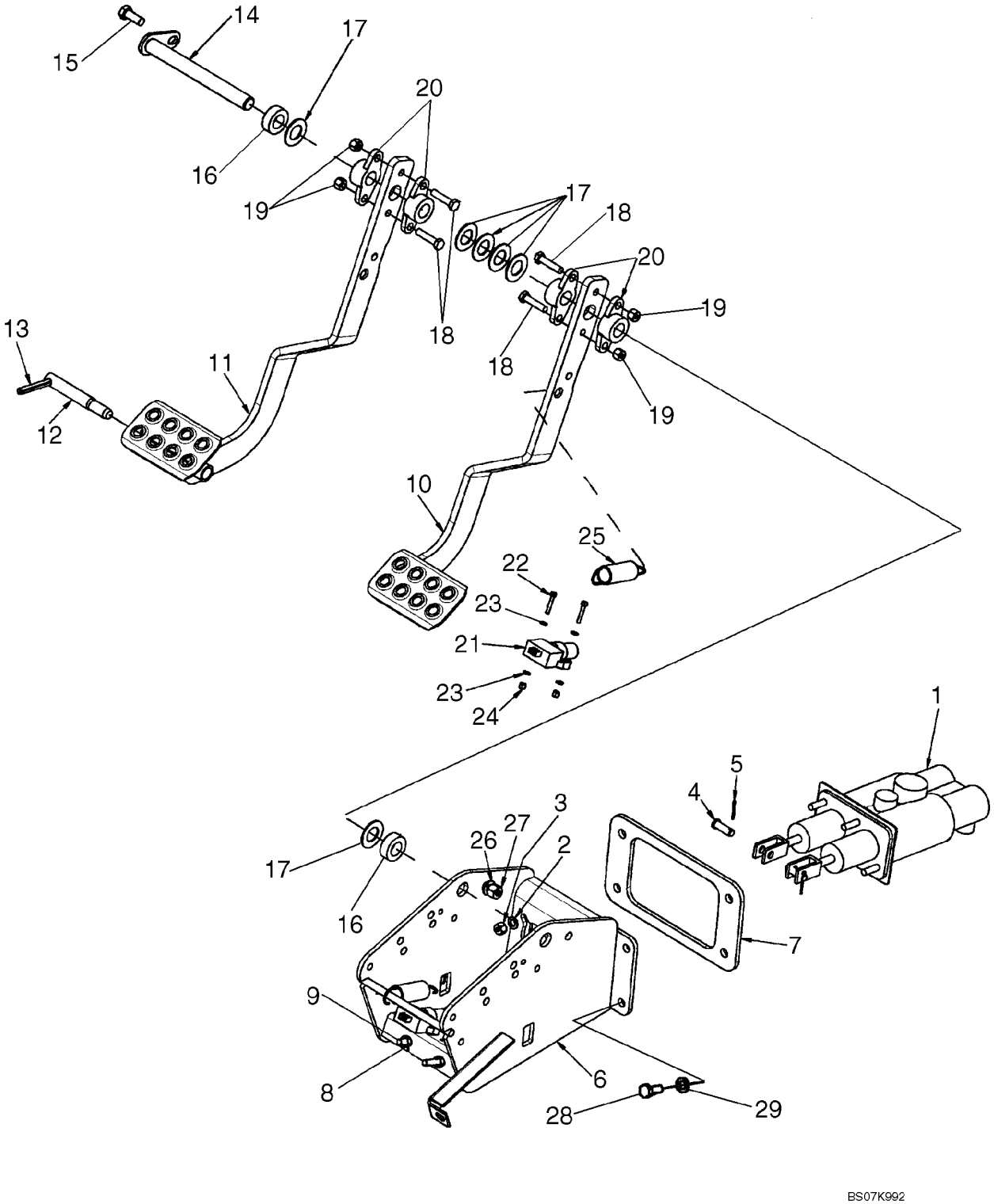

FRENO - PEDALES

REF	FN	PART NUMBER	YR/SN	QTY	DENOMINACION
1		87714038		1	CILINDRO PRINCIPAL, See Figure 07-07
2		895-11008		4	ARANDELA, M8 x 16 x 1.6
3		832-10408		4	CONTRA TUERCA, M8 x 1.25, Cl 8
4		427-6106		2	PASADOR DE HORQUILLA, 3/8" x 1 1/16"
5		432-612		2	PASADOR ABIERTO, 3/32" x 3/4"
6		87642370		1	PIEZA DE APOYO, Brake Pedal and Brake Master Cylinder Mounting
7		87644495		1	JUNTA HERMETICA
8		829-1408		4	TUERCA, M8, Cl 10
9		87644497		2	AISLADOR, Brake Pedal
10		87642365		1	PEDAL, Right-Hand
11		87642364		1	PEDAL, Left-Hand
12		D124530		1	PERNO, Brake Pedal Lock
13		86625112		1	PASADOR DE FIJACION, 5/16" x 2 1/2", Slotted
14		D140035		1	BULON/PIN, LARGO, Shaft
15		614-10025		1	TORNILLO, Hex, M10 x 25, 8.8, Full Thd
16		D124529		2	ESPACIADOR
17		495-81261		X	ARANDELA, 13/16" x 1 1/2" x .067", HDN, Used As A Spacer
18		814-8035		4	TORNILLO, Hex, M8 x 35, 8.8
19		832-10408		4	CONTRA TUERCA, M8 x 1.25, Cl 8
20		A77310		4	PIVOTE, Bearing
21		82026949		2	CONTACTOR, Push Button, Brake Lamp, Attaches To Front Console Wiring Harness
22		87016468		4	TORNILLO, Hex Soc Hd, M4 x 25, 8.8
23		895-11004		8	ARANDELA, M4
24		832-10404		4	CONTRA TUERCA, M4 x .7, Cl 8
25		230973A1		2	RESORTE
26		895-11010		1	ARANDELA, M10 x 20 x 2
27		832-10410		1	CONTRA TUERCA, M10 x 1.5, Cl 8
28		614-8020		4	TORNILLO, Hex, M8 x 20, 8.8
29		895-11008		4	ARANDELA, M8 x 16 x 1.6

07-04		p1	11/07

HIDRAULICA - CILINDRO PRINCIPAL DEL FRENO

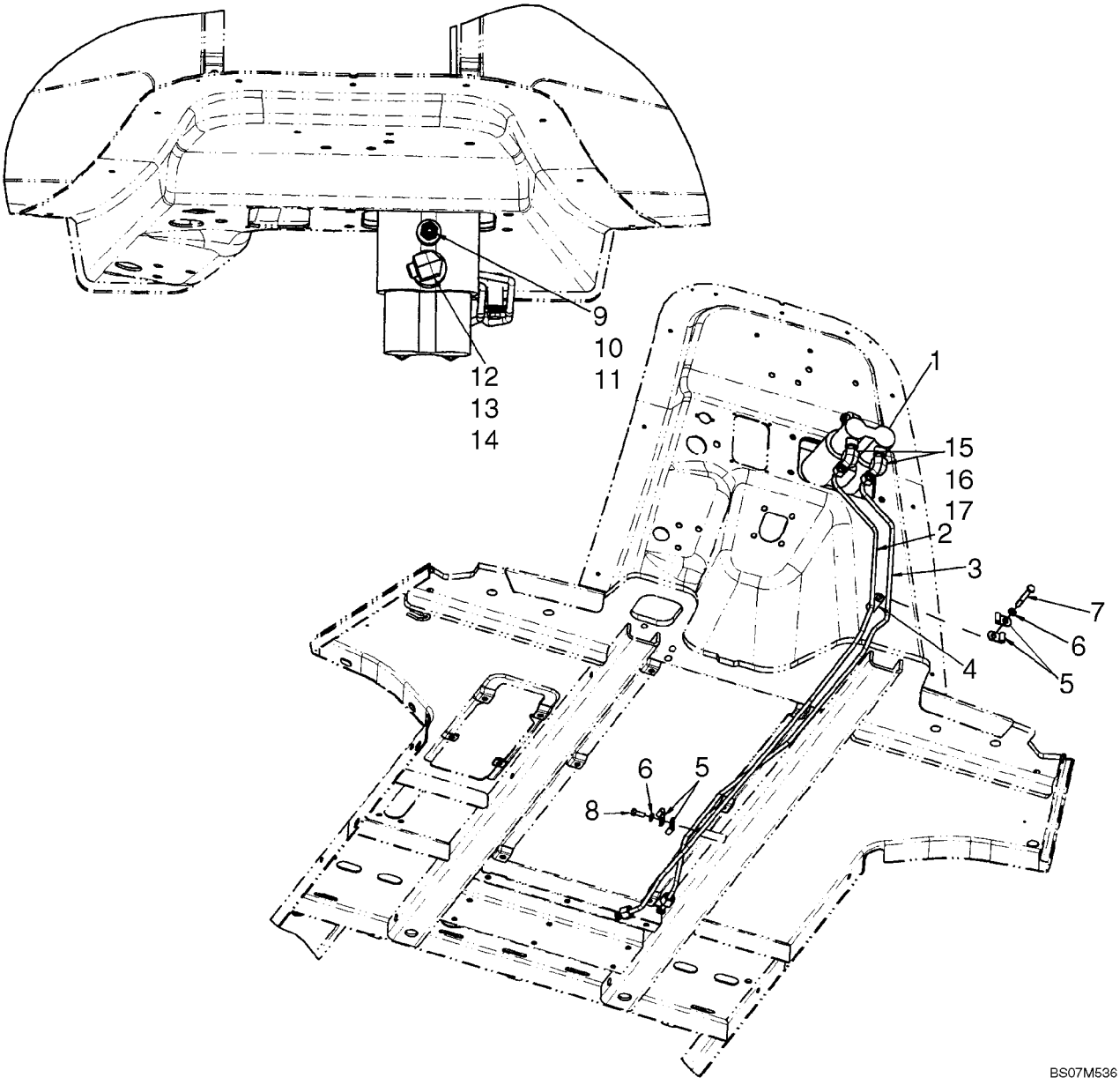

HIDRAULICA - CILINDRO PRINCIPAL DEL FRENO

REF	FN	PART NUMBER	YR/SN	QTY	DENOMINACION
1		87714038		1	CILINDRO PRINCIPAL, See Figure 07-07
2		87697589		1	TUBERIA HIDRAULICO, RH Brake
3		87697590		1	TUBERIA HIDRAULICO, LH Brake
4		87449579		1	SEPARADOR, Brake Tube
5		515-2379		4	BORNE, 5/16", Insul, 3/8" Bolt
6		895-11008		2	ARANDELA, M8 x 16 x 1.6
7		814-8060		1	TORNILLO, Hex, M8 x 60, 8.8
8		614-8020		1	TORNILLO, Hex, M8 x 20, 8.8
9		700-101		1	RACOR, 11/16"-16 ORFS x M14 x 1.5 ORB, Incl. 10, 11
10		238-6012		1	JUNTA HERMETICA, -012, 90 Duro, .364" ID x .070" Thk, Face Seal End
11		637-63113		1	JUNTA HERMETICA, Cl 6, 11.3MM ID x 2.2 Thk
12		700-345		1	CODO, 90Ü, 11/16"-18 ORFS x M18 x 1.5 ORB, Incl. 13, 14
13		637-63153		1	JUNTA HERMETICA, Cl 6, 15.3MM ID x 2.2 Thk
14		238-6012		1	JUNTA HERMETICA, -012, 90 Duro, .364" ID x .070" Thk, Face Seal End
15		700-304		2	CODO, 90Ü, 11/16"-18 ORFS x M14 x 1.5 ORB, Incl. 16, 17
16		238-6012		1	JUNTA HERMETICA, -012, 90 Duro, .364" ID x .070" Thk, Face Seal End
17		637-63113		1	JUNTA HERMETICA, Cl 6, 11.3MM ID x 2.2 Thk

CONDUITES DE FREINAGE A LA TRANSMISIĎN

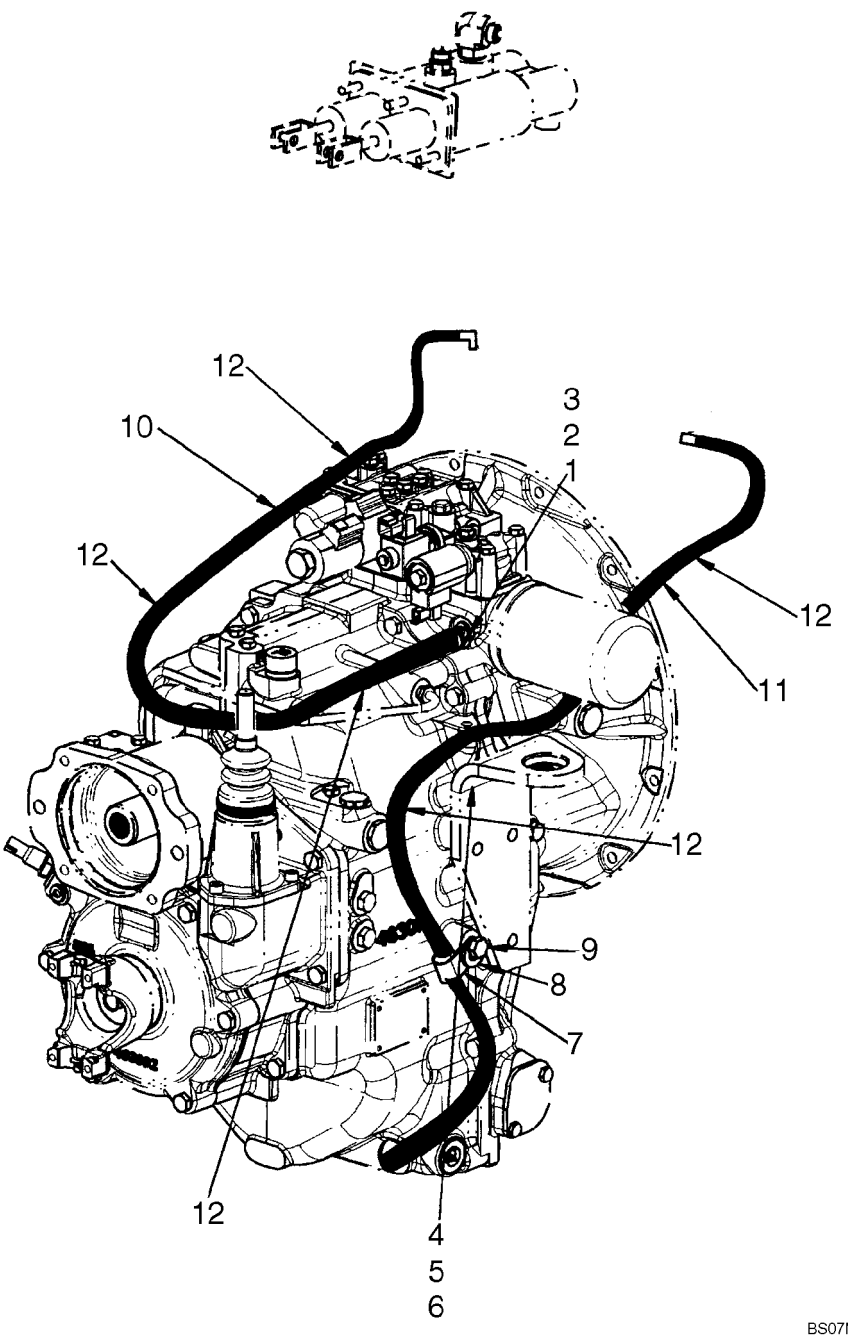

CONDUITES DE FREINAGE A LA TRANSMISIĎN

REF	FN	PART NUMBER	YR/SN	QTY	DENOMINACION
1		201-101		1	RACOR, 11/16"-16 ORFS x 9/16"-18 ORB, Incl. 2, 3
2		237-6006		1	JUNTA HERMETICA, 6-1, 90 Duro, .468" ID x .078" Thk, Face Seal End
3		238-6012		1	JUNTA HERMETICA, -012, 90 Duro, .364" ID x .070" Thk, Boss End
4		201-304		1	CODO, 90Ü, 11/16"-16 x 9/16"-18 Adj, ORFS, Incl. 5, 6
5		238-6012		1	JUNTA HERMETICA, -012, 90 Duro, .364" ID x .070" Thk, Face Seal End
6		237-6006		1	JUNTA HERMETICA, 6-1, 90 Duro, .468" ID x .078" Thk, Boss End
7		515-25190		1	BORNE, 3/4", Insul, 1/2" Bolt
8		896-15012		1	ARANDELA, M12 x 28.5 x 4, HT
9		614-12025		1	TORNILLO, Hex, M12 x 25, 8.8
10		87603513		1	MANGUERA (CONJUNTO)
11		87603514		1	MANGUERA (CONJUNTO)
12		191704A1		5	TUBO AISLANTE

CONDUCTOS DEL FRENO A EJE

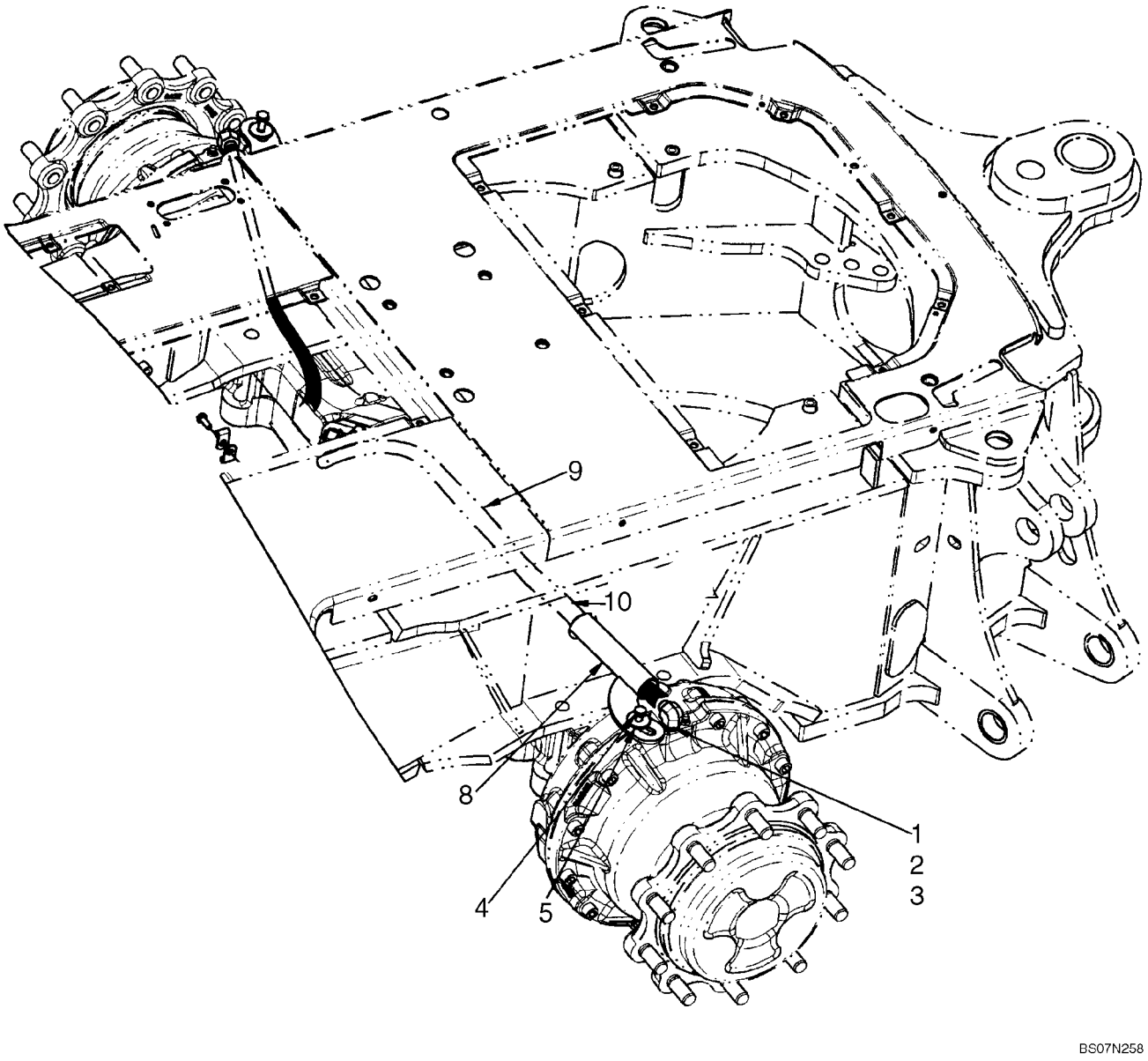

CONDUCTOS DEL FRENO A EJE

REF	FN	PART NUMBER	YR/SN	QTY	DENOMINACION
1		700-304		2	CODO, 90Ü, 11/16"-18 ORFS x M14 x 1.5 ORB, Incl. 2, 3
2		238-6012		1	JUNTA HERMETICA, -012, 90 Duro, .364" ID x .070" Thk, Face Seal End
3		237-6006		1	JUNTA HERMETICA, 6-1, 90 Duro, .468" ID x .078" Thk, Boss End
4		614-10020		2	TORNILLO, Hex, M10 x 20, 8.8, Full Thd
5		12644301		2	ARANDELA, M10 x 35 x 3
8		87699881		2	DEFENSA
9		87603511		2	MANGUERA (CONJUNTO)
10		191704A1		2	TUBO AISLANTE

CONJUNTO DE CILINDRO FRENO PRINCIPAL

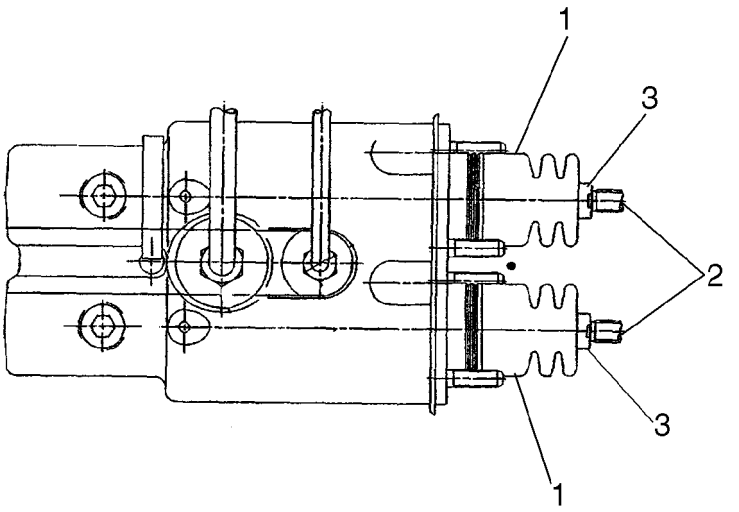

BS07M539

CONJUNTO DE CILINDRO FRENO PRINCIPAL

REF	FN	PART NUMBER	YR/SN	QTY	DENOMINACION
		87714038		1	CILINDRO PRINCIPAL, Incl. Ref 1 - 3
1		87716969		2	PROTECTOR
2		87716970		2	HORQUILLA PEQUENA
3		829-1410		2	TUERCA, M10, Cl 10

NOTAS

SECTION INDEX
Sistema Hidráulico

08-01	HIDRAULICA - BOMBA, FILTRO Y VĆLVULA DE LA CARGADORA
08-02	HIDRAULICA - VĆLVULA DE LA CARGADORA AL FILTRO A LA VĆLVULA DE LA RETROEXCAVADORA
08-03	HIDRAULICA - REFRIGERADOR, LčNEAS DE RETORNO Y FILTRO
08-04	HIDRAULICA - CILINDRO, ELEVACIčN DE LA CARGADORA
08-05	HIDRAULICA - CILINDRO, CUCHARčN DE LA CARGADORA
08-06	HIDRAULICA - CILINDRO, ALMEJA DE LA CARGADORA
08-07	HIDRAULICA - CILINDRO, ALMEJA DE LA CARGADORA
08-07A	HIDRAULICA - ALMEJA DE LA CARGADORA, ACUMULADOR CON EL£CTRICO
08-07B	HIDRAULICA - ALMEJA DE LA CARGADORA, ACUMULADOR CON EL£CTRICO (MODELOS CON CONTROL PILOTO)
08-08	HIDRAULICA - CILINDRO, ESTABILIZADOR DE LA RETROEXCAVADORA (SIN DE CONTROL PILOTO)
08-08A	HIDRAULICA - CILINDRO, ESTABILIZADOR DE LA RETROEXCAVADORA (CON DE CONTROL PILOTO)
08-09	HIDRAULICA - CILINDRO, BALANCčN DE LA RETROEXCAVADORA (SIN DE CONTROL PILOTO)
08-09A	HIDRAULICA - CILINDRO, BALANCčN DE LA RETROEXCAVADORA (CON DE CONTROL PILOTO)
08-10	HIDRAULICA - CILINDRO, AGUILčN DE LA RETROEXCAVADORA
08-10A	HIDRAULICA - EL PICAPORTE DEL ESTAMPIDO DE BACKHOE Y EL CIRCUITO ELECTRICO
08-11	HIDRAULICA - CILINDRO, PALA DE LA RETROEXCAVADORA
08-12	HIDRAULICA - CILINDRO, CUCHARčN DE LA RETROEXCAVADORA (MODELOS SIN PALA EXTENDIBLE)
08-13	HIDRAULICA - CILINDRO, CUCHARčN DE LA RETROEXCAVADORA (MODELOS CON PALA EXTENDIBLE)
08-14	HIDRAULICA - CILINDRO, PALA EXTENSIBLE DE LA RETROEXCAVADORA
08-15	HIDRAULICA - VĆLVULA, CONTROL PILOTO DE PALANCA DE CONTROL (6 SPOOL, W/O EXT DIPPER, W/O AUX HYDS)
08-16	HIDRAULICA - VĆLVULA, CONTROL PILOTO DE PALANCA DE CONTROL (6 SPOOL, W/O EXT DIPPER, W/ AUX HYDS)
08-17	HIDRAULICA - VĆLVULA, CONTROL PILOTO DE PALANCA DE CONTROL (7 SPOOL, W/ EXT DIPPER, W/O AUX HYDS)
08-18	HIDRAULICA - VĆLVULA, CONTROL PILOTO DE PALANCA DE CONTROL (7 SPOOL, W/ EXT DIPPER, W/ AUX HYDS)
08-19	HIDRAULICA - VĆLVULA, CONTROL PILOTO DE PALANCA DE CONTROL (7 SPOOL, W/O EXT DIPPER, W/ AUX HYDS)
08-20	HIDRAULICA - VĆLVULA, CONTROL PILOTO DE PALANCA DE CONTROL (8 SPOOL, W/ EXT DIPPER, W/ AUX HYDS)
08-21	HIDRAULICA - CONTROL PILOTO DE PALANCA DE CONTROL
08-22	HIDRAULICA - CONTROL PILOTO
08-23	HIDRAULICA - AUXILIAR DE LA RETROEXCAVADORA (SIN DE CONTROL PILOTO)
08-23A	CONJUNTO DE LA VALVULA - AUXILIAR UNI-DIRECCIONAL (SIN DE CONTROL PILOTO)
08-23B	HIDRAULICA - AUXILIAR DE LA RETROEXCAVADORA (CON DE CONTROL PILOTO)
08-23C	CONJUNTO DE LA VALVULA - AUXILIAR UNI-DIRECCIONAL (CON DE CONTROL PILOTO)
08-24	HIDRAULICA - AUXILIAR DE LA RETROEXCAVADORA, EN EL AGUILčN Y LA PALA
08-25	HIDRAULICA - DISPOSITIVO ANTICABECEO
08-26	HIDRAULICA - ACOPLADOR, HERRAMIENTA RĆPIDA DE LA CARGADORA

SECTION INDEX
Sistema Hidráulico

08-27	HIDRAULICA - ACOPLADOR, HERRAMIENTA RĆPIDA DE LA CARGADORA; EN EL CHASIS DE ELEVACIčN DE LA CARGADORA; EN EL CHASIS DE ELEVACIčN DE LA CARGADORA
08-28	CONJUNTO DE LA VĆLVULA DEL ACOPLADOR - HERRAMIENTA RĆPIDA DE LA CARGADORA
08-29	BOMBA, EQUIPAMIENTO HIDRĆULICO
08-30	CONJUNTO DE LA VALVULA - CONTROL DE LA CARGADORA, DOS CORREDERAS
08-31	CONJUNTO DE LA VALVULA - CONTROL DE LA CARGADORA, TRES CORREDERAS
08-32	CONJUNTO DE LA VALVULA - CONTROL DE LA RETROEXCAVADORA, 6 BOBINAS (SIN PALA EXTENSIBLE Y SIN SISTEM)
08-33	CONJUNTO DE LA VALVULA - CONTROL DE LA RETROEXCAVADORA, 7 BOBINAS (SIN PALA EXTENSIBLE Y CON SISTEM)
08-34	CONJUNTO DE LA VALVULA - CONTROL DE LA RETROEXCAVADORA, 7 BOBINAS (CON PALA EXTENSIBLE Y SIN SISTEM)
08-35	CONJUNTO DE LA VALVULA - CONTROL DE LA RETROEXCAVADORA, 8 BOBINAS (CON PALA EXTENSIBLE Y CON SISTEM)
08-36	CONJUNTO DE LA VALVULA - CONTROL DE LA RETROEXCAVADORA, 6 BOBINAS
08-37	CONJUNTO DE LA VALVULA - CONTROL DE LA RETROEXCAVADORA, 7 BOBINAS
08-38	CONJUNTO DE LA VALVULA - CONTROL DE LA RETROEXCAVADORA, 7 BOBINAS
08-39	CONJUNTO DE LA VALVULA - CONTROL DE LA RETROEXCAVADORA, 8 BOBINAS
08-40	SECCION DE LA VALVULA - DE LA RETROEXCAVADORA (CON DE CONTROL PILOTO)
08-41	SECCION DE LA VALVULA - AGUILON DE LA RETROEXCAVADORA (CON DE CONTROL PILOTO)
08-42	SECCION DE LA VALVULA - ESTABILIZADOR DE LA RETROEXCAVADORA (CON DE CONTROL PILOTO)
08-43	SECCION DE LA VALVULA - BRAZO DE LA RETROEXCAVADORA (CON DE CONTROL PILOTO)
08-44	SECCION DE LA VALVULA - CUCHARON DE LA RETROEXCAVADORA (CON DE CONTROL PILOTO)
08-45	SECCION DE LA VALVULA - PALA EXTENSIBLE (CON DE CONTROL PILOTO)
08-46	SECCION DE LA VALVULA - OPCIONES, SISTEMA HIDRĆULICO AUXILIAR (CON DE CONTROL PILOTO)
08-47	VALVULA DE REDUCCION DEPRESION (2 SPOOL) (CON DE CONTROL PILOTO)
08-48	VALVULA DE REDUCCION DEPRESION (3 SPOOL) (CON DE CONTROL PILOTO)
08-49	VALVULA DE REDUCCION DEPRESION (4 SPOOL) (CON DE CONTROL PILOTO)
08-50	VĆLVULA, PALANCA DE CONTROL (CONTROL PILOTO) (IZQUIERDO) BOCINA
08-51	VĆLVULA, PALANCA DE CONTROL (CONTROL PILOTO) (IZQUIERDO) BOCINA & UNI-DIR
08-52	VĆLVULA, PALANCA DE CONTROL (CONTROL PILOTO) (IZQUIERDO) BOCINA & BI-DIR
08-53	VĆLVULA, PALANCA DE CONTROL (CONTROL PILOTO) (DERECHA/O) SIN PALA EXTENDIBLE
08-54	VĆLVULA, PALANCA DE CONTROL (CONTROL PILOTO) (DERECHA/O) CON PALA EXTENDIBLE
08-55	CONJUNTO DE LA VALVULA - ALMOHADILLA DE OSCILACIčN
08-55A	SOLENOIDE VALVE CONJUNTO - TRABA DEL AGUILON
08-56	ACUMULADOR CONJ. - DISPOSITIVO ANTICABECEO
08-57	FILTRO DE ACEITE
08-58	CONJUNTO DE CILINDRO - ELEVADOR DE LA CARGADORA
08-59	CONJUNTO DE CILINDRO - CUCHARON DE LA CARGADORA

SECTION INDEX
Sistema Hidráulico

08-60	CONJUNTO DE CILINDRO - ALMEJA DE LA CARGADORA
08-61	CONJUNTO DE CILINDRO - ESTABILIZADOR DE LA RETROEXCAVADORA
08-62	CONJUNTO DE CILINDRO - DE LA RETROEXCAVADORA
08-63	CONJUNTO DE CILINDRO - AGUILON DE LA RETROEXCAVADORA
08-64	CONJUNTO DE CILINDRO - BRAZO DE LA RETROEXCAVADORA
08-65	CONJUNTO DE CILINDRO - CUCHARON DE LA RETROEXCAVADORA
08-66	CONJUNTO DE CILINDRO - PALA EXTENSIBLE DE LA RETROEXCAVADORA

08-01		p1	02/08

HIDRAULICA - BOMBA, FILTRO Y VéLVULA DE LA CARGADORA

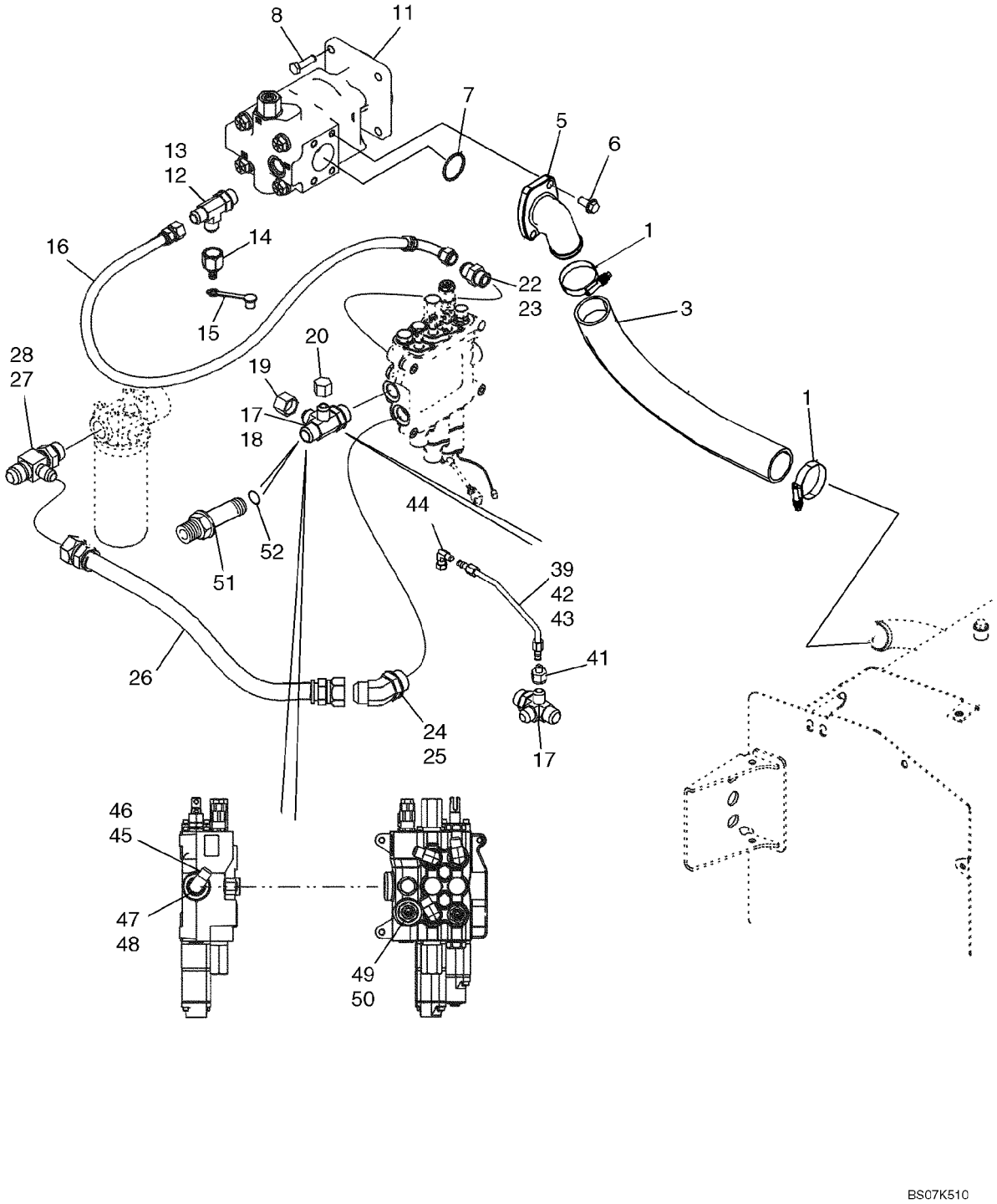

HIDRAULICA - BOMBA, FILTRO Y VáLVULA DE LA CARGADORA

REF	FN	PART NUMBER	YR/SN	QTY	DENOMINACION
1		259044A1		2	COLLAR
3		87627903		1	MANGUITO, Suction
5		87592658		1	BRIDA, Pump
6		864-12030		3	TORNILLO, Hex Soc Hd, M12 x 30, 8.8
7		238-5228		1	JUNTA HERMETICA, -228, 70 Duro, 2.234" ID x .139" Thk
8		514-832		4	TORNILLO, Hex, M12 x 1.25 x 35, 8.8, Full Thd
11		87434672		1	BOMBA HIDRćULICA, Equipment, See Figure 08-29
12		218-5239		1	RACOR-T, 1 1/16"-12, 37Ü x 1 1/16"-12, O-Ring run, Incl. Ref 13
13		237-6012		1	JUNTA HERMETICA, 12-1, 90 Duro, .924 ID x .118" Thk
14		D137625		1	ACOPLAMIENTO, Quick Disconnect; Includes (1) 425-1120 Nut
15		H434163		1	CAPUCHON GUARDA-POLVO
16		87452399		1	MANGUERA (CONJUNTO), 775 mm (30-9/16 in)
17		87436066		1	CONEXION, 4-Way Special Fitting; Incl. Ref 18; If Used
18		237-6016		1	JUNTA HERMETICA, 16-1, 90 Duro, 1.171" ID x .118" Thk
19		218-335		1	TAPON DEL DEPOSITO, 37Ü, 1 1/16"-12, Models Without Pilot Controls; If Used
20		218-756		1	TAPON DEL DEPOSITO, 37Ü, 7/8"-14, Models Without Pilot Controls; If Used
22		218-5064		1	RACOR, 1 1/16"-12, 37Ü x 1 1/16"-12, O-Ring, Incl. Ref 23
23		237-6012		1	JUNTA HERMETICA, 12-1, 90 Duro, .924 ID x .118" Thk
24		218-5140		1	CODO, 45Ü, 1 5/16"-12 x 1 5/16"-12, O-Ring, Incl. Ref 25
25		237-6016		1	JUNTA HERMETICA, 16-1, 90 Duro, 1.171" ID x .118" Thk
26		87452400		1	MANGUERA (CONJUNTO), 635 mm (25 in), Loader Valve to Filter

HIDRAULICA - BOMBA, FILTRO Y VÁLVULA DE LA CARGADORA

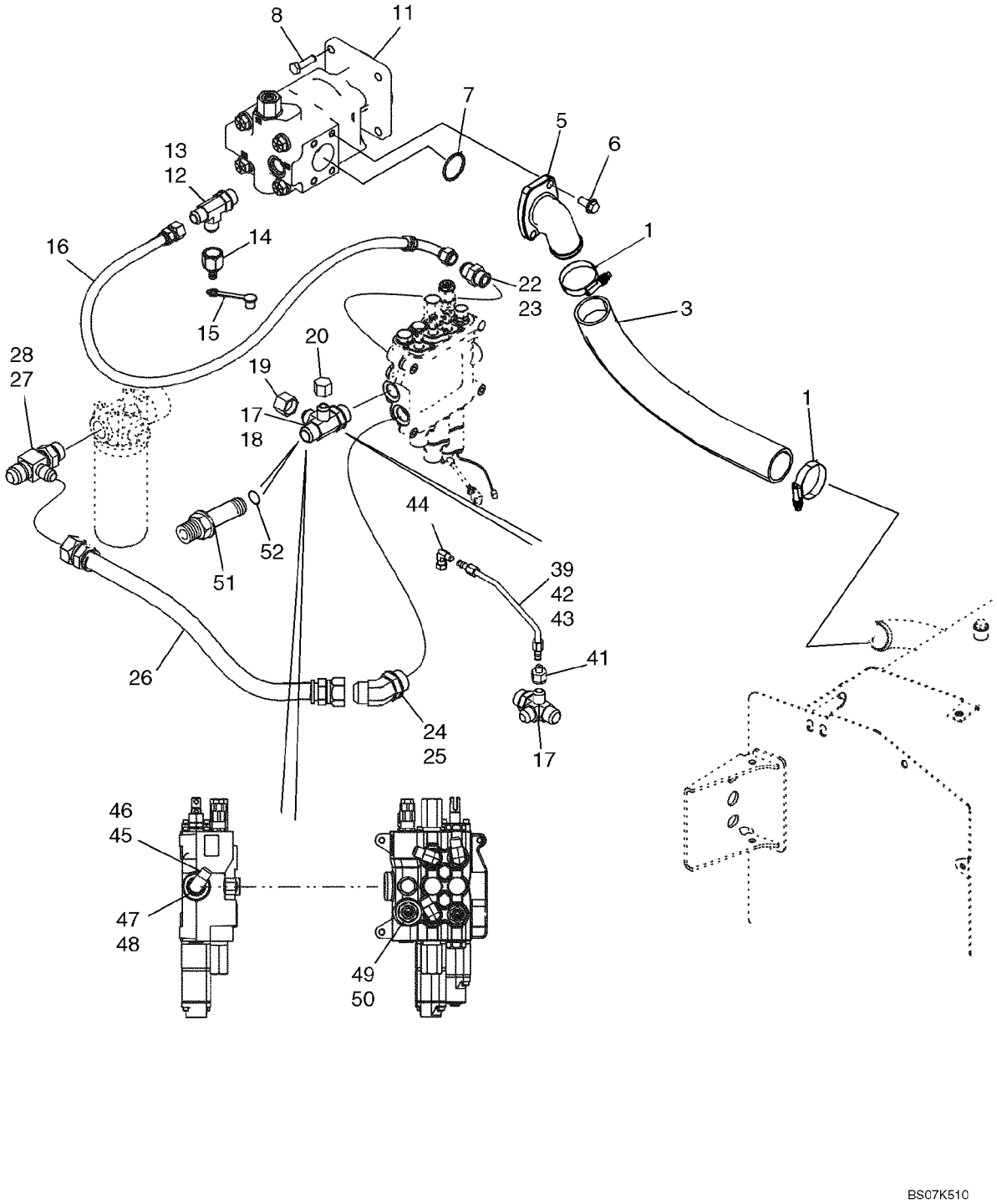

HIDRAULICA - BOMBA, FILTRO Y VáLVULA DE LA CARGADORA

REF	FN	PART NUMBER	YR/SN	QTY	DENOMINACION
27		218-5584		1	RACOR-T, 37Ü, 1 5/16"-12, 1 5/16"-12 O-Ring Run, 1 1/16"-12, Incl. Ref 28
28		237-6016		1	JUNTA HERMETICA, 16-1, 90 Duro, 1.171" ID x .118" Thk
39		87437655		1	TUBO (CONJUNTO), Two Spool Loader Valve; Models Without Pilot Controls
39		87437657		1	TUBO (CONJUNTO), Three Spool Loader Valve; Models Without Pilot Controls
41		218-765		1	REDUCTOR, 37Ü, 7/8"-14, Fem x 9/16"-18 Male, Models With Pilot Controls
42		87437980		1	TUBO (CONJUNTO), Two Spool Loader Valve; Models With Pilot Controls
43		87437982		1	TUBO (CONJUNTO), Three Spool Loader Valve; Models With Pilot Controls
44		218-980		1	CODO, 90Ü, 9/16"-18, 37Ü x 9/16"-18, 37Ü Fem Sw, Models With Pilot Controls
45		218-5107		1	CODO, 90Ü, 7/8"-14, 37Ü x 7/8"-14, O-Ring, Incl. Ref 46; Models Without Pilot Controls
46		237-6010		1	JUNTA HERMETICA, 10-1, 90 Duro, .755" ID x .097" Thk
47		86512512		1	TAPčN, Hex Hd, 7/8"-14 ORB, Incl. Ref 48; Models with Pilot Controls
48		237-6010		1	JUNTA HERMETICA, 10-1, 90 Duro, .755" ID x .097" Thk
49		218-5064		1	RACOR, 1 1/16"-12, 37Ü x 1 1/16"-12, O-Ring, Incl. Ref 50
50		237-6012		1	JUNTA HERMETICA, 12-1, 90 Duro, .924 ID x .118" Thk
51		218-5034		1	RACOR, 3/8"-24, 37Ü x 3/8"-24, Pipe, Incl. Ref 52
52		237-6016		1	JUNTA HERMETICA, 16-1, 90 Duro, 1.171" ID x .118" Thk

08-02		p1	01/08

HIDRAULICA - VéLVULA DE LA CARGADORA AL FILTRO A LA VéLVULA DE LA RETROEXCAVADORA

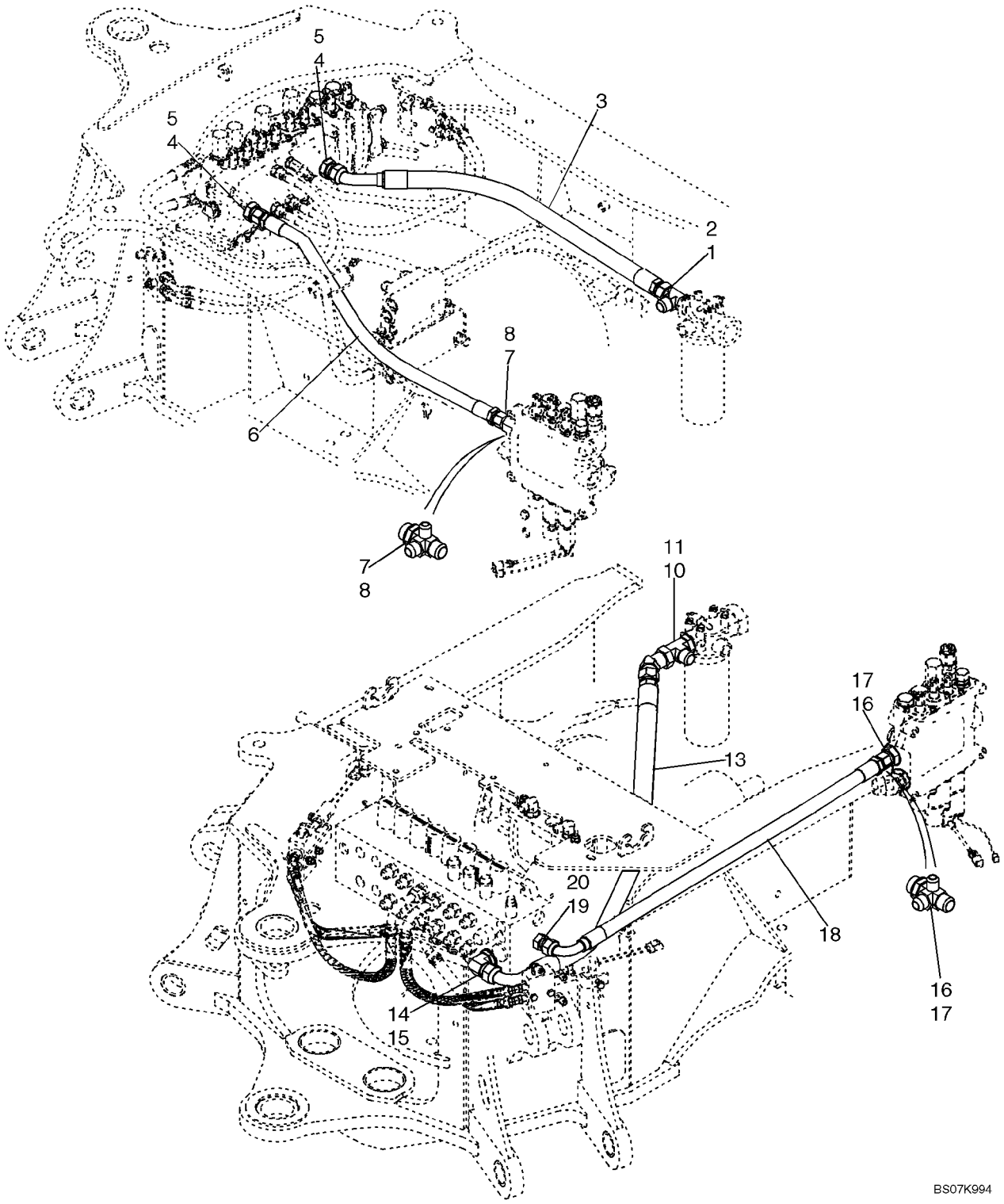

HIDRAULICA - VáLVULA DE LA CARGADORA AL FILTRO A LA VáLVULA DE LA RETROEXCAVADORA

REF	FN	PART NUMBER	YR/SN	QTY	DENOMINACION
		REF			MANUAL, MODELS WITHOUT PILOT CONTROLS
1		218-5584		1	RACOR-T, 37Ü, 1 5/16"-12, 1 5/16"-12 O-Ring Run, 1 1/16"-12, Incl. Ref 2
2		237-6016		1	JUNTA HERMETICA, 16-1, 90 Duro, 1.171" ID x .118" Thk
3		313648A1		1	MANGA, 910 mm (35-7/8 in); Return; Models Without Pilot Controls
4		218-5069		2	RACOR, 1 5/16"-12, 37Ü x 1 5/16"-12, O-Ring, Incl. Ref 5
5		237-6016		1	JUNTA HERMETICA, 16-1, 90 Duro, 1.171" ID x .118" Thk
6		87437441		1	MANGUERA (CONJUNTO), 1025 mm (40-3/8 in); 2 or 3 Spool Valve; Without Auxiliary Hydraulics, Without Pilot Controls; Loader Valve Power Beyond to Backhoe Valve
6		87437232		1	MANGUERA (CONJUNTO), 420 mm (16-9/16 in); 2 Spool Valve; With Auxiliary Hydraulics; With or Without Pilot Controls; Loader Valve Power Beyond to Backhoe Valve
6		87437231		1	MANGUERA (CONJUNTO), 370 mm (14-5/8 in); 3 Spool Valve; With Auxiliary Hydraulics; With or Without Pilot Controls; Loader Valve Power Beyond to Backhoe Valve
7		87436066		1	CONEXION, 4-Way Special Tee; Incl. Ref 8
8		237-6016		1	JUNTA HERMETICA, 16-1, 90 Duro, 1.171" ID x .118" Thk
		REF			MANUAL, MODELS WITH PILOT CONTROLS
10		218-5584		1	RACOR-T, 37Ü, 1 5/16"-12, 1 5/16"-12 O-Ring Run, 1 1/16"-12, Incl. Ref 11
11		237-6016		1	JUNTA HERMETICA, 16-1, 90 Duro, 1.171" ID x .118" Thk
13		87450456		1	MANGUERA (CONJUNTO), 1254 mm (49-3/8 in); Return; Models With Pilot Controls
14		218-5110		1	CODO, 90Ü, 1 5/16"-12, 37Ü x 1 5/16"-12, O-Ring, Incl. Ref 15

08-02		p2	01/08

HIDRAULICA - VéLVULA DE LA CARGADORA AL FILTRO A LA VéLVULA DE LA RETROEXCAVADORA

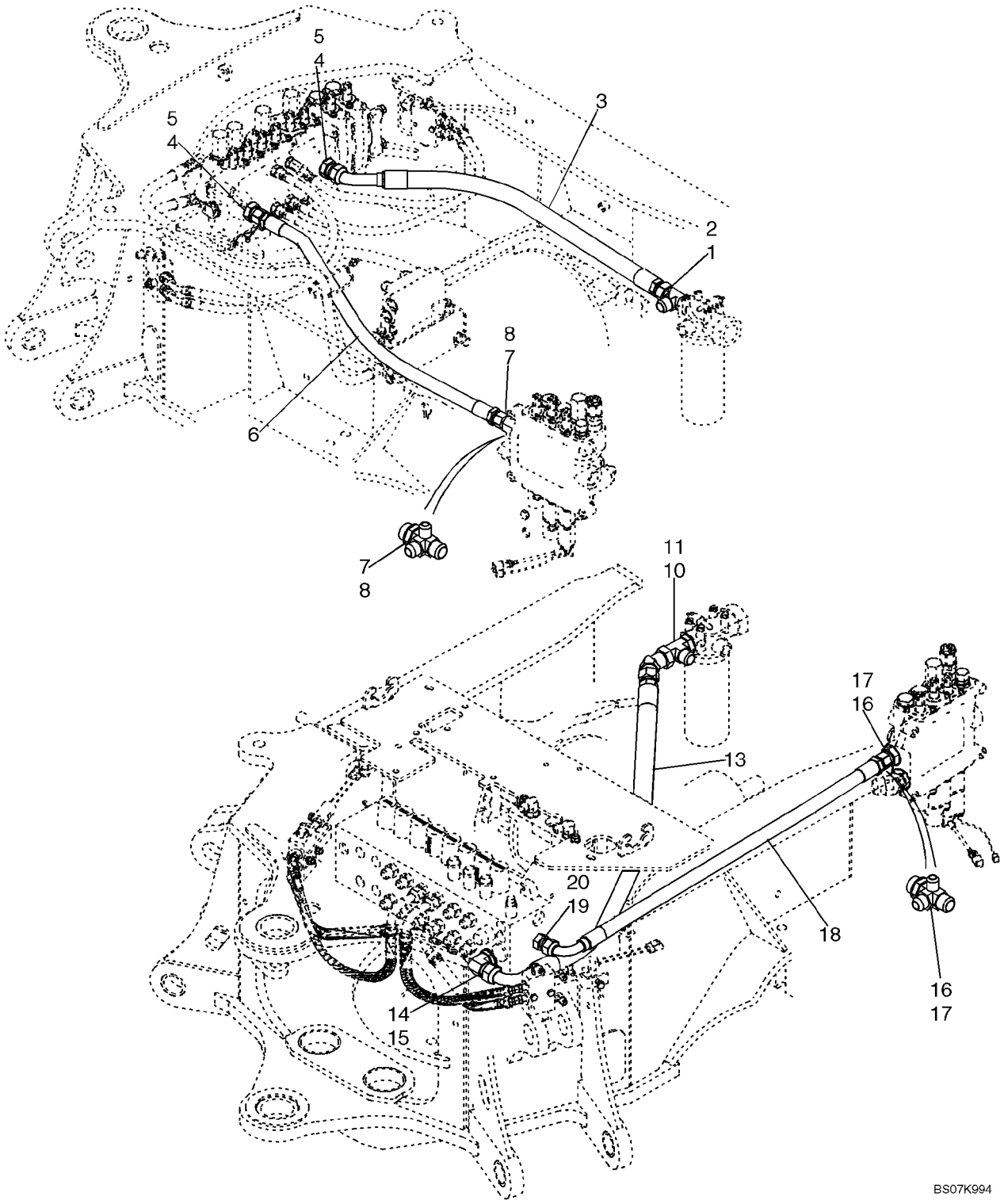

HIDRAULICA - VćLVULA DE LA CARGADORA AL FILTRO A LA VćLVULA DE LA RETROEXCAVADORA

REF	FN	PART NUMBER	YR/SN	QTY	DENOMINACION
15		237-6016		1	JUNTA HERMETICA, 16-1, 90 Duro, 1.171" ID x .118" Thk
16		87436066		1	CONEXION, 4-Way Tee, Special, 1-5/16 fl x Or; Incl. Ref 17
17		237-6016		1	JUNTA HERMETICA, 16-1, 90 Duro, 1.171" ID x .118" Thk
18		87455832		1	MANGUERA (CONJUNTO), 1020 mm (40-5/32 in); 2 or 3 Spool Valve; Without Auxiliary Hydraulics, With Pilot Controls; Power Beyond
18		87437232		1	MANGUERA (CONJUNTO), 420 mm (16-9/16 in); 2 Spool Valve; With Auxiliary Hydraulics; With or Without Pilot Controls; Loader Valve Power Beyond to Backhoe Valve
18		87437231		1	MANGUERA (CONJUNTO), 370 mm (14-5/8 in); 3 Spool Valve; With Auxiliary Hydraulics; With or Without Pilot Controls; Loader Valve Power Beyond to Backhoe Valve
19		218-5064		1	RACOR, 1 1/16"-12, 37Ü x 1 1/16"-12, O-Ring, Incl. Ref 20
20		237-6012		1	JUNTA HERMETICA, 12-1, 90 Duro, .924 ID x .118" Thk

08-03		p1	02/08

HIDRAULICA - REFRIGERADOR, LĊNEAS DE RETORNO Y FILTRO

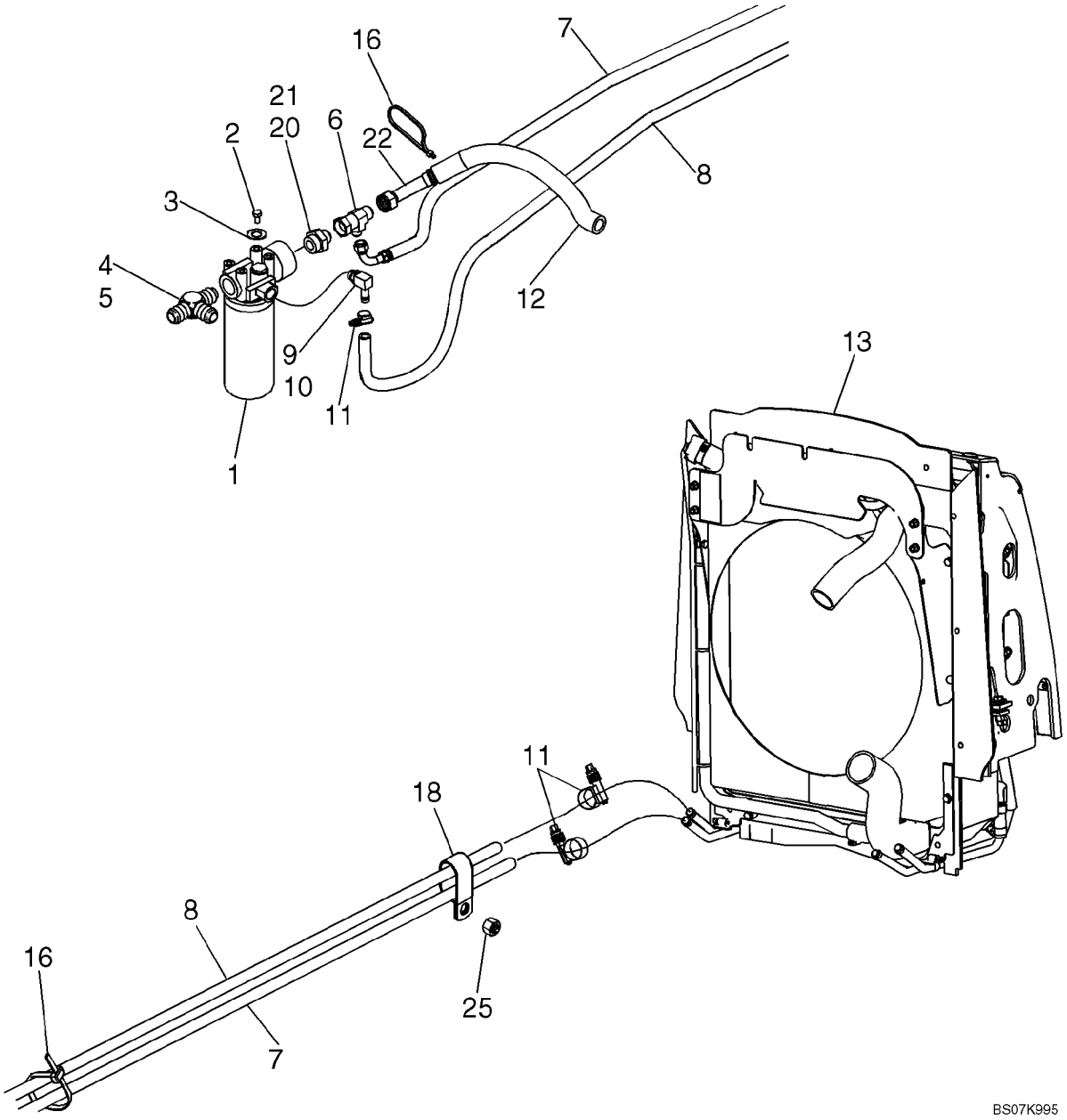

HIDRAULICA - REFRIGERADOR, LĊNEAS DE RETORNO Y FILTRO

REF	FN	PART NUMBER	YR/SN	QTY	DENOMINACION
1		87440045		1	FILTRO CONJ, Hydraulic Oil; See Figure 08-57
2		614-10020		4	TORNILLO, Hex, M10 x 20, 8.8, Full Thd
3		895-11010		4	ARANDELA, M10 x 20 x 2
4		218-5584		1	RACOR-T, 37Ü, 1 5/16"-12, 1 5/16"-12 O-Ring Run, 1 1/16"-12, Incl. Ref 5
5		237-6016		1	JUNTA HERMETICA, 16-1, 90 Duro, 1.171" ID x .118" Thk
6		218-5490		1	RACOR-T, 37Ü, 1 1/16"-12x1 1/16"-12, Fem Sw Runx7/8"-14 Br
7		87659604		1	MANGUERA (CONJUNTO), Hydraulic Cooler Outlet To Filter
8		87659784		1	MANGA, Cooler Return To Filter
9		217-349		1	CONEXION, 90Ü, 5/8" Hose x 7/8"-14 ORB Beaded, Incl. Ref 10
10		237-6010		1	JUNTA HERMETICA, 10-1, 90 Duro, .755" ID x .097" Thk
11		328186A1		3	ABRAZADERA MANGUERA
12		87656501		1	PROTECTOR DE TUBO
13		REF		1	MANUAL, Hydraulic Oil Cooler; For Cooler and Attaching Parts, See Figure 06-10
16		L18337		4	CIERRA CABLES, 9.95"-12.1" lg
18		D39696		1	COLLAR, Double P-Type
20		218-5086		1	RACOR, 1 5/16"-12, 37Ü x 1 5/8"-12, O-Ring, Incl. Ref 21
21		237-6020		1	JUNTA HERMETICA, 20-1, 90 Duro, 1.475" ID x .118" Thk
22		87659613		1	MANGUERA (CONJUNTO), Return To Tank
25		829-1410		1	TUERCA, M10, Cl 10

08-04		p1	02/08

HIDRAULICA - CILINDRO, ELEVACIĎN DE LA CARGADORA

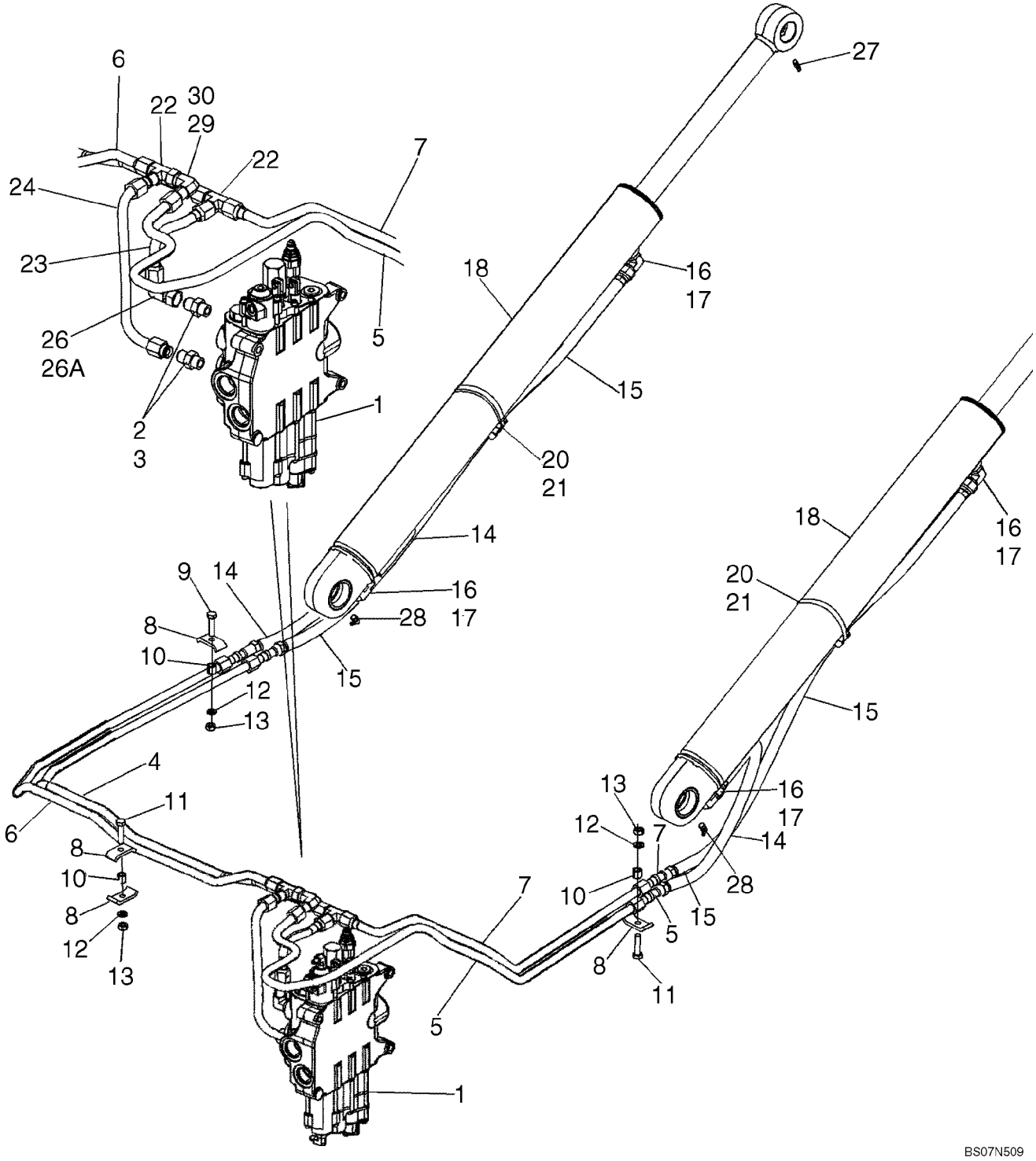

HIDRAULICA - CILINDRO, ELEVACIĎN DE LA CARGADORA

REF	FN	PART NUMBER	YR/SN	QTY	DENOMINACION
1		REF		1	MANUAL, LOADER CONTROL VALVE; For Correct Assembly and Components, See Figures 08-30, 08-31; For Mounting, See Figure 09-01
2		218-5062		2	RACOR, 7/8"-14, 37Ü x 7/8"-14, O-Ring, Incl. Ref 3
3		237-6010		1	JUNTA HERMETICA, 10-1, 90 Duro, .755" ID x .097" Thk
4		87622718		1	TUBERIA HIDRAULICO, Upper Lift Port
5		87712299		1	TUBERIA HIDRAULICO, Lower Lift Port
6		87622714		1	TUBERIA HIDRAULICO, Lower Lift Port
7		87642658		1	TUBERIA HIDRAULICO, Upper Lift Port
8		D138055		5	COLLAR
9		614-10040		1	TORNILLO, Hex, M10 x 40, 8.8, Full Thd
10		120303A1		4	ESPACIADOR
11		614-10045		3	TORNILLO, Hex, M10 x 45, 8.8, Full Thd
12		892-11010		4	ARANDELA DE FRENO, M10
13		829-1410		4	TUERCA, M10, Cl 10
14		87443150		2	MANGUERA (CONJUNTO), 740 mm (29-5/32 in)
15		87443149		2	MANGUERA (CONJUNTO), 1130 mm (44-1/2 in)
16		218-5107		4	CODO, 90Ü, 7/8"-14, 37Ü x 7/8"-14, O-Ring, Incl. Ref 17
17		237-6010		1	JUNTA HERMETICA, 10-1, 90 Duro, .755" ID x .097" Thk
18		384240A1		2	CILINDRO (CONJUNTO), 82.6 ID x 766 mm strk; Loader Lift Cylinder; See Figure 08-58
20		D142787		2	ESPACIADOR
21		214-1472		2	ABRAZADERA MANGUERA, #72, 4.06/5.00 Type F Worm
22		218-595		2	RACOR-T, 7/8"-14, 37Ü
23		87625976		1	TUBERIA HIDRAULICO, Upper Lift Port
24		87675513		1	TUBERIA HIDRAULICO, Lower Lift Port
26		218-5232		1	CODO, 90Ü, 7/8"-14, 37Ü x 7/8"-14, 37Ü Fem Sw, Incl. 26A
26A		237-6010		1	JUNTA HERMETICA, 10-1, 90 Duro, .755" ID x .097" Thk
27		219-1		2	ENGRASADOR, 1/8"-27 x .66 lg

08-04		p2	02/08

HIDRAULICA - CILINDRO, ELEVACIĎN DE LA CARGADORA

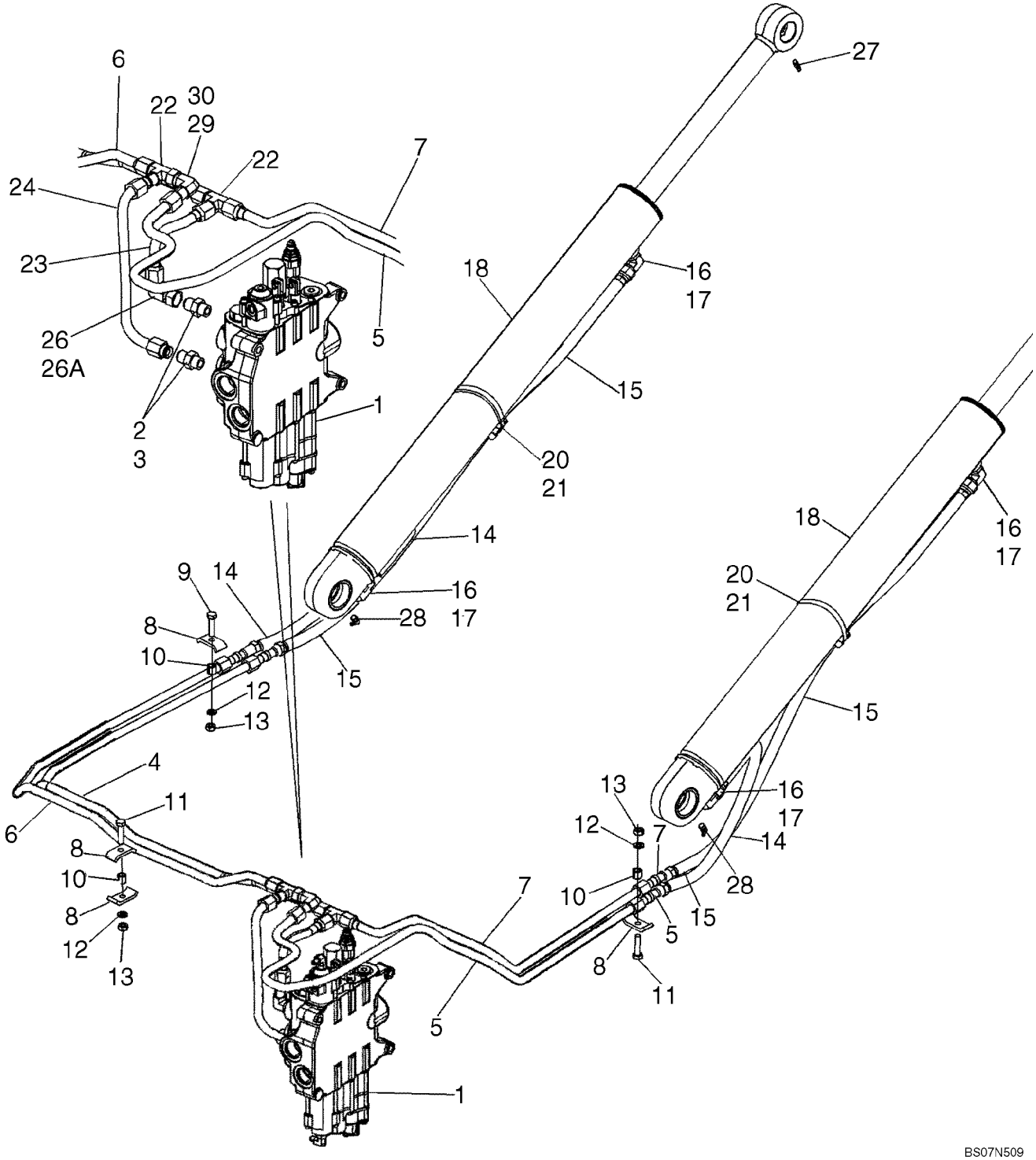

HIDRAULICA - CILINDRO, ELEVACIĎN DE LA CARGADORA

REF	FN	PART NUMBER	YR/SN	QTY	DENOMINACION
28		219-55		2	ENGRASADOR, 90Ü, 1/8" NPT x .84" lg
29		218-5232		1	CODO, 90Ü, 7/8"-14, 37Ü x 7/8"-14, 37Ü Fem Sw, Incl. 30
30		237-6010		1	JUNTA HERMETICA, 10-1, 90 Duro, .755" ID x .097" Thk

08-05		p1	02/08

HIDRAULICA - CILINDRO, CUCHARĎN DE LA CARGADORA

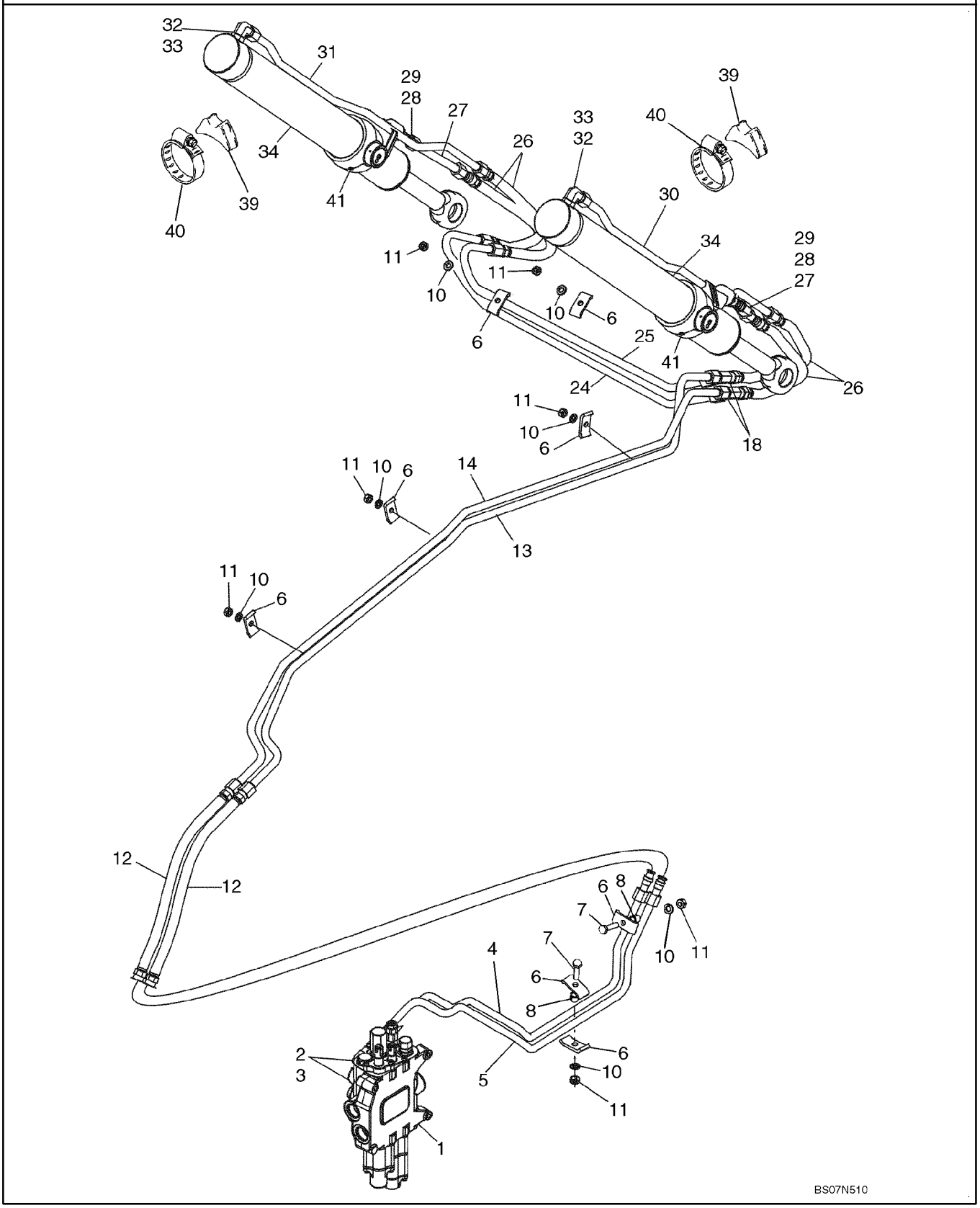

HIDRAULICA - CILINDRO, CUCHARĎN DE LA CARGADORA

REF	FN	PART NUMBER	YR/SN	QTY	DENOMINACION
1		REF		1	MANUAL, LOADER CONTROL VALVE; For Correct Assembly and Components, See Figures 08-30, 08-31; For Mounting, See Figure 09-01
2		218-5107		2	CODO, 90Ü, 7/8"-14, 37Ü x 7/8"-14, O-Ring, Incl. Ref 3
3		237-6010		1	JUNTA HERMETICA, 10-1, 90 Duro, .755" ID x .097" Thk, Boss Seal
4		87421918		1	TUBO (CONJUNTO), Upper Bucket Port
5		87421920		1	TUBO (CONJUNTO), Lower Bucket Port
6		D138055		8	COLLAR
7		614-10045		2	TORNILLO, Hex, M10 x 45, 8.8, Full Thd
8		120303A1		2	ESPACIADOR
10		892-11010		7	ARANDELA DE FRENO, M10
11		829-1410		7	TUERCA, M10, Cl 10
12		87429287		2	MANGUERA (CONJUNTO), 710 mm (28 in)
13		87716480		1	TUBERIA HIDRAULICO, To Upper Port
14		87716482		1	TUBERIA HIDRAULICO
18		218-5220		2	RACOR-T, 37Ü, 7/8"-14 x 7/8"-14, Fem Sw Run
24		196815A1		1	CUELLO DE CARGA, Rear
25		196813A1		1	CUELLO DE CARGA, Front
26		371031A1		4	MANGUERA (CONJUNTO), 840 mm (33 in)
27		87316049		2	TUBO (CONJUNTO), Bucket Cylinder Rod End
28		218-5062		2	RACOR, 7/8"-14, 37Ü x 7/8"-14, O-Ring, Incl. Ref 29
29		237-6010		1	JUNTA HERMETICA, 10-1, 90 Duro, .755" ID x .097" Thk, Boss Seal
30		87316270		1	TUBO (CONJUNTO), Right-Hand Cylinder Closed End
31		87316264		1	TUBO (CONJUNTO), Left-Hand Cylinder Closed End
32		218-5107		2	CODO, 90Ü, 7/8"-14, 37Ü x 7/8"-14, O-Ring, Incl. Ref 33
33		237-6010		1	JUNTA HERMETICA, 10-1, 90 Duro, .755" ID x .097" Thk, Boss Seal
34		87609669		2	CILINDRO HIDRAULICO, 76 ID x 522 mm strk; Loader Bucket Cylinder; See Figure 08-59
39		L79937		2	SILLA

08-05		p2	02/08

HIDRAULICA - CILINDRO, CUCHARĎN DE LA CARGADORA

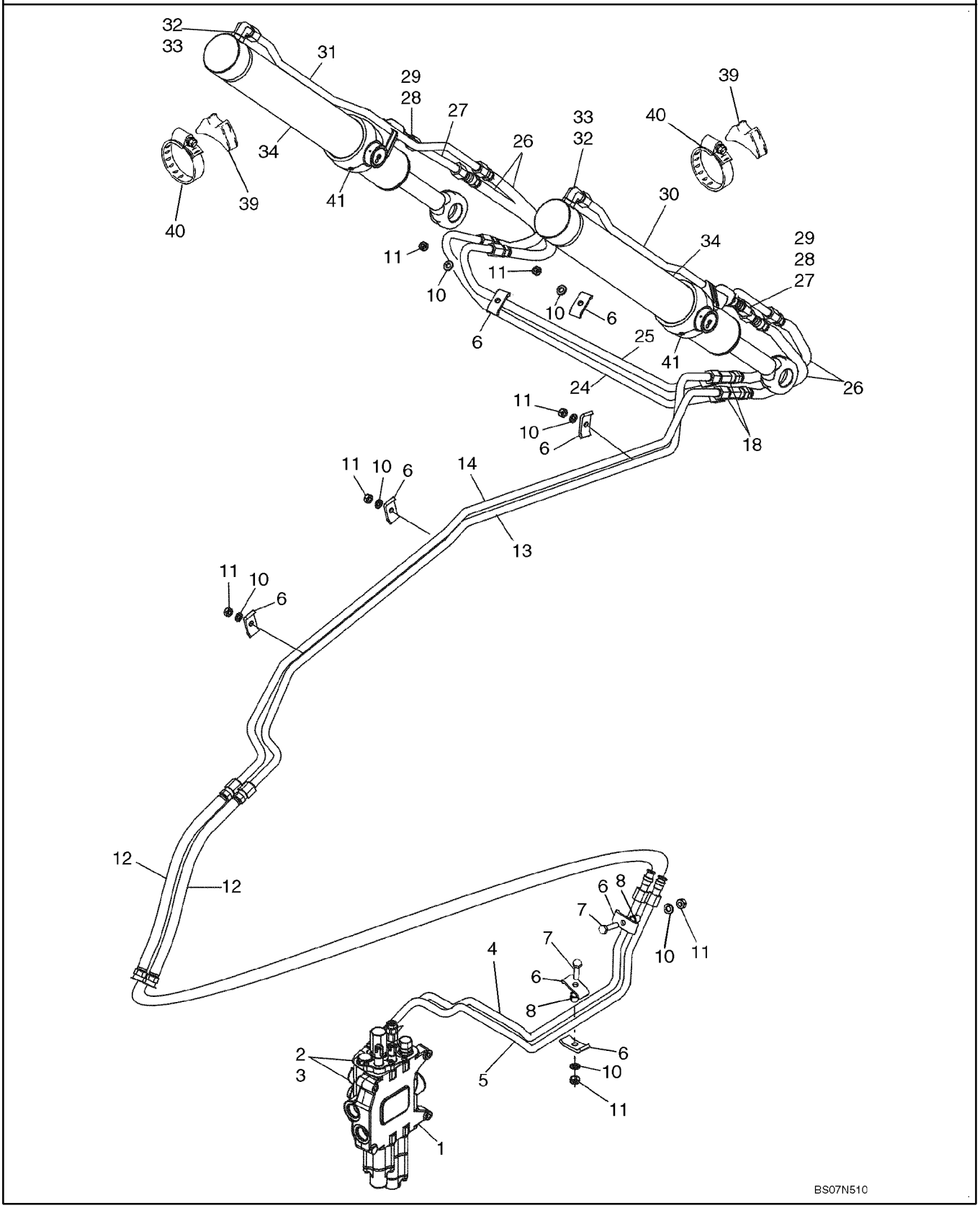

HIDRAULICA - CILINDRO, CUCHARĎN DE LA CARGADORA

REF	FN	PART NUMBER	YR/SN	QTY	DENOMINACION
40		214-1464		2	ABRAZADERA MANGUERA, #64, 3.56/4.50 Type F Worm
41		219-55		2	ENGRASADOR, 90Ü, 1/8" NPT x .84" lg

08-06		p1	02/08

HIDRAULICA - CILINDRO, ALMEJA DE LA CARGADORA

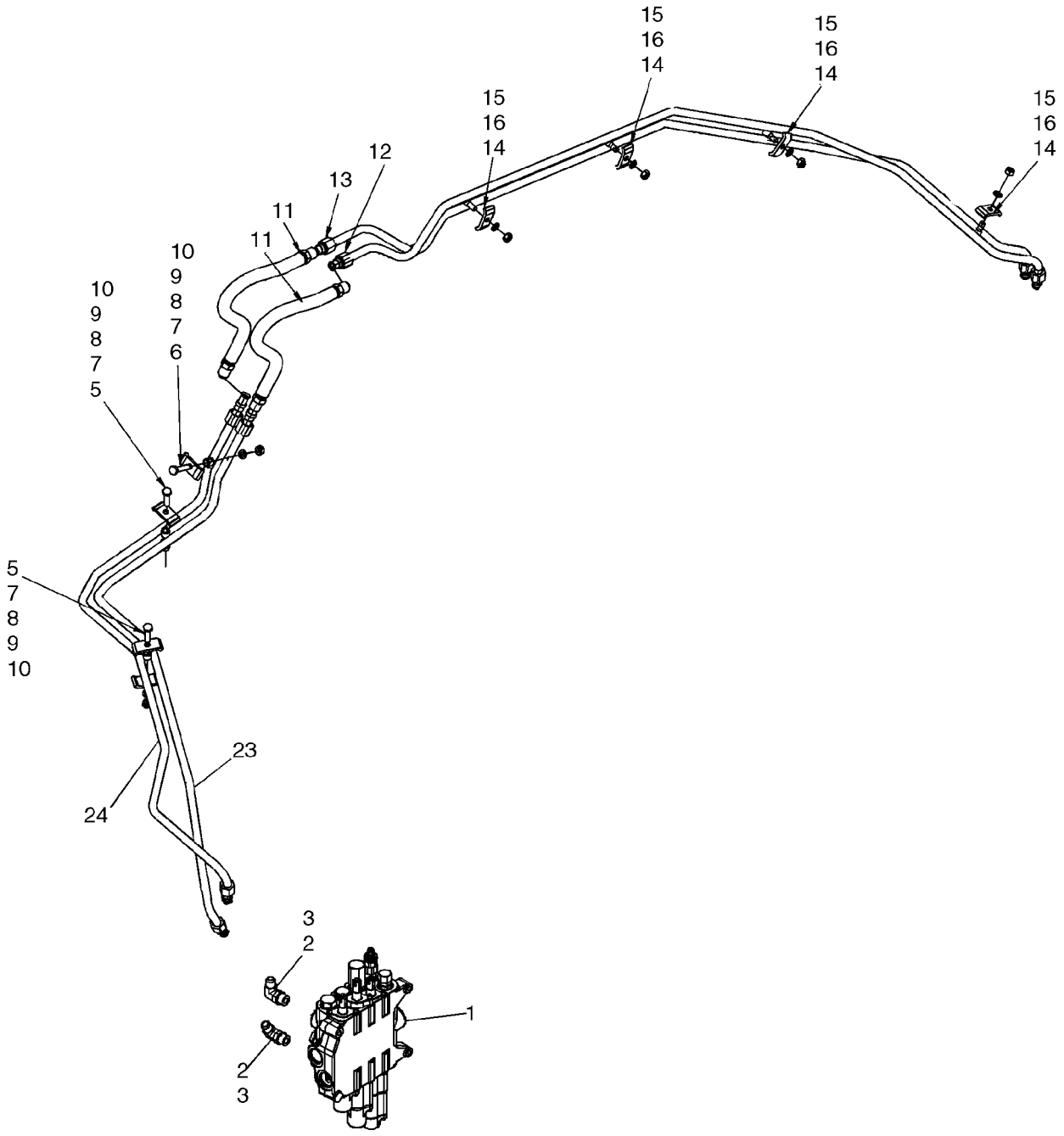

HIDRAULICA - CILINDRO, ALMEJA DE LA CARGADORA

REF	FN	PART NUMBER	YR/SN	QTY	DENOMINACION
1		REF		1	MANUAL, LOADER CONTROL VALVE; Three Spool; See Figure 08-31 for Valve Options; For Mounting, See Figure 09-01
2		218-5107		2	CODO, 90Ü, 7/8"-14, 37Ü x 7/8"-14, O-Ring, Incl. Ref 3
3		237-6010		1	JUNTA HERMETICA, 10-1, 90 Duro, .755" ID x .097" Thk, Boss Seal
5		614-10040		2	TORNILLO, Hex, M10 x 40, 8.8, Full Thd
6		614-10045		1	TORNILLO, Hex, M10 x 45, 8.8, Full Thd
7		D138055		4	COLLAR
8		120303A1		3	ESPACIADOR
9		892-11010		3	ARANDELA DE FRENO, M10
10		829-1410		3	TUERCA, M10, Cl 10
11		87429287		2	MANGUERA (CONJUNTO), 710 mm (28 in)
12		87716486		1	TUBERIA HIDRAULICO, Upper Clam Port
13		87716488			TUBERIA HIDRAULICO, Lower Clam Port
14		D138055		4	COLLAR
15		829-1410		4	TUERCA, M10, Cl 10
16		892-11010		4	ARANDELA DE FRENO, M10
23		{87478483}		1	Tube, Upper Clam Port
24		87449440		1	TUBO (CONJUNTO), Lower Clam Port

08-07		p1	10/07

HIDRAULICA - CILINDRO, ALMEJA DE LA CARGADORA

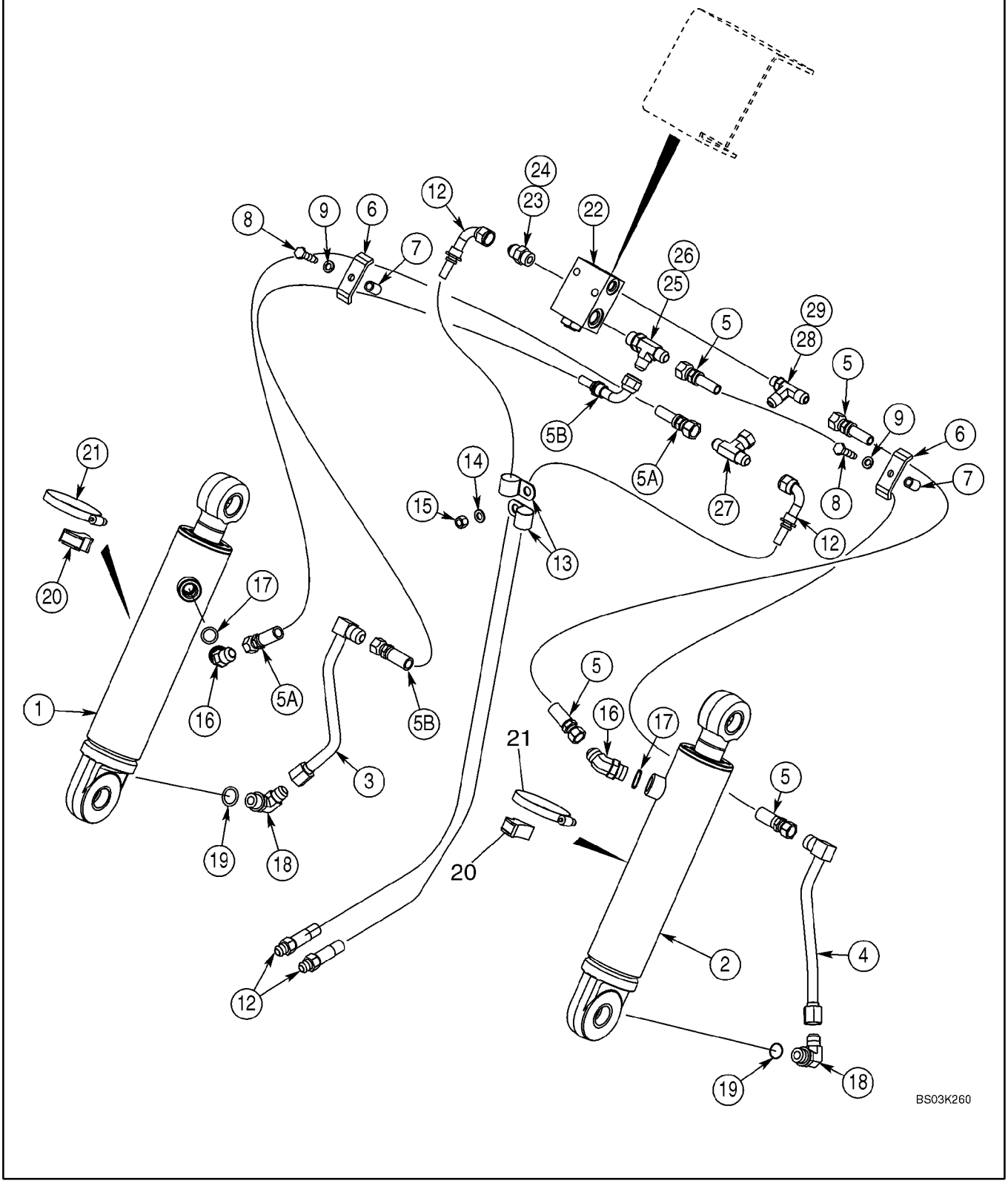

HIDRAULICA - CILINDRO, ALMEJA DE LA CARGADORA

REF	FN	PART NUMBER	YR/SN	QTY	DENOMINACION
1		87454016		1	CILINDRO (CONJUNTO), 76 ID x 231 mm strk: Loader Clam Cylinder; Left-Hand; See Figure 08-60
2		87454017		1	CILINDRO (CONJUNTO), 76 ID x 231 mm strk; Loader Clam Cylinder; Right-Hand; See Figure 08-60
3		192352A1		1	CUELLO DE CARGA, LH Cylinder
4		192345A1		1	CUELLO DE CARGA, RH Cylinder
5		353167A1		2	MANGUERA (CONJUNTO), 1100 mm (43-5/16 in); Right-Hand Cylinder
5A		353103A1		1	MANGUERA (CONJUNTO), 1200 mm (47-1/4 in); Left-Hand Cylinder
5B		367352A1		1	MANGUERA (CONJUNTO), 1200 mm (47-1/4 in); Left-Hand Cylinder
6		D143846		2	BRIDA, CLAMP
7		R46493		2	ESPACIADOR
8		614-10040		2	TORNILLO, Hex, M10 x 40, 8.8, Full Thd
9		892-11010		2	ARANDELA DE FRENO, M10
12		356743A1		2	MANGUERA (CONJUNTO), 1170 mm (46-1/16 in); Lift Frame
13		515-25254		2	BORNE, 1", Insul, 1/2" Bolt
14		895-11010		1	ARANDELA, M10 x 20 x 2
15		832-10410		1	CONTRA TUERCA, M10 x 1.5, Cl 8
16		218-5137		2	CODO, 45Ü, 7/8"-14 x 7/8"-14, O-Ring, Incl. Ref 17
17		237-6010		1	JUNTA HERMETICA, 10-1, 90 Duro, .755" ID x .097" Thk, Boss Seal
18		218-5107		2	CODO, 90Ü, 7/8"-14, 37Ü x 7/8"-14, O-Ring, Incl. Ref 19
19		237-6010		1	JUNTA HERMETICA, 10-1, 90 Duro, .755" ID x .097" Thk, Boss Seal
20		D38648		2	BLOQUE MOTOR
21		214-1464		2	ABRAZADERA MANGUERA, #64, 3.56/4.50 Type F Worm
22		325465A2		1	VALVULA ANTIRRETORNO, Pilot Operated Check Valve; For Mounting, See Figure 09-08

08-07		p2	10/07

HIDRAULICA - CILINDRO, ALMEJA DE LA CARGADORA

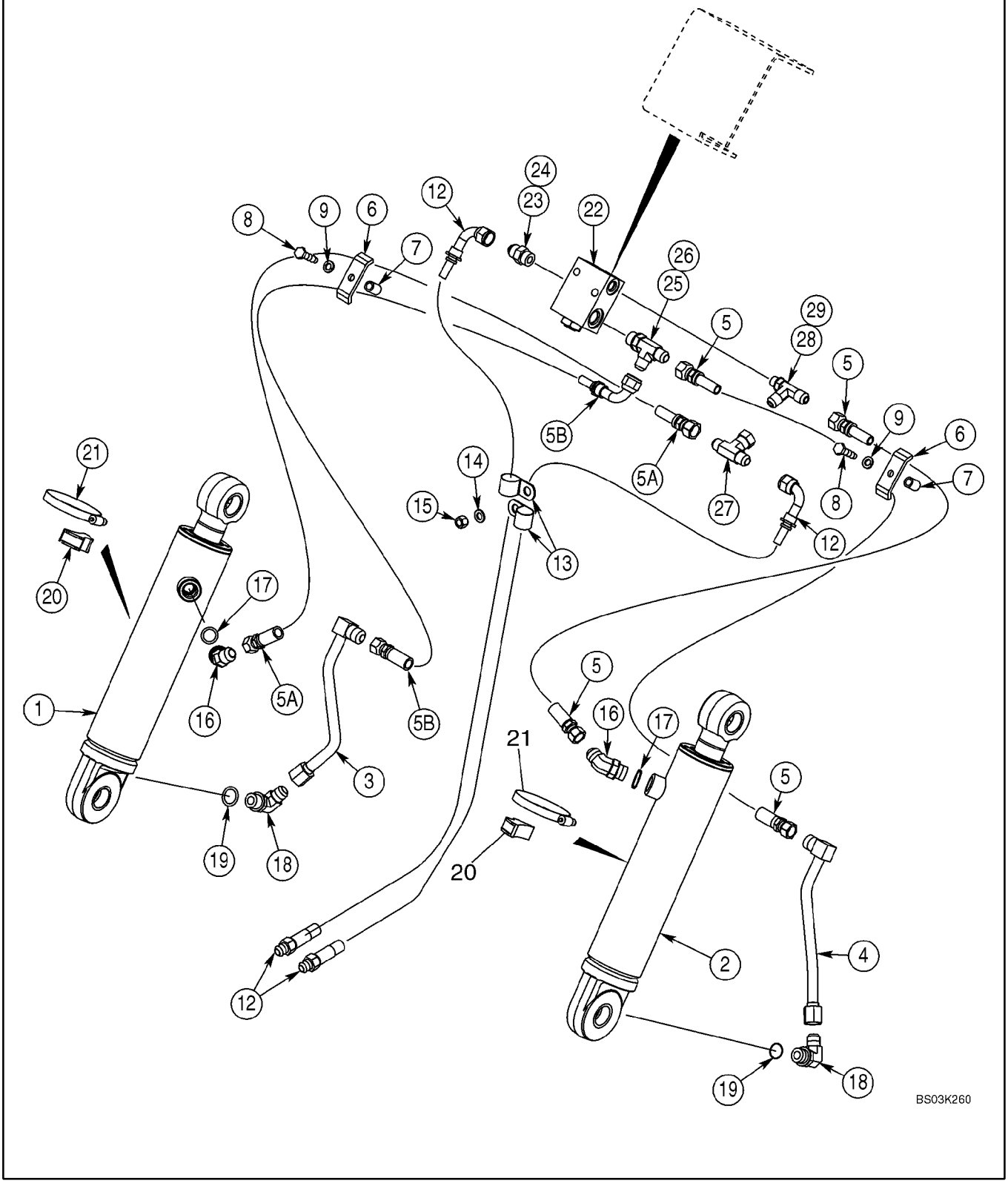

HIDRAULICA - CILINDRO, ALMEJA DE LA CARGADORA

REF	FN	PART NUMBER	YR/SN	QTY	DENOMINACION
		399963A1		1	JEUGO, Seal; For Use With 325465A2 Valve; Includes (1) Piston, (1) Backup Ring, (2) O-Rings and Instructions
23		218-5059		1	RACOR, 3/4"-16, 37Ü x 3/4"-16, O-Ring, Incl. Ref 24
24		237-6008		1	JUNTA HERMETICA, 8-1, 90 Duro, .644" ID x .087" Thk, Boss seal
25		218-5242		1	RACOR-T, 3/4"-16, 37Ü x 3/4"-18, O-Ring Run, Incl. Ref 26
26		237-6008		1	JUNTA HERMETICA, 8-1, 90 Duro, .644" ID x .087" Thk, Boss seal
27		218-840		1	RACOR-T, 37Ü, 3/4"-16 x 3/4"-16, Fem Sw Br
28		218-5650		1	RACOR-T, 37Ü, 3/4"-16, 9/16"-18 O-Ring Run, 3/4"-16, Incl. Ref 29
29		237-6006		1	JUNTA HERMETICA, 6-1, 90 Duro, .468" ID x .078" Thk, Boss seal

08-07A		p1	02/08

HIDRAULICA - ALMEJA DE LA CARGADORA, ACUMULADOR CON EL£CTRICO

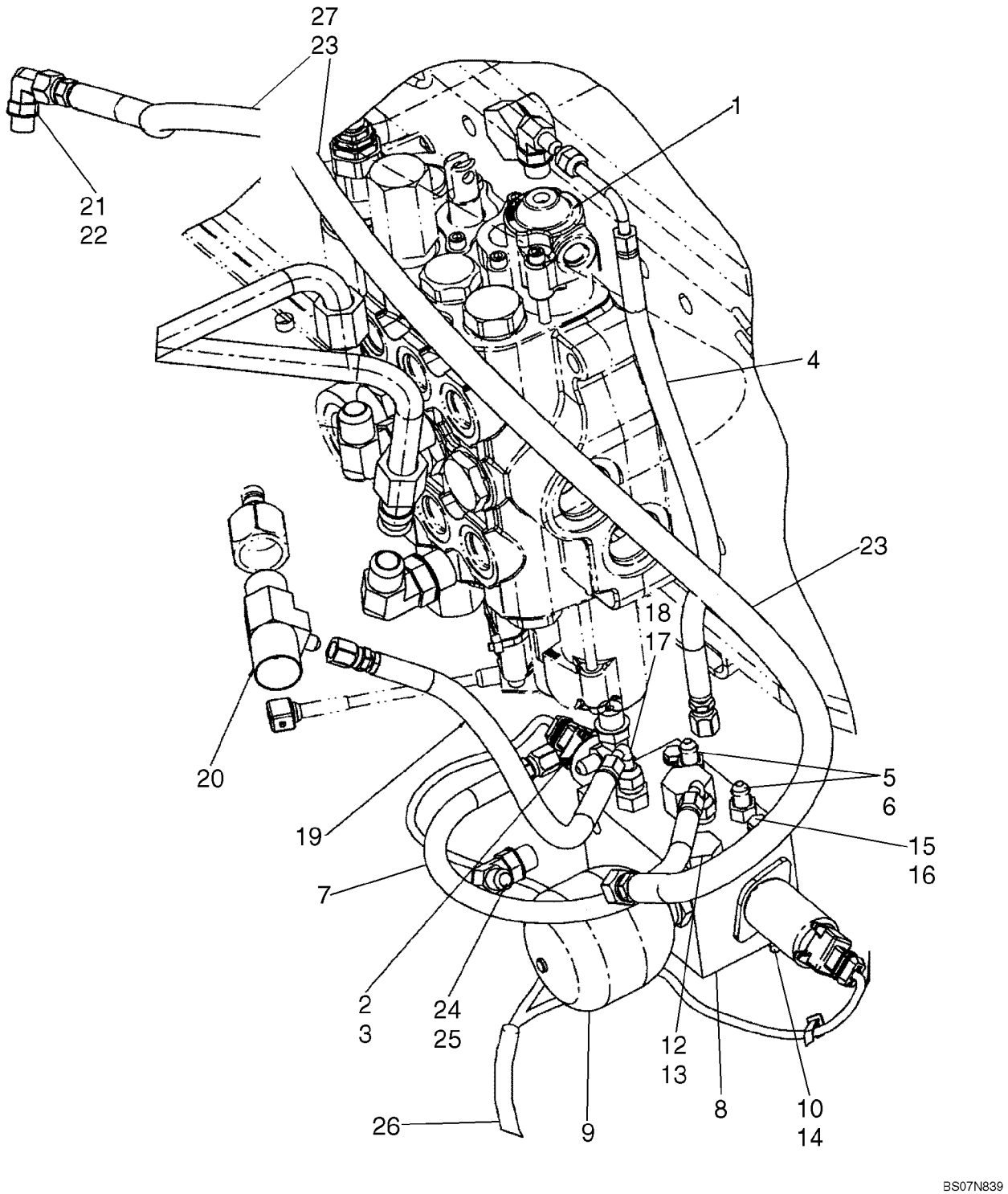

HIDRAULICA - ALMEJA DE LA CARGADORA, ACUMULADOR CON EL£CTRICO

REF	FN	PART NUMBER	YR/SN	QTY	DENOMINACION
1		REF		1	MANUAL, LOADER CONTROL VALVE; Three Spool; See Figure 08-31; For Mounting, See Figure 09-01
2		218-5283		2	CODO, 90Ü, 7/16"-20, 37Ü x 9/16"-18, O-Ring, Incl. 3
3		237-6006		1	JUNTA HERMETICA, 6-1, 90 Duro, .468" ID x .078" Thk
4		87662930		1	MANGUERA (CONJUNTO), Loader Control Valve To Proportional Control Valve
5		218-5053		2	RACOR, 7/16"-20, 37Ü x 7/16"-20, O-Ring, Incl. 6
6		237-6004		1	JUNTA HERMETICA, 4-1, 90 Duro, .351" ID x .072" Thk
7		87662928		1	MANGUERA (CONJUNTO), Proportional Control Valve
8		87566480		1	VALVULA, Proportional Control; Component Parts Not Available At Time Of Printing
9		87425225		1	ACUMULADOR, Includes 237-6008 O-Ring
10		814-6090		2	TORNILLO, Hex, M6 x 90, 8.8
12		218-5156		1	TAPčN, Hex Hd, 3/4"-16 ORB, Incl. 13
13		237-6008		1	JUNTA HERMETICA, 8-1, 90 Duro, .644" ID x .087" Thk
14		895-25006		2	ARANDELA, M6 x 18 x 1.6
15		892-11006		2	ARANDELA DE FRENO, M6
16		829-1406		2	TUERCA, M6, Cl 10
17		218-5089		1	RACOR, 7/16"-20, 37Ü x 9/16"-18, O-Ring, Incl. 18
18		237-6006		1	JUNTA HERMETICA, 6-1, 90 Duro, .468" ID x .078" Thk
19		87662932		1	MANGUERA (CONJUNTO), Proportional Control Valve To Pump
20		218-5411		1	RACOR-T, 37Ü, 7/8"-14 x 3/4"-16, Fem Sw Run x 7/16"-20 Br
21		218-5105		1	CODO, 90Ü, 9/16"-18, 37Ü x 9/16"-18, O-Ring, Incl. 22
22		237-6006		1	JUNTA HERMETICA, 6-1, 90 Duro, .468" ID x .078" Thk
23		87650602		1	MANGUERA (CONJUNTO), Proportional Control Valve To Tank
24		218-5105		1	CODO, 90Ü, 9/16"-18, 37Ü x 9/16"-18, O-Ring, Incl. 25

HIDRAULICA - ALMEJA DE LA CARGADORA, ACUMULADOR CON EL£CTRICO

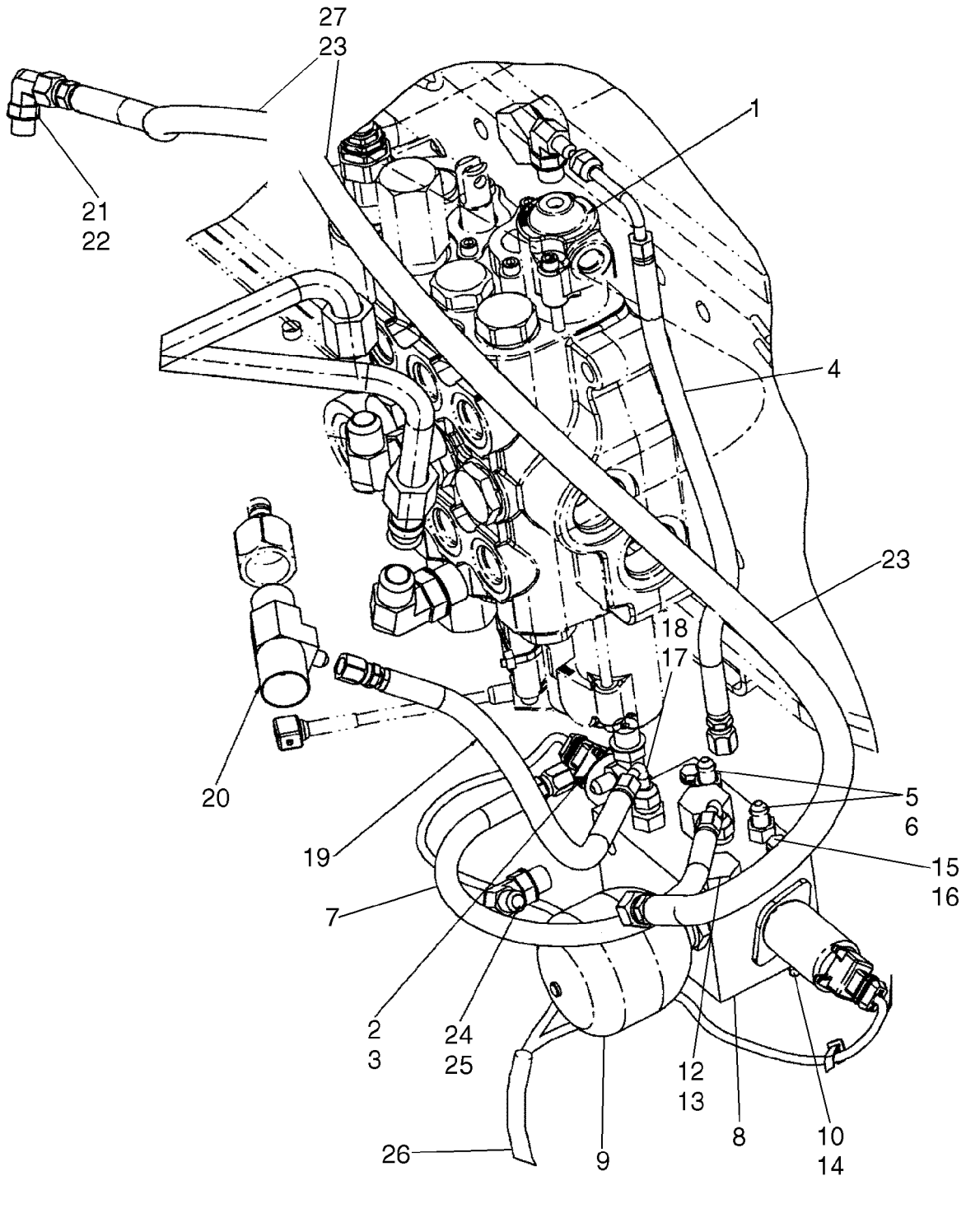

HIDRAULICA - ALMEJA DE LA CARGADORA, ACUMULADOR CON EL£CTRICO

REF	FN	PART NUMBER	YR/SN	QTY	DENOMINACION
25		237-6006		1	JUNTA HERMETICA, 6-1, 90 Duro, .468" ID x .078" Thk
26		87651975		1	GRUPO DE CABLES, Jumper
27		87452021		1	FUNDA DE PLĆSTICO, 650 mm; Hose Guard

08-07B		p1	02/08

HIDRAULICA - ALMEJA DE LA CARGADORA, ACUMULADOR CON EL£CTRICO (MODELOS CON CONTROL PILOTO)

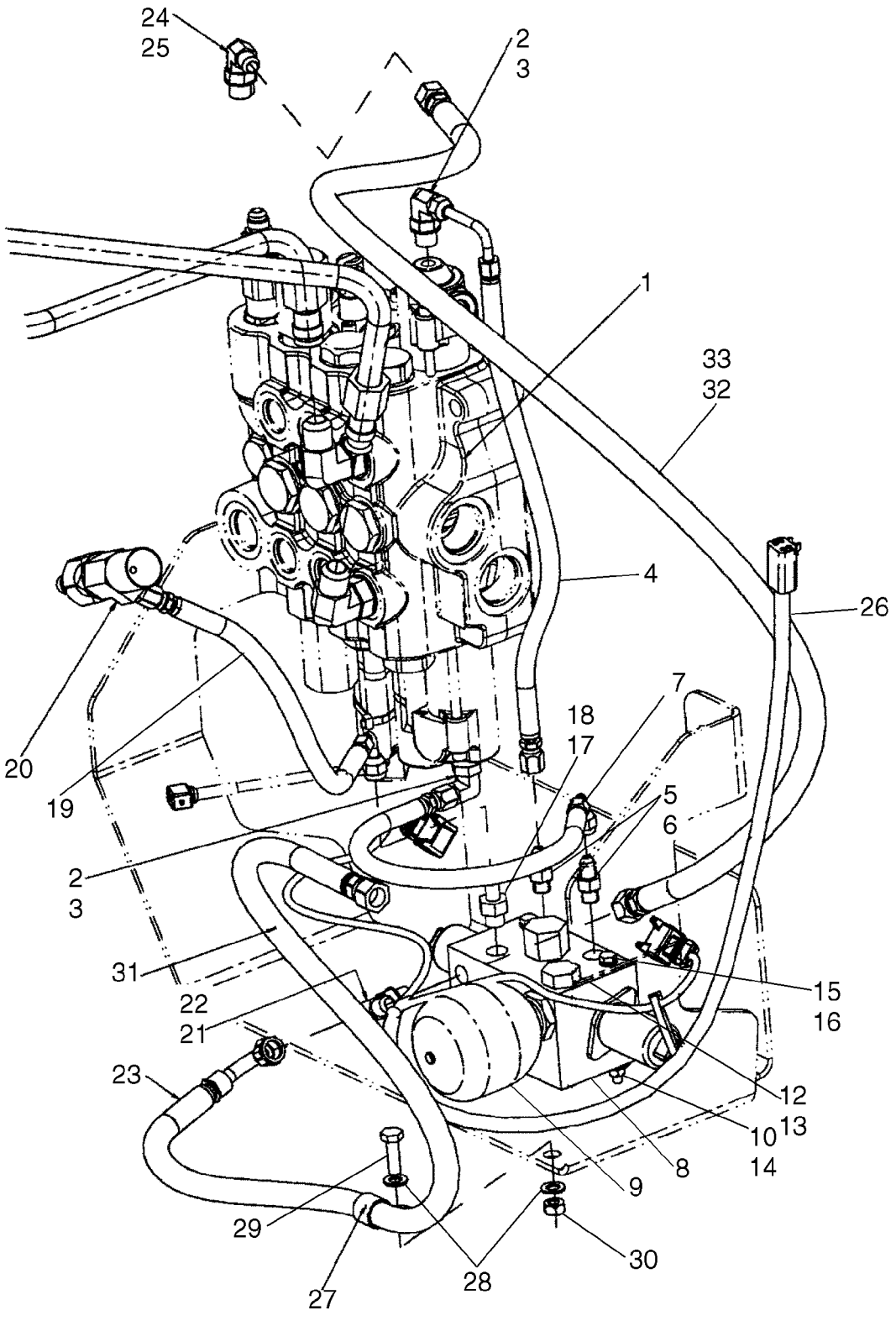

HIDRAULICA - ALMEJA DE LA CARGADORA, ACUMULADOR CON EL£CTRICO (MODELOS CON CONTROL PILOTO)

REF	FN	PART NUMBER	YR/SN	QTY	DENOMINACION
1		REF		1	MANUAL, LOADER CONTROL VALVE; Three Spool; See Figure 08-31; For Mounting, See Figure 09-01
2		218-5283		2	CODO, 90Ü, 7/16"-20, 37Ü x 9/16"-18, O-Ring, Incl. 3
3		237-6006		1	JUNTA HERMETICA, 6-1, 90 Duro, .468" ID x .078" Thk
4		87662930		1	MANGUERA (CONJUNTO), Loader Control Valve To Proportional Control Valve
5		218-5053		2	RACOR, 7/16"-20, 37Ü x 7/16"-20, O-Ring, Incl. 6
6		237-6004		1	JUNTA HERMETICA, 4-1, 90 Duro, .351" ID x .072" Thk
7		87662928		1	MANGUERA (CONJUNTO), Proportional Control Valve
8		87566480		1	VALVULA, Proportional Control; Component Parts Not Available At Time Of Printing
9		87425225		1	ACUMULADOR
10		814-6090		2	TORNILLO, Hex, M6 x 90, 8.8
12		218-5156		1	TAPčN, Hex Hd, 3/4"-16 ORB, Incl. 13
13		237-6008		1	JUNTA HERMETICA, 8-1, 90 Duro, .644" ID x .087" Thk
14		895-25006		2	ARANDELA, M6 x 18 x 1.6
15		892-11006		2	ARANDELA DE FRENO, M6
16		829-1406		2	TUERCA, M6, Cl 10
17		218-5089		1	RACOR, 7/16"-20, 37Ü x 9/16"-18, O-Ring, Incl. 18
18		237-6006		1	JUNTA HERMETICA, 6-1, 90 Duro, .468" ID x .078" Thk
19		87662932		1	MANGUERA (CONJUNTO), Proportional Control Valve To Pump
20		218-5411		1	RACOR-T, 37Ü, 7/8"-14 x 3/4"-16, Fem Sw Run x 7/16"-20 Br
21		218-5182		1	RACOR-T, 9/16"-18, 37Ü x 9/16"-18, O-Ring Br, Incl. 22
22		237-6006		1	JUNTA HERMETICA, 6-1, 90 Duro, .468" ID x .078" Thk
23		87668167		1	MANGUERA (CONJUNTO), Proportional Control Valve To Tank

08-07B		p2	02/08

HIDRAULICA - ALMEJA DE LA CARGADORA, ACUMULADOR CON EL£CTRICO (MODELOS CON CONTROL PILOTO)

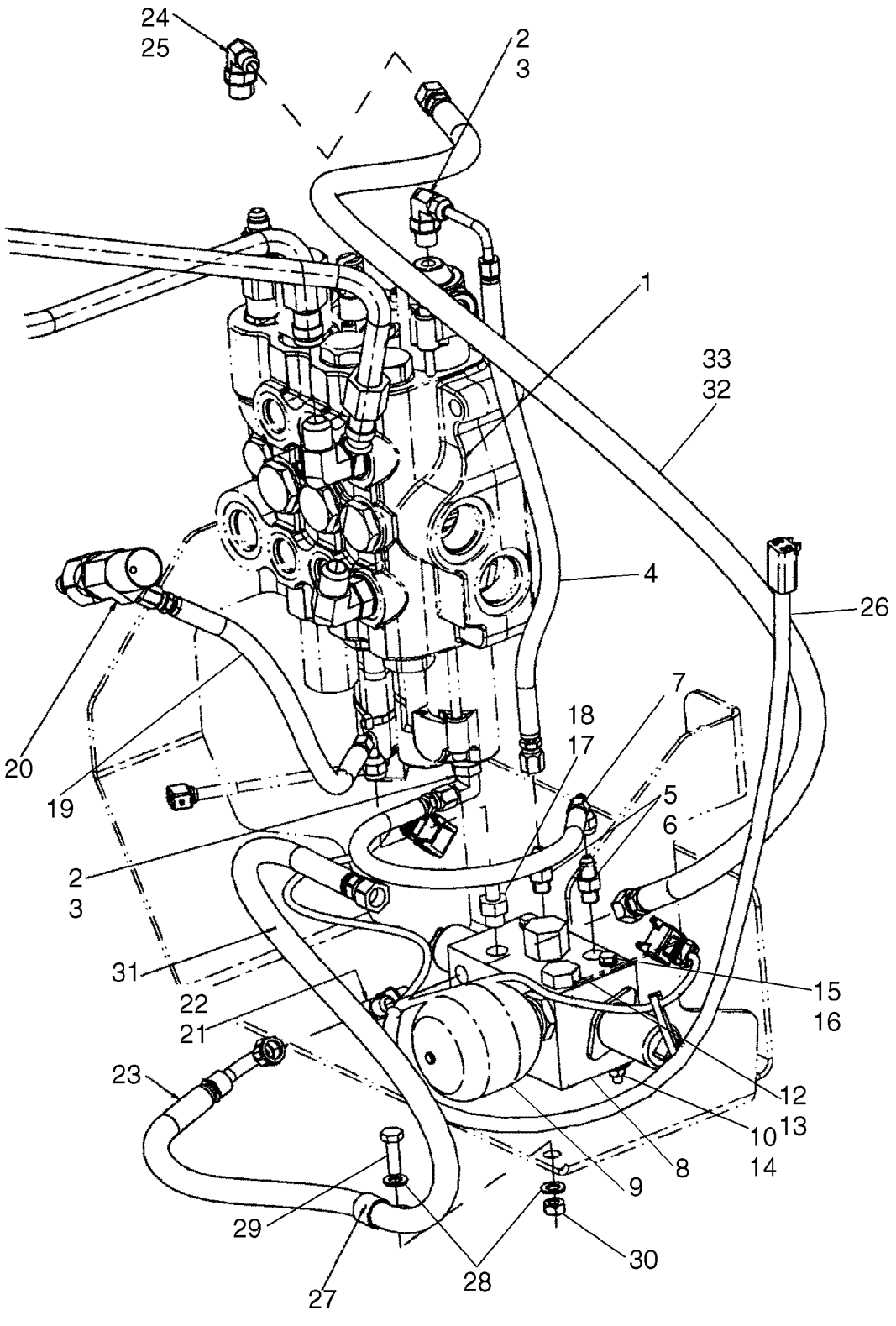

HIDRAULICA - ALMEJA DE LA CARGADORA, ACUMULADOR CON EL£CTRICO (MODELOS CON CONTROL PILOTO)

REF	FN	PART NUMBER	YR/SN	QTY	DENOMINACION
24		218-5105		1	CODO, 90Ü, 9/16"-18, 37Ü x 9/16"-18, O-Ring, Incl. 25
25		237-6006		1	JUNTA HERMETICA, 6-1, 90 Duro, .468" ID x .078" Thk
26		87651975		1	GRUPO DE CABLES, Jumper
27		515-22190		1	BORNE, 3/4", Insul, 5/16" Bolt
28		895-11008		2	ARANDELA, M8 x 16 x 1.6
29		614-8025		1	TORNILLO, Hex, M8 x 25, 8.8
30		829-1408		1	TUERCA, M8, Cl 10
31		191704A1		1	TUBO AISLANTE
32		87650602		1	MANGUERA (CONJUNTO)
33		87452021		1	FUNDA DE PLĆSTICO, 650 mm; Hose Guard

08-08		p1	02/08

HIDRAULICA - CILINDRO, ESTABILIZADOR DE LA RETROEXCAVADORA (SIN DE CONTROL PILOTO)

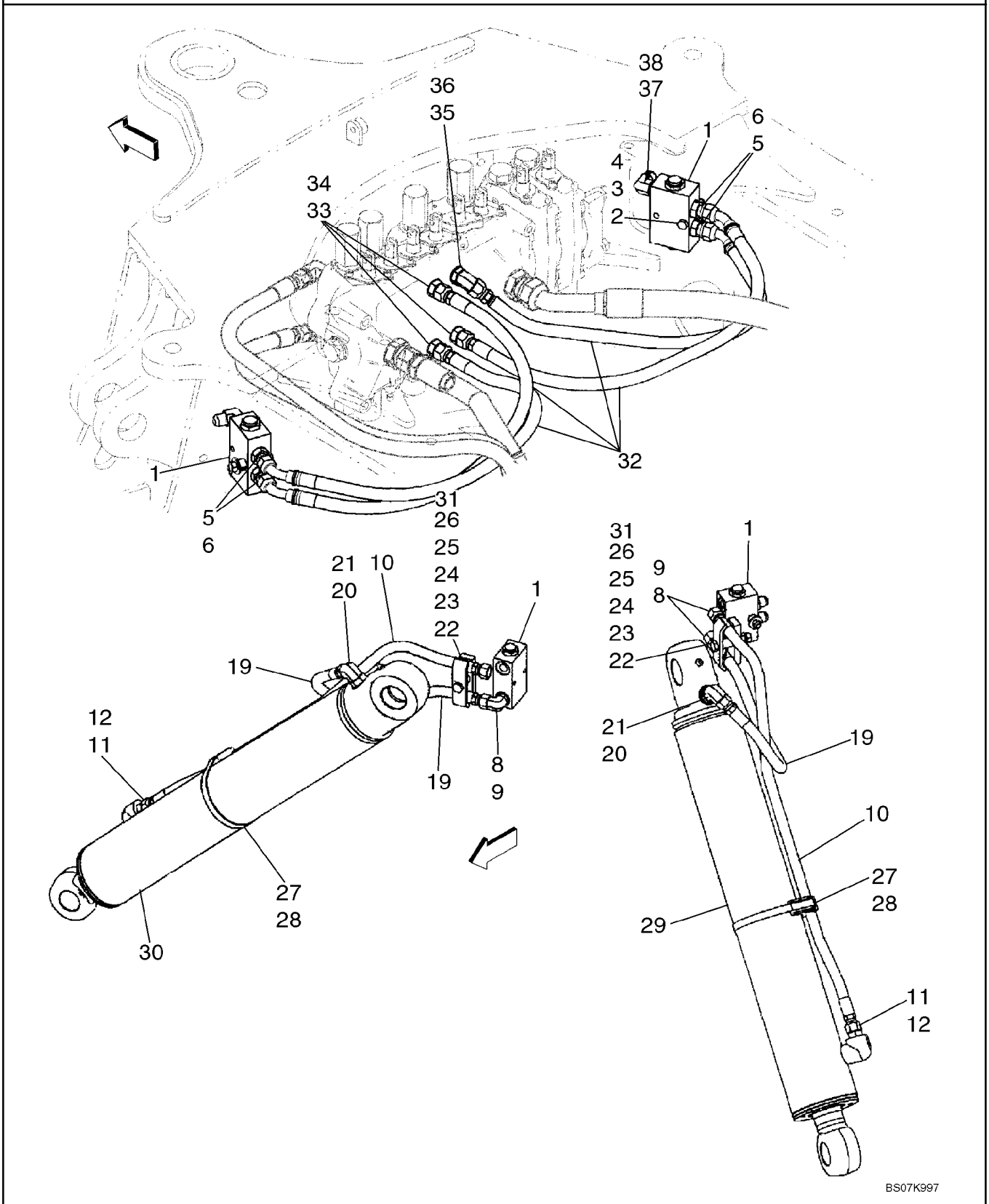

HIDRAULICA - CILINDRO, ESTABILIZADOR DE LA RETROEXCAVADORA (SIN DE CONTROL PILOTO)

REF	FN	PART NUMBER	YR/SN	QTY	DENOMINACION
		REF			MANUAL, MODELS WITHOUT PILOT CONTROLS
1		85802820		2	VALVULA DE CIERRE, Load Check; Includes 85820159, 85820160, 85821126
		85820159		1	EMBOLO
		85820160		1	VALVULA HIDRAULICA
		85821126		1	EQUIPO
2		814-8060		2	TORNILLO, Hex, M8 x 60, 8.8
		87437840		2	SEPARADOR
4		829-1408		2	TUERCA, M8, Cl 10
3		496-81028		2	ARANDELA, 13/32" x 1 1/4" x .134", HDN
5		218-5057		4	RACOR, 9/16"-18, 37Ü x 9/16"-18, O-Ring, Incl. Ref 6
6		237-6006		1	JUNTA HERMETICA, 6-1, 90 Duro, .468" ID x .078" Thk
8		218-5105		4	CODO, 90Ü, 9/16"-18, 37Ü x 9/16"-18, O-Ring, Incl. Ref 9
9		237-6006		1	JUNTA HERMETICA, 6-1, 90 Duro, .468" ID x .078" Thk
10		87439306		2	MANGUERA (CONJUNTO), 830 mm (32-11/16 in)
19		87429584		2	MANGUERA (CONJUNTO), 500 mm (19-11/16 in) Hose
11		218-5059		2	RACOR, 3/4"-16, 37Ü x 3/4"-16, O-Ring, Incl. Ref 12
20		218-5121		2	CODO, 90Ü, 3/4"-16, 37Ü x 7/8"-14, O-Ring, Incl. Ref 21
12		237-6008		1	JUNTA HERMETICA, 8-1, 90 Duro, .644" ID x .087" Thk
21		237-6008		1	JUNTA HERMETICA, 8-1, 90 Duro, .644" ID x .087" Thk
22		814-10070		2	TORNILLO, Hex, M10 x 70, 8.8
24		87439665		2	SEPARADOR
23		87420673		2	ABRAZADERA MANGUERA
25		87420672		2	SEPARADOR
		496-81028		2	ARANDELA, 13/32" x 1 1/4" x .134", HDN
26		829-1410		2	TUERCA, M10, Cl 10
27		D142787		2	ESPACIADOR
28		214-3188		2	ABRAZADERA MANGUERA, 4.75/5.625 HD Worm

08-08		p2	02/08

HIDRAULICA - CILINDRO, ESTABILIZADOR DE LA RETROEXCAVADORA (SIN DE CONTROL PILOTO)

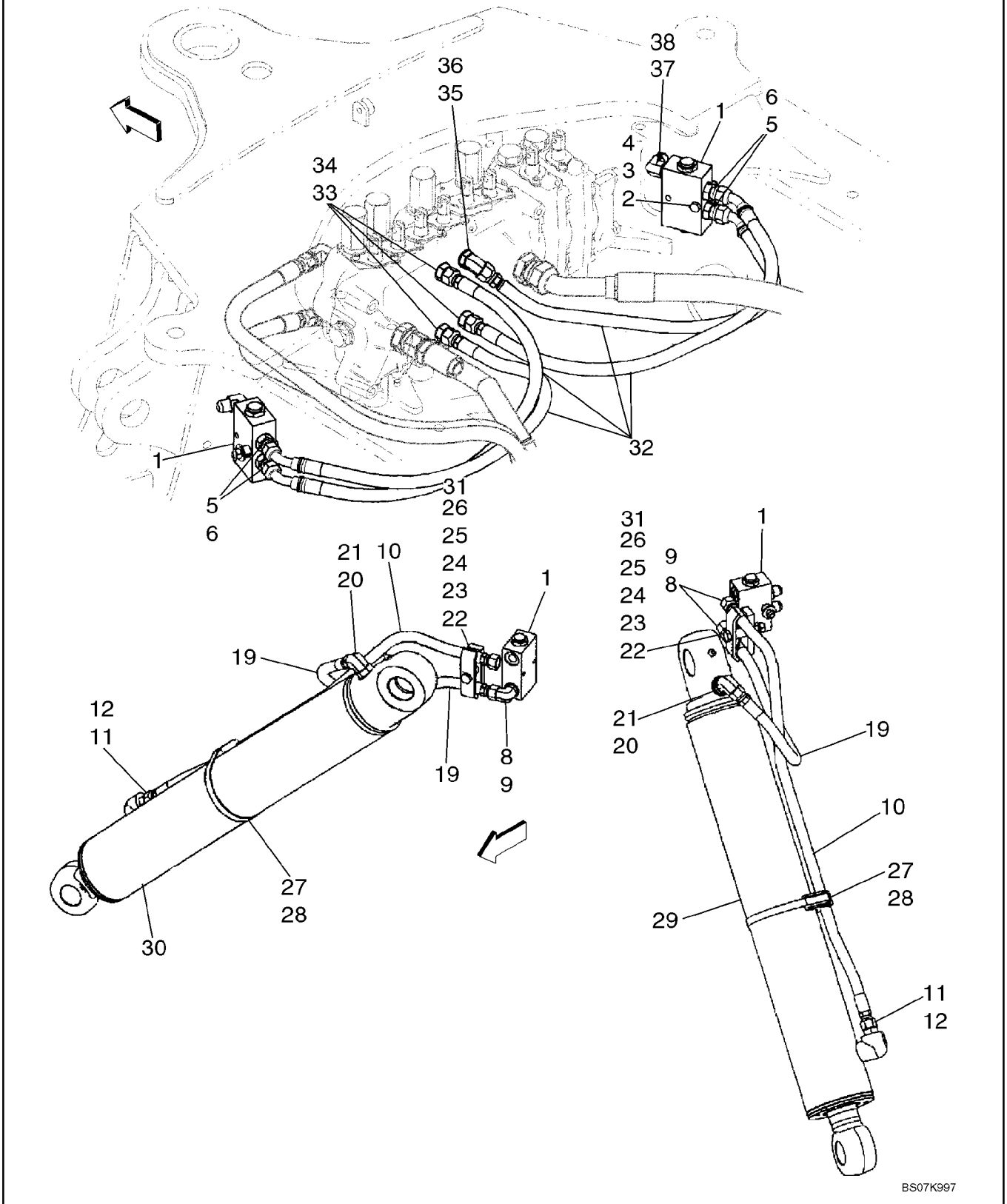

HIDRAULICA - CILINDRO, ESTABILIZADOR DE LA RETROEXCAVADORA (SIN DE CONTROL PILOTO)

REF	FN	PART NUMBER	YR/SN	QTY	DENOMINACION
29		195504A1		1	CILINDRO, 102 ID x 553 mm strk; Stabilizer Cylinder; Left-Hand; See Figure 08-61
30		195503A1		1	CILINDRO (CONJUNTO), 102 ID x 553 mm strk; Stabilizer Cylinder; Right-Hand; See Figure 08-61
31		895-11010		2	ARANDELA, M10 x 20 x 2
32		87429654		4	MANGUERA (CONJUNTO), 720 mm (28-3/8 in)
33		218-5059		3	RACOR, 3/4"-16, 37Ü x 3/4"-16, O-Ring, Incl. Ref 34
34		237-6008		1	JUNTA HERMETICA, 8-1, 90 Duro, .644" ID x .087" Thk
35		218-5136		1	CODO, 45Ü, 3/4"-16, 37Ü x 3/4"-16, O-Ring, Incl. Ref 36
36		237-6008		1	JUNTA HERMETICA, 8-1, 90 Duro, .644" ID x .087" Thk
37		218-5280		2	CODO, 90Ü, 3/4"-16, 37Ü x 9/16"-18, O-Ring, Incl. Ref 38
38		237-6006		1	JUNTA HERMETICA, 6-1, 90 Duro, .468" ID x .078" Thk

08-08A		p1	02/08

HIDRAULICA - CILINDRO, ESTABILIZADOR DE LA RETROEXCAVADORA (CON DE CONTROL PILOTO)

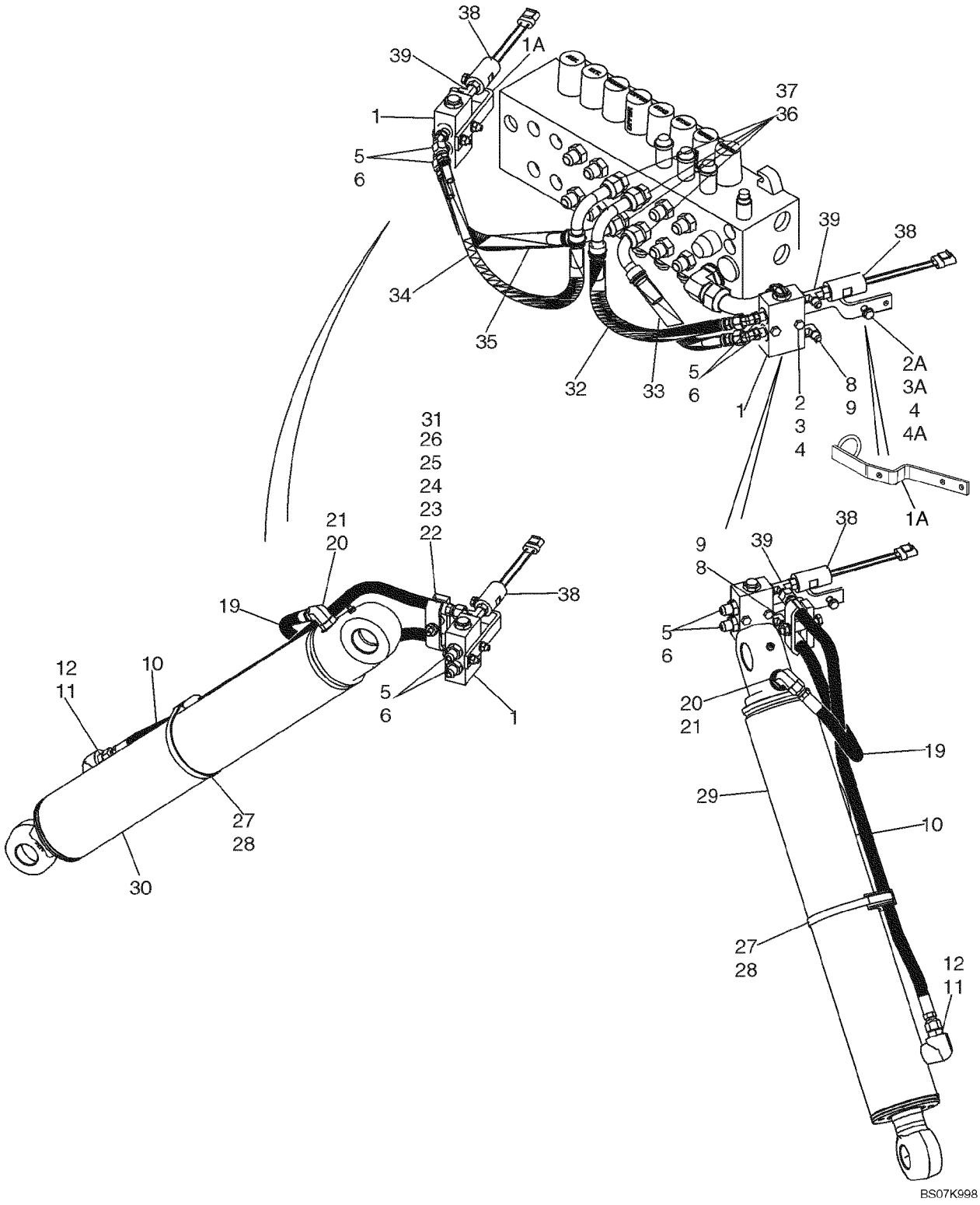

HIDRAULICA - CILINDRO, ESTABILIZADOR DE LA RETROEXCAVADORA (CON DE CONTROL PILOTO)

REF	FN	PART NUMBER	YR/SN	QTY	DENOMINACION
		REF			MANUAL, MODELS WITH PILOT CONTROLS
1		85802820		2	VALVULA DE CIERRE, Load Check; Includes 85820159, 85820160, 85821126
		85820159		1	EMBOLO
		85820160		1	VALVULA HIDRAULICA
		85821126		1	EQUIPO
1A		87450318		2	PIEZA DE APOYO
2		814-8055		4	TORNILLO, Hex, M8 x 55, 8.8
2A		814-8035		2	TORNILLO, Hex, M8 x 35, 8.8
3		496-81028		2	ARANDELA, 13/32" x 1 1/4" x .134", HDN
3A		895-11008		6	ARANDELA, M8 x 16 x 1.6
4		829-1408		6	TUERCA, M8, Cl 10
4A		87437840		2	SEPARADOR
5		218-5135		4	CODO, 45Ü, 9/16"-18, 37Ü x 9/16"-18, O-Ring, Incl. Ref 6
6		237-6006		1	JUNTA HERMETICA, 6-1, 90 Duro, .468" ID x .078" Thk
8		218-5105		2-4	CODO, 90Ü, 9/16"-18, 37Ü x 9/16"-18, O-Ring, Incl. Ref 9; (2) Used On Models With Auto-Up; (4) Used On Models Without Auto-Up
9		237-6006		1	JUNTA HERMETICA, 6-1, 90 Duro, .468" ID x .078" Thk
10		87439306		2	MANGUERA (CONJUNTO), 830 mm (32-11/16 in)
11		218-5059		2	RACOR, 3/4"-16, 37Ü x 3/4"-16, O-Ring, Incl. Ref 12
12		237-6008		1	JUNTA HERMETICA, 8-1, 90 Duro, .644" ID x .087" Thk
19		87429584		2	MANGUERA (CONJUNTO), 500 mm (19-11/16 in) Hose
20		218-5121		2	CODO, 90Ü, 3/4"-16, 37Ü x 7/8"-14, O-Ring, Incl. Ref 21
21		237-6008		1	JUNTA HERMETICA, 8-1, 90 Duro, .644" ID x .087" Thk
22		814-10070		2	TORNILLO, Hex, M10 x 70, 8.8
23		87420673		2	ABRAZADERA MANGUERA, Clamp
		496-81028		2	ARANDELA, 13/32" x 1 1/4" x .134", HDN

08-08A		p2	02/08

HIDRAULICA - CILINDRO, ESTABILIZADOR DE LA RETROEXCAVADORA (CON DE CONTROL PILOTO)

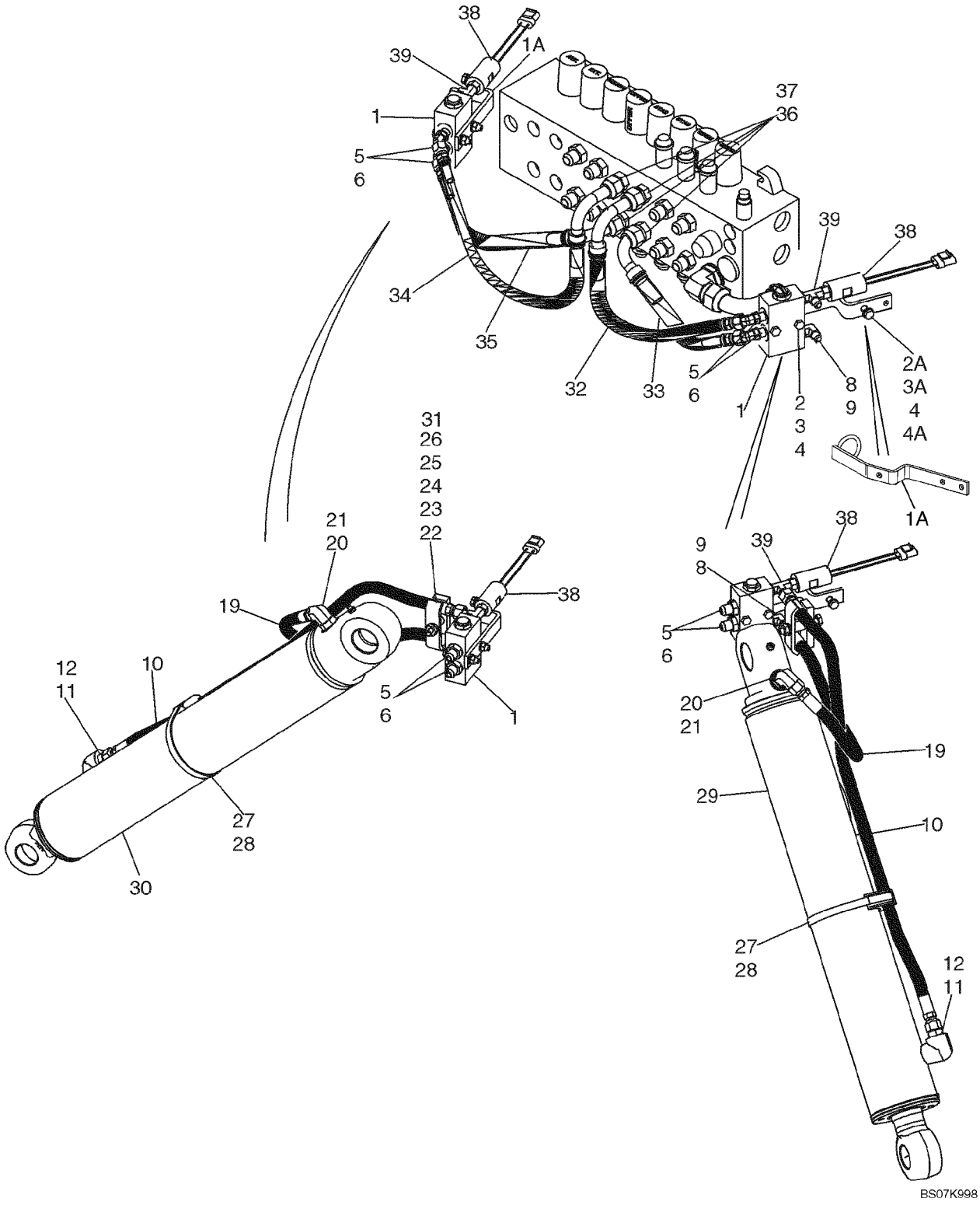

HIDRAULICA - CILINDRO, ESTABILIZADOR DE LA RETROEXCAVADORA (CON DE CONTROL PILOTO)

REF	FN	PART NUMBER	YR/SN	QTY	DENOMINACION
24		87439665		2	SEPARADOR
25		87420672		2	SEPARADOR, Clamp
26		829-1410		2	TUERCA, M10, Cl 10
27		D142787		2	ESPACIADOR
28		214-3188		2	ABRAZADERA MANGUERA, 4.75/5.625 HD Worm
29		195504A1		1	CILINDRO, 102 ID x 553 mm strk; Stabilizer Cylinder; Left-Hand; See Figure 08-61
30		195503A1		1	CILINDRO (CONJUNTO), 102 ID x 553 mm strk; Stabilizer Cylinder; Right-Hand; See Figure 08-61
31		895-11010		2	ARANDELA, M10 x 20 x 2
32		87437939		1	MANGUERA (CONJUNTO), 440 mm (17-3/8 in)
33		87437938		1	MANGUERA (CONJUNTO), 350 mm (13-13/16 in)
34		87437941		1	MANGUERA (CONJUNTO), 485 mm (19-1/8 in)
35		87437940		1	MANGUERA (CONJUNTO), 400 mm (15-3/4 in)
36		218-5070		4	RACOR, 3/4"-16, 37Ü x 1 1/16"-12, O-Ring, Incl. Ref 37
37		237-6012		1	JUNTA HERMETICA, 12-1, 90 Duro, .924 ID x .118" Thk
38		87552560		2	INTERRUPTOR DE PRESION, Pilot Control; Includes 237-6004 O-Ring; Used On Models With Auto-Up; 12 inch Wire Lead; With Rubber Snubbing; CNH Part Number Stamped On Body Of Switch; North American Models; Replaces 87439163 Switch
38		86992557		2	INTERRUPTOR DE PRESION, Pilot Control; Includes 237-6004 O-Ring; Used On Models With Auto-Up; 6 inch Wire Lead; CNH Part Number Stamped On Body Of Switch; European Models
39		87423033		2	RACOR-T, 9/16 x 9/16 Or x 7/16 Or; Includes 237-6004, 237-6006 O-Ring; Used On Models With Auto-Up

08-09		p1	02/08

HIDRAULICA - CILINDRO, BALANCĊN DE LA RETROEXCAVADORA (SIN DE CONTROL PILOTO)

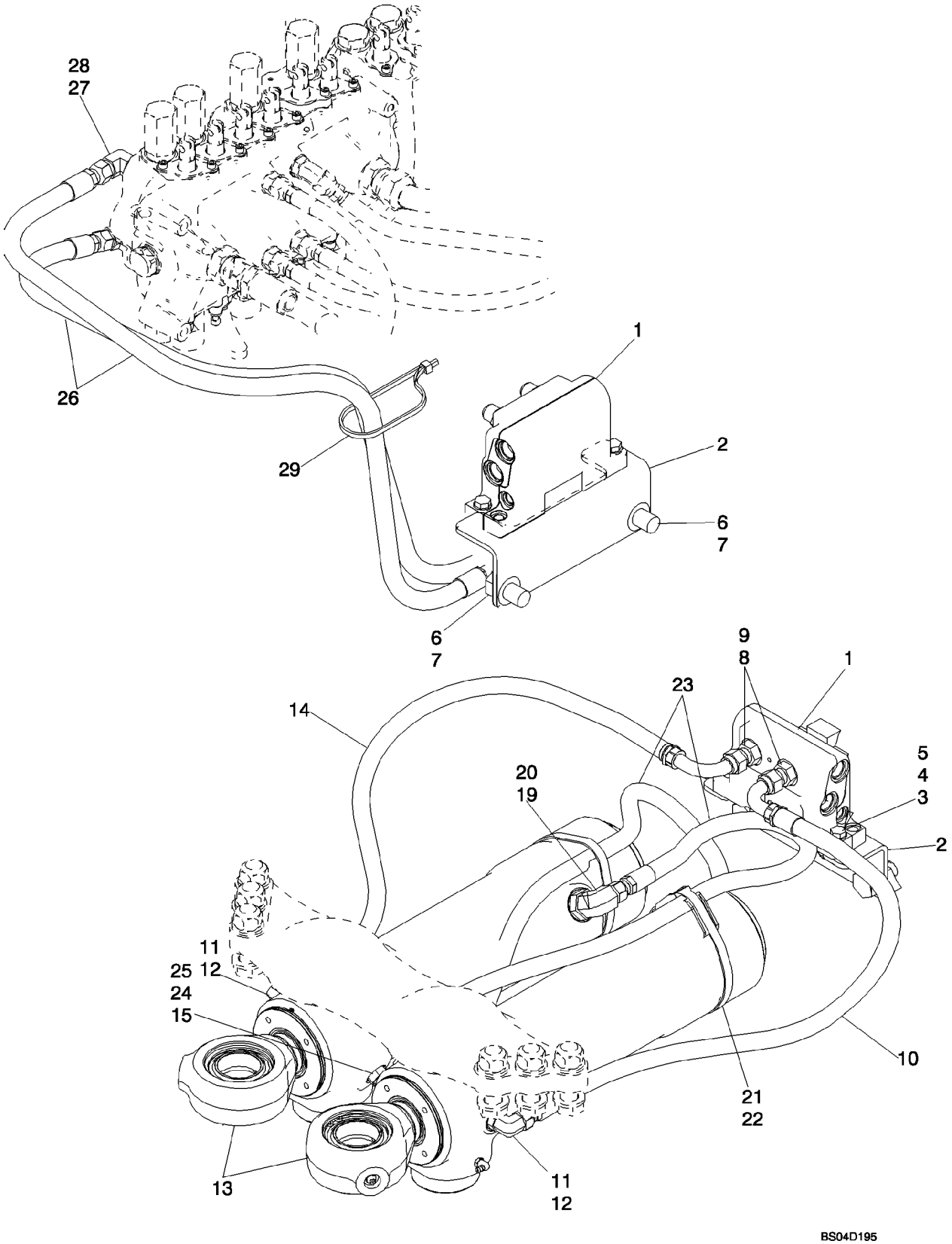

HIDRAULICA - CILINDRO, BALANCĊN DE LA RETROEXCAVADORA (SIN DE CONTROL PILOTO)

REF	FN	PART NUMBER	YR/SN	QTY	DENOMINACION
		REF			MANUAL, MODELS WITHOUT PILOT CONTROLS
1		87449373		1	VALVULA HIDRAULICA, Swing Cushion; See Figure 08-55
2		87428140		1	PIEZA DE APOYO, Valve Bracket
3		814-10040		2	TORNILLO, Hex, M10 x 40, 8.8, Full Thd
4		895-11010		4	ARANDELA, M10 x 20 x 2
5		829-1410		2	TUERCA, M10, Cl 10
6		614-18035		2	TORNILLO, Hex, M18 x 35, 8.8, Full Thd
7		895-11018		4	ARANDELA, M18 x 34 x 3
8		218-5062		4	RACOR, 7/8"-14, 37Ü x 7/8"-14, O-Ring, Incl. Ref 9
9		237-6010		1	JUNTA HERMETICA, 10-1, 90 Duro, .755" ID x .097" Thk
10		87423356		1	MANGUERA (CONJUNTO), 850 mm (33-1/2 in)
11		218-5106		2	CODO, 90Ü, 3/4"-16, 37Ü x 3/4"-16, O-Ring, Incl. Ref 12
12		237-6008		1	JUNTA HERMETICA, 8-1, 90 Duro, .644" ID x .087" Thk, Boss seal
13		188027A2		2	CILINDRO (CONJUNTO), 95 ID x 292 mm strk; Swing Cylinder, See Figure 08-62
14		87423356		1	MANGUERA (CONJUNTO), 850 mm (33-1/2 in)
15		192971A1		2	ORIFICIO, Restrictor
19		218-5119		2	CODO, 90Ü, 7/8"-14, 37Ü x 1 1/16"-12, O-Ring, Incl. Ref 20
20		237-6012		1	JUNTA HERMETICA, 12-1, 90 Duro, .924 ID x .118" Thk, Boss Seal
21		D142787		2	ESPACIADOR
22		214-1492		2	ABRAZADERA MANGUERA, #92, 5.38/6.25 Type F Worm, W/liner
23		87441076		2	MANGUERA (CONJUNTO), 802 mm (31-19/32 in)
24		218-5106		2	CODO, 90Ü, 3/4"-16, 37Ü x 3/4"-16, O-Ring, Incl. Ref 25
25		237-6008		1	JUNTA HERMETICA, 8-1, 90 Duro, .644" ID x .087" Thk, Boss seal
26		87428158		2	MANGUERA (CONJUNTO), 1194 mm (47 in)

08-09		p2	02/08

HIDRAULICA - CILINDRO, BALANCĊN DE LA RETROEXCAVADORA (SIN DE CONTROL PILOTO)

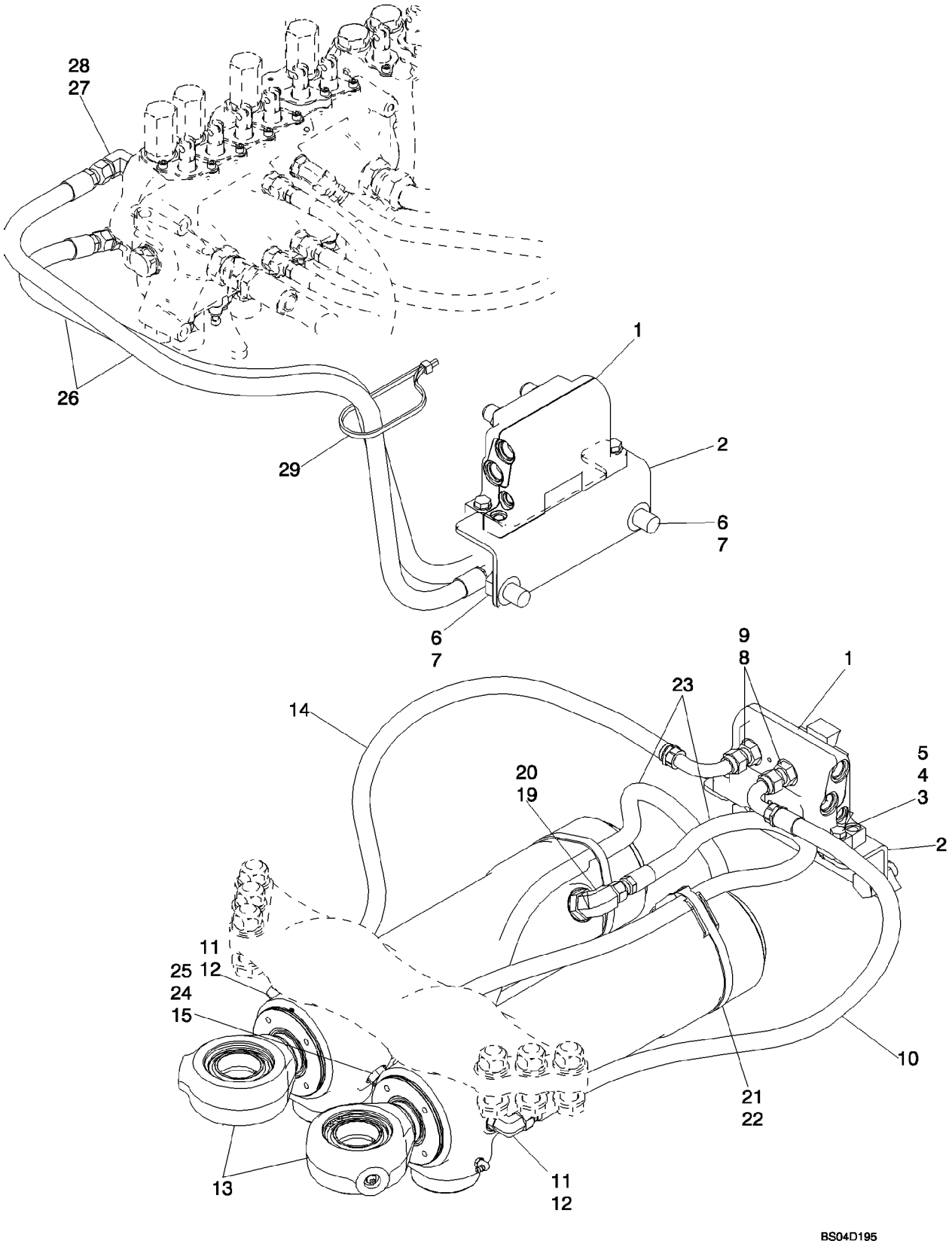

HIDRAULICA - CILINDRO, BALANCĊN DE LA RETROEXCAVADORA (SIN DE CONTROL PILOTO)

REF	FN	PART NUMBER	YR/SN	QTY	DENOMINACION
27		218-5107		2	CODO, 90Ü, 7/8"-14, 37Ü x 7/8"-14, O-Ring, Incl. Ref 28
28		237-6010		1	JUNTA HERMETICA, 10-1, 90 Duro, .755" ID x .097" Thk
29		L18337		1	CIERRA CABLES, 9.95"-12.1" lg

08-09A		p1	02/08

HIDRAULICA - CILINDRO, BALANCĊN DE LA RETROEXCAVADORA (CON DE CONTROL PILOTO)

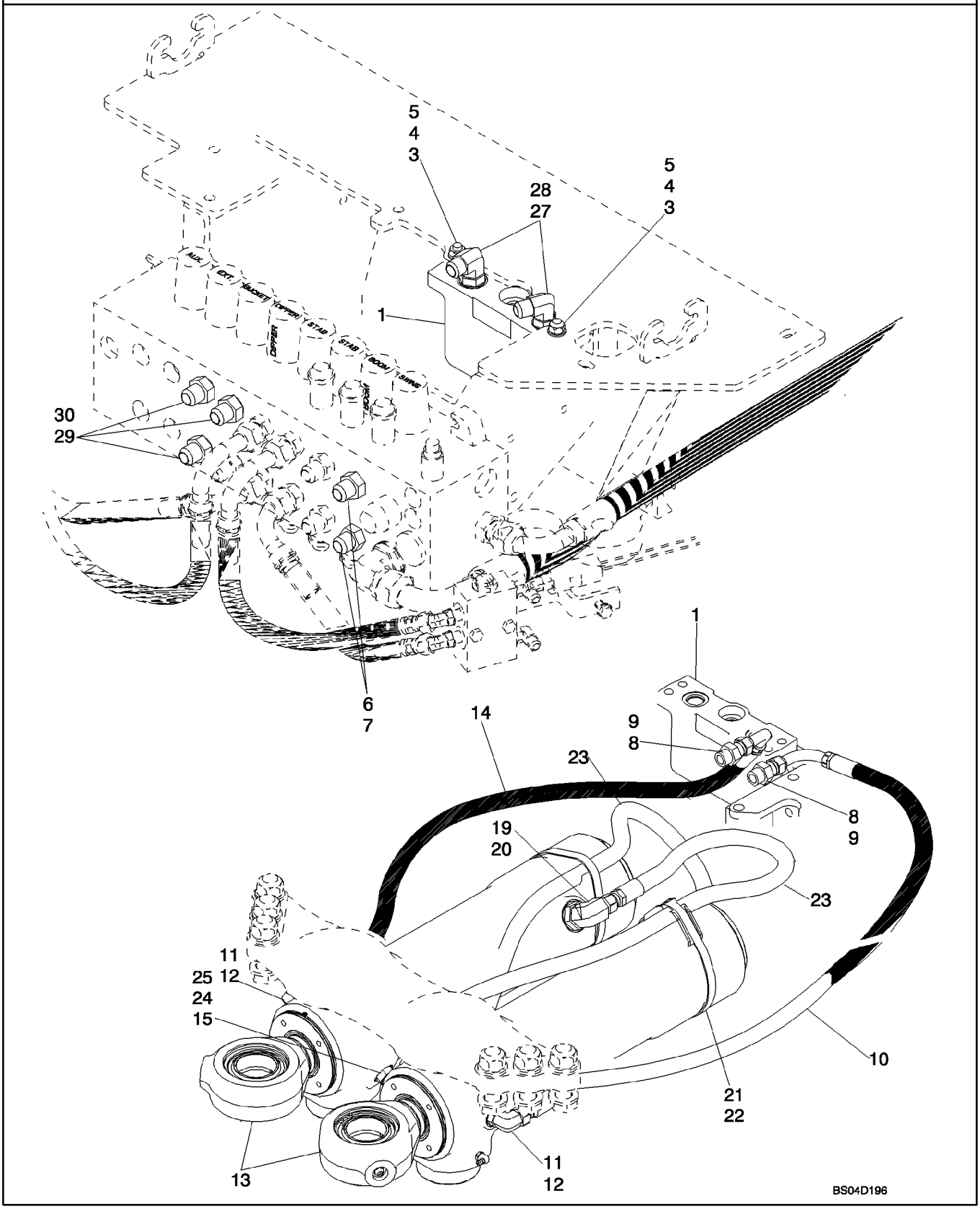

HIDRAULICA - CILINDRO, BALANCĊN DE LA RETROEXCAVADORA (CON DE CONTROL PILOTO)

REF	FN	PART NUMBER	YR/SN	QTY	DENOMINACION
		REF			MANUAL, MODELS WITH PILOT CONTROLS
1		87449373		1	VALVULA HIDRAULICA, Swing Cushion; See Figure 08-55
3		814-10045		2	TORNILLO, Hex, M10 x 45, 8.8
4		895-11010		4	ARANDELA, M10 x 20 x 2
5		829-1410		2	TUERCA, M10, Cl 10
6		218-5063		2	RACOR, 7/8"-14, 37Ü x 1 1/16"-12, O-Ring, Incl. Ref 7
7		237-6012		1	JUNTA HERMETICA, 12-1, 90 Duro, .924 ID x .118" Thk
8		218-5062		2	RACOR, 7/8"-14, 37Ü x 7/8"-14, O-Ring, Incl. Ref 9
9		237-6010		1	JUNTA HERMETICA, 10-1, 90 Duro, .755" ID x .097" Thk
10		87440812		1	MANGUERA (CONJUNTO), 950 mm (37-13/32 in)
11		218-5106		2	CODO, 90Ü, 3/4"-16, 37Ü x 3/4"-16, O-Ring, Incl. Ref 12
12		237-6008		1	JUNTA HERMETICA, 8-1, 90 Duro, .644" ID x .087" Thk, Boss seal
13		188027A2		2	CILINDRO (CONJUNTO), 95 ID x 292 mm strk; Swing Cylinder, See Figure 08-62
14		87450698		1	MANGUERA (CONJUNTO), 1285 mm (50-19/32 in)
15		192971A1		2	ORIFICIO, Restrictor
19		218-5119		2	CODO, 90Ü, 7/8"-14, 37Ü x 1 1/16"-12, O-Ring, Incl. Ref 20
20		237-6012		1	JUNTA HERMETICA, 12-1, 90 Duro, .924 ID x .118" Thk, Boss Seal
21		D142787		2	ESPACIADOR
22		214-1492		2	ABRAZADERA MANGUERA, #92, 5.38/6.25 Type F Worm, W/liner
23		87441076		2	MANGUERA (CONJUNTO), 802 mm (31-19/32 in)
24		218-5106		2	CODO, 90Ü, 3/4"-16, 37Ü x 3/4"-16, O-Ring, Incl. Ref 25
25		237-6008		1	JUNTA HERMETICA, 8-1, 90 Duro, .644" ID x .087" Thk, Boss seal
27		218-5107		2	CODO, 90Ü, 7/8"-14, 37Ü x 7/8"-14, O-Ring, Incl. Ref 28

08-09A		p2	02/08

HIDRAULICA - CILINDRO, BALANCĊN DE LA RETROEXCAVADORA (CON DE CONTROL PILOTO)

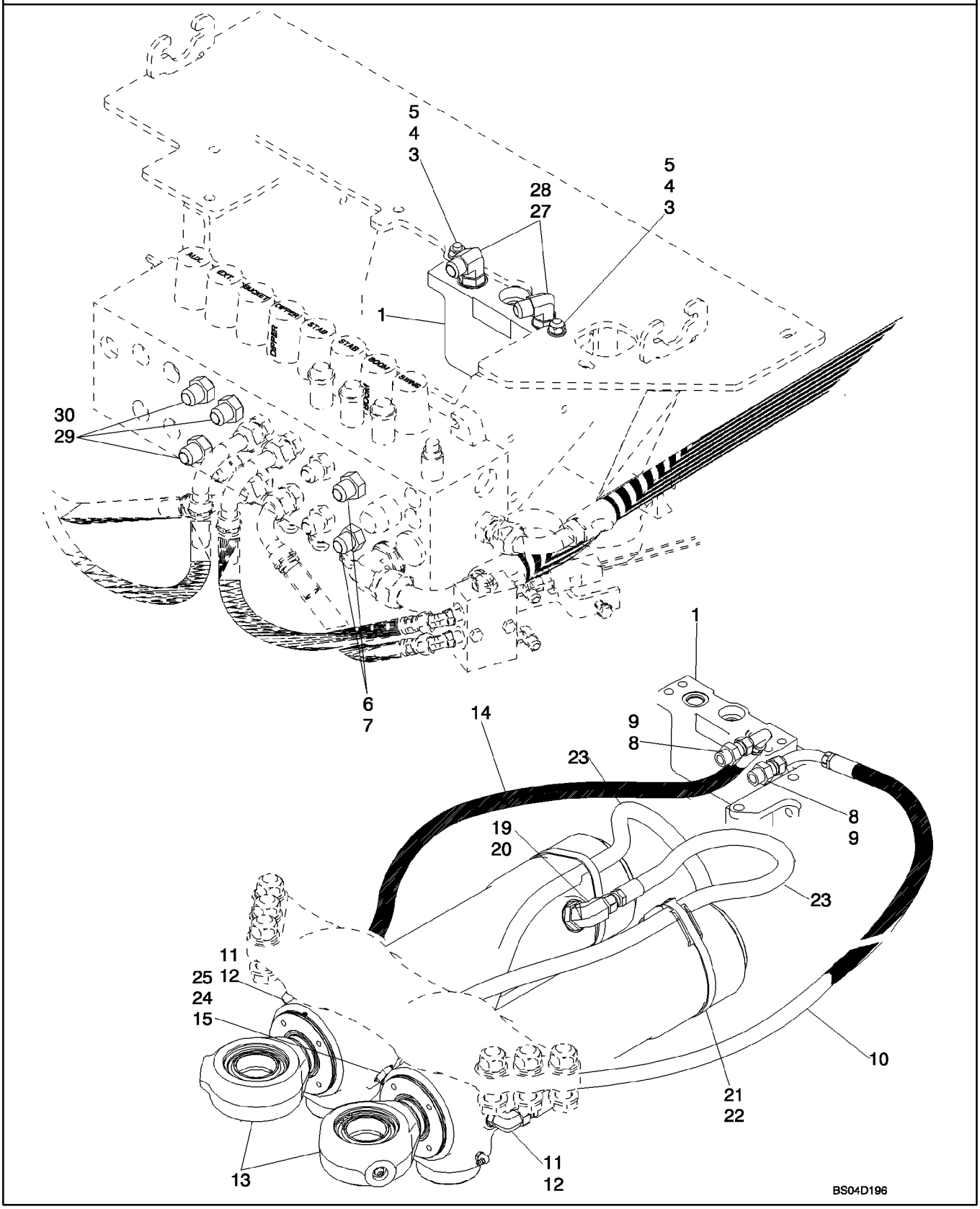

HIDRAULICA - CILINDRO, BALANCĊN DE LA RETROEXCAVADORA (CON DE CONTROL PILOTO)

REF	FN	PART NUMBER	YR/SN	QTY	DENOMINACION
28		237-6010		1	JUNTA HERMETICA, 10-1, 90 Duro, .755" ID x .097" Thk
29		218-5063		6	RACOR, 7/8"-14, 37Ü x 1 1/16"-12, O-Ring, Incl. Ref 30
30		237-6012		1	JUNTA HERMETICA, 12-1, 90 Duro, .924 ID x .118" Thk

08-10		p1	01/08

HIDRAULICA - CILINDRO, AGUILĎN DE LA RETROEXCAVADORA

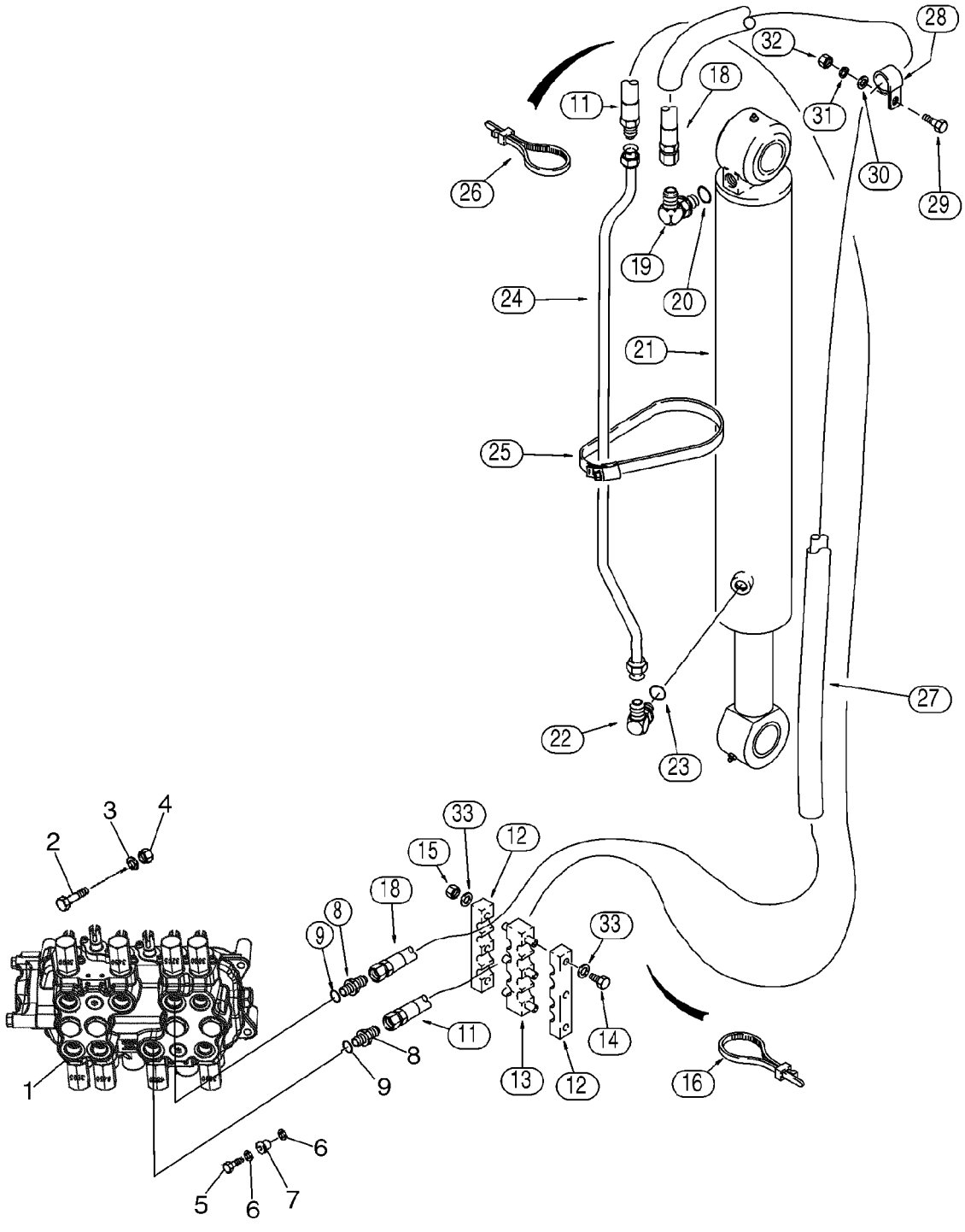

BS03M026

HIDRAULICA - CILINDRO, AGUILĎN DE LA RETROEXCAVADORA

REF	FN	PART NUMBER	YR/SN	QTY	DENOMINACION
1		REF		1	MANUAL, Valve Assy, Control; Backhoe Control Valve; For Correct Assembly and Components, See Figures 08-32 - 08-39
2		814-10080		2	TORNILLO, Hex, M10 x 80, 8.8
3		896-11010		2	ARANDELA, M10 x 21.5 x 2.5, HT
4		829-1410		2	TUERCA, M10, Cl 10
5		614-10035		1	TORNILLO, Hex, M10 x 35, 8.8, Full Thd
6		496-41041		2	ARANDELA, 13/32" x 1 1/8" x .134"
7		D52276		1	AISLADOR
8		218-5063		2	RACOR, 7/8"-14, 37Ü x 1 1/16"-12, O-Ring, Incl. Ref 9
9		237-6012		1	JUNTA HERMETICA, 12-1, 90 Duro, .924 ID x .118" Thk, Boss Seal
11		397786A1		1	MANGUERA (CONJUNTO), 3470 mm (136-5/8 in), Lower Valve Port
12		178951A1		2	TORNILLO DE SUJECTIO
13		178952A1		1	TORNILLO DE SUJECTIO
14		814-10120		3	TORNILLO, Hex, M10 x 120, 8.8
15		832-10410		3	CONTRA TUERCA, M10 x 1.5, Cl 8
16		L18337		4	CIERRA CABLES, 9.95"-12.1" lg
18		393369A1		1	MANGUERA (CONJUNTO), 3495 mm (137-5/8 in)
19		218-5107		1	CODO, 90Ü, 7/8"-14, 37Ü x 7/8"-14, O-Ring, Incl. Ref 20
20		237-6010		1	JUNTA HERMETICA, 10-1, 90 Duro, .755" ID x .097" Thk, Boss Seal
21		189653A2		1	CILINDRO (CONJUNTO), 114 ID x 982 mm strk, Boom Cylinder, See Figure 08-63
22		218-5107		1	CODO, 90Ü, 7/8"-14, 37Ü x 7/8"-14, O-Ring, Incl. Ref 23
23		237-6010		1	JUNTA HERMETICA, 10-1, 90 Duro, .755" ID x .097" Thk, Boss Seal
24		357471A1		1	TUBO (CONJUNTO)
25		214-1488		2	ABRAZADERA MANGUERA, #88, 5.12/6.00 Type F Worm
26		L18337		4	CIERRA CABLES, 9.95"-12.1" lg
27		224057A1		2	MANGUITO, 946 mm (37-15/64 in)

HIDRAULICA - CILINDRO, AGUILĎN DE LA RETROEXCAVADORA

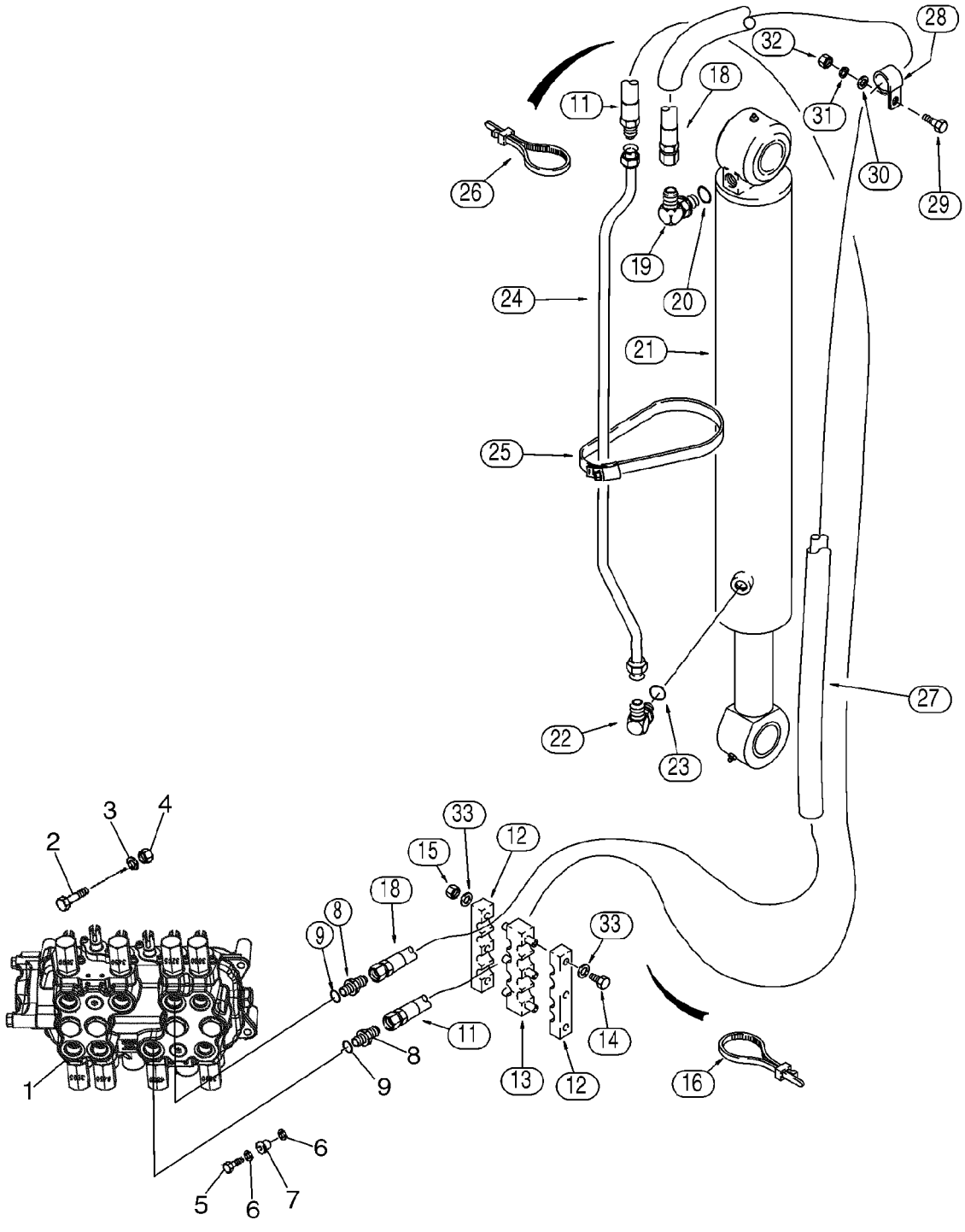

HIDRAULICA - CILINDRO, AGUILĎN DE LA RETROEXCAVADORA

REF	FN	PART NUMBER	YR/SN	QTY	DENOMINACION
28		515-23254		1	BORNE, 1", Insul, 3/8" Bolt
28		R24840		1	COLLAR, 1-1/8 in ID
29		614-10035		2	TORNILLO, Hex, M10 x 35, 8.8, Full Thd
30		895-11010		2	ARANDELA, M10 x 20 x 2
31		892-11010		2	ARANDELA DE FRENO, M10
32		829-1410		2	TUERCA, M10, Cl 10
33		895-11010		6	ARANDELA, M10 x 20 x 2

08-10A		p1	01/08

HIDRAULICA - EL PICAPORTE DEL ESTAMPIDO DE BACKHOE Y EL CIRCUITO ELECTRICO

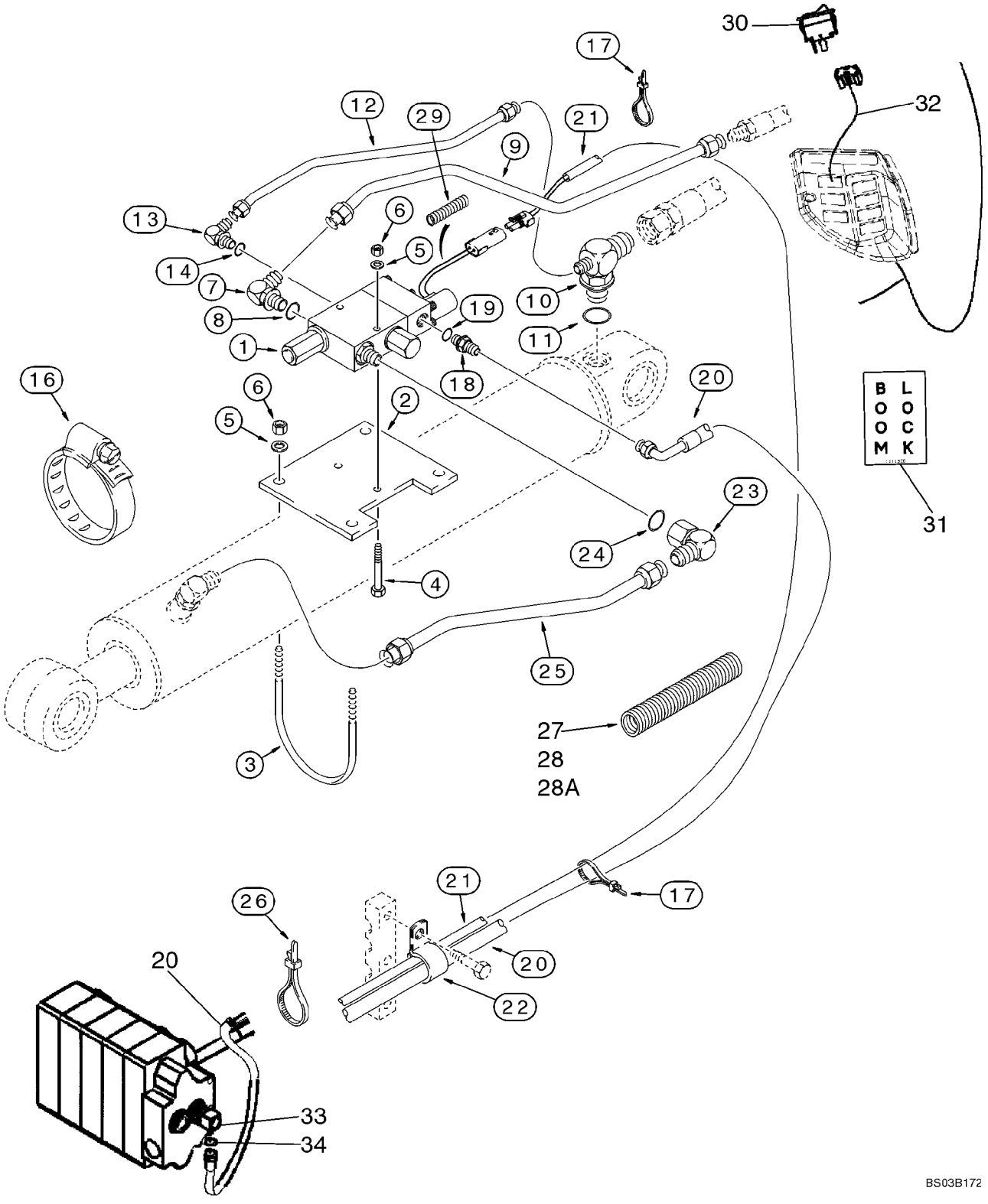

HIDRAULICA - EL PICAPORTE DEL ESTAMPIDO DE BACKHOE Y EL CIRCUITO ELECTRICO

REF	FN	PART NUMBER	YR/SN	QTY	DENOMINACION
		399227A1		1	JEUGO, Backhoe Boom Lock, Incl. Ref 1 - 34 and an Instruction Sheet; Also Includes Boom Lock Valve On Figure 08-55A
1		189957A1		1	VALVULA, Solenoid, Backhoe Boom Lock, Incl. (2) 321-6046 Warning Decals; See Figure 08-55A
2		D150054		1	PLACA, GRANDE, Valve Mounting
3		D150053		2	TORNILLO, 3/8 in
4		413-648		2	TORNILLO, Hex, 3/8"-16 x 3", G5
5		495-11041		6	ARANDELA, 3/8", SAE
6		231-1446		6	CONTRA TUERCA, 3/8"-16, GB
7		218-5118		1	CODO, 90Ü, 1 1/16"-12, 37Ü x 1 5/16"-12, O-Ring, Incl. Ref 8
8		237-6016		1	JUNTA HERMETICA, 16-1, 90 Duro, 1.171" ID x .118" Thk, Boss Seal
9		191756A1		1	TUBO, Valve Port; Attaches to Ref 11 Hose on Figure 08-10
10		191063A1		1	CONEXION, Reducer, Boom Cylinder Closed End; Attaches to Ref 18 Hose, Figure 08-10
11		237-6010		1	JUNTA HERMETICA, 10-1, 90 Duro, .755" ID x .097" Thk, Boss Seal
12		191790A1		1	TUBO, Pilot Port
13		218-5283		1	CODO, 90Ü, 7/16"-20, 37Ü x 9/16"-18, O-Ring, Incl. Ref 14
14		237-6006		1	JUNTA HERMETICA, 6-1, 90 Duro, .468" ID x .078" Thk, Boss Seal
16		214-31104		1	ABRAZADERA MANGUERA, 5.75/6.625 HD Worm
17		L18337		15	CIERRA CABLES, 9.95"-12.1" lg
18		218-5359		1	RACOR, 7/16"-20, 37Ü x 3/4"-16, O-Ring, Incl. Ref 19
19		237-6008		1	JUNTA HERMETICA, 8-1, 90 Duro, .644" ID x .087" Thk, Boss seal
20		189103A1		1	MANGA, 3700 mm (145-11/16 in), Return; Attaches to Elbow at Backhoe Valve
21		189263A1		1	HAZ, Boom Lock Valve to Control Tower Harness
22		515-25190		1	BORNE, 3/4", Insul, 1/2" Bolt, Return Hose

08-10A		p2	01/08

HIDRAULICA - EL PICAPORTE DEL ESTAMPIDO DE BACKHOE Y EL CIRCUITO ELECTRICO

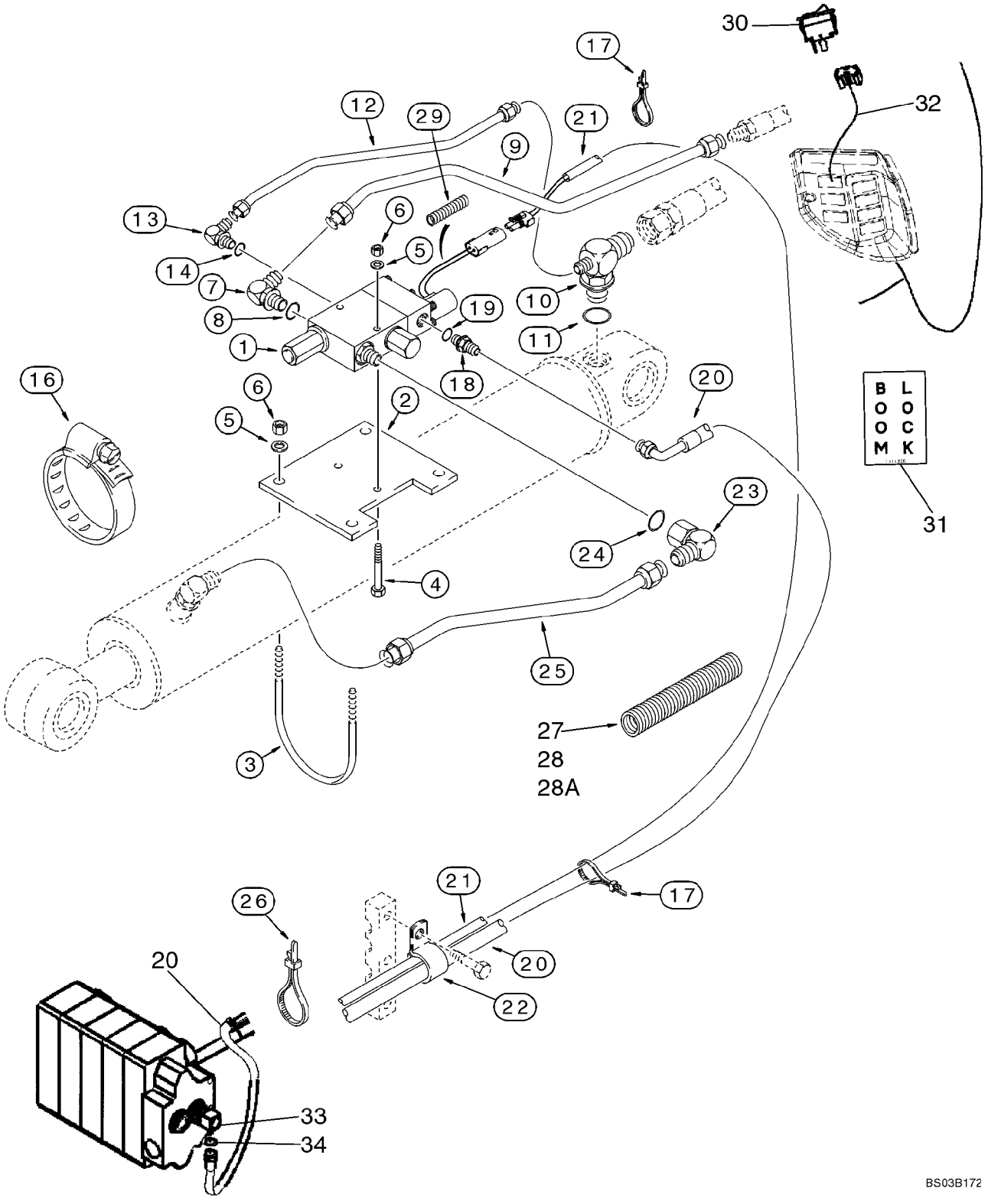

HIDRAULICA - EL PICAPORTE DEL ESTAMPIDO DE BACKHOE Y EL CIRCUITO ELECTRICO

REF	FN	PART NUMBER	YR/SN	QTY	DENOMINACION
23		218-5382		1	CODO, 90Ü, 1 1/16"-12, 37Ü x 1 5/16"-12, 37Ü Fem Sw, Incl. Ref 24
24		237-6016		1	JUNTA HERMETICA, 16-1, 90 Duro, 1.171" ID x .118" Thk, Boss Seal
25		187612A1		1	TUBO, Boom Lock Valve to Boom Cylinder Rod End, See Figure 08-10, Ref 22 for Elbow
26		D147773		1	COLLAR, Tie, 11 in
27		226582A1		1	PROTECTOR, 1850 mm lg, Harness Guard, Below Floor Plate
28		220276A1		1	MANGUITO, 610 mm lg, Harness Ahead of Swing Tower Opening
28A		404907A1		1	MANGUITO, 740 mm lg, Harness Behind Swing Tower Opening
29		1999528C1		1	TUBERIA, 455 mm lg, Solenoid Wire
30		400016A1		1	CONTACTOR, Rocker, Boom Lock
31		L111356		1	CALCOMANIA, Boom Lock
32		399246A1		1	HAZ, Cab To Solenoid
33		189414A1		1	CODO, 90 deg, Incl. Ref 34
34		237-6010		1	JUNTA HERMETICA, 10-1, 90 Duro, .755" ID x .097" Thk, Boss Seal

08-11		p1	01/08

HIDRAULICA - CILINDRO, PALA DE LA RETROEXCAVADORA

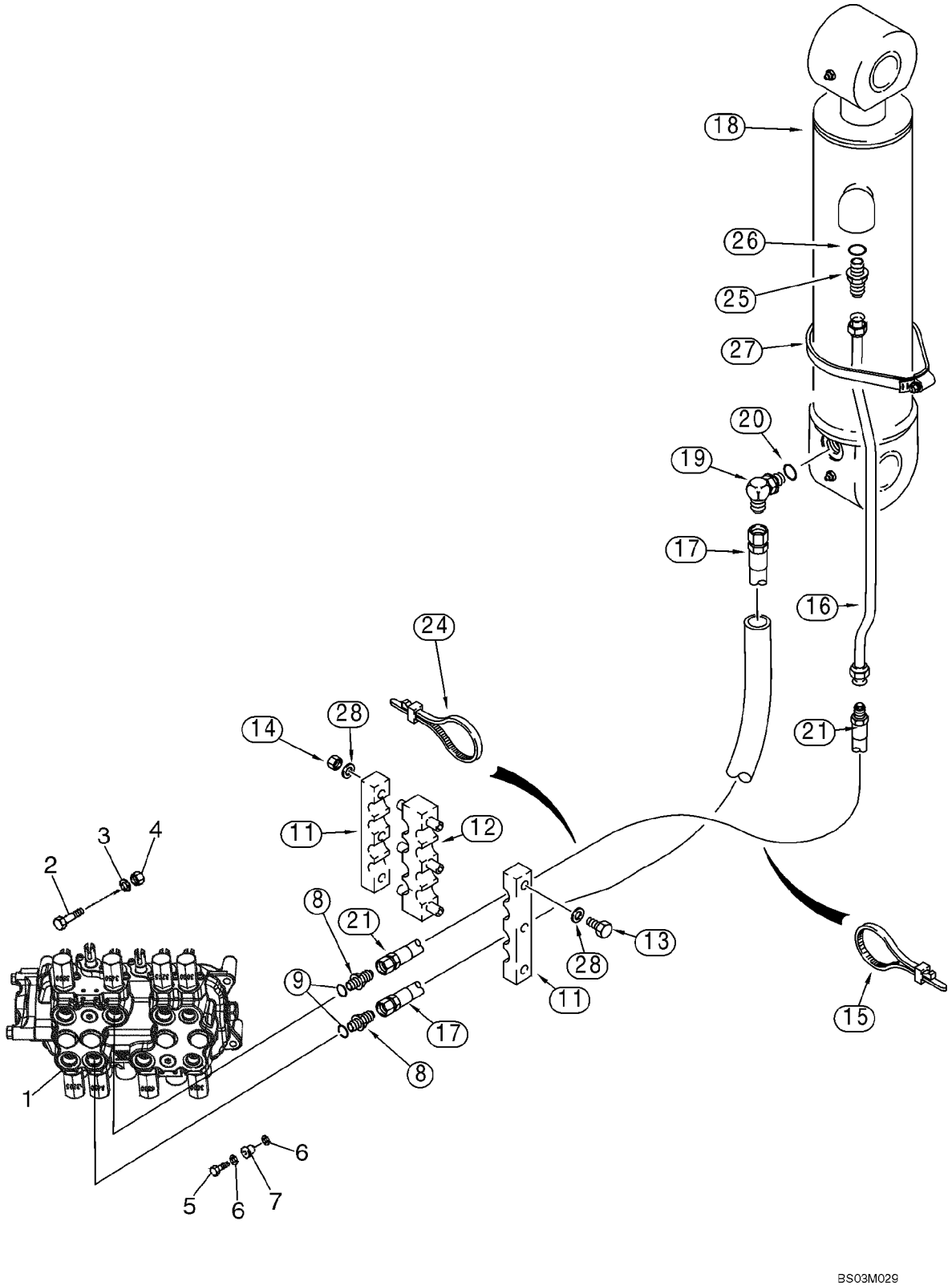

HIDRAULICA - CILINDRO, PALA DE LA RETROEXCAVADORA

REF	FN	PART NUMBER	YR/SN	QTY	DENOMINACION
1		REF		1	MANUAL, Valve Assy, Control; Backhoe Control Valve; For Correct Assembly and Components, See Figures 08-32 - 08-39
2		814-10080		2	TORNILLO, Hex, M10 x 80, 8.8
3		896-11010		2	ARANDELA, M10 x 21.5 x 2.5, HT
4		829-1410		2	TUERCA, M10, Cl 10
5		614-10035		1	TORNILLO, Hex, M10 x 35, 8.8, Full Thd
6		496-41041		2	ARANDELA, 13/32" x 1 1/8" x .134"
7		D52276		1	AISLADOR
8		218-5063		2	RACOR, 7/8"-14, 37Ü x 1 1/16"-12, O-Ring, Incl. Ref 9
9		237-6012		1	JUNTA HERMETICA, 12-1, 90 Duro, .924 ID x .118" Thk, Boss Seal
11		178951A1		2	TORNILLO DE SUJECTIO
12		178952A1		1	TORNILLO DE SUJECTIO
13		814-10120		3	TORNILLO, Hex, M10 x 120, 8.8
14		832-10410		3	CONTRA TUERCA, M10 x 1.5, Cl 8
15		L18337		4	CIERRA CABLES, 9.95"-12.1" lg
16		357469A1		1	TUBO (CONJUNTO)
17		393371A1		1	MANGUERA (CONJUNTO), 2025 mm (79-3/4 in), Lower Valve Port
18		233114A2		1	CILINDRO (CONJUNTO), 108 ID x 686 mm strk; Dipper Cylinder, See Figure 08-64
19		218-5107		1	CODO, 90Ü, 7/8"-14, 37Ü x 7/8"-14, O-Ring, Incl. Ref 20
20		237-6010		1	JUNTA HERMETICA, 10-1, 90 Duro, .755" ID x .097" Thk, Boss Seal
21		397787A1		1	MANGUERA (CONJUNTO), 2025 mm (79-3/4 in), Upper Valve Port
24		L18337		2-4	CIERRA CABLES, 9.95"-12.1" lg
25		218-5062		1	RACOR, 7/8"-14, 37Ü x 7/8"-14, O-Ring, Incl. Ref 26
26		237-6010		1	JUNTA HERMETICA, 10-1, 90 Duro, .755" ID x .097" Thk
27		214-1488		1	ABRAZADERA MANGUERA, #88, 5.12/6.00 Type F Worm
28		895-11010		6	ARANDELA, M10 x 20 x 2

08-12		p1	02/08

HIDRAULICA - CILINDRO, CUCHARĎN DE LA RETROEXCAVADORA (MODELOS SIN PALA EXTENDIBLE)

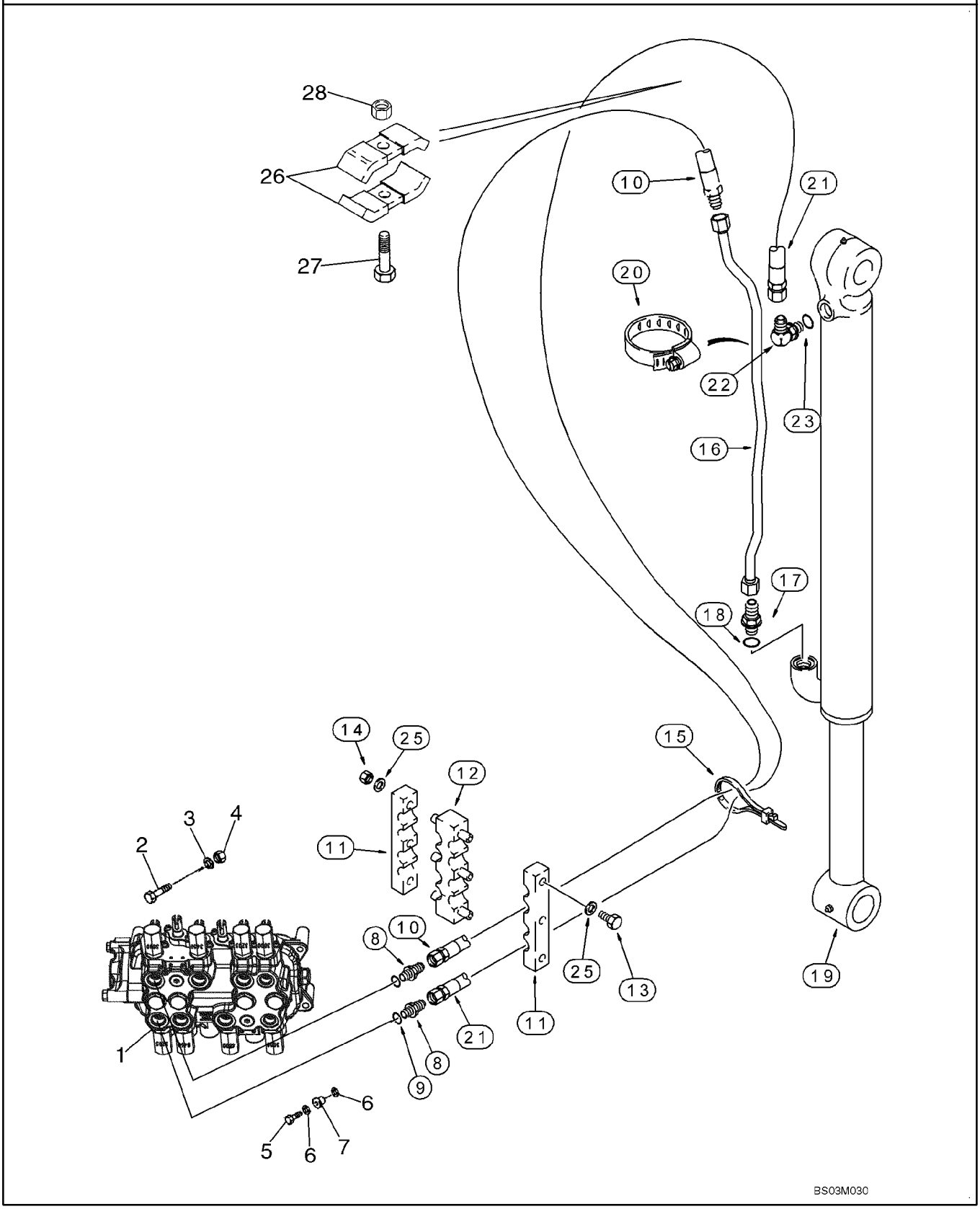

HIDRAULICA - CILINDRO, CUCHARĎN DE LA RETROEXCAVADORA (MODELOS SIN PALA EXTENDIBLE)

REF	FN	PART NUMBER	YR/SN	QTY	DENOMINACION
1		REF		1	MANUAL, Valve Assy, Control; Backhoe Control Valve; For Correct Assembly and Components, See Figures 08-32, 08-33, 08-36, 08-38
2		814-10080		2	TORNILLO, Hex, M10 x 80, 8.8
3		896-11010		2	ARANDELA, M10 x 21.5 x 2.5, HT
4		829-1410		2	TUERCA, M10, Cl 10
5		614-10035		1	TORNILLO, Hex, M10 x 35, 8.8, Full Thd
6		496-41041		2	ARANDELA, 13/32" x 1 1/8" x .134"
7		D52276		1	AISLADOR
8		218-5063		2	RACOR, 7/8"-14, 37Ü x 1 1/16"-12, O-Ring, Incl. Ref 9
9		237-6012		1	JUNTA HERMETICA, 12-1, 90 Duro, .924 ID x .118" Thk, Boss Seal
10		397788A1		1	MANGUERA (CONJUNTO), 3860 mm (152 in)
11		178951A1		2	TORNILLO DE SUJECTIO
12		178952A1		1	TORNILLO DE SUJECTIO
13		814-10120		3	TORNILLO, Hex, M10 x 120, 8.8
14		832-10410		3	CONTRA TUERCA, M10 x 1.5, Cl 8
15		L18337		2-4	CIERRA CABLES, 9.95"-12.1" lg
16		396339A1		1	TUBO (CONJUNTO), Models Without Backhoe Auxiliary Hydraulics
16		357470A1		1	TUBO (CONJUNTO), Models With Backhoe Auxiliary Hydraulics
17		218-5062		1	RACOR, 7/8"-14, 37Ü x 7/8"-14, O-Ring, Incl. Ref 18
18		237-6010		1	JUNTA HERMETICA, 10-1, 90 Duro, .755" ID x .097" Thk, Boss Seal
19		128760A1		1	CILINDRO (CONJUNTO), 83 ID x 872 mm strk; Bucket Cylinder, See Figure 08-65
20		214-1464		1	ABRAZADERA MANGUERA, #64, 3.56/4.50 Type F Worm
21		393360A1		1	MANGUERA (CONJUNTO), 3860 mm (152 in)
22		218-5107		1	CODO, 90Ü, 7/8"-14, 37Ü x 7/8"-14, O-Ring, Incl. Ref 23
23		237-6010		1	JUNTA HERMETICA, 10-1, 90 Duro, .755" ID x .097" Thk
25		895-11010		6	ARANDELA, M10 x 20 x 2

08-12		p2	02/08

HIDRAULICA - CILINDRO, CUCHARĎN DE LA RETROEXCAVADORA (MODELOS SIN PALA EXTENDIBLE)

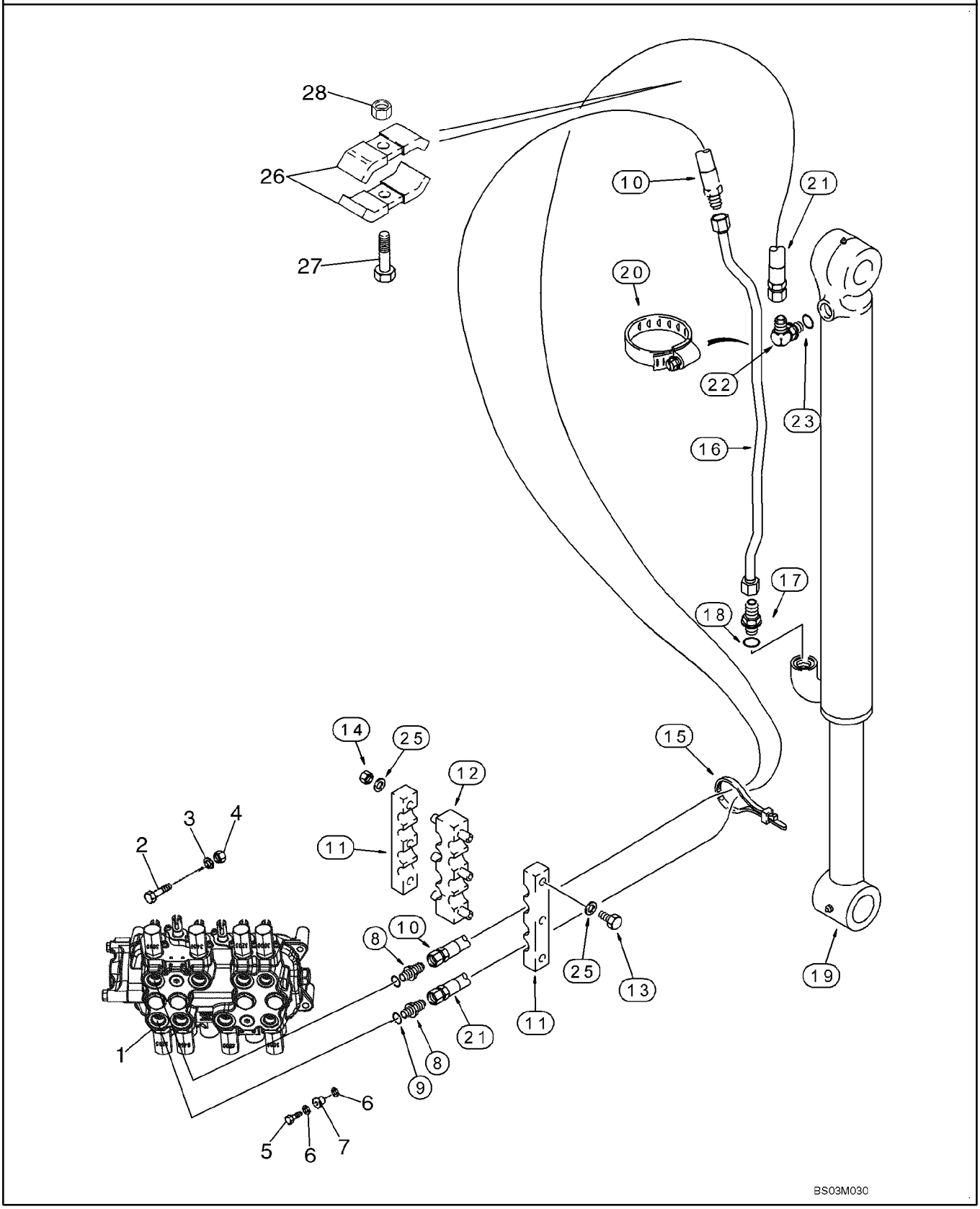

HIDRAULICA - CILINDRO, CUCHARĎN DE LA RETROEXCAVADORA (MODELOS SIN PALA EXTENDIBLE)

REF	FN	PART NUMBER	YR/SN	QTY	DENOMINACION
26		D143846		2	BRIDA, Clamp
27		814-10055		1	TORNILLO, Hex, M10 x 55, 8.8
28		832-10410		1	CONTRA TUERCA, M10 x 1.5, Cl 8

08-13		p1	02/08

HIDRAULICA - CILINDRO, CUCHARĎN DE LA RETROEXCAVADORA (MODELOS CON PALA EXTENDIBLE)

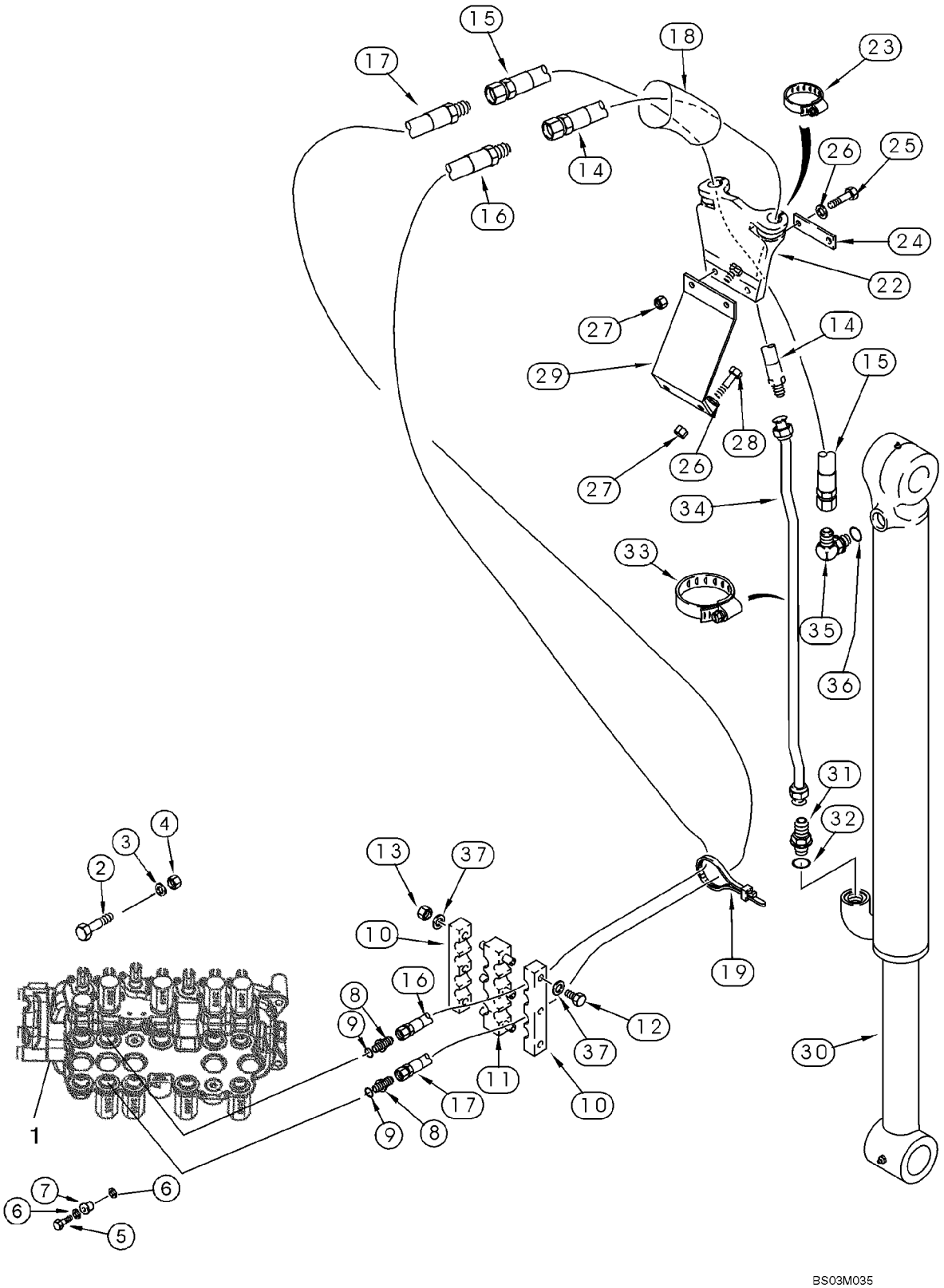

HIDRAULICA - CILINDRO, CUCHARŎN DE LA RETROEXCAVADORA (MODELOS CON PALA EXTENDIBLE)

REF	FN	PART NUMBER	YR/SN	QTY	DENOMINACION
1		REF		1	MANUAL, Valve Assy, Control; Backhoe Control Valve; For Correct Assembly and Components, See Figures 08-34, 08-35, 08-37, 08-39
2		814-10080		2	TORNILLO, Hex, M10 x 80, 8.8
3		896-11010		2	ARANDELA, M10 x 21.5 x 2.5, HT
4		829-1410		2	TUERCA, M10, Cl 10
5		614-10035		1	TORNILLO, Hex, M10 x 35, 8.8, Full Thd
6		496-41041		2	ARANDELA, 13/32" x 1 1/8" x .134"
7		D52276		1	AISLADOR
8		218-5063		2	RACOR, 7/8"-14, 37Ü x 1 1/16"-12, O-Ring, Incl. Ref 9
9		237-6012		1	JUNTA HERMETICA, 12-1, 90 Duro, .924 ID x .118" Thk
10		178951A1		2	TORNILLO DE SUJECTIO
11		178952A1		1	TORNILLO DE SUJECTIO
12		814-10120		3	TORNILLO, Hex, M10 x 120, 8.8
13		832-10410		3	CONTRA TUERCA, M10 x 1.5, Cl 8
14		365309A1		1	MANGUERA (CONJUNTO), 2052 mm (80-3/4 in)
15		143400A1		1	MANGA, 2052 mm (80-3/4 in)
16		393361A1		1	MANGUERA (CONJUNTO), 3048 mm (120 in)
17		393362A1		1	MANGUERA (CONJUNTO), 3048 mm (120 in)
18		87455961		1	FUNDA DE PLĆSTICO, Sleeve; 87.4 Flat ID x 2000 mm
19		L18337		2-5	CIERRA CABLES, 9.95"-12.1" lg
22		184297A1		1	APOYADERO
23		214-3132		2	ABRAZADERA MANGUERA, 1.25/2.125 HD Worm
24		101479A1		1	APOYADERO
25		814-10045		2	TORNILLO, Hex, M10 x 45, 8.8
26		895-11010		4	ARANDELA, M10 x 20 x 2
27		832-10410		4	CONTRA TUERCA, M10 x 1.5, Cl 8
28		614-10030		2	TORNILLO, Hex, M10 x 30, 8.8
29		183736A1		1	APOYADERO
30		128760A1		1	CILINDRO (CONJUNTO), 83 ID x 872 mm strk; Bucket Cylinder, See Figure 08-65
31		218-5062		1	RACOR, 7/8"-14, 37Ü x 7/8"-14, O-Ring, Incl. Ref 32

08-13		p2	02/08

HIDRAULICA - CILINDRO, CUCHARĎN DE LA RETROEXCAVADORA (MODELOS CON PALA EXTENDIBLE)

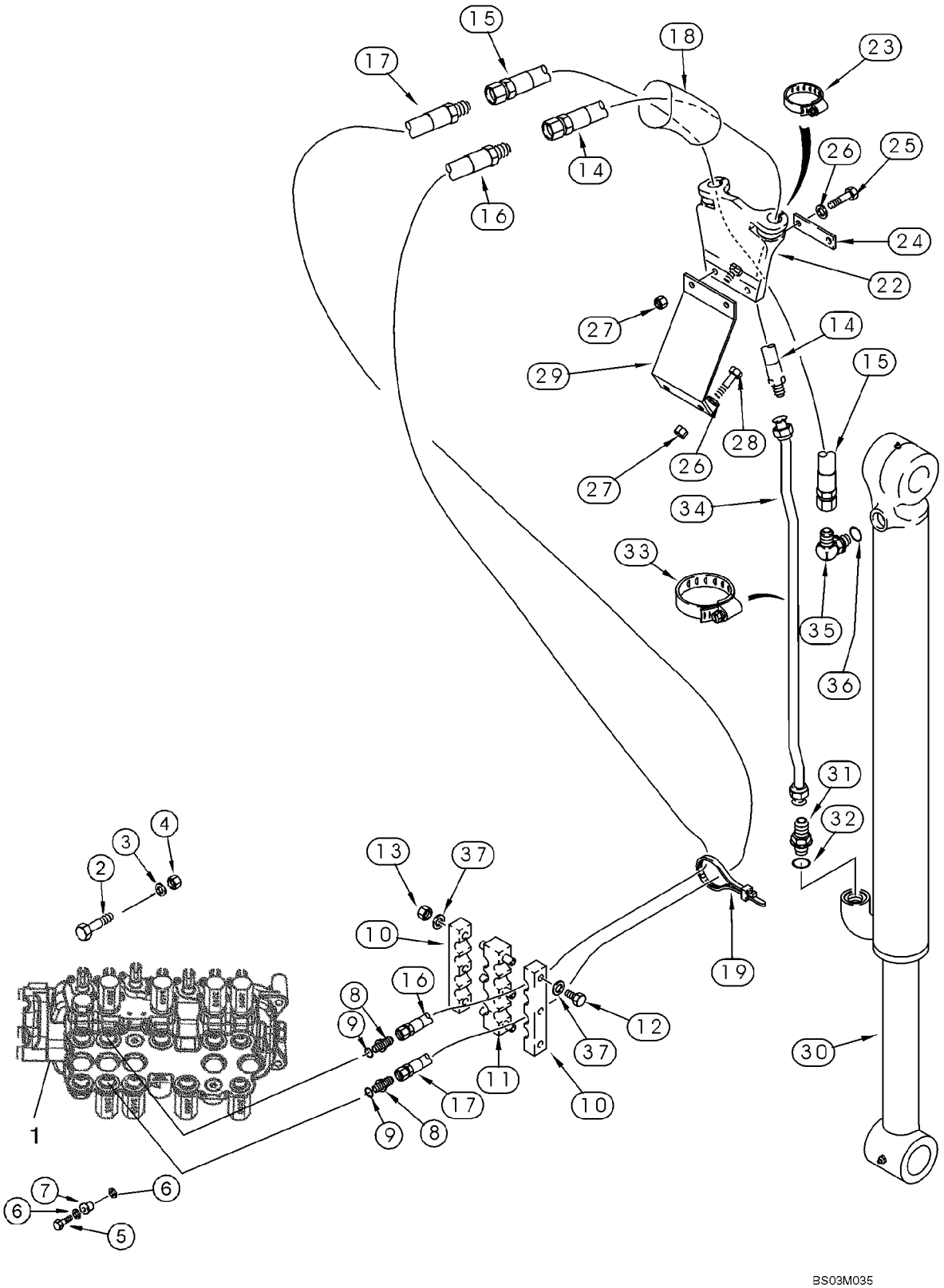

HIDRAULICA - CILINDRO, CUCHARĎN DE LA RETROEXCAVADORA (MODELOS CON PALA EXTENDIBLE)

REF	FN	PART NUMBER	YR/SN	QTY	DENOMINACION
32		237-6010		1	JUNTA HERMETICA, 10-1, 90 Duro, .755" ID x .097" Thk
33		214-1464		2	ABRAZADERA MANGUERA, #64, 3.56/4.50 Type F Worm
34		396339A1		1	TUBO (CONJUNTO), Models Without Auxiliary Hydraulics
34		357470A1		1	TUBO (CONJUNTO), Models With Auxiliary Hydraulics
35		218-5107		1	CODO, 90Ü, 7/8"-14, 37Ü x 7/8"-14, O-Ring, Incl. Ref 36
36		237-6010		1	JUNTA HERMETICA, 10-1, 90 Duro, .755" ID x .097" Thk
37		895-11010		6	ARANDELA, M10 x 20 x 2

08-14		p1	02/08

HIDRAULICA - CILINDRO, PALA EXTENSIBLE DE LA RETROEXCAVADORA

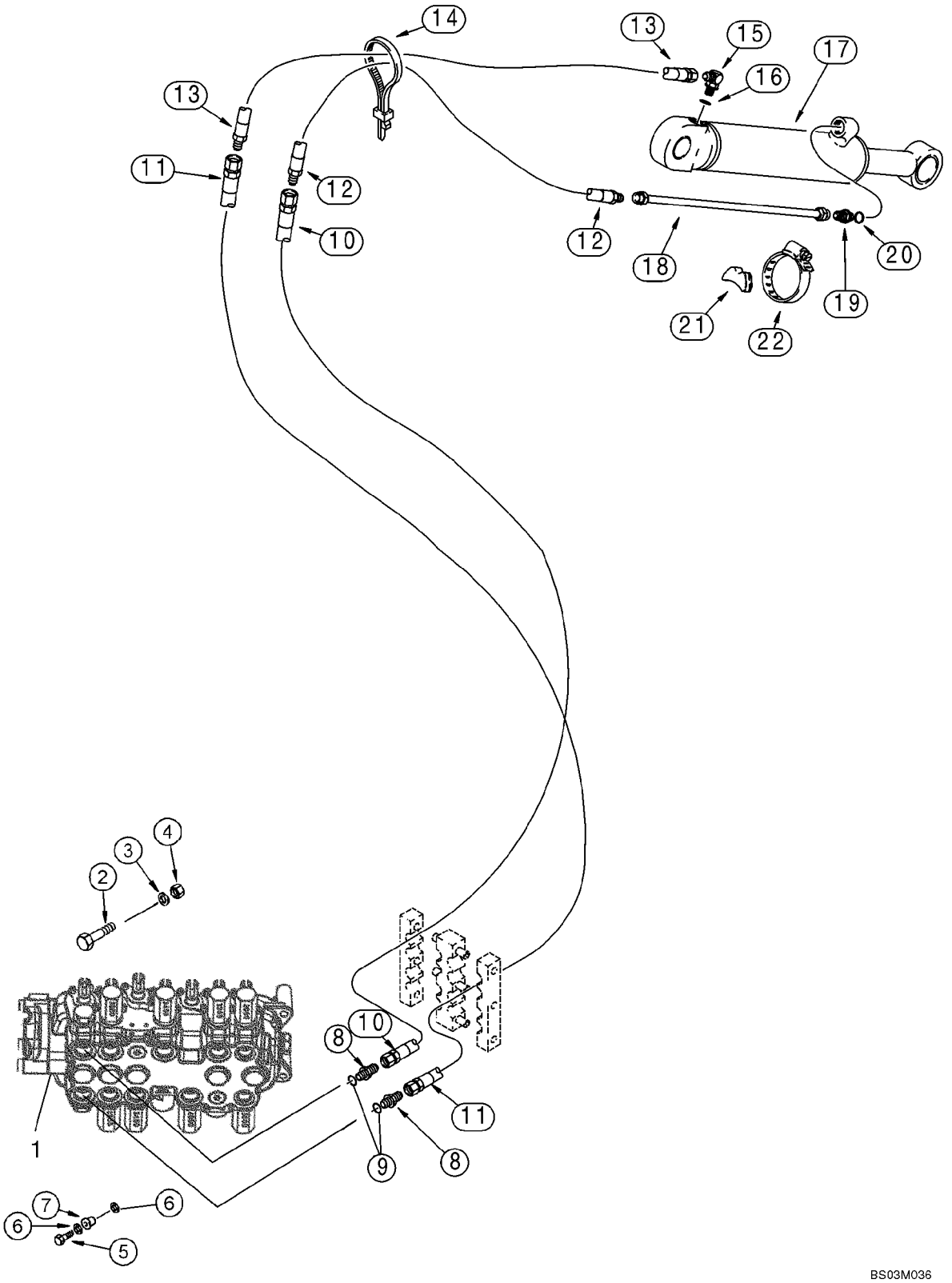

HIDRAULICA - CILINDRO, PALA EXTENSIBLE DE LA RETROEXCAVADORA

REF	FN	PART NUMBER	YR/SN	QTY	DENOMINACION
1		REF		1	MANUAL, Valve Assy, Control; Backhoe Control Valve; For Correct Assembly and Components, See Figures 08-34, 08-35, 08-37, 08-39
2		814-10080		2	TORNILLO, Hex, M10 x 80, 8.8
3		896-11010		2	ARANDELA, M10 x 21.5 x 2.5, HT
4		829-1410		2	TUERCA, M10, Cl 10
5		614-10035		1	TORNILLO, Hex, M10 x 35, 8.8, Full Thd
6		496-41041		2	ARANDELA, 13/32" x 1 1/8" x .134"
7		D52276		1	AISLADOR
8		218-5063		2	RACOR, 7/8"-14, 37Ü x 1 1/16"-12, O-Ring, Incl. Ref 9
9		237-6012		1	JUNTA HERMETICA, 12-1, 90 Duro, .924 ID x .118" Thk
10		393354A1		1	MANGUERA (CONJUNTO), 3073 mm (121 in)
11		393357A1		1	MANGUERA (CONJUNTO), 3073 mm (121 in)
12		184617A1		1	MANGA, 850 mm (33-1/2 in)
13		184616A1		1	MANGA, 700 mm (27-9/16 in)
14		L18337		4	CIERRA CABLES, 9.95"-12.1" lg
15		218-5107		1	CODO, 90Ü, 7/8"-14, 37Ü x 7/8"-14, O-Ring, Incl. Ref 16
16		237-6010		1	JUNTA HERMETICA, 10-1, 90 Duro, .755" ID x .097" Thk
17		1340969C2		1	CILINDRO (CONJUNTO), 76 ID x 1068 mm strk; Extendable Dipper Cylinder, See Figure 08-66
18		87439537		1	TUBO (CONJUNTO)
19		218-5062		1	RACOR, 7/8"-14, 37Ü x 7/8"-14, O-Ring, Incl. Ref 20
20		237-6010		1	JUNTA HERMETICA, 10-1, 90 Duro, .755" ID x .097" Thk
21		D38648		1	BLOQUE MOTOR
22		214-1464		1	ABRAZADERA MANGUERA, #64, 3.56/4.50 Type F Worm

08-15		p1	02/08

HIDRAULICA - VáLVULA, CONTROL PILOTO DE PALANCA DE CONTROL (6 SPOOL, W/O EXT DIPPER, W/O AUX HYDS)

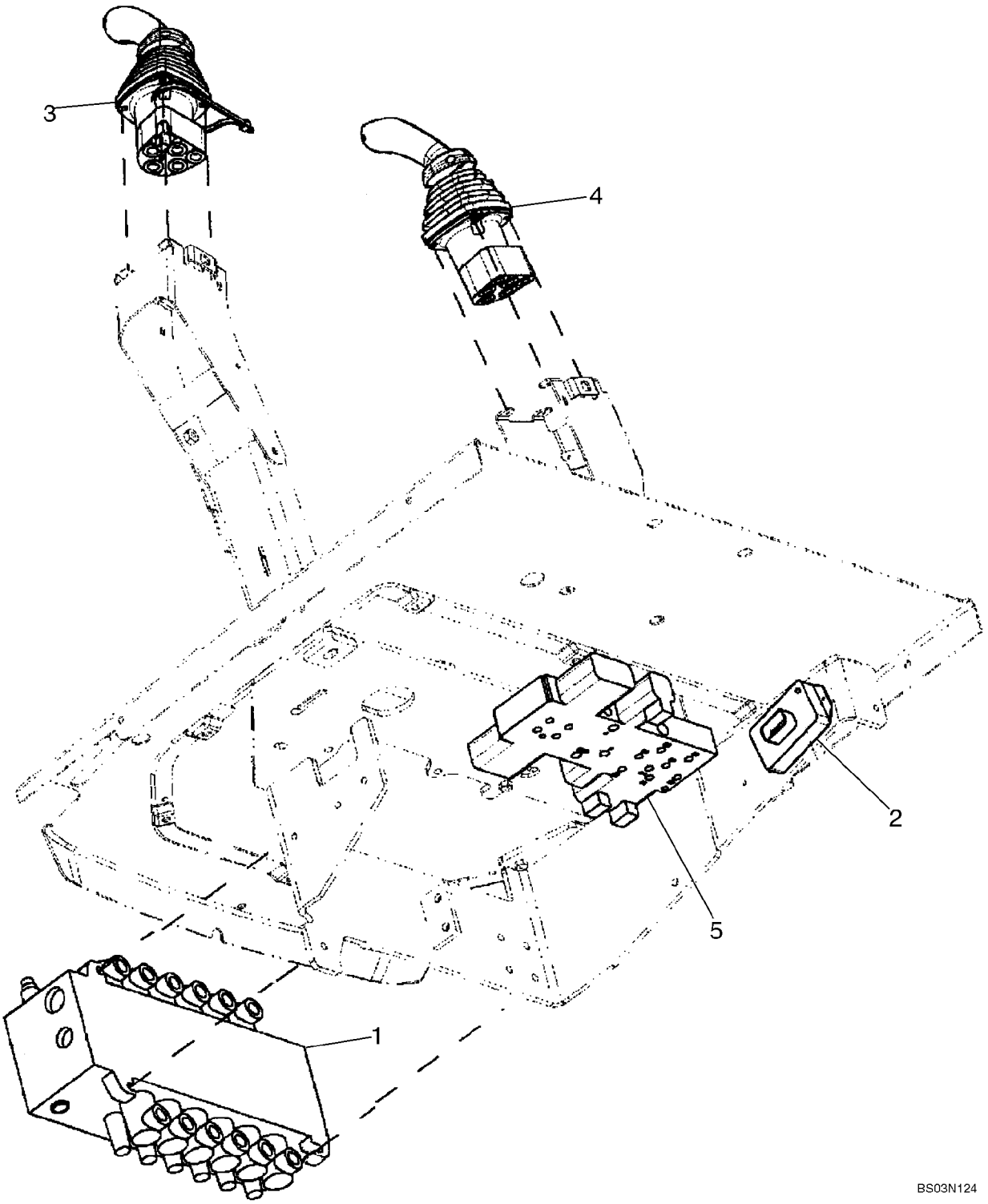

HIDRAULICA - VáLVULA, CONTROL PILOTO DE PALANCA DE CONTROL (6 SPOOL, W/O EXT DIPPER, W/O AUX HYDS)

REF	FN	PART NUMBER	YR/SN	QTY	DENOMINACION
		REF			MANUAL, SIX SPOOL VALVE WITHOUT EXTENDABLE DIPPER; WITH AUTO-UP; WITHOUT AUXILIARY HYDRAULICS, WITHOUT UNI-DIRECTIONAL OR BI-DIRECTIONAL
1		87577343		1	VALVULA DISTRIBUIDORA, Backhoe, 6 Spool; Rexroth No. 08 403 273; See Figure 08-36; For Mounting See Figure 08-22
2		{87746673}		1	Box; Pilot Control Power Supply Module
		840-1416		2	TORNILLO, Cross Pan Hd, M4 x 16
3		87685948		1	VALVULA DISTRIBUIDORA, LH; With Horn Button; See Figure 08-50
4		87685954		1	VALVULA DISTRIBUIDORA, RH; See Figure 08-53
5		85827472		1	VALVULA HIDRAULICA, Pressure Reducing, 2 Spool; See Figure 08-47

08-16		p1	02/08

HIDRAULICA - VóLVULA, CONTROL PILOTO DE PALANCA DE CONTROL (6 SPOOL, W/O EXT DIPPER, W/ AUX HYDS)

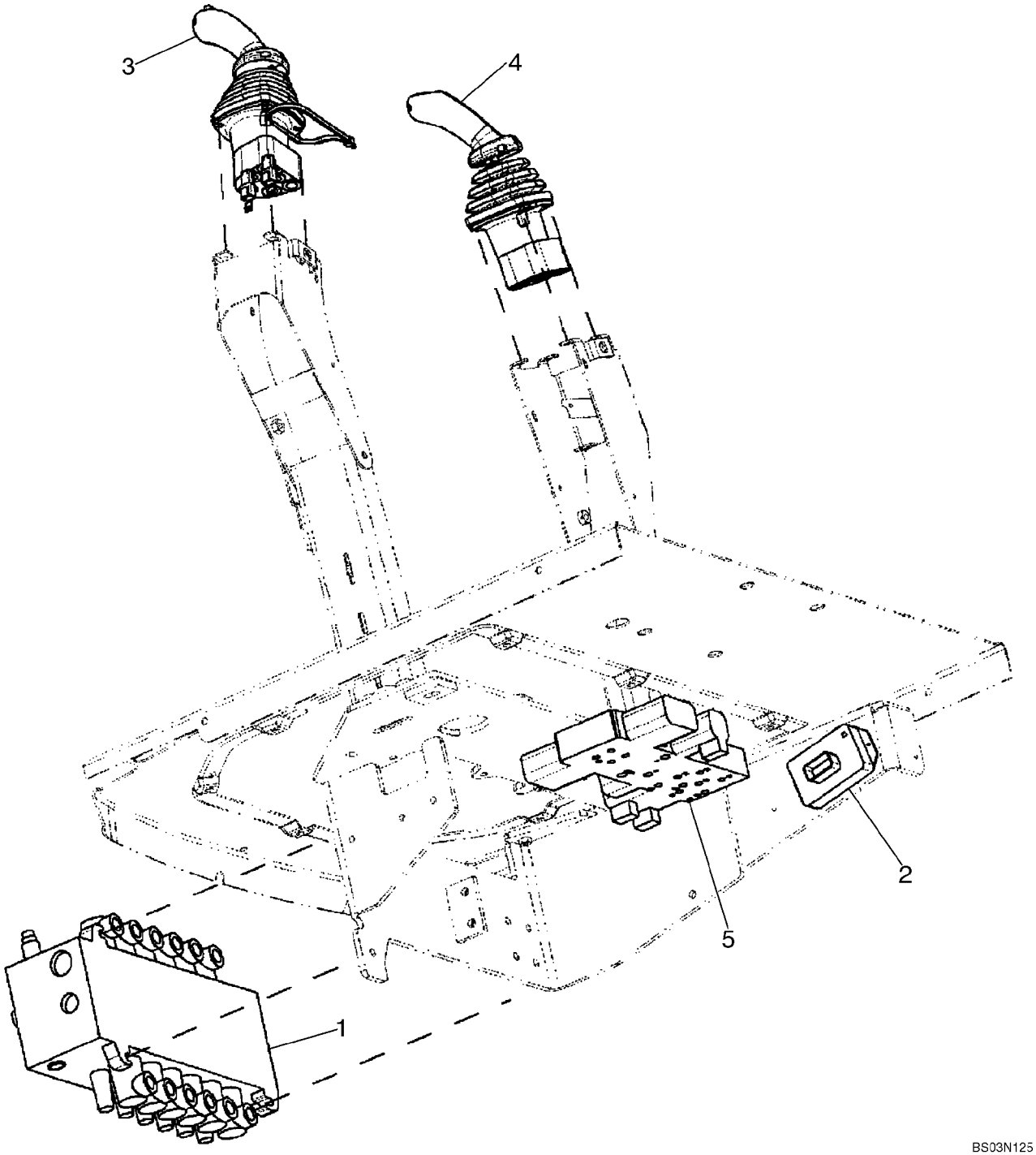

HIDRAULICA - VáLVULA, CONTROL PILOTO DE PALANCA DE CONTROL (6 SPOOL, W/O EXT DIPPER, W/ AUX HYDS)

REF	FN	PART NUMBER	YR/SN	QTY	DENOMINACION
		REF			MANUAL, SIX SPOOL VALVE WITHOUT EXTENDABLE DIPPER; WITH AUTO-UP; WITH AUXILIARY HYDRAULICS, WITH UNI-DIRECTIONAL
1		87577343		1	VALVULA DISTRIBUIDORA, Backhoe, 6 Spool; Rexroth No. 08 403 273; See Figure 08-36; For Mounting See Figure 08-22
2		{87746673}		1	Box; Pilot Control Power Supply Module
		840-1416		2	TORNILLO, Cross Pan Hd, M4 x 16
3		87685953		1	VALVULA DISTRIBUIDORA, LH; With Horn and Uni-Directional Buttons; See Figure 08-51
4		87685954		1	VALVULA DISTRIBUIDORA, RH; See Figure 08-53
5		85827472		1	VALVULA HIDRAULICA, Pressure Reducing, 2 Spool; See Figure 08-47

08-17		p1	02/08

HIDRAULICA - VóLVULA, CONTROL PILOTO DE PALANCA DE CONTROL (7 SPOOL, W/ EXT DIPPER, W/O AUX HYDS)

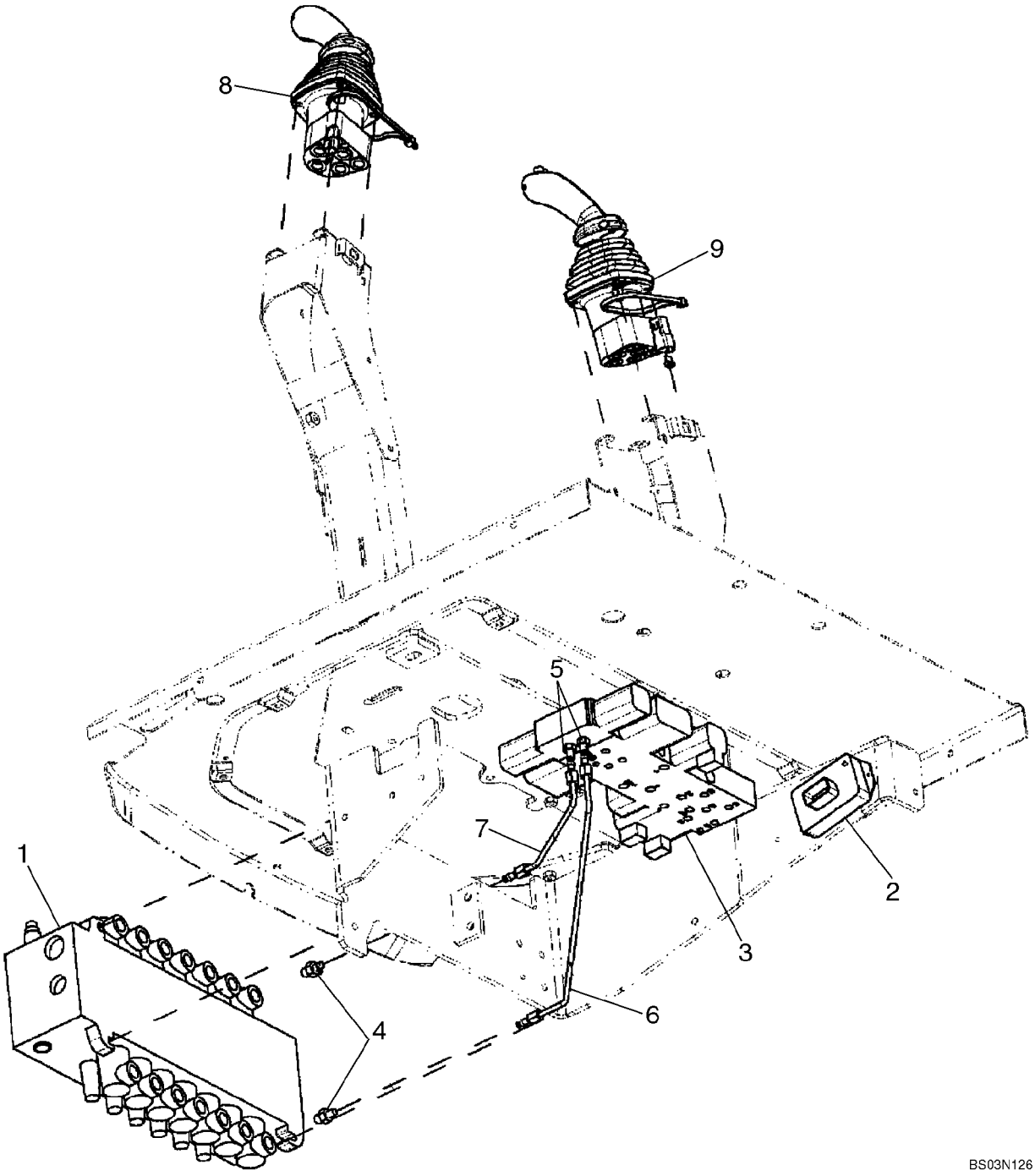

HIDRAULICA - VáLVULA, CONTROL PILOTO DE PALANCA DE CONTROL (7 SPOOL, W/ EXT DIPPER, W/O AUX HYDS)

REF	FN	PART NUMBER	YR/SN	QTY	DENOMINACION
		REF			MANUAL, SEVEN SPOOL VALVE WITH EXTENDABLE DIPPER; WITHOUT AUXILIARY HYDRAULICS; WITH AUTO-UP; WITHOUT UNI-DIRECTIONAL OR BI-DIRECTIONAL
1		87577346		1	VALVULA DISTRIBUIDORA, Backhoe, 7 Spool; Rexroth No. 08 402 663; See Figure 08-37; For Mounting See Figure 08-22
2		{87746673}		1	Box; Pilot Control Power Supply Module
		840-1416		2	TORNILLO, Cross Pan Hd, M4 x 16
3		85827471		1	VALVULA HIDRAULICA, Pressure Reducing, 3 Spool; See Figure 08-48
4		218-5089		2	RACOR, 7/16"-20, 37Ü x 9/16"-18, O-Ring, Includes 237-6006 O-Ring
		237-6006		1	JUNTA HERMETICA, 6-1, 90 Duro, .468" ID x .078" Thk
5		218-5053		2	RACOR, 7/16"-20, 37Ü x 7/16"-20, O-Ring, Incl. 237-6004 O-Ring
		237-6004		1	JUNTA HERMETICA, 4-1, 90 Duro, .351" ID x .072" Thk
6		87437633		1	TUBO (CONJUNTO), To Lower Extendable Dipper Port
7		87437635		1	TUBO (CONJUNTO), To Upper Extendable Dipper Port
8		87685948		1	VALVULA DISTRIBUIDORA, LH; With Horn Button; See Figure 08-50
9		87685955		1	VALVULA DISTRIBUIDORA, RH; See Figure 08-54

08-18		p1	02/08

HIDRAULICA - VóLVULA, CONTROL PILOTO DE PALANCA DE CONTROL (7 SPOOL, W/ EXT DIPPER, W/ AUX HYDS)

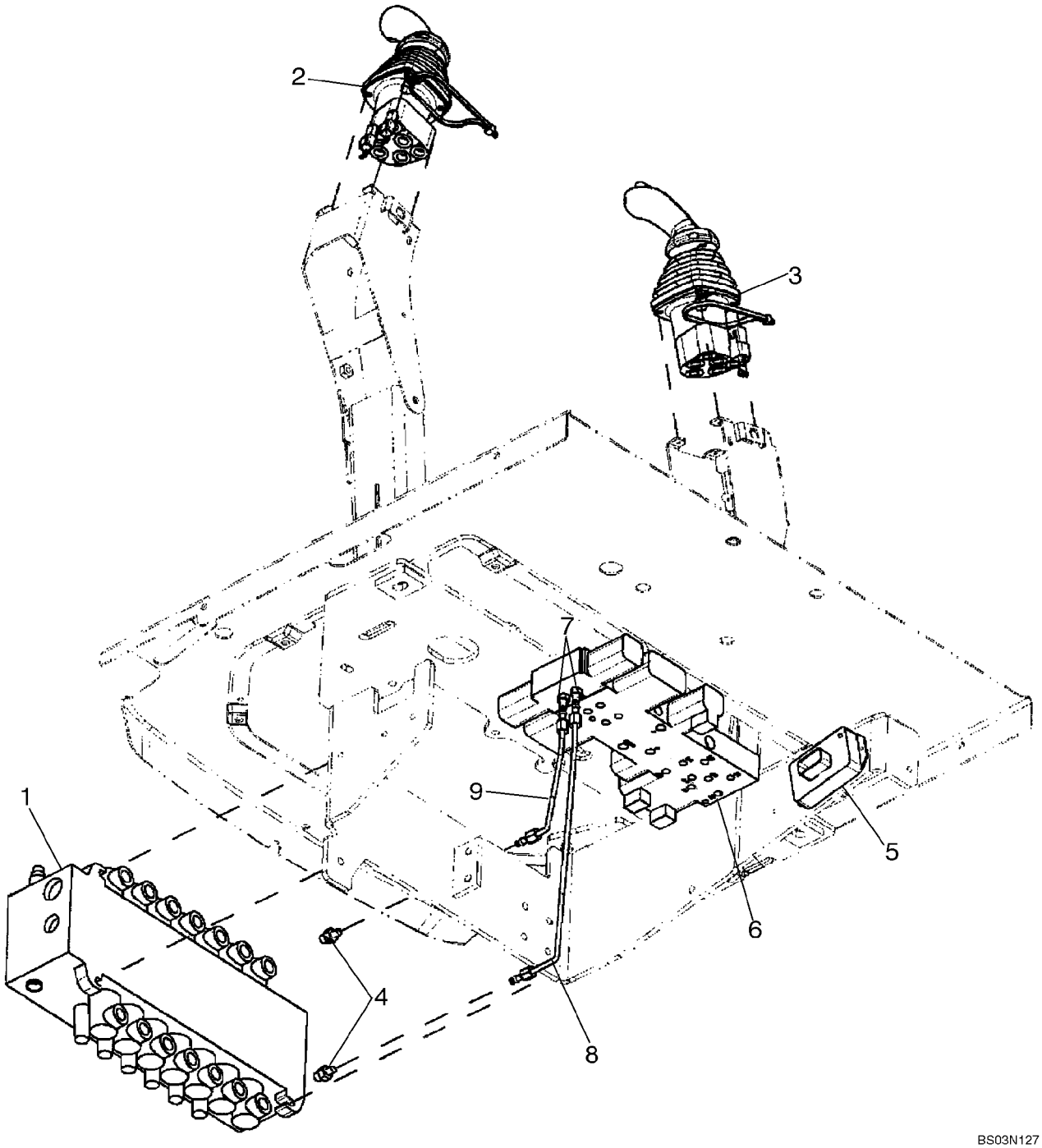

HIDRAULICA - VáLVULA, CONTROL PILOTO DE PALANCA DE CONTROL (7 SPOOL, W/ EXT DIPPER, W/ AUX HYDS)

REF	FN	PART NUMBER	YR/SN	QTY	DENOMINACION
		REF			MANUAL, SEVEN SPOOL VALVE WITH EXTENDABLE DIPPER; WITH AUXILIARY HYDRAULICS; WITH AUTO-UP; WITH UNI-DIRECTIONAL
1		87577346		1	VALVULA DISTRIBUIDORA, Backhoe, 7 Spool; Rexroth No. 08 402 663; See Figure 08-37; For Mounting See Figure 08-22
2		87685953		1	VALVULA DISTRIBUIDORA, LH; With Horn and Uni-Directional Buttons; See Figure 08-51
3		87685955		1	VALVULA DISTRIBUIDORA, RH; See Figure 08-54
4		218-5089		2	RACOR, 7/16"-20, 37Ü x 9/16"-18, O-Ring, Includes 237-6006 O-Ring
		237-6006		1	JUNTA HERMETICA, 6-1, 90 Duro, .468" ID x .078" Thk
5		{87746673}		1	Box; Pilot Control Power Supply Module
		840-1416		2	TORNILLO, Cross Pan Hd, M4 x 16
6		85827471		1	VALVULA HIDRAULICA, Pressure Reducing, 3 Spool; See Figure 08-48
7		218-5053		2	RACOR, 7/16"-20, 37Ü x 7/16"-20, O-Ring, Incl. 237-6004 O-Ring
		237-6004		1	JUNTA HERMETICA, 4-1, 90 Duro, .351" ID x .072" Thk
8		87437633		1	TUBO (CONJUNTO), To Lower Extendable Dipper Port
9		87437635		1	TUBO (CONJUNTO), To Upper Extendable Dipper Port

08-19		p1	02/08

HIDRAULICA - VóLVULA, CONTROL PILOTO DE PALANCA DE CONTROL (7 SPOOL, W/O EXT DIPPER, W/ AUX HYDS)

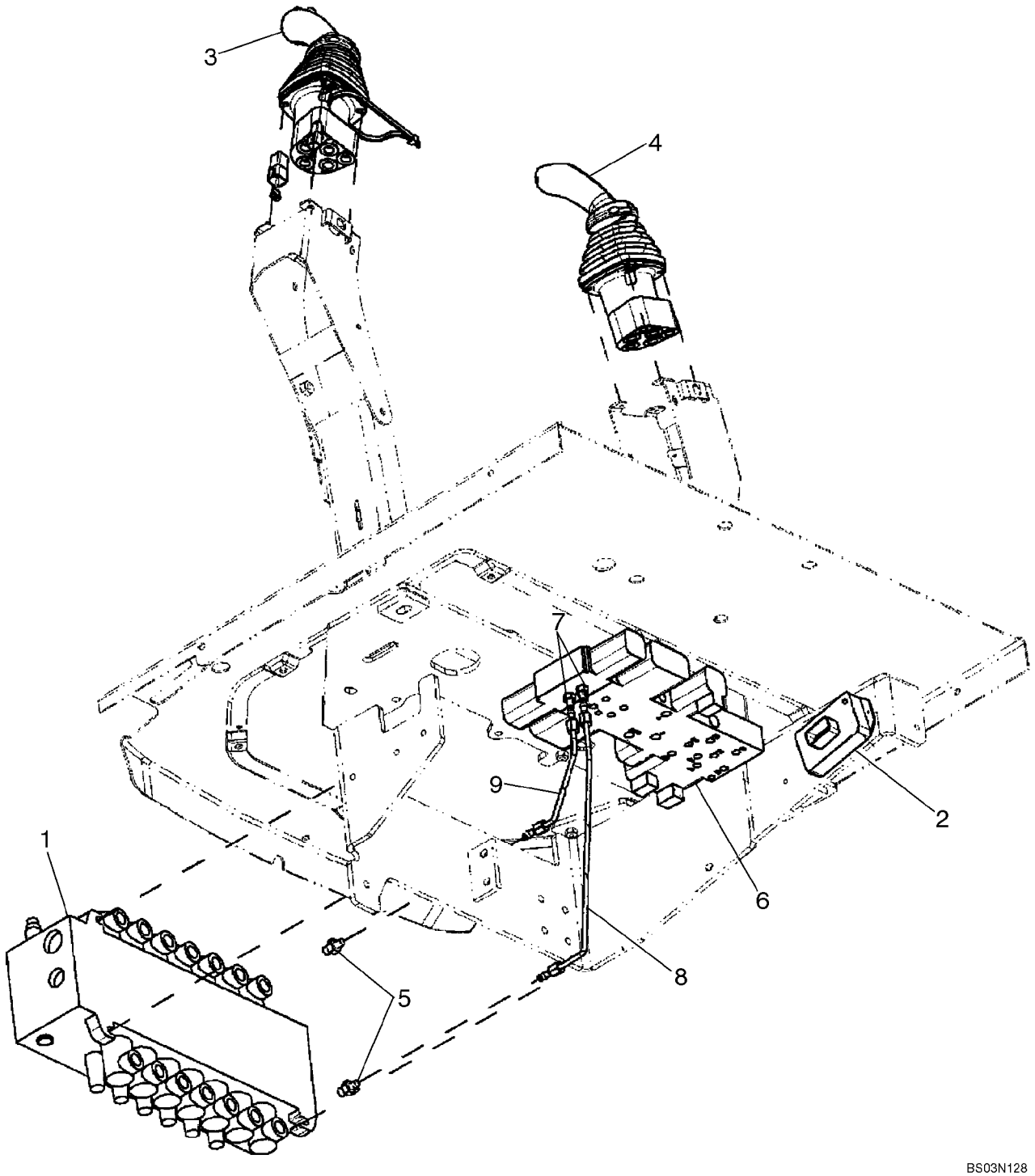

HIDRAULICA - VáLVULA, CONTROL PILOTO DE PALANCA DE CONTROL (7 SPOOL, W/O EXT DIPPER, W/ AUX HYDS)

REF	FN	PART NUMBER	YR/SN	QTY	DENOMINACION
		REF			MANUAL, SEVEN SPOOL VALVE WITHOUT EXTENDABLE DIPPER; WITH AUXILIARY HYDRAULICS; WITH AUTO-UP; WITH BI-DIRECTIONAL
1		87577348		1	VALVULA DISTRIBUIDORA, Backhoe, 7 Spool; Rexroth No. 08 403 27; See Figure 08-38; For Mounting See Figure 08-22
2		{87746674}		1	Box; Pilot Control Power Supply Module
		840-1416		2	TORNILLO, Cross Pan Hd, M4 x 16
3		87685952		1	VALVULA DISTRIBUIDORA, LH; With Horn and Bi-Directional Buttons; See Figure 08-52
4		87685954		1	VALVULA DISTRIBUIDORA, RH; See Figure 08-53
5		218-5089		2	RACOR, 7/16"-20, 37Ü x 9/16"-18, O-Ring, Includes 237-6006 O-Ring
		237-6006		1	JUNTA HERMETICA, 6-1, 90 Duro, .468" ID x .078" Thk
6		85827471		1	VALVULA HIDRAULICA, Pressure Reducing, 3 Spool; See Figure 08-48
7		218-5053		2	RACOR, 7/16"-20, 37Ü x 7/16"-20, O-Ring, Incl. 237-6004 O-Ring
		237-6004		1	JUNTA HERMETICA, 4-1, 90 Duro, .351" ID x .072" Thk
8		87438012		1	TUBO (CONJUNTO), To Lower Auxiliary Port
9		87438015		1	TUBO (CONJUNTO), To Upper Auxiliary Port

08-20		p1	02/08

HIDRAULICA - VóLVULA, CONTROL PILOTO DE PALANCA DE CONTROL (8 SPOOL, W/ EXT DIPPER, W/ AUX HYDS)

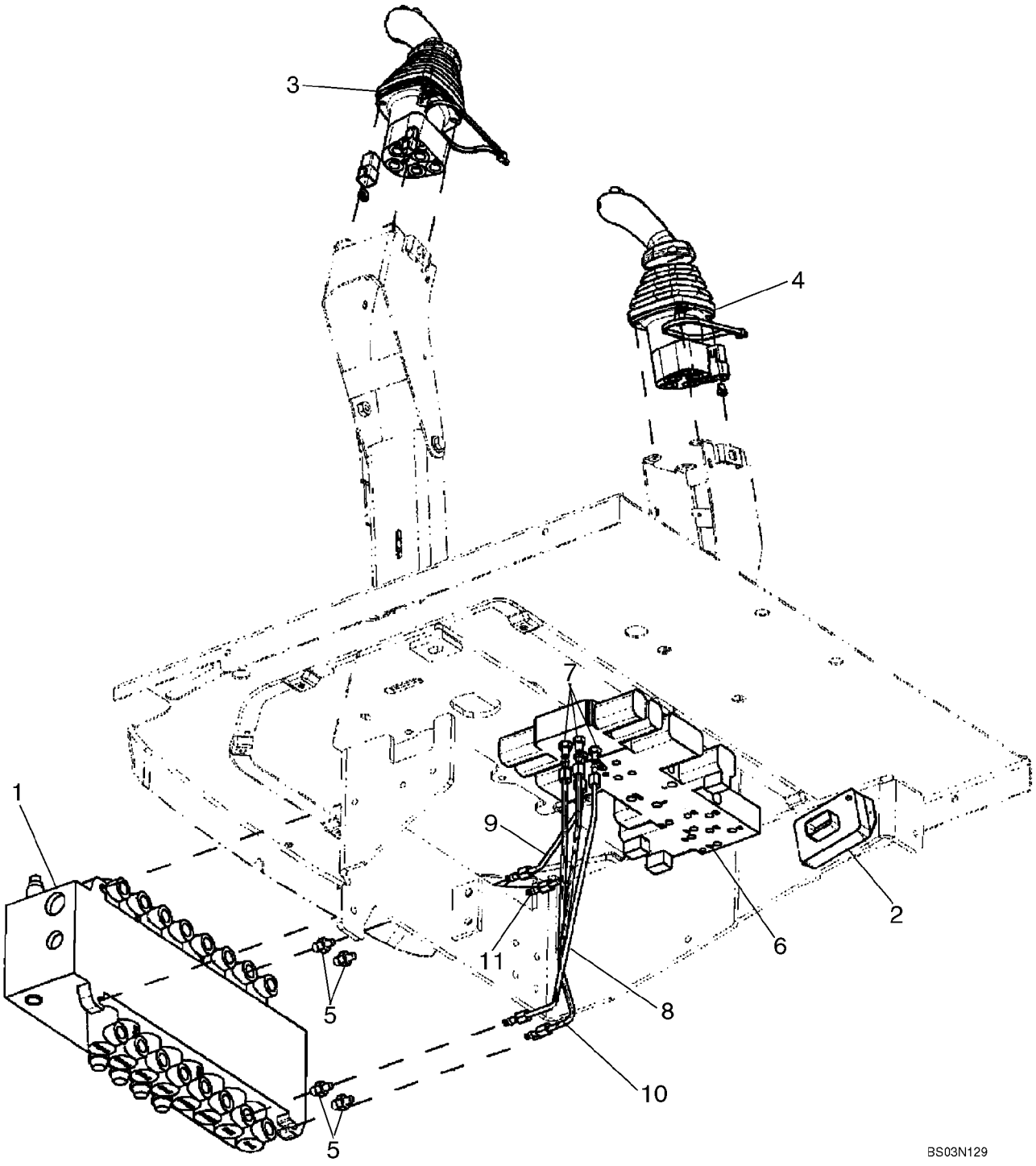

HIDRAULICA - VáLVULA, CONTROL PILOTO DE PALANCA DE CONTROL (8 SPOOL, W/ EXT DIPPER, W/ AUX HYDS)

REF	FN	PART NUMBER	YR/SN	QTY	DENOMINACION
		REF			MANUAL, EIGHT SPOOL VALVE WITH EXTENDABLE DIPPER; WITH AUXILIARY HYDRAULICS; WITH AUTO-UP; WITH BI-DIRECTIONAL
1		87577349		1	VALVULA DISTRIBUIDORA, Backhoe, 8 Spool; Rexroth No. 08 403 271; See Figure 08-39; For Mounting See Figure 08-22
2		{87746674}		1	Box; Pilot Control Power Supply Module
		840-1416		2	TORNILLO, Cross Pan Hd, M4 x 16
3		87685952		1	VALVULA DISTRIBUIDORA, LH; With Horn and Bi-Directional Buttons; See Figure 08-52
4		87685955		1	VALVULA DISTRIBUIDORA, RH; See Figure 08-54
5		218-5089		4	RACOR, 7/16"-20, 37Ü x 9/16"-18, O-Ring, Includes 237-6006 O-Ring
		237-6006		1	JUNTA HERMETICA, 6-1, 90 Duro, .468" ID x .078" Thk
6		87434621		1	VALVULA DISTRIBUIDORA, Pressure Reducing, 4 Spool; See Figure 08-49
7		218-5053		4	RACOR, 7/16"-20, 37Ü x 7/16"-20, O-Ring, Incl. 237-6004 O-Ring
		237-6004		1	JUNTA HERMETICA, 4-1, 90 Duro, .351" ID x .072" Thk
8		87437633		1	TUBO (CONJUNTO), To Lower Extendable Dipper Port
9		87437635		1	TUBO (CONJUNTO), To Upper Extendable Dipper Port
10		87440835		1	TUBO (CONJUNTO), Tube, To Lower Auxiliary Port
11		87440837		1	TUBO (CONJUNTO), Tube, To Upper Auxiliary Port

HIDRAULICA - CONTROL PILOTO DE PALANCA DE CONTROL

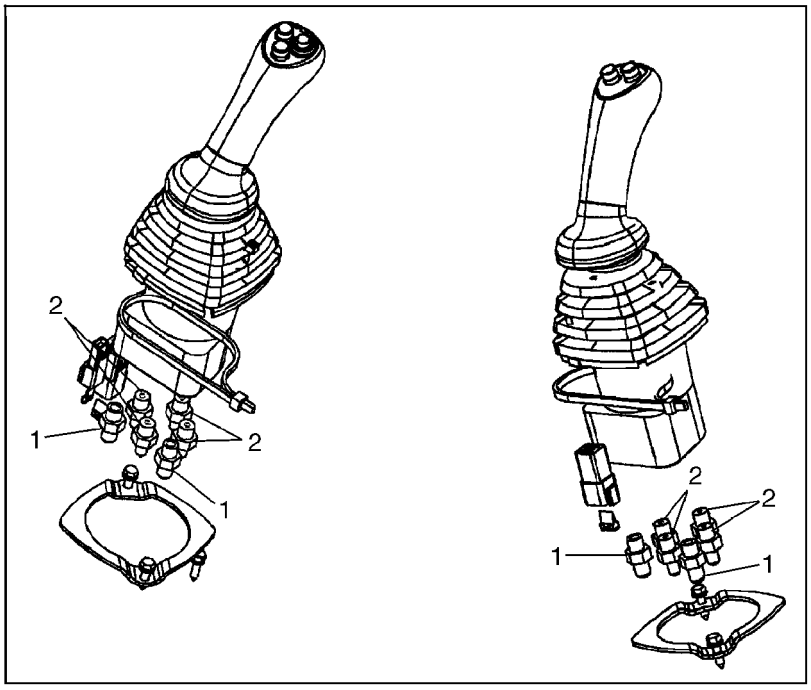

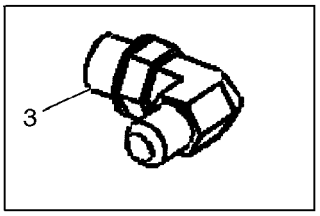

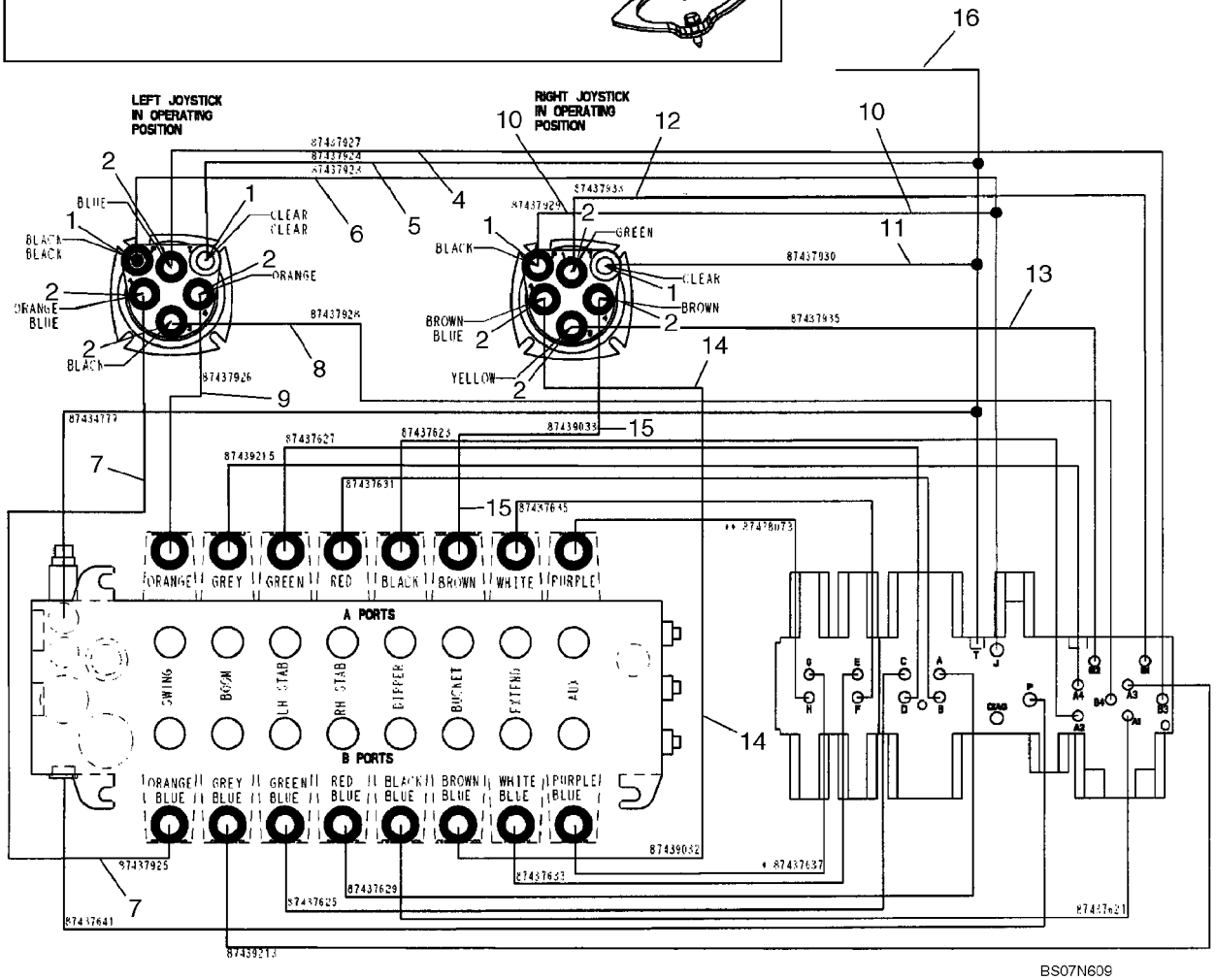

BS07N609

HIDRAULICA - CONTROL PILOTO DE PALANCA DE CONTROL

REF	FN	PART NUMBER	YR/SN	QTY	DENOMINACION
1		218-5057		4	RACOR, 9/16"-18, 37Ü x 9/16"-18, O-Ring, Incl. 237-6006 O-Ring
2		218-5089		8	RACOR, 7/16"-20, 37Ü x 9/16"-18, O-Ring, Includes 237-6006 O-Ring
3		218-5105		1	CODO, 90Ü, 9/16"-18, 37Ü x 9/16"-18, O-Ring, Includes 237-6006; Installs in Hydraulic Tank for Pilot Return
4		87437927		1	MANGUERA (CONJUNTO), 1295 mm (51 in); LH Joystick No. 1 to Selector Valve B3
5		87437924		1	MANGUERA (CONJUNTO), 1000 mm (39-3/8 in); LH Joystick Tank to Pressure Reducing Valve T
6		87437923		1	MANGUERA (CONJUNTO), 1035 mm (40-3/4 in); LH Joystick Pressure to Pressure Reducing Valve J
7		87437925		1	MANGUERA (CONJUNTO), 1075 mm (42-3/8 in); LH Joystick No. 2 to Swing Port B
8		87437928		1	MANGUERA (CONJUNTO), 1270 mm (50 in); LH Joystick No. 3 to Selector Valve B4
		399004A1		1	DEFENSA, Hose, 38.9 ID x 270 mm long; Used With Ref 4 - 8
9		87437926		1	MANGUERA (CONJUNTO), 825 mm (32-1/2 in); LH Joystick No. 4 to Swing Port A
10		87437929		1	MANGUERA (CONJUNTO), 1105 mm (43-1/2 in); RH Joystick Pressure to Pressure Reducing Valve J
11		87437930		1	MANGUERA (CONJUNTO), 1345 mm (53 in); RH Joystick Tank to Pressure Reducing Valve T
		191703A1		1	TUBO AISLANTE, Hose Guard, 28 ID x 400 mm long; Used With Ref 10, 11
12		87437933		1	MANGUERA (CONJUNTO), 1185 mm (46-11/16 in); RH Joystick No. 1 to Selector Valve B1
13		87437935		1	MANGUERA (CONJUNTO), 1175 mm (46-5/16 in); RH Joystick No. 3 to Selector Valve B2
14		87439032		1	MANGUERA (CONJUNTO), 1090 mm (42-15/16 in); RH Joystick No. 2 to Bucket Port B
15		87439033		1	MANGUERA (CONJUNTO), 915 mm (36-1/32 in); RH Joystick No. 4 to Bucket Port A

HIDRAULICA - CONTROL PILOTO DE PALANCA DE CONTROL

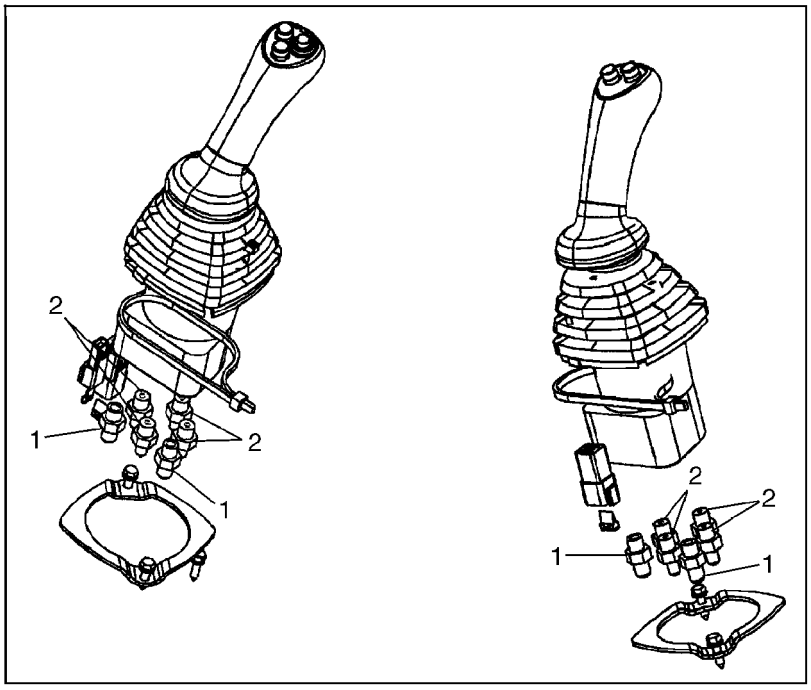

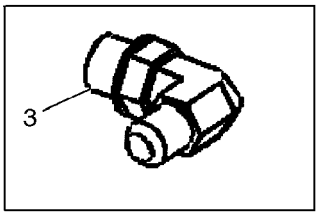

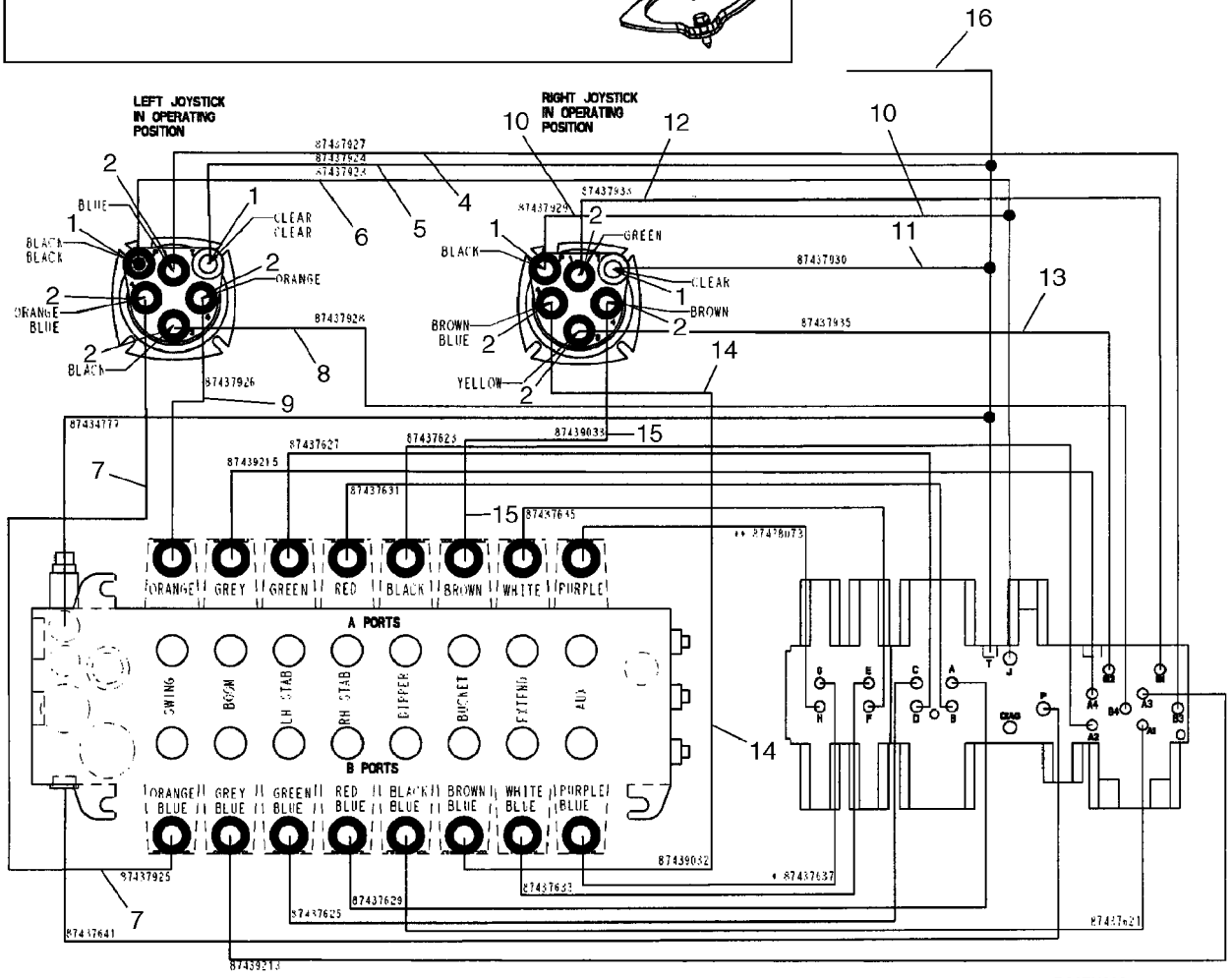

HIDRAULICA - CONTROL PILOTO DE PALANCA DE CONTROL

REF	FN	PART NUMBER	YR/SN	QTY	DENOMINACION
		191703A1		1	TUBO AISLANTE, Hose Guard, 28 ID x 400 mm long; Used With Ref 12 - 15
16		87452405		1	MANGUERA (CONJUNTO), 1520 mm (59-7/8 in); Pressure Reducing Valve T to Tank; Replaces 87435073
		143219A1		1	PROTECTOR, HOSE GUARD, 19 ID x 450 mm long; Used With Ref 16
		L18337		AR	CIERRA CABLES, 9.95"-12.1" lg

08-22		p1	02/08

HIDRAULICA - CONTROL PILOTO

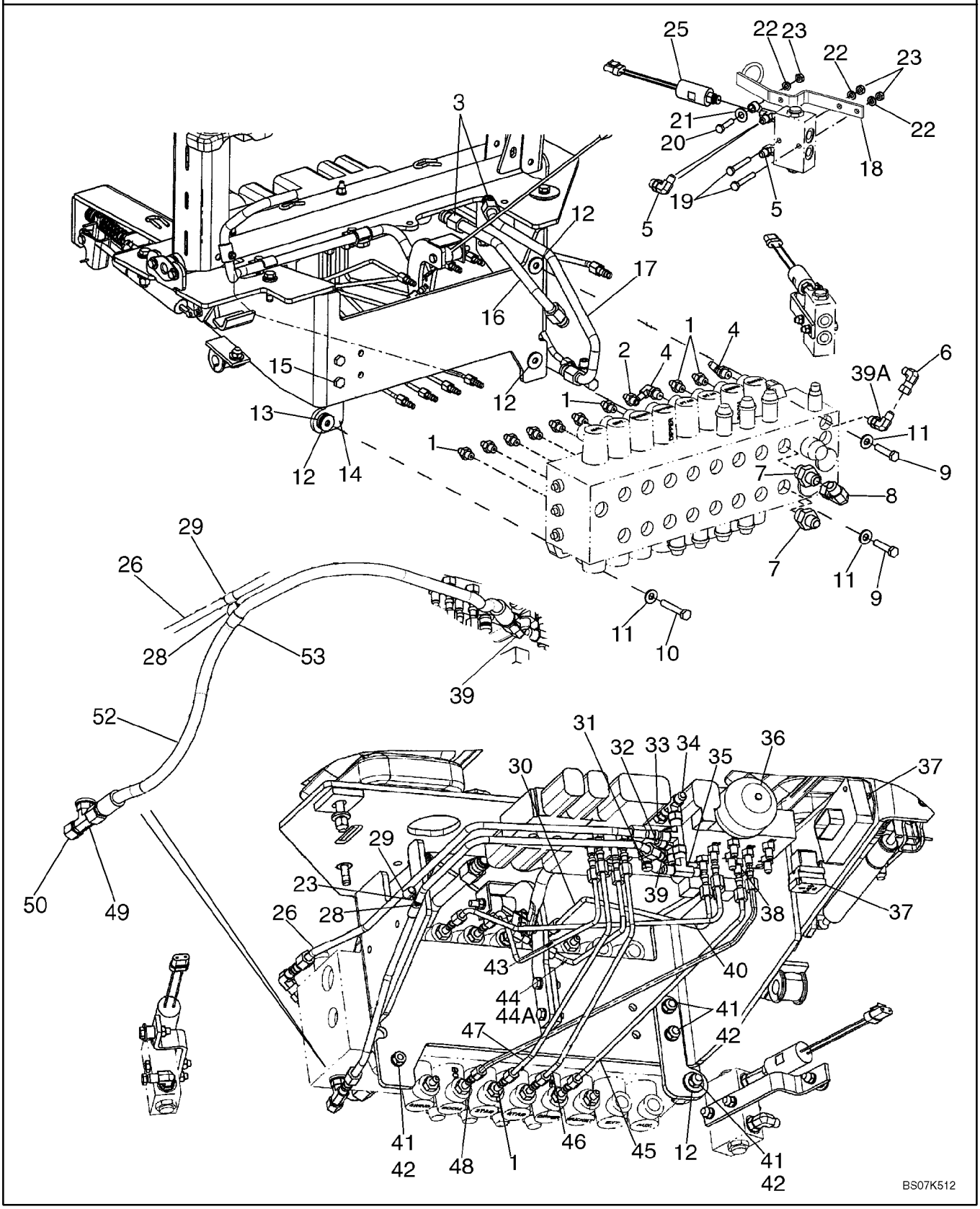

HIDRAULICA - CONTROL PILOTO

REF	FN	PART NUMBER	YR/SN	QTY	DENOMINACION
1		218-5089		9	RACOR, 7/16"-20, 37Ü x 9/16"-18, O-Ring, Includes 237-6006 O-Ring
2		87423401		1	CONEXION, Special Orifice; 7/16 fl x 9/16 Or; Incl. 237-6006 O-Ring; If Unit Experiences Dipper Stuttering, As Dipper Is Moving Toward the Unit, Replace Ref 2 Fitting & Ref 30 & 45 Tubes, With (1) 87594363 Snubber, (2) 87594364 Hoses
2		87594363		1	VALVULA AMORTIGUADORA, Snubber Fitting; Incl. 237-6006 O-ring; Used In Place of 87423401 Fitting On Models With Dipper Stuttering
3		218-5107		1	CODO, 90Ü, 7/8"-14, 37Ü x 7/8"-14, O-Ring, Includes 237-6010 O-Ring
4		218-5365		2	CODO, 45Ü, 7/16"-20, 37Ü x 9/16"-18, O-Ring, Includes 237-6006 O-Ring
5		218-5105		2-4	CODO, 90Ü, 9/16"-18, 37Ü x 9/16"-18, O-Ring, Includes 237-6006; 2 Used on Models With Auto Up; 4 Used on Models Without Auto Up
6		218-980		1	CODO, 90Ü, 9/16"-18, 37Ü x 9/16"-18, 37Ü Fem Sw
7		218-5063		2	RACOR, 7/8"-14, 37Ü x 1 1/16"-12, O-Ring, Includes 237-6012 O-Ring
8		218-5232		1	CODO, 90Ü, 7/8"-14, 37Ü x 7/8"-14, 37Ü Fem Sw
9		814-10045		2	TORNILLO, Hex, M10 x 45, 8.8
10		814-10060		1	TORNILLO, Hex, M10 x 60, 8.8
11		896-15010		3	ARANDELA, M10 x 24.5 x 3, HT
12		496-41041		5	ARANDELA, 13/32" x 1 1/8" x .134"
13		D52276		1	AISLADOR, Mount
14		87440712		1	PIEZA DE APOYO, Valve Mounting Bracket
15		614-10030		2	TORNILLO, Hex, M10 x 30, 8.8
16		87426488		1	TUBO (CONJUNTO), Swing Dampening Upper Port
17		87427948		1	TUBO (CONJUNTO), Swing Dampening Lower Port
18		87450318		2	PIEZA DE APOYO
19		814-8055		4	TORNILLO, Hex, M8 x 55, 8.8
20		814-8035		2	TORNILLO, Hex, M8 x 35, 8.8
21		496-81028		2	ARANDELA, 13/32" x 1 1/4" x .134", HDN
21A		87437840		2	SEPARADOR, Not Illustrated

08-22		p2	02/08

HIDRAULICA - CONTROL PILOTO

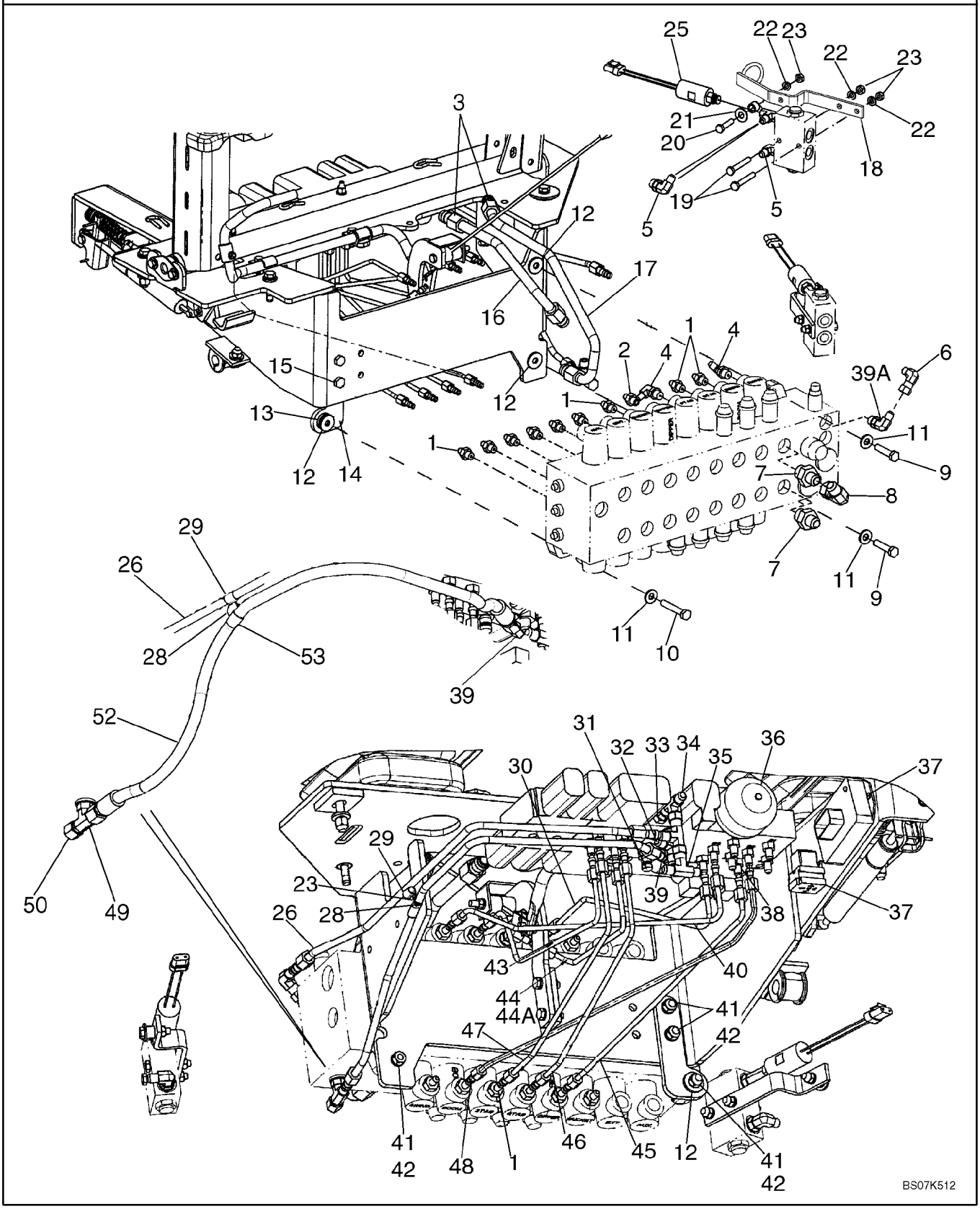

HIDRAULICA - CONTROL PILOTO

REF	FN	PART NUMBER	YR/SN	QTY	DENOMINACION
22		895-11008		6	ARANDELA, M8 x 16 x 1.6
23		829-1408		7	TUERCA, M8, Cl 10
24		87423033		2	RACOR-T, Includes 237-6004 O-Ring, 237-6006 O-Ring; Models With Auto Up, If Used
25		87552560		2	INTERRUPTOR DE PRESION, Includes 237-6004 O-Ring; Models With Auto Up, 12 inch Wire Lead; With Rubber Snubbing; CNH Part Number Stamped On Body Of Switch; North American Models; Replaces 87439163 Switch
26		87434777		1	TUBO (CONJUNTO), Reducing Valve Tank to Backhoe Valve
28		614-8025		1	TORNILLO, Hex, M8 x 25, 8.8
29		515-2295		1-2	BORNE, 3/8", Insul, 5/16" Bolt
30		87437623		1	TUBO (CONJUNTO), Selector A2 to Dipper Port A; If Unit Experiences Dipper Stuttering, As Dipper Is Moving Toward the Unit, Replace Ref 2 Fitting & Ref 30 & 45 Tubes, With (1) 87594363 Snubber, (2) 87594364 Hoses
30		87594364		1	MANGUERA (CONJUNTO), 550 mm (21-21/32 in); Used in Place of 87437623 Tube On Models With Dipper Stuttering
31		86596853		1	EMPALME RAPIDO, Includes 9617873 O-Ring
32		218-5243		1	RACOR-T, 9/16"-18, 37Ü x 9/16"-18, O-Ring Run, Includes 237-6006 O-Ring
33		218-5057		1	RACOR, 9/16"-18, 37Ü x 9/16"-18, O-Ring, Incl. 237-6006 O-Ring
34		218-5222		2	RACOR-T, 37Ü, 9/16"-18, x 9/16"-18, Fem Sw Run
35		218-836		1	RACOR-T, 37Ü, 9/16"-18 x 9/16"-18, Fem Sw Br
36		87425225		1	ACUMULADOR, Includes 237-6008 O-Ring
37		840-1416		3	TORNILLO, Cross Pan Hd, M4 x 16, See Figure 08-15 - 08-20 For Pilot Control Power Supply Control Unit; See Figure 04-20 For Relay
38		218-5053		12	RACOR, 7/16"-20, 37Ü x 7/16"-20, O-Ring, Incl. 237-6004 O-Ring

08-22		p3	02/08

HIDRAULICA - CONTROL PILOTO

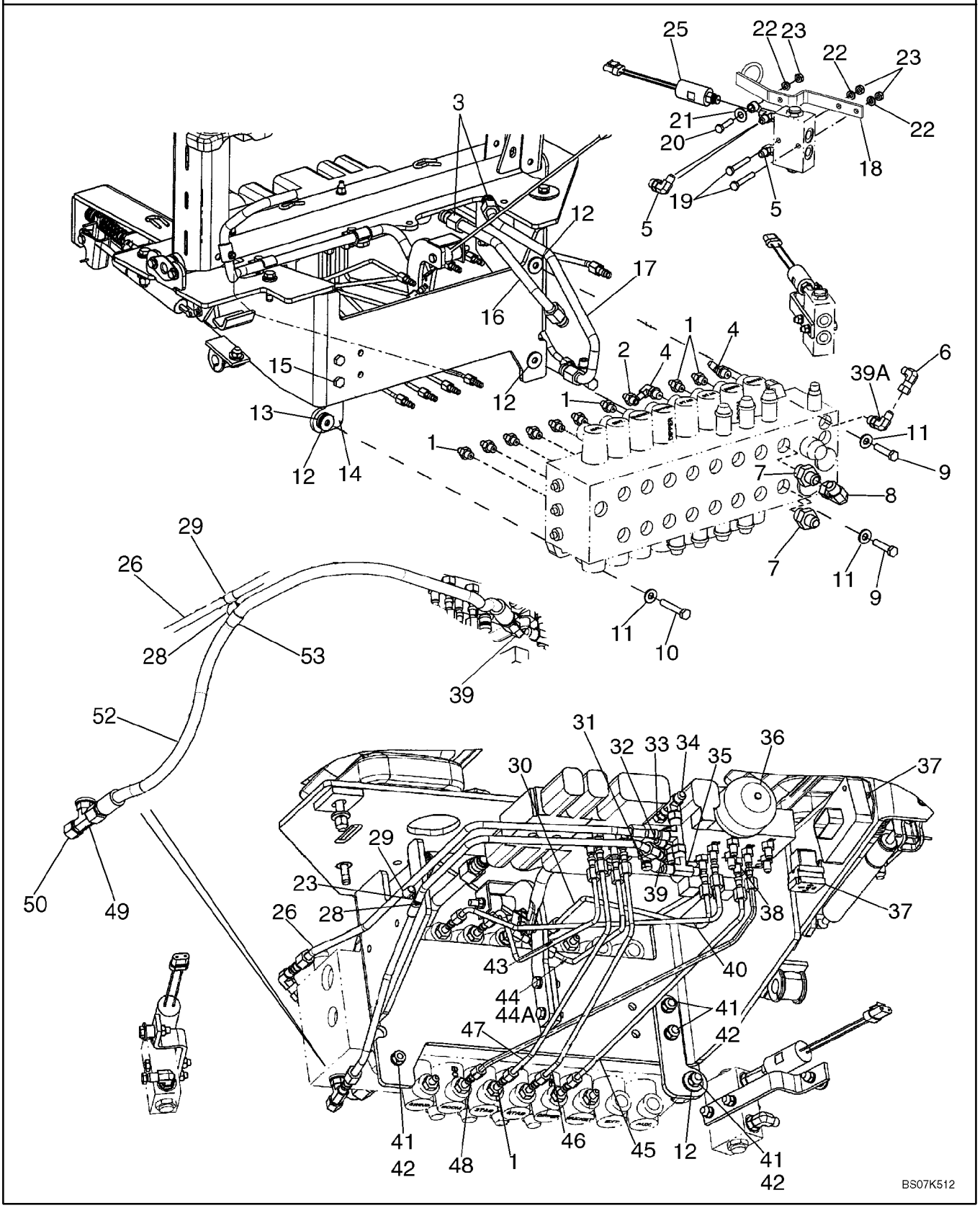

HIDRAULICA - CONTROL PILOTO

REF	FN	PART NUMBER	YR/SN	QTY	DENOMINACION
39		218-5105		2	CODO, 90Ü, 9/16"-18, 37Ü x 9/16"-18, O-Ring, Includes 237-6006 O-Ring
39A		87448990		1	CODO, Includes Orifice; Includes 237-6006 O-Ring
40		87439215		1	TUBO (CONJUNTO), Selector A4 to Boom Port A
41		829-1410		5	TUERCA, M10, Cl 10
42		892-11010		4	ARANDELA DE FRENO, M10
43		87437627		1	TUBO (CONJUNTO), Reducing Valve to Left-Hand Stabilizer Port A
44		87445557		1	TUBO (CONJUNTO), Reducing Valve to Right-Hand Stabilizer Port A; Used With 45 deg Elbow, Ref 44B
45		87437621		1	TUBO (CONJUNTO), Selector A1 to Dipper Port B; If Unit Experiences Dipper Stuttering, As Dipper Is Moving Toward the Unit, Replace Ref 2 Fitting & Ref 30 & 45 Tubes, With (1) 87594363 Snubber, (2) 87594364 Hoses
45		87594364		1	MANGUERA (CONJUNTO), 550 mm (21-21/32 in); Used in Place of 87437621 Tube On Models With Dipper Stuttering
46		87437629		1	TUBO (CONJUNTO), Reducing Valve to Right-Hand Stabilizer Port B
47		87437625		1	TUBO (CONJUNTO), Reducing Valve to Left-Hand Stabilizer Port B
48		87439213		1	TUBO (CONJUNTO), Selector A3 to Boom Port B
49		218-5182		1	RACOR-T, 9/16"-18, 37Ü x 9/16"-18, O-Ring Br, Includes 237-6006 O-Ring
50		218-754		1	TAPON DEL DEPOSITO, 37Ü, 9/16"-18
52		87352590		1	MANGUERA (CONJUNTO), 809 mm (31-7/8 in); Reducing Valve Pressure to Backhoe Valve
53		515-22127		1	BORNE, 1/2", Insul, 5/16" Bolt

08-23		p1	01/08

HIDRAULICA - AUXILIAR DE LA RETROEXCAVADORA (SIN DE CONTROL PILOTO)

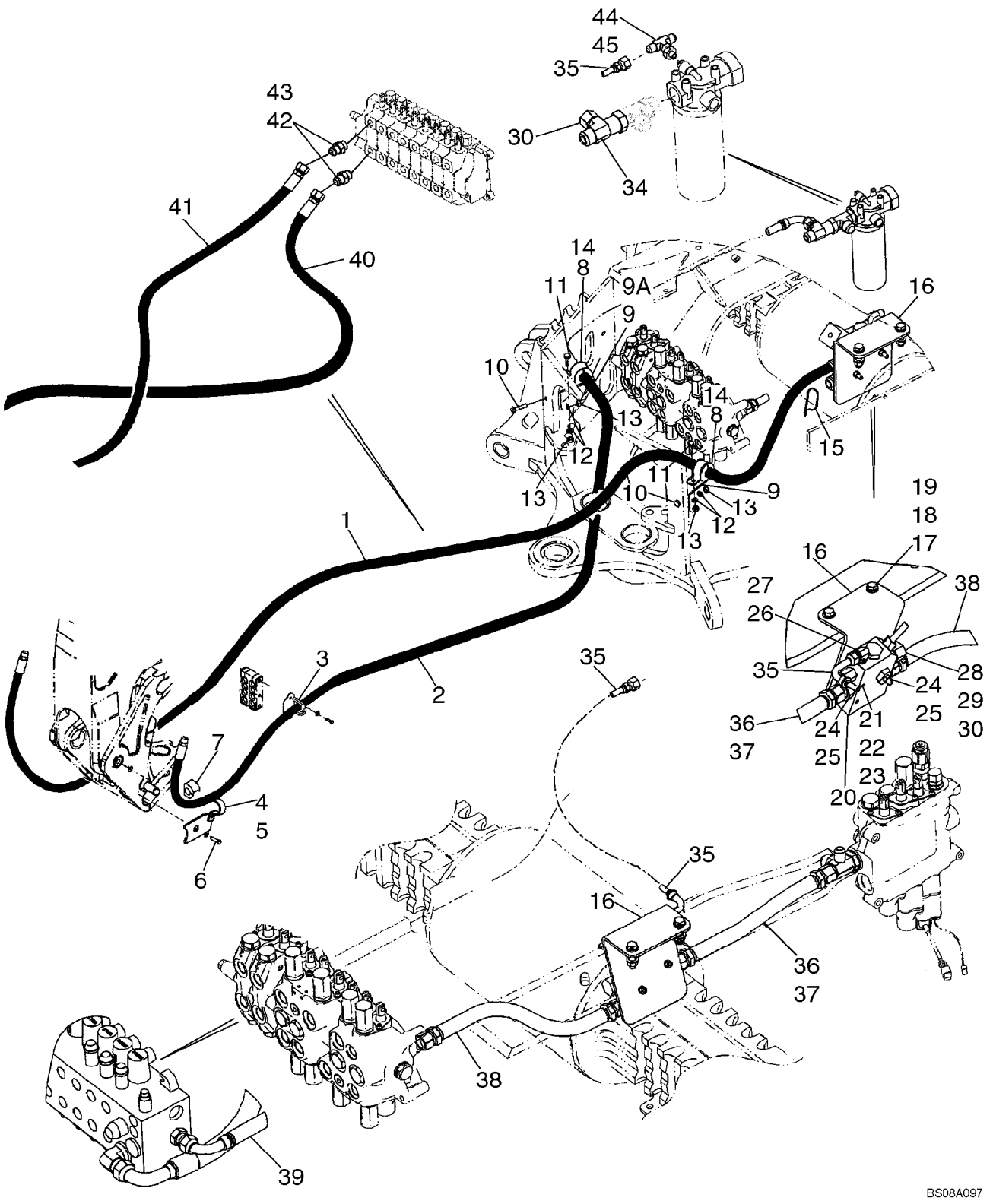

HIDRAULICA - AUXILIAR DE LA RETROEXCAVADORA (SIN DE CONTROL PILOTO)

REF	FN	PART NUMBER	YR/SN	QTY	DENOMINACION
1		87430972		1	MANGUERA (CONJUNTO), 2467 mm (97-1/8 in) Hose; Models With Uni-Directional
2		87429387		1	MANGUERA (CONJUNTO), 2890 mm (113-13/16 in) Hose; Models With Uni-Directional
3		87431630		2	PIEZA DE SOPORTE
4		329799A1		1	APOYADERO, LH
5		329797A1		1	APOYADERO, RH
6		604-20045		2	TORNILLO, Hex, Lock, M20 x 45, Cl 8.8
7		144477A1		2	AMORTIGUADOR
8		144479A1		2	COLLAR
9		413778A1		1-2	PIEZA DE SOPORTE, 45 degree Bend
9A		282842A1		1	PIEZA DE SOPORTE, 90 degree Bend
10		614-10040		2	TORNILLO, Hex, M10 x 40, 8.8, Full Thd
11		614-10025		2	TORNILLO, Hex, M10 x 25, 8.8, Full Thd
12		892-11010		4	ARANDELA DE FRENO, M10
13		829-1410		4	TUERCA, M10, Cl 10
14		144477A1		2	AMORTIGUADOR
15		L18337		1	CIERRA CABLES, 9.95"-12.1" lg
16		87440694		1	PIEZA DE APOYO
17		814-12050		2	TORNILLO, Hex, M12 x 50, 8.8
18		896-11012		4	ARANDELA, M13.5 x 24.5 x 3, HT
19		829-1412		2	TUERCA, M12, Cl 10
20		87421836		1	VALVULA HIDRAULICA, Auxiliary Uni-Directional Valve; See Figure 08-23A
21		814-8070		2	TORNILLO, Hex, M8 x 70, 8.8
22		892-11008		2	ARANDELA DE FRENO, M8
23		829-1408		2	TUERCA, M8, Cl 10
24		218-5050		2	RACOR, 1 5/16"-12, 37Ü x 1 1/16"-12, O-Ring, Incl. Ref 25
25		237-6012		1	JUNTA HERMETICA, 12-1, 90 Duro, .924 ID x .118" Thk
26		218-5280		1	CODO, 90Ü, 3/4"-16, 37Ü x 9/16"-18, O-Ring, Incl. Ref 27
27		237-6006		1	JUNTA HERMETICA, 6-1, 90 Duro, .468" ID x .078" Thk

08-23		p2	01/08

HIDRAULICA - AUXILIAR DE LA RETROEXCAVADORA (SIN DE CONTROL PILOTO)

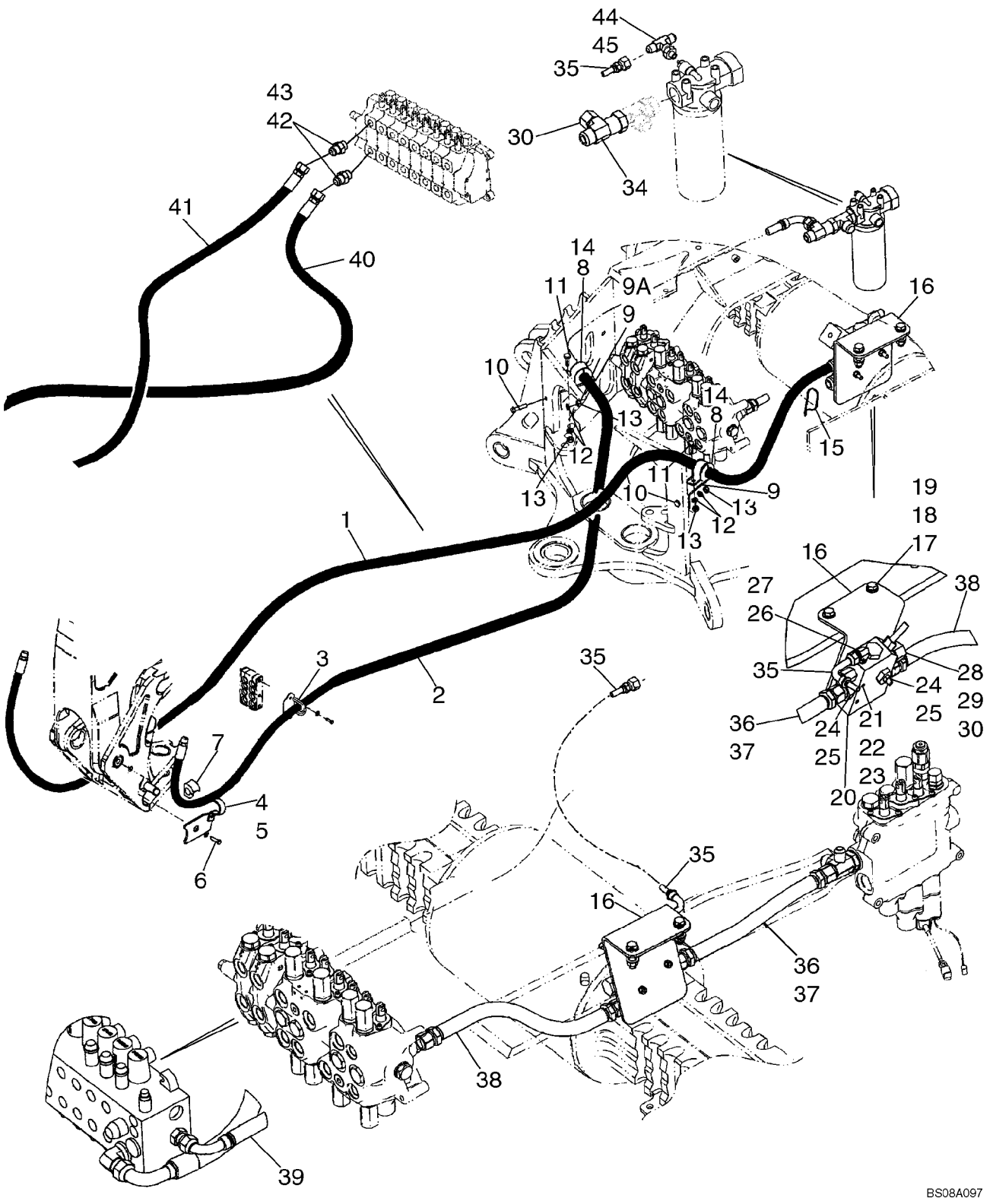

HIDRAULICA - AUXILIAR DE LA RETROEXCAVADORA (SIN DE CONTROL PILOTO)

REF	FN	PART NUMBER	YR/SN	QTY	DENOMINACION
28		218-5064		1	RACOR, 1 1/16"-12, 37Ü x 1 1/16"-12, O-Ring, Incl. Ref 29
29		237-6012		1	JUNTA HERMETICA, 12-1, 90 Duro, .924 ID x .118" Thk
30		218-335		2	TAPON DEL DEPOSITO, 37Ü, 1 1/16"-12
34		218-5216		1	RACOR-T, 37Ü, 1 1/16"-12x1 1/16"-12, Fem Sw Runx1 1/16"-12
35		87422948		1	MANGUERA (CONJUNTO), 930 mm (36-5/8 in)
36		87437232		1	MANGUERA (CONJUNTO), 420 mm (16-9/16 in); Two Spool Loader Valve
37		87437231		1	MANGUERA (CONJUNTO), 370 mm (14-19/32 in); Three Spool Loader Valve
38		87422977		1	MANGUERA (CONJUNTO), 465 mm (18-5/16 in); Power Beyond; Models Without Pilot Controls; Hose Lengthened to 485 mm (19-3/32 in)
39		87428814		1	MANGUERA (CONJUNTO), 458 mm (18-1/32 in); Power Beyond; Models With Pilot Controls
40		87423969		1	MANGUERA (CONJUNTO), 1500 mm (59-1/16 in); Models With Bi-Directional
41		87423970		1	MANGUERA (CONJUNTO), 1725 mm (67-15/16 in); Models With Bi Directional
42		218-5064		2	RACOR, 1 1/16"-12, 37Ü x 1 1/16"-12, O-Ring, Incl. Ref 43
43		237-6012		1	JUNTA HERMETICA, 12-1, 90 Duro, .924 ID x .118" Thk
44		218-5511		1	RACOR-T, 37Ü, 3/4"-16 x 9/16"-18, O-Ring Br, Incl. Ref 45
45		237-6006		1	JUNTA HERMETICA, 6-1, 90 Duro, .468" ID x .078" Thk

CONJUNTO DE LA VALVULA - AUXILIAR UNI-DIRECCIONAL (SIN DE CONTROL PILOTO)

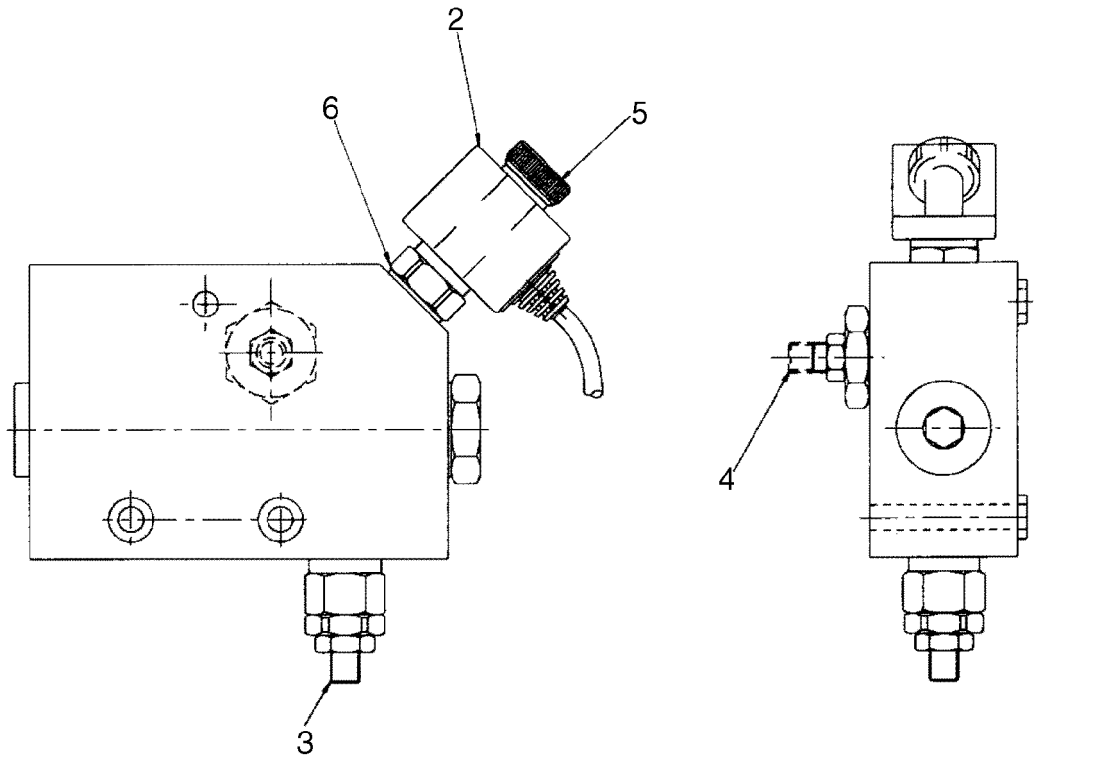

BS07E500

CONJUNTO DE LA VALVULA - AUXILIAR UNI-DIRECCIONAL (SIN DE CONTROL PILOTO)

REF	FN	PART NUMBER	YR/SN	QTY	DENOMINACION
		87421836		1	VALVULA HIDRAULICA, Auxiliary Uni-Directional Valve; Incl. 1 - 6
1		9970181		1	SERIE DE JUNTAS, Miscellaneous Gaskets; Not Illustrated
2		87421832		1	BOBINA, Solenoid With Connector
3		9970178		1	VĆLVULA, DESCARGA
4		9970179		1	REGULADOR, Voltage Assy
5		9970384		1	TUERCA, Ring
6		9970180		1	ELECTROVĆLVULA

08-23B		p1	01/08

HIDRAULICA - AUXILIAR DE LA RETROEXCAVADORA (CON DE CONTROL PILOTO)

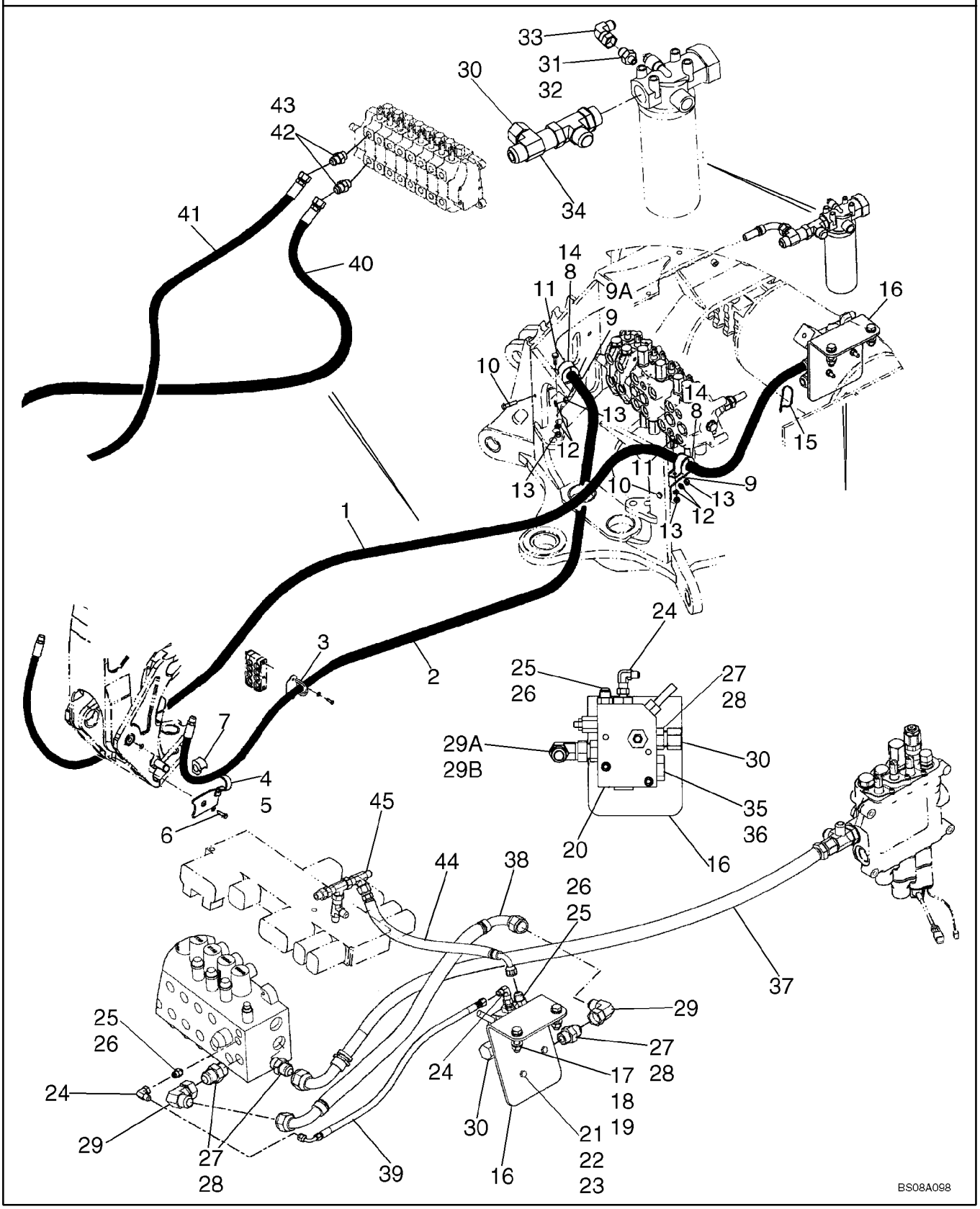

HIDRAULICA - AUXILIAR DE LA RETROEXCAVADORA (CON DE CONTROL PILOTO)

REF	FN	PART NUMBER	YR/SN	QTY	DENOMINACION
1		87430972		1	MANGUERA (CONJUNTO), 2467 mm (97-1/8 in) Hose; Models With Uni-Directional
2		87429387		1	MANGUERA (CONJUNTO), 2890 mm (113-13/16 in) Hose; Models With Uni-Directional
3		87431630		2	PIEZA DE SOPORTE
4		329799A1		1	APOYADERO, LH
5		329797A1		1	APOYADERO, RH
6		604-20045		2	TORNILLO, Hex, Lock, M20 x 45, Cl 8.8
7		144477A1		2	AMORTIGUADOR
8		144479A1		2	COLLAR
9		413778A1		1-2	PIEZA DE SOPORTE, 45 degree Bend
9A		282842A1		1	PIEZA DE SOPORTE, 90 degree Bend
10		614-10040		2	TORNILLO, Hex, M10 x 40, 8.8, Full Thd
11		614-10025		2	TORNILLO, Hex, M10 x 25, 8.8, Full Thd
12		892-11010		4	ARANDELA DE FRENO, M10
13		829-1410		4	TUERCA, M10, Cl 10
14		144477A1		2	AMORTIGUADOR
15		L18337		1	CIERRA CABLES, 9.95"-12.1" lg
16		87440694		1	PIEZA DE APOYO
17		814-12050		2	TORNILLO, Hex, M12 x 50, 8.8
18		896-11012		4	ARANDELA, M13.5 x 24.5 x 3, HT
19		829-1412		2	TUERCA, M12, Cl 10
20		87448993		1	VALVULA HIDRAULICA, Auxiliary Hammer Uni-Directional Valve; See Figure 08-23C
21		814-8070		2	TORNILLO, Hex, M8 x 70, 8.8
22		892-11008		2	ARANDELA DE FRENO, M8
23		829-1408		2	TUERCA, M8, Cl 10
24		218-980		2	CODO, 90Ü, 9/16"-18, 37Ü x 9/16"-18, 37Ü Fem Sw
25		218-5057		2	RACOR, 9/16"-18, 37Ü x 9/16"-18, O-Ring, Incl. Ref 26
26		237-6006		1	JUNTA HERMETICA, 6-1, 90 Duro, .468" ID x .078" Thk
27		218-5064		4	RACOR, 1 1/16"-12, 37Ü x 1 1/16"-12, O-Ring, Incl. Ref 28
28		237-6012		1	JUNTA HERMETICA, 12-1, 90 Duro, .924 ID x .118" Thk

08-23B		p2	01/08

HIDRAULICA - AUXILIAR DE LA RETROEXCAVADORA (CON DE CONTROL PILOTO)

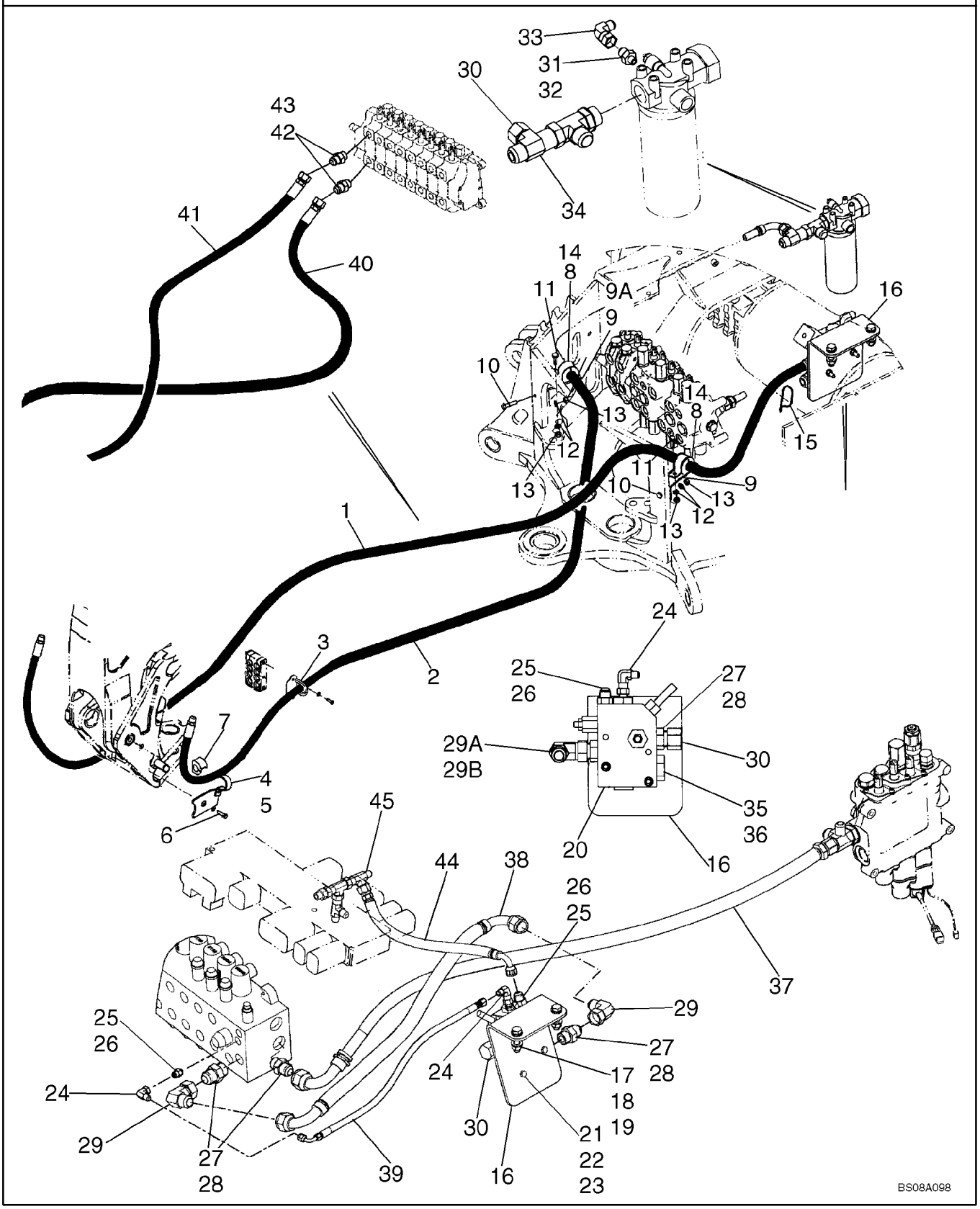

HIDRAULICA - AUXILIAR DE LA RETROEXCAVADORA (CON DE CONTROL PILOTO)

REF	FN	PART NUMBER	YR/SN	QTY	DENOMINACION
29		218-5231		1	CODO, 90Ü, 1 1/16"-12, 37Ü x 1 1/16"-12, 37Ü Fem Sw
29A		218-5108		1	CODO, 90Ü, 1 1/16"-12, 37Ü x 1 1/16"-12, O-Ring
30		218-335		2	TAPON DEL DEPOSITO, 37Ü, 1 1/16"-12
29B		237-6012		1	JUNTA HERMETICA, 12-1, 90 Duro, .924 ID x .118" Thk
32		237-6006		1	JUNTA HERMETICA, 6-1, 90 Duro, .468" ID x .078" Thk
31		218-5351		1	RACOR, 3/4"-16, 37Ü x 9/16"-18, O-Ring, Incl. Ref 32
33		218-5230		1	CODO, 90Ü, 3/4"-16, 37Ü x 3/4"-16, 37Ü Fem Sw
34		218-5216		1	RACOR-T, 37Ü, 1 1/16"-12x1 1/16"-12, Fem Sw Runx1 1/16"-12
35		218-5158		1	TAPčN, Hex Hd, 1 1/16"-12 ORB, Incl. Ref 36
36		237-6012		1	JUNTA HERMETICA, 12-1, 90 Duro, .924 ID x .118" Thk
37		87455832		1	MANGUERA (CONJUNTO), 1020 mm (40-3/16 in); Loader Valve to Backhoe Valve; Power Beyond
38		87518479		1	MANGUERA (CONJUNTO), 770 mm (30-11/32 in); 'E' Port Auxiliary Hammer Uni-Directional Valve to Backhoe Valve
39		87443052		1	MANGUERA (CONJUNTO), 715 mm (28-5/32 in); 'LS' Port Auxiliary Hammer Uni-Direction Valve to Backhoe Valve
40		87423969		1	MANGUERA (CONJUNTO), 1500 mm (59-1/16 in); Models With Bi-Directional
41		87423970		1	MANGUERA (CONJUNTO), 1725 mm (67-15/16 in); Models With Bi Directional
42		218-5064		2	RACOR, 1 1/16"-12, 37Ü x 1 1/16"-12, O-Ring, Incl. Ref 43
43		237-6012		1	JUNTA HERMETICA, 12-1, 90 Duro, .924 ID x .118" Thk
44		87445794		1	MANGUERA (CONJUNTO), 375 mm (14-13/16 in)
45		218-5222		1	RACOR-T, 37Ü, 9/16"-18, x 9/16"-18, Fem Sw Run

CONJUNTO DE LA VALVULA - AUXILIAR UNI-DIRECCIONAL (CON DE CONTROL PILOTO)

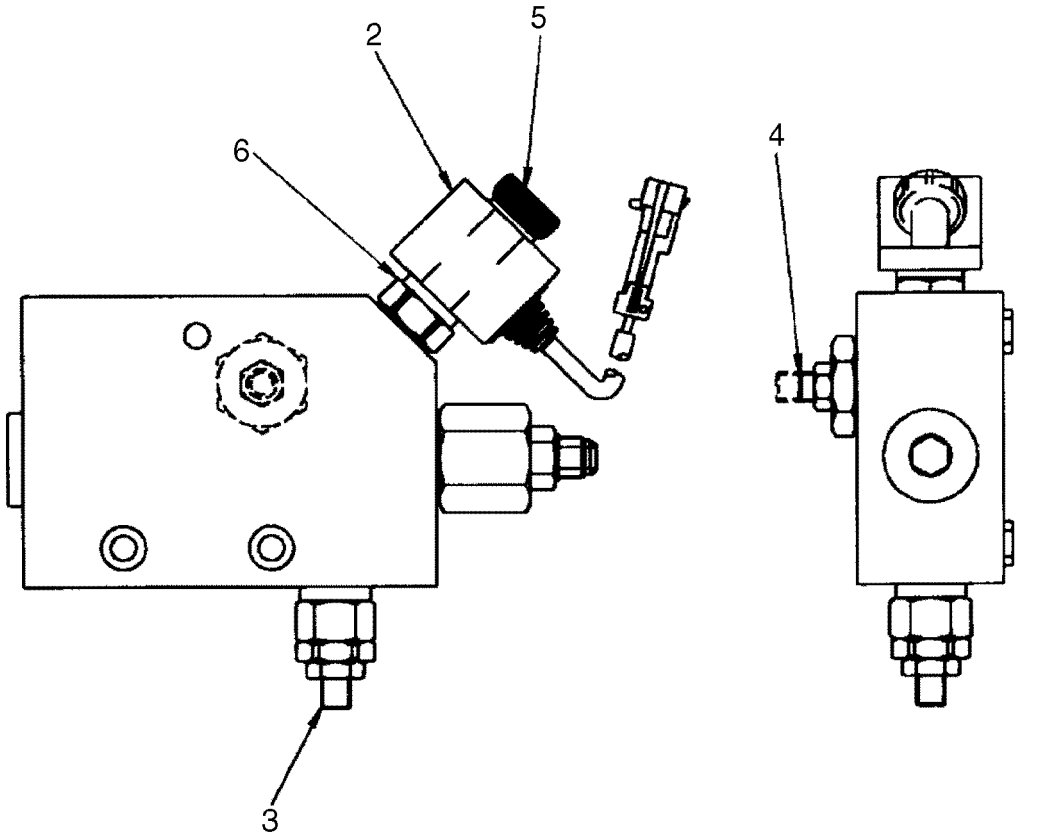

BS07E499

CONJUNTO DE LA VALVULA - AUXILIAR UNI-DIRECCIONAL (CON DE CONTROL PILOTO)

REF	FN	PART NUMBER	YR/SN	QTY	DENOMINACION
		87448993		1	VALVULA HIDRAULICA, Auxiliary Uni-Directional Valve; Incl. 1 - 6
1		9970181		1	SERIE DE JUNTAS, Miscellaneous Gaskets; Not Illustrated
2		87421832		1	BOBINA, Solenoid With Connector
3		9970178		1	VĆLVULA, DESCARGA
4		9970179		1	REGULADOR, Voltage Assy
5		9970384		1	TUERCA, Ring
6		9970180		1	ELECTROVĆLVULA

08-24		p1	02/08

HIDRAULICA - AUXILIAR DE LA RETROEXCAVADORA, EN EL AGUILĎN Y LA PALA

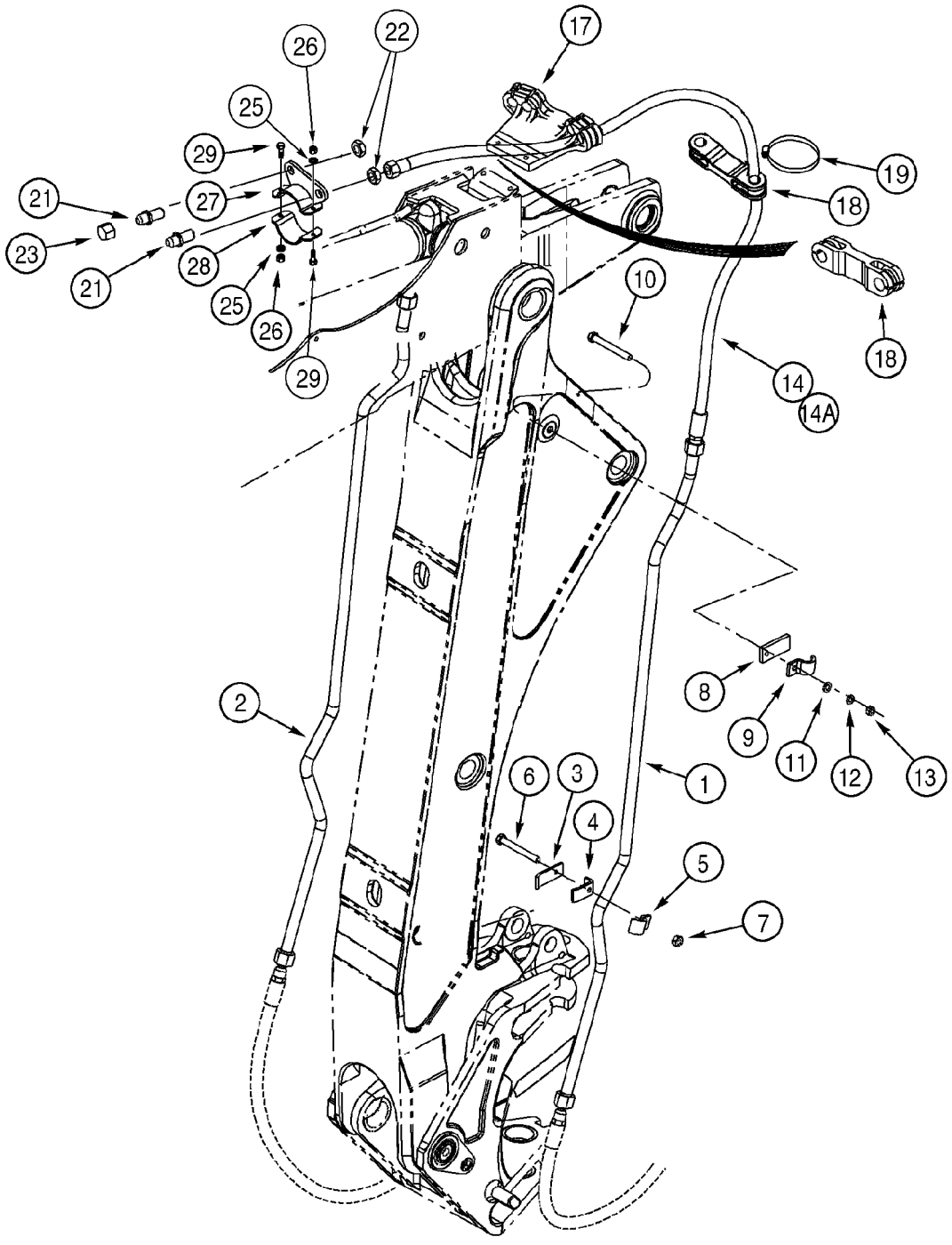

HIDRAULICA - AUXILIAR DE LA RETROEXCAVADORA, EN EL AGUILĎN Y LA PALA

REF	FN	PART NUMBER	YR/SN	QTY	DENOMINACION
		REF			MANUAL, AT BOOM AND DIPPER
1		243300A1		1	CUELLO DE CARGA, Tube
2		243404A1		1	CUELLO DE CARGA, Tube
3		D149309		2	COLLAR
4		243298A1		2	COLLAR
5		242459A1		2	BRIDA, Clamp
6		814-10060		2	TORNILLO, Hex, M10 x 60, 8.8
7		829-1410		2	TUERCA, M10, Cl 10
8		243398A1		2	APOYADERO
9		242459A1		2	BRIDA, Clamp
10		814-10050		2	TORNILLO, Hex, M10 x 50, 8.8, Not Required With Standard Dipper
11		895-11010		2	ARANDELA, M10 x 20 x 2
12		892-11010		2	ARANDELA DE FRENO, M10
13		829-1410		2	TUERCA, M10, Cl 10
14		243679A2		2	MANGA, 2665 mm (104-15/16 in); Models With Extendable Dipper
14A		256210A2		2	MANGA, 1285 mm (50-19/32 in); Models Without Extendable Dipper
17		246151A1		1	APOYADERO, Models With Extendable Dipper; Used With (2) 214-3156 Clamps
18		103670A1		2	ABRAZADERA MANGUERA, Rubber
19		214-3132		4	ABRAZADERA MANGUERA, 1.25/2.125 HD Worm
21		218-676		2	CONEXION, Blkhd, 1 1/16"-12, 37Ü x 1 1/16"-12, 37Ü
22		218-1256		2	CONTRA TUERCA, Blkhd, 1 1/16"-12
23		218-335		2	TAPON DEL DEPOSITO, 37Ü, 1 1/16"-12
25		896-11010		2	ARANDELA, M10 x 21.5 x 2.5, HT
26		832-10410		2	CONTRA TUERCA, M10 x 1.5, Cl 8
27		314319A1		1	ABRAZADERA
28		314320A1		1	ABRAZADERA
29		614-10040		2	TORNILLO, Hex, M10 x 40, 8.8, Full Thd

08-25		p1	12/07

HIDRAULICA - DISPOSITIVO ANTICABECEO

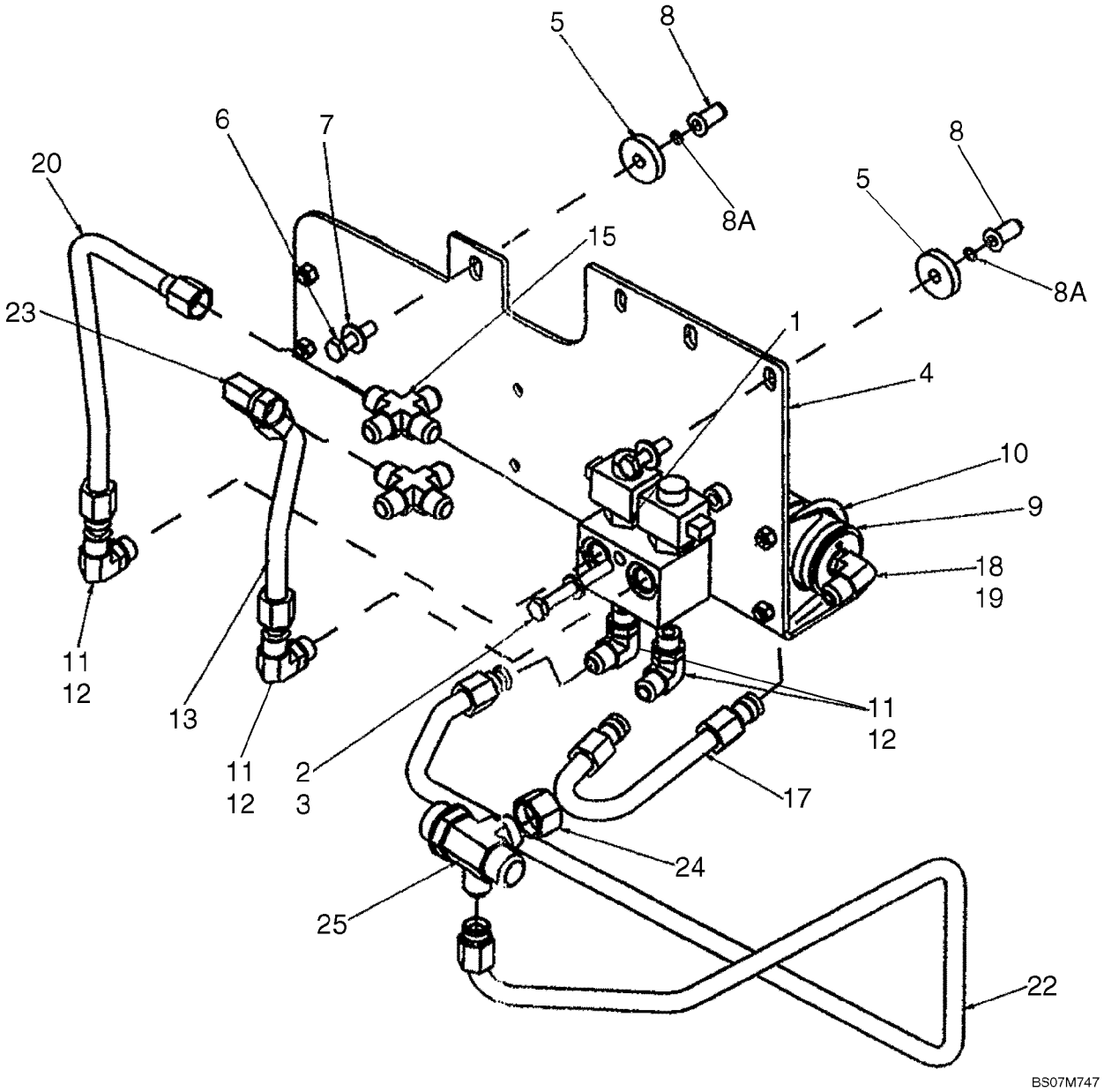

HIDRAULICA - DISPOSITIVO ANTICABECEO

REF	FN	PART NUMBER	YR/SN	QTY	DENOMINACION
		REF			MANUAL, RIDE CONTROL HYDRAULIC AND ELECTRICAL CIRCUIT
1		87433240		1	ELECTROVĆLVULA, Ride Control; Component Parts Not Available At Time Of Printing
2		814-10080		1	TORNILLO, Hex, M10 x 80, 8.8
3		895-11010		1	ARANDELA, M10 x 20 x 2
4		87421213		1	PIEZA DE APOYO
5		87423067		2	SEPARADOR
6		814-10040		2	TORNILLO, Hex, M10 x 40, 8.8, Full Thd
7		895-15010		2	ARANDELA, M11 x 24 x 2
8		87417721		2	ROSCA POSTIZA, M10
8A		238-5011		2	JUNTA HERMETICA, -011, 70 Duro, .301" ID x .070" Thk
9		448284A1		1	ACUMULADOR, Ride Control; Component Parts Not Serviced Separately; Used In Production, For Service, Order 234412A1 Accumulator
9		234412A1		1	ACUMULADOR, Ride Control; See Figure 08-60
10		A13240		2	COLLAR, Two Piece; Includes Hardware
11		218-5117		4	CODO, 90Ü, 7/8"-14, 37Ü x 3/4"-16, O-Ring, Incl. Ref 12
12		237-6008		1	JUNTA HERMETICA, 8-1, 90 Duro, .644" ID x .087" Thk
13		87675026		1	TUBERIA HIDRAULICO, Solenoid Valve to Loader Control Valve Lower Lift Section Port
15		218-655		2	RACOR DE 4 BOCAS, 7/8"-14, 37Ü
17		87420696		1	TUBO (CONJUNTO), Accumulator to Solenoid Valve
18		218-5600		1	CODO, 90Ü, 7/8"-14, 37Ü x 3/4"-16, O-Ring, Incl. Ref 19
19		237-6008		1	JUNTA HERMETICA, 8-1, 90 Duro, .644" ID x .087" Thk
20		87675071		1	TUBERIA HIDRAULICO, Solenoid Valve To Loader Control Valve Upper Lift Section Port
22		87675074		1	TUBERIA HIDRAULICO, Solenoid Valve To Filter
23		218-5232		1	CODO, 90Ü, 7/8"-14, 37Ü x 7/8"-14, 37Ü Fem Sw
24		218-335		1	TAPON DEL DEPOSITO, 37Ü, 1 1/16"-12

HIDRAULICA - DISPOSITIVO ANTICABECEO

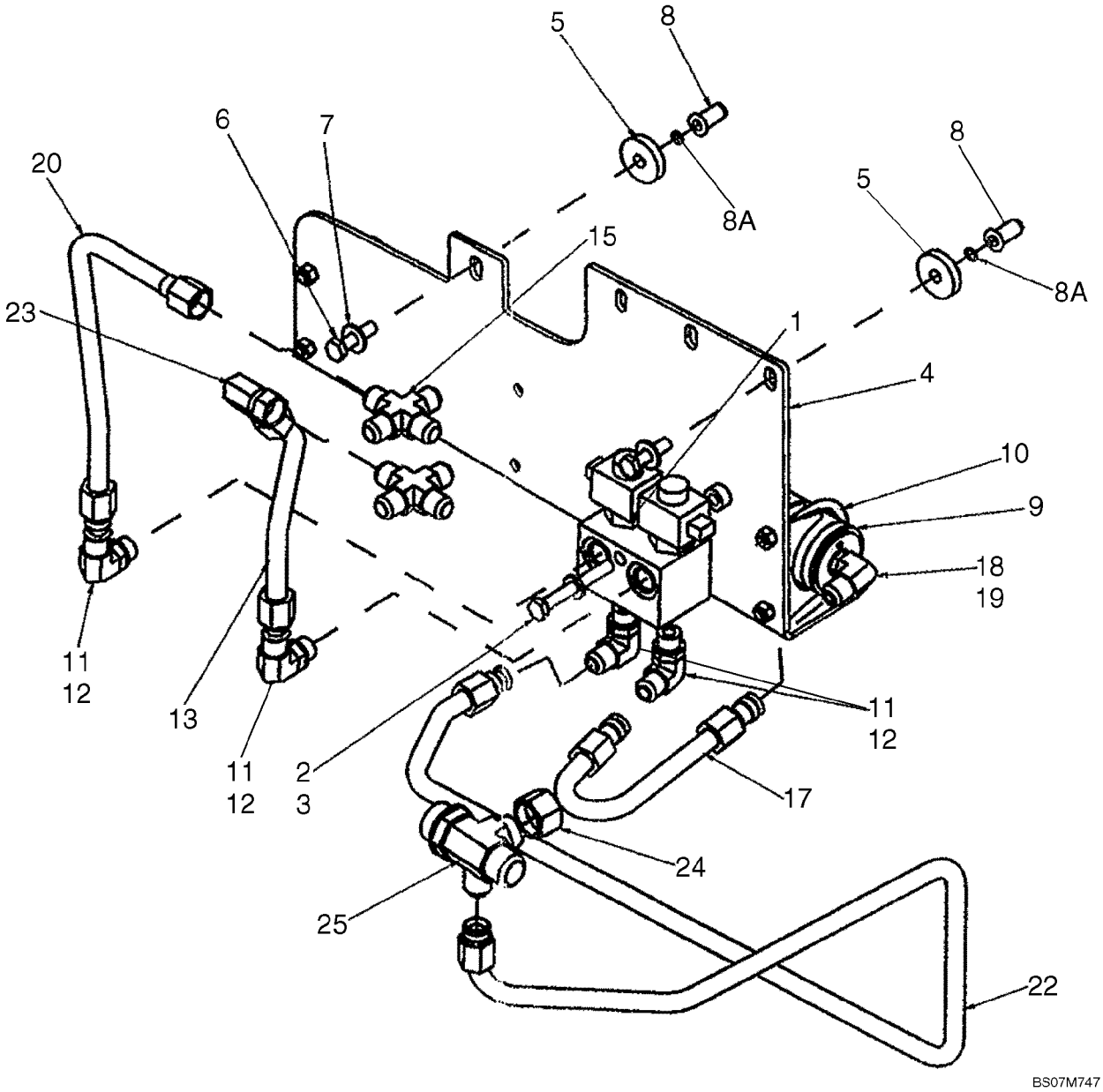

HIDRAULICA - DISPOSITIVO ANTICABECEO

REF	FN	PART NUMBER	YR/SN	QTY	DENOMINACION
25		87436066		1	CONEXION
26		235002A1		1	CONTACTOR, Ride Control; Not Illustrated; See Figure 04-10

08-26		p1	02/08

HIDRAULICA - ACOPLADOR, HERRAMIENTA RÓPIDA DE LA CARGADORA

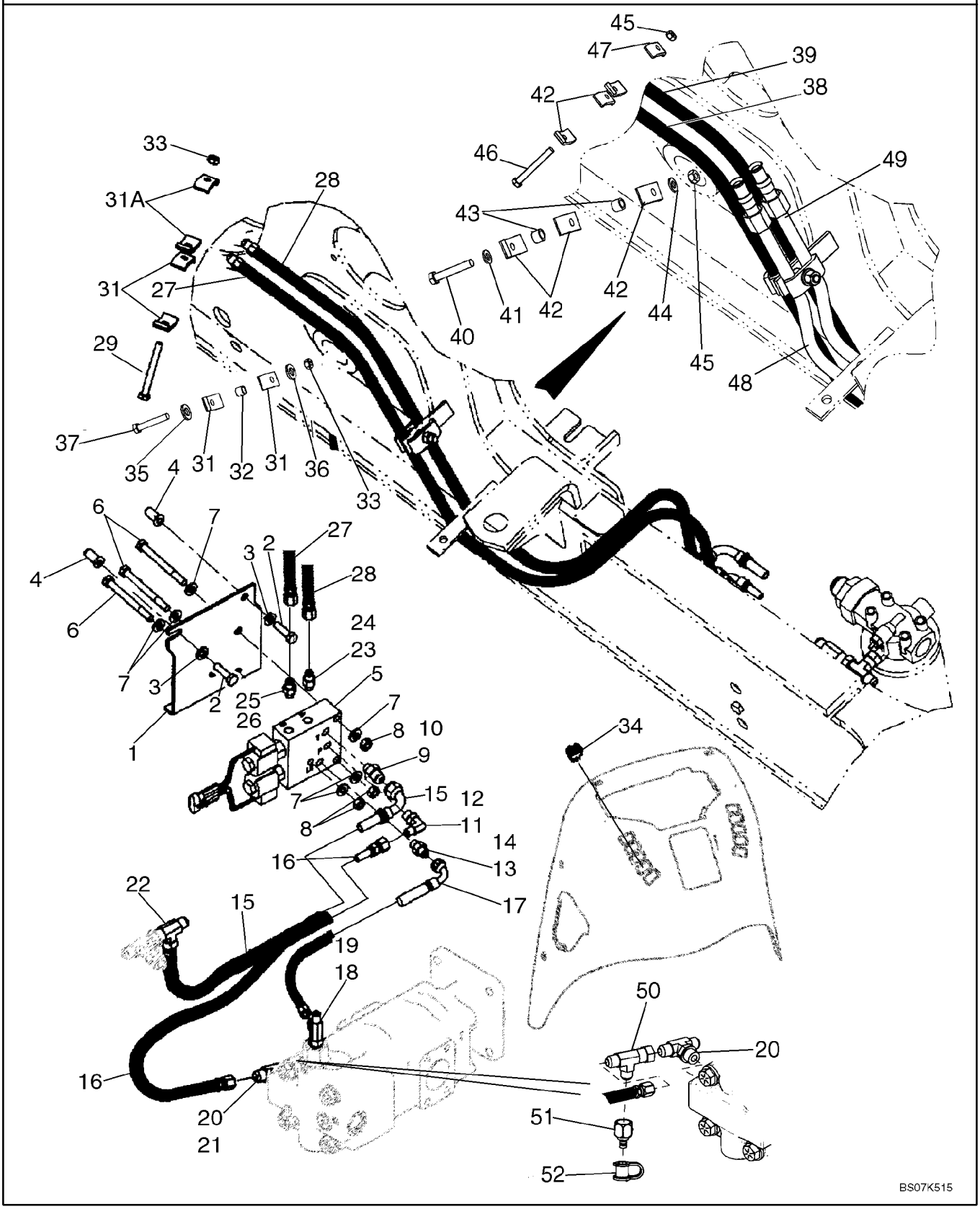

HIDRAULICA - ACOPLADOR, HERRAMIENTA RćPIDA DE LA CARGADORA

REF	FN	PART NUMBER	YR/SN	QTY	DENOMINACION
1		87437263		1	PIEZA DE APOYO, Coupler Valve Mounting
2		614-10035		2	TORNILLO, Hex, M10 x 35, 8.8, Full Thd
3		896-11010		2	ARANDELA, M10 x 21.5 x 2.5, HT
4		87417721		2	ROSCA POSTIZA, M10
5		87435909		1	ELECTROVĆLVULA, Coupler; Loader Tool; See Figure 08-28
6		814-10060		3	TORNILLO, Hex, M10 x 60, 8.8
7		896-11010		6	ARANDELA, M10 x 21.5 x 2.5, HT
8		829-1410		3	TUERCA, M10, Cl 10
9		218-5351		1	RACOR, 3/4"-16, 37Ü x 9/16"-18, O-Ring, Incl. Ref 10
10		237-6006		1	JUNTA HERMETICA, 6-1, 90 Duro, .468" ID x .078" Thk
11		218-5105		1	CODO, 90Ü, 9/16"-18, 37Ü x 9/16"-18, O-Ring, Incl. Ref 12
12		237-6006		1	JUNTA HERMETICA, 6-1, 90 Duro, .468" ID x .078" Thk
13		218-5057		1	RACOR, 9/16"-18, 37Ü x 9/16"-18, O-Ring, Incl. Ref 14
14		237-6006		1	JUNTA HERMETICA, 6-1, 90 Duro, .468" ID x .078" Thk
15		87434265		1	MANGUERA (CONJUNTO), 500 mm (19-11/16 in); Coupler Valve to Filter
16		87452402		1	MANGUERA (CONJUNTO), 830 mm (32-11/16 in); Pump to Coupler Pressure Port
17		87452403		1	MANGUERA (CONJUNTO), 600 mm (23-5/8 in); Pump to Coupler Valve Load Sense Port
18		282428A1		1	VĆLVULA DE PASO, Check Tee; Incl. Ref 19
19		237-6006		1	JUNTA HERMETICA, 6-1, 90 Duro, .468" ID x .078" Thk
20		218-5183		1	RACOR-T, 3/4"-16, 37Ü x 3/4"-16, O-Ring Br, Incl. Ref 21; Replaces Standard Steering Fitting
21		237-6008		1	JUNTA HERMETICA, 8-1, 90 Duro, .644" ID x .087" Thk
22		218-845		1	RACOR-T, 37Ü, 3/4"-16 x 3/4"-16, Fem Sw Run, Attaches to Tee At Back Of Filter
23		218-5053		1	RACOR, 7/16"-20, 37Ü x 7/16"-20, O-Ring, Incl. Ref 24

08-26		p2	02/08

HIDRAULICA - ACOPLADOR, HERRAMIENTA RÓPIDA DE LA CARGADORA

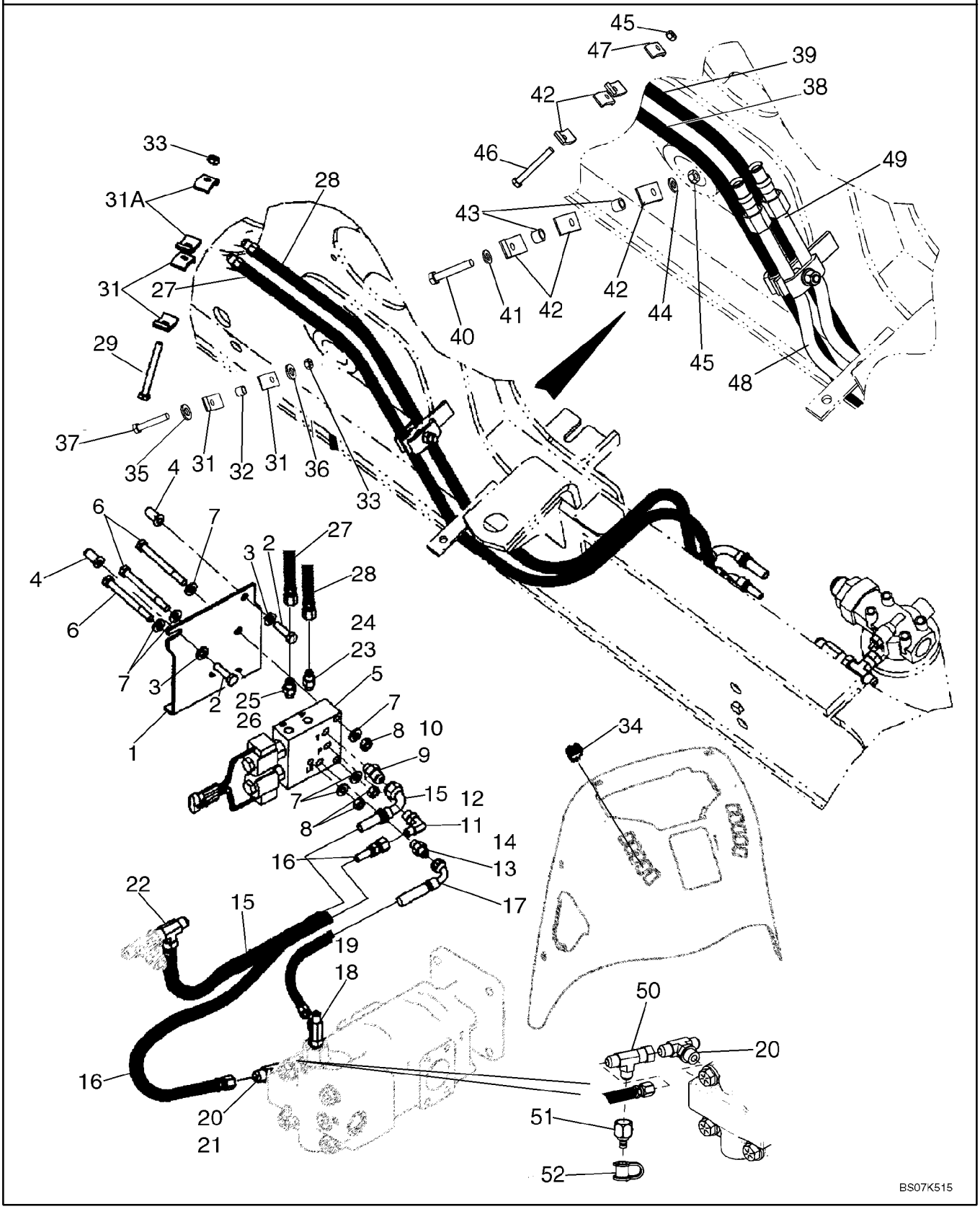

HIDRAULICA - ACOPLADOR, HERRAMIENTA RćPIDA DE LA CARGADORA

REF	FN	PART NUMBER	YR/SN	QTY	DENOMINACION
24		237-6004		1	JUNTA HERMETICA, 4-1, 90 Duro, .351" ID x .072" Thk
25		218-5056		1	RACOR, 1/2"-20, 37Ü x 1/2"-20, O-Ring, Incl. Ref 26
26		237-6005		1	JUNTA HERMETICA, 5-1, 90 Duro, .414" ID x .072" Thk
		REF			MANUAL, COUPLER ONLY (SEE REF 38-49 FOR CLAMPING ON MODELS WITH COUPLER AND 3-SPOOL LOADER VALVE)
27		87427539		1	MANGUERA (CONJUNTO), 1815 mm (71-1/2 in); B Port
28		87427537		1	MANGUERA (CONJUNTO), 1815 mm (71-1/2 in); A Port
29		814-10090		1	TORNILLO, Hex, M10 x 90, 8.8
31		D138055		5	COLLAR
31A		D143846		2	BRIDA, CLAMP
32		120303A1		1	ESPACIADOR
33		832-10410		2	CONTRA TUERCA, M10 x 1.5, Cl 8
34		398675A2		1	CONTACTOR, Loader Tool Quick Coupler
35		892-11010		1	ARANDELA DE FRENO, M10
36		896-11010		1	ARANDELA, M10 x 21.5 x 2.5, HT
37		83931335		1	TORNILLO, Hex, M10 x 75, 8.8
		REF			MANUAL, COUPLER AND 3-SPOOL LOADER VALVE (SEE REF 27-37 FOR CLAMPING ON MODELS WITH COUPLER ONLY)
38		87427539		1	MANGUERA (CONJUNTO), 1815 mm (71-1/2 in); B Port
39		87427537		1	MANGUERA (CONJUNTO), 1815 mm (71-1/2 in); A Port
40		83931335		1	TORNILLO, Hex, M10 x 75, 8.8
41		892-11010		1	ARANDELA DE FRENO, M10
42		D138055		5	COLLAR
43		120303A1		2	ESPACIADOR
44		896-11010		1	ARANDELA, M10 x 21.5 x 2.5, HT
45		832-10410		2	CONTRA TUERCA, M10 x 1.5, Cl 8
46		814-10090		1	TORNILLO, Hex, M10 x 90, 8.8

08-26		p3	02/08

HIDRAULICA - ACOPLADOR, HERRAMIENTA RÓPIDA DE LA CARGADORA

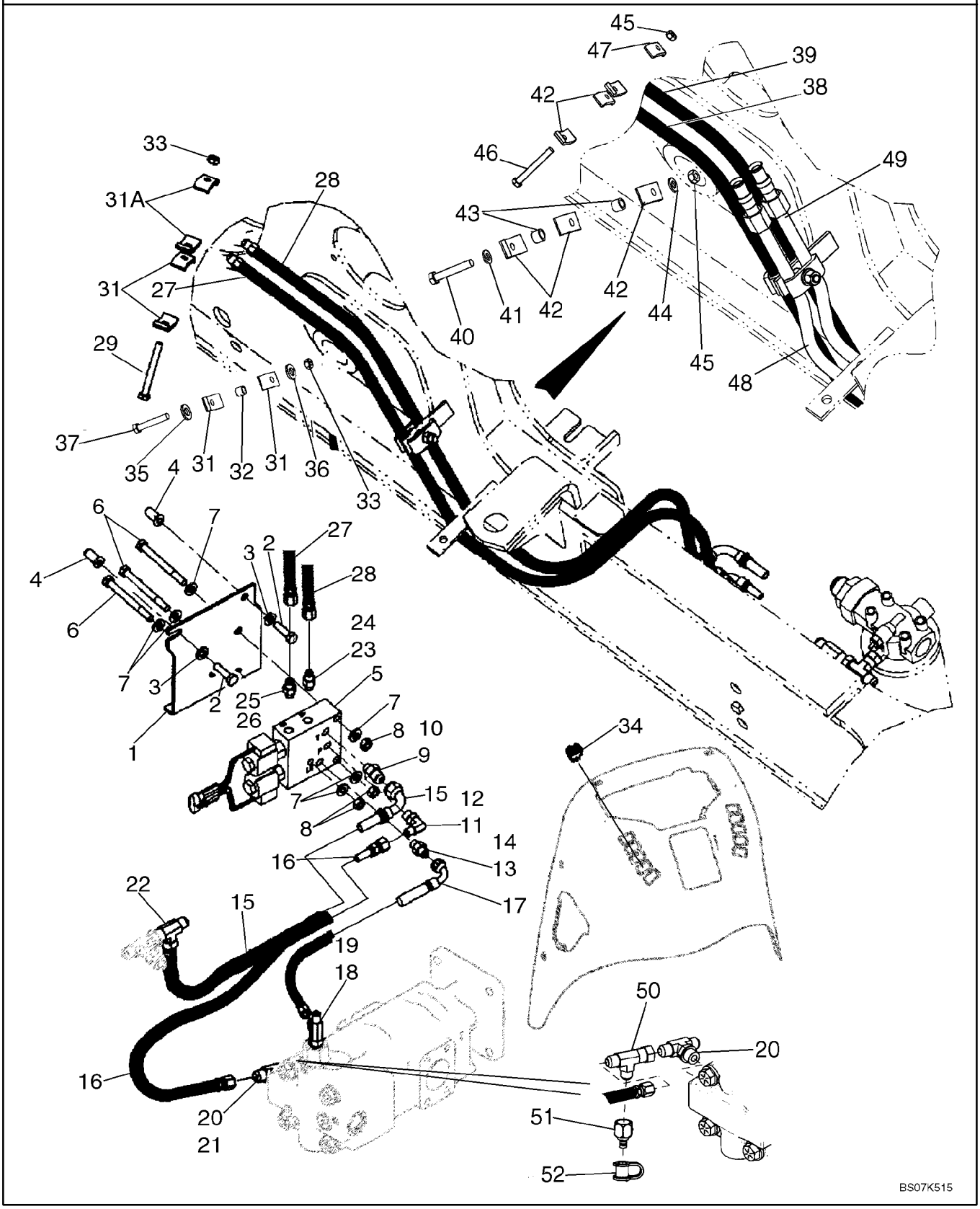

HIDRAULICA - ACOPLADOR, HERRAMIENTA RćPIDA DE LA CARGADORA

REF	FN	PART NUMBER	YR/SN	QTY	DENOMINACION
47		D143846		2	BRIDA, Clamp
48		{87478483}		1	Tube, Loader Clam; A Port
49		87449440		1	TUBO (CONJUNTO), Loader Clam; B Port
50		218-845		1	RACOR-T, 37Ü, 3/4"-16 x 3/4"-16, Fem Sw Run
51		192834A1		1	CARDAN, Diagnostic
52		H434163		1	CAPUCHON GUARDA-POLVO

HIDRAULICA - ACOPLADOR, HERRAMIENTA RÁPIDA DE LA CARGADORA; EN EL CHASIS DE ELEVACIÓN DE LA CARGADORA; EN E

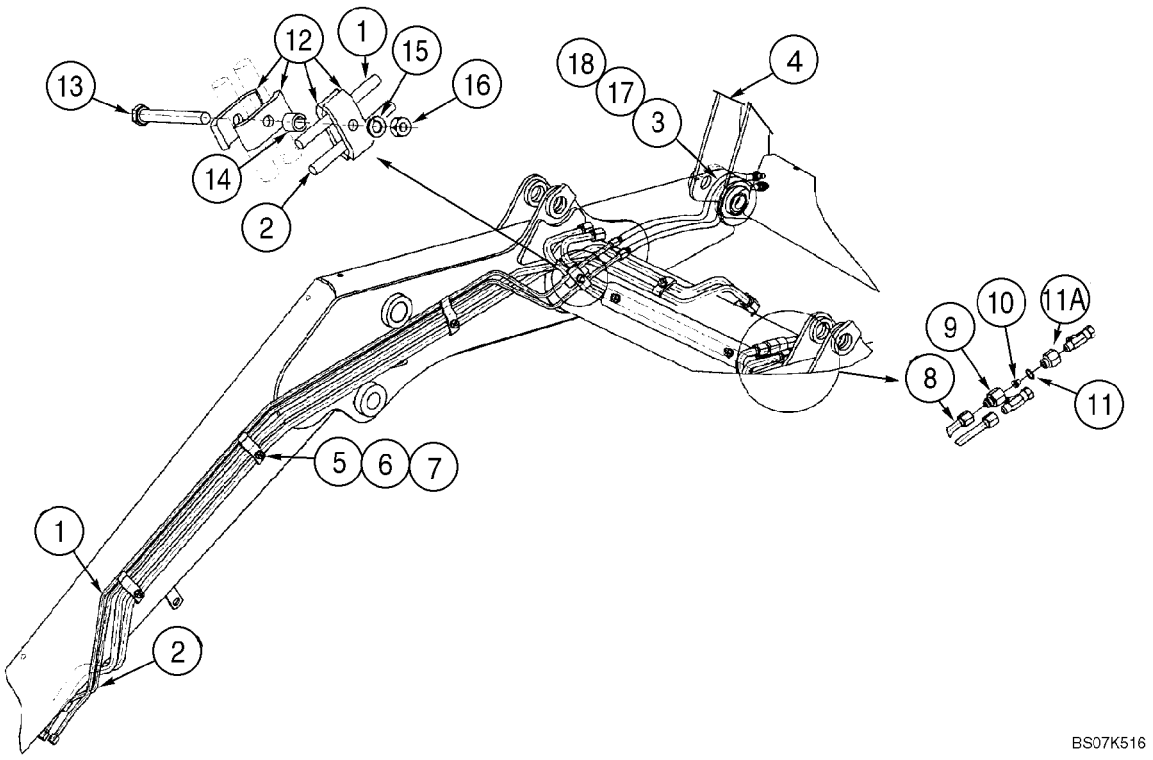

HIDRAULICA - ACOPLADOR, HERRAMIENTA RćPIDA DE LA CARGADORA; EN EL CHASIS DE ELEVACIĎN DE LA CARGADORA

REF	FN	PART NUMBER	YR/SN	QTY	DENOMINACION
		REF			MANUAL, AT LOADER LIFT FRAME
1		87716490		1	TUBERIA HIDRAULICO
2		87716492		1	TUBERIA HIDRAULICO
3		300996A3		2	MANGUERA (CONJUNTO), 772 mm (30-13/32 in)
4		REF		1	MANUAL, Coupler, Hydr., Loader Tool Quick Coupler; For Complete Assembly, See Figure 09-10; Order From Machinery Price List; Use Standard Loader Bucket Pins To Mount Coupler
5		302820A2		3	COLLAR
6		892-11010		3	ARANDELA DE FRENO, M10
7		829-1410		3	TUERCA, M10, Cl 10
8		87716484		1	TUBERIA HIDRAULICO
9		304424A1		1	CONECTOR
10		304890A1		1	UNION REDUCCION
11		237-6010		1	JUNTA HERMETICA, 10-1, 90 Duro, .755" ID x .097" Thk
11A		309674A1		1	CONECTOR, 7/8 male x 7/8 female
12		D138055		4	COLLAR
13		814-10090		1	TORNILLO, Hex, M10 x 90, 8.8
14		120303A1		1	ESPACIADOR
15		892-11010		1	ARANDELA DE FRENO, M10
16		829-1410		1	TUERCA, M10, Cl 10
17		307277A1		1	MANGUITO
18		L18337		2	CIERRA CABLES, 9.95"-12.1" lg

CONJUNTO DE LA VÁLVULA DEL ACOPLADOR - HERRAMIENTA RÁPIDA DE LA CARGADORA

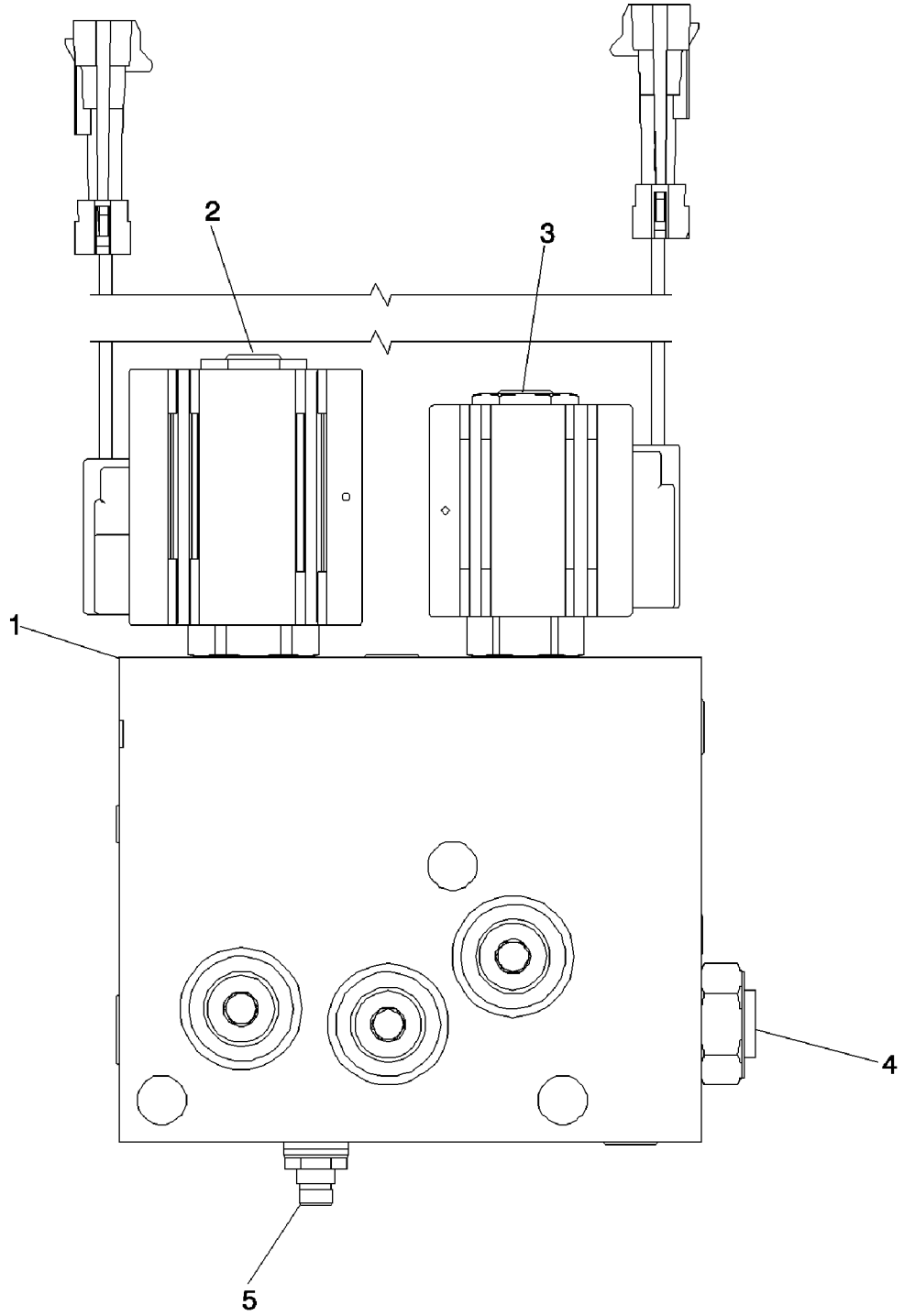

BS03M143

CONJUNTO DE LA VóLVULA DEL ACOPLADOR - HERRAMIENTA RóPIDA DE LA CARGADORA

REF	FN	PART NUMBER	YR/SN	QTY	DENOMINACION
		87435909		1	ELECTROVĆLVULA, Incl. Ref 1 - 5
1		NSS		1	NO SE REPARA SEPARADAM., Body
2		87438021		1	ELECTROVĆLVULA, 4-Way Cartridge With Coil; Includes 87438022, 87438023, 87438024
		87438022		1	VALVULA HIDRAULICA, Cartridge
		87438023		1	BOBINA, Solenoid
		87438024		1	SERIE DE JUNTAS, 4-Way Solenoid
3		87438025		1	ELECTROVĆLVULA, 2-Way 2-Position Cartridge With Coil; Includes 87438026, 87438027, 87438028
		87438026		1	VALVULA HIDRAULICA, Cartridge
		87438027		1	BOBINA, Solenoid
		87438028		1	SERIE DE JUNTAS, 2-Way Solenoid
4		87438029		1	VALVULA ANTIRRETORNO, Includes 87438028 Seal Kit
		87438028		1	SERIE DE JUNTAS, 2-Way Solenoid
5		87438031		1	VĆLVULA, DESCARGA, Includes 87438032
		87438032		1	SERIE DE JUNTAS, Relief Valve

08-29		p1	09/07

BOMBA, EQUIPAMIENTO HIDRćULICO

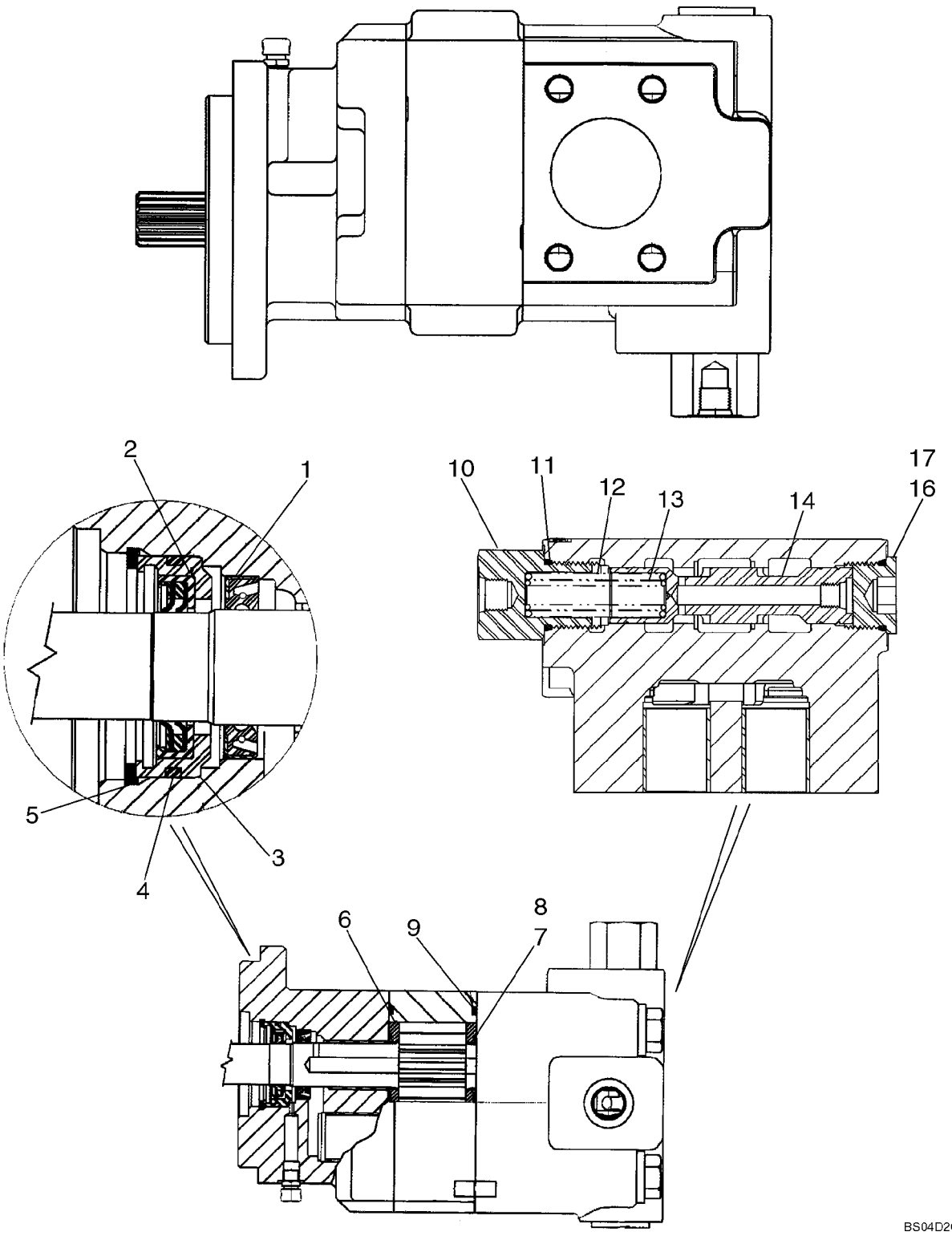

BOMBA, EQUIPAMIENTO HIDRćULICO

REF	FN	PART NUMBER	YR/SN	QTY	DENOMINACION
		87434672		1	BOMBA HIDRĆULICA, Component Parts Not Serviced Separately, Except for 87434070 and 87438045 Service Kits, Ref 1 - 17, See Below
		87434070		1	JUEGO REPAR.BOMBA HIDRAU, Pump Service Kit, Single Section; Incl. Ref 1 - 9
1		L32418		1	ANILLO DE CIERRE, Double Lip
2		87434075		1	ANILLO DE CIERRE, Lip Seal
3		87434076		1	RETENADOR DE JUNTA
4		87434077		1	RETEN
5		102-23206		1	ANILLO DE RESORTE, #206, 2.190", Int, Spiral
6		N13582		2	PLACA, Thrust
7		144173A1		2	ANILLO DE CIERRE
8		178051A1		2	JUNTA
9		L32100		2	ANILLO DE CIERRE, Gear Housing Gasket
		87438045		1	JUEGO REPAR.BOMBA HIDRAU, Priority Valve Service Kit, Single; Incl. Ref 10 - 17
10		87437899		1	TAPčN, Load Sense
11		237-6014		1	JUNTA HERMETICA, 14-1, 90 Duro, 1.048" ID x .118" Thk
12		87437905		1	GARFIO DE MUELLE, Spool Spring, 100 psi
13		87437906		1	GARFIO DE MUELLE, Spool Spring, 50 psi
14		87437914		1	PISTONCILLO, Priority Valve Spool
16		218-5213		1	TAPčN, Hex Soc, 1 3/16"-12 ORB, Incl. Ref 17
17		237-6014		1	JUNTA HERMETICA, 14-1, 90 Duro, 1.048" ID x .118" Thk

08-30		p1	09/07

CONJUNTO DE LA VALVULA - CONTROL DE LA CARGADORA, DOS CORREDERAS

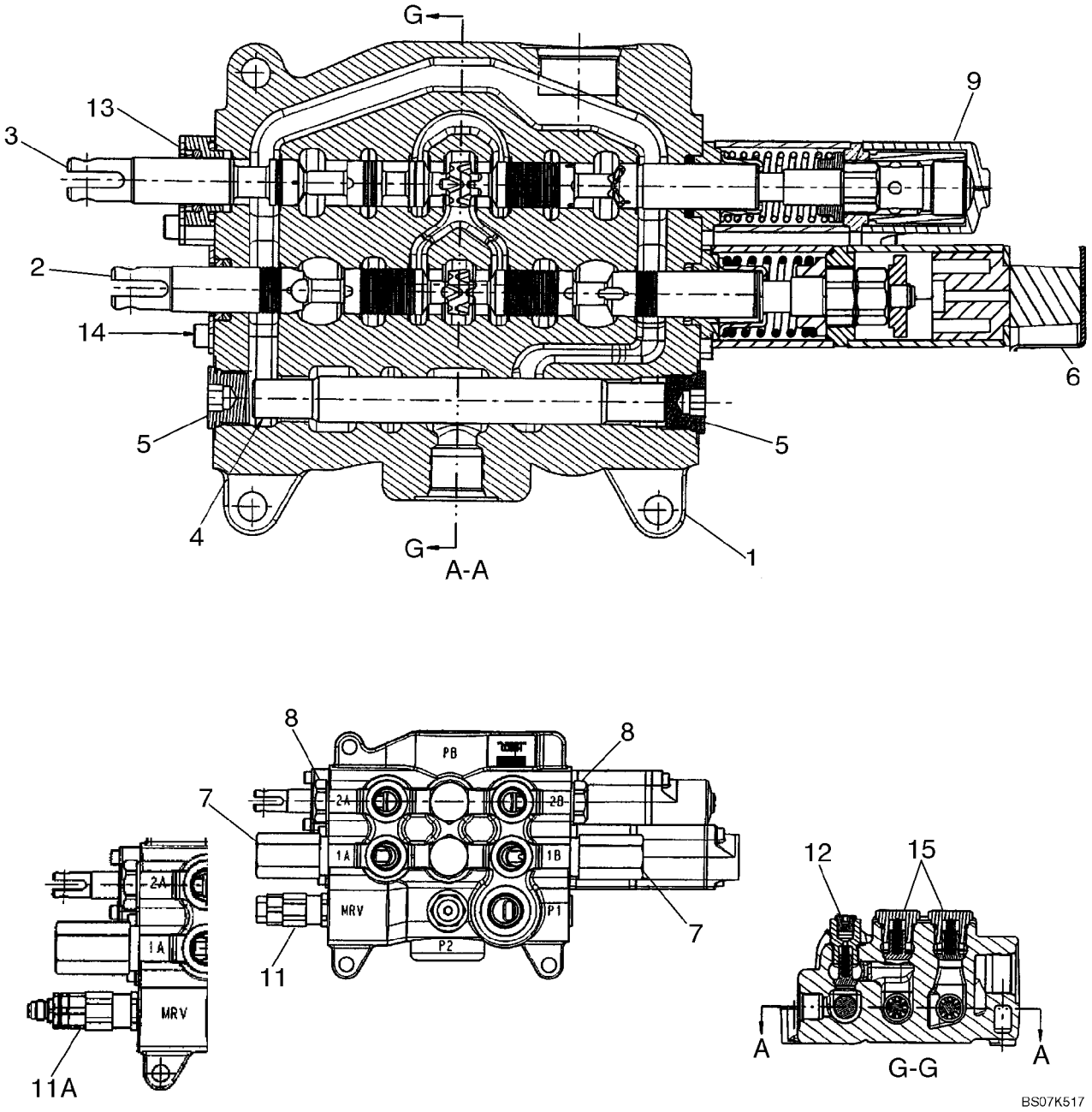

CONJUNTO DE LA VALVULA - CONTROL DE LA CARGADORA, DOS CORREDERAS

REF	FN	PART NUMBER	YR/SN	QTY	DENOMINACION
		87351494		1	VALVULA HIDRAULICA, Two Spool Loader Valve, Used On Models Without Pilot Controls; Incl. Ref 1 - 11, 12 - 15
		87351498		1	VALVULA HIDRAULICA, Two Spool Loader Valve, Used On Models With Pilot Controls; Incl. Ref 1 - 9, 11A - 15
1		NSS		1	NO SE REPARA SEPARADAM., HOUSING
2		NSS		1	NO SE REPARA SEPARADAM., SPOOL, Bucket
3		NSS		1	NO SE REPARA SEPARADAM., SPOOL, Lift
4		NSS		1	NO SE REPARA SEPARADAM., SPOOL
5		87426233		2	TAPčN, 7/8 - 14 NF Plug, Includes Serviceable (1) 87455974 O-Ring
6		87515955		1	TRINQUETE, Magnetic Detent Kit, Bucket; Some Component Parts Not Serviced Separately; Serviceable Includes (1) 87454547 O-Ring, (1) 87515957 Magnet, (2) 87310278 Screw
7		87450978		2	VĆLVULA, DESCARGA, Component Parts Not Serviced Separately; Serviceable Includes (1) 87455549 Seal Kit
8		81868381		2	VALVULA ANTIRRETORNO, Load Check Valve, Anti-Void; Component Parts Not Serviced Separately; Includes Serviceable 87455580 Seal Kit
9		87426227		1	TRINQUETE, Manual Detent Assembly, Lift; Some Component Parts Not Serviced Separately; Serviceable Includes (1) 87454547 O-Ring, (2) 87310275 Screw, (4) 87310276 Ball Bearing
11		87426717		1	VĆLVULA, DESCARGA, Main Relief Valve Assembly, Single Stage; 87351494 Loader Valve, Models Without Pilot Controls; Component Parts Not Serviced Separately; Includes Serviceable 87455551 Seal Kit

CONJUNTO DE LA VALVULA - CONTROL DE LA CARGADORA, DOS CORREDERAS

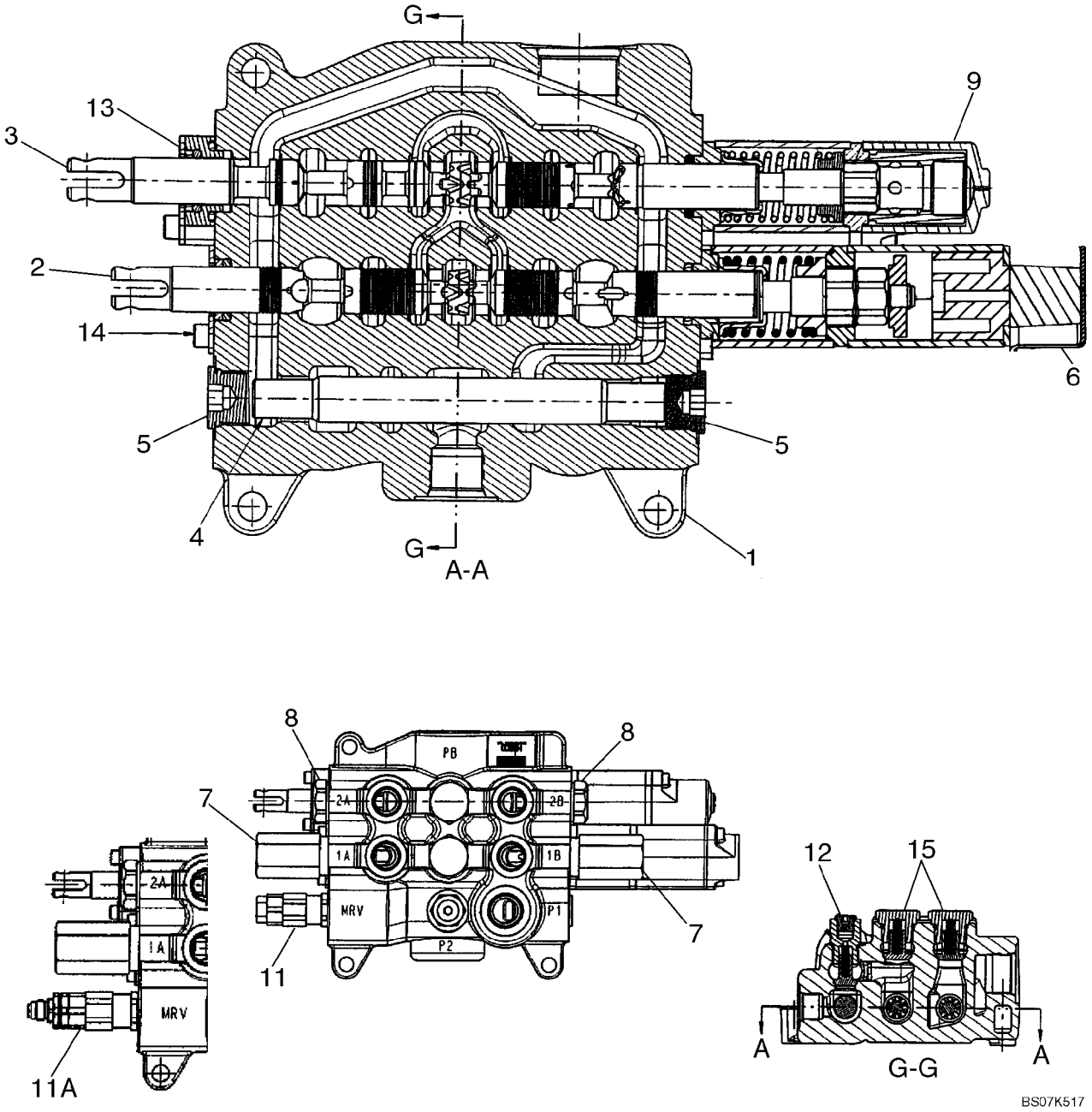

CONJUNTO DE LA VALVULA - CONTROL DE LA CARGADORA, DOS CORREDERAS

REF	FN	PART NUMBER	YR/SN	QTY	DENOMINACION
11A		87426235		1	VĆLVULA, DESCARGA, Main Relief Valve Assembly, Two Stage; 87351498 Loader Valve, Models With Pilot Controls; Component Parts Not Serviced Separately; Includes Serviceable 87455550 Seal Kit
12		87426716		1	VALVULA ANTIRRETORNO, Check Valve; Some Component Parts Not Serviced Separately; Serviceable Includes (1) 87455974 O-Ring, (1) 87309001 O-Ring, (1) 87446002 Poppet, (1) 87446003 Spring
13		87440815		1	PLACA (CONJUNTO), Lift Spool Plate and Seal Assembly; Some Component Parts Not Serviced Separately; Serviceable Includes (1) 87454547 O-Ring, (1) 87454548 Seal, (1) 87455538 O-Ring, (2) 87455534 Screw
14		87440814		1	PLACA (CONJUNTO), Bucket Spool Plate and Seal Assembly; Some Component Parts Not Serviced Separately; Serviceable Includes (1) 87454547 O-Ring, (1) 87454548 Seal, (2) 87455540 Screw
15		87426238		2	VALVULA ANTIRRETORNO, Check Valve; Some Component Parts Not Serviced Separately; Serviceable Includes (1) 87455975 O-Ring

CONJUNTO DE LA VALVULA - CONTROL DE LA CARGADORA, TRES CORREDERAS

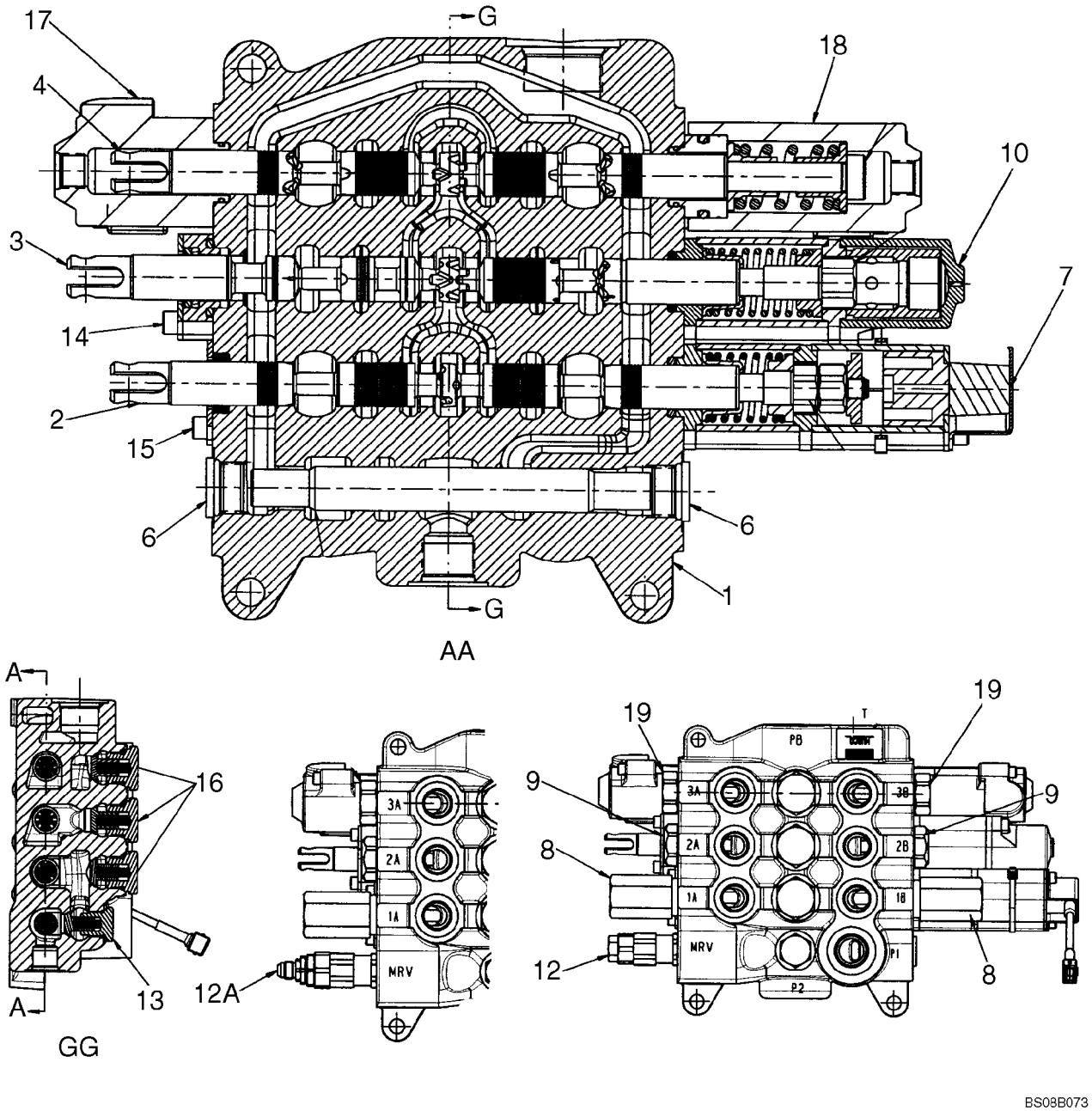

CONJUNTO DE LA VALVULA - CONTROL DE LA CARGADORA, TRES CORREDERAS

REF	FN	PART NUMBER	YR/SN	QTY	DENOMINACION
		87593382		1	VALVULA DISTRIBUIDORA, Three Spool Loader Valve, Used On Models Without Pilot Controls; Component Parts Not Available At Time Of Printing
		87593381		1	VALVULA DISTRIBUIDORA, Three Spool Loader Valve, Used On Models With Pilot Controls; Component Parts Not Available At Time Of Printing
1		NSS		1	NO SE REPARA SEPARADAM., Housing
2		NSS		1	NO SE REPARA SEPARADAM., Spool, Bucket
3		NSS		1	NO SE REPARA SEPARADAM., Spool, Lift
4		NSS		1	NO SE REPARA SEPARADAM., Spool, Clam
5		NSS		1	NO SE REPARA SEPARADAM., Spool
6		87426233		1	TAPčN, 7/8 - 14 NF Plug, Serviceable Includes (1) 87455974 O-Ring
7		87515955		1	TRINQUETE, Magnetic Detent Kit, Bucket; Included In 87351496 or 87351501 Valve, Some Component Parts Not Serviced Separately; Serviceable Includes (1) 87454547 O-Ring, (1) 87515957 Magnet, (2) 87310278 Screw
8		87450978		2	VĆLVULA, DESCARGA, Relief Valve Assembly; Some Component Parts Not Serviced Separately; Includes Serviceable 87455549 Seal Kit
9		81868381		2	VALVULA ANTIRRETORNO, Load Check Valve, Anti-Void; Component Parts Not Serviced Separately; Includes Serviceable 87455580 Seal Kit
10		87426227		1	TRINQUETE, Manual Detent Assembly, Lift; Some Component Parts Not Serviced Separately; Serviceable Includes (1) 87454547 O-Ring, (2) 87310275 Screw, (4) 87310276 Ball Bearing
12		87426717		1	VĆLVULA, DESCARGA, Main Relief Valve Assembly, Single Stage; 87434767 or 87351496Loader Valve, Models Without Pilot Controls; Component Parts Not Serviced Separately; Includes Serviceable 87455551 Seal Kit

CONJUNTO DE LA VALVULA - CONTROL DE LA CARGADORA, TRES CORREDERAS

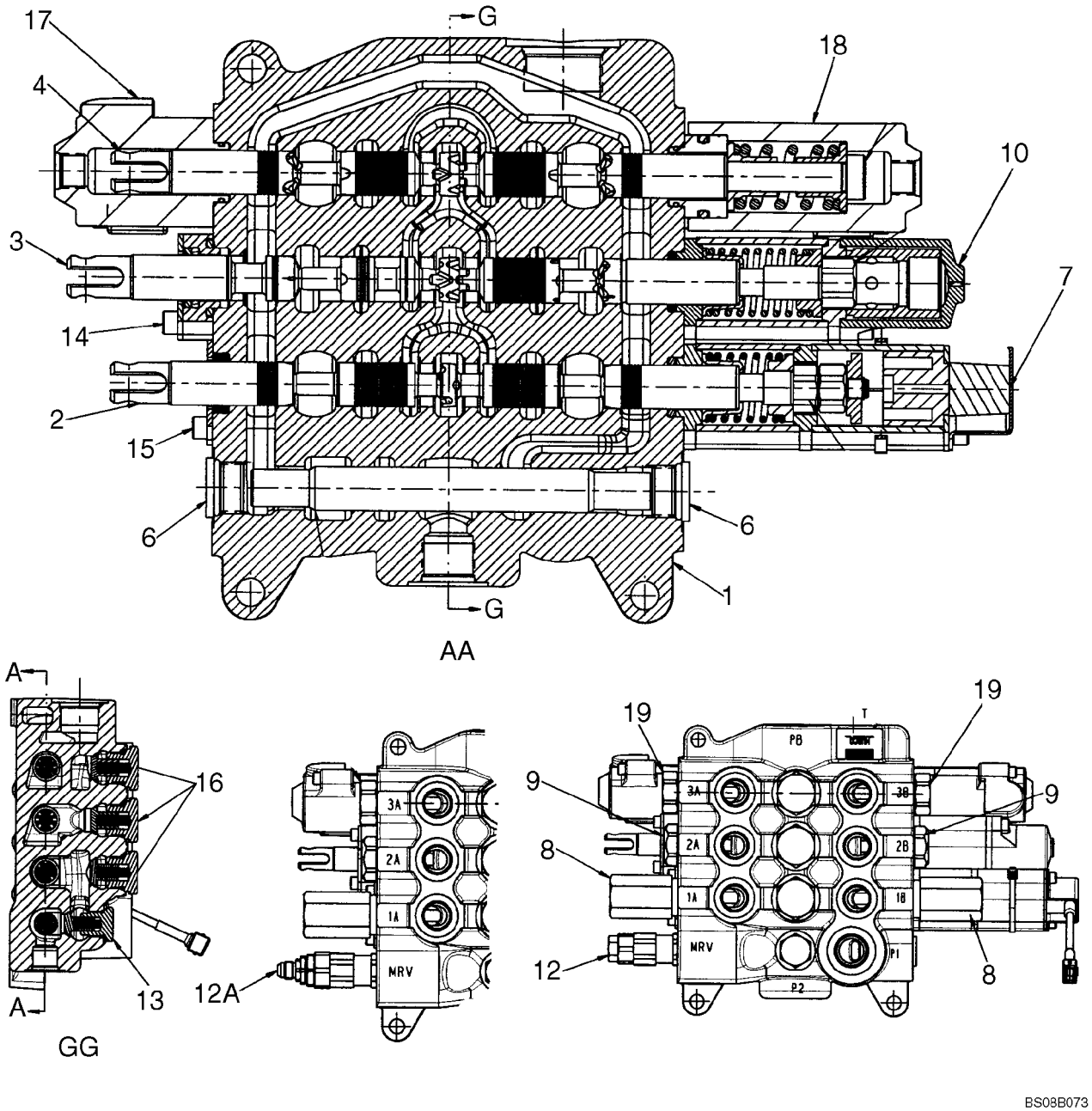

BS08B073

CONJUNTO DE LA VALVULA - CONTROL DE LA CARGADORA, TRES CORREDERAS

REF	FN	PART NUMBER	YR/SN	QTY	DENOMINACION
12A		87426235		1	VĆLVULA, DESCARGA, Main Relief Valve Assembly, Two Stage; 87434769 or 87351501 Loader Valve, Models With Pilot Controls; Component Parts Not Serviced Separately; Includes Serviceable 87455550 Seal Kit
13		87426716		1	VALVULA ANTIRRETORNO, Some Component Parts Not Serviced Separately; Serviceable Includes (1) 87455974 O-Ring, (1) 87309001 O-Ring, (1) 87446002 Poppet, (1) 87446003 Spring
14		87440815		1	PLACA (CONJUNTO), Lift Spool Plate and Seal Assembly; Some Component Parts Not Serviced Separately; Serviceable Includes (1) 87454547 O-Ring, (1) 87454548 Seal, (1) 87455538 O-Ring, (2) 87455534 Screw
15		87440814		2	PLACA (CONJUNTO), Bucket and Clam Spool Plate and Seal Assembly; Some Component Parts Not Serviced Separately; Serviceable Includes (1) 87454547 O-Ring, (1) 87454548 Seal, (2) 87455540 Screw
16		87426238		3	VALVULA ANTIRRETORNO, Component Parts Not Serviced Separately; Includes Serviceable 87455975 O-Ring
17		{87757931}		1	End Cap; Clam Spool; Component Parts Not Available At Time Of Printing
18		{87757932}		1	End Cap; Clam Spool; Component Parts Not Available At Time Of Printing
19		83981068		2	CILINDROS DE CERRADURA, Shut-Off Plug Assembly Includes Seal; Component Parts Not Serviced Separately

08-32		p1	09/07

CONJUNTO DE LA VALVULA - CONTROL DE LA RETROEXCAVADORA, 6 BOBINAS (SIN PALA EXTENSIBLE Y SIN SISTEM)

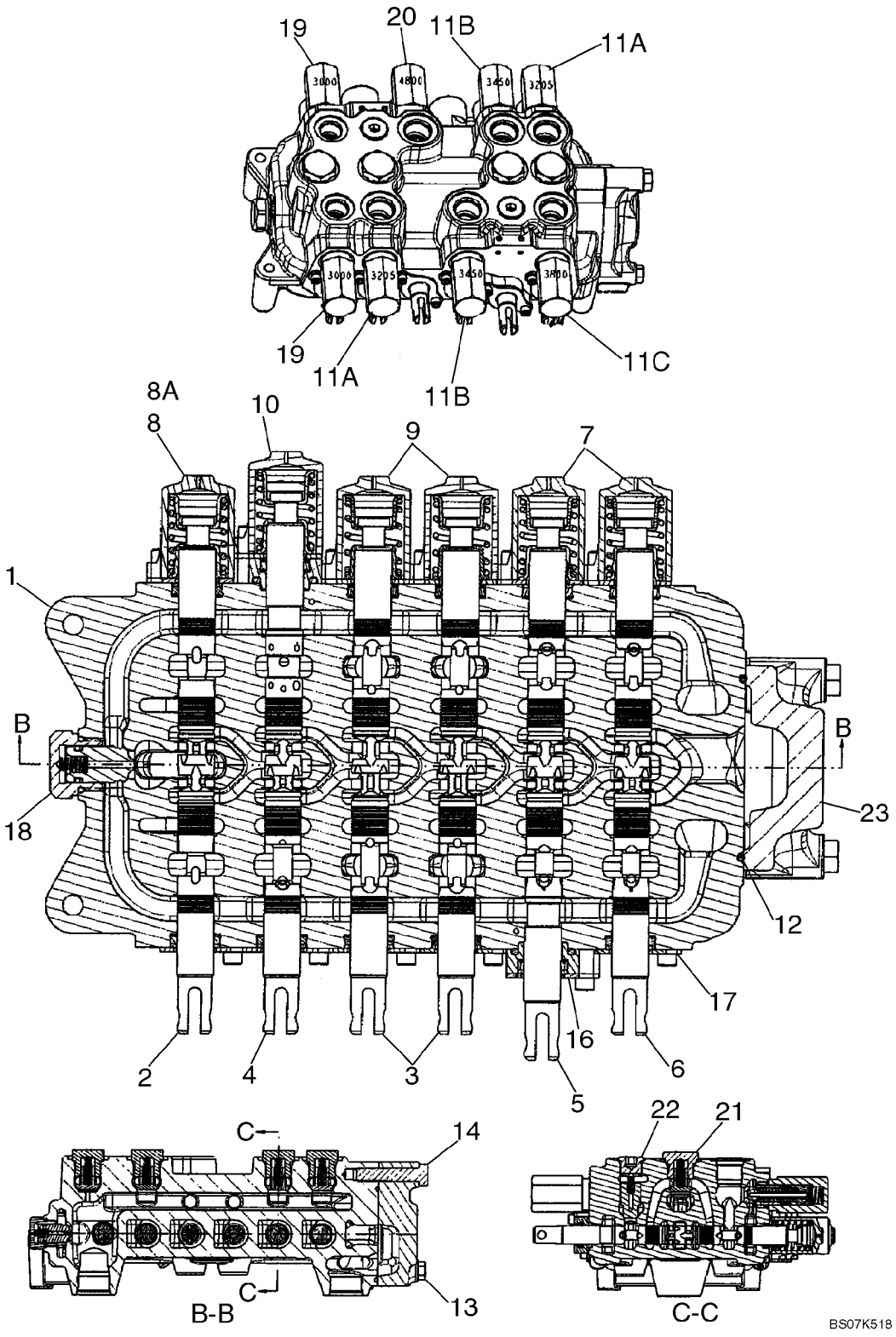

CONJUNTO DE LA VALVULA - CONTROL DE LA RETROEXCAVADORA, 6 BOBINAS (SIN PALA EXTENSIBLE Y SIN SISTEM)

REF	FN	PART NUMBER	YR/SN	QTY	DENOMINACION
		REF			MANUAL, MODELS WITHOUT EXTENDABLE DIPPER, WITHOUT AUXILIARY HYDRAULICS, WITHOUT PILOT CONTROLS
		87555499		1	VALVULA HIDRAULICA, 6 Spool, Foot Swing; Incl. Ref 1 - 8, 9 - 23; If Used
		87555505		1	VALVULA HIDRAULICA, 6 Spool, Hand Swing; Incl. Ref 1 - 7, 8A, 9 - 23; If Used
1		NSS		1	NO SE REPARA SEPARADAM., HOUSING
2		NSS		1	NO SE REPARA SEPARADAM., SPOOL, SWING
3		NSS		2	NO SE REPARA SEPARADAM., SPOOL, STABILIZER, Right-hand and Left-Hand
4		NSS		1	NO SE REPARA SEPARADAM., SPOOL, BOOM
5		NSS		1	NO SE REPARA SEPARADAM., SPOOL, DIPPER
6		NSS		1	NO SE REPARA SEPARADAM., SPOOL, BUCKET
7		87426241		2	FINAL(CONJ), Cap Assembly, Bucket and Dipper Spool End; Some Component Parts Not Serviced Separately; Serviceable Includes (1) 87454547 O-Ring, (1) 87454548 Seal, (1) 87444567 Spring, (2) 87455541 Screw
8		87428500		1	FINAL(CONJ), Cap Assembly, Swing Spool End; 87555499 Foot Swing Valve; Some Component Parts Not Serviced Separately; Serviceable Includes (1) 87454547 O-Ring, (1) 87454548 Seal, (1) 87429151 Centering Spring, (2) 87455541 Screw
8A		87426241		1	FINAL(CONJ), Cap Assembly, Swing Spool End; 87555505 Hand Swing Valve; Some Component Parts Not Serviced Separately; Serviceable Includes (1) 87454547 O-Ring, (1) 87454548 Seal, (1) 87444567 Spring, (2) 87455541 Screw
9		87428497		2	FINAL(CONJ), Cap Assembly, Stabilizer Spool Ends; Some Component Parts Not Serviced Separately; Serviceable Includes (1) 87454547 O-Rings, (1) 87454548 Seal, (1) 87455533 Spring, (2) 87455541 Screw

CONJUNTO DE LA VALVULA - CONTROL DE LA RETROEXCAVADORA, 6 BOBINAS (SIN PALA EXTENSIBLE Y SIN SISTEM)

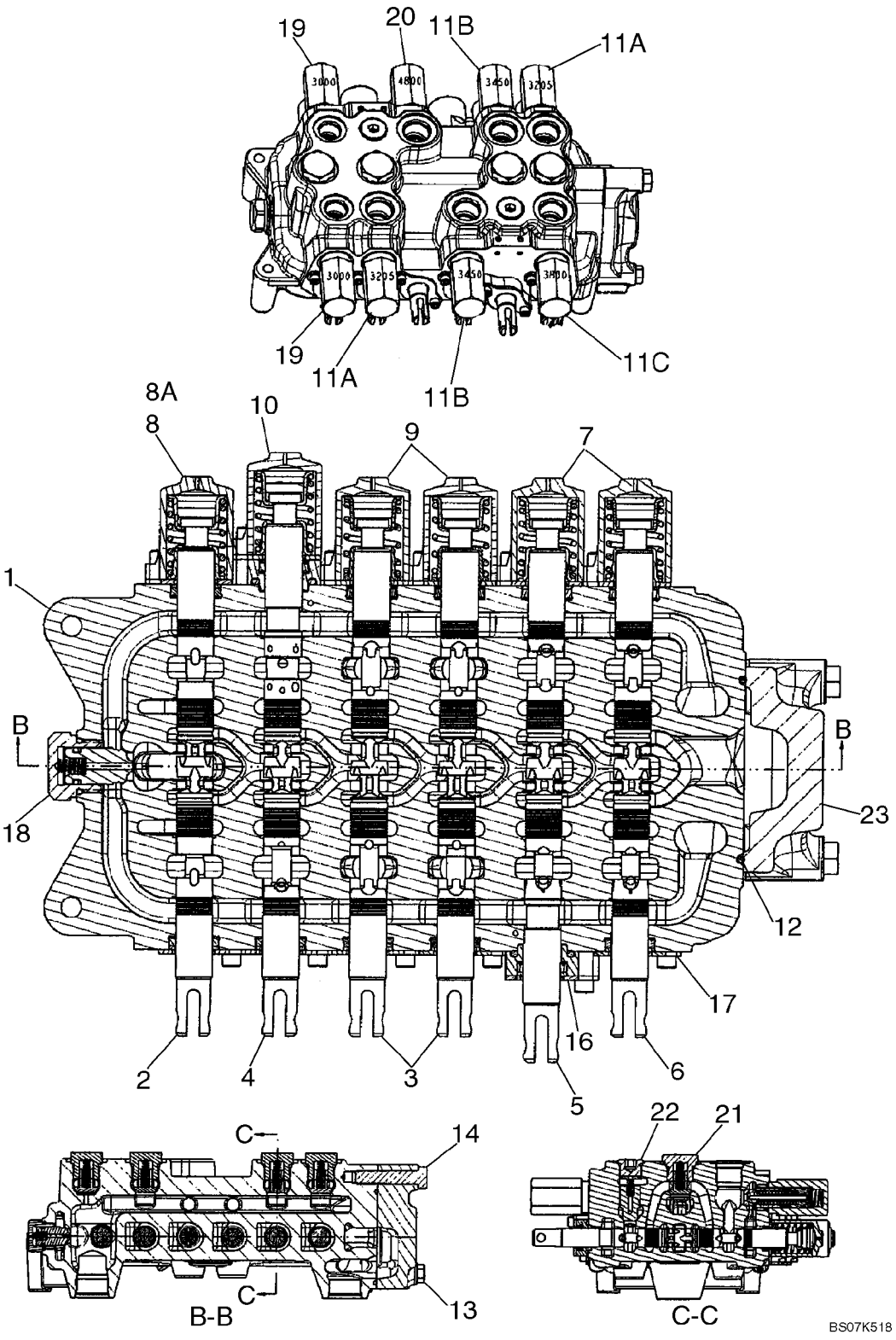

CONJUNTO DE LA VALVULA - CONTROL DE LA RETROEXCAVADORA, 6 BOBINAS (SIN PALA EXTENSIBLE Y SIN SISTEM)

REF	FN	PART NUMBER	YR/SN	QTY	DENOMINACION
10		87433029		1	FINAL(CONJ), Cap Assembly, Boom Spool End; Some Component Parts Not Serviced Separately; Serviceable Includes (1) 87454547 O-Ring, (1) 87454548 Seal, (1) 87444567 Spring, (1) 87455538 O-Ring, (2) 87455545 Screw
11A		87450978		2	VĆLVULA, DESCARGA, Circuit; 3205 psi; Component Parts Not Serviced Separately; Includes 87455549 Seal Kit
11B		87450979		2	VĆLVULA, DESCARGA, Circuit; 3450 psi; Component Parts Not Serviced Separately; Includes 87455549 Seal Kit
11C		87450980		1	VĆLVULA, DESCARGA, Circuit; 3800 psi; Component Parts Not Serviced Separately; Includes 87455549 Seal Kit
12		87428495		1	JUNTA HERMETICA, O-Ring Seal, Outlet Section
13		87428491		2	TORNILLO, Bolt
14		87428492		1	TORNILLO, Bolt
16		87440815		1	PLACA (CONJUNTO), Seal Plate Assembly, Dipper Spool; Some Component Parts Not Serviced Separately; Serviceable Includes (1) 87454547 O-Ring, (1) 87454548 Seal, (1) 87455538 O-Ring, (2) 87455534 Screw
17		87440814		5	PLACA (CONJUNTO), Seal Plate Assembly; Some Component Parts Not Serviced Separately; Serviceable Includes (1) 87454547 O-Ring, (1) 87454548 Seal, (2) 87455540 Screw
18		81868381		1	VALVULA ANTIRRETORNO, Anti-Void Valve; Component Parts Not Serviced Separately; Includes 87455580 Seal Kit
19		87428490		2	VĆLVULA, DESCARGA, Relief Valve Assembly; 3000 psi; Component Parts Not Serviced Separately; Includes 87455549 Seal Kit
20		87566237		1	VĆLVULA, DESCARGA, Relief Valve Assembly; 4800 psi; Component Parts Not Serviced Separately; Includes 87455549 Seal Kit

CONJUNTO DE LA VALVULA - CONTROL DE LA RETROEXCAVADORA, 6 BOBINAS (SIN PALA EXTENSIBLE Y SIN SISTEM)

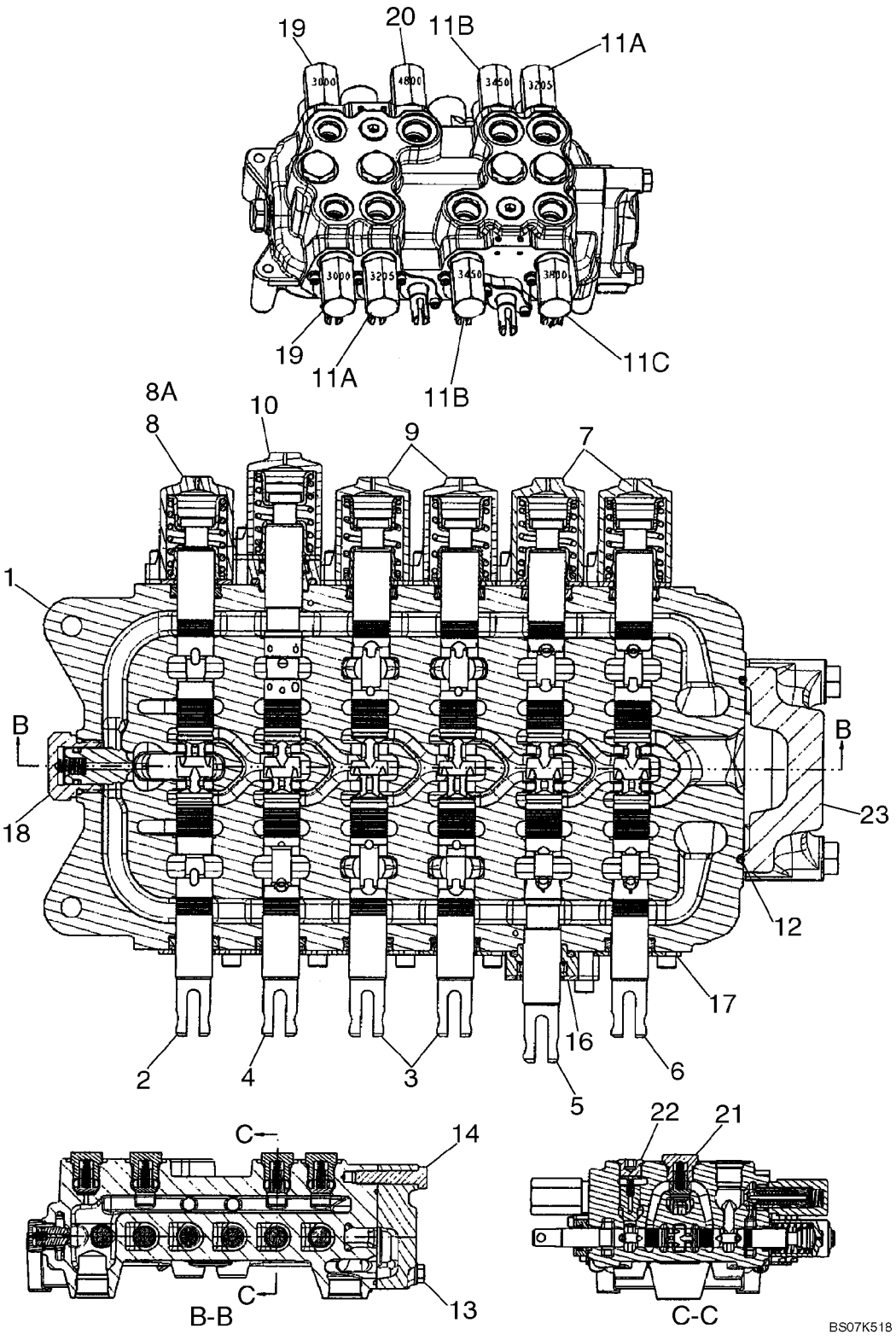

CONJUNTO DE LA VALVULA - CONTROL DE LA RETROEXCAVADORA, 6 BOBINAS (SIN PALA EXTENSIBLE Y SIN SISTEM)

REF	FN	PART NUMBER	YR/SN	QTY	DENOMINACION
21		87426238		4	VALVULA ANTIRRETORNO, Check Valve Assembly; Hex Head; Component Parts Not Serviced Separately; Includes (1) 87455975 O-Ring
22		87428486		2	VALVULA ANTIRRETORNO, Check Valve Assembly; Hex Socket Head; Component Parts Not Serviced Separately; Includes (1) 87455974 O-Ring
23		87433030		1	DISTRIBUIDOR HYDR, Outlet Section Assembly; Component Parts Not Serviced Separately

CONJUNTO DE LA VALVULA - CONTROL DE LA RETROEXCAVADORA, 7 BOBINAS (SIN PALA EXTENSIBLE Y CON SISTEM)

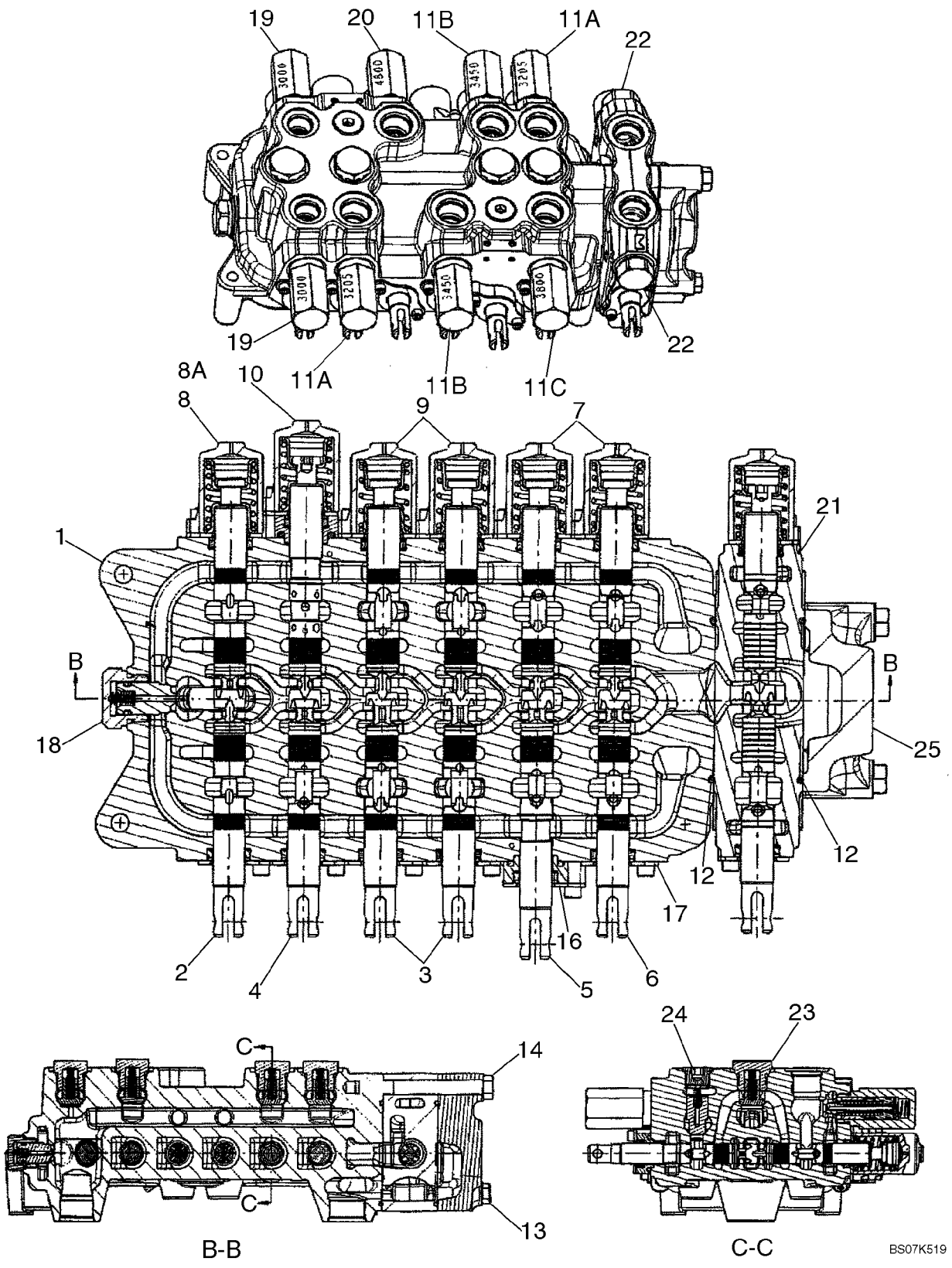

CONJUNTO DE LA VALVULA - CONTROL DE LA RETROEXCAVADORA, 7 BOBINAS (SIN PALA EXTENSIBLE Y CON SISTEM)

REF	FN	PART NUMBER	YR/SN	QTY	DENOMINACION
		REF			MANUAL, MODELS WITHOUT EXTENDABLE DIPPER, WITH AUXILIARY HYDRAULICS, WITHOUT PILOT CONTROLS
		87555536		1	VALVULA HIDRAULICA, 7 Spool, Foot Swing; Incl. Ref 1 - 8, 9 - 25; If Used
		87555530		1	VALVULA HIDRAULICA, 7 Spool, Hand Swing; Incl. Ref 1 - 7, 8A, 9 - 24, 25A; If Used
1		NSS		1	NO SE REPARA SEPARADAM., HOUSING
2		NSS		1	NO SE REPARA SEPARADAM., SPOOL, SWING
3		NSS		2	NO SE REPARA SEPARADAM., SPOOL, STABILIZER, Left-Hand and Right-Hand
4		NSS		1	NO SE REPARA SEPARADAM., SPOOL, BOOM
5		NSS		1	NO SE REPARA SEPARADAM., SPOOL, DIPPER
6		NSS		1	NO SE REPARA SEPARADAM., SPOOL, BUCKET
7		87426241		2	FINAL(CONJ), Cap Assembly, Bucket and Dipper Spool End; Some Component Parts Not Serviced Separately; Serviceable Includes (1) 87454547 O-Ring, (1) 87454548 Seal, (1) 87444567 Spring, (2) 87455541 Screw
8		87428500		1	FINAL(CONJ), Cap Assembly, Swing Spool End; 87555536 Foot Swing Valve; Some Component Parts Not Serviced Separately; Serviceable Includes (1) 87454547 O-Ring, (1) 87454548 Seal, (1) 87429151 Centering Spring, (2) 87455541 Screw
8A		87426241		1	FINAL(CONJ), Cap Assembly, Swing Spool End; 87555530 Hand Swing Valve; Some Component Parts Not Serviced Separately; Serviceable Includes (1) 87454547 O-Ring, (1) 87454548 Seal, (1) 87444567 Spring, (2) 87455541 Screw
9		87428497		2	FINAL(CONJ), Cap Assembly, Stabilizer Spool Ends; Some Component Parts Not Serviced Separately; Serviceable Includes (2) 87454547 O-Ring, (1) 87454548 Seal, (1) 87455533 Spring, (2) 87455541 Screw

CONJUNTO DE LA VALVULA - CONTROL DE LA RETROEXCAVADORA, 7 BOBINAS (SIN PALA EXTENSIBLE Y CON SISTEM)

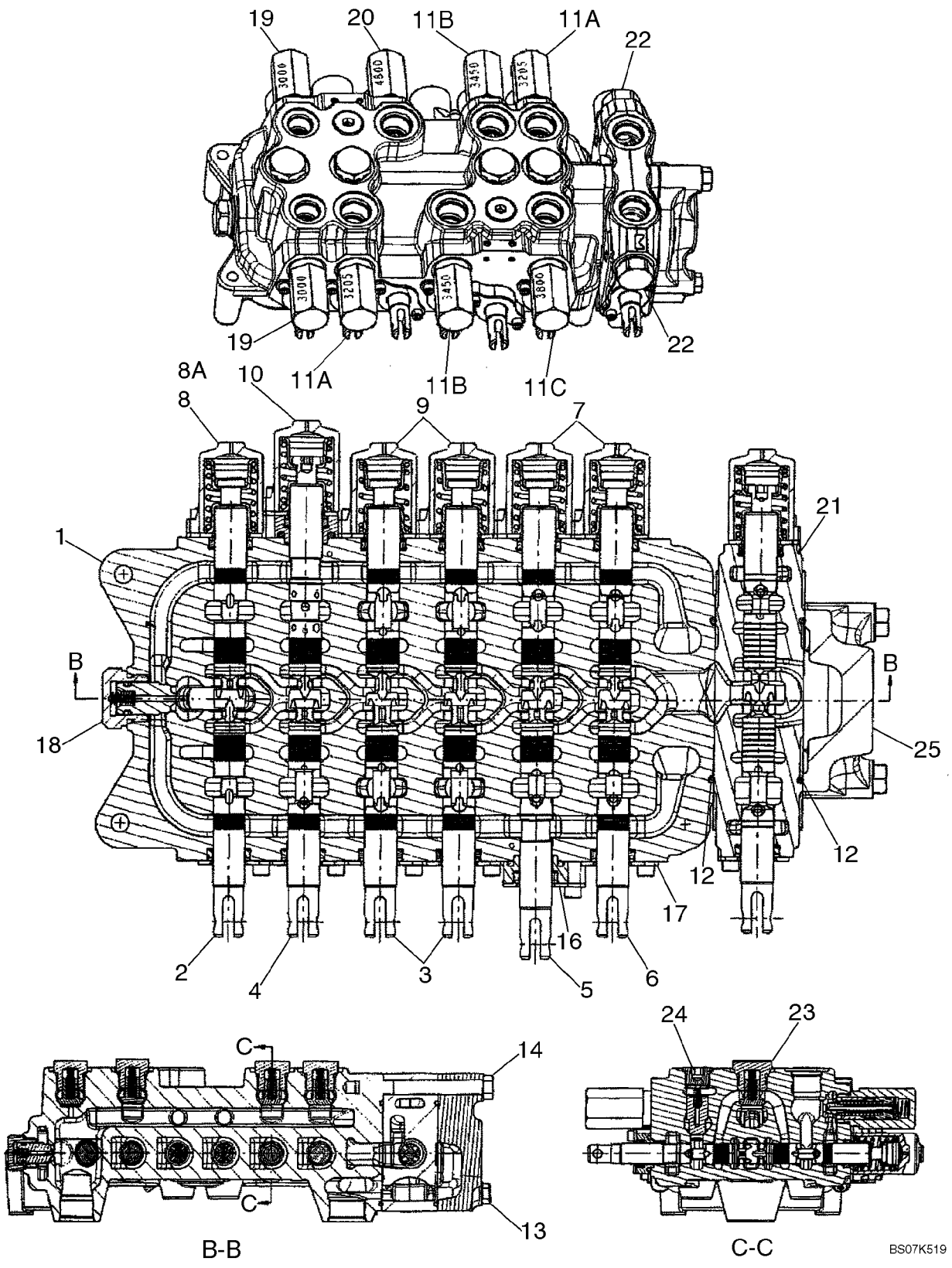

CONJUNTO DE LA VALVULA - CONTROL DE LA RETROEXCAVADORA, 7 BOBINAS (SIN PALA EXTENSIBLE Y CON SISTEM)

REF	FN	PART NUMBER	YR/SN	QTY	DENOMINACION
10		87433029		1	FINAL(CONJ), Cap Assembly, Boom Spool End; Some Component Parts Not Serviced Separately; Serviceable Includes (1) 87454547 O-Ring, (1) 87454548 Seal, (1) 87444567 Spring, (1) 87455538 O-Ring, (2) 87455545 Screw
11A		87450978		2	VĆLVULA, DESCARGA, Circuit; 3205 psi; Component Parts Not Serviced Separately; Includes 87455549 Seal Kit
11B		87450979		2	VĆLVULA, DESCARGA, Circuit; 3450 psi; Component Parts Not Serviced Separately; Includes 87455549 Seal Kit
11C		87450980		1	VĆLVULA, DESCARGA, Circuit; 3800 psi; Component Parts Not Serviced Separately; Includes 87455549 Seal Kit
12		87428495		2	JUNTA HERMETICA, Auxiliary/Outlet Section
13		87428476		2	TORNILLO
14		87428477		1	TORNILLO
16		87440815		1	PLACA (CONJUNTO), Seal, Dipper Spool; Some Component Parts Not Serviced Separately; Serviceable Includes (1) 87454547 O-Ring, (1) 87454548 Seal, (1) 87455538 O-Ring, (2) 87455534 Screw
17		87440814		5	PLACA (CONJUNTO), Seal; Some Component Parts Not Serviced Separately; Serviceable Includes (1) 87454547 O-Ring, (1) 87454548 Seal, (2) 87455540 Screw
18		81868381		1	VALVULA ANTIRRETORNO, Anti-Void Valve; Component Parts Not Serviced Separately; Includes 87455580 Seal Kit
19		87428490		2	VĆLVULA, DESCARGA, 3000 psi; Component Parts Not Serviced Separately; Includes 87455549 Seal Kit
20		87566237		1	VĆLVULA, DESCARGA, 4800 psi; Component Parts Not Serviced Separately; Includes 87455549 Seal Kit

CONJUNTO DE LA VALVULA - CONTROL DE LA RETROEXCAVADORA, 7 BOBINAS (SIN PALA EXTENSIBLE Y CON SISTEM)

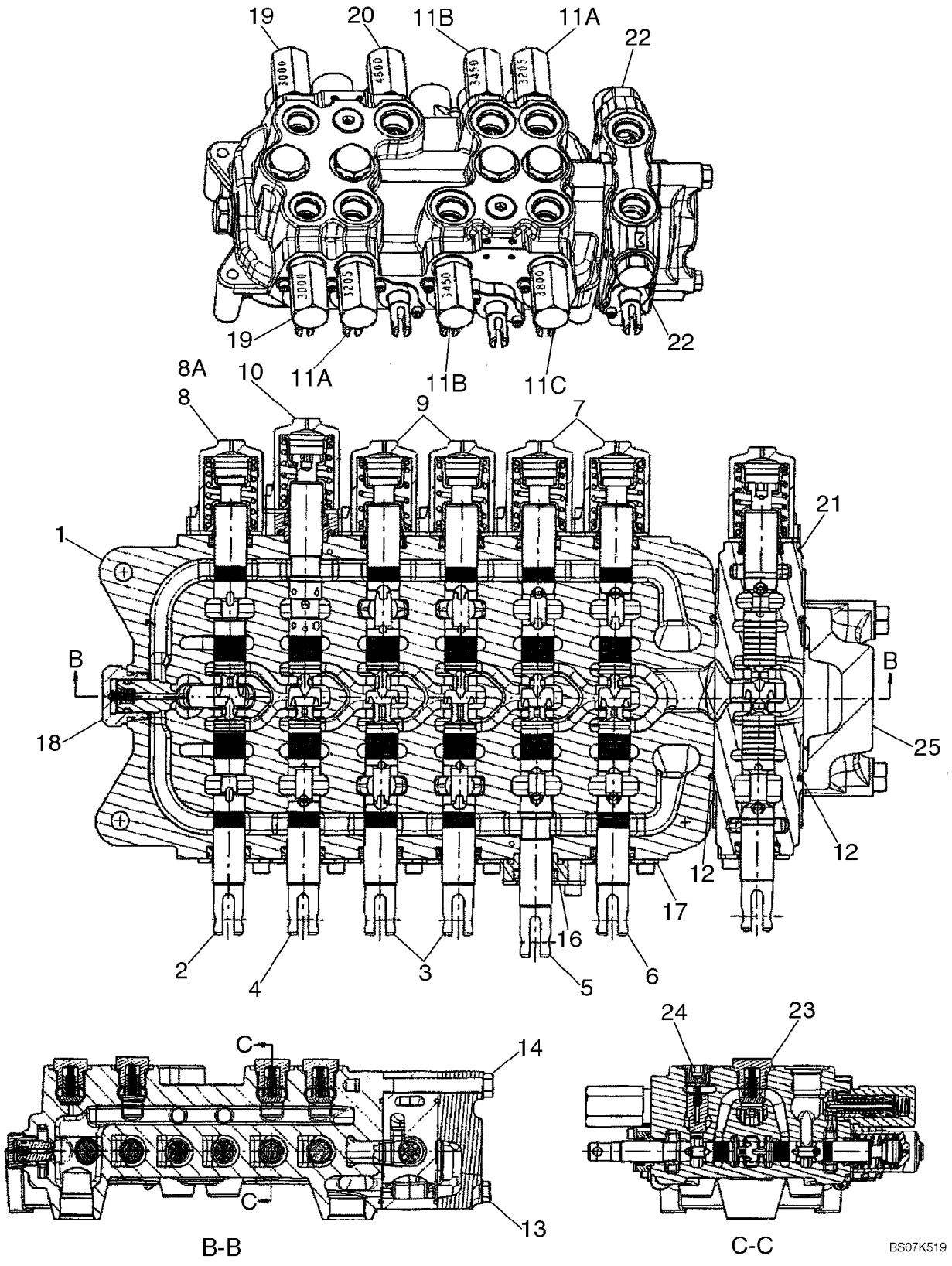

CONJUNTO DE LA VALVULA - CONTROL DE LA RETROEXCAVADORA, 7 BOBINAS (SIN PALA EXTENSIBLE Y CON SISTEM)

REF	FN	PART NUMBER	YR/SN	QTY	DENOMINACION
21		87428501		1	DISTRIBUIDOR HYDR, Spool Section Assembly; Auxiliary Hydraulics; Incl. Ref 21A - 21I, Which Are Not Illustrated; Remainder Component Parts Not Serviced Separately
21A		87433028		1	FINAL(CONJ), Spool; Incl. Ref 21B - 21E, Which Are Not Illustrated; Remainder Components Not Serviced Separately
21B		87454547		1	JUNTA HERMETICA
21C		87454548		1	ANILLO DE CIERRE, Wiper
21D		87429150		1	MUELLE, VALVULA
21E		87455541		2	TORNILLO
21F		87428495		1	JUNTA HERMETICA
21G		87455564		1	VĆLVULA DE PASO, Load Check
21H		87455565		1	MUELLE, VALVULA, Load Check
21I		83981068		2	CILINDROS DE CERRADURA
22		83981068		2	CILINDROS DE CERRADURA, Component Parts Not Serviced Separately; Now Included With Ref 21
23		87426238		4	VALVULA ANTIRRETORNO, Hex Head; Component Parts Not Serviced Separately; Includes (1) 87455975 O-Ring
24		87428486		2	VALVULA ANTIRRETORNO, Hex Socket Head; Component Parts Not Serviced Separately; Includes (1) 87455974 O-Ring
25		87433030		1	DISTRIBUIDOR HYDR, Outlet Section Assembly; Component Parts Not Serviced Separately

CONJUNTO DE LA VALVULA - CONTROL DE LA RETROEXCAVADORA, 7 BOBINAS (CON PALA EXTENSIBLE Y SIN SISTEM)

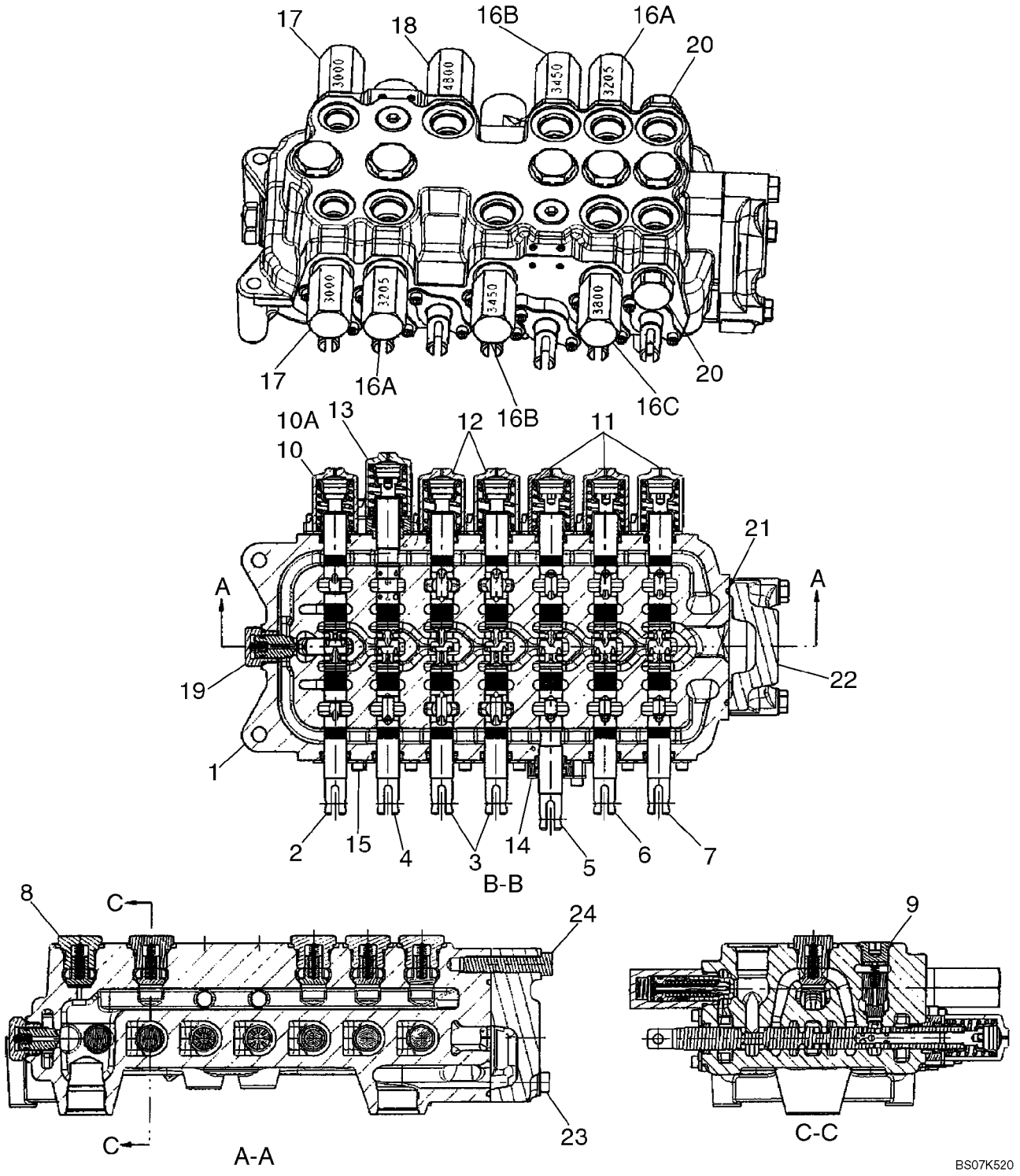

CONJUNTO DE LA VALVULA - CONTROL DE LA RETROEXCAVADORA, 7 BOBINAS (CON PALA EXTENSIBLE Y SIN SISTEM)

REF	FN	PART NUMBER	YR/SN	QTY	DENOMINACION
		REF			MANUAL, MODELS WITH EXTENDABLE DIPPER, WITHOUT AUXILIARY HYDRAULICS, WITHOUT PILOT CONTROLS
		87555524		1	VALVULA HIDRAULICA, 7 Spool, Foot Swing; Incl. Ref 1 - 10, 11 - 24; If Used
		87555519		1	VALVULA HIDRAULICA, 7 Spool, Hand Swing; Incl. Ref 1 - 9, 10A, 11 - 24; If Used
1		NSS		1	NO SE REPARA SEPARADAM., HOUSING
2		NSS		1	NO SE REPARA SEPARADAM., SPOOL, SWING
3		NSS		2	NO SE REPARA SEPARADAM., SPOOL, STABILIZER, Right-Hand and Left-Hand
4		NSS		1	NO SE REPARA SEPARADAM., SPOOL, BOOM
5		NSS		1	NO SE REPARA SEPARADAM., SPOOL, DIPPER
6		NSS		1	NO SE REPARA SEPARADAM., SPOOL, BUCKET
7		NSS		1	NO SE REPARA SEPARADAM., SPOOL, EXTENDABLE DIPPER
8		87426238		5	VALVULA ANTIRRETORNO, Hex Head; Component Parts Not Serviced Separately; Includes (1) 87455975 O-Ring
9		87428486		2	VALVULA ANTIRRETORNO, Hex Socket Head; Component Parts Not Serviced Separately; Includes (1) 87455974 O-Ring
10		87428500		1	FINAL(CONJ), Cap Assembly, Swing Spool End; 87555524 Foot Swing Valve; Some Component Parts Not Serviced Separately; Serviceable Includes (1) 87454547 O-Ring, (1) 87454548 Seal, (1) 87429151 Centering Spring, (2)
10A		87426241		1	FINAL(CONJ), Cap Assembly, Swing Spool End; 87555519 Hand Swing Valve; Some Component Parts Not Serviced Separately; Serviceable Includes (1) 87454547 O-Ring, (1) 87454548 Seal, (1) 87444567 Spring, (2) 87455541 Screw

CONJUNTO DE LA VALVULA - CONTROL DE LA RETROEXCAVADORA, 7 BOBINAS (CON PALA EXTENSIBLE Y SIN SISTEM)

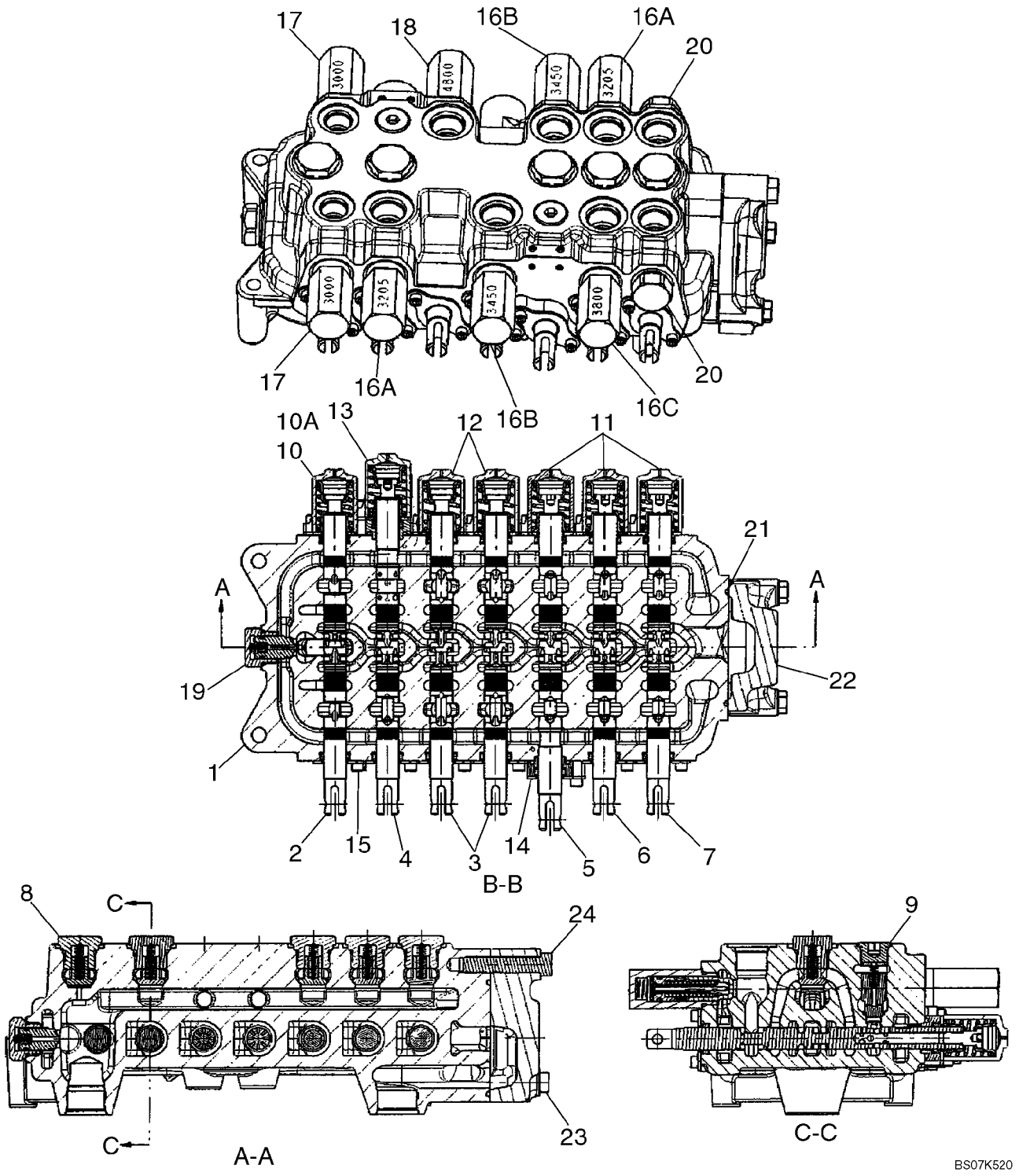

CONJUNTO DE LA VALVULA - CONTROL DE LA RETROEXCAVADORA, 7 BOBINAS (CON PALA EXTENSIBLE Y SIN SISTEM)

REF	FN	PART NUMBER	YR/SN	QTY	DENOMINACION
11		87426241		3	FINAL(CONJ), Cap Assembly, Bucket, Dipper, and Extendahoe Spool End; Some Component Parts Not Serviced Separately; Serviceable Includes (1) 87454547 O-Ring, (1) 87454548 Seal, (1) 87444567 Spring, (2) 87455541 Screw
12		87428497		2	FINAL(CONJ), Cap Assembly, Stabilizer Spool Ends; Some Component Parts Not Serviced Separately; Serviceable Includes (1) 87454547 O-Ring, (1) 87454548 Seal, (1) 87455533 Spring, (2) 87455541 Screw
13		87433029		1	FINAL(CONJ), Cap Assembly, Boom Spool End; Some Component Parts Not Serviced Separately; Serviceable Includes (1) 87454547 O-Ring, (1) 87454548 Seal, (1) 87444567 Spring, (1) 87455538 O-Ring, (2) 87455545 Screw
14		87440815		1	PLACA (CONJUNTO), Seal, Dipper Spool; Some Component Parts Not Serviced Separately; Serviceable Includes (1) 87454547 O-Ring, (1) 87454548 Seal, (1) 87455538 O-Ring, (2) 87455534 Screw
15		87440814		6	PLACA (CONJUNTO), Seal; Some Component Parts Not Serviced Separately; Serviceable Includes (1) 87454547 O-Ring, (1) 87454548 Seal, (2) 87455540 Screw
16A		87450978		2	VĆLVULA, DESCARGA, Circuit; 3205 psi; Component Parts Not Serviced Separately; Includes 87455549 Seal Kit
16B		87450979		2	VĆLVULA, DESCARGA, Circuit; 3450 psi; Component Parts Not Serviced Separately; Includes 87455549 Seal Kit
16C		87450980		1	VĆLVULA, DESCARGA, Circuit; 3800 psi; Component Parts Not Serviced Separately; Includes 87455549 Seal Kit
17		87428490		2	VĆLVULA, DESCARGA, 3000 psi; Component Parts Not Serviced Separately; Includes 87455549 Seal Kit

CONJUNTO DE LA VALVULA - CONTROL DE LA RETROEXCAVADORA, 7 BOBINAS (CON PALA EXTENSIBLE Y SIN SISTEM)

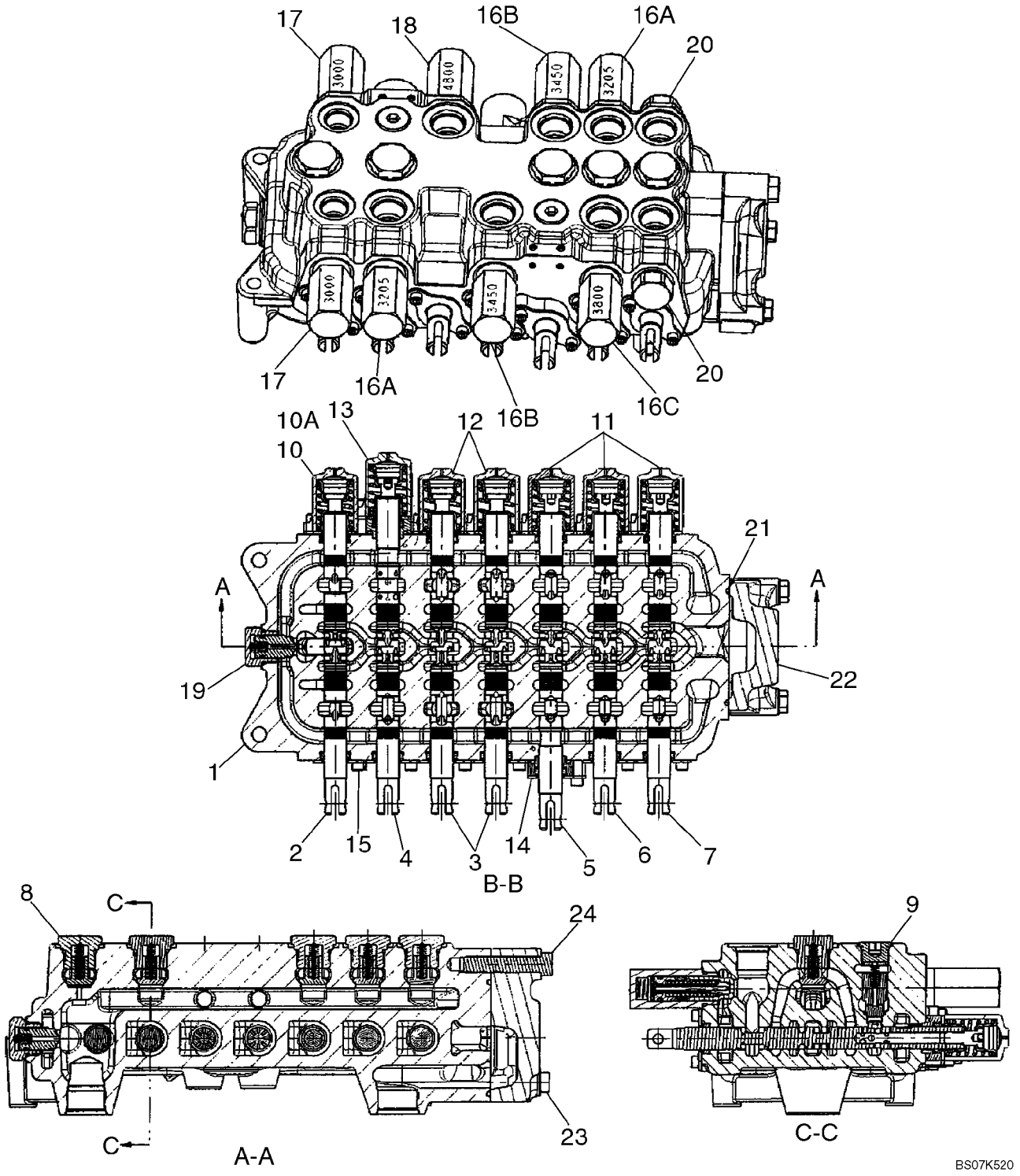

CONJUNTO DE LA VALVULA - CONTROL DE LA RETROEXCAVADORA, 7 BOBINAS (CON PALA EXTENSIBLE Y SIN SISTEM)

REF	FN	PART NUMBER	YR/SN	QTY	DENOMINACION
18		87566237		1	VĆLVULA, DESCARGA, 4800 psi; Component Parts Not Serviced Separately; Includes 87455549 Seal Kit
19		81868381		1	VALVULA ANTIRRETORNO, Anti-Void Plug; Component Parts Not Serviced Separately; Includes 87455580 Seal Kit
20		83981068		2	CILINDROS DE CERRADURA, Component Parts Not Serviced Separately
21		87428495		1	JUNTA HERMETICA, Outlet Section
22		87433030		1	DISTRIBUIDOR HYDR, Outlet Section Assembly; Component Parts Not Serviced Separately
23		87428491		2	TORNILLO
24		87428492		1	TORNILLO

08-35		p1	11/07

CONJUNTO DE LA VALVULA - CONTROL DE LA RETROEXCAVADORA, 8 BOBINAS (CON PALA EXTENSIBLE Y CON SISTEM)

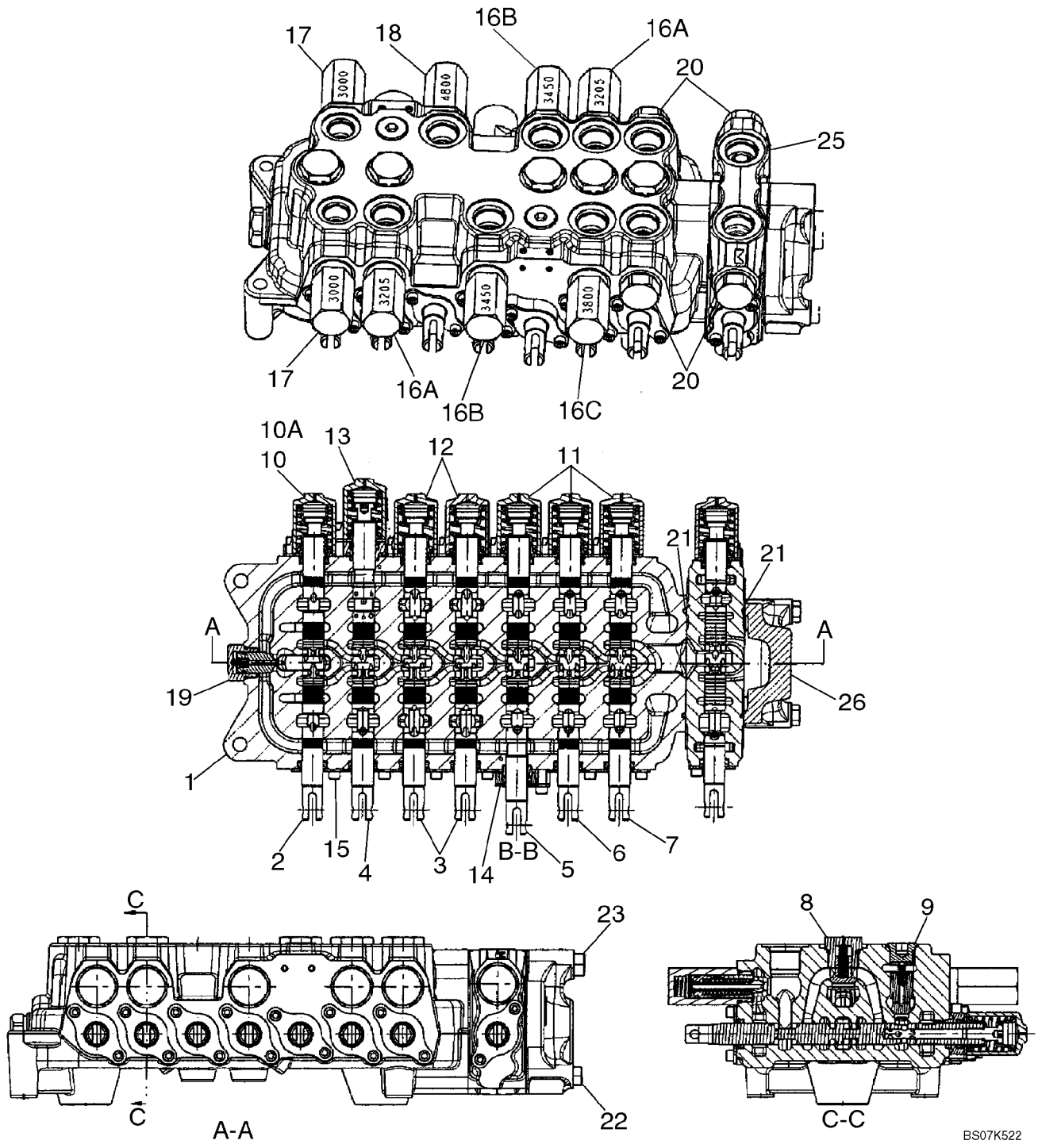

CONJUNTO DE LA VALVULA - CONTROL DE LA RETROEXCAVADORA, 8 BOBINAS (CON PALA EXTENSIBLE Y CON SISTEM)

REF	FN	PART NUMBER	YR/SN	QTY	DENOMINACION
		REF			MANUAL, MODELS WITH EXTENDABLE DIPPER, WITH AUXILIARY HYDRAULICS, WITHOUT PILOT CONTROLS
		87555570		1	VALVULA HIDRAULICA, 8 Spool, Foot Swing; Incl. Ref 1 - 10, 12 - 26; If Used
		87555567		1	VALVULA HIDRAULICA, 8 Spool, Hand Swing; Incl. Ref 1 - 9, 10A, 11 - 25, 26A; If Used
1		NSS		1	NO SE REPARA SEPARADAM., HOUSING
2		NSS		1	NO SE REPARA SEPARADAM., SPOOL, SWING
3		NSS		2	NO SE REPARA SEPARADAM., SPOOL, STABILIZER, Right-Hand and Left-Hand
4		NSS		1	NO SE REPARA SEPARADAM., SPOOL, BOOM
5		NSS		1	NO SE REPARA SEPARADAM., SPOOL, DIPPER
6		NSS		1	NO SE REPARA SEPARADAM., SPOOL, BUCKET
7		NSS		1	NO SE REPARA SEPARADAM., SPOOL, EXTENDABLE DIPPER
8		87426238		5	VALVULA ANTIRRETORNO, Hex Head; Component Parts Not Serviced Separately; Includes (1) 87455975 O-Ring
9		87428486		2	VALVULA ANTIRRETORNO, Hex Socket Head; Component Parts Not Serviced Separately; Includes (1) 87455974 O-Ring
10		87428500		1	FINAL(CONJ), Cap Assembly, Swing Spool End; 87555570 Foot Swing Valve; Component Parts Not Serviced Separately; Includes 87429151 Centering Spring
10A		87426241		1	FINAL(CONJ), Cap Assembly, Swing Spool End; 87555567 Hand Swing Valve; Some Component Parts Not Serviced Separately; Serviceable Includes (1) 87454547 O-Ring, (1) 87454548 Seal, (1) 87444567 Spring, (2) 87455541 Screw

CONJUNTO DE LA VALVULA - CONTROL DE LA RETROEXCAVADORA, 8 BOBINAS (CON PALA EXTENSIBLE Y CON SISTEM)

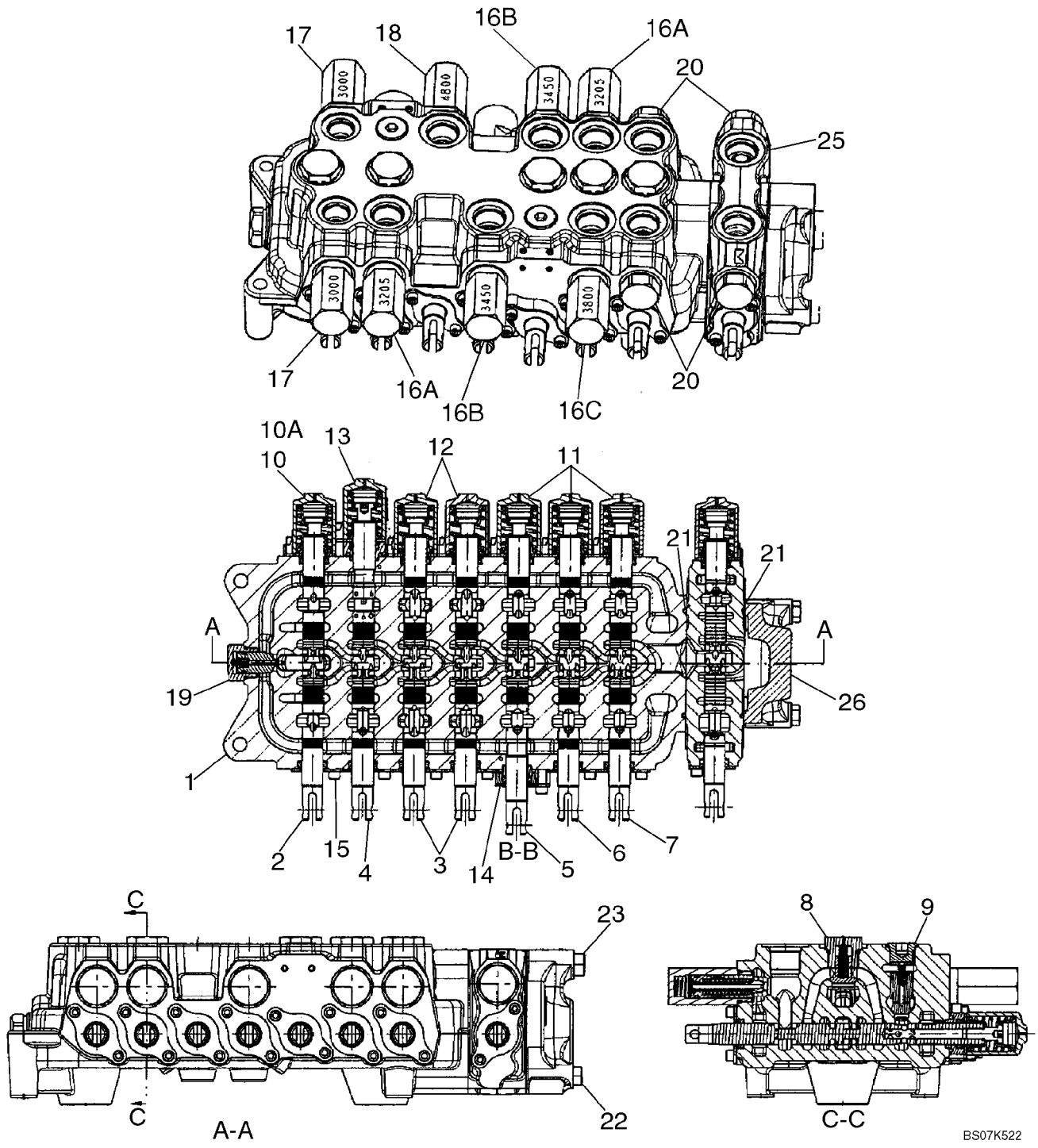

CONJUNTO DE LA VALVULA - CONTROL DE LA RETROEXCAVADORA, 8 BOBINAS (CON PALA EXTENSIBLE Y CON SISTEM)

REF	FN	PART NUMBER	YR/SN	QTY	DENOMINACION
11		87426241		3	FINAL(CONJ), Cap Assembly, Bucket, Dipper and Extendahoe Spool Ends; Some Component Parts Not Serviced Separately; Serviceable Includes (1) 87454547 O-Ring, (1) 87454548 Seal, (1) 87444567 Spring, (2) 87455541 Screw
12		87428497		2	FINAL(CONJ), Cap Assembly, Stabilizer Spool Ends; Some Component Parts Not Serviced Separately; Serviceable Includes (1) 87454547 O-Ring, (1) 87454548 Seal, (1) 87455533 Spring, (2) 87455541 Screw
13		87433029		1	FINAL(CONJ), Cap Assembly, Boom Spool End; Some Component Parts Not Serviced Separately; Serviceable Includes (1) 87454547 O-Ring, (1) 87454548 Seal, (1) 87444567 Spring, (1) 87455538 O-Ring, (2) 87455545 Screw
14		87440815		1	PLACA (CONJUNTO), Seal, Dipper Spool; Some Component Parts Not Serviced Separately; Serviceable Includes (1) 87454547 O-Ring, (1) 87454548 Seal, (1) 87455538 O-Ring, (2) 87455534 Screw
15		87440814		6	PLACA (CONJUNTO), Seal; Some Component Parts Not Serviced Separately; Serviceable Includes (1) 87454547 O-Ring, (1) 87454548 Seal, (2) 87455540 Screw
16A		87450978		2	VĆLVULA, DESCARGA, Circuit; 3205 psi; Component Parts Not Serviced Separately; Includes 87455549 Seal Kit
16B		87450979		2	VĆLVULA, DESCARGA, Circuit; 3450 psi; Component Parts Not Serviced Separately; Includes 87455549 Seal Kit
16C		87450980		1	VĆLVULA, DESCARGA, Circuit; 3800 psi; Component Parts Not Serviced Separately; Includes 87455549 Seal Kit
17		87428490		2	VĆLVULA, DESCARGA, 3000 psi; Component Parts Not Serviced Separately; Includes 87455549 Seal Kit

CONJUNTO DE LA VALVULA - CONTROL DE LA RETROEXCAVADORA, 8 BOBINAS (CON PALA EXTENSIBLE Y CON SISTEM)

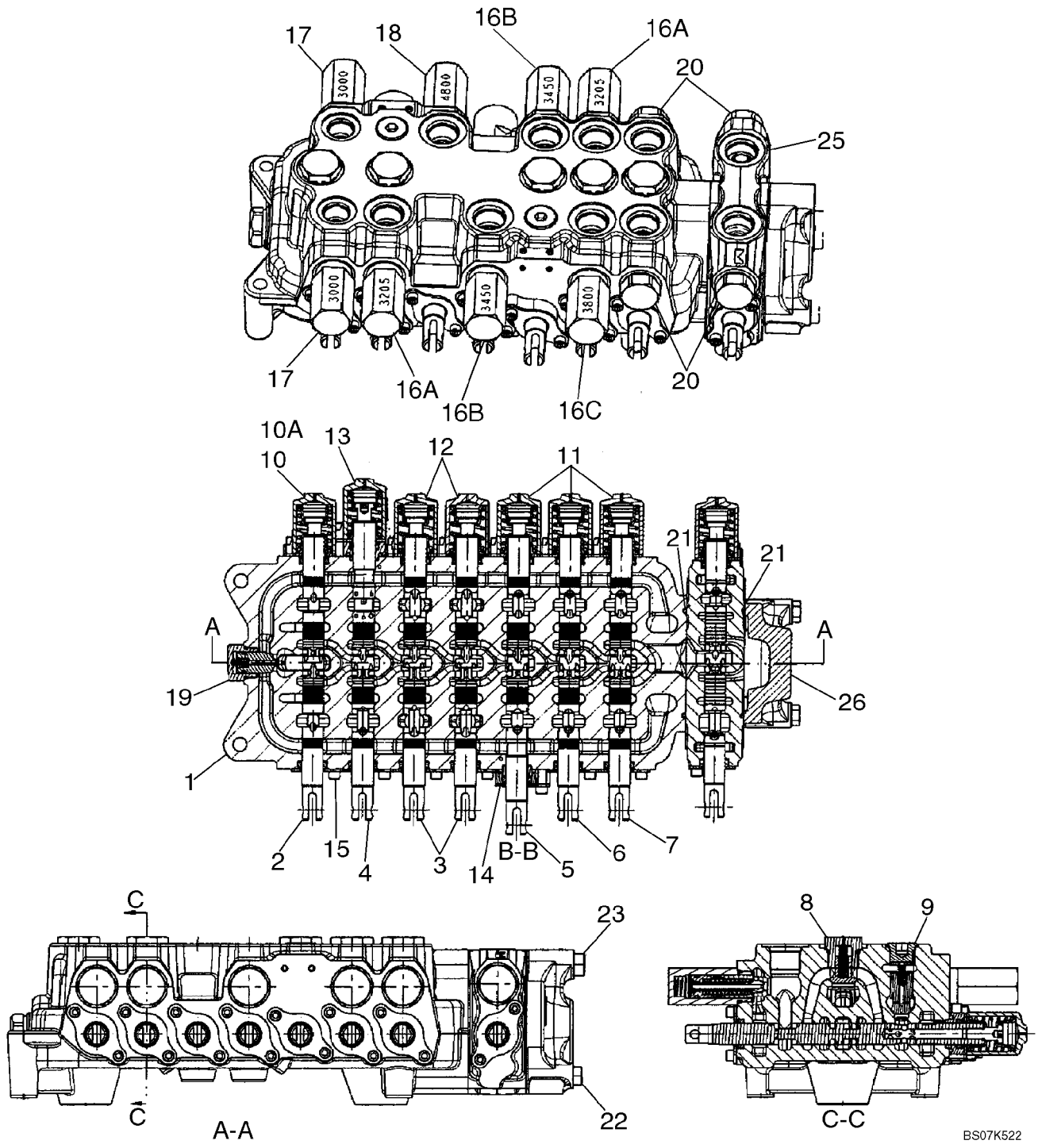

CONJUNTO DE LA VALVULA - CONTROL DE LA RETROEXCAVADORA, 8 BOBINAS (CON PALA EXTENSIBLE Y CON SISTEM)

REF	FN	PART NUMBER	YR/SN	QTY	DENOMINACION
18		87566237		1	VĆLVULA, DESCARGA, 4800 psi; Component Parts Not Serviced Separately; Includes 87455549 Seal Kit
19		81868381		1	VALVULA ANTIRRETORNO, Anti-Void Valve; Component Parts Not Serviced Separately; Includes 87455580 Seal Kit
20		83981068		4	CILINDROS DE CERRADURA, Component Parts Not Serviced Separately; (2) Are Now Included With Ref 25
21		87428495		2	JUNTA HERMETICA, Auxiliary/Outlet Section
22		87428476		2	TORNILLO
23		87428477		1	TORNILLO
25		87428501		1	DISTRIBUIDOR HYDR, Spool Section Assembly; Auxiliary Hydraulics; Includes Ref 25A - 25I, Which Are Not Illustrated; Remainder Component Parts Not Serviced Separately
25A		87433028		1	FINAL(CONJ), Spool; Incl. Ref 25B - 25E, Which Are Not Illustrated; Remainder Component Parts Not Serviced Separately
25B		87454547		1	JUNTA HERMETICA
25C		87454548		1	ANILLO DE CIERRE, Wiper
25D		87429150		1	MUELLE, VALVULA
25E		87455541		2	TORNILLO
25F		87428495		1	JUNTA HERMETICA
25G		87455564		1	VĆLVULA DE PASO, Load Check
25H		87455565		1	MUELLE, VALVULA, Load Check
25I		83981068		2	CILINDROS DE CERRADURA
26		87433030		1	DISTRIBUIDOR HYDR, Outlet Section Assembly; Component Parts Not Serviced Separately

CONJUNTO DE LA VALVULA - CONTROL DE LA RETROEXCAVADORA, 6 BOBINAS

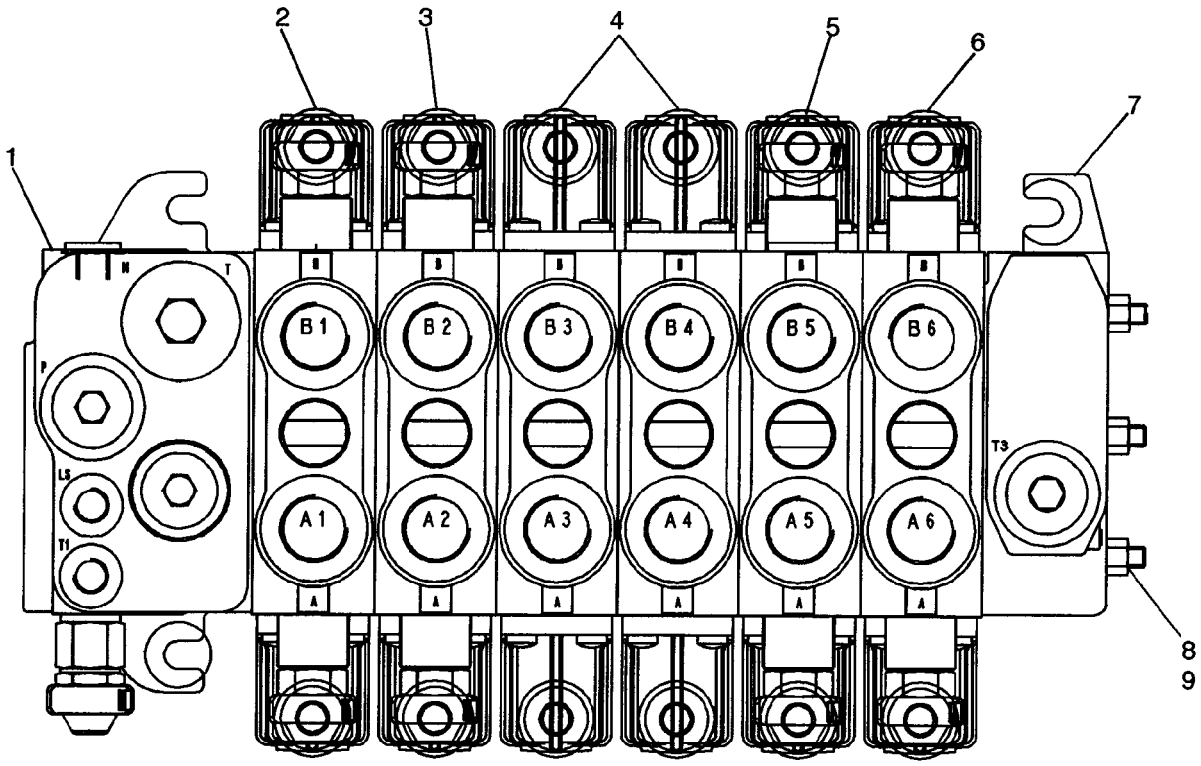

BS07K523

CONJUNTO DE LA VALVULA - CONTROL DE LA RETROEXCAVADORA, 6 BOBINAS

REF	FN	PART NUMBER	YR/SN	QTY	DENOMINACION
		87577343		1	VALVULA DISTRIBUIDORA, Backhoe 6 Spool; Rexroth No. 08 403 273; Check Data Plate On Valve For Part Number; Incl. Ref 1 - 9
1		87441495		1	DISTRIBUIDOR HYDR, Inlet Section; With Orifice Threaded In LS Cavity; See Figure 08-39A
2		85826339		1	DISTRIBUIDOR HYDR, Swing Section; See Figure 08-40
3		85826337		1	DISTRIBUIDOR HYDR, Boom Section; See Figure 08-41
4		87617618		2	DISTRIBUIDOR HYDR, Stabilizer Section; Without Flow Sharing to Provide Open Center Performance; See Figure 08-42
5		85826338		1	DISTRIBUIDOR HYDR, Dipper Section; See Figure 08-43
6		85826365		1	DISTRIBUIDOR HYDR, Bucket Section; See Figure 08-44
7		NSS		1	NO SE REPARA SEPARADAM., Outlet Section
8		NSS		3	NO SE REPARA SEPARADAM., Tie Bolt
9		NSS		3	NO SE REPARA SEPARADAM., Nut

CONJUNTO DE LA VALVULA - CONTROL DE LA RETROEXCAVADORA, 7 BOBINAS

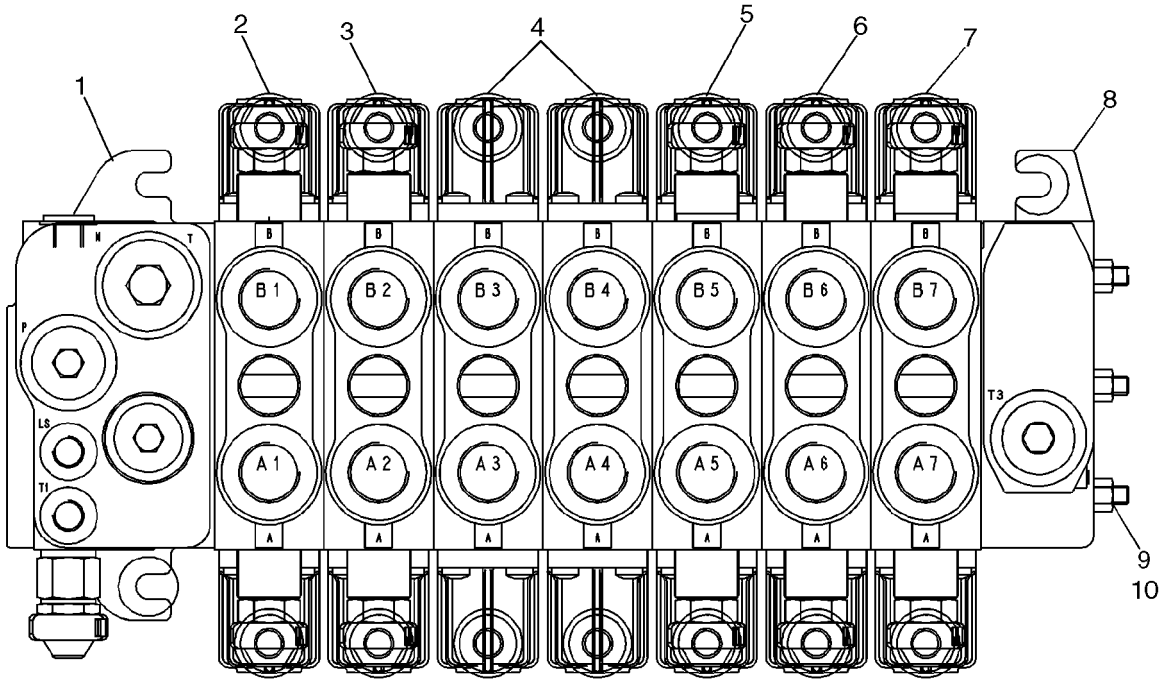

BS07K524

CONJUNTO DE LA VALVULA - CONTROL DE LA RETROEXCAVADORA, 7 BOBINAS

REF	FN	PART NUMBER	YR/SN	QTY	DENOMINACION
		87577346		1	VALVULA DISTRIBUIDORA, Backhoe 7 Spool; Rexroth No. 08 402 663; Check Data Plate On Valve For Part Number; Incl. Ref 1 - 10;
1		87441495		1	DISTRIBUIDOR HYDR, Inlet Section; With Orifice Threaded In LS Cavity; See Figure 08-39A
2		85826339		1	DISTRIBUIDOR HYDR, Swing Section; See Figure 08-40
3		85826337		1	DISTRIBUIDOR HYDR, Boom Section; See Figure 08-41
4		87617618		2	DISTRIBUIDOR HYDR, Stabilizer Section; Without Flow Sharing to Provide Open Center Performance; 87577346 Valve; See Figure 08-42
5		85826338		1	DISTRIBUIDOR HYDR, Dipper Section; See Figure 08-43
6		85826365		1	DISTRIBUIDOR HYDR, Bucket Section; See Figure 08-44
7		85826341		1	DISTRIBUIDOR HYDR, Extendable Dipper Section; See Figure 08-45
8		NSS		1	NO SE REPARA SEPARADAM., Outlet Section
9		NSS		3	NO SE REPARA SEPARADAM., Tie Bolt
10		NSS		3	NO SE REPARA SEPARADAM., Nut

CONJUNTO DE LA VALVULA - CONTROL DE LA RETROEXCAVADORA, 7 BOBINAS

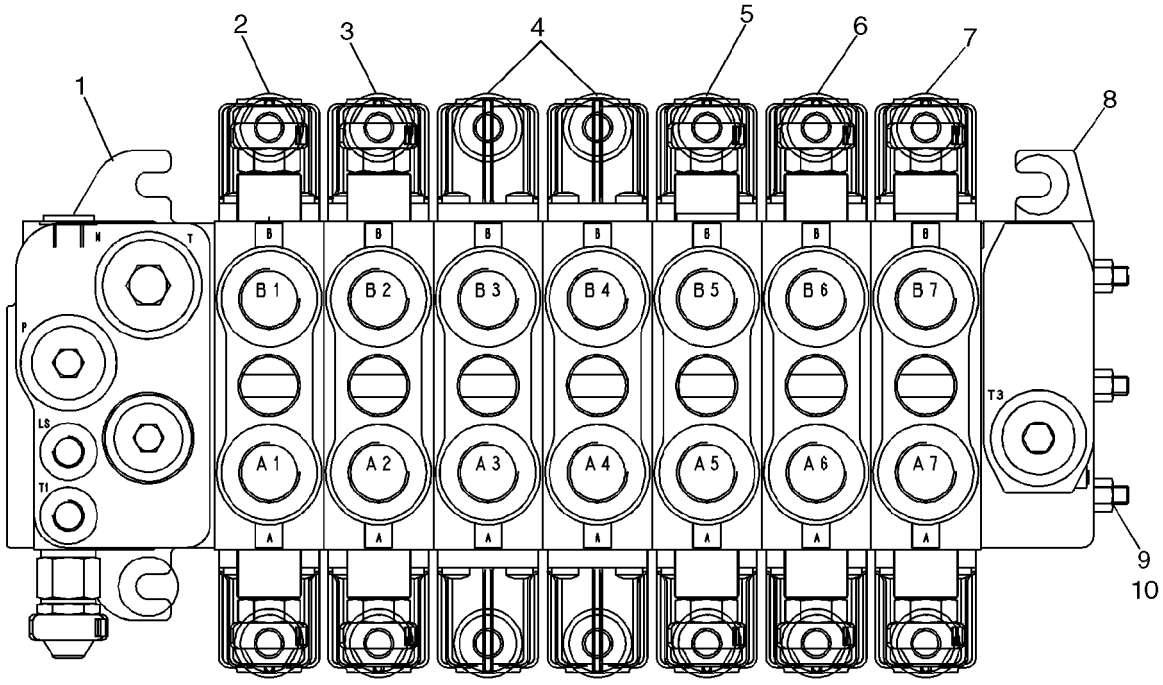

BS07K524

CONJUNTO DE LA VALVULA - CONTROL DE LA RETROEXCAVADORA, 7 BOBINAS

REF	FN	PART NUMBER	YR/SN	QTY	DENOMINACION
		87577348		1	VALVULA DISTRIBUIDORA, Backhoe 7 Spool; Rexroth No. 08 403 272; Check Data Plate On Valve For Part Number; Incl. Ref 1 - 10
1		87441495		1	DISTRIBUIDOR HYDR, Inlet Section; With Orifice Threaded In LS Cavity; See Figure 08-39A
2		85826339		1	DISTRIBUIDOR HYDR, Swing Section; See Figure 08-40
3		85826337		1	DISTRIBUIDOR HYDR, Boom Section; See Figure 08-41
4		87617618		2	DISTRIBUIDOR HYDR, Stabilizer Section; Without Flow Sharing to Provide Open Center Performance; See Figure 08-42
5		85826338		1	DISTRIBUIDOR HYDR, Dipper Section; See Figure 08-43
6		85826365		1	DISTRIBUIDOR HYDR, Bucket Section; See Figure 08-44
7		85826342		1	DISTRIBUIDOR HYDR, Auxiliary Section; See Figure 08-46
8		NSS		1	NO SE REPARA SEPARADAM., Outlet Section
9		NSS		3	NO SE REPARA SEPARADAM., Tie Bolt
10		NSS		3	NO SE REPARA SEPARADAM., Nut

08-39		p1	01/08

CONJUNTO DE LA VALVULA - CONTROL DE LA RETROEXCAVADORA, 8 BOBINAS

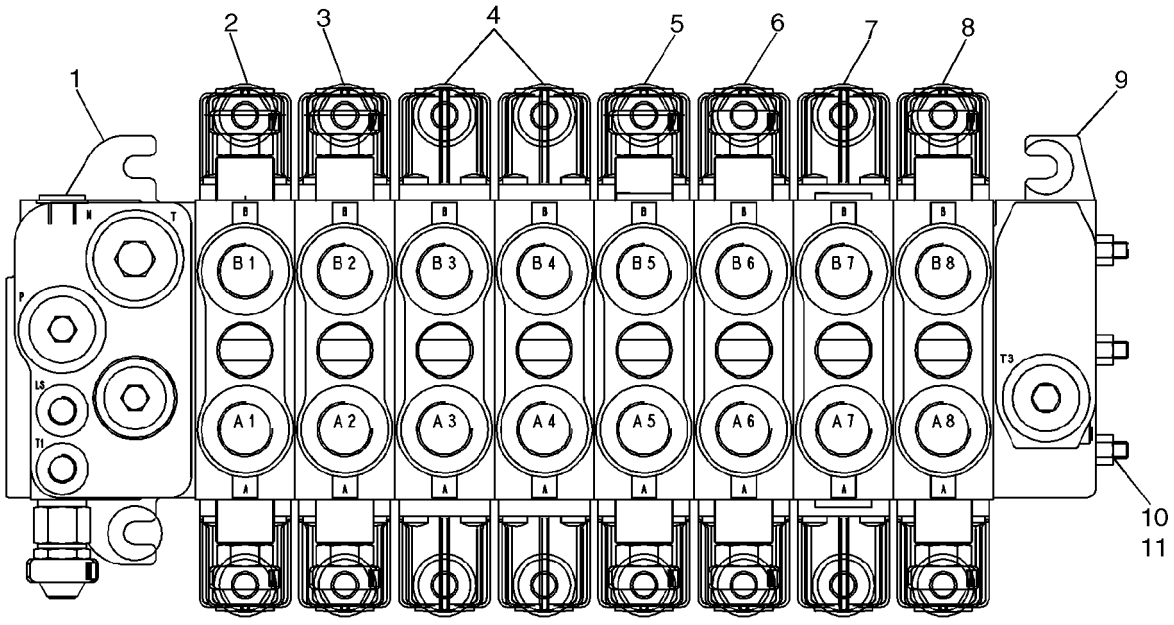

BS07M008

CONJUNTO DE LA VALVULA - CONTROL DE LA RETROEXCAVADORA, 8 BOBINAS

REF	FN	PART NUMBER	YR/SN	QTY	DENOMINACION
		87577349		1	VALVULA DISTRIBUIDORA, Backhoe 8 Spool; Rexroth No. 08 403 271; Check Data Plate On Valve For Part Number; Incl. Ref 1 - 11
1		87441495		1	DISTRIBUIDOR HYDR, Inlet Section; With Orifice Threaded In LS Cavity; See Figure 08-43A
2		85826339		1	DISTRIBUIDOR HYDR, Swing Section; See Figure 08-44
3		85826337		1	DISTRIBUIDOR HYDR, Boom Section; See Figure 08-45
4		87617618		2	DISTRIBUIDOR HYDR, Stabilizer Section; Without Flow Sharing to Provide Open Center Performance; 87577349 Valve; See Figure 08-46; If Used
5		85826338		1	DISTRIBUIDOR HYDR, Dipper Section; See Figure 08-47
6		85826365		1	DISTRIBUIDOR HYDR, Bucket Section; See Figure 08-48
7		85826341		1	DISTRIBUIDOR HYDR, Extendable Dipper Section; See Figure 08-49
8		85826342		1	DISTRIBUIDOR HYDR, Auxiliary Section; See Figure 08-50
9		NSS		1	NO SE REPARA SEPARADAM., Outlet Section
10		87447477		3	JUEGO DE PIEZAS, Tie Bolt
11		280136		3	TUERCA, 3/8"-16, G8

SECCION DE LA VALVULA - DE LA RETROEXCAVADORA (CON DE CONTROL PILOTO)

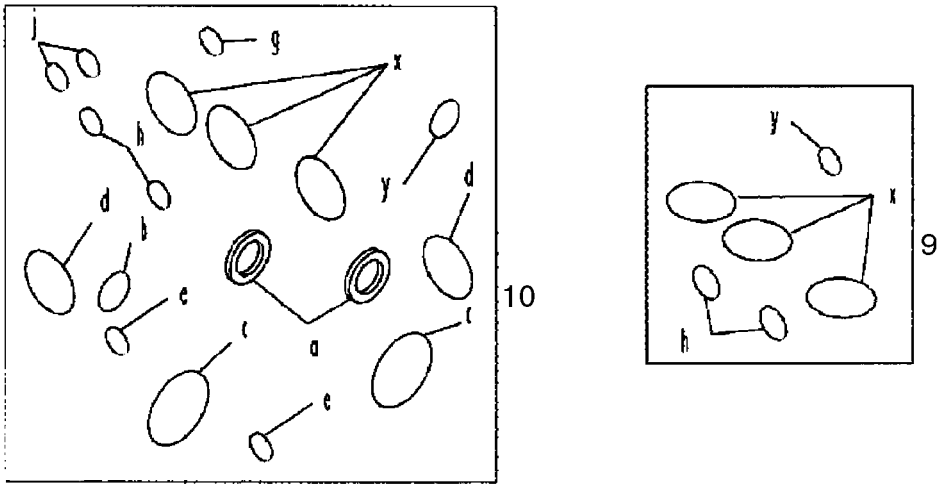

SECCION DE LA VALVULA - DE LA RETROEXCAVADORA (CON DE CONTROL PILOTO)

REF	FN	PART NUMBER	YR/SN	QTY	DENOMINACION
		85826339		1	DISTRIBUIDOR HYDR, Swing; Incl. Ref 1 - 10
1		NSS		1	NO SE REPARA SEPARADAM., HOUSING
2		NSS		1	NO SE REPARA SEPARADAM., SPOOL
3		85826345		1	EQUIPO, Pressure Compensator; Component Parts Not Serviced Separately
4		85811938		2	VALVULA DE CIERRE, Component Parts Not Serviced Separately
5		85826344		1	EQUIPO, End Cap; Component Parts Not Serviced Separately
6		85812114		2	VALVULA HIDRAULICA, Pressure Relief Valve; Some Component Parts Not Serviced Separately; Serviceable Includes 85811933, Ref 8 Kit
7		85811934		2	EQUIPO, Cover, Orange
8		85811933		2	SERIE DE JUNTAS, Includes (2) O-Rings, (1) Thrust Ring; Component Parts Not Serviced Separately
9		85819148		1	SERIE DE JUNTAS, Includes (6) O-Rings; Component Parts Not Serviced Separately
10		85824282		1	EQUIPO, Seal, Includes (15) O-Rings, (2) Lip Seals; Component Parts Not Serviced Separately

08-41		p1	09/07

SECCION DE LA VALVULA - AGUILON DE LA RETROEXCAVADORA (CON DE CONTROL PILOTO)

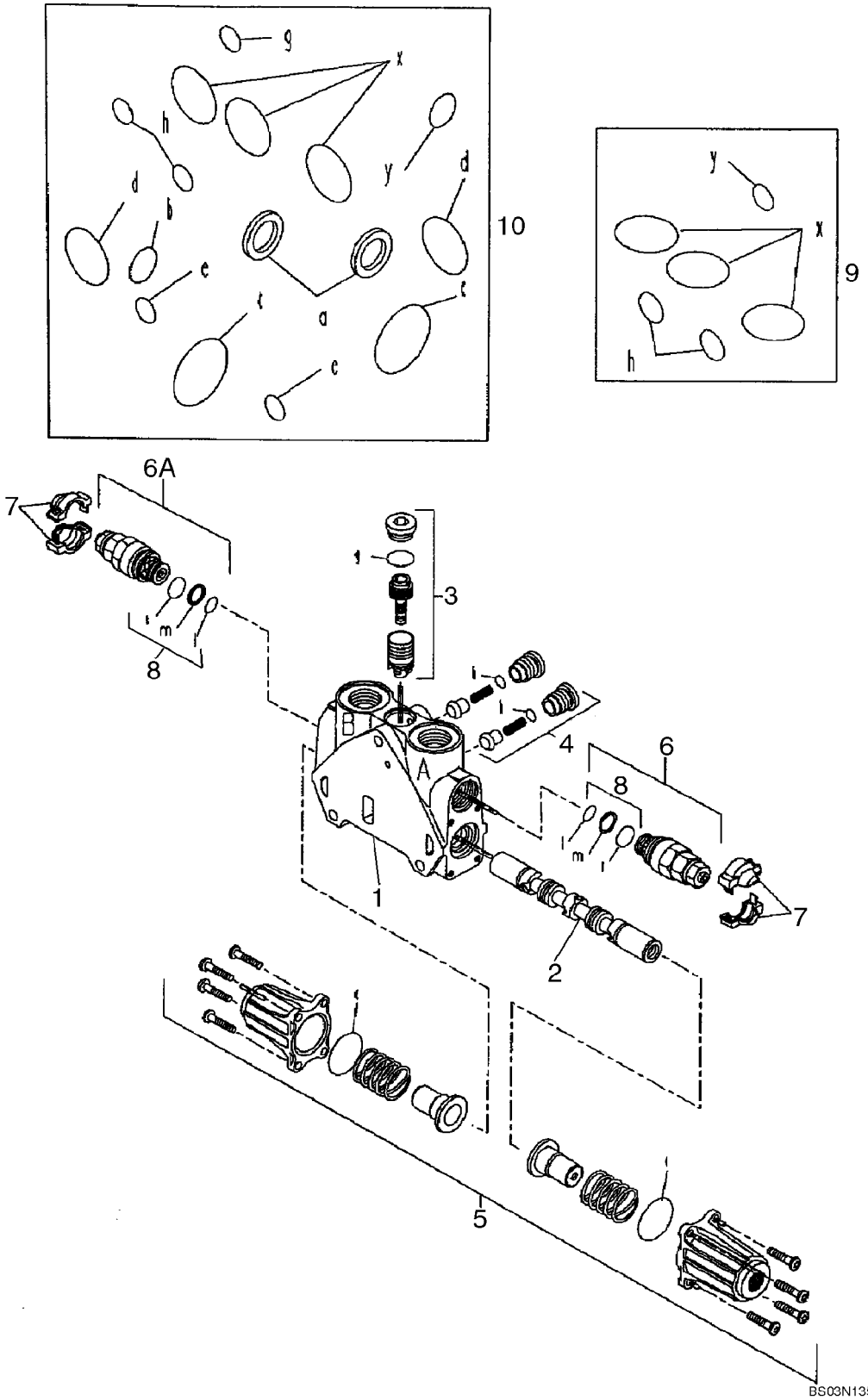

SECCION DE LA VALVULA - AGUILON DE LA RETROEXCAVADORA (CON DE CONTROL PILOTO)

REF	FN	PART NUMBER	YR/SN	QTY	DENOMINACION
		85826337		1	DISTRIBUIDOR HYDR, Boom; Incl. Ref 1 - 10
1		NSS		1	NO SE REPARA SEPARADAM., HOUSING
2		NSS		1	NO SE REPARA SEPARADAM., SPOOL
3		85819378		1	SERIE DE JUNTAS, Pressure Compensator; Component Parts Not Serviced Separately
4		85811938		2	VALVULA DE CIERRE, Component Parts Not Serviced Separately
5		85826344		1	EQUIPO, End Cap; Component Parts Not Serviced Separately
6		85812115		1	VALVULA HIDRAULICA, Pressure Relief Valve Kit; Side A; Some Component Parts Not Serviced Separately; Serviceable Includes 85811933, Ref 8 Kit
6A		85826346		1	VĆLVULA, DESCARGA, Pressure Relief Valve Kit; Side B; Component Parts Not Serviced Separately
7		85811934		2	EQUIPO, Cover, Orange
7		85811935		2	EQUIPO, Cover, Blue
8		85811933		2	SERIE DE JUNTAS, Seal Kit Includes (2) O-Rings, (1) Thrust Ring; Component Parts Not Serviced Separately
9		85819148		1	SERIE DE JUNTAS, Seal Kit Includes (6) O-Rings; Component Parts Not Serviced Separately
10		85824281		1	SERIE DE JUNTAS, Seal Kit Includes (13) O-Rings, (2) Lip Seals; Component Parts Not Serviced Separately

08-42		p1	02/08

SECCION DE LA VALVULA - ESTABILIZADOR DE LA RETROEXCAVADORA (CON DE CONTROL PILOTO)

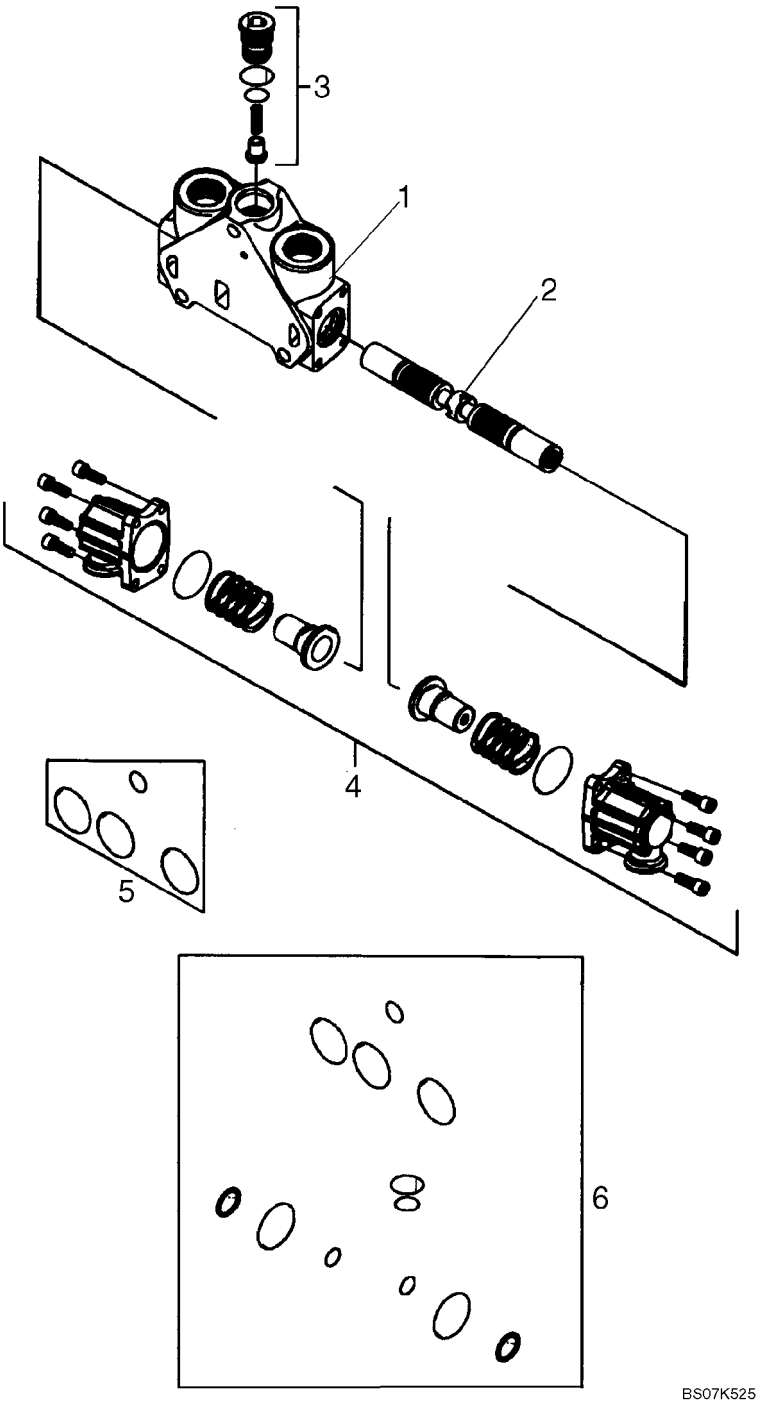

SECCION DE LA VALVULA - ESTABILIZADOR DE LA RETROEXCAVADORA (CON DE CONTROL PILOTO)

REF	FN	PART NUMBER	YR/SN	QTY	DENOMINACION
		87617618		2	DISTRIBUIDOR HYDR, Stabilizer; Left-Hand and Right-Hand; Without Flow Sharing to Provide Open Center Performance; Incl. Ref 1 - 6
1		NSS		1	NO SE REPARA SEPARADAM., HOUSING
2		NSS		1	NO SE REPARA SEPARADAM., SPOOL
3		87617655		1	VALVULA DE CIERRE, Kit; Component Parts Not Serviced Separately
4		85826344		1	EQUIPO, End Cap; Component Parts Not Serviced Separately
5		85825473		1	SERIE DE JUNTAS, Includes (4) O-Rings; Component Parts Not Serviced Separately
6		87617657		1	HERMETICA□, Includes (12) Seals; Component Parts Not Serviced Separately

08-43		p1	09/07

SECCION DE LA VALVULA - BRAZO DE LA RETROEXCAVADORA (CON DE CONTROL PILOTO)

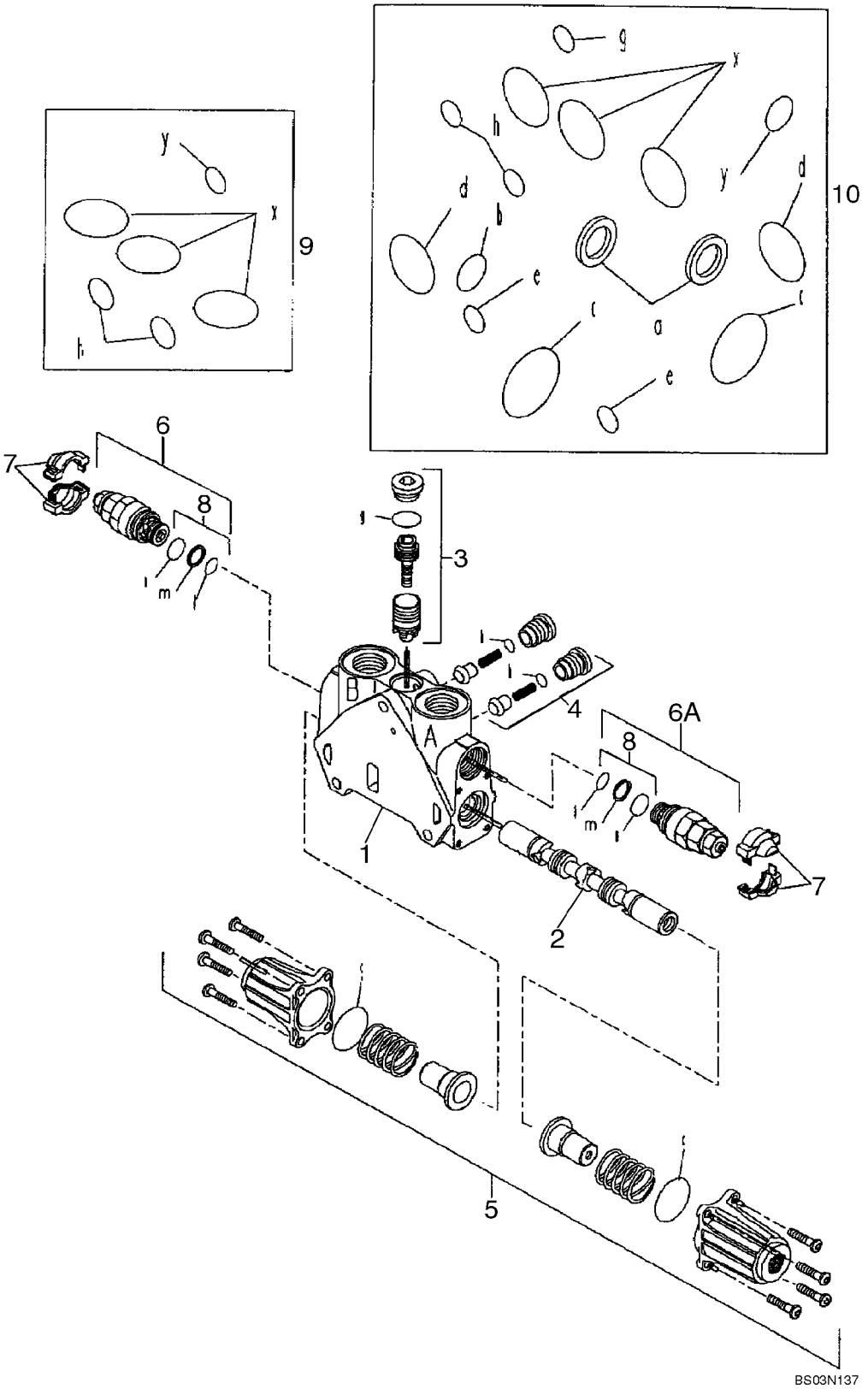

SECCION DE LA VALVULA - BRAZO DE LA RETROEXCAVADORA (CON DE CONTROL PILOTO)

REF	FN	PART NUMBER	YR/SN	QTY	DENOMINACION
		85826338		1	DISTRIBUIDOR HYDR, Dipper; Incl. Ref 1 - 10
1		NSS		1	NO SE REPARA SEPARADAM., HOUSING
2		NSS		1	NO SE REPARA SEPARADAM., SPOOL
3		85826345		1	EQUIPO, Pressure Compensator; Component Parts Not Serviced Separately
4		85811938		2	VALVULA DE CIERRE, Kit; Component Parts Not Serviced Separately
5		85826344		1	EQUIPO, End Cap; Component Parts Not Serviced Separately
6		85812116		1	VĆLVULA, DESCARGA, Side B; Some Component Parts Not Serviced Separately; Serviceable Includes 85811933, Ref 8 Kit
6A		85826343		1	VĆLVULA, DESCARGA, Side A; Component Parts Not Serviced Separately
7		85811934		2	EQUIPO, Cover, Orange
7		85811935		2	EQUIPO, Cover, Blue
8		85811933		2	SERIE DE JUNTAS, Includes (2) O-Rings, (1) Thrust Ring; Component Parts Not Serviced Separately
9		85819148		1	SERIE DE JUNTAS, Includes (6) O-Rings; Component Parts Not Serviced Separately
10		85824281		1	SERIE DE JUNTAS, Includes (13) O-Rings, (2) Lip Seals; Component Parts Not Serviced Separately

08-44		p1	09/07

SECCION DE LA VALVULA - CUCHARON DE LA RETROEXCAVADORA (CON DE CONTROL PILOTO)

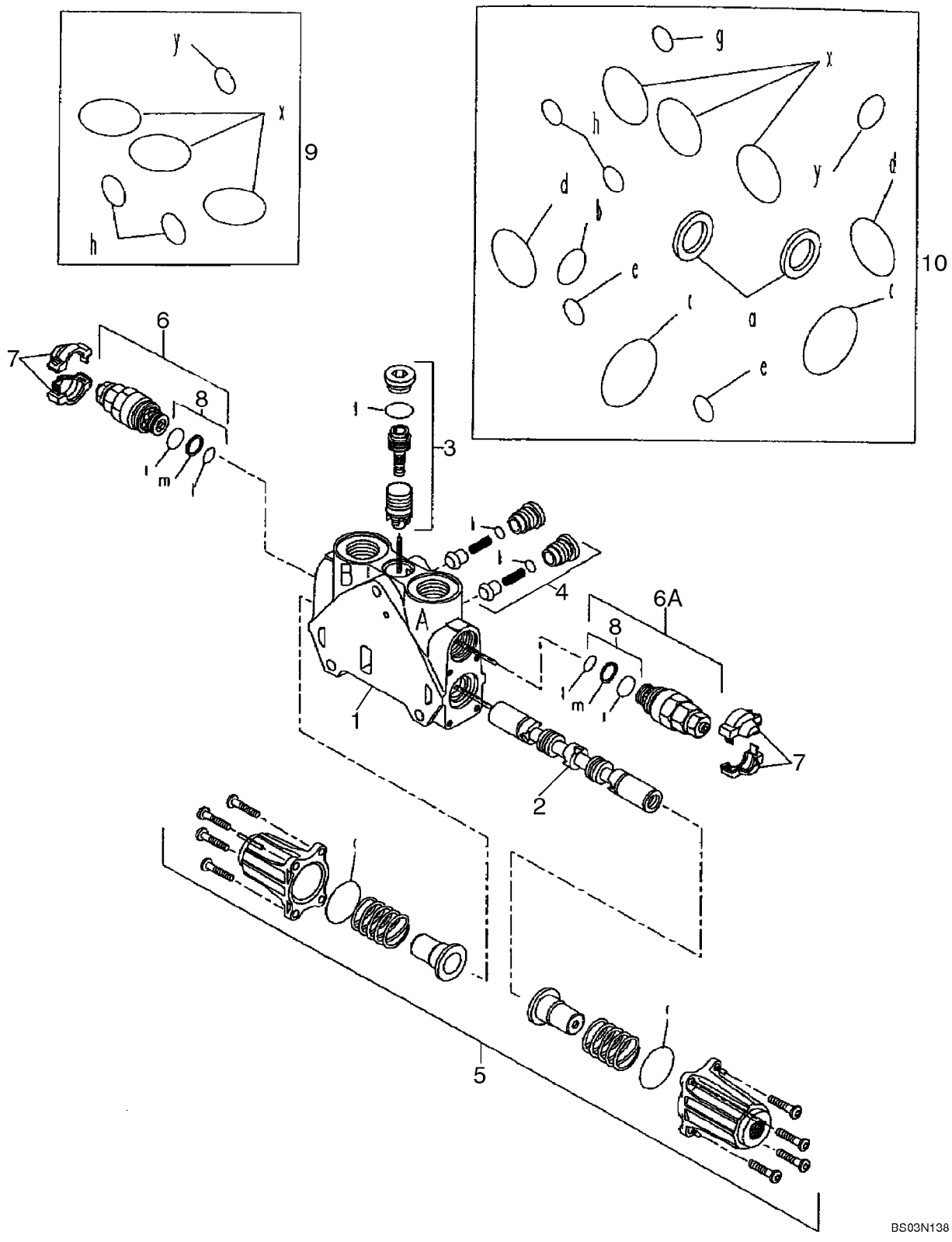

SECCION DE LA VALVULA - CUCHARON DE LA RETROEXCAVADORA (CON DE CONTROL PILOTO)

REF	FN	PART NUMBER	YR/SN	QTY	DENOMINACION
		85826365		1	DISTRIBUIDOR HYDR, Bucket; Incl. Ref 1 - 10
1		NSS		1	NO SE REPARA SEPARADAM., HOUSING
2		NSS		1	NO SE REPARA SEPARADAM., SPOOL
3		85819378		1	SERIE DE JUNTAS, Pressure Compensator; Component Parts Not Serviced Separately
4		85811938		2	VALVULA DE CIERRE, Kit; Component Parts Not Serviced Separately
5		85826344		1	EQUIPO, End Cap; Component Parts Not Serviced Separately
6		85812116		1	VĆLVULA, DESCARGA, Side B; Some Component Parts Not Serviced Separately; Serviceable Includes 85811933, Ref 8 Kit
6A		85826905		1	VĆLVULA, DESCARGA, Side A; Some Component Parts Not Serviced Separately; Serviceable Includes 85811933, Ref 8 Kit
7		85811934		2	EQUIPO, Cover, Orange
7		85811935		2	EQUIPO, Cover, Blue
8		85811933		2	SERIE DE JUNTAS, Includes (2) O-Rings, (1) Thrust Ring; Component Parts Not Serviced Separately
9		85819148		1	SERIE DE JUNTAS, Includes (6) O-Rings; Component Parts Not Serviced Separately
10		85824281		1	SERIE DE JUNTAS, Includes (13) O-Rings, (2) Lip Seals; Component Parts Not Serviced Separately

08-45		p1	01/08

SECCION DE LA VALVULA - PALA EXTENSIBLE (CON DE CONTROL PILOTO)

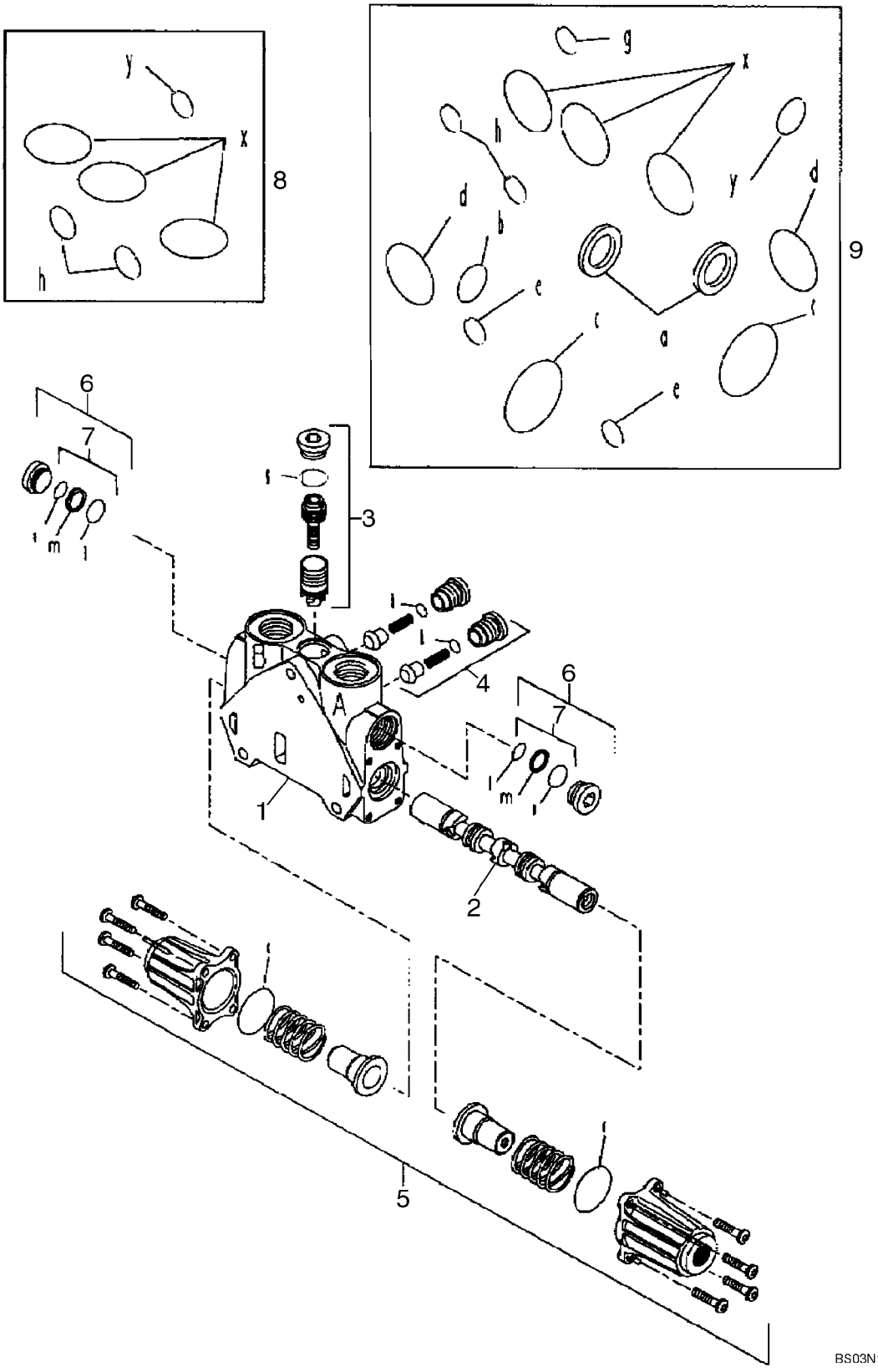

SECCION DE LA VALVULA - PALA EXTENSIBLE (CON DE CONTROL PILOTO)

REF	FN	PART NUMBER	YR/SN	QTY	DENOMINACION
		85826341		1	DISTRIBUIDOR HYDR, Extendable Dipper; Incl. Ref 1 - 9
1		NSS		1	NO SE REPARA SEPARADAM., HOUSING
2		NSS		1	NO SE REPARA SEPARADAM., SPOOL
3		85819378		1	SERIE DE JUNTAS, Pressure Compensator Kit; Component Parts Not Serviced Separately
4		85811938		2	VALVULA DE CIERRE, Check Valve Kit; Component Parts Not Serviced Separately
5		85826344		1	EQUIPO, End Cap Kit; Component Parts Not Serviced Separately
6		85811937		2	TAPčN, Plug Assembly Kit; Some Component Parts Not Serviced Separately; Serviceable Includes 85811933, Ref 7 Kit
7		85811933		2	SERIE DE JUNTAS, Seal Kit Includes (2) O-Rings, (1) Thrust Ring; Component Parts Not Serviced Separately
8		85819148		1	SERIE DE JUNTAS, Seal Kit Includes (6) O-Rings; Component Parts Not Serviced Separately
9		85824281		1	SERIE DE JUNTAS, Seal Kit Includes (13) O-Rings, (2) Lip Seals; Component Parts Not Serviced Separately

08-46		p1	01/08

SECCION DE LA VALVULA - OPCIONES, SISTEMA HIDRćULICO AUXILIAR (CON DE CONTROL PILOTO)

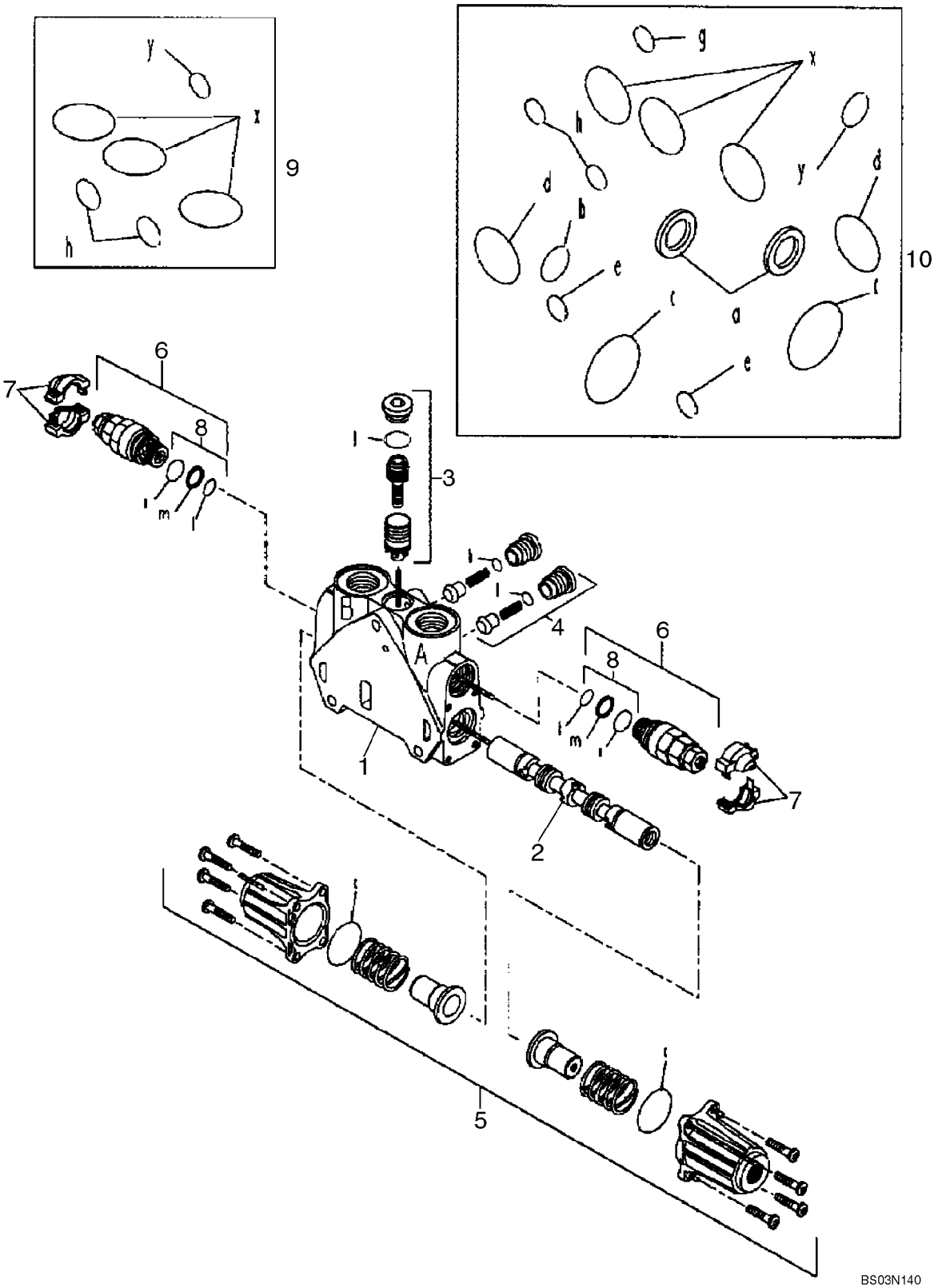

SECCION DE LA VALVULA - OPCIONES, SISTEMA HIDRćULICO AUXILIAR (CON DE CONTROL PILOTO)

REF	FN	PART NUMBER	YR/SN	QTY	DENOMINACION
		85826342		1	DISTRIBUIDOR HYDR, Options, Auxiliary Hydraulics; Incl. Ref 1 - 10
1		NSS		1	NO SE REPARA SEPARADAM., HOUSING
2		NSS		1	NO SE REPARA SEPARADAM., SPOOL
3		85819378		1	SERIE DE JUNTAS, Pressure Compensator Kit; Component Parts Not Serviced Separately
4		85811938		2	VALVULA DE CIERRE, Check Valve Kit; Component Parts Not Serviced Separately
5		85826344		1	EQUIPO, End Cap Kit; Component Parts Not Serviced Separately
6		85812115		2	VALVULA HIDRAULICA, Pressure Relief Valve; Some Component Parts Not Serviced Separately; Serviceable Includes 85811933, Ref 8 Kit
7		85811934		2	EQUIPO, Cover, Orange
7		85811935		2	EQUIPO, Cover, Blue
8		85811933		2	SERIE DE JUNTAS, Seal Kit Includes (2) O-Rings, (1) Thrust Ring; Component Parts Not Serviced Separately
9		85819148		1	SERIE DE JUNTAS, Seal Kit Includes (6) O-Rings; Component Parts Not Serviced Separately
10		85824281		1	SERIE DE JUNTAS, Seal Kit Includes (13) O-Rings, (2) Llp Seals; Component Parts Not Serviced Separately

08-47		p1	09/07

VALVULA DE REDUCCION DEPRESION (2 SPOOL) (CON DE CONTROL PILOTO)

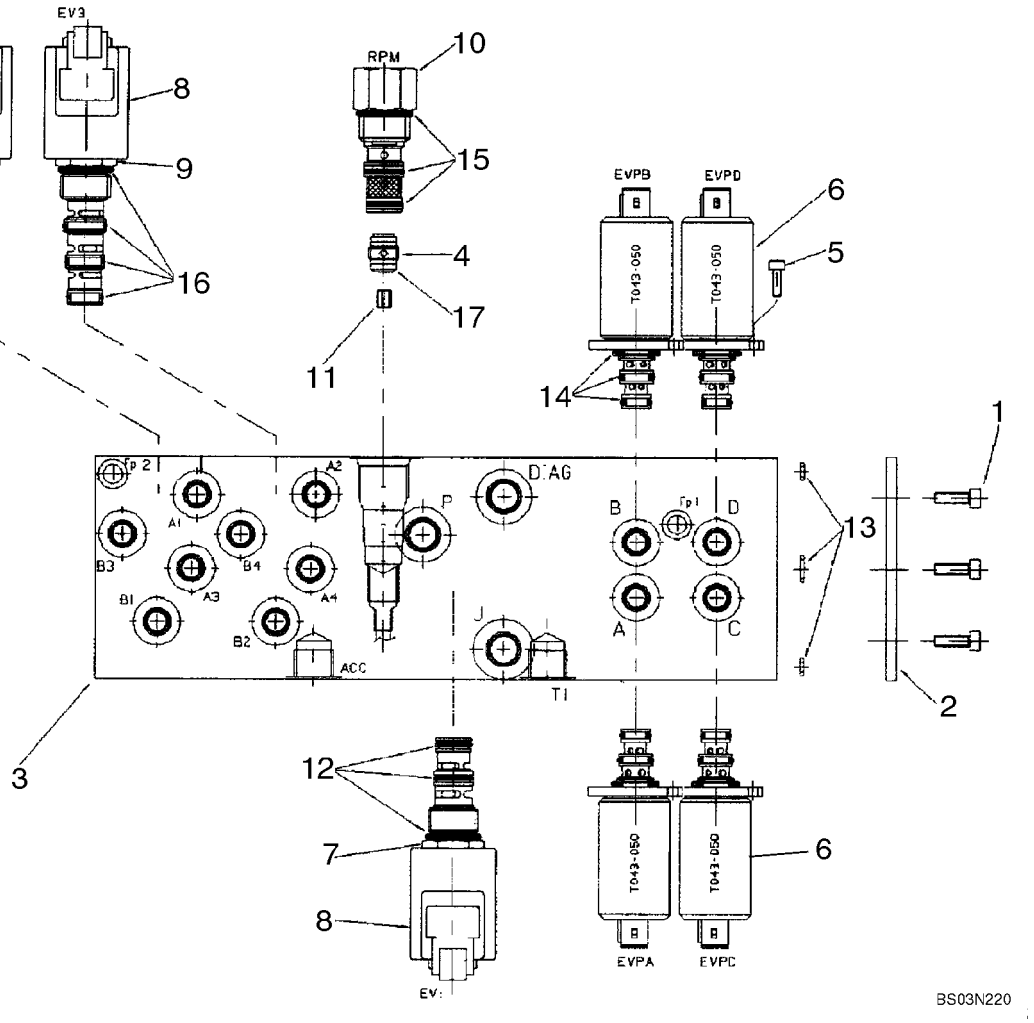

VALVULA DE REDUCCION DEPRESION (2 SPOOL) (CON DE CONTROL PILOTO)

REF	FN	PART NUMBER	YR/SN	QTY	DENOMINACION
		85827472		1	VALVULA HIDRAULICA, Pressure Reducing, Two Spool, Pilot Controls; Incl. Ref 1 - 17
1		14304021		3	TORNILLO, Hex Soc Hd, M5 x 10, 8.8
2		85827991		1	PLACA, Sealing
3		85828013		1	CUERPO, Manifold Block
4		85827992		1	VALVULA DE CIERRE, Incl. 17
5		14302921		8	TORNILLO, Hex, M4 x 10, 8.8, Full Thd
6		85827993		4	SOLENOIDE, Pressure Reducing Valve; Incl. 14
7		85827994		1	SOLENOIDE, Valve Cartridge, 3 Way, 2 Position; Incl. Ref 8, 12
8		85827995		3	BOBINA, With Diode
9		85827996		2	SOLENOIDE, Valve Cartridge, 4 Way, 2 Position; Incl. Ref 8, 16
10		85827997		1	VALVULA, Mechanical Pressure Reducing Valve With Fixed Setting; Incl. 15
11		85828005		1	ORIFICIO, 1.8 mm
12		85827998		1	SERIE DE JUNTAS
13		85827999		1	SERIE DE JUNTAS
14		85828000		4	SERIE DE JUNTAS
15		85828001		1	SERIE DE JUNTAS
16		85828002		2	SERIE DE JUNTAS
17		85828003		1	JUNTA HERMETICA, D9x1

08-48		p1	09/07

VALVULA DE REDUCCION DEPRESION (3 SPOOL) (CON DE CONTROL PILOTO)

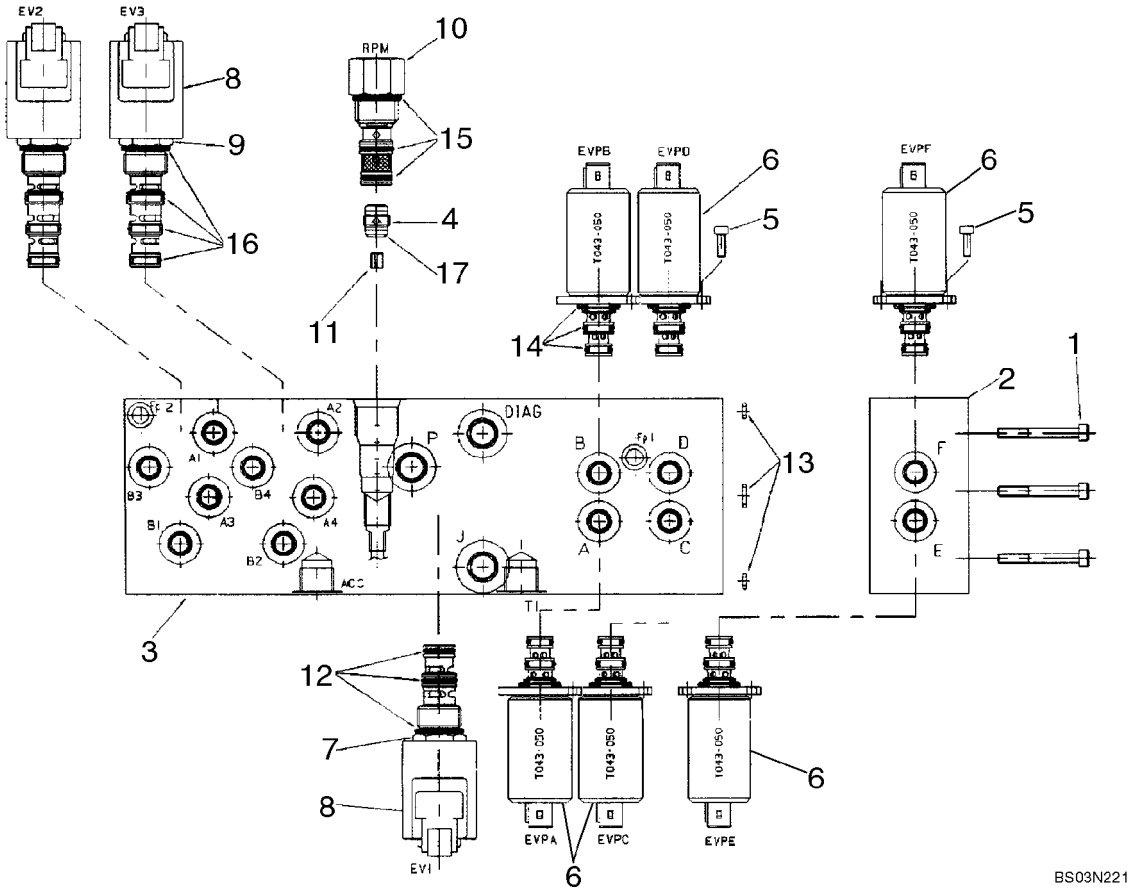

VALVULA DE REDUCCION DEPRESION (3 SPOOL) (CON DE CONTROL PILOTO)

REF	FN	PART NUMBER	YR/SN	QTY	DENOMINACION
		85827471		1	VALVULA HIDRAULICA, Pressure Reducing, Three Spool, Pilot Controls; Incl. Ref 1 - 17
1		14358921		3	TORNILLO, Hex Soc Hd, M5 x 45, 10.9
2		85828004		1	CUERPO, One Function Add-On Manifold Block; Incl. 1, 5, 6
3		85828015		1	CUERPO, Manifold Block
4		85827992		1	VALVULA DE CIERRE, Incl. 17
5		14302921		12	TORNILLO, Hex, M4 x 10, 8.8, Full Thd
6		85827993		6	SOLENOIDE, Pressure Reducing Valve; Incl. 14
7		85827994		1	SOLENOIDE, Valve Cartridge, 3 Way, 2 Position; Incl. Ref 8, 12
8		85827995		3	BOBINA, With Diode
9		85827996		2	SOLENOIDE, Valve Cartridge, 4 Way, 2 Position; Incl. Ref 8, 16
10		85827997		1	VALVULA, Mechanical Pressure Reducing Valve With Fixed Setting; Incl. 15
11		85828005		1	ORIFICIO, 1.8 mm
12		85827998		1	SERIE DE JUNTAS
13		85827999		1	SERIE DE JUNTAS
14		85828000		6	SERIE DE JUNTAS
15		85828001		1	SERIE DE JUNTAS
16		85828002		2	SERIE DE JUNTAS
17		85828003		1	JUNTA HERMETICA, D9x1

08-49		p1	09/07

VALVULA DE REDUCCION DEPRESION (4 SPOOL) (CON DE CONTROL PILOTO)

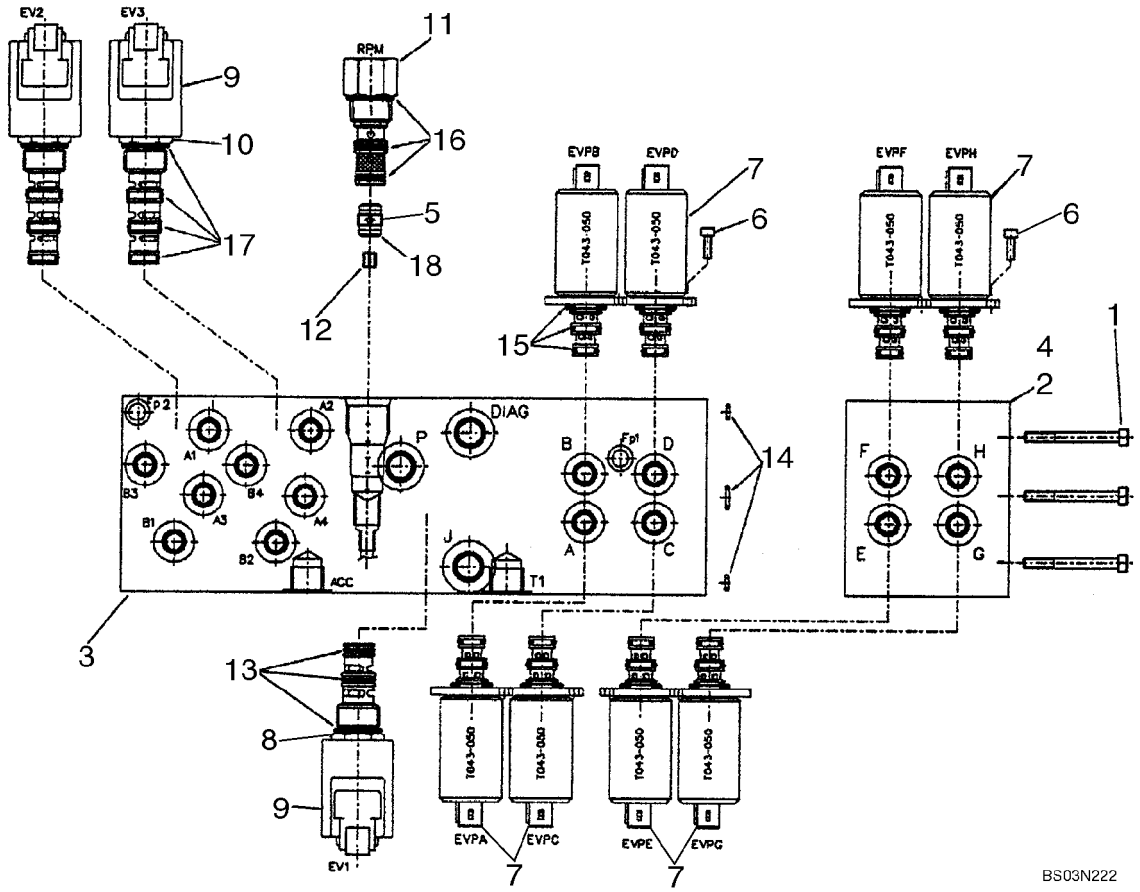

VALVULA DE REDUCCION DEPRESION (4 SPOOL) (CON DE CONTROL PILOTO)

REF	FN	PART NUMBER	YR/SN	QTY	DENOMINACION
		87434621		1	VALVULA DISTRIBUIDORA, Pressure Reducing, Four Spool, Pilot Controls; Incl. Ref 1 - 18
1		85828061		3	TORNILLO, M5 x 80
2		85828048		1	BLOQUE COLECTOR, Manifold Block
3		85828015		1	CUERPO, Manifold Block
4		85828054		1	BLOQUE COLECTOR, Manifold Block
5		85827992		1	VALVULA DE CIERRE
6		14302921		16	TORNILLO, Hex, M4 x 10, 8.8, Full Thd
7		85827993		8	SOLENOIDE, Pressure Reducing Valve
8		85827994		1	SOLENOIDE, Valve Cartridge, 3 Way, 2 Position; Incl. Ref 9, 13
9		85827995		3	BOBINA, With Diode
10		85827996		2	SOLENOIDE, Valve Cartridge, 4 Way, 2 Position; Incl. Ref 9, 17
11		85827997		1	VALVULA, Mechanical Pressure Reducing Valve With Fixed Setting
12		85828005		1	ORIFICIO, 1.8 mm
13		85827998		1	SERIE DE JUNTAS
14		85827999		1	SERIE DE JUNTAS
15		85828000		8	SERIE DE JUNTAS
16		85828001		1	SERIE DE JUNTAS
17		85828002		2	SERIE DE JUNTAS
18		85828003		1	JUNTA HERMETICA, D9x1

08-50		p1	02/08

VćLVULA, PALANCA DE CONTROL (CONTROL PILOTO) (IZQUIERDO) BOCINA

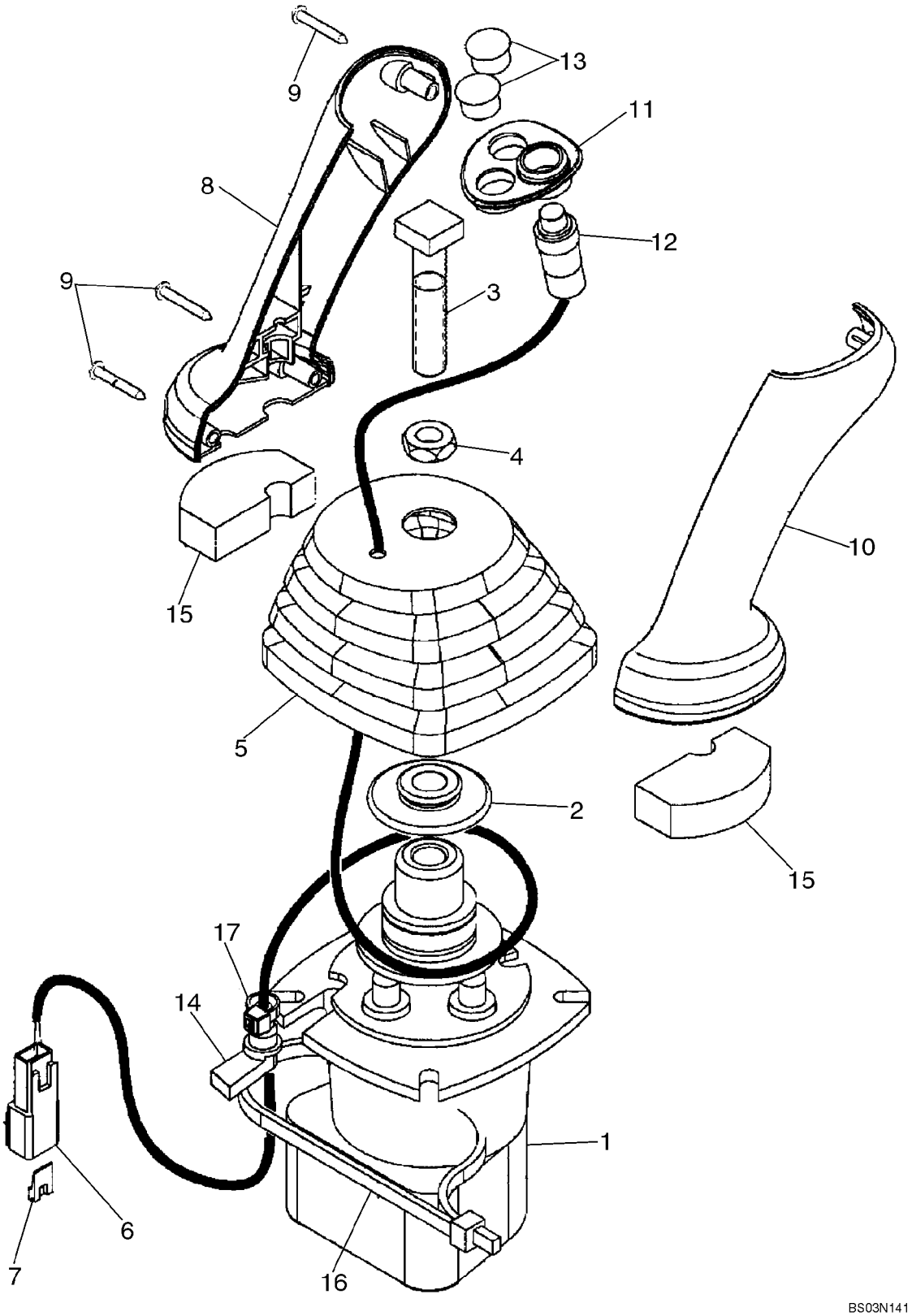

VćLVULA, PALANCA DE CONTROL (CONTROL PILOTO) (IZQUIERDO) BOCINA

REF	FN	PART NUMBER	YR/SN	QTY	DENOMINACION
		87685948		1	VALVULA DISTRIBUIDORA, Pilot Controls, LH; With Horn Button; Incl. Ref 1 - 17; Part Number Stamped On Valve Base
1		87687141		1	VĆLVULA DE PILOTAJE, Pilot Control Joystick Valve; Component Parts Not Serviced Separately
		87586776		1	MANECILLA, Incl. Ref 2 - 17
2		87436225		1	RETENEDOR, Control Boot Retainer
3		87428023		1	TORNILLO, Square Head Bolt
4		87037944		1	TUERCA, Thin, M12 x 1.75, Cl 05
5		87443721		1	CASQUETE, Control Handle
6		225315C1		1	CONECTOR
7		225318C1		1	CUNA, Connector
8		87308838		1	PERILLA, Joystick Control Handle
9		15687475		3	TORNILLO AUTOROSCANTE, Pan Hd, M3.5 x 25, Stainless
10		87308839		1	PERILLA, Joystick Control Handle
11		87435243		1	MARCO, Switch Mounting
12		87437372		1	CONTACTOR, Push Button Horn
13		86625128		2	TAPčN, Dome, .562" hole, Nylon
14		87424267		1	PASACABLES, Wire
15		87435506		2	ANILLO DE CIERRE, Pilot Control Handle Seal, Lower
16		87438046		1	CIERRA CABLES
17		87000312		1	CIERRA CABLES

08-51		p1	10/07

VćLVULA, PALANCA DE CONTROL (CONTROL PILOTO) (IZQUIERDO) BOCINA & UNI-DIR

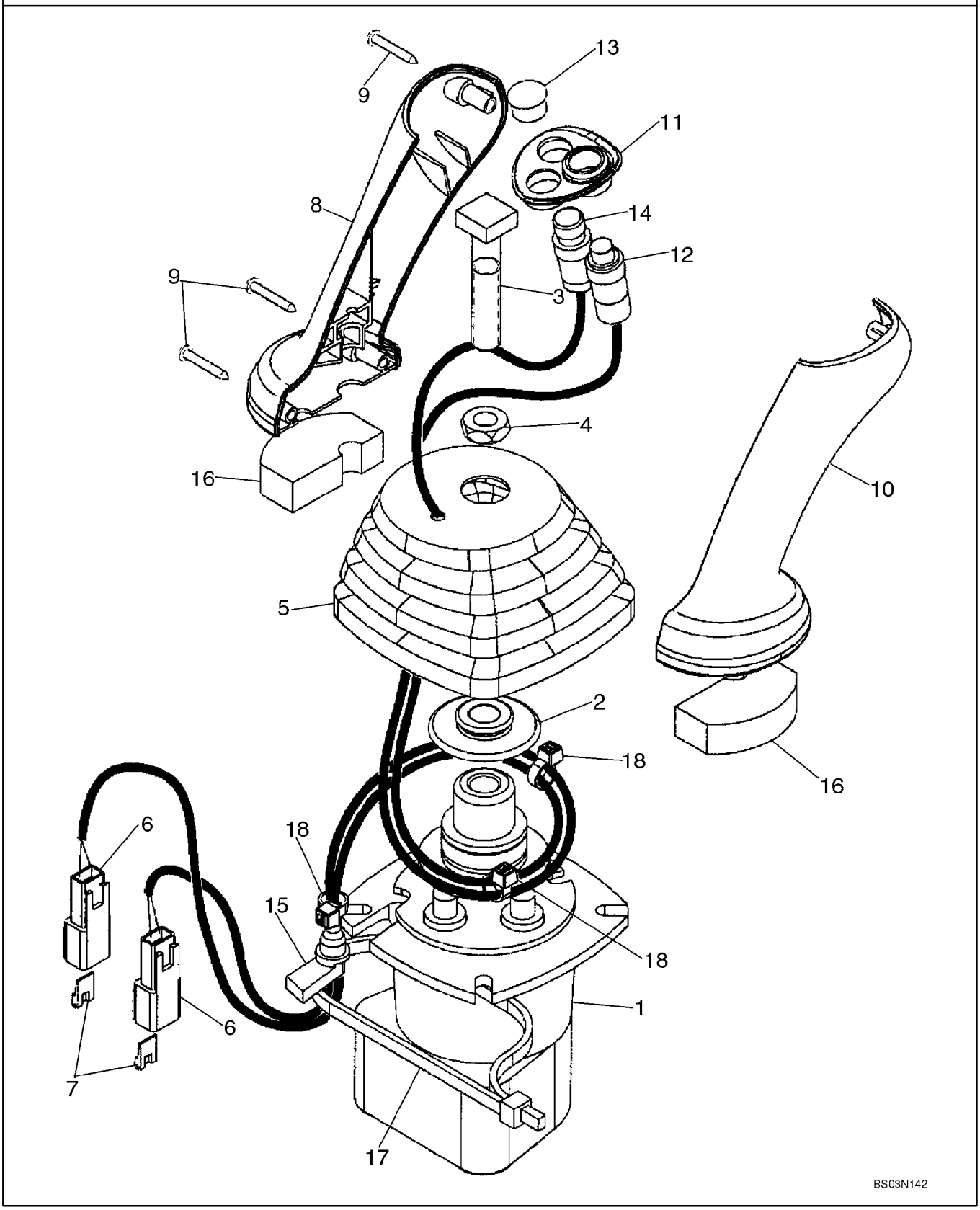

VćLVULA, PALANCA DE CONTROL (CONTROL PILOTO) (IZQUIERDO) BOCINA & UNI-DIR

REF	FN	PART NUMBER	YR/SN	QTY	DENOMINACION
		87685953		1	VALVULA DISTRIBUIDORA, Pilot Controls, LH; With Horn and Uni-Directional Buttons; Incl. Ref 1 - 18; Part Number Stamped On Valve Base
1		87687141		1	VĆLVULA DE PILOTAJE, Pilot Control Joystick Valve; Component Parts Not Serviced Separately
2		87436225		1	RETENEDOR, Control Boot
3		87428023		1	TORNILLO, Square Head
4		87037944		1	TUERCA, Thin, M12 x 1.75, Cl 05
5		87443721		1	CASQUETE, Control Handle
6		225315C1		2	CONECTOR
7		225318C1		2	CUNA, Connector
8		87308838		1	PERILLA, Joystick Control Handle
9		15687475		3	TORNILLO AUTOROSCANTE, Pan Hd, M3.5 x 25, Stainless
10		87308839		1	PERILLA, Joystick Control Handle
11		87435243		1	MARCO, Switch Mounting
12		87437372		1	CONTACTOR, Push Button Horn
13		86625128		1	TAPčN, Dome, .562" hole, Nylon
14		87437373		1	INTERRUPTOR, Push Button Uni-Directional Auxiliary Hydraulic Switch
15		87424267		1	PASACABLES, Wire
16		87435506		2	ANILLO DE CIERRE, Pilot Control Handle Seal, Lower
17		L18331		1	CIERRA CABLES
18		L11541		3	CIERRA CABLES

08-52		p1	10/07

VćLVULA, PALANCA DE CONTROL (CONTROL PILOTO) (IZQUIERDO) BOCINA & BI-DIR

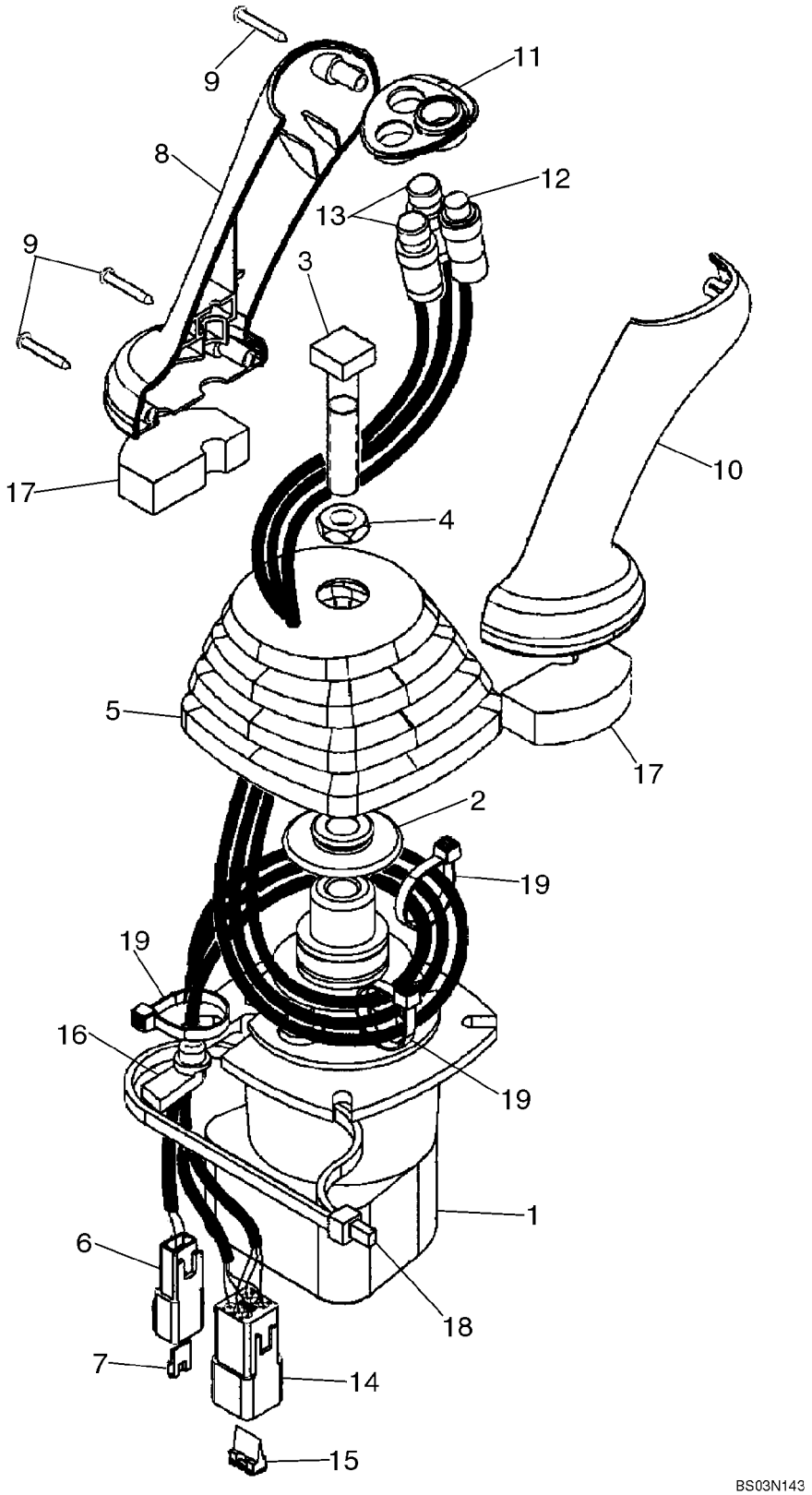

VćLVULA, PALANCA DE CONTROL (CONTROL PILOTO) (IZQUIERDO) BOCINA & BI-DIR

REF	FN	PART NUMBER	YR/SN	QTY	DENOMINACION
		87685952		1	VALVULA DISTRIBUIDORA, Pilot Controls, LH; With Horn and Bi-Directional Buttons; Incl. Ref 1 - 19; Part Number Stamped On Valve Base
1		87687141		1	VĆLVULA DE PILOTAJE, Pilot Control Joystick Valve; Component Parts Not Serviced Separately
2		87436225		1	RETENEDOR, Control Boot
3		87428023		1	TORNILLO, Square Head
4		87037944		1	TUERCA, Thin, M12 x 1.75, Cl 05
5		87443721		1	CASQUETE, Control Handle
6		225315C1		1	CONECTOR
7		225318C1		1	CUNA, Connector
8		87308838		1	PERILLA, Joystick Control Handle
9		15687475		3	TORNILLO AUTOROSCANTE, Pan Hd, M3.5 x 25, Stainless
10		87308839		1	PERILLA, Joystick Control Handle
11		87435243		1	MARCO, Switch Mounting
12		87437372		1	CONTACTOR, Push Button Horn
13		87437371		2	INTERRUPTOR, Push Button Bi-Directional Auxiliary Hydraulic
14		225350C1		1	CONECTOR
15		225353C1		1	CUNA, Connector
16		87424267		1	PASACABLES, Wire
17		87435506		2	ANILLO DE CIERRE, Pilot Control Handle Seal, Lower
18		87438046		1	CIERRA CABLES
19		87000312		3	CIERRA CABLES, Black

08-53		p1	10/07

VćLVULA, PALANCA DE CONTROL (CONTROL PILOTO) (DERECHA/O) SIN PALA EXTENDIBLE

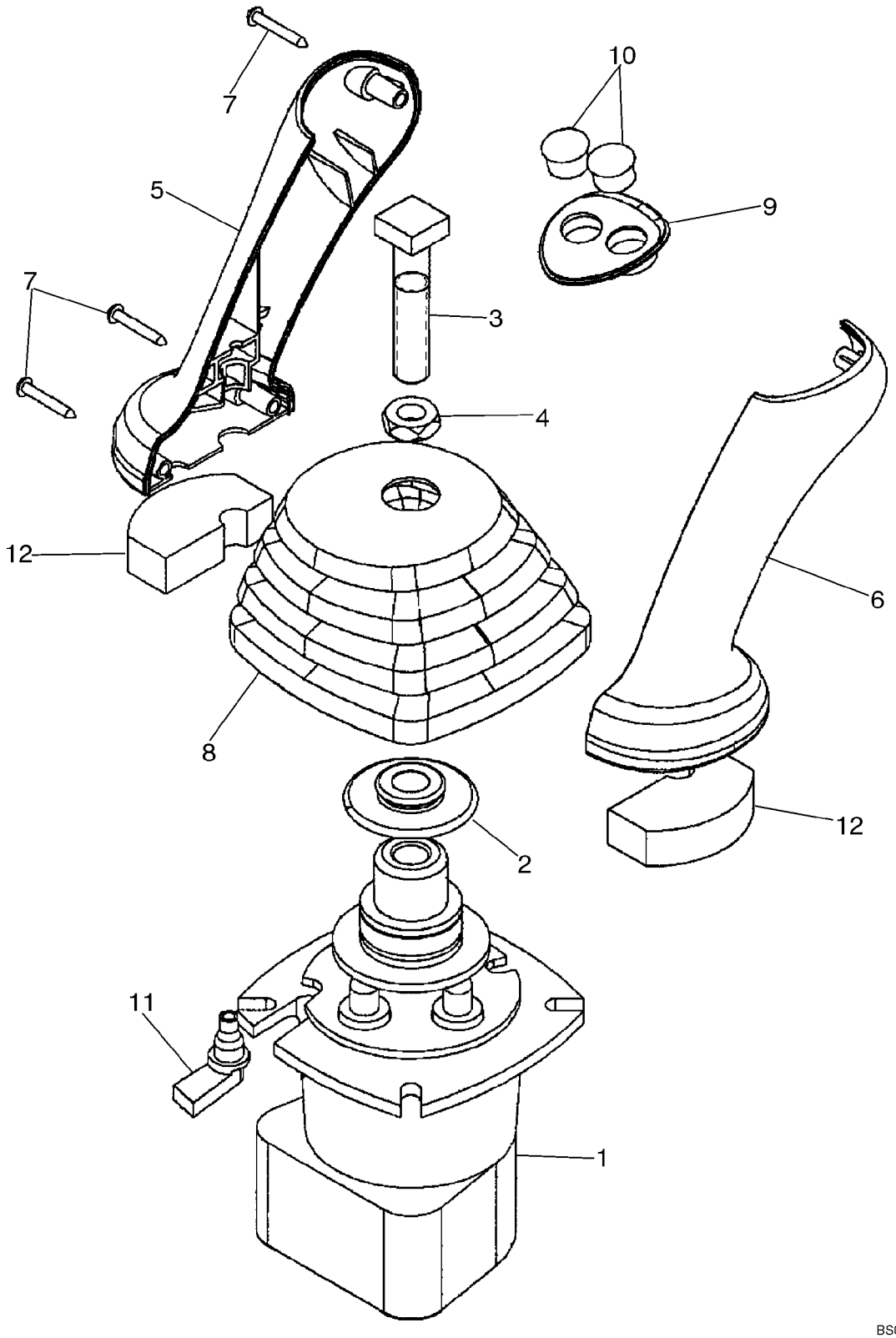

VćLVULA, PALANCA DE CONTROL (CONTROL PILOTO) (DERECHA/O) SIN PALA EXTENDIBLE

REF	FN	PART NUMBER	YR/SN	QTY	DENOMINACION
		87685954		1	VALVULA DISTRIBUIDORA, Pilot Controls, RH; Without Extendable Dipper; Incl. Ref 1 - 12; Part Number Stamped On Valve Base
1		87687141		1	VĆLVULA DE PILOTAJE, Pilot Control Joystick Valve; Component Parts Not Serviced Separately
2		87436225		1	RETENEDOR, Control Boot
3		87428023		1	TORNILLO, Square Head
4		87037944		1	TUERCA, Thin, M12 x 1.75, Cl 05
5		87308838		1	PERILLA, Joystick Control Handle
6		87308839		1	PERILLA, Joystick Control Handle
7		15687475		3	TORNILLO AUTOROSCANTE, Pan Hd, M3.5 x 25, Stainless
8		87443722		1	CASQUETE, Joystick Control
9		87435242		1	MARCO, Switch Mounting
10		86625128		2	TAPčN, Dome, .562" hole, Nylon
11		87451448		1	PASACABLES, Wire
12		87435506		2	ANILLO DE CIERRE, Pilot Control Handle, Lower

08-54		p1	10/07

VćLVULA, PALANCA DE CONTROL (CONTROL PILOTO) (DERECHA/O) CON PALA EXTENDIBLE

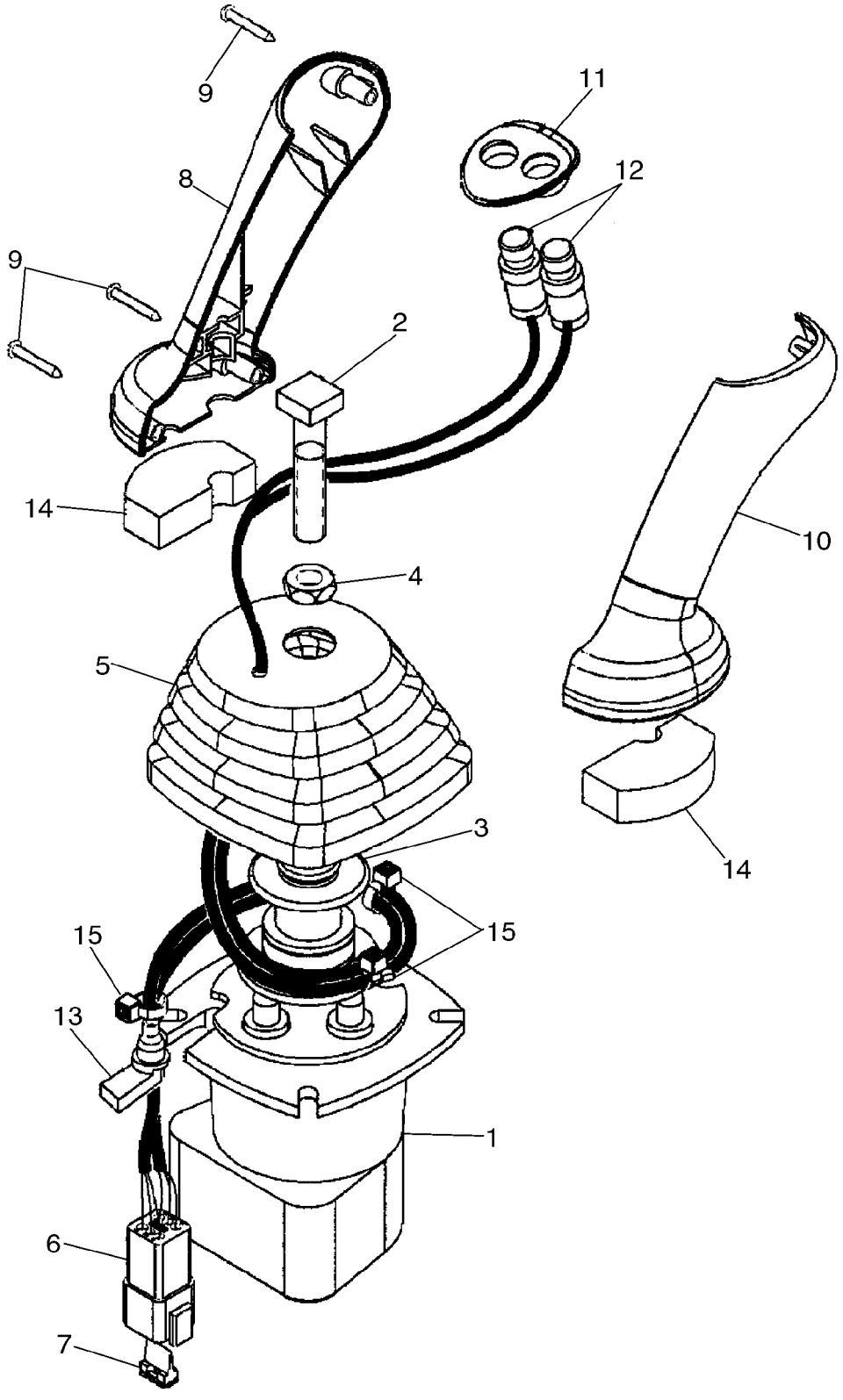

VćLVULA, PALANCA DE CONTROL (CONTROL PILOTO) (DERECHA/O) CON PALA EXTENDIBLE

REF	FN	PART NUMBER	YR/SN	QTY	DENOMINACION
		87685955		1	VALVULA DISTRIBUIDORA, Pilot Controls, RH; With Extendable Dipper; Includes 87398960 Base Valve; Incl. Ref 1 - 15; Part Number Stamped On Valve Base
1		87687141		1	VĆLVULA DE PILOTAJE, Pilot Control Joystick Valve; Component Parts Not Serviced Separately
2		87428023		1	TORNILLO, Square Head
3		87436225		1	RETENEDOR, Control Boot
4		87037944		1	TUERCA, Thin, M12 x 1.75, Cl 05
5		87443721		1	CASQUETE, Joystick Control
6		225350C1		1	CONECTOR
7		225353C1		1	CUNA, Connector
8		87308838		1	PERILLA, Joystick Control Handle
9		15687475		3	TORNILLO AUTOROSCANTE, Pan Hd, M3.5 x 25, Stainless
10		87308839		1	PERILLA, Joystick Control Handle
11		87435242		1	MARCO, Switch Mounting
12		87437371		2	INTERRUPTOR, Push Button Retract and Extendahoe
13		87424267		1	PASACABLES, Wire
14		87435506		2	ANILLO DE CIERRE, Pilot Control Handle Seal, Lower
15		87000312		3	CIERRA CABLES
		87438046		1	CIERRA CABLES

CONJUNTO DE LA VALVULA - ALMOHADILLA DE OSCILACIĎN

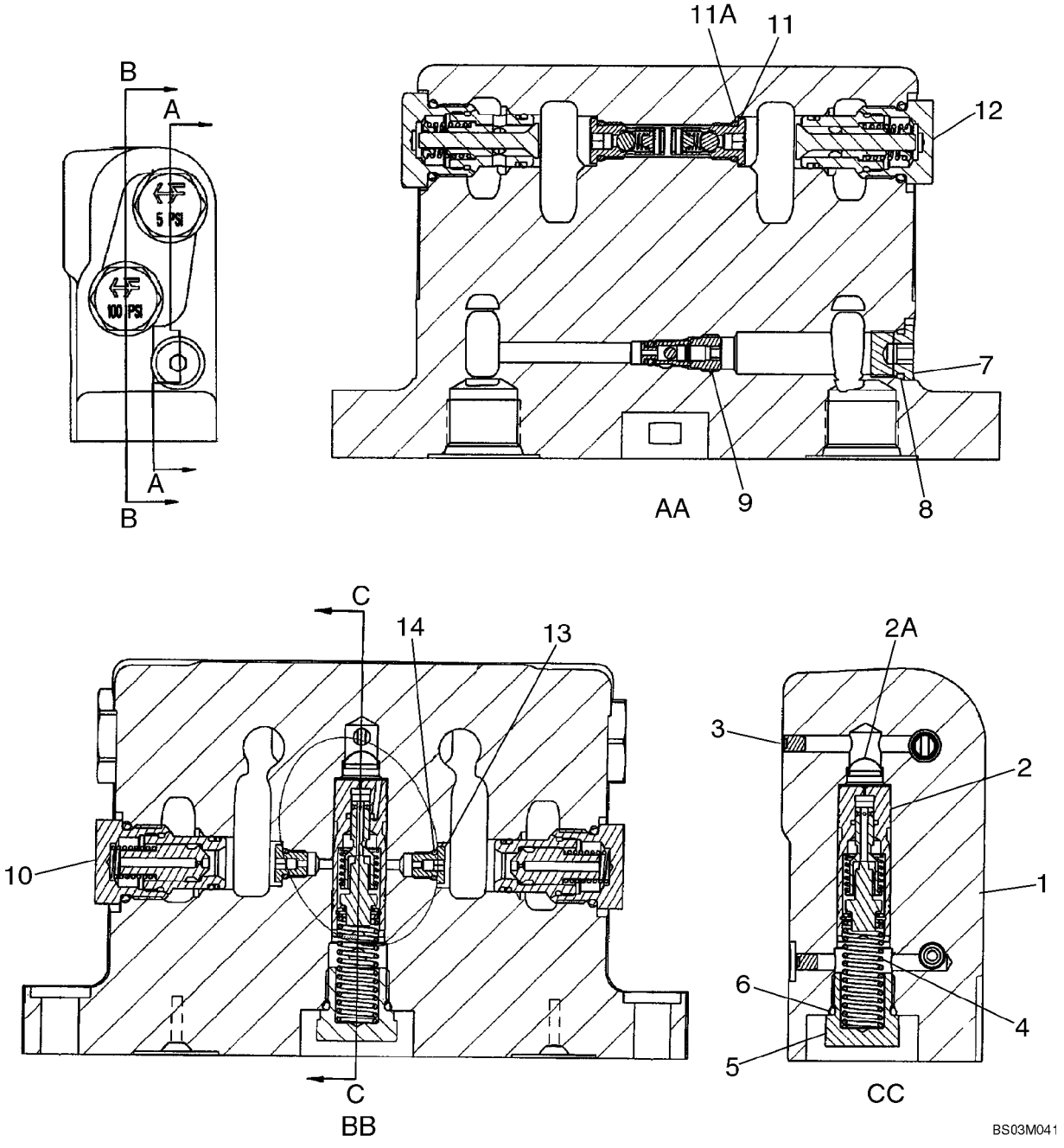

CONJUNTO DE LA VALVULA - ALMOHADILLA DE OSCILACIĎN

REF	FN	PART NUMBER	YR/SN	QTY	DENOMINACION
		87449373		1	VALVULA HIDRAULICA, Swing Cushion; Incl. Ref 1 - 14
1		NSS		1	NO SE REPARA SEPARADAM., Housing
2		87449374		1	PISTONCILLO, Thermal Compensating; Component Parts Not Serviced Separately; Replaces 388876A6 Spool
2A		1976955C1		1	CARTUCHO FILTRO, Screen, Filter
3		369372A1		2	TAPčN, M5; Plug, Expansion
4		388881A1		1	MUELLE HELICOIDAL
5		409025A1		1	TAPčN, Relief Check; Incl. Ref 6
6		237-6008		1	JUNTA HERMETICA, 8-1, 90 Duro, .644" ID x .087" Thk, Boss seal
7		9625178		1	TAPčN, Hex Soc, 9/16"-18 ORB, Includes Ref 8
8		237-6006		1	JUNTA HERMETICA, 6-1, 90 Duro, .468" ID x .078" Thk, Boss seal
9		388712A2		1	VALVULA, Bi-Directional Check Valve; Includes 388713A1 Seal Kit
		388713A1		1	JEUGO, Seal; Includes An O-Ring and Backup Ring; Component Parts Not Serviced Separately
10		396422A2		2	VALVULA ANTIRRETORNO, 100 psi, Orifice Check Valve; Component Parts Not Serviced Separately; Order 1542830C2 Seal Kit To Service External Seals
		443432A1		1	SERIE DE JUNTAS, For Servicing External Seals on Ref 9, 10, 11 or 12 Valve; If Used
11		400296A2		2	VALVULA ANTIRRETORNO, In-Line Check Valve; Component Parts Not Serviced Separately; Incl. Ref 11A
11A		237-6004		1	JUNTA HERMETICA, 4-1, 90 Duro, .351" ID x .072" Thk, Boss seal
12		389541A1		2	VALVULA ANTIRRETORNO, 5 psi; Component Parts Not Serviced Separately; Order 1542830C2 Seal Kit To Service External Seals
13		400657A1		2	TAPčN, Orifice 1.85 mm; Incl. Ref 14
		1542830C2		1	EMPAQUE DE JUNTAS, For Servicing External Seals on Ref 10 or 12 Valve

CONJUNTO DE LA VALVULA - ALMOHADILLA DE OSCILACIĎN

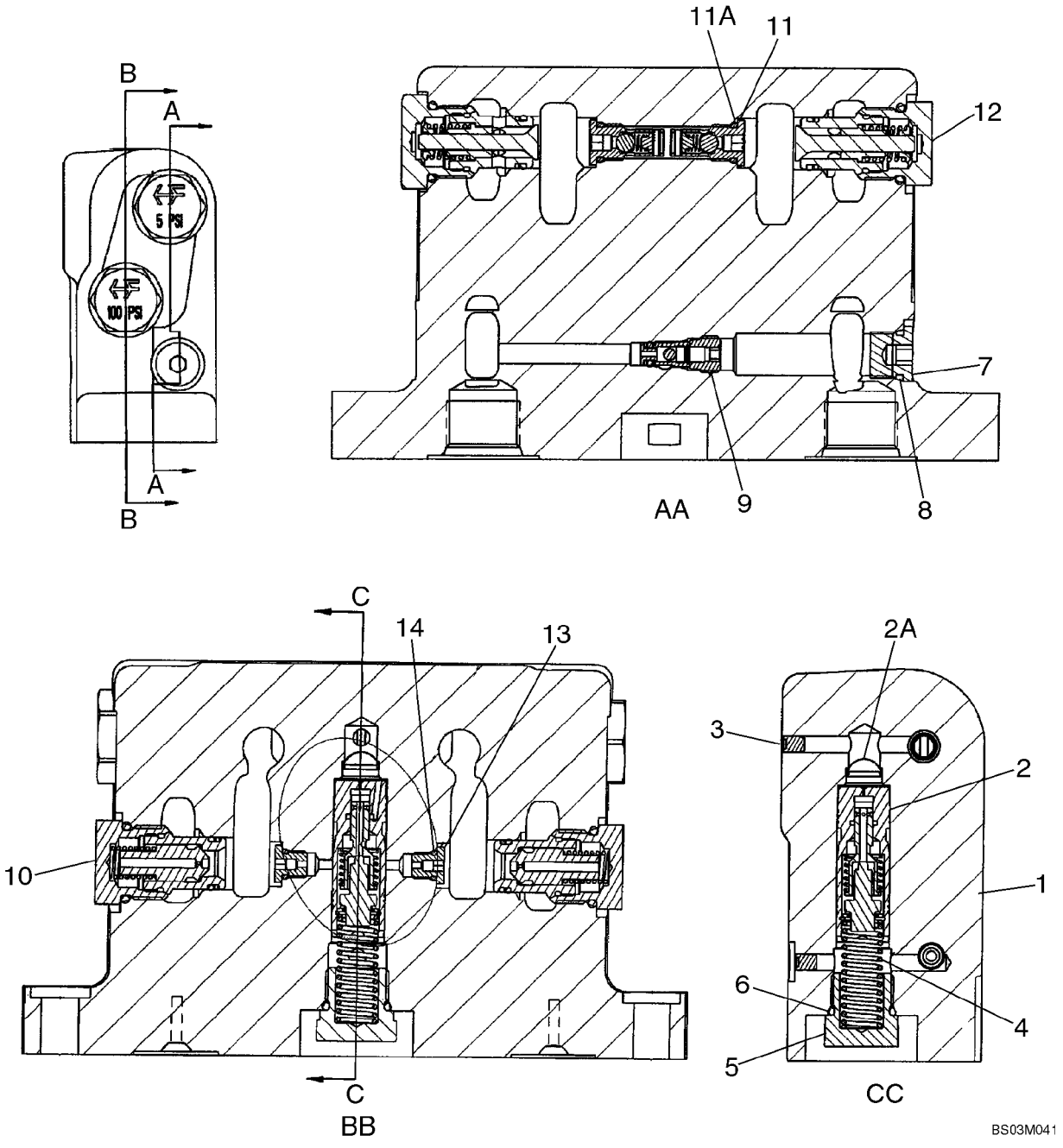

CONJUNTO DE LA VALVULA - ALMOHADILLA DE OSCILACIĎN

REF	FN	PART NUMBER	YR/SN	QTY	DENOMINACION
14		237-6002		1	JUNTA HERMETICA, 2-1, .239" ID x .064" Thk

08-55A		p1	12/07

SOLENOIDE VALVE CONJUNTO - TRABA DEL AGUILON

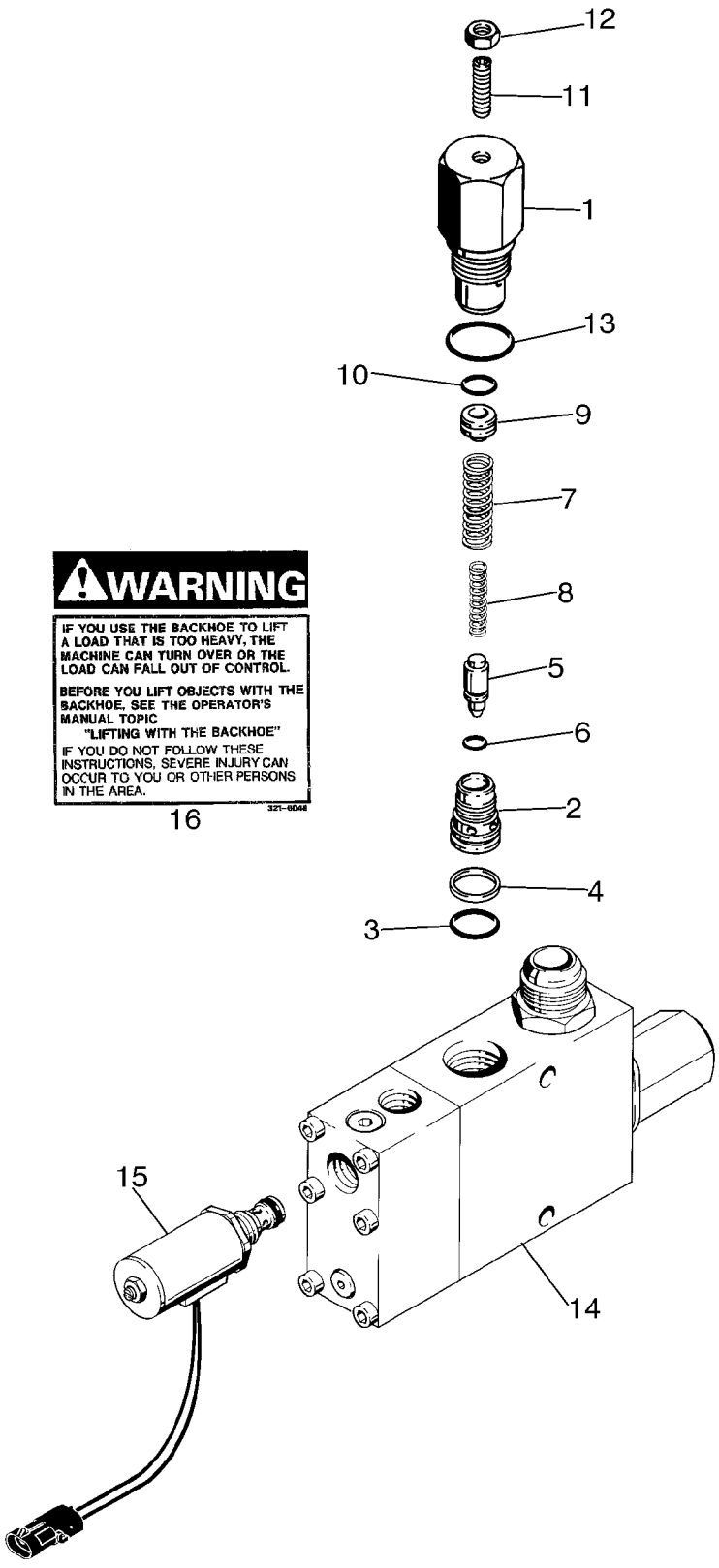

BS03B174

SOLENOIDE VALVE CONJUNTO - TRABA DEL AGUILON

REF	FN	PART NUMBER	YR/SN	QTY	DENOMINACION
		189957A1		1	VALVULA, Solenoid, Backhoe Boom Lock; Incl. Ref 1 - 16; Included In 399227A1 Backhoe Boom Lock Kit
		G110467		1	VĆLVULA, DESCARGA, Circuit, Solenoid; Used In Production; Order G110077, Kit For Service
1		NSS		1	NO SE REPARA SEPARADAM., Body, Relief Valve
2		NSS		1	NO SE REPARA SEPARADAM., Seat, Relief Valve
3		238-6018		1	JUNTA HERMETICA, -018, 90 Duro, .739" ID x .070" Thk, Face Seal
4		G35540		1	ANILLO, Backup, Seat
5		NSS		1	NO SE REPARA SEPARADAM., Poppet
6		NSS		1	NO SE REPARA SEPARADAM., O-Ring
7		NSS		1	NO SE REPARA SEPARADAM., Spring, Relief, Outer
8		NSS		1	NO SE REPARA SEPARADAM., Spring, Relief, Inner
9		NSS		1	NO SE REPARA SEPARADAM., Piston
10		NSS		1	NO SE REPARA SEPARADAM., O-Ring
11		484-43120		1	TORNILLO DE AJUSTE, Hex Soc, 5/16"-24 x 1 1/4"
12		425-155		1	TUERCA, Jam, 5/16"-24, G5
13		237-6012		1	JUNTA HERMETICA, 12-1, 90 Duro, .924 ID x .118" Thk, Boss Seal
14		NSS		1	NO SE REPARA SEPARADAM., Body, Solenoid
15		221168A1		1	SOLENOIDE, 12 Volt; Relief, With Connector
		D150781		1	JEUGO, Repair; Incl. (3) Springs, (1) Ball, (1) Poppet, (1) Plug; Not Serviced Separately; and D150810 Seal Kit, Not Shown
		D150810		1	ANILLO DE CIERRE, Kit, Incl. (8) O-Rings and (2) Backup Rings; Which Are Not Serviced Separately, Not Shown
		G110077		1	JEUGO, Service For G110467, Circuit Relief Valve; Incl. G110078, Circuit Relief Valve Assembly (Ref. 1 - 13), Instruction Sheet
16		321-6046		2	CALCOMANIA, Warning, If You Use The Backhoe To Lift A Load That Is Too Heavy

ACUMULADOR CONJ. - DISPOSITIVO ANTICABECEO

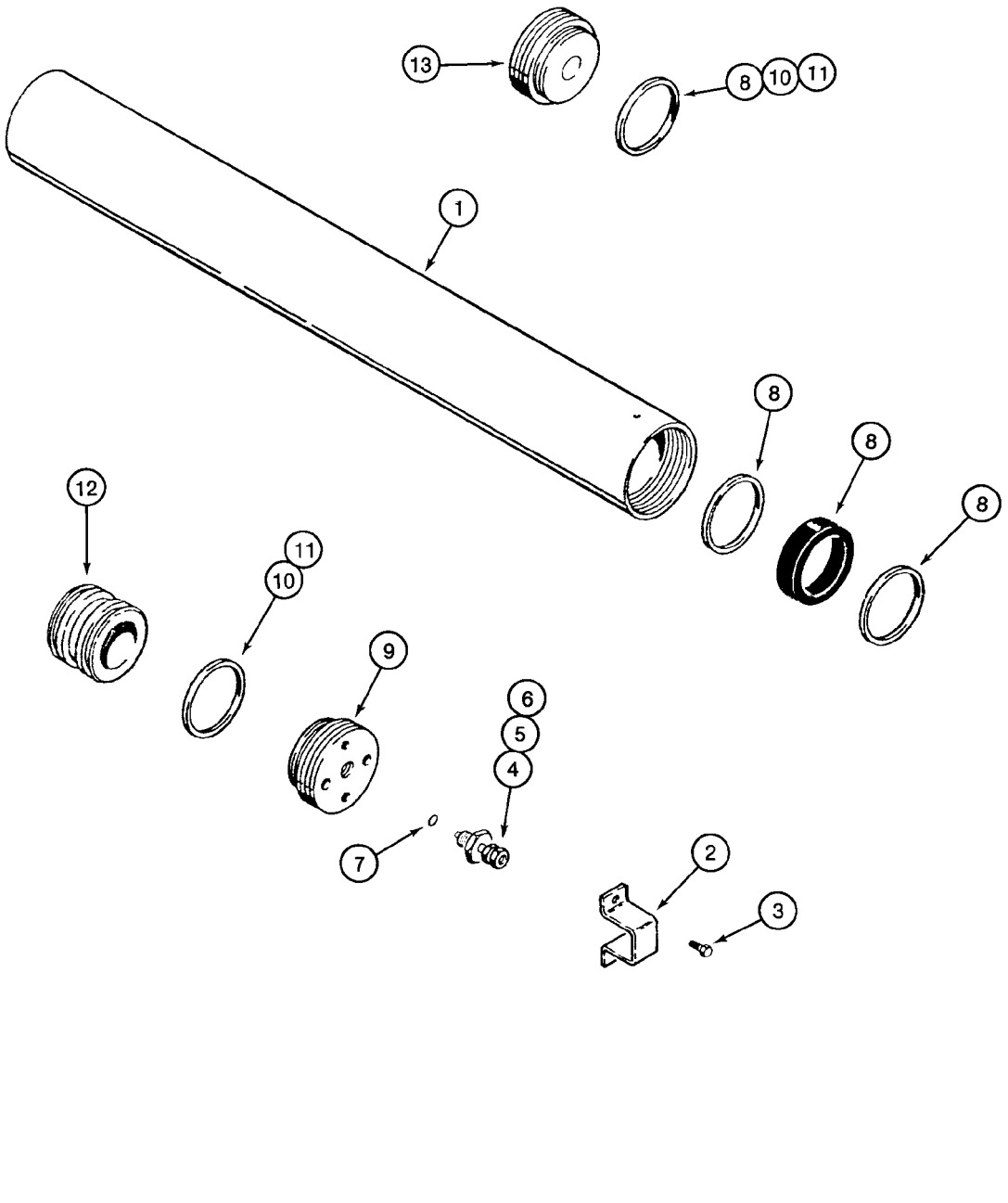

BS97C154

ACUMULADOR CONJ. - DISPOSITIVO ANTICABECEO

REF	FN	PART NUMBER	YR/SN	QTY	DENOMINACION
		234412A1		1	ACUMULADOR, Incl. Ref 1 - 13
1		NSS		1	NO SE REPARA SEPARADAM., Body
2		192895A1		1	PROTECTOR
3		276-2456		2	TORNILLO AUTOROSCANTE, Hex Hd, #10 x 3/8"
		1978142C1		1	VALVULA, Incl. Ref 4 - 6
4		NSS		1	NO SE REPARA SEPARADAM., Valve, Pressure
5		1978143C1		1	EMBOLO
6		1978144C1		1	TAPON DEL DEPOSITO
7		1978158C1		1	JUNTA HERMETICA
8		1978141C1		1	JUEGO JUNTAS, Includes (1) V-Type O-Ring, (2) Teflon Bearing Rings and (1) Body End Seal Ring; Component Parts Not Serviced Separately
9		NSS		1	NO SE REPARA SEPARADAM., Gland, Cylinder
10		NSS		2	NO SE REPARA SEPARADAM., O-Ring
11		NSS		2	NO SE REPARA SEPARADAM., Ring, Backup, If Used
12		NSS		1	NO SE REPARA SEPARADAM., Piston
13		NSS		1	NO SE REPARA SEPARADAM., Cap

FILTRO DE ACEITE

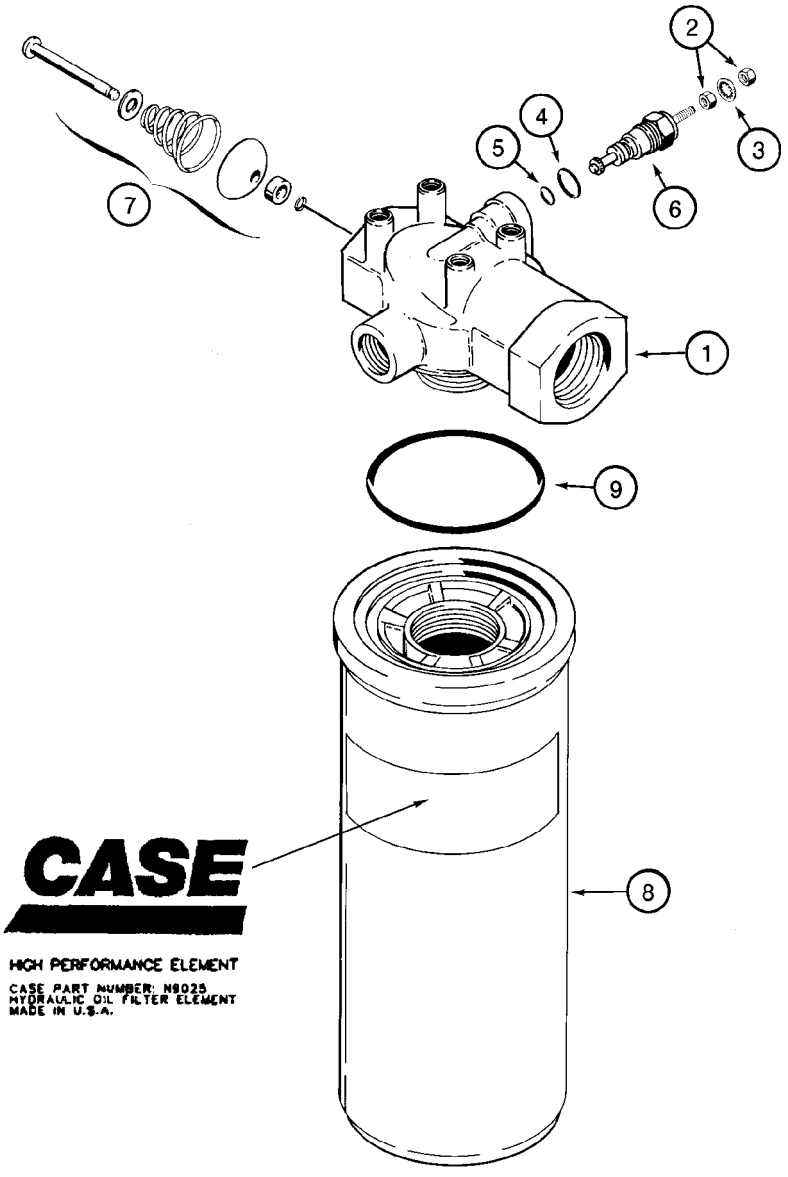

BS00D009

FILTRO DE ACEITE

REF	FN	PART NUMBER	YR/SN	QTY	DENOMINACION
		87440045		1	FILTRO CONJ, Hydraulic Oil Filter; Incl. Ref 1 - 9
1		NSS		1	NO SE REPARA SEPARADAM., Head, Filter
		N6755		1	TESTIGO, Restriction; Includes N6941, Ref 6
		N6941		1	JEUGO, Restriction Indicator Repair; Incl. Ref 2 - 5; Order Ref 2 - 5
2		129-667		2	TUERCA, #10-32, LH
3		493-21020		1	ARANDELA DE FRENO, Int Tooth, #10
4		237-6006		1	JUNTA HERMETICA, 6-1, 90 Duro, .468" ID x .078" Thk, Boss Seal
5		238-5011		1	JUNTA HERMETICA, -011, 70 Duro, .301" ID x .070" Thk
6		NSS		1	NO SE REPARA SEPARADAM., Indicator
7		NSS		1	NO SE REPARA SEPARADAM., Valve, By-Pass
		N9025		1	ELEMENTO DE FILTRADO, Incl. Ref 8, 9
8		NSS		1	NO SE REPARA SEPARADAM., Element
9		238-5230		1	JUNTA HERMETICA, -230, 70 Duro, 2.484" ID x .139" Thk

08-58		p1	07/07

CONJUNTO DE CILINDRO - ELEVADOR DE LA CARGADORA

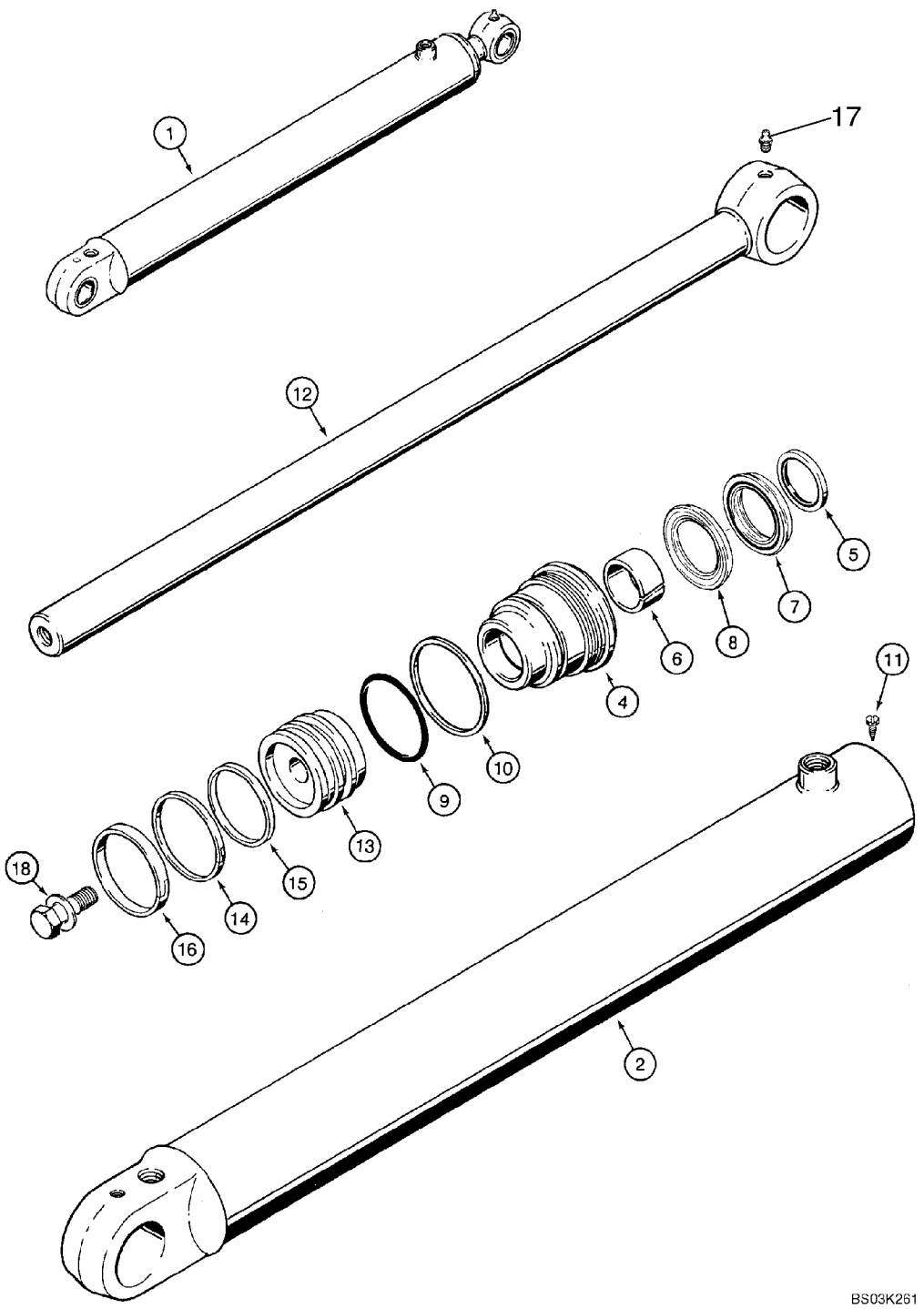

CONJUNTO DE CILINDRO - ELEVADOR DE LA CARGADORA

REF	FN	PART NUMBER	YR/SN	QTY	DENOMINACION
1		384240A1		2	CILINDRO (CONJUNTO), 82.6 ID x 766 mm strk; Loader Lift; Incl. Ref 2 - 18
2		384241A1		1	CILINDRO DE GATO, TUBE, Without Bushings
4		1980321C3		1	EMPAQUETADURA
		1543260C1		1	EMPAQUE DE JUNTAS, Seal Repair, Incl. Ref 5 - 10, 14 - 16
5		D95143		1	ANILLO DE CIERRE, Wiper
6		G102425		1	CASQUILLO
		1542875C1		1	SERIE DE JUNTAS, Rod and Buffer Seal Kit; Incl. Ref 7, 8
7		NSS		1	NO SE REPARA SEPARADAM., Rod Seal
8		NSS		1	NO SE REPARA SEPARADAM., Buffer Seal
9		238-5233		1	JUNTA HERMETICA, -233, 70 Duro, 2.859" ID x .139" Thk
10		G32122		1	ANILLO
11		86642312		1	TORNILLO AUTOROSCANTE, Hex Hd, #8 x 3/8"
12		133083A1		1	VASTAGO CILINDRO, 44 mm (1-3/4 in) dia
13		135161A1		1	EMBOLO
14		G102287		1	ANILLO DE CIERRE
15		S109444		1	ANILLO
16		S109445		1	ANILLO
17		219-1		1	ENGRASADOR, 1/8"-27 x .66 lg
18		86982437		1	PERNO ESPECIAL, 1 x 2,5 in; Includes Washer

08-59		p1	09/07

CONJUNTO DE CILINDRO - CUCHARON DE LA CARGADORA

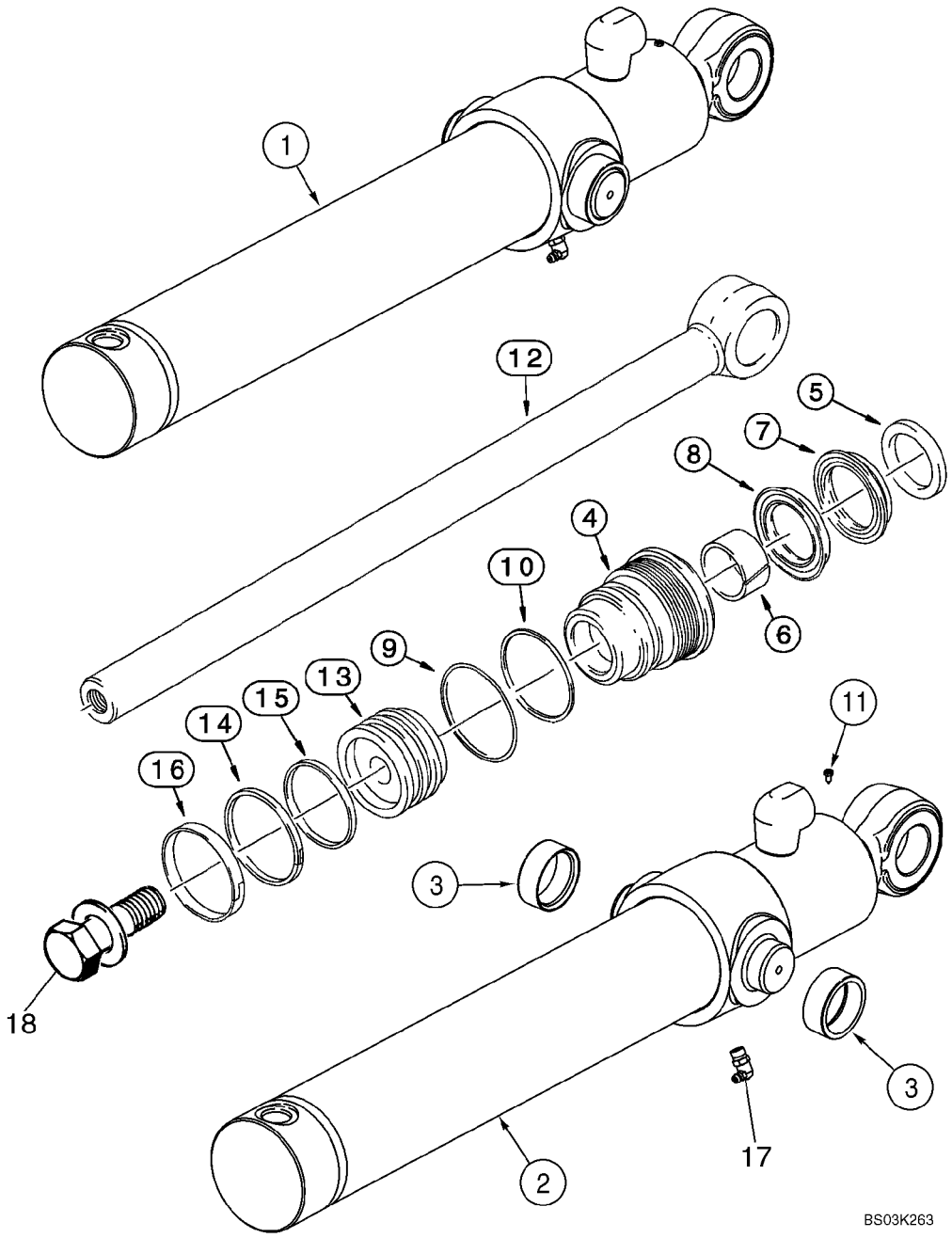

CONJUNTO DE CILINDRO - CUCHARON DE LA CARGADORA

REF	FN	PART NUMBER	YR/SN	QTY	DENOMINACION
1		87609669		2	CILINDRO HIDRAULICO, 76 ID x 522 mm strk; Loader Bucket; Incl. Ref 2- 18
2		113135A2		1	CILINDRO DE GATO, TUBE, Incl. Ref 3
3		G108512		2	CASQUILLO
4		297280A1		1	EMPAQUETADURA
		1543256C1		1	EMPAQUE DE JUNTAS, Seal Repair; Incl. Ref 5 - 10, 14 - 16
5		D95142		1	ANILLO DE CIERRE, Wiper
6		G102424		1	CASQUILLO
		1542874C1		1	PAQUETE, Rod and Buffer Seal Kit; Incl. Ref 7, 8; Not Serviced Separately; Order 1543256C1 Seal Kit
7		NSS		1	NO SE REPARA SEPARADAM., Rod Seal; Order 1543256C1 Seal Kit
8		NSS		1	NO SE REPARA SEPARADAM., Buffer Seal; Order 1543256C1 Seal Kit
9		238-5231		1	JUNTA HERMETICA, -231, 70 Duro, 2.609" ID x .139" Thk
10		G109298		1	ANILLO
11		86642312		1	TORNILLO AUTOROSCANTE, Hex Hd, #8 x 3/8", No. 8 x 3/8, self-tapping
12		87609666		1	VASTAGO CILINDRO, Rod, Piston; 38 mm (1-1/2 in) dia
13		G108518		1	EMBOLO
14		G102288		1	SELLO (CONJUNTO)
15		G100444		1	ANILLO DE CIERRE
16		G100449		1	ANILLO DE DESGASTE
17		219-55		1	ENGRASADOR, 90Ü, 1/8" NPT x .84" lg, 90 deg, 1/8 PT x 27/32
18		86982435		1	PERNO ESPECIAL, 3/4 x 2,5 in, Includes Washer

08-60		p1	10/07

CONJUNTO DE CILINDRO - ALMEJA DE LA CARGADORA

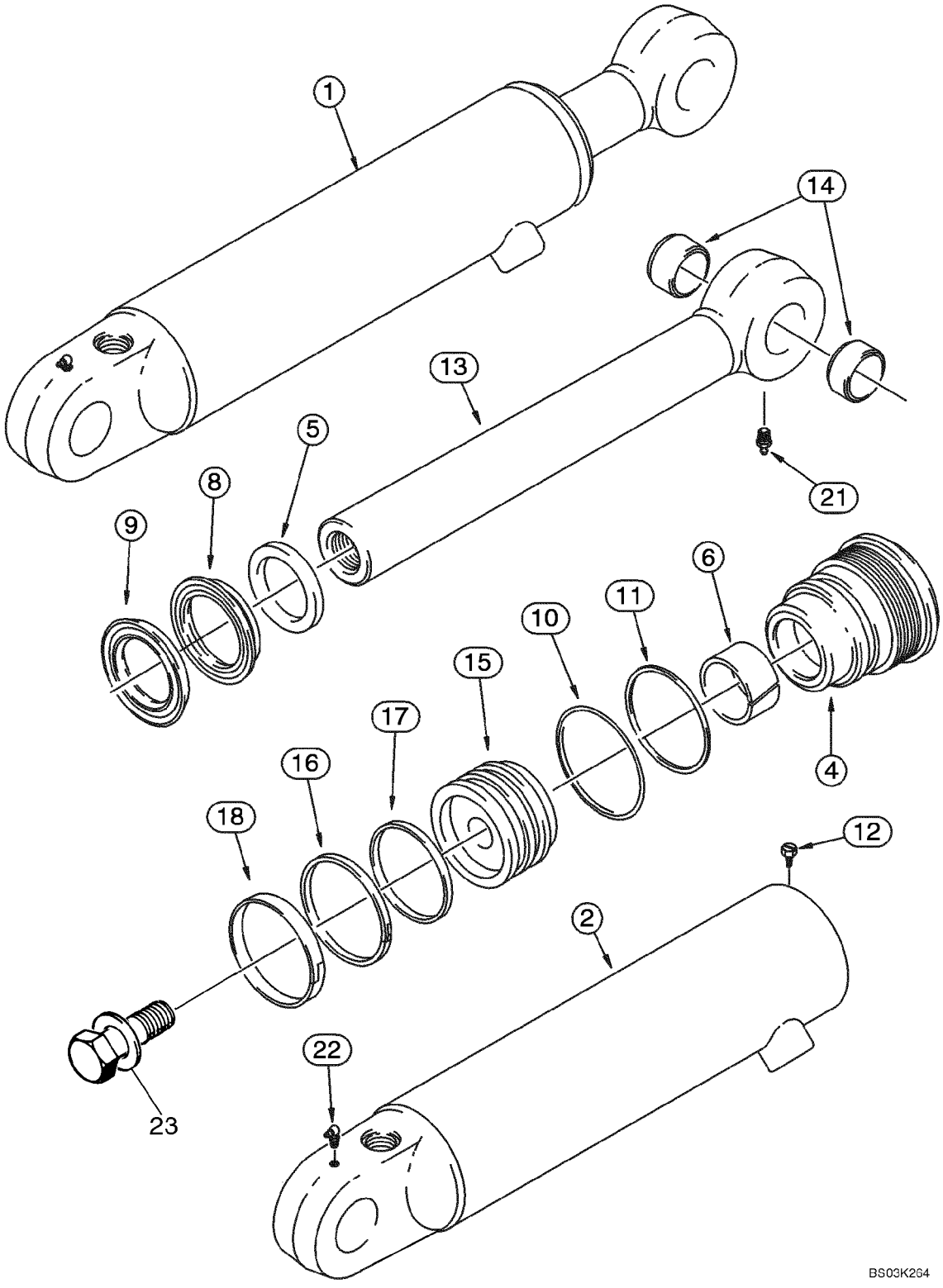

CONJUNTO DE CILINDRO - ALMEJA DE LA CARGADORA

REF	FN	PART NUMBER	YR/SN	QTY	DENOMINACION
1		87454017		1	CILINDRO (CONJUNTO), 76 ID x 231 mm strk; RH; Incl. Ref 2 - 23
1		87454016		1	CILINDRO (CONJUNTO), 76 ID x 231 mm strk; LH; Incl. Ref 2 - 23
2		87454907		1	TUBO (CONJUNTO), RH; 87454017 Cylinder; Includes (2) 30634 Bushings, Ref 14
2		87454908		1	TUBO (CONJUNTO), LH; 87454016 Cylinder; Includes (2) 30634 Bushings, Ref 14
4		297281A1		1	PALIER, Gland
		1543267C1		1	EMPAQUE DE JUNTAS, Seal Repair; Incl. Ref 5 - 11, 16 - 18
5		D95143		1	ANILLO DE CIERRE
6		G102425		1	CASQUILLO
		1542875C1		1	SERIE DE JUNTAS, Rod and Buffer Seal; Incl. Ref 8, 9; Not Serviced Separately; Order 1543267C1 Seal Kit
8		NSS		1	NO SE REPARA SEPARADAM., Rod Seal; Order 1543267C1 Seal Kit
9		NSS		1	NO SE REPARA SEPARADAM., Buffer Seal; Order 1543267C1 Seal Kit
10		238-5231		1	JUNTA HERMETICA, -231, 70 Duro, 2.609" ID x .139" Thk
11		G109298		1	ANILLO
12		86642312		1	TORNILLO AUTOROSCANTE, Hex Hd, #8 x 3/8"
13		1346195C1		1	VASTAGO CILINDRO, 44 mm (1-3/4 in) dia; Incl. Ref 14
14		30634		2	CASQUILLO
15		1340798C1		1	EMBOLO
16		G102288		1	SELLO (CONJUNTO)
17		G100444		1	ANILLO DE CIERRE
18		G100449		1	ANILLO DE DESGASTE
21		219-1		1	ENGRASADOR, 1/8"-27 x .66 lg
22		219-55		1	ENGRASADOR, 90Ü, 1/8" NPT x .84" lg
23		86982437		1	PERNO ESPECIAL, 1,0 x 2,5 in, Includes Washer

08-61		p1	01/08

CONJUNTO DE CILINDRO - ESTABILIZADOR DE LA RETROEXCAVADORA

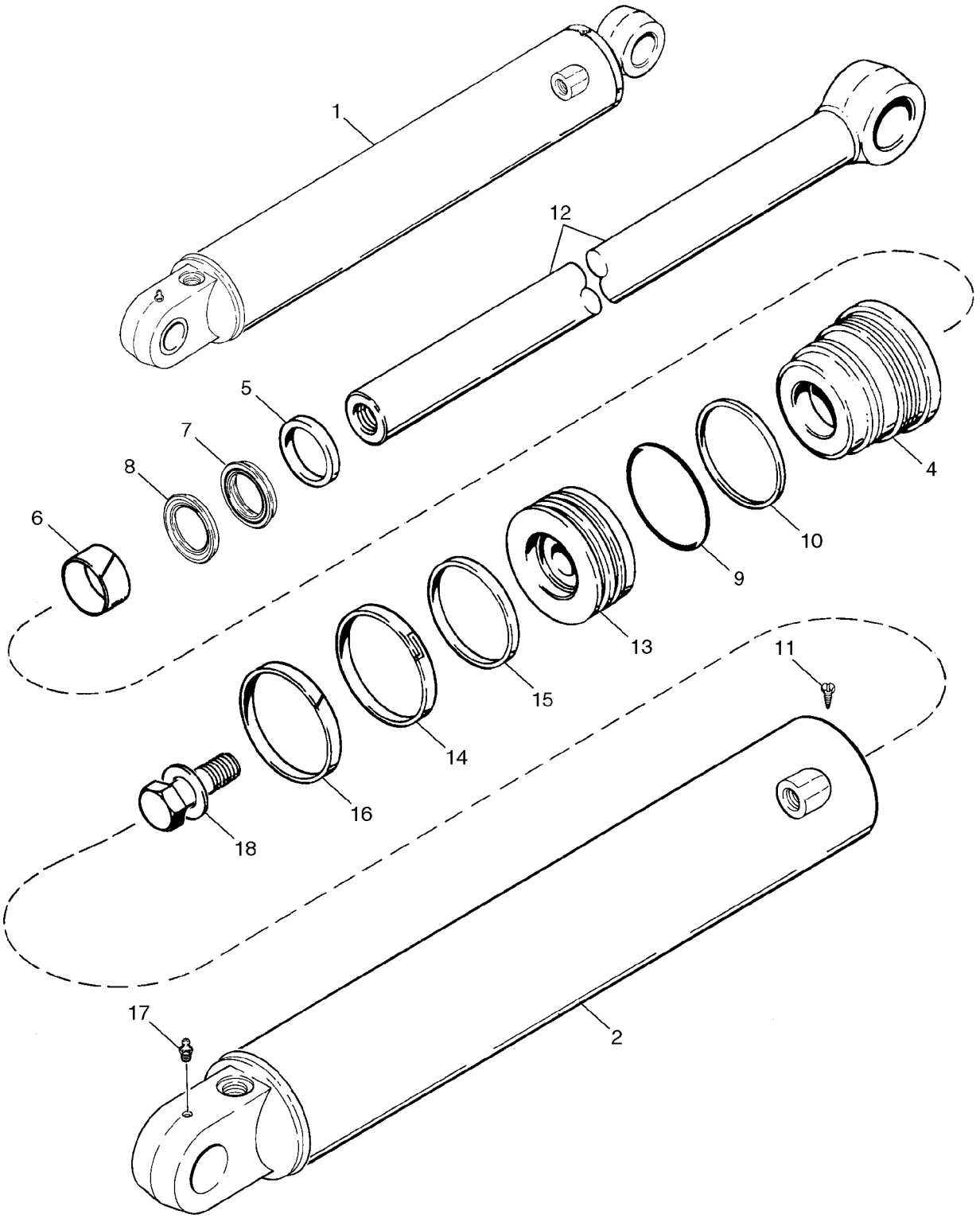

CONJUNTO DE CILINDRO - ESTABILIZADOR DE LA RETROEXCAVADORA

REF	FN	PART NUMBER	YR/SN	QTY	DENOMINACION
1		195503A1		1	CILINDRO (CONJUNTO), 102 ID x 553 mm strk, RH, Incl. Ref 2 - 18
1		195504A1		1	CILINDRO, 102 ID x 553 mm strk, LH, Incl. Ref 2 - 18
2		195505A1		1	TUBO, RH
2		195506A1		1	TUBO, LH
4		128135A2		1	EMPAQUETADURA
		1543269C1		1	EMPAQUE DE JUNTAS, Seal, Incl. Ref 5 - 10, 14 - 16
5		D95144		1	RETEN, WIPER
6		G101533		1	ANILLO DE DESGASTE
		1542876C1		1	EMPAQUETADURA, Rod and Buffer Seal; Incl. Ref 7, 8; Not Serviced Separately; Order 1543269C1 Seal Kit
7		NSS		1	NO SE REPARA SEPARADAM., Rod Seal; Order 1543269C1 Seal Kit
8		NSS		1	NO SE REPARA SEPARADAM., Buffer Seal; Order 1543269C1 Seal Kit
9		238-5239		1	JUNTA HERMETICA, -239, 70 Duro, 3.609" ID x .139" Thk
10		G109299		1	ANILLO, Backup
11		276-2446		1	TORNILLO AUTOROSCANTE, Hex Hd, #8 x 3/8"
12		123726A1		1	VASTAGO CILINDRO, 51 mm (2 in) dia
13		G108123		1	EMBOLO
14		G102285		1	ANILLO DE CIERRE
15		G100440		1	ANILLO
16		G100448		1	ANILLO
17		219-1		1	ENGRASADOR, 1/8"-27 x .66 lg
18		86982440		1	PERNO ESPECIAL, 1,25 x 2,75; Incl. Washer

08-62		p1	11/07

CONJUNTO DE CILINDRO - DE LA RETROEXCAVADORA

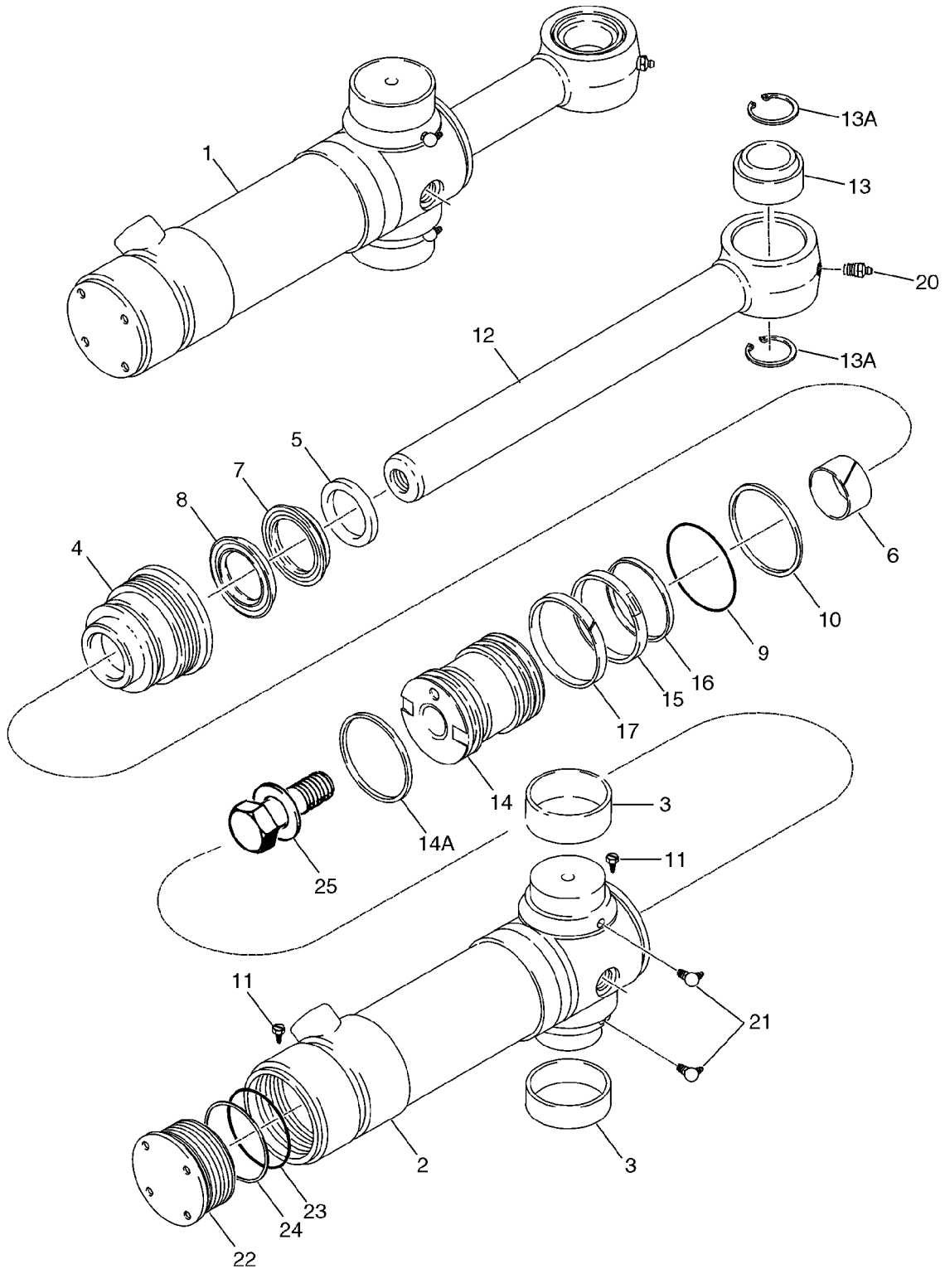

CONJUNTO DE CILINDRO - DE LA RETROEXCAVADORA

REF	FN	PART NUMBER	YR/SN	QTY	DENOMINACION
1		188027A2		2	CILINDRO (CONJUNTO), 95 ID x 292 mm strk, Incl. Ref 2 - 25
2		220165A2		1	TUBO, Incl. Ref 2, 3, 11, 22 - 24; Not Available As An Assembly; Order Components
2		188028A2		1	TUBO (CONJUNTO), Incl. Ref 3
3		124568A2		2	ANILLO, Bushing
4		188032A2		1	EMPAQUETADURA
		191747A1		1	ANILLO DE CIERRE, KIT, Incl. Ref 5 - 10, 14A - 17, 23, 24
5		D95144		1	RETEN, WIPER
6		G101533		1	ANILLO DE DESGASTE
		1542876C1		1	EMPAQUETADURA, Rod and Buffer Seal; Incl. Ref 7, 8; Not Serviced Separately; Order 191747A1 Seal Kit
7		NSS		1	NO SE REPARA SEPARADAM., Rod Seal; Order 191747A1 Seal Kit
8		NSS		1	NO SE REPARA SEPARADAM., Buffer Seal; Order 191747A1 Seal Kit
9		238-5237		1	JUNTA HERMETICA, -237, 70 Duro, 3.359" ID x .139" Thk
10		G32126		1	ANILLO, Backup
11		86642312		2	TORNILLO AUTOROSCANTE, Hex Hd, #8 x 3/8"
12		87413722		1	VASTAGO CILINDRO, 51 mm (2 in) dia, Incl. Ref 13, 13A
13		137248A1		1	ANILLO
13A		100-21315		2	ANILLO DE RESORTE, 3.156", Int, #315
14		188034A3		1	EMBOLO
14A		191252A1		1	JUNTA DE ACEITE, Cast Iron
15		1340764C1		1	SELLO (CONJUNTO)
16		1340763C1		1	ANILLO
17		1980245C1		1	JUNTA DE ACEITE
20		219-1		1	ENGRASADOR, 1/8"-27 x .66 lg
21		219-55		2	ENGRASADOR, 90Ü, 1/8" NPT x .84" lg
		188035A1		1	PALIER, Incl. Ref 22 - 24; Not Available As An Assembly, Order Components

CONJUNTO DE CILINDRO - DE LA RETROEXCAVADORA

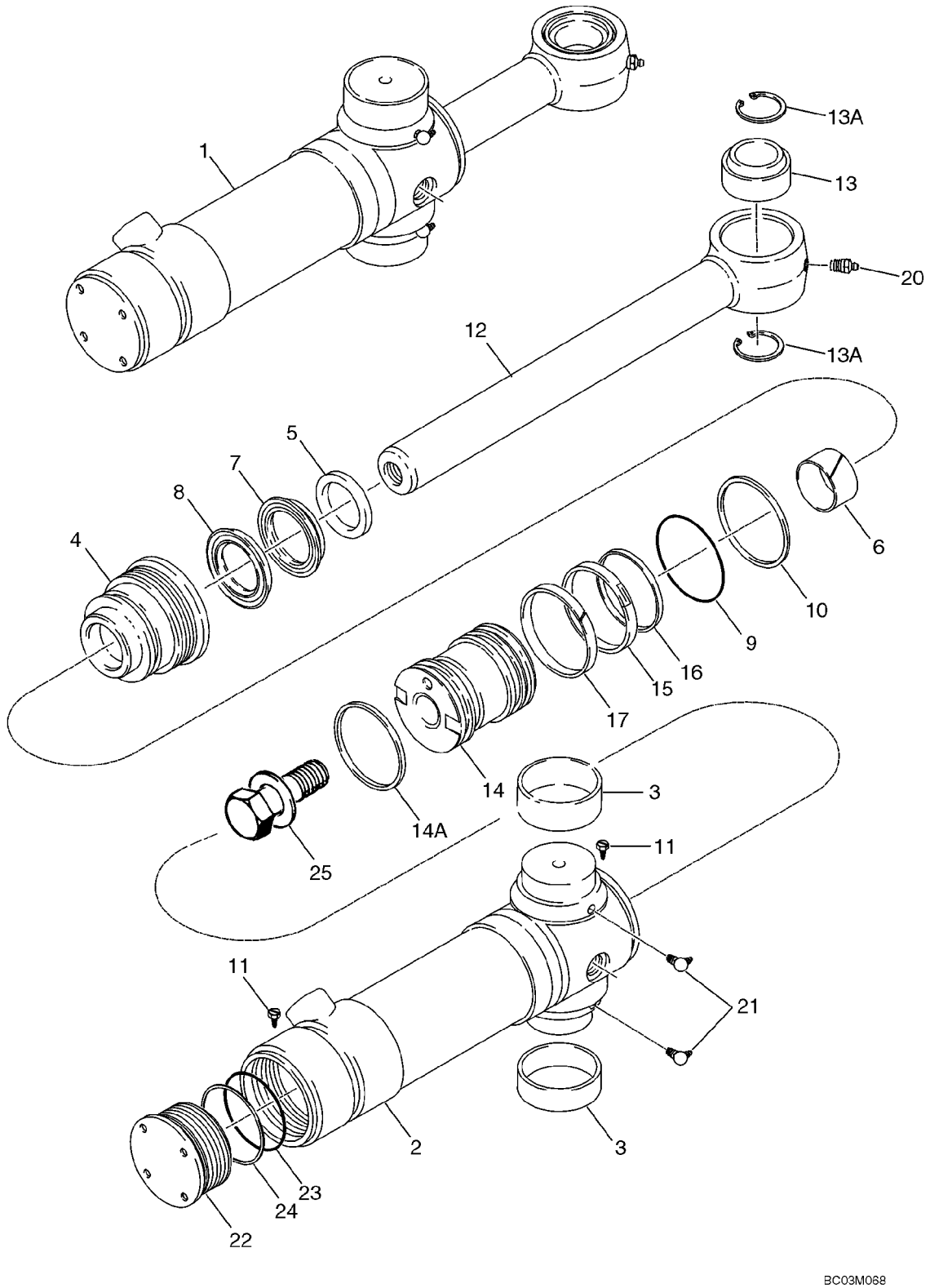

CONJUNTO DE CILINDRO - DE LA RETROEXCAVADORA

REF	FN	PART NUMBER	YR/SN	QTY	DENOMINACION
22		188036A1		1	TAPON DEL DEPOSITO, End
23		238-5239		1	JUNTA HERMETICA, -239, 70 Duro, 3.609" ID x .139" Thk
24		G109299		1	ANILLO, Backup
25		86982439		1	PERNO ESPECIAL, 1 x 4,0; Incl. Washer

08-63		p1	11/07

CONJUNTO DE CILINDRO - AGUILON DE LA RETROEXCAVADORA

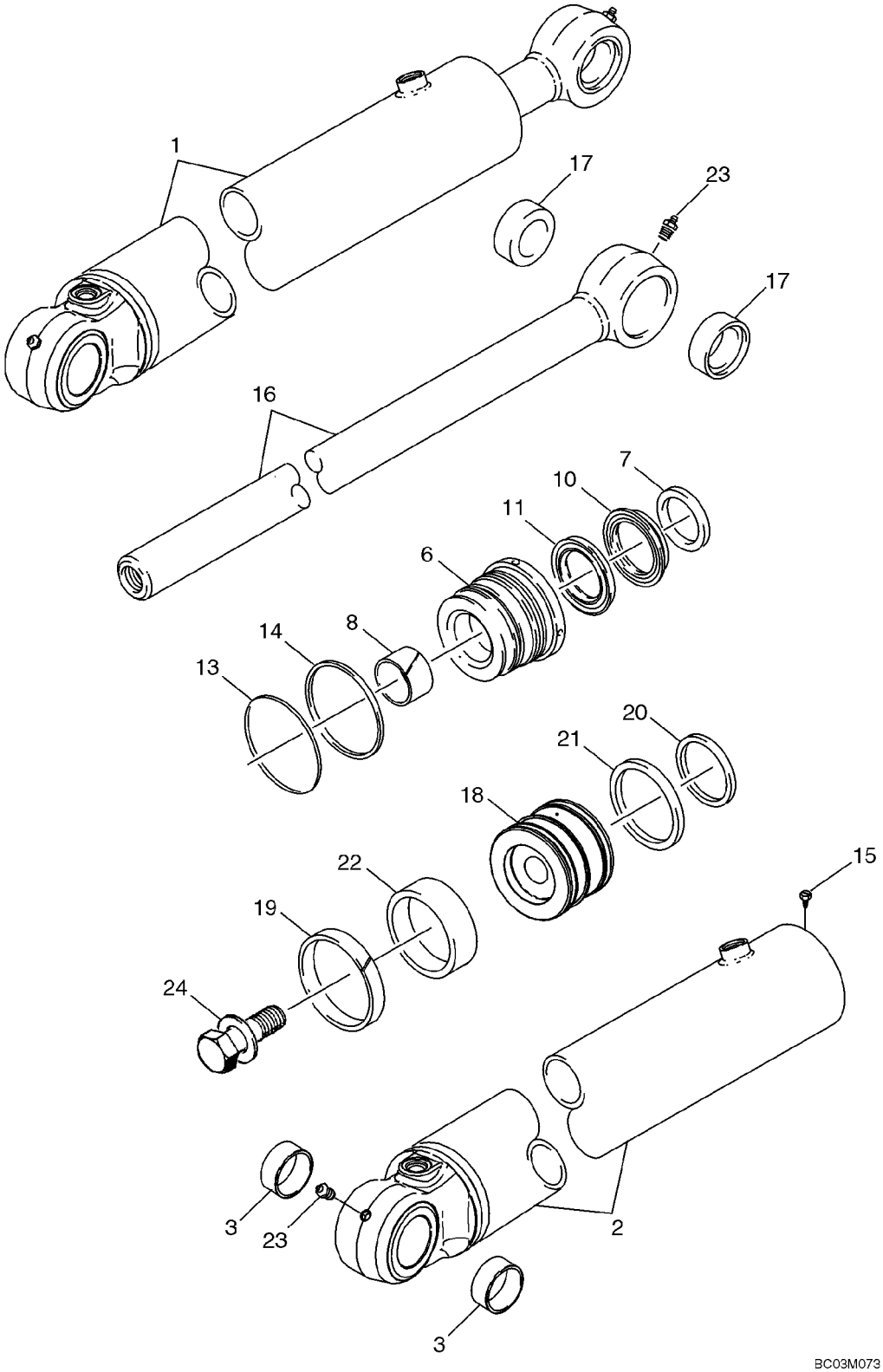

CONJUNTO DE CILINDRO - AGUILON DE LA RETROEXCAVADORA

REF	FN	PART NUMBER	YR/SN	QTY	DENOMINACION
1		189653A2		1	CILINDRO (CONJUNTO), 114 ID x 982 mm strk, Incl. Ref 2 - 24
2		397080A1		1	CILINDRO DE GATO, Incl. Ref 3
3		D149079		2	CASQUILLO, 50 x 34 mm lg
6		127862A2		1	PALIER, GLAND
		182218A1		1	JUEGO JUNTAS, Incl. Ref 7 - 14, 19 - 22
7		D95145		1	ANILLO DE CIERRE
8		G102426		1	CASQUILLO
		1542877C1		1	SERIE DE JUNTAS, Rod and Buffer Seal; Incl. Ref 10, 11; Not Serviced Separately; Order 182218A1 Seal Kit
10		NSS		1	NO SE REPARA SEPARADAM., Rod Seal; Order 182218A1 Seal Kit
11		NSS		1	NO SE REPARA SEPARADAM., Buffer Seal; Order 182218A1 Seal Kit
13		238-5243		1	JUNTA HERMETICA, -243, 70 Duro, 4.109" ID x .139" Thk
14		G109300		1	ANILLO, Backup
15		86642312		1	TORNILLO AUTOROSCANTE, Hex Hd, #8 x 3/8"
16		182109A1		1	VASTAGO CILINDRO, 57 mm (2-1/4 in) dia, Incl. Ref 17
17		D149079		2	CASQUILLO, 50 x 34 mm lg
18		189657A2		1	PISTON CILINDRO
19		182116A1		1	ANILLO, Cast Iron
20		G101995		1	RETEN
21		G101994		2	ANILLO DE CIERRE
22		G101996		1	ANILLO DE DESGASTE
23		219-1		2	ENGRASADOR, 1/8"-27 x .66 lg
24		86982442		1	PERNO ESPECIAL, 1,25 x 3,25; Incl. Washer

08-64		p1	11/07

CONJUNTO DE CILINDRO - BRAZO DE LA RETROEXCAVADORA

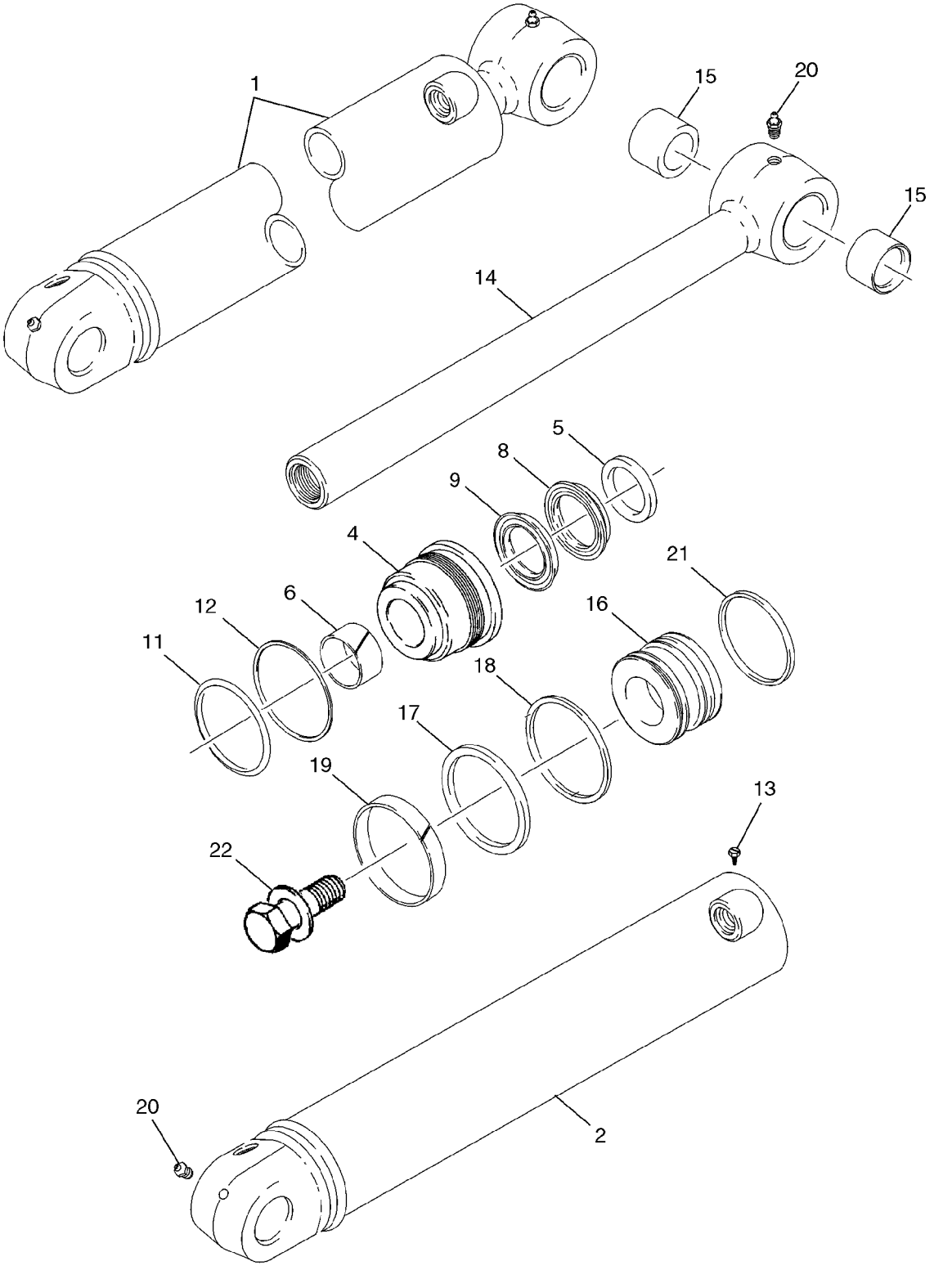

CONJUNTO DE CILINDRO - BRAZO DE LA RETROEXCAVADORA

REF	FN	PART NUMBER	YR/SN	QTY	DENOMINACION
1		233114A2		1	CILINDRO (CONJUNTO), 108 ID x 686 mm strk, Incl. Ref 2 - 22
2		297952A1		1	CUELLO DE CARGA, TUBE
4		234141A2		1	PALIER, GLAND
		234844A1		1	EMPAQUE DE JUNTAS, Incl. Ref 5 - 12, 17 - 19, 21
5		D95145		1	ANILLO DE CIERRE
6		G102426		1	CASQUILLO
		1542877C1		1	SERIE DE JUNTAS, Rod and Buffer Seal; Incl. Ref 8, 9; Not Serviced Separately; Order 234844A1 Seal Kit
8		NSS		1	NO SE REPARA SEPARADAM., Rod Seal; Order 234844A1 Seal Kit
9		NSS		1	NO SE REPARA SEPARADAM., Buffer Seal; Order 234844A1 Seal Kit
11		238-5241		1	JUNTA HERMETICA, -241, 70 Duro, 3.859" ID x .139" Thk
12		G32176		1	ANILLO, Backup
13		86642312		1	TORNILLO AUTOROSCANTE, Hex Hd, #8 x 3/8"
14		175778A1		1	VASTAGO CILINDRO, 57 mm (2-1/4 in) dia, Incl. Ref 15
15		D149079		2	CASQUILLO
16		233110A2		1	EMBOLO
17		G110531		1	ANILLO DE CIERRE
18		G110529		1	ANILLO
19		G110530		1	ANILLO
20		219-1		2	ENGRASADOR, 1/8"-27 x .66 lg
21		233104A1		1	ANILLO, Cast Iron
22		86982443		1	PERNO ESPECIAL, 1-3/8 x 3,5; Incl. Washer

08-65		p1	11/07

CONJUNTO DE CILINDRO - CUCHARON DE LA RETROEXCAVADORA

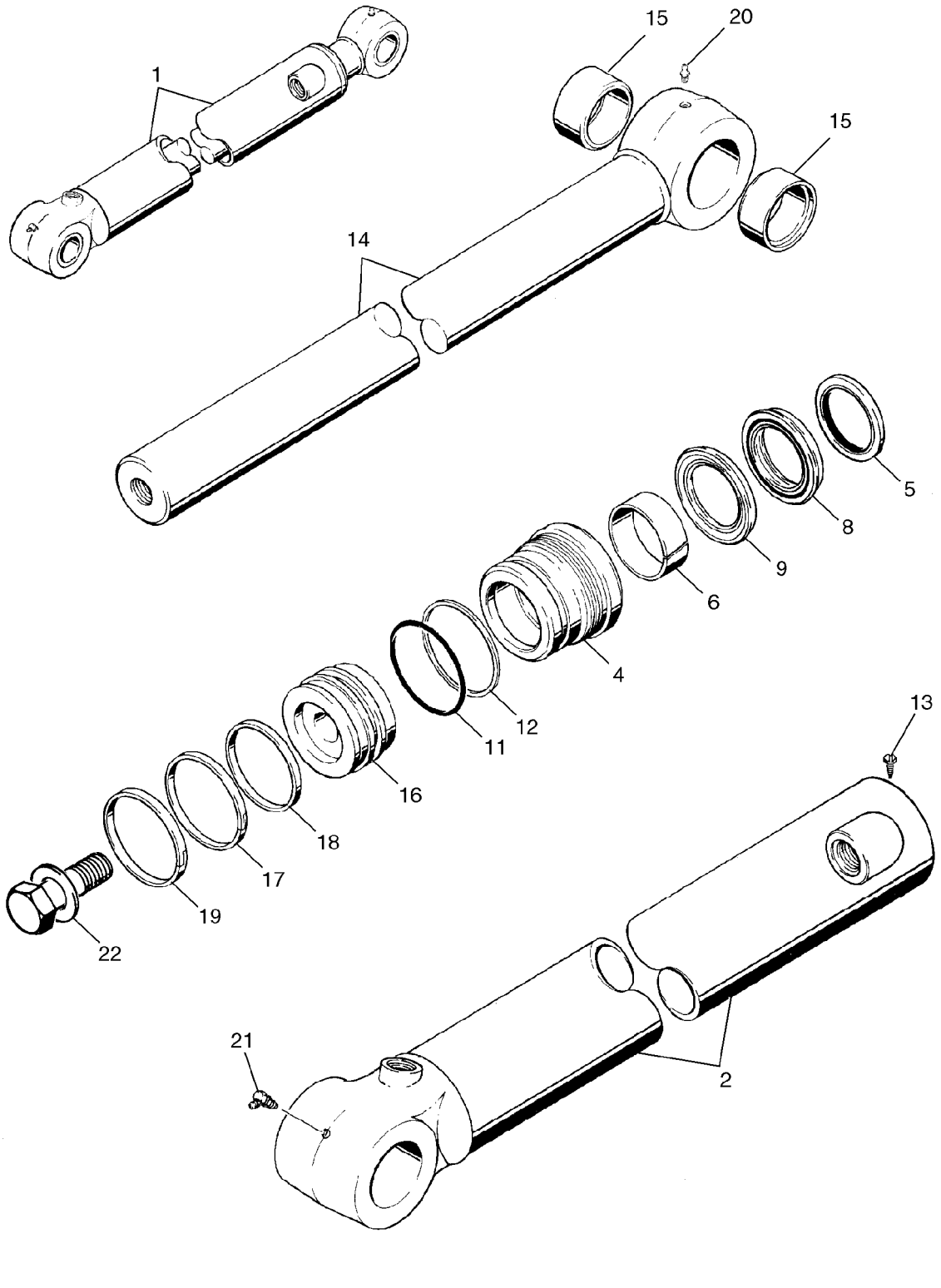

CONJUNTO DE CILINDRO - CUCHARON DE LA RETROEXCAVADORA

REF	FN	PART NUMBER	YR/SN	QTY	DENOMINACION
1		128760A1		1	CILINDRO (CONJUNTO), 83 ID x 872 mm strk, Incl. Ref 2 - 22
2		128761A1		1	CILINDRO DE GATO, TUBE
4		128770A2		1	PALIER, GLAND
		131750A2		1	EMPAQUE DE JUNTAS, Seal, Incl. Ref 5 - 12, 17 - 19
5		D95145		1	ANILLO DE CIERRE
6		1346476C1		1	ANILLO
		1542877C1		1	SERIE DE JUNTAS, Rod and Buffer Seal; Incl. Ref 8, 9; Not Serviced Separately; Order 131750A2 Seal Kit
8		NSS		1	NO SE REPARA SEPARADAM., Rod Seal; Order 131750A2 Seal Kit
9		NSS		1	NO SE REPARA SEPARADAM., Buffer Seal; Order 131750A2 Seal Kit
11		238-5233		1	JUNTA HERMETICA, -233, 70 Duro, 2.859" ID x .139" Thk
12		G32122		1	ANILLO, Backup
13		86642312		1	TORNILLO AUTOROSCANTE, Hex Hd, #8 x 3/8"
14		198033A1		1	VASTAGO CILINDRO, 57 mm (2-1/4 in) dia, Incl. Ref 15
15		D140029		2	CASQUILLO
16		128772A1		1	EMBOLO
17		G102287		1	ANILLO DE CIERRE
18		S109444		1	ANILLO
19		S109445		1	ANILLO
20		219-1		1	ENGRASADOR, 1/8"-27 x .66 lg
21		219-36		1	ENGRASADOR, 45Ü, 1/8" NPT x 7/8" lg
22		86982441		1	PERNO ESPECIAL, 1,25 x 3,00; Incl. Washer

08-66		p1	12/07

CONJUNTO DE CILINDRO - PALA EXTENSIBLE DE LA RETROEXCAVADORA

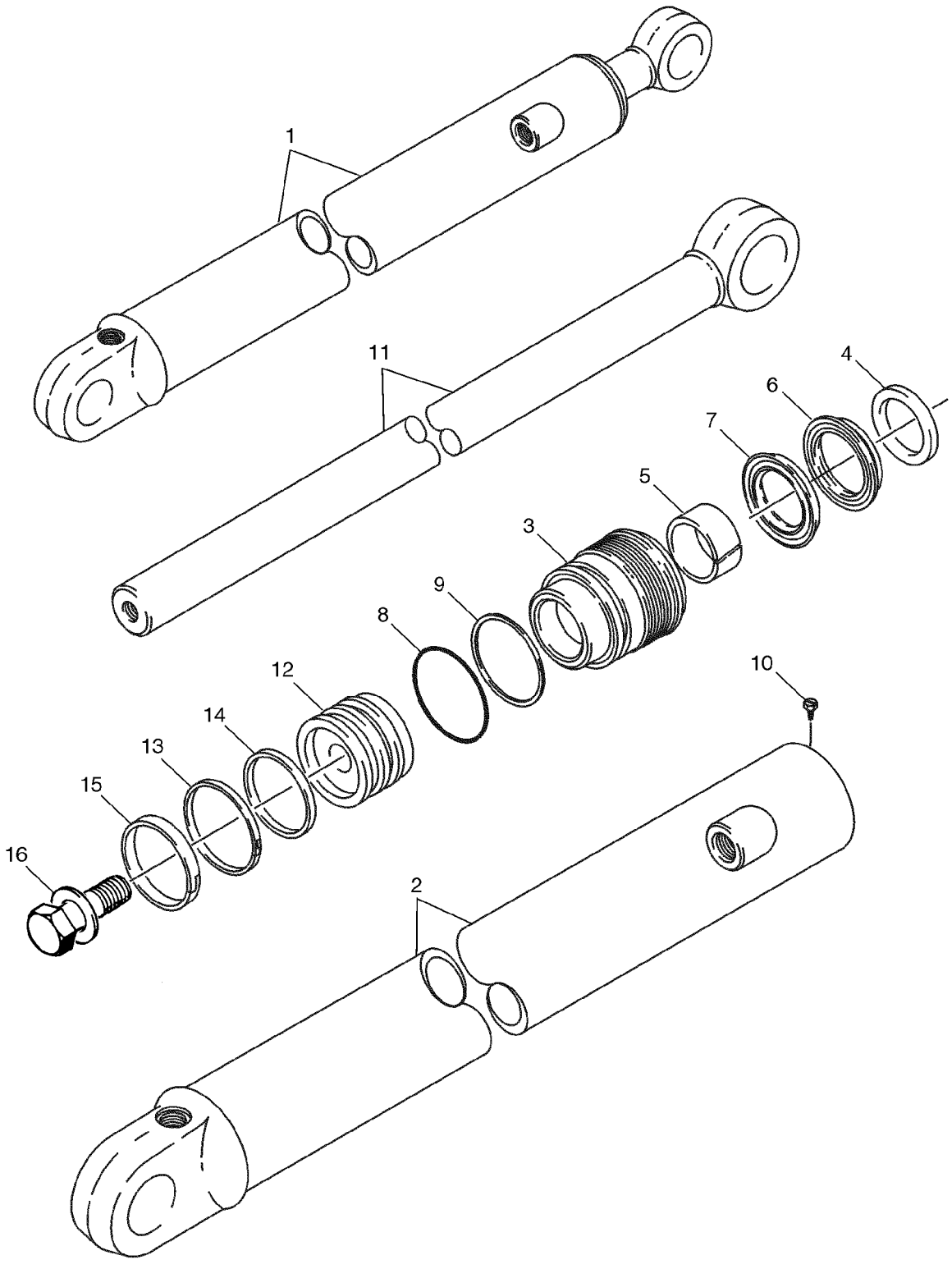

CONJUNTO DE CILINDRO - PALA EXTENSIBLE DE LA RETROEXCAVADORA

REF	FN	PART NUMBER	YR/SN	QTY	DENOMINACION
1		1340969C2		1	CILINDRO (CONJUNTO), 76 ID x 1068 mm strk; Incl. Ref 2 - 16
2		1340970C1		1	CILINDRO DE GATO, TUBE
3		297281A1		1	PALIER, GLAND
		1543267C1		1	EMPAQUE DE JUNTAS, Seal; Incl. Ref 4 - 9, 13 - 15
4		D95143		1	ANILLO DE CIERRE, WIPER
5		G102425		1	CASQUILLO
		1542875C1		1	SERIE DE JUNTAS, Rod and Buffer Seal; Incl. Ref 6, 7; Not Serviced Separately; Order 1543267C1 Seal Kit
6		NSS		1	NO SE REPARA SEPARADAM., Rod Seal; Order 1543267C1 Seal Kit
7		NSS		1	NO SE REPARA SEPARADAM., Buffer Seal; Order 1543267C1 Seal Kit
8		238-5231		1	JUNTA HERMETICA, -231, 70 Duro, 2.609" ID x .139" Thk
9		G109298		1	ANILLO, Backup
10		276-2446		1	TORNILLO AUTOROSCANTE, Hex Hd, #8 x 3/8"
11		1980296C1		1	VASTAGO CILINDRO, 44 mm (1-3/4 in) dia
12		G107277		1	EMBOLO
13		G102288		1	SELLO (CONJUNTO)
14		G100444		1	ANILLO DE CIERRE
15		G100449		1	ANILLO DE DESGASTE
16		86982435		1	PERNO ESPECIAL, 3/4 x 2,5 in, Incl. Washer

NOTAS

SECTION INDEX
Bastidor/Accesorios

09-01	CONTROLES - ELEVACIčN DE LA CARGADORA Y CUCHARčN
09-01A	MANILLA, CONTROL DE LA CARGADORA - CONJUNTO DE LA TRANSMISION, 2WD, 4WD
09-02	CONTROLES - ALMEJA DE LA CARGADORA
09-03	CONTROLES - CARGADORA AUTO-NIVELADORA
09-04	MARCO - ELEVADOR DE LA CARGADORA
09-05	MARCO - VARILLAJE DE LA CARGADORA
09-06	CUCHARčN, BORDE ANCHO DE LA CARGADORA (82 IN)
09-07	CUCHARčN, BORDE ANCHO DE LA CARGADORA (93 IN)
09-08	CUCHARčN, ALMEJA DE LA CARGADORA
09-09	PROTECTOR - VĆLVULA, CARGADORA
09-10	ACOPLADOR RĆPIDO, HERRAMIENTA
09-11	CUBIERTAS - TORRE DE CONTROL DE LA RETROEXCAVADORA, SIN DE CONTROL PILOTO
09-12	APOYO DE LA TORRE DE CONTROL DE LA RETROEXCAVADORA Y JUNTAS, SIN DE CONTROL PILOTO
09-13	TORRE DE CONTROL DE LA RETROEXCAVADORA SOPORTE, CON DE CONTROL PILOTO
09-14	TORRE DE CONTROL DE LA RETROEXCAVADORA SOPORTE DE JUNTA, CON DE CONTROL PILOTO
09-15	TORRE DE CONTROL DE LA RETROEXCAVADORA PALANCA (TRABA DEL AGUILčN), CON DE CONTROL PILOTO
09-16	CONTROLES - RETROEXCAVADORA, CON PEDAL DE OSCILACIčN (MODELOS CON O SIN PALA EXTENSIBLE)
09-17	CONTROLES - RETROEXCAVADORA, CON PEDAL DE OSCILACIčN (MODELOS CON PALA EXTENDIBLE)
09-18	CONTROLES - RETROEXCAVADORA, CON OSCILACIčN MANUAL (MODELOS CON O SIN PALA EXTENSIBLE)
09-19	CONTROLES - RETROEXCAVADORA, CON OSCILACIčN MANUAL (MODELOS CON O SIN PALA EXTENSIBLE)
09-19A	CONTROLES - RETROEXCAVADORA, PATRčN DE CONTROL DE LA EXCAVADORA
09-20	CONTROLES - RETROEXCAVADORA, CON OSCILACIčN MANUAL (MODELOS CON PALA EXTENDIBLE)
09-21	CONTROLES - SISTEMA HIDRĆULICO AUXILIAR DE LA RETROEXCAVADORA, SIN DE CONTROL PILOTO
09-22	RETROEXCAVADORA - ESTABILIZADORES, PLACAS Y ALMOHADILLAS
09-23	RETROEXCAVADORA - TORRE DE OSCILACIčN Y CILINDROS DE OSCILACIčN
09-24	RETROEXCAVADORA - AGUILčN Y TORRE DE OSCILACIčN
09-24A	PLUMA RESGUARDO
09-25	TRABA DEL AGUILčN (SIN DE CONTROL PILOTO)
09-25A	TRABA DEL AGUILčN (CON DE CONTROL PILOTO)
09-26	RETROEXCAVADORA - PALA Y CUCHARčN
09-27	RETROEXCAVADORA - PALA, EXTENSIBLE
09-28	CUCHARčN, RETROEXCAVADORA UNIVERSAL (305 MM (12 INCH) WIDE)
09-29	CUCHARčN, RETROEXCAVADORA UNIVERSAL (406 MM (16 INCH) WIDE)
09-30	CUCHARčN, RETROEXCAVADORA UNIVERSAL (457 MM (18 INCH) WIDE)
09-31	CUCHARčN, RETROEXCAVADORA (457 MM (18 INCH) WIDE)
09-32	CUCHARčN, RETROEXCAVADORA UNIVERSAL (610 MM (24 INCH) / 762 MM (30 INCH) WIDE)
09-33	CUCHARčN, RETROEXCAVADORA (610 MM (24 INCH) WIDE)
09-34	CUCHARčN, RETROEXCAVADORA UNIVERSAL (914 MM (36 INCH) WIDE)

SECTION INDEX
Bastidor/Accesorios

09-35	CUCHARčN, RETROEXCAVADORA UNIVERSAL (610 MM (24 INCH) WIDE)
09-35A	CONJUNTO DEL PUNTO DE HIELO
09-36	CONTRAPESO, DELANTERO
09-37	CHASIS / SOPORTES, RECEPTĆCULO - PANTALLA, ENTRADA DE AIRE
09-38	DEPčSITO, ACEITE - CAJA, BATERĉA Y HERRAMIENTA
09-39	REVESTIMIENTO DEL RADIADOR
09-40	CAPO - PANELES, LATERALES
09-41	CAPO - PARRILLA
09-42	PLACAS, SUELO - ALFOMBRILLAS
09-43	CUBIERTA DEL GUARDABARROS, LADO IZQUIERDO - PANEL, CIERRE TRASERO (BANDEJA DE ALMACENAMIENTO CON SUJ
09-44	EXTENSIONES DEL GUARDABARROS
09-45	GUARDABARROS
09-46	ASIENTO (SEARS, ESTĆNDAR)
09-47	ASIENTO - SOPORTE (SEARS SUSPENSION MECANICA)
09-48	CONJUNTO DEL ASIENTO, SUSPENSION MECANICA (SEARS)
09-49	ASIENTO - SOPORTE (SUSPENSIčN DE AIRE)
09-53	CABINA - CRISTAL, ESPEJO Y MANTENER ABIERTO
09-54	CABINA - CHASIS Y CUBIERTAS
09-55	CABINA - PUERTAS
09-56	CABINA - MONTAJE DE LA PUERTA
09-57	CABINA - VENTANILLA, DERECHA, PARA MARCOS DE CABINA DE PUERTA ĐNICA
09-58	CABINA - VENTANA, TRASERA
09-59	CABINA - ARANDELA, PARABRISAS
09-60	CABINA - LIMPIA PARABRISAS
09-61	REVESTIMIENTO DE LA CABINA - FILTRO, REJILLAS, LĆMPARA DEL TECHO
09-62	CABINA - FILTRO, AIRE
09-63	CABINA - ALOJAMIENTO DEL SOPLADOR, CONDUCTOS DE VENTILACIčN, TUBOS DE DRENADO
09-64	CABINA - CALENTADOR
09-65	CABINA - TUBOS DE AIRE ACONDICIONADO, NĐCLEO DEL EVAPORADOR
09-66	CABINA - AIRE ACONDICIONADOR, CONDENSADOR, RECIBIDOR-SECADOR
09-67	CABINA - COMPRESOR DEL AIRE ACONDICIONADO
09-68	TECHO Y ROPS - CHASIS, CUBIERTAS, ESPEJOS, VISOR
09-69	TECHO Y ROPS - VIDRIO
09-70	TECHO Y ROPS - LIMPIAPARABRISAS, DELANTERO Y LAVAPARABRISAS
09-71	ESPEJO, VISTA TRASERA - SOPORTE, MODELLE MIT KABINE
09-72	EMBLEMA DE VEHICULO LENTO
09-73	CALCOMANIAS
09-74	CALCOMANIAS
09-75	CALCOMANIAS
09-76	CALCOMANIAS - INGLES
09-77	CALCOMANIAS - CASTELLANO PARA LATINOAMERICA
09-78	CALCOMANIAS - FRANCES CANADIENSE
09-79	CALCOMANIAS - INGLES
09-80	CALCOMANIAS - CASTELLANO PARA LATINOAMERICA
09-81	CALCOMANIAS - FRANCES CANADIENSE

NOTAS

09-01		p1	11/07

CONTROLES - ELEVACIĎN DE LA CARGADORA Y CUCHARĎN

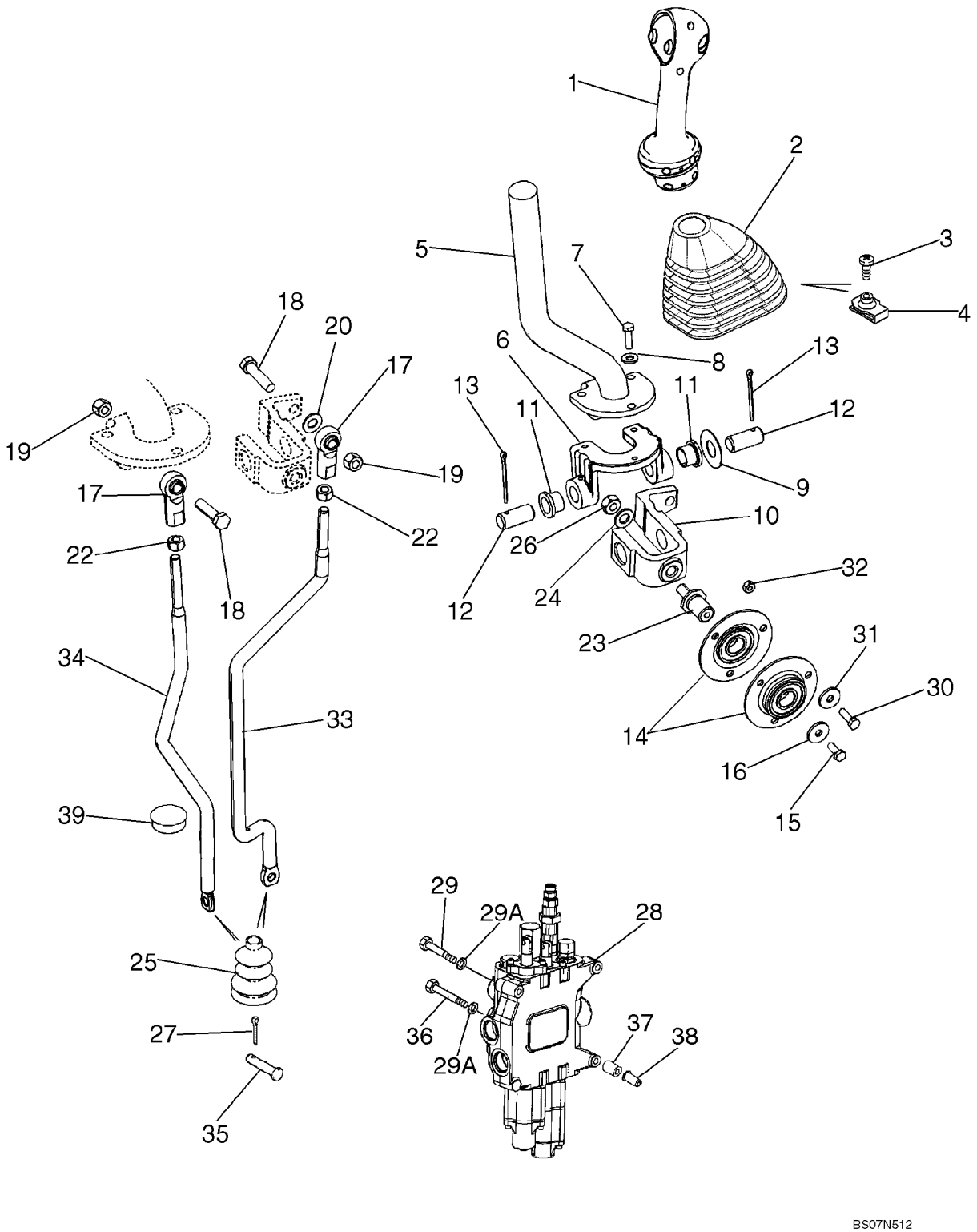

CONTROLES - ELEVACIĎN DE LA CARGADORA Y CUCHARĎN

REF	FN	PART NUMBER	YR/SN	QTY	DENOMINACION
1		87638046		1	MANECILLA, Loader Control Lever; Two Button, Declutch and Differential Lock Switches; 2 Spool With Standard Transmission; See Figure 09-01A
		256347A1		1	CONECTOR
		258616A1		1	CERRADURA
		298176A1		1	TAPčN
		87301351		AR	MASILLA, Permabond Adhesive, F246, 1 ml With No. 5 Initiator
2		87632920		1	CASQUETE
3		140-107		1	TORNILLO, Cross Pan Hd, #10-24 x 3/4"
4		131-121		1	TUERCA, Tinn, U, #10-24
5		87708015		1	EJE CON PRESILLA
6		87681261		1	PRLONGACION
7		614-6020		3	TORNILLO, Hex, M6 x 20, 8.8
8		495-11028		3	ARANDELA, 1/4", SAE
9		495-81184		1	ARANDELA, 21/32" x 1 1/2" x .030"
10		87586156		1	PALONIER-PALOMILLA
11		108088A1		2	CASQUILLO
12		102761A1		2	BULON/PIN, LARGO
13		432-828		2	PASADOR ABIERTO, 1/8" x 1 3/4"
14		112380A1		2	COJINETE, Incl. Ref 14A
14A		362804		1	COJINETE, Not Illustrated
15		614-6016		1	TORNILLO, Hex, M6 x 16, 8.8
16		396-41028		1	ARANDELA, .281" x 7/8" x .098", HDN
17		87382812		2	COJINETE, BALLJOINT; 3/8 NF
18		413-624		1	TORNILLO, Hex, 3/8"-16 x 1 1/2", G5
19		232-4246		2	CONTRA TUERCA, 3/8"-16, GC
20		496-11041		1	ARANDELA, 13/32" x 13/16" x .065", HDN
22		425-116		2	TUERCA, 3/8"-24, G5
23		176309A1		1	EJE
24		895-11010		1	ARANDELA, M10 x 20 x 2
25		132931A1		1	FUELLE
		189109A1		2	RESORTE
26		829-1410		1	TUERCA, M10, Cl 10
27		432-612		2	PASADOR ABIERTO, 3/32" x 3/4"

09-01		p2	11/07

CONTROLES - ELEVACIĎN DE LA CARGADORA Y CUCHARĎN

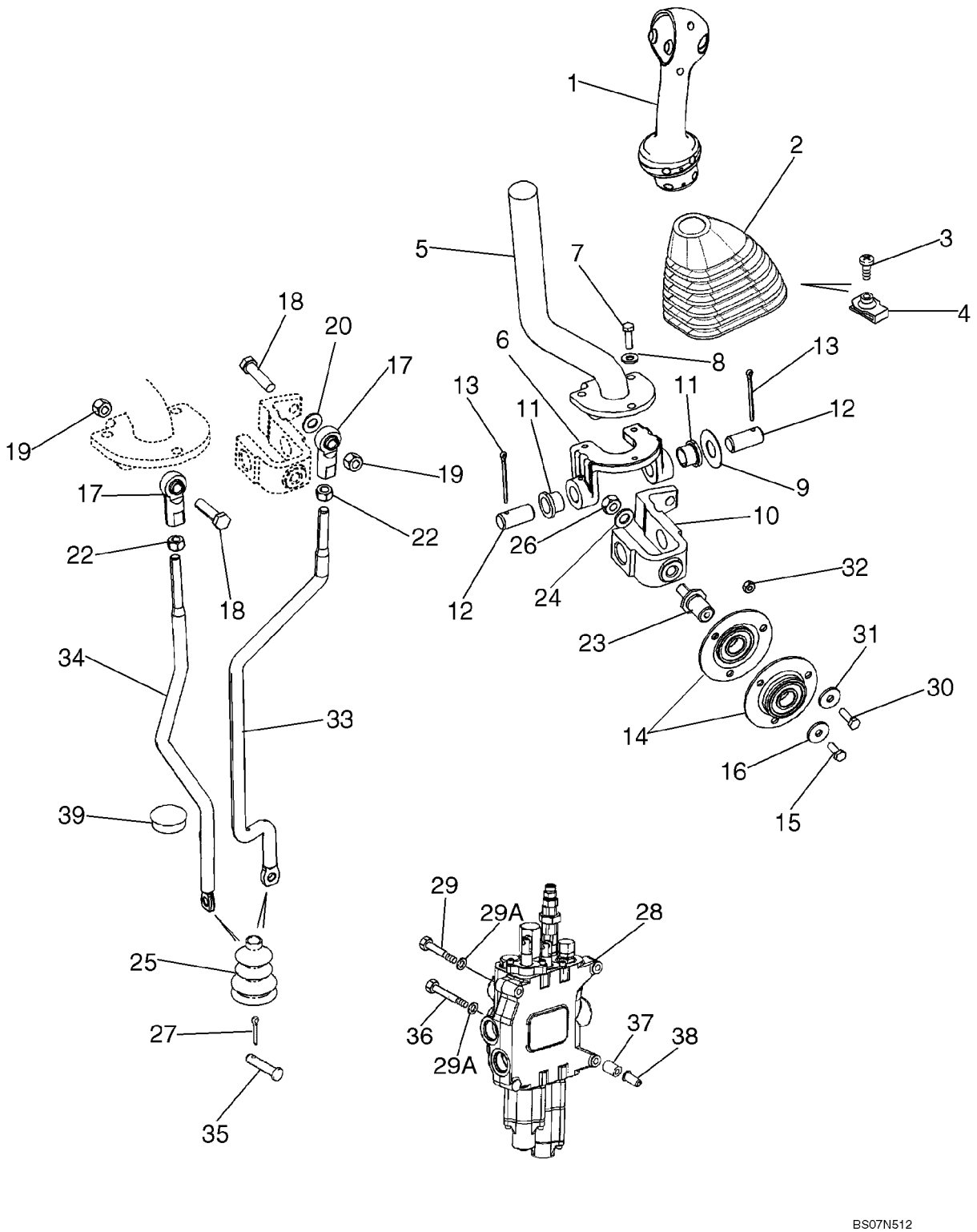

CONTROLES - ELEVACIĎN DE LA CARGADORA Y CUCHARĎN

REF	FN	PART NUMBER	YR/SN	QTY	DENOMINACION
28		REF		1	MANUAL, LOADER CONTROL VALVE; Two Spool, See Figure 08-30 for Two Spool Valve Options
29		814-10090		2	TORNILLO, Hex, M10 x 90, 8.8
29A		896-11010		3	ARANDELA, M10 x 21.5 x 2.5, HT
30		614-6020		3	TORNILLO, Hex, M6 x 20, 8.8
31		396-41028		3	ARANDELA, .281" x 7/8" x .098", HDN
32		829-1406		3	TUERCA, M6, Cl 10
33		87664425		1	BIELA DE EMBOLO, Bucket Control Rod
34		87664422		1	BIELA DE EMBOLO, Lift Control Rod
35		D149287		2	BULON/PIN, LARGO
36		814-10110		1	TORNILLO, Hex, M10 x 110, 8.8
37		87417599		3	SEPARADOR
38		87417721		3	ROSCA POSTIZA, M10
39		353-422		1	TAPčN, Dome, 1.250" hole, Nylon

09-01A		p1	02/08

MANILLA, CONTROL DE LA CARGADORA - CONJUNTO DE LA TRANSMISION, 2WD, 4WD

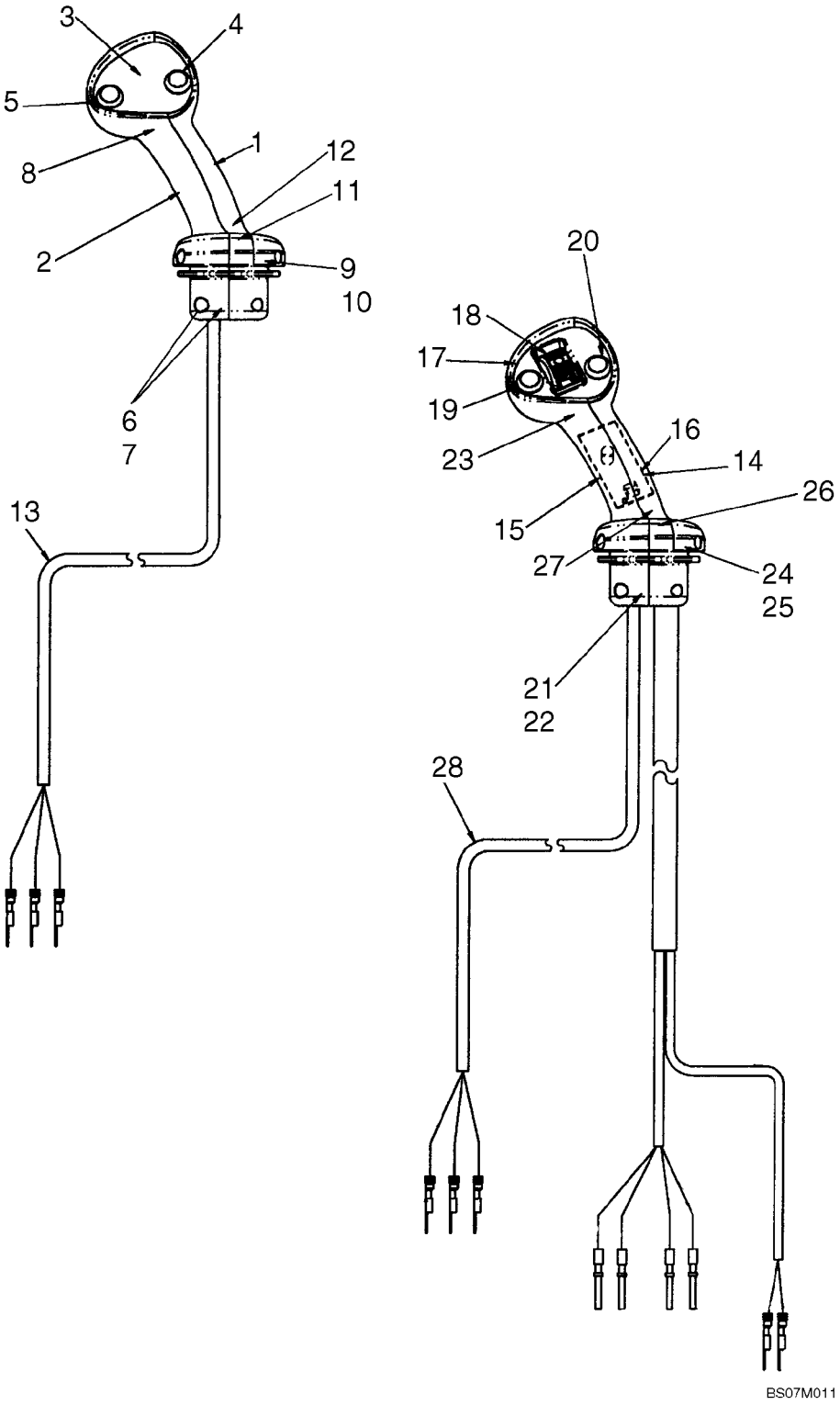

MANILLA, CONTROL DE LA CARGADORA - CONJUNTO DE LA TRANSMISION, 2WD, 4WD

REF	FN	PART NUMBER	YR/SN	QTY	DENOMINACION
		87638046		1	MANECILLA, Loader Control Lever, Two Button, DeClutch and Differential Lock Switches; 2 Spool With Standard Transmission; Incl. 1 - 13
1		87623338		1	PERILLA, Loader Control, RH Half
2		87623339		1	PERILLA, Loader Control, LH Half
3		NSS		1	NO SE REPARA SEPARADAM., Bezel, Switch Mounting
4		NSS		1	NO SE REPARA SEPARADAM., Switch, Push Button, Differential Lock
5		NSS		1	NO SE REPARA SEPARADAM., Switch, Push Button, De-Clutch
6		825-1404		4	TUERCA, M4, Cl 8
7		86639294		4	TORNILLO, Hex Soc Hd, M4 x 20, 8.8
8		260-16312		2	TORNILLO AUTOROSCANTE
9		87019103		2	TORNILLO DE AJUSTE
10		87638350		2	TUERCA
11		87689189		1	CIERRA CABLES
12		87689338		1	TORNILLO
13		NSS		1	NO SE REPARA SEPARADAM., Harness, Differential Lock and De-Clutch
		87638047		1	MANECILLA, Loader Control Lever, Two Button, DeClutch and Differential Lock, Prop Roller With Detent; 3 Spool With Standard Transmission; Incl. 14 - 28
14		87623338		1	PERILLA
15		87623339		1	PERILLA
16		NSS		1	NO SE REPARA SEPARADAM., Circuit Board With Harness; Bi-Directional PWM Driver
17		NSS		1	NO SE REPARA SEPARADAM., Bezel, Switch Mounting
18		NSS		1	NO SE REPARA SEPARADAM., Switch, Prop Roller With Detent
19		NSS		1	NO SE REPARA SEPARADAM., Switch, Push Button, De-Clutch

09-01A		p2	02/08

MANILLA, CONTROL DE LA CARGADORA - CONJUNTO DE LA TRANSMISION, 2WD, 4WD

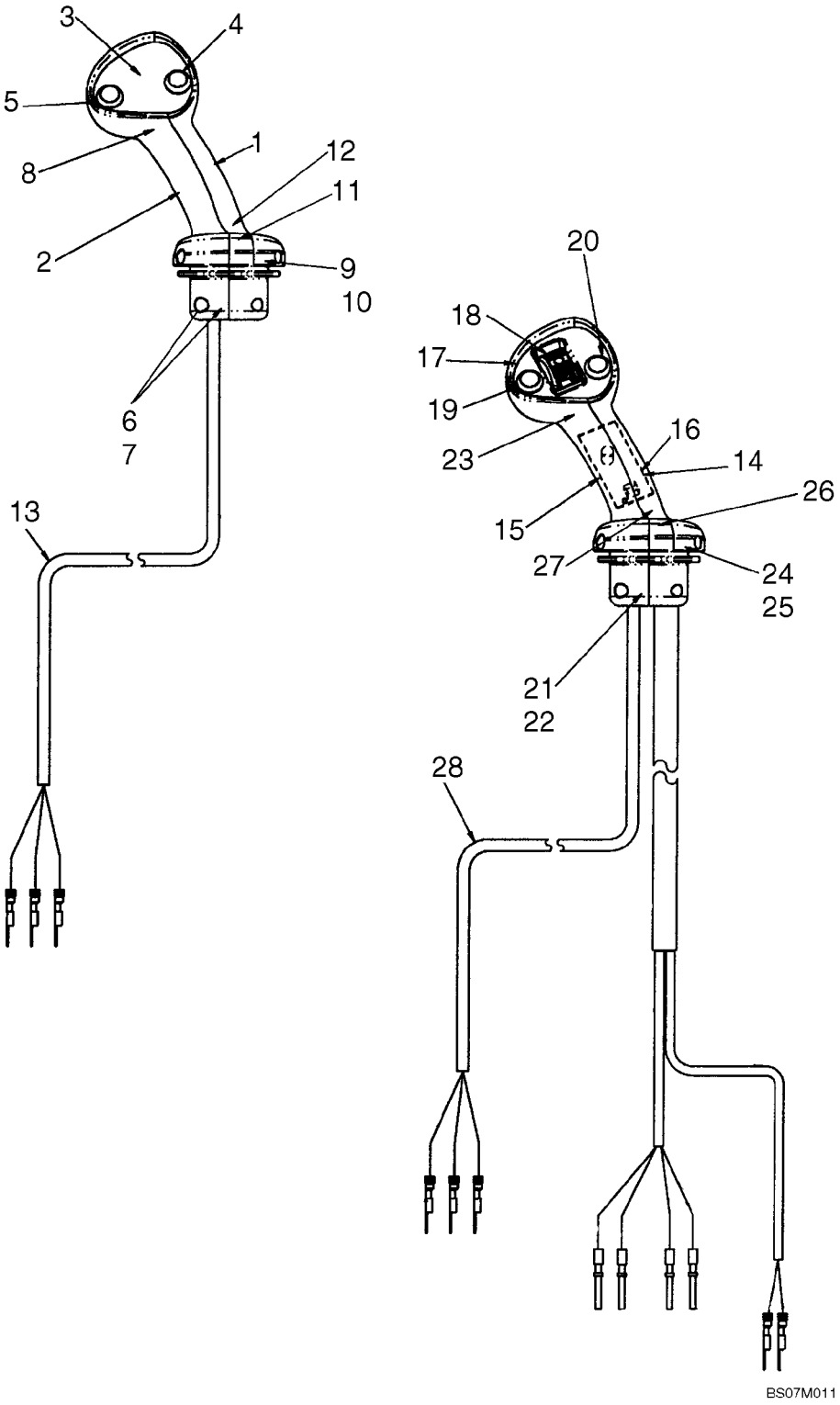

MANILLA, CONTROL DE LA CARGADORA - CONJUNTO DE LA TRANSMISION, 2WD, 4WD

REF	FN	PART NUMBER	YR/SN	QTY	DENOMINACION
20		NSS		1	NO SE REPARA SEPARADAM., Switch, Push Button, Differential Lock
21		825-1404		4	TUERCA, M4, Cl 8
22		86639294		4	TORNILLO, Hex Soc Hd, M4 x 20, 8.8
23		260-16312		2	TORNILLO AUTOROSCANTE
24		87019103		2	TORNILLO DE AJUSTE
25		87638350		2	TUERCA
26		87689189		1	CIERRA CABLES
27		87689338		1	TORNILLO
28		NSS		1	NO SE REPARA SEPARADAM., Harness, Differential Lock and De-Clutch

09-02		p1	01/08

CONTROLES - ALMEJA DE LA CARGADORA

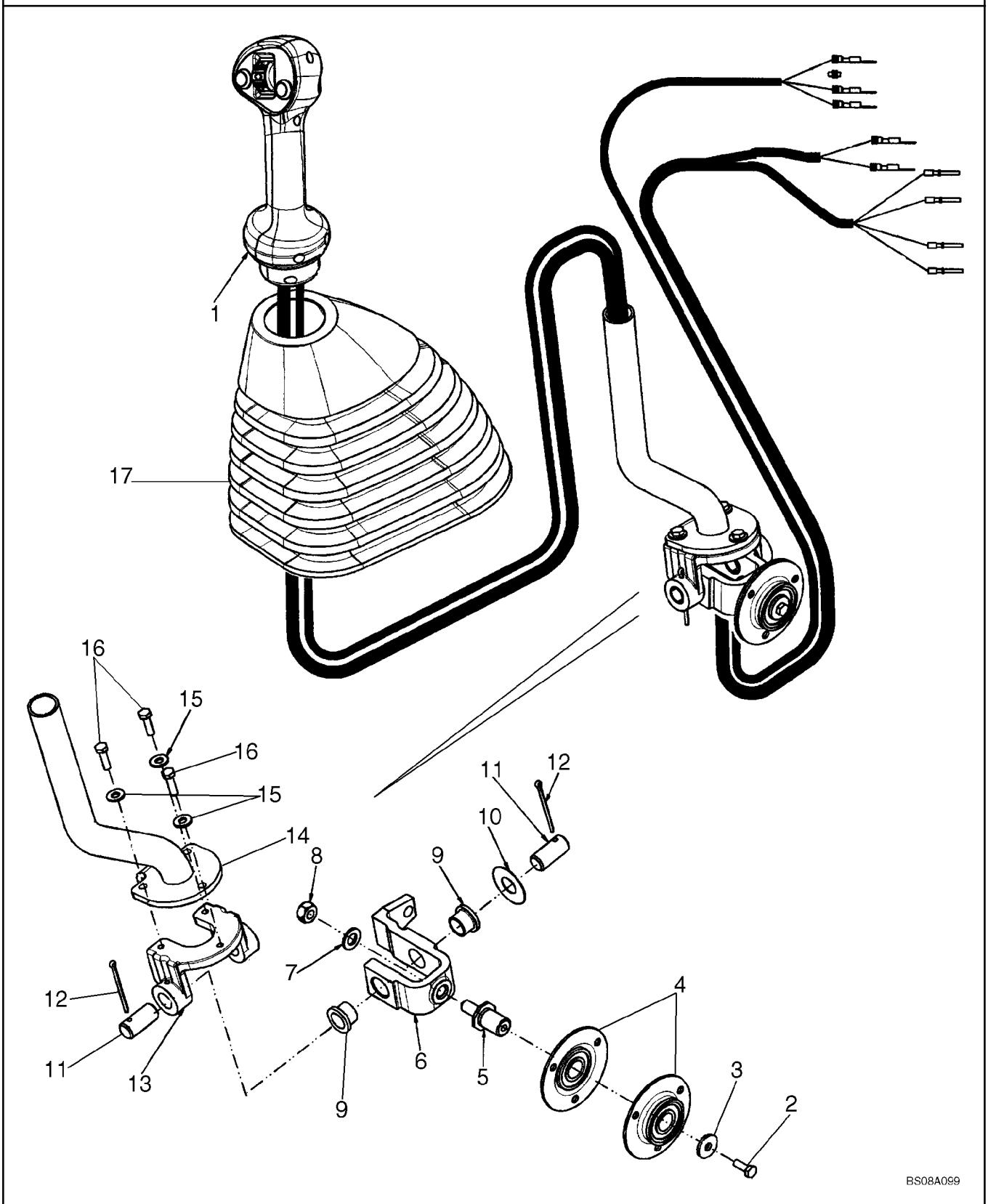

CONTROLES - ALMEJA DE LA CARGADORA

REF	FN	PART NUMBER	YR/SN	QTY	DENOMINACION
1		87638047		1	MANECILLA, Loader Control Lever, Two Button, DeClutch and Differential Lock, Prop Roller With Detent; 3 Spool; See Figure 09-01A
		256347A1		1	CONECTOR
		258616A1		1	CERRADURA
		298176A1		1	TAPčN
2		614-6016		1	TORNILLO, Hex, M6 x 16, 8.8
3		396-41028		1	ARANDELA, .281" x 7/8" x .098", HDN
4		112380A1		2	COJINETE
5		176309A1		1	EJE
6		87586156		1	PALONIER-PALOMILLA
7		895-11010		1	ARANDELA, M10 x 20 x 2
8		829-1410		1	TUERCA, M10, Cl 10
9		108088A1		2	CASQUILLO
10		495-81184		1	ARANDELA, 21/32" x 1 1/2" x .030"
11		102761A1		2	BULON/PIN, LARGO
12		432-828		2	PASADOR ABIERTO, 1/8" x 1 3/4"
13		87681261		1	PRLONGACION
14		87708015		1	EJE CON PRESILLA
15		495-11028		3	ARANDELA, 1/4", SAE
16		614-6020		3	TORNILLO, Hex, M6 x 20, 8.8
17		87632920		1	CASQUETE

09-03		p1	09/07

CONTROLES - CARGADORA AUTO-NIVELADORA

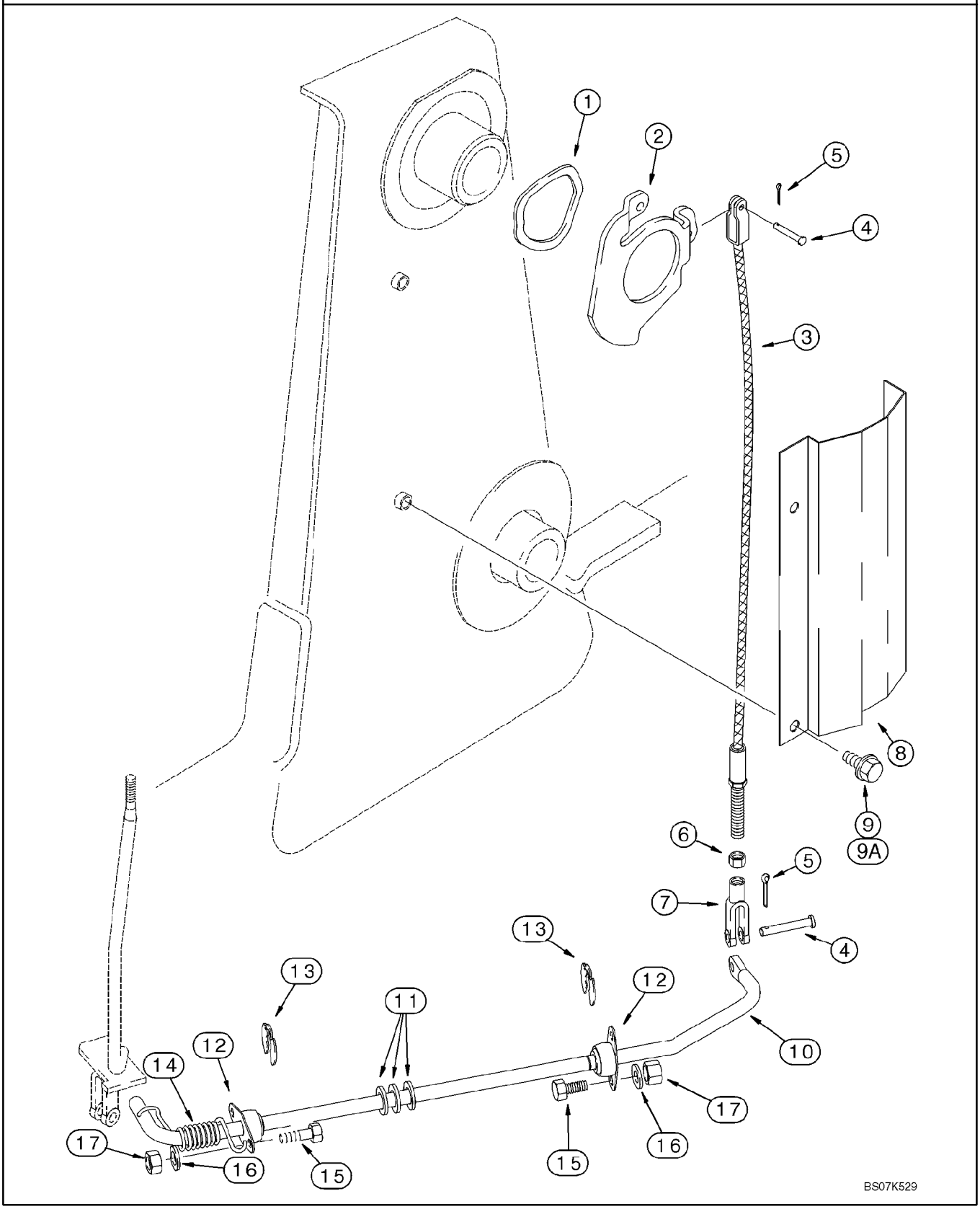

CONTROLES - CARGADORA AUTO-NIVELADORA

REF	FN	PART NUMBER	YR/SN	QTY	DENOMINACION
1		137283A1		1	ARANDELA
2		142404A1		1	LEVA
3		87428645		1	CABLE, Self-Leveling
4		D149287		2	BULON/PIN, LARGO
5		432-612		2	PASADOR ABIERTO, 3/32" x 3/4"
6		425-115		1	TUERCA, 5/16"-24, G5
7		239406A1		1	HORQUILLA PEQUENA, 5/16
8		139865A1		1	PROTECTOR
9		614-10020		2	TORNILLO, Hex, M10 x 20, 8.8, Full Thd
9A		895-11010		2	ARANDELA, M10 x 20 x 2
		87417601		1	VARILLA (CONJUNTO), Incl. Ref 10 - 12
10		NSS		1	NO SE REPARA SEPARADAM., Rod
11		A30881		3	ARANDELA
12		L15401		2	COJINETE
13		D95096		2	ANILLO
14		124721A1		1	RESORTE
15		614-8025		4	TORNILLO, Hex, M8 x 25, 8.8
16		895-11008		4	ARANDELA, M8 x 16 x 1.6
17		829-1408		4	TUERCA, M8, Cl 10

09-04		p1	02/08

MARCO - ELEVADOR DE LA CARGADORA

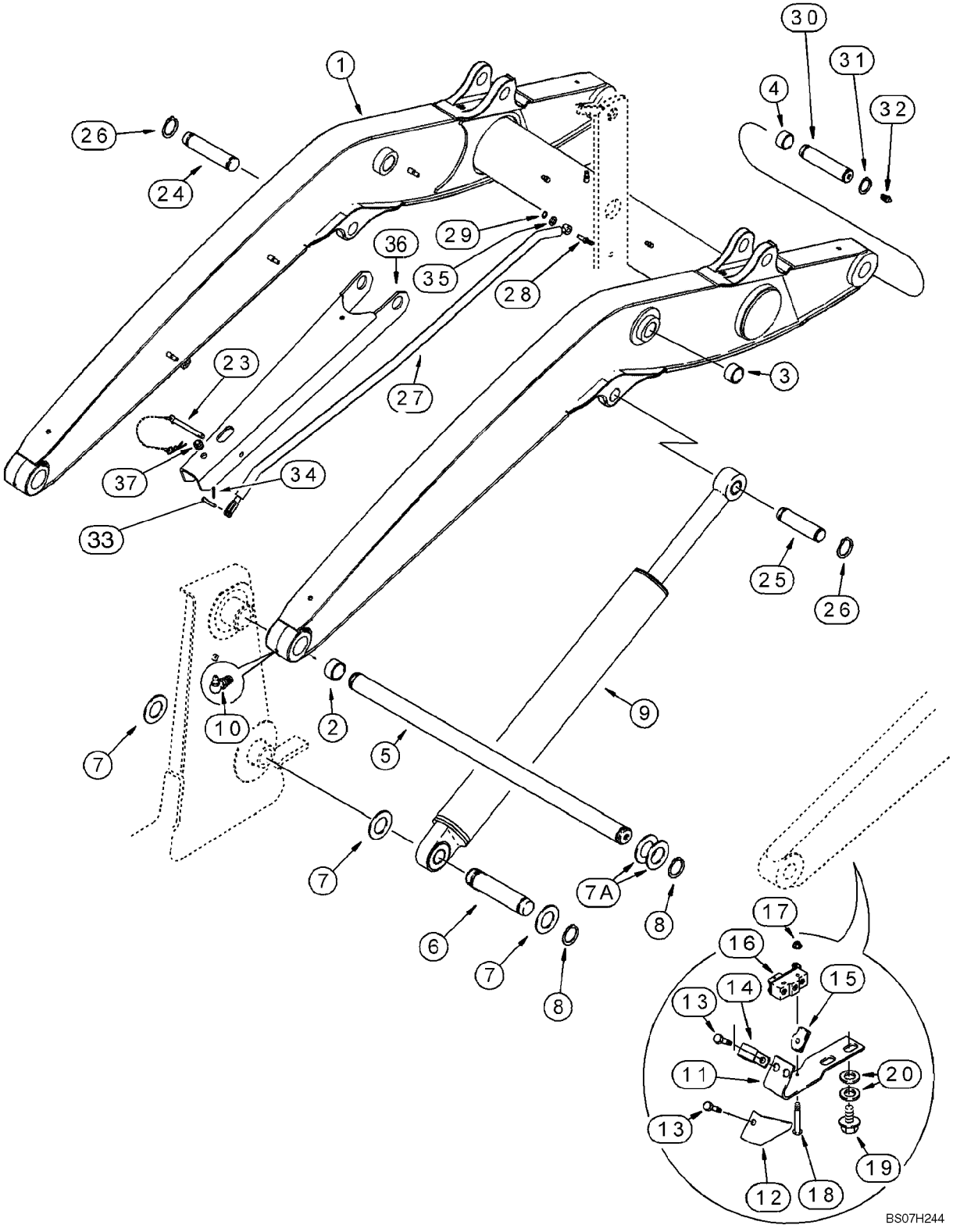

MARCO - ELEVADOR DE LA CARGADORA

REF	FN	PART NUMBER	YR/SN	QTY	DENOMINACION
		REF			MANUAL, LIFT CYLINDER, SUPPORT STRUT, RETURN-TO-DIG AND ANTIROLLBACK
1		87566994		1	BRAZO DE ELEVACIčN, Loader; Incl. Ref 2, 4
2		D127542		4	CASQUILLO
3		100696A1		4	CASQUILLO, Bucket Cylinder Link Pivot; Not Included With Frame; Purchase Separately
4		109268A1		4	CASQUILLO
5		111522A1		1	PERNO, SHAFT
6		335177A1		2	PERNO
7		495-81282		6	ARANDELA, 2 1/16" x 3" x .109"
7A		181842A1		AR	ARANDELA
8		800-44050		6	ANILLO DE RESORTE, M50, Ext
9		384240A1		2	CILINDRO (CONJUNTO), 82.6 ID x 766 mm strk; Loader Lift; See Figure 08-58
10		219-55		2	ENGRASADOR, 90Ü, 1/8" NPT x .84" lg
11		128818A1		1	APOYADERO, Return-To-Dig
12		142524A1		1	PROTECTOR
13		614-6016		2	TORNILLO, Hex, M6 x 16, 8.8
14		515-2179		1	BORNE, 5/16", Insul, 1/4" Bolt
15		833-40406		2	TUERCA, M6, U
16		D137363		1	CONTACTOR, Return-To-Dig
17		193-1003		2	TUERCA, Keps, w/LW,#6-32
18		440-10616		2	TORNILLO, Cross Pan Hd, #6-32 x 1"
19		128312A1		2	TORNILLO, M10 x 15
20		895-11010		4	ARANDELA, M10 x 20 x 2
23		104824A1		1	BULON/PIN, LARGO
24		118900A1		1	BULON/PIN, LARGO
25		87623771		1	PASADOR RANURADO
26		800-44040		4	ANILLO DE RESORTE, M40, Ext
27		87614481		1	VARILLA, Anti-Rollback
28		192815A1		1	PERNO
29		103-3350		1	ANILLO DE FRENO, #50, .392" Dia, E-Type
30		118901A1		2	BULON/PIN, LARGO
31		800-44040		4	ANILLO DE RESORTE, M40, Ext
32		219-1		2	ENGRASADOR, 1/8"-27 x .66 lg

09-04		p2	02/08

MARCO - ELEVADOR DE LA CARGADORA

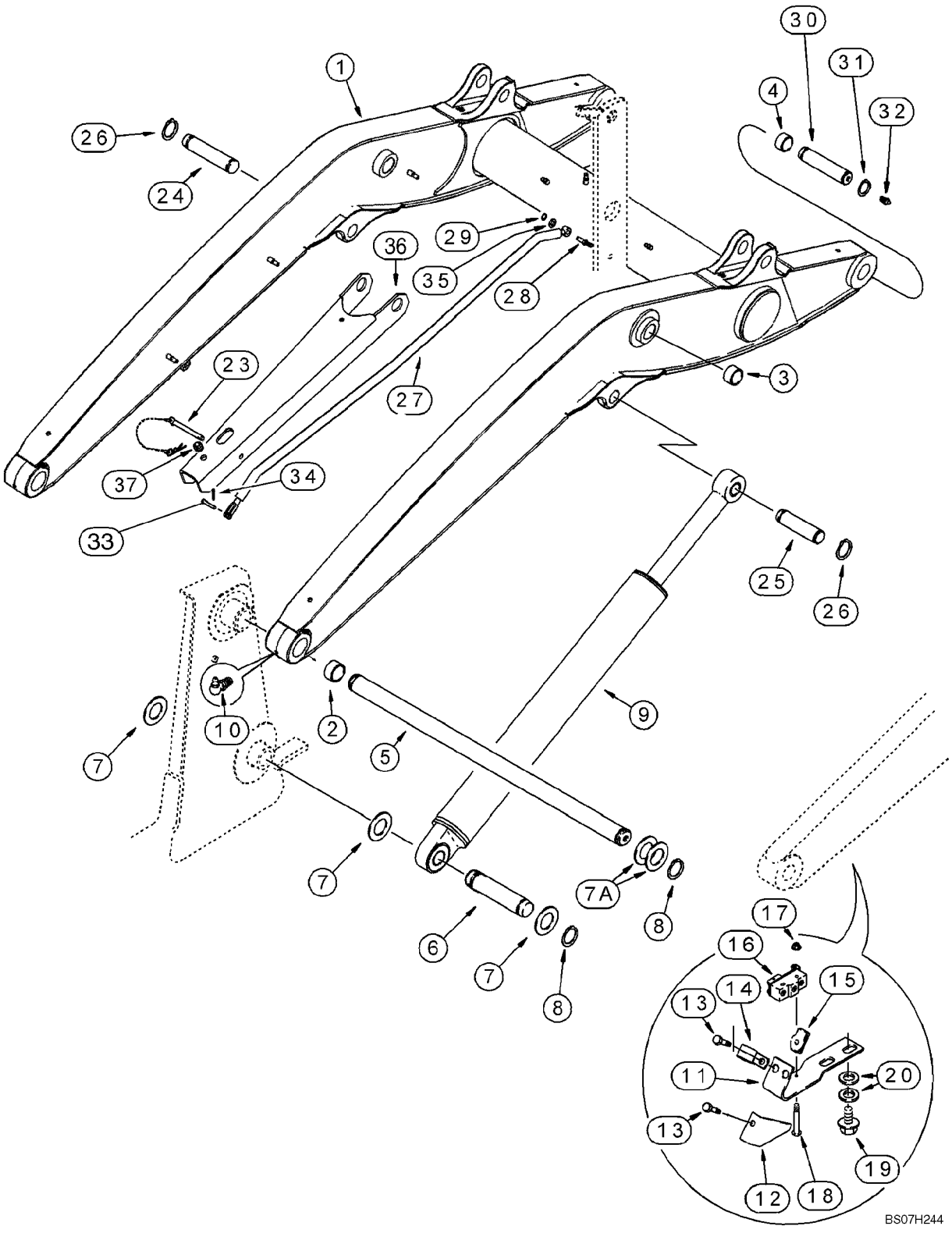

MARCO - ELEVADOR DE LA CARGADORA

REF	FN	PART NUMBER	YR/SN	QTY	DENOMINACION
33		427-6100		1	PASADOR DE HORQUILLA, 3/8" x 1"
34		432-612		1	PASADOR ABIERTO, 3/32" x 3/4"
35		495-11053		1	ARANDELA, 1/2", SAE
36		341564A2		1	RESISTIDOR DE PRESIO
37		344892A1		1	PASACABLES

09-05		p1	12/07

MARCO - VARILLAJE DE LA CARGADORA

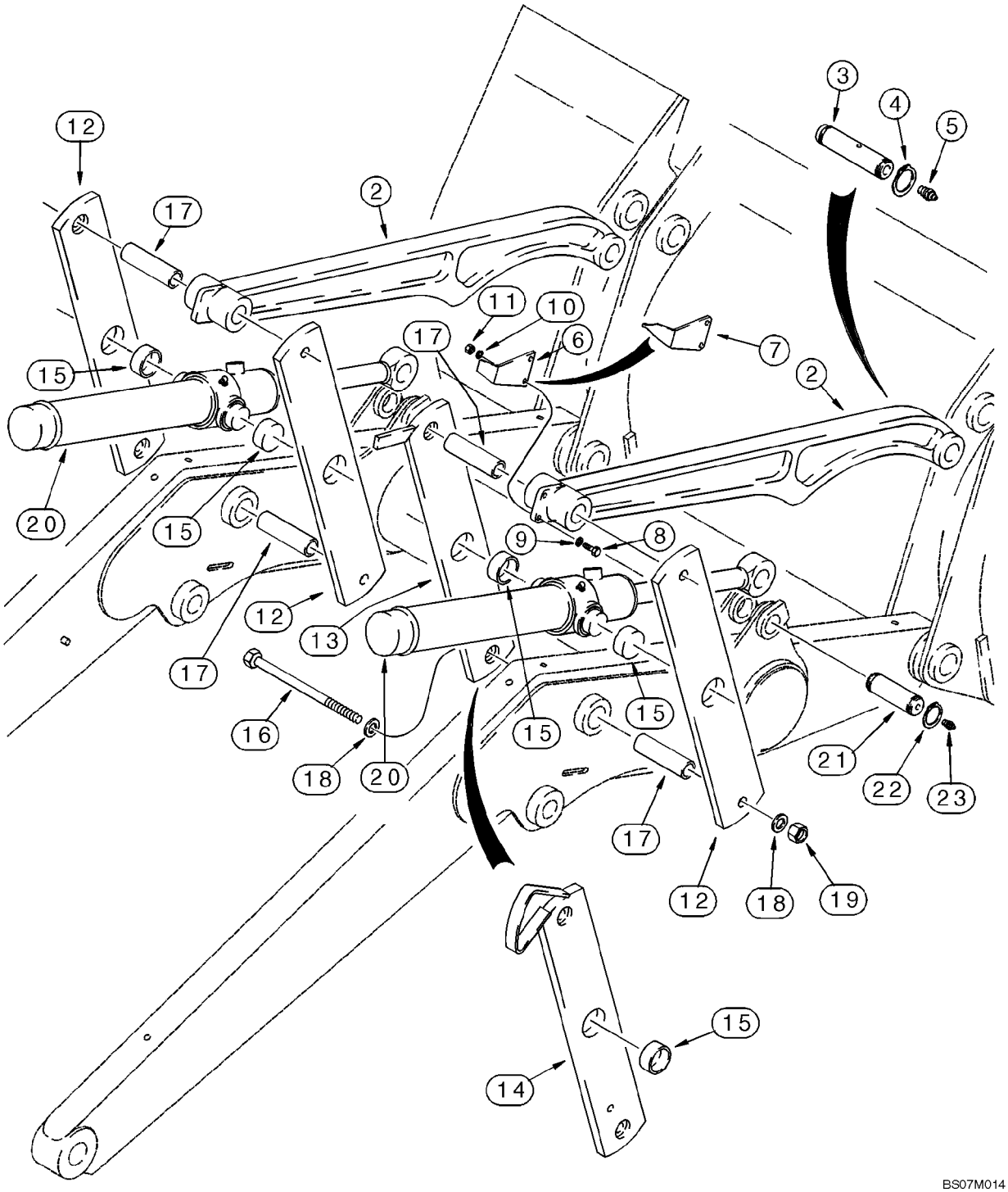

MARCO - VARILLAJE DE LA CARGADORA

REF	FN	PART NUMBER	YR/SN	QTY	DENOMINACION
2		331620A1		2	BIELA DE CONEXION, Bucket, Left-Hand and Right-Hand
3		118901A1		2	BULON/PIN, LARGO
4		800-44040		4	ANILLO DE RESORTE, M40, Ext
5		219-1		2	ENGRASADOR, 1/8"-27 x .66 lg
6		D121194		1	INDICADOR, Models Without Clam Bucket
7		250851A1		1	INDICADOR, Models With Clam Bucket
8		614-8030		2	TORNILLO, Hex, M8 x 30, 8.8
9		895-11008		2	ARANDELA, M8 x 16 x 1.6
10		892-11008		2	ARANDELA DE FRENO, M8
11		829-1408		2	TUERCA, M8, Cl 10
12		139180A1		3	ESLABON (CONJUNTO), Bucket Cylinder, Outer Right-Hand; Inner and Outer Left-Hand; Incl. Ref 15
13		139235A1		1	BIELA DE CONEXION, Bucket Cylinder, Inner Right-Hand; With Extra Hole For Antirollback Rod; Models Without Clam Bucket; Incl. Ref 15
14		139195A1		1	BIELA DE CONEXION, Bucket Cylinder, Inner Right-Hand; With Extra Hole For Antirollback Rod; Models With Clam Bucket; Incl. Ref 15
15		D151034		1	CASQUILLO
16		827-20190		4	TORNILLO, Hex, M20 x 190, 10.9
17		D132076		4	ESPACIADOR
18		896-11020		8	ARANDELA, M20 x 37.5 x 4, HT
19		829-1420		4	TUERCA, M20, Cl 10
20		87609669		2	CILINDRO HIDRAULICO, 76 ID x 522 mm strk; Loader Bucket Cylinder; See Figure 08-59
21		87724438		2	PASADOR RANURADO
22		800-44040		4	ANILLO DE RESORTE, M40, Ext
23		219-1		2	ENGRASADOR, 1/8"-27 x .66 lg

09-06		p1	10/07

CUCHARĎN, BORDE ANCHO DE LA CARGADORA (82 IN)

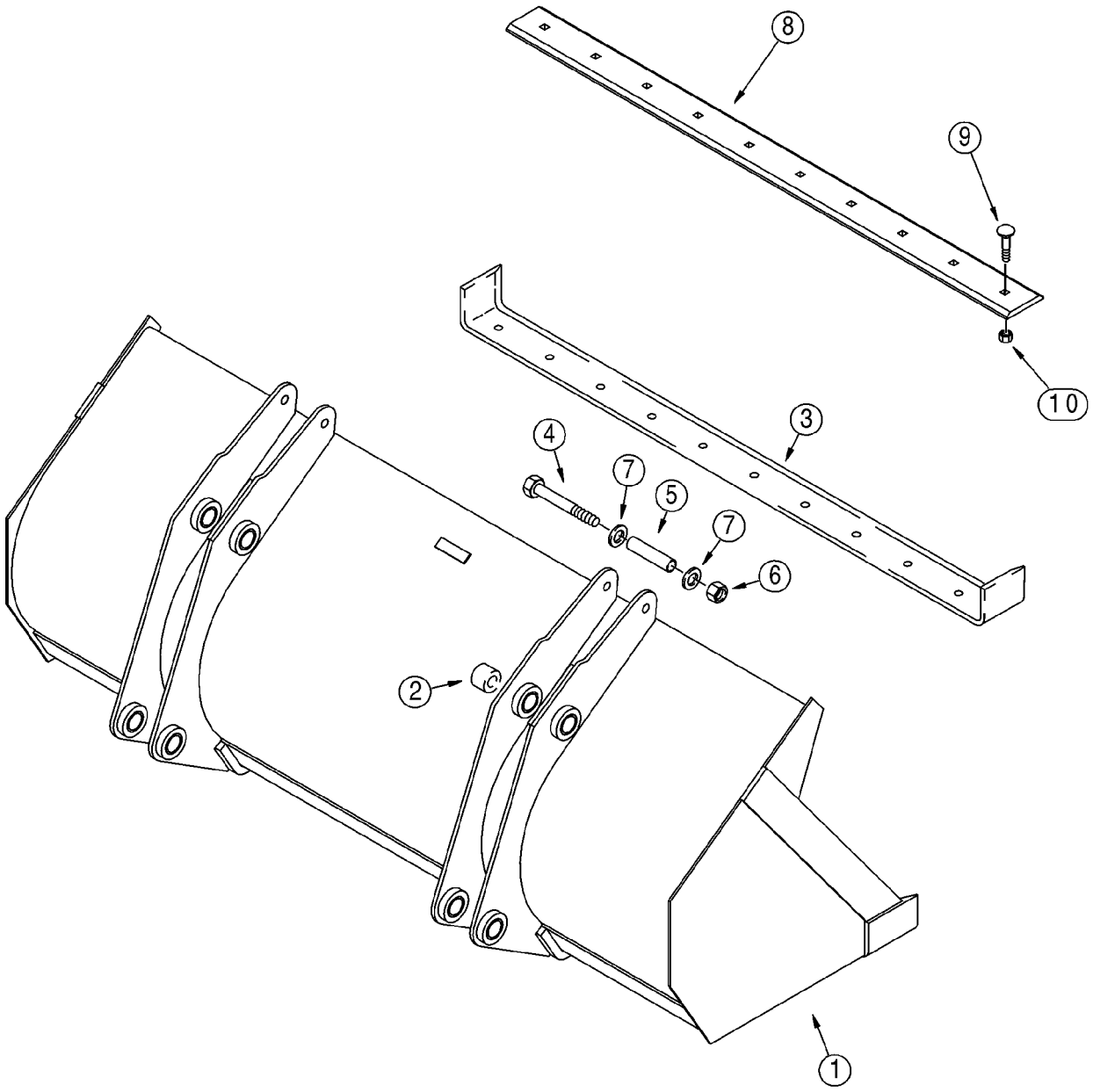

CUCHARĎN, BORDE ANCHO DE LA CARGADORA (82 IN)

REF	FN	PART NUMBER	YR/SN	QTY	DENOMINACION
		87368702		1	CUCHARA, ASSEMBLY, 2083 mm (82 in); Assembly Does Not Include Bolt-On Cutting Edge; Without Bucket Teeth; Incl. Ref 1 - 7; Order Through Parts Marketing; Replaces 385588A1 Bucket
1		NSS		1	NO SE REPARA SEPARADAM., Bucket; Incl. Ref 2, 3
2		D129264		8	CASQUILLO
3		132988A1		1	BORDE, Welded-On
4		828-20160		2	TORNILLO, Hex, M20 x 160, 10.9, M20 x 160; 10.9
5		142538A1		2	ESPACIADOR
6		832-10420		2	CONTRA TUERCA, M20 x 2.5, Cl 8
7		896-11020		4	ARANDELA, M20 x 37.5 x 4, HT
8		411661A1		1	CUCHILLA DE ATAQUE, Bolt-On; Unpainted; For Painted Edge, Order 112946A1 Edge
8		112946A1		1	CUCHILLA DE ATAQUE, Bolt-On; Tan; Not Included In 385588A1or 87368702 Bucket Assembly, Purchase Separately
9		420-21232		10	PERNO, CABEZA RONDA, 3/4"-10 x 2", G5
10		429-1012		10	TUERCA, 3/4"-10, G8
		87577141		1	CUCHARA, ASSEMBLY, 2083 mm (82 in); Assembly Includes 87365015 Bucket Assy; Ref 1 - 10; Order Through Parts Marketing
		87365015		1	CUCHARA, ASSEMBLY, 2083 mm (82 in); Assembly Includes 87368737 Bucket and 411661A1 Bolt-On Cutting Edge; Incl. Ref 1 - 10; Order Through Parts Marketing
1		NSS		1	NO SE REPARA SEPARADAM., Bucket; Incl. Ref 2, 3
2		D129264		8	CASQUILLO
3		132988A1		1	BORDE, Weld-On
4		828-20160		2	TORNILLO, Hex, M20 x 160, 10.9, M20 x 160; 10.9
5		142538A1		2	ESPACIADOR
6		832-10420		2	CONTRA TUERCA, M20 x 2.5, Cl 8
7		896-11020		4	ARANDELA, M20 x 37.5 x 4, HT
8		411661A1		1	CUCHILLA DE ATAQUE, Bolt-On; Unpainted; For Painted Edge, Order 112946A1 Edge

09-06		p2	10/07

CUCHARĎN, BORDE ANCHO DE LA CARGADORA (82 IN)

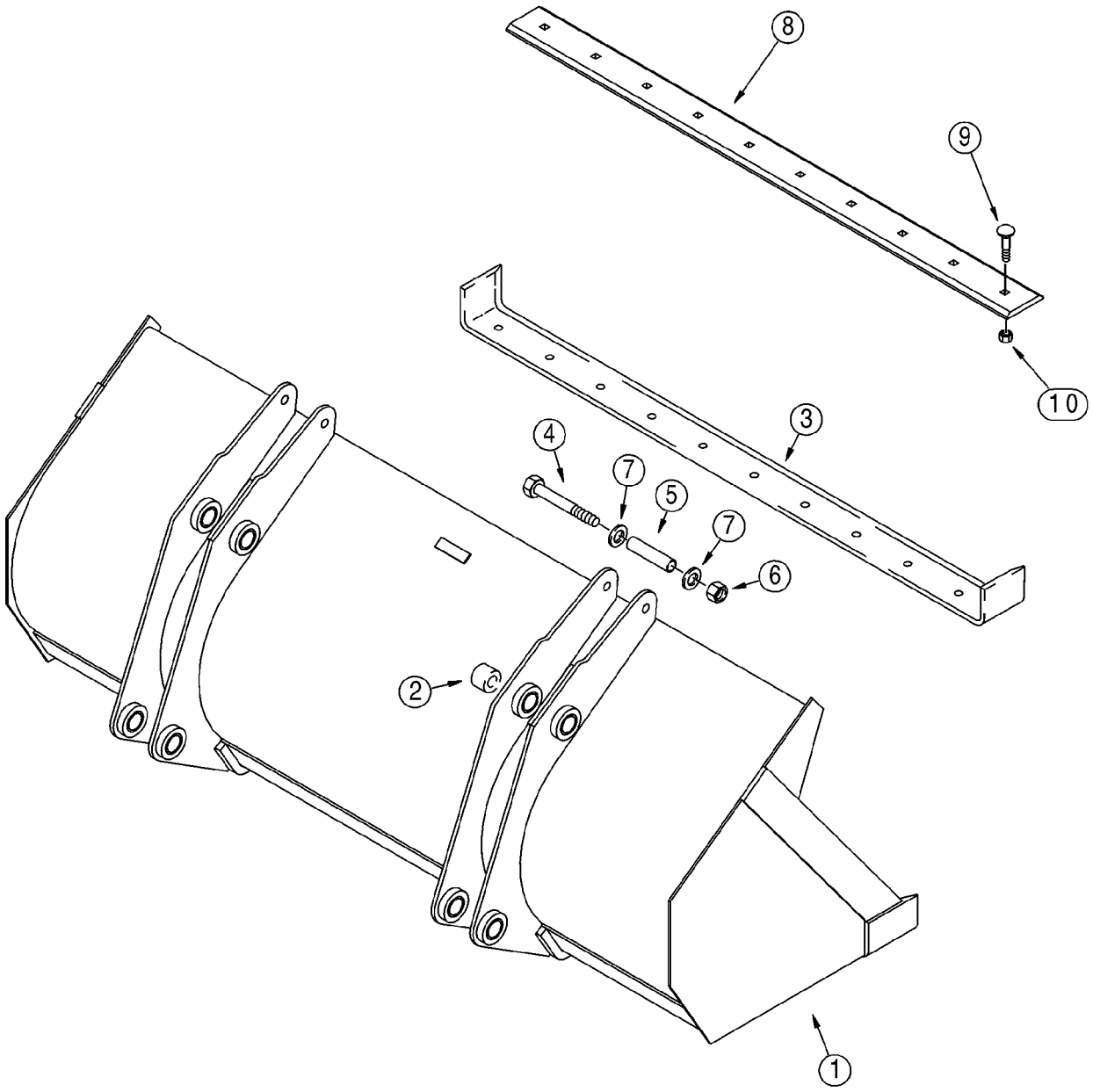

CUCHARĎN, BORDE ANCHO DE LA CARGADORA (82 IN)

REF	FN	PART NUMBER	YR/SN	QTY	DENOMINACION
9		20-21232		10	PERNO, CABEZA RONDA, 3/4"-10 x 2", G8, Non-Plated; Replaces 420-21232 Plated Bolt Used On Some Models
10		29-1012		10	TUERCA, 3/4"-10, G8, 3/4; 8; Non-Plated; Replaces 429-1012 Plated Nut Used On Some Models

09-07		p1	10/07

CUCHARĎN, BORDE ANCHO DE LA CARGADORA (93 IN)

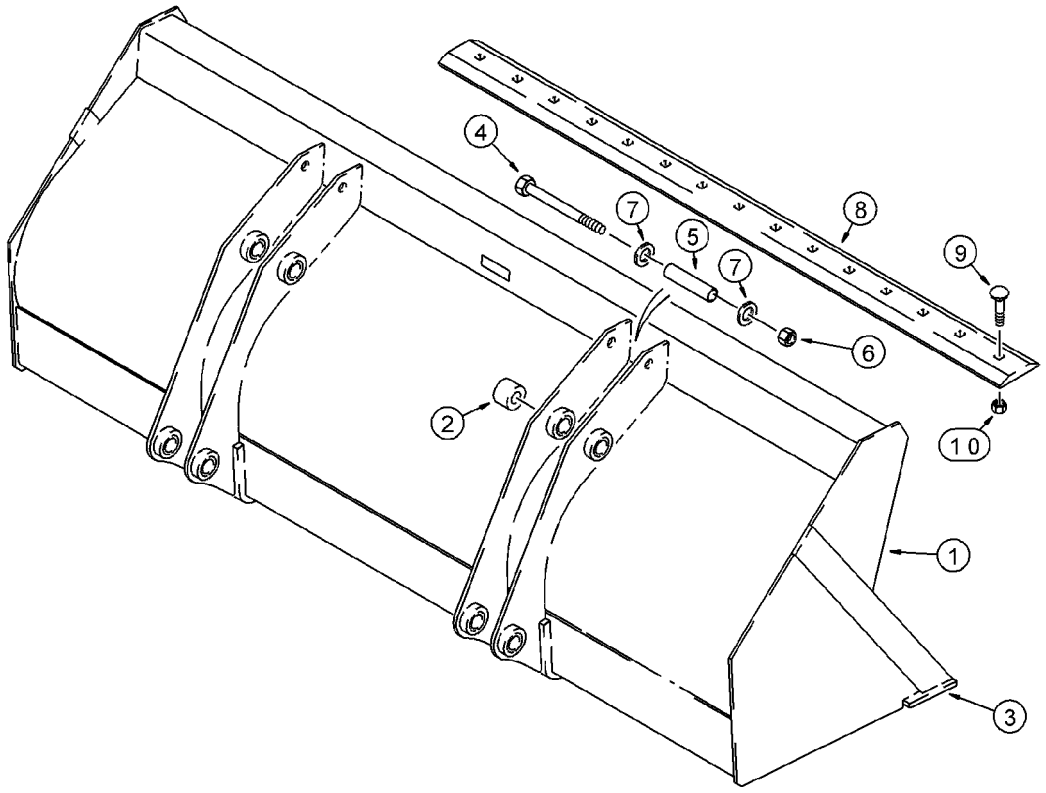

BS00C247

CUCHARĎN, BORDE ANCHO DE LA CARGADORA (93 IN)

REF	FN	PART NUMBER	YR/SN	QTY	DENOMINACION
		87368710		1	CUCHARA, 2362 mm (93 in), Without Bucket Teeth; Assembly Includes Bolt-On Cutting Edge; Incl. Ref 1 - 10; Order Through Parts Marketing
1		NSS		1	NO SE REPARA SEPARADAM., Bucket, Incl. Ref 2, 3
2		D129264		8	CASQUILLO
3		134844A1		1	PLACA, GRANDE, Weld-On
4		828-20160		2	TORNILLO, Hex, M20 x 160, 10.9
5		142538A1		2	ESPACIADOR
6		832-10420		2	CONTRA TUERCA, M20 x 2.5, Cl 8
7		896-11020		4	ARANDELA, M20 x 37.5 x 4, HT
8		87375240		1	BORDE, Bolt-On Blade, Unpainted;Production Only; For Service Order 185506A1 Blade
8		185506A1		1	BORDE, Bolt-On Blade, Tan
9		20-21232		10	PERNO, CABEZA RONDA, 3/4"-10 x 2", G8
10		429-1012		10	TUERCA, 3/4"-10, G8

09-08		p1	10/07

CUCHARĎN, ALMEJA DE LA CARGADORA

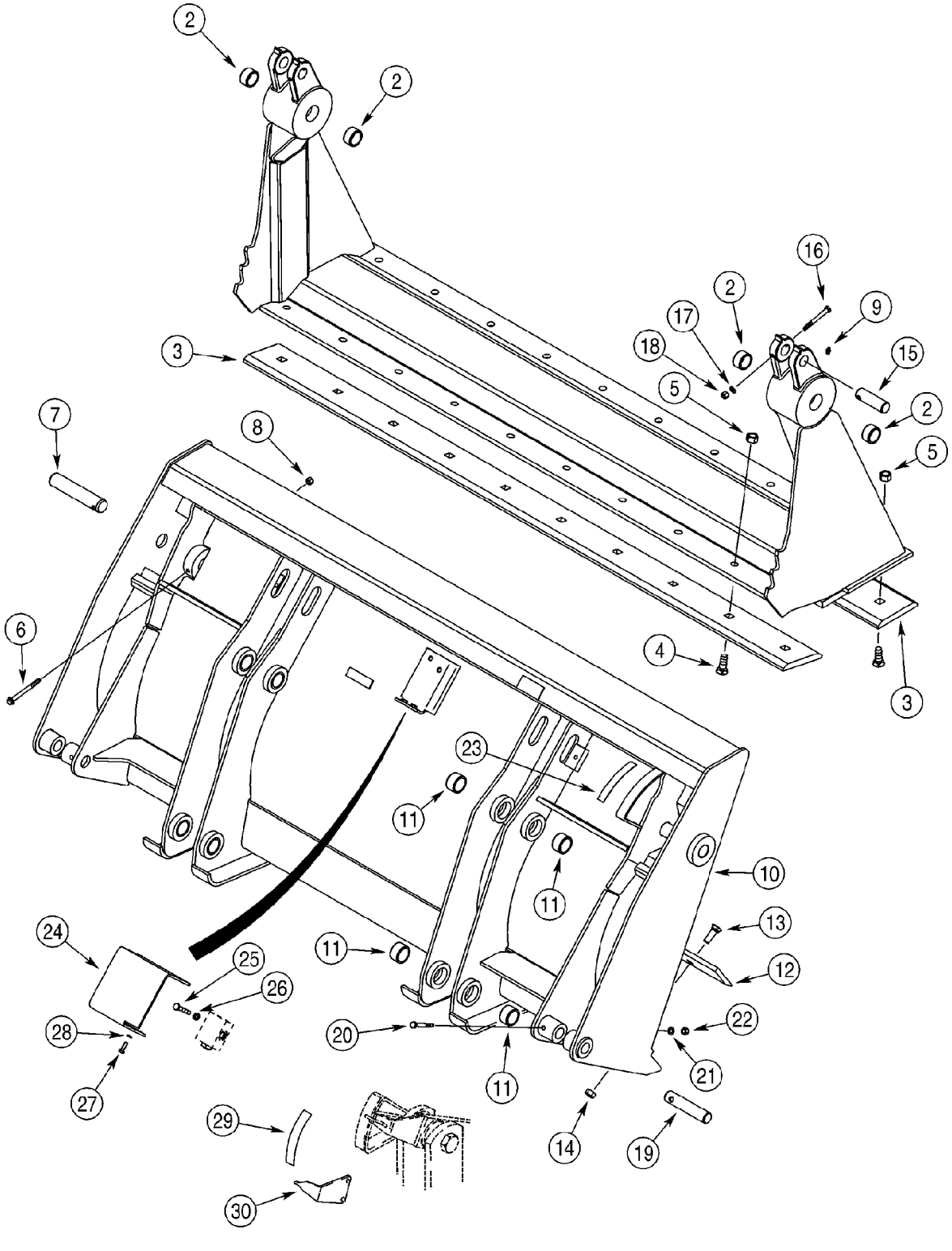

CUCHARĎN, ALMEJA DE LA CARGADORA

REF	FN	PART NUMBER	YR/SN	QTY	DENOMINACION
		87455509		1	CUCHARA, ASSEMBLY; 2083 mm (82 in); With Hydraulics; Includes 376288A2 Bucket Assembly, Ref 1 - 28; Also Includes Hydraulics on Figure 08-07, Ref 1 - 29; Order Through Parts Marketing
		{}		1	376288A2 BUCKET ASSEMBLY; 2083 mm (82 in); Without Hydraulics; Includes 411668A1 Bucket and (2) Ref 7 Pins; Order Through Parts Marketing
		411668A1		1	CUCHARA, BUCKET ASSEMBLY; 2083 mm (82 in); Without Hydraulics; Incl. Ref 1 - 6, 8 - 14
		175156A1		1	COQUILLA, CLAM, Incl. Ref 1, 2
1		NSS		1	NO SE REPARA SEPARADAM., Clam Assy
2		D31140		4	CASQUILLO
3		142300A1		2	MADIA HOJA
4		20-21232		20	PERNO, CABEZA RONDA, 3/4"-10 x 2", G8
5		29-1012		20	TUERCA, 3/4"-10, G8
6		844-10110		2	TORNILLO, Hex Flg, M10 x 110, 8.8
7		D51391		2	BULON/PIN, LARGO
8		832-10410		2	CONTRA TUERCA, M10 x 1.5, Cl 8
9		219-1		2	ENGRASADOR, 1/8"-27 x .66 lg
		376286A2		1	CUCHARA, BLADE, Incl. Ref 10, 11
10		NSS		1	NO SE REPARA SEPARADAM., Blade Assy, Dozer
11		D129264		8	CASQUILLO
12		121920A1		1	BORDE, Cutting
13		20-21032		10	PERNO, CABEZA RONDA, 5/8"-11 x 2", G8, Full Thd
14		29-1010		10	TUERCA, 5/8"-11, G8
15		D51392		2	PERNO
16		814-10090		2	TORNILLO, Hex, M10 x 90, 8.8
17		895-11010		2	ARANDELA, M10 x 20 x 2
18		832-10410		2	CONTRA TUERCA, M10 x 1.5, Cl 8
19		D51393		2	BULON/PIN, LARGO
20		814-10080		2	TORNILLO, Hex, M10 x 80, 8.8
21		895-11010		2	ARANDELA, M10 x 20 x 2
22		832-10410		2	CONTRA TUERCA, M10 x 1.5, Cl 8
23		321-1708		1	CALCOMANIA
24		388848A1		1	DEFENSA, Pilot Operated Check Valve

09-08		p2	10/07

CUCHARĎN, ALMEJA DE LA CARGADORA

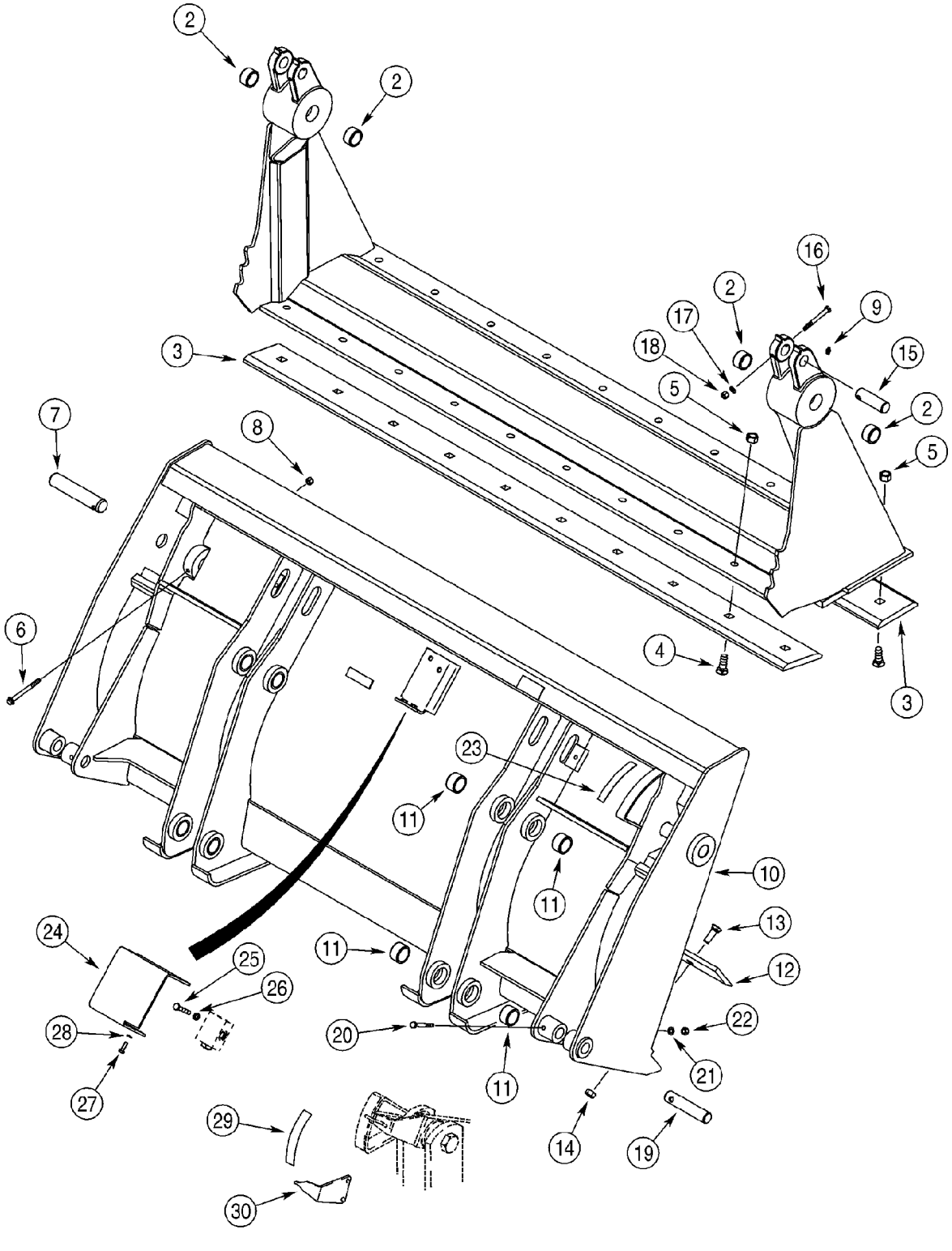

CUCHARĎN, ALMEJA DE LA CARGADORA

REF	FN	PART NUMBER	YR/SN	QTY	DENOMINACION
25		814-10060		2	TORNILLO, Hex, M10 x 60, 8.8
26		892-11010		2	ARANDELA DE FRENO, M10
27		614-8025		2	TORNILLO, Hex, M8 x 25, 8.8
28		892-11008		2	ARANDELA DE FRENO, M8
29		321-1707		1	CALCOMANIA
30		250851A1		1	INDICADOR

09-09		p1	01/08

PROTECTOR - VáLVULA, CARGADORA

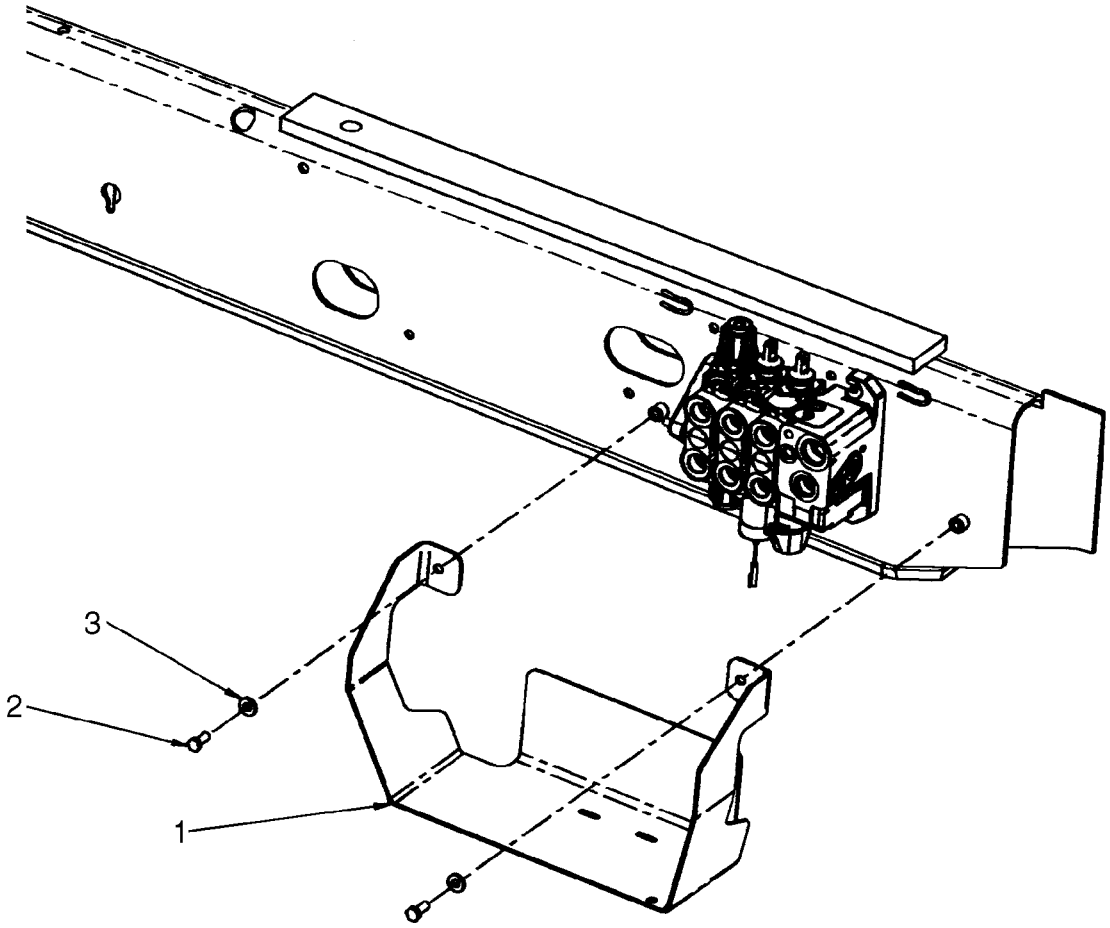

BS07M540

PROTECTOR - VáLVULA, CARGADORA

REF	FN	PART NUMBER	YR/SN	QTY	DENOMINACION
1		87630445		1	DEFENSA, Loader Valve
2		614-10025		2	TORNILLO, Hex, M10 x 25, 8.8, Full Thd
3		896-15010		2	ARANDELA, M10 x 24.5 x 3, HT

09-10		p1	01/08

ACOPLADOR RÓPIDO, HERRAMIENTA

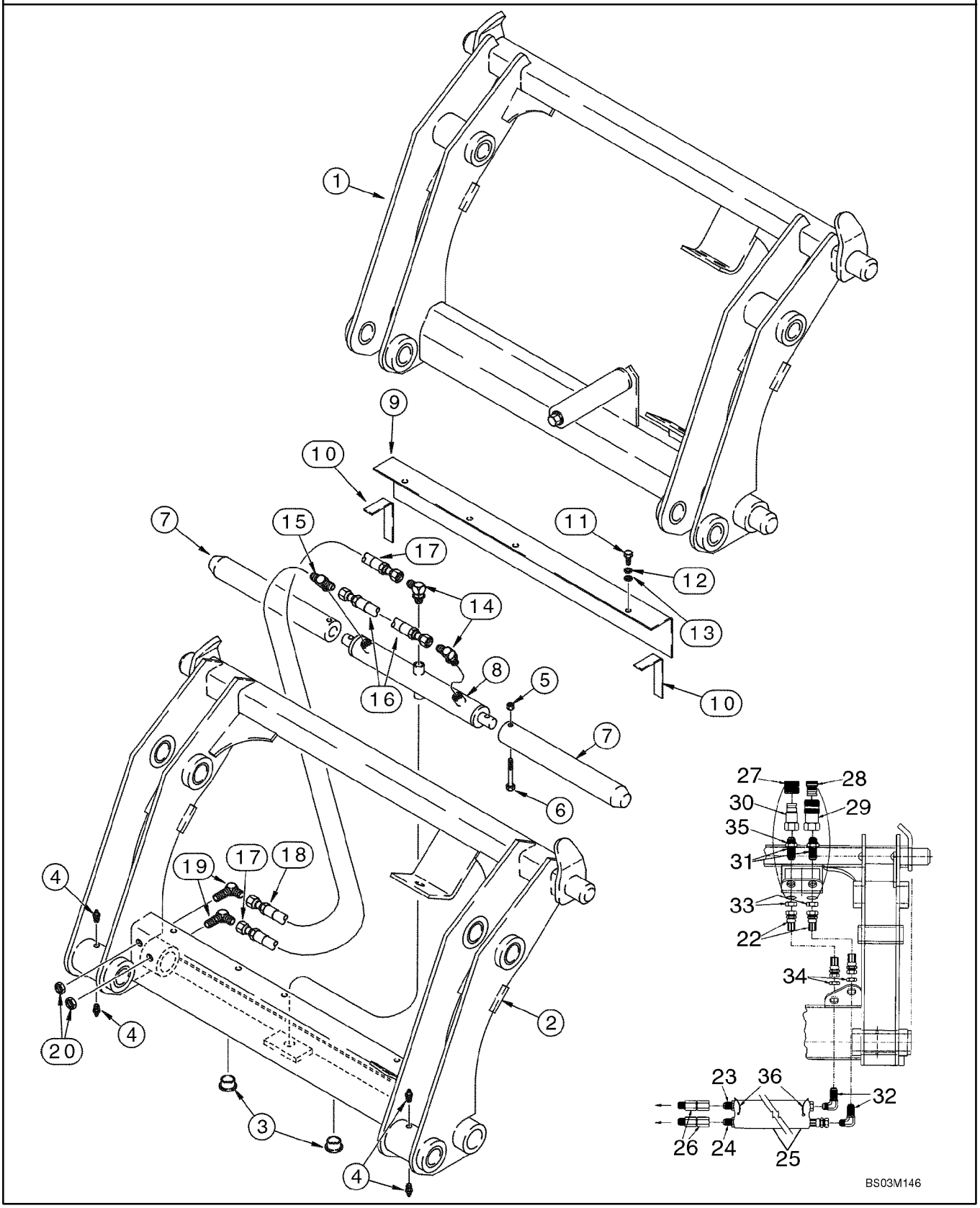

ACOPLADOR RóPIDO, HERRAMIENTA

REF	FN	PART NUMBER	YR/SN	QTY	DENOMINACION
		87602620		1	ELEMENTO DE ACOPLAM., Loader; Incl. Ref 2 - 35; With Auxiliary Hydraulics; For Complete Assembly, Order From Machinery Price List; Category III; For Hydraulic Tool Quick Coupler Hydraulics, See Figure 08-26, 08-27
2		NSS		1	NO SE REPARA SEPARADAM., Frame
3		305497A1		2	TAPčN, 1-1/4 ID x 1/2 in OD; Plastic
4		219-87		4	ENGRASADOR, 1/4"-28 x .56" lg, Self-Tap
5		231-4246		2	CONTRA TUERCA, 3/8"-16, GB
6		326-640		2	TORNILLO, Hex, 3/8"-16 x 2 1/2", G8
7		305496A1		2	PERNO, 1-15/16 OD x 15 in lg
8		305499A1		1	CILINDRO (CONJUNTO), Double Acting; Component Parts Not Serviced Separately
9		305495A1		1	TAPA
10		NSS		2	NO SE REPARA SEPARADAM., Seal; Foam
11		413-516		3	TORNILLO, Hex, 5/16"-18 x 1", G5, Full Thd
12		492-11031		3	ARANDELA DE FRENO, 5/16"
13		495-11034		3	ARANDELA, 5/16", SAE
14		218-5105		2	CODO, 90Ü, 9/16"-18, 37Ü x 9/16"-18, O-Ring, Includes 237-6006 O-Ring
		237-6006		1	JUNTA HERMETICA, 6-1, 90 Duro, .468" ID x .078" Thk
15		218-5182		1	RACOR-T, 9/16"-18, 37Ü x 9/16"-18, O-Ring Br, Includes 237-6006 O-Ring
		237-6006		1	JUNTA HERMETICA, 6-1, 90 Duro, .468" ID x .078" Thk
16		305492A1		1	MANGUERA (CONJUNTO), 260 mm (10-1/4 in)
17		305494A1		1	MANGUERA (CONJUNTO), 387 mm (15-1/4 in)
18		305493A1		1	MANGUERA (CONJUNTO), 235 mm (9-1/4 in)
19		218-693		2	CODO, 90Ü Blkhd, 9/16"-18, 37Ü x 9/16"-18, 37Ü
20		218-1254		2	CONTRA TUERCA, Blkhd, 9/16"-18
21		305508A1		1	JEUGO, Decal; Includes Four Decals; Not Illustrated
22		307385A1		2	MANGUERA (CONJUNTO), 387 mm (15-1/4 in)
23		307386A1		1	MANGUERA (CONJUNTO), 629 mm (24-3/4 in)
24		307387A1		1	MANGUERA (CONJUNTO), 718 mm (28-1/4 in)

09-10		p2	01/08

ACOPLADOR RÓPIDO, HERRAMIENTA

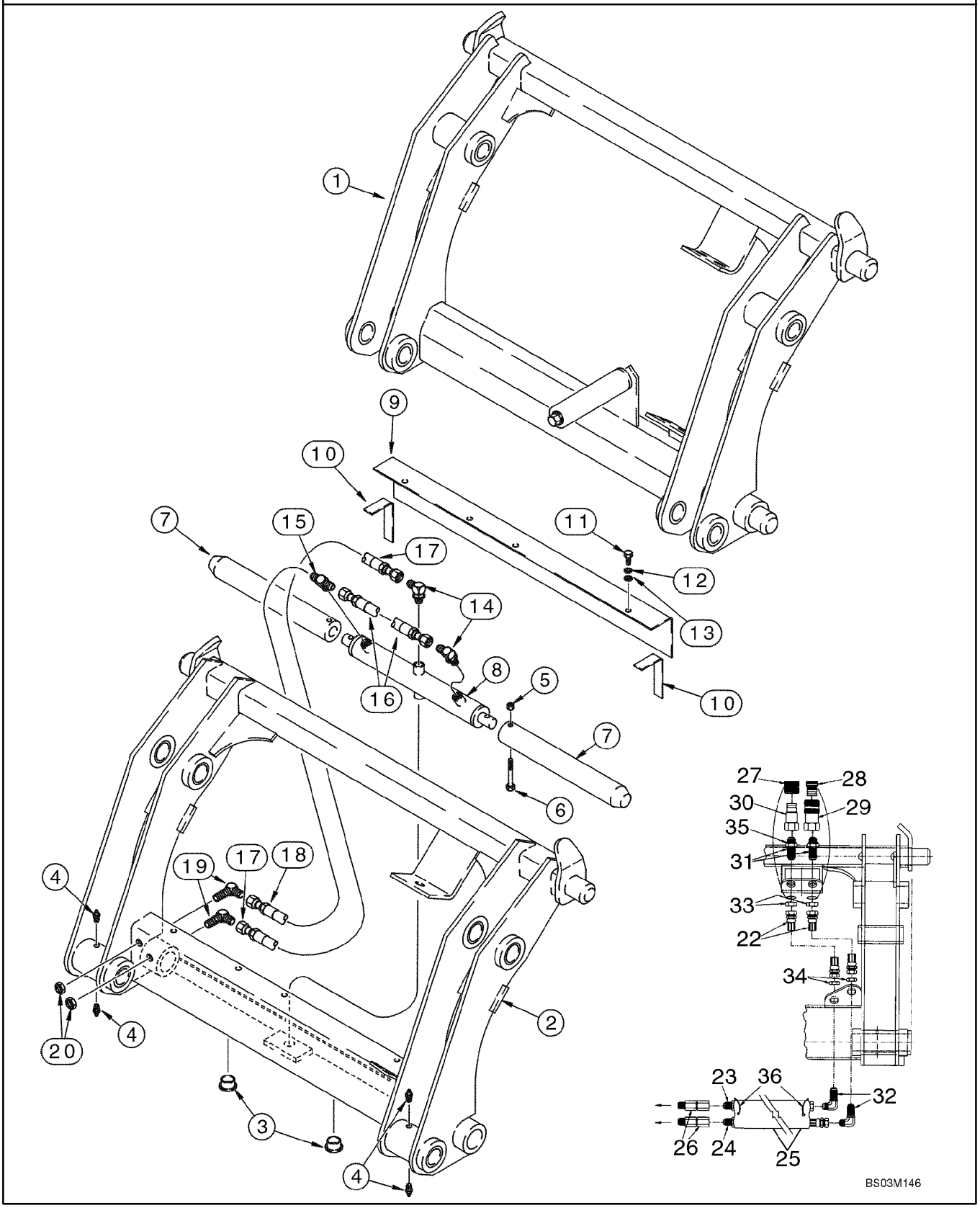

ACOPLADOR RóPIDO, HERRAMIENTA

REF	FN	PART NUMBER	YR/SN	QTY	DENOMINACION
25		307388A1		1	MANGA, SLEEVE, 660 mm (26 in)
26		307389A1		2	PIVOTE, Swivel
27		137344A1		1	TAPčN, Male Coupling
28		137343A1		1	TAPčN, Female Coupling
29		123537A1		1	CONEXION, Quick Disconnect; Female
30		245423A1		1	CONEXION
31		126155A1		2	CONEXION, 1-1/16 blkhd fl x Or
32		218-695		2	CODO, 90Ü Blkhd, 7/8"-14, 37Ü x 7/8"-14, 37Ü
33		218-1256		2	CONTRA TUERCA, Blkhd, 1 1/16"-12
34		218-1279		2	CONTRA TUERCA, Blkhd, 7/8"-14
35		237-6012		2	JUNTA HERMETICA, 12-1, 90 Duro, .924 ID x .118" Thk
36		L18337		2	CIERRA CABLES, 9.95"-12.1" lg

09-11		p1	02/08

CUBIERTAS - TORRE DE CONTROL DE LA RETROEXCAVADORA, SIN DE CONTROL PILOTO

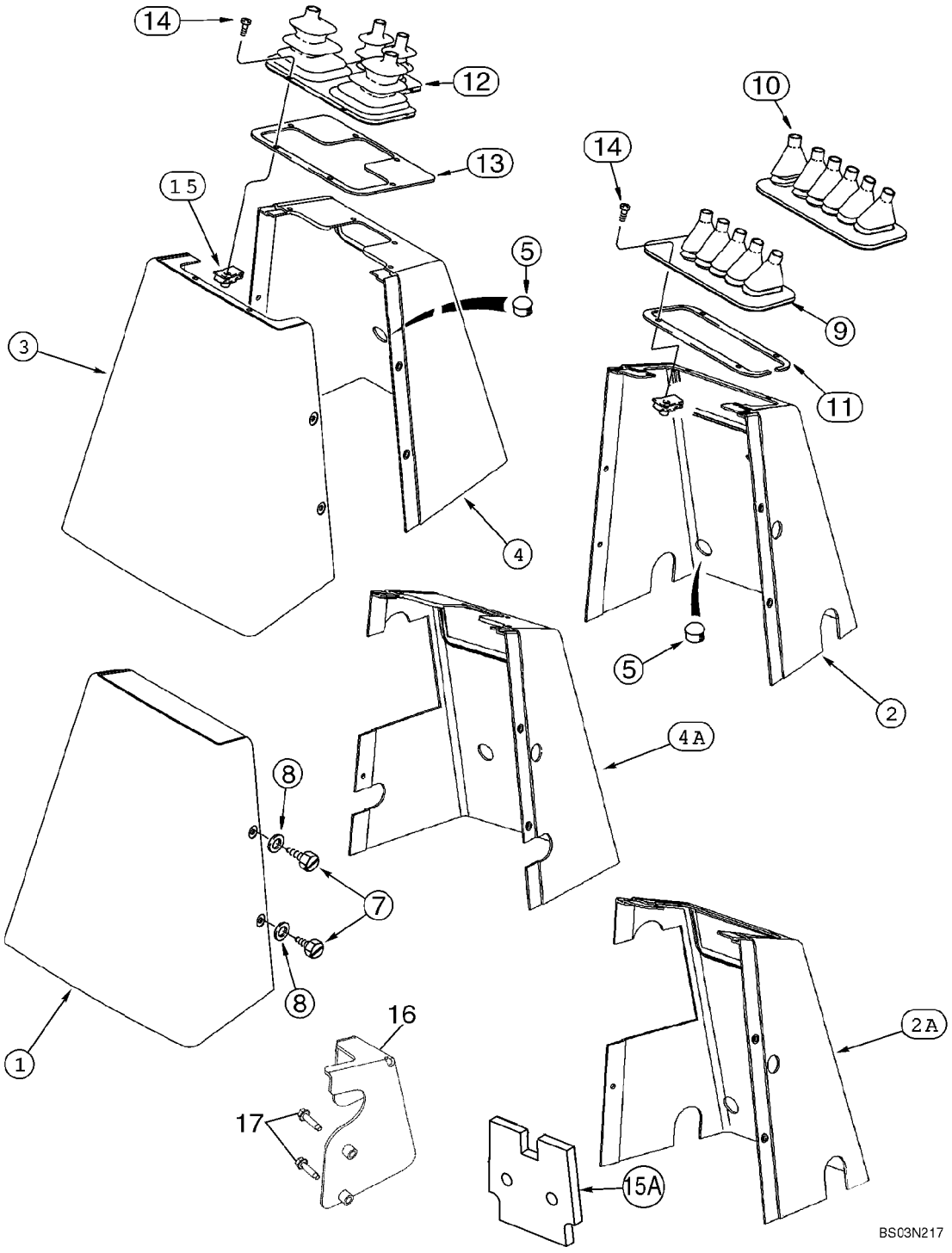

CUBIERTAS - TORRE DE CONTROL DE LA RETROEXCAVADORA, SIN DE CONTROL PILOTO

REF	FN	PART NUMBER	YR/SN	QTY	DENOMINACION
1		390759A1		1	PROTECTOR, Rear; All Models With Foot Swing
2		390760A1		1	PROTECTOR, Front; Foot Swing; Without Auxiliary Hydraulics
2A		87411083		1	PROTECTOR, Front; Foot Swing; With Auxiliary Hydraulics
3		390758A1		1	PROTECTOR, Rear; All Models With Hand Swing
4		390690A1		1	PROTECTOR, Front; Hand Swing; Without Auxiliary Hydraulics
4A		87411084		1	PROTECTOR, Front; Hand Swing; With Auxiliary Hydraulics
5		353-411		1-2	TAPčN, Dome, 1.000" hole, Nylon
7		87310156		5	TORNILLO, M6.3 x 16 st, Stainless Steel
8		87310139		5	ARANDELA, 9/32 ID x 5/8 OD x 1/16 thk, Stainless Steel
9		D149866		1	PROTECTOR, 5 Control Levers
10		D149867		1	PROTECTOR, 6 Control Levers
11		136822A1		1	JUNQUILLO
12		D149868		1	FUELLE, 4 Control Levers
13		136824A1		1	PLACA, GRANDE, Used With Ref 12 Only
14		87310124		4	TORNILLO, No. 10 x 1/2, Stainless Steel
14		87310126		6	TORNILLO, No. 10 x 3/4, Stainless Steel; Used With Ref 13 Retainer; Replaces 140-107 Non-Stainless Steel Screw Used On Some Models
15		131-861		4-6	TUERCA, Tinn, U, #10-24, Used With Ref 11 Retainer; (6) Used With Ref 13 Retainer
15A		397870A3		2	ANILLO DE CIERRE, Front and Rear Console Covers; Noise Barrier; Adhesive Back
16		87425122		1	PIEZA DE SOPORTE, Models With Backhoe Auxiliary Hydraulics
		87430677		1	CALCOMANIA, Auxiliary Hydraulics
17		281-14716		2	TORNILLO AUTOROSCANTE, Hex Wash Hd, 1/4" x 1"

09-12		p1	09/07

APOYO DE LA TORRE DE CONTROL DE LA RETROEXCAVADORA Y JUNTAS, SIN DE CONTROL PILOTO

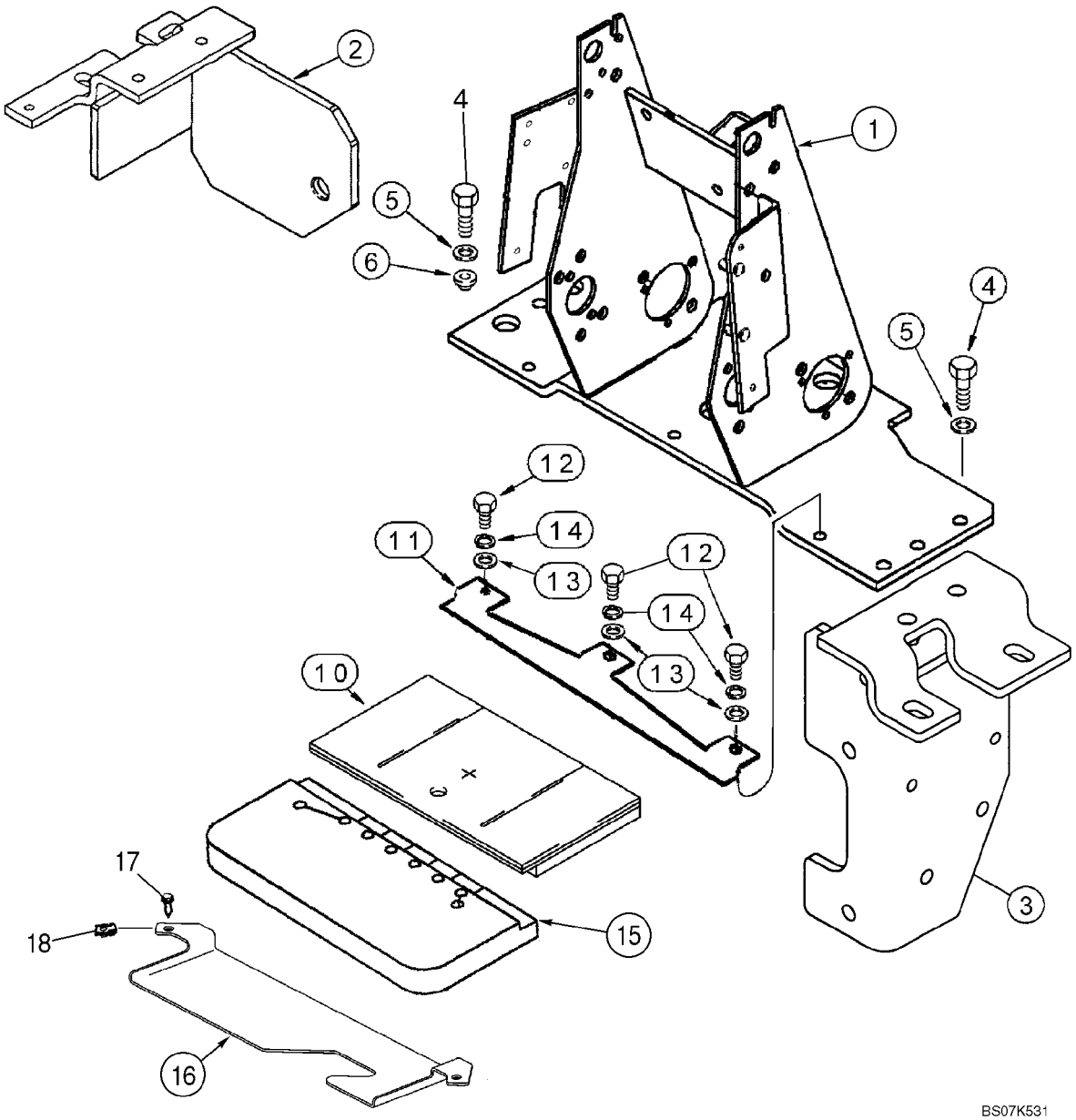

APOYO DE LA TORRE DE CONTROL DE LA RETROEXCAVADORA Y JUNTAS, SIN DE CONTROL PILOTO

REF	FN	PART NUMBER	YR/SN	QTY	DENOMINACION
1		87418516		1	PIEZA DE APOYO
2		87448059		1	PIEZA DE APOYO, LH
3		87452627		1	PIEZA DE APOYO, RH
4		614-10035		8	TORNILLO, Hex, M10 x 35, 8.8, Full Thd
5		496-41041		8	ARANDELA, 13/32" x 1 1/8" x .134"
6		179956A1		2	AMORTIGUADOR
10		400069A1		1	ESPUMA
11		87418518		1	PIEZA DE APOYO
12		614-8020		3	TORNILLO, Hex, M8 x 20, 8.8
13		895-11008		3	ARANDELA, M8 x 16 x 1.6
14		892-11008		3	ARANDELA DE FRENO, M8
15		87439210		1	ESPUMA
16		397911A1		1	PIEZA DE SOPORTE
17		87310096		2	TORNILLO, M6 x 25, Includes Washer, Stainless Steel
18		833-40406		2	TUERCA, M6, U

09-13		p1	12/07

TORRE DE CONTROL DE LA RETROEXCAVADORA SOPORTE, CON DE CONTROL PILOTO

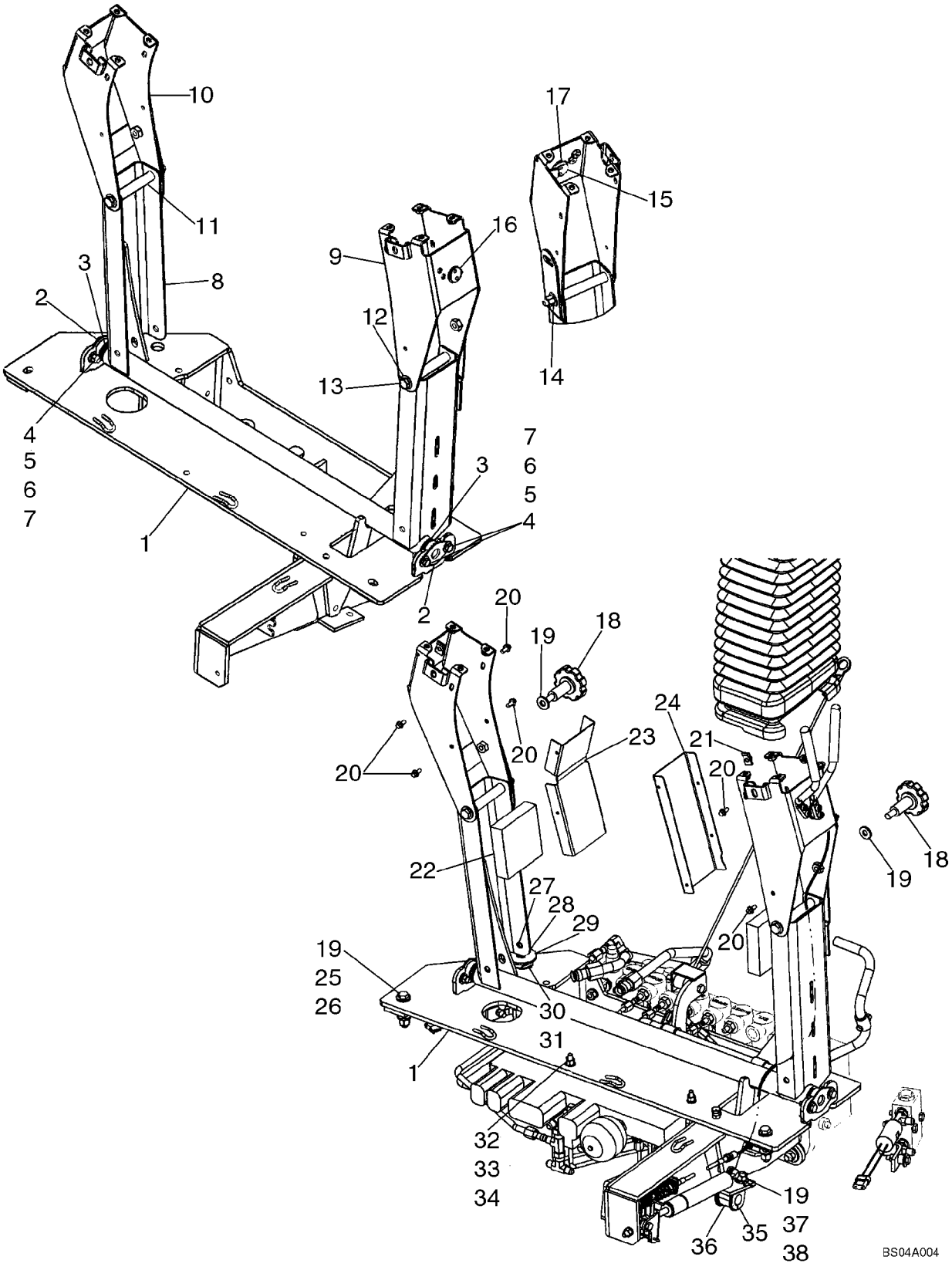

TORRE DE CONTROL DE LA RETROEXCAVADORA SOPORTE, CON DE CONTROL PILOTO

REF	FN	PART NUMBER	YR/SN	QTY	DENOMINACION
		87440711		1	TORRECILLA, Tower Assembly; Pilot Controls; Includes Ref 1 - 17
1		87440710		1	PIEZA DE APOYO, Tower
2		D148993		2	COJINETE
3		A30881		4	ARANDELA, Seal
4		895-15008		8	ARANDELA, M8 x 20 x 1.6
5		614-8025		4	TORNILLO, Hex, M8 x 25, 8.8
6		892-11008		4	ARANDELA DE FRENO, M8
7		829-1408		4	TUERCA, M8, Cl 10
8		87435275		1	PIVOTE (CONJUNTO)
9		87440704		1	PIEZA DE APOYO, Right-Hand Joystick Mounting
10		87440706		1	PIEZA DE APOYO, Left-Hand Joystick Mounting
11		87329475		2	SEPARADOR
12		895-15010		4	ARANDELA, M11 x 24 x 2
13		814-10130		2	TORNILLO, Hex, M10 x 130, 8.8
14		832-10410		2	CONTRA TUERCA, M10 x 1.5, Cl 8
15		87431529		1	PALANCA (CONJUNTO), Control Tower Release
16		103-11100		1	ANILLO DE RESORTE, #100, .925", Ext
17		87405706		1	ARANDELA, Wave, 1 inch
18		87437688		2	POMO, Lateral Adjustment Pilot Control Tower
19		896-15010		8	ARANDELA, M10 x 24.5 x 3, HT
20		781-24613		8	TORNILLO AUTOROSCANTE, Hex Flg Hd, M6 x 13
21		833-40406		2	TUERCA, M6, U
22		87425696		2	JUNTA DE CAUCHO
23		87431301		1	PROTECCION, Shield, Left-Hand
24		87431300		1	DEFENSA, Shield, Right-Hand
25		814-10060		2	TORNILLO, Hex, M10 x 60, 8.8
26		832-10410		2	CONTRA TUERCA, M10 x 1.5, Cl 8
27		87450914		2	TORNILLO, Locking, M10 x 40
28		892-11010		2	ARANDELA DE FRENO, M10
29		496-81018		1	ARANDELA, 17/32 x 2 x 1/8
30		D148962		1	ARANDELA, Belleville
31		87440381		1	SEPARADOR
32		896-11008		2	ARANDELA, M8 x 17.5 x 2, HT
33		832-10408		2	CONTRA TUERCA, M8 x 1.25, Cl 8

09-13		p2	12/07

TORRE DE CONTROL DE LA RETROEXCAVADORA SOPORTE, CON DE CONTROL PILOTO

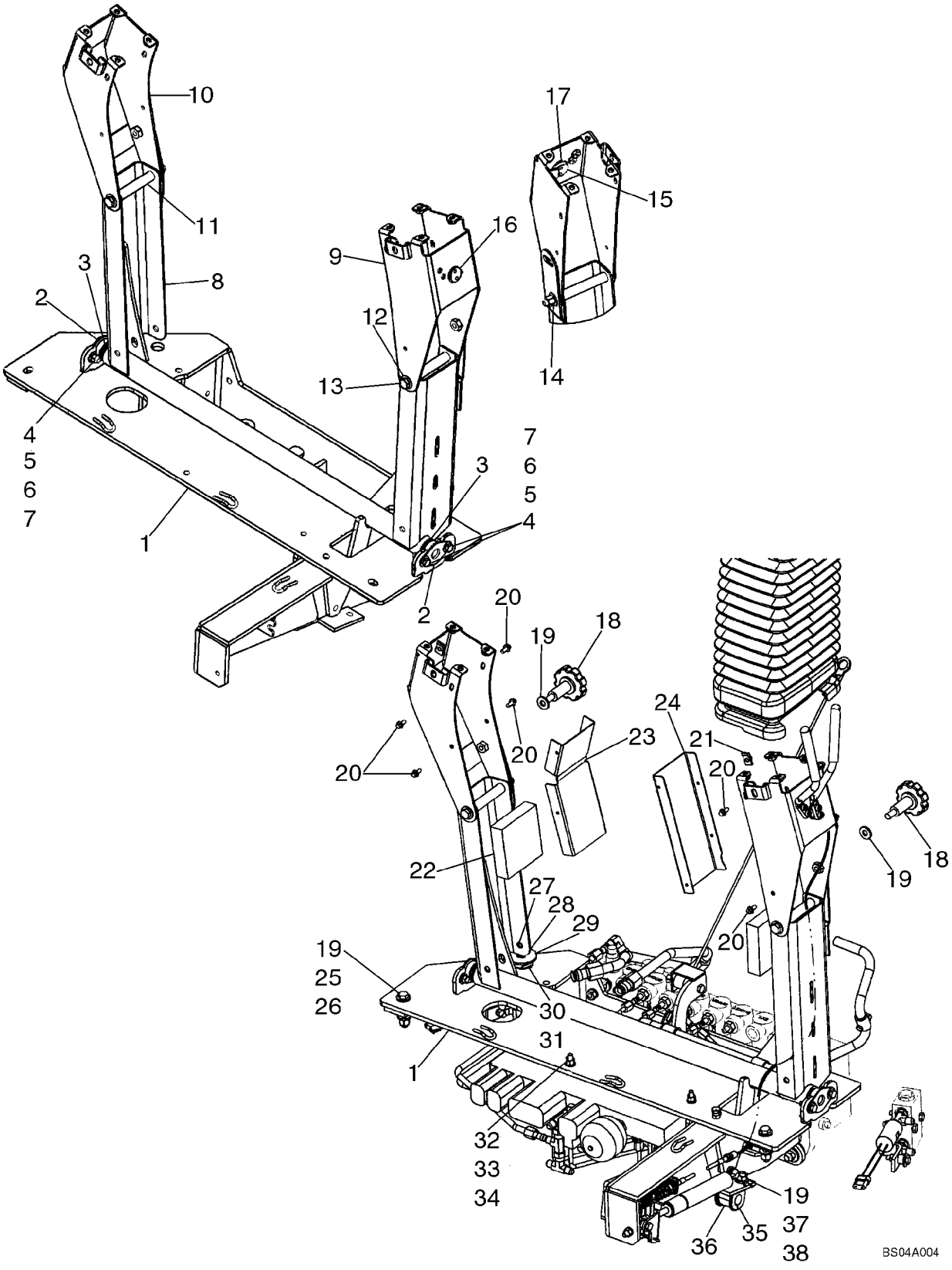

TORRE DE CONTROL DE LA RETROEXCAVADORA SOPORTE, CON DE CONTROL PILOTO

REF	FN	PART NUMBER	YR/SN	QTY	DENOMINACION
34		864-8055		2	TORNILLO, Hex Soc Hd, M8 x 55, 8.8
35		D143411		1	COLLAR
36		D74182		1	PASACABLES, Isolation Block
37		829-1410		1	TUERCA, M10, Cl 10
38		614-10025		1	TORNILLO, Hex, M10 x 25, 8.8, Full Thd

09-14		p1	02/08

TORRE DE CONTROL DE LA RETROEXCAVADORA SOPORTE DE JUNTA, CON DE CONTROL PILOTO

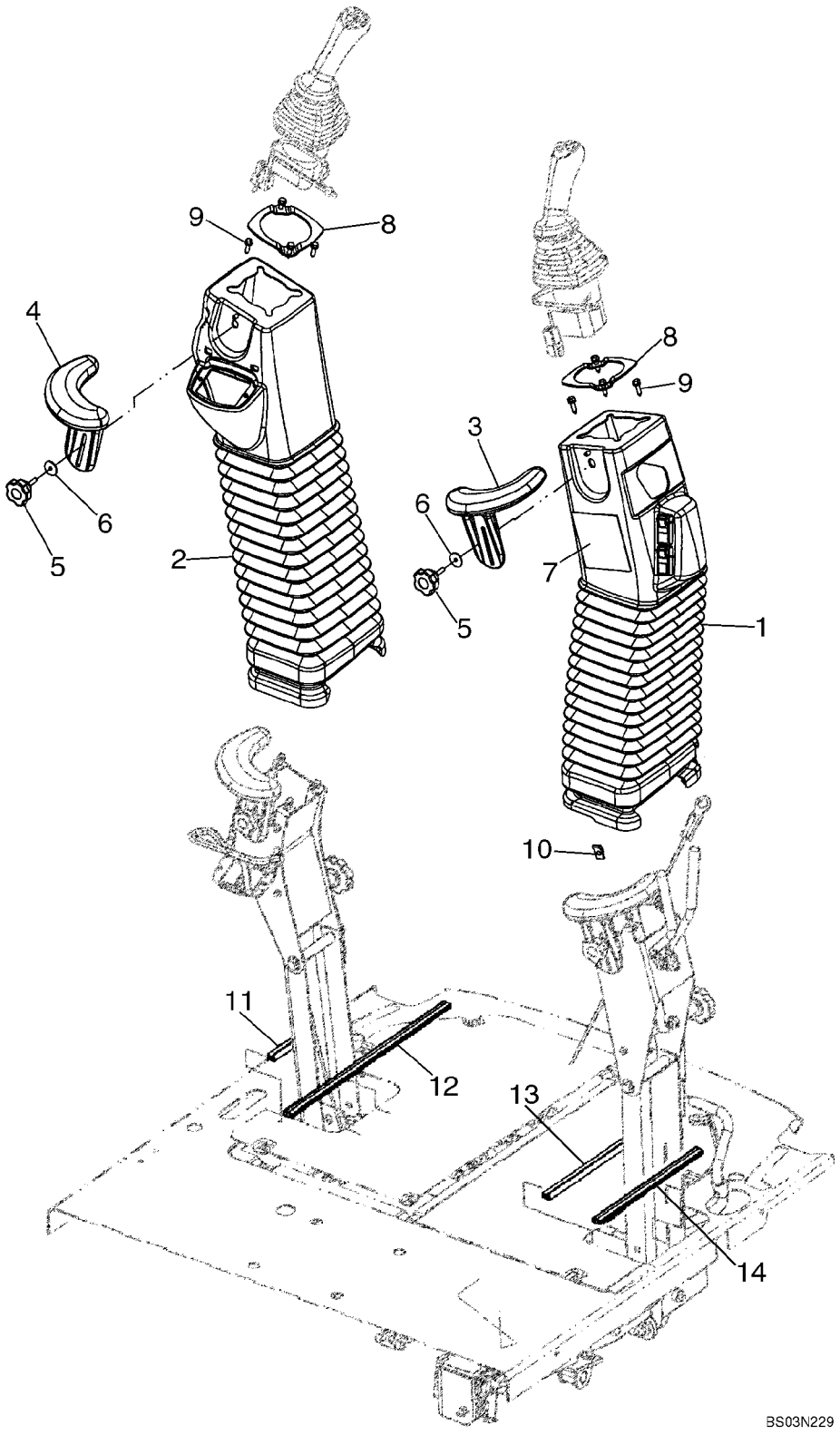

TORRE DE CONTROL DE LA RETROEXCAVADORA SOPORTE DE JUNTA, CON DE CONTROL PILOTO

REF	FN	PART NUMBER	YR/SN	QTY	DENOMINACION
1		87309924		1	CASQUETE
2		87309923		1	CASQUETE
3		87437366		1	APOYABRAZOS, Wrist, RH
4		87437369		1	APOYABRAZOS, Wrist, LH
5		87437689		2	POMO
6		87310186		2	ARANDELA, 6.6 ID x 25 OD x 1.6 mm thk, Stainless Steel
7		87305413		1	CALCOMANIA, Pattern Selecting; With Backhoe/Excavator Black Silhouette on Decal; Not Illustrated
8		87435372		2	PLACA DE SUJECION
9		87608777		8	TORNILLO
10		833-40406		2	TUERCA, M6, U
11		87433008		1	JUNTA DE CAUCHO, 183 mm (7-1/4 in); Cut From 87438002
12		87433006		1	JUNTA DE CAUCHO, 428 mm (16-7/8 in); Cut From 87438002
13		87433005		1	JUNTA DE CAUCHO, 335 mm (13-3/16 in); Cut From 87438002
14		87433007		1	JUNTA DE CAUCHO, 275 mm (10-7/8 in); Cut From 87438002

09-15		p1	12/07

TORRE DE CONTROL DE LA RETROEXCAVADORA PALANCA (TRABA DEL AGUILĎN), CON DE CONTROL PILOTO

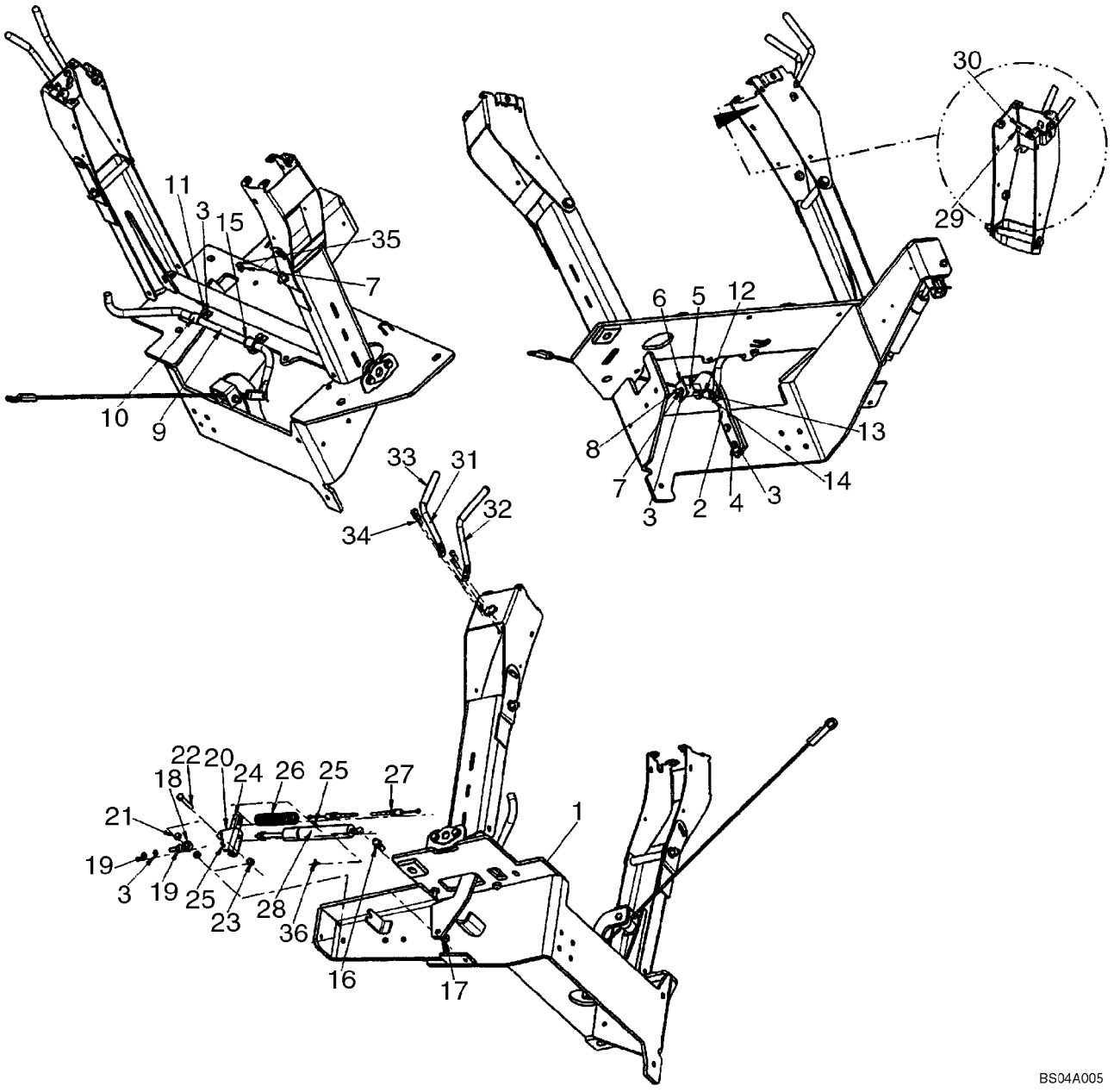

TORRE DE CONTROL DE LA RETROEXCAVADORA PALANCA (TRABA DEL AGUILĎN), CON DE CONTROL PILOTO

REF	FN	PART NUMBER	YR/SN	QTY	DENOMINACION
1		87440711		1	TORRECILLA, Pilot Control Tower Assembly; See Figure 09-13
2		86984544		1	PIEZA DE SOPORTE, Roller Mounting
3		892-11008		6	ARANDELA DE FRENO, M8
4		614-8030		2	TORNILLO, Hex, M8 x 30, 8.8
5		86984547		2	GUIA
6		86984545		1	PIEZA DE SOPORTE
7		829-1408		2	TUERCA, M8, Cl 10
8		814-8070		1	TORNILLO, Hex, M8 x 70, 8.8
9		87441850		1	VARILLA, Boom Latch Release
10		D143723		2	BRIDA, Clamp
11		614-8025		2	TORNILLO, Hex, M8 x 25, 8.8
12		87435924		1	CABLE, Boom Latch
13		427-5094		1	PASADOR DE HORQUILLA, 5/16" x .940"
		895-11008		1	ARANDELA, M8 x 16 x 1.6, Used with Ref 13 and 14
14		432-612		1	PASADOR ABIERTO, 3/32" x 3/4"
15		D143591		2	ANILLO DE CIERRE
16		85824067		1	PIVOTE DE LA ROTULAPERNO,, Stud
17		832-10410		1	CONTRA TUERCA, M10 x 1.5, Cl 8
18		85824081		1	JUNTA DE ROTULA
19		425-115		2	TUERCA, 5/16"-24, G5
20		85824080		1	PIEZA DE SOPORTE
21		85821520		2	SEPARADOR
22		413-528		1	TORNILLO, Hex, 5/16"-18 x 1 3/4", G5
23		231-1445		1	CONTRA TUERCA, 5/16"-18, GB
24		86984549		1	CANAL
25		432-828		2	PASADOR ABIERTO, 1/8" x 1 3/4"
26		87443692		1	RESORTE
27		87437806		1	CABLE FLEXIBLE, Pilot Control Positioner
28		86989616		1	COMPAS, Cylinder
29		140-108		1	TORNILLO, Cross Pan Hd, #10-24 x 3/4"
30		231-14409		1	CONTRA TUERCA, #10-24, GB
31		87418368		1	VARILLA, Tower Stationary
32		87418369		1	VARILLA, Tower Position
33		87442409		2	MANGO

09-15		p2	12/07

TORRE DE CONTROL DE LA RETROEXCAVADORA PALANCA (TRABA DEL AGUILĎN), CON DE CONTROL PILOTO

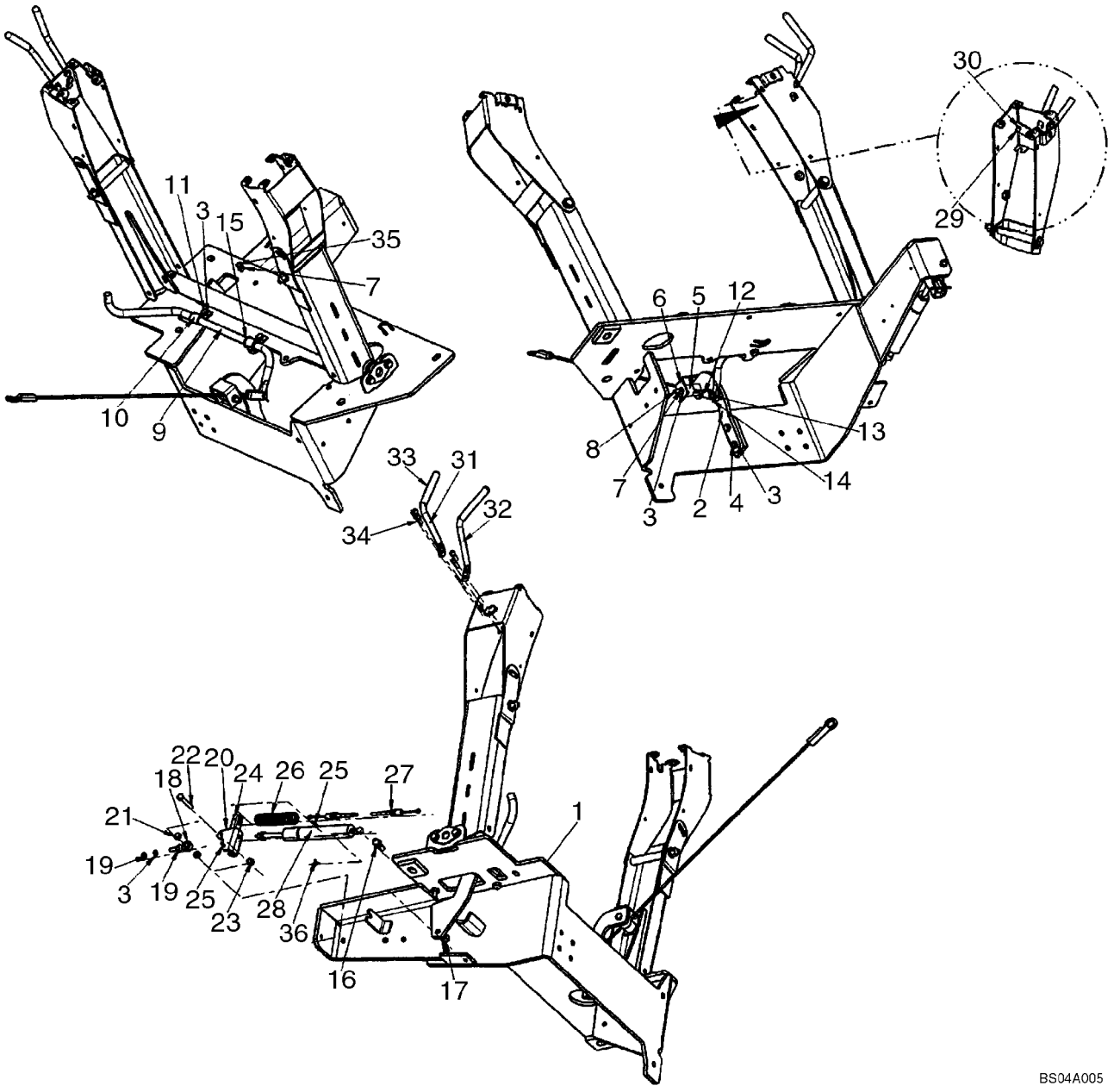

TORRE DE CONTROL DE LA RETROEXCAVADORA PALANCA (TRABA DEL AGUILĎN), CON DE CONTROL PILOTO

REF	FN	PART NUMBER	YR/SN	QTY	DENOMINACION
34		87310098		4	TORNILLO, Hex Flange, M6 x 20, Black Oxide
35		614-8050		1	TORNILLO, Hex, M8 x 50, 8.8, Full Thd
36		3233348R1		1	SUJETADOR

09-16		p1	09/07

CONTROLES - RETROEXCAVADORA, CON PEDAL DE OSCILACIĎN (MODELOS CON O SIN PALA EXTENSIBLE)

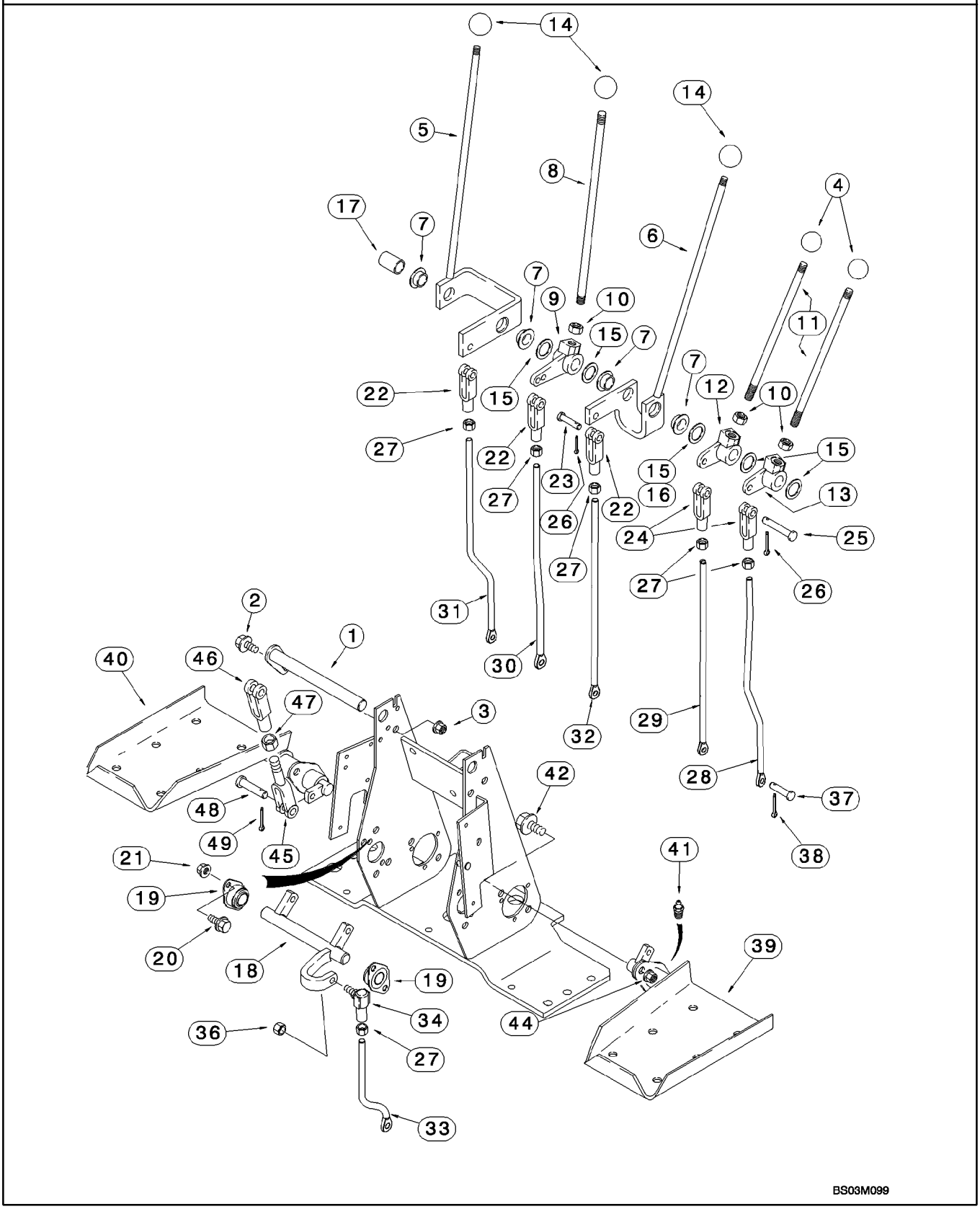

CONTROLES - RETROEXCAVADORA, CON PEDAL DE OSCILACIĎN (MODELOS CON O SIN PALA EXTENSIBLE)

REF	FN	PART NUMBER	YR/SN	QTY	DENOMINACION
1		87401203		1	ARBOL (CONJUNTO)
2		614-8025		1	TORNILLO, Hex, M8 x 25, 8.8
3		832-10408		1	CONTRA TUERCA, M8 x 1.25, Cl 8
4		D59912		2	PLACA, Stabilizer Control Levers
5		136267A1		1	PALANCA, Boom; Incl. Ref 7
6		136269A1		1	PALANCA, Bucket; Incl. Ref 7
7		D148992		2	CASQUILLO
8		136263A1		1	VARILLA, Dipper
9		D150397		1	PALANCA-REENVIO, Dipper
10		425-118		3	TUERCA, 1/2"-20, G5
11		136261A1		2	PALANCA MANDO, Stabilizer
12		D150435		1	PALANCA-REENVIO, Right-Hand Stabilizer Control
13		D150434		1	PALANCA-REENVIO, Left-Hand Stabilizer Control
14		L54563		3	PLACA, Boom, Dipper, and Bucket
15		A30881		AR	ARANDELA, 49/64 x 1-15/64 x 1/32; Used As A Shim
16		D34666		1	ARANDELA, 25/32 x 1-3/8 x 9/64; May Be Used In Place Of Ref 15
17		D150486		1	ESPACIADOR, Not Used On Models With Extendable Dipper
18		D148994		1	EJE, Swing
19		D139039		2	COJINETE
20		614-8025		4	TORNILLO, Hex, M8 x 25, 8.8
21		832-10408		4	CONTRA TUERCA, M8 x 1.25, Cl 8
22		213-126		3	HORQUILLA DE AJUSTE, 3/8"-24 x 2 1/2"
23		D149288		3	BULON/PIN, LARGO, Special
24		D150493		2	HORQUILLA PEQUENA
25		427-6088		2	PASADOR DE HORQUILLA, 3/8" x 3/4"
26		432-612		5	PASADOR ABIERTO, 3/32" x 3/4"
27		425-156		6	TUERCA, Jam, 3/8"-24, G5
28		87422243		1	VARILLA ROSCADA, Left-Hand Stabilizer Control
29		87422245		1	VARILLA ROSCADA, Right-Hand Stabilizer Control
30		87422247		1	VARILLA ROSCADA, Dipper
31		87422241		1	VARILLA ROSCADA, Boom
32		87422249		1	VARILLA ROSCADA, Bucket
33		87422239		1	VARILLA ROSCADA, Swing

CONTROLES - RETROEXCAVADORA, CON PEDAL DE OSCILACIĎN (MODELOS CON O SIN PALA EXTENSIBLE)

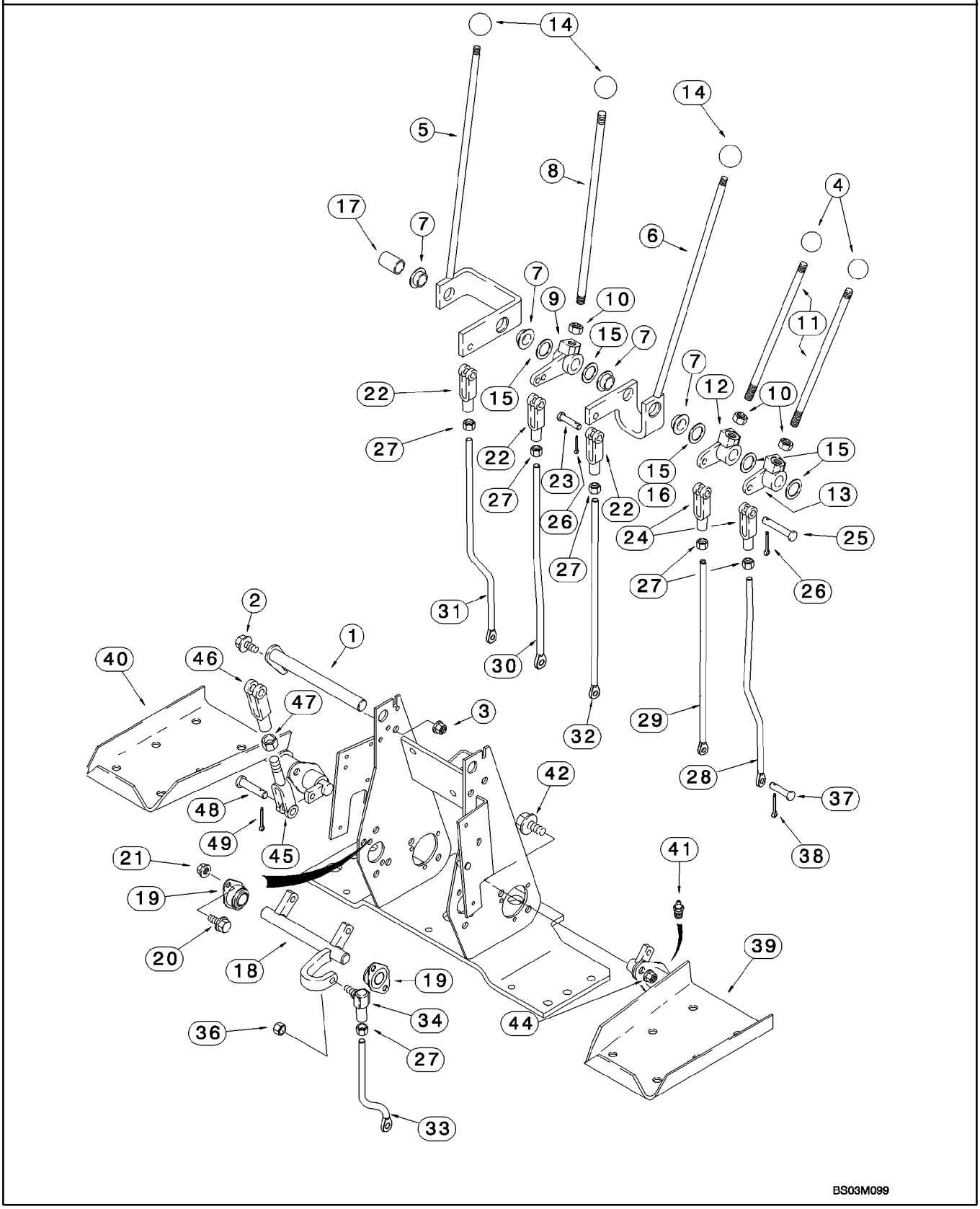

CONTROLES - RETROEXCAVADORA, CON PEDAL DE OSCILACIĎN (MODELOS CON O SIN PALA EXTENSIBLE)

REF	FN	PART NUMBER	YR/SN	QTY	DENOMINACION
34		D149295		1	JUNTA DE ROTULA, 3/8
36		425-116		1	TUERCA, 3/8"-24, G5
37		D149287		6	BULON/PIN, LARGO, 5/16
38		432-612		6	PASADOR ABIERTO, 3/32" x 3/4"
39		136271A2		1	PEDAL (CONJUNTO), Left-Hand Swing; Without Pilot Controls
40		136270A2		1	PEDAL (CONJUNTO), Right-Hand Swing; Without Pilot Controls
41		219-4		2	ENGRASADOR, 1/8"-27 NPTF, Short
42		614-10025		4	TORNILLO, Hex, M10 x 25, 8.8, Full Thd
44		832-10410		4	CONTRA TUERCA, M10 x 1.5, Cl 8
45		D150503		2	EXTREMIDAD, Yoke
46		D149262		2	HORQUILLA PEQUENA, 3/8
47		425-156		2	TUERCA, Jam, 3/8"-24, G5
48		D149288		4	BULON/PIN, LARGO, 3/8
49		432-612		4	PASADOR ABIERTO, 3/32" x 3/4"

09-17		p1	09/07

CONTROLES - RETROEXCAVADORA, CON PEDAL DE OSCILACIĎN (MODELOS CON PALA EXTENDIBLE)

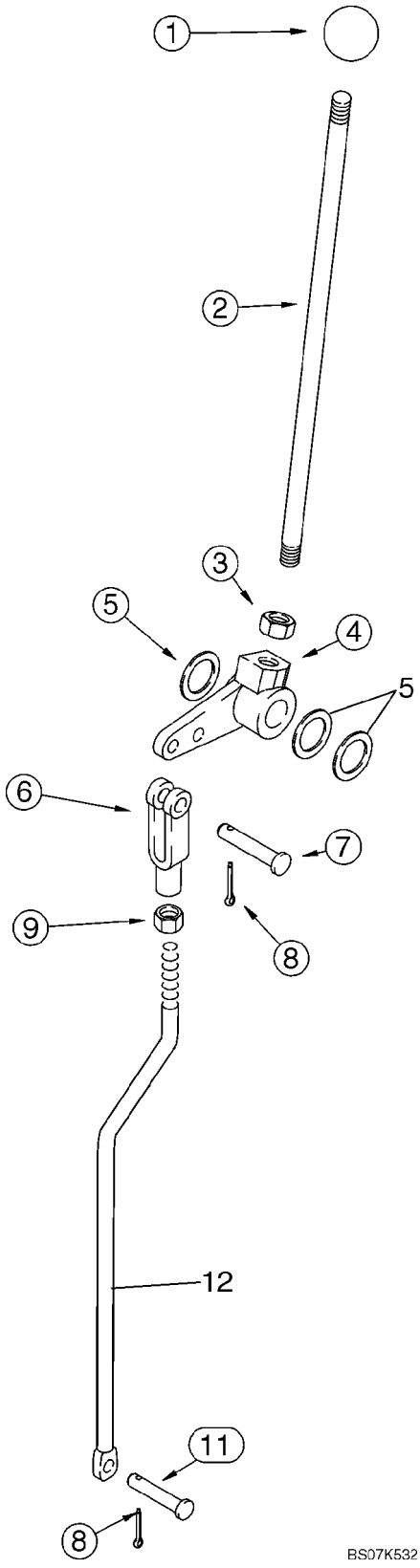

CONTROLES - RETROEXCAVADORA, CON PEDAL DE OSCILACIĎN (MODELOS CON PALA EXTENDIBLE)

REF	FN	PART NUMBER	YR/SN	QTY	DENOMINACION
1		L54563		1	PLACA, Extendahoe
2		136263A1		1	VARILLA, Extendahoe
3		425-118		1	TUERCA, 1/2"-20, G5
4		182006A1		1	PALANCA, Bellcrank
5		A30881		AR	ARANDELA
6		213-126		1	HORQUILLA DE AJUSTE, 3/8"-24 x 2 1/2"
7		427-6088		1	PASADOR DE HORQUILLA, 3/8" x 3/4"
8		432-612		2	PASADOR ABIERTO, 3/32" x 3/4"
9		425-156		1	TUERCA, Jam, 3/8"-24, G5
11		D149287		1	BULON/PIN, LARGO
12		87446113		1	VARILLA ROSCADA, Extendahoe; Mounts In Inner Bellcrank Lever Hole

09-18		p1	09/07

CONTROLES - RETROEXCAVADORA, CON OSCILACIĎN MANUAL (MODELOS CON O SIN PALA EXTENSIBLE)

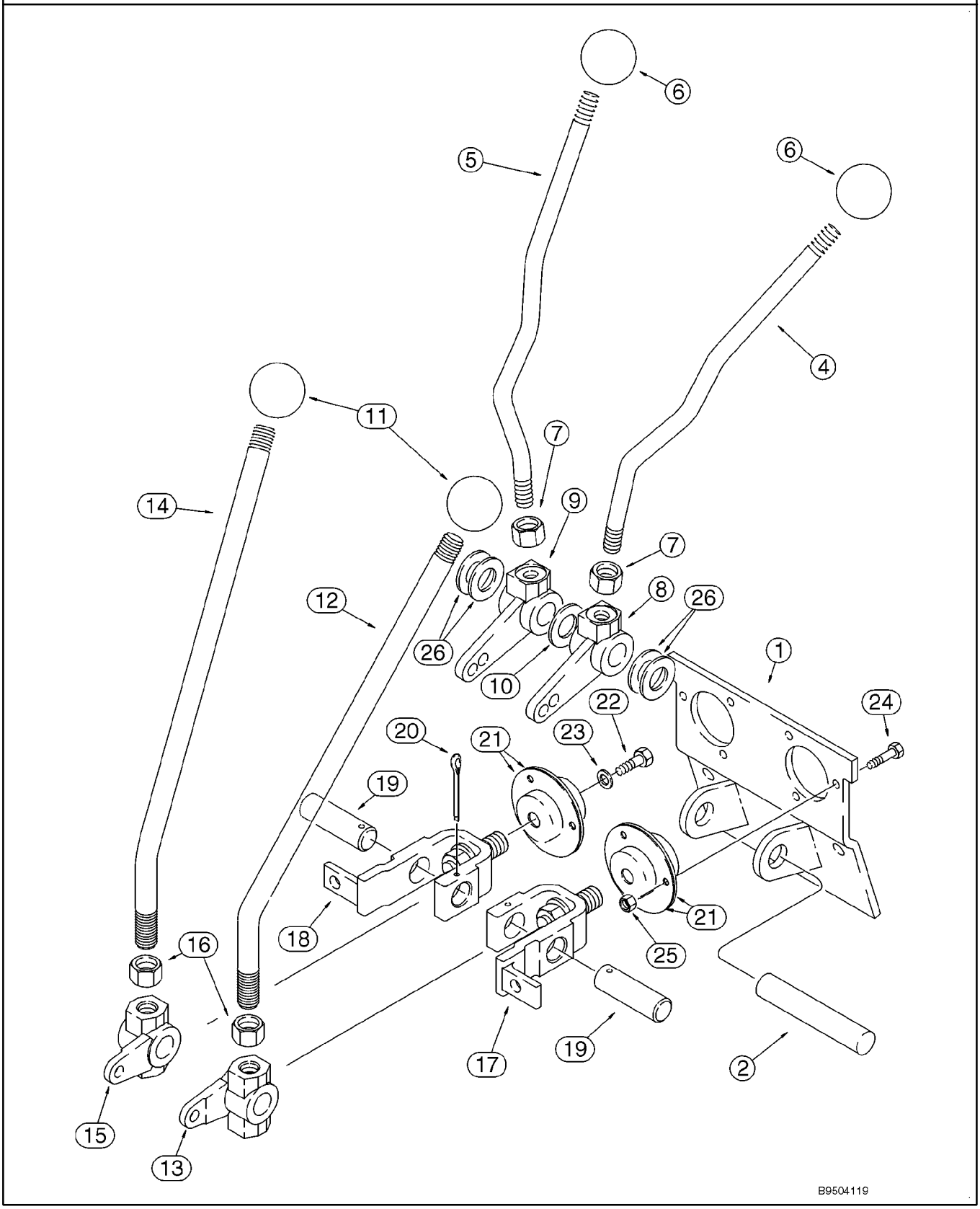

CONTROLES - RETROEXCAVADORA, CON OSCILACIĎN MANUAL (MODELOS CON O SIN PALA EXTENSIBLE)

REF	FN	PART NUMBER	YR/SN	QTY	DENOMINACION
		REF			MANUAL, UPPER CONTROL LEVERS
1		108864A1		1	APOYADERO
2		D148947		1	BULON/PIN, LARGO, Stabilizer
4		409672A1		1	PALANCA, Left-Hand; Stabilizer
5		409673A1		1	PALANCA, Right-Hand; Stabilizer
6		D59912		2	PLACA, Stabilizer
7		425-118		2	TUERCA, 1/2"-20, G5
8		108924A1		1	PALANCA
9		108923A1		1	PALANCA
10		495-11081		1	ARANDELA, 3/4", SAE
11		D39118		2	PLACA
12		125113A1		1	PALANCA, Boom and Swing
13		106989A1		1	PALANCA, Left-Hand Boom and Swing Lever
14		125113A1		1	PALANCA, Bucket and Dipper
15		106990A1		1	PALANCA, Right-Hand Bucket and Dipper Lever
16		425-1110		2	TUERCA, 5/8"-18, G5
17		178006A1		1	PALANCA, Boom and Swing
18		178004A1		1	PALANCA, Bucket and Dipper
19		102765A1		2	BULON/PIN, LARGO, Bellcrank
20		432-828		2	PASADOR ABIERTO, 1/8" x 1 3/4"
21		112380A1		4	COJINETE
22		614-6016		2	TORNILLO, Hex, M6 x 16, 8.8
23		396-41028		2	ARANDELA, .281" x 7/8" x .098", HDN
24		614-6020		6	TORNILLO, Hex, M6 x 20, 8.8
25		829-1406		6	TUERCA, M6, Cl 10
26		A30881		AR	ARANDELA, 49/64 x 1-15/64 x 1/32

09-19		p1	09/07

CONTROLES - RETROEXCAVADORA, CON OSCILACIĎN MANUAL (MODELOS CON O SIN PALA EXTENSIBLE)

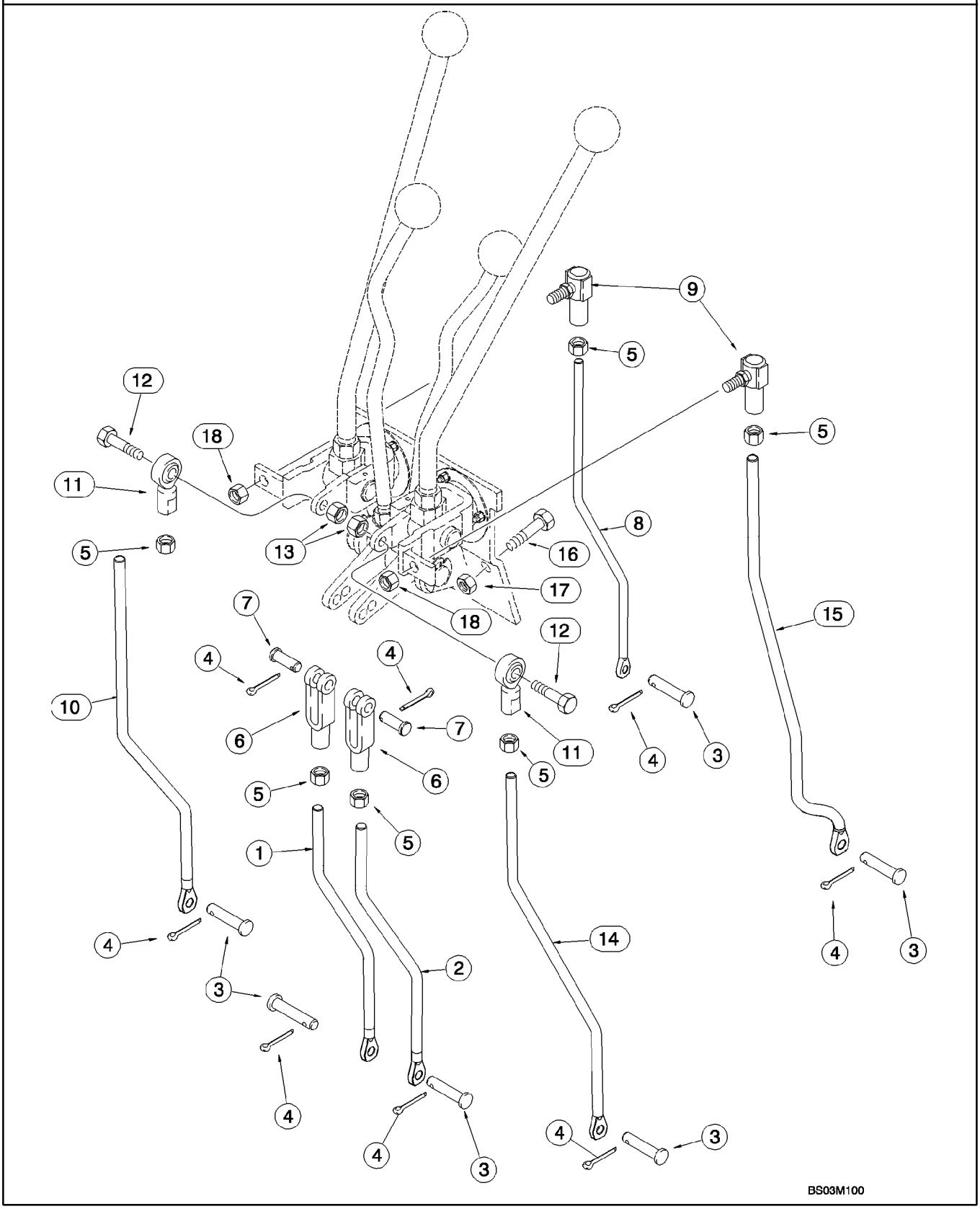

CONTROLES - RETROEXCAVADORA, CON OSCILACIĎN MANUAL (MODELOS CON O SIN PALA EXTENSIBLE)

REF	FN	PART NUMBER	YR/SN	QTY	DENOMINACION
		REF			MANUAL, LOWER CONTROL LEVERS
1		87452406		1	VARILLA ROSCADA, Right-Hand; Stabilizer; 286.6 mm (11-9/32 in) Long
2		87452404		1	VARILLA ROSCADA, Left-Hand; Stabilizer; 286.6 mm (11-9/32 in) Long
3		D149287		6	BULON/PIN, LARGO
4		432-612		8	PASADOR ABIERTO, 3/32" x 3/4"
5		425-116		6	TUERCA, 3/8"-24, G5
6		213-126		2	HORQUILLA DE AJUSTE, 3/8"-24 x 2 1/2"
7		D149288		2	BULON/PIN, LARGO, Special
8		87422264		1	VARILLA ROSCADA, Bucket
9		D149295		2	JUNTA DE ROTULA
10		87422262		1	VARILLA ROSCADA, Dipper
11		87382812		2	COJINETE, BALLJOINT; 3/8NF
12		413-624		2	TORNILLO, Hex, 3/8"-16 x 1 1/2", G5
13		425-106		2	TUERCA, 3/8"-16, G5
14		87422256		1	VARILLA ROSCADA, Boom
15		87422253		1	VARILLA ROSCADA, Swing
16		614-10025		2	TORNILLO, Hex, M10 x 25, 8.8, Full Thd
17		832-10410		2	CONTRA TUERCA, M10 x 1.5, Cl 8
18		231-2446		2	CONTRA TUERCA, 3/8"-24, GB

CONTROLES - RETROEXCAVADORA, PATRĎN DE CONTROL DE LA EXCAVADORA

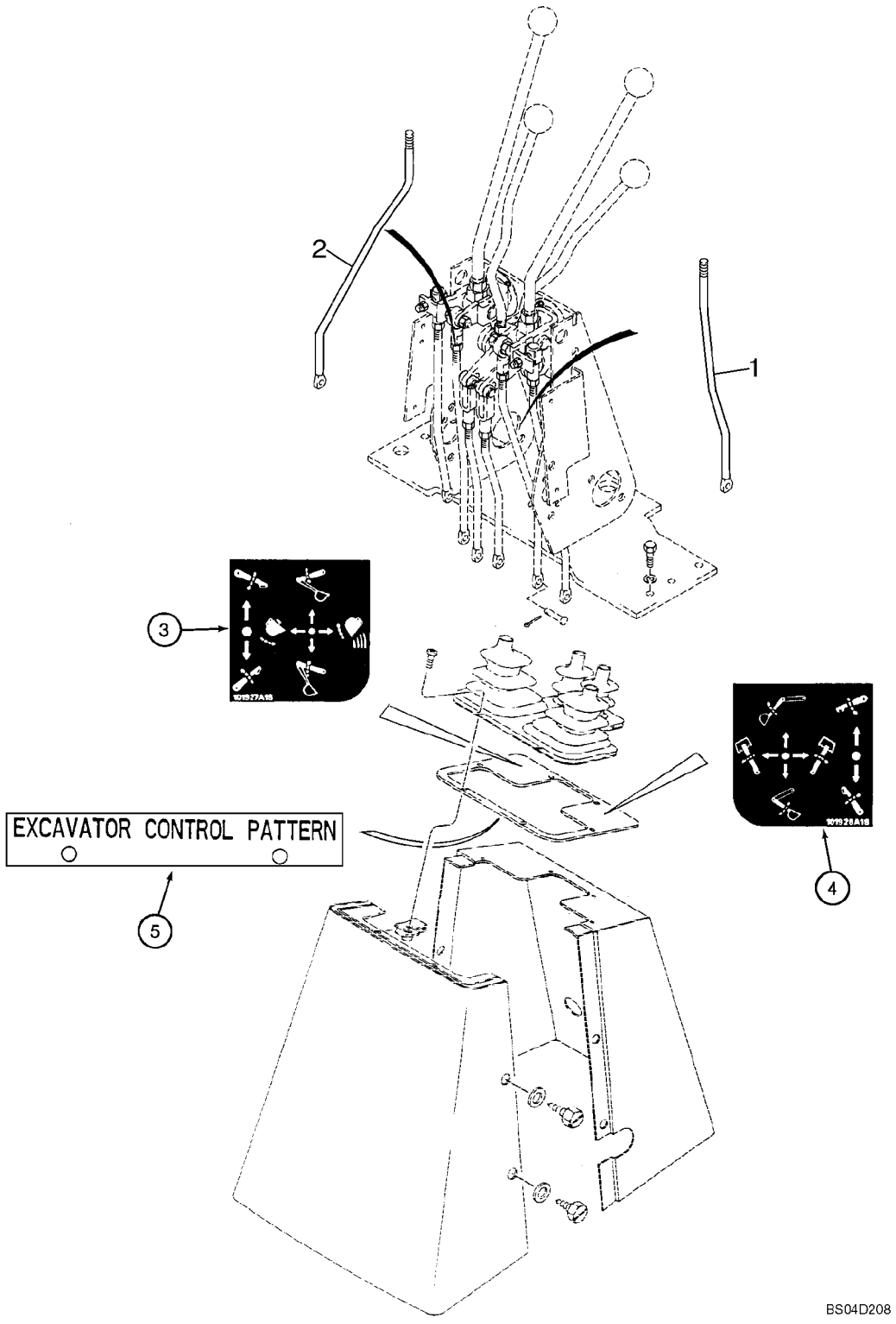

CONTROLES - RETROEXCAVADORA, PATRĎN DE CONTROL DE LA EXCAVADORA

REF	FN	PART NUMBER	YR/SN	QTY	DENOMINACION
		87447088		1	KIT, SERVICE, Excavator Control Pattern; Incl. Ref 1 - 5; Purchase From Parts and Components; Machine Must Be Equipped With Hand Swing Controls; If Machine Is Equipped With Foot Swing Controls, Foot Swing to Hand Swing Controls Kit Must Be Ordered and Installed First
1		87422272		1	VARILLA ROSCADA, Dipper; Replaces Existing Boom Control Rod; Right-Hand Control Lever Which Used To Control The Dipper, Now Controls The Boom
2		87422270		1	VARILLA ROSCADA, Boom; Replaces Existing Dipper Control Rod; The Left-Hand Control Lever Which Used To Control The Boom, Now Controls The Dipper
3		E49498		1	CALCOMANIA, Control; Right-Hand
4		E49497		1	CALCOMANIA, Control; Left-Hand
5		198410A1		1	PLACA, GRANDE, Excavator Control Pattern

CONTROLES - RETROEXCAVADORA, CON OSCILACIĎN MANUAL (MODELOS CON PALA EXTENDIBLE)

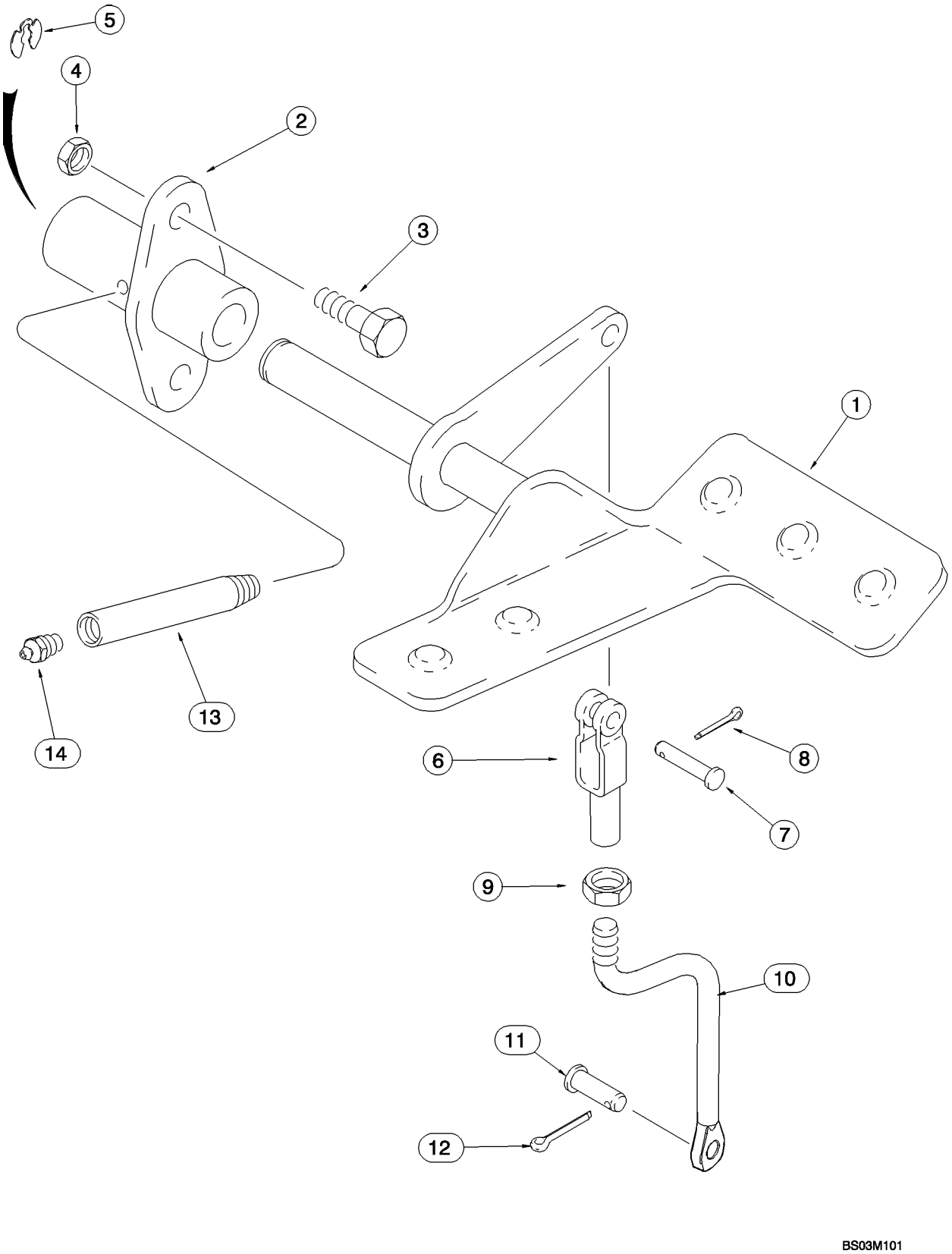

CONTROLES - RETROEXCAVADORA, CON OSCILACIĎN MANUAL (MODELOS CON PALA EXTENDIBLE)

REF	FN	PART NUMBER	YR/SN	QTY	DENOMINACION
1		179029A1		1	PEDAL, Right-Hand; Extendahoe
2		126918A1		1	APOYADERO (CONJUNTO)
3		614-10025		2	TORNILLO, Hex, M10 x 25, 8.8, Full Thd
4		832-10410		2	CONTRA TUERCA, M10 x 1.5, Cl 8
5		D143416		1	ANILLO DE CIERRE
6		D134900		1	HORQUILLA PEQUENA
7		427-6088		1	PASADOR DE HORQUILLA, 3/8" x 3/4"
8		432-612		1	PASADOR ABIERTO, 3/32" x 3/4"
9		425-156		1	TUERCA, Jam, 3/8"-24, G5
10		87440058		1	VARILLA ROSCADA, Extendahoe Rod
11		D149287		1	BULON/PIN, LARGO
12		432-612		1	PASADOR ABIERTO, 3/32" x 3/4"
13		D150032		1	TUBO, Lube
14		219-1		1	ENGRASADOR, 1/8"-27 x .66 lg

CONTROLES - SISTEMA HIDRáULICO AUXILIAR DE LA RETROEXCAVADORA, SIN DE CONTROL PILOTO

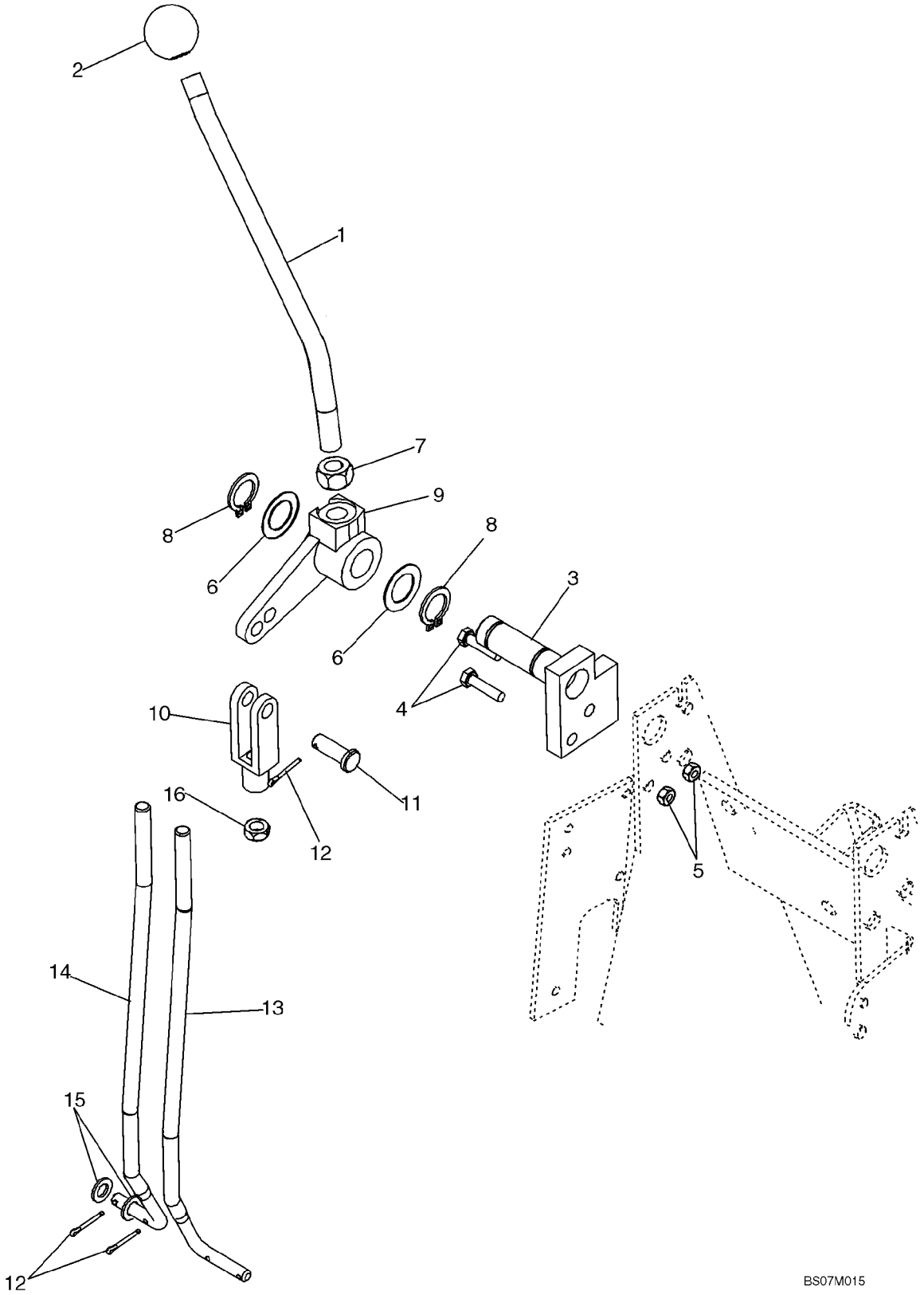

CONTROLES - SISTEMA HIDRáULICO AUXILIAR DE LA RETROEXCAVADORA, SIN DE CONTROL PILOTO

REF	FN	PART NUMBER	YR/SN	QTY	DENOMINACION
1		221477A1		1	PALANCA MANDO, Auxiliary Control; 250 mm (9-27/32 in) long
2		D59912		1	PLACA
3		87425117		1	PIVOTE (CONJUNTO), 7 or 8 Spool Valve
4		614-6025		2	TORNILLO, Hex, M6 x 25, 8.8
5		829-1406		2	TUERCA, M6, Cl 10
6		A30881		2	ARANDELA, Used As A Shim
7		425-118		1	TUERCA, 1/2"-20, G5
8		103-1475		2	ANILLO DE RESORTE, #75, Ext
9		182006A1		1	PALANCA
10		213-126		1	HORQUILLA DE AJUSTE, 3/8"-24 x 2 1/2"
11		D149288		1	BULON/PIN, LARGO
12		432-612		3	PASADOR ABIERTO, 3/32" x 3/4"
13		87439135		1	VARILLA ROSCADA, 7 Spool Valve; If Used
14		87438157		1	VARILLA ROSCADA, 8 Spool Valve; If Used
15		895-11008		2	ARANDELA, M8 x 16 x 1.6
16		425-156		1	TUERCA, Jam, 3/8"-24, G5

09-22		p1	12/07

RETROEXCAVADORA - ESTABILIZADORES, PLACAS Y ALMOHADILLAS

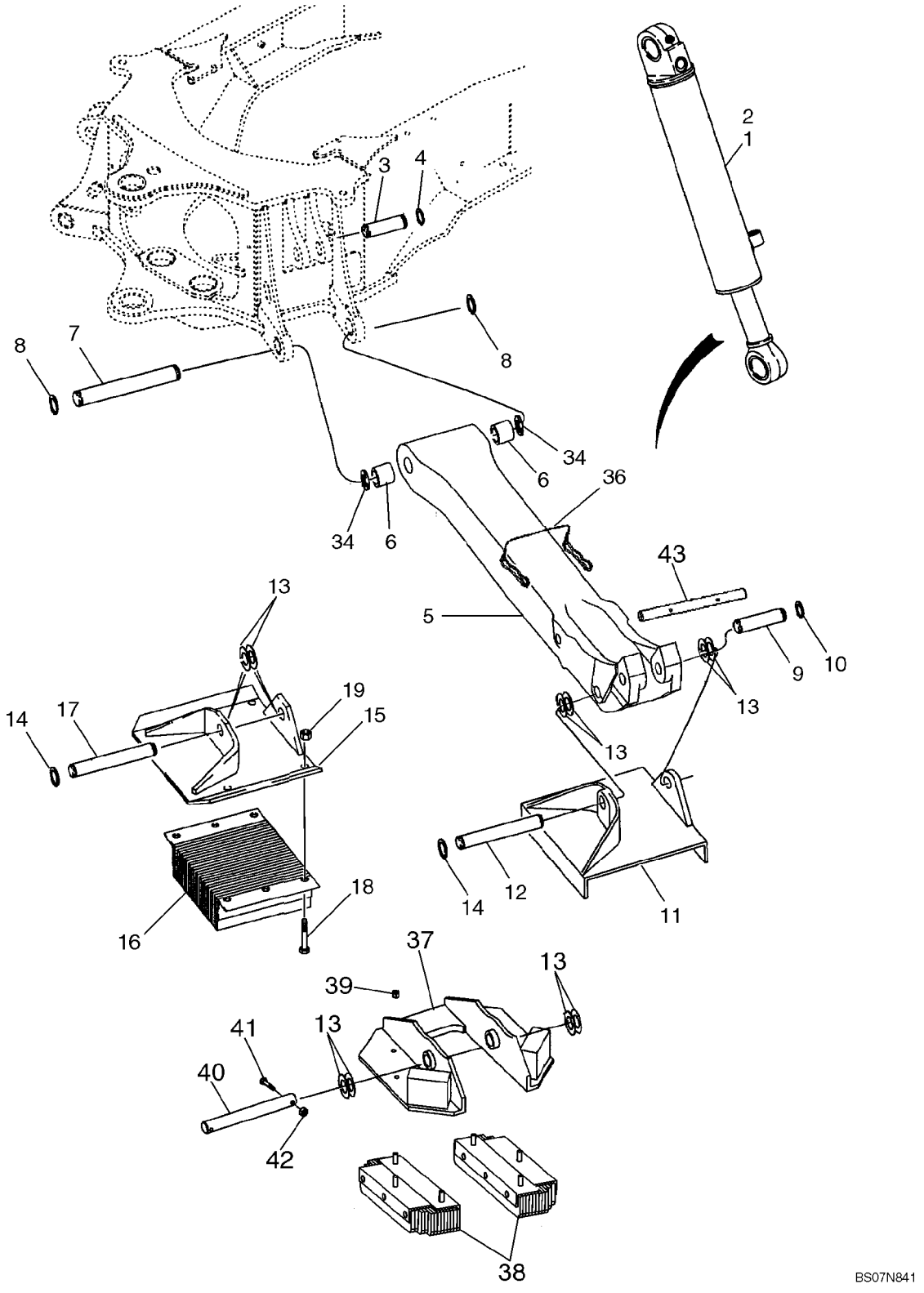

RETROEXCAVADORA - ESTABILIZADORES, PLACAS Y ALMOHADILLAS

REF	FN	PART NUMBER	YR/SN	QTY	DENOMINACION
1		195503A1		1	CILINDRO (CONJUNTO), 102 ID x 553 mm strk; Stabilizer; Right-Hand; See Figure 08-61
2		195504A1		1	CILINDRO, 102 ID x 553 mm strk; Stabilizer; Left-Hand; See Figure 08-61
3		D38907		2	PERNO, Stabilizer Cylinder to Chassis
4		103-16175		4	ANILLO DE RESORTE, #175, Ext
5		446222A1		2	ESTABILIZADOR, 1135 mm (44-11/16 in), Leg; Incl. Ref 6
6		D50146		2	CASQUILLO, 1.760" x 2.250" x 1.50"
7		121665A1		2	BULON/PIN, LARGO, Stabilizer Leg to Chassis
8		103-16175		4	ANILLO DE RESORTE, #175, Ext
9		D26002		2	PERNO, Stabilizer Cylinder
10		D25279		4	ANILLO DE CIERRE
11		87456199		2	TACO, Plate; Cleated, Tan
12		D28648		2	PERNO, Plate/Pad to Leg
13		D143406		AR	ARANDELA, Used as a Spacer
14		D25279		4	ANILLO DE CIERRE
15		87389813		2	TACO, Street or Cemetery, If Used
16		D61368		2	AMORTIGUADOR, Rubber, If Used
17		D53812		2	PERNO DE PIVOTE, 10-9/64 in Long; Plate to Leg
18		413-1228		8	TORNILLO, Hex, 3/4"-10 x 1 3/4", G5
19		425-1012		8	TUERCA, 3/4"-10, G5
34		495-81226		AR	ARANDELA, 1 13/16" x 2 1/2" x .109"
36		446454A1		2	PASADOR DE FIJACION
37		386000A2		2	TACO, Anti-Flipover
38		395753A2		4	PLACA, CAUCHO
39		231-4247		12	CONTRA TUERCA, 7/16"-14, GB
40		D149033		2	BULON/PIN, LARGO
41		814-10050		2	TORNILLO, Hex, M10 x 50, 8.8
42		832-10410		2	CONTRA TUERCA, M10 x 1.5, Cl 8
43		87436782		2	PERNO DE PIVOTE

09-23		p1	11/07

RETROEXCAVADORA - TORRE DE OSCILACIĎN Y CILINDROS DE OSCILACIĎN

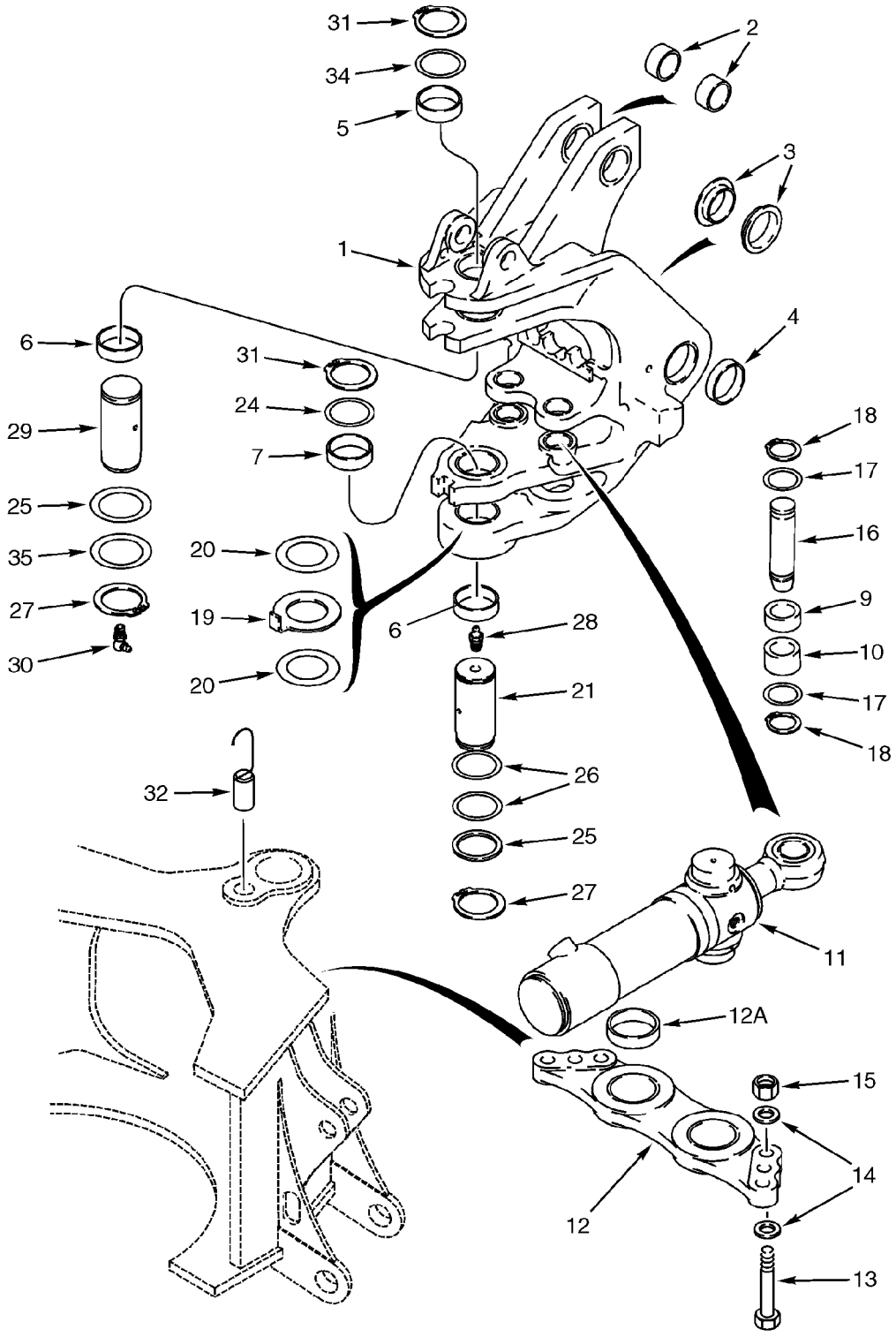

RETROEXCAVADORA - TORRE DE OSCILACIĎN Y CILINDROS DE OSCILACIĎN

REF	FN	PART NUMBER	YR/SN	QTY	DENOMINACION
1		326806A1		1	TORRECILLA, Swing Tower; Incl. Ref 2 - 10
2		D149079		2	CASQUILLO, 50 x 34 mm wide
3		121778A1		2	CASQUILLO
4		329998A1		2	CASQUILLO
5		D135557		1	CASQUILLO
6		D135559		2	CASQUILLO, 70.22 ID x 86 OD x 28 mm wide
7		D138042		1	CASQUILLO, 70.22 ID x 86 OD x 34 mm wide
9		135249A1		2	CASQUILLO, 28.6 mm wide
10		135248A1		2	CASQUILLO, 38.1 mm wide
11		188027A2		2	CILINDRO (CONJUNTO), 95 ID x 292 mm strk; Swing; See Figure 08-62
12		198976A1		1	PLACA, GRANDE, Incl. Ref 12A
12A		114318A1		2	CASQUILLO, 80 x 90 x 29.3 mm
13		827-20075		6	TORNILLO, Hex, M20 x 75, 10.9, Full Thd
14		896-11020		12	ARANDELA, M20 x 37.5 x 4, HT
15		829-1420		6	TUERCA, M20, Cl 10
16		386092A2		2	BULON/PIN, LARGO
17		495-81227		4	ARANDELA, 2 1/16" x 2 15/16" x .060"
18		103-16200		4	ANILLO DE RESORTE, #200, Ext
19		243084A1		1	ARANDELA, 5 mm thk
20		134167A1		AR	SUPLEMENTO, 2.05 mm (.08 in) thk
21		D151065		1	BULON/PIN, LARGO
24		D136392		AR	SUPLEMENTO, 72 x 89 x 3.0 mm
25		D136700		2	SUPLEMENTO, 67 x 83 x 2.0 mm
26		D136391		AR	SUPLEMENTO, 72 x 89 x 1.6 mm
27		800-40065		2	ANILLO DE RESORTE, M65, Ext
28		219-1		1	ENGRASADOR, 1/8"-27 x .66 lg
29		292385A1		1	BULON/PIN, LARGO
30		219-55		1	ENGRASADOR, 90Ü, 1/8" NPT x .84" lg
31		800-40070		2	ANILLO DE RESORTE, M70 Ext
32		384815A1		1	PASADOR (CONJUNTO), Swing Stop
34		293636A1		1	ARANDELA, Upper
35		D144423		AR	ARANDELA, 2-5/8 x 3-3/8 x 1/8; Used As A Shim

09-24		p1	11/07

RETROEXCAVADORA - AGUILĎN Y TORRE DE OSCILACIĎN

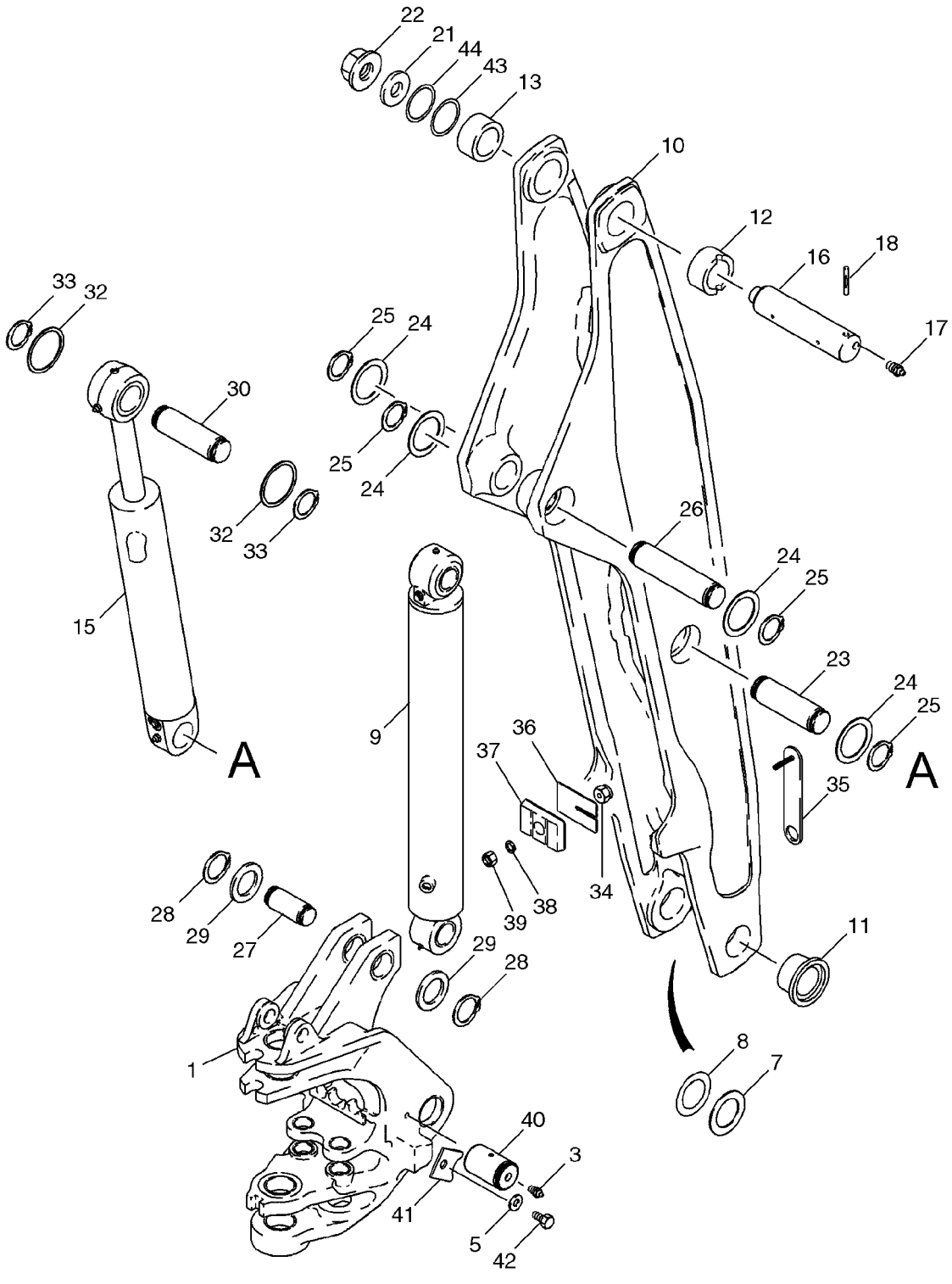

RETROEXCAVADORA - AGUILĎN Y TORRE DE OSCILACIĎN

REF	FN	PART NUMBER	YR/SN	QTY	DENOMINACION
1		326806A1		1	TORRECILLA, Swing Tower; See Figure 09-23 For Bushings
3		219-1		2	ENGRASADOR, 1/8"-27 x .66 lg
5		896-11020		2	ARANDELA, M20 x 37.5 x 4, HT, 22 x 37 x 4 mm
7		H71514		AR	ARANDELA
8		R32119		AR	ARANDELA, 71 ID x 114 mm
9		189653A2		1	CILINDRO (CONJUNTO), 114 ID x 982 mm strk; Boom; See Figure 08-63
10		129883A1		1	PLUMA, Incl. Ref 11 - 13
11		D151071		2	CASQUILLO, 70 ID x 34 mm lg
12		D135739		1	CASQUILLO, 70 ID x 44 mm lg; With Slot For Groove Pin; Right-Hand Side
13		D137218		1	CASQUILLO, 70 ID x 44 mm lg; Without Slot For Groove Pin; Left-Hand Side
15		233114A2		1	CILINDRO (CONJUNTO), 108 ID x 686 mm strk; Dipper; See Figure 08-64
16		D132494		1	BULON/PIN, LARGO
17		219-1		2	ENGRASADOR, 1/8"-27 x .66 lg
18		135-51652		1	PASADOR RANURADO, 1/2" x 3 1/4"
21		D133632		1	ARANDELA
22		181042A1		1	TUERCA, Flange, Special
23		129040A1		1	BULON/PIN, LARGO
24		495-81226		4	ARANDELA, 1 13/16" x 2 1/2" x .109"
25		103-16175		4	ANILLO DE RESORTE, #175, Ext
26		129040A1		1	BULON/PIN, LARGO
27		142842A1		1	BULON/PIN, LARGO
28		800-44050		2	ANILLO DE RESORTE, M50, Ext
29		495-81227		AR	ARANDELA, 2 1/16" x 2 15/16" x .060"
30		129041A1		1	BULON/PIN, LARGO
32		495-81226		AR	ARANDELA, 1 13/16" x 2 1/2" x .109"
33		103-16175		2	ANILLO DE RESORTE, #175, Ext
34		87592819		1	TAPčN, Boom Bumper Plug; 11.04 ID x 25.4 OD x 14.5 wide; Headless
35		184723A1		1	PIEZA DE APOYO
36		138624A1		AR	BLOQUE MOTOR, 1.5 mm thk Shim

RETROEXCAVADORA - AGUILĎN Y TORRE DE OSCILACIĎN

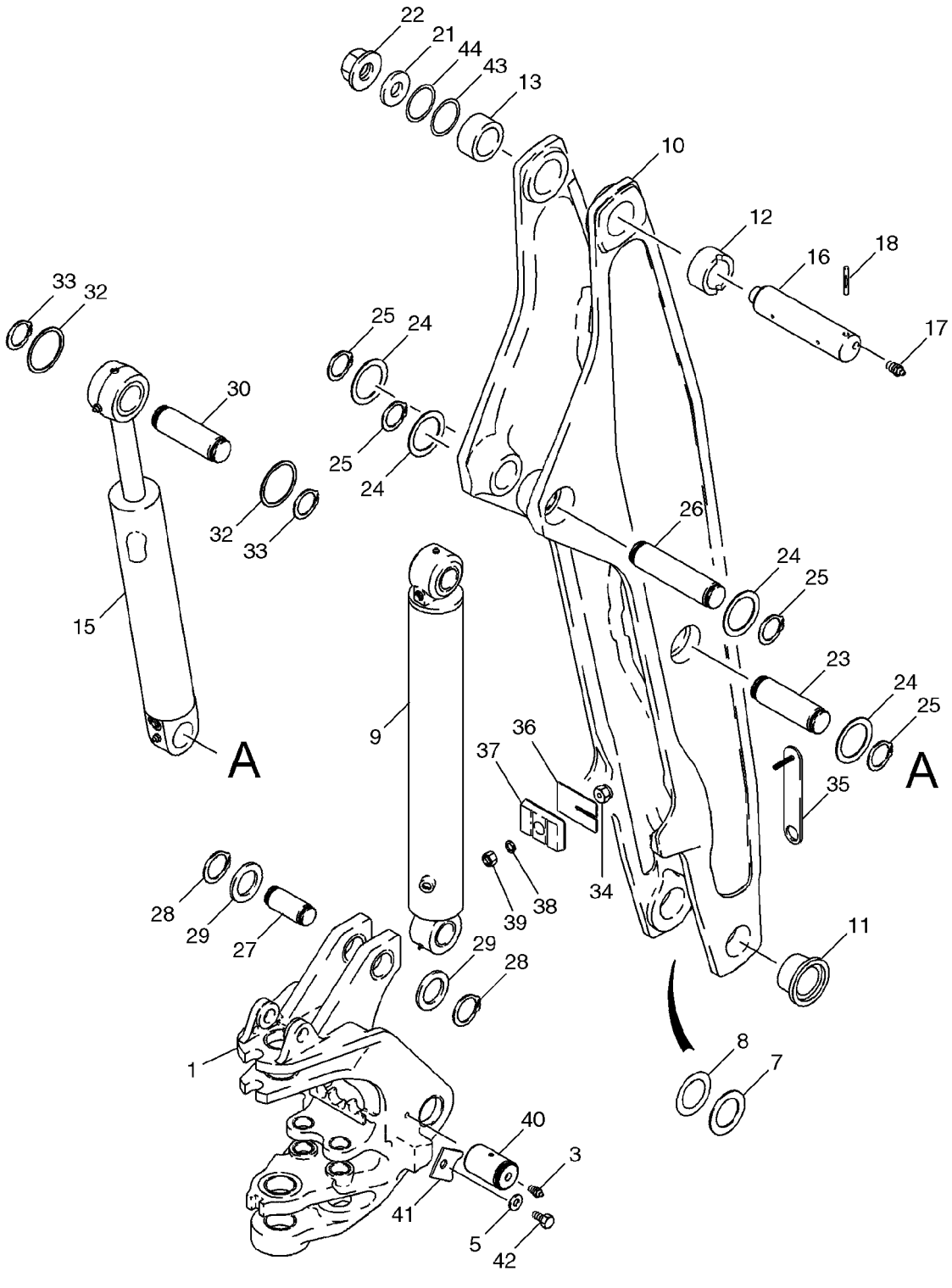

RETROEXCAVADORA - AGUILĎN Y TORRE DE OSCILACIĎN

REF	FN	PART NUMBER	YR/SN	QTY	DENOMINACION
37		87371132		1	PARACHOQUES, Bumper
38		496-81018		1	ARANDELA, Flat
39		829-1410		1	TUERCA, M10, Cl 10
40		87326813		2	PASADOR RANURADO
41		303646A1		2	PIEZA DE SOPORTE
42		604-20035		2	TORNILLO, Hex, Lock, M20 x 35, Cl 8.8
43		404834A1		AR	SUPLEMENTO, 5 mm thk, Concave
44		404835A1		AR	SUPLEMENTO, 5 mm thk, Concave

09-24A		p1	01/08

PLUMA RESGUARDO

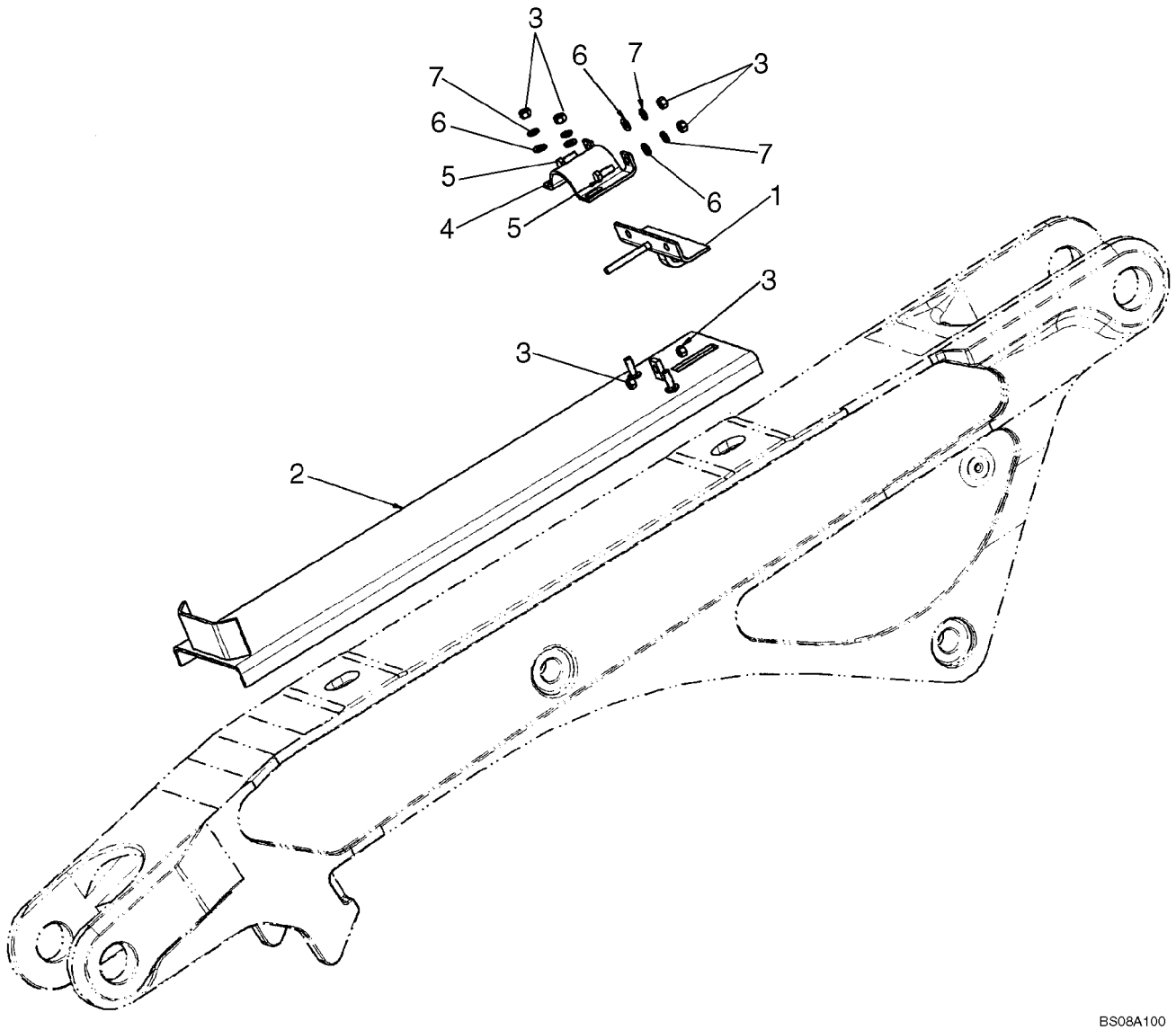

PLUMA RESGUARDO

REF	FN	PART NUMBER	YR/SN	QTY	DENOMINACION
		87537209		1	DEFENSA, Boom; Incl. 1 - 7
1		87537207		1	DEFENSA, Clevis
2		87537201		1	DEFENSA, Boom
3		829-1412		6	TUERCA, M12, Cl 10
4		87537208		1	DEFENSA, Cover
5		614-12030		2	TORNILLO, Hex, M12 x 30, 8.8
6		896-11012		4	ARANDELA, M13.5 x 24.5 x 3, HT
7		892-11012		4	ARANDELA DE FRENO, M12

09-25		p1	10/07

TRABA DEL AGUILĎN (SIN DE CONTROL PILOTO)

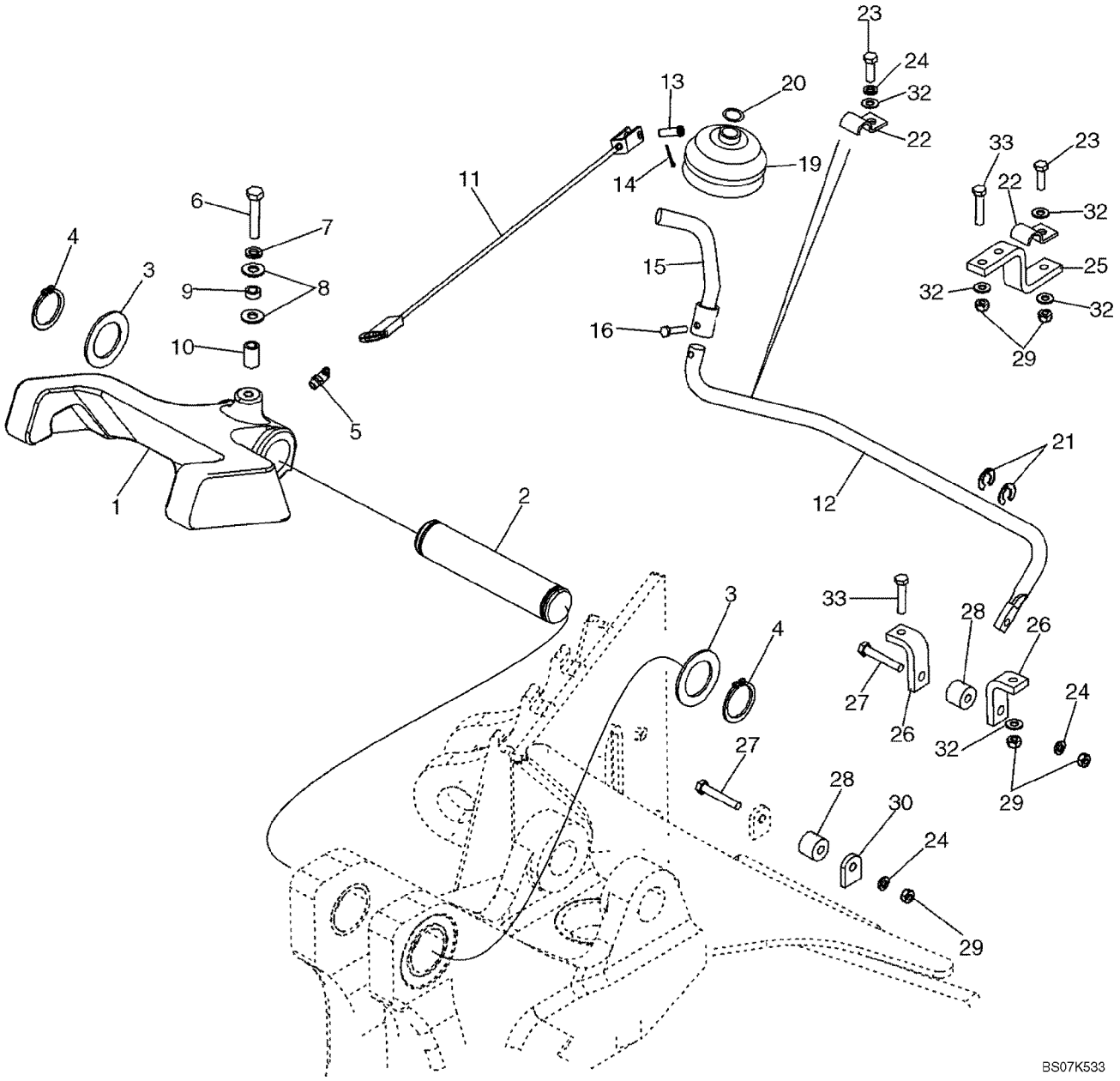

TRABA DEL AGUILĎN (SIN DE CONTROL PILOTO)

REF	FN	PART NUMBER	YR/SN	QTY	DENOMINACION
1		379941A1		1	PESTILLO
2		D129227		1	BULON/PIN, LARGO
3		D144592		2	ARANDELA
4		800-44040		2	ANILLO DE RESORTE, M40, Ext
5		219-55		1	ENGRASADOR, 90Ü, 1/8" NPT x .84" lg
6		614-10050		1	TORNILLO, Hex, M10 x 50, 8.8, Full Thd
7		892-11010		1	ARANDELA DE FRENO, M10
8		895-15010		2	ARANDELA, M11 x 24 x 2
9		87445245		1	SEPARADOR, 15.88 OD x 6.4 W x 2.41 mm thick wall
10		396092A1		1	ESPACIADOR
11		87435924		1	CABLE
12		87441850		1	VARILLA, Boom Latch Release; 6.0 mm Mounting Hole
13		427-5094		1	PASADOR DE HORQUILLA, 5/16" x .940"
14		432-612		1	PASADOR ABIERTO, 3/32" x 3/4"
15		87444149		1	VARILLA (CONJUNTO)
16		87041331		4	TORNILLO, Hex, Lock, M6 x 16, Cl 8.8
19		D86664		1	PROTECTOR
20		D143735		1	COLLAR, Ring
21		D143591		2	ANILLO DE CIERRE, 5/8 dia
22		D143723		2	BRIDA, CLAMP, 5/8
23		614-8025		2	TORNILLO, Hex, M8 x 25, 8.8
24		892-11008		3	ARANDELA DE FRENO, M8
25		87449995		1	PIEZA DE SOPORTE, Rod
26		87449996		2	PIEZA DE SOPORTE, Cable
27		814-8050		2	TORNILLO, Hex, M8 x 50, 8.8
28		86984547		2	GUIA, Roller, Cable Guide
29		829-1408		7	TUERCA, M8, Cl 10
30		87432811		1	PIEZA DE SOPORTE
32		895-11008		7	ARANDELA, M8 x 16 x 1.6
33		614-8030		4	TORNILLO, Hex, M8 x 30, 8.8

09-25A		p1	10/07

TRABA DEL AGUILĎN (CON DE CONTROL PILOTO)

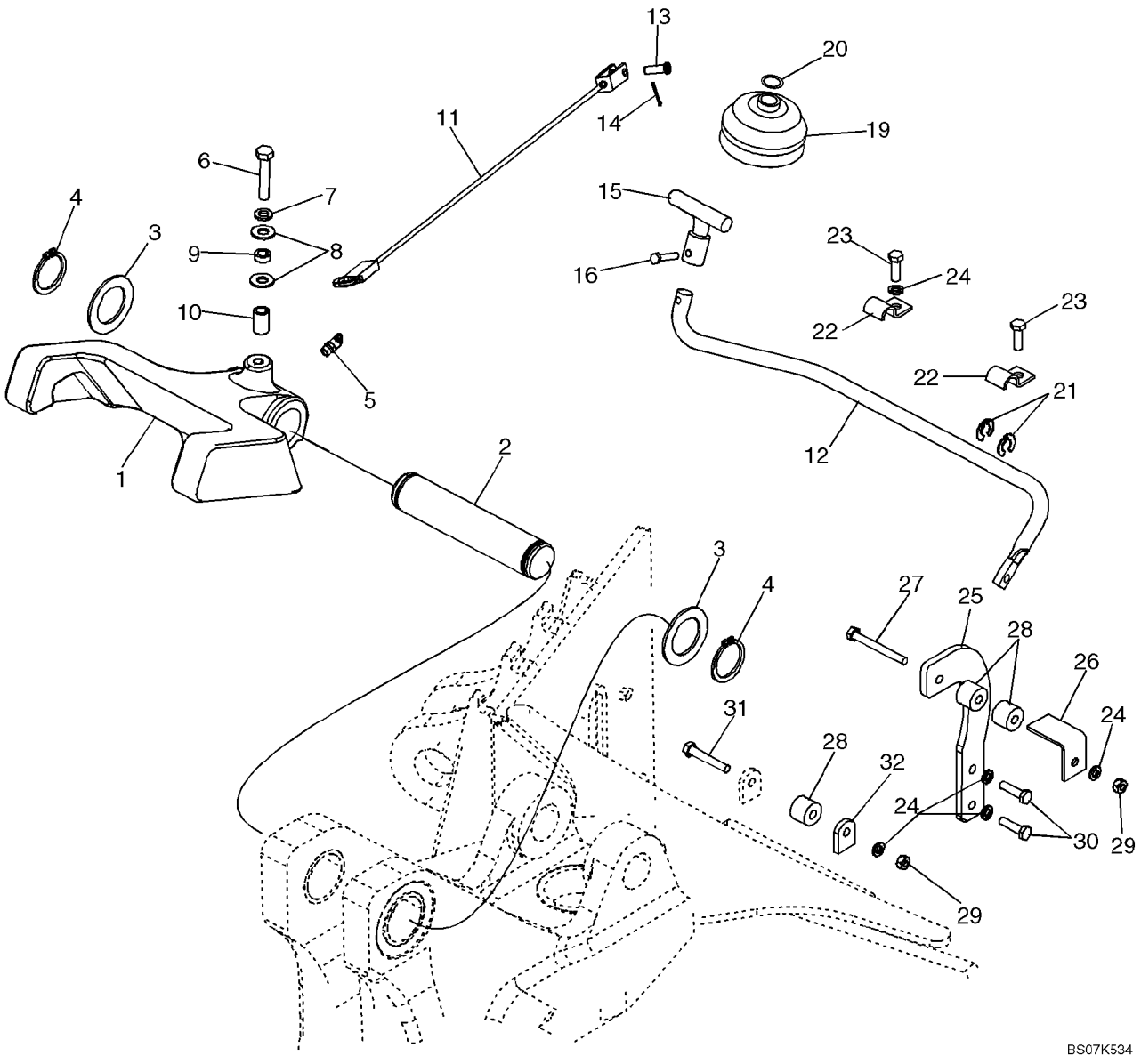

TRABA DEL AGUILĎN (CON DE CONTROL PILOTO)

REF	FN	PART NUMBER	YR/SN	QTY	DENOMINACION
1		379941A1		1	PESTILLO
2		D129227		1	BULON/PIN, LARGO
3		D144592		2	ARANDELA
4		800-44040		2	ANILLO DE RESORTE, M40, Ext
5		219-55		1	ENGRASADOR, 90Ü, 1/8" NPT x .84" lg
6		614-10050		1	TORNILLO, Hex, M10 x 50, 8.8, Full Thd
7		892-11010		1	ARANDELA DE FRENO, M10
8		895-15010		2	ARANDELA, M11 x 24 x 2
9		87445245		1	SEPARADOR
10		396092A1		1	ESPACIADOR
11		87435924		1	CABLE
12		87441850		1	VARILLA, Boom Latch Release
13		427-5094		1	PASADOR DE HORQUILLA, 5/16" x .940"
14		432-612		1	PASADOR ABIERTO, 3/32" x 3/4"
15		87427775		1	VARILLA (CONJUNTO)
16		87041331		1	TORNILLO, Hex, Lock, M6 x 16, Cl 8.8
19		D86664		1	PROTECTOR
20		D143735		1	COLLAR, Ring
21		D143591		2	ANILLO DE CIERRE
22		D143723		2	BRIDA, CLAMP, 5/8
23		614-8025		2	TORNILLO, Hex, M8 x 25, 8.8
24		892-11008		5	ARANDELA DE FRENO, M8
25		86984544		1	PIEZA DE SOPORTE, Roller Mounting
26		86984545		1	PIEZA DE SOPORTE, Cable
27		814-8070		1	TORNILLO, Hex, M8 x 70, 8.8
28		86984547		3	GUIA, Roller, Cable Guide
29		829-1408		2	TUERCA, M8, Cl 10
30		614-8030		2	TORNILLO, Hex, M8 x 30, 8.8
31		814-8050		1	TORNILLO, Hex, M8 x 50, 8.8
32		87432811		1	PIEZA DE SOPORTE

09-26		p1	11/07

RETROEXCAVADORA - PALA Y CUCHARĎN

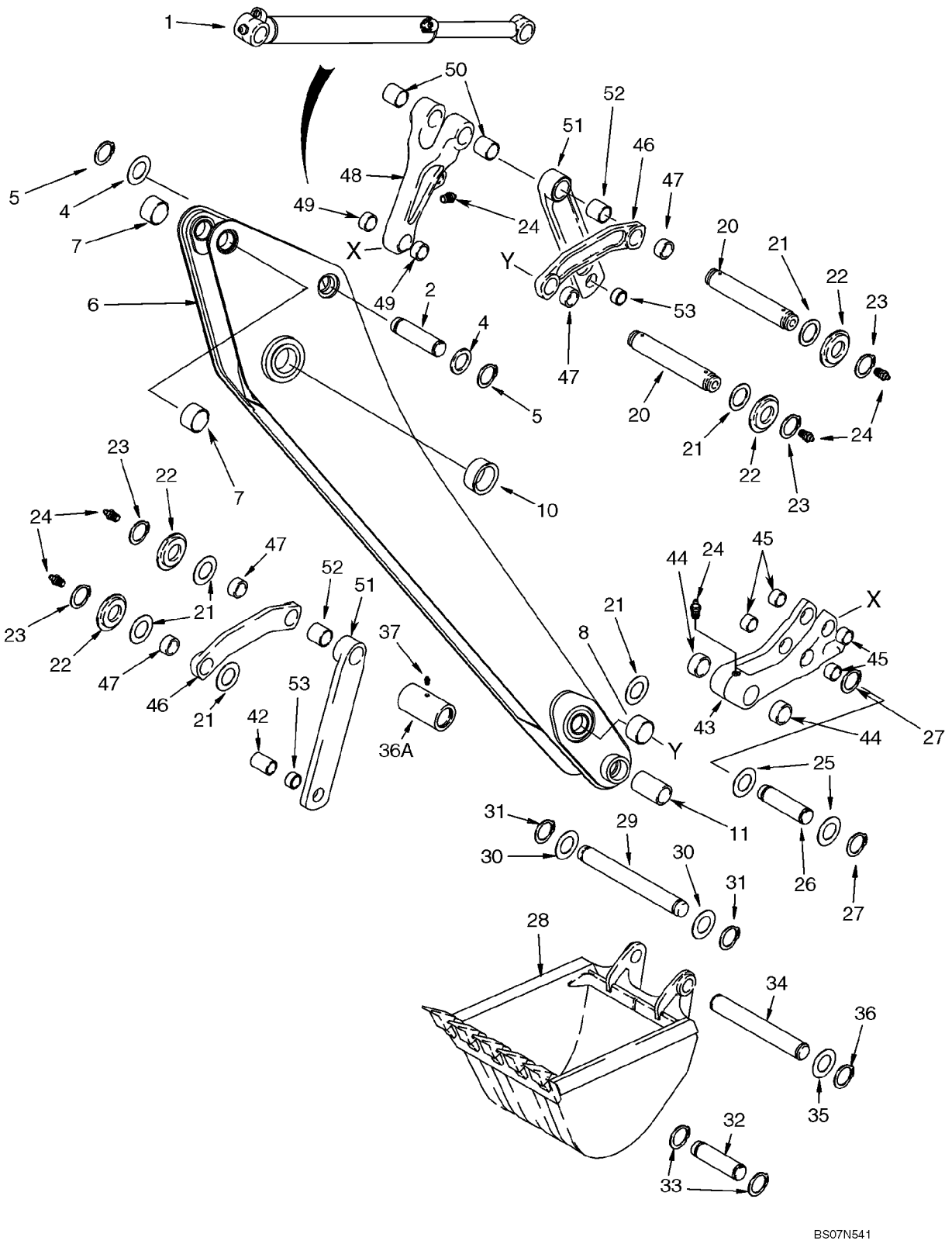

RETROEXCAVADORA - PALA Y CUCHARĎN

REF	FN	PART NUMBER	YR/SN	QTY	DENOMINACION
1		128760A1		1	CILINDRO (CONJUNTO), 83 ID x 872 mm strk; Bucket; See Figure 08-65
2		129041A1		1	BULON/PIN, LARGO
4		495-81226		AR	ARANDELA, 1 13/16" x 2 1/2" x .109"
5		103-16175		2	ANILLO DE RESORTE, #175, Ext
		129884A2		1	ESCUADRA DE TRANSMIS, Incl. Ref 6 - 10
6		NSS		1	NO SE REPARA SEPARADAM., Dipper
7		D145978		2	CASQUILLO
8		D140029		2	CASQUILLO, 50 x 60 x 25.5 mm lg
10		D150121		2	CASQUILLO, 70 ID x 36 mm lg
11		87451279		2	CASQUILLO, 44.6 (1-3/4) ID x 57.15 (2-1/4) OD x 68 mm (2-11/16 in) long; Not Included In Assembly; Purchase Separately
20		D141142		2	BULON/PIN, LARGO, 306 mm lg, Guide Link
21		495-81282		AR	ARANDELA, 2 1/16" x 3" x .109"
22		D141164		4	ESPACIADOR
23		103-16175		4	ANILLO DE RESORTE, #175, Ext
24		219-1		6	ENGRASADOR, 1/8"-27 x .66 lg
25		495-81226		2	ARANDELA, 1 13/16" x 2 1/2" x .109"
26		D146288		1	BULON/PIN, LARGO
27		103-16175		2	ANILLO DE RESORTE, #175, Ext
28		REF		1	MANUAL, Bucket; See Figure(s) 09-28 - 09-35
29		D37614		1	PERNO
30		D143324		2	ARANDELA
31		D25279		2	ANILLO DE CIERRE
32		D149298		1	PERNO, 305 mm (12 inch) Universal Bucket Only
33		103-16175		2	ANILLO DE RESORTE, #175, Ext
34		D150619		1	BULON/PIN, LARGO, All Buckets Except 12 Inch (305 mm) Buckets
35		495-81226		AR	ARANDELA, 1 13/16" x 2 1/2" x .109"
36		103-16175		2	ANILLO DE RESORTE, #175, Ext
36A		87451280		1	SEPARADOR, 67 (2-5/8) OD x 138 mm (5-7/16 in) long
37		219-1		1	ENGRASADOR, 1/8"-27 x .66 lg

RETROEXCAVADORA - PALA Y CUCHARĎN

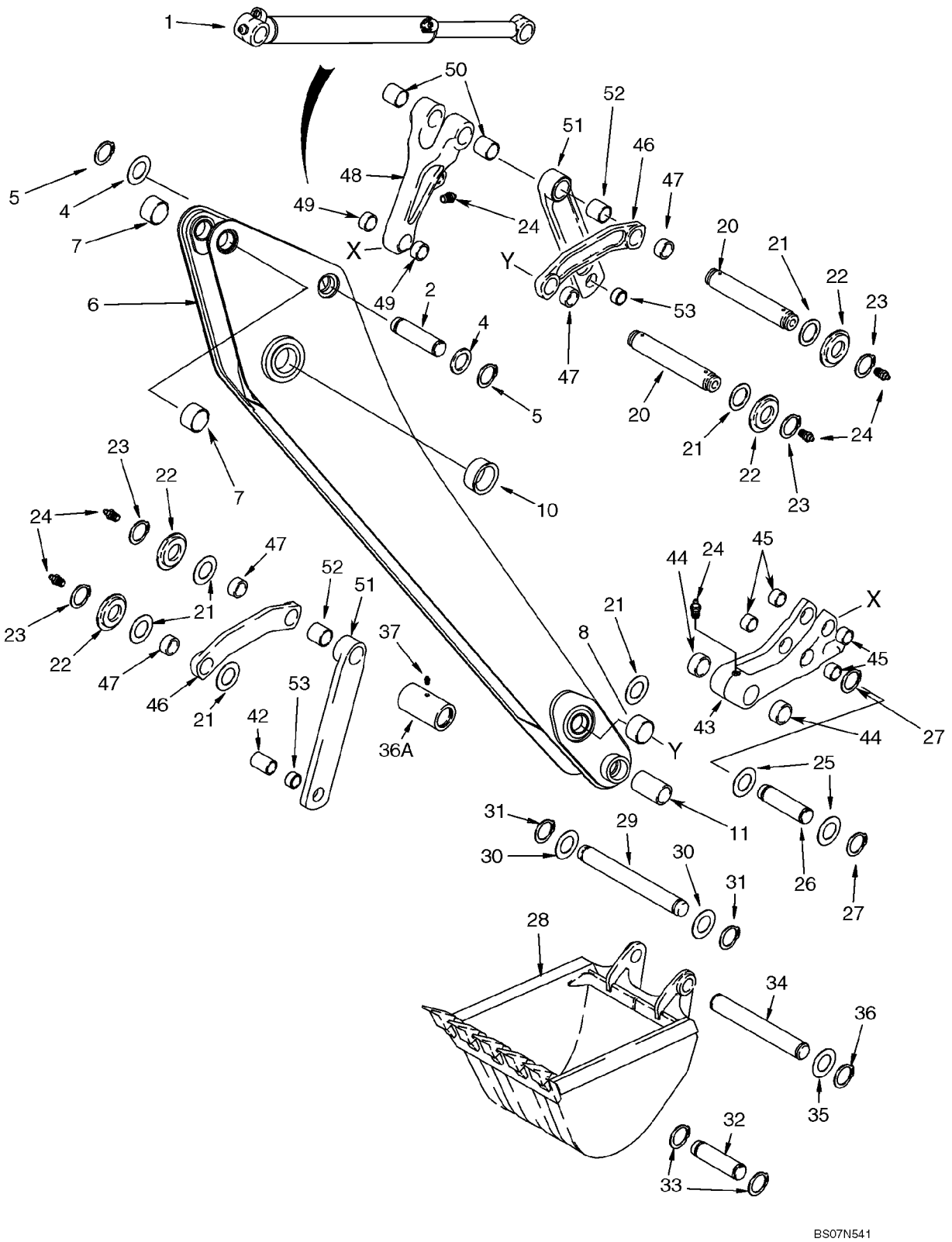

RETROEXCAVADORA - PALA Y CUCHARĎN

REF	FN	PART NUMBER	YR/SN	QTY	DENOMINACION
42		D141075		1	ESPACIADOR, 40 (1-9/16) ID x 47 (1-27/32) OD x 71 mm (2-51/64 in) long
		281185A1		1	ELEMENTO DE ACOPLAM., Bucket, Incl. Ref 43 - 45
43		NSS		1	NO SE REPARA SEPARADAM., Coupler, Quick
44		D127167		2	CASQUILLO, 30 mm lg
45		107124A1		4	CASQUILLO, 29 mm lg
46		348706A1		2	ESLABON (CONJUNTO), Bucket Guide, Incl. Ref 47
47		D149079		2	CASQUILLO, 50 x 34 mm lg
48		400398A1		1	ESLABON (CONJUNTO), Bucket Dump, Incl. Ref 49, 50
49		107124A1		2	CASQUILLO
50		D138047		2	CASQUILLO, 54 mm (2-1/8 in) lg
51		244790A1		2	ESLABON (CONJUNTO), Standard Equipment; Bucket Dump; Incl. Ref 52, 53
52		D138047		1	CASQUILLO, 54 mm (2-1/8 in) lg
53		D31140		1	CASQUILLO

09-27		p1	02/08

RETROEXCAVADORA - PALA, EXTENSIBLE

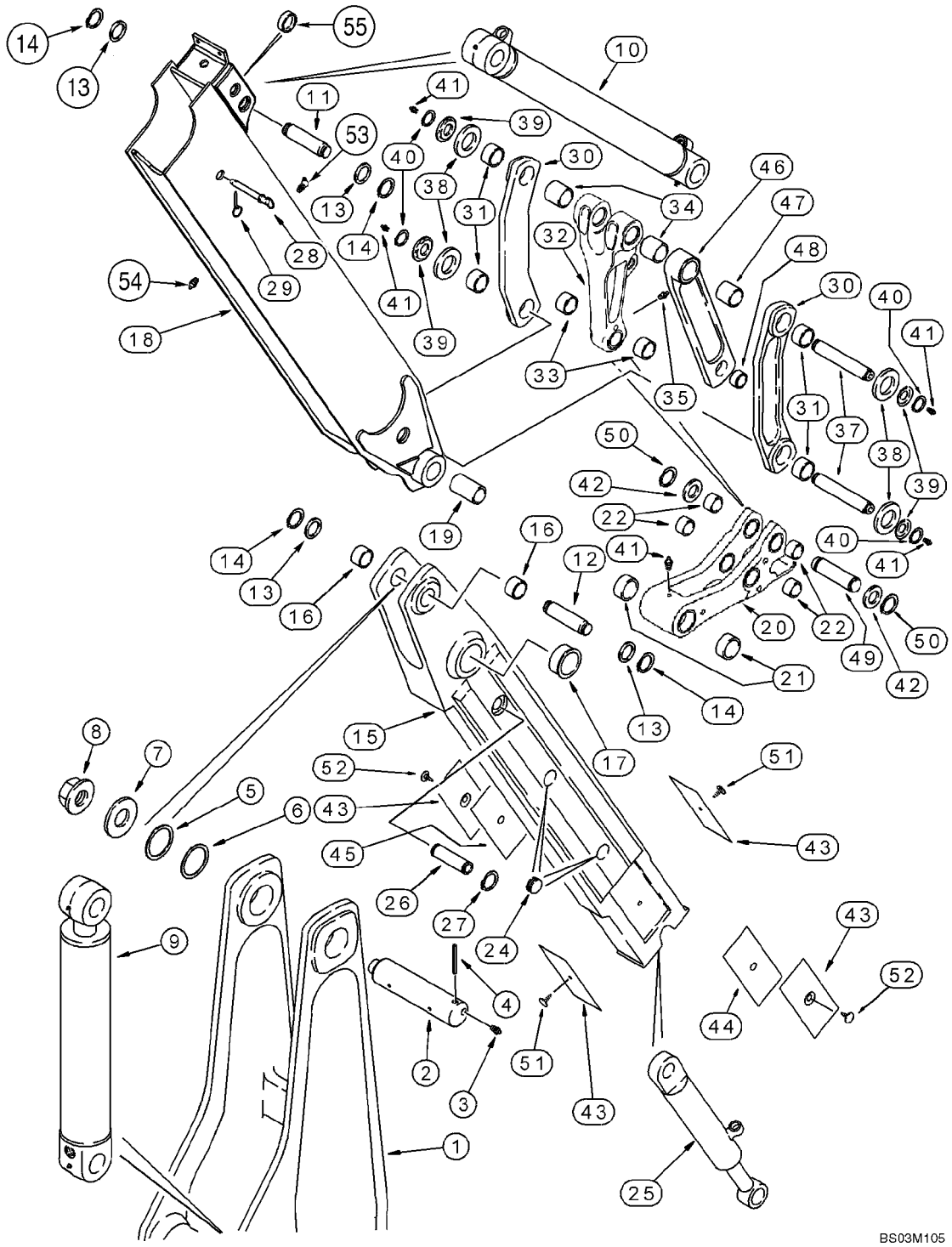

RETROEXCAVADORA - PALA, EXTENSIBLE

REF	FN	PART NUMBER	YR/SN	QTY	DENOMINACION
1		129883A1		1	PLUMA, See Figure 09-24
2		D132494		1	BULON/PIN, LARGO
3		219-1		2	ENGRASADOR, 1/8"-27 x .66 lg
4		135-51652		1	PASADOR RANURADO, 1/2" x 3 1/4"
5		404834A1		AR	SUPLEMENTO
6		404835A1		AR	SUPLEMENTO
7		D133632		1	ARANDELA
8		181042A1		1	TUERCA, Flange, Special
9		233114A2		1	CILINDRO (CONJUNTO), 108 ID x 686 mm strk, Dipper; See Figure 08-64
10		128760A1		1	CILINDRO (CONJUNTO), 83 ID x 872 mm strk, Bucket; See Figure 08-65
11		D141666		1	BULON/PIN, LARGO
12		129041A1		1	BULON/PIN, LARGO
13		495-81282		2	ARANDELA, 2 1/16" x 3" x .109"
14		103-16175		4	ANILLO DE RESORTE, #175, Ext
		122503A1		1	ESCUADRA DE TRANSMIS, Inner; Incl. Ref 15 - 17
15		NSS		1	NO SE REPARA SEPARADAM., Dipper
16		D145978		2	CASQUILLO
17		D150121		2	CASQUILLO, 70 ID x 36 mm lg
18		87619781		1	ESCUADRA DE TRANSMIS, Outer Dipper; Incl. Ref 53, 54; Replaces 87436235
19		307186A1		2	CASQUILLO, 104 mm lg
		281185A1		1	ELEMENTO DE ACOPLAM., Bucket; Incl. Ref 20 - 22
20		NSS		1	NO SE REPARA SEPARADAM., Coupler, Quick
21		D127167		2	CASQUILLO, 30 mm lg
22		107124A1		4	CASQUILLO, 29 mm lg
24		D133865		4	TAPčN
25		1340969C2		1	CILINDRO (CONJUNTO), 76 ID x 1068 mm strk, Extendable Dipper; See Figure 08-66
26		300588A1		1	BULON/PIN, LARGO
27		800-44040		2	ANILLO DE RESORTE, M40, Ext
28		D140247		1	BULON/PIN, LARGO, Lock, Transport
29		A33509		1	BULON/PIN, LARGO
30		348706A1		2	ESLABON (CONJUNTO), Bucket Guide, Incl. Ref 31

09-27		p2	02/08

RETROEXCAVADORA - PALA, EXTENSIBLE

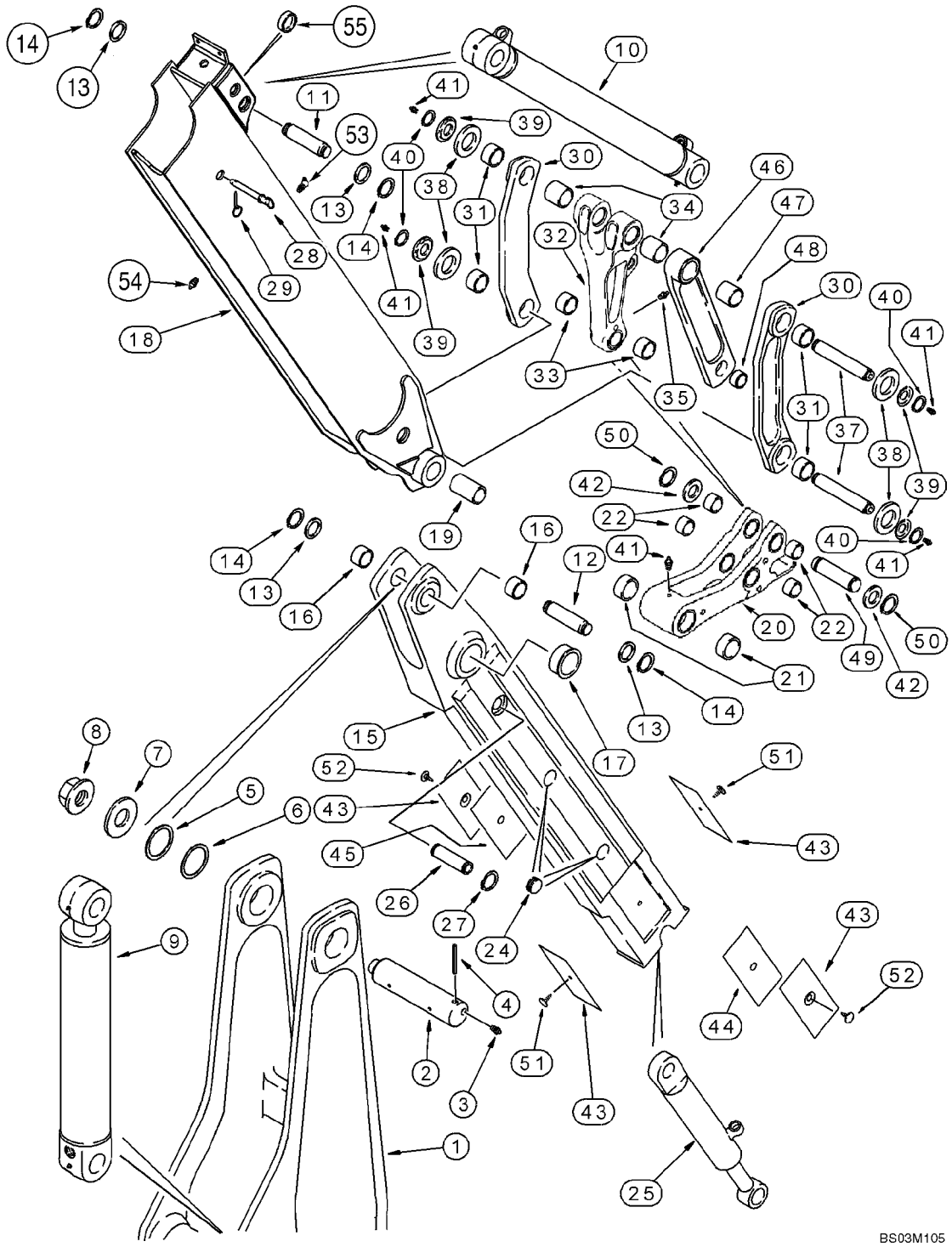

RETROEXCAVADORA - PALA, EXTENSIBLE

REF	FN	PART NUMBER	YR/SN	QTY	DENOMINACION
31		D149079		2	CASQUILLO, 50 x 34 mm lg
32		400398A1		1	ESLABON (CONJUNTO), Bucket Dump, Incl. Ref 33, 34
33		107124A1		2	CASQUILLO
34		D138047		2	CASQUILLO, 54 mm (2-1/8 in) lg
35		219-1		1	ENGRASADOR, 1/8"-27 x .66 lg
37		D141142		2	BULON/PIN, LARGO, 306 mm lg
38		495-81282		4	ARANDELA, 2 1/16" x 3" x .109"
39		D141164		4	ESPACIADOR
40		103-16175		4	ANILLO DE RESORTE, #175, Ext
41		219-1		5	ENGRASADOR, 1/8"-27 x .66 lg
42		495-81226		2	ARANDELA, 1 13/16" x 2 1/2" x .109"
43		451384A1		4	PLACA DE DESGASTE
44		132844A1		1	SUPLEMENTO, 0.8 mm thk
45		132842A1		1	SUPLEMENTO, 1.6 mm thk
46		244790A1		2	ESLABON (CONJUNTO), Bucket Dump; Standard Equipment; Incl. Ref 47, 48
47		D138047		1	CASQUILLO, 54 mm (2-1/8 in) lg
48		D31140		1	CASQUILLO
49		D146288		1	BULON/PIN, LARGO
50		103-16175		2	ANILLO DE RESORTE, #175, Ext
51		183443A1		2	BULON/PIN, LARGO
52		183509A1		2	BULON/PIN, LARGO
53		219-89		1	ENGRASADOR, 45Ü, 1/8" NPT x .78" lg, Drive
54		219-86		1	ENGRASADOR, 1/8" x .62" lg, Drive
55		396483A1		2	ESPACIADOR

09-28		p1	12/07

CUCHARĎN, RETROEXCAVADORA UNIVERSAL (305 MM (12 INCH) WIDE)

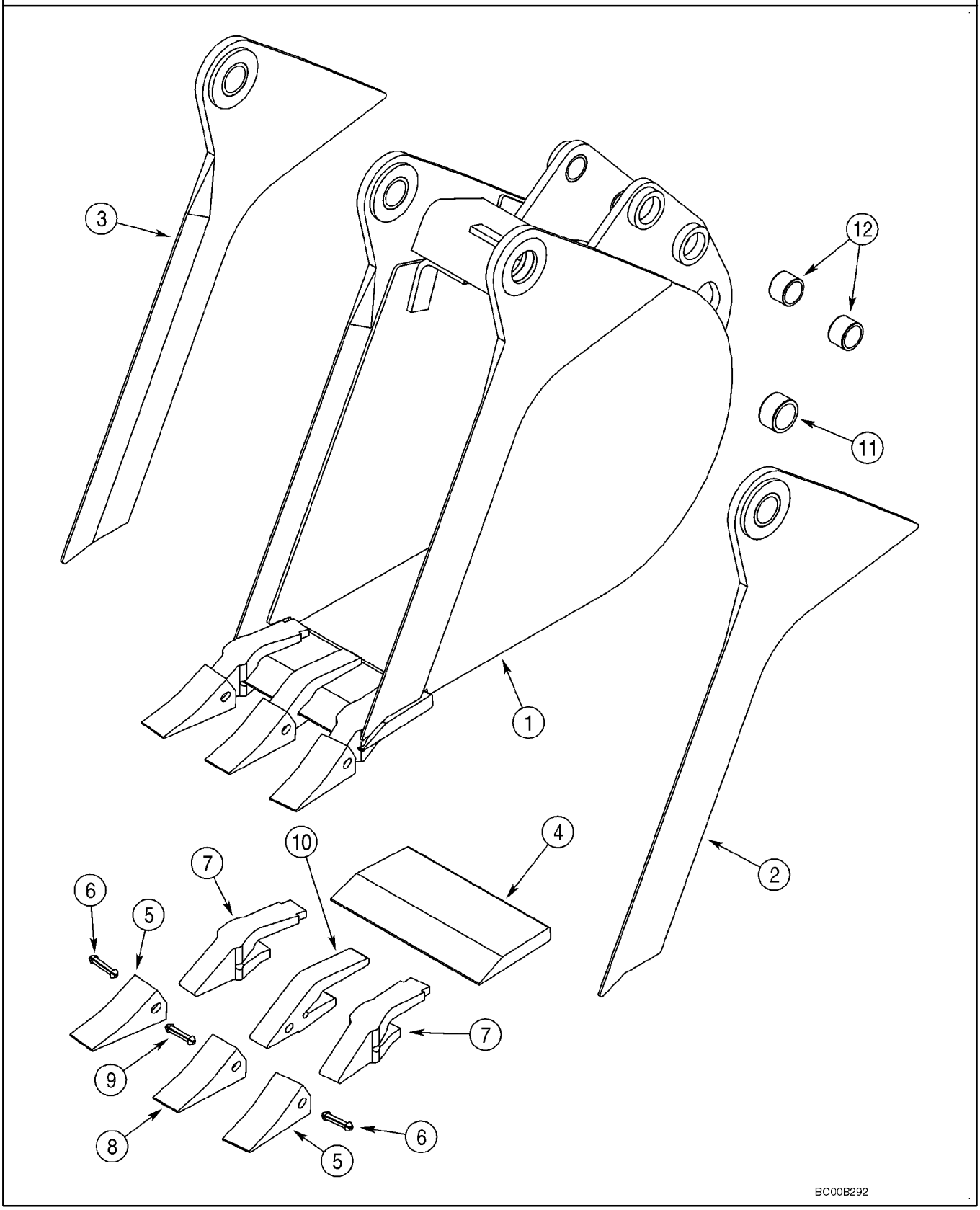

CUCHARĎN, RETROEXCAVADORA UNIVERSAL (305 MM (12 INCH) WIDE)

REF	FN	PART NUMBER	YR/SN	QTY	DENOMINACION
1		381488A4		1	CUCHARA, 305 mm (12 in); With 3 Teeth; Order Through Parts Marketing; Incl. Ref 2 - 12
2		NSS		1	NO SE REPARA SEPARADAM., Edge, Right-Hand; Incl. Ref 11
3		NSS		1	NO SE REPARA SEPARADAM., Edge, Left-Hand; Incl. Ref 11
4		D147409		1	CUCHILLA DE ATAQUE
		D139851		2	DIENTE, Outer; Incl. Ref 5 - 7
5		D51750		1	PUNTA
6		245466A1		1	PASADOR
7		D138157		1	PIE
		D139849		1	DIENTE, Center; Incl. Ref 8 - 10; Order Ref 8 - 10
8		D51750		1	PUNTA
9		245466A1		1	PASADOR
10		D48212		1	PIE
11		D43940		2	CASQUILLO, 1-3/4 x 2-1/4 x 1
12		D30933		4	CASQUILLO

09-29		p1	12/07

CUCHARĎN, RETROEXCAVADORA UNIVERSAL (406 MM (16 INCH) WIDE)

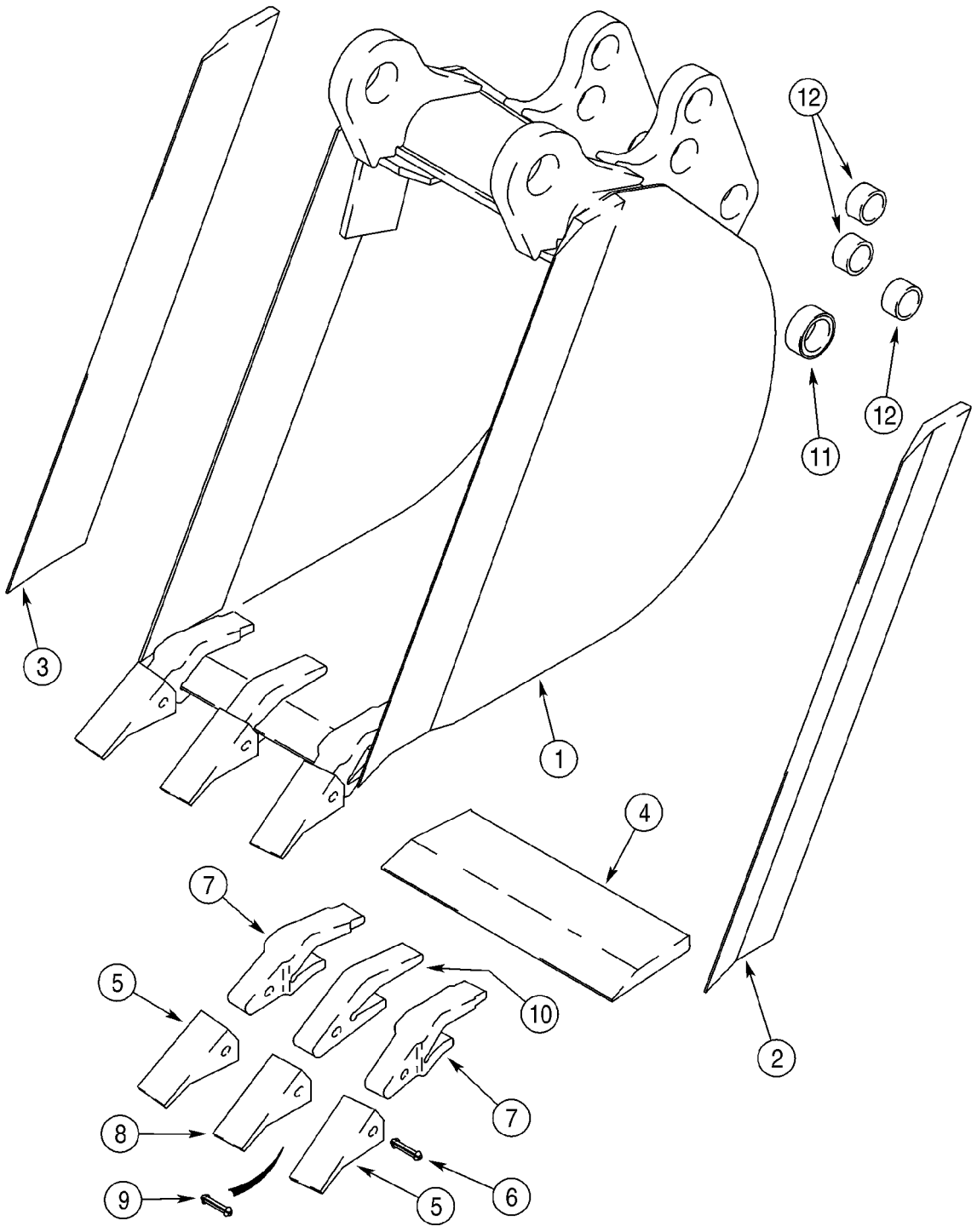

CUCHARĎN, RETROEXCAVADORA UNIVERSAL (406 MM (16 INCH) WIDE)

REF	FN	PART NUMBER	YR/SN	QTY	DENOMINACION
1		388843A1		1	CUCHARA, 406 mm (16 in); With 3 Teeth; Order Through Parts Marketing; Incl. Ref 2 - 12
2		D146421		1	CUCHILLA DE ATAQUE, Right-Hand
3		D146420		1	CUCHILLA DE ATAQUE, Left-Hand
4		D147249		1	BORDE
		D139851		2	DIENTE, Outer; Incl. Ref 5 - 7
5		D51750		1	PUNTA
6		245466A1		1	PASADOR
7		D138157		1	PIE
		D139849		1	DIENTE, Center; Incl. Ref 8 - 10; Order Ref 8 - 10
8		D51750		1	PUNTA
9		245466A1		1	PASADOR
10		D48212		1	PIE
11		D37495		2	CASQUILLO
12		D30933		6	CASQUILLO

09-30		p1	12/07

CUCHARĎN, RETROEXCAVADORA UNIVERSAL (457 MM (18 INCH) WIDE)

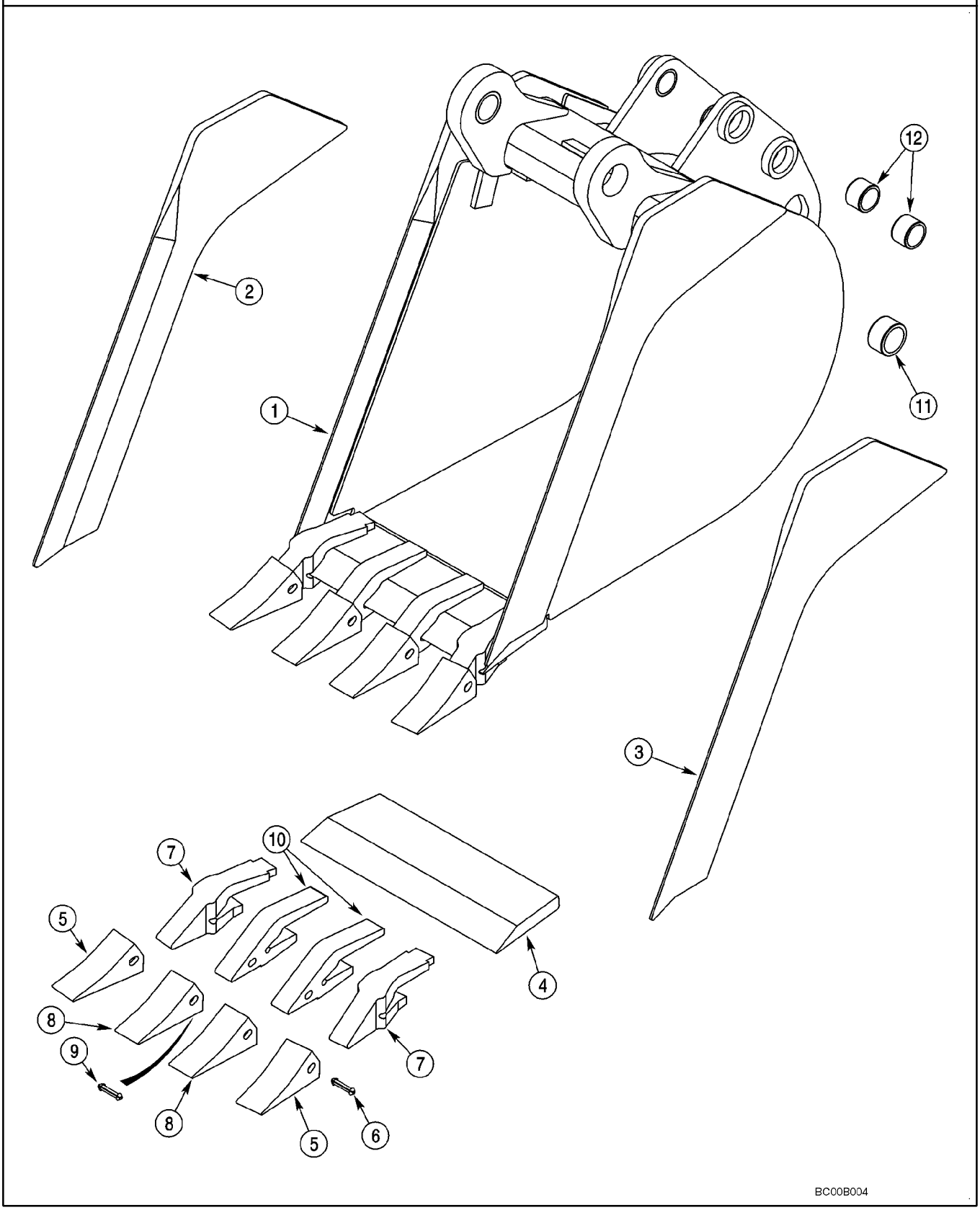

CUCHARĎN, RETROEXCAVADORA UNIVERSAL (457 MM (18 INCH) WIDE)

REF	FN	PART NUMBER	YR/SN	QTY	DENOMINACION
1		376384A1		1	CUCHARA, 457 mm (18 in); With 4 Teeth; Order Through Parts Marketing; Incl. Ref 2 - 12
2		NSS		1	NO SE REPARA SEPARADAM., Edge, Right-Hand
3		NSS		1	NO SE REPARA SEPARADAM., Edge, Left-Hand
4		NSS		1	NO SE REPARA SEPARADAM., Edge
		D139851		2	DIENTE, Outer; Incl. Ref 5 - 7
5		D51750		1	PUNTA
6		245466A1		1	PASADOR
7		D138157		1	PIE
		D139849		2	DIENTE, Center; Incl. Ref 8 - 10; Order Ref 8 - 10
8		D51750		1	PUNTA
9		245466A1		1	PASADOR
10		D48212		1	PIE
11		D37495		2	CASQUILLO
12		D30933		4	CASQUILLO

09-31		p1	12/07

CUCHARĎN, RETROEXCAVADORA (457 MM (18 INCH) WIDE)

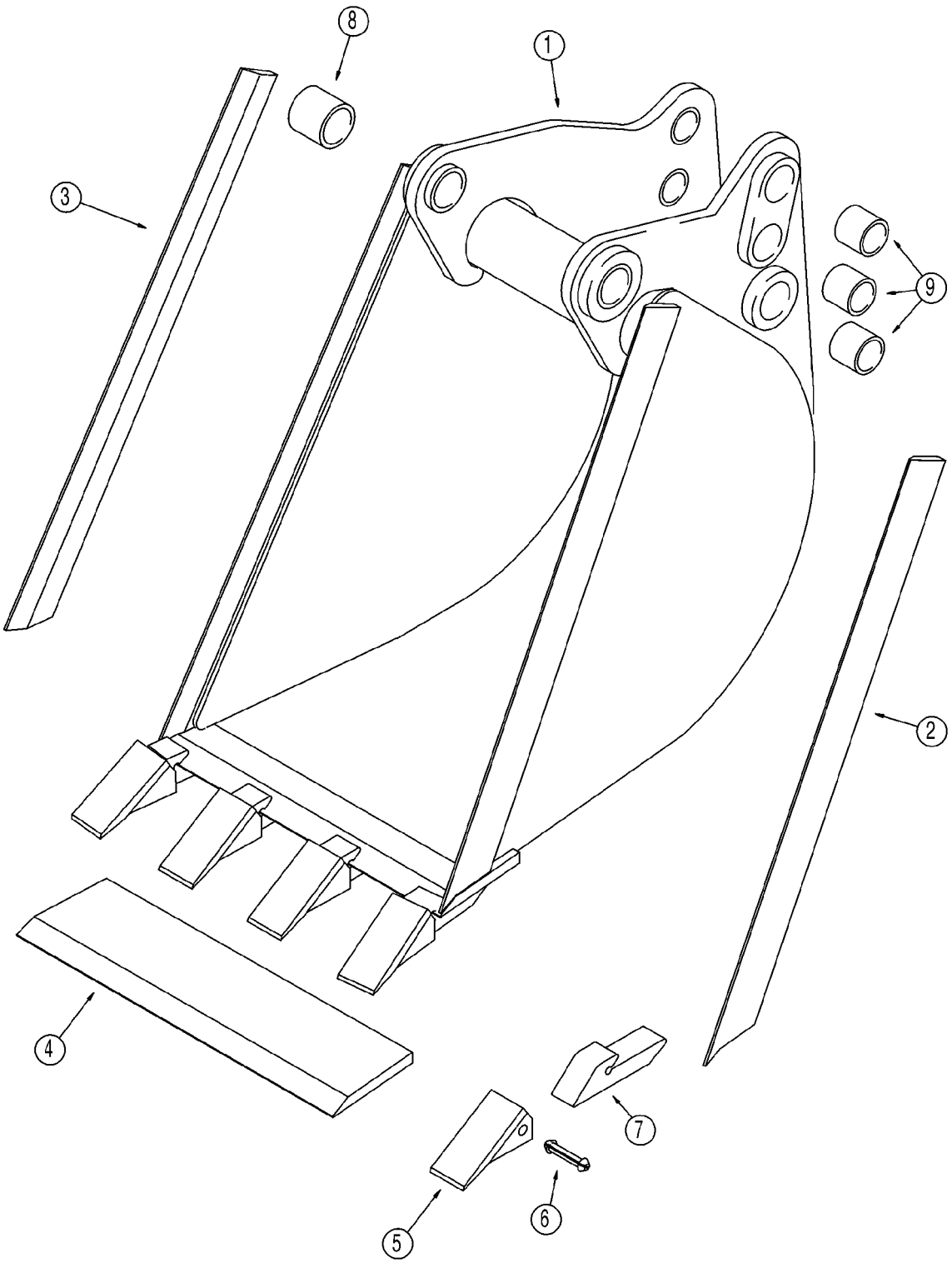

CUCHARĎN, RETROEXCAVADORA (457 MM (18 INCH) WIDE)

REF	FN	PART NUMBER	YR/SN	QTY	DENOMINACION
1		183808A1		1	CUCHARA, 457 mm (18 in); With 4 Teeth; Order Through Parts Marketing; Incl. Ref 2 - 9
2		129894A1		1	BORDE, Right-Hand
3		129893A1		1	BORDE, Left-Hand
4		183810A1		1	BORDE
		D41659		4	DIENTE, Incl. Ref 5 - 7
5		D51750		1	PUNTA
6		245466A1		1	PASADOR
7		NSS		1	NO SE REPARA SEPARADAM., Shank
8		D37495		2	CASQUILLO
9		D30933		6	CASQUILLO

09-32		p1	12/07

CUCHARĎN, RETROEXCAVADORA UNIVERSAL (610 MM (24 INCH) / 762 MM (30 INCH) WIDE)

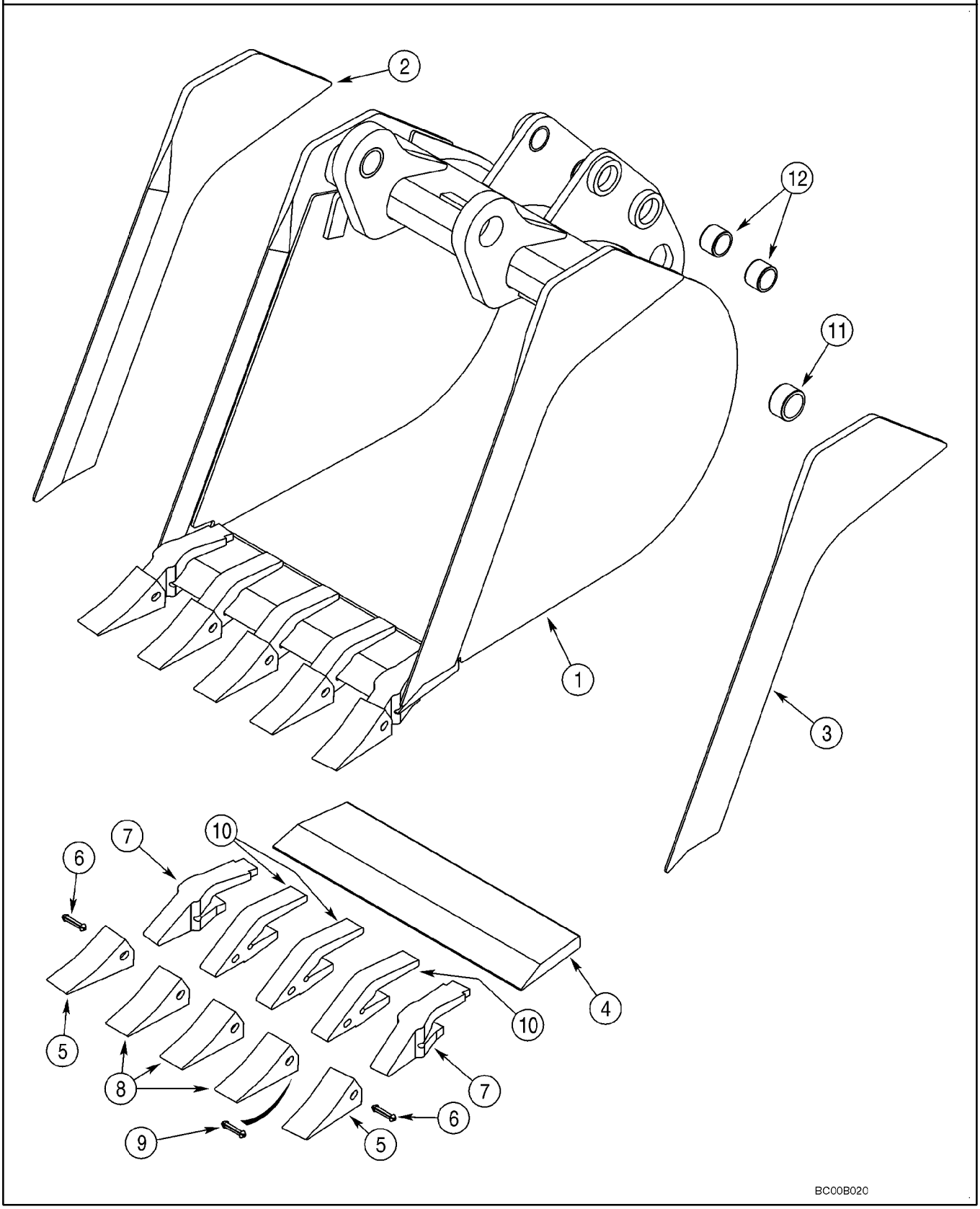

CUCHARĎN, RETROEXCAVADORA UNIVERSAL (610 MM (24 INCH) / 762 MM (30 INCH) WIDE)

REF	FN	PART NUMBER	YR/SN	QTY	DENOMINACION
1		365328A1		1	CUCHARA, 610 mm (24 in); With 5 Teeth; Order Through Parts Marketing; Incl. Ref 2 - 12
2		NSS		1	NO SE REPARA SEPARADAM., Edge, Right-Hand
3		NSS		1	NO SE REPARA SEPARADAM., Edge, Left-Hand
4		NSS		1	NO SE REPARA SEPARADAM., Edge
		D139851		2	DIENTE, Outer; Incl. Ref 5 - 7
5		D51750		1	PUNTA
6		245466A1		1	PASADOR
7		D138157		1	PIE
		D139849		3	DIENTE, Center; Incl. Ref 8 - 10; Order Ref 8 - 10
8		D51750		1	PUNTA
9		245466A1		1	PASADOR
10		D48212		1	PIE
11		D37495		2	CASQUILLO
12		D30933		4	CASQUILLO
1		376385A1		1	CUCHARA, 762 mm (30 in); With 6 Teeth; Not Illustrated; Order Through Parts Marketing; Incl. Ref 2 - 12
2		NSS		1	NO SE REPARA SEPARADAM., Edge, Right-Hand
3		NSS		1	NO SE REPARA SEPARADAM., Edge, Left-Hand
4		NSS		1	NO SE REPARA SEPARADAM., Edge
		D139851		2	DIENTE, Outer; Incl. Ref 5 - 7
5		D51750		1	PUNTA
6		245466A1		1	PASADOR
7		D138157		1	PIE
		D139849		4	DIENTE, Center; Incl. Ref 8 - 10; Order Ref 8 - 10
8		D51750		1	PUNTA
9		245466A1		1	PASADOR
10		D48212		1	PIE
11		D37495		2	CASQUILLO
12		D30933		4	CASQUILLO

09-33		p1	12/07

CUCHARĎN, RETROEXCAVADORA (610 MM (24 INCH) WIDE)

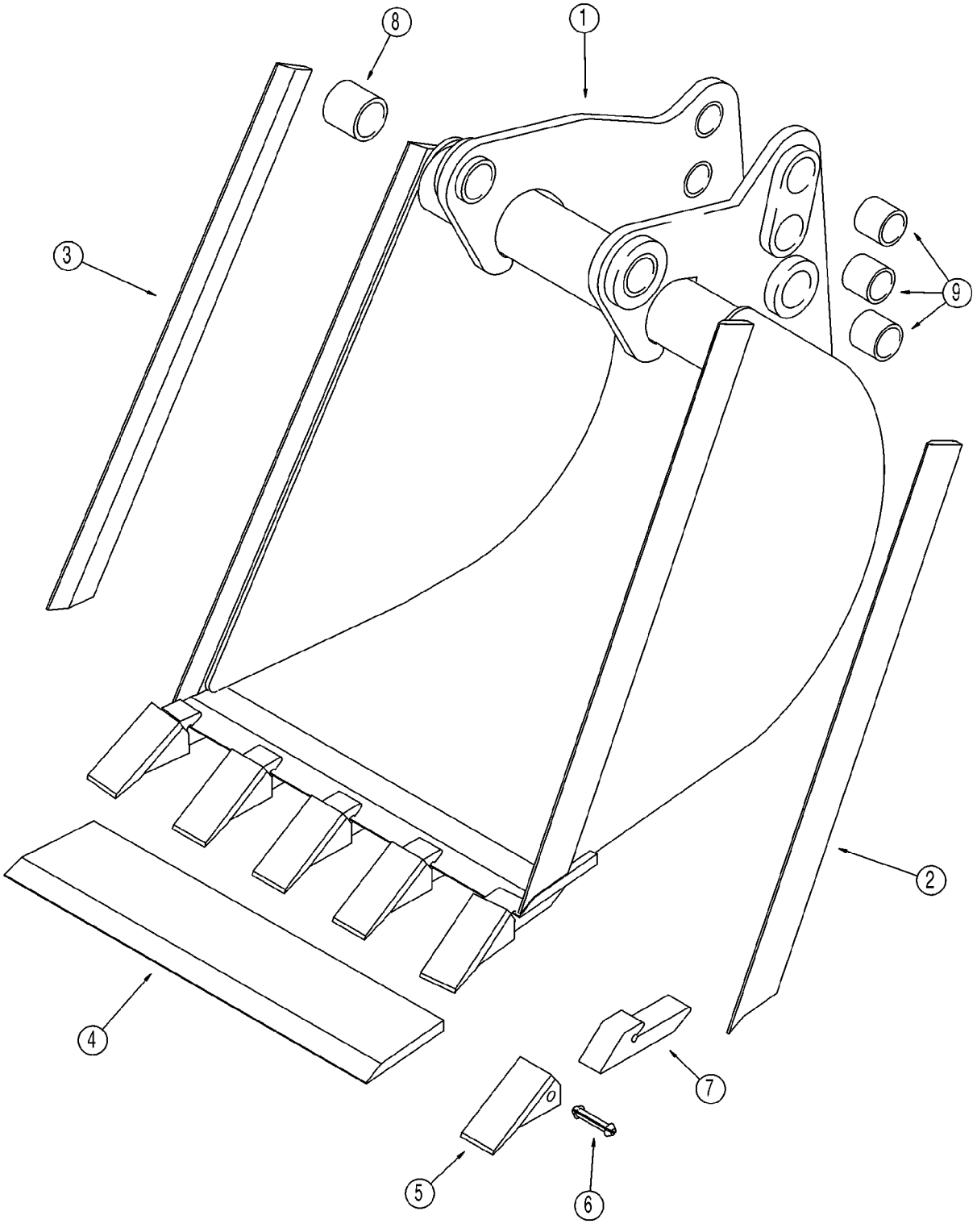

CUCHARĎN, RETROEXCAVADORA (610 MM (24 INCH) WIDE)

REF	FN	PART NUMBER	YR/SN	QTY	DENOMINACION
1		129885A1		1	CUCHARA, 610 mm (24 in); With 5 Teeth; Order Through Parts Marketing; Incl. Ref 2 - 9
2		129894A1		1	BORDE, Right-Hand
3		129893A1		1	BORDE, Left-Hand
4		129944A1		1	APOYADERO
		D41659		5	DIENTE, Incl. Ref 5 - 7
5		D51750		1	PUNTA
6		245466A1		1	PASADOR
7		NSS		1	NO SE REPARA SEPARADAM., Shank
8		D37495		2	CASQUILLO
9		D30933		6	CASQUILLO

09-34		p1	12/07

CUCHARĎN, RETROEXCAVADORA UNIVERSAL (914 MM (36 INCH) WIDE)

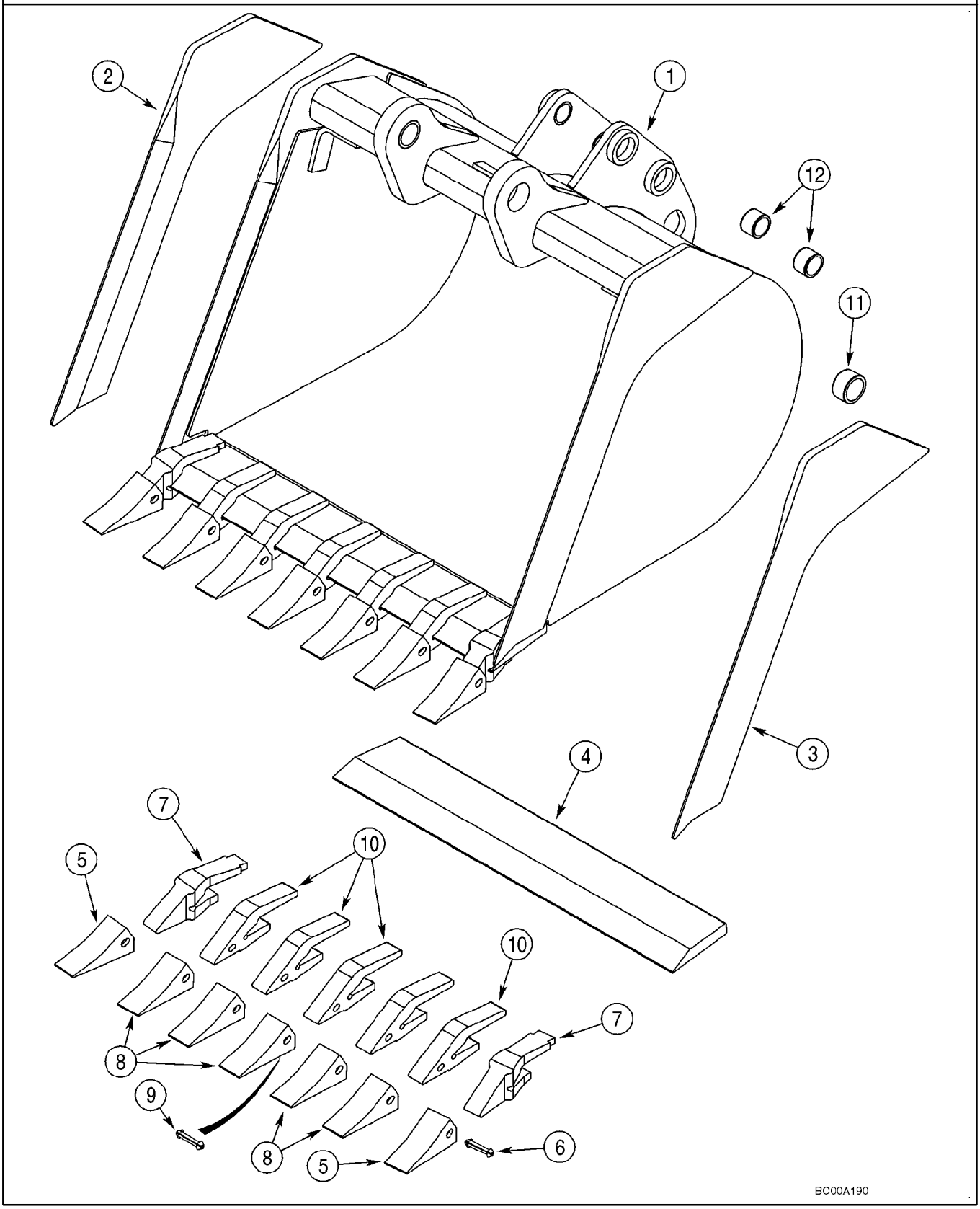

CUCHARĎN, RETROEXCAVADORA UNIVERSAL (914 MM (36 INCH) WIDE)

REF	FN	PART NUMBER	YR/SN	QTY	DENOMINACION
1		376386A1		1	CUCHARA, 914 mm (36 in); With 7 Teeth; Order Through Parts Marketing; Incl. Ref 2 - 12
2		365941A1		1	CUCHILLA DE ATAQUE, Edge, Left-Hand
3		365942A1		1	CUCHILLA DE ATAQUE, Edge, Right-Hand
		370747A1		1	DIENTE DE CUCHARA, CUTTING EDGE ASSEMBLY; With Teeth; Incl Ref 4 - 10
4		NSS		1	NO SE REPARA SEPARADAM., Edge
		D139851		2	DIENTE, Outer; Incl. Ref 5 - 7
5		D51750		1	PUNTA
6		245466A1		1	PASADOR
7		D138157		1	PIE
		D139849		5	DIENTE, Center; Incl. Ref 8 - 10; Order Ref 8 - 10
8		D51750		1	PUNTA
9		245466A1		1	PASADOR
10		D48212		1	PIE
11		D37495		2	CASQUILLO
12		D30933		4	CASQUILLO

09-35		p1	12/07

CUCHARĎN, RETROEXCAVADORA UNIVERSAL (610 MM (24 INCH) WIDE)

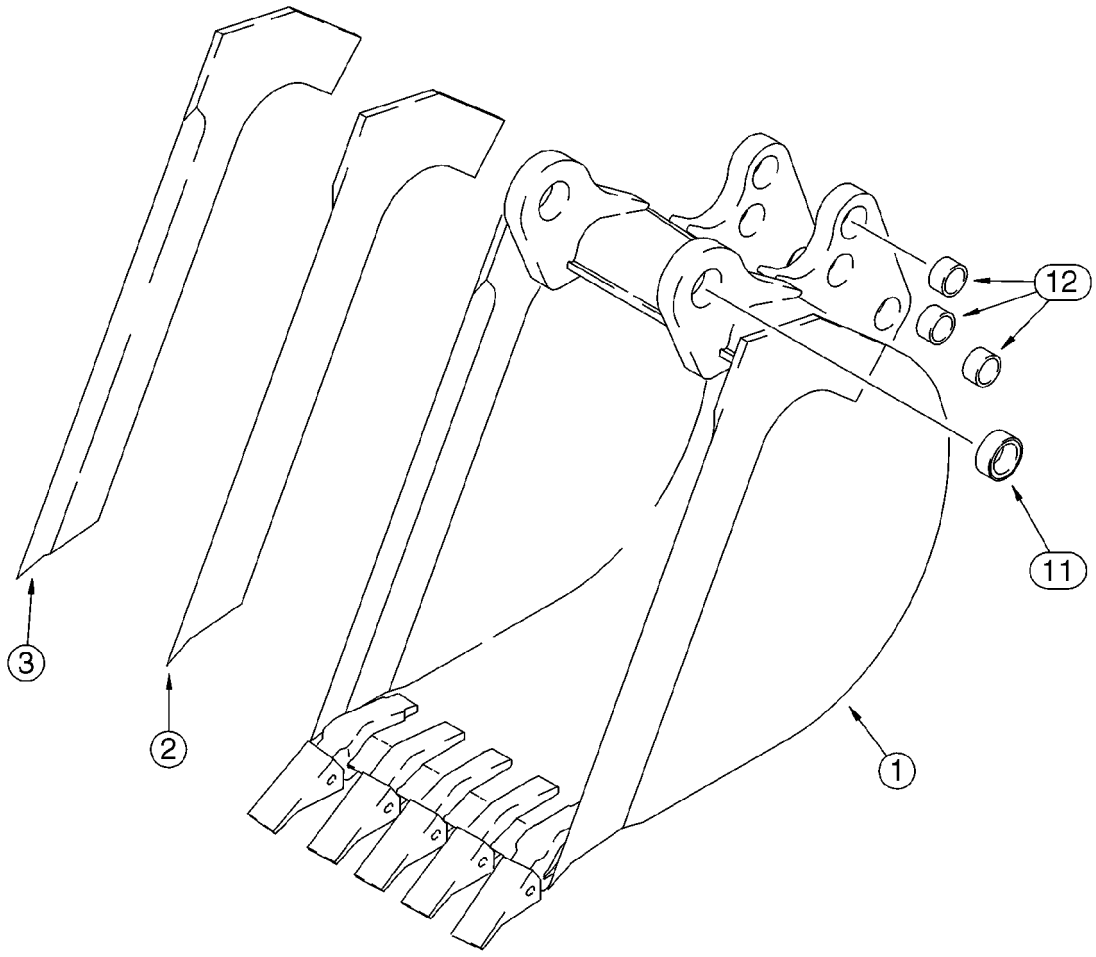

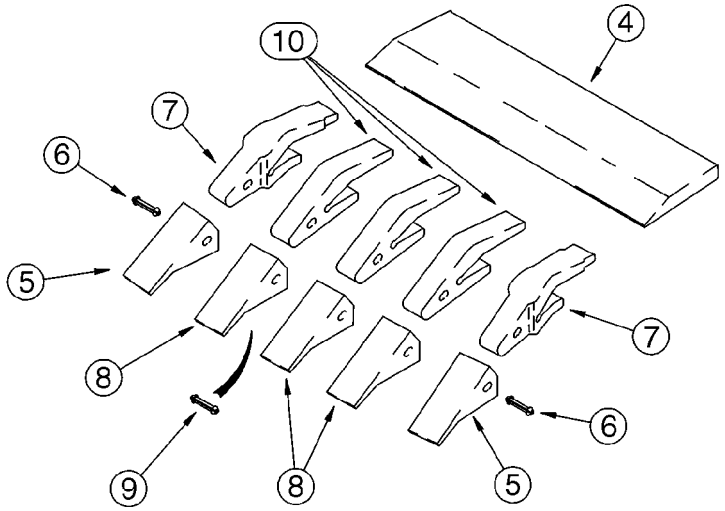

B9405159

CUCHARĎN, RETROEXCAVADORA UNIVERSAL (610 MM (24 INCH) WIDE)

REF	FN	PART NUMBER	YR/SN	QTY	DENOMINACION
1		141232A2		1	CUCHARA, 610 mm (24 in); With 5 Teeth; Order Through Parts Marketing; Incl. Ref 2 - 12
2		141234A1		1	CUCHILLA DE ATAQUE, Right-Hand
3		141233A1		1	CUCHILLA DE ATAQUE, Left-Hand
4		D142012		1	CUCHILLA DE ATAQUE
		D139851		2	DIENTE, Outer; Incl. Ref 5 - 7
5		D51750		1	PUNTA
6		245466A1		1	PASADOR
7		D138157		1	PIE
		D139849		3	DIENTE, Center; Incl. Ref 8 - 10; Order Ref 8 - 10
8		D51750		1	PUNTA
9		245466A1		1	PASADOR
10		D48212		1	PIE
11		D37495		2	CASQUILLO
12		D30933		6	CASQUILLO

09-35A		p1	12/07

CONJUNTO DEL PUNTO DE HIELO

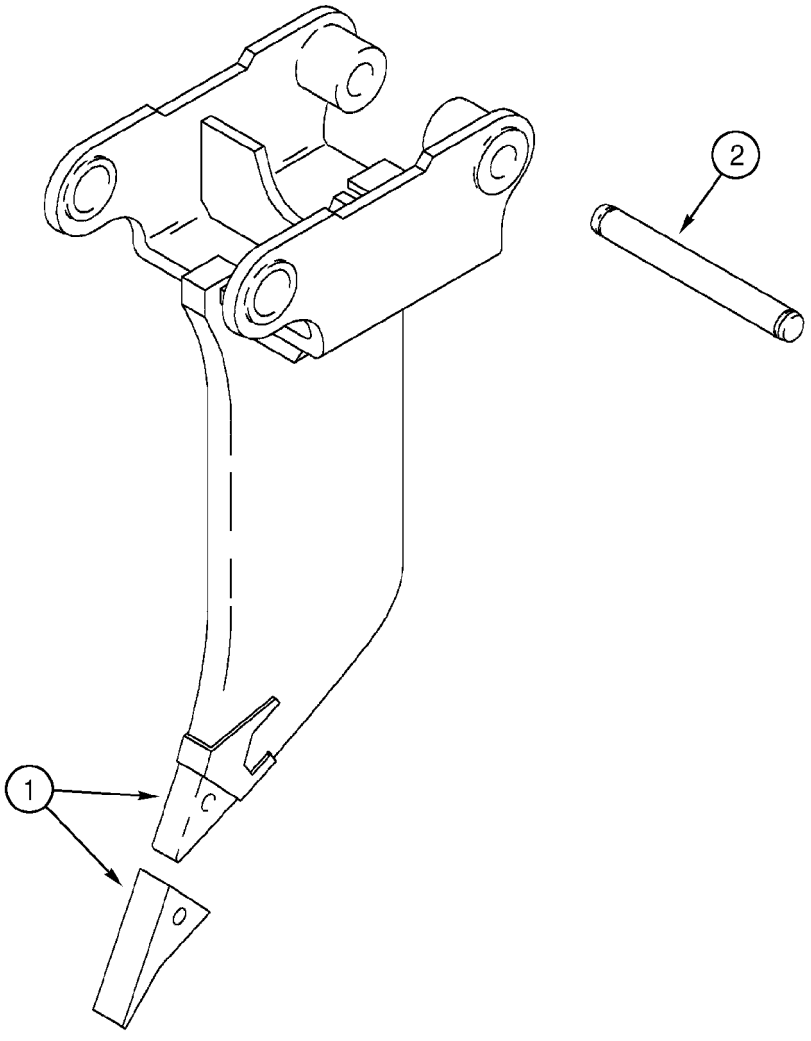

BS00H128

CONJUNTO DEL PUNTO DE HIELO

REF	FN	PART NUMBER	YR/SN	QTY	DENOMINACION
1		319467A1		1	PUNTA, Frost Point Assembly; Includes (2) Pin Retaining Bolts; Component Parts Not Serviced Separately
2		D50696		1	PERNO

09-36		p1	07/07

CONTRAPESO, DELANTERO

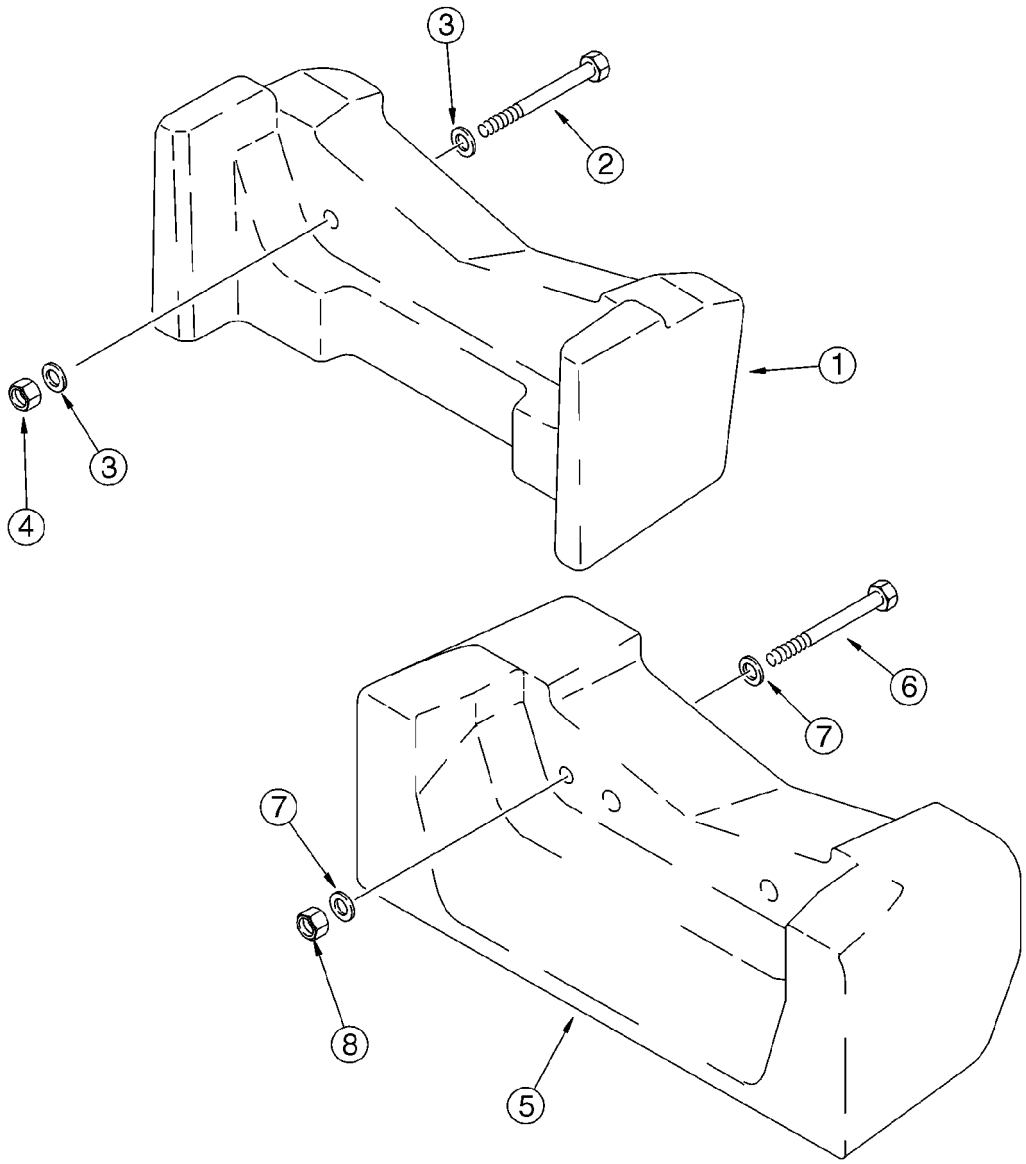

BT97N084

CONTRAPESO, DELANTERO

REF	FN	PART NUMBER	YR/SN	QTY	DENOMINACION
1		360867A1		1	CONTRAPESO, 200 kg (441 lbs); If Used
2		827-20170		2	TORNILLO, Hex, M20 x 170, 10.9
3		896-11020		4	ARANDELA, M20 x 37.5 x 4, HT
4		829-1420		2	TUERCA, M20, Cl 10
5		87425456		1	EQUILIBRADOR, 408 kg (900 lbs); If Used
6		827-20170		2	TORNILLO, Hex, M20 x 170, 10.9
7		896-11020		4	ARANDELA, M20 x 37.5 x 4, HT
8		829-1420		2	TUERCA, M20, Cl 10

09-37		p1	02/08

CHASIS / SOPORTES, RECEPTáCULO - PANTALLA, ENTRADA DE AIRE

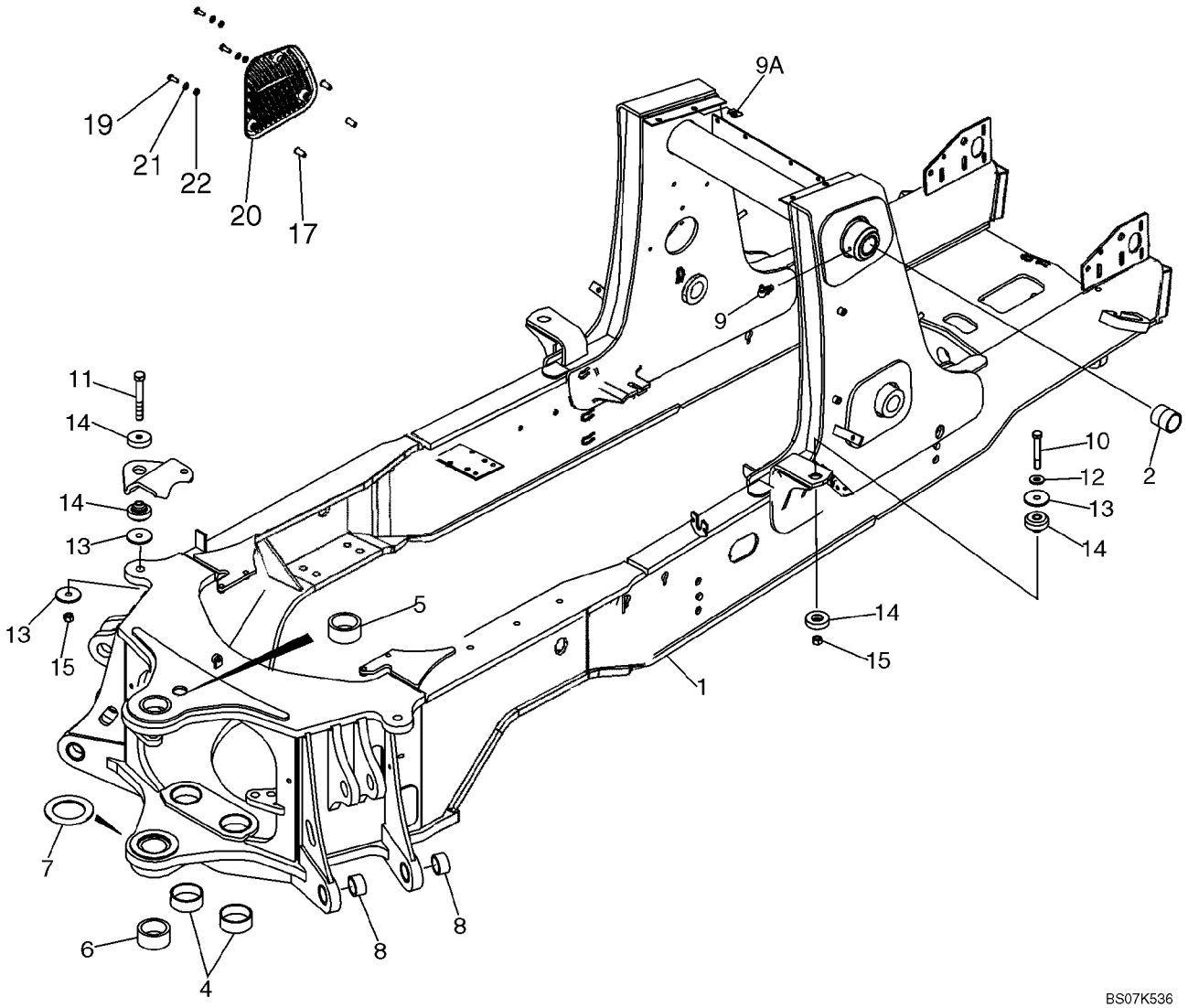

CHASIS / SOPORTES, RECEPTáCULO - PANTALLA, ENTRADA DE AIRE

REF	FN	PART NUMBER	YR/SN	QTY	DENOMINACION
1		87716973		1	ARMADURA-CARCASA, Chassis, Incl. Ref 2 - 8
2		180427A1		2	CASQUILLO
4		114318A1		2	CASQUILLO, 80 x 5 x 28.8
5		D151069		1	CASQUILLO, 70 x 10 x 32 mm
6		D151070		1	CASQUILLO, 70 x 10 x 38 mm
7		220413A1		1	ESPACIADOR, 93 x 135 x 5 mm; Welded-On
8		107124A1		4	CASQUILLO
9		219-55		2	ENGRASADOR, 90Ü, 1/8" NPT x .84" lg
9A		833-40310		4	TUERCA, M10, U
10		827-16085		2	TORNILLO, Hex, M16 x 85, 10.9
11		827-16100		2	TORNILLO, Hex, M16 x 100, 10.9
12		896-11016		2	ARANDELA, M17.5 x 30 x 4, HT
13		186977A1		6	ARANDELA, 4,5 mm thick
14		411892A1		4	TEJUELO, GOMA, M16; Operator Compartment Pod Mounts
15		829-1416		4	TUERCA, M16, Cl 10
17		87417383		3	ROSCA POSTIZA
19		614-8030		3	TORNILLO, Hex, M8 x 30, 8.8
20		87324160		1	PANTALLA PROTECTORA, Air Inlet, Plastic, With Slots
21		895-15008		3	ARANDELA, M8 x 20 x 1.6
22		87310109		3	SEPARADOR, 9.5 ID x 15 OD x 3.0 mm thk

09-38		p1	01/08

DEPĎSITO, ACEITE - CAJA, BATERĆA Y HERRAMIENTA

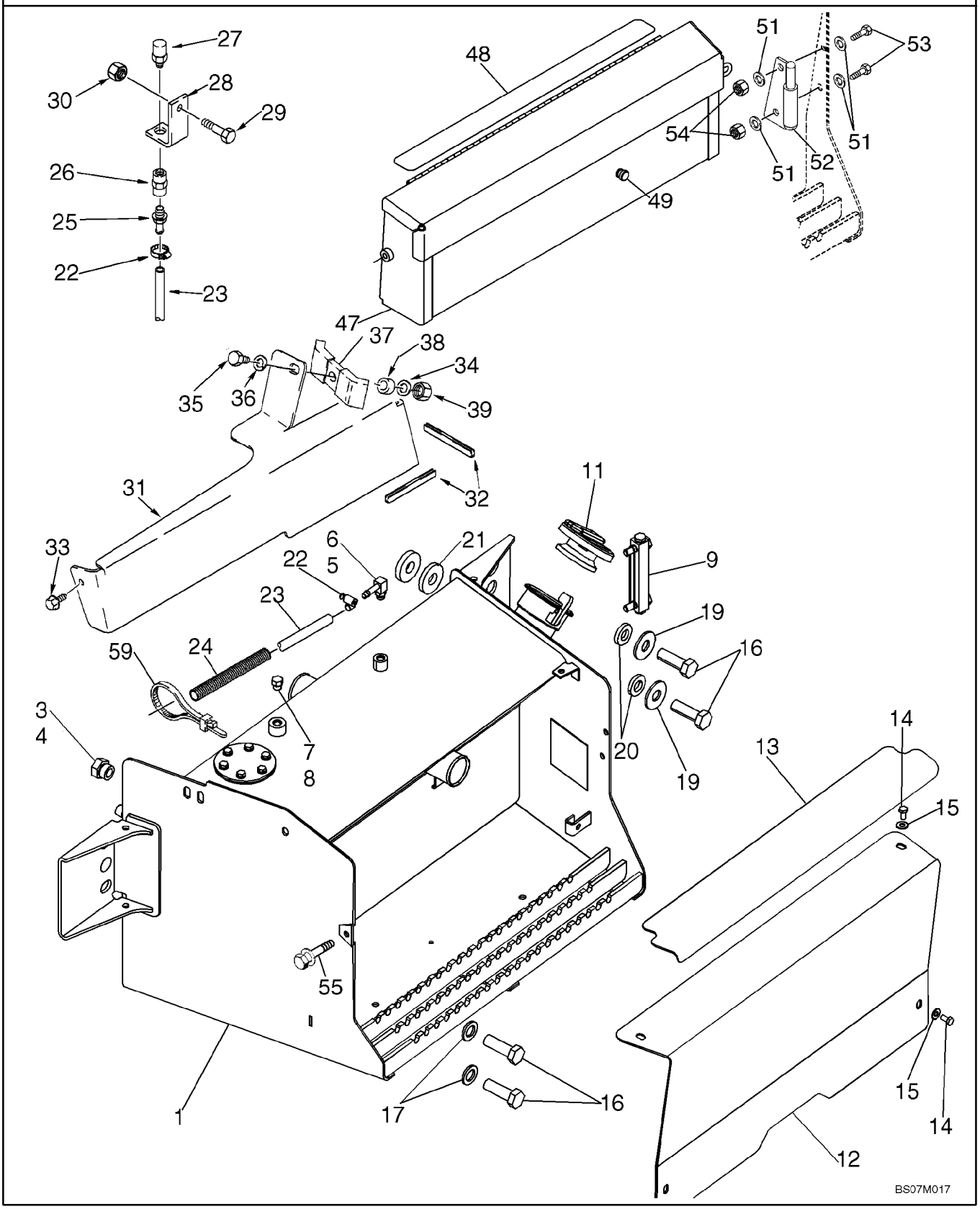

DEPĎSITO, ACEITE - CAJA, BATERĆA Y HERRAMIENTA

REF	FN	PART NUMBER	YR/SN	QTY	DENOMINACION
		87651830		1	DEPOSITO DE ACEITE, ASSEMBLY; Incl. Ref 1 - 11
1		87651790		1	DEPOSITO DE ACEITE, Right-Hand Side of Chassis
2		321-229		1	CALCOMANIA, Not Illustrated
3		218-5158		1	TAPčN, Hex Hd, 1 1/16"-12 ORB, Incl. 4
4		237-6012		1	JUNTA HERMETICA, 12-1, 90 Duro, .924 ID x .118" Thk
5		217-347		1	CONEXION, 90Ü, 3/8" Hose x 9/16"-18 ORB Beaded, Incl. 6
6		237-6006		1	JUNTA HERMETICA, 6-1, 90 Duro, .468" ID x .078" Thk
7		218-5155		1	TAPčN, Hex Hd, 9/16"-18 ORB, Incl. 8
8		237-6006		1	JUNTA HERMETICA, 6-1, 90 Duro, .468" ID x .078" Thk
9		226456A1		1	CALIBRE, Aluminum; Includes (2) Hollow Head Bolts and (4) O-Rings; Component Parts Not Serviced Separately, Used With Ref 10
9A		87673270		1	CINTA ADHESIVA, Adhesive Backed; Not Illustrated
10		345-49		1	LOCTITE, 242; 1 ml; Not Illustrated
11		138595A1		1	TAPA DE DEPOSITO, CAP
12		87348192		1	COBERTURA, Battery
13		87719444		1	TIRA CONTRA DESLIZAM.
14		614-8016		4	TORNILLO, Hex, M8 x 16, 8.8
15		895-15008		4	ARANDELA, M8 x 20 x 1.6
16		443375A1		4	TORNILLO, M20 x 60; 10.9; Thread to Head
17		896-11020		2	ARANDELA, M20 x 37.5 x 4, HT
19		302358A1		2	ARANDELA
20		185926A1		2	ESPACIADOR
21		87360280		1	SEPARADOR
22		214-1406		2	ABRAZADERA MANGUERA, #06, .44/.78 Type F Worm
23		87363421		1	TUBO (METROS), 912 mm (35-29/32 in); Vent
24		87452021		1	FUNDA DE PLĆSTICO, 650 mm (25-19/32 in)
25		217-380		1	CONEXION, 3/8" Hose X 3/8" NPTF Beaded, 3/8 stem x PT; Use With 345-147 Sealant
26		217-1102		1	RACOR, 3/8"-18 NPTF, Female

09-38		p2	01/08

DEPĎSITO, ACEITE - CAJA, BATERĆA Y HERRAMIENTA

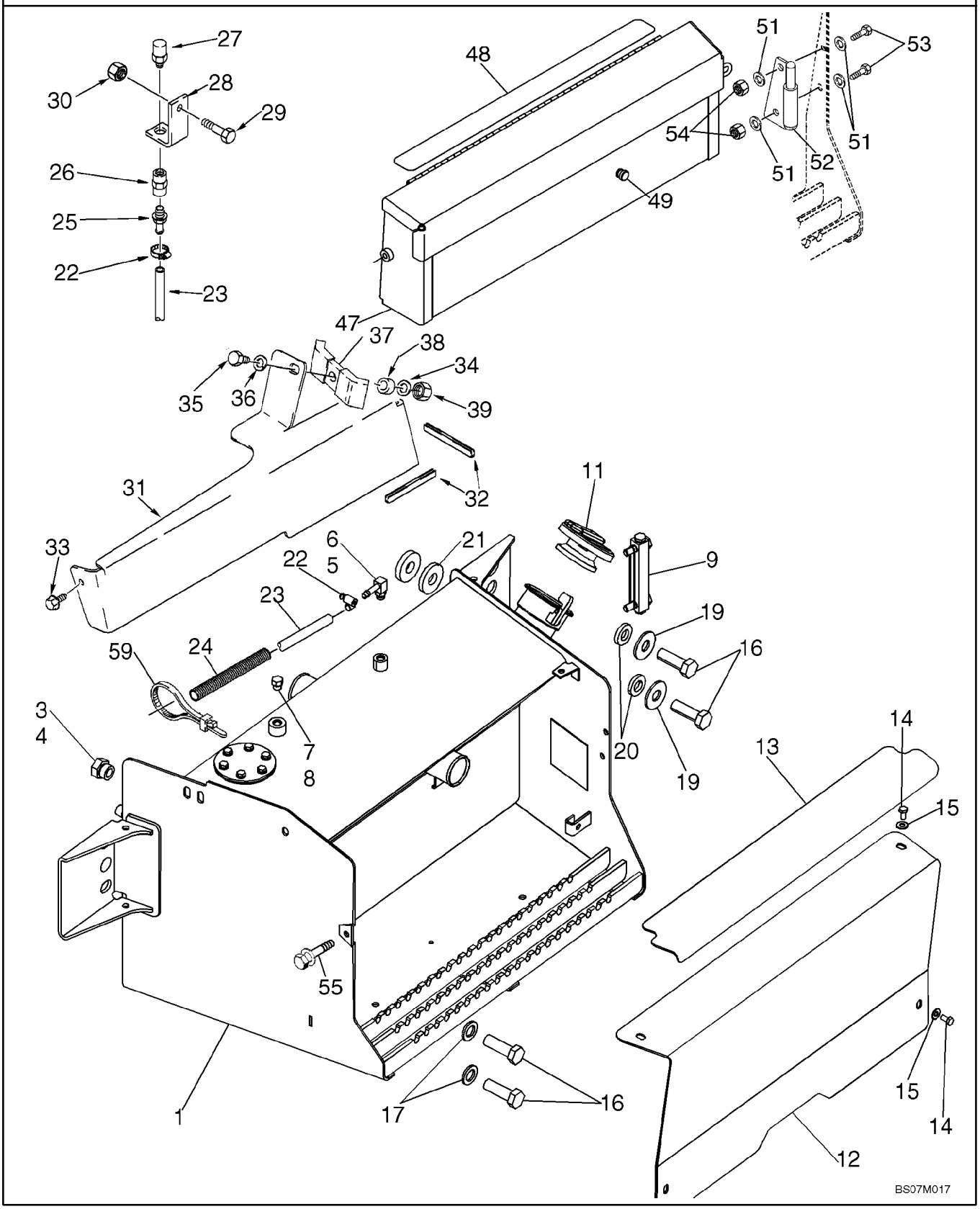

DEPŎSITO, ACEITE - CAJA, BATERĆA Y HERRAMIENTA

REF	FN	PART NUMBER	YR/SN	QTY	DENOMINACION
27		87674850		1	RESPIRADERO, Use With 345-147 Sealant
28		122603A1		1	APOYADERO
29		711-10030		1	PERNO, CABEZA RONDA, Short NK, M10 x 30, Cl8.8, Full Thd
30		829-1410		1	TUERCA, M10, Cl 10
31		399959A2		1	TAPA
32		191047A1		1	MOLDURA, 305 mm (12 in) lg; Apply 65 mm (2-9/16 in) Of Trim To Front Lower Edge and 240 mm (9-1/2 in) Of Trim To Outisde Lower Edge of Cover
33		307577A1		1	TORNILLO, With Washer, M8 x 20
34		895-11010		1	ARANDELA, M10 x 20 x 2
35		814-10045		1	TORNILLO, Hex, M10 x 45, 8.8
36		892-11010		1	ARANDELA DE FRENO, M10
37		D138055		1	COLLAR
38		120303A1		1	ESPACIADOR
39		829-1410		1	TUERCA, M10, Cl 10
47		380807A4		1	CAJA HERRAMIENTAS
48		87694065		1	TIRA CONTRA DESLIZAM.
49		L60224		1	PARACHOQUES, 1/2 in Hole
51		895-11010		4	ARANDELA, M10 x 20 x 2
52		382202A2		1	BISAGRA
53		614-10025		2	TORNILLO, Hex, M10 x 25, 8.8, Full Thd
54		829-1410		2	TUERCA, M10, Cl 10
55		121856A1		1	TORNILLO, Hex Wash Hd, M10 x 1.5 x 30, 10.9, Includes Washer
59		L18337		2	CIERRA CABLES, 9.95"-12.1" lg

REVESTIMIENTO DEL RADIADOR

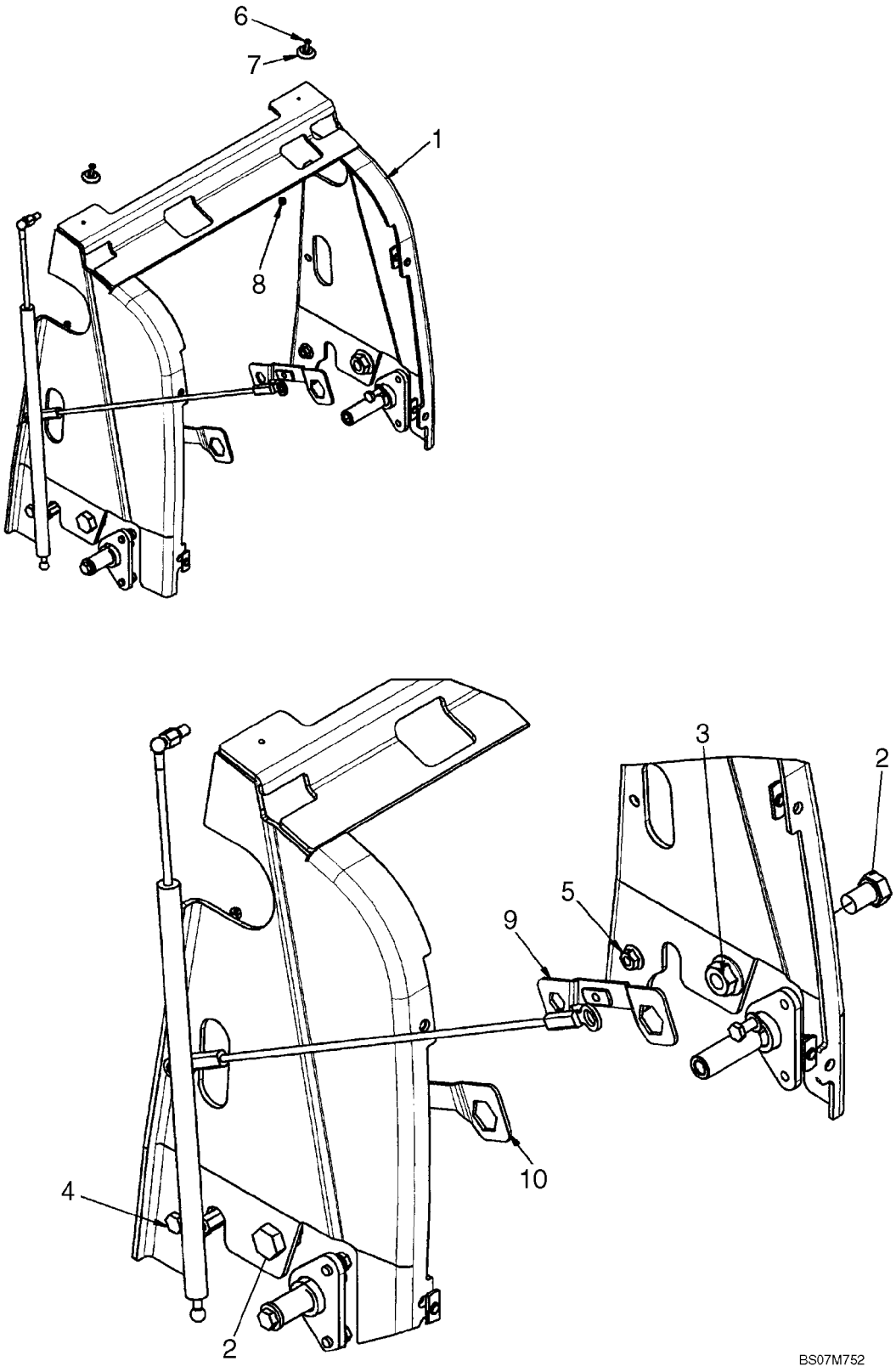

REVESTIMIENTO DEL RADIADOR

REF	FN	PART NUMBER	YR/SN	QTY	DENOMINACION
1		87719412		1	MULETILLA DE FIJACION, Wrapper
2		614-20030		2	TORNILLO, Hex, M20 x 30, 8.8, Full Thd
3		829-2420		2	TUERCA, M20 x 2.5, Flg, Cl 10
4		614-12030		2	TORNILLO, Hex, M12 x 30, 8.8
5		829-2412		2	TUERCA, M12 x 1.75, Flg, Cl 10
6		440-11012		2	TORNILLO, Cross Pan Hd, #10-24 x 3/4"
7		109879A1		2	ESPACIADOR, Hood; Plastic
8		231-14109		2	CONTRA TUERCA, #10-24, GB
9		87725886		1	RETENEDOR
10		87725883		1	RETENEDOR

09-40		p1	11/07

CAPO - PANELES, LATERALES

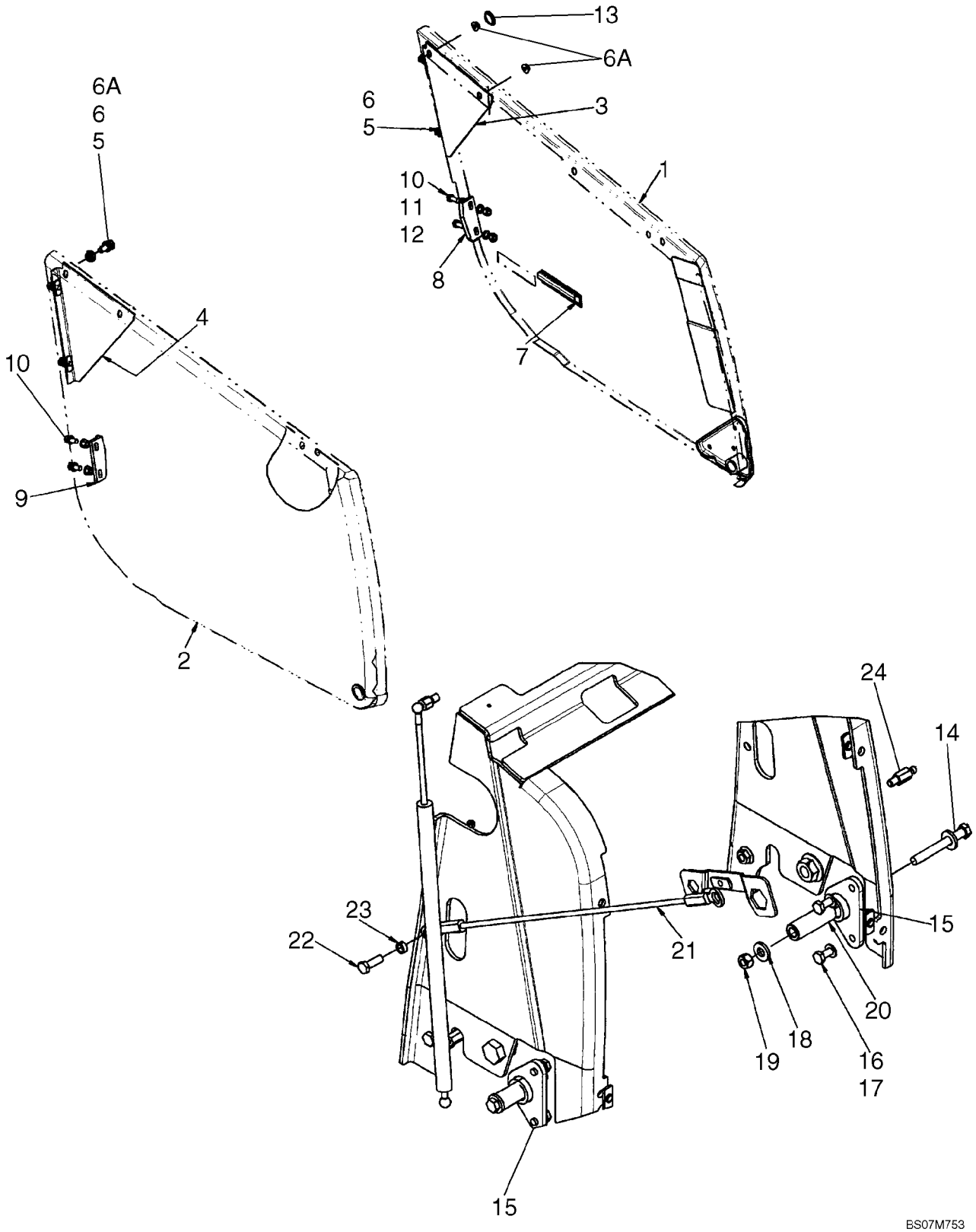

CAPO - PANELES, LATERALES

REF	FN	PART NUMBER	YR/SN	QTY	DENOMINACION
1		87444148		1	PANEL LATERAL, Left-Hand Side
2		87444147		1	PANEL LATERAL, Right-Hand Side
3		362609A1		1	TENSOR, Left-Hand
4		362607A1		1	TENSOR, Right-Hand
5		614-10025		8	TORNILLO, Hex, M10 x 25, 8.8, Full Thd
6		895-11010		8	ARANDELA, M10 x 20 x 2
6A		825-2410		4	TUERCA, M10 x 1.5, Flg, Cl 8
7		183168A1		1	MANECILLA, Left-Hand
8		D143715		1	APOYADERO, Guide, Left-Hand
9		D143714		1	APOYADERO, Guide, Right-Hand
10		614-10025		4	TORNILLO, Hex, M10 x 25, 8.8, Full Thd
11		895-11010		8	ARANDELA, M10 x 20 x 2
12		832-10410		4	CONTRA TUERCA, M10 x 1.5, Cl 8
13		D140267		2	TAPčN
14		814-12100		2	TORNILLO, Hex, M12 x 100, 8.8
15		87606502		2	PIVOTE
16		614-10020		4	TORNILLO, Hex, M10 x 20, 8.8, Full Thd
17		895-11010		4	ARANDELA, M10 x 20 x 2
18		896-15012		4	ARANDELA, M12 x 28.5 x 4, HT
19		829-1412		2	TUERCA, M12, Cl 10
20		87412060		2	TUBO
21		144908A2		1	CABLE
22		614-10030		1	TORNILLO, Hex, M10 x 30, 8.8
23		D143417		1	ESPACIADOR
24		87561131		2	JUNTA DE ROTULA

09-41		p1	01/08

CAPO - PARRILLA

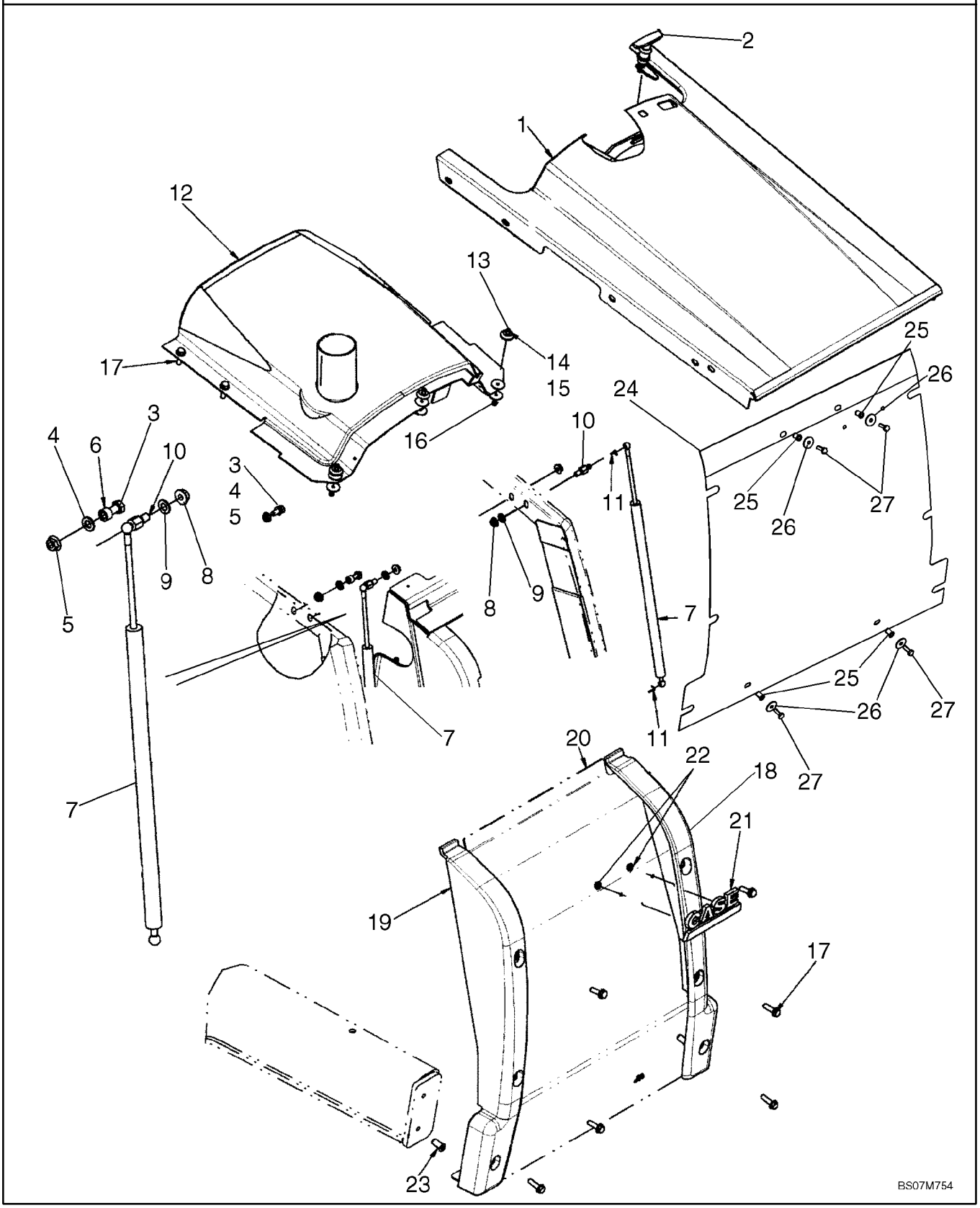

CAPO - PARRILLA

REF	FN	PART NUMBER	YR/SN	QTY	DENOMINACION
1		87594903		1	CAPO DE MOTOR, Engine; Tilt
2		175599A1		1	PESTILLO
3		614-10025		4	TORNILLO, Hex, M10 x 25, 8.8, Full Thd
4		895-11010		4	ARANDELA, M10 x 20 x 2
5		825-2410		4	TUERCA, M10 x 1.5, Flg, Cl 8
6		396605A1		1	ESPACIADOR
7		114980A1		2	AMORTIGUADOR, Spring; Counterbalance
8		825-2410		2	TUERCA, M10 x 1.5, Flg, Cl 8
9		895-11010		2	ARANDELA, M10 x 20 x 2
10		139363A1		2	JUNTA DE ROTULA, Stud
11		F44883		4	SUJETADOR
12		87545557		1	MULETILLA DE FIJACION, Fixed Hood
13		440-11012		3	TORNILLO, Cross Pan Hd, #10-24 x 3/4"
14		109879A1		3	ESPACIADOR
15		185325A1		8	ESPACIADOR
16		231-14109		3	CONTRA TUERCA, #10-24, GB
17		392828A2		10	TORNILLO, With Washer, M10 x 40
18		87719497		1	PARACHOQUES, LH Front
19		87719495		1	PARACHOQUES, RH Front
20		87585167		1	PANTALLA PROTECTORA, Front Grille
21		186989A1		1	SIMBOLO, CASE Medallion
22		131-431		2	CONTRA TUERCA, Self, Threading, 1/4"
23		87417721		2	ROSCA POSTIZA
24		87726055		1	PANTALLA PROTECTORA, Screen, Chaff
25		255447A1		4	REMACHE, Insert, Threaded
26		257382A1		4	ARANDELA, 6.6 x 25 x 1.6 mm
27		257381A1		4	TORNILLO, 1/4 NF x 3/4

09-42		p1	01/08

PLACAS, SUELO - ALFOMBRILLAS

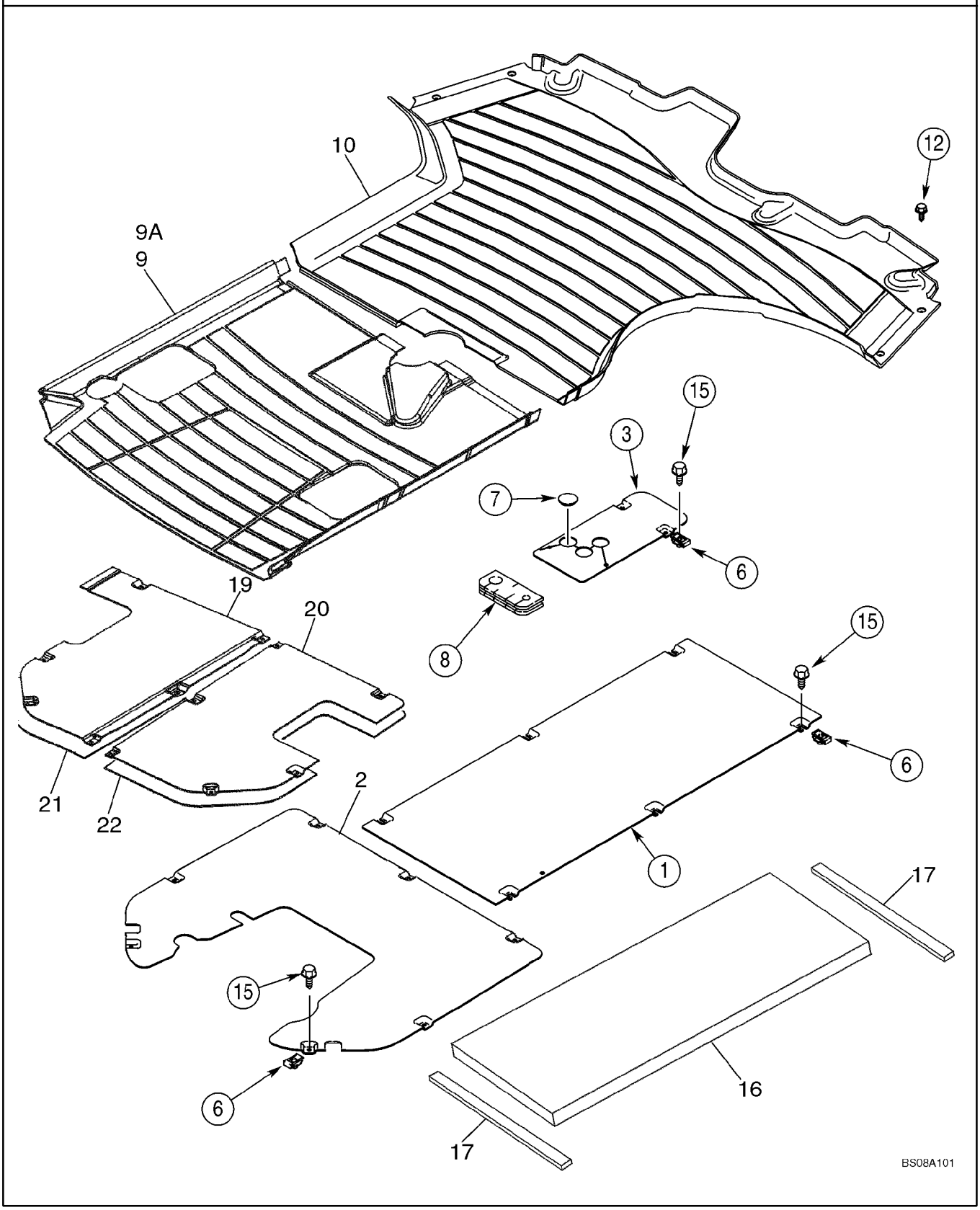

PLACAS, SUELO - ALFOMBRILLAS

REF	FN	PART NUMBER	YR/SN	QTY	DENOMINACION
1		355984A2		1	PLACA, GRANDE, Front
2		86983190		1	PLAQUITA, Rear; Without Pilot Controls
3		87436076		1	PLAQUITA, Loader Control Lever
6		833-40406		16-17	TUERCA, M6, U
7		353-422		1	TAPčN, Dome, 1.250" hole, Nylon, Models Without Clam Bucket
8		393623A1		1	BLOQUE MOTOR, Floor
9		86983325		1	TAPETE DE SUELO, Rear, Canopy Models, Without Pilot Controls
9A		86983269		1	TAPETE DE SUELO, Rear, Canopy Models, With Pilot Controls; Not Illustrated
10		390551A2		1	TAPETE DE SUELO, Front, Cab or Canopy Models
12		87310085		4	TORNILLO AUTOROSCANTE, Hex Washer Head, No. 10 x 1, Self-Tapping, Stainless Steel
15		87310096		16-17	TORNILLO, M6 x 25, Includes Washer, Stainless Steel
16		411074A1		1	ANILLO DE CIERRE, Cab Models
17		181981A1		2	BANDA HERMETICIDAD, Foam; Adhesive Back; Cab Models
19		87434049		1	PLAQUITA, Rear, With Pilot Controls
20		87434050		1	PLAQUITA, Rear, With Pilot Controls
21		87442376		1	ESPUMA AISLANTE, Heat Barrier, Left-Hand, Canopy Models With Pilot Controls
22		87442377		1	ESPUMA AISLANTE, Heat Barrier, Right-Hand, Canopy Models With Pilot Controls

09-43		p1	12/07

CUBIERTA DEL GUARDABARROS, LADO IZQUIERDO - PANEL, CIERRE TRASERO (BANDEJA DE ALMACENAMIENTO CON SUJ

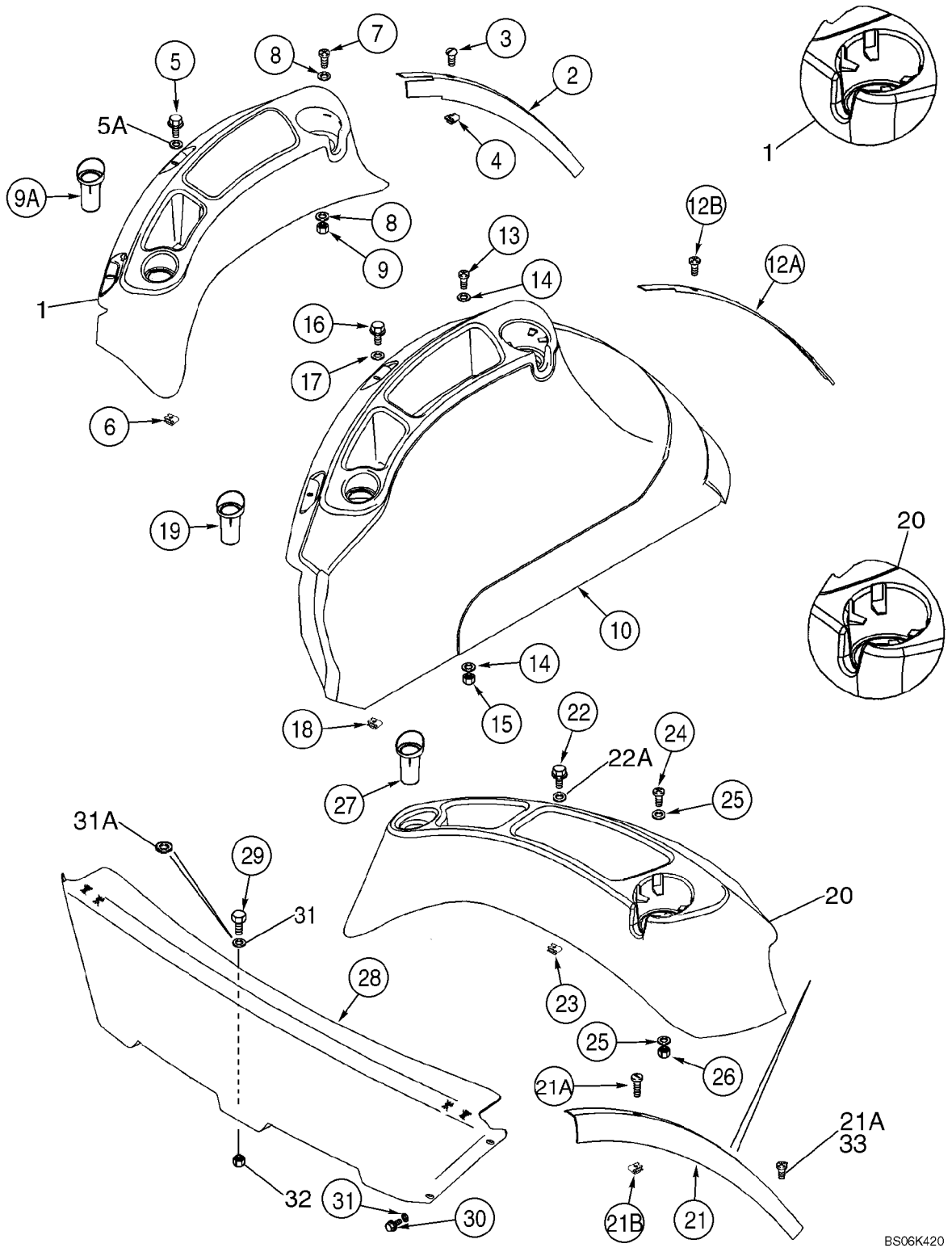

CUBIERTA DEL GUARDABARROS, LADO IZQUIERDO - PANEL, CIERRE TRASERO (BANDEJA DE ALMACENAMIENTO CON SU

REF	FN	PART NUMBER	YR/SN	QTY	DENOMINACION
1		86992247		1	BANDEJA, Cab Models, With Standard Interior; Includes 86992284, 400077A1
		NSS		1	NO SE REPARA SEPARADAM., Tray
		86992284		4	PARACHOQUES
		400077A1		1	BANDA POR METRO, 1300 mm (51-3/16 in); Cut From 1977224C1
2		397026A3		1	BANDA DE PROTECCIčN, Trim, Left-Hand Fender, Cab Models With Standard Interior
3		87310088		3	TORNILLO, No. 10 x 3/4, Stainless Steel
4		131-869		3	TUERCA, Ret, J, #10-24
5		87310098		2	TORNILLO, Flange, M6 x 20, Stainless Steel
5A		87310186		2	ARANDELA, 6.6 ID x 25 OD x 1.6 mm thk, Stainless Steel
6		833-40406		2	TUERCA, M6, U
7		87310127		2	TORNILLO, No. 10 x 1, Stainless Steel
8		87310146		4	ARANDELA, 13/64 x 3/4 x 1/16, Stainless Steel
9		86625057		2	CONTRA TUERCA, #10-24, GB
9A		378742A3		1	INTRODUCTOR, Swing Pin Holder
10		86992245		1	TABA (CONJUNTO), Cab Models With Deluxe Interior; Includes (4) 86992284 Bumpers
12A		397774A3		1	CINTA, Deluxe Interior
12B		87310088		3	TORNILLO, No. 10 x 3/4, Stainless Steel
13		87310127		2	TORNILLO, No. 10 x 1, Stainless Steel
14		87310146		4	ARANDELA, 13/64 x 3/4 x 1/16, Stainless Steel
15		86625057		2	CONTRA TUERCA, #10-24, GB
16		87310098		2	TORNILLO, Flange, M6 x 20, Stainless Steel
17		87310186		2	ARANDELA, 6.6 ID x 25 OD x 1.6 mm thk, Stainless Steel
18		833-40406		2	TUERCA, M6, U
19		378742A3		1	INTRODUCTOR, Swing Pin Holder
20		86992243		1	BANDEJA (CONJUNTO), Canopy Models; Includes 86992284, 4000077A1
		NSS		1	NO SE REPARA SEPARADAM., Tray
		86992284		4	PARACHOQUES

CUBIERTA DEL GUARDABARROS, LADO IZQUIERDO - PANEL, CIERRE TRASERO (BANDEJA DE ALMACENAMIENTO CON SUJ

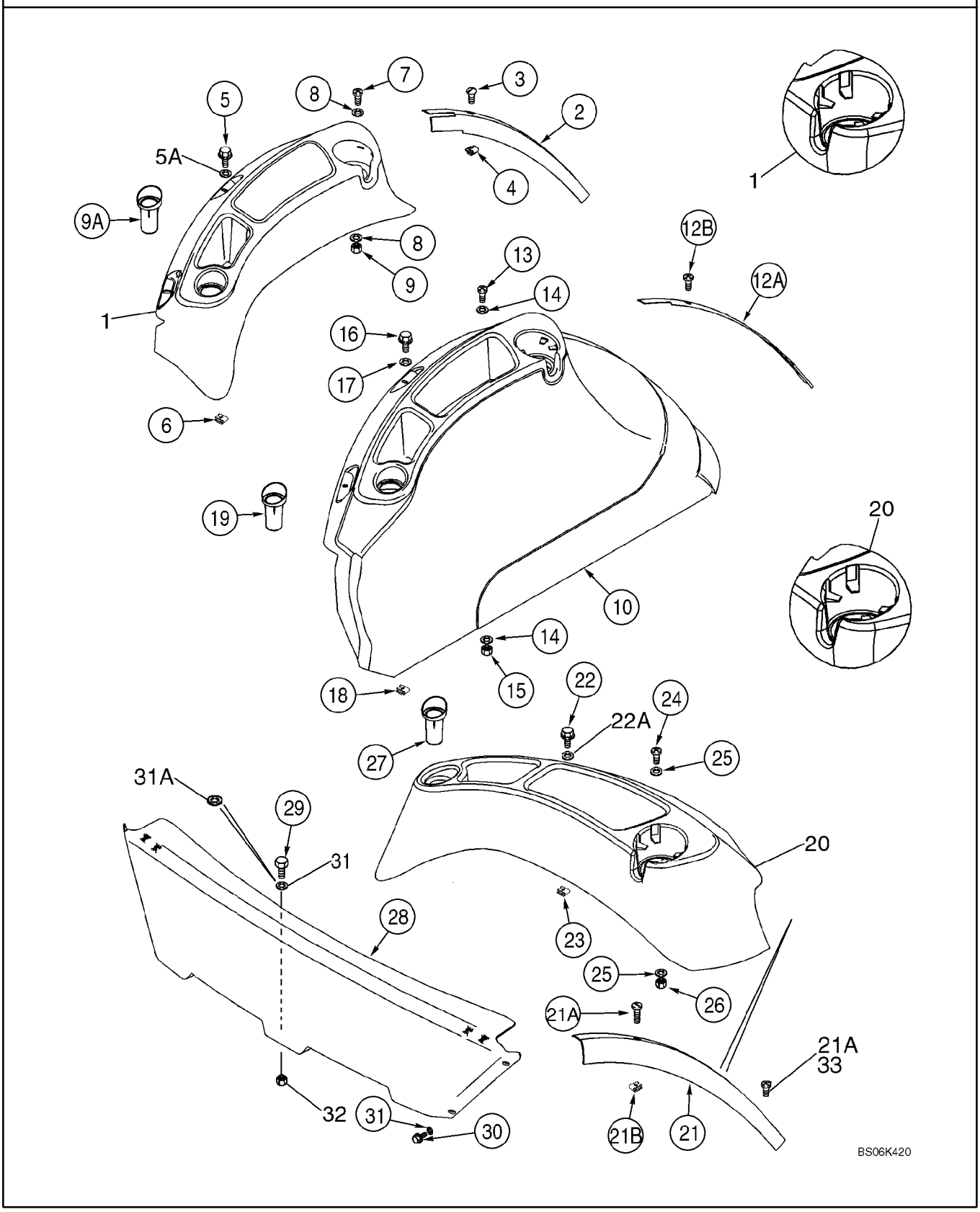

CUBIERTA DEL GUARDABARROS, LADO IZQUIERDO - PANEL, CIERRE TRASERO (BANDEJA DE ALMACENAMIENTO CON SU

REF	FN	PART NUMBER	YR/SN	QTY	DENOMINACION
		400077A1		1	BANDA POR METRO, 1300 mm (51-3/16 in); Cut From 1977224C1
21		397025A2		1	BANDA DE PROTECCIčN, Trim, Canopy Models
21A		87534992		2-3	TORNILLO AUTOROSCANTE, Pan Hd Slotted Rec, #10 x 1 SST
21B		131-869		3	TUERCA, Ret, J, #10-24
22		87310098		2	TORNILLO, Flange, M6 x 20, Stainless Steel
22A		87310186		2	ARANDELA, 6.6 ID x 25 OD x 1.6 mm thk, Stainless Steel
23		833-40406		2	TUERCA, M6, U
24		87310127		2	TORNILLO, No. 10 x 1, Stainless Steel
25		87310146		4	ARANDELA, 13/64 x 3/4 x 1/16, Stainless Steel
26		86625057		2	CONTRA TUERCA, #10-24, GB
27		378742A3		1	INTRODUCTOR, Swing Pin Holder
28		86992977		1	CONTRAPANEL, Rear Closure Panel; Canopy Models
29		87310154		1	TORNILLO, M8 x 25, Stainless Steel
30		781-24820		4	TORNILLO AUTOROSCANTE, Hex Flg Hd, M8 x 20
31		895-15008		4-5	ARANDELA, M8 x 20 x 1.6
31A		87310185		1	ARANDELA, 9 x 20 x 1,6 mm, Stainless Steel
32		832-10408		1	CONTRA TUERCA, M8 x 1.25, Cl 8
33		87310126		1	TORNILLO, Pan Hd Cross Rec, No. 10 x 3/4 Stainless Steel

09-44		p1	12/07

EXTENSIONES DEL GUARDABARROS

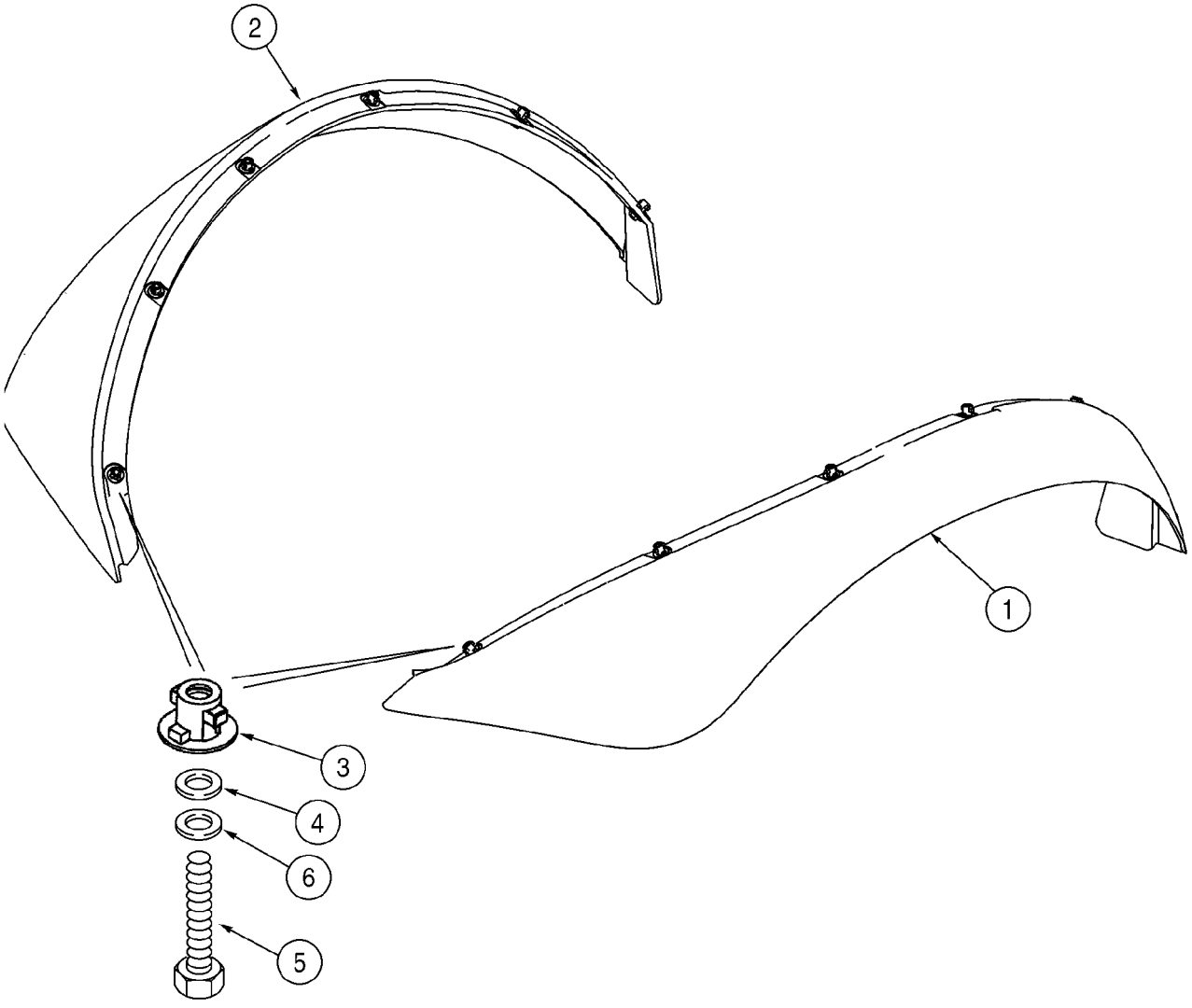

BC00F002

EXTENSIONES DEL GUARDABARROS

REF	FN	PART NUMBER	YR/SN	QTY	DENOMINACION
1		340998A3		1	GUARDABARROS, Right-Hand
2		340997A3		1	GUARDABARROS, Left-Hand
3		345231A1		12	BOTON DE RESORTE
4		496-41041		12	ARANDELA, 13/32" x 1 1/8" x .134"
5		614-8030		12	TORNILLO, Hex, M8 x 30, 8.8
6		892-11008		12	ARANDELA DE FRENO, M8

09-45		p1	02/08

GUARDABARROS

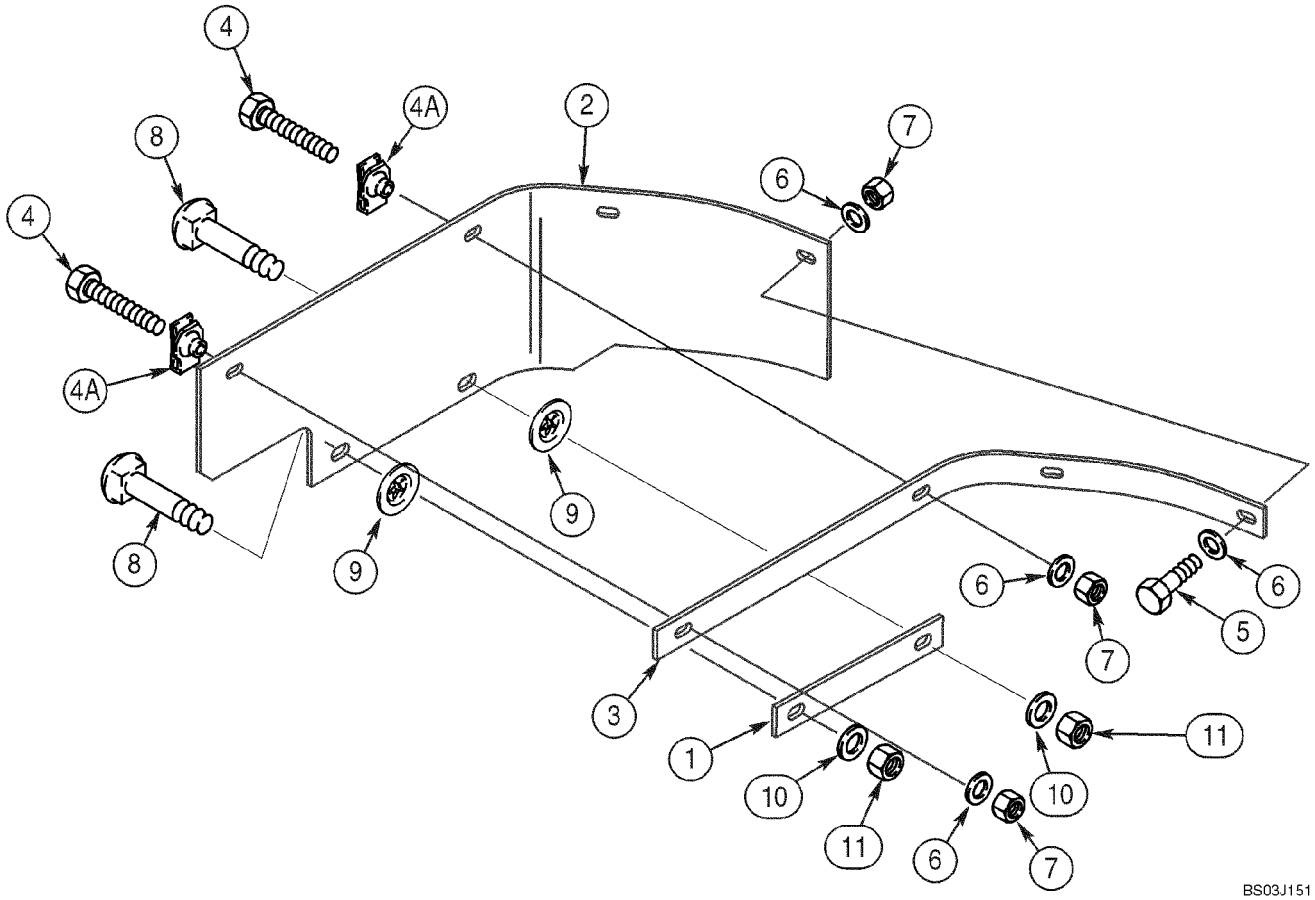

GUARDABARROS

REF	FN	PART NUMBER	YR/SN	QTY	DENOMINACION
1		362557A1		1	CINTA, Plate
2		362556A2		1	DEFENSA, Mounts At Right-Hand Fender
3		362558A1		1	CINTA, Angle
4		614-8040		2	TORNILLO, Hex, M8 x 40, 8.8, Full Thd
4A		833-40408		2	TUERCA, M8, U
5		614-8030		2	TORNILLO, Hex, M8 x 30, 8.8
6		495-21038		6	ARANDELA, 5/16"
7		832-10408		4	CONTRA TUERCA, M8 x 1.25, Cl 8
8		711-10040		2	PERNO, CABEZA RONDA, Short NK, M10 x 40, Cl8.8, Full Thd
9		368417A1		2	ARANDELA
10		895-11010		2	ARANDELA, M10 x 20 x 2
11		832-10410		2	CONTRA TUERCA, M10 x 1.5, Cl 8

09-46		p1	01/08

ASIENTO (SEARS, ESTóNDAR)

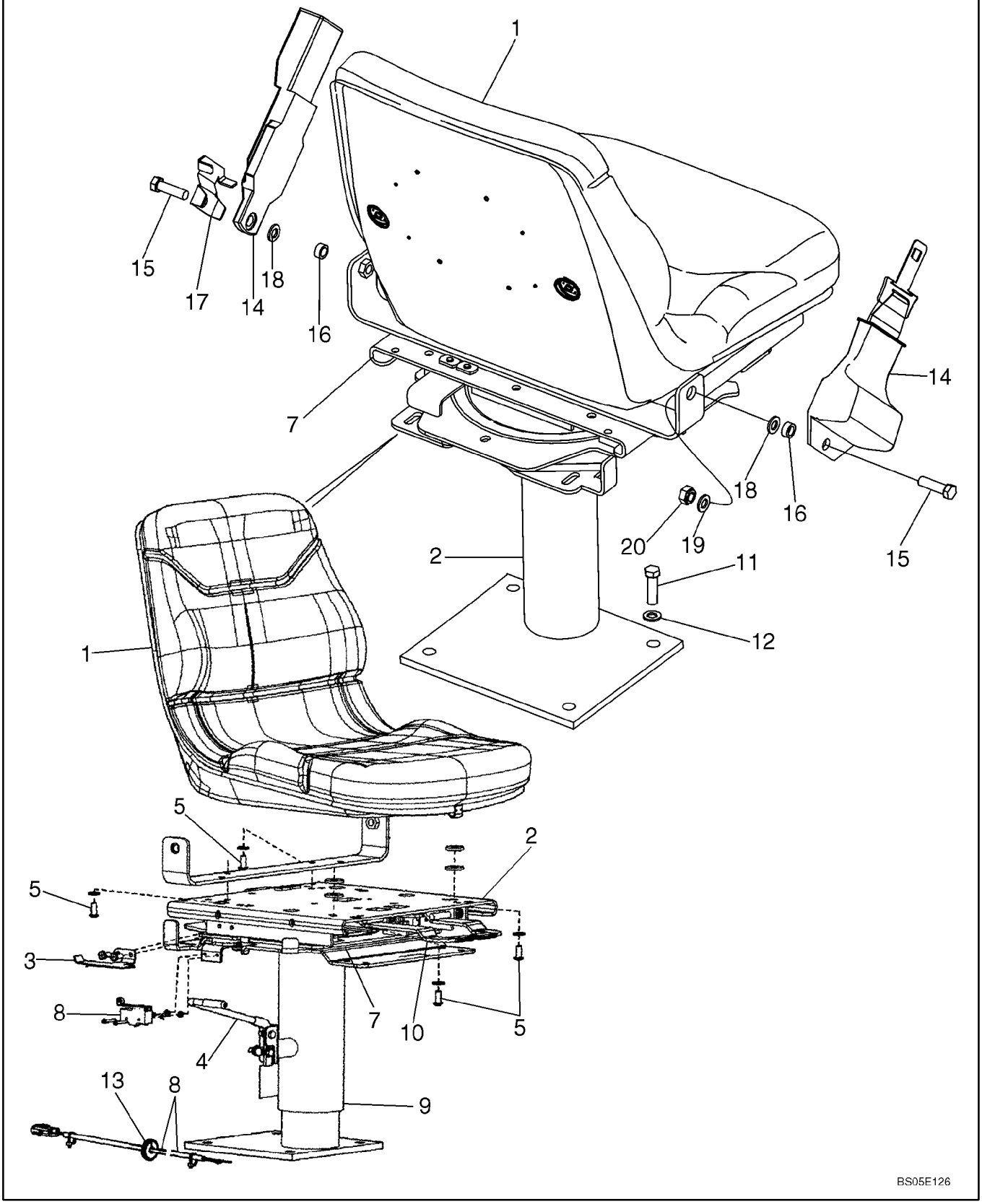

ASIENTO (SEARS, ESTćNDAR)

REF	FN	PART NUMBER	YR/SN	QTY	DENOMINACION
		87454292		1	ASIENTO (CONJUNTO), Standard, Vinyl, Without Armrest, Sears Brand; Includes Seat, Swivel and Pedestal, and Swivel Bearing Kit, Ref 1 - 10
1		87338681		1	RESPALDO, Seat Only
2		87346606		1	ACCESORIOS ASIENTO, Swivel and Pedestal; Component Parts Not Serviced Separately
3		87346607		1	ACCESORIOS ASIENTO, Lever, Switch Actuator
4		87346611		1	ACCESORIOS ASIENTO, Handle, Height Adjustment
5		87346612		4	ACCESORIOS ASIENTO, Button Head Screw, 5/16 x 3/4
6		87346615		1	ACCESORIOS ASIENTO, Spring Not Illustrated
7		87308132		1	COJINETE, Swivel Bearing Kit; Includes (1) Bolt, (8) Bearings, (1) Clip, (1) Nut, (1) Cotter Pin, (1) Plastic Washer, (1) Ball Retainer; Component Parts Not Serviced Separately
8		87346625		1	ACCESORIOS ASIENTO, Kit, Switch/Harness, Adj. Height
9		87346633		1	ACCESORIOS ASIENTO, Kit, Pedestal
10		87346634		1	ACCESORIOS ASIENTO, Kit, Slide/Swivel
11		604-12030		4	TORNILLO, Hex, Lock, M10 x 30, Cl 8.8, Locking, M12 x 30
12		896-15012		4	ARANDELA, M12 x 28.5 x 4, HT, 13.5 x 28 x 4 mm
13		248-2373		1	PASACABLES, 1/2" ID x 1 1/4" Groove Dia, Str Cut, Rubber, 1/2 ID
14		87408888		1	CINTURčN, SEGURIDAD, 76 mm (3 in); Retractable, If Used
14		87408889		1	CINTURčN, SEGURIDAD, 51 mm (2 in), Retractable, If Used
15		414-724		2	TORNILLO, Hex, 7/16"-20 x 1 1/2", G5
16		87311572		2	SEPARADOR
17		87310149		1	PIEZA DE SOPORTE, Left-Hand; Seat Belt Mounting/Standard Seat
18		495-81169		2	ARANDELA, 17/32" x 2 1/2" x .120"
19		496-81010		4	ARANDELA
20		232-4617		2	CONTRA TUERCA, 7/16"-20, GC

09-47		p1	02/08

ASIENTO - SOPORTE (SEARS SUSPENSION MECANICA)

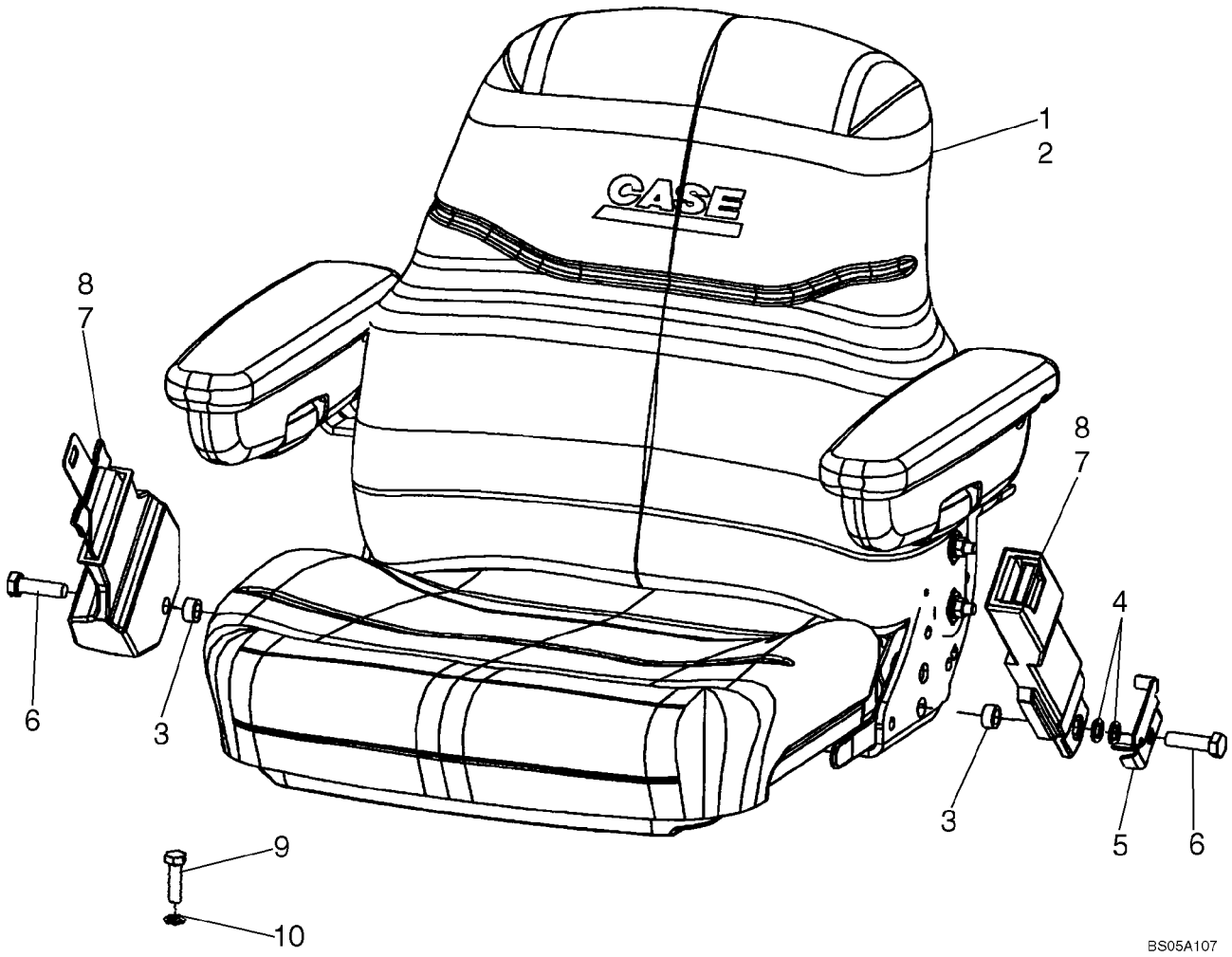

ASIENTO - SOPORTE (SEARS SUSPENSION MECANICA)

REF	FN	PART NUMBER	YR/SN	QTY	DENOMINACION
1		87399492		1	ASIENTO (CONJUNTO), Mechanical Suspension, Sears, Vinyl, With Armrests; This Seat is Located 19 mm (3/4 in) Farther Forward From Center of Pedestal; See Figure 09-48
2		87399491		1	ASIENTO (CONJUNTO), Mechanical Suspension, Sears, Cloth, With Armrests; This Seat is Located 19 mm (3/4 in) Farther Forward From Center of Pedestal; See Figure 09-48
3		87311572		2	SEPARADOR
4		895-18012		2	ARANDELA, M12 x 20 x 2, Left-Hand Side
5		87310149		1	PIEZA DE SOPORTE, Belt Mounting
6		614-12040		2	TORNILLO, Hex, M12 x 40, 8.8, Full Thd
7		87408888		1	CINTURčN, SEGURIDAD, 76 mm (3 in), Retractable, If Used
8		87408889		1	CINTURčN, SEGURIDAD, 51 mm (2 in), If Used
9		604-12030		4	TORNILLO, Hex, Lock, M10 x 30, Cl 8.8, Seat Pedestal to Floor
10		896-15012		4	ARANDELA, M12 x 28.5 x 4, HT

09-48		p1	01/08

CONJUNTO DEL ASIENTO, SUSPENSION MECANICA (SEARS)

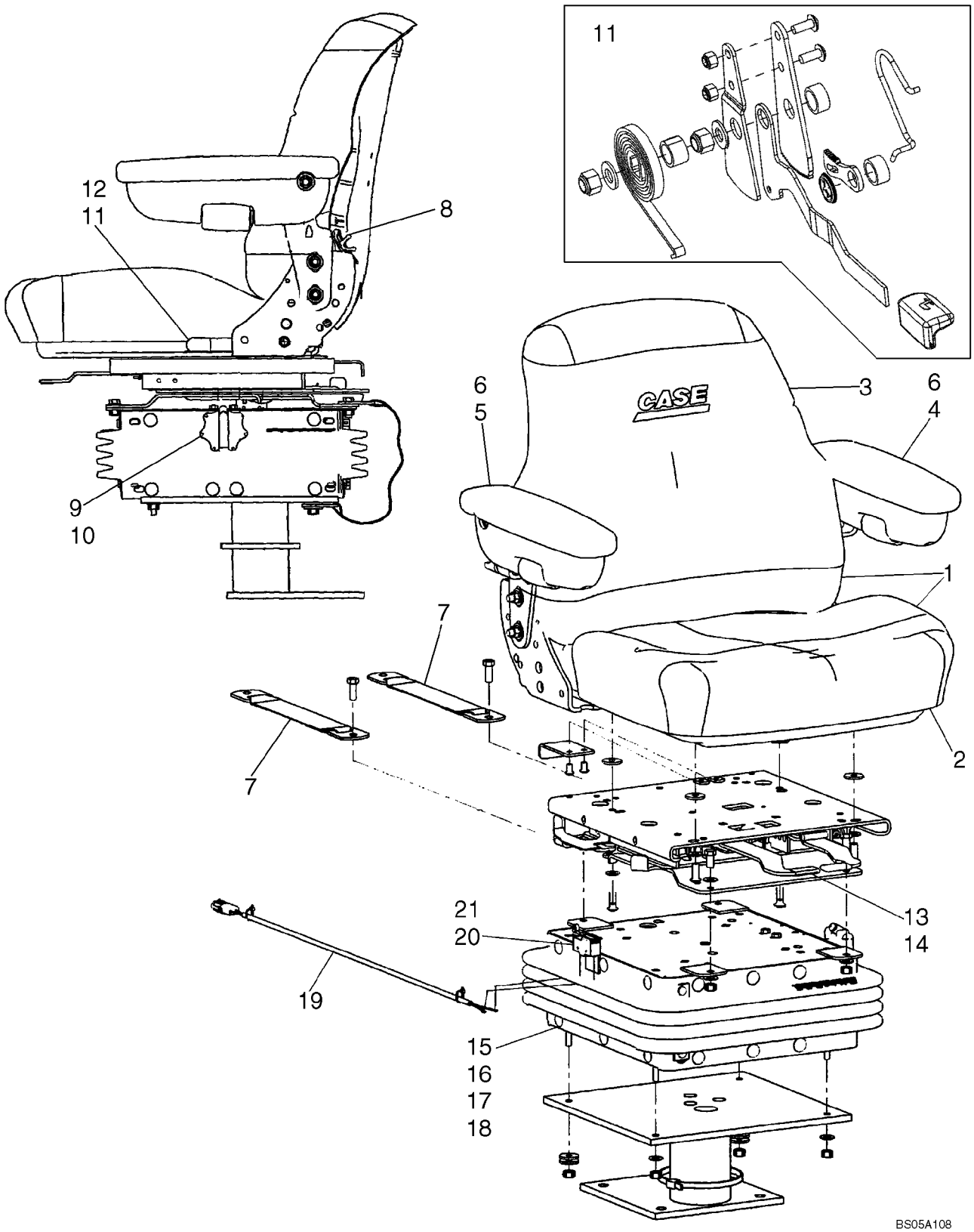

CONJUNTO DEL ASIENTO, SUSPENSION MECANICA (SEARS)

REF	FN	PART NUMBER	YR/SN	QTY	DENOMINACION
		87399492		1	ASIENTO (CONJUNTO), Vinyl, Mechanical Suspension, Sears; This Seat is Located 19 mm (3/4 in) Farther Forward From Center of Pedestal; Incl. Ref 1 - 21; Also Includes 87555125 Pedestal Assy; Replaces 87454295 Seat Assy, Which Included 87349995 Pedestal
		87399491		1	ASIENTO (CONJUNTO), Cloth, Mechanical Suspension, Sears; This Seat is Located 19 mm (3/4 in) Farther Forward From Center of Pedestal; Incl. Ref 1 - 21; Also Includes 87555125 Pedestal Assy; Replaces 87454294 Seat Assy, Which Included 87349995 Pedestal
		87555125		1	ACCESORIOS ASIENTO, Pedestal Assembly
1		87308118		1	RESPALDO, Seat Top Assy, Vinyl; Includes Back and Seat Cushions
1		87308157		1	RESPALDO, Seat Top Assy, Cloth; Includes Back and Seat Cushions
2		87308119		1	COJIN, Vinyl
2		87308158		1	COJIN, Cloth
3		87308127		1	RESPALDO, Vinyl
3		87308159		1	RESPALDO, Cloth
4		87308153		1	BRAZO (CONJUNTO), Left-Hand
5		87308152		1	BRAZO (CONJUNTO), Right-Hand
6		87308154		2	ACCESORIOS ASIENTO, Kit, Arm Pad; Includes (1) Arm Pad, (1) Screw
7		87308128		1	ACCESORIOS ASIENTO, Kit, Tether Belt; Includes (2) Tether Belts, (2) Bolts, (4) Washers, (2) Lock Nuts
8		87037462		1	DISP. REGULACION RES, Lumbar Knob Kit; Includes Knob, 1/8 x 5/8 Roll Pin
		87308130		1	DISP. REGULACION RES, Kit, Lumbar; Includes (2) Screws, (2) Rivets, (1) Back Support, (1) Lumbar Shaft Yoke
9		123969A1		1	BOTON, Kit, Height/Weight Adjustment; Includes (1) Knob, (1) Shaft, (1) 5/32 x 1 in Roll Pin
10		38-11016		1	PASADOR DE FIJACION, 5/32" x 1", Slotted

09-48		p2	01/08

CONJUNTO DEL ASIENTO, SUSPENSION MECANICA (SEARS)

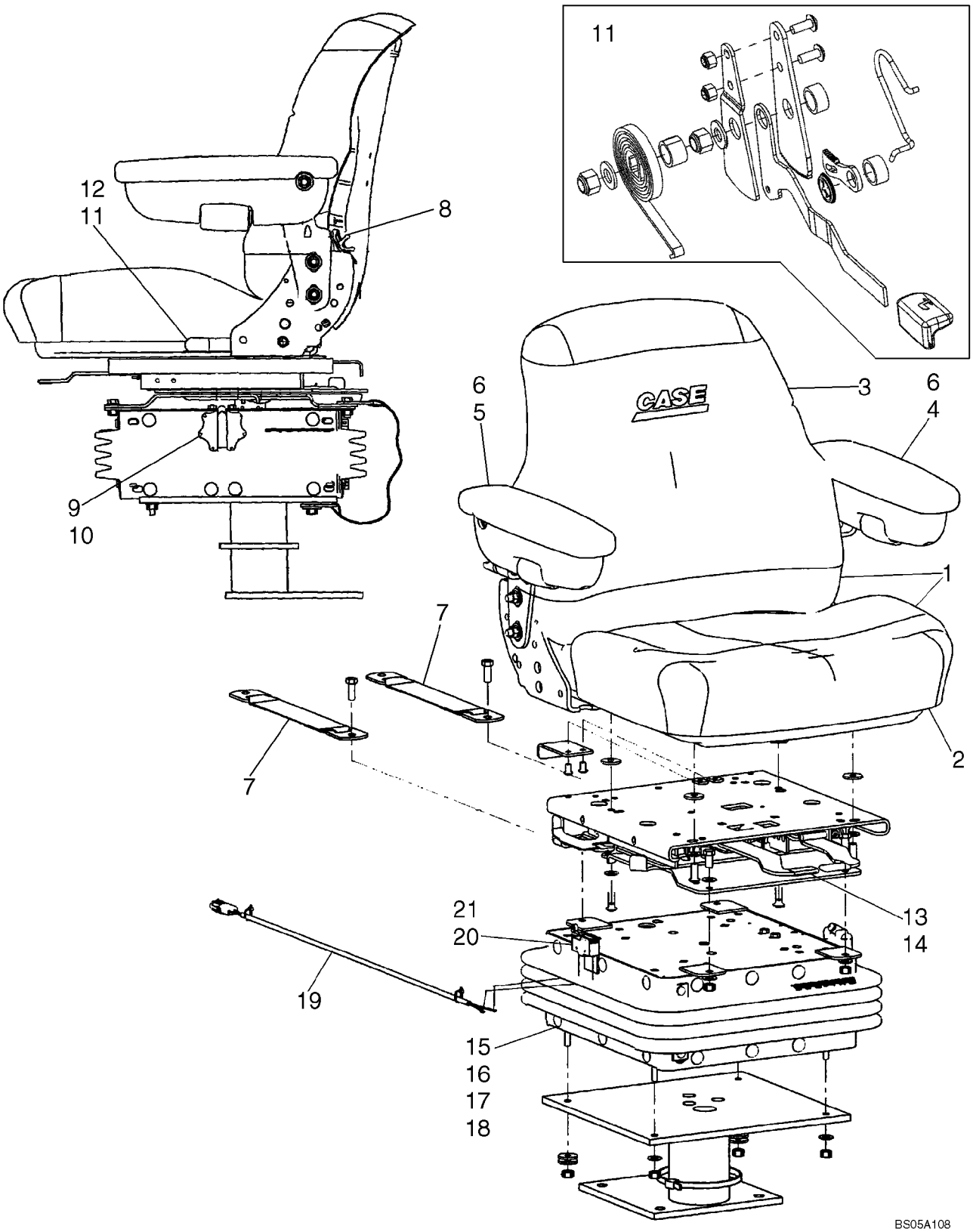

CONJUNTO DEL ASIENTO, SUSPENSION MECANICA (SEARS)

REF	FN	PART NUMBER	YR/SN	QTY	DENOMINACION
		130674A1		1	JUEGO, Kit, Weight Adjustment; Includes (1) Thrust Washer, (2) Shaft and Gear
		87308145		1	ARANDELA DE TOPE, 2 OD x .6 in ID
11		86994165		1	ACCESORIOS ASIENTO, Recliner Kit; Includes (2) Brackets, (3) Spacers, (2) Springs, Knob, Latch, Lever, (2) Bolts, (2) Washers, (5) Nuts
12		87416475		1	POMO, Recliner Cap
		87308143		1	SOPORTE DE ASIENTO, Upper Housing, Boxed
		1977725C1		1	REGLETA, Kit, Bearing, Slider Block; Includes (4) Tube Bearings, (1) Ride Indicator, (1) A45512 Slider Block, (1) A45515 Slider Block, (1) A45516 Slider Block, (1) NSS Slider Block
13		87308131		1	ACCESORIOS ASIENTO, Swivel Assembly
14		87308132		1	COJINETE, Kit, Swivel Bearing; Includes (1) Bolt, (8) Ball Bearings, (1) Clip, (1) Nut, (1) Cotter Pin, (1) Plastic Washer, (1) Ball Retainer
15		87308141		1	SOPORTE DE ASIENTO, Kit, Suspension Assembly, Boxed
16		87308144		1	SOPORTE DE ASIENTO, Suspension Arm, Boxed
17		87308146		1	ACCESORIOS ASIENTO, Kit, Spring, Suspension
18		87308147		1	ACCESORIOS ASIENTO, Kit, Boot, Suspension, Boxed; Includes (1) Boot, (26) Buttons
		87308148		1	ACCESORIOS ASIENTO, Kit, Shock Absorber, Boxed; Includes (1) Shock Absorber, (2) Bushings
		51200906		1	PIEZA DE SOPORTE, Shaft, Suspension
		112884A1		2	EJE, Bearing Shaft Weldment, Boxed
		A45504		1	ARANDELA, Spring, Square, With Weldnut
		A45505		1	ENGRANAJE, Large Gear and Shaft Weldment
		A45513		1	ENGRANAJE, Gear and Shaft Weldment
		A45054		2	PARACHOQUES, Rubber, Black
		87308142		1	SOPORTE DE ASIENTO, Lower Housing, Boxed
19		87308149		1	GRUPO DE CABLES
20		87308150		1	CONTACTOR, Seat

09-48		p3	01/08

CONJUNTO DEL ASIENTO, SUSPENSION MECANICA (SEARS)

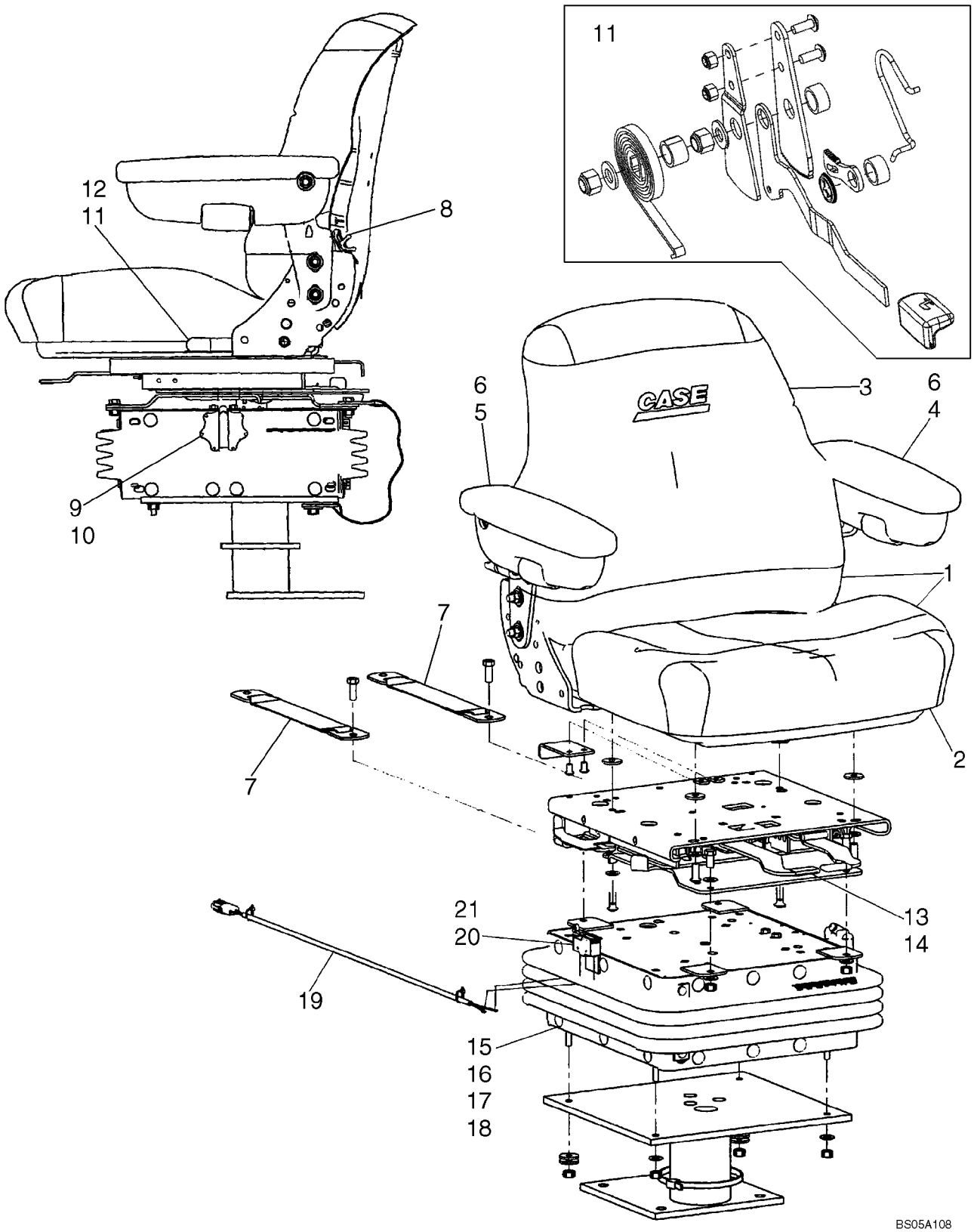

CONJUNTO DEL ASIENTO, SUSPENSION MECANICA (SEARS)

REF	FN	PART NUMBER	YR/SN	QTY	DENOMINACION
21		87308151		1	ACCESORIOS ASIENTO, Kit, Switch and Actuator Lever; Includes Switch, Actuator, (4) Screws, (2) Lock Washers, (2) Nuts

09-49		p1	12/07

ASIENTO - SOPORTE (SUSPENSIĎN DE AIRE)

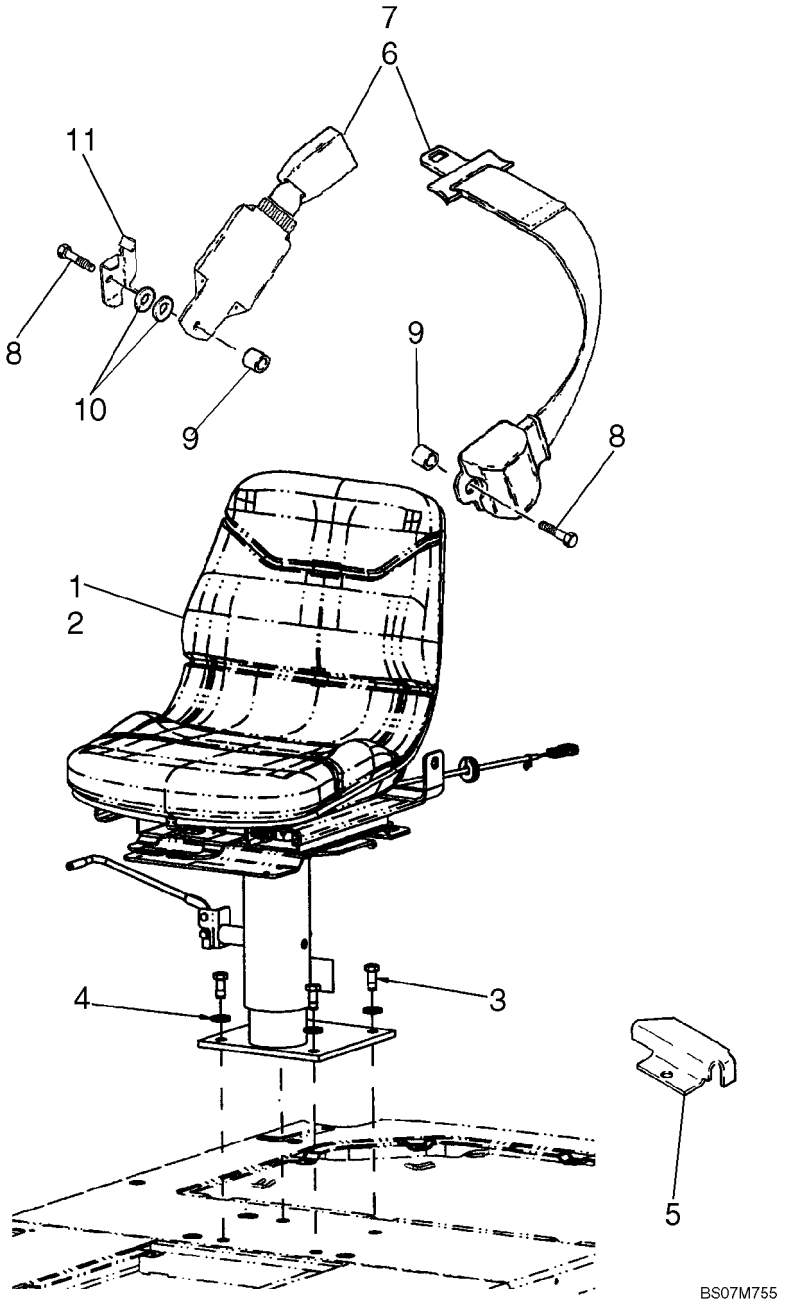

ASIENTO - SOPORTE (SUSPENSIĎN DE AIRE)

REF	FN	PART NUMBER	YR/SN	QTY	DENOMINACION
1		87578905		1	ASIENTO, Air Suspension, Vinyl; Component Parts Not Available At Time Of Printing
2		87578904		1	ASIENTO, Air Suspension, Cloth; Component Parts Not Available At Time Of Printing; Not Illustrated
3		604-12030		4	TORNILLO, Hex, Lock, M10 x 30, Cl 8.8
4		896-15012		4	ARANDELA, M12 x 28.5 x 4, HT
5		186351A1		1	DEFENSA, Harness
6		87408889		1	CINTURčN, SEGURIDAD, 51 mm (2 in), If Used; Suspension Seat Belt Mounting
7		87408888		1	CINTURčN, SEGURIDAD, 76 mm (3 in), Retractable, If Used; Suspension Seat Belt Mounting
8		614-12040		2	TORNILLO, Hex, M12 x 40, 8.8, Full Thd
9		87311572		2	SEPARADOR
10		895-18012		2	ARANDELA, M12 x 20 x 2
11		87310149		1	PIEZA DE SOPORTE

09-53		p1	12/07

CABINA - CRISTAL, ESPEJO Y MANTENER ABIERTO

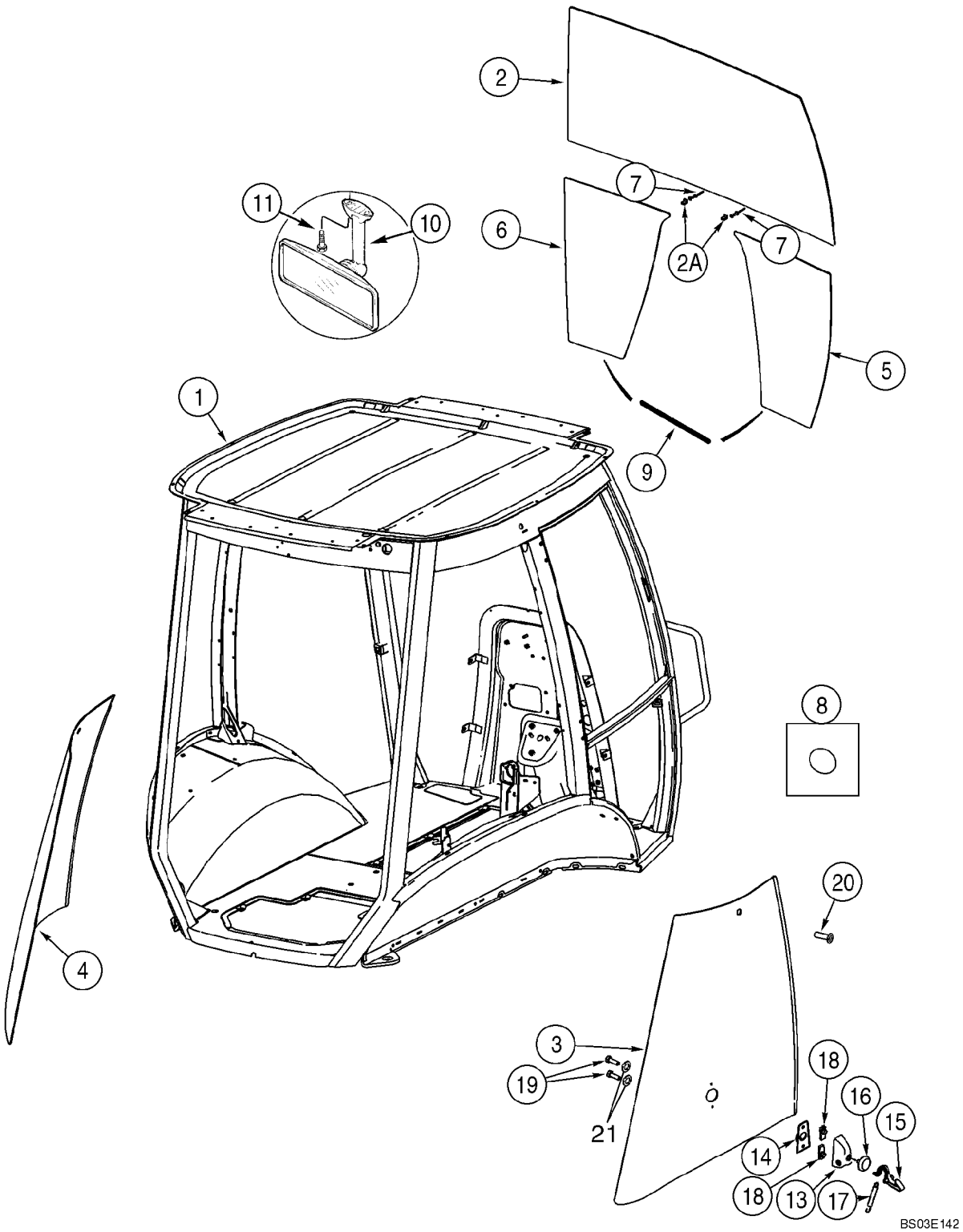

CABINA - CRISTAL, ESPEJO Y MANTENER ABIERTO

REF	FN	PART NUMBER	YR/SN	QTY	DENOMINACION
1		87636560		1	CABINA, Single Door; Includes Frame, Left-Hand Door, All Glass, Front and Rear Wipers and Exterior Lamps; Order From Machinery Price List
1		87636562		1	CABINA, Two Door; Includes Frame, Left-Hand Door, All Glass, Front and Rear Wipers and Exterior Lamps; Order From Machinery Price List
2		448607A1		1	PARABRISAS
2A		279482A1		2	TORNILLO DE SUJECTIO, Windshield
3		338425A1		1	VENTANILLA, Right Rear Quarter Panel
4		338424A1		1	VENTANILLA, Left Rear Quarter Panel
5		448609A1		1	PARABRISAS, Lower Right-Hand
6		448608A1		1	PARABRISAS, Lower Left-Hand
7		151-516		2	REMACHE, Pop, 1/8" x .775"
8		391827A1		36	ESPACIADOR
9		395793A1		2	BANDA DE PROTECCIčN
10		87406924		1	ESPEJO RETROVISOR, Interior
11		286-56520		2	TORNILLO, Cross Fil Hd, #10-24 x 1 1/4"
13		405740A1		2	TAPA
14		405739A1		2	CUERPO
15		405738A1		2	PALANCA, Hold Open
16		400573A1		2	PASACABLES
17		405741A1		2	MUELLE HELICOIDAL, Latch Back
18		405742A1		4	TUERCA, M8
19		400572A1		4	TORNILLO, M8; Nylon
20		400571A2		2	PARACHOQUES
21		431801A1		4	ARANDELA, Black Nylon

09-54		p1	12/07

CABINA - CHASIS Y CUBIERTAS

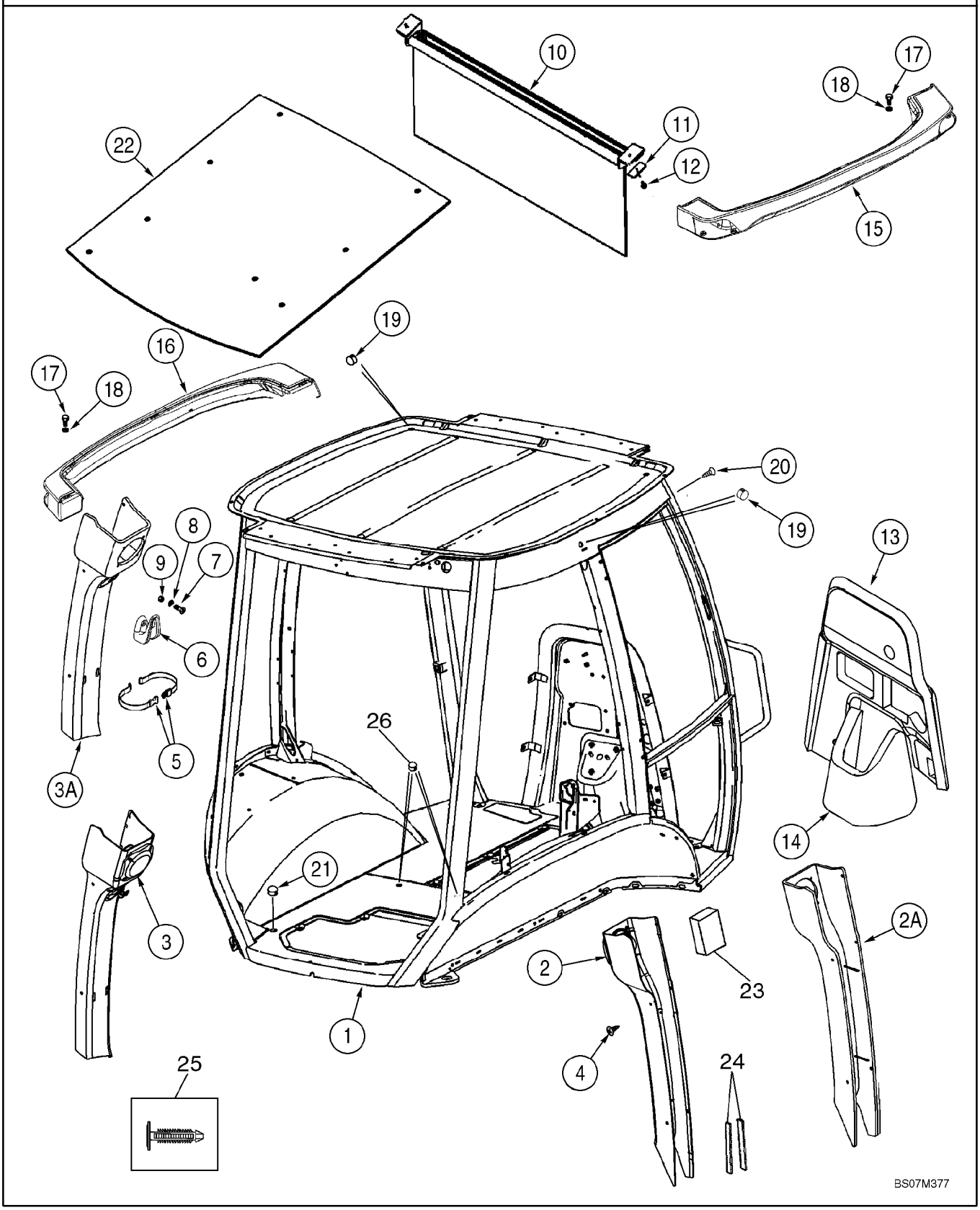

CABINA - CHASIS Y CUBIERTAS

REF	FN	PART NUMBER	YR/SN	QTY	DENOMINACION
1		87636561		1	ESTRUCTURA CABINA, Single Door
1		87636563		1	ESTRUCTURA CABINA, Two Door
2		87657149		1	TAPADERA, Plastic; Right-Hand Post; Standard Interior
2A		379425A3		1	TAPA, Vinyl; Right-Hand Post; Deluxe Interior
3		87657148		1	TAPADERA, Plastic; Left-Hand Post; Standard Interior
3A		379424A2		1	TAPA, Vinyl; Left-Hand Post; Deluxe Interior
4		401949A1		10	BOTON DE RESORTE
5		378227A1		1	BANDA, Garment
6		114549A1		1	PERCHA
7		87310147		2	TORNILLO, M4 x 16, Stainless Steel
8		895-11004		2	ARANDELA, M4
9		832-10404		2	CONTRA TUERCA, M4 x .7, Cl 8
10		364180A1		1	PARASOL
11		409618A1		2	PLACA, 1/4 in Mounting Hole
12		396516A1		3	PUNZON VALVULA, No. 10 x 1; With Washer; Phillips
13		87704851		1	PROTECTOR, Firewall, Upper
14		87440283		1	PROTECTOR, Firewall, Lower
15		360247A3		1	FARO (CONJ), Right-Hand
16		360246A3		1	FARO (CONJ), Left-Hand
17		394863A1		10	TORNILLO, M6 x 20
18		395387A1		10	ARANDELA, 6.4 ID; Nylon
19		395388A1		3	TAPčN
		353-415		1	TAPčN, Dome, 1.500" hole, Nylon, Cab Roof; Models Without Radio Antenna
		353-410		1	TAPčN, Dome, .875" hole, Nylon, Upper Windshield Frame; Models Without Radio Antenna
		353-407		1	TAPčN, Dome, .687" hole, Nylon, Rear Filter Plate On Models Without Windshield Washer
		353-425		2	TAPčN, 7/16 in dia
		353-421		1	TAPčN, Dome, .187" hole, Nylon
		353-405		1	TAPčN, Dome, .562" hole, Nylon
		353-408		1	TAPčN, Dome, .750" hole, Nylon

09-54		p2	12/07

CABINA - CHASIS Y CUBIERTAS

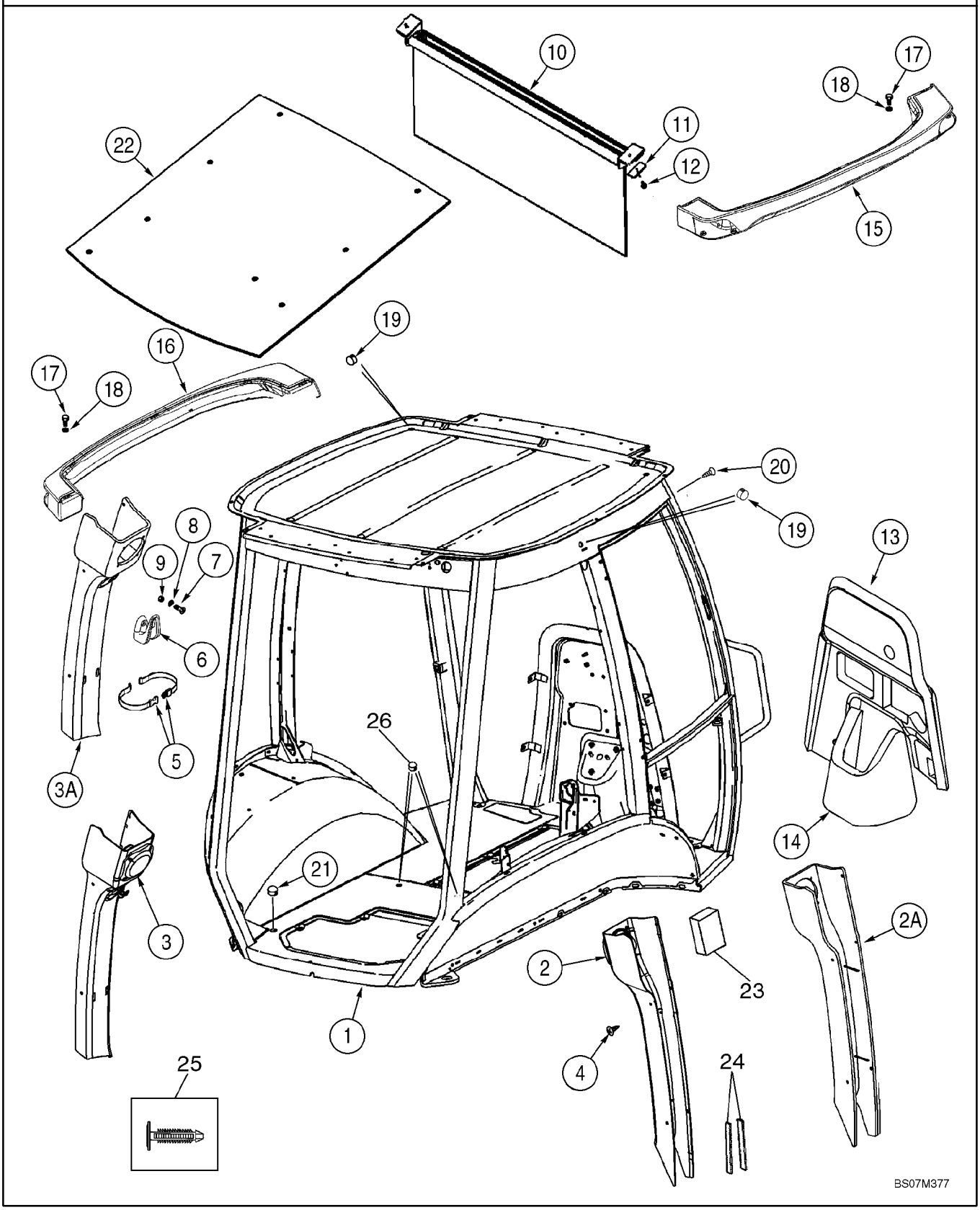

CABINA - CHASIS Y CUBIERTAS

REF	FN	PART NUMBER	YR/SN	QTY	DENOMINACION
20		402610A1		8	BOTON DE RESORTE, Cab Frame; Models Without Exterior Mirrors
21		382298A1		2	TAPčN
22		368809A1		1	AISLADOR, Insulation
23		412285A1		1	CINTA, Foam; Adhesive Back; B-Post
24		414939A1		2	BANDA HERMETICIDAD, Adhesive Back; B Post
25		411399A1		1	BOTON DE RESORTE, For 1/4 in dia Hole; Christmas Tree Clip
26		D140267		2	TAPčN, 1-3/16 Hole Size; Brake Bleeder

09-55		p1	12/07

CABINA - PUERTAS

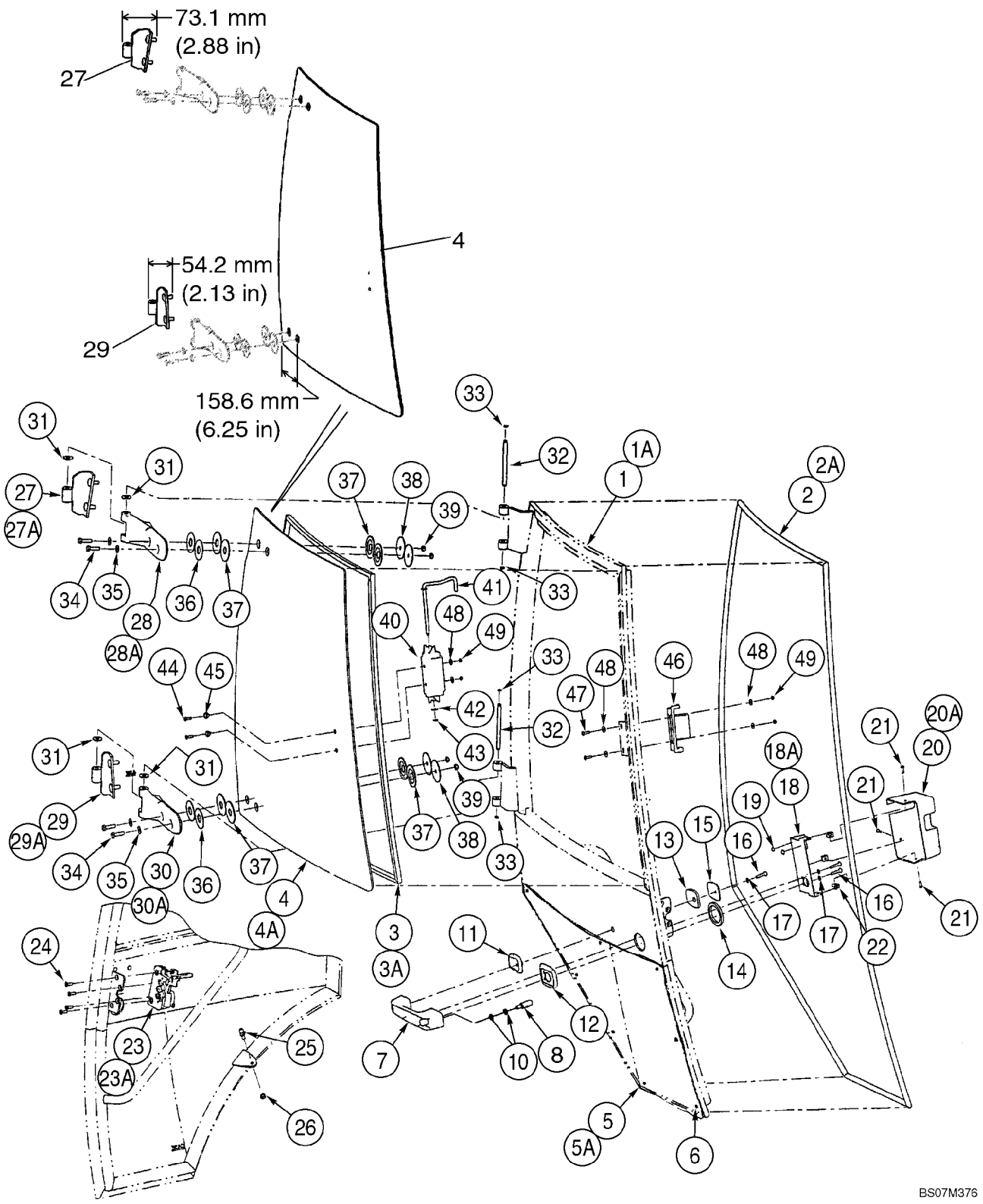

CABINA - PUERTAS

REF	FN	PART NUMBER	YR/SN	QTY	DENOMINACION
		REF			MANUAL, Left-Hand and Right-Hand Cab Doors; Left-Hand Door Not Illustrated
		87439726		1	PUERTA DE CABINA, DERECH, Right-Hand Door; Incl. Ref 1 - 49, Except Where Noted For Left-Hand Door
		341743A3		1	PUERTA DE CABINA,I., Left-Hand Door; Incl. Ref 1A - 49, Except Where Noted For Right-Hand Door
1		87439728		1	BASTIDOR (CONJUNTO), Right-Hand Door
1A		87443691		1	BASTIDOR (CONJUNTO), Left-Hand Door
2		394707A1		1	PORCION DE GOMMA, Right-Hand Door
2A		390838A1		1	PORCION DE GOMMA, Left-Hand Door
3		394708A1		1	JUNTA DE CRISTAL, Upper; Right-Hand Door
3A		391850A1		1	JUNTA DE CRISTAL, Upper; Left-Hand Door
		87448199		1	VENTANA (CJTO), SERVICE KIT, Right-Hand Door Window and Hinges; Includes Ref 4, 27, 29, Plus Instructions
4		87439725		1	VIDRIO, Upper; Right-Hand Door
4A		338429A1		1	VIDRIO, Upper; Left-Hand Door
5		338427A1		1	VENTANA, Lower; Right-Hand Door
5A		338426A1		1	VENTANA, Lower; Left-Hand Door
6		391827A1		4	ESPACIADOR, 4 Per Door; Cut Bumpers In Half For 8 Locations
7		60-7083T1		1	MANECILLA, Outer
8		442718A1		1	BOTON, Release
10		895-11006		1	ARANDELA, M6
11		315276A1		1	MARCO, Small
12		315273A1		1	MARCO, Large
13		391847A1		1	JUNTA HERMETICA, Small
14		391838A1		1	JUNTA HERMETICA, Large
15		391848A1		1	PLACA DORSAL
16		393203A1		3	TORNILLO
17		393202A1		3	ARANDELA, 6 mm
18		394704A1		1	PIEZA DE SOPORTE, Cover Mounting; Right-Hand Door

CABINA - PUERTAS

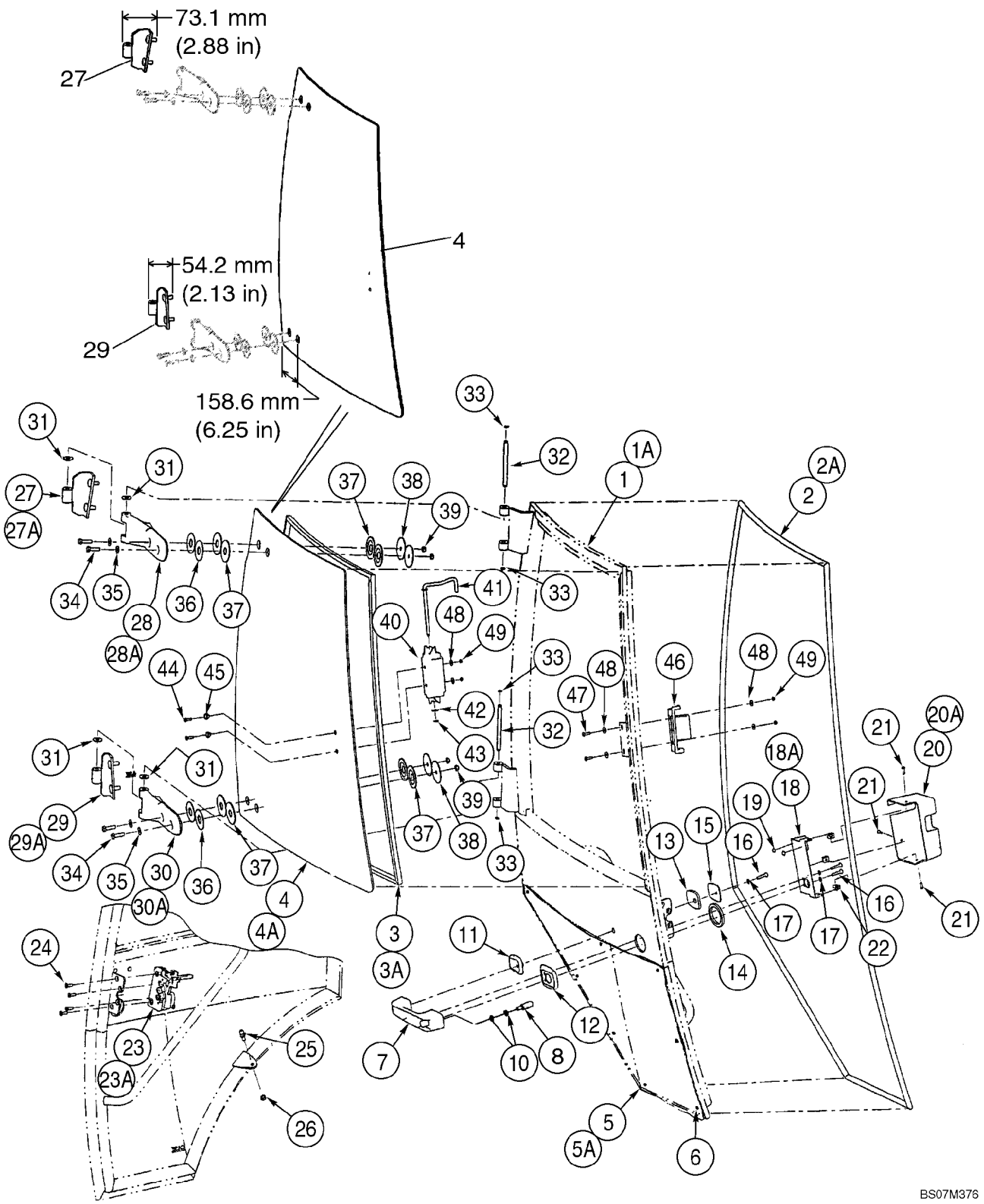

CABINA - PUERTAS

REF	FN	PART NUMBER	YR/SN	QTY	DENOMINACION
18A		391841A1		1	PIEZA DE SOPORTE, Cover Mounting; Left-Hand Door
19		391827A1		2	ESPACIADOR
20		394705A1		1	TAPA, Latch; Right-Hand Door
20A		391842A1		1	TAPA, Latch; Left-Hand Door
21		390-100		3	TORNILLO, Cross Pan Hd, #10-32 x 5/8"
22		393209A1		3	TUERCA ESPECIAL
23		382777A1		1	PESTILLO, Right-Hand Door
23A		382775A1		1	PESTILLO, Left-Hand Door
24		569-4		4	TORNILLO, Hex Soc Flat Hd, M6 x 20, 8.8
25		3234063R1		1	JUNTA DE ROTULA, M10
26		832-10410		1	CONTRA TUERCA, M10 x 1.5, Cl 8
27		87439722		1	BISAGRA, Upper; Right-Hand Door
27A		390840A1		1	BISAGRA, Upper; Left-Hand Door
28		364134A2		1	BISAGRA, Plastic; Upper; Right-Hand Door
28A		364132A2		1	BISAGRA, Plastic; Upper; Left-Hand Door
29		87439723		1	BISAGRA, Lower; Right-Hand Door
29A		390841A1		1	BISAGRA, Lower; Left-Hand Door
30		364135A2		1	BISAGRA, Plastic; Lower; Right-Hand Door
30A		364133A2		1	BISAGRA, Plastic; Lower; Left-Hand Door
31		391845A1		4	ARANDELA, Nylon
32		391843A1		2	PERNO
33		442773A1		4	RETENEDOR
34		514-633		4	TORNILLO, Hex, M8 x 30, 8.8, Full Thd
35		895-30107		4	ARANDELA, M8 x 20 x 2
36		376334A1		4	ARANDELA, 55 mm OD; Yellow
37		376336A1		8	ARANDELA ELASTICA
38		376332A1		4	ARANDELA, 60 mm OD; Black
39		832-10508		4	CONTRA TUERCA, M8 x 1.25, Cl 8
40		87344860		1	MANECILLA, Slam Latch
41		87534372		1	VARILLA
42		906086R1		1	ARANDELA, M8.4 ID x 16 OD x 1.6 Thk
43		100-39001		1	ANILLO DE FRENO, #X31, Ext, E-Type
44		140-104		2	TORNILLO, Cross Pan Hd, #8-32 x 3/4"
45		F64198		2	SEPARADOR, Nylon

CABINA - PUERTAS

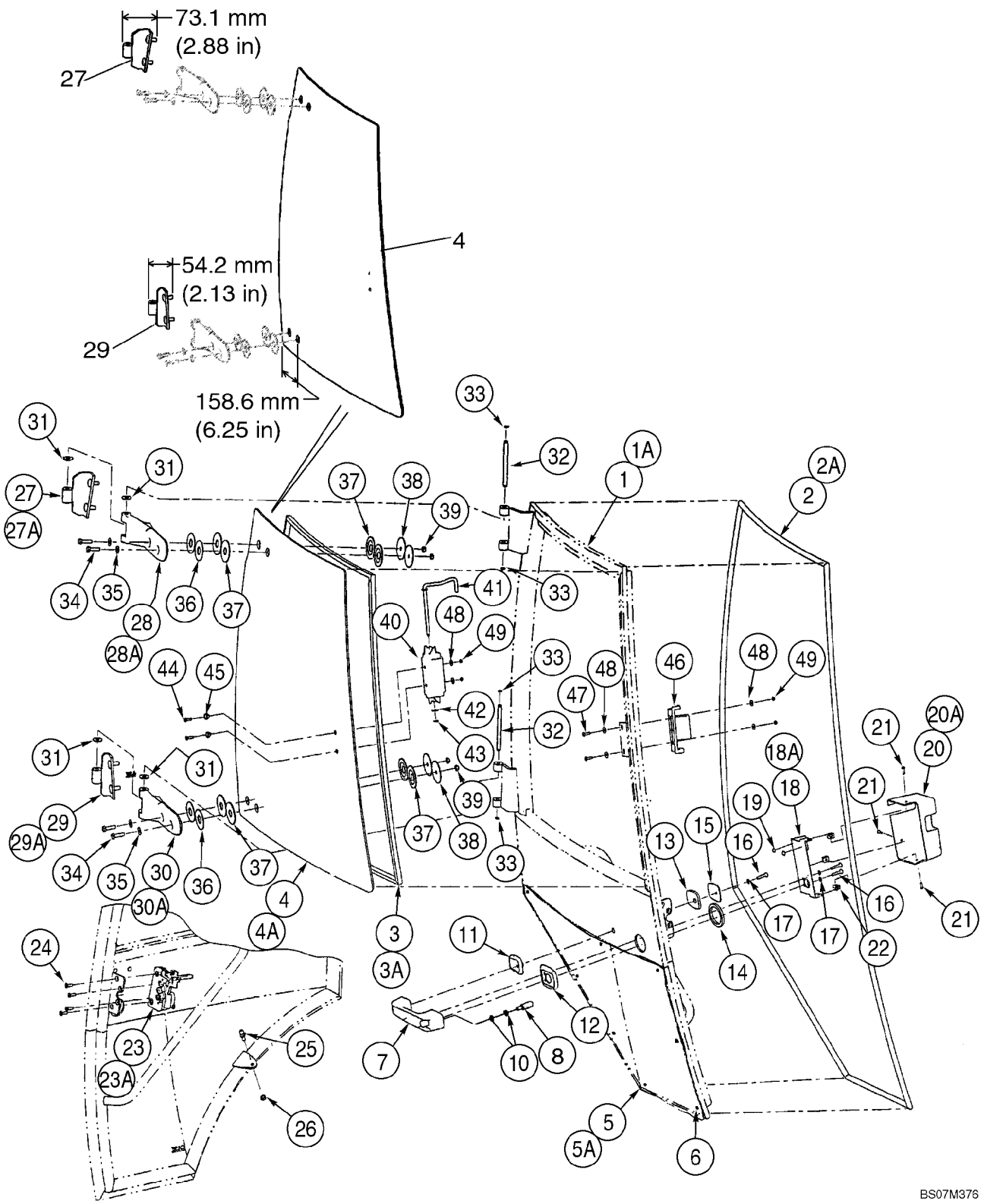

CABINA - PUERTAS

REF	FN	PART NUMBER	YR/SN	QTY	DENOMINACION
46		87344859		1	PESTILLO, Slam Latch
47		142-103		2	TORNILLO, Cross Oval Hd, #10-24 x 3/4"
48		195-81023		6	ARANDELA, #12
49		F45165		4	TUERCA SEGURIDAD, No. 10

09-56		p1	12/07

CABINA - MONTAJE DE LA PUERTA

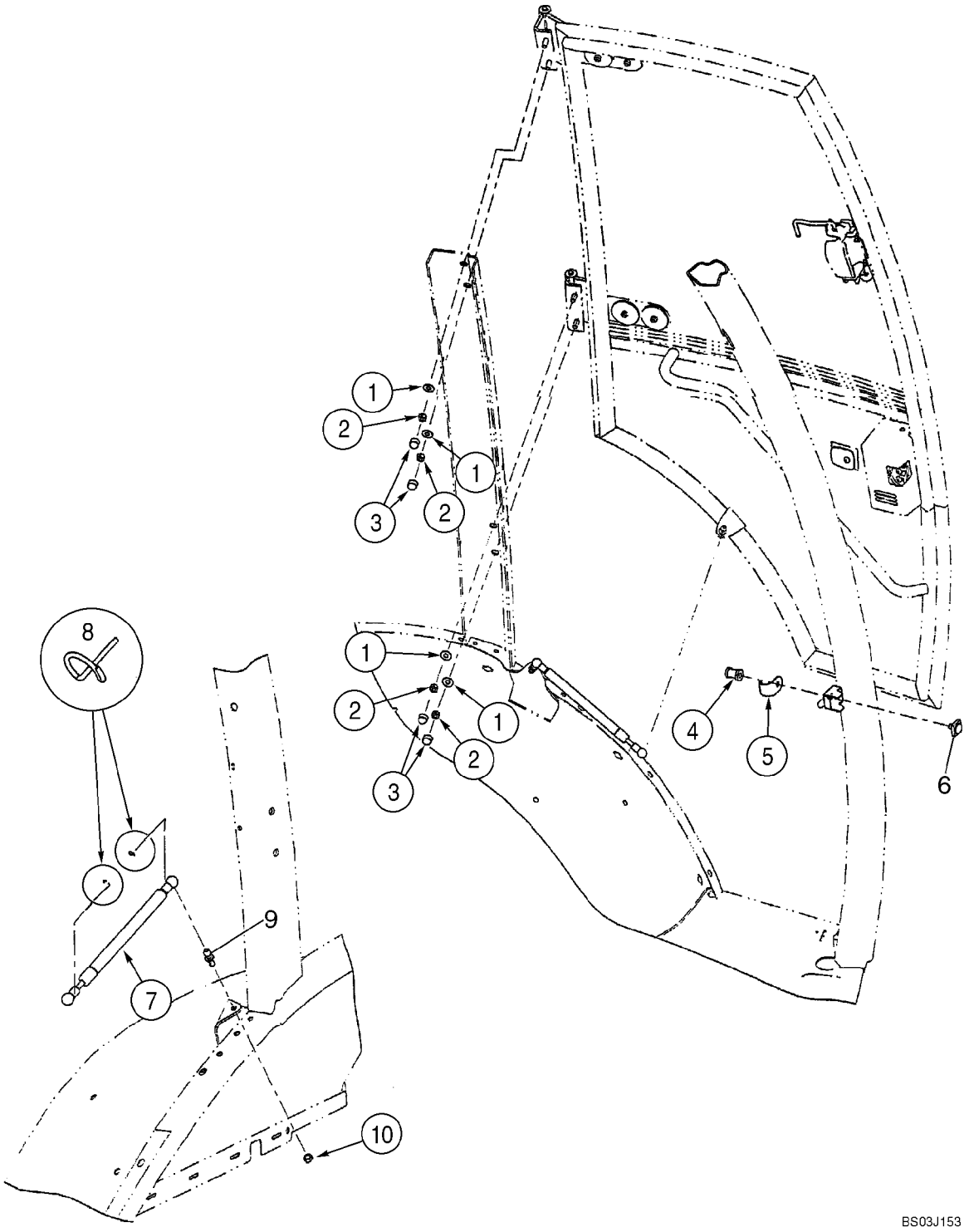

CABINA - MONTAJE DE LA PUERTA

REF	FN	PART NUMBER	YR/SN	QTY	DENOMINACION
		REF			MANUAL, Left-Hand and Right-Hand Cab Doors; Left-Hand Cab Door Shown
1		397064A1		4-8	ARANDELA FRENO, 3/8 x 7/8 x 1/16 thk
2		232-1446		4-8	CONTRA TUERCA, 3/8"-16, GC
3		396841A1		4-8	TAPON DEL DEPOSITO
4		87411108		1-2	PERNO ESPECIAL, Striker
5		393211A1		1-2	DEFENSA
6		442842A1		1-2	BLOQUE (CONJUNTO), Striker
7		394800A1		1-2	RESORTE, Gas Spring
8		3233348R1		2-4	SUJETADOR
9		432431A1		1-2	PRISIONERO, Ball
10		832-10408		1-2	CONTRA TUERCA, M8 x 1.25, Cl 8

09-57		p1	12/07

CABINA - VENTANILLA, DERECHA, PARA MARCOS DE CABINA DE PUERTA ÚNICA

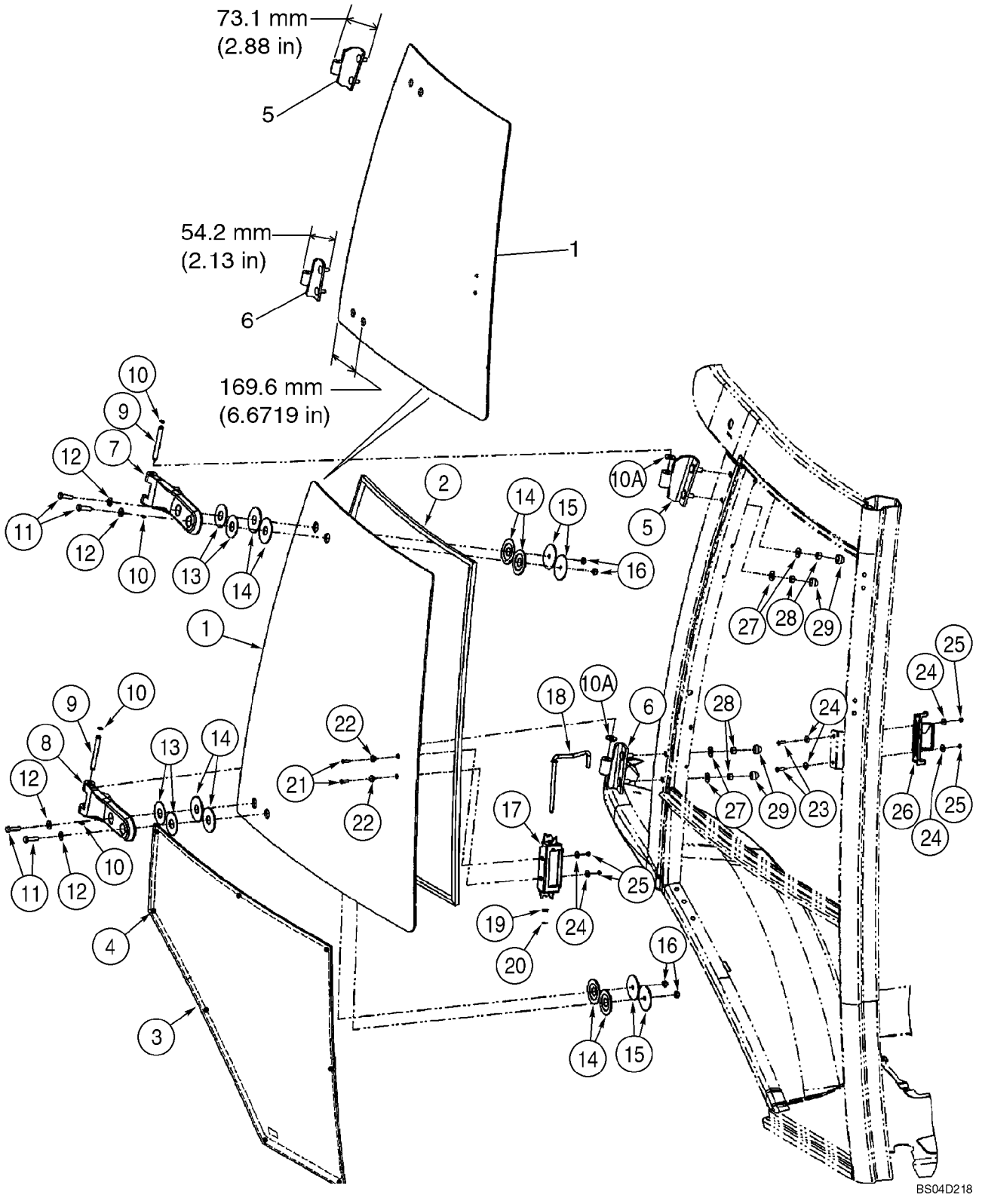

CABINA - VENTANILLA, DERECHA, PARA MARCOS DE CABINA DE PUERTA ÚNICA

REF	FN	PART NUMBER	YR/SN	QTY	DENOMINACION
		{}		1	87442204 Window Assy; Right-Hand; Incl. Ref 1 - 29; Not Available As An Assembly, Order Components
		87448198		1	VENTANA (CJTO), SERVICE KIT, Right-Hand Window and Hinges; Incl. Ref 1, 5, 6, Plus Instructions
1		87439724		1	VENTANA, Upper
2		394864A1		1	JUNTA DE CRISTAL
3		338428A1		1	VENTANA (CJTO), Lower
4		391827A1		4	ESPACIADOR, Cut Bumpers In Half For 8 Locations
5		87439722		1	BISAGRA, Upper
6		87439723		1	BISAGRA, Lower
7		364134A2		1	BISAGRA, Plastic; Upper
8		364135A2		1	BISAGRA, Plastic; Lower
9		394865A1		2	PERNO
10		393330A1		4	ANILLO
10A		391845A1		4	ARANDELA, Nylon
11		514-633		4	TORNILLO, Hex, M8 x 30, 8.8, Full Thd
12		895-30107		4	ARANDELA, M8 x 20 x 2
13		376334A1		4	ARANDELA, 55 mm OD; Yellow
14		376336A1		8	ARANDELA ELASTICA, Rubber
15		376332A1		4	ARANDELA, 60 mm OD; Black
16		832-10508		4	CONTRA TUERCA, M8 x 1.25, Cl 8
17		87344860		1	MANECILLA, Slam Latch
18		87534372		1	VARILLA
19		906086R1		1	ARANDELA, M8.4 ID x 16 OD x 1.6 Thk
20		100-39001		1	ANILLO DE FRENO, #X31, Ext, E-Type
21		140-104		2	TORNILLO, Cross Pan Hd, #8-32 x 3/4"
22		F64198		2	SEPARADOR, Nylon
23		142-103		2	TORNILLO, Cross Oval Hd, #10-24 x 3/4"
24		195-81023		6	ARANDELA, #12
25		F45165		4	TUERCA SEGURIDAD, No. 10
26		87344859		1	PESTILLO, Slam
27		397064A1		4	ARANDELA FRENO, 3/8 x 7/8 x 1/16 thk
28		232-1446		4	CONTRA TUERCA, 3/8"-16, GC
29		396841A1		4	TAPON DEL DEPOSITO

09-58		p1	01/08

CABINA - VENTANA, TRASERA

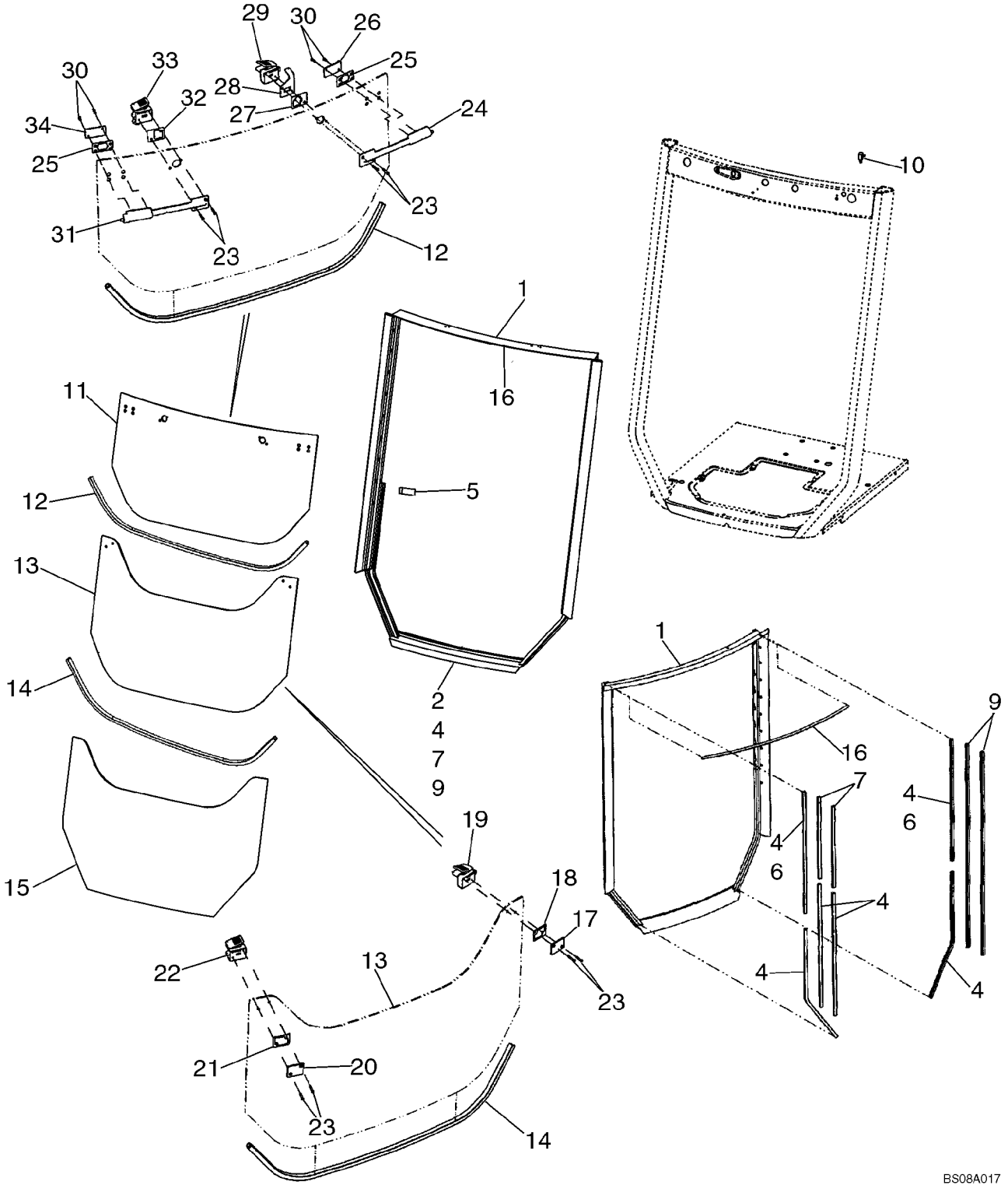

CABINA - VENTANA, TRASERA

REF	FN	PART NUMBER	YR/SN	QTY	DENOMINACION
		411850A1		1	JEUGO, Frame and Seal; Incl. 1, 4, 7, 9, 16
1		87435929		1	BASTIDOR (CONJUNTO), Included in 411850A1 Frame and Seal Kit
2		410867A1		1	JUNTA HERMETICA, Rubber Seal; Bulb Type
		411851A1		1	JEUGO, Seal; Incl. 4, 7, 9, 16
4		404228A1		6	ANILLO DE CIERRE, 760 mm (29-15/16 in), Flocked Channel Seals; Cut From 402852A1; Included in 411851A1 Seal Kit and 411850A1 Frame and Seal Kit
5		400200A1		2	PORCION DE GOMMA, Stop
6		404226A1		2	ANILLO DE CIERRE, 787 mm (31 in), Flocked Channel Seals; Cut From 402852A1
7		404229A1		2	ANILLO DE CIERRE, 508 mm (20 in), Flocked Channel Seals; Cut From 402852A1; Included In 411851A1 Seal Kit and 411850A1 Frame and Seal Kit
9		404227A1		2	ANILLO DE CIERRE, 1270 mm (50 in), Flocked Channel Seals; Cut From 402852A1; Included in 411851A1 Seal Kit and 411850A1 Frame and Seal Kit
10		A187714		1	CONTACTOR, Rear Wiper Cutout
11		352208A1		1	VENTANA, Upper
12		395348A1		1	CINTA DE ADEREZO, 1210 mm (47-21/32 in), Lower Glass Edge; Cut From 404426A1
		87434783		1	VENTANA (CJTO), Center; Includes Ref 13, 19, 22, 23; Plus (1) 87426969 Backing Plate and (4) Backing Plates and (4) Grommets Which Are Not Serviced Separately; Includes Instructions
13		352209A1		1	VENTANA, Center
14		395348A1		1	CINTA DE ADEREZO, 1210 mm (47-21/32 in), Lower Glass Edge; Cut From 404426A1
15		352210A1		1	VENTANA, Lower
16		400494A1		1	ANILLO DE CIERRE, 1095 mm (43-1/8 in), Hollow Seal; Cut From 404231A1; Included in 411851A1 Seal Kit and 411850A1 Frame and Seal Kit

09-58		p2	01/08

CABINA - VENTANA, TRASERA

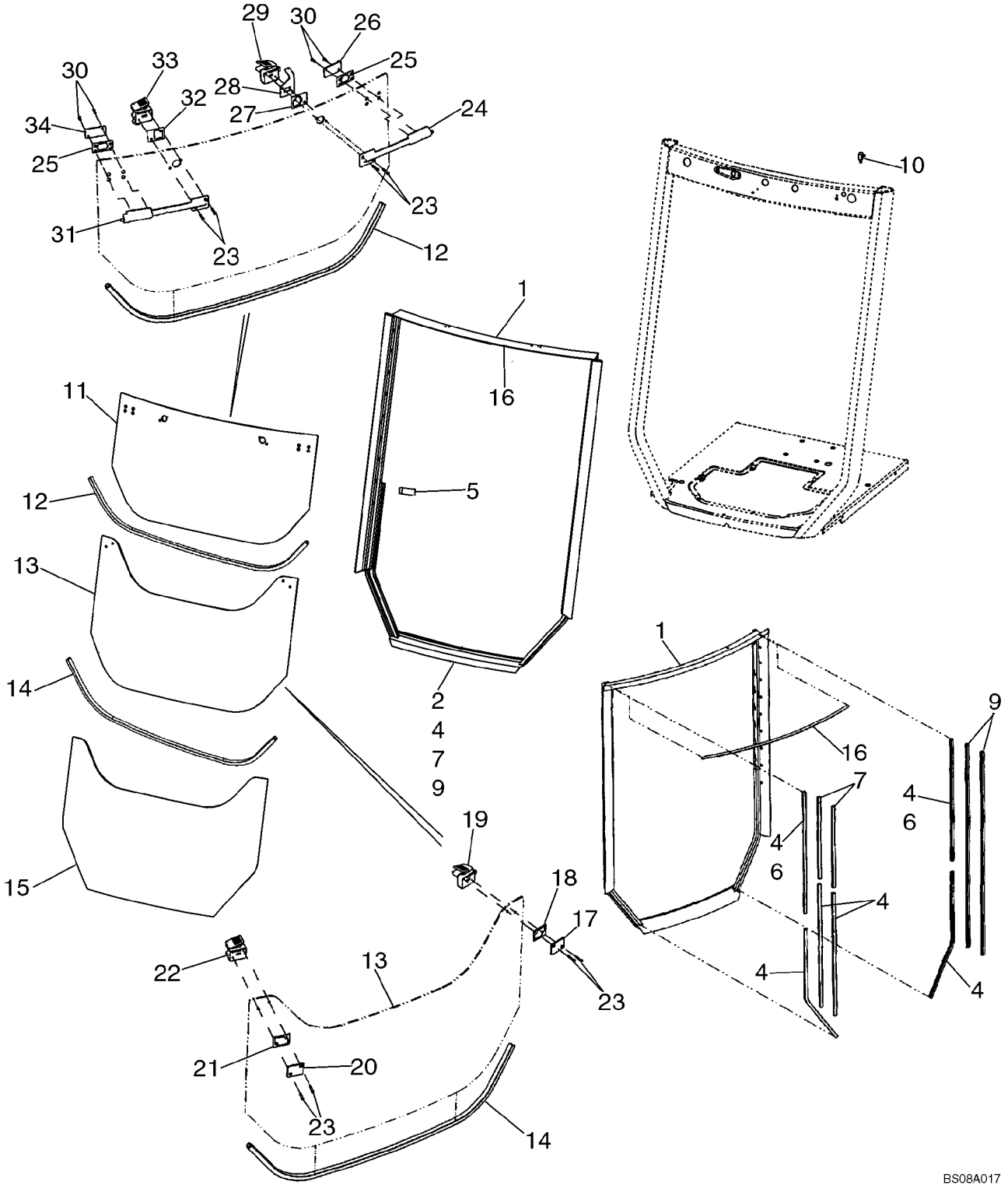

CABINA - VENTANA, TRASERA

REF	FN	PART NUMBER	YR/SN	QTY	DENOMINACION
17		411917A1		1	PLACA DORSAL, Kit; Includes 1 Each 402849A1 Plate, 411942A1 Gasket Pad
18		402847A1		1	PLACA PLASTICA, Bushing
19		411909A1		1	PESTILLO, Kit, Includes 1 Each 402868A1 Cover, 402867A1 Lever, 402833A1 Plunger, 402831A1 Housing, 402830A1 Bushing, 402870A1 Spring, 402869A1 Rivet, 402865A1 Bumper
20		411916A1		1	PLACA DORSAL, Kit; Includes 1 Each 402848A1 Plate, 411942A1 Gasket Pad
21		402846A1		1	PLACA PLASTICA, Bushing
22		411908A1		1	PESTILLO, Kit, Includes 1 Each 402871A1 Cover, 402872A1 Lever, 402873A1 Plunger, 402832A1 Housing, 402830A1 Bushing, 402870A1 Spring, 402869A1 Rivet, 402865A1 Bumper
23		87435453		8	TORNILLO, Flat Head Socket, M5 x 25
24		411910A1		1	PESTILLO, Kit, Bolt Assy; Includes 1 Each 402860A1 Housing, 402840A1 Gasket, 402837A1 Bolt, 402861A1 Insert, 402838A1 Rod, 402856A1 Spring
25		402843A1		2	PLACA PLASTICA
26		87423503		1	PLACA DORSAL, Backing Plate
27		402844A1		1	PLACA PLASTICA
28		402836A1		1	PIEZA DE SOPORTE, Rear Wiper Cutout Switch
29		411914A1		1	PESTILLO, Kit, Includes 1 Each 402831A1 Housing, 402866A1 Bumper, 402830A1 Bushing, 402833A1 Plunger, 402867A1 Lever, 402868A1 Cover
30		87445051		4	TORNILLO, Flat Head Socket, M5 x 16
31		411911A1		1	PESTILLO, Kit, Bolt Assy; Includes 1 Each 402863A1 Housing, 402851A1 Gasket, 402856A1 Spring, 402841A1 Bolt, 402861A1 Insert, 402838A1 Rod
32		402845A1		1	PLACA PLASTICA
33		411912A1		1	PESTILLO, Kit, Includes 1 Each 402832A1 Housing, 402866A1 Bumper, 402830A1 Bushing, 402873A1 Plunger, 402872A1 Lever, 402871A1 Cover

09-58		p3	01/08

CABINA - VENTANA, TRASERA

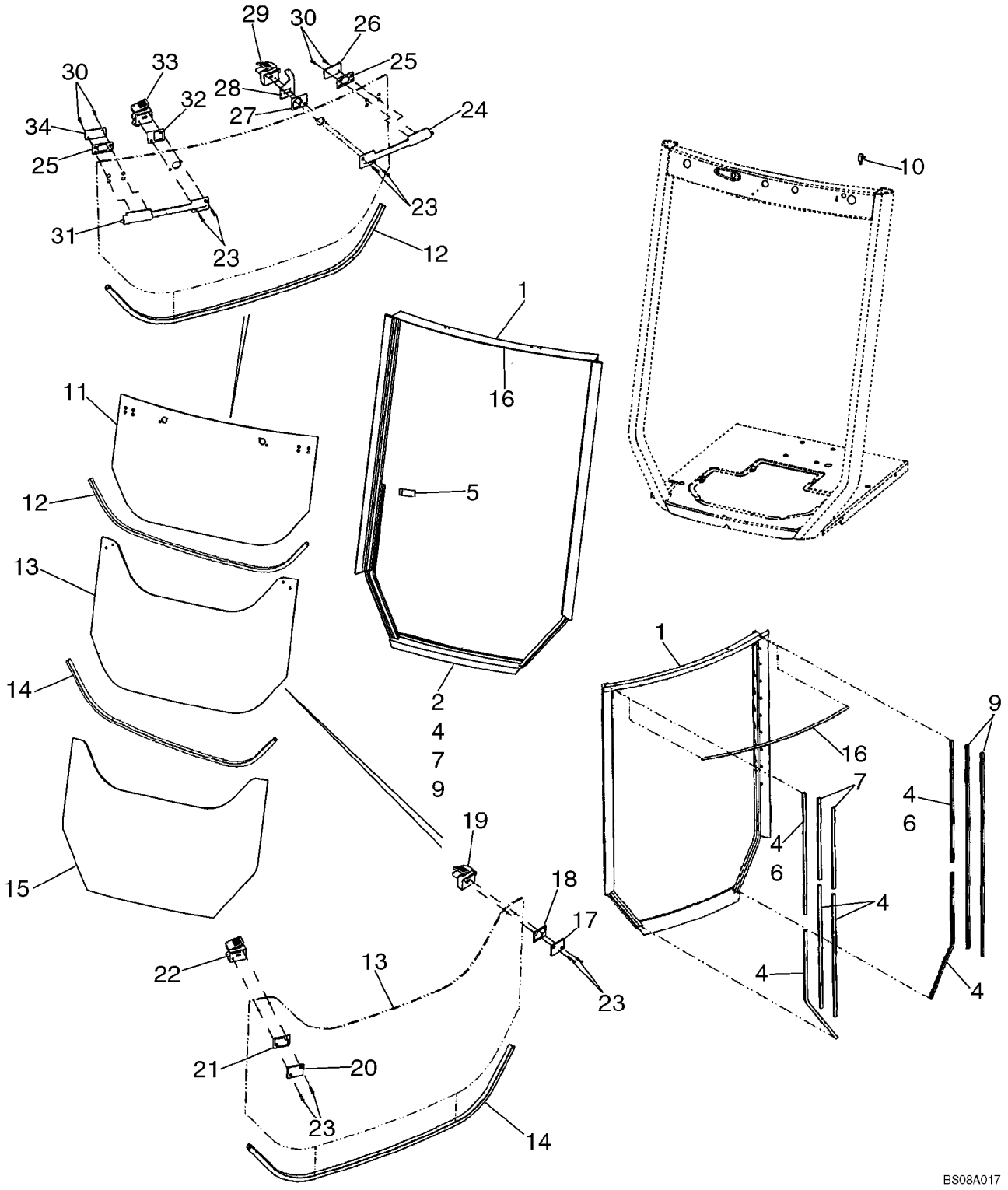

CABINA - VENTANA, TRASERA

REF	FN	PART NUMBER	YR/SN	QTY	DENOMINACION
34		87423502		1	PLACA DORSAL, Backing Plate

09-59		p1	02/08

CABINA - ARANDELA, PARABRISAS

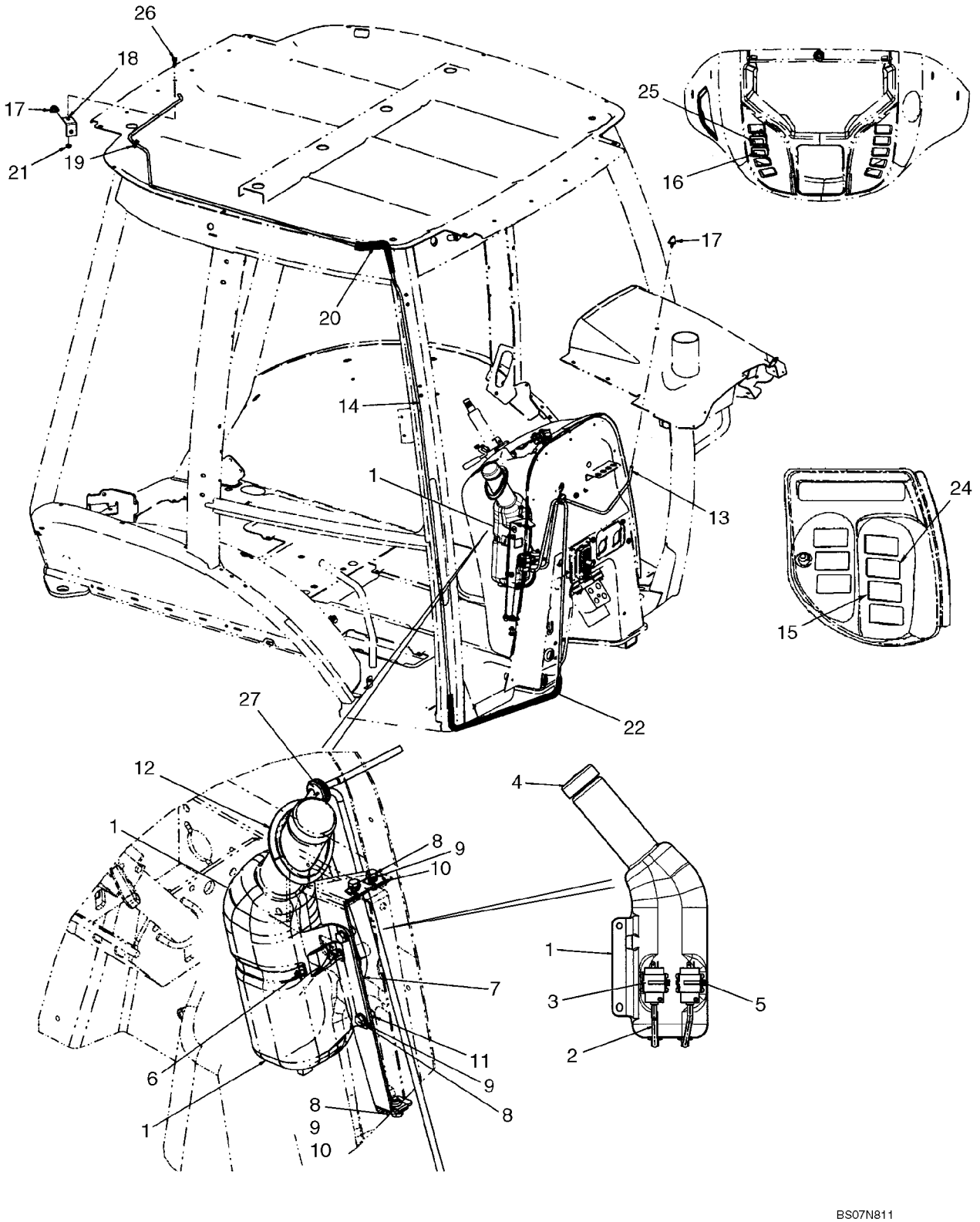

CABINA - ARANDELA, PARABRISAS

REF	FN	PART NUMBER	YR/SN	QTY	DENOMINACION
1		87675208		1	DEPOSITO LAVACRIST., RESERVOIR; Window Washing Fluid
2		87700794		2	TUBO (METROS), Washer Bottle
3		86507198		2	POMPILLA, Window Washer
4		87711985		1	TAPA DE DEPOSITO, Cap; Washer Bottle
5		L11541		2	CIERRA CABLES
6		214-3180		1	ABRAZADERA MANGUERA, 4.25/5.125 HD Worm
7		87676276		2	PIEZA DE APOYO
8		614-8020		5	TORNILLO, Hex, M8 x 20, 8.8
9		895-11008		5	ARANDELA, M8 x 16 x 1.6
10		833-40408		3	TUERCA, M8, U
11		832-10408		2	CONTRA TUERCA, M8 x 1.25, Cl 8
12		87694565		1	BANDA HERMETICIDAD, 268 mm (10-1/2 in); Cut To Length From 87438002
13		87699640		1	TUBO (METROS), Front Washer; 700 mm, Cut From 87282056
14		87741446		1	MANGA, Hose, Rear Washer; 5500 mm; Cut From 1968141CX
15		386788A1		1	CONTACTOR, Rocker; Rear Washer
16		386787A1		1	CONTACTOR, Rocker; Front Washer
17		E43769		2	VAPORIZADOR, Nozzle, Windshield Spray
18		386720A1		1	PIEZA DE SOPORTE, Washer Nozzle, Rear
19		87442441		1	PASACABLES, Washer Hose, Rear
20		408965A1		1	DEFENSA, 550 mm, Rear Washer Hose, Cut From 397155A2
21		825-2408		1	TUERCA, M8 x 1.25, Flg, Cl 8
22		87741447		1	PROTECTOR DE TUBO, Guard; 1800 mm, Front Washer Hose, Cut From 397155A2
24		386786A1		1	CONTACTOR, Rocker; Windshield Wiper, Rear
25		386785A1		1	CONTACTOR, Rocker; Windshield Wiper, Front
26		614-8020		1	TORNILLO, Hex, M8 x 20, 8.8
27		87637384		1	PASACABLES, Washer Hose

09-60		p1	12/07

CABINA - LIMPIA PARABRISAS

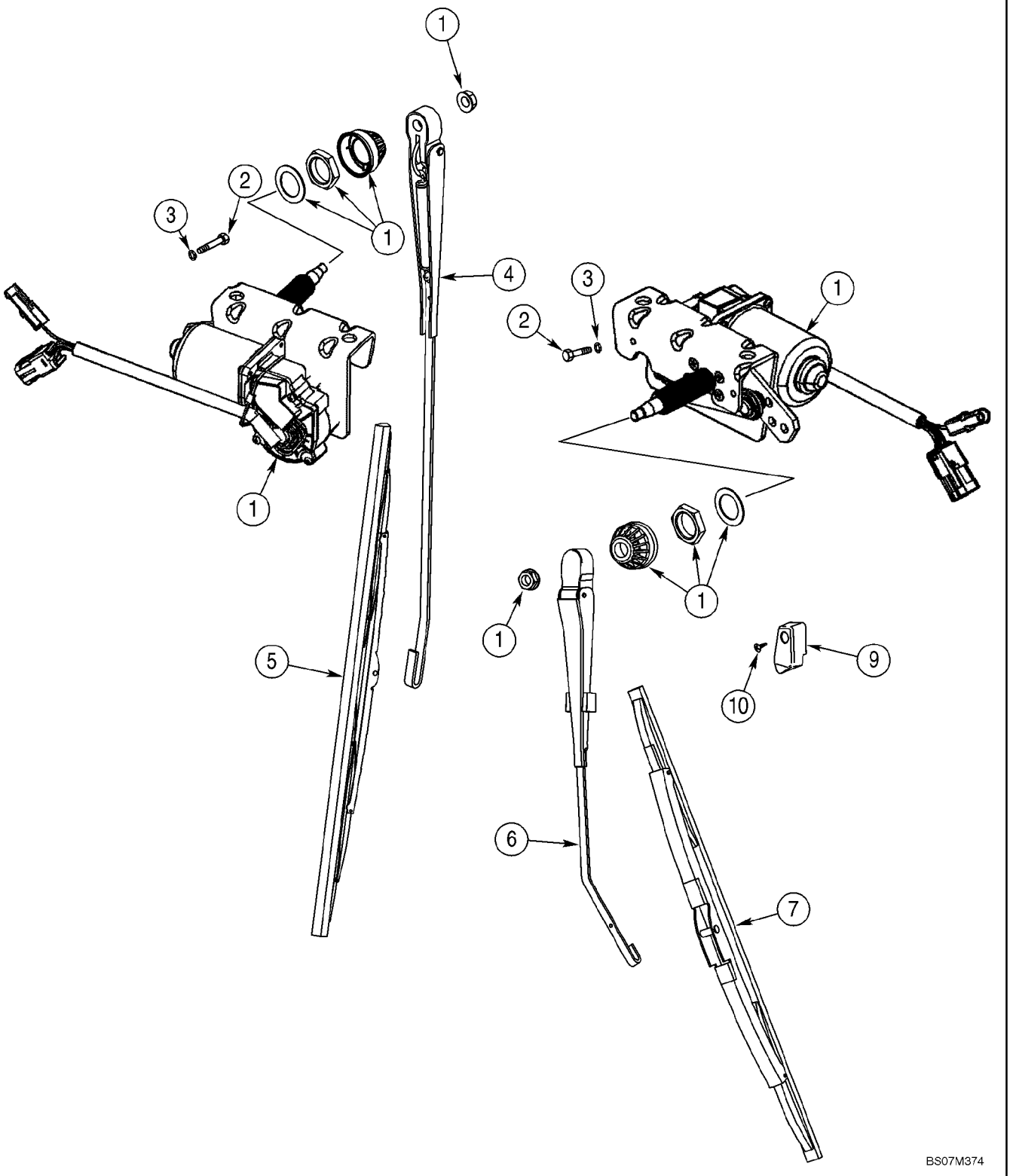

CABINA - LIMPIA PARABRISAS

REF	FN	PART NUMBER	YR/SN	QTY	DENOMINACION
1		87669381		2	LIMPIA-PARABRISAS, 12V
		404617A1		1	HAZ, Front Lamps and Wiper
		396018A3		1	HAZ, Cab, B-Post, Rear Wiper, Radio, Blower, Dome Lamp
		386786A1		1	CONTACTOR, Rear Wiper
		386785A1		1	CONTACTOR, Front Wiper
		A187714		1	CONTACTOR, Rear Wiper Cutout Switch
		495-11047		2	ARANDELA, 7/16", SAE
		425-147		1	TUERCA, Jam, 7/16"-14, G5
2		814-6050		4	TORNILLO, Hex, M6 x 50, 8.8
3		892-11006		4	ARANDELA DE FRENO, M6
4		87669391		1	BRAZO LIMPIAPARABRISAS, Front Wiper
5		87669761		1	RASQUETA LIMPIAPARABR., Front Wiper
6		87669712		1	BRAZO LIMPIAPARABRISAS, Rear Wiper
7		87669401		1	RASQUETA LIMPIAPARABR., Rear Wiper
9		395026A1		1	RAMPA, Block
10		395389A1		1	TORNILLO, M6

09-61		p1	12/07

REVESTIMIENTO DE LA CABINA - FILTRO, REJILLAS, LáMPARA DEL TECHO

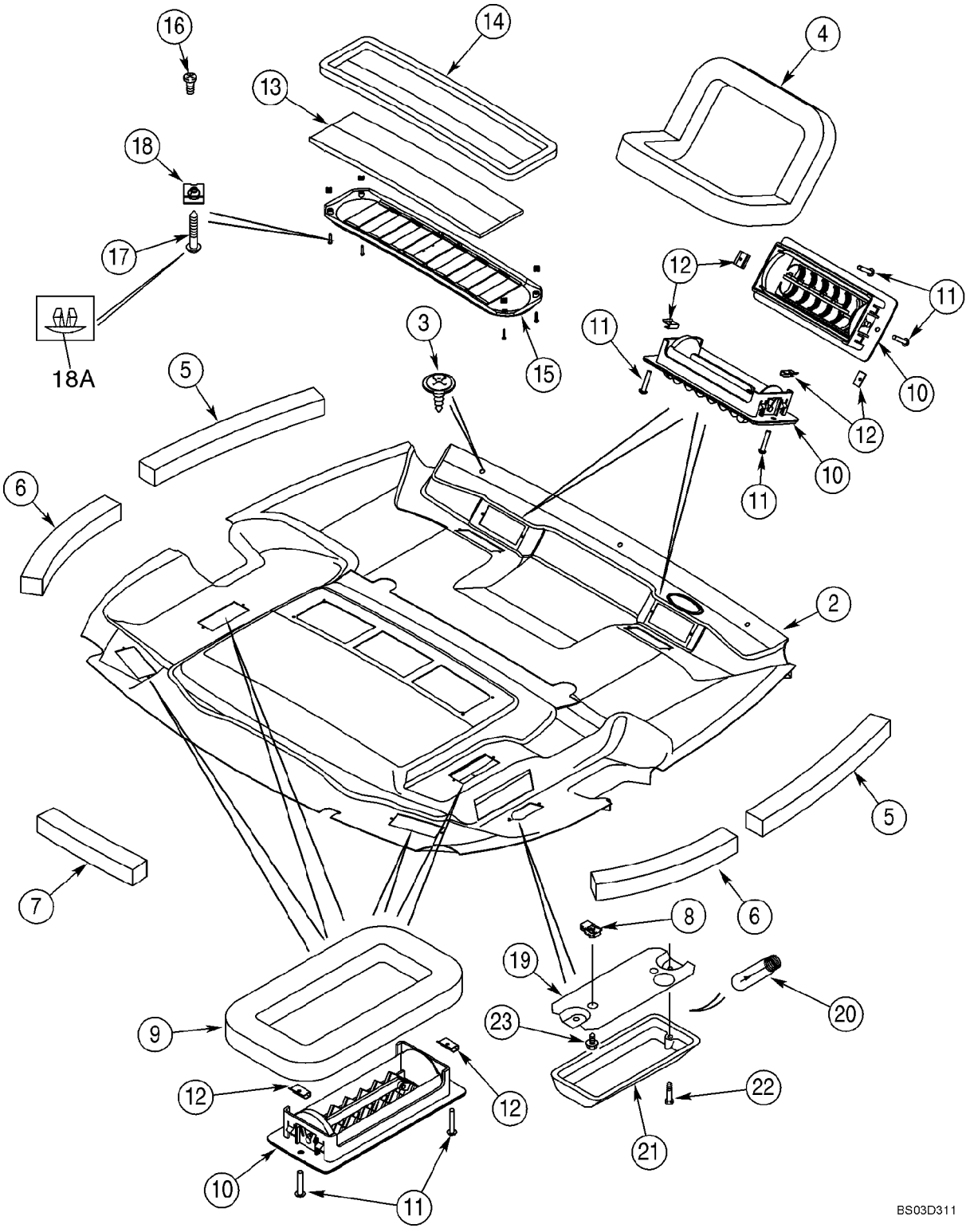

REVESTIMIENTO DE LA CABINA - FILTRO, REJILLAS, LćMPARA DEL TECHO

REF	FN	PART NUMBER	YR/SN	QTY	DENOMINACION
		{87653246}		1	HEADLINER ASSY, Standard Interior; Incl. Ref 1, 4 - 18A
		360272A6		1	REVESTIMIENTO/TECHO, HEADLINER ASSY, Deluxe Interior; Incl. Ref 2, 4 - 18A
1		87653245		1	TUBO AISLANTE, Shell; Standard Interior; Not Illustrated
2		381696A5		1	REVESTIMIENTO/TECHO, Shell With Foam and Fabric Covering; Deluxe Interior
3		396516A1		3	PUNZON VALVULA
4		368813A2		2	ANILLO DE CIERRE, Defrost
5		379160A1		2	ANILLO DE CIERRE, 494 mm; Foam; Adhesive Back; Front
6		379161A1		2	ANILLO DE CIERRE, 379 mm; Foam; Adhesive Back; Rear
7		379209A1		1	ANILLO DE CIERRE, 303 mm; Foam; Adhesive Back, Center, Rear
8		131-861		2	TUERCA, Tinn, U, #10-24, Dome Lamp
9		377194A1		4	ANILLO DE CIERRE, Heat and Air
10		363883A1		8	RERILLA (CONJUNTO)
11		140-103		16	TORNILLO, Cross Pan Hd, #6-32 x 3/4"
12		125749A1		16	TUERCA, J-Type, No. 6
13		377594A5		1	FILTRO, Air Recirculation
14		381972A1		1	ANILLO DE CIERRE
15		369450A1		1	CALANDRIA, Air Recirculation; Incl. Ref 16
16		260-1436		2	TORNILLO AUTOROSCANTE, Cross Pan Hd, #6 x 3/8"
17		414600A1		4	TORNILLO
18		177269A1		4	TUERCA
18A		409723A1		4	TAPčN, Plastic; Fits 5,5 mm Hole
		380719A2		1	FARO, Dome Lamp; Incl. Ref 19 - 21
19		NSS		1	NO SE REPARA SEPARADAM., Base
20		N14466		1	AMPOLLA
21		NSS		1	NO SE REPARA SEPARADAM., Lens; With Switch
22		440-1088		2	TORNILLO, Cross Pan Hd, #8-32 x 1/2", Base To Lens

09-61		p2	12/07

REVESTIMIENTO DE LA CABINA - FILTRO, REJILLAS, LáMPARA DEL TECHO

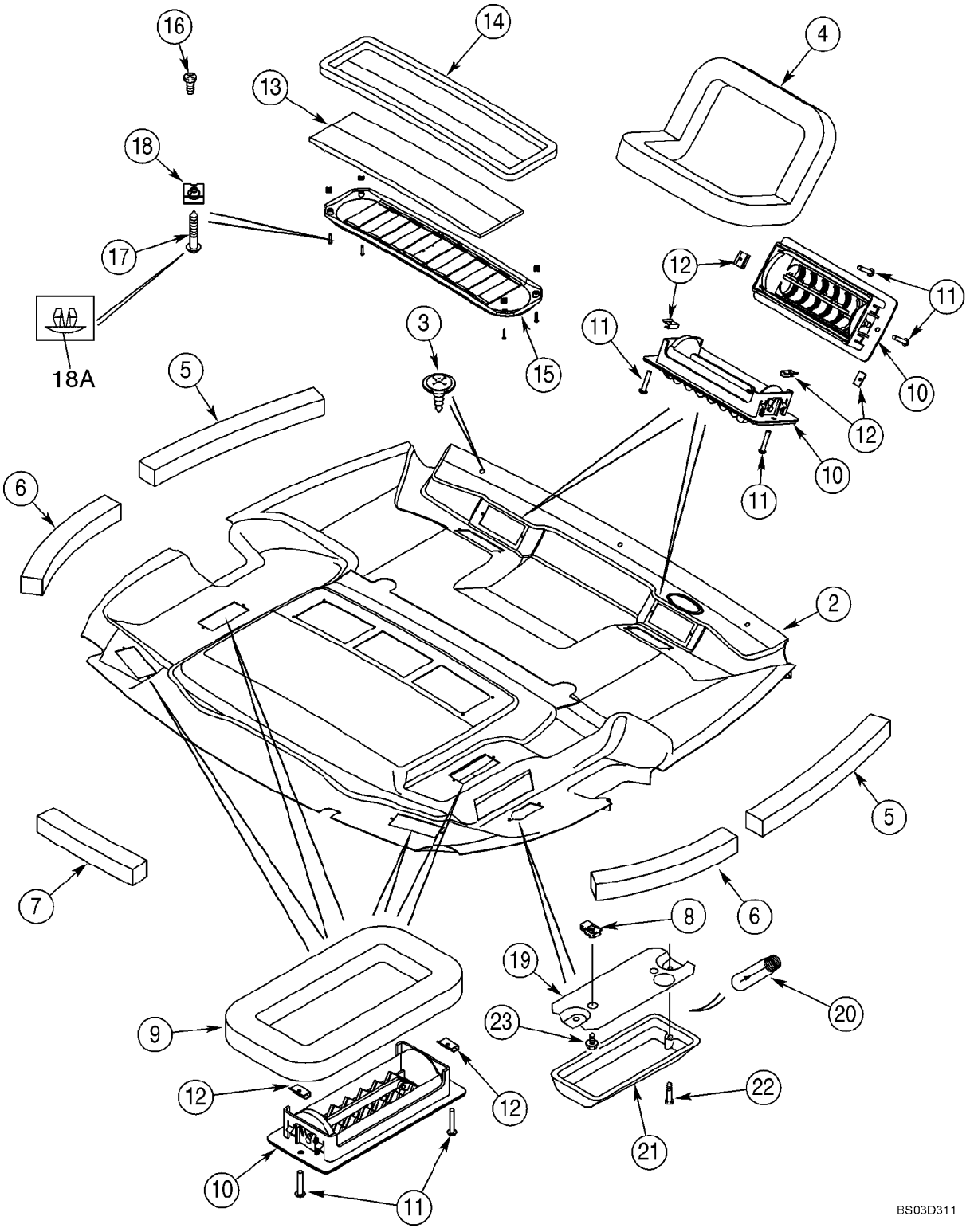

REVESTIMIENTO DE LA CABINA - FILTRO, REJILLAS, LáMPARA DEL TECHO

REF	FN	PART NUMBER	YR/SN	QTY	DENOMINACION
23		281-54512		2	TORNILLO, Hex Wash Hd, #10-24 x 3/4", Lamp To Headliner

09-62		p1	12/07

CABINA - FILTRO, AIRE

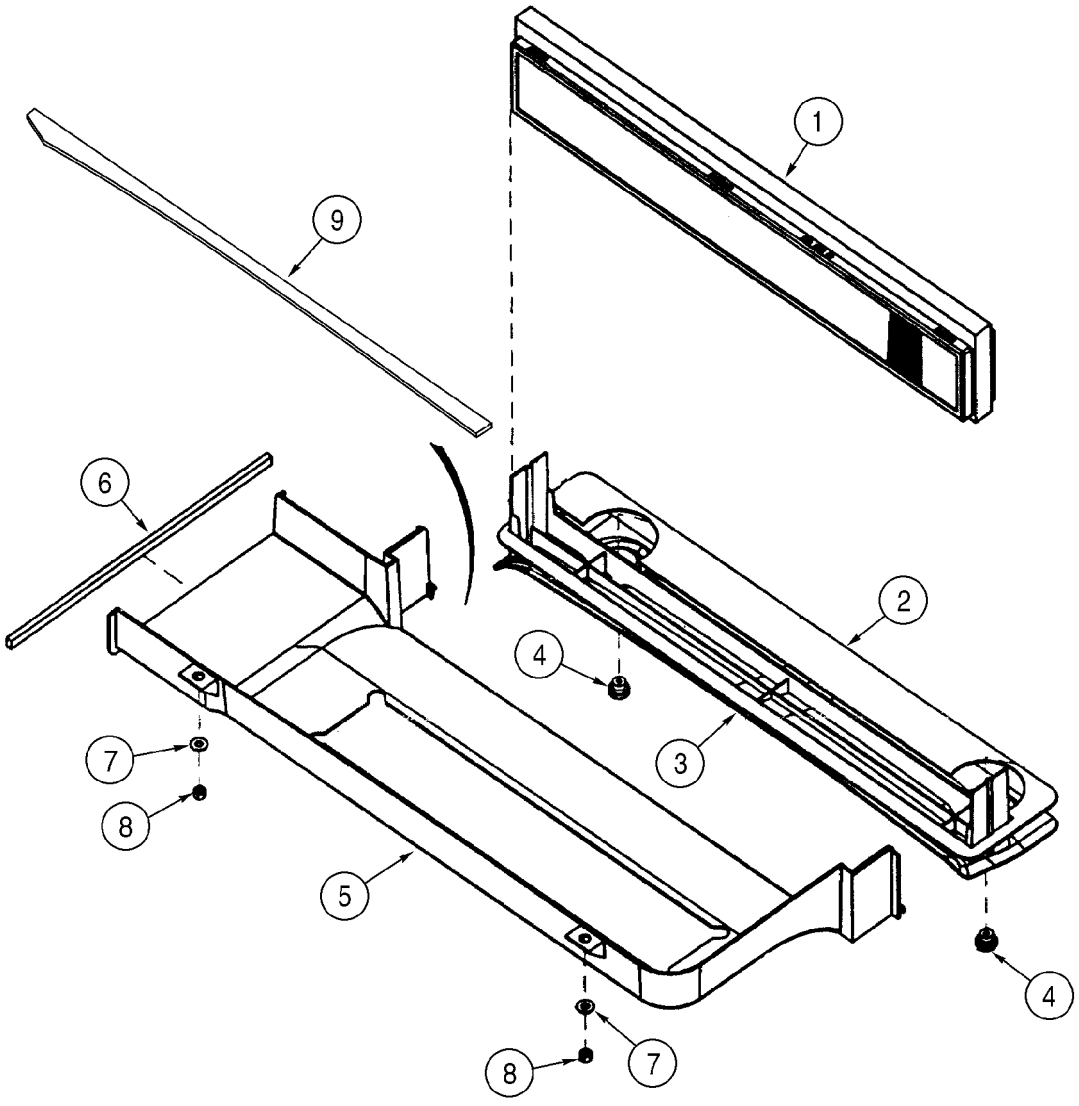

BSC0F073

CABINA - FILTRO, AIRE

REF	FN	PART NUMBER	YR/SN	QTY	DENOMINACION
1		360260A2		1	ELEMENTO DE FILTRADO, Includes Foam Seal
2		382770A2		1	ANILLO DE CIERRE
3		360261A1		1	BANDEJA
4		398738A1		2	PLACA, Fresh Air Duct Retainer
5		360252A2		1	CONDUCTO, Fresh Air Intake
6		368990A1		1	ANILLO DE CIERRE
7		895-15008		2	ARANDELA, M8 x 20 x 1.6
8		832-10408		2	CONTRA TUERCA, M8 x 1.25, Cl 8
9		403271A1		1	ANILLO DE CIERRE, 882 mm; Adhesive Back

09-63		p1	12/07

CABINA - ALOJAMIENTO DEL SOPLADOR, CONDUCTOS DE VENTILACIĎN, TUBOS DE DRENADO

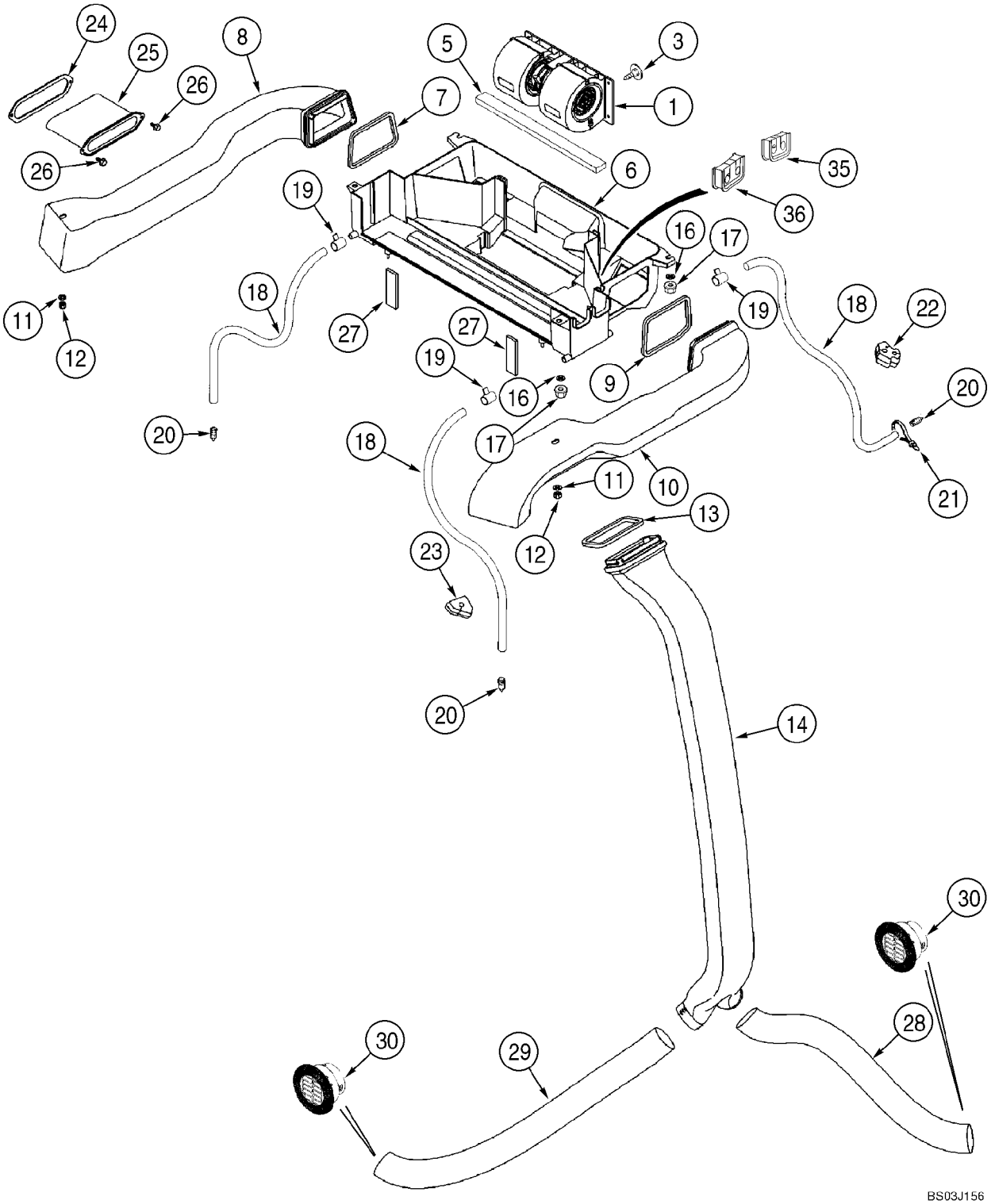

CABINA - ALOJAMIENTO DEL SOPLADOR, CONDUCTOS DE VENTILACIĎN, TUBOS DE DRENADO

REF	FN	PART NUMBER	YR/SN	QTY	DENOMINACION
1		377220A2		1	VENTILADOR (CONJUNTO, Component Parts Not Serviced Separately; Kysor/Westran Brand; If Used; For Blower Switch, See Figure 04-10
1		377241A2		1	VENTILADOR (CONJUNTO, Component Parts Not Serviced Separately; Aurora Brand; If Used; For Blower Switch, See Figure 04-10
3		182697A1		1	GRAPA
5		181981A1		1	BANDA HERMETICIDAD, 6 x 20 x 355 mm; Adhesive Back; Under Blower
6		360251A3		1	CUBIERTA PRINCIPAL, Heat and Air; Includes 373995A1
		373995A1		2	INTRODUCTOR
7		368805A1		1	ANILLO DE CIERRE, Left-Hand Duct
8		360253A3		1	CONDUCTO, Left-Hand
9		369249A1		1	ANILLO DE CIERRE, Right-Hand Duct
10		360254A3		1	CONDUCTO, Right-Hand
11		895-15010		2	ARANDELA, M11 x 24 x 2
12		832-10408		2	CONTRA TUERCA, M8 x 1.25, Cl 8
13		368807A1		1	ANILLO DE CIERRE
14		360255A1		1	CONDUCTO
16		895-15008		4	ARANDELA, M8 x 20 x 1.6
17		832-10408		4	CONTRA TUERCA, M8 x 1.25, Cl 8
18		87615800		4	MANGA, 3050 mm; Drain
19		214-1406		4	ABRAZADERA MANGUERA, #06, .44/.78 Type F Worm
20		365789A1		4	GRIFO DE VACIADO, Drain
21		L18337		2	CIERRA CABLES, 9.95"-12.1" lg
22		383794A2		2	TAPčN
23		383795A2		2	TAPčN
24		381113A2		1	ANILLO DE CIERRE
25		381111A2		1	MANGUITO
26		281-18712		2	TORNILLO AUTOROSCANTE, Hex Wash Hd, 1/4" x 3/4"
27		377230A3		2	ANILLO DE CIERRE, 16 mm thk; Fresh Air Duct To Ventilation Housing

09-63		p2	12/07

CABINA - ALOJAMIENTO DEL SOPLADOR, CONDUCTOS DE VENTILACIĎN, TUBOS DE DRENADO

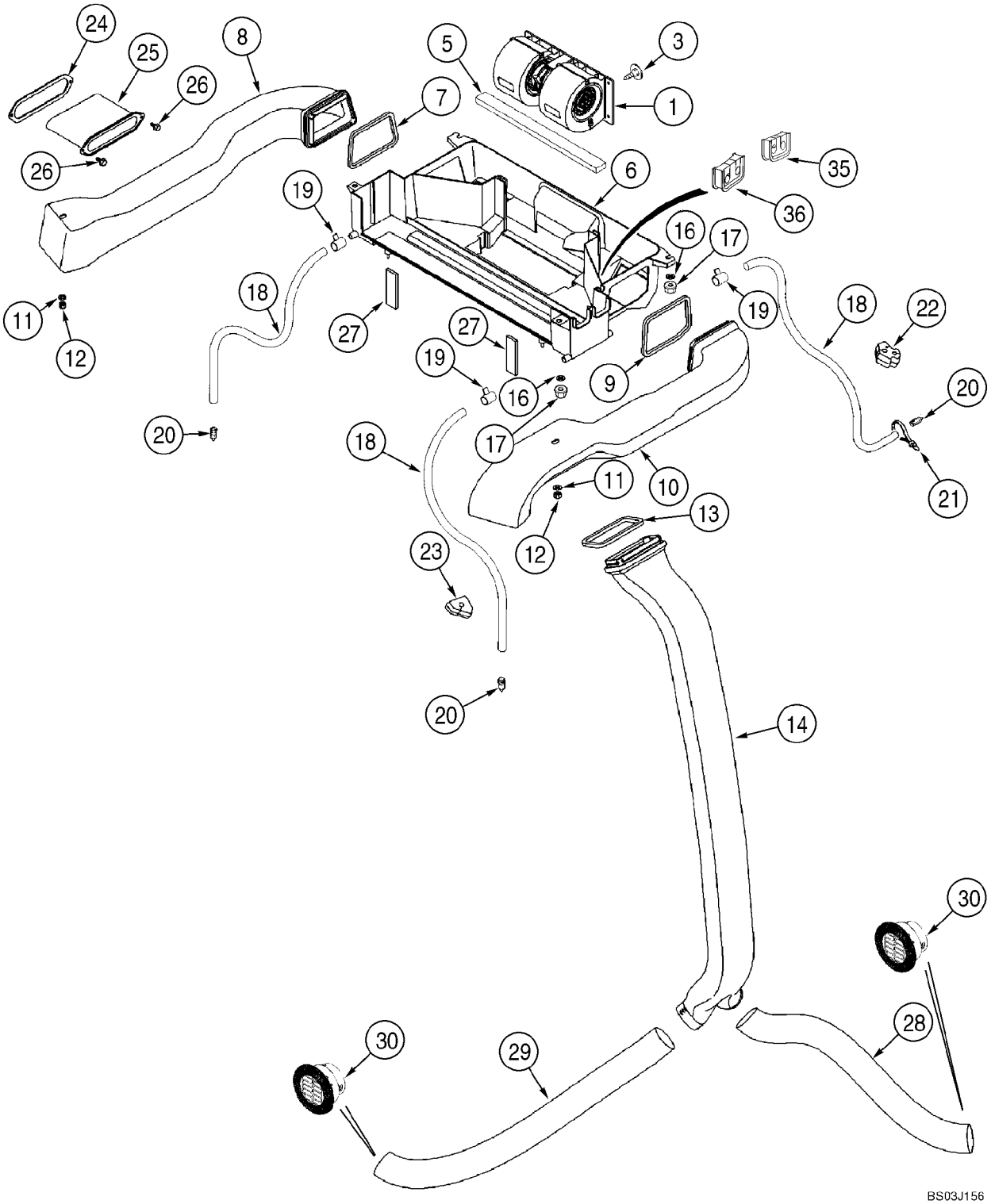

CABINA - ALOJAMIENTO DEL SOPLADOR, CONDUCTOS DE VENTILACIĎN, TUBOS DE DRENADO

REF	FN	PART NUMBER	YR/SN	QTY	DENOMINACION
28		375392A1		1	MANGUITO, 750 mm; Cut From 236559A1
29		368818A1		1	MANGUITO, 1015 mm; Cut From 236559A1
30		398986A1		2	RESPIRADERO
32		D88052		2	COLLAR, Not Illustrated
35		403225A1		1	ANILLO DE CIERRE, Heater Tubes At Housing
36		403193A1		1	ANILLO DE CIERRE, Air Conditioning Tubes At Housing

09-64		p1	12/07

CABINA - CALENTADOR

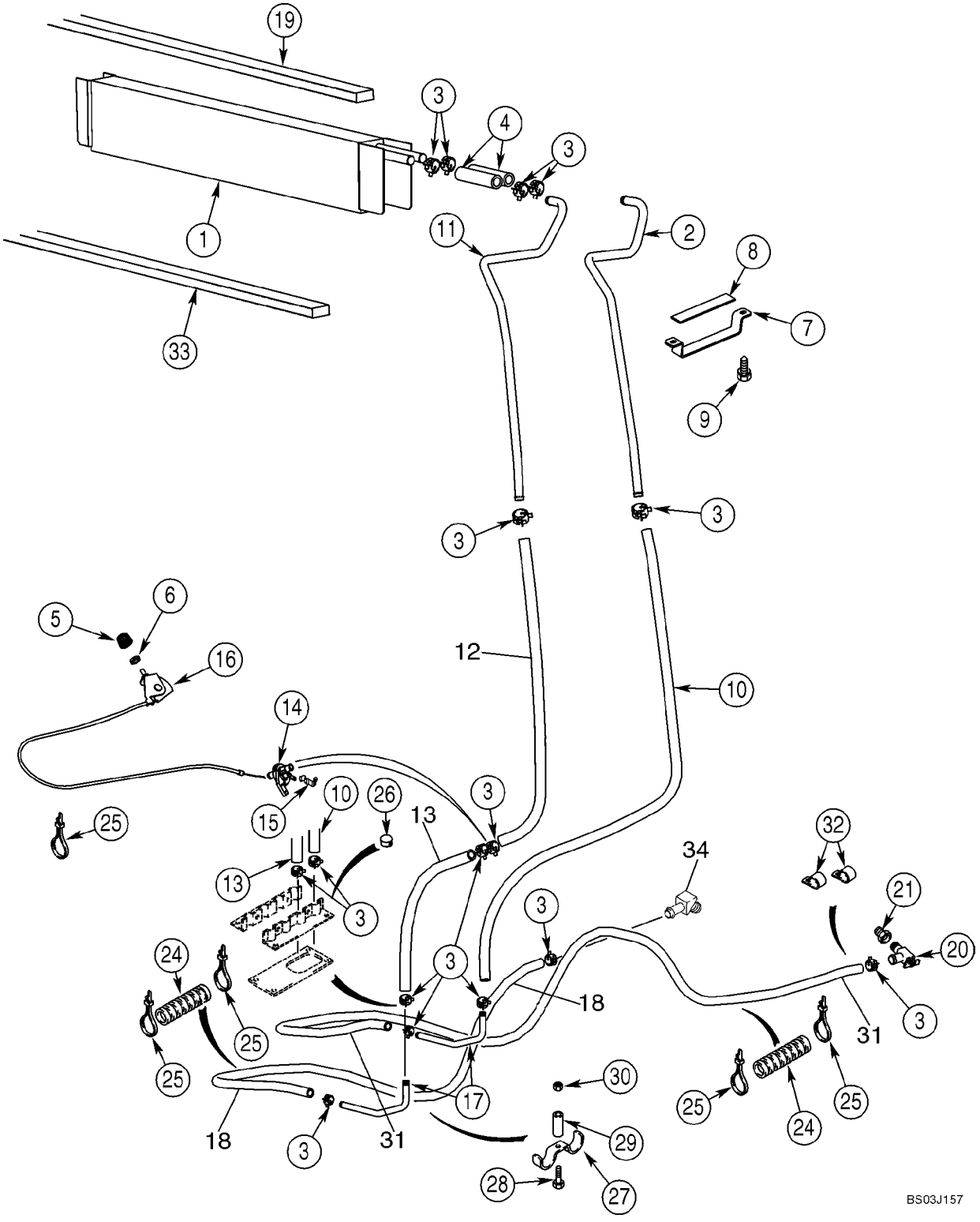

CABINA - CALENTADOR

REF	FN	PART NUMBER	YR/SN	QTY	DENOMINACION
1		360262A2		1	INTERCAMBIADOR/CALOR, Core, Mounts In Blower Housing Box; Seal Mounts On Top Of Core On Models With Heat Only
2		400282A1		1	TUBO, Front
3		1954736C1		14	ABRAZADERA MANGUERA, No. 24
4		377222A1		2	MANGA, 100 mm; Cut From 97252CX
5		400379A1		1	PLACA, 23 mm
6		A42561		1	TUERCA
7		388762A1		1	PIEZA DE SOPORTE
8		389402A1		1	ANILLO DE CIERRE
9		281-14520		2	TORNILLO AUTOROSCANTE, Hex Wash Hd, #10 x 1/4"
10		368801A2		1	MANGA, 1361 mm; Cut From 97252CX
11		400280A1		1	TUBO, Rear
12		448428A1		1	TUBO (METROS), 1175 mm (46-1/4 in); Heater Valve To Core; Cut From 97252CX
13		448429A1		1	TUBO (METROS), 150 mm (5-29/32 in) Floor To Valve; Cut From 97252CX
14		1331087C1		1	VALVULA DISTRIBUIDORA, Heater
15		1954626C1		1	COLLAR
16		1999666C1		1	MANDO, Heater; Includes 1999667C1, 1999668C1
		1999667C1		1	MANDO
		1999668C1		1	CABLE
17		190675A1		2	CUELLO DE CARGA
18		377232A2		1	MANGUITO, 2650 mm (104-21/64 in); Heater; Return To Water Pump; Cut From 97252CX
19		406287A1		1	ANILLO DE CIERRE, 19 x 19 x 736 mm; Location Of Seal On Models With Heat Only; On Models With Air Conditioning, Seal Is Located On Evaporator Cor
20		87686604		1	VALVULA DE CIERRE
21		221-89		1	REDUCTOR, Hex, 1/2" x 3/8" NPT
24		D132982		7	TUBO AISLANTE, Sleeve, 400 mm (15-3/4 in)
25		L18337		6	CIERRA CABLES, 9.95"-12.1" lg
26		353-410		2	TAPčN, Dome, .875" hole, Nylon, Models With Heat Only

CABINA - CALENTADOR

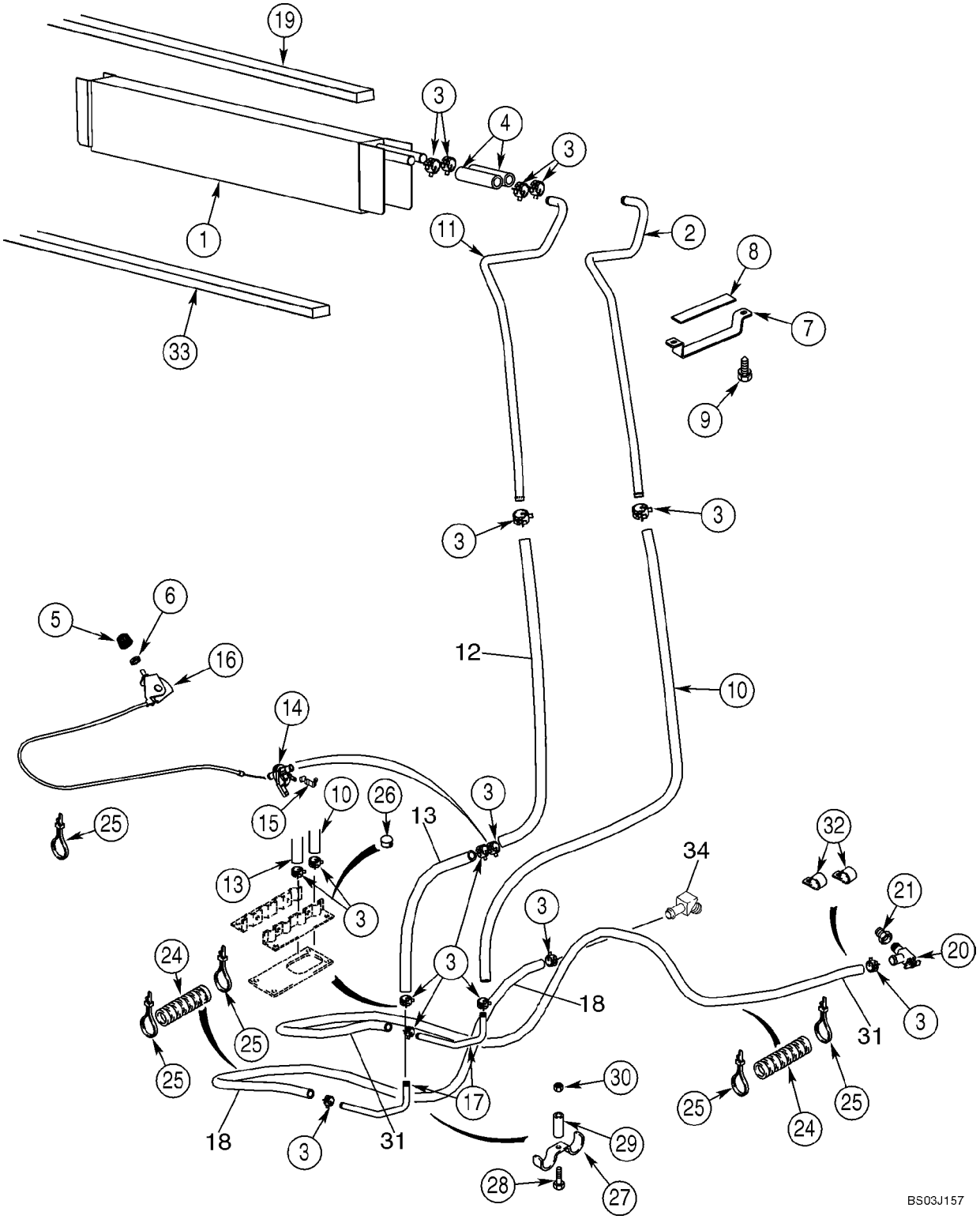

CABINA - CALENTADOR

REF	FN	PART NUMBER	YR/SN	QTY	DENOMINACION
27		D143427		1	COLLAR
28		614-8030		1	TORNILLO, Hex, M8 x 30, 8.8
29		D143417		1	ESPACIADOR
30		825-2408		1	TUERCA, M8 x 1.25, Flg, Cl 8
31		377233A2		1	MANGUITO, 1830 mm (72-3/64 in); Heater; Inlet From Engine; Cut From 97252CX
32		D88052		2	COLLAR
33		1987096C1		1	PLACA, GRANDE, Seal, Below Heater Core; Location Of Seal On Models With Heat Only; On Models With Air Conditioning, Seal Is Located At Rear Of Housing
34		217-425		1	CONEXION, 45Ü, 5/8" Hose x 3/4" NPTF Beaded

09-65		p1	12/07

CABINA - TUBOS DE AIRE ACONDICIONADO, NdCLEO DEL EVAPORADOR

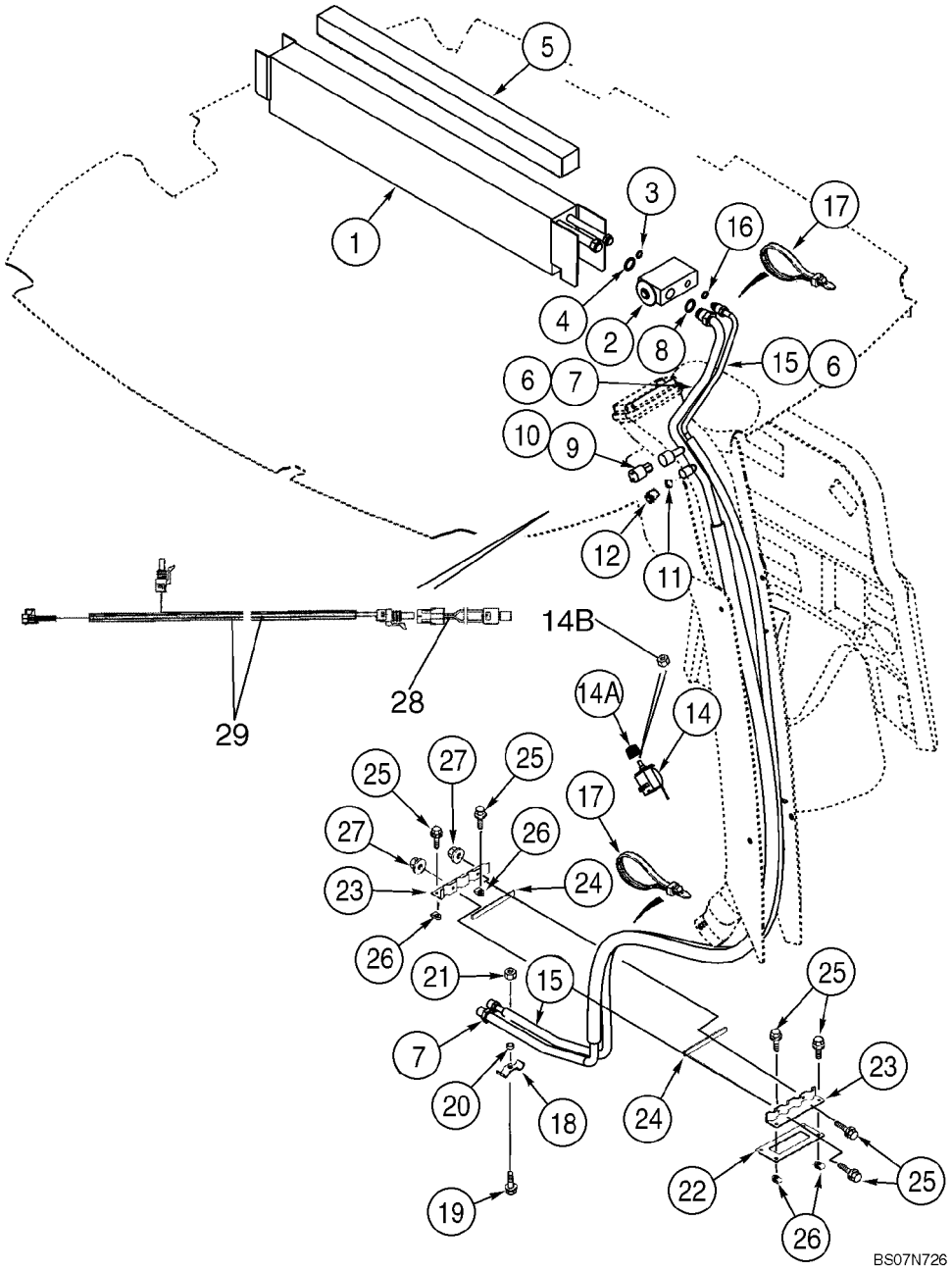

CABINA - TUBOS DE AIRE ACONDICIONADO, NđCLEO DEL EVAPORADOR

REF	FN	PART NUMBER	YR/SN	QTY	DENOMINACION
		363832A5		1	EVAPORADOR, Incl. Ref 1 - 4; Not Available as An Assembly; Order Components
1		360263A4		1	EVAPORADOR, Core
2		386535A1		1	VALVULA
3		128484A1		1	JUNTA HERMETICA, 7/16 ID x 1/16
4		128485A1		1	JUNTA HERMETICA, 9/16 ID x 1/16
		83822C1		3	CINTA, Insulation; 63,5 (2-1/2 in) x 610 mm (24-1/64 in)
5		406287A1		1	ANILLO DE CIERRE, 19 x 19 x 736 mm; Adhesive Back; Models With Heat and Air, Locate Seal On Top Of Core
		345-621		2	CINTA, 2 x 6 in
7		360257A1		1	FUNDA DE PLĆSTICO, Suction; Incl. Ref 8 - 12
8		128485A1		1	JUNTA HERMETICA, 9/16 ID x 1/16
9		128483A1		1	JUNTA HERMETICA, 5/16 ID x 1/16; Valve Core
10		1250594C1		1	NĐCLEO, Low Pressure Switch
11		1250594C1		1	NĐCLEO, Low Side Service Port
12		122553A1		1	TAPON DEL DEPOSITO
14		370381A1		1	CONTACTOR, Temperature Control; Air Conditioning
14A		400379A1		1	PLACA, 23 mm
14B		A42561		1	TUERCA, 7/16
15		360256A1		1	FUNDA DE PLĆSTICO, Pressure; Incl. Ref 16
16		128483A1		1	JUNTA HERMETICA, 5/16 ID x 1/16
17		L18337		4	CIERRA CABLES, 9.95"-12.1" lg
18		D143427		1	COLLAR
19		614-8030		1	TORNILLO, Hex, M8 x 30, 8.8
20		D143417		1	ESPACIADOR
21		825-2408		1	TUERCA, M8 x 1.25, Flg, Cl 8
22		124011A1		1	JUNTA HERMETICA
23		123980A1		2	BRIDA, CLAMP, Heater and Air Conditioning Hoses
24		181979A1		2	BANDA HERMETICIDAD
25		845-6020		6	TORNILLO, Hex Flg, M6 x 20, 8.8, Full Thd
26		833-40406		4	TUERCA, M6, U
27		825-2406		2	TUERCA, M6 x 1, Flg, Cl 8

09-65		p2	12/07

CABINA - TUBOS DE AIRE ACONDICIONADO, NdCLEO DEL EVAPORADOR

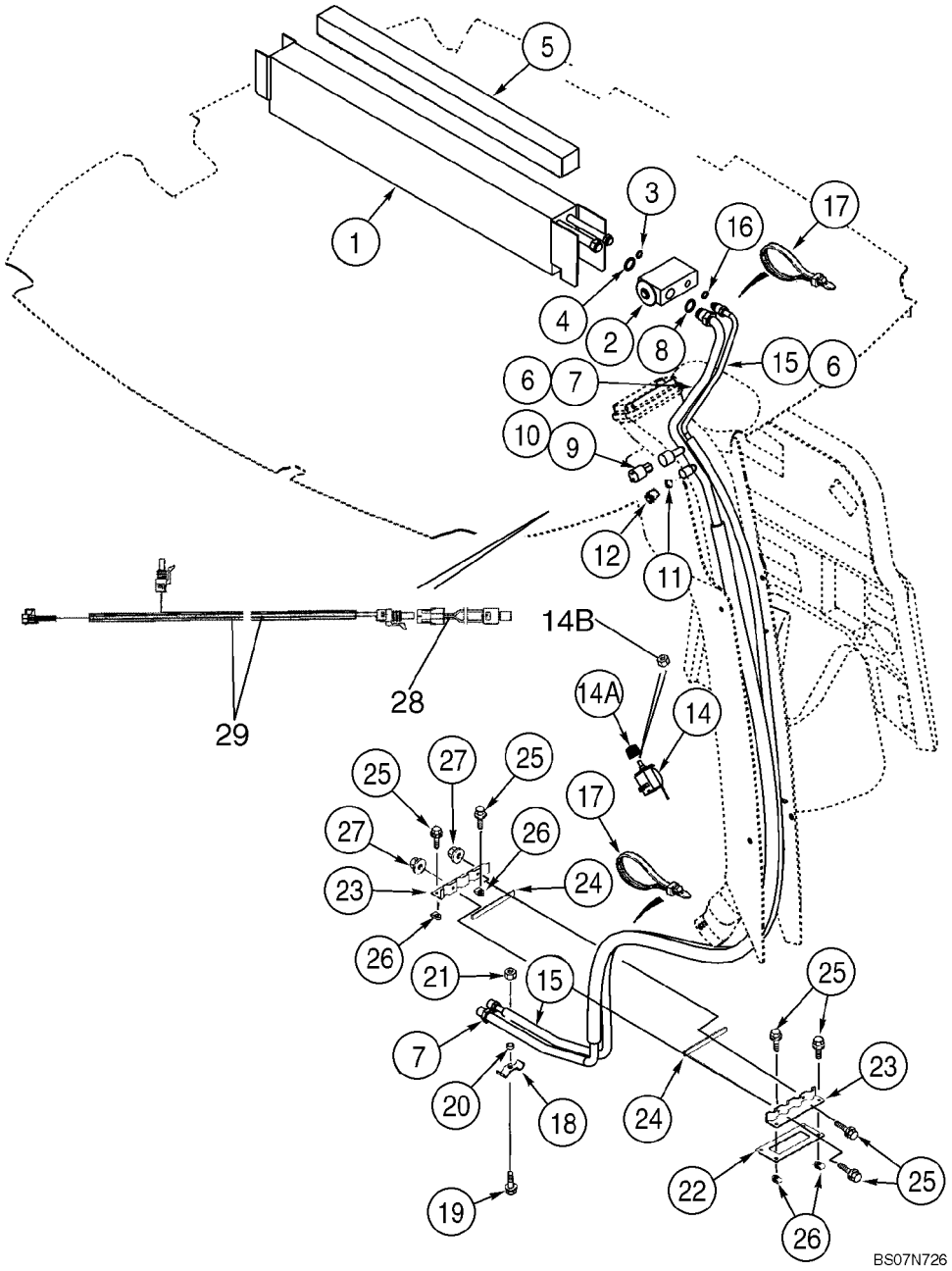

CABINA - TUBOS DE AIRE ACONDICIONADO, NúCLEO DEL EVAPORADOR

REF	FN	PART NUMBER	YR/SN	QTY	DENOMINACION
28		87000228		1	INTERRUPTOR DE PRESION, A/C Low Pressure; Blue Wire
29		87538167		1	GRUPO DE CABLES, Service; A/C Low Pressure Switch; Connects to A/C Compressor and A/C Relay
30		401949A1		5	BOTON DE RESORTE, Xmas Tree Clips; B Post Cover; Not Illustrated
31		L11541		10	CIERRA CABLES, Tie; Not Illustrated

09-66		p1	01/08

CABINA - AIRE ACONDICIONADOR, CONDENSADOR, RECIBIDOR-SECADOR

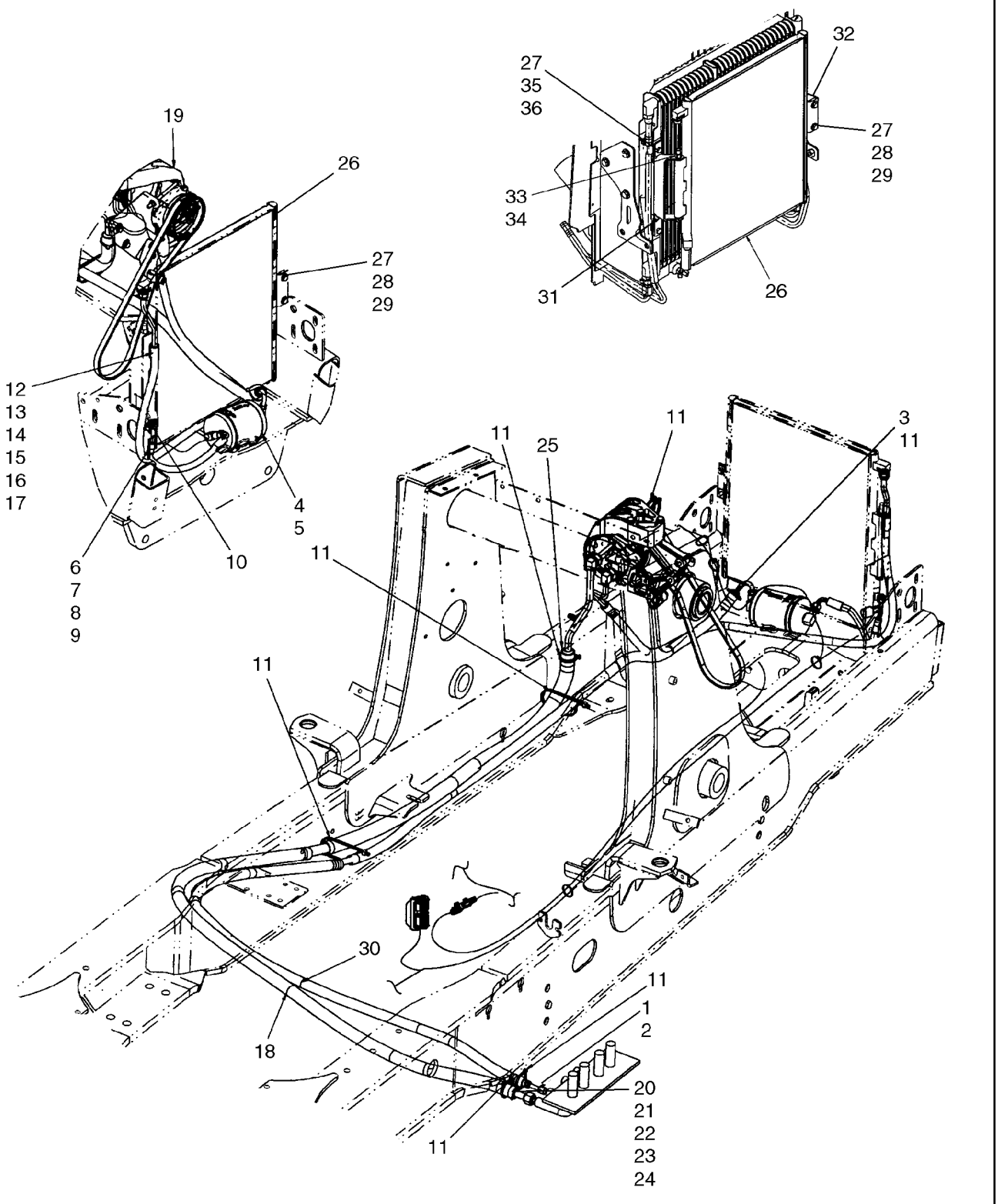

CABINA - AIRE ACONDICIONADOR, CONDENSADOR, RECIBIDOR-SECADOR

REF	FN	PART NUMBER	YR/SN	QTY	DENOMINACION
1		87630219		1	MANGUERA (CONJUNTO), 2930 mm, Receiver Drier to Cab; Incl. Ref 2
2		128483A1		2	JUNTA HERMETICA, 5/16 ID x 1/16
3		191704A1		2	TUBO AISLANTE, 460 mm (18-1/8 in)
4		86984155		1	RECEPTOR-DESHIDRAT.
5		214-1464		2	ABRAZADERA MANGUERA, #64, 3.56/4.50 Type F Worm
6		87630218		1	MANGUERA (CONJUNTO), 340 mm, Condenser to Drier; Incl. Ref 7 - 9
7		128483A1		3	JUNTA HERMETICA, 5/16 ID x 1/16
8		1250594C1		1	NÐCLEO, Valve, High Pressure Switch
9		122081A1		1	CONEXION, Switch
10		232948A1		1	INTERRUPTOR DE PRESION, High Pressure
11		L18337		10	CIERRA CABLES, 9.95"-12.1" lg
12		87590156		1	MANGUERA (CONJUNTO), 1350 mm; Compressor to Condenser; Incl. Ref 13 - 17
13		128484A1		1	JUNTA HERMETICA, 7/16 D x 1/16
14		128485A1		1	JUNTA HERMETICA, 9/16 ID x 1/16
15		1999926C1		1	TUBO, BOQUILLA
16		1250594C1		1	NÐCLEO, Valve
17		122554A1		1	TAPON DEL DEPOSITO, Sealing Cap
18		87726951		1	PROTECTOR DE TUBO, Guard, 1200 mm (47-1/4 in)
19		87430122		1	COMPRESOR ACOND., Component Parts Not Serviced Separately, See Figure 09-66 for Mounting
20		87630220		1	MANGUERA (CONJUNTO), 2425 mm, Cab to Compressor; Incl. Ref 21 - 24
21		128485A1		2	JUNTA HERMETICA, 9/16 ID x 1/16
22		1999927C1		1	TUBO, BOQUILLA
23		1250594C1		1	NÐCLEO, Valve
24		122553A1		1	TAPON DEL DEPOSITO, Sealing
25		191703A1		1	TUBO AISLANTE, Sleeve, 400 mm (15-3/4 in)
26		87546291		1	CONDENSADOR
27		614-8020		6	TORNILLO, Hex, M8 x 20, 8.8
28		895-15008		2	ARANDELA, M8 x 20 x 1.6
29		833-40408		2	TUERCA, M8, U

09-66		p2	01/08

CABINA - AIRE ACONDICIONADOR, CONDENSADOR, RECIBIDOR-SECADOR

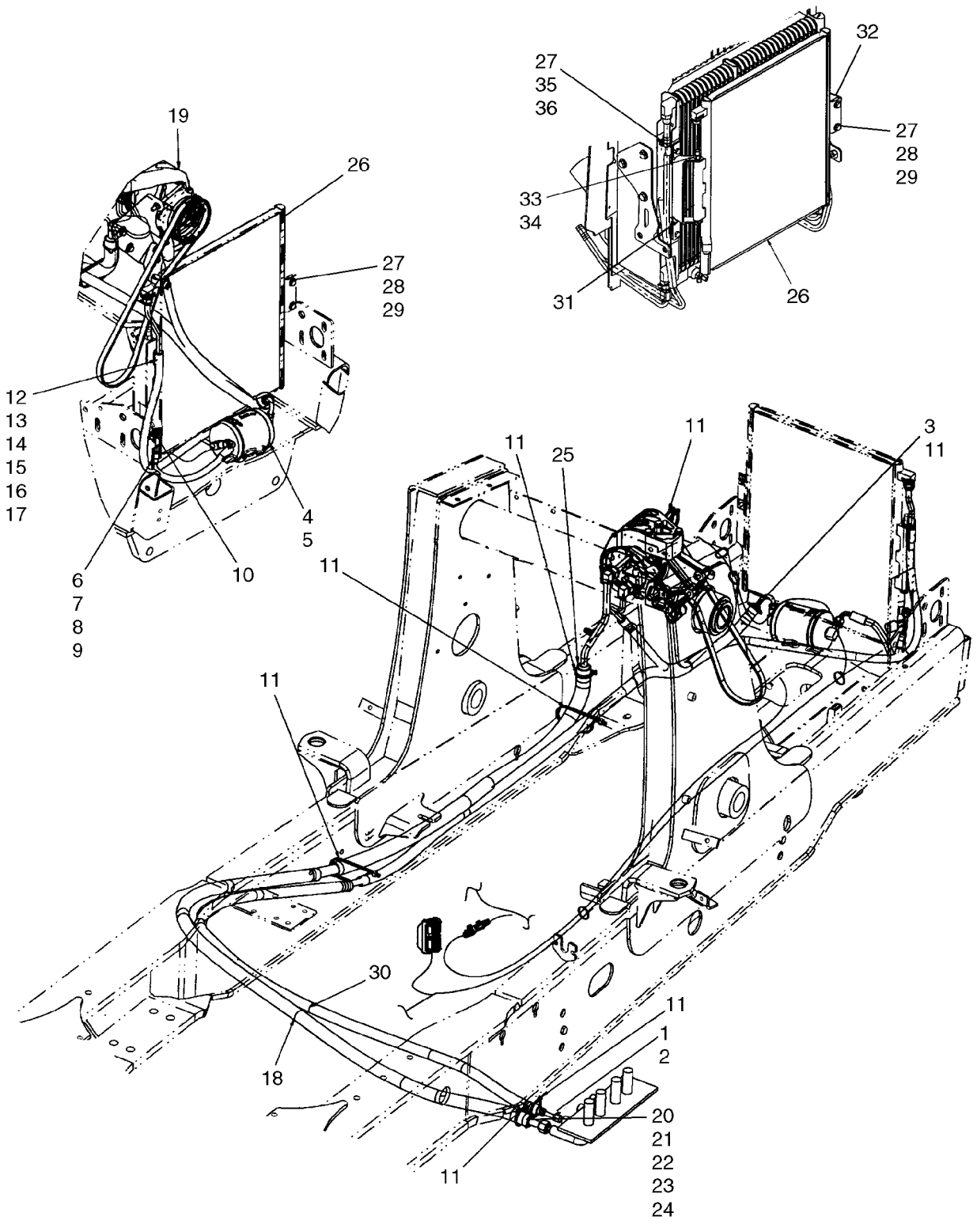

CABINA - AIRE ACONDICIONADOR, CONDENSADOR, RECIBIDOR-SECADOR

REF	FN	PART NUMBER	YR/SN	QTY	DENOMINACION
30		87726950		1	PROTECTOR DE TUBO, Guard, 1200 mm (47-1/4 in)
31		87598501		1	PIVOTE, JUNTA GIRATO
32		87589025		1	PIEZA DE APOYO
33		814-10220		1	TORNILLO, Hex, M10 x 220, 8.8
34		832-10410		1	CONTRA TUERCA, M10 x 1.5, Cl 8
35		829-1408		4	TUERCA, M8, Cl 10
36		895-11008		6	ARANDELA, M8 x 16 x 1.6

09-67		p1	12/07

CABINA - COMPRESOR DEL AIRE ACONDICIONADO

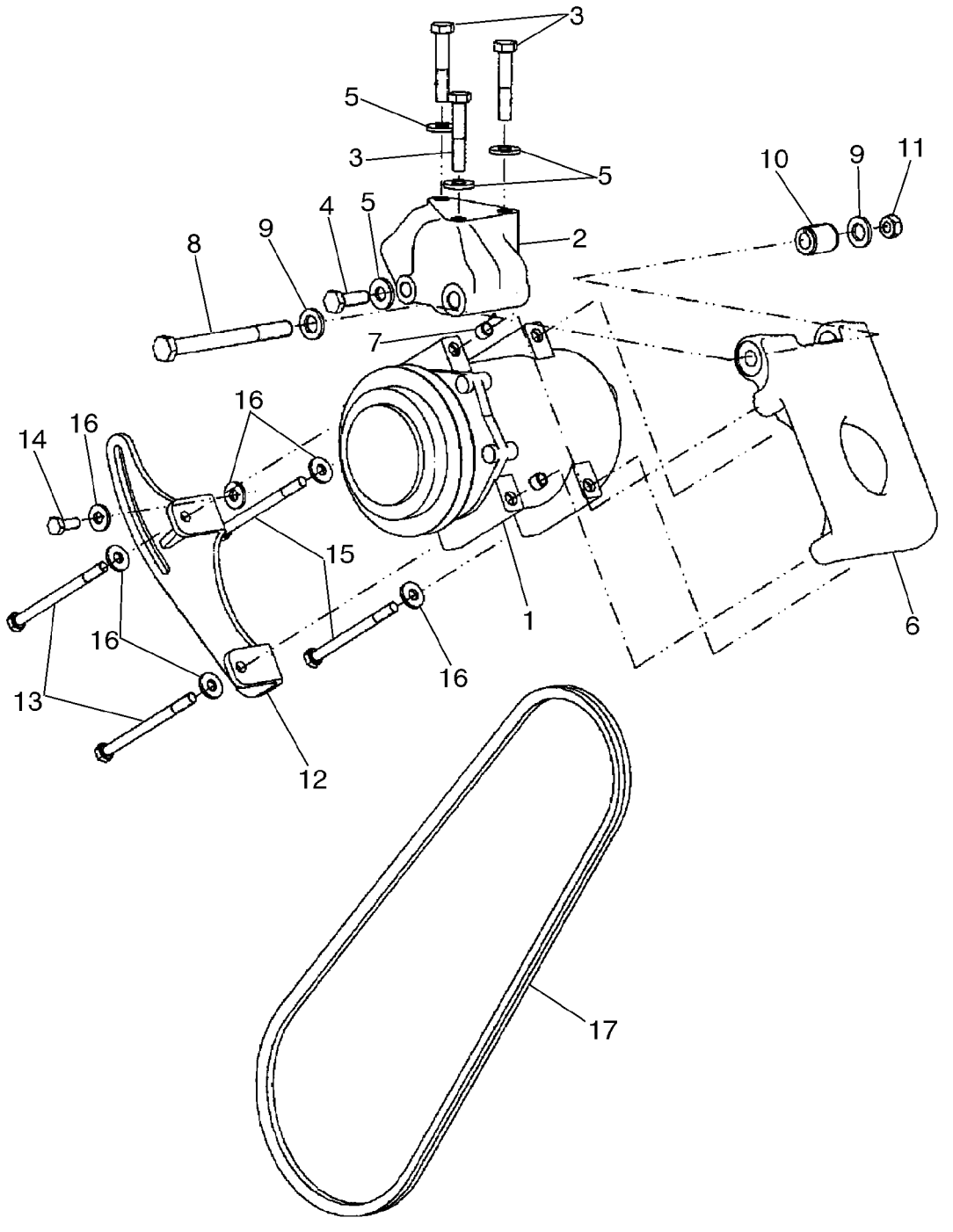

CABINA - COMPRESOR DEL AIRE ACONDICIONADO

REF	FN	PART NUMBER	YR/SN	QTY	DENOMINACION
1		87430122		1	COMPRESOR ACOND., Compressor Component Parts Not Serviced Separately
2		87429950		1	SOPORTE, Mounting Support
3		814-10055		3	TORNILLO, Hex, M10 x 55, 8.8
4		614-10030		1	TORNILLO, Hex, M10 x 30, 8.8
5		896-15010		4	ARANDELA, M10 x 24.5 x 3, HT
6		87429948		1	SOPORTE
7		87429952		2	ANILLO
8		814-12130		1	TORNILLO, Hex, M12 x 130, 8.8
9		896-11012		2	ARANDELA, M13.5 x 24.5 x 3, HT
10		87429951		1	SEPARADOR, Pivot
11		829-1412		1	TUERCA, M12, Cl 10
12		87429949		1	PIEZA DE APOYO
13		814-8110		2	TORNILLO, Hex, M8 x 110, 8.8
14		614-8020		1	TORNILLO, Hex, M8 x 20, 8.8
15		814-8100		2	TORNILLO, Hex, M8 x 100, 8.8
16		896-15008		6	ARANDELA, M8 x 21.5 x 2.5, HT
17		87393292		1	COURROIE DE TRANSMISS., V-Belt

09-68		p1	01/08

TECHO Y ROPS - CHASIS, CUBIERTAS, ESPEJOS, VISOR

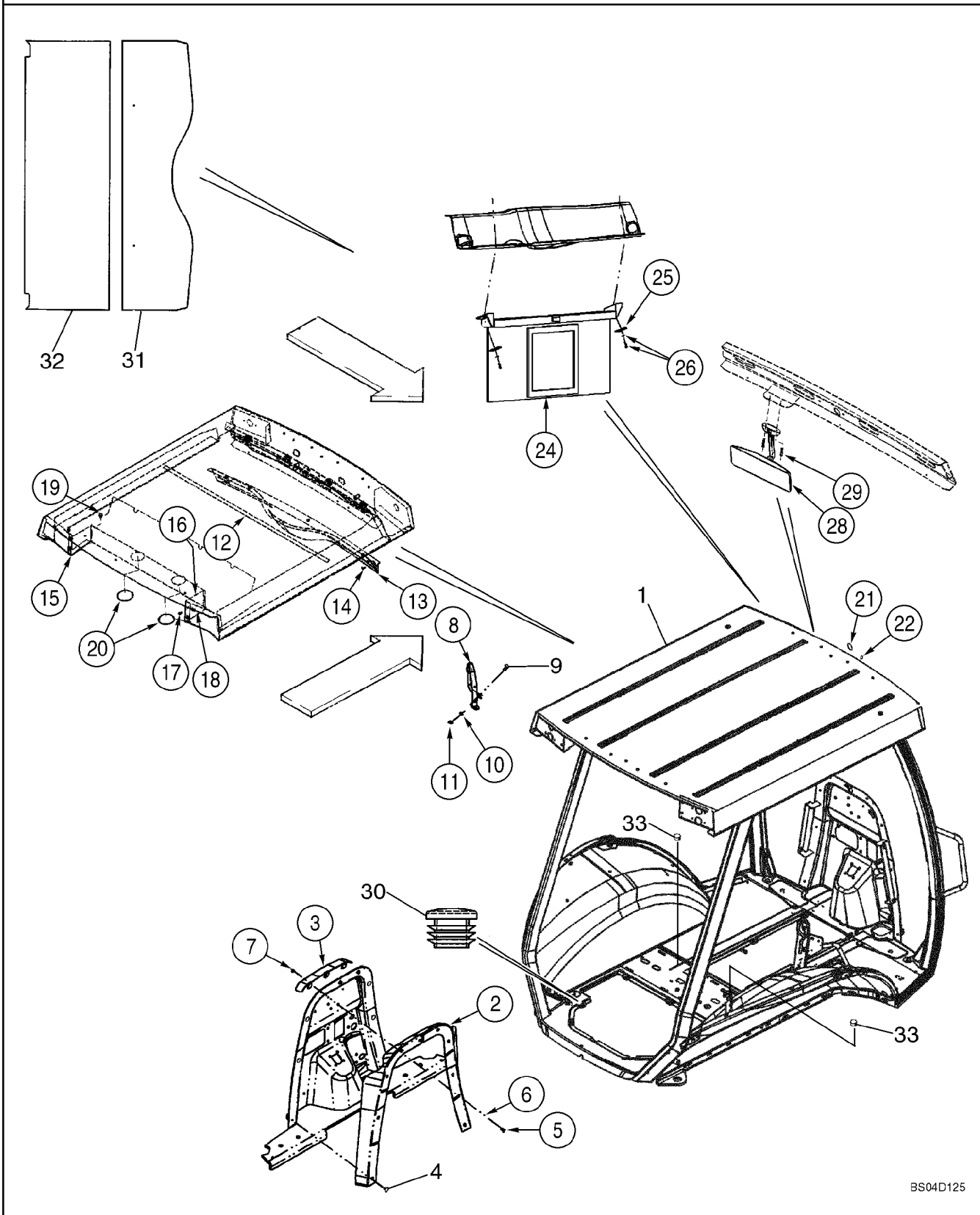

TECHO Y ROPS - CHASIS, CUBIERTAS, ESPEJOS, VISOR

REF	FN	PART NUMBER	YR/SN	QTY	DENOMINACION
		87636559		1	ARMADURA DE SEGURIDAD, ASSEMBLY, Includes 87636554 Frame, Glass, Wiper and Roof Foam Panels
1		87636554		1	ARMADURA DE SEGURIDAD, Canopy Frame; Order From Machinery Price List
2		396938A3		1	MOLDURA, Firewall
3		395478A3		1	PIEZA DE SOPORTE
4		D143242		6	TAPčN, Push-In Fastener
5		614-8020		3	TORNILLO, Hex, M8 x 20, 8.8
6		495-81001		3	ARANDELA, 5/16"
7		832-10408		3	CONTRA TUERCA, M8 x 1.25, Cl 8
8		87627072		1	BARANDILLA
9		87310177		2	TORNILLO, M10 x 25; 8.8, Round Head Square Neck, Stainless Steel
10		495-81267		2	ARANDELA, .469" x 1 1/2" x .134"
11		832-10410		2	CONTRA TUERCA, M10 x 1.5, Cl 8
12		385506A1		1	BANDA DE PROTECCIčN, 127 mm; Foam; Adhesive Back
13		367712A3		1	TAPA, Harness
14		F64519		5	TORNILLO AUTOROSCANTE, Cross Wash Hd, #10-16 x 3/4", For Service, Order 265-16512, F64315
15		357099A1		1	TAPA, Left-Hand
16		357100A1		1	TAPA, Right-Hand
17		87310098		4	TORNILLO, Flange, M6 x 20, Stainless Steel
18		833-40406		4	TUERCA, M6, U
19		353-402		4	TAPčN, Dome, .375" hole, Nylon, Models With 4 Lamps; Not Used On Models With 8 Lamps
20		1302758C1		2	TAPčN, 3 in
		353-410		1	TAPčN, Dome, .875" hole, Nylon
21		411549A1		1	TAPčN, 1 in; Windshield Frame
22		353-421		2	TAPčN, Dome, .187" hole, Nylon, Upper Windshield Frame
24		364180A1		1	PARASOL
25		409618A1		2	PLACA, 1/4 in Mounting Hole

09-68		p2	01/08

TECHO Y ROPS - CHASIS, CUBIERTAS, ESPEJOS, VISOR

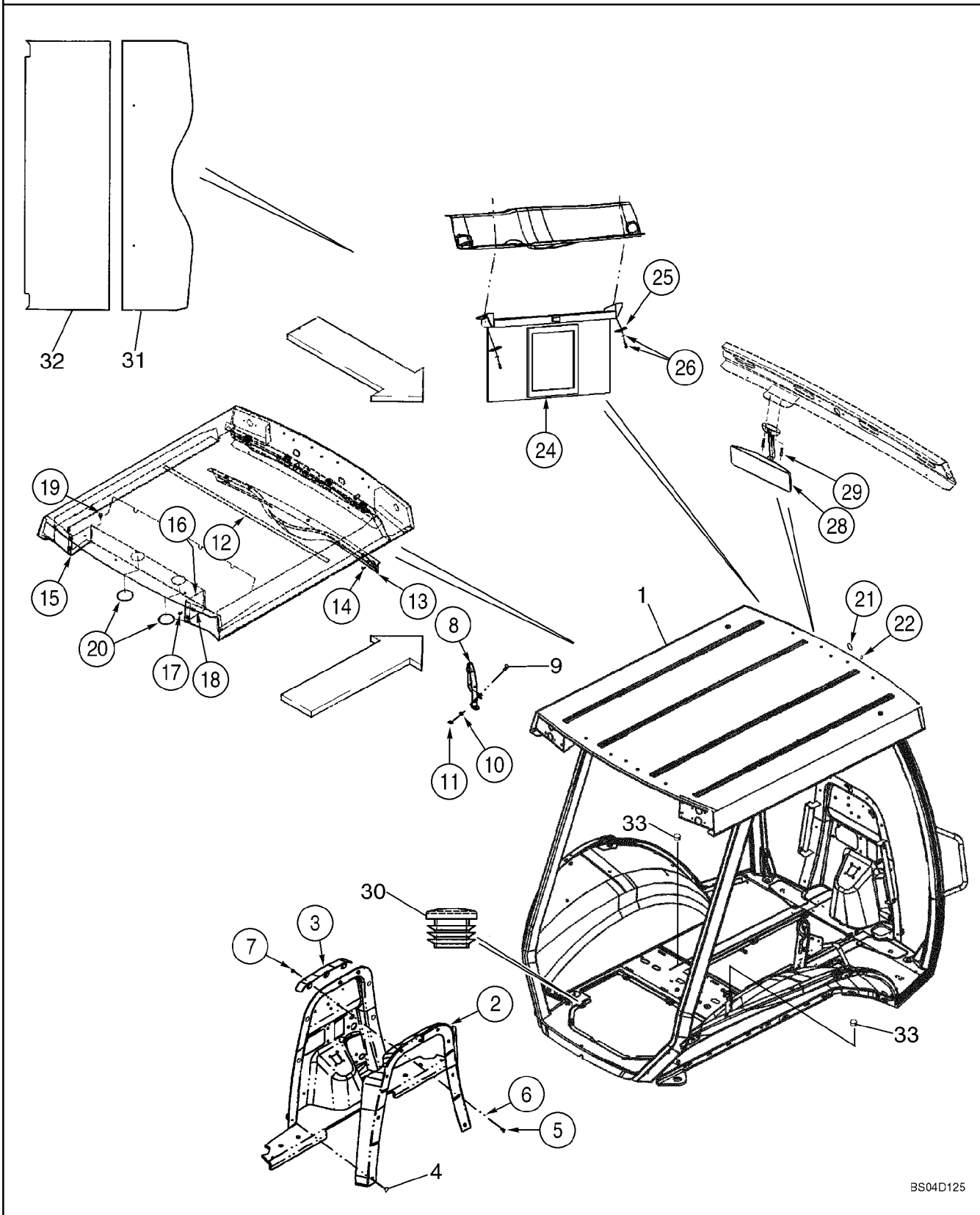

TECHO Y ROPS - CHASIS, CUBIERTAS, ESPEJOS, VISOR

REF	FN	PART NUMBER	YR/SN	QTY	DENOMINACION
26		396516A1		2	PUNZON VALVULA, No 10 x 1 st; With Washer; Phillips
28		87406924		1	ESPEJO RETROVISOR
29		286-56520		2	TORNILLO, Cross Fil Hd, #10-24 x 1 1/4"
30		382298A1		2	TAPčN, 7/8 in
31		431583A1		1	CONTRAPANEL, Foam; Roof Front
32		431584A1		1	CONTRAPANEL, Foam: Roof Rear
33		353-413		2	TAPčN, Dome, 1.187" hole, Nylon, 1-3/16 Hole Size, Black Nylon; Brake Bleeder

09-69		p1	12/07

TECHO Y ROPS - VIDRIO

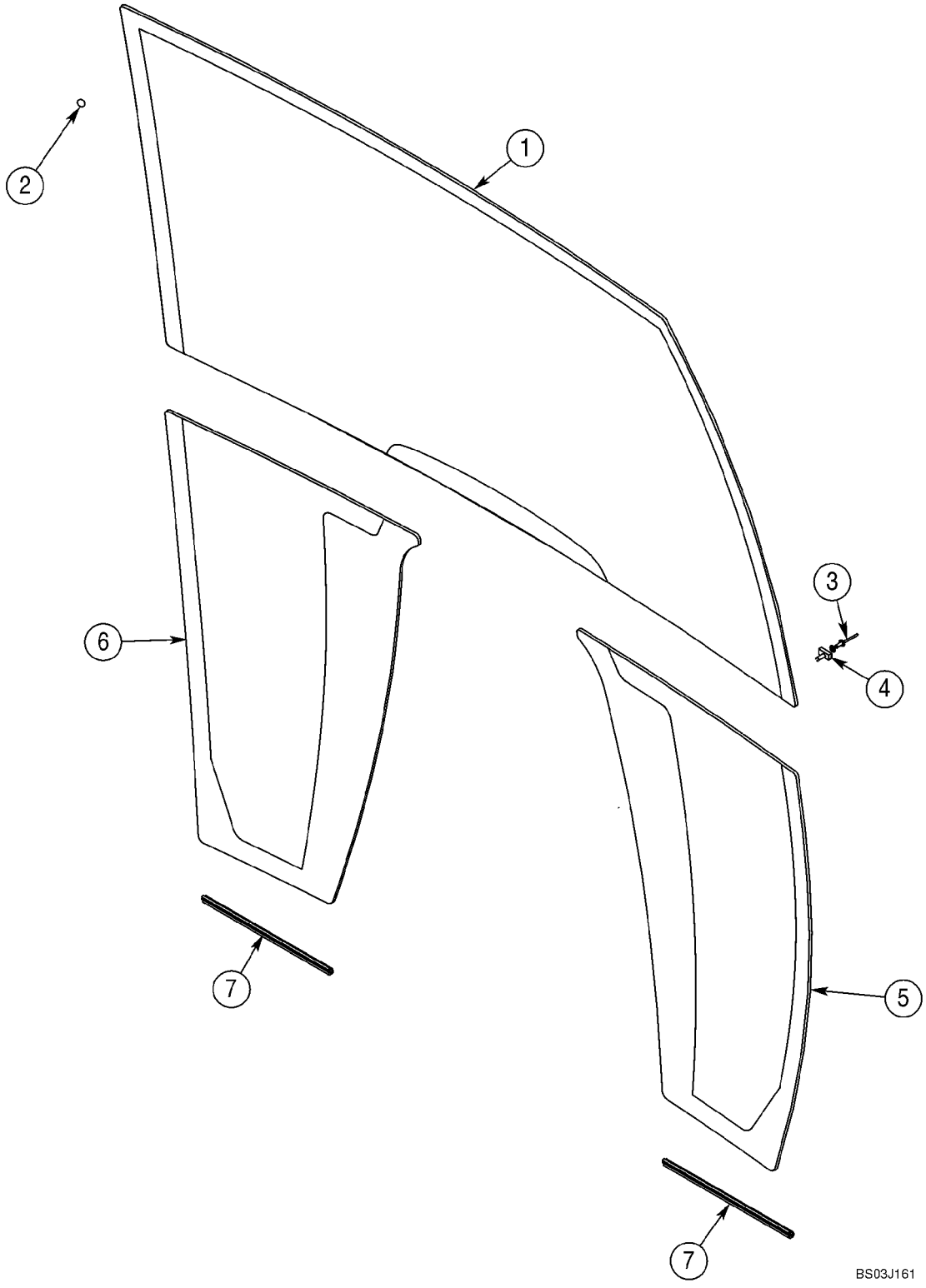

TECHO Y ROPS - VIDRIO

REF	FN	PART NUMBER	YR/SN	QTY	DENOMINACION
1		448607A1		1	PARABRISAS
2		391827A1		28	ESPACIADOR
3		151-516		2	REMACHE, Pop, 1/8" x .775"
4		279482A1		2	TORNILLO DE SUJECTIO
5		448609A1		1	PARABRISAS, Lower; Right-Hand
6		448608A1		1	PARABRISAS, Lower; Left-Hand
7		395793A1		2	BANDA DE PROTECCIčN, Lower Glass Trim

09-70		p1	02/08

TECHO Y ROPS - LIMPIAPARABRISAS, DELANTERO Y LAVAPARABRISAS

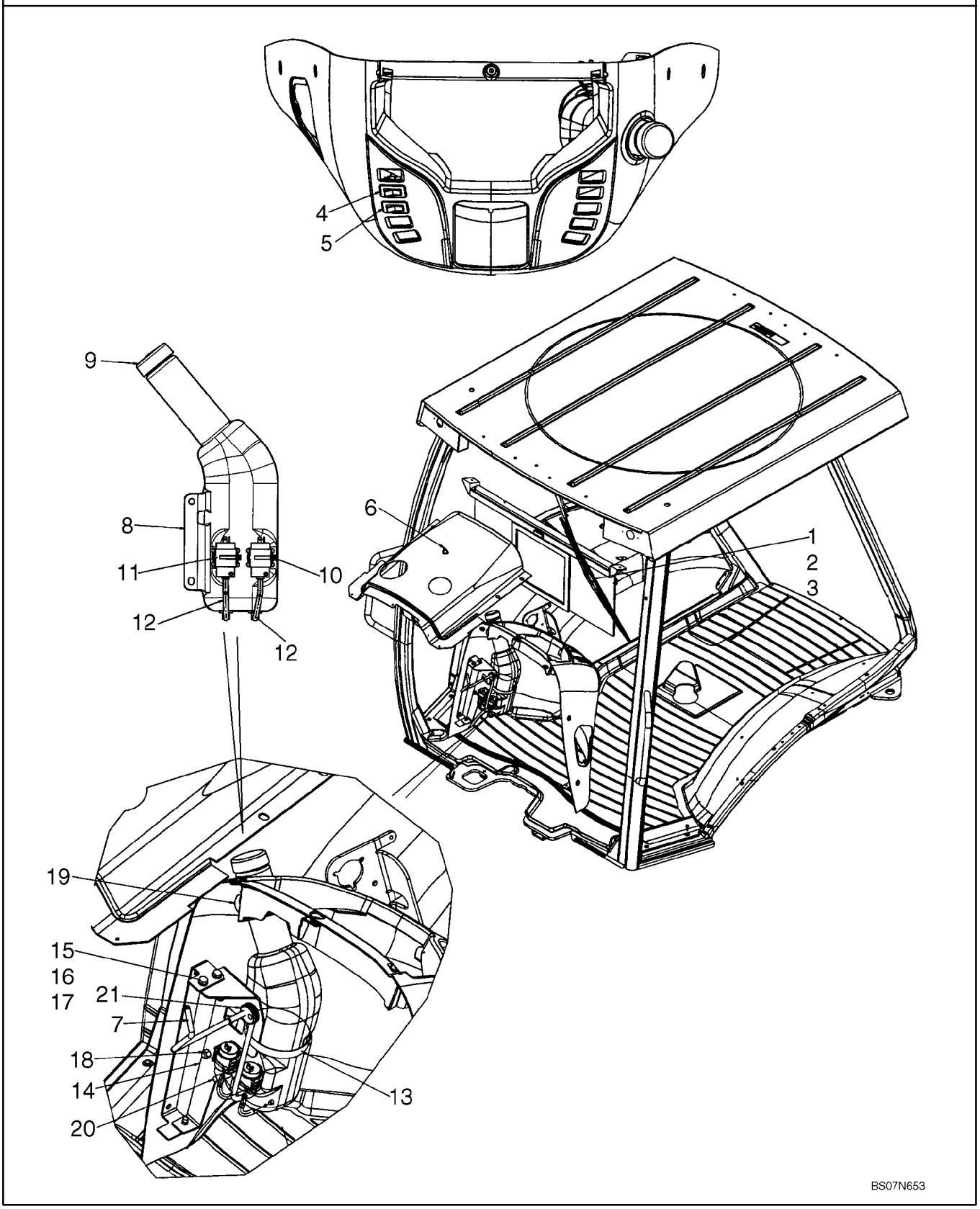

TECHO Y ROPS - LIMPIAPARABRISAS, DELANTERO Y LAVAPARABRISAS

REF	FN	PART NUMBER	YR/SN	QTY	DENOMINACION
1		450037A1		1	LIMPIA-PARABRISAS, 12V
		814-6050		2	TORNILLO, Hex, M6 x 50, 8.8, Wiper Motor Mounting
		892-11006		2	ARANDELA DE FRENO, M6
2		D128745		1	BRAZO DE ESCOBILLAS
3		414426A1		1	ESCOBILLA, 600 mm
4		386785A1		1	CONTACTOR, Front Wiper
5		386787A1		1	CONTACTOR, Windshield Washer
6		E43769		1	VAPORIZADOR, NOZZLE; Front; Includes Rubber Gasket; Plastic
7		87699640		1	TUBO (METROS), 700 mm (27-1/2 in); Cut From 87282056
8		87675208		1	DEPOSITO LAVACRIST., RESERVOIR; Window Washing Fluid
9		87711985		1	TAPA DE DEPOSITO, Cap; Washer Bottle
10		L11541		2	CIERRA CABLES
11		86507198		2	POMPILLA, Window Washer
12		87700794		2	TUBO (METROS), Washer Bottle
13		214-3180		1	ABRAZADERA MANGUERA, 4.25/5.125 HD Worm
14		87676276		2	PIEZA DE APOYO
15		614-8020		5	TORNILLO, Hex, M8 x 20, 8.8
16		895-11008		5	ARANDELA, M8 x 16 x 1.6
17		833-40408		3	TUERCA, M8, U
18		832-10408		2	CONTRA TUERCA, M8 x 1.25, Cl 8
19		87694565		1	BANDA HERMETICIDAD, 268 mm (10-1/2 in); Cut To Length From 87438002
20		87441758		1	PLATILLO, Reservoir
21		87637384		1	PASACABLES, Washer Hose
		404617A1		1	HAZ, Front Lamps and Wiper
		87726574		1	GRUPO DE CABLES, Front Console Options; Includes (1) L71879 Diode
		87726573		1	GRUPO DE CABLES, Chassis Options; Includes (4) L71879 Diodes; Not Illustrated]

09-71		p1	02/08

ESPEJO, VISTA TRASERA - SOPORTE, MODELLE MIT KABINE

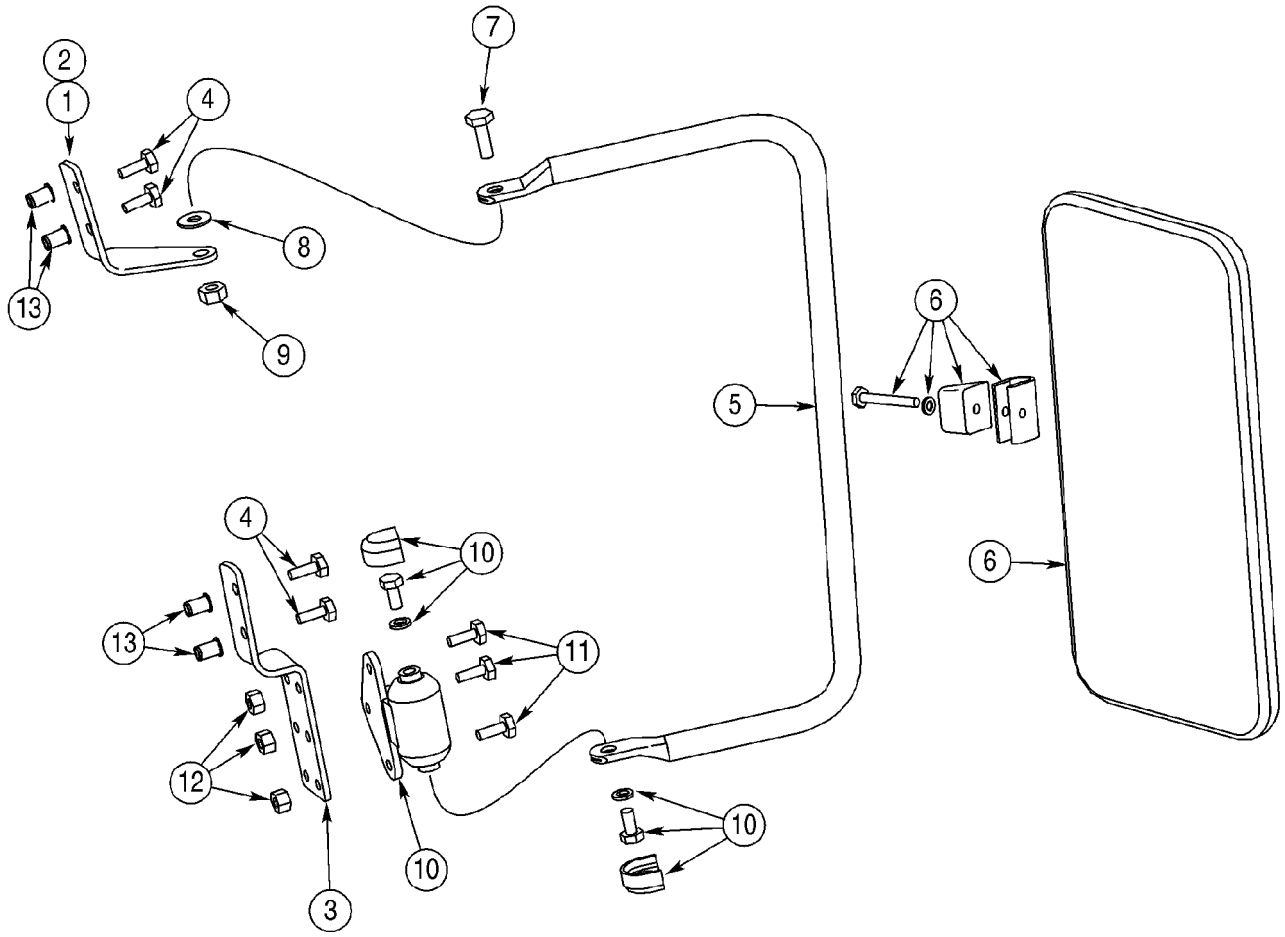

ESPEJO, VISTA TRASERA - SOPORTE, MODELLE MIT KABINE

REF	FN	PART NUMBER	YR/SN	QTY	DENOMINACION
		397974A1		1	JEUGO, Outside Mirror; Incl. Ref 1 - 14 and Instructions
1		402933A1		1	PIEZA DE SOPORTE, Upper; Right-Hand
2		402934A1		1	PIEZA DE SOPORTE, Upper; Left-Hand; Not Illustrated
3		402936A1		2	PIEZA DE SOPORTE, Lower
4		413-412		8	TORNILLO, Hex, 1/4"-20 x 3/4", G5, Full Thd
5		402935A1		2	TUBO PORTADOR
6		R54682		2	ESPEJO, Exterior
7		413-516		2	TORNILLO, Hex, 5/16"-18 x 1", G5, Full Thd, 5/16 x 1
8		A167037		2	ARANDELA
9		231-4115		2	CONTRA TUERCA, 5/16"-18, GB, 5/16
10		D142144		2	CHARNELA, Includes Hardware
11		413-412		6	TORNILLO, Hex, 1/4"-20 x 3/4", G5, Full Thd
12		231-1444		6	CONTRA TUERCA, 1/4"-20, GB
13		255447A1		10	REMACHE, Threaded Insert; Cab Front ROPS Post
14		NSS		1	NO SE REPARA SEPARADAM., Tool, Insert Nut; Not Illustrated

09-72		p1	01/08

EMBLEMA DE VEHICULO LENTO

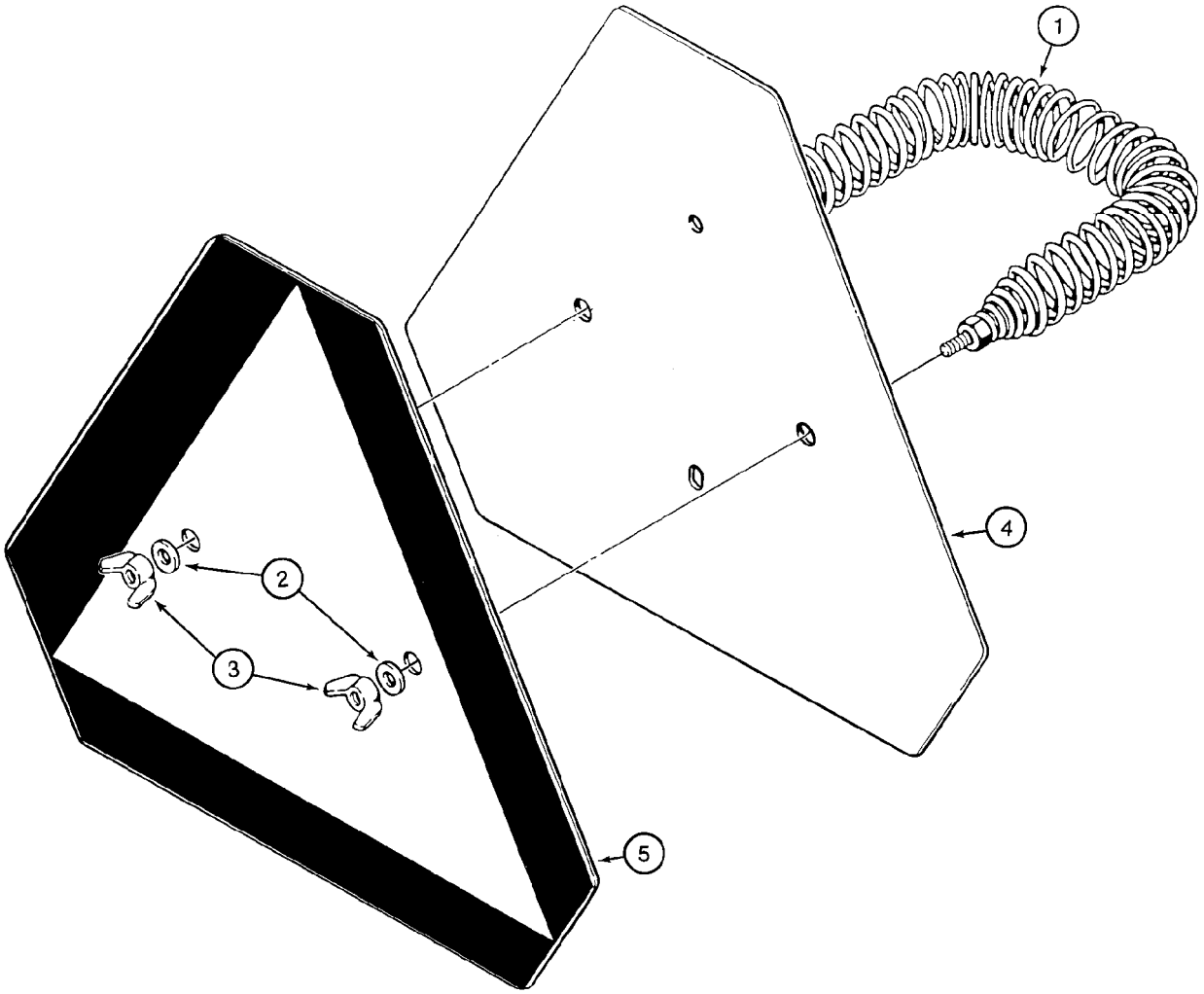

B9409034

EMBLEMA DE VEHICULO LENTO

REF	FN	PART NUMBER	YR/SN	QTY	DENOMINACION
1		D52564		1	RESORTE
2		495-11028		2	ARANDELA, 1/4", SAE, 9/32 x 5/8 x 1/16
3		126177		2	DISCO, 1/4
4		86547710		1	TRIANGULO, Incl. Ref 5
5		321-4311		1	CALCOMANIA, Slow Moving Vehicle

CALCOMANIAS



1

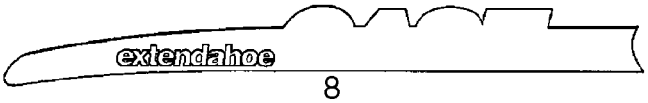

8



1B

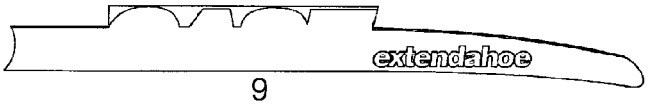

9



2
3

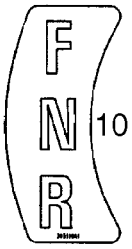

10



11

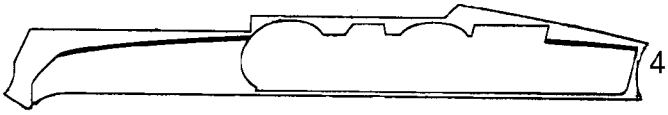
4



12

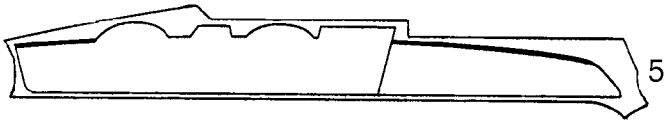
5

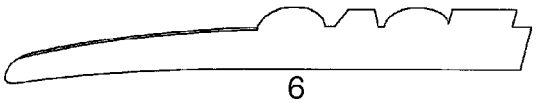
6



13


14

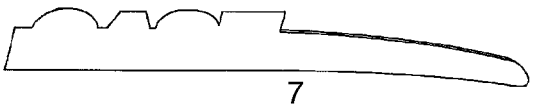
7



15



16

BS08A289

CALCOMANIAS

REF	FN	PART NUMBER	YR/SN	QTY	DENOMINACION
1		{87754369}		2	580M Model Designation
1B		87412815		2	CALCOMANIA, Series 3
2		401457A1		2	CALCOMANIA, 525 mm (20-11/16 in) Wide; Case Logo; Loader Arm
3		401458A1		4	CALCOMANIA, 655 mm (25-13/16 in) Wide, Case Logo; Backhoe Dipper
4		{87751884}		1	Case, Loader Arm Pin Stripe, Left-Hand Stripe
5		{87751885}		1	Case, Loader Arm Pin Stripe, Right-Hand Stripe
6		407009A2		1	CALCOMANIA, Case, Standard Dipper, Left-Hand Stripe
7		407010A2		1	CALCOMANIA, Case, Standard Dipper, Right-Hand Stripe
8		373698A2		1	CALCOMANIA, Case, Extendahoe Dipper, Left-Hand Stripe
9		373699A2		1	CALCOMANIA, Case, Extendahoe Dipper, Right-Hand Stripe
10		395910A2		1	CALCOMANIA, FNR (Forward/Neutral/Reverse); Shuttle Shift Lever Control Pattern
11		321-1708		1	CALCOMANIA, 0-2-4, Clam Bucket Opening Indicator
12		87435569		1	SIMBOLO, Insert, Case; Steering Wheel
13		186989A1		1	SIMBOLO, Case
14		131-431		2	CONTRA TUERCA, Self, Threading, 1/4"
15		87415931		2	CALCOMANIA, Case, 37 x 70 mm; Located On Engine Filters
16		87429186		1	SIMBOLO, Case, 37 x 70 mm; Located On Engine

CALCOMANIAS

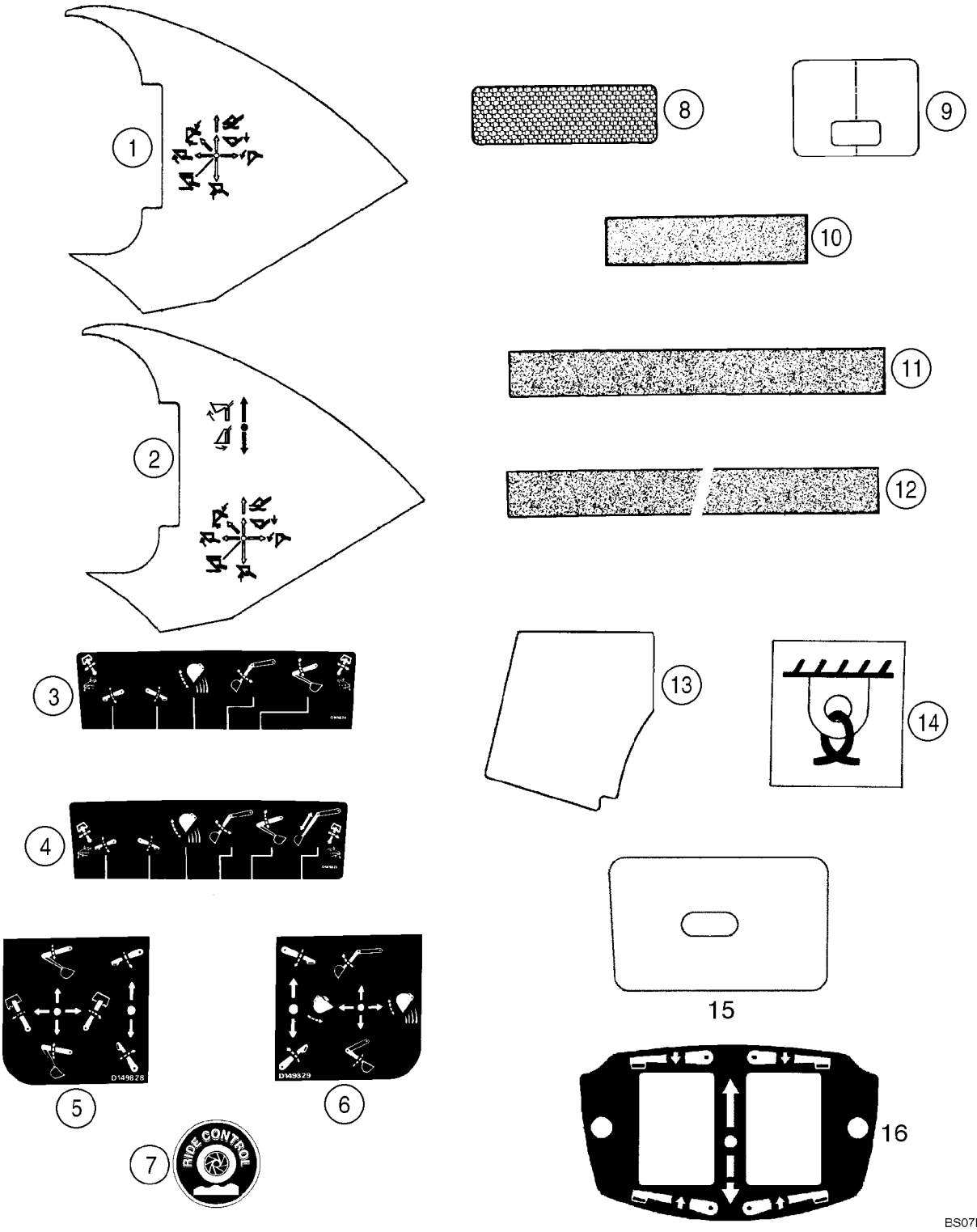

CALCOMANIAS

REF	FN	PART NUMBER	YR/SN	QTY	DENOMINACION
1		87702261		1	CALCOMANIA, Two Function Loader Control
2		{87480903}		1	Decal; Three Function Loader Control
3		D149824		1	CALCOMANIA, Upper; Standard Backhoe Control Pattern
4		D149825		1	CALCOMANIA, Upper; Extendahoe Control Pattern; With Foot Swing
5		D149828		1	CALCOMANIA, Upper; Standard Backhoe Control Pattern; With Hand Swing; Left-Hand Side Of Console
6		D149829		1	CALCOMANIA, Upper; Standard Backhoe Control Pattern; With Hand Swing; Right-Hand Side Of Console
7		304083A1		2	CALCOMANIA, Ride Control
8		449842A1		2	CALCOMANIA, 2 x 6-5/16 in; Red, Reflector
9		192450A1		1	CALCOMANIA, Clear Vinyl; Hood
10		D55216		2-11	TIRA CONTRA DESLIZAM., 2 x 9 in; Anti-Skid
11		D80270		3-4	CINTA, 635 mm (25 in); Anti-Skid
12		307348A1		2	CINTA, 700 mm (27-9/16 in); Anti-Skid; 40 gallon fuel tank
13		367848A2		1	TACO, Anti-Skid; Canopy Models
14		87626017		4	CALCOMANIA, Tie Down; Replaces 139728A1
15		406723A1		1	CALCOMANIA, Poly Film; Lockup Cover; Canopy Models
16		87423812		1	CALCOMANIA, Stabilizer Switch; Models With Pilot Controls
17		T41159		1	CINTA, Not Illustrated

CALCOMANIAS

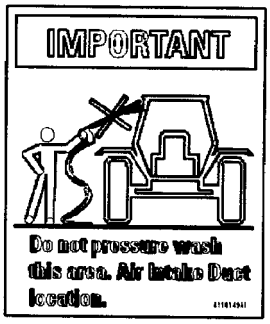

2

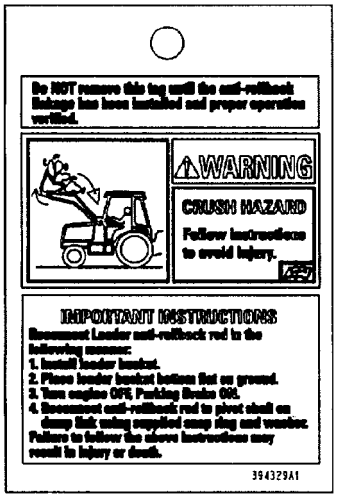

3

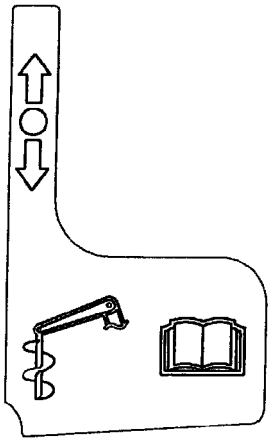

4

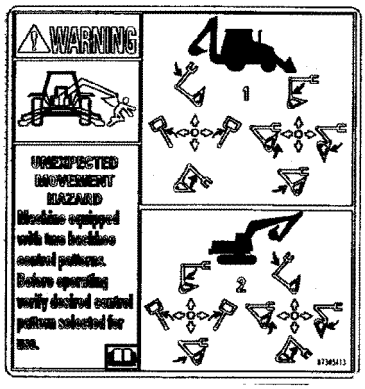

5

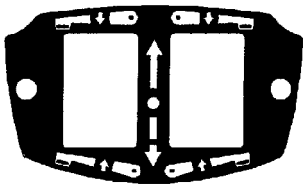

6

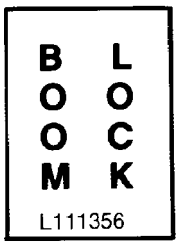

7



8



9

BS07M814

CALCOMANIAS

REF	FN	PART NUMBER	YR/SN	QTY	DENOMINACION
2		411049A1		1	CALCOMANIA, Important; Do Not Pressure Wash This Area
3		394329A1		1	ETIQUETA, Warning; Anti-Rollback Hazard; English
3		430309A1		1	ETIQUETA, Warning; Anti-Rollback Hazard; Latin American Spanish
3		430310A1		1	ETIQUETA, Warning; Anti-Rollback Hazard; Canadian French
4		87430677		1	CALCOMANIA, Auxiliary Hydraulics
5		87305413		1	CALCOMANIA, Warning, Unexpected Movement; Pattern Selecting; English
5		87336843		1	CALCOMANIA, Warning, Unexpected Movement; Pattern Selecting; Latin American Spanish
5		87336844		1	CALCOMANIA, Warning, Unexpected Movement; Pattern Selecting; French Canadian
6		87423812		1	CALCOMANIA, Stabilizer Control Switch
7		L111356		1	CALCOMANIA, Boom Lock; Included In 399221A1 Backhoe Boom Lock Kit
8		321-6046		2	CALCOMANIA, Warning, If You Use The Backhoe To Lift A Load That Is Too Heavy; Included With 189957A1 Boom Lock Valve Used In 399221A1 Backhoe Boom Lock Kit
9		87444776		1	CALCOMANIA, Warning, Crush Hazard; When Changing A Machine to Foot Swing Controls; English
9		87307893		1	CALCOMANIA, Warning, Crush Hazard; When Changing A Machine to Foot Swing Controls; Latin American spanish
9		87307896		1	CALCOMANIA, Warning, Crush Hazard; When Changing A Machine to Foot Swing Controls; Canadian French

CALCOMANIAS - INGLES

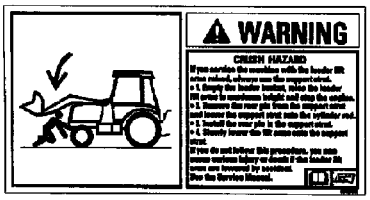

1

FUSES 87652902			
SPARE	....	....	....
SPARE	POWER OUTLET 30A	SPARE	PILOT CONTROLS BH AUX (OPT) 15AMP
FRONT WORK LIGHTS 20A	POWER OUTLET 30A	AIR SUSP. SEAT-AIR COMP. (OPT) 20A	RETURN TO DIG 10A
REAR WORK LIGHTS 20A	PWRSHIFT CTRL, COMFORT STEER (OPT) 10A	SPARE	DRIVING LIGHTS 15A
FUEL SHUTOFF 10A	BLOWER 25A	DOME LIGHT 10A	ROTATING BEACON (OPT) 10A
INSTRUMENTS ALARMS SYS. 10A	SIGNAL LIGHTS PARK BRAKE 20A	HORN 10A	4WD (OPT) 10A
STARTING TRANSMISSION CONTROL 10A	RADIO, RIDE CONTROL, QUICK COUPLER 15A	RADIO (BATT) (OPT) 10A	WIPERS 15A

8

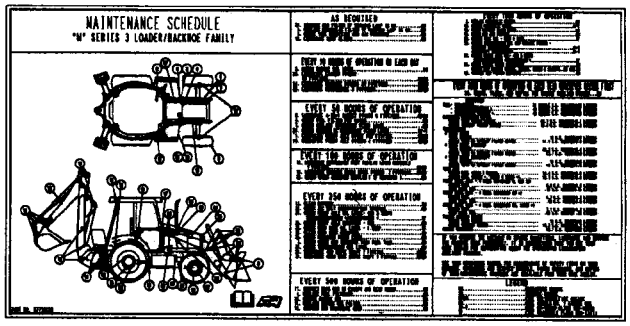

2

POWER RELAY #1	POWER RELAY #4	FLASHER RELAY	STARTER RELAY
POWER RELAY #2	LDR LVR DIFF LK RELAY	SHUTTLE INTLK TIMING RELAY	NEUTRAL RELAY
POWER RELAY #3	CLUTCH RELAY	SHUTTLE INTLK RELAY	FORWARD RELAY
PARK BRAKE RELAY	....	....	REVERSE RELAY
		AC RELAY (OPT)	....
COMFORT STEER POWER (OPT)	COMFORT STEER CUTOUT (OPT)		

RELAYS

9



3

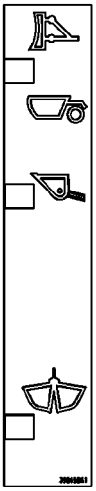

5

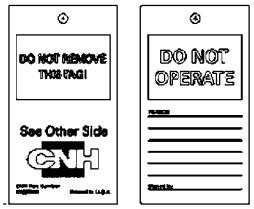

11

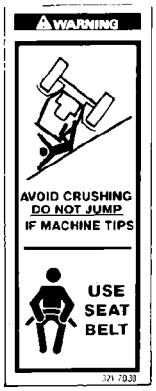

10



12

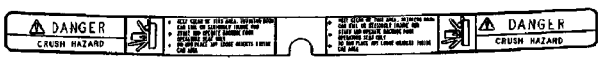

4

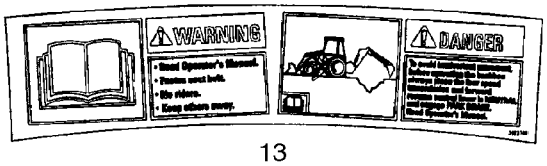

13

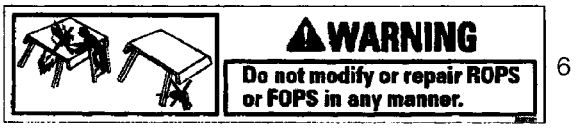

6

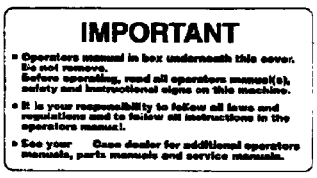

7



14

BS08A110

CALCOMANIAS - INGLES

REF	FN	PART NUMBER	YR/SN	QTY	DENOMINACION
1		384264A1		1	CALCOMANIA, Warning; Crush Hazard; Loader Arm Support Strut
2		87735103		1	CALCOMANIA, Maintenance Schedule; Supplied by Parts and Components
3		8603092		1	DECAL, WARNING, Warning; Explosion Hazard, Do Not Use Ether
4		86992976		1	CALCOMANIA, Danger; Crush Hazard
5		398658A1		1	CALCOMANIA, Clam Bucket Position
6		383972A1		1	CALCOMANIA, Warning; Do Not Modify or Repair ROPS or FOPS In Any Manner
7		144193A3		1	CALCOMANIA, Important; Operator's Manual In Box Underneath This Cover; Glove Box Lid
8		87652902		1	CALCOMANIA, Fuse Location
9		87647001		1	CALCOMANIA, Relay
10		321-7030		2	CALCOMANIA, Warning; Avoid Crushing; Do Not Jump / Use Seat Belt
11		87358697		1	ETIQUETA, TAG, Do Not Operate
12		86992975		2	CALCOMANIA, Warning; No Step/Not An Exit; Canopy
13		392374A1		1	CALCOMANIA, Warning/Danger; Read the Operator's Manual
14		87702297		1	CALCOMANIA, Parking Brake

CALCOMANIAS - CASTELLANO PARA LATINOAMERICA

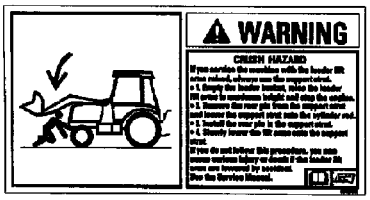

1

FUSES 87652902			
SPARE	....	....	....
SPARE	POWER OUTLET 30A	SPARE	PILOT CONTROLS BH AUX (OPT) 15AMP
FRONT WORK LIGHTS 20A	POWER OUTLET 30A	AIR SUSP. SEAT-AIR COMP. (OPT) 20A	RETURN TO DIG 10A
REAR WORK LIGHTS 20A	PWRSHIFT CTRL, COMFORT STEER (OPT) 10A	SPARE	DRIVING LIGHTS 15A
FUEL SHUTOFF 10A	BLOWER 25A	DOME LIGHT 10A	ROTATING BEACON (OPT) 10A
INSTRUMENTS ALARMS SYS. 10A	SIGNAL LIGHTS PARK BRAKE 20A	HORN 10A	4WD (OPT) 10A
STARTING TRANSMISSION CONTROL 10A	RADIO, RIDE CONTROL, QUICK COUPLER 15A	RADIO (BATT) (OPT) 10A	WIPERS 15A

8

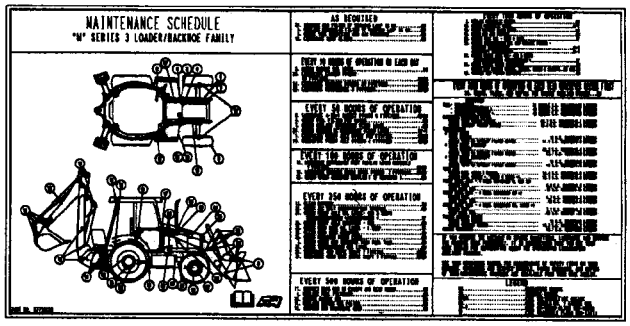

2

POWER RELAY #1	POWER RELAY #4	FLASHER RELAY	STARTER RELAY
POWER RELAY #2	LDR LVR DIFF LK RELAY	SHUTTLE INTLK TIMING RELAY	NEUTRAL RELAY
POWER RELAY #3	CLUTCH RELAY	SHUTTLE INTLK RELAY	FORWARD RELAY
PARK BRAKE RELAY	....	....	REVERSE RELAY
		AC RELAY (OPT)	....
COMFORT STEER POWER (OPT)	COMFORT STEER CUTOUT (OPT)		

RELAYS

9



3

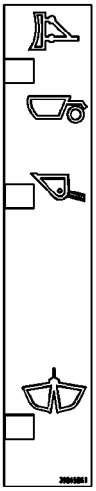

5

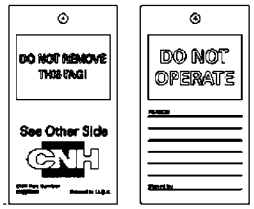

11

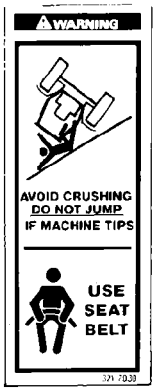

10



12

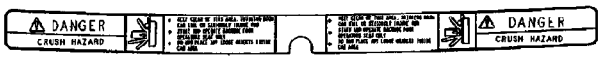

4

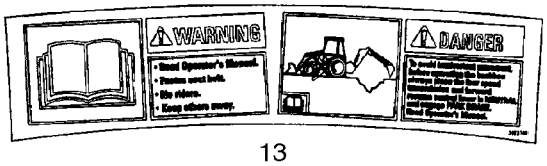

13

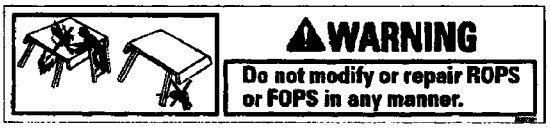

6

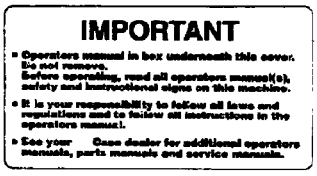

7



14

BS08A110

CALCOMANIAS - CASTELLANO PARA LATINOAMERICA

REF	FN	PART NUMBER	YR/SN	QTY	DENOMINACION
		87307893		1	CALCOMANIA, Warning, Crush Hazard; When Changing A Machine to Foot Swing Controls; For Illustration See Ref 9 On Figure 09-75
1		398576A1		1	CALCOMANIA, Warning; Crush Hazard; Loader Arm Support Strut
2		87735105		1	CALCOMANIA, Maintenance Schedule; Supplied by Parts and Components
3		8603094		1	CALCOMANIA, Warning; Explosion Hazard, Do Not Use Ether
4		86992981		1	CALCOMANIA, Danger; Crush Hazard
5		398658A1		1	CALCOMANIA, Clam Bucket Position
6		389729A1		1	CALCOMANIA, Warning; Do Not Modify or Repair ROPS or FOPS In Any Manner
7		398662A1		1	CALCOMANIA, Important; Operator's Manual In Box Underneath This Cover; Glove Box Lid
8		87706237		1	CALCOMANIA, Fuse Location
9		87706250		1	CALCOMANIA, Relay
10		398672A1		2	CALCOMANIA, Warning; Avoid Crushing; Do Not Jump / Use Seat Belt
11		87380559		1	ETIQUETA, Do Not Operate
12		86992980		2	CALCOMANIA, Warning; No Step/Not An Exit; Canopy
13		398598A1		1	CALCOMANIA, Warning/Danger; Read the Operator's Manual
14		87708227		1	CALCOMANIA, Parking Brake
15		148093A1		1	CALCOMANIA, Important; Lubrication; Not Illustrated
16		148095A1		1	CALCOMANIA, Attention; Welding; Not Illustrated

CALCOMANIAS - FRANCES CANADIENSE

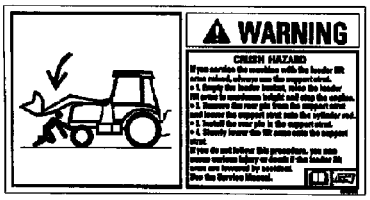

1

FUSES 87652902			
SPARE	....	....	....
SPARE	POWER OUTLET 30A	SPARE	PILOT CONTROLS BH AUX (OPT) 15AMP
FRONT WORK LIGHTS 20A	POWER OUTLET 30A	AIR SUSP. SEAT-AIR COMP. (OPT) 20A	RETURN TO DIG 10A
REAR WORK LIGHTS 20A	PWRSHIFT CTRL, COMFORT STEER (OPT) 10A	SPARE	DRIVING LIGHTS 15A
FUEL SHUTOFF 10A	BLOWER 25A	DOME LIGHT 10A	ROTATING BEACON (OPT) 10A
INSTRUMENTS ALARMS SYS. 10A	SIGNAL LIGHTS PARK BRAKE 20A	HORN 10A	4WD (OPT) 10A
STARTING TRANSMISSION CONTROL 10A	RADIO, RIDE CONTROL, QUICK COUPLER 15A	RADIO (BATT) (OPT) 10A	WIPERS 15A

8

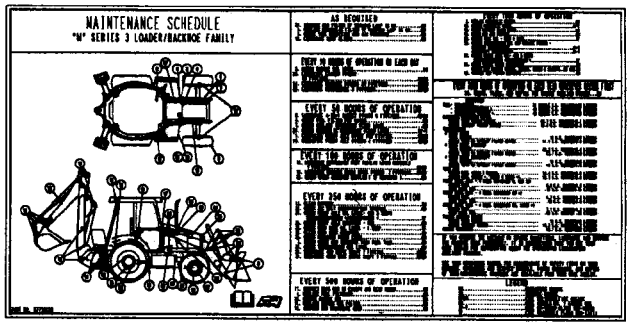

2

POWER RELAY #1	POWER RELAY #4	FLASHER RELAY	STARTER RELAY
POWER RELAY #2	LDR LVR DIFF LK RELAY	SHUTTLE INTLK TIMING RELAY	NEUTRAL RELAY
POWER RELAY #3	CLUTCH RELAY	SHUTTLE INTLK RELAY	FORWARD RELAY
PARK BRAKE RELAY	....	....	REVERSE RELAY
		AC RELAY (OPT)	....
COMFORT STEER POWER (OPT)	COMFORT STEER CUTOUT (OPT)		

RELAYS

9



3

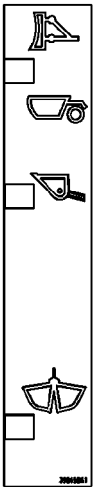

5

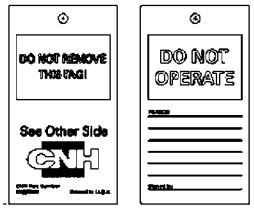

11

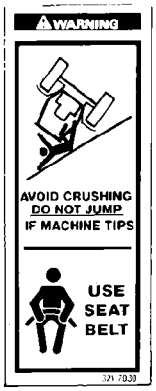

10



12

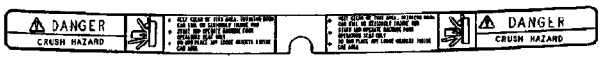

4

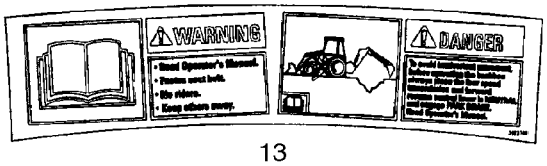

13

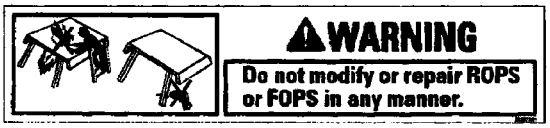

6

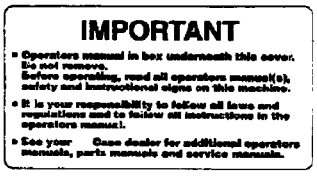

7

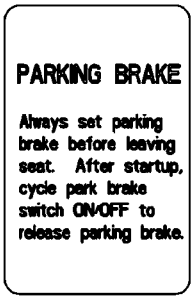

14

BS08A110

CALCOMANIAS - FRANCES CANADIENSE

REF	FN	PART NUMBER	YR/SN	QTY	DENOMINACION
		87307896		1	CALCOMANIA, Warning, Crush Hazard; When Changing A Machine to Foot Swing Controls; For Illustration See Ref 9 On Figure 09-75
1		398577A1		1	CALCOMANIA, Warning; Crush Hazard; Loader Arm Support Strut
2		{877355104}		1	Maintenance Schedule; Supplied by Parts and Components
3		8603093		1	CALCOMANIA, Warning; Explosion Hazard, Do Not Use Ether
4		86992979		1	CALCOMANIA, Danger; Crush Hazard
5		398658A1		1	CALCOMANIA, Clam Bucket Position
6		389730A1		1	CALCOMANIA, Warning; Do Not Modify or Repair ROPS or FOPS In Any Manner
7		398663A1		1	CALCOMANIA, Important; Operator's Manual In Box Underneath This Cover; Glove Box Lid
8		87706239		1	CALCOMANIA, Fuse Location
9		87706251		1	CALCOMANIA, Relay
10		398673A1		2	CALCOMANIA, Warning; Avoid Crushing; Do Not Jump / Use Seat Belt
11		87380558		1	ETIQUETA, TAG, Do Not Operate
12		86992978		2	CALCOMANIA, Warning; No Step/Not An Exit; Canopy
13		398599A1		1	CALCOMANIA, Warning/Danger; Read the Operator's Manual
16		87708242		1	CALCOMANIA, Parking Brake

CALCOMANIAS - INGLES

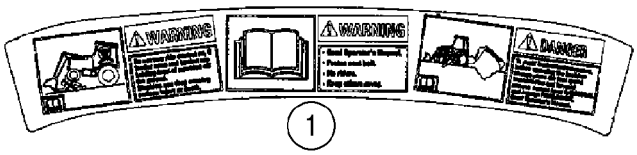

1



2

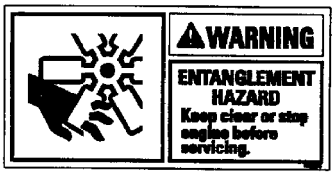

3

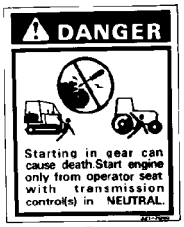

4



5

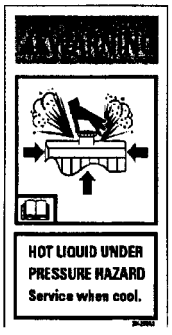

6



7



8



8A



13



9



10



11

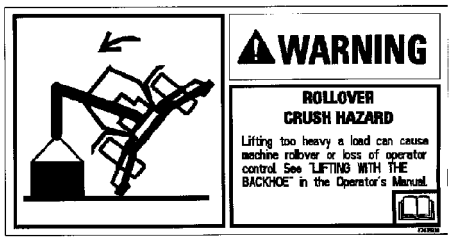

12

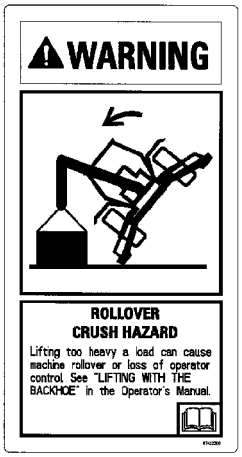

12A



14



15

BS07M816

CALCOMANIAS - INGLES

REF	FN	PART NUMBER	YR/SN	QTY	DENOMINACION
1		392375A1		1	CALCOMANIA, Warning/Warning/Danger; Front, With Ride Control; Do Not Turn Ride Control On/Read Operator's Manual/To Avoid Inadvertent Movement
2		384265A1		1	CALCOMANIA, Warning; Crush Hazard; Keep Clear; Support Loader Lift Arms During Maintenance
3		384267A1		2	CALCOMANIA, Warning; Entanglement Hazard, Fan; Keep Clear or Stop Engine Before Servicing
4		321-7040		1	CALCOMANIA, Danger; Starting In Gear
5		384269A1		2	CALCOMANIA, Danger; Jump Start
6		384258A1		1	CALCOMANIA, Warning; Hot Liquid Under Pressure
7		321-230		1	CALCOMANIA, Diesel Fuel
8		321-229		1	CALCOMANIA, Hydraulic Fluid; Used In Production; For Service, Order 321-6376, English Decal Only
8A		321-6376		1	CALCOMANIA, Hydraulic Fluid
9		384260A1		1	CALCOMANIA, Warning; Ride Control Accumulator
10		D149826		1	CALCOMANIA, Caution/Important; For All Models With Foot Swing Backhoe Controls and Standard Backhoe Models With Hand Swing
11		D149827		1	CALCOMANIA, Caution/Important; Extendahoe Backhoe Models With Hand Swing
12		87435938		1	CALCOMANIA, Warning; Rollover Crush Hazard; Lifting Too Heavy A Load; Models Without Pilot Controls
12A		87433209		1	CALCOMANIA, Warning; Rollover Crush Hazard; Lifting Too Heavy A Load; Models With Pilot Controls
13		321-6774		1	CALCOMANIA, Warning; Seat Spring
14		87423813		2	CALCOMANIA, Warning; Unexpected Movement Hazard; Before Adjusting Windows
15		87581010		1	CALCOMANIA, Warning; Pressurized System Hazard

CALCOMANIAS - CASTELLANO PARA LATINOAMERICA

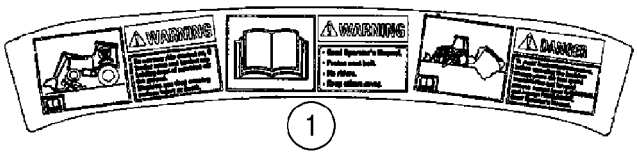

1



2

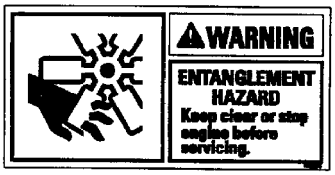

3

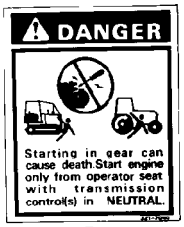

4



5

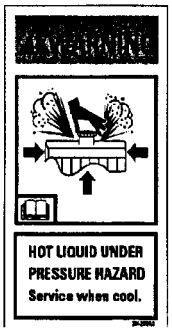

6

DIESEL FUEL

7

HYDRAULIC FLUID

8



8A



13

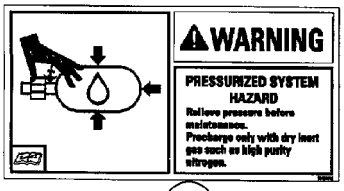

9



10



11

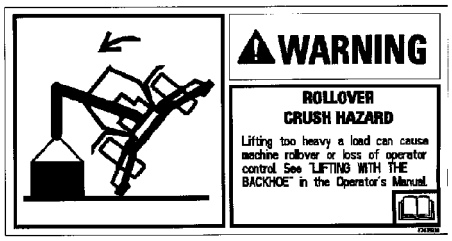

12

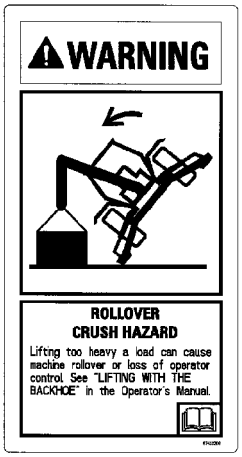

12A



14



15

BS07M816

CALCOMANIAS - CASTELLANO PARA LATINOAMERICA

REF	FN	PART NUMBER	YR/SN	QTY	DENOMINACION
1		398600A1		1	CALCOMANIA, Warning/Warning/Danger; Front, With Ride Control; Do Not Turn Ride Control On/Read Operator's Manual/To Avoid Inadvertent Movement
2		398578A1		1	CALCOMANIA, Warning; Crush Hazard; Keep Clear; Support Loader Lift Arms During Maintenance
3		398580A1		2	CALCOMANIA, Warning; Entanglement Hazard, Fan; Keep Clear or Stop Engine Before Servicing
4		398674A1		1	CALCOMANIA, Danger; Starting In Gear
5		398582A1		2	CALCOMANIA, Danger; Jump Start
6		398570A1		1	CALCOMANIA, Warning; Hot Liquid Under Pressure
7		398667A1		1	CALCOMANIA, Diesel Fuel
8		398665A1		1	CALCOMANIA, Hydraulic Fluid
8A		321-6376		1	CALCOMANIA, Hydraulic Fluid, English Decal Only
9		398572A1		1	CALCOMANIA, Warning; Ride Control Accumulator
10		398677A1		1	CALCOMANIA, Caution/Important; For All Models With Foot Swing Backhoe Controls and Standard Backhoe Models With Hand Swing
11		398669A1		1	CALCOMANIA, Caution/Important; Extendahoe Backhoe Models With Hand Swing
12		87435939		1	CALCOMANIA, Warning; Rollover Crush Hazard; Lifting Too Heavy A Load; Models Without Pilot Controls
12A		87434771		1	CALCOMANIA, Warning; Rollover Crush Hazard; Lifting Too Heavy A Load; Models With Pilot Controls
13		398670A1		1	CALCOMANIA, Warning; Seat Spring
14		87429163		2	CALCOMANIA, Warning; Unexpected Movement Hazard; Before Adjusting Windows
15		87622505		1	CALCOMANIA, Warning; Pressurized System Hazard

CALCOMANIAS - FRANCES CANADIENSE

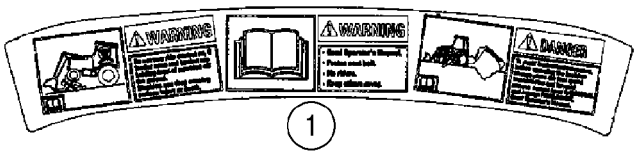

1



2

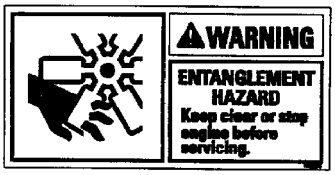

3

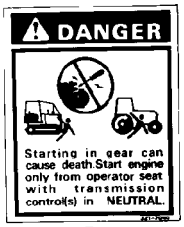

4



5

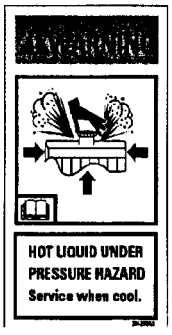

6



7



8



8A

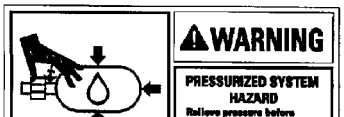

9



10



11

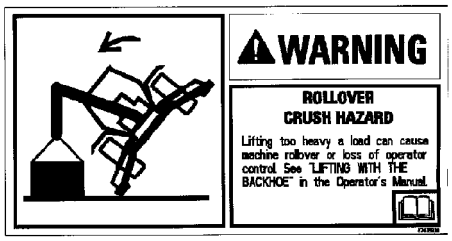

12

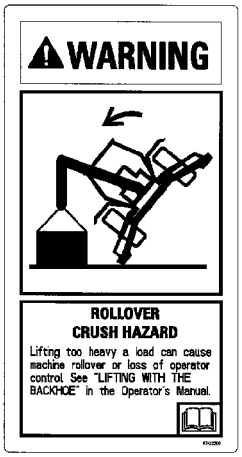

12A



14



15



13

BS07M816

CALCOMANIAS - FRANCES CANADIENSE

REF	FN	PART NUMBER	YR/SN	QTY	DENOMINACION
1		398601A1		1	CALCOMANIA, Warning/Warning/Danger; Front, With Ride Control; Do Not Turn Ride Control On/Read Operator's Manual/To Avoid Inadvertent Movement
2		398579A1		1	CALCOMANIA, Warning; Crush Hazard; Keep Clear; Support Loader Lift Arms During Maintenance
3		398581A1		2	CALCOMANIA, Warning; Entanglement Hazard, Fan; Keep Clear or Stop Engine Before Servicing
4		398676A1		1	CALCOMANIA, Danger; Starting In Gear
5		398583A1		2	CALCOMANIA, Danger; Jump Start
6		398571A1		1	CALCOMANIA, Warning; Hot Liquid Under Pressure
7		398668A1		1	CALCOMANIA, Diesel Fuel
8		398666A1		1	CALCOMANIA, Hydraulic Fluid
8A		321-6376		1	CALCOMANIA, Hydraulic Fluid, English Decal Only
9		398573A1		1	CALCOMANIA, Warning; Ride Control Accumulator
10		398656A1		1	CALCOMANIA, Caution/Important; For All Models With Foot Swing Backhoe Controls and Standard Backhoe Models With Hand Swing
11		398654A1		1	CALCOMANIA, Caution/Important; Extendahoe Backhoe Models With Hand Swing
12		87435940		1	CALCOMANIA, Warning; Rollover Crush Hazard; Lifting Too Heavy A Load; Models Without Pilot Controls
12A		87434772		1	CALCOMANIA, Warning; Rollover Crush Hazard; Lifting Too Heavy A Load; Models With Pilot Controls
13		398671A1		1	CALCOMANIA, Warning; Seat Spring
14		87429164		2	CALCOMANIA, Warning; Unexpected Movement Hazard; Before Adjusting Windows
15		87622506		1	CALCOMANIA, Warning; Pressurized System Hazard

Number	Figure	Sequence	Ref.
{ 2854866}	02-14		12
{}	02-25		4
	09-08		
	09-57		
{2853815}	02-21		4
{2853816}	02-21		3
{2855183}	02-28		7
{2855380}	02-25		
{2855381}	02-25		3
{2856271}	02-21		1
{2856309}	02-22		4
{2856436}	03-05		
{434746A1}	06-33		5
{452140A1}	06-37		8
{87478483}	08-06		23
	08-26		48
{87480903}	09-74		2
{87521766}	04-09		14
	04-12		
{87578867}	06-15		1A
	06-23		1A
{87653246}	09-61		
{87701053}	06-21		4
{87701253}	06-13		4
{87701255}	06-13		5
{87701257}	06-13		11
	06-21		11
{87701258}	06-13		18
	06-21		22
{87701260}	06-13		22
{87701269}	06-13		26
	06-21		27
{87701270}	06-13		27
	06-21		26
{87701275}	06-17		28
	06-25		28
{87701276}	06-16		4
	06-24		4
{87701278}	06-18		4
	06-26		4
{87701293}	06-18		16
	06-26		16
{87701294}	06-18		27
{87701309}	07-01		1
	07-01	01	1
{87701310}	07-01		2
	07-01	01	2
{87701313}	07-01		4
	07-01	01	4
{87701315}	07-01		5
	07-01	01	5
{87701317}	07-01		6
	07-01	01	6
{87701318}	07-01		7
	07-01	01	7
{87701320}	07-01		8
	07-01	01	8
{87701321}	07-01		9
	07-01	01	9
{87701323}	07-01		10
	07-01	01	10
{87701324}	07-01		11
	07-01	01	11
{87701325}	07-01		12
	07-01	01	12
{87701327}	07-01		13
	07-01	01	13
{87701328}	07-01		14
	07-01	01	14
{87701329}	07-01		15
	07-01	01	15
{87701330}	07-01		16
	07-01	01	16
{87701331}	07-01		17
	07-01	01	17
{87701332}	07-01		18
	07-01	01	18
{87701333}	07-01		19
{87701333}	07-01	01	19
{87701775}	06-26		27
{87701777}	06-21		5
{87702570}	06-13		20
	06-21		18
{87704971}	06-27		1
{87708390}	06-33		1
{87708391}	06-33		9
{87708392}	06-33		10
{87708393}	06-35		1
{87708394}	06-34		1
{87708395}	06-34		2
{87708396}	06-34		4
{87708397}	06-34		6
{87708398}	06-34		7
{87708399}	06-34		8
{87708400}	06-34		9
{87708401}	06-34		11
{87708402}	06-34		14
{87708403}	06-34		15
{87708408}	06-34		16
{87708409}	06-34		17
{87708411}	06-34		18
{87708413}	06-36		1
{87708415}	06-36		2
{87708417}	06-36		5
{87708420}	06-36		6
{87708422}	06-36		8
{87708424}	06-36		9
{87708427}	06-36		10
{87708431}	07-02		1
{87708432}	07-02		1
{87708433}	07-02		2
{87708434}	07-02		3
{87708435}	07-02		4
{87708436}	07-02		6
{87708438}	07-02		7
{87708440}	07-02		9
{87708441}	07-02		12
{87708442}	07-02		13
{87708443}	06-37		2
{87708444}	06-37		3
{87708445}	06-37		6
{87708447}	06-37		9
{87708452}	06-37		10
{87708453}	06-37		11
{87708454}	06-37		12
{87708466}	06-37		17
{87708467}	06-37		18
{87710131}	06-02		
{87710137}	06-04		9
{87710141}	06-04		8
{87710142}	06-04		6
{87710143}	06-04		7
{87710144}	06-04		
{87710156}	06-03		1
{87710158}	06-04		5
{87710159}	06-03		2
{87711038}	06-37		15
{877355104}	09-78		2
{87746673}	08-15		2
	08-16		2
	08-17		2
	08-18		5
{87746674}	08-19		2
	08-20		2
{87751884}	09-73		4
{87751885}	09-73		5
{87754369}	09-73		1
{87757931}	08-31		17
{87757932}	08-31		18
{P1139855X}	06-35		7
100-21315	08-62		13A
100-39001	09-55		43
	09-57		20
100016	04-01		39
100520A1	06-02		12
100532A1	06-03		3

Number	Figure	Sequence	Ref.
100533A1	05-06		11
	06-03		8
100552A1	06-06		5
100553A1	06-06		
100554A1	06-06		
100555A1	06-06		18
100556A1	06-06		4
100557A1	06-06		22
	06-13		3
	06-21		3
	06-33		6
100559A1	06-06		6
100561A1	06-06		13
100562A1	06-06		19
100696A1	09-04		3
100748A1	06-12		9
	06-20		9
100753A1	06-27		17
100760A1	07-01		22
	07-01	01	22
101479A1	08-13		24
101531A1	04-17		9
102-1387	05-03		4
102-23206	08-29		5
102761A1	09-01		12
	09-02		11
102765A1	09-18		19
103-11100	09-13		16
103-1475	09-21		8
103-1518	03-03		7
103-16175	09-22		4
	09-22		8
	09-24		25
	09-24		33
	09-26		23
	09-26		27
	09-26		33
	09-26		36
	09-26		5
	09-27		14
	09-27		40
	09-27		50
103-16200	09-23		18
103-3350	09-04		29
103670A1	08-24		18
104824A1	09-04		23
104907A1	06-30		1
106989A1	09-18		13
106990A1	09-18		15
107124A1	09-26		45
	09-26		49
	09-27		22
	09-27		33
	09-37		8
108088A1	09-01		11
	09-02		9
108366A1	04-17		4
108864A1	09-18		1
108923A1	09-18		9
108924A1	09-18		8
109268A1	09-04		4
109879A1	09-39		7
	09-41		14
111522A1	09-04		5
112380A1	09-01		14
	09-02		4
	09-18		21
112486A1	06-07		10
112509A1	05-06		5
	06-04		3
112517A1	06-27		4
112884A1	09-48		
112946A1	09-06		8
113135A2	08-59		2
114295A1	06-06		20
114318A1	09-23		12A
	09-37		4
114549A1	09-54		6
114882A2	05-01		2
114980A1	09-41		7
116425A1	06-06		12
116426A1	06-06		7
116427A1	06-06		8
118900A1	09-04		24
118901A1	09-04		30
	09-05		3
119241A1	06-30		1
119243A1	05-09		4
120303A1	05-02		25
	08-04		10
	08-05		8
	08-06		8
	08-26		32
	08-26		43
	08-27		14
	09-38		38
121412A1	04-07		2
	04-09		
	04-17		16
121413A1	04-07		3
	04-09		
	04-19		1
	04-20		13
121414A1	04-07		4
121415A1	04-09		
121416A1	04-07		5
121665A1	09-22		7
121778A1	09-23		3
121856A1	09-38		55
121920A1	09-08		12
122081A1	09-66		9
122259A1	05-06		10
122261A1	05-05		9
122264A1	06-03		10
122265A1	05-06		9
	06-03		9
122268A1	06-02		13
122270A1	05-05		5
	06-02		7
122503A1	09-27		
122553A1	09-65		12
	09-66		24
122554A1	09-66		17
122603A1	09-38		28
123537A1	09-10		29
123726A1	08-61		12
123809A2	04-04		31
	04-07		30
	06-11		43
123969A1	09-48		9
123980A1	09-65		23
124011A1	09-65		22
124568A2	08-62		3
124721A1	09-03		14
1250594C1	09-65		10
	09-65		11
	09-66		16
	09-66		23
	09-66		8
125113A1	09-18		12
	09-18		14
125749A1	09-61		12
126-116	06-11		12
126155A1	09-10		31
126177	09-72		3
12644301	07-06		5
126918A1	09-20		2
127009A1	04-10		6
127158A1	04-17		6
127862A2	08-63		6
128135A2	08-61		4
128312A1	04-04		38
	04-08		3
	04-13		13
	04-14		3
	09-04		19

Number	Figure	Sequence	Ref.
128483A1	09-65		16
	09-65		9
	09-66		2
	09-66		7
128484A1	09-65		3
	09-66		13
128485A1	09-65		4
	09-65		8
	09-66		14
	09-66		21
128570A1	06-08		11
	06-35		11
128760A1	08-12		19
	08-13		30
	08-65		1
	09-26		1
	09-27		10
128761A1	08-65		2
128770A2	08-65		4
128772A1	08-65		16
128818A1	09-04		11
129-667	08-57		2
129040A1	09-24		23
	09-24		26
129041A1	09-24		30
	09-26		2
	09-27		12
129883A1	09-24		10
	09-27		1
129884A2	09-26		
129885A1	09-33		1
129893A1	09-31		3
	09-33		3
129894A1	09-31		2
	09-33		2
129944A1	09-33		4
130047A1	03-01		15
1302758C1	04-11		35
	09-68		20
130674A1	09-48		
131-121	04-10		15
	09-01		4
131-431	09-41		22
	09-73		14
131-619	04-11		17
	04-11		20
131-861	04-10		7
	09-11		15
	09-61		8
131-869	09-43		21B
	09-43		4
1312210C2	04-13		
	04-13		
131750A2	08-65		
132842A1	09-27		45
132844A1	09-27		44
132931A1	03-03		2
	09-01		25
132988A1	09-06		3
	09-06		3
133083A1	08-58		12
1331087C1	09-64		14
133715A1	04-09		17
1340763C1	08-62		16
1340764C1	08-62		15
1340798C1	08-60		15
1340969C2	08-14		17
	08-66		1
	09-27		25
1340970C1	08-66		2
134167A1	09-23		20
1346195C1	08-60		13
1346476C1	08-65		6
134844A1	09-07		3
1349058C1	06-08		5
1349059C1	06-08		6
	06-35		2
135-51652	09-24		18
135-51652	09-27		4
135161A1	08-58		13
135248A1	09-23		10
135249A1	09-23		9
136-54	04-17		14
136261A1	09-16		11
136263A1	09-16		8
	09-17		2
136267A1	09-16		5
136269A1	09-16		6
136270A2	09-16		40
136271A2	09-16		39
136822A1	09-11		11
136824A1	09-11		13
137219A1	04-19		3
137223A2	06-01		13
137248A1	08-62		13
137283A1	09-03		1
137343A1	09-10		28
137344A1	09-10		27
138595A1	09-38		11
138624A1	09-24		36
139180A1	09-05		12
139195A1	09-05		14
139235A1	09-05		13
139294A1	07-02		5
139312A1	06-17		20A
	06-25		20A
	07-01		20
	07-01	01	20
139363A1	09-41		10
139865A1	09-03		8
140-103	09-61		11
140-104	09-55		44
	09-57		21
140-107	09-01		3
140-108	09-15		29
140-119	04-09		15
140943A1	06-08		7
140944A1	06-08		7
140945A1	06-08		7
140946A1	06-08		7
140947A1	06-08		7
140948A1	06-08		7
140949A1	06-08		7
140951A1	06-08		7
140953A1	06-08		7
140954A1	06-08		7
141232A2	09-35		1
141233A1	09-35		3
141234A1	09-35		2
142-103	09-55		47
	09-57		23
142300A1	09-08		3
142404A1	09-03		2
142524A1	09-04		12
142538A1	09-06		5
	09-06		5
	09-07		5
142842A1	09-24		27
14302921	08-47		5
	08-48		5
	08-49		6
14304021	08-47		1
143219A1	08-21		
143400A1	08-13		15
14358921	08-48		1
144173A1	08-29		7
144193A3	09-76		7
144457A1	06-04		
144460A1	06-08		
144461A1	06-05		
144462A1	06-05		1
144463A1	06-05		5
144465A1	06-05		4
144466A1	06-06		
144477A1	08-23		14
	08-23		7

Number	Figure	Sequence	Ref.
144477A1	08-23B		14
	08-23B		7
144479A1	08-23		8
	08-23B		8
144908A2	09-40		21
148093A1	09-77		15
148095A1	09-77		16
151-516	09-53		7
	09-69		3
1530028C1	06-13		6
	06-21		6
1542830C2	08-55		
1542874C1	08-59		
1542875C1	08-58		
	08-60		
	08-66		
1542876C1	08-61		
	08-62		
1542877C1	08-63		
	08-64		
	08-65		
1543256C1	08-59		
1543260C1	08-58		
1543267C1	08-60		
	08-66		
1543269C1	08-61		
15687475	08-50		9
	08-51		9
	08-52		9
	08-53		7
	08-54		9
1637759	06-01		14
16586225	02-33		14
16673635	02-11		1
168-71	04-17		7
16882515	02-12		4
175156A1	09-08		
175599A1	09-41		2
175778A1	08-64		14
175957A1	06-35		3
175966A1	06-36		7
176309A1	09-01		23
	09-02		5
177269A1	04-18		14
	09-61		18
178004A1	09-18		18
178006A1	09-18		17
178051A1	08-29		8
178951A1	08-10		12
	08-11		11
	08-12		11
	08-13		10
178952A1	08-10		13
	08-11		12
	08-12		12
	08-13		11
179029A1	09-20		1
17916280	02-34		6
179956A1	09-12		6
180427A1	09-37		2
181042A1	09-24		22
	09-27		8
181100A1	06-13		8
	06-15		24
	06-21		8
	06-23		24
	06-29		5
181101A1	06-13		23
	06-21		19
181105A1	06-13		14
	06-21		14
181108A1	06-17		24
	06-18		26
	06-25		24
	06-26		26
181111A1	06-17		13
	06-25		13
181116A1	06-17		9
181116A1	06-25		9
181118A1	06-18		1
	06-26		1
181122A1	06-27		5
181123A1	06-18		31
	06-26		31
181126A1	06-16		3
	06-24		3
	06-27		9
181128A1	06-17		3
	06-25		3
181130A1	06-18		30
	06-26		30
181132A1	06-16		5
	06-18		2
	06-24		5
	06-26		2
181138A1	06-15		12
	06-23		12
181139A1	06-15		5
	06-23		5
181141A1	06-13		17
	06-21		17
181142A1	06-14		19
	06-22		19
181144A1	06-18		33
	06-26		33
181158A1	06-17		12
	06-25		12
181159A1	06-17		11
	06-25		11
181161A1	06-17		14
	06-25		14
181165A1	06-18		34
	06-26		34
181171A1	06-15		7
	06-23		7
181173A1	06-15		16
	06-23		16
181174A2	06-15		22
	06-23		22
181175A1	06-15		18
	06-23		18
181176A1	06-21		13
181177A1	06-15		11
	06-23		11
181179A1	06-13		15
	06-21		15
181198A1	06-27		3
181202A1	06-12		13
	06-20		13
181203A1	06-15		21
	06-23		21
181207A1	06-19		24
	06-28		24
181219A1	06-12		10
	06-20		10
181232A1	06-13		16
	06-21		16
181245A2	06-15		1
	06-23		1
181251A1	06-19		9
	06-28		9
181274A1	06-12		3
	06-20		3
181842A1	09-04		7A
181979A1	09-65		24
181981A1	09-42		17
	09-63		5
182006A1	09-17		4
	09-21		9
182109A1	08-63		16
182116A1	08-63		19
182218A1	08-63		
182594A1	04-11		11
182697A1	09-63		3
182721A2	04-18		11
183168A1	09-40		7

Number	Figure	Sequence	Ref.
183443A1	09-27		51
183509A1	09-27		52
183736A1	08-13		29
183808A1	09-31		1
183810A1	09-31		4
184297A1	08-13		22
184616A1	08-14		13
184617A1	08-14		12
184723A1	09-24		35
184726A1	04-11		10
185325A1	09-41		15
185377A1	02-01		29
185506A1	09-07		8
185926A1	03-01		4
	09-38		20
186351A1	09-49		5
186977A1	09-37		13
186989A1	09-41		21
	09-73		13
187281A1	04-18		12
187612A1	08-10A		25
187714A1	06-11		1
187715A1	06-11		2
188009A3	03-01		29A
188027A2	08-09		13
	08-09A		13
	08-62		1
	09-23		11
188028A2	08-62		2
188032A2	08-62		4
188034A3	08-62		14
188035A1	08-62		
188036A1	08-62		22
189103A1	08-10A		20
189109A1	03-03		2A
	09-01		
189263A1	08-10A		21
189414A1	08-10A		33
189602A3	03-01		29
189653A2	08-10		21
	08-63		1
	09-24		9
189657A2	08-63		18
189957A1	08-10A		1
	08-55A		
190427A1	06-18		
	06-26		
190428A3	06-15		8
	06-23		8
190431A1	06-29		10
190442A1	06-19		3
	06-28		3
190506A1	06-35		6
190508A1	06-35		6
190509A1	06-35		6
190510A1	06-35		6
190511A1	06-35		6
190512A1	06-35		6
190513A1	06-35		6
190514A1	06-35		6
190515A1	06-35		6
190516A1	06-35		6
190675A1	09-64		17
190682A1	06-06		10
190684A1	06-06		9
191046A1	03-01		30
191047A1	09-38		32
191063A1	08-10A		10
191252A1	08-62		14A
191703A1	08-21		
	08-21		
	09-66		25
191704A1	03-01		23
	06-32		2
	07-05		12
	07-06		10
	08-07B		31
	09-66		3
191747A1	08-62		
191756A1	08-10A		9
191790A1	08-10A		12
191796A1	05-04		2
	06-01		8
192345A1	08-07		4
192352A1	08-07		3
192450A1	09-74		9
192815A1	09-04		28
192834A1	05-02		31
	08-26		51
192895A1	08-56		2
192971A1	08-09		15
	08-09A		15
193-1000	04-04		3
	04-07		
193-1003	09-04		17
195-81023	09-55		48
	09-57		24
1954626C1	09-64		15
1954736C1	09-64		3
195503A1	08-08		30
	08-08A		30
	08-61		1
	09-22		1
195504A1	08-08		29
	08-08A		29
	08-61		1
	09-22		2
195505A1	08-61		2
195506A1	08-61		2
195552A1	04-18		3
1959509C1	05-01		4
196096A1	06-19		21A
	06-28		21A
196454A1	06-18		3A
	06-26		3A
1964831C2	04-09		4
1966136C1	06-02		16
1966138C1	06-02		17
	06-33		7
1966149C1	06-33		2
1966149C2	06-02		5
1966169C1	06-06		2
1966186C1	06-02		10
1966993C1	06-15		4
	06-23		4
1967003C1	06-07		4
1967581C1	06-15		10
	06-23		10
1967585C1	06-15		9
	06-23		9
196813A1	08-05		25
196815A1	08-05		24
1976955C1	08-55		2A
197745A1	04-18		4
197771A1	05-09		1
1977725C1	09-48		
1978141C1	08-56		8
1978142C1	08-56		
1978143C1	08-56		5
1978144C1	08-56		6
1978158C1	08-56		7
1980245C1	08-62		17
1980296C1	08-66		11
1980321C3	08-58		4
198033A1	08-65		14
198410A1	09-19A		5
1987096C1	09-64		33
198976A1	09-23		12
1999528C1	08-10A		29
1999666C1	09-64		16
1999667C1	09-64		
1999668C1	09-64		
1999926C1	09-66		15
1999927C1	09-66		22
20-21032	09-08		13
20-21232	09-06		9

Number	Figure	Sequence	Ref.
20-21232	09-07		9
	09-08		4
201-101	07-05		1
201-304	07-05		4
213-123	03-02		14
	03-03		17
213-126	09-16		22
	09-17		6
	09-19		6
	09-21		10
214-1406	09-38		22
	09-63		19
214-1412	02-04		5
	06-10		7
214-1416	02-02		8
	02-06		15
	03-03		33
214-1436	02-06		16
214-1440	02-01		17
214-1456	02-04		9
214-1464	02-04		8
	08-05		40
	08-07		21
	08-12		20
	08-13		33
	08-14		22
	09-66		5
214-1472	08-04		21
214-1488	08-10		25
	08-11		27
214-1492	08-09		22
	08-09A		22
214-1704	02-02		5
	03-01		8
214-1706	03-01		7
214-31104	08-10A		16
214-3132	08-13		23
	08-24		19
214-3180	09-59		6
	09-70		13
214-3188	08-08		28
	08-08A		28
217-1102	09-38		26
217-117	03-01		9
217-314	06-10		15
217-347	09-38		5
217-349	06-10		22
	08-03		9
217-380	09-38		25
217-425	09-64		34
218-1023	06-21		2
218-1254	09-10		20
218-1256	08-24		22
	09-10		33
218-1279	09-10		34
218-335	08-01		19
	08-23		30
	08-23B		30
	08-24		23
	08-25		24
218-459	06-11		38
218-5027	05-02		3
218-5034	08-01		51
218-5050	08-23		24
218-5053	08-07A		5
	08-07B		5
	08-17		5
	08-18		7
	08-19		7
	08-20		7
	08-22		38
	08-26		23
218-5056	08-26		25
218-5057	05-02		15
	05-02A		5
	08-08		5
	08-21		1
	08-22		33
218-5057	08-23B		25
	08-26		13
218-5059	05-02		8
	08-07		23
	08-08		11
	08-08		33
	08-08A		11
218-5062	06-10		4
	08-04		2
	08-05		28
	08-09		8
	08-09A		8
	08-11		25
	08-12		17
	08-13		31
	08-14		19
218-5063	08-09A		29
	08-09A		6
	08-10		8
	08-11		8
	08-12		8
	08-13		8
	08-14		8
	08-22		7
218-5064	08-01		22
	08-01		49
	08-02		19
	08-23		28
	08-23		42
	08-23B		27
	08-23B		42
218-5069	08-02		4
218-5070	08-08A		36
218-5086	08-03		20
218-5089	08-07A		17
	08-07B		17
	08-17		4
	08-18		4
	08-19		5
	08-20		5
	08-21		2
	08-22		1
218-5103	05-04		8
	06-01		33
218-5105	05-02A		15
	06-32		4
	08-07A		21
	08-07A		24
	08-07B		24
	08-08		8
	08-08A		8
	08-21		3
	08-22		39
	08-22		5
	08-26		11
	09-10		14
218-5106	05-02		6
	08-09		11
	08-09		24
	08-09A		11
	08-09A		24
218-5107	08-01		45
	08-04		16
	08-05		2
	08-05		32
	08-06		2
	08-07		18
	08-09		27
	08-09A		27
	08-10		19
	08-10		22
	08-11		19
	08-12		22
	08-13		35
	08-14		15
	08-22		3
218-5108	08-23B		29A
218-5110	08-02		14

Number	Figure	Sequence	Ref.
218-5117	08-25		11
218-5118	08-10A		7
218-5119	08-09		19
	08-09A		19
218-5121	08-08		20
	08-08A		20
218-5135	08-08A		5
218-5136	05-02		11
	08-08		35
218-5137	08-07		16
218-5140	08-01		24
218-5155	09-38		7
218-5156	08-07A		12
	08-07B		12
218-5158	08-23B		35
	09-38		3
218-5182	08-07B		21
	08-22		49
	09-10		15
218-5183	08-26		20
218-5213	08-29		16
218-5216	08-23		34
	08-23B		34
218-5220	08-05		18
218-5222	08-22		34
	08-23B		45
218-5228	05-02		2
218-5230	08-23B		33
218-5231	08-23B		29
218-5232	08-04		26
	08-04		29
	08-22		8
	08-25		23
218-5239	08-01		12
218-5242	08-07		25
218-5243	08-22		32
218-5280	05-02		19
	08-08		37
	08-23		26
218-5283	08-07A		2
	08-07B		2
	08-10A		13
218-5351	05-04		14
	06-01		4
	08-23B		31
	08-26		9
218-5359	08-10A		18
218-5365	08-22		4
218-5382	08-10A		23
218-5411	08-07A		20
	08-07B		20
218-5486	05-02A		20
218-5490	08-03		6
218-5511	08-23		44
218-5529	06-01		5
218-5584	08-01		27
	08-02		1
	08-02		10
	08-03		4
218-5600	08-25		18
218-5650	08-07		28
218-595	08-04		22
218-655	08-25		15
218-676	08-24		21
218-693	09-10		19
218-695	09-10		32
218-754	08-22		50
218-756	08-01		20
218-765	08-01		41
218-836	08-22		35
218-840	08-07		27
218-845	05-02		30
	05-02A		3
	08-26		22
	08-26		50
218-980	08-01		44
	08-22		6
	08-23B		24
219-1	06-01		6
	08-04		27
	08-58		17
	08-60		21
	08-61		17
	08-62		20
	08-63		23
	08-64		20
	08-65		20
	09-04		32
	09-05		23
	09-05		5
	09-08		9
	09-20		14
	09-23		28
	09-24		17
	09-24		3
	09-26		24
	09-26		37
	09-27		3
	09-27		35
	09-27		41
219-10	06-09		8
219-36	08-65		21
219-4	09-16		41
219-55	08-04		28
	08-05		41
	08-59		17
	08-60		22
	08-62		21
	09-04		10
	09-23		30
	09-25		5
	09-25A		5
	09-37		9
219-86	09-27		54
219-87	09-10		4
219-89	09-27		53
220165A2	08-62		2
220276A1	08-10A		28
220413A1	09-37		7
221-89	09-64		21
221168A1	08-55A		15
221477A1	09-21		1
224057A1	08-10		27
225-14210	03-02		13
	03-03		20
225315C1	08-50		6
	08-51		6
	08-52		6
225318C1	08-50		7
	08-51		7
	08-52		7
225350C1	08-52		14
	08-54		6
225353C1	08-52		15
	08-54		7
226456A1	09-38		9
226582A1	08-10A		27
227389A1	04-18		2
228133A2	02-01		29
230973A1	07-03		25
231-14109	09-39		8
	09-41		16
231-14409	09-15		30
231-1444	09-71		12
231-1445	09-15		23
231-1446	08-10A		6
231-24409	04-06A		37
	04-07		12
	04-08		25
231-2446	09-19		18
231-4115	09-71		9
231-4246	09-10		5
231-4247	09-22		39
231397A1	06-07		
232-1446	09-56		2
	09-57		28

Number	Figure	Sequence	Ref.
232-4246	09-01		19
232-4617	09-46		20
232948A1	09-66		10
233104A1	08-64		21
233110A2	08-64		16
233114A2	08-11		18
	08-64		1
	09-24		15
	09-27		9
233284A1	06-18		32
	06-26		32
234141A2	08-64		4
234412A1	08-25		9
	08-56		
234844A1	08-64		
235002A1	04-09		13
	08-25		26
237-6002	08-55		14
237-6004	05-02		4
	05-04		8A
	06-01		34
	08-07A		6
	08-07B		6
	08-17		
	08-18		
	08-19		
	08-20		
	08-26		24
	08-55		11A
237-6005	08-26		26
237-6006	05-02		16
	05-02		18
	05-02		20
	05-02A		16
	05-02A		6
	05-04		14A
	06-01		4A
	06-01		5A
	06-32		5
	07-05		2
	07-05		6
	07-06		3
	08-07		29
	08-07A		18
	08-07A		22
	08-07A		25
	08-07A		3
	08-07B		18
	08-07B		22
	08-07B		25
	08-07B		3
	08-08		38
	08-08		6
	08-08		9
	08-08A		6
	08-08A		9
	08-10A		14
	08-17		
	08-18		
	08-19		
	08-20		
	08-23		27
	08-23		45
	08-23B		26
	08-23B		32
	08-26		10
	08-26		12
	08-26		14
	08-26		19
	08-55		8
	08-57		4
	09-10		
	09-10		
	09-38		6
	09-38		8
237-6008	05-02		12
	05-02		7
	05-02		9
237-6008	06-19		18
	06-28		18
	08-07		24
	08-07		26
	08-07A		13
	08-07B		13
	08-08		12
	08-08		21
	08-08		34
	08-08		36
	08-08A		12
	08-08A		21
	08-09		12
	08-09		25
	08-09A		12
	08-09A		25
	08-10A		19
	08-25		12
	08-25		19
	08-26		21
	08-55		6
237-6010	03-01		6A
	06-10		16
	06-10		23
	06-10		5
	08-01		46
	08-01		48
	08-03		10
	08-04		17
	08-04		26A
	08-04		3
	08-04		30
	08-05		29
	08-05		3
	08-05		33
	08-06		3
	08-07		17
	08-07		19
	08-09		28
	08-09		9
	08-09A		28
	08-09A		9
	08-10		20
	08-10		23
	08-10A		11
	08-10A		34
	08-11		20
	08-11		26
	08-12		18
	08-12		23
	08-13		32
	08-13		36
	08-14		16
	08-14		20
	08-27		11
237-6012	05-02A		21
	08-01		13
	08-01		23
	08-01		50
	08-02		20
	08-08A		37
	08-09		20
	08-09A		20
	08-09A		30
	08-09A		7
	08-10		9
	08-11		9
	08-12		9
	08-13		9
	08-14		9
	08-23		25
	08-23		29
	08-23		43
	08-23B		28
	08-23B		29B
	08-23B		36
	08-23B		43
	08-55A		13

Number	Figure	Sequence	Ref.
237-6012	09-10		35
	09-38		4
237-6014	08-29		11
	08-29		17
237-6016	08-01		18
	08-01		25
	08-01		28
	08-01		52
	08-02		11
	08-02		15
	08-02		17
	08-02		2
	08-02		5
	08-02		8
	08-03		5
	08-10A		24
	08-10A		8
237-6020	08-03		21
237582A1	04-16		1
238-5005	04-17		8
238-5011	04-06A		5
	08-25		8A
	08-57		5
238-5013	06-19		20
	06-28		20
238-5014	06-19		19
	06-28		19
238-5152	06-08		10
238-5227	05-01		3
238-5228	08-01		7
238-5230	08-57		9
238-5231	08-59		9
	08-60		10
	08-66		8
238-5233	08-58		9
	08-65		11
238-5237	08-62		9
238-5239	08-61		9
	08-62		23
238-5241	08-64		11
238-5243	08-63		13
238-6012	06-01		13A
	07-04		10
	07-04		14
	07-04		16
	07-05		3
	07-05		5
	07-06		2
238-6018	08-55A		3
238-6121	06-06		22A
	06-13		
	06-21		
238-8217	06-27		22
239406A1	09-03		7
239408A1	04-09		12
239606A1	06-21		20
242459A1	08-24		5
	08-24		9
243084A1	09-23		19
243298A1	08-24		4
243300A1	08-24		1
243398A1	08-24		8
243404A1	08-24		2
243679A2	08-24		14
244109A1	06-18		6
	06-26		6
244790A1	09-26		51
	09-27		46
245258A1	04-09		7
245423A1	09-10		30
245466A1	09-28		6
	09-28		9
	09-29		6
	09-29		9
	09-30		6
	09-30		9
	09-31		6
	09-32		6
245466A1	09-32		6
	09-32		9
	09-32		9
	09-33		6
	09-34		6
	09-34		9
	09-35		6
	09-35		9
246151A1	08-24		17
246526A1	04-04		31A
248-2373	09-46		13
250851A1	09-05		7
	09-08		30
254686A2	06-12		1
	06-20		1
255447A1	09-41		25
	09-71		13
256210A2	08-24		14A
256347A1	09-01		
	09-02		
256776A1	03-03		5
257381A1	09-41		27
257382A1	09-41		26
258616A1	09-01		
	09-02		
259044A1	08-01		1
260-1436	09-61		16
260-16312	09-01A		23
	09-01A		8
261-14310	04-15		11
	04-15		4
27549R1	06-30		2
	06-30		2
276-2446	08-61		11
	08-66		10
276-2456	08-56		3
276-26512	04-18		10
276498A1	04-13		
	04-14		
277800A1	02-01		39
278316A2	04-10		9
278328A1	04-07		27
278532A1	06-15		14
	06-23		14
278533A1	06-15		13
	06-23		13
278534A1	06-12		8
	06-20		8
279039A1	06-15		15
	06-23		15
279223A1	04-14		6
279224A1	04-14		5
279265A2	04-14		15
279482A1	09-53		2A
	09-69		4
279916A1	04-14		16
280136	08-39		11
281-14520	09-64		9
281-14716	09-11		17
281-18712	09-63		26
281-54512	09-61		23
281185A1	09-26		
	09-27		
282-16512	04-18		7
282038A2	06-01		18
282242A1	03-03		1
282428A1	05-02		17
	08-26		18
282775A1	04-09		
282842A1	08-23		9A
	08-23B		9A
2830082	02-09		1
2830156	03-09		2
2830158	02-23		4
2830266	03-09		1
2830281	02-17		2
2830411	03-08		7
2830433	02-26		7

Number	Figure	Sequence	Ref.	Number	Figure	Sequence	Ref.
2830559	02-34		10	2852834	02-20		3
2830769	02-17		8	2852865	02-14		2
2830775	02-17		5	2852866	02-18		3
2830784	02-17		7	2852871	03-07		1
2830919	02-16		15	2852872	03-07		2
2830920	02-16		15	2852873	03-07		3
2830948	02-26		16	2852874	03-07		4
2831031	02-26		8	2852875	03-07		5
2831203	02-20		1	2852876	03-07		6
2831297	02-22		3	2852877	03-07		7
2831298	02-22		1	2852878	03-07		8
2831305	02-26		14	2852879	03-07		9
2831354	02-26		9	2852880	03-07		10
283779A1	04-09		22	2852881	03-07		11
283781A1	04-09		23	2852882	03-07		12
2852011	02-11		4	2852883	03-07		13
2852012	02-11		7	2852884	03-07		14
2852013	02-11		9	2852885	03-06		2
2852016	02-11		8	2852889	02-10		3
2852028	02-15		2	2852894	02-17		11
2852029	02-19		3	2852978	02-11		5
2852030	02-19		6	2853133	02-37		4
2852032	02-17		4	2853135	02-37		5
2852033	02-17		6	2853407	02-30		10
2852037	02-23		4	2853410	02-30		7
2852044	02-19		1	2853412	02-30		11
2852047	02-35		2	2853414	02-31		1
2852049	02-24		1	2853671	02-12		5
2852051	02-24		2	2853722	02-34		9
2852057	03-06		8	2853781	02-34		3
2852059	03-06		5	2853782	02-34		
2852062	02-28		2	2854030	02-23		3
2852065	03-11		3	2854072	02-36		2
2852075	03-07			2854073	02-14		6
2852088	03-04		3	2854075	02-14		3
2852089	03-04		4	2854340	03-06		1
2852098	03-08		1	2854493	02-33		6
2852101	02-33		13	2854603	02-23		4
2852102	02-33		10	2854611	02-38		
2852105	03-10		1	2855103	03-08		2
2852111	03-10		3	2855178	02-14		9
2852114	02-35		1	2855273	02-29		9
2852122	02-30		1	2855287	02-12		9
2852125	02-30		2	2855531	02-23		1
2852127	02-30		6	2855622	02-38		2
2852134	02-30		9	2855743	02-26		
2852135	02-30		8	2855746	02-26		15
2852145	02-36		3	2855747	02-26		3
2852151	02-37		1	2855748	02-26		5
2852153	02-37		2	2855750	02-26		4
2852155	02-37		1	2855753	02-26		2
2852157	02-37		6	2855894	02-37		3
2852161	02-38		2		02-41		3
2852162	02-38		3	2855903	03-11		6
2852163	02-38		1	2856017	02-16		3
2852170	02-39		3	2856086	02-11		6
2852171	02-39		4	2856170	02-28		5
2852172	02-39		5	2856255	03-05		1
2852180	02-42		2	2856263	02-19		4
	04-03		14	2856350	03-04		2
2852181	02-42		1	2856352	03-04		1
	04-03		16	2856462	02-19		1
2852183	02-41		1	286-56520	09-53		11
2852195	02-33		8		09-68		29
2852196	02-33		15	29-1010	09-08		14
2852197	02-33		12	29-1012	09-06		10
2852202	02-10		10		09-08		5
2852294	03-06		3	291010A1	04-18		6
2852473	02-37			292207A1	06-34		12
2852507	02-29		3	292208A1	06-34		13
2852509	02-29		5	292210A1	06-36		3
2852510	02-29		4	292212A1	06-36		4
2852511	02-36		5	292385A1	09-23		29
2852519	02-12		7	293636A1	09-23		34
2852521	03-11		4	294933A1	06-07		
2852531	02-15		1	297280A1	08-59		4
2852594	03-10		2	297281A1	08-60		4
2852743	02-20		2		08-66		3

Number	Figure	Sequence	Ref.
297952A1	08-64		2
298176A1	09-01		
	09-02		
298614A1	06-19		22
	06-28		22
300030A1	04-19		4
300588A1	09-27		26
300996A3	08-27		3
302358A1	03-01		3
	09-38		19
302820A2	08-27		5
303192A1	02-01		36
303465A2	04-10		10B
303466A1	04-10		10C
303467A1	04-10		10D
303646A1	09-24		41
304083A1	09-74		7
304424A1	08-27		9
304890A1	08-27		10
305492A1	09-10		16
305493A1	09-10		18
305494A1	09-10		17
305495A1	09-10		9
305496A1	09-10		7
305497A1	09-10		3
305499A1	09-10		8
305508A1	09-10		21
30634	08-60		14
307186A1	09-27		19
307277A1	08-27		17
307348A1	09-74		12
307385A1	09-10		22
307386A1	09-10		23
307387A1	09-10		24
307388A1	09-10		25
307389A1	09-10		26
307577A1	03-01		31
	09-38		33
309674A1	08-27		11A
309747A1	06-11		
310519A1	06-17		8
	06-25		8
310772A1	06-13		12
	06-21		12
311569A1	05-08		1
	06-06		1
313648A1	08-02		3
314319A1	08-24		27
314320A1	08-24		28
315273A1	09-55		12
315276A1	09-55		11
319467A1	09-35A		1
321-1707	09-08		29
321-1708	09-08		23
	09-73		11
321-229	09-38		2
	09-79		8
321-230	09-79		7
321-4311	09-72		5
321-6046	08-55A		16
	09-75		8
321-6376	09-79		8A
	09-80		8A
	09-81		8A
321-6774	09-79		13
321-7030	09-76		10
321-7040	09-79		4
321204	05-06		12
	06-03		7
321428A1	06-29		8
322357	04-06A		19
322860A1	03-03		4
3233348R1	09-15		36
	09-56		8
3234063R1	09-55		25
324213A1	05-08		2
325465A2	08-07		22
326-640	09-10		6
326806A1	09-23		1
	09-24		1
326865A1	06-18		13
	06-26		13
328186A1	06-10		21
	08-03		11
329032A1	04-13		3
329483A1	05-02A		
329797A1	08-23		5
	08-23B		5
329799A1	08-23		4
	08-23B		4
329998A1	09-23		4
331620A1	09-05		2
335177A1	09-04		6
338424A1	09-53		4
338425A1	09-53		3
338426A1	09-55		5A
338427A1	09-55		5
338428A1	09-57		3
338429A1	09-55		4A
340997A3	09-44		2
340998A3	09-44		1
341564A2	09-04		36
341743A3	09-55		
344892A1	09-04		37
345-49	09-38		10
345-621	09-65		
345231A1	09-44		3
347706A3	04-07		7
348706A1	09-26		46
	09-27		30
348794A1	05-01		18
	05-03		
349291A1	06-19		21
	06-28		21
349292A1	06-19		23
	06-28		23
349295A1	06-19		17
	06-28		17
352208A1	09-58		11
352209A1	09-58		13
352210A1	09-58		15
352401A1	05-01		7
352569A4	05-01		6
	05-03		10
352727A1	05-01		23
353-402	09-68		19
353-405	09-54		
353-407	09-54		
353-408	09-54		
353-410	09-54		
	09-64		26
	09-68		
353-411	09-11		5
353-413	09-68		33
353-415	09-54		
353-421	09-54		
	09-68		22
353-422	09-01		39
	09-42		7
353-425	09-54		
353068A2	04-11		18
353103A1	08-07		5A
353167A1	08-07		5
355198A2	04-11		1A
355827A2	04-10		1
355984A2	09-42		1
356743A1	08-07		12
357099A1	09-68		15
357100A1	09-68		16
357278A1	04-08		23
357469A1	08-11		16
357470A1	08-12		16
	08-13		34
357471A1	08-10		24
357540A1	04-14		7
357541A1	04-14		8

Number	Figure	Sequence	Ref.
357966A1	04-08		22
358282A1	06-18		19
	06-26		19
358283A1	06-18		28
	06-26		28
358632A1	06-17		7
	06-25		7
358633A1	06-17		6
	06-25		6
358635A1	06-17		4
	06-25		4
358636A1	06-16		2
	06-24		2
358637A1	06-17		15
	06-25		15
358638A1	06-17		21
	06-25		21
358639A1	06-18		29
	06-26		29
358640A1	06-17		10
	06-25		10
358641A1	06-17		16
	06-25		16
358642A1	06-17		19
	06-25		19
358643A1	06-17		18
	06-25		18
358644A1	06-17		17
	06-25		17
358645A1	06-17		1
	06-17		29
	06-25		1
	06-25		29
	06-27		7
358649A1	06-18		3
	06-26		3
358650A1	06-18		3A
	06-26		3A
358651A1	06-18		3A
	06-26		3A
358652A1	06-18		3A
	06-26		3A
358654A1	06-26		37
358655A1	06-26		39
358656A1	06-26		38
360242A2	04-10		10A
360243A2	04-10		11
360244A1	04-10		4
360245A2	04-10		8
360246A3	09-54		16
360247A3	09-54		15
360250A2	04-11		1
360251A3	09-63		6
360252A2	09-62		5
360253A3	09-63		8
360254A3	09-63		10
360255A1	09-63		14
360256A1	09-65		15
360257A1	09-65		7
360260A2	09-62		1
360261A1	09-62		3
360262A2	09-64		1
360263A4	09-65		1
360272A6	09-61		
360867A1	09-36		1
361900A1	04-07		9
362556A2	09-45		2
362557A1	09-45		1
362558A1	09-45		3
362607A1	09-40		4
362609A1	09-40		3
362804	09-01		14A
362930A2	04-08		13
363485A1	07-01		3
	07-01	01	3
363832A5	09-65		
363883A1	09-61		10
364132A2	09-55		28A
364133A2	09-55		30A
364134A2	09-55		28
	09-57		7
364135A2	09-55		30
	09-57		8
364180A1	09-54		10
	09-68		24
365309A1	08-13		14
365328A1	09-32		1
365789A1	09-63		20
365941A1	09-34		2
365942A1	09-34		3
366230A1	06-27		13
366231A1	06-27		18
366232A1	06-27		15
366234A1	06-27		11
366235A1	06-27		12
366236A1	06-27		14
366632A2	04-11		21
366633A3	04-11		25
366889A2	04-07		28
366910A1	06-29		9
367352A1	08-07		5B
367712A3	09-68		13
367848A2	09-74		13
368417A1	09-45		9
368801A2	09-64		10
368805A1	09-63		7
368807A1	09-63		13
368809A1	09-54		22
368813A2	09-61		4
368818A1	09-63		29
368990A1	09-62		6
369249A1	09-63		9
369372A1	08-55		3
369450A1	09-61		15
370381A1	09-65		14
370747A1	09-34		
371031A1	08-05		26
371144A1	07-02		8
371145A1	07-02		11
372167A3	04-11		1B
373689A2	04-10		10
373693A1	04-10		10E
373698A2	09-73		8
373699A2	09-73		9
373995A1	09-63		
375112A1	04-11		26
375392A1	09-63		28
376286A2	09-08		
376332A1	09-55		38
	09-57		15
376334A1	09-55		36
	09-57		13
376336A1	09-55		37
	09-57		14
376384A1	09-30		1
376385A1	09-32		1
376386A1	09-34		1
377194A1	09-61		9
377220A2	09-63		1
377222A1	09-64		4
377230A3	09-63		27
377232A2	09-64		18
377233A2	09-64		31
377241A2	09-63		1
377594A5	09-61		13
378227A1	09-54		5
378742A3	09-43		19
	09-43		27
	09-43		9A
378955A1	03-03		8A
378956A3	03-03		15
378957A3	03-02		17
378958A1	03-03		13
379160A1	09-61		5
379161A1	09-61		6
379209A1	09-61		7

Number	Figure	Sequence	Ref.
379314A4	06-11		6
379424A2	09-54		3A
379425A3	09-54		2A
379846A1	05-01		14
	05-01		22
379941A1	09-25		1
	09-25A		1
38-11016	09-48		10
380483A2	03-03		12
380537A2	06-11		13
380719A2	09-61		
380807A4	09-38		47
381111A2	09-63		25
381113A2	09-63		24
381488A4	09-28		1
381659A1	04-18		5
381696A5	09-61		2
381972A1	09-61		14
382202A2	09-38		52
382298A1	09-54		21
	09-68		30
382664A2	04-18		1
382770A2	09-62		2
382775A1	09-55		23A
382777A1	09-55		23
383794A2	09-63		22
383795A2	09-63		23
383972A1	09-76		6
384240A1	08-04		18
	08-58		1
	09-04		9
384241A1	08-58		2
384258A1	09-79		6
384260A1	09-79		9
384264A1	09-76		1
384265A1	09-79		2
384267A1	09-79		3
384269A1	09-79		5
384769A1	06-18		14
	06-26		14
384773A1	06-18		9
	06-26		9
384815A1	09-23		32
385506A1	09-68		12
385614A4	04-11		31
386000A2	09-22		37
386092A2	09-23		16
386368A2	04-11		29
386369A2	04-11		28
386502A1	04-11		
386535A1	09-65		2
386720A1	09-59		18
386785A1	04-07		22
	09-59		25
	09-60		
	09-70		4
386786A1	04-09		21
	09-59		24
	09-60		
386787A1	04-07		23
	09-59		16
	09-70		5
386788A1	04-09		20
	09-59		15
386789A2	04-09		19
386849A1	04-07		18
386850A1	04-07		19
386851A1	04-07		20
	04-17		15
386852A2	04-09		18
386927A1	04-18		9
387897R91	05-09		3
	05-09		6
387940A1	04-17		
388116A2	05-01		8
388712A2	08-55		9
388713A1	08-55		
388762A1	09-64		7
388843A1	09-29		1
388848A1	09-08		24
388881A1	08-55		4
389402A1	09-64		8
389487A1	04-07		13
389541A1	08-55		12
389729A1	09-77		6
389730A1	09-78		6
390-100	09-55		21
390029A1	06-05		2
390255A2	04-11		15A
390258A1	04-11		
	04-11		
390551A2	09-42		10
390690A1	09-11		4
390758A1	09-11		3
390759A1	09-11		1
390760A1	09-11		2
390838A1	09-55		2A
390840A1	09-55		27A
390841A1	09-55		29A
391818A2	04-11		15
391827A1	09-53		8
	09-55		19
	09-55		6
	09-57		4
	09-69		2
391838A1	09-55		14
391841A1	09-55		18A
391842A1	09-55		20A
391843A1	09-55		32
391845A1	09-55		31
	09-57		10A
391847A1	09-55		13
391848A1	09-55		15
391850A1	09-55		3A
392353A1	04-08		14
392374A1	09-76		13
392375A1	09-79		1
392828A2	09-41		17
393202A1	09-55		17
393203A1	09-55		16
393209A1	09-55		22
393211A1	09-56		5
393231A1	06-09		
393330A1	09-57		10
393354A1	08-14		10
393357A1	08-14		11
393360A1	08-12		21
393361A1	08-13		16
393362A1	08-13		17
393369A1	08-10		18
393371A1	08-11		17
393623A1	09-42		8
394329A1	09-75		3
394704A1	09-55		18
394705A1	09-55		20
394707A1	09-55		2
394708A1	09-55		3
394800A1	09-56		7
394863A1	04-14		9
	09-54		17
394864A1	09-57		2
394865A1	09-57		9
395026A1	09-60		9
395189A2	03-02		1
395348A1	09-58		12
	09-58		14
395387A1	09-54		18
395388A1	09-54		19
395389A1	09-60		10
395478A3	09-68		3
395753A2	09-22		38
395793A1	09-53		9
	09-69		7
395910A2	09-73		10
396-41028	09-01		16
	09-01		31

Number	Figure	Sequence	Ref.
396-41028	09-02		3
	09-18		23
396018A3	04-14		13
	09-60		
396023A2	04-13		10
396092A1	09-25		10
	09-25A		10
396339A1	08-12		16
	08-13		34
396422A2	08-55		10
396483A1	09-27		55
396516A1	09-54		12
	09-61		3
	09-68		26
396592A1	05-02		
	05-02A		
396593A1	05-02		
396605A1	09-41		6
396841A1	09-56		3
	09-57		29
396938A3	09-68		2
397025A2	09-43		21
397026A3	09-43		2
397064A1	09-56		1
	09-57		27
397065A2	03-03		22
397080A1	08-63		2
397548A4	03-01		40
397569A1	04-09		5
397570A1	04-09		6
397774A3	09-43		12A
397786A1	08-10		11
397787A1	08-11		21
397788A1	08-12		10
397870A3	09-11		15A
397876A1	04-08		19
397911A1	09-12		16
397974A1	09-71		
397990A1	04-07		29
398380A3	04-14		12
398570A1	09-80		6
398571A1	09-81		6
398572A1	09-80		9
398573A1	09-81		9
398576A1	09-77		1
398577A1	09-78		1
398578A1	09-80		2
398579A1	09-81		2
398580A1	09-80		3
398581A1	09-81		3
398582A1	09-80		5
398583A1	09-81		5
398598A1	09-77		13
398599A1	09-78		13
398600A1	09-80		1
398601A1	09-81		1
398654A1	09-81		11
398656A1	09-81		10
398658A1	09-76		5
	09-77		5
	09-78		5
398662A1	09-77		7
398663A1	09-78		7
398665A1	09-80		8
398666A1	09-81		8
398667A1	09-80		7
398668A1	09-81		7
398669A1	09-80		11
398670A1	09-80		13
398671A1	09-81		13
398672A1	09-77		10
398673A1	09-78		10
398674A1	09-80		4
398675A2	04-07		24
	08-26		34
398676A1	09-81		4
398677A1	09-80		10
398738A1	09-62		4
398847A3	04-13		8
	04-14		2
398986A1	09-63		30
399004A1	08-21		
399227A1	08-10A		
399246A1	08-10A		32
399959A2	09-38		31
399963A1	08-07		
400016A1	08-10A		30
400069A1	09-12		10
400077A1	09-43		
	09-43		
400200A1	09-58		5
400280A1	09-64		11
400282A1	09-64		2
400296A2	08-55		11
400379A1	04-09		9
	09-64		5
	09-65		14A
400398A1	09-26		48
	09-27		32
400494A1	09-58		16
400571A2	09-53		20
400572A1	09-53		19
400573A1	09-53		16
400588A2	06-11		7
400657A1	08-55		13
401052A1	05-06		
401054A1	05-06		3
401055A1	05-06		7
	05-07		1
401059A1	05-06		13
401060A1	05-06		14
401061A1	05-07		4
401062A1	05-07		3
401063A1	05-07		5
401064A1	05-07		6
401065A1	05-08		3
401066A1	05-08		4
401067A1	05-08		5
401457A1	09-73		2
401458A1	09-73		3
401949A1	09-54		4
	09-65		30
402610A1	09-54		20
402836A1	09-58		28
402843A1	09-58		25
402844A1	09-58		27
402845A1	09-58		32
402846A1	09-58		21
402847A1	09-58		18
402933A1	09-71		1
402934A1	09-71		2
402935A1	09-71		5
402936A1	09-71		3
403193A1	09-63		36
403225A1	09-63		35
403271A1	09-62		9
403955A1	06-37		14
404226A1	09-58		6
404227A1	09-58		9
404228A1	09-58		4
404229A1	09-58		7
404617A1	04-13		12
	04-14		10
	09-60		
	09-70		
404816A1	04-07		14
404834A1	09-24		43
	09-27		5
404835A1	09-24		44
	09-27		6
404907A1	08-10A		28A
405738A1	09-53		15
405739A1	09-53		14
405740A1	09-53		13
405741A1	09-53		17
405742A1	09-53		18

Number	Figure	Sequence	Ref.
406287A1	09-64		19
	09-65		5
406723A1	09-74		15
407009A2	09-73		6
407010A2	09-73		7
407660A1	04-11		8A
407962A1	02-01		11
	04-06A		4
408965A1	09-59		20
409025A1	08-55		5
409618A1	09-54		11
	09-68		25
409672A1	09-18		4
409673A1	09-18		5
409723A1	09-61		18A
410561A1	06-11		44
410867A1	09-58		2
411049A1	09-75		2
411074A1	09-42		16
411399A1	09-54		25
411549A1	09-68		21
411661A1	09-06		8
	09-06		8
411668A1	09-08		
411850A1	09-58		
411851A1	09-58		
411892A1	09-37		14
411908A1	09-58		22
411909A1	09-58		19
411910A1	09-58		24
411911A1	09-58		31
411912A1	09-58		33
411914A1	09-58		29
411916A1	09-58		20
411917A1	09-58		17
412285A1	09-54		23
412510A1	04-11		40
413-1228	09-22		18
413-412	09-71		11
	09-71		4
413-516	09-10		11
	09-71		7
413-528	09-15		22
413-624	09-01		18
	09-19		12
413-648	08-10A		4
413778A1	08-23		9
	08-23B		9
414-724	09-46		15
414033A1	04-10		18
414034A1	04-10		17
414071A1	04-11		39
414092A1	04-11		38
414426A1	09-70		3
414572A1	04-10		16
414600A1	09-61		17
414939A1	09-54		24
420-21232	09-06		9
425-1012	09-22		19
425-106	04-08		2
	04-08		26
	09-19		13
425-1110	09-18		16
425-115	09-03		6
	09-15		19
425-116	09-01		22
	09-16		36
	09-19		5
425-118	09-16		10
	09-17		3
	09-18		7
	09-21		7
425-147	09-60		
425-155	08-55A		12
425-156	09-16		27
	09-16		47
	09-17		9
	09-20		9
425-156	09-21		16
427-3058	03-02		15
	03-03		18
427-5094	09-15		13
	09-25		13
	09-25A		13
427-6088	09-16		25
	09-17		7
	09-20		7
427-6100	09-04		33
427-6106	07-03		4
427107A1	06-02		1
429-1012	09-06		10
	09-07		10
429230A1	05-05		1
429231A1	05-06		1
429232A1	05-06		2
430309A1	09-75		3
430310A1	09-75		3
430471A1	04-11		37
431583A1	09-68		31
431584A1	09-68		32
431801A1	09-53		21
432-48	03-02		10
	03-02		16
	03-03		19
432-612	07-03		5
	09-01		27
	09-03		5
	09-04		34
	09-15		14
	09-16		26
	09-16		38
	09-16		49
	09-17		8
	09-19		4
	09-20		12
	09-20		8
	09-21		12
	09-25		14
	09-25A		14
432-828	09-01		13
	09-02		12
	09-15		25
	09-18		20
432431A1	09-56		9
440-10616	09-04		18
440-1066	04-11		27
440-1088	09-61		22
440-11012	09-39		6
	09-41		13
440038A1	04-06A		9
442718A1	09-55		8
442773A1	09-55		33
442842A1	09-56		6
443375A1	03-01		2
	09-38		16
443432A1	08-55		
445720A1	06-35		10
446222A1	09-22		5
446454A1	09-22		36
448284A1	08-25		9
448428A1	09-64		12
448429A1	09-64		13
448607A1	09-53		2
	09-69		1
448608A1	09-53		6
	09-69		6
448609A1	09-53		5
	09-69		5
449842A1	09-74		8
450037A1	09-70		1
451384A1	09-27		43
47132002	04-06A		8
47132347	02-05		3
484-43120	08-55A		11
484-6316	06-11		3
4890343	02-01		44

Number	Figure	Sequence	Ref.	Number	Figure	Sequence	Ref.
4890732	02-39		8	4895393	02-36		7
4890832	02-13		4	4895394	02-36		6
4890833	02-14		8	4895406	02-30		3
4890964	03-09		4	4895414	02-21		3
4891209	02-13		5	4895489	02-11		2
4891252	02-35		1	4895538	02-11		10
4891353	02-09		6		02-42		6
4892426	02-39		7	4895586	02-26		6
4892708	02-22		2	4895610	02-30		5
4892712	02-23		2	4895623	02-10		14
4892713	02-23		3		02-36		8
4892715	02-22		4	4895625	02-10		15
4892732	02-39		6		02-36		9
4892859	02-16		2	4895641	02-19		8
4892860	02-18		4	4895919	02-09		
4892861	02-16		1	4895921	02-09		
4892867	02-25		2	4896153	02-10		13
4892915	02-14		2	4896404	02-34		4
4893036	02-14		12	4896409	02-34		11
4893386	02-21		2	4896410	02-34		7
4893391	02-34		8	4896770	03-06		7
4893518	03-06		6	4896773	02-25		1
4894095	03-10		4	4896884	03-07		15
4894218	02-10		1	4896947	02-26		5
4894641	02-24		3	4897024	02-13		1
4894721	03-09		5	4897048	02-26		4
4895017	02-21		4	4897125	02-26		1
4895038	02-09		4	4897178	02-16		13
4895039	02-09		3	4897179	02-16		14
4895040	02-09		7	4897330	02-30		4
4895045	02-34		5	4897457	02-28		4
4895049	02-10		8	4897480	02-31		1
4895078	02-16		16	4897934	02-26		11
4895085	02-16		17	4898301	02-11		3
4895107	02-33		2	4898482	02-29		6
4895133	02-29		2	4899003	03-06		4
4895155	02-14		10	4899009	02-10		4
4895164	02-33		1		02-16		10
4895166	02-42		5	4899019	02-34		1
	03-08		5	4899020	02-14		7
4895179	02-16		12	4899026	02-09		2
4895180	02-10		9		02-12		1
4895183	02-16		4		02-14		1
4895184	02-16		9	4899027	02-26		17
4895187	02-16		6	4899031	02-42		4
4895188	02-16		5		03-09		3
4895195	02-18		1	4899039	02-19		2
4895196	02-18		7	4899046	02-21		5
4895198	02-18		9	4899053	02-39		1
4895199	02-18		10	4899063	02-13		3
4895200	02-18		11	4899068	02-14		11
4895202	02-17		9		02-28		3
4895204	02-18		12		03-08		3
4895214	02-17		3	4899072	02-10		5
4895215	02-16		8		02-16		11
4895228	02-09		5	4899073	02-12		3
4895244	03-11		1		02-41		2
4895291	02-39		2	4899074	02-14		2
	02-42		3	4899076	02-14		2
	04-03		12	4899078	02-13		2
4895294	02-19		7	4899079	02-35		3
4895296	02-17		10		02-38		5
4895297	03-05		2	4899080	02-28		6
4895301	02-39		10	4899090	02-31		2
4895305	03-11		2	4899091	02-11		2
4895323	02-28		1		02-12		2
4895347	02-16		7	4899092	02-15		3
4895355	02-12		8	4899093	02-12		3
4895360	02-17		1	4899106	02-33		7
4895361	02-18		2	4899107	02-33		3
4895363	02-18		5	4899108	02-33		4
4895364	02-18		6	4899109	02-14		2
4895365	02-18		8		02-26		11
4895378	02-14		4		02-36		1
4895379	02-14		5		02-38		6
4895392	02-10		6	4899110	02-15		3
	02-36			4899115	02-12		
4895393	02-10		7	4899118	02-29		1

Number	Figure	Sequence	Ref.
4899143	02-14		2
4899467	02-33		5
4899519	02-33		6
4899643	02-34		2
4899849	03-08		4
4899859	02-20		4
	02-29		8
4899921	02-19		5
490-11012	04-07		
	04-08		24
492-11031	09-10		12
493-11026	04-17		2
493-21020	08-57		3
493-21033	04-04		7
493-41020	06-11		5
495-11028	09-01		8
	09-02		15
	09-72		2
495-11034	09-10		13
495-11041	08-10A		5
495-11047	05-04		11
	06-01		30
	09-60		
495-11053	09-04		35
495-11081	09-18		10
495-21031	04-17		3
495-21038	09-45		6
495-31022	03-02		9
	04-13		4
495-81001	02-04		12
	09-68		6
495-81025	06-01		15
	06-01		20
495-81169	09-46		18
495-81184	09-01		9
	09-02		10
495-81226	09-22		34
	09-24		24
	09-24		32
	09-26		25
	09-26		35
	09-26		4
	09-27		42
495-81227	09-23		17
	09-24		29
495-81261	07-03		17
495-81267	09-68		10
495-81282	09-04		7
	09-26		21
	09-27		13
	09-27		38
496-11041	09-01		20
496-21041	02-01		31
	06-11		17
496-41041	08-10		6
	08-11		6
	08-12		6
	08-13		6
	08-14		6
	08-22		12
	09-12		5
	09-44		4
496-81000	05-09		9
	06-01		3
	06-06		24
496-81010	09-46		19
496-81018	03-02		7
	09-13		29
	09-24		38
496-81028	05-01		11
	08-08		
	08-08		3
	08-08A		
	08-08A		3
	08-22		21
51200906	09-48		
5135738	02-33		9
514-633	09-55		34
514-633	09-57		11
514-832	08-01		8
514-847	03-02		3
515-2179	09-04		14
515-22127	02-02		16
	08-22		53
515-22190	04-06A		2
	08-07B		27
515-22254	02-02		17
515-2295	08-22		29
515-23127	03-01		16
	04-04		13
	04-04		15
515-23143	02-02		18
515-23159	05-02		23
515-23254	08-10		28
515-23444	04-09		27
515-2379	07-04		5
515-25190	04-06A		31
	06-10		27
	07-05		7
	08-10A		22
515-25254	08-07		13
5194169	06-02		18
5194190	06-07		11
5194191	06-07		9
5194194	06-07		3
5194264	06-03		6
561201	06-07		12
569-4	09-55		24
60-7083T1	09-55		7
604-12030	09-46		11
	09-47		9
	09-49		3
604-20035	09-24		42
604-20045	08-23		6
	08-23B		6
614-10020	02-01		20
	03-01		38
	03-01		41
	05-01		19
	05-01		9
	06-11		26
	07-06		4
	08-03		2
	09-03		9
	09-40		16
614-10025	07-03		15
	08-23		11
	08-23B		11
	09-09		2
	09-13		38
	09-16		42
	09-19		16
	09-20		3
	09-38		53
	09-40		10
	09-40		5
	09-41		3
614-10030	02-01		37
	04-04		18
	04-16		6
	05-02A		9
	06-13		10
	06-21		10
	08-13		28
	08-22		15
	09-40		22
	09-67		4
614-10035	03-03		23
	05-01		20
	08-10		29
	08-10		5
	08-11		5
	08-12		5
	08-13		5
	08-14		5
	08-26		2

Number	Figure	Sequence	Ref.
614-10035	09-12		4
614-10040	08-04		9
	08-06		5
	08-07		8
	08-23		10
	08-23B		10
	08-24		29
614-10045	08-04		11
	08-05		7
	08-06		6
614-10050	09-25		6
	09-25A		6
614-10080	02-06		3
614-12016	06-15		2
	06-23		2
614-12025	04-06A		32
	05-04		6
	06-01		32
	07-05		9
614-12030	09-24A		5
	09-39		4
614-12035	02-07		3
	06-11		27
614-12040	02-07		10
	09-47		6
	09-49		8
614-18035	08-09		6
614-20030	09-39		2
614-6016	03-03		32
	09-01		15
	09-02		2
	09-04		13
	09-18		22
614-6020	04-06A		13
	04-17		13
	09-01		30
	09-01		7
	09-02		16
	09-18		24
614-6025	04-06		6
	09-21		4
614-6035	04-06A		11
614-8012	06-10		2
614-8016	02-01		40
	09-38		14
614-8018	06-12		11
	06-20		11
614-8020	02-04		2
	03-03		9A
	04-08		15
	04-16		3
	07-03		28
	07-04		8
	09-12		12
	09-59		26
	09-59		8
	09-66		27
	09-67		14
	09-68		5
	09-70		15
614-8022	06-27		2
614-8025	02-01		22
	02-02		12
	04-03		4
	04-08		16
	08-07B		29
	08-22		28
	09-03		15
	09-08		27
	09-13		5
	09-15		11
	09-16		2
	09-16		20
	09-25		23
	09-25A		23
614-8030	02-01		9
	03-01		17
	04-09		28
614-8030	09-05		8
	09-15		4
	09-25		33
	09-25A		30
	09-37		19
	09-44		5
	09-45		5
	09-64		28
	09-65		19
614-8040	02-02		21
	04-06A		3
	09-45		4
614-8050	09-15		35
627-10030	02-06		11
	06-11		16
627-12025	03-03		26
637-63113	07-04		11
	07-04		17
637-63153	07-04		13
700-101	07-04		9
700-304	07-04		15
	07-06		1
700-345	07-04		12
711-10030	09-38		29
711-10040	09-45		8
711-10050	05-02		24
761-17325	04-18		13
781-24613	04-08		21
	09-13		20
781-24820	09-43		30
79081900	02-05		5
800-1130	06-17		31
	06-25		31
800-1134	06-06		17
800-1150	06-17		26
	06-25		26
	06-37		1
800-40065	09-23		27
800-40070	09-23		31
800-44040	09-04		26
	09-04		31
	09-05		22
	09-05		4
	09-25		4
	09-25A		4
	09-27		27
800-44050	05-04		5
	06-01		7
	09-04		8
	09-24		28
800-5145	06-27		19
806-8016	02-01		27
806-8025	02-04		11
8093883	02-26		3
811-6016	04-06A		16
814-10040	08-09		3
	08-25		6
814-10045	03-01		38
	08-09A		3
	08-13		25
	08-22		9
	09-38		35
814-10050	05-01		10
	08-24		10
	09-22		41
814-10055	08-12		27
	09-67		3
814-10060	08-22		10
	08-24		6
	08-26		6
	09-08		25
	09-13		25
814-10070	08-08		22
	08-08A		22
814-10080	08-10		2
	08-11		2
	08-12		2
	08-13		2

Number	Figure	Sequence	Ref.
814-10080	08-14		2
	08-25		2
	09-08		20
814-10090	02-01		30
	08-26		29
	08-26		46
	08-27		13
	09-01		29
	09-08		16
814-10110	09-01		36
814-10120	08-10		14
	08-11		13
	08-12		13
	08-13		12
814-10130	09-13		13
814-10150	06-13		1
814-10220	09-66		33
814-12050	08-23		17
	08-23B		17
814-12080	02-07		5
	06-11		31
814-12100	09-40		14
814-12130	09-67		8
814-6050	05-02A		12
	09-60		2
	09-70		
814-6090	08-07A		10
	08-07B		10
814-8035	07-03		18
	08-08A		2A
	08-22		20
814-8050	09-25		27
	09-25A		31
814-8055	08-08A		2
	08-22		19
814-8060	06-14		16
	06-22		16
	06-29		7
	07-04		7
	08-08		2
814-8070	08-23		21
	08-23B		21
	09-15		8
	09-25A		27
814-8100	09-67		15
814-8110	09-67		13
81465471	02-01		13
81868381	08-30		8
	08-31		9
	08-32		18
	08-33		18
	08-34		19
	08-35		19
82017872	04-06A		26
82026949	04-07		35
	04-08		8
	07-03		21
824-1405	04-19		7
825-11412	03-02		8
825-11418	05-09		8
	06-01		2
	06-06		25
825-1404	09-01A		21
	09-01A		6
825-2406	09-65		27
825-2408	09-59		21
	09-64		30
	09-65		21
825-2410	09-40		6A
	09-41		5
	09-41		8
827-10045	02-06		19
827-10130	04-03		15
827-12060	06-01		21
827-12065	06-11		9
827-16085	09-37		10
827-16100	09-37		11
827-20075	09-23		13
827-20170	09-36		2
	09-36		6
827-20190	09-05		16
827-20200	06-31		4
828-20160	09-06		4
	09-06		4
	09-07		4
829-1406	04-06A		20
	08-07A		16
	08-07B		16
	09-01		32
	09-18		25
	09-21		5
829-1408	03-03		11A
	04-04		8
	04-05		9
	04-06		18
	04-06A		18
	04-08		18
	04-09		31
	04-16		5
	07-03		8
	08-07B		30
	08-08		4
	08-08A		4
	08-22		23
	08-23		23
	08-23B		23
	09-03		17
	09-05		11
	09-13		7
	09-15		7
	09-25		29
	09-25A		29
	09-66		35
829-1410	02-06		13
	02-06		6
	03-01		35
	03-01		43
	04-05		11
	04-06		13
	04-07		38
	05-02		27
	05-02A		11
	06-10		25
	07-07		3
	08-03		25
	08-04		13
	08-05		11
	08-06		10
	08-06		15
	08-08		26
	08-08A		26
	08-09		5
	08-09A		5
	08-10		32
	08-10		4
	08-11		4
	08-12		4
	08-13		4
	08-14		4
	08-22		41
	08-23		13
	08-23B		13
	08-24		13
	08-24		7
	08-26		8
	08-27		16
	08-27		7
	09-01		26
	09-02		8
	09-13		37
	09-24		39
	09-38		30
	09-38		39
	09-38		54
829-1412	06-01		22
	08-23		19

Number	Figure	Sequence	Ref.
829-1412	08-23B		19
	09-24A		3
	09-40		19
	09-67		11
829-1416	09-37		15
829-1420	06-31		7
	09-05		19
	09-23		15
	09-36		4
	09-36		8
829-2412	09-39		5
829-2420	09-39		3
832-10404	04-11		14
	07-03		24
	09-54		9
832-10406	04-06		8
	04-06A		15
	04-07		34
	04-09		33
	04-11		9
	05-02A		14
832-10408	02-01		24
	02-02		14
	02-02		25
	04-05		10
	04-06		5
	04-11		34
	05-01		17
	05-01		25
	07-03		19
	07-03		3
	09-13		33
	09-16		21
	09-16		3
	09-43		32
	09-45		7
	09-56		10
	09-59		11
	09-62		8
	09-63		12
	09-63		17
	09-68		7
	09-70		18
832-10410	04-03		18
	05-01		13
	07-03		27
	08-07		15
	08-10		15
	08-11		14
	08-12		14
	08-12		28
	08-13		13
	08-13		27
	08-24		26
	08-26		33
	08-26		45
	09-08		18
	09-08		22
	09-08		8
	09-13		14
	09-13		26
	09-15		17
	09-16		44
	09-19		17
	09-20		4
	09-22		42
	09-40		12
	09-45		11
	09-55		26
	09-66		34
	09-68		11
832-10412	02-07		9
	06-11		11
	06-11		34
832-10420	09-06		6
	09-06		6
	09-07		6
832-10508	09-55		39
832-10508	09-57		16
833-40310	09-37		9A
833-40406	04-10		3
	04-11		23
	04-11		4
	04-16		11
	09-04		15
	09-12		18
	09-13		21
	09-14		10
	09-42		6
	09-43		18
	09-43		23
	09-43		6
	09-65		26
	09-68		18
833-40408	02-04		13
	09-45		4A
	09-59		10
	09-66		29
	09-70		17
838-3640	03-03		16
83822C1	09-65		
83931335	08-26		37
	08-26		40
83981068	08-31		19
	08-33		21I
	08-33		22
	08-34		20
	08-35		20
	08-35		25I
840-1416	04-20		12
	08-15		
	08-16		
	08-17		
	08-18		
	08-19		
	08-20		
	08-22		37
843-1516	04-19		5
844-10020	04-04		16
	04-09		34
	04-14		11
844-10025	04-05		13
	04-06		19
844-10035	04-03		2
844-10110	09-08		6
844-6025	04-07		33
	04-09		32
	04-11		7
	04-16		10
844-8025	04-07		36
845-6020	09-65		25
85801585	02-07		6
	06-11		32
85802618	02-07		8
	06-11		32A
85802820	08-08		1
	08-08A		1
85803019	02-02		
85805986	06-03		5
85811933	08-40		8
	08-41		8
	08-43		8
	08-44		8
	08-45		7
	08-46		8
85811934	08-40		7
	08-41		7
	08-43		7
	08-44		7
	08-46		7
85811935	08-41		7
	08-43		7
	08-44		7
	08-46		7
85811937	08-45		6
85811938	08-40		4

Number	Figure	Sequence	Ref.
85811938	08-41		4
	08-43		4
	08-44		4
	08-45		4
	08-46		4
85812114	08-40		6
85812115	08-41		6
	08-46		6
85812116	08-43		6
	08-44		6
85819148	08-40		9
	08-41		9
	08-43		9
	08-44		9
	08-45		8
	08-46		9
85819378	08-41		3
	08-44		3
	08-45		3
	08-46		3
85820159	08-08		
	08-08A		
85820160	08-08		
	08-08A		
85821126	08-08		
	08-08A		
85821520	09-15		21
85824067	09-15		16
85824080	09-15		20
85824081	09-15		18
85824281	08-41		10
	08-43		10
	08-44		10
	08-45		9
	08-46		10
85824282	08-40		10
85825473	08-42		5
85826230	02-01		33
85826337	08-36		3
	08-37		3
	08-38		3
	08-39		3
	08-41		
85826338	08-36		5
	08-37		5
	08-38		5
	08-39		5
	08-43		
85826339	08-36		2
	08-37		2
	08-38		2
	08-39		2
	08-40		
85826341	08-37		7
	08-39		7
	08-45		
85826342	08-38		7
	08-39		8
	08-46		
85826343	08-43		6A
85826344	08-40		5
	08-41		5
	08-42		4
	08-43		5
	08-44		5
	08-45		5
	08-46		5
85826345	08-40		3
	08-43		3
85826346	08-41		6A
85826365	08-36		6
	08-37		6
	08-38		6
	08-39		6
	08-44		
85826905	08-44		6A
85827471	08-17		3
	08-18		6
85827471	08-19		6
	08-48		
85827472	08-15		5
	08-16		5
	08-47		
85827991	08-47		2
85827992	08-47		4
	08-48		4
	08-49		5
85827993	08-47		6
	08-48		6
	08-49		7
85827994	08-47		7
	08-48		7
	08-49		8
85827995	08-47		8
	08-48		8
	08-49		9
85827996	08-47		9
	08-48		9
	08-49		10
85827997	08-47		10
	08-48		10
	08-49		11
85827998	08-47		12
	08-48		12
	08-49		13
85827999	08-47		13
	08-48		13
	08-49		14
85828000	08-47		14
	08-48		14
	08-49		15
85828001	08-47		15
	08-48		15
	08-49		16
85828002	08-47		16
	08-48		16
	08-49		17
85828003	08-47		17
	08-48		17
	08-49		18
85828004	08-48		2
85828005	08-47		11
	08-48		11
	08-49		12
85828013	08-47		3
85828015	08-48		3
	08-49		3
85828048	08-49		2
85828054	08-49		4
85828061	08-49		1
86000535	04-07		17
	04-09		10
	04-09		16
86014151	04-06A		27
8603092	09-76		3
8603093	09-78		3
8603094	09-77		3
863-16070	05-06		8
864-10025	06-15		17
	06-23		17
864-12030	08-01		6
864-6025	06-33		8
864-8025	06-15		6
	06-23		6
864-8055	09-13		34
86507198	09-59		3
	09-70		11
86512512	08-01		47
86547710	09-72		4
86596853	08-22		31
86616248	04-17		10
86619908	04-06A		7
86625057	09-43		15
	09-43		26
	09-43		9
86625112	07-03		13

Number	Figure	Sequence	Ref.	Number	Figure	Sequence	Ref.
86625128	08-50		13	87301351	09-01		
	08-51		13	87301355	02-01		5
	08-53		10	87301356	02-01		8
86625138	03-01		6	87301687	04-06A		36
86639294	09-01A		22		04-07		11
	09-01A		7	87303784	04-20		3
86642312	08-58		11	87305413	09-14		7
	08-59		11		09-75		5
	08-60		12	87307656	04-20		5
	08-62		11	87307893	09-75		9
	08-63		15		09-77		
	08-64		13	87307896	09-75		9
	08-65		13		09-78		
86976679	02-05		4	87308118	09-48		1
86982435	08-59		18	87308119	09-48		2
	08-66		16	87308127	09-48		3
86982437	08-58		18	87308128	09-48		7
	08-60		23	87308130	09-48		
86982439	08-62		25	87308131	09-48		13
86982440	08-61		18	87308132	09-46		7
86982441	08-65		22		09-48		14
86982442	08-63		24	87308141	09-48		15
86982443	08-64		22	87308142	09-48		
86983190	09-42		2	87308143	09-48		
86983269	09-42		9A	87308144	09-48		16
86983325	09-42		9	87308145	09-48		
86984155	09-66		4	87308146	09-48		17
86984544	09-15		2	87308147	09-48		18
	09-25A		25	87308148	09-48		
86984545	09-15		6	87308149	09-48		19
	09-25A		26	87308150	09-48		20
86984547	09-15		5	87308151	09-48		21
	09-25		28	87308152	09-48		5
	09-25A		28	87308153	09-48		4
86984549	09-15		24	87308154	09-48		6
86988086	04-20		1	87308157	09-48		1
86989616	09-15		28	87308158	09-48		2
86989676	03-01		10	87308159	09-48		3
86990837	05-04		1	87308838	08-50		8
	05-05				08-51		8
	05-06				08-52		8
	05-07				08-53		5
	05-08				08-54		8
86992243	09-43		20	87308839	08-50		10
86992245	09-43		10		08-51		10
86992247	09-43		1		08-52		10
86992284	09-43				08-53		6
	09-43				08-54		10
86992395	04-01			87309656	02-06		1
	04-03		1	87309923	09-14		2
86992557	08-08A		38	87309924	09-14		1
86992975	09-76		12	87310085	04-20		6
86992976	09-76		4		09-42		12
86992977	09-43		28	87310086	04-10		5
86992978	09-78		12	87310088	09-43		12B
86992979	09-78		4		09-43		3
86992980	09-77		12	87310096	06-11		8
86992981	09-77		4		09-12		17
86993546	06-11		23		09-42		15
86994165	09-48		11	87310098	04-11		22
87000228	09-65		28		04-11		3
87000312	08-50		17		09-15		34
	08-52		19		09-43		16
	08-54		15		09-43		22
87016468	07-03		22		09-43		5
87019103	09-01A		24		09-68		17
	09-01A		9	87310109	09-37		22
87019767	06-11		23A	87310124	04-10		12
87020181	06-11		4		04-10		13
87037462	09-48		8		09-11		14
87037944	08-50		4	87310126	04-11		16A
	08-51		4		04-11		19
	08-52		4		09-11		14
	08-53		4		09-43		33
	08-54		4	87310127	09-43		13
87041331	09-25		16		09-43		24
	09-25A		16		09-43		7
87301325	02-02		4	87310128	04-11		16

Number	Figure	Sequence	Ref.	Number	Figure	Sequence	Ref.
87310128	04-11		30	87382811	05-02A		7
87310139	09-11		8	87382812	09-01		17
87310144	04-11		36		09-19		11
87310146	09-43		14	87389813	09-22		15
	09-43		25	87393292	09-67		17
	09-43		8	87395300	06-11		14
87310147	09-54		7		06-12		
87310149	09-46		17		06-13		
	09-47		5		06-14		
	09-49		11		06-15		
87310152	04-10		2		06-16		
	04-11		6		06-17		
87310154	09-43		29		06-18		
87310156	09-11		7		06-19		
87310176	04-11		32		07-01		
87310177	09-68		9	87395301	06-11		15
87310184	04-11		12		06-20		
87310185	04-11		33		06-21		
	09-43		31A		06-22		
87310186	09-14		6		06-23		
	09-43		17		06-24		
	09-43		22A		06-25		
	09-43		5A		06-26		
87311219	06-10		8		06-27		
87311572	09-46		16		06-28		
	09-47		3		06-29		
	09-49		9		07-01	01	
87312712	04-04		32	87395365	06-01		1
	04-07		31		06-02		
	06-11		42		06-03		
87313544	06-31		3		06-04		
87316049	08-05		27		06-05		
87316264	08-05		31		06-06		
87316270	08-05		30		06-07		
87324160	09-37		20		06-08		
87326813	09-24		40	87395372	06-31		1
87329475	09-13		11		06-33		
87335469	03-01		5		06-34		
87336843	09-75		5		06-35		
87336844	09-75		5		06-36		
87338681	09-46		1		06-37		
87340008	02-01		42		07-02		
87340753	03-02		11	87396228	04-06A		24
87340754	03-03		21	87397601	04-06A		1
87343247	04-13		5	87399491	09-47		2
	04-14		1		09-48		
87344859	09-55		46	87399492	09-47		1
	09-57		26		09-48		
87344860	09-55		40	87400286	05-05		7
	09-57		17		06-02		9
87345006	03-03		8	87401203	09-16		1
87346606	09-46		2	87403835	04-05		1
87346607	09-46		3		04-06		1
87346611	09-46		4	87404197	05-04		4
87346612	09-46		5		06-01		9
87346615	09-46		6	87405706	09-13		17
87346625	09-46		8	87406924	09-53		10
87346633	09-46		9		09-68		28
87346634	09-46		10	87406934	06-11		22
87348192	09-38		12	87408480	03-01		11
87348571	05-02A			87408888	09-46		14
87351494	08-30				09-47		7
87351498	08-30				09-49		7
87352590	08-22		52	87408889	09-46		14
87353191	02-01		32		09-47		8
87358697	09-76		11		09-49		6
87360280	03-01		4A	87409201	06-11		24
	09-38		21	87410105	04-20		9
87363421	09-38		23	87410265	04-06A		21
87365015	09-06			87410602	04-06A		10
87367622	02-02		7A	87411083	09-11		2A
87368702	09-06			87411084	09-11		4A
87368710	09-07			87411108	09-56		4
87371132	09-24		37	87411319	02-07		1
87375240	09-07		8		02-07		2
87378776	03-03		9	87412060	09-40		20
87380558	09-78		11	87412815	09-73		1B
87380559	09-77		11	87413722	08-62		12

Number	Figure	Sequence	Ref.
87414237	04-06A		12
87414560	03-01		45
87415774	02-01		43
87415931	09-73		15
87416475	09-48		12
87416966	02-07		7
87416967	06-11		33
87416977	06-11		29
87416978	06-11		30
87417383	03-01		18
	04-06A		6
	09-37		17
87417599	09-01		37
87417601	09-03		
87417721	04-16		8
	08-25		8
	08-26		4
	09-01		38
	09-41		23
87418360	02-02		22
87418368	09-15		31
87418369	09-15		32
87418516	09-12		1
87418518	09-12		11
87419229	04-04		23
87419615	04-06A		23
87419634	05-02		14
87420672	08-08		25
	08-08A		25
87420673	08-08		23
	08-08A		23
87420696	08-25		17
87421213	08-25		4
87421807	03-03		28
87421832	08-23A		2
	08-23C		2
87421836	08-23		20
	08-23A		
87421918	08-05		4
87421920	08-05		5
87422239	09-16		33
87422241	09-16		31
87422243	09-16		28
87422245	09-16		29
87422247	09-16		30
87422249	09-16		32
87422253	09-19		15
87422256	09-19		14
87422262	09-19		10
87422264	09-19		8
87422270	09-19A		2
87422272	09-19A		1
87422597	06-10		12
87422598	06-10		13
87422777	04-02		
	04-03		3
87422948	08-23		35
87422977	08-23		38
87423033	08-08A		39
	08-22		24
87423067	08-25		5
87423356	08-09		10
	08-09		14
87423401	08-22		2
87423496	04-16		2
87423502	09-58		34
87423503	09-58		26
87423531	02-06		9
87423802	04-20		8
87423812	04-20		4
	09-74		16
	09-75		6
87423813	09-79		14
87423926	04-04		6
87423969	08-23		40
	08-23B		40
87423970	08-23		41
	08-23B		41
87424267	08-50		14
	08-51		15
	08-52		16
	08-54		13
87425117	09-21		3
87425122	09-11		16
87425225	08-07A		9
	08-07B		9
	08-22		36
87425456	09-36		5
87425631	04-19		2
87425635	04-19		8
87425636	04-20		10
87425696	09-13		22
87426227	08-30		9
	08-31		10
87426233	08-30		5
	08-31		6
87426235	08-30		11A
	08-31		12A
87426238	08-30		15
	08-31		16
	08-32		21
	08-33		23
	08-34		8
	08-35		8
87426241	08-32		7
	08-32		8A
	08-33		7
	08-33		8A
	08-34		10A
	08-34		11
	08-35		10A
	08-35		11
87426488	08-22		16
87426716	08-30		12
	08-31		13
87426717	08-30		11
	08-31		12
87427537	08-26		28
	08-26		39
87427539	08-26		27
	08-26		38
87427775	09-25A		15
87427948	08-22		17
87428023	08-50		3
	08-51		3
	08-52		3
	08-53		3
	08-54		2
87428140	08-09		2
87428158	08-09		26
87428476	08-33		13
	08-35		22
87428477	08-33		14
	08-35		23
87428486	08-32		22
	08-33		24
	08-34		9
	08-35		9
87428490	08-32		19
	08-33		19
	08-34		17
	08-35		17
87428491	08-32		13
	08-34		23
87428492	08-32		14
	08-34		24
87428495	08-32		12
	08-33		12
	08-33		21F
	08-34		21
	08-35		21
	08-35		25F
87428497	08-32		9
	08-33		9
	08-34		12
	08-35		12

Number	Figure	Sequence	Ref.
87428500	08-32		8
	08-33		8
	08-34		10
	08-35		10
87428501	08-33		21
	08-35		25
87428645	09-03		3
87428814	08-23		39
87429150	08-33		21D
	08-35		25D
87429163	09-80		14
87429164	09-81		14
87429186	09-73		16
87429287	08-05		12
	08-06		11
87429310	03-01		1
87429314	03-01		1A
87429382	05-02		10
87429387	08-23		2
	08-23B		2
87429584	08-08		19
	08-08A		19
87429654	08-08		32
87429948	09-67		6
87429949	09-67		12
87429950	09-67		2
87429951	09-67		10
87429952	09-67		7
87429970	06-14		1
	06-22		1
87429971	06-14		15
	06-22		15
87429974	06-18		
	06-26		
87429978	06-29		
87429982	06-13		28
	06-21		28
87429983	06-17		30
	06-25		30
87429984	06-17		27
	06-25		27
87429985	06-13		19
	06-15		23
	06-21		25
	06-23		23
87429994	06-15		3
	06-23		3
87430122	09-66		19
	09-67		1
87430677	09-11		
	09-75		4
87430972	08-23		1
	08-23B		1
87431300	09-13		24
87431301	09-13		23
87431529	09-13		15
87431630	08-23		3
	08-23B		3
87431701	06-32		1
87431799	02-07		11
87432811	09-25		30
	09-25A		32
87433005	09-14		13
87433006	09-14		12
87433007	09-14		14
87433008	09-14		11
87433028	08-33		21A
	08-35		25A
87433029	08-32		10
	08-33		10
	08-34		13
	08-35		13
87433030	08-32		23
	08-33		25
	08-34		22
	08-35		26
87433209	09-79		12A
87433240	08-25		1
87433401	04-03		6
87434049	09-42		19
87434050	09-42		20
87434070	08-29		
87434075	08-29		2
87434076	08-29		3
87434077	08-29		4
87434265	08-26		15
87434621	08-20		6
	08-49		
87434672	08-01		11
	08-29		
87434771	09-80		12A
87434772	09-81		12A
87434777	08-22		26
87434783	09-58		
87434978	02-01		12
87435076	06-10		9
87435078	06-10		6
87435080	06-10		10
87435082	06-10		11
87435242	08-53		9
	08-54		11
87435243	08-50		11
	08-51		11
	08-52		11
87435275	09-13		8
87435372	09-14		8
87435381	04-20		2
87435453	09-58		23
87435506	08-50		15
	08-51		16
	08-52		17
	08-53		12
	08-54		14
87435569	05-01		1
	09-73		12
87435909	08-26		5
	08-28		
87435924	09-15		12
	09-25		11
	09-25A		11
87435929	09-58		1
87435938	09-79		12
87435939	09-80		12
87435940	09-81		12
87436066	08-01		17
	08-02		16
	08-02		7
	08-25		25
87436076	09-42		3
87436225	08-50		2
	08-51		2
	08-52		2
	08-53		2
	08-54		3
87436782	09-22		43
87436836	04-06A		35
	04-07		15
	04-07		8
	04-20		11
87437231	08-02		18
	08-02		6
	08-23		37
87437232	08-02		18
	08-02		6
	08-23		36
87437263	08-26		1
87437366	09-14		3
87437369	09-14		4
87437371	08-52		13
	08-54		12
87437372	08-50		12
	08-51		12
	08-52		12
87437373	08-51		14
87437441	08-02		6
87437621	08-22		45

Number	Figure	Sequence	Ref.
87437623	08-22		30
87437625	08-22		47
87437627	08-22		43
87437629	08-22		46
87437633	08-17		6
	08-18		8
	08-20		8
87437635	08-17		7
	08-18		9
	08-20		9
87437655	08-01		39
87437657	08-01		39
87437688	09-13		18
87437689	09-14		5
87437804	02-06		2
87437806	09-15		27
87437840	08-08		
	08-08A		4A
	08-22		21A
87437899	08-29		10
87437905	08-29		12
87437906	08-29		13
87437914	08-29		14
87437923	08-21		6
87437924	08-21		5
87437925	08-21		7
87437926	08-21		9
87437927	08-21		4
87437928	08-21		8
87437929	08-21		10
87437930	08-21		11
87437933	08-21		12
87437935	08-21		13
87437938	08-08A		33
87437939	08-08A		32
87437940	08-08A		35
87437941	08-08A		34
87437980	08-01		42
87437982	08-01		43
87438012	08-19		8
87438015	08-19		9
87438021	08-28		2
87438022	08-28		
87438023	08-28		
87438024	08-28		
87438025	08-28		3
87438026	08-28		
87438027	08-28		
87438028	08-28		
	08-28		
87438029	08-28		4
87438031	08-28		5
87438032	08-28		
87438045	08-29		
87438046	08-50		16
	08-52		18
	08-54		
87438157	09-21		14
87438925	04-01		3
87438926	04-01		4
87438927	04-01		5
87438928	04-01		6
87438929	04-01		8
87438930	04-01		9
87438931	04-01		10
87438932	04-01		11
87438933	04-01		12
87438935	04-01		13
87438937	04-01		14
87438940	04-01		15
87438941	04-01		16
87438942	04-01		17
87438944	04-01		18
87438946	04-01		19
87438948	04-01		20
87438950	04-01		22
87438951	04-01		32
87438954	04-01		36
87438956	04-01		38
87438960	04-02		1
87438963	04-02		2
87438965	04-02		3
87438967	04-02		4
87438969	04-02		5
87438970	04-02		6
87438971	04-02		7
87438972	04-02		8
87438973	04-02		9
87438974	04-02		10
87438975	04-02		11
87438976	04-02		12
87438977	04-02		13
87438978	04-02		14
87438979	04-02		15
87438980	04-02		16
87438981	04-02		17
87438982	04-02		18
87438983	04-02		19
87438984	04-02		20
87438985	04-02		21
87438986	04-02		22
87438987	04-02		23
87438989	04-02		24
87438992	04-01		1
87438993	04-01		2
87438994	04-01		
87438995	04-01		21
87438996	04-01		23
87438997	04-01		24
87438999	04-01		25
87439000	04-01		26
87439001	04-01		27
87439002	04-01		28
87439003	04-01		29
87439004	04-01		30
87439005	04-01		31
87439006	04-01		33
87439007	04-01		34
87439008	04-01		35
87439009	04-01		37
87439010	04-01		41
87439011	04-01		43
87439032	08-21		14
87439033	08-21		15
87439061	04-01		42
87439135	09-21		13
87439136	05-02		13
87439137	05-02		1
87439138	05-02		5
87439210	09-12		15
87439213	08-22		48
87439215	08-22		40
87439306	08-08		10
	08-08A		10
87439537	08-14		18
87439665	08-08		24
	08-08A		24
87439722	09-55		27
	09-57		5
87439723	09-55		29
	09-57		6
87439724	09-57		1
87439725	09-55		4
87439726	09-55		
87439728	09-55		1
87440045	05-02		22
	08-03		1
	08-57		
87440058	09-20		10
87440283	09-54		14
87440381	09-13		31
87440694	08-23		16
	08-23B		16
87440704	09-13		9
87440706	09-13		10
87440710	09-13		1

Number	Figure	Sequence	Ref.
87440711	09-13		
	09-15		1
87440712	08-22		14
87440812	08-09A		10
87440814	08-30		14
	08-31		15
	08-32		17
	08-33		17
	08-34		15
	08-35		15
87440815	08-30		13
	08-31		14
	08-32		16
	08-33		16
	08-34		14
	08-35		14
87440835	08-20		10
87440837	08-20		11
87441076	08-09		23
	08-09A		23
87441495	08-36		1
	08-37		1
	08-38		1
	08-39		1
87441758	09-70		20
87441850	09-15		9
	09-25		12
	09-25A		12
87441876	06-10		1
87442357	02-06		20
87442376	09-42		21
87442377	09-42		22
87442409	09-15		33
87442419	02-01		45
87442441	09-59		19
87443052	08-23B		39
87443080	04-13		8
	04-14		2
87443149	08-04		15
87443150	08-04		14
87443691	09-55		1A
87443692	09-15		26
87443721	08-50		5
	08-51		5
	08-52		5
	08-54		5
87443722	08-53		8
87444147	09-40		2
87444148	09-40		1
87444149	09-25		15
87444776	09-75		9
87445051	09-58		30
87445245	09-25		9
	09-25A		9
87445557	08-22		44
87445794	08-23B		44
87446081	02-01		7
87446082	02-01		6
87446113	09-17		12
87447088	09-19A		
87447450	05-01		12
87447477	08-39		10
87448059	09-12		2
87448198	09-57		
87448199	09-55		
87448990	08-22		39A
87448993	08-23B		20
	08-23C		
87449373	08-09		1
	08-09A		1
	08-55		
87449374	08-55		2
87449440	08-06		24
	08-26		49
87449579	07-04		4
87449995	09-25		25
87449996	09-25		26
87450318	08-08A		1A
87450318	08-22		18
87450456	08-02		13
87450698	08-09A		14
87450914	09-13		27
87450978	08-30		7
	08-31		8
	08-32		11A
	08-33		11A
	08-34		16A
	08-35		16A
87450979	08-32		11B
	08-33		11B
	08-34		16B
	08-35		16B
87450980	08-32		11C
	08-33		11C
	08-34		16C
	08-35		16C
87451167	02-06		10
87451279	09-26		11
87451280	09-26		36A
87451448	08-53		11
87452021	08-07A		27
	08-07B		33
	09-38		24
87452399	08-01		16
87452400	08-01		26
87452402	08-26		16
87452403	08-26		17
87452404	09-19		2
87452405	08-21		16
87452406	09-19		1
87452511	04-20		15
87452627	09-12		3
87452823	03-03		29
87454016	08-07		1
	08-60		1
87454017	08-07		2
	08-60		1
87454292	09-46		
87454376	02-02		7
87454377	02-01		14
87454378	02-01		16
87454545	05-02		
	05-02A		
87454547	08-33		21B
	08-35		25B
87454548	08-33		21C
	08-35		25C
87454907	08-60		2
87454908	08-60		2
87455509	09-08		
87455541	08-33		21E
	08-35		25E
87455564	08-33		21G
	08-35		25G
87455565	08-33		21H
	08-35		25H
87455832	08-02		18
	08-23B		37
87455961	08-13		18
87456199	09-22		11
87456900	06-19		4
	06-28		4
87456901	06-29		11
87456968	06-19		1
	06-28		1
87456969	06-29		12
87515955	08-30		6
	08-31		7
87518479	08-23B		38
87522766	04-05		4
	04-06		3
87524409	06-19		
	06-28		
87524432	06-19		14
	06-28		14
87524433	06-19		13

Number	Figure	Sequence	Ref.
87524433	06-28		13
87524435	06-19		16
	06-28		16
87524436	06-19		5
	06-28		5
87524437	06-19		11
	06-28		11
87524438	06-19		12
	06-28		12
87524439	06-19		10
	06-28		10
87524440	06-19		15
	06-28		15
87524441	06-19		8
	06-28		8
87525756	06-19		
	06-28		
87525849	06-17		20
	06-25		20
87527167	04-09		35
87528887	04-16		9
87530365	06-19		7
	06-28		7
87534372	09-55		41
	09-57		18
87534992	09-43		21A
87537201	09-24A		2
87537207	09-24A		1
87537208	09-24A		4
87537209	09-24A		
87538167	09-65		29
87538515	06-09		12
	06-11		40
	06-38		2
87539792	04-09		36
87540980	04-10		14
87545557	09-41		12
87545561	02-04		6
87546291	09-66		26
87552560	08-08A		38
	08-22		25
87555125	09-48		
87555499	08-32		
87555505	08-32		
87555519	08-34		
87555524	08-34		
87555530	08-33		
87555536	08-33		
87555567	08-35		
87555570	08-35		
87557237	02-02		6
87559003	02-01		2
87560507	05-02A		19
87560508	05-02A		4
87561131	09-40		24
87566237	08-32		20
	08-33		20
	08-34		18
	08-35		18
87566480	08-07A		8
	08-07B		8
87566994	09-04		1
87572760	05-04		9
	06-01		35
87576643	02-01		1
87577141	09-06		
87577343	08-15		1
	08-16		1
	08-36		
87577346	08-17		1
	08-18		1
	08-37		
87577348	08-19		1
	08-38		
87577349	08-20		1
	08-39		
87578455	04-07		6
87578904	09-49		2
87578905	09-49		1
87578910	05-02A		
87579286	05-02A		1
87581010	09-79		15
87584645	04-05		16
87585167	09-41		20
87585817	04-07		21
87586156	09-01		10
	09-02		6
87586776	08-50		
87589025	09-66		32
87590156	09-66		12
87592658	08-01		5
87592819	09-24		34
87593381	08-31		
87593382	08-31		
87593642	03-03		3
87594363	08-22		2
87594364	08-22		30
	08-22		45
87594903	09-41		1
87598501	09-66		31
87601338	06-11		39
87601345	06-11		20
87601612	04-06A		28
87602620	09-10		
87603511	07-06		9
87603513	07-05		10
87603514	07-05		11
87603948	02-07		
	02-08		1
87606502	09-40		15
87608352	04-06A		22
87608368	02-01		18
87608370	02-01		19
87608777	09-14		9
87609666	08-59		12
87609669	08-05		34
	08-59		1
	09-05		20
87610318	05-02A		8
87610338	02-04		1
	02-05		
87610679	04-05		8
	04-06		17
87610680	04-05		7
	04-06		16
87610681	04-06		15
87610682	04-06		14
87611852	02-06		17
87613159	05-02A		
87613161	05-02A		
87613924	06-11		35
	06-38		1
87614481	09-04		27
87614808	04-09		11
87615800	09-63		18
87616934	02-02		2
87617576	02-06		7
87617618	08-36		4
	08-37		4
	08-38		4
	08-39		4
	08-42		
87617655	08-42		3
87617657	08-42		6
87618533	06-31		6
87619415	05-02A		
87619781	09-27		18
87622505	09-80		15
87622506	09-81		15
87622714	08-04		6
87622718	08-04		4
87623338	09-01A		1
	09-01A		14
87623339	09-01A		15
	09-01A		2
87623771	09-04		25

Number	Figure	Sequence	Ref.	Number	Figure	Sequence	Ref.
87625976	08-04		23	87668167	08-07B		23
87626017	09-74		14	87669381	09-60		1
87627072	09-68		8	87669391	09-60		4
87627903	08-01		3	87669401	09-60		7
87628308	02-01		4	87669712	09-60		6
87628324	02-01		3	87669761	09-60		5
87630218	09-66		6	87671746	04-06		9
87630219	09-66		1	87671893	05-02A		18
87630220	09-66		20	87673270	09-38		9A
87630445	09-09		1	87674844	02-02		1
87632870	02-02		9	87674850	09-38		27
87632920	09-01		2	87675026	08-25		13
	09-02		17	87675071	08-25		20
87633581	04-11		2	87675074	08-25		22
87636554	09-68		1	87675208	09-59		1
87636559	09-68				09-70		8
87636560	09-53		1	87675513	08-04		24
87636561	09-54		1	87676276	09-59		7
87636562	09-53		1		09-70		14
87636563	09-54		1	87679228	03-01		39
87637384	09-59		27	87681261	09-01		6
	09-70		21		09-02		13
87638046	09-01		1	87682197	04-05		5
	09-01A				04-06		10
87638047	09-01A			87682993	02-05		2
	09-02		1	87685948	08-15		3
87638350	09-01A		10		08-17		8
	09-01A		25		08-50		
87642364	07-03		11	87685952	08-19		3
87642365	07-03		10		08-20		3
87642370	07-03		6		08-52		
87642658	08-04		7	87685953	08-16		3
87644495	07-03		7		08-18		2
87644497	07-03		9		08-51		
87647001	09-76		9	87685954	08-15		4
87647029	02-01		15		08-16		4
87648733	03-03		25		08-19		4
87649398	06-01		12		08-53		
87649405	04-08		27	87685955	08-17		9
87650602	08-07A		23		08-18		3
	08-07B		32		08-20		4
87651790	09-38		1		08-54		
87651830	09-38			87686604	09-64		20
87651975	08-07A		26	87687141	08-50		1
	08-07B		26		08-51		1
87652272	02-04		10		08-52		1
87652902	09-76		8		08-53		1
87653245	09-61		1		08-54		1
87653377	04-05		3	87689189	09-01A		11
	04-06		2		09-01A		26
87656128	04-05		6	87689338	09-01A		12
	04-06		11		09-01A		27
87656146	03-01		14	87690874	03-01		28
87656501	03-01		25	87693492	03-01		12
	08-03		12	87694065	09-38		48
87657148	09-54		3	87694305	04-10		1
87657149	09-54		2	87694565	09-59		12
87658696	03-01		26		09-70		19
87659604	08-03		7	87694656	06-01		11
87659610	05-03				06-09		
87659611	05-03			87697589	07-04		2
87659612	05-03			87697590	07-04		3
87659613	05-02A		2	87699640	09-59		13
	08-03		22		09-70		7
87659616	05-03			87699880	06-01		19
87659784	08-03		8	87699881	07-06		8
87662928	08-07A		7	87700144	04-09		30
	08-07B		7	87700794	09-59		2
87662930	08-07A		4		09-70		12
	08-07B		4	87702194	06-11		21
87662932	08-07A		19	87702261	09-74		1
	08-07B		19	87702297	09-76		14
87663365	05-02A		17	87704851	09-54		13
87664021	04-05		2	87704858	02-06		14
	04-06		20	87706237	09-77		8
87664422	09-01		34	87706239	09-78		8
87664425	09-01		33	87706250	09-77		9
87666451	02-04		7	87706251	09-78		9

Number	Figure	Sequence	Ref.
87708015	09-01		5
	09-02		14
87708227	09-77		14
87708242	09-78		16
87710145	06-03		4
87710155	06-02		11
87711985	09-59		4
	09-70		9
87712299	08-04		5
87714038	07-03		1
	07-04		1
	07-07		
87715487	02-02		3
87716480	08-05		13
87716482	08-05		14
87716484	08-27		8
87716486	08-06		12
87716488	08-06		13
87716490	08-27		1
87716492	08-27		2
87716823	06-09		7
87716824	06-09		6
87716969	07-07		1
87716970	07-07		2
87716973	09-37		1
87719412	09-39		1
87719444	09-38		13
87719495	09-41		19
87719497	09-41		18
87724438	09-05		21
87725883	09-39		10
87725886	09-39		9
87726055	09-41		24
87726573	04-09		
	09-70		
87726574	04-07		16
	04-09		24
	09-70		
87726576	04-07		32
87726584	04-04		1
	04-08		20
87726592	04-07		1
	04-08		1
87726595	04-09		1
87726617	04-20		7
87726950	09-66		30
87726951	09-66		18
87735103	09-76		2
87735105	09-77		2
87741446	09-59		14
87741447	09-59		22
87803194	03-08		6
87803261	02-32		1
892-11005	03-03		30
	04-19		6
892-11006	03-03		31
	08-07A		15
	08-07B		15
	09-60		3
	09-70		
892-11008	02-01		41
	03-01		17A
	03-03		10
	04-03		5
	04-06A		17
	04-08		17
	04-16		4
	08-23		22
	08-23B		22
	09-05		10
	09-08		28
	09-12		14
	09-13		6
	09-15		3
	09-25		24
	09-25A		24
	09-44		6
892-11010	02-06		5
892-11010	03-01		32
	03-03		24
	04-01		40
	05-02		26
	08-04		12
	08-05		10
	08-06		16
	08-06		9
	08-07		9
	08-10		31
	08-22		42
	08-23		12
	08-23B		12
	08-24		12
	08-26		35
	08-26		41
	08-27		15
	08-27		6
	09-08		26
	09-13		28
	09-25		7
	09-25A		7
	09-38		36
892-11012	09-24A		7
893-11005	04-18		8
895-11004	04-11		13
	07-03		23
	09-54		8
895-11005	03-03		6
895-11006	04-06		7
	04-06A		14
	05-02A		13
	09-55		10
895-11008	02-01		10
	02-01		23
	02-01		28
	02-02		13
	02-02		23
	02-04		3
	03-03		11
	04-05		14
	04-06		4
	06-10		3
	07-03		2
	07-03		29
	07-04		6
	08-07B		28
	08-08A		3A
	08-22		22
	09-03		16
	09-05		9
	09-12		13
	09-15		
	09-21		15
	09-25		32
	09-59		9
	09-66		36
	09-70		16
895-11010	03-01		34
	03-01		42
	04-04		19
	04-05		12
	04-06		12
	04-16		7
	05-02A		10
	07-03		26
	08-03		3
	08-07		14
	08-08		31
	08-08A		31
	08-09		4
	08-09A		4
	08-10		30
	08-10		33
	08-11		28
	08-12		25
	08-13		26
	08-13		37

Number	Figure	Sequence	Ref.
895-11010	08-24		11
	08-25		3
	09-01		24
	09-02		7
	09-03		9A
	09-04		20
	09-08		17
	09-08		21
	09-38		34
	09-38		51
	09-40		11
	09-40		17
	09-40		6
	09-41		4
	09-41		9
	09-45		10
895-11018	08-09		7
895-15006	04-11		8
895-15008	04-09		29
	05-01		16
	05-01		24
	09-13		4
	09-37		21
	09-38		15
	09-43		31
	09-62		7
	09-63		16
	09-66		28
895-15010	02-01		21
	04-07		37
	05-01		21
	08-25		7
	09-13		12
	09-25		8
	09-25A		8
	09-63		11
895-18012	09-47		4
	09-49		10
895-25006	08-07A		14
	08-07B		14
895-30107	09-55		35
	09-57		12
896-11008	09-13		32
896-11010	02-01		38
	02-06		18
	04-03		17
	08-10		3
	08-11		3
	08-12		3
	08-13		3
	08-14		3
	08-24		25
	08-26		3
	08-26		36
	08-26		44
	08-26		7
	09-01		29A
896-11012	04-06A		33
	06-11		10
	08-23		18
	08-23B		18
	09-24A		6
	09-67		9
896-11016	09-37		12
896-11020	03-01		3A
	06-31		5
	09-05		18
	09-06		7
	09-06		7
	09-07		7
	09-23		14
	09-24		5
	09-36		3
	09-36		7
	09-38		17
896-15008	09-67		16
896-15010	02-06		12
	02-06		4
896-15010	06-11		25
	08-22		11
	09-09		3
	09-13		19
	09-67		5
896-15012	02-07		4
	03-03		27
	06-11		28
	07-05		8
	09-40		18
	09-46		12
	09-47		10
	09-49		4
90-6682T1	06-01		16
905794R1	06-15		20
	06-23		20
905839R1	05-06		6
	06-04		4
906086R1	09-55		42
	09-57		19
933781R1	07-01		24
	07-01	01	24
934667R1	06-13		7
	06-21		7
	06-29		6
934727R1	05-06		4
	06-04		2
9625178	06-37		4
	08-55		7
9637611	06-01		17
	06-09		13
	06-11		41
	06-38		3
9703399	04-14		
	04-14		
9827902	04-04		17
9966352	06-07		8
9966356	06-07		13
9968031	06-08		3
9970178	08-23A		3
	08-23C		3
9970179	08-23A		4
	08-23C		4
9970180	08-23A		6
	08-23C		6
9970181	08-23A		1
	08-23C		1
9970384	08-23A		5
	08-23C		5
A13240	08-25		10
A156873	06-02		6
	06-33		3
A166057	04-04		2
A167037	09-71		8
A170467	02-06		8
A177435	03-02		2
A187542	04-17		5
A187575	04-17		11
A187714	09-58		10
	09-60		
A23870	04-17		1
A30881	09-03		11
	09-13		3
	09-16		15
	09-17		5
	09-18		26
	09-21		6
A33509	09-27		29
A38208	05-04		15
	05-09		7
A41264	04-15		9
A42561	04-09		8
	09-64		6
	09-65		14B
A45054	09-48		
A45504	09-48		
A45505	09-48		
A45513	09-48		

Number	Figure	Sequence	Ref.
A48041	06-06		11
	06-16		6
	06-17		2
	06-24		6
	06-25		2
A65544	05-01		5
A77310	07-03		20
D121152	04-13		2
	04-15		
D121194	09-05		6
D123684	05-04		3
	06-01		10
D124529	07-03		16
D124530	07-03		12
D125223	05-09		1
D127167	09-26		44
	09-27		21
D127335	04-11		24
D127542	09-04		2
D128745	09-70		2
D129227	09-25		2
	09-25A		2
D129264	09-06		2
	09-06		2
	09-07		2
	09-08		11
D132076	09-05		17
D132494	09-24		16
	09-27		2
D132982	06-10		26
	09-64		24
D133632	09-24		21
	09-27		7
D133865	09-27		24
D134900	09-20		6
D135384	04-13		1
	04-15		
D135557	09-23		5
D135559	09-23		6
D135739	09-24		12
D136391	09-23		26
D136392	09-23		24
D136700	09-23		25
D137218	09-24		13
D137363	04-04		12
	09-04		16
D137625	08-01		14
D138042	09-23		7
D138047	09-26		50
	09-26		52
	09-27		34
	09-27		47
D138055	08-04		8
	08-05		6
	08-06		14
	08-06		7
	08-26		31
	08-26		42
	08-27		12
	09-38		37
D138157	09-28		7
	09-29		7
	09-30		7
	09-32		7
	09-32		7
	09-34		7
	09-35		7
D138380	06-30		4
D138492	06-30		5
	06-31		2
D139039	09-16		19
D139225	03-01		27
D139849	09-28		
	09-29		
	09-30		
	09-32		
	09-32		
	09-34		
D139849	09-35		
D139851	09-28		
	09-29		
	09-30		
	09-32		
	09-32		
	09-34		
	09-35		
D140029	08-65		15
	09-26		8
D140035	07-03		14
D140247	09-27		28
D140267	09-40		13
	09-54		26
D141075	09-26		42
D141142	09-26		20
	09-27		37
D141164	09-26		22
	09-27		39
D141666	09-27		11
D142012	09-35		4
D142144	09-71		10
D142787	08-04		20
	08-08		27
	08-08A		27
	08-09		21
	08-09A		21
D142890	07-02		10
D142898	05-08		6
	06-27		16
	06-34		3
D142986	06-37		7
D143242	09-68		4
D143324	09-26		30
D143406	09-22		13
D143411	09-13		35
D143416	09-20		5
D143417	09-40		23
	09-64		29
	09-65		20
D143427	09-64		27
	09-65		18
D143591	09-15		15
	09-25		21
	09-25A		21
D143714	09-40		9
D143715	09-40		8
D143723	09-15		10
	09-25		22
	09-25A		22
D143735	09-25		20
	09-25A		20
D143846	08-07		6
	08-12		26
	08-26		31A
	08-26		47
D144423	09-23		35
D144592	09-25		3
	09-25A		3
D145978	09-26		7
	09-27		16
D146288	09-26		26
	09-27		49
D146420	09-29		3
D146421	09-29		2
D147249	09-29		4
D147409	09-28		4
D147773	08-10A		26
D148947	09-18		2
D148962	03-02		6
	09-13		30
D148992	09-16		7
D148993	09-13		2
D148994	09-16		18
D149033	09-22		40
D149079	08-63		17
	08-63		3
	08-64		15

Number	Figure	Sequence	Ref.
D149079	09-23		2
	09-26		47
	09-27		31
D149262	09-16		46
D149287	09-01		35
	09-03		4
	09-16		37
	09-17		11
	09-19		3
	09-20		11
D149288	09-16		23
	09-16		48
	09-19		7
	09-21		11
D149295	09-16		34
	09-19		9
D149298	09-26		32
D149309	08-24		3
D149725	05-05		4
	06-02		2
D149726	05-05		3
	06-02		4
D149824	09-74		3
D149825	09-74		4
D149826	09-79		10
D149827	09-79		11
D149828	09-74		5
D149829	09-74		6
D149860	06-09		
D149866	09-11		9
D149867	09-11		10
D149868	09-11		12
D150032	09-20		13
D150053	08-10A		3
D150054	08-10A		2
D150121	09-26		10
	09-27		17
D150214	05-06		11A
D150397	09-16		9
D150434	09-16		13
D150435	09-16		12
D150486	09-16		17
D150493	09-16		24
D150503	09-16		45
D150619	09-26		34
D150781	08-55A		
D150810	08-55A		
D151034	09-05		15
D151065	09-23		21
D151069	09-37		5
D151070	09-37		6
D151071	09-24		11
D25279	09-22		10
	09-22		14
	09-26		31
D26002	09-22		9
D28648	09-22		12
D30933	09-28		12
	09-29		12
	09-30		12
	09-31		9
	09-32		12
	09-32		12
	09-33		9
	09-34		12
	09-35		12
D31140	09-08		2
	09-26		53
	09-27		48
D34666	09-16		16
D37495	09-29		11
	09-30		11
	09-31		8
	09-32		11
	09-32		11
	09-33		8
	09-34		11
	09-35		11
D37614	09-26		29
D38648	08-07		20
	08-14		21
D38907	09-22		3
D39118	09-18		11
D39696	06-10		24
	08-03		18
D41659	09-31		
	09-33		
D43940	09-28		11
D48212	09-28		10
	09-29		10
	09-30		10
	09-32		10
	09-32		10
	09-34		10
	09-35		10
D50146	09-22		6
D50696	09-35A		2
D51391	09-08		7
D51392	09-08		15
D51393	09-08		19
D51750	09-28		5
	09-28		8
	09-29		5
	09-29		8
	09-30		5
	09-30		8
	09-31		5
	09-32		5
	09-32		5
	09-32		8
	09-32		8
	09-33		5
	09-34		5
	09-34		8
	09-35		5
	09-35		8
D52276	08-10		7
	08-11		7
	08-12		7
	08-13		7
	08-14		7
	08-22		13
D52564	09-72		1
D53812	09-22		17
D55216	09-74		10
D59912	09-16		4
	09-18		6
	09-21		2
D61368	09-22		16
D74182	09-13		36
D80270	09-74		11
D86664	09-25		19
	09-25A		19
D88052	09-63		32
	09-64		32
D95096	09-03		13
D95142	08-59		5
D95143	08-58		5
	08-60		5
	08-66		4
D95144	08-61		5
	08-62		5
D95145	08-63		7
	08-64		5
	08-65		5
E135777	06-34		5
E135785	06-34		10
E135809	06-13		21
	06-21		1
	06-32		6
	07-01		23
	07-01	01	23
E135810	06-37		16
E43769	09-59		17
	09-70		6
E49497	09-19A		4

Number	Figure	Sequence	Ref.
F49498	09-19A		3
F22426	04-11		
F44883	09-41		11
F45165	09-55		49
	09-57		25
F53473	05-04		10
	06-01		36
F64198	09-55		45
	09-57		22
F64519	09-68		14
G100440	08-61		15
G100444	08-59		15
	08-60		17
	08-66		14
G100448	08-61		16
G100449	08-59		16
	08-60		18
	08-66		15
G101533	08-61		6
	08-62		6
G101994	08-63		21
G101995	08-63		20
G101996	08-63		22
G102285	08-61		14
G102287	08-58		14
	08-65		17
G102288	08-59		14
	08-60		16
	08-66		13
G102424	08-59		6
G102425	08-58		6
	08-60		6
	08-66		5
G102426	08-63		8
	08-64		6
G107277	08-66		12
G108123	08-61		13
G108512	08-59		3
G108518	08-59		13
G109298	08-59		10
	08-60		11
	08-66		9
G109299	08-61		10
	08-62		24
G109300	08-63		14
G110077	08-55A		
G110467	08-55A		
G110529	08-64		18
G110530	08-64		19
G110531	08-64		17
G32122	08-58		10
	08-65		12
G32126	08-62		10
G32176	08-64		12
G35540	08-55A		4
H434163	05-02		32
	08-01		15
	08-26		52
H71514	09-24		7
K260177	06-13		9
	06-21		9
K261014	06-08		4
	06-35		5
K262143	06-08		9
	06-35		9
K395082	06-06		23
K395090	06-08		8
	06-35		8
K395091	06-06		21
K395093	06-06		16
	06-37		5
K395101	06-37		13
L111356	08-10A		31
	09-75		7
L11541	05-02		33
	08-51		18
	09-59		5
	09-65		31
L11541	09-70		10
L15401	09-03		12
L17985	02-04		4
L18331	04-18		15
	08-51		17
L18337	02-02		24
	03-01		24
	03-02		12
	04-04		28
	04-05		15
	04-06		21
	04-06A		25
	04-07		26
	04-13		11
	04-14		14
	04-20		14
	06-10		14
	06-32		7
	08-03		16
	08-09		29
	08-10		16
	08-10		26
	08-10A		17
	08-11		15
	08-11		24
	08-12		15
	08-13		19
	08-14		14
	08-21		
	08-23		15
	08-23B		15
	08-27		18
	09-10		36
	09-38		59
	09-63		21
	09-64		25
	09-65		17
	09-66		11
L32100	08-29		9
L32418	08-29		1
L54563	09-16		14
	09-17		1
L60224	04-11		5
	09-38		49
L71879	04-07		
	04-07		10
L79937	08-05		39
N13505	05-06		12A
	06-03		11
	08-29		6
N13582	04-15		10
N14283	05-05		2
N14367	06-02		3
	05-05		8
N14373	06-05		3
N14410	09-61		20
N14466	08-57		
N6755	04-15		3
N6836	08-57		
N6941	06-35		4
N7536	08-57		
N9025	02-05		1
NSS	02-26		10
	02-33		11
	02-36		4
	02-39		9
	03-11		5
	04-04		31B
	04-09		2
	04-09		25
	04-09		3
	04-12		1
	04-12		2
	04-12		3
	04-12		4
	04-12		5
	04-12		6
	04-12		7

Number	Figure	Sequence	Ref.
NSS	04-15		1
	04-15		5
	04-15		6
	04-15		7
	04-15		8
	04-17		12
	05-02A		22
	05-02A		23
	05-02A		24
	05-03		1
	05-03		3
	05-03		5
	05-03		6
	05-07		2
	06-02		14
	06-04		1
	06-04		10
	06-04		11
	06-06		14
	06-06		15
	06-06		3
	06-07		1
	06-07		2
	06-07		5
	06-07		6
	06-07		7
	06-08		1
	06-08		2
	06-09		10
	06-09		11
	06-09		2
	06-09		3
	06-09		4
	06-09		9
	06-11		
	06-13		13
	06-13		2
	06-13		24
	06-13		25
	06-14		10
	06-14		11
	06-14		12
	06-14		13
	06-14		14
	06-14		17
	06-14		18
	06-14		2
	06-14		20
	06-14		21
	06-14		3
	06-14		3A
	06-14		4
	06-14		5
	06-14		6
	06-14		7
	06-14		8
	06-14		9
	06-18		10
	06-18		11
	06-18		12
	06-18		15
	06-18		20
	06-18		21
	06-18		22
	06-18		23
	06-18		24
	06-18		25
	06-18		25A
	06-18		7
	06-18		8
	06-19		2
	06-21		21
	06-21		23
	06-21		24
	06-22		10
	06-22		11
	06-22		12
	06-22		13
NSS	06-22		14
	06-22		17
	06-22		18
	06-22		2
	06-22		20
	06-22		21
	06-22		3
	06-22		3A
	06-22		4
	06-22		5
	06-22		6
	06-22		7
	06-22		8
	06-22		9
	06-26		10
	06-26		11
	06-26		12
	06-26		15
	06-26		20
	06-26		21
	06-26		22
	06-26		23
	06-26		24
	06-26		25
	06-26		25A
	06-26		7
	06-26		8
	06-28		2
	06-29		1
	06-29		2
	06-29		3
	06-29		4
	07-01		21
	07-01	01	21
	08-28		1
	08-30		1
	08-30		2
	08-30		3
	08-30		4
	08-31		1
	08-31		2
	08-31		3
	08-31		4
	08-31		5
	08-32		1
	08-32		2
	08-32		3
	08-32		4
	08-32		5
	08-32		6
	08-33		1
	08-33		2
	08-33		3
	08-33		4
	08-33		5
	08-33		6
	08-34		1
	08-34		2
	08-34		3
	08-34		4
	08-34		5
	08-34		6
	08-34		7
	08-35		1
	08-35		2
	08-35		3
	08-35		4
	08-35		5
	08-35		6
	08-35		7
	08-36		7
	08-36		8
	08-36		9
	08-37		10
	08-37		8
	08-37		9
	08-38		10
	08-38		8

Number	Figure	Sequence	Ref.	Number	Figure	Sequence	Ref.
NSS	08-38		9	NSS	09-28		3
	08-39		9		09-30		2
	08-40		1		09-30		3
	08-40		2		09-30		4
	08-41		1		09-31		7
	08-41		2		09-32		2
	08-42		1		09-32		2
	08-42		2		09-32		3
	08-43		1		09-32		3
	08-43		2		09-32		4
	08-44		1		09-32		4
	08-44		2		09-33		7
	08-45		1		09-34		4
	08-45		2		09-43		
	08-46		1		09-43		
	08-46		2		09-61		19
	08-55		1		09-61		21
	08-55A		1		09-71		14
	08-55A		10	P2745466	06-27		21
	08-55A		14	P2745478	06-27		10
	08-55A		2	P3533055	06-18		35
	08-55A		5		06-26		35
	08-55A		6		06-27		20
	08-55A		7	R24840	08-10		28
	08-55A		8	R32119	09-24		8
	08-55A		9	R46493	08-07		7
	08-56		1	R54682	09-71		6
	08-56		10	REF	02-10		11
	08-56		11		02-10		12
	08-56		12		02-15		4
	08-56		13		02-29		
	08-56		4		02-29		7
	08-56		9		02-38		10
	08-57		1		02-38		4
	08-57		6		02-38		7
	08-57		7		02-38		8
	08-57		8		02-38		9
	08-58		7		02-39		11
	08-58		8		03-04		5
	08-59		7		03-06		9
	08-59		8		05-02A		
	08-60		8		05-09		2
	08-60		9		05-09		5
	08-61		7		06-30		3
	08-61		8		06-30		3
	08-62		7		08-02		
	08-62		8		08-02		
	08-63		10		08-03		13
	08-63		11		08-04		1
	08-64		8		08-05		1
	08-64		9		08-06		1
	08-65		8		08-07A		1
	08-65		9		08-07B		1
	08-66		6		08-08		
	08-66		7		08-08A		
	09-01A		13		08-09		
	09-01A		16		08-09A		
	09-01A		17		08-10		1
	09-01A		18		08-11		1
	09-01A		19		08-12		1
	09-01A		20		08-13		1
	09-01A		28		08-14		1
	09-01A		3		08-15		
	09-01A		4		08-16		
	09-01A		5		08-17		
	09-03		10		08-18		
	09-06		1		08-19		
	09-06		1		08-20		
	09-07		1		08-24		
	09-08		1		08-25		
	09-08		10		08-26		
	09-10		10		08-26		
	09-10		2		08-27		
	09-26		43		08-27		4
	09-26		6		08-32		
	09-27		15		08-33		
	09-27		20		08-34		
	09-28		2		08-35		

Number	Figure	Sequence	Ref.	Number	Figure	Sequence	Ref.
REF	09-01		28				
	09-04						
	09-18						
	09-19						
	09-26		28				
	09-55						
	09-56						
S109444	08-58		15				
	08-65		18				
S109445	08-58		16				
	08-65		19				
S115351	05-03		2				
S301064	06-33		4				
S301065	06-02		15				
ST205A	06-16		1				
	06-24		1				
	06-27		6				
ST264	06-17		23				
	06-25		23				
T34857	04-15		2				
T41159	09-74		17				