RUTHZIL TRATOR COMERCIAL DE PEÇAS LTDA 11 97083-6812 ROLANDO CITRANGULO

2

MOTEUR ET ACCESSOIRES
MOTOR UND ZUBEHOER
MOTORE ED ACCESSORI
MOTOR Y ACCESORIOS
ENGINE AND ACCESSORIES

00101006

1 0010 006

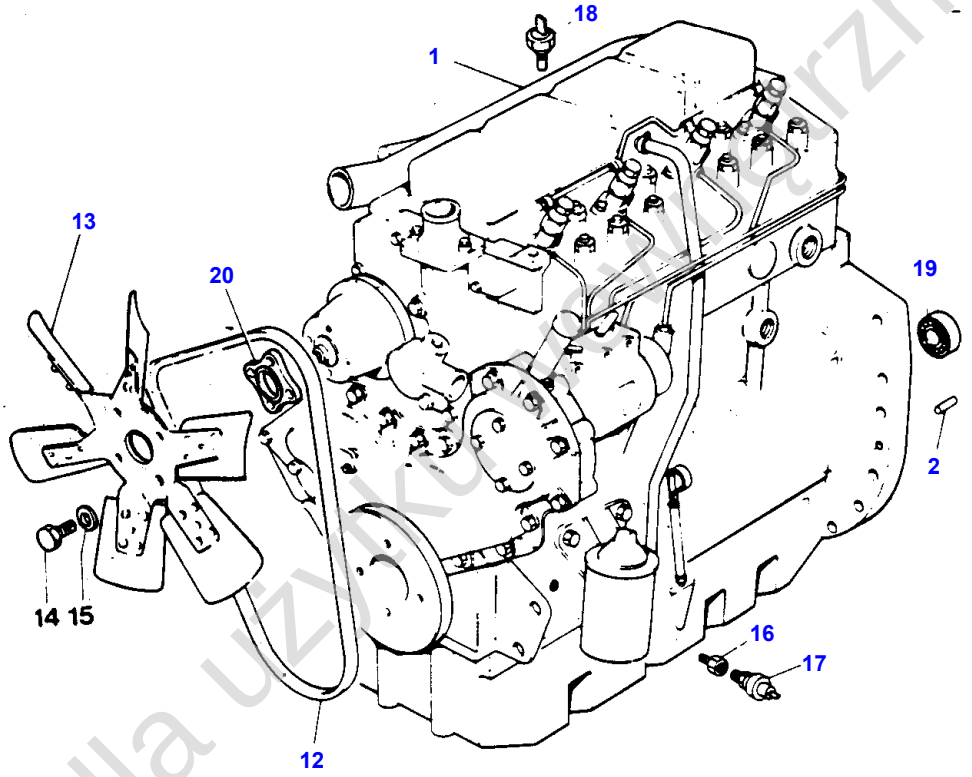

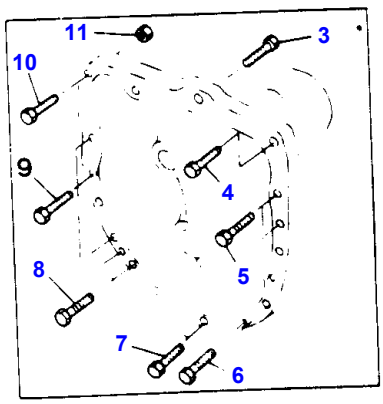

1-0010-006

Tylko dla użytku prywatnego

Item	Part Number	Qty	Description	Comments
1	1872097M91	1	Engine	A4 248 Up to Serial or Engine Number 04/80 For Germany only or any text in German only
1	1673038M91	1	Engine	(A,B) A4 248 From Serial or Engine Number 04/80
1	1872093M91	1	Engine	A4 248 Up to Serial or Engine Number 04/80
1	1673929M91	1	Engine	(A,C) A4 248
2	825302M1	2	Dowel	
3	362479X1	1	Screw	
4	362489X1	1	Bolt	
5	362493X1	2	Screw	
6	362499X1	2	Screw	
7	362485X1	2	Screw	
8	362499X1	2	Screw	
9	362493X1	3	Screw	
10	361536X1	1	Screw	
11	363625X1	1	Nut	
12	1669923M1	1	Belt	LUCAS
	3038999M1	1	Belt	MOTOROLA
13	1874995M92	1	Fan	
14	0096208	4	Bolt	
15	0920053	4	Washer	Repairs and replaces 0920645
16	355851X1	1	Bush	
17	1877721M92	1	Pressure Switch	
18	1877731M92	1	Sender	
19	828123M1	1	Bearing Assy	
20	0360027	1	Extension	

(A)
OUTSIDE HOOD EXHAUST

(B)
WITH RSIS

(C)
WITH ROAD SPEED LIMITING DEVICE

Tylko dla użytku wewnętrznego

4

BLOC CYLINDRES
ZYLINDERBLOCK
BLOCCO CILINDRI
BLOQUE DE CILINDROS
CYLINDER BLOCK

00501007

1 0050 007

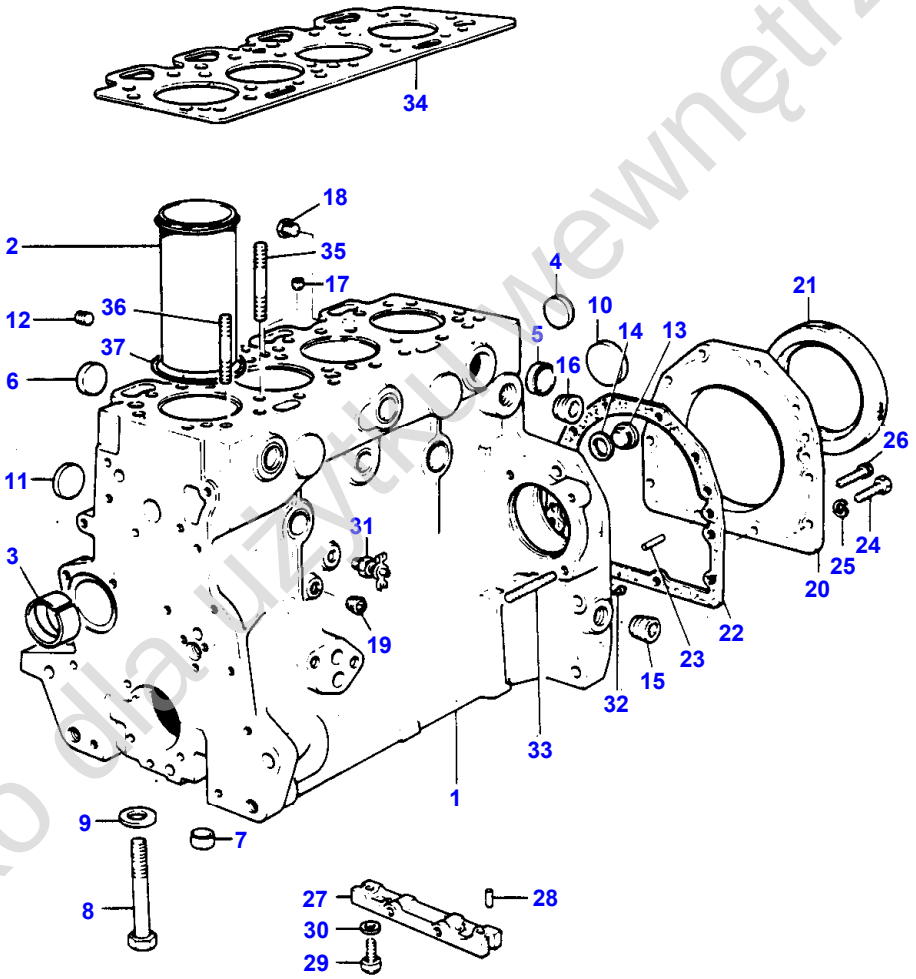

1-0050-007

Tylko dla użytku wewnętrznego

Item	Part Number	Qty	Description	Comments
1	61677	1	Block	
2	31358346	4	Liner	(1) (A)
2	31358352	4	Liner	(1) (B)
3	31134132	1	Bush	(1)
4	0650710	2	Plug	(1) Repairs and replaces 0650563
5	0650710	6	Plug	(1) Repairs and replaces 0650563
6	0650618	4	Plug	(1)
7	33142111	10	Thimble	(1)
8	32166329	10	Bolt	(1) Repairs and replaces 32181434
9	0760001	10	Shim	
10	32416105	1	Plug	
11	0650577	4	Plug	
12	32114461	1	Plug	Repairs and replaces 32417133
13	0650582	1	Plug	
14	0920130	1	Washer	
15	0650588	1	Plug	
16	0650588	2	Plug	
17	32417134	1	Plug	
18	32161114	2	Plug	
19	0650594	1	Plug	
20	37513851	1	Housing	
21	2415391	1	Seal	
22	36817157	1	Joint	
23	0350009	2	Dowel	
24	0746211	10	Bolt	
25	0920003	10	Washer	
26	2172530	2	Capscrew	
27	36277831	1	Bridge Piece	
28	32811408	2	Joint	
29	PF210045	2	Screw	
30	0920521	2	Washer	
31	PF 53270	1	Cock	
32	32715119	1	Pin	
33	0826481	3	Stud	
34	36812349	1	Head Gasket	Repairs and replaces 36812338
35	32526311	2	Stud	Up to Serial or Engine Number
36	32526312	2	Stud	
37	33127419	4	Shim	

(A)
PRESS FIT

(B)
SLIP FIT

Tylko dla użytku wewnętrznego

6

VILEBREQUIN
KURBELWELLE
ALBERO A MANOVELLA
CIGUENAL
CRANKSHAFT

00801007

1 0080 007

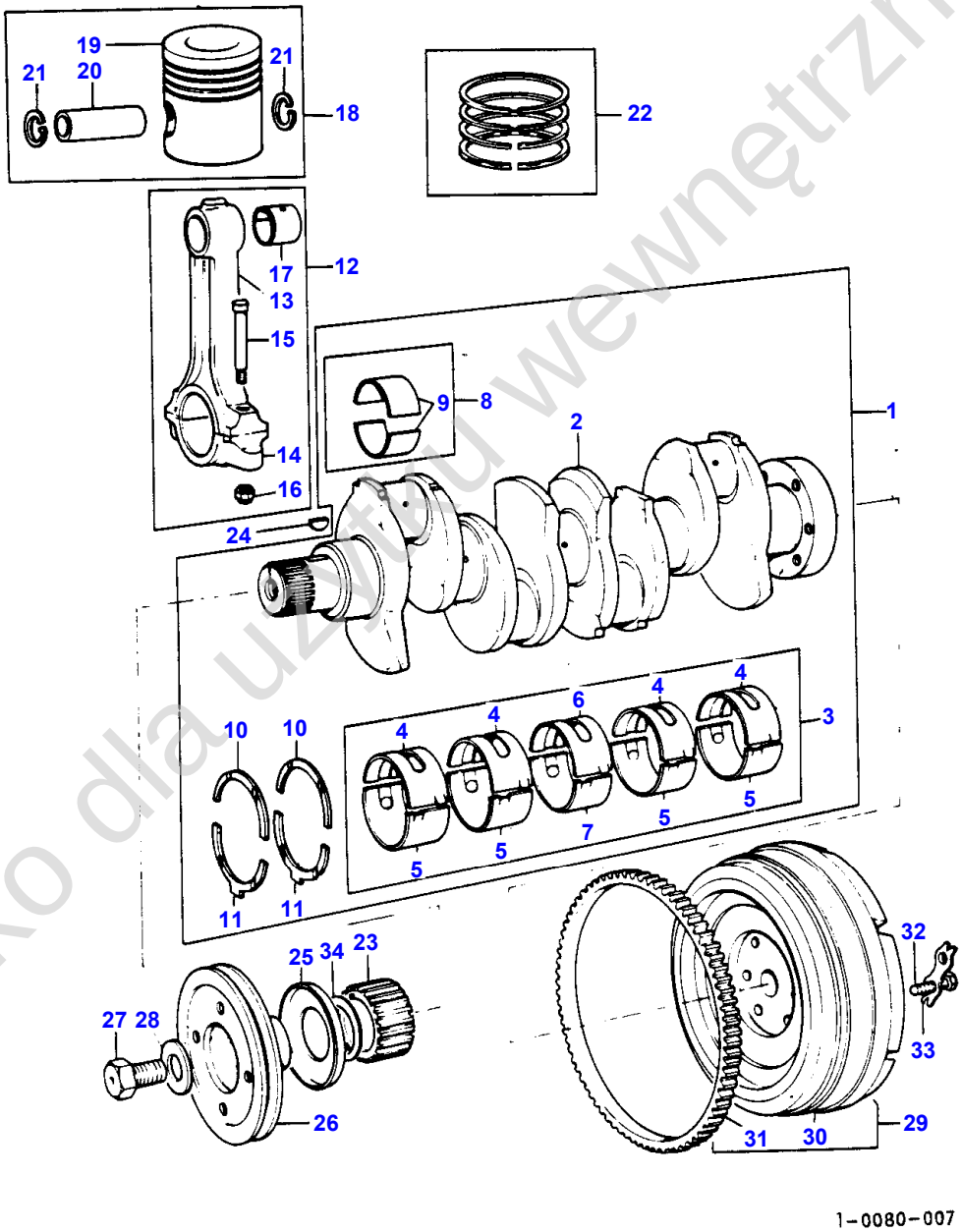

Tylko dla użytku wewnętrznego

Item	Part Number	Qty	Description	Comments
1	94434	1	Kit, Crankshaft	
2		1	Crankshaft	(1) Not serviced, order 94434 Not serviced, order 68609
3	81558	1	Kit, Bearing	(1) (A)
3	81558A	X	Kit, Bearing	(A) Thickness - 0,25MM
3	81558B	X	Kit, Bearing	(A) Thickness - 0,50MM
3	81558C	X	Kit, Bearing	(A) Thickness - 0,75MM
4		4	Kit, Bearing	(3) Not serviced, order 81558
5		4	Kit, Bearing	(3) Not serviced, order 81558
6		1	Kit, Bearing	(3) Not serviced, order 81558
7		1	Kit, Bearing	(3) Not serviced, order 81558
8	85042	1	Kit, Bearing	(1) (A)
8	85042A	X	Kit, Bearing	(A) Thickness - 0,25MM
8	85042B	X	Kit, Bearing	(A) Thickness - 0,50MM
8	85042C	X	Kit, Bearing	(A) Thickness - 0,75MM
9		8	Kit, Bearing	(8) Not serviced, order 85042
10	31137311	2	Washer	(1)
	31137312	X	Thrust Washer	Thickness + 0,18MM
11	31137321	2	Washer	(1)
	31137322	X	Thrust Washer	Thickness + 0,18MM
12	84920	4	Conrod	
13		4	Piston Rod	(12) Not serviced, order 84920
14		4	Cap	(12) Not serviced, order 84920
15	32762116	8	Bolt	(12)
16	33221321	8	Nut	(12)
17	31134123	4	Bush	(12)
18	89207	4	Kit, Piston	(B) Repairs and replaces 68367
18	68318	4	Kit, Piston	(C) Repairs and replaces 68303
19		4	Piston	(18) Not serviced, order 89207-68318
20		4	Piston Pin	(18) Not serviced, order 89207-68318
21	0170002	8	Circlip	(18)
22	86778	X	Kit, Ring	Repairs and replaces 92473
23	31171681	1	Gear,Crankshaft	
24	0500012	1	Woodruff Key	
25	33415311	1	Flange	Repairs and replaces 33157523
26	31148711	1	Pulley	
27	32162319	1	Screw	
28	33125124	1	Washer	
29	41117084	1	Flywheel	
30		1	Flywheel	Not serviced, order 41117084
31	0410236	1	Starter Ring	
32	0746851	6	Screw	Up to Serial or Engine Number 248UA135728L
	2182122	6	Setscrew	From Serial or Engine Number 248UA135729L
33	0921062	3	Tab Washer	
34	33125416	1	Washer	(D)

Tylko dla użytku wewnętrznego

Item	Part Number	Qty	Description	Comments
				(A) PRE-FINNISHED (B) PRE-TOPPED (C) UNTOPPED (D) WITH 33157523

Tylko dla użytku wewnętrznego

10

CULASSE
ZYLINDERKOPF
TESTATA
CULATA
CYLINDER HEAD

00751026

1 0075 006

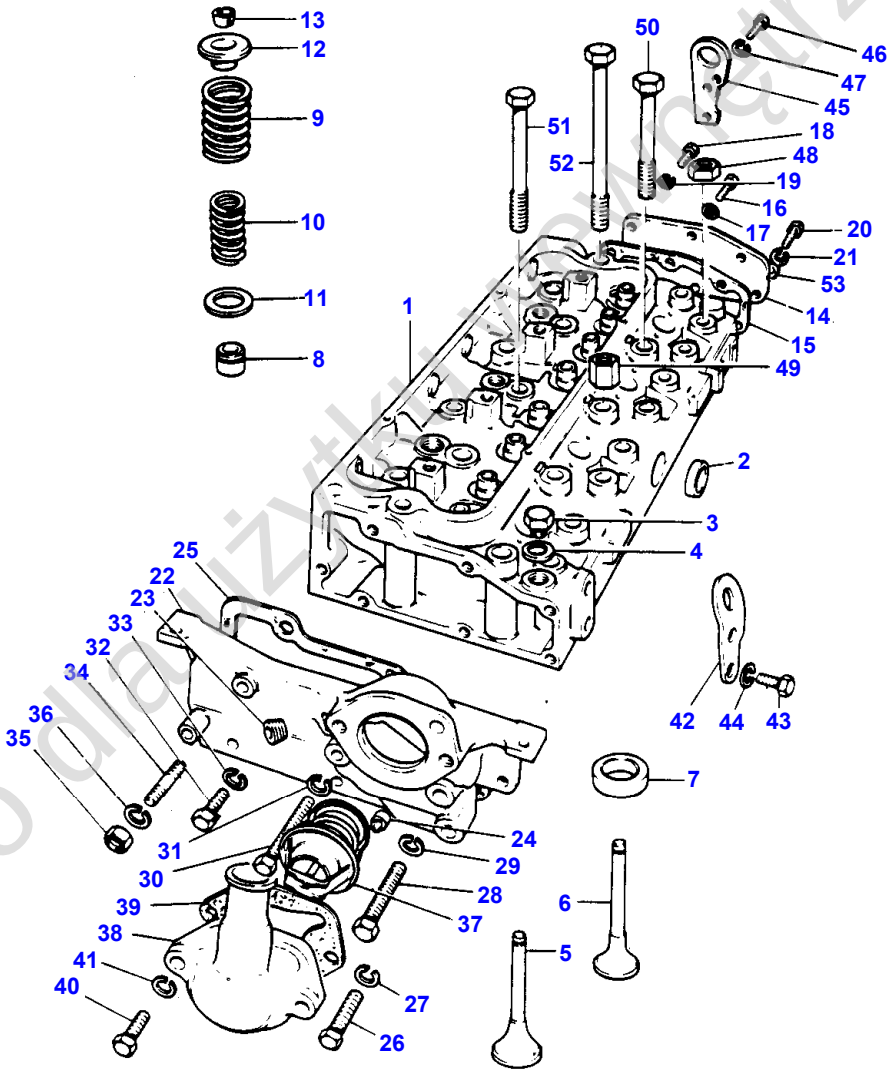

1-0075-006

Tylko dla użytku prywatnego

Item	Part Number	Qty	Description	Comments
1	68116	1	Cylinder Head	
2	0650710	1	Plug	(1) Repairs and replaces 0650563
3	0650203	1	Plug	(1)
4	2411107	1	Washer	(1) Repairs and replaces 2411157
5	31431315	4	Valve Inlet	(1)
6	31431881	4	Valve Exhaust	(1) Repairs and replaces 31431851
7	33152139	4	Insert	(1) Up to Serial or Engine Number UA135684L
7	33152153	4	Insert	(1) From Serial or Engine Number UA135685L
8	33817125	8	Seal	(1) Repairs and replaces 33817117
9	31745121	8	Spring	(1)
10	31744131	8	Spring	(1)
11	33123117	8	Washer	(1)
12	33423147	8	Cap	(1) Repairs and replaces 33423122
13	33173108	16	Cotter	(1) (A)
14	37553142	1	Cover	Repairs and replaces 36212152
15	36851409	1	Joint	
16	0746255	2	Setscrew	
17	0920053	2	Washer	
18	0746255	2	Setscrew	
19	0920053	2	Washer	
20	0746255	2	Setscrew	
21	0920053	2	Washer	
22	37762705	1	Body	Repairs and replaces 37762704
23	2431154	2	Plug	
24	2485791	1	Pin	
25	36853514	1	Joint	
26	0096434	2	Bolt	
27	0920054	2	Washer	
28	0096439	1	Bolt	
29	0920054	1	Washer	
30	0096238	1	Bolt	
31	0920053	1	Washer	
32	0746255	2	Setscrew	
33	0920053	2	Washer	
34	0826467	1	Stud	
35	0576051	1	Nut	
36	0920054	1	Washer	
37	2485659	1	Thermostat	
38	37746643	1	Connection	
39	36862151	1	Joint	
40	0096433	2	Bolt	
41	0920054	2	Washer	
42	36475706	1	Plate	
43	0746453	2	Setscrew	
44	0920054	2	Washer	
45	36177111	1	Plate	
46	0746453	2	Setscrew	
47	0920054	2	Washer	
48	33221316	2	Nut	
49	33287318	2	Nut	Up to Serial or Engine Number
50	32181424	6	Screw	
51	32181425	10	Screw	Up to Serial or Engine Number
	32181425	12	Screw	From Serial or Engine Number
52	32181426	2	Screw	
53	0330807	6	Spacer	
54	2415B201	4	O Ring	

(A)

Tylko do użytku wewnętrznego

Item	Part Number	Qty	Description	Comments
				SERVICED IN PAIRS

Tylko dla użytku wewnętrznego

14

CACHE CULBUTEURS
ZYLINDERKOPFDECKEL
COPERCHIO TESTATA
TAPA CULATA
CYLINDER HEAD COVER

00851015

1 0085 005

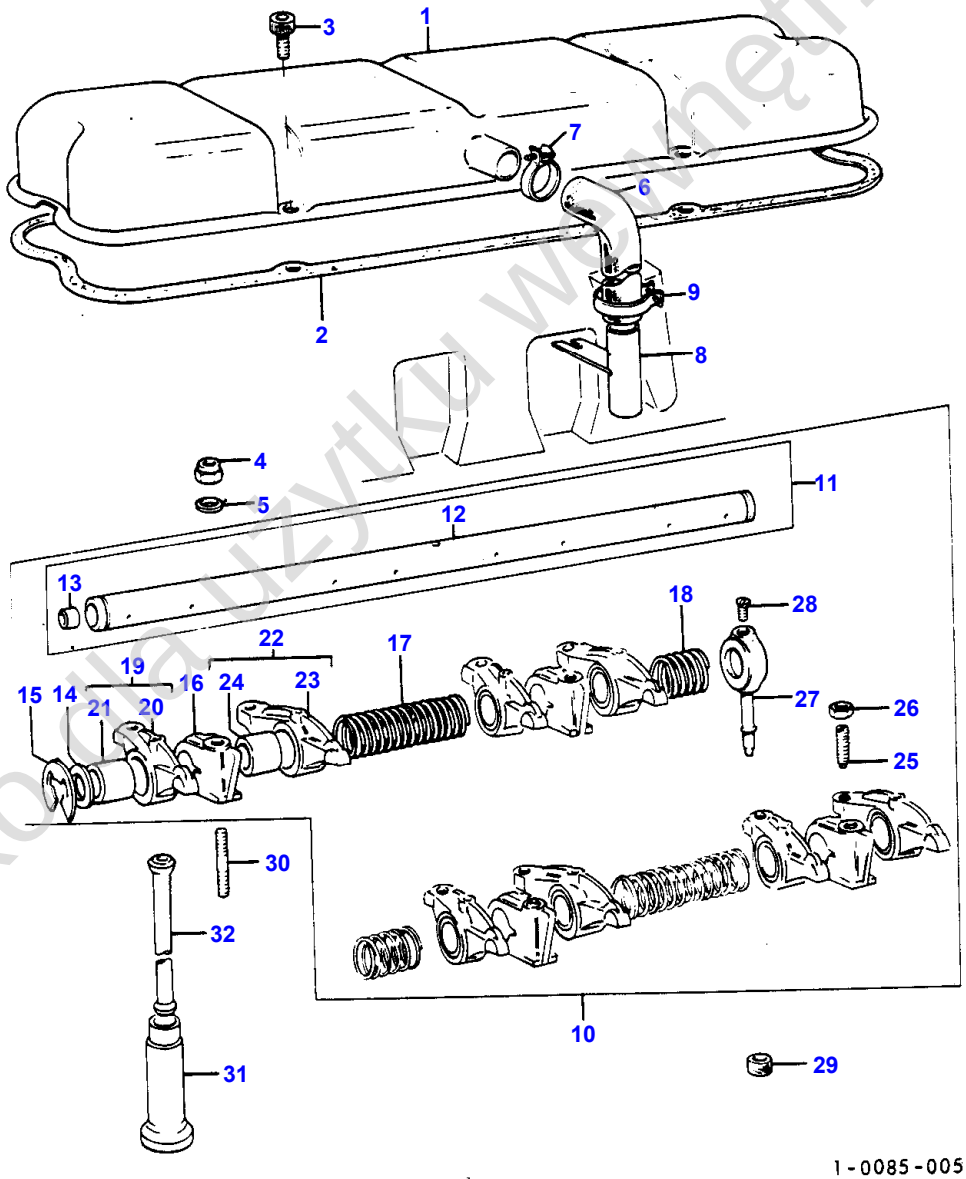

Tylko do użytku wewnętrznego

Item	Part Number	Qty	Description	Comments
1	37188549	1	Cyl.Head Cover	
2	36811132	1	Joint	Repairs and replaces 36811122
3	2172513	4	Screw	
4	0576054	4	Nut	Repairs and replaces 2211284
5	0920006	4	Washer	
6	33872516	1	Pipe,Breather	
7	0180063	1	Clip	Repairs and replaces 2481802
8	35731144	1	Pipe,Breather	
9	0180063	1	Clip	Repairs and replaces 2481802
10	88677	1	Rocker Shaft	
11	83449	1	Rocker Shaft	(10)
12		1	Rocker Shaft	(11)
				Not serviced, order 83449
13	0650507	2	Plug	(11)
14	33117415	2	Washer	(10)
15	0170151	2	Circlip	(10)
16	37521332	4	Bracket	(10)
				Repairs and replaces 37521331
17	31744123	2	Spring	(10)
18	31743108	2	Spring	(10)
19	41151421	4	Lever	(10)
				Right Hand
20		4	Rocker	(19)
				Not serviced, order 41151421
21	2511425	4	Bush	(19)
22	41151419	4	Lever	(10)
				Left Hand
23		4	Rocker	(22)
				Not serviced, order 41151419
24	2511425	4	Bush	(22)
25	0720579	8	Screw	(10)
26	0576052	8	Nut	(10)
27	35511111	1	Pipe	(10)
28	0726504	1	Setscrew	(10)
29	33811113	1	Olive	
30	0826628	4	Stud	
31	31434163	8	Tappet	
32	31434307	8	Pushrod	

Tylko dla użytku wewnętrznego

16

ADMISSION D'AIR
LUFTANSAUGUNG
SISTEMA DI ASPIRAZIONE
ADMISION
AIR INDUCTION

0295 1014

1 0295 012

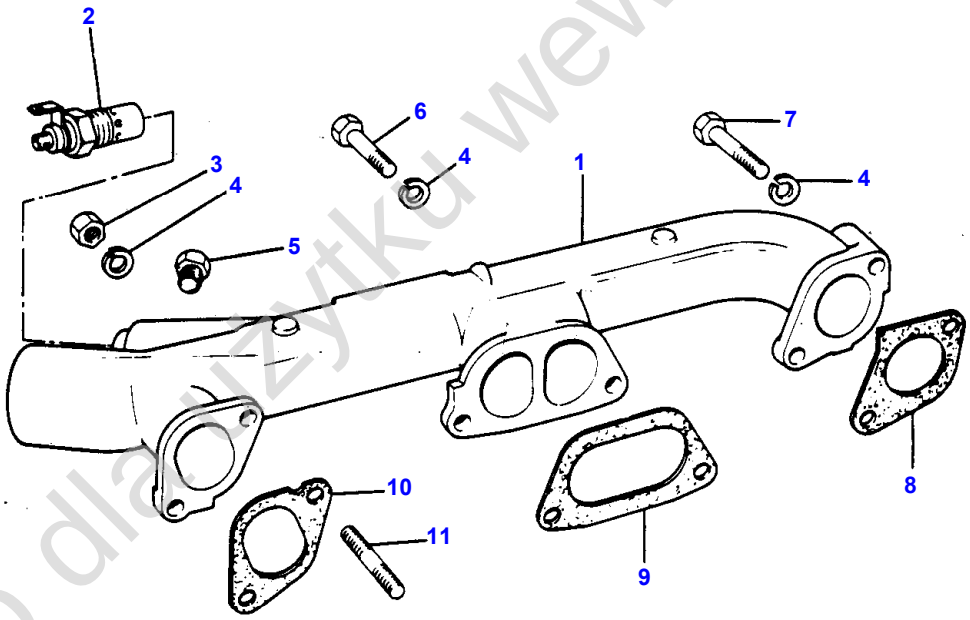

1-0295-012

Tylko dla użytku wewnętrznego

Item	Part Number	Qty	Description	Comments
1	37787654	1	Induct.Manifold	Repairs and replaces 37787653
2	2666108	1	Intake Heater	
3	0576051	1	Nut	
4	0920054	6	Washer	
5	0650204	1	Plug	
6	0746424	4	Bolt	Repairs and replaces 0096431
7	0096439	1	Bolt	
8	36862131	1	Joint	
9	36862133	1	Joint	
10	36866462	1	Joint	
11	0826481	1	Stud	Repairs and replaces 0826443

Tylko dla użytku wewnętrznego

18

COLLECTEUR D'ECHAPPEMENT
AUSPUFFKRUEMMER
COLLETTORE DI SCARICO
COLECTOR ESCAPE
EXHAUST MANIFOLD

03301006

1 0330 006

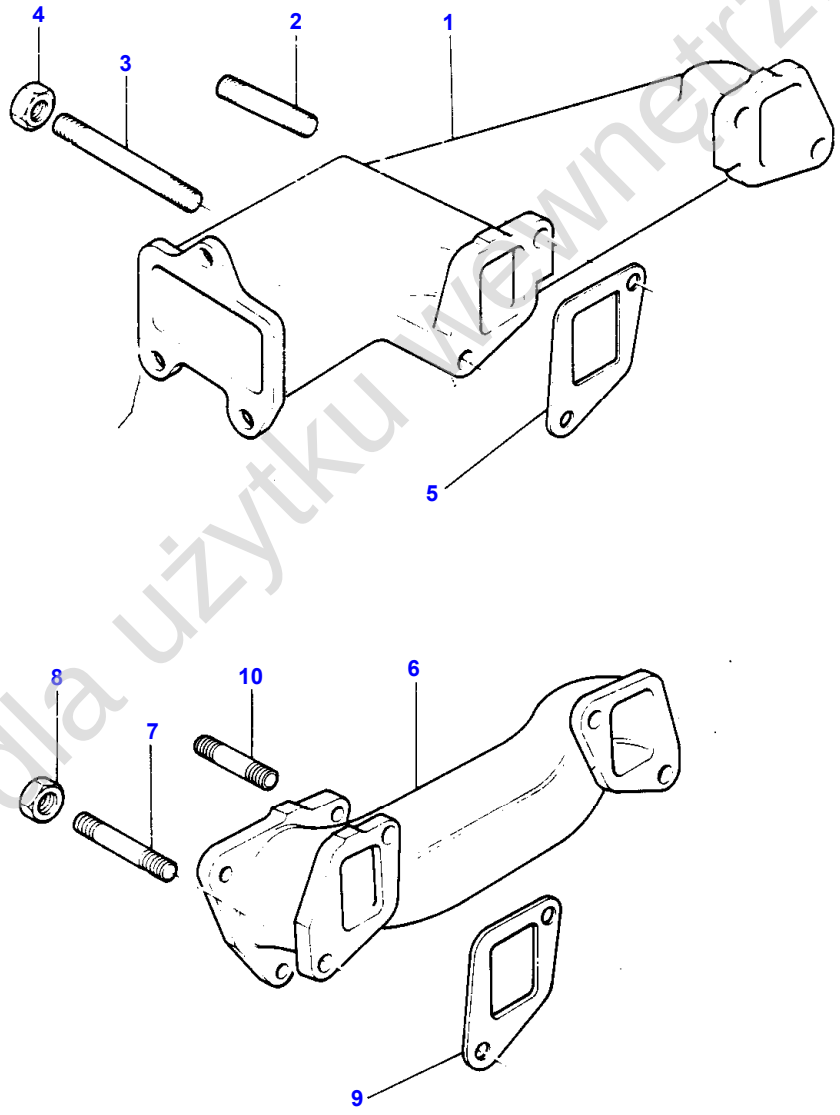

1-0330-006

Tylko dla użytku wewnętrznego

Item	Part Number	Qty	Description	Comments
1	37781051	1	Exhaust Manifold	Up to Serial or Engine Number 04-80
2	0826526	1	Stud	
3	0826408	3	Stud	Repairs and replaces 0826403
4	2188135	4	Nut	
5	36862159	2	Joint	Repairs and replaces 36862134
6	37781781	1	Exhaust Manifold	(A) From Serial or Engine Number 04-80
7	0826439	4	Stud	
8	2188135	4	Nut	
9	36862159	2	Joint	Repairs and replaces 36862134

(A)
OUTSIDE HOOD EXHAUST

Tylko dla użytku wewnętrznego

20

DISTRIBUTION
STEUERUNG
DISTRIBUZIONE
ENGRANDJES DISTRIBUCION
TIMING GEAR

01001021

1 0100 006

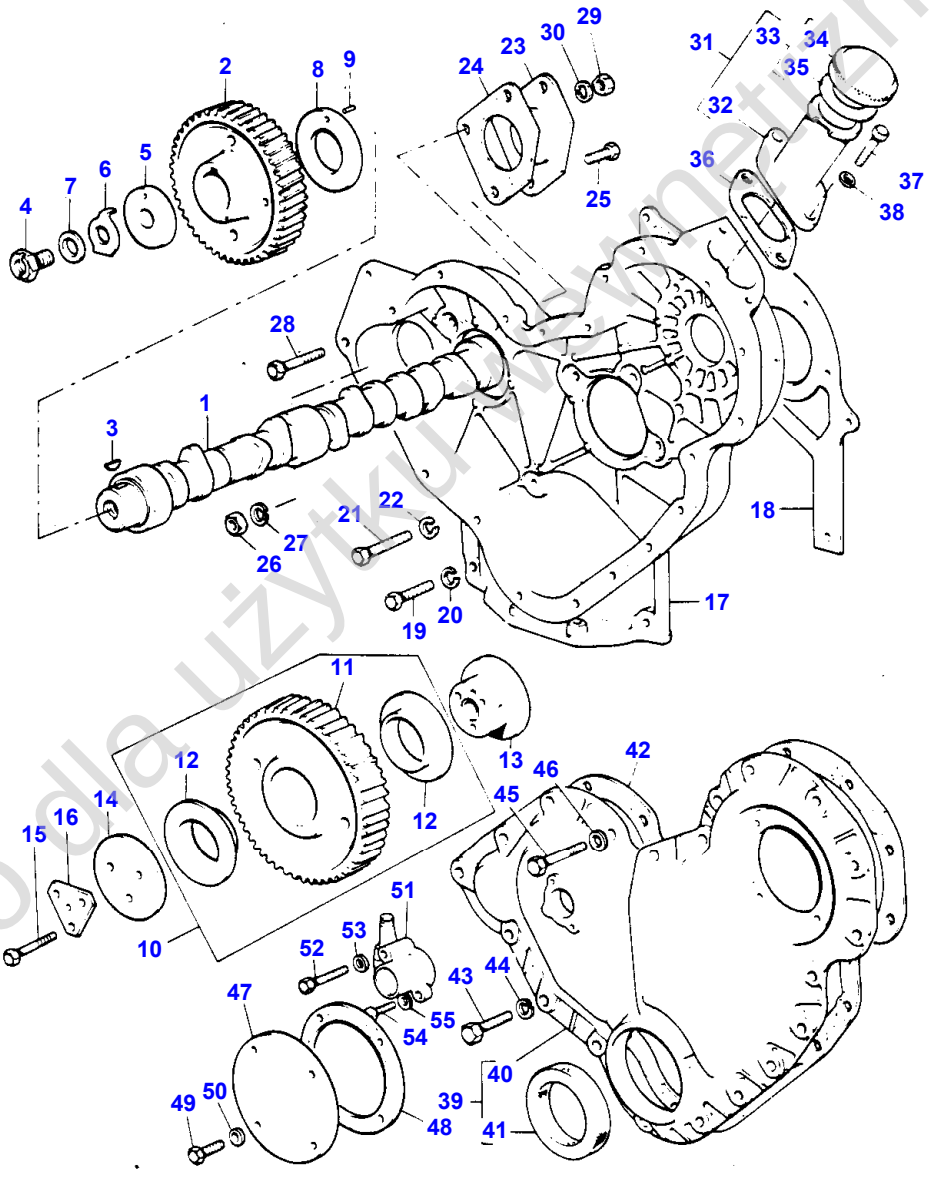

1-0100-006

Tylko do użytku wewnętrznego

Item	Part Number	Qty	Description	Comments
1	31415321	1	Camshaft	
2	31171353	1	Gear,Camshaft	
3	0500012	1	Woodruff Key	
4	32161209	1	Screw	
5	33153128	1	Washer	
6	31733121	1	Washer	
7	33115408	1	Washer	
8	33153121	1	Washer	
9	2116053	1	Pin	Repairs and replaces 0610844
10	41115023	1	Idler	
11		1	Pinion	(10) Not serviced, order 41115023
12	0050345	2	Bush	(10)
13	33426161	1	Hub	
14	0941082	1	Plate	
15	0096439	3	Bolt	
16	0921246	1	Washer	(A)
17	37161871	1	Timing Case	
18	36814127	1	Joint	Repairs and replaces 36814123
19	0746255	8	Setscrew	
20	0920053	8	Washer	
21	0746211	1	Bolt	
22	0920053	1	Washer	
23	37556148	1	Plate	
24	36861429	1	Joint	
25	0748505	1	Screw	
26	2238153	1	Nut	
27	0920054	1	Washer	
28	2232151	2	Screw	
29	2238153	2	Nut	
30	0920054	2	Washer	
31	35784117	1	Filler	
32		1	Filler	(31) Not serviced, order 35784117
33	2487854	1	Cap	
34		1	Plug	Not serviced, order 2487854
35	24870001	1	Joint	
36	36862138	1	Joint	
37	0746254	2	Setscrew	
38	2411152	2	Washer	
39	41422703	1	Cover	
40		1	Cover	(39) Not serviced, order 41422703
41	2415361	1	Seal	(39)
42	36813137	1	Joint	
43	0746255	14	Setscrew	
44	0920053	14	Washer	
45	0096238	4	Bolt	
46	2411152	4	Washer	
47	32413415	1	Cover	
48	33825419	1	Joint	
49	0746252	4	Screw	
50	2411152	4	Washer	
51	2758346	1	Angle Drive	
52	0746019	1	Screw	
53	0920101	1	Washer	Repairs and replaces 2411151
54	0746053	1	Bolt	
55	0920101	1	Washer	Repairs and replaces 2411151

(A)
CANCELLED

Tylko dla użytku wewnętrznego

24

EQUILIBREUR
AUSGLEICHPUMPE
MASSA EQUILIBRATRICE
EQUILIBRADOR
BALANCER UNIT

01201008

1 0120 001

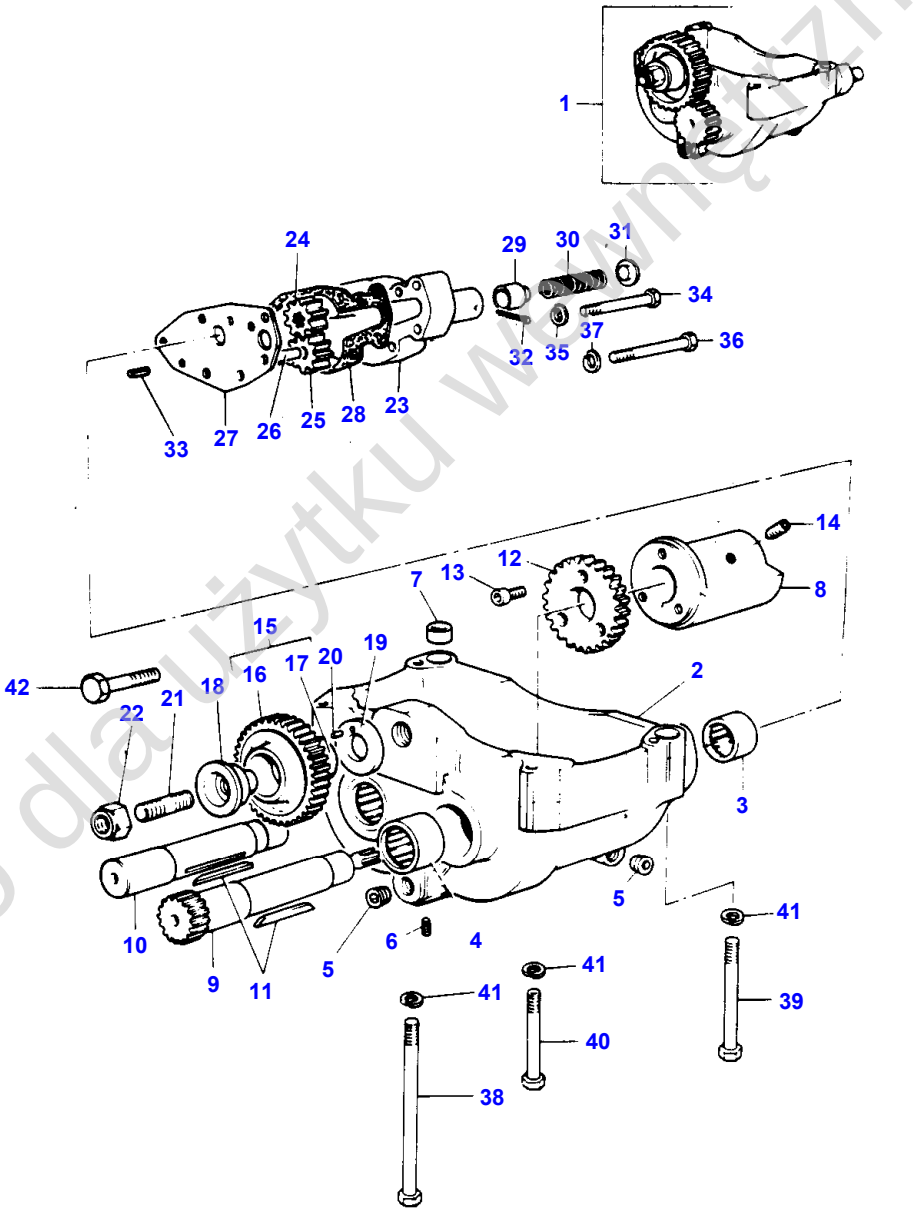

1-0120-001

Tylko do użytku wewnętrznego

Item	Part Number	Qty	Description	Comments
1	41733402	1	Balancer	Up to Serial or Engine Number UA147638L
	41733066	1	Balancer	From Serial or Engine Number UA147639L
2		1	Frame	(1) Not serviced, order 41733402 Not serviced, order 41733066
3	2558375	2	Bearing Roller	(1) Up to Serial or Engine Number UA147638L
3	2557180	2	Bearing	(1) From Serial or Engine Number UA147639L
4	2558371	2	Bearing Roller	(1) Up to Serial or Engine Number UA147638L
4	2557176	2	Bearing	(1) From Serial or Engine Number UA147639L
5	2431131	2	Plug	(1)
6	2431A051	1	Plug	(1) Repairs and replaces 2431130
7	33137408	2	Thimble	(1) Repairs and replaces 0870001
8	37417472	2	Weight	(1)
9	31171275	1	Shaft	(1) Up to Serial or Engine Number UA147638L
9	31171276	1	Shaft	(1) From Serial or Engine Number UA147639L
10	32731126	1	Shaft	(1) Up to Serial or Engine Number UA147638L
10	32731127	1	Shaft	(1) From Serial or Engine Number UA147639L
11	2576675	2	Woodruff Key	(1)
12	31164581	2	Gear	(1)
13	2172513	6	Screw	(1)
14	2171225	4	Screw	(1)
15	84447	1	Gear	(1)
16		1	Pinion	(15) Not serviced, order 84447
17	2511458	1	Bush	(15)
18	33451801	1	Hub	(1)
19	33153133	1	Plate	(1)
20	0610879	1	Pin	(1)
21	32523404	1	Stud	(1) Up to Serial or Engine Number UA147638L
22	33221319	1	Nut	(1) Up to Serial or Engine Number UA147638L Repairs and replaces 2211155
23	37714234	1	Body	(1) Repairs and replaces 37714232
24	31165531	1	Gear,Oil Pump	(1) Repairs and replaces 31165121
25	31165461	1	Gear,Balancer	(1)
26	32455123	1	Shaft	(1)
27	36237156	1	Plate	(1)
28	36866722	1	Joint	(1)
29	32712715	1	Plunger	(1)
30	31742128	1	Spring	(1)
31	33157122	1	Cap	(1)
32	0610012	1	Pin	(1)
33	0350005	2	Dowel	
34	0096236	5	Bolt	
35	0920053	5	Washer	
36	0096237	2	Bolt	
37	0920053	2	Washer	
38	2184546	1	Screw	
39	0096441	1	Bolt	
40	0096439	2	Bolt	
41	0920054	4	Washer	
42	0096633	1	Bolt	From Serial or Engine Number UA147639L

Tylko dla użytku wewnętrznego

26

CARTER D'HUILE
OELWANNE
COPPA OLIO
CARTER ACEITE
LUBRICATING OIL SUMP

04401008

1 0440 002

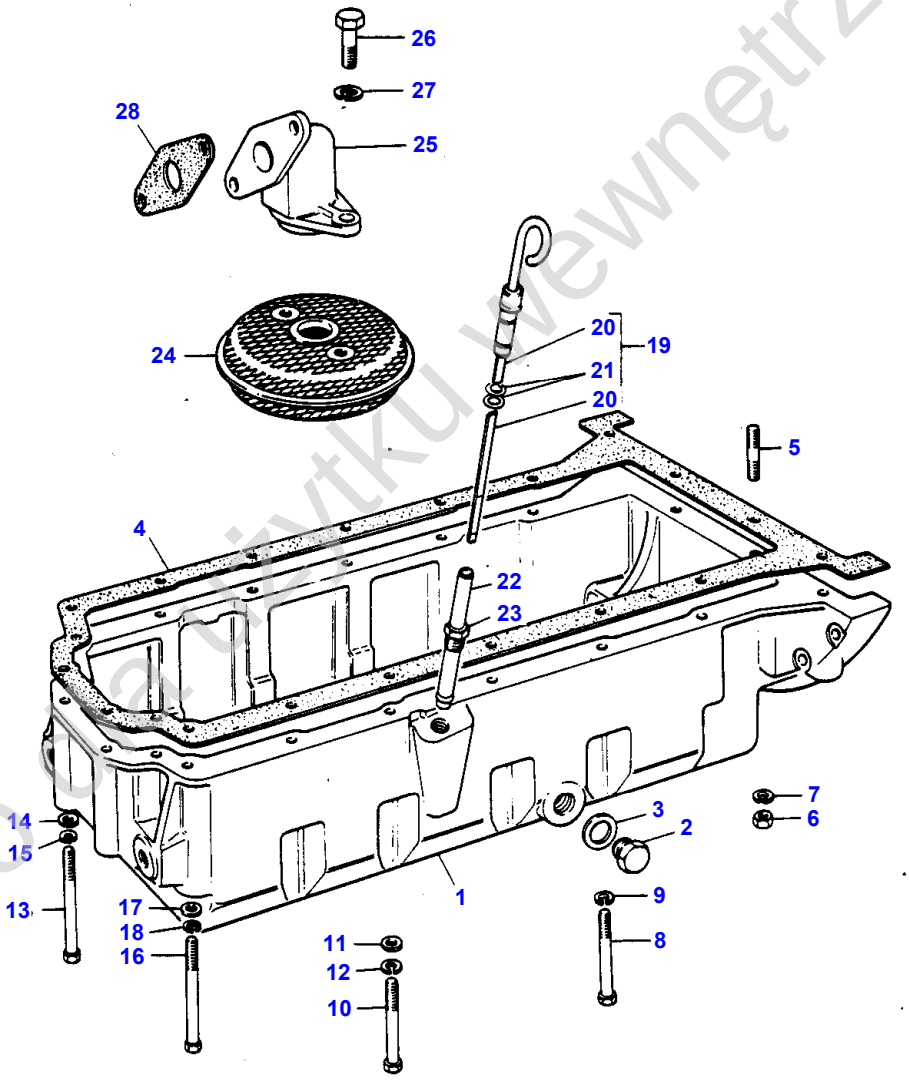

Tylko do użytku wewnętrznego

Item	Part Number	Qty	Description	Comments
1	37171823	1	Sump	
2	2487004	1	Plug	
3	2411160	1	Washer	
4	36815707	1	Joint	
5	32517128	2	Stud	
6	0576002	2	Nut	
7	0920053	2	Washer	
8	0096241	11	Bolt	
9	0920053	11	Washer	
10	0096215	1	Screw	
11	0920003	1	Washer	
12	0920053	1	Washer	
13	2184435	4	Screw	
14	0920003	4	Washer	
15	0920053	4	Washer	
16	2184435	2	Screw	
17	0920003	2	Washer	
18	0920053	2	Washer	
19	31785007	1	Dipstick	
20		1	Oil Dipstick	19 Not serviced, order 31785007
21	0640126	2	Ring	
22	33435123	1	Tube	
23	33533103	1	Nut	
24	37725443	1	Strainer	
25	37738261	1	Elbow	
26	0746052	2	Bolt	
27	0920052	2	Washer	
28	36832409	1	Joint	

Tylko dla użytku wewnętrznego

28

FILTRE A HUILE
OELFILTER
FILTRO OLIO
FILTRO DE ACEITE
LUBRICATING OIL FILTER

04451019

1 0445 002

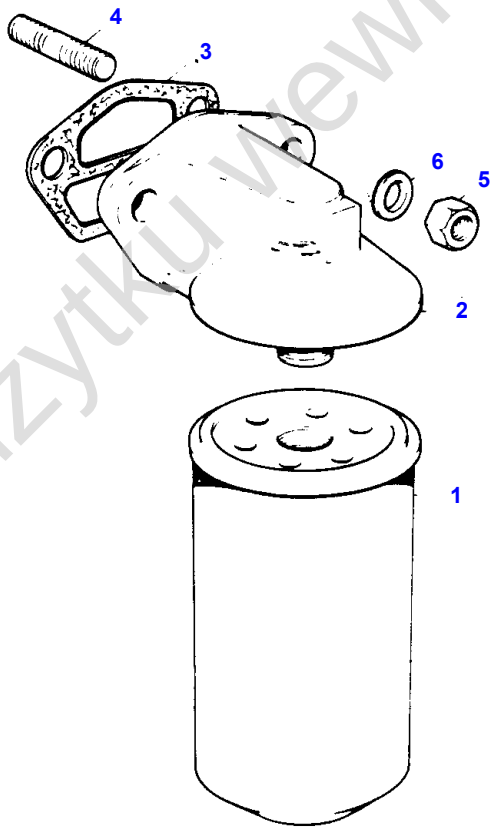

1-0445-002

Tylko dla użytku wewnętrznego

Item	Part Number	Qty	Description
1	2654403	1	Oil Filter
2	37764181	1	Filter Head
3	36862517	1	Joint
4	0826608	2	Stud
5	0576054	2	Nut
6	33115118	2	Washer

Tylko dla użytku wewnętrznego

30

POMPE A EAU
WASSERPUMPE
POMPA ACQUA
BOMBA DE AGUA
WATER PUMP

02751027

1 0275 008

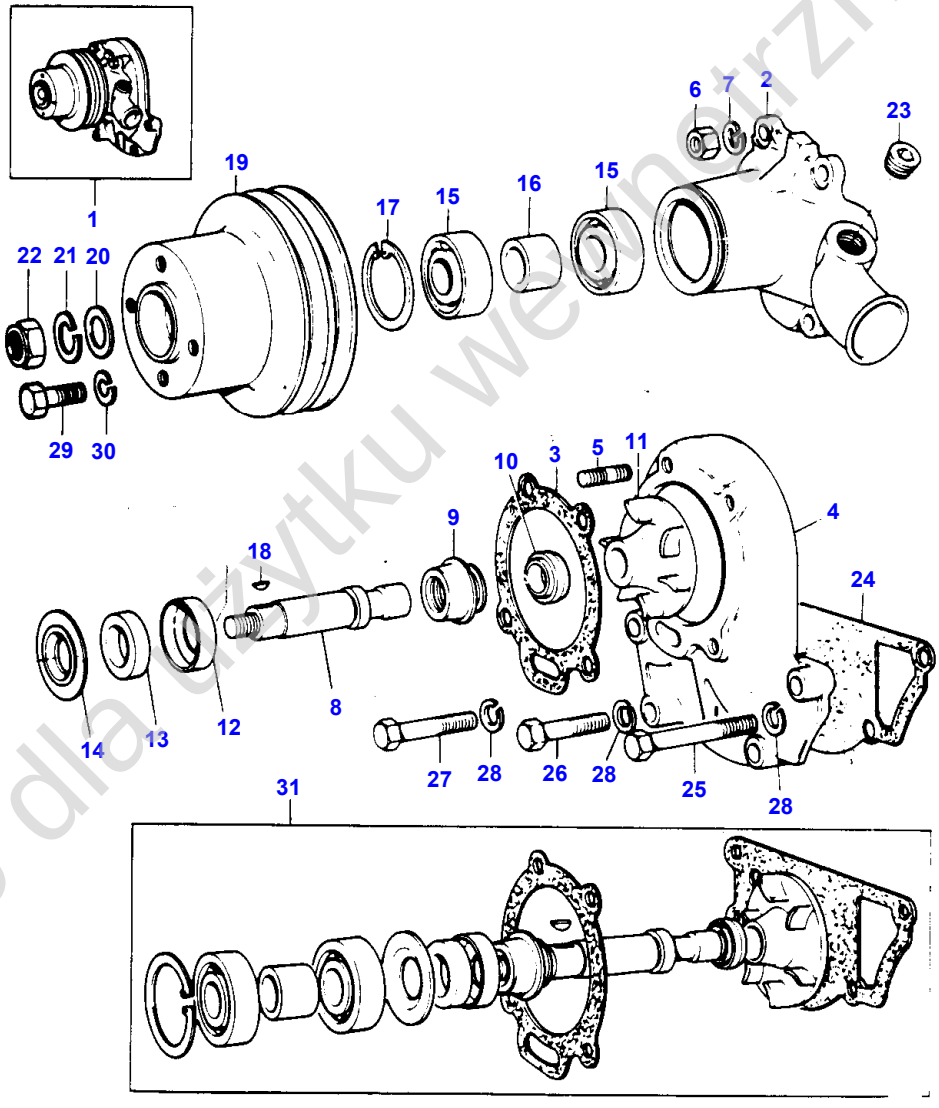

1-0275-008

Tylko dla użytku wewnętrznego

Item	Part Number	Qty	Description	Comments
1	41313201	1	Pump	Repairs and replaces 41312756
2		1	Body Pump	(1) Not serviced, order 41313201
3	36866721	1	Joint	(1)
4	37711711	1	Body	(1)
5	0826212	4	Stud	(1)
6	0576002	4	Nut	(1)
7	0920053	4	Washer	(1)
8		1	Shaft	(1) Not serviced, order 89034
9	2415216	1	Seal	(1)
10	2417208	1	Seal	(1)
11		1	Turbine	(1) Not serviced, order 89034
12		1	Cage	(1) Not serviced, order 89034
13	33813313	1	Seal	(1)
14		1	Cage	(1) Not serviced, order 89034
15		2	Bearing Assy	(1) Not serviced, order 89034
16		1	Spacer	(1) Not serviced, order 89034
17	0170040	1	Circlip	(1)
18	0500006	1	Woodruff Key	
19	31147031	1	Pulley,Waterpump	Repairs and replaces 31153502
20	0920009	1	Washer	
21	0920058	1	Washer	
22	0576007	1	Nut	
23	2431154	1	Plug	
24	36867156	1	Joint	
25	0096439	1	Bolt	
26	0096434	2	Bolt	
27	0096440	1	Screw	
28	0920054	4	Washer	
29	0746254	4	Setscrew	
30	0920053	4	Washer	
31	89034	X	Kit, Repair	

Tylko dla użytku wewnętrznego

32

POMPE D'ALIMENTATION
KRAFTSTOFFOERDERPUMPE
POMPA ALIMENTAZIONE NAFTA
BOMBA DE COMBUSTIBLE
FUEL OIL LIFT PUMP

03951014

1 0395 005

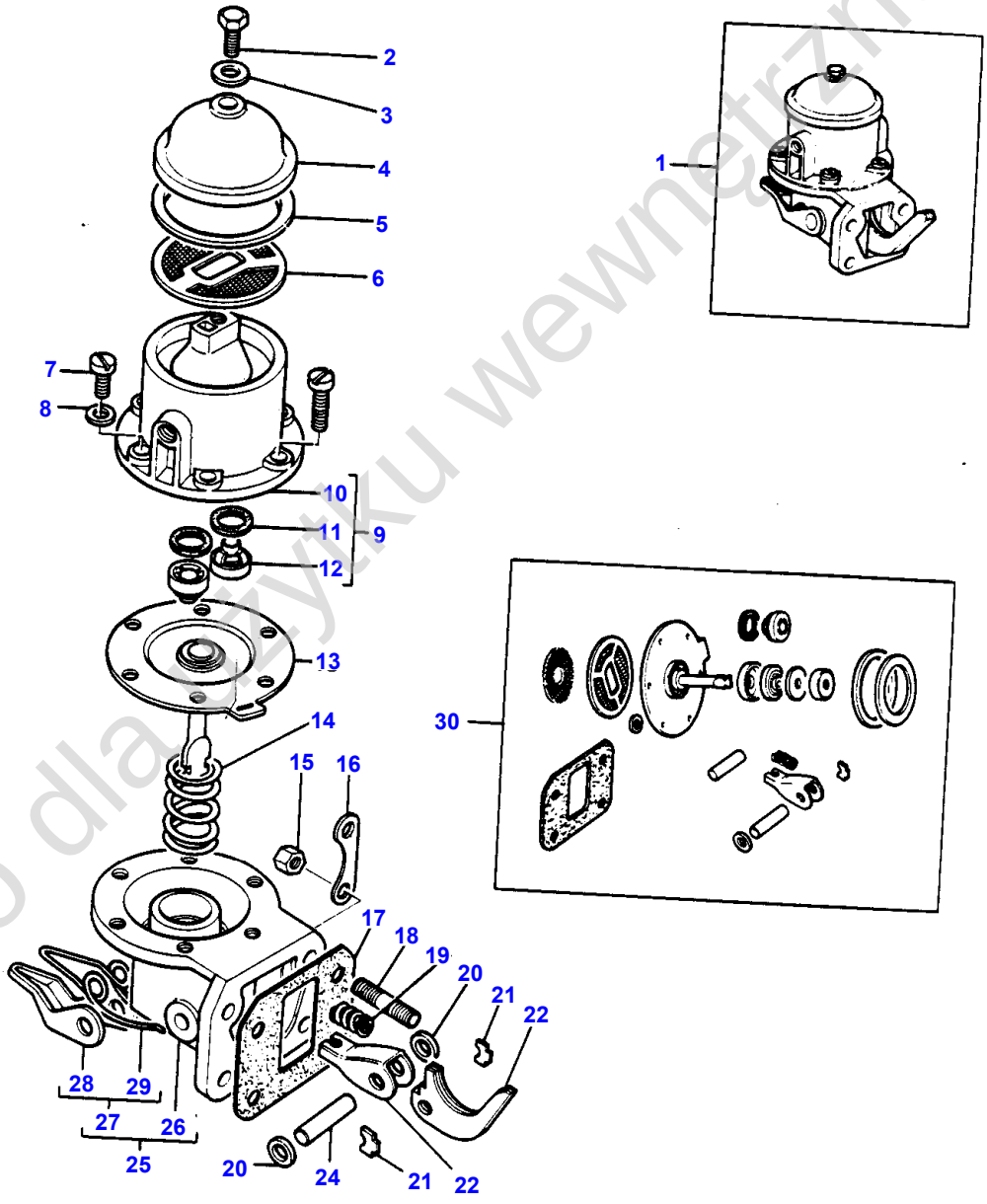

Tylko dla użytku wewnętrznego

FUEL OIL LIFT PUMP 32

Item	Part Number	Qty	Description	Comments
1	2641711	1	Fuel Pump	
2		1	Screw	Not serviced, order 2641711
3		1	Washer	Not serviced, order 2641711
4		1	Cover	Not serviced, order 2641711
5		1	Gasket	Not serviced, order 26410009
6		1	Chaffer	Not serviced, order 26410009
7		5	Screw	Not serviced, order 2641711
8		5	Washer	Not serviced, order 2641711
9		1	Housing	Not serviced, order 2641711
10		1	Housing	Not serviced, order 2641711 9
11		2	O Ring	Not serviced, order 26410009 9
12		2	Pressure Valve	Not serviced, order 26410009 9
13		1	Diaphragm	Not serviced, order 26410009
14	0780240	1	Spring	
15	33221115	4	Nut	
16	36241316	2	Plate	
17	36851113	1	Joint	
18	0826222	4	Stud	
19		1	Spring	Not serviced, order 26410009
20		2	Washer	Not serviced, order 26410009
21		2	Stop	Not serviced, order 26410009
22		1	Rockerarm	Not serviced, order 2641711
23		1	Arm	Not serviced, order 26410009
24		1	Clevis Pin	Not serviced, order 26410009
25		1	Body Pump	Not serviced, order 2641711
26		1	Body Pump	Not serviced, order 2641711 25
27		1	Primer	Not serviced, order 2641711 25
28		1	Primer	Not serviced, order 2641711 27
29		1	Spring	Not serviced, order 2641711 27
30	26410009	X	Kit, Repair	

Tylko dla użytku wewnętrznego

34

SYSTEME D'INJECTION
EINSPRITZANLAGE
EQUIPAGGIAMENTO INIEZIONE NAFTA
EQUIPO DE INYECCION
FUEL INJECTION EQUIPMENT

04001021

1 0400 005

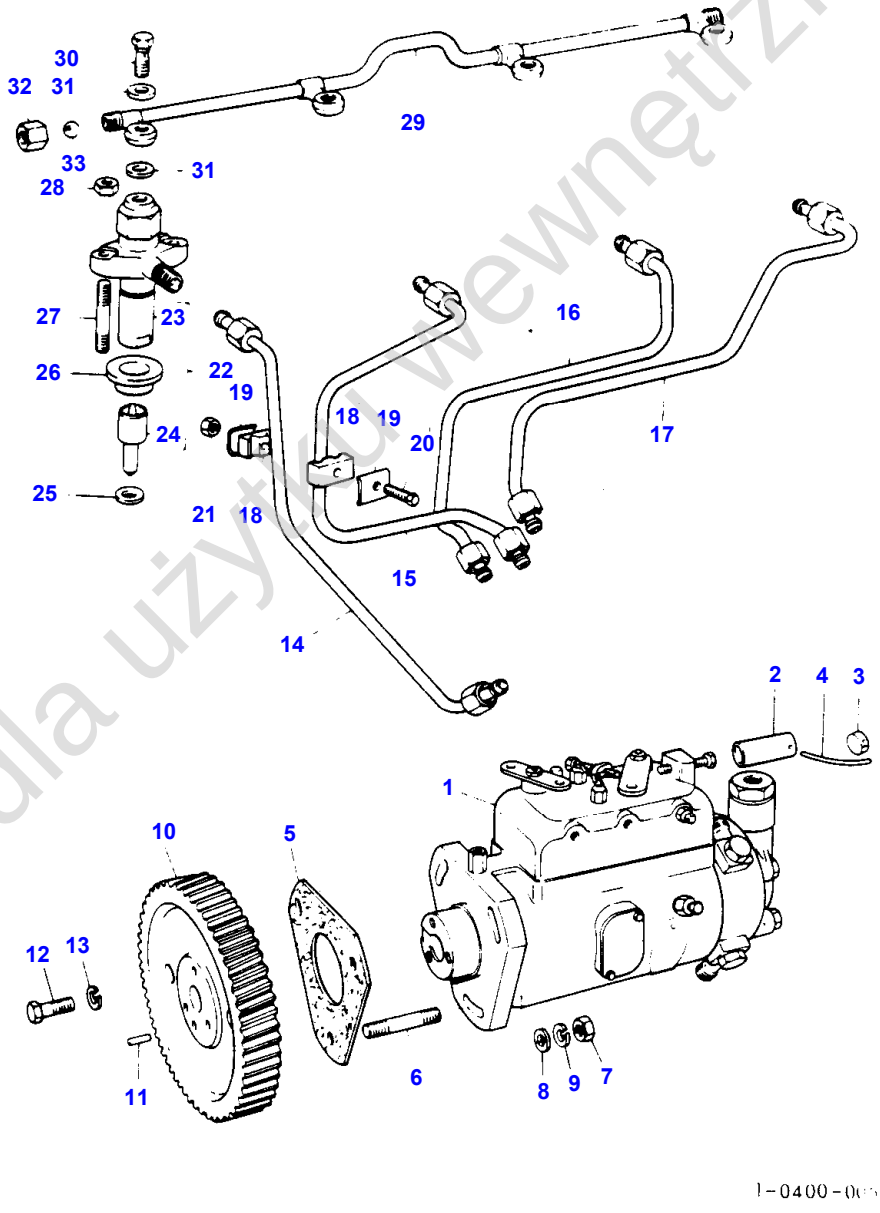

Tylko dla użytku wewnętrznego

Item	Part Number	Qty	Description	Comments
1	37879	1	Injection Pump	(A) Up to Serial or Engine Number UA151180
1	38367	1	Injection Pump	(A) From Serial or Engine Number UA151181
1	38373	1	Injection Pump	(B)
	38372	1	Pump	(C)
2	2644951	1	Sleeve	
3	31718104	1	Seal	
4	31718105	1	Wire	
5	0490685	1	Joint	
6	0826277	3	Stud	
7	0576002	3	Nut	
8	0920003	3	Washer	
9	0920053	3	Washer	
10	31171524	1	Gear,Fuel Pump	
11	2116078	1	Dowel	
12	0746254	3	Setscrew	
13	0920053	3	Washer	
14	35354266	1	Pipe	(A,C)
	35354292	1	Pipe	(B)
15	35354267	1	Pipe	(A,C)
	35355293	1	Pipe	(B)
16	35354293	1	Pipe	
17	35355409	1	Pipe	Repairs and replaces 35355289
18	36844116	4	Bridle	
19	36511123	4	Plate	
20	0726260	2	Bolt	
21	2211401	2	Nut	
22	2645664	4	Atomiser	
23	2646466	4	Holder	(22)
24	2646826	4	Nozzle	(22)
25	0921173	4	Washer	
	1645935M91	X	Washer	
26	33817114	4	Shield	
27	0826280	8	Stud	
28	0576002	8	Nut	
29	35587344	1	Leak-Off Pipe	
30	0095315	4	Banjo Bolt	
31	0921176	8	Washer	
32	0576111	1	Nut	(B)
33	0020006	1	Ball	(B)

(A)
STANDARD INJECTION

(B)
WITH ROAD SPEED LIMITING DEVICE

(C)
ROAD SPEED INTERNAL STOP

Tylko dla użytku wewnętrznego

38

SUPPORT D'ALTERNATEUR
HALTERUNG DREHSTROMLICHTMASCHINE
FISSAGGIO ALTERNATORE
SOPORTE ALTERNADOR
ALTERNATOR POSITIONER

01551018

1 0155 022

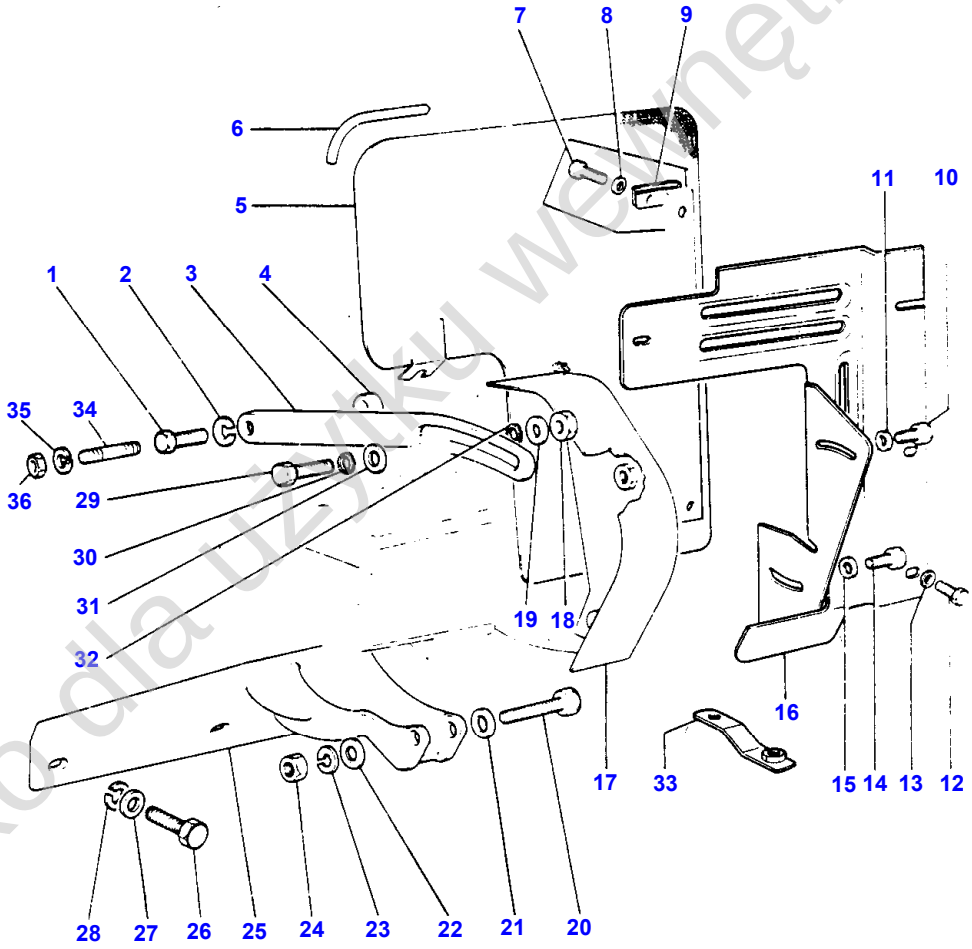

1 0155 022

Tylko dla użytku wewnętrznego

Item	Part Number	Qty	Description	Comments
1	0096441	1	Bolt	
2	0920054	1	Washer	
3	36544327	1	Lever	Repairs and replaces 36178175
4	0920469	1	Spacer	
5	1664763M94	1	Guard	For Germany only or any text in German only
6	1668722M1	1	Trim	For Germany only or any text in German only
7	353501X1	3	Screw Unf	
8	355617X1	3	Washer	
9	360039X1	2	Clip	
10	353501X1	1	Screw Unf	
11	355617X1	1	Washer	
12	353501X1	3	Screw Unf	
13	355617X1	3	Washer	
14	353501X1	1	Screw Unf	
15	355617X1	1	Washer	
16	1673659M91	1	Guard	
17	1664769M91	1	Guard	
	1872720M92	1	Guard	
18	355565X1	1	Nut Unc	
19	353755X1	1	Washer	
20	354267X1	1	Bolt Unc	
21	353756X1	1	Washer	
22	353756X1	1	Washer	
23	353434X1	1	Lock Washer	
24	355566X1	1	Nut Unc	
25	38165159	1	Bracket	
26	0746453	2	Setscrew	
27	0920004	2	Washer	
28	0920054	2	Washer	
29	353682X1	1	Screw Unc	
30	353446X1	1	Lock Washer	
31	353755X1	1	Washer	
32	353446X1	1	Lock Washer	
33	1673619M91	1	Bracket	

Tylko dla użytku wewnętrznego

40

JOINTS
DICHTUNGEN
GRUPPO GUARNIZIONI
JUEGOS DE JUNTAS
JOINTS AND GASKETS

01101019

1 0110 007

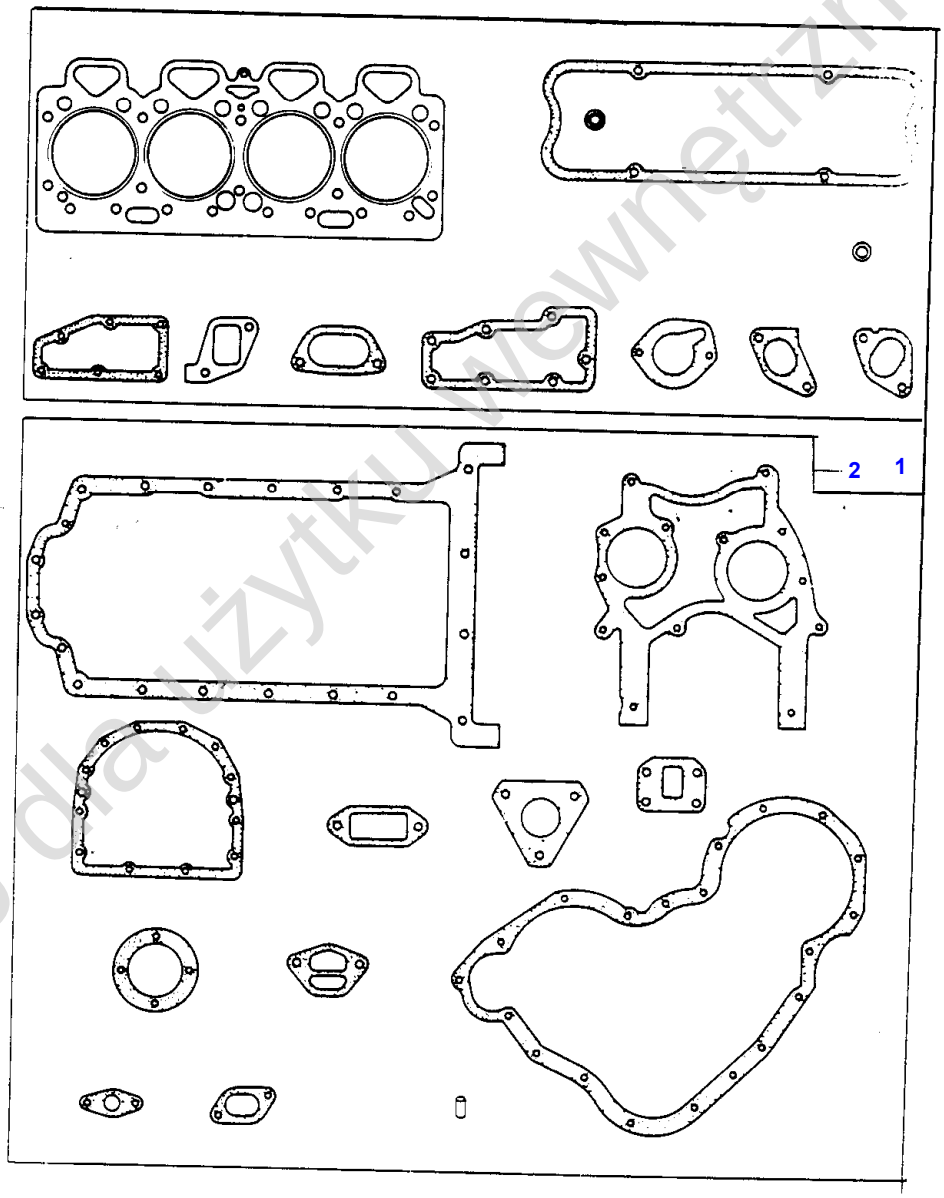

1-0110-007

Tylko do użytku wewnętrznego

Item	Part Number	Qty	Description	Comments
1	68248	X	Kit, Joint	Repairs and replaces 89297
2	68013	X	Kit, Joint	Repairs and replaces 92440

Tylko dla użytku wewnętrznego

42

EQUIPEMENT ELECTRIQUE
ELEKTRISCHE AUSRUESTUNG
IMPIANTO ELETTRICO
EQUIPO ELECTRICO
ELECTRICAL EQUIPMENT

01501010

1 0150 011

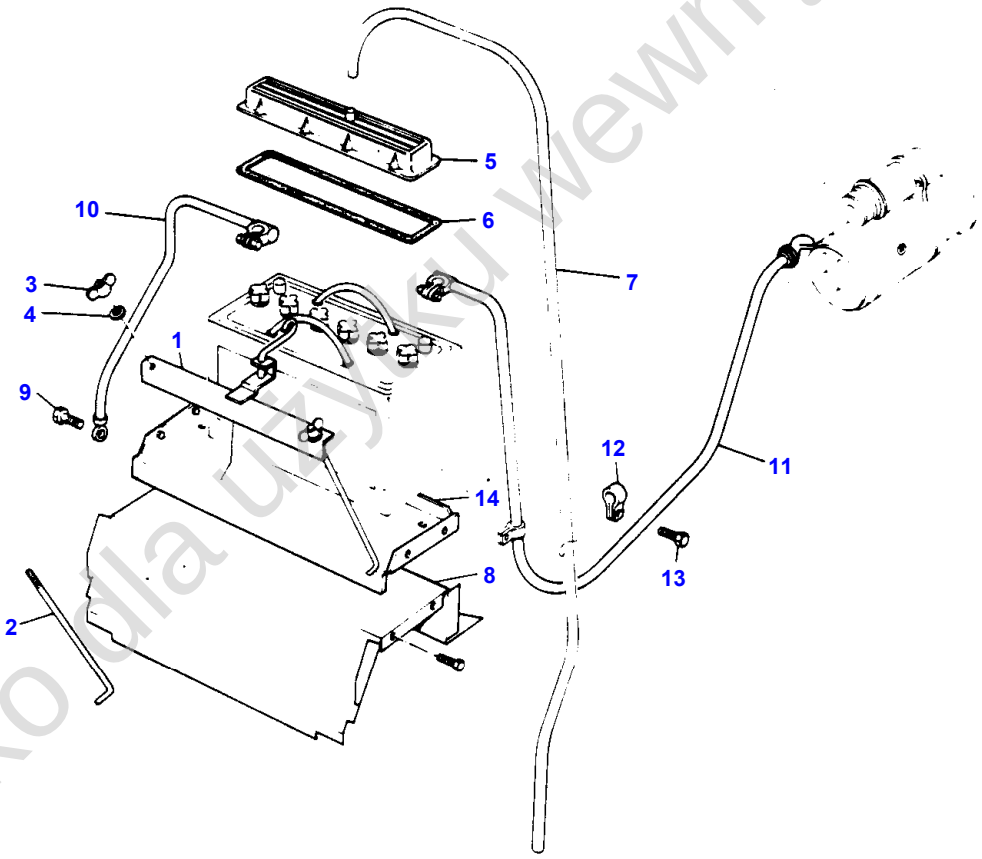

1-0150-011

Tylko dla użytku wewnętrznego

Item	Part Number	Qty	Description	Comments
				BATTERY OLD MOUNTING- 2 WHEEL DRIVE
1	1662585M92	1	Band	
2	1875671M1	2	Stem	
3	355592X1	2	Nut Unc	
4	355617X1	2	Washer	
5	1661974M1	1	Cover	For UK only or any text in English only EE
	1661975M1	1	Cover	For France only or any text in French only
				For Germany only or any text in German only
6	1661977M1	1	Gasket	For UK only or any text in English only EE
	1661978M1	1	Gasket	For France only or any text in French only
				For Germany only or any text in German only
7	1875722M1	1	Tube	
8	1613512M91	1	Pan	
9	365017X1	4	Self Tap Screws	
	22464X	1	Washer	
10	1875675M91	1	Cable	
11	1875674M91	1	Cable	
12	21522A	2	Tie	
	1699055M2	1	Strap	For France only or any text in French only
				For Germany only or any text in German only
13	353694X1	1	Bolt	
14	1875667M91	1	Tray	

Tylko dla użytku wewnętrznego

44

EQUIPEMENT ELECTRIQUE
ELEKTRISCHE AUSRUESTUNG
IMPIANTO ELETTRICO
EQUIPO ELECTRICO
ELECTRICAL EQUIPMENT

01501033

1 0150 058

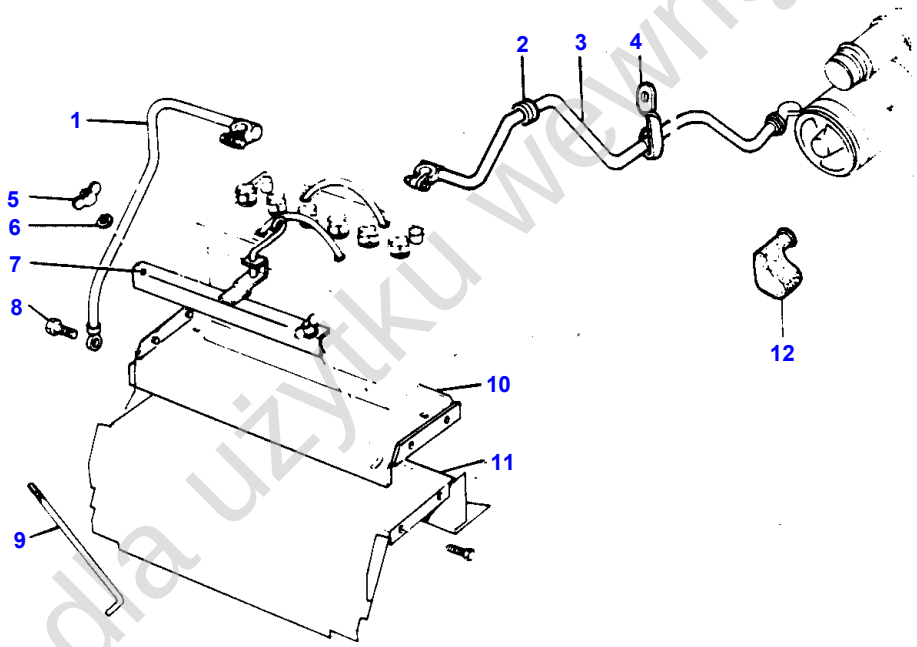

1 0150 058

Tylko dla użytku wewnętrznego

Item	Part Number	Qty	Description	Comments
				BATTERY NEW MOUNTING- 2 WHEEL DRIVE
1	1675698M92	1	Cable	,-,
2	1680062M1	1	Grommet	
	831935M1	1	Grommet	
3	1676235M91	1	Cable	,+,
4	968429M1	1	Fastener	
	950235M1	1	Strap	
	1669122M1	1	Strap	
5	355564X1	2	Nut Unc	
6	355617X1	2	Washer	
7	1671730M1	1	Strap	
8	365017X1	4	Self Tap Screws	
9	1678526M1	2	Draglink	
10	1875667M91	1	Tray	
11	1613512M91	1	Pan	
12	1676255M1	1	Cover	

Tylko dla użytku wewnętrznego

46

EQUIPEMENT ELECTRIQUE
ELEKTRISCHE AUSRUESTUNG
IMPIANTO ELETTRICO
EQUIPO ELECTRICO
ELECTRICAL EQUIPMENT

01501011

1 0150 012

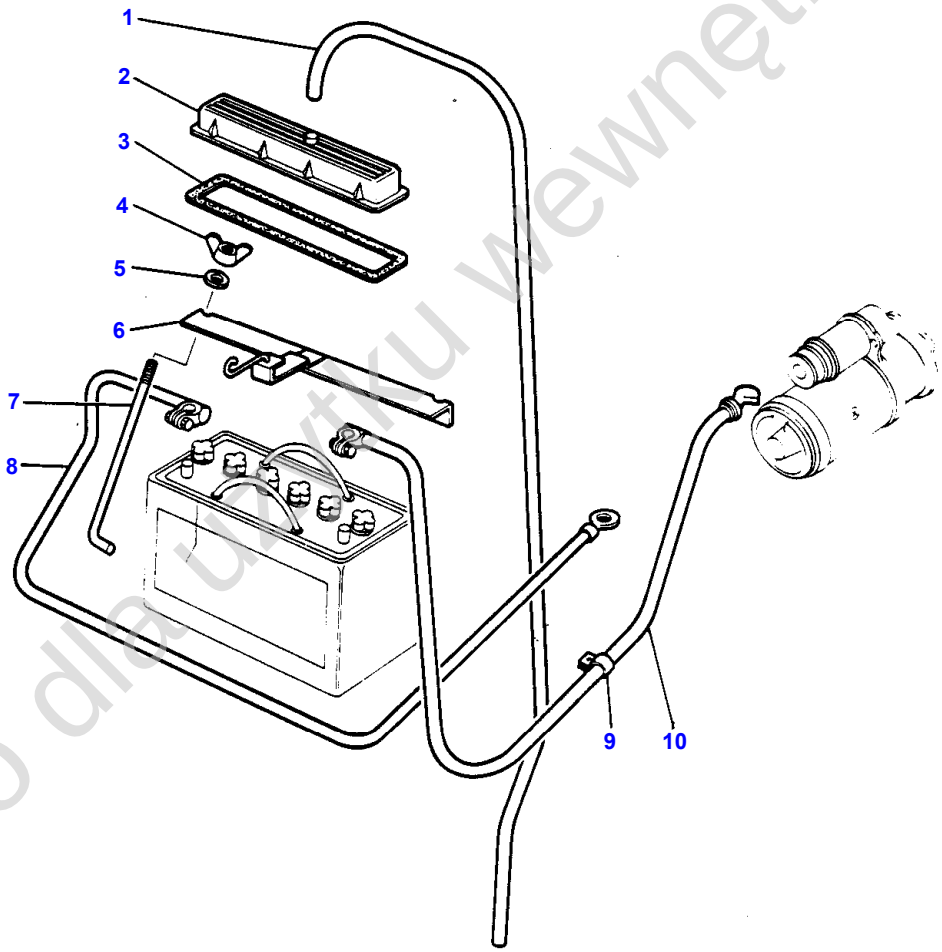

1-0150-012

Tylko dla użytku wewnętrznego

Item	Part Number	Qty	Description	Comments
				BATTERY OLD MOUNTING- 4 WHEEL DRIVE
1	1875722M1	1	Tube	
2	1661974M1	1	Cover	For UK only or any text in English only EE
	1661975M1	1	Cover	For France only or any text in French only
				For Germany only or any text in German only
3	1661977M1	1	Gasket	For UK only or any text in English only EE
	1661978M1	1	Gasket	For France only or any text in French only
				For Germany only or any text in German only
4	355592X1	2	Nut Unc	
5	355617X1	2	Washer	
6	1698231M91	1	Bracket	
7	1698277M1	2	Rod	
8	1875679M91	1	Cable	
9	1873838M1	1	Strap	
10	1875678M91	1	Cable	

Tylko dla użytku wewnętrznego

48

EQUIPEMENT ELECTRIQUE
ELEKTRISCHE AUSRUESTUNG
IMPIANTO ELETTRICO
EQUIPO ELECTRICO
ELECTRICAL EQUIPMENT

01501034

1 0150 059

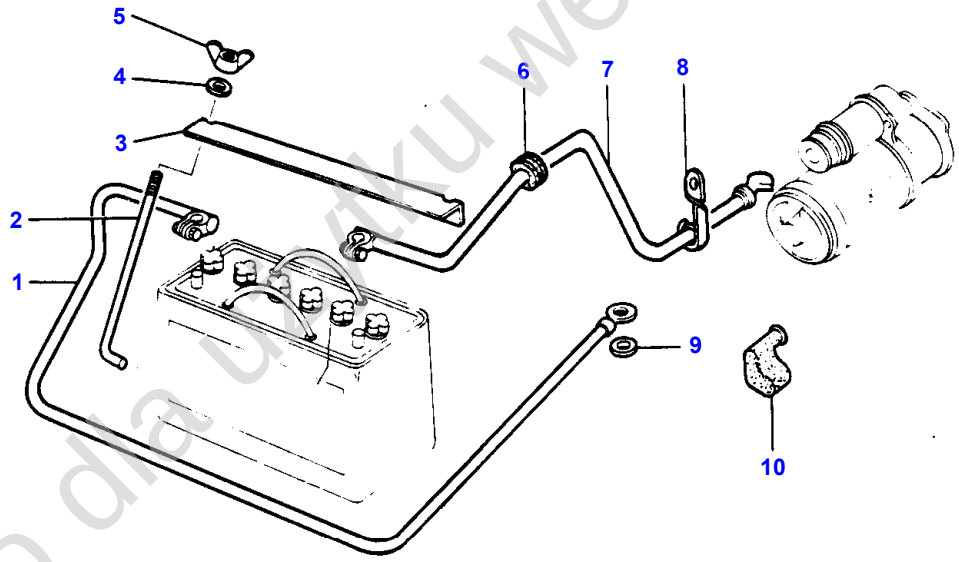

1-0150-059

Tylko dla użytku wewnętrznego

Item	Part Number	Qty	Description	Comments
				BATTERY NEW MOUNTING- 4 WHEEL DRIVE
1	1675699M91	1	Cable	,-,
2	1698304M1	2	Draglink	
3	1671733M1	1	Angle	
4	355617X1	2	Washer	
5	355564X1	2	Nut Unc	
6	1680062M1	1	Grommet	
7	1675696M91	1	Cable	,+,
8	968429M1	1	Fastener	
	1669122M1	1	Strap	
9	22465X	1	Lock Washer	
10	1676255M1	1	Cover	

Tylko dla użytku wewnętrznego

50

EQUIPEMENT ELECTRIQUE
ELEKTRISCHE AUSRUESTUNG
IMPIANTO ELETTRICO
EQUIPO ELECTRICO
ELECTRICAL EQUIPMENT

01501008

1 0150 009

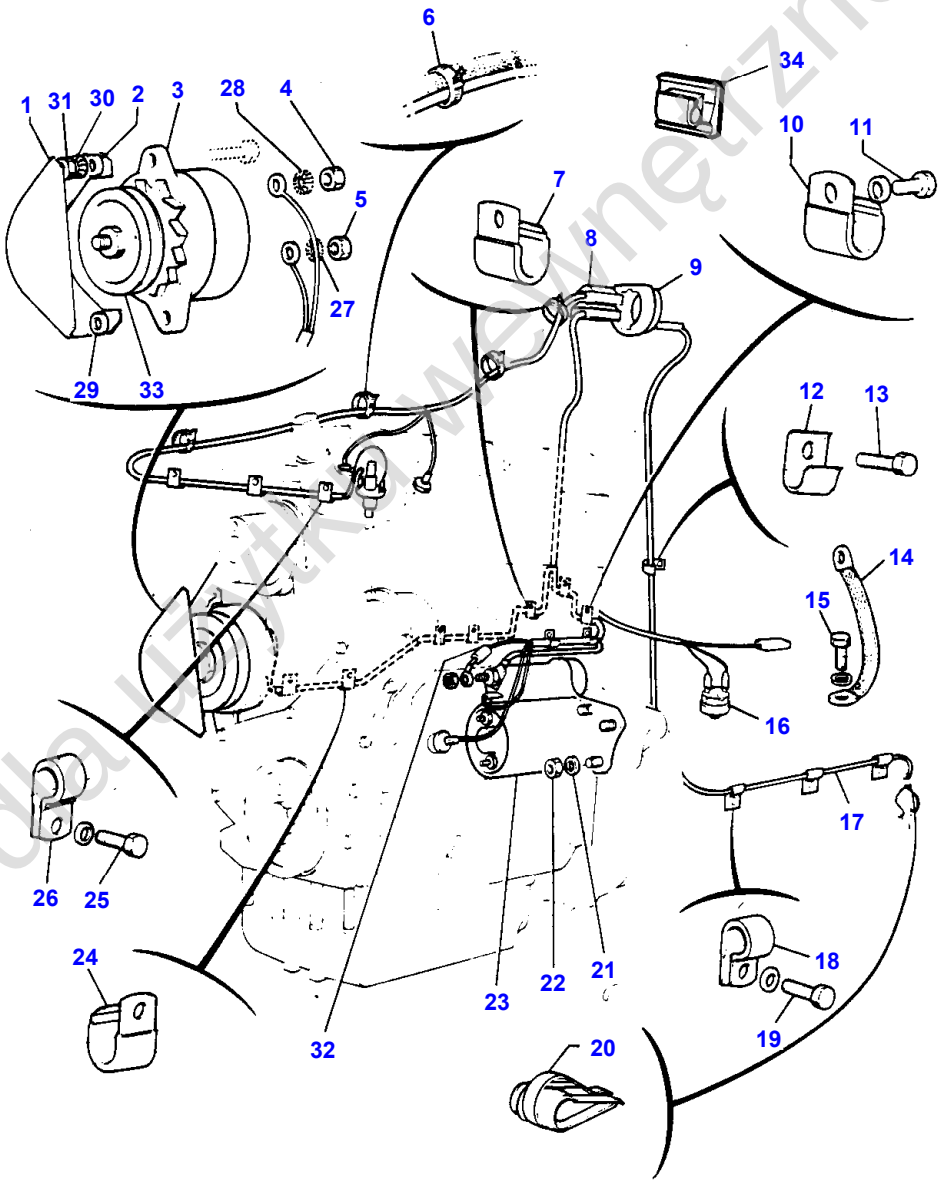

Tylko do użytku wewnętrznego

Item	Part Number	Qty	Description	Comments
				UP TO SERIAL NO A 228006
1	1872720M92	1	Guard	
2	353755X1	1	Washer	
3		1	Alternator	See Page - Reference Number 52/1
4	390995X1	1	Nut Metric	
5	339030X1	1	Nut Metric	
6	517587M1	4	Cable Tie	
7	1873861M1	1	Clip	
8	1617645M2	1	Harness	See Page - Reference Number 536/
9	1877729M1	1	Grommet	
10	1873859M1	1	Clip	
11	364754X1	1	Bolt	
	353432X1	1	Lock Washer	
12	506293M1	1	Clip	
13	365007X1	1	Self Tap Screws	
14	1618920M1	1	Cable	See Page - Reference Number 446/16 Repairs and replaces 169927M1
15	364754X1	1	Bolt	
	353757X1	1	Washer	
16	963417M2	1	Switch	
17	1699264M1	1	Harness	
18	361018X1	3	Tie	
19	365007X1	3	Self Tap Screws	Alternative 377547X1
	377547X1	3	Screw	Alternative 365007X1
20	506294M1	8	Clip	
21	353434X1	3	Lock Washer	
22	363623X1	3	Nut	
23		1	Startermotor	See Page - Reference Number 60/1 PARIS-RHONE
23		1	Startermotor	See Page - Reference Number 58/1 LUCAS
24	1668211M1	5	Strap	
25	353502X1	3	Screw Unf	
	353441X1	3	Lock Washer	
26	1873840M1	3	Strap	
27	391289X1	1	Lock Washer	Alternative 22463X
	22463X	1	Lock Washer	Alternative 391289X1
28	1441100X1	1	Washer	Alternative 359409X1
	359409X1	1	Washer	Alternative 1441100X1
29	353756X1	1	Washer	
30	353446X1	1	Lock Washer	
31	355565X1	1	Nut Unc	
32	1875449M1	1	Wire	Up to Serial or Engine Number 02/81
33	1876818M1	1	Pulley	Up to Serial or Engine Number NO Z 291
	1699137M91	1	Pulley	From Serial or Engine Number NO Z 291
34	1664815M1	2	Strap	

Tylko do użytku wewnętrznego

52

ALTERNATEUR	MOTOROLA
DREHSTROMLICHTMASCHINE	MOTOROLA
ALTERNATORE	MOTOROLA
ALTERNADOR	MOTOROLA
ALTERNATOR	MOTOROLA

01611002

1 0161 003

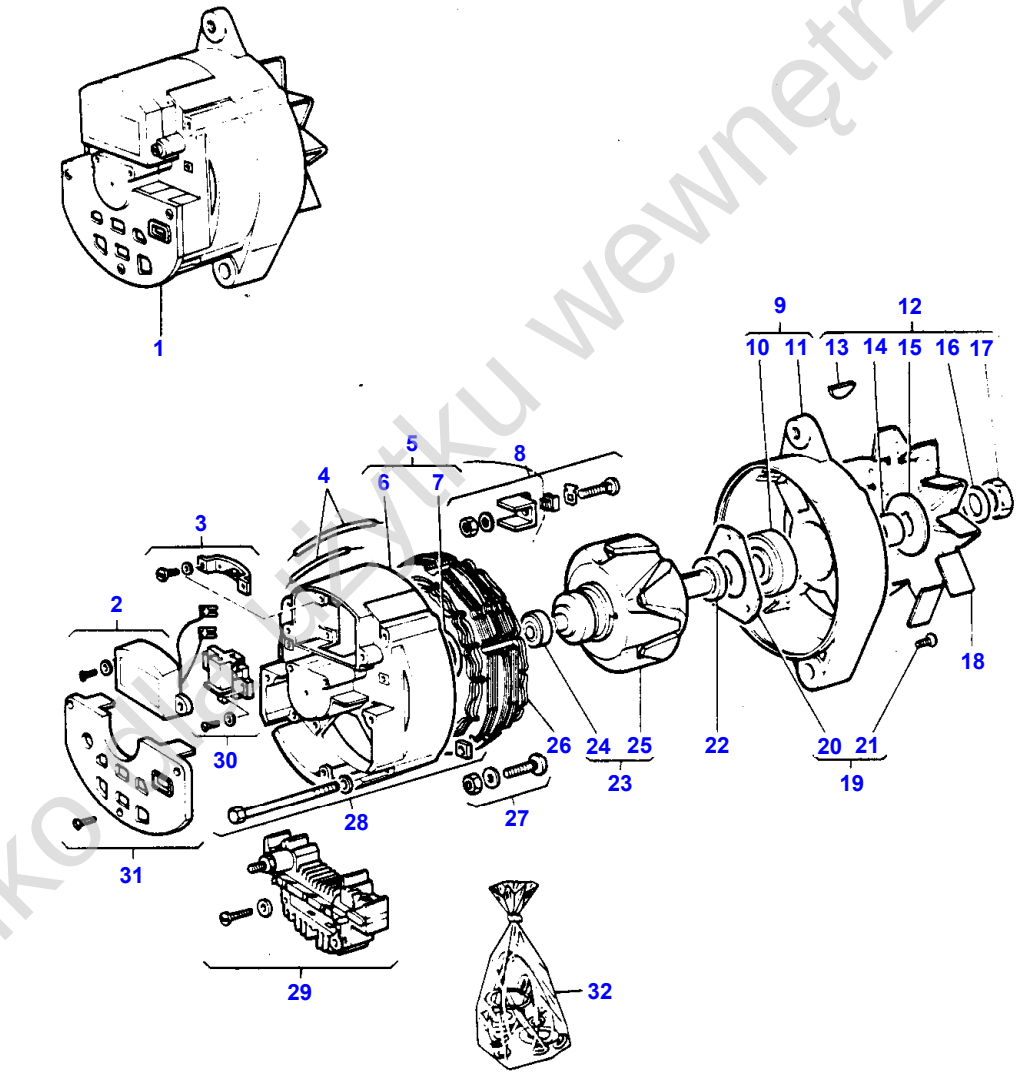

Tylko do użytku wewnętrznego

Item	Part Number	Qty	Description	Comments
1	1875955M1	1	Alternator	Up to Serial or Engine Number
				Not serviced, order 1674526M1
2	1633295M91	1	Regulator	(1)
				Repairs and replaces 1639419M91
3	1639364M91	1	Tappet Plate	(1)
4	1639379M91	1	Union	(1)
5	1633297M91	1	Flange	(1)
				Repairs and replaces 1639370M91
6		1	Flange	(5)
				Not serviced, order 1633297M91
7	1639382M1	1	O Ring	(5)
8	1639380M91	1	Terminal	(1)
9	1639371M91	1	Flange	(1)
10	1639376M1	1	Bearing	(9)
11		1	Flange	(9)
				Not serviced, order 1639371M91
12	1639374M91	1	Kit, Hardware	(1)
13	1639381M1	1	Key	(12)
14		1	Spacer	(12)
				Not serviced, order 1639374M91
15		1	Washer	(12)
				Not serviced, order 1639374M91
16		1	Washer	(12)
				Not serviced, order 1639374M91
17		1	Nut	(12)
				Not serviced, order 1639374M91
18	3045705M1	1	Fan	Repairs and replaces 1618469M1
19	1639372M91	1	Bearing Plate	(1)
20		1	Plate	(19)
				Not serviced, order 1639372M91
21		3	Screw	(19)
				Not serviced, order 1639372M91
22	1633296M1	1	Spacer	(1)
				Repairs and replaces 1639367M1
23	1639365M91	1	Rotor	(1)
24	1639375M1	1	Bearing	(23)
25		1	Rotor	(23)
				Not serviced, order 1639365M91
26	1639368M91	1	Stator	(1)
27	1639422M91	1	Bolt	(1)
				Repairs and replaces 1639378M91
28	1639377M91	1	Parts Pack	(1)
29	1639362M91	1	Bridge Piece	(1)
30	1639363M91	1	Kit, Brush	(1)
31	1639369M91	1	Cover	(1)
32	1639366M91	X	Bush	(1)

Tylko dla użytku wewnętrznego

54

ALTERNATEUR	MOTOROLA
DREHSTROMLICHTMASCHINE	MOTOROLA
ALTERNATORE	MOTOROLA
ALTERNADOR	MOTOROLA
ALTERNATOR	MOTOROLA

01611007

1 0161 012

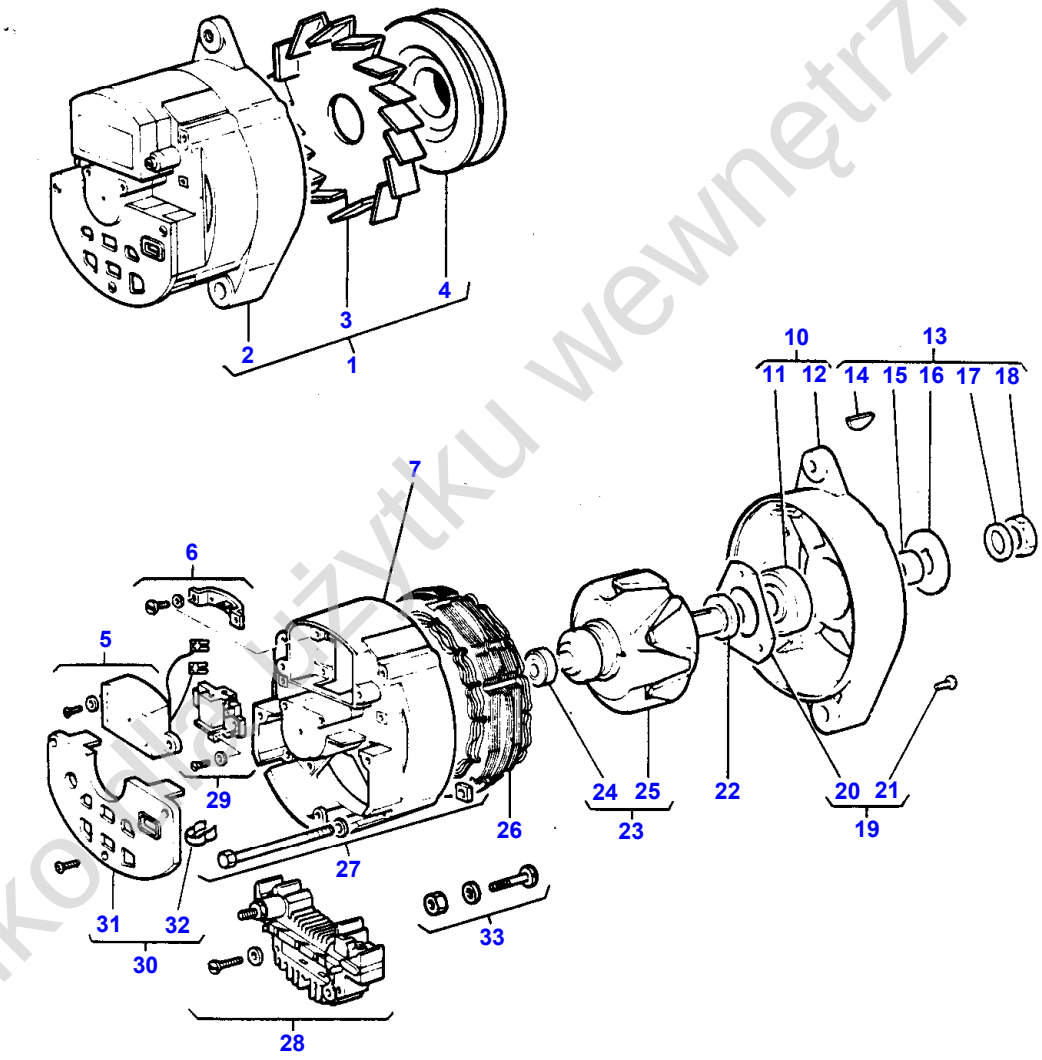

1-0161-012

Tylko do użytku wewnętrznego

Item	Part Number	Qty	Description	Comments
1		1	Alternator	Not serviced, order REF 2,3,4
2	1674526M1	1	Alternator	(1)
3	3045705M1	1	Fan	(1)
4	1699137M91	1	Pulley	
5	1633295M91	1	Regulator	(2)
6	1639364M91	1	Tappet Plate	(2)
7	1642874M91	1	Flange	(2)
10	1639371M91	1	Flange	(2)
11	1639376M1	1	Bearing	(10)
12		1	Flange	(10)
				Not serviced, order REF NO 10
13	1642876M91	1	Kit	(2)
14		1	Key	(13)
				Not serviced, order REF NO 13
15		1	Spacer	(13)
				Not serviced, order REF NO 13
16		1	Washer	(13)
				Not serviced, order REF NO 13
17		1	Washer	(13)
				Not serviced, order REF NO 13
18		1	Nut	(13)
				Not serviced, order REF NO 13
19	1639372M91	1	Bearing Plate	(2)
20		1	Plate	(19)
				Not serviced, order REF NO 19
21		3	Screw	(19)
				Not serviced, order REF NO 19
22	1633296M1	1	Spacer	(2)
23	1639365M91	1	Rotor	(2)
24	1639375M1	1	Bearing	(23)
25		1	Rotor	(23)
				Not serviced, order REF NO 23
26	1639368M91	1	Stator	(2)
27	1639377M91	1	Parts Pack	(2)
28	1642356M91	1	Bridge	(2)
29	1642873M91	1	Holder	(2)
30	1634267M91	1	Flange	(2)
31		1	Bonnet	(30)
				Not serviced, order REF NO 30
32	1634268M1	1	Fastener	(30)
33	1639378M91	1	Tie	(1)

Tylko dla użytku wewnętrznego

56

ALTERNATEUR	LUCAS
DREHSTROMLICHTMASCHINE	LUCAS
ALTERNATORE	LUCAS
ALTERNADOR	LUCAS
ALTERNATOR	LUCAS

01621007

1 0162 007

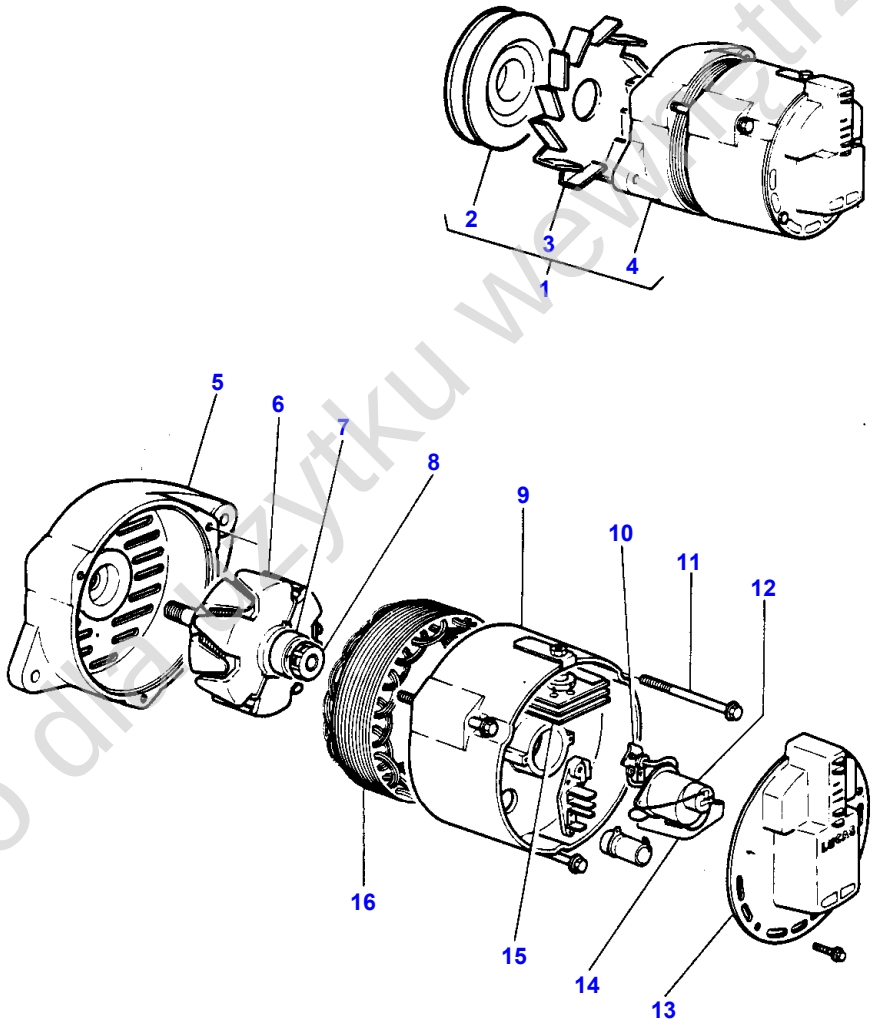

Tylko do użytku wewnętrznego

Item	Part Number	Qty	Description	Comments
				SCANDINAVIA
1		1	Alternator	Not serviced, order REF 2,3,4
2	1895379M1	1	Pulley	(1)
3	1895399M1	1	Fan	(1)
4	1895398M91	1	Alternator	(1)
				LUCAS
5	1894570M91	1	Housing	(4)
	1894571M91	1	Parts Pack	(4)
6	1894572M91	1	Rotor	(4)
7	1887422M1	1	Kit, Bearing	(6)
8	1887421M1	1	Ring	(6)
9	1894573M1	1	Body	(4)
10	1894577M1	1	Protector	(4)
11	1894575M1	3	Bolt	(4)
	1894576M91	1	Kit, Sundry	(4)
12	1887425M1	1	Box	(4)
	1887426M1	1	Brush	(4)
13	1894828M1	1	Cover	(4)
14	1894615M1	1	Regulator	(4)
15	1894616M1	1	Rectifier	(4)
16	1895400M1	1	Stator	(4)

Tylko dla użytku wewnętrznego

58

DEMARREUR	LUCAS
ANLASSER	LUCAS
MOTORINO DI AVVIAMENTO	LUCAS
ARRANQUE	LUCAS
STARTER	LUCAS

01821004

1 0182 002

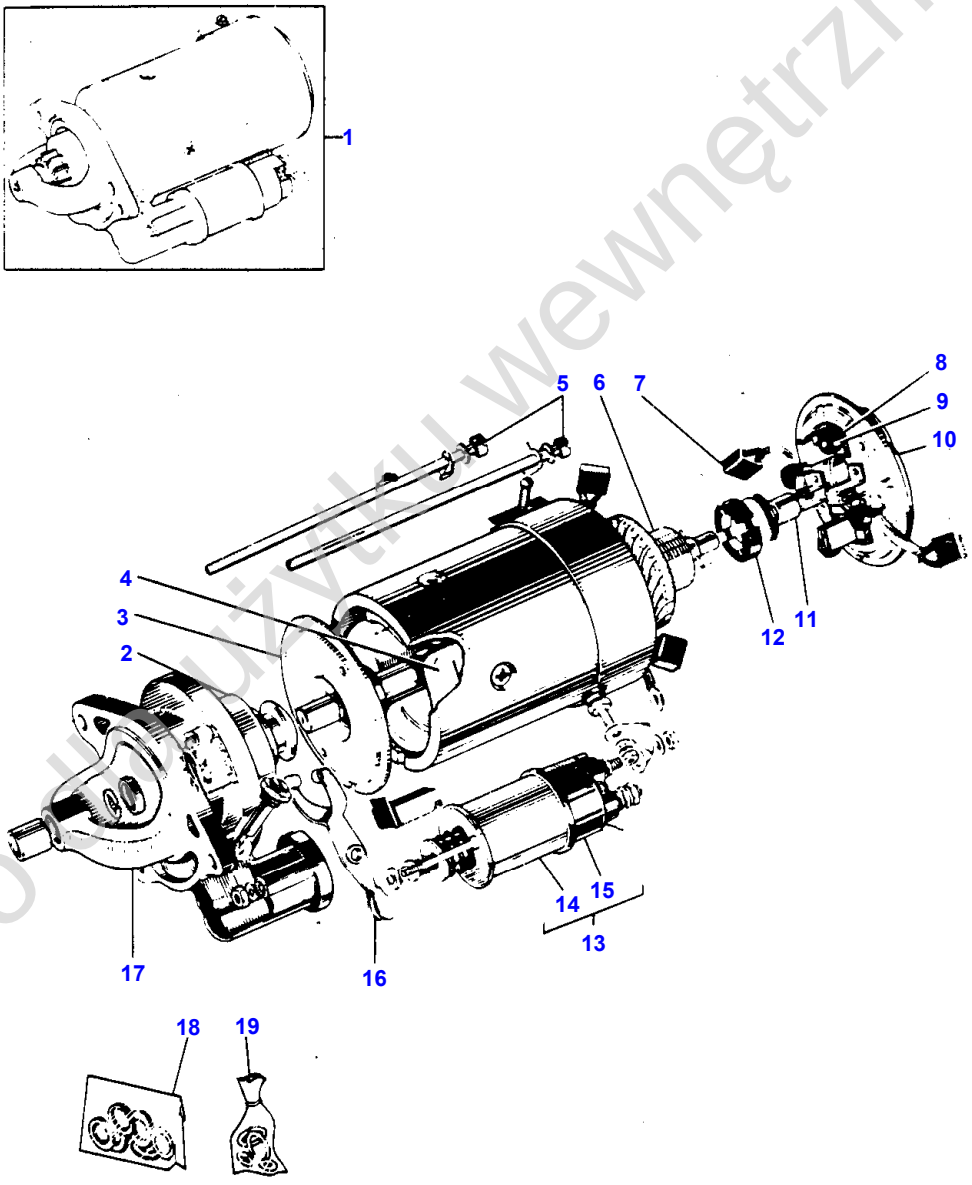

Tylko do użytku wewnętrznego

Item	Part Number	Qty	Description	Comments
1	1868285M2	1	Startermotor	(1) Alternative 909971M2 See Page - Reference Number 60/1 26410
2	1893713M91	1	Drive	(1) Repairs and replaces 1888292M1
3	1810615M91	1	Bearing Plate	(1) Repairs and replaces 1810574M91
4	1887953M91	1	Coil	(1)
5	1887962M91	1	Kit, Bolt	(1)
6	1887964M91	1	Armature	(1)
7	1810576M91	1	Kit, Brush	(1)
8	1887952M91	1	Kit, Brush Plate	(1)
9	1039134M91	1	Kit, Spring	(1) Repairs and replaces 1810577M91
10	1806009M1	1	Housing	(1)
11	1887955M91	1	Kit, Bush	(1)
12	1041750M1	1	Brake	(1) Repairs and replaces 1887956M91
13	1895415M1	1	Solenoid	(1)
14		1	Solenoid	(13) Not serviced, order 1895415M1
15	1895106M91	1	Kit, Cover	(13) Repairs and replaces 1810575M91
16	1893706M91	1	Fork	(1) Repairs and replaces 1887958M91
17	1894584M91	1	Bearing Carrier	(1)
18	1887967M91	1	Kit, Sundry	(1)
19	1887957M91	1	Kit, Gasket	(1)

Tylko dla użytku wewnętrznego

60

DEMARREUR	PARIS RHONE
ANLASSER	PARIS RHONE
MOTORINO DI AVVIAMENTO	PARIS RHONE
ARRANQUE	PARIS RHONE
STARTER	PARIS RHONE

01851001

1 0185 001

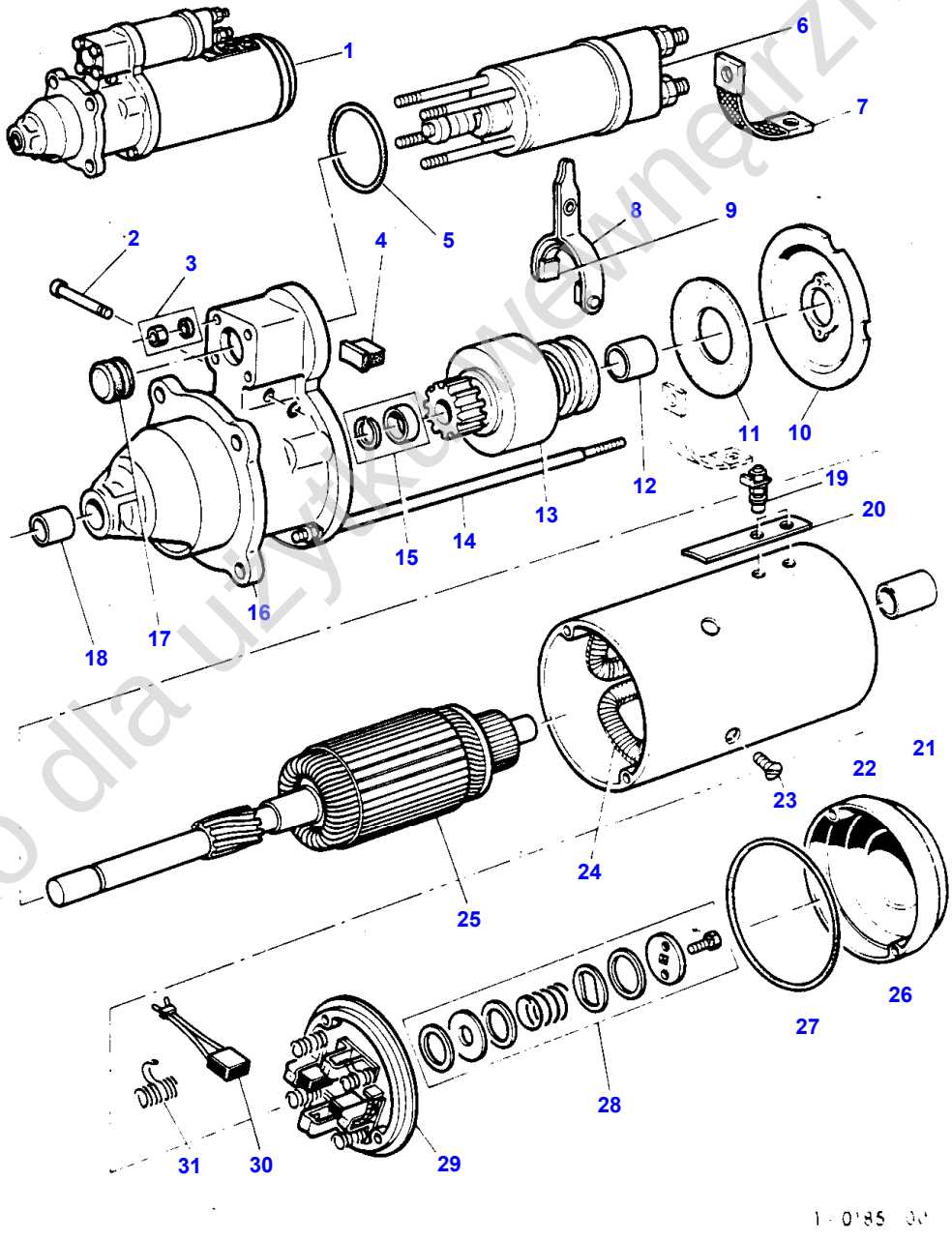

Tylko dla użytku wewnętrznego

Item	Part Number	Qty	Description	Comments
1	909971M2	1	Startermotor	Alternative 1868285M2
2	1807151M1	1	Pin	(1)
3	1807157M1	1	Kit	(1)
4	1807155M1	1	Joint	(1)
5	1639409M91	1	Gasket	(1)
6	1807158M1	1	Solenoid	(1)
7	1802142M1	1	Union	(1)
8	1807149M1	1	Fork	(1)
9	1807150M1	1	Skid	(1)
10	1639406M91	1	Bearing	(1)
11	1639408M1	1	Bush	(1)
12	1639410M1	1	Bush	(1)
13	1639401M1	1	Pinion	(1)
14	1639276M91	1	Stem	(1)
15	1807136M1	1	Parts Pack	(1)
16	1807137M1	1	Bracket	(1)
17	1807138M1	1	Plug	(1)
18	1601858M1	1	Bush	(1)
19	1807148M1	1	Terminal	(1)
20	1807147M1	1	Plate	(1)
21	1601044M1	1	Bush	(1)
22	1807144M1	1	Housing	(1)
23	1802713M1	4	Screw	(1)
24	1807145M1	1	Inductor	(1)
25	1639400M1	1	Kit, Coil	(1)
26	1807143M1	1	Cover	(1)
27	1807160M2	1	Joint	(1)
28	1807134M1	1	Parts Pack	(1)
29	1807139M1	1	Bearing	(1)
30	1630966M91	1	Brush	(1)
31	1639387M91	1	Kit, Spring	(1)

Tylko dla użytku wewnętrznego

62

SYSTEME DE LIMITATION DE VITESSE
GESCHWINDIGKEITSBEGRENZUNG
LIMITATORE DI VELOCITA'
CONTACTOR VELOCIDAD LIMITADA
ROAD SPEED LIMITING DEVICE

02251001

1 0225 001

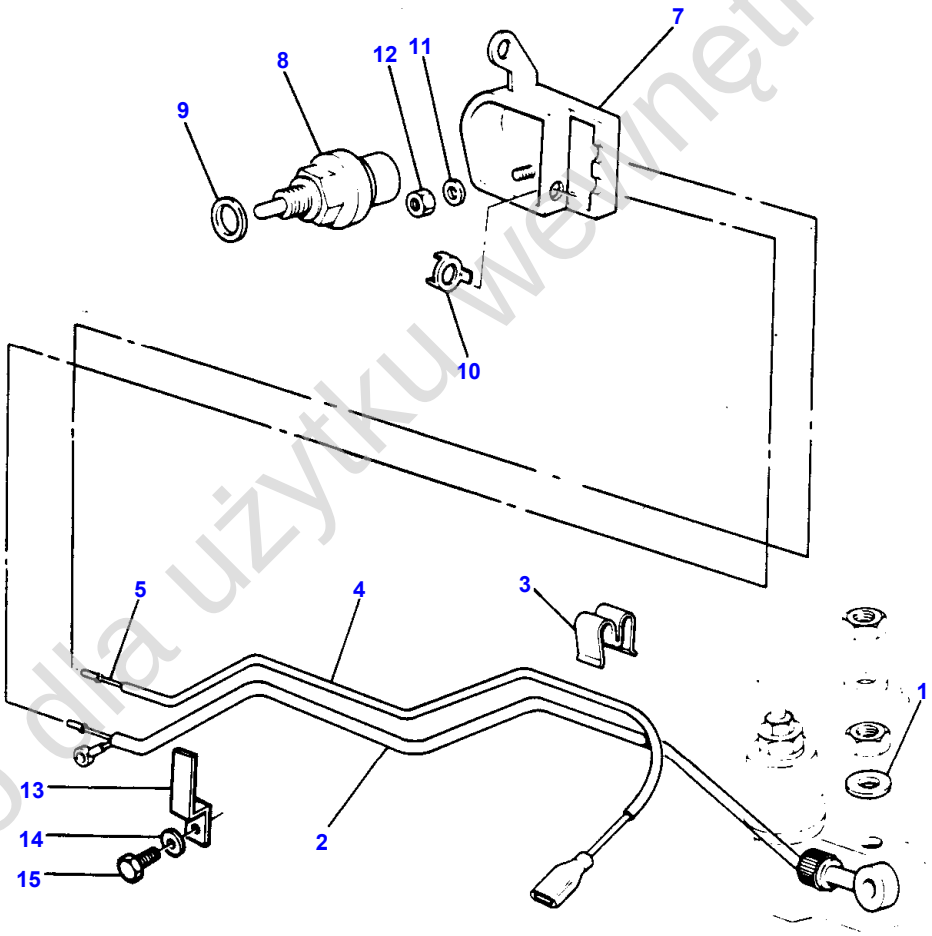

1-0225-001

Tylko dla użytku wewnętrznego

Item	Part Number	Qty	Description	Comments
				EE- 4 WHEEL DRIVE
1	883498M1	2	Washer	
2	1660311M92	1	Tube	
3	1866063M1	1	Clip	
4	1660315M2	1	Tube	Not serviced, order REF NO 5
5	1660314M94	1	Tube	
7	1862567M92	1	Cover	
8	880120M92	1	Switch	
9	880117M1	X	Shim	Thickness 0,38MM
	880118M1	X	Shim	Thickness 0,76MM
10	1866592M2	1	Washer	
11	195441M1	1	Washer	
12	354118X1	1	Nut Unc	
13	1668812M1	1	Bracket	
14	353432X1	1	Lock Washer	
15	353696X1	1	Screw Unc	

Tylko dla użytku wewnętrznego

64

SYSTEME DE REFROIDISSEMENT
KUEHLUNG
SISTEMA DI RAFFREDDAMENTO
SISTEMA REFRIGERACION
COOLING SYSTEM

02601001

1 0260 018

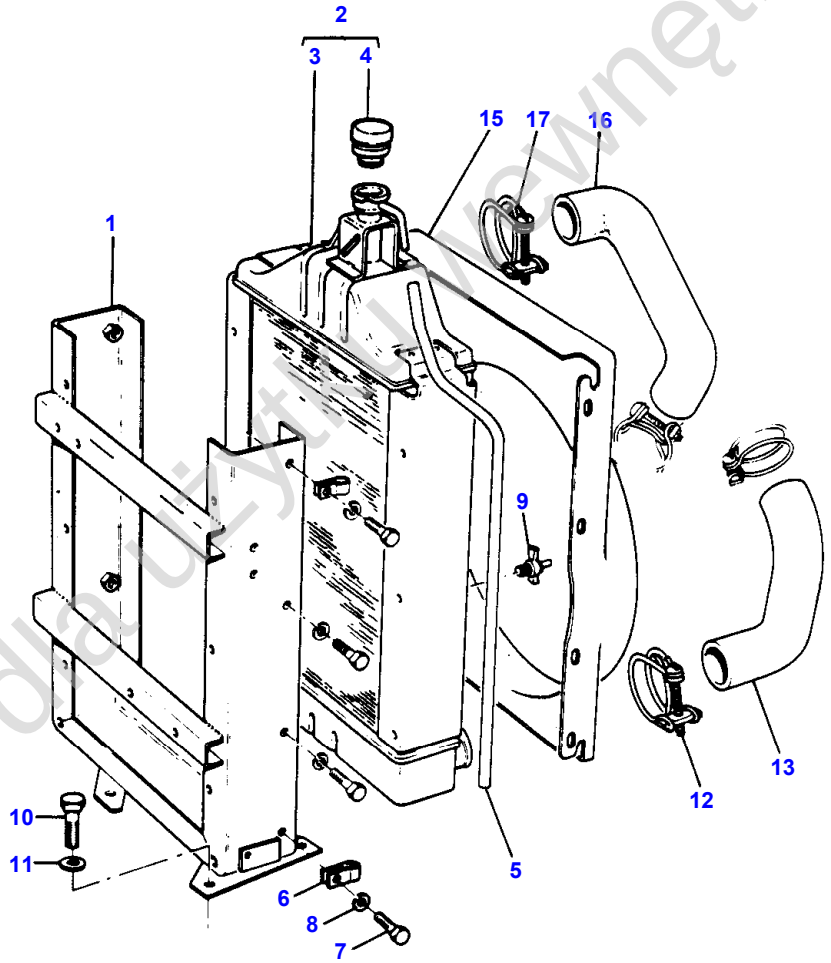

1-0260-018

Tylko do użytku wewnętrznego

Item	Part Number	Qty	Description	Comments
1	1671360M96	1	Frame	Repairs and replaces 1873011M91
2	1874960M94	1	Radiator	
3	1874964M93	1	Radiator	(2)
4	1874445M92	1	Cap	(2)
5	1872616M1	1	Tube	
6	360039X1	2	Clip	
7	365775X1	8	Screw	
8	355617X1	8	Washer	
9	1851095M2	1	Tap	Alternative 1850544M1
	1850544M1	1	Cock	Alternative 1851095M2
10	362471X1	4	Screw	
11	353432X1	4	Lock Washer	
12	338617X1	2	Hose Clip	
13	885563M1	1	Water Hose	
15	898650M91	1	Shroud	Thickness 74,6
	885573M91	1	Shroud	Thickness 117,5
	1673816M91	1	Shroud	Thickness 117,5
16	899144M1	1	Water Hose	Repairs and replaces 885564M1
17	338617X1	2	Hose Clip	

Tylko dla użytku wewnętrznego

66

RESERVOIR A CARBURANT
KRAFTSTOFFBEHAELTER UND BEFESTIGUNG
SERBATOIO NAFTA E FISSAGGIO
DEPOSITO COMBUSTIBLE Y SUJECCIONES
FUEL TANK AND ATTACHMENTS

0385100

1 0385 005

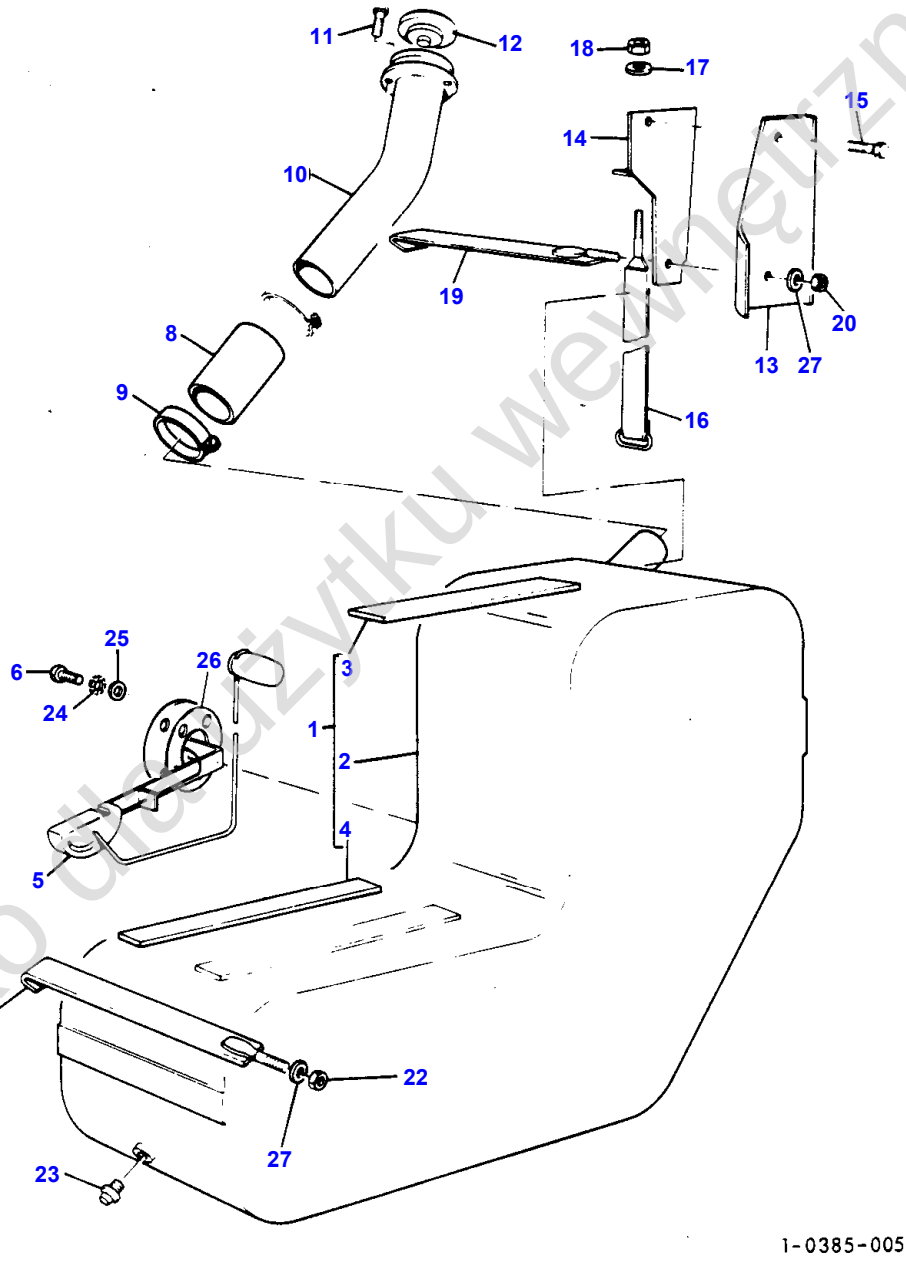

Tylko do użytku wewnętrznego

Item	Part Number	Qty	Description	Comments
1	1614431M94	1	Tank	
2		1	Fuel Tank	(1) Not serviced, order 1614431M94
3	1612566M1	1	Shoe	(1) Repairs and replaces 1612567M1
4	1612566M1	2	Shoe	(1)
5	1613002M3	1	Sender	
6	1699765M1	6	Screw	
8	1613086M1	1	Hose	
9	338618X1	2	Hose Clip	
10	1613398M91	1	Tube	
11	377547X1	3	Screw	Alternative 365011X1
	365011X1	3	Screw	Alternative 377547X1
12	828583M91	1	Cap	
13	1613382M3	1	Brace	
14	1612524M91	1	Bracket	
15	353690X1	1	Screw Unc	
16	1612463M92	1	Strap	
17	390735X1	1	Washer Metric	
18	375098X1	1	Nut Unc	
19	1613805M94	1	Clamp	
20	355566X1	1	Nut Unc	
21	1613805M94	1	Clamp	
22	355566X1	1	Nut Unc	
23	22769X	1	Plug	
24	1699784M1	6	Washer	
25	1699785M1	6	Cup	
26	1674250M1	1	Gasket	Repairs and replaces 1617869M1
27	353756X1	2	Washer	

Tylko dla użytku wewnętrznego

68

FILTRE À CARBURANT ET TUYAUTERIES
KRAFTSTOFFILTER UND LEITUNGEN
FILTRI NAFTA E TUBAZIONI
FILTROS COMBUSTIBLE Y CONDUCCIONES
FUEL FILTERS AND PIPES

03901003

1 0390 004

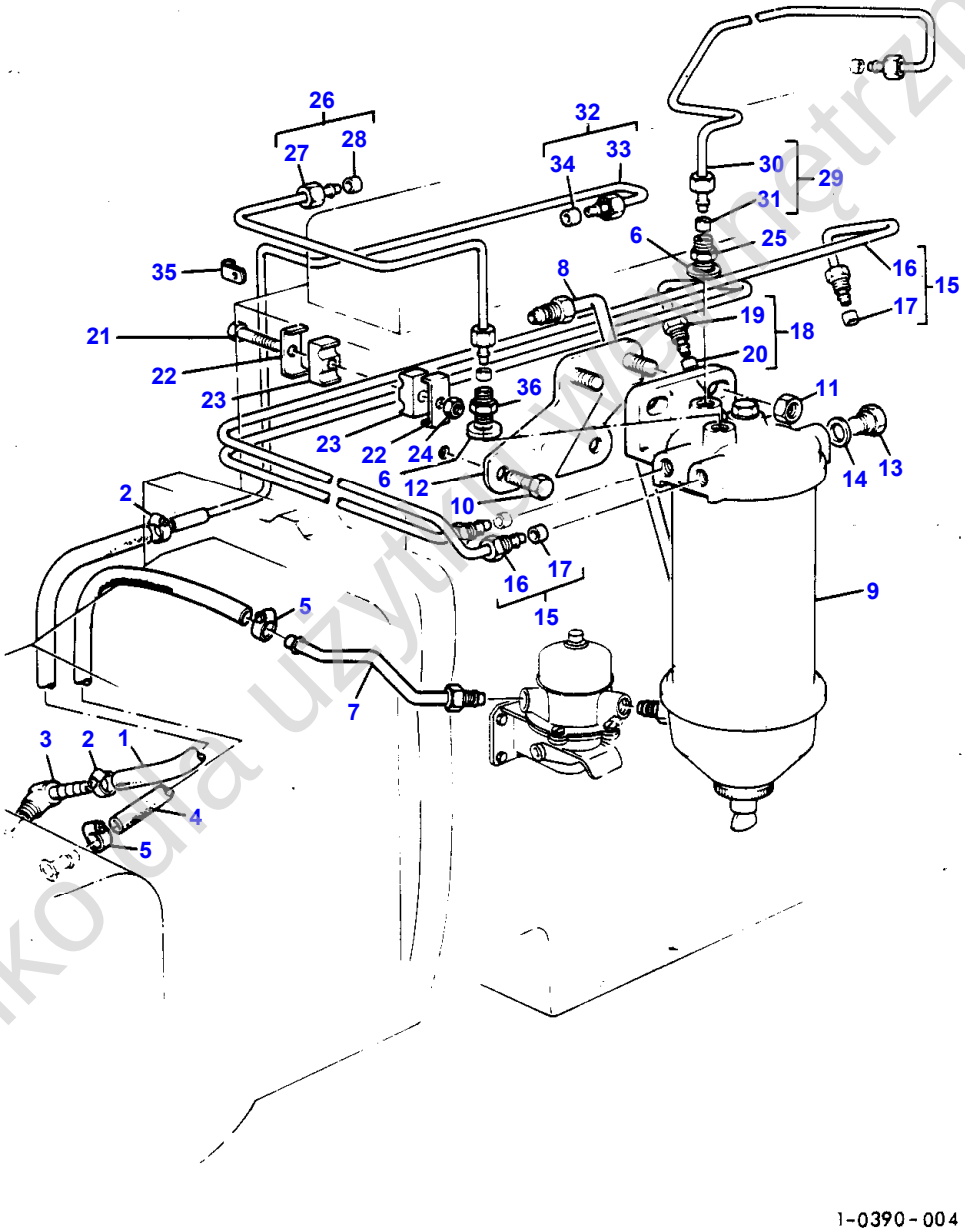

Tylko do użytku własnego nietrzynego

Item	Part Number	Qty	Description	Comments
1	1612633M3	1	Hose	
2	338612X1	2	Hose Clip	
3	368272X1	1	Union	
4	1612634M4	1	Hose	
5	338612X1	2	Hose Clip	
6	391579X1	2	Washer Metric	Alternative 1613029M1
	1613029M1	2	Washer	Alternative 391579X1
7	1873824M92	1	Tube	
8	1873172M94	1	Tube	
9		1	Fuel Filter	See Page - Reference Number 70/1
10	353536X1	2	Screw Unf	
11	355566X1	2	Nut Unc	
12	1876505M91	1	Bracket	
13	1871779M1	1	Plug	Repairs and replaces 884748M1
14	1871780M1	1	Washer	Repairs and replaces 880961M1
15	1876541M94	1	Tube	
16		1	Tube	(15) Not serviced, order 1876541M91
17	376525X1	2	Olive	(15)
18	1876539M93	1	Tube	
19		1	Tube	(18) Not serviced, order 1876539M93
20	376525X1	2	Olive	(18)
21	330962X1	1	Screw Special	Repairs and replaces 1754400M1
22	733869M1	2	Channel	
23	733868M1	2	Clip	
24	376578X1	1	Nut	Alternative 376665X1
	376665X1	1	Nut Unf	Alternative 376578X1
25	33555338	1	Adaptor	
26	1876543M92	1	Tube	
27		1	Tube	(26) Not serviced, order 1876543M92
28	376524X1	2	Olive	(26)
29	1876549M92	1	Tube	
30		1	Tube	(29) Not serviced, order 1876549M92
31	376524X1	2	Olive	(29)
32	1613420M91	1	Tube	
33		1	Tube	(32) Not serviced, order 1613420M91
34	376524X1	2	Olive	(32)
35	364319X1	1	Clip	
36	1447011M91	1	Valve	

Tylko dla użytku wewnętrznego

70

FILTRE A CARBURANT
KRAFTSTOFFILTER
FILTRO NAFTA
FILTRO GAS OIL
FUEL FILTER

03921004

1 0392 005

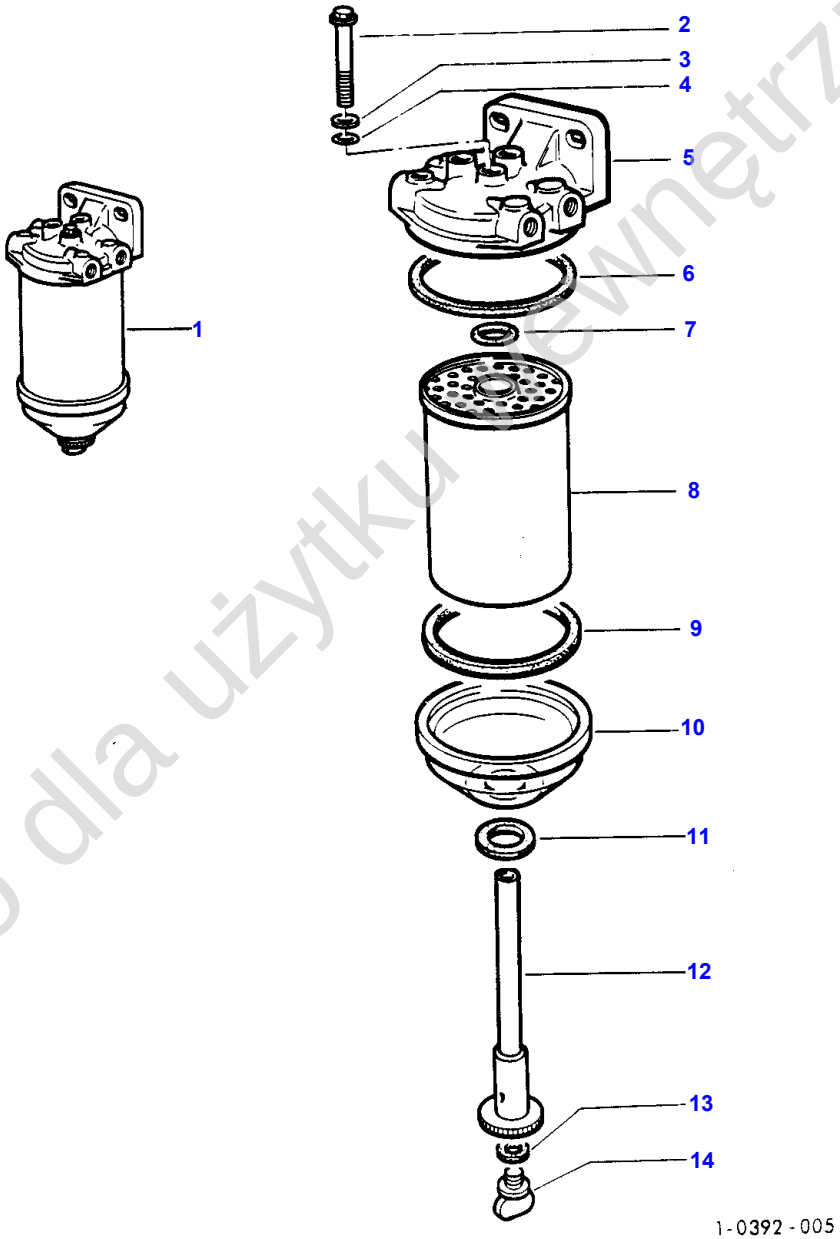

Tylko dla użytku wewnętrznego

Item	Part Number	Qty	Description	Comments
1	1876507M91	1	Fuel Filter	
2	1890142M1	1	Bolt	(1)
3	1890141M1	1	Washer	(1)
4	1890140M1	1	Ring	(1)
5	1891262M1	1	Filter Head	(1)
				(A)
5	1890139M1	1	Filter Head	(B)
6	1890144M1	1	Gasket	(1)
7	1890143M1	1	Bush	(1)
8	26560602	1	Kit, Element	(1)
				Repairs and replaces 1890145M1
9	1890144M1	1	Gasket	(1)
10	1890147M1	1	Bowl	(1)
11	1890149M1	1	Bush	(1)
12	1890148M1	1	Stem	(1)
13	1890146M1	1	Washer	(1)
14	1890150M1	1	Plug	(1)

(A)
4 APERTURES

(B)
3 APERTURES

Tylko dla użytku wewnętrznego

72

FILTRE A AIR
LUFTFILTER
FILTRO ARIA
FILTRO DE AIRE
AIR FILTER

02901008

1 0290 037

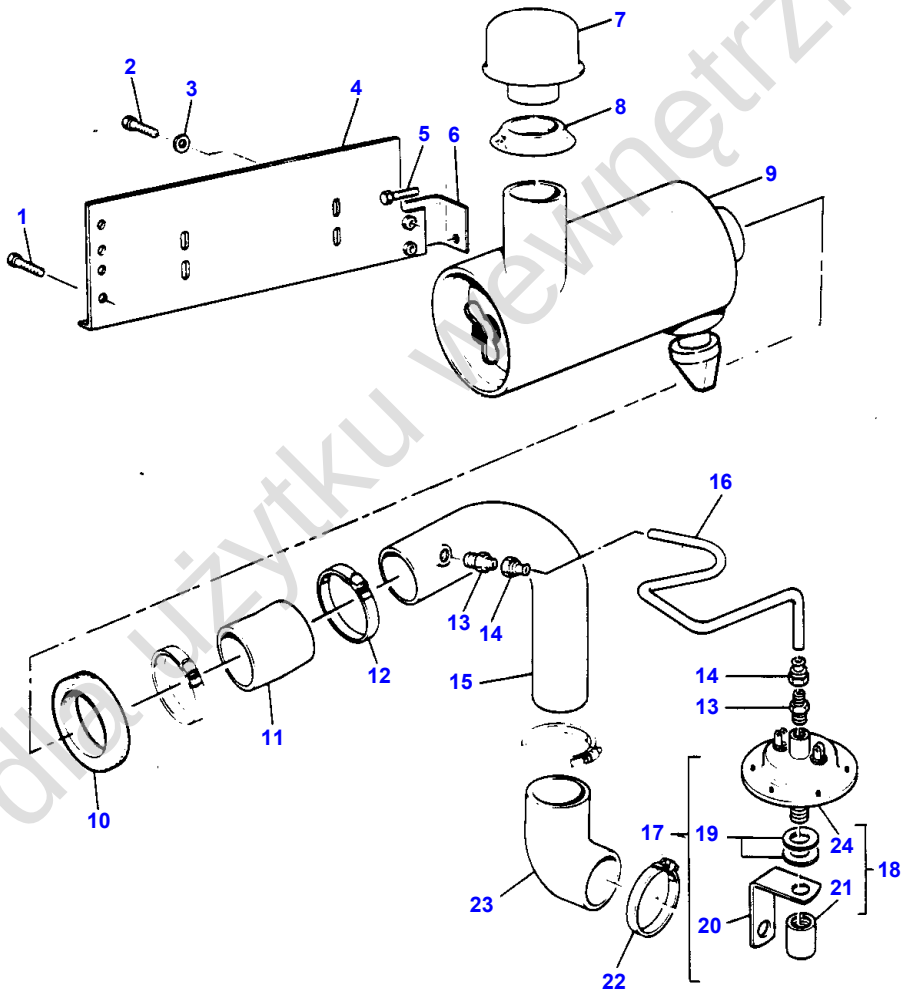

1-0290-03

Tylko do użytku wewnętrznego

Item	Part Number	Qty	Description	Comments
				EQUIPMENT
1	353675X1	2	Screw Unc	
2	353675X1	6	Screw Unc	Two Wheel Drive
	353675X1	4	Screw Unc	Four Wheel Drive
3	0920497	6	Washer	Two Wheel Drive
	0920497	4	Washer	Four Wheel Drive
4	1698785M91	1	Bracket	Two Wheel Drive
	1698771M93	1	Bearer	Four Wheel Drive
5	353516X1	1	Screw Unf	
6	1698720M3	1	Strap	
7	1874894M92	1	Cap	
8	1874033M3	1	Collar	
9		1	Filter	See Page - Reference Number 74/
10	1876072M1	1	Seal	
11	1670905M1	1	Hose	
12	338618X1	2	Hose Clip	
13	364444X1	2	Connector	
14	365980X1	2	Nut	
15	1876305M91	1	Tube	
16	1876313M2	1	Hose	L 813MM
17	1664129M91	1	Switch	
18	528853M91	1	Switch	(17)
19	353756X1	2	Washer	(17)
20	1664130M1	1	Bracket	(17)
21	1041877M91	1	Filter	(18)
22	338618X1	2	Hose Clip	
23	1876307M1	1	Hose	
24		1	Valvometer	(18) Not serviced, order 528853M91

Tylko dla użytku wewnętrznego

74

FILTRE A AIR
LUFTFILTER
FILTRO ARIA
FILTRO DE AIRE
AIR FILTER

02901025

1 0290 035

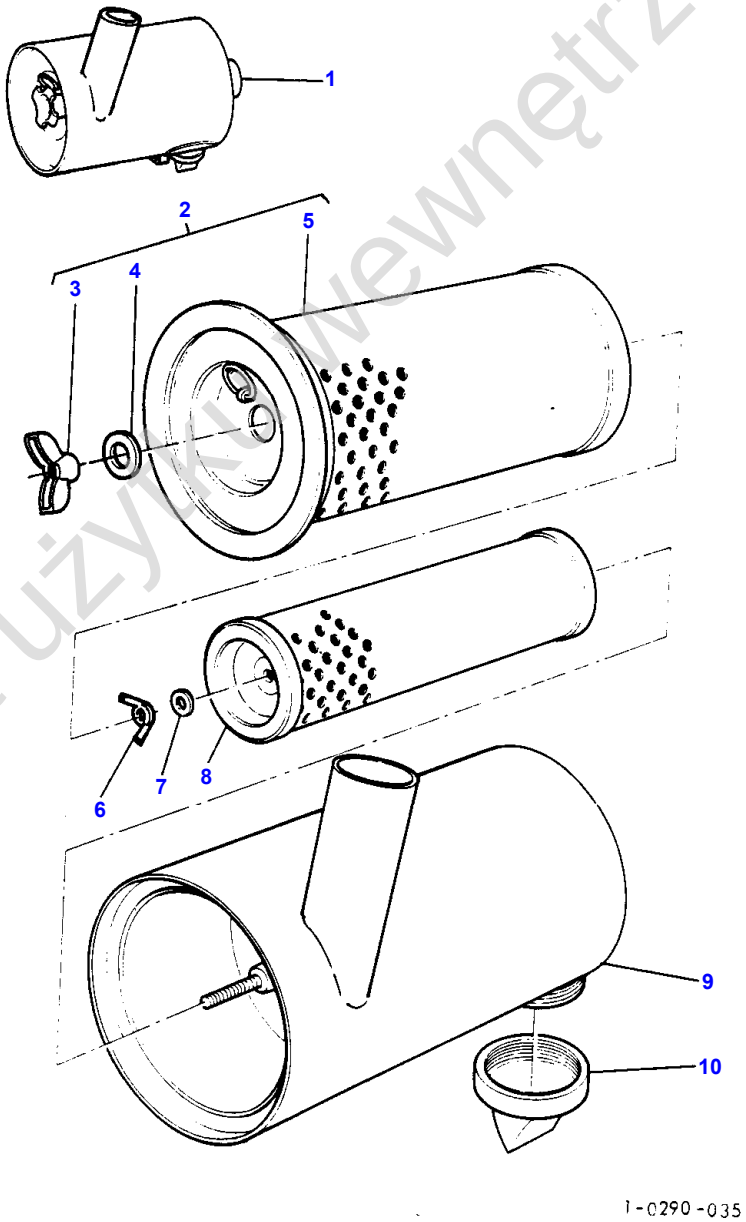

Tylko dla użytku wewnętrznego

Item	Part Number	Qty	Description	Comments
1	1698677M91	1	Cleaner	LAUTRETTE Repairs and replaces 1876300M93 Not serviced, order 1678292M91
2	1698679M1	1	Element	(1)
	1699779M1	1	Cartridge	(A)
3	1639384M1	1	Nut	(2)
4	1639385M1	1	Seal	(2)
5		1	Cartridge	(2) Not serviced, order 1698679M1
6	1639319M1	1	Nut	(1)
7	1635990M1	1	Seal	(1)
8	1698680M1	1	Element	(1)
	1639423M1	1	Cartridge	(A)
9		1	Filter Body	(1) Not serviced, order 1698677M91
10	1635991M1	1	Valve	(1) (A) WITH 1876300M93

Tylko dla użytku wewnętrznego

76

FILTRE A AIR
LUFTFILTER
FILTRO ARIA
FILTRO DE AIRE
AIR FILTER

02901026

1 0290 036

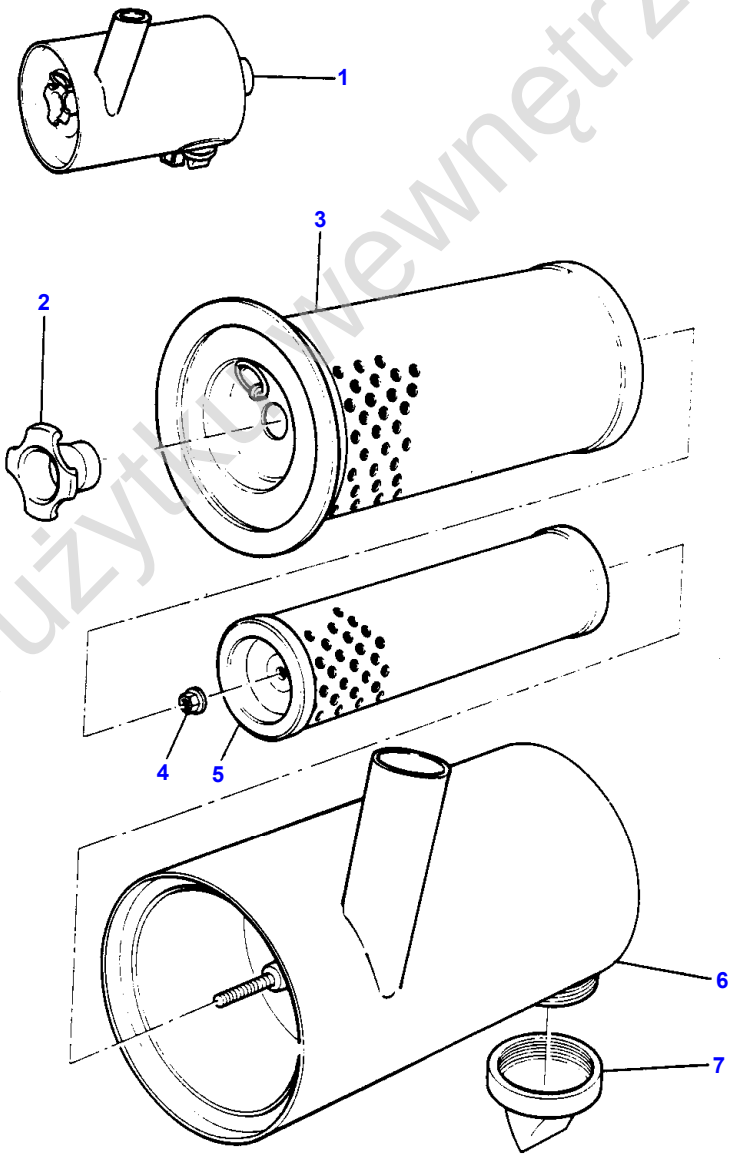

Tylko dla użytku wewnętrznego

Item	Part Number	Qty	Description	Comments
1	1678292M91	1	Air Filter	Repairs and replaces 1698677M91 LAUTRETTE
2	1639317M1	1	Knob	(1)
3	1678294M1	1	Air Fitr.Element	(1)
4	1642062M1	1	Locknut	(1)
5	1678295M1	1	Air Fitr.Element	(1)
6		1	Filter Body	(1) Not serviced, order REF NO 1
7	1635991M1	1	Valve	(1)

Tylko dla użytku wewnętrznego

78

ECHAPPEMENT
AUSPUFF
SISTEMA DI SCARICO
ESCAPE
EXHAUST SYSTEM

03101003

1 0310 003

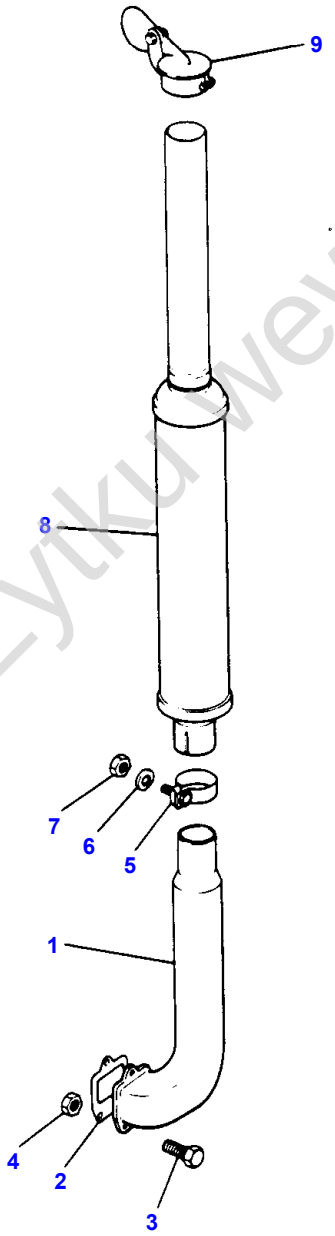

1-0310-003

Tylko dla użytku wewnętrznego

Item	Part Number	Qty	Description	Comments
1	1874771M3	1	Elbow	
2	1876671M2	1	Gasket	
3	368443X1	3	Bolt Unc	
4	375109X1	3	Nut Unc	
5	1664152M1	1	Bridle	Repairs and replaces 1876431M1
6	353446X1	1	Lock Washer	
7	354122X1	1	Nut	
8	1699143M92	1	Silencer	
9	1808164M91	1	Cap	Alternative 188776M91
	188776M91	1	Cap	Alternative 1808164M91

Tylko dla użytku wewnętrznego

80

ECHAPPEMENT
AUSPUFF
SISTEMA DI SCARICO
ESCAPE
EXHAUST SYSTEM

03101018

1 0310 027

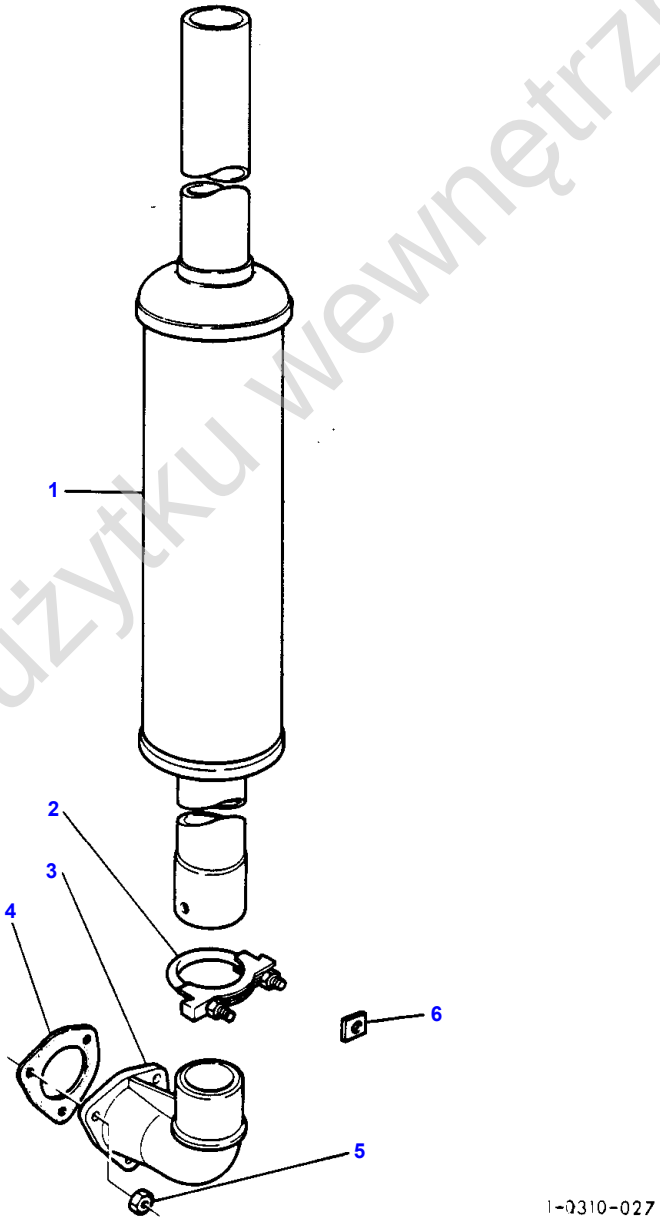

Tylko dla użytku wewnętrznego

Item	Part Number	Qty	Description	Comments
				OUTSIDE HOOD EXHAUST
1	1675390M91	1	Silencer	
2	1676470M91	1	Clamp	
3	1862807M1	1	Elbow	
4	194742M1	1	Gasket	
5	376448X1	3	Nut Unf	
6	907155M1	1	Shim	

Tylko dla użytku wewnętrznego

82

COMMANDE D'ACCELERATION A MAIN ET AU PIED
HAND- UND FUSSGAS
COMANDI A MANO E PIEDI DEL MOTORE
MANDOS ACELERADOR DE PIE Y MANUAL
HAND AND FOOT THROTTLE CONTROLS

05101003

1 0510 015

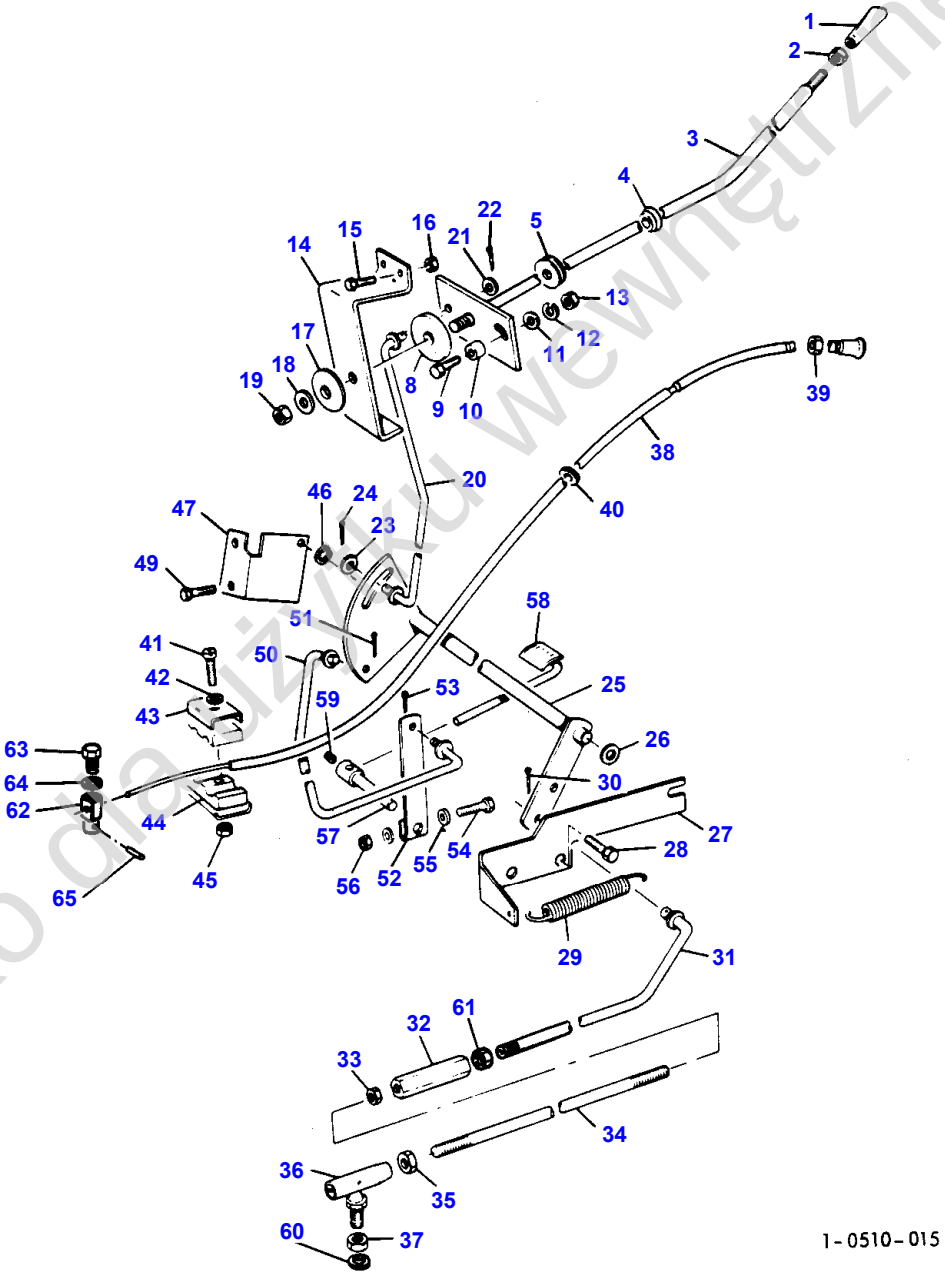

Tylko do użytku wewnętrznego

Item	Part Number	Qty	Description
1	1877395M1	1	Knob
2	375108X1	1	Nut Unc
3	1664113M93	1	Hand Lever
4	1875716M1	1	Grommet
5	833694M1	1	Grommet
8	826997M1	1	Disc
9	353669X1	1	Screw Unc
10	1873888M1	1	Spacer
11	376806X1	2	Washer
12	353441X1	1	Lock Washer
13	353918X1	1	Nut Unf
14	1876774M1	1	Bracket
15	365007X1	2	Self Tap Screws
16	355564X1	2	Nut Unc
17	880712M1	1	Washer
18	353756X1	2	Washer
19	376454X1	1	Locknut
20	1873812M92	1	Rod
21	353754X1	1	Washer
22	354041X1	1	Pin
23	353754X1	1	Washer
24	354041X1	1	Pin
25	1874295M94	1	Cross Shaft
26	353756X1	1	Washer
27	1874317M4	1	Clevis Pin
28	353536X1	2	Screw Unf
29	504029M1	1	Spring
30	354041X1	1	Pin
31	1873897M95	1	Tie Rod
32	525396M1	1	Buckle
33	353919X1	1	Nut Unf
34	1613664M2	1	Stem
35	353919X1	1	Nut Unf
36	187688M1	1	Toggle
37	353919X1	1	Nut Unf
38	1617602M1	1	Cable
39	353430X1	1	Nut Unf
40	356944X1	1	Grommet
41	355031X1	1	Screw Unc
42	338431X1	1	Washer
43	733869M1	1	Channel
44	733868M1	2	Clip
45	354119X1	2	Nut Unc
46	368232X1	1	Clip
47	1874316M2	1	Support
49	365026X1	2	Self Tap Screws
50	1873805M93	1	Rod
51	354041X1	1	Pin
52	1612120M1	1	Lever
53	354041X1	1	Pin
54	376331X1	1	Bolt Unc
55	353754X1	2	Washer
56	355564X1	1	Nut Unc
57	1873358M1	1	Pivot
58	1873578M91	1	Pedal
59	354128X1	1	Screw Unc
60	377706X1	1	Washer
61	365674X1	1	Nut
62	736486M2	1	Clamp
63	377294X1	1	Screw
64	353753X1	1	Washer
65	361332X1	1	Pin

Tylko do użytku wewnętrznego

86

EMBRAYAGE SIMPLE
EINSTUFENKUPPLUNG
FRIZIONE SINGOLA
EMBRAGUE SIMPLE
SINGLE CLUTCH

07601001

1 0760 001

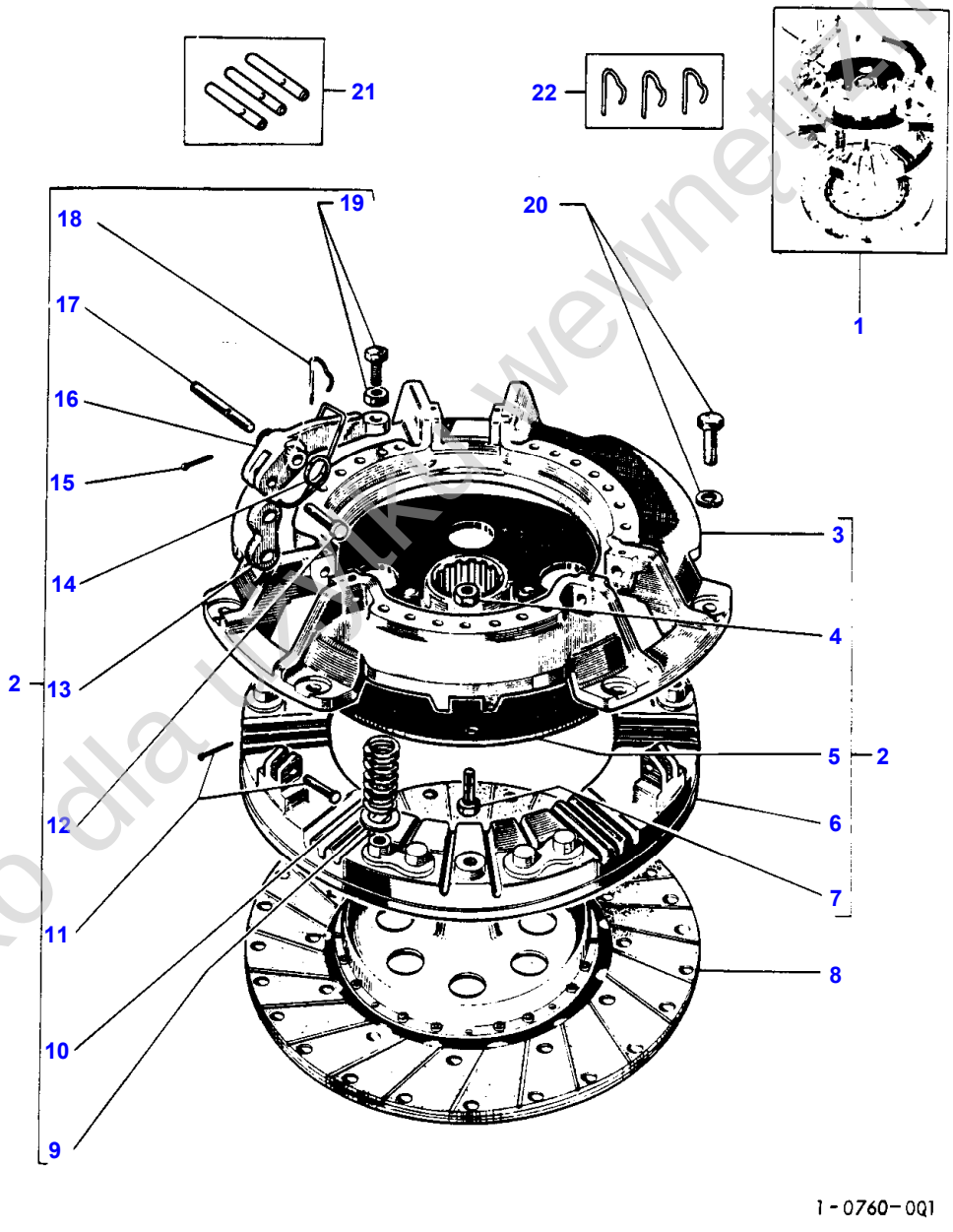

Tylko dla użytku wewnętrznego

Item	Part Number	Qty	Description	Comments
1	1867434M91	1	Clutch	12"
2	1867436M91	1	Cover	(1)
3	887895M1	1	Cover	(2)
4	885931M1	3	Nut	(2)
5	1867388M91	1	Hub	(2)
6	887907M1	1	Plate	(2)
				12"
7	885930M1	3	Bolt	(2)
8	887889M94	1	Drive Plate,Main	(1)
				12"
9	1753751M1	12	Washer	(2)
10	886396M1	12	Spring	(2)
11	887893M1	3	Pin	(2)
	354046X1	3	Pin	(2)
12	887897M1	3	Pin	(2)
13	887894M1	3	Link	(2)
14	887910M1	3	Spring	(2)
15	354046X1	3	Pin	(2)
16	887898M1	3	Lever	(2)
17		3	Clevis Pin	(2)
				Not serviced, order 1632923M91
18		3	Pin	(2)
				Not serviced, order 1632929M91
19	1853164M1	3	Screw	(2)
	353430X1	3	Nut Unf	(2)
20	887891M1	6	Bolt	
	19752X	6	Lock Washer	
21	1632923M91	1	Clevis Pin	
22	1632929M91	1	Pin	

Tylko dla użytku wewnętrznego

88

EMBRAYAGE DOUBLE
ZWEISTUFENKUPPLUNG
FRIZIONE DOPPIA
EMBRAGUE DOBLE
DUAL CLUTCH

0765 1001

1 0765 001

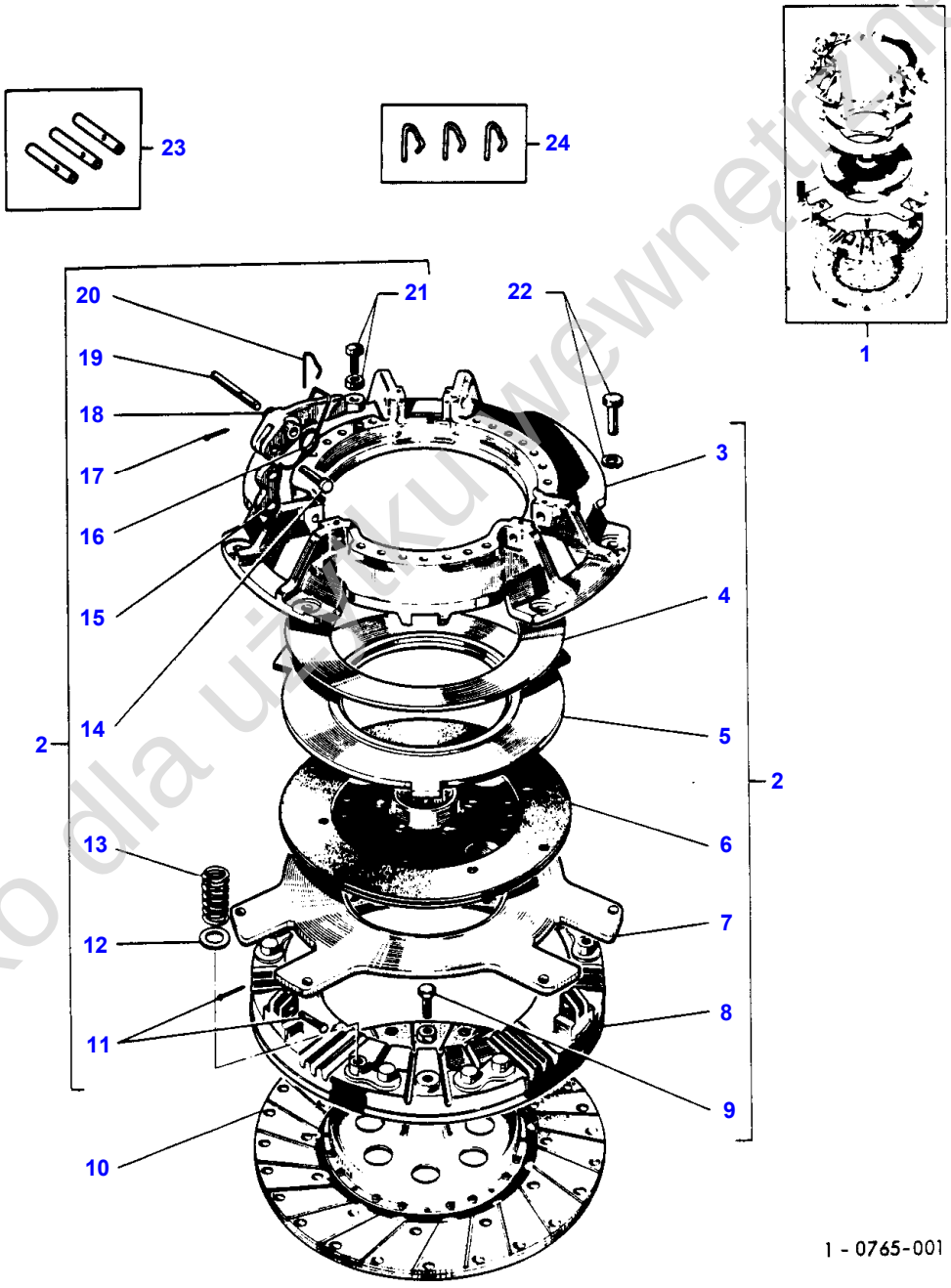

Tylko dla użytku wewnętrznego

Item	Part Number	Qty	Description	Comments
1	1868003M91	1	Clutch	10/12"
2	1868005M91	1	Cover	(1)
3	887896M1	1	Cover	(2)
4	887906M1	1	Spring	(2)
5	887903M1	1	Plate	(2) 10"
6	1865836M91	1	Drive Plate,Pto	(2) 10"
7	887902M1	1	Plate	(2)
8	887907M1	1	Plate	(2) 12"
9	181124M1	3	Screw	(2)
	353917X1	3	Nut Unf	(2)
10	887889M94	1	Drive Plate,Main	(1) 12"
11	887893M1	3	Pin	(2)
	354046X1	3	Pin	(2)
12	1753751M1	12	Washer	(2)
13	886396M1	12	Spring	(2)
14	887897M1	3	Pin	(2)
15	887894M1	3	Link	(2)
16	887910M1	3	Spring	(2)
17	354046X1	3	Pin	(2)
18	887898M1	3	Lever	(2)
19		3	Clevis Pin	(2) Not serviced, order 1632923M91
20		3	Pin	(2) Not serviced, order 1632929M91
21	1853164M1	3	Screw	(2)
	353430X1	3	Nut Unf	(2)
22	887892M1	6	Bolt	
	19752X	6	Lock Washer	
23	1632923M91	1	Clevis Pin	
24	1632929M91	1	Pin	

Tylko dla użytku wewnętrznego

90

COMMANDE D'EMBRAYAGE
KUPPLUNGSPEDAL UND GESTAENGE
PEDALE FRIZIONE E LEVERISMI
PEDAL DEL EMBRAGUE Y MANDOS
CLUTCH PEDAL AND LINKAGE

07751003

1 0775 032

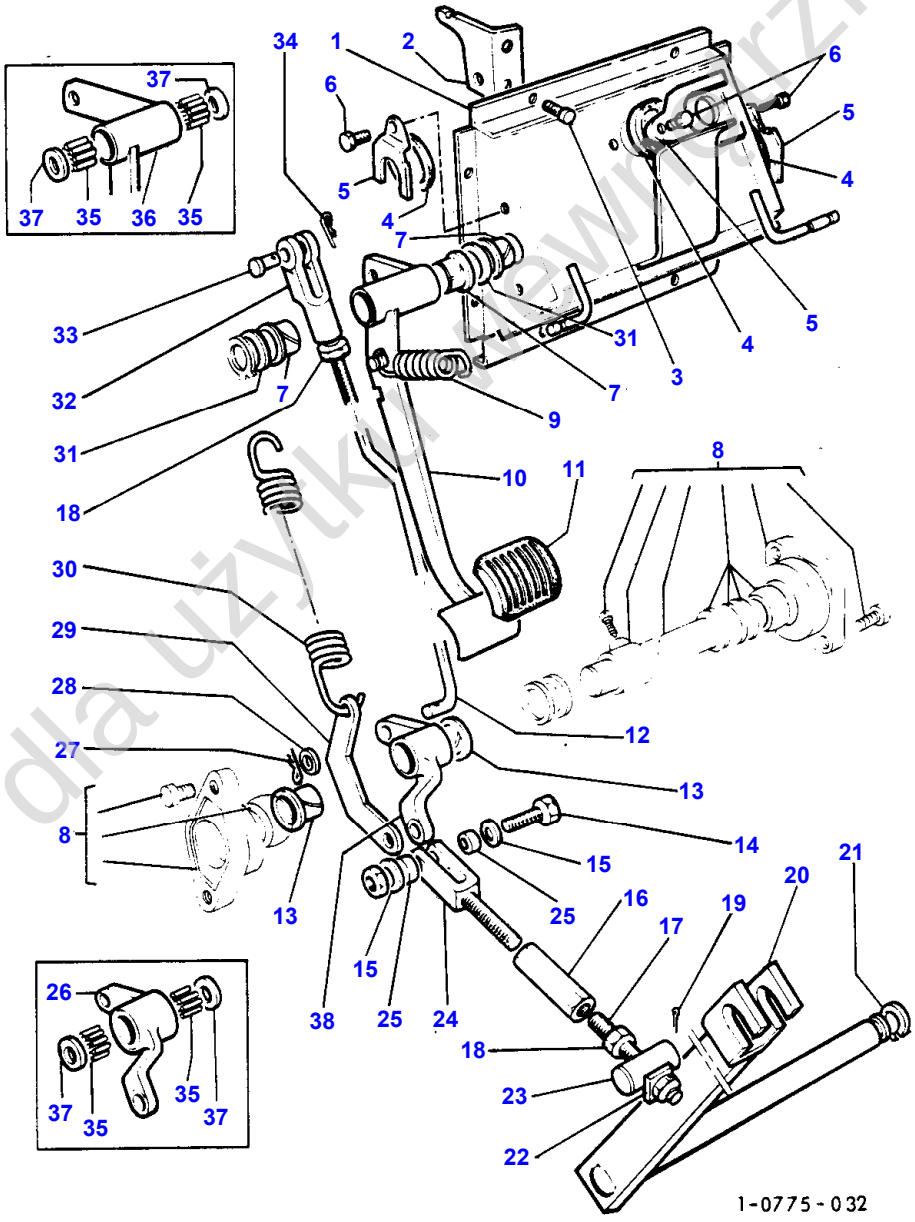

Tylko dla użytku serwisowego

Item	Part Number	Qty	Description	Comments
1	1666000M91	1	Console	Repairs and replaces 1613907M93
2	1874021M2	1	Bracket	DUAL CLUTCH
3	353676X1	8	Screw Unc	
4	1875108M1	3	Seal	
5	1614699M1	3	Bracket	
6	365007X1	3	Self Tap Screws	
7	1877349M1	3	Bearing	SINGLE CLUTCH
8		1	Countershaft	Bottom See Page - Reference Number 220/
9	1613970M2	1	Spring	
10	1666001M91	1	Pedal	Repairs and replaces 1613878M92 Q Up to Serial or Engine Number Z 231027
10	1669013M91	1	Pedal	From Serial or Engine Number Z 231028 Q
11	1878782M1	1	Pad	Up to Serial or Engine Number Z 231027
12	1614159M2	1	Rod	DUAL CLUTCH
	1665023M91	1	Rod	SINGLE CLUTCH
13	1877774M1	2	Bearing	SINGLE CLUTCH
14	377704X1	1	Bolt	
	355565X1	1	Nut Unc	
15	353755X1	2	Washer	
16	762705M1	1	Buckle	
17	1614690M3	1	Rod	
18	353431X1	2	Nut Unf	
19	355855X1	1	Pin	
20	1612557M96	1	Lever	Two Wheel Drive Up to Serial or Engine Number Z283050
20	1613939M92	1	Lever	Four Wheel Drive Up to Serial or Engine Number Z283050
20	1612557M96	1	Lever	From Serial or Engine Number Z 283051 Two Wheel Drive C Up to Serial or Engine Number
20	1679552M91	1	Lever	From Serial or Engine Number Two Wheel Drive Four Wheel Drive
21	352438X1	1	Circlip	
22	1614696M92	1	Plate	
23	1876776M4	1	Pin	
24	1614686M93	1	Clevis	
25	1613924M1	2	Bush	
26	1618093M3	1	Lever	
27	195414M1	1	Hair Pin	
28	353756X1	1	Washer	
29	1613928M2	1	Link	DUAL CLUTCH
30	1613971M2	1	Spring	DUAL CLUTCH
31	1877773M1	2	Washer	
32	195270M1	1	Yoke	
33	354189X1	1	Pin	
34	195414M1	1	Hair Pin	
35	833846M1	4	Bearing	DUAL CLUTCH
	833846M1	2	Bearing	SINGLE CLUTCH
36	1666002M91	1	Pedal	Repairs and replaces 1618079M92 Q Up to Serial or Engine Number Z 231027
36	1669012M91	1	Pedal	From Serial or Engine Number Z 231028 Q
37	195908M1	4	Seal	DUAL CLUTCH
	195908M1	2	Seal	SINGLE CLUTCH
38	1876765M2	1	Lever	SINGLE CLUTCH

Tylko do użytku wewnętrznego

92

BOITE DE VITESSES	LEVIERS DE COMMANDE
GETRIEBE	SCHALTUNG
TRASMISSIONE	COMANDO CAMBIO
TRANSMISION	MANDOS CAMBIO
TRANSMISSION	SHIFT CONTROL

07961002

1 0796 001

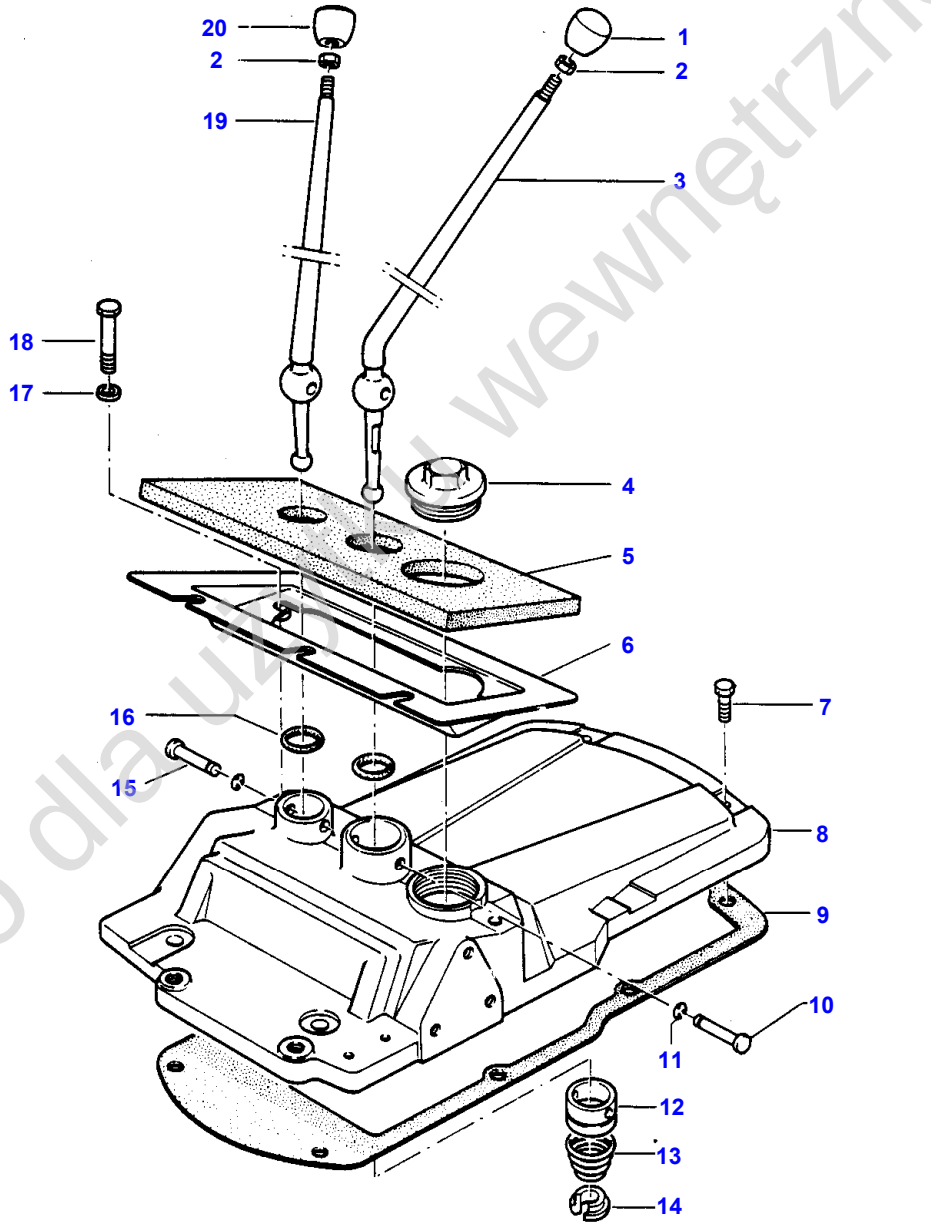

Tylko dla użytku wewnętrznego

Item	Part Number	Qty	Description	Comments
1	1862401M1	1	Knob	(A)
	1867275M1	1	Ball	(B)
2	338553X1	2	Nut	
3	1662700M3	1	Lever	Repairs and replaces 1873588M3
	1673894M2	1	Lever	(D)
4	768300M1	1	Plug	
5	1698243M1	1	Seal	
6	1667383M93	1	Plate	Repairs and replaces 1877492M3
7	362475X1	6	Screw	
8	1875431M1	1	Support	Up to Serial or Engine Number G 146204
	1662997M3	1	Support	From Serial or Engine Number G 146205 Up to Serial or Engine Number H 279040
8	1667385M2	1	Support	From Serial or Engine Number H 279041
9	180511M2	1	Gasket	
10	1663178M1	1	Pin	
11	3000261X1	2	Clip	
12	1663884M1	1	Cup	
	1673897M1	1	Cup	(D)
13	192007M1	1	Spring	
14	1861024M1	1	Seat	
	368233X1	1	Ring	(D)
15	1663598M1	1	Pin	
16	831527M1	2	O Ring	
17	353757X1	2	Washer	
18	353716X1	2	Bolt Unc	
19	1873276M2	1	Lever	
20	1862399M1	1	Knob	

(A)
WITH MULTIPOWER TRANSMISSION

(B)
WITH 8 SPEED TRANSMISSION

(D)
WITH SYNCHRO ZF TRANSMISSION

Tylko dla użytku wewnętrznego

94

BOITE DE VITESSES	CARTER
GETRIEBE	GEHAEUSE
TRASMISSIONE	CARCASSA
TRANSMISION	CARTER
TRANSMISSION	HOUSING

07901002

1 0790 004

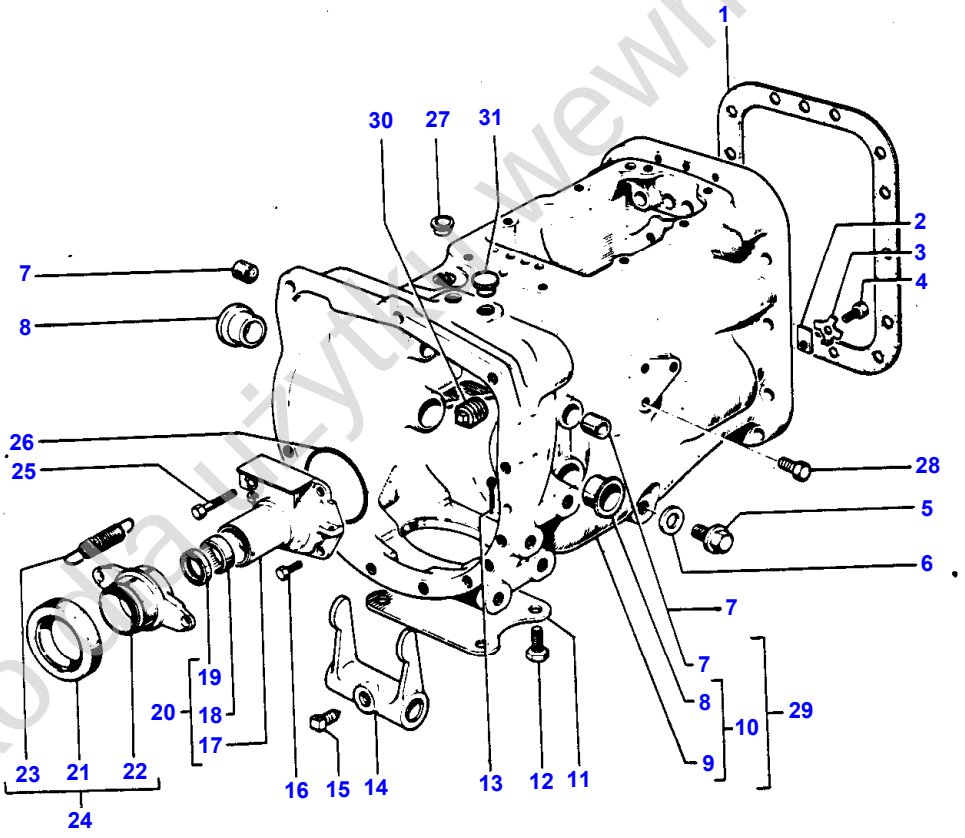

1-0790-004

Tylko do użytku wewnętrznego

Item	Part Number	Qty	Description	Comments
				8 SPEED
1	1861986M2	1	Gasket	
2	184789M1	1	Stop	
3	828020M1	1	Washer	
4	362433X1	1	Bolt	
5	884691M1	1	Plug	
6	180474M1	1	Gasket	
7	1875185M1	2	Cap	2 WHEEL DRIVE
	1875185M1	2	Cap	(29) Q
8	1874876M1	2	Bush	(10) Q
	1874876M1	2	Bush	(29) Q
9		1	Housing	(10) Q
				Not serviced, order REF 10
9		1	Housing	(29) Q
				Not serviced, order REF 29
10	1660232M95	1	Housing	2 WHEEL DRIVE
11	1871922M1	1	Plate	2 WHEEL DRIVE
	909481M1	1	Cover	4 WHEEL DRIVE
12	354441X1	X	Screw Unc	
13	354076X1	1	Pin	
14	1877497M1	1	Fork	
15	881144M1	1	Screw	
16	377477X1	3	Screw Unc	Alternative 353690X1
	353690X1	3	Screw Unc	Alternative 377477X1
17		1	Housing	(20)
				Not serviced, order REF 20
18	886668M1	1	Bearing	(20)
19	1860867M3	1	Oil Seal	(20)
20	1860890M91	1	Housing	2 WHEEL DRIVE
	1860889M91	1	Housing	4 WHEEL DRIVE
21	892862M1	1	Bearing	(24)
				Alternative 1868225M1
21	1868225M1	1	Bearing	(24)
				Alternative 892862M1
22	886727M2	1	Support	(24)
23	1867690M2	1	Spring	(24)
24	886768M92	1	Stop	
25	377480X1	1	Bolt Unc	Alternative 354265X1
	354265X1	1	Bolt Unc	Alternative 377480X1
26	886089M1	1	O Ring	
27	894685M1	1	Plug	
28	899297M1	1	Plug	
29	1660413M94	1	Housing	4 WHEEL DRIVE
30	894684M1	1	Plug	Alternative 882509M1 Q
	882509M1	1	Plug	Alternative 894684M1 Q
			Not Used	
31	894683M1	1	Plug	2 WHEEL DRIVE
	848301M1	1	Plug	4 WHEEL DRIVE

Tylko do użytku wewnętrznego

96

BOITE 8 VITESSES SYNCHRONISEES
8-GANG SYNCHRONGETRIEBE
TRASMISSIONE A 8 VELOCITA' SINCRONIZZATE
CAJA CAMBIO SINCRONIZADA 8 VELOCIDADES
8 SPEED SYNCHROMESH TRANSMISSION

AXES ET FOURCHETTES
SCHALTGABEL UND SCHALTSCHIENE
FORCELLA ED INGRANAGG10 CAMBIO
HORQUILLAS
FORK AND GEAR SHIFTRAIL

0854 1001

1 0854 001

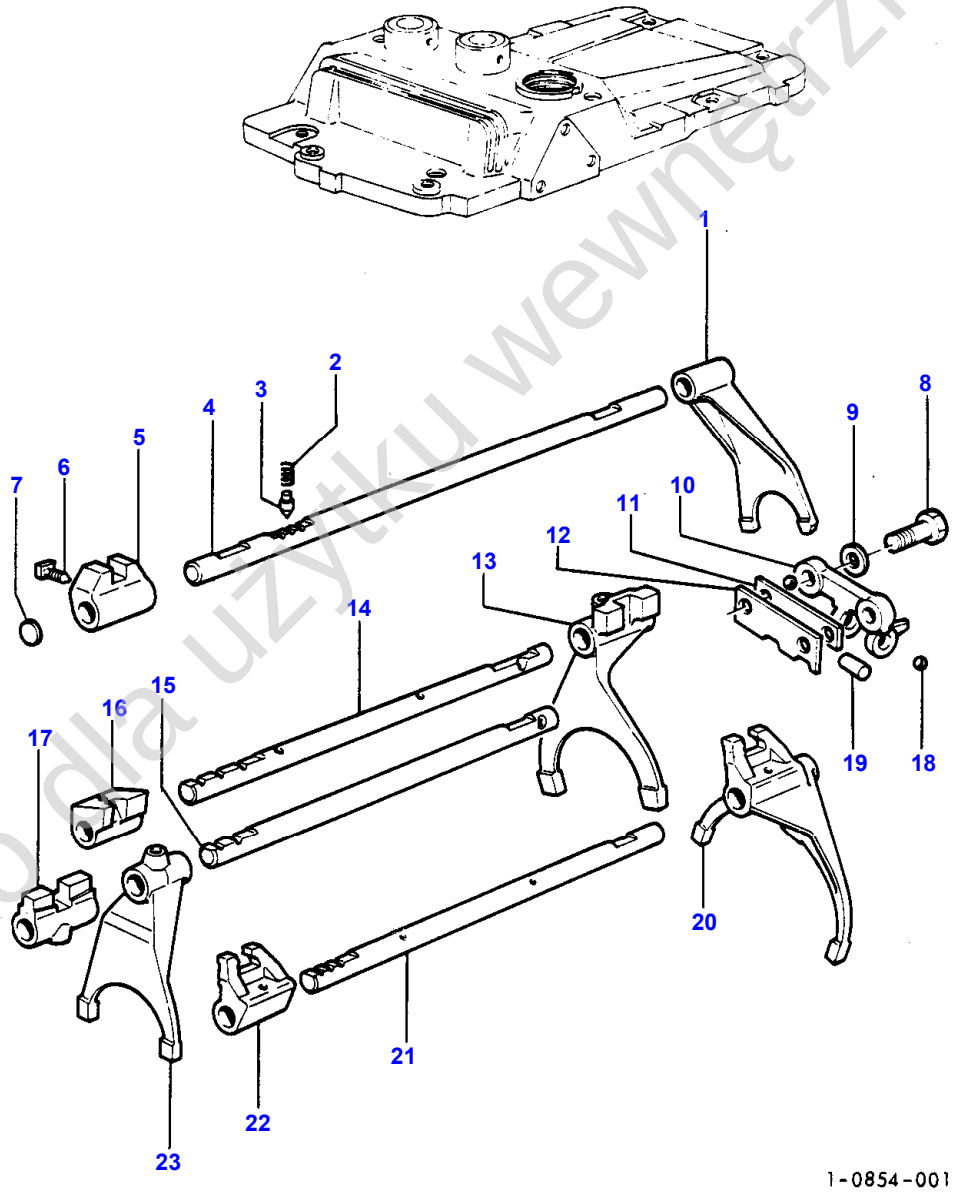

Tylko dla użytku wewnętrznego

Item	Part Number	Qty	Description	Comments
1	897065M2	1	Fork	
2	191221M1	4	Spring	
3	180418M1	4	Plunger	
4	894703M2	1	Rail	
5	180446M1	1	Selector	
6	180002M1	8	Setscrew	Alternative 881144M1
	881144M1	8	Screw	Alternative 180002M1
7	2950X	1	Plug	
8	362443X1	2	Bolt	
9	353434X1	2	Lock Washer	Alternative 376720X1
	376720X1	2	Washer	Alternative 353434X1
10	1860761M1	1	Retainer	
11	1860765M1	1	Packing	
12	1860764M1	1	Plate	
13	1860773M1	1	Fork	
14	180442M3	1	Rail	
15	1862866M2	1	Rail	
16	1877607M1	1	Selector	
17	1862868M2	1	Selector	
18	391838X1	2	Ball	
19	1860767M1	1	Pin	
20	1873533M1	1	Fork	
21	1867260M2	1	Rail	
22	1873534M1	1	Selector	
23	1873532M2	1	Fork	

Tylko dla użytku wewnętrznego

98

BOITE 8 VITESSES SYNCHRONISEES
8-GANG SYNCHRONGETRIEBE
TRASMISSIONE A 8 VELOCITA' SINCRONIZZATE
CAJA CAMBIO SINCRONIZADA 8 VELOCIDADES
8 SPEED SYNCHROMESH TRANSMISSION

ARBRE PRINCIPAL
HAUPTWELLE
ALBERO PRINCIPALE
EJE PRINCIPAL
MAIN SHAFT

0848100 1

1 0848 001

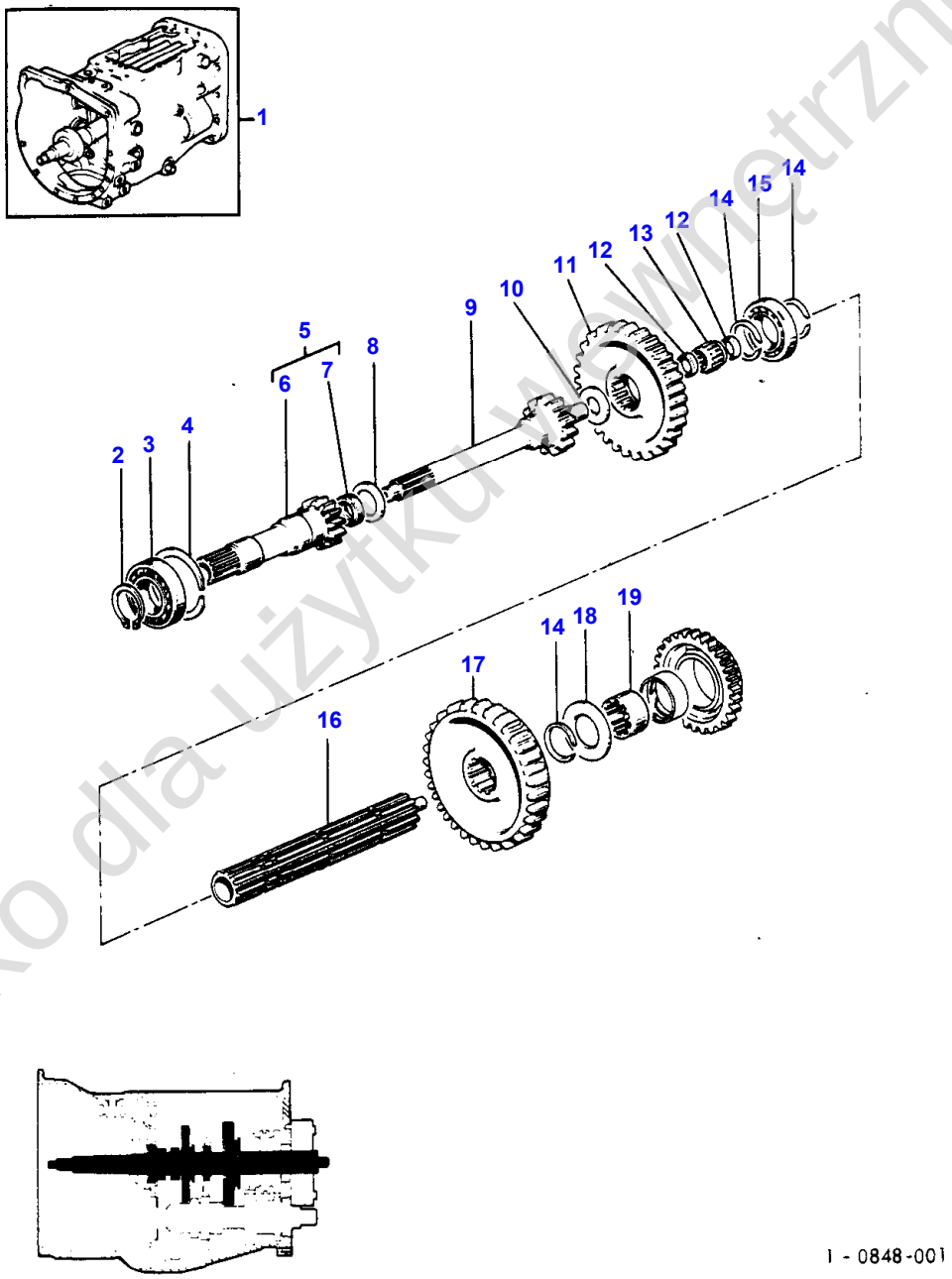

1 - 0848-001

Tylko dla użytku wewnętrznego

Item	Part Number	Qty	Description	Comments
1	1872750M92	1	Gearbox	Two Wheel Drive For UK only or any text in English only)
1	1665404M91	1	Gearbox	Repairs and replaces 1660134M91
2	762101M1	1	Ring	
3	GK 2151	1	Bearing Ball	
4	377631X1	1	Ring	
5	1869712M91	1	Pinion	
6		1	Shaft	(5) Not serviced, order REF 5
7	1860011M1	1	Seal	(5)
8	964929M1	1	Washer	
9	1862423M3	1	Pinion	
10	964944M1	1	Spacer	
11	1682692M1	1	Gear	Number of teeth/spines 46 Repairs and replaces 1660093M1
12	2700274M1	2	Spacer	
13	2700273M1	1	Bearing	
14	195363M1	3	Circlip	
15	338552X1	1	Bearing	
16	1870823M2	1	Shaft	Number of teeth/spines 22
17	1682688M1	1	Gear	Number of teeth/spines 44 Repairs and replaces 520700M4
18	1867259M1	1	Washer	
19	1867258M1	1	Sleeve	

Tylko dla użytku wewnętrznego

100

BOITE 8 VITESSES SYNCHRONISEES	ARBRE DE RENVOI
8-GANG SYNCHRONGETRIEBE	VORGELEGEWELLE
TRASMISSIONE A 8 VELOCITA' SINCRONIZZATE	ALBERO RINVIO
CAJA CAMBIO SINCRONIZADA 8 VELOCIDADES	EJE SECUNDARIO
8 SPEED SYNCHROMESH TRANSMISSION	COUNTERSHAFT

08511001

1 0851 002

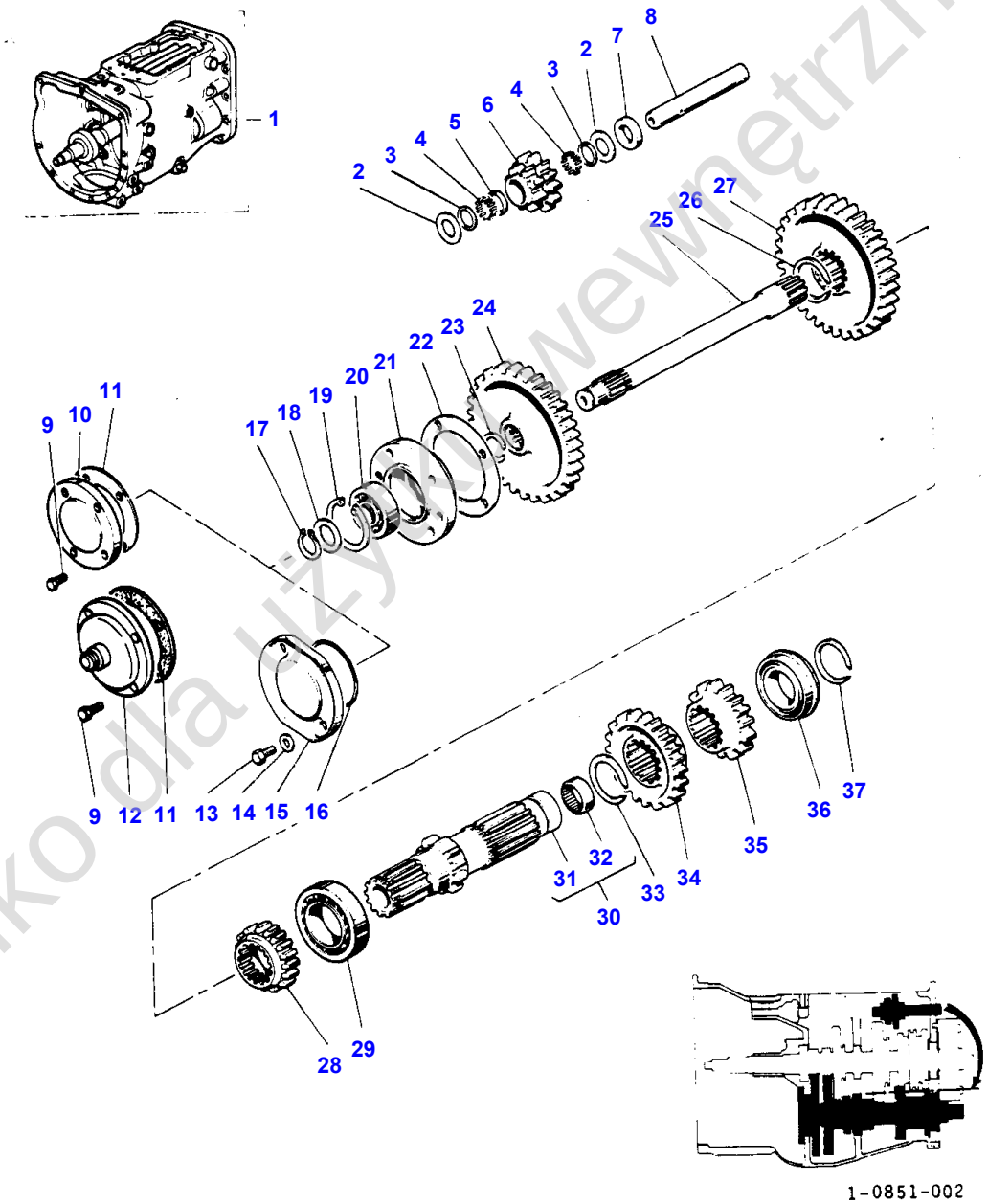

Tylko dla użytku wewnętrznego

Item	Part Number	Qty	Description	Comments
1		1	Gearbox	See Page - Reference Number 98/1
2	180458M1	2	Washer	
3	183037M1	2	Washer	
4	183039M1	56	Needle	
5	183038M1	1	Spacer	
	1617886M1	1	Spacer	(A)
6	1660920M1	1	Gear	
	1617901M1	1	Gear	(A)
7	189449M1	1	Washer	
	1617886M1	1	Spacer	(A)
8	180445M1	1	Shaft	
9	377481X1	4	Bolt Unc	Alternative 354262X1
	354262X1	4	Bolt Unc	Alternative 377481X1
10	509833M1	1	Case	
11	181237M1	1	Gasket	
12	1872669M92	1	Cap	
13	377479X1	4	Screw Unc	
14	376703X1	4	Washer	
15	883620M1	1	Cap	
16	2415813	1	O Ring	Repairs and replaces 1004633M1
17	899385M1	1	Ring	
18	881122M2	1	Ring	
19	355988X1	1	Snapring	
20	899377M2	1	Bearing	
21	899331M1	1	Housing	
22	180432M1	1	Gasket	
23	358913X1	1	Snapring	
24	1869708M1	1	Gear	Number of teeth/spines 38
25	1868533M1	1	Shaft	Two Wheel Drive Up to Serial or Engine Number NOV 1978
25	1869279M1	1	Shaft	Four Wheel Drive Up to Serial or Engine Number NOV 1978
25	1869279M1	1	Shaft	Two Wheel Drive Four Wheel Drive From Serial or Engine Number DEC 1978
26	195499M1	1	Ring	
27	1862422M1	1	Gear	Two Wheel Drive
	1617939M1	1	Gear	(A) Two Wheel Drive
27	1617940M1	1	Gear	(A) Four Wheel Drive
28	1867254M1	1	Gear	Number of teeth/spines 23
29	195507M1	1	Bearing Ball	
	3003372X1	1	Bearing	(A)
30	906743M92	1	Shaft	Two Wheel Drive
	1617919M91	1	Shaft	(A)
31		1	Tubular Shaft	(30) Not serviced, order REF 30
32	195453M1	1	Bearing Needle	(30)
33	195500M1	1	Ring	
34	1867253M2	1	Gear	Number of teeth/spines 33
	1617923M2	1	Pinion	(A)
35	1867252M2	1	Gear	Number of teeth/spines 28
36	1675274M1	1	Bearing	
37	195363M1	1	Circlip	
				(A) WITH MK II TRANSMISSION

Tylko dla użytku wewnętrznego

104

SYNCHRO
SYNCHRONISIEREINRICHTUNG
SINCRONIZZATORE

SYNCHRO 08201001

1 0820 001

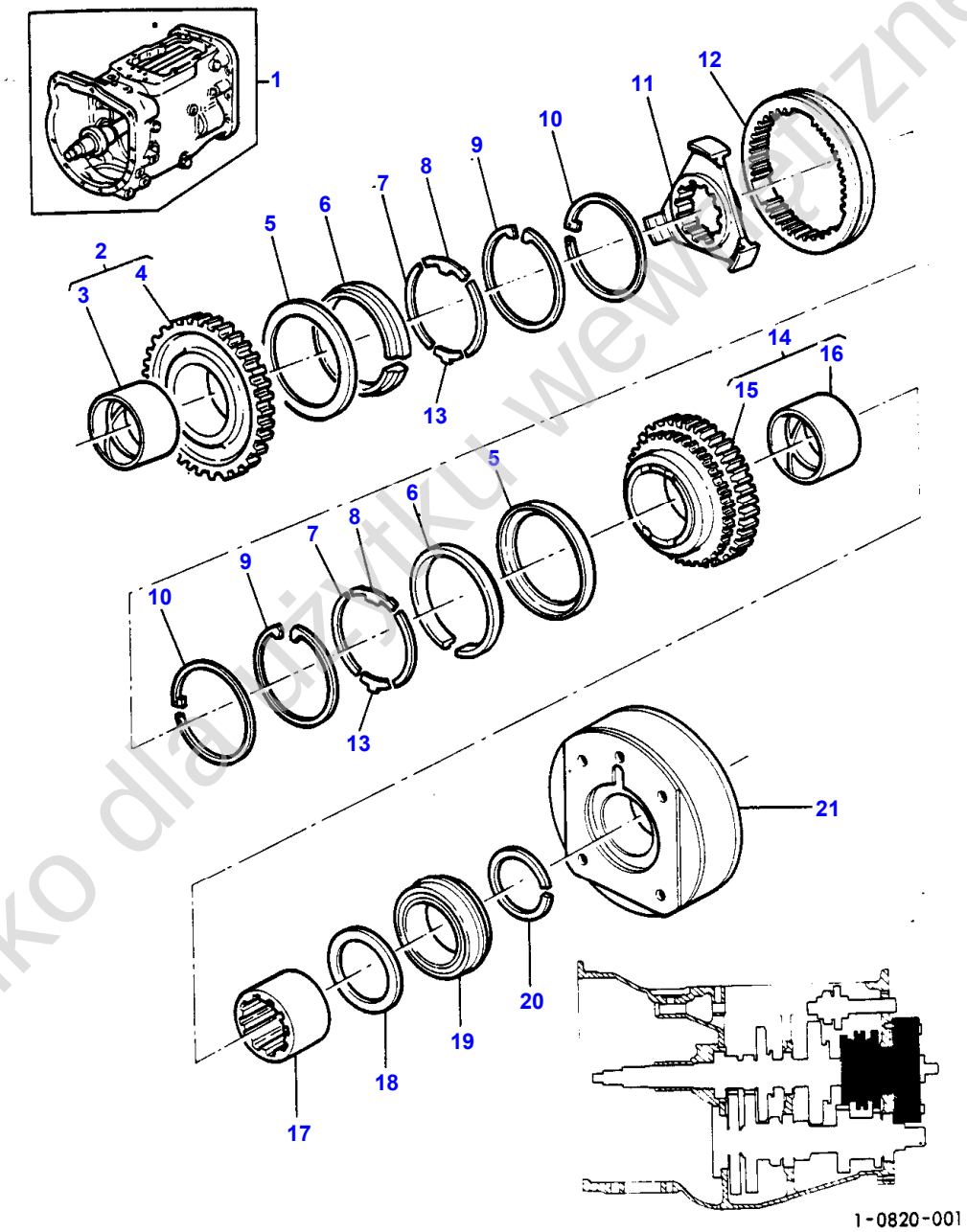

Tylko dla użytku wewnętrznego

Item	Part Number	Qty	Description	Comments
1		1	Gearbox	See Page - Reference Number 98/1
2	1867248M93	1	Gear	Number of teeth/spines 36
3	1867250M1	1	Bush	(2)
4		1	Pinion	(2) Not serviced, order 1867248M93
5	1613685M1	2	Retainer	
6	1618369M1	2	Synchro Gear	
7	1619641M2	4	Band	
8	1619126M1	2	Stop	
9	1618319M1	2	Ring	
10	1867263M1	2	Ring	
11	1867930M2	1	Sleeve	
	1661749M1	1	Sleeve	(A)
12	1867929M2	1	Sleeve	
13	1613687M1	2	Stop	
14	1867244M94	1	Gear	Number of teeth/spines 41
15		1	Pinion	(14) Not serviced, order 1867244M94
16	1867246M1	1	Bush	(14)
17	1867324M1	1	Sleeve	
	1617894M1	1	Sleeve	(A)
18	1867259M1	1	Washer	
19	1675274M1	1	Bearing	
20	195363M1	1	Circlip	
21		1	Epicyclic	See Page - Reference Number 110/ (A) WITH MK II TRANSMISSION

Tylko dla użytku wewnętrznego

106

BOITE 8 VITESSES PRISE CONSTANTE
8-GANG MUFFENSCHALTGETRIEBE
TRASMISSIONE A 8 VELOCITA' COSTANTE
CAJA CAMBIO 8 VELOCIDADES
8 SPEED CONSTANT MESH TRANSMISSION

AXES ET FOURCHETTES
SCHALTGABEL UND SCHALTSCHIENE
FORCELLA ED INGRANAGG10 CAMBIO
HORQUILLAS
FORK AND GEAR SHIFTRAIL

08941002

1 0894 002

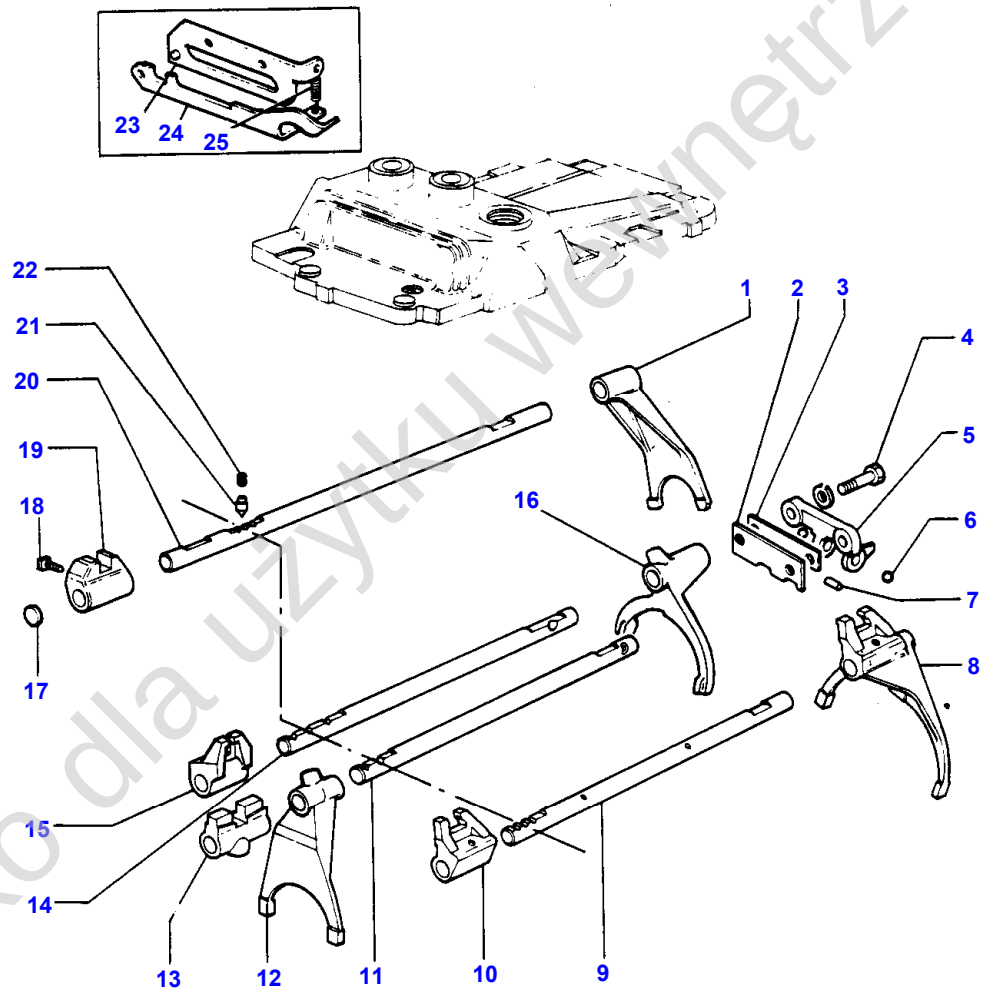

1-0894-002

Tylko dla użytku wewnętrznego

Item	Part Number	Qty	Description	Comments
1	897065M2	1	Fork	
2	1860764M1	1	Plate	
3	1860765M1	1	Packing	
4	362443X1	2	Bolt	
	376720X1	2	Washer	
5	1860761M1	1	Retainer	
6	391838X1	2	Ball	
7	1860767M1	1	Pin	
8	1873533M1	1	Fork	
9	1867260M2	1	Rail	Two Wheel Drive
	1867993M2	1	Rail	Four Wheel Drive
10	1873534M1	1	Selector	
11	1862866M2	1	Rail	
12	1873532M2	1	Fork	
13	1862868M2	1	Selector	
14	1617947M1	1	Rail	
15	1873534M1	1	Selector	
16	1662215M1	1	Shifter	
17	2950X	1	Plug	
18	180002M1	X	Setscrew	Alternative 881144M1
	881144M1	X	Screw	Alternative 180002M1
19	180446M1	1	Selector	
20	894703M2	1	Rail	Two Wheel Drive
	880108M2	1	Rail	Four Wheel Drive
21	180418M1	4	Plunger	
22	191221M1	4	Spring	
23	880111M92	1	Plate	Four Wheel Drive
24	1866694M92	1	Latch	Four Wheel Drive
25	1866693M1	1	Spring	Four Wheel Drive

Tylko dla użytku wewnętrznego

108

BOITE 8 VITESSES PRISE CONSTANTE
8-GANG MUFFENSCHALTGETRIEBE
TRASMISSIONE A 8 VELOCITA' COSTANTE
CAJA CAMBIO 8 VELOCIDADES
8 SPEED CONSTANT MESH TRANSMISSION

ARBRE PRINCIPAL
HAUPTWELLE
ALBERO PRINCIPALE
TREN DE ENGRANAJES
MAIN SHAFT

08881003

1 0888 002

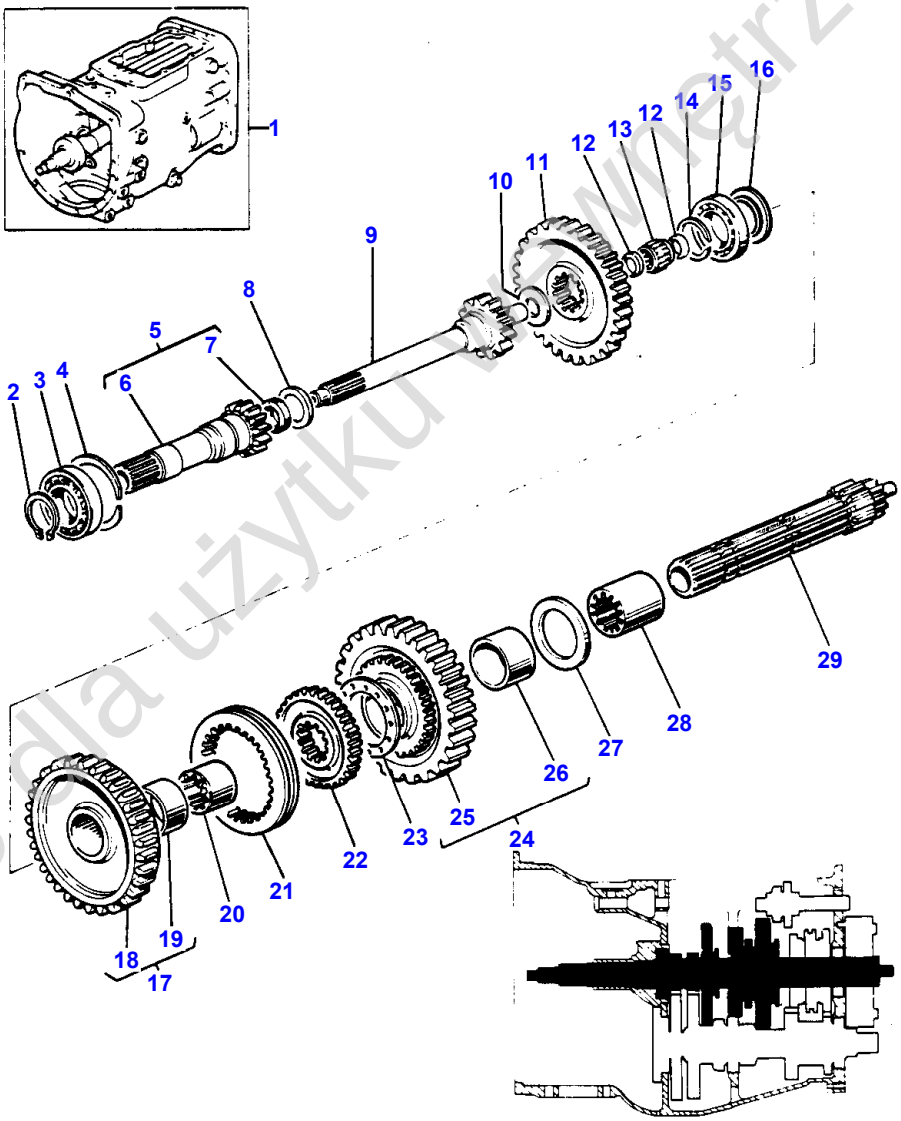

1-0888-002

Tylko dla użytku wewnętrznego

Item	Part Number	Qty	Description	Comments
1	1667915M91	1	Gearbox	Four Wheel Drive
	1665390M91	1	Gearbox	Repairs and replaces 1662847M92 Two Wheel Drive
2	762101M1	1	Ring	
3	GK 2151	1	Bearing Ball	
4	377631X1	1	Ring	Alternative 358890X1
	358890X1	1	Ring	Alternative 377631X1
5	1869712M91	1	Pinion	20 T.D.Z
	1671705M1	1	Shaft	16 T.D.Z
	1868530M91	1	Pinion	17 T.D Z
6		1	Tubular Shaft	(5) Not serviced, order NO 5
7	1860011M1	1	Seal	(5)
8	964929M1	1	Washer	
9	1617936M4	1	Shaft	Two Wheel Drive 23 T.D.Z
9	1617937M4	1	Shaft	Four Wheel Drive 26 T.D.Z
10	964944M1	1	Spacer	
11	1617959M1	1	Gear	46 T.D.Z 2 EME
12	2700274M1	2	Spacer	
13	2700273M1	1	Bearing	
14	195363M1	1	Circlip	
15	338552X1	1	Bearing	
16	1617888M2	1	Washer	
17	1664549M91	1	Gear	42 T.D.Z Up to Serial or Engine Number B.131018 1 ERE
17	1682693M91	1	Gear	42 T.D.Z From Serial or Engine Number B.131019
18		1	Pinion	(17) Not serviced, order 1664549M91
19	1617890M1	1	Bush	(17)
20	1617893M1	1	Sleeve	
21	1664659M2	1	Sleeve	Up to Serial or Engine Number B.131018
	1672957M1	1	Sleeve	From Serial or Engine Number B.131019
22	1664556M1	1	Carrier	
23	1663796M1	1	Bearing Assy	
24	1664550M91	1	Gear	44 T.D.Z Up to Serial or Engine Number B.131018 M.AR
24	1682694M91	1	Gear	44 T.D.Z From Serial or Engine Number B.131019
25		1	Pinion	(24) Not serviced, order 1664550M91
26	1867246M1	1	Bush	(24)
27	1617885M2	1	Washer	
28	1617892M1	1	Sleeve	
29	1617942M2	1	Shaft	

Tylko dla użytku wewnętrznego

110

REDUCTEUR EPICYCLOIDAL	MODELE RENFORCE
UNTERSETZUNGSGETRIEBE	VERSTAERKT
GRUPPO EPICICLOIDALE	TIPO PESANTE
UNIDAD EPICICLOIDAL	SERVICIO PESADO
EPICYCLIC UNIT	HEAVY DUTY

10261002

1 1026 001

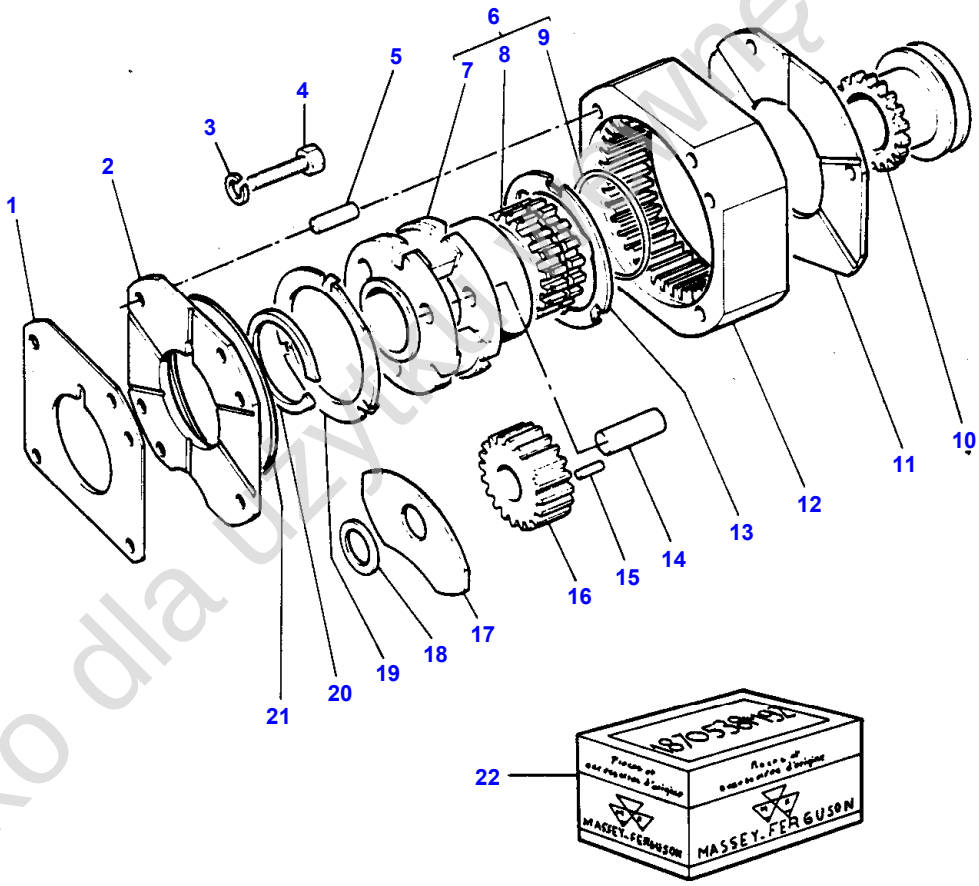

1-1026-001

Tylko dla użytku wewnętrznego

Item	Part Number	Qty	Description	Comments
1	1867426M1	1	Shim	
2	1867425M1	1	Plate	
3	376720X1	3	Washer	
4	362463X1	4	Screw	
5	180409M1	2	Pin	
6	1866558M92	1	Carrier	(22)
7		1	Carrier	(6) Not serviced, order 1866558M92
8	1866544M1	1	Spacer	(6)
9	1866539M1	1	Ring	(6)
10	1866557M1	1	Coupler	
11	1867423M1	1	Plate	
12	1867424M2	1	Gear	
13	1866545M2	1	Washer	(22)
14	1866538M2	3	Shaft	(22)
15	1866553M2	96	Roller	(22)
16	1866552M1	3	Pinion	(22)
17	1866542M1	6	Thrust Washer	(22)
18	1866543M1	3	Washer	(22)
19	1866545M2	1	Washer	(22)
20	377424X1	1	Ring	(22)
21	1661953M1	1	Disc	
22	1870538M92	1	Carrier	

Tylko dla użytku wewnętrznego

112

BOITE DE VITESSES MULTIPOWER	CARTER
MULTIPOWER-GETRIEBE	GEHAEUSE
TRASMISSIONE POTENZA MULTIPLA	CARCASSA
CAJA CAMBIO MULTIPOWER	CARTER
MULTIPOWER TRANSMISSION	HOUSING

09131001

1 0913 003

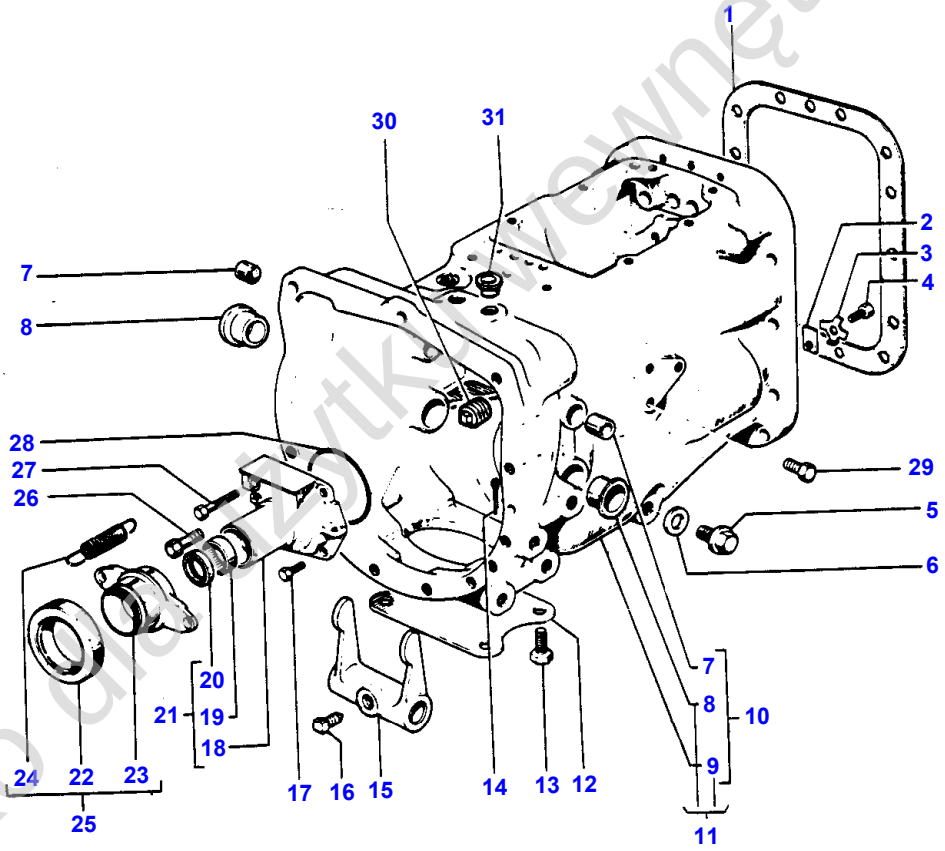

1-0913-003

Tylko do użytku wewnętrznego

Item	Part Number	Qty	Description	Comments
1	1861986M2	1	Gasket	
2	184789M1	1	Stop	
3	828020M1	1	Washer	
4	362433X1	1	Bolt	
5	884691M1	1	Plug	
6	180474M1	1	Gasket	
7	1875185M1	2	Cap	2 WHEEL DRIVE
	1875185M1	2	Cap	(10) Q
8	1874876M1	2	Bush	(10) Q
	1874876M1	2	Bush	(11) Q
9		1	Housing	(10) Q Not serviced, order REF 10
9		1	Housing	(11) Q Not serviced, order REF 11
10	1660413M94	1	Housing	4 WHEEL DRIVE
11	1660232M95	1	Housing	2 WHEEL DRIVE
12	1871922M1	1	Plate	2 WHEEL DRIVE
	909481M1	1	Cover	4 WHEEL DRIVE
13	354441X1	2	Screw Unc	
14	354076X1	1	Pin	
15	1877497M1	1	Fork	
16	180002M1	1	Setscrew	Alternative 881144M1
	881144M1	1	Screw	Alternative 180002M1
17	377477X1	1	Screw Unc	Alternative 353690X1
	353690X1	1	Screw Unc	Alternative 377477X1
18		1	Housing	(21) Not serviced, order 1860889M91
19	886668M1	1	Bearing	(21)
20	1860867M3	1	Oil Seal	(21)
21	1860889M91	1	Housing	
22	1868225M1	1	Bearing	(25)
23	886727M2	1	Support	(25)
24	1867690M2	1	Spring	(25)
25	886768M92	1	Stop	
26	354262X1	2	Bolt Unc	Alternative 377481X1
	377481X1	2	Bolt Unc	Alternative 354262X1
27	354265X1	1	Bolt Unc	Alternative 377480X1
	377480X1	1	Bolt Unc	Alternative 354265X1
28	886089M1	1	O Ring	
29	899297M1	1	Plug	
30	894684M1	1	Plug	
31	894683M1	1	Plug	2 WHEEL DRIVE
	848301M1	1	Plug	4 WHEEL DRIVE

Tylko do użytku wewnętrznego

114

BOITE DE VITESSES MULTIPOWER
MULTIPOWER-GETRIEBE
TRASMISSIONE POTENZA MULTIPLA
CAJA CAMBIO MULTIPOWER
MULTIPOWER TRANSMISSION

AXES ET FOURCHETTES
SCHALTGABEL UND SCHALTSCHIENE
FORCELLA ED INGRANAGG10 CAMBIO
HORQUILLAS
FORK AND GEAR SHIFT

09341002

1 0934 002

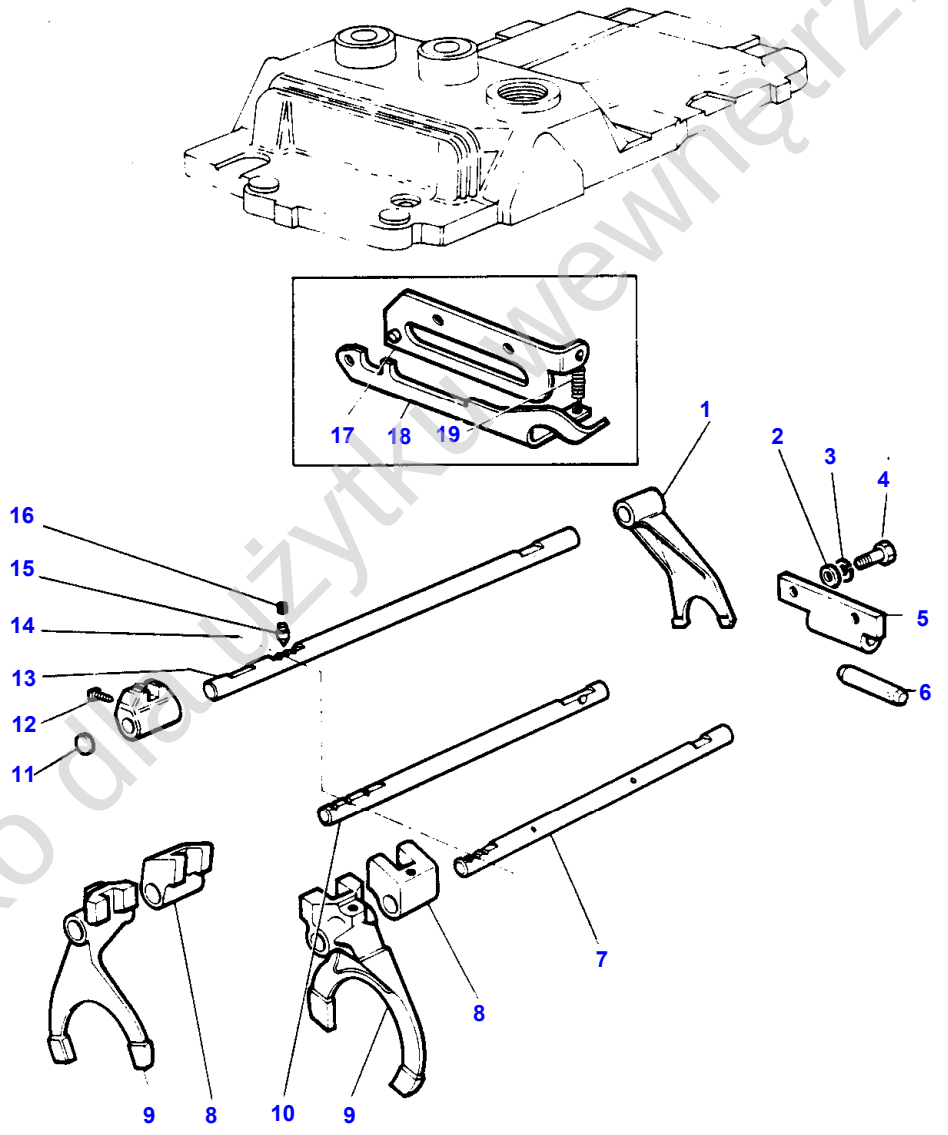

1-0934-002

Tylko do użytku wewnętrznego

Item	Part Number	Qty	Description	Comments
1	897065M2	1	Fork	
2	888701M1	1	Spacer	
3	376720X1	2	Washer	
4	362437X1	2	Bolt	
5	180453M1	1	Plate	
6	180457M1	1	Pin	
7	180438M3	1	Rail	
	880109M2	1	Rail	(A)
8	1877605M1	2	Jaw	
9	180437M1	2	Fork	
10	180442M3	1	Rail	
11	2950X	1	Plug	
12	180002M1	7	Setscrew	Alternative 881144M1
	881144M1	7	Screw	Alternative 180002M1
13	180446M1	1	Selector	
14	894703M2	1	Rail	
	880108M2	1	Rail	(A)
15	180418M1	3	Plunger	
16	191221M1	3	Spring	
17	880111M92	1	Plate	(A)
18	1866694M92	1	Latch	(A)
19	1866693M1	1	Spring	(A)
				(A) WITH ROAD SPEED LIMITING DEVICE

Tylko dla użytku wewnętrznego

116

BOITE DE VITESSES MULTIPOWER	ARBRE D'ENTREE
MULTIPOWER-GETRIEBE	ANTRIEBSWELLE
TRASMISSIONE POTENZA MULTIPLA	ALBERO ENTRATA
CAJA CAMBIO MULTIPOWER	EJE PRIMARIO
MULTIPOWER TRANSMISSION	INPUT SHAFT

09251001

1 0925 001

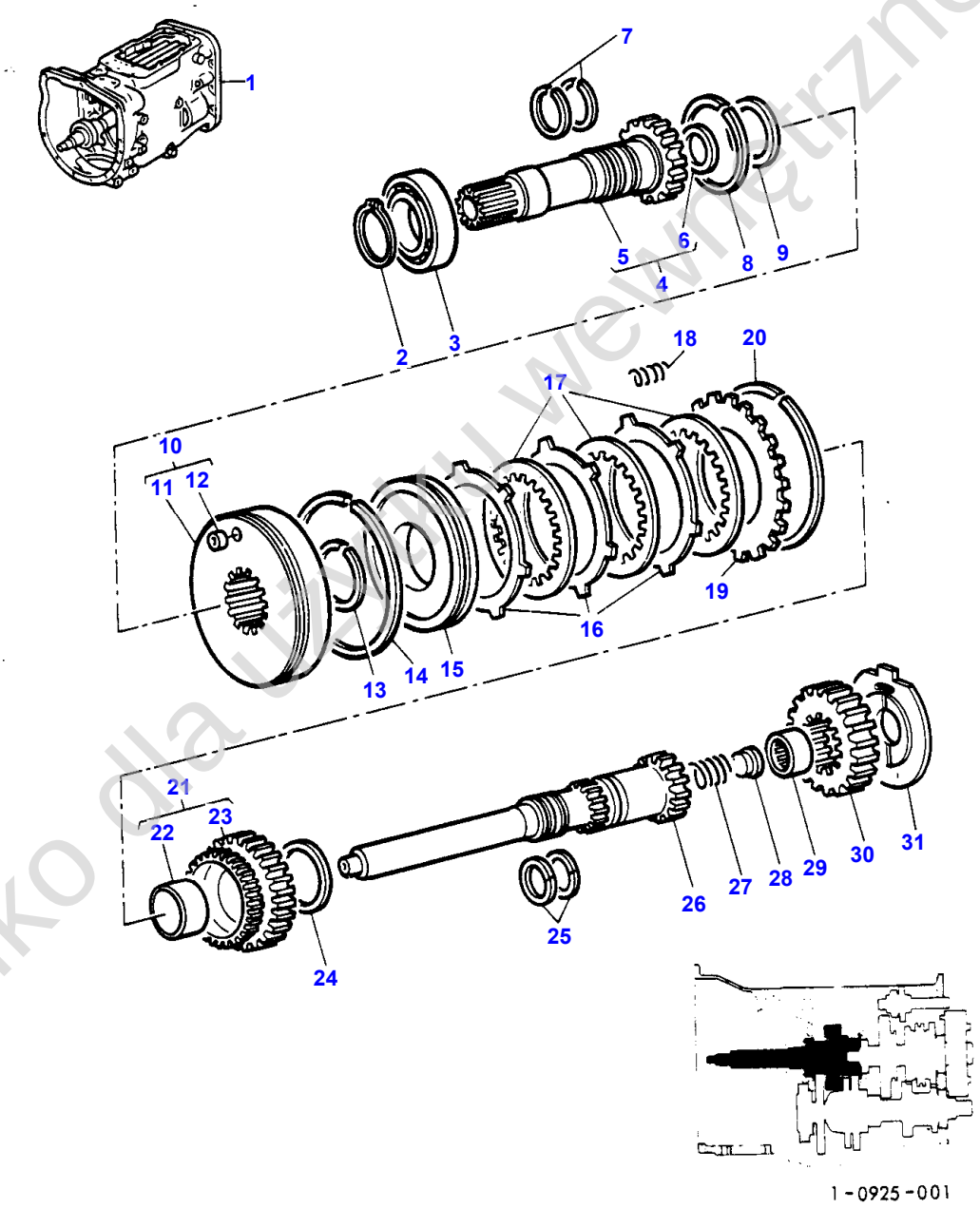

1-0925-001

Tylko dla użytku wewnętrznego

Item	Part Number	Qty	Description	Comments
1	1666874M91	1	Gearbox	Repairs and replaces 1664393M91 Two Wheel Drive
2	762101M1	1	Ring	
3	GK 2151	1	Bearing Ball	
4		1	Shaft	Not serviced, order NO 5,6
5	1869707M1	1	Pinion	(4) 20 T.D.Z
6	883935M4	1	Seal	(4)
7	907315M2	2	Ring	
8	377631X1	1	Ring	
9	187074M1	1	Washer	
10	518508M93	1	Housing	
11		1	Housing	(10) Not serviced, order REF 10
12	1872134M92	1	Valve Check	(10)
13	186580M1	1	Ring	
14	185425M1	1	Ring	
15	186531M2	1	Piston	
16	185464M1	3	Plate	
17	1870879M1	3	Disc	Repairs and replaces 1862289M2
18	186519M1	6	Spring	
19	518507M1	1	Plate	
20	364689X1	1	Snapring	
21	1872488M91	1	Pinion	25T,D,Z
22	188806M1	1	Bush	(21)
23		1	Pinion	(21) Not serviced, order REF 21
24	186567M1	1	Washer	
25	186581M1	2	Ring	
26	516523M92	1	Shaft	
27	886352M1	1	Spring	
28	886353M1	1	Abutment	
29	834844M1	1	Bearing Assy	
30	1872486M1	1	Pinion	21T,D,Z
31	186579M1	1	Spacer	

Tylko dla użytku wewnętrznego

118

BOITE DE VITESSES MULTIPOWER	ARBRE DE RENVOI
MULTIPOWER-GETRIEBE	VORGELEGEWELLE
TRASMISSIONE POTENZA MULTIPLA	ALBERO RINVIO
CAJA CAMBIO MULTIPOWER	EJE SECUNDARIO
MULTIPOWER TRANSMISSION	COUNTERSHAFT

09311002

1 0931 002

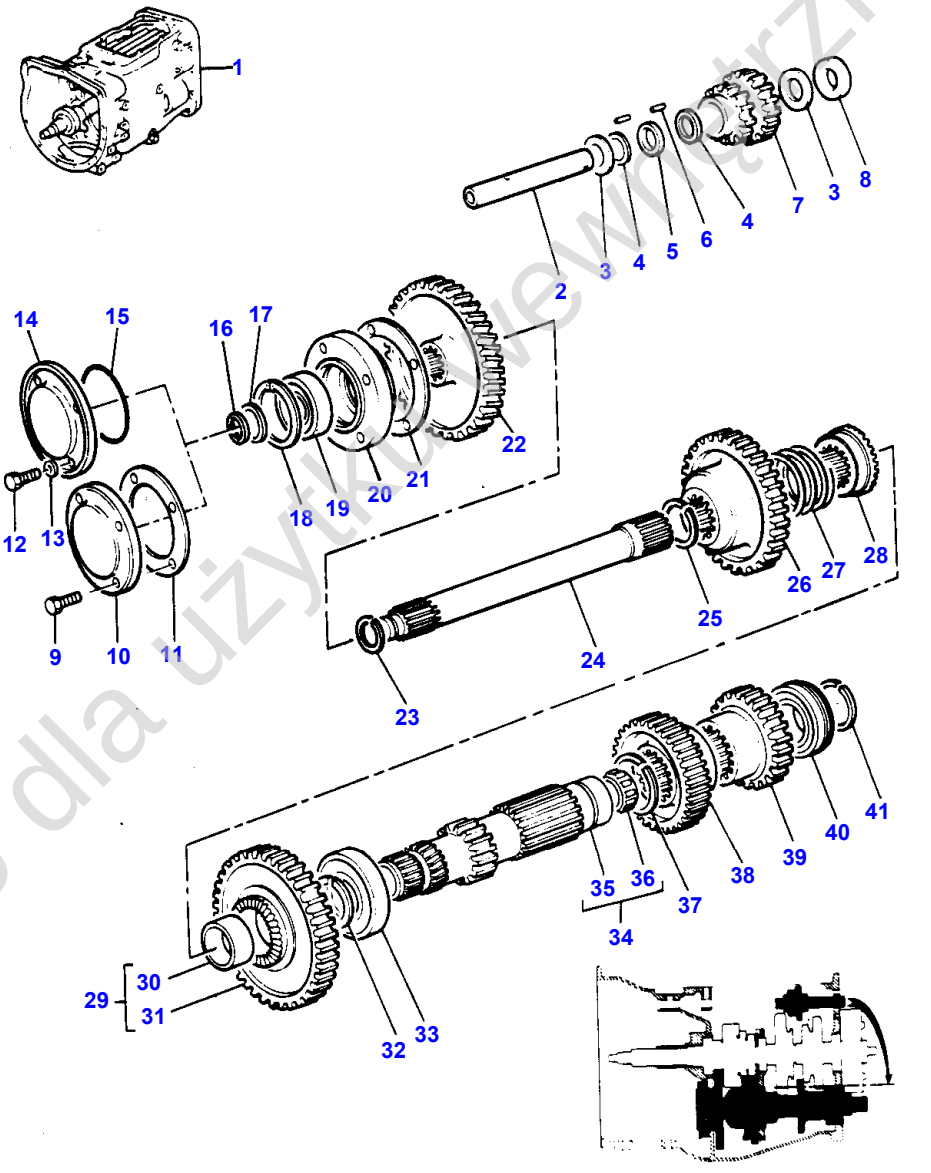

1-0931-002

Tylko dla użytku niekomercyjnego

Item	Part Number	Qty	Description	Comments
1		1	Gearbox	See Page - Reference Number 116/1
		1	Gearbox	(A)
				See Page - Reference Number 126/1
2	180445M1	1	Shaft	
3	180458M1	2	Washer	
4	183037M1	2	Washer	
5	183038M1	1	Spacer	
	1617886M1	1	Spacer	(A)
6	183039M1	56	Needle	
7	1660919M1	1	Gear	Two Wheel Drive
				Repairs and replaces 183040M1
7	1617901M1	1	Gear	(A)
	1660919M1	1	Gear	Four Wheel Drive
8	189449M1	1	Washer	
	1617886M1	1	Spacer	(A)
9	377481X1	4	Bolt Unc	Alternative 354262X1
	354262X1	4	Bolt Unc	Alternative 377481X1
10	509833M1	1	Case	Repairs and replaces 12,13,14,15
11	181237M1	1	Gasket	Repairs and replaces 12,13,14,15
12	377479X1	4	Screw Unc	
13	376703X1	4	Washer	
14	883620M1	1	Cap	Not serviced, order NO 9,10,11
15	2415813	1	O Ring	Not serviced, order NO 9,10,11
16	899385M1	1	Ring	
17	881122M2	1	Ring	
18	355988X1	1	Snapring	
19	899377M2	1	Bearing	
20	899331M1	1	Housing	
21	180432M1	1	Gasket	
22	1869708M1	1	Gear	38T,D,Z
23	358913X1	1	Snapring	
24	1868533M1	1	Shaft	Two Wheel Drive
	1869279M1	1	Shaft	Four Wheel Drive
25	831581M1	1	Ring	
26	1872487M1	1	Gear	35T,D,Z
	1617915M1	1	Gear	(A)
				35T,D,Z
26	1617914M1	1	Gear	(A)
				34T,D,Z
				For Germany only or any text in German only
27	188803M1	1	Spring	
28	188834M2	1	Coupler	
29	188838M91	1	Gear	38T,D,Z
	1617931M91	1	Gear	(A)
				38T,D,Z
30	832491M1	1	Bush	(29)
31		1	Pinion	(29)
				Not serviced, order REF 29
32	188859M1	1	Washer	
33	195507M1	1	Bearing Ball	
	3003372X1	1	Bearing	(A)
34	1660915M91	1	Shaft	Two Wheel Drive
				Repairs and replaces 189391M92
34	1660915M91	1	Shaft	Four Wheel Drive
	1617921M91	1	Shaft	(A)
35		1	Tubular Shaft	(34)
				Not serviced, order REF 34
36	195453M1	1	Bearing Needle	(34)
37	195500M1	1	Ring	
38	180415M1	1	Pinion	Number of teeth/spines 33
	1617923M2	1	Pinion	(A)
39	180419M1	1	Pinion	Number of teeth/spines 23
	1617946M1	1	Pinion	(A)
40	1675274M1	1	Bearing	
41	195363M1	1	Circlip	

Tylko dla użytku wewnętrznego

Item	Part Number	Qty	Description	Comments
				(A) WITH MK II TRANSMISSION

Tylko dla użytku wewnętrznego

122

BOITE DE VITESSES MULTIPOWER	ARBRE PRINCIPAL
MULTIPOWER-GETRIEBE	HAUPTWELLE
TRASMISSIONE POTENZA MULTIPLA	ALBERO PRINCIPALE
CAJA CAMBIO MULTIPOWER	EJE PRINCIPAL
MULTIPOWER TRANSMISSION	MAIN SHAFT

09281002

1 0928 002

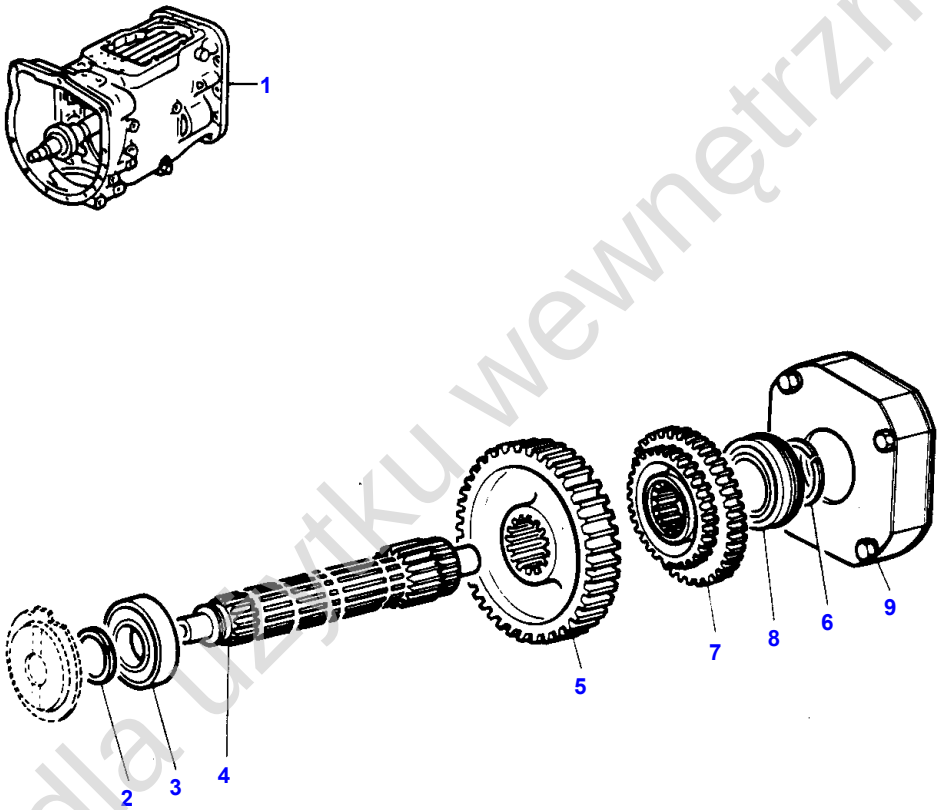



1-0928-002

Tylko dla użytku wewnętrznego

Item	Part Number	Qty	Description	Comments
1		1	Gearbox	See Page - Reference Number 116/1
2	352972X1	1	Ring	
3	831469M1	1	Bearing	Alternative 195505M1
	195505M1	1	Bearing	Alternative 831469M1
4	1866550M1	1	Shaft	
5	1660917M1	1	Gear	Four Wheel Drive 45T,D,Z
5	1682688M1	1	Gear	Repairs and replaces 520700M4 Two Wheel Drive Number of teeth/spines 44
6	195363M1	1	Circlip	
7	880957M1	1	Gear	
8	1675274M1	1	Bearing	
9		1	Reducer	See Page - Reference Number 110/

Tylko dla użytku wewnętrznego

124

BOITE DE VITESSES MULTIPOWER PRISE CONSTANTE
MULTIPOWER-MUFFENSCHALTGETRIEBE
TRASMISSIONE POTENZA MULTIPLA COSTANTE
CAJA MULTIPOWER DE TOMA CONSTANTE
MULTIPOWER CONSTANTMESH TRANSMISSION

AXES ET FOURCHETTES
SCHALTGABEL UND SCHALTSCHIENE
FORCELLA ED INGRANAGG10 CAMBIO
HORQUILLAS
FORK AND GEAR SHIFTRAIL

09741002

1 0974 002

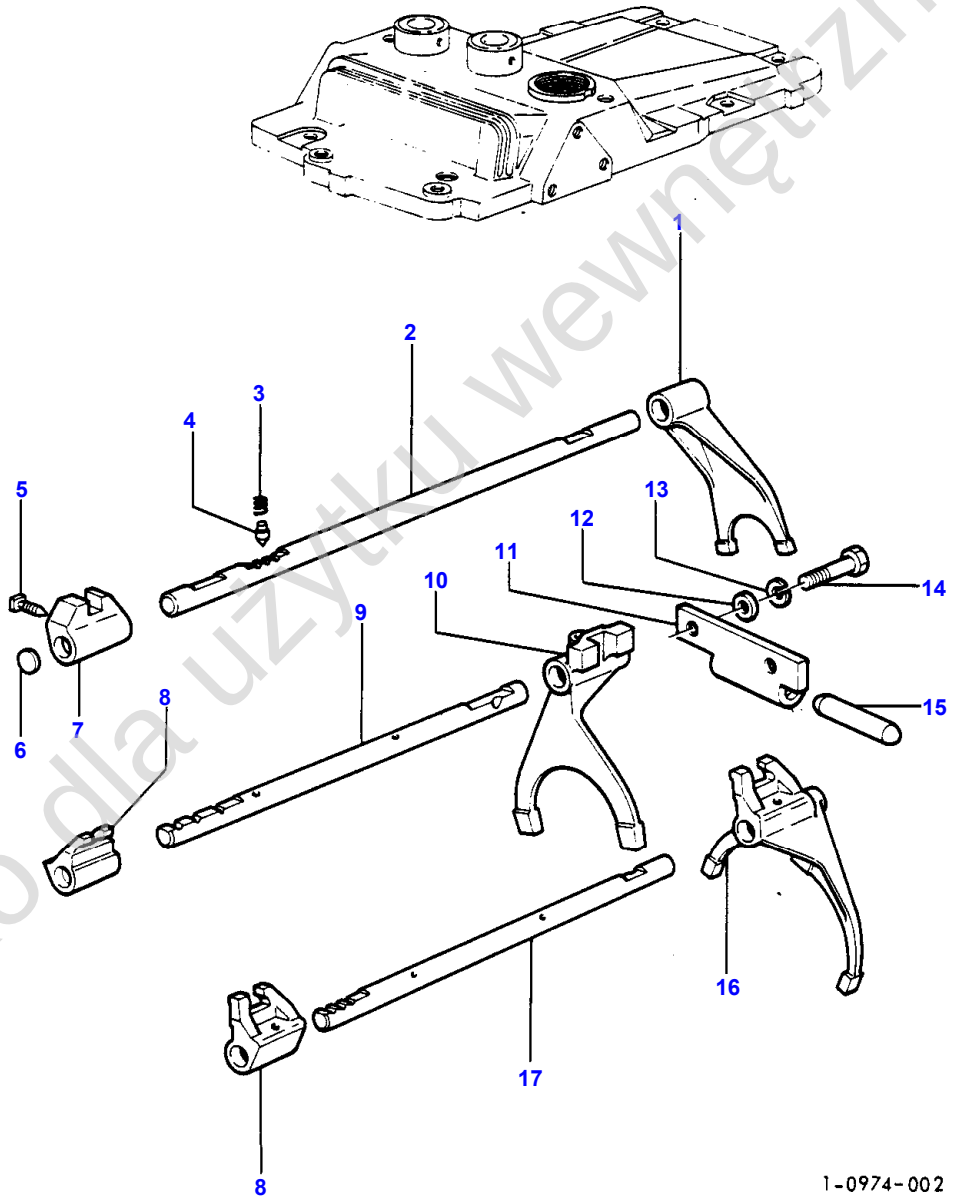

Tylko dla użytku wewnętrznego

Item	Part Number	Qty	Description	Comments
1	897065M2	1	Fork	
2	894703M2	1	Rail	
3	191221M1	3	Spring	
4	180418M1	3	Plunger	
5	180002M1	6	Setscrew	Alternative 881144M1
	881144M1	6	Screw	Alternative 180002M1
6	2950X	1	Plug	
7	180446M1	1	Selector	
8	1875215M3	2	Jaw	
9	1617947M1	1	Rail	
10	1662215M1	1	Shifter	
11	180453M1	1	Plate	
12	888701M1	1	Spacer	
13	376720X1	2	Washer	
14	362437X1	2	Bolt	
15	180457M1	1	Pin	
16	1663814M1	1	Fork	
17	1867260M2	1	Rail	

Tylko dla użytku wewnętrznego

126

BOITE DE VITESSES MULTIPOWER PRISE CONSTANTE
MULTIPOWER-MUFFENSCHALTGETRIEBE
TRASMISSIONE POTENZA MULTIPLA COSTANTE
CAJA MULTIPOWER DE TOMA CONSTANTE
MULTIPOWER CONSTANTMESH TRANSMISSION

ARBRE D'ENTREE
ANTRIEBSWELLE
ALBERO ENTRATA
EJE PRIMARIO
INPUTSHAFT

09651002

1 0965 002

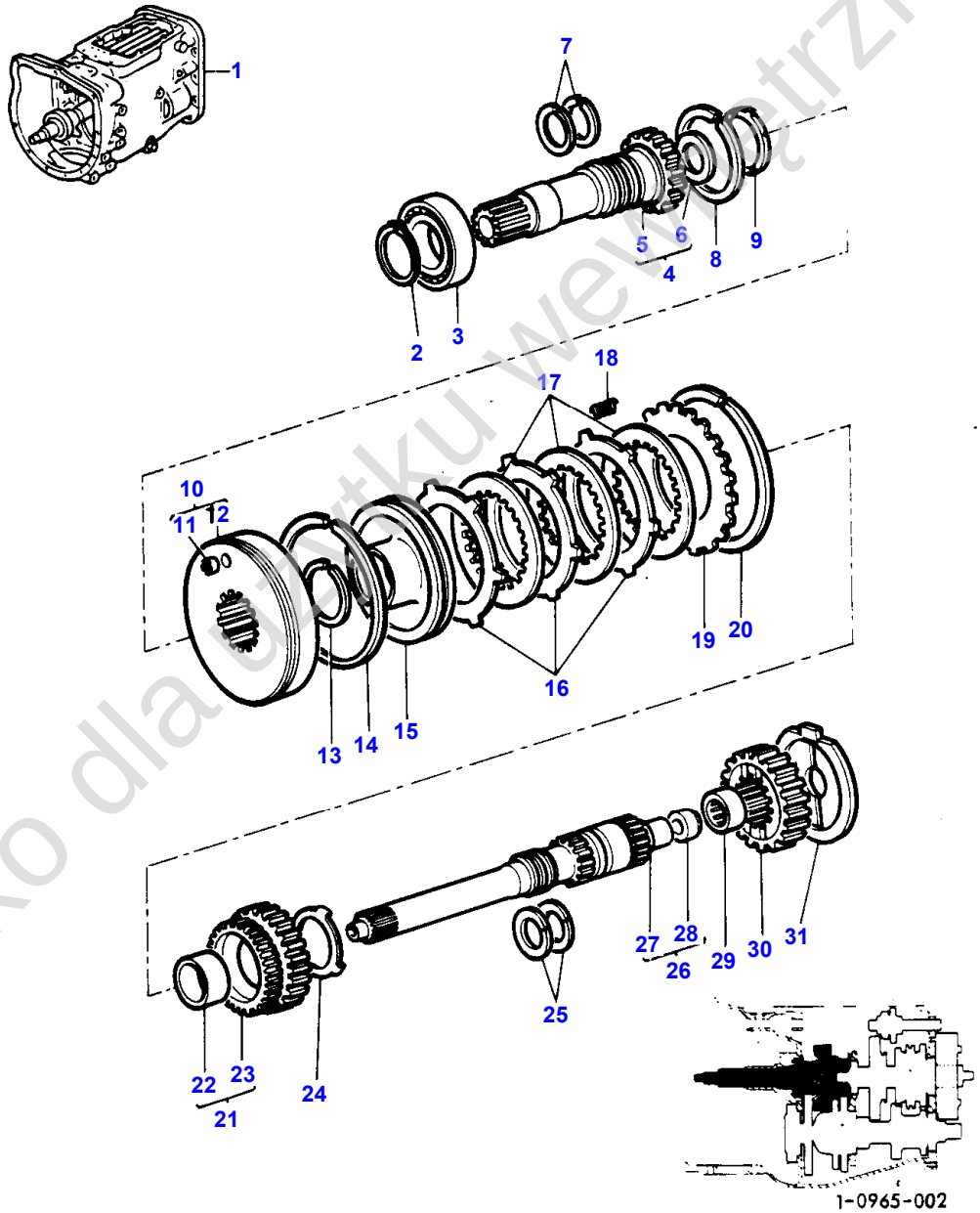

Tylko dla użytku wewnętrznego

Item	Part Number	Qty	Description	Comments
1	1666909M91	1	Gearbox	Repairs and replaces 1664160M91 Four Wheel Drive
1	1666908M91	1	Gearbox	Repairs and replaces 1664159M92 Two Wheel Drive
1	1668827M91	1	Transmission	Two Wheel Drive For Germany only or any text in German only
2	762101M1	1	Ring	
3	GK 2151	1	Bearing Ball	
4	1869706M91	1	Pinion	Not serviced, order NO 5,6
5	1869707M1	1	Pinion	(4) Number of teeth/spines 20
6	883935M4	1	Seal	(4)
7	907315M2	2	Ring	
8	377631X1	1	Ring	
9	1661951M1	1	Washer	Thickness 2,29-2,36MM
	1667607M1	1	Washer	Thickness 2,92-3,00MM
10	1662157M92	1	Housing	
11		1	Housing	(10) Not serviced, order REF 10
12	1872134M92	1	Valve Check	(10)
13	186580M1	1	Ring	
14	185425M1	1	Ring	
15	1661952M1	1	Piston	Repairs and replaces 186531M2
16	185464M1	3	Plate	
17	1870879M1	3	Disc	Repairs and replaces 1862289M2
18	186519M1	6	Spring	
19	518507M1	1	Plate	
20	364689X1	1	Snapring	
21	1662205M92	1	Pinion	
22	188806M1	1	Bush	(21)
23		1	Pinion	(21) Not serviced, order REF 21
24	1661950M1	1	Washer	
25	186581M1	2	Ring	
26	1662163M94	1	Shaft	
27		1	Shaft	(26) Not serviced, order REF 26
28	1662167M1	1	Plug	(26)
29	2700273M1	1	Bearing	
30	1662220M1	1	Pinion	21T,D,Z
	1662218M1	1	Pinion	(B) 22T,D,Z
31	1662628M1	1	Spacer	 (B) 30KPH

Tylko dla użytku wewnętrznego

128

BOITE DE VITESSES MULTIPOWER PRISE CONSTANTE	ARBRE PRINCIPAL
MULTIPOWER-MUFFENSCHALTGETRIEBE	HAUPTWELLE
TRASMISSIONE POTENZA MULTIPLA COSTANTE	ALBERO PRINCIPALE
CAJA MULTIPOWER DE TOMA CONSTANTE	EJE PRINCIPAL
MULTIPOWER CONSTANTMESH TRANSMISSION	MAIN SHAFT

09681002

1 0968 004

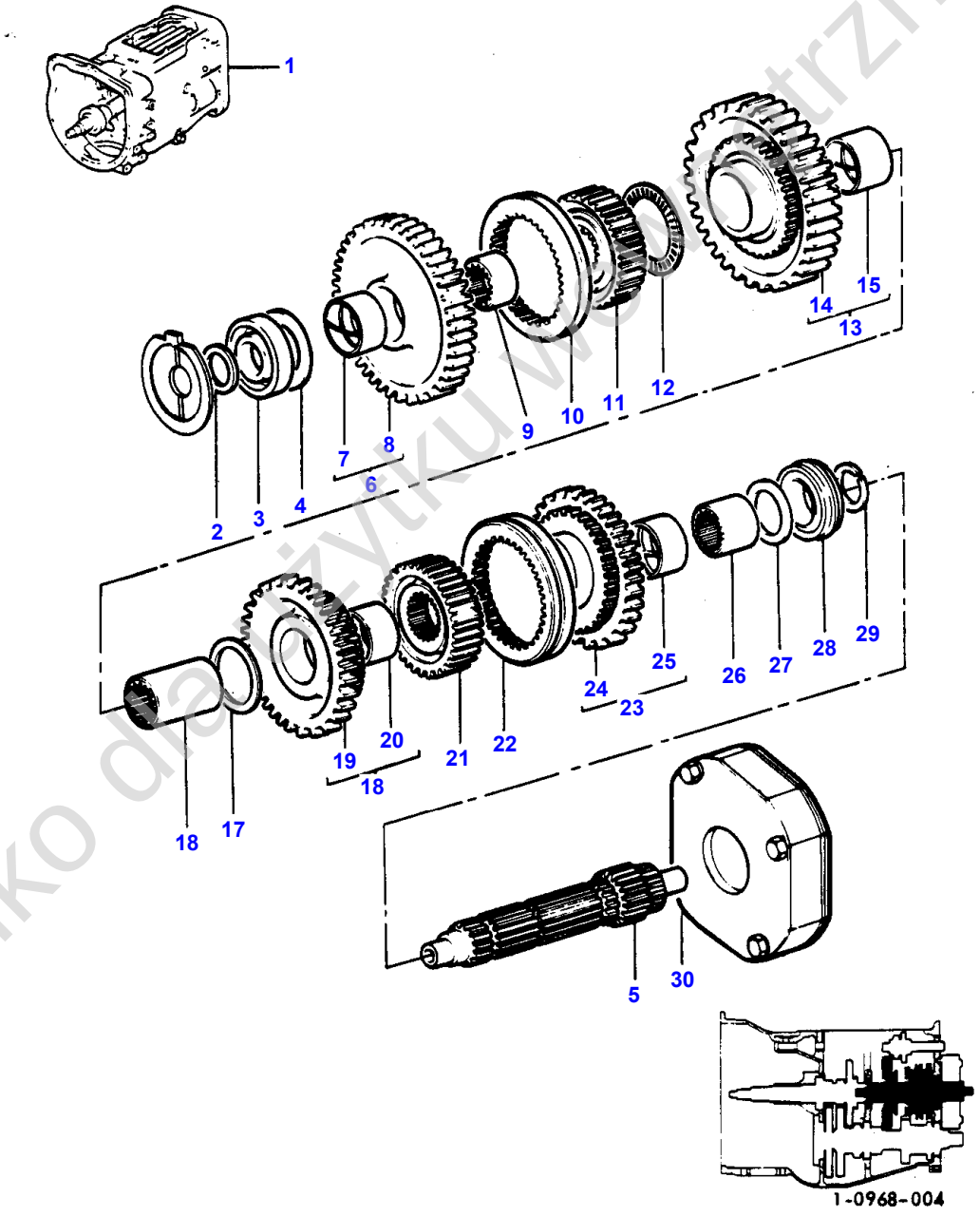

Tylko do użytku wewnętrznego

Item	Part Number	Qty	Description	Comments
1		1	Gearbox	See Page - Reference Number 126/1
2	762101M1	1	Ring	
3	338552X1	1	Bearing	
4	1617889M1	1	Washer	
5	1662224M2	1	Shaft	
6	1664549M91	1	Gear	Number of teeth/spines 42 Up to Serial or Engine Number B.131018 1 ERE
6	1682693M91	1	Gear	Number of teeth/spines 42 From Serial or Engine Number B.131019
7	1617890M1	1	Bush	(6)
8		1	Pinion	(6) Not serviced, order REF 6
9	1617893M1	1	Sleeve	
10	1664659M2	1	Sleeve	Up to Serial or Engine Number B.131018
	1672957M1	1	Sleeve	From Serial or Engine Number B.131019
11	1664556M1	1	Carrier	
12	1663796M1	1	Bearing Assy	
13	1664550M91	1	Gear	Number of teeth/spines 44 Up to Serial or Engine Number B.131018 M.AR
13	1682694M91	1	Gear	Number of teeth/spines 44 From Serial or Engine Number B.131019
14		1	Pinion	(13) Not serviced, order REF 13
15	1867246M1	1	Bush	(13)
16	1617892M1	1	Sleeve	
17	1617885M2	1	Washer	
18	1672978M91	1	Gear	Repairs and replaces 1664554M91
19		1	Pinion	(18) Not serviced, order REF 18
20	1867250M1	1	Bush	(18)
21	1664557M1	1	Carrier	
22	1664659M2	1	Sleeve	
23	1672977M91	1	Gear	Repairs and replaces 1664553M92
24		1	Pinion	(23) Not serviced, order REF 23
25	1867246M1	1	Bush	(23)
26	1617894M1	1	Sleeve	
27	1867259M1	1	Washer	
28	1675274M1	1	Bearing	Repairs and replaces 3000781X1
29	195363M1	1	Circlip	
30		1	Reducer	See Page - Reference Number 110/

Tylko do użytku wewnętrznego

130

BOITE DE VITESSES MULTIPOWER	COMMANDE
MULTIPOWER-GETRIEBE	BETAETIGUNG
TRASMISSIONE POTENZA MULTIPLA	COMANDO
CAJA CAMBIO MULTIPOWER	MANDOS
MULTIPOWER TRANSMISSION	CONTROL

09161003

1 0916 003

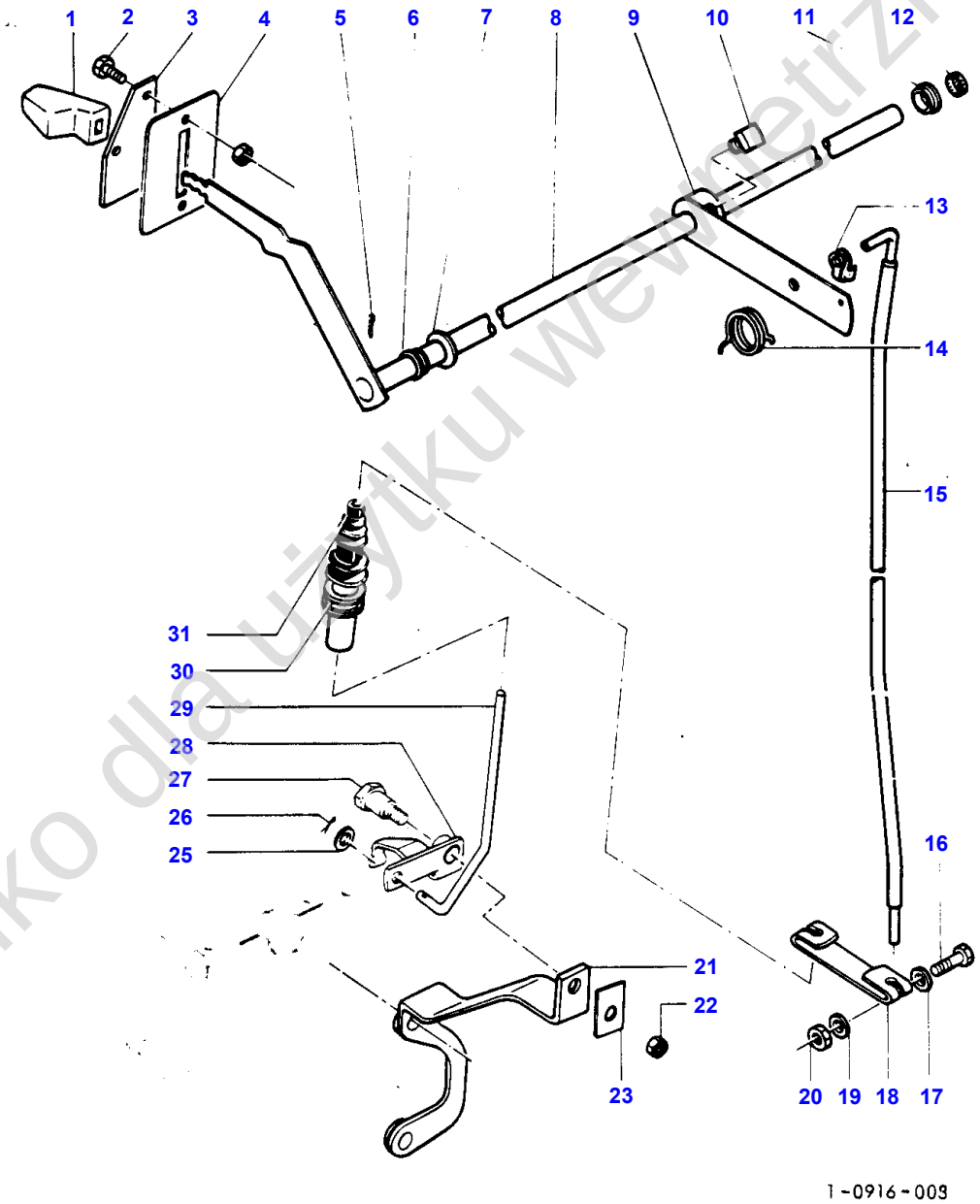

Tylko dla użytku wewnętrznego

Item	Part Number	Qty	Description	Comments
1	517114M1	1	Knob	
2	187137M1	X	Screw	
	357515X1	X	Nut Unf	
3	1877745M1	1	Plate	(A)
4	1873577M1	1	Plate	
5	354057X1	1	Pin	
6	1610565M1	1	Bush	
7	390735X1	1	Washer Metric	
8	1614718M92	1	Shaft	
9	1614715M91	1	Lever	
10	353744X1	1	Screw Unc	
11	1610565M1	1	Bush	
12	359374X1	2	Plug	
13	37332415	1	Strap	Repairs and replaces 894225M1
14	1618042M1	1	Spring	
15	1614709M1	1	Rod	
16	353669X1	2	Screw Unc	
17	353754X1	2	Washer	
18	1614738M1	1	Link	
19	353754X1	2	Washer	
20	355564X1	2	Nut Unc	
21	1660451M91	1	Bracket	
22	355564X1	1	Nut Unc	
23	1660904M1	1	Washer	
25	353754X1	1	Washer	
26	354041X1	1	Pin	
27	187143M1	1	Bolt	
28	187142M91	1	Lever	
29	188880M2	1	Rod	
30	522658M1	1	Guide	
31	186518M1	1	Bellows	

(A)
WITHOUT MULTIPOWER TRANSMISSION

Tylko dla użytku wewnętrznego

132

BOITE 8 VITESSES SYNCHRONISEES
8-GANG SYNCHRONGETRIEBE
TRASMISSIONE A 8 VELOCITA' SINCRONIZZATE
CAJA CAMBIO SINCRONIZADA 8 VELOCIDADES
8 SPEED SYNCHROMESH TRANSMISSION

AXES ET FOURCHETTES
SCHALTGABEL UND SCHALTSCHIENE
FORCELLA ED INGRANAGG10 CAMBIO
HORQUILLAS
FORK AND GEAR SHIFTRAIL

08541005

1 0854 005

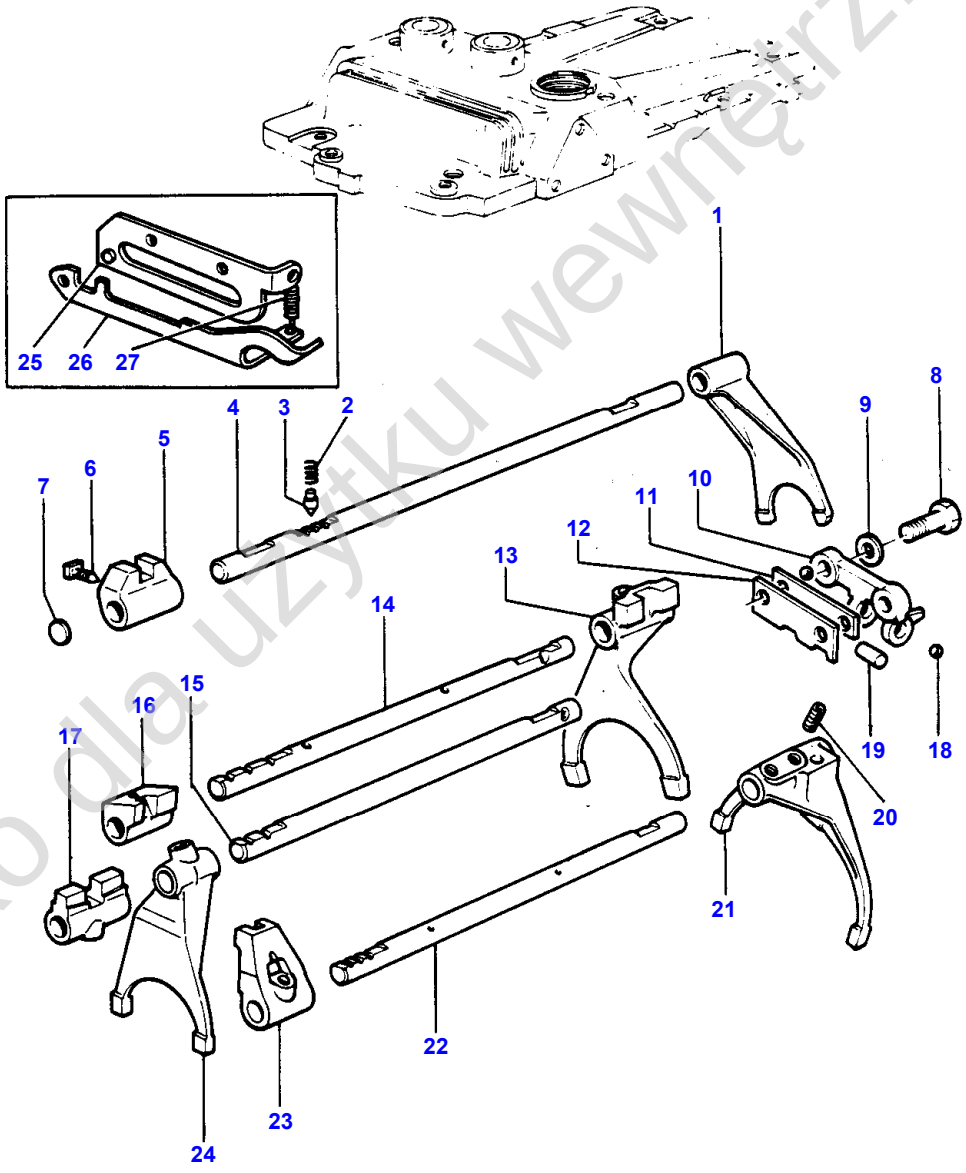

1-0854-005

Tylko dla użytku wewnętrznego

Item	Part Number	Qty	Description	Comments
				SYNCHRO- ZF
1	897065M2	1	Fork	
2	191221M1	4	Spring	
3	180418M2	4	Plunger	
4	894703M2	1	Rail	
	880108M2	1	Rail	(A,B)
5	180446M1	1	Selector	
6	180002M1	7	Setscrew	
7	2950X	1	Plug	
8	362443X1	2	Bolt	
9	353434X1	2	Lock Washer	
10	1860761M1	1	Retainer	
11	1860765M1	1	Packing	
12	1860764M1	1	Plate	
13	1662215M1	1	Shifter	(B)
14	1617947M1	1	Rail	(B)
15	1678864M1	1	Rail	
16	1672781M1	1	Jaw	(B)
17	1862868M2	1	Selector	
18	391838X1	2	Ball	
19	1860767M1	1	Pin	
20	1675367M2	2	Screw	
21	1674654M2	1	Shift Fork	
22	1672783M3	1	Rail	
	1672784M3	1	Rail	(A,B)
23	1672781M2	1	Jaw	
24	1873532M2	1	Fork	
25	880111M92	1	Plate	(A,B)
26	1866694M92	1	Latch	(A,B)
27	1866693M1	1	Spring	(A,B)

(A)
WITH ROAD SPEED LIMITING DEVICE

(B)
WITH MK II TRANSMISSION

Tylko dla użytku wewnętrznego

134

BOITE 8 VITESSES SYNCHRONISEES	ARBRE PRINCIPAL
8-GANG SYNCHRONGETRIEBE	HAUPTWELLE
TRASMISSIONE A 8 VELOCITA' SINCRONIZZATE	ALBERO PRINCIPALE
CAJA CAMBIO SINCRONIZADA 8 VELOCIDADES	EJE PRINCIPAL
8 SPEED SYNCHROMESH TRANSMISSION	MAIN SHAFT

08481003

1 0848 001

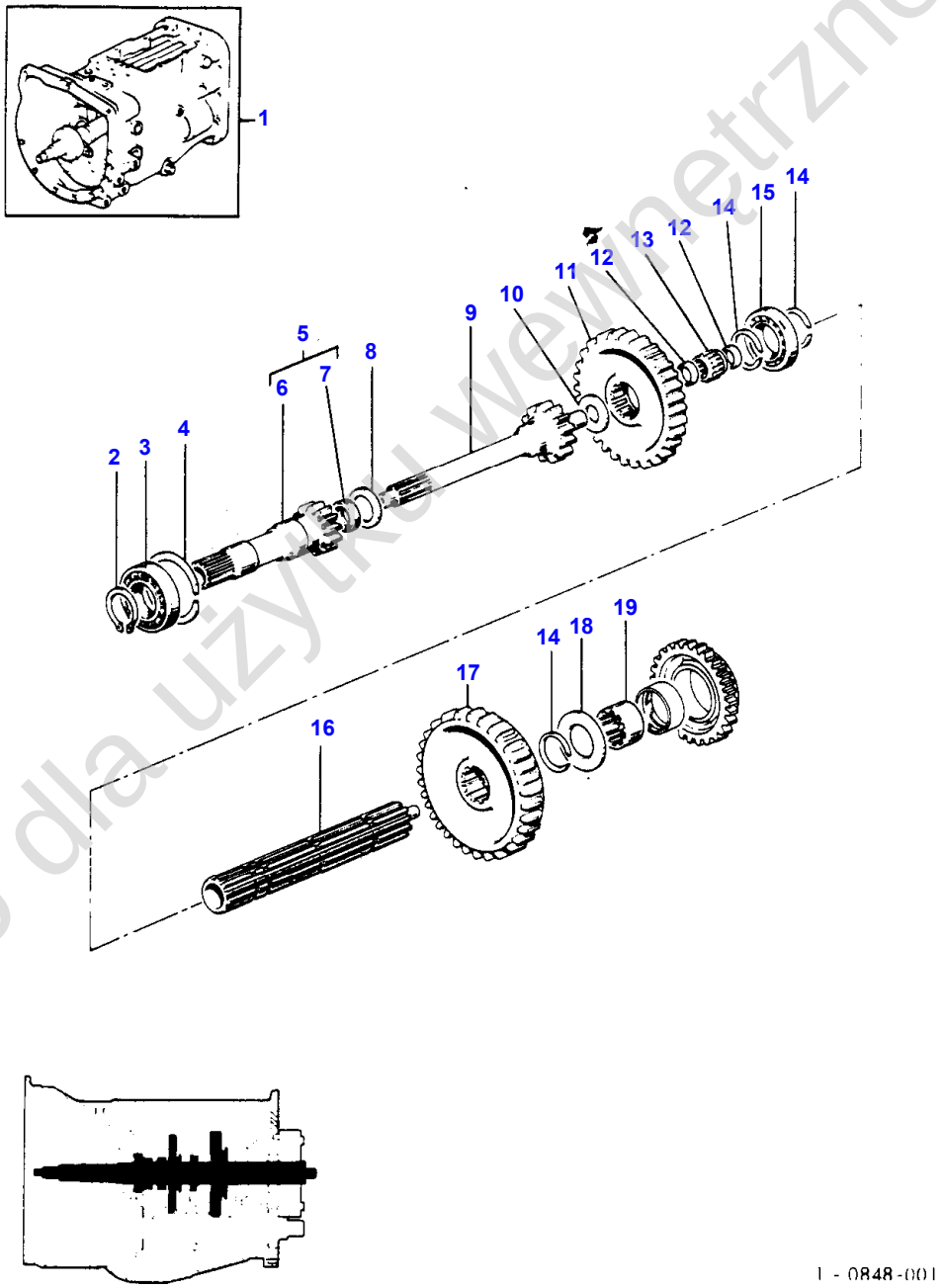

1 - 0848-001

Tylko dla użytku wewnętrznego

Item	Part Number	Qty	Description	Comments
				SYNCHRO- ZF
1	1673628M91	1	Gearbox	For UK only or any text in English only
	1673629M91	1	Gearbox	
2	762101M1	1	Ring	
3	834303M1	1	Bearing	
4	377631X1	1	Ring	
5	1869712M91	1	Pinion	20 T,D,Z
6		1	Shaft	(5) Not serviced, order REF 5
7	1860011M1	1	Seal	(5)
8	964929M1	1	Washer	
9	1862423M3	1	Pinion	26 T,D,Z
10	964944M1	1	Spacer	
11	1660093M1	1	Gear	46 T,D,Z
12	2700274M1	2	Spacer	
13	2700273M1	1	Bearing	
14	195363M1	3	Circlip	
15	338552X1	1	Bearing	
16	1617696M1	1	Shaft	22 T,D,Z
17	520700M4	1	Gear	44 T,D,Z
18	1867259M1	1	Washer	
19	1867258M1	1	Sleeve	

Tylko dla użytku wewnętrznego

136

BOITE 8 VITESSES PRISE CONSTANTE	ARBRE PRINCIPAL
8-GANG MUFFENSCHALTGETRIEBE	HAUPTWELLE
TRASMISSIONE A 8 VELOCITA' COSTANTE	ALBERO PRINCIPALE
CAJA CAMBIO 8 VELOCIDADES	TREN DE ENGRANAJES
8 SPEED CONSTANT MESH TRANSMISSION	MAIN SHAFT

08881004

1 0888 003

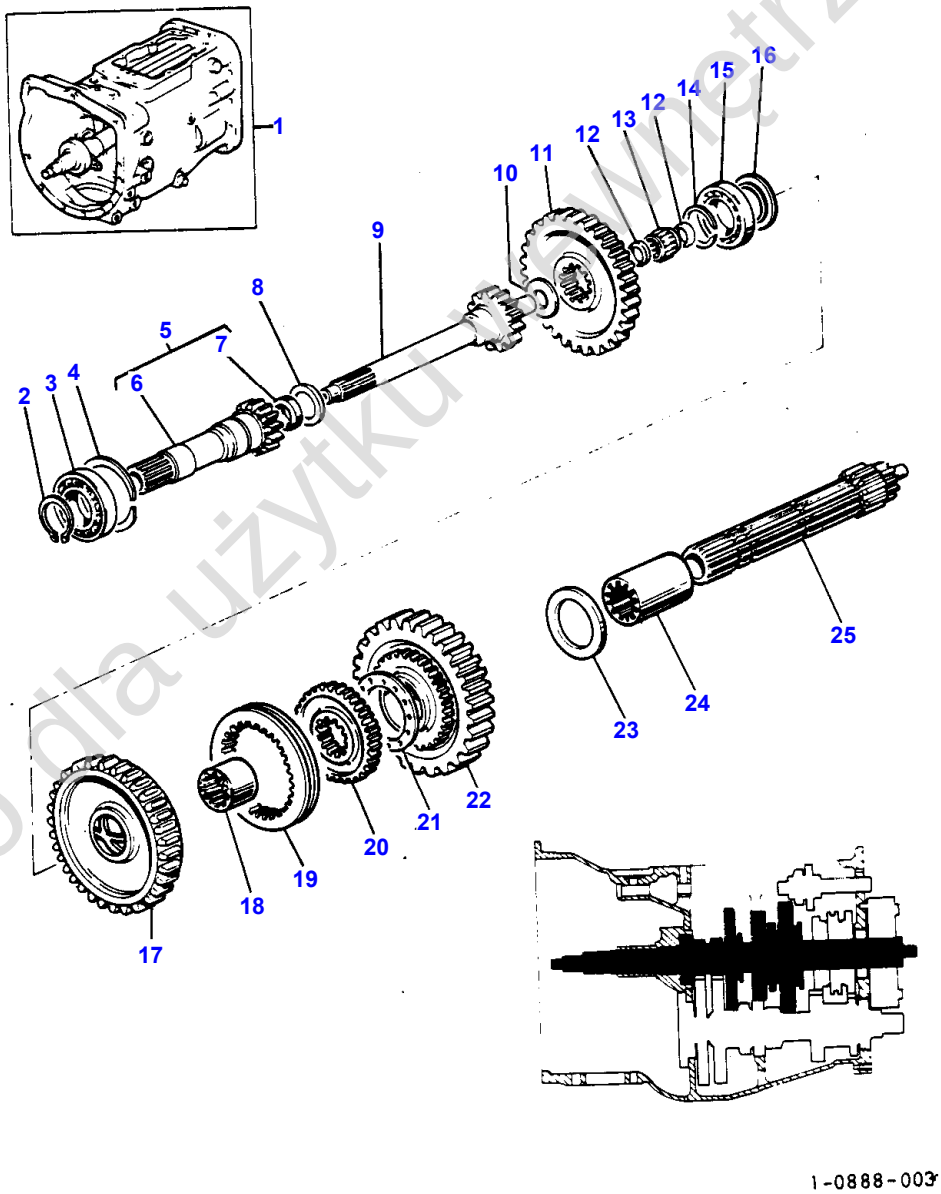

Tylko dla użytku wewnętrznego

Item	Part Number	Qty	Description	Comments
				SYNCHRO- ZF
1	1673649M91	1	Gearbox	(A) Four Wheel Drive
1	1677783M91	1	Transmission	Two Wheel Drive 30 KM/H
1	1673646M91	1	Gearbox	Two Wheel Drive
2	762101M1	1	Ring	
3	834303M1	1	Bearing	
4	377631X1	1	Ring	
5	1869712M91	1	Pinion	20 T,D,Z
6		1	Tubular Shaft	(5) Not serviced, order REF 5
7	1860011M1	1	Seal	(5)
8	964929M1	1	Washer	
9	1617936M4	1	Shaft	23 T,D,Z
	1617937M4	1	Shaft	26 T,D,Z
10	964944M1	1	Spacer	
11	1617959M1	1	Gear	
12	2700274M1	2	Spacer	
13	2700273M1	1	Bearing	
14	195363M1	1	Circlip	
15	338552X1	1	Bearing	
16	1617888M2	1	Washer	Thickness 6,47-6,52MM
	1671892M2	1	Thrust Washer	Thickness 6,48-6,68MM
	1671893M1	1	Thrust Washer	Thickness 6,71-6,91MM
	1671894M2	1	Thrust Washer	Thickness 6,93-7,14MM
	1671895M2	1	Thrust Washer	Thickness 7,16-7,37MM
17	1664549M91	1	Gear	Number of teeth/spines 42 Up to Serial or Engine Number B.131018 1 ERE
17	1682693M91	1	Gear	Number of teeth/spines 42 From Serial or Engine Number B.131019
18	1617893M1	1	Sleeve	
19	1664659M2	1	Sleeve	Up to Serial or Engine Number B.131018
	1672957M1	1	Sleeve	From Serial or Engine Number B.131019
20	1664556M1	1	Carrier	
21	1663796M1	1	Bearing Assy	
22	1664550M91	1	Gear	Number of teeth/spines 44 Up to Serial or Engine Number B.131018 M.AR
22	1682694M91	1	Gear	Number of teeth/spines 44 From Serial or Engine Number B.131019
23	1617885M2	1	Washer	
24	1617892M1	1	Sleeve	
25	1617942M2	1	Shaft	
				(A) WITH ROAD SPEED LIMITING DEVICE

Tylko dla użytku wewnętrznego

138

SYNCHRO
SYNCHRONISIEREINRICHTUNG
SINCRONIZZATORE

SYNCHRO 08201004

1 0820 003

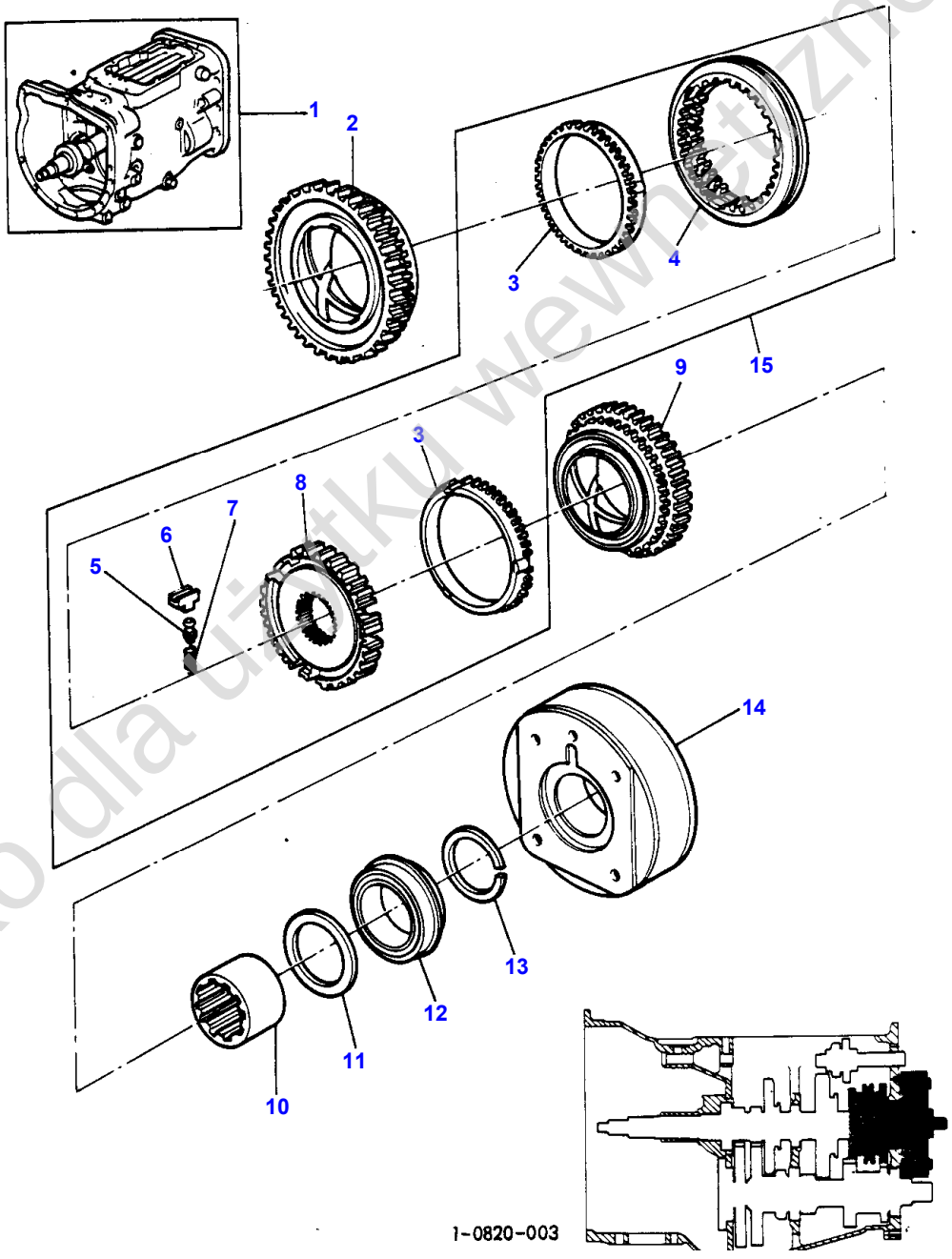

Tylko dla użytku wewnętrznego

Item	Part Number	Qty	Description	Comments
				ZF- 8 SPEED TRANSMISSION
1		1	Gearbox	(A)
				See Page - Reference Number 136/1
1		1	Gearbox	See Page - Reference Number 134/1
2	1672167M93	1	Gear	36 T,D,Z
	1674943M93	1	Gear	(A,B)
	1686028M91	1	Gear	(A,C)
	1685067M1	1	Cone	(A,C)
3	1684022M1	2	Ring	(15)
				Repairs and replaces 1671911M1
4	1672095M3	1	Sleeve	(15)
5	3188958M1	3	Ball Pin	(15)
				Repairs and replaces 1671880M1
6	3033849M1	3	Poppet	(15)
				Repairs and replaces 1671828M1
7	3033851M1	3	Spring	(15)
				Repairs and replaces 1672084M1
8	1671774M3	1	Carrier	(15)
				18 CANNELURES
8	1671773M3	1	Sleeve	(15)
				(A)
				31 CANNELURES
9	1672168M93	1	Gear	(B)
				41 T,D,Z
9	1686030M91	1	Gear	(C)
	1685067M1	1	Cone	(C)
10	1867324M1	1	Sleeve	
	1617894M1	1	Sleeve	(A)
11	1867259M1	1	Washer	
12	1675274M1	1	Bearing	
13	195363M1	1	Circlip	
14		1	Epicyclic	See Page - Reference Number 110/
15	1677237M91	1	Kit, Synchromesh	Repairs and replaces 1641983M92
	1677238M92	1	Synchro Gear	(A)
				Repairs and replaces 1641982M92
				(A)
				WITH MK II TRANSMISSION
				(B)
				WELDED VERSION
				(C)
				FLUTED VERSION

Tylko dla użytku wewnętrznego

140

BOITE 8 VITESSES SYNCHRONISEES	ARBRE DE RENVOI
8-GANG SYNCHRONGETRIEBE	VORGELEGEWELLE
TRASMISSIONE A 8 VELOCITA' SINCRONIZZATE	ALBERO RINVIO
CAJA CAMBIO SINCRONIZADA 8 VELOCIDADES	EJE SECUNDARIO
8 SPEED SYNCHROMESH TRANSMISSION	COUNTERSHAFT

08511006

1 0851 005

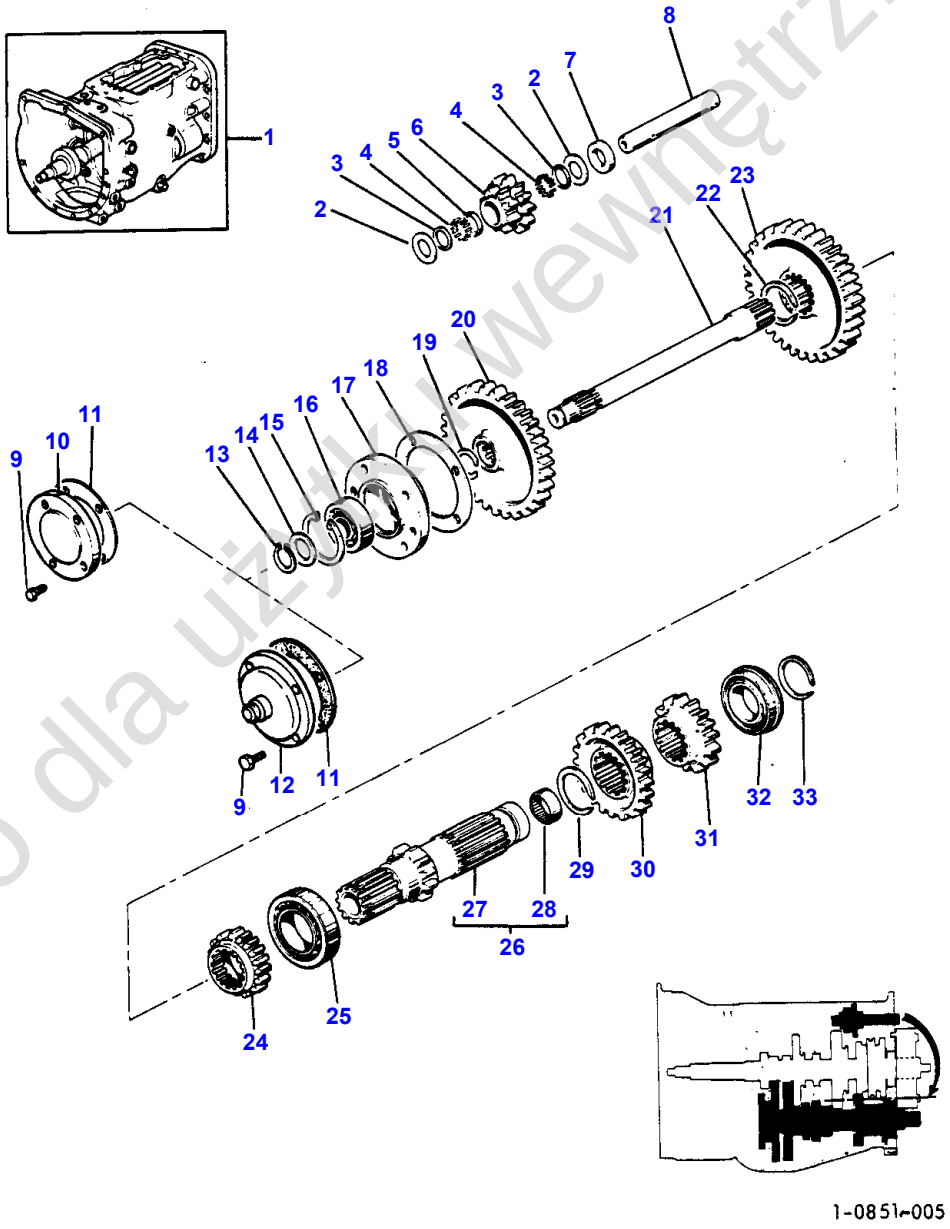

Tylko dla użytku wewnętrznego

Item	Part Number	Qty	Description	Comments
				SYNCHRO- ZF
1		1	Gearbox	(A)
				See Page - Reference Number 136/1
1		1	Gearbox	See Page - Reference Number 134/1
2	180458M1	2	Washer	
3	183037M1	2	Washer	
4	183039M1	56	Needle	
5	183038M1	1	Spacer	
	1617886M1	1	Spacer	(A)
6	1660920M1	1	Gear	
	1617901M1	1	Gear	(A)
7	189449M1	1	Washer	Without or not
				)A(
8	180445M1	1	Shaft	
9	377481X1	4	Bolt Unc	Alternative 354262X1
	354262X1	4	Bolt Unc	Alternative 377481X1
10	509833M1	1	Case	Four Wheel Drive
11	181237M1	1	Gasket	
12	1872669M92	1	Cap	Two Wheel Drive
13	899385M1	1	Ring	
14	881122M2	1	Ring	
15	355988X1	1	Snapring	
16	899377M2	1	Bearing	
17	899331M1	1	Housing	
18	180432M1	1	Gasket	
19	358913X1	1	Snapring	
20	1869708M1	1	Gear	38 T,D,Z
21	1868533M1	1	Shaft	L 406,4 MM
	1869279M1	1	Shaft	L 557,5 MM
22	195499M1	1	Ring	
23	1862422M1	1	Gear	42 T,D,Z
	1617939M1	1	Gear	(A)
				37 T,D,Z
23	1617940M1	1	Gear	(A)
				34 T,D,Z
24	1867254M1	1	Gear	23 T,D,Z
25	195507M1	1	Bearing Ball	
	3003372X1	1	Bearing	(A)
26	1660916M91	1	Shaft	Repairs and replaces 906743M92
	1617919M91	1	Shaft	(A)
27		1	Tubular Shaft	(26)
				Not serviced, order REF 26
28	195453M1	1	Bearing Needle	(26)
29	195500M1	1	Ring	
30	1867253M2	1	Gear	33 T,D,Z
	1617923M2	1	Pinion	(A)
				Number of teeth/spines 33
31	1867252M2	1	Gear	28 T,D,Z
32	1675274M1	1	Bearing	
33	195363M1	1	Circlip	
				(A)
				WITH MK II TRANSMISSION

Tylko dla użytku wewnętrznego

142

BOITE 12 VITESSES	CARTER
12 GANG GETRIEBE	GEHAEUSE
TRASMISSIONE A 12 VELOCITA	CARCASSA
TRANSMISION 12 VELOCIDADES	CARTER
12 SPEED TRANSMISSION	HOUSING

09971002

1 0997 007

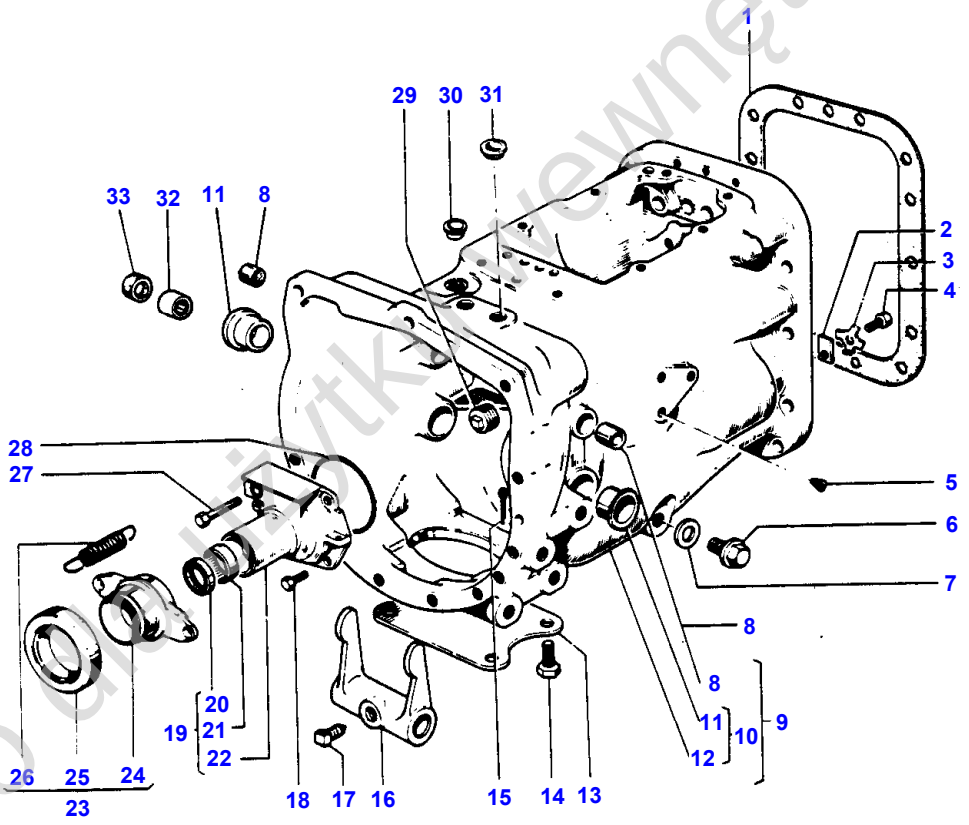

1-0997-007

Tylko do użytku wewnętrznego

Item	Part Number	Qty	Description	Comments
				SYNCHRO- ZF
1	1861986M2	1	Gasket	
2	184789M1	1	Stop	
3	828020M1	1	Washer	
4	353690X1	1	Screw Unc	
5	899297M1	1	Plug	
6	884691M1	1	Plug	
7	180474M1	1	Gasket	
8	1875185M1	2	Cap	2 WHEEL DRIVE
	1875185M1	2	Cap	(9) Q
9	1660413M94	1	Housing	4 WHEEL DRIVE
10	1660232M95	1	Housing	2 WHEEL DRIVE
11	1874876M1	2	Bush	(9) Q
	1874876M1	2	Bush	(10) Q
12		1	Housing	(9) Q Not serviced, order REF 9
12		1	Housing	(10) Q Not serviced, order REF 10
13	1871922M1	1	Plate	2 WHEEL DRIVE
	909481M1	1	Cover	4 WHEEL DRIVE
14	362810X1	X	Screw	L 83 MM
	354441X1	X	Screw Unc	L 25 MM
15	354076X1	1	Pin	
16	1877497M1	1	Fork	
17	881144M1	1	Screw	
18	377477X1	3	Screw Unc	Alternative 353690X1
	353690X1	3	Screw Unc	Alternative 377477X1
19	1860890M91	1	Housing	2 WHEEL DRIVE
	1860889M91	1	Housing	4 WHEEL DRIVE
20	1860867M3	1	Oil Seal	(19)
21	886668M1	1	Bearing	(19)
22		1	Housing	(19) Not serviced, order REF 19
23	886768M92	1	Stop	
24	886727M2	1	Support	(23)
25	892862M1	1	Bearing	(23) Alternative 1868225M1
25	1868225M1	1	Bearing	(23) Alternative 892862M1
26	1867690M2	2	Spring	(23)
27	377480X1	1	Bolt Unc	Alternative 338480X1
	338480X1	1	Screw	Alternative 377480X1
28	886089M1	1	O Ring	
29	894684M1	1	Plug	
30	894685M1	1	Plug	
31	894683M1	1	Plug	2 WHEEL DRIVE
	848301M1	1	Plug	4 WHEEL DRIVE
32	833846M1	2	Bearing	
33	195908M1	2	Seal	

Tylko do użytku wewnętrznego

144

BOITE 12 VITESSES — LEVIERS DE COMMANDE

12 SPEED TRANSMISSION — SHIFT CONTROL — 10021002

1 1002 002

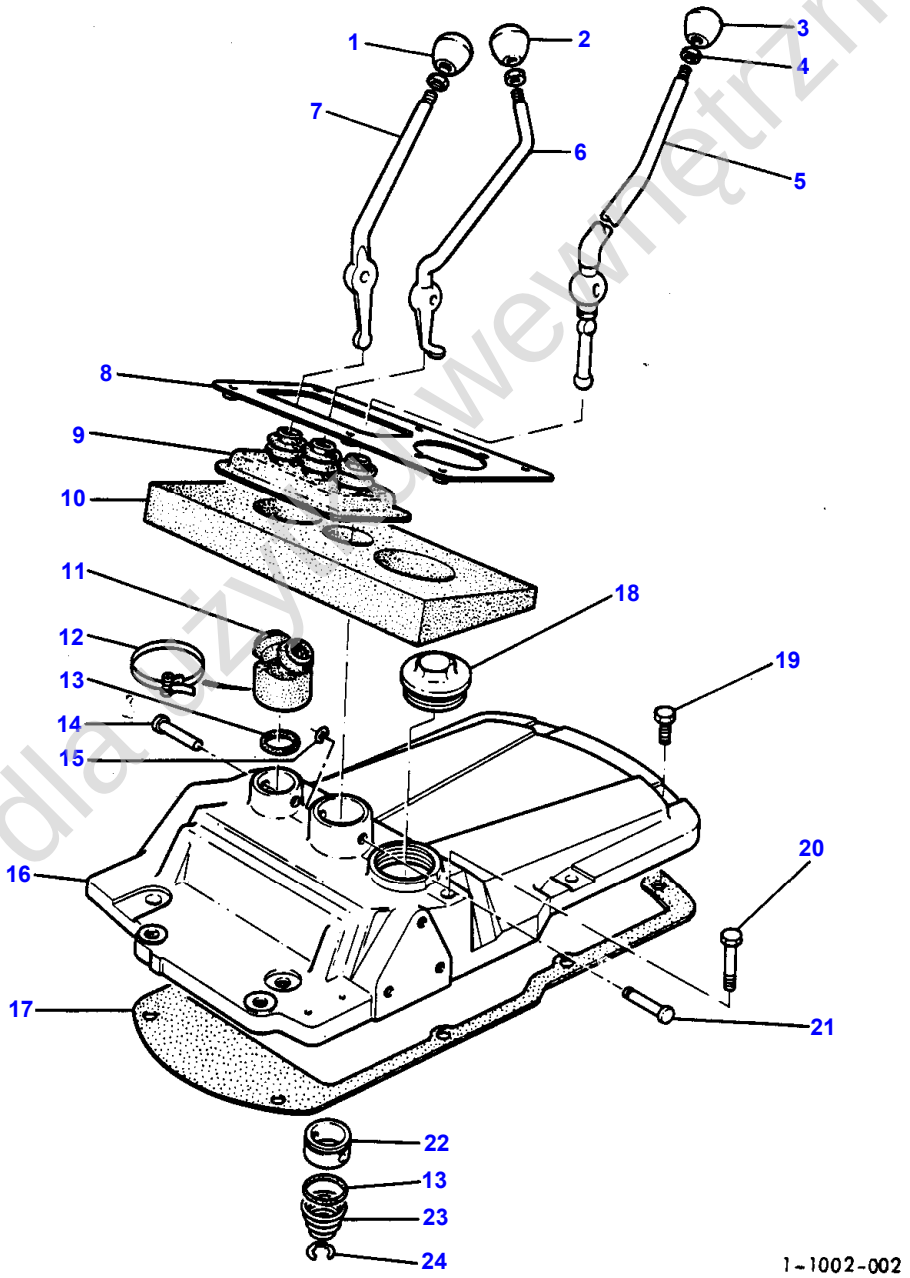

Tylko dla użytku wewnętrznego

Item	Part Number	Qty	Description	Comments
				SYNCHRO- ZF
1	1862399M1	1	Knob	
2	1677998M1	1	Knob	
3	1862401M1	1	Knob	
4	338553X1	3	Nut	
5	1674924M2	1	Lever	
6	1674936M3	1	Lever	
7	1674931M3	1	Lever	
8	1675424M92	1	Trim	
9	1675386M1	1	Boot	
10	1675893M1	1	Seal	
11	1676044M2	1	Cover	
12	3009326X1	1	Clip	
13	831527M1	2	O Ring	
14	1678440M1	1	Pin	
15	3000261X1	1	Clip	
16	1667385M1	1	Support	
17	180511M2	1	Gasket	
18	768300M1	1	Plug	
19	362473X1	6	Screw	
20	353714X1	2	Bolt Unc	
21	1663178M1	1	Pin	
22	1673897M1	1	Cup	
23	192007M1	1	Spring	
24	368233X1	1	Ring	

Tylko dla użytku wewnętrznego

146

BOITE 12 VITESSES	AXES ET FOURCHETTES
12 GANG GETRIEBE	SCHALTGABEL UND SCHALTSCHEINE
TRASMISSIONE A 12 VELOCITA	FORCELLA E INGRANAGGIO CAMBIO
TRANSMISION 12 VELOCIDADES	HORQUILLAS
12 SPEED TRANSMISSION	FORK AND GEAR SHIFTRAIL

10011001

1 1001 001

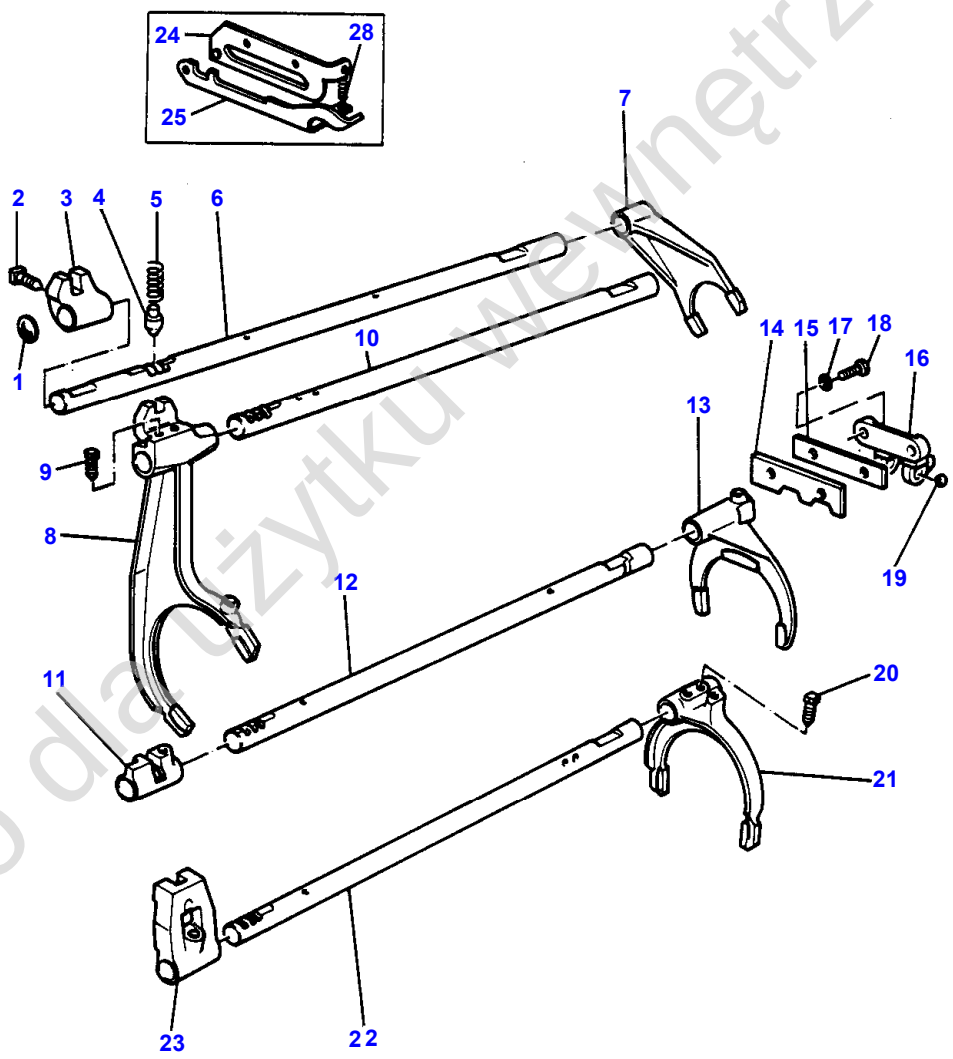

1-1001-001

Tylko do użytku wewnętrznego

Item	Part Number	Qty	Description	Comments
				SYNCHRO- ZF
1	2950X	1	Plug	
2	180002M1	5	Setscrew	
3	1674536M1	1	Selector	
4	180418M2	4	Plunger	
5	191221M1	4	Spring	
6	880108M2	1	Rail	(A)
	894703M2	1	Rail	
7	897065M2	1	Fork	
8	1674533M3	1	Fork	
9	1675367M2	2	Screw	
10	1674531M1	1	Rail	
11	1674530M4	1	Selector	
12	1674528M1	1	Rail	
13	1674529M2	1	Fork	
14	1860764M1	1	Plate	
15	1860765M1	1	Packing	
16	1860761M1	1	Retainer	
17	354434X1	2	Washer	
18	354262X1	2	Bolt Unc	
19	391838X1	1	Ball	
20	1675367M2	2	Screw	
21	1674654M2	1	Shift Fork	
22	1672784M3	1	Rail	(A)
	1672783M3	1	Rail	
23	1672781M2	1	Jaw	
24	880111M92	1	Plate	(A)
			Not Used	
25	1866694M92	1	Latch	(A)
			Not Used	
26	1866693M1	1	Spring	(A)
			Not Used	
				(A)
				WITH ROAD SPEED LIMITING DEVICE

Tylko dla użytku wewnętrznego

148

BOITE 12 VITESSES	ARBRE D'ENTREE
12 GANG GETRIEBE	ANTRIEBSWELLE
TRASMISSIONE A 12 VELOCITA	ALBERO ENTRATA
TRANSMISION 12 VELOCIDADES	EJE PRIMARIO
12 SPEED TRANSMISSION	INPUTSHAFT

0998100

1 0998 001

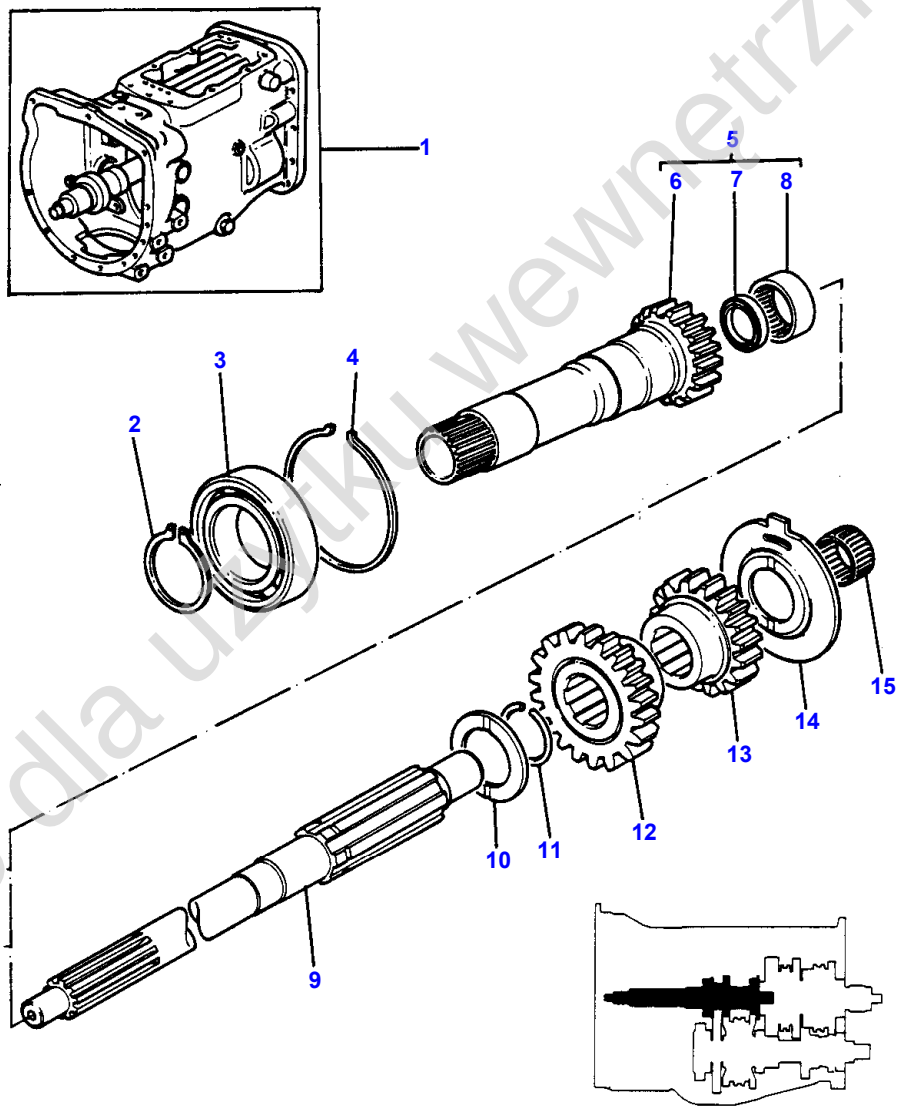

1-0998-001

Tylko dla użytku wewnętrznego

Item	Part Number	Qty	Description	Comments
				SYNCHRO- ZF
1	1676031M93	1	Gearbox	(C) Two Wheel Drive 25 KM H
1	1676033M93	1	Transmission	(B) Two Wheel Drive
1	1676032M93	1	Transmission	(C) Two Wheel Drive 30 KM H
1	1676035M93	1	Gearbox	Four Wheel Drive 25 KM H
1	1676036M93	1	Gearbox	Four Wheel Drive 30 KM H
1	1676037M93	1	Gearbox	(A) Four Wheel Drive 30 KM H
2	762101M1	1	Ring	
3	834303M1	1	Bearing	
4	377631X1	1	Ring	
5		1	Shaft	Not serviced, order REF 6,7,8
6	1677738M1	1	Shaft	(5) 20 T,D,Z
6	1677740M1	1	Shaft	(5) 16 T,D,Z
7	883935M4	1	Seal	(5)
8	1677724M1	1	Bearing	(5)
9	1677725M2	1	Shaft	
10	1677742M1	1	Thrust Washer	Thickness 3,53-3,58MM
	1677743M1	1	Washer	Thickness 3,86-3,91MM
11	358969X1	1	Ring	
12	1677733M1	1	Pinion	28 T,D,Z
	1677734M1	1	Pinion	25 T,D,Z
13	1677727M1	1	Pinion	21 T,D,Z
	1677731M1	1	Pinion	24 T,D,Z
14	1674668M1	1	Spacer	
15	2700273M1	1	Bearing	

(A)
WITH ROAD SPEED LIMITING DEVICE

(B)
WITH LOW FLOW PUMP

(C)
WITH HIGH FLOW PUMP

Tylko dla użytku wewnętrznego

150

BOITE 12 VITESSES	ARBRE PRINCIPAL
12 GANG GETRIEBE	HAUPTWELLE
TRASMISSION A 12 VELOCITA	ALBERO PRINCIPALE
TRANSMISION 12 VELOCIDADES	EJE PRINCIPAL
12 SPEED TRANSMISSION	MAIN SHAFT

0999100

1 0999 001

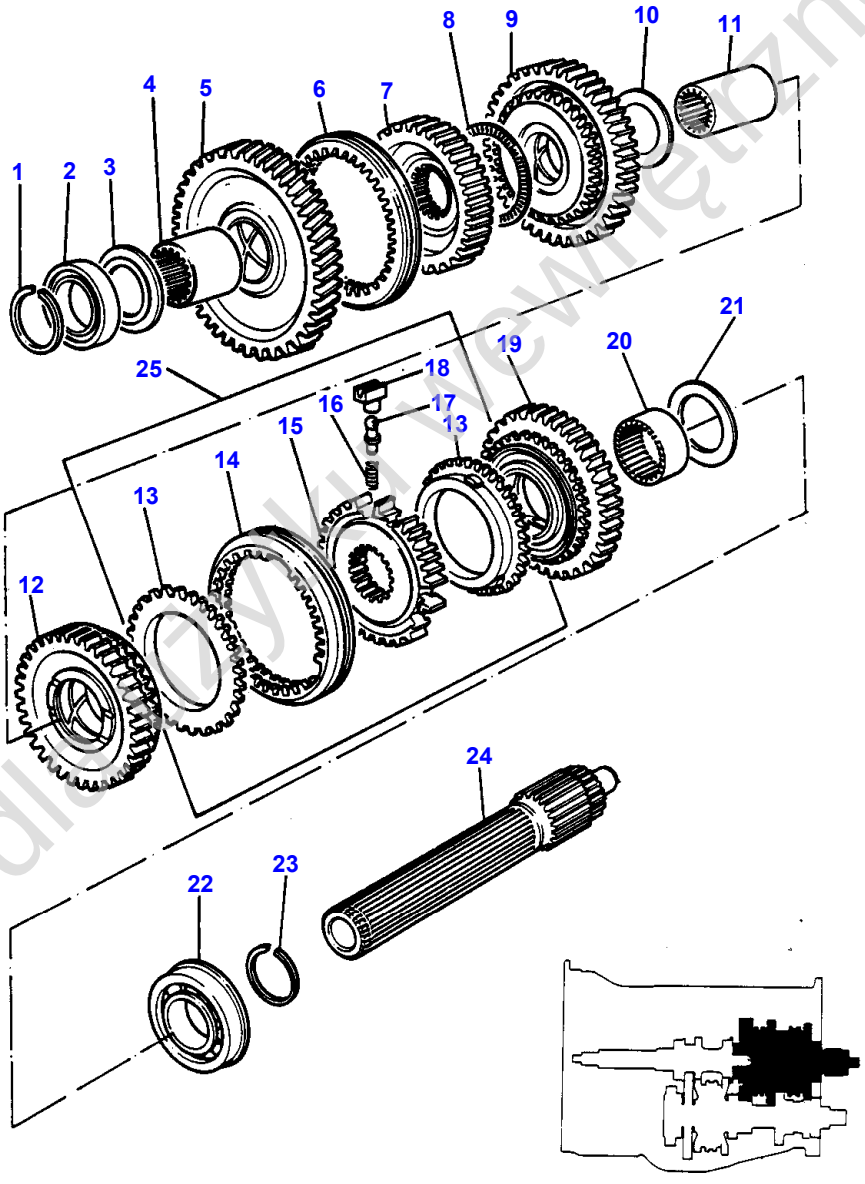

1-0999-001

Tylko dla użytku wewnętrznego

Item	Part Number	Qty	Description	Comments
				SYNCHRO- ZF
1	762101M1	1	Ring	
2	338552X1	1	Bearing	
3	1671888M2	1	Thrust Washer	Thickness 4,14-4,19MM
	1671889M1	1	Thrust Washer	Thickness 4,39-4,45MM
	1671890M2	1	Thrust Washer	Thickness 4,62-4,67MM
	1671891M2	1	Thrust Washer	Thickness 4,85-4,90MM
4	1617893M1	1	Sleeve	
5	1664549M91	1	Gear	42 T,D,Z
6	1664659M2	1	Sleeve	
7	1664556M1	1	Carrier	
8	1663796M1	1	Bearing Assy	
9	1664550M91	1	Gear	44 T,D,Z
10	1617885M2	1	Washer	
11	1617892M1	1	Sleeve	
12	1674943M93	1	Gear	36 T,D,Z
13	1684022M1	2	Ring	(25)
				Repairs and replaces 1671911M1
14	1672095M3	1	Sleeve	(25)
15	1671773M3	1	Sleeve	(25)
16	1672084M1	3	Spring	(25)
17	3033850M1	3	Clevis Pin	(25)
				Repairs and replaces 1671880M1
18	1671828M1	3	Strut	(25)
19	1672166M93	1	Gear	40 T,D,Z
20	1617894M1	1	Sleeve	
21	1867259M1	1	Washer	
22	1675274M1	1	Bearing	
23	195363M1	1	Circlip	
24	1662224M2	1	Shaft	
25	1677238M92	1	Synchro Gear	

Tylko dla użytku wewnętrznego

152

BOITE 12 VITESSES	ARBRE DE RENVOI
12 GANG GETRIEBE	VORGELEGEWELLE
TRASMISSIONE A 12 VELOCITA	ALBERO RINVIO
TRANSMISION 12 VELOCIDADES	EJE SECUNDARIO
12 SPEED TRANSMISSION	COUNTERSHAFT

10001001

1 1000 001

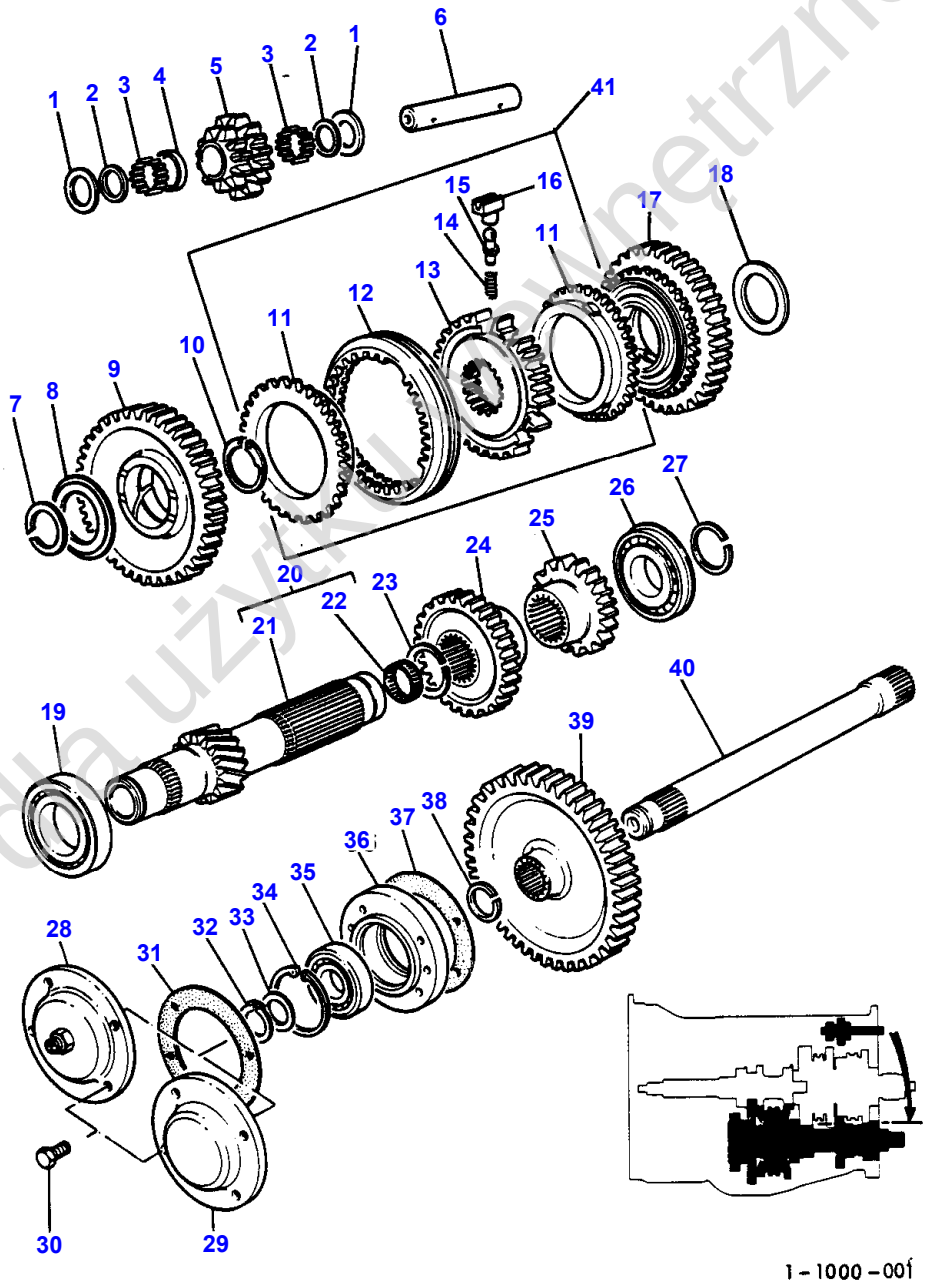

1 - 1000 - 001

Tylko do użytku wewnętrznego

Item	Part Number	Qty	Description	Comments
				SYNCHRO- ZF
1	180458M1	2	Washer	
2	183037M1	2	Washer	
3	183039M1	56	Needle	
4	1617886M1	1	Spacer	
5	1617901M1	1	Gear	
6	180445M1	1	Shaft	
7	831581M1	1	Ring	
8	1677829M1	1	Thrust Washer	
9	1677845M92	1	Gear	32 T,D,Z
	1677846M92	1	Pinion	35 T,D,Z
10	1440873X1	1	Circlip	
11	1684022M1	2	Ring	(41)
				Repairs and replaces 1671911M1
12	1672095M3	1	Sleeve	(41)
13	1677830M1	1	Sleeve	(41)
14	1672084M1	3	Spring	(41)
15	3033850M1	3	Clevis Pin	(41)
				Repairs and replaces 1671880M1
16	1671828M1	3	Strut	(41)
17	1677841M92	1	Gear	35 T,D,Z
	1677842M92	1	Pinion	37 T,D,Z
18	1677973M1	1	Thrust Washer	
19	3003372X1	1	Bearing	
20	1677965M92	1	Countershaft	
21		1	Tubular Shaft	(20)
				Not serviced, order REF 20
22	195453M1	1	Bearing Needle	(20)
23	195500M1	1	Ring	
24	1617923M2	1	Pinion	33 T,D,Z
25	1617946M1	1	Pinion	20 T,D,Z
26	1675274M1	1	Bearing	
27	195363M1	1	Circlip	
28	1872669M92	1	Cap	Two Wheel Drive
29	509833M1	1	Case	Four Wheel Drive
30	354262X1	4	Bolt Unc	Alternative 377481X1
	377481X1	4	Bolt Unc	Alternative 354262X1
31	181237M1	1	Gasket	
32	899385M1	1	Ring	
33	881122M2	1	Ring	
34	355988X1	1	Snapring	
35	899377M2	1	Bearing	
36	899331M1	1	Housing	
37	180432M1	1	Gasket	
38	358913X1	1	Snapring	
39	1671706M2	1	Gear	53 T,D,Z
	1869708M1	1	Gear	38 T,D,Z
40	1868533M1	1	Shaft	L:406,4 MM
	1869279M1	1	Shaft	L:557,5 MM
41	1677239M92	1	Synchro Gear	

Tylko do użytku wewnętrznego

154

BOITE DE VITESSES MULTIPOWER
MULTIPOWER-GETRIEBE
TRASMISSIONE POTENZA MULTIPLA
CAJA CAMBIO MULTIPOWER
MULTIPOWER TRANSMISSION

AXES ET FOURCHETTES
SCHALTGABEL UND SCHALTSCHIENE
FORCELLA ED INGRANAGG10 CAMBIO
HORQUILLAS
FORK AND GEAR SHIFT

09341005

1 0934 005

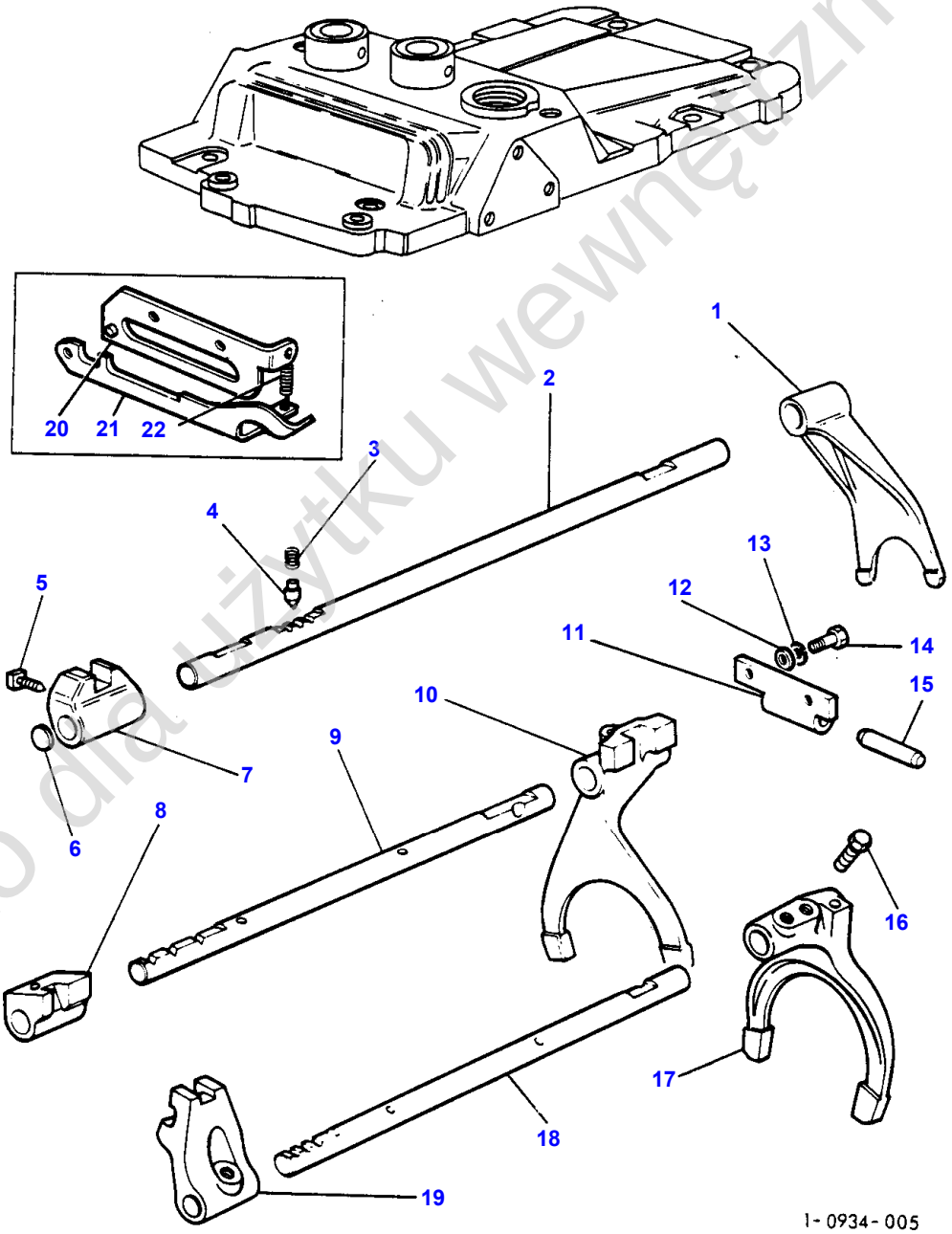

Tylko dla użytku wewnętrznego

Item	Part Number	Qty	Description	Comments
				SYNCHRO- ZF
1	897065M2	1	Fork	
2	894703M2	1	Rail	
	880108M2	1	Rail	(A)
3	191221M1	3	Spring	
4	180418M2	3	Plunger	
5	180002M1	5	Setscrew	
6	2950X	1	Plug	
7	180446M1	1	Selector	
8	1877605M1	1	Jaw	
	1672780M3	1	Jaw	(B)
9	1678867M1	1	Rail	
	1617947M1	1	Rail	(B)
10	180437M1	1	Fork	
	1662215M1	1	Shifter	(B)
11	180453M1	1	Plate	
12	888701M1	1	Spacer	
13	353434X1	2	Lock Washer	
14	338481X1	2	Screw	
15	180457M1	1	Pin	
16	1675367M2	2	Screw	
17	1674654M2	1	Shift Fork	
18	1672783M3	1	Rail	
	1672784M3	1	Rail	(A)
19	1672780M3	1	Jaw	(B)
	1678704M2	1	Jaw	
20	880111M92	1	Plate	(A)
21	1866694M92	1	Latch	(A)
22	1866693M1	1	Spring	(A)

(A)
WITH ROAD SPEED LIMITING DEVICE

(B)
WITH MK II TRANSMISSION

Tylko dla użytku wewnętrznego

156

BOITE DE VITESSES MULTIPOWER
MULTIPOWER-GETRIEBE
TRASMISSIONE POTENZA MULTIPLA
CAJA CAMBIO MULTIPOWER
MULTIPOWER TRANSMISSION

ARBRE D'ENTREE
ANTRIEBSWELLE
ALBERO ENTRATA
EJE PRIMARIO
INPUT SHAFT

09251002

1 0925 001

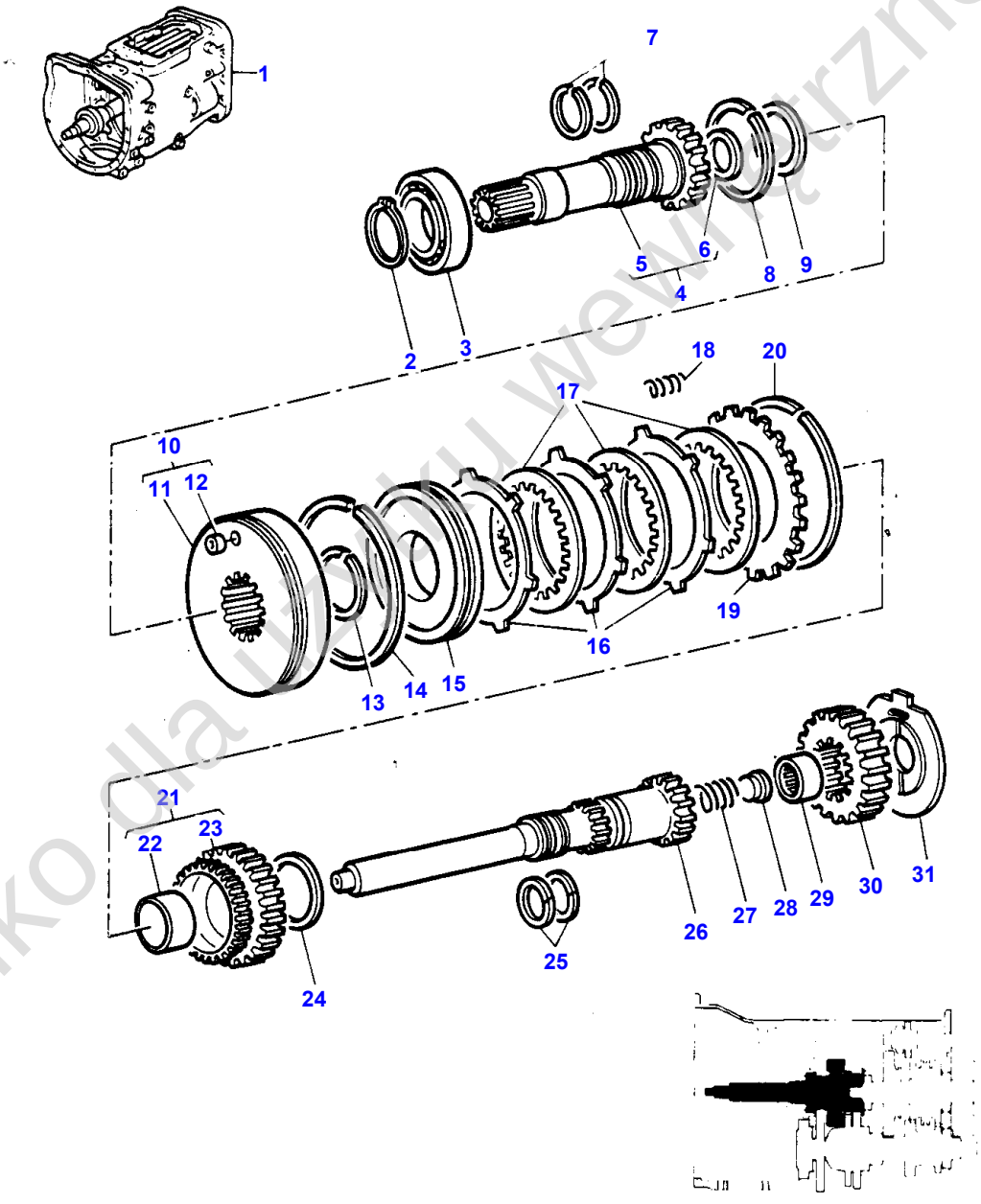

1-0925-001

Tylko dla użytku wewnętrznego

Item	Part Number	Qty	Description	Comments
				SYNCHRO- ZF
1	1674616M91	1	Gearbox	Two Wheel Drive
2	762101M1	1	Ring	
3	834303M1	1	Bearing	
4	1869706M91	1	Pinion	20 T,D,Z
5		1	Shaft	(4)
				Not serviced, order REF 4
6	883935M4	1	Seal	(4)
7	907315M2	2	Ring	
8	377631X1	1	Ring	
9	187074M1	1	Washer	
10	518508M93	1	Housing	
11		1	Housing	(10)
				Not serviced, order REF 10
12	1872134M92	1	Valve Check	(10)
13	186580M1	1	Ring	
14	185425M1	1	Ring	
15	186531M2	1	Piston	Repairs and replaces 1661952M1
16	185464M1	3	Plate	
17	1870879M1	3	Disc	
18	186519M1	6	Spring	
19	510241M1	1	Plate	
20	364689X1	1	Snapring	
21	1872488M91	1	Pinion	25 T,D,Z
22	188806M1	1	Bush	(21)
23		1	Pinion	(21)
				Not serviced, order REF 21
24	186567M1	1	Washer	
25	186581M1	2	Ring	
26	516523M92	1	Shaft	
27	886352M1	1	Spring	
28	886353M1	1	Abutment	
29	834844M1	1	Bearing Assy	
30	1872486M1	1	Pinion	21 T,D,Z
31	186579M1	1	Spacer	

Tylko dla użytku wewnętrznego

158

BOITE DE VITESSES MULTIPOWER	ARBRE DE RENVOI
MULTIPOWER-GETRIEBE	VORGELEGEWELLE
TRASMISSIONE POTENZA MULTIPLA	ALBERO RINVIO
CAJA CAMBIO MULTIPOWER	EJE SECUNDARIO
MULTIPOWER TRANSMISSION	COUNTERSHAFT

09311003

1 0931 003

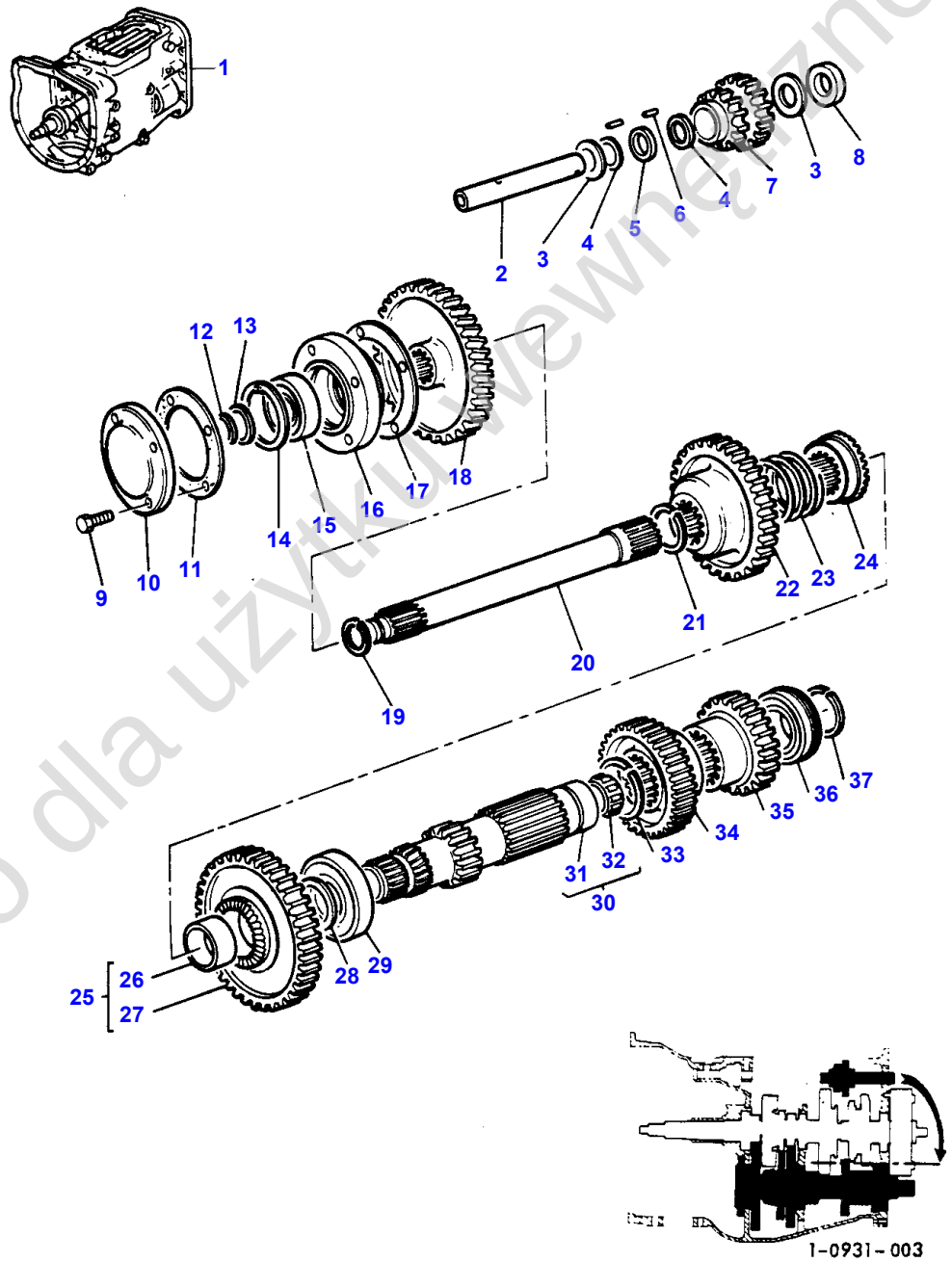

Tylko dla użytku wewnętrznego

Item	Part Number	Qty	Description	Comments
				SYNCHRO- ZF
1		1	Gearbox	See Page - Reference Number 156/1
		1	Gearbox	(A)
				See Page - Reference Number 166/1
2	180445M1	1	Shaft	
3	180458M1	2	Washer	
4	183037M1	2	Washer	
5	183038M1	1	Spacer	
	1617886M1	1	Spacer	(A)
6	183039M1	56	Needle	
7	1660920M1	1	Gear	
	1617901M1	1	Gear	(A)
8	189449M1	1	Washer	Without or not
				)A(
9	377481X1	4	Bolt Unc	Alternative 354262X1
	354262X1	4	Bolt Unc	Alternative 377481X1
10	509833M1	1	Case	
11	181237M1	1	Gasket	
12	899385M1	1	Ring	
13	881122M2	1	Ring	
14	355988X1	1	Snapring	
15	899377M2	1	Bearing	
16	899331M1	1	Housing	
17	180432M1	1	Gasket	
18	1869708M1	1	Gear	38 T,D,Z
19	358913X1	1	Snapring	
20	1868533M1	1	Shaft	L 406,4 MM
	1869279M1	1	Shaft	L 557,5 MM
21	831581M1	1	Ring	
22	1872487M1	1	Gear	35 T,D,Z
	1617915M1	1	Gear	(A)
				35 T,D,Z
22	1617918M1	1	Gear	(A)
				30 T,D,Z
22	1617914M1	1	Gear	(A)
				34 T,D,Z
23	188803M1	1	Spring	
24	188834M2	1	Coupler	
25	188838M91	1	Gear	38 T,D,Z
	1617925M91	1	Gear	(A)
				38 T,D,Z
				For Germany only or any text in German only
25	1617931M91	1	Gear	(A)
				38 T,D,Z
25	1617927M91	1	Gear	(A)
				34 T,D,Z
26	832491M1	1	Bush	(25)
27		1	Pinion	(25)
				Not serviced, order REF 25
28	188859M1	1	Washer	
29	195507M1	1	Bearing Ball	
	3003372X1	1	Bearing	(A)
30	189391M92	1	Shaft	Two Wheel Drive
	1617921M91	1	Shaft	(A)
31		1	Tubular Shaft	(30)
				Not serviced, order REF 30
32	195453M1	1	Bearing Needle	(30)
33	195500M1	1	Ring	
34	180415M1	1	Pinion	
	1617923M2	1	Pinion	(A)
	1867253M2	1	Gear	
35	1617946M1	1	Pinion	
36	1675274M1	1	Bearing	
37	195363M1	1	Circlip	

Tylko dla użytku wewnętrznego

Item	Part Number	Qty	Description	Comments
				(A) WITH MK II TRANSMISSION

Tylko dla użytku wewnętrznego

162

BOITE DE VITESSES MULTIPOWER	ARBRE PRINCIPAL
MULTIPOWER-GETRIEBE	HAUPTWELLE
TRASMISSIONE POTENZA MULTIPLA	ALBERO PRINCIPALE
CAJA CAMBIO MULTIPOWER	EJE PRINCIPAL
MULTIPOWER TRANSMISSION	MAIN SHAFT

09281003

1 0928 003

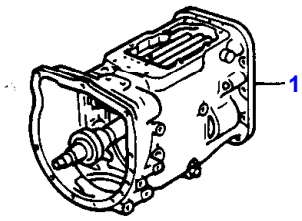

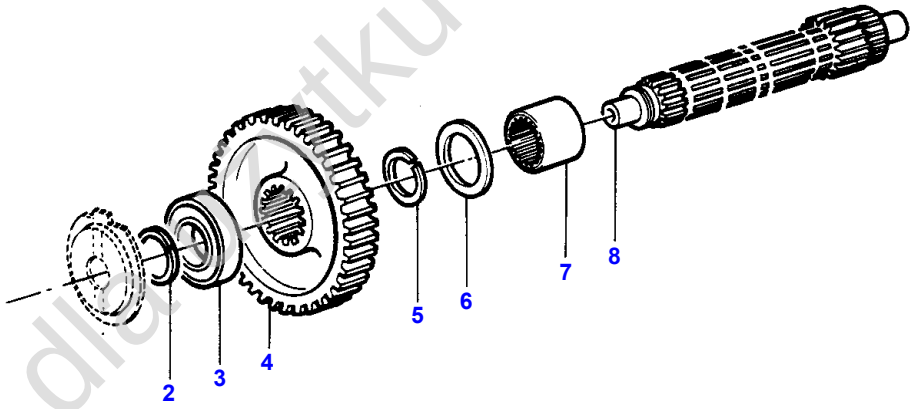

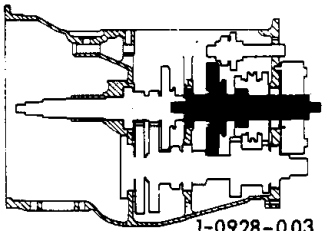

Tylko dla użytku wewnętrznego

Item	Part Number	Qty	Description	Comments
				SYNCHRO- ZF
1		1	Gearbox	See Page - Reference Number 156/1
2	352972X1	1	Ring	
3	195505M1	1	Bearing	
4	520700M4	1	Gear	Two Wheel Drive 44 T,D,Z
5	195363M1	1	Circlip	
6	1867259M1	1	Washer	
7	1867258M1	1	Sleeve	
8	1867967M1	1	Shaft	

Tylko dla użytku wewnętrznego

164

SYNCHRO
SYNCHRONISIEREINRICHTUNG
SINCRONIZZATORE

SYNCHRO

08201005

1 0820 003

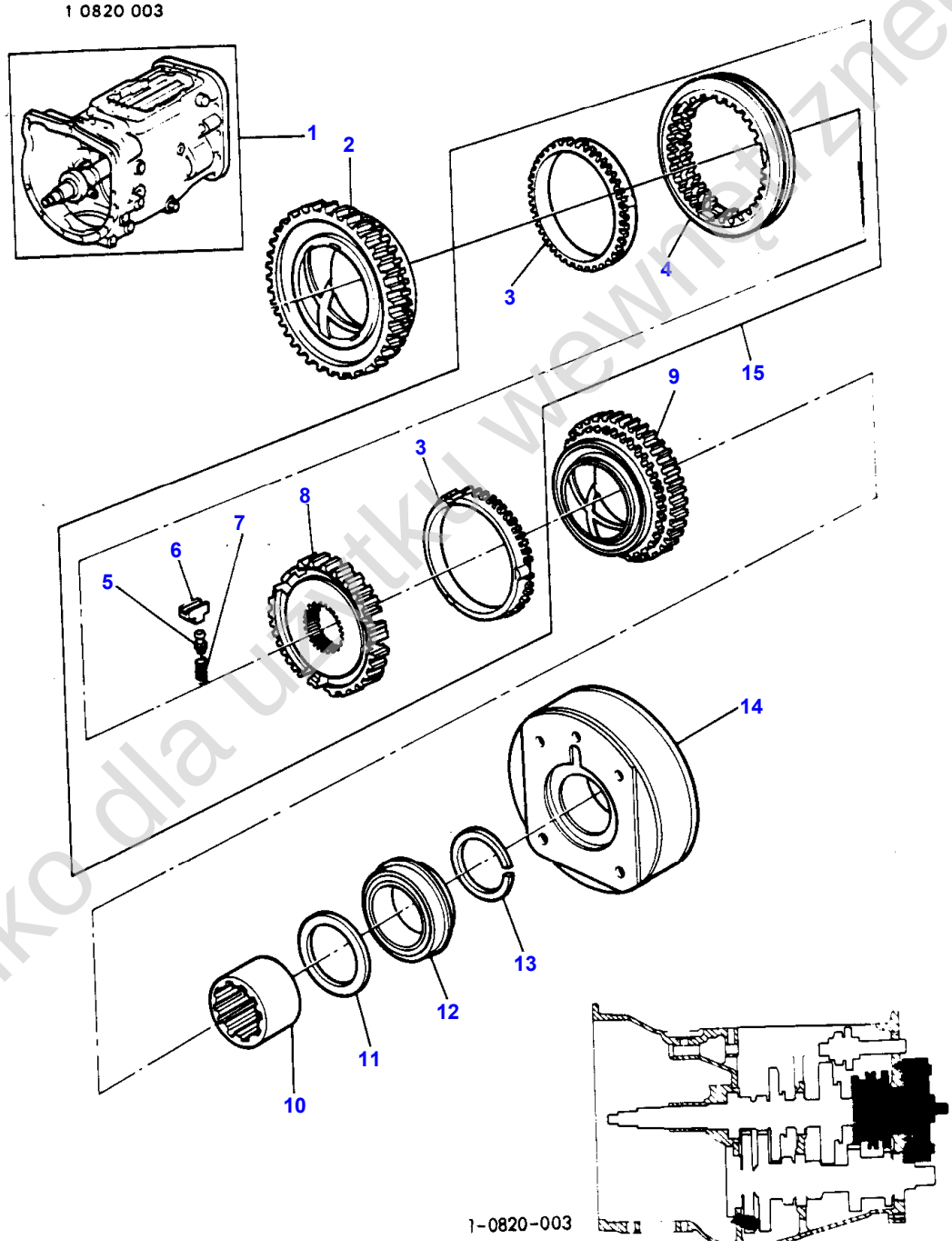

Tylko dla użytku wewnętrznego

Item	Part Number	Qty	Description	Comments
				ZF- MULTIPOWER TRANSMISSIOM
1		1	Gearbox	See Page - Reference Number 156/1
		1	Gearbox	(A)
				See Page - Reference Number 166/1
2	1672167M93	1	Gear	36 T,D,Z
	1674943M93	1	Gear	(A)
				36 T,D,Z
3	1671911M1	2	Ring	(15)
4	1672095M3	1	Sleeve	(15)
5	1671880M1	3	Plunger	(15)
6	1671828M1	3	Strut	(15)
7	1672084M1	3	Spring	(15)
8	1671774M3	1	Carrier	(15)
				18 T,D,Z
8	1671773M3	1	Sleeve	(15)
				(A)
				31 T,D,Z
9	1672166M93	1	Gear	40 T,D,Z
10	1867324M1	1	Sleeve	
	1617894M1	1	Sleeve	(A)
11	1867259M1	1	Washer	
12	1675274M1	1	Bearing	
13	195363M1	1	Circlip	
14		1	Epicyclic	See Page - Reference Number 110/
15	1677237M91	1	Kit, Synchromesh	Repairs and replaces 1641983M92
	1677238M91	1	Synchro Gear	(A)
				Repairs and replaces 1641982M92
				(A)
				WITH MK II TRANSMISSION

Tylko dla użytku wewnętrznego

166

BOITE DE VITESSES MULTIPOWER PRISE CONSTANTE	ARBRE D'ENTREE
MULTIPOWER-MUFFENSCHALTGETRIEBE	ANTRIEBSWELLE
TRASMISSIONE POTENZA MULTIPLA COSTANTE	ALBERO ENTRATA
CAJA MULTIPOWER DE TOMA CONSTANTE	EJE PRIMARIO
MULTIPOWER CONSTANTMESH TRANSMISSION	INPUTSHAFT

09651003

1 0965 003

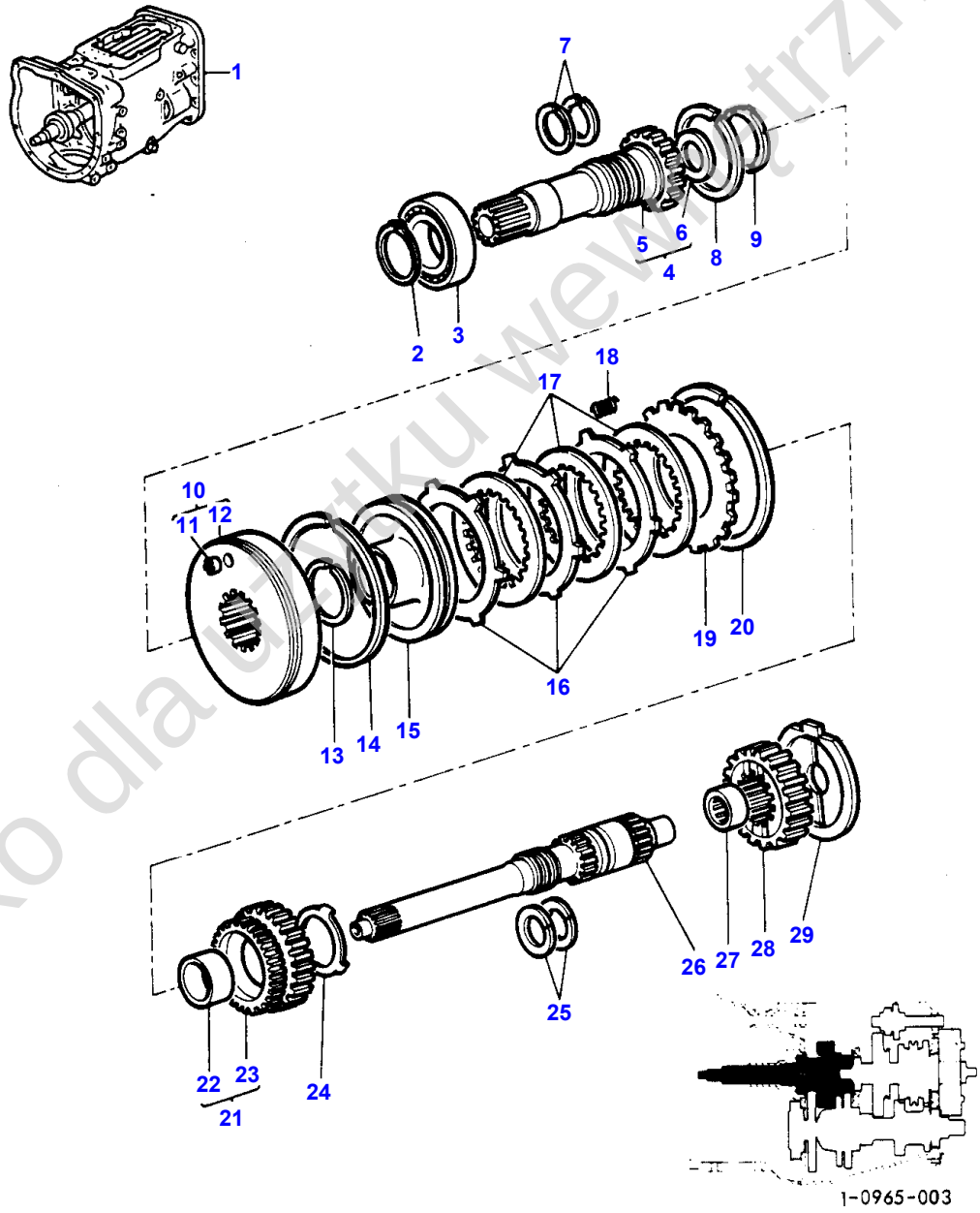

Tylko dla użytku wewnętrznego

Item	Part Number	Qty	Description	Comments
				SYNCHRO- ZF
1	1674578M91	1	Gearbox	Two Wheel Drive
	1675928M91	1	Gearbox	Four Wheel Drive
	1679697M91	1	Gearbox	Four Wheel Drive 30 KM/H
1	1674580M91	1	Transmission	Two Wheel Drive 30 KM/H
2	762101M1	1	Ring	
3	834303M1	1	Bearing	
4	1869706M91	1	Pinion	20 T,D,Z
5		1	Shaft	(4) Not serviced, order REF 4
6	883935M4	1	Seal	(4)
7	907315M2	2	Ring	
8	377631X1	1	Ring	
9	1667607M1	1	Washer	Thickness 2,92-3,00MM
10	1662157M92	1	Housing	
11		1	Housing	(10) Not serviced, order REF 10
12	1872134M92	1	Valve Check	(10)
13	186580M1	1	Ring	
14	185425M1	1	Ring	
15	186531M2	1	Piston	Repairs and replaces 1661952M1
16	185464M1	3	Plate	
17	1870879M1	3	Disc	
18	186519M1	6	Spring	
19	510241M1	1	Plate	
20	364689X1	1	Snapring	
21	1662205M92	1	Pinion	25 T,D,Z
	1662206M92	1	Pinion	26 T,D,Z 30 KM/H
21	1662208M91	1	Pinion	30 T,D,Z
22	188806M1	1	Bush	(21)
23		1	Pinion	(21) Not serviced, order REF 21
24	1661950M1	1	Washer	
25	186581M1	2	Ring	
26	1662163M94	1	Shaft	
27	2700273M1	1	Bearing	
28	1662220M1	1	Pinion	21 T,D,Z
	1662218M1	1	Pinion	22 T,D,Z 30 KM/H
28	1662219M1	1	Pinion	26 T,D,Z
29	1662628M1	1	Spacer	

Tylko dla użytku wewnętrznego

168

BOITE DE VITESSES MULTIPOWER PRISE CONSTANTE	ARBRE PRINCIPAL
MULTIPOWER-MUFFENSCHALTGETRIEBE	HAUPTWELLE
TRASMISSIONE POTENZA MULTIPLA COSTANTE	ALBERO PRINCIPALE
CAJA MULTIPOWER DE TOMA CONSTANTE	EJE PRINCIPAL
MULTIPOWER CONSTANTMESH TRANSMISSION	MAIN SHAFT

09681003

1 0968 005

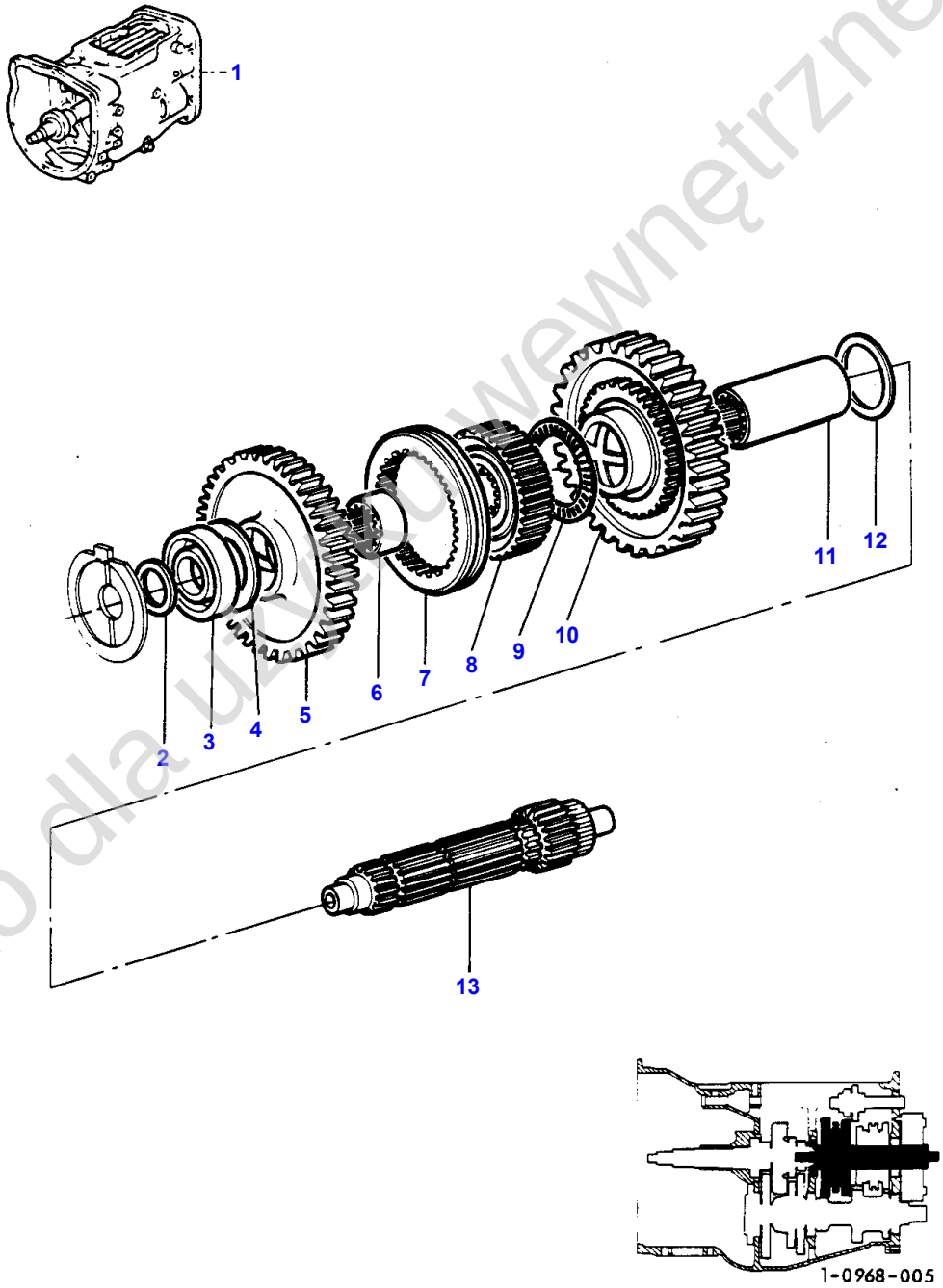

Tylko dla użytku wewnętrznego

Item	Part Number	Qty	Description	Comments
				SYNCHRO- ZF
1		1	Gearbox	See Page - Reference Number 166/1
2	762101M1	1	Ring	
3	338552X1	1	Bearing	
4	1671888M2	1	Thrust Washer	Thickness 4,14-4,19MM
	1671889M1	1	Thrust Washer	Thickness 4,39-4,45MM
	1671890M2	1	Thrust Washer	Thickness 4,62-4,67MM
	1671891M2	1	Thrust Washer	Thickness 4,85-4,90MM
5	1664549M91	1	Gear	42 T,D,Z
6	1617893M1	1	Sleeve	
7	1664659M2	1	Sleeve	
8	1664556M1	1	Carrier	
9	1663796M1	1	Bearing Assy	
10	1664550M91	1	Gear	44 T,D,Z
11	1617892M1	1	Sleeve	
12	1617885M2	1	Washer	
13	1662224M2	1	Shaft	

Tylko dla użytku wewnętrznego

170

TRANSMISSION PRISE DE FORCE	UNE VITESSE
ZAPFWELLENANTRIEB	1-GANG
MECCANISMO PRESA DI FORZA	SINGOLA VELOCITA
MECANISMO ACCIONAMIENTO TOMA DE FUERZA	UNA VELOCIDAD
PTO-DRIVE MECHANISM	SINGLE SPEED

10601001

1 1060 006

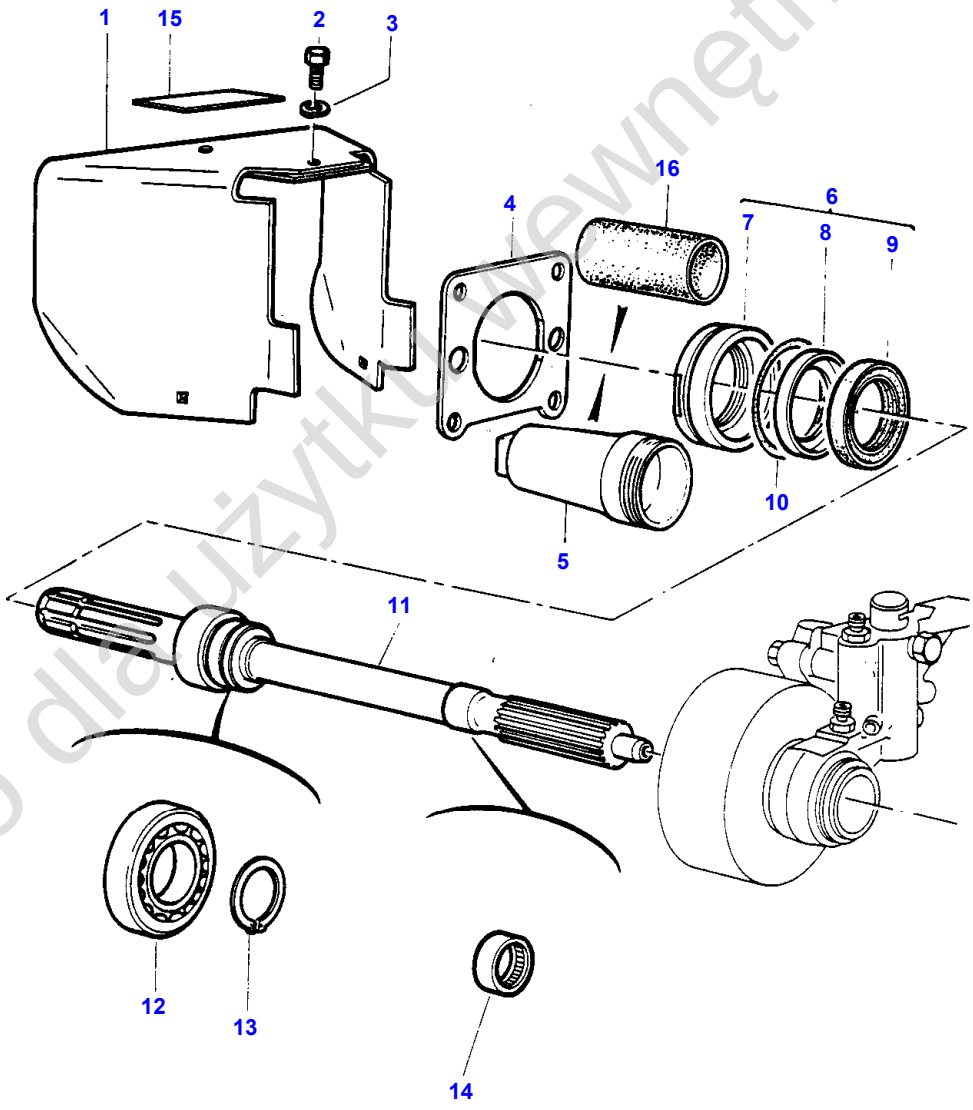

1-1060-006

Tylko dla użytku wewnętrznego

Item	Part Number	Qty	Description	Comments
1	1869007M93	1	Shield	
2	353557X1	1	Screw Unf	
3	353432X1	1	Lock Washer	
4	1663254M1	1	Retainer	Repairs and replaces 532887M2
5	532888M1	1	Cap	Alternative 3038717M1
6	532968M91	1	Seal	
7	532880M1	1	Retainer	(6)
8	533183M1	1	Seal	(6)
9	834216M1	1	Seal	(6)
10	2415813	1	O Ring	
11	1660288M91	1	Shaft	
12	391261X1	1	Bearing Ball	Repairs and replaces 834218M1
13	377602X1	1	Circlip	
14	195453M1	1	Bearing Needle	
15	883612M1	1	Decal	For Germany only or any text in German only
	886408M1	1	Decal	For France only or any text in French only
16	3038717M1	1	Protector	Alternative 532888M1

Tylko dla użytku wewnętrznego

172

TRANSMISSION PRISE DE FORCE	UNE VITESSE
ZAPFWELLENANTRIEB	1-GANG
MECCANISMO PRESA DI FORZA	SINGOLA VELOCITA
MECANISMO ACCIONAMIENTO TOMA DE FUERZA	UNA VELOCIDAD
PTO-DRIVE MECHANISM	SINGLE SPEED

10601004

1 1060 005

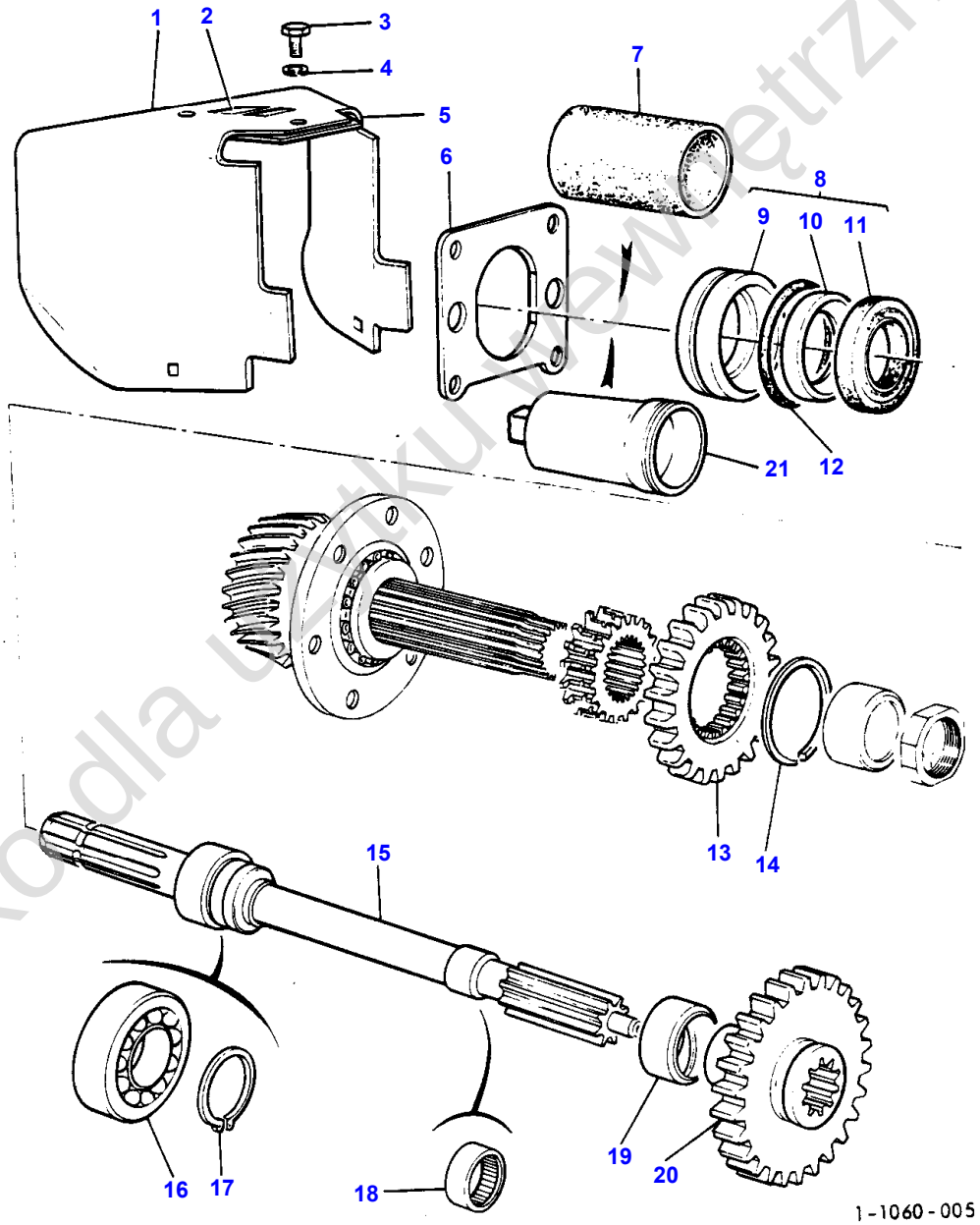

Tylko dla użytku wewnętrznego

Item	Part Number	Qty	Description	Comments
				WITH GROUND SPEED POWER TAKE-OFF
1	1869007M93	1	Shield	
2	1664250M1	1	Decal	For France only or any text in French only
	1664251M1	1	Decal	For Germany only or any text in German only
	1664249M1	1	Decal	For UK only or any text in English only
3	353557X1	1	Screw Unf	
4	353432X1	1	Lock Washer	
5	886408M1	1	Decal	For France only or any text in French only
	883612M1	1	Decal	For Germany only or any text in German only
6	1663254M1	1	Retainer	
7	3038717M1	1	Protector	Alternative 532888M1
8	532968M91	1	Seal	
9	532880M1	1	Retainer	(8)
10	533183M1	1	Seal	(8)
11	834216M1	1	Seal	(8)
12	2415813	1	O Ring	
13	1872274M1	1	Pinion	
14	1872362M1	1	Ring	
15	1660288M91	1	Shaft	
16	391261X1	1	Bearing Ball	
17	377602X1	1	Circlip	
18	195453M1	1	Bearing Needle	
19	532883M1	1	Bush	
20	532907M1	1	Gear	
21	532888M1	1	Cap	Alternative 3038717M1

Tylko dla użytku wewnętrznego

174

TRANSMISSION PRISE DE FORCE	DEUX VITESSES
ZAPFWELLENANTRIEB	2-GANG
MECCANISMO PRESA DI FORZA	2 VELOCITA
MECANISMO ACCIONAMIENTO TOMA DE FUERZA	DOS VELOCIDADES
PTO-DRIVE MECHANISM	TWO SPEED

10651002

1 1065 009

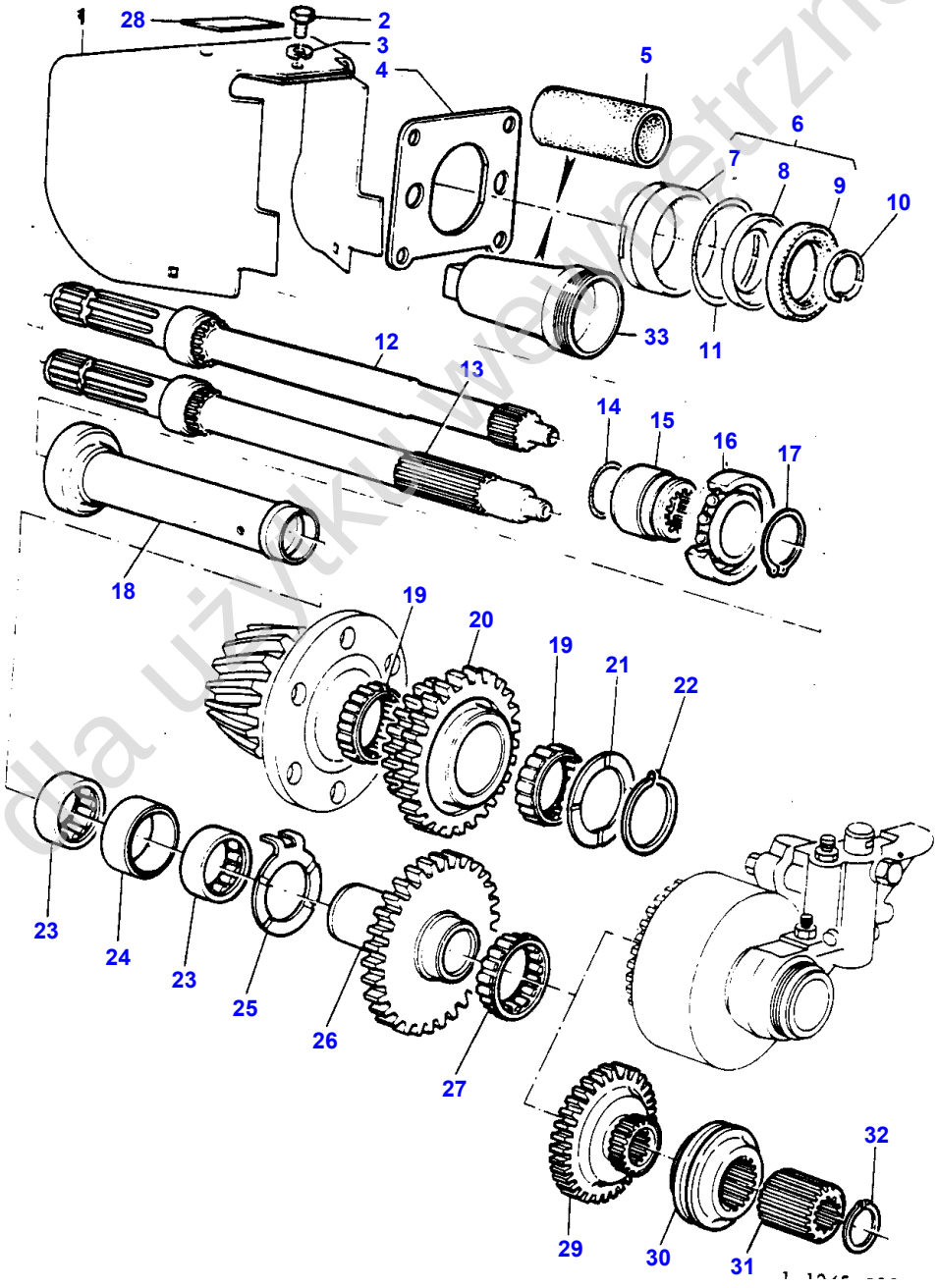

Tylko do użytku wewnętrznego

Item	Part Number	Qty	Description	Comments
1	1869007M93	1	Shield	
2	353557X1	1	Screw Unf	
3	353432X1	1	Lock Washer	
4	1663254M1	1	Retainer	Repairs and replaces 532887M2
5	3038717M1	1	Protector	Alternative 532888M1
6	532968M91	1	Seal	
7	532880M1	1	Retainer	(6)
8	533183M1	1	Seal	(6)
9	834216M1	1	Seal	(6)
10	1662726M1	1	Ring	Repairs and replaces 377608X1
11	2415813	1	O Ring	Repairs and replaces 1004633M1
12	532897M1	1	Shaft	(A)
13	532899M1	1	Shaft	(B)
14	377832X1	1	O Ring	
15	1660462M3	1	Sleeve	
16	391261X1	1	Bearing Ball	Repairs and replaces 834218M1
17	377602X1	1	Circlip	
18	532877M91	1	Tube	
19	842922M1	2	Bearing	
20	532900M1	1	Gear	Repairs and replaces 1663044M1
21	532882M1	1	Washer	
22	355919X1	1	Snapring	
23	831220M1	2	Bearing	
24	532876M2	1	Spacer	
25	1663312M2	1	Washer	Repairs and replaces 532884M1
26	1660714M1	1	Gear	Repairs and replaces 1663045M1 Number of teeth/spines 29
27	842921M1	1	Bearing	
28	883612M1	1	Decal	For Germany only or any text in German only
	886408M1	1	Decal	For France only or any text in French only
29	1660713M1	1	Gear	(C) For UK only or any text in English only
30	532889M1	1	Collar	(C) For UK only or any text in English only
31	532891M1	1	Hub	(C) For UK only or any text in English only
32	352699X1	1	Ring	(C) For UK only or any text in English only
33	532888M1	1	Cap	Alternative 3038717M1

(A)
1000R.P.M.

(B)
540R.P.M.

(C)
WITHOUT INDEPENDANT P.T.O.

Tylko dla użytku wewnętrznego

176

COUVERCLE DE PRISE DE FORCE
ZAPFWELLENDECKEL
COPERCHIO PRESA DI FORZA
CONJUNTO CUBIERTA TOMA DE FUERZA
PTO-COVER ASSEMBLY

10701005

1 1070 005

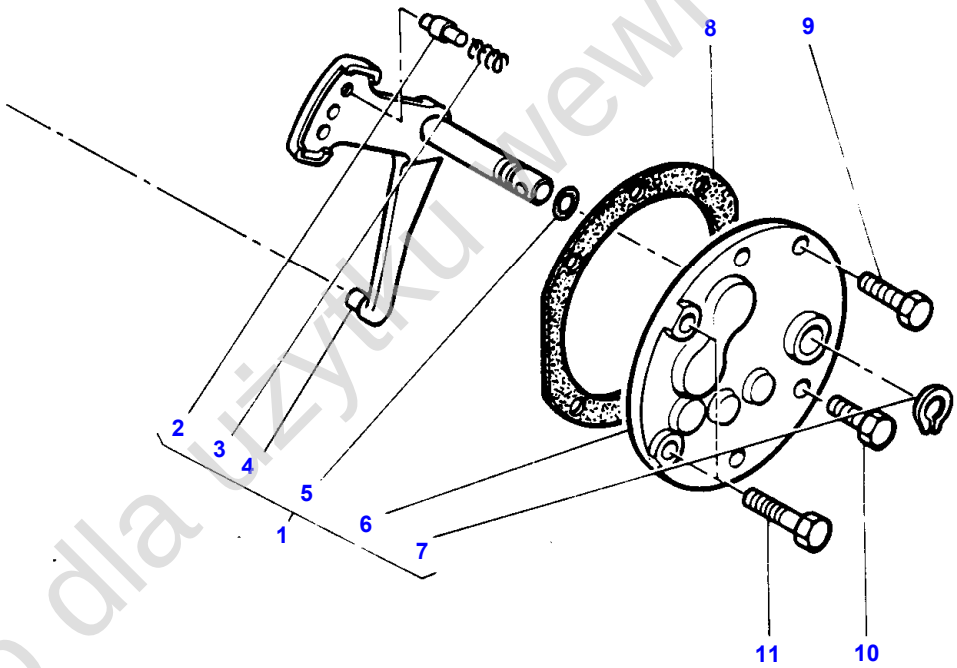

1-1070-005

Tylko dla użytku wewnętrznego

Item	Part Number	Qty	Description	Comments
				WITHOUT INDEPENDANT P.T.O.- GB
1		1	Cover	(C,D)
	1870787M91	1	Cover	(B)
2	180418M2	1	Plunger	(1)
3	191221M1	1	Spring	(1)
4	1870594M91	1	Lever	(1)
				(A,C)
4	532886M91	1	Lever	(1)
				(B)
5	195562M1	1	O Ring	(1)
6	888108M2	1	Cover	(1)
				(A,B)
6	888109M2	1	Cover	(1)
				(C)
7	353213X1	1	Snapring	(1)
8	181217M1	1	Gasket	
9	362471X1	3	Screw	L: 22MM
10	362479X1	X	Screw	L: 35MM
	376408X1	X	Screw Unc	L: 19MM
	353703X1	X	Bolt Unc	L: 42MM
	362481X1	X	Screw	L: 38MM
11	362475X1	2	Screw	L: 29MM

(A)
WITH LOW FLOW PUMP

(B)
WITH HIGH FLOW PUMP

(C)
WITH GROUND SPEED POWER TAKE OFF

(D)
ORDER DETAILS

Tylko dla użytku wewnętrznego

178

EMBRAYAGE ET VALVES DE PRISE DE FORCE INDEPENDANTE
LASTSCHALTBARE ZAPFWELLE - KUPPLUNG UND VENTILE
VALVOLE E FRIZIONI PRESA DI FORZA
TOMA DE FUERZA INDEPENDIENTE-EMBRAGUE Y VALVULAS
IPTO-CLUTCH AND VALVES

10801007

1 1080 012

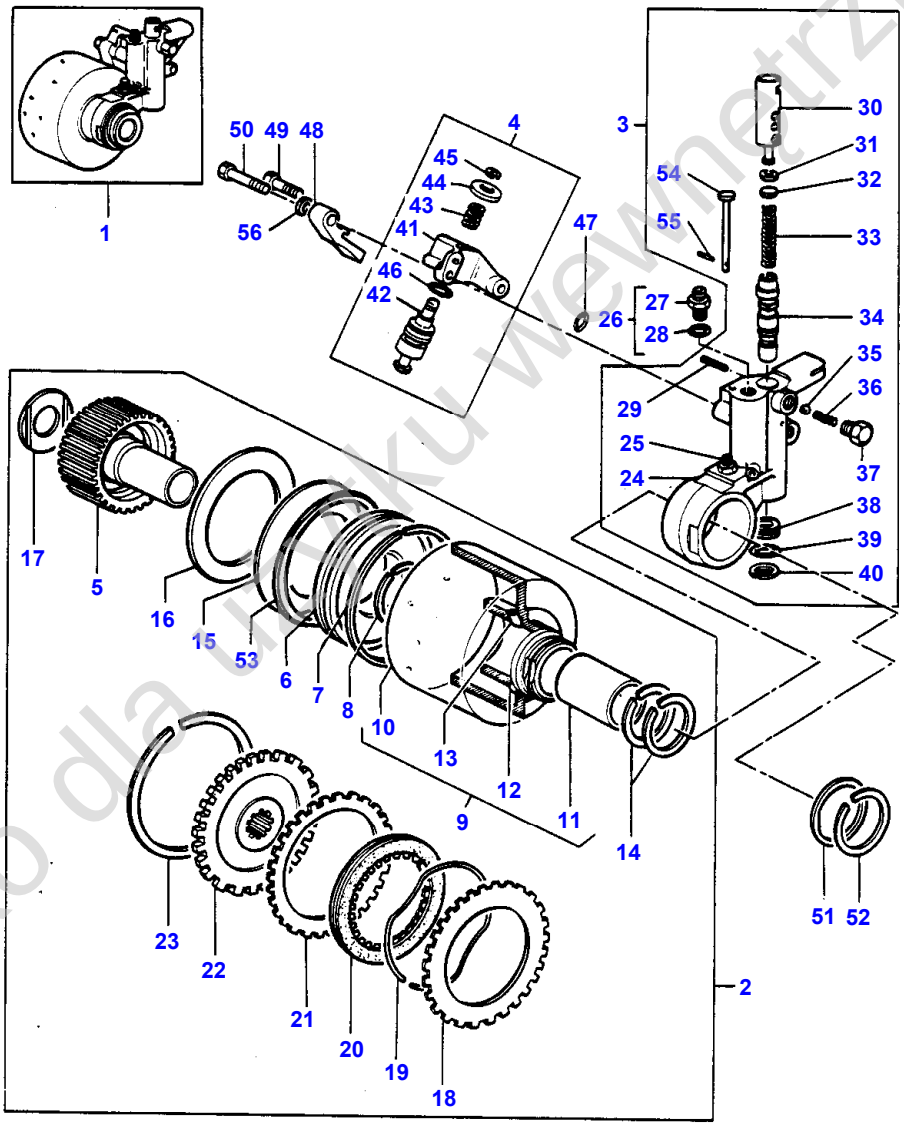

1 - 1080 - 012

Tylko dla użytku wewnętrznego

Item	Part Number	Qty	Description	Comments
1	1872277M96	1	Clutch	1 SPEED
	1660842M98	1	Clutch	2 SPEED
2	1872266M92	1	Clutch	(1) Q G
	1660843M93	1	Clutch	(1) Q F
3	1872296M95	1	Valve	(1) Q G
	1872279M95	1	Pressure Valve	(1) Q F
4	1662237M91	1	Housing	(1)
5	532892M1	1	Hub	(2)
6	1870002M2	1	Piston	(2)
7	1870859M1	1	Seal	(2)
8	1870858M1	1	Seal	(2)
9	1870004M92	1	Housing	(2)
10		1	Housing	(9)
				Not serviced, order REF 9
11	1870547M1	1	Bush	(9)
12	1870012M92	1	Restrictor	(9)
13	1872134M92	1	Valve Check	(9)
14	1866260M1	2	Piston Ring	(2)
15	1870003M1	1	Spring	(2)
16	1870001M1	1	Plate	(2)
17	1660206M1	1	Washer	(2)
18	1870860M1	7	Plate	(2)
19	1660406M1	7	Spring	(2)
20	1870879M1	7	Disc	(2)
21	1870010M1	X	Shim	(2)
				Thickness 0,51MM
21	1870011M1	X	Shim	(2)
				Thickness 0,76MM
22	1871985M2	1	Retainer	(2) Q G
	1660712M1	1	Plate	(2) Q F
23	364689X1	1	Snapring	(2)
24		1	Valve Body	(3)
				Not serviced, order REF 3
24	361024X1	4	Ball	(3)
25	22257X	1	Union	(3)
26	1860557M91	1	Connector	Up to Serial or Engine Number K136053
	358741X91	1	Union	From Serial or Engine Number K136054
27	1860558M1	1	Union	(26)
				Up to Serial or Engine Number K136053
27		1	Union	(26)
				From Serial or Engine Number K136054
28	831495M1	1	O Ring	(26)
29	355563X1	1	Pin	(3)
30	1867145M1	1	Plunger	(3)
31	377223X1	1	Circlip	(3)
32	377913X1	X	Shim	(3)
				Thickness 0,4MM
33	1677431M1	1	Spring	(3) Q G
	1677430M1	1	Spring	(3) Q F
34	1865110M7	1	Spool	(3)
35	13535X	1	Ball	(3)
36	1661671M1	1	Spring	(3)
37	888703M2	1	Plug	(3)
38	1865111M2	1	Collar	(3)
39	831528M1	1	O Ring	(3)
40	22554X	1	Circlip	(3)
41	1662239M1	1	Housing	(4)
42	1662238M1	1	Piston	(4)
43	1662240M1	1	Spring	(4)
44	1662241M1	1	Retainer	(4)
45	355905X1	1	Circlip	(4)
46	364101X1	1	Seal	(4)
47	762191M1	1	Gasket	(1)
48	1662242M2	1	Pad	(1)

Tylko dla użytku wewnętrznego

Item	Part Number	Qty	Description	Comments
49	22830X	1	Bolt	(1)
50	888738M3	1	Bolt	(1)
51	513176M1	1	Washer	(1)
52	358876X1	1	Circlip	(1)
53	1677535M2	1	Spacer	(2) Q F Thickness 2,67-2,79MM
53	1677536M2	1	Spacer	(2) Q G Thickness 2,16-2,29MM
54	1677432M1	1	Pin	(3)
55	3008828X1	1	Pin	(3)
56	1671886M1	1	Washer	(1)

Tylko dla użytku wewnętrznego

182

ENTRETOISE D'ESSIEU ARRIERE
HINTERACHSZWISCHENSTUECK
DISTANZIALE ASSALE POSTERIORE
SEPARADOR EJE TRASERO
REAR AXLE-SPACER

10931003

1 1093 022

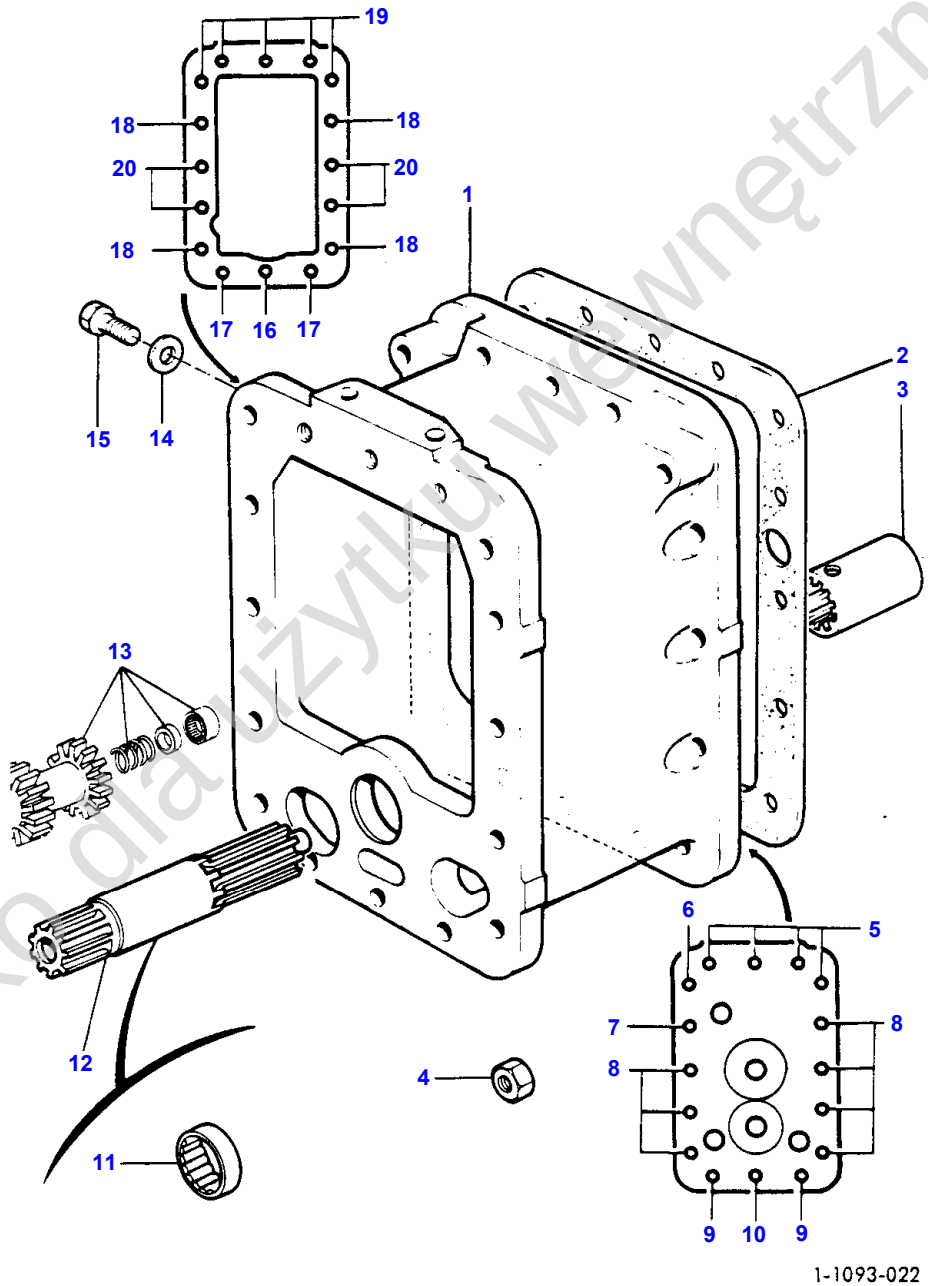

Tylko do użytku wewnętrznego

Item	Part Number	Qty	Description	Comments
1	1663273M1	1	Spacer	
2		1	Gasket	See Page - Reference Number 94/1 See Page - Reference Number 112/1
3	1868538M4	1	Coupling	
4	377185X1	19	Nut Unf	
5	376768X1	4	Bolt Unc	
6	376768X1	1	Bolt Unc	
7	377181X1	1	Bolt Unf	
8	377181X1	7	Bolt Unf	
9	377560X1	2	Bolt Unf	
10	377557X1	1	Screw	
11	195453M1	1	Bearing Needle	
12	1868539M1	1	Shaft	Repairs and replaces 1663272M1
13		1	Shaft	See Page - Reference Number 184/24
14	882011M1	1	Washer	
15	880695M1	1	Plug	
16	377570X1	1	Stud	
17	377557X1	2	Screw	
18	377181X1	4	Bolt Unf	
19	376768X1	5	Bolt Unc	
20	377181X1	4	Bolt Unf	

Tylko dla użytku wewnętrznego

184

ESSIEU ARRIERE	CARTER CENTRAL
ZENTRALGEHAEUSE	GEHAEUSE
ASSALE CENTRALE	CARCASSA
EJE CENTRAL	CARCASA
CENTRE AXLE	HOUSING

11151006

1 1115 006

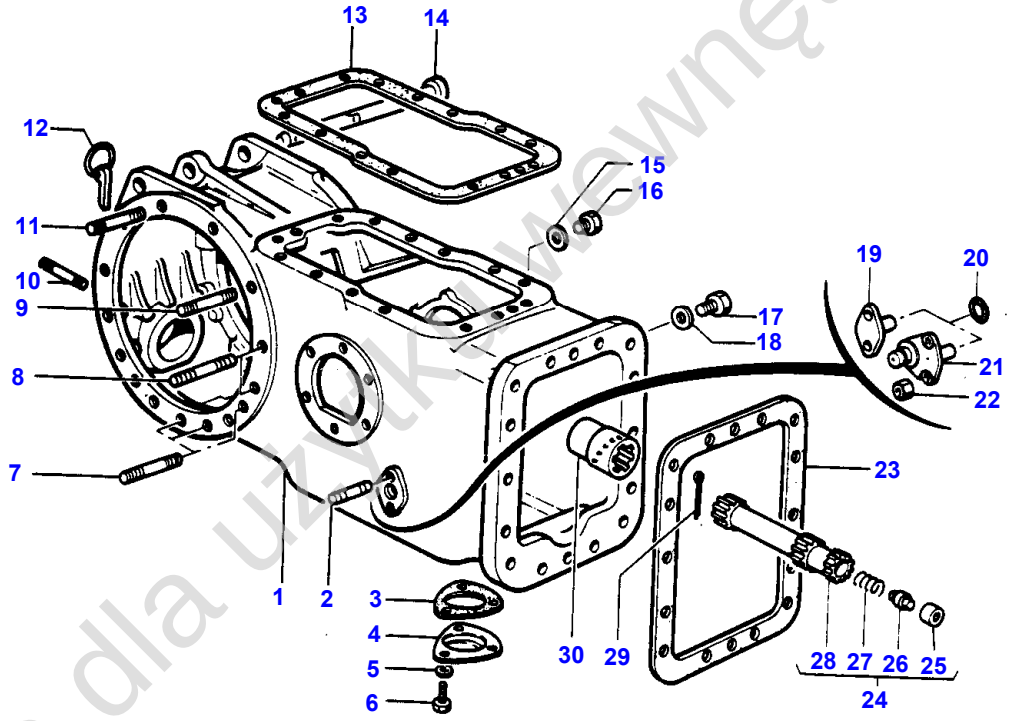

1-1115-006

Tylko dla użytku wewnętrznego

Item	Part Number	Qty	Description	Comments
1	1664511M3	1	Housing	2 WHEEL DRIVE
	1664513M2	1	Diff Housing	4 WHEEL DRIVE
2	377611X1	4	Stud	
3	1660551M1	1	Gasket	
4	1869491M1	1	Cover	
5	353446X1	3	Lock Washer	
6	353676X1	3	Screw Unc	
7	377617X1	6	Stud	
8	377616X1	4	Stud	
9	377617X1	2	Stud	
10	1860900M2	4	Stud	
11	377617X1	2	Stud	
12	950371M91	1	Pin	
13	886549M2	1	Gasket	
14	180901M91	1	Pin	
15	180474M1	1	Gasket	
16	884691M1	1	Plug	
17	880695M1	1	Plug	
18	1664183M1	1	Washer	Repairs and replaces 825293M1
19	898643M1	2	Support	Repairs and replaces REF.21,22
	898937M1	2	Support	(A) Q
20	851258M1	2	O Ring	
21	517636M1	2	Pivot	
22	363621X1	4	Nut	
23	1861986M2	1	Gasket	
24	1866661M91	1	Shaft	22T,D,Z Q 371,36MM
24	186047M91	1	Shaft	18T,D,Z Q 221,36MM
25	195513M1	1	Bearing	(24)
26	886353M1	1	Abutment	(24) Q
27	886352M1	1	Spring	(24) Q
28		1	Shaft	(24) Not serviced, order REF 24
29	354416X1	1	Pin	
30	1680189M1	1	Coupler	Repairs and replaces 1871925M1
				(A) WITH HYDRAULIC BRAKING CONTROL

Tylko dla użytku wewnętrznego

186

COMMANDE DE PRISE DE FORCE
ZAPFWELLENBETAETIGUNG
COMANDO PRESA DI FORZA
MANDO TOMA DE FUERZA
PTO-CONTROL

10551006

1 1055 004

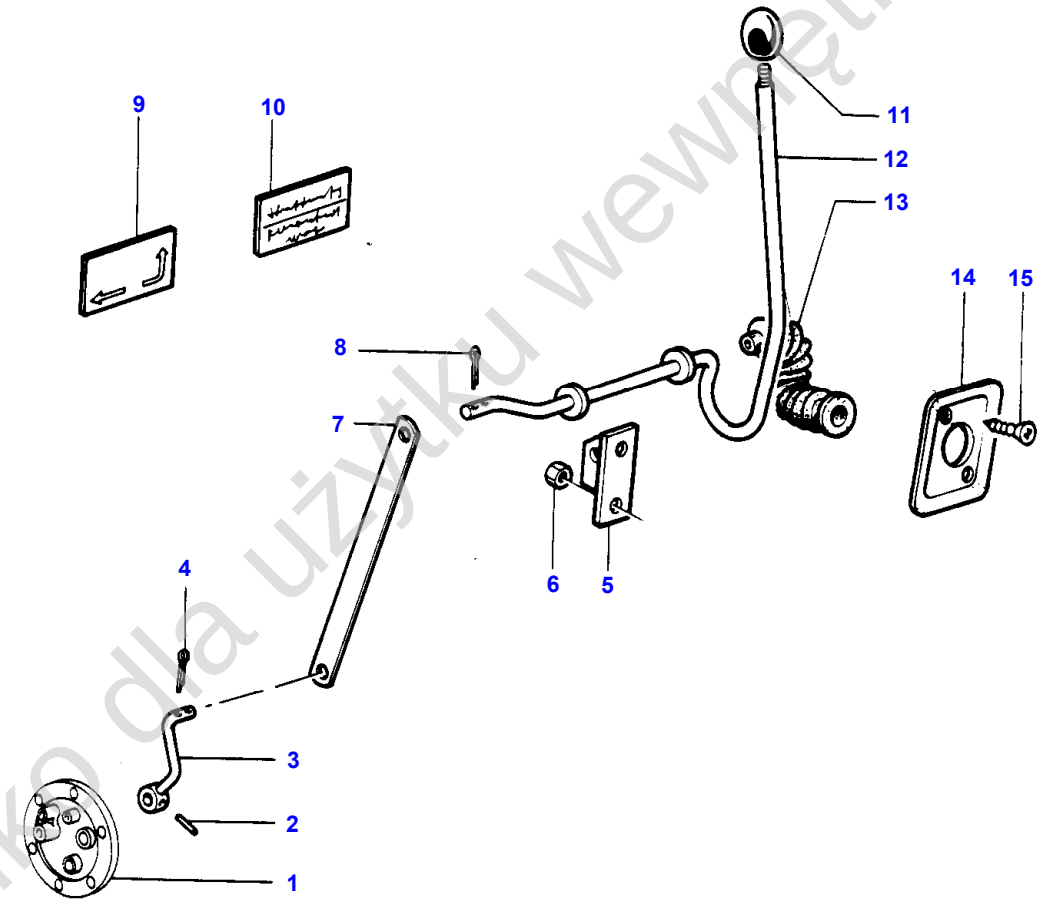

1-1055-004

Tylko dla użytku wewnętrznego

Item	Part Number	Qty	Description	Comments
				UP TO SERIAL NO H 154830
1		1	Cover	See Page - Reference Number 298/1
2	377355X1	1	Spirol Pin	
3	1869424M92	1	Lever	
4	354059X1	2	Pin	
5	1877462M1	2	Bracket	
6	355566X1	4	Nut Unc	
7	1875817M1	1	Link	
8	354059X1	2	Pin	
9	1664250M1	1	Decal	For France only or any text in French only
	1664249M1	1	Decal	For UK only or any text in English only
10	1663774M1	1	Decal	IPTO
11	1877461M1	1	Knob	
12	1699391M92	1	Rod	
13	1875457M1	1	Cap	
14	1875458M1	1	Cover	
15	360371X1	2	Screw	

Tylko dla użytku wewnętrznego

188

COMMANDE DE PRISE DE FORCE
ZAPFWELLENBETAETIGUNG
COMANDO PRESA DI FORZA
MANDO TOMA DE FUERZA
PTO-CONTROL

10551005

1 1055 017

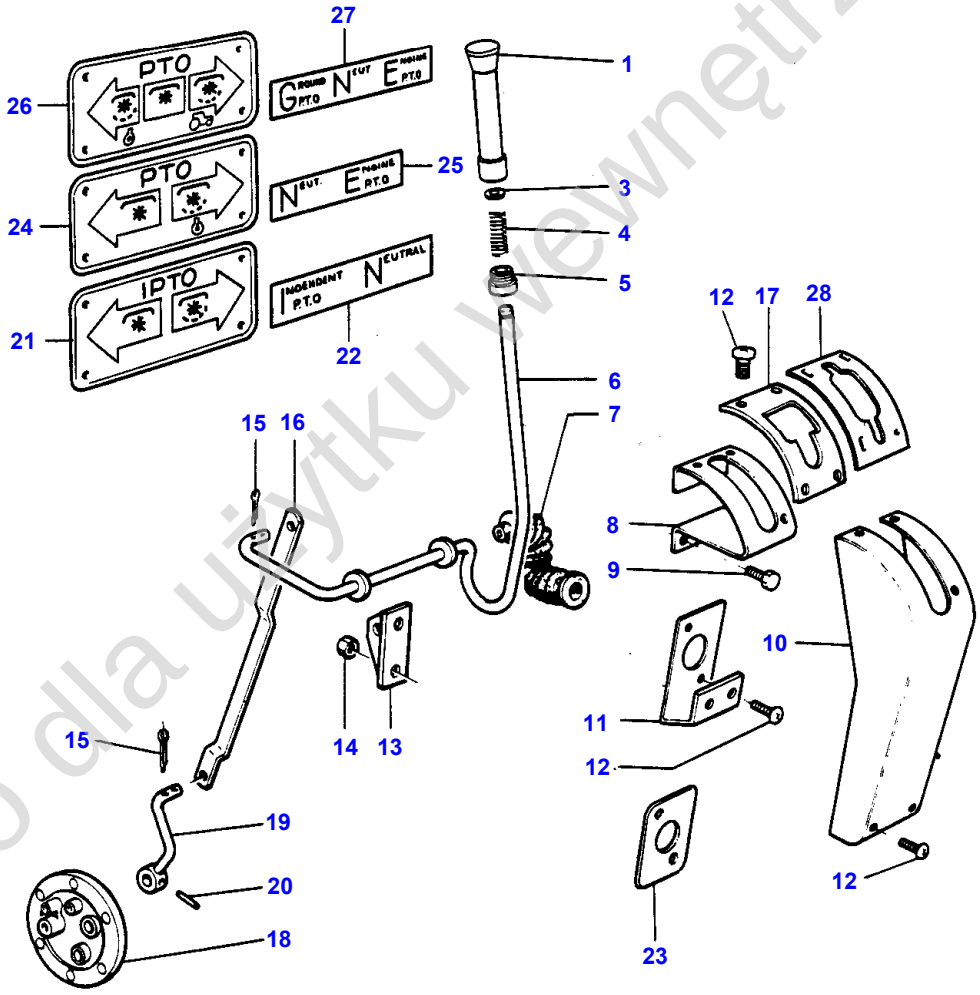

Tylko dla użytku wewnętrznego

Item	Part Number	Qty	Description	Comments
				FROM TO SERIAL NO H 154831
1	1675465M1	1	Shifter	
3	368231X1	1	Ring	
4	1699407M1	1	Spring	
5	1699388M1	1	Plug	
6	1699391M93	1	Rod	
7	1669461M1	1	Boot	
8	1699400M3	1	Bracket	
9	365007X1	3	Self Tap Screws	
10	1699429M3	1	Cover	
11	1698609M2	1	Bearer	Up to Serial or Engine Number
12	365925X1	8	Self Tap Screws	
13	1877462M2	2	Bracket	
14	355566X1	4	Nut Unc	
15	354059X1	8	Pin	
16	1669271M91	1	Link	
17	1665037M1	1	Gate	
18		1	Cover	See Page - Reference Number 298/1
19	1869424M92	1	Lever	
20	377355X1	1	Spirol Pin	
21	1665857M1	1	Emblem	(B)
22	1867104M2	1	Decal	(B)
23	1669465M1	1	Cover	From Serial or Engine Number NO---
24	1665856M1	1	Emblem	(A)
25	1665313M1	1	Decal	(A)
26	1665858M1	1	Emblem	(C)
27	1867132M1	1	Decal	(C)
28	1665038M1	1	Gate	(C)

(A)
WITH STANDARD P.T.O.

(B)
WITH INDEPENDANT P.T.O.

(C)
WITH GROUND SPEED POWER TAKE OFF

Tylko dla użytku wewnętrznego

190

DIFFERENTIEL D'ESSIEU ARRIERE
HINTERACHSDIFFERENTIAL
DIFFERENZIALE ASSALE POSTERIORE
DIFERENCIAL EJE TRASERO
REAR AXLE-DIFFERENTIAL

10971002

1 1097 015

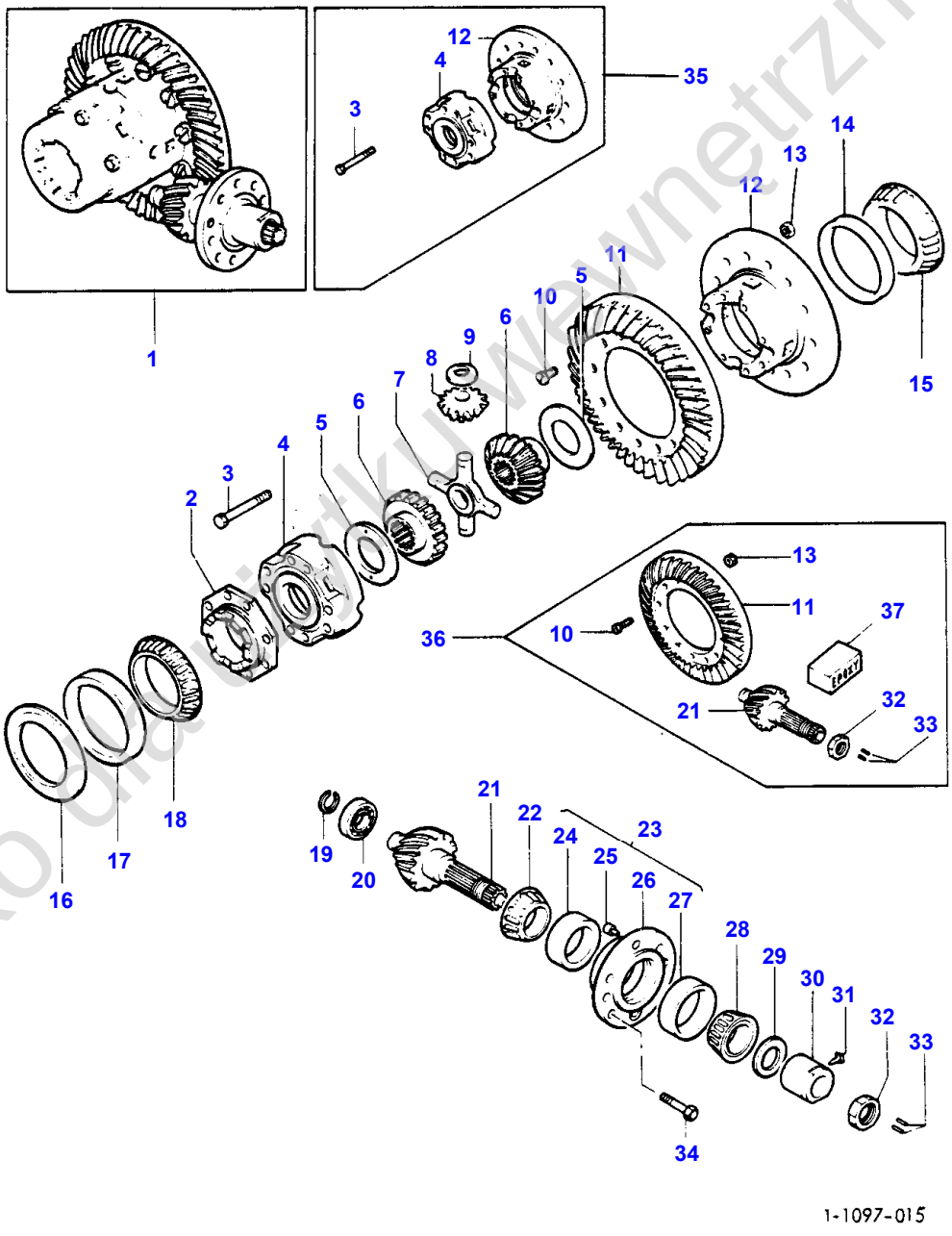

Tylko do użytku wewnętrznego

Item	Part Number	Qty	Description	Comments
1	1661068M92	1	Differential	11X38 Q H
	1870906M92	1	Differential	11X38 Q !
	1872859M92	1	Differential	9X35 Q H
				Repairs and replaces 10X39
2	898712M2	1	Cap	
3	338548X1	8	Bolt	(35)
4		1	Housing	(35)
				Not serviced, order REF 35
5	897726M1	2	Washer	(1)
6	885518M1	2	Gear	(1)
7	894302M2	1	Crosspiece	(1)
8	897725M1	4	Pinion	(1)
9	514958M1	4	Washer	(1)
10	825776M1	12	Screw Special	(36)
11		1	Bevel Gear	(36)
				Not serviced, order REF 36
12		1	Housing	(35)
				Not serviced, order REF 35
13	891947M1	12	Nut Special	(36)
14	185776M1	1	Cup	Not serviced, order 1851533M91
15	185775M1	1	Cone	Not serviced, order 1851533M91
16	521401M1	1	Shield	Thickness 0,61MM-0,66
	187689M1	1	Shield	Thickness 0,73-0,78MM
	892173M1	1	Shield	Thickness 0,86-0,91MM
	892172M1	1	Shield	Thickness 0,99-1,04MM
	892171M1	1	Shield	Thickness 1,11-1,16MM
	892170M1	1	Shield	Thickness 1,24-1,29MM
	191124M1	1	Shield	Thickness 1,37-1,42MM
17	3039249M1	1	Race	Not serviced, order 1850909M91
18	3039248M1	1	Cone	Not serviced, order 1850909M91
19	196097M1	1	Circlip	11X38
	366442X1	1	Ring	9X35 Q H
				Repairs and replaces 10X39
20	191250M1	1	Bearing	11X38
	834733M1	1	Bearing	9X35 Q H
				Repairs and replaces 10X39
21		1	Bevel Pinion	(36)
				Not serviced, order REF 36
22	185777M1	1	Cone	(1)
				11X38
				Not serviced, order 1850090M92
22	834257M1	1	Cone	(1) Q H
				9X35
				Repairs and replaces 10X39
23	518861M91	1	Sleeve	(1)
				11X38
23	507565M91	1	Sleeve	(1) Q H
				9X35
				Repairs and replaces 10X39
24	185778M1	1	Cup	(23)
				11X38
				Not serviced, order 1850090M92
24	834519M1	1	Bearing Assy	(23) Q H
				9X35
				Repairs and replaces 10X39
25	181253M1	1	Pin	(23)
26		1	Housing	(23)
				Not serviced, order REF 23
27	185778M1	1	Cup	(23)
				11X38
27	195525M1	1	Cup	(23) Q H
				9X35
				Repairs and replaces 10X39
28	185777M1	1	Cone	(1)

Tylko dla użytku wewnętrznego

Item	Part Number	Qty	Description	Comments
				11X38
28	831553M1	1	Cone	(1) Q H
				9X35
				Repairs and replaces 10X39
29	516377M1	1	Washer	(1)
30	1661065M1	1	Spacer	(1) Q H
				11X38
30	532893M1	1	Sleeve	(1)
				(A)
31	532910M1	1	Keeper	(1)
				(B)
32	532956M1	1	Nut	(36)
33	831485M1	2	Roller	(36)
34	899199M1	6	Bolt	
35	3042578M91	1	Housing	
36	1664255M92	1	Kit, Crownwheel	11X38
36	1665438M92	1	Kit, Crownwheel	9X35 Q H
				Repairs and replaces 10X39
37	1852913M91	1	Loctite	(36)
				(A)
				WITH 532910M1
				(B)
				WITH 532893M1

Tylko dla użytku wewnętrznego

194

DIFFERENTIEL D'ESSIEU ARRIERE
HINTERACHSDIFFERENTIAL
DIFFERENZIALE ASSALE POSTERIORE
DIFERENCIAL EJE TRASERO
REAR AXLE-DIFFERENTIAL

10971013

1 1097 016

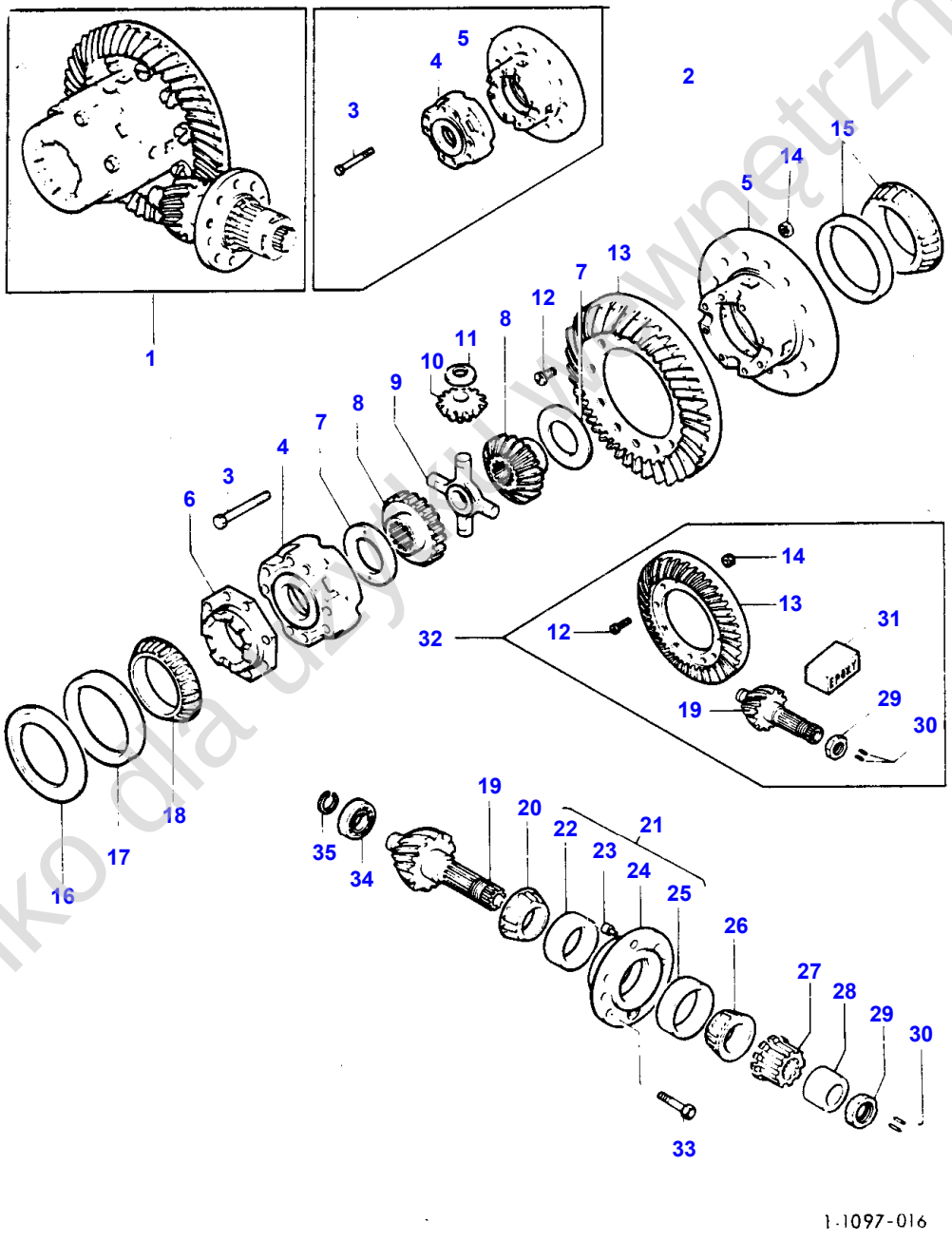

Tylko dla użytku www.ętrznego

Item	Part Number	Qty	Description	Comments
				WITH GROUND SPEED POWER TAKE OFF
1	1676900M91	1	Differential	9X35
2	3042578M91	1	Housing	
3	338548X1	8	Bolt	(2)
4		1	Housing	(2)
				Not serviced, order REF 2
5		1	Housing	(2)
				Not serviced, order REF 2
6	898712M2	1	Cap	
7	897726M1	2	Washer	
8	885518M1	2	Gear	
9	894302M2	1	Crosspiece	
10	897725M1	4	Pinion	
11	514958M1	4	Washer	
12	825776M1	12	Screw Special	(32)
13		1	Bevel Gear	(32)
				Not serviced, order REF 32
14	891947M1	12	Nut Special	(32)
15	1851533M91	1	Bearing Assy	
16	521401M1	1	Shield	Thickness 0,61-0,66MM
	187689M1	1	Shield	Thickness 0,73-0,78MM
	892173M1	1	Shield	Thickness 0,86-0,91MM
	892172M1	1	Shield	Thickness 0,99-1,04MM
	892171M1	1	Shield	Thickness 1,11-1,16MM
	892170M1	1	Shield	Thickness 1,24-1,29MM
	191124M1	1	Shield	Thickness 1,37-1,42MM
17	3039249M1	1	Race	
18	3039248M1	1	Cone	
19		1	Bevel Pinion	(32)
				Not serviced, order REF 32
20	834257M1	1	Cone	
21	507565M91	1	Sleeve	
22	834519M1	1	Bearing Assy	(21)
23	181253M1	1	Pin	(21)
24		1	Housing	(21)
				Not serviced, order REF 21
25	195525M1	1	Cup	(21)
26	831553M1	1	Cone	
27	1872271M1	1	Hub	Alternative 180798M1
	180798M1	1	Hub	Alternative 1872271M1
28	1660155M1	1	Spacer	
29	532956M1	1	Nut	(32)
30	831485M1	2	Roller	(32)
31	1852913M91	1	Loctite	(32)
32	1665438M92	1	Kit, Crownwheel	
33	899199M1	6	Bolt	
34	191250M1	1	Bearing	
35	196097M1	1	Circlip	

Tylko do użytku wewnętrznego

196

BLOCAGE DE DIFFERENTIEL D'ESSIEU ARRIERE
HINTERACHSDIFFERENTIALSPERRE
MECCANISMO AUTOBLOCCANTE DIFFERENZIALE ASSALE POSTER
EJE TRASERO CON BLOCAJE DIFERENCIAL-MECANISMO
REAR AXLE-DIFFERENTIAL LOCK MECHANISM

11001003

1 1100 005

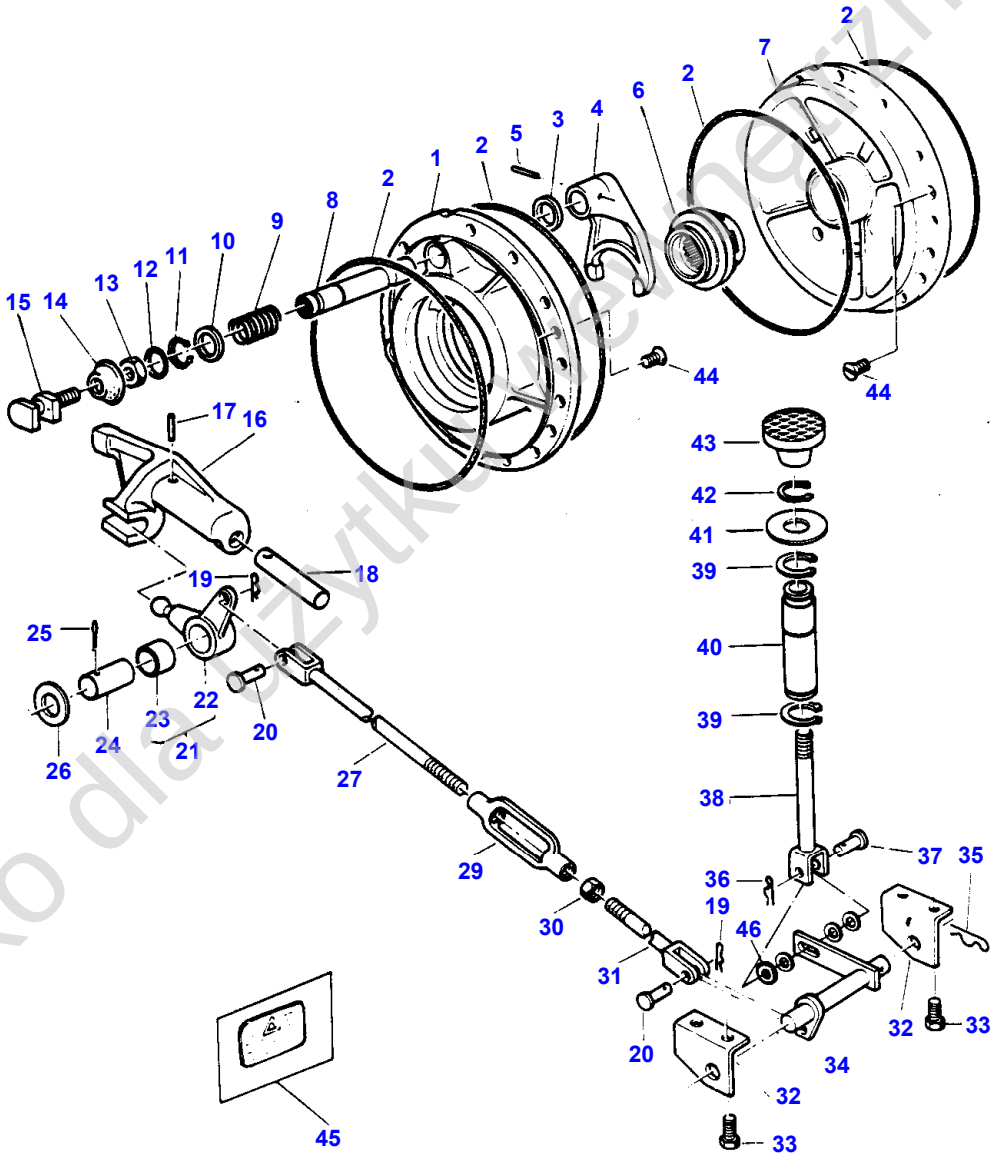

1-1100-005

Tylko dla użytku wewnętrznego

Item	Part Number	Qty	Description	Comments
1	1860882M2	1	Plate	Right Hand
2	1860838M1	4	Seal	
3	832463M1	1	Seal	(A)
4	906807M1	1	Fork	
5	355723X1	1	Pin	
6	897003M3	1	Coupler	
7	1860885M1	1	Plate	Left Hand
8	1864763M1	1	Shaft	
9	906808M1	1	Spring	
10	1864764M1	1	Washer	
11	358950X1	1	Circlip	
12	851258M1	1	O Ring	
13	338644X1	1	Nut	
	353428X1	1	Nut Unf	(B)
14	906811M1	1	Cap	
15	1865014M1	1	Clevis	
	1860958M1	1	Fork	(B)
16	1617689M1	1	Lever	
17	354454X1	1	Pin	
18	1860961M1	1	Shaft	
19	195414M1	2	Hair Pin	
20	195609M1	2	Clevis Pin	Repairs and replaces 832813M1
21	1613315M92	1	Lever	
22		1	Lever	(21) Not serviced, order REF 21
23	377253X1	1	Bush	(21)
24	847708M1	1	Pin	
25	354078X1	1	Pin	
26	353762X1	1	Washer	
27	1614723M91	1	Rod	
29	762705M1	1	Buckle	
30	353431X1	1	Nut Unf	
31	1614721M91	1	Rod	
32	1613283M3	2	Bearer	
33	353677X1	4	Screw Unc	
34	1613280M93	1	Pivot	
35	400060M2	1	Pin	
36	354039X1	1	Cotter	
37	831117M1	1	Pin	
38	1614156M92	1	Shaft	
39	352438X1	2	Circlip	
40	1613300M2	1	Shaft	
41	1614725M1	1	Washer	
42	358948X1	1	Circlip	
43	1610768M3	1	Skid	
44	376407X1	4	Screw	
45	969882M1	1	Decal	For France only or any text in French only
	892472M1	1	Decal	For UK only or any text in English only
	892418M1	1	Decal	For Germany only or any text in German only
46	1698203M1	4	Spacer	

(A)
WITH DRY BRAKES

(B)
WITH HEAVY DUTY REAR AXLE HOUSING

Tylko do użytku wewnętrznego

200

TROMPETTES D'ESSIEU ARRIERE
HINTERACHSGEHAEUSE
CARCASSA ASSALE POSTERIORE
CARCASA EJE TRASERO
REAR AXLE-HOUSING

10891006

1 1089 007

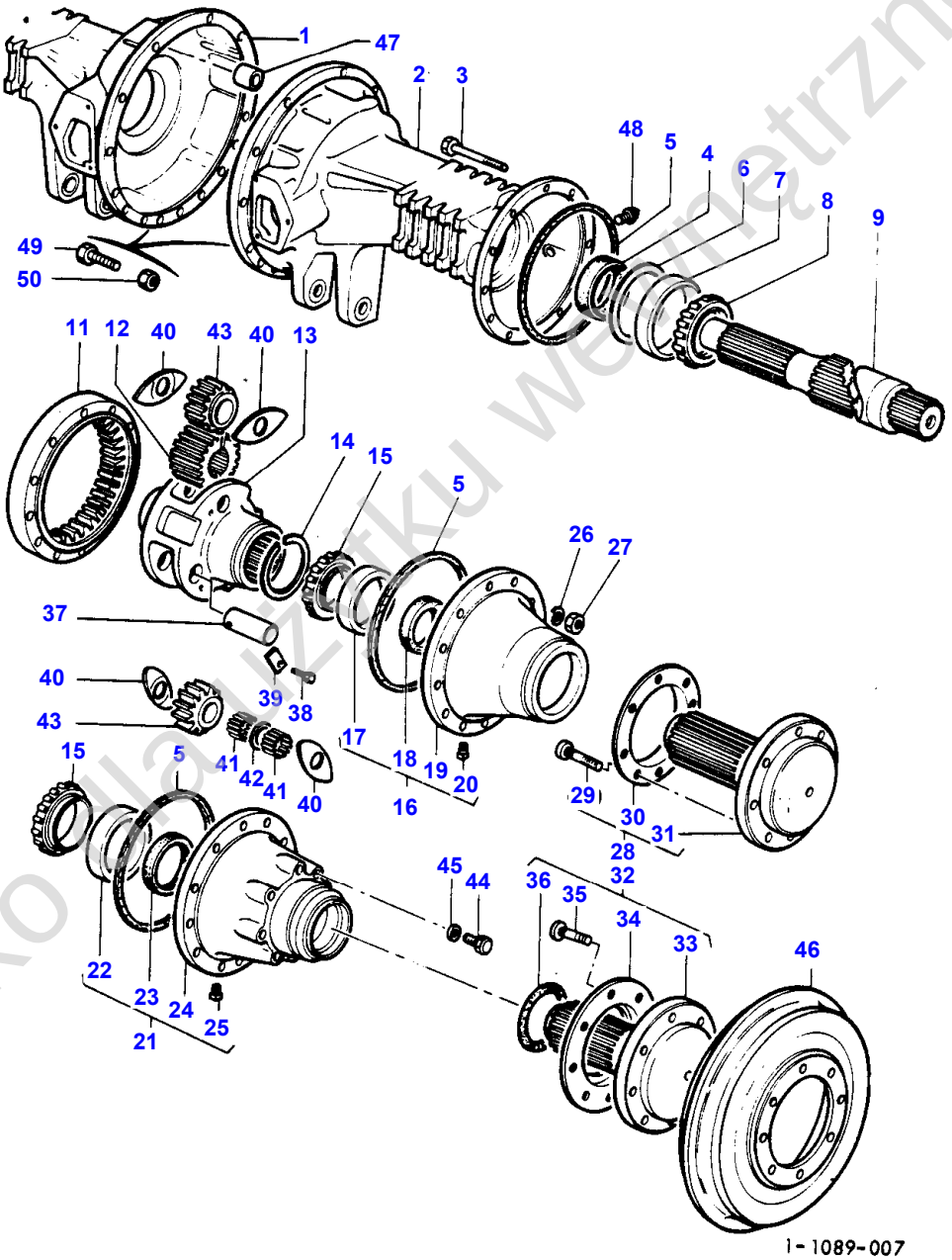

Tylko do użytku wewnętrznego

Item	Part Number	Qty	Description	Comments
1	1666935M1	1	Housing	Right Hand
2	1666936M1	1	Housing	Left Hand
3	338598X1	24	Bolt Unf	
4	1860954M1	2	Seal	
5	516389M2	4	Gasket	
6	894757M1	X	Shim	Thickness 0,13MM
	894758M1	X	Shim	Thickness 0,25MM
	894759M1	X	Shim	Thickness 0,38MM
7	22020X	2	Race	
8	894776M1	2	Cone	
9	1674506M1	2	Shaft	Repairs and replaces 516383M3
11	906803M1	2	Gear	
12	1808251M1	2	Pinion	
13	516382M1	2	Carrier	
14	366141X1	2	Circlip	
15	831343M1	2	Cone	
16	516395M92	2	Housing	2 WHEEL DRIVE
	907440M92	2	Housing	IPTO 2 SPEED
17	29747X	1	Race	(16)
18	894763M4	1	Seal	(16)
19	516384M1	1	Cover	(16) Q
	907436M1	1	Cover	(16) Q !
20	355547X1	1	Plug	(16)
21	907425M92	2	Housing	For Germany only or any text in German only
22	29747X	1	Race	(21)
23	894763M4	1	Seal	(21)
24	907424M1	1	Housing	(21) For Germany only or any text in German only
25	355547X1	1	Plug	(21)
26	353432X1	24	Lock Washer	
27	338600X1	24	Nut Unf	
28	1860433M91	2	Axle	2 WHEEL DRIVE
	1661783M91	2	Axle	IPTO 2 SPEED
29	847416M1	8	Bolt	(28) Q 11/16"
29	893017M2	8	Bolt	(28) Q ! 5/8"
30	894756M1	1	Seal	(28)
31		1	Shaft	(28) Q Not serviced, order REF 28
31	884850M1	1	Axle	(28) Q !
32	1872823M91	2	Clevis Pin	# 7Q
	1661782M91	2	Clevis Pin	!
33		1	Shaft	(32) For Germany only or any text in German only Not serviced, order REF 32
34	906841M1	1	Deflector	(32) For Germany only or any text in German only
35	847416M1	8	Bolt	(32) Q For Germany only or any text in German only 11/16"
35	893017M2	8	Bolt	(32) Q ! For Germany only or any text in German only 5/8"
36	906842M1	1	Gasket	(32) For Germany only or any text in German only
37	516390M1	6	Shaft	
38	361308X1	6	Bolt Unc	
39	517790M1	6	Retainer	
40	516391M1	12	Washer	
41	190462M1	264	Bearing	
42	516398M1	6	Washer	
43	516388M2	6	Pinion	
44	353697X1	16	Screw Unc	

Tylko dla użytku wewnętrznego

Item	Part Number	Qty	Description	Comments
45	353432X1	16	Lock Washer	
46	909238M1	2	Drum	
47	909787M1	1	Bush	
48	375182X1	2	Plug	
49	377622X1	18	Bolt Unc	
50	377626X1	12	Nut Unf	

Tylko dla użytku wewnętrznego

204

FREINS A DISQUES
SCHEIBENBREMSEN
FRENO A DISCO
DISCO DE FRENO
DISC BRAKES

11401002

1 1140 001

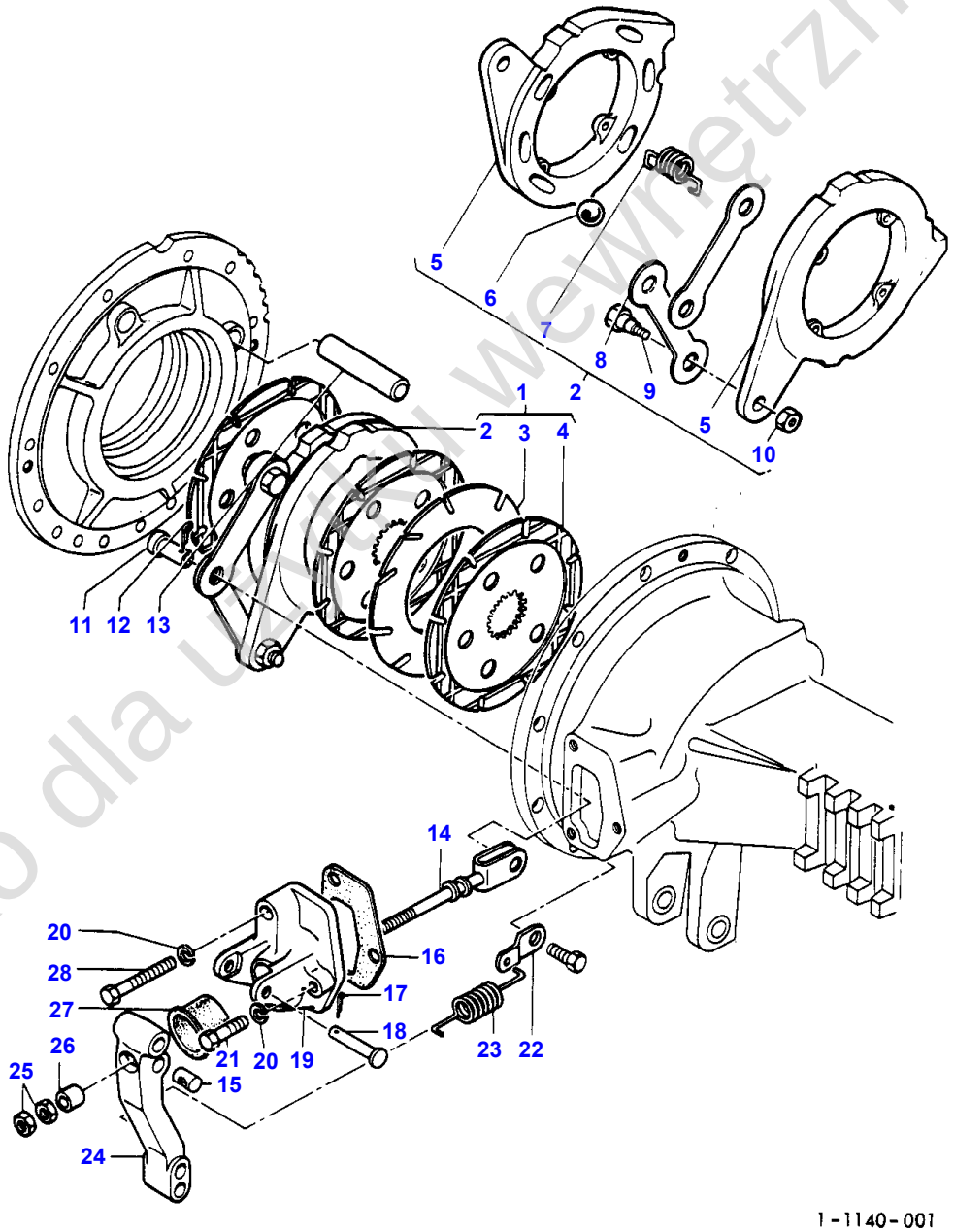

Tylko dla użytku wewnętrznego

Item	Part Number	Qty	Description	Comments
1	1861059M92	2	Brake	
2	1860963M91	1	Actuator	(1)
3	1860965M2	3	Brake Disc	(1)
4	1860964M2	5	Brake Disc	(1)
5	1886561M1	2	Disc	(2)
6	16779X	6	Ball	(2)
7	1886562M1	4	Spring	(2)
8	1886565M1	2	Link	(2)
9	1886563M1	2	Pin	(2)
10	1886564M1	2	Nut	(2)
11	195348M1	2	Pin	
12	354068X1	2	Pin	
13	1860956M1	2	Pin	
14	1861676M91	2	Rod	Up to Serial or Engine Number A264034
	1698715M91	2	Rod	From Serial or Engine Number A264035 Repairs and replaces 1670732M91
15	1865003M1	2	Trunnion	
16	1860960M1	2	Gasket	
17	354059X1	2	Pin	
18	363459X1	2	Pin	
19	1860970M1	1	Bracket	Left Hand Alternative 1860969M1 Without or not For Germany only or any text in German only
19	1860969M1	1	Bracket	Left Hand Alternative 1860970M1
19	847705M2	1	Bracket	Right Hand
20	353434X1	6	Lock Washer	
21	362455X1	4	Screw	
22	907245M1	2	Bracket	
	1808101M1	2	Bracket	
	184310M1	2	Clip	
23	184171M1	2	Spring	
24	1660701M1	1	Lever	Left Hand
	1660700M1	1	Lever	Right Hand
	1861665M1	1	Lever	Left Hand
	1861666M1	1	Lever	Right Hand
25	353428X1	4	Nut Unf	
26	1865002M1	2	Collar	
27	1860959M1	2	Seal	
28	362463X1	2	Screw	

Tylko dla użytku wewnętrznego

206

FREINS TAMBOUR
TROMMELBREMSEN
FRENI A TAMBURO
TAMBOR DE FRENO
DRUM BRAKES

11251001

1 1125 002

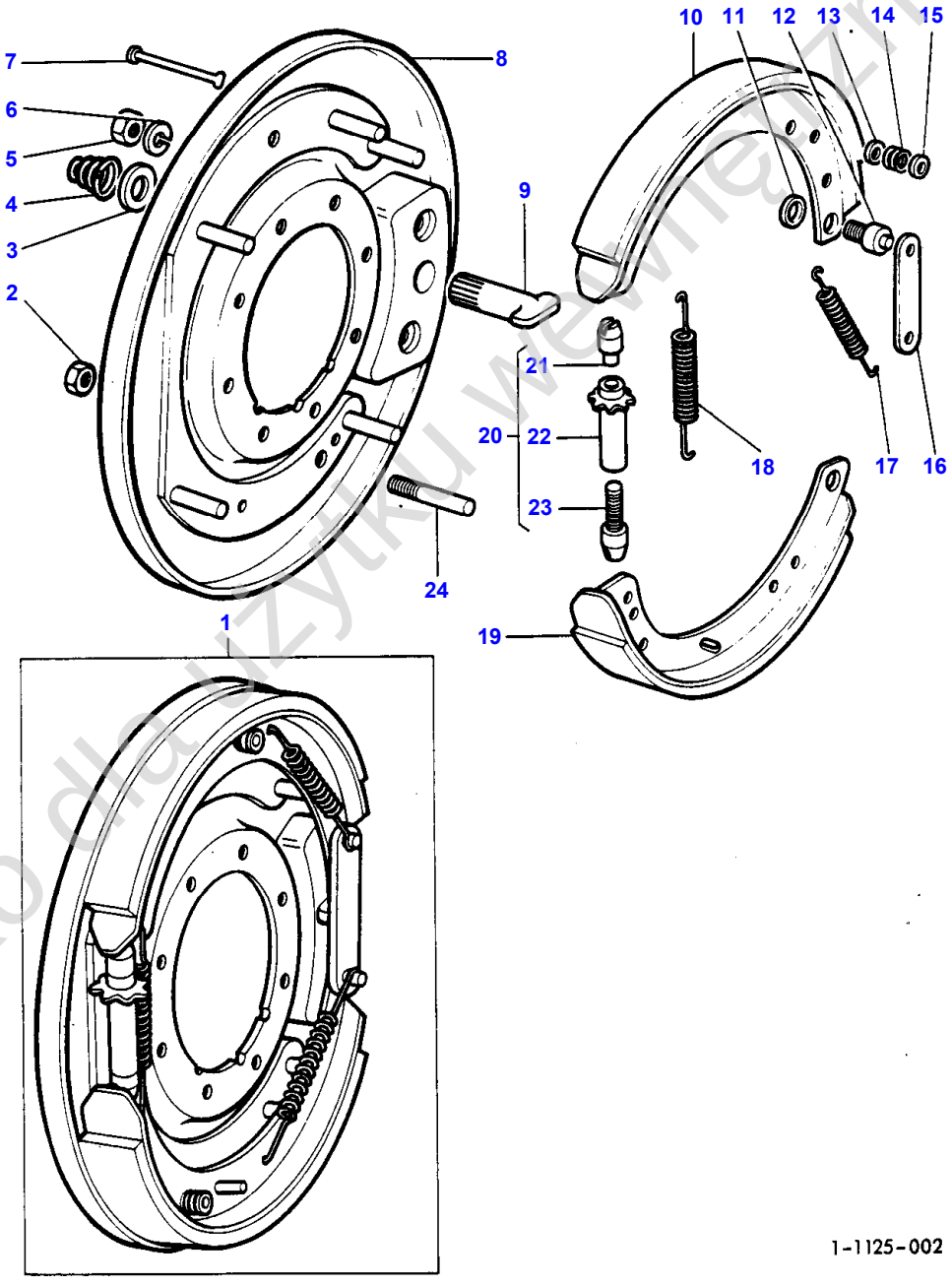

Tylko do użytku wewnętrznego

Item	Part Number	Qty	Description	Comments
				GERMANY
1	884624M94	1	Brake	Right Hand
	884623M94	1	Brake	Left Hand
2	1850210M1	2	Nut	(1)
3	825040M1	1	Plate	(1)
4	825041M1	1	Spring	(1)
5	1850208M1	2	Nut	(1)
6	353440X1	2	Lock Washer	(1)
7	1850207M1	4	Pin	(1)
8	1851002M92	1	Plate	(1)
				Right Hand
8	1851003M91	1	Plate	(1)
				Left Hand
9	884625M2	1	Shaft	(1)
10	964416M91	1	Jaw	(1)
				Repairs and replaces 1810517M91
				Repairs and replaces 1867746M91
11	1851526M1	2	Washer	(1)
12	827150M1	2	Pin	(1)
13	1850218M1	4	Cup	(1)
14	1850219M1	4	Spring	(1)
15	1850218M1	4	Cup	(1)
16	825039M1	1	Plate	(1)
17	825064M1	2	Spring	(1)
18	1851130M1	1	Spring	(1)
19	964416M91	1	Jaw	(1)
				Repairs and replaces 1810517M91
				Repairs and replaces 1867746M91
20	1850213M91	1	Adjuster	(1)
				Not serviced, order REF.21-23
21	1850216M1	1	Tappet	(20)
22	1850215M91	1	Adjuster	(20)
23	1850214M1	1	Tappet	(20)
24	1850212M1	2	Stud	(1)

Tylko dla użytku wewnętrznego

208

COUVERCLE HYDRAULIQUE DE FREINAGE
ABDECKUNG – HYDRAULISCHE BREMSE
COPERCHIO FRENO IDRAULICO
CUBIERTA FRENOS HIDRAULICOS
HYDRAULIC BRAKE COVER

11651003

1 1165 002

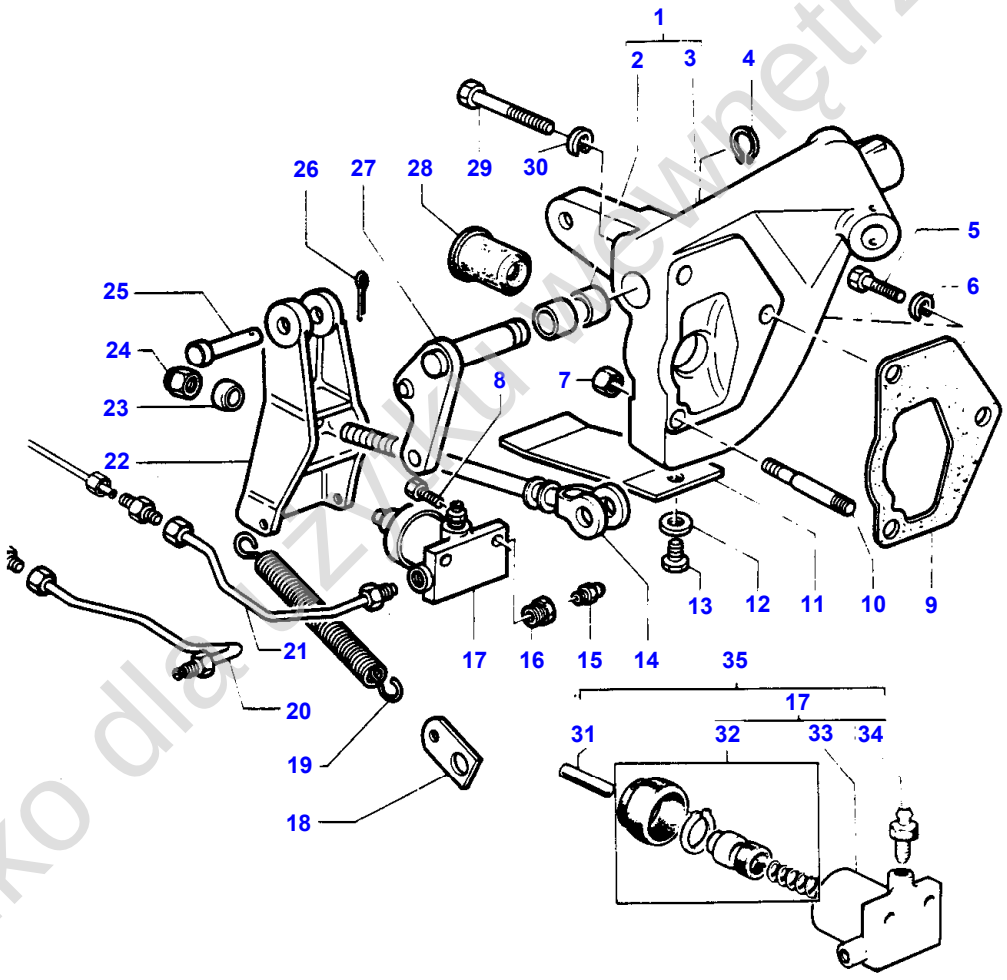

1 - 1165 - 002

Tylko dla użytku wewnętrznego

Item	Part Number	Qty	Description	Comments
				UP TO SERIAL NO J 121...
1	1873672M93	1	Cover	Left Hand
	1873766M93	1	Cover	Right Hand
2	908335M1	2	Bush	(1)
3	1873680M2	1	Cover	(1) Left Hand
3	1873767M2	1	Cover	(1) Right Hand
4	1440476X1	2	Circlip	For France only or any text in French only
5	362435X1	2	Bolt	Thickness 25MM
	362455X1	4	Screw	Thickness 57MM
6	353434X1	2	Lock Washer	
7	339030X1	2	Nut Metric	
8	339560X1	2	Screw Metric	
9	1860960M1	2	Gasket	
10	908299M1	2	Stud	
11	908309M1	2	Spring	
12	353756X1	2	Washer	
13	353689X1	2	Screw Unc	
14	1875440M92	2	Rod	Alternative 1670731M91
	1670731M91	2	Draglink	Alternative 1875440M92
15	1400863M1	2	Screw	
16	1617603M1	2	Plug	
17	243132M91	2	Cylinder	(35)
18	908308M1	2	Clip	
19	519419M2	2	Spring	
20	1612741M91	1	Tube	Left Hand
21	1612740M91	1	Pipe	Right Hand
22	1669572M1	1	Lever	Right Hand
	1669573M1	1	Lever	Left Hand
23	1875439M1	2	Washer	
24	353428X1	4	Nut Unf	Repairs and replaces 353426X1
25	376398X1	2	Pin	
26	354057X1	2	Pin	
27	1612596M92	1	Lever	For France only or any text in French only
	1612597M92	1	Lever	For France only or any text in French only
28	1860959M1	2	Seal	
29	362463X1	2	Screw	Thickness 70MM
30	353434X1	2	Lock Washer	
31	1669852M1	1	Stem	(35)
32	835939M91	1	Parts Pack	(17)
33		1	Body	(17) Not serviced, order REF 17
34	1400863M1	1	Screw	(17)
35	1669574M91	1	Cylinder	

Tylko dla użytku wewnętrznego

210

COUVERCLE HYDRAULIQUE DE FREINAGE
ABDECKUNG - HYDRAULISCHE BREMSE
COPERCHIO FRENO IDRAULICO
CUBIERTA FRENOS HIDRAULICOS
HYDRAULIC BRAKE COVER

11651007

1 1165 007

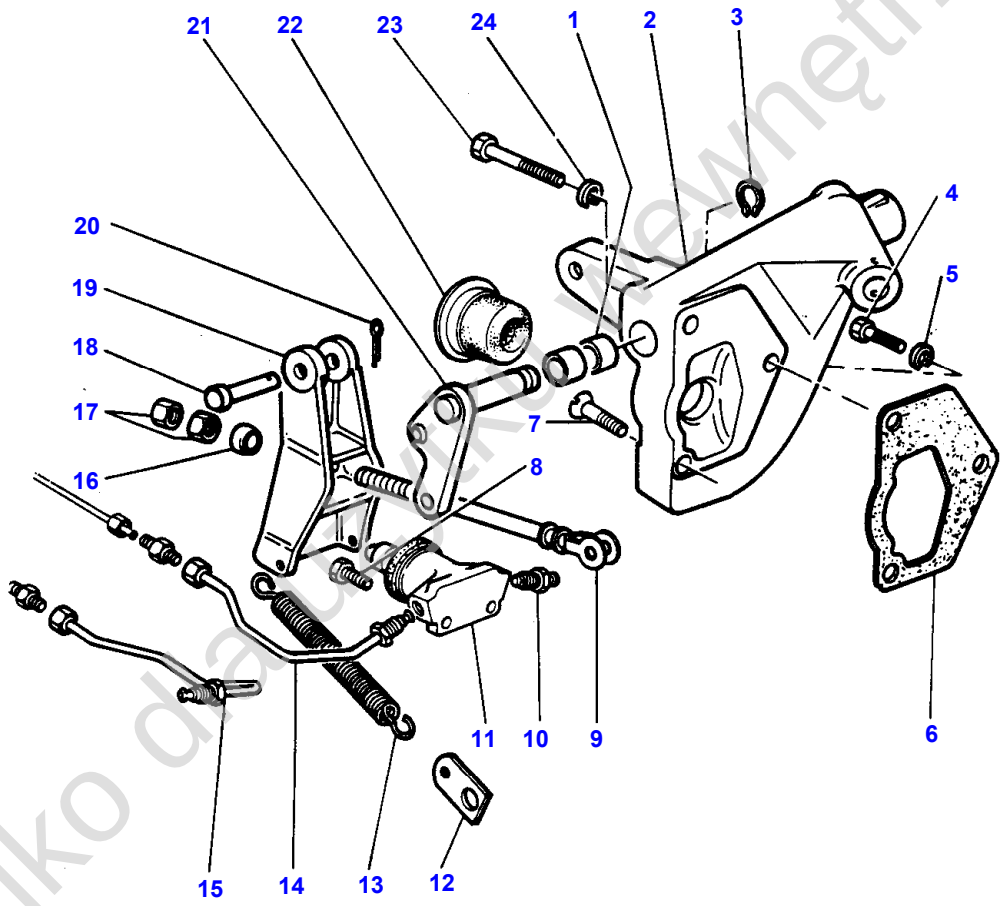

1-1165-007

Tylko dla użytku wewnętrznego

Item	Part Number	Qty	Description	Comments
				FROM TO SERIAL NO J 122...
1	908335M1	4	Bush	
2	1676756M2	1	Cover	Right Hand
	1676773M1	1	Cover	Left Hand
3	1440476X1	2	Circlip	
4	362435X1	X	Bolt	L 25 MM
	362447X1	X	Screw	L 44,5 MM
5	353434X1	2	Lock Washer	
6	1860960M1	2	Gasket	
7	358371X1	2	Screw	
8	339666X1	2	Screw Metric	
9	1875440M92	1	Rod	Alternative 1670731M91
	1670731M91	1	Draglink	Alternative 1875440M92
10	3187874M1	2	Bleeder	
11		2	Brake Cylinder	See Page - Reference Number 212/1
12	908308M1	2	Clip	
13	519419M2	2	Spring	
14	1676620M91	1	Tube	Right Hand
15	1676617M91	1	Tube	Left Hand
16	1875439M1	2	Washer	
17	353428X1	4	Nut Unf	
18	376398X1	2	Pin	
19	1669572M1	1	Lever	Right Hand
	1669573M1	1	Lever	Left Hand
20	354057X1	2	Pin	
21	1612596M92	1	Lever	Right Hand
	1612597M92	1	Lever	Left Hand
22	1860959M1	2	Seal	
23	362461X1	2	Bolt	L 67 MM
24	353434X1	2	Lock Washer	

Tylko dla użytku wewnętrznego

212

CYLINDRE DE FREIN
BREMSZYLINDER
CILINDRO FRENO
CILINDRO FRENO
BRAKE CYLINDER

11711002

1 1171 001

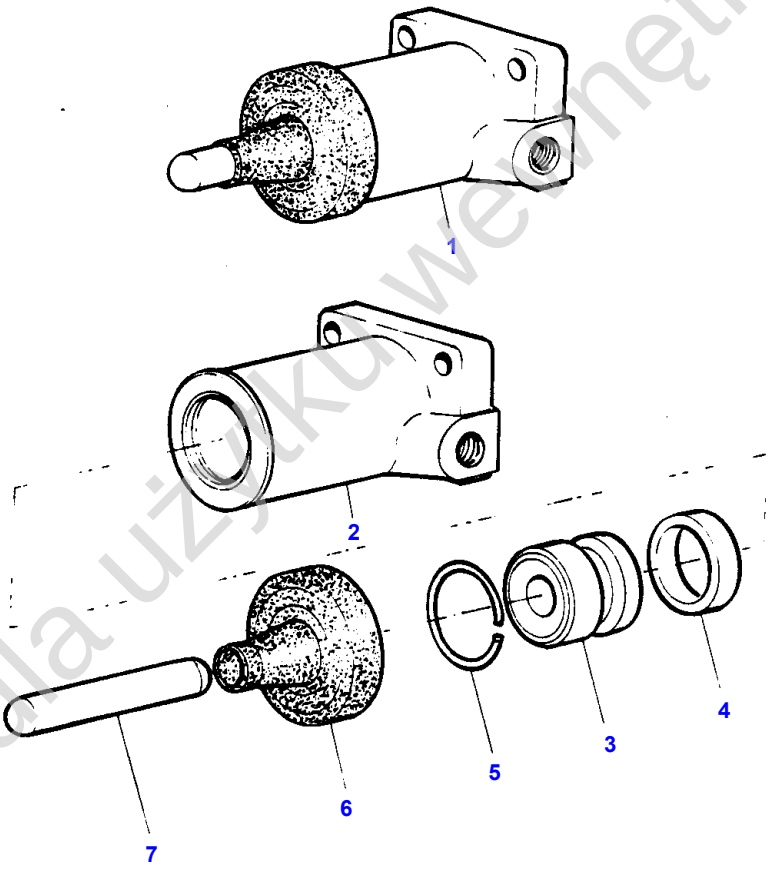

Tylko dla użytku wewnętrznego

Item	Part Number	Qty	Description	Comments
1	1676387M92	2	Brake Cylinder	
2		1	Body	(1) Not serviced, order REF 1
3		1	Piston	(1) Not serviced, order REF 1
4	3187461M1	1	Seal	(1)
5	3006772X1	1	Circlip	(1)
6	3402171M1	1	Boot	(1)
7	3314220M1	1	Rod	(1)

Tylko dla użytku wewnętrznego

214

COMMANDE HYDRAULIQUE DE FREINAGE
BETAETIGUNG - HYDRAULISCHE BREMSE
COMANDO FRENO IDRAULICO
MANDO FRENO HIDRAULICO
HYDRAULIC BRAKE CONTROL

11601005

1 1160 017

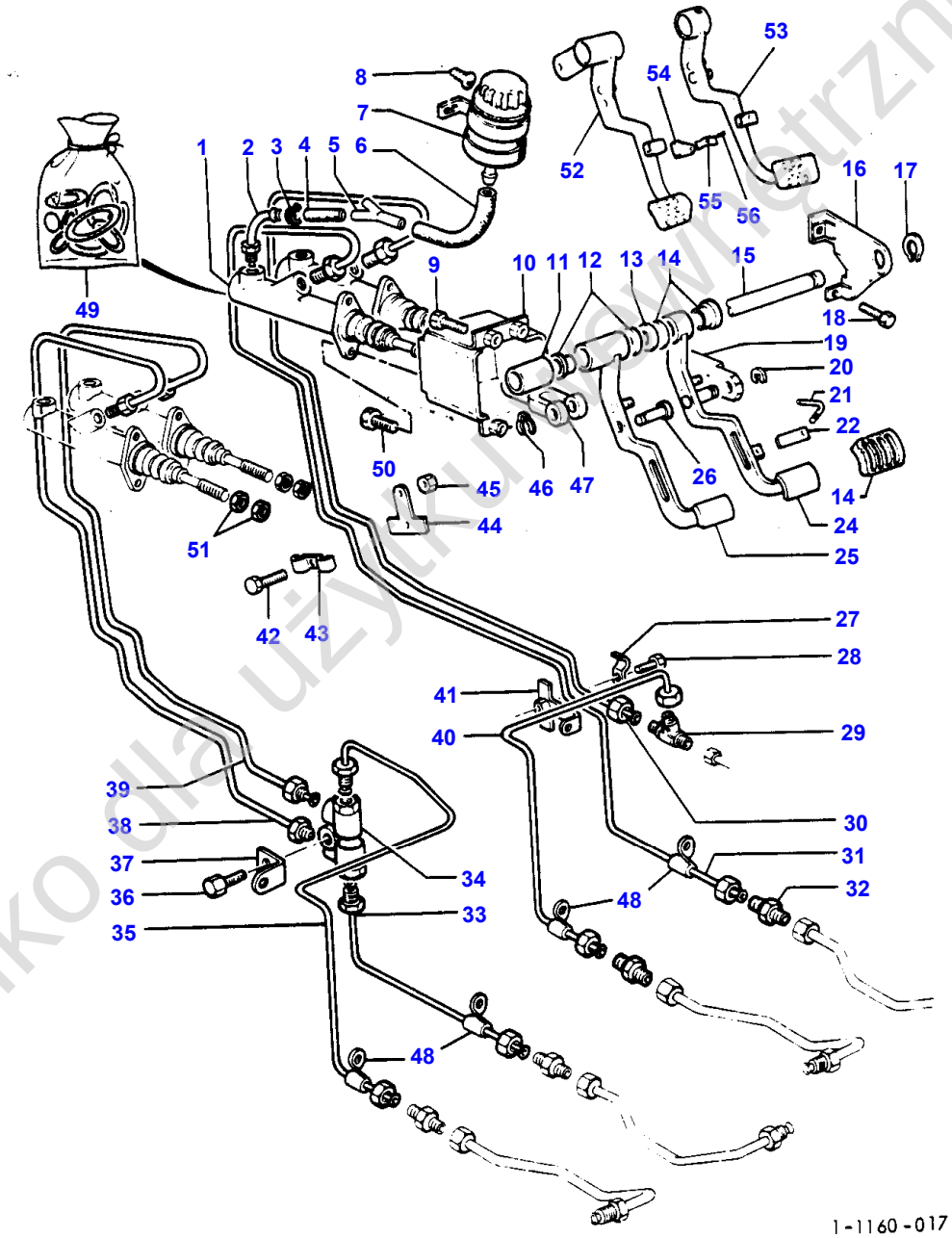

Tylko dla użytku prywatnego

Item	Part Number	Qty	Description	Comments
1	1874957M91	2	Cylinder	
2	1698752M91	2	Tube	Repairs and replaces 1873780M91
3	338612X1	3	Hose Clip	
4	1698753M1	2	Hydr Hose	Repairs and replaces 1873796M1
5	1874440M1	1	Union	
6	1873797M1	1	Hose	
7	1875414M2	1	Reservoir	
8	365011X1	2	Screw	
9	353676X1	4	Screw Unc	
10	1874921M91	1	Bracket	
11	1614162M2	1	Bush	
12	1877349M1	2	Bearing	
13	1877885M1	1	Shim	
14	1877774M1	2	Bearing	
15	1876703M2	1	Shaft	
16	1618250M91	1	Bracket	
17	352438X1	1	Circlip	
18	353677X1	2	Screw Unc	
19	1618282M2	1	Plate	
20	368212X1	1	Circlip	
21	1873319M1	1	Handle	Up to Serial or Engine Number Z 231027
22	1873315M2	1	Latch	Up to Serial or Engine Number Z 231027
23	1878782M1	2	Pad	Up to Serial or Engine Number Z 231027
24	1876713M94	1	Pedal	Right Hand Up to Serial or Engine Number Z231027
25	1876716M96	1	Pedal	Left Hand Up to Serial or Engine Number Z231027
26	195609M1	1	Clevis Pin	Repairs and replaces 1699059M1
27	1875438M1	1	Clip	
28	355124X1	1	Screw Unc	
29	356547X1	1	Union	Alternative 356557X1
	356557X1	1	Connector	Alternative 356547X1
30	1698504M91	1	Tube	Left Hand
31	1698501M91	1	Tube	Right Hand
32	1612720M1	1	Coupling	Up to Serial or Engine Number J 121...
	356856X1	1	Adaptor	From Serial or Engine Number J 122...
33	1873551M91	1	Tube	Right Hand
34	417860M1	1	Pressure Valve	Repairs and replaces 1873163M1
35	1873553M92	1	Pipe	Left Hand
36	339228X1	1	Screw Metric	
37	1875213M1	1	Bracket	
38	1698286M91	1	Tube	Right Hand Repairs and replaces 1873769M92
39	1698283M91	1	Tube	Left Hand Repairs and replaces 1873776M92
40	1873545M91	1	Pipe	Left Hand
41	1875411M92	1	Clip	
42	355124X1	1	Screw Unc	
43	1875438M1	1	Clip	
44	1873569M91	1	Clip	
45	355566X1	1	Nut Unc	
46	354057X1	1	Pin	Repairs and replaces 368232X1
47	1618284M1	1	Yoke	
48	1875946M2	2	Fastener	
49	1810596M91	1	Kit, Seal	
50	353678X1	4	Screw Unc	
51	353917X1	4	Nut Unf	
52	1669011M92	1	Pedal	Left Hand From Serial or Engine Number Z 231028
53	1669008M93	1	Pedal	Right Hand From Serial or Engine Number Z 231028
54	1669001M1	1	Latch	From Serial or Engine Number Z 231028
55	510004M1	1	Clip	From Serial or Engine Number Z 231028
56	357609X1	1	Pin	From Serial or Engine Number Z 231028

Tylko dla użytku wewnętrznego

218

COMMANDE MECANIQUE DE FREINAGE
BREMSPEDALE UND GESTAENGE
PEDALI E TIRANTERIA FRENO
PEDALES DE FRENO Y ARTICULACIONES
BRAKE PEDALS AND LINKAGE

11551003

1 1155 018

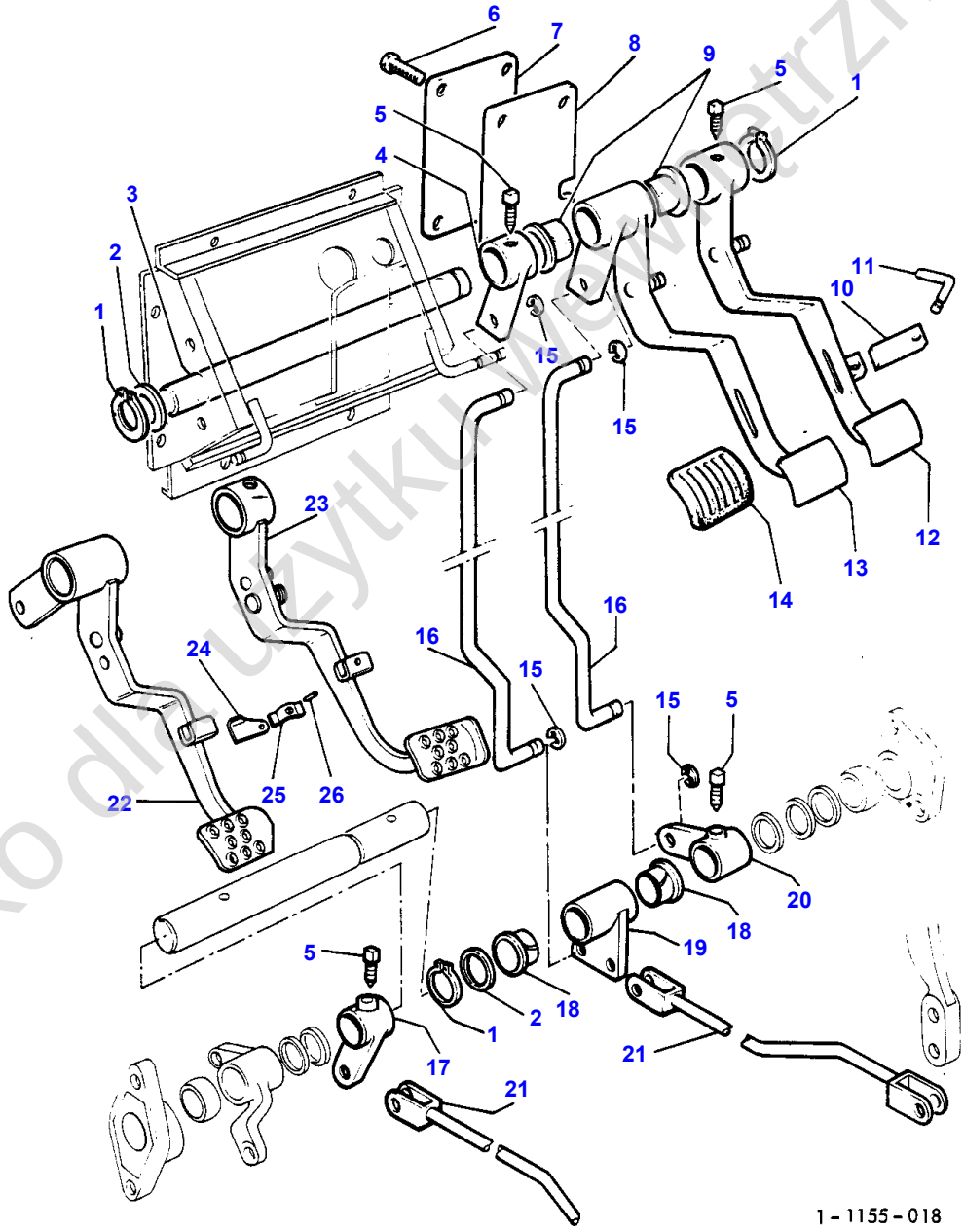

Tylko dla użytku wewnętrznego

Item	Part Number	Qty	Description	Comments
1	352438X1	3	Circlip	
2	1877773M1	X	Washer	Thickness 2,5MM
	1877885M1	X	Shim	Thickness 1,5MM
3	1876703M2	1	Shaft	
4	1875189M3	1	Lever	
5	180002M1	4	Setscrew	
6	353676X1	4	Screw Unc	
7	1873904M2	1	Gasket	
8	1873905M4	1	Gasket	
9	1877349M1	2	Bearing	
10	1873315M2	1	Latch	Up to Serial or Engine Number Z 231027
11	1873319M1	1	Handle	Up to Serial or Engine Number Z 231027
12	1876073M94	1	Pedal	Right Hand Up to Serial or Engine Number Z231027
13	1875081M97	1	Pedal	Left Hand Up to Serial or Engine Number Z231027
14	1878782M1	2	Pad	Up to Serial or Engine Number Z 231027
15	368232X1	4	Clip	
16	1876733M2	2	Rod	
17	1876775M2	1	Lever	
18	1877774M1	2	Bearing	
19	1876766M1	1	Lever	
20	1876772M2	1	Lever	
21	1613394M91	2	Rod	
22	1669010M92	1	Pedal	Left Hand From Serial or Engine Number Z 231028
23	1669007M92	1	Pedal	Right Hand From Serial or Engine Number Z 231028
24	1669001M1	1	Latch	From Serial or Engine Number Z 231028
25	510004M1	1	Clip	From Serial or Engine Number Z 231028
26	357609X1	1	Pin	From Serial or Engine Number Z 231028

Tylko dla użytku wewnętrznego

220

ARBRE DE RENVOI DES FREINS
BREMSWELLE
ALBERO RINVIO FRENI
FRENOS-EJE SECUNDARIO
BRAKES- COUNTER SHAFT

1175 1001

1 1175 001

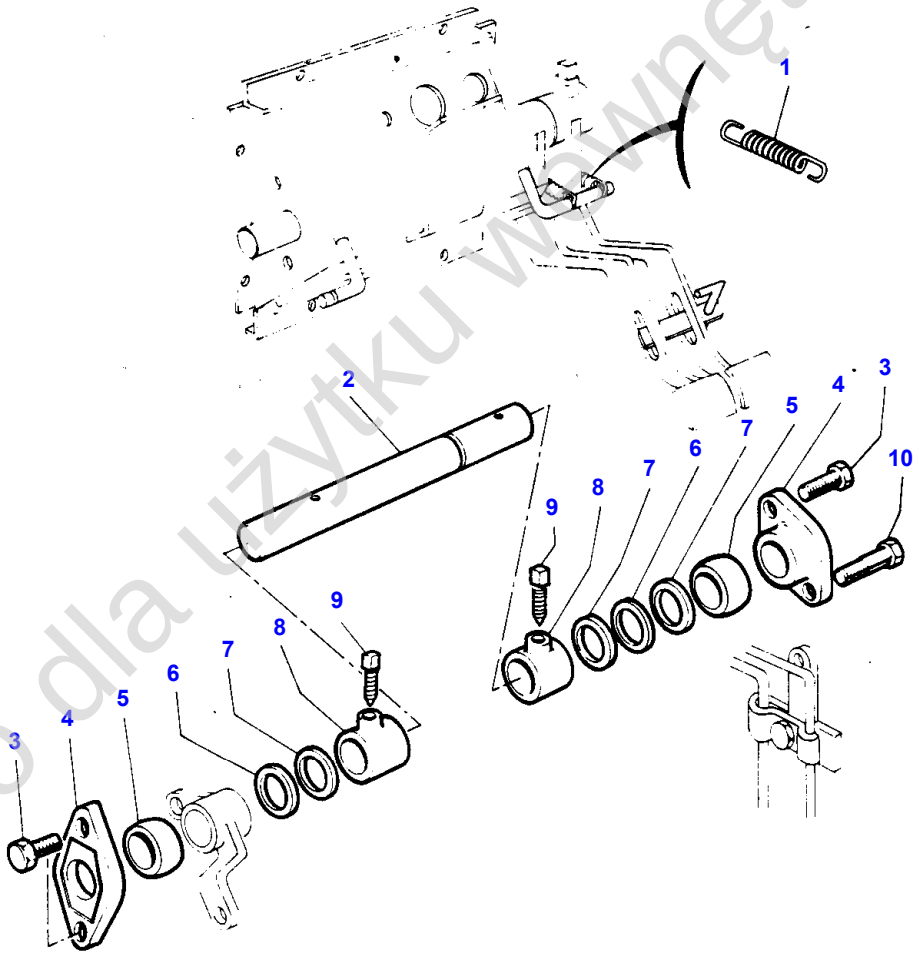

Tylko dla użytku wewnętrznego

Item	Part Number	Qty	Description	Comments
1	1613970M2	2	Spring	
2	1876718M2	1	Shaft	
3	365011X1	3	Screw	(A)
	365011X1	4	Screw	(B)
4	1876723M1	2	Retainer	
5	1876728M1	2	Bearing	
6	1877773M1	2	Washer	
7	367166X1	3	Washer	
8	1876719M1	2	Spacer	(A)
9	180002M1	2	Setscrew	(A)
10	353693X1	1	Screw Unc	(A)

(A)
WITH HYDRAULIC BRAKING CONTROL

(B)
WITH MECHANICAL BRAKING CONTROL

Tylko dla użytku wewnętrznego

222

TRINGLERIE DE FREINAGE DE REMORQUE
ANHAENGERBREMSGESTAENGE
TIRANTERIA FRENO RIMORCHIO
CONEXION FRENOS TRAILER
TRAILER BRAKE LINKAGE

1190100

1 1190 007

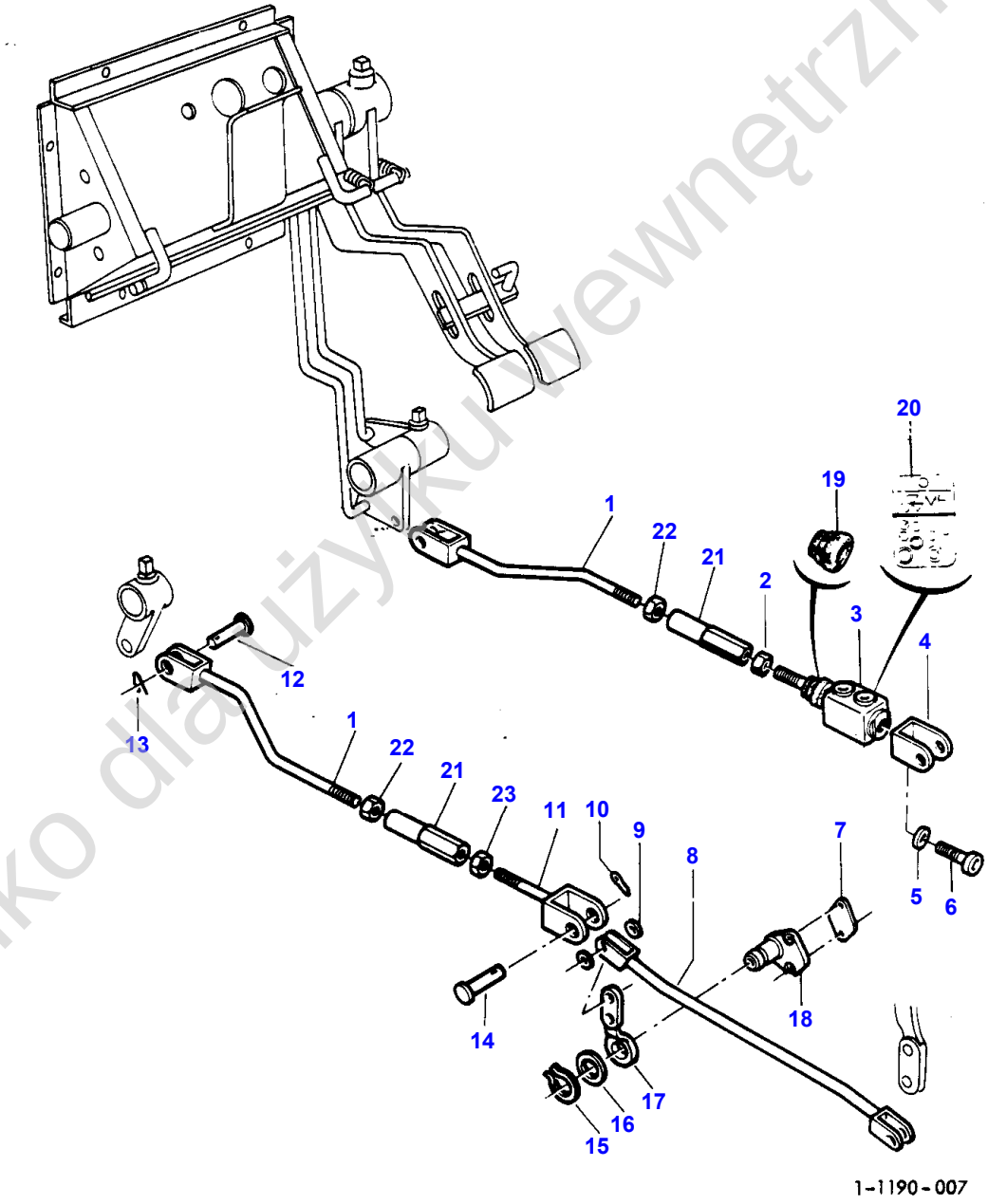

Tylko dla użytku wewnętrznego

Item	Part Number	Qty	Description
1	1665290M91	2	Rod
2	391185X1	1	Nut Metric
3	1660506M92	1	Valve
4	1660487M1	1	Yoke
5	339369X1	1	Lock Washer
6	1443593X1	1	Screw Metric
7	1660488M1	2	Spacer
8	1660741M91	2	Rod
9	355619X1	4	Washer
10	354059X1	2	Pin
11	1634313M91	1	Stem
12	832813M1	2	Clevis Pin
13	354057X1	2	Pin
14	908679M1	2	Pin
15	352980X1	2	Ring
16	898942M1	2	Washer
17	880375M91	2	Lever
18	880335M1	2	Support
19	1718996M1	1	Bellows
20	1718995M91	1	Gasket
21	1634312M1	2	Tensioner
22	375109X1	2	Nut Unc
23	390699X1	1	Nut

Tylko dla użytku wewnętrznego

224

FREIN A MAIN
HANDBREMSE
FRENO A MANO
FRENO DE MANO
HANDBRAKE

11801006

1 1180 009

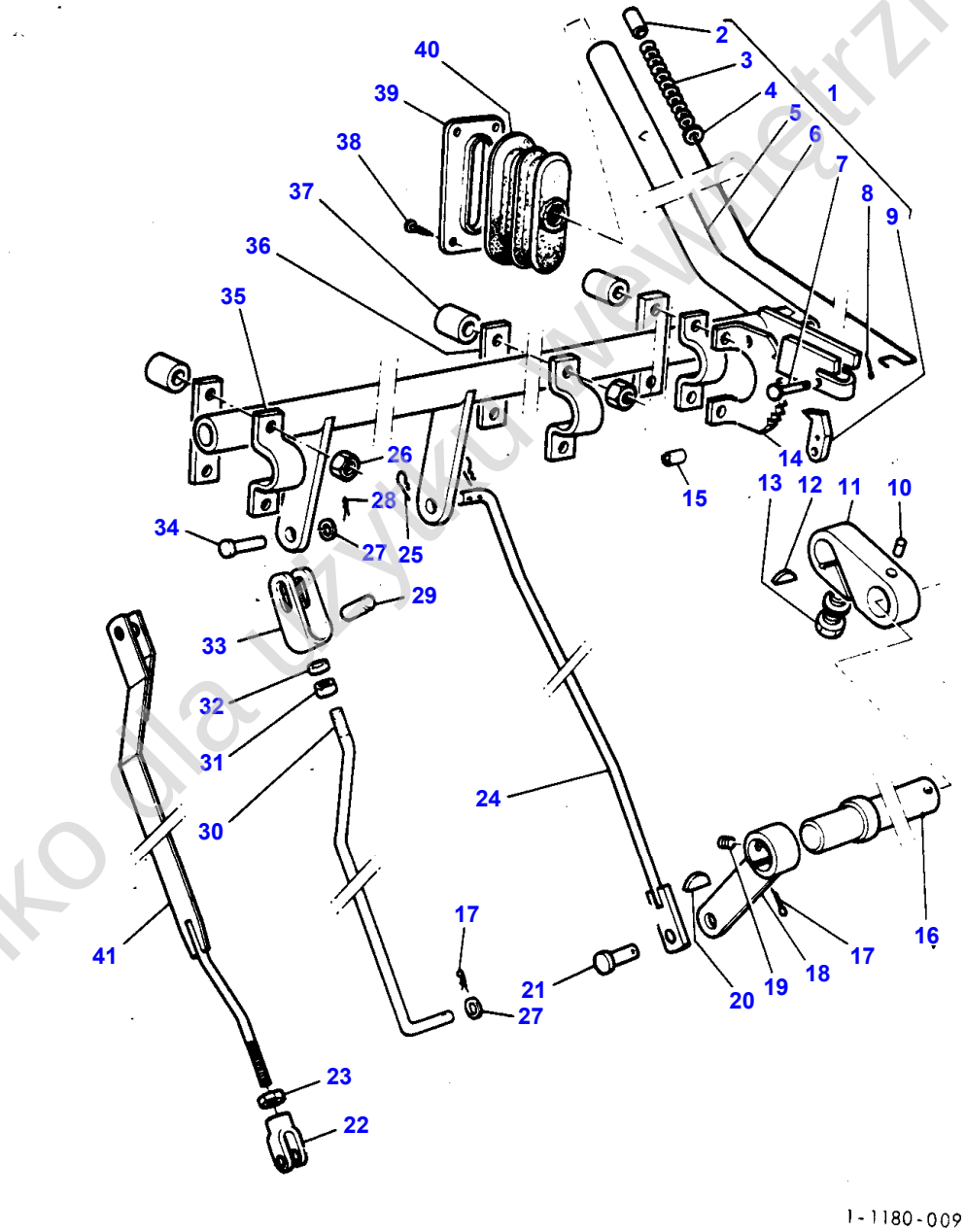

Tylko dla użytku wewnętrznego

Item	Part Number	Qty	Description	Comments
				OLD MOUTING
1		1	Brake	Not serviced, order 1665761M92 See Page - Reference Number 228/1
2	1874726M1	1	Knob	(1)
3	1877474M1	1	Spring	(1)
4	366622X1	1	Washer	(1)
5	1612497M93	1	Lever	(1)
6	1874727M1	1	Stem	(1)
7	361291X1	1	Pin	(1)
8	354039X1	1	Cotter	(1)
9	1877476M1	1	Pawl	(1)
10	353478X1	2	Groove Pin	
11	907427M2	2	Rod	
12	14462X	2	Key	
13	361536X1	2	Screw	
	353432X1	2	Lock Washer	
14	1877478M3	1	Plate	
15	22668X	1	Pin	
16	1612604M92	1	Shaft	Right Hand
	1612605M92	1	Shaft	Left Hand
17	355343X1	2	Pin	
18	1612506M92	2	Lever	
19	354128X1	2	Screw Unc	
20	14462X	2	Key	
21	354189X1	2	Pin	(A)
22	833100M1	1	Pin	(A)
23	353430X1	1	Nut Unf	(A)
24	1617722M92	1	Stem	(A) For Germany only or any text in German only Repairs and replaces 1612600M2
24	1612495M1	2	Rod	(A) For France only or any text in French only
25	354048X1	4	Pin	(A)
26	355566X1	6	Nut Unc	
27	353756X1	4	Washer	(B)
28	354048X1	2	Pin	(B)
29	894538M1	2	Trunnion	(B)
30	1613515M1	2	Rod	(B)
31	353430X1	2	Nut Unf	(B)
32	884750M1	2	Washer	(B)
33	894539M1	2	Yoke	(B)
34	195609M1	2	Clevis Pin	(B)
35	1877477M2	3	Plate	
36	1877479M2	3	Plate	
37	1875361M1	6	Spacer	
38	365925X1	4	Self Tap Screws	
39	1875459M1	1	Plate	
40	1877772M2	1	Seal	
41	1662720M93	1	Stem	(A) For Germany only or any text in German only Repairs and replaces 1612600M2 (A) WITH HYDRAULIC BRAKING CONTROL (B) WITH MECHANICAL BRAKING CONTROL

Tylko do użytku wewnętrznego

228

FREIN A MAIN
HANDBREMSE
FRENO A MANO
FRENO DE MANO
HANDBRAKE

11801007

1 1180 048

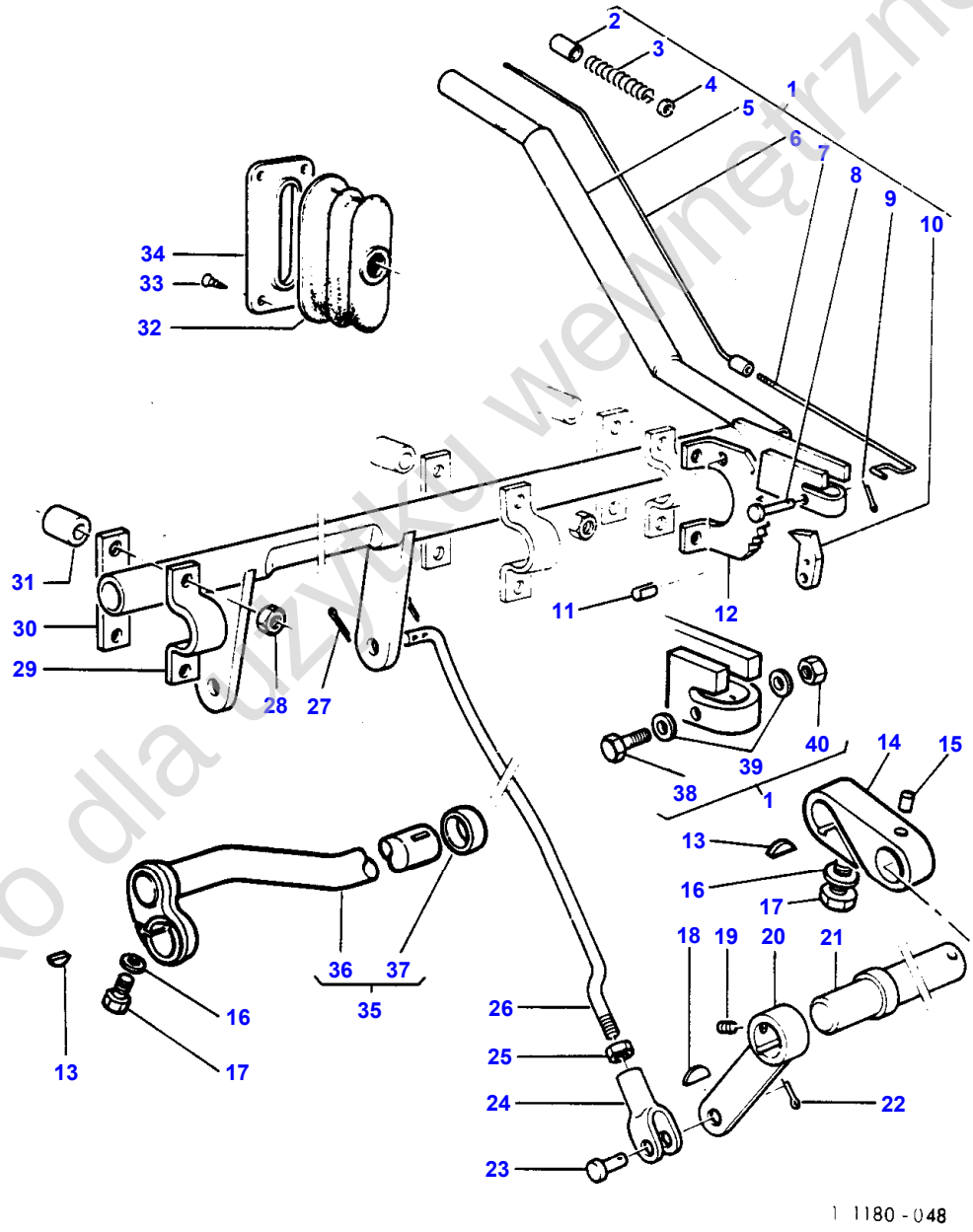

Tylko dla użytku wewnętrznego

Item	Part Number	Qty	Description	Comments
				NEW MOUTING
1	1665761M92	1	Brake	Repairs and replaces 1612496M94 Up to Serial or Engine Number
1	1665761M94	1	Brake	From Serial or Engine Number
2	1874726M1	1	Knob	(1)
3	1877474M1	1	Spring	(1)
4	1664151M1	1	Spacer	(1) Up to Serial or Engine Number
4	1664151M2	1	Spacer	(1) From Serial or Engine Number
5	1666959M91	1	Brake	(1)
6	1666961M91	1	Rod	(1)
7	1665755M1	1	Rod	(1)
8	361291X1	1	Pin	(1) Up to Serial or Engine Number
9	354039X1	1	Cotter	(1) Up to Serial or Engine Number
10	1877476M1	1	Pawl	(1) Up to Serial or Engine Number
10	1877476M2	1	Pawl	(1) From Serial or Engine Number
11	22668X	1	Pin	
12	1877478M3	1	Plate	
13	14462X	2	Key	For Germany only or any text in German only
14	907427M2	2	Rod	For Germany only or any text in German only
15	353478X1	2	Groove Pin	For Germany only or any text in German only
16	353432X1	2	Lock Washer	For Germany only or any text in German only
17	361536X1	2	Screw	For Germany only or any text in German only
18	14462X	2	Key	For Germany only or any text in German only
19	354128X1	2	Screw Unc	For Germany only or any text in German only
20	1612506M92	2	Lever	For Germany only or any text in German only
21	1612604M92	1	Shaft	Right Hand For Germany only or any text in German only
21	1612605M92	1	Shaft	Left Hand For Germany only or any text in German only
22	354048X1	2	Pin	For Germany only or any text in German only
23	354189X1	2	Pin	
24	1665972M1	2	Clevis	
25	353430X1	2	Nut Unf	
26	1665906M2	2		
27	354048X1	4	Pin	
28	355566X1	6	Nut Unc	
29	1877477M2	3	Plate	
30	1877479M2	3	Plate	
31	1875361M1	6	Spacer	
32	1877772M2	1	Seal	
33	365925X1	4	Self Tap Screws	
34	1875459M1	1	Plate	
35			Not Used	
36			Not Used	
37			Not Used	
38	377917X1	1	Bolt Unf	(1) From Serial or Engine Number
39	353754X1	2	Washer	(1) From Serial or Engine Number
40	376446X1	1	Nut Unf	(1) From Serial or Engine Number

Tylko do użytku wewnętrznego

230

ROUES ARRIERE
HINTERRAEDER
RUOTE POSTERIORI
RUEDAS TRASERAS
REAR WHEELS

11951011

1 1195 009

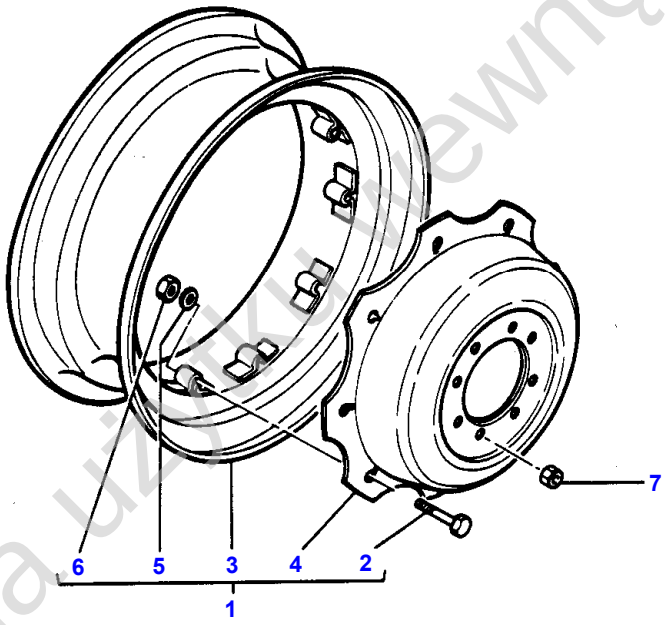

1 - 1195 - 009

Tylko dla użytku wewnętrznego

Item	Part Number	Qty	Description	Comments
1	1865905M91	2	Wheel	14X34 Repairs and replaces 964710M92
1	1863769M91	2	Wheel	11X38 Q Repairs and replaces 964236M91
2	828217M1	8	Bolt Unf	(1)
3	1865914M91	1	Rim	(1) 14X34 Repairs and replaces 964709M92
3	828518M91	1	Rim	(1) 11X38
3	828518M91	1	Rim	(1) Q 11X38
4	1865907M1	1	Disc	(1) 14X34
4	1863777M1	1	Disc	(1) Q 11X38
5	377329X1	8	Washer	(1) Repairs and replaces 377329X1
6	353427X1	8	Nut Unf	(1)
7	881162M2	16	Nut	5/8 Repairs and replaces 184273M1
7	847417M1	16	Nut Unf	11/16

Tylko dla użytku wewnętrznego

232

ROUE A VOIE VARIABLE
KRAFTVERSTELLFELGEN
SERVOSTERZO
DIRECCION ASISTIDA VARIABLE
POWER ASSISTED VARIABLE THREADS WHEEL

1200100 1

1 1200 001

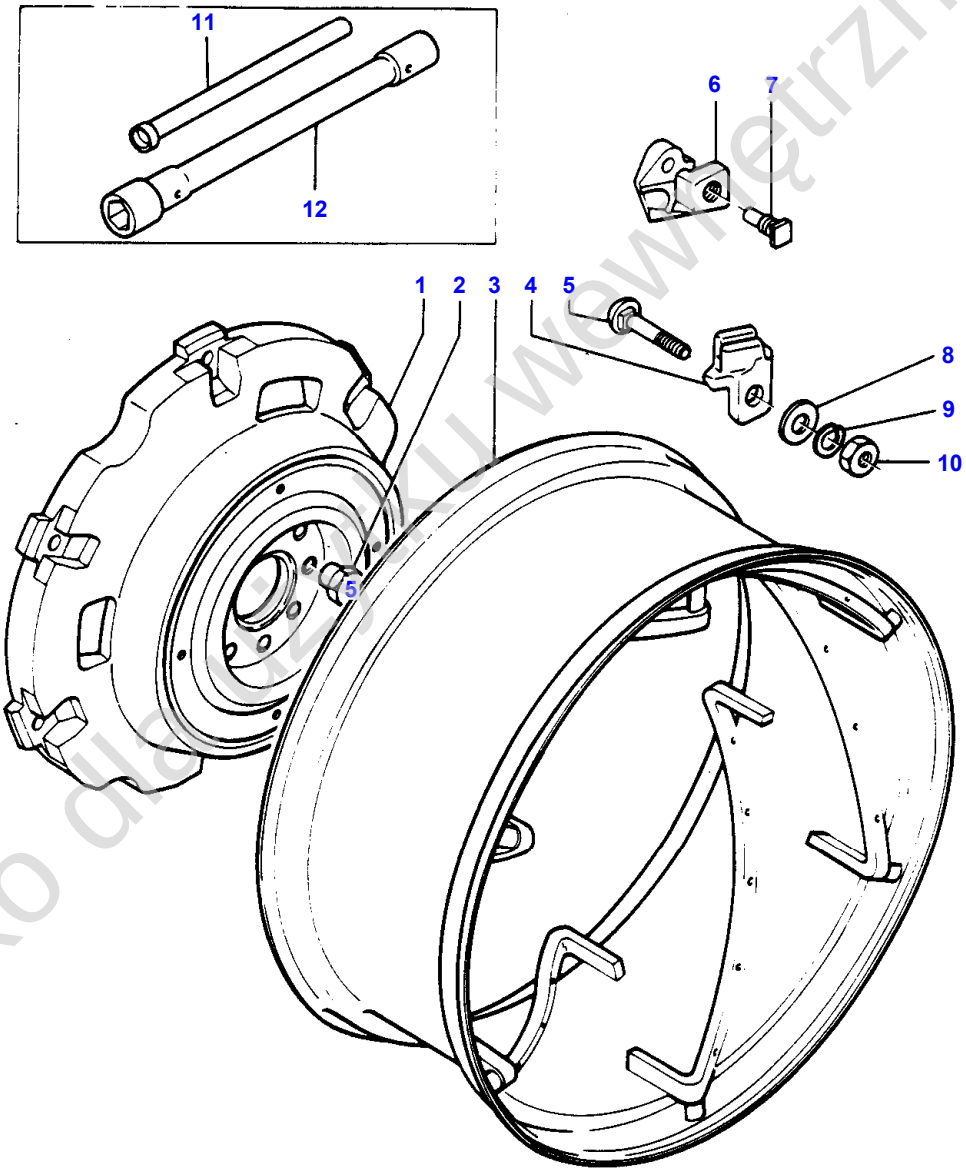

1-1200-001

Tylko do użytku wewnętrznego

Item	Part Number	Qty	Description	Comments
1	1662805M1	2	Disc	11X38
	1611308M2	2	Disc	14X34
2	1872529M1	16	Nut	5/8"
	1872458M1	16	Nut Unf	11/16"
3	906235M92	2	Rim	11X38
	906234M92	2	Rim	14X34
4	898021M1	12	Bridle	
5	364012X1	12	Bolt Unc	
6	227609M1	8	Cleat	
	898022M2	8	Stop	Two Wheel Drive
7	1751403M1	8	Screw Unc	
8	353775X1	12	Washer	
9	353440X1	12	Lock Washer	
10	375100X1	12	Nut Unc	
11	882692M1	1	Handle	
12	882691M1	1	Spanner	

Tylko dla użytku wewnętrznego

234

ROUES AVANT
VORDERRAEDER
RUOTE ANTERIORI
RUEDAS DELANTERAS
FRONT WHEELS

12551003

1 1255 012

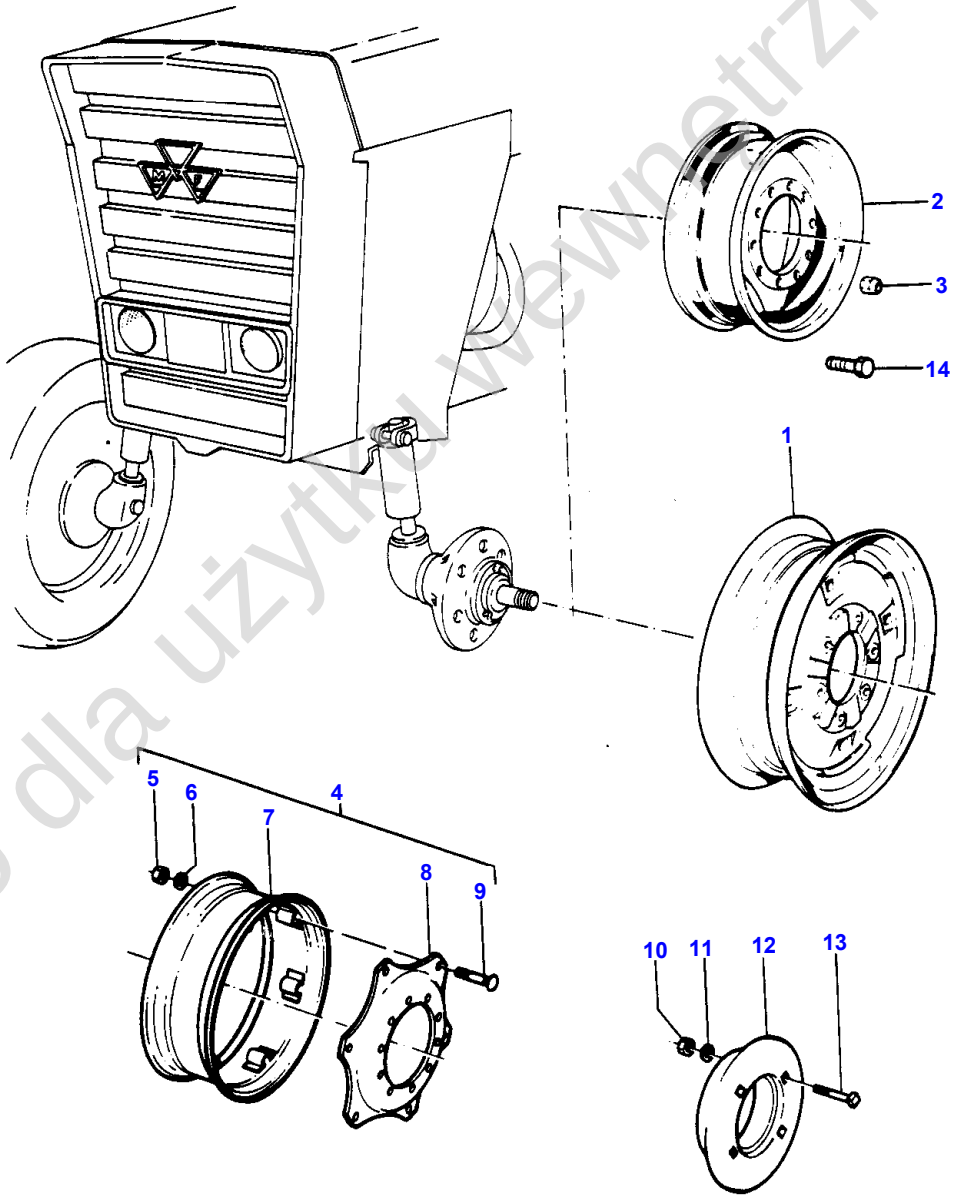

Tylko dla użytku wewnętrznego

Item	Part Number	Qty	Description	Comments
1	1671829M91	2	Wheel	650X16 Q
	1861319M91	2	Rim	550X18 Q
	1660769M91	2	Wheel	550X16 Q
2	1664261M91	2	Wheel	10X24 Q
3	2707829M1	10	Nut	4 WHEEL DRIVE
4	1669727M91	2	Wheel	10X24 CAT 2 Q
5	353427X1	6	Nut Unf	(4) Q
6	377055X1	6	Washer	(4) Q
7	1670281M92	1	Rim	(4) Q
8	1670279M1	1	Disc	(4) Q
9	353870X1	6	Bolt Unf	(4) Q
10	353437X1	8	Nut Unf	2 WHEEL DRIVE
11	353439X1	8	Lock Washer	2 WHEEL DRIVE
12	1867287M2	2	Weight	2 WHEEL DRIVE
13	899162M1	8	Screw	2 WHEEL DRIVE
14	1823598M1	12	Screw Metric	CAT 2 Q

Tylko dla użytku wewnętrznego

236

ROUES ARRIERE
HINTERRAEDER
RUOTE POSTERIORI
RUEDAS TRASERAS
REAR WHEELS

11951021

1 1195 019

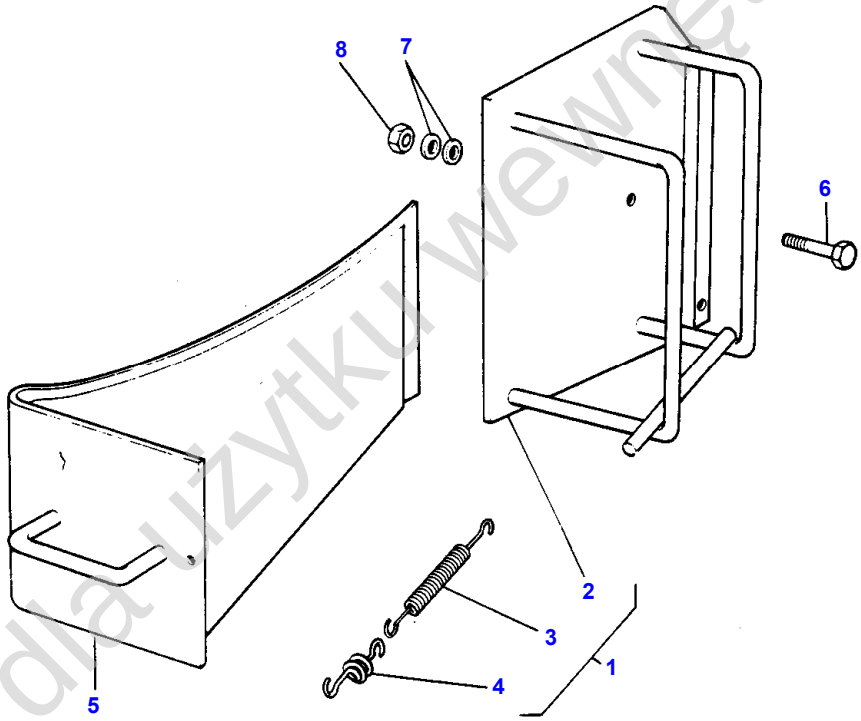

1-1195-019

Tylko dla użytku wewnętrznego

Item	Part Number	Qty	Description	Comments
				WEDGE WHEEL-SUPPORT
1	1617752M92	1	Bearer	
2		1	Support	(1) Not serviced, order 1617752M92
3	322980M2	1	Spring	(1)
4	322979M2	1	Hook	(1)
5	419049M2	1	Shim	
6	354262X1	2	Bolt Unc	
7	353434X1	2	Lock Washer	
	355620X1	4	Washer	
8	355566X1	2	Nut Unc	

Tylko dla użytku wewnętrznego

238

ESSIEU AVANT	MODELE RENFORCE
VORDERACHSE	VERSTAERKT
ASSALE ANTERIORE	TIPO PESANTE
EJE DELANTERO	SERVICIO PESADO
FRONT AXLE	HEAVY DUTY

12371003

1 1237 003

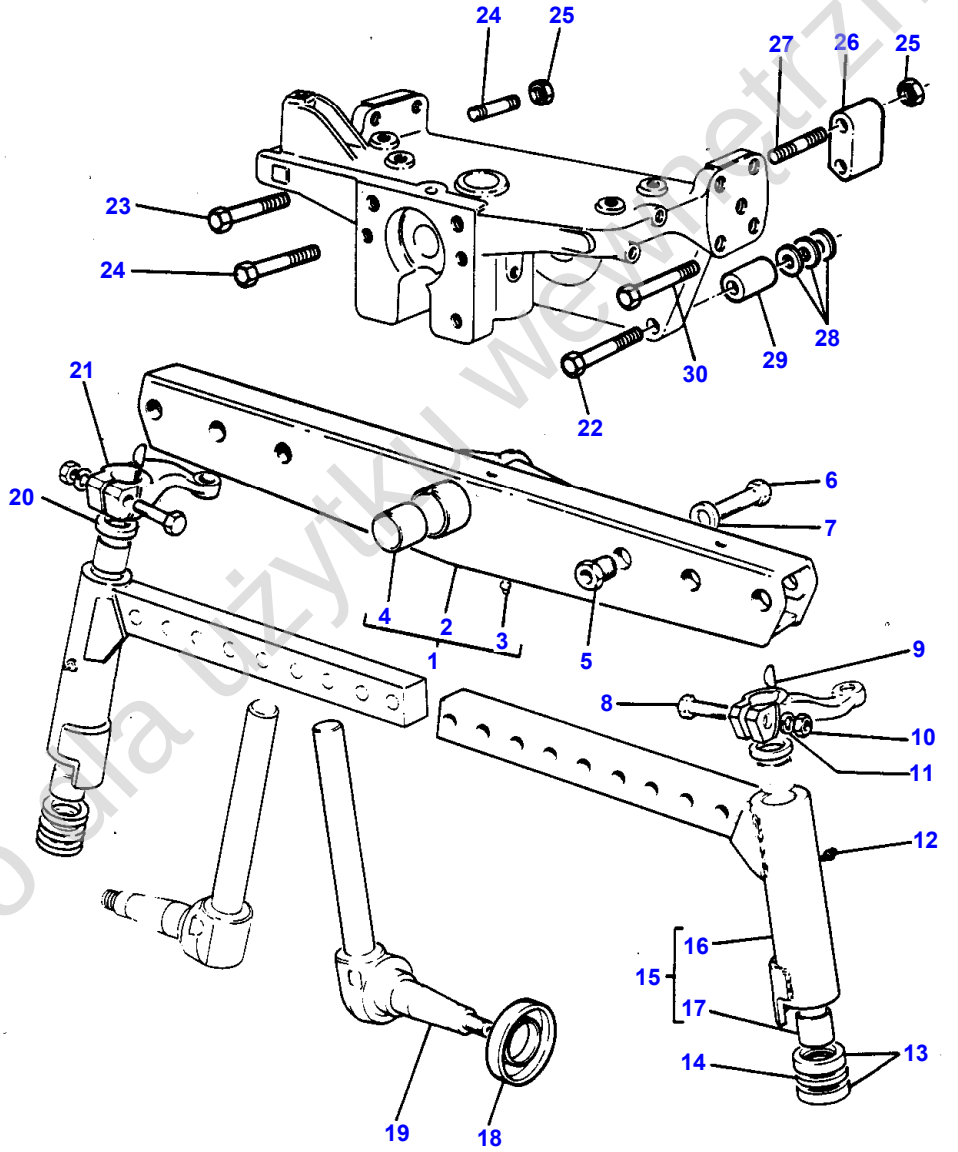

1-1237-003

Tylko dla użytku wewnętrznego

Item	Part Number	Qty	Description	Comments
1	897625M91	1	Beam	
2		1	Front Axle	(1) Not serviced, order REF NO 1
3	365572X1	1	Nipple	(1)
4	897712M2	1	Bush	(1)
5	894060M3	6	Nut	
6	894061M1	6	Bolt	
7	353440X1	6	Lock Washer	
8	353625X1	2	Bolt Unf	
9	350355X1	2	Woodruff Key	
10	353427X1	2	Nut Unf	
11	353433X1	2	Lock Washer	
12	13811X	2	Grease Nipple	
13	1860036M2	4	Bearing	(B) Thickness 6,35 MM
14	1868732M1	2	Spacer	(B) Thickness 2,99 MM
15	897471M91	2	Steering Arm	
16		1	Steering Arm	(15) (C,D) Not serviced, order REF NO 15
17	183086M1	2	Bush	(15)
18	898350M1	2	Shield	
19	897476M95	1	Spindle	Left Hand
	897475M95	1	Spindle	Right Hand
20	183021M2	2	Seal	
21	898343M1	1	Arm	Left Hand
	898342M1	1	Arm	Right Hand
22	369397X1	2	Screw	
23	369459X1	1	Screw	
24	377683X1	1	Stud	
25	377641X1	2	Nut Unf	
26	885531M1	1	Distance Piece	Left Hand
	885532M1	1	Distance Piece	Right Hand
27	377683X1	1	Stud	
28	1660192M1	X	Shim	Thickness 0,10 MM
	894825M1	X	Shim	Thickness 0,25MM
	894826M1	X	Shim	Thickness 0,50 MM
29	885533M1	1	Distance Piece	
30	369459X1	1	Screw	

(B)
WITH POWER STEERING

(C)
ARM LENGHT 288MM

(D)
INTERNAL DIAMETER 38MM

Tylko dla użytku wewnętrznego

240

SUPPORT D'ESSIEU AVANT
ACHSTRAEGER
SUPPORTO ASSALE
SOPORTE EJE
AXLE SUPPORT

12701009

1 1270 013

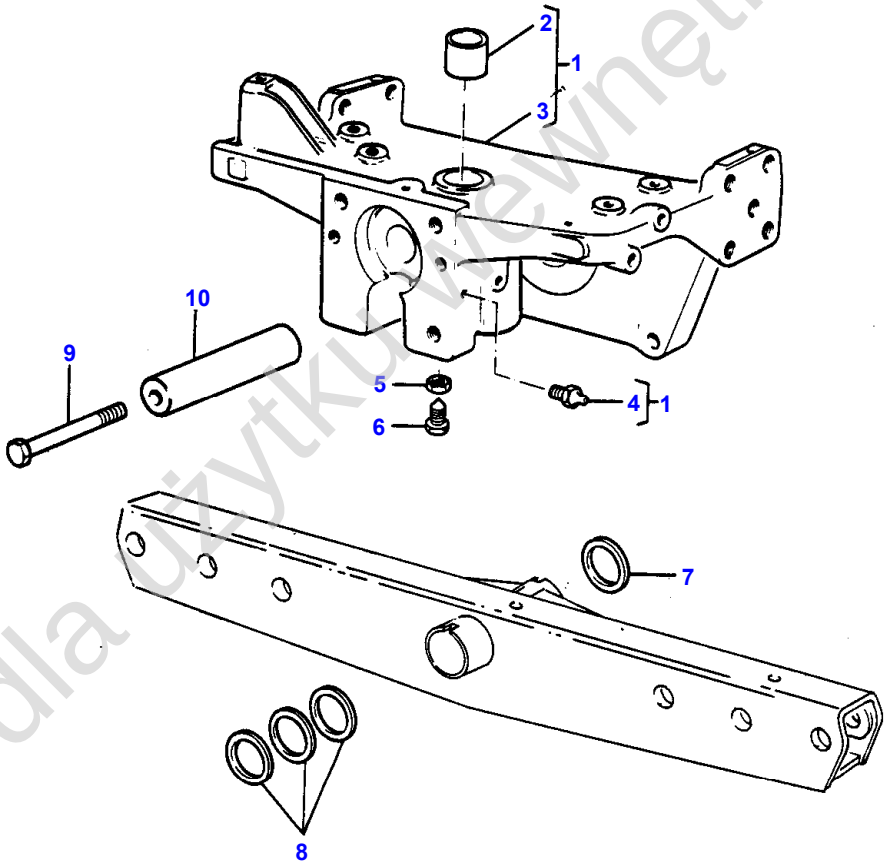

1-1270-013

Tylko dla użytku wewnętrznego

Item	Part Number	Qty	Description	Comments
1	1872485M94	1	Bearer	
2	897235M1	1	Bush	(1)
3		1	Support	(1) Not serviced, order REF NO 1
4	850778M1	1	Nipple	(1)
5	363649X1	1	Nut	
6	847406M1	1	Screw	
7	898017M1	1	Thrust Washer	
8	898018M1	X	Shim	Thickness 0,71/0,76
	898019M1	X	Shim	Thickness 0,87/0,92
	898020M1	X	Shim	Thickness 0,99/1,04
	882868M1	X	Shim	Thickness 1,12/1,17
	882869M1	X	Shim	Thickness 1,25/1,30
9	362501X1	1	Screw	
10	898016M3	1	Pin	

Tylko dla użytku wewnętrznego

242

ESSIEU AVANT
VORDERACHSE
ASSALE ANTERIORE
EJE DELANTERO
FRONT AXLE

12351003

1 1235 019

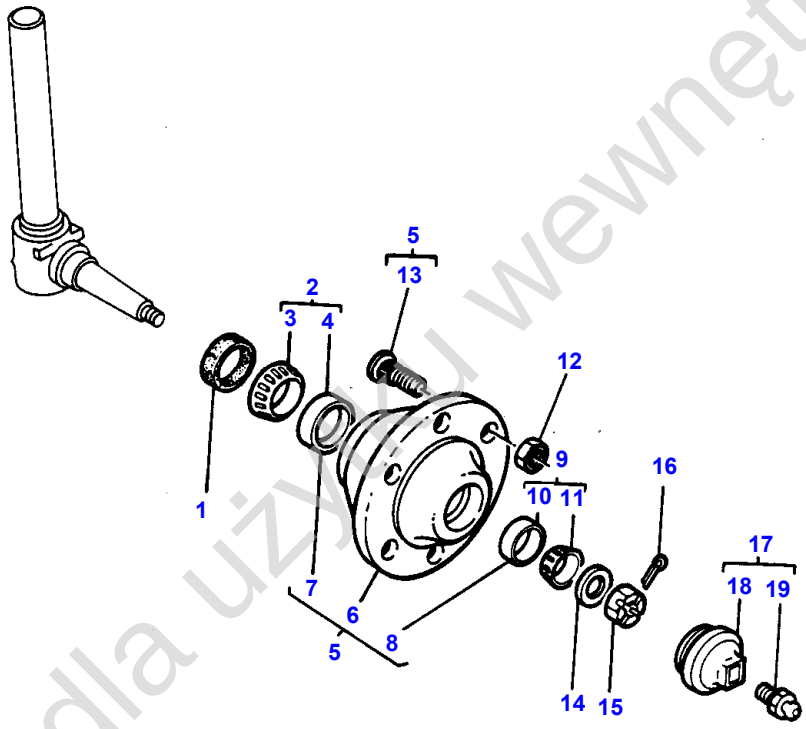

1-1235-019

Tylko dla użytku wewnętrznego

Item	Part Number	Qty	Description	Comments
				WHEEL HUB
1	897702M1	2	Seal	
2		2	Bearing Taper	Not serviced, order REF 3+4
3	701114M1	1	Cone	(2)
4	17201X	1	Cup	(2)
5	898346M92	2	Hub	
6		1	Hub	(5)
				Not serviced, order 898346M92
7	17201X	1	Cup	(5)
8	354369X1	1	Race	(5)
9		2	Bearing Taper	Not serviced, order REF 10+11
10	354369X1	1	Race	(9)
11	354370X1	1	Cone	(9)
12	195490M1	12	Nut	
13	831420M1	12	Bolt	(5)
14	881384M1	2	Washer	
15	882263M1	2	Nut Special	
16	354072X1	2	Pin	
17	882636M91	2	Cap	
18		1	Cap	(17)
				Not serviced, order REF NO 17
19	13811X	1	Grease Nipple	(17)

Tylko dla użytku wewnętrznego

244

VOLANT DE DIRECTION
LENKRAD
VOLANTE
VOLANTE DIRECCION
STEERING WHEEL

13501003

1 1350 010

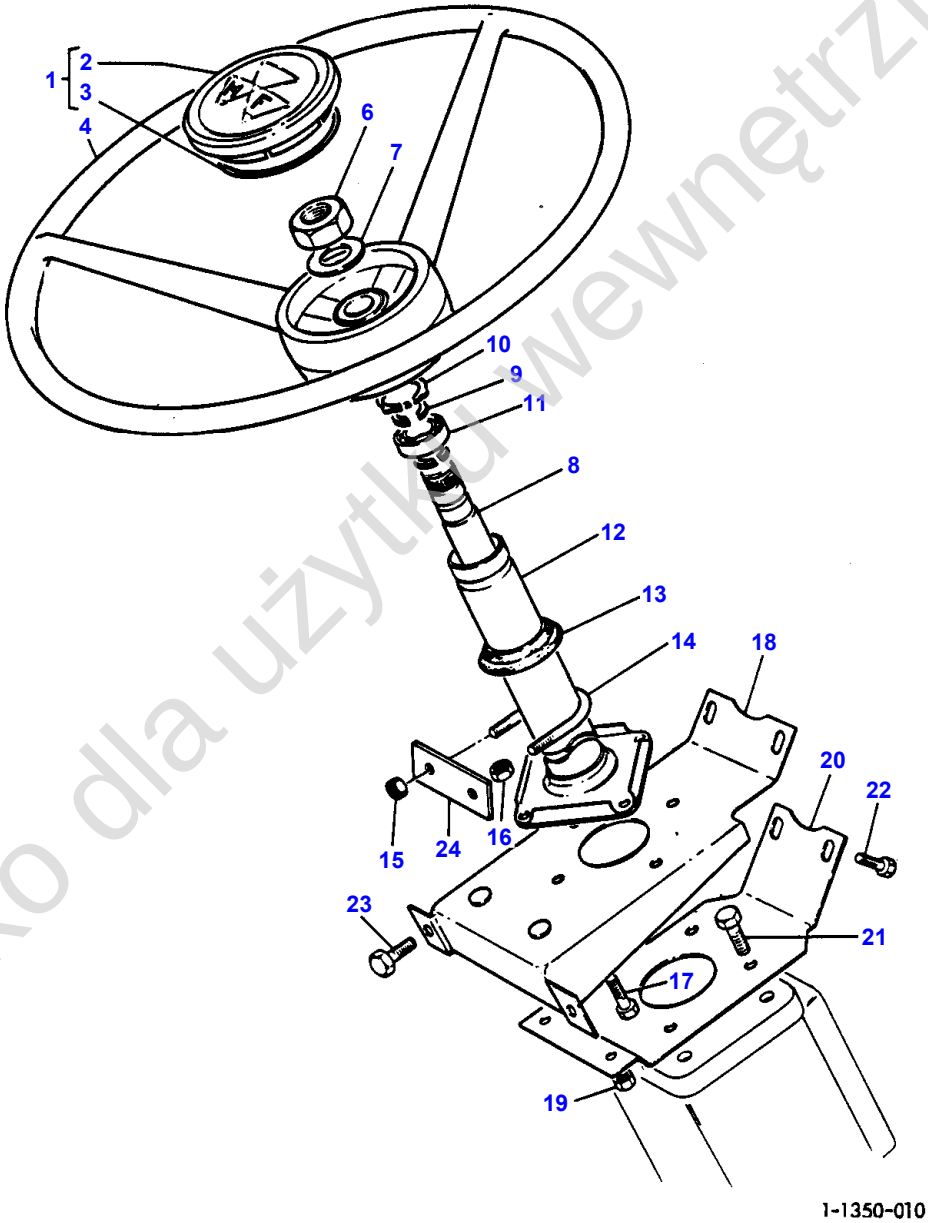

Tylko dla użytku wewnętrznego

Item	Part Number	Qty	Description	Comments
				HYDROSTATIC
1	1870806M91	1	Cap	Repairs and replaces 1867837M91
2		1	Emblem	(1) Not serviced, order 1870806M91
3	961714M1	1	Ring	(1)
4	1674232M1	1	Steering Wheel	
6	1853123M1	1	Nut	
7	353763X1	1	Washer	
8	1875989M2	1	Shaft	
9	359071X1	2	Ring	
10	1876376M1	1	Ring	
11	1876371M91	1	Bearing Assy	
12	1875990M92	1	Column	
13	1874351M2	1	Cover	
14	1876597M2	1	U Bolt	
15	355565X1	2	Nut Unc	
16	355566X1	4	Nut Unc	
17	353689X1	4	Screw Unc	
18	1874891M93	1	Bracket	
19	355565X1	2	Nut Unc	
20	1873681M1	1	Bracket	
21	362431X1	4	Screw Unc	
22	365052X1	2	Screw	
23	353677X1	2	Screw Unc	Repairs and replaces 365747X1
24		3	Chock	(A) Thickness 2MM
24		1	Chock	(A) Thickness 5MM
				(A) TO BE ADVISED

Tylko dla użytku wewnętrznego

246

DISTRIBUTEUR DE DIRECTION	ORBITROL
LENKSTEUERVENTIL	ORBITROL
GRUPPO STERZO	ORBITROL
CONJUNTO DIRECCION	ORBITROL
STEERING UNIT	ORBITROL

13081003

1 1308 002

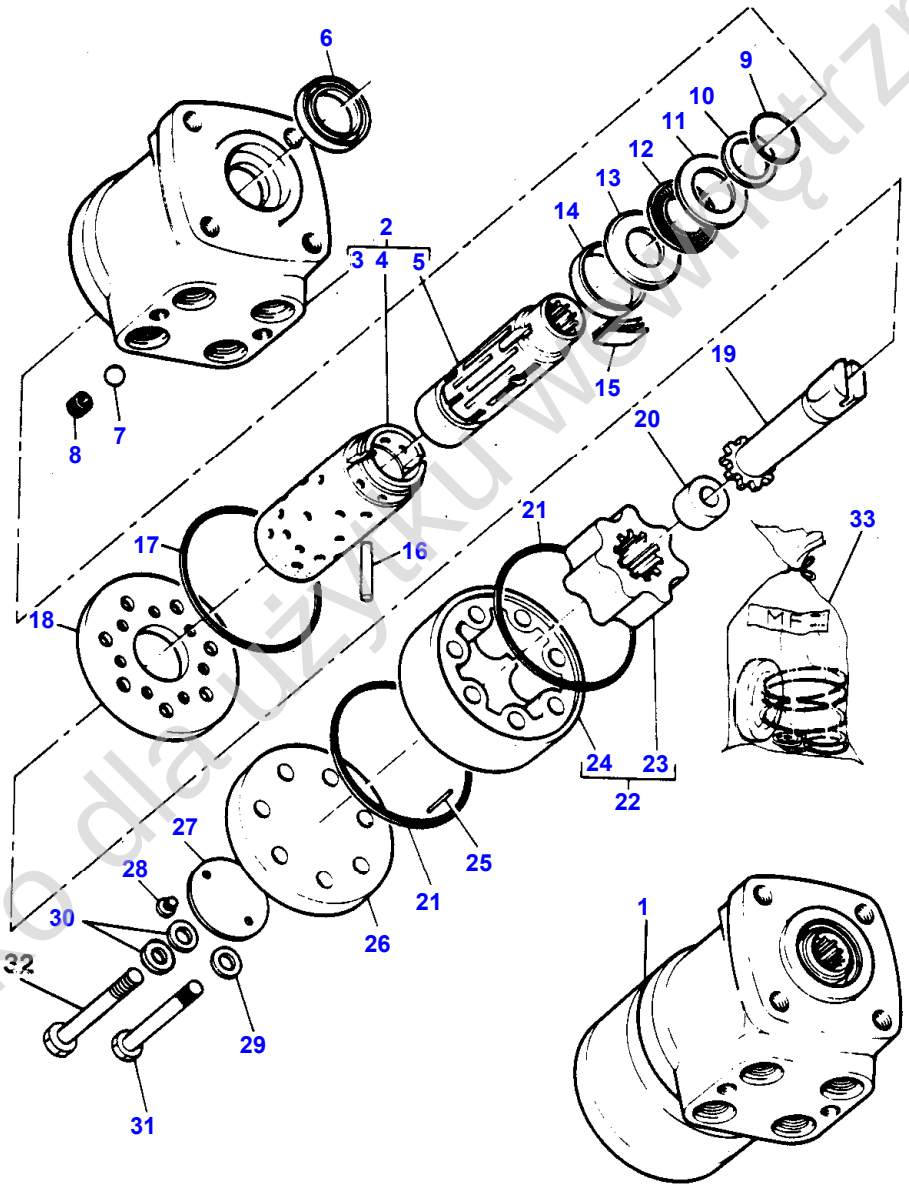

1-1308-002

Tylko dla użytku wewnętrznego

Item	Part Number	Qty	Description	Comments
				DANFOSS
1	1666682M91		Steering Housing	Repairs and replaces 1611241M91
	1666682M91	1	Steering Housing	Repairs and replaces 1611241M91 Up to Serial or Engine Number A 291030 C
2	1891786M1	1	Housing	(1)
3		1	Body	(2) Not serviced, order 1891786M1
4		1	Spool	(2) Not serviced, order 1891786M1
5		1	Sleeve	(2) Not serviced, order 1891786M1
6	1887719M1	1	Seal	(1) Not serviced, order 1810503M91
7	1806311M1	1	Ball	(1)
8	1806313M1	1	Seat	(1)
9	1887717M1	1	Seal	(1) Not serviced, order 1810503M91
10	1887718M1	1	Seal	(1) Not serviced, order 1810503M91
11	1887720M1	1	Washer	(1)
12	1887721M1	1	Bearing	(1)
13	1887722M1	1	Race	(1)
14	1806303M1	1	Bush	(1)
15	1891787M1	1	Spring	(1)
16	1806310M1	1	Pin	(1)
17	1806314M1	1	Seal	(1) Not serviced, order 1810503M91
18	1806319M1	1	Plate	(1)
19	1806416M1	1	Shaft	(1)
20	1891788M1	1	Spacer	(1)
21	1806315M1	2	Seal	(1) Not serviced, order 1810503M91
22	1891789M1	1	Gear	(1)
23		1	Pinion	(22) Not serviced, order 1891789M1
24		1	Rotor	(22) Not serviced, order 1891789M1
25	1806312M1	1	Pin	(1)
26	1891790M1	1	Cover	(1)
27	1890402M1	1	Plate	(1)
28	1806318M1	2	Screw	(1)
29	1806317M1	1	Washer	(1) Not serviced, order 1810503M91
30	1806317M1	6	Washer	(1) Not serviced, order 1810503M91
31	1887727M1	1	Screw	(1)
32	1887730M1	6	Screw	(1)
33	1810503M91	1	Kit, Repair	(1)

Tylko dla użytku wewnętrznego

248

DISTRIBUTEUR DE DIRECTION	ORBITROL
LENKSTEUERVENTIL	ORBITROL
GRUPPO STERZO	ORBITROL
CONJUNTO DIRECCION	ORBITROL
STEERING UNIT	ORBITROL

1308 1001

1 1308 004

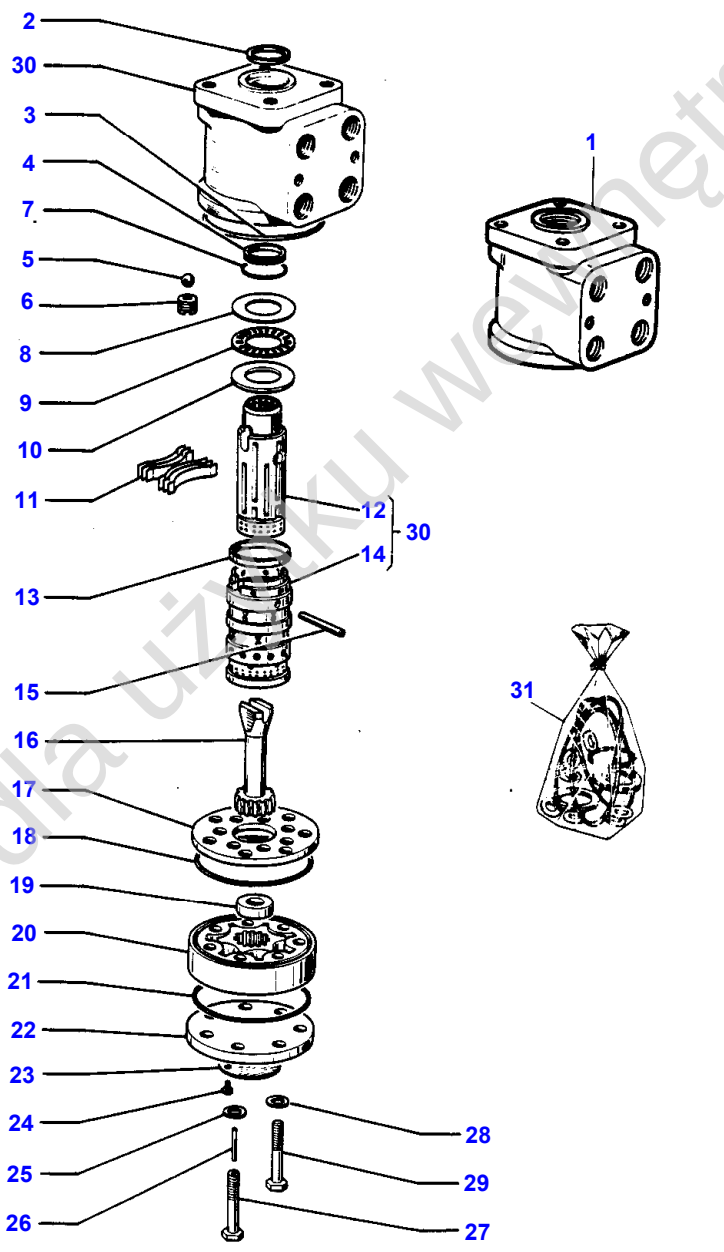

Tylko dla użytku wewnętrznego

Item	Part Number	Qty	Description	Comments
				4 WHEELS DRIVE
1	1809696M91	1	Distributor	From Serial or Engine Number NO A 291031
2	1887719M1	1	Seal	(1)
3	1806314M1	1	Seal	(1)
4	1887718M1	1	Seal	(1)
5	1806311M1	1	Ball	(1)
6	1806313M1	1	Seat	(1)
7	1887717M1	1	Seal	(1)
8	1887720M1	1	Washer	(1)
9	1887721M1	1	Bearing	(1)
10	1887722M1	1	Race	(1)
11	1806305M1	6	Spring	(1)
12		1	Drum	(30)
				Not serviced, order REF NO 30
13	1806303M1	1	Bush	(1)
14		1	Sleeve	(30)
				Not serviced, order REF NO 30
15	1806310M1	1	Pin	(1)
16	1806416M1	1	Shaft	(1)
17	1806319M1	1	Plate	(1)
18	1806315M1	1	Seal	(1)
19	1887732M1	1	Spacer	(1)
20	1887733M1	1	Kit, Gear	(1)
21	1806315M1	1	Seal	(1)
22	1806316M1	1	Cap	(1)
23	1887734M1	1	Plate	(1)
24	1806318M1	2	Screw	(1)
25	1806317M1	1	Washer	(1)
26	1806312M1	1	Pin	(1)
27	1887727M1	1	Screw	(1)
28	1806317M1	6	Washer	(1)
29	1887730M1	6	Screw	(1)
30	1887731M91	1	Housing	(1)
31	1810503M92	X	Parts Pack	(1)

Tylko dla użytku wewnętrznego

250

DIRECTION HYDROSTATIQUE
HYDROSTATISCHE LENKUNG
STERZO IDROSTATICO
DIRECCION HIDROSTATICA
HYDROSTATIC- STEERING

12751001

1 1275 001

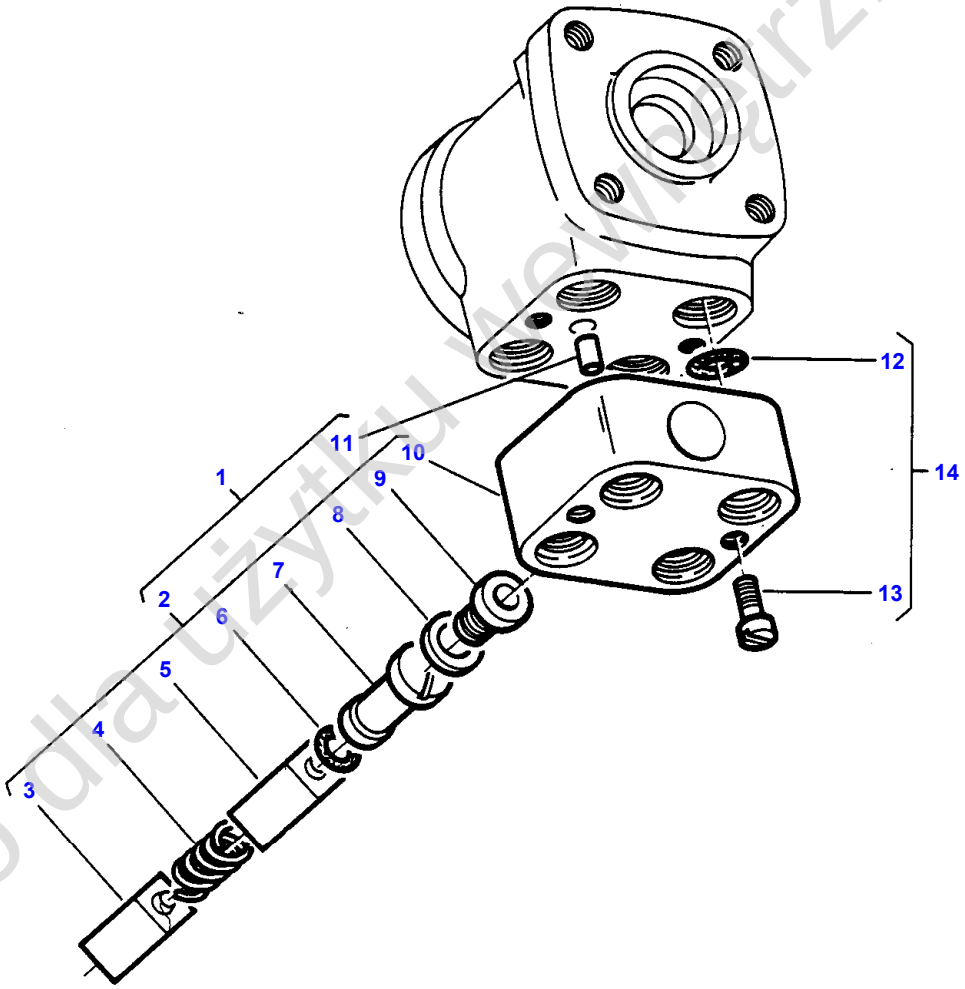

1-1275-001

Tylko do użytku wewnętrznego

Item	Part Number	Qty	Description	Comments
				SAFETY VALVE
1	1662788M91	1	Block	DANFOSS For Germany only or any text in German only
2	1890403M91	1	Valve	(1)
3		1	Pressure Valve	(2) Not serviced, order 1890403M91
4		1	Spring	(2) Not serviced, order 1890403M91
5		1	Pressure Valve	(2) Not serviced, order 1890403M91
6		1	O Ring	(2) Not serviced, order 1890403M91
7		1	Pressure Valve	(2) Not serviced, order 1890403M91
8		1	Gasket	(2) Not serviced, order 1890403M91
9		1	Screw	(2) Not serviced, order 1890403M91
10		1	Block	(2) Not serviced, order 1890403M91
11	1890404M1	1	Pin	(1)
12		4	O Ring	(1) Not serviced, order 1810657M91
13		2	Screw	(1) Not serviced, order 1810657M91
14	1810657M91	1	Kit	

Tylko dla użytku wewnętrznego

252

TUYAUTERIES HYDRAULIQUES DE DIRECTION
LENKUNG - HYDRAULIKLEITUNGEN
TUBAZIONI IDRAULICHE STERZO
CIRCUITO HIDRAULICO DIRECCION
STEERING HYDRAULIC LINES

12951017

1 1295 030

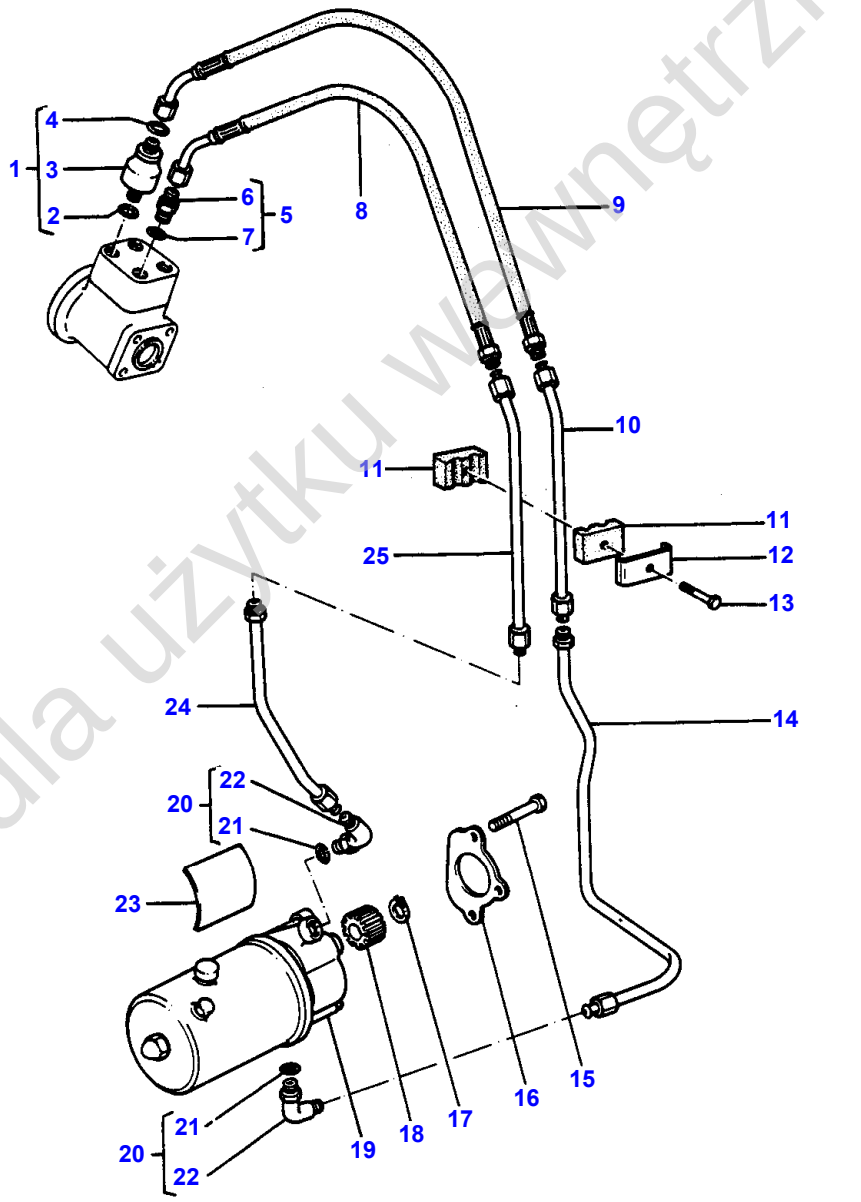

1-1295-030

Tylko dla użytku wewnętrznego

Item	Part Number	Qty	Description	Comments
				2 WHEEL DRIVE ORBITROL PUMP- GERMANY
1	1662727M91	1	Reservoir	
2	831497M1	1	O Ring	(1)
3		1	Tank	(1) Not serviced, order REF NO 1
4	1662772M1	1	Washer	(1)
5	360202X91	1	Connector	
6		1	Union	(5) Not serviced, order REF NO 5
7	831497M1	1	O Ring	(5)
8	1665108M91	1	Hose	
9	1665108M91	1	Hose	
10	1613582M93	1	Tube	
11	1613580M1	2	Clamp	
12	1613581M1	1	Strap	
13	376331X1	1	Bolt Unc	
14	1876418M95	1	Tube	
15	353546X1	1	Screw	
16	897148M3	1	Gasket	
17	355791X1	1	Ring	
18	31171082	1	Gear,Hydr.Pump	
19		1	Pump	AIR EQUIPEMENT See Page - Reference Number 276/1
19		1	Pump	PLESSEY See Page - Reference Number 274/1
19		1	Pump	AIR EQUIPEMENT See Page - Reference Number 272/1
20	357197X91	2	Elbow	
21	831452M1	1	O Ring	(20)
22		1	Union	(20) Not serviced, order REF NO 20
23	1875783M1	1	Decal	
24	1876416M93	1	Tube	

Tylko dla użytku wewnętrznego

254

TUYAUTERIES HYDRAULIQUES DE DIRECTION
LENKUNG - HYDRAULIKLEITUNGEN
TUBAZIONI IDRAULICHE STERZO
CIRCUITO HIDRAULICO DIRECCION
STEERING HYDRAULIC LINES

12951018

1 1295 031

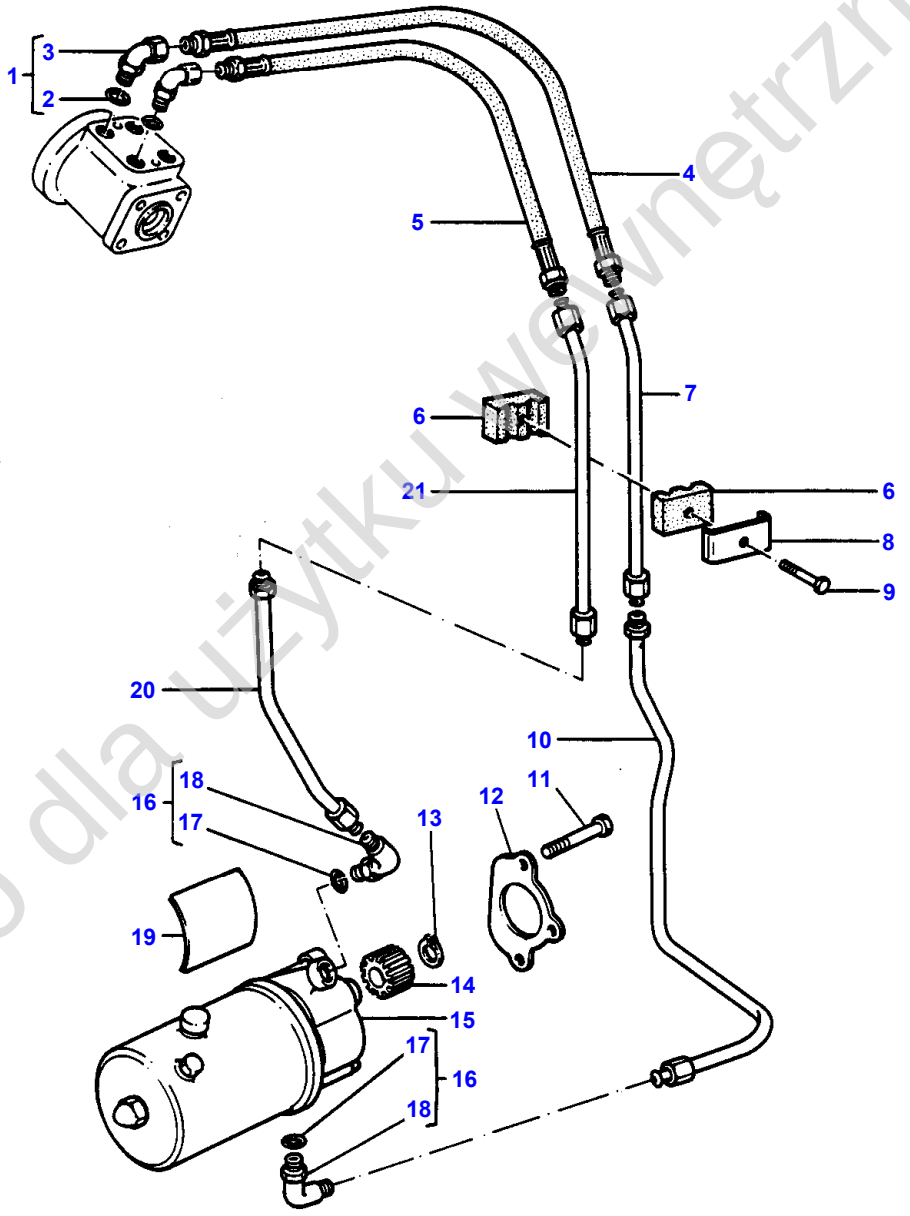

1-1295-031

Tylko dla użytku wewnętrznego

Item	Part Number	Qty	Description	Comments
				2 WHEEL DRIVE ORBITROL PUMP
1	364414X91	2	Elbow	
2	831497M1	1	O Ring	(1)
3		1	Union	(1) Not serviced, order REF NO 1
4	1665106M91	1	Hose	
5	1665106M91	1	Hose	
6	1613580M1	2	Clamp	
7	1613582M93	1	Tube	
8	1613581M1	1	Strap	
9	376331X1	1	Bolt Unc	
10	1876418M95	1	Tube	
11	353546X1	1	Screw	
12	897148M3	1	Gasket	
13	355791X1	1	Ring	
14	31171082	1	Gear,Hydr.Pump	
15		1	Pump	AIR EQUIPEMENT See Page - Reference Number 276/1
15		1	Pump	PLESSEY See Page - Reference Number 274/1
15		1	Pump	AIR EQUIPEMENT See Page - Reference Number 272/1
16	357197X91	2	Elbow	
17	831452M1	1	O Ring	(17)
18		1	Union	(17) Not serviced, order REF NO 16
19	1875782M1	1	Decal	For France only or any text in French only
	1866634M1	1	Decal	For UK only or any text in English only
20	1876416M93	1	Tube	

Tylko dla użytku wewnętrznego

256

TUYAUTERIES HYDRAULIQUES DE DIRECTION
LENKUNG - HYDRAULIKLEITUNGEN
TUBAZIONI IDRAULICHE STERZO
CIRCUITO HIDRAULICO DIRECCION
STEERING HYDRAULIC LINES

1295 1019

1 1295 032

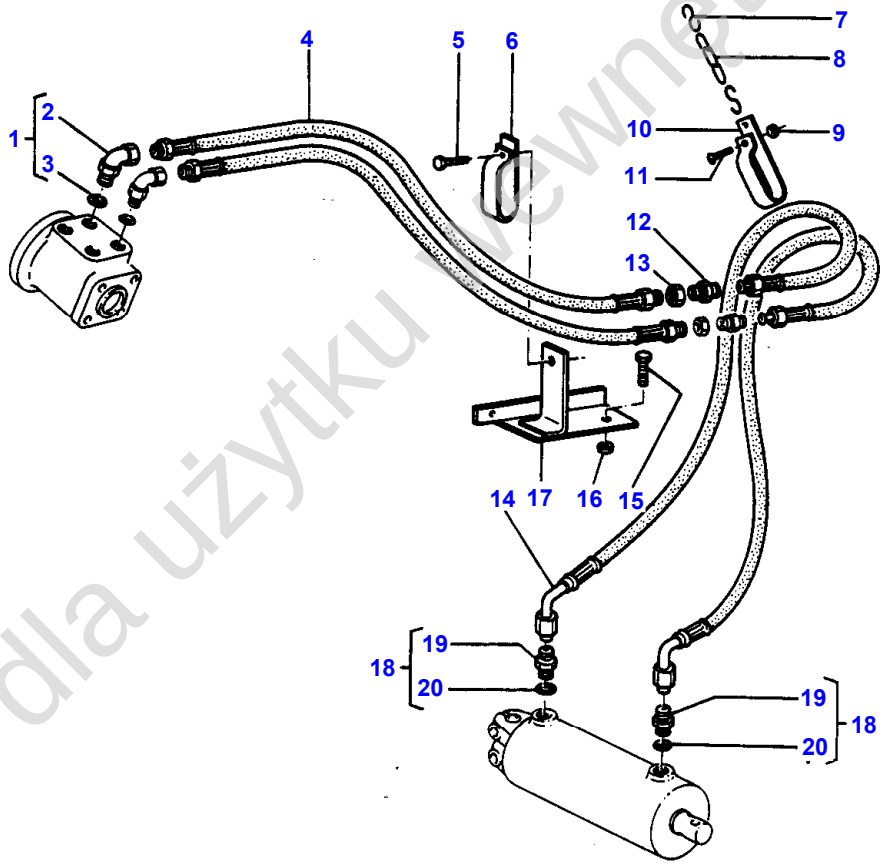

1-1295-032

Tylko dla użytku wewnętrznego

Item	Part Number	Qty	Description	Comments
				ORBITROL CYLINDER
1	364414X91	2	Elbow	
2		1	Union	Not serviced, order REF NO 1
3	831497M1	1	O Ring	
4	1665107M91	2	Hose	
5	353666X1	1	Screw Unc	
6	1875624M1	1	Clamp	
7	195559M1	2	Eye	Up to Serial or Engine Number NO...
8	833332M1	1	Chain	Up to Serial or Engine Number NO...
9	353918X1	1	Nut Unf	Up to Serial or Engine Number NO...
10	1875624M1	1	Clamp	Up to Serial or Engine Number NO...
11	353501X1	1	Screw Unf	Up to Serial or Engine Number NO...
12	356266X1	2	Union	
13	355830X1	2	Locknut	
14	1676622M91	2	Hydr Hose	
15	353681X1	1	Bolt Unc	
16	355565X1	1	Nut Unc	
17	1663673M91	1	Bracket	
18	835091M91	2	Connector	
19		1	Union	(18) Not serviced, order REF NO 18
20	831452M1	1	O Ring	(18)

Tylko dla użytku wewnętrznego

256

TUYAUTERIES HYDRAULIQUES DE DIRECTION
LENKUNG - HYDRAULIKLEITUNGEN
TUBAZIONI IDRAULICHE STERZO
CIRCUITO HIDRAULICO DIRECCION
STEERING HYDRAULIC LINES

1295 1019

1 1295 032

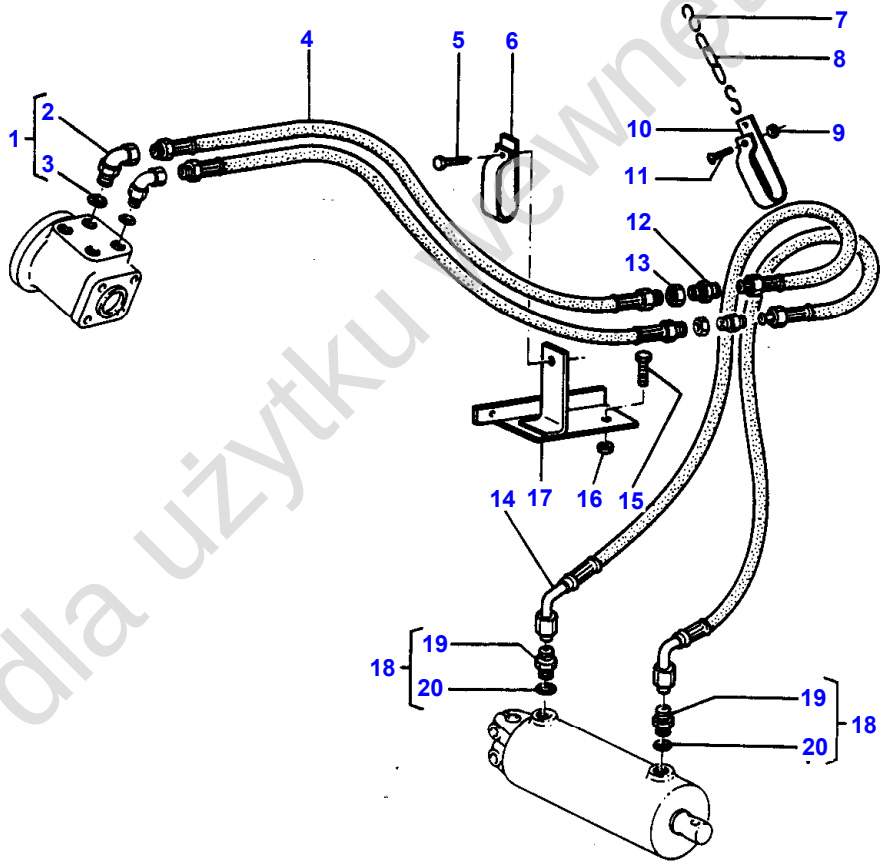

1-1295-032

Tylko dla użytku wewnętrznego

Item	Part Number	Qty	Description	Comments
				ORBITROL CYLINDER
1	364414X91	2	Elbow	
2		1	Union	Not serviced, order REF NO 1
3	831497M1	1	O Ring	
4	1665107M91	2	Hose	
5	353666X1	1	Screw Unc	
6	1875624M1	1	Clamp	
7	195559M1	2	Eye	Up to Serial or Engine Number NO...
8	833332M1	1	Chain	Up to Serial or Engine Number NO...
9	353918X1	1	Nut Unf	Up to Serial or Engine Number NO...
10	1875624M1	1	Clamp	Up to Serial or Engine Number NO...
11	353501X1	1	Screw Unf	Up to Serial or Engine Number NO...
12	356266X1	2	Union	
13	355830X1	2	Locknut	
14	1676622M91	2	Hydr Hose	
15	353681X1	1	Bolt Unc	
16	355565X1	1	Nut Unc	
17	1663673M91	1	Bracket	
18	835091M91	2	Connector	
19		1	Union	(18) Not serviced, order REF NO 18
20	831452M1	1	O Ring	(18)

Tylko dla użytku wewnętrznego

258

TUYAUTERIES HYDRAULIQUES DE DIRECTION
LENKUNG – HYDRAULIKLEITUNGEN
TUBAZIONI IDRAULICHE STERZO
CIRCUITO HIDRAULICO DIRECCION
STEERING HYDRAULIC LINES

12951003

1 1295 033

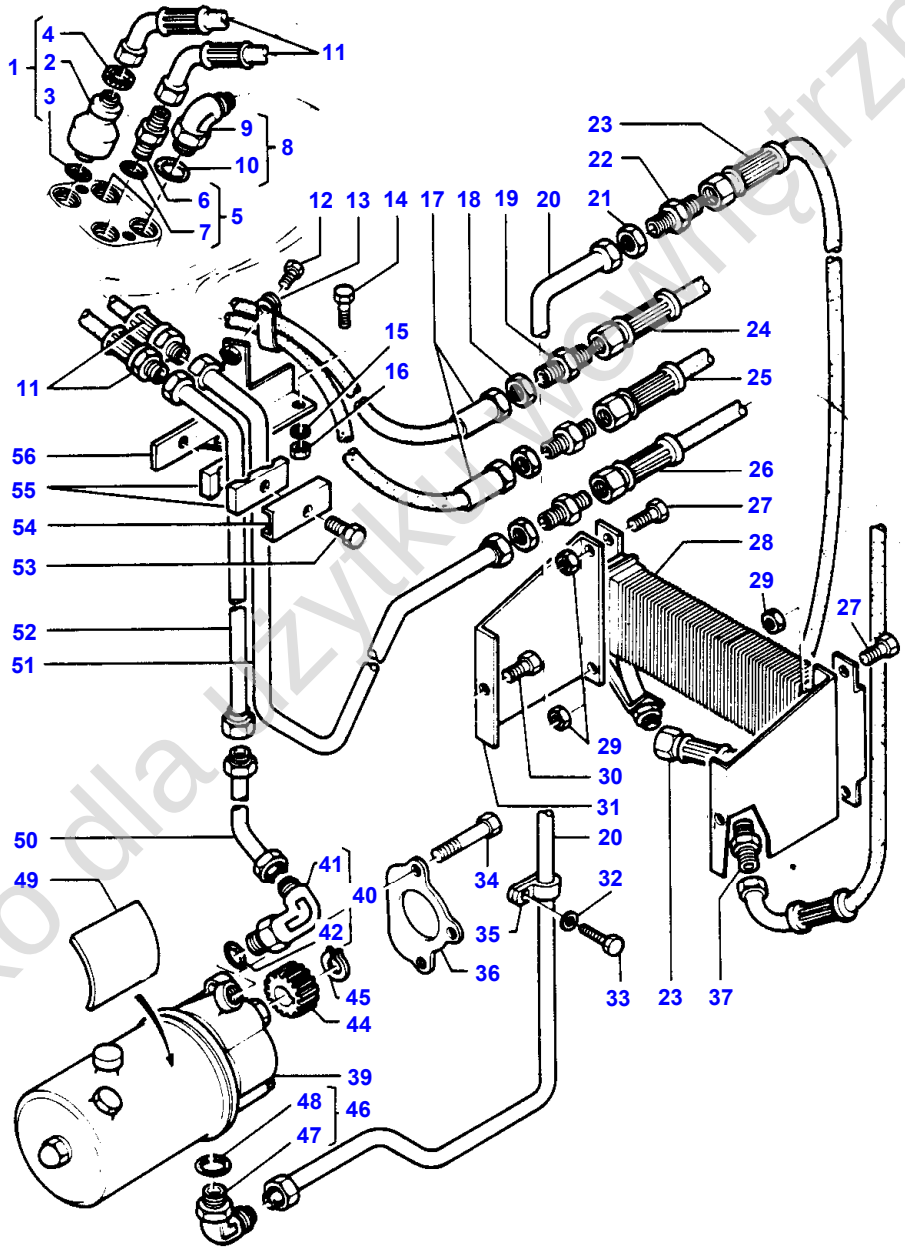

1-1295-033

Tylko dla użytku wewnętrznego

Item	Part Number	Qty	Description	Comments
				4 WHEEL DRIVE UP TO SERIAL NO...
1	1662727M91	1	Reservoir	For Germany only or any text in German only
2		1	Tank	(1)
				Not serviced, order 1662727M91
3	831497M1	1	O Ring	(1)
4	1662772M1	1	Washer	(1)
5	360202X91	1	Connector	For Germany only or any text in German only
6		1	Union	(5)
				Not serviced, order 360202X91
7	831497M1	1	O Ring	(5)
8	364414X91	2	Elbow	For Germany only or any text in German only
	364414X91	4	Elbow	Without or not
				For Germany only or any text in German only
9		1	Elbow Nipple	(8)
				Not serviced, order REF 8
10	831497M1	1	O Ring	(8)
11	1665108M91	2	Hose	For Germany only or any text in German only
	1665106M91	2	Hose	Without or not
				For Germany only or any text in German only
12	353666X1	2	Screw Unc	
13	1875624M1	2	Clamp	
14	353681X1	1	Bolt Unc	
15	353755X1	1	Washer	
16	355565X1	1	Nut Unc	
17	1665107M91	2	Hose	
18	355830X1	3	Locknut	
19	356266X1	3	Union	
20	1665576M92	1	Tube	
21	356614X1	1	Nut Unf	Up to Serial or Engine Number A 139071
22	356267X1	1	Union	Up to Serial or Engine Number A 139071
23	1665604M91	1	Hose	Up to Serial or Engine Number A 139071
24		1	Hydr Hose	See Page - Reference Number 268/2
25		1	Hydr Hose	See Page - Reference Number 268/1
26	1665599M91	1	Hose	Up to Serial or Engine Number A 309017
27	353516X1	4	Screw Unf	Up to Serial or Engine Number
28	1665556M91	1	Radiator	Up to Serial or Engine Number A 142040
29	353916X1	4	Nut Unf	Up to Serial or Engine Number
30	353517X1	2	Screw Unf	Up to Serial or Engine Number
31	1665546M1	1	Bracket	Left Hand
				Up to Serial or Engine Number J 111056
31	1665545M1	1	Bracket	Right Hand
				Up to Serial or Engine Number J 111056
32	355617X1	1	Washer	
33	353502X1	1	Screw Unf	
34	353546X1	1	Screw	
35	1665575M1	1	Strap	
36	897148M3	1	Gasket	
37	364603X1	1	Elbow	
39		1	Steering Pump	AIR EQUIPEMENT
				See Page - Reference Number 276/1
40	357197X91	1	Elbow	
41		1	Elbow Nipple	(40)
				Not serviced, order 357197X91
42	831452M1	1	O Ring	(40)
44	31171082	1	Gear,Hydr.Pump	
45	355791X1	1	Ring	
46	186127M91	1	Elbow	
47		1	Elbow Nipple	(46)
				Not serviced, order 186127M91
48	831452M1	1	O Ring	(46)
49	1875782M1	1	Decal	For France only or any text in French only
	1875783M1	1	Decal	For Germany only or any text in German only
	1866634M1	1	Decal	For UK only or any text in English only
50	1876416M93	1	Tube	
51	1665622M92	1	Tube	

Tylko dla użytku wewnętrznego

Item	Part Number	Qty	Description	Comments
52	1613582M93	1	Tube	
53	376331X1	1	Bolt Unc	
54	1613581M1	1	Strap	
55	1613580M1	2	Clamp	
56	1663673M91	1	Bracket	

Tylko dla użytku wewnętrznego

262

TUYAUTERIES HYDRAULIQUES DE DIRECTION
LENKUNG – HYDRAULIKLEITUNGEN
TUBAZIONI IDRAULICHE STERZO
CIRCUITO HIDRAULICO DIRECCION
STEERING HYDRAULIC LINES

1295020

1 1295 034

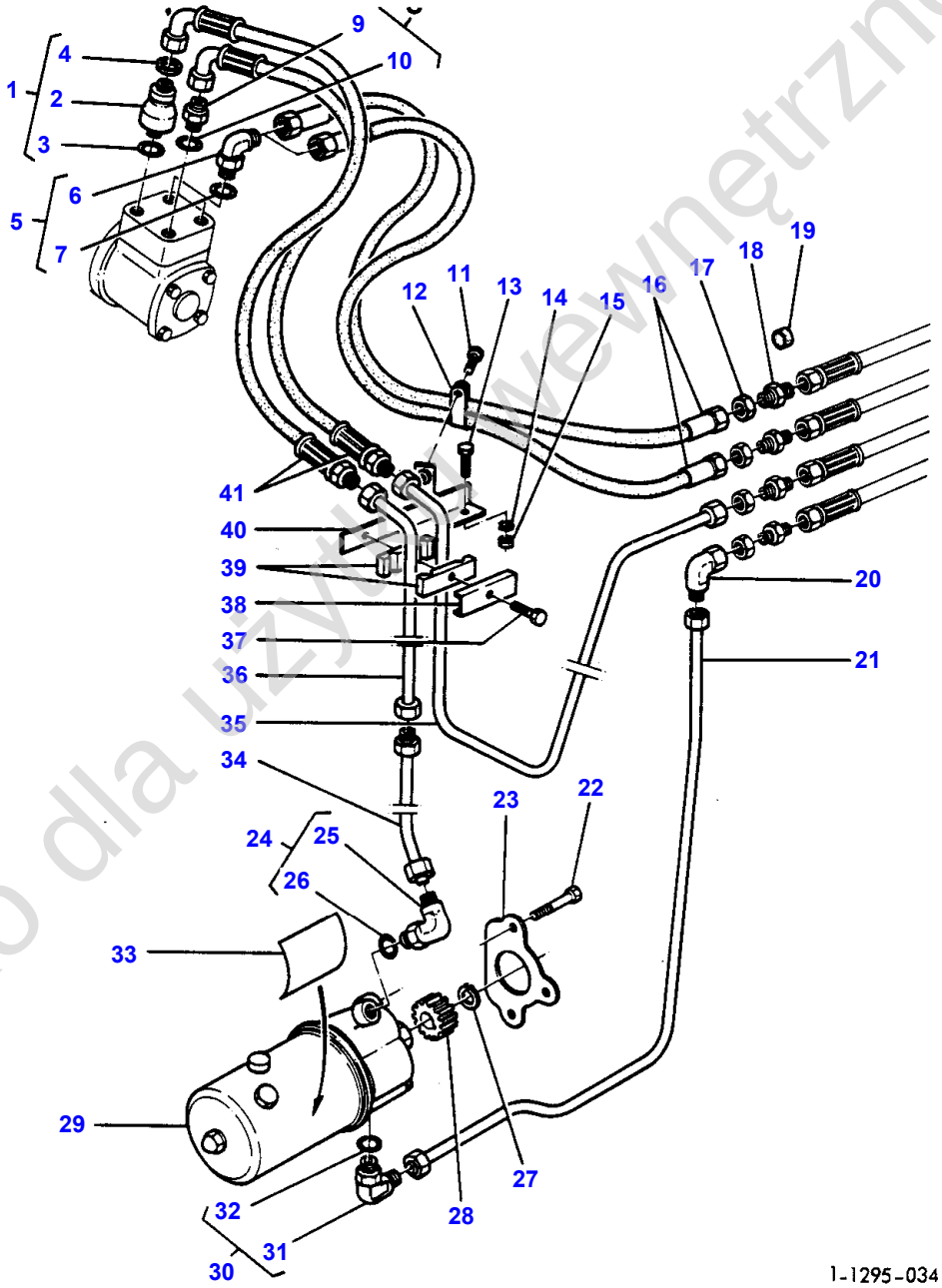

Tylko dla użytku wewnętrznego

Item	Part Number	Qty	Description	Comments
				4 WHEEL DRIVE FROM SERIAL- GERMANY
1	1662727M91	1	Reservoir	
2		1	Tank	(1)
				Not serviced, order REF 1
3	831497M1	1	O Ring	(1)
4	1662772M1	1	Washer	(1)
5	364414X91	2	Elbow	
6		1	Union	(5)
				Not serviced, order REF 5
7	831497M1	1	O Ring	(5)
8	360202X91	1	Connector	
9		1	Union	(8)
				Not serviced, order REF 8
10	831497M1	1	O Ring	(8)
11	353666X1	2	Screw Unc	
12	1875624M1	2	Clamp	
13	353681X1	1	Bolt Unc	
14	353755X1	1	Washer	
15	355565X1	1	Nut Unc	
16	1665107M91	2	Hose	
17	355830X1	4	Locknut	
18	356266X1	4	Union	
19	359380X1	1	Plug	
20	356376X1	1	Elbow	
21	1679461M91	1	Tube	
22	353546X1	1	Screw	
23	897148M3	1	Gasket	
24	357197X91	1	Elbow	
25		1	Union	(24)
				Not serviced, order REF NO 24
26	831452M1	1	O Ring	(24)
27	355791X1	1	Ring	
28	31171082	1	Gear,Hydr.Pump	
29		1	Pump	See Page - Reference Number 276/1
30	186127M91	1	Elbow	
31		1	Union	(30)
				Not serviced, order REF NO 30
32	831452M1	1	O Ring	(30)
33	1875783M1	1	Decal	
34	1876416M93	1	Tube	
35	1665622M92	1	Tube	
36	1613582M93	1	Tube	
37	376331X1	1	Bolt Unc	
38	1613581M1	1	Strap	
39	1613580M1	1	Clamp	
40	1663673M91	1	Bracket	
41	1665108M91	2	Hose	

Tylko dla użytku wewnętrznego

264

TUYAUTERIES HYDRAULIQUES DE DIRECTION
LENKUNG - HYDRAULIKLEITUNGEN
TUBAZIONI IDRAULICHE STERZO
CIRCUITO HIDRAULICO DIRECCION
STEERING HYDRAULIC LINES

12951021

1 1295 035

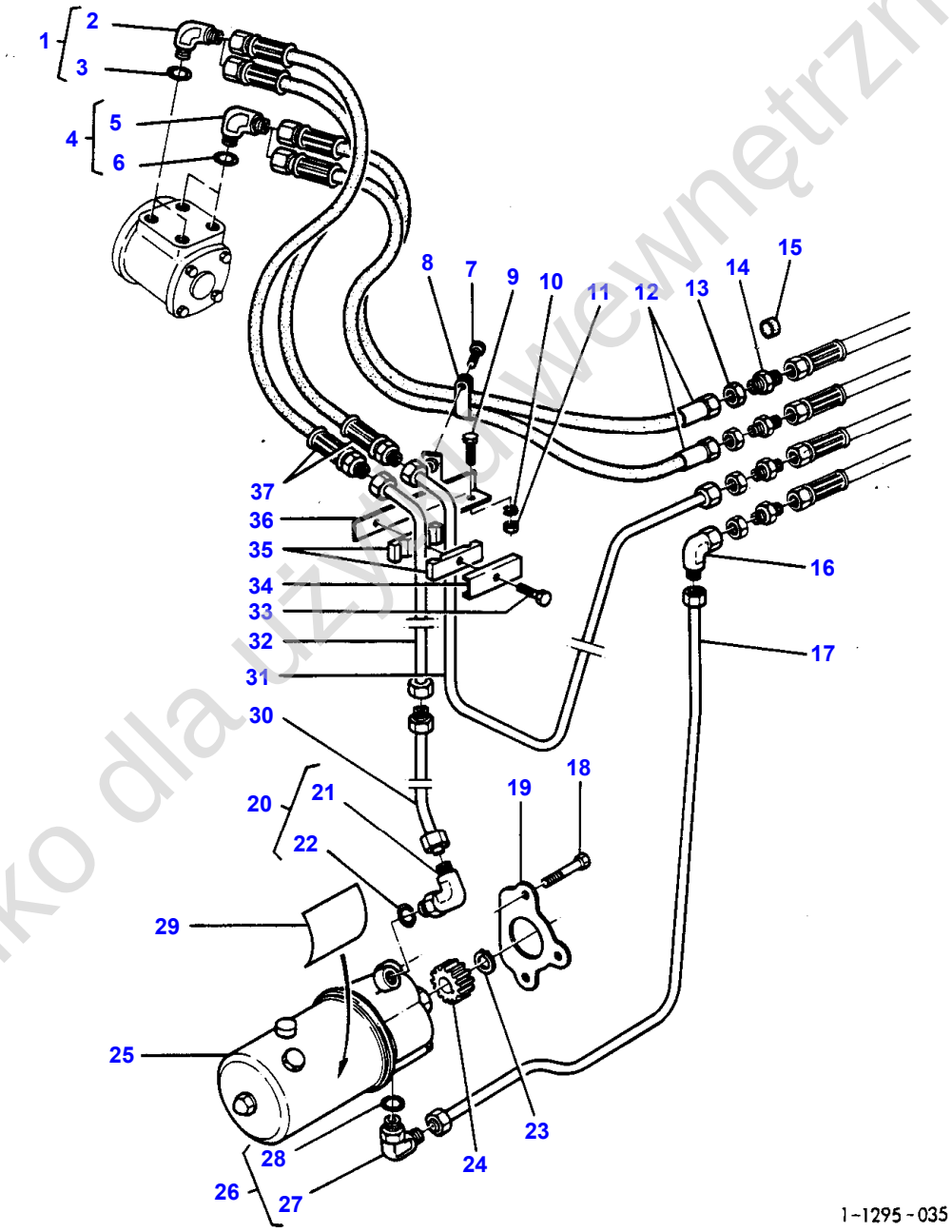

Tylko dla użytku wewnętrznego

Item	Part Number	Qty	Description	Comments
				4 WHEEL DRIVE FROM SERIAL
1	364414X91	2	Elbow	
2		1	Union	(1)
				Not serviced, order REF NO 1
3	831497M1	1	O Ring	(1)
4	364414X91	2	Elbow	
5		1	Union	(4)
				Not serviced, order REF NO 4
6	831497M1	1	O Ring	(4)
7	353666X1	2	Screw Unc	
8	1875624M1	2	Clamp	
9	353681X1	1	Bolt Unc	
10	353755X1	1	Washer	
11	355565X1	1	Nut Unc	
12	1665107M91	2	Hose	
13	355830X1	4	Locknut	
14	356266X1	4	Union	
15	359380X1	1	Plug	
16	356376X1	1	Elbow	
17	1679461M91	1	Tube	
18	353546X1	1	Screw	
19	897148M3	1	Gasket	
20	357197X91	1	Elbow	
21		1	Union	(20)
				Not serviced, order REF NO 24
22	831452M1	1	O Ring	(20)
23	355791X1	1	Ring	
24	31171082	1	Gear,Hydr.Pump	
25		1	Pump	See Page - Reference Number 276/1
26	186127M91	1	Elbow	
27		1	Union	(26)
28	831452M1	1	O Ring	(26)
29	1875782M1	1	Decal	For France only or any text in French only
	1866634M1	1	Decal	For UK only or any text in English only
30	1876416M93	1	Tube	
31	1665622M92	1	Tube	
32	1613582M93	1	Tube	
33	376331X1	1	Bolt Unc	
34	1613581M1	1	Strap	
35	1613580M1	2	Clamp	
36	1663673M91	1	Bracket	
37	1665106M91	2	Hose	

Tylko do użytku wewnętrznego

266

DIRECTION HYDROSTATIQUE	4 ROUES MOTRICES
HYDROSTATISCHE LENKUNG	ALLRADANTRIEB
STERZO IDROSTATICO	4 RUOTE MOTRICI
DIRECCION HIDROSTATICA	4 RUEDAS MOTRICES
HYDROSTATIC- STEERING	4 WHEEL DRIVE

12771011

1 1277 011

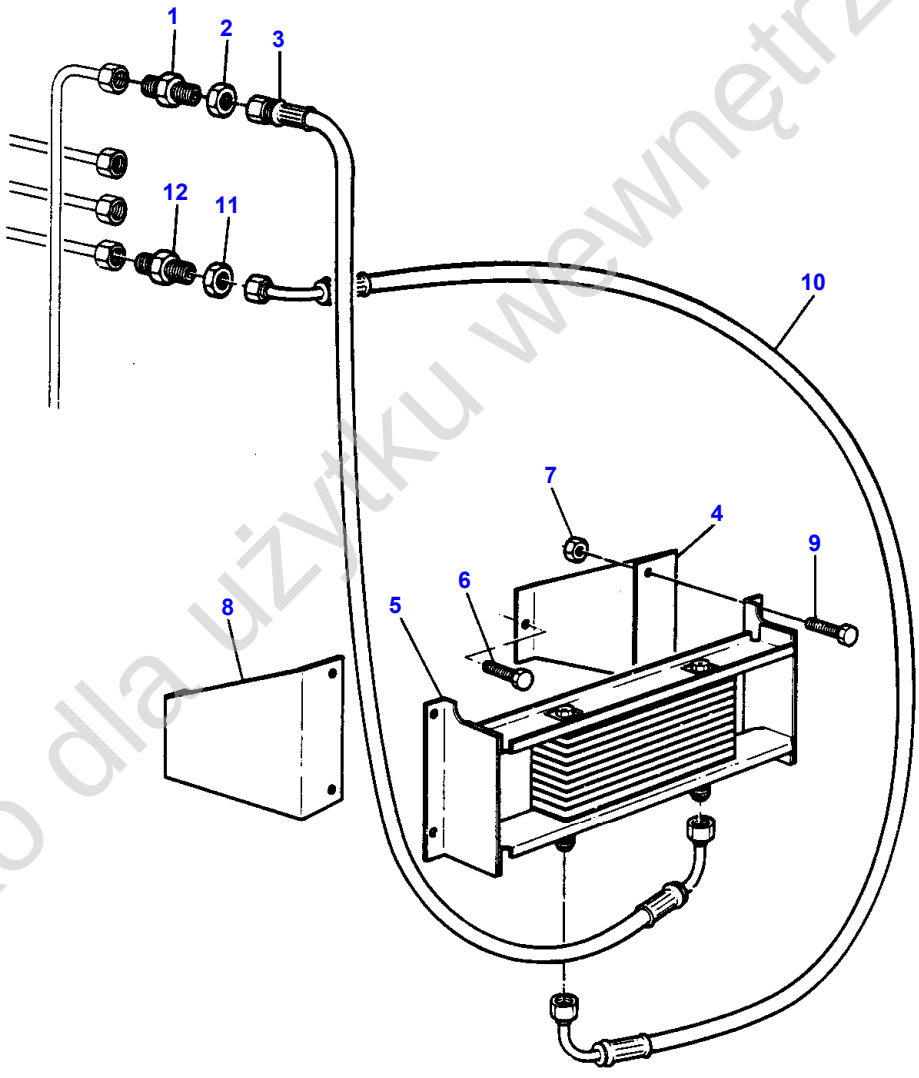

1-1277-011

Tylko dla użytku wewnętrznego

Item	Part Number	Qty	Description	Comments
				OIL COOLER- FROM SERIAL
1	356266X1	1	Union	From Serial or Engine Number NO A 139072
2	355830X1	1	Locknut	From Serial or Engine Number NO A 139072
3	1672194M91	1	Hydr Hose	From Serial or Engine Number NO A 139072
4	1672596M1	1	Bearer	Left Hand From Serial or Engine Number NO J 111057
5	1672393M1	1	Radiator	From Serial or Engine Number NO A 142041
6	353517X1	2	Screw Unf	
7	353916X1	4	Nut Unf	
8	1672597M1	1	Bearer	Right Hand From Serial or Engine Number NO J 111057
9	353516X1	4	Screw Unf	
10	3033171M1	1	Hydr Hose	From Serial or Engine Number NO A 309018
11	355830X1	3	Locknut	From Serial or Engine Number NO A 309018
12	356266X1	3	Union	From Serial or Engine Number NO A 309018

Tylko dla użytku wewnętrznego

268

TUYAUTERIES HYDRAULIQUES DE DIRECTION
LENKUNG - HYDRAULIKLEITUNGEN
TUBAZIONI IDRAULICHE STERZO
CIRCUITO HIDRAULICO DIRECCION
STEERING HYDRAULIC LINES

4 ROUES MOTRICES
ALLRADANTRIEB
4 RUOTE MOTRICI
4 RUEDAS MOTRICES
4 WHEEL DRIVE

1297-003

1 1297 003

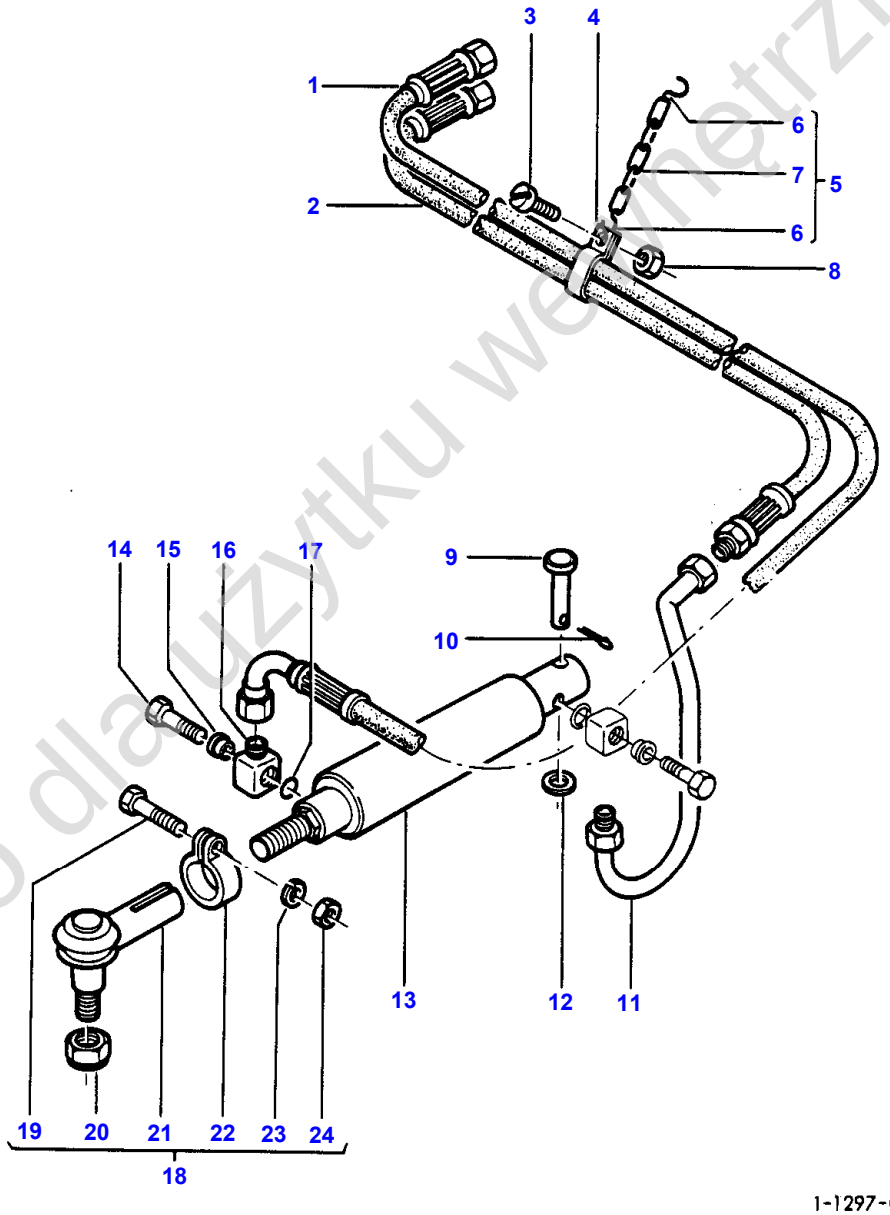

1-1297-003

Tylko dla użytku wewnętrznego

Item	Part Number	Qty	Description	Comments
				CAT 3
1	1665603M91	1	Hose	
2	1665600M91	1	Hose	
3	353988X1	1	Screw Unc	
4	1875624M1	1	Clamp	
5	1665624M91	2	Chain	
6	195559M1	2	Eye	(5)
7	195340M1	1	Chain	(5)
8	375107X1	1	Nut Unc	
9	1442452X1	1	Pin	
10	339133X1	1	Pin	
11	1665574M91	1	Tube	
12	390749X1	1	Washer	
13		1	Steering Cyl	See Page - Reference Number 282/1
14	338704X1	2	Plug	
15	338705X1	2	Bolt	
16	338703X1	2	Union	
17	338706X1	2	Washer	
18	1617826M93	1	End	
19	339246X1	1	Bolt Metric	(18)
20	884700M1	1	Nut	(18)
21	1617868M1	1	Toggle	(18)
22	182304M1	1	Collar	(18)
23	339376X1	1	Lock Washer	(18)
24	339402X1	1	Nut Metric	(18)

Tylko dla użytku wewnętrznego

270

TUYAUTERIES HYDRAULIQUES DE DIRECTION
LENKUNG – HYDRAULIKLEITUNGEN
TUBAZIONI IDRAULICHE STERZO
CIRCUITO HIDRAULICO DIRECCION
STEERING HYDRAULIC LINES

4 ROUES MOTRICES
ALLRADANTRIEB
4 RUOTE MOTRICI
4 RUEDAS MOTRICES
4 WHEEL DRIVE

12971002

1 1297 007

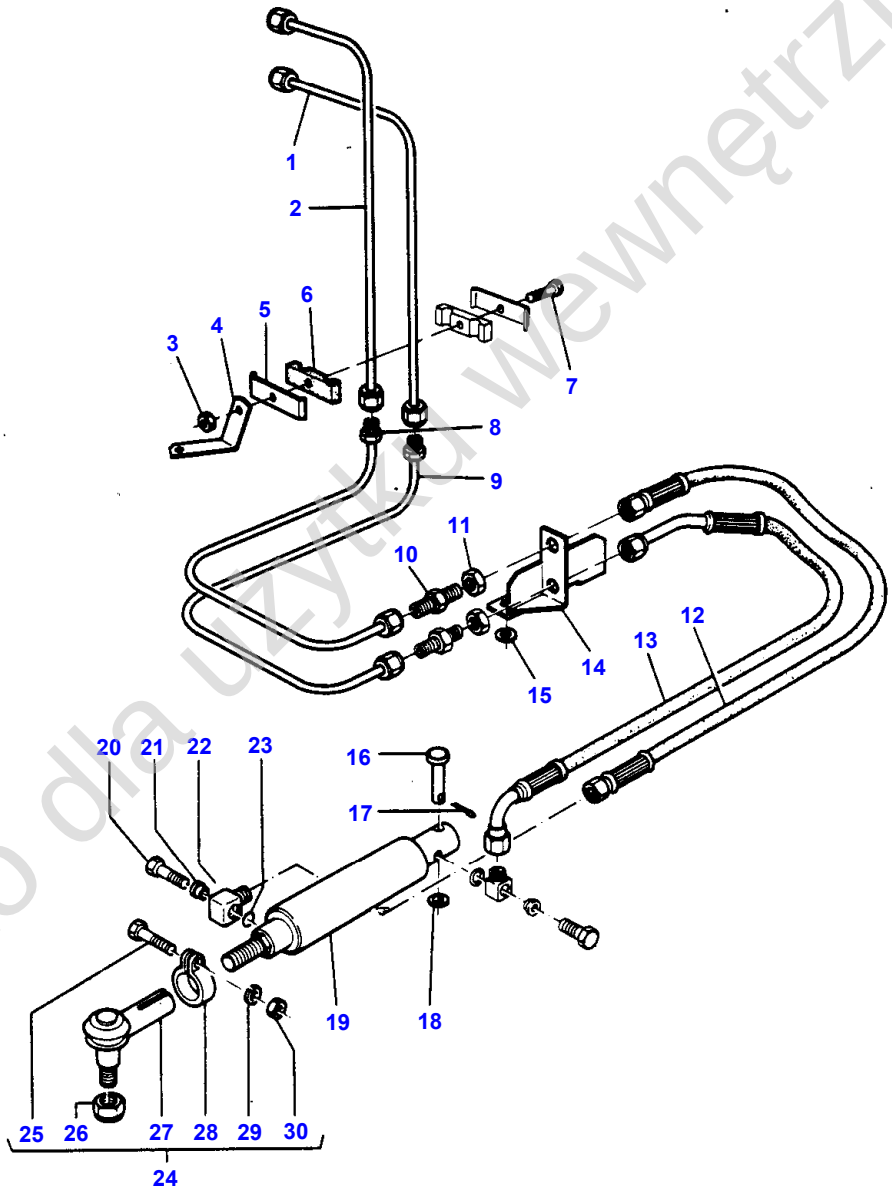

1-1297-007

Tylko dla użytku wewnętrznego

Item	Part Number	Qty	Description	Comments
				CAT 2
1	1669935M91	1	Tube	
2	1669931M91	1	Tube	
3	353918X1	1	Nut Unf	
4	1669915M1	1	Bearer	
5	1613581M1	2	Strap	
6	1613580M1	2	Clamp	
7	353509X1	1	Bolt Unf	
8	1669933M91	1	Tube	
9	1669937M91	1	Tube	
10	356266X1	2	Union	
11	355830X1	2	Locknut	
12	1669911M91	1	Hydr Hose	
13	1669910M91	1	Hydr Hose	
14	1669912M91	1	Bearer	
15	1441664X1	2	Washer Metric	
16	1442452X1	1	Pin	
17	339133X1	1	Pin	
18	390749X1	1	Washer	
19		1	Steering Cyl	See Page - Reference Number 282/1
20	338704X1	2	Plug	
21	338705X1	2	Bolt	
22	338703X1	2	Union	
23	338706X1	2	Washer	
24	1617826M93	1	End	
25	339246X1	1	Bolt Metric	(24)
26	884700M1	1	Nut	(24)
27		1	Toggle	(24)
				Not serviced, order REF NO 24
28	182304M1	1	Collar	(24)
29	339376X1	1	Lock Washer	(24)
30	339402X1	1	Nut Metric	(24)

Tylko dla użytku wewnętrznego

272

POMPE HYDRAULIQUE DE DIRECTION	AIR EQUIPEMENT
LENKHILFEPUMPE	AIR EQUIPEMENT
PUMPA STERZO	AIR EQUIPEMENT
BOMBA DIRECCION	AIR EQUIPEMENT
STEERING PUMP	AIR EQUIPEMENT

1304 1002

1 1304 009

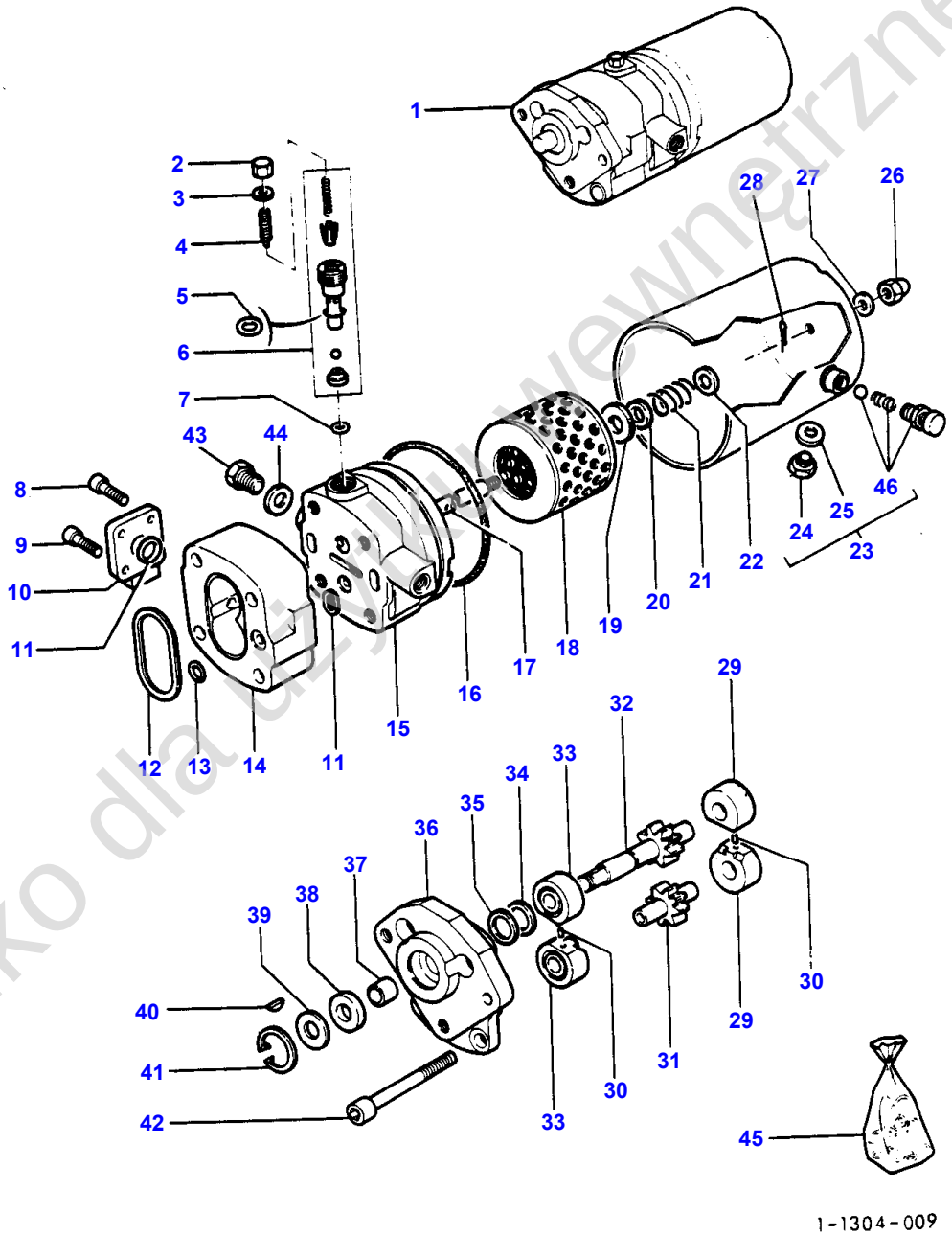

Tylko dla użytku wewnętrznego

Item	Part Number	Qty	Description	Comments
1	1808289M1	1	Pump	Up to Serial or Engine Number 11/76
2	1645885M1	1	Plug	(1)
3	1645884M1	1	Bush	(1)
4	1645883M1	1	Screw	(1)
5		1	Gasket	(45)
				Not serviced, order REF.45
6	1645879M91	1	Valve	(1)
7	1645887M1	1	Bush	(1)
8	1645909M1	2	Screw	(1)
9	1645908M1	2	Screw	(1)
10	1645907M1	1	Tie	(1)
11		3	Gasket	(45)
				Not serviced, order REF.45
12		2	Gasket	(45)
				Not serviced, order REF.45
13		1	Gasket	(45)
				Not serviced, order REF.45
14	1645878M1	1	Body	(1)
15	1645890M1	1	Pedestal	(1)
				Repairs and replaces 1635946M1
16		1	Gasket	(45)
				Not serviced, order REF.45
17	1645893M1	1	Rod	(1)
18	1645894M1	1	Element	(1)
19		1	Gasket	(45)
				Not serviced, order REF.45
20	1645896M1	1	Washer	(1)
21	1645897M1	1	Spring	(1)
22	1645910M1	1	Washer	(1)
23	1635945M1	1	Cover	(1)
24	1645903M1	1	Plug	(23)
25		1	Gasket	(23)
				Not serviced, order REF.45
26	1645905M1	1	Nut	(1)
27		1	Gasket	(45)
				Not serviced, order REF.45
28	1645944M1	1	Pin	(1)
29	1645876M1	2	Bush	(1)
30	1645877M1	2	Dowel	(1)
31	1645875M1	1	Gear	(1)
32	1645874M1	1	Gear	(1)
33	1645872M1	2	Bush	(1)
34		2	Gasket	(45)
				Not serviced, order REF.45
35	1645871M1	2	Washer	(1)
36	1645867M1	1	Cover	(1)
37	1645915M1	1	Bush	(1)
38		1	Gasket	(45)
				Not serviced, order REF.45
39	1645886M2	1	Bush	(1)
40	1645914M1	1	Key	(1)
41	1645945M1	1	Clip	(1)
42	1645891M1	4	Screw	(1)
43	1645917M1	1	Plug	(1)
44	1645916M1	1	Seal	(1)
45	1635948M92	1	Kit, Joint	(1)
46	1642859M91	1	Breather	(23)

Tylko dla użytku wewnętrznego

274

POMPE HYDRAULIQUE DE DIRECTION	PLESSEY
LENKHILFEPUMPE	PLESSEY
POMPA STERZO	PLESSEY
BOMBA DIRECCION	PLESSEY
STEERING PUMP	PLESSEY

1307100

1 1307 002

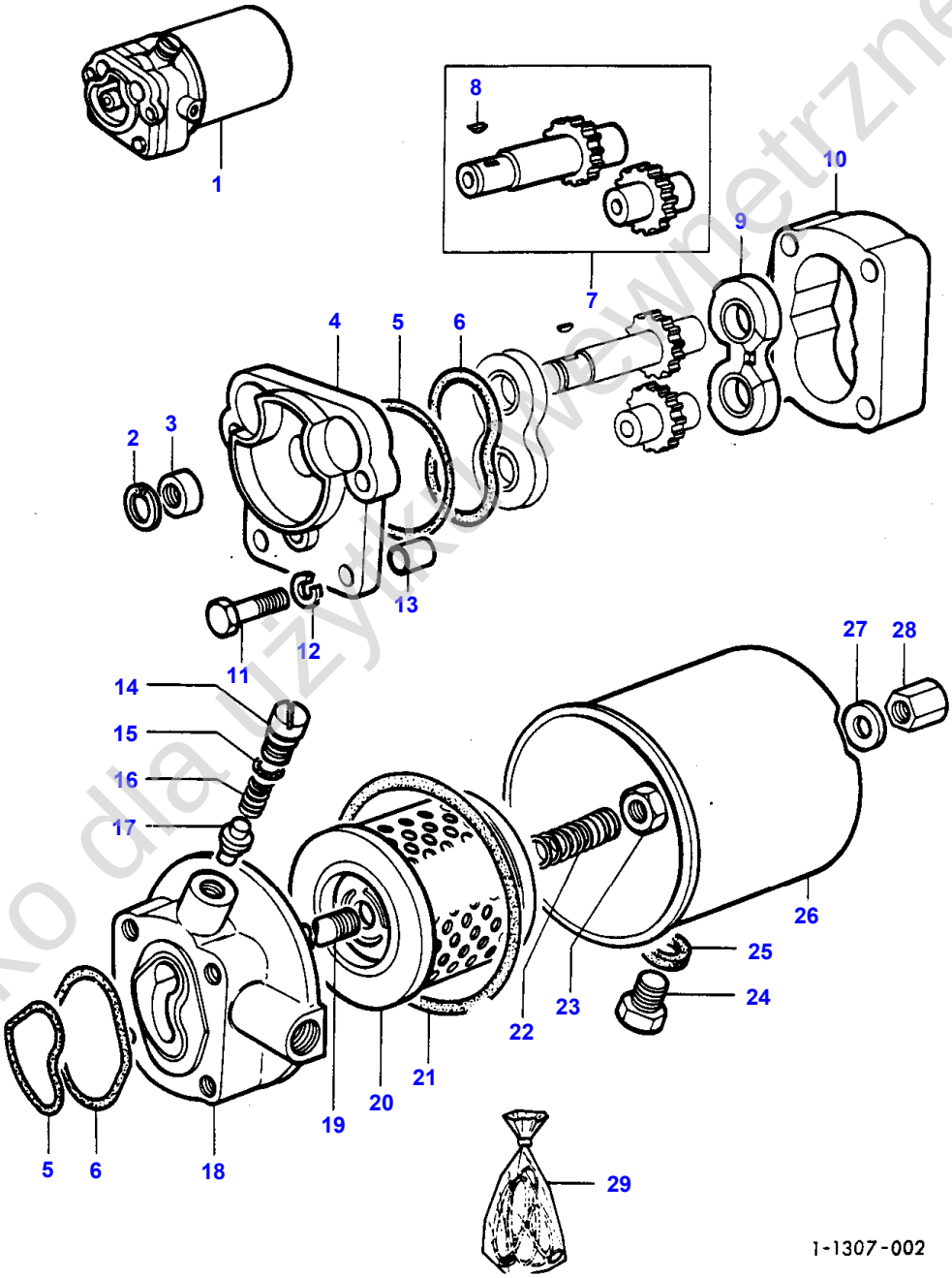

Tylko dla użytku wewnętrznego

Item	Part Number	Qty	Description	Comments
1	897147M93	1	Pump	Up to Serial or Engine Number
2	1883324M1	1	Circlip	(1)
3	1887989M1	2	Seal	(29)
4	1887985M1	1	Flange	(1)
5	1887993M1	2	Ring	(29)
6	1887992M1	2	Ring	(29)
7	894978M91	1	Kit, Gear	(1)
8	0500003	1	Woodruff Key	(7)
				Repairs and replaces 2957X
9	1884880M1	2	Bearing	(1)
10		1	Body	(1)
				Not serviced, order REF NO1
11	1886125M1	4	Bolt	(1)
12	353434X1	4	Lock Washer	(1)
13	1886212M1	4	Dowel	(1)
14	1886152M1	1	Plug	(1)
15	1887995M1	1	O Ring	(29)
16	1886120M1	1	Spring	(1)
17	1886121M1	1	Valve	(1)
18	1887984M91	1	Cover	(1)
19	1887987M1	1	Stud	(1)
20	1662566M1	1	Steering Element	(1)
				Repairs and replaces 1887990M1
21	1887994M1	1	Ring	(29)
22	1887991M1	1	Spring	(1)
23	376454X1	1	Locknut	(1)
24	1887986M1	1	Plug	(1)
25	1887988M1	1	Washer	(1)
26	1887983M91	1	Tank	(1)
27	1887996M1	1	Washer	(29)
28	1883314M1	1	Nut	(1)
29	1810509M91	X	Kit, Seal	

Tylko dla użytku wewnętrznego

276

POMPE HYDRAULIQUE DE DIRECTION	AIR EQUIPEMENT
LENKHILFEPUMPE	AIR EQUIPEMENT
PUMPA STERZO	AIR EQUIPEMENT
BOMBA DIRECCION	AIR EQUIPEMENT
STEERING PUMP	AIR EQUIPEMENT

1304-003

1 1304 010

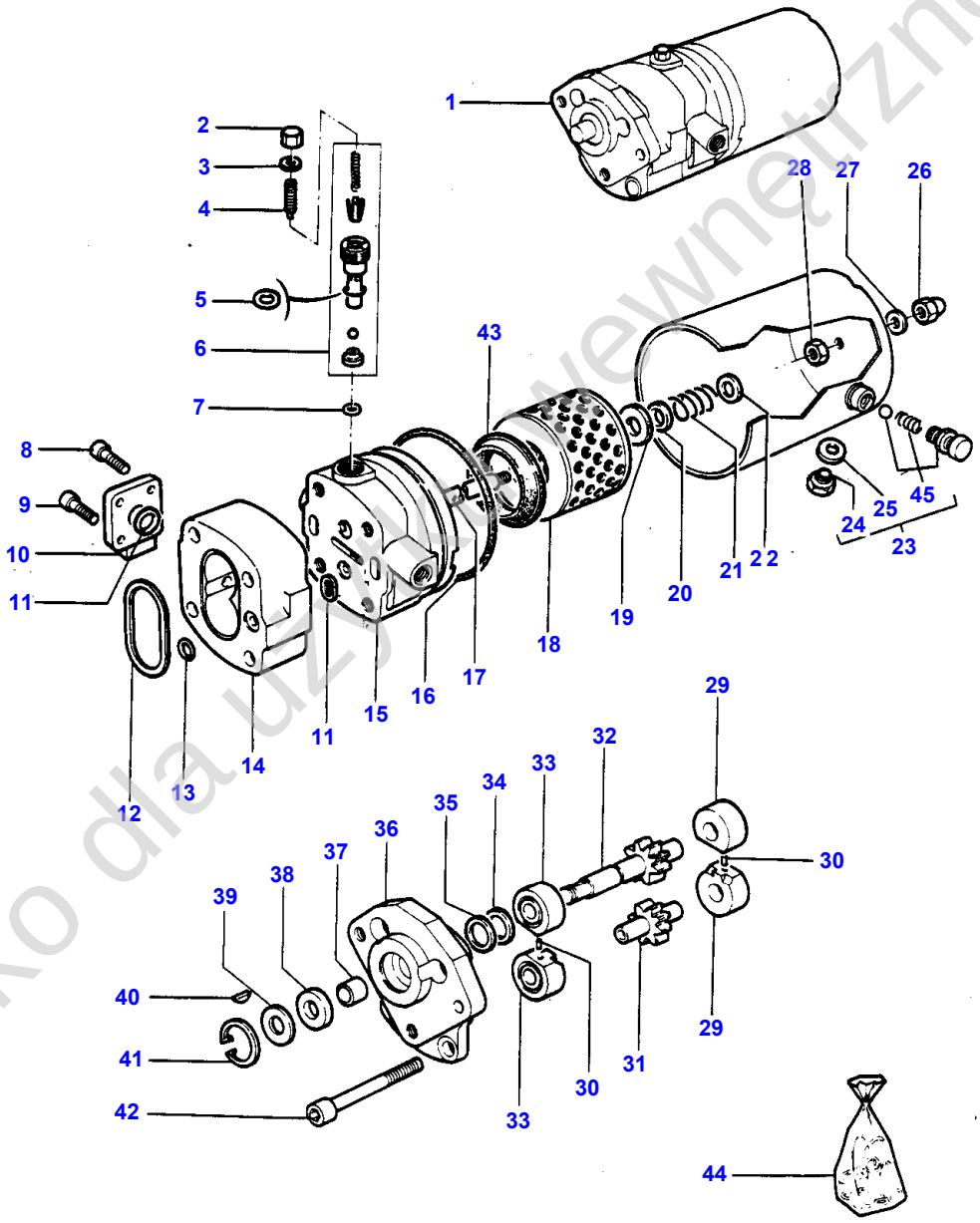

1-1304-010

Tylko dla użytku wewnętrznego

Item	Part Number	Qty	Description	Comments
1	1666726M91	1	Pump	From Serial or Engine Number 12/76 See Page - Reference Number 278/1 Not serviced, order 1666726M92
2	1645885M1	1	Plug	(1)
3	1645884M1	1	Bush	(1)
4	1645883M1	1	Screw	(1)
5		1	Gasket	(44) Not serviced, order REF.44
6	1645879M91	1	Valve	(1)
7	1645887M1	1	Bush	(1)
8	1645909M1	2	Screw	(1)
9	1645908M1	2	Screw	(1)
10	1645907M1	1	Tie	(1)
11		3	Gasket	(44) Not serviced, order REF.44
12		2	Gasket	(44) Not serviced, order REF.44
13		1	Gasket	(44) Not serviced, order REF.44
14	1645878M1	1	Body	(1)
15	1633422M1	1	Base	(1)
16		1	Gasket	(44) Not serviced, order REF.44
17	1639430M1	1	Rod	(1)
18	1639428M91	1	Filter	(1)
19		1	Gasket	(44) Not serviced, order REF.44
20	1645910M1	1	Washer	(1)
21	1639429M1	1	Spring	(1)
22			Washer	(A)
23	1635945M1	1	Cover	(1)
24	1645903M1	1	Plug	(23)
25		1	Gasket	(23) Not serviced, order REF.44
26	1639431M1	1	Nut	(1)
27		1	Gasket	(44) Not serviced, order REF.44
28	1639433M1	2	Nut	(1)
29	1645876M1	2	Bush	(1)
30	1645877M1	2	Dowel	(1)
31	1633280M1	1	Gear	(1)
32	1633279M1	1	Gear	(1)
33	1633278M1	2	Bearing	(1)
34		2	Gasket	(44) Not serviced, order REF.44
35	1645871M1	1	Washer	(1)
36	1645867M1	1	Cover	(1)
37	1645915M1	1	Bush	(1)
38		1	Gasket	(44) Not serviced, order REF.44
39	1645886M2	1	Bush	(1)
40	1645914M1	1	Key	(1)
41	1645945M1	1	Clip	(1)
42	1645891M1	4	Screw	(1)
43	1639432M1	1	Support	(1)
44	1635948M92	1	Kit, Joint	
45	1642859M91	1	Breather	(23)

(A)
NOT FITTED ON THIS APPLICATION

Tylko dla użytku wewnętrznego

278

POMPE HYDRAULIQUE DE DIRECTION	AIR EQUIPEMENT
LENKHILFEPUMPE	AIR EQUIPEMENT
PUMPA STERZO	AIR EQUIPEMENT
BOMBA DIRECCION	AIR EQUIPEMENT
STEERING PUMP	AIR EQUIPEMENT

1304-004

1 1304 016

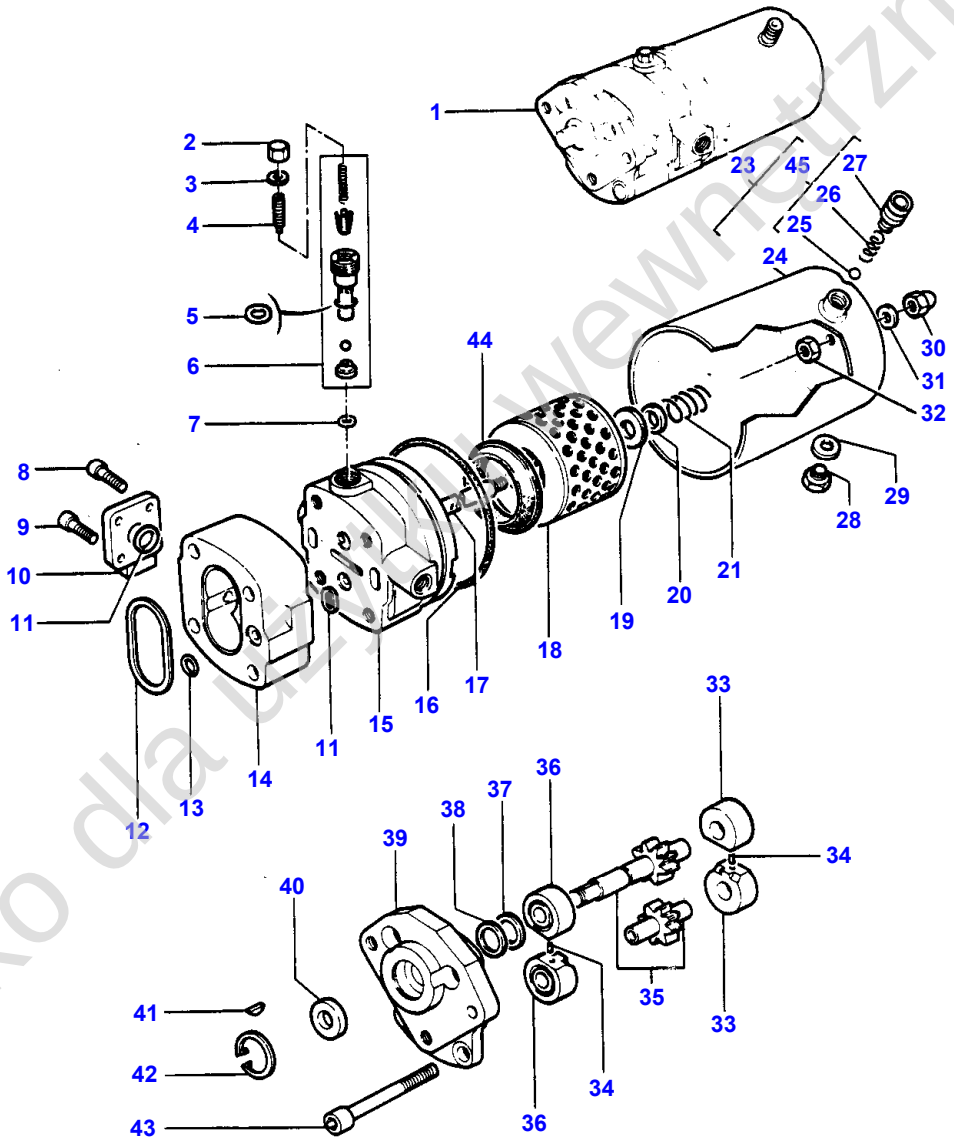

1-1304-016

Tylko dla użytku wewnętrznego

Item	Part Number	Qty	Description	Comments
1	1666726M92	1	Pump	Repairs and replaces 1666726M91
2	1645885M1	1	Plug	(1)
3	1645884M1	1	Bush	(1)
4	1645883M1	1	Screw	(1)
5		1	Gasket	(1)
				(A)
6	1645879M91	1	Valve	(1)
7	1645887M1	1	Bush	(1)
8	1645909M1	2	Screw	(1)
9	1645908M1	2	Screw	(1)
10	1645907M1	1	Tie	(1)
11		3	Gasket	(1)
				(A)
12		2	Gasket	(1)
				(A)
13		1	Gasket	(1)
				(A)
14	1645878M1	1	Body	(1)
15	1633422M1	1	Base	(1)
16		1	Gasket	(1)
				(A)
17	1639430M1	1	Rod	(1)
18	1662566M1	1	Steering Element	(1)
19		1	Gasket	(1)
				(A)
20	1645910M1	1	Washer	(1)
21	1639429M1	1	Spring	(1)
23	1635945M1	1	Cover	(1)
24		1	Tank	(23)
				Not serviced, order REF NO 23
25		1	Ball	(23)
				Not serviced, order REF NO 45
26		1	Spring	(23)
				Not serviced, order REF NO 45
27		1	Breather	(23)
				Not serviced, order REF NO 45
28	1645903M1	1	Plug	(1)
29		1	Gasket	(1)
				(A)
30	1639431M1	1	Nut	(1)
31		1	Gasket	(1)
				(A)
32	1639433M1	2	Nut	(1)
33	1645876M1	2	Bush	(1)
34	1645877M1	2	Dowel	(1)
35	1642195M91	1	Kit, Gear	(1)
36	1633278M1	2	Bearing	(1)
37		2	Gasket	(1)
				(A)
38	1645871M1	2	Washer	(1)
39	1642286M1	1	Cover	(1)
40		1	Gasket	(1)
				(A)
41	1645914M1	1	Key	(1)
42	1645945M1	1	Clip	(1)
43	1645891M1	4	Screw	(1)
44	1639432M1	1	Support	(1)
45	1642859M91	1	Breather	(23)
46	1635948M92	X	Kit, Joint	
				(A)
				INCLUDED IN KIT 1635948M92

Tylko dla użytku wewnętrznego

280

VERIN DE DIRECTION	2 ROUES MOTRICES
LENKZYLINDER	HINTERRADANTRIEB
CILINDRO STERZO	2 RUOTE MOTRICI
CILINDRO DIRECCION	2 RUEDAS MOTRICES
STEERING CYLINDER	2 WHEEL DRIVE

1316'00

1 1316 002

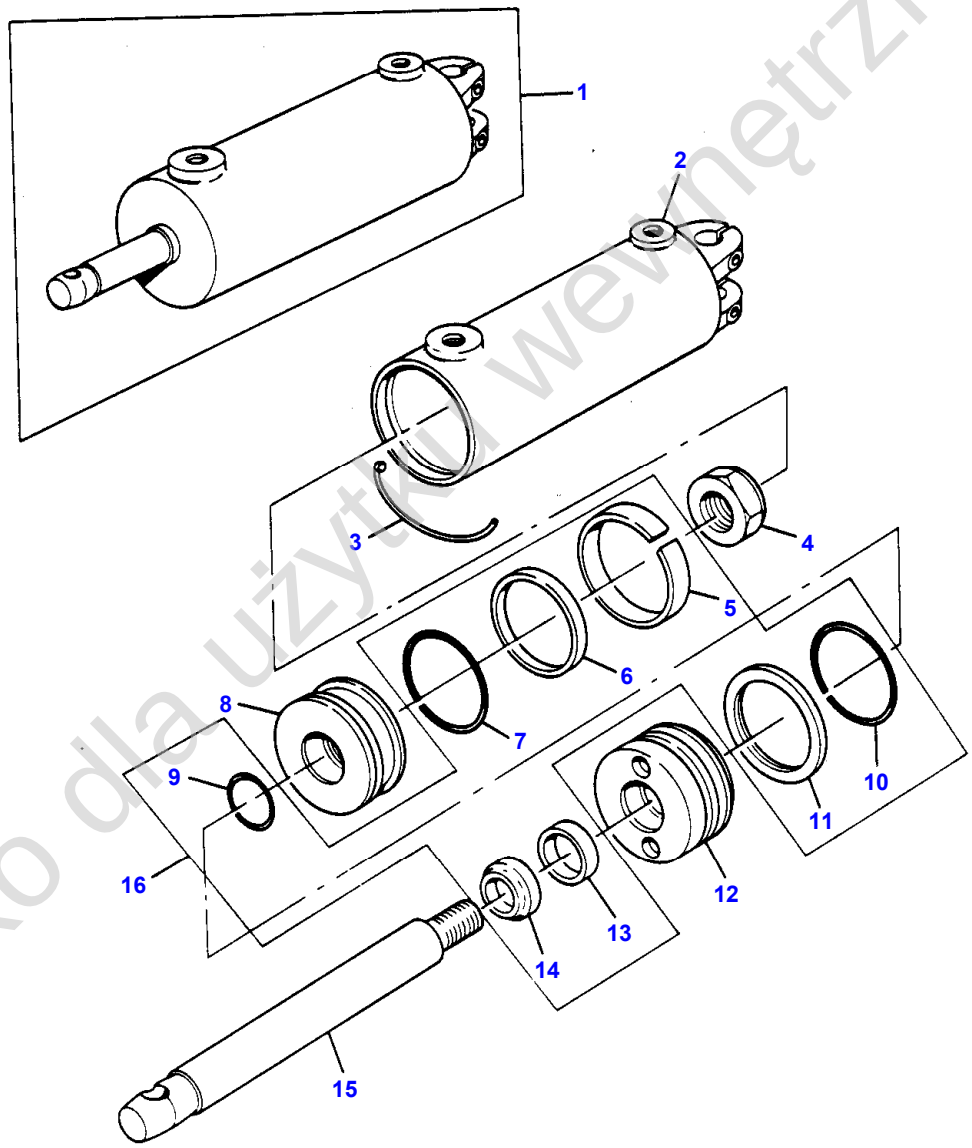

1-1316-002

Tylko dla użytku wewnętrznego

Item	Part Number	Qty	Description	Comments
1	1605121M92	1	Cylinder	
2	1606884M91	1	Barrel	(1)
3	1605320M1	1	Ring	(1)
4	1607687M1	1	Nut	(1)
5	1033685M1	1	Seal	(1) Not serviced, order 1606890M91
6	1606797M1	1	Ring	(1) Not serviced, order 1606890M91
7	338855X1	1	O Ring	(1) Not serviced, order 1606890M91
8	1606885M1	1	Piston	(1)
9	1442527X1	1	O Ring	(1) Not serviced, order 1606890M91
10	1442891X1	1	O Ring	(1) Not serviced, order 1606890M91
11	1605958M1	1	Backup Ring	(1) Not serviced, order 1606890M91
12	1606883M1	1	Bush	(1)
13	1605370M1	1	Seal	(1) Not serviced, order 1606890M91
14	1605369M1	1	Seal	(1) Not serviced, order 1606890M91
15	1606882M3	1	Rod	(1)
16	1606890M91	1	Kit	

Tylko dla użytku wewnętrznego

282

VERIN DE DIRECTION
LENKZYLINDER
CILINDRO STERZO
CILINDRO DIRECCION
STEERING CYLINDER

4 ROUES MOTRICES
ALLRADANTRIEB
4 RUOTE MOTRICI
4 RUEDAS MOTRICES
4 WHEEL DRIVE

13171003

1 1317 003

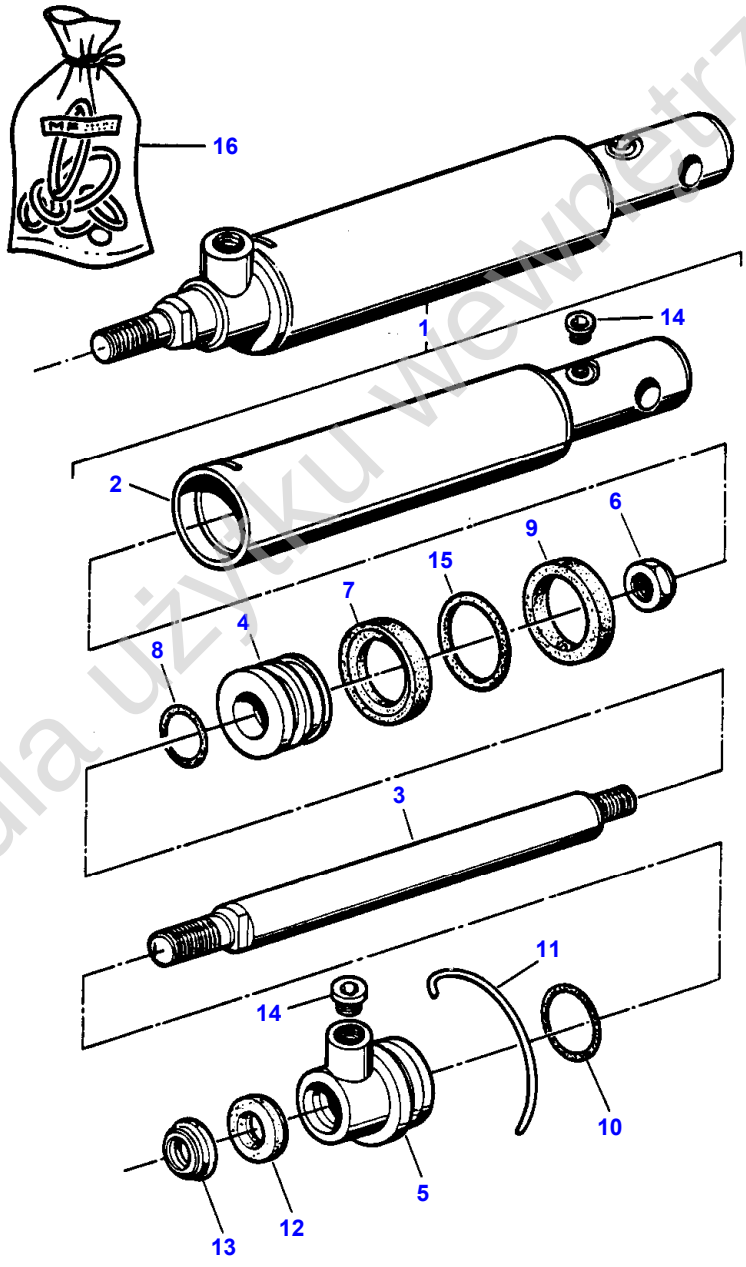

Tylko dla użytku wewnętrznego

Item	Part Number	Qty	Description	Comments
1	1748133M92	1	Ram	
2	1748134M91	1	Body	(1)
3	1748137M1	1	Piston	(1)
4	1606844M1	1	Piston	(1)
5	1748139M1	1	Packing	(1)
6	1442526X1	1	Nut Metric	(1)
7	1606780M1	1	Ring	(1) Not serviced, order 1749581M91
8	1442527X1	1	O Ring	(1) Not serviced, order 1749581M91
9	1033681M1	1	Ring	(1) Not serviced, order 1749581M91
10	1442528X1	1	Seal	(1) Not serviced, order 1749581M91
11	1748141M1	1	Clip	(1)
12	1605370M1	1	Seal	(1) Not serviced, order 1749581M91
13	1441847X1	1	Seal	(1) Not serviced, order 1749581M91
14	1748043M1	2	Plug	(1)
15	1026516M1	1	Ring	(1) Alternative 338854X1 Not serviced, order 1749581M91
15	338854X1	1	O Ring	(1) Alternative 1026516M1 Not serviced, order 1749581M91
16	1749581M91	1	Kit, Seal	

Tylko dla użytku wewnętrznego

284

DIRECTION HYDROSTATIQUE
HYDROSTATISCHE LENKUNG
STERZO IDROSTATICO
DIRECCION HIDROSTATICA
HYDROSTATIC- STEERING

12751002

1 1275 009

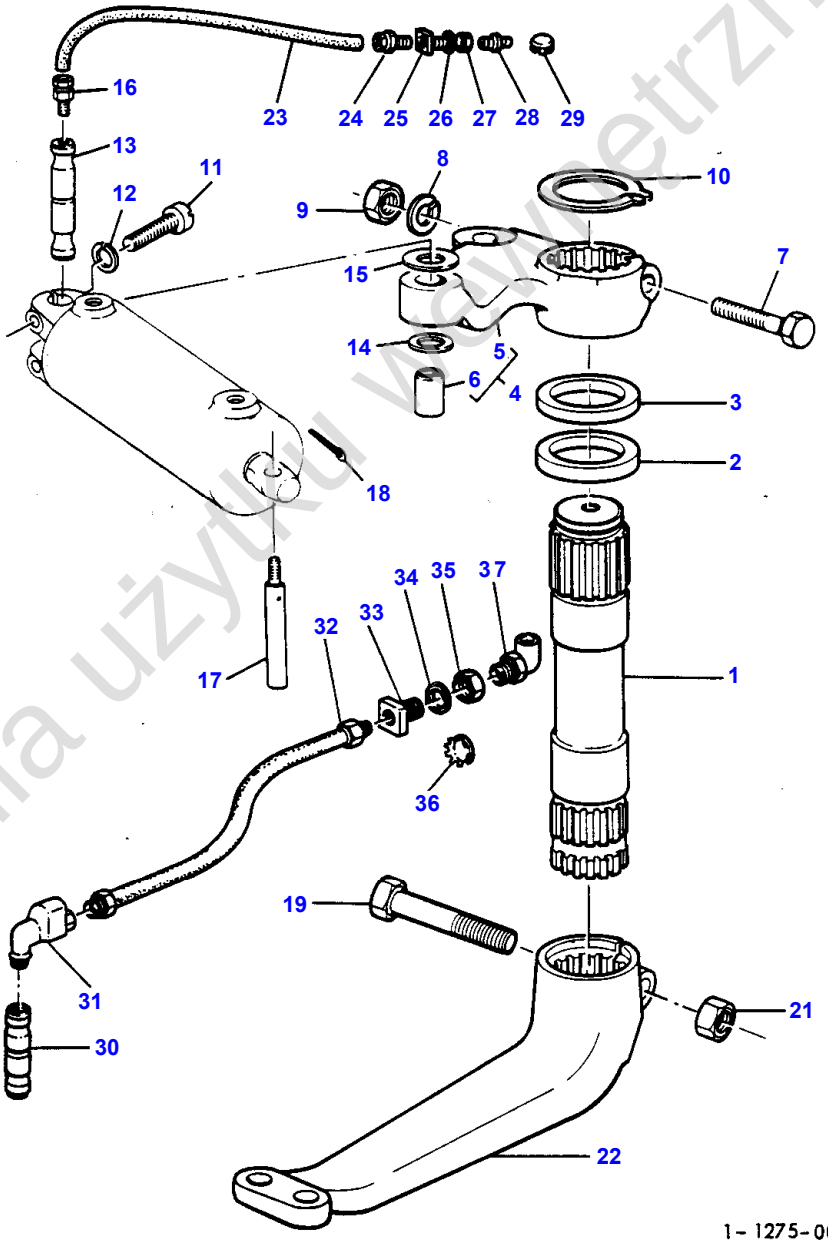

Tylko dla użytku wewnętrznego

Item	Part Number	Qty	Description	Comments
				STEERING ARM- 2 WHEEL DRIVE
1	1676666M1	1	Shaft	Repairs and replaces 898023M2
2	196079M1	1	Seal	
3	196079M1	1	Seal	
4	898355M91	1	Steering Arm	
5		1	Steering Arm	(4) Not serviced, order 898355M91
6	190560M1	1	Bush	(4)
7	361849X1	1	Bolt	
8	353433X1	1	Lock Washer	
9	368748X1	1	Nut	
10	355917X1	1	Snapring	
11	362523X1	2	Screw	
12	353439X1	2	Lock Washer	
13	898363M1	1	Pin	Up to Serial or Engine Number
14	829258M1	X	Shim	Thickness 0,08MM
15	829259M1	X	Shim	Thickness 0,51MM
16	517251M1	1	Connector	Up to Serial or Engine Number
17	898366M2	1	Pin	
18	375090X1	1	Pin	
19	377899X1	1	Bolt Unf	
21	377900X1	1	Nut	
22	1676664M1	1	Steering Arm	Repairs and replaces 897923M2
23	517253M1	1	Tube	Up to Serial or Engine Number
24	517252M1	1	Connector	Up to Serial or Engine Number
25	1809904M1	1	Union	Up to Serial or Engine Number
26	353756X1	1	Washer	Up to Serial or Engine Number
27	517254M1	1	Nut	Up to Serial or Engine Number
28	850778M1	1	Nipple	Repairs and replaces 13811X Up to Serial or Engine Number
29	1671703M1	1	Plug	
30	1671322M1	1	Pin	
31	377859X1	1	Elbow	
32	1670916M91	1	Hose	
33	517250M1	1	Union	
34	353756X1	1	Washer	
35	517254M1	1	Nut	
36	1671703M1	1	Plug	
37	29951X	1	Nipple	

Tylko dla użytku wewnętrznego

286

BARRES DE DIRECTION
LENKGESTAENGE
TIRANTERIA STERZO
CONEXIONES DIRECCION
STEERING LINKAGE

1325 1002

1 1325 023

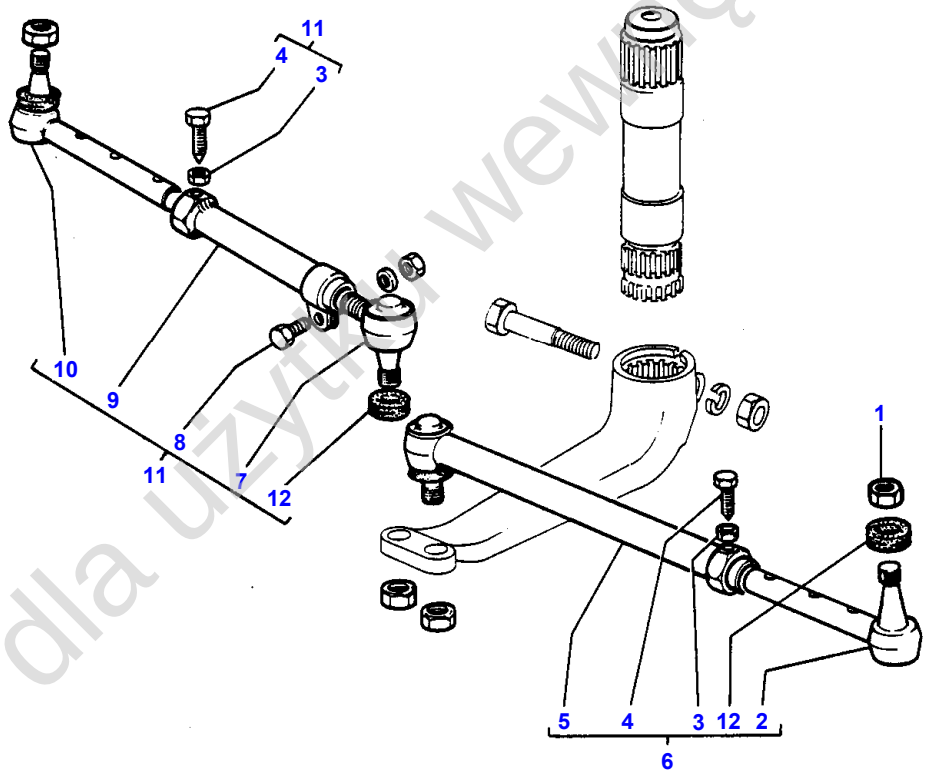

1-1325-023

Tylko dla użytku wewnętrznego

Item	Part Number	Qty	Description	Comments
1	376267X1	4	Nut Unf	
2	881736M92	1	Stem	(6)
3	355566X1	1	Nut Unc	(11)
	355566X1	1	Nut Unc	(6)
4	963113M1	1	Bolt	(6)
	963113M1	1	Bolt	(11)
5	886797M91	1	Tube	(6)
6	886796M92	1	Rod	Left Hand
7	886802M91	1	Ball Joint	(11)
8	354263X1	1	Bolt Unc	(11)
	355566X1	1	Nut Unc	(11)
	353434X1	1	Lock Washer	(11)
9	886801M91	1	Tube	(11)
10	881736M92	1	Stem	(11)
11	886800M92	1	Bar	Right Hand
12	883475M1	1	Boot	(6)
	883475M1	1	Boot	(11)

Tylko dla użytku wewnętrznego

288

COMMANDE DE POMPE HYDRAULIQUE
HYDRAULIKPUMPENANTRIEB
POMPA IDRAULICA
BOMBA HIDRALICA
HYDRAULIC PUMP DRIVE

14201009

1 1420 010

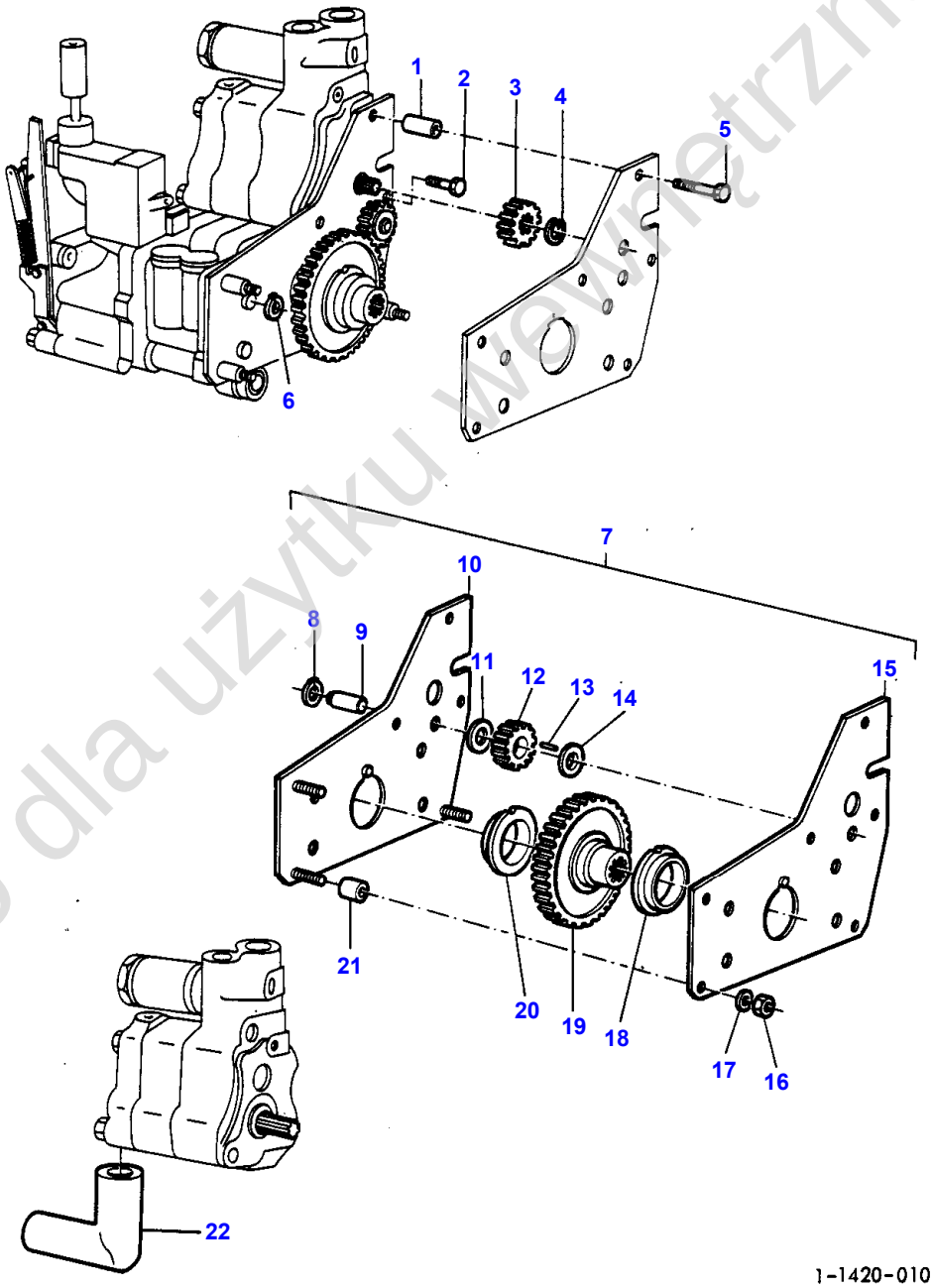

Tylko dla użytku wewnętrznego

Item	Part Number	Qty	Description	Comments
				WITH AUXILIARY PUMP
1	366045X1	2	Spacer	
2	357852X1	1	Screw Unc	
3	515961M1	1	Gear	(A) 13 D.T.Z
3	516966M2	1	Gear	(B) 19 D.T.Z
4	353213X1	1	Snapring	
5	516259M2	2	Bolt Unc	
6	377690X1	2	Ring	
7	1868970M91	1	Gear	(A)
	1869627M91	1	Gear	(B)
8	22042X	1	Segment	(7)
9	515963M3	1	Shaft	(7) (A)
9	1666146M2	1	Shaft	(7) (B)
10	1661240M91	1	Plate	(7) (A)
10	1661239M91	1	Plate	(7) (B)
11	515966M1	1	Washer	(7)
12	515962M1	1	Gear	(7) 22 D.T.Z
13	834167M1	22	Roller	(7)
14	515966M1	1	Washer	(7)
15	1661235M1	1	Plate	(7) (A)
15	1661233M1	1	Plate	(7) (B)
16	363622X1	3	Nut	(7)
17	353434X1	3	Lock Washer	(7)
18	1661237M1	1	Bush	(7)
19	1868540M1	1	Gear	(7) (A) 58 D.T.Z
19	1869628M1	1	Gear	(7) (B) 46 D.T.Z
20	1661237M1	1	Bush	(7)
21	366045X1	3	Spacer	(7)
22	1868865M2	1	Tube	
				(A) LOW FLOW
				(B) HIGH FLOW

Tylko dla użytku wewnętrznego

290

POMPE HYDRAULIQUE	DOUBLE-WARNER MOTIVE
HYDRAULIKPUMPE	DOPPELT - WARNER MOTIVE
POMPA IDRAULICA	DOPPIA WARNER MOTIVE
BOMBA HIDRAULICA	DOBLE-WARNER MOTIVE
HYDRAULIC PUMP	DUAL-WARNER MOTIVE

13941004

1 1394 001

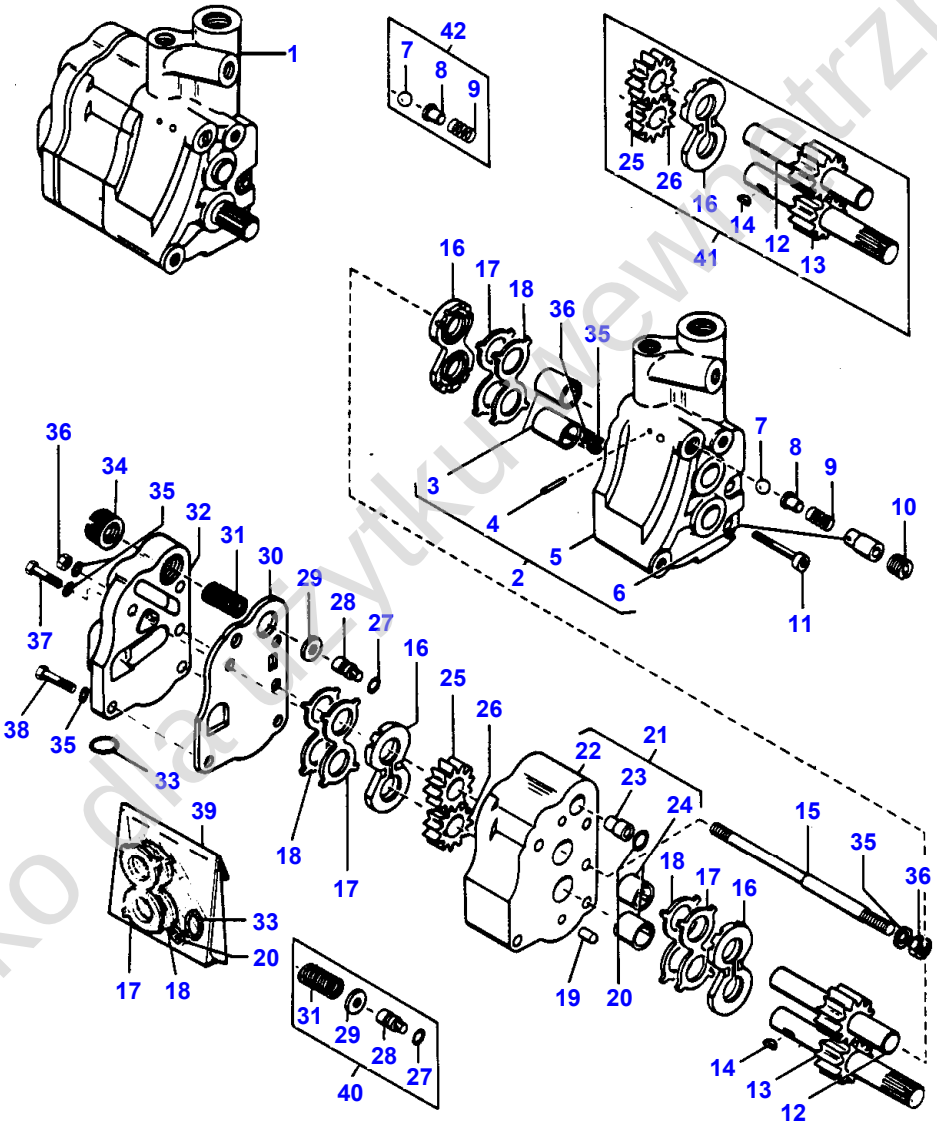

1-1394-001

Tylko dla użytku wewnętrznego

Item	Part Number	Qty	Description	Comments
1	1869458M92	1	Pump	Not serviced, order 1663627M92
2	1630996M91	1	Body	See Page - Reference Number 294/ (1)
3		2	Bush	(2) Not serviced, order 1630996M91
4		1	Pin	(2) Not serviced, order 1630996M91
5		1	Body	(2) Not serviced, order 1630996M91
6		1	Spring Pot	(2) Not serviced, order 1630996M91
7		1	Ball	(1) Not serviced, order 837009M91
8		1	Plunger	(1) Not serviced, order 837009M91
9		1	Spring	(1) Not serviced, order 837009M91
10	1035750M1	1	Screw	(1)
11	366406X1	1	Bolt	(1)
12		1	Pinion	(1) Not serviced, order 1635833M91
13		1	Pinion	(1) Not serviced, order 1635833M91
14		1	Key	(1) Not serviced, order 1635833M91
15	1035753M1	1	Stud	(1)
16		3	Seal Plate	(1) Not serviced, order 1635833M91
17		3	Gasket	(1) Not serviced, order 836528M91
18		3	Gasket	(1) Not serviced, order 836528M91
19	1043283M1	2	Pin	(1)
20		1	Gasket	(1) Not serviced, order 836528M91
21	1630997M91	1	Body	(1)
22		1	Body	(21) Not serviced, order 1630997M91
23		1	Spring Pot	(21) Not serviced, order 1630997M91
24		2	Bush	(21) Not serviced, order 1630997M91
25		1	Pinion	(1) Not serviced, order 1635833M91
26		1	Pinion	(1) Not serviced, order 1635833M91
27		1	Gasket	(1) Not serviced, order 836881M91
28		1	Piston	(1) Not serviced, order 836881M91
29		1	Spring Pot	(1) Not serviced, order 836881M91
30	1043097M1	1	Plate	(1)
31		1	Spring	(1) Not serviced, order 836881M91
32	1040933M1	1	Cover	(1)
33		1	Gasket	(1) Not serviced, order 836528M91
34	1635834M1	1	Screw	(1)
35	353755X1	6	Washer	(1)
36	353916X1	3	Nut Unf	(1)
37	368341X1	1	Bolt Unc	(1)
38	368340X1	2	Bolt Unc	(1)
39	836528M91	1	Kit, Seal	
40	836881M91	1	Kit, Valve	
41	1635833M91	1	Kit, Gear	

Tylko dla użytku wewnętrznego

Item	Part Number	Qty	Description	Comments
42	837009M91	1	Kit, Valve	

Tylko dla użytku wewnętrznego

292

POMPE HYDRAULIQUE	DOUBLE-PLESSEY
HYDRAULIKPUMPE	DOPPELT - PLESSEY
POMPA IDRAULICA	DOPPIA PLESSEY
BOMBA HIDRAULICA	DOBLE-PLESSEY
HYDRAULIC PUMP	DUAL-PLESSEY

13921003

1 1392 001

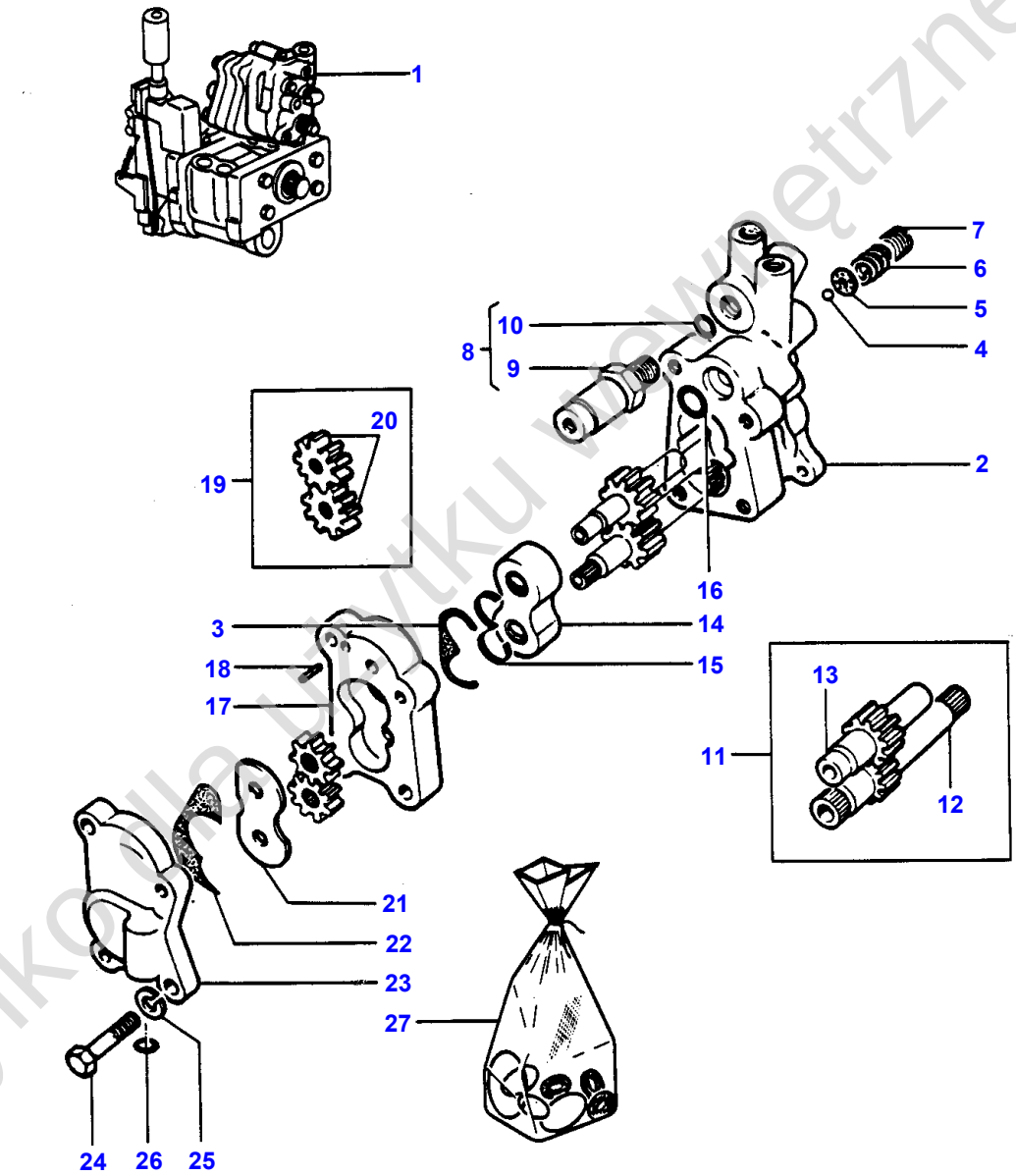

1-1392-001

Tylko do użytku prywatnego

Item	Part Number	Qty	Description	Comments
1	886367M96	1	Pump	Not serviced, order 1663627M92
				See Page - Reference Number 294/
2		1	Body	(1)
				Not serviced, order 1663627M92
3	1886038M1	1	Ring	(27)
4	22208X	1	Ball	(1)
5	1885788M1	1	Plate	(1)
6	1886511M1	1	Spring	(1)
7	1885582M1	1	Adjuster	(1)
8	1885316M91	1	Valve	(1)
9		1	Pressure Valve	(8)
				Not serviced, order 1885316M91
10	1885319M1	1	Ring	(8)
11	1810438M91	1	Gear	(1)
12		1	Pinion	(11)
				Not serviced, order 1810438M91
13		1	Pinion	(11)
				Not serviced, order 1810438M91
14	1885305M1	1	Bearing	(1)
15	1885315M1	1	Strip	(27)
16	1885313M1	1	Seal	(27)
17	1885306M1	1	Body	(1)
18	1886037M1	2	Dowel	(1)
19	1810519M91	1	Kit	(1)
20		2	Pinion	(19)
				Not serviced, order 1810519M91
21	1888192M1	1	Plate	(1)
22	1885310M1	1	Seal	(27)
23	1888360M1	1	Cover	(1)
24	1888194M1	4	Bolt	(1)
25	353434X1	4	Lock Washer	(1)
26	1886036M1	1	Gasket	(27)
27	1810318M91	X	Kit	(1)

Tylko dla użytku wewnętrznego

294

POMPE HYDRAULIQUE	DOUBLE-AIR EQUIPEMENT
HYDRAULIKPUMPE	DOPPELT – AIR EQUIPMENT
POMPA IDRAULICA	EQUIPAGGIAMENTO ARIA DOPPIA
BOMBA HIDRAULICA	DOBLE-AIR EQUIPMENT
HYDRAULIC PUMP	DUAL-AIR EQUIPMENT

13961009

1 1396 004

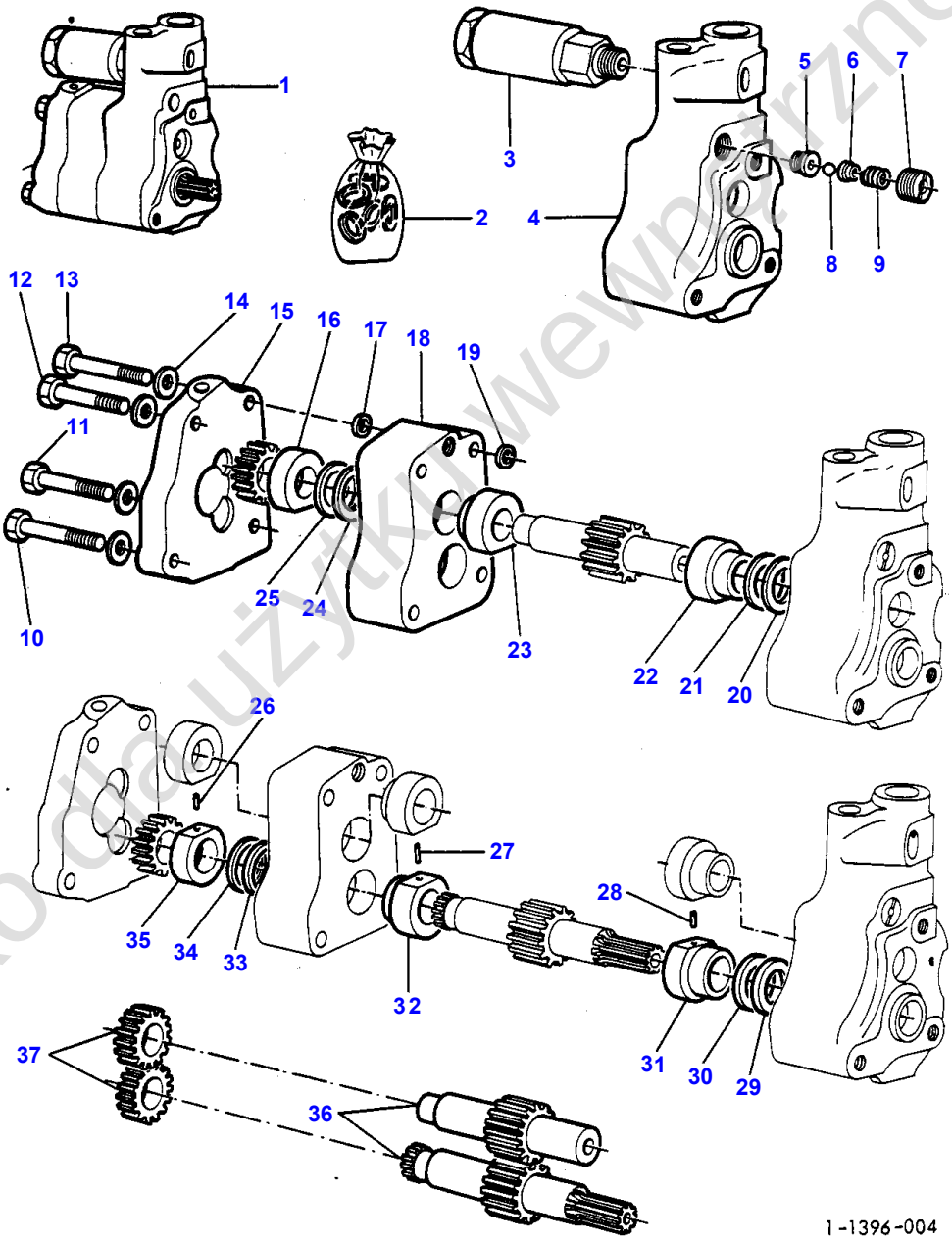

Tylko do użytku wewnętrznego

Item	Part Number	Qty	Description	Comments
1	1663627M92	1	Hydraulic Pump	(A) Repairs and replaces 886367M96 Repairs and replaces 1869458M92
2	1633110M91	1	Kit, Seal	(1)
3	1633216M92	1	Restrictor	(1)
4	1422385M1	1	Body	(1)
5	1422399M1	1	Seat	(1)
6	1633107M1	1	Stop	(1)
7	1633109M1	1	Regulator	(1)
8	1633106M1	1	Ball	(1)
9	1633108M1	1	Spring	(1)
10	1422398M1	1	Screw	(1)
11	1422397M1	1	Screw	(1)
12	1422397M1	1	Screw	(1)
13	1422398M1	1	Screw	(1)
14	1639263M1	4	Washer	(1)
15	1422396M1	1	Cover	(1)
16	1422394M1	1	Bearing	(1)
17	1633187M1	1	Seal	(1)
18	1422393M1	1	Body	(1)
19	1633187M1	1	Seal	(1)
20	1645871M1	1	Washer	(1)
21	1422390M1	1	Seal	(1)
22	1422386M1	1	Bearing	(1)
23	1422391M1	1	Bearing	(1)
24	1645871M1	1	Washer	(1)
25	1422390M1	1	Seal	(1)
26	1645877M1	1	Dowel	(1)
27	1645877M1	1	Dowel	(1)
28	1645877M1	1	Dowel	(1)
29	1645871M1	1	Washer	(1)
30	1422390M1	1	Seal	(1)
31	1422387M1	1	Bearing	(1)
32	1422391M1	1	Bearing	(1)
33	1645871M1	1	Washer	(1)
34	1422390M1	1	Seal	(1)
35	1422394M1	1	Bearing	(1)
36	1422388M1	1	Kit, Pinion	(1)
37	1422395M1	1	Kit, Pinion	(1)

(A)
NOT SUPPLIED-1675136M91 ORDER-DETAIL ORDER

Tylko dla użytku wewnętrznego

296

POMPE HYDRAULIQUE
HYDRAULIKPUMPE
POMPA IDRAULICA
BOMBA HIDRAULICA
HYDRAULIC PUMP

DOUBLE-AIR EQUIPEMENT
DOPPELT – AIR EQUIPMENT
EQUIPAGGIAMENTO ARIA DOPPIA
DOBLE-AIR EQUIPMENT
DUAL-AIR EQUIPMENT

13961010

1 1396 004

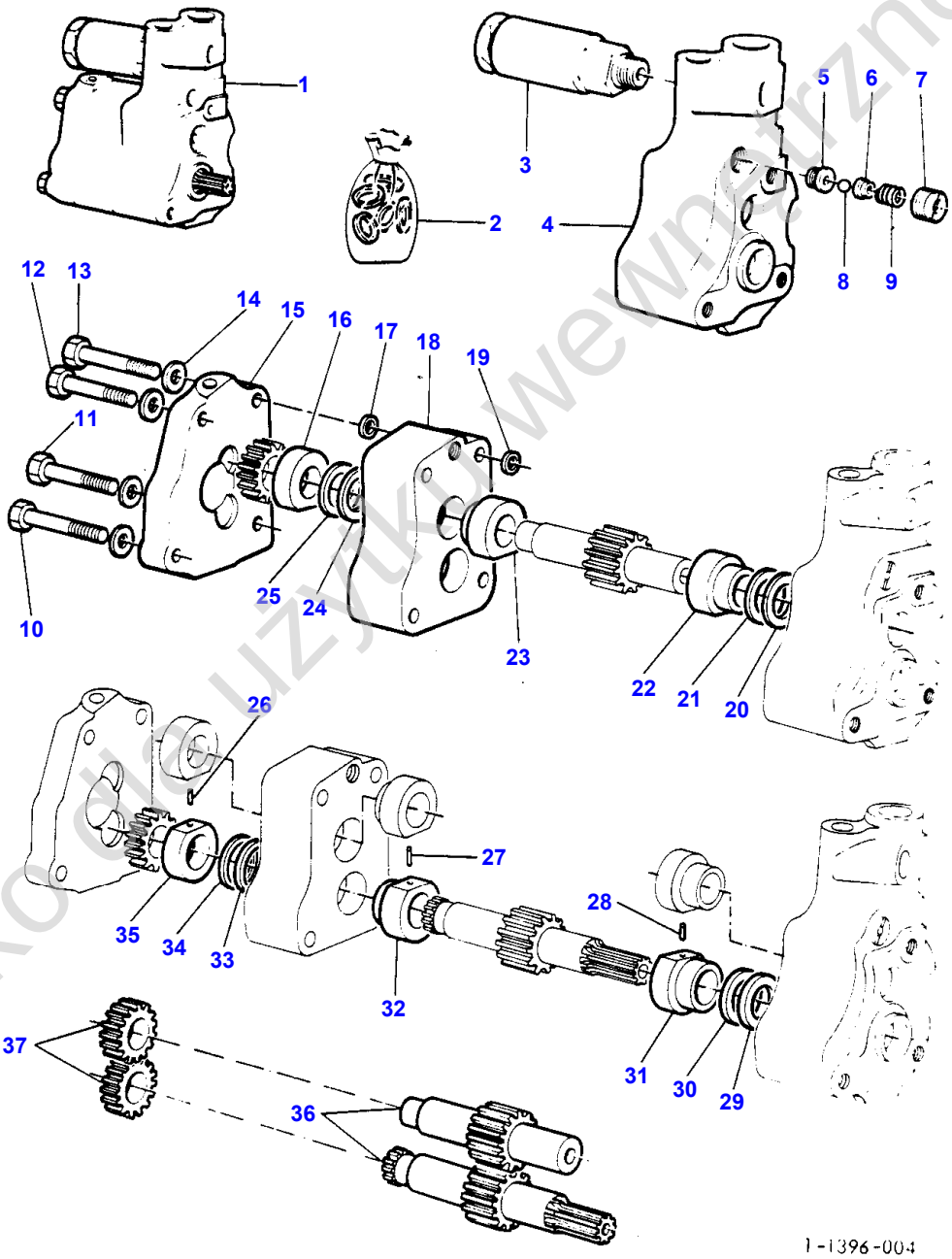

Tylko dla użytku wewnętrznego

Item	Part Number	Qty	Description	Comments
1	1675136M91	1	Hydraulic Pump	Repairs and replaces 1663627M92 See Page - Reference Number 294/
2	1642276M91	1	Kit	(1)
3	1633216M92	1	Restrictor	(1)
4	1422385M1	1	Body	(1)
5	1422399M1	1	Seat	(1)
6	1633107M1	1	Stop	(1)
7	1633109M1	1	Regulator	(1)
8	1633106M1	1	Ball	(1)
9	1633108M1	1	Spring	(1)
10	1422398M1	1	Screw	(1)
11	1422397M1	1	Screw	(1)
12	1422397M1	1	Screw	(1)
13	1422398M1	1	Screw	(1)
14	1639263M1	1	Washer	(1)
15	1642275M1	1	Cover	(1)
16	1422394M1	1	Bearing	(1)
17	1633187M1	1	Seal	(1)
18	1422393M1	1	Body	(1)
19	1633187M1	1	Seal	(1)
20	1645871M1	1	Washer	(1)
21	1422390M1	1	Seal	(1)
22	1422386M1	1	Bearing	(1)
23	1422391M1	1	Bearing	(1)
24	1645871M1	1	Washer	(1)
25	1422390M1	1	Seal	(1)
26	1645877M1	1	Dowel	(1)
27	1645877M1	1	Dowel	(1)
28	1645877M1	1	Dowel	(1)
29	1645871M1	1	Washer	(1)
30	1422390M1	1	Seal	(1)
31	1422387M1	1	Bearing	(1)
32	1422391M1	1	Bearing	(1)
33	1645871M1	1	Washer	(1)
34	1422390M1	1	Seal	(1)
35	1422394M1	1	Bearing	(1)
36	1422388M1	1	Kit, Pinion	(1)
37	1422395M1	1	Kit, Pinion	(1)

Tylko dla użytku wewnętrznego

298

COUVERCLE ET TUYAUTERIE DE PRISE DE FORCE INDEPENDANTE
LASTSCHALTBARE ZAPFWELLE – LEITUNGEN UND DECKEL
TUBAZIONI E COPERCHIO PRESA DI FORZA
TOMA DE FUERZA INDEPENDIENTE-TUBERIAS Y CUBIERTA
IPTO-PIPES AND COVER

1075 1001

1 1075 001

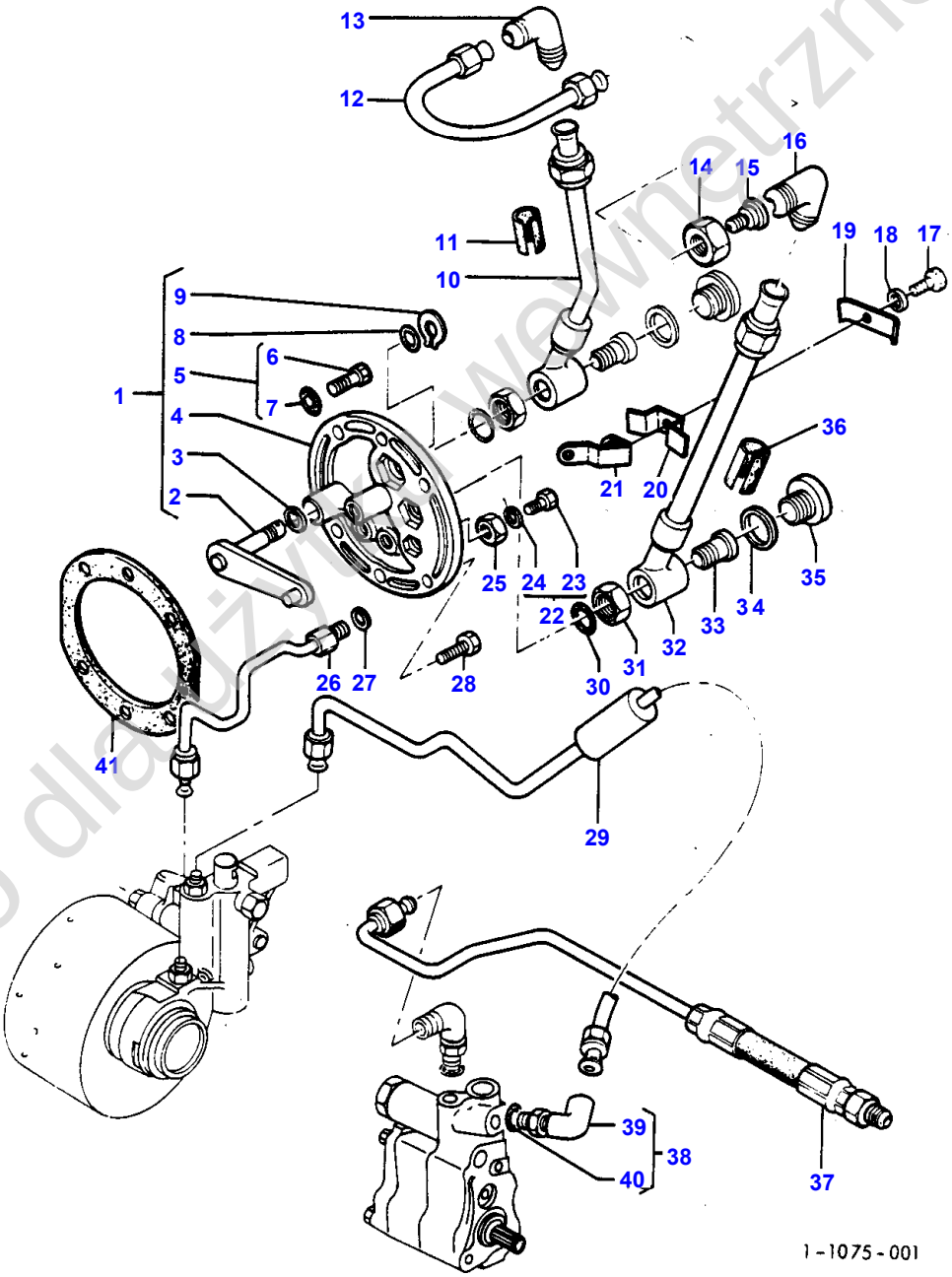

Tylko dla użytku wewnętrznego

Item	Part Number	Qty	Description	Comments
1	1870551M91	1	Cover	(A)
2	1870065M92	1	Actuator	(1)
3	377127X1	1	Shim	(1)
4	1870544M1	1	Cover	(1)
				(A)
5	518336M91	1	Locator	(1)
6		1	Plough Bolt	(5)
				Not serviced, order 518336M91
7	831452M1	1	O Ring	(5)
8	195562M1	1	O Ring	(1)
9	353213X1	1	Snapring	(1)
10	1660177M92	1	Tube	(A)
11	1660328M1	1	Isolator	(A)
12	1660179M91	1	Tube	(A)
13	356376X1	1	Elbow	(A)
14	22241X	1	Nut	(A)
15	356632X1	1	Adaptor	(A)
16	356378X1	1	Elbow	(A)
17	353503X1	1	Screw Unf	(A)
18	353754X1	1	Washer	(A)
19	1661079M1	1	Plate	(A)
20	1661077M1	1	Plate	(A)
21	1661112M91	1	Bracket	(A)
22	358720X91	1	Plug	
23		1	Plug	(22)
24	831493M1	1	O Ring	(22)
25	886534M1	1	Nut	
26	1869936M92	1	Tube Assy	
27	886535M1	1	Washer	
28	362471X1	X	Screw	
	362475X1	X	Screw	
29	1872539M92	1	Filter	
30	831497M1	2	O Ring	(A)
31	886467M1	2	Nut Unf	(A)
32	1660175M91	1	Tube	(A)
33	1660171M3	2	Connector	(A)
34	377376X1	2	Seal	(A)
35	1660173M1	2	Plug	(A)
36	1660327M1	1	Isolator	(A)
37	1676103M91	1	Hydr Hose	(C)
				Repairs and replaces 1872608M91
38	377579X91	2	Elbow	
39		1	Union	(38)
				Not serviced, order 377579X91
40	831452M1	1	O Ring	(38)
41	181217M1	1	Gasket	

(A)
WITH AUXILIARY HYDRAULICS

(C)
INTERNAL LINES

Tylko dla użytku wewnętrznego

300

TUYAUTERIES INTERNES
INNERE LEITUNGEN
TUBAZIONI INTERNE
CONDUCCIONES INTERNAS
INTERNAL LINES

14901019

1 1490 023

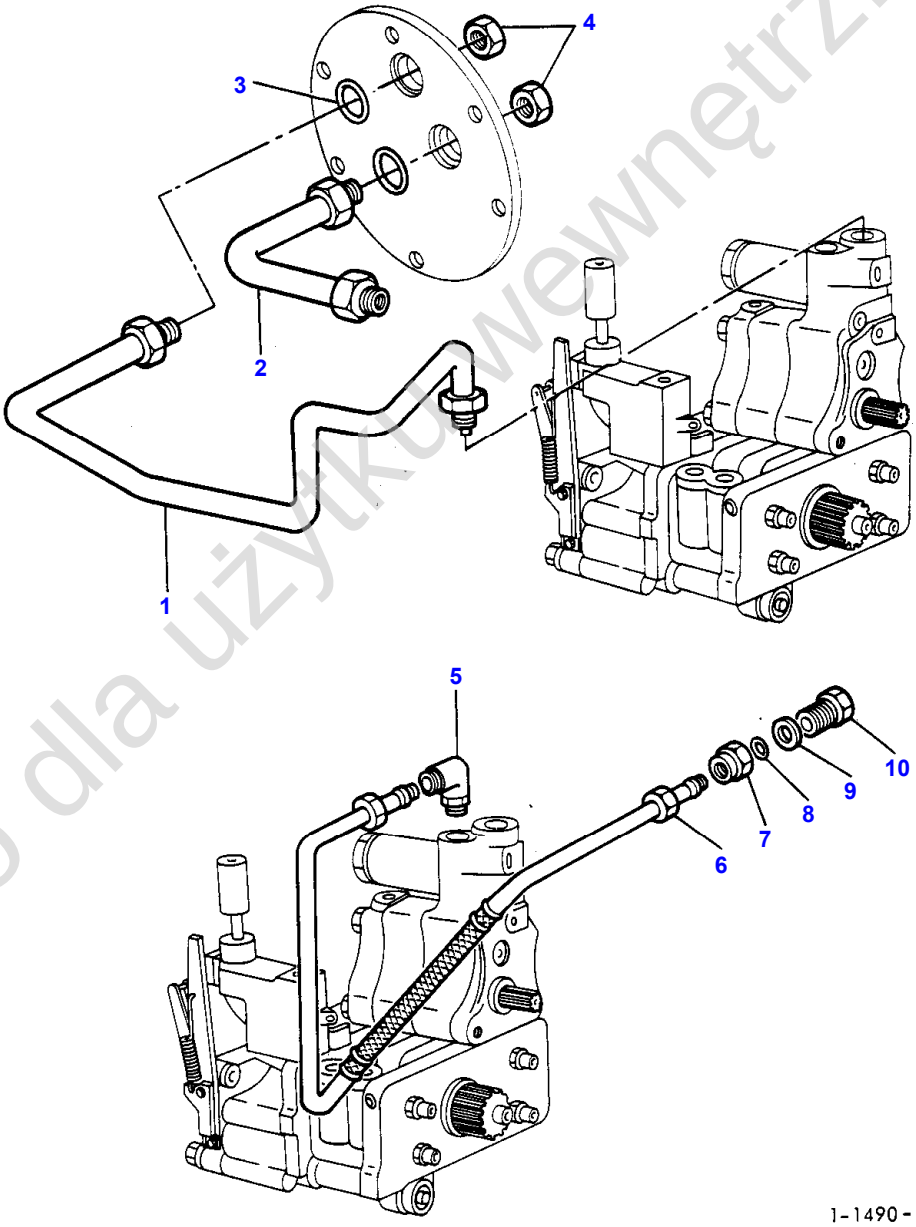

Tylko dla użytku wewnętrznego

Item	Part Number	Qty	Description	Comments
				AUXILIARY HYDRAULICS-WITH AUXILIARY PUMP
1	1872542M92	1	Tube	
2	1674197M91	1	Tube	
3	886468M1	2	Washer	
4	886467M1	2	Nut Unf	
5	377579X91	1	Elbow	
6	1663281M93	1	Hose Assy	
7	1664125M1	1	Connector	
8	3007609X1	1	O Ring	
9	1664183M1	1	Washer	
10	1663474M1	1	Connector	

Tylko dla użytku wewnętrznego

302

TUYAUTERIES INTERNES
INNERE LEITUNGEN
TUBAZIONI INTERNE
CONDUCCIONES INTERNAS
INTERNAL LINES

14901003

1 1490 003

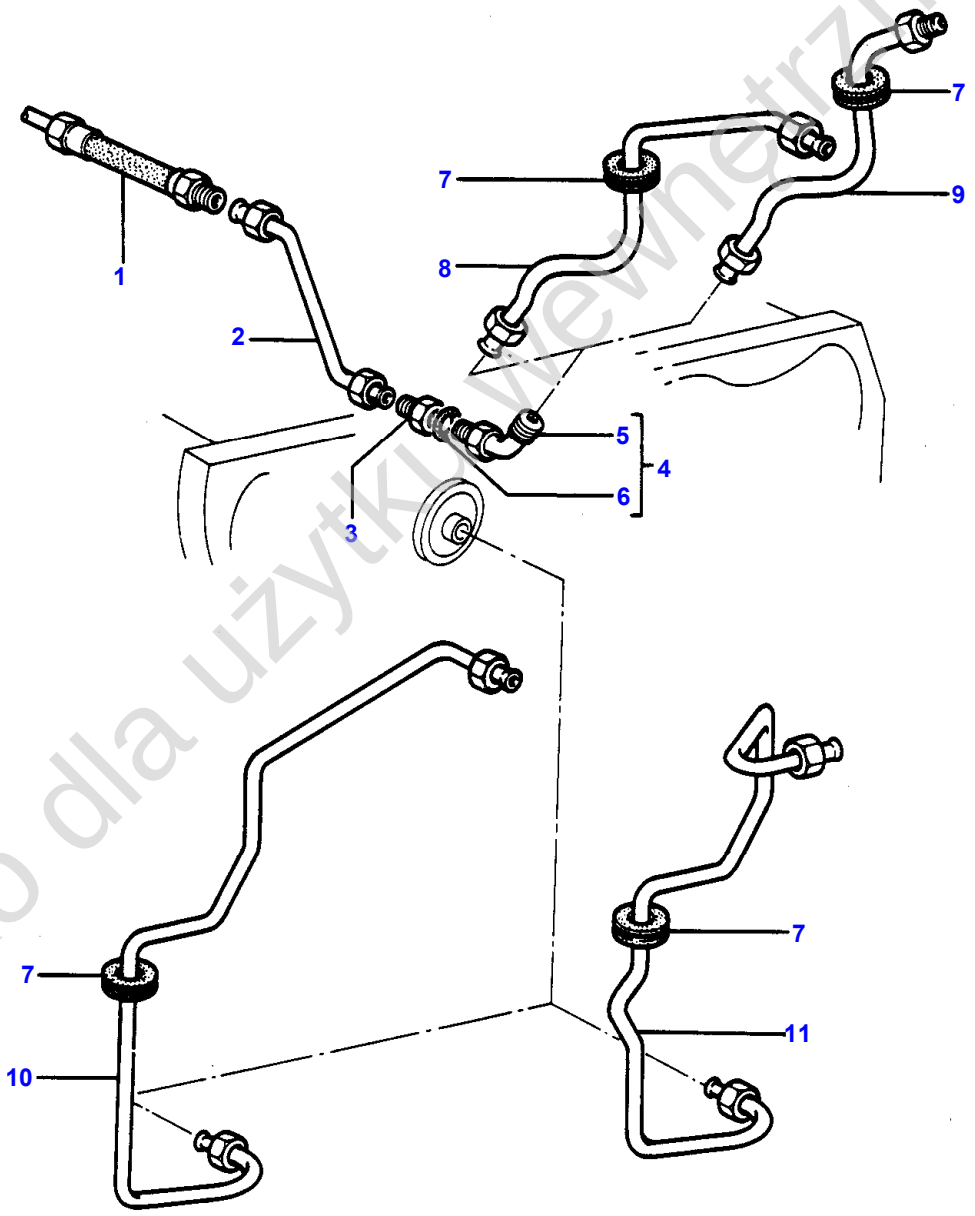

Tylko dla użytku wewnętrznego

Item	Part Number	Qty	Description	Comments
				8 SPEED - 12 SPEED- 2 WHEEL DRIVE
1		1	Hydr Hose	See Page - Reference Number 298/37
2	1870181M91	1	Tube	
3	188805M2	1	Adaptor	
4	377554X91	1	Elbow	
5		1	Elbow	(4) Not serviced, order 377554X91
6	831452M1	1	O Ring	(4)
7	185688M1	2	Grommet	
8	1874406M91	1	Pipe	Up to Serial or Engine Number H132225
9	1665515M91	1	Tube	From Serial or Engine Number H132226
10	1663641M91	1	Pipe	Repairs and replaces 1874414M93 Up to Serial or Engine Number 1976
11	1665521M91	1	Tube	From Serial or Engine Number 1977

Tylko dla użytku wewnętrznego

304

TUYAUTERIES INTERNES
INNERE LEITUNGEN
TUBAZIONI INTERNE
CONDUCCIONES INTERNAS
INTERNAL LINES

14901004

1 1490 004

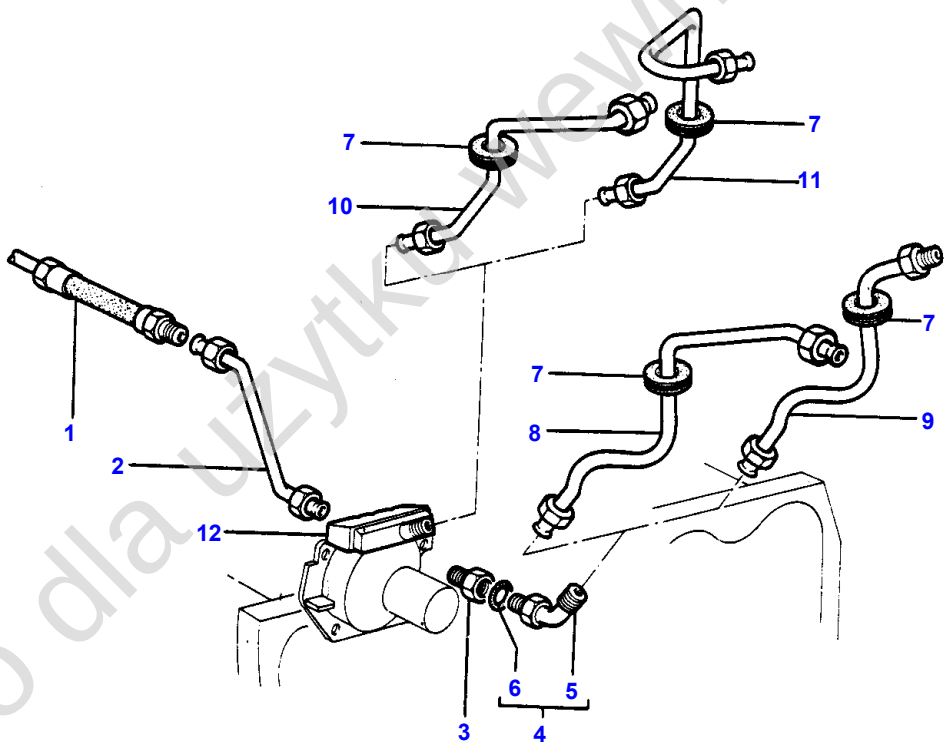

1-1490-004

Tylko dla użytku wewnętrznego

Item	Part Number	Qty	Description	Comments
				8 SPEED - 12 SPEED- 4 WHEEL DRIVE
1		1	Hydr Hose	See Page - Reference Number 298/37
2	1870181M91	1	Tube	
3	188805M2	1	Adaptor	
4	377554X91	1	Elbow	
5		1	Elbow	(4) Not serviced, order 377554X91
6	831452M1	1	O Ring	(4)
7	909424M1	1	Grommet	Up to Serial or Engine Number
	185688M1	1	Grommet	Up to Serial or Engine Number
	185688M1	2	Grommet	From Serial or Engine Number
8	1874406M91	1	Pipe	Up to Serial or Engine Number H132225
9	1665515M91	1	Tube	From Serial or Engine Number H132226
10	1874404M91	1	Tube	Up to Serial or Engine Number H132225
11	1665513M91	1	Tube	From Serial or Engine Number H132226
12		1	Pressure Valve	See Page - Reference Number 312/1

Tylko dla użytku wewnętrznego

306

TUYAUTERIES INTERNES
INNERE LEITUNGEN
TUBAZIONI INTERNE
CONDUCCIONES INTERNAS
INTERNAL LINES

14901005

1 1490 005

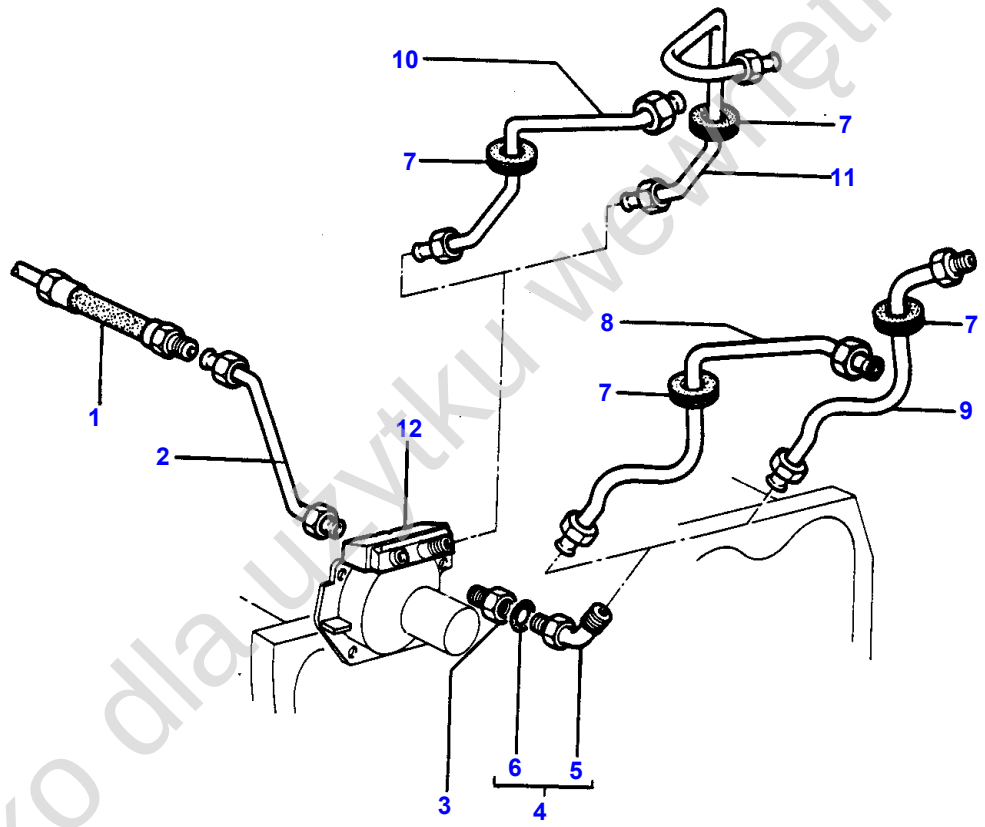

1-1490-005

Tylko dla użytku wewnętrznego

Item	Part Number	Qty	Description	Comments
				MULTI-POWER
1		1	Hydr Hose	See Page - Reference Number 298/37
2	1870181M91	1	Tube	
3	188805M2	1	Adaptor	
4	377554X91	1	Elbow	
5		1	Elbow	(4) Not serviced, order 377554X91
6	831452M1	1	O Ring	(4)
7	185688M1	2	Grommet	
8	1874406M91	1	Pipe	Up to Serial or Engine Number H132225
9	1665515M91	1	Tube	From Serial or Engine Number H132226
10	1874404M91	1	Tube	Up to Serial or Engine Number H135225
11	1665513M91	1	Tube	From Serial or Engine Number H135225
12		1	Pressure Valve	See Page - Reference Number 310/1

Tylko dla użytku wewnętrznego

308

TUYAUTERIES HYDRAULIQUES
HYDRAULIKLEITUNGEN
TUBAZIONE IDRAULICA
CONDUCCION HIDRAULICA
HYDRAULIC LINE

14851012

1 1485 011

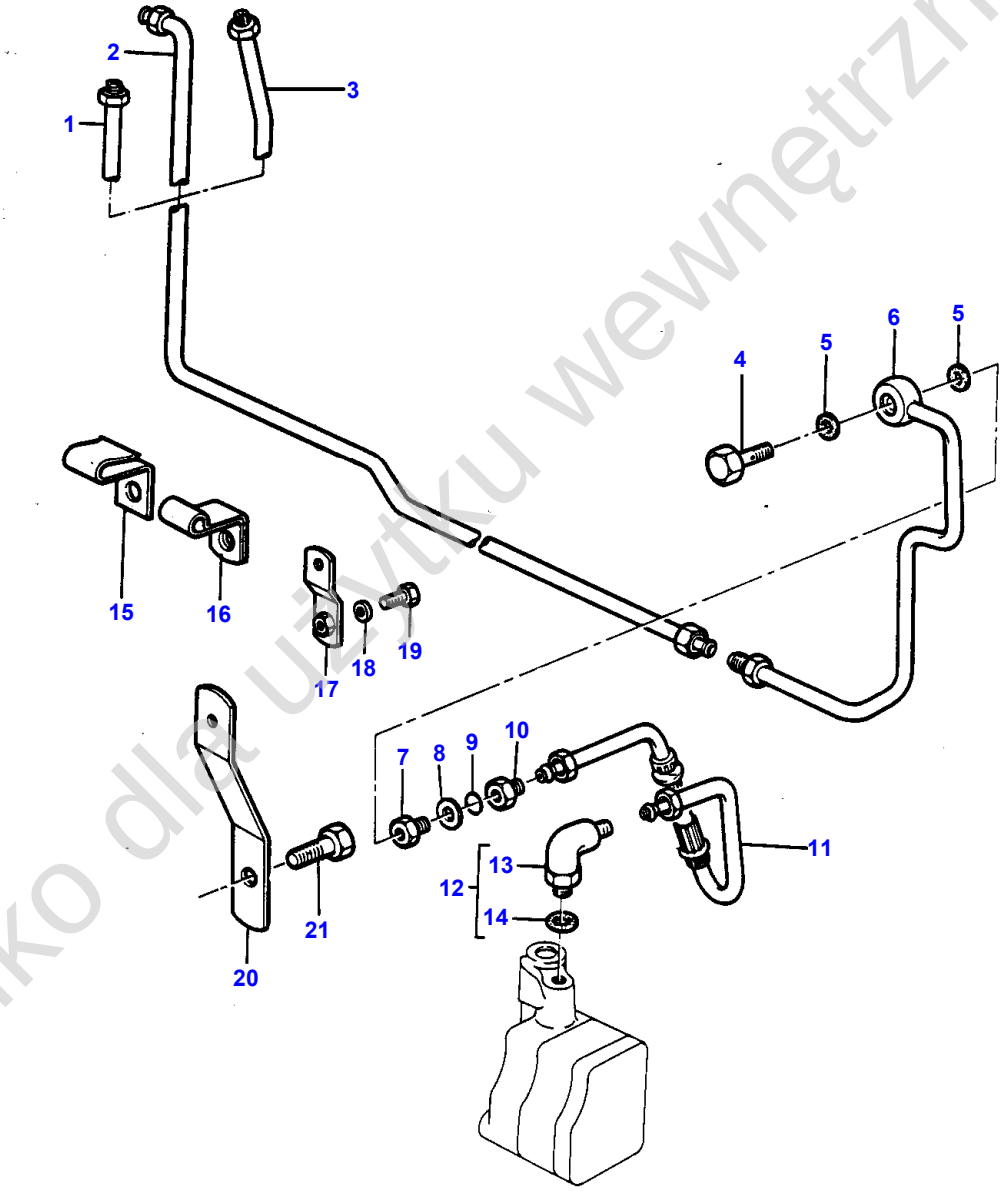

1 - 1485 - 011

Tylko dla użytku wewnętrznego

Item	Part Number	Qty	Description	Comments
				EXTERNAL LINE
1			Not Used	
2			Not Used	
3	1665582M91	1	Tube	
4	1663472M2	1	Bolt	
5	363549X1	2	Seal	
6	1665580M91	1	Tube	
7	1663474M1	1	Connector	
8	1664183M1	1	Washer	
9	3007609X1	1	O Ring	
10	1664125M1	1	Connector	
11	1663281M91	1	Hose	
12	377579X91	1	Elbow	
13		1	Union	(12) Not serviced, order REF NO 12
14	831452M1	1	O Ring	(12)
15	1875887M1	1	Clip	
16	1662507M1	1	Strap	
17	1670101M91	1	Bearer	Two Wheel Drive
18	353754X1	1	Washer	Two Wheel Drive
19	353666X1	1	Screw Unc	Two Wheel Drive
20	1666413M1	1	Bearer	
21	353695X1	1	Screw Unc	

Tylko dla użytku wewnętrznego

310

VALVE HYDRAULIQUE
HYDRAULIKVENTIL
VALVOLA IDRAULICA
VALVULA HIDRAULICA
HYDRAULIC VALVE

14701001

1 1470 002

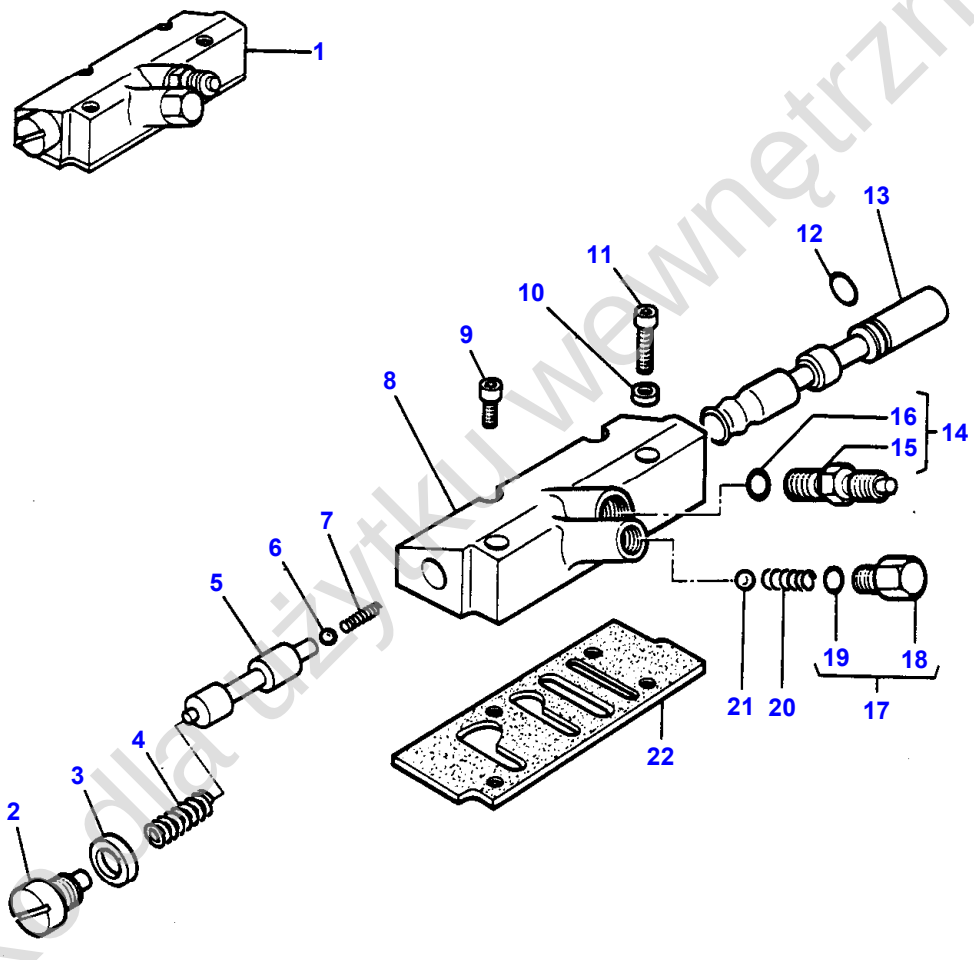

1-1470-002

Tylko dla użytku wewnętrznego

Item	Part Number	Qty	Description	Comments
				MULTI-POWER
1	1864904M93	1	Valve	
2	1868196M1	1	Plug	(1)
				Repairs and replaces 186808M2
3	186570M1	1	Seal	(1)
4	512784M1	1	Spring	(1)
5		1	Spool	(1)
				Not serviced, order 1864904M93
6	1442344X2	1	Ball	(1)
7	1862287M2	1	Spring	(1)
8		1	Body	(1)
				Not serviced, order 1864904M93
9	357819X1	2	Screw Unc	
10	186568M1	1	Washer	
11	357822X1	2	Screw Unc	
12	832207M1	1	Seal	(1)
13		1	Spool	(1)
				Not serviced, order 1864904M93
14	835091M91	1	Connector	(1)
15	358733X1	1	Union	(14)
16	831452M1	1	O Ring	(14)
17	358720X91	1	Plug	(1)
18		1	Plug	(17)
				Not serviced, order 358720X91
19	831493M1	1	O Ring	(17)
20	521130M1	1	Spring	(1)
21	16773X	1	Ball	(1)
22	512787M2	1	Gasket	

Tylko dla użytku wewnętrznego

312

VALVE HYDRAULIQUE
HYDRAULIKVENTIL
VALVOLA IDRAULICA
VALVULA HIDRAULICA
HYDRAULIC VALVE

14701002

1 1470 003

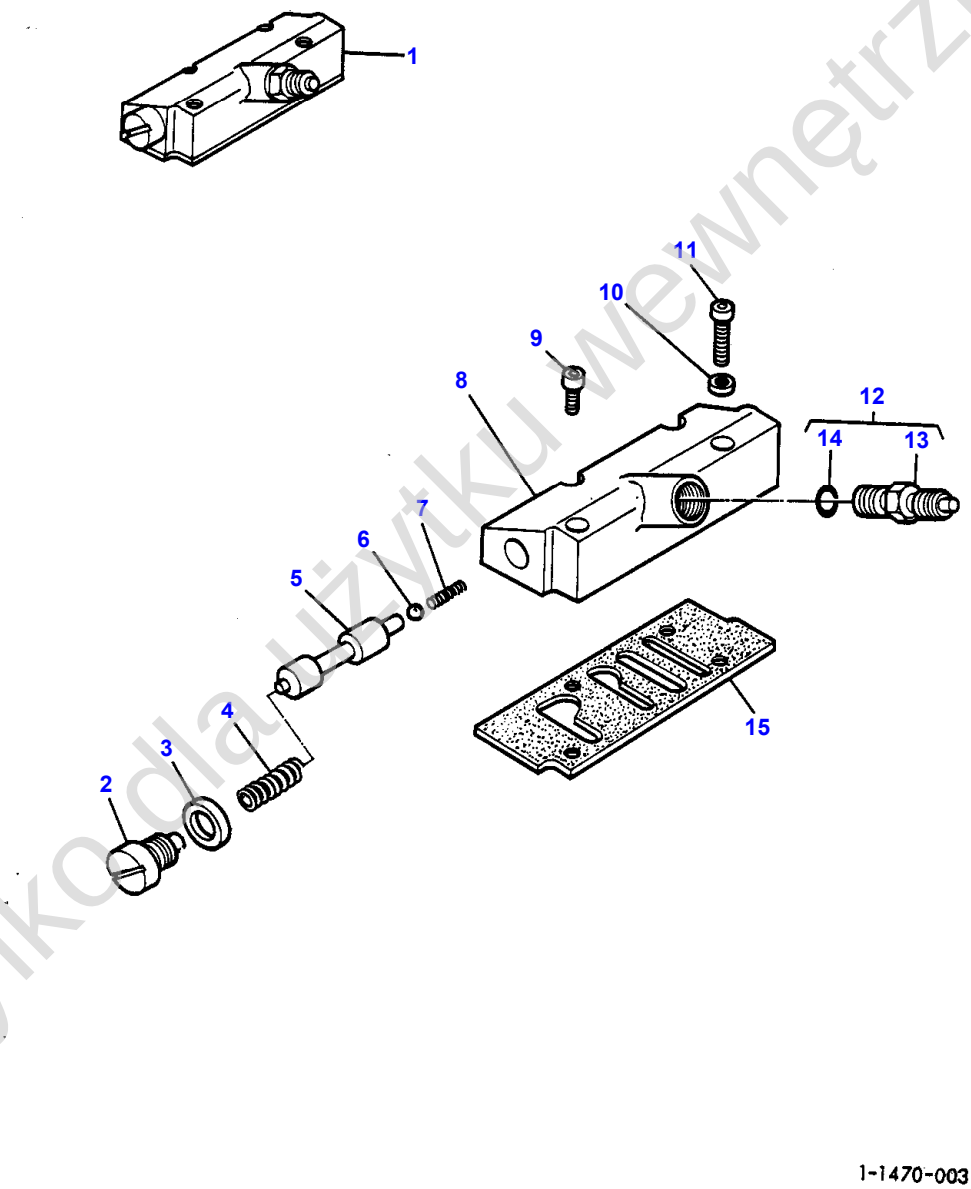

1-1470-003

Tylko dla użytku wewnętrznego

Item	Part Number	Qty	Description	Comments
				8 SPEED - 12 SPEED- 4 WHEEL DRIVE
1	1866973M92	1	Valve	
2	1868196M1	1	Plug	(1) Repairs and replaces 186808M2
3	186570M1	1	Seal	(1)
4	512784M1	1	Spring	(1)
5		1	Spool	(1) Not serviced, order 1866973M92
6	1442344X2	1	Ball	(1)
7	1862287M2	1	Spring	(1)
8		1	Body	(1) Not serviced, order 1866973M92
9	357819X1	2	Screw Unc	
10	186568M1	1	Washer	
11	357822X1	2	Screw Unc	
13	358733X1	1	Union	
14	831452M1	1	O Ring	
15	512787M2	1	Gasket	

Tylko dla użytku wewnętrznego

314

REFROIDISSEUR D'HUILE ET FILTRE
OELKUEHLER UND FILTER
FILTRO OLIO E SCAMBIATORE DI CALORE
RADIADOR ACEITE Y FILTRO
OIL COOLER AND FILTER

14851002

1 1465 040

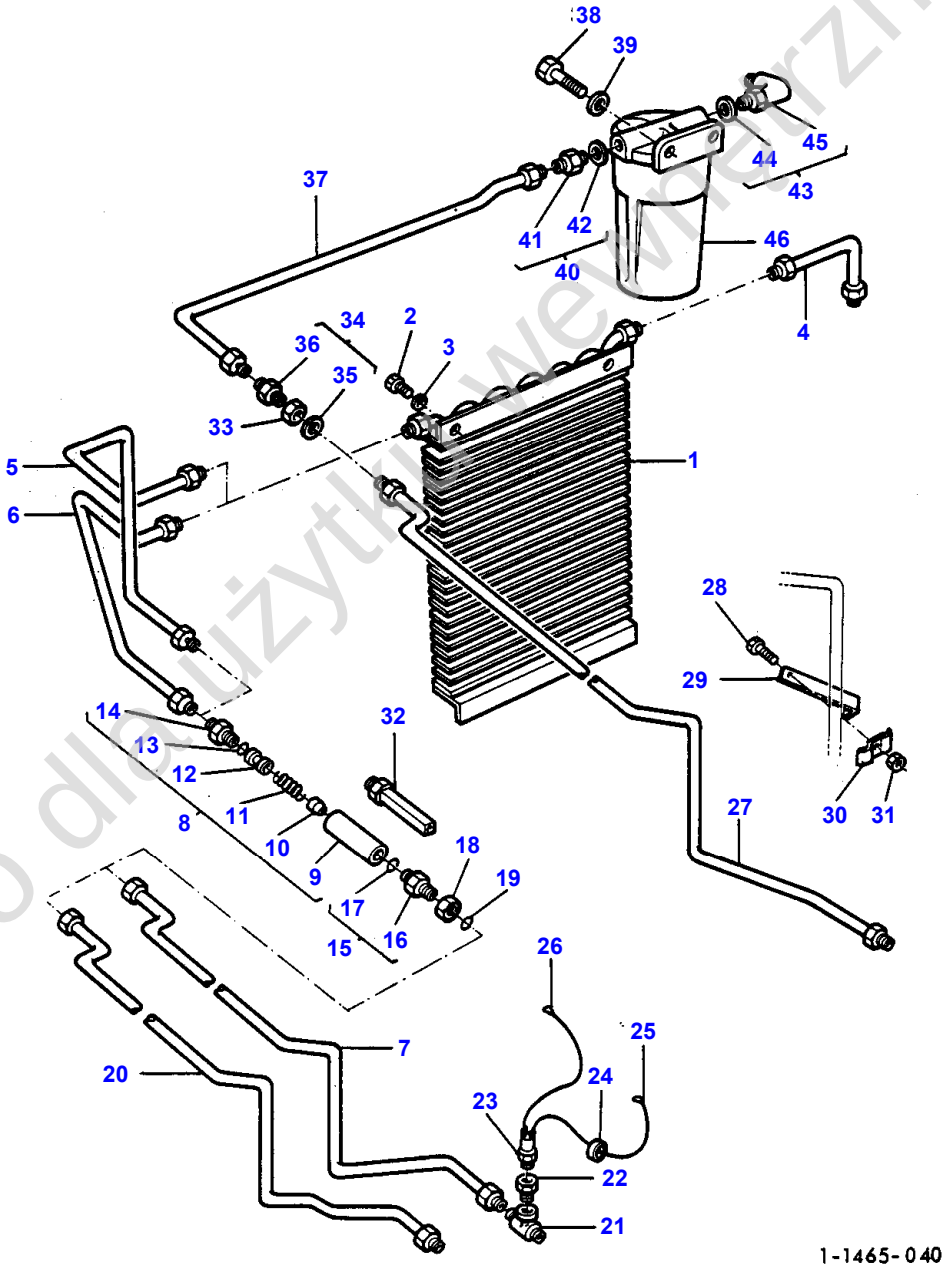

Tylko dla użytku wewnętrznego.

Item	Part Number	Qty	Description	Comments
				OLD MOUNTING- 2 WHEEL DRIVE
1	1875553M92	1	Cooler	
2	353665X1	4	Screw Unc	
3	353441X1	4	Lock Washer	
4	1875566M92	1	Tube	
5	1874504M92	1	Tube	(B)
6	1875564M91	1	Tube	(A)
7	1699298M91	1	Tube	(A) Up to Serial or Engine Number H156201
8	1869652M91	1	Valve	(A) Up to Serial or Engine Number 1/77
8		1	Pressure Valve	(B) Not serviced, order NO 32
9		1	Valve Body	(8) Not serviced, order REF 8
10	1867034M1	1	Spool	(8)
11	1869651M1	1	Spring	(8) (A)
11	1866912M1	1	Spring	(8) (B)
12	1867033M1	1	Sleeve	(8)
13	831497M1	1	O Ring	(8)
14	1867032M1	1	Connector	(8)
15	358847X91	1	Union	
16		1	Union	(15) Not serviced, order 358847X91
17	831452M1	1	O Ring	(15)
18	355830X1	1	Locknut	
19	831452M1	1	O Ring	
20	1875560M92	1	Tube	(B) Up to Serial or Engine Number H156201
21	356500X1	1	Teepiece	(A)
22	359728X1	1	Reducer	(A)
23	1614707M1	1	Switch	(A) Up to Serial or Engine Number A298042
23	1677386M1	1	Switch,Indirect	(A) From Serial or Engine Number A298043
24	517587M1	1	Cable Tie	(A)
25	1875697M1	1	Cable	(A)
26	1699638M1	1	Harness	(A)
28	353667X1	1	Screw Unc	
29	1614647M1	1	Bearer	
30	504589M1	1	Clamp	
31	355564X1	1	Nut Unc	
32	1677235M91	1	Pressure Valve	(C)
33	355830X1	1	Locknut	
34	358847X91	1	Union	
35	831452M1	1	O Ring	(34)
36	356266X1	1	Union	(34)
37	1875568M91	1	Tube	
38	353689X1	2	Screw Unc	19 MM
	353691X1	2	Screw Unc	25 MM
39	353756X1	2	Washer	
40	835091M91	1	Connector	
41		1	Union	(40) Not serviced, order 835091M91
42	831452M1	1	O Ring	(40)
43	357197X91	1	Elbow	
44	831452M1	1	O Ring	(43)
45		1	Union	(43) Not serviced, order 357197X91
46		1	Oil Filter	See Page - Reference Number 326/
				(A) WITH MULTIPOWER TRANSMISSION

Tylko do użytku wewnętrznego

Item	Part Number	Qty	Description	Comments
				(B) WITH 8 SPEED TRANSMISSION
				(C) TO BE ADVISED

Tylko dla użytku wewnętrznego

318

REFROIDISSEUR D'HUILE ET FILTRE
OELKUEHLER UND FILTER
FILTRO OLIO E SCAMBIATORE DI CALORE
RADIADOR ACEITE Y FILTRO
OIL COOLER AND FILTER

1465 1003

1 1465 039

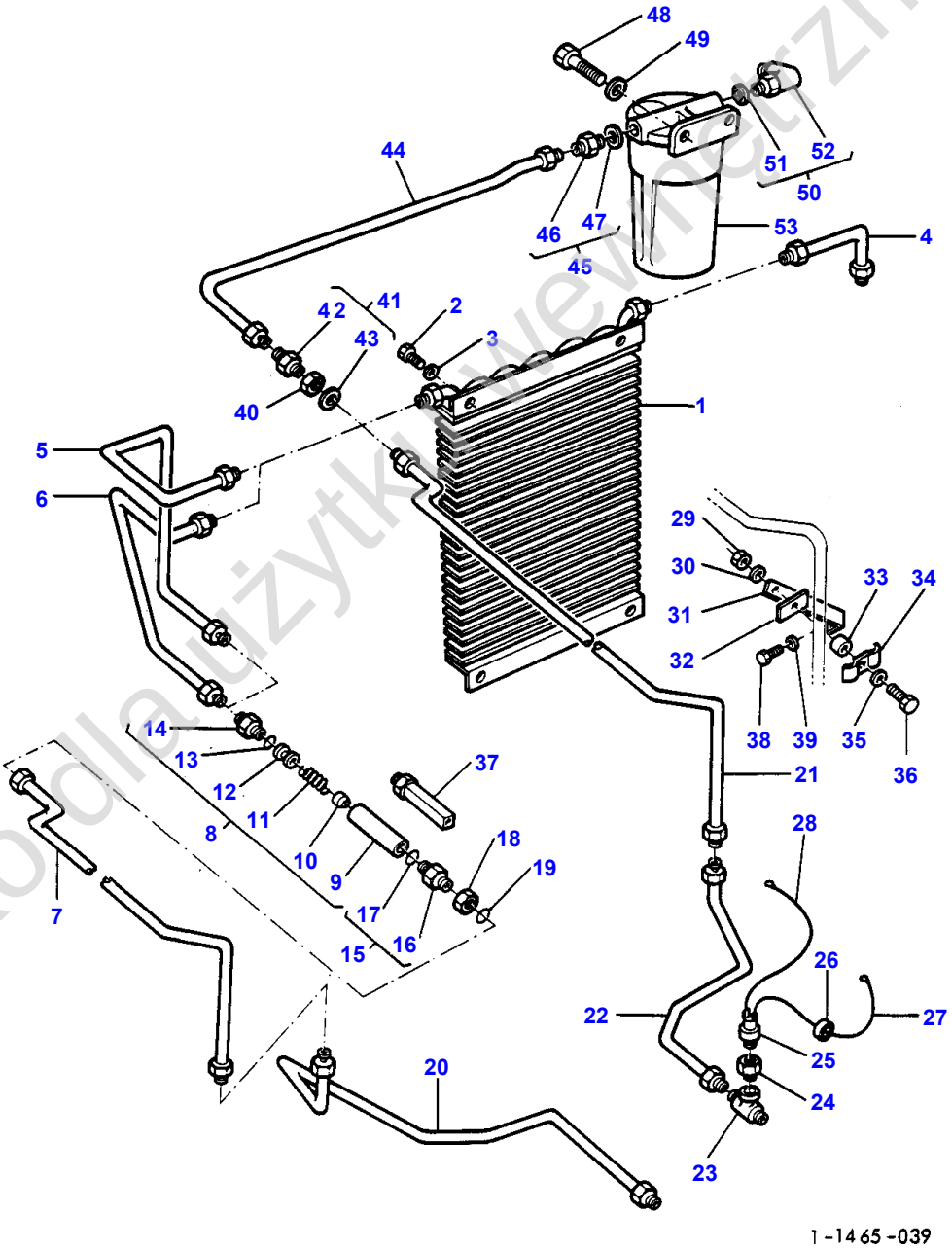

Tylko do użytku niekomercyjnego

Item	Part Number	Qty	Description	Comments
				NEW MOUNTING- 2 WHEEL DRIVE
1	1875553M92	1	Cooler	
2	377702X1	4	Screw	
3	353441X1	4	Lock Washer	
4	1671997M91	1	Tube	Repairs and replaces 1875566M92
5	1874504M92	1	Tube	(B)
6	1875564M91	1	Tube	(A)
7	1665536M91	1	Tube	From Serial or Engine Number H156202
8		1	Pressure Valve	(B)
				Not serviced, order NO 37
9		1	Valve Body	(8)
				Not serviced, order NO 37
10	1867034M1	1	Spool	(8)
11	1866912M1	1	Spring	(8)
12	1867033M1	1	Sleeve	(8)
13	831497M1	1	O Ring	(8)
14	1867032M1	1	Connector	(8)
15	358847X91	1	Union	
16	356266X1	1	Union	(15)
17	831452M1	1	O Ring	(15)
18	355830X1	1	Locknut	
19	831452M1	1	O Ring	
20	1665507M91	1	Tube	From Serial or Engine Number H156202
21	1665538M91	1	Tube	From Serial or Engine Number H156202
22	1665509M91	1	Tube	(A)
				From Serial or Engine Number H156202
22	1665511M91	1	Tube	(B)
				From Serial or Engine Number H156202
23	356500X1	1	Teepiece	(A)
24	355851X1	1	Bush	(A)
				Alternative 359728X1
24	359728X1	1	Reducer	(A)
				Alternative 355851X1
25	1614707M1	1	Switch	(A)
				Up to Serial or Engine Number A298042
25	1677386M1	1	Switch,Indirect	(A)
				From Serial or Engine Number A298043
26	517587M1	1	Cable Tie	(A)
27	1875697M1	1	Cable	(A)
28	1699638M1	1	Harness	(A)
29	353918X1	1	Nut Unf	
30	353754X1	1	Washer	
31	1665706M1	1	Bracket	
32	893522M1	1	Bracket	
33	893532M1	1	Spacer	
34	504589M1	1	Clamp	
35	353441X1	1	Lock Washer	
36	353505X1	1	Screw Unf	
37	1677235M91	1	Pressure Valve	(E)
	1671702M1	2	Plug	(C,D)
38	366664X1	1	Screw Unf	
39	353434X1	1	Lock Washer	
40	355830X1	1	Locknut	
41	358847X91	1	Union	
42	356266X1	1	Union	(41)
43	831452M1	1	O Ring	(41)
44	1875568M91	1	Tube	
45	835091M91	1	Connector	
46		1	Union	(45)
				Not serviced, order 835091M91
47	831452M1	1	O Ring	(45)
48	353689X1	2	Screw Unc	19 MM
	353691X1	2	Screw Unc	25 MM
49	353756X1	2	Washer	
50	357197X91	1	Elbow	

Tylko do użytku wewnętrznego

Item	Part Number	Qty	Description	Comments
51	831452M1	1	O Ring	(50)
52		1	Union	(50) Not serviced, order 357197X91
53		1	Oil Filter	See Page - Reference Number 326/

(A)
WITH MULTIPOWER TRANSMISSION

(B)
WITH 8 SPEED TRANSMISSION

(C)
WITHOUT OIL COOLER AND FILTER

(D)
NOT ILLUSTRATED

(E)
TO BE ADVISED

Tylko dla użytku wewnętrznego

322

REFROIDISSEUR D'HUILE ET FILTRE
OELKUEHLER UND FILTER
FILTRO OLIO E SCAMBIATORE DI CALORE
RADIADOR ACEITE Y FILTRO
OIL COOLER AND FILTER

14651004

1 1465 041

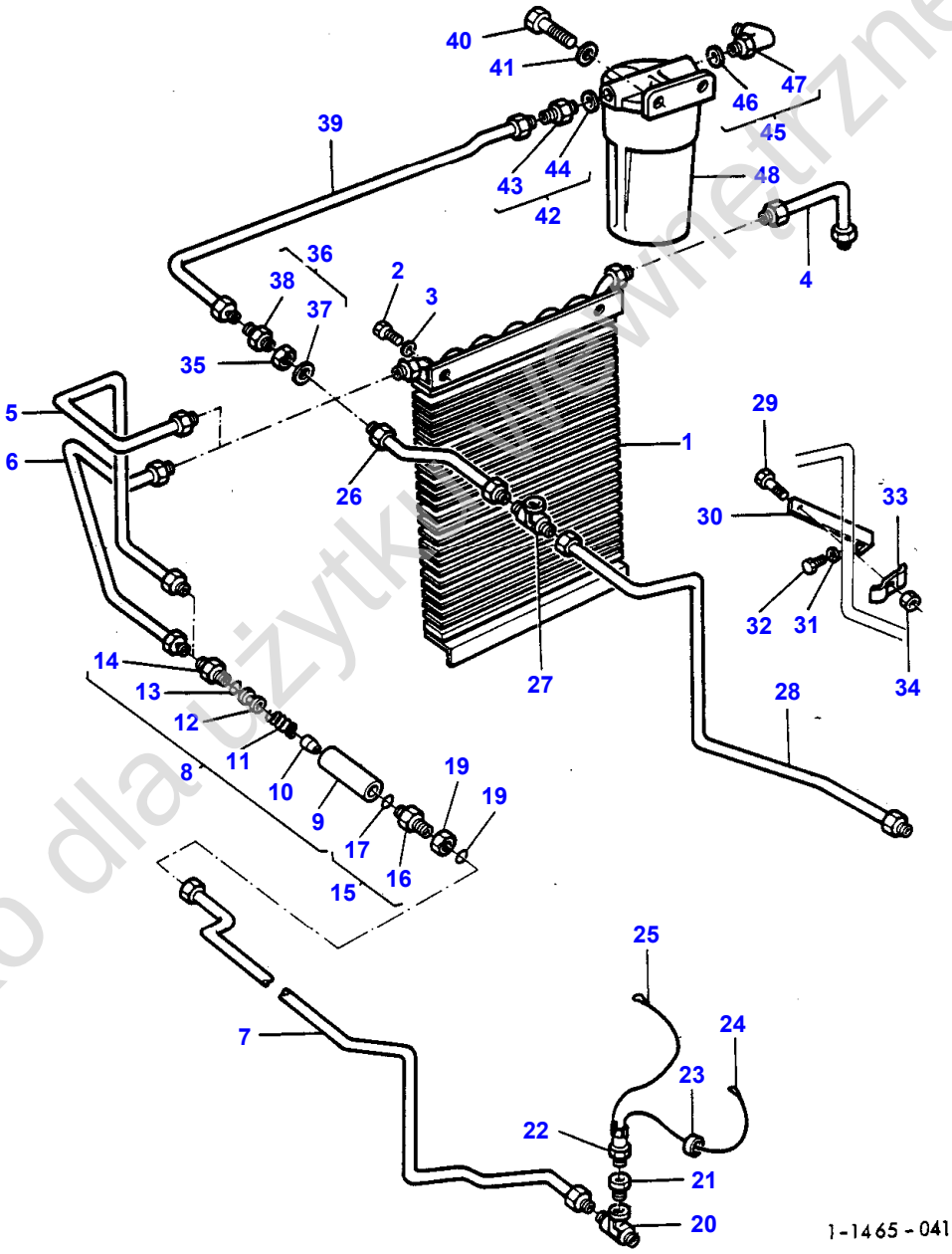

Tylko dla użytku prywatnego

Item	Part Number	Qty	Description	Comments
				OLD MOUNTING- 4 WHEEL DRIVE
1	1875553M92	1	Cooler	
2	353665X1	4	Screw Unc	
3	353441X1	4	Lock Washer	
4	1875566M92	1	Tube	
5	1874504M92	1	Tube	Up to Serial or Engine Number H132226
7	1875560M92	1	Tube	Up to Serial or Engine Number H132226
8	1869652M91	1	Valve	150 PSI Up to Serial or Engine Number H132226
9		1	Valve Body	(8) Not serviced, order 1869652M91
10	1867034M1	1	Spool	(8)
11	1869651M1	1	Spring	(8)
12	1867033M1	1	Sleeve	(8)
13	831497M1	1	O Ring	(8)
14	1867032M1	1	Connector	(8)
15	358847X91	1	Union	
16	356266X1	1	Union	(15)
17	831452M1	1	O Ring	(15)
18	355830X1	1	Locknut	
19	831452M1	1	O Ring	
20	356500X1	1	Teepiece	
21	355851X1	1	Bush	Alternative 359728X1
	359728X1	1	Reducer	Alternative 355851X1
22	1614707M1	1	Switch	Up to Serial or Engine Number A298042
	1677386M1	1	Switch,Indirect	From Serial or Engine Number A298043
23	517587M1	1	Cable Tie	
24	1875697M1	1	Cable	
25	1699638M1	1	Harness	
26	1662497M91	1	Tube	
27	355829X1	1	Teepiece	
28	1662501M92	1	Tube	Up to Serial or Engine Number H132226
29	353667X1	1	Screw Unc	
30	1614647M1	1	Bearer	
31	353536X1	1	Screw Unf	
32	353434X1	1	Lock Washer	
33	504589M1	1	Clamp	
34	355564X1	1	Nut Unc	
35	355830X1	1	Locknut	
36	358847X91	1	Union	
37	831452M1	1	O Ring	(36)
38	356266X1	1	Union	(36)
39	1875568M91	1	Tube	
40	353689X1	2	Screw Unc	19 MM
	353691X1	2	Screw Unc	25 MM
41	353756X1	2	Washer	
42	835091M91	1	Connector	
43		1	Union	(42) Not serviced, order 835091M91
44	831452M1	1	O Ring	(42)
45	357197X91	1	Elbow	
46	831452M1	1	O Ring	(45)
47		1	Union	(45) Not serviced, order 357197X91
48		1	Oil Filter	See Page - Reference Number 326/

Tylko do użytku wewnętrznego

324

REFROIDISSEUR D'HUILE ET FILTRE
OELKUEHLER UND FILTER
FILTRO OLIO E SCAMBIATORE DI CALORE
RADIADOR ACEITE Y FILTRO
OIL COOLER AND FILTER

14651005

1 1465 042

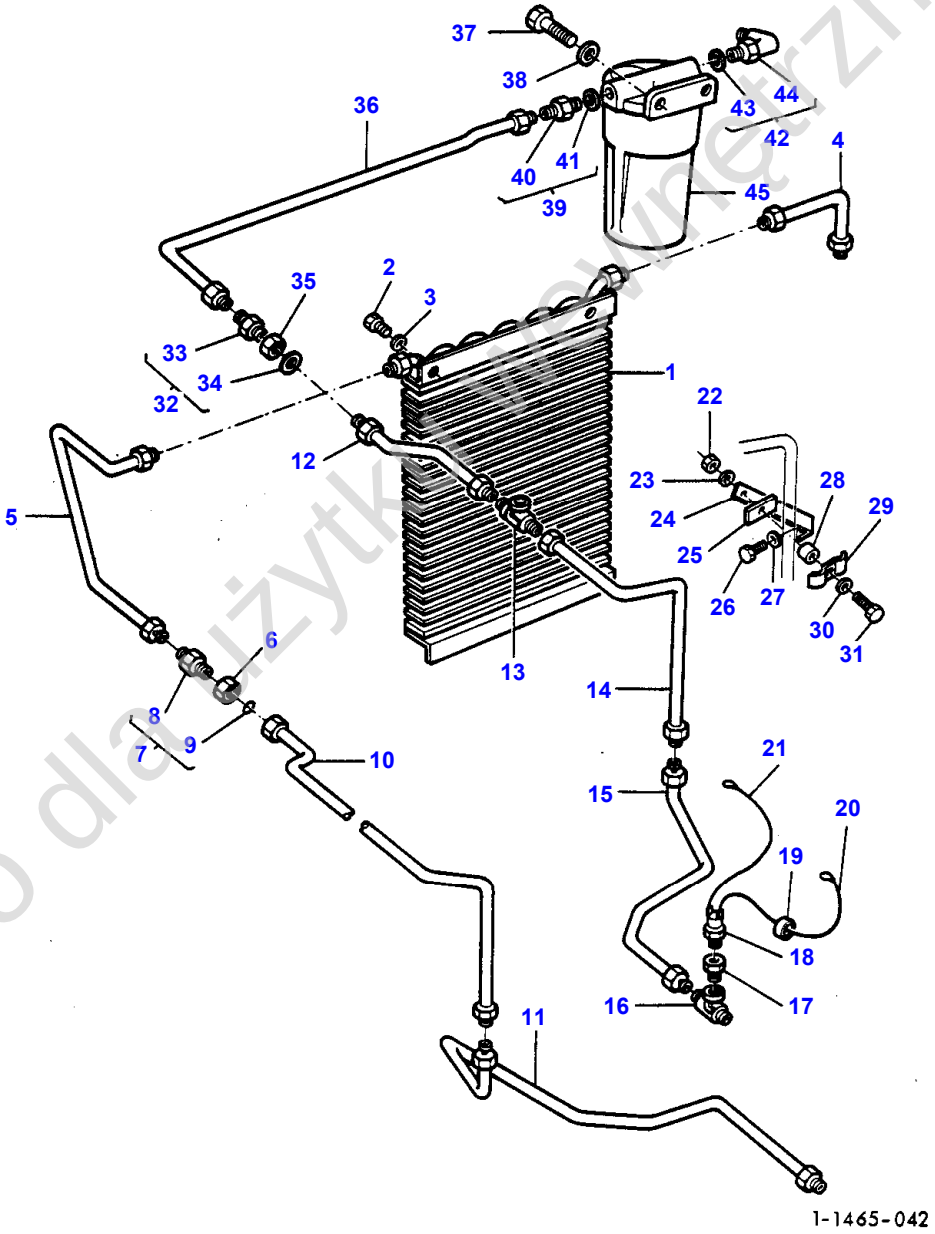

Tylko dla użytku prywatnego

Item	Part Number	Qty	Description	Comments
				NEW MOUNTING- 4 WHEEL DRIVE
1	1875553M92	1	Cooler	
2	377702X1	4	Screw	
3	353441X1	4	Lock Washer	
4	1671997M91	1	Tube	Repairs and replaces 1875566M92
5	1875564M91	1	Tube	From Serial or Engine Number H132227
6	355830X1	1	Locknut	
7	358847X91	1	Union	
8	356266X1	1	Union	(7)
9	831452M1	1	O Ring	(7)
10	1665536M91	1	Tube	From Serial or Engine Number H132227
11	1665507M91	1	Tube	From Serial or Engine Number H132227
12	1662497M91	1	Tube	
13	355829X1	1	Teepiece	
14	1666205M91	1	Tube	From Serial or Engine Number H132227
15	1665509M91	1	Tube	From Serial or Engine Number H132227
16	356500X1	1	Teepiece	
17	355851X1	1	Bush	Alternative 359728X1
	359728X1	1	Reducer	Alternative 355851X1
18	1614707M1	1	Switch	Up to Serial or Engine Number A298042
	1677386M1	1	Switch,Indirect	From Serial or Engine Number A298043
19	517587M1	1	Cable Tie	
20	1875697M1	1	Cable	
21	1699638M1	1	Harness	
22	353918X1	1	Nut Unf	
23	353754X1	1	Washer	
24	1665706M1	1	Bracket	
25	893522M1	1	Bracket	
26	353536X1	1	Screw Unf	
27	353434X1	1	Lock Washer	
28	893532M1	1	Spacer	
29	1871747M1	1	Clip	
30	353441X1	1	Lock Washer	
31	353505X1	1	Screw Unf	
32	358847X91	1	Union	
33	356266X1	1	Union	(32)
34	831452M1	1	O Ring	(32)
35	355830X1	1	Locknut	
36	1875568M91	1	Tube	
37	353689X1	2	Screw Unc	19 MM
	353691X1	2	Screw Unc	25 MM
38	353756X1	2	Washer	
39	835091M91	1	Connector	
40		1	Union	(39)
				Not serviced, order 835091M91
41	831452M1	1	O Ring	(39)
42	357197X91	1	Elbow	
43	831452M1	1	O Ring	(42)
44		1	Union	(42)
				Not serviced, order 357197X91
45		1	Oil Filter	See Page - Reference Number 326/

Tylko do użytku wewnętrznego

326

FILTRE A HUILE
HYDRAULIKOELFILTER
FILTRO OLIO
FILTRO ACEITE
OIL FILTER

14601009

1 1460 011

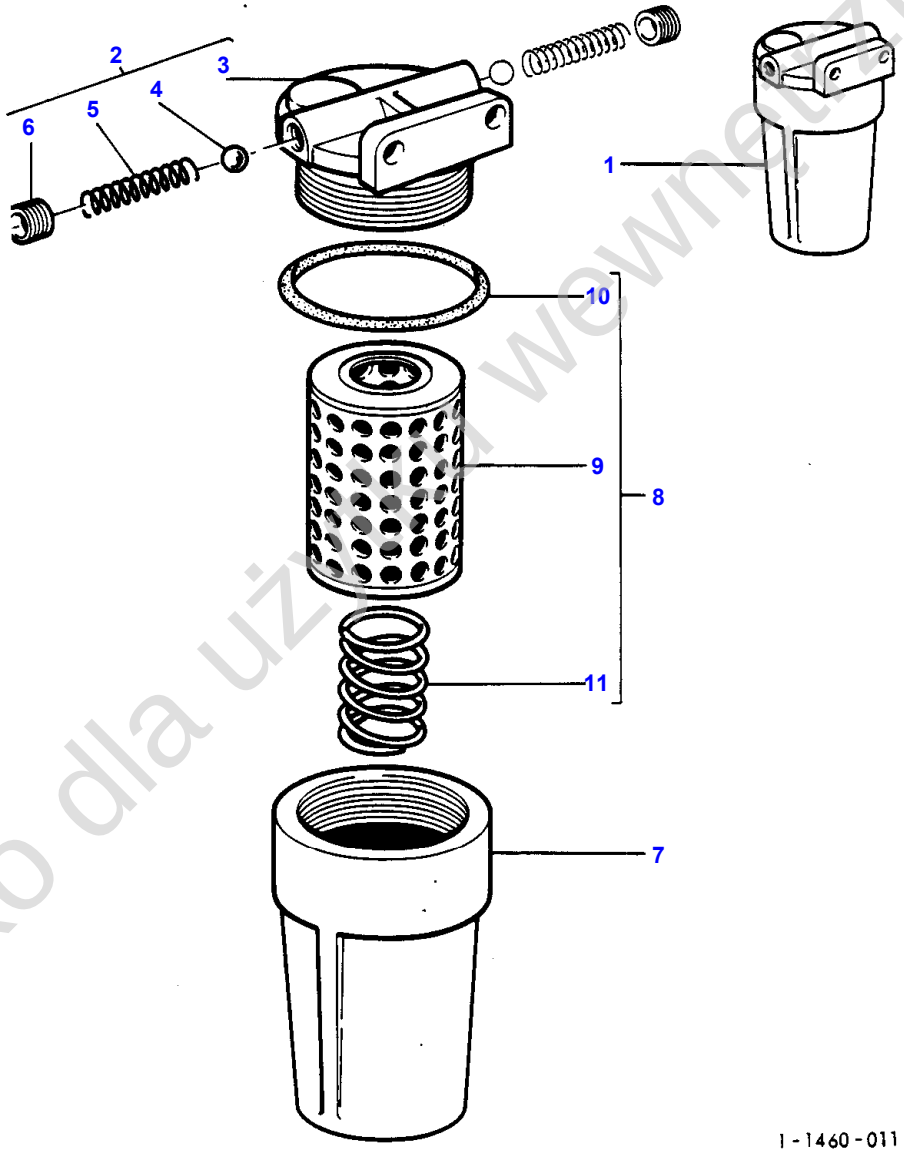

Tylko dla użytku wewnętrznego

Item	Part Number	Qty	Description	Comments
1	1867882M91	1	Filter	
2	1888751M1	1	Filter Head	(1)
3		1	Filter Head	(2)
				Not serviced, order 1888751M1
4	1888752M1	1	Ball	(2)
5	1888753M1	1	Spring	(2)
6	1888754M1	1	Screw	(2)
7	1888750M1	1	Shell	(1)
8	1810539M91	1	Kit	(1)
9		1	Cartridge	(8)
				Not serviced, order 1810539M91
10	1888755M1	1	Seal	(8)
11	1888756M1	1	Spring	(8)

Tylko dla użytku wewnętrznego

328

REFROIDISSEUR D'HUILE
OELKUEHLER
RADIATORE OLIO
ENFRIADOR EL ACIETE
OIL COOLER

14641008

1 1464 022

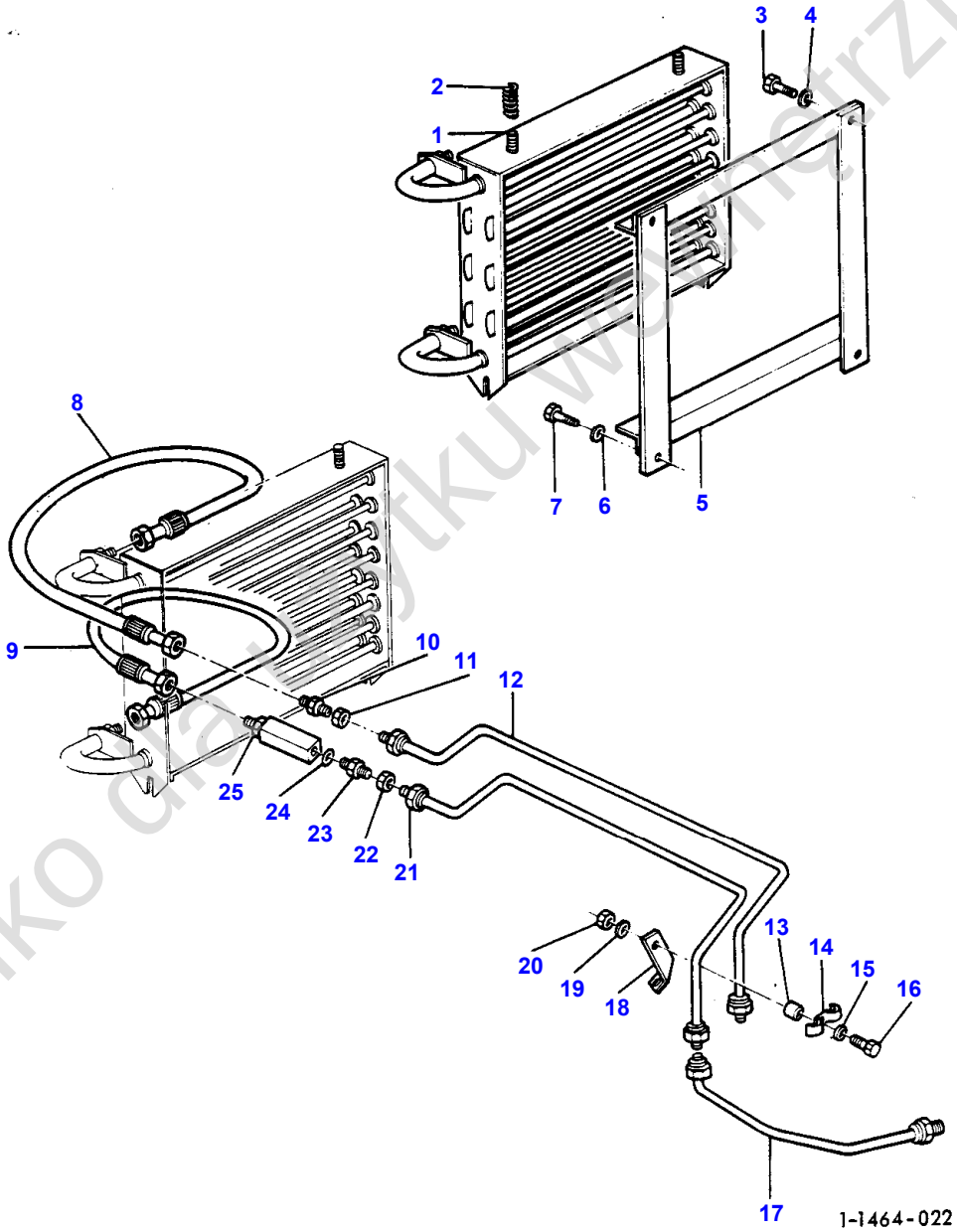

Tylko dla użytku wewnętrznego

Item	Part Number	Qty	Description	Comments
				MICRONIC FILTRATION-WITH OIL COOLER- 8 SPEED-2 WHE EL DRIVE-FROM SERIAL NO A227032
1	533737M91	1	Cooler	
2	519029M1	2	Spring	
3	362429X1	1	Screw	
4	353434X1	1	Lock Washer	
5	1674868M91	1	Bracket	
6	391130X1	3	Washer	
7	353502X1	3	Screw Unf	
8	1671319M91	1	Hose	
9	1671320M91	1	Hose	
10	356266X1	1	Union	
11	355830X1	1	Locknut	
12	1665538M91	1	Tube	
13	1667326M1	1	Spacer	
14	504589M1	1	Clamp	
15	391130X1	1	Washer	
16	353505X1	1	Screw Unf	
17	1665511M91	1	Tube	
18	1665706M1	1	Bracket	
19	353754X1	1	Washer	
20	363619X1	1	Nut	
21	1665536M91	1	Tube	
22	355830X1	1	Locknut	
23	356266X1	1	Union	
24	831452M1	1	O Ring	
25	1677235M91	1	Pressure Valve	(A)

(A)
TO BE ADVISED DETAIL

Tylko dla użytku wewnętrznego

330

REFROIDISSEUR D'HUILE
OELKUEHLER
RADIATORE OLIO
ENFRIADOR EL ACIETE
OIL COOLER

14641014

1 1464 023

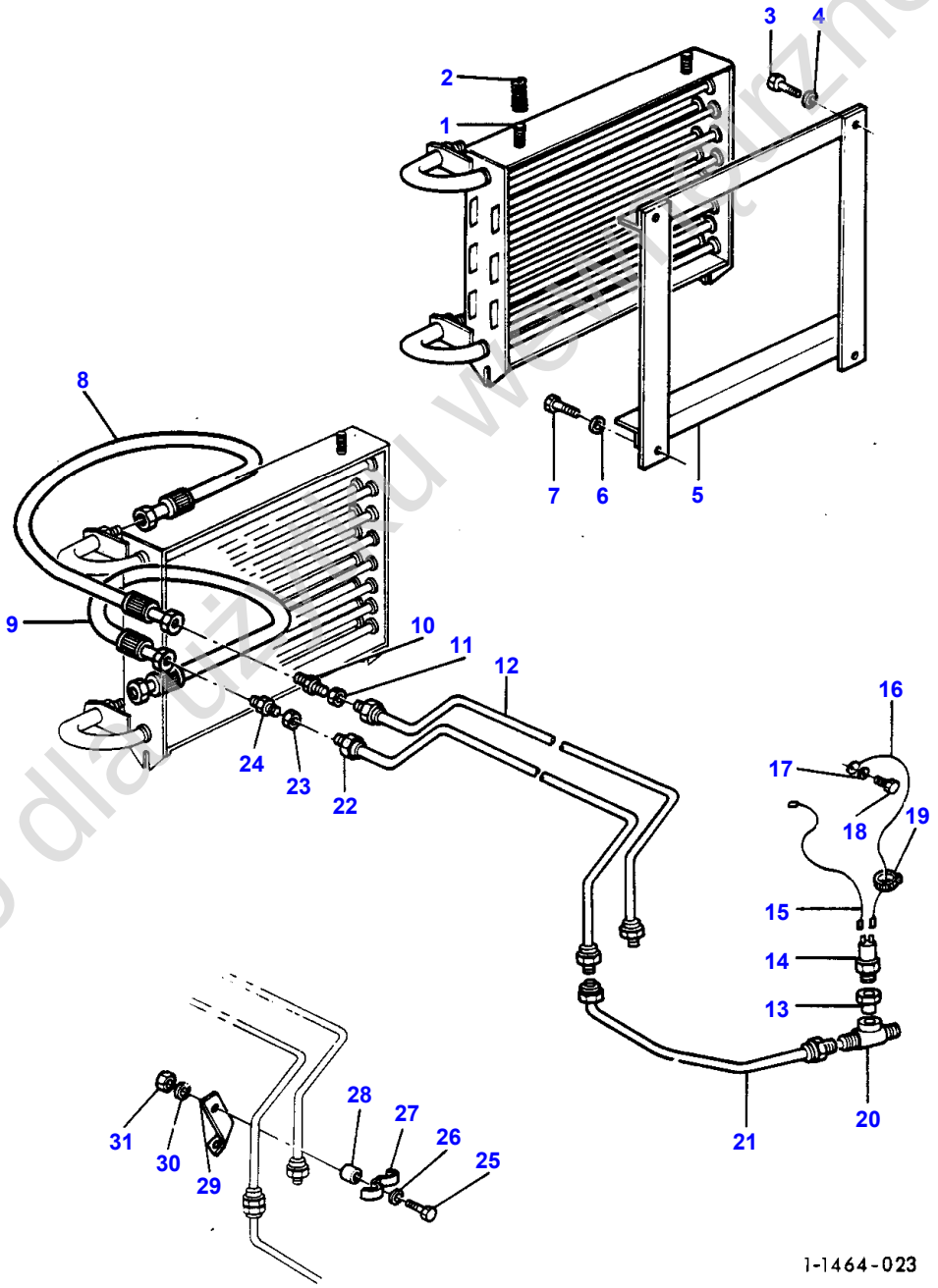

Tylko dla użytku wewnętrznego

OIL COOLER - MICRONIC FILTRATION-WITH OIL COOLER- MULTIPOWER-2 WHEEL DRIVE-FROM SERIAL NO A227032

330

Item	Part Number	Qty	Description	Comments
				MICRONIC FILTRATION-WITH OIL COOLER- MULTIPOWER-2 WHEEL DRIVE-FROM SERIAL NO A227032
1	533737M91	1	Cooler	
2	519029M1	2	Spring	
3	362429X1	1	Screw	
4	353434X1	1	Lock Washer	
5	1674868M91	1	Bracket	
6	391130X1	3	Washer	
7	353502X1	3	Screw Unf	
8	1671319M91	1	Hose	
9	1671320M91	1	Hose	
10	356266X1	1	Union	
11	355830X1	1	Locknut	
12	1665538M91	1	Tube	
13	355851X1	1	Bush	
14	1614707M1	1	Switch	Up to Serial or Engine Number A298042
	1677386M1	1	Switch,Indirect	From Serial or Engine Number A298043
15	1875697M1	1	Cable	
16	1699638M1	1	Harness	
17	353756X1	1	Washer	
18	362429X1	1	Screw	
19	517587M1	1	Cable Tie	
20	356500X1	1	Teepiece	
21	1665509M91	1	Tube	
22	1665536M91	1	Tube	
23	355830X1	1	Locknut	
24	356266X1	1	Union	
25	353505X1	1	Screw Unf	
26	391130X1	1	Washer	
27	504589M1	1	Clamp	
28	1667326M1	1	Spacer	
29	1665706M1	1	Bracket	
30	353754X1	1	Washer	
31	363619X1	1	Nut	

Tylko dla użytku wewnętrznego

332

REFROIDISSEUR D'HUILE
OELKUEHLER
RADIATORE OLIO
ENFRIADOR EL ACIETE
OIL COOLER

14641015

1 1464 031

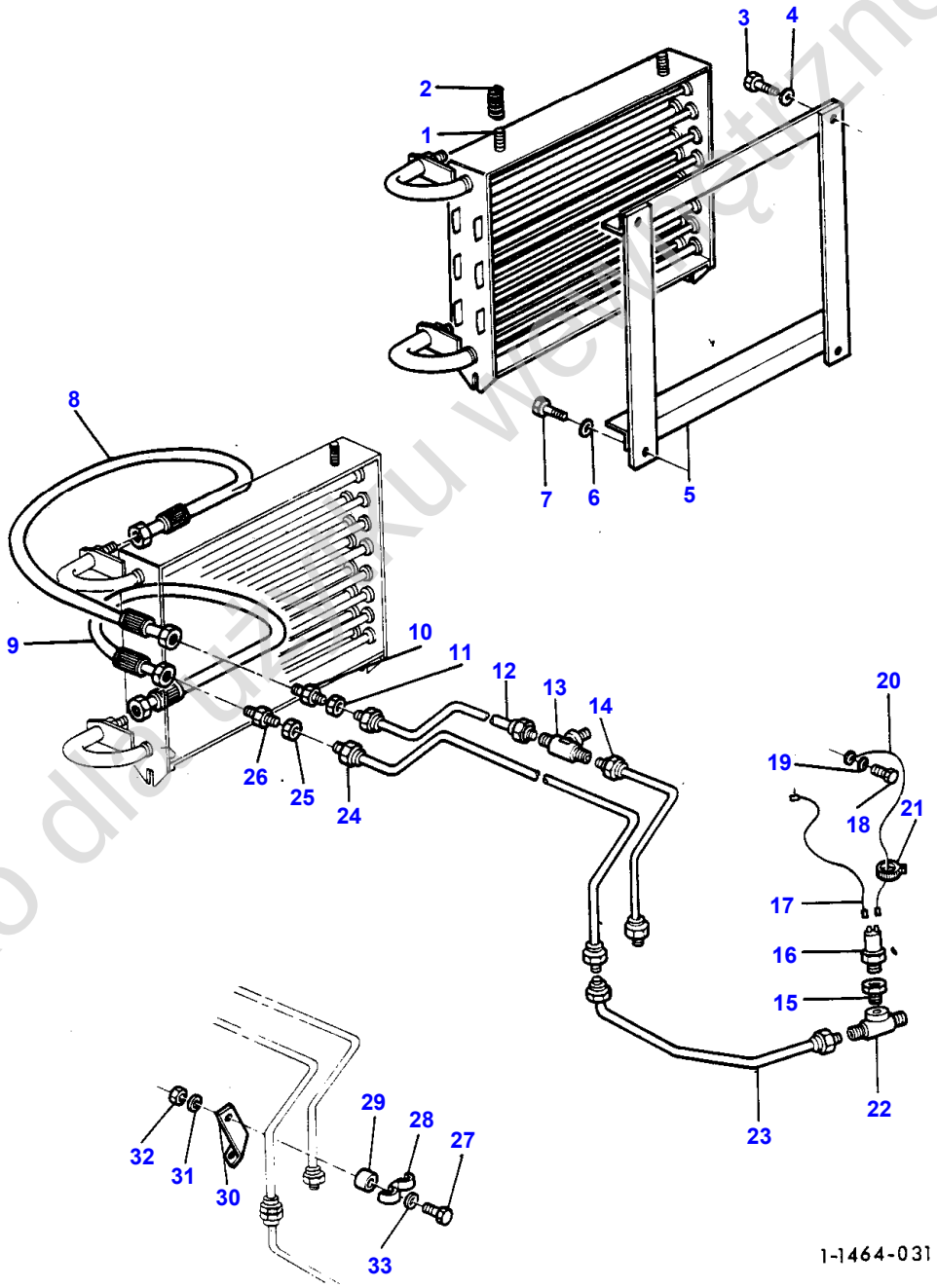

Tylko dla użytku wewnętrznego

OIL COOLER - MICRONIC FILTRATION-WITH OIL COOLER- 4 WHEEL DRIVE -FROM SERIAL NO A 227032

332

Item	Part Number	Qty	Description	Comments
				MICRONIC FILTRATION-WITH OIL COOLER- 4 WHEEL DRIVE -FROM SERIAL NO A 227032
1	533737M91	1	Cooler	
2	519029M1	2	Spring	
3	353690X1	1	Screw Unc	
4	353434X1	1	Lock Washer	
5	1674868M91	1	Bracket	
6	353441X1	3	Lock Washer	
7	353503X1	3	Screw Unf	
8	1671319M91	1	Hose	
9	1671320M91	1	Hose	
10	356266X1	1	Union	
11	355830X1	1	Locknut	
12	1662497M91	1	Tube	
13	355829X1	1	Teepiece	
14	1666205M91	1	Tube	
15	355851X1	1	Bush	(A)
16	1614707M1	1	Switch	(A) Up to Serial or Engine Number A298042
16	1677386M1	1	Switch,Indirect	(A) From Serial or Engine Number A298043
17	1875697M1	1	Cable	(A)
18	362429X1	1	Screw	(A)
19	353756X1	1	Washer	(A)
20	1699638M1	1	Harness	(A)
21	517587M1	1	Cable Tie	(A)
22	356500X1	1	Teepiece	(A)
23	1665509M91	1	Tube	
24	1665536M91	1	Tube	
25	355830X1	1	Locknut	
26	356266X1	1	Union	
27	353505X1	1	Screw Unf	
28	504589M1	1	Clamp	
29	1667326M1	1	Spacer	
30	1665706M1	1	Bracket	
31	353441X1	1	Lock Washer	
32	353918X1	1	Nut Unf	
33	353754X1	1	Washer	
				(A) WITH MULTIPOWER TRANSMISSION

Tylko dla użytku wewnętrznego

334

FILTRE A L'ASPIRATION
ENLUEFTUNGSFILTER
FILTRO DI SFIATO
FILTRO RESPIRACION
BREATHING FILTER

14751002

1 1475 002

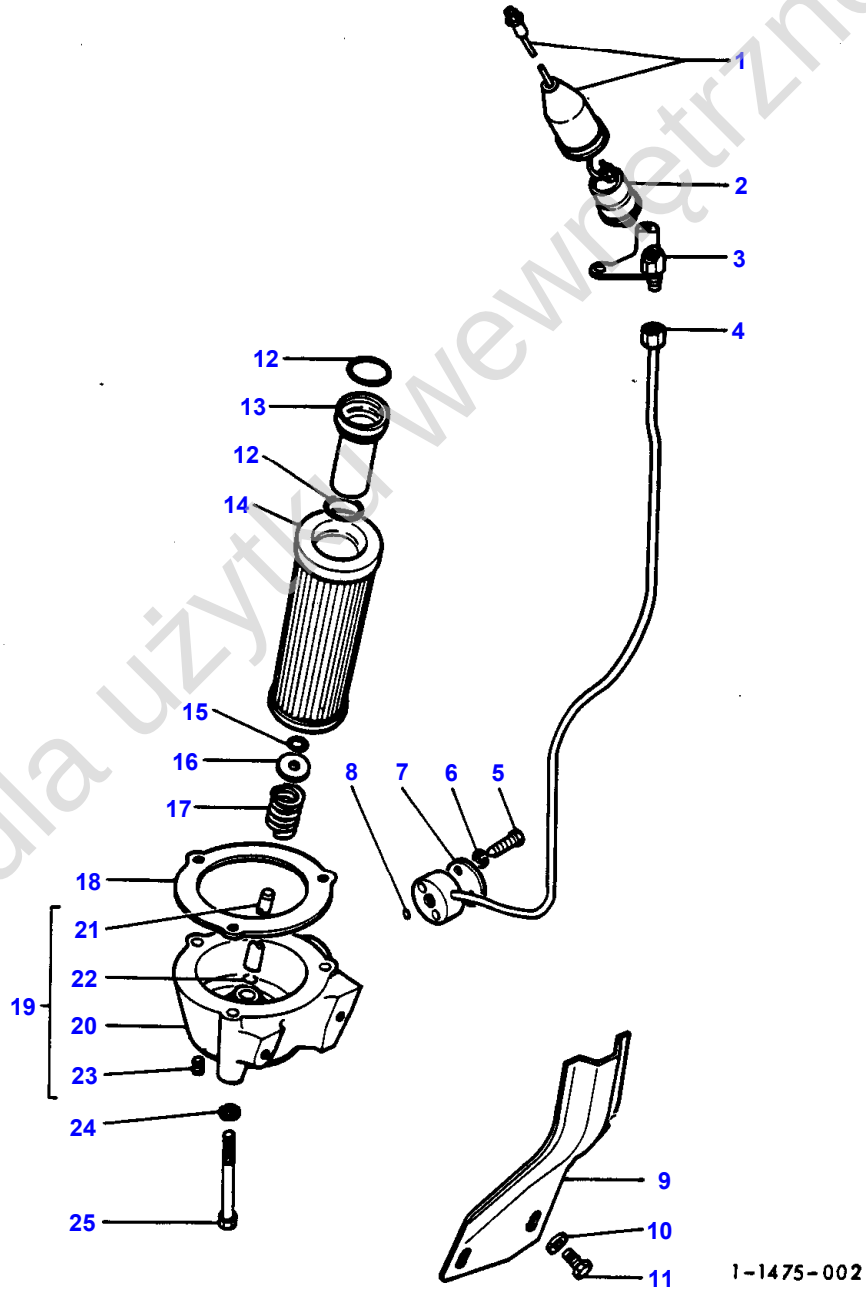

Tylko dla użytku wewnętrznego

Item	Part Number	Qty	Description	Comments
1	1674701M92	1	Cover	
2	3033132M1	1	Switch	
3	1678535M91	1	Bearer	
4	1678538M91	1	Tube	
5	0748354	2	Screw	
6	391130X1	2	Washer	
7	1674233M1	1	Plate	
8	3008335X1	1	O Ring	
9	1678036M1	1	Guard	
10	0920053	2	Washer	
11	361444X1	2	Screw	
12	3008359X1	2	O Ring	
13	1672936M1	1	Tube	
14	1674984M92	1	Filter Element	
15	1007240M1	1	O Ring	
16	1672941M1	1	Plate	
17	1673018M1	1	Spring	
18	1675294M1	1	Gasket	
19	1673919M93	1	Cover	
	1673920M93	1	Cover	(A) Four Wheel Drive
20		1	Body	(19) Not serviced, order REF NO 19
21	1673017M1	1	Pin	(19)
22	358936X1	1	Ring	(19)
23	358670X1	1	Screw Unc	(19)
24	353770X1	3	Washer	
25	354615X1	3	Bolt Unc	
	354613X1	3	Bolt Unc	(A)
				(A) HEAVY DUTY

Tylko dla użytku wewnętrznego

336

TUYAUTERIES DE FREINAGE DE REMORQUE
ANHAENGERBREMSLEITUNGEN
TUBAZIONI FRENO RIMORCHIO
CIRCUITO FRENO REMOLQUE
TRAILOR BRAKE LINES

15451003

1 1545 003

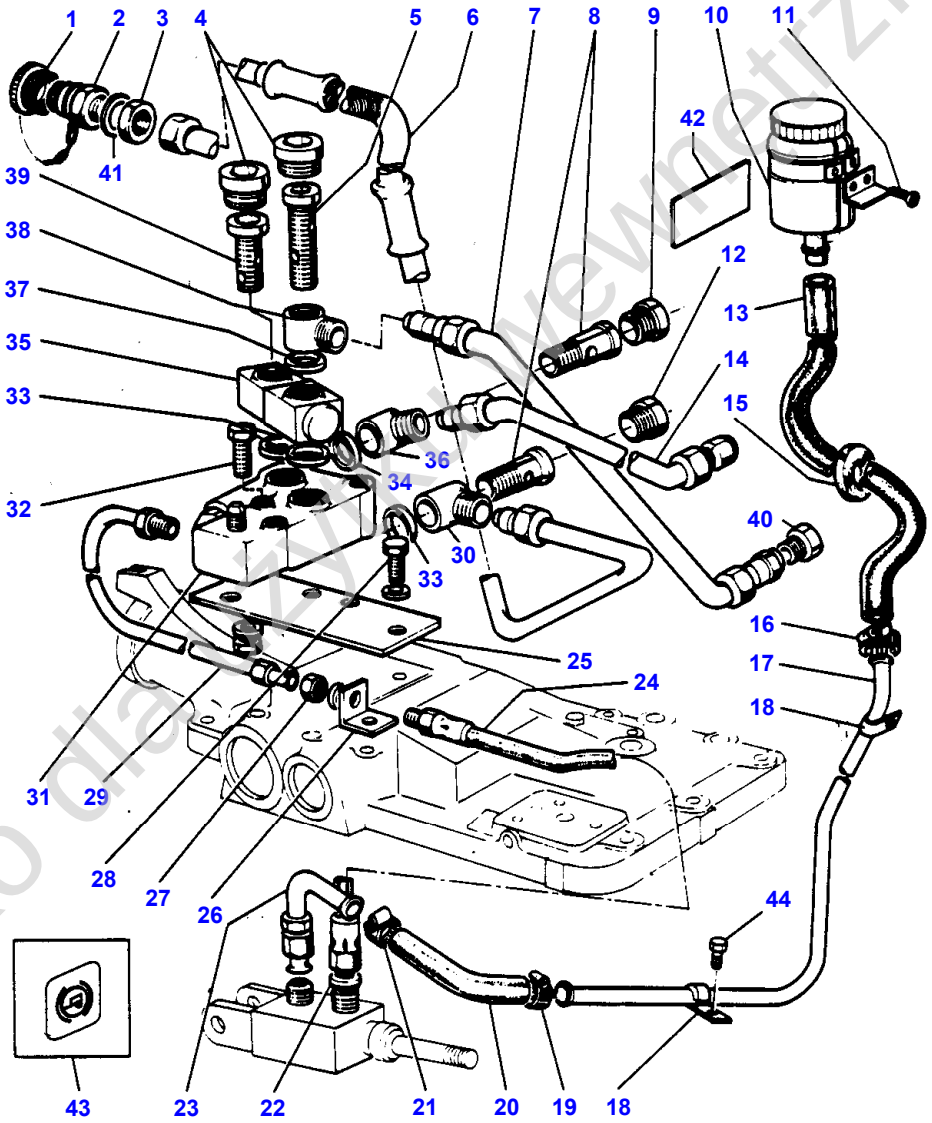

1-1545-003

Tylko dla użytku wewnętrznego

Item	Part Number	Qty	Description	Comments
1	908605M1	1	Plug	
2	909024M1	1	Coupler	
3	1442336X1	1	Nut	
4	338704X1	2	Plug	
5	1661628M1	1	Bolt	
6	1660906M92	1	Hydr.Hose Assy.	
7	1661745M91	1	Tube	
8	338705X1	2	Bolt	
9	338704X1	1	Plug	
10	1875414M2	1	Reservoir	
11	377547X1	2	Screw	
12	338704X1	1	Plug	
13	1661104M1	1	Hydr.Hose Assy.	
14	1660922M91	1	Tube	
15	1661229M1	1	Grommet	
16	338612X1	1	Hose Clip	
17	1670066M91	1	Tube	Repairs and replaces 1661102M2
18	360031X1	2	Clip	
19	338612X1	1	Hose Clip	
20	1661165M1	1	Hydr.Hose Assy.	
21	338612X1	1	Hose Clip	
22	1613029M1	1	Washer	
23	1661038M92	1	Tube	
24	1660971M91	1	Hydr Hose	
25	1660921M1	1	Plate	
26	1661100M1	1	Bracket	
27	390333X1	1	Nut Metric	
	390287X1	1	Lock Washer	
28	353698X1	2	Screw Unc	
	353432X1	2	Lock Washer	
29	1660990M91	1	Tube	
30	338703X1	1	Union	
31		1	Control Valve	See Page - Reference Number 338/1
32	353531X1	2	Bolt Unf	
	353446X1	2	Lock Washer	
	353916X1	2	Nut Unf	
33	338706X1	3	Washer	
34	338706X1	1	Washer	
35	1661625M91	1	Manifold	
36	338703X1	1	Union	
37	338706X1	1	Washer	
38	338735X1	1	Connection	
39	338705X1	1	Bolt	
40	377657X1	1	Reducer	
41	1662876M1	2	Washer	
42	1662981M1	1	Decal	
43	1664360M1	1	Decal	
44	365011X1	2	Screw	

Tylko do użytku wewnętrznego

338

VALVE DE FREINAGE DE REMORQUE
ANHAENGERBREMSVENTIL
VALVOLA FRENO RIMORCHIO
VALVULA FRENO REMOLQUE
TRAILOR BRAKE VALVE

15401003

1 1540 003

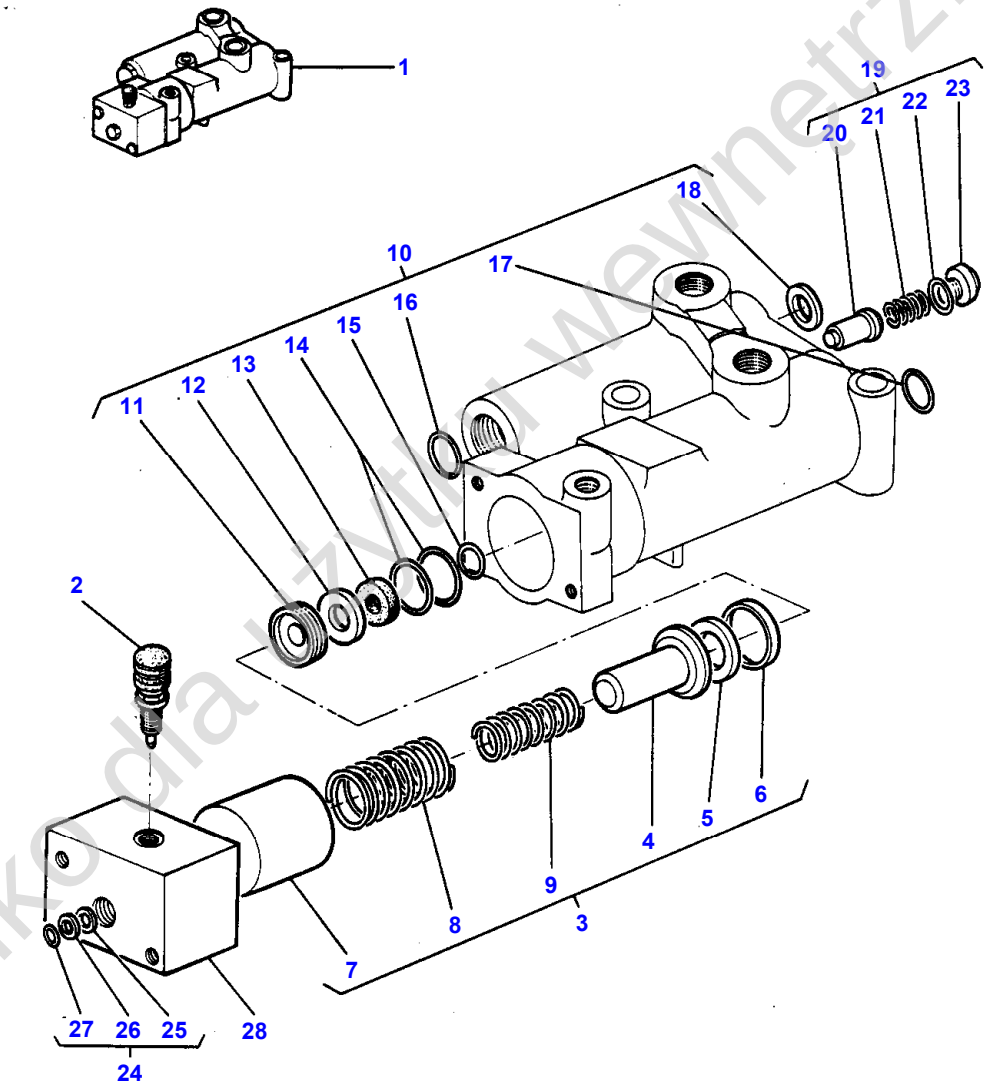

1-1540-003

Tylko dla użytku wewnętrznego

Item	Part Number	Qty	Description	Comments
				UP 08/1980
1	1661095M91	1	Valve	BOSCH
2	1718886M1	1	Valve	(1)
3	1718889M91	1	Parts Pack	(1)
4		1	Clevis Pin	(3)
				Not serviced, order 1718889M91
5		3	Washer	(3)
				Not serviced, order 1718889M91
6		1	Seal	(3)
				Not serviced, order 1718889M91
7		1	Helmet	(3)
				Not serviced, order 1718889M91
8		1	Spring	(3)
				Not serviced, order 1718889M91
9		1	Spring	(3)
				Not serviced, order 1718889M91
10	1718890M91	1	Kit, Seal	(1)
11		1	Plug	(10)
				Not serviced, order 1718890M91
12		1	Washer	(10)
				Not serviced, order 1718890M91
13		1	Seal	(10)
				Not serviced, order 1718890M91
14		2	O Ring	(10)
				Not serviced, order 1718890M91
15		1	O Ring	(10)
				Not serviced, order 1718890M91
16		1	O Ring	(10)
				Not serviced, order 1718890M91
17		1	O Ring	(10)
				Not serviced, order 1718890M91
18		1	Seal	(10)
				Not serviced, order 1718890M91
19	1718888M91	1	Parts Pack	(1)
20		1	Valve	(19)
				Not serviced, order 1718888M91
21		1	Spring	(19)
				Not serviced, order 1718888M91
22		1	O Ring	(19)
				Not serviced, order 1718888M91
23		1	Plug	(19)
				Not serviced, order 1718888M91
24	1719045M91	1	Gasket	(1)
25		1	Seal	(24)
				Not serviced, order 1719045M91
26		1	Ring	(24)
				Not serviced, order 1719045M91
27		1	O Ring	(24)
				Not serviced, order 1719045M91
28		1	Head	(1)
				Not serviced, order 1661095M91
28	1719044M1	1	Gasket	(A)
				(A) NOT ILLUSTRATED

Tylko dla użytku wewnętrznego

340

DISTRIBUTEUR
VERTEILER
DISTRIBUTORE
DISTRIBUIDOR
DISTRIBUTOR

14721013

1 1472 039

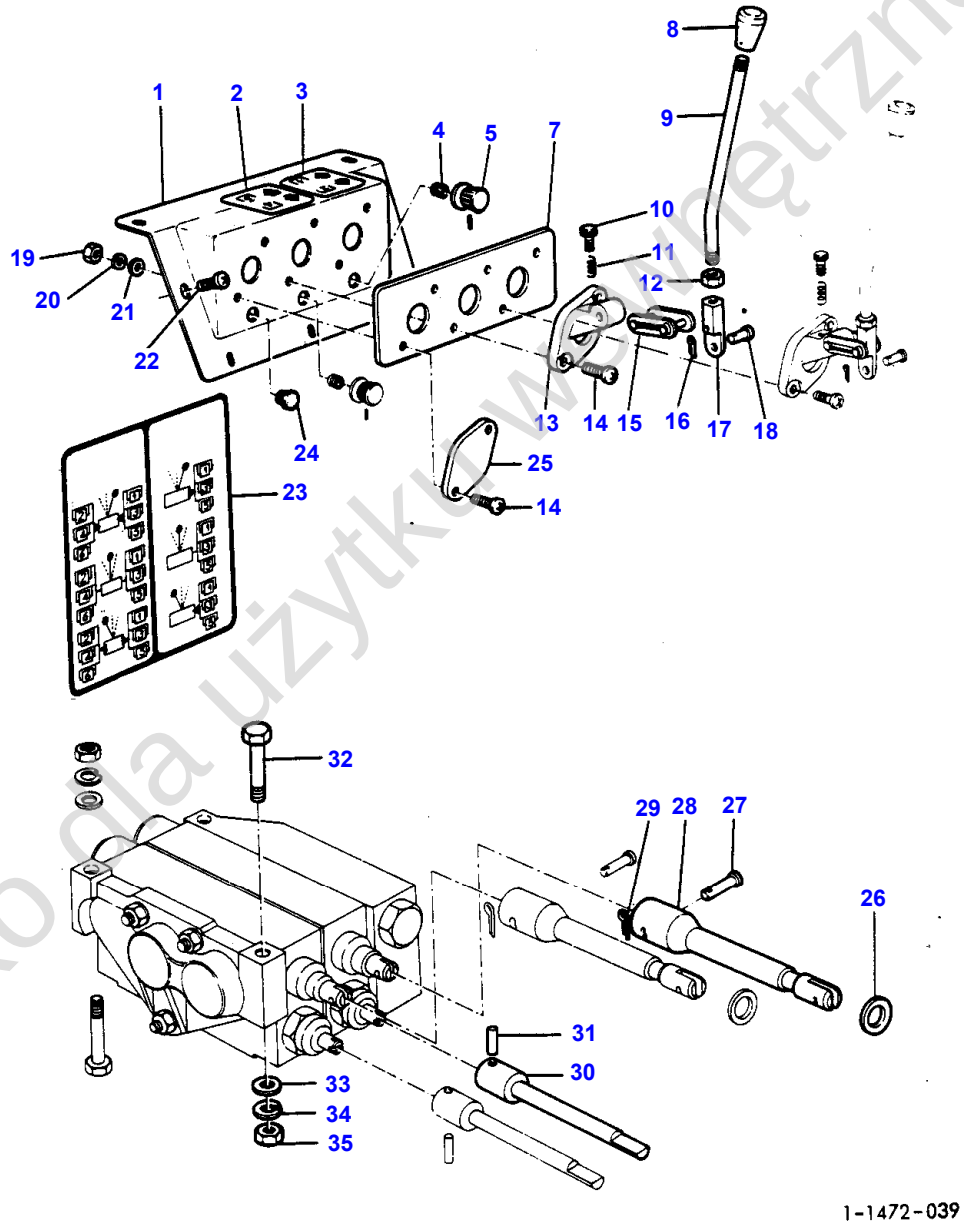

Tylko dla użytku wewnętrznego

Item	Part Number	Qty	Description	Comments
				KONTAK-DRIVE
1	1662766M1	1	Support	
2	1664258M1	1	Decal	
3	1664257M1	1	Decal	
4	893879M1	2	Grommet	
5	1662865M1	2	Knob	
7	1662839M1	1	Plate	
8	1662935M1	2	Knob	
9	1662762M1	2	Lever	
10	377701X1	2	Screw	
11	1663778M1	2	Spring	
12	377681X1	2	Nut	
13	1662933M1	2	Bracket	
14	377687X1	6	Screw Unc	
15	1662934M1	2	Link	
16	354039X1	2	Cotter	
17	1662881M1	2	Pivot	
18	375198X1	2	Pin	
19	355564X1	6	Nut Unc	
20	353441X1	6	Lock Washer	
21	353754X1	6	Washer	
22	364237X1	7	Self Tap Screws	
23	1664341M1	1	Decal	
24	1699748M1	1	Plug	
25	1662822M1	1	Plate	
26	1662815M2	2	Washer	
27	832006M1	2	Pin	
28	1662759M3	2	Extension	
29	354039X1	2	Cotter	
30	1662765M92	2	Rod	
31	195479M1	2	Roll Pin	
32	353550X1	3	Bolt Unf	
33	353756X1	3	Washer	
34	353434X1	3	Lock Washer	
35	353431X1	3	Nut Unf	

Tylko dla użytku wewnętrznego

342

DISTRIBUTEUR
VERTEILER
DISTRIBUTORE
DISTRIBUIDOR
DISTRIBUTOR

14721014

1 1472 024

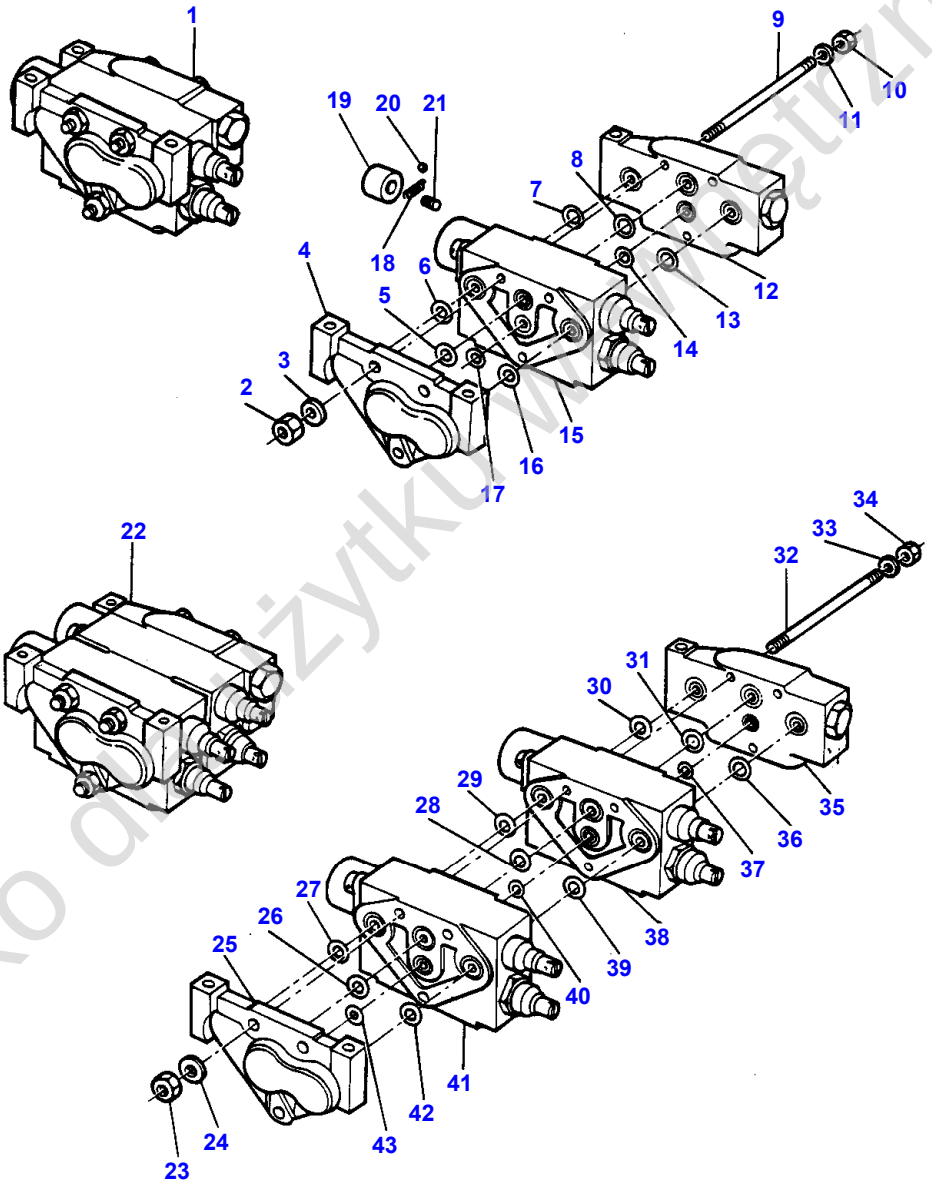

1-1472-024

Tylko do użytku w Massey Ferguson

Item	Part Number	Qty	Description	Comments
				KONTAK
1	1661328M94	1	Valve	Up to Serial or Engine Number 11/80
2	353431X1	3	Nut Unf	(1)
3	1888715M1	3	Washer	(1)
4	1891252M1	1	Cover	(1)
5	1889915M1	1	O Ring	(1)
6	1888706M1	1	Ring	(1)
7	1888706M1	1	Ring	(1)
8	1889915M1	1	O Ring	(1)
9	1664498M1	3	Stud	(1)
10	353431X1	3	Nut Unf	(1)
11	1888715M1	3	Washer	(1)
12	1888717M1	1	Cover	(1)
13	1888706M1	1	Ring	(1)
14	1889914M1	1	O Ring	(1)
15	1661418M94	1	Distributor	(1)
				See Page - Reference Number 344/
16	1888706M1	1	Ring	(1)
17	1889914M1	1	O Ring	(1)
18	1672124M1	1	Spring	
19	1672125M1	1	Cage	
20	16773X	1	Ball	
21	1672126M1	1	Carrier	
22	1661329M94	1	Valve	From Serial or Engine Number 11/80
23	353431X1	3	Nut Unf	(22)
24	1888715M1	3	Washer	(22)
25	1891252M1	1	Cover	(22)
26	1889915M1	1	O Ring	(22)
27	1888706M1	1	Ring	(22)
28	1889915M1	1	O Ring	(22)
29	1888706M1	1	Ring	(22)
30	1888706M1	1	Ring	(22)
31	1889915M1	1	O Ring	(22)
32	1664498M1	1	Stud	(22)
33	1888715M1	3	Washer	(22)
34	353431X1	3	Nut Unf	(22)
35	1888717M1	1	Cover	(22)
36	1888706M1	1	Ring	(22)
37	1889914M1	1	O Ring	(22)
38	1661418M94	1	Distributor	(22)
				See Page - Reference Number 344/
39	1888706M1	1	Ring	(22)
40	1889914M1	1	O Ring	(22)
41	1661418M94	1	Distributor	(22)
				See Page - Reference Number 344/
42	1888706M1	1	Ring	(22)
43	1889914M1	1	O Ring	(22)

Tylko dla użytku wewnętrznego

344

DISTRIBUTEUR
VERTEILER
DISTRIBUTORE
DISTRIBUIDOR
DISTRIBUTOR

14721007

1 1472 023

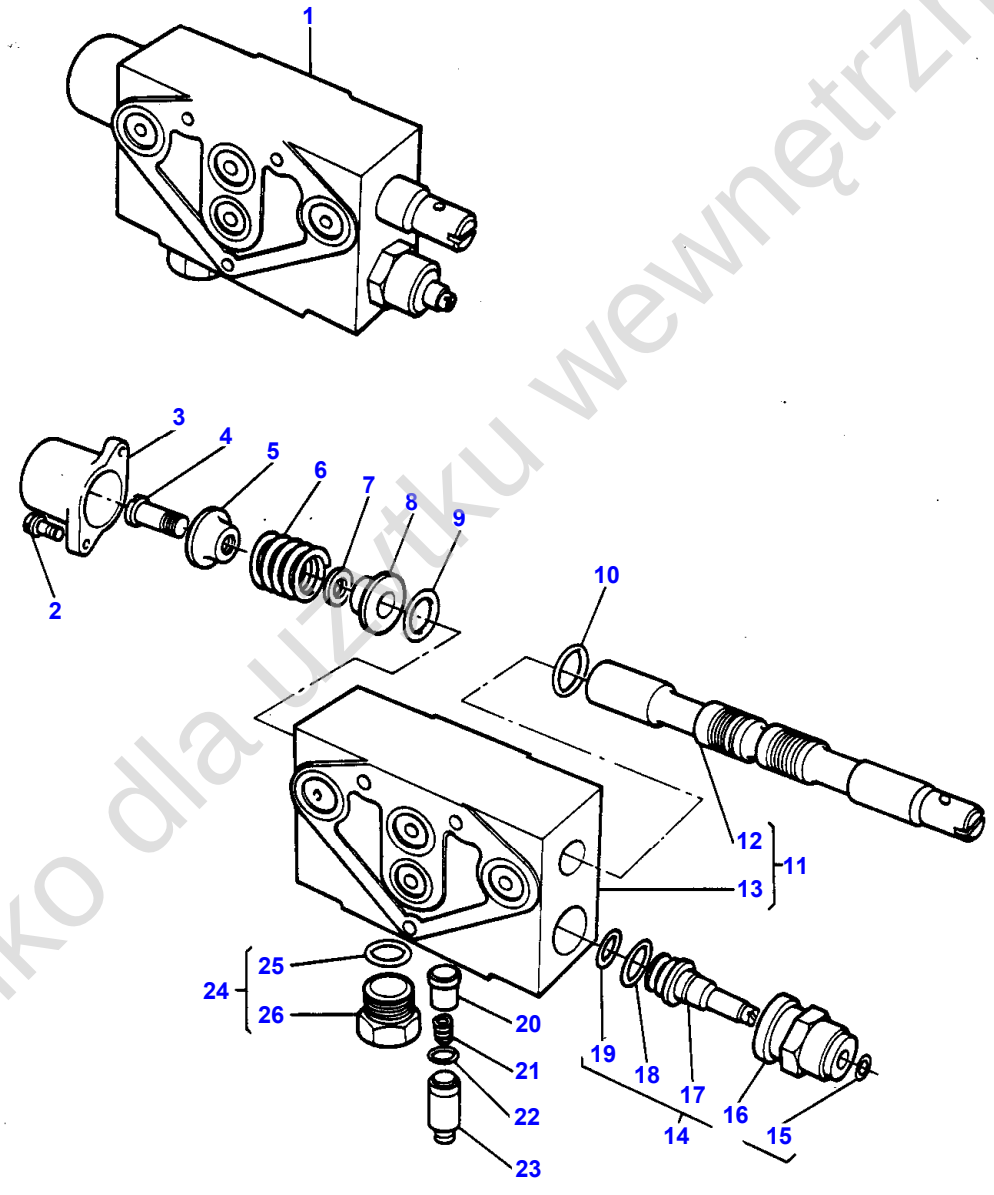

Tylko dla użytku wewnętrznego

Item	Part Number	Qty	Description	Comments
1	1661418M94	1	Distributor	
2	1888768M1	2	Screw	(1)
3	1888764M1	1	Cap	(1)
4	1888763M1	1	Screw	(1)
5	1888765M1	1	Seat	(1)
6	1888766M1	1	Spring	(1)
7	1888767M1	1	Spacer	(1)
8	1888765M1	1	Seat	(1)
9	1888769M1	1	O Ring	(1)
10	1888769M1	1	O Ring	(1)
11	1891244M1	1	Body	(1)
12		1	Spool	(11)
				Not serviced, order 1891244M1
13		1	Body	(11)
				Not serviced, order 1891244M1
14	1891248M91	1	Convertor	(1)
15	1888761M1	1	O Ring	(14)
16	1891255M1	1	Body	(14)
17	1891254M1	1	Spindle	(14)
18	1885849M1	1	Seal	(14)
19	1888762M1	1	O Ring	(14)
20	1891247M1	1	Poppet	(1)
21	1888758M1	1	Spring	(1)
22	1888720M1	1	Ring	(1)
23	1891245M1	1	Slide	(1)
24	1891250M91	1	Plug	(1)
25		1	Gasket	(24)
				Not serviced, order 1891250M91
26		1	Plug	(24)
				Not serviced, order 1891250M91

Tylko dla użytku wewnętrznego

346

DISTRIBUTEUR
VERTEILER
DISTRIBUTORE
DISTRIBUIDOR
DISTRIBUTOR

14721015

1 1472 040

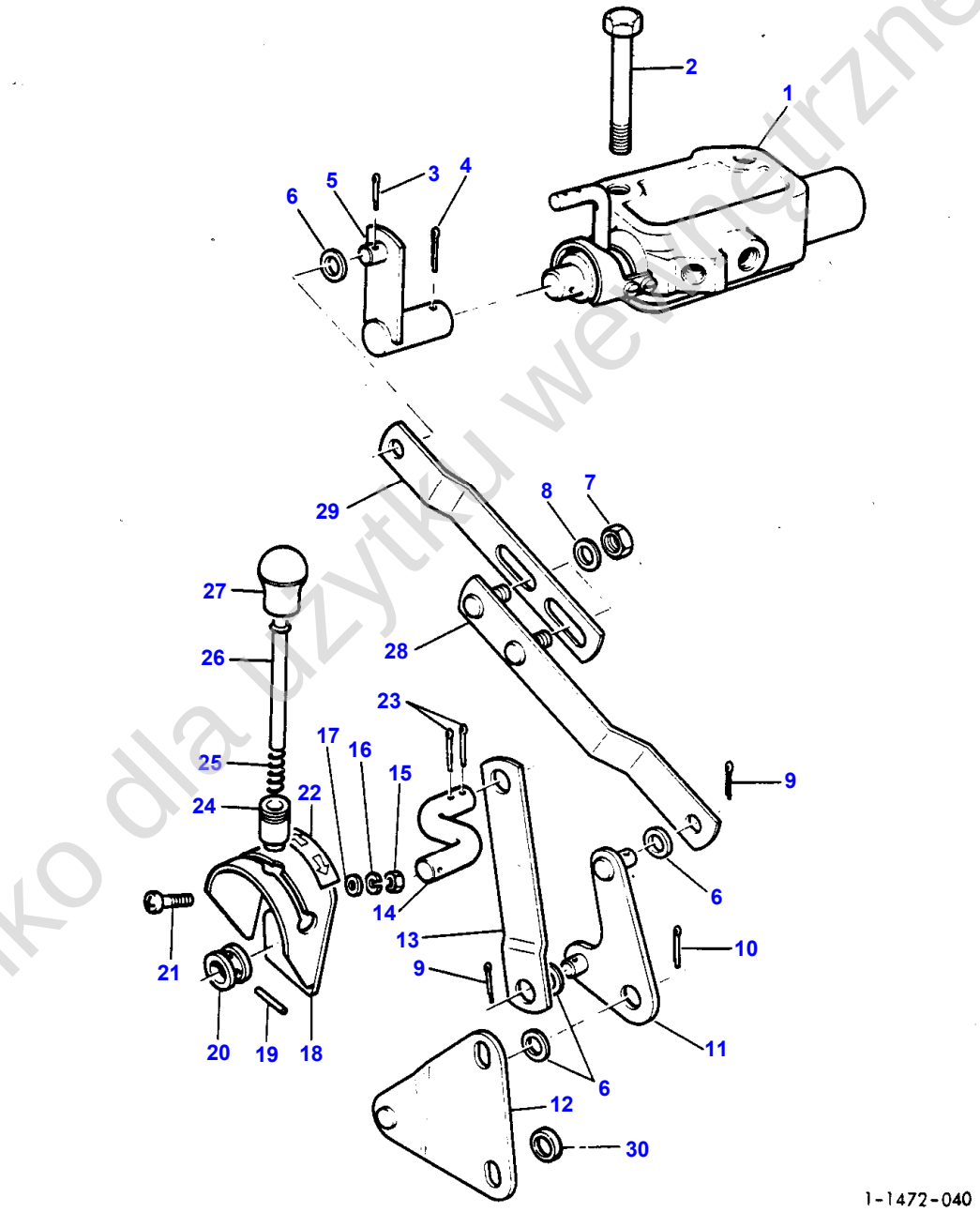

Tylko dla użytku wewnętrznego

Item	Part Number	Qty	Description	Comments
				KONTAK-SELECTOR CONTROL
1		1	Selector	See Page - Reference Number 348/
2	362726X1	2	Screw	
3	354048X1	1	Pin	
4	763786M1	1	Pin	
5	1663437M93	1	Lever	
6	353756X1	4	Washer	
7	353919X1	2	Nut Unf	
8	353754X1	2	Washer	
9	354057X1	2	Pin	
10	354057X1	2	Pin	
11	1663438M92	1	Lever	
12	1663442M91	1	Plate	
13	1666401M2	1	Link	
14	1663445M2	1	Lever	
15	355564X1	2	Nut Unc	
16	353441X1	2	Lock Washer	
17	353754X1	2	Washer	
18	1662889M93	1	Plate	
19	763786M1	1	Pin	
20	1662800M1	1	Boss	
21	377688X1	2	Screw Unc	
22	1663291M1	1	Decal	
23	354048X1	2	Pin	
24	1662799M1	1	Tube	
25	1662895M1	1	Spring	
26	1662798M2	1	Shaft	
27	1662797M1	1	Knob	
28	1665039M92	1	Conrod	
29	1666405M1	1	Link	
30	390735X1	1	Washer Metric	

Tylko dla użytku wewnętrznego

348

DISTRIBUTEUR
VERTEILER
DISTRIBUTORE
DISTRIBUIDOR
DISTRIBUTOR

14721016

1 1472 049

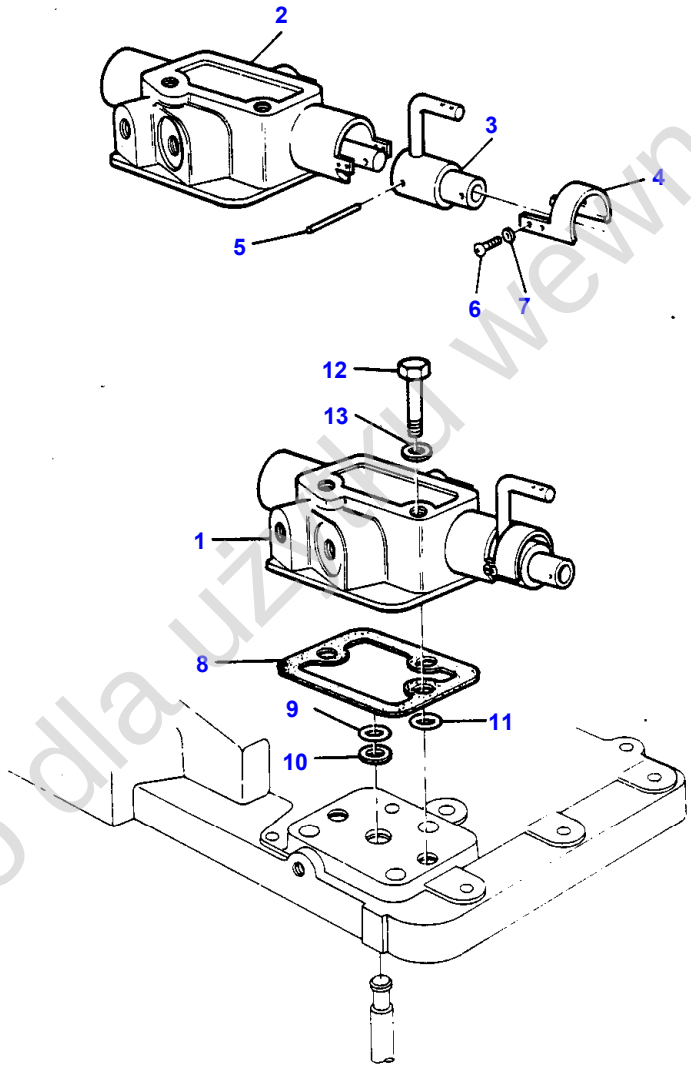

Tylko dla użytku wewnętrznego

Item	Part Number	Qty	Description	Comments
				KONTAK-SELECTOR
1	1666782M91	1	Selector	
2	1666783M91	1	Pressure Valve	(1)
3	1666709M91	1	Lever	(1)
4	1666558M1	1	Plate	(1)
5	22807X	1	Roll Pin	(1)
6	357442X1	4	Screw Unc	(1)
7	22427X	4	Lock Washer	(1)
8	1860488M1	1	Gasket	
9	195561M1	1	O Ring	
10	195874M1	1	Washer	
11	195561M1	1	O Ring	
12	362726X1	2	Screw	
13	353432X1	2	Lock Washer	

Tylko dla użytku wewnętrznego

350

DISTRIBUTEUR
VERTEILER
DISTRIBUTORE
DISTRIBUIDOR
DISTRIBUTOR

14721039

1 1472 050

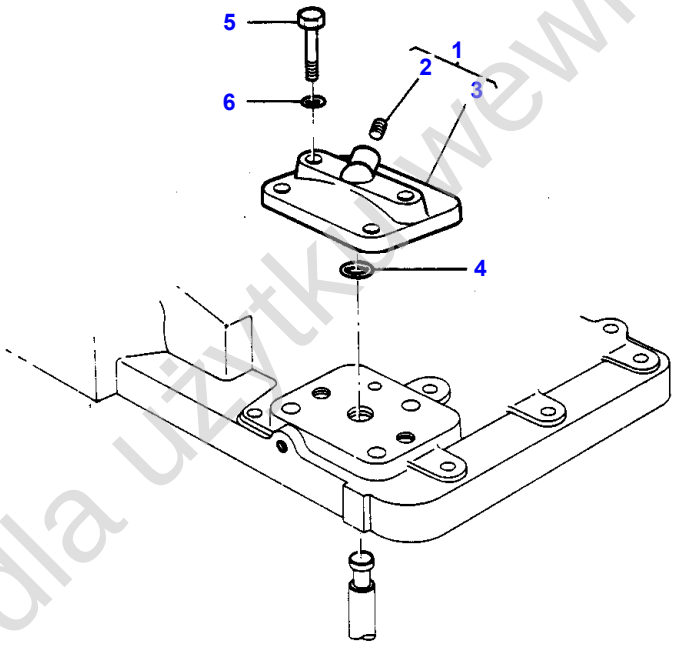

1-1472-050

Tylko dla użytku wewnętrznego

Item	Part Number	Qty	Description	Comments
				KONTAK-LIFT COVER CAP- WITHOUT SELECTOR
1	182373M91	1	Cap	
2	195567M1	1	Plug	(1)
3	180908M1	1	Cap	(1)
4	195561M1	1	O Ring	
5	362479X1	2	Screw	
6	353432X1	2	Lock Washer	

Tylko dla użytku wewnętrznego

352

DISTRIBUTEUR
VERTEILER
DISTRIBUTORE
DISTRIBUIDOR
DISTRIBUTOR

14721017

1 1472 041

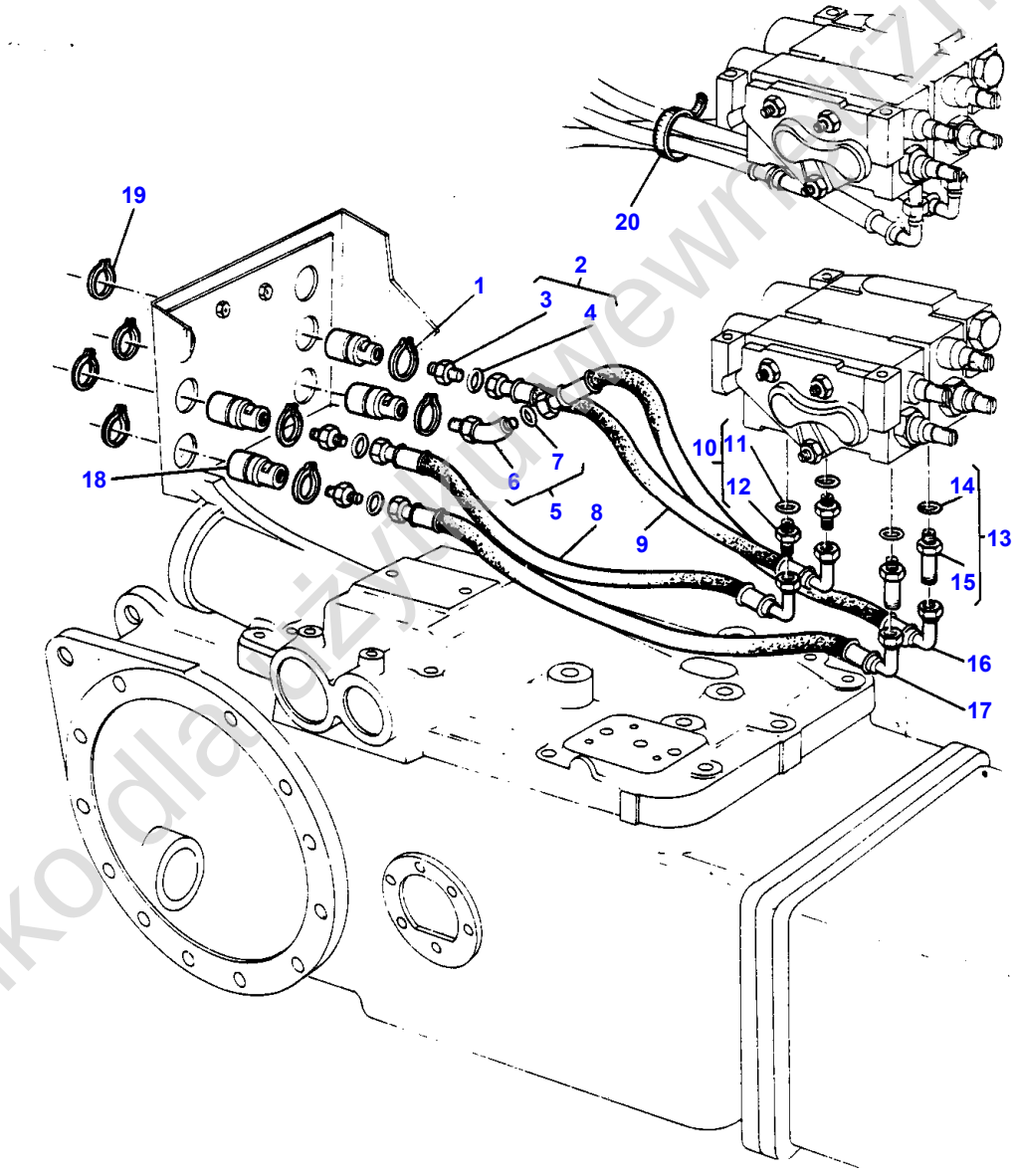

Tylko dla użytku wewnętrznego

Item	Part Number	Qty	Description	Comments
				KONTAK-REAR TUBE
1	352972X1	4	Ring	
2	358743X91	3	Union	
3		1	Union	(2) Not serviced, order 358743X91
4	831497M1	1	O Ring	(2)
5	358782X91	1	Elbow	
6		1	Union	(5) Not serviced, order 358782X91
7	831497M1	1	O Ring	(5)
8	1660597M91	1	Hydr.Hose Assy.	
9	1660596M91	1	Hydr.Hose Assy.	
10	358743X91	2	Union	
11	831497M1	1	O Ring	(10)
12		1	Union	(10) Not serviced, order 358743X91
13	377517X91	2	Union	
14	831497M1	1	O Ring	(13)
15		1	Union	(13) Not serviced, order 377517X91
16	1662863M91	1	Hydr.Hose Assy.	
17	1660594M91	1	Hydr.Hose Assy.	
18	1610606M4	4	Union	
19	352972X1	4	Ring	
20	1699753M1	2	Strap	

Tylko dla użytku wewnętrznego

354

DISTRIBUTEUR
VERTEILER
DISTRIBUTORE
DISTRIBUIDOR
DISTRIBUTOR

14721018

1 1472 044

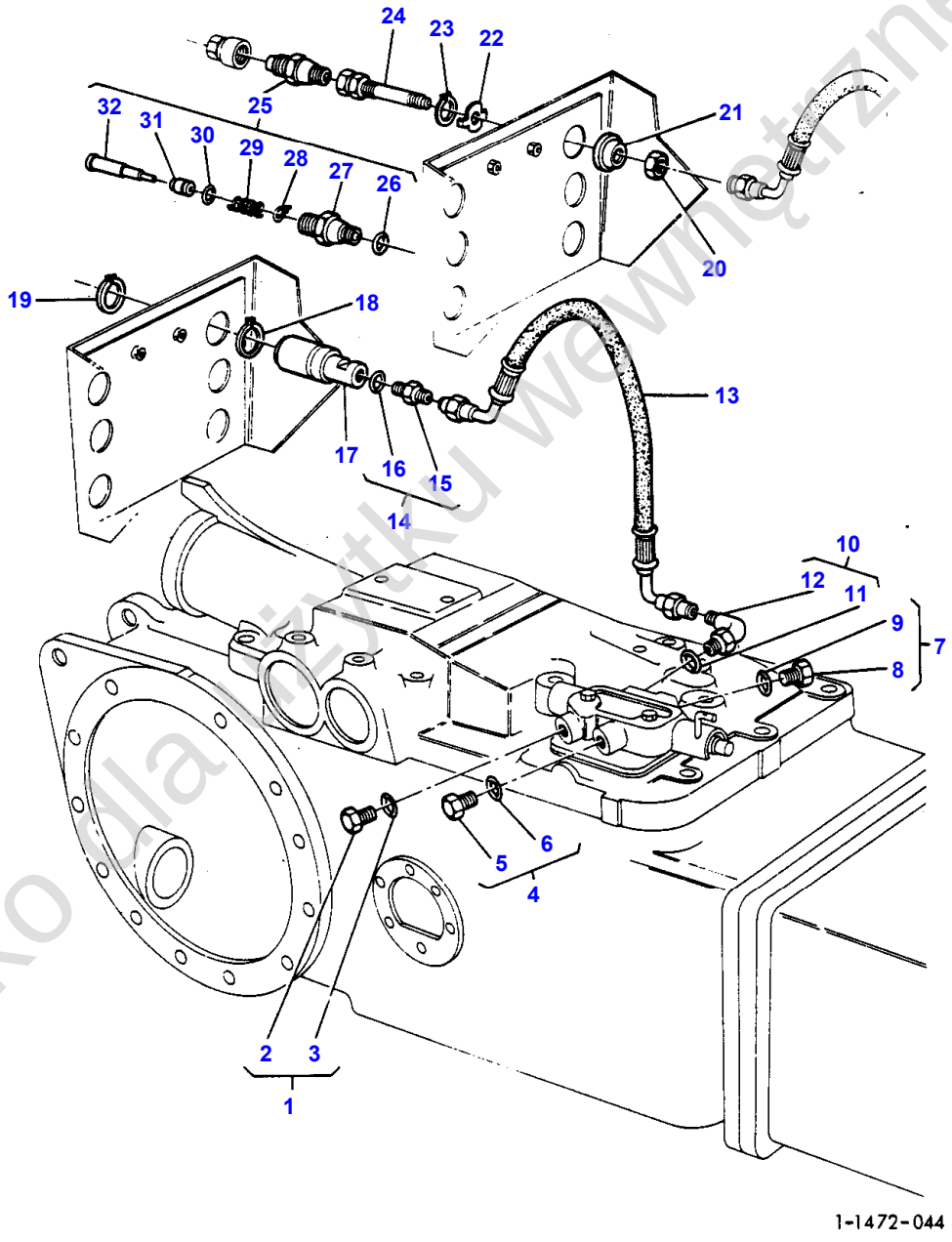

Tylko dla użytku wewnętrznego

Item	Part Number	Qty	Description	Comments
				KONTAK-TILTING TRAILER TUBE
1	358724X91	1	Plug	
2		1	Plug	(1) Not serviced, order 358724X91
3	831452M1	1	O Ring	(1)
4	835087M91	1	Plug	
5		1	Plug	(4) Not serviced, order 835087M91
6	831452M1	1	O Ring	(4)
7	835087M91	1	Plug	
8		1	Plug	(7) Not serviced, order 835087M91
9	831452M1	1	O Ring	(7)
10	186127M91	1	Elbow	
	377678X91	1	Elbow	(A) Two Wheel Drive
11	831452M1	1	O Ring	(10)
12		1	Union	(10) Not serviced, order NO 10
13	1664489M91	1	Hydr.Hose Assy.	
14	358743X91	1	Union	(B)
15		1	Union	(14) Not serviced, order 358743X91
16	831497M1	1	O Ring	(14)
17	1610606M4	1	Union	(B)
18	352972X1	1	Ring	(B)
19	352972X1	1	Ring	(B)
20	355574X1	1	Nut Unf	(C)
21	1668586M1	1	Washer	(C)
22	1671642M1	1	Washer	(C)
23	208505M1	1	Circlip	(C)
24	377773X2	1	Union	(C)
25	868713M91	1	Coupling	(C)
26	831497M1	1	O Ring	(25) (C)
27		1	Body	(25) (C) Not serviced, order 868713M91
28		1	Spring	(25) (C) Not serviced, order 868713M91
29		1	Spring	(25) (C) Not serviced, order 868713M91
30	831461M1	1	O Ring	(25) (C)
31		1	Spring Pot	(25) (C) Not serviced, order 868713M91
32		1	Clevis Pin	(25) (C) Not serviced, order 868713M91
				(A) DELIVERY COMBINED
				(B) BRUNING COUPLING
				(C) DOWTY COUPLING

Tylko dla użytku wewnętrznego

358

DISTRIBUTEUR
VERTEILER
DISTRIBUTORE
DISTRIBUIDOR
DISTRIBUTOR

14721019

1 1472 045

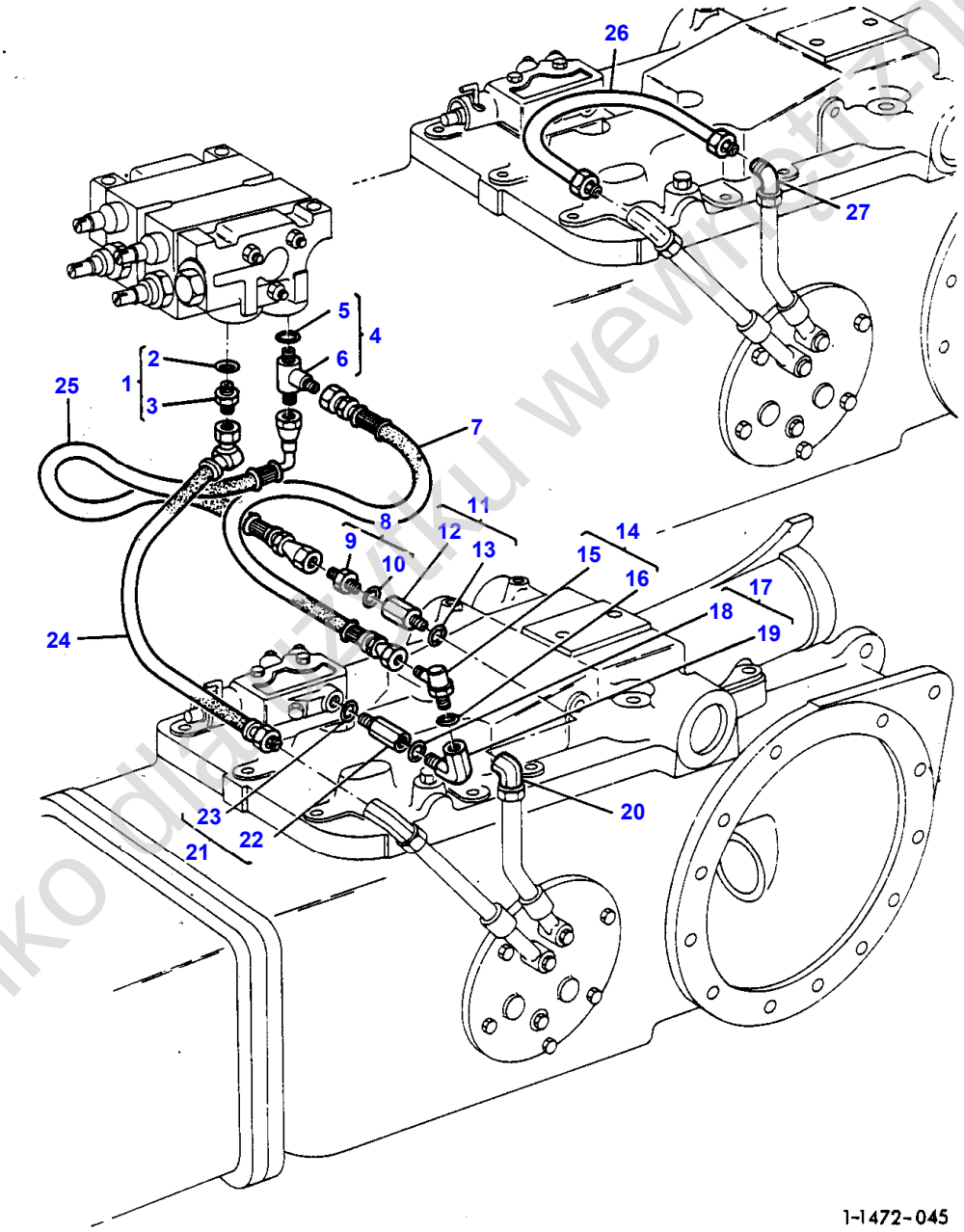

Tylko dla użytku wewnętrznego

Item	Part Number	Qty	Description	Comments
				KONTAK-DELIVERY COMBINED
1	377673X91	1	Adaptor	
2	831497M1	1	O Ring	(1)
3		1	Union	(1) Not serviced, order 377673X91
4	358728X91	1	Teepiece	
5	831497M1	1	O Ring	(4)
6		1	Union	(4) Not serviced, order 358728X91
7	1664603M91	1	Hydr Hose	
8	358743X91	1	Union	(A)
9		1	Union	(8) Not serviced, order 358743X91
10	831497M1	1	O Ring	(8)
11	1868882M92	1	Valve	
12		1	Union	(11) Not serviced, order 1868882M92
13	831497M1	1	O Ring	(11)
14	377505X91	1	Elbow	
15		1	Union	(14) Not serviced, order 377505X91
16	831497M1	1	O Ring	(14)
17	377678X91	1	Elbow	(B) Two Wheel Drive
18	831452M1	1	O Ring	(17)
19		1	Union	(17) Not serviced, order 377678X91
20	377680X1	1	Elbow	
21	1868880M91	1	Valve	
22		1	Union	(21) Not serviced, order 1868880M91
23	831452M1	1	O Ring	(21)
24	1663633M92	1	Hydr.Hose Assy.	
25	1660591M91	1	Hydr.Hose Assy.	
26	1660179M91	1	Tube	(C)
27	356376X1	1	Elbow	(C)
				(A) WITHOUT TILTING TRAILER
				(B) WITH TILTING TRAILER
				(C) WITHOUT DISTRIBUTOR

Tylko dla użytku wewnętrznego

360

DISTRIBUTEUR
VERTEILER
DISTRIBUTORE
DISTRIBUIDOR
DISTRIBUTOR

14721020

1 1472 046

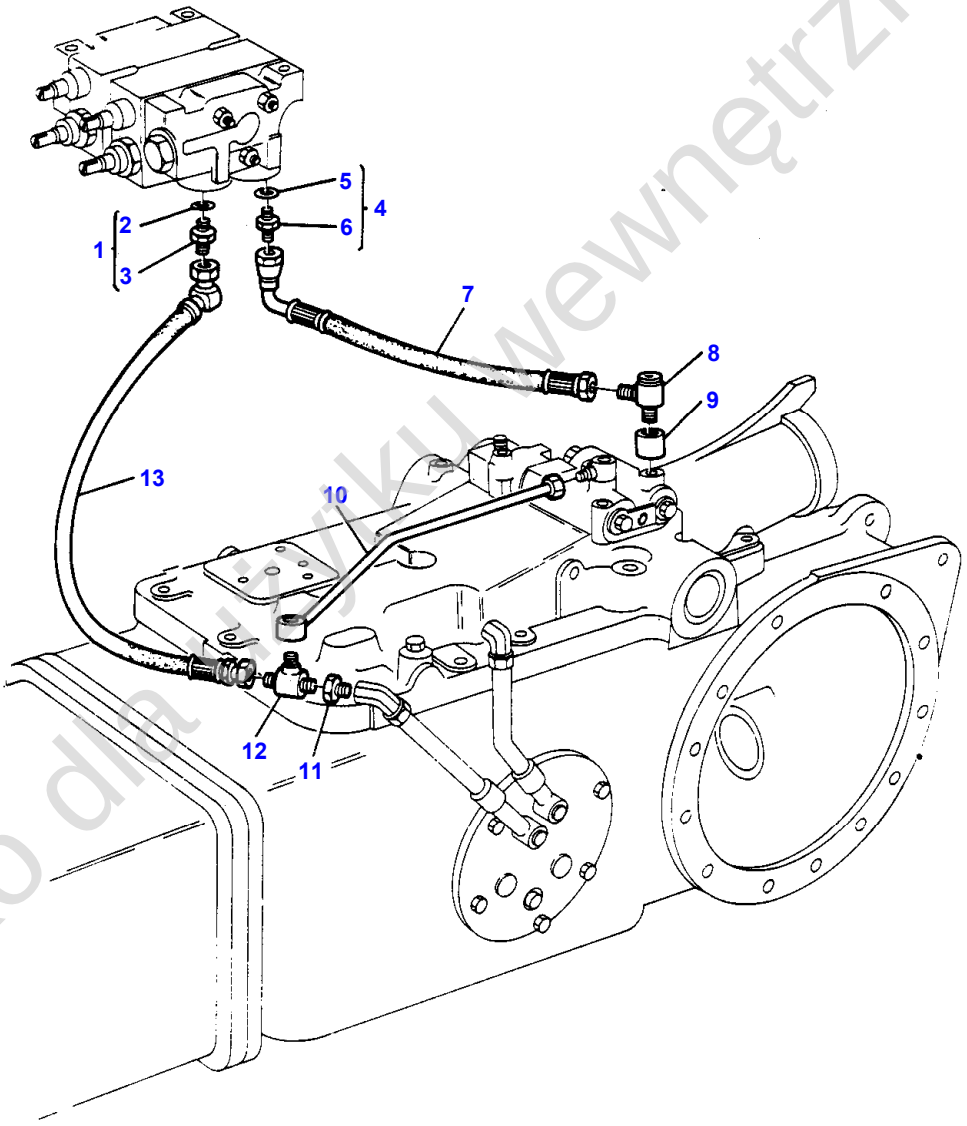

1-1472-046

Tylko dla użytku wewnętrznego

Item	Part Number	Qty	Description	Comments
				KONTAK-TRAILOR BRAKE DELIVERY
1	377673X91	1	Adaptor	
2	831497M1	1	O Ring	(1)
3		1	Union	(1) Not serviced, order 377673X91
4	358743X91	1	Union	
5	831497M1	1	O Ring	(4)
6		1	Union	(4) Not serviced, order 358743X91
7	1664547M91	1	Hydr Hose	
8	1441470X1	1	Union	
9	1661621M1	1	Spacer	
10	1667623M91	1	Tube	
11	377657X1	1	Reducer	
12	377717X1	1	Teepiece	
13	1663633M92	1	Hydr.Hose Assy.	

Tylko dla użytku wewnętrznego

362

DISTRIBUTEUR
VERTEILER
DISTRIBUTORE
DISTRIBUIDOR
DISTRIBUTOR

14721037

1 1472 047

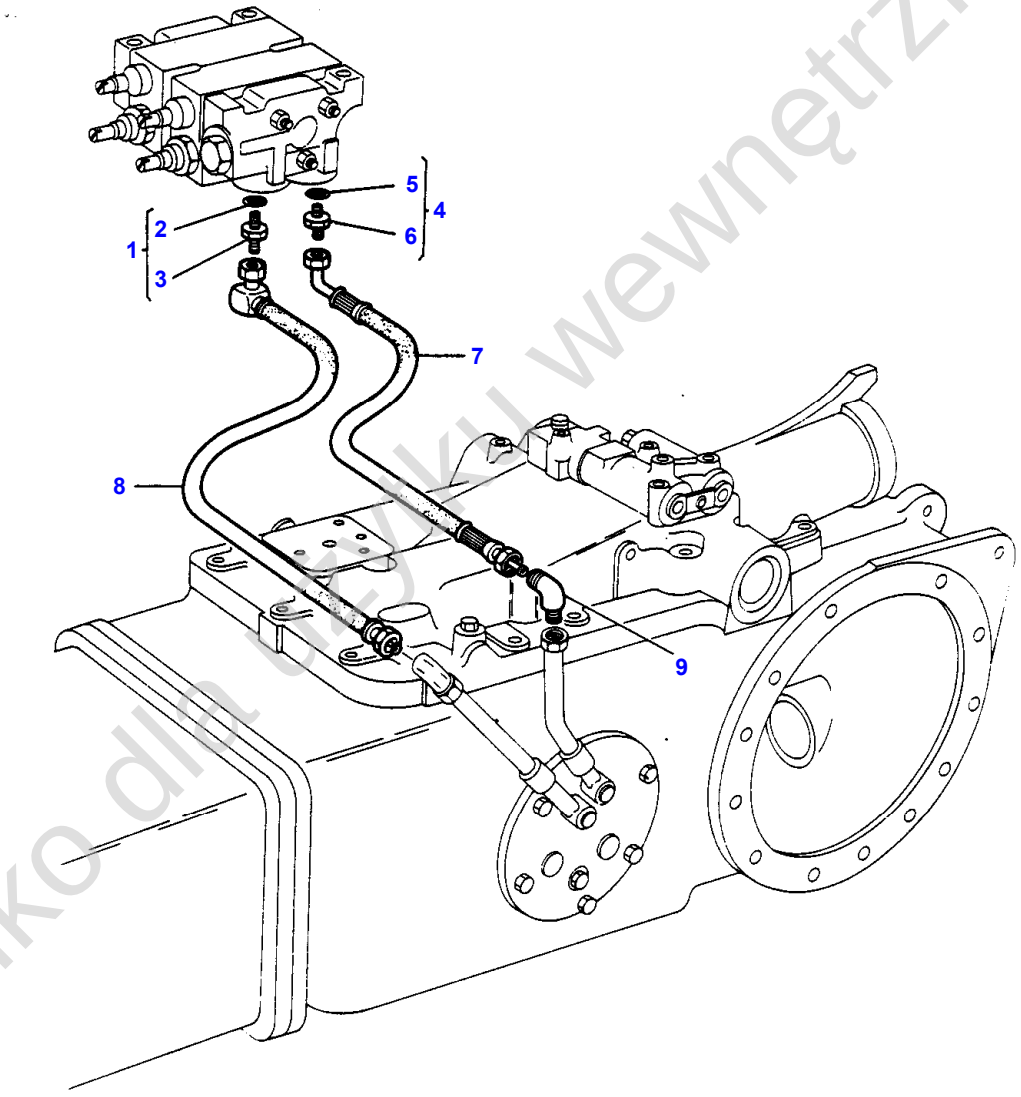

1-1472-047

Tylko dla użytku wewnętrznego

Item	Part Number	Qty	Description	Comments
				KONTAK-AUXILIARY HYDRAULIC DELIVERY
1	377673X91	1	Adaptor	
2	831497M1	1	O Ring	(1)
3		1	Union	(1) Not serviced, order 377673X91
4	358743X91	1	Union	
5	831497M1	1	O Ring	(4)
6		1	Union	(4) Not serviced, order 358743X91
7	1660591M91	1	Hydr.Hose Assy.	
8	1663633M92	1	Hydr.Hose Assy.	
9	356376X1	1	Elbow	

Tylko dla użytku wewnętrznego

364

DISTRIBUTEUR
VERTEILER
DISTRIBUTORE
DISTRIBUIDOR
DISTRIBUTOR

14721035

1 1472 042

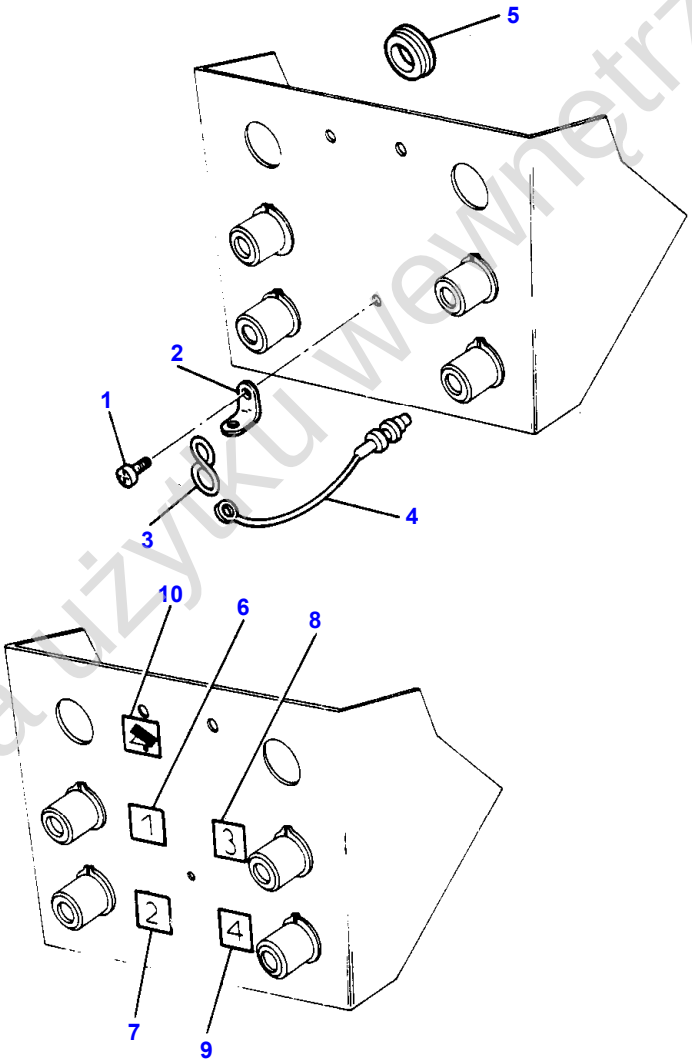

1-1472-042

Tylko dla użytku wewnętrznego

Item	Part Number	Qty	Description	Comments
				REAR SUPPORT-CAP-TRANSFERS- WITH DISTRIBUTOR
1	365925X1	1	Self Tap Screws	
2	1662757M1	1	Bracket	
3	195559M1	1	Eye	
4	1866308M1	4	Plug	
5	1671682M1	1	Plug	(A)
	1671682M1	2	Plug	(B)
6	1664276M1	1	Decal	
7	1664277M1	1	Decal	
8	1664278M1	1	Decal	
9	1664279M1	1	Decal	
10	1664352M1	1	Decal	(C) Two Wheel Drive
				(A) WITH DELIVERY TRAILOR BRAKE
				(B) WITH DELIVERY AUXILIARY HYDRAULIC
				(C) WITH TILTING TRAILER

Tylko dla użytku wewnętrznego

366

DISTRIBUTEUR
VERTEILER
DISTRIBUTORE
DISTRIBUIDOR
DISTRIBUTOR

14721036

1 1472 043

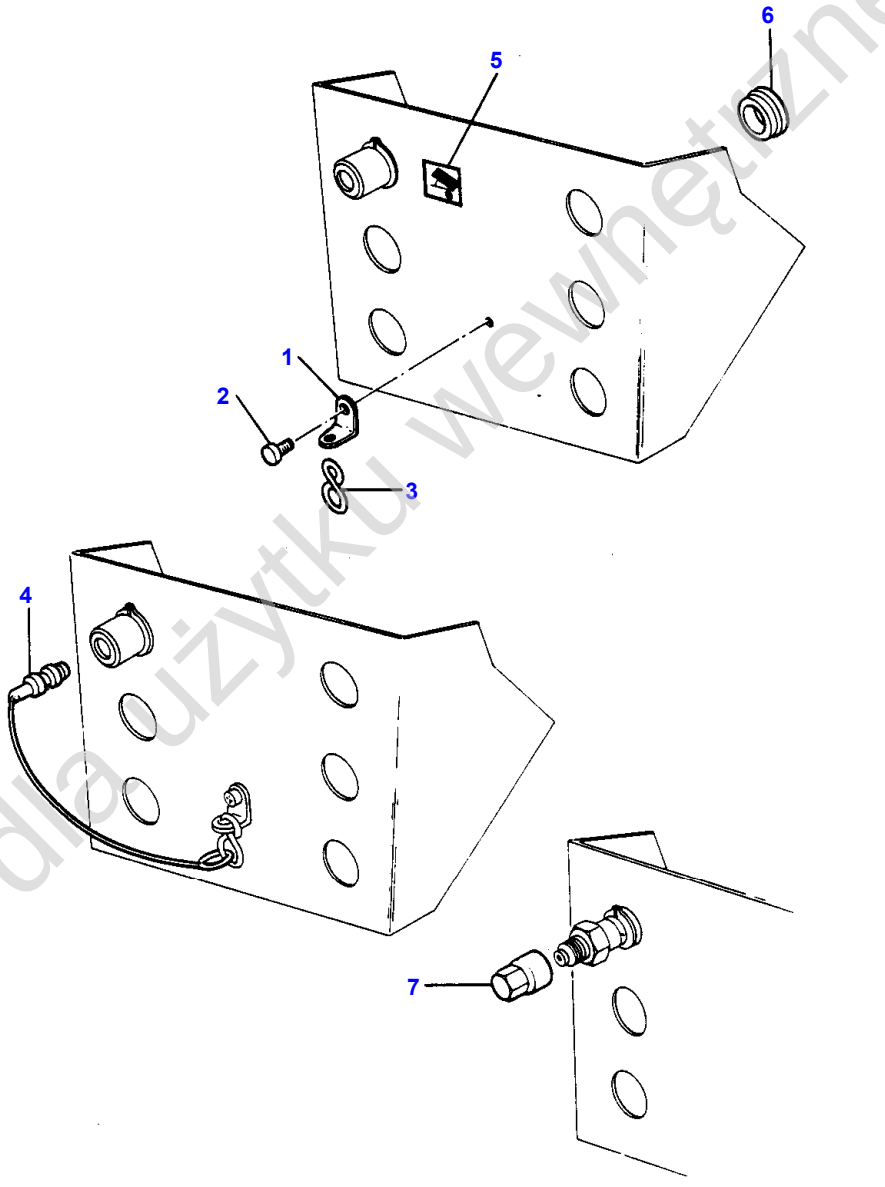

Tylko dla użytku wewnętrznego

Item	Part Number	Qty	Description	Comments
				REAR SUPPORT-CAP-TRANSFERS- WITHOUT DISTRIBUTOR
1	1662757M1	1	Bracket	
2	365925X1	1	Self Tap Screws	
3	195559M1	1	Eye	
4	1866308M1	1	Plug	
5	1664352M1	1	Decal	(A)
6	1671682M1	5	Plug	(A)
	1671682M1	6	Plug	(B)
7	646669M1	1	Cap	(C)

(A)
WITH TILTING TRAILER

(B)
WITHOUT TILTING TRAILER

(C)
DOWTY COUPLER

Tylko dla użytku wewnętrznego

368

DISTRIBUTEUR
VERTEILER
DISTRIBUTORE
DISTRIBUIDOR
DISTRIBUTOR

14721038

1 1472 048

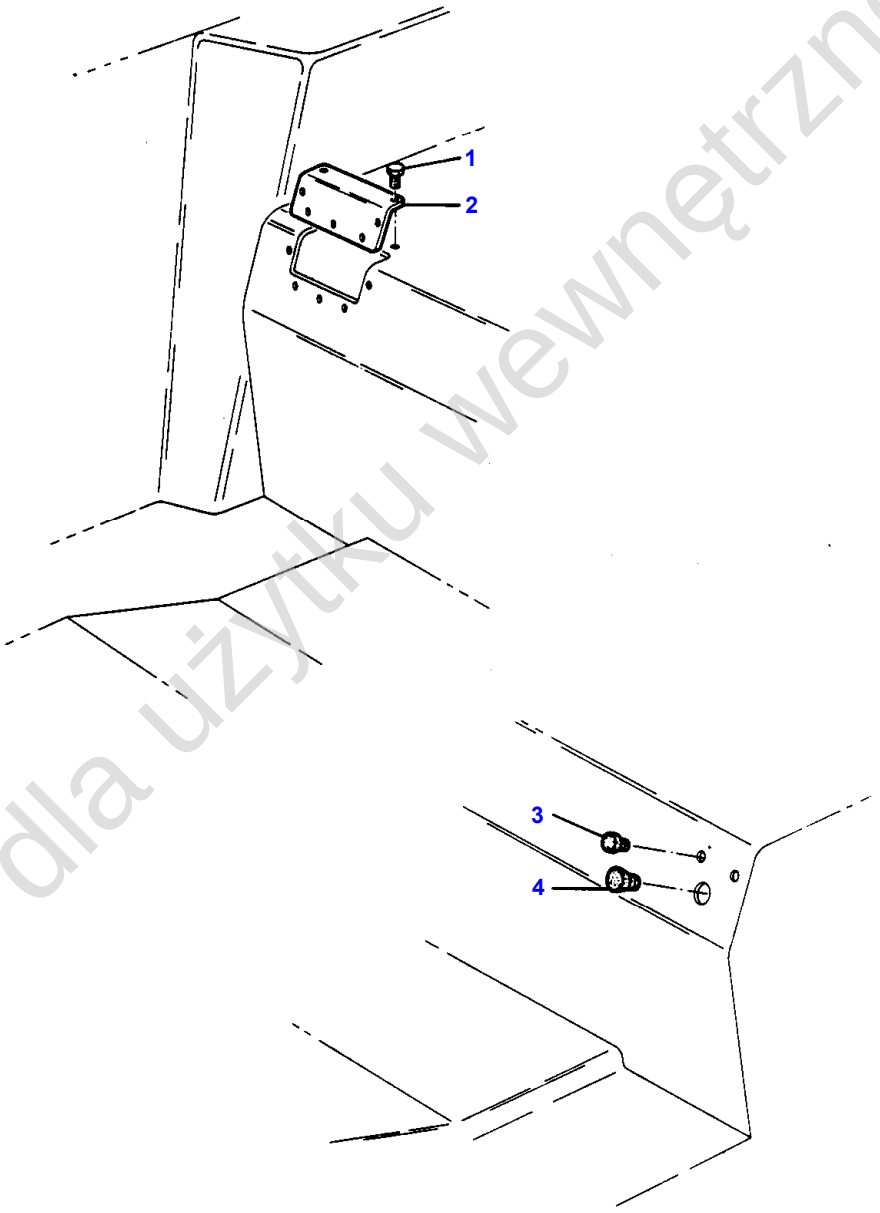

Tylko dla użytku wewnętrznego

Item	Part Number	Qty	Description	Comments
				KONTAK-PLATE-PLUG
1	364237X1	7	Self Tap Screws	(A)
2	1662769M1	1	Cover	(A)
3	1671908M1	2	Plug	(B)
4	1671909M1	1	Plug	(B)
	1860526M1	1	Plug	(C)

(A)
WITHOUT DISTRIBUTOR-WITH SELECTOR

(B)
WITH DISTRIBUTOR-WITHOUT SELECTOR

(C)
WITHOUT DISTRIBUTOR-WITHOUT SELECTOR

Tylko dla użytku wewnętrznego

370

POMPE HYDRAULIQUE	CORPS ARBRE PISTONS
HYDRAULIKPUMPE	GEHAEUSE-WELLE-KOLBEN
POMPA IDRAULICA	CORPO-ALBERO-PISTOME
BOMBA HIDRALICA	CUERPO
HYDRAULIC PUMP	BODY SHAFT PISTON

14301006

1 1430 005

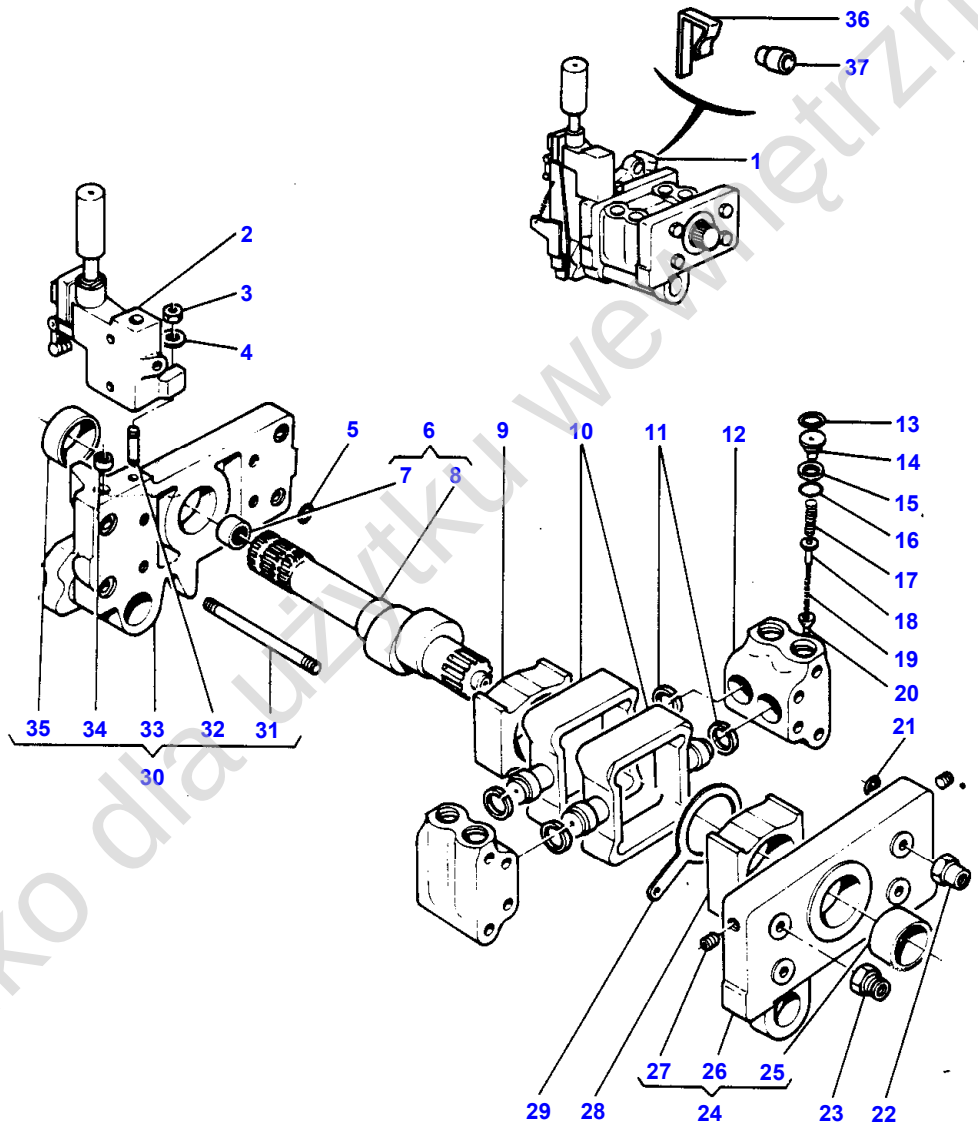

1-1430-005

Tylko dla użytku wewnętrznego

Item	Part Number	Qty	Description	Comments
				WITH PRESSURE MODULATION
1	1868439M98	1	Pump	Not serviced, order 1872449M95
				See Page - Reference Number 372/
				Two Wheel Drive
1	1868439M98	1	Pump	Not serviced, order 1675125M91
				See Page - Reference Number 374/
2		1	Pressure Valve	(1)
				See Page - Reference Number 384/
3	195258M1	1	Nut	(1)
4	353756X1	1	Washer	(1)
5	831528M1	4	O Ring	(1)
6	1868544M91	1	Camshaft	(1)
7	1000251M1	1	Bearing	(6)
8		1	Shaft	(6)
				Not serviced, order 1868544M91
9	180925M2	1	Block	(1)
10	518476M1	2	Piston	(1)
				Alternative 1860038M1
10	1860038M1	2	Piston	(1)
				Alternative 518476M1
11	897493M1	4	Hydr.Piston Ring	(1)
12	1868435M3	1	Valve Body	(1)
13	1868743M1	4	Ring	(1)
14	1868741M1	4	Plug	(1)
15	1870849M1	4	Washer	(1)
16	1868742M1	4	O Ring	(1)
17	180928M1	4	Spring	(1)
18	180930M2	4	Valve	(1)
19	180927M2	4	Spring	(1)
20	1660116M1	4	Valve	(1)
21	377494X1	4	O Ring	(1)
22	1871659M1	2	Nut	(1)
23	1871660M1	2	Nut	(1)
24	1868428M91	1	Body	(1)
25	1865012M1	1	Bearing	(24)
26		1	Body	(24)
				Not serviced, order 1868428M91
27	195567M1	2	Plug	(24)
28	180924M2	1	Block	(1)
29	180933M1	1	Follower	(1)
30	1869962M93	1	Body	(1)
31	377528X1	4	Stud	(30)
32	377527X1	1	Stud	(30)
33		1	Body	(30)
				Not serviced, order 1869962M93
34	1868431M3	1	Plug	(30)
35	1865012M1	1	Bearing	(30)
36	1870819M1	1	Clip	
37	1870820M1	1	Plug	

Tylko do użytku wewnętrznego

372

POMPE HYDRAULIQUE	CORPS ARBRE PISTONS
HYDRAULIKPUMPE	GEHAEUSE-WELLE-KOLBEN
POMPA IDRAULICA	CORPO-ALBERO-PISTOME
BOMBA HIDRALICA	CUERPO
HYDRAULIC PUMP	BODY SHAFT PISTON

14301013

1 1430 007

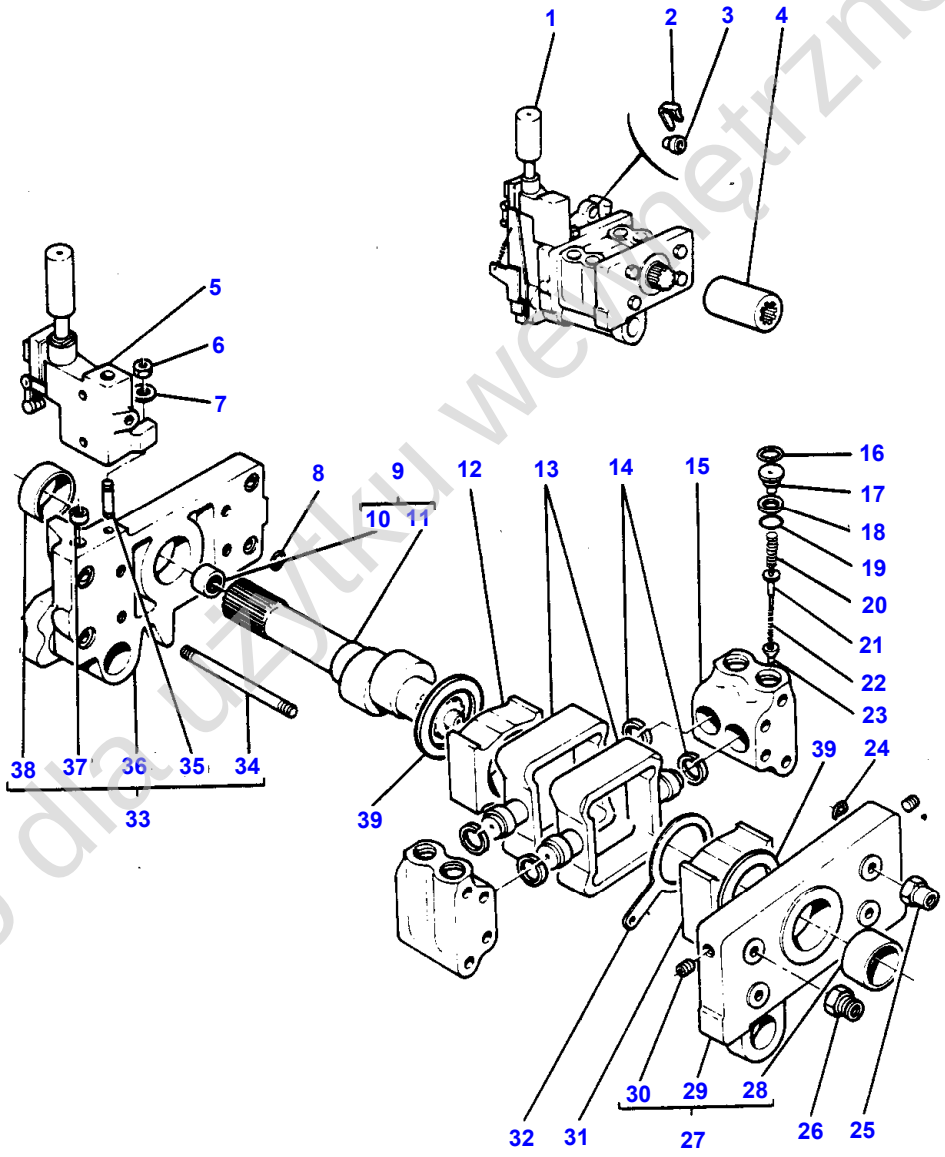

1-1430-007

Tylko dla użytku wewnętrznego

Item	Part Number	Qty	Description	Comments
				HIGH FLOW-WITHOUT AUXILIARY PUMP- WITH PRESSURE MO DULATION-2 WHEEL DRIVE
1	1872449M95	1	Hydraulic Pump	
2	1870819M1	1	Clip	
3	1870820M1	1	Plug	
4	1868538M4	1	Coupling	
5		1	Pressure Valve	(1) See Page - Reference Number 384/
6	376448X1	1	Nut Unf	(1)
7	353771X1	1	Washer	(1)
8	831528M1	4	O Ring	(1)
9	1871781M92	1	Camshaft	(1)
10	1000251M1	1	Bearing	(9)
11		1	Shaft	(9) Not serviced, order 1871781M92
12	180925M2	1	Block	(1)
13	1860038M1	2	Piston	(1)
14	897493M1	4	Hydr.Piston Ring	(1)
15	1868435M3	2	Valve Body	(1)
16	1868743M1	4	Ring	(1)
17	1868741M1	4	Plug	(1)
18	1870849M1	4	Washer	(1)
19	1868742M1	4	O Ring	(1)
20	180928M1	4	Spring	(1)
21	180930M2	4	Valve	(1)
22	180927M2	4	Spring	(1)
23	1660116M1	4	Valve	(1)
24	377494X1	4	O Ring	(1)
25	1871659M1	2	Nut	(1)
26	1871660M1	2	Nut	(1)
27	1665499M91	1	Body	(1)
28	1664491M1	1	Bearing	(27)
29		1	Body	(27) Not serviced, order 1665499M91
30	195567M1	2	Plug	(27)
31	180924M2	1	Block	(1)
32	180933M1	1	Follower	(1)
33	1665609M91	1	Body	(1)
34	377528X1	4	Stud	(33)
35	377527X1	1	Stud	(33)
36		1	Body	(33) Not serviced, order 1665609M91
37	1868431M3	2	Plug	(33)
38	1664491M1	1	Bearing	(33)
39	1664589M1	2	Washer	(1)

Tylko do użytku wewnętrznego

374

POMPE HYDRAULIQUE	CORPS ARBRE PISTONS
HYDRAULIKPUMPE	GEHAEUSE-WELLE-KOLBEN
POMPA IDRAULICA	CORPO-ALBERO-PISTONE
BOMBA HIDRALICA	CUERPO
HYDRAULIC PUMP	BODY SHAFT PISTON

14301014

1 1430 008

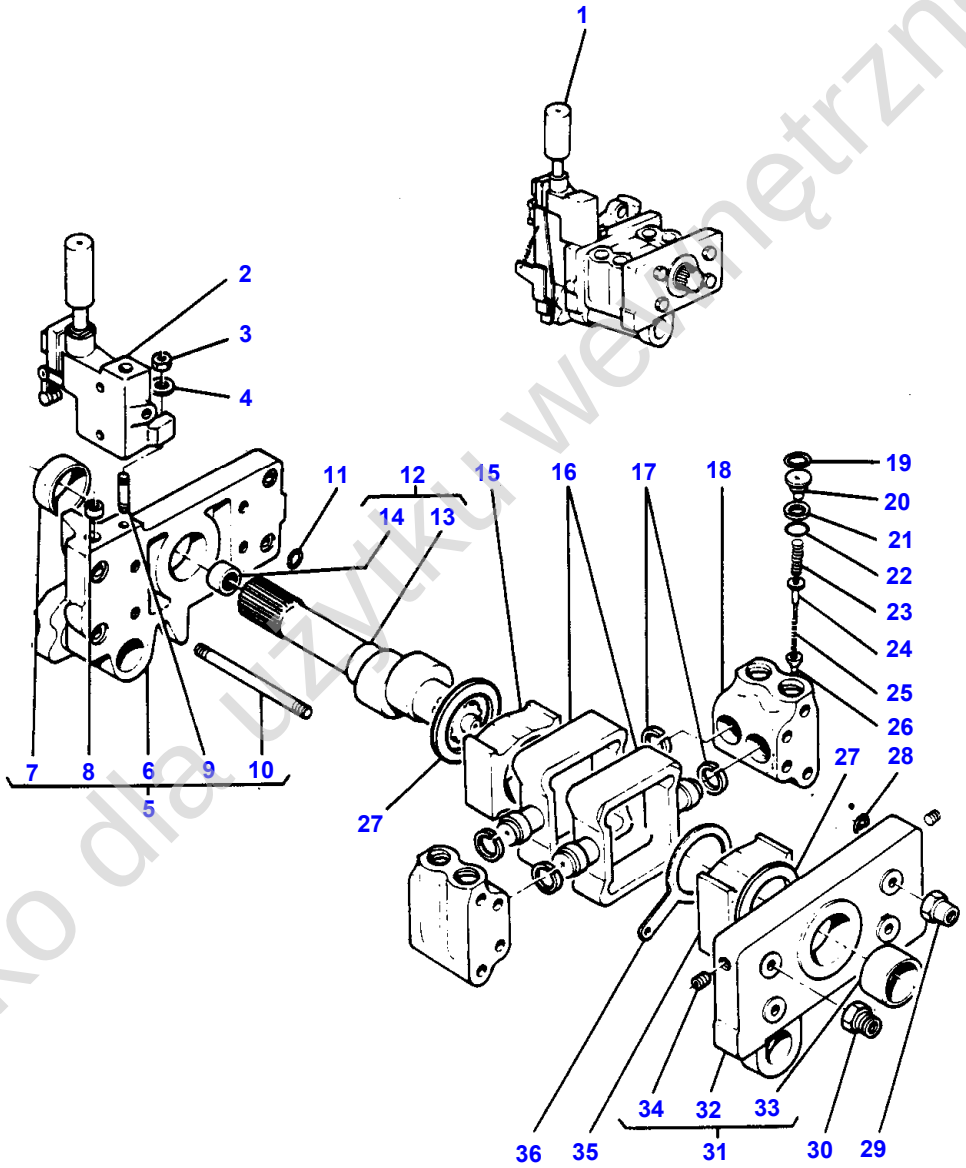

1 - 1430 - 008

Tylko dla użytku wewnętrznego

Item	Part Number	Qty	Description	Comments
				WITH AUXILIARY PUMP OR MULTI POWER PUMP- WITH PRES SURE MODULATION
1	1675125M91	1	Hydraulic Pump	
2		1	Pressure Valve	(1)
				See Page - Reference Number 384/
3	376448X1	1	Nut Unf	(1)
				Alternative 195567M1
4	353771X1	1	Washer	(1)
5	1665609M92	1	Body	(1)
6		1	Body	(5)
				Not serviced, order 1665609M92
7	1664491M1	1	Bearing	(5)
8	1868431M3	2	Plug	(5)
9	377527X1	1	Stud	(5)
10	377528X1	4	Stud	(5)
11	831528M1	4	O Ring	(1)
12	1868544M92	1	Camshaft	(1)
13		1	Shaft	(12)
				Not serviced, order 1868544M92
14	1000251M1	1	Bearing	(12)
15	180925M2	1	Block	(1)
16	1860038M1	2	Piston	(1)
17	897493M1	4	Hydr.Piston Ring	(1)
18	1868435M3	2	Valve Body	(1)
19	1868743M1	4	Ring	(1)
20	1868741M1	4	Plug	(1)
21	1870849M1	4	Washer	(1)
22	1868742M1	4	O Ring	(1)
23	180928M1	4	Spring	(1)
24	180930M2	4	Valve	(1)
25	180927M2	4	Spring	(1)
26	1660116M1	4	Valve	(1)
27	1664589M1	2	Washer	(1)
28	377494X1	4	O Ring	(1)
29	1871659M1	2	Nut	(1)
30	1871660M1	2	Nut	(1)
31	1665499M91	1	Body	(1)
32		1	Body	(31)
				Not serviced, order 1665499M91
33	1664491M1	1	Bearing	(31)
34	195567M1	2	Plug	(31)
				Alternative 356032X1
34	356032X1	1	Plug	(31)
				Alternative 195567M1
35	180924M2	1	Block	(1)
36	180933M1	1	Follower	(1)

Tylko dla użytku wewnętrznego

376

POMPE HYDRAULIQUE	CREPINE
HYDRAULIKPUMPE	OELSIEB
POMPA IDRAULICA	UNITA' FILTRANTE
BOMBA HIDRALICA	FILTRO
HYDRAULIC PUMP	STRAINER UNIT

14451006

1 1445 008

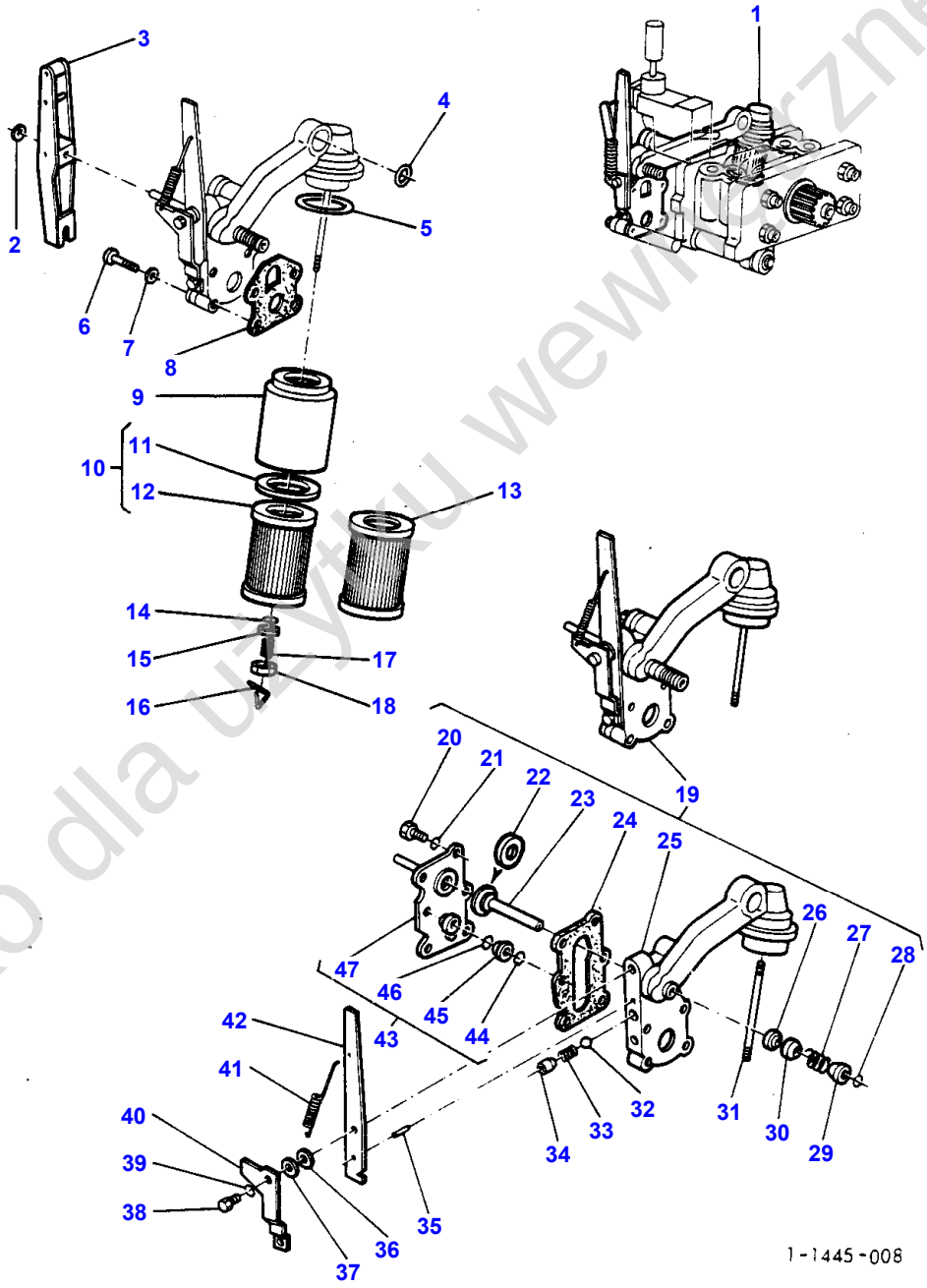

Tylko dla użytku wewnętrznego

Item	Part Number	Qty	Description	Comments
				2 WHEEL DRIVE
1		1	Pump	(A)
				See Page - Reference Number 372/
2	377493X1	1	Ring	(1)
3	1868471M91	1	Lever	(1)
4	851134M1	1	O Ring	(1)
5	195876M1	1	O Ring	(1)
6	353682X1	4	Screw Unc	(1)
7	0920053	4	Washer	(1)
8	1869529M2	1	Gasket	(1)
9	1671633M1	1	Tube	(1)
10	1870199M92	1	Strainer	(1)
				Alternative 1660715M91
11		1	Gasket	(10)
				Not serviced, order 1870199M92
12		1	Strainer	(10)
				Not serviced, order 1870199M92
13	1660715M91	1	Strainer	(1)
				Alternative 1870199M92
14	1007240M1	1	O Ring	(1)
15	377538X1	1	Washer	(1)
16	1870089M1	1	Clip	(1)
17	1868469M1	1	Spring	(1)
18	363645X1	1	Nut	(1)
19	1870812M92	1	Housing	(1)
20	0748412	2	Screw	(19)
				Alternative 377594X1
20	377594X1	2	Screw Unc	(19)
				Alternative 0748412
21	0920053	2	Washer	(19)
22	1870810M1	1	Ring	(19)
23	1870811M1	1	Piston	(19)
24	1868456M1	1	Gasket	(19)
25	1870072M2	1	Housing	(19)
26	1868466M1	1	Seal	(19)
27	1868465M1	1	Spring	(19)
28	377501X1	1	Circlip	(19)
29	1868464M1	1	Cap	(19)
30	1868460M1	1	Retainer	(19)
31	377531X1	1	Stud	(19)
32	361023X1	1	Ball	(19)
33	1868452M1	1	Spring	(19)
34	1868451M2	1	Bush	(19)
35	377489X1	1	Pin	(19)
36	377500X1	1	Washer	(19)
37	1868444M1	1	Bush	(19)
38	377550X1	2	Screw Unc	(19)
				Alternative 362352X1
38	362352X1	2	Bolt	(19)
				Alternative 377550X1
39	16229X	2	Washer	(19)
				Alternative 359004X1
39	359004X1	2	Lock Washer	(19)
				Alternative 16229X
40	1869831M1	1	Retainer	(19)
41	1868454M2	1	Spring	(19)
42	1868453M2	1	Lever	(19)
43	1870809M91	1	Cover	(19)
44	358936X1	1	Ring	(43)
45	377499X1	1	Washer	(43)
46	1442621X1	1	Ring	(43)
47	1870807M1	1	Cover	(43)
				(A)
				WITHOUT AUXILIARY PUMP-2 WHEEL DRIVE

Tylko do użytku wewnętrznego

380

POMPE HYDRAULIQUE	CREPINE
HYDRAULIKPUMPE	OELSIEB
POMPA IDRAULICA	UNITA' FILTRANTE
BOMBA HIDRALICA	FILTRO
HYDRAULIC PUMP	STRAINER UNIT

14451007

1 1445 011

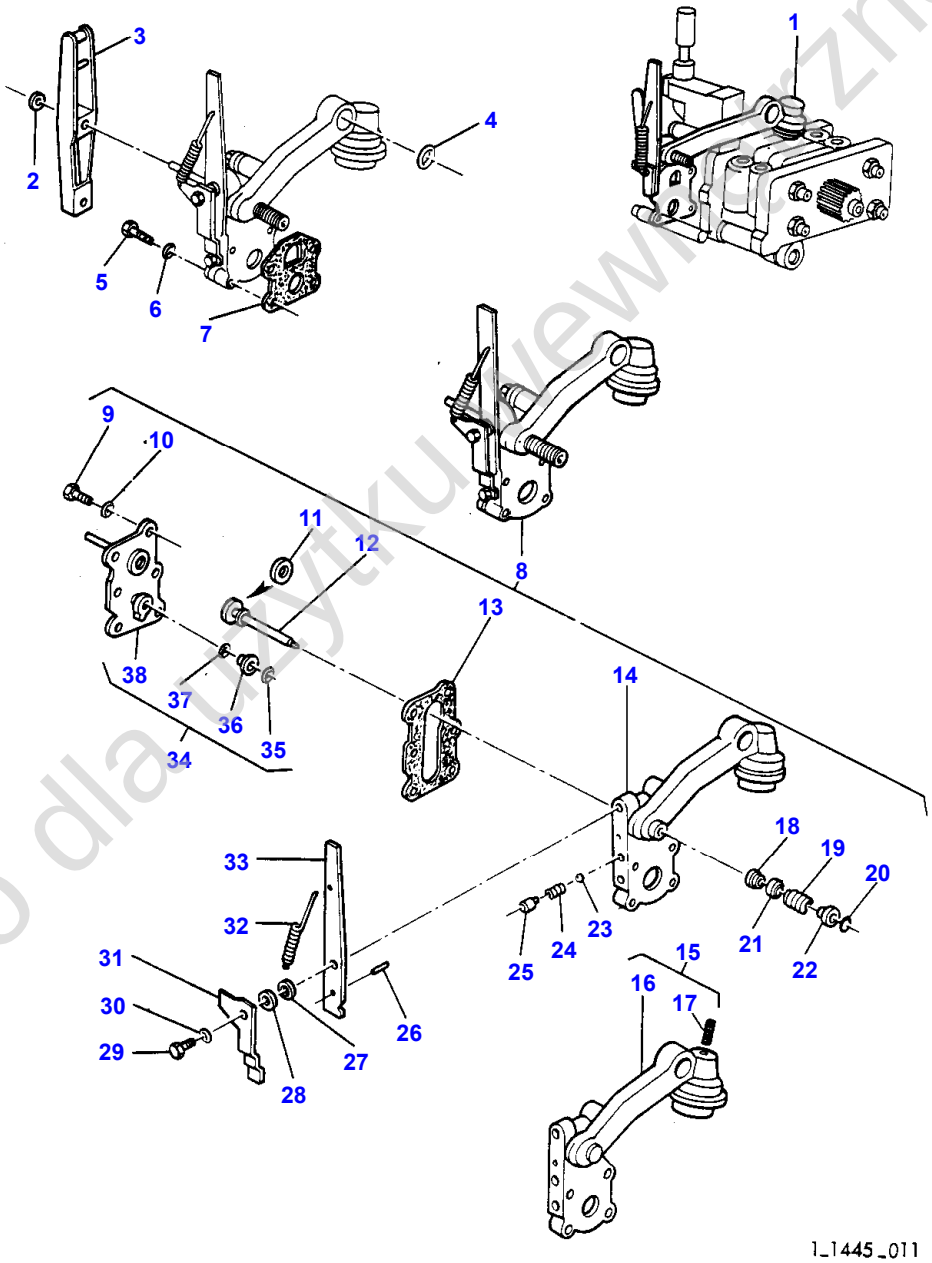

Tylko dla użytku wewnętrznego

Item	Part Number	Qty	Description	Comments
1		1	Pump	(A) See Page - Reference Number 374/
2	377493X1	1	Ring	(1)
3	1868471M91	1	Lever	(1)
4	851134M1	1	O Ring	(1)
5	353682X1	4	Screw Unc	(1)
6	0920053	4	Washer	(1)
7	1869529M2	1	Gasket	(1)
8	1675124M91	1	Housing	(1)
9	0748412	2	Screw	(8) Alternative 377594X1
9	377594X1	2	Screw Unc	(8) Alternative 0748412
10	0920053	2	Washer	(8)
11	1870810M1	1	Ring	(8)
12	1870811M1	1	Piston	(8)
13	1868456M1	1	Gasket	(8)
14	1675122M1	1	Housing	(8) Alternative 1675228M91
15	1675228M91	1	Housing	(8) Alternative 1675122M1
16	1870072M2	1	Housing	(15)
17	354133X1	1	Screw	(15)
18	1868466M1	1	Seal	(8)
19	1868465M1	1	Spring	(8)
20	377501X1	1	Circlip	(8)
21	1868460M1	1	Retainer	(8)
22	1868464M1	1	Cap	(8)
23	361023X1	1	Ball	(8)
24	1868452M1	1	Spring	(8)
25	1868451M2	1	Bush	(8)
26	377489X1	1	Pin	(8)
27	377500X1	1	Washer	(8)
28	1868444M1	1	Bush	(8)
29	377550X1	2	Screw Unc	(8) Alternative 362352X1
29	362352X1	2	Bolt	(8) Alternative 377550X1
30	16229X	2	Washer	(8) Alternative 359004X1
30	359004X1	2	Lock Washer	(8) Alternative 16229X
31	1869831M1	1	Retainer	(8)
32	1868454M2	1	Spring	(8)
33	1868453M2	1	Lever	(8)
34	1870809M91	1	Cover	(8)
35	358936X1	1	Ring	(34)
36	377499X1	1	Washer	(34)
37	1442621X1	1	Ring	(34)
38	1870807M1	1	Cover	(34)

(A)
WITH AUXILIARY PUMP OR MULTI POWER PUMP

Tylko do użytku wewnętrznego

382

POMPE HYDRAULIQUE	OSCILLATEUR VALVE
HYDRAULIKPUMPE	OSZILLATOR-VENTIL
POMPA IDRAULICA	VALVOLA OSCILLANTE
BOMBA HIDRALICA	VALVULA OSCILADORA
HYDRAULIC PUMP	OSCILLATOR VALVE

14351007

1 1435 010

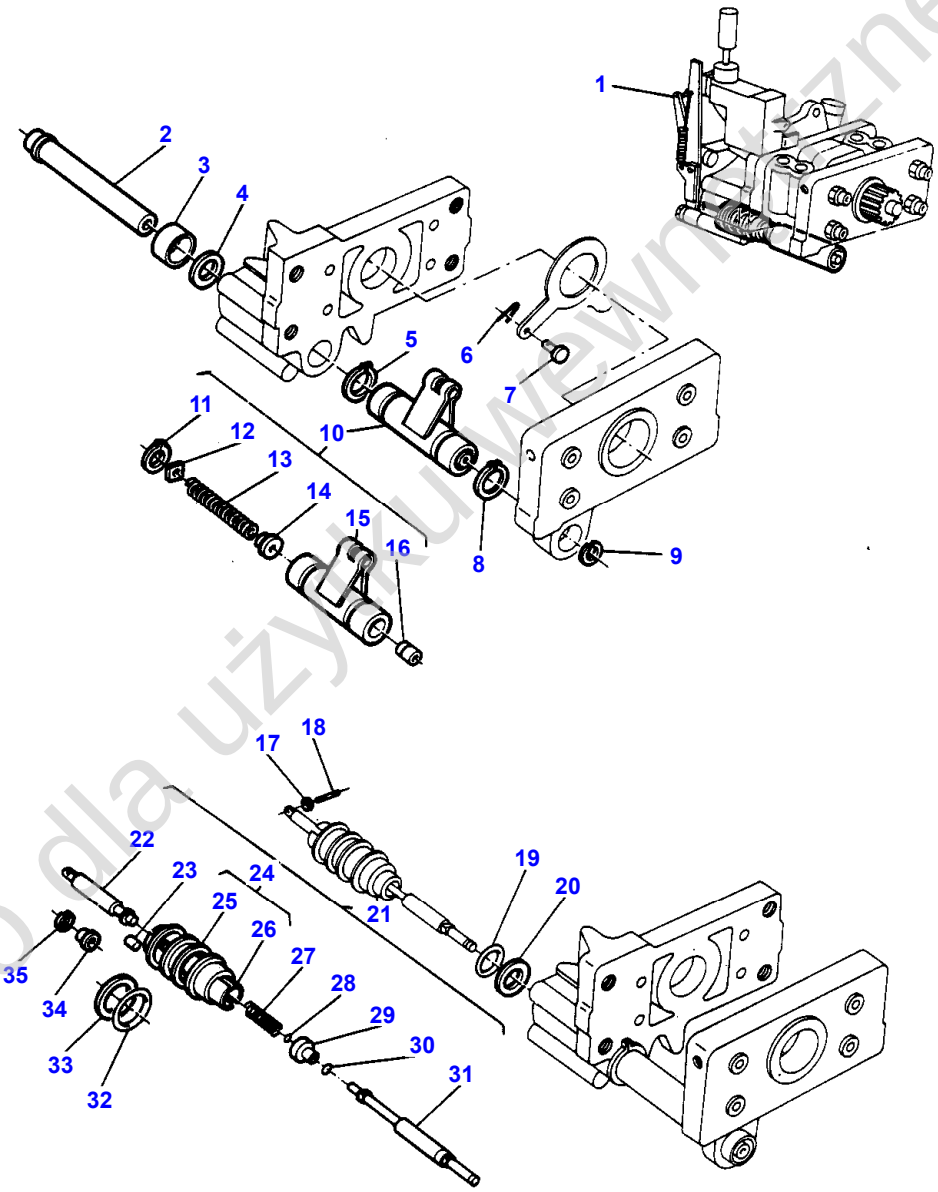

1-1435-010

Tylko dla użytku wewnętrznego

Item	Part Number	Qty	Description	Comments
1		1	Pump	See Page - Reference Number 370/
		1	Pump	(A)
				See Page - Reference Number 372/
1		1	Pump	(B)
				See Page - Reference Number 374/
2	1661325M91	1	Tube	(1)
3	1868486M1	1	Spacer	(1)
4	1868485M1	1	Washer	(1)
5	195946M1	1	Clip	(1)
6	1671699M1	1	Retainer	(1)
7	831130M1	1	Clevis Pin	(1)
8	195946M1	1	Clip	(1)
9	358932X1	1	Ring	(1)
10	1869825M94	1	Oscillator	(1)
11	1442622X1	1	Snapring	(10)
12	1869830M2	1	Disc	(10)
13	180940M1	1	Spring	(10)
14	1862576M2	1	Guide	(10)
15	1869826M93	1	Oscillator	(10)
16	1869828M1	1	Sleeve	(10)
17	897599M1	2	Roller	(1)
18	897504M1	1	Pin	(1)
19	377502X1	1	O Ring	(1)
20	377543X1	1	Washer	(1)
21	1870763M92	1	Control Valve	(1)
22	1868478M2	1	Valve	(21)
23	1488840M1	1	Pin	(21)
				Alternative 377492X1
23	377492X1	1	Pin	(21)
				Alternative 1488840M1
24		1	Sleeve	(21)
				Not serviced, order 1870763M92
25	1868423M2	1	Sleeve	(24)
26	1870765M2	1	Spool	(24)
27	520610M1	1	Spring	(21)
28	358932X1	1	Ring	(21)
29	1870752M1	1	Clamp	(21)
30	1001833M1	1	O Ring	(21)
31	1870766M2	1	Rod	(21)
32	377502X1	1	O Ring	(21)
33	377497X1	1	Washer	(21)
34	897513M1	1	Washer	(21)
35	897512M1	1	Ring	(21)

(A)
WITHOUT AUXILIARY PUMP-2 WHEEL DRIVE

(B)
WITH AUXILIARY PUMP OR MULTI POWER PUMP

Tylko dla użytku wewnętrznego

384

POMPE HYDRAULIQUE
HYDRAULIKPUMPE
POMPA IDRAULICA
BOMBA HIDRALICA
HYDRAULIC PUMP

VALVE DE MODULATION DE PRESSION
DRUCKREGELUNG
VALVOLA A PRESSIONE
VALV CONTROL PRESIO
PRESSURE CONTROL VALVE

14401004

1 1440 003

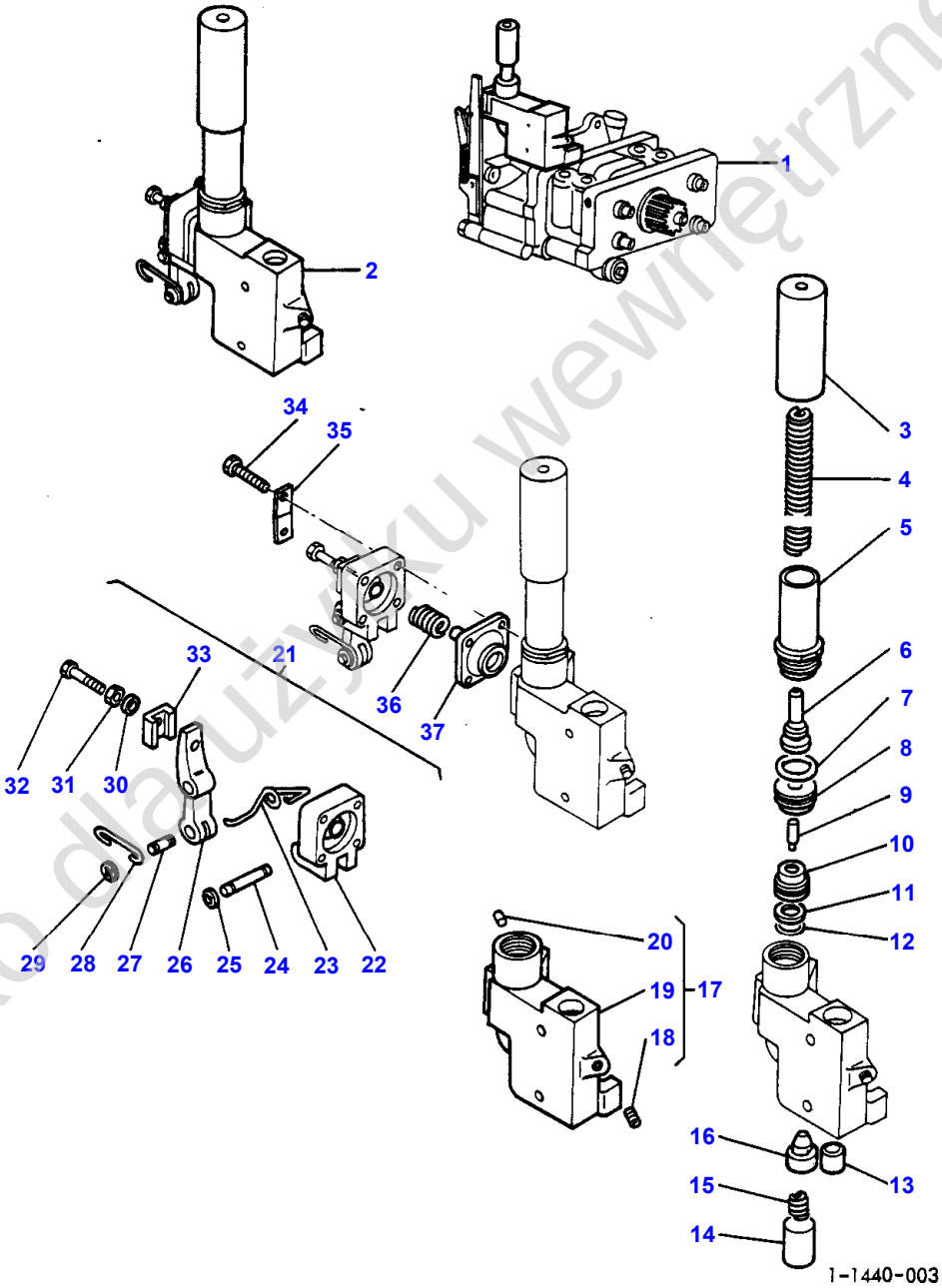

Tylko dla użytku wewnętrznego

Item	Part Number	Qty	Description	Comments
1		1	Pump	See Page - Reference Number 370/
		1	Pump	(A)
				See Page - Reference Number 372/
1		1	Pump	(B)
				See Page - Reference Number 374/
2	1680061M91	1	Valve	(1)
				Repairs and replaces 1869966M98
3	1872066M2	1	Head	(2)
4	1867478M1	1	Spring	(2)
5	1870830M2	1	Guide	(2)
6	1870838M3	1	Support	(2)
7	196055M1	1	Ring	(2)
8	1867421M2	1	Guide	(2)
9	1677417M2	1	Pin	(2)
10	1867422M1	1	Seat	(2)
11	361163X1	1	Washer	(2)
12	359294X1	1	Ring	(2)
13	377605X1	1	Dowel	(2)
14	1869935M2	1	Spacer	(2)
15	1870100M1	1	Spring	(2)
16	1870099M2	1	Valve	(2)
17		1	Body	(2)
				Not serviced, order 1680061M91
18	375184X1	1	Plug	(17)
19		1	Body	(17)
				Not serviced, order 1680061M91
20	377504X1	1	Plug	(17)
21	1868503M93	1	Housing	(2)
22		1	Body	(21)
				Not serviced, order 1868503M93
23	1870101M3	1	Spring	(21)
24		1	Pin	(21)
				Not serviced, order 1868503M93
25	377493X1	2	Ring	(21)
26		1	Lever	(21)
				Not serviced, order 1868503M93
27	1870834M1	1	Pin	(21)
28		1	Link	(21)
				Not serviced, order 1868503M93
29	377493X1	2	Ring	(21)
30	22463X	1	Lock Washer	(21)
				Alternative 1870835M1
31	377606X1	1	Nut	(21)
				Alternative 1870835M1
32	377556X1	1	Screw	(21)
33	1870835M1	1	Tie	(21)
				Alternative NO 30+31
34	377474X1	4	Screw Unc	(2)
35	1872015M1	2	Spring	(2)
				Alternative 1872016M1
35	1872016M1	2	Spring	(2)
				Alternative 1872015M1
36	1868495M1	1	Spring	(2)
37	1860114M91	1	Diaphragm	(2)

(A)
WITHOUT AUXILIARY PUMP-2 WHEEL DRIVE

(B)
WITH AUXILIARY PUMP OR MULTI POWER PUMP

Tylko dla użytku wewnętrznego

386

COUVERCLE DE RELEVAGE HYDRAULIQUE
HYDRAULIKDECKEL
COPERCHIO SOLLEVATORE IDRAULICO
TAPA ELEVADOR HIDRAULICO
HYDRAULIC LIFT COVER

15001008

1 1500 011

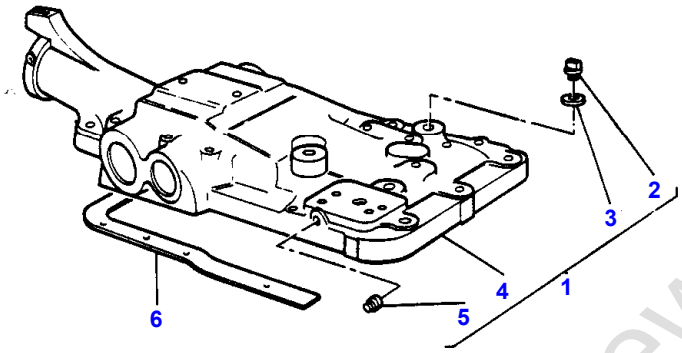

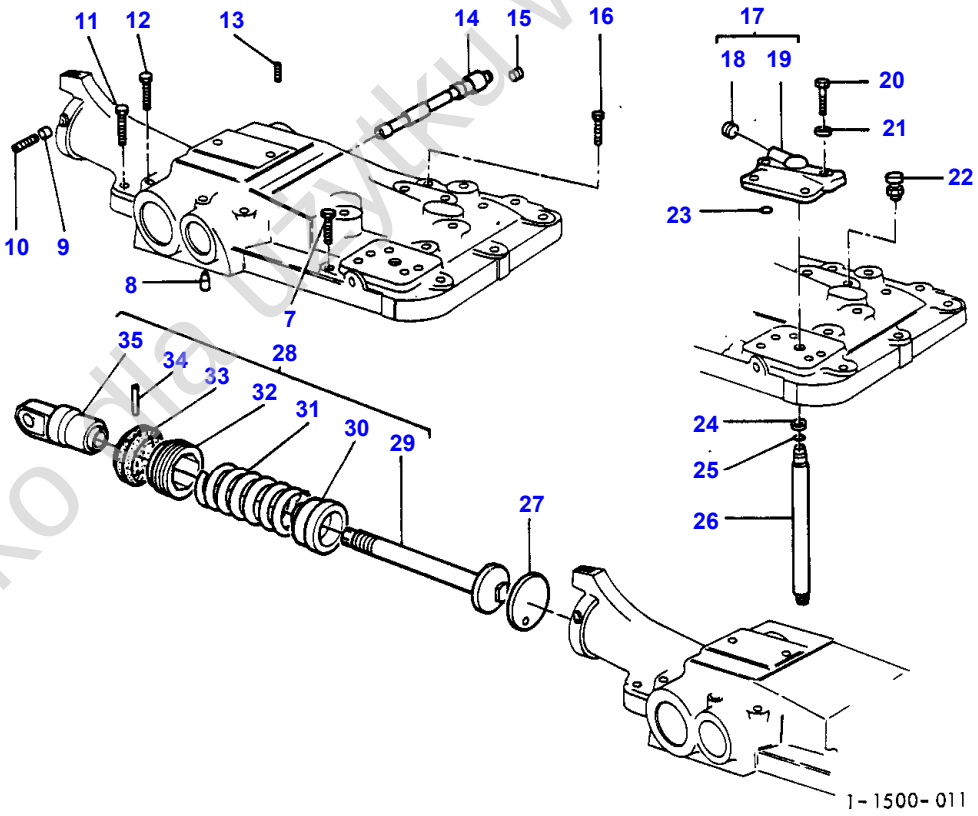

Tylko do użytku wewnętrznego

Item	Part Number	Qty	Description	Comments
1	1870952M92	1	Cover	
2	826237M1	1	Plug	(1)
3	826238M1	1	Seal	(1)
4		1	Cover	(1)
				Not serviced, order 1870952M92
5	825031M2	2	Plug	(1)
6	886549M2	1	Gasket	
7	377143X1	3	Bolt Unc	
8	1869074M1	1	Centraliser	
9	882451M1	1	Plug	
10	355286X1	1	Screw Unc	
11	377144X1	2	Bolt Unc	
12	377145X1	5	Bolt Unc	
13	355286X1	1	Screw Unc	
14	898304M91	1	Shaft	
15	825031M2	1	Plug	Two Wheel Drive
	880224M1	1	Union	Four Wheel Drive
16	376805X1	4	Bolt Unc	
17	182373M91	1	Cap	
18	195567M1	1	Plug	(17)
				Repairs and replaces 356032X1
19	180908M1	1	Cap	(17)
20	362479X1	2	Screw	
21	353432X1	2	Lock Washer	
22	182099M91	1	Breather	
23	195561M1	1	O Ring	
24	195874M1	2	Washer	
25	195561M1	1	O Ring	
26	1869119M1	1	Pipe	
27	180981M1	1	Disc	
28	908834M92	1	Spring	
29	886348M2	1	Plunger	(28)
30	886351M1	1	Seat	(28)
31	1661755M2	1	Spring	(28)
32	180979M1	1	Nut	(28)
33	887654M1	1	Boot	(28)
34	195573M1	1	Pin	(28)
35	1863389M1	1	Head	(28)

Tylko dla użytku wewnętrznego

388

CONTROLE D'EFFORT ET DE POSITION
ZUGKRAFT- UND POSITIONSEINSTELLUNG
COMANDI POSIZIONAMENTO
CONTROL DE TIRO Y POSICION
DRAFT AND POSITION CONTROLS

1525 1003

1 1525 021

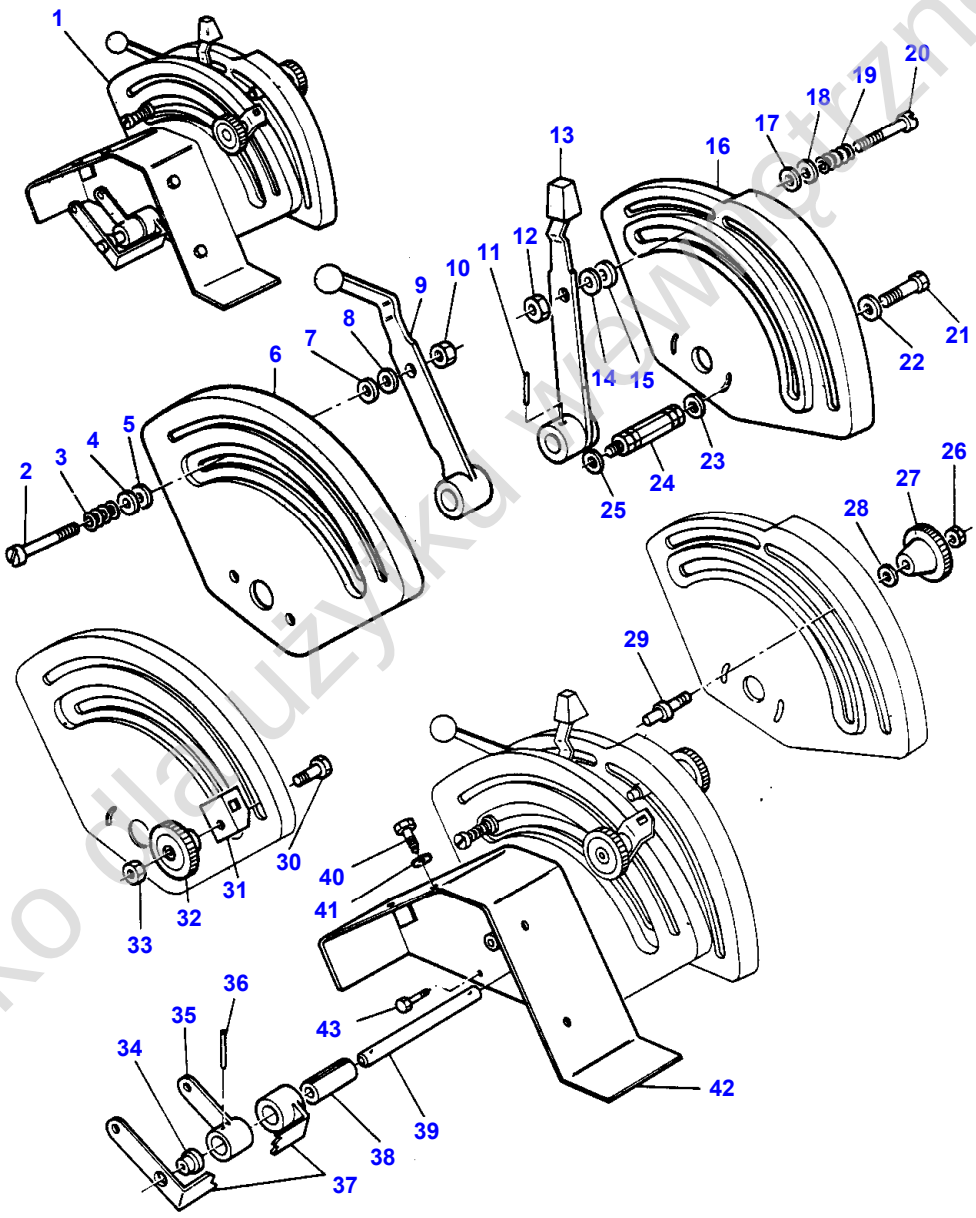

1-1525-021

Tylko do użytku wewnętrznego

Item	Part Number	Qty	Description	Comments
				SECTOR
1	1875284M96	1	Quadrant	
2	353510X1	1	Bolt Unf	(1)
				Alternative 377607X1
2	377607X1	1	Screw Unf	(1)
				Alternative 353510X1
3	1872240M1	1	Spring	(1)
4	377581X1	1	Washer	(1)
5	181041M1	1	Washer	(1)
6	1665518M1	1	Quadrant	(1)
7	181041M1	1	Washer	(1)
8	377581X1	1	Washer	(1)
9	1877809M92	1	Lever	(1)
				Alternative 1669394M91
9	1669394M91	1	Lever	(1)
				Alternative 1877809M92
10	353919X1	1	Nut Unf	(1)
11	22807X	1	Roll Pin	(1)
12	353919X1	1	Nut Unf	(1)
13	1877804M91	1	Lever	(1)
14	377581X1	1	Washer	(1)
15	181041M1	1	Washer	(1)
16	1870317M1	1	Quadrant	(1)
17	181041M1	1	Washer	(1)
18	377581X1	1	Washer	(1)
19	1872240M1	1	Spring	(1)
20	353510X1	1	Bolt Unf	(1)
				Alternative 377607X1
20	377607X1	1	Screw Unf	(1)
				Alternative 353510X1
21	353538X1	2	Screw Unf	(1)
22	353434X1	2	Lock Washer	(1)
23	353756X1	2	Washer	(1)
24	1870294M1	2	Spacer	(1)
25	353756X1	2	Washer	(1)
26	353918X1	2	Nut Unf	(1)
27	1860403M1	2	Knob	(1)
28	353754X1	2	Washer	(1)
29	898201M1	2	Stop	(1)
30	898183M1	1	Retainer	(1)
31	884387M1	1	Slide	(1)
32	1860402M1	1	Knob	(1)
33	353918X1	1	Nut Unf	(1)
34	1610565M1	1	Bush	(1)
35	1875296M93	1	Lever	(1)
36	22807X	1	Roll Pin	(1)
37	1665517M91	1	Lever	(1)
38	1877814M1	1	Coupler	(1)
39	1877815M1	1	Shaft	(1)
40	365007X1	4	Self Tap Screws	(1)
41	353754X1	4	Washer	(1)
42	1875867M96	1	Support	(1)
43	365775X1	1	Screw	(1)

Tylko do użytku wewnętrznego

390

SUPPORT DE SECTEURS
HALTER FUER VERSTELLSEGMENT
SUPPORTO QUADRANTE
SOPORTE CUADRANTE
QUADRANT SUPPORT

15151003

1 1515 009

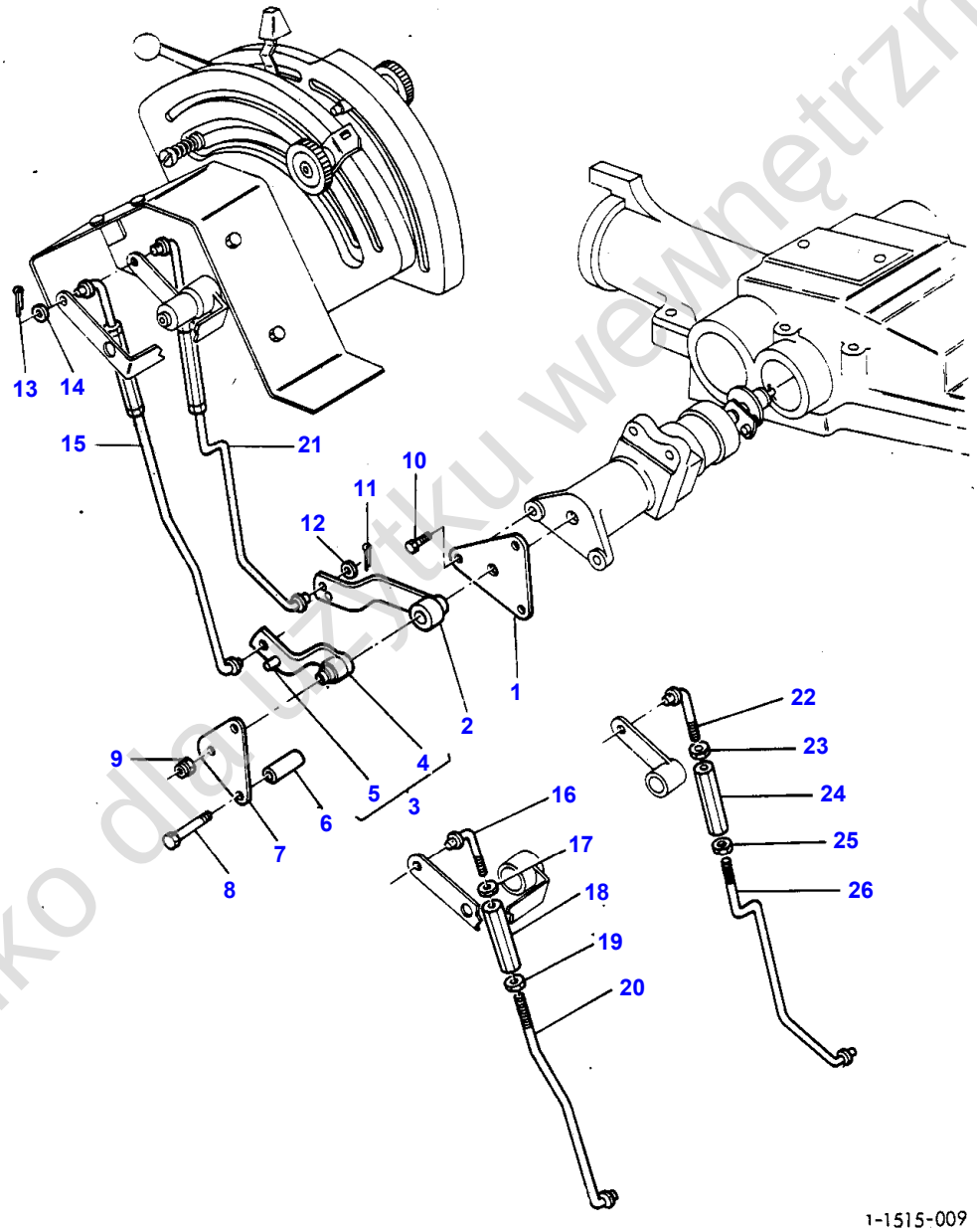

Tylko do użytku wewnętrznego

Item	Part Number	Qty	Description	Comments
				SHIFTER
1	1875489M91	1	Plate	
2	1874122M91	1	Lever	
3	1665853M91	1	Lever	
4		1	Lever	(3) Not serviced, order 1665853M91
5	3000720X1	1	Pin	(3)
6	898190M1	2	Spacer	
7	1875491M1	1	Plate	
8	362463X1	2	Screw	
9	353430X1	2	Nut Unf	Alternative 376448X1
	376448X1	1	Nut Unf	Alternative 353430X1
10	362431X1	1	Screw Unc	
11	354046X1	2	Pin	
12	391576X1	2	Washer Metric	
13	354046X1	2	Pin	
14	377827X1	2	Washer	
15	1699837M91	1	Stem	
16	1671211M91	1	End	(15) Repairs and replaces 1699813M91
17	363870X1	1	Nut	(15)
18	1699838M1	1	Buckle	(15)
19	375108X1	1	Nut Unc	(15)
20	1699836M91	1	Rod	(15)
21	1699831M91	1	Stem	
22	1671211M91	1	End	(21) Repairs and replaces 1699813M91
23	363870X1	1	Nut	(21)
24	1699838M1	1	Buckle	(21)
25	375108X1	1	Nut Unc	(21)
26	1699830M91	1	Rod	(21)

Tylko dla użytku wewnętrznego

392

SUPPORT DE SECTEURS
HALTER FUER VERSTELLSEGMENT
SUPPORTO QUADRANTE
SOPORTE CUADRANTE
QUADRANT SUPPORT

15151002

1 1515 006

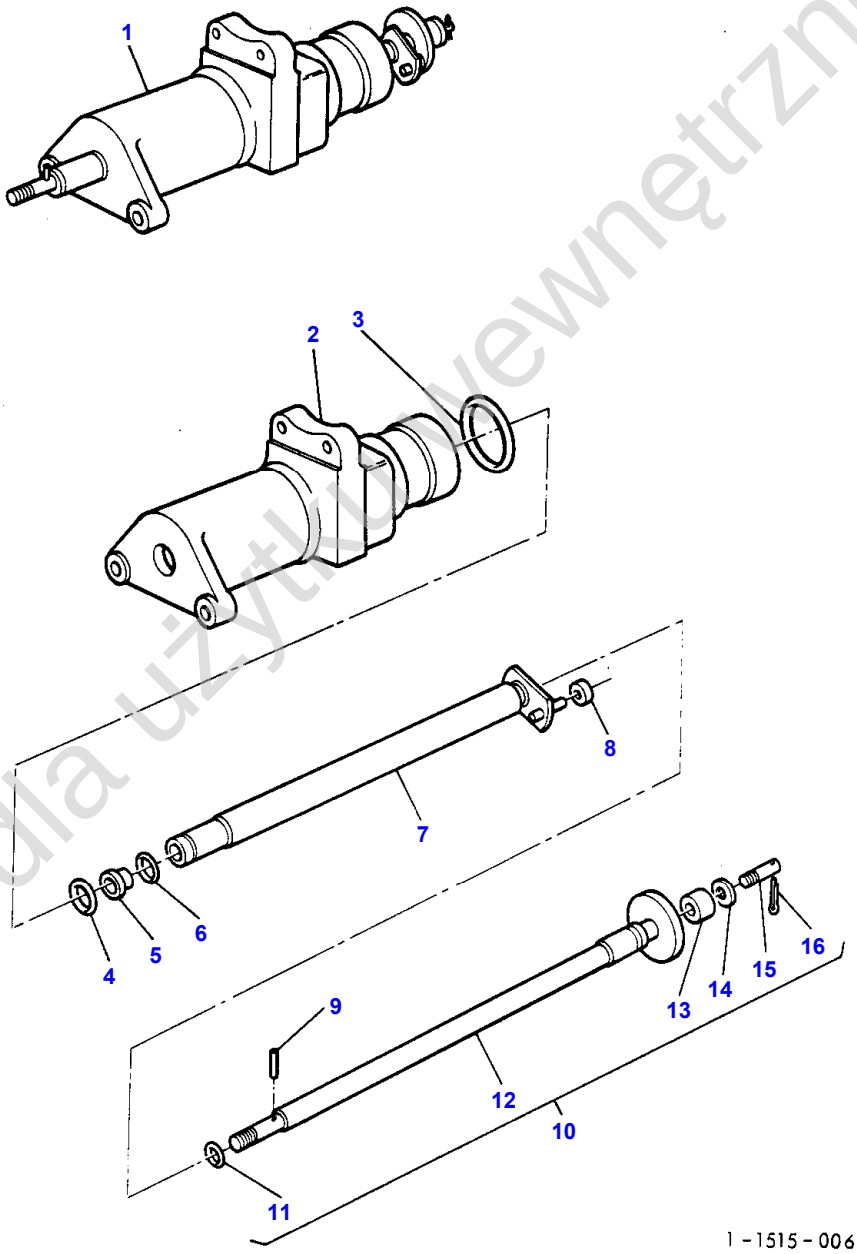

Tylko dla użytku wewnętrznego

Item	Part Number	Qty	Description	Comments
				DRIVE SHAFT
1	1870365M93	1	Bracket	
2	1870363M1	1	Support	(1)
3	364281X1	1	O Ring	(1)
4	762026M1	1	O Ring	(1)
5	1870225M1	1	Bush	(1)
6	358945X1	1	Ring	(1)
7	1870220M93	1	Shaft	(1)
8	898189M2	1	Roller	(1)
9	1870244M1	1	Pin	(1)
10	1870243M92	1	Shaft	(1)
11	195561M1	1	O Ring	(10)
12		1	Shaft	(10)
				Not serviced, order 1870243M92
13	898196M2	1	Roller	(10)
14	377747X1	1	Washer	(10)
15	898194M1	1	Pin	(10)
16	354039X1	1	Cotter	(10)

Tylko dla użytku wewnętrznego

394

CONTROLE DE REPONSE
DRUCKVERSTELLUNG
COMANDI DI POTENZA
CONTROL DE PRESION
RESPONSE CONTROLS

15301002

1 1530 003

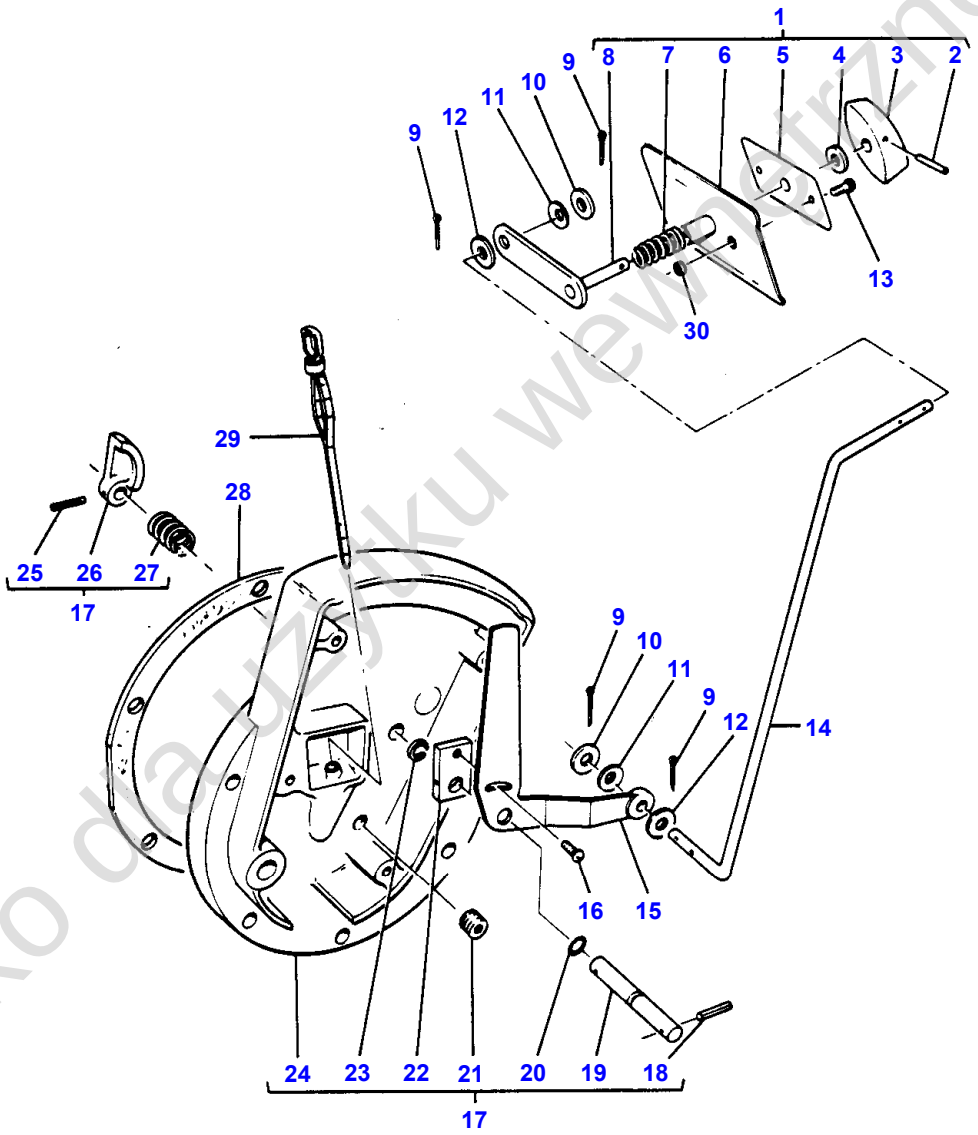

1-1530-003

Tylko dla użytku wewnętrznego

Item	Part Number	Qty	Description	Comments
1	1875413M94	1	Control	
2	357614X1	1	Pin	(1)
3	1875399M2	1	Knob	(1)
4	1875398M1	1	Washer	(1)
5	1875394M2	1	Decal	(1)
6	1875395M92	1	Bezel	(1)
7	1668631M1	1	Spring	(1)
				Repairs and replaces 1877842M1
8	1875393M93	1	Lever	(1)
9	354039X1	4	Cotter	
10	353753X1	X	Washer	
11	1876053M1	2	Washer	
12	353753X1	2	Washer	
13	365925X1	2	Self Tap Screws	
14	1663672M1	1	Rod	
15	1875516M93	1	Lever	
16	1869138M1	1	Screw	
17	1872648M92	1	Cover	
18	360588X1	1	Spirol Pin	(17)
19	1869407M1	1	Shaft	(17)
20	1001833M1	1	O Ring	(17)
				Alternative 359290X1
20	359290X1	1	Gasket	(17)
				Alternative 1001833M1
21	825031M2	1	Plug	(17)
22	1869408M1	1	Plate	(17)
23	377426X1	1	Ring	(17)
24		1	Cover	(17)
				Not serviced, order 1872648M92
25	360559X1	1	Spirol Pin	(17)
26	1869134M2	1	Cam	(17)
27	1869136M1	1	Spring	(17)
28	181217M1	1	Gasket	
29	1665962M91	1	Dipstick	Repairs and replaces 898215M2
30	1664151M1	2	Spacer	

Tylko dla użytku wewnętrznego

396

BRAS DE RELEVAGE
HUBARME
SOLLEVAMENTO BRACCI
BRAZOS ELEVADOR
LIFT ARMS

15201037

1 1520 020

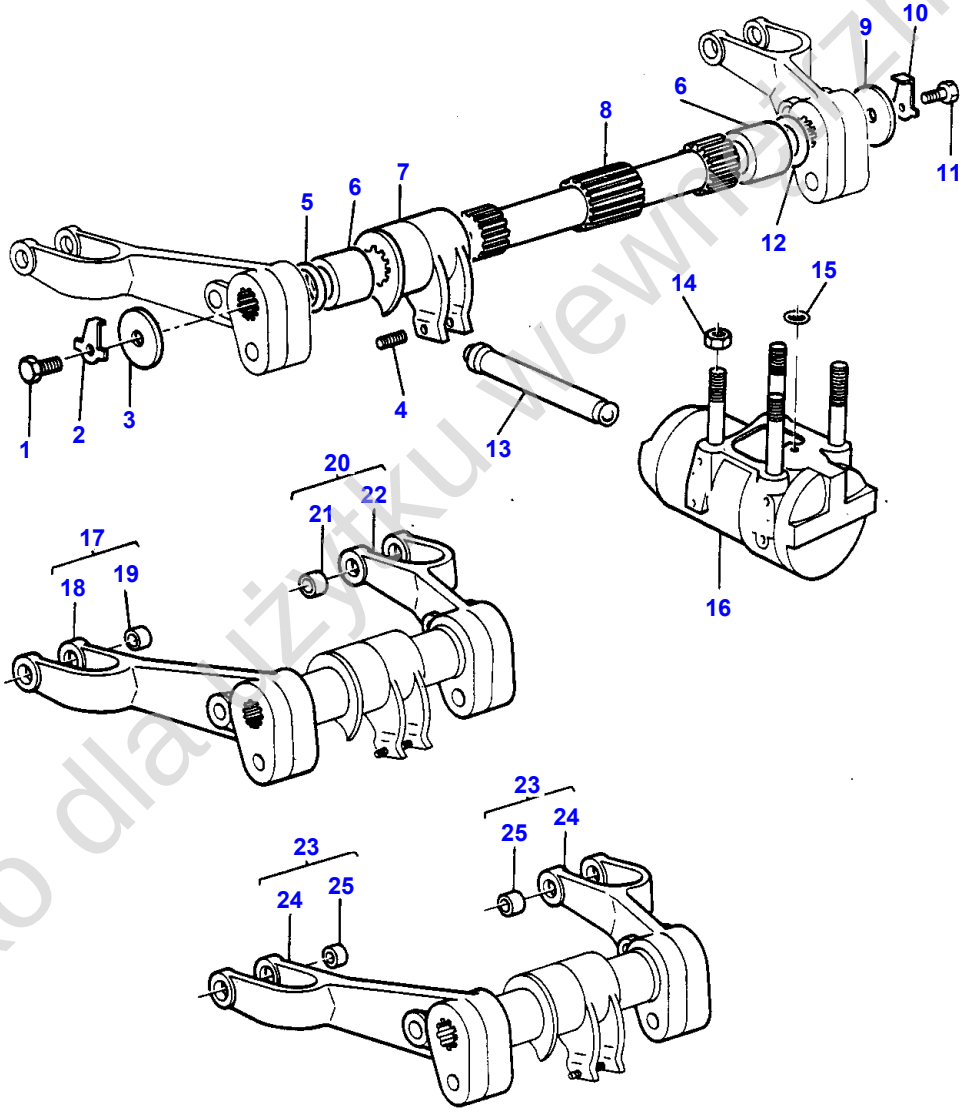

1-1520-020

Tylko dla użytku wewnętrznego

Item	Part Number	Qty	Description	Comments
1	361526X1	1	Screw	
2	897581M3	1	Clip	
3	897580M1	1	Washer	
4	887076M2	1	Screw	
5	359136X1	1	Ring	
6	1870934M1		Bearing	
7	886404M2	1	Arm	
8	899149M3	1	Shaft	Alternative 897567M3
	897567M3	1	Shaft	Alternative 899149M3
9	897580M1	1	Washer	
10	897581M3	1	Clip	
11	361526X1	1	Screw	
12	359136X1	1	Ring	
13	886410M1	1	Rod	
14	368749X1	4	Nut	
15	195562M1	1	O Ring	Alternative 359293X1
	359293X1	1	Ring	Alternative 195562M1
16		1	Ram	See Page - Reference Number 398/ See Page - Reference Number 400/
17	1809380M1	1	Arm	Right Hand Up to Serial or Engine Number 5-82
18		1	Arm	(17) Not serviced, order 1809380M1
19	885455M1	2	Bush	(17)
20	1809381M1	1	Arm	Left Hand Up to Serial or Engine Number 5-82
21	885455M1	2	Bush	(20)
22		1	Arm	(20) Not serviced, order 1809381M1
23	1680040M91	2	Arm	Alternative 1680033M1
	1680033M1	2	Arm	Alternative 1680040M91
24		1	Arm	(23) Not serviced, order NO 23
25	885455M1	2	Bush	(23)

Tylko dla użytku wewnętrznego

398

BRAS DE RELEVAGE
HUBARME
SOLLEVAMENTO BRACCI
BRAZOS ELEVADOR
LIFT ARMS

15201035

1 1520 014

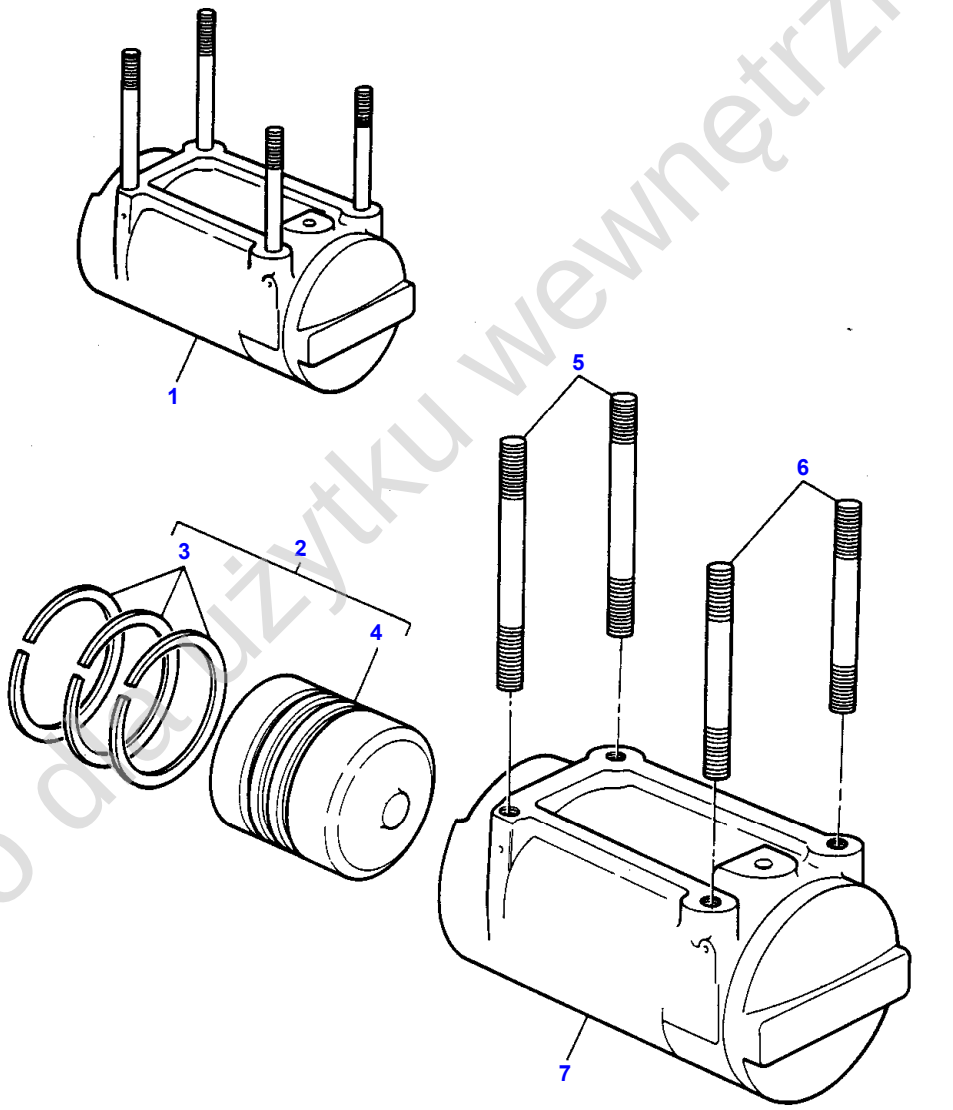

1-1520-014

Tylko do użytku wewnętrznego

Item	Part Number	Qty	Description	Comments
				CYLINDER-UPTO 12-81
1	897593M95	1	Ram	(A)
2	897595M91	1	Piston	(1)
3	897597M1	3	Ring	(2)
4		1	Piston	(2) Not serviced, order 897595M91
5	1667579M2	2	Stud	(1)
6	1667580M1	2	Stud	(1)
7	897594M3	1	Cylinder	(1)
				(A) NOT SUPPLIED-DETAIL ORDER

Tylko dla użytku wewnętrznego

400

BRAS DE RELEVAGE
HUBARME
SOLLEVAMENTO BRACCI
BRAZOS ELEVADOR
LIFT ARMS

15201036

1 1520 017

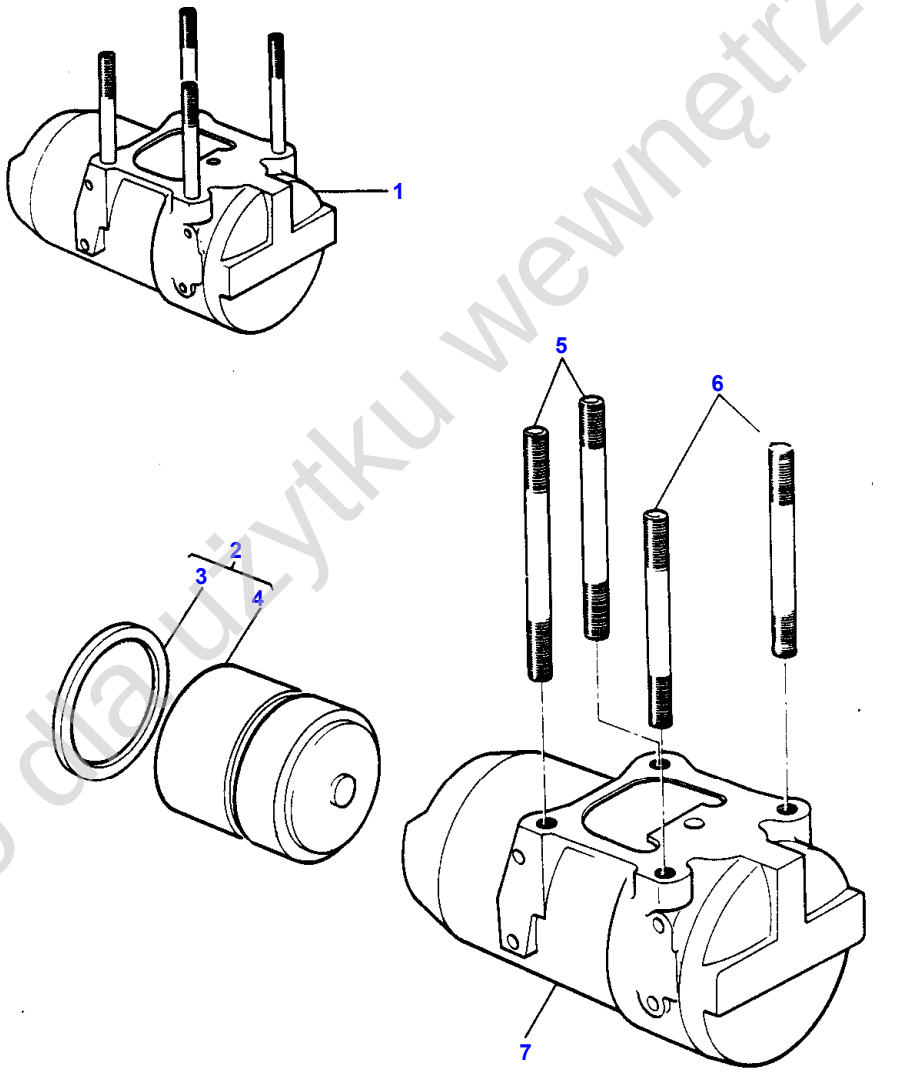

1-1520-017

Tylko do użytku wewnętrznego

Item	Part Number	Qty	Description	Comments
				CYLINDER-FROM 12-81
1	1671127M91	1	Ram	(A)
2	1665738M91	1	Piston	(1)
3	1665684M91	3	Seal	(2)
4		1	Piston	(2) Not serviced, order 1665738M91
5	1667579M2	2	Stud	(1)
6	1667580M1	2	Stud	(1)
7	1671082M1	1	Cylinder	(1)

(A)
NOT SUPPLIED-DETAIL ORDER

Tylko dla użytku wewnętrznego

402

BRAS DE RELEVAGE
HUBARME
SOLLEVAMENTO BRACCI
BRAZOS ELEVADOR
LIFT ARMS

15201003

1 1520 019

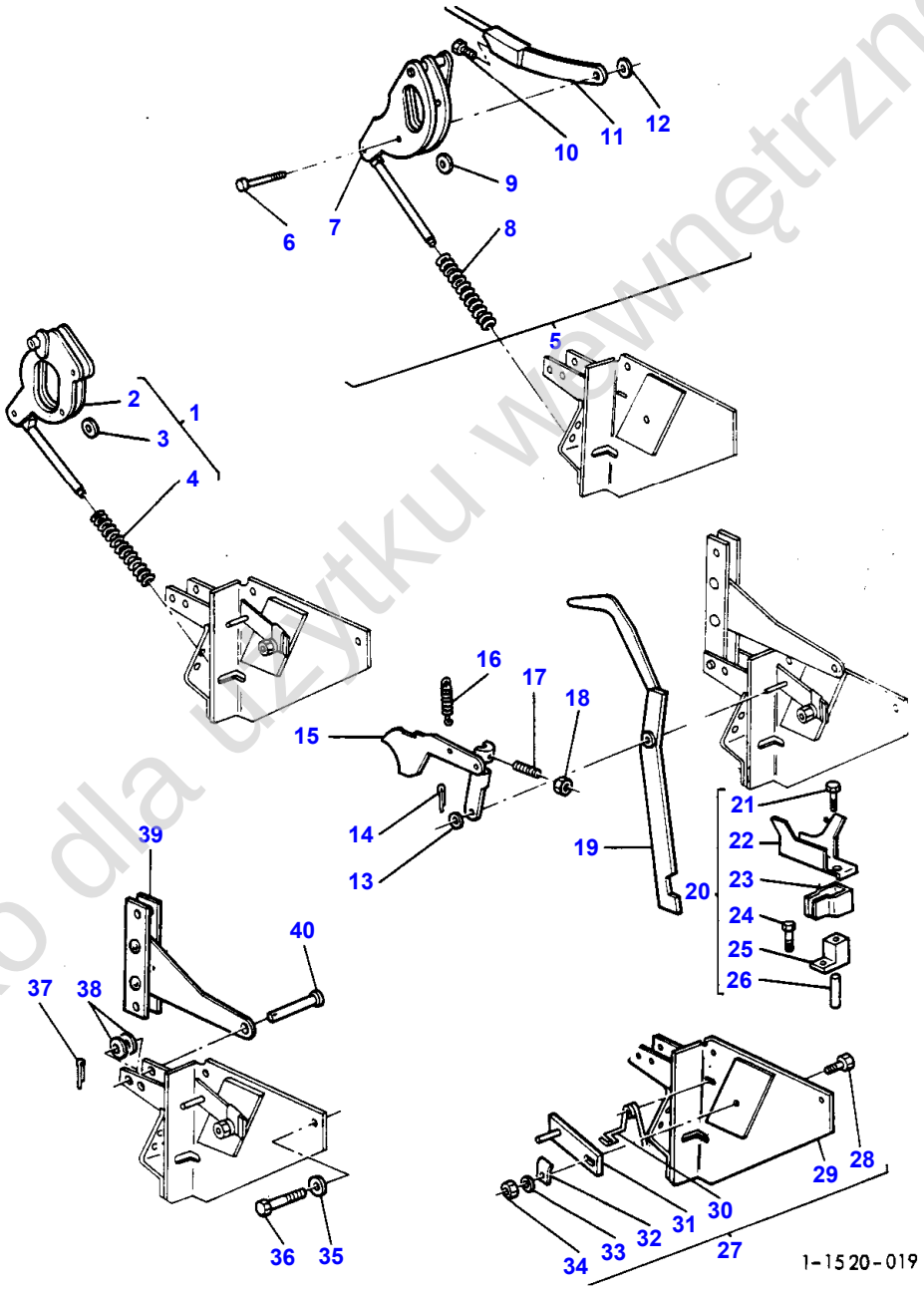

Tylko dla użytku wewnętrznego

Item	Part Number	Qty	Description	Comments
				DRAFT AND POSITION CONTROL
1	1661918M91	1	Link	
2		1	Lever	(1)
				Not serviced, order 1661918M91
3	898125M1	1	Roller	(1)
4	1660323M1	1	Spring	(1)
5	1660324M91	1	Lever	
6	180990M1	1	Pin	(5)
7		1	Lever	(5)
				Not serviced, order 1660324M91
8	1660323M1	1	Spring	(5)
9	898125M1	1	Roller	(5)
10	898128M1	1	Screw	(5)
11	898124M1	1	Rod	(5)
12	195575M1	1	Ring	(5)
13	355616X1	1	Washer	
14	354039X1	1	Cotter	
15	1661547M92	1	Cam	
16	898137M1	1	Spring	
17	898153M2	1	Screw	
18	354120X1	1	Nut	
19	1869093M93	1	Lever	
20	1868847M91	1	Block	
21	377613X1	1	Screw Unf	(20)
				Repairs and replaces 377488X1
22	1868851M1	1	Fork	(20)
23	1868850M1	1	Clip	(20)
24	377498X1	1	Screw	(20)
25	1660653M1	1	Block	(20)
				Repairs and replaces 1868848M1
26	377490X1	1	Pin	(20)
27	1869097M91	1	Bearer	
28	361448X1	1	Screw	(27)
29	1869100M91	1	Bracket	(27)
30	1872044M1	1	Spring	(27)
31	1869104M91	1	Pivot	(27)
32	1869107M1	1	Washer	(27)
33	376702X1	1	Washer	(27)
34	363621X1	1	Nut	(27)
35	22764X	2	Lock Washer	
36	362429X1	2	Screw	
37	354039X1	1	Cotter	
38	355616X1	1	Washer	
	353754X1	X	Washer	Repairs and replaces 12442X
39	882514M91	1	Link	
40	898303M1	1	Pin	

Tylko do użytku wewnętrznego

404

ATTELAGE SUPERIEUR
OBERER LENKER
MAGLIE SUPERIORI
BARRAS ENGANCHE SUPERIORES
TOP LINKS

16051005

1 1605 037

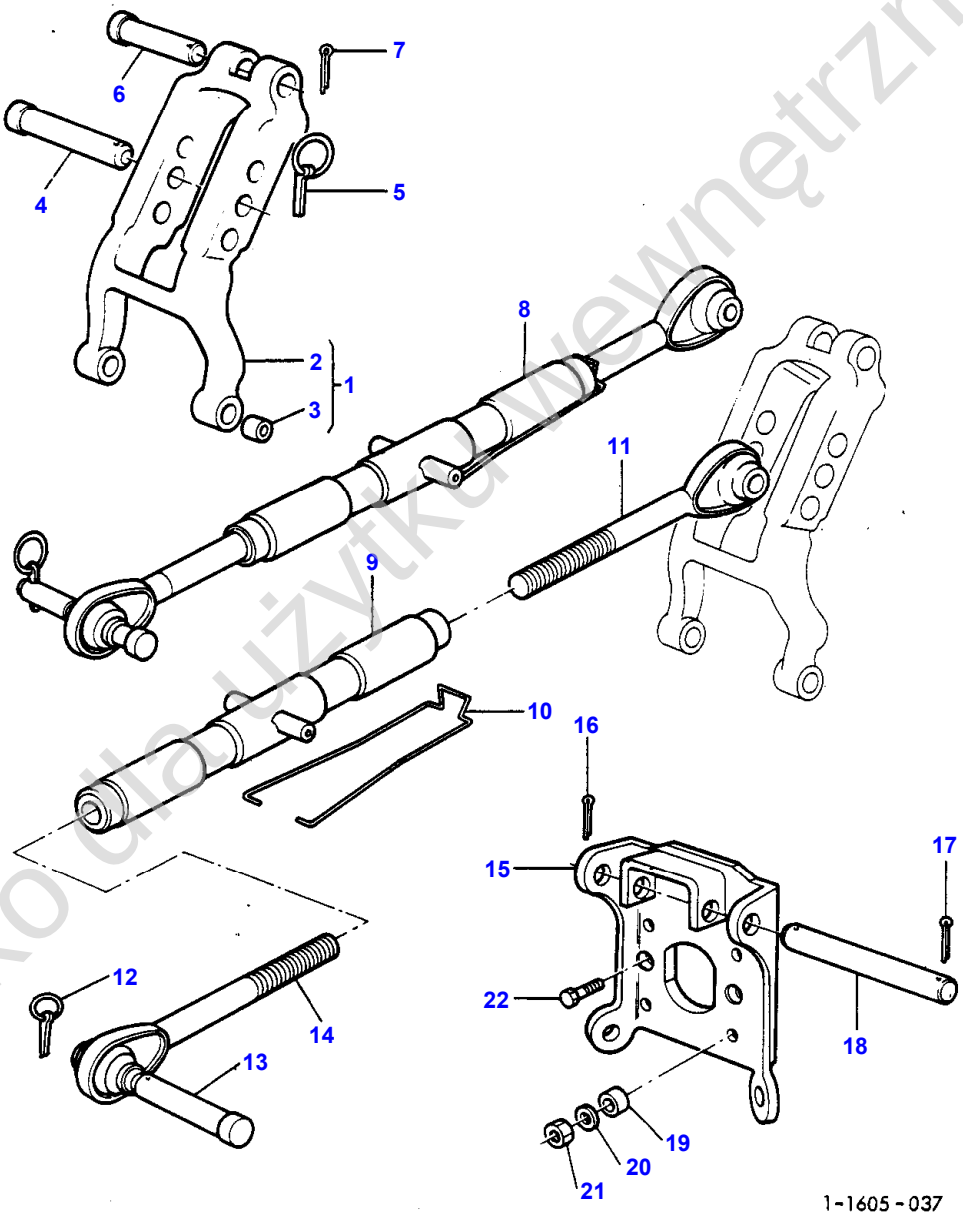

Tylko dla użytku wewnętrznego

Item	Part Number	Qty	Description	Comments
				UPPER LINK-SCALE
1	1863393M92	1	Arm	
2		1	Arm	(1) Not serviced, order 1863393M92
3	1860913M1	2	Bush	(1)
4	892476M1	1	Pin Hitch	
5	950371M91	1	Pin	
6	893567M1	1	Clevis Pin	
7	354068X1	1	Pin	
8	1660050M91	1	Top Link	
9	1660051M91	1	Tube	(8)
10	1660057M1	1	Spring	(8)
11	1660055M91	1	Toggle	(8)
12	950371M91	1	Pin	(8)
13	831262M1	1	Clevis Pin	(8)
14	1660053M91	1	End	(8)
15	1862841M92	1	Bracket	
16	354089X1	1	Pin	
17	354089X1	1	Pin	
18	1867294M1	1	Pin	
19	1869272M1	4	Spacer	
20	353439X1	4	Lock Washer	
21	363627X1	4	Nut	
22	362475X1	2	Screw	

Tylko dla użytku wewnętrznego

406

ATTELAGE INFERIEUR
UNTERE LENKER
MAGLIE INFERIORI
BARRAS ENGANCHE INFERIORES
LOWER LINKS

16151003

1 1615 062

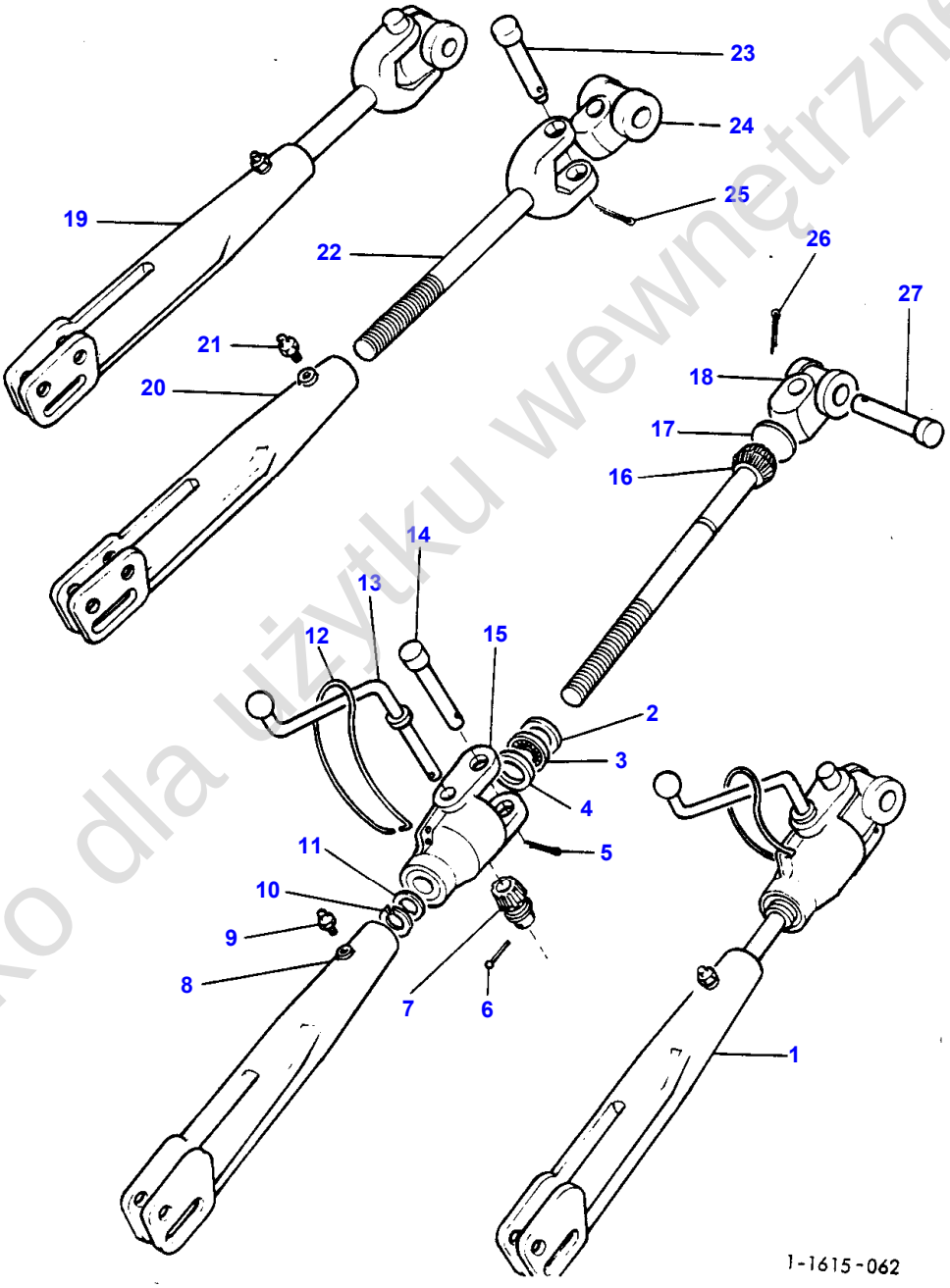

Tylko dla użytku wewnętrznego

Item	Part Number	Qty	Description	Comments
				LEUELLING BOX
1	1660438M92	1	Box	
2	183630M1	1	Race	(1)
3	831263M1	1	Bearing Needle	(1)
4	183630M1	1	Race	(1)
5	354068X1	1	Pin	(1)
6	195648M1	1	Rivet	(1)
7	181345M1	1	Gear	(1)
8	1861392M3	1	Fork	(1)
9	13811X	2	Grease Nipple	(1)
10	352438X1	1	Circlip	(1)
11	1860834M2	1	Thrust Washer	(1)
12	193092M1	1	Ring	(1)
13	1662382M1	1	Crank	(1)
14	893567M1	1	Clevis Pin	(1)
15	1860829M2	1	Box	(1)
16	1863885M1	1	Shaft	(1)
17	195644M1	1	Plug	(1)
18	897653M2	1	Knuckle	(1)
19	1660437M91	1	Box	
20	1861392M3	1	Fork	(19)
21	13811X	1	Grease Nipple	(19)
22	1863888M91	1	Yoke	(19)
23	893567M1	1	Clevis Pin	(19)
24	897653M2	1	Knuckle	(19)
25	354068X1	1	Pin	(19)
26	354068X1	2	Pin	
27	893568M1	2	Clevis Pin	

Tylko dla użytku wewnętrznego

408

ATTELAGE INFERIEUR
UNTERE LENKER
MAGLIE INFERIORI
BARRAS ENGANCHE INFERIORES
LOWER LINKS

16151068

1 1615 083

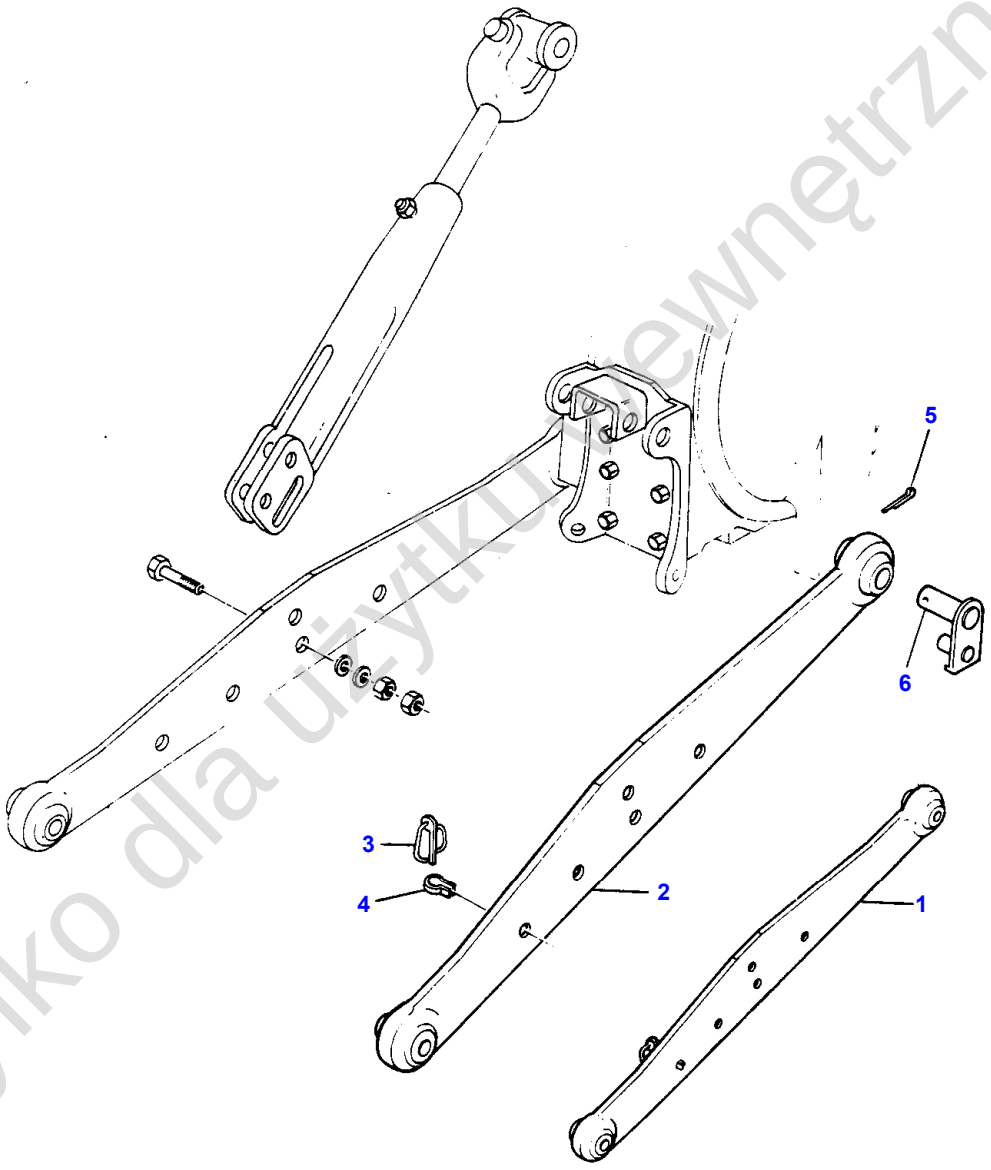

1-1615-083

Tylko dla użytku wewnętrznego

Item	Part Number	Qty	Description	Comments
				BOTTOM BAR
1	1660265M92	1	Link	Right Hand
	1660266M92	1	Link	Left Hand
2	1660262M92	1	Link	(1) Right Hand
2	1660263M92	1	Link	(1) Left Hand
3	950371M91	1	Pin	(1)
4	1869218M1	1	Clip	(1)
5	377601X1	2	Pin	
6	1660436M91	2	Link	

Tylko dla użytku wewnętrznego

410

ATTELAGE INFERIEUR
UNTERE LENKER
MAGLIE INFERIORI
BARRAS ENGANCHE INFERIORES
LOWER LINKS

16151069

1 1615 068

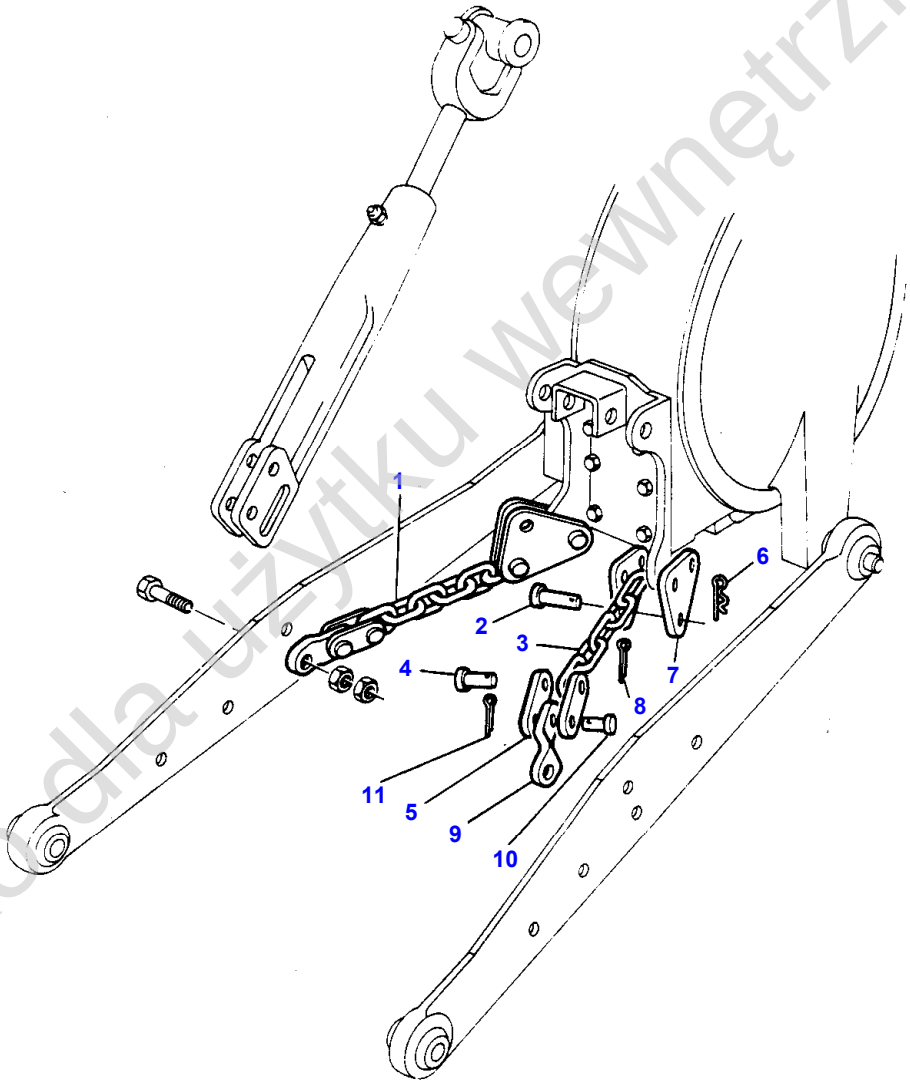

1-1615-068

Tylko dla użytku wewnętrznego

Item	Part Number	Qty	Description	Comments
				CHAIN
1	1865239M91	2	Chain	
2	195408M1	2	Pin	(1)
3	1865195M1	1	Chain	(1)
4	195408M1	1	Pin	(1)
5	1865194M1	2	Plate	(1)
6	195415M1	2	Hair Pin	(1)
7	1863902M1	2	Link	(1)
8	354066X1	1	Pin	(1)
9	1862429M2	2	Bracket	
10	377415X1	2	Pin	
11	354066X1	2	Pin	

Tylko dla użytku wewnętrznego

412

BARRE OSCILLANTE
ZUGPENDEL
BARRA TRAZIONE ORIENTABILE
BARRA DE TIRO OSCILANTE
SWINGING DRAWBAR

16351009

1 1635 007

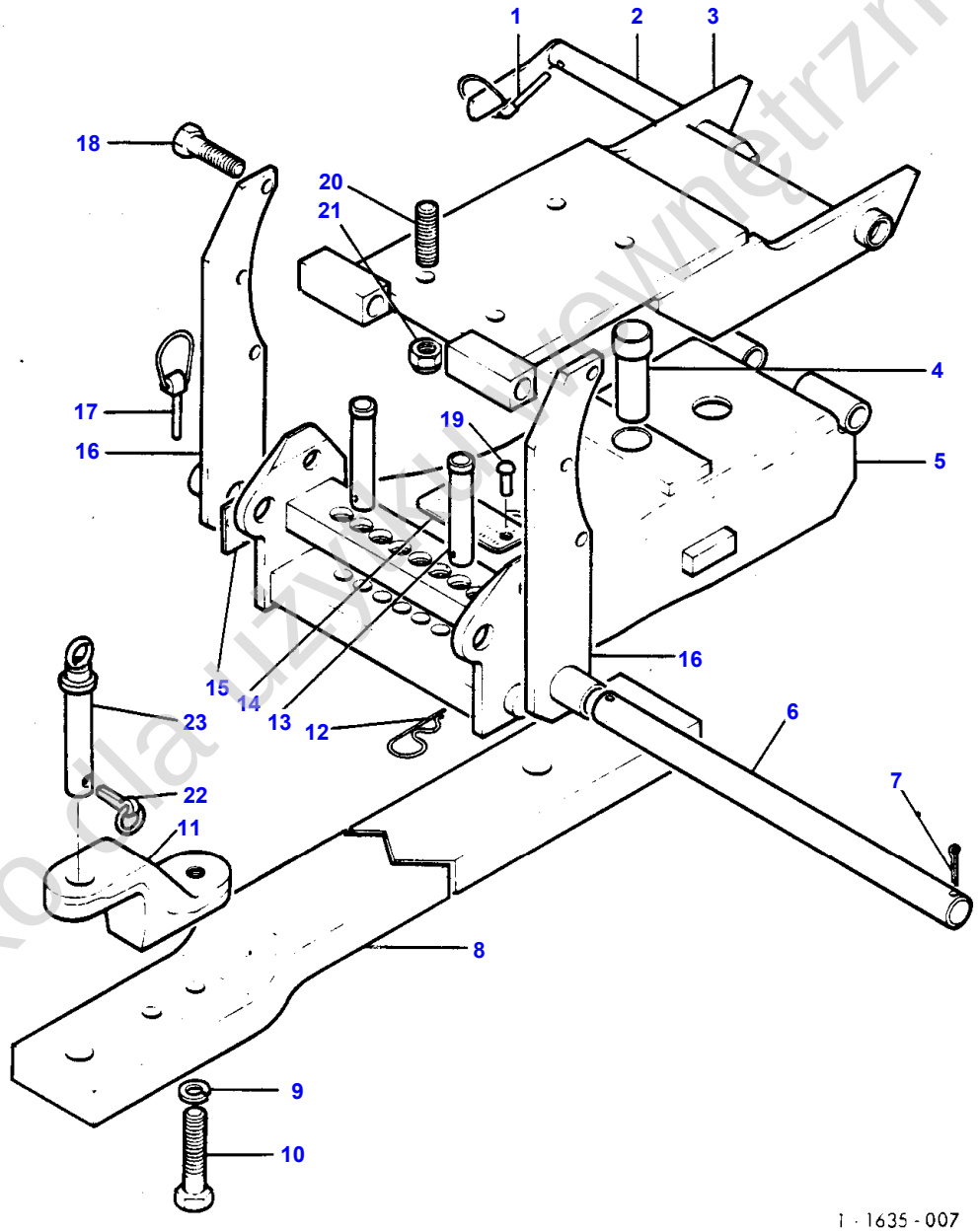

Tylko dla użytku wewnętrznego

Item	Part Number	Qty	Description	Comments
1	811201M91	1	Lynch Pin 6mm	
2	886162M92	1	Pin	
3	874938M91	1	Bracket	
4	886166M1	1	Pin	
5	874940M91	1	Frame	
6	886224M2	1	Shaft	
7	354091X1	1	Pin	
8	1869060M1	1	Drawbar	
9	353433X1	1	Lock Washer	
10	353618X1	2	Bolt Unf	
11	874948M1	2	Adaptor	
12	375285X1	1	Hair Pin	
13	1867303M1	2	Dowel	
14	810299M2	2	Plate	
15	888851M1	1	Decal	
16	874949M91	1	Support	Left Hand
	874952M91	1	Support	Right Hand
17	365139X1	1	Hair Pin	
18	362533X1	6	Screw	
19	353448X1	2	Screw	
20	658163M1	4	Stud	
21	376451X1	4	Nut Unf	
22	1636927M91	1	Pin	
23	1668803M91	1	Pin	

Tylko dla użytku wewnętrznego

414

CROCHET D'ATTELAGE	CRAMER
ANHAENGEKUPPLUNG	CRAMER
ATTACCO	CRAMER
ENGANCHE	CRAMER
HITCH	CRAMER

16721006

1 1672 008

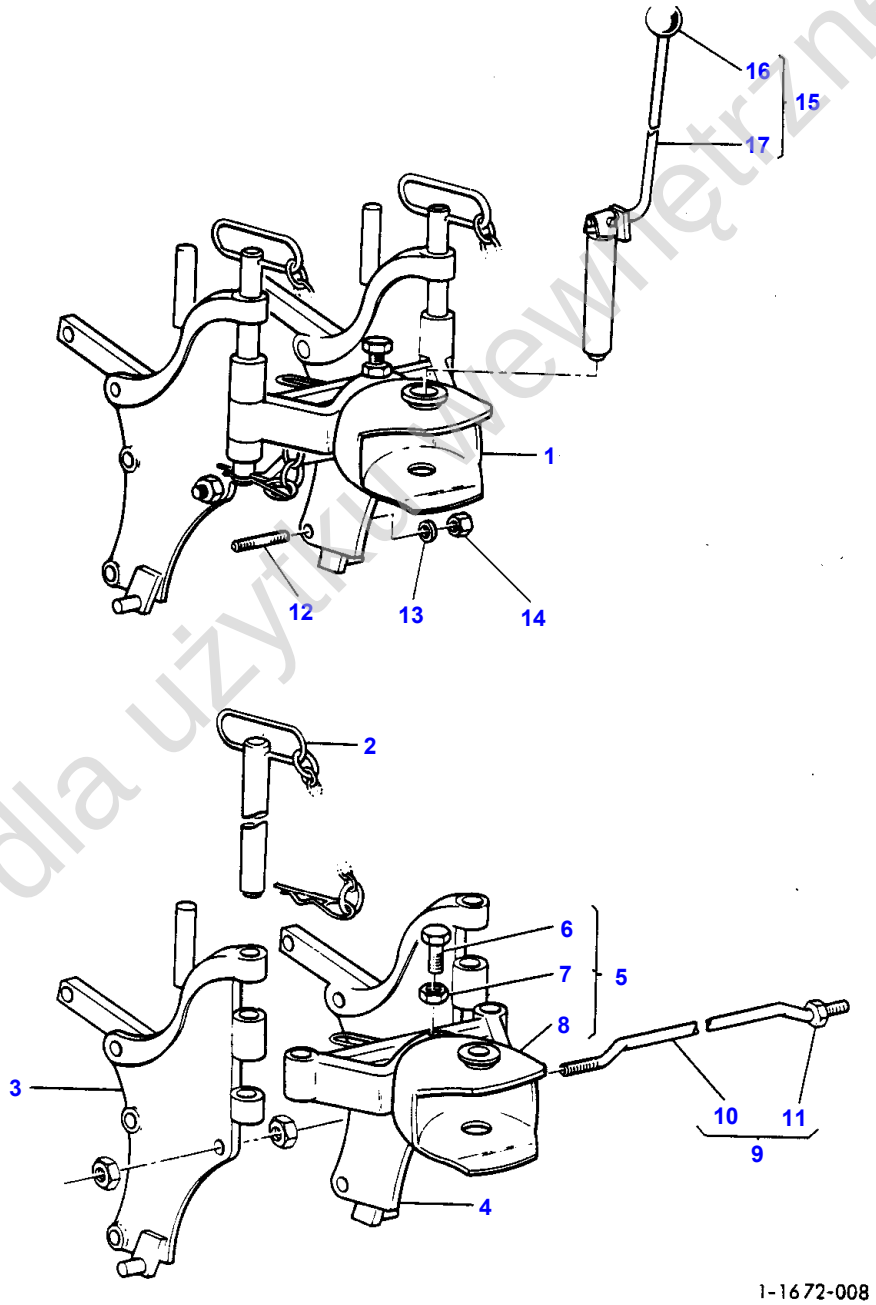

Tylko dla użytku wewnętrznego

Item	Part Number	Qty	Description	Comments
1	1661751M91	1	Hitch	
2	1718458M1	2	Pin	(1)
3	1719202M1	1	Bracket	(1) Left Hand
4	1719203M1	1	Bracket	(1) Right Hand
5	1719204M1	1	Body	(1)
6	339631X1	1	Screw	(5)
7	339079X1	1	Nut	(5)
8		1	Hook	(5) Not serviced, order 1719204M1
9	1719205M91	1	Rod	(1)
10		1	Rod	(9) Not serviced, order 1719205M91
11	339034X1	4	Nut Metric	(9)
12	1730524M1	8	Stud	
13	353439X1	8	Lock Washer	
14	353437X1	8	Nut Unf	
15	1718357M91	1	Pin	
16	1718358M1	1	Knob	(15)
17		1	Stem	(15) Not serviced, order 1718357M91

Tylko dla użytku wewnętrznego

416

CROCHET D'ATTELAGE	LEMOINE
ANHAENGEKUPPLUNG	LEMOINE
ATTACCO	LEMOINE
ENGANCHE	LEMOINE
HITCH	LEMOINE

16711008

1 1671 002

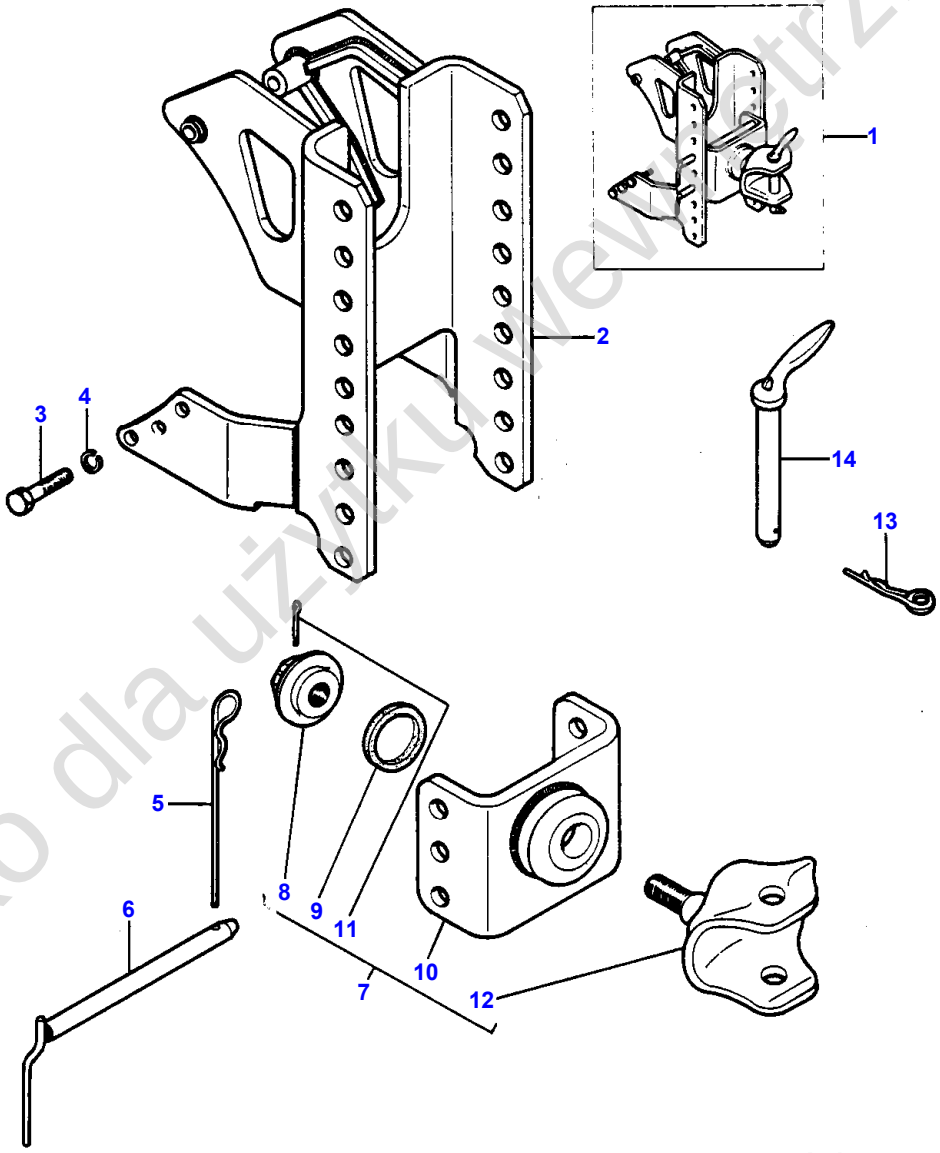

Tylko dla użytku wewnętrznego

Item	Part Number	Qty	Description	Comments
1	1665695M91	1	Frame	
2	1665697M1	1	Frame	(1)
3	377661X1	6	Bolt Unc	(1)
4	353439X1	6	Lock Washer	(1)
5	1665702M1	1	Pin	(1)
6	1665701M1	2	Pin	(1)
7	1665700M91	1	Hook	(1)
8	1645984M1	1	Nut	(7)
9	1809330M1	1	Bush	(7)
10		1	Clevis	(7) Not serviced, order 1665700M91
11	1633410M1	2	Pin	(7)
12		1	Hook	(7) Not serviced, order 1665700M91
13	1665699M1	1	Pin	(1)
14	1809332M1	1	Pin	(1)

Tylko dla użytku wewnętrznego

418

ATTELAGE INFERIEUR
UNTERE LENKER
MAGLIE INFERIORI
BARRAS ENGANCHE INFERIORES
LOWER LINKS

16151072

1 1615 077

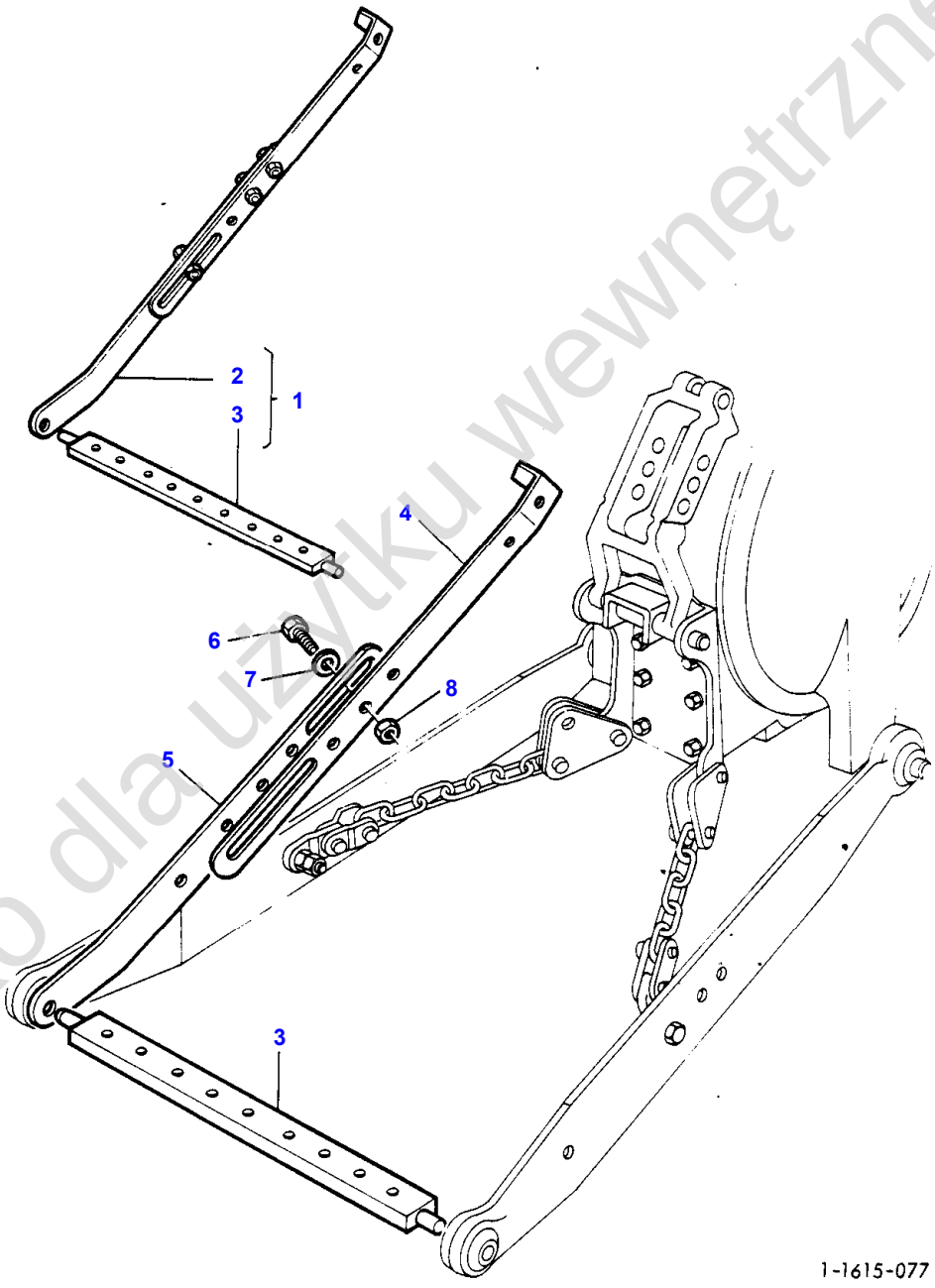

Tylko dla użytku wewnętrznego

Item	Part Number	Qty	Description	Comments
				STAYS-HITCH BAR
1	1865556M92	1	Bar	
2	1865384M92	2	Link	(1)
3	829032M1	1	Bar	(1)
4	1865560M92	1	Stay	(2)
5	1865383M2	1	Stay	(2)
6	353563X1	3	Bolt Unf	(2)
7	353772X1	3	Washer	(2)
8	353426X1	3	Nut Unf	(2)

Tylko dla użytku wewnętrznego

420

STABILISATEURS
STABISTREBEN
STABILIZZATORI
ESTABILIZADORES
STABILIZERS

16551017

1 1655 014

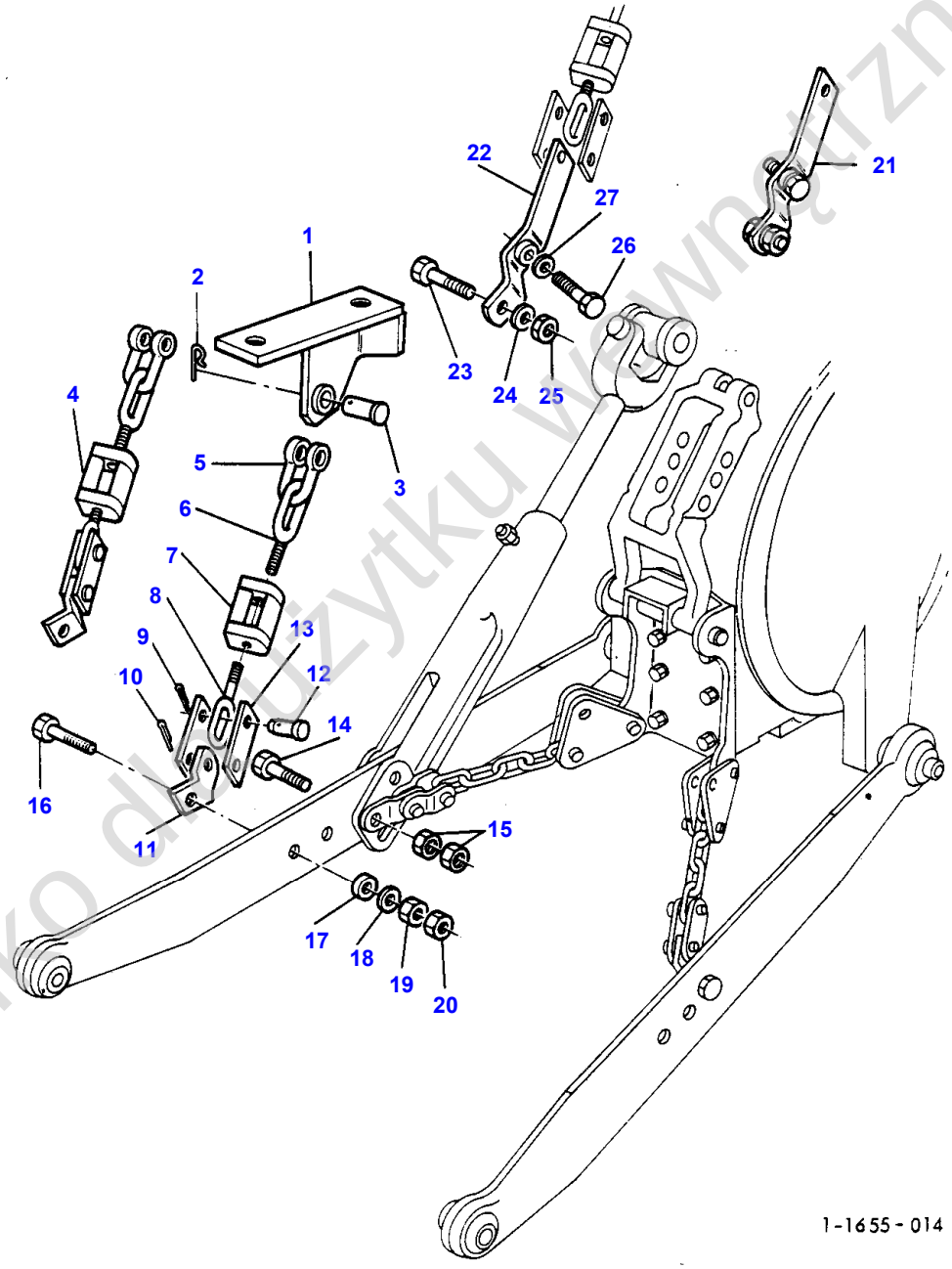

Tylko do użytku wewnętrznego

Item	Part Number	Qty	Description	Comments
1	1661397M91	1	Bracket	Right Hand Up to Serial or Engine Number 4-81
1	1676229M91	1	Bracket	Right Hand From Serial or Engine Number 4-81
1	1661398M91	1	Bracket	Left Hand Up to Serial or Engine Number 4-81
1	1680214M91	1	Bracket	Left Hand From Serial or Engine Number 4-81
2	354089X1	2	Pin	
3	52964M1	2	Clevis Pin	
4	1661406M91	2	Stabiliser	
5	1860594M1	1	Shackle	(4)
6	1661408M1	1	Eye Bolt	(4)
7	1661411M1	1	Buckle	(4)
8	1661409M1	1	Eye Bolt	(4)
9	346161X1	1	Hair Pin	(4)
10	354076X1	1	Pin	(4)
11	1661413M1	1	Plate	(4)
12	364491X1	2	Clevis Pin	(4)
13	1661412M1	2	Plate	(4)
14	1865157M1	2	Bolt	
15	353426X1	4	Nut Unf	
16	894034M1	2	Screw Special	
17	1865159M1	2	Spacer	
18	353762X1	2	Washer	
19	353435X1	2	Nut Unf	
20	353436X1	2	Nut Unf	
21	1661381M91	1	Kit, Stabiliser	Two Wheel Drive
22	1661415M91	2	Bracket	(21) Two Wheel Drive
23	353567X1	2	Bolt Unf	(21) Two Wheel Drive
24	353440X1	2	Lock Washer	(21) Two Wheel Drive
25	353435X1	2	Nut Unf	(21) Two Wheel Drive
26	354116X1	2	Screw Unf	(21) Two Wheel Drive
27	353440X1	2	Lock Washer	(21) Two Wheel Drive

Tylko dla użytku wewnętrznego

422

STABILISATEURS
STABISTREBEN
STABILIZZATORI
ESTABILIZADORES
STABILIZERS

16551018

1 1655 015

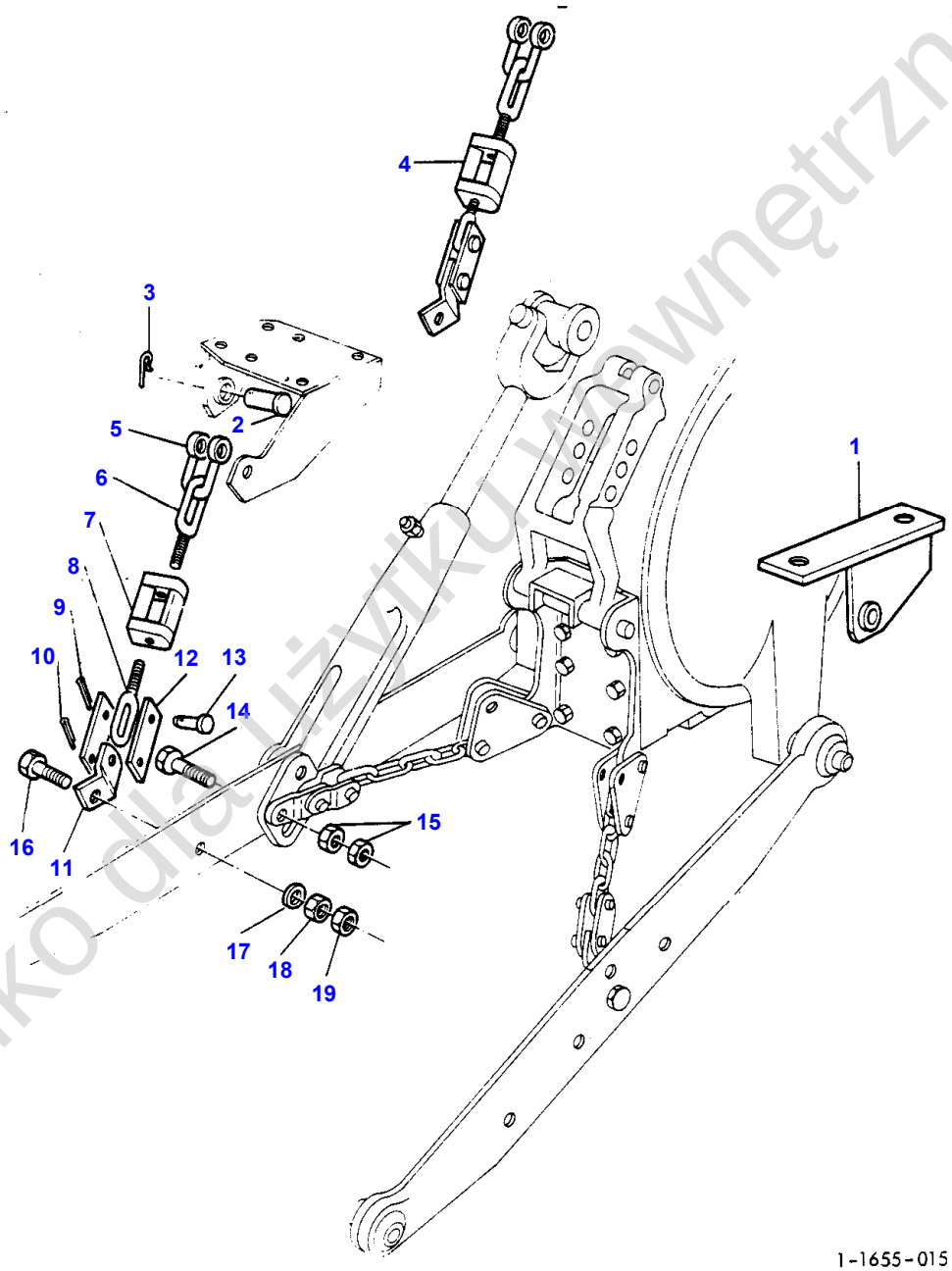

Tylko dla użytku wewnętrznego

Item	Part Number	Qty	Description	Comments
				WITH CYLINDER
1	1676229M91	1	Bracket	Right Hand
2	52964M1	2	Clevis Pin	
3	354089X1	2	Pin	
4	1661406M91	2	Stabiliser	
5	1860594M1	1	Shackle	(4)
6	1661408M1	1	Eye Bolt	(4)
7	1661411M1	1	Buckle	(4)
8	1661409M1	1	Eye Bolt	(4)
9	346161X1	1	Hair Pin	(4)
10	354076X1	1	Pin	(4)
11	1661413M1	1	Plate	(4)
12	1661412M1	2	Plate	(4)
13	364491X1	2	Clevis Pin	(4)
14	1865157M1	2	Bolt	
15	353435X1	2	Nut Unf	
	353436X1	2	Nut Unf	
16	894034M1	2	Screw Special	
17	353762X1	2	Washer	
18	353435X1	2	Nut Unf	
19	353436X1	2	Nut Unf	

Tylko dla użytku wewnętrznego

424

RELEVAGE HYDRAULIQUE BACK BONE
HYDRAULISCHE AUSHEBUNG BACK-BONE
SOSTEGNO SOLLEVAMENTO IDRAULICO
COLUMNA ELEVADOR
BACK BONE HYDRAULIC LIFT

16601002

1 1666 007

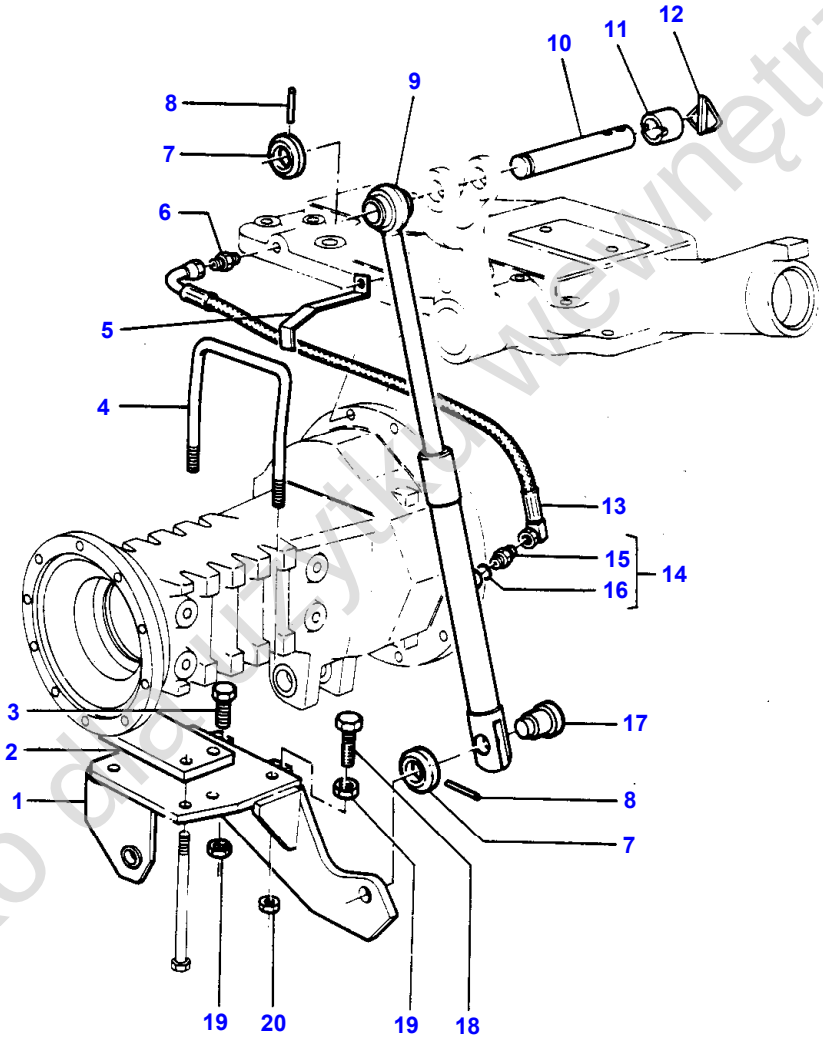

1-1666-007

Tylko do użytku wewnętrznego

Item	Part Number	Qty	Description	Comments
1	1661382M91	1	Bracket	Left Hand
2	1661414M2	1	Spacer	
3	377762X1	1	Screw	
4	1661389M2	1	U Bolt	
5	1671200M1	1	Retainer	
6	1661394M1	1	Adaptor	
7	1668542M1	2	Collar	
8	377028X1	2	Pin	
9	1748456M92	1	Ram	Left Hand See Page - Reference Number 426/
10	1669533M1	1	Pin	
11	1675557M1	1	Spacer	
12	1636927M91	1	Pin	
13	1661393M91	1	Kit, Hose	
14	835091M91	1	Connector	
15		1	Union	(14) Not serviced, order 835091M91
16	831452M1	1	O Ring	(14)
17	1668543M1	1	Pin	
18	377761X1	1	Screw	
19	353429X1	2	Nut Unf	
20	376450X1	2	Nut Unf	

Tylko dla użytku wewnętrznego

426

VERIN DE BACK BONE
BACK-BONE HYDRAULIKZYLINDER
SOSTEGNO CILINDRO
SOPORTE CILINDRO
BACK BONE CYLINDER

16651002

1 1665 002

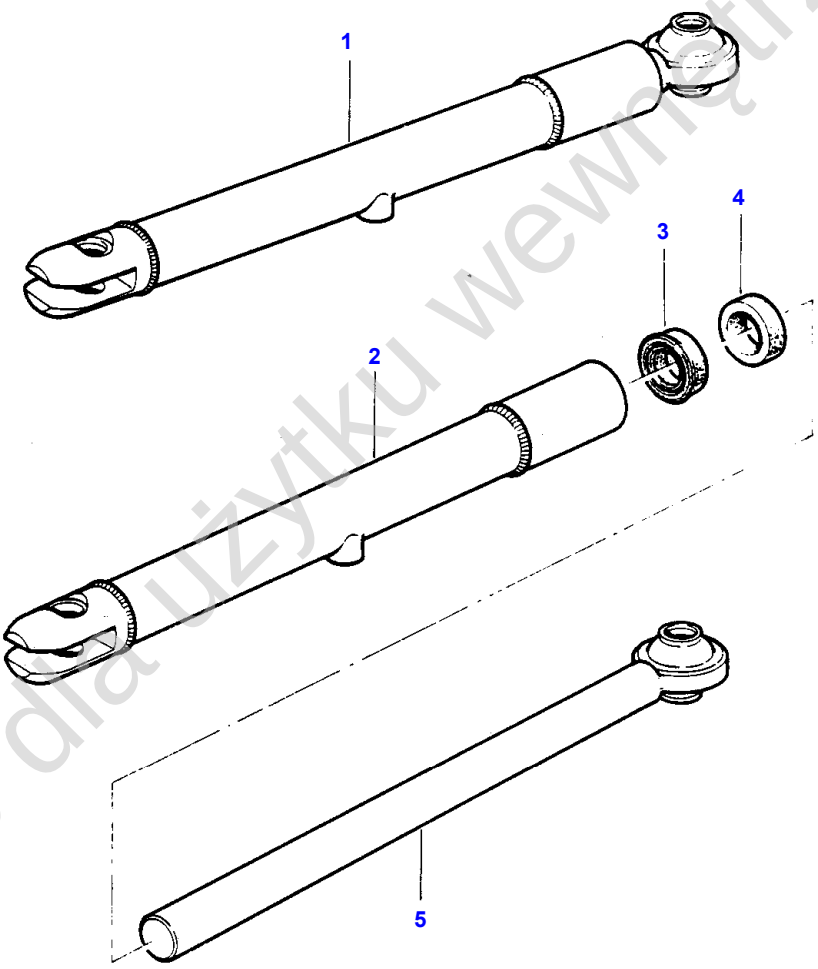

1-1665-002

Tylko dla użytku wewnętrznego

Item	Part Number	Qty	Description	Comments
				DIAMETER 25 MM
1	1748456M92	1	Ram	
2	1748458M92	1	Barrel	
3	1749562M1	1	Seal	
4	1749616M1	1	Seal	
5	1748457M91	1	Rod	

Tylko dla użytku wewnętrznego

428

ATTELAGE INFERIEUR
UNTERE LENKER
MAGLIE INFERIORI
BARRAS ENGANCHE INFERIORES
LOWER LINKS

16151073

1 1615 088

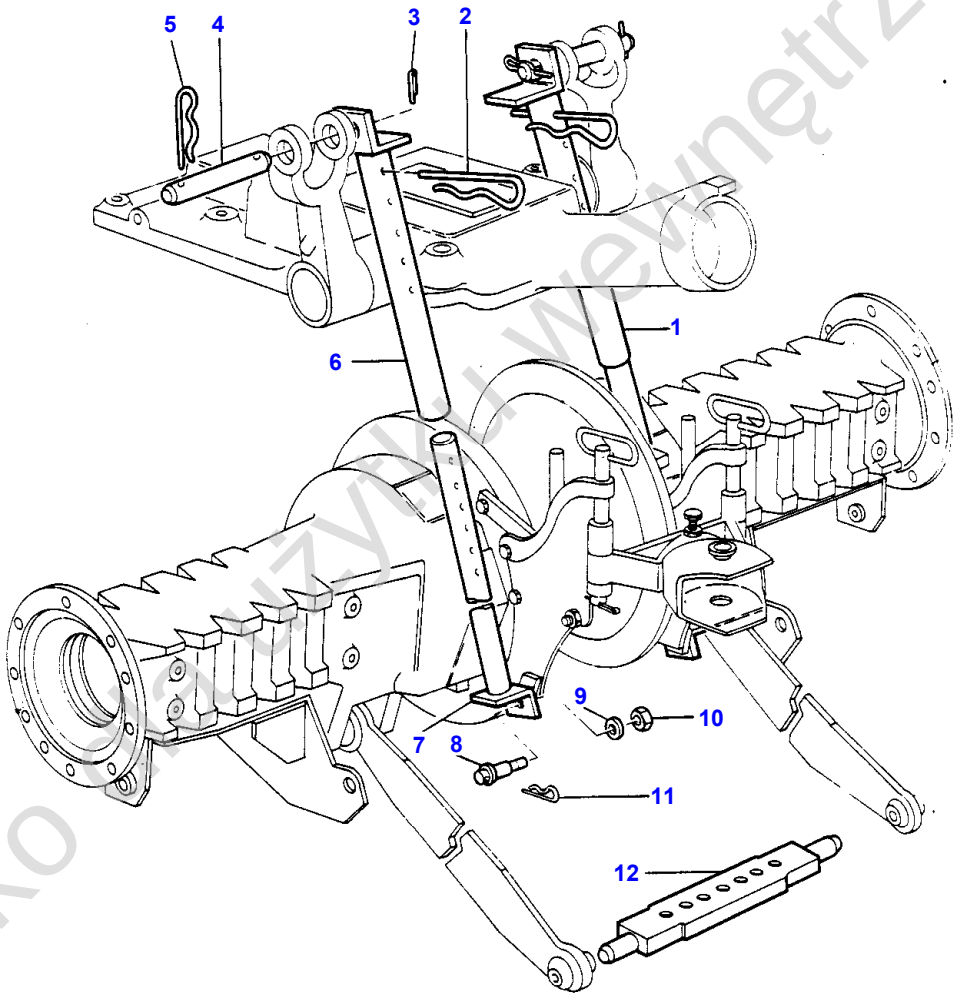

1-1615-088

Tylko do użytku wewnętrznego

Item	Part Number	Qty	Description	Comments
				TELESCOPIC STAY-HITCH BAR
1	1661965M91	1	Arm	
	1661966M91	1	Arm	(A)
2	327730M1	2	Pin	(1)
3	354068X1	2	Pin	(1)
4	1730096M1	2	Clevis Pin	(1)
	1730518M1	2	Pin	(1)
				(A)
5	407863M1	2	Pin	(1)
6	1730091M91	2	Tube	(1)
7	1730094M91	2	Bracket	(1)
8	1730097M1	2	Pin	(1)
9	339377X1	2	Lock Washer	(1)
10	339034X1	2	Nut Metric	(1)
11	407863M1	2	Pin	(1)
12	829032M1	1	Bar	(1)
				(A)
				HEAUY DUTY

Tylko dla użytku wewnętrznego

430

CROCHET AVANT
VORDERE ZUGVORRICHTUNG
ATTACCO AUTERIORE
ENGANCHE FRONTAL
FRONT HITCH

18901006

1 1890 026

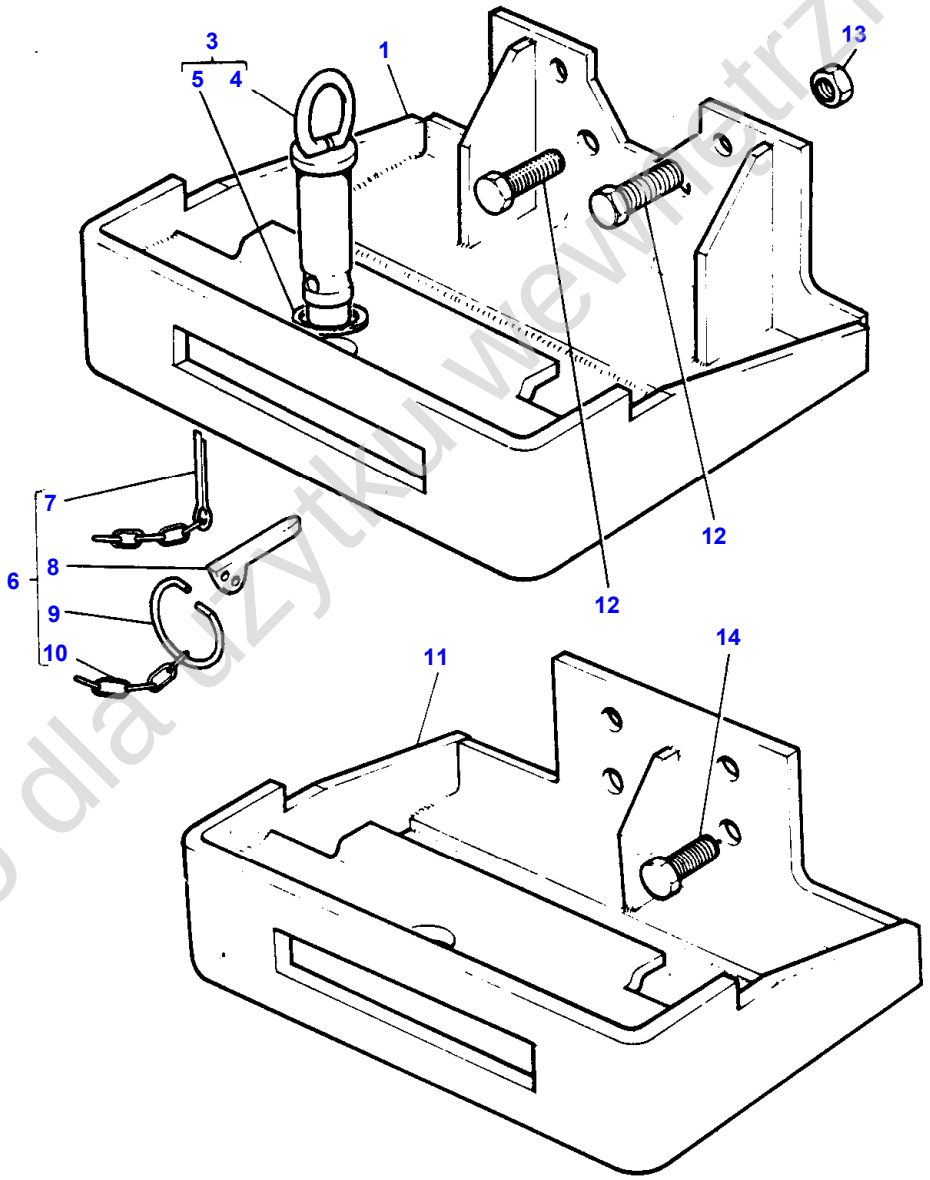

Tylko dla użytku wewnętrznego

Item	Part Number	Qty	Description	Comments
				UP TO SERIAL NUMBER
1	1667592M95	1	Hitch	Repairs and replaces 1667617M95 Q
3	3052232M91	1	Pin Hitch	
4		1	Clevis Pin	(3)
				Not serviced, order 3052232M91
5	835026M1	1	O Ring	(3)
6	1699608M91	1	Pin	
7	354074X1	1	Pin	(6)
8		1	Pin	(6)
				Not serviced, order 1699608M91
9		1	Ring	(6)
				Not serviced, order 1699608M91
10		1	Chain	(6)
				Not serviced, order 1699608M91
11	1699604M93	1	Frame	Repairs and replaces 1665124M92 Q
12	353726X1	2	Screw Unc	2 WHEEL DRIVE
13	375099X1	2	Nut Unc	2 WHEEL DRIVE
14	362567X1	2	Screw	2 WHEEL DRIVE
	354281X1	4	Screw Unc	(A) Q
				(A)
				WITHOUT FRONT HITCH

Tylko dla użytku wewnętrznego

432

CROCHET AVANT
VORDERE ZUGVORRICHTUNG
ATTACCO AUTERIORE
ENGANCHE FRONTAL
FRONT HITCH

18901004

1 1890 023

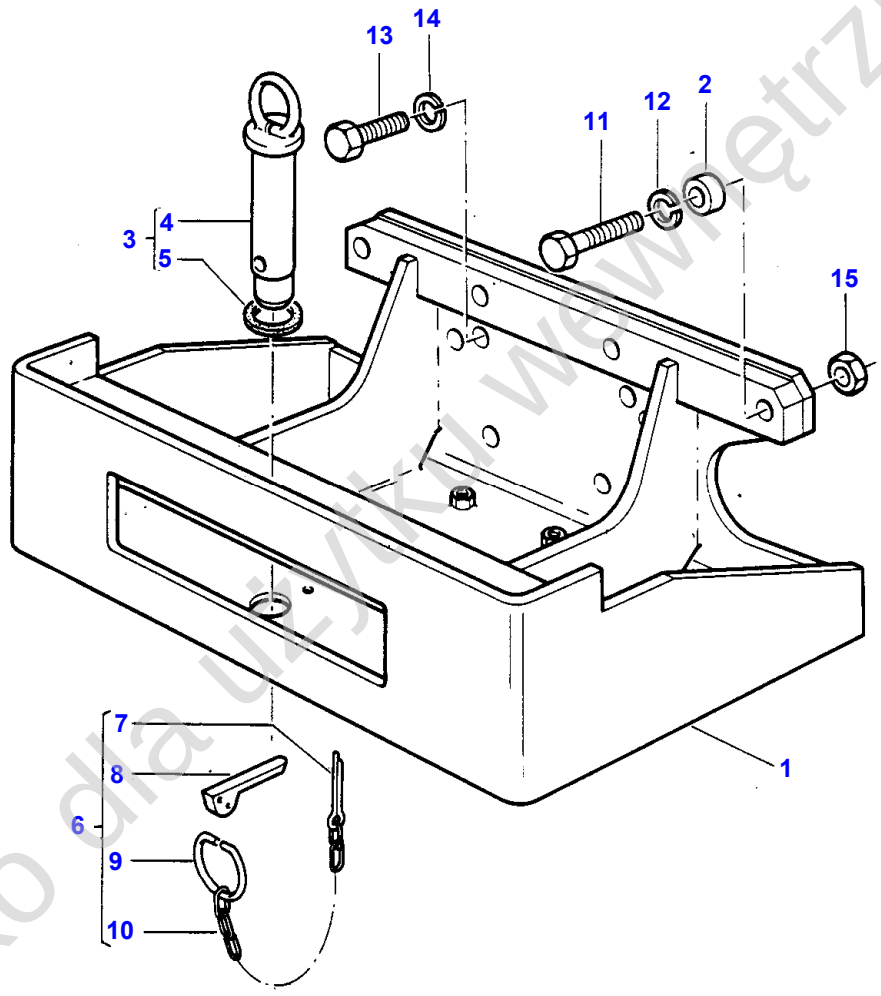

1-1890-023

Tylko dla użytku wewnętrznego

Item	Part Number	Qty	Description	Comments
				FROM SERIAL NO H200211- 2 WHEEL DRIVE
1	1667592M95	1	Hitch	Repairs and replaces 1667617M95
2	1662513M2	4	Spacer	Up to Serial or Engine Number 5/80
3	3052232M91	1	Pin Hitch	
4		1	Clevis Pin	(3) Not serviced, order 3052232M91
5	835026M1	1	O Ring	(3)
6	1699608M91	1	Pin	
7	354074X1	1	Pin	(6)
8		1	Pin	(6) Not serviced, order 1699608M91
9		1	Ring	(6) Not serviced, order 1699608M91
10		1	Chain	(6) Not serviced, order 1699608M91
11	353937X1	4	Bolt Unc	Up to Serial or Engine Number 5/80 5/8-11X70
11	362567X1	4	Screw	From Serial or Engine Number 5/80 5/8-11X57
12	353433X1	4	Lock Washer	Up to Serial or Engine Number
13	353726X1	2	Screw Unc	5/8-11X38
	354281X1	4	Screw Unc	(A) 5/8-11X35
14	353433X1	2	Lock Washer	Up to Serial or Engine Number
15	375099X1	2	Nut Unc	
				(A) WITHOUT FRONT HITCH

Tylko dla użytku wewnętrznego

434

CROCHET AVANT
VORDERE ZUGVORRICHTUNG
ATTACCO AUTERIORE
ENGANCHE FRONTAL
FRONT HITCH

18901005

1 1890 006

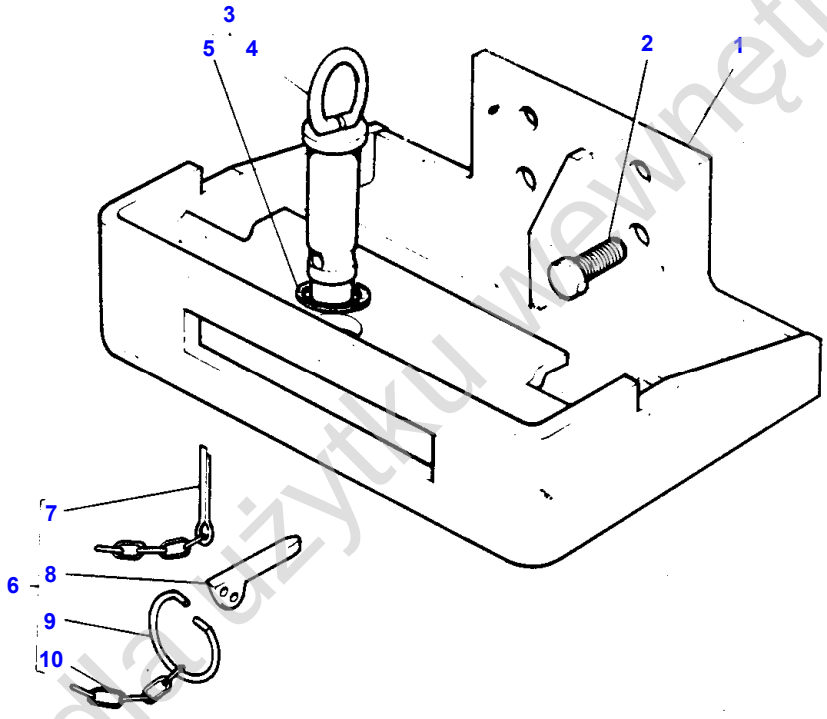

I-1890-006

Tylko do użytku wewnętrznego

Item	Part Number	Qty	Description	Comments
				4 WHEELS DRIVE FROM SERIAL
1	1665124M92	1	Hook	
2	353728X1	6	Bolt Unc	5/8-11X51
3	3052232M91	1	Pin Hitch	
4		1	Clevis Pin	(3) Not serviced, order 3052232M91
5	835026M1	1	O Ring	(3)
6	1699608M91	1	Pin	
7	354074X1	1	Pin	(6)
8		1	Pin	(6) Not serviced, order 1699608M91
9		1	Ring	(6) Not serviced, order 1699608M91
10		1	Chain	(6) Not serviced, order 1699608M91

Tylko dla użytku wewnętrznego

436

CARROSSERIE	CAPOT
VERKLEIDUNG	MOTORHAUBE
CARROZZERIA	COFANO
EMPLANCHADOS	CAPO
SHEET METAL	HOOD

17131003

1 1713 073

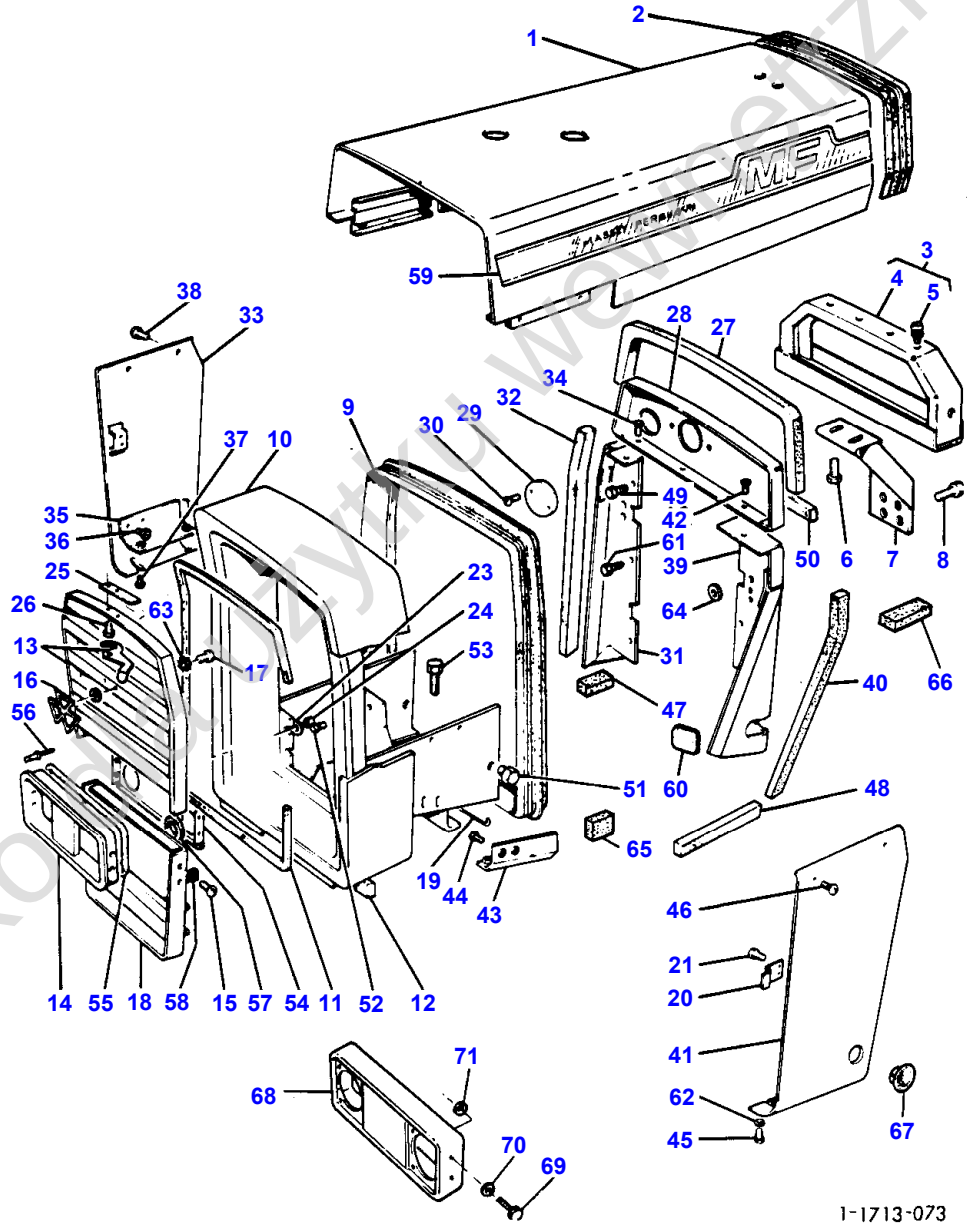

Tylko do użytku wewnętrznego

Item	Part Number	Qty	Description	Comments
				2 WHEEL DRIVE
1	1611883M95	1	Hood	Up to Serial or Engine Number 04/80
	1673774M91	1	Hood	(A) From Serial or Engine Number 04/80
2	1611973M2	1	Moulding	
3	1611860M92	1	Support	
4		1	Support	(3) Not serviced, order 1611860M92
5	180673M1	4	Bumper	(3)
6	353677X1	2	Screw Unc	
7	1873819M92	1	Brace	
8	353517X1	4	Screw Unf	
9	1876153M1	1	Moulding	
10	1669638M91	1	Support	Repairs and replaces 1611918M95
11	1876206M2	1	Gasket	(10) 9,5X6X2604
12	1876214M1	1	Seal	(10) 16X19X521
13	1876198M91	1	Grille	
	1877933M91	1	Latch	
14	1876187M91	1	Frame	Up to Serial or Engine Number 01-1981
15	365007X1	4	Self Tap Screws	Up to Serial or Engine Number 01-1981
16	1877996M2	1	Emblem	
17	355124X1	2	Screw Unc	
18	1876182M94	1	Grille	
19	1876057M1	1	Rod	
20	1614065M1	2	Clip	
21	353565X1	4	Bolt Unf	
23	353754X1	4	Washer	
24	355564X1	4	Nut Unc	
25	1877958M92	1	Plate	
26	353667X1	2	Screw Unc	
27	1613514M1	1	Pad	25X25X991
28	1613173M94	1	Panel	
29	1614390M2	1	Plate	Up to Serial or Engine Number
30	360358X1	2	Screw	Up to Serial or Engine Number
31	1876150M92	1	Panel	Right Hand
32	1876210M1	1	Joint	25X25X540
33	1669641M91	1	Panel	Repairs and replaces 1618016M92
34	353516X1	1	Screw Unf	
35	1669620M91	1	Support	Right Hand Repairs and replaces 1876146M91
36	362433X1	2	Bolt	
37	353677X1	2	Screw Unc	
38	365637X1	2	Bolt	
39	1671406M91	1	Panel	Left Hand Up to Serial or Engine Number 01/81
39	1876235M96	1	Panel	Left Hand From Serial or Engine Number 01/81
40	1876210M1	1	Joint	25X25X540
41	1669640M91	1	Panel	Left Hand Repairs and replaces 1618015M92
42	353676X1	1	Screw Unc	
43	1669620M91	1	Support	Left Hand Repairs and replaces 1875997M91
44	362433X1	2	Bolt	
45	353677X1	2	Screw Unc	
46	365637X1	2	Bolt	
47	1670497M1	2	Pad	38X38X140 From Serial or Engine Number
47	1876207M1	2	Pad	25X13X140
48	1876209M1	3	Pad	38X19X311
49	353517X1	5	Screw Unf	
50	1876208M2	1	Pad	25X13X400
51	377720X1	2	Bolt	

Tylko do użytku wewnętrznego

Item	Part Number	Qty	Description	Comments
52	354281X1	4	Screw Unc	
53	353665X1	7	Screw Unc	
54	1876193M91	1	Adaptor	Up to Serial or Engine Number 01-1981
55	1618349M1	2	Strip	For Germany only or any text in German only Up to Serial or Engine Number 01-1981
56	391349X1	4	Rivet	For Germany only or any text in German only Up to Serial or Engine Number 01-1981
57	1876205M1	2	Seal	8X8X406
58	881410M1	4	Washer	
59	1698130M2	1	Emblem	Left Hand
59	1698131M2	1	Emblem	Right Hand
60	1860525M1	1	Plug	
61	353516X1	5	Screw Unf	
62	355618X1	4	Washer	
63	353753X1	4	Washer	
64	832682M1	1	Grommet	
65	1698033M1	1	Pad	102X38X102
66	1670495M1	1	Pad	25X13X76
67	1877335M1	4	Plug	
68	1676237M1	1	Case Assy	From Serial or Engine Number 02-1981
69	353666X1	4	Screw Unc	From Serial or Engine Number 02-1981
70	355617X1	4	Washer	From Serial or Engine Number 02-1981
71	355564X1	4	Nut Unc	From Serial or Engine Number 02-1981
				(A) OUTSIDE HOOD EXHAUST

Tylko dla użytku wewnętrznego

440

CARROSSERIE	CAPOT
VERKLEIDUNG	MOTORHAUBE
CARROZZERIA	COFANO
EMPLANCHADOS	CAPO
SHEET METAL	HOOD

17131005

1 1713 074

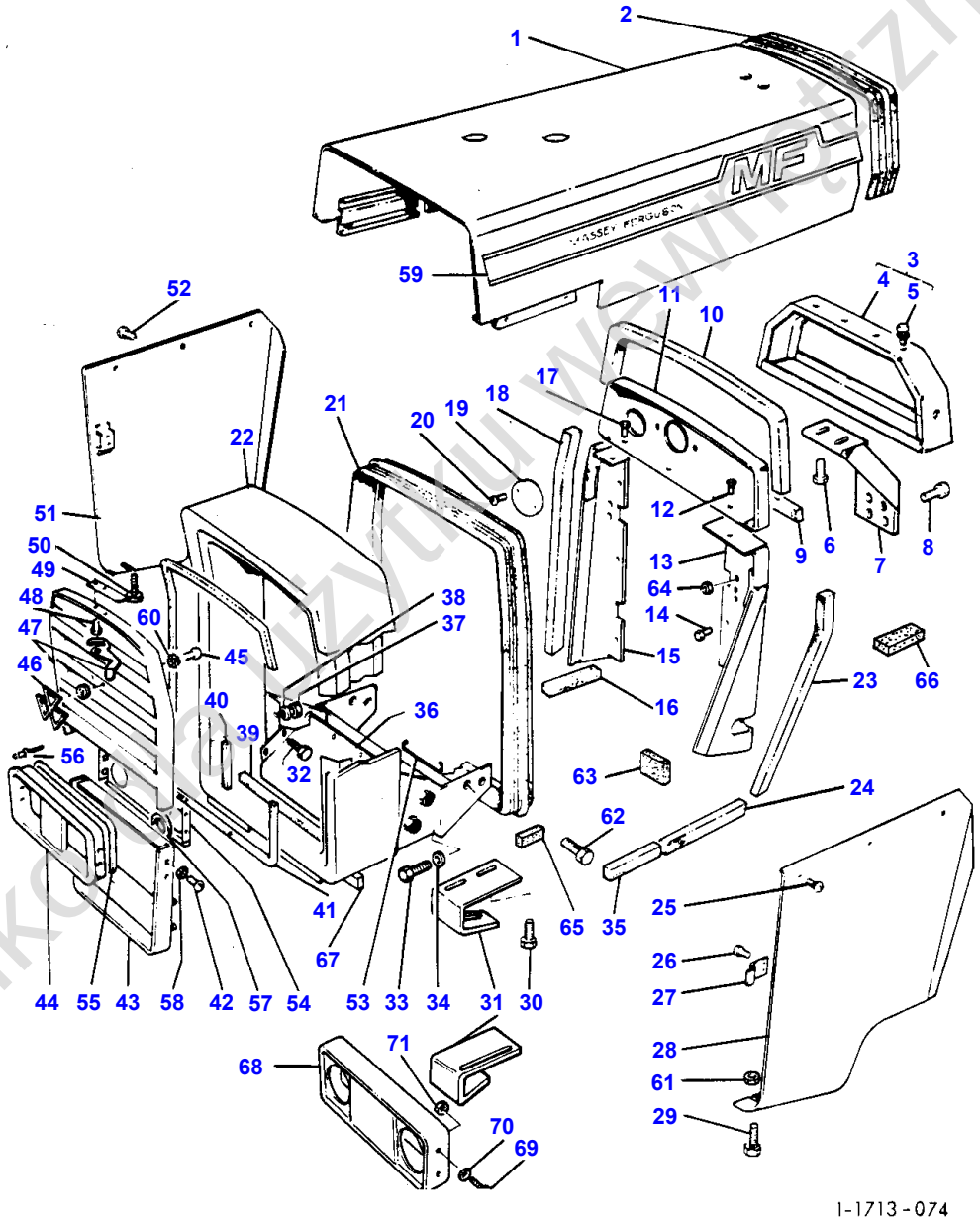

Tylko do użytku wewnętrznego

Item	Part Number	Qty	Description	Comments
				4 WHEELS DRIVE
1	1874733M94	1	Bonnet	Up to Serial or Engine Number 04/80
	1673782M91	1	Hood	(A)
				From Serial or Engine Number 04/80
2	1611973M2	1	Moulding	
3	1611860M92	1	Support	Repairs and replaces 1874961M91
4		1	Support	(3)
				Not serviced, order 1611860M92
5	897892M1	4	Bumper	(3)
6	353677X1	4	Screw Unc	
7	1873819M92	1	Brace	
8	353517X1	5	Screw Unf	
9	1876208M2	1	Pad	25X13X400
10	1613514M1	1	Pad	25X25X991
11	1665650M93	1	Panel	Repairs and replaces 1874693M91
12	0748412	1	Screw	
13	1671406M91	1	Panel	Left Hand 2 01/81
	1876235M96	1	Panel	Left Hand 1 01/81
14	361444X1	5	Screw	
15	1665648M91	1	Panel	Right Hand 2 01/81
	1678188M91	1	Panel	Right Hand 1 01/81
16	1876209M1	1	Pad	38X19X311
	1670497M2	2	Pad	38X38X140
17	0748412	1	Screw	
18	1876210M1	1	Joint	25X25X540
19	1614390M2	1	Plate	Up to Serial or Engine Number
20	360358X1	2	Screw	Up to Serial or Engine Number
21	1876153M1	1	Moulding	
22	1874678M92	1	Chassis	
23	1876210M1	1	Joint	25X25X540
24	1698247M1	2	Seal	Up to Serial or Engine Number 32X13X473
25	353675X1	5	Screw Unc	
26	0748351	4	Screw	
27	1614065M1	2	Clip	
28	1874954M92	1	Panel	Left Hand
29	353677X1	4	Screw Unc	
30	353677X1	1	Screw Unc	
31	1874993M1	1	Bearer	Right Hand 2 Z 255063
	1671231M1	1	Bearer	Right Hand 1 Z 255064
	1874992M1	1	Bearer	Left Hand 2 Z 255063
	1671230M1	1	Bearer	Left Hand 1 Z 255064
32	0748351	7	Screw	
33	354441X1	6	Screw Unc	
34	353433X1	8	Lock Washer	
35	1611616M1	2	Seal	25X19X111
36	1874643M2	1	Panel	
37	355564X1	4	Nut Unc	
38	353754X1	4	Washer	
39	1698245M1	1	Seal	25,4X9,5X508
	1670496M1	2	Gasket	From Serial or Engine Number 38X38X500
40	1611616M1	2	Seal	25X19X111
	1670507M2	2	Gasket	38X38X200
41	1876206M2	1	Gasket	9,5X6X2604
42	365007X1	4	Self Tap Screws	Up to Serial or Engine Number 01/81
43	1876182M94	1	Grille	
44	1876187M91	1	Frame	Up to Serial or Engine Number 01/81
45	355124X1	2	Screw Unc	
46	1877996M2	1	Emblem	
47	1876198M91	1	Grille	
	1877933M91	1	Latch	
48	353667X1	2	Screw Unc	
49	1877958M92	1	Plate	
50	353677X1	1	Screw Unc	
	355565X1	1	Nut Unc	
	0920497	1	Washer	Up to Serial or Engine Number Z 255063

Tylko do użytku wewnętrznego

Item	Part Number	Qty	Description	Comments
51	1874955M92	1	Panel	Right Hand
52	353637X1	5	Bolt Unf	
53	1876057M1	1	Rod	
54	1876193M91	1	Adaptor	Up to Serial or Engine Number 01/81
55	1618349M1	2	Strip	For Germany only or any text in German only 2 01/81
56	391349X1	4	Rivet	For Germany only or any text in German only 2 01/81
57	1876205M1	2	Seal	8X8X406
58	881410M1	4	Washer	
59	1698136M1	1	Decal	Left Hand 590
59	1698176M1	1	Decal	Left Hand 575
59	1698137M1	1	Decal	Right Hand 590
59	1698177M1	1	Decal	Right Hand 575
60	353753X1	4	Washer	
61	355565X1	1	Nut Unc	
62	377729X1	2	Bolt	
63	1860525M1	1	Plug	
64	377132X1	1	Grommet	
65	1670495M2	1	Pad	25X13X76
66	1698033M1	1	Pad	102X38X102
67	1698245M1	1	Seal	25,4X9,5X508
68	1676237M1	1	Case Assy	From Serial or Engine Number 02/81
69	353666X1	4	Screw Unc	From Serial or Engine Number 02/81
70	355617X1	4	Washer	From Serial or Engine Number 02/81
71	355564X1	4	Nut Unc	From Serial or Engine Number 02/81

(A)
OUTSIDE HOOD EXHAUST

Tylko dla użytku wewnętrznego

446

CABINE TRACTEUR	CABINE ET FENETRES
SCHLEPPERKABINE	KABINE UND SCHEIBEN
CABINA TRATTORE	CABINA E FINESTRINI
CABINA TRACTOR	CABINA Y VENTANAS
TRACTOR CAB	CAB AND WINDOWS

1760100 1

1 1760 001

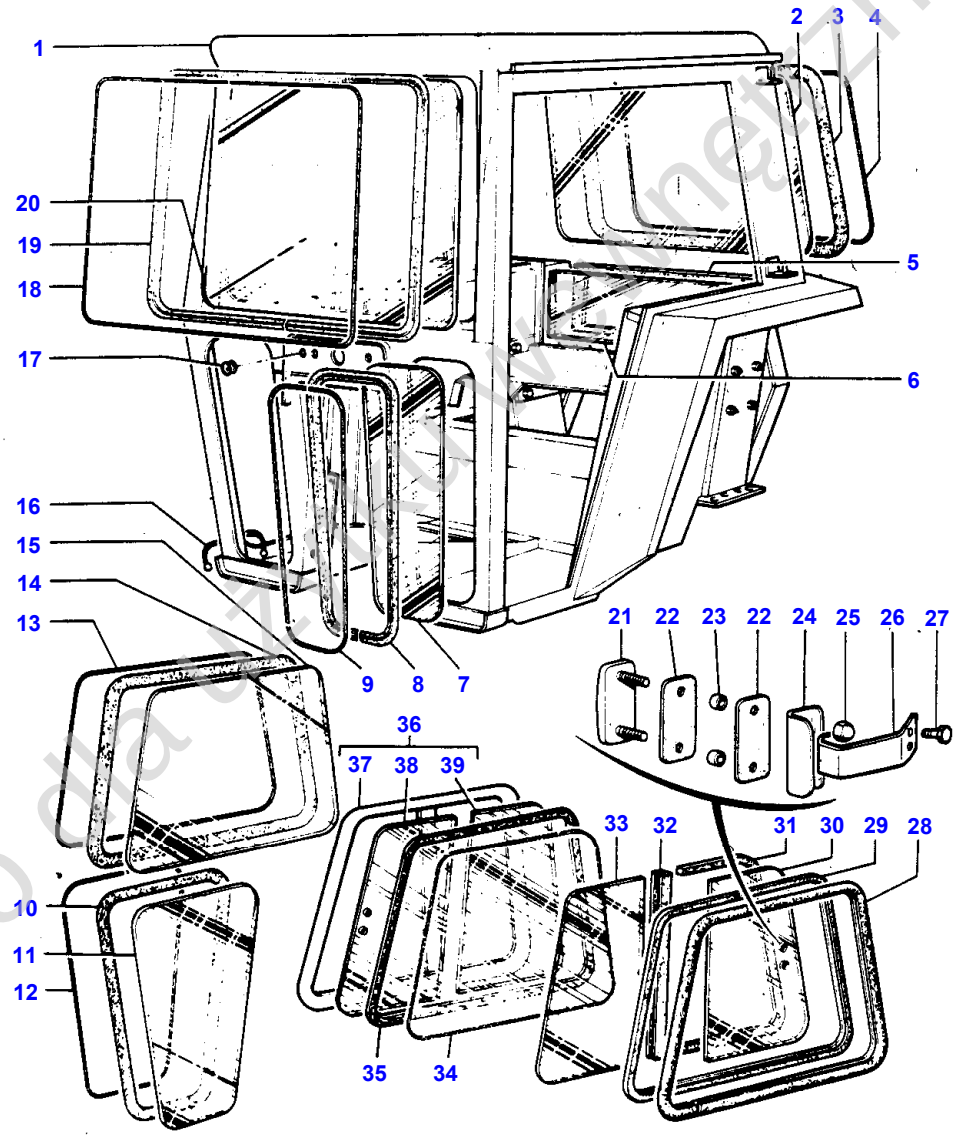

1-1760-001

Tylko dla użytku wewnętrznego

Item	Part Number	Qty	Description	Comments
1	1663698M92	1	Cab	1 DOOR
		1	Cab	(C) Q
2	1699450M1	1	Window	
	1665680M2	1	Glass Pane	(A) Q
3	1877221M2	1	Moulding	Alternative 1698197M1
	1698197M1	1	Moulding	Alternative 1877221M2
4	1877222M1	1	Strip	Alternative 1698184M1 Not serviced, order 917417M1 50M
4	1698184M1	1	Strip	Alternative 1877222M1 Not serviced, order 917417M1 50M
5	1875175M1	1	Moulding	Not serviced, order 917502M1-15M
6	1699452M1	1	Window	
	1665677M2	1	Window	(A) Q
7	1699453M1	2	Window	
	1665676M2	2	Glass Pane	(A) Q
8	1877238M2	2	Moulding	Alternative 1698199M1
	1698199M1	2	Moulding	Alternative 1877238M2
9	1877239M1	2	Strip	Alternative 1873966M91
	1698186M1	2	Strip	1877239M1 Alternative 1877239M1 50M
10	1877176M2	2	Moulding	Alternative 1698196M1
	1698196M1	2	Moulding	Alternative 1877176M2
11	1699454M1	2	Window	
	1665682M1	1	Window	(A) Q
12	1877177M1	2	Strip	Alternative 1698183M1 Not serviced, order 917417M1 50M
12	1698183M1	2	Strip	Alternative 1877177M1 Not serviced, order 917417M1 50M
13	1877174M1	1	Strip	Alternative 1698182M1 Q
	1877174M1	2	Strip	Alternative 1698182M1 Q Not serviced, order 917417M1 50M
13	1698182M1	1	Strip	Alternative 1877174M1 Q
	1698182M1	2	Strip	Alternative 1877174M1 Q Not serviced, order 917417M1 50M
13	1698201M1	2	Strip	(A) Q Alternative 1698219M1
13	1698219M1	2	Kit, Heater	(A) Q Alternative 1698201M1
14	1877173M2	1	Moulding	Alternative 1698195M1 Q
	1877173M2	2	Moulding	Alternative 1698195M1 Q
	1698195M1	1	Moulding	Alternative 1877173M2 Q
	1698195M1	2	Moulding	Alternative 1877173M2 Q
	1698200M1	2	Moulding	(A) Q Alternative 1698218M1
14	1698218M1	2	Profile	(A) Q Alternative 1698200M1
15	1699449M1	1	Window	2 DOORS
	1699449M1	2	Window	1 DOOR
	1697033M1	2	Window Assembly	(A) Q Alternative 1665683M2
15	1665683M2	1	Glass Pane	(A) Q
	1665683M2	2	Glass Pane	(A) Q Alternative 1697033M1
16		1	Earth Strap	See Page - Reference Number 50/14
17	1877664M1	2	Plug	1 DOOR
18	1668905M1	1	Kit, Heater	Alternative 1668903M1

Tylko dla użytku wewnętrznego

Item	Part Number	Qty	Description	Comments
				Not serviced, order 917417M1
				50M
18	1668903M1	1	Kit, Heater	Alternative 1668905M1
				Not serviced, order 917417M1
				50M
19	1668904M1	1	Profile	Alternative 1668902M1
19	1668902M1	1	Profile	Alternative 1668904M1
20	1699448M1	1	Window	
20	1670465M1	1	Windscreen	(A) Q
				Repairs and replaces 1668901M1
21	1875933M1	1	Bezel	2 DOORS
22	1875935M1	2	Gasket	2 DOORS
23	1875934M1	2	Spacer	2 DOORS
24	1875932M1	1	Bracket	2 DOORS
25	1877620M1	2	Nut	2 DOORS
26	1875931M2	1	Latch	2 DOORS
27	365927X1	2	Self Tap Screws	2 DOORS
28	1875897M2	1	Moulding	(B) Q
29	1875899M1	1	Channel	(B) Q
30	1875902M3	1	Window	(B) Q
31	1875898M2	1	Spacer	(B) Q
32	1875900M2	1	Strip	(B) Q
33	1875901M3	1	Window	(B) Q
34	1698200M1	1	Moulding	(B) Q
				Alternative 1698218M1
34	1698218M1	1	Profile	(B) Q
				Alternative 1698200M1
35	1698201M1	1	Strip	(B) Q
				Alternative 1698219M1
35	1698219M1	1	Kit, Heater	(B) Q
				Alternative 1698201M1
36	1698025M91	1	Window	(B) Q
38	1698161M1	1	Window	(36) Q
39	1698162M1	1	Window	(36) Q

(A)
TINTED GLASS

(B)
N0 34-35-36 ALTERNATIVE WITH N0 28-29-30-31-32-33

(C)
TO BE ADVISED

Tylko dla użytku wewnętrznego

450

CABINE TRACTEUR
SCHLEPPERKABINE
CABINA TRATTORE
CABINA TRACTOR
TRACTOR CAB

CABINE ET FENETRES
KABINE UND SCHEIBEN
CABINA E FINESTRINI
CABINA Y VENTANAS
CAB AND WINDOWS

17601003

1 1760 003

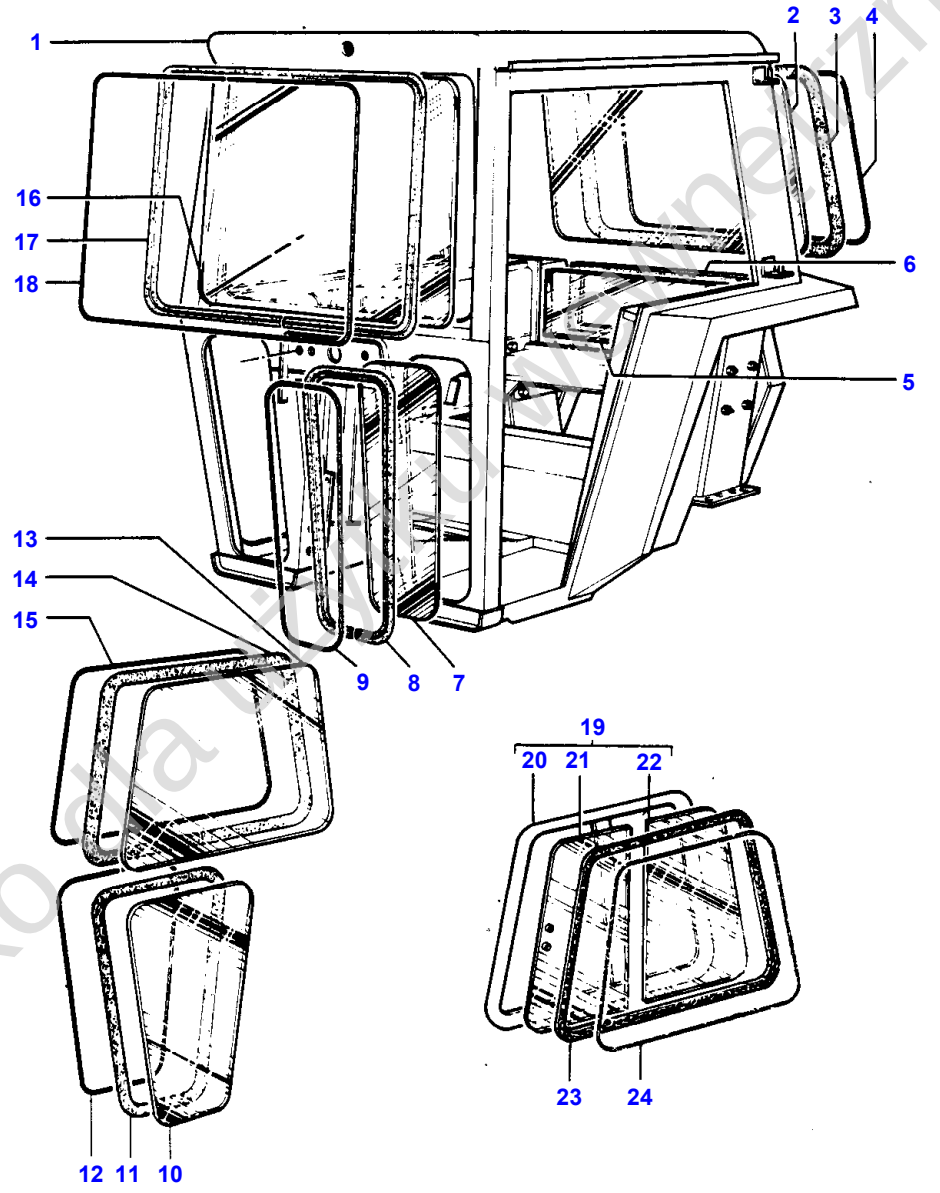

Tylko dla użytku wewnętrznego

Item	Part Number	Qty	Description	Comments
				CAB MARQUETTE TINTED WINDOW
1	917869M91	1	Cab	TYPE C Q
	917865M91	1	Cab	TYPE C Q
2	1665680M2	1	Glass Pane	
3	1698197M1	1	Moulding	
4	1698184M1	1	Strip	Not serviced, order 917417M2 50M
5	1665677M2	1	Window	
6	1875175M1	1	Moulding	Not serviced, order 917502M2 15M
7	1665676M2	2	Glass Pane	
8	1698199M1	2	Moulding	
9	1698186M1	2	Strip	Not serviced, order 917417M2 50M
10	1665682M1	2	Window	
11	1698196M1	2	Moulding	
12	1698183M1	2	Strip	Not serviced, order 917417M2 50M
13	1665683M1	1	Window	# HQ
	1665683M1	1	Window	# GQ
	917905M2	1	Window	# GQ For UK only or any text in English only
14	1698195M1	1	Moulding	# HQ
	1698195M1	1	Moulding	# HQ
	1698218M1	1	Profile	# GQ For UK only or any text in English only
15	1698182M1	1	Strip	Not serviced, order 917417M2 Q 50M Right Hand
15	1698182M1	1	Strip	Not serviced, order 917417M2 Q 50M Left Hand
16	1665681M1	1	Windscreen	
17	1698198M1	1	Moulding	
18	917410M2	1	Matting	
19	1665672M92	1	Window	# HQ
	1674108M91	1	Window	# GQ For France only or any text in French only
20		1	Window Assembly	(19) Q Not serviced, order REF NO 19
21		1	Window	Not serviced, order REF NO 19 Q
22		1	Window	Not serviced, order REF NO 19 Q
23	1698218M1	1	Profile	2 DOORS
24	1698182M1	1	Strip	Not serviced, order 917417M2 Q

Tylko dla użytku wewnętrznego

452

CABINE TRACTEUR
SCHLEPPERKABINE
CABINA TRATTORE
CABINA TRACTOR
TRACTOR CAB

17591014

1 1759 015

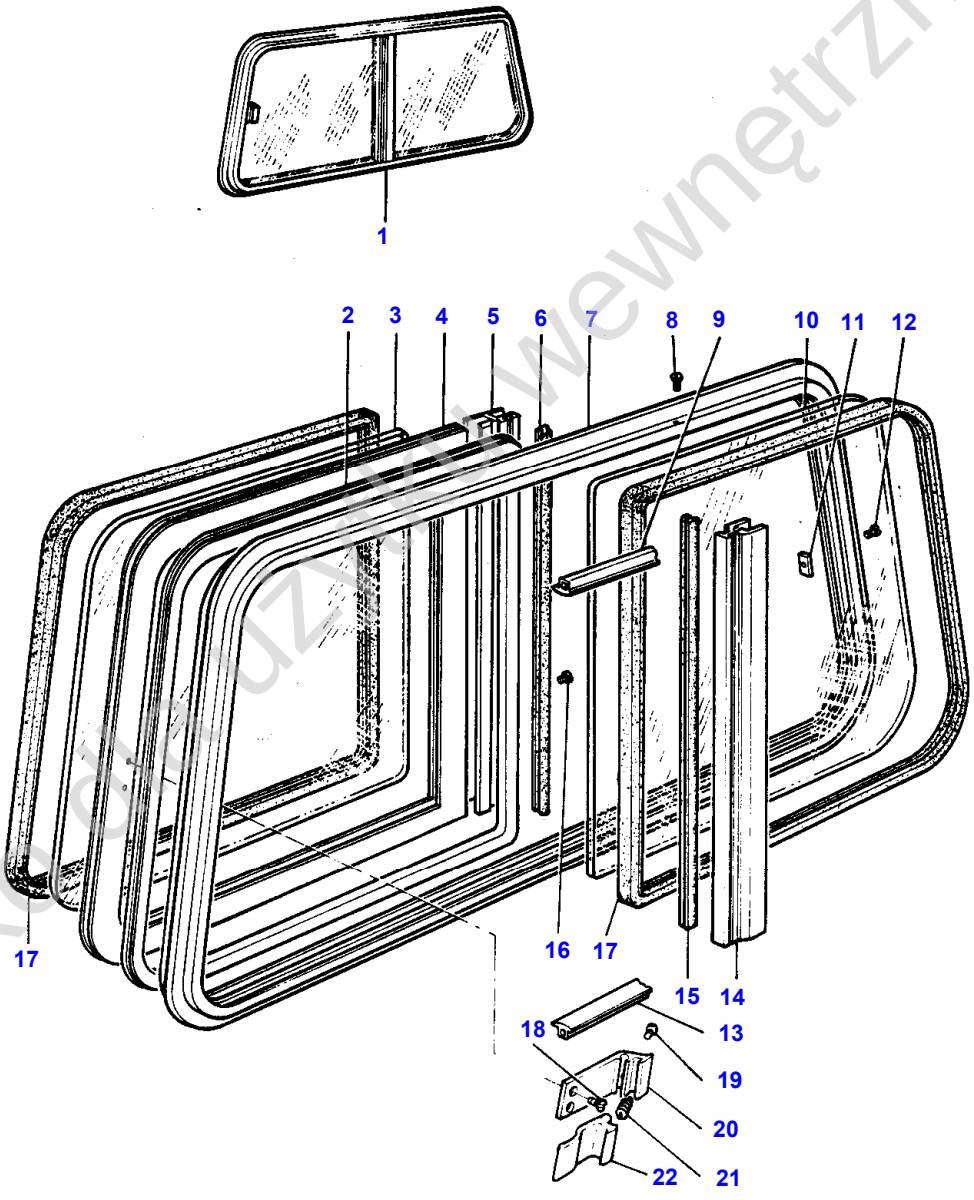

Tylko do użytku wewnętrznego

Item	Part Number	Qty	Description	Comments
				SLIDING GLASS
1	1665672M92	1	Window	Right Hand
	1674108M91	1	Window	Left Hand
2	1642306M1	1	Beading	(1)
3	1665674M2	1	Window	(1)
4		1	Frame	(1)
				Not serviced, order REF NO 1
5	1642304M1	1	Gasket	(1)
6	1642302M1	1	Gasket	(1)
7		1	Frame	(1)
				Not serviced, order REF NO 1
8	1642310M1	2	Screw	(1)
9	1642324M1	1	Beading	(1)
				Right Hand
9	1642309M1	1	Beading	(1)
				Left Hand
10	1665675M2	1	Window	(1)
11	1642298M1	X	Shim	(1)
12	1642297M1	4	Screw	(1)
13	1642325M1	1	Beading	(1)
				Right Hand
13	1642307M1	1	Beading	(1)
				Left Hand
14	1642299M1	1	Profile	(1)
15	1642300M1	1	Gasket	(1)
16	1642303M1	2	Screw	(1)
17	1642308M1	2	Gasket	(1)
				L 1950 MM
18	1642301M1	2	Screw	(1)
19	1642305M1	1	Screw	(1)
20	1634983M1	1	Handle	(1)
21	1634987M1	1	Spring	(1)
22	1634982M1	1	Handle	(1)

Tylko dla użytku wewnętrznego

454

CABINE TRACTEUR	PORTES
SCHLEPPERKABINE	KABINENTUER
CABINA TRATTORE	PORTA CABINA
CABINA TRACTOR	PUERTA
TRACTOR CAB	CAB DOOR

17701001

1 1770 001

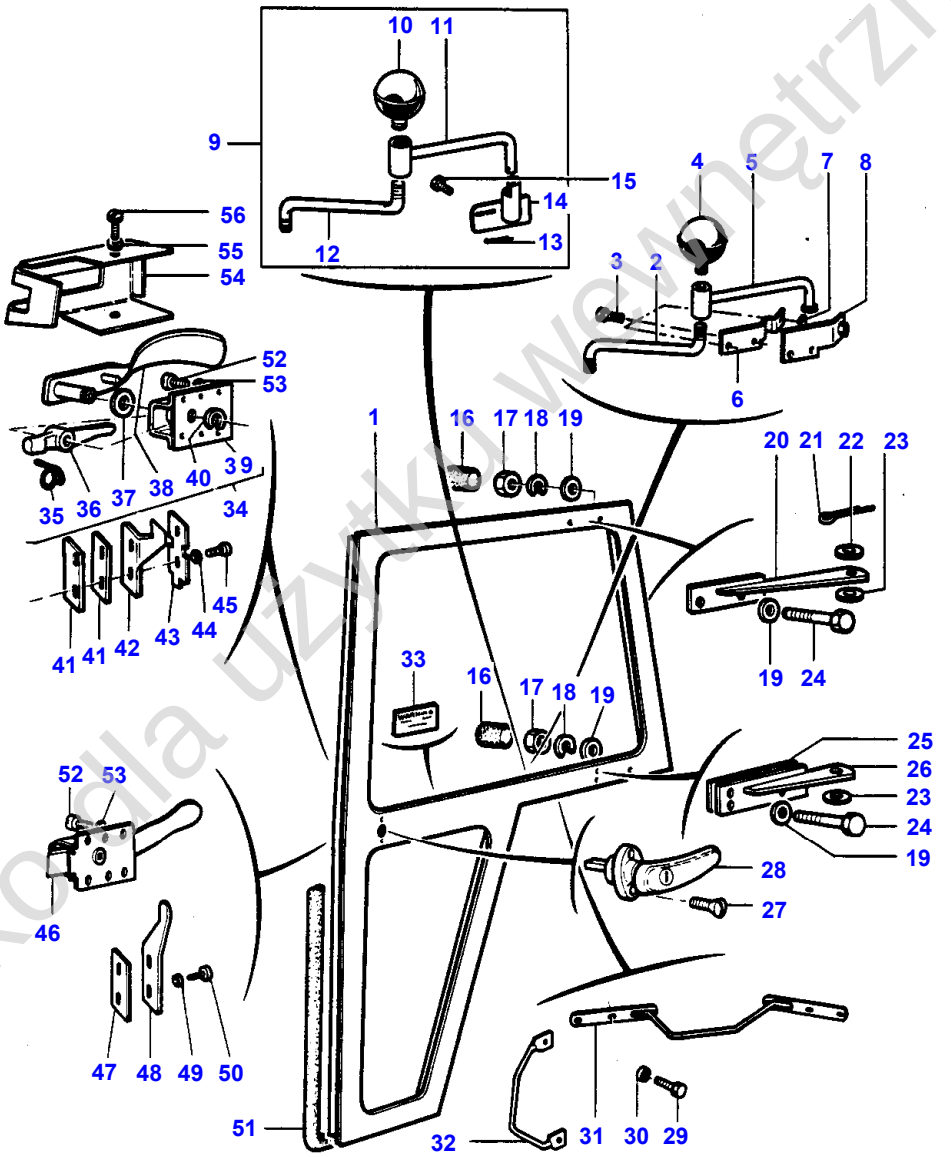

1-1770-001

Tylko dla użytku wewnętrznego

Item	Part Number	Qty	Description	Comments
	1670966M1	2	Reinforcement	(B)
	1670967M1	2	Reinforcement	(B)
1	1671016M91	1	Door	Repairs and replaces 1877140M98 Q Left Hand
1	1875740M97	1	Door	# HQ
	1671033M91	1	Gate	(A) Q Repairs and replaces 1697025M91
2	1877167M1	1	Arm	Up to Serial or Engine Number G311208
3	353669X1	3	Screw Unc	Up to Serial or Engine Number G311208
4	1877166M1	1	Ball	Up to Serial or Engine Number G311208
5	1877163M91	1	Arm	Up to Serial or Engine Number G 311208
6	1875181M1	1	Bracket	Up to Serial or Engine Number G311208
7	353754X1	X	Washer	Up to Serial or Engine Number G311208
8	1877168M91	1	Bracket	From Serial or Engine Number G311209
9	1667949M91	1	Pivot	Left Hand From Serial or Engine Number G311209 Not serviced, order REF 10A14
9	1667955M91	1	Pivot	# HQ From Serial or Engine Number G311209 Not serviced, order REF 10A14
10	1877166M1	1	Ball	(9) From Serial or Engine Number G311209
11	1667948M91	1	Arm	(9) From Serial or Engine Number G311209
12	1877167M1	1	Arm	(9) From Serial or Engine Number G311209
13	354048X1	1	Pin	(9) From Serial or Engine Number G311209
14	1667944M91	1	Pivot	(9) Left Hand From Serial or Engine Number G311209
14	1667954M91	1	Pivot	(9) Q Right Hand From Serial or Engine Number G311209
15	353669X1	2	Screw Unc	From Serial or Engine Number G311209
16	1664829M1	10	Cover	2 DOORS
	1664829M1	5	Cover	1 DOOR
17	355565X1	10	Nut Unc	2 DOORS
	355565X1	5	Nut Unc	1 DOOR
18	353446X1	10	Lock Washer	2 DOORS
	353446X1	5	Lock Washer	1 DOOR
19	353755X1	20	Washer	2 DOORS
	353755X1	10	Washer	1 DOOR
20	1877156M92	1	Hinge	Left Hand
	1875746M92	1	Hinge	# HQ
21	354078X1	2	Pin	2 DOORS
	354078X1	1	Pin	1 DOOR
22	353762X1	2	Washer	2 DOORS
	353762X1	1	Washer	1 DOOR
23	1877337M1	4	Washer	2 DOORS
	1877337M1	1	Washer	1 DOOR
24	354613X1	10	Bolt Unc	2 DOORS
	354613X1	5	Bolt Unc	1 DOOR
25	1873951M1	2	Plate	2 DOORS
	1873951M1	1	Plate	1 DOOR
26	1877157M92	1	Hinge	# GQ
	1877157M92	4	Hinge	# GQ
	1875743M92	1	Hinge	# HQ
27	357353X1	4	Screw Unc	2 DOORS
	357353X1	2	Screw Unc	1 DOOR
28	1877159M92	2	Handle	2 DOORS
	1877159M92	1	Handle	1 DOOR
29	353676X1	12	Screw Unc	# 1Q
	353676X1	6	Screw Unc	# 1Q

Tylko do użytku wewnętrznego

Item	Part Number	Qty	Description	Comments
30	353755X1	12	Washer	# 1Q
30	353755X1	6	Washer	# 1Q
31	1670961M92	1	Handle	Left Hand From Serial or Engine Number
31	1670962M92	1	Handle	# GQ From Serial or Engine Number
32	1873836M1	1	Guard	# HQ Up to Serial or Engine Number
32	1873709M1	1	Guard	Left Hand Up to Serial or Engine Number
33	1660936M1	1	Decal	For UK only or any text in English only
34	1877857M97	1	Hasp	Left Hand
34	1875785M95	1	Hasp	# HQ
35	1873079M1	1	Spring	(34)
36	1875806M3	1	Plate	(34) Q
36	1875129M3	1	Plate	(34)
37	1875131M1	1	Washer	(34)
38	1873893M93	1	Handle	(34) Q Right Hand Alternative 1873043M3
38	1873043M3	1	Handle	(34) Q Right Hand Alternative 1873893M93
38	1873042M3	1	Handle	(34) Left Hand Alternative 1873891M93
38	1873891M93	1	Handle	(34) Left Hand Alternative 1873042M3
39		1	Housing	(34) Not serviced, order REF.34
40	22327X	1	Circlip	(34)
41	1874978M1	X	Shim	Thickness 3MM
41	1874979M1	X	Shim	Thickness 0,8MM
42	1874968M4	1	Hasp	Left Hand
42	1874976M4	1	Plate	# HQ
43	1666708M1	1	Plate	# 2Q
44	353754X1	X	Washer	(C)
45	353667X1	4	Screw Unc	(C) Q
45	353667X1	2	Screw Unc	(C) Q
45	365052X1	4	Screw	(D) Q
45	365052X1	2	Screw	(D) Q
46	1670819M91	1	Latch	# GQ
47	1671061M1	1	Pad	1 DOOR
48	1670957M1	1	Plate	1 DOOR
49	353755X1	2	Washer	1 DOOR
50	353678X1	2	Screw Unc	1 DOOR
51	1877171M2	2	Gasket	Not serviced, order 917418M2 Q
51	1877171M2	1	Gasket	Not serviced, order 917418M2 Q 25M
52	357446X1	6	Screw Unc	1 DOOR
53	1441100X1	6	Washer	1 DOOR
54	1873018M4	1	Plate	Left Hand
54	1873019M4	1	Plate	# HQ
55	339588X1	6	Washer	2 DOORS
55	339588X1	3	Washer	1 DOOR
56	353989X1	6	Screw Unc	2 DOORS
56	353989X1	3	Screw Unc	1 DOOR

(A)
TEINTED GLASS

(B)
NOT ILLUSTRATED

(C)

Tylko do użytku wewnętrznego

Item	Part Number	Qty	Description	Comments
				NO 44-45 ALTERNATIVE WITH NO 45(D)
				(D) NO 45(D) ALTERNATIVE WITH NO 44-45

Tylko dla użytku wewnętrznego

462

CABINE TRACTEUR	PORTES
SCHLEPPERKABINE	KABINENTUER
CABINA TRATTORE	PORTA CABINA
CABINA TRACTOR	PUERTA
TRACTOR CAB	CAB DOOR

17701006

1 1770 005

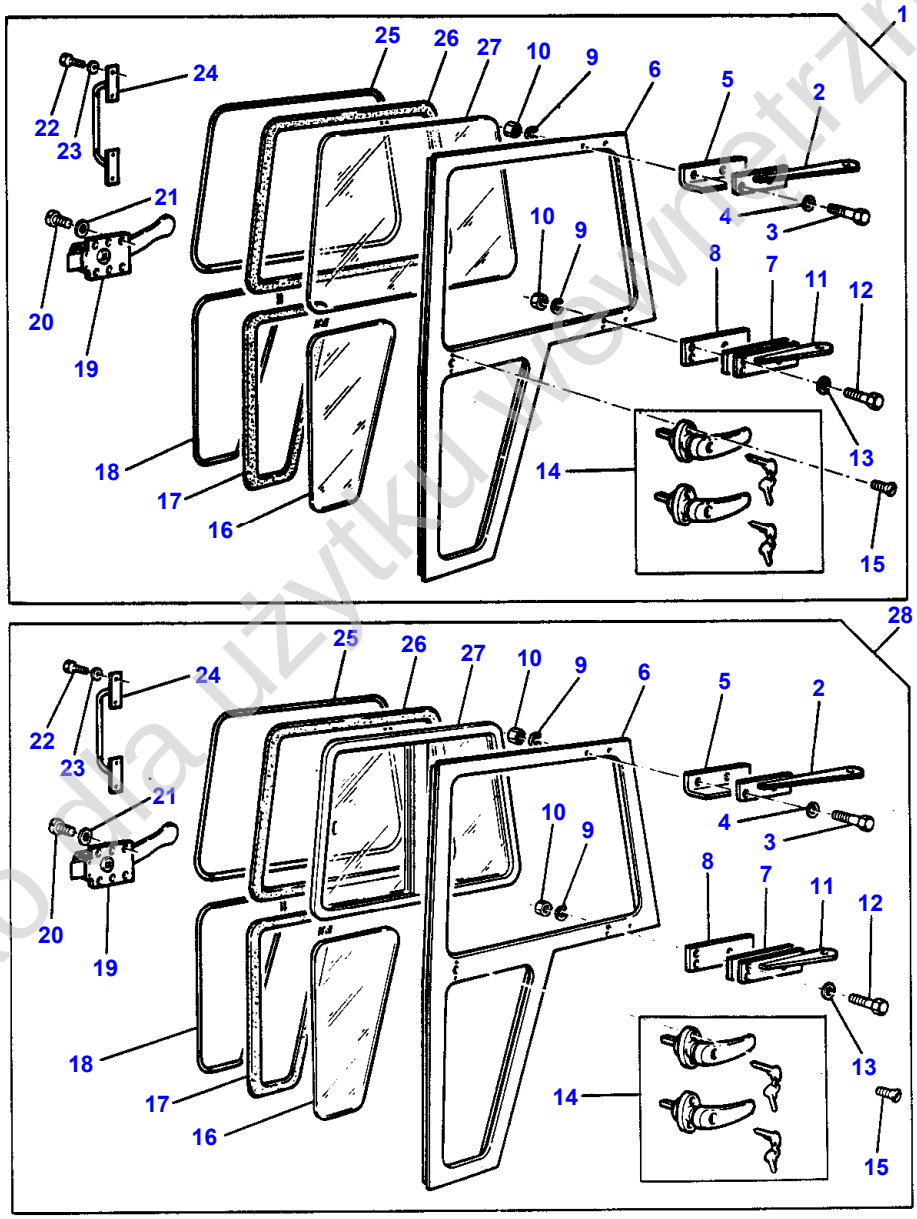

1-1770-005

Tylko do użytku prywatnego

Item	Part Number	Qty	Description	Comments
				KIT LEFT- CAB MARQUETTE TINTED WINDOW
1	917961M91	1	Gate	NO 2 A 28
2	1877156M92	1	Hinge	
3	354613X1	2	Bolt Unc	
4	353755X1	2	Washer	
	353446X1	2	Lock Washer	
5	1670966M1	1	Reinforcement	
6		1	Gate	Not serviced, order REF NO 1
		1	Gate	Not serviced, order REF NO 28
7	1670967M1	1	Reinforcement	
8	917565M1	1	Gasket	
9	353446X1	5	Lock Washer	
10	355565X1	5	Nut Unc	
11	1877156M92	1	Hinge	
12	354613X1	5	Bolt Unc	
13	353755X1	5	Washer	
14	1667203M92	1	Handle	
15	357353X1	2	Screw Unc	
16	1665682M1	1	Window	
17	1698196M1	1	Moulding	
18	1698183M1	1	Strip	Not serviced, order 917417M2
19	1670819M92	1	Latch	
20	357446X1	6	Screw Unc	
21	1441100X1	6	Washer	
22	353676X1	6	Screw Unc	
23	353755X1	6	Washer	
24	1670961M92	1	Handle	
25	1698182M1	1	Strip	Not serviced, order 917417M2
26	1698218M1	1	Profile	
27	917905M2	1	Window	(1)
	1674108M91	1	Window	(28)
				See Page - Reference Number 452/
28	917962M91	1	Gate	NO 1 A 27

Tylko dla użytku wewnętrznego

464

CABINE TRACTEUR	PORTES
SCHLEPPERKABINE	KABINENTUER
CABINA TRATTORE	PORTA CABINA
CABINA TRACTOR	PUERTA
TRACTOR CAB	CAB DOOR

17701007

1 1770 006

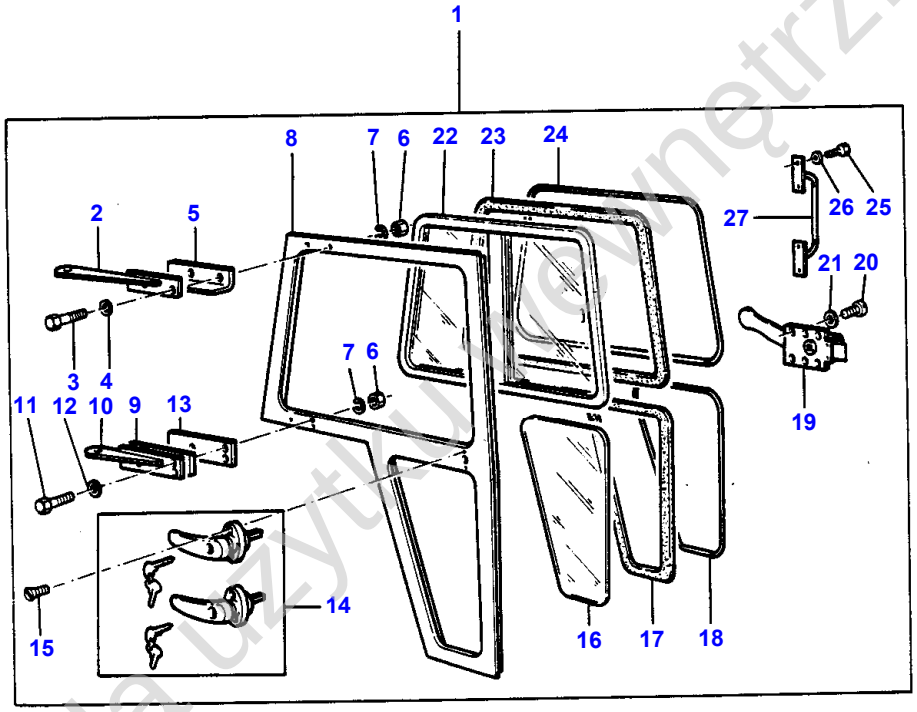

1 - 1770 - 006

Tylko dla użytku wewnętrznego

Item	Part Number	Qty	Description	Comments
				KIT RIGHT- CAB MARQUETTE TINTED WINDOW
1	917960M91	1	Gate	
2	1875746M92	1	Hinge	(1)
3	354613X1	2	Bolt Unc	(1)
4	353755X1	2	Washer	(1)
5	1670966M1	1	Reinforcement	(1)
6	355565X1	5	Nut Unc	(1)
7	353755X1	5	Washer	(1)
8		1	Gate	(1)
				Not serviced, order REF NO 1
9	1670967M1	1	Reinforcement	(1)
10	1875743M92	1	Hinge	(1)
11	354613X1	3	Bolt Unc	(1)
12	353755X1	3	Washer	(1)
13	917565M1	1	Gasket	(1)
14	1667203M92	1	Handle	(1)
15	357353X1	2	Screw Unc	(1)
16	1665682M1	1	Window	(1)
17	1698196M1	1	Moulding	(1)
18	1698183M1	1	Strip	(1)
				Not serviced, order 917417M2
19	1670820M92	1	Latch	(1)
20	357692X1	6	Screw	(1)
21	1441100X1	6	Washer	(1)
22	1665672M92	1	Window	(1)
				See Page - Reference Number 452/
23	1698218M1	1	Profile	(1)
24	1698182M1	1	Strip	(1)
				Not serviced, order 917417M2
25	353676X1	6	Screw Unc	(1)
26	353755X1	6	Washer	(1)
27	1670962M92	1	Handle	(1)

Tylko dla użytku wewnętrznego

466

CABINE TRACTEUR	FENETRES
SCHLEPPERKABINE	SCHEIBEN
CABINA TRATTORE	FINESTRINI
CABINA TRACTOR	VENTANAS
TRACTOR CAB	WINDOWS

1781001

1 1781 001

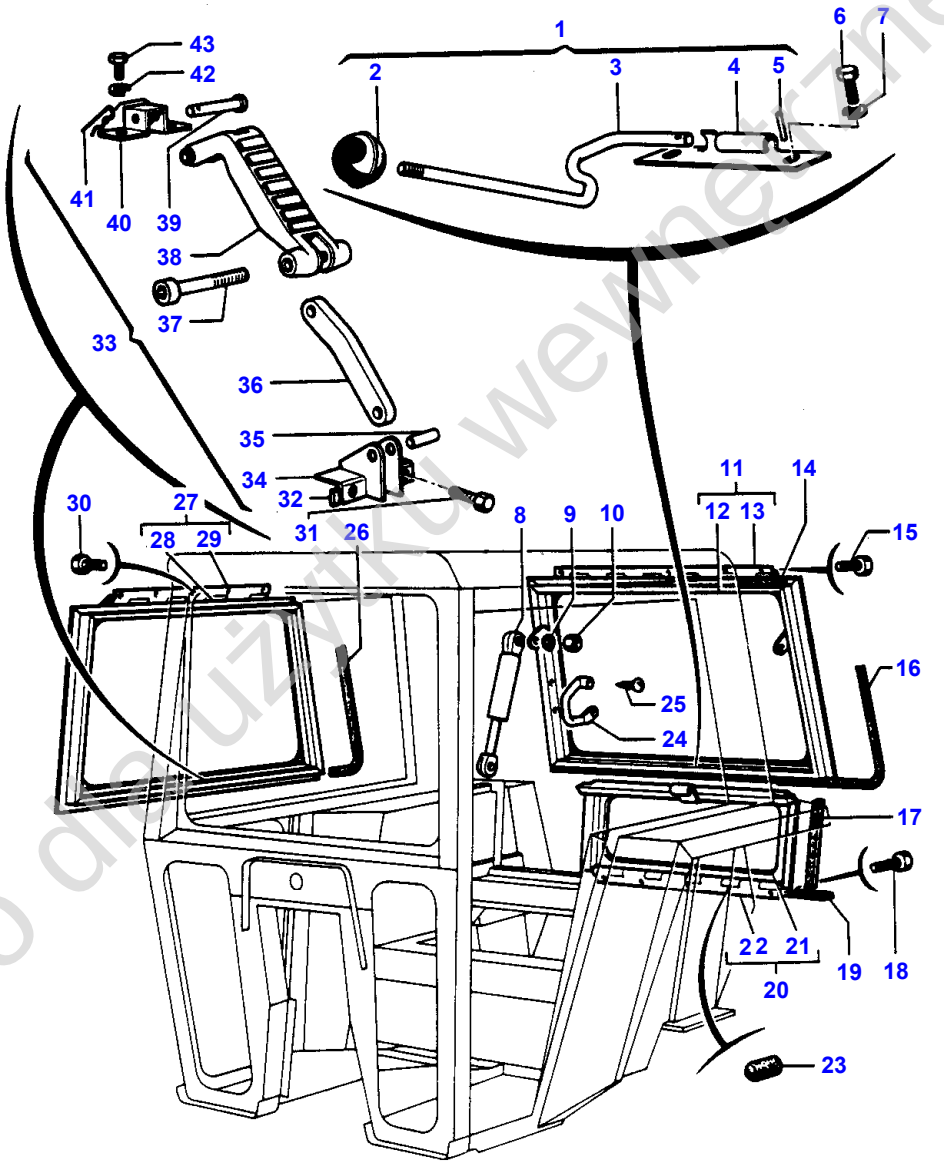

1-1781-001

Tylko do użytku wewnętrznego

Item	Part Number	Qty	Description	Comments
1	1875135M92	1	Latch	
2	1875133M1	1	Knob	(1)
3	1875134M1	1	Stem	(1)
4	1875132M2	1	Pivot	(1)
5	16708X	1	Pin	(1) Alternative 763343M1
5	763343M1	1	Roll Pin	(1) Alternative 364042X1
5	364042X1	1	Pin	(1) Alternative 16708X
6	353665X1	2	Screw Unc	
7	353441X1	2	Lock Washer	
8	1877218M92	2	Ram	Alternative 1873903M91
	1873903M91	2	Cylinder	Alternative 1877218M92
9	1440313X1	4	Washer	
10	1440086X1	2	Nut Metric	
11	1877199M91	1	Window	
12		1	Window Assembly	(11) Not serviced, order 1877199M91
13	1877209M91	1	Hinge	(11) Alternative 1871992M91
13	1871992M91	1	Hinge	(11) Alternative 1877209M91
14	1873142M3	1	Gasket	
15	365007X1	5	Self Tap Screws	
16	1877219M2	1	Gasket	(A) Not serviced, order 917418M1 25M
17	1877233M2	2	Seal	Alternative 917503M1
	917503M1	2	Seal	Alternative 1877233M2
18	353666X1	5	Screw Unc	
19	1875183M2	1	Strip	
20	1877223M91	1	Frame Assy	
21		1	Window Assembly	(20) Not serviced, order 1877223M91
22	1871995M91	1	Hinge	(20) Alternative 1871994M91
22	1871994M91	1	Hinge	(20) Alternative 1871995M91
23	1664829M1	5	Cover	
24	1876892M2	1	Handle	
25	365775X1	2	Screw	
26	1877198M2	1	Gasket	Not serviced, order 917418M1 25M
27	1877855M92	1	Window Assembly	# HQ
28		1	Window Assembly	(27) Q Not serviced, order REF N027
29	1875971M91	1	Hinge	(27) Q Alternative 1871993M91
29	1871993M91	1	Hinge	(27) Q Alternative 1875971M91
30	365007X1	5	Self Tap Screws	1 DOOR
31	365007X1	2	Self Tap Screws	1 DOOR
32	1874490M1	X	Plate	1 DOOR
33	1875793M94	1	Latch	1 DOOR
34	1875792M91	1	Bracket	(33) Q
35	357149X1	1	Pin	(33) Q
36	1875790M2	1	Toggle	(33) Q
37	1698607M1	1	Bolt	(33) Q
38	1875791M3	1	Handle	(33) Q
39	195633M1	1	Pin	(33) Q
40	1618990M92	1	Bracket	(33) Q
41	376804X1	1	Hair Pin	(33) Q
42	353441X1	2	Lock Washer	1 DOOR

Tylko dla użytku wewnętrznego

Item	Part Number	Qty	Description	Comments
43	353665X1	2	Screw Unc	1 DOOR
				(A) TEINTED GLASS

Tylko dla użytku wewnętrznego

470

CABINE TRACTEUR	FENETRES
SCHLEPPERKABINE	SCHEIBEN
CABINA TRATTORE	FINESTRINI
CABINA TRACTOR	VENTANAS
TRACTOR CAB	WINDOWS

1780008

1 1780 008

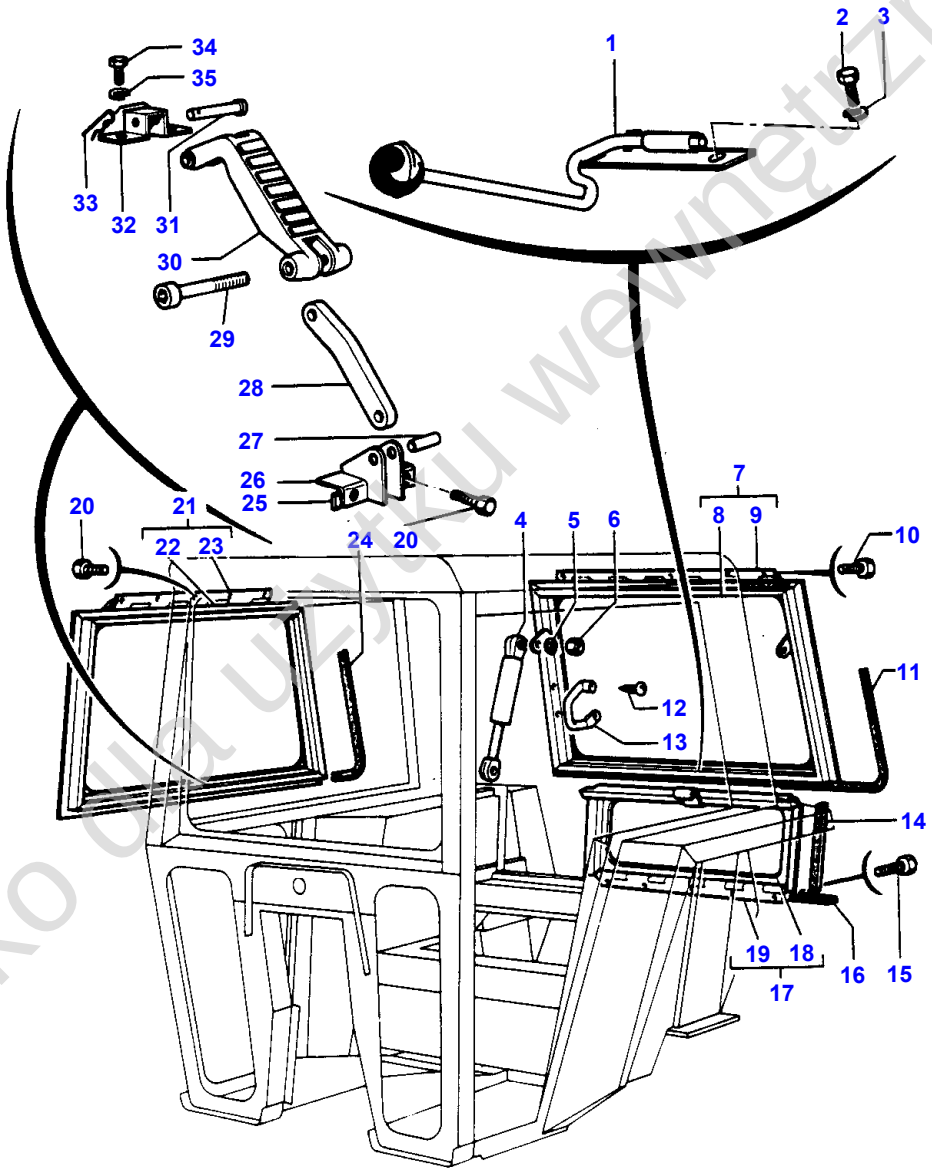

1-1780-008

Tylko do użytku wewnętrznego

Item	Part Number	Qty	Description	Comments
				CAB MARQUETTE TINTED WINDOW
1	1875135M92	1	Latch	
2	353665X1	2	Screw Unc	
3	353441X1	2	Lock Washer	
4	1873903M91	2	Cylinder	
5	1440313X1	4	Washer	
6	1440086X1	2	Nut Metric	
7	917701M91	1	Window Assembly	
8		1	Window Assembly	(7)
				Not serviced, order REF NO 7
9	1871992M91	1	Hinge	(7)
10	365007X1	5	Self Tap Screws	
11	917567M1	1	Gasket	
12	365775X1	2	Screw	
13	1876892M2	1	Handle	
14	917503M1	2	Seal	
15	353668X1	5	Screw Unc	
16	1875183M2	1	Strip	
17	1877223M91	1	Frame Assy	
18		1	Window Assembly	(17)
				Not serviced, order REF NO 17
19	1871994M91	1	Hinge	(17)
20	353665X1	7	Screw Unc	1 DOOR
	353665X1	2	Screw Unc	2 DOORS
21	917699M91	1	Window Assembly	# HQ
22		1	Window Assembly	(21) Q
				Not serviced, order REF NO 21
23	1871993M91	1	Hinge	(21) Q
24	917566M1	1	Gasket	1 DOOR
25	1874490M1	2	Plate	1 DOOR
26	1875792M91	1	Bracket	1 DOOR
27	357149X1	1	Pin	1 DOOR
28	3038204M1	1	Lever	1 DOOR
29	357844X1	1	Screw Unc	1 DOOR
30	1875791M3	1	Handle	1 DOOR
31	195633M1	1	Pin	1 DOOR
32	1618990M92	1	Bracket	1 DOOR
	1699162M91	1	Bearer	(A)
33	359020X1	1	Pin	1 DOOR
34	353665X1	2	Screw Unc	
35	353441X1	2	Lock Washer	
	1617714M1	2	Washer	(A) Q
	353566X1	3	Bolt Unf	(A)
	0920054	3	Washer	(A)
				(A)
				NOT ILLUSTRATED

Tylko dla użytku wewnętrznego

472

CABINE TRACTEUR
SCHLEPPERKABINE
CABINA TRATTORE
CABINA TRACTOR
TRACTOR CAB

FIXATION CABINE ET MARCHEPIED
BEFESTIGUNG UND AUFSTIEG
MONTAGGIO CABINA E GRADINI
MONTANTES Y ESTRIBO
CAB MOUNTINGS AND STEP / STAIRS

1805 1004

1 1805 004

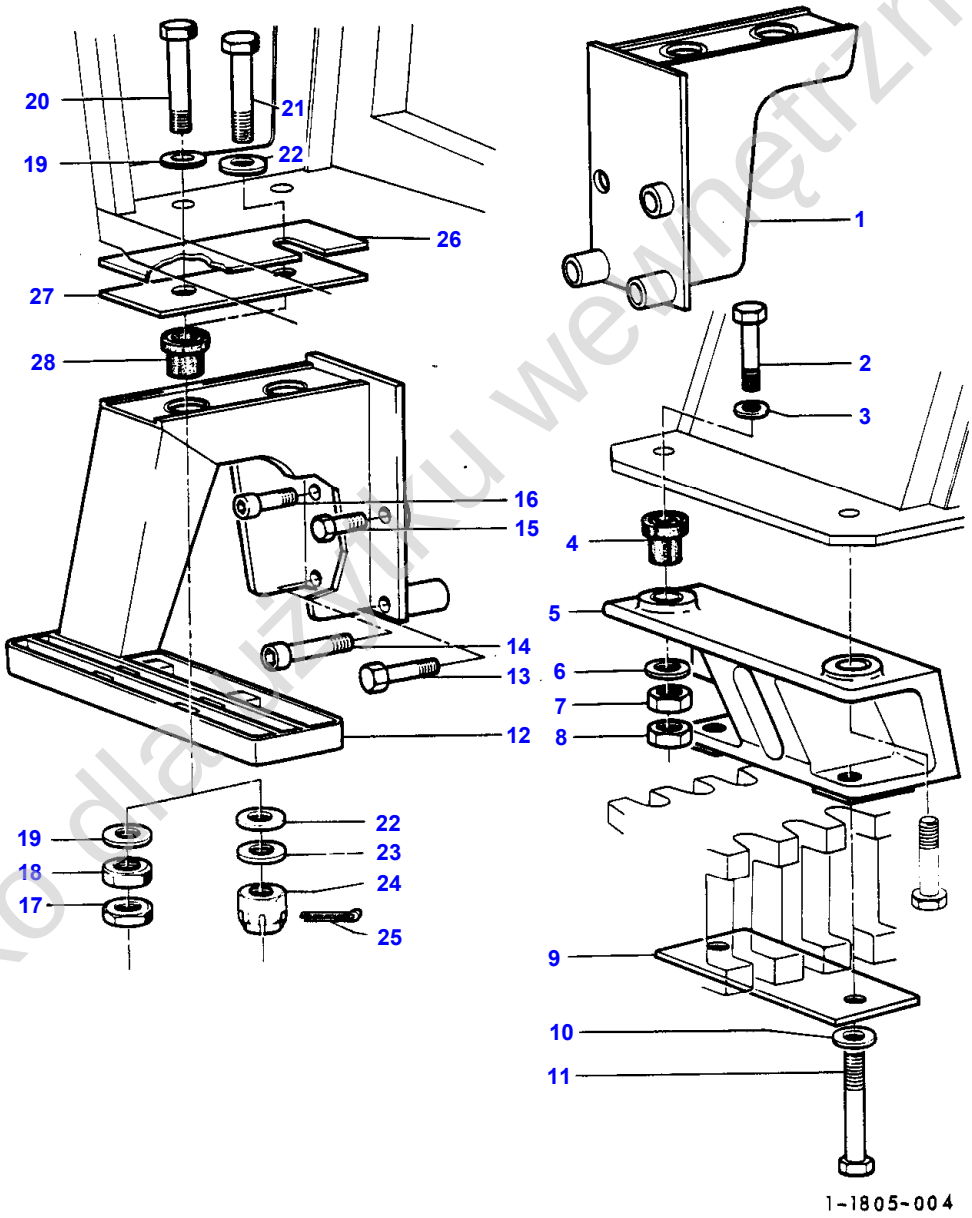

Tylko dla użytku wewnętrznego

Item	Part Number	Qty	Description	Comments
1	1613176M95	1	Support	# HQ Alternative 1613325M94
1	1613325M94	1	Bearer	# HQ Alternative 1613176M95
2	354292X1	4	Bolt Unc	
3	355623X1	4	Washer	
4	1612171M1	4	Shock Absorber	
5	1612226M3	1	Mounting	Left Hand
	1612227M3	1	Mounting	Right Hand
6	1612089M1	4	Washer	
7	375099X1	4	Nut Unc	
8	375112X1	4	Nut Unc	
9	1612091M1	2	Plate	
10	353774X1	8	Washer	(C)
	353774X1	4	Washer	
11	357272X1	4	Bolt Unc	For Germany only or any text in German only For France only or any text in French only
12	1873563M95	1	Stair	(A) Q Left Hand Alternative 1873561M93
12	1873561M93	1	Step	(A) Q Left Hand Alternative 1873563M95
12	1698057M93	1	Stair	(B) Q Right Hand
12	1664715M91	1	Stair	(B) Q Left Hand
13	354292X1	2	Bolt Unc	
14	1612084M1	2	Bolt	Alternative 1699698M1
	1699698M1	2	Screw	Alternative 1612084M1
15	353728X1	2	Bolt Unc	
16	360862X1	2	Screw Unc	Alternative 1699697M1
	1699697M1	2	Bolt	Alternative 360862M1
17	375111X1	4	Nut Unc	(E)
18	358649X1	4	Nut	(E) Alternative 376456X1
18	376456X1	4	Locknut	(E) Alternative 358649X1
19	1877701M1	8	Spacer	(E)
20	354671X1	2	Screw	(E)
21	1699774M1	2	Bolt	(E) Right Hand
21	354671X1	2	Screw	(E) Left Hand
21	1699786M1	2	Bolt	(E) Left Hand
22	1877701M1	8	Spacer	(E)
23	1699767M1	X	Shim	(E) Thickness 0,8MM
23	1699768M1	X	Shim	(E) Thickness 3MM
24	1699755M1	4	Nut	(E)
25	354061X1	4	Pin	(E)
26	1699787M1	X	Shim	Thickness 0,8MM Left Hand
26	1699788M1	X	Shim	Thickness 1,5MM Left Hand
26	1699789M1	X	Shim	Thickness 2,5MM Left Hand
26	1699790M1	X	Shim	Thickness 3MM Left Hand
27	1612177M1	2	Plate	
28	1877407M1	4	Vibration Mount	

Tylko dla użytku wewnętrznego

Item	Part Number	Qty	Description	Comments
				(A) 1 STEP
				(B) 2 STEPS
				(C) WITH HYD. ASSISTOR RAM AND LINK STABILIZER
				(E) NO 17 TO 20 ALTERNATIVE WITH NO 21 TO 25

Tylko dla użytku wewnętrznego

476

CABINE TRACTEUR	FIXATION CABINE ET MARCHEPIED
SCHLEPPERKABINE	BEFESTIGUNG UND AUFSTIEG
CABINA TRATTORE	MONTAGGIO CABINA E GRADINI
CABINA TRACTOR	MONTANTES Y ESTRIBO
TRACTOR CAB	CAB MOUNTINGS AND STEP / STAIRS

1805 1000

1 1805 013

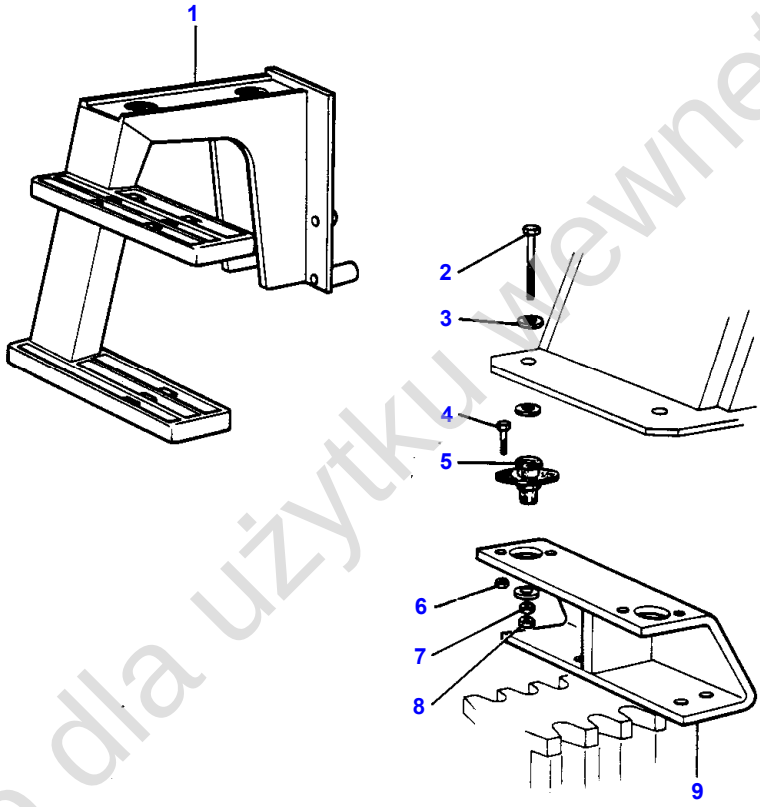

1-1805-013

Tylko dla użytku wewnętrznego

Item	Part Number	Qty	Description	Comments
				2 GATES
1	1678806M91	1	Stair	Left Hand
	1678805M91	1	Stair	Right Hand
2	353606X1	2	Bolt Unf	
	354552X1	4	Bolt	
3	510776M1	18	Washer	
4	353540X1	12	Screw Unf	
5	1676655M1	6	Mounting	
6	353431X1	12	Nut Unf	
7	353437X1	6	Nut Unf	
8	353438X1	6	Nut Unf	
9	1676634M91	1	Mounting	Left Hand
	1676635M91	1	Mounting	Right Hand

Tylko dla użytku wewnętrznego

478

CABINE TRACTEUR
SCHLEPPERKABINE
CABINA TRATTORE
CABINA TRACTOR
TRACTOR CAB

PANNEAUX ARRIERE
HINTERE KABINENVERKLEIDUNG
PANNELLI POSTERIORICABINA
PANELES TRASEROS
REAR PANELS CAB

18161001

1 1816 008

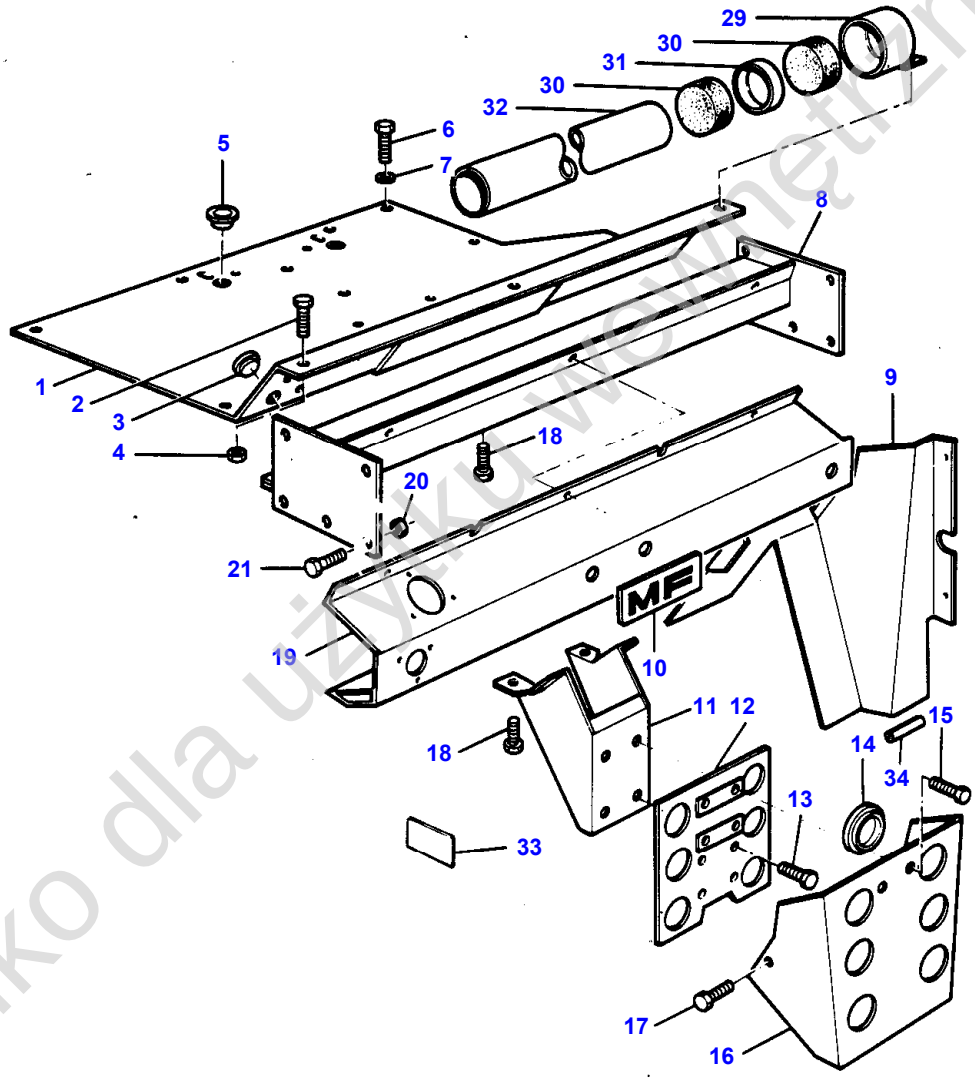

1-1816-008

Tylko dla użytku wewnętrznego

Item	Part Number	Qty	Description	Comments
1	1699177M96	1	Panel	
	1666199M92	1	Panel	# AQ
2	376331X1	3	Bolt Unc	
3	1699925M1	3	Plug	
4	355898X1	3	Nut	
5	1699192M1	4	Plug	
	1699193M1	X	Plug	
6	365026X1	7	Self Tap Screws	
7	1699180M1	10	Washer	
8	1877129M96	1	Beam	Alternative 1660048M95 Q
	1660048M95	1	Brace	Alternative 1877129M96
9	1699438M94	1	Panel	Left Hand
	1699439M94	1	Panel	Right Hand
10	1873643M1	1	Emblem	
11	1699245M91	1	Channel	
12	1698021M93	1	Plate	
13	365008X1	2	Screw Unc	
14	1671689M1	6	Plug	
15	365054X1	2	Screw	
16	1665262M92	1	Panel	
17	365007X1	16	Self Tap Screws	
18	353678X1	4	Screw Unc	
19	1699446M94	1	Panel	
20	375098X1	6	Nut Unc	
21	354653X1	6	Screw	
	354659X1	10	Bolt Unc	For Germany only or any text in German only
29	1665982M92	2	Tube	
30	1698337M1	4	Foam	
31	1698331M1	2	Helmet	
32	1698330M1	1	Tube	
33	1617728M1	1	Decal	
34	1671216M1	1	Moulding	

Tylko dla użytku wewnętrznego

480

CARROSSERIE	EXTENSIONS D'AILES
VERKLEIDUNG	KOTFLUEGELVERLAENGERUNG
CARROZZERIA	PROLUNGHE PARAFANGHI
EMPLANCHADOS	PROLONG GUARDABARRO
SHEET METAL	FENDER EXTENSION

17311002

1 1731 006

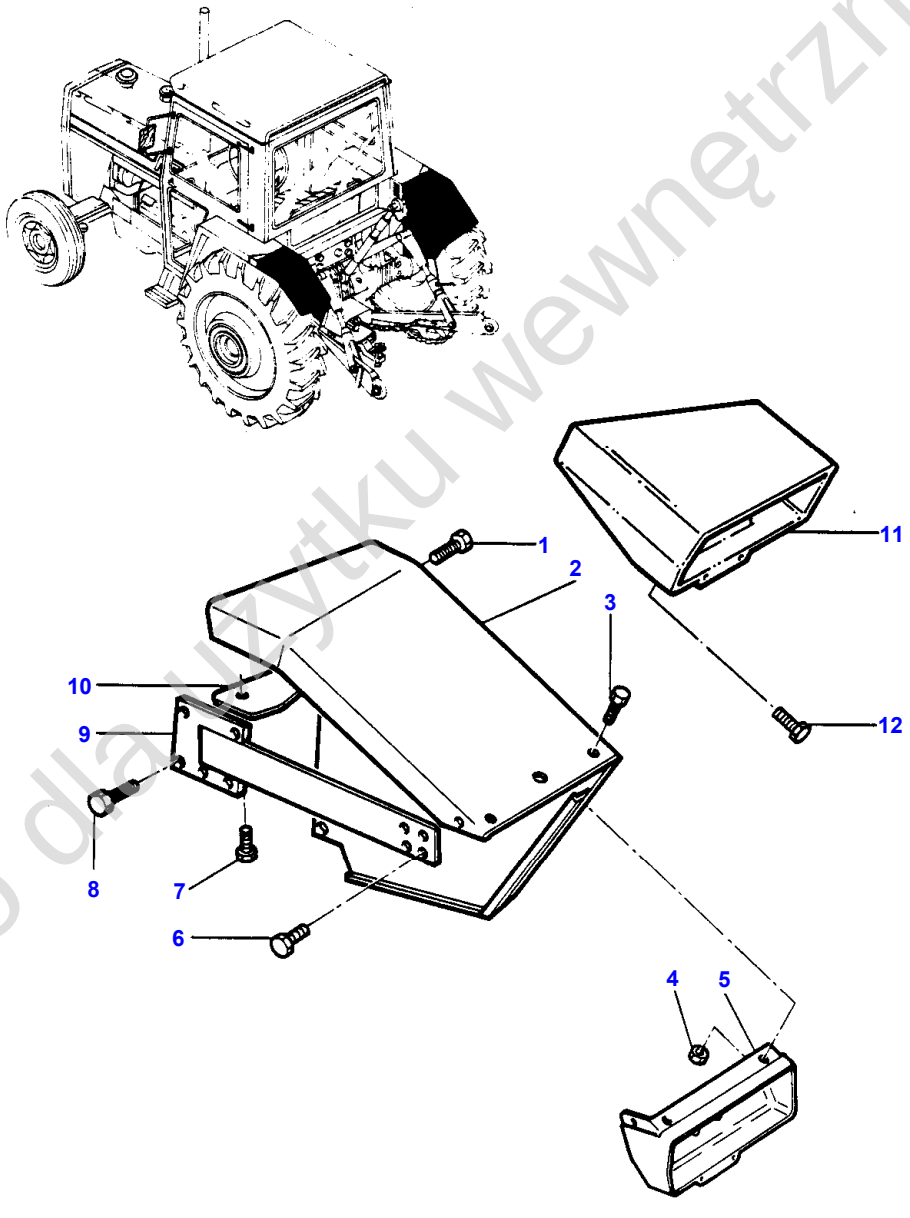

Tylko do użytku wewnętrznego

Item	Part Number	Qty	Description	Comments
1	365007X1	4	Self Tap Screws	
2	917917M91	1	Extension	Left Hand From Serial or Engine Number NO Z 150067 (A)
2	1699923M92	1	Extension	Left Hand For Germany only or any text in German only
2	917918M91	1	Extension	Right Hand From Serial or Engine Number NO Z 150067 (A)
2	1699924M92	1	Extension	Right Hand For Germany only or any text in German only
3	365007X1	8	Self Tap Screws	
4	355564X1	8	Nut Unc	
5	1699877M3	1	Housing	Left Hand
	1699911M3	1	Housing	Right Hand
6	354264X1	8	Bolt Unc	
7	365007X1	8	Self Tap Screws	
8	354659X1	10	Bolt Unc	
9	1699917M91	1	Reinforcement	Left Hand
	1699916M91	1	Reinforcement	Right Hand
10	1699921M91	1	Panel	Left Hand
	1699932M91	1	Panel	Right Hand
11	1699949M5	1	Housing	(B) Left Hand For Italy only or any text in Italian only
11	1699953M5	1	Housing	(B) Right Hand For Italy only or any text in Italian only
11	1699013M6	1	Housing	(B) Left Hand
11	1699014M6	1	Housing	(B) Right Hand
12	365020X1	6	Bolt	

(A)
WITH FENDER EXTENSION

(B)
WITHOUT FENDER EXTENSION

Tylko dla użytku wewnętrznego

482

ESSUIE GLACES
SCHEIBENWISCHER
TERGICRISTALLO
LIMPIA PARABRISAS
WINDSCREEN WIPER

1880 1002

1 1880 002

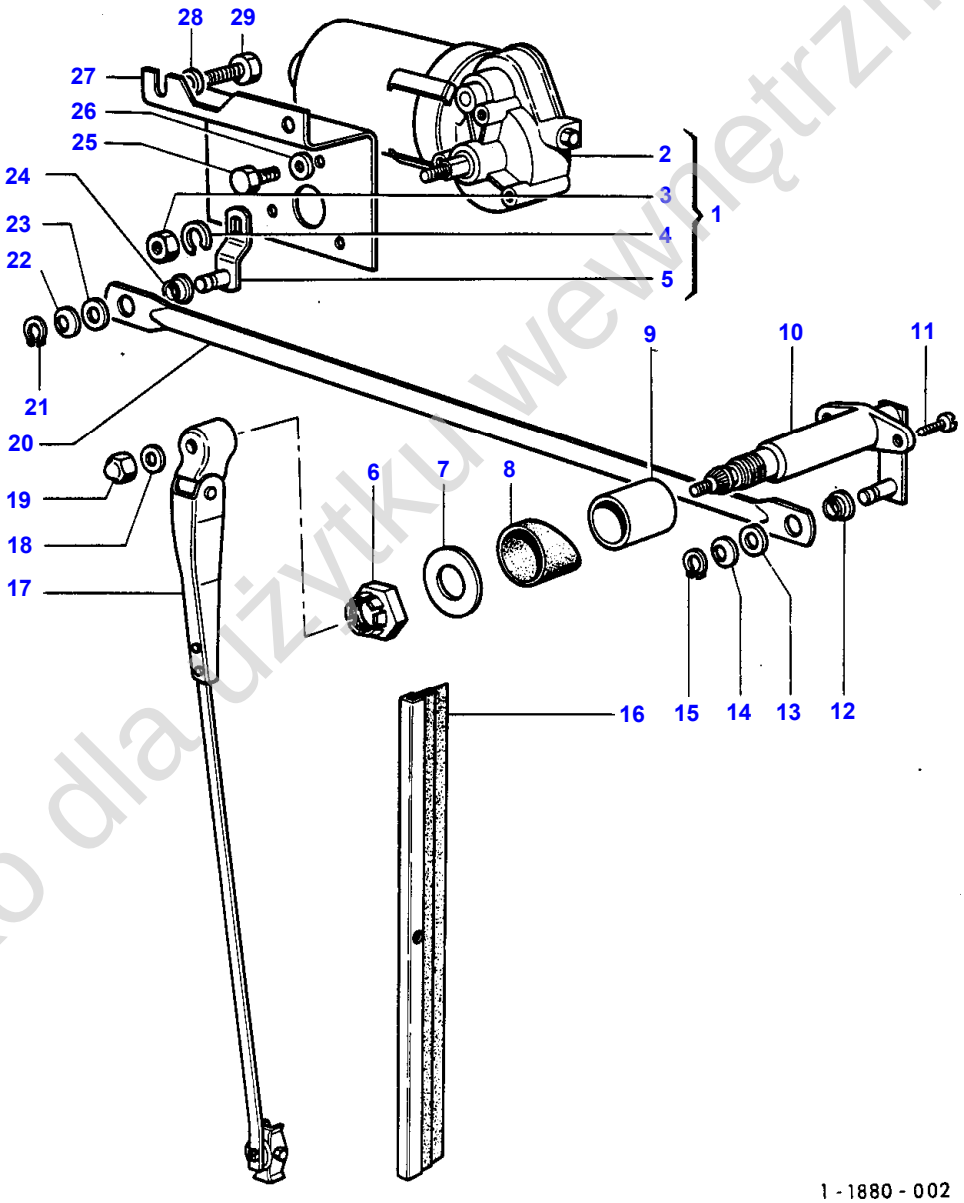

Tylko dla użytku wewnętrznego

Item	Part Number	Qty	Description	Comments
1	1877624M92	1	Wiper Motor	
2		1	Wiper Motor	(1) See Page - Reference Number 484/1
3	363619X1	1	Nut	(1) Repairs and replaces 353918X1
4	22463X	1	Lock Washer	(1) Up to Serial or Engine Number
5	1877626M92	1	Arm	(1)
6	1679298M1	1	Nut	
7	353763X1	1	Washer	
8	1877621M3	1	Seal	
9	1877622M1	1	Spacer	
10	1877617M91	1	Spindle	
11	365925X1	2	Self Tap Screws	Repairs and replaces 360372X1
12	1877627M1	1	Bush	
13	376474X1	1	Washer	
14	1877618M1	1	Washer	
15	368231X1	1	Ring	
16	1610025M91	1	Wiper Blade	Up to Serial or Engine Number LUCAS
	1671631M1	2	Brush	From Serial or Engine Number SEV MARCHAL
17	1610026M91	1	Wiper Arm	Up to Serial or Engine Number LUCAS
	1671630M1	2	Arm	From Serial or Engine Number SEV MARCHAL
18	22463X	1	Lock Washer	
19	1877620M1	1	Nut	
20	1877628M1	1	Arm	
21	368231X1	1	Ring	
22	1877618M1	1	Washer	
23	376474X1	1	Washer	
24	1877627M1	1	Bush	
25	364237X1	3	Self Tap Screws	
26	22445X	3	Tooth Washer	
27	1877623M2	1	Bracket	
28	353755X1	2	Washer	
29	362391X1	2	Bolt	

Tylko dla użytku wewnętrznego

482

ESSUIE GLACES
SCHEIBENWISCHER
TERGICRISTALLO
LIMPIA PARABRISAS
WINDSCREEN WIPER

1880 1002

1 1880 002

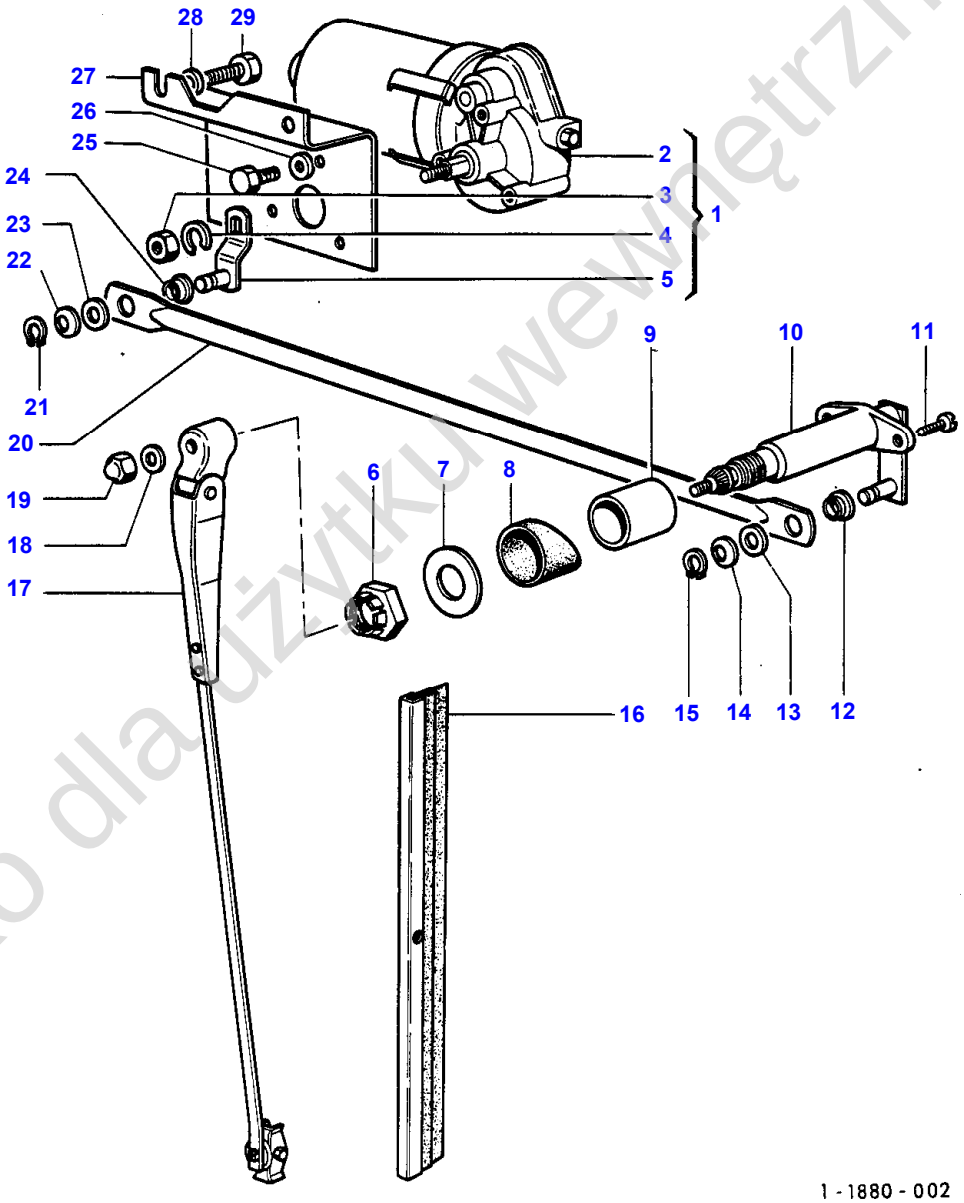

Tylko dla użytku wewnętrznego

Item	Part Number	Qty	Description	Comments
1	1877624M92	1	Wiper Motor	
2		1	Wiper Motor	(1) See Page - Reference Number 484/1
3	363619X1	1	Nut	(1) Repairs and replaces 353918X1
4	22463X	1	Lock Washer	(1) Up to Serial or Engine Number
5	1877626M92	1	Arm	(1)
6	1679298M1	1	Nut	
7	353763X1	1	Washer	
8	1877621M3	1	Seal	
9	1877622M1	1	Spacer	
10	1877617M91	1	Spindle	
11	365925X1	2	Self Tap Screws	Repairs and replaces 360372X1
12	1877627M1	1	Bush	
13	376474X1	1	Washer	
14	1877618M1	1	Washer	
15	368231X1	1	Ring	
16	1610025M91	1	Wiper Blade	Up to Serial or Engine Number LUCAS
	1671631M1	2	Brush	From Serial or Engine Number SEV MARCHAL
17	1610026M91	1	Wiper Arm	Up to Serial or Engine Number LUCAS
	1671630M1	2	Arm	From Serial or Engine Number SEV MARCHAL
18	22463X	1	Lock Washer	
19	1877620M1	1	Nut	
20	1877628M1	1	Arm	
21	368231X1	1	Ring	
22	1877618M1	1	Washer	
23	376474X1	1	Washer	
24	1877627M1	1	Bush	
25	364237X1	3	Self Tap Screws	
26	22445X	3	Tooth Washer	
27	1877623M2	1	Bracket	
28	353755X1	2	Washer	
29	362391X1	2	Bolt	

Tylko dla użytku wewnętrznego

484

MOTEUR D'ESSUIE GLACES
SCHEIBENWISCHERMOTOR
MOTORE TERGICRISTALLO
MOTOR LIMPIA PARABRISAS
SCREEN WIPER MOTOR

1 1885 002

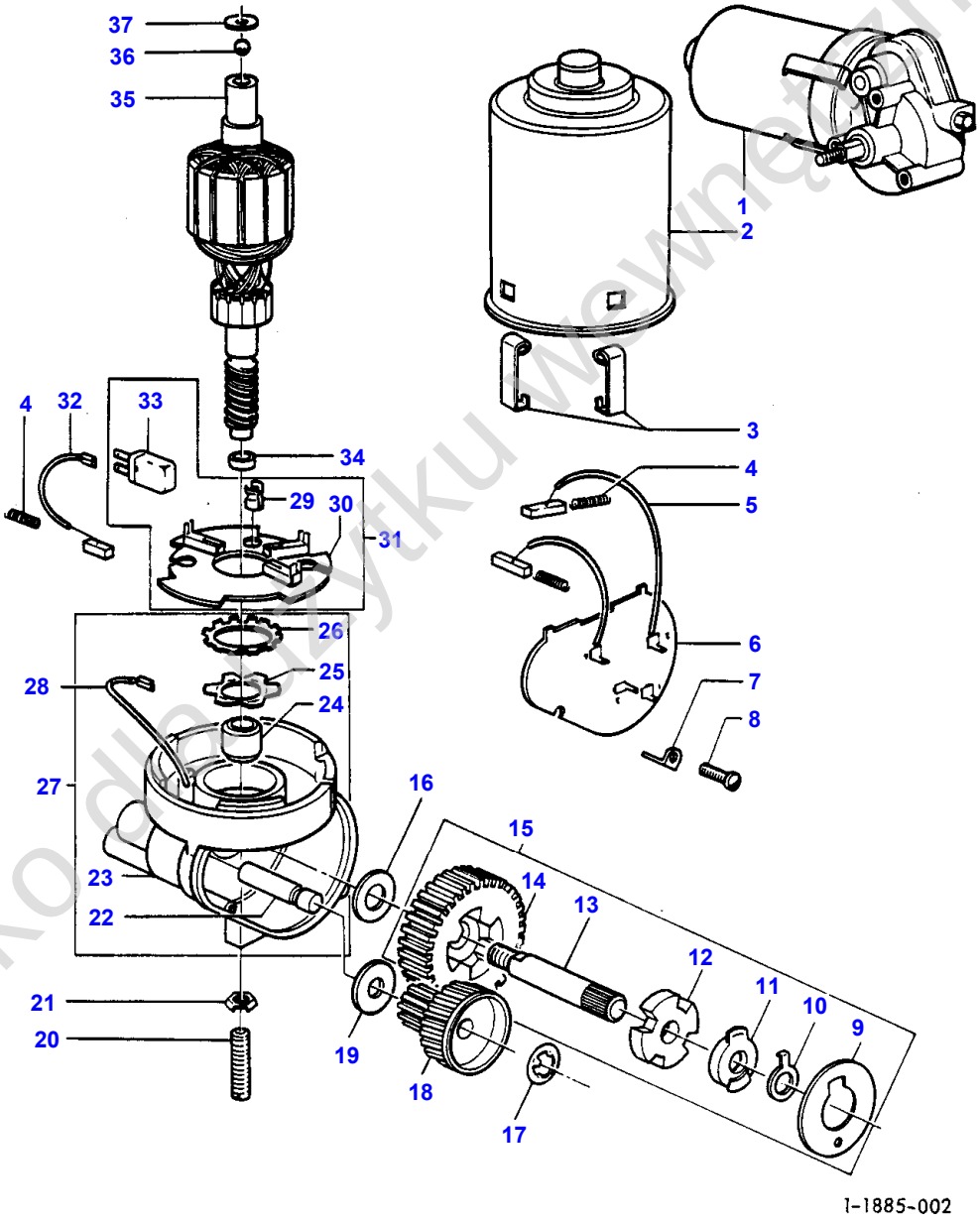

Tylko do użytku wewnętrznego

Item	Part Number	Qty	Description	Comments
1	1877625M91	1	Engine	AC DELCO
2	1890166M91	1	Frame	(1)
3	1890187M1	3	Clamp	(1)
4	1890186M1	3	Spring	(1)
5		2	Wiper Blade	(6)
				Not serviced, order 1890177M91
6	1890177M91	1	Plate	(1)
7	1890172M1	1	Connection	(1)
8	1890173M1	1	Connection	(1)
9		1	Plate	(15)
				Not serviced, order 1890183M91
10		1	Tappet Plate	(15)
				Not serviced, order 1890183M91
11		1	Tie	(15)
				Not serviced, order 1890183M91
12		1	Pivot	(15)
				Not serviced, order 1890183M91
13		1	Clevis Pin	(15)
				Not serviced, order 1890183M91
14		1	Drive Pinion	(15)
				Not serviced, order 1890183M91
15	1890183M91	1	Shaft	(1)
16	1890181M1	1	Washer	(1)
17	1890169M1	1	Clip	(1)
18	1890175M91	1	Pinion	(1)
19	1890174M1	1	Washer	(1)
20	1890182M1	1	Catch	(1)
21	1890176M1	1	Nut	(1)
22		1	Clevis Pin	(27)
				Not serviced, order 1890168M91
23		1	Housing	(27)
				Not serviced, order 1890168M91
24		1	Toggle	(27)
				Not serviced, order 1890168M91
25		1	Circlip	(27)
				Not serviced, order 1890168M91
26		1	Circlip	(27)
				Not serviced, order 1890168M91
27	1890168M91	1	Bearing Carrier	(1)
28	1890185M1	1	Harness	(1)
29		1	Circlip	(31)
				Not serviced, order 1890167M91
30		1	Plate	(31)
				Not serviced, order 1890167M91
31	1890167M91	1	Plate	(1)
32	1890184M1	1	Brush	(1)
33	1890188M1	1	Relay	(31)
34	1890171M1	1	Catch	(1)
35	1890170M1	1	Armature	(1)
36	1890164M1	1	Catch	(1)
37	1890165M1	1	Washer	(1)

Tylko do użytku wewnętrznego

486

LAVE GLACES
SCHEIBENWASCHANLAGE
LAVAGGIO DEL PARABREZZA
LAVAPARABRISAS
WINDSCREEN WASHER

1875002

1 1875 007

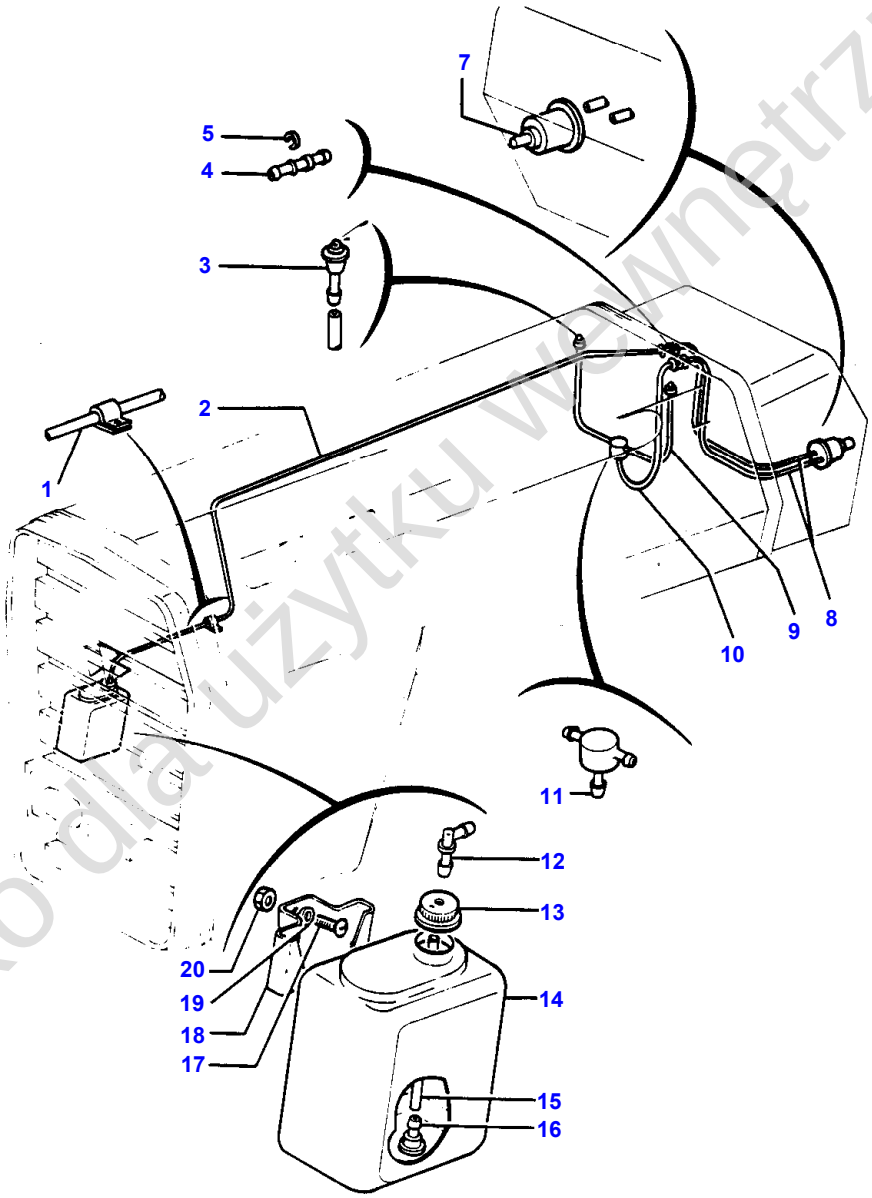

Tylko do użytku wewnętrznego

Item	Part Number	Qty	Description	Comments
1	950302M1	1	Clip	Repairs and replaces 361312X1
	517587M1	1	Cable Tie	
2	1876095M2	1	Tube	
3	1877709M91	2	Jet	
4	1618988M1	2	Connector	
5	368230X1	2	Snapring	
7	1877711M91	1	Pump	
8	1875357M1	2	Tube	
9	1875356M2	2	Tube	
10	1877724M1	1	Tube	
11	1877722M91	1	Pressure Valve	
12	1877713M1	1	Union	
13	1877715M1	1	Plug	
14	1877714M1	1	Reservoir	
15	1877724M1	1	Tube	
16	1877710M91	1	Valve	
17	354198X1	2	Screw Unc	Repairs and replaces 353981X1
18	1877712M1	1	Bracket	
19	1441100X1	2	Washer	
20	354120X1	2	Nut	

Tylko dla użytku wewnętrznego

488

SIEGE	DE LUXE
FAHRERSITZ	DE LUXE
SEDILE	DI LUSSO
ASIENTO	LUJO
SEAT	DE LUXE

18461002

1 1846 001

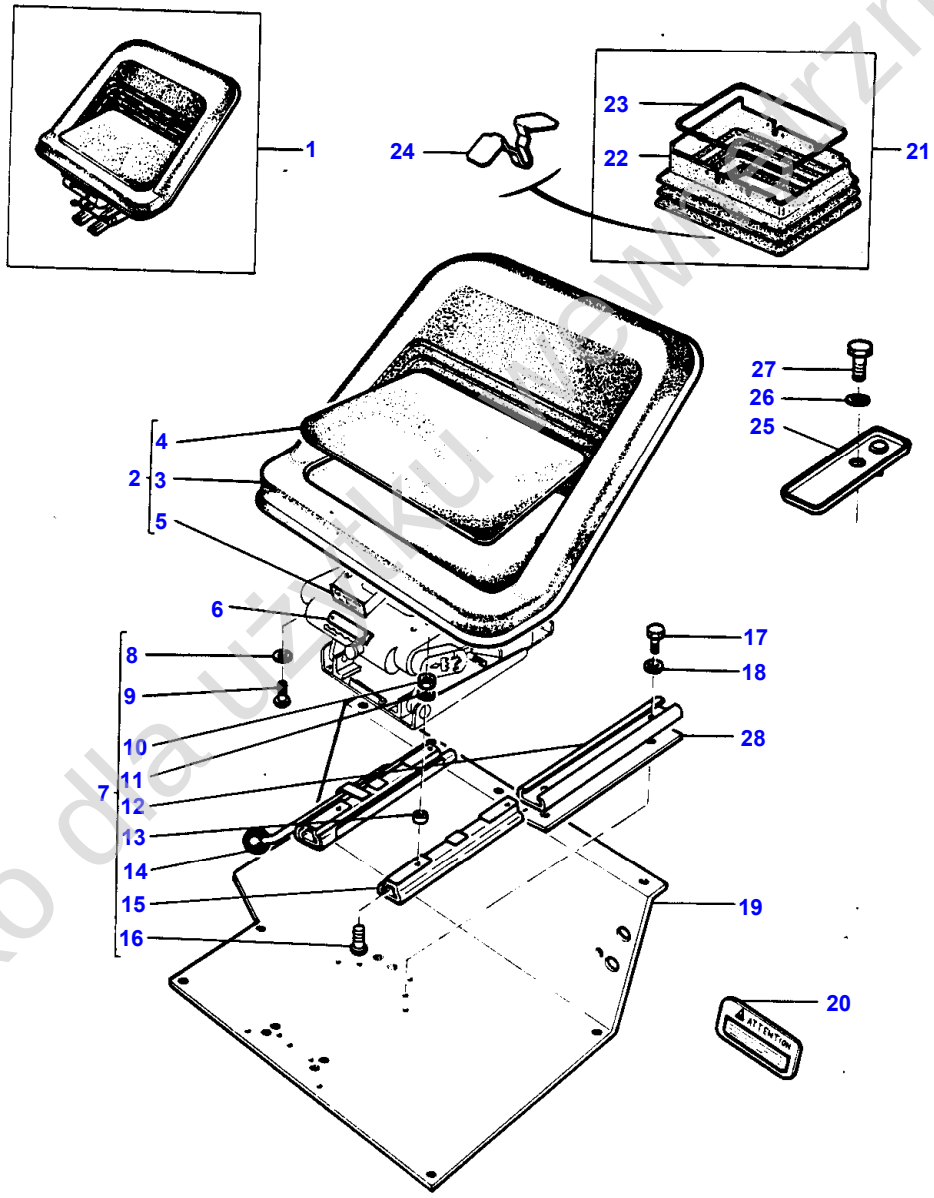

1-1846-001

Tylko do użytku www.rzznego

Item	Part Number	Qty	Description	Comments
1	1662269M91	1	Seat	XL BOSTROM See Page - Reference Number 492/1
1	1662271M91	1	Seat	XH BOSTROM See Page - Reference Number 490/1
2	1889961M91	1	Pan	(1)
3		1	Seat	(2) Not serviced, order 1889961M91
4	1889954M1	1	Cushion	(2)
5	1889967M1	1	Decal	(2)
6	1890079M1	1	Decal	
7	1890058M91	1	Kit, Mounting	(1)
8	353446X1	4	Lock Washer	(7)
9	1886755M1	4	Screw	(7)
10	1889983M1	4	Nut	(7)
11	353446X1	8	Lock Washer	(7)
12		1	Slipper	(7) Not serviced, order 1890058M91
13	1890059M1	4	Spacer	(7)
14		1	Slipper	(7) Not serviced, order 1890058M91
15		1	Slipper	(7) Not serviced, order 1890058M91
16	1890060M1	4	Screw	(7)
17	376305X1	4	Screw Unf	
18	353755X1	4	Washer	
19		1	Panel	See Page - Reference Number 478/1
20	1664570M3	1	Decal	For UK only or any text in English only
	1664644M3	1	Decal	For Germany only or any text in German only
	1664608M3	1	Decal	For France only or any text in French only
21	1665550M91	1	Cowl	(A)
22	1665547M1	1	Cowl	(21)
23	1665549M1	1	Chassis	(21)
24	1665548M1	16	Fastener	
25	1668595M91	1	Cover	
26	390735X1	1	Washer Metric	
27	353723X1	1	Screw Unc	
28	1668295M1	2	Shim	
				(A) SCANDINAVIA

Tylko dla użytku wewnętrznego

490

SIEGE	SUSPENSION REGLABLE
FAHRERSITZ	VERSTELLBARE FEDERUNG
SEDILE	SOSPENSIONE REGOLABILE
ASIENTO	SUSPENSION REGULABL
SEAT	ADJUSTABLE SUSPENSION

18611001

1 1861 001

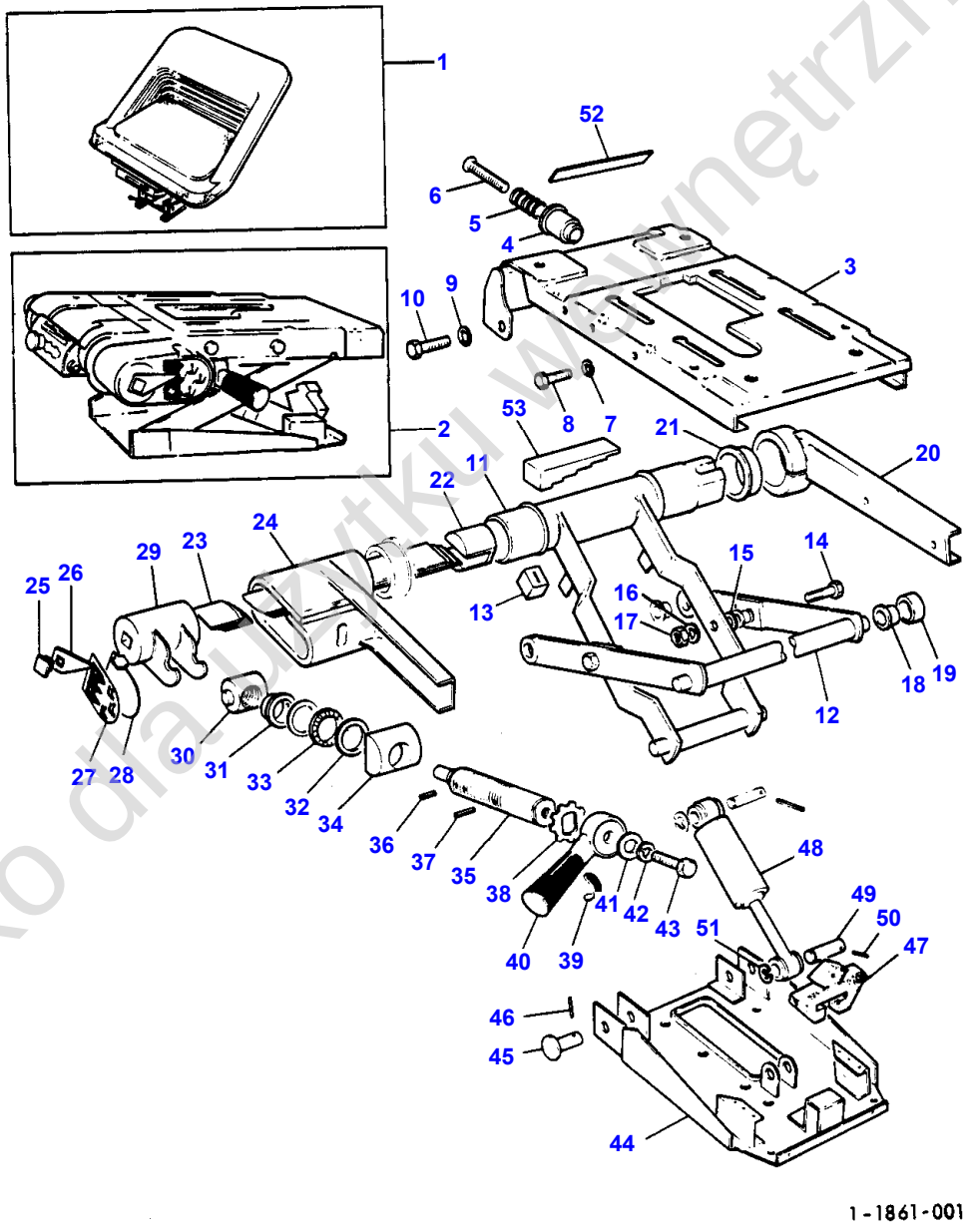

1-1861-001

Tylko dla użytku wewnętrznego

Item	Part Number	Qty	Description	Comments
1		1	Seat	See Page - Reference Number 488/1 XH
2	1890062M91	1	Suspension	(1)
3	1890063M91	1	Plate	(2)
4	1890066M1	1	Knob	(2)
5	1890065M1	1	Spring	(2)
6	1890064M1	1	Screw	(2)
7	1890070M1	4	Washer	(2)
8	1890069M1	4	Bolt	(2)
9	1890070M1	2	Washer	(2)
10	1890069M1	2	Bolt	(2)
11	1890068M91	1	Lever	(2)
12	1890040M91	1	Lever	(2)
13	1890041M1	2	Stop	(2)
14	1890042M1	2	Screw	(2)
15	1043361M1	X	Washer	(2)
16	353446X1	2	Lock Washer	(2)
17	1889983M1	2	Nut	(2)
18	1890044M1	8	Bush	(2)
19	1890043M1	4	Roller	(2)
20	1890071M91	1	Support	(2)
21	1890046M1	2	Bush	(2)
22	1890072M1	1	Retainer	(2)
23	1890073M1	5	Bar	(2)
24	1890074M91	1	Shroud	(2)
25	1043302M1	1	Plug	(2)
26	1890050M1	1	Indicator	(2)
27	1890053M1	1	Decal	(2)
28	1043299M1	1	Cover	(2)
29	1890077M91	1	Fork	(2)
30	1043304M1	1	Trunnion	(2)
31	1043305M1	1	Collar	(2)
32	1043365M1	2	Washer	(2)
33	833386M1	1	Bearing	(2)
34	1043306M1	1	Rocker	(2)
35	1890078M1	1	Stud	(2)
36	391285X1	1	Pin	(2)
37	339080X1	1	Roll Pin	(2)
38	1043309M1	1	Gear	(2)
39	1890057M1	1	Decal	(2)
40	1043310M91	1	Handle	(2)
41	1043311M1	1	Spacer	(2)
42	353446X1	1	Lock Washer	(2)
43	353677X1	1	Screw Unc	(2)
44	1890076M91	1	Plate	(2)
45	1890055M1	4	Pin	(2)
46	1890056M1	2	Pin	(2)
47	1043293M1	1	Bumper	(2)
48	1890075M1	1	Damper	(2)
49	1043292M1	2	Pin	(2)
50	1043363M1	2	Pin	(2)
51	361003X1	2	Circlip	(2)
52	1890079M1	1	Decal	(2)
53	1890067M1	1	Bracket	(2)

Tylko do użytku wewnętrznego

492

SIEGE
FAHRERSITZ
SEDILE
ASIENTO
SEAT

SUSPENSION A RESSORT
FEDERUNG
SOSPENSIONE A MOLLA
MUELLE SUSPENSION
SPRING SUSPENSION

18601002

1 1860 002

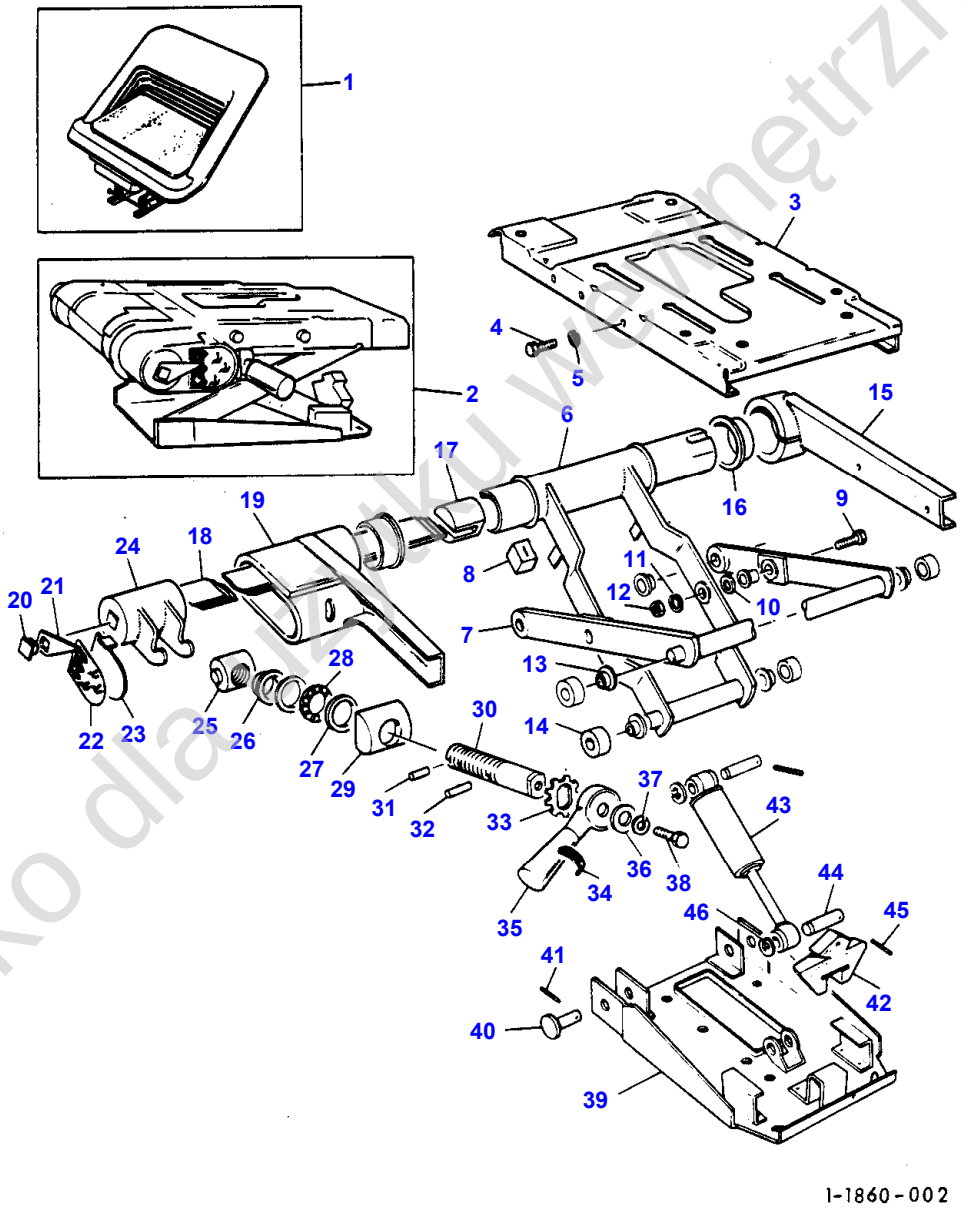

Tylko dla użytku wewnętrznego

Item	Part Number	Qty	Description	Comments
1		1	Seat	See Page - Reference Number 488/1 XL
2	1889996M91	1	Suspension	(1)
3	1889957M91	1	Plate	(2)
4	353675X1	4	Screw Unc	(2)
5	353446X1	4	Lock Washer	(2)
6	1890000M91	1	Lever	(2)
7	1890040M91	1	Lever	(2)
8	1890041M1	2	Stop	(2)
9	1890042M1	2	Screw	(2)
10	1043361M1	X	Washer	(2)
11	353446X1	2	Lock Washer	(2)
12	339169X1	2	Nut Metric	(2)
13	1890044M1	8	Bush	(2)
14	1890043M1	4	Roller	(2)
15	1890045M91	1	Support	(2)
16	1890046M1	2	Bush	(2)
17	1043296M1	1	Retainer	(2)
18	1890048M1	3	Bar	(2)
19	1890047M91	1	Shroud	(2)
20	1043302M1	1	Plug	(2)
21	1890050M1	1	Indicator	(2)
22	1890053M1	1	Decal	(2)
23	1043299M1	1	Cover	(2)
24	1890049M91	1	Adjuster	(2)
25	1043304M1	1	Trunnion	(2)
26	1043305M1	1	Collar	(2)
27	1043365M1	2	Washer	(2)
28	833386M1	1	Bearing	(2)
29	1043306M1	1	Rocker	(2)
30	1890051M1	1	Stud	(2)
31	391285X1	1	Pin	(2)
32	339080X1	1	Roll Pin	(2)
33	1043309M1	1	Gear	(2)
34	1890057M1	1	Decal	(2)
35	1043310M91	1	Handle	(2)
36	1043311M1	1	Spacer	(2)
37	353446X1	1	Lock Washer	(2)
38	353677X1	1	Screw Unc	(2)
39	1890054M91	1	Plate	(2)
40	1890055M1	2	Pin	(2)
41	1890056M1	2	Pin	(2)
42	1043293M1	2	Bumper	(2)
43	1890052M91	1	Damper	(2)
44	1043292M1	2	Pin	(2)
45	1043363M1	2	Pin	(2)
46	361003X1	2	Circlip	(2)

Tylko dla użytku wewnętrznego

494

SIEGE	GRAMMER
FAHRERSITZ	GRAMMER
SEDILE	GRAMMER
ASIENTO	GRAMMER
SEAT	GRAMMER

18401001

1 1840 001

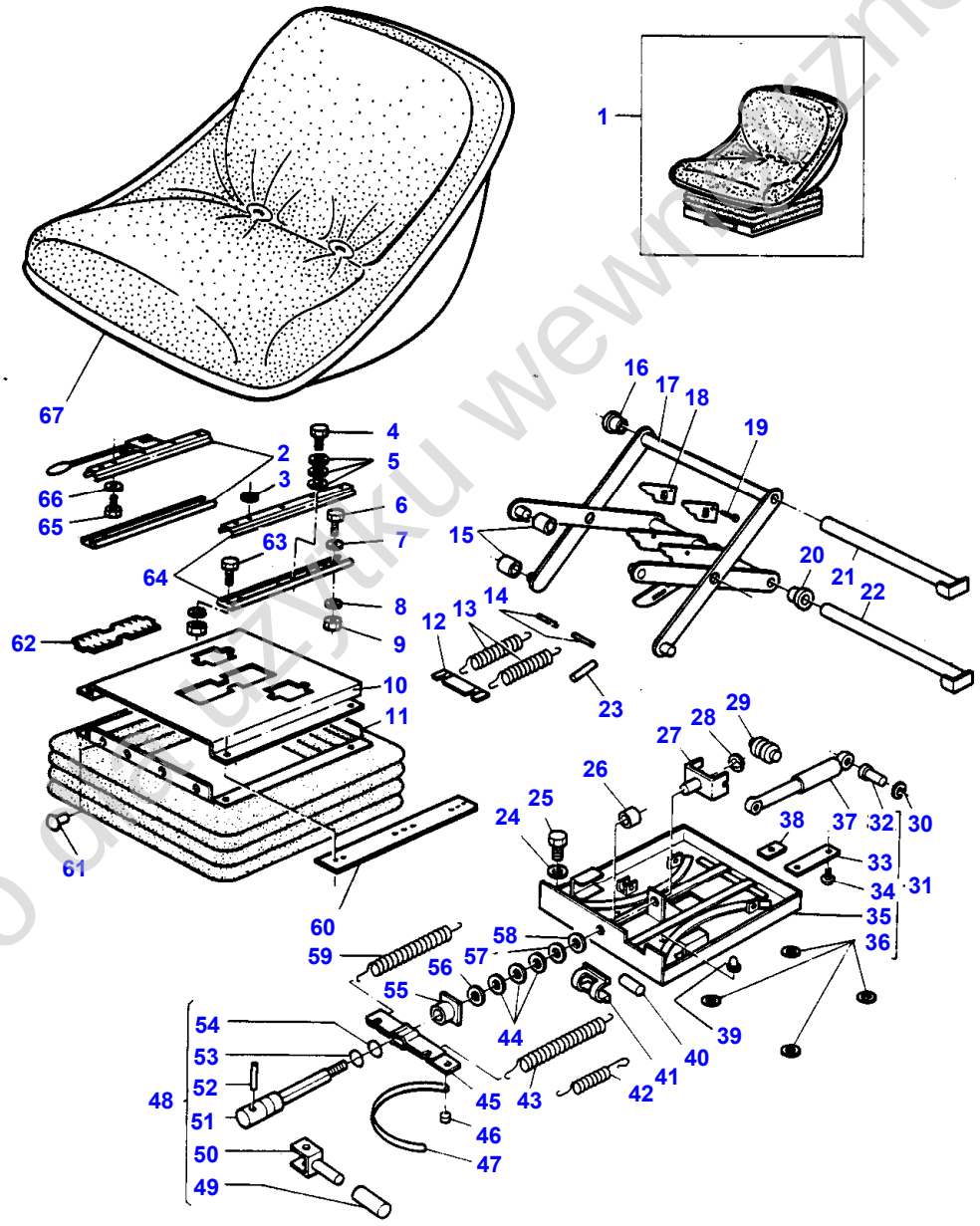

1 - 1840 - 001

Tylko do użytku wewnętrznego

Item	Part Number	Qty	Description	Comments
1	1669535M91	1	Seat	DS 85 H4
	1679221M91	1	Seat	(A) DS 44 1H
2	1719928M1	1	Slide	(1) Right Hand
3	1719895M1	4	Washer	(1)
4	339044X1	1	Screw	(1)
5	390972X1	3	Washer Metric	(1)
6	391485X1	1	Screw	(1)
7	390972X1	2	Washer Metric	(1)
8	391025X1	6	Lock Washer	(1)
9	339169X1	6	Nut Metric	(1)
10	1719936M1	1	Cover	(1)
11	1719915M1	1	Gaiter	(1)
12	1719910M1	1	Plate	(1)
13	1719911M1	2	Spring	(1)
14	1719925M1	2	Pin	(1)
15	1719914M1	4	Roller	(1)
16	1719916M1	2	Bush	(1)
17	3100435M1	1	Suspension	(1)
18	1719907M1	2	Plate	(1)
19	1719924M1	2	Pin	(1)
20	1719916M1	2	Bush	(1)
21	1719908M1	1	Pin	(1)
22	1719909M1	1	Pin	(1)
23	1719923M1	1	Pin	(1)
24	353755X1	4	Washer	
25	353518X1	4	Screw Unf	
26	1719901M1	1	Bush	(1)
27	1719906M1	1	Fork	(1)
28	1442783X1	1	Circlip	(1)
29	1719905M1	1	Bearing	(1)
30	1442783X1	2	Circlip	(1)
31	1719937M91	1	Housing	(1)
32	1719935M1	2	Pin	(31)
33	1719919M1	1	Bar	(31)
34	339083X1	2	Rivet	(31)
35		1	Frame	(31) Not serviced, order 1719937M91
36	390972X1	4	Washer Metric	(31)
37	1719904M1	1	Shock Absorber	(1)
38	1719917M1	1	Plate	(31)
39	1719867M1	2	Bumper	(1)
40	1719903M1	1	Roller	(1)
41	1719891M1	1	Guide	(1)
42	1719932M1	1	Spring	(1)
43	1719931M1	1	Spring	(1)
44	1719921M1	3	Bearing	(1)
45	1719900M1	1	Anchor	(1)
46	1719918M1	1	Fastener	(1)
47	1719930M1	1	Band	(1)
48	1719899M91	1	Adjuster	(1)
49	1719892M1	1	Knob	(48)
50	1719893M1	1	Toggle	(48)
51	1719898M1	1	Pin	(48)
52	1719894M1	1	Pin	(48)
53	1719927M1	1	Ring	(48)
54	1719926M1	1	Ring	(48)
55	1719920M1	1	Nut Special	(1)
56	1719938M1	1	Washer	(1)
57	1719922M1	1	Washer	(1)
58	1719902M1	1	Washer	(1)
59	1719931M1	1	Spring	(1)
60	3100433M1	1	Strap	(1)
61	1719896M1	24	Plug	(1)
62	3100437M1	1	Plate	(1)

Tylko do użytku wewnętrznego

Item	Part Number	Qty	Description	Comments
63	391485X1	4	Screw	(1)
64	1719929M1	1	Slide	(1) Left Hand
65	339043X1	4	Screw Metric	(1)
66	391025X1	4	Lock Washer	(1)
67	3100434M1	1	Seat Pan	(1)
67	3100436M1	1	Plate	(1) (B)

(A)
SWEDEN-TO BE ADVISED

(B)
NOT ILLUSTRATED

Tylko dla użytku wewnętrznego

498

SIEGE	GRAMMER
FAHRERSITZ	GRAMMER
SEDILE	GRAMMER
ASIENTO	GRAMMER
SEAT	GRAMMER

1840100

1 1840 002

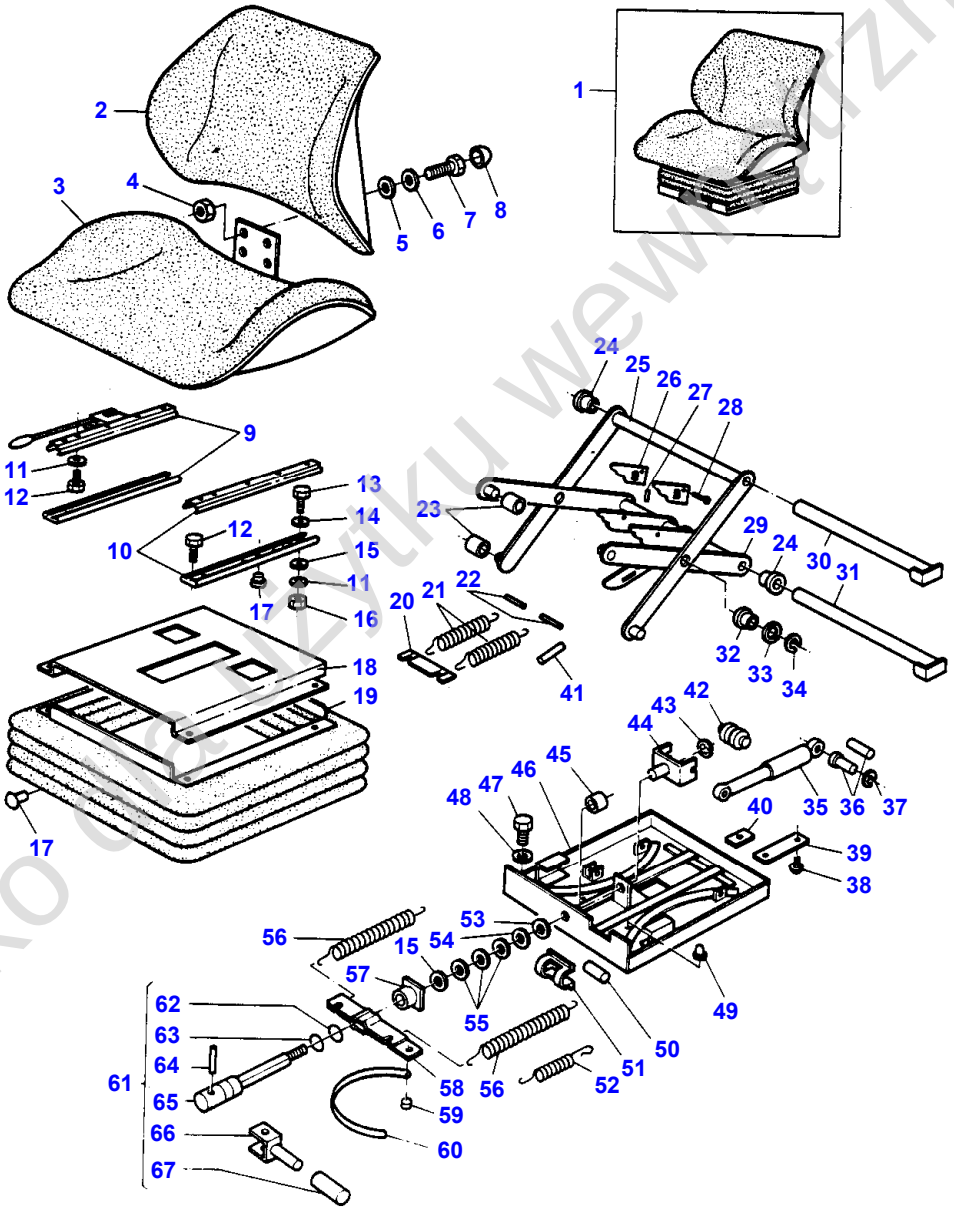

1-1840-002

Tylko do użytku wewnętrznego

Item	Part Number	Qty	Description	Comments
1	1699191M91	1	Seat	DS 85H/2B EE
2	1719933M1	1	Cushion	(1)
3	1719897M1	1	Cushion	(1)
4	339402X1	4	Nut Metric	(3)
5	390734X1	4	Washer Metric	(1)
6	1440314X1	4	Washer	(1)
7	339081X1	4	Screw Metric	(1)
8	1719939M1	4	Cap	(1)
9	1719928M1	1	Slide	(1)
				Right Hand
10	1719929M1	1	Slide	(1)
				Left Hand
11	1440313X1	8	Washer	(1)
12	339043X1	6	Screw Metric	(1)
13	390966X1	2	Screw Metric	(1)
14	1719895M1	2	Washer	(1)
15	1719938M1	5	Washer	(1)
16	339169X1	4	Nut Metric	(1)
17	1719896M1	26	Plug	(1)
18	1719936M1	1	Cover	(1)
19	1719915M1	1	Gaiter	(1)
20	1719910M1	1	Plate	(1)
21	1719911M1	2	Spring	(1)
22	1719925M1	2	Pin	(1)
23	1719914M1	4	Roller	(1)
24	1719916M1	4	Bush	(1)
25	1719912M1	1	Arm	(1)
26	1719907M1	2	Plate	(1)
27	1440395X1	2	Dowel	(1)
28	1719924M1	2	Pin	(1)
29	1719913M1	1	Arm	(1)
30	1719908M1	1	Pin	(1)
31	1719909M1	1	Pin	(1)
32	1719934M1	2	Bush	(1)
33	390735X1	2	Washer Metric	(1)
34	391415X1	2	Circlip	(1)
35	1719904M1	1	Shock Absorber	(1)
36	1719940M1	2	Pin	(1)
				Alternative 1719935M1
36	1719935M1	2	Pin	(1)
				Alternative 1719940M1
37	1442783X1	2	Circlip	(A)
	1442783X1	4	Circlip	(1)
				(B)
38	339083X1	2	Rivet	(1)
39	1719919M1	1	Bar	(1)
40	1719917M1	1	Plate	(1)
41	1719923M1	1	Pin	(1)
42	1719905M1	1	Bearing	(1)
43	1442783X1	1	Circlip	(1)
44	1719906M1	1	Fork	(1)
45	1719901M1	1	Bush	(1)
46	1719937M91	1	Housing	(1)
47	353519X1	4	Screw Unf	
48	353755X1	4	Washer	
49	1719867M1	2	Bumper	(1)
50	1719903M1	1	Roller	(1)
51	1719891M1	1	Guide	(1)
				Top
52	1719932M1	1	Spring	(1)
53	1719902M1	1	Washer	(1)
54	1719922M1	1	Washer	(1)
55	1719921M1	1	Bearing	(1)
56	1719931M1	1	Spring	(1)
57	1719920M1	1	Nut Special	(1)
58	1719900M1	1	Anchor	(1)

Tylko do użytku wewnętrznego

Item	Part Number	Qty	Description	Comments
59	1719918M1	1	Fastener	(1)
60	1719930M1	1	Band	(1)
61	1719899M91	1	Adjuster	(1)
62	1719926M1	1	Ring	(61)
63	1719927M1	1	Ring	(61)
64	1719894M1	1	Pin	(61)
65	1719898M1	1	Pin	(61)
66	1719893M1	1	Toggle	(61)
67	1719892M1	1	Knob	(61)
				(A) WITH 1719935M1
				(B) WITH 1719940M1

Tylko dla użytku wewnętrznego

502

SIEGE	SABLE
FAHRERSITZ	SABLE
SEDILE	SABLE
ASIENTO	SABLE
SEAT	SABLE

18381010

1 1838 010

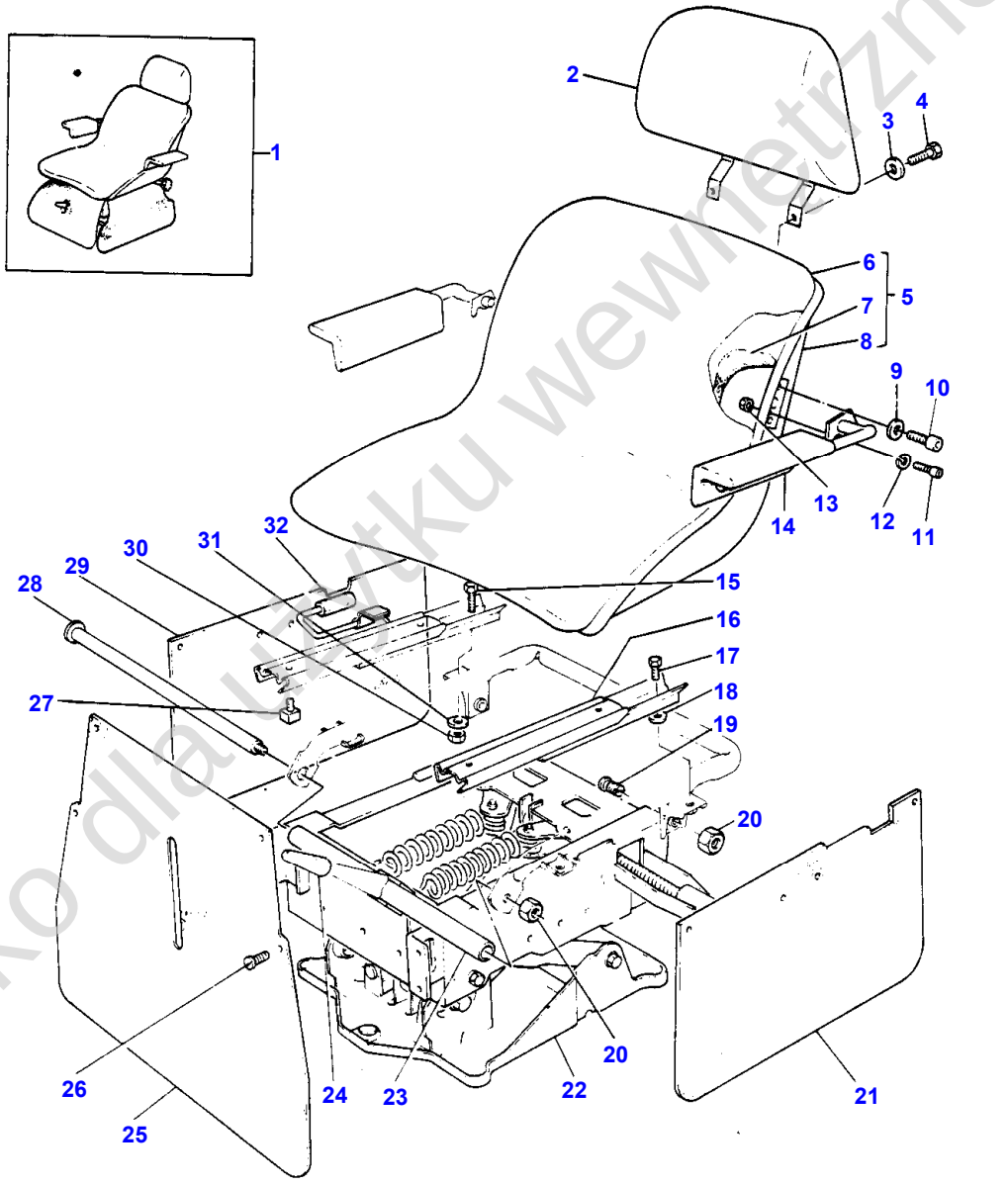

1-1838-010

Tylko dla użytku wewnętrznego

Item	Part Number	Qty	Description	Comments
1	1666313M1	1	Seat	
2	1893295M91	1	Back Rest	(1)
3	1894094M1	2	Washer	(1)
4		2	Screw	(1)
5	1893288M91	1	Pan	(1)
6	1893289M1	1	Seat Cover	(5)
7	1894091M1	1	Foam	(5)
8		1	Race	(5)
				Not serviced, order REF.5
9	1632958M1	2	Washer	(1)
10	1632960M1	4	Screw	(1)
11	1638387M1	2	Bolt	(1)
12	1894093M1	2	Washer	(1)
13	1804968M1	2	Nut	(1)
14	1893297M91	1	Armrest	(1)
				Left Hand
14	1893296M91	1	Armrest	(1)
				Right Hand
15	1894096M1	2	Pin	(1)
16	1893293M91	2	Slide	(1)
17	1804966M1	2	Screw	(1)
18	1894097M1	2	Washer	(1)
19	1894099M1	2	Axle	(1)
20	1441932X1	3	Nut Metric	(1)
21	1893292M1	1	Flap	(1)
				Right Hand
22	1893284M91	1	Suspension	(1)
				See Page - Reference Number 504/1
23	1894088M91	1	Lever	(1)
24	1894098M1	1	Handle	(1)
25	1893290M1	1	Flap	(1)
26	1894100M1	12	Rivet	(1)
27	1894095M1	4	Screw	(1)
28	1894090M1	1	Spindle	(1)
29	1893291M1	1	Flap	(1)
				Left Hand
30		4	Nut	(1)
31	1632958M1	4	Washer	(1)
32	1632955M1	1	Handle	(1)

Tylko dla użytku wewnętrznego

504

SIEGE	SUSPENSION A RESSORT
FAHRERSITZ	FEDERUNG
SEDILE	SOSPENSIONE A MOLLA
ASIENTO	MUELLE SUSPENSION
SEAT	SPRING SUSPENSION

18601003

1 1860 003

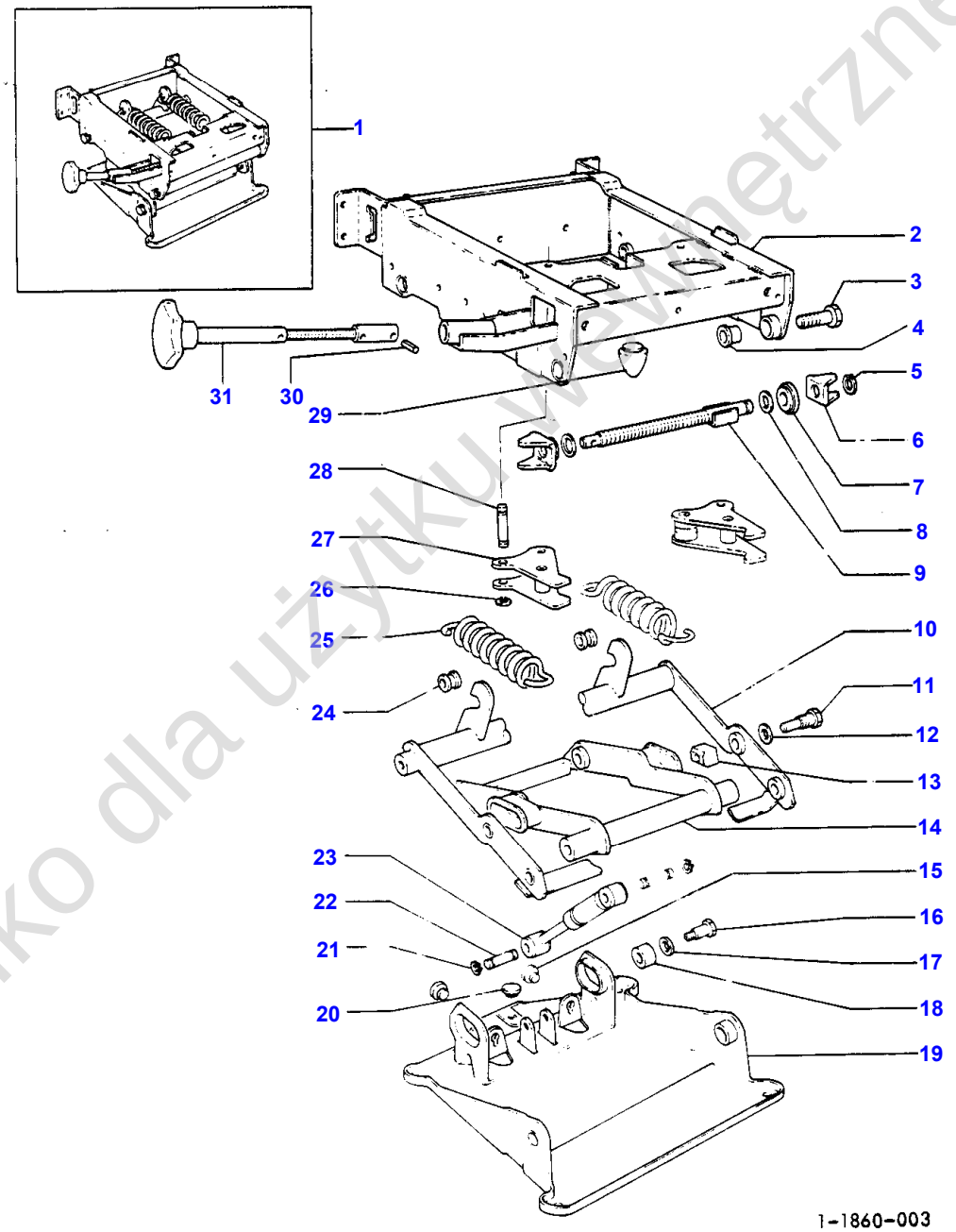

Tylko dla użytku wewnętrznego

Item	Part Number	Qty	Description	Comments
1	1893284M91	1	Suspension	(1) See Page - Reference Number 502/1
2	1894083M91	1	Body	(1)
3	1894104M1	2	Axle	(1)
4	1894080M1	2	Roller	(1)
5		1	Clip	(1)
6	1894110M1	2	Bracket	(1)
7	1893566M1	3	Thrust Washer	(1)
8	1894103M1	2	Washer	(1)
9	1894107M91	1	Axle	(1)
10	1894084M91	1	Strap	(1)
11	1894105M1	2	Axle	(1)
12		1	Washer	(1)
13	1894106M1	2	Slide	(1)
14	1894085M91	1	Strap	(1)
15	1893287M1	2	Stop	(1)
16	1894102M1	2	Axle	(1)
17	1894103M1	2	Washer	(1)
18	1894082M1	2	Bush	(1)
19	1894101M91	1	Base Plate	(1)
20	1893287M1	1	Stop	(1)
21	1894112M1	4	Ring	(1)
22	1894111M1	2	Pin	(1)
23	1893286M1	1	Damper	(1)
24	1894079M1	2	Roller	(1)
25	1893285M1	2	Spring	(1)
26	1894112M1	2	Ring	(1)
27	1894108M91	1	Lever	(1)
28	1894111M1	2	Pin	(1)
29	1894109M91	1	Nut	(1)
30	1885841M1	1	Stop	(1)
31	3006445X1	2	Pin	(1)
32	1893287M1	2	Stop	(1)

Tylko dla użytku wewnętrznego

506

SIEGE SECONDAIRE
BEIFAHRERSITZ
SEDILE SECONDARIO
ASIENTO
SECONDARY SEAT

1855 1001

1 1855 001

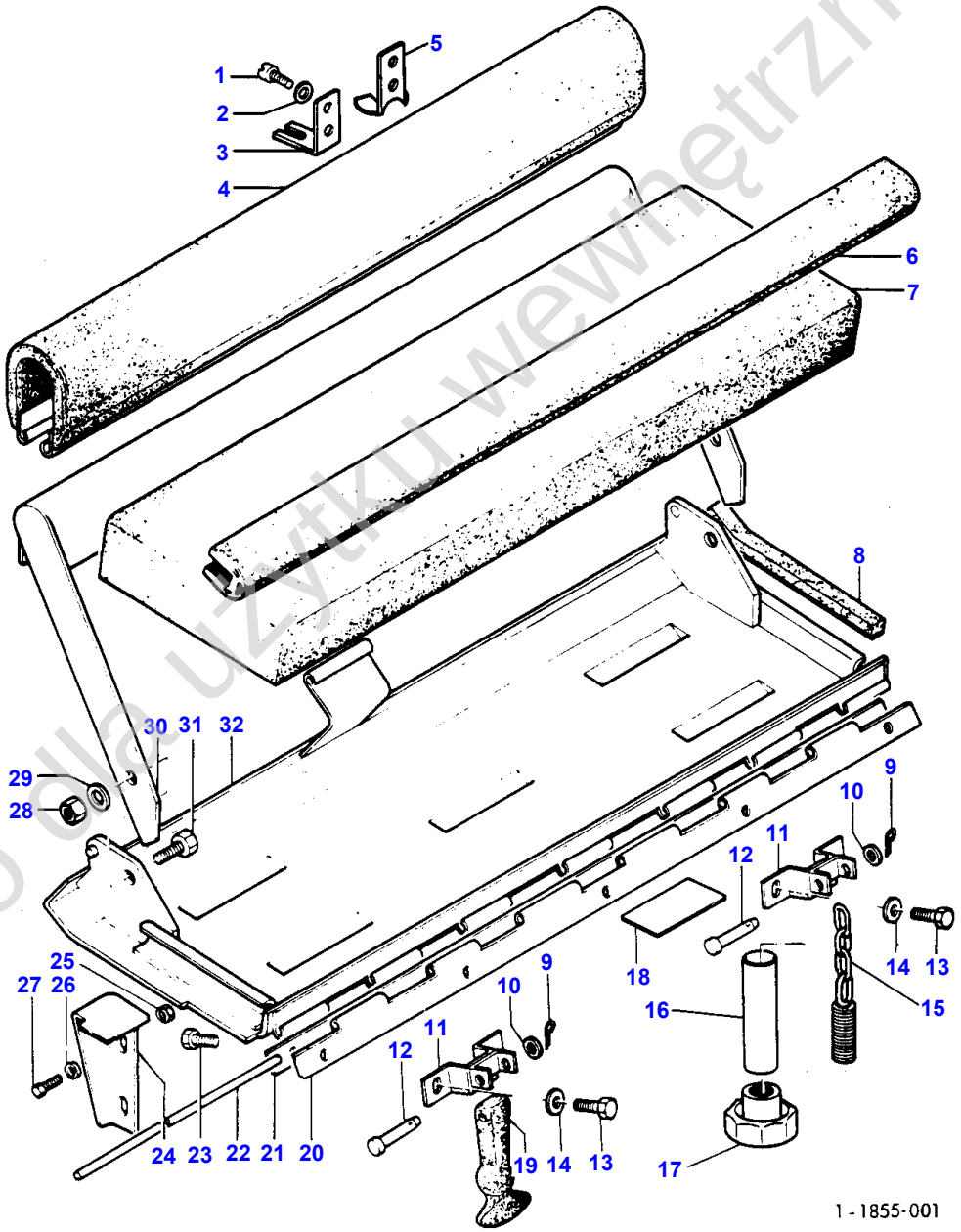

Tylko dla użytku wewnętrznego

Item	Part Number	Qty	Description	Comments
				GERMANY
1	355029X1	2	Screw	
2	22710X	2	Washer	
3	403659M1	1	Angle	Up to Serial or Engine Number G294110
4	1617592M2	1	Facing	
5	3033109M1	1	Strap	From Serial or Engine Number G294111
6	1617750M1	1	Pad	
7	1617591M1	1	Cushion	
8	1617590M1	2	Seal	
9	390147X1	1	Pin	
10	390146X1	1	Washer Metric	
11	1617586M92	1	Bracket	
12	403660M1	1	Pin	
13	353667X1	2	Screw Unc	
14	353754X1	2	Washer	
15	3033108M91	1	Chain	From Serial or Engine Number G294111
16	3033111M1	1	Protector	From Serial or Engine Number G294111
17	3033110M1	1	Button	From Serial or Engine Number G294111
18	1617728M1	1	Decal	
19	403657M1	1	Fastener	Up to Serial or Engine Number G294110
20	1877225M1	1	Hinge	
21	1617628M1	X	Wedge	
22	1877226M1	1	Pin	
23	353667X1	5	Screw Unc	
24	1617585M2	1	Bracket	Left Hand
	1617584M2	1	Bracket	Right Hand
25	355565X1	4	Nut Unc	
26	353755X1	4	Washer	
27	353676X1	4	Screw Unc	
28	338494X1	2	Nut	
29	353756X1	2	Washer	
30	1617579M92	1	Back Rest	
31	353537X1	2	Screw Unf	
32	1617559M93	1	Bearer	

Tylko dla użytku wewnętrznego

508

CABINE TRACTEUR	INSONORISATION
SCHLEPPERKABINE	ISOLIERUNG
CABINA TRATTORE	ISOLANTE CABINA
CABINA TRACTOR	AISLAMIENTO
TRACTOR CAB	CAB INSULATION

18101003

1 1810 007

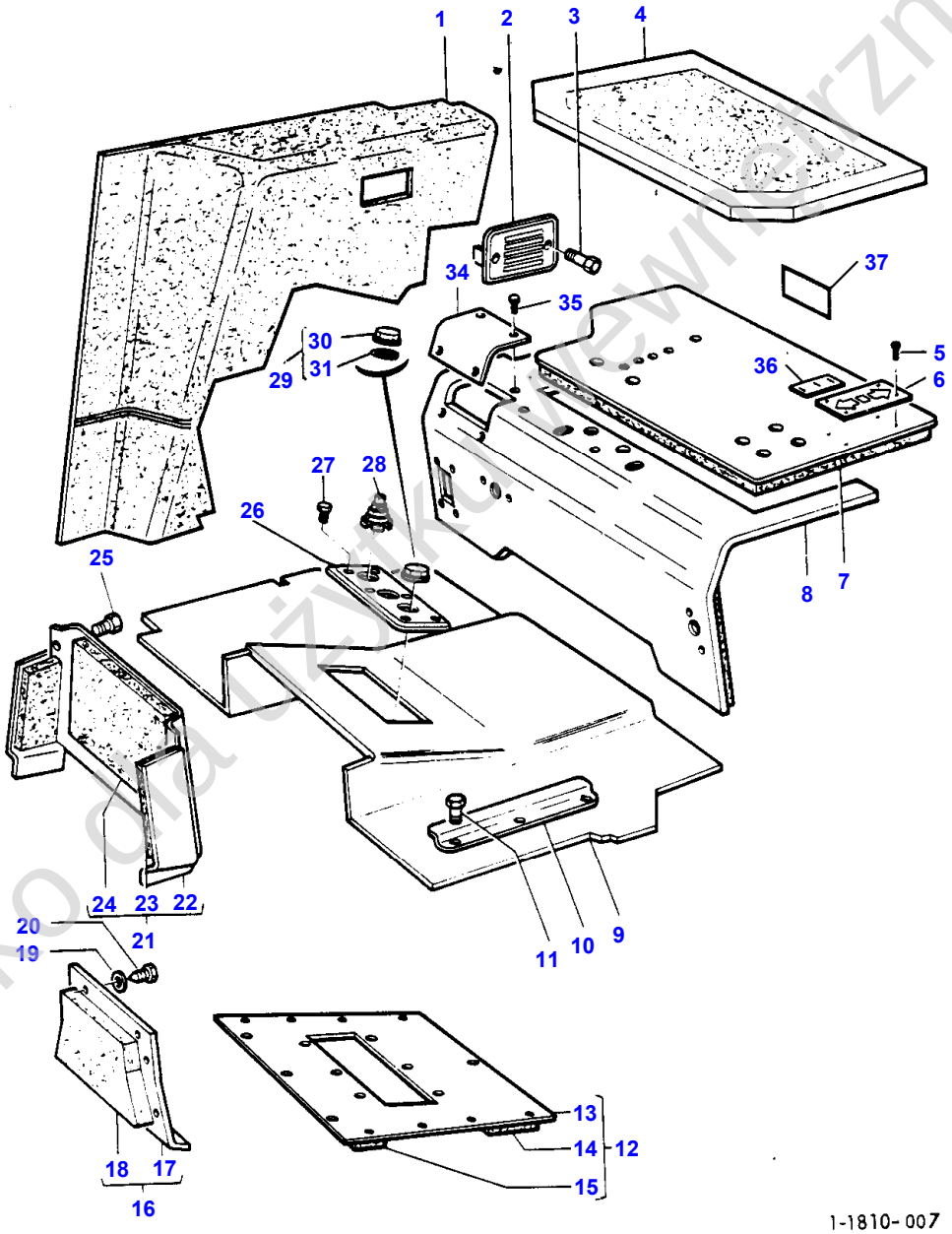

Tylko dla użytku prywatnego

Item	Part Number	Qty	Description	Comments
1	1875517M96	1	Facing	Left Hand
	1875507M96	1	Lining	# HQ
	1874814M96	1	Pad	# HQ
2	1875148M91	2	Grille	
3	357450X1	4	Screw Unc	
4	1873294M3	1	Underlay	
5	365925X1	4	Self Tap Screws	
6	1665857M1	1	Emblem	For Germany only or any text in German only
				For France only or any text in French only
6	1665856M1	1	Emblem	For UK only or any text in English only
7	1699204M92	1	Foam	# DQ
	1699205M92	1	Lining	# CQ
	1666244M1	1	Facing	2 DOORS
8	1669458M91	1	Facing	Repairs and replaces 1875202M94
9	1874142M4	1	Mat	1 DOOR
	1874222M4	1	Mat	2 DOORS
10	1877860M1	2	Cover	2 DOORS
	1877860M1	1	Cover	1 DOOR
11	360369X1	6	Screw	2 DOORS
	360369X1	3	Screw	1 DOOR
12	1873919M91	1	Plate	
13		1	Plate	(12)
				Not serviced, order 1873919M91
14	1875949M2	1	Pad	(12)
15	1875948M2	1	Pad	(12)
16	1875852M93	1	Panel	
17		1	Plate	(16)
				Not serviced, order 1875852M93
18	1875851M1	1	Gasket	(16)
19	353755X1	14	Washer	(A)
20	353676X1	14	Screw Unc	(A)
	365008X1	14	Screw Unc	(B)
21	1873584M91	1	Plate	
22		1	Plate	(21)
				Not serviced, order 1873584M91
23	1873272M1	2	Plate	(21)
24	1873277M1	1	Plate	(21)
25	365020X1	4	Bolt	
26	1874685M92	1	Plate	
27	353992X1	6	Bolt	
28	1873289M3	2	Boot	
29	1671845M91	1	Plug	Not serviced, order 1873911M91
30	1671793M1	1	Plug	(29)
31	1873912M1	1	Gasket	(29)
34	1662769M1	1	Cover	
35	365924X1	4	Screw	
36	1867104M2	1	Decal	
37	1664570M3	1	Decal	For Germany only or any text in German only
	1664608M3	1	Decal	For France only or any text in French only
	1664644M3	1	Decal	For UK only or any text in English only
				(A)
				NO 19-20 ALTERNATIVE WITH NO 20(B)
				(B)
				NO 20(B) ALTERNATIVE WITH NO 19-20

Tylko do użytku wewnętrznego

512

CABINE TRACTEUR	CHAUFFAGE CABINE
SCHLEPPERKABINE	KABINENHEIZUNG
CABINA TRATTORE	RISCALDATORE CABINA
CABINA TRACTOR	CALEFACTOR
TRACTOR CAB	CAB HEATER

18131004

1 1813 004

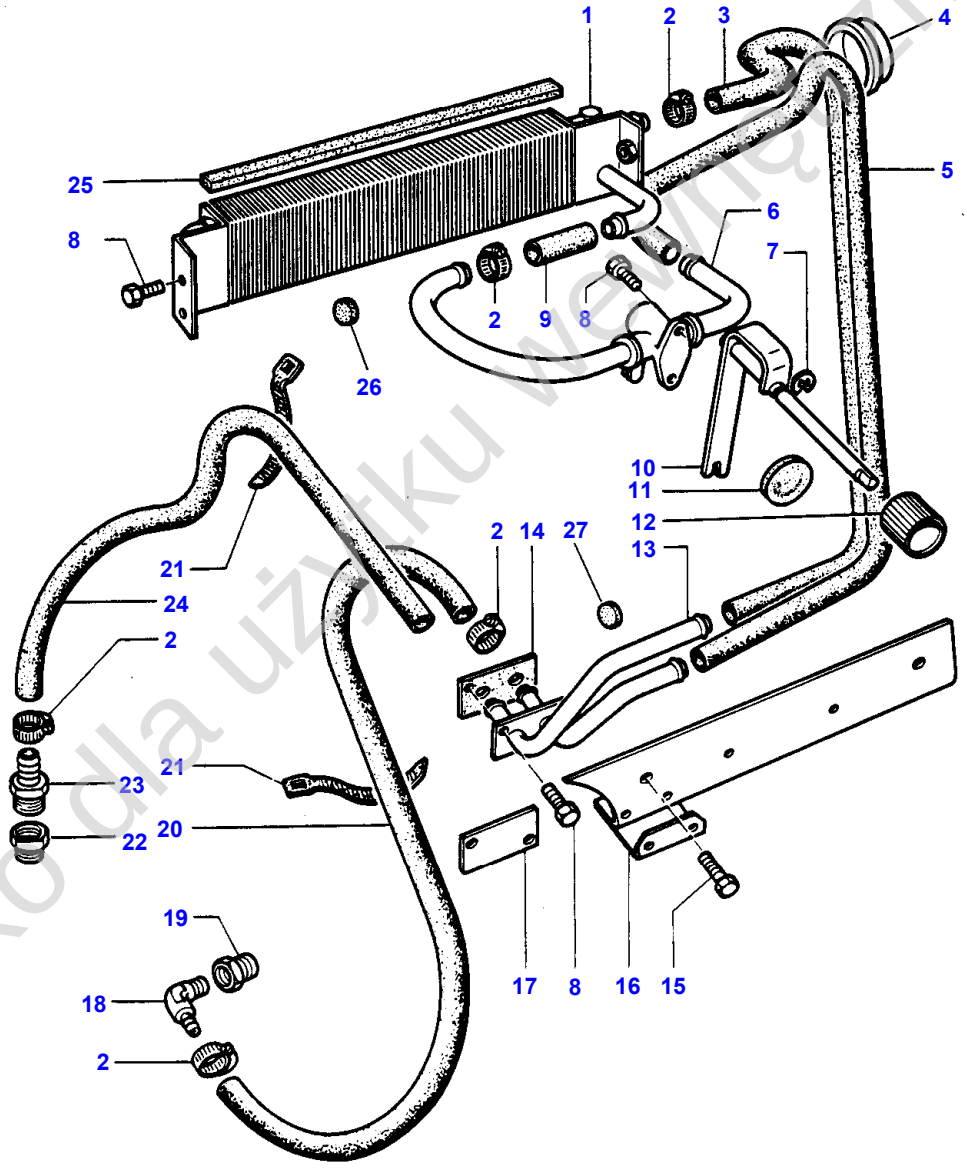

1-1813-004

Tylko dla użytku wewnętrznego

Item	Part Number	Qty	Description	Comments
1	1874945M92	1	Heater	Up to Serial or Engine Number J 144
	1674684M1	1	Hose	From Serial or Engine Number J 145
2	3000483X1	10	Clamp	
3	1877639M3	1	Water Hose	Up to Serial or Engine Number J 144
	1674683M91	1	Heater	From Serial or Engine Number J 145
4	1663914M1	1	Plug	
5	1664054M1	1	Hose	
6	1699803M91	1	Valve	
7	368230X1	1	Snapring	
8	365007X1	6	Self Tap Screws	
9	1699816M1	1	Hose	
10	1699810M92	1	Stop	
11	828790M2	1	Plug	
12	3039459M1	1	Knob	
13	1875102M91	1	Plate	
14	1875103M1	1	Gasket	
15	365007X1	2	Self Tap Screws	
16	1873669M92	1	Bearer	(B) Right Hand
16	1875929M2	1	Bearer	Left Hand
	1875930M3	1	Cover	Right Hand
17	1875098M1	1	Plate	(A)
18	365889X1	1	Elbow	
19	377693X1	1	Reducer	
20	1874502M1	1	Water Hose	
21	517587M1	2	Cable Tie	Repairs and replaces 1876229M1
22	1625241M1	1	Union	Repairs and replaces 367610X1
23	1625241M1	1	Union	Repairs and replaces 369925X1
24	1874502M1	1	Water Hose	
25	1877267M2	2	Pad	
26	359396X1	2	Plug	(A)
27	1699031M1	2	Plug	(A)

(A)
WITHOUT HEATING

(B)
WITH HYDRAULIC BRAKING CONTROL

Tylko dla użytku wewnętrznego

514

CABINE TRACTEUR	VENTILATION
SCHLEPPERKABINE	LUEFTUNG
CABINA TRATTORE	VENTILAZIONE
CABINA TRACTOR	VENTILADOR
TRACTOR CAB	VENTILATION

18071004

1 1807 006

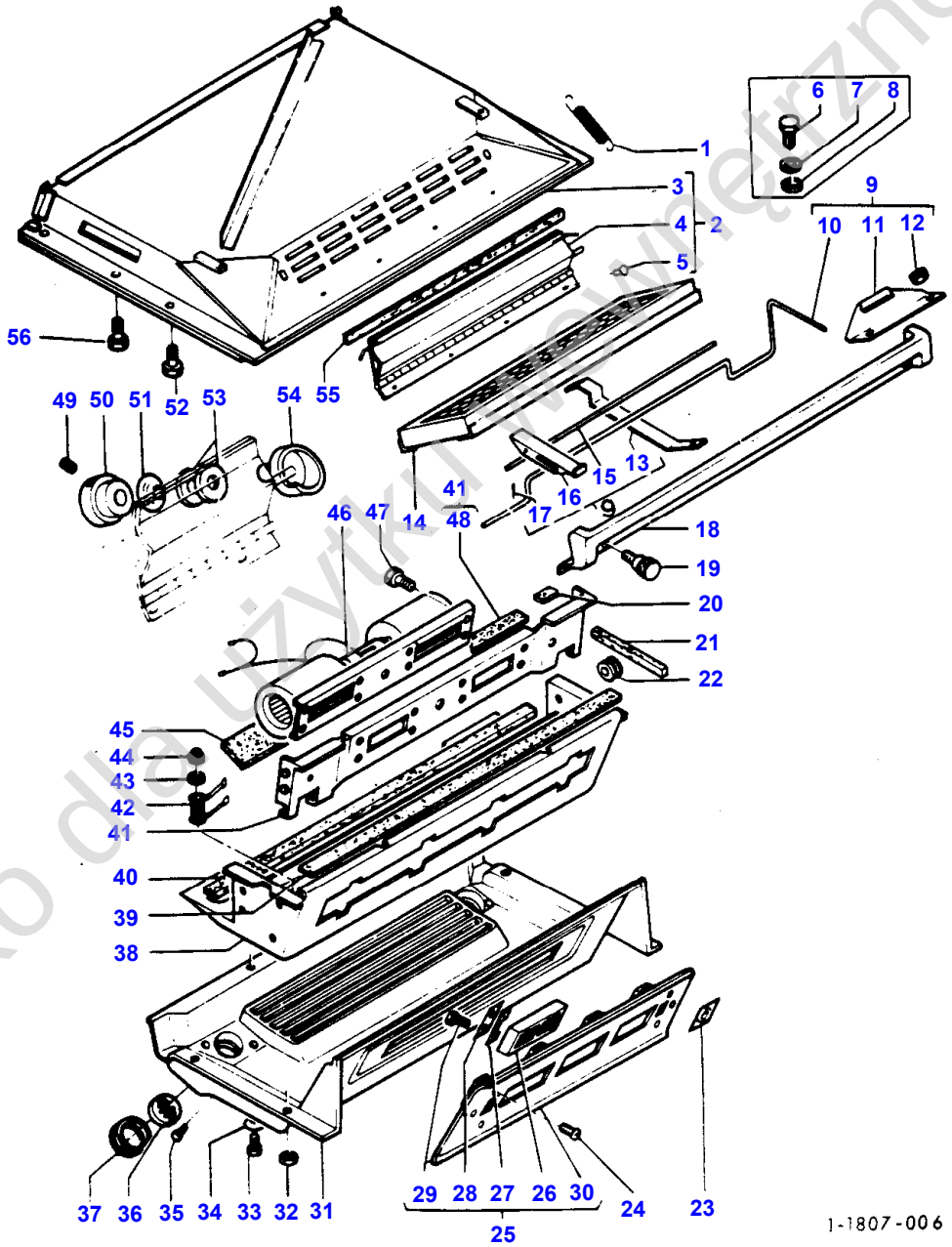

Tylko do użytku prywatnego

Item	Part Number	Qty	Description	Comments
1	1699099M2	2	Spring	(A)
2	1874821M95	1	Liner	(A)
3		1	Roof Lining	(2) (A) Not serviced, order 1874821M95
4	1699520M94	1	Plate	(2) (A)
5	19638X	4	Rivet	(2) (A)
6	353723X1	2	Screw Unc	
7	390735X1	2	Washer Metric	
8	1699117M1	2	Washer	
9	1699824M95	1	Lever	
10	1699563M2	1	Clamp	(9)
11	1699567M3	1	Spring	(9) Left Hand
11	1699566M3	1	Spring	(9) Right Hand
12	355564X1	5	Nut Unc	(9)
13	1699756M1	1	Bracket	(9)
14	1877242M2	1	Cab Filter	
15	1699564M3	1	Rod	(9)
16	1699565M3	2	Clamp	(9)
17	354046X1	5	Pin	(9)
18	1875199M2	1	Grille	
19	1873778M1	2	Knob	
	353754X1	2	Washer	
20	1613673M1	2	Pad	(41) Repairs and replaces 1614086M1
21	1698015M1	2	Gasket	
22	831935M1	2	Grommet	
23	1873908M3	1	Emblem	
24	357361X1	6	Screw Unc	
25	1877272M94	1	Cover	
26	3320434M91	3	Louvre	(25) Repairs and replaces 1874496M91
27	1699960M1	4	Spacer	(25)
28	1874538M1	4	Block	(25)
29	360366X1	8	Screw	(25)
30	1874539M92	1	Cover	(25) Up to Serial or Engine Number
30	3322276M1	1	Panel	From Serial or Engine Number
31	1875171M4	1	Liner	
32	355566X1	4	Nut Unc	
33	365026X1	8	Self Tap Screws	
34	1699180M1	8	Washer	
35	365925X1	4	Self Tap Screws	Repairs and replaces 360371X1
36	1875164M1	2	Louvre	
37	1875163M2	2	Retainer	
38	1626072M94	1	Chamber	
39	1877267M2	1	Pad	(38)
40	1617654M1	1	Gasket	(38)
41	1875172M94	1	Mounting	
42	1877679M92	1	Resistor	
43	1875243M1	2	Washer	
44	1875423M1	1	Nut	
45	1619951M1	1	Pad	
46	1610023M92	1	Blower	
47	365007X1	10	Self Tap Screws	
48	1877267M2	1	Pad	(41)
49	365718X1	1	Screw	
50	1625080M1	1	Knob	
51	1625079M1	1	Washer	
52	365026X1	13	Self Tap Screws	
53	1625077M1	2	Washer	
54	1699598M93	1	Riser	

Tylko do użytku wewnętrznego

Item	Part Number	Qty	Description	Comments
55	1699961M1	1	Underlay	
56	353988X1	3	Screw Unc	

(A)
WITHOUT LOUVRE IN ROOF

Tylko dla użytku wewnętrznego

518

CARROSSERIE	TABLEAU DE BORD
VERKLEIDUNG	ARMATURENBRETT
CARROZZERIA	PANNELLO STRUMENTI
EMPLANCHADOS	PANEL INSTRUMENTOS
SHEET METAL	INSTRUMENT PANEL

17191007

1 1719 024

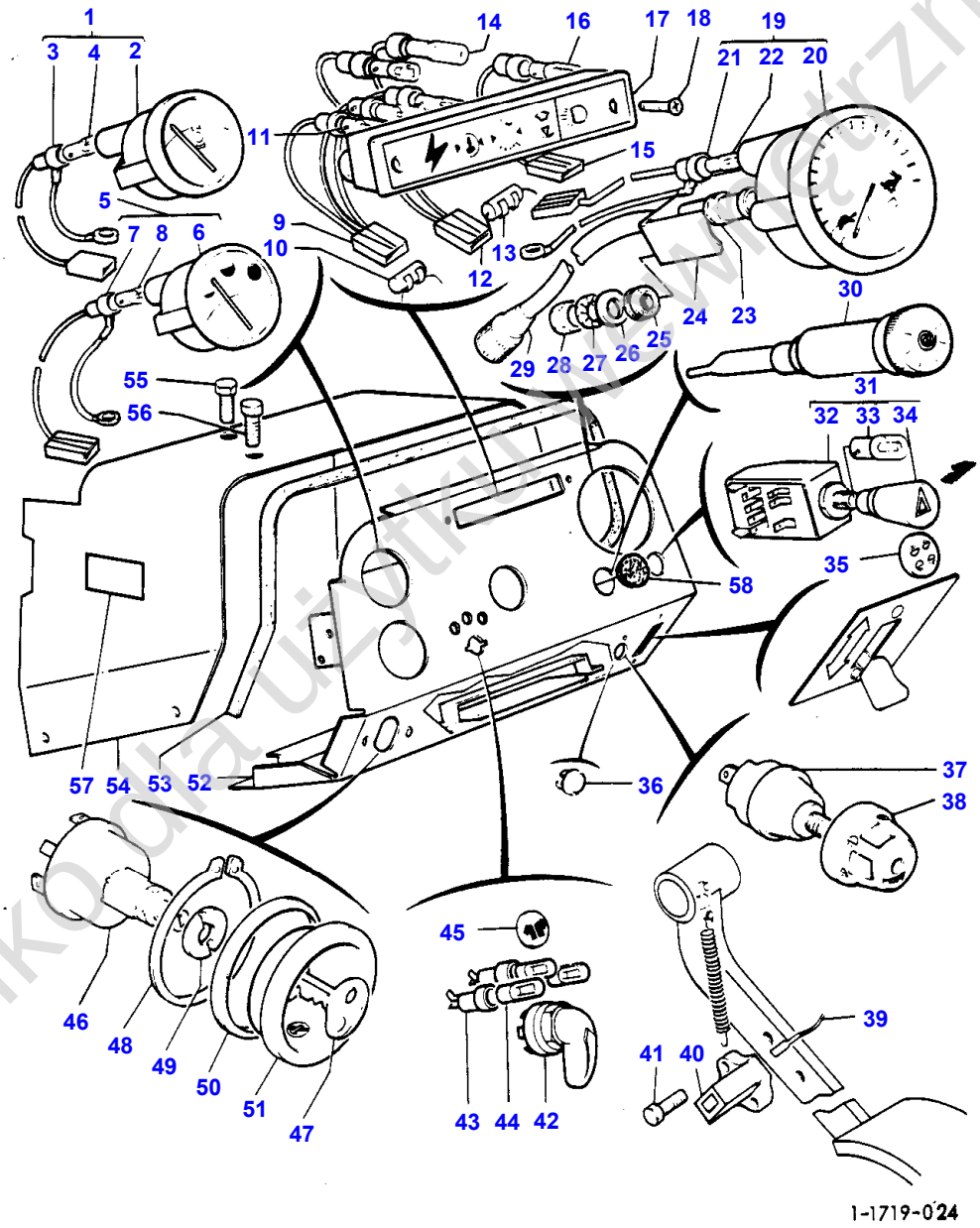

Tylko dla użytku prywatnego

Item	Part Number	Qty	Description	Comments
				UP TO SERIAL NO A 228006
1	1665585M92	1	Indicator	Alternative 1665586M92 SMITHS
1	1665586M92	1	Indicator	Alternative 1665585M92 SMITHS
2	1877719M92	1	Gauge	(1)
3	1877716M92	1	Harness	(1)
4	403704M1	1	Bulb 12v 2w	(3) 2W
5	1665591M92	1	Indicator	Alternative 1665592M92 SMITHS
5	1665592M92	1	Indicator	Alternative 1665591M92 JAEGER
6	1877717M92	1	Gauge	(5)
7	1877716M93	1	Harness	(5)
8	403704M1	1	Bulb 12v 2w	(7) 2W
9	1663289M91	1	Light	(A,B) Alternative 1663287M92 LUCAS
9	1873966M91	1	Light	(A,B) Alternative 1873964M91 ELICON
9	1663287M92	1	Harness	(B) Alternative 1663289M91
9	1873964M91	1	Lamp	(B) Alternative 1873966M91
10	1613434M1	1	Capacitor	(9) (D)
11	1048302M1	3	Bulb 12v 3w	(9) 2W
12	1663290M91	1	Light	(A,C) Alternative 1663288M92 LUCAS
12	1873967M91	1	Light	(A,C) Alternative 1873965M91 ELICON
12	1663288M92	1	Lamp	(C) Alternative 1663290M91
12	1873965M91	1	Lamp	(C) Alternative 1873967M91
13	1613434M1	1	Capacitor	(12) (D)
14	1048302M1	2	Bulb 12v 3w	(12) 2W
15	1663556M92	2	Harness	Alternative 1873872M91 LUCAS
15	1873872M91	2	Control	Alternative 1663556M92 ELICON
16	1048302M1	1	Bulb 12v 3w	(15) 2W
17	1663555M91	1	Housing	Alternative 1873868M91 LUCAS
17	1873868M91	1	Housing	Alternative 1663555M91 ELICON
18	354022X1	2	Screw Unc	Alternative 1665562M92 SMITHS
19	1665561M92	1	Meter	Alternative 1665561M92 JAEGER
19	1665562M92	1	Meter	
20	1875187M92	1	Tractormeter	(19)
21	1877716M93	1	Harness	(19)
22	403704M1	1	Bulb 12v 2w	(21) 2W
23	1613503M1	1	Grommet	

Tylko dla użytku wewnętrznego

Item	Part Number	Qty	Description	Comments
24	1873297M3	1	Bracket	
25	367391X1	2	Grommet	
26	355616X1	2	Washer	
27	391289X1	2	Lock Washer	
28	390995X1	2	Nut Metric	
29	1875889M91	1	Cable	
30	1874536M91	1	Lighter	
31	1671544M1	1	Switch	Repairs and replaces 1604409M1
32		1	Body	(31) Not serviced, order 1671544M1
33	1718899M1	1	Bulb	(31) 12W
34		1	Button	(31) Not serviced, order 1671544M1
35	1875316M1	1	Decal	
36	1699036M1	1	Plug	
37	1699034M1	1	Switch	
38	1873910M1	1	Knob	
39	964103M1	2	Connector	
40	1874709M1	1	Switch	
41	353977X1	2	Screw Unc	
42	881670M1	1	Switch	
43	1668168M91	3	Indicator	Repairs and replaces 1698035M91
44	1635938M1	3	Bulb	(43) 2W
45	1875315M1	1	Emblem	
46	1874120M93	1	Switch, Ignition	
47	883930M1	1	Ignition Key	(46)
48	355924X1	1	Snapring	
49	1662420M1	1	Nut	
50	1873961M2	1	Gasket	
51	1873906M1	1	Cup	Alternative 1698049M91
51	1698049M91	1	Cup	Alternative 1873906M1
52	1667387M92	1	Instrument Panel	Up to Serial or Engine Number 01/81
53	1875773M1	1	Trim	
54	1613727M93	1	Cowl	
55	365007X1	2	Self Tap Screws	
56	377547X1	8	Screw	Alternative 365011X1
56	365011X1	8	Screw	Alternative 377547X1
57	967945M1	1	Plate	For France only or any text in French only
58	1874928M1	1	Plug	(E)

(A)
FOR USE WITH MOTOROLA ALTERNATOR

(B)
WITH PRESSURE GAUGE

(C)
WITHOUT PRESSURE GAUGE

(D)
NOT USED FOR 1663289M91-1663290M91-1873966M91--187
3967M91

(E)
WITHOUT CIGAR LIGHTER

Tylko dla użytku wewnętrznego

524

CARROSSERIE
VERKLEIDUNG
CARROZZERIA
EMPLANCHADOS
SHEET METAL

TABLEAU DE BORD
ARMATURENBRETT
PANNELLO STRUMENTI
PANEL INSTRUMENTOS
INSTRUMENT PANEL

17191030

1 1719 049

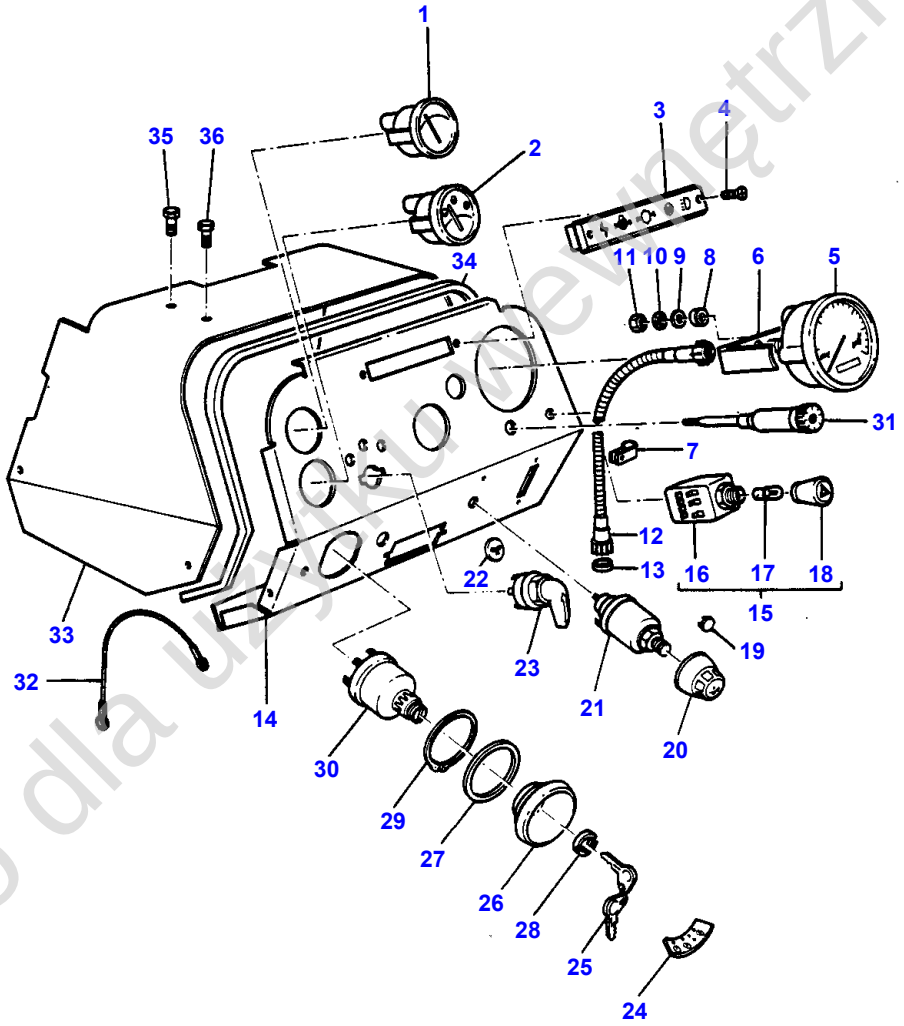

1 - 1719 - 049

Tylko dla użytku wewnętrznego

Item	Part Number	Qty	Description	Comments
				FROM SERIAL 02/1981
1	1877719M92	1	Gauge	
2	1877717M92	1	Gauge	
3	1663555M92	1	Housing	
4	354022X1	2	Screw Unc	
5	1875187M92	1	Tractormeter	Alternative 1674637M91
	1674637M91	1	Tractormeter	Alternative 1875187M92
6	1672860M1	1	Bracket	
7	1875887M1	1	Clip	
8	367391X1	2	Grommet	
9	355616X1	2	Washer	
10	391289X1	2	Lock Washer	
11	390995X1	2	Nut Metric	
12	882021M91	1	Cable	
13	520909M1	1	Adaptor	
14	1673764M92	1	Panel	
15	1671544M1	1	Switch	
16		1	Body	(15)
				Not serviced, order REF NO 15
17	1718899M1	1	Bulb	(15)
18		1	Helmet	(15)
				Not serviced, order REF NO 15
19	1699036M1	1	Plug	
20	1873910M1	1	Knob	
21	1699034M1	1	Switch	
22	1875315M1	1	Emblem	
23	881670M1	1	Switch	
24	1678059M1	1	Decal	
25	883930M1	1	Ignition Key	(30)
26	1678057M1	1	Cup	
27	1873961M2	1	Gasket	
28	1662420M1	1	Nut	
29	355924X1	1	Snapring	
30	2846121	1	Switch	
31	1874536M91	1	Lighter	
32	962744M2	1	Wire	
33	1613727M93	1	Cowl	
34	1875773M1	1	Trim	
35	365007X1	1	Self Tap Screws	
36	377547X1	8	Screw	Alternative 365011X1
	365011X1	8	Screw	Alternative 377547X1
	354120X1	1	Nut	(A)
	359409X1	1	Washer	(A)
				(A)
				NOT ILLUSTRATED

Tylko dla użytku wewnętrznego

526

CARROSSERIE
VERKLEIDUNG
CARROZZERIA
EMPLANCHADOS
SHEET METAL

CABLAGE TABLEAU DE BORD
KABELVERKLEIDUNG
CAVI PANNELLO
PANEL CONEXIONES
PANEL WIRING

17221003

1 1722 004

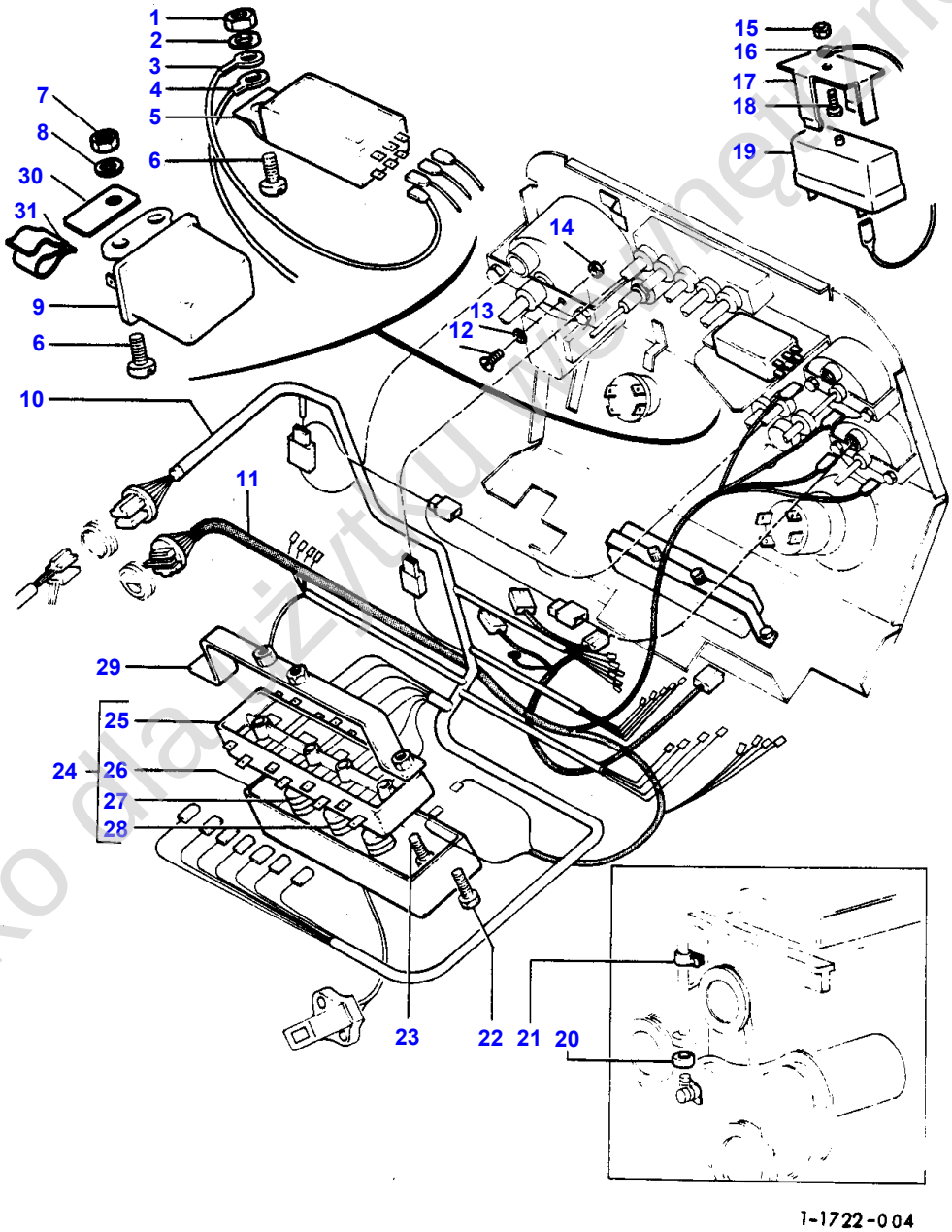

1-1722-004

Tylko dla użytku wewnętrznego

Item	Part Number	Qty	Description	Comments
				UP TO SERIAL NO 228006
1	354120X1	2	Nut	
2	22445X	2	Tooth Washer	
3	1875450M3	1	Cable	
4	1698045M91	1	Harness	
5	1617401M1	1	Blinker Unit	
6	353990X1	2	Screw Unc	
7	354121X1	2	Nut	
8	22463X	1	Lock Washer	
9	521391M91	1	Relay	
10	1617613M5	1	Harness	(A)
11	1617645M2	1	Harness	(B)
12	353980X1	1	Screw Special	
13	22445X	1	Tooth Washer	
14	354120X1	2	Nut	
15	354120X1	1	Nut	
16	1875450M3	1	Cable	
17	1699534M1	1	Clip	
18	353982X1	1	Screw Unc	
19	1619792M1	1	Warning	
20	520909M1	1	Adaptor	
21	1875887M1	1	Clip	
22	377547X1	2	Screw	Alternative 365011X1
	365011X1	2	Screw	Alternative 377547X1
23	357446X1	2	Screw Unc	
24	1617085M3	1	Box	ETMA
25		1	Support	(24)
26	1630973M91	1	Cover	(24)
27	1630972M1	6	Fuse	(24) 10 A.
28	1630977M1	2	Fuse	(24) 15 A.
29	1873159M91	1	Bracket	
30	1663822M1	1	Plate	
31	506294M1	1	Clip	
				(A) INSTRUMENT PANEL
				(B) ENGINE

Tylko dla użytku wewnętrznego

528

CABINE TRACTEUR	DIVERS CABINE
SCHLEPPERKABINE	VERSCHIEDENES
CABINA TRATTORE	MISCELLANEA CABINA
CABINA TRACTOR	VARIOS
TRACTOR CAB	CAB MISCELLANEOUS

18191005

1 1819 011

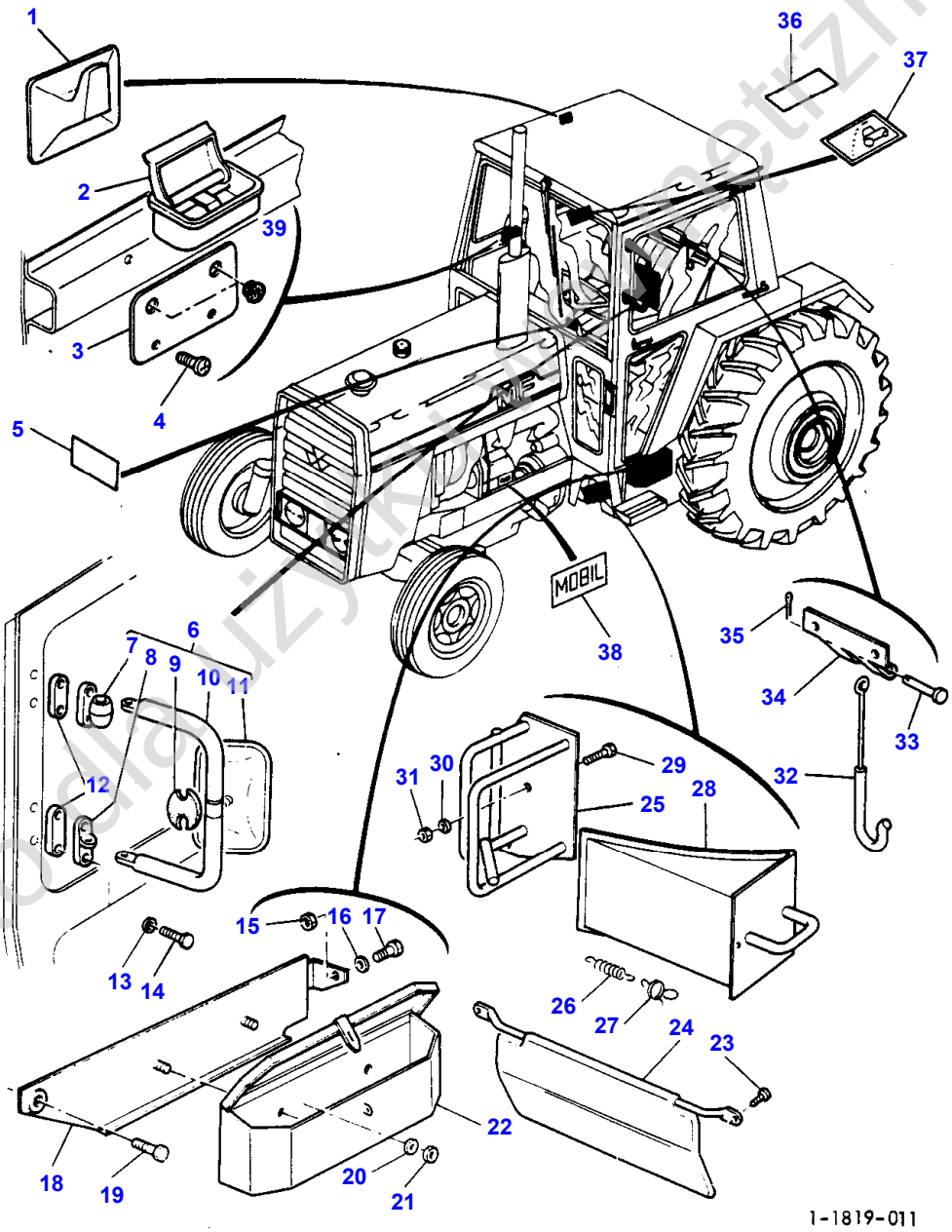

Tylko do użytku prywatnego

Item	Part Number	Qty	Description	Comments
1	1662902M1	1	Knotter Hook	
2	1699864M91	1	Ashtray	
3	1699869M1	1	Plate	
4	365026X1	2	Self Tap Screws	
5	969882M1	1	Decal	For France only or any text in French only ,EE
	892418M1	1	Decal	For Germany only or any text in German only
	892472M1	1	Decal	For UK only or any text in English only
6	1613663M93	1	Mirror	Left Hand CIPA
	1873907M92	1	Mirror	Right Hand CIPA
7	1635993M1	1	Bracket	(6) (F) Left Hand Up to Serial or Engine Number 1613663M92
7	1635992M1	1	Bracket	(6) (F) Right Hand Up to Serial or Engine Number 1873907M91
8	1639346M91	1	Bracket	(6) (F) Left Hand Up to Serial or Engine Number 1613663M92
8	1636079M91	1	Bracket	(6) (F) Right Hand Up to Serial or Engine Number 1873907M91
9	1635997M1	1	Cover	(6)
10	1635998M1	1	Crank	(6) Up to Serial or Engine Number 1613663M92 Up to Serial or Engine Number 1873907M91
10	1634270M1	1	Arm	(6) From Serial or Engine Number 1613663793 From Serial or Engine Number 1873907M92
11	1635999M91	1	Mirror	(6)
12	1614636M1	2	Spacer	
13	353754X1	8	Washer	
14	353671X1	8	Bolt Unc	Up to Serial or Engine Number
	353667X1	8	Screw Unc	From Serial or Engine Number
15	353431X1	1	Nut Unf	
16	353434X1	1	Lock Washer	
17	353538X1	1	Screw Unf	
18	1662871M92	1	Plate	
19	354704X1	1	Screw Unc	
20	353446X1	2	Lock Washer	
21	353918X1	2	Nut Unf	
22	1662749M91	1	Tool Box	Alternative 909616M93
	909616M93	1	Tool Box	Alternative 1662749M91
23	365052X1	2	Screw	
24	1662553M92	1	Kit	
25		1	Support	See Page - Reference Number 236/
26		1	Spring	(25) See Page - Reference Number 236/
27		1	Hook	(25) See Page - Reference Number 236/
28		1	Chock	See Page - Reference Number 236/
29		2	Bolt	See Page - Reference Number 236/
30		2	Washer	See Page - Reference Number 236/
		4	Washer	See Page - Reference Number 236/
31		2	Nut	See Page - Reference Number 236/
32	1809938M2	1	Hook	
33	195969M1	1	Pin	
34	1698017M2	1	Bracket	
35	354057X1	1	Pin	
36	1617728M1	1	Decal	For Germany only or any text in German only
37	1677341M1	1	Chart	(B,C) Q

Tylko do użytku wewnętrznego

Item	Part Number	Qty	Description	Comments
37	1677342M1	1	Chart	(B,C) Q
37	1669231M1	1	Sketch	(A,C) Q
37	1669308M1	1	Sketch	(A,C) Q
37	1669309M1	1	Sketch	(B,C)
38	1809554M1	1	Decal	For France only or any text in French only
38	1809555M1	1	Decal	Without or not For France only or any text in French only
39	1699874M1	2	Plug	(E) Q

(A)
TRANSMISSION 8 SPEED

(B)
MULTI POWER TRANSMISSION

(C)
HIGH FLOW PUMP

(E)
WITHOUT AHSTRAY

(F)
NOT SUPPLIED FOR 1613663M93 AND 1873907M92

Tylko dla użytku wewnętrznego

532

DECALCOMANIES
ABZIEHBILDER
DECALCOMANIE
TRANSMISIONES
TRANSFERS

48001005

1 4800 029

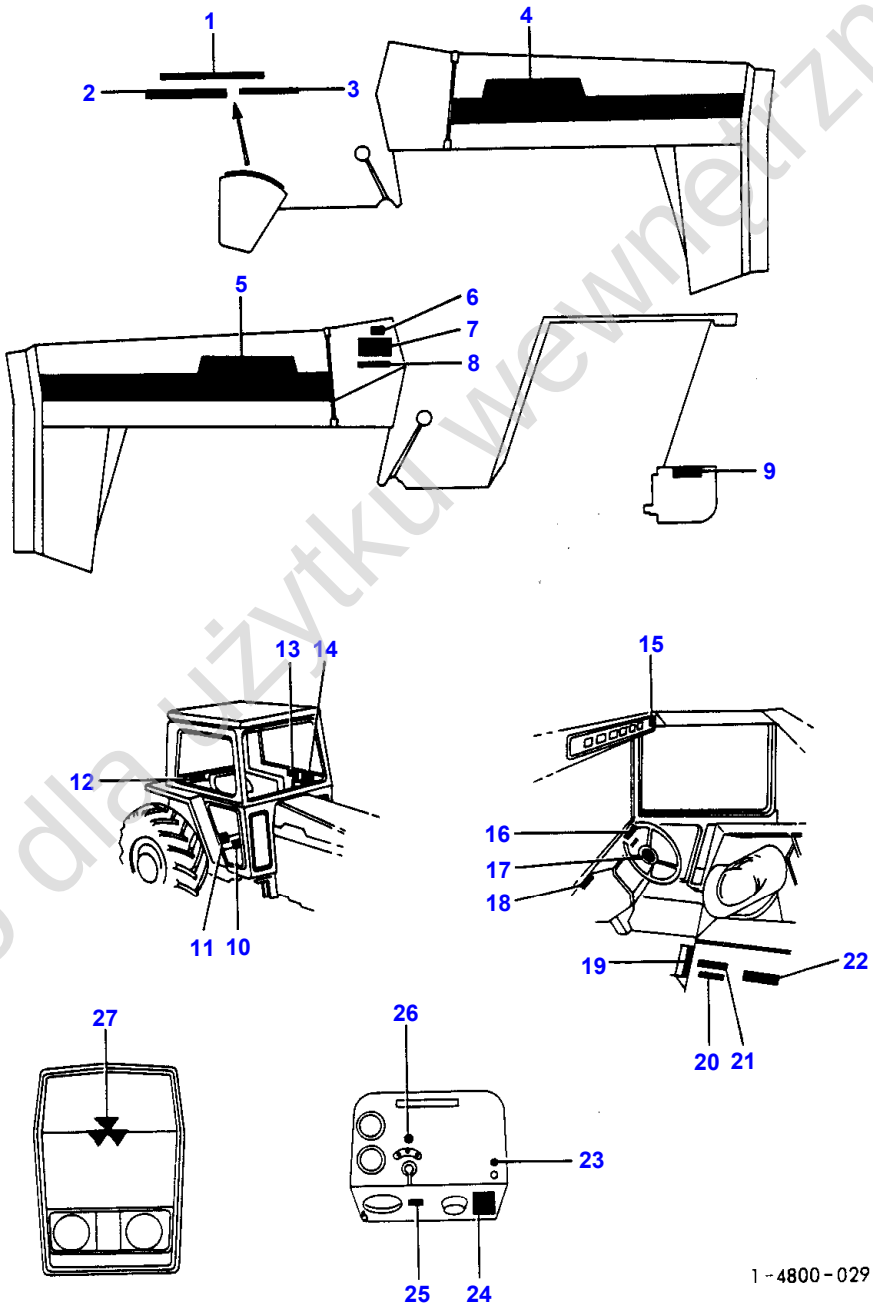

Tylko dla użytku wewnętrznego

Item	Part Number	Qty	Description	Comments
1	1671039M1	1	Decal	(A) For France only or any text in French only
1	1671040M1	1	Decal	(A) For Germany only or any text in German only
1	194560M1	1	Emblem	(A) For UK only or any text in English only
2	962220M1	1	Emblem	(B) For France only or any text in French only
2	881711M1	1	Emblem	(B) For Germany only or any text in German only
2	506876M1	1	Decal	(B) For UK only or any text in English only
3	962221M1	1	Emblem	(C) For France only or any text in French only
3	881709M1	1	Emblem	(C) For Germany only or any text in German only
3	506877M1	1	Decal	(C) For UK only or any text in English only
4	1698131M2	1	Emblem	Right Hand Two Wheel Drive
4	1698137M1	1	Decal	Right Hand Four Wheel Drive
5	1698130M2	1	Emblem	Left Hand Two Wheel Drive
5	1698136M1	1	Decal	Left Hand Four Wheel Drive
6	1809554M1	1	Decal	For France only or any text in French only
	1809555M1	1	Decal	Without or not For France only or any text in French only
7	1664249M1	1	Decal	For UK only or any text in English only
8	1617728M1	1	Decal	For Germany only or any text in German only
9	883612M1	1	Decal	For Germany only or any text in German only
	886408M1	1	Decal	For France only or any text in French only
10	1875394M2	1	Decal	
11	1664257M1	1	Decal	
	1664258M1	1	Decal	
12	1873643M1	1	Emblem	For Germany only or any text in German only
13	1664608M3	1	Decal	For France only or any text in French only
	1664644M3	1	Decal	For Germany only or any text in German only
	1664570M3	1	Decal	For UK only or any text in English only
14	1660936M1	1	Decal	For UK only or any text in English only
15	1873908M3	1	Emblem	
16	967945M2	1	Plate	For France only or any text in French only
17	1870806M91	1	Cap	
18	969882M1	1	Decal	For France only or any text in French only
	892418M1	1	Decal	For Germany only or any text in German only
	892472M1	1	Decal	For UK only or any text in English only
19	1663291M1	1	Decal	
20	1867104M2	1	Decal	For France only or any text in French only For Germany only or any text in German only
20	1665313M1	1	Decal	For UK only or any text in English only
21	1665856M1	1	Emblem	
22	1873657M1	1	Decal	Four Wheel Drive
23	1875316M1	1	Decal	
24	1873577M1	1	Plate	
25	1875410M1	1	Decal	
26	1875315M1	1	Emblem	
27	1667712M91	1	Emblem	For Germany only or any text in German only
	1661689M1	1	Emblem	For Germany only or any text in German only
	353754X1	2	Washer	For Germany only or any text in German only
	353918X1	2	Nut Unf	For Germany only or any text in German only
	1877996M2	1	Emblem	Without or not For Germany only or any text in German only
27	354198X1	2	Screw Unc	Without or not For Germany only or any text in German only
27	353753X1	2	Washer	Without or not

Tylko do użytku wewnętrznego

Item	Part Number	Qty	Description	Comments
				For Germany only or any text in German only
				(A) DRAFT CONTROL
				(B) RESPONSE CONTROL
				(C) POSITION CONTROL

Tylko dla użytku wewnętrznego

536

CABLAGE
ELEKTRISCHE LEITUNGEN
CAVO
CABLEADO
WIRING

02201014

1 0220 019

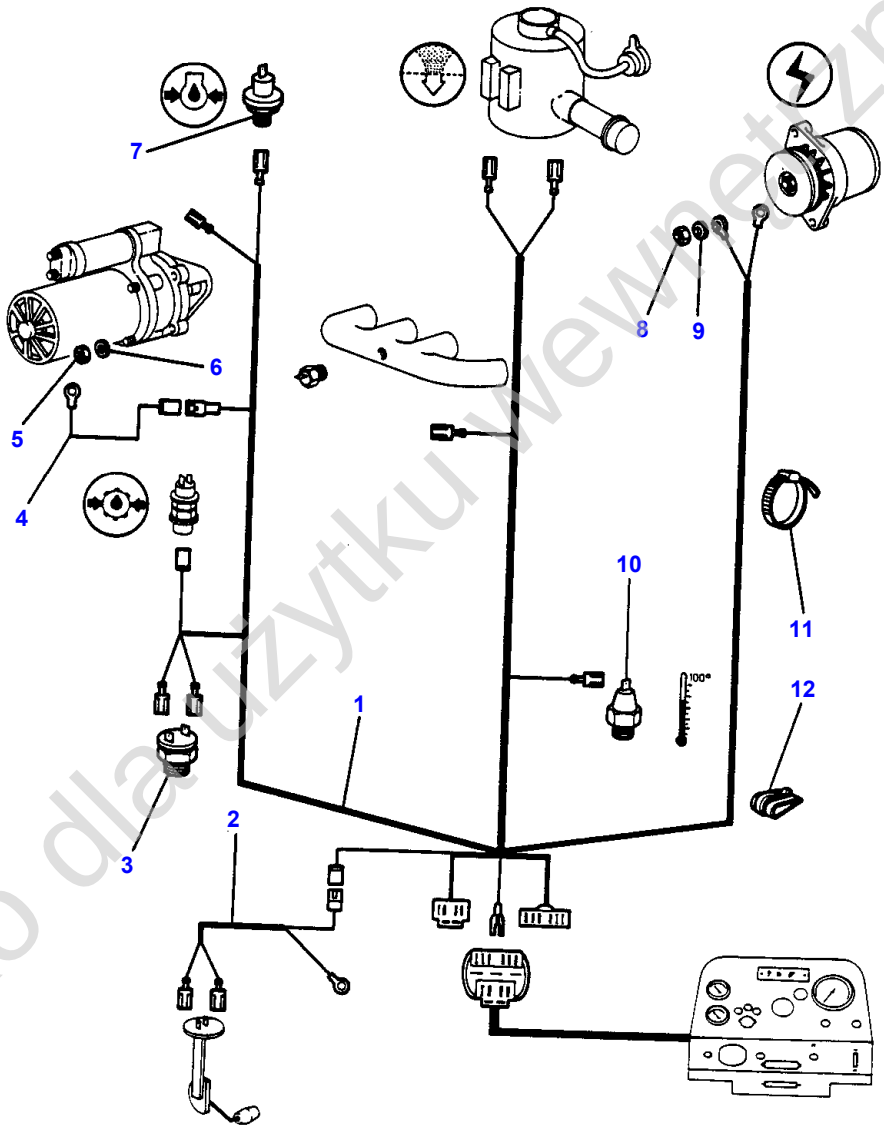

Tylko dla użytku wewnętrznego

Item	Part Number	Qty	Description	Comments
				ENGINE- FROM SERIAL NO A 228007 UP TO SERIAL 01-19 81
1	1873759M3	1	Harness	
2	1699264M1	1	Harness	
3	963417M2	1	Switch	
4	1875449M1	1	Wire	
5	363623X1	3	Nut	
6	353434X1	3	Lock Washer	
7	1877721M92	1	Pressure Switch	
8	390995X1	1	Nut Metric	
9	359409X1	1	Washer	
10	1877731M92	1	Sender	
11	517587M1	2	Cable Tie	
12	1809844M1	8	Strap	

Tylko dla użytku wewnętrznego

538

CABLAGE
ELEKTRISCHE LEITUNGEN
CAVO
CABLEADO
WIRING

02201012

1 0220 017

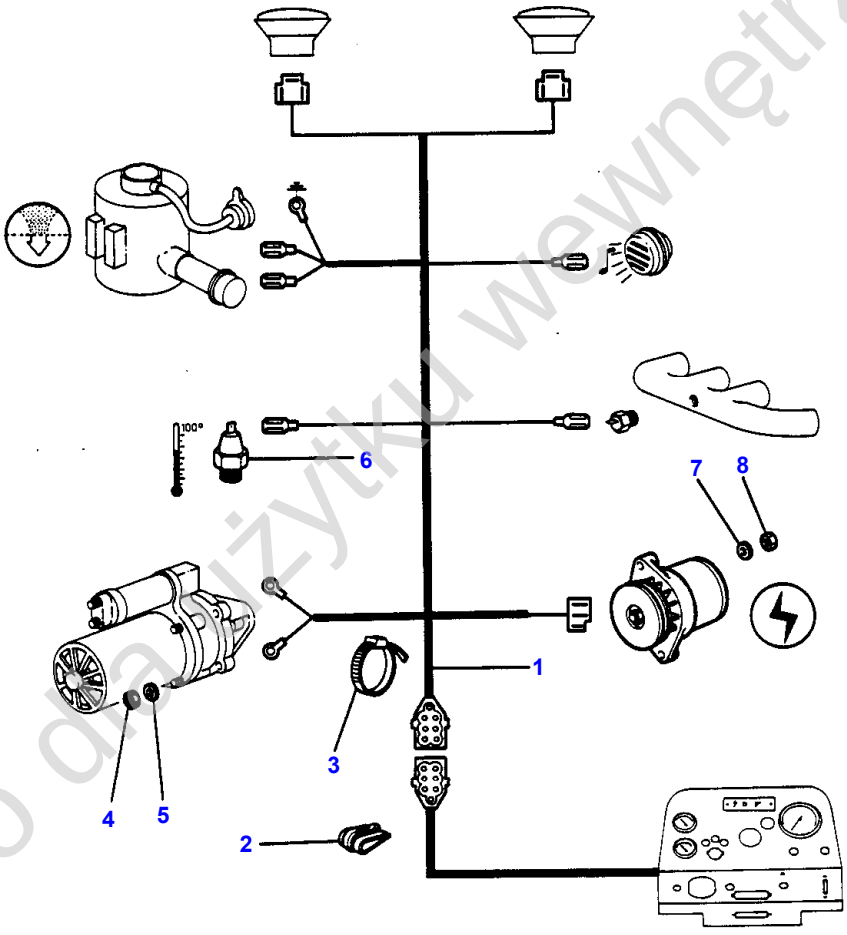

1-0220-017

Tylko do użytku wewnętrznego

Item	Part Number	Qty	Description	Comments
				ENGINE- FROM SERIAL 02-1981
1	1672919M93	1	Harness	
2	1809844M1	8	Strap	
3	517587M1	2	Cable Tie	
4	363623X1	3	Nut	
5	353434X1	3	Lock Washer	
6	1877731M92	1	Sender	
7	359409X1	1	Washer	
8	390995X1	1	Nut Metric	

Tylko dla użytku wewnętrznego

540

CABLAGE
ELEKTRISCHE LEITUNGEN
CAVO
CABLEADO
WIRING

02201011

1 0220 016

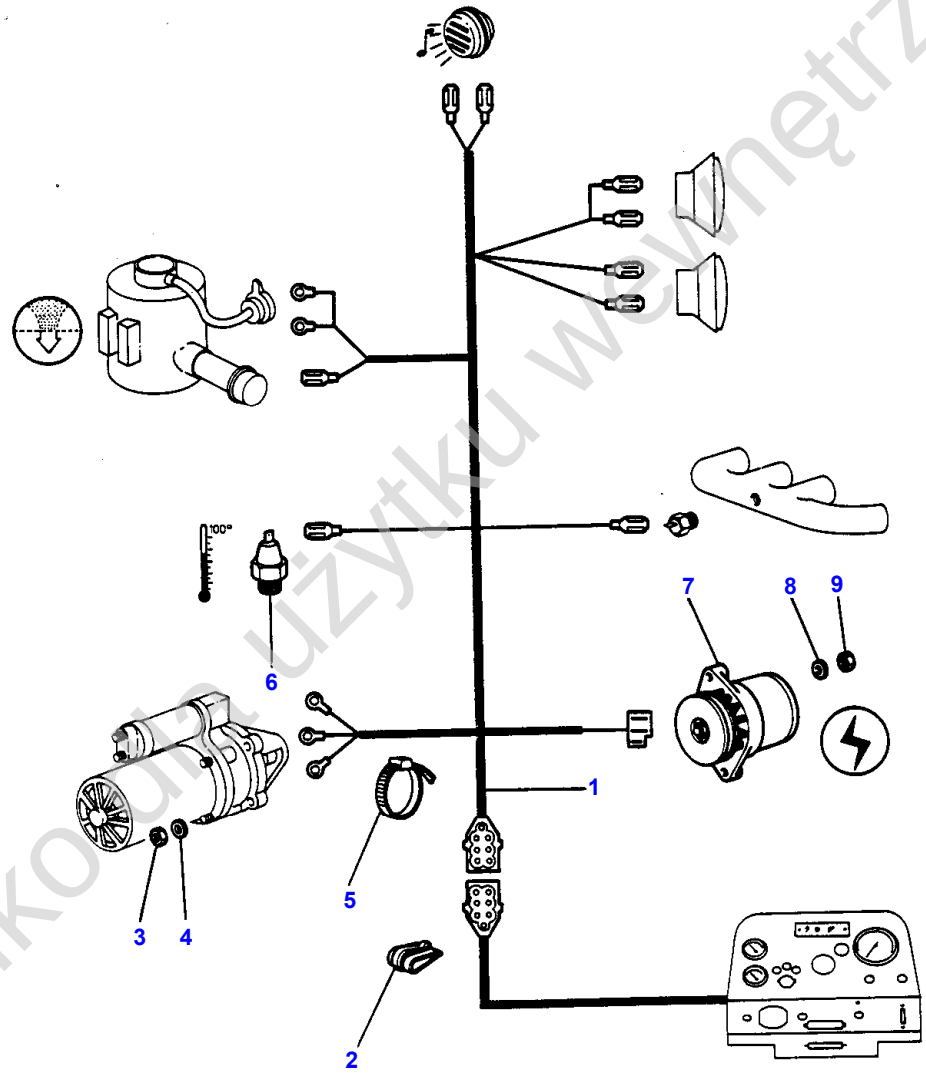

1-0220-016

Tylko do użytku wewnętrznego

Item	Part Number	Qty	Description	Comments
				ENGINE- SCANDINAVIA FROM SERIAL 02-1981
1	1678406M92	1	Harness	
2	1809844M1	8	Strap	
3	363623X1	3	Nut	
4	353434X1	3	Lock Washer	
5	517587M1	2	Cable Tie	
6	1877731M92	1	Sender	
7		1	Alternator	See Page - Reference Number 56/
8	359409X1	1	Washer	
9	390995X1	1	Nut Metric	

Tylko dla użytku wewnętrznego

542

CABLAGE
ELEKTRISCHE LEITUNGEN
CAVO
CABLEADO
WIRING

02201015

1 0220 020

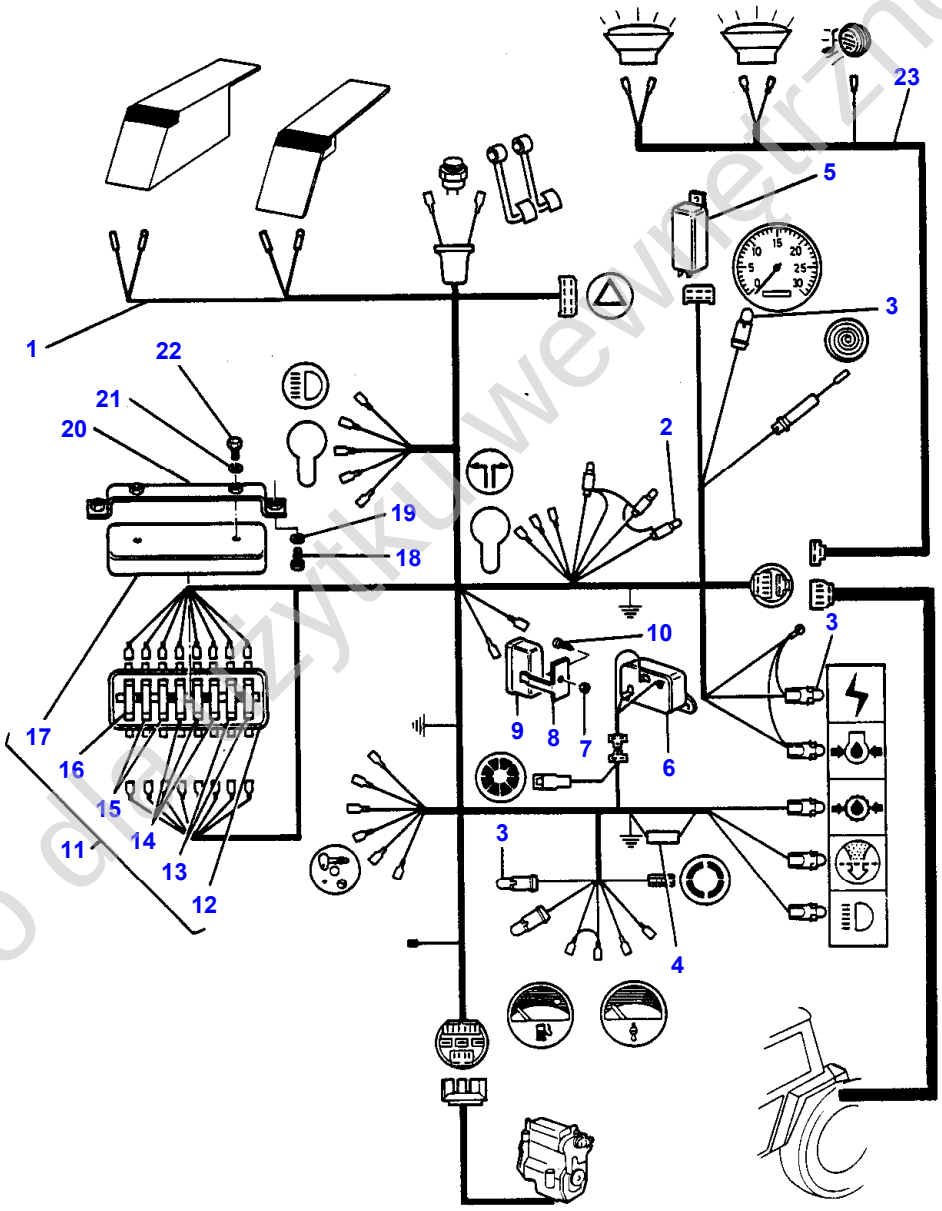

1-0220-020

Tylko do użytku wewnętrznego

WIRING - INSTRUMENT PANEL- FROM SERIAL NO A 228007 UP TO SE RIAL 01-1981 542

Item	Part Number	Qty	Description	Comments
				INSTRUMENT PANEL- FROM SERIAL NO A 228007 UP TO SE RIAL 01-1981
1	1669992M91	1	Harness	
2	2854336	3	Bulb	(1) 2W
3	1048302M1	8	Bulb 12v 3w	(1) 3W
4	784677M1	1	Fuse	(1)
5	1672755M1	1	Blinker	
6	521391M91	1	Relay	Up to Serial or Engine Number J138047
	772296M91	1	Relay	From Serial or Engine Number J138048 Up to Serial or Engine Number J 222028
7	354120X1	1	Nut	
8	1699534M1	1	Clip	
9	1619792M1	1	Warning	
10	353982X1	1	Screw Unc	
11	1670613M91	1	Fuse Box	
12		1	Support	(11) Not serviced, order REF NO 11
13	15358A	2	Fuse 20a Glass	(11) 20AMP
14	525851M1	3	Fuse 5a Glass	(11) 5 AMP
15	239819M1	2	Fuse 10a Glass	(11) 10AMP
16	15358A	1	Fuse 20a Glass	(11) 20AMP
17		1	Cover	(11) Not serviced, order REF NO 11
18	365011X1	2	Screw	Alternative 377547X1
	377547X1	2	Screw	Alternative 365011X1
19	353754X1	2	Washer	
20	1873159M92	1	Bracket	
21	353756X1	1	Washer	
22	357446X1	2	Screw Unc	
23	1699008M2	1	Harness	

Tylko dla użytku wewnętrznego

544

CABLAGE
ELEKTRISCHE LEITUNGEN
CAVO
CABLEADO
WIRING

02201016

1 0220 021

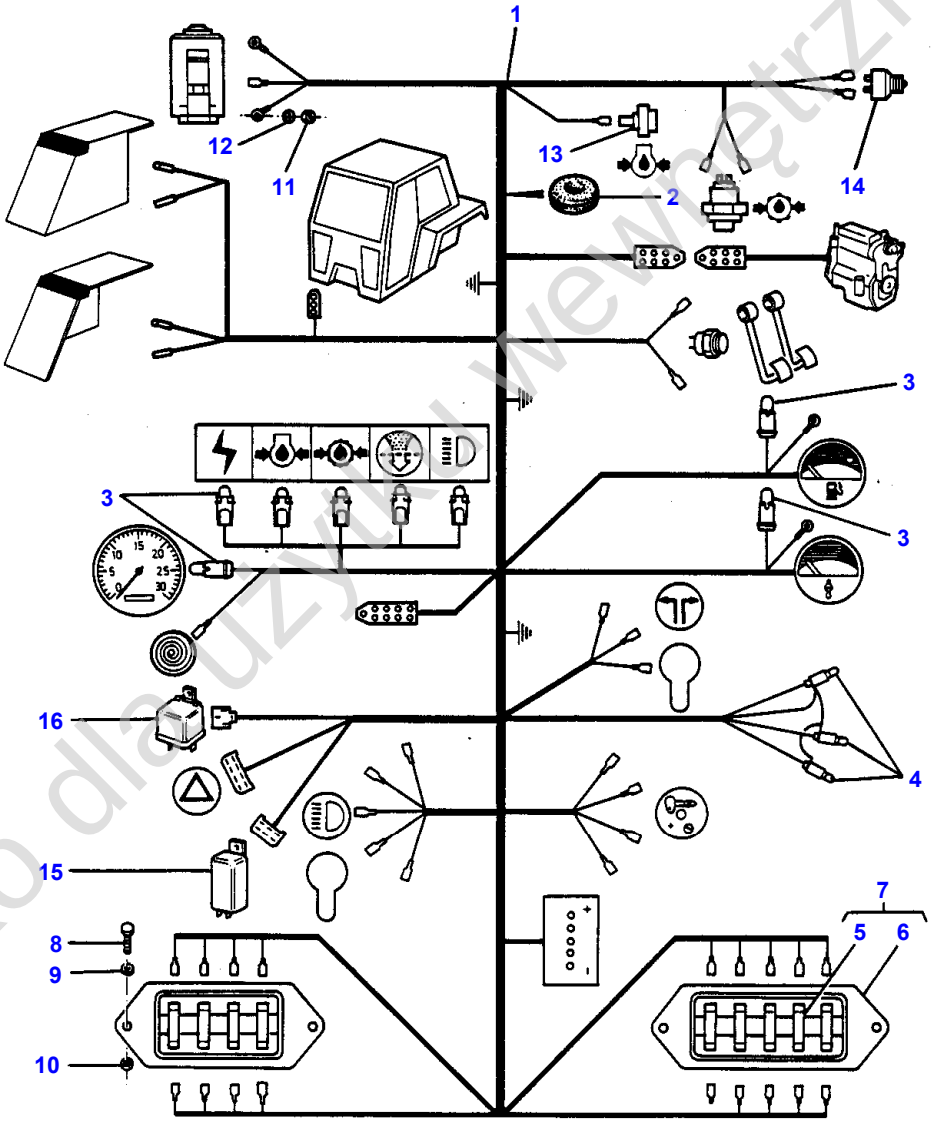

1-0220-021

Tylko dla użytku wewnętrznego

Item	Part Number	Qty	Description	Comments
				INSTRUMENT PANEL- FROM SERIAL 02-1981
1	1676542M91	1	Harness	
2	1895238M1	1	Grommet	(1)
3	1891862M1	8	Bulb 12v 3w	(1) 3W
4	1669993M91	3	Light	(1) 2W
5	784677M1	1	Fuse	(1) 10AMP
5	1615456M1	3	Fuse	(1) 20AMP
5	1895342M1	1	Cover	(1) 50AMP
6	1893740M1	2	Gasket	(7)
	1893739M1	2	Cover	(7)
7	1810697M91	1	Fuse Box	(1)
8	187137M1	4	Screw	
9	22427X	4	Lock Washer	
10	354120X1	4	Nut	
11	390995X1	1	Nut Metric	
12	359409X1	1	Washer	
13	1877721M92	1	Pressure Switch	
14	963417M2	1	Switch	
15	1672755M1	1	Blinker	
16	1674861M91	1	Relay	From Serial or Engine Number J 222029

Tylko dla użytku wewnętrznego

546

CABLAGE
ELEKTRISCHE LEITUNGEN
CAVO
CABLEADO
WIRING

02201020

1 0220 025

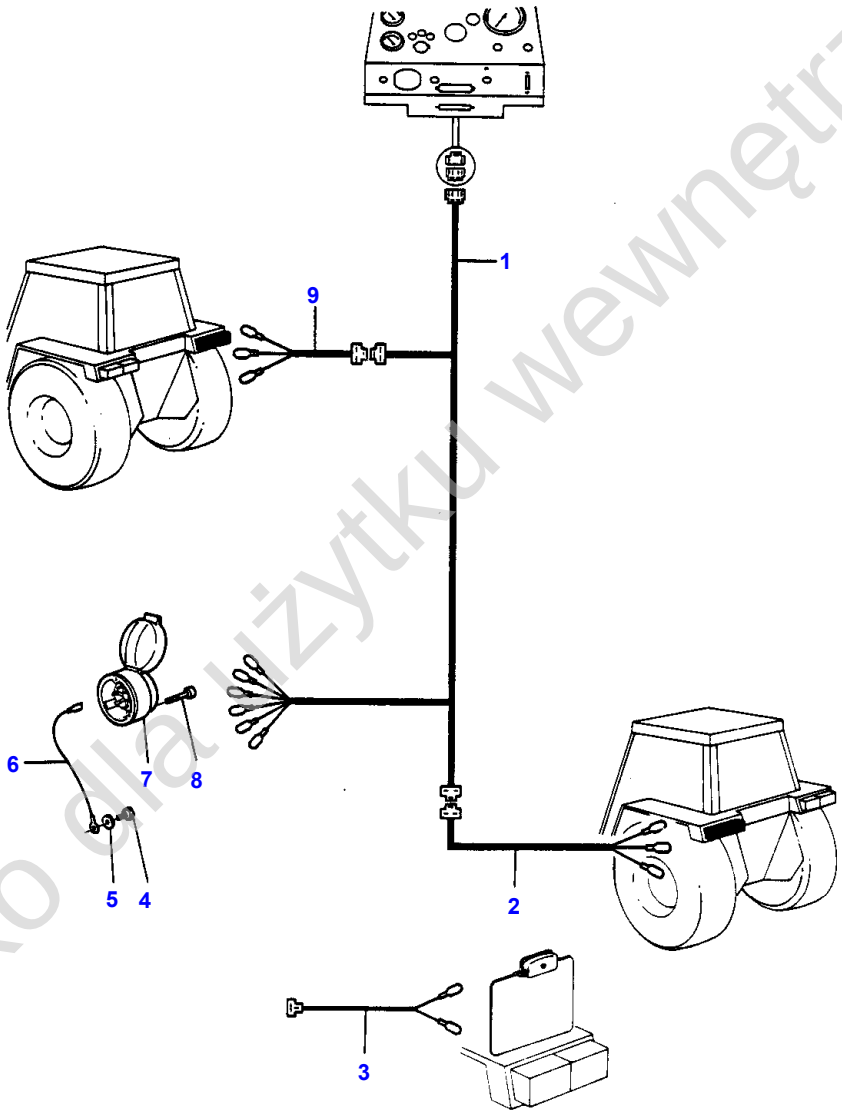

1 - 0220 -025

Tylko dla użytku wewnętrznego

Item	Part Number	Qty	Description	Comments
				REAR- UP TO SERIAL J222028
1	1699319M3	1	Harness	
2	1699084M2	1	Harness	Up to Serial or Engine Number J195011
	2260373M2	1	Harness	From Serial or Engine Number J195012
3	1663215M92	1	Harness	
4	365007X1	1	Self Tap Screws	
5	22463X	1	Lock Washer	
6	1875448M92	1	Harness	
7	409965M1	1	Socket 7 Pin Sup	
8	357450X1	3	Screw Unc	
9	1699084M2	1	Harness	Up to Serial or Engine Number J195011
	2260373M2	1	Harness	From Serial or Engine Number J195012

Tylko dla użytku wewnętrznego

548

CABLAGE
ELEKTRISCHE LEITUNGEN
CAVO
CABLEADO
WIRING

02201021

1 0220 026

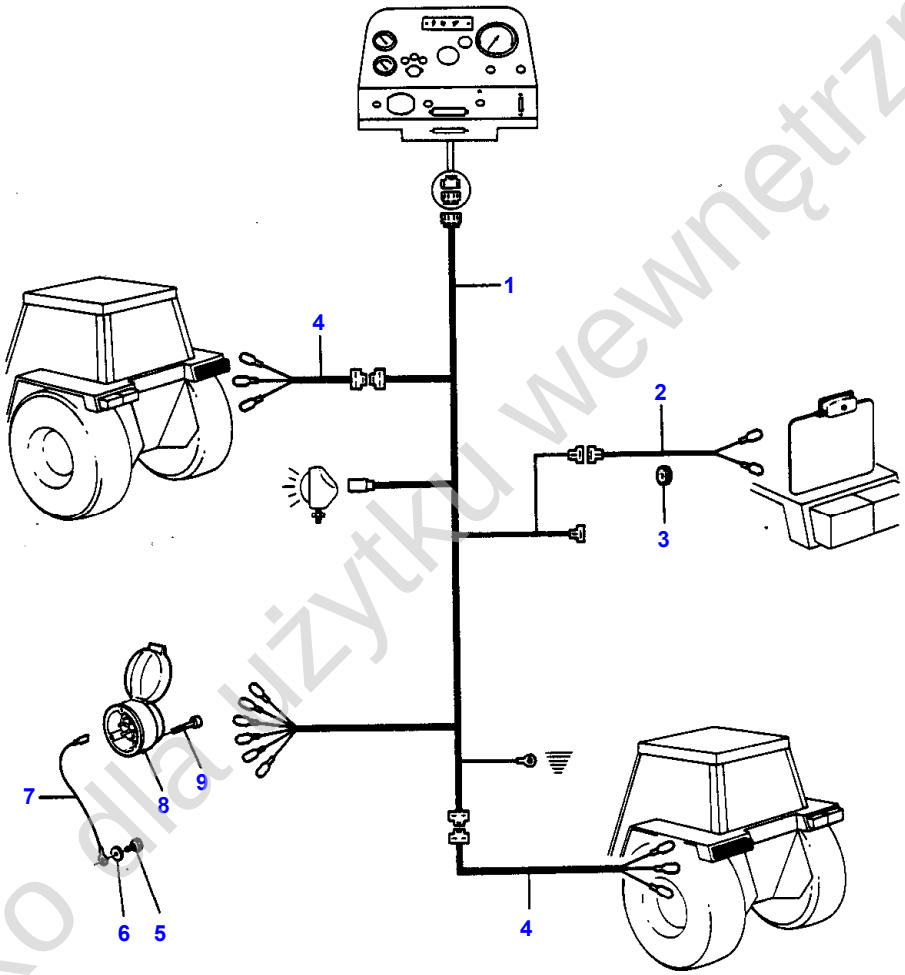

1-0220-026

Tylko dla użytku wewnętrznego

Item	Part Number	Qty	Description	Comments
				REAR- AUSTRIA- UP TO SERIAL J222028
1	1699092M8	1	Harness	
2	1699076M91	1	Harness	
3	831935M1	1	Grommet	
4	1699317M1	2	Harness	Up to Serial or Engine Number J195011
	2260374M1	2	Harness	From Serial or Engine Number J195012
5	365007X1	1	Self Tap Screws	
6	22463X	1	Lock Washer	
7	1875448M92	1	Harness	
8	409965M1	1	Socket 7 Pin Sup	
9	357450X1	3	Screw Unc	

Tylko dla użytku wewnętrznego

550

CABLAGE
ELEKTRISCHE LEITUNGEN
CAVO
CABLEADO
WIRING

02201022

1 0220 027

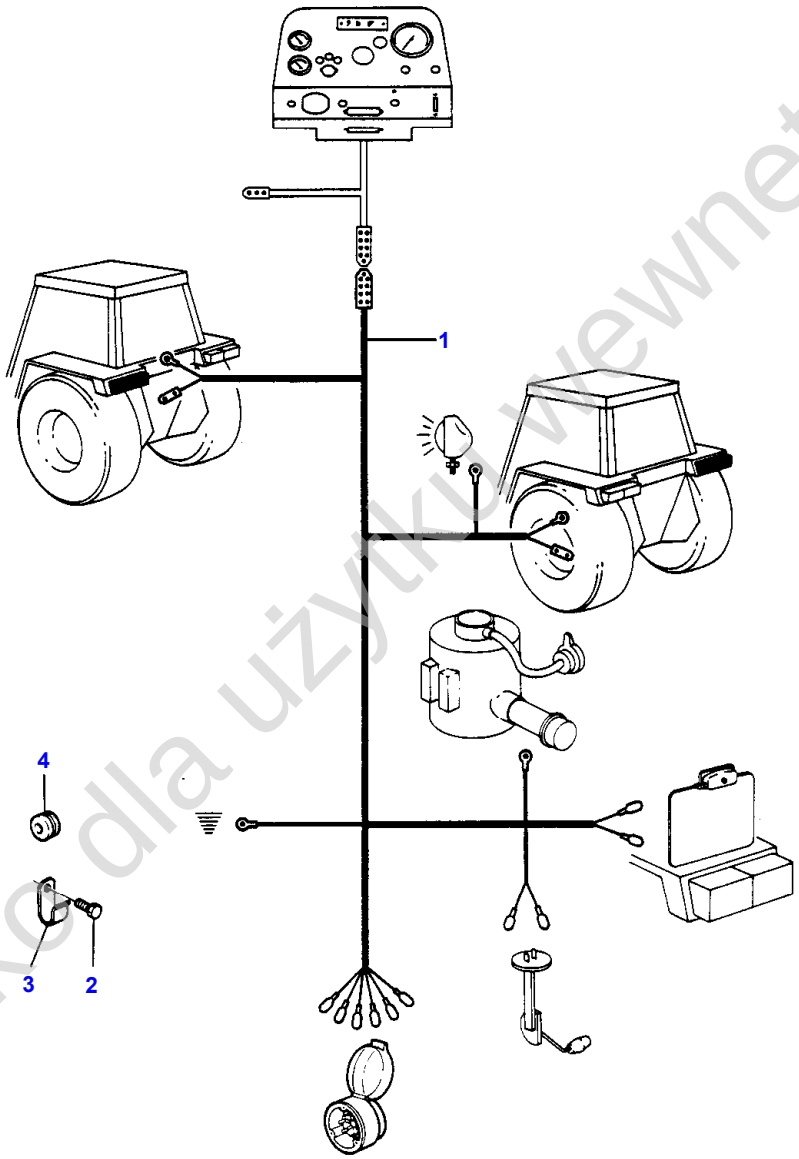

1-0220-027

Tylko dla użytku wewnętrznego

Item	Part Number	Qty	Description	Comments
				REAR- FROM SERIAL J222029
1	1673785M91	1	Harness	
2	365007X1	1	Self Tap Screws	
3	968266M1	1	Strap	
4	1674974M1	2	Grommet	
	1018495M1	1	Grommet	
	831935M1	1	Grommet	
	832885M1	1	Plug	

Tylko dla użytku wewnętrznego

552

CABLAGE
ELEKTRISCHE LEITUNGEN
CAVO
CABLEADO
WIRING

02201023

1 0220 028

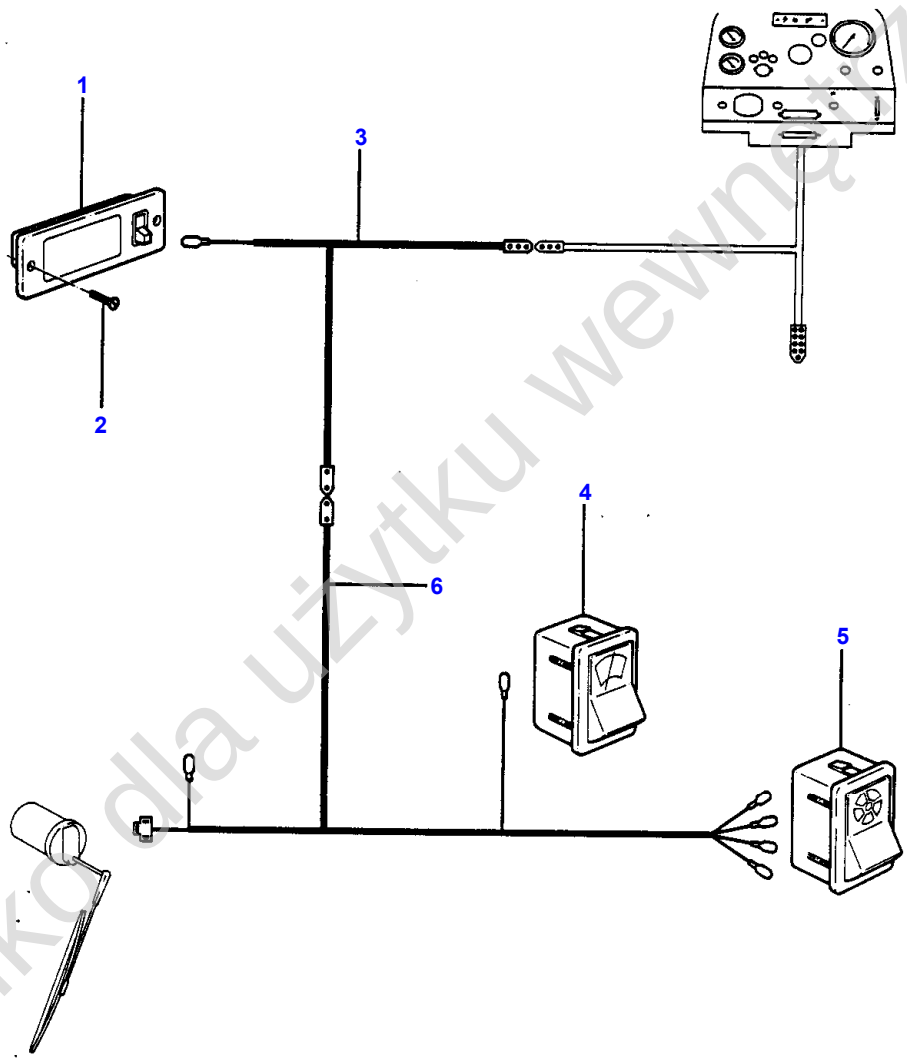

1-0220-028

Tylko dla użytku wewnętrznego

Item	Part Number	Qty	Description	Comments
				ROOF- FROM SERIAL J222029
1	1674895M91	1	Roof Light	From Serial or Engine Number J197011
2	377718X1	2	Screw	
3	1673786M91	1	Harness	
4	1633176M1	1	Switch	
5	1877310M91	1	Cutout	
6	1673787M91	1	Harness	

Tylko dla użytku wewnętrznego

554

CABLAGE ELECTRIQUE	CABINE
KABELAUSRUESTUNG SCHLEPPERKABINE	
EQUIPAGGIAMENTO ELETTRICO	CABINA
CABLEADO ELECTRICO	CABINA
ELECTRICAL WIRING FOR TRACTOR CAB	

19211001

1 1921 001

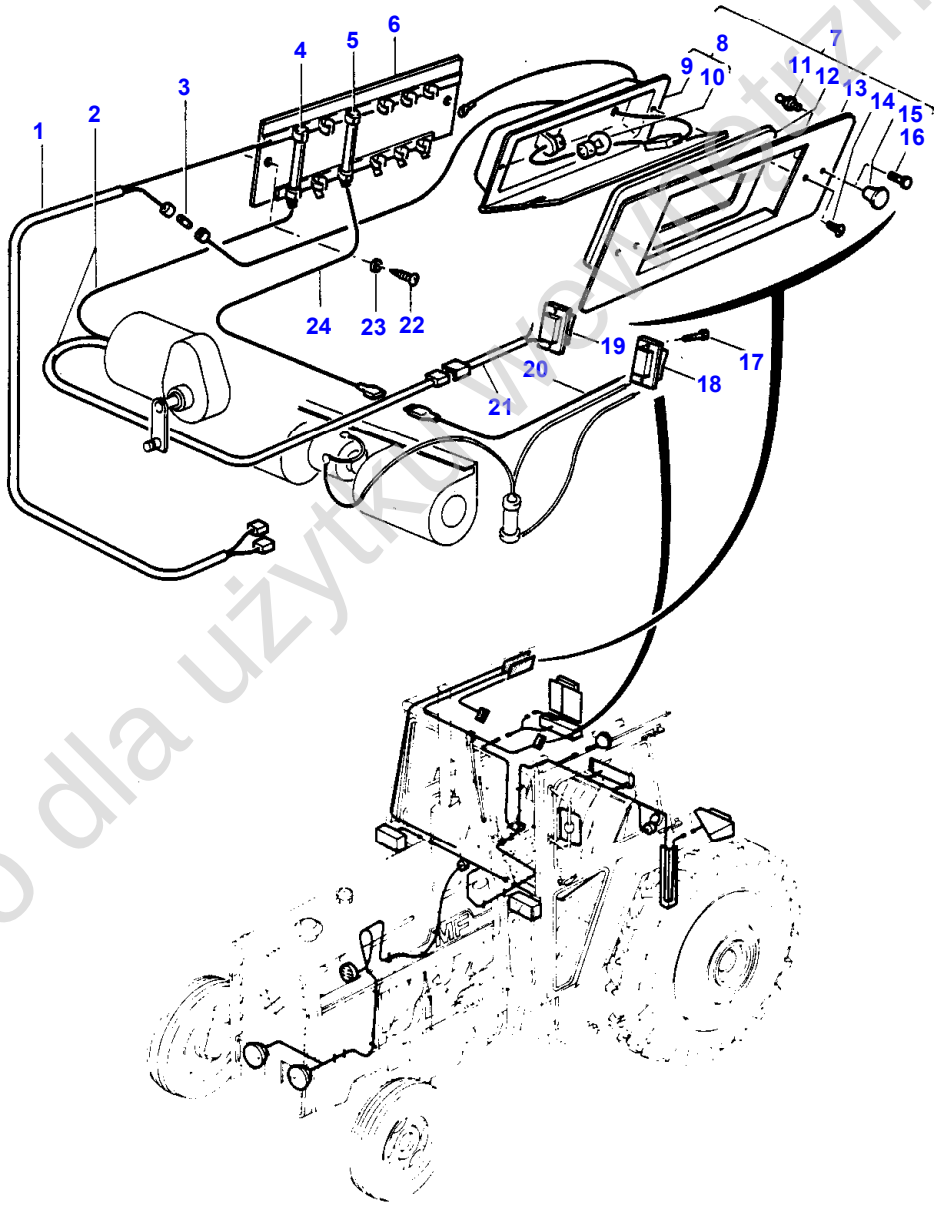

1 - 1921 - 001

Tylko dla użytku wewnętrznego

Item	Part Number	Qty	Description	Comments
				UP TO SERIAL NO J 222028
1	1877691M2	1	Harness	
2	1877629M96	1	Harness	
3	525498M1	1	Fuse	3A
4	525500M1	1	Fuse	10A
5	525499M1	1	Fuse	25A
6	1877681M91	1	Fuse Box	
7	1699959M94	1	Roof Light	Alternative 1698698M91
	1698698M91	1	Roof Light	Alternative 1699959M94
8	1877674M91	1	Lamp	(7) Alternative 1662719M91
8	1662719M91	1	Lamp	(7) Alternative 1877674M91
9		1	Housing	(8) Not serviced, order 1877674M91 Not serviced, order 1662719M91
10	1018731M1	1	Bulb	(8)
11	1699957M1	2	Stud	(7) Alternative 1664585M1
11	1664585M1	2	Nut	(7) Alternative 1699957M1
12	1699958M2	1	Pad	(7)
13	1699956M1	1	Plate	(7)
14	360369X1	2	Screw	(7)
15	1699118M1	2	Knob	(7) Alternative 377718X1
16	377718X1	2	Screw	(7) Alternative 1699118M1
17	368038X1	4	Screw	
18	1877310M91	1	Cutout	
19	1877276M1	1	Cutout	
20	1877692M93	1	Harness	
21	1874352M92	1	Harness	
22	364237X1	2	Self Tap Screws	
23	359410X1	1	Washer	
24	1875369M92	1	Harness	

Tylko dla użytku wewnętrznego

556

ECLAIRAGE AVANT
FRONTBELEUCHTUNG
EQUIPAGGIAMENTO FARO ANTERIORE
EQUIPO ALUMBRADO FRONTAL
FRONT LIGHTING EQUIPMENT

19151003

1 1915 004

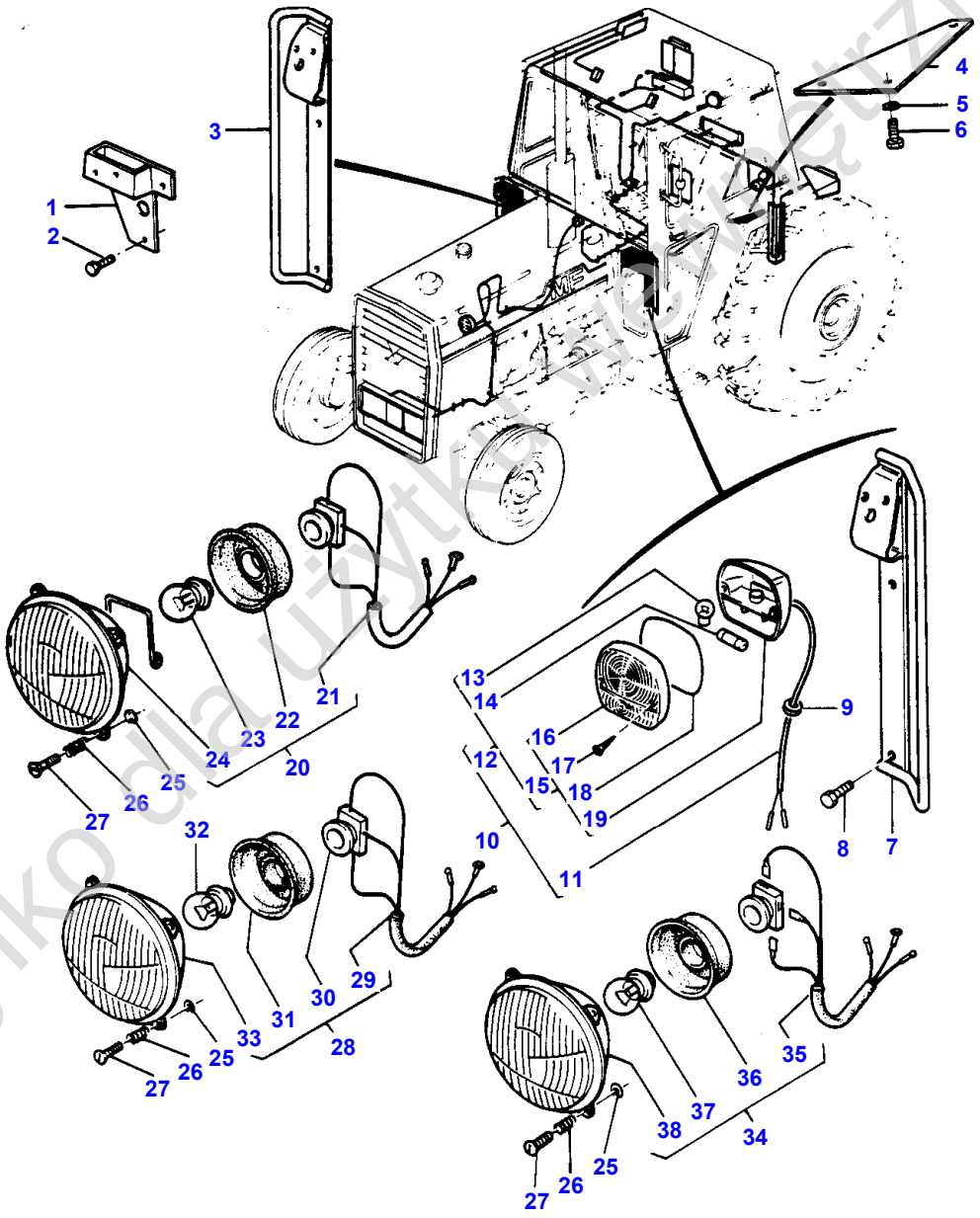

Tylko dla użytku nieodpłatnego

Item	Part Number	Qty	Description	Comments
				UP TO SERIAL 01-1981
1	1662968M91	1	Bracket	(A) Right Hand
2	365008X1	2	Screw Unc	
3	1662963M92	1	Handle	(B) Right Hand
4	1699065M1	2	Cover	
5	353446X1	6	Lock Washer	
6	353676X1	6	Screw Unc	
7	1662962M92	1	Handle	Left Hand
8	365008X1	2	Screw Unc	
9	1663216M1	2	Grommet	
10	1663023M91	1	Light	Left Hand
	1663024M91	1	Light	Right Hand
11	1663025M1	1	Harness	(10) Left Hand
11	1663026M1	1	Harness	(10) Right Hand
12	619413M91	2	Lamp	(10)
13	621235M1	1	Bulb 21w Side	(12) 21W
14	621234M1	1	Bulb 5w Festoon	(12) 5W
15	621236M1	1	Light	(12)
16	1806417M1	1	Lens	(15)
17	1806421M1	2	Screw	(15)
18	1806422M1	1	Gasket	(15)
19		1	Box	(15) Not serviced, order 621236M1
20	1662374M91	1	Lamp	(C) Alternative 1874192M92 Left Hand ,HELLA
20	1662375M91	1	Lamp	(C) Alternative 1874193M92 Right Hand ,HELLA
20	1662482M91	1	Light	(D) Alternative 1870326M92 Left Hand ,HELLA
20	1662481M91	1	Light	(D) Alternative 1870325M92 Right Hand ,HELLA
21	1719262M1	1	Harness	(20)
22	1719263M1	1	Helmet	(20)
23	1719264M1	1	Lamp	(20) Without or not For Germany only or any text in German only 12V.45/40W
23	328873M1	1	Bulb	(20) For Germany only or any text in German only 12V.45/40W
23	1719265M1	1	Bulb	(20) 12V.45/40W
24	1719260M1	1	Headlamp	(20)
	1719261M1	1	Headlamp	(20)
25	1860173M1	6	Washer	
26	1860174M1	6	Spring	
27	1860172M1	6	Screw	
28	1874192M92	1	Headlamp	
	1874193M92	1	Headlamp	
	1870326M92	1	Lamp	
	1870325M92	1	Headlamp	
	1664605M91	1	Lamp	For UK only or any text in English only BUTLERS
28	1664604M91	1	Lamp	For UK only or any text in English only BUTLERS

Tylko dla użytku wewnętrznego

Item	Part Number	Qty	Description	Comments
29	1889929M1	1	Cable	(28)
29	1870321M1	1	Harness	(28) For UK only or any text in English only
30	1888773M1	1	Connector	(28)
30	1860181M1	1	Connector	(28) For UK only or any text in English only
31	1860182M1	1	Seal	(28)
32	1040804M1	1	Bulb	(C) 12V-45/40W
32	1889928M1	1	Bulb	(D) 12V-45/40W
32		1	Bulb P/Lamp	(C,E) For UK only or any text in English only 12V-45/40W
33	1860176M1	1	Light	(28) Left Hand
33	1860175M1	1	Light	(28) Right Hand
33		1	Housing	(28) For UK only or any text in English only Left Hand
33		1	Housing	(28) For UK only or any text in English only Right Hand
34	1662377M91	1	Holder	Alternative 1662374M91 AUTEROCHE
34	1662378M91	1	Holder	Alternative 1662375M91 AUTEROCHE
34	1662480M91	1	Light	Alternative 1662482M91 AUTEROCHE
34	1662479M91	1	Light	Alternative 1662481M91 AUTEROCHE
35	1633292M1	1	Harness	(34)
36	1633291M1	1	Helmet	(34)
37	965465M1	1	Bulb H/L 45/40w	(34) (D) 12V-45/40W
37	961866M1	1	Bulb H/L 45/40w	(34) (C) 12V-45/40W
38		1	Box	(34) Not serviced, order REF 34

(A)
1 DOOR

(B)
2 DOORS

(C)
WHITE

(D)
YELLOW

(E)
TO BE ADVISED

Tylko dla użytku wewnętrznego

562

ECLAIRAGE AVANT
FRONTBELEUCHTUNG
EQUIPAGGIAMENTO FARO ANTERIORE
EQUIPO ALUMBRADO FRONTAL
FRONT LIGHTING EQUIPMENT

19151022

1 1915 026

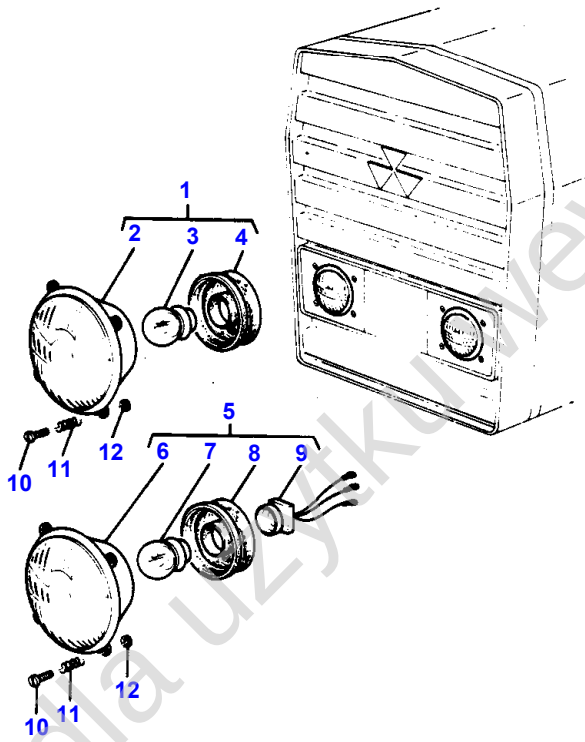

1-1915-026

Tylko dla użytku wewnętrznego

Item	Part Number	Qty	Description	Comments
				HELLA- FROM SERIAL 02-1981
1	1672770M91	2	Headlamp	(A)
	1672766M91	2	Headlamp	(B)
2		1	Lamp Insert	(1) Not serviced, order REF NO 1
3	965465M1	1	Bulb H/L 45/40w	(1) 12V 40/45W
4	3100999M1	1	Lamp Socket	(1)
5	1672768M91	2	Headlamp	(B) Right Hand
6		1	Lamp Insert	(5) Not serviced, order REF NO 5
7	961866M1	1	Bulb H/L 45/40w	(5) 12V 40/45W
8	3100999M1	1	Lamp Socket	(5)
9	1719262M1	1	Harness	(5)
10	1860172M1	6	Screw	
11	963441M1	6	Spring	
12	1860173M1	6	Washer	
				(A) YELLOW
				(B) WHITE

Tylko dla użytku wewnętrznego

564

ECLAIRAGE AVANT
FRONTBELEUCHTUNG
EQUIPAGGIAMENTO FARO ANTERIORE
EQUIPO ALUMBRADO FRONTAL
FRONT LIGHTING EQUIPMENT

19151023

1 1915 027

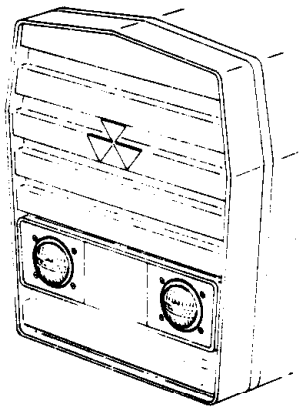

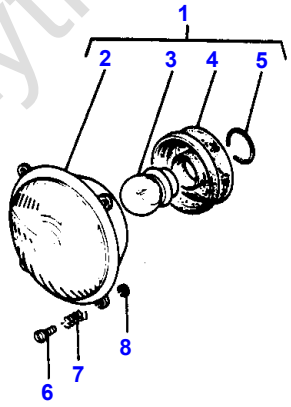

1-1915-027

Tylko dla użytku wewnętrznego

Item	Part Number	Qty	Description	Comments
				AUTEROCHE- FROM SERIAL 02-1981
1	1672768M91	2	Headlamp	(A)
	1672770M91	2	Headlamp	(B)
2		1	Lamp Insert	(1) Not serviced, order REF NO 1
3	961866M1	1	Bulb H/L 45/40w	(1) (A) 12V 40/45W
3	965465M1	1	Bulb H/L 45/40w	(1) (B) 12V 40/45W
4	962842M2	1	Lamp Socket	(1)
5	1634120M1	1	Spring	(1)
6	1860172M1	6	Screw	
7	963441M1	6	Spring	
8	1860173M1	6	Washer	
				(A) WHITE
				(B) YELLOW

Tylko dla użytku wewnętrznego

566

ECLAIRAGE AVANT
FRONTBELEUCHTUNG
EQUIPAGGIAMENTO FARO ANTERIORE
EQUIPO ALUMBRADO FRONTAL
FRONT LIGHTING EQUIPMENT

19151024

1 1915 028

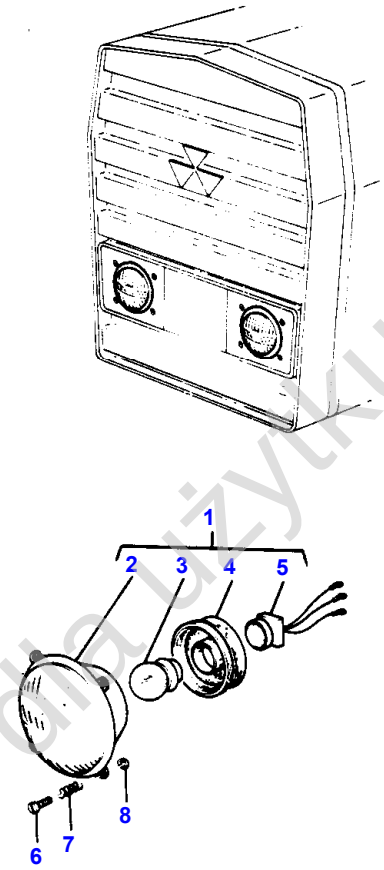

1-1915-028

Tylko dla użytku wewnętrznego

Item	Part Number	Qty	Description	Comments
				LUCAS- FROM SERIAL 02-1981
1	1672766M91	1	Headlamp	(A)
2		1	Lamp Insert	(1)
				Not serviced, order REF NO 1
3	1894045M1	1	Bulb	(1)
4	1860182M1	1	Seal	(1)
5	1860181M1	1	Connector	(1)
6	1860172M1	6	Screw	
7	963441M1	6	Spring	
8	1860173M1	6	Washer	
				(A)
				WHITE

Tylko dla użytku wewnętrznego

568

ECLAIRAGE ARRIERE
HECKBELEUCHTUNG
EQUIPAGGIAMENTO FARO POSTERIORE
EQUIPO ALUMBRADO TRASERO
REAR LIGHTING EQUIPMENT

19161004

1 1916 040

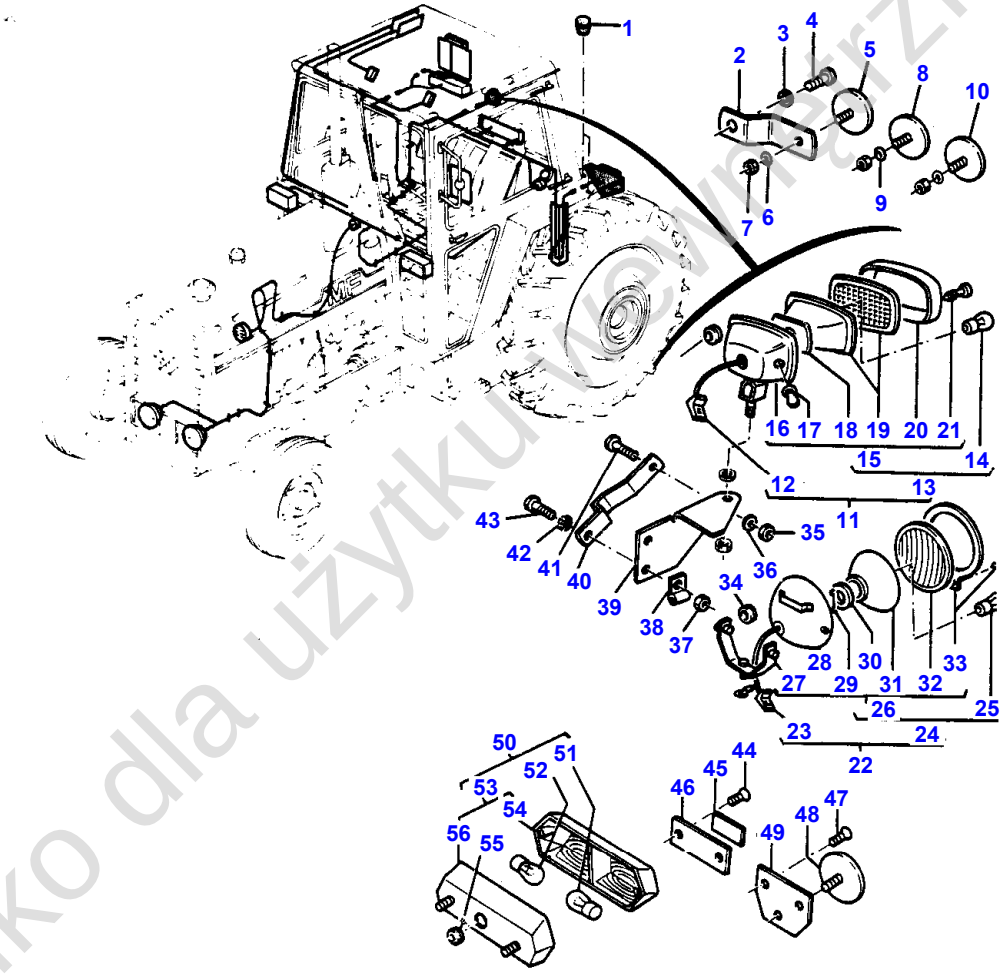

1-1916-040

Tylko dla użytku wewnętrznego

Item	Part Number	Qty	Description	Comments
				UP TO SERIAL NO J 222028
1	1699029M1	4	Plug	
2	1666377M1	2	Bracket	
3	353433X1	2	Lock Washer	
4	354699X1	2	Screw Unc	
5	962421M2	2	Reflector	(A) Without or not For Germany only or any text in German only
6	14731X	2	Washer	(A) Without or not For Germany only or any text in German only
7	390995X1	2	Nut Metric	(A) Without or not For Germany only or any text in German only
8	1862550M1	2	Reflector	(B) Without or not For Germany only or any text in German only
9	353753X1	2	Washer	(B) Without or not For Germany only or any text in German only
10	416085M1	2	Reflector	(C) Without or not For Germany only or any text in German only
10	416085M1	2	Reflector	For Germany only or any text in German only
11	1699089M92	1	Lamp	Alternative 1699090M92 Without or not For Germany only or any text in German only
12	1699087M2	1	Harness	(11)
13	908790M92	1	Lamp	(11)
14	950832M1	1	Bulb P/Lamp	(13) 12V-45W
15	908789M2	1	Lamp	(13) AUTEROCHE
16	1806776M1	1	Housing	(15)
17	1806777M2	1	Switch	(15)
18	1806779M1	1	Socket	(15) Repairs and replaces 1600998M1
19	1806775M1	1	Insert	(15)
20	1807200M1	1	Bezel	(15)
21	1806429M1	2	Screw	(15)
22	1699090M91	1	Lamp	Alternative 1699089M92 Without or not For Germany only or any text in German only
23	1699088M1	1	Cable	(22)
24		1	Lamp	(22) Not serviced, order 1699090M92
25		1	Bulb P/Lamp	(24) (D)
26	886998M92	1	Lamp	(24) AUTEROCHE
27	1807302M1	1	Bracket	(26)
28		1	Housing	(26)
29	1807303M1	1	Spring	(26)
30	1600998M1	1	Clamp	(26)
31	1600996M1	1	Reflector	(26)
32	1807300M1	1	Glass	(26)
33	1807298M1	1	Door	(26)
34	831935M1	1	Grommet	Without or not For Germany only or any text in German only
35	355564X1	1	Nut Unc	Without or not For Germany only or any text in German only
36	353754X1	1	Washer	Without or not For Germany only or any text in German only
37	355565X1	1	Nut Unc	Without or not For Germany only or any text in German only

Tylko dla użytku wewnętrznego

Item	Part Number	Qty	Description	Comments
38	623605M1	1	Clip	Without or not For Germany only or any text in German only
39	1698044M91	1	Bracket	(E) Without or not For Germany only or any text in German only
39	1617285M2	1	Bracket	(F)
40	1698056M2	1	Strap	(F) Without or not For Germany only or any text in German only
41	365007X1	1	Self Tap Screws	Without or not For Germany only or any text in German only
42	353446X1	2	Lock Washer	Without or not For Germany only or any text in German only
43	353679X1	2	Screw Unc	Without or not For Germany only or any text in German only
44	360362X1	4	Screw	Without or not For Germany only or any text in German only
45	1862550M1	2	Reflector	Without or not For Germany only or any text in German only
46	1862551M1	2	Rim	Without or not For Germany only or any text in German only
47	360362X1	2	Screw	For Germany only or any text in German only
48	416085M1	2	Reflector	For Germany only or any text in German only
49	1665325M1	2	Bearer	For Germany only or any text in German only
50	1808842M92	1	Rear Light	ETMA
50	1808843M92	1	Rear Light	ETMA
51	908543M1	1	Bulb S/L 21/5w	(50) 12V-5/21W
52	621235M1	1	Bulb 21w Side	(50) 12V-21W
53	1808844M2	1	Rear Light	(50) Right Hand
53	1808845M2	1	Rear Light	(50) Left Hand
54	1645959M2	1	Cover	(53) Right Hand
54	1645960M2	1	Cover	(53) Left Hand
55	1645967M1	1	Grommet	(53)
56		1	Box	(53) Not serviced, order 1808844M2 Not serviced, order 1808845M2

(A)
ALTERNATIVE WITH 1862550M1-353753X1

(B)
ALTERNATIVE WITH 416085M1

(C)
ALTERNATIVE WITH 962421M2,14731X,390995X1

(D)
TO BE ADVISED

(E)
WITHOUT FENDER EXTENSION

(F)
WITH FENDER EXTENSION

Tylko dla użytku wewnętrznego

574

ECLAIRAGE ARRIERE
HECKBELEUCHTUNG
EQUIPAGGIAMENTO FARO POSTERIORE
EQUIPO ALUMBRADO TRASERO
REAR LIGHTING EQUIPMENT

19161029

1 1916 041

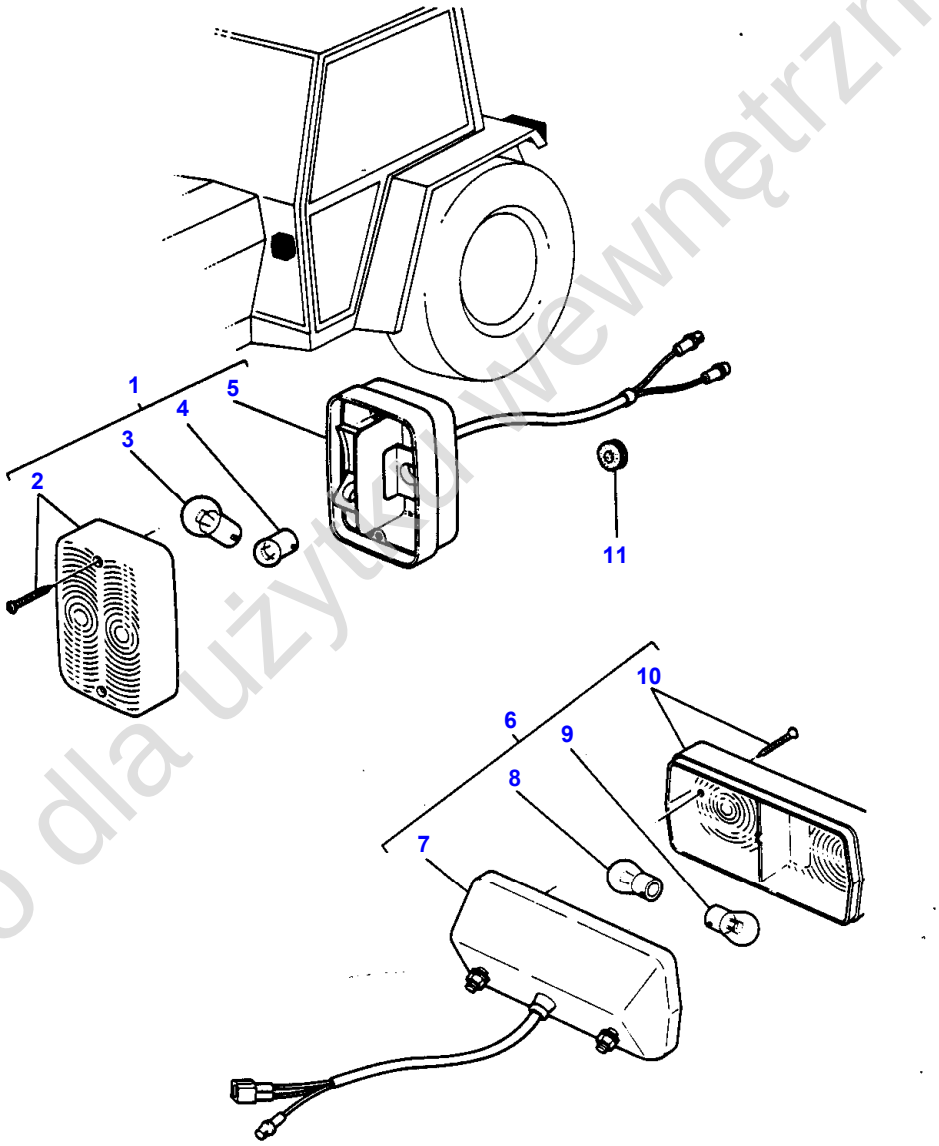

1-1916-041

Tylko dla użytku wewnętrznego

Item	Part Number	Qty	Description	Comments
				FROM TO SERIAL NO J 228029
1	1673841M91	1	Light	Left Hand COBO
	1673840M91	1	Light	Right Hand COBO
2	3310293M91	1	Lens	(1)
3	1420037M1	1	Bulb 12v 5w	(1) 5W
4	621235M1	1	Bulb 21w Side	(1) 21W
5		1	Box	(1) Not serviced, order REF NO 1
6	1674074M91	1	Light	Left Hand COBO
	1674073M91	1	Light	Right Hand COBO
7		1	Box	(6) Not serviced, order REF NO 6
8	908543M1	1	Bulb S/L 21/5w	(6) 5W/21W
9	621235M1	1	Bulb 21w Side	(6) 21W
10	3310307M91	1	Lens	(6)

Tylko dla użytku wewnętrznego

576

CABINE TRACTEUR	DIVERS CABINE
SCHLEPPERKABINE	VERSCHIEDENES
CABINA TRATTORE	MISCELLANEA CABINA
CABINA TRACTOR	VARIOS
TRACTOR CAB	CAB MISCELLANEOUS

18191010

1 1819 020

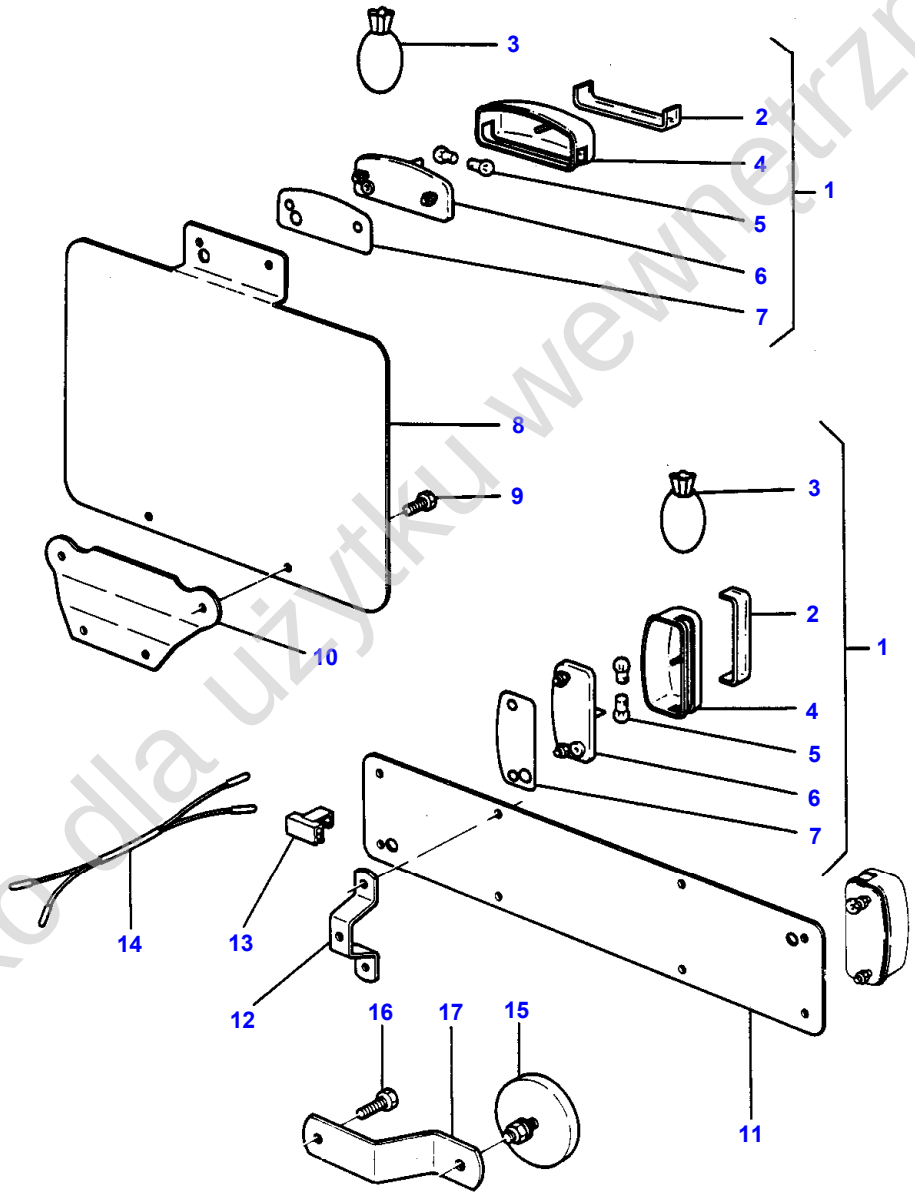

1-1819-020

Tylko dla użytku wewnętrznego

Item	Part Number	Qty	Description	Comments
				FROM SERIAL NO J 222029
1	829121M1	1	N/Plate Lamp	
	829121M1	2	N/Plate Lamp	For UK only or any text in English only
2	1892219M1	1	Glass	(1)
3	1892221M91	1	Screw	(1)
4	1885432M1	1	Housing	(1)
5	785450M1	2	Bulb 12v 5w	(1)
6		1	Box	(1)
				Not serviced, order REF NO 1
7	885434M1	1	Gasket	(1)
8	1663587M91	1	Plate	
9	353989X1	4	Screw Unc	
10	1663333M1	1	Bracket	
11	1663017M1	1	Licence Plate	
12	1663019M1	2	Bearer	
13	1674079M91	1	Connector	
14	1674063M91	1	Harness	
15	1674125M91	2	Reflector	Alternative 1678390M91
	1678390M1	2	Reflector	Alternative 1674125M91
16	354441X1	2	Screw Unc	
17	1666377M1	2	Bracket	

Tylko dla użytku wewnętrznego

578

CABLAGE ELECTRIQUE
KABELAUSRUESTUNG
EQUIPAGGIAMENTO ELETTRICO
CABLEADO ELECTRICO
ELECTRICAL WIRING

19201014

1 1920 023

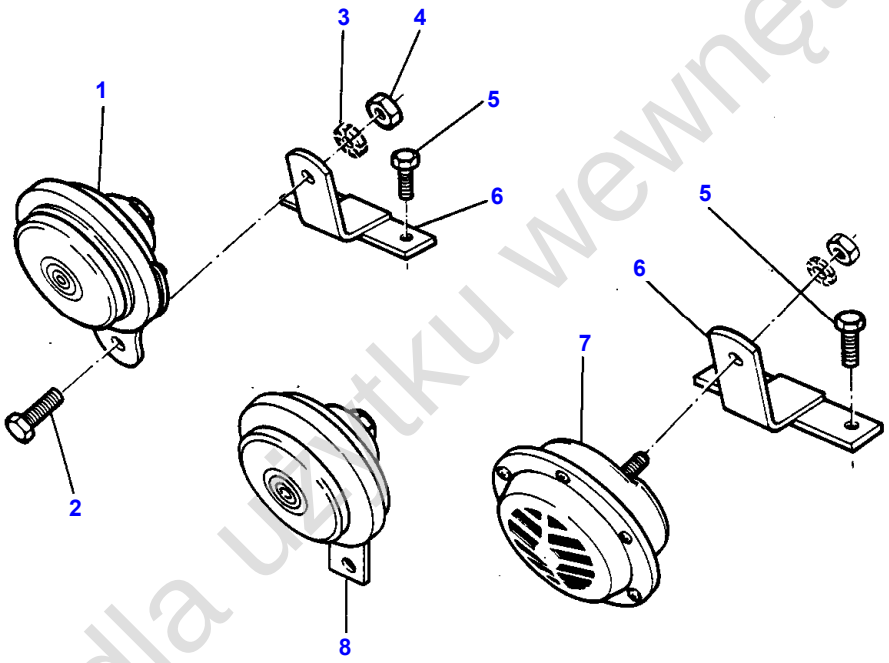

1-1920-023

Tylko dla użytku wewnętrznego

Item	Part Number	Qty	Description	Comments
				HORN
1	899319M2	1	Horn	Alternative 899319M2
2	353517X1	1	Screw Unf	
3	353446X1	1	Lock Washer	
4	353916X1	1	Nut Unf	
5	365008X1	2	Screw Unc	
6	1664683M91	1	Bracket	
7	621219M2	1	Horn	Alternative 621219M2 Up to Serial or Engine Number NO---
8	1678404M1	1	Horn	From Serial or Engine Number NO---

Tylko dla użytku wewnętrznego

580

ECLAIRAGE ARRIERE
HECKBELEUCHTUNG
EQUIPAGGIAMENTO FARO POSTERIORE
EQUIPO ALUMBRADO TRASERO
REAR LIGHTING EQUIPMENT

19161015

1 1916 016

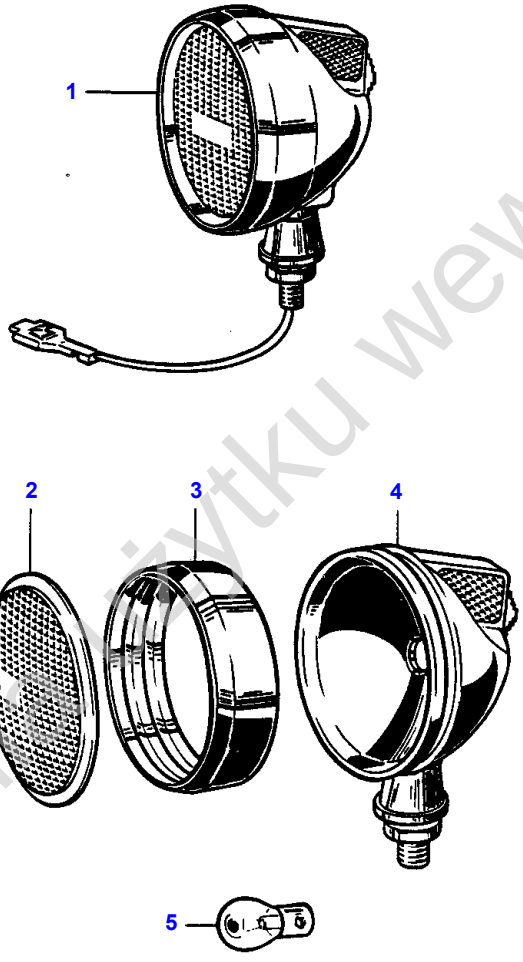

1-1916-016

Tylko do użytku wewnętrznego

Item	Part Number	Qty	Description	Comments
				FIELD LIGHTS
1	1634203M91	1	Lamp	COBO Diameter 118MM
2	1424335M1	1	Window	(1)
3	1427836M1	1	Gasket	(1)
4		1	Lamp	(1) Not serviced, order 1634203M91
5	1427839M1	1	Bulb	(1)

Tylko dla użytku wewnętrznego

582

ECLAIRAGE ARRIERE
HECKBELEUCHTUNG
EQUIPAGGIAMENTO FARO POSTERIORE
EQUIPO ALUMBRADO TRASERO
REAR LIGHTING EQUIPMENT

19161030

1 1916 042

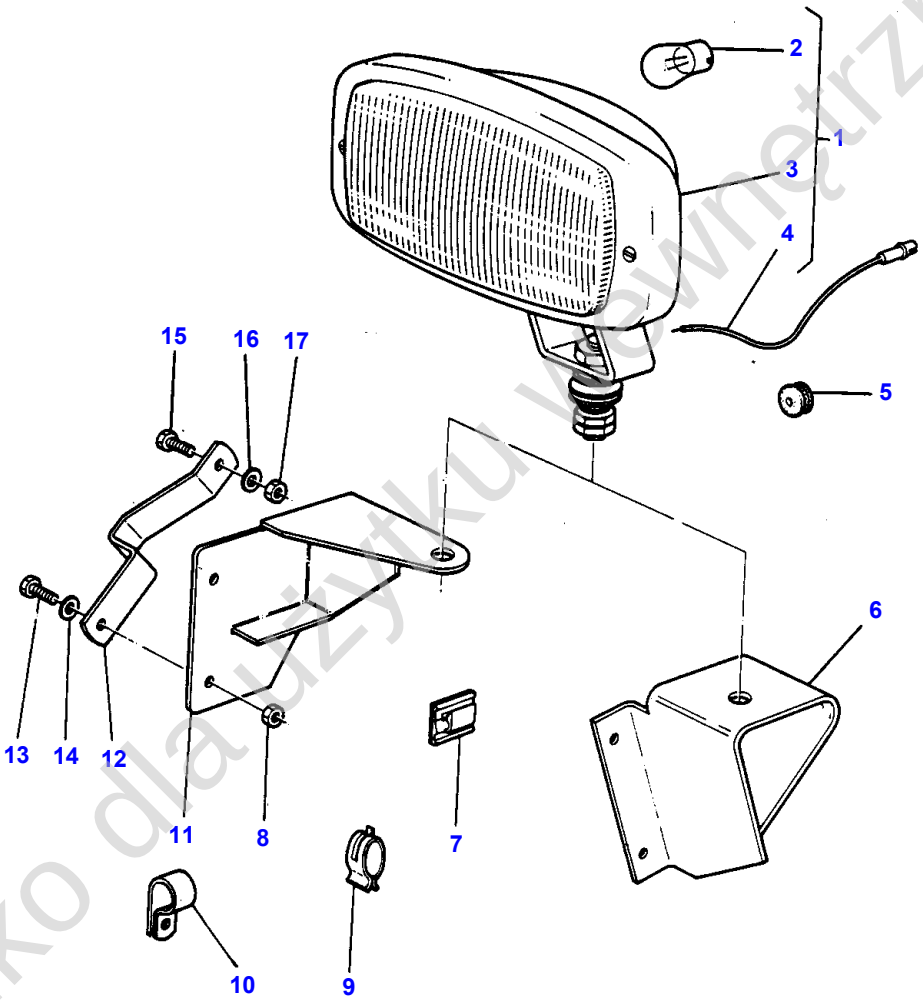

1-1916-042

Tylko dla użytku wewnętrznego

Item	Part Number	Qty	Description	Comments
				FIELD LIGHTS- FROM SERIAL J222029
1	1673857M91	1	Lamp	
2	950832M1	1	Bulb P/Lamp	(1) 45W
3		1	Lamp	(1) Not serviced, order REF NO 1
4	1673859M91	1	Harness	(1)
5	370630X1	1	Grommet	
6	1617285M2	1	Bracket	(B)
7	1664815M1	1	Strap	
8	355565X1	1	Nut Unc	
9	1809844M1	3	Strap	
10	361018X1	2	Tie	
11	1698044M91	1	Bracket	(A)
12	1698056M2	1	Strap	(A)
13	353679X1	X	Screw Unc	
14	353446X1	X	Lock Washer	
15	365007X1	1	Self Tap Screws	
16	353754X1	1	Washer	
17	355564X1	1	Nut Unc	
				(A) WITHOUT FENDER EXTENSION
				(B) WITH FENDER EXTENSION

Tylko dla użytku wewnętrznego

584

COMMANDE HYDRAULIQUE DE PONT AVANT
HYDRAULISCHE BETAETIGUNG VORDERACHSE
COMANDO IDRAULICO ASSALE ANTERIORE
EJE DELANTERO MANDO HIDRAULICO
FRONT AXLE HYDRAULIC CONTROL

19451003

1 1945 003

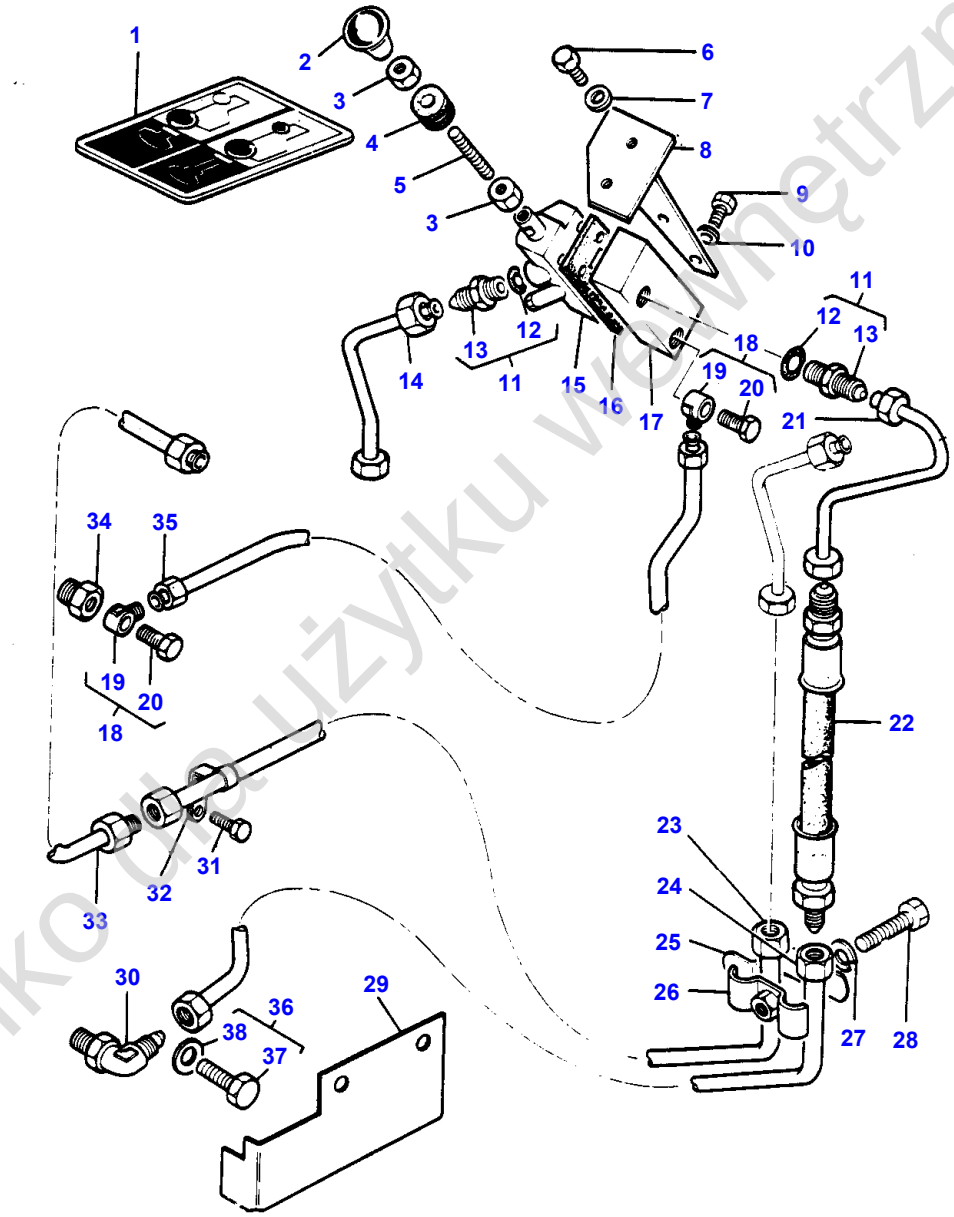

1-1945-003

Tylko do użytku wewnętrznego

Item	Part Number	Qty	Description	Comments
1	1873657M1	1	Decal	
2	909114M1	1	Knob	
3	391255X1	2	Nut Metric	
4	366268X1	1	Grommet	
5	1699223M1	1	Rod	
6	353536X1	2	Screw Unf	
7	353434X1	2	Lock Washer	
8	1612661M91	1	Bracket	
9	353883X1	2	Bolt Unf	
10	353434X1	2	Lock Washer	
11	835091M91	2	Connector	
12	831452M1	1	O Ring	(11)
13		1	Union	(11) Not serviced, order 835091M91
14	1613894M91	1	Tube	
15		1	Pressure Valve	See Page - Reference Number 586/1
16		1	Gasket	See Page - Reference Number 586/11
17	3033012M1	1	Plate	
18	1442020X91	2	Connection	
19	338788X1	1	Body	(18)
20	338789X1	1	Bolt	(18)
21	1613886M91	2	Tube	
22	1613898M1	2	Hose	
23	1666717M91	1	Tube	Repairs and replaces 1613896M91
24	1613888M91	1	Tube	
25	1662508M1	1	Bearer	
26	898341M91	1	Clip	
27	353446X1	2	Lock Washer	
28	353516X1	2	Screw Unf	
29	909760M2	1	Plate	
30	357197X91	1	Elbow	
31	353896X1	1	Screw Unc	
32	377750X1	1	Strap	Repairs and replaces 1662507M1
33	1662493M92	1	Tube	
34	909383M1	1	Union	
35	1612665M91	1	Tube	Repairs and replaces 1662505M91 Up to Serial or Engine Number H 184 209
35	1664629M91	1	Tube	From Serial or Engine Number H 184 210
36	835087M91	1	Plug	
37		1	Union	(36) Not serviced, order 835087M91
38	831452M1	1	O Ring	(36)

Tylko dla użytku wewnętrznego

586

VALVE DE COMMANDE DE PONT AVANT
STEUERVENTIL-VORDERACHSE
DISTRIBUTORE ASSALE ANTERIORE
VALVULA CONTROL EJE DELANTERO
FRONT AXLE CONTROL VALVE

19551001

1 1955 003

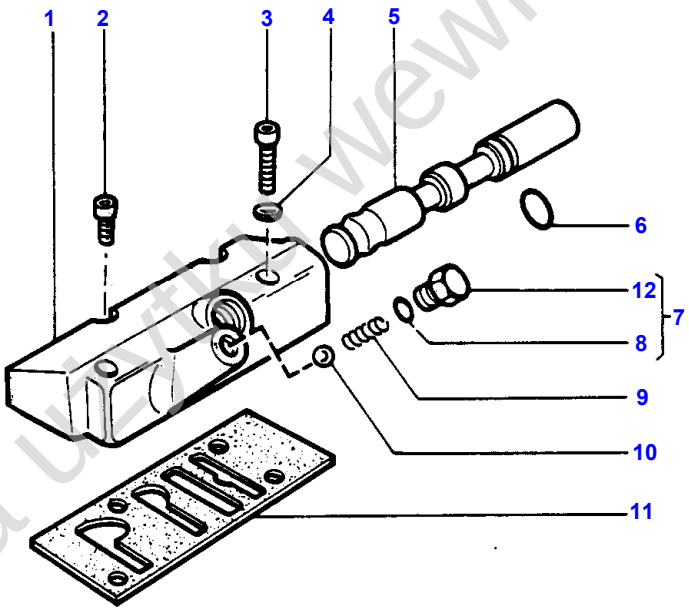

1-1955-003

Tylko dla użytku wewnętrznego

Item	Part Number	Qty	Description	Comments
1	3033013M1	1	Valve	
2	357819X1	2	Screw Unc	
3	357822X1	2	Screw Unc	
4	186568M1	1	Washer	
5	909808M1	1	Spool	
6	832207M1	1	Seal	
7	358720X91	1	Plug	
8	831493M1	1	O Ring	(7)
9	521130M1	1	Spring	
10	16773X	1	Ball	
11	512787M2	1	Gasket	
12		1	Plug	(7) Not serviced, order REF 7

Tylko dla użytku wewnętrznego

588

BOITE DE TRANSFERT	PIGNONNERIE
VERTEILERGETRIEBE	ZAHNRAEDER
SCATOLA CAMBIO	INGRANAGGI
TRANSFER GEAR BOX	GEARS

1965 1002

1 1965 002

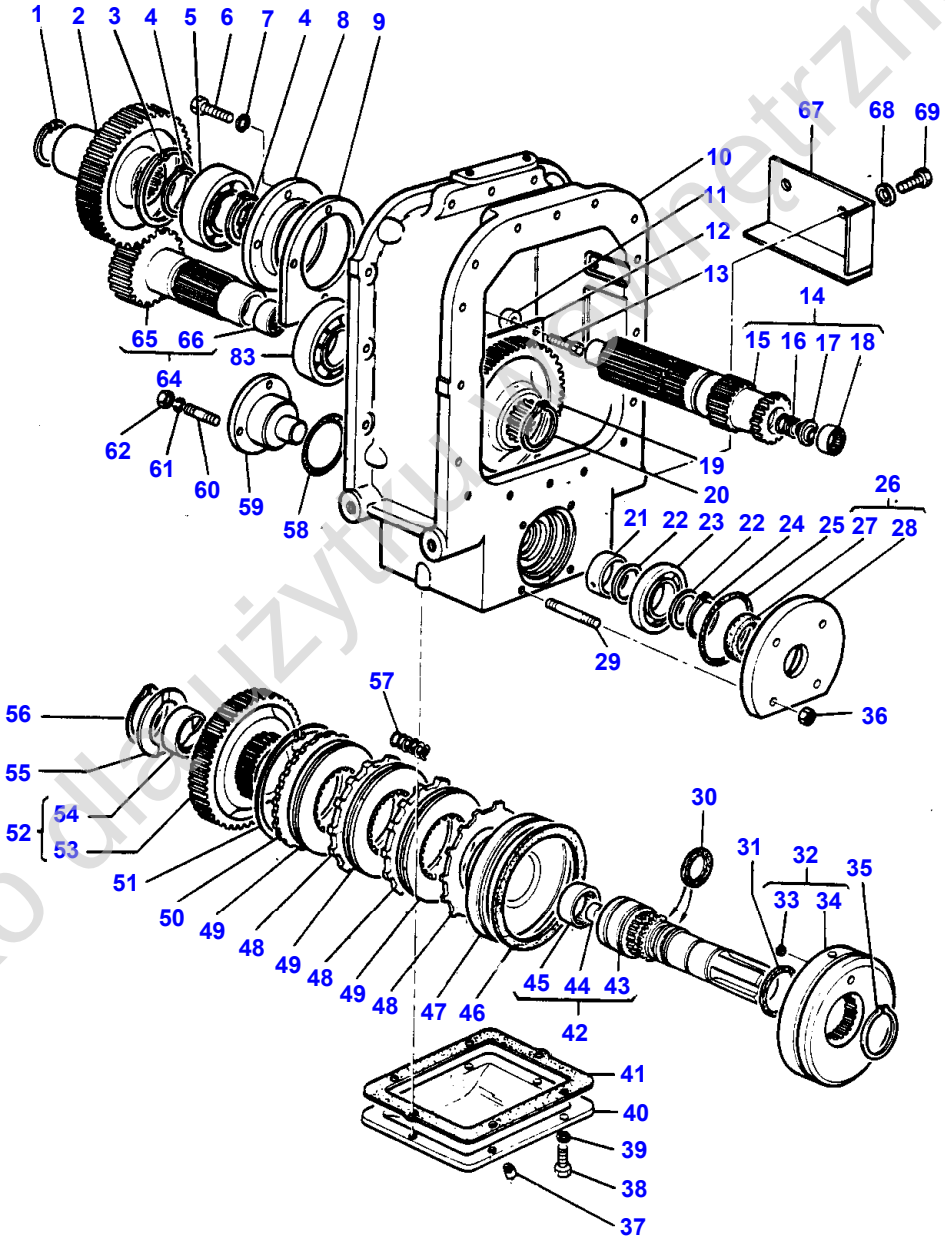

1-1965-002

Tylko do użytku prywatnego

Item	Part Number	Qty	Description	Comments
1	355976X1	1	Circlip	
2	908976M1	1	Gear	
3	1440516X1	1	Circlip	
4	195363M1	2	Circlip	
5	834303M1	1	Bearing	
6	353681X1	4	Bolt Unc	
7	353446X1	4	Lock Washer	
8	908974M1	1	Sleeve	
9	908975M1	1	Plate	
10	1809858M2	1	Spacer	
11	1809845M1	2	Spacer	
12	1809738M1	1	Deflector	
13	353680X1	2	Screw Unc	
14	1809849M92	1	Shaft	
15		1	Shaft	(14) Not serviced, order REF NO 14
16	886352M1	1	Spring	(14)
17	886353M1	1	Abutment	(14)
18	195513M1	1	Bearing	(14)
19	908971M1	1	Gear	
20	339470X1	1	Circlip	
21	908959M1	1	Bush	
22	908965M1	2	Washer	
23	1440501X1	1	Bearing Assy	
24	339469X1	1	Segment	
25	1004633M1	1	O Ring	
26	1808472M91	1	Cover	
27	1442346X1	1	Oil Seal	(26)
28	1808471M1	1	Cover	(26)
29	376860X1	4	Stud	
30	186581M1	2	Ring	
31	186580M1	1	Ring	
32	518508M93	1	Housing	
33	1872134M92	1	Valve Check	(32)
34	518509M3	1	Housing	(32)
35	850723M1	1	Circlip	
36	353437X1	4	Nut Unf	
37	22769X	1	Plug	
38	353678X1	6	Screw Unc	
39	353446X1	6	Lock Washer	
40	908956M1	1	Cover	
41	908958M1	1	Joint	
42	1809151M93	1	Shaft	
43		1	Shaft	(42) Not serviced, order REF NO 42
44	186573M1	1	Plug	(42)
45	195873M1	1	Bearing	(42)
46	185425M1	1	Ring	
47	186531M2	1	Piston	Repairs and replaces 1661952M1
48	503585M1	3	Plate	
49	1870879M1	3	Disc	Repairs and replaces 1870074M1
50	510241M1	1	Plate	Repairs and replaces 518507M1
51	364689X1	1	Snapring	
52	908967M91	1	Gear	
53		1	Pinion	(52) Not serviced, order REF NO 52
54	188806M1	1	Bush	(52)
55	186567M1	1	Washer	
56	22608X	1	Circlip	
57	186519M1	6	Spring	
58	835130M1	1	Ring	
59	908960M1	1	Plug	
60	195569M1	4	Stud	
61	353446X1	4	Lock Washer	
62	353916X1	4	Nut Unf	
63	831186M1	1	Bearing	

Tylko do użytku wewnętrznego

Item	Part Number	Qty	Description	Comments
64	908969M91	1	Shaft	
65	908970M1	1	Shaft	(64)
66	195717M1	1	Needle	(64)
67	909760M2	1	Plate	
68	353433X1	2	Lock Washer	
69	353726X1	2	Screw Unc	

Tylko dla użytku wewnętrznego

592

BOITE DE TRANSFERT
VERTEILERGETRIEBE
SCATOLA CAMBIO

TRANSFER GEAR BOX

19601002

1 1960 002

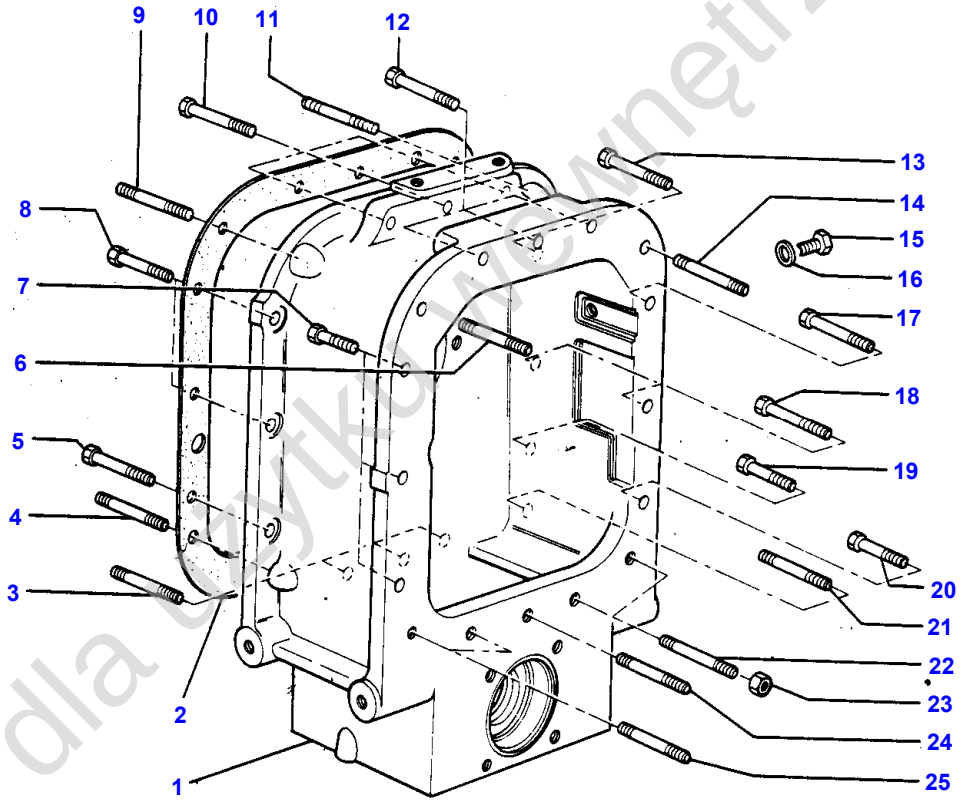

1-1960-002

Tylko dla użytku wewnętrznego

Item	Part Number	Qty	Description	Comments
				ASSEMBLING PARTS
1		1	Housing	See Page - Reference Number 588/10
2	1861986M2	1	Gasket	
3	377570X1	3	Stud	
4	377570X1	1	Stud	
5	377560X1	1	Bolt Unf	
6	377591X1	1	Stud	
7	377181X1	3	Bolt Unf	
8	377181X1	2	Bolt Unf	
9	377570X1	1	Stud	
10	377184X1	3	Bolt Unc	
11	377570X1	1	Stud	
12	377563X1	3	Bolt Unf	
13	377180X1	1	Bolt Unf	
14	377567X1	1	Bolt Unc	
15	880695M1	1	Plug	
16	882011M1	1	Washer	
17	377572X1	1	Bolt Unf	
18	377181X1	2	Bolt Unf	
19	377560X1	1	Bolt Unf	
20	377182X1	1	Bolt Unf	
21	377570X1	1	Stud	
22	377569X1	2	Stud	
23	377185X1	29	Nut Unf	
24	377590X1	1	Stud	
25	377569X1	3	Stud	

Tylko dla użytku wewnętrznego

594

GARANT ET ARBRE DE TRANSMISSION
GELENKWELLE UND SCHUTZ
ALBERO CAMBIO E DIFESA
EJE DE TRANSMISION Y PROTECCIONES
GUARD AND TRANSMISSION SHAFT

19701003

1 1970 014

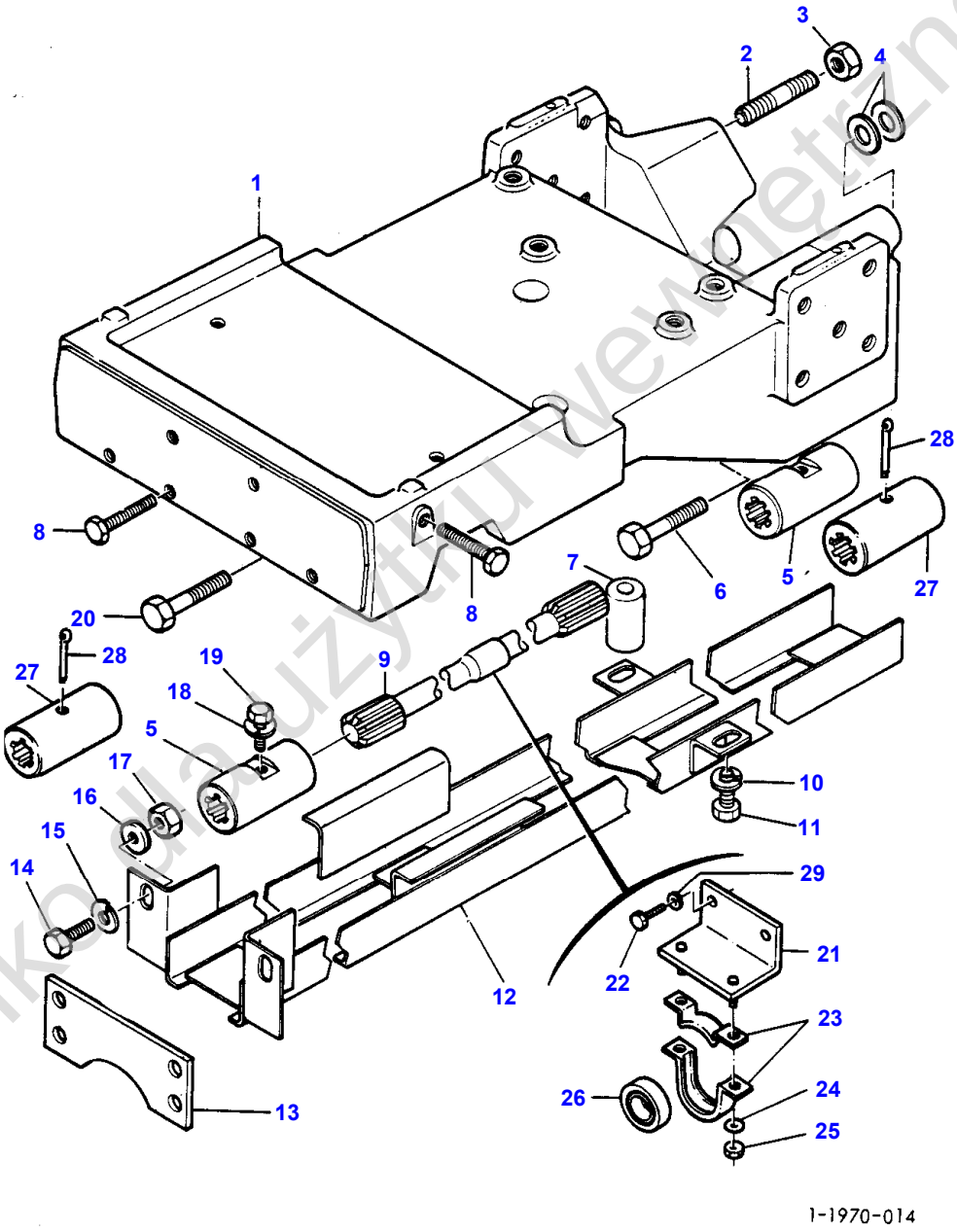

Tylko do użytku wewnętrznego

Item	Part Number	Qty	Description	Comments
1	1874111M5	1	Bearer	
2	377682X1	1	Stud	
	377598X1	1	Stud	
3	377641X1	2	Nut Unf	
4	894825M1	X	Shim	Thickness 0,25MM
	894826M1	X	Shim	Thickness 0,50MM
5	909106M1	2	Sleeve	Up to Serial or Engine Number
6	369459X1	2	Screw	
7	1808475M1	2	Spacer	
8	354285X1	8	Bolt Unc	
9	1672301M1	1	Shaft	Repairs and replaces 909090M2
10	353774X1	2	Washer	
11	353901X1	2	Screw Unc	
12	1808473M92	1	Guard	
13	909105M2	1	Plate	
14	353901X1	2	Screw Unc	
15	353774X1	4	Washer	
16	353433X1	1	Lock Washer	
17	375099X1	2	Nut Unc	
18	353441X1	2	Lock Washer	Up to Serial or Engine Number NO...
19	354489X1	2	Bolt Unf	Up to Serial or Engine Number NO
20	377599X1	8	Bolt Unc	
21	1673798M91	1	Anglepiece	
22	362493X1	2	Screw	
23	658092M1	1	Bearing Carrier	
24	353434X1	2	Lock Washer	
25	353431X1	2	Nut Unf	
26	1722011M1	1	Bearing Assy	
27	3380056M1	2	Sleeve	From Serial or Engine Number NO...
28	354416X1	2	Pin	From Serial or Engine Number NO...
29	353772X1	2	Washer	

Tylko dla użytku wewnętrznego

596

CARTER DE PONT AVANT
VORDERACHSGEHAEUSE
CARCASSA ASSALE ANTERIORE
CARCASA EJE DELANTERO
FRONT AXLE HOUSING

1975 1005

1 1975 006

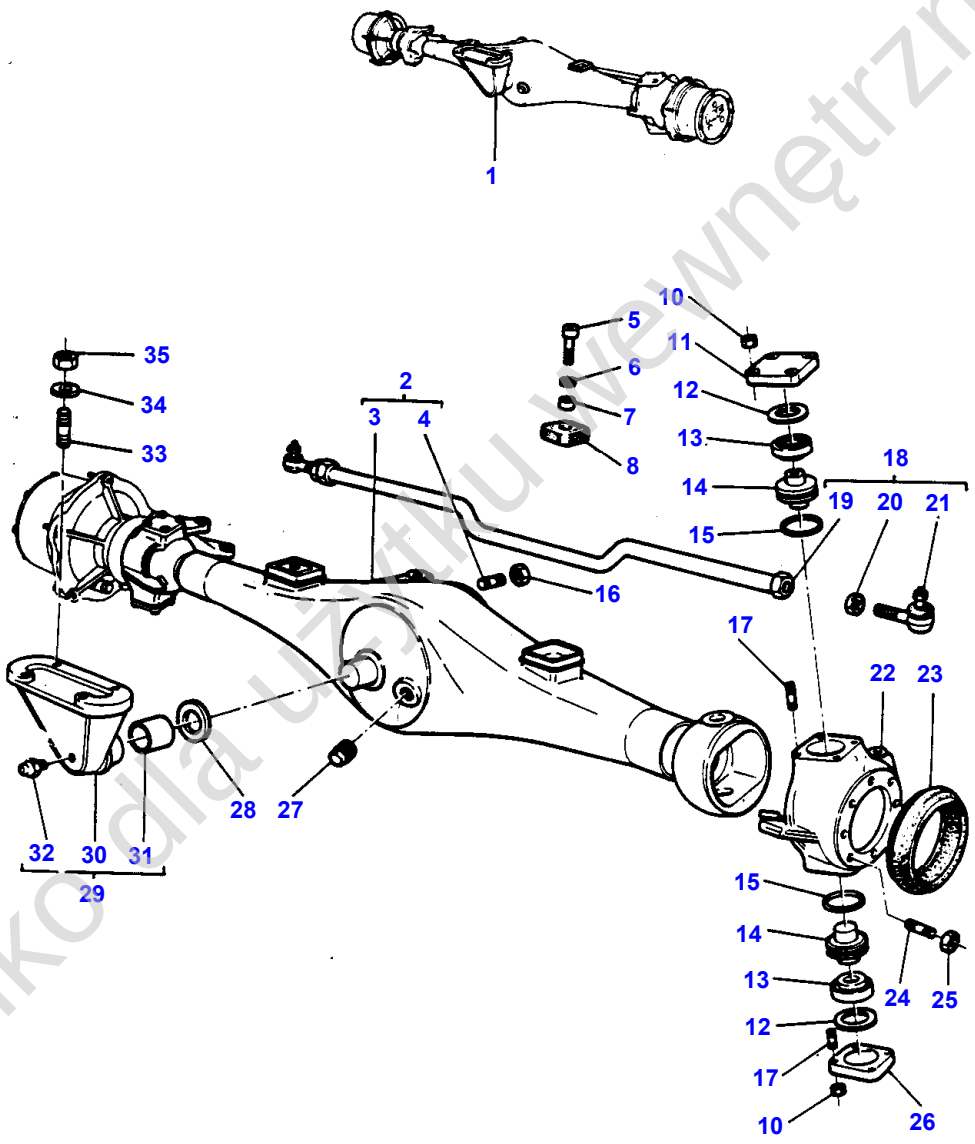

Tylko dla użytku wewnętrznego

Item	Part Number	Qty	Description	Comments
				CAT III
1	1424604M94	1	Bridge	
2	3301327M92	1	Housing	From Serial or Engine Number NO...
	1424835M92	1	Housing	(1)
				Up to Serial or Engine Number NO...
2	1823603M91	1	Breather	(1)
				(A)
2	390887X1	2	Bolt Metric	(A)
	339186X1	2	Nut Metric	(A)
3		1	Axle Housing	(2)
				Not serviced, order REF NO 2
4	393582X1	12	Stud	(2)
5	390580X1	2	Screw Metric	(1)
				M10X25
6	390734X1	2	Washer Metric	(1)
7	1424838M1	2	Spacer	(1)
8	1424837M2	2	Pad	(1)
				Up to Serial or Engine Number NO...
8	3302577M1	1	Bumper	From Serial or Engine Number NO...
10	2714094M1	16	Nut	(1)
11	2714091M2	2	Cover	(1)
				Top
12	2714095M1	X	Shim	(1)
				Thickness 0,10MM
12	2714096M1	X	Shim	(1)
				Thickness 0,15MM
12	2714097M1	X	Shim	(1)
				Thickness 0,30MM
12	2714098M1	X	Shim	(1)
				Thickness 0,50MM
13	1442253X1	4	Bearing	(1)
14	2714089M3	4	Pivot	(1)
15	1441550X1	4	Ring	(1)
16	2712985M1	12	Nut	(1)
17	2714093M1	16	Stud	(1)
18	2714128M96	1	Rod	(1)
19		1	Bar	(18)
				Not serviced, order REF NO 18
20	392842X1	2	Nut Metric	(18)
21	1824403M91	2	End	(18)
22	1426473M1	1	Housing	(1)
				Left Hand
22	1426474M1	1	Housing	(1)
				Right Hand
23	2714107M2	2	Boot	(1)
24	1442248X1	16	Stud	(1)
25	2714094M1	16	Nut	(1)
26	2714090M2	1	Cover	(1)
				Bottom
27	2712981M3	2	Plug	(1)
28	2714137M3	1	Washer	(1)
29	2714132M95	1	Bearer	(1)
30		1	Support	(29)
				Not serviced, order REF NO 29
31	2714131M3	1	Bush	(29)
				Repairs and replaces 1424892M1
32	339608X1	1	Grease Nipple	(29)
33	824387M1	8	Stud	
34	353433X1	8	Lock Washer	
35	353427X1	8	Nut Unf	
				(A)
				NOT ILLUSTRATED

Tylko dla użytku wewnętrznego

598

DIFFERENTIEL DE PONT AVANT
VORDERACHSDIFFERENTIAL
DIFFERENZIALE ASSALE ANTERIORE
DIFERENCIAL EJE DELANTERO
FRONT AXLE DIFFERENTIAL

19801003

1 1980 008

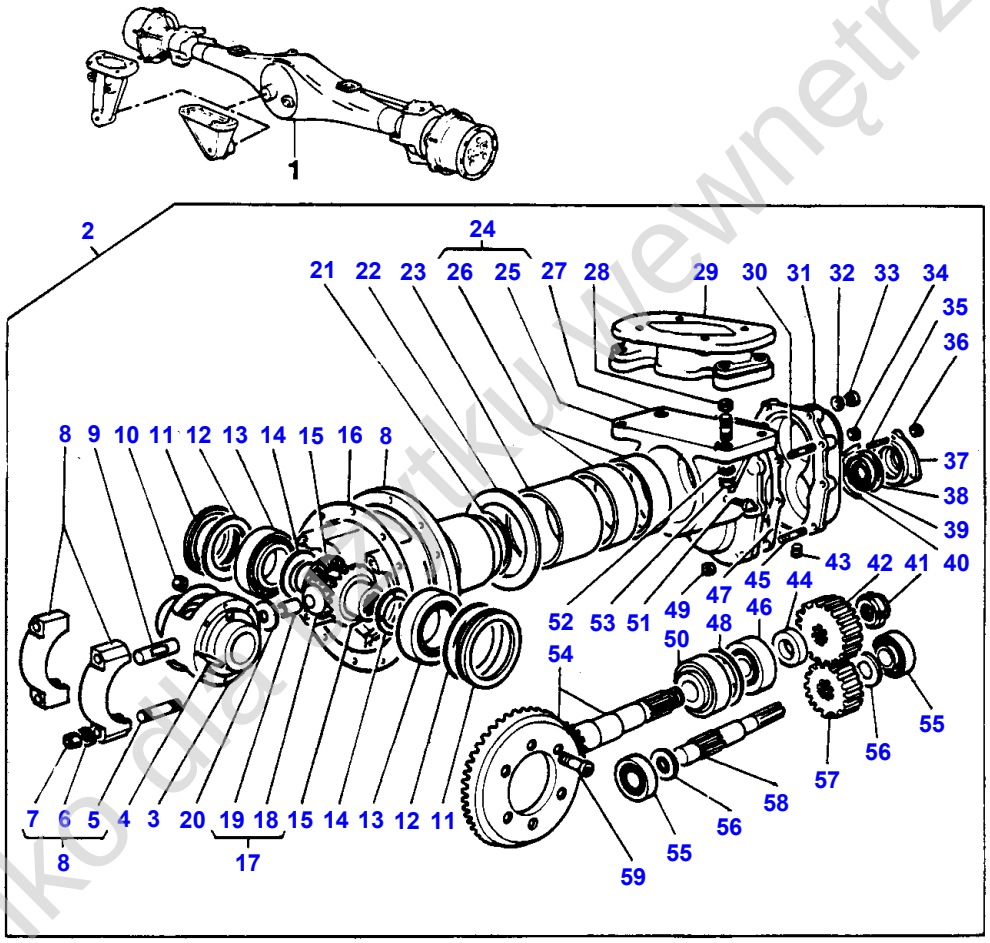

1-1980-008

Tylko do użytku wewnętrznego

Item	Part Number	Qty	Description	Comments
				CAT III
1		1	Bridge	
2	1424605M92	1	Housing	(1)
	2712986M98	1	Housing	(1)
3	2712997M4	1	Differential	(2)
4	2712999M2	1	Pin	(2)
5	1442325X1	4	Stud	(8)
6	1441402X1	4	Washer	(8)
7	1440230X1	4	Nut Metric	(8)
8	1423948M91	1	Bracket	(2)
9	2712998M3	1	Shaft	(2)
10	395549X1	6	Nut	(2)
11	2714862M1	2	Ring	(2)
12	2712993M1	X	Shim	(2)
				Thickness 0,50MM
12	2712994M1	X	Shim	(2)
				Thickness 0,30MM
12	2712995M1	X	Shim	(2)
				Thickness 0,15MM
12	2712996M1	X	Shim	(2)
				Thickness 0,10MM
13	1440651X1	2	Bearing	(2)
14	2714054M2	2	Washer	(2)
15	2714053M3	2	Gear	(2)
16	2712988M1	1	Gasket	(2)
17			Not Used	(2)
				Not serviced, order REF NO 18
18	1425001M1	2	Gear	(2)
19			Not Used	(17)
20	2714052M1	2	Washer	(2)
21	1442218X1	1	Seal	(2)
22	2714071M3	1	Washer	(2)
23	2714058M2	1	Sleeve	(2)
24	2714138M96	1	Bracket	(2)
25		1	Support	(24)
				Not serviced, order 2714138M96
26	2714070M3	2	Bush	(24)
				Repairs and replaces 1424891M1
27	1440040X1	2	Stud	(2)
				M16X45
27	1440041X1	2	Stud	(2)
				M16X60
28	1824118M1	2	Bush	(2)
29	2714634M5	1	Spacer	(2)
30	393535X1	6	Stud	(2)
31	2714072M2	1	Gear	(2)
32	391376X1	1	Joint	(2)
33	339423X1	1	Bolt Metric	(2)
34	2712985M1	6	Nut	(2)
35	391000X1	3	Stud	(2)
36	2714100M1	3	Nut	(2)
37	2714074M4	1	Cover	(2)
38	392022X1	1	Seal	(2)
39	2714076M1	1	Seal	(2)
40	2714077M1	X	Shim	(2)
				Thickness 0,50MM
40	2714078M1	X	Shim	(2)
				Thickness 0,30MM
40	2714079M1	X	Shim	(2)
				Thickness 0,15MM
40	2714080M1	X	Shim	(2)
				Thickness 0,10MM
41	2714630M2	1	Nut	(2)
42	1424607M1	1	Gear	(2)
				20 T,D,Z

Tylko do użytku wewnętrznego

Item	Part Number	Qty	Description	Comments
43	2714139M1	1	Plug	(2)
44	2714083M1	1	Spacer	(2)
45	393535X1	2	Stud	(2)
46	1440636X1	1	Bearing	(2)
47	2714073M1	1	Gasket	(2)
48	2714060M1	X	Shim	(2) Thickness 0,10MM
48	2714061M1	X	Shim	(2) Thickness 0,15MM
48	2714062M1	X	Shim	(2) Thickness 0,30MM
48	2714063M1	X	Shim	(2) Thickness 0,50MM
49	2712985M1	2	Nut	(2)
50	1442408X1	1	Bearing	(2)
51	339608X1	1	Grease Nipple	(2)
52	391414X1	4	Washer	(2)
53	1440091X1	4	Nut Metric	(2)
54	2714055M93	1	Gear	(2)
55	1440637X1	2	Bearing Taper	(2)
56	2714084M1	2	Spacer	(2)
57	1424606M1	1	Gear	(2) 17 T,D,Z
58	2714085M4	1	Shaft	(2)
59	392880X1	6	Screw	(2)

Tylko dla użytku wewnętrznego

602

REDUCTIONS FINALES DE PONT AVANT
VORDERACHS-ENDANTRIEB
RIDUZIONE FINALE ASSALE ANTERIORE
REDUCCION FINAL EJE DELANTERO
FRONT AXLE FINAL DRIVE

1985 1003

1 1985 007

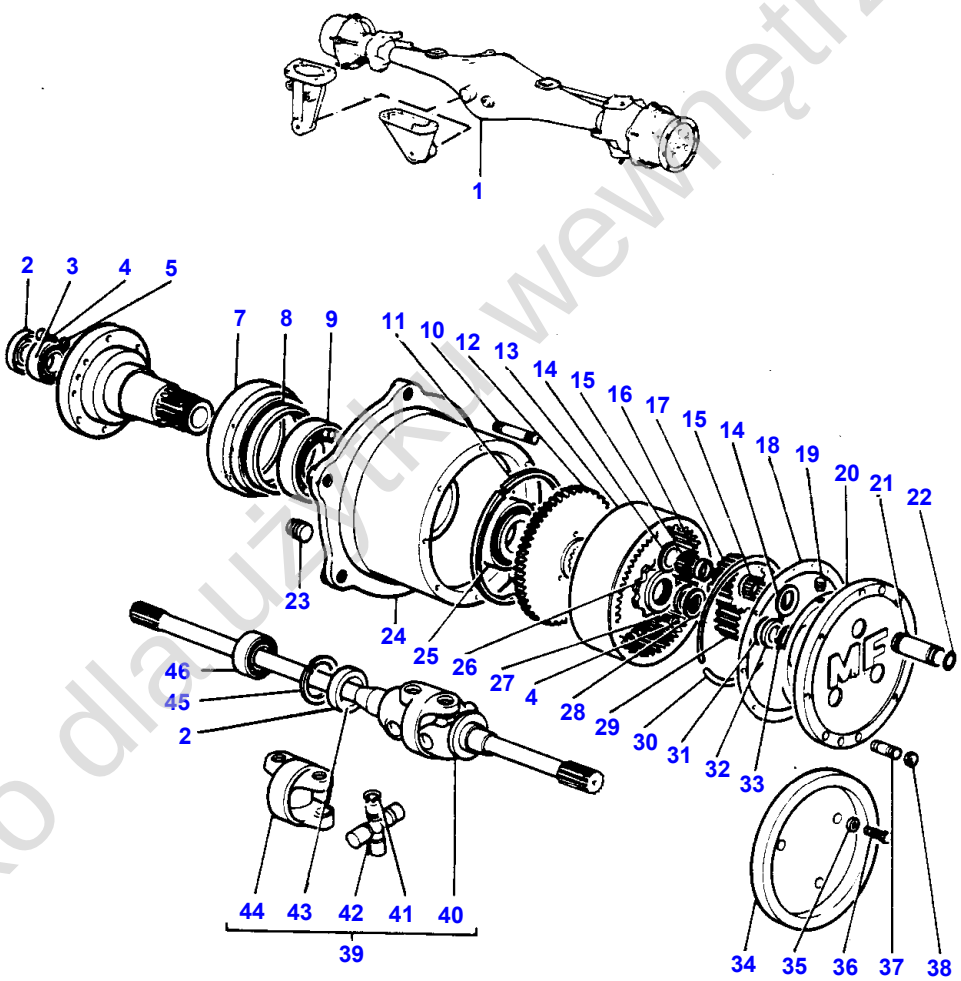

1-1985-007

Tylko dla użytku wewnętrznego

Item	Part Number	Qty	Description	Comments
				CAT III
1		1	Bridge	
2	1442250X1	4	Seal	(1)
3	1442252X1	2	Bearing	(1)
4	1441000X1	6	Screw Metric	(1)
5	391376X1	8	Joint	(1)
6	2714099M5	2	Spindle	(1)
7	2714106M1	2	Seal	(1)
	2714107M2	2	Boot	(1)
8	2714105M1	2	Seal	(1)
9	1442255X1	2	Bearing	(1)
10	2714633M4	10	Stud	(1)
11	2714118M3	2	Ring	(1)
12	2714108M4	2	Gear	(1)
13	2714117M3	2	Nut	(1)
14	2714124M2	12	Washer	(1)
15	2714123M1	480	Roller	(1)
16	2714122M2	6	Spacer	(1)
17	2714121M4	6	Gear	(1)
18	2714104M1	2	Gasket	(1)
19	392535X1	6	Screw Metric	(1)
20	2714120M5	2	Carrier	(1)
	393549X1	6	Plug	(1)
21	2714125M4	6	Shaft	(1)
22	1442219X1	6	O Ring	(1)
23	2712981M3	2	Plug	(1)
24	2714872M5	2	Hub	(1)
25	391337X1	2	Bearing Assy	(1)
26	2714109M2	2	Nut	(1)
27	1440313X1	2	Washer	(1)
28	2714111M1	4	Washer	(1)
29	2714110M3	2	Gear	(1)
30	2714119M2	2	Ring	(1)
31	2714113M1	X	Shim	(1) Thickness 0,10MM
31	2714114M1	X	Shim	(1) Thickness 0,15MM
31	2714115M1	X	Shim	(1) Thickness 0,30MM
31	2714116M1	X	Shim	(1) Thickness 0,50MM
32	2714112M2	2	Spacer	(1)
33	392759X1	2	Clip	(1)
34	1809781M1	2	Shroud	(1)
35	339374X1	6	Lock Washer	(1)
	390972X1	6	Washer Metric	(1)
36	339124X1	6	Screw Metric	(1)
37	1442249X1	16	Stub	(1)
38	395550X1	16	Nut	(1)
39	2714086M92	2	Drive Shaft	(1)
40	1429024M1	1	Shaft	(39) Up to Serial or Engine Number
41	1429022M1	4	Circlip	(39) Up to Serial or Engine Number
42	1429021M1	2	Crosspiece	(39) Up to Serial or Engine Number
43	1429025M1	1	Shaft	(39) Up to Serial or Engine Number
44	1429023M1	1	Joint	(39) Up to Serial or Engine Number
45	339437X1	2	Circlip	(1)
46	2714087M1	2	Bearing	(1)

Tylko do użytku wewnętrznego

604

PONT AVANT
ANTRIEBSACHSE VORN
ASSALE ANTERIORE
EJE ANTERIOR
FRONT LIVE AXLE

19901001

1 1990 009

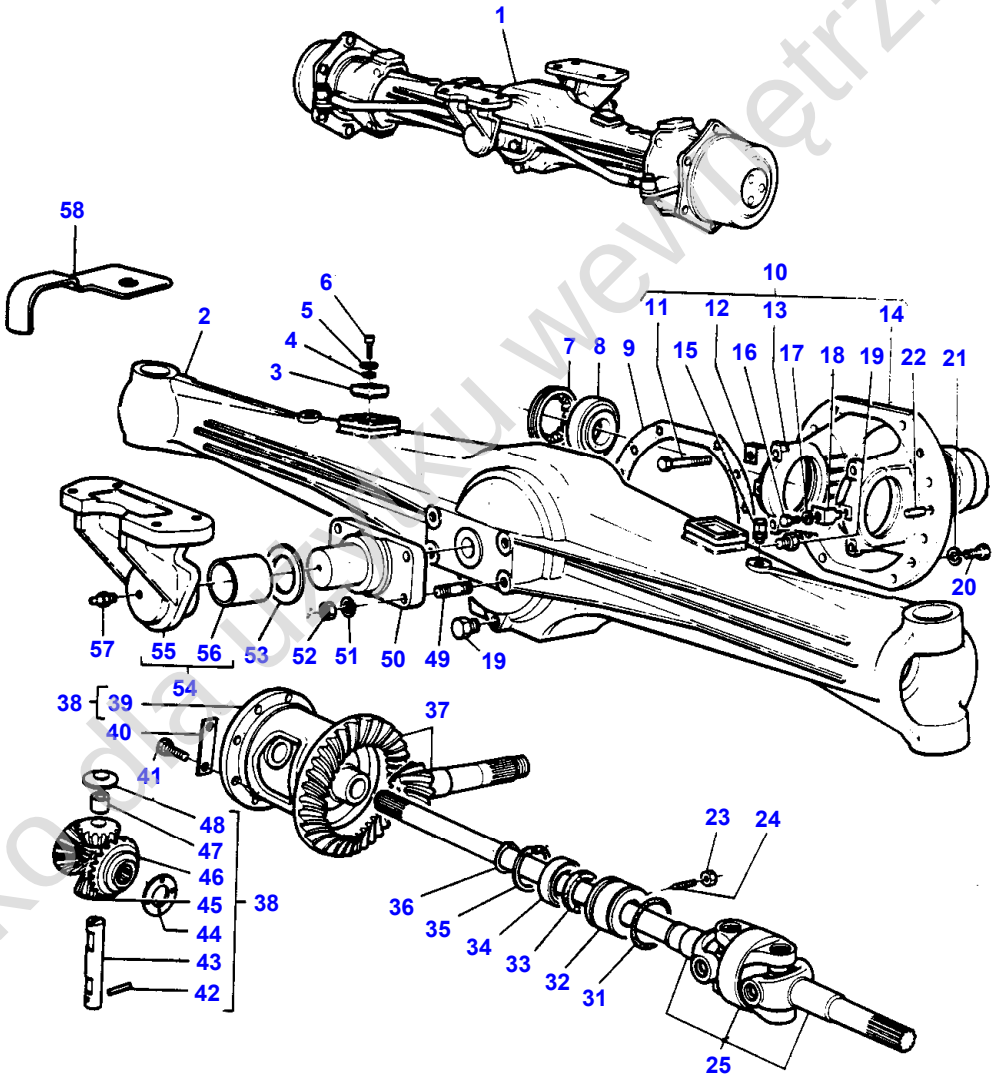

1-1990-009

Tylko do użytku wewnętrznego

Item	Part Number	Qty	Description	Comments
				HOUSING -DIFFERENTIAL -CAT II
1	1659763M93	1	Axle	Up to Serial or Engine Number 04/79 Not serviced, order 3300050M93
1	3300050M95	1	Bridge	Repairs and replaces 1659763M93 From Serial or Engine Number 04/79
2	1426468M91	1	Body	(1) Up to Serial or Engine Number 04/79
2	3300052M91	1	Housing	(1) From Serial or Engine Number 04/79 Up to Serial or Engine Number NO...
2	3302342M1	1	Housing	(1) From Serial or Engine Number NO...
3	1424837M1	2	Pad	(1) Up to Serial or Engine Number NO...
3	3302343M1	1	Shock Absorber	(1) From Serial or Engine Number NO ...
4	1424838M1	2	Spacer	(1)
5	390734X1	2	Washer Metric	(1)
6	390580X1	2	Screw Metric	(1)
7	1823550M2	2	Nut	(1)
8	339440X1	2	Bearing	(1)
9	1823574M1	1	Gasket	(1)
10	3301503M91	1	Diff Housing	(1) Repairs and replaces 1659770M91
11	1441473X1	4	Bolt Metric	(10)
12	1442553X1	4	Plate	(10)
13		2	Bearing Carrier	(10) Not serviced, order REF NO 10
14		1	Support	(10) Not serviced, order REF NO 10
15	1823603M91	1	Breather	(1)
16	339124X1	2	Screw Metric	(1)
17	1440313X1	2	Washer	(1)
18	1823577M1	2	Plate	(1)
19	392735X1	2	Plug	(1)
20	1441244X1	12	Bolt Metric	(1)
21	1440315X1	12	Washer	(1)
22	393596X1	2	Centraliser	(1)
23	394367X1	2	Locknut	(1)
24	394678X1	2	Screw	(1)
25	1823636M91	2	Shaft	(1)
31	1441885X1	2	O Ring	(1)
32	1823555M1	2	Housing	(1)
33	392107X1	2	Seal	(1)
34	390984X1	2	Bearing Ball	(1)
35	1440479X1	2	Circlip	(1)
36	339469X1	2	Segment	(1)
37	1659772M92	1	Kit, Bevel Gear	(1)
38	1824241M92	1	Differential	(1)
39	1823551M1	1	Box	(38)
40	1823590M1	4	Plate	(1)
41	1442557X1	8	Bolt Metric	(1)
42	339349X1	1	Pin	(38)
43	1823589M2	1	Pin	(38)
44	1823586M1	2	Washer	(38)
45	1823552M91	2	Gear	(38)
46	1823554M1	2	Gear	(38)
47	973917M1	2	Bush	(38)
48	1823587M1	2	Washer	(38)
49	974545M1	4	Stud	(1)
50	1823542M1	1	Pin	(1)
51	1440316X1	4	Washer	(1)
52	1440223X1	4	Nut Metric	(1)
53	1823571M1	1	Spacer	(1)
54	1659764M91	1	Support	(1)

Tylko do użytku wewnętrznego

Item	Part Number	Qty	Description	Comments
55		1	Support	(54) Not serviced, order 1659764M91
56	1823570M2	1	Bush	(54)
57	339608X1	1	Grease Nipple	(1)
58		1	Support	(1) (A) (A) TO BE ADVISED

Tylko dla użytku wewnętrznego

608

PONT AVANT
ANTRIEBSACHSE VORN
ASSALE ANTERIORE
EJE ANTERIOR
FRONT LIVE AXLE

19901002

1 1990 002

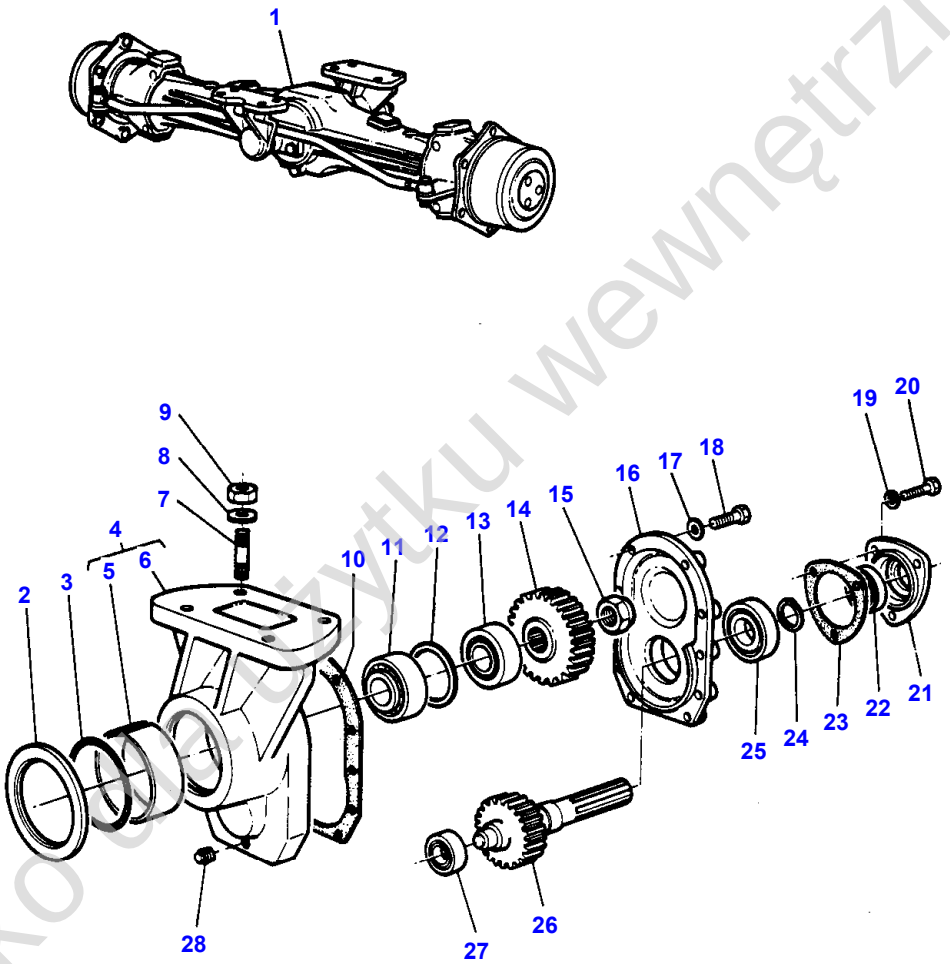

1-1990-002

Tylko do użytku wewnętrznego

Item	Part Number	Qty	Description	Comments
				REDUCER- -CAT II
1		1	Bridge	See Page - Reference Number 604/1
2	1659769M1	1	Disc	(1)
3	392082X1	1	O Ring	(1)
4	3301492M91	1	Support	(1) Repairs and replaces 1659766M91
5	3301462M1	1	Bush	(4) Repairs and replaces 1659768M1
6	1440690X1	1	Pin	(4)
		1	Support	(4) Not serviced, order REF NO 4
7	824387M1	8	Stud	(1)
8	353433X1	8	Lock Washer	(1)
9	353427X1	8	Nut Unf	(1)
10	1659783M2	1	Gasket	(1)
11	390876X1	1	Bearing Taper	(1)
12	1659774M1	X	Shim	(1) Thickness 0,15MM
12	1659775M1	X	Shim	(1) Thickness 0,30MM
12	1659776M1	X	Shim	(1) Thickness 0,50MM
12	1659777M1	X	Shim	(1) Thickness 0,70MM
13	1440636X1	1	Bearing	(1)
14	1659779M1	1	Gear	(1) 29 T, D,Z
15	392838X1	1	Nut Metric	(1)
16	1659782M2	1	Cover	(1)
17	1440314X1	10	Washer	(1)
18	339018X1	10	Bolt Metric	(1)
19	1440313X1	3	Washer	(1)
20	339761X1	3	Screw Metric	(1)
21	1659784M1	1	Cover	(1)
22	392107X1	1	Seal	(1)
23	1659785M1	1	Gasket	(1)
24	392759X1	1	Clip	(1)
25	339818X1	1	Bearing Assy	(1)
26	1659781M1	1	Gear	(1) 24T,D,2
27	392084X1	1	Bearing	(1)
28	392735X1	2	Plug	(1)

Tylko dla użytku wewnętrznego

610

REDUCTIONS FINALES DE PONT AVANT
VORDERACHS-ENDANTRIEB
RIDUZIONE FINALE ASSALE ANTERIORE
REDUCCION FINAL EJE DELANTERO
FRONT AXLE FINAL DRIVE

1985 1004

1 1985 004

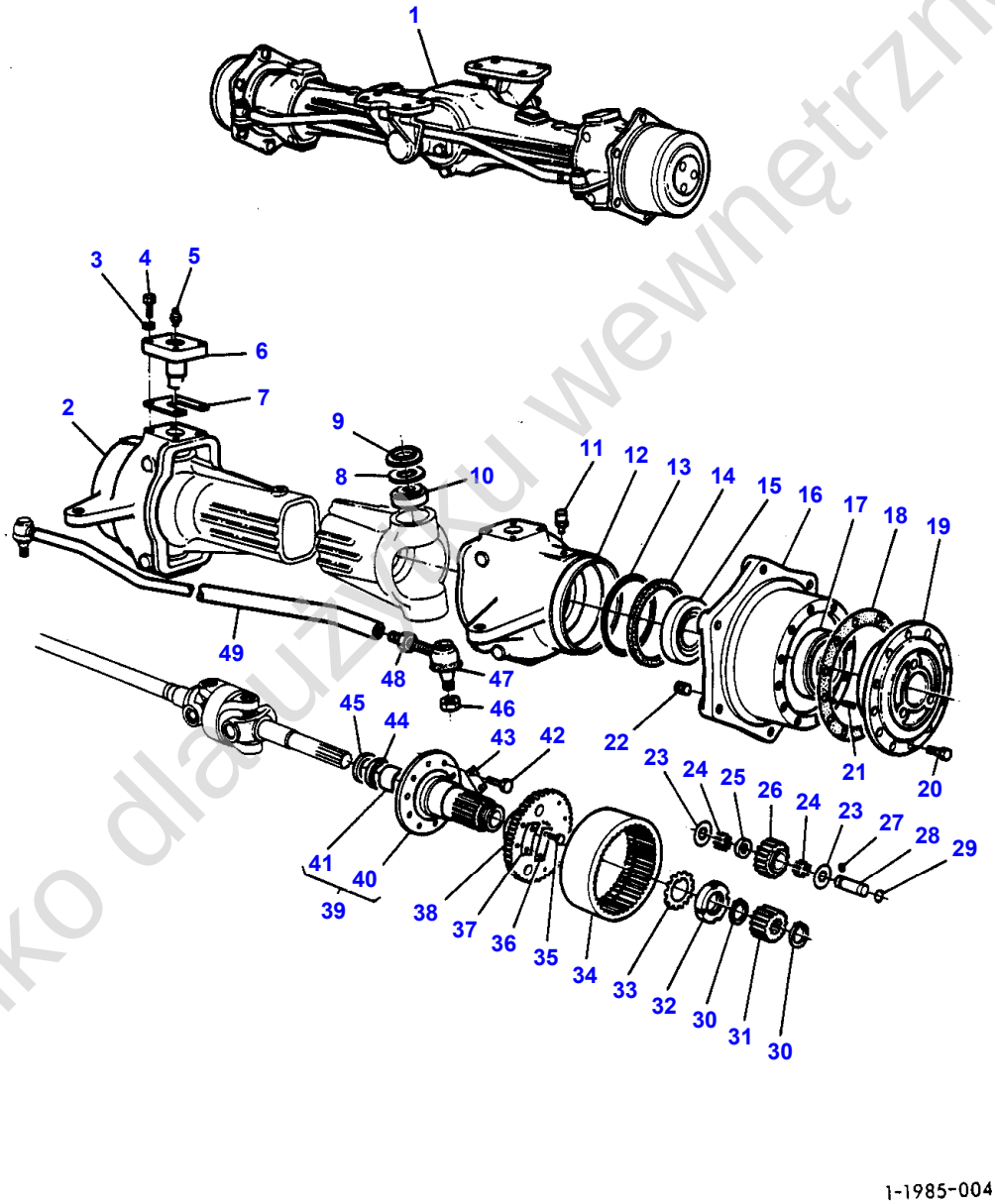

1-1985-004

Tylko dla użytku wewnętrznego

Item	Part Number	Qty	Description	Comments
				CAT II
1		1	Bridge	See Page - Reference Number 604/1
2	1823557M2	1	Housing	(1) Up to Serial or Engine Number Right Hand
2	1427447M2	1	Housing	(1) Right Hand From Serial or Engine Number Up to Serial or Engine Number NO...
2	3302414M1	1	Housing	(1) Right Hand From Serial or Engine Number NO...
3	1440315X1	16	Washer	(1)
4	1441244X1	16	Bolt Metric	(1)
5	1440838X1	2	Nipple	(1) Up to Serial or Engine Number
5	1440838X1	2	Nipple	(1) From Serial or Engine Number
6	1823560M1	4	Pin	(1) Up to Serial or Engine Number
6	1427449M1	4	Pivot	(1) From Serial or Engine Number
7	1823592M1	X	Shim	(1) Thickness 0,30MM Up to Serial or Engine Number
7	1823593M1	X	Shim	(1) Thickness 0,50MM Up to Serial or Engine Number
7	1823594M1	X	Spacer	(1) Thickness 0,70MM Up to Serial or Engine Number
7	1427451M1	X	Shim	(1) Thickness 0,10MM From Serial or Engine Number
7	1427452M1	X	Shim	(1) Thickness 0,15MM From Serial or Engine Number
7	1427453M1	X	Shim	(1) Thickness 0,30MM From Serial or Engine Number
7	1427454M1	X	Shim	(1) Thickness 0,50MM From Serial or Engine Number
7	1427455M1	X	Shim	(1) Thickness 0,70MM From Serial or Engine Number
8	392734X1	4	Bearing	(1) Up to Serial or Engine Number
9	1823575M1	4	Ring	(1) Up to Serial or Engine Number
9	392184X1	4	Seal	(1) From Serial or Engine Number
10	1442550X1	4	Bearing Taper	(1) Up to Serial or Engine Number
10	1427448M1	4	Bearing Assy	(1) From Serial or Engine Number
11	1823603M91	2	Breather	(1)
12	1424889M2	1	Housing	(1) Left Hand Up to Serial or Engine Number
12	1427446M2	1	Housing	(1) Left Hand From Serial or Engine Number Up to Serial or Engine Number NO...
12	3302413M1	1	Housing	(1)

Tylko dla użytku wewnętrznego

Item	Part Number	Qty	Description	Comments
				Left Hand
				From Serial or Engine Number NO...
13	1442554X1	2	Gasket	(1)
14	395527X1	2	Seal	(1)
15	391337X1	2	Bearing Assy	(1)
16	1423784M3	2	Hub	(1)
17	391336X1	2	Bearing	(1)
18	1823648M1	2	Gasket	(1)
19	1423783M2	2	Housing	(1)
20	1441134X1	24	Screw Metric	(1)
21	1440690X1	4	Pin	(1)
22	392735X1	2	Plug	(1)
23	392354X1	12	Washer	(1)
24	392352X1	192	Roller	(1)
25	1426387M1	6	Spacer	(1)
26	1426386M2	6	Diff Pinion	(1)
27	392539X1	6	Screw Metric	(1)
28	1823637M1	6	Pin	(1)
29	1441119X1	6	Ring	(1)
30	339322X1	4	Segment	(1)
31	1823650M2	2	Gear	(1)
32	1442559X1	2	Nut	(1)
33	1442534X1	2	Plate	(1)
34	1823647M3	2	Annular Gear	(1)
35	391894X1	12	Screw Metric	(1)
36	1823600M1	6	Locking Plate	(1)
37	1823601M1	6	Locking Plate	(1)
38	1823638M1	2	Hub	(1)
39	1824255M91	2	Spindle	(1)
40		1	Spike	(39)
				Not serviced, order 1824255M91
41	1823602M1	1	Bush	(39)
42	1441243X1	20	Bolt Metric	(1)
43	1823596M1	10	Plate	(1)
44	392108X1	2	Seal	(1)
45	1823595M1	2	Cover	(1)
46	393565X1	2	Nut Metric	(47)
47	1821234M91	2	Ball	(1)
48	392817X1	2	Nut Metric	(1)
49	1823597M1	1	Rod	(1)
49	390912X1	2	Screw Metric	(1)
				(A)
49	339186X1	2	Nut Metric	(1)
				(A)
49	1441192X1	4	Screw Metric	(1)
				(A)
				M6X12
				(A)
				NOT ILLUSTRADED

Tylko dla użytku wewnętrznego