OUTUBRO 2000

CASE

RUTHZIL TRATOR COMERCIAL DE PEÇAS LTDA 11 97083-6812 ROLANDO

590 SUPER M

590 Super M Loader Backhoe

Parts Catalog

7-6101 NA

Reprinted

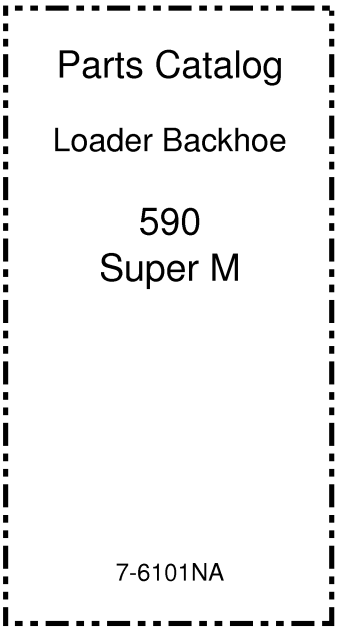

1. Trim along the dotted line
2. Slide into the pocket on the Binder spine

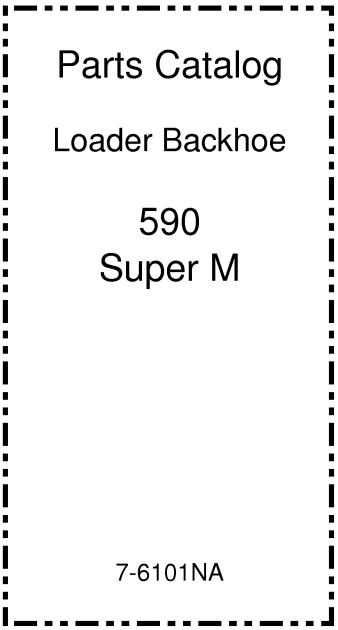

1. Trim along the dotted line
2. Slide into the pocket on the Binder spine

590 SUPER M
LOADER BACKHOE

PARTS CATALOG

Publication Part Number: 7-6101 NA



BD00H005
Photograph may show installation of optional equipment.

This unit first become available in October, 2000.

TABLE OF CONTENTS
GENERAL INFORMATION
SECTION 2 – ENGINE
SECTION 3 – FUEL SYSTEM
SECTION 4 – ELECTRICAL SYSTEM
SECTION 5 – STEERING
SECTION 6 – POWER TRAIN
SECTION 7 – BRAKES
SECTION 8 – HYDRAULICS
SECTION 9 – CHASSIS/ATTACHMENTS
INDEX

Issued June 2003 (Revised May, 2003) • 7-6101 NA • Bur
Copyright © 2003 Case, LLC. All Rights Reserved.

TABLE OF CONTENTS

02 -01	RADIATOR - MOUNTING
02 -02	RADIATOR ASSY
02 -03	AIR CLEANER - AIR INTAKE PARTS
02 -04	AIR CLEANER - PRECLEANER ASSY
02 -05	MUFFLER - EXHAUST SYSTEM
02 -06	COLD START SYSTEM
02 -07	ENGINE - MOUNTING
02 -08	WATER PUMP SYSTEM - 4T-390 EMISSIONS CERTIFIED ENGINE
02 -09	FRONT GEAR COVER - 4T-390 EMISSIONS CERTIFIED ENGINE
02 -10	MANIFOLDS - 4T-390 EMISSIONS CERTIFIED ENGINE
02 -11	TURBOCHARGER SYSTEM - 4T-390 EMISSIONS CERTIFIED ENGINE
02 -12	TURBOCHARGER ASSY - 4T-390 EMISSIONS CERTIFIED ENGINE
02 -13	OIL FILTER AND COOLER - 4T-390 EMISSIONS CERTIFIED ENGINE
02 -14	OIL PUMP AND OIL PAN - 4T-390 EMISSIONS CERTIFIED ENGINE
02 -15	BALANCER, ENGINE - 4T-390 EMISSIONS CERTIFIED ENGINE
02 -16	CYLINDER HEAD COVERS - 4T-390 EMISSIONS CERTIFIED ENGINE
02 -17	CYLINDER HEAD AND VALVE MECHANISM - 4T-390 EMISSIONS CERTIFIED ENGINE
02 -18	CAMSHAFT - 4T-390 EMISSIONS CERTIFIED ENGINE
02 -19	CYLINDER BLOCK - 4T-390 EMISSIONS CERTIFIED ENGINE
02 -20	CRANKSHAFT - 4T-390 EMISSIONS CERTIFIED ENGINE
02 -21	FLYWHEEL AND HOUSING - 4T-390 EMISSIONS CERTIFIED ENGINE
02 -22	PISTONS AND CONNECTING ROD - 4T-390 EMISSIONS CERTIFIED ENGINE
02 -23	GASKET KIT, VALVE GRIND - 4T-390 EMISSIONS CERTIFIED ENGINE
02 -24	GASKET KIT, CYLINDER BLOCK - 4T-390 EMISSIONS CERTIFIED ENGINE
02 -25	GASKET KIT, BASIC SERVICE ENGINE - 4T-390 EMISSIONS CERTIFIED ENGINE
03 -01	FUEL LINES, RESERVOIR - FILTER, IN-LINE FUEL
03 -02	CONTROLS - THROTTLE, HAND
03 -03	CONTROLS - THROTTLE, FOOT
03 -04	FUEL FILTER - 4T-390 EMISSIONS CERTIFIED ENGINE
03 -05	FUEL INJECTION SYSTEM - 4T-390 EMISSIONS CERTIFIED ENGINE
03 -06	ANEROID AND WASTEGATE SYSTEM - 4T-390 EMISSIONS CERTIFIED ENGINE
03 -07	FUEL INJECTION PUMP AND DRIVE - 4T-390 EMISSIONS CERTIFIED ENGINE
03 -08	FUEL INJECTION NOZZLE - 4T-390 EMISSIONS CERTIFIED ENGINE
04 -01	STARTER
04 -02	ALTERNATOR
04 -03	STARTER MOUNTING - ALTERNATOR MOUNTING
04 -04	HARNESS, ENGINE - MOUNTING AND CONNECTIONS
04 -05	BATTERY - CABLES (MODELS WITHOUT COLD START)
04 -06	BATTERY, DUAL - COLD START
04 -07	HARNESS, FRONT CONSOLE - SWITCHES
04 -08	HARNESS, FRONT CONSOLE - MOUNTING
04 -09	ELECTRICAL - TRANSMISSION, POWERSHIFT
04 -10	HARNESS, SIDE CONSOLE - SWITCHES
04 -11	INSTRUMENT PANEL, FRONT - COVERS
04 -12	INSTRUMENT PANEL, SIDE - COVERS, RIGHT HAND SIDE
04 -13	INSTRUMENT CLUSTER
04 -14	ELECTRICAL - LAMPS, ROPS CANOPY
04 -15	ELECTRICAL - LAMPS, ROPS CAB
04 -16	LAMP ASSY (ROPS CANOPY MODELS)
04 -17	HORN - ALARM, BACKUP
04 -18	BEACON, ROTATING (CAB OR CANOPY MODELS)

TABLE OF CONTENTS

04 -19	ANTENNA, RADIO - HARNESS, RADIO
04 -20	ELECTRICAL - BACKHOE AUXILIARY HYDRAULIC
05 -01	STEERING WHEEL - COLUMN
05 -02	HYDRAULICS - STEERING
05 -03	STEERING COLUMN
05 -04	CYLINDER ASSY - STEERING (D148413 / 441647A1 FRONT AXLE) (IF USED)
05 -05	AXLE, FRONT (D148413 / 441647A1) - SPINDLES (IF USED)
05 -06	AXLE, FRONT (D148413 / 441647A1) - HUB AND BEARINGS (IF USED)
05 -07	AXLE, FRONT (377979A1 / 86990837) - MOUNTING (IF USED)
05 -08	AXLE, FRONT (377979A1 / 86990837) - HOUSING (IF USED)
05 -09	AXLE, FRONT (377979A1 / 86990837) - HOUSING, SWIVEL (IF USED)
05 -10	AXLE, FRONT (377979A1 / 86990837) - CYLINDER, STEERING (IF USED)
05 -11	AXLE, FRONT (377979A1 / 86990837) - HUB AND BEARINGS (IF USED)
05 -12	WHEELS, FRONT - TIRES
06 -01	AXLE, FRONT DRIVE - MOUNTING
06 -02	AXLE, FRONT DRIVE - HOUSING
06 -03	AXLE, FRONT DRIVE - HOUSING, SWIVEL
06 -04	AXLE, FRONT DRIVE - CYLINDER, STEERING
06 -05	AXLE, FRONT DRIVE - SHAFTS, AXLE
06 -06	AXLE, FRONT DRIVE - PLANETARY
06 -07	AXLE, FRONT DRIVE - DIFFERENTIAL
06 -08	AXLE, FRONT DRIVE - RING AND PINION
06 -09	DRIVE SHAFT, FRONT AXLE
06 -10	COOLING SYSTEM - TRANSMISSION (MODELS WITHOUT POWERSHIFT)
06 -11	COOLING SYSTEM - TRANSMISSION (MODELS WITH POWERSHIFT)
06 -12	TRANSMISSION - MOUNTING (MODELS WITHOUT POWERSHIFT)
06 -13	TRANSMISSION - MOUNTING (MODELS WITH POWERSHIFT)
06 -14	TRANSMISSION ASSY - FILTER, OIL (MODELS WITHOUT POWERSHIFT)
06 -15	TRANSMISSION ASSY (2WD) - HOUSING (MODELS WITHOUT POWERSHIFT)
06 -16	TRANSMISSION ASSY (4WD) - HOUSING (MODELS WITHOUT POWERSHIFT)
06 -17	TRANSMISSION ASSY - PUMP, OIL (MODELS WITHOUT POWERSHIFT)
06 -18	TRANSMISSION ASSY - SHIFTER MECHANISM (MODELS WITHOUT POWERSHIFT)
06 -19	TRANSMISSION ASSY - SHAFT, IDLER AND PRIMARY (MODELS WITHOUT POWERSHIFT)
06 -20	TRANSMISSION ASSY - SHAFT, INPUT (MODELS WITHOUT POWERSHIFT)
06 -21	TRANSMISSION ASSY - SHAFT, SECONDARY (MODELS WITHOUT POWERSHIFT)
06 -22	TRANSMISSION ASSY (4WD) - SHAFT, OUTPUT (MODELS WITHOUT POWERSHIFT)
06 -23	TRANSMISSION ASSY - VALVE, CONTROL (MODELS WITHOUT POWERSHIFT)
06 -24	TRANSMISSION ASSY (4WD) - VALVE, SOLENOID (MODELS WITHOUT POWERSHIFT)
06 -25	TRANSMISSION ASSY, POWERSHIFT - HOUSING
06 -26	TRANSMISSION ASSY, POWERSHIFT - HOUSING, REAR
06 -27	TRANSMISSION ASSY, POWERSHIFT - TORQUE CONVERTER
06 -28	TRANSMISSION ASSY, POWERSHIFT - PUMP, OIL
06 -29	TRANSMISSION ASSY, POWERSHIFT - CLUTCH, FORWARD DRIVE
06 -30	TRANSMISSION ASSY, POWERSHIFT - CLUTCH, REVERSE DRIVE
06 -31	TRANSMISSION ASSY, POWERSHIFT - CLUTCH, PUMP DRIVE
06 -32	TRANSMISSION ASSY, POWERSHIFT - CLUTCH, SECOND GEAR
06 -33	TRANSMISSION ASSY, POWERSHIFT - CLUTCH, OUTPUT SHAFT
06 -34	TRANSMISSION ASSY, POWERSHIFT - MOUNTING, VALVE
06 -35	TRANSMISSION ASSY, POWERSHIFT - VALVE, CONTROL

TABLE OF CONTENTS

06 -36	TRANSMISSION ASSY, POWERSHIFT - PLATE, DRIVE
06 -37	WHEELS, REAR - TIRES
06 -38	AXLE, REAR DRIVE - MOUNTING
06 -39	AXLE, REAR - DIFFERENTIAL LOCK
06 -40	AXLE, REAR DRIVE - HOUSING
06 -41	AXLE, REAR DRIVE - DIFFERENTIAL (CLOCKWISE INPUT, MODELS WITHOUT POWERSHIFT)
06 -42	AXLE, REAR DRIVE - DIFFERENTIAL (COUNTER CLOCKWISE INPUT, MODELS WITH POWERSHIFT)
06 -43	AXLE, REAR DRIVE - RING AND PINION
06 -44	AXLE, REAR DRIVE - DIFFERENTIAL LOCK (CLOCKWISE INPUT, MODELS WITHOUT POWERSHIFT)
06 -45	AXLE, REAR DRIVE - DIFFERENTIAL LOCK (COUNTER CLOCKWISE INPUT, MODELS WITH POWERSHIFT)
06 -46	AXLE, REAR DRIVE - PLANETARY
06 -47	DRIVE SHAFT, REAR AXLE
07 -01	AXLE, REAR DRIVE - BRAKE, DIFFERENTIAL
07 -02	AXLE, REAR DRIVE - BRAKE, PARKING
07 -03	BRAKE - PEDALS
07 -04	HYDRAULICS - BRAKE MASTER CYLINDER
07 -05	CYLINDER ASSY - BRAKE MASTER
07 -06	CONTROLS - BRAKE, PARKING
08 -01	HYDRAULICS - PUMP, FILTER AND LOADER VALVE
08 -02	HYDRAULICS - PUMP AND LOADER VALVE TO BACKHOE VALVE
08 -03	HYDRAULICS - COOLER, RETURN LINES AND FILTER
08 -04	HYDRAULICS - CYLINDER, LOADER LIFT
08 -05	HYDRAULICS - CYLINDER, LOADER BUCKET
08 -06	HYDRAULICS - CYLINDER, LOADER CLAM
08 -07	HYDRAULICS - CYLINDER, LOADER CLAM
08 -08	HYDRAULICS - CYLINDER, BACKHOE STABILIZER
08 -09	HYDRAULICS - CYLINDER, BACKHOE SWING
08 -10	HYDRAULICS - CYLINDER, BACKHOE BOOM
08 -11	HYDRAULICS - CYLINDER, BACKHOE DIPPER
08 -12	HYDRAULICS - CYLINDER, BACKHOE BUCKET (MODELS WITHOUT EXTENDABLE DIPPER)
08 -13	HYDRAULICS - CYLINDER, BACKHOE BUCKET (MODELS WITH EXTENDABLE DIPPER)
08 -14	HYDRAULICS - CYLINDER, BACKHOE EXTENDABLE DIPPER
08 -15	HYDRAULICS - HAND HELD AUXILIARY (MODELS WITH OR WITHOUT EXTENDABLE DIPPER)
08 -16	HYDRAULICS - HAND HELD AUXILIARY
08 -17	HYDRAULICS - HAND HELD AUXILIARY
08 -18	HYDRAULICS - BACKHOE AUXILIARY
08 -19	HYDRAULICS - BACKHOE AUXILIARY
08 -19A	HYDRAULICS - BACKHOE BOOM LOCK AND ELECTRICAL CIRCUIT
08 -20	HYDRAULICS - RIDE CONTROL (297977A4 SOLENOID VALVE)
08 -20A	HYDRAULICS - RIDE CONTROL (86983598 SOLENOID VALVE)
08 -21	HYDRAULICS - COUPLER, LOADER TOOL QUICK
08 -22	HYDRAULICS - COUPLER, LOADER TOOL QUICK
08 -23	HYDRAULICS - COUPLER, BACKHOE BUCKET
08 -24	HYDRAULICS - COUPLER, BACKHOE BUCKET

TABLE OF CONTENTS

08 -25	CYLINDER - COUPLER, BACKHOE BUCKET
08 -26	PUMP, EQUIPMENT HYDRAULIC
08 -27	VALVE ASSY - LOADER CONTROL, TWO SPOOL
08 -28	VALVE ASSY - LOADER CONTROL, THREE SPOOL
08 -29	VALVE - SECTION INLET
08 -30	VALVE SECTION - LOADER BUCKET
08 -31	VALVE SECTION - LOADER LIFT
08 -32	VALVE - SECTION OUTLET
08 -33	VALVE SECTION - LOADER CLAM
08 -34	VALVE ASSY - RELIEF, CIRCUIT
08 -35	VALVE ASSY - BACKHOE CONTROL, 6 SPOOL
08 -36	VALVE ASSY - BACKHOE CONTROL, 7 SPOOL
08 -37	VALVE ASSY - BACKHOE CONTROL, 7 SPOOL
08 -38	VALVE ASSY - BACKHOE CONTROL, 8 SPOOL
08 -39	VALVE SECTION - INLET AND OUTLET
08 -40	VALVE SECTION - BACKHOE BUCKET
08 -41	VALVE SECTION - BACKHOE DIPPER
08 -42	VALVE SECTION - BACKHOE STABILIZER
08 -43	VALVE SECTION - BACKHOE BOOM
08 -44	VALVE SECTION - BACKHOE SWING
08 -45	VALVE ASSY - SWING CUSHION
08 -46	VALVE SECTION - EXTENDABLE DIPPER
08 -47	VALVE SECTION - OPTIONS, AUXILIARY HYDRAULICS
08 -48	VALVE, AUXILIARY - HAND HELD HYDRAULICS
08 -49	VALVE SECTION - HAND HELD AUXILIARY
08 -50	VALVE ASSY - AUXILIARY BACKHOE
08 -50A	SOLENOID VALVE - BOOM LOCK
08 -51	ACCUMULATOR ASSY - RIDE CONTROL
08 -52	FILTER ASSY, OIL
08 -53	CYLINDER ASSY - LOADER LIFT
08 -54	CYLINDER ASSY - LOADER BUCKET
08 -55	CYLINDER ASSY - LOADER CLAM
08 -56	CYLINDER ASSY - BACKHOE STABILIZER
08 -57	CYLINDER ASSY - BACKHOE SWING
08 -58	CYLINDER ASSY - BACKHOE BOOM
08 -59	CYLINDER ASSY - BACKHOE DIPPER
08 -60	CYLINDER ASSY - BACKHOE BUCKET
08 -61	CYLINDER ASSY - BACKHOE EXTENDABLE DIPPER
09 -01	CONTROLS - LOADER LIFT AND BUCKET
09 -02	CONTROLS - LOADER CLAM
09 -03	CONTROLS - LOADER SELF-LEVELING
09 -04	FRAME - LOADER LIFT
09 -05	FRAME - LOADER LINKAGE
09 -06	BUCKETS, LOADER LONG LIP
09 -07	BUCKET, LOADER CLAM
09 -08	GUARD - VALVE, LOADER
09 -09	COUPLER, TOOL QUICK
09 -10	COVERS - BACKHOE CONTROL TOWER
09 -11	BACKHOE CONTROL TOWER SUPPORT AND SEALS
09 -12	CONTROLS - BACKHOE, WITH FOOT SWING (MODELS WITHOUT EXTENDABLE DIPPER)

TABLE OF CONTENTS

09 -13	CONTROLS - BACKHOE, WITH FOOT SWING (MODELS WITH EXTENDABLE DIPPER)
09 -14	CONTROLS - BACKHOE, WITH HAND SWING (MODELS WITHOUT EXTENDABLE DIPPER)
09 -15	CONTROLS - BACKHOE, WITH HAND SWING (MODELS WITHOUT EXTENDABLE DIPPER)
09 -16	CONTROLS - BACKHOE, EXCAVATOR CONTROL PATTERN
09 -17	CONTROLS - BACKHOE, WITH HAND SWING (MODELS WITH EXTENDABLE DIPPER)
09 -18	CONTROLS - BACKHOE AUXILIARY HYDRAULICS
09 -19	BACKHOE - STABILIZERS, PLATES AND PADS
09 -20	BACKHOE - SWING TOWER AND SWING CYLINDERS
09 -21	BACKHOE - BOOM AND SWING TOWER
09 -22	BOOM LATCH
09 -23	BACKHOE - ARM AND BUCKET
09 -24	BACKHOE - DIPPER, EXTENDABLE
09 -25	DIPPER, BACKHOE - COUPLER, HYDRAULIC (MODELS WITH HYDRAULIC BACKHOE BUCKET COUPLER)
09 -26	BUCKET, UNIVERSAL BACKHOE (305 MM (12 INCH) WIDE)
09 -27	BUCKET, UNIVERSAL BACKHOE (406 MM (16 INCH) WIDE)
09 -28	BUCKET, UNIVERSAL BACKHOE (457 MM (18 INCH) WIDE)
09 -29	BUCKET, UNIVERSAL BACKHOE (610 MM (24 INCH) AND 762 MM (30 INCH) WIDE)
09 -30	BUCKET, UNIVERSAL BACKHOE (914 MM (36 INCH) WIDE)
09 -31	BUCKET, UNIVERSAL BACKHOE (610 MM (24 INCH) AND 762 MM (30 INCH) WIDE)
09 -32	FROST POINT ASSEMBLY
09 -33	COUNTERWEIGHT, FRONT
09 -34	CHASSIS - MOUNTS, POD
09 -35	TANK, OIL - BOX, BATTERY AND TOOL
09 -36	RADIATOR WRAPPER
09 -37	GUARD, PUMP
09 -38	BAFFLE - PLATE (MODELS WITH AIR CONDITIONING)
09 -39	BAFFLE - PLATE (MODELS WITHOUT AIR CONDITIONING)
09 -40	HOOD - PANELS, SIDE
09 -41	HOOD - GRILLE AND CHAFF SCREEN
09 -42	PLATES, FLOOR - FLOORMATS
09 -43	FENDER COVER, LEFT-HAND - PANEL, REAR CLOSURE (STORAGE TRAY WITH CUP HOLDER)
09 -44	FENDER EXTENSIONS
09 -45	GUARD, MUD
09 -46	SEAT - MOUNTING
09 -47	SEAT ASSY, STANDARD
09 -48	SEAT SUPPORT AND PEDESTAL, STANDARD
09 -49	SEAT ASSY, MECHANICAL SUSPENSION
09 -50	SEAT PEDESTAL AND SUSPENSION, MECHANICAL SUSPENSION
09 -51	SEAT ASSY, AIR SUSPENSION
09 -52	SEAT PEDESTAL AND SUSPENSION, AIR SUSPENSION
09 -53	CAB - GLASS, MIRROR AND HOLD OPEN
09 -54	CAB - FRAME AND COVERS
09 -55	CAB - DOORS
09 -56	CAB - DOOR MOUNTING
09 -57	CAB - WINDOW, RIGHT-HAND, FOR SINGLE DOOR CAB FRAMES
09 -58	CAB - WINDOW, REAR
09 -59	CAB - WASHER, WINDSHIELD

TABLE OF CONTENTS

09 -60	CAB - WIPERS
09 -61	CAB HEADLINER - FILTER, LOUVERS, DOME LAMP
09 -62	CAB - FILTER, AIR
09 -63	CAB - BLOWER HOUSING, VENTILATION DUCTS, DRAIN LINES
09 -64	CAB - HEATER
09 -65	CAB - AIR CONDITIONING LINES, EVAPORATOR CORE
09 -66	CAB - AIR CONDITIONING, CONDENSER, RECEIVER-DRIER
09 -67	CAB - AIR CONDITIONING COMPRESSOR
09 -68	CANOPY, ROPS - FRAME, COVERS, MIRROR, VISOR
09 -69	CANOPY, ROPS - GLASS
09 -70	CANOPY, ROPS - WIPER, FRONT AND WINDSHIELD WASHER
09 -71	MIRROR, REAR VIEW - MOUNTING, CAB MODELS
09 -72	SLOW MOVING VEHICLE EMBLEM
09 -73	DECALS
09 -74	DECALS
09 -75	DECALS
09 -76	DECALS - ENGLISH
09 -77	DECALS - LATIN AMERICAN SPANISH
09 -78	DECALS - CANADIAN FRENCH
09 -79	DECALS - ENGLISH
09 -80	DECALS - LATIN AMERICAN SPANISH
09 -81	DECALS - CANADIAN FRENCH

GENERAL INFORMATION

PROPRIETARY NOTICE

The contents of this manual are proprietary data of this company. Reproduction or use of any part for other than the operation and maintenance of our equipment is permissible only if expressly authorized in writing.

Additional copies may be obtained from your dealer. Address requests for copies to your Dealer and refer to the publication part number appearing on the bottom of the rear catalog cover or on the title page.

COMPANY POLICY

Company policy, which is one of continuous improvement, reserves the right to change prices and to make changes in design and specification at any time without notice and without obligation to modify units previously built.

All data given in this book is subject to production variations. Dimensions and weights are approximate only and the illustrations do not necessarily show machines in standard condition. For exact information about any particular machine please consult your dealer.

PARTS AND ACCESSORIES

Genuine parts and accessories have been specifically designed for these machines.

We would like to point out that “non-genuine” parts and accessories have NOT been examined and released by the Company. The installation and or use of such products could have negative effects upon the design characteristics of your machine and thereby affect its safety. The company is not liable for any damage caused by the use of “non-genuine” parts and accessories.

IMPROVEMENTS

We are continually striving to improve our products. We reserve the right to make improvements or changes when it becomes practical and possible to do so, without incurring any obligation to make changes or additions to the equipment sold previously.

MODEL CODES

The range of machines listed may not be available in all countries or markets therefore, for the latest information consult your local dealer.

OWNER ASSISTANCE

We want you to be completely satisfied with your investment. Normally any problems with your equipment will be handled by your dealer's Service Department; however, misunderstandings can occur. If your problem has not been handled to your satisfaction, we suggest the following:

1. Contact the owner or General Manager of the dealership, explain the problem, and request assistance. When additional assistance is needed, your dealer has direct access to our office.
2. Provide your dealer with:
   - Your Name, Address, and Telephone number
   - Machine Model and Serial Number
   - Dealership Name and Address
   - Machine purchase date and amount of use
   - Nature of problem

Be aware that your problem will likely be resolved in the dealership using the dealer's facilities, equipment, and personnel. So it is important that your initial contact be with the dealer.

SPARE PARTS

To maintain operating efficiency, use original spare parts.

When ordering parts, give the following information:

- Machine Model
- Machine and Engine Serial Numbers
- Part Number from the Parts Catalog

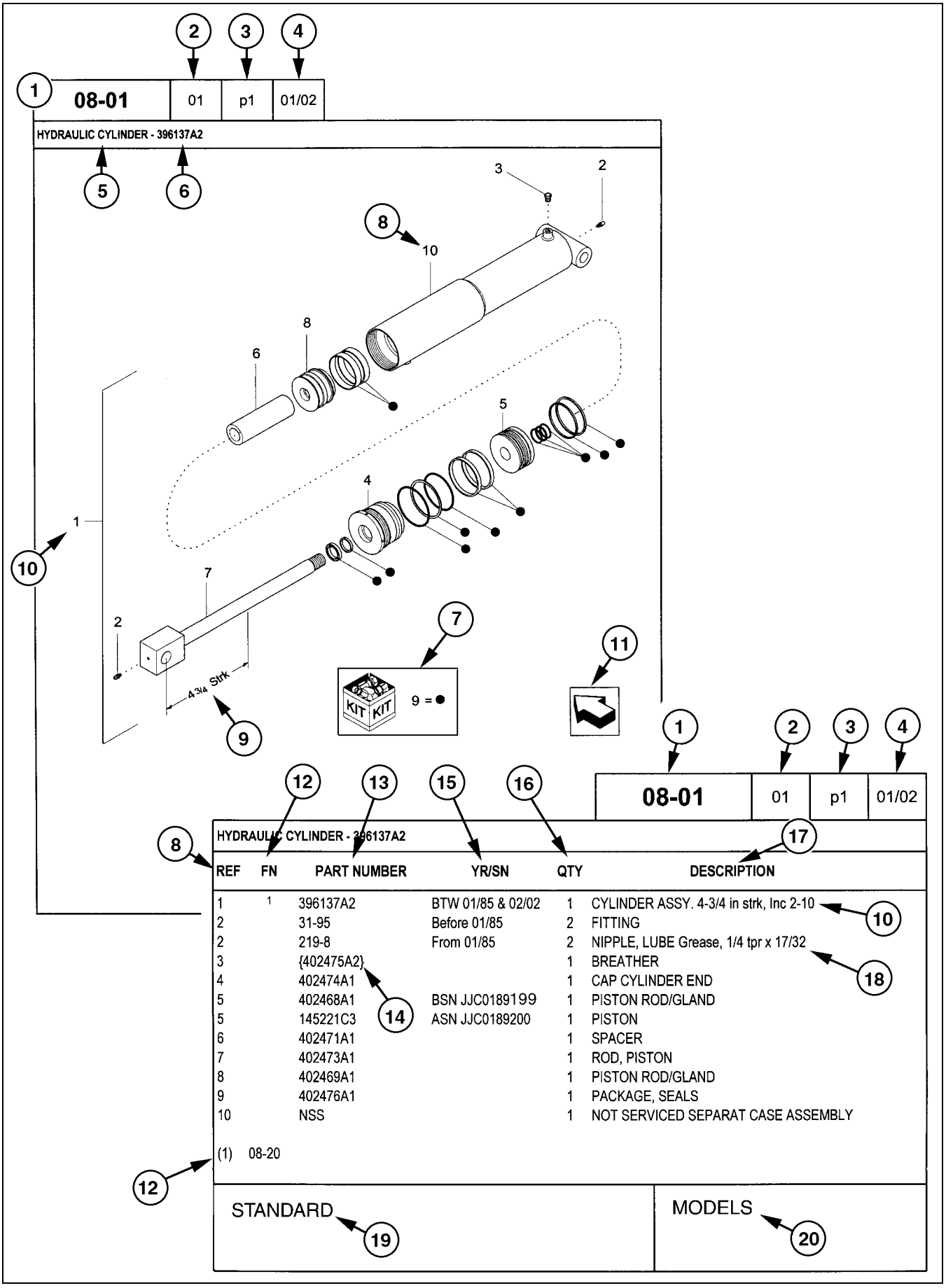

REF	FN	PART NUMBER	YR/SN	QTY	DESCRIPTION
1	1	396137A2	BTW 01/85 & 02/02	1	CYLINDER ASSY. 4-3/4 in strk, Inc 2-10
2		31-95	Before 01/85	2	FITTING
2		219-8	From 01/85	2	NIPPLE, LUBE Grease, 1/4 tpr x 17/32
3		{402475A2}		1	BREATHER
4		402474A1		1	CAP CYLINDER END
5		402468A1	BSN JJC0189199	1	PISTON ROD/GLAND
5		145221C3	ASN JJC0189200	1	PISTON
6		402471A1		1	SPACER
7		402473A1		1	ROD, PISTON
8		402469A1		1	PISTON ROD/GLAND
9		402476A1		1	PACKAGE, SEALS
10		NSS		1	NOT SERVICED SEPARAT CASE ASSEMBLY

(1) 08-20

STANDARD

MODELS

HOW TO USE YOUR PARTS CATALOG

1. Figure Number
2. Sequence Code within the Figure Number
3. Page Number within the Sequence Code
4. Date of Printing (month / year)
5. Figure Description
6. General information regarding the figure
7. Parts supplied in repair kits per symbol reference
8. Figure call-out of the part number (REF)
9. Technical specifications relating to the part indicated
10. Figure call-out includes bracketed items, the included items may also be listed in the additional description area
11. Orientation - Arrow indicates front of the machine
12. Footnote - Additional information relating to the part number. In this example, 08-20 equals another figure that this part is shown on
13. Part Number
    NSS = Not Serviced Separately (Non-serviced parts)
    Bracketed numbers = not available as service parts in this market
14. Not Available as service part in this market
15. YR/SN
    Year
    Before 01/85 = Part valid for production January 1985 and before
    From 01/85 = Part valid for production from January 1985 and after
    BTW 01/85 & 02/02 = Part valid for machines produced between January 1985 and February 2002.
    Serial Number (P.I.N.)
    BSN JJC0268800 = Part valid for serial number JJC0268800 and below
    ASN JJC0268800 = Part valid for serial number JJC0268800 and above
    BTW JJC0178000 & JJC0179000 = Part valid for serial numbers between JJC0178000 & JJC0179000
16. Total Quantity of the Part referred to in the page. The quantity can be replaced by the following indications:
    AR = As Required
    X = As required
17. Part Description
18. Additional description of the part to help confirm identification
19. Figure Notes
20. Model Number(s)

RIGHT-HAND AND LEFT-HAND

The reference to right-hand and left-hand in this catalog is identified by the operator standing at the rear of the basic unit (without rear attachment), looking toward the front of the machine (in normal forward travel).

For pages covering any machine attachments, right-hand and left-hand are defined by the operator sitting in the position for proper operation of the attachment.

DIMENSIONS

Metric and U.S. hardware dimensions do not show the numeric designations of standard coarse threads. A number following a semi colon (;) is the class or grade of hardware. A comma (,) represents the decimal point (.) used in U.S. dimensions.

EXPLANATION OF ABBREVIATIONS

AC	Alternating Current
adj	adjustable
amp	ampere
AR	As required
ASN	Serial number and after P.I.N. and after
blkhd	bulkhead
br	branch
BSN	before Serial number before P.I.N.
BTW	between
cc	cubic centimetre
cl	class
cmprsn	compression
cn pt	cone point
cp pt	cup point
CRS	Chrome Alloy Steel
CST	Carbon Steel
cu yd	cubic yard
DC	Direct Current
deg	degree
dg pt	dog point
dia	diameter
dr type	drive type
fc	face
fc sl	face seal
fem	female
fem PT	female pipe thread
fl	flare
flat pt	flat point
ft	feet or foot
ga	gauge
gal	gallon or gallons
gpm	gallons per minute
gr	grade
hd	head
hdg pt	half dog point
hp	horsepower
ID	inside diameter
in	inch or inches
Incl.	Includes
inv fl	inverted flare
K	kilo
kg	kilogram
km/h	kilometers per hour
L	litre
lb	pounds
lb-ft	pound-foot
lg	long
LH	left-hand
LH thd	left-hand thread
M	(prefix) metric thread size
m	metre
ml	milliliter
mm	millimetre
NF	National Fine
No.	number
NPT	National Pipe Thread
NS	National Super Fine
OD	outside diameter
ohm	electrical unit of resistance
Or	O-ring
ORB	O-ring boss
ORFS	O-ring face seal
ov cntr	over center
ov pt	oval point
oz	ounce
P	pitch
psi	pounds per square inch
pt	pint
PT	pipe thread
rd	round
rd holes	round holes
RH	right-hand
RH thd	right-hand thread
rpm	revolutions per minute
sl	self-locking
sq	square
SST	Stainless Steel
st	self-tapping
strk	stroke
sw	swivel
T	teeth
thk	thick
tpr	taper
tube OD	tube outside diameter
V	volt or volts
W	watt or watts
X	as required
yd	yard

SECTION INDEX

02 -01	RADIATOR - MOUNTING
02 -02	RADIATOR ASSY
02 -03	AIR CLEANER - AIR INTAKE PARTS
02 -04	AIR CLEANER - PRECLEANER ASSY
02 -05	MUFFLER - EXHAUST SYSTEM
02 -06	COLD START SYSTEM
02 -07	ENGINE - MOUNTING
02 -08	WATER PUMP SYSTEM - 4T-390 EMISSIONS CERTIFIED ENGINE
02 -09	FRONT GEAR COVER - 4T-390 EMISSIONS CERTIFIED ENGINE
02 -10	MANIFOLDS - 4T-390 EMISSIONS CERTIFIED ENGINE
02 -11	TURBOCHARGER SYSTEM - 4T-390 EMISSIONS CERTIFIED ENGINE
02 -12	TURBOCHARGER ASSY - 4T-390 EMISSIONS CERTIFIED ENGINE
02 -13	OIL FILTER AND COOLER - 4T-390 EMISSIONS CERTIFIED ENGINE
02 -14	OIL PUMP AND OIL PAN - 4T-390 EMISSIONS CERTIFIED ENGINE
02 -15	BALANCER, ENGINE - 4T-390 EMISSIONS CERTIFIED ENGINE
02 -16	CYLINDER HEAD COVERS - 4T-390 EMISSIONS CERTIFIED ENGINE
02 -17	CYLINDER HEAD AND VALVE MECHANISM - 4T-390 EMISSIONS CERTIFIED ENGINE
02 -18	CAMSHAFT - 4T-390 EMISSIONS CERTIFIED ENGINE
02 -19	CYLINDER BLOCK - 4T-390 EMISSIONS CERTIFIED ENGINE
02 -20	CRANKSHAFT - 4T-390 EMISSIONS CERTIFIED ENGINE
02 -21	FLYWHEEL AND HOUSING - 4T-390 EMISSIONS CERTIFIED ENGINE
02 -22	PISTONS AND CONNECTING ROD - 4T-390 EMISSIONS CERTIFIED ENGINE
02 -23	GASKET KIT, VALVE GRIND - 4T-390 EMISSIONS CERTIFIED ENGINE
02 -24	GASKET KIT, CYLINDER BLOCK - 4T-390 EMISSIONS CERTIFIED ENGINE
02 -25	GASKET KIT, BASIC SERVICE ENGINE - 4T-390 EMISSIONS CERTIFIED ENGINE

02 -01		p1	05/03

RADIATOR - MOUNTING

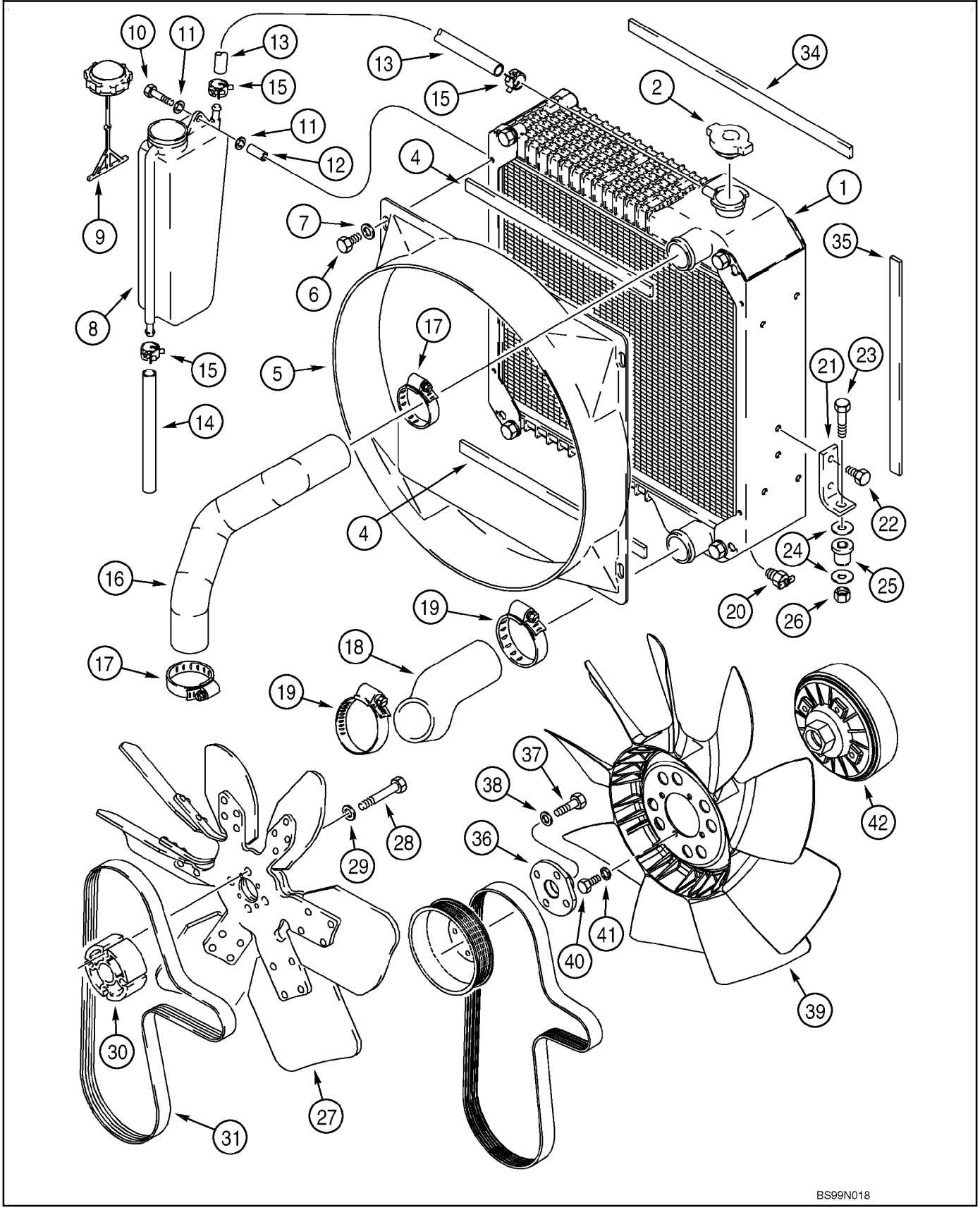

RADIATOR - MOUNTING

REF	FN	PART NUMBER	YR/SN	QTY	DESCRIPTION
1		239739A2		1	RADIATOR Heavy Duty, See Figure 02-02; Incl. Ref 2; For Cooler and Baffles, See Figures 06-10, 06-11
2		A170241		1	CAP, FILLER 15 psi
4		233272A1		2	SEAL 20 x 404 x 6 mm, Adhesive Back, Radiator to Shroud, Upper And Lower
5		186433A1		1	SHROUD
6		806-8016		4	SCREW M8 x 16; 10.9
7		895-15008		4	WASHER 9 x 20 x 1,6 mm
8		131084A1		1	RESERVOIR Incl. Ref 9
9		1547924C1		1	CAP
10		806-8050		2	SCREW M8 x 50; 10.9
11		895-11008		4	WASHER 9 x 17 x 1,6 mm
12		132215A1		2	SPACER
13		132218A1		1	HOSE, LARGE 591 mm (23-1/4 in), Coolant Recovery, Cut From L126767
14		132217A1		1	HOSE, LARGE 125 mm (4-15/16 in), Coolant Overflow
15		A171099		3	CLAMP
16		232366A1		1	HOSE, LARGE Upper
17		214-1432		2	CLAMP 1-9/16 x 2-1/2
18		141513A1		1	HOSE, LARGE Lower
19		214-1440		2	CLAMP 2-1/16 - 3
20		217-92		1	COCK, DRAIN 1/4, Drain Valve
21		121501A2		2	SUPPORT Lower, For Upper Bracket, See Figure 09-36
22		614-8016		4	CAPSCREW M8 x 16
23		814-10050		2	CAPSCREW M10 x 50
24		K691987		4	WASHER
25		D52276		2	ISOLATOR Rubber
26		832-10410		2	NUT M10
27		228133A2		1	FAN Degree 39; Replaces 228133A1 Fan
28		814-10070		4	CAPSCREW M10 x 70
29		496-21041		4	WASHER 13/32 x 13/16 x 3/32
30		A184545		1	SPACER 43 mm
31		J925953		1	V-BELT Alternator And Fan

RADIATOR - MOUNTING

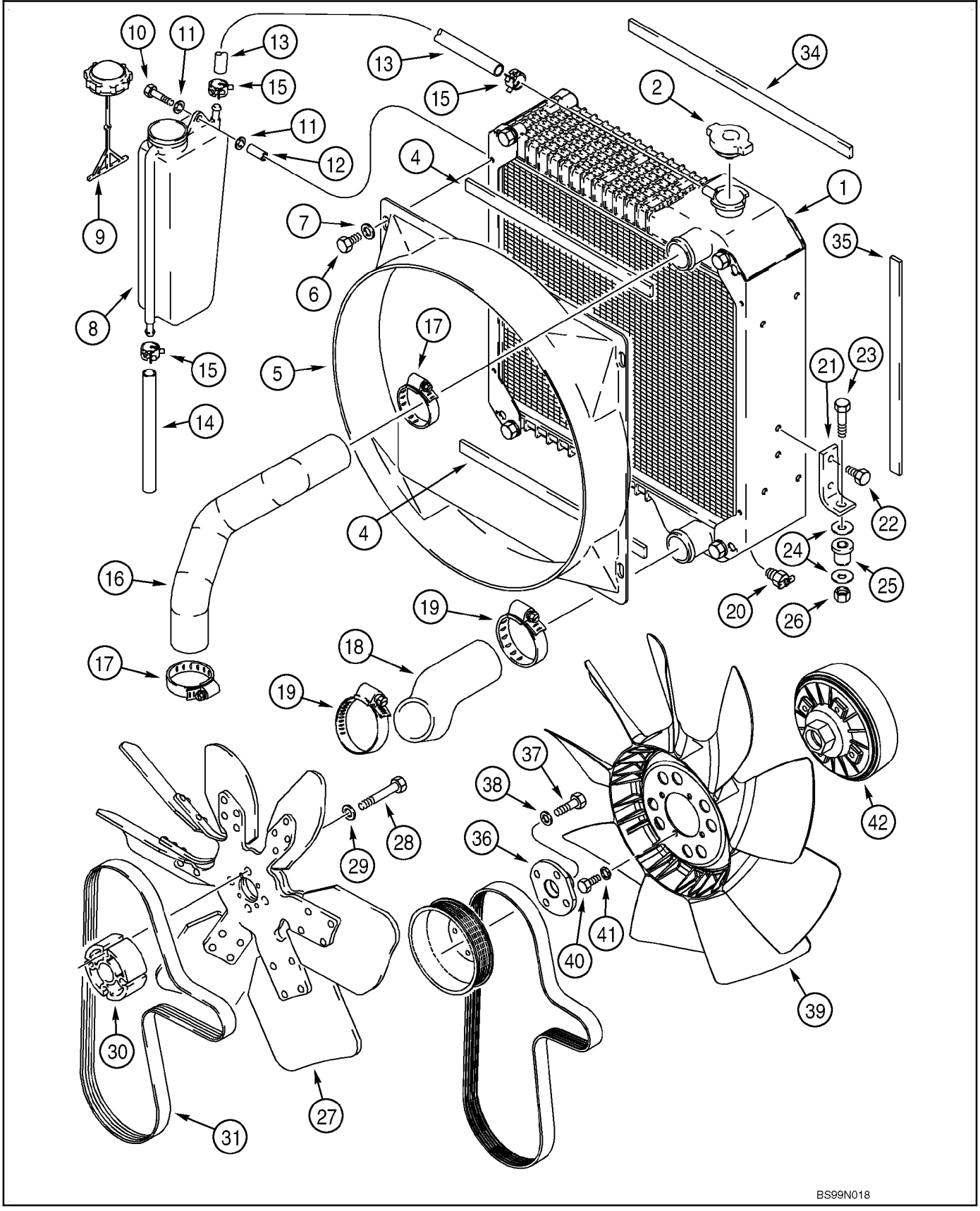

RADIATOR - MOUNTING

REF	FN	PART NUMBER	YR/SN	QTY	DESCRIPTION
34		235040A2		2	SEAL 20 x 542 x 6 mm, Adhesive Back, Horizontal, Radiator to Oil Cooler
35		235038A2		2	SEAL 20 x 490 x 8 mm, Adhesive Back, Vertical, Radiator to Oil Cooler
36		303192A1		1	ADAPTER Fan Drive
37		614-10030		4	SCREW M10 x 30
38		896-11010		4	WASHER 11 x 21 x 2,5 mm
39		277800A1		1	FAN 9 Blade
40		614-8016		4	CAPSCREW M8 x 16
41		892-11008		4	WASHER M8
42		303195A1		1	ASSEMBLY Drive, Fan, Component Parts Not Serviced Separately
42		303195A1		1	ASSEMBLY Drive Assembly, Component Parts Not Serviced Separately

02 -02		p1	05/03

RADIATOR ASSY

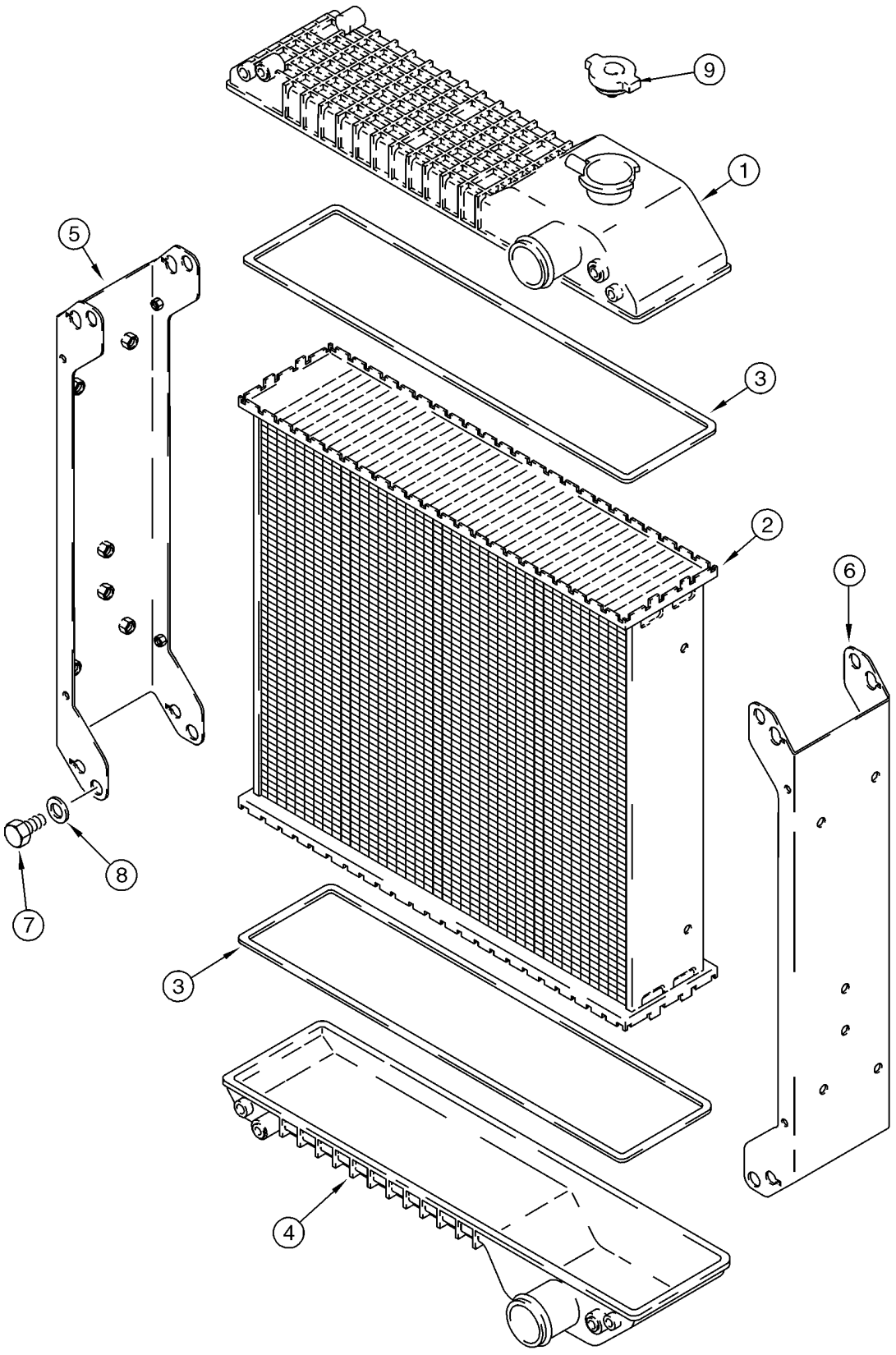

RADIATOR ASSY

REF	FN	PART NUMBER	YR/SN	QTY	DESCRIPTION
		239739A2		1	RADIATOR 5 Row, Heavy Duty, Incl. Ref 1 - 11
1		175161A1		1	RESERVOIR Tank
2		257434A1		1	ASSEMBLY Core
3		175163A1		2	GASKET Upper And Lower, Order 226586A1 Kit
		226586A1		2	PACKAGE,SERVICE Includes One Gasket and Instructions
4		175162A1		1	RESERVOIR Tank
5		175164A1		1	SUPPORT Left Hand
6		175165A2		1	SUPPORT Right Hand
7		614-8012		8	CAPSCREW M8 x 12
8		895-11008		8	WASHER 9 x 17 x 1,6 mm
9		A170241		1	CAP, FILLER 15 psi
10		NSS		2	NOT SERVICED SEPARATELY Seal, Foam, Side Channel Brackets, Not Illustrated
11		NSS		4	NOT SERVICED SEPARATELY Seal, Foam, Corners, Side Channel Brackets, Not Illustrated

AIR CLEANER - AIR INTAKE PARTS

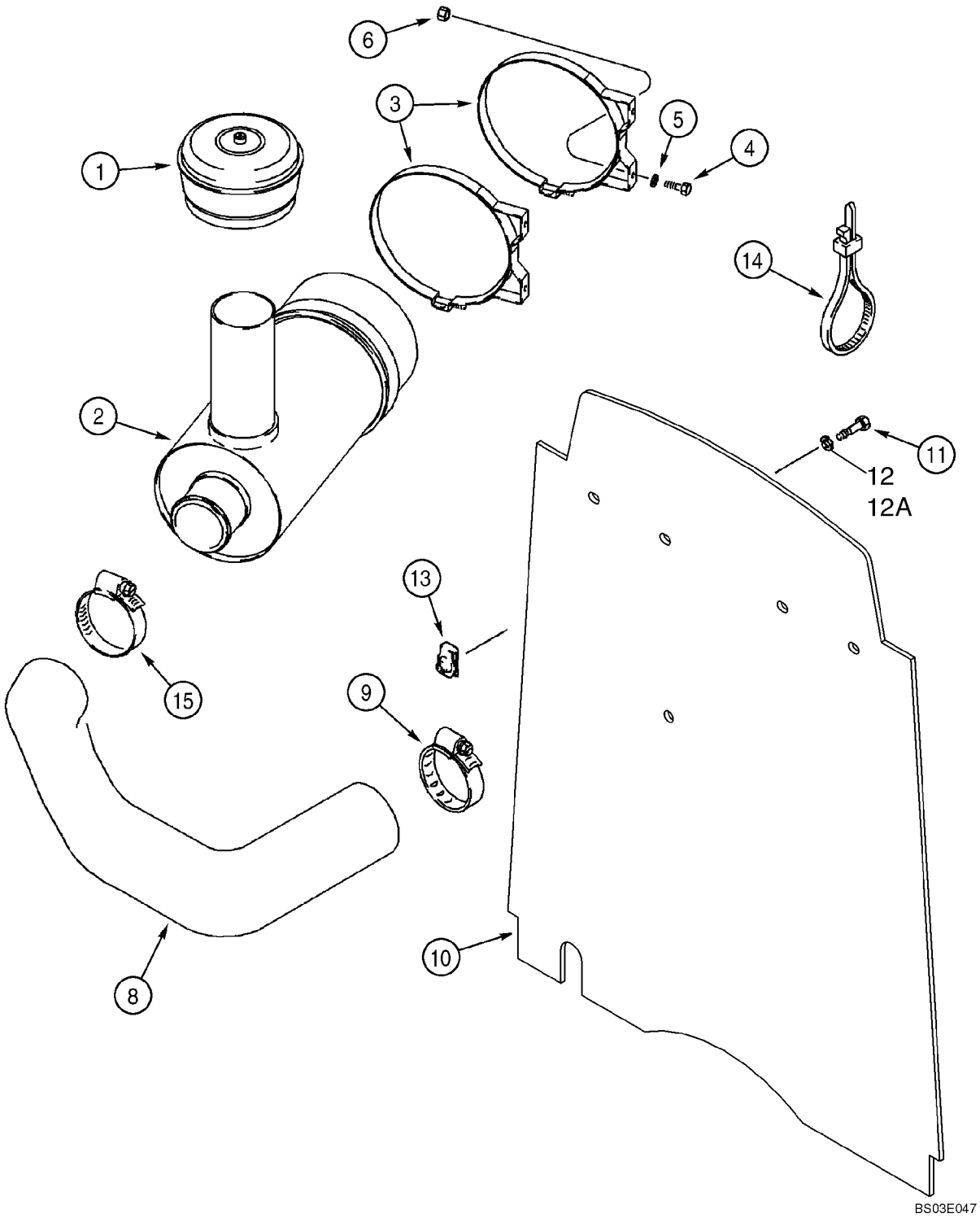

AIR CLEANER - AIR INTAKE PARTS

REF	FN	PART NUMBER	YR/SN	QTY	DESCRIPTION
1		228120A1		1	PRECLEANER See Figure 02-04
2		293571A1		1	AIR CLEANER See Figure 02-04
3		70973		2	BRACKET
4		614-8020		4	CAPSCREW M8 x 20
5		895-11008		4	WASHER 9 x 17 x 1,6 mm
6		829-1408		4	NUT M8; 10
8		223944A1		1	HOSE, LARGE
9		214-1456		1	CLAMP 3-1/16 - 4 in dia
10		398315A1		1	CURTAIN Barrier, Heat and Noise Reduction
11		806-8025		4	SCREW M8 x 25; 10.9
12		895-15008		4	WASHER 9 x 20 x 1,6 mm; If Used
12A		495-81001		4	WASHER 9,5 x 29 x 1,6 mm; If Used
13		833-40408		4	NUT U-Type, M8
14		L18337		2	STRAP 15 in
15		214-1464		1	CLAMP 3-9/16 - 4-1/2 in dia

AIR CLEANER - PRECLEANER ASSY

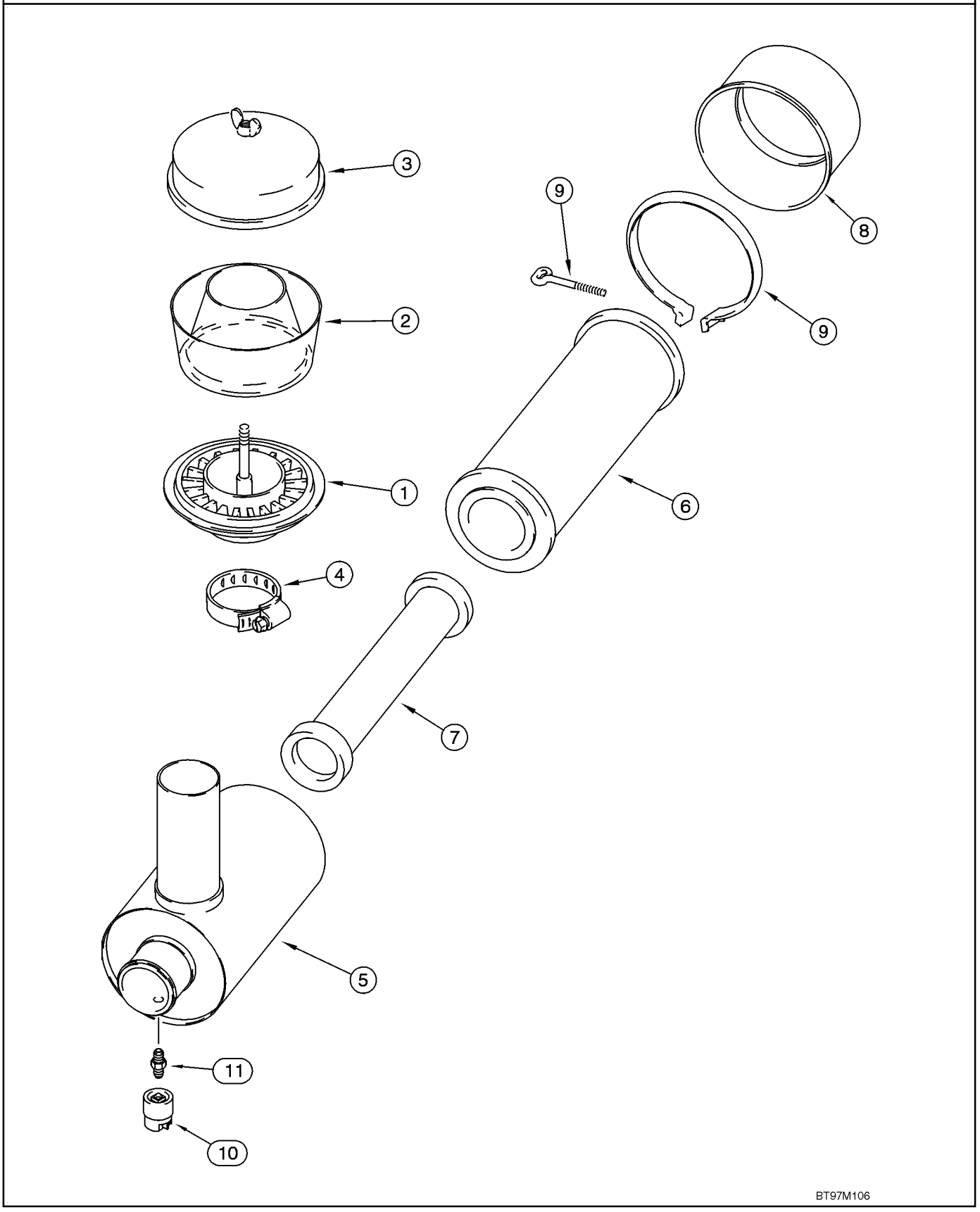

AIR CLEANER - PRECLEANER ASSY

REF	FN	PART NUMBER	YR/SN	QTY	DESCRIPTION
		228120A1		1	PRECLEANER Incl. Ref 1 - 4
1		NSS		1	NOT SERVICED SEPARATELY Body
2		277377R1		1	HOUSING Bowl
3		A42281		1	COVER
4		214-1464		1	CLAMP 3-9/16 - 4-1/2 in dia
		293571A1		1	AIR CLEANER Incl. 226378A1; Ref 5 - 9, 10, 11
		226378A1		1	AIR CLEANER Incl. Ref 5 - 9
5		NSS		1	NOT SERVICED SEPARATELY Housing
6		222421A1		1	ELEMENT, FILTER Primary
7		222422A1		1	ELEMENT, FILTER Secondary
8		247743A1		1	COVER,FILTER
9		R21391		1	CLAMP Includes Hardware
10		292740A1		1	SWITCH Air Restriction
11		D36264		1	FITTING Adapter

MUFFLER - EXHAUST SYSTEM

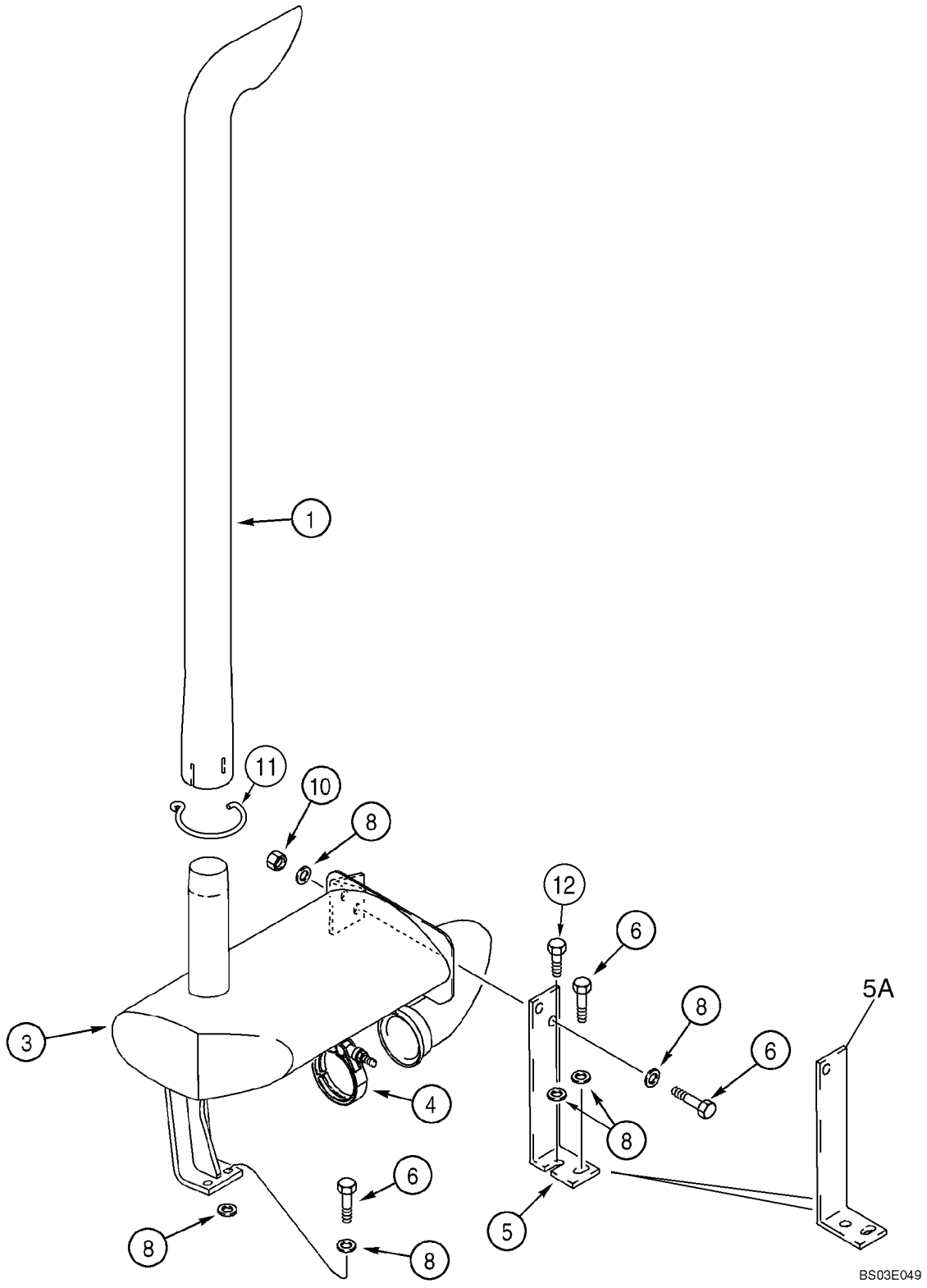

MUFFLER - EXHAUST SYSTEM

REF	FN	PART NUMBER	YR/SN	QTY	DESCRIPTION
		432013A1		1	KIT Service, Incl. Ref 1, 3, 11
1		392301A1		1	PIPE, EXHAUST
3		392295A1		1	MUFFLER
4		A170467		1	CLAMP Includes Hardware
5		225033A1		1	SUPPORT If Used
5A		225033A2		1	BRACKET If Used
6		627-10030		4	SCREW M10 x 30; 10.9
8		896-11010		10	WASHER 11 x 21 x 2,5 mm
10		829-1410		2	NUT M10; 10.9
11		401541A1		1	CLIP
12		627-10020		1	SCREW M10 x 20; 10.9

COLD START SYSTEM

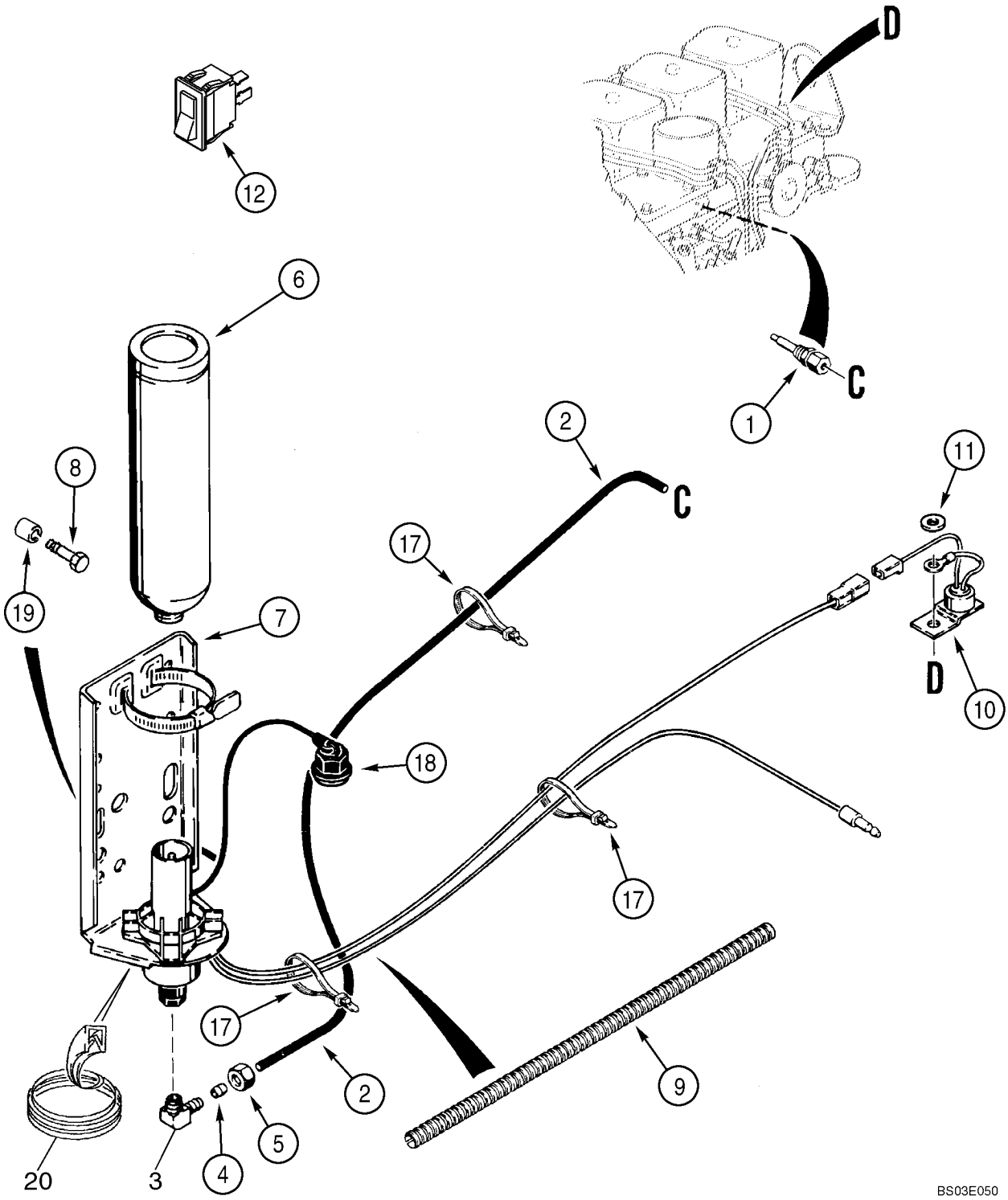

COLD START SYSTEM

REF	FN	PART NUMBER	YR/SN	QTY	DESCRIPTION
1		A189154		1	JET Nozzle Assy; .008 Inch Dual Orifice Nozzle, Component Parts Not Serviced Separately
2		D145367		1	TUBE 762 mm (30 in), Cut From L60539X
		222-615		1	FITTING 90 Deg Elbow; 1/8 tube OD x 1/8 PT, Compression, Incl. Ref 3 - 5
3		NSS		1	NOT SERVICED SEPARATELY Body
4		222-650		1	SLEEVE 1/8 tube OD
5		222-660		1	NUT 1/8 tube OD
6		A171940		1	CYLINDER Ether
7		A172116		1	VALVE Solenoid, 12V, 3 cc, Cold Start, Starting Fluid Injection, Component Parts Not Serviced Separately
8		276-24924		2	SCREW 3/8 x 1-1/2
9		D128402		1	SLEEVE 380 mm (15 in)
10		A187923		1	SWITCH Temperature, Uses Existing Hardware
11		495-11041		1	WASHER 13/32 x 13/16 x 1/16
12		386791A1		1	SWITCH Rocker
17		L18337		X	STRAP 15 in
18		254729A1		1	SET OF PARTS Cap and Cord, 1 Inch Threaded Cap
19		120303A1		2	SPACER
20		399923A1		1	STRIP, RUBBER Trim, 203 mm (7-13/16 in)

ENGINE - MOUNTING

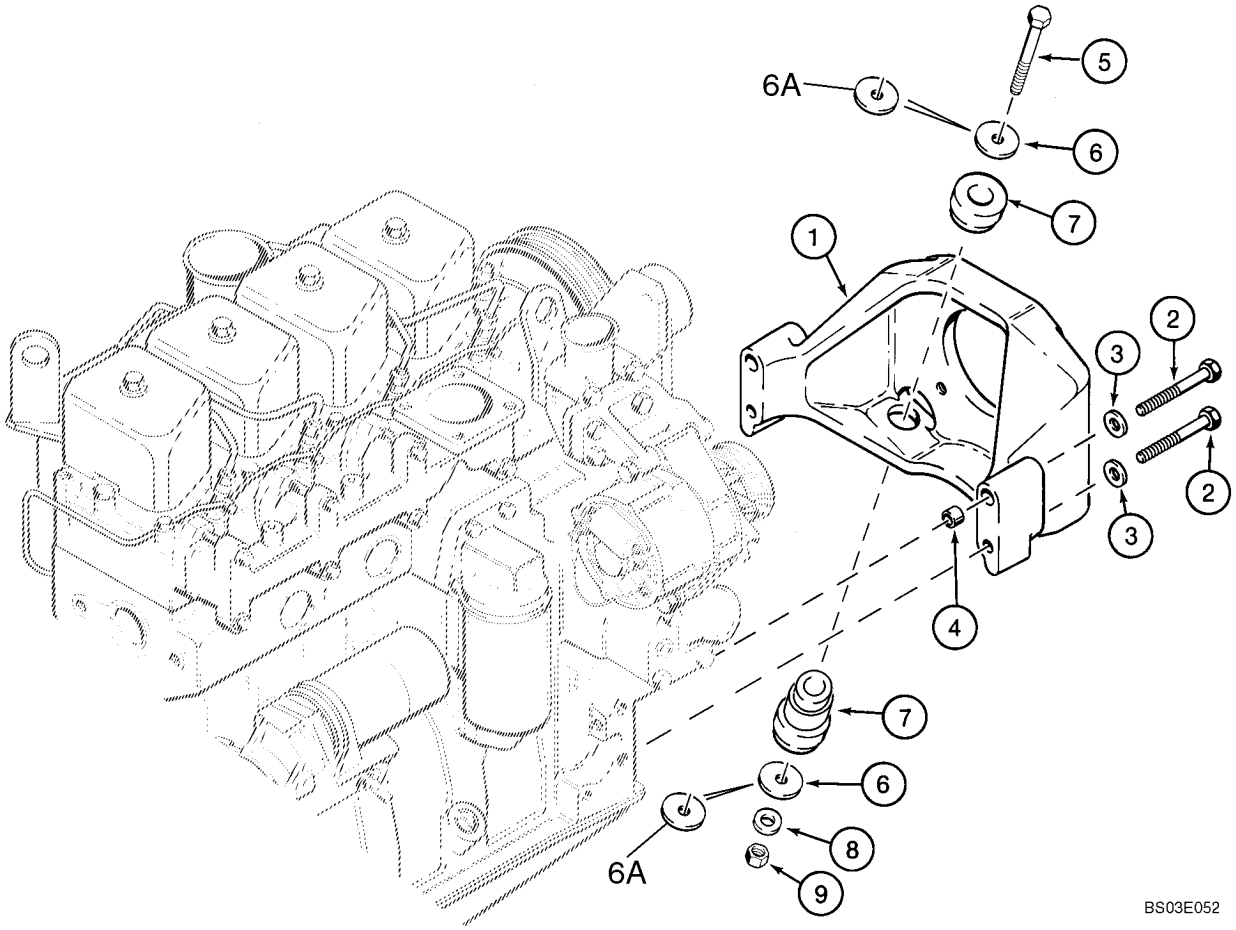

ENGINE - MOUNTING

REF	FN	PART NUMBER	YR/SN	QTY	DESCRIPTION
1		175637A1		1	SUPPORT
2		814-12110		4	SCREW M12 x 110
3		896-15012		4	WASHER 13,5 x 28 x 4 mm
4		A170309		2	BUSHING Dowel, Used as a Spacer, Upper Bolt Holes
5		814-12090		2	CAPSCREW M12 x 90, Without Blue 3M Scotch Grip; Used With 117844A1 Mount
5A		86992193		2	BOLT M12 x 90; With Blue 3M Scotch Grip; Used With 413153A1 Mount
5B		87418165		2	BOLT M12 x 95; With Blue 3M Scotch Grip
6		496-81018		2-4	WASHER 33/64 x 2 x 1/8
6A		195-81030		2	WASHER 17/32 x 1,5 x 3/16, If Used
7		117844A1		2	MOUNTING Front; Used With 814-12090 Bolt; No Longer Used, Order 87405487 Mount
7A		413153A1		2	MOUNTING,RUBBER Front; Without Metal Sleeve; Used With 86992193 Bolt; No Longer Used, Order 87405487 Mount; Not Illustrated
7B		87405487		2	MOUNTING,RUBBER Front; With Metal Sleeve; Used With 87418165 95 mm Long Bolt; Not Illustrated
8		896-15012		2	WASHER 13,5 x 28 x 4 mm
9		832-10412		2	NUT M12

WATER PUMP SYSTEM - 4T-390 EMISSIONS CERTIFIED ENGINE

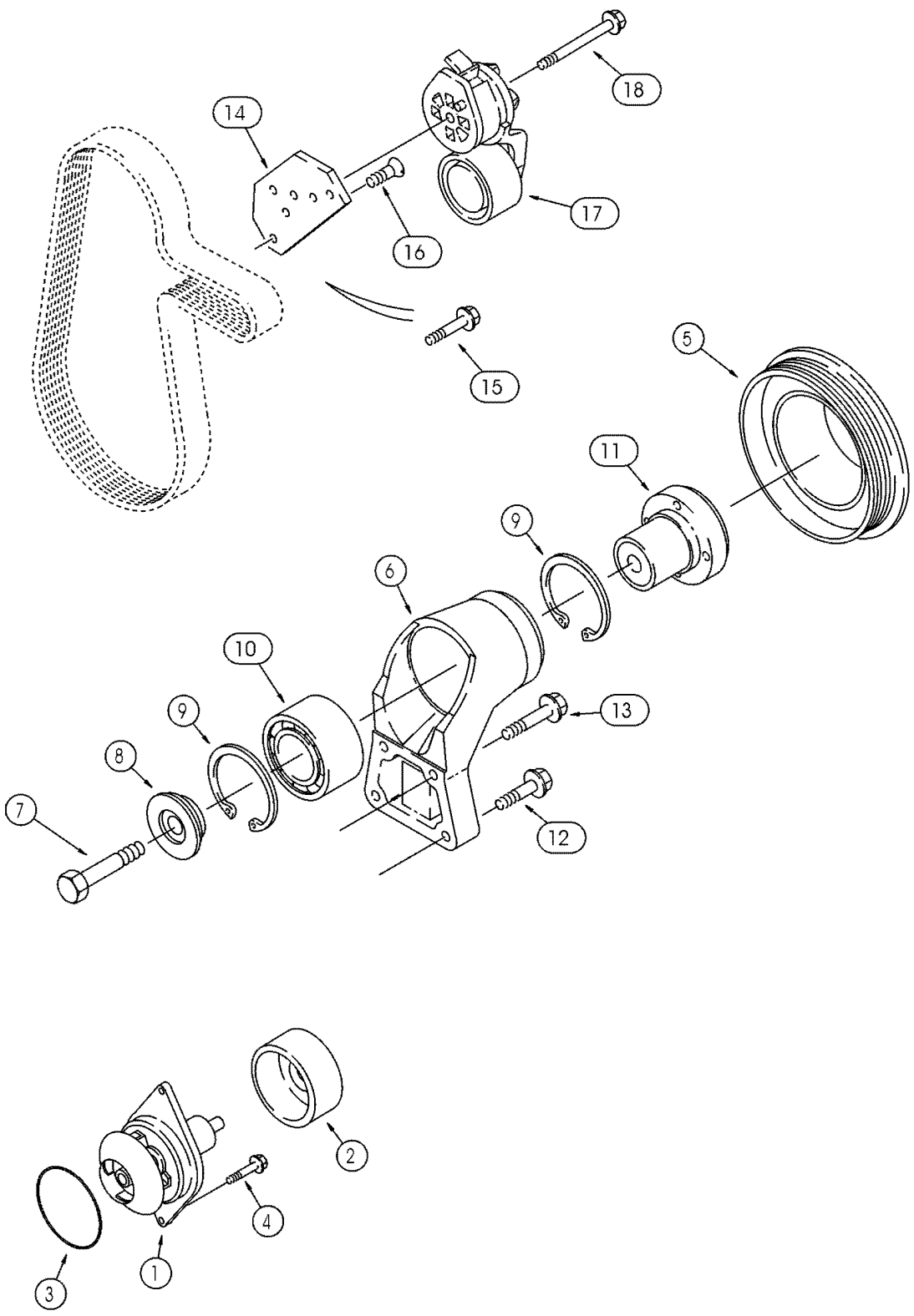

WATER PUMP SYSTEM - 4T-390 EMISSIONS CERTIFIED ENGINE

REF	FN	PART NUMBER	YR/SN	QTY	DESCRIPTION
		J286277		1	PUMP, WATER Incl. 1 - 3; Replaces J802970
1		NSS		1	NOT SERVICED SEPARATELY Pump Assy
2		NSS		1	NOT SERVICED SEPARATELY Pulley
3		238-5341		1	O-RING 3-1/2 ID x 3/16, J802970 Kit
3		J906698		1	SEAL, RUBBER J286277 Kit
4		J900227		2	CAPSCREW M8 x 22
5		J914459		1	PULLEY
6		J911205		1	BRACKET Incl. 7 - 11
7		J907769		1	SCREW M10 x 70
8		J923044		1	RETAINER
9		100-21250		2	RING, SNAP No. 250
10		J910739		1	BEARING, BALL
11		J911924		1	HUB
12		854-8040		2	SCREW M8 x 40, 10.9
13		844-8030		2	CAPSCREW M8 x 30
14		J934469		1	SUPPORT
15		845-8025		1	SCREW M8 x 25
16		J925186		2	SCREW M8 x 25
17		J936209		1	TENSIONER
18		J904446		1	SCREW M10 x 70

FRONT GEAR COVER - 4T-390 EMISSIONS CERTIFIED ENGINE

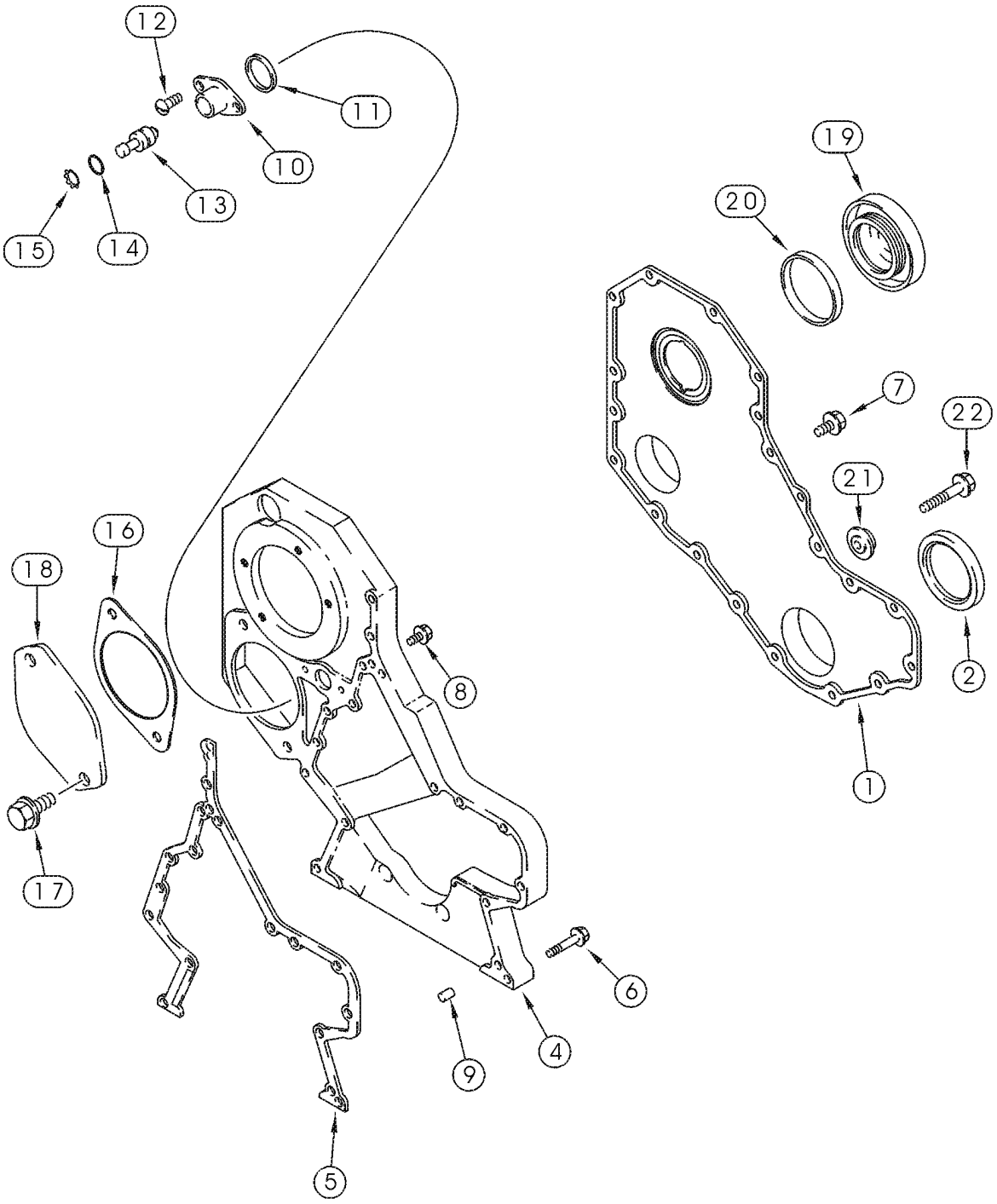

FRONT GEAR COVER - 4T-390 EMISSIONS CERTIFIED ENGINE

REF	FN	PART NUMBER	YR/SN	QTY	DESCRIPTION
1		J935583		1	COVER Replaces J935581
2		NSS		1	NOT SERVICED SEPARATELY Seal, See Figure 2-20, A77889, REF 13
4		J991069		1	HOUSING, GEARS Replaces J936257
5		J938156		1	GASKET Replaces J931351
6		J926863		10	CAPSCREW M8 x 50; Replaces 845-8050
7		J924962		11	BOLT M8 x 16, External
8		J924962		5	BOLT M8 x 16, Internal
9		J900257		2	PIN 16 mm
10		J919683		1	HOUSING
11		J915772		1	SEAL
12		J907998		2	SCREW M5 x 17
13		J903924		1	PIN
14		J913994		1	O-RING
15		100-2587		1	CIRCLIP
16		J938655		1	GASKET Replaces J929751
17		854-12025		2	SCREW M12 x 25; 10.9
18		J914868		1	COVER
19		J903463		1	COVER
20		J903475		1	SEAL
21		J912772		1	RETAINER
22		87421315		1	SCREW M8 x 65, 10.9; Replaces 845-8060
		J823494		X	SEALANT 3 oz, Not Illustrated

MANIFOLDS - 4T-390 EMISSIONS CERTIFIED ENGINE

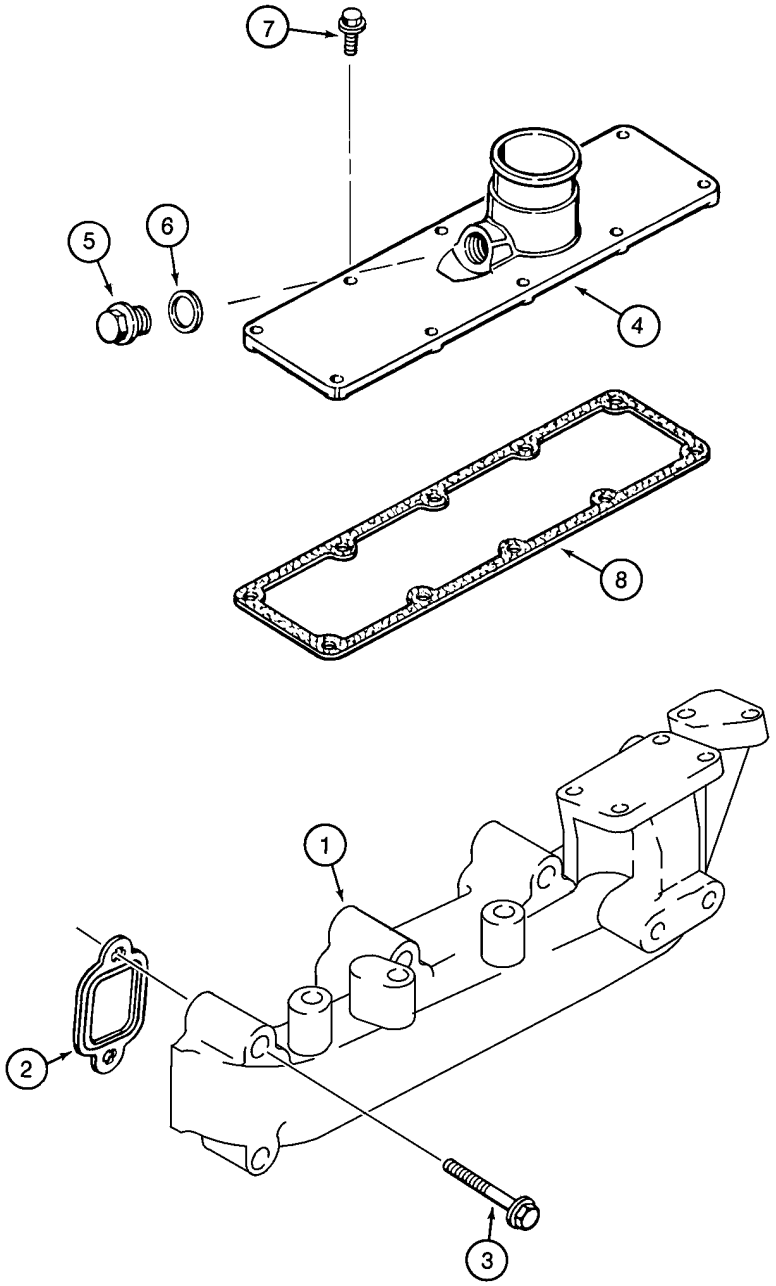

BS98M083

MANIFOLDS - 4T-390 EMISSIONS CERTIFIED ENGINE

REF	FN	PART NUMBER	YR/SN	QTY	DESCRIPTION
1		J287119		1	MANIFOLD, EXHAUST Replaces J932145
2		J927154		4	GASKET
3		J901448		8	SCREW M10 x 65
4		J904339		1	COVER Intake
5		J907185		1	PLUG
6		J906773		1	WASHER
7		J918109		10	SCREW M8 x 25
8		J938153		1	GASKET Replaces J938153

TURBOCHARGER SYSTEM - 4T-390 EMISSIONS CERTIFIED ENGINE

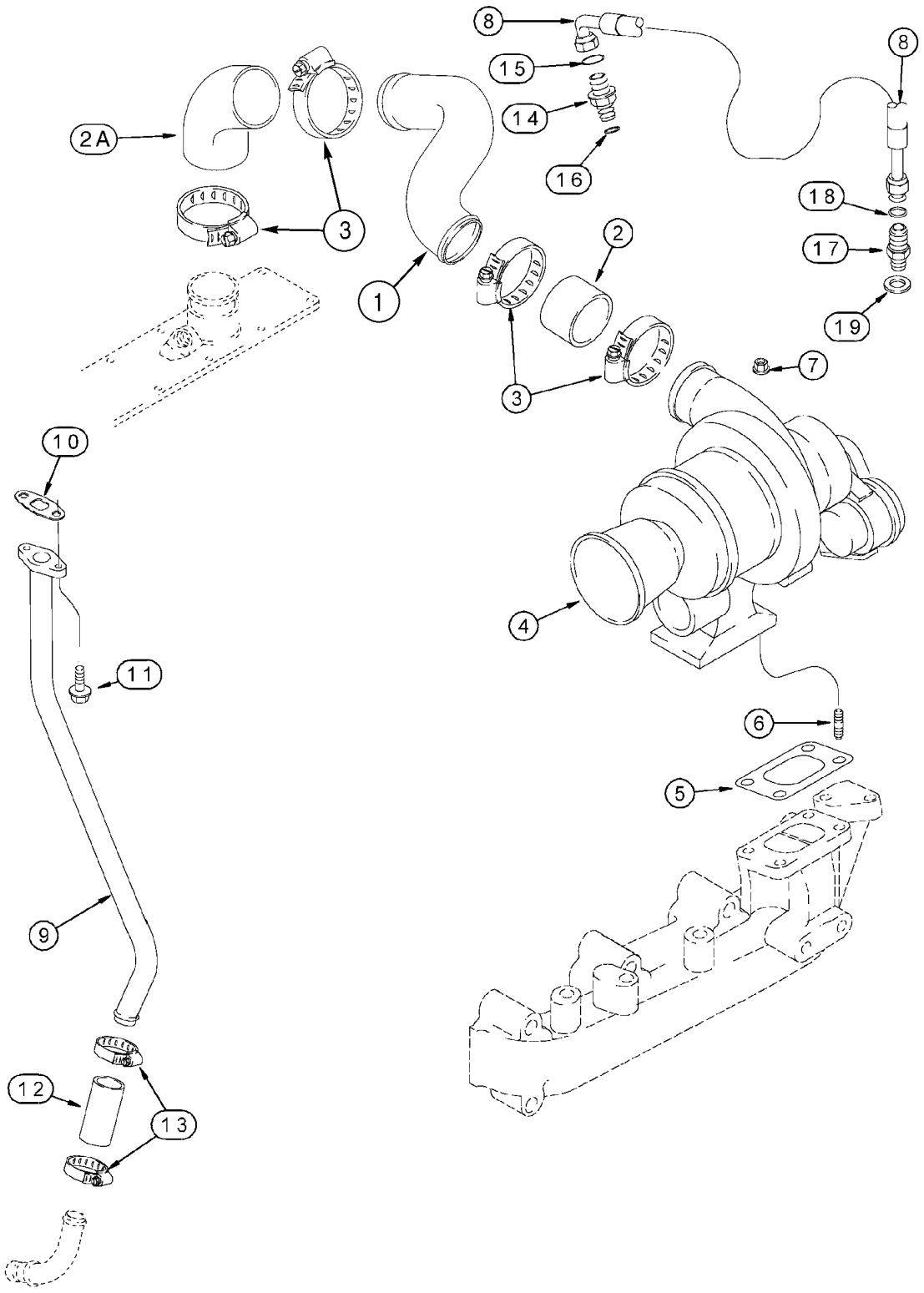

TURBOCHARGER SYSTEM - 4T-390 EMISSIONS CERTIFIED ENGINE

REF	FN	PART NUMBER	YR/SN	QTY	DESCRIPTION
1		J931784		1	TUBE
2		J916438		1	HOSE 80 mm (3-1/8 in)
2A		J933026		1	SCREW
3		214-3240		4	CLAMP 1-3/4 - 2-5/8
4		REF		1	INSTRUCTION Turbocharger Assy; See Figure 02-12
5		J932475		1	GASKET
6		J934178		4	STUD M8
7		J929777		4	NUT M8
8		J282159		1	HOSE
9		J934459		1	PIPE ASSY.
10		J934638		1	GASKET
11		845-8016		2	SCREW M8 x 16
12		J286499		1	HOSE 76 mm (3 in); Replaces J931970
13		214-1512		2	CLAMP 11/16 - 1-1/4; Replaces 214-1416
14		J922789		1	CONNECTOR Incl. 15
15		J678603		1	O-RING 7/16 ID x 1/16
16		313262A1		1	SEAL 3/8 OD
17		J932445		1	UNION
18		238-7012		1	GASKET
19		J932484		1	WASHER

TURBOCHARGER ASSY - 4T-390 EMISSIONS CERTIFIED ENGINE

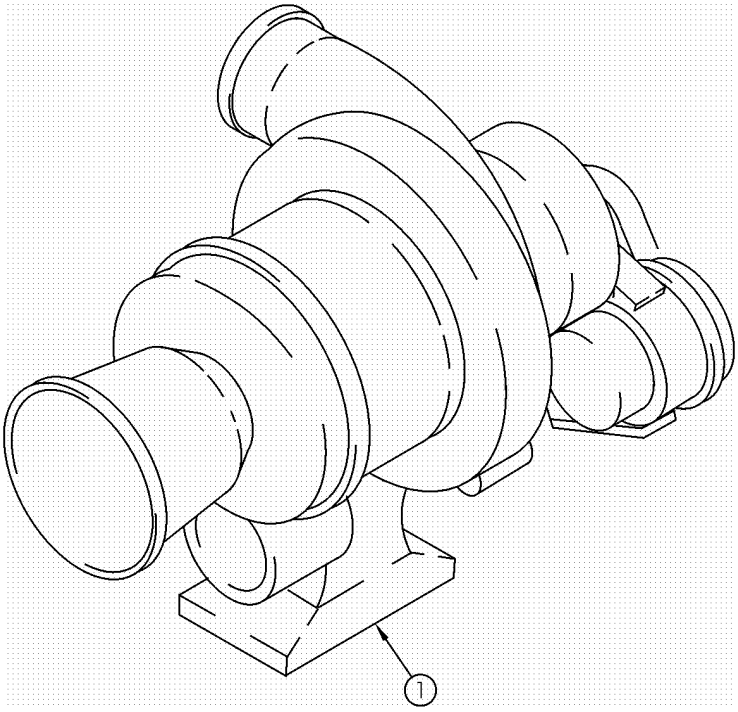

BT98M085

TURBOCHARGER ASSY - 4T-390 EMISSIONS CERTIFIED ENGINE

REF	FN	PART NUMBER	YR/SN	QTY	DESCRIPTION
		JR806298		1	REMAN-TURBOCHARGER With Gaskets; N.A. Only
		JC596586		1	CORE-TURBOCHARGER Return Number
		J806298		1	TURBOCHARGER Kit, With Gaskets; Incl. 1 - 4
1		NSS		1	NOT SERVICED SEPARATELY Housing Assy, Center
2		J932475		1	GASKET Not Illustrated, See Figure 02-11
3		J934638		1	GASKET Not Illustrated, See Figure 02-11
4		J591893		1	HOSE 150 mm (6 in), Not Illustrated
5		214-1704		2	CLAMP 1/4 - 5/8, Not Illustrated

OIL FILTER AND COOLER - 4T-390 EMISSIONS CERTIFIED ENGINE

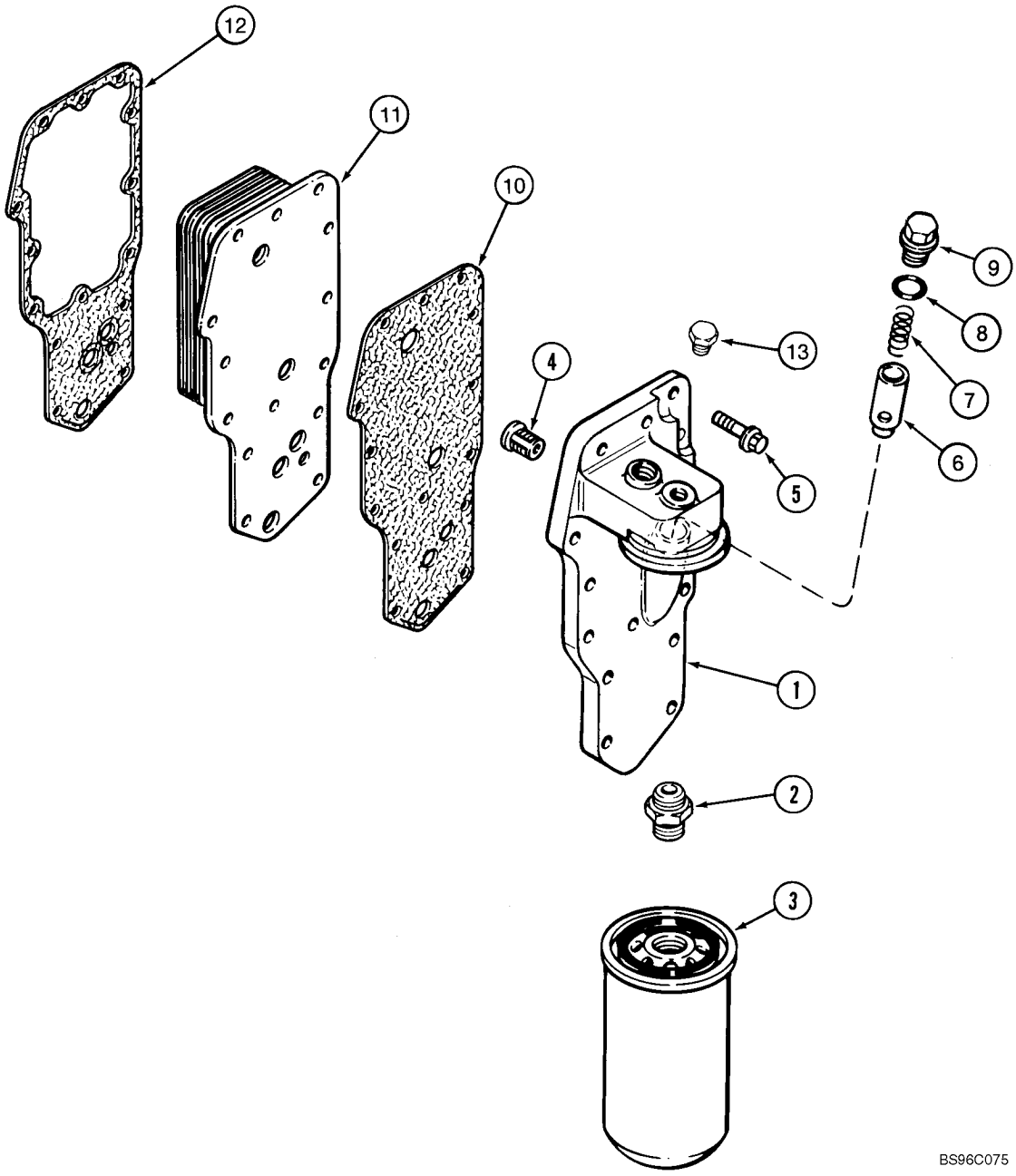

OIL FILTER AND COOLER - 4T-390 EMISSIONS CERTIFIED ENGINE

REF	FN	PART NUMBER	YR/SN	QTY	DESCRIPTION
		J918954		1	HEAD Incl. 1, 2
1		NSS		1	NOT SERVICED SEPARATELY Head
2		J909355		1	ADAPTER
3		J908616		1	FILTER Standard, If Used
3		J934429		1	FILTER Premium, If Used
4		J936365		1	VALVE, PRESSURE RELIEF Replaces J933615
5		845-8035		14	SCREW M8 x 35; 8,8
6		J918428		1	PLUNGER
7		J918427		1	SPRING
8		J929457		1	O-RING 23/32 ID x 7/64
9		J915787		1	PLUG
10		J942915		1	GASKET Replaces J929792
11		87416027		1	COOLER Replaces J921557
12		J942914		1	GASKET
13		J906619		1	PLUG 1/8 PT

OIL PUMP AND OIL PAN - 4T-390 EMISSIONS CERTIFIED ENGINE

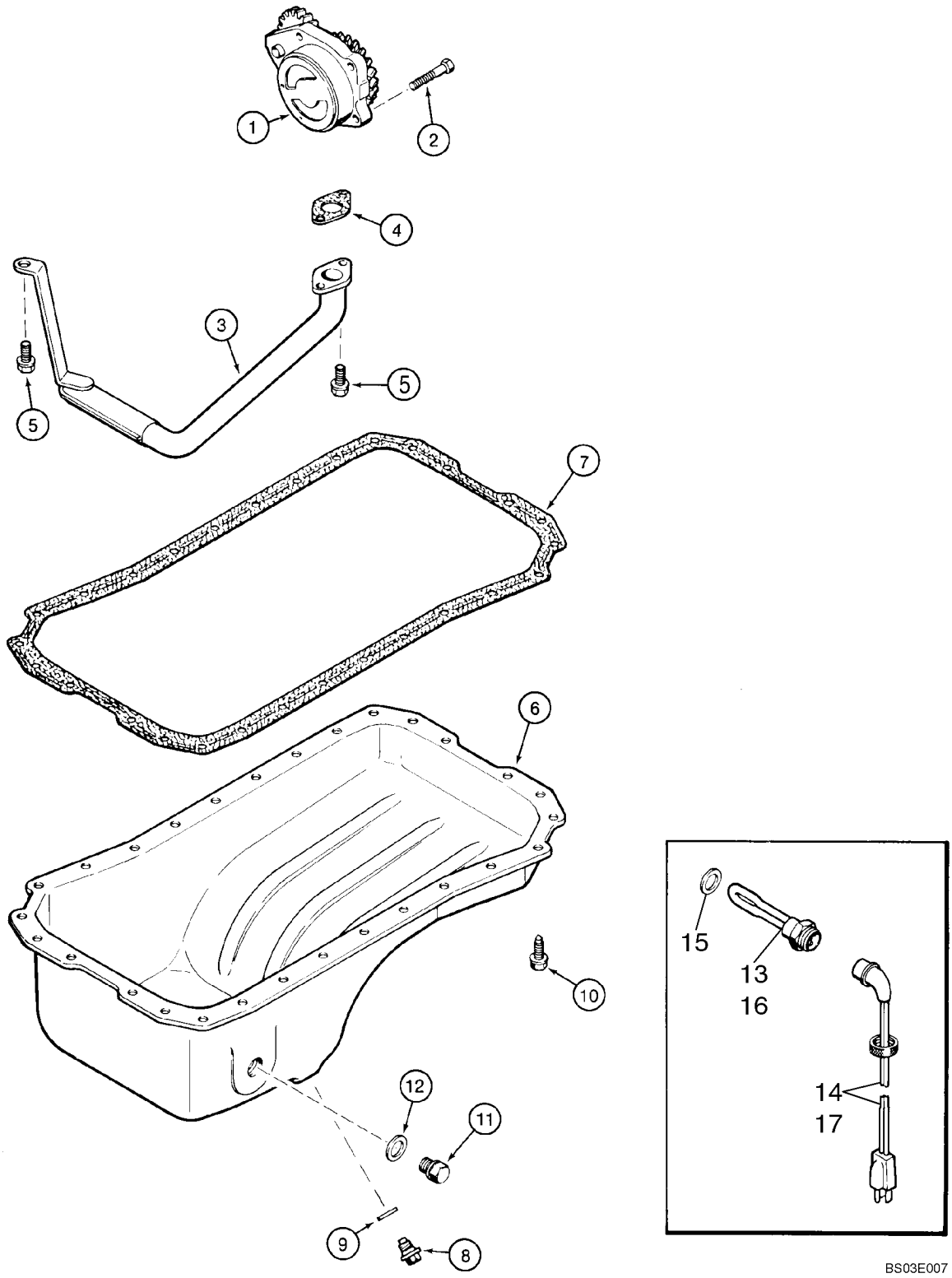

OIL PUMP AND OIL PAN - 4T-390 EMISSIONS CERTIFIED ENGINE

REF	FN	PART NUMBER	YR/SN	QTY	DESCRIPTION
		JR937027		1	REMAN-PUMP, ENGINEOIL Remanufactured; N.A. Only; Replaces JR930336
		JC937027		1	CORE PUMP, ENGINE OIL Return Number
1		J937027		1	PUMP, ENGINE OIL Replaces J930336
2		J900677		4	BOLT M8 x 30
3		J905206		1	TUBE
4		J938157		1	GASKET Replaces J931349
5		845-8020		3	SCREW M8 x 20
6		J901049		1	PAN, OIL
7		NSS		1	NOT SERVICED SEPARATELY Gasket, Pan, Order A77673
8		J924147		1	PLUG M18
9		J920773		1	RING, PACKING
10		J920400		28	SCREW M8 x 25
11		J924148		1	PLUG M22
12		J902425		1	WASHER
		A77673		1	KIT, GASKET Incl. 4, 7, 9
		A77490		1	KIT Engine Oil Heater; 120V; Incl. 13, 14, Also Order J902425
13		NSS		1	NOT SERVICED SEPARATELY Element
14		196466A1		1	CABLE, ELECTRIC 1829 mm (72 in)
15		J902425		1	WASHER
16		J285916		1	HEATER Engine Oil; 240V/150W; Europe Only
17		J905114		1	CABLE, ELECTRIC

02 -15		p1	05/03

BALANCER, ENGINE - 4T-390 EMISSIONS CERTIFIED ENGINE

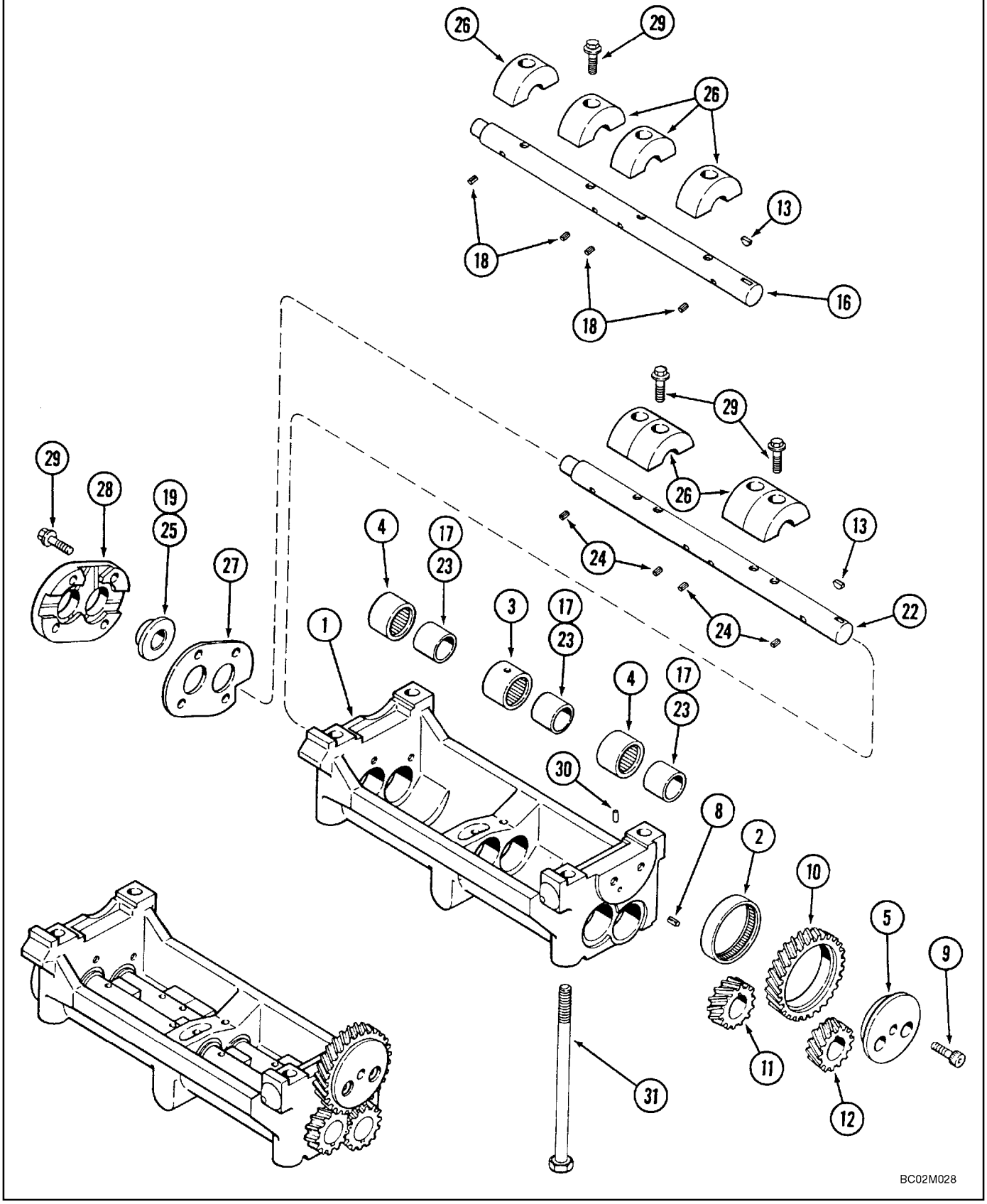

BALANCER, ENGINE - 4T-390 EMISSIONS CERTIFIED ENGINE

REF	FN	PART NUMBER	YR/SN	QTY	DESCRIPTION
		J963388		1	BALANCER Engine; Incl. 1 - 29
1		J285651		1	HOUSING
2		J901352		1	BEARING, NEEDLE
3		J906378		2	BEARING, NEEDLE
4		J907201		4	BEARING, NEEDLE
5		J907572		1	RETAINER Gear, Idler
8		J904701		1	PIN, ROLL
9		864-10030		2	SCREW Socket, M10 x 30; 8.8
10		J907571		1	GEAR,IDLE
11		J906064		1	GEAR Upper
12		J906065		1	GEAR Lower
13		126-112		2	WOODRUFF KEY Woodruff
		{J906376}		1	SHAFT, BALANCER ASSY; Upper; Incl. 16 - 19
16		J906373		1	SHAFT Upper
17		J906069		3	RACE Bearing, Inner
18		J906072		4	PIN Spiral
19		J906068		1	COLLAR Thrust
		{J906377}		1	SHAFT, BALANCER ASSY; Lower; Incl. 22 - 25
22		J906374		1	SHAFT Lower
23		J906069		3	RACE Bearing, Inner
24		J906072		4	PIN Spiral
25		J906068		1	COLLAR Thrust
26		J906073		8	WEIGHT Counterbalance
27		J906066		1	PLATE Thrust
28		J906067		1	PLATE Thrust
29		845-8035		12	SCREW Flange, M8 x 35
30		J907307		1	DOWEL Pin, 6 x 13 mm
31		J927949		4	SCREW Flange, M12 x 231

CYLINDER HEAD COVERS - 4T-390 EMISSIONS CERTIFIED ENGINE

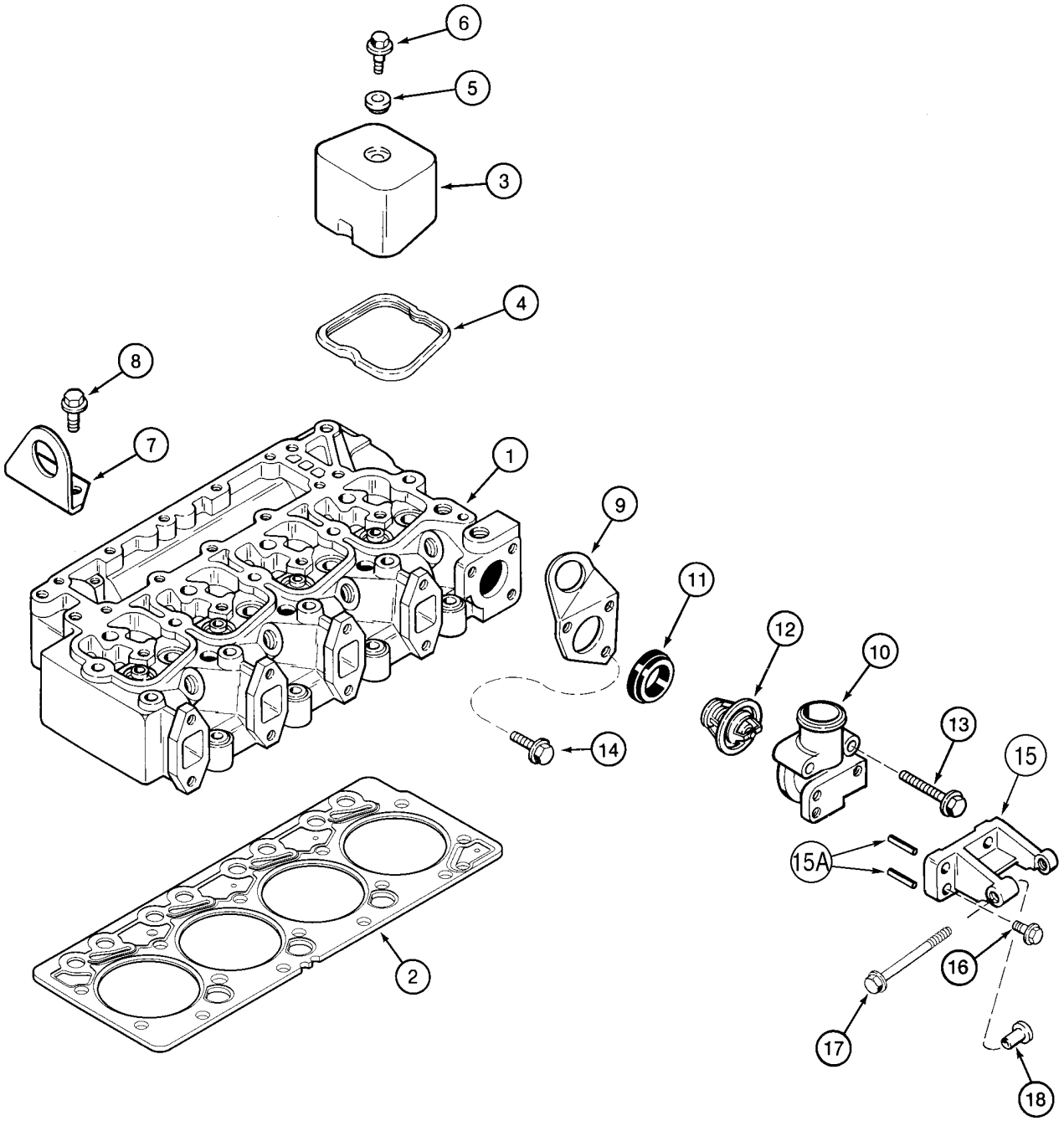

CYLINDER HEAD COVERS - 4T-390 EMISSIONS CERTIFIED ENGINE

REF	FN	PART NUMBER	YR/SN	QTY	DESCRIPTION
1		REF		1	INSTRUCTION Head, See Figure(s) 02-17
2		J283333		1	GASKET Standard
2		J283336		1	GASKET 0,25 mm, Notch 1
2		J283338		1	GASKET 0,50 mm, Notch 2
3		J928404		4	COVER
4		J930906		4	GASKET
5		J935449		4	ISOLATOR
6		J907049		4	BOLT M8 x 21
6A		495-11041		4	WASHER 13/32 x 13/16 x 1/16, Use With J907049, Not Illustrated
7		J908118		1	BRACKET Rear
8		844-12030		2	SCREW M12 x 30; 10.9
9		J903757		1	BRACKET Front
10		J285102		1	HOUSING
		A77736		1	PACKAGE Incl. 11, 12
11		J923331		1	GASKET
12		NSS		1	NOT SERVICED SEPARATELY Thermostat
13		845-8070		2	SCREW M8 x 70; Replaces J926972
14		845-8035		1	SCREW M8 x 35
15		J287096		1	SUPPORT Incl.15A; Replaces J285113
15A		838-5310		2	PIN, ROLL
16		844-8025		3	SCREW M8 x 25
17		814-10100		1	SCREW M10 x 10
18		J902469		1	SPACER

CYLINDER HEAD AND VALVE MECHANISM - 4T-390 EMISSIONS CERTIFIED ENGINE

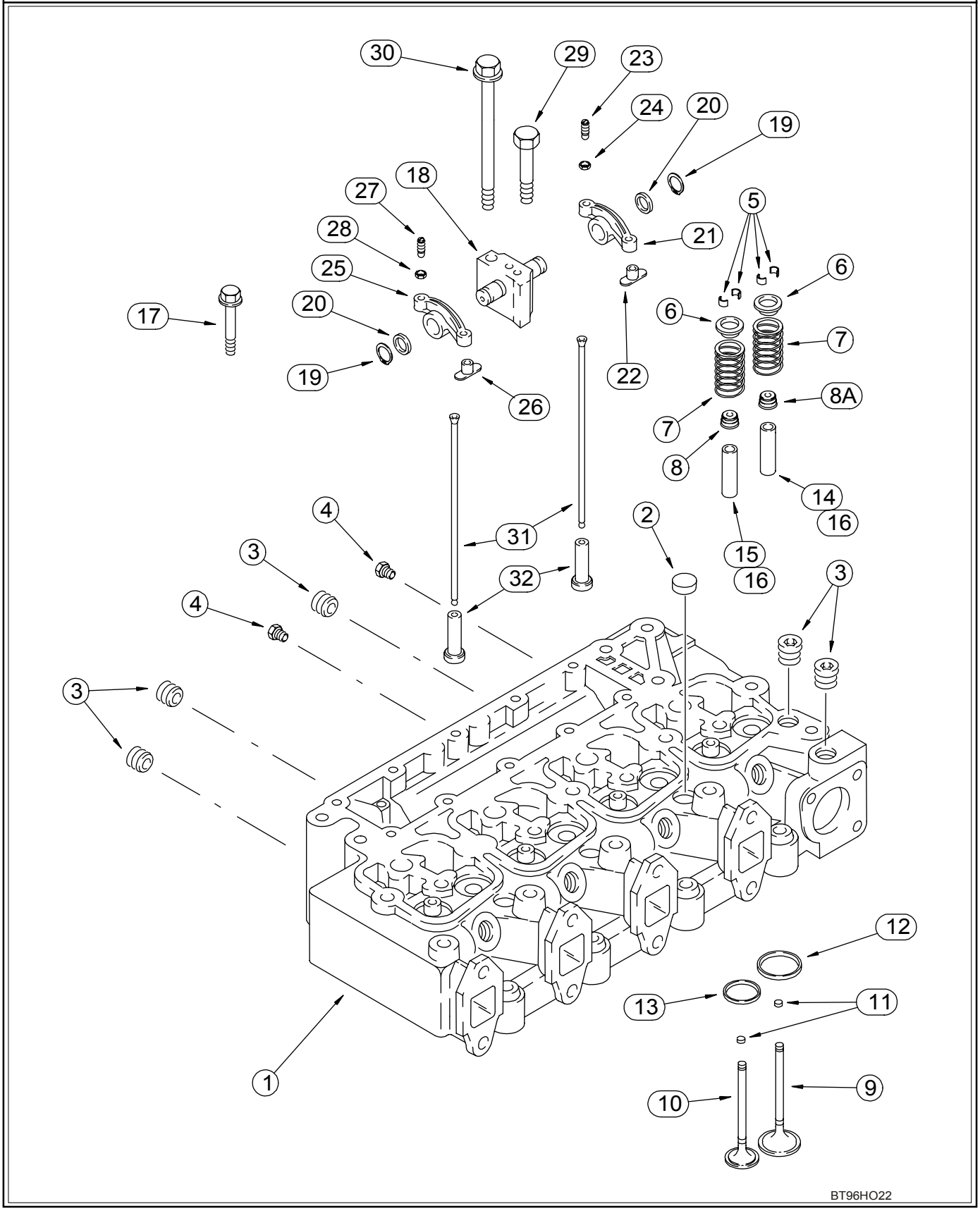

CYLINDER HEAD AND VALVE MECHANISM - 4T-390 EMISSIONS CERTIFIED ENGINE

REF	FN	PART NUMBER	YR/SN	QTY	DESCRIPTION
		JR938660		1	REMAN-CYLINDER HEAD N.A. Only; Replaces JR927330
		JC938660		1	CORE-CYLINDER HEAD Return Number; Replaces JC927330
		J938660		1	CYLINDER HEAD With Valves, Incl. 1, 2, 5 - 11, Replaces J927330
1		NSS		1	NOT SERVICED SEPARATELY Without Valves
2		A77783		3	PLUG 21 mm OD
3		217-466		5	PLUG 1/2 PT
4		J906619		2	PLUG 1/8 PT
5		J900250		16	RETAINER
6		J935038		8	RETAINER
7		J932453		8	SPRING Replaces J926700
8		J921640		4	SEAL
8A		J921640		4	SEAL
9		J920867		4	VALVE
10		J920868		4	VALVE
11		J910412		X	PAD, WEAR Service Repair Only
12		J906854		4	SEAT, VALVE Intake; Service Repair Only
13		J904105		4	SEAT, VALVE Exhaust; Service Repair Only
14		J904408		4	GUIDE 14 mm OD; Intake; Service Repair Only
15		J904409		4	GUIDE 14 mm OD; Exhaust; Service Repair Only
16		J906206		8	GUIDE 11 mm OD; Intake And Exhaust; Service Repair Only
17		J920779		4	SCREW 70 mm
17		J920780		10	SCREW 120 mm
18		J922488		4	SUPPORT
19		J900242		8	RING
20		J900245		8	WASHER
21		J910811		4	ROCKER Intake; Incl. 22 -24
22		NSS		1	NOT SERVICED SEPARATELY Insert
23		J934086		1	SCREW
24		A77902		1	NUT 3/8 NF
25		J910810		4	ROCKER Exhaust; Incl. 26 - 28
26		NSS		1	NOT SERVICED SEPARATELY Insert
27		J934086		1	SCREW

CYLINDER HEAD AND VALVE MECHANISM - 4T-390 EMISSIONS CERTIFIED ENGINE

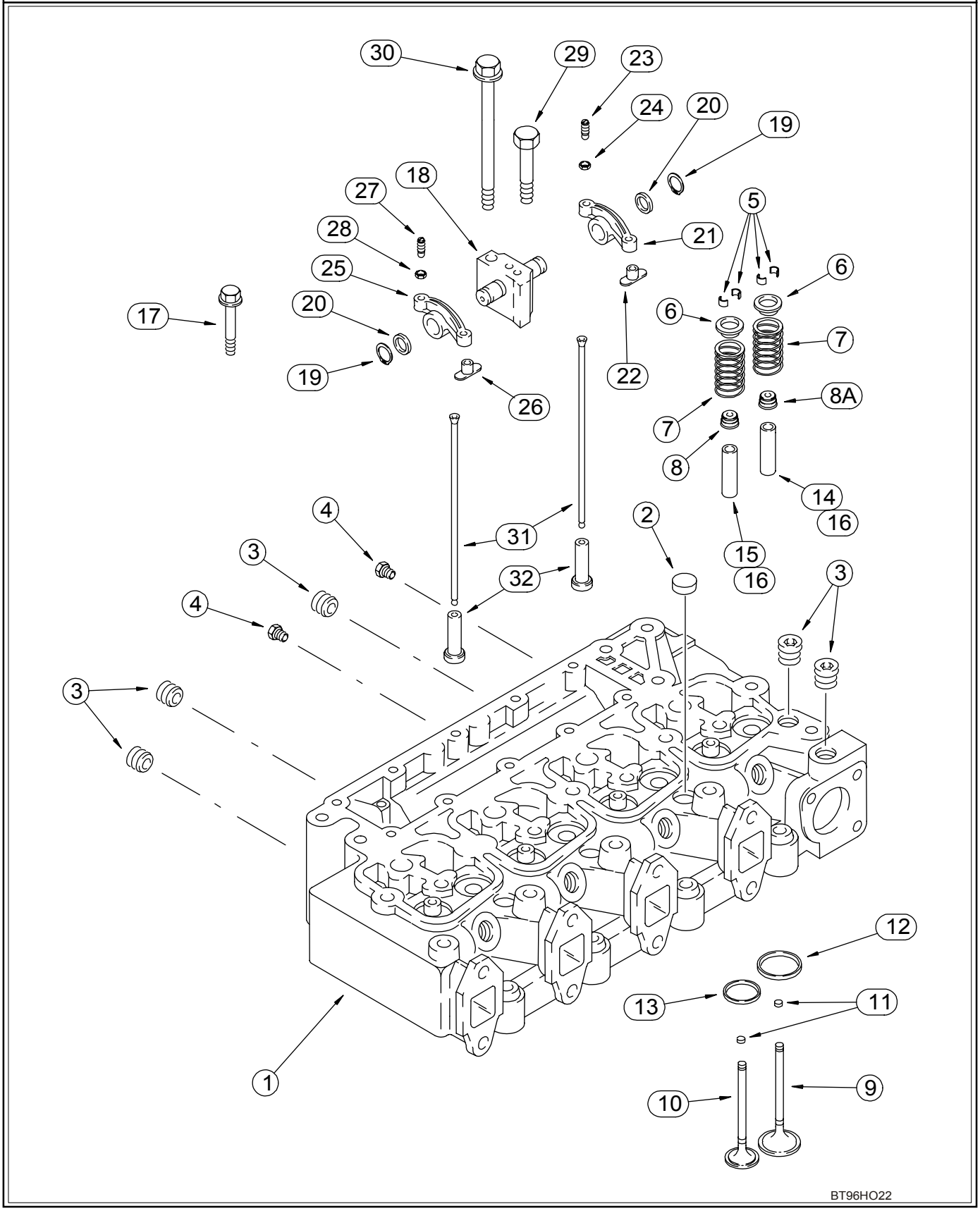

CYLINDER HEAD AND VALVE MECHANISM - 4T-390 EMISSIONS CERTIFIED ENGINE

REF	FN	PART NUMBER	YR/SN	QTY	DESCRIPTION
28		A77902		1	NUT 3/8 NF
29		J901221		4	BOLT M8 x 75
30		J920781		4	SCREW 180 mm
31		J284377		8	ROD, PUSH
32		J931623		8	TAPPET
33		87404692		1	GAUGE Cylinder Head Bolt Length; Not Illustrated

CAMSHAFT - 4T-390 EMISSIONS CERTIFIED ENGINE

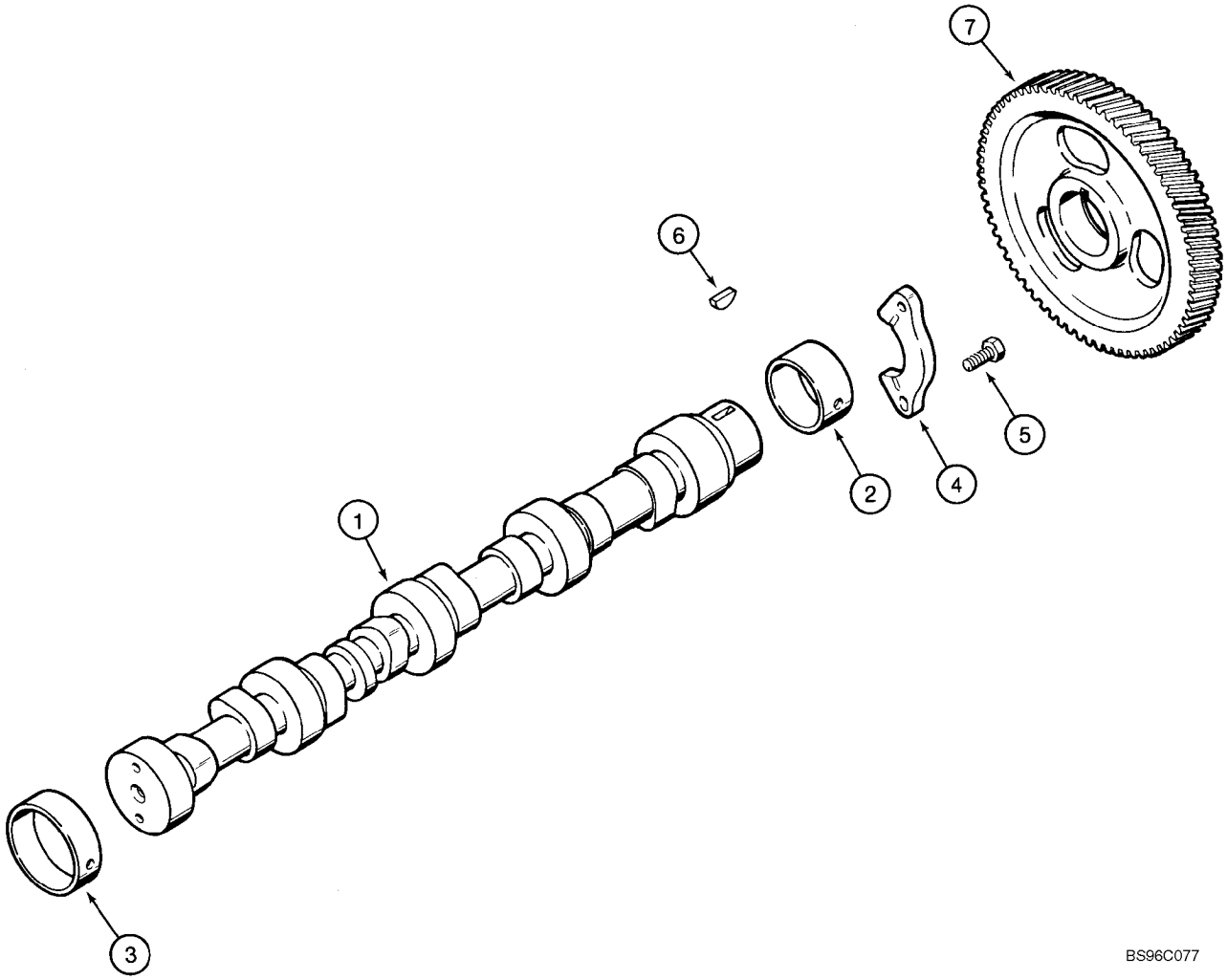

CAMSHAFT - 4T-390 EMISSIONS CERTIFIED ENGINE

REF	FN	PART NUMBER	YR/SN	QTY	DESCRIPTION
1		J929885		1	CAMSHAFT
2		J940059		1	BUSHING Front
3		J903242		4	BUSHING Intermediate And Rear; Service Repair Only
4		J927155		1	SUPPORT
5		J900227		2	CAPSCREW M8 x 22
6		836-4065		1	KEY 4 x 6,5 mm
7		J929028		1	PINION

02 -19		p1	05/03

CYLINDER BLOCK - 4T-390 EMISSIONS CERTIFIED ENGINE

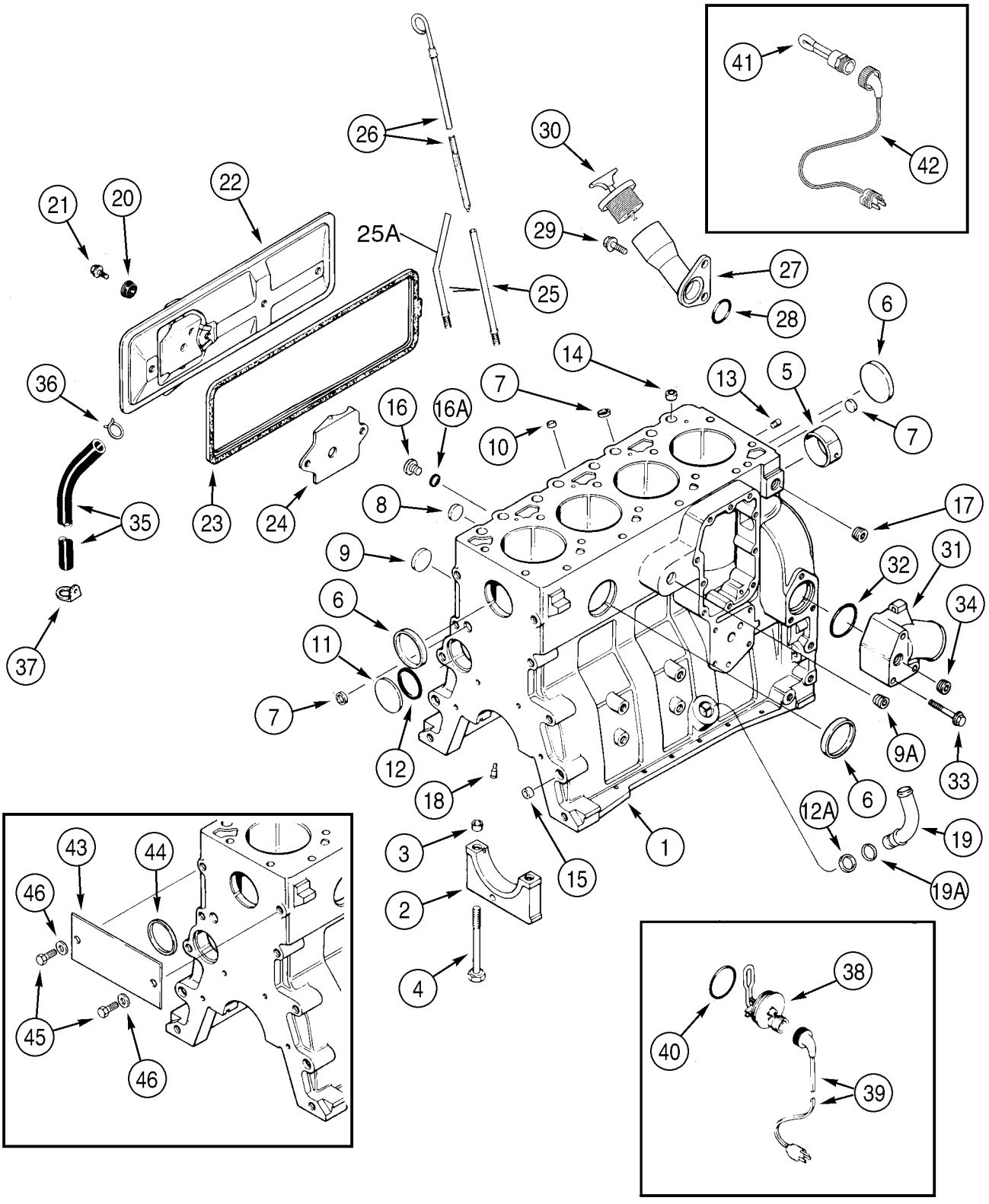

CYLINDER BLOCK - 4T-390 EMISSIONS CERTIFIED ENGINE

REF	FN	PART NUMBER	YR/SN	QTY	DESCRIPTION
		380460A1		1	ENGINE Complete Engine Without Balancer, Includes All Parts Except Fan, Air Cleaner, Muffler and Exhaust Manifold; For Service Order 234277A2 Basic Engine; Models Without Powershift Transmission
		87410702		1	ENGINE Complete Engine With Balancer, Includes All Parts Except Fan, Air Cleaner, Muffler and Exhaust Manifold; For Service Order 417322A1 Basic Engine; Replaces 414528A1, Models Without Powershift Transmission
		380461A1		1	ENGINE Complete Engine Without Balancer, Includes All Parts Except Fan, Air Cleaner, Muffler and Exhaust Manifold; For Service Order 234277A2 Basic Engine, Models With Powershift Transmission
		87410703		1	ENGINE Complete Engine With Balancer, Includes All Parts Except Fan, Air Cleaner, Muffler and Exhaust Manifold; For Service Order 417322A1 Basic Engine, Replaces 414529A1; Models With Powershift Transmission
		234277A2R		1	ENGINE (EXCHANGE) Basic, Remanufactured; N.A. Only; Without Balancer
		417322A1R		1	ENGINE, BASIC Remanufactured, N. A. Only; Wtih Balancer
		4-390-LBC		1	CORE Return Number, Basic
		234277A2		1	ENGINE, BASIC Without Balancer; Includes All Parts Except Starter, Alternator, Fan, Fan Belt, Air Cleaner, Muffler, Exhaust Manifold, Flywheel and Housing, Oil Fill and Dipstick, Fuel Injection Pump, Injectors and Lines, Front Pulley, Belt Tensioner and Turbocharger

CYLINDER BLOCK - 4T-390 EMISSIONS CERTIFIED ENGINE

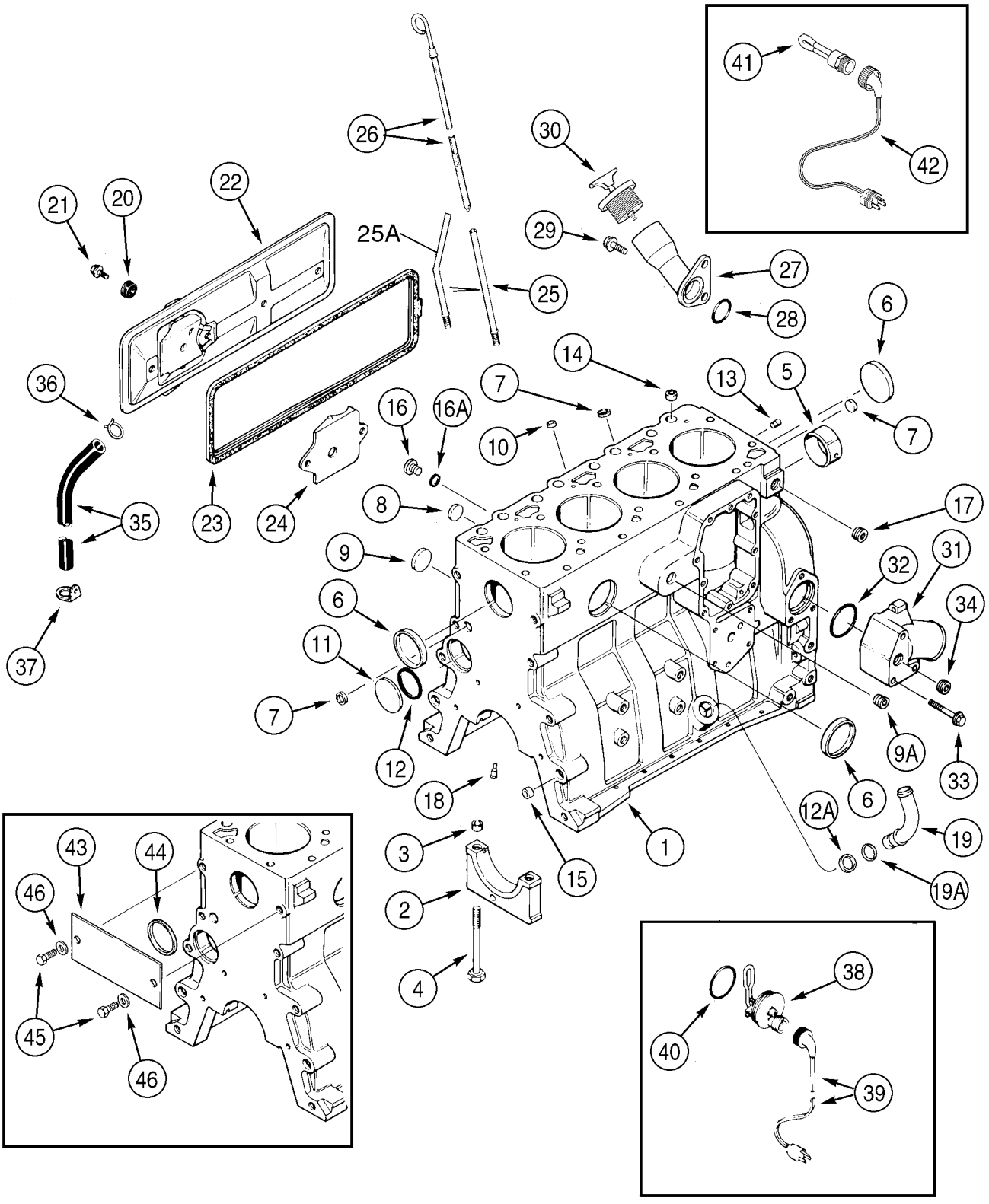

CYLINDER BLOCK - 4T-390 EMISSIONS CERTIFIED ENGINE

REF	FN	PART NUMBER	YR/SN	QTY	DESCRIPTION
		417322A1		1	ENGINE, BASIC With Balancer; Includes All Parts Except Starter, Alternator, Fan, Fan Belt, Air Cleaner, Muffler, Exhaust Manifold, Flywheel and Housing, Oil Fill and Dipstick, Fuel Injection Pump, Injectors and Lines, Front Pulley, Belt Tensioner and Turbocharger
		JR933648		1	ENGINE (EXCHANGE) Remanufactured, Short
		4-390-SHBC		1	CORE Return Number, Short
		J933648		1	ENGINE, SHORT Short; Includes Stripped Block, Pistons, Connecting Rods and Bearings, Crankshaft and Bearings
1		J932012		1	BLOCK ASSY. Stripped, Incl. 2 - 8
2		J936791		5	CARRIER, BEARING Incl. 3
3		J900068		2	SPACER 18 mm OD
4		J927948		10	SCREW
5		REF		1	INSTRUCTION Bushing, See Figure 02-18
6		A77782		1	PLUG 58 mm
7		J900956		3	PLUG 18 mm OD
8		41-1616		2	PLUG 1 in dia
		J933220		1	PACKAGE,SERVICE Hardware Kit, Incl 9 - 18
9		J900958		1	PLUG 32 mm OD
9A		217-441		1	PLUG 3/4 PT; Replaces A77505
10		J900955		3	PLUG 10 mm OD
11		41-3038		1	PLUG 60 mm OD; Replaces 172599
12		J926047		1	GASKET 57 mm ID
12A		J920706		3	PLUG 22 mm OD
13		J900257		2	PIN 16 mm
14		J902343		2	DOWEL 16 mm OD
15		J900068		2	SPACER 18 mm OD
16		J678923		3	PLUG 10 mm, Incl. 16A; Two Used In This Application
16A		637-72081		1	O-RING 8,1 ID x 1,6 mm
17		217-438		1	PLUG 1/2 PT; Replaces A77429
17A		J678921		1	PLUG 14 mm, Incl. 17B, Not Illustrated; Not Used In This Application
17B		J678912		1	O-RING 11,3 ID x 2,2 mm, Not Illustrated

CYLINDER BLOCK - 4T-390 EMISSIONS CERTIFIED ENGINE

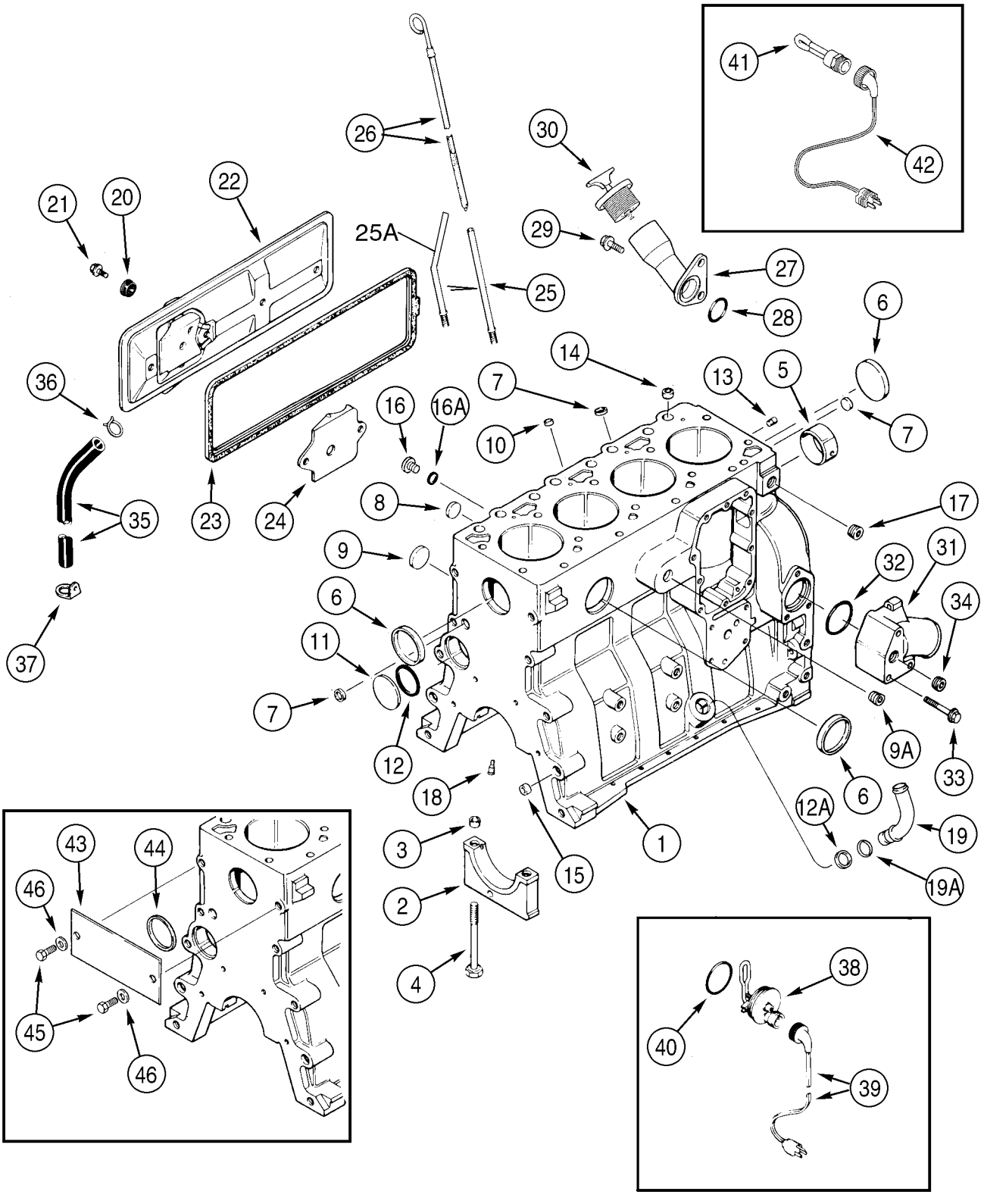

CYLINDER BLOCK - 4T-390 EMISSIONS CERTIFIED ENGINE

REF	FN	PART NUMBER	YR/SN	QTY	DESCRIPTION
17C		J932296		1	PLUG Incl. 17D, Not Illustrated; Not Used In This Application
17D		J330478		1	O-RING Not Illustrated
18		J937214		6	NOZZLE CAP 4 Used In This Application
19		J931973		1	TUBE
19A		238-7018		1	O-RING 3/4 ID x 1/16; Replaces J931824
20		J928759		2	SEAL
21		845-8016		2	SCREW M8 x 16; 8,8
22		J936186		1	COVER Incl. 24
23		J283767		1	GASKET
24		J907586		1	BAFFLE
25		J937535		1	TUBE No Longer Available, Order J992053, REF 25A
25A		J992053		1	TUBE
26		J937534		1	DIPSTICK
27		J934912		1	WASHER,RUBBER
28		J906696		1	SEAL 38 mm ID
29		844-12020		2	BOLT M12 x 20
30		A77424		1	PLUG
31		J934877		1	CONNECTOR
32		J906697		1	SEAL 50 mm ID
33		854-10075		3	SCREW M10 x 75; 10.9
34		217-438		2	PLUG 1/2 PT; Replaces A77429
35		J918612		1	HOSE 360 mm (14-1/4 in)
36		J904230		1	CLAMP
37		J928989		1	CLIP
		196803A1		1	KIT Engine Block Heater, 120V; Incl. 38 - 40
38		NSS		1	NOT SERVICED SEPARATELY Element
39		196466A1		1	CABLE, ELECTRIC 1829 mm (72 in)
40		J910517		1	O-RING
		124340A1		1	KIT Engine Block Heater, 240V, Europe Only; Incl. 38 - 40
38		J916662		1	HEATER-UNIT
39		J905114		1	CABLE, ELECTRIC
40		J910517		1	O-RING
		309651A1		1	KIT Engine Block Heater, 120V; Incl. 41, 42
41		NSS		1	NOT SERVICED SEPARATELY Element

CYLINDER BLOCK - 4T-390 EMISSIONS CERTIFIED ENGINE

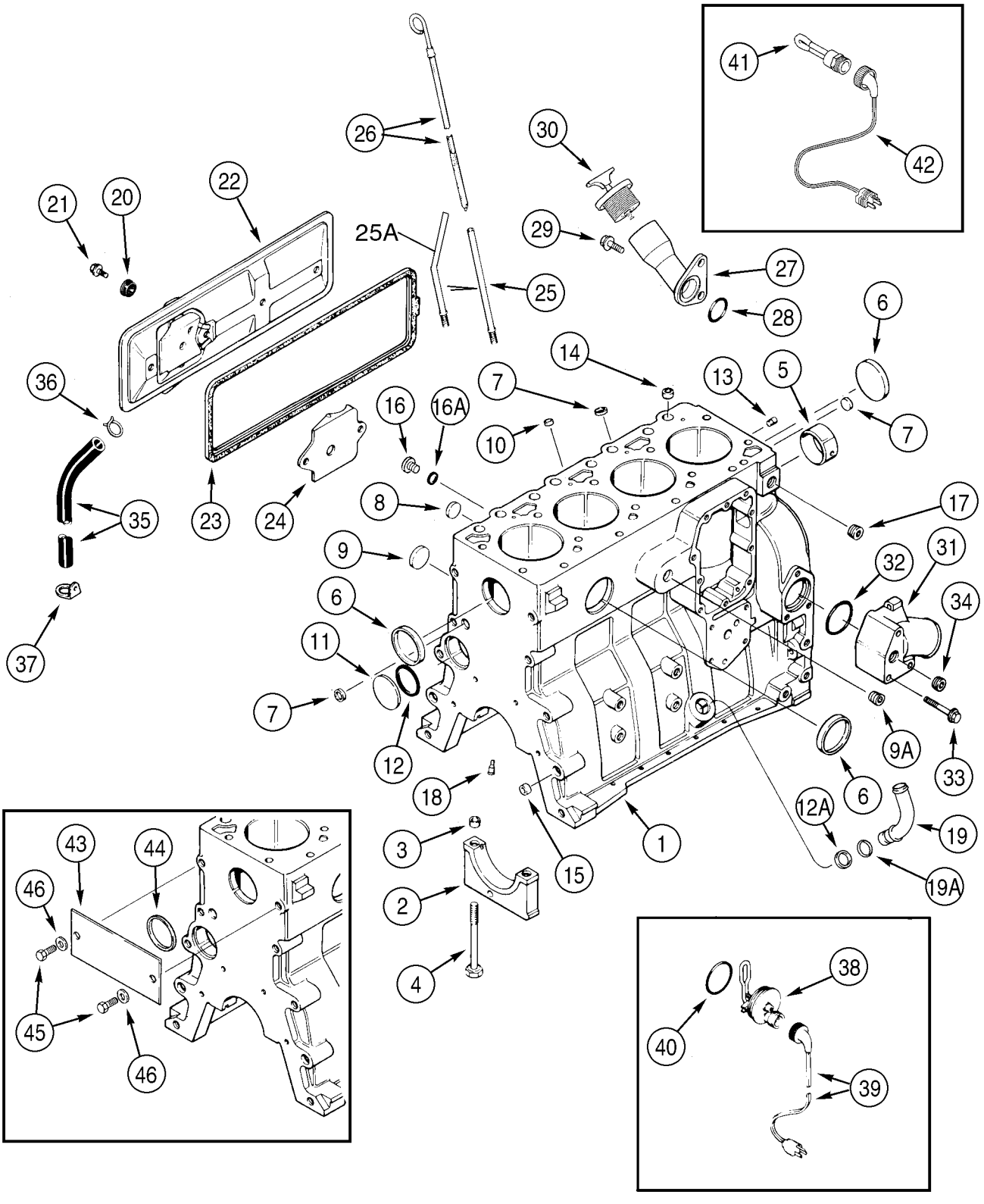

CYLINDER BLOCK - 4T-390 EMISSIONS CERTIFIED ENGINE

REF	FN	PART NUMBER	YR/SN	QTY	DESCRIPTION
42		196466A1		1	CABLE, ELECTRIC 1829 mm (72 in)
		309652A1		1	KIT Engine Block Heater, 240V, Europe Only; Incl. 41, 42
41		NSS		1	NOT SERVICED SEPARATELY Element
42		J905114		1	CABLE, ELECTRIC
		323698A1		1	KIT Expansion Plug Repair Kit; Incl. 43 - 46; Not Part of Engine Assy.
43		322984A1		1	PLATE
44		J910530		1	SEAL
45		614-12040		2	CAPSCREW M12 x 40; 8,8
46		896-11012		2	WASHER 13,5 x 24 x 3 mm
		A77887		1	PACKAGE,SERVICE Incl. 47 - 54, Not Illustrated; N.A. Built Engines Prior To SN 46231395; Great Britain Built Engines Prior to SN 21486151
		87425543		1	KIT PACKAGE, SERVICE; Incl. 47 - 54, Not Illustrated; N.A Built Engines SN 46231395 And After; Great Britain Built Engines SN 21486150 And After
47		J802747		4	KIT, PISTON & RINGS See Figure 02-22
48		J934047		4	PIN See Figure 02-22
49		A77465		4	BEARING, CON. ROD See Figure 02-22
50		A77405		4	BEARING, CRANKSHAFT See Figure 02-20
51		A77896		1	BEARING, THRUST See Figure 02-20
52		A77975		1	KIT, GASKET See Figure 02-23; Used in A77887 Package, Service
52		87405727		1	KIT, ENGINE BOTTOM G See Figure 02-23; Used in 87425543 Package, Service
53		J283333		1	GASKET See Figure 02-16
54		A77673		1	KIT, GASKET See Figure 02-14

CRANKSHAFT - 4T-390 EMISSIONS CERTIFIED ENGINE

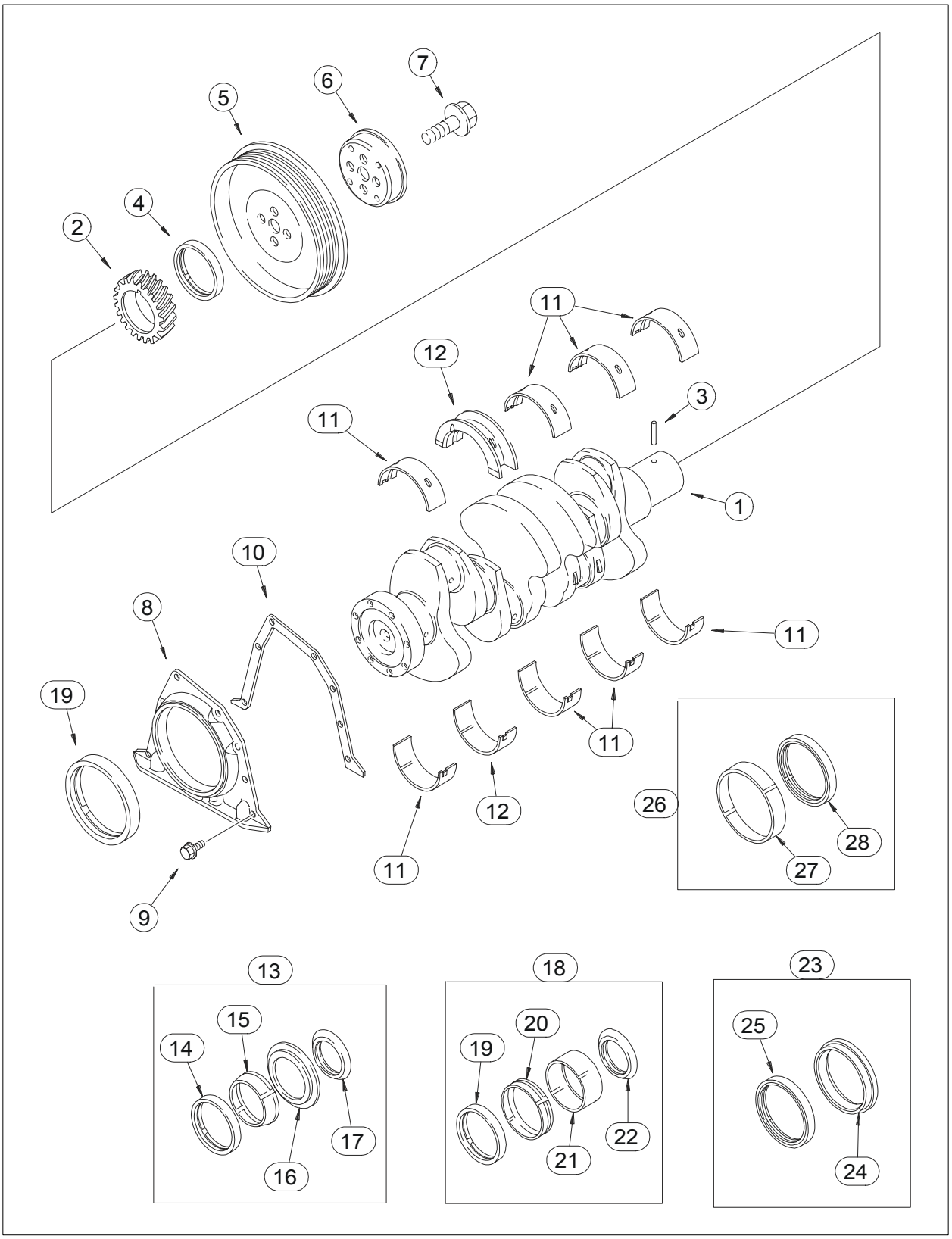

CRANKSHAFT - 4T-390 EMISSIONS CERTIFIED ENGINE

REF	FN	PART NUMBER	YR/SN	QTY	DESCRIPTION
		JR908031		1	CRANKCASE Remanufactured; No Longer Available, Order J908031
		JC908031		1	CORE-CRANKSHAFT Return Number
1		J908031		1	CRANKSHAFT Incl. 2, 3
2		J929027		1	PINION
3		J904483		1	PIN
4		NSS		1	NOT SERVICED SEPARATELY Seal, Order REF 13, A77889
5		J914494		1	PULLEY
6		J905820		1	SPACER
7		J903857		4	BOLT M12 x 36
8		J936904		1	COVER, REAR
9		87409160		6	SCREW M6 x 16; 10.9; Replaces 845-6015
10		J938159		1	GASKET Replaces J928493
11		A77405		4	BEARING, CRANKSHAFT
11		A77472		4	BEARING, CRANKSHAFT 0,25 mm, Undersize
11		A77474		4	BEARING, CRANKSHAFT 0,50 mm, Undersize
11		A77476		4	BEARING, CRANKSHAFT 0,75 mm, Undersize
11		A77478		4	BEARING, CRANKSHAFT 1,0 mm, Undersize
12		A77896		1	BEARING, THRUST
12		A77473		1	BEARING, THRUST 0,25 mm, Undersize
12		A77475		1	BEARING, THRUST 0,50 mm, Undersize
12		A77477		1	BEARING, THRUST 0,75 mm, Undersize
12		A77479		1	BEARING, THRUST 1,0 mm, Undersize
12		A77841		1	BEARING, THRUST 0,50 mm, Undersize
12		A77840		1	BEARING, THRUST 1,0 mm, Undersize
13		A77889		1	PACKAGE, SEALS Front, Incl. 14 - 17
14		NSS		1	NOT SERVICED SEPARATELY Seal
15		NSS		1	NOT SERVICED SEPARATELY Tool
16		NSS		1	NOT SERVICED SEPARATELY Tool
17		NSS		1	NOT SERVICED SEPARATELY Shield
18		A77890		1	PACKAGE, SEALS Front, Incl. 19 - 22
19		NSS		1	NOT SERVICED SEPARATELY Seal
20		NSS		1	NOT SERVICED SEPARATELY Sleeve
21		NSS		1	NOT SERVICED SEPARATELY Tool
22		NSS		1	NOT SERVICED SEPARATELY Shield

CRANKSHAFT - 4T-390 EMISSIONS CERTIFIED ENGINE

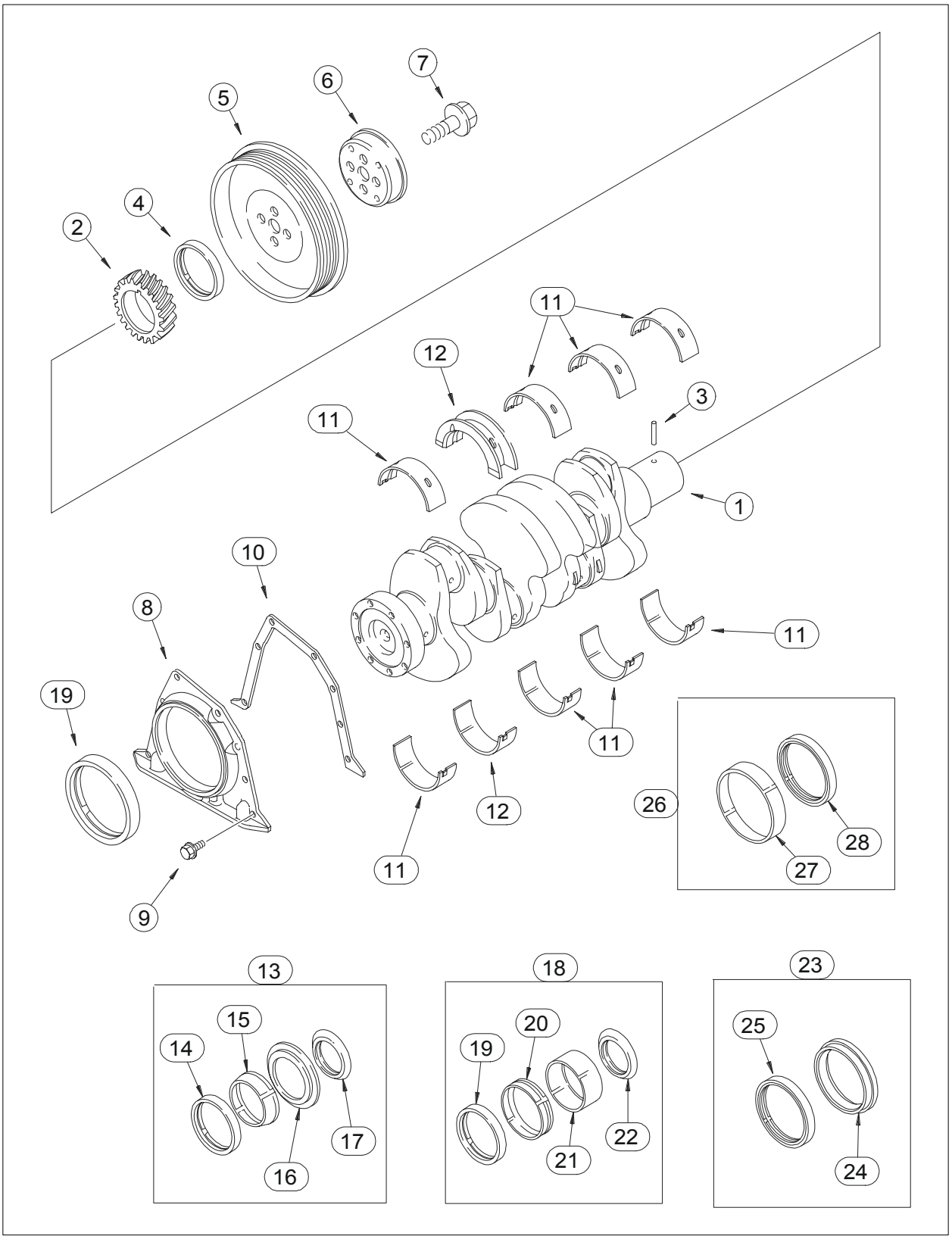

CRANKSHAFT - 4T-390 EMISSIONS CERTIFIED ENGINE

REF	FN	PART NUMBER	YR/SN	QTY	DESCRIPTION
23		J934486		1	PACKAGE, SEALS Rear, Incl. 24, 24A, 25
24		NSS		1	NOT SERVICED SEPARATELY Tool
24A		NSS		1	NOT SERVICED SEPARATELY Tool, Not Illustrated
25		J933262		1	GASKET
26		A77810		1	PACKAGE, SEALS Rear, Incl. 27, 28
27		NSS		1	NOT SERVICED SEPARATELY Sleeve
28		NSS		1	NOT SERVICED SEPARATELY Seal

FLYWHEEL AND HOUSING - 4T-390 EMISSIONS CERTIFIED ENGINE

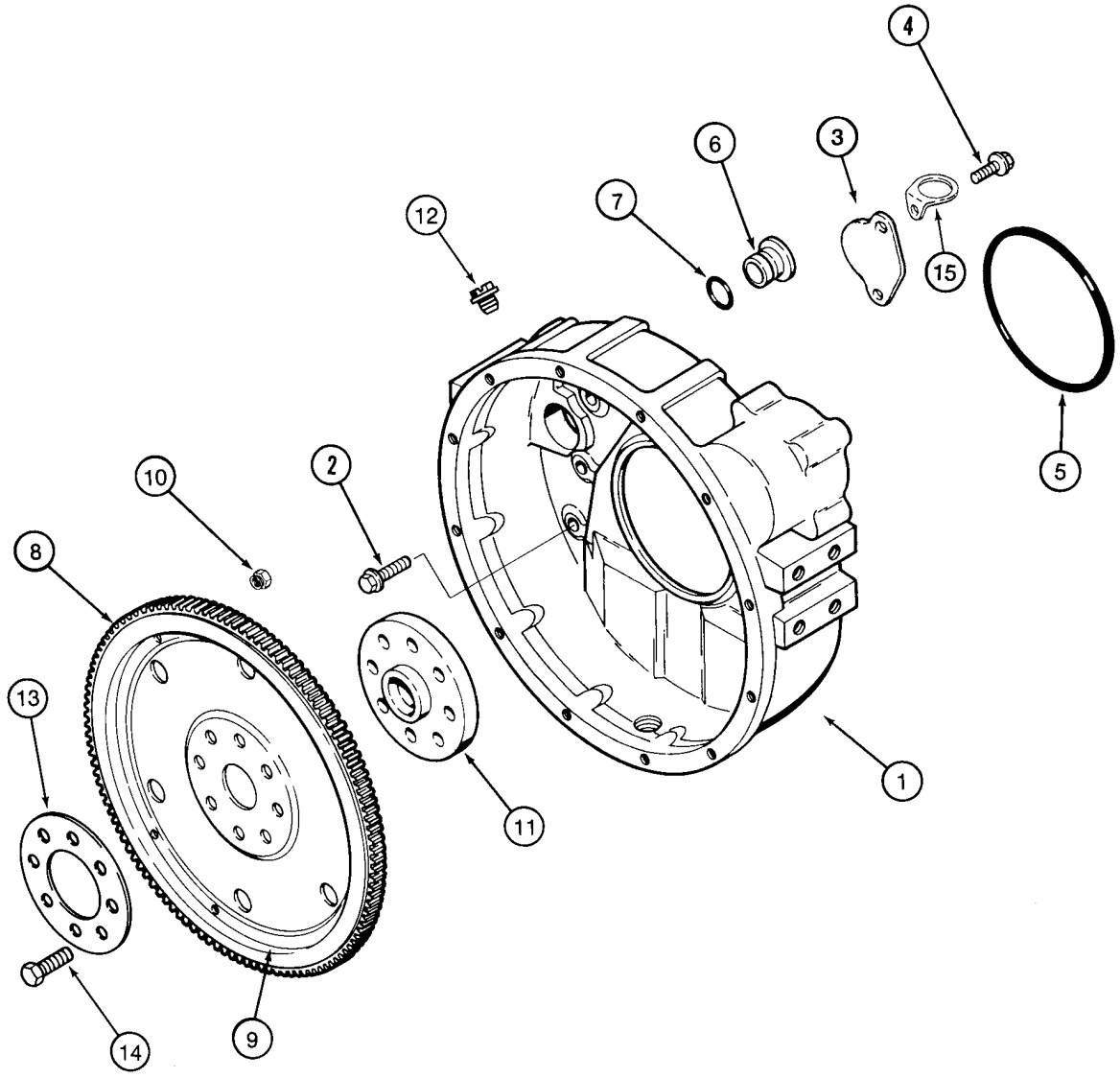

BS98J031

FLYWHEEL AND HOUSING - 4T-390 EMISSIONS CERTIFIED ENGINE

REF	FN	PART NUMBER	YR/SN	QTY	DESCRIPTION
1		J930886		1	HOUSING ASSY.
2		854-12040		8	SCREW M12 x 40; 10.9
3		J925234		1	PLATE
4		613-8016		2	SCREW M8 x 16
5		J912473		1	O-RING
6		J910248		1	PLUG
7		238-5212		1	O-RING 7/8 ID x 1/8
		J934937		1	FLYWHEEL Incl. 8 - 10; Models Without Powershift Transmission
8		NSS		1	NOT SERVICED SEPARATELY Gear
9		NSS		1	NOT SERVICED SEPARATELY Plate
10		NSS		6	NOT SERVICED SEPARATELY Nut
11		J913689		1	FLANGE Models Without Powershift Transmission
12		353-225		1	PLUG 3/4 NF
13		J923049		1	RING, COUPLING Replaces J904361; Models Without Powershift Transmission
14		J901395		8	SCREW M12 x 32
15		J928989		1	CLIP
		J287008		1	FLYWHEEL Incl. 16; Models With Powershift Transmission; Replaces J910284; Not Illustrated
16		J901774		1	RING, FLYWHEEL 159 T
17		J900269		8	WASHER Models With Powershift Transmission; Not Illustrated

PISTONS AND CONNECTING ROD - 4T-390 EMISSIONS CERTIFIED ENGINE

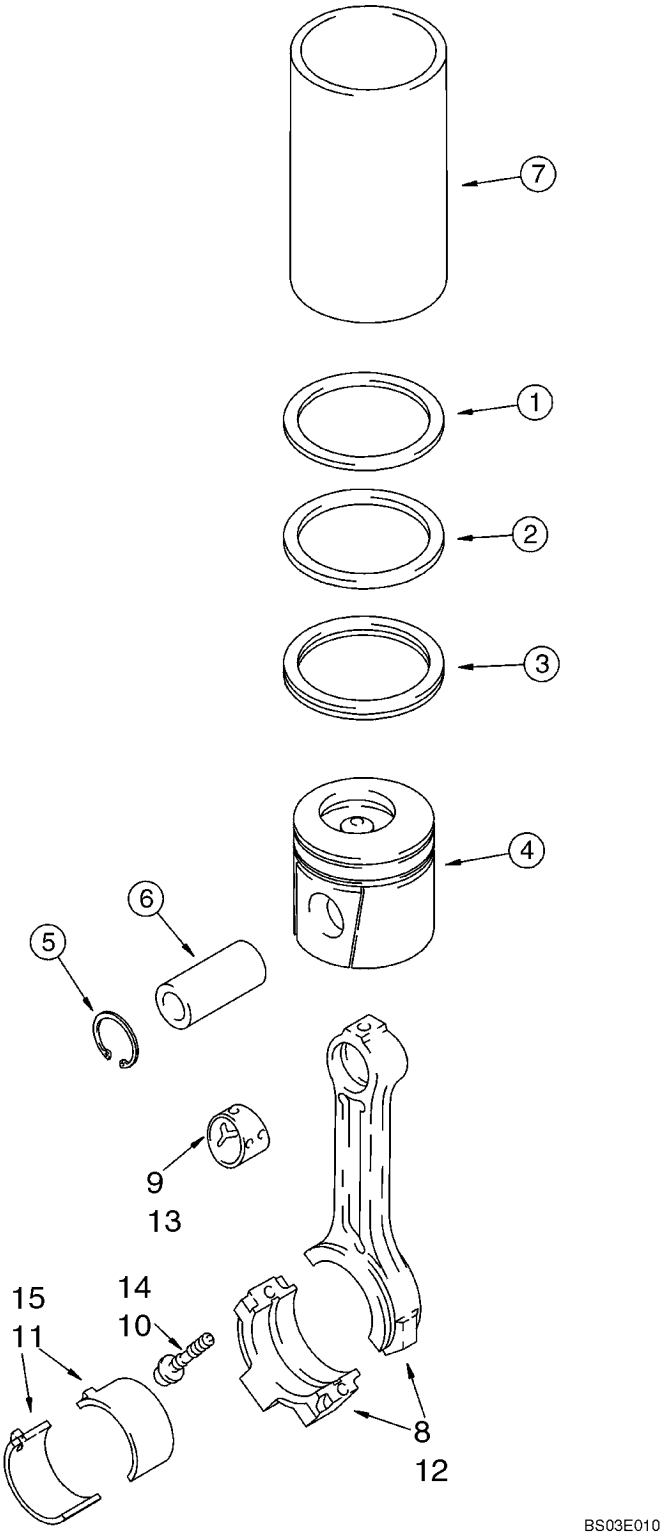

PISTONS AND CONNECTING ROD - 4T-390 EMISSIONS CERTIFIED ENGINE

REF	FN	PART NUMBER	YR/SN	QTY	DESCRIPTION
		J802747		4	KIT, PISTON & RINGS Standard, Incl. 1 - 5, J802746
		J802746		1	RING SET, PISTON Incl. 1 - 3
1		NSS		1	NOT SERVICED SEPARATELY Ring, Top
2		NSS		1	NOT SERVICED SEPARATELY Ring, Middle
3		NSS		1	NOT SERVICED SEPARATELY Ring, Oil
4		NSS		1	NOT SERVICED SEPARATELY Piston, Standard
5		J920691		2	RING,SPECIAL
6		J934047		1	PIN
		J802764		4	KIT, PISTON & RINGS 0,5 mm, Oversize, Incl. 1 - 5, J802422
		J802422		1	RING SET, PISTON 0,5 mm, Incl. 1 - 3
1		NSS		1	NOT SERVICED SEPARATELY Ring, Top
2		NSS		1	NOT SERVICED SEPARATELY Ring, Middle
3		NSS		1	NOT SERVICED SEPARATELY Ring, Oil
4		NSS		1	NOT SERVICED SEPARATELY Piston, Oversize
5		J920691		2	RING,SPECIAL
6		J934047		1	PIN
		J802765		4	KIT, PISTON & RINGS 1,0 mm, Oversize, Incl. 1 - 5, J802423
		J802423		1	RING SET, PISTON 1,0 mm, Incl. 1 - 3
1		NSS		1	NOT SERVICED SEPARATELY Ring, Top
2		NSS		1	NOT SERVICED SEPARATELY Ring, Middle
3		NSS		1	NOT SERVICED SEPARATELY Ring, Oil
4		NSS		1	NOT SERVICED SEPARATELY Piston
5		J920691		2	RING,SPECIAL
6		J934047		1	PIN
7		J904166		X	SLEEVE Connecting Rods
		JR942581		1	REMAN-ROD CONNECTING N.A. Only; N.A. Built Engines Prior to SN 46231395
		JC901569		1	CORE-ROD CONNECTING
		J942581		4	ROD, CONNECTING Incl. 8 - 10; N.A. Built Engines Prior to SN 46231395; Great Britain Built Engines Prior to SN 21486151
8		NSS		1	NOT SERVICED SEPARATELY Rod
9		J941476		1	BUSHING, LARGE
10		J900919		2	CAPSCREW M11 x 59

PISTONS AND CONNECTING ROD - 4T-390 EMISSIONS CERTIFIED ENGINE

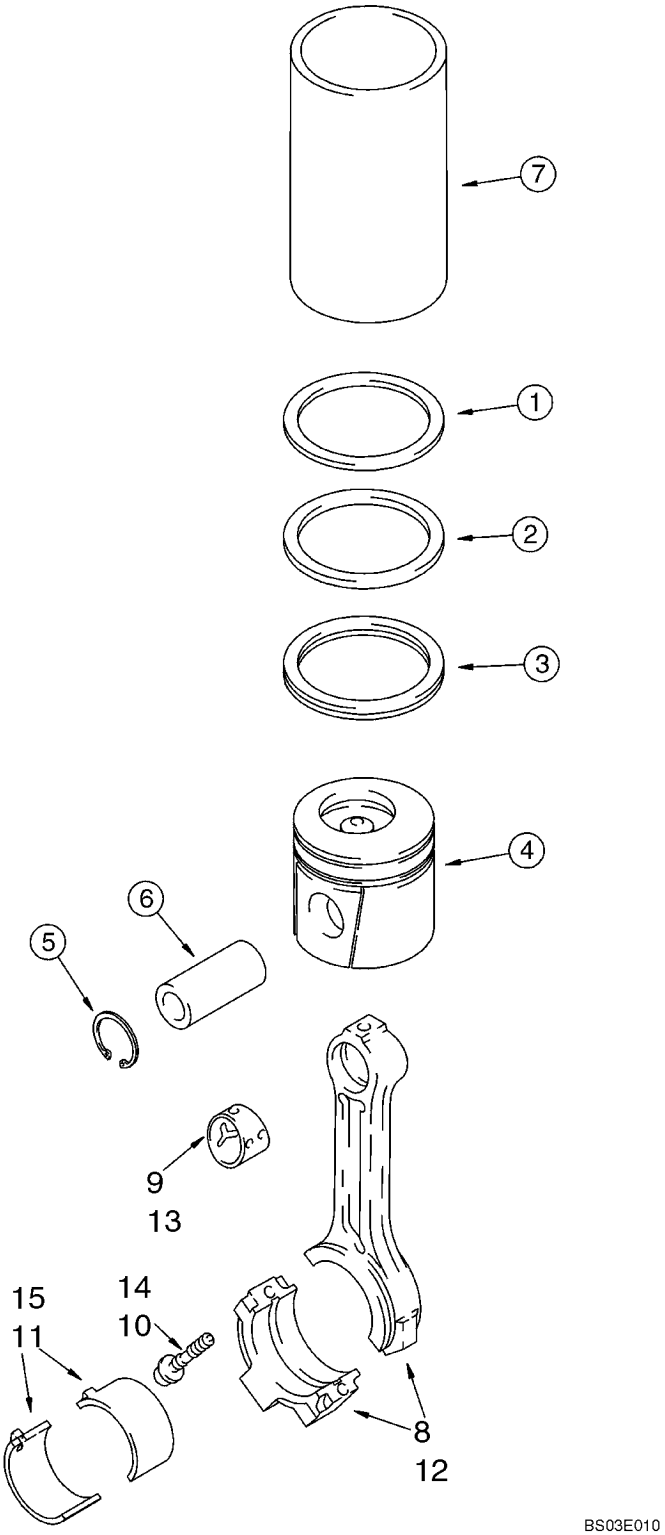

PISTONS AND CONNECTING ROD - 4T-390 EMISSIONS CERTIFIED ENGINE

REF	FN	PART NUMBER	YR/SN	QTY	DESCRIPTION
11		A77465		4	BEARING, CON. ROD Standard
11		A77466		4	BEARING, CON. ROD 0,25 mm, Oversize
11		A77467		4	BEARING, CON. ROD 0,50 mm, Oversize
11		A77468		4	BEARING, CON. ROD 0,75 mm, Oversize
11		A77469		4	BEARING, CON. ROD 1,0 mm, Oversize
		87417069			REMAN-ROD CONNECTING N.A. Only; N.A Built Engines SN 46231395 And After
		87417070			CORE-ROD CONNECTING Return Number
		87413279		4	ROD, CONNECTING Incl. 12 - 14; N.A Built Engines SN 46231395 And After; Great Britain Built Engines SN 21486150 And After
12		NSS		1	NOT SERVICED SEPARATELY Rod
13		87403209		1	BUSHING, LARGE
14		87413283		2	SCREW
15		{87425525}		4	BEARING, CON. ROD, Standard
15		{87425526}		4	BEARING, CON. ROD, 0,25 mm, Oversize
15		{87425527}		4	BEARING, CON. ROD, 0,50 mm, Oversize
15		{87425528}		4	BEARING, CON. ROD, 0,75 mm, Oversize
15		{87425529}		4	BEARING, CON. ROD, 1,00 mm, Oversize

02 -23		p1	05/03

GASKET KIT, VALVE GRIND - 4T-390 EMISSIONS CERTIFIED ENGINE

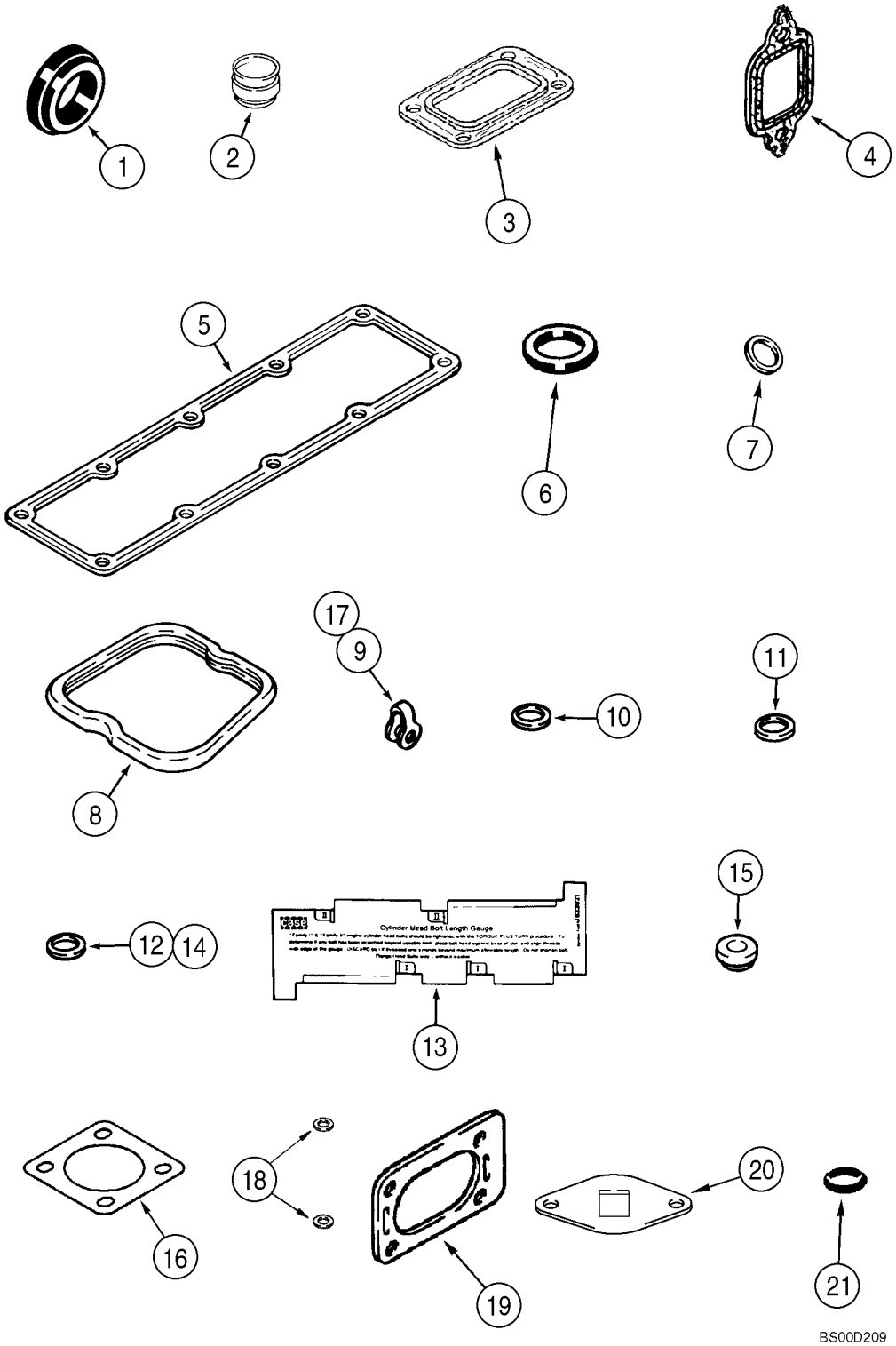

BS00D209

GASKET KIT, VALVE GRIND - 4T-390 EMISSIONS CERTIFIED ENGINE

REF	FN	PART NUMBER	YR/SN	QTY	DESCRIPTION
		87405727		1	KIT, ENGINE BOTTOM G Valve Grind; Incl. 1 - 21; Replaces A77975
1		J923331		1	GASKET Housing; See Figure 02-16
2		J921640		8	SEAL See Figure 02-23
3		J919369		1	GASKET Not Used In This Application
4		J927154		4	GASKET Exhaust Manifold; See Figure 02-10
5		J938153		1	GASKET Intake Manifold; See Figure 02-10
6		J936876		1	OIL-SEAL Replaces J902363; Not Used In This Application
7		J900808		4	SEAL Not Used In This Application
8		J930906		4	GASKET See Figure 02-16
9		J903380		4	SEAL See Figure 03-05
10		J937142		4	SEAL 1,5 mm, Replaces J906659; See Figure 03-05
11		J909356		4	SEAL See Figure 03-08
12		J923261		4	WASHER 2,5 mm; Not Used In This Application
13		87404692		1	GAUGE Cylinder Head Bolt Length, Replaces J823921; See Figure 02-17
14		J930324		4	SEAL 0,5 mm; Not Used In This Application
15		J935449		4	ISOLATOR See Figure 02-16
16		J912220		1	GASKET Not Used In This Application
17		J903380		1	SEAL See Figure 03-05
18		J918188		2	WASHER See Figure 03-04
19		J914856		1	GASKET Not Used In This Application
20		J937706		1	GASKET Not Used In This Application
21		J910824		4	O-RING Not Used In This Application

02 -24		p1	05/03

GASKET KIT, CYLINDER BLOCK - 4T-390 EMISSIONS CERTIFIED ENGINE

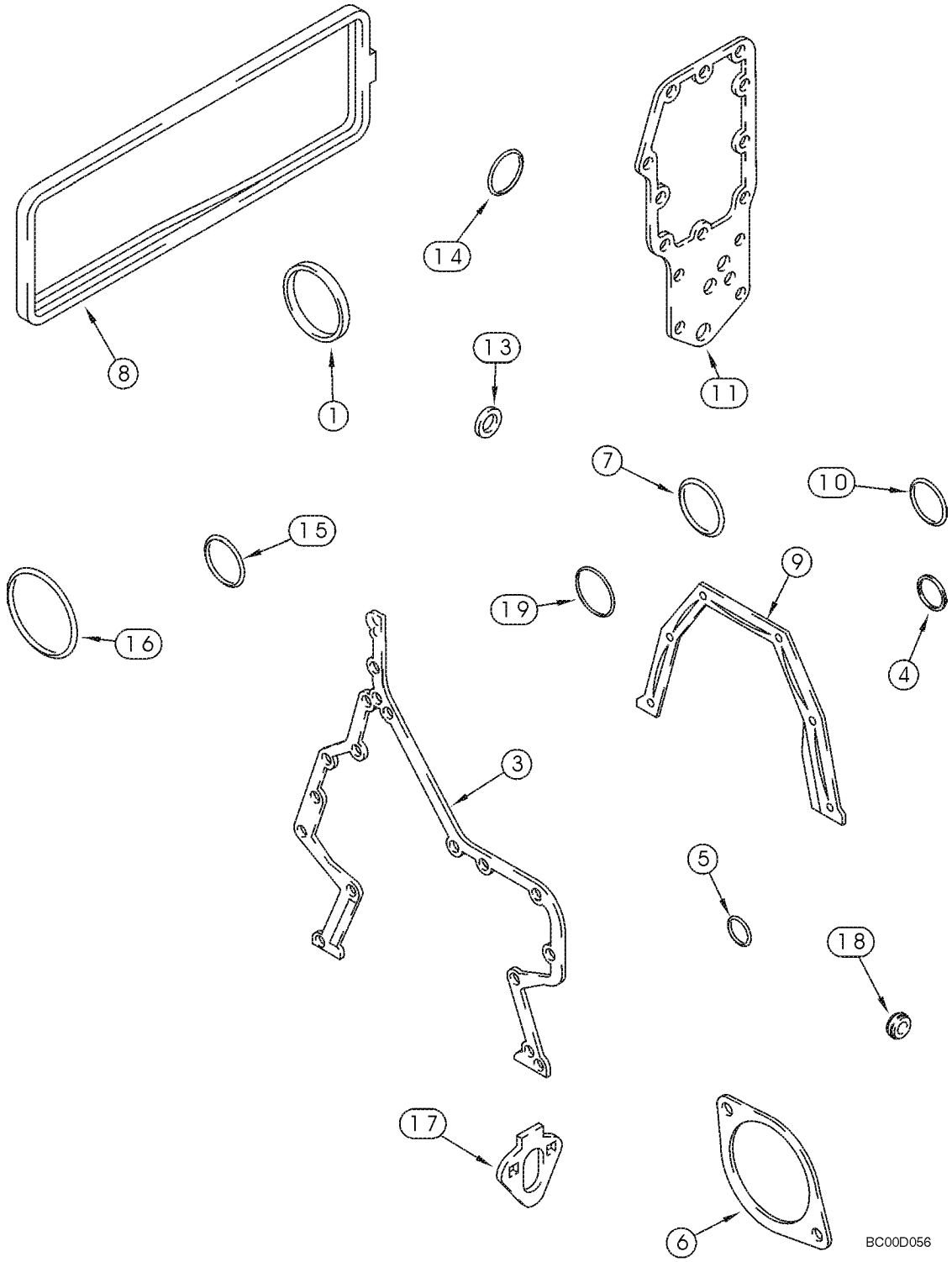

GASKET KIT, CYLINDER BLOCK - 4T-390 EMISSIONS CERTIFIED ENGINE

REF	FN	PART NUMBER	YR/SN	QTY	DESCRIPTION
		A78036		1	KIT, ENGINE BOTTOM G Cylinder Block; Incl. 1 - 20
1		J903475		1	SEAL See Figure 02-09
2		J942915		1	GASKET See Figure 02-13, Not Illustrated
3		J938156		1	GASKET Housing; See Figure 02-09
4		J915772		1	SEAL See Figure 02-09
5		J913994		1	O-RING See Figure 02-09
6		J938655		1	GASKET Replaces J929751; See Figure 02-09
7		J906698		1	SEAL, RUBBER 3-1/2 ID x 3/16; Replaces 238-5341; See Figure 02-08
8		J283767		1	GASKET Cover; See Figure 02-19
9		J938159		1	GASKET See Figure 02-20
10		J906697		1	SEAL 50 mm ID; See Figure 02-19
11		J942914		1	GASKET See Figure 02-13
13		J902425		1	WASHER See Figure 02-14
14		J906696		1	SEAL 38 mm ID; See Figure 02-19
15		J929457		1	O-RING 23/32 ID x 7/64; See Figure 02-13
16		J912473		1	O-RING See Figure 02-21
17		J939258		1	GASKET Replaces J931059; See Figure 03-04
18		J928759		4	SEAL See Figure 02-19
19		J935032		1	SEAL 80 mm ID; See Figure 03-07
20		J931607		1	GASKET Not Used In This Application

02 -25		p1	05/03

GASKET KIT, BASIC SERVICE ENGINE - 4T-390 EMISSIONS CERTIFIED ENGINE

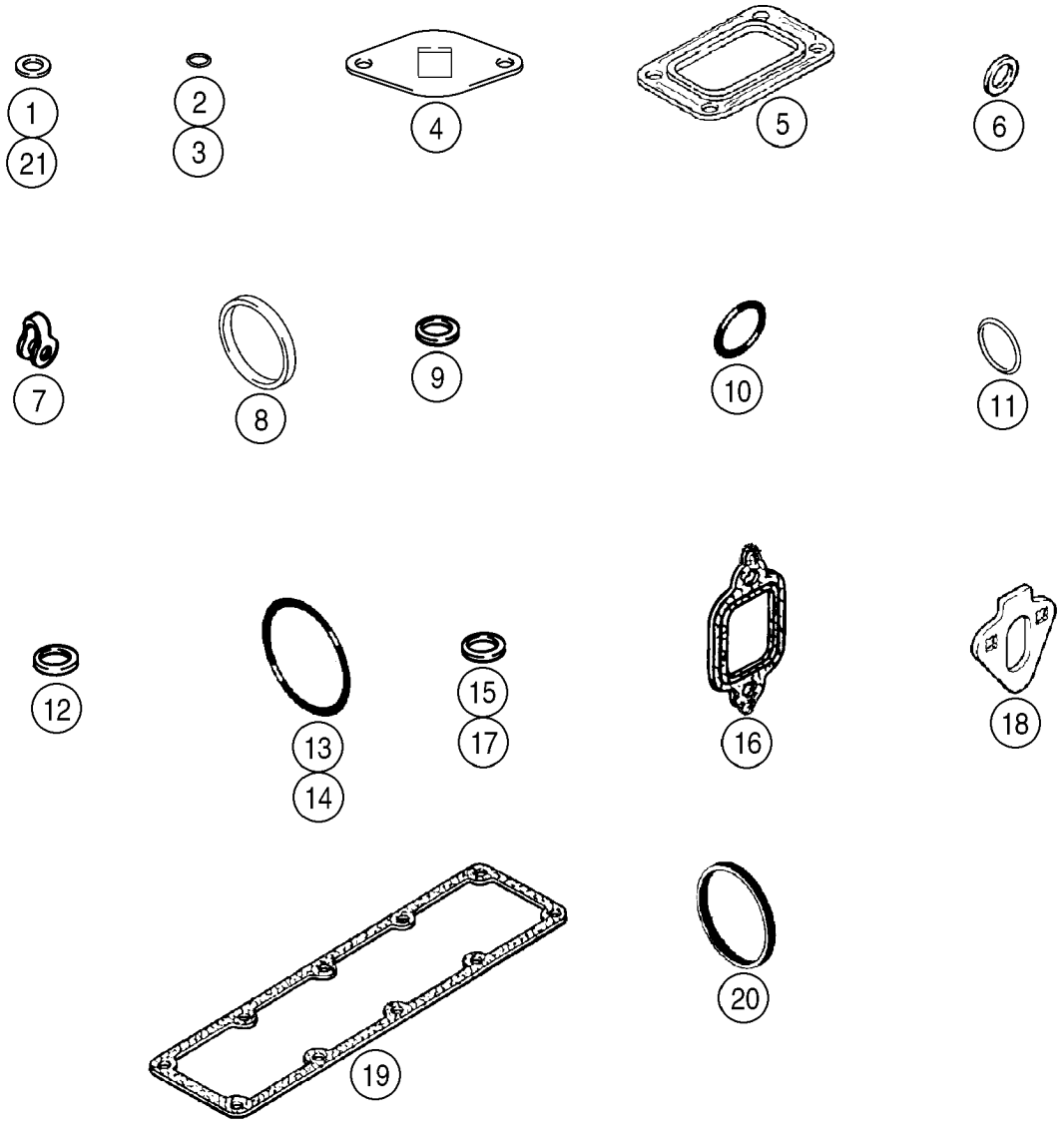

BS00J015

GASKET KIT, BASIC SERVICE ENGINE - 4T-390 EMISSIONS CERTIFIED ENGINE

REF	FN	PART NUMBER	YR/SN	QTY	DESCRIPTION
		A77994		1	KIT, GASKET Basic Service Engine, Incl. 1 - 21
1		222-993		2	COPPER SEAL 3/8 OD; Not Used In This Application
2		238-5013		2	O-RING 7/16 ID x 1/16; Not Used In This Application; Not Illustrated
3		637-62081		1	O-RING 8,1 ID x 1,6 mm; See Figure 03-07
4		J937706		2	GASKET Not Used In This Application
5		J919369		1	GASKET Not Used In This Application
6		J902425		1	WASHER See Figure 02-14
7		J903380		4	SEAL See Figure 03-05
8		J903475		1	SEAL See Figure 02-09
9		J937142		4	SEAL 1,5 mm; Replaces J906659; See Figure 03-05
10		J906696		1	SEAL 38 mm ID; See Figure 02-19
11		J906697		1	SEAL 50 mm ID; See Figure 02-19
12		J909356		4	SEAL See Figure 03-08
13		J910517		1	O-RING See Figure 02-19
14		J912473		1	O-RING See Figure 02-21
15		J923261		4	WASHER 2,5 mm; Not Used In This Application
16		J927154		4	GASKET See Figure 02-10
17		J930324		4	SEAL 0,5 mm; Not Used In This Application
18		J939258		2	GASKET Replaces J931059; See Figure 03-04
19		J938153		1	GASKET See Figure 02-10
20		J935032		1	SEAL 80 mm ID; See Figure 03-07
21		87415913		4	WASHER, SEALING 12 x 19 x 1,5 mm; Replaces J935171; See Figure 03-04

NOTES

SECTION INDEX

03 -01	FUEL LINES, RESERVOIR - FILTER, IN-LINE FUEL
03 -02	CONTROLS - THROTTLE, HAND
03 -03	CONTROLS - THROTTLE, FOOT
03 -04	FUEL FILTER - 4T-390 EMISSIONS CERTIFIED ENGINE
03 -05	FUEL INJECTION SYSTEM - 4T-390 EMISSIONS CERTIFIED ENGINE
03 -06	ANEROID AND WASTEGATE SYSTEM - 4T-390 EMISSIONS CERTIFIED ENGINE
03 -07	FUEL INJECTION PUMP AND DRIVE - 4T-390 EMISSIONS CERTIFIED ENGINE
03 -08	FUEL INJECTION NOZZLE - 4T-390 EMISSIONS CERTIFIED ENGINE

03 -01		p1	05/03

FUEL LINES, RESERVOIR - FILTER, IN-LINE FUEL

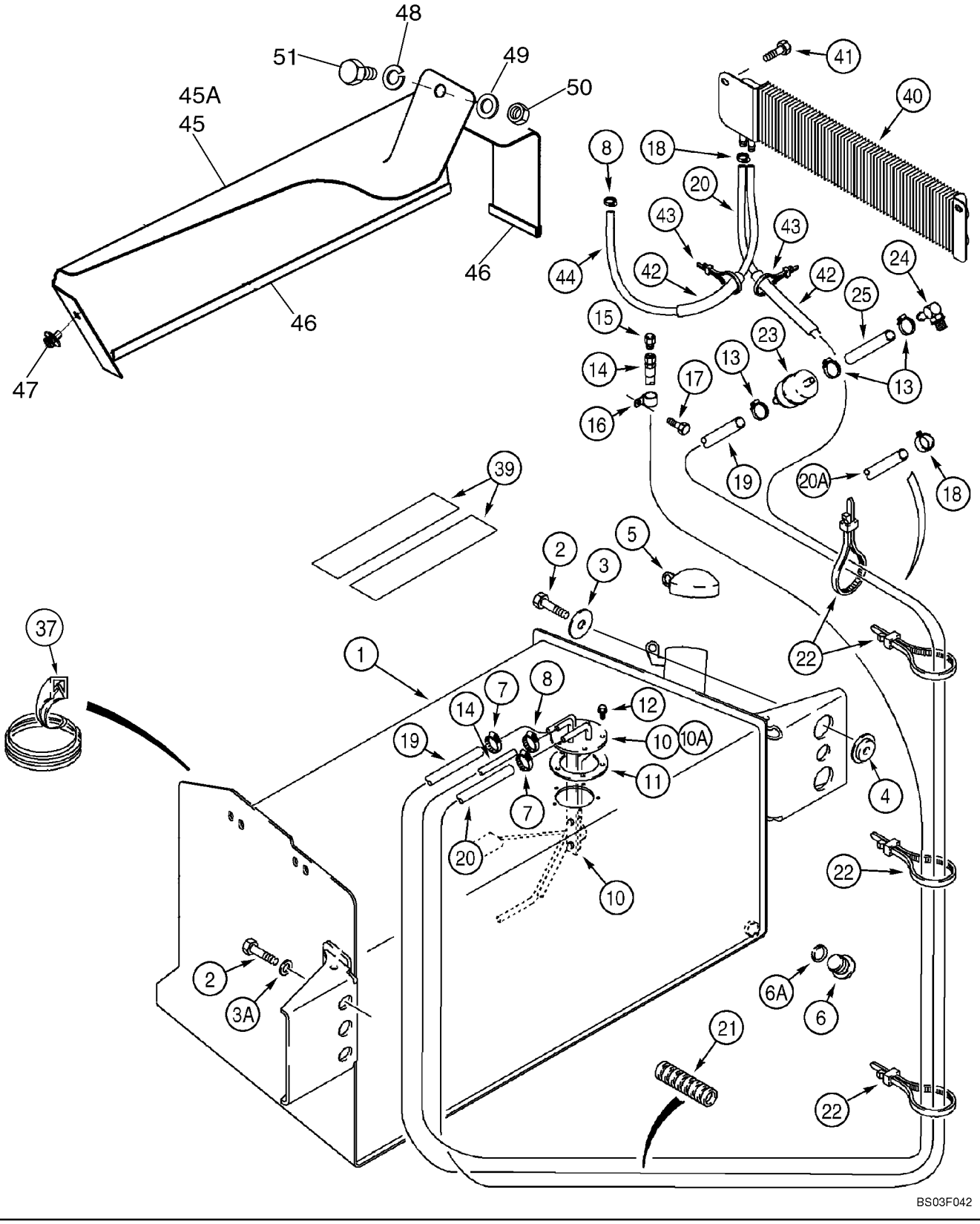

FUEL LINES, RESERVOIR - FILTER, IN-LINE FUEL

REF	FN	PART NUMBER	YR/SN	QTY	DESCRIPTION
1		364001A5		1	TANK, FUEL 42 gal, Incl. Ref 6; Without Welded Fuel Sender Tubes; Includes Left Hand Steps, Mounts to Left Hand Side of Chassis; Replaces 364001A4 Tank; If Used
1		87419601		1	TANK, FUEL 42 gal, Incl. Ref 6; With Welded Fuel Sender Tubes; Includes Left Hand Steps, Mounts to Left Hand Side of Chassis; If Used
2		443375A1		4	BOLT M20 x 60; With Loctite; Replaces 627-20060 Bolt Without Loctite Used On Some Models
3		302358A1		2	WASHER
3A		896-11020		2	WASHER 22 x 37 x 4 mm
4		185926A1		1	SPACER Upper Left Hand Side of Tank
4A		409473A1		1	SPACER Lower Left Hand Side of Tank
5		130049A1		1	PLUG Cap
6		218-5211		1	PLUG Hex Socket, 7/8 Or, Drain, Incl. Ref 6A, Included With Ref 1
6A		237-6010		1	O-RING 3/4 ID x 3/32
7		214-1708		2	CLAMP 1/2 - 29/32
8		214-1704		2	CLAMP 1/4 - 5/8
10		380442A1		1	SENDER Fuel Level, 40 Gallon Tank, With Tubes, Includes Grounding Nut, Lock Washer and Flat Washer; If Used
10		87408480		1	SENDER UNIT Fuel Level, 40 Gallon Tank, Without Tubes; Used With 87419601 Tank; If Used
11		188311A2		1	GASKET
12		D75465		5	SCREW No. 10 NF x 5/8
13		214-1708		3	CLAMP 1/2 - 29/32
14		234892A1		1	HOSE, LARGE 1100 mm (43-5/16 in), Vent
15		130047A1		1	STRAINER ASSY. Vent
16		515-23127		1	CLAMP 1/2 ID
17		276-24924		1	SCREW 3/8 x 1-1/2
17A		495-11041		1	WASHER 13/32 x 13/16 x 1/16
18		1348264C1		2	CLAMP, HOSE 3/8 ID
19		234888A1		1	HOSE 1280 mm (50-7/16 in), Fuel Supply, To Fuel Lift Pump

FUEL LINES, RESERVOIR - FILTER, IN-LINE FUEL

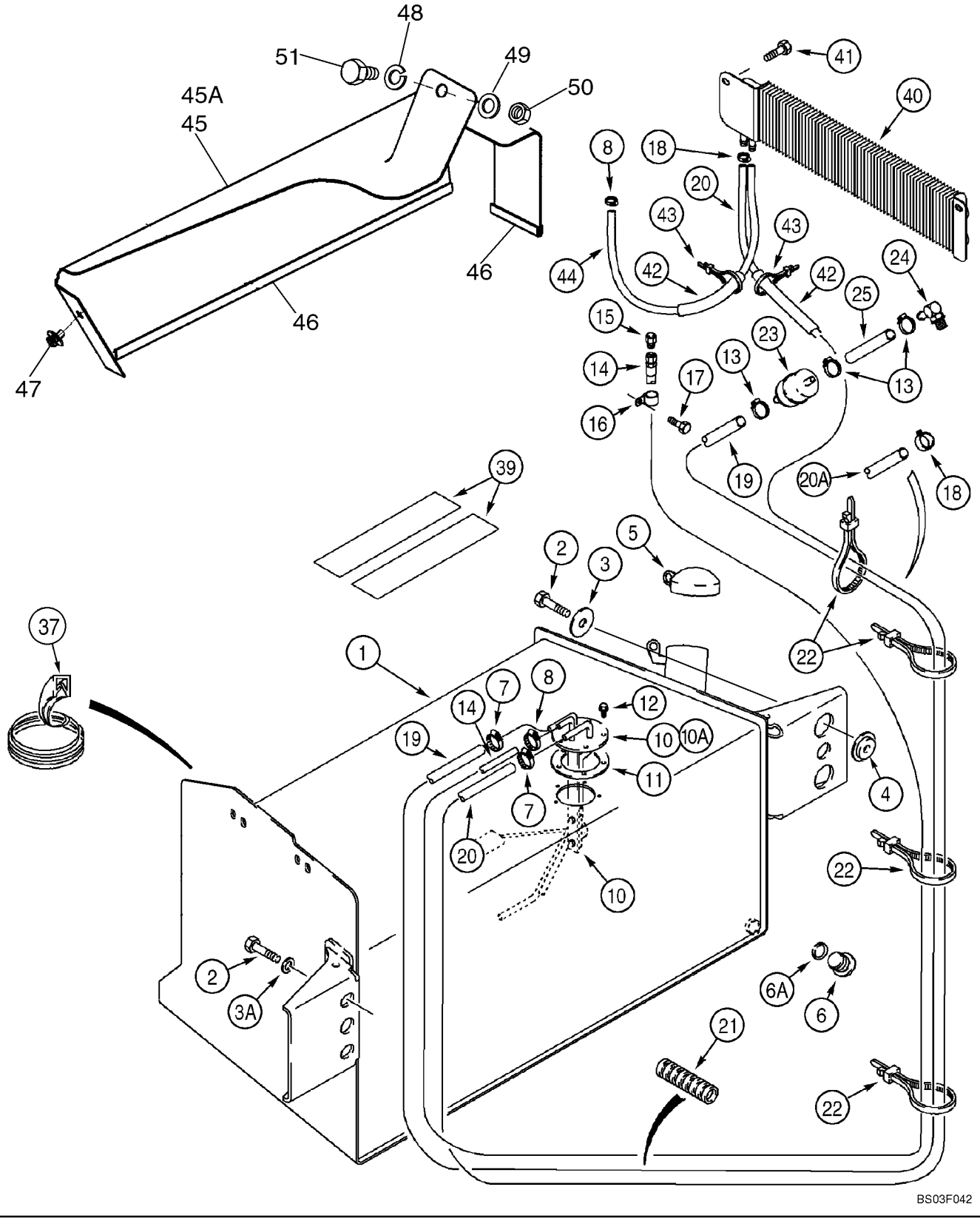

FUEL LINES, RESERVOIR - FILTER, IN-LINE FUEL

REF	FN	PART NUMBER	YR/SN	QTY	DESCRIPTION
20		244552A1		1	HOSE 2550 mm (110-7/16 in), Fuel Return, Fuel Cooler to Tank
21		399004A1		1	GUARD 270 mm (10-5/8 in)
22		L18337		X	STRAP 15 in
23		194199A1		1	FILTER In-Line Fuel Filter
24		410847A1		1	FITTING 90 deg Elbow, 12 stem x 1/4 PT, With Loctite; To Engine Fuel Lift Pump; Replaces 217-372 Elbow Without Loctite Used On Some Models
25		393827A1		1	HOSE 152 mm, Fuel Filter to Lift Pump
29		189602A3		1	COVER Mounted Above Fuel Reservoir, Models Without Clam Bucket or Auxiliary Hydraulics; Replaces 189602A2 With Hole Instead of Slot on Tab
29A		188009A3		1	COVER Mounted Above Fuel Reservoir, Models With Clam Bucket; Replaces 188009A2 With Hole Instead of Slot on Tab
30		191046A1		1	STRIP,ORNAMENTAL Trim, 650 mm (25-5/8 in), Cut From A165860; Apply 75 mm (3 in) of Trim to Front Lower Edge and 240 mm (9-7/16 in) of Trim to Outside Lower Edge of Cover
31		307577A1		1	BOLT Special, M8 x 20
32		892-11010		1	WASHER, LOCK M10
34		895-11010		1	WASHER 11 x 21 x 2 mm
35		829-1410		1	NUT M10; 10.9
37		D40442		1	MOLDING Trim, 305 mm (12 in), Cut From F42827; If Used
38		814-10045		1	CAPSCREW M10 x 45, Used With 188009A2 or 188009A3 Cover On Models With Three Spool Loader Valve
38		614-10020		1	CAPSCREW M10 x 20, Used With 189602A2 or 189602A3 Cover On Models With Two Spool Loader Valve
39		D80270		2	STRIP 635 mm (25 in)
40		379499A2		1	COOLER Fuel
41		814-8050		2	CAPSCREW M8 x 50; If Used

FUEL LINES, RESERVOIR - FILTER, IN-LINE FUEL

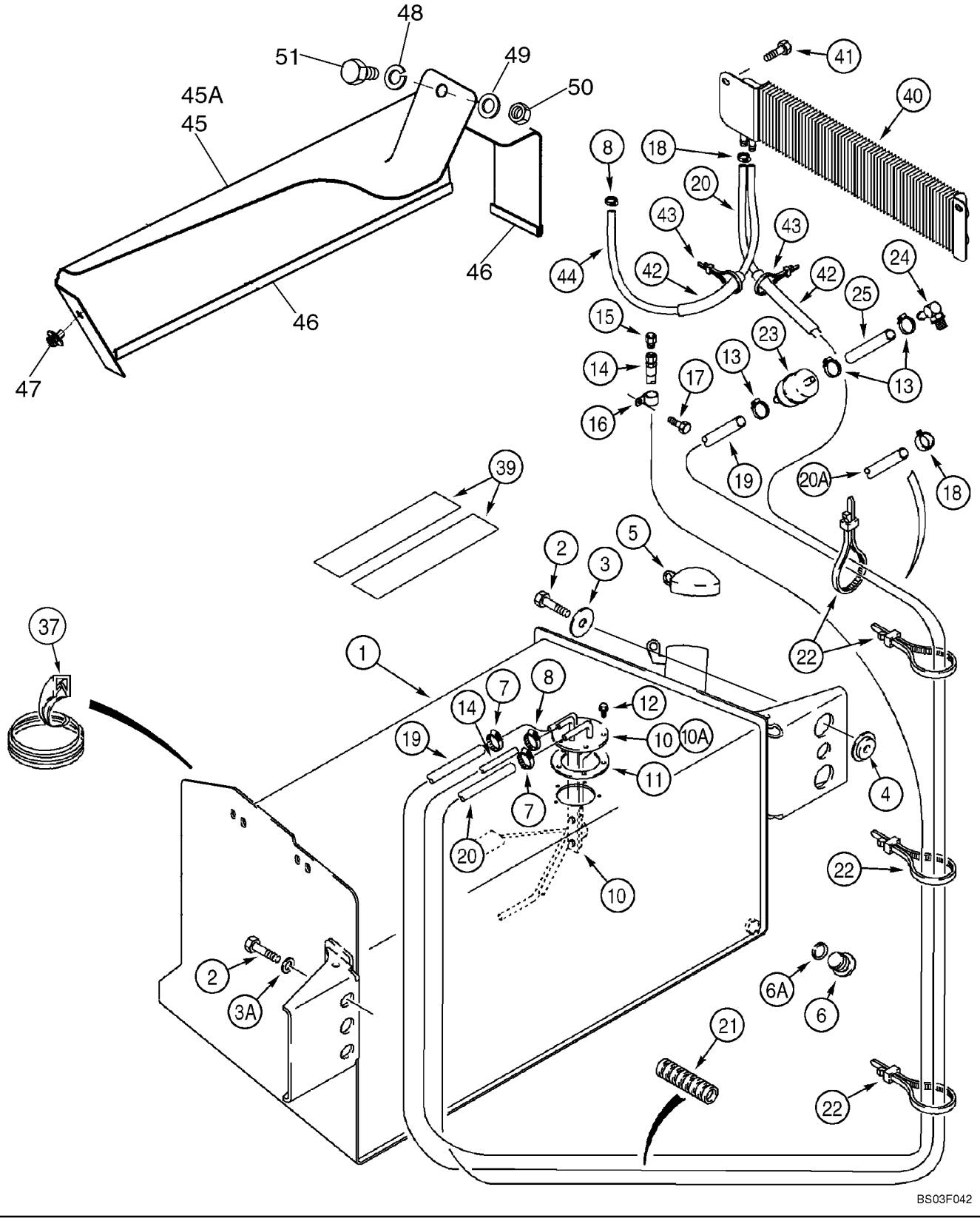

FUEL LINES, RESERVOIR - FILTER, IN-LINE FUEL

REF	FN	PART NUMBER	YR/SN	QTY	DESCRIPTION
42		143219A1		2	PROTECTOR Hose Sleeve
43		L18337		4	STRAP 15 in
44		303922A1		1	HOSE 1225 mm (48-1/4 in), Injection Pump to Fuel Cooler
47		895-11008		2	WASHER 9 x 17 x 1,6 mm; If Used
48		397548A3		1	PLATE Mud
49		614-10020		2	CAPSCREW M10 x 20
50		895-11010		3	WASHER 11 x 21 x 2 mm
51		829-1410		2	NUT M10; 10.9
52		399923A1		1	STRIP, RUBBER Trim, 203 mm; If Used
53		614-8016		2	CAPSCREW M8 x 16; If Used

CONTROLS - THROTTLE, HAND

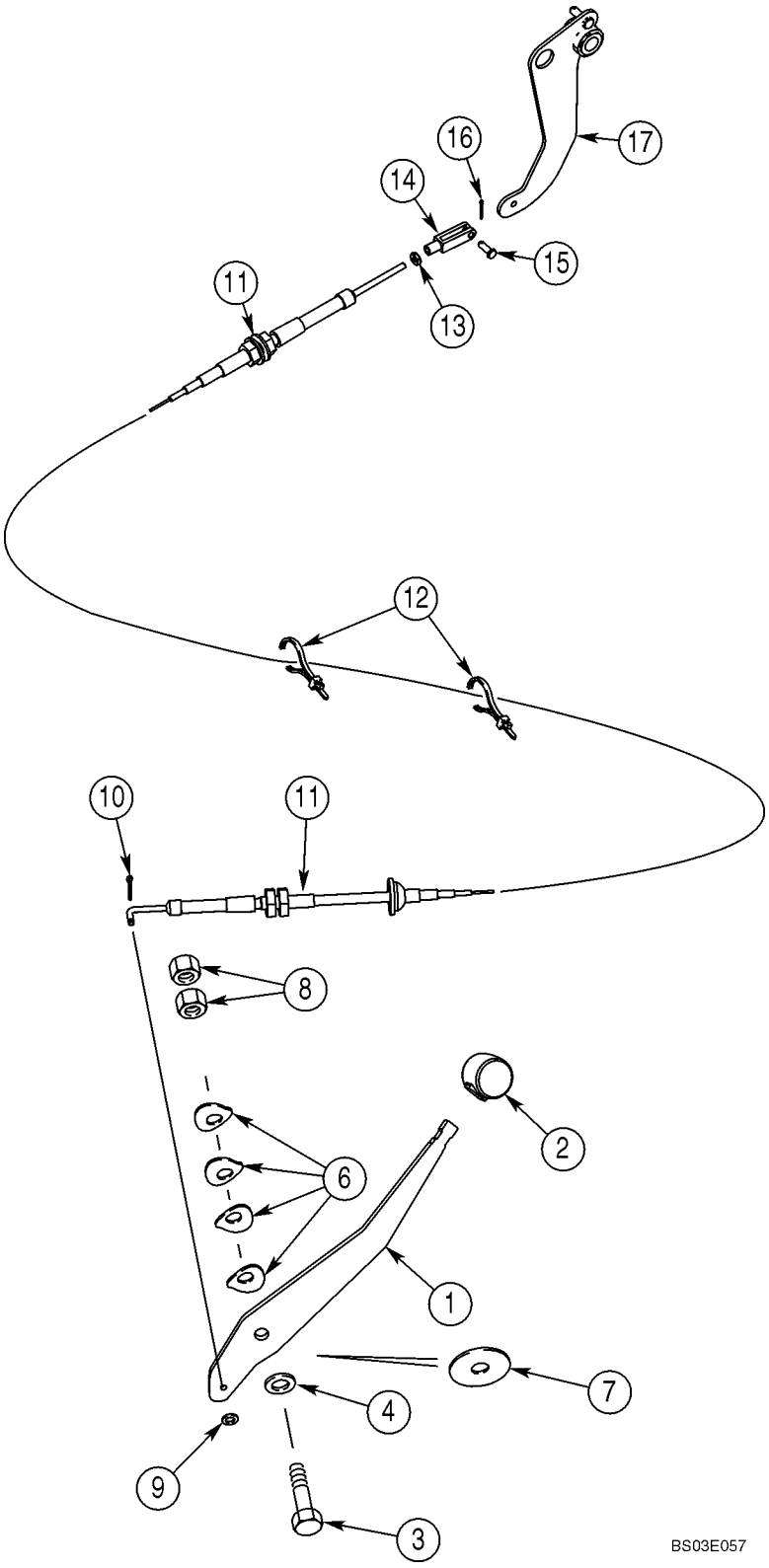

CONTROLS - THROTTLE, HAND

REF	FN	PART NUMBER	YR/SN	QTY	DESCRIPTION
1		395189A2		1	LEVER
2		A177435		1	KNOB,BALL Lever
3		814-12050		1	SCREW M12 x 50
4		896-11012		1	WASHER 13,5 x 24 x 3 mm, If Used
6		D148962		3-4	WASHER 3 Required When Two of Ref 7 Are Used
7		496-81018		1-2	WASHER 33/64 x 2 x 1/8
8		829-1412		2	NUT M12; 10
9		495-31022		1	WASHER 7/32 x 1/2 x 3/64
10		432-48		1	PIN, SPLIT (COTTER) 1/16 x 1/2
11		350014A3		1	CABLE
12		L18337		2	STRAP 15 in, Nylon, Retaining
13		225-14210		1	NUT No. 10 NF
14		213-123		1	CLEVIS No. 10 NF
15		427-3058		1	PIN, CLEVIS 3/16 x 9/16
16		432-48		1	PIN, SPLIT (COTTER) 1/16 x 1/2
17		378957A3		1	LEVER ASSY. Models Without Powershift Transmission
17A		380485A3		1	LEVER ASSY. Models With Powershift Transmission, Not Illustrated

CONTROLS - THROTTLE, FOOT

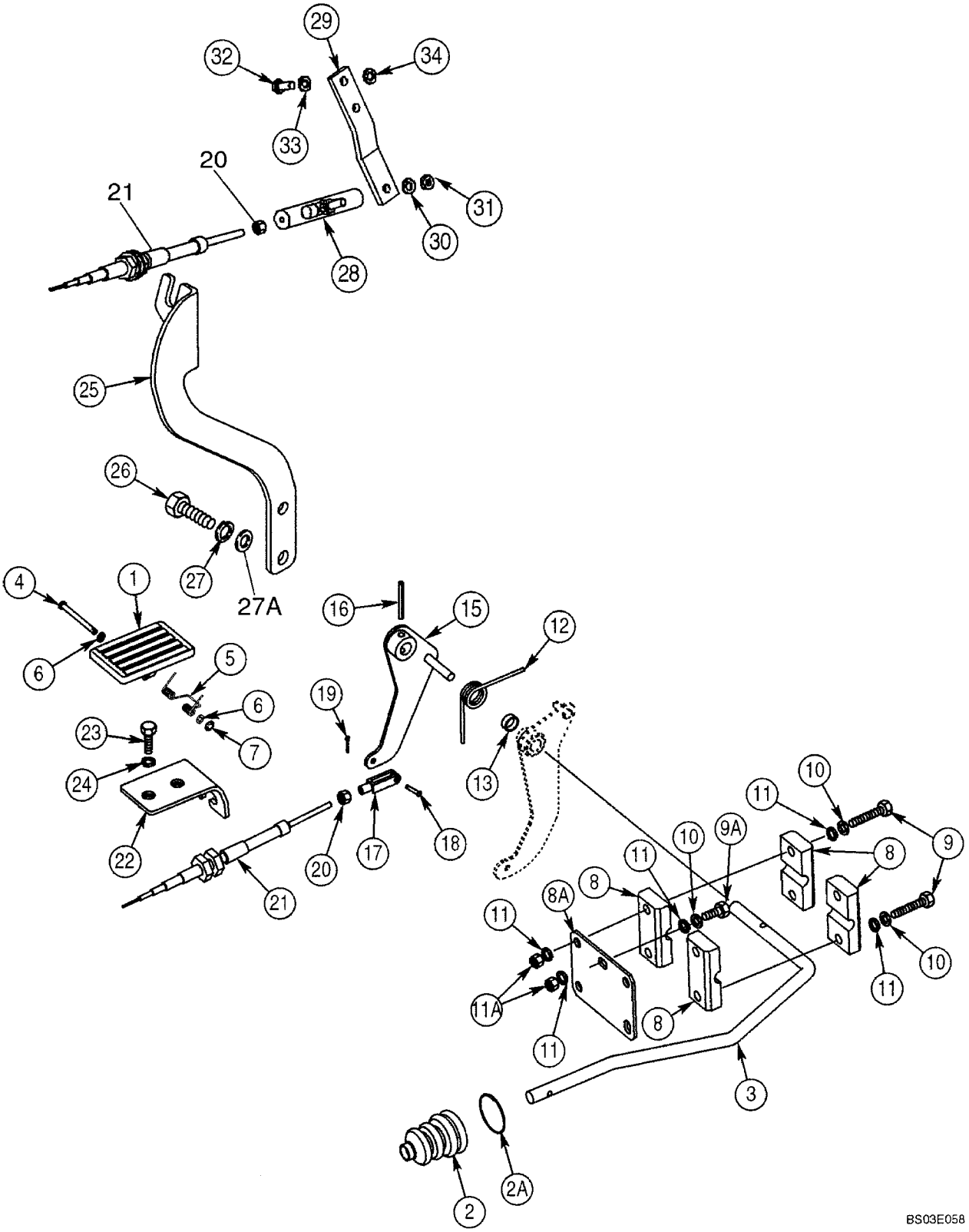

CONTROLS - THROTTLE, FOOT

REF	FN	PART NUMBER	YR/SN	QTY	DESCRIPTION
1		282242A1		1	PEDAL Acceleerator, Plastic
2		132931A1		1	BELLOWS Boot, Accelerator Pedal Rod
2A		189109A1		1	SPRING Retainer
3		378960A1		1	ROD
4		322860A1		1	PIN, LARGE
5		256776A1		1	SPRING
6		895-11005		2	WASHER 5,5 x 10 x 1 mm
7		103-1518		1	RING SNAP No. 18
8		D124857		4	CLAMP Block
8A		378955A1		1	PLATE
9		814-8050		4	CAPSCREW M8 x 50
9A		614-8020		1	CAPSCREW M8 x 20
10		892-11008		5	WASHER M8
11		895-11008		7	WASHER 9 x 17 x 1,6 mm
11A		829-1408		2	NUT M8; 10
12		380483A2		1	SPRING
13		378958A1		1	SPACER, RING
15		378956A3		1	LEVER ASSY. Models Without Powershift Transmission
15A		380484A3		1	LEVER ASSY. Models With Powershift Transmission, Not Illustrated
16		838-3640		1	PIN 6 x 40 mm
17		213-123		1	CLEVIS No. 10 NF
18		427-3058		1	PIN, CLEVIS 3/16 x 9/16
19		432-48		1	PIN, SPLIT (COTTER) 1/16 x 1/2
20		225-14210		2	NUT No. 10 NF
21		380021A1		1	CABLE To Injection Pump
22		397065A2		1	BRACKET Models Without Powershift Transmission
22A		397158A2		1	BRACKET Models With Powershift Transmission, Not Illustrated
23		614-10035		2	SCREW M10 x 35
24		892-11010		2	WASHER, LOCK M10
25		392757A3		1	BRACKET
26		627-12030		2	SCREW M12 x 30; 10.9
27		892-11012		2	WASHER, LOCK M12
27A		896-11012		2	WASHER 13,5 x 24 x 3 mm

CONTROLS - THROTTLE, FOOT

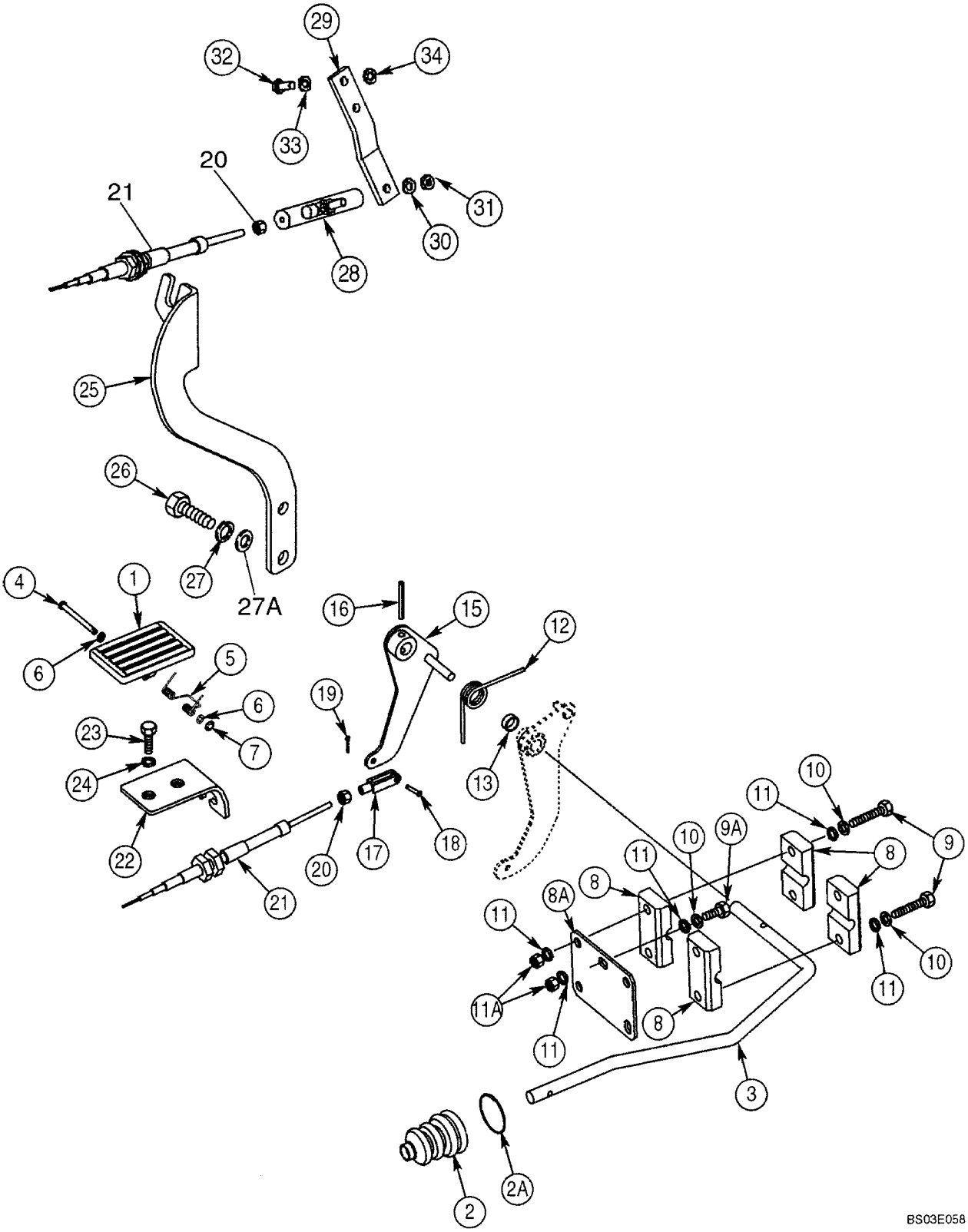

CONTROLS - THROTTLE, FOOT

REF	FN	PART NUMBER	YR/SN	QTY	DESCRIPTION
28		278183A1		1	BALL JOINT
29		394020A1		1	BAR
30		492-11025		1	WASHER, LOCK 1/4
31		425-154		1	NUT 1/4 NF
32		614-6016		2	CAPSCREW M6 x 16
33		892-11006		2	WASHER, LOCK M6
34		895-11006		2	WASHER 6,6 x 12 x 1,6 mm

FUEL FILTER - 4T-390 EMISSIONS CERTIFIED ENGINE

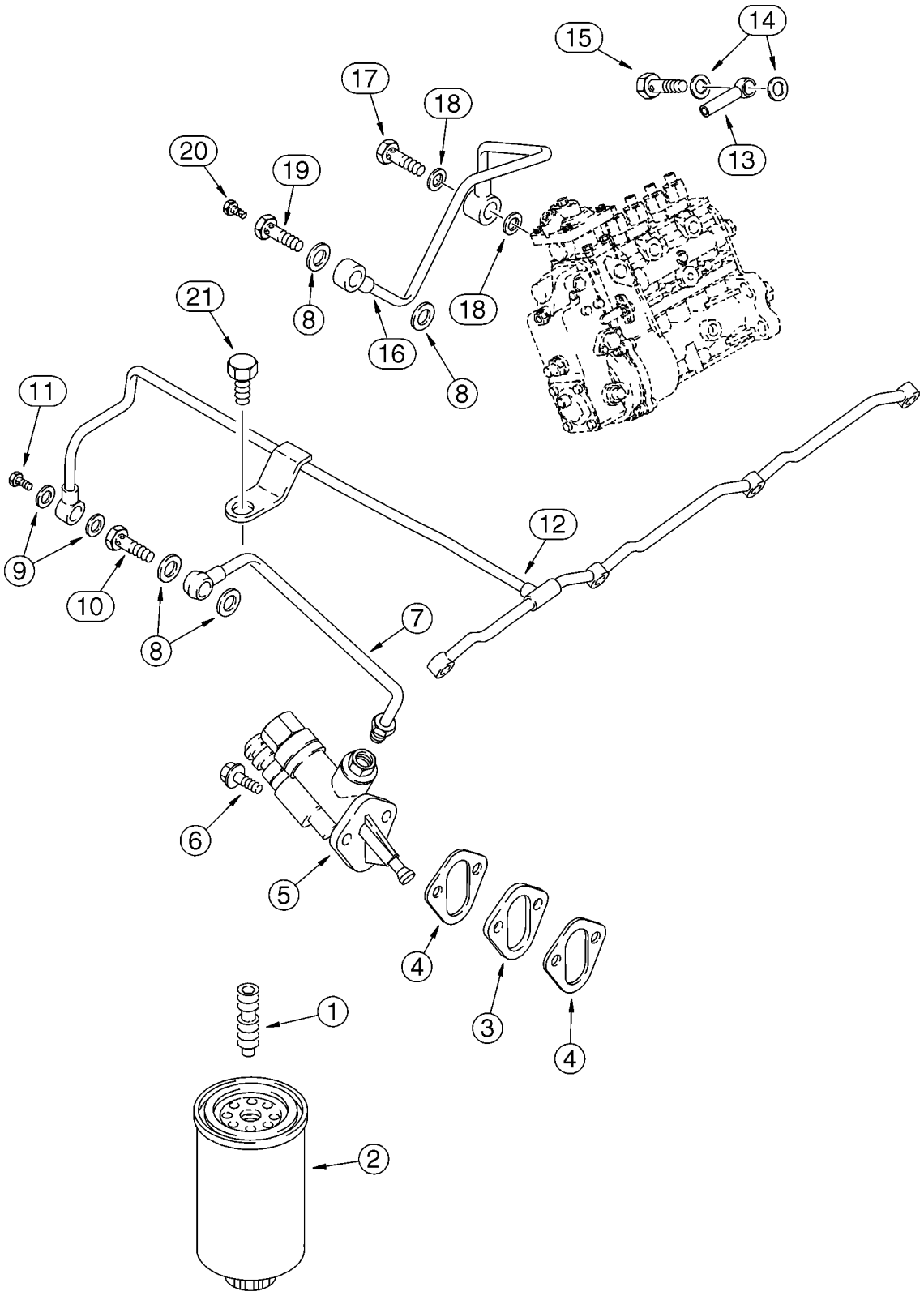

FUEL FILTER - 4T-390 EMISSIONS CERTIFIED ENGINE

REF	FN	PART NUMBER	YR/SN	QTY	DESCRIPTION
1		J925955		1	ADAPTER Mounts To Cylinder Head Cover
2		J286503		1	FILTER, ELEMENT Fuel; Replaces J931062
3		J914284		1	SPACER
4		J939258		2	GASKET Replaces J931059
5		J936318		1	PUMP Replaces J933254
6		845-8025		2	SCREW M8 x 25
7		J917280		1	TUBE
8		87415913		4	WASHER, SEALING 12 x 19 x 1,5 mm, Replaces J935171
9		J918188		2	WASHER
10		J916361		1	BOLT M12 x 24
11		J924726		1	VALVE
12		J927633		1	TUBE
13		J944869		1	FITTING
14		J918192		2	RING, PACKING 14 x 20 x 1 mm
15		87409051		1	VALVE Replaces J932096
16		J936348		1	TUBE Replaces J935023
17		J924725		1	BOLT, BANJO
18		J918192		2	RING, PACKING 14 x 20 x 1 mm
		J905860		1	SCREW Incl. 19, 20
19		J911446		1	JACK SCREW M12 x 24
20		J939570		1	SCREW, BLEED Replaces J905403
21		844-8025		1	SCREW M8 x 25

FUEL INJECTION SYSTEM - 4T-390 EMISSIONS CERTIFIED ENGINE

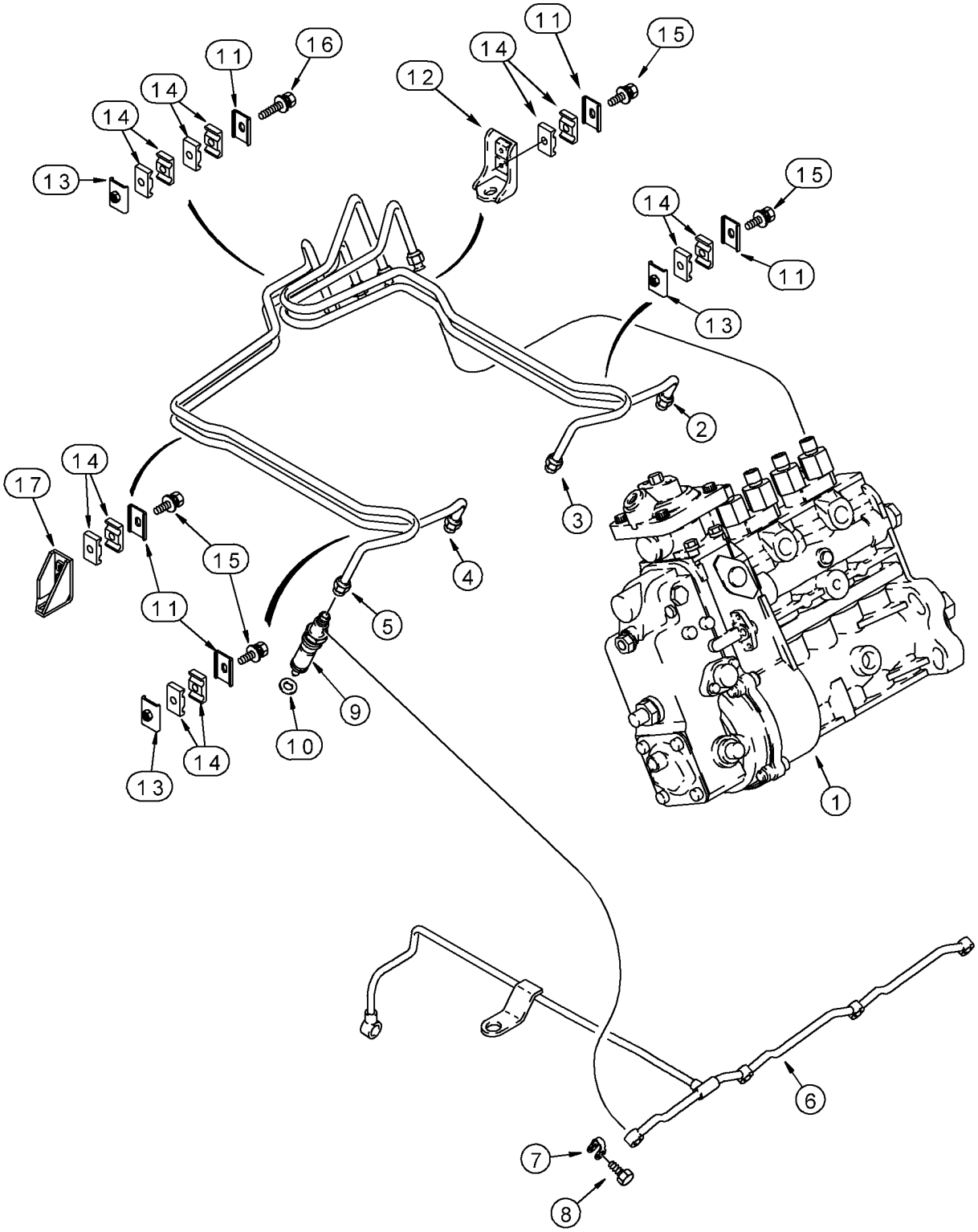

FUEL INJECTION SYSTEM - 4T-390 EMISSIONS CERTIFIED ENGINE

REF	FN	PART NUMBER	YR/SN	QTY	DESCRIPTION
1		J991962		1	PUMP, INJECTION Replaces J930153; See Figure 03-07
2		J932157		1	TUBE No. 1
3		J932158		1	TUBE No. 2
4		J932159		1	TUBE No. 3
5		J932160		1	TUBE No. 4
6		J927633		1	TUBE
7		J903380		4	SEAL
8		J905307		4	SCREW Special
9		J929490		4	NOZZLE INJECTION Nozzle Assy, See Figure 3-08
10		J937142		4	SEAL 7 mm; Replaces J906659
11		J904711		5	BRACE
12		J282942		1	BRACKET
13		J917717		3	BRACE
14		J917746		12	CLAMP
15		J920854		4	BOLT M5 x 20, Special
16		J920855		1	BOLT M5 x 35, Special
17		J919086		1	BRACKET

ANEROID AND WASTEGATE SYSTEM - 4T-390 EMISSIONS CERTIFIED ENGINE

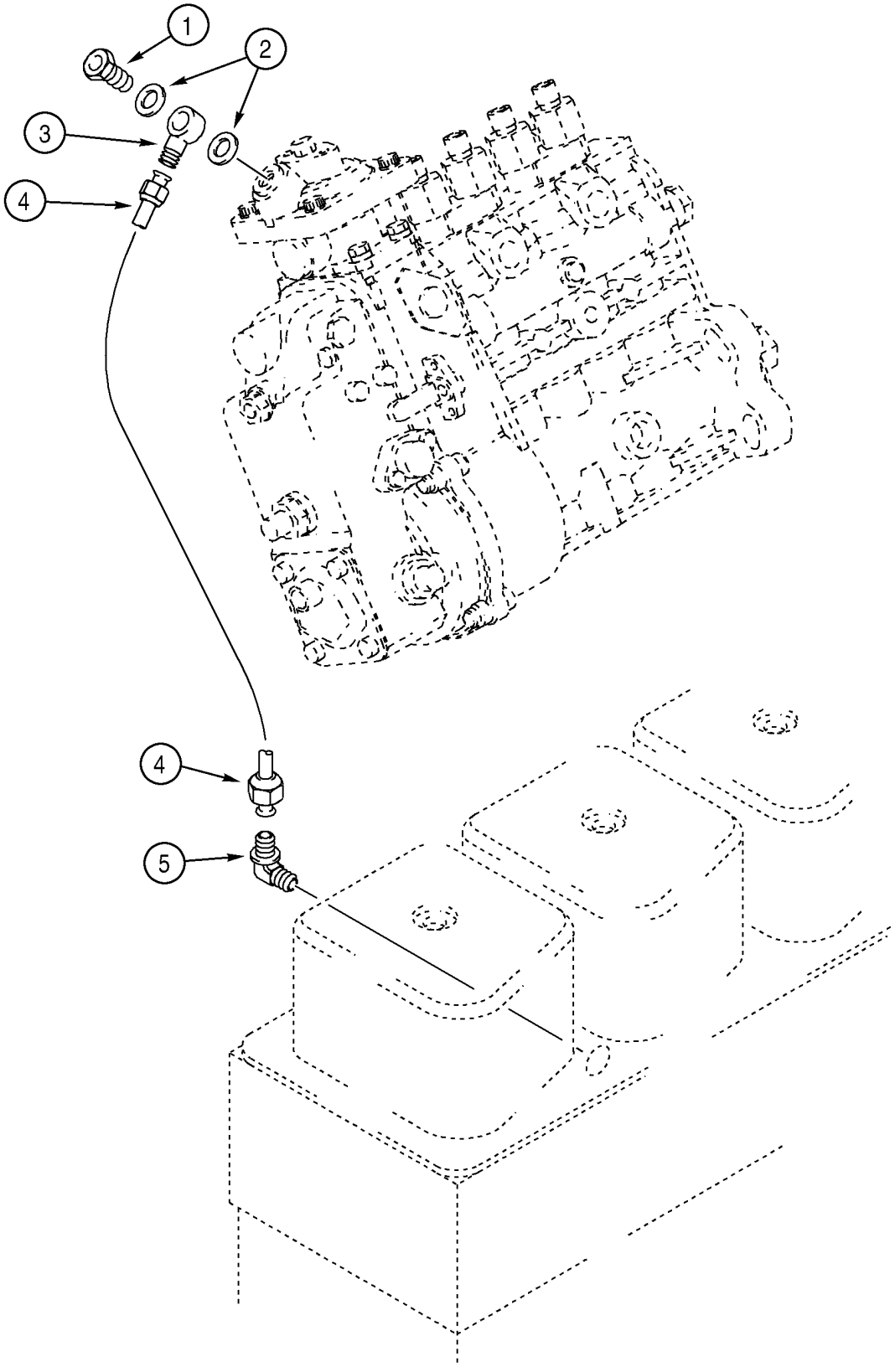

ANEROID AND WASTEGATE SYSTEM - 4T-390 EMISSIONS CERTIFIED ENGINE

REF	FN	PART NUMBER	YR/SN	QTY	DESCRIPTION
1		J903035		1	BOLT, BANJO
2		87415913		2	WASHER, SEALING
3		J990881		1	FITTING Replaces J919644
4		J991517		1	TUBE 220 mm (8-5/8 in); Replaces J934608
5		222-41		1	FITTING
6		221-87		1	FITTING, REDUCER Not Illustrated
7		217-402		1	PLUG Not Illustrated

FUEL INJECTION PUMP AND DRIVE - 4T-390 EMISSIONS CERTIFIED ENGINE

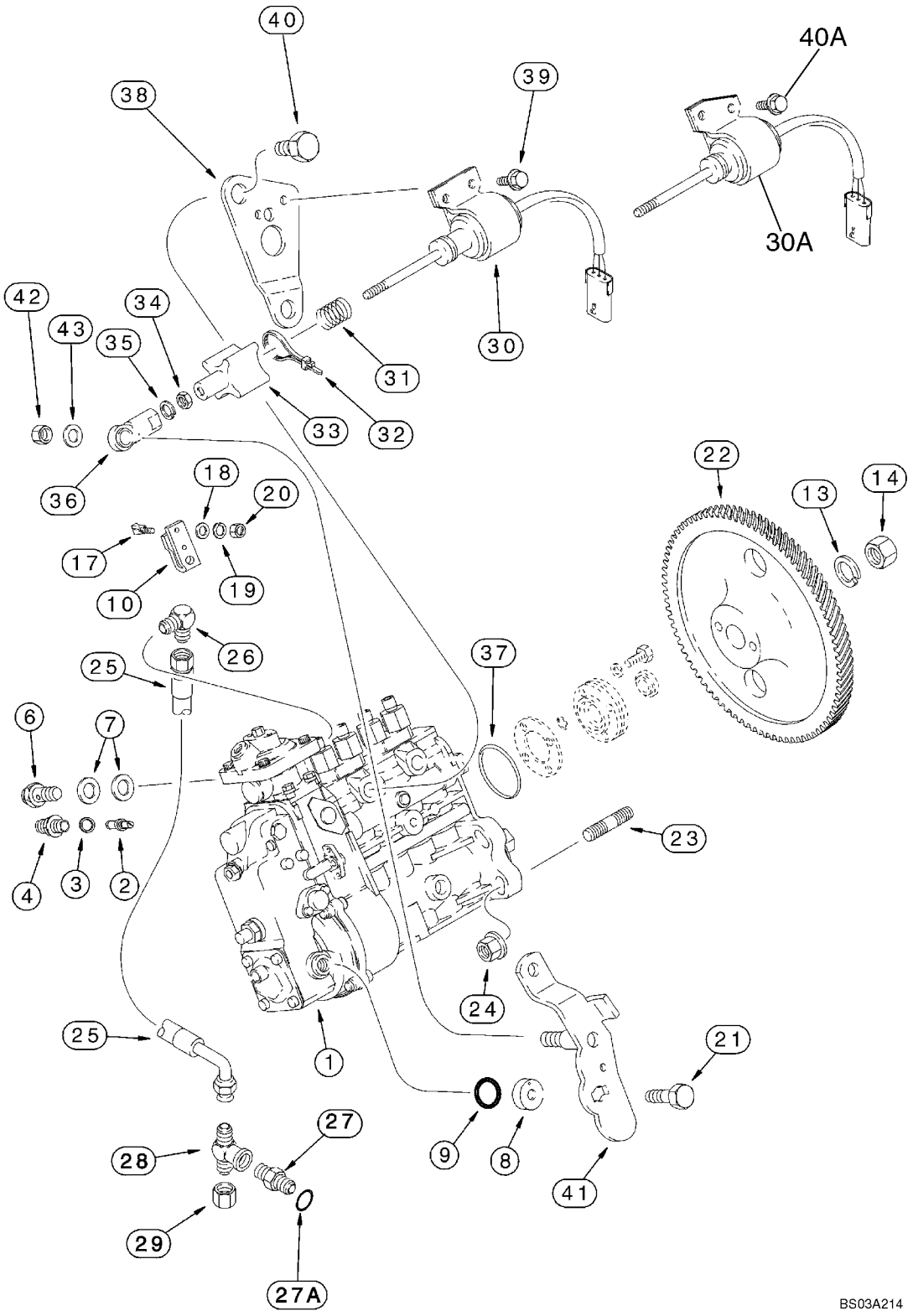

FUEL INJECTION PUMP AND DRIVE - 4T-390 EMISSIONS CERTIFIED ENGINE

REF	FN	PART NUMBER	YR/SN	QTY	DESCRIPTION
		JR930153		1	REMAN-INJECTION PUMP N.A. Only, If Used
		JR991962		1	REMAN-INJECTION PUMP N.A. Only, If Used
		JC930153		1	CORE-INJECTION PUMP Return Number
		JC991962		1	CORE-INJECTION PUMP Return Number
1		J930153		1	PUMP, INJECTION Incl. 2 - 21, No Longer Available, Order J991962
1		J991962		1	PUMP, INJECTION Incl. 2 - 21, If Used
2		A77720		1	PIN, LARGE
3		J928981		1	WASHER, LOCK
4		J912888		1	PLUG
6		J932096		1	VALVE Used With J930153 Pump Assy
6		87409051		1	VALVE Used With J991962 Pump Assy
7		933697R1		2	RING, PACKING
8		691292C1		1	BUSHING
9		680187C1		1	O-RING
10		1808728C1		1	LEVER
13		A77775		1	WASHER
14		A41852		1	NUT
17		1808822C1		1	SCREW
18		895-11006		1	WASHER 6,6 x 12 x 1,6 mm
19		892-11006		1	WASHER, LOCK M6
20		829-1306		1	NUT M6; 10
21		628-6016		1	SCREW M6 x 16; 10.9
22		J934636		1	PINION
23		86991263		4	STUD 55 mm (2-5/32 in); Replaces J915036
24		825-2410		4	NUT M10
25		J918536		1	HOSE 295 mm (11-5/8 in)
26		A77512		1	ELBOW male
27		J932321		1	UNION Incl. 27A
27A		637-62081		1	O-RING 8,1 ID x 1,6 mm
28		J924346		1	TEE 1/8 PT x 7/16
29		218-752		1	CAP 7/16
30		J932529		1	SOLENOID 12V, Incl. 31 - 36; No Longer Used, Order J991167, REF 30A
30A		J991167		1	SOLENOID 12 V, Incl. 31 - 36
31		311100A1		1	SPRING

FUEL INJECTION PUMP AND DRIVE - 4T-390 EMISSIONS CERTIFIED ENGINE

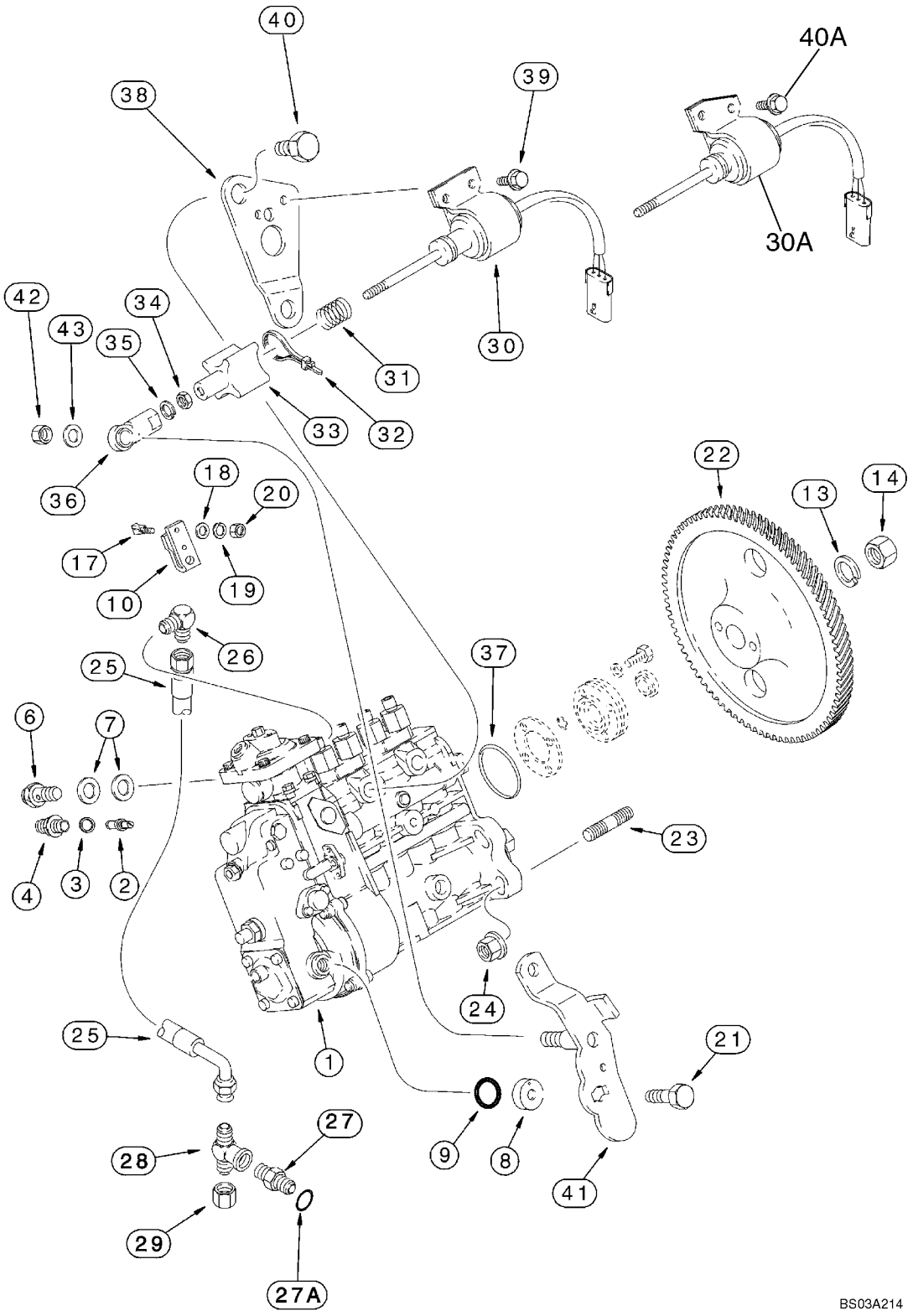

FUEL INJECTION PUMP AND DRIVE - 4T-390 EMISSIONS CERTIFIED ENGINE

REF	FN	PART NUMBER	YR/SN	QTY	DESCRIPTION
32		473321C1		1	STRAP
33		J925171		1	BOOT
34		425-154		1	NUT 1/4 NF
35		492-11025		1	WASHER, LOCK 1/4
36		311099A1		1	JOINT
37		J935032		1	SEAL 80 mm ID
38		J930590		1	SUPPORT Used With J932529 Solenoid, REF 30
39		845-6012		2	SCREW M6 x 12; Used With J932529 Solenoid, REF 30
40		J929456		2	SCREW M16 x 12; Used With J932529 Solenoid, REF 30
40A		J991132		2	SCREW Used With J991167 Solenoid, REF 30
		J802998		1	PACKAGE,SERVICE Incl. 41 - 43
41		NSS		1	NOT SERVICED SEPARATELY Lever
42		832-41306		1	NUT M6
43		J934022		1	WASHER

FUEL INJECTION NOZZLE - 4T-390 EMISSIONS CERTIFIED ENGINE

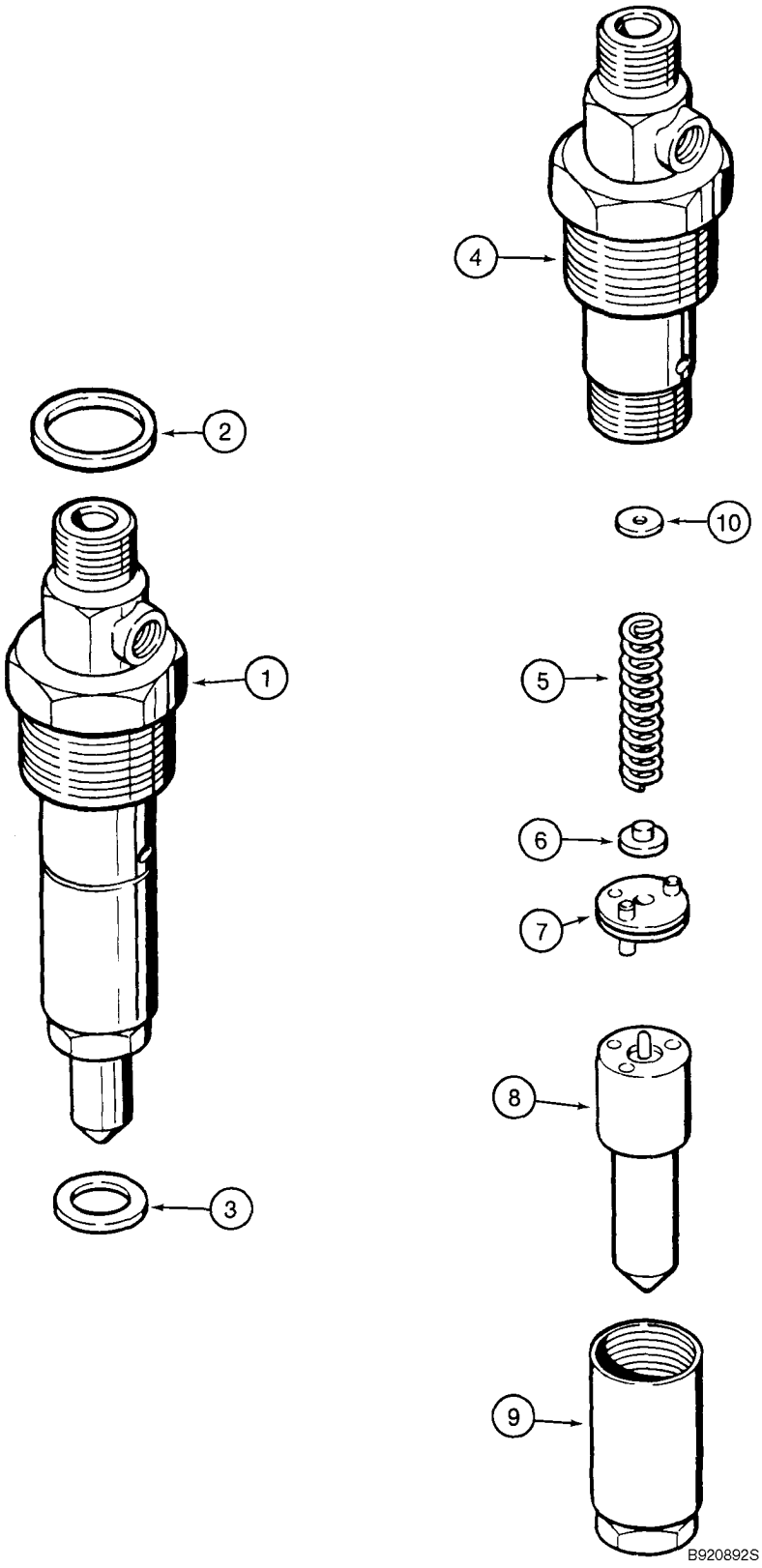

FUEL INJECTION NOZZLE - 4T-390 EMISSIONS CERTIFIED ENGINE

REF	FN	PART NUMBER	YR/SN	QTY	DESCRIPTION
		JR929490		4	REMAN-NOZZLE,INJECT N.A. Only
		JC929490		4	CORE-NOZZLE, INJECT Return Number
1		J929490		4	NOZZLE INJECTION Incl. 2 - 10
2		J909356		1	SEAL
3		J937142		1	SEAL 1,5 mm; Replaces J906659
4		NSS		1	NOT SERVICED SEPARATELY Body
5		NSS		1	NOT SERVICED SEPARATELY Spring
6		NSS		1	NOT SERVICED SEPARATELY Seat
7		NSS		1	NOT SERVICED SEPARATELY Stop
8		NSS		1	NOT SERVICED SEPARATELY Tip, Injector
9		NSS		1	NOT SERVICED SEPARATELY Nut
10		1806233C1		X	SHIM 1,00 mm
10		1806234C1		X	SHIM 1,04 mm
10		1806235C1		X	SHIM 1,08 mm
10		1806236C1		X	SHIM 1,10 mm
10		1806237C1		X	SHIM 1,14 mm
10		1806238C1		X	SHIM 1,18 mm
10		1806239C1		X	SHIM 1,20 mm
10		1806240C1		X	SHIM 1,24 mm
10		1806241C1		X	SHIM 1,28 mm
10		1806242C1		X	SHIM 1,30 mm
10		1806243C1		X	SHIM 1,34 mm
10		1806244C1		X	SHIM 1,38 mm
10		1806245C1		X	SHIM 1,40 mm
10		1806246C1		X	SHIM 1,44 mm
10		1806247C1		X	SHIM 1,48 mm
10		1806248C1		X	SHIM 1,50 mm
10		1806249C1		X	SHIM 1,54 mm
10		1806250C1		X	SHIM 1,58 mm
10		1806251C1		X	SHIM 1,60 mm
10		1806252C1		X	SHIM 1,64 mm
10		1806253C1		X	SHIM 1,68 mm
10		1806254C1		X	SHIM 1,70 mm
10		1806255C1		X	SHIM 1,74 mm
10		1806256C1		X	SHIM 1,78 mm
10		1806257C1		X	SHIM 1,80 mm

FUEL INJECTION NOZZLE - 4T-390 EMISSIONS CERTIFIED ENGINE

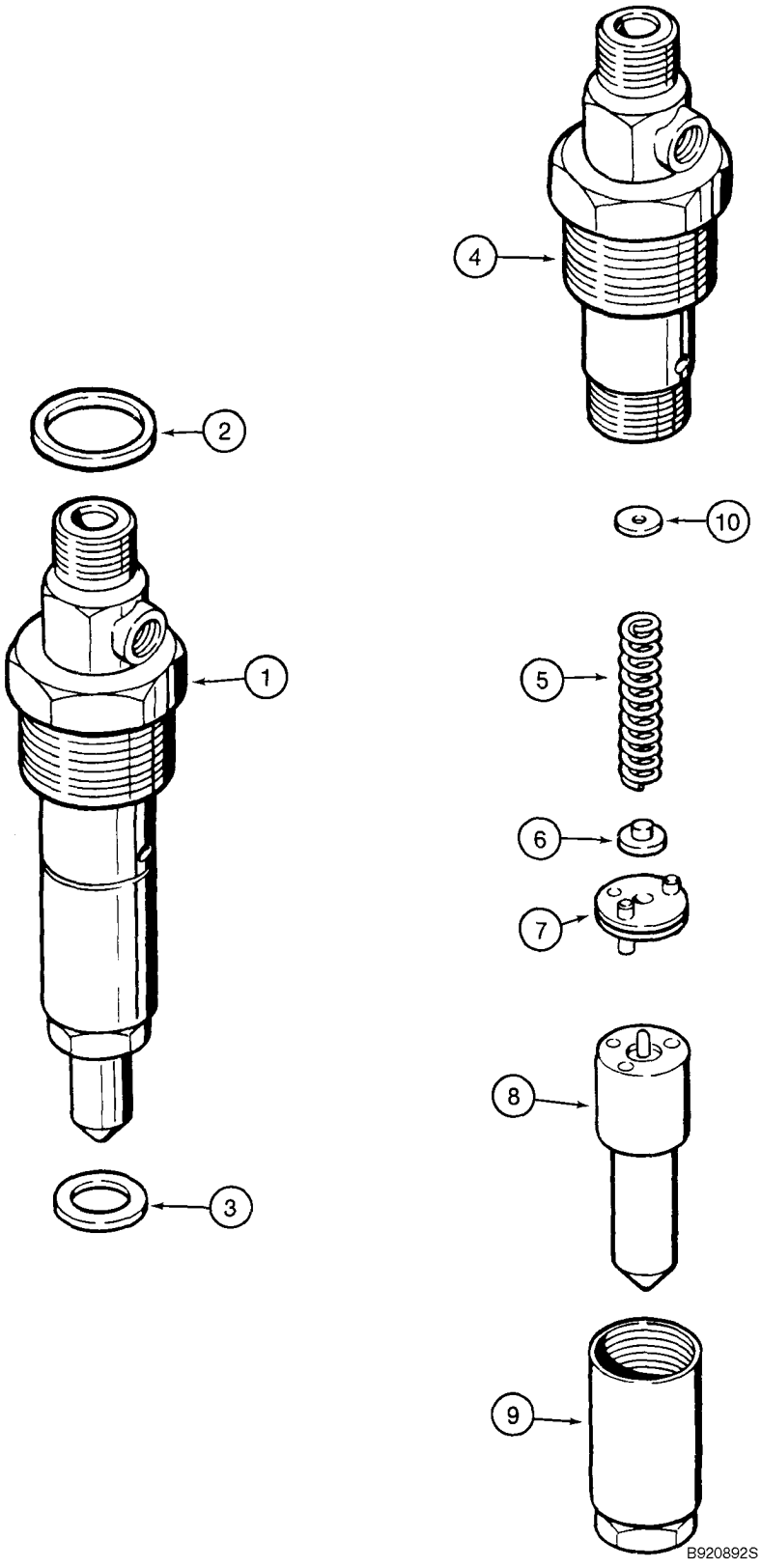

FUEL INJECTION NOZZLE - 4T-390 EMISSIONS CERTIFIED ENGINE

REF	FN	PART NUMBER	YR/SN	QTY	DESCRIPTION
10		1806258C1		X	SHIM 1,84 mm
10		1806259C1		X	SHIM 1,88 mm
10		1806260C1		X	SHIM 1,90 mm
10		1806261C1		X	SHIM 1,94 mm
10		1806262C1		X	SHIM 1,98 mm

NOTES

SECTION INDEX

04 -01	STARTER
04 -02	ALTERNATOR
04 -03	STARTER MOUNTING - ALTERNATOR MOUNTING
04 -04	HARNESS, ENGINE - MOUNTING AND CONNECTIONS
04 -05	BATTERY - CABLES (MODELS WITHOUT COLD START)
04 -06	BATTERY, DUAL - COLD START
04 -07	HARNESS, FRONT CONSOLE - SWITCHES
04 -08	HARNESS, FRONT CONSOLE - MOUNTING
04 -09	ELECTRICAL - TRANSMISSION, POWERSHIFT
04 -10	HARNESS, SIDE CONSOLE - SWITCHES
04 -11	INSTRUMENT PANEL, FRONT - COVERS
04 -12	INSTRUMENT PANEL, SIDE - COVERS, RIGHT HAND SIDE
04 -13	INSTRUMENT CLUSTER
04 -14	ELECTRICAL - LAMPS, ROPS CANOPY
04 -15	ELECTRICAL - LAMPS, ROPS CAB
04 -16	LAMP ASSY (ROPS CANOPY MODELS)
04 -17	HORN - ALARM, BACKUP
04 -18	BEACON, ROTATING (CAB OR CANOPY MODELS)
04 -19	ANTENNA, RADIO - HARNESS, RADIO
04 -20	ELECTRICAL - BACKHOE AUXILIARY HYDRAULIC

STARTER

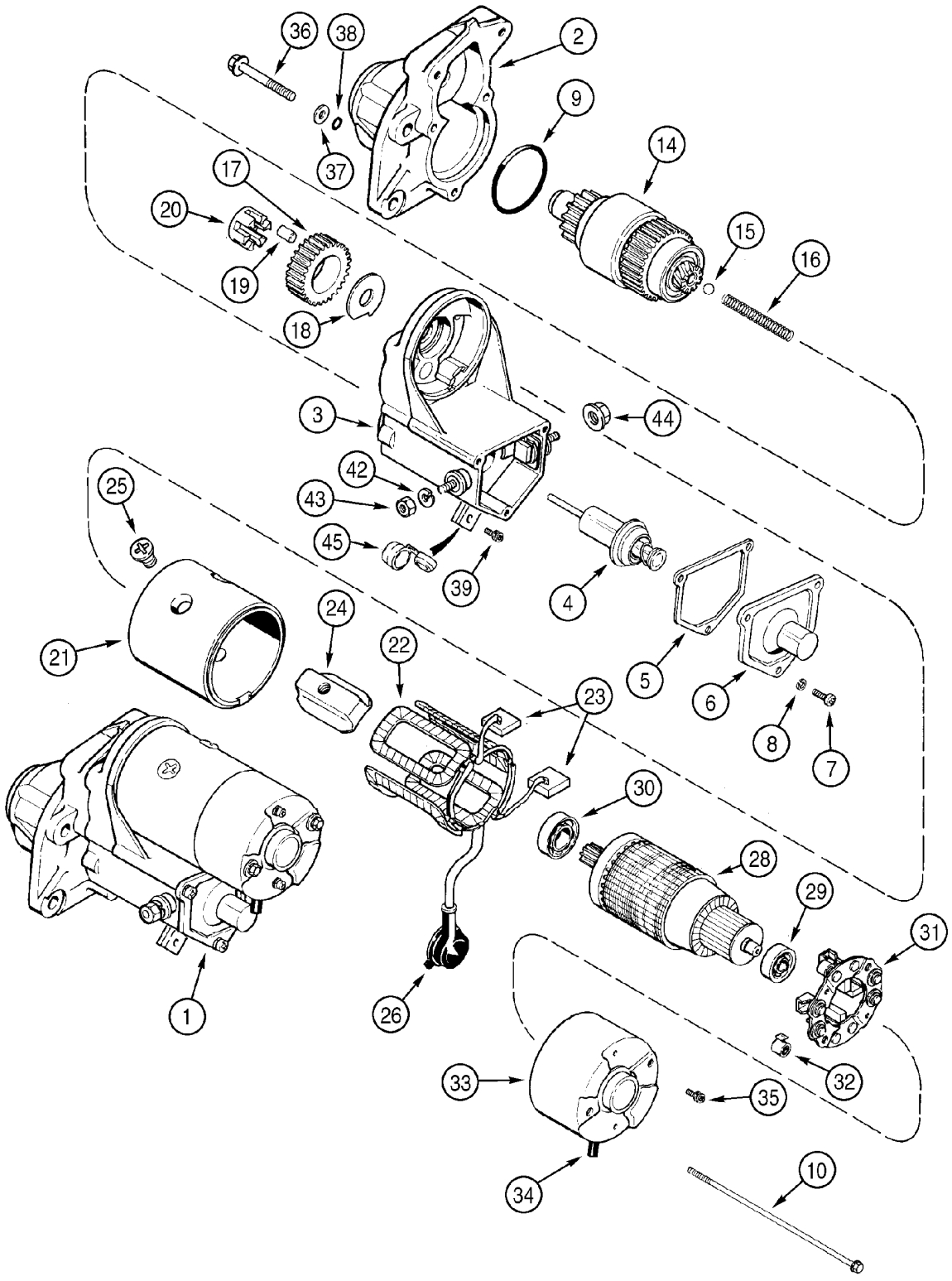
36
38
2
9
14
37
17
20
15
16
19
18
3
44
42
43
25
45
39
4
24
22
21
5
6
8
7
23
30
28
29
31
1
26
33
32
35
34
10
BS00G069

STARTER

REF	FN	PART NUMBER	YR/SN	QTY	DESCRIPTION
1		86982709		1	MOTOR Incl. Ref 2 - 45, Replaces 1987559C1
2		A46948		1	HOUSING Drive End
3		104588A1		1	SWITCH ASSY Magnetic; Incl. Ref 4 - 8
4		NSS		1	NOT SERVICED SEPARATELY Solenoid
5		NSS		1	NOT SERVICED SEPARATELY Seal
6		NSS		1	NOT SERVICED SEPARATELY Cover
7		NSS		3	NOT SERVICED SEPARATELY Screw
8		NSS		3	NOT SERVICED SEPARATELY Washer
9		1546500C1		1	O-RING
10		332467A1		2	SCREW M6 x 181
14		104587A1		1	CLUTCH
15		211-1011		1	BALL 3/4; 24,CRS
16		A47232		1	SPRING 2-13/16
17		A47233		1	GEAR
18		141360A1		1	RETAINER
19		A47235		5	ROLLER
20		A47236		1	RETAINER
		A47240		1	HOUSING With Coil and Brushes; Incl. Ref 21 - 26
21		NSS		1	NOT SERVICED SEPARATELY Housing
22		NSS		1	NOT SERVICED SEPARATELY Coil
23		NSS		2	NOT SERVICED SEPARATELY Brush
24		NSS		4	NOT SERVICED SEPARATELY Shoe
25		NSS		4	NOT SERVICED SEPARATELY Screw
26		NSS		1	NOT SERVICED SEPARATELY Boot
28		A47242		1	ARMATURE Incl. Ref 29, 30
29		452698C1		1	BEARING Commutator End
30		A47247		1	BEARING Drive End
31		A47239		1	HOLDER Includes Two Brushes; Incl. Ref 32
32		A47249		4	SPRING
33		401106A1		1	FRAME Commutator End
34		141355A1		1	COVER Rubber; Ventilation
35		141361A1		2	SCREW With Washer
		A47230		3	BOLT Incl. Ref 36 - 38
36		332475A1		1	BOLT
37		495-81252		1	WASHER 1/4 x 9/16 x 1/16
38		332476A1		1	O-RING

STARTER

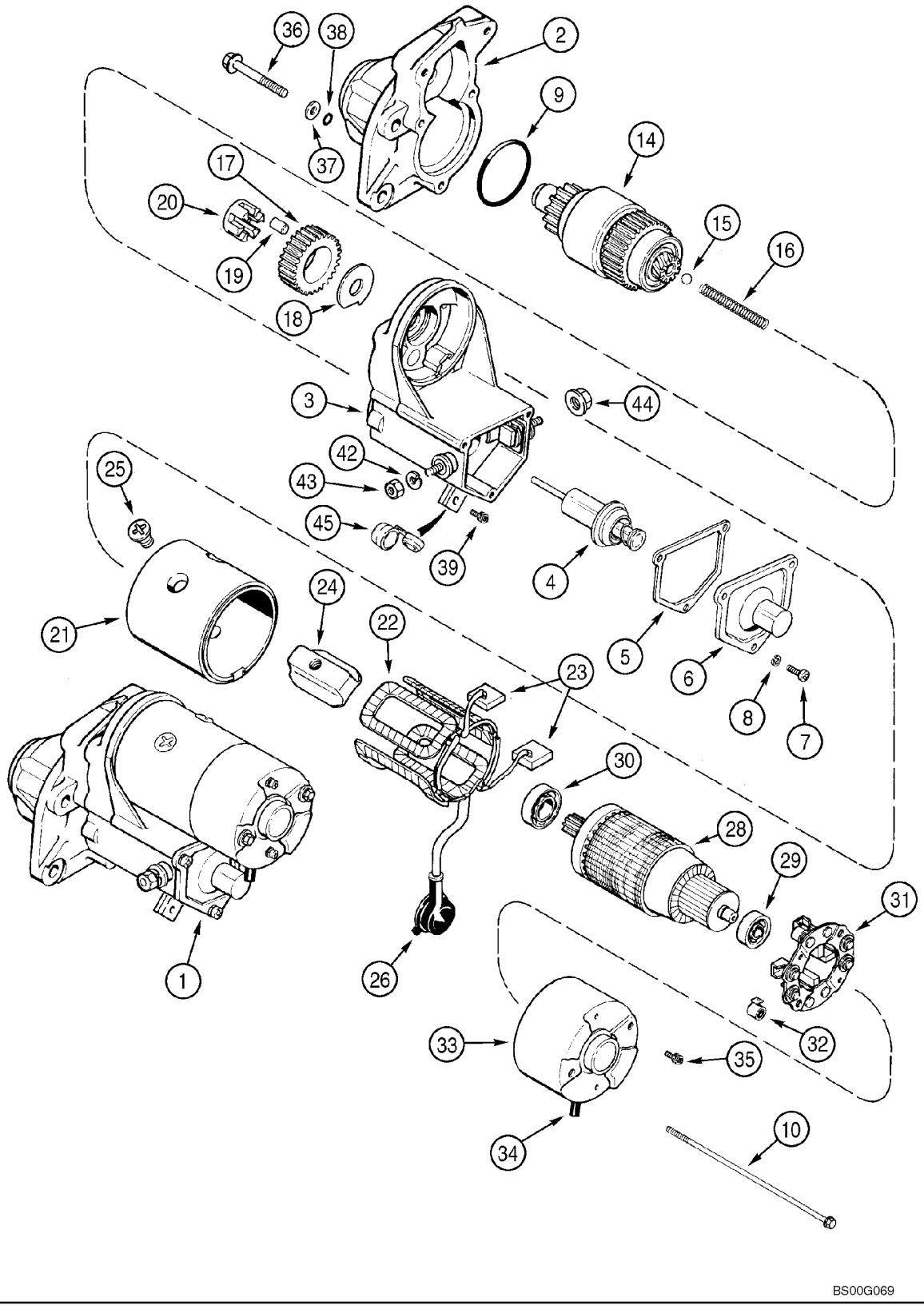
36
38
2
9
14
17
20
37
15
16
19
18
3
44
42
43
25
45
39
4
24
22
21
5
6
8
7
23
30
28
29
31
1
26
33
35
32
34
10
BS00G069

STARTER

REF	FN	PART NUMBER	YR/SN	QTY	DESCRIPTION
39		401126A1		1	SCREW With Lock Washer
42		892-11010		1	WASHER, LOCK M10
43		825-1410		1	NUT M10
44		332468A1		1	NUT M10
45		141354A1		1	RING

ALTERNATOR

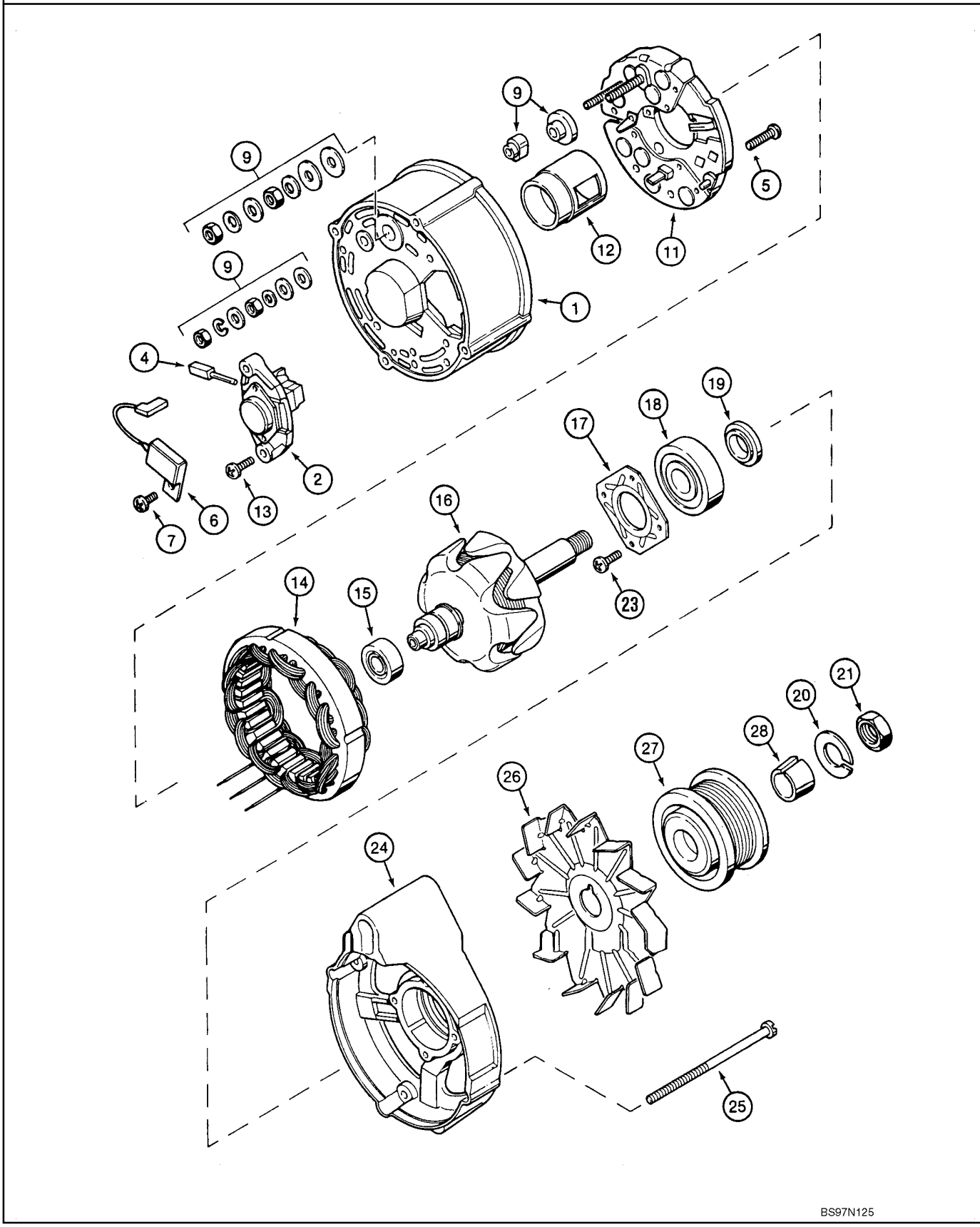
9
9
9
1
2
4
5
6
7
11
12
13
14
15
16
17
18
19
20
21
23
24
25
26
27
28
BS97N125

ALTERNATOR

REF	FN	PART NUMBER	YR/SN	QTY	DESCRIPTION
		A187873		1	ALTERNATOR 12V, 65 amp; Incl. Ref 1 - 25
1		A187903		1	COVER Collector Ring End
2		A187906		1	REGULATOR
4		1964968C1		1	BRUSH Set Of Two
5		1530431C1		2	SCREW With Washer
6		3079134R1		1	CAPACITOR
7		840-1510		1	SCREW
9		A187904		1	PACKAGE Hardware
11		360330A1		1	RECTIFIER
12		A187899		1	HOUSING
13		A187504		2	BOLT
14		1964966C1		1	STATOR
15		A186186		1	BEARING
16		1964964C1		1	ROTOR
17		A187901		1	COVER
18		A186183		1	BEARING
		3078897R1		1	SET OF PARTS Incl. Ref 19 - 23
19		NSS		1	NOT SERVICED SEPARATELY Ring
20		NSS		1	NOT SERVICED SEPARATELY Washer
21		NSS		1	NOT SERVICED SEPARATELY Nut
22		NSS		1	NOT SERVICED SEPARATELY Key; Not Used In This Application
23		NSS		4	NOT SERVICED SEPARATELY Screw
24		A186182		1	HOUSING Drive End
25		A186193		4	BOLT
26		221425R1		1	FAN Not Included In Assembly; Purchase Separately
27		J908560		1	PULLEY Not Included In Assembly; Purchase Separately
28		J908563		1	RETAINER Not Included In Assembly; Purchase Separately

STARTER MOUNTING - ALTERNATOR MOUNTING

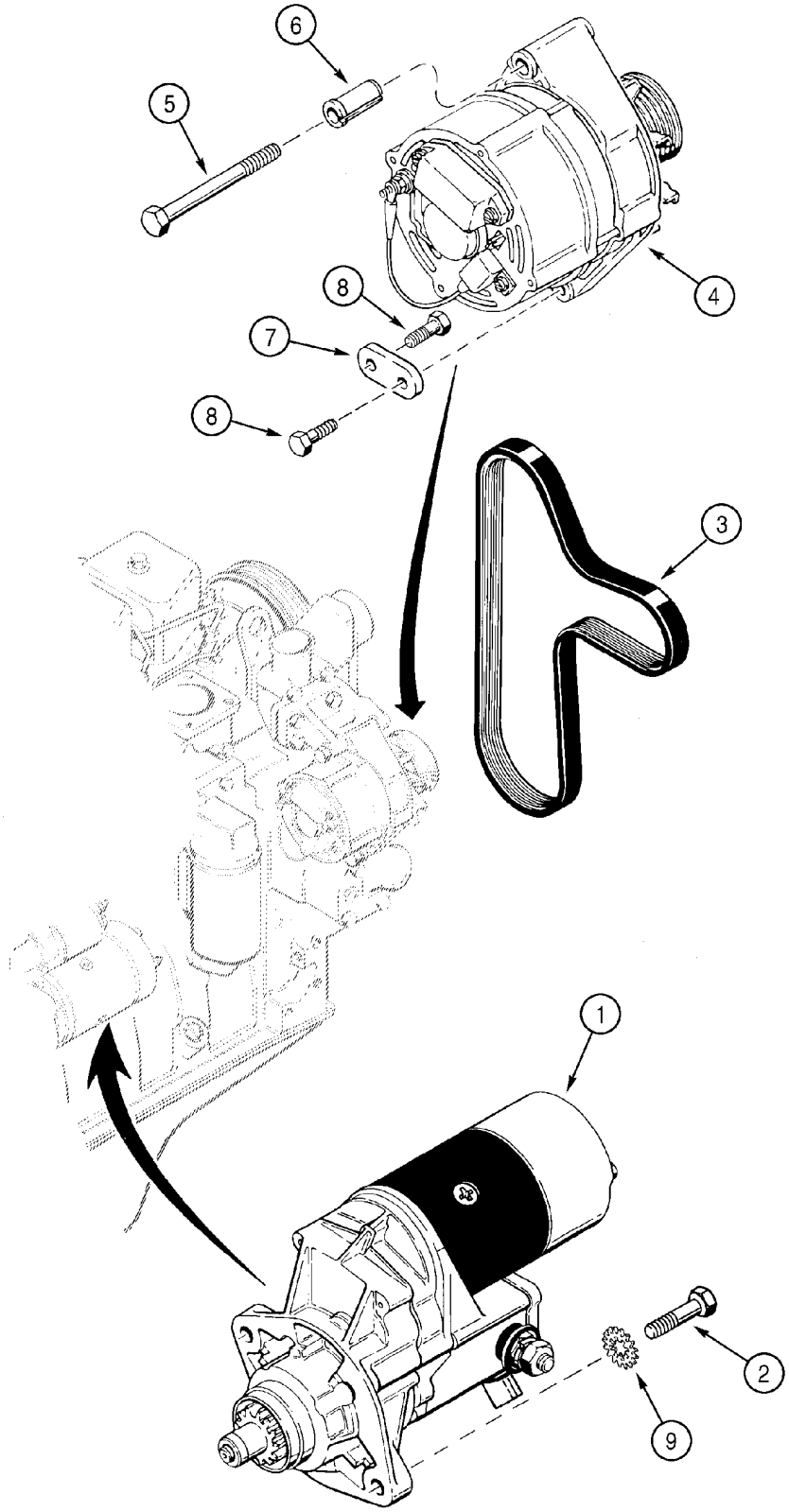

STARTER MOUNTING - ALTERNATOR MOUNTING

REF	FN	PART NUMBER	YR/SN	QTY	DESCRIPTION
1		86982709		1	MOTOR See Figure 04-01; Replaces 1987559C1
2		814-10040		2	CAPSCREW M10 x 40
3		86982450		1	V-BELT Alternator And Fan; Replaces J925953
4		A187873		1	ALTERNATOR 12V, 65 amp, See Figure 04-02
5		814-10100		1	SCREW M10 x 100
6		J902469		1	SPACER
7		J903089		1	SUPPORT
8		614-8020		2	CAPSCREW M8 x 20
9		493-11039		2	WASHER 3/8; Ground Strap

04 -04		p1	05/03

HARNESS, ENGINE - MOUNTING AND CONNECTIONS

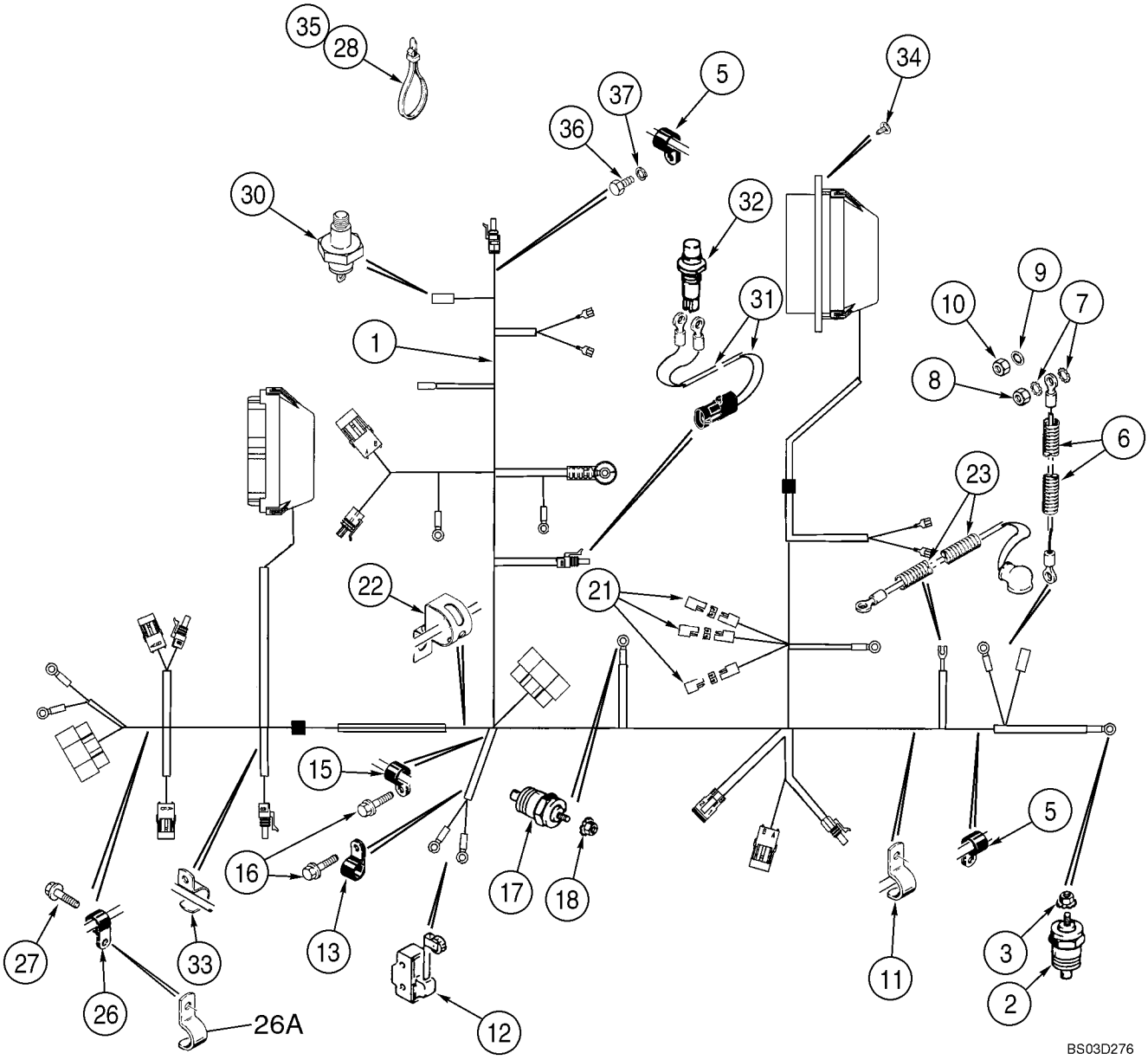

HARNESS, ENGINE - MOUNTING AND CONNECTIONS

REF	FN	PART NUMBER	YR/SN	QTY	DESCRIPTION
1		396014A1		1	HARNESS Engine
2		A166057		1	SENDER Engine Water Coolant Temperature
3		193-1000		1	NUT No. 10 NF; With External Tooth Lock Washer
5		515-2379		2	CLAMP 7,9 mm; Use Existing Hardware
6		D143830		1	CABLE Alternator to Starter
7		493-21033		2	WASHER, LOCK 5/16
8		829-1408		1	NUT M8; 10
9		493-21020		1	WASHER, LOCK 3/16
10		824-1405		1	NUT M5
11		D147383		1	CLIP Use Existing Hardware
12		D137363		1	SWITCH Return To Dig; For Mounting, See Figure 09-04
13		515-23127		1	CLAMP 1/2 ID; At Return To Dig Limit Switch
15		515-23127		1	CLAMP 1/2 ID
16		844-10020		2	SCREW M10 x 20
17		A166057		1	SENDER Transmission Temperature
18		193-1000		1	NUT No. 10 NF; With External Tooth Lock Washer
21		L71879		3	DIODE
22		192196A2		1	CLAMP Attaches to Backup Alarm Wire
23		381262A1		1	WIRE Power
26		515-23127		1	CLAMP 1/2 ID; For Brake Cable Bracket, See Figure 07-06; If Used
26A		D147383		1	CLIP For Brake Cable Bracket, See Figure 07-06; If Used
27		814-10060		1	CAPSCREW M10 x 60
28		L18337		32	STRAP 15 in
30		277016A1		1	SWITCH M10; Oil Pressure; Incl. Ref 30A
30A		637-62081		1	O-RING 8,1 ID x 1,6 mm; Not Illustrated
31		123809A2		1	HARNESS Clutch Cutout; Transmission Gear Shift Lever; Incl. Ref 31A, 31B
31A		246526A1		1	CONNECTOR Not Illustrated
31B		NSS		2	NOT SERVICED SEPARATELY Eye; Not Illustrated
32		123097A1		1	SWITCH Push Button; Clutch Cutout; Transmission Gear Shift Lever; For Lever and Knob, See Figure 06-12
33		D147383		1	CLIP Use Existing Hardware

HARNESS, ENGINE - MOUNTING AND CONNECTIONS

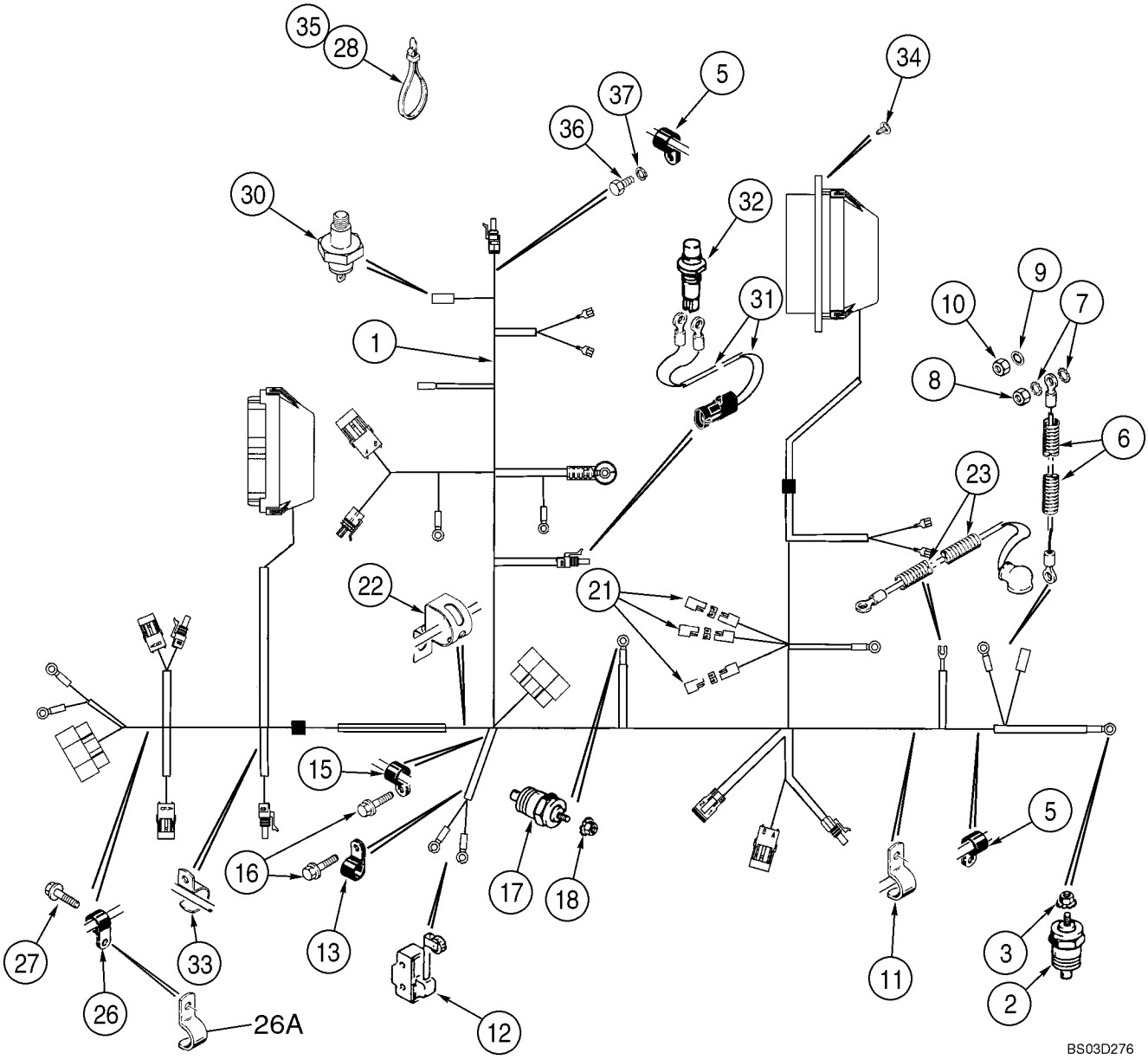

HARNESS, ENGINE - MOUNTING AND CONNECTIONS

REF	FN	PART NUMBER	YR/SN	QTY	DESCRIPTION
34		781-24613		4	SCREW M6 x 13
35		305342A1		1	STRAP 450 mm (18 in); Air Filter Restriction Branch to Air Filter Inlet Tube
36		614-8016		1	CAPSCREW M8 x 16; If Used
36		614-8020		1	CAPSCREW M8 x 20; Models With Antennuator Hose
37		892-11008		1	WASHER M8

BATTERY - CABLES (MODELS WITHOUT COLD START)

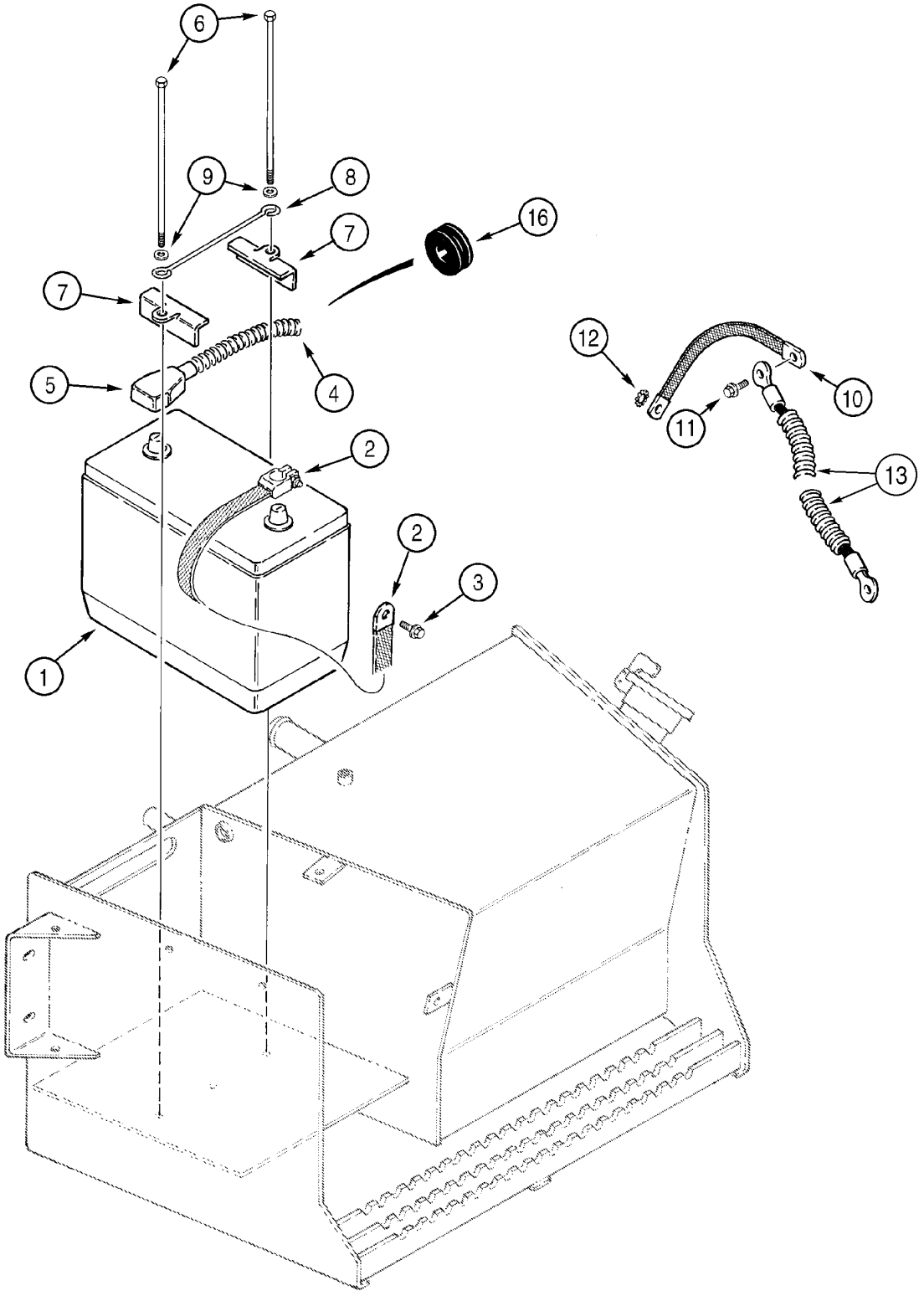

BATTERY - CABLES (MODELS WITHOUT COLD START)

REF	FN	PART NUMBER	YR/SN	QTY	DESCRIPTION
1		BMF31E		1	BATTERY 12V; Models Without Cold Start
2		D83485		1	CABLE Negative Ground
3		844-10020		1	SCREW M10 x 20; Negative Battery Cable Ground; Bolt To Chassis
4		144171A1		1	CABLE 1500 mm; Positive; Incl. Ref 5
5		383619R1		1	COVER
6		814-10245		2	BOLT M10 x 245 mm
7		D125079		2	BRACKET Battery Hold-Down
8		D55561		1	RETAINER
9		495-11041		2	WASHER 13/32 x 13/16 x 1/16
10		D127018		2	STRAP
11		844-10025		1	CAPSCREW M10 x 25; If Used
11		844-10020		1	SCREW M10 x 20; Flange; If Used
12		493-11039		1	WASHER 3/8; Internal External Tooth Lock Washer
13		381261A1		1	WIRE Ground; Cab to Chassis
16		257279A1		2	GROMMET Battery Cable; Mounts In Chassis Side Channel

04 -06		p1	05/03

BATTERY, DUAL - COLD START

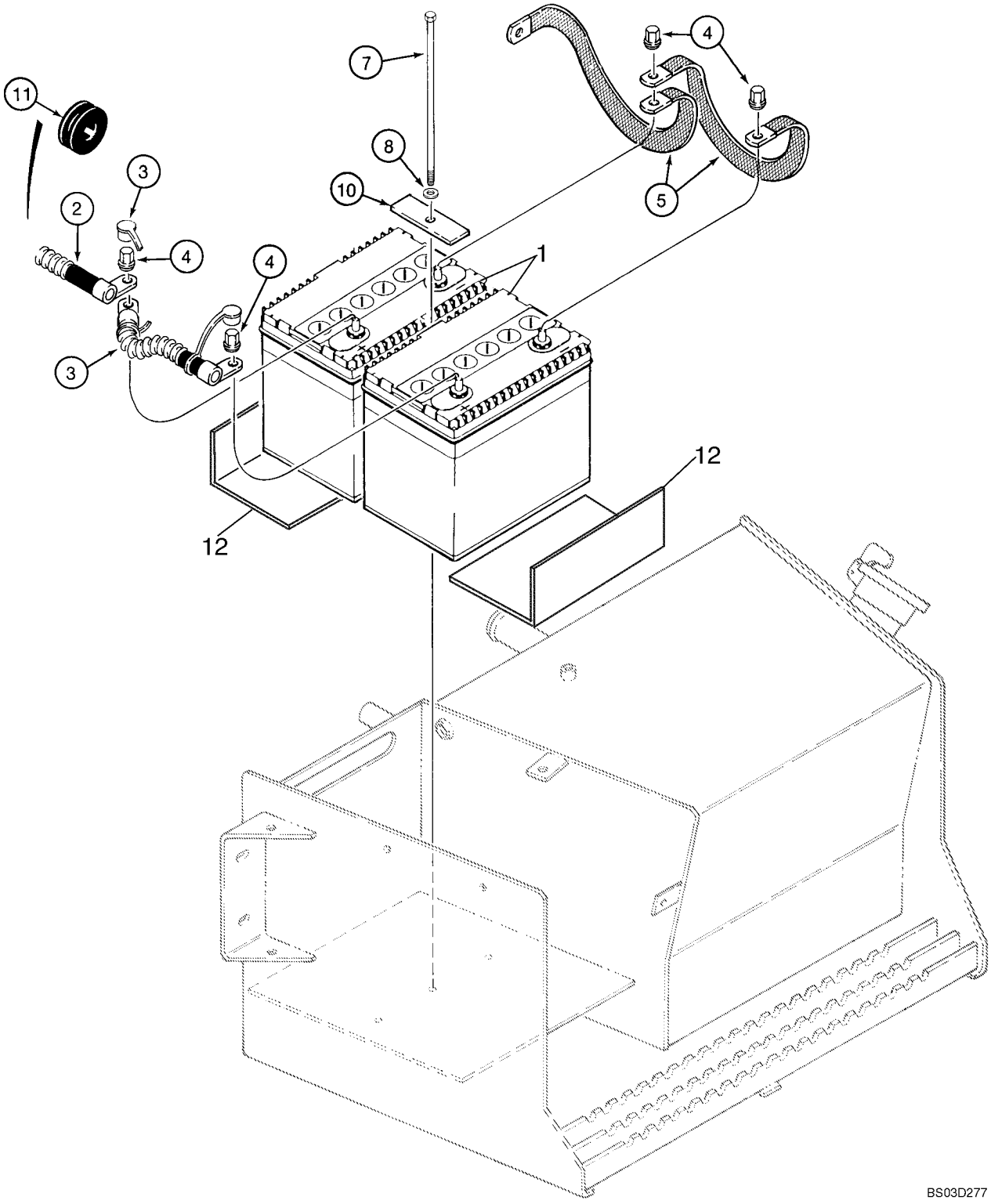

BATTERY, DUAL - COLD START

REF	FN	PART NUMBER	YR/SN	QTY	DESCRIPTION
1		BMF28S		2	BATTERY DRY 12V
2		184498A1		1	CABLE 1460 mm; Positive
3		184497A1		1	CABLE 227 mm; Positive Jumper
4		D126409		4	NUT 3/8
5		D73383		2	STRAP Flat
7		814-10245		1	BOLT M10 x 245 mm
8		495-11041		1	WASHER 13/32 x 13/16 x 1/16
10		250854A1		1	STRAP
11		257279A1		2	GROMMET Battery Cable; Mounts In Chassis Side Channel
12		408535A1		2	PLATE Battery Support

04 -07		p1	05/03

HARNESS, FRONT CONSOLE - SWITCHES

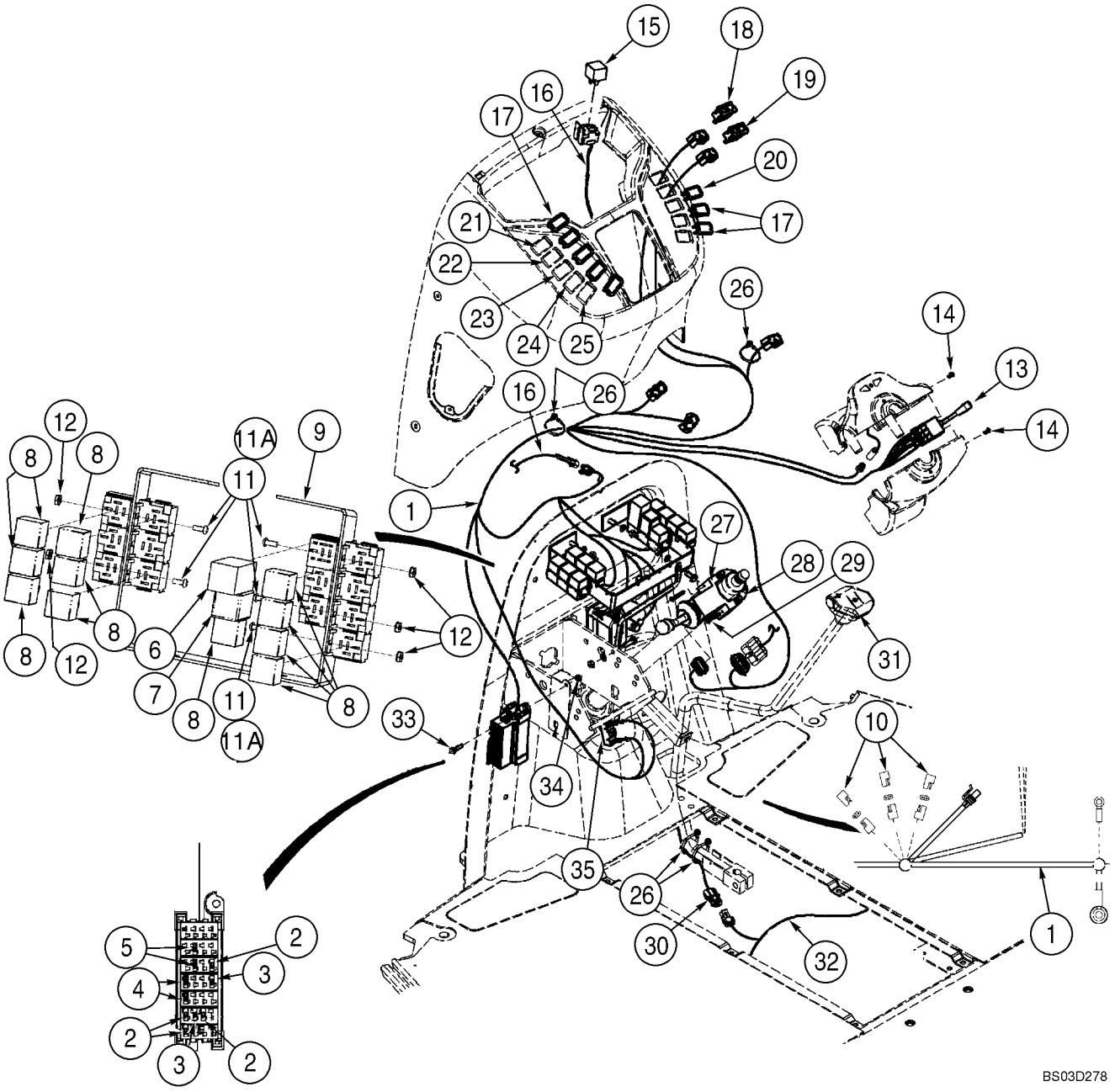

HARNESS, FRONT CONSOLE - SWITCHES

REF	FN	PART NUMBER	YR/SN	QTY	DESCRIPTION
1		396015A1		1	HARNESS Front Console; Incl. Ref 13
2		121412A1		4	FUSE 10 amp; Mini, Red
3		121413A1		2	FUSE 15 amp; Mini, Blue
4		121414A1		2	FUSE 20 amp; Mini, Yellow
5		121416A1		2	FUSE 30 amp; Mini, Green
6		D147166		1	UNIT, FLASHER Hazard; Turn Signal
7		347706A3		1	RELAY Sealed Time Delay; Shuttle Interlock Timing Relay; Forward Reverse Control
8		314451A1		11	RELAY 40 amp, 12V
9		361900A1		1	BRACKET Relay Mounting
10		L71879		3	DIODE
11		490-1108		6	SCREW No. 10 NF x 1/2
11A		490-1106		1	SCREW No. 10 x 3/8
12		193-1000		7	NUT No. 10 NF; With External Tooth Lock Washer
13		389487A1		1	SWITCH, DIP Turn Signal/Driving Lamp High/Low Beam
14		404816A1		2	SCREW M4 x 12
15		314451A1		1	RELAY 40 amp, 12V; Air Conditioning; Attaches To Front Console Options Harness
16		390519A3		1	HARNESS Front Console Options; Front Options Incl. Hand Held Auxiliary Hydraulics Switch, Front Windshield Washer Switch, Loader Tool Quick Coupler Switch, and Air Conditioner Relay, Includes L71879
		L71879		1	DIODE
		490-1108		1	SCREW No. 10 NF x 1/2; Mounts Relay Recepticle
		193-1000		1	NUT No. 10 NF; Mounts Relay Recepticle
17		126844A1		2-8	PLUG Accessory; If Used
18		386849A1		1	SWITCH Front Work Lamps
19		386850A1		1	SWITCH Hazard Lamps
20		386851A1		1	SWITCH Rotating Beacon; If Used
21		191532A1		1	SWITCH Hand Held Auxiliary Hydraulics; If Used
22		386785A1		1	SWITCH Front Wiper; If Used
23		386787A1		1	SWITCH Front Windshield Washer; If Used
24		398675A2		1	SWITCH Loader Tool Quick Coupler; If Used
25		386791A1		1	SWITCH Cold Start; If Used

04 -07		p2	05/03

HARNESS, FRONT CONSOLE - SWITCHES

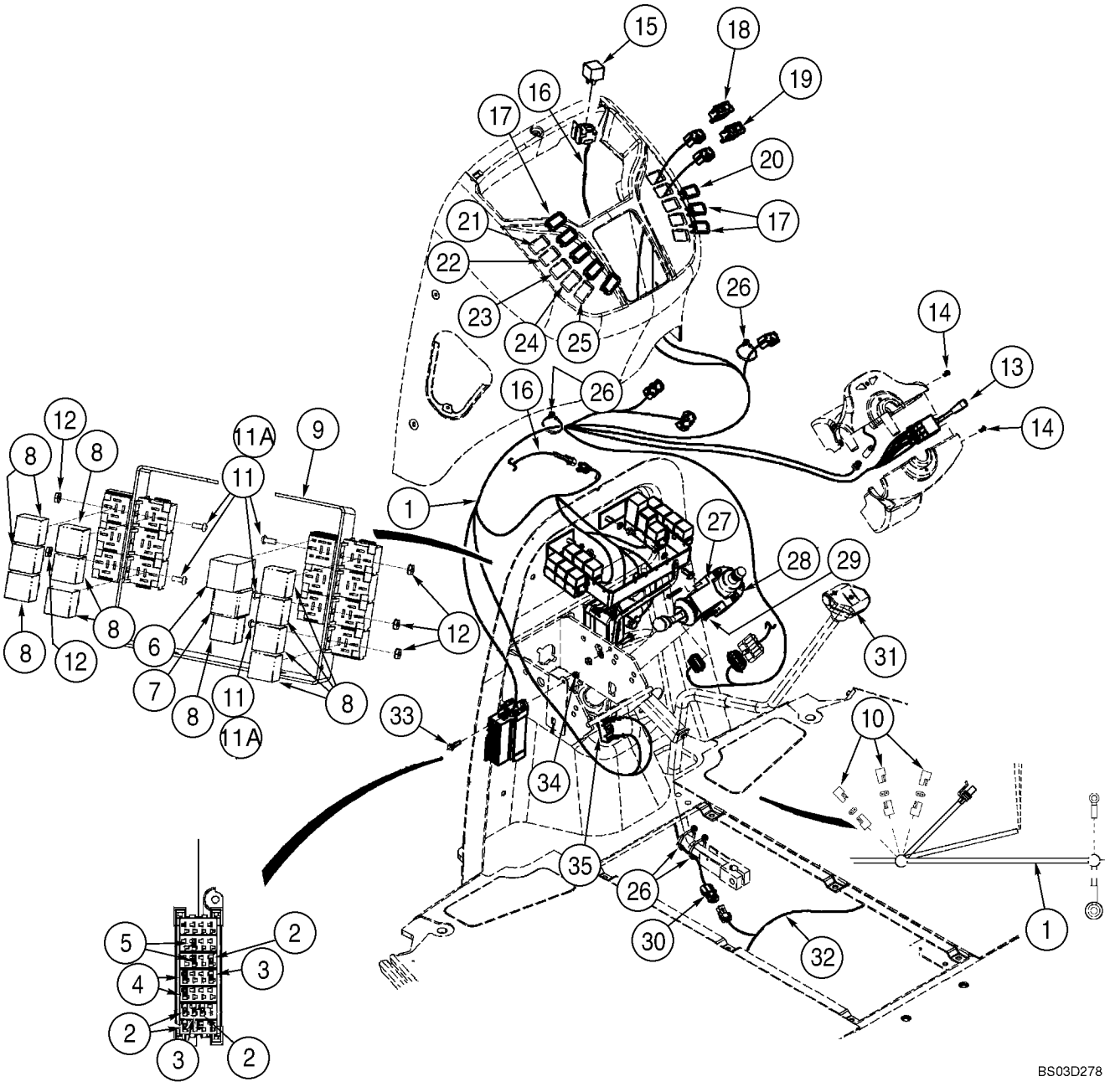

HARNESS, FRONT CONSOLE - SWITCHES

REF	FN	PART NUMBER	YR/SN	QTY	DESCRIPTION
26		L18337		4	STRAP 15 in
27		278328A1		1	SWITCH Shuttle Shift; Transmission Forward/Neutral/Reverse Switch; Models Without Powershift Transmission
27		231520A2		1	SWITCH Shuttle Shift; Transmission Forward/Neutral/Reverse Switch; Models With Powershift Transmission
28		366889A2		1	HALF COLLAR Shuttle Lever; Incl. Threaded Insert
29		397990A1		2	SCREW M5 x 35
30		123809A2		1	HARNESS Clutch Cutout; Transmission Gear Shift Lever; For Lever, See Figure 06-12
31		123097A1		1	SWITCH Clutch Cutout; For Lever and Knob, See Figure 06-12
32		396014A1		1	HARNESS Engine; Incl. L71879
		L71879		3	DIODE
33		844-6025		1	CAPSCREW M6 x 25
34		832-10406		1	NUT M6
35		D148108		1	SWITCH Brake Lamp, Includes Hardware, For Mounting, See Figure 07-03
		390520A2		1	HARNESS Chassis Options, Chassis Options Incl. Ride Control Solenoids, Hand Held Auxiliary Hydraulics Solenoid
		L71879		4	DIODE

04 -08		p1	05/03

HARNESS, FRONT CONSOLE - MOUNTING

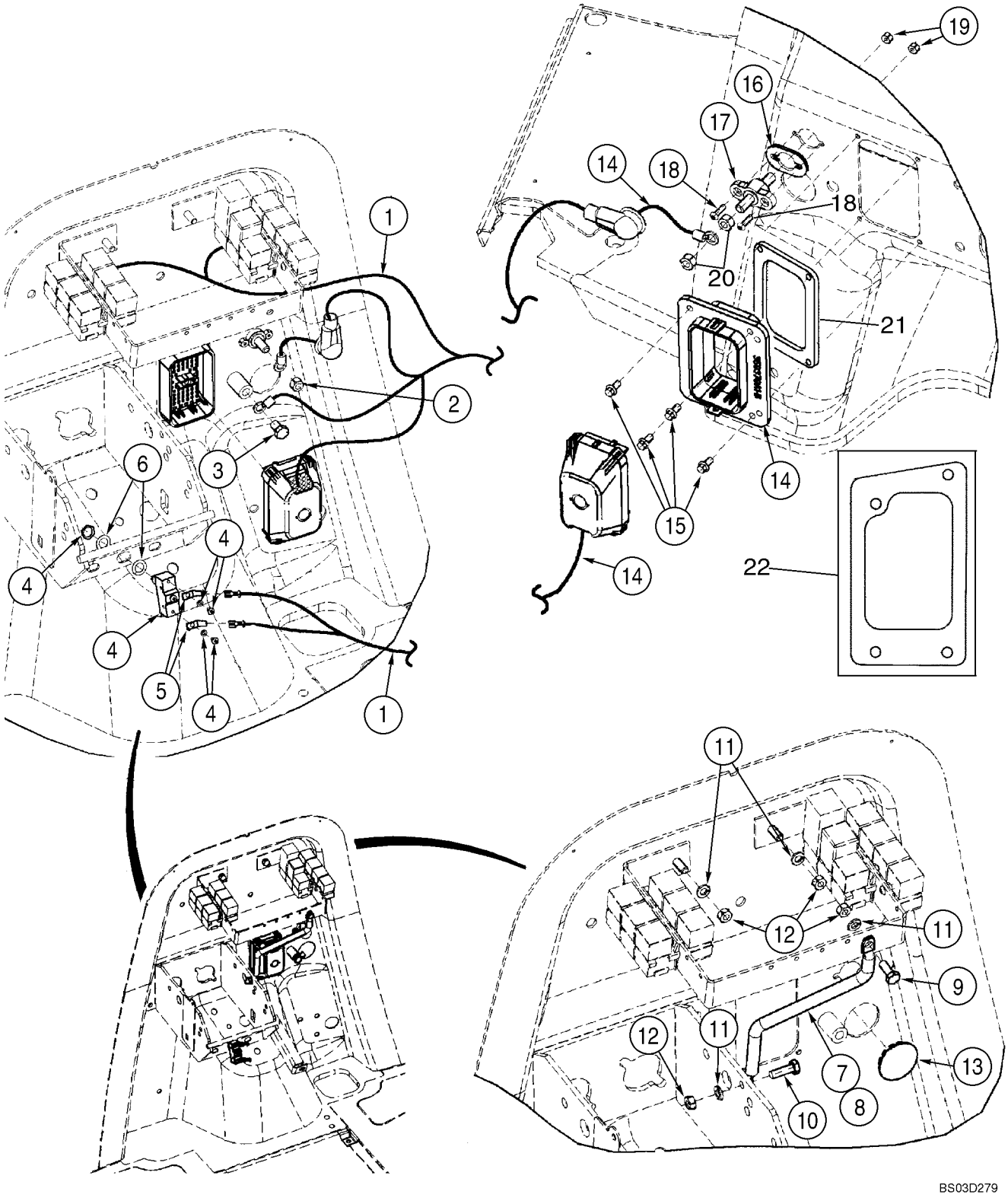

HARNESS, FRONT CONSOLE - MOUNTING

REF	FN	PART NUMBER	YR/SN	QTY	DESCRIPTION
1		396015A1		1	HARNESS Front Console; Mounts To Front Firewall
2		425-106		1	NUT 3/8
3		128312A1		1	BOLT M10 x 15; Mounts To Front Firewall
4		D148108		1	SWITCH Brake Lamp; Includes Hardware
5		A187990		2	TERMINAL CONNECTOR Male
6		495-81153		2	WASHER
7		362930A2		1	BRACE
8		392353A1		1	CONDUIT
9		614-8020		1	CAPSCREW M8 x 20
10		614-8025		1	CAPSCREW M8 x 25
11		892-11008		4	WASHER M8
12		829-1408		4	NUT M8; 10
13		397876A1		1	PLUG 1-5/8 in; Button
14		396014A1		1	HARNESS Engine; Main Chassis; Mounts Behind Front Firewall; Includes L71879
		L71879		3	DIODE
15		781-24613		4	SCREW M6 x 13
16		357966A1		1	GASKET
17		357278A1		1	JUNCTION BLOCK Positive Battery
18		490-11012		2	SCREW No. 10 NF x 3/4
19		231-24409		2	NUT, LOCK No. 10
20		425-106		2	NUT 3/8
21		409370A1		1	SEAL
22		414174A1		1	GASKET

ELECTRICAL - TRANSMISSION, POWERSHIFT

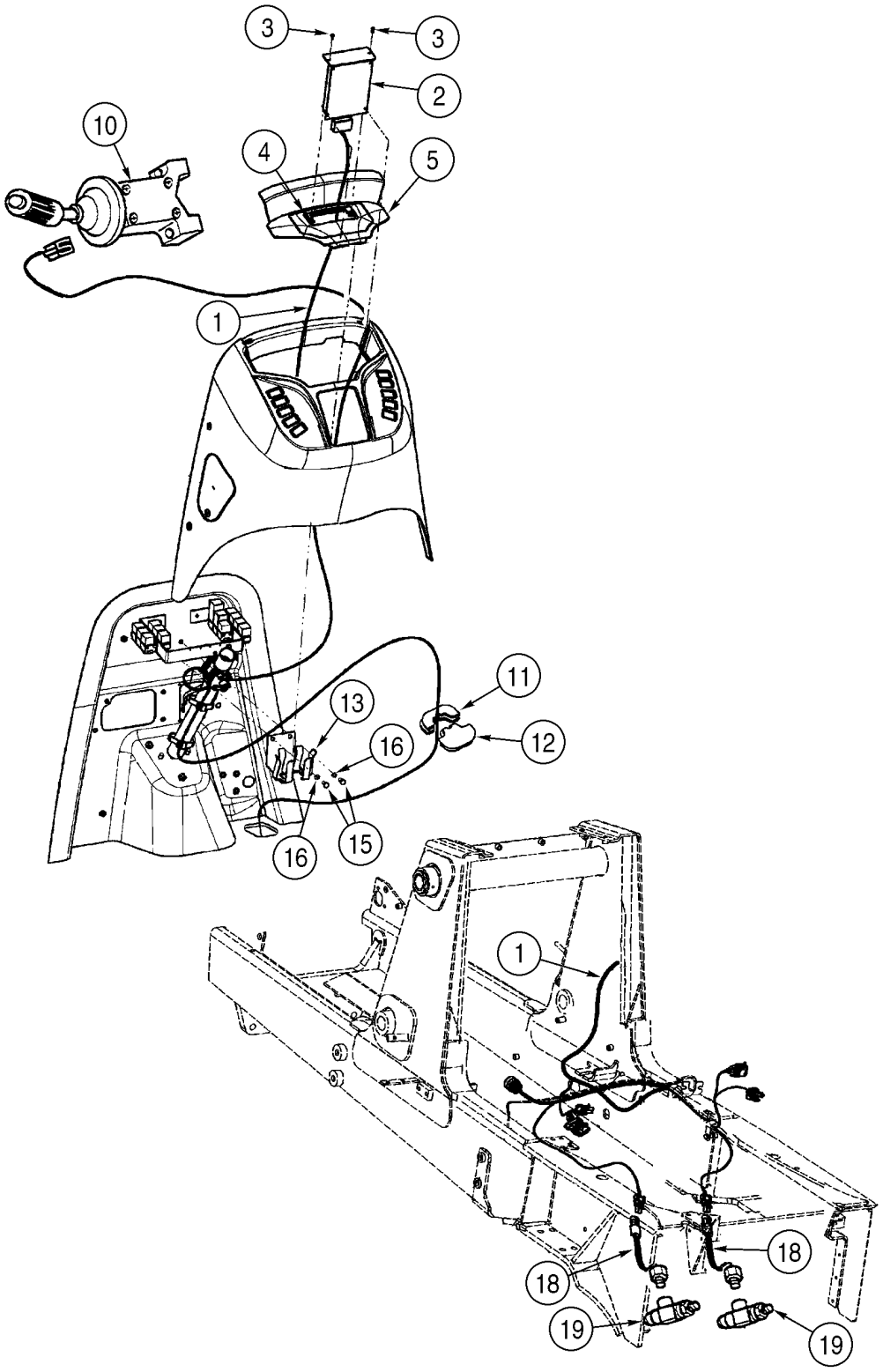

ELECTRICAL - TRANSMISSION, POWERSHIFT

REF	FN	PART NUMBER	YR/SN	QTY	DESCRIPTION
1		392882A4		1	HARNESS Powershift Transmission
2		87403291		1	CONTROL Transmission, APC73; Replaces 400375A1, 432253A1
3		140-107		2	SCREW No. 10 x 3/4
4		176857A1		2	NUT No. 10, J-Type
5		363227A2		1	COVER Relay Access
		278316A2		2	CLIP Relay Access Cover
10		231520A2		1	SWITCH Shuttle Shift; Transmission; Forward/Neutral/Reverse; See Figure 04-07
11		397443A2		1	SEAL Replaces 397443A1
12		397493A2		1	SEAL Replaces 397493A1
13		400376A1		1	PLATE,ELEC.SUPPORT
15		614-8016		2	CAPSCREW M8 x 16
16		892-11008		2	WASHER M8
18		D138955		2	SWITCH Pressure; Stop Lamp
19		222889A1		2	FITTING At Rear Axle Brakes; See Figure 07-04

04 -10		p1	05/03

HARNESS, SIDE CONSOLE - SWITCHES

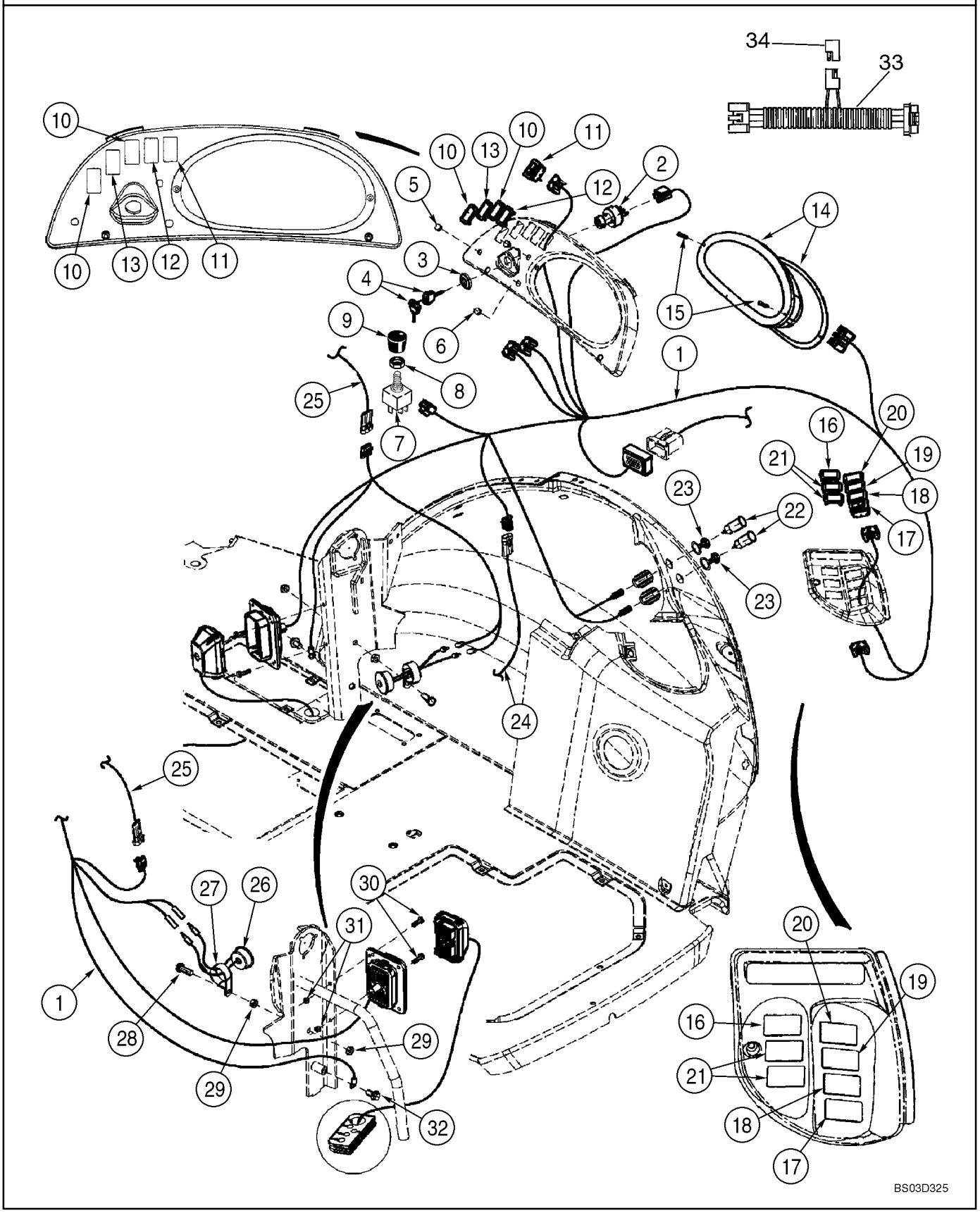

HARNESS, SIDE CONSOLE - SWITCHES

REF	FN	PART NUMBER	YR/SN	QTY	DESCRIPTION
1		396017A1		1	HARNESS Side Console
		282775A1		1	SWITCH,IGNITION Incl. Ref 2 - 4
2		NSS		1	NOT SERVICED SEPARATELY Switch; Without Keys
3		NSS		1	NOT SERVICED SEPARATELY Nut
4		NSS		1	NOT SERVICED SEPARATELY Key; Ignition; Set Of Two; Padded
5		397569A1		2	PLUG 7/16 in; Dome; If Used; For Air Conditioning Switch and Knob, See Figure 09-65
6		397570A1		1	PLUG 1/2 in; Dome; If Used; For Heater Switch and Knob, See Figure 09-64
7		245258A1		1	SWITCH Blower; If Used
		121415A1		1	FUSE 25 amp; Blower And Wiper
8		A42561		1	NUT
9		400379A1		1	KNOB
10		126844A1		1-4	PLUG If Used
11		133715A1		1	SWITCH Rear Work Lamps
12		235002A1		1	SWITCH Ride Control; If Used
13		133716A1		1	SWITCH Four Wheel Drive; Models Without Powershift Transmission; If Used
13		239408A1		1	SWITCH Four Wheel Drive; Models With Powershift Transmission; If Used
		121412A1		1	FUSE 10 amp
14		395943A1		1	CLUSTER, INSTRUMENT See Figure 04-13
15		140-119		2	SCREW
16		126844A1		1-6	PLUG If Used
17		386852A2		1	SWITCH Horn
18		386788A1		1	SWITCH Rear Window Washer; If Used
19		386786A1		1	SWITCH Rear Wiper; If Used
20		284058A1		1	SWITCH Backhoe Auxiliary Hydraulics Hi/Low Flow; If Used
21		386789A2		2	SWITCH Backhoe Quick Coupler and Hydraulic Backhoe Bucket Coupler; If Used
22		283779A1		2	OUTLET Power Plug Outlet
23		283781A1		2	CAP Power Plug Outlet
		L71879		1	DIODE

04 -10		p2	05/03

HARNESS, SIDE CONSOLE - SWITCHES

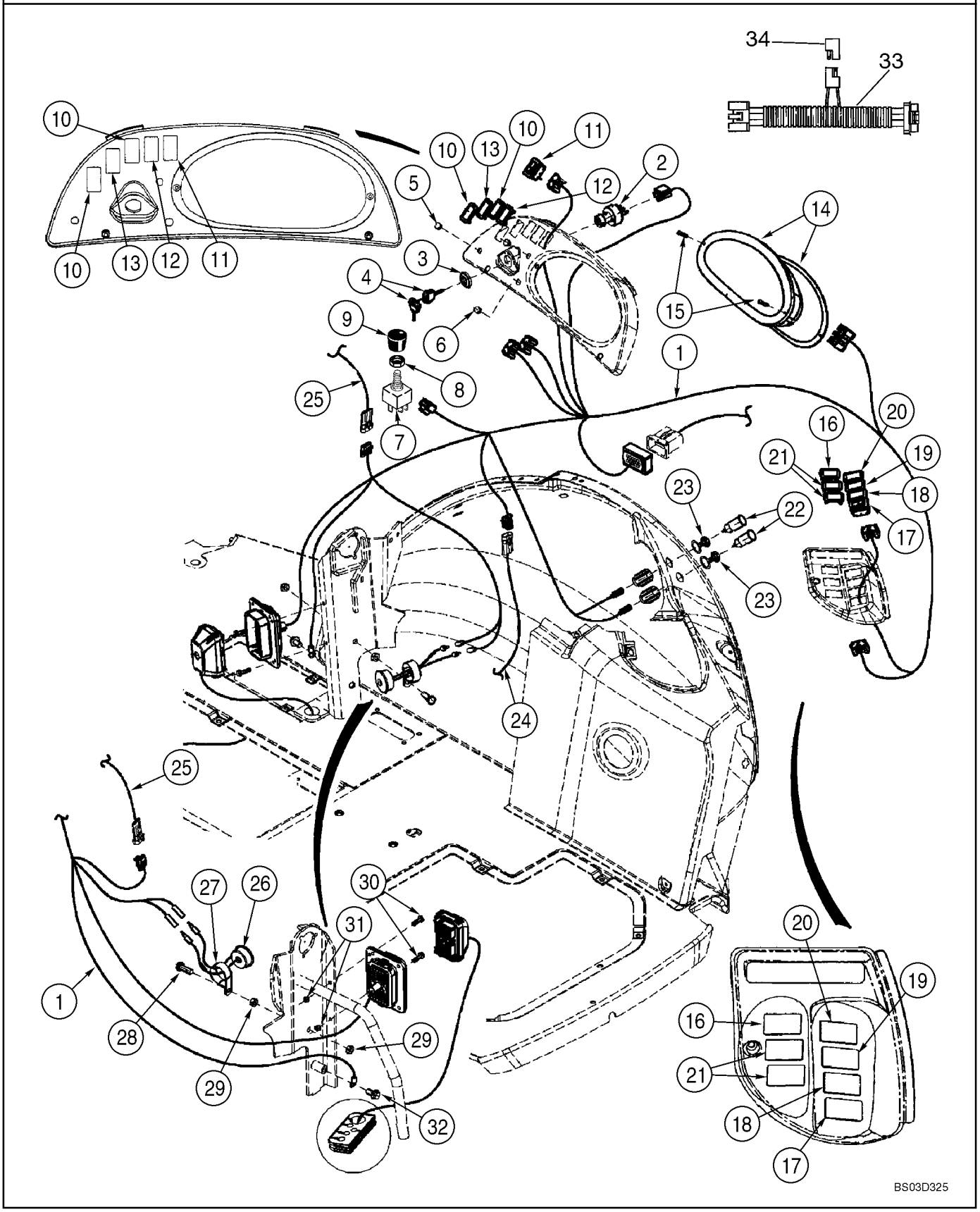

HARNESS, SIDE CONSOLE - SWITCHES

REF	FN	PART NUMBER	YR/SN	QTY	DESCRIPTION
25		NSS		1	NOT SERVICED SEPARATELY Harness; Loader Control Lever; Included In Loader Control Lever Handle
26		D137468		1	BUZZER Engine Water Temperature, Engine Oil Pressure and Parking Brake
27		515-23444		1	CLAMP 1-3/4
28		614-10030		1	SCREW M10 x 30
29		829-1410		2	NUT M10; 10.9
30		844-6025		2	CAPSCREW M6 x 25
31		832-10406		2	NUT M6
32		844-10020		1	SCREW M10 x 20
		390520A2		1	HARNESS Chassis Options; Chassis Options Include Ride Control Solenoids, Hand Held Auxiliary Hydraulics Solenoid; Plus Air Conditioning, Air Conditioning High Pressure Switch, Front and Rear Windshield Washer Pumps and Backhoe Auxiliary Hydraulic Foot Switch
		L71879		4	DIODE
		87422908		1	KIT, SERVICE "No Stop" Issue; Includes Instructions; If Used; Incl. Ref 33, 34
33		87418406		1	HARNESS, WIRE Jumper; Incl. Ref 34
34		L71879		1	DIODE

INSTRUMENT PANEL, FRONT - COVERS

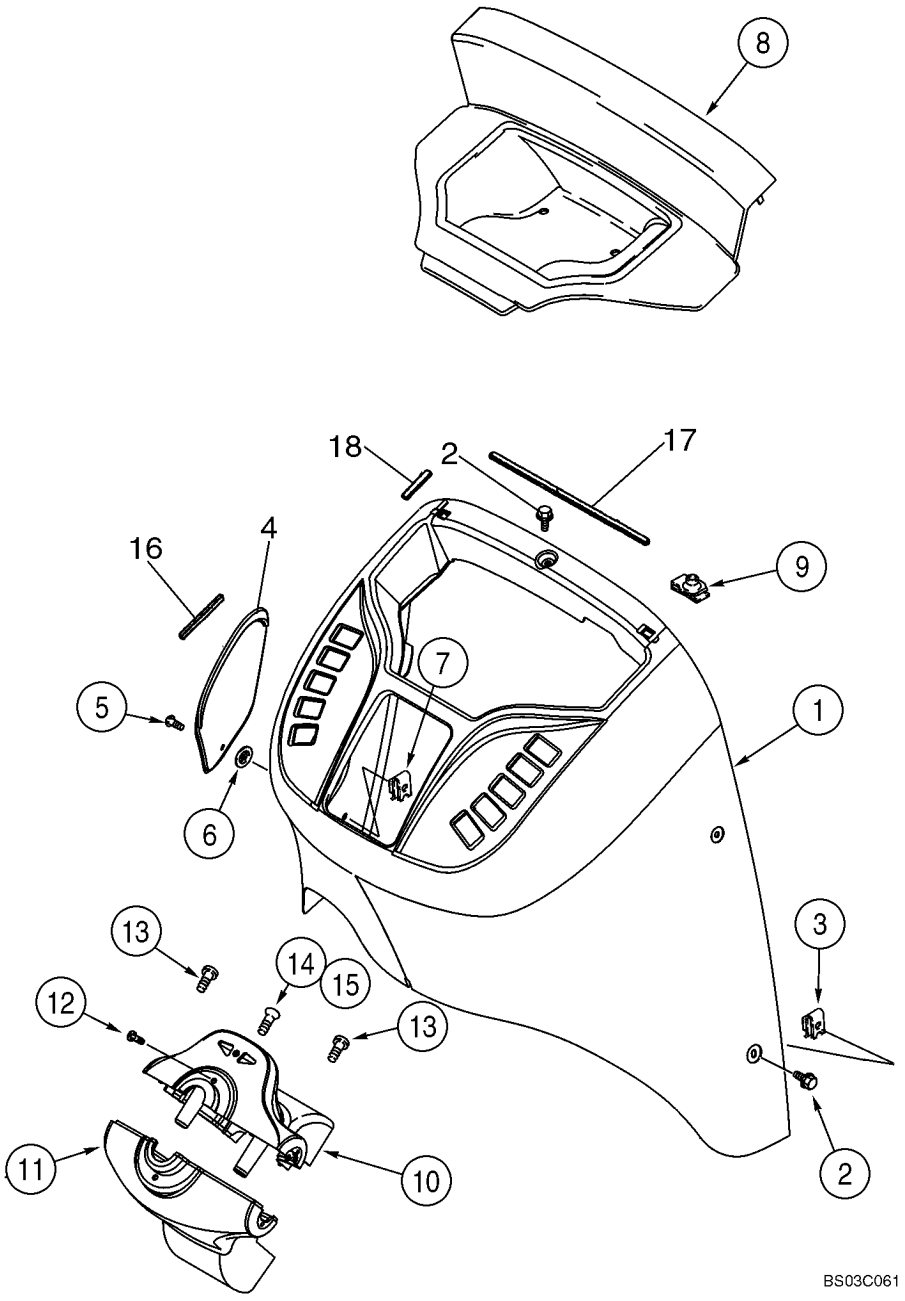

INSTRUMENT PANEL, FRONT - COVERS

REF	FN	PART NUMBER	YR/SN	QTY	DESCRIPTION
1		355827A2		1	COVER Front
2		555-10		6	BOLT
3		833-40406		6	NUT
4		360244A1		1	COVER Fuse Access
5		182276A1		1	SCREW
6		127009A1		1	CLIP,ELECTRICAL
7		131-861		1	NUT
8		360245A2		1	COVER Relay Access; Models Without Powershift Transmission
8A		363227A2		1	COVER Relay Access; Models With Powershift Transmission; Not Illustrated
9		278316A2		2	CLIP
10		373689A2		1	COVER ASSY Steering Column; Upper; Incl. Ref 10A - 10E; Components Not Illustrated
10A		360242A2		1	COVER
10B		303465A2		1	LAMP
10C		303466A1		1	SYMBOL Right Flasher
10D		303467A1		1	SYMBOL Left Flasher
10E		373693A1		1	SCREW
11		360243A2		1	COVER Steering Column; Lower
12		140-107		2	SCREW No. 10 x 3/4
13		140-106		2	SCREW No. 10 x 1/2
14		260-1358		1	SCREW No. 10-16 x 1/2
15		131-121		1	NUT, SPECIAL
16		414572A1		1	STRIP 100 mm; Adhesive; Back
17		414034A1		1	STRIP 330 mm; Adhesive; Back
18		414033A1		4	STRIP 60 mm; Adhesive; Back

04 -12		p1	05/03

INSTRUMENT PANEL, SIDE - COVERS, RIGHT HAND SIDE

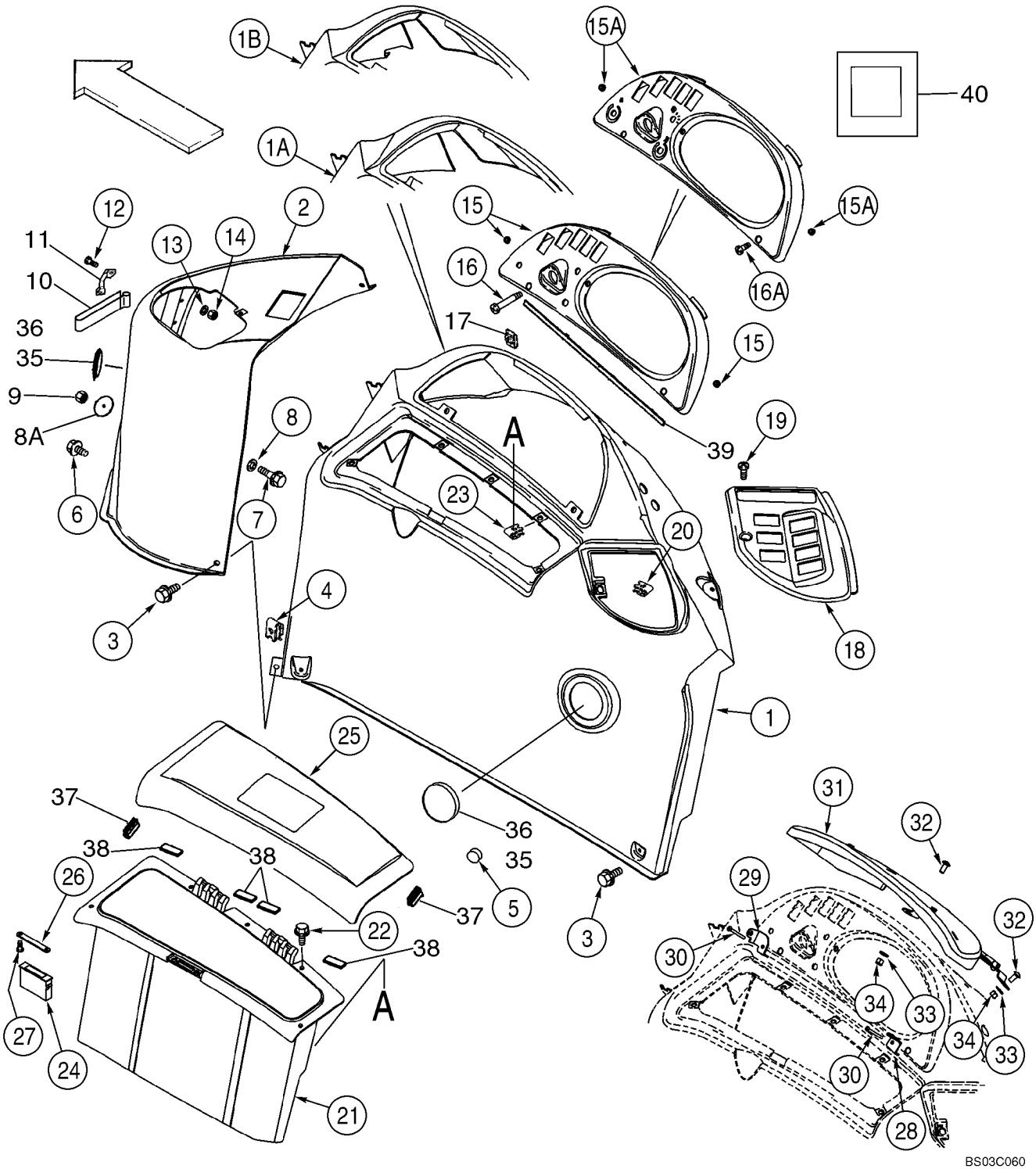

INSTRUMENT PANEL, SIDE - COVERS, RIGHT HAND SIDE

REF	FN	PART NUMBER	YR/SN	QTY	DESCRIPTION
1		360250A2		1	CONSOLE Canopy Models
1A		355198A2		1	CONSOLE Cab; Single Door
1B		372167A3		1	CONSOLE Cab; Two Door
2		355197A2		1	CONSOLE Loader Control
3		555-2		6	SCREW M6 x 20
4		833-40406		5	NUT M6
5		L60224		1	DAMPER, HITCH Rubber
6		555-10		1	BOLT M6 x 16
7		844-6025		1	CAPSCREW M6 x 25
8		895-15006		2	WASHER 6,6 x 25 x 1,6 mm
8A		407660A1		1	WASHER 7 mm ID x 50 mm OD
9		832-10406		1	NUT M6
10		184726A1		1	STRIP, FIXING Velcro
11		182594A1		2	HANDLE Velcro Retainer
12		842-1416		4	SCREW M4 x 16; 4.8; Replaces 842-1425 Screw Used On Some Models
13		895-11004		4	WASHER 4,3 x 9 x 0,8 mm
14		832-10404		4	NUT M4
15		391818A2		1	BEZEL Instrument Cluster Mounting; Canopy Models; Includes 390258A1; Replaces 391818A2
		390258A1		2	INSERT No. 10; Threaded Insert
15A		390255A2		1	BEZEL Instrument Cluster Mounting; Cab Models; Includes 390258A1; Replaces 390255A1
		390258A1		2	INSERT No. 10; Threaded Insert
16		140-120		2	SCREW No. 10 x 2-1/4; Canopy Models
16A		140-107		2	SCREW No. 10 x 3/4; Cab Models
17		131-619		2	NUT No. 10; Cab or Canopy
18		353068A2		1	BEZEL Rear Switches
19		140-107		1	SCREW No. 10 x 3/4
20		131-619		1	NUT No. 10
21		366632A2		1	BOX, TOOL Right-Hand
22		555-2		5	SCREW M6 x 20
23		833-40406		5	NUT M6
24		D127335		1	RETAINER Magnetic Catch
25		366633A3		1	LID Storage Box
26		375112A1		1	PLATE, CATCH Striker

04 -12		p2	05/03

INSTRUMENT PANEL, SIDE - COVERS, RIGHT HAND SIDE

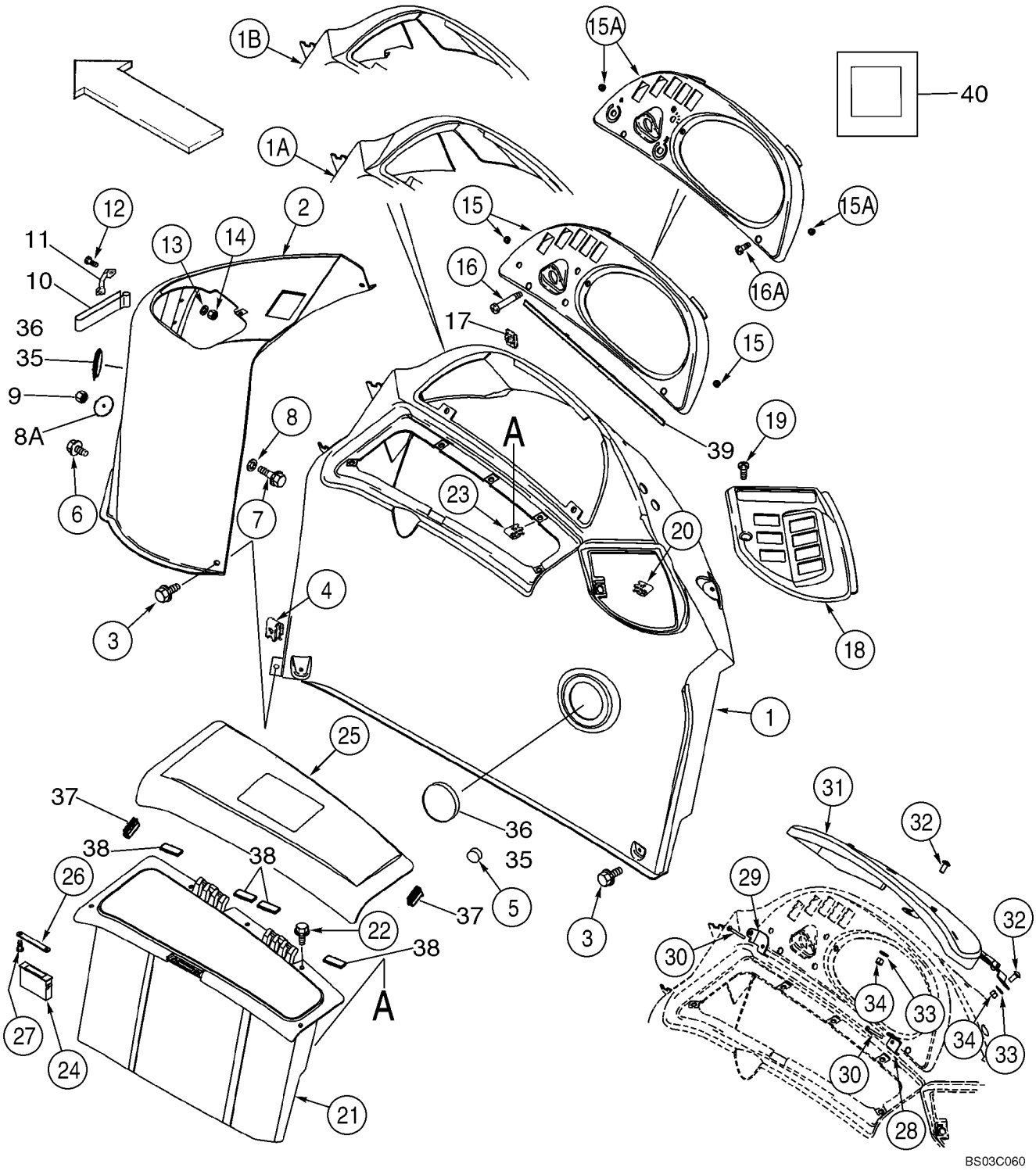

INSTRUMENT PANEL, SIDE - COVERS, RIGHT HAND SIDE

REF	FN	PART NUMBER	YR/SN	QTY	DESCRIPTION
27		440-1066		2	SCREW No. 6 x 3/8 Anti-Vandalism, Canopy Models
28		386369A2		1	BRACKET
29		386368A2		1	BRACKET
30		140-120		2	SCREW No. 10 x 2-1/4
31		385614A3		1	COVER ASSY Instrument Cluster; Includes 386502A1, F22426
		386502A1		2	BUMPER
		F22426		3	STOP
32		811-8020		2	SCREW M8 x 20
33		895-15008		2	WASHER 9 x 20 x 1,6 mm
34		832-10408		2	NUT M8
35		1302758C1		2	PLUG 3 in
36		413054A1		4	SCREW 1/2 in
37		430471A1		2	SEAL 40 mm; Bulb; Bumper, Storage Lid; Replaces 414094A1
38		414092A1		4	STRIP 50 mm; Adhesive Back; Storage Box
39		414071A1		1	STRIP, SEALING 480 mm; Adhesive Back
40		412510A1		1	SEAL 25 x 25 x 3 mm; Adhesive Back; Console To Fender

INSTRUMENT CLUSTER

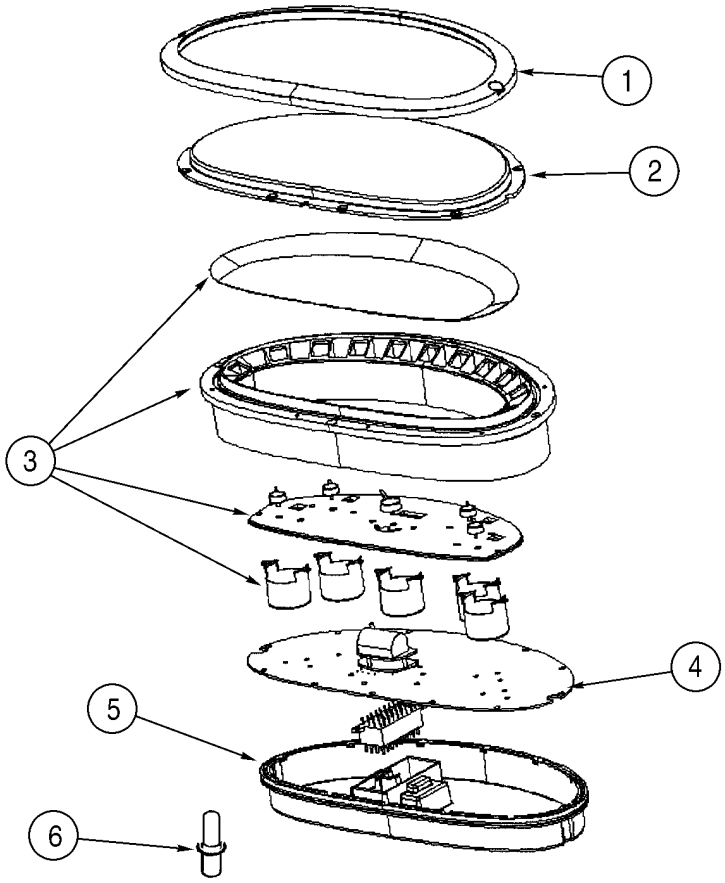

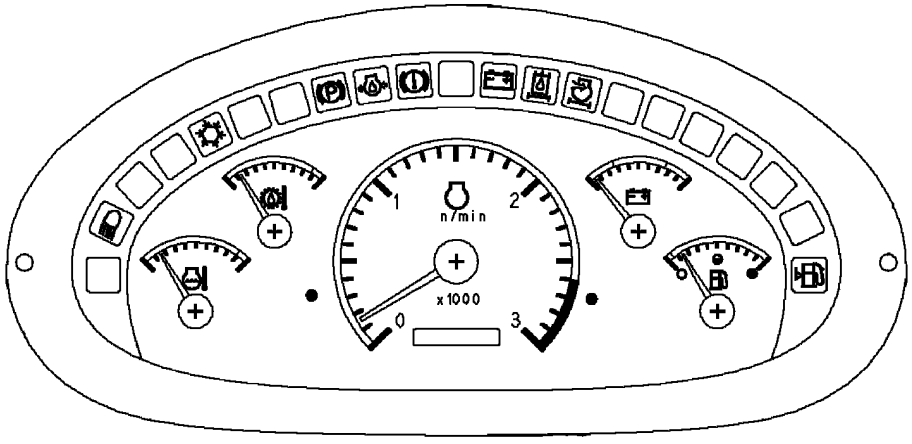

BS00G031

INSTRUMENT CLUSTER

REF	FN	PART NUMBER	YR/SN	QTY	DESCRIPTION
		395943A1		1	CLUSTER, INSTRUMENT Incl. Ref 1 - 6
1		370755A1		1	BEZEL Black
		NSS		2	NOT SERVICED SEPARATELY No. 6 x 1/4; Screw; Trim
2		370756A1		1	LENS Clear; Includes O-Ring Which Is Not Serviced Separately
3		370758A1		1	GAUGE ASSY. Includes Overlay, Seal and Gauges Which Are Not Serviced Separately
4		370759A1		1	HOURMETER Circuit Board; Includes Seal and Hourmeter Which Are Not Serviced Separately
		NSS		25	NOT SERVICED SEPARATELY No. 6 x 3/8; Screw
5		370760A1		1	COVER, REAR Rear; Includes O-Ring Which Is Not Serviced Separately
		NSS		2	NOT SERVICED SEPARATELY No. 6 x 3/4; Screw; Rear Cover
6		388053A2		1	BULB 1W, 14V; Includes Socket

ELECTRICAL - LAMPS, ROPS CANOPY

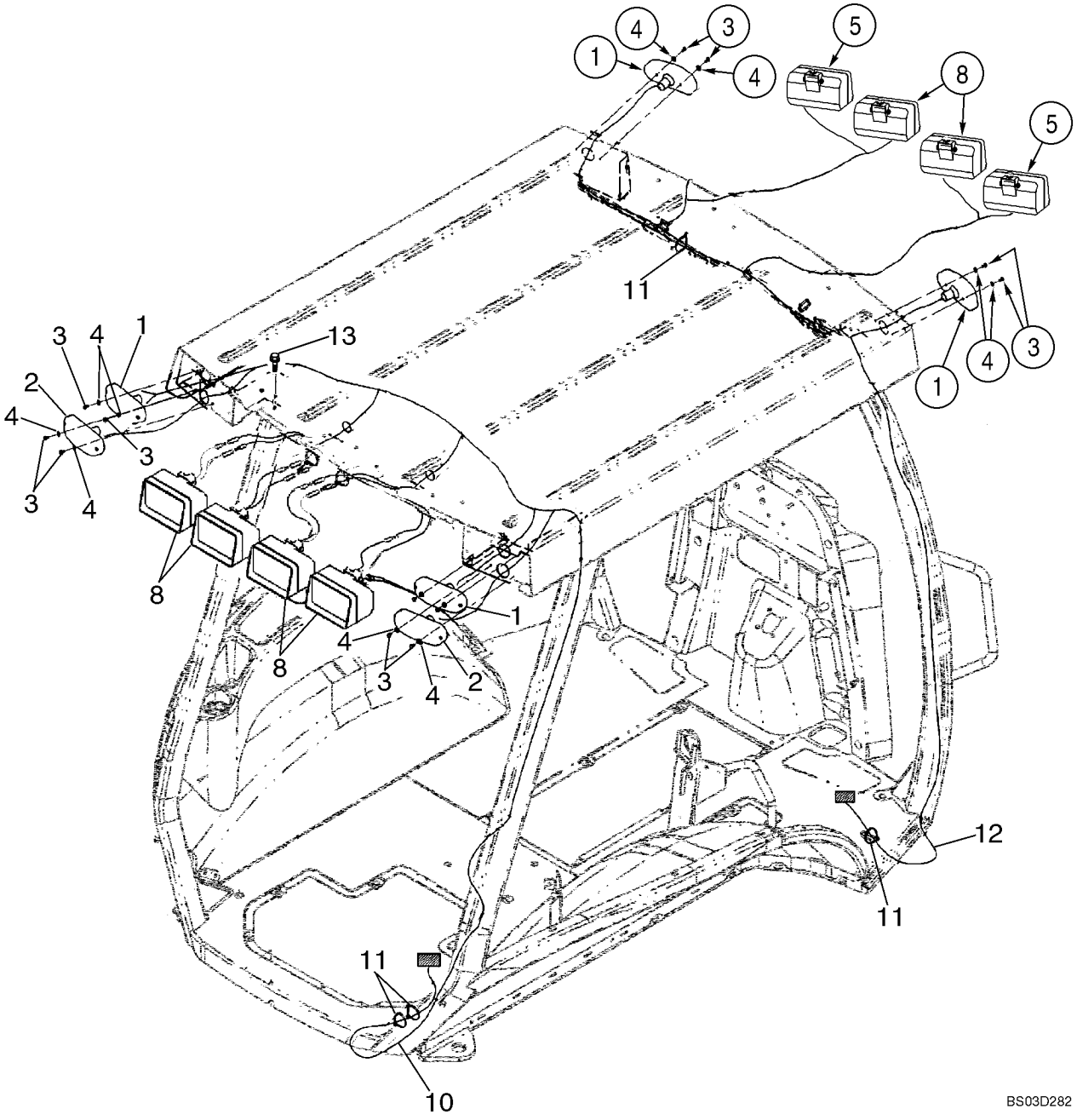

ELECTRICAL - LAMPS, ROPS CANOPY

REF	FN	PART NUMBER	YR/SN	QTY	DESCRIPTION
1		D135384		4	LAMP Turn Signal and Flasher; See Figure 04-16
2		D121152		2	LAMP Stop And Tail; See Figure 04-16
3		329032A1		12	SCREW No. 10 x 3/8
4		495-31022		12	WASHER 7/32 x 1/2 x 3/64
5		398846A3		2	LIGHT ASSY. Front Driving; Includes 1312210C2, 404996A1
		1312210C2		1	BULB 12V, 55W
		{404996A1}		1	
8		398847A3		6	LIGHT ASSY. Front and Rear Flood and Work Lamps; Includes 1312210C2, 276498A1
		1312210C2		1	BULB 12V, 55W
		276498A1		1	LENS With Hardened Glass; Replaces 1964801C1 Non-Hardened Lens Used In Production
10		396023A2		1	HARNESS Canopy Lamps; Rear
11		L18337		X	STRAP 15 in
12		404617A1		1	HARNESS Canopy Lamps; Front
13		128312A1		8	BOLT M10 x 15

04 -15		p1	05/03

ELECTRICAL - LAMPS, ROPS CAB

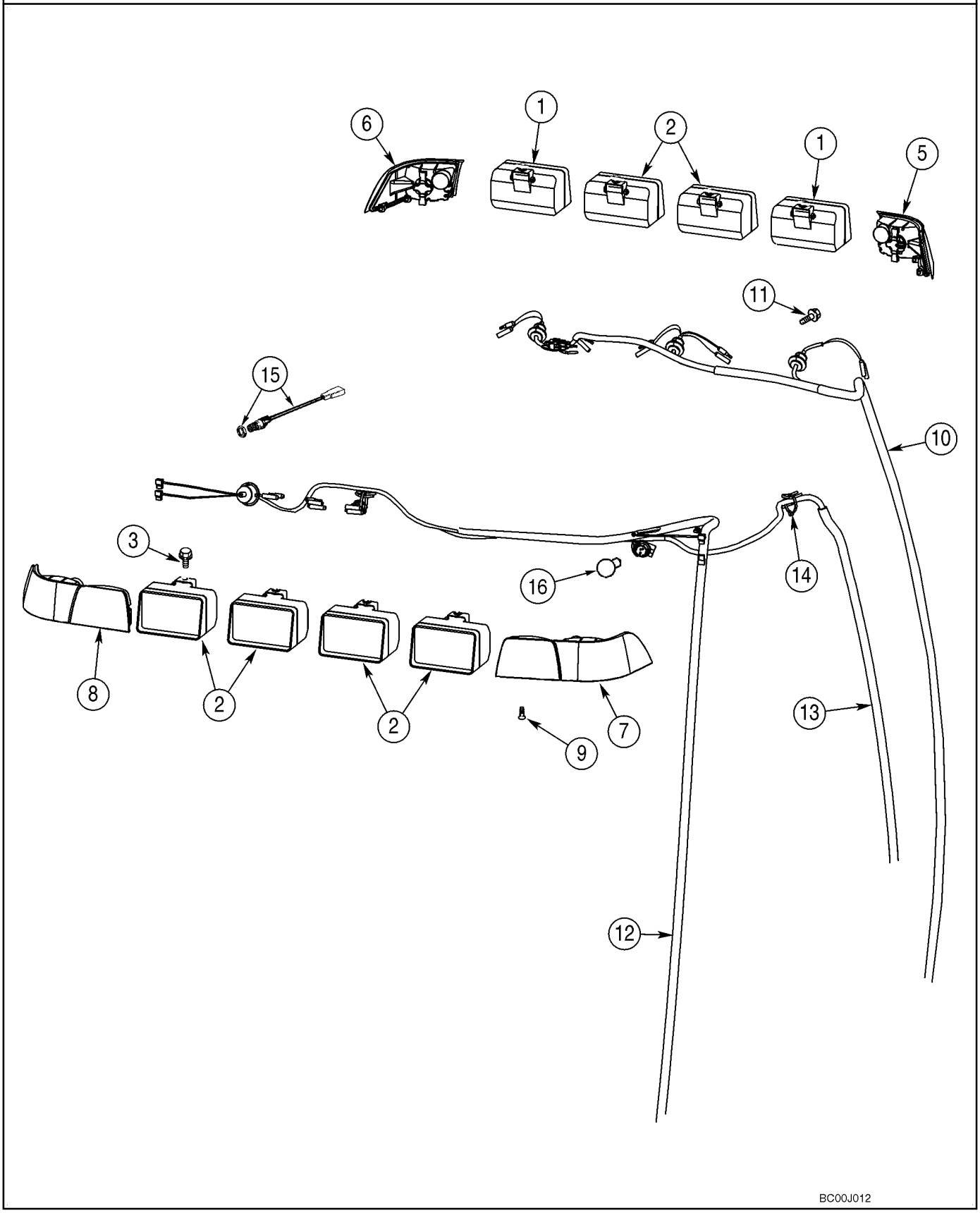

ELECTRICAL - LAMPS, ROPS CAB

REF	FN	PART NUMBER	YR/SN	QTY	DESCRIPTION
1		398846A2		2	LIGHT ASSY. Front Driving; Incl. 1312210C2, 404996A1
		1312210C2		1	BULB 12V, 55W
		{404996A1}		1	Lens
2		398847A2		6	LIGHT ASSY. Front and Rear Flood and Work Lamps; Incl. 1312210C2, 276498A1
		1312210C2		1	BULB 12V, 55W
		276498A1		1	LENS With Hardened Glass; Replaces 1964801C1 Non-Hardened Lens Used In Production
3		128312A1		8	BOLT M10 x 15
5		279224A1		1	LIGHT, TAIL Amber; Right Front Corner
6		279223A1		1	LIGHT, TAIL Amber; Left Front Corner
7		357540A1		1	LIGHT ASSY. Amber and Red; Right Rear Corner
8		357541A1		1	LIGHT ASSY. Amber and Red; Left Rear Corner
9		394863A1		10	SCREW M6 x 20
10		404617A1		1	HARNESS Front
11		844-10020		2	SCREW M10 x 20
12		398380A3		1	HARNESS Rear
13		396018A2		1	HARNESS B-Post, Dome Lamp, Radio, Rear Wiper
14		L18337		5	STRAP 15 in
15		279265A2		1	SWITCH Dome Lamp
16		279916A1		2	BULB

04 -16		p1	05/03

LAMP ASSY (ROPS CANOPY MODELS)

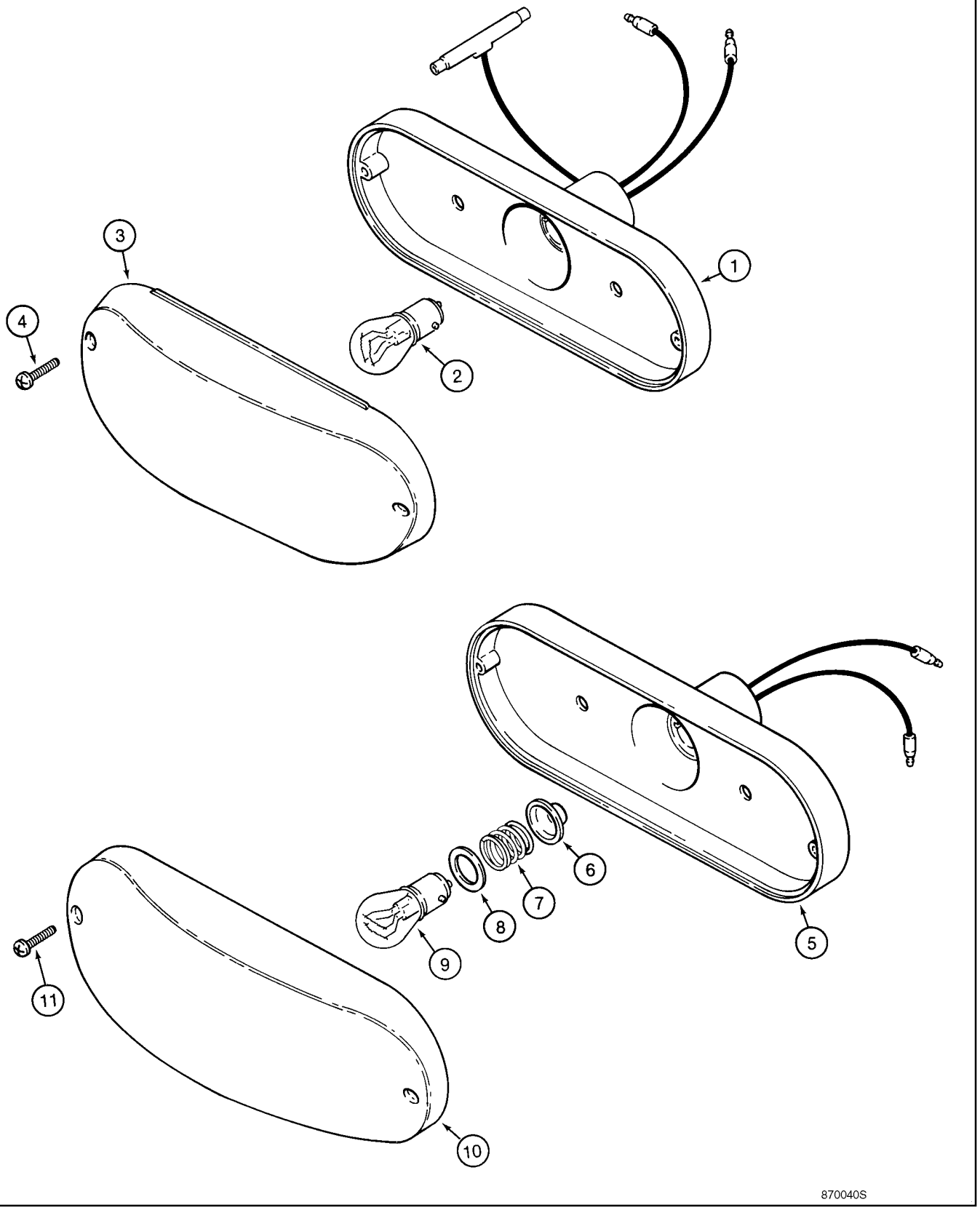

LAMP ASSY (ROPS CANOPY MODELS)

REF	FN	PART NUMBER	YR/SN	QTY	DESCRIPTION
		D121152		2	LAMP Stop And Tail Lamp, Red; Incl. Ref 1 - 4
1		NSS		1	NOT SERVICED SEPARATELY Housing
2		T34857		1	BULB
3		N6836		1	LENS Red
4		261-14310		2	SCREW
		D135384		4	LAMP Turn Signal and Flasher; Amber; Incl. Ref 5 - 11
5		NSS		1	NOT SERVICED SEPARATELY Housing
6		NSS		1	NOT SERVICED SEPARATELY Seal
7		NSS		1	NOT SERVICED SEPARATELY Spring
8		NSS		1	NOT SERVICED SEPARATELY Insulator
9		A41264		1	BULB
10		N14283		1	LENS Amber
11		261-14310		2	SCREW

HORN - ALARM, BACKUP

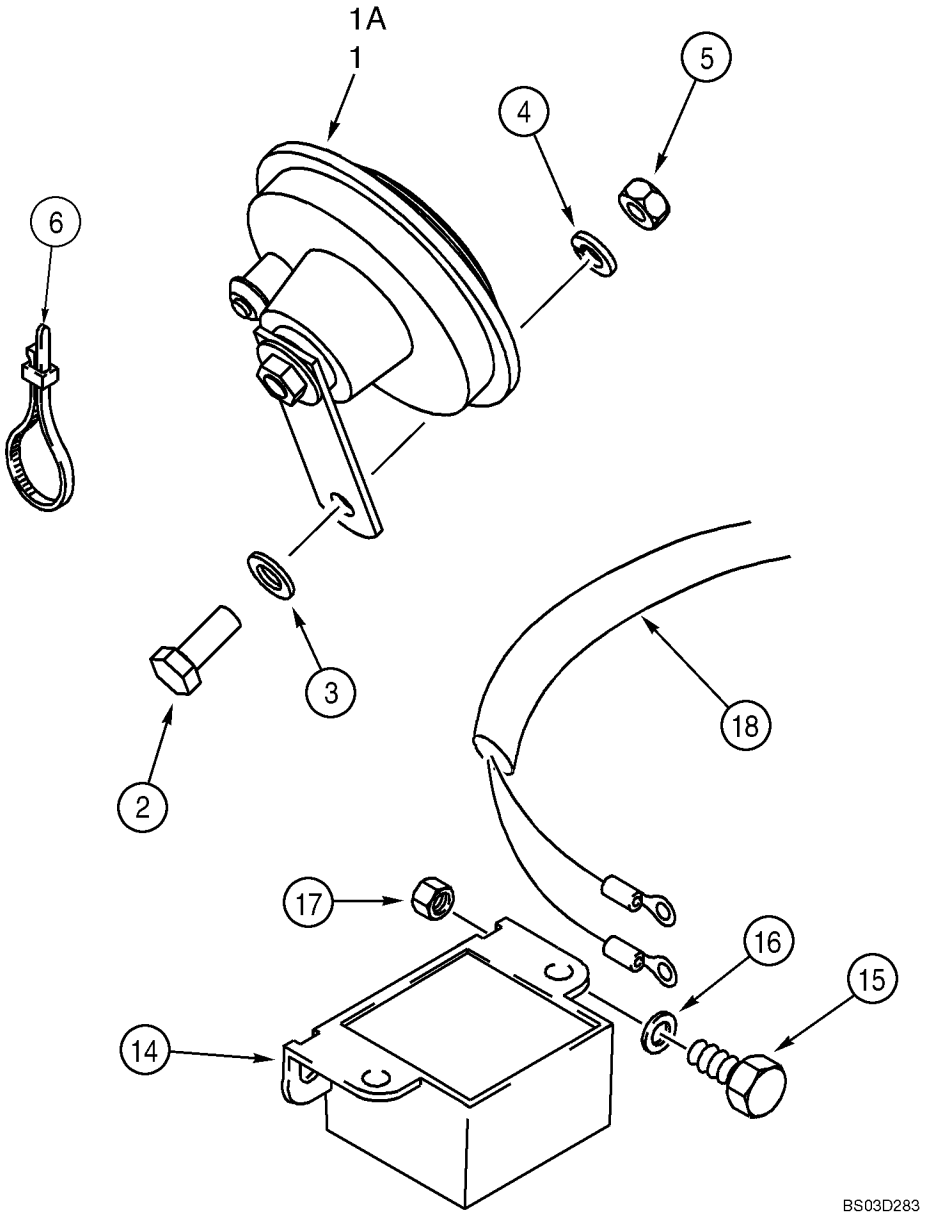

HORN - ALARM, BACKUP

REF	FN	PART NUMBER	YR/SN	QTY	DESCRIPTION
1		3057542R91		1	HORN If Used
1A		237582A1		1	HORN Black; Replaces 3057542R91
2		614-8020		1	CAPSCREW M8 x 20
3		895-11008		1	WASHER 9 x 17 x 1,6 mm
4		892-11008		1	WASHER M8
5		829-1408		1	NUT M8; 10
6		L18337		2	STRAP 15 in
14		109511A1		1	BUZZER
15		614-8025		2	CAPSCREW M8 x 25
16		895-11008		2	WASHER 9 x 17 x 1,6 mm
17		832-10408		2	NUT M8
18		396014A1		1	HARNESS For Clamp, See Figure 04-04

04 -18		p1	05/03

BEACON, ROTATING (CAB OR CANOPY MODELS)

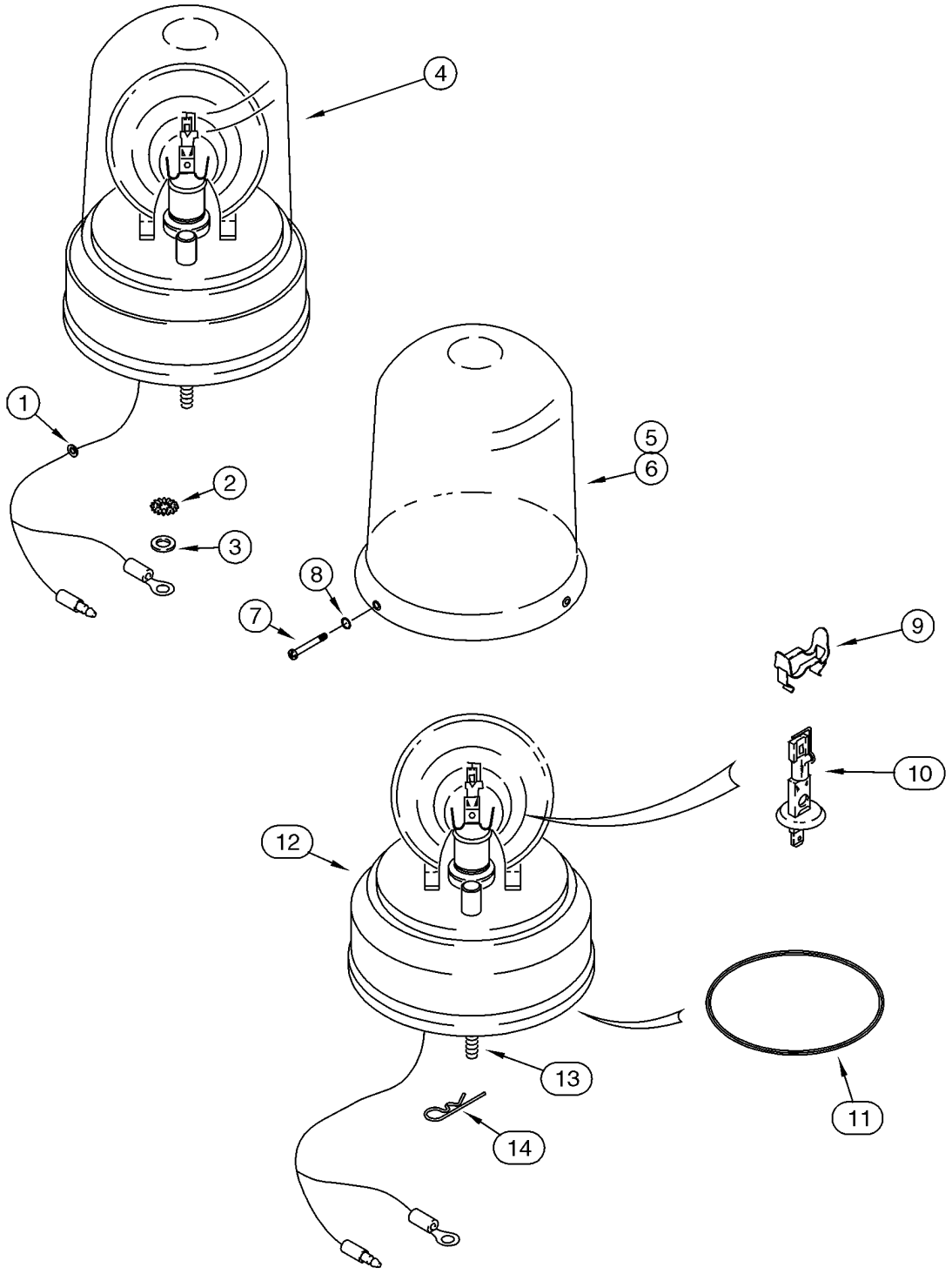

BEACON, ROTATING (CAB OR CANOPY MODELS)

REF	FN	PART NUMBER	YR/SN	QTY	DESCRIPTION
1		A23870		1	GROMMET
2		493-11026		1	WASHER Internal External Tooth Lock Washer, Ground
3		495-21031		1	WASHER 1/4 wide plain
4		108366A1		1	LIGHT, WARNING Incl. Ref 5 - 14
5		A187542		1	LENS Amber; If Used
6		127158A1		1	LENS Blue; If Used
7		168-71		3	SCREW
8		238-5005		3	O-RING
9		101531A1		1	CLIP
10		3125705R1		1	BULB
11		A187575		1	BELT Drive Motor
12		NSS		1	NOT SERVICED SEPARATELY Base; With Drive Motor
13		614-6020		3	BOLT
14		136-54		3	PIN
15		386851A1		1	SWITCH Rotating Beacon; Not Illustrated
16		121412A1		1	FUSE Not Illustrated

ANTENNA, RADIO - HARNESS, RADIO

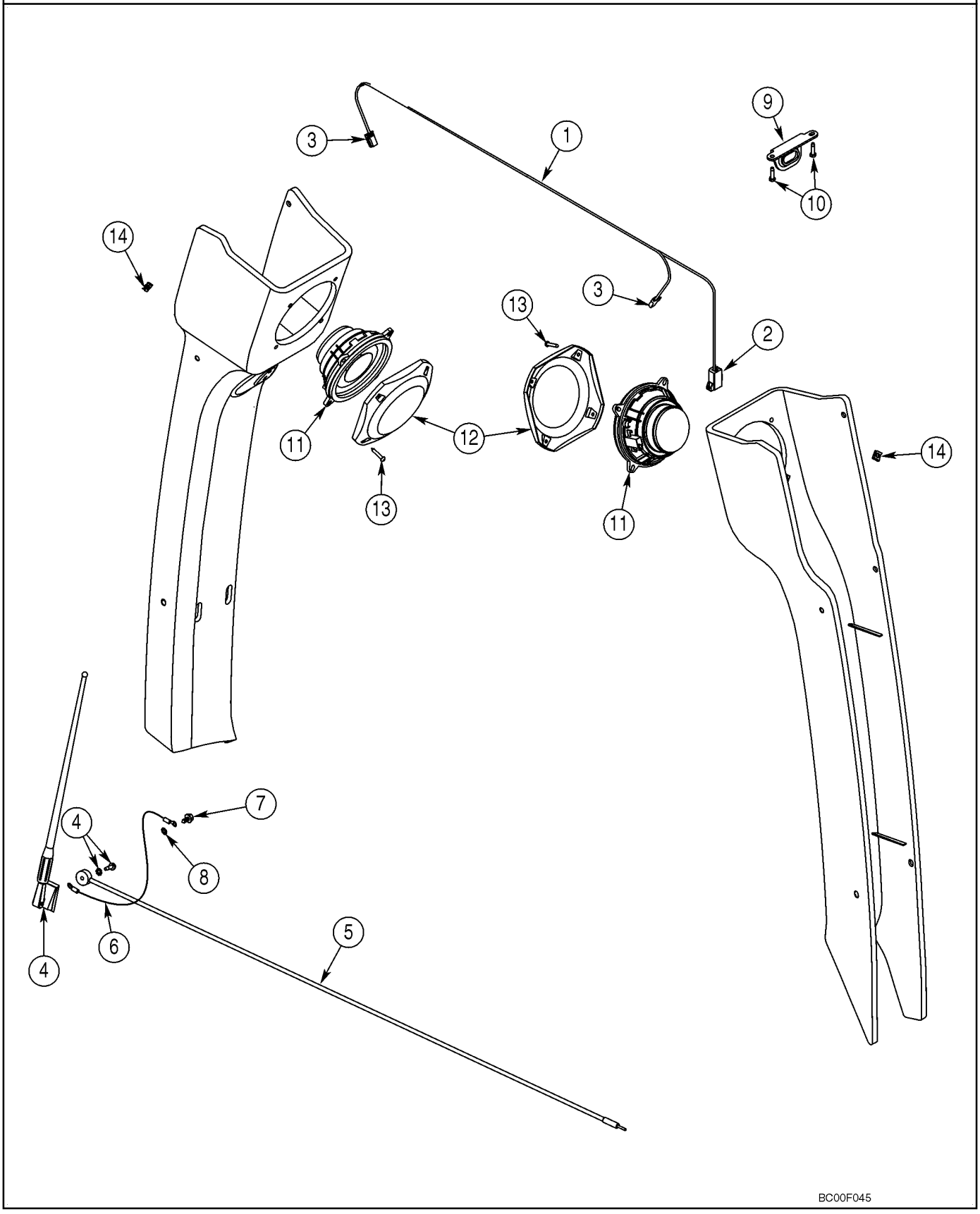

ANTENNA, RADIO - HARNESS, RADIO

REF	FN	PART NUMBER	YR/SN	QTY	DESCRIPTION
1		382664A2		1	HARNESS Speaker; Incl. Ref 2, 3
2		227389A1		1	CONNECTOR To Cab Harness
3		195552A1		2	FITTING Speaker
4		197745A1		1	ANTENNA Radio; Incl. Flat Washer and Nut Which Are Not Serviced Separately
5		381659A1		1	CABLE ASSY.
6		291010A1		1	WIRE Ground
7		282-17512		1	SCREW No. 10 x 3/4
8		893-11005		1	WASHER M5
9		386927A1		1	BRACKET
10		276-26512		2	SCREW No. 10 x 3/4, st
11		182721A2		2	SPEAKER 5-1/2
12		187281A1		2	COVER
13		761-17325		8	SCREW M4,2 x 25
14		177269A1		8	NUT

ELECTRICAL - BACKHOE AUXILIARY HYDRAULIC

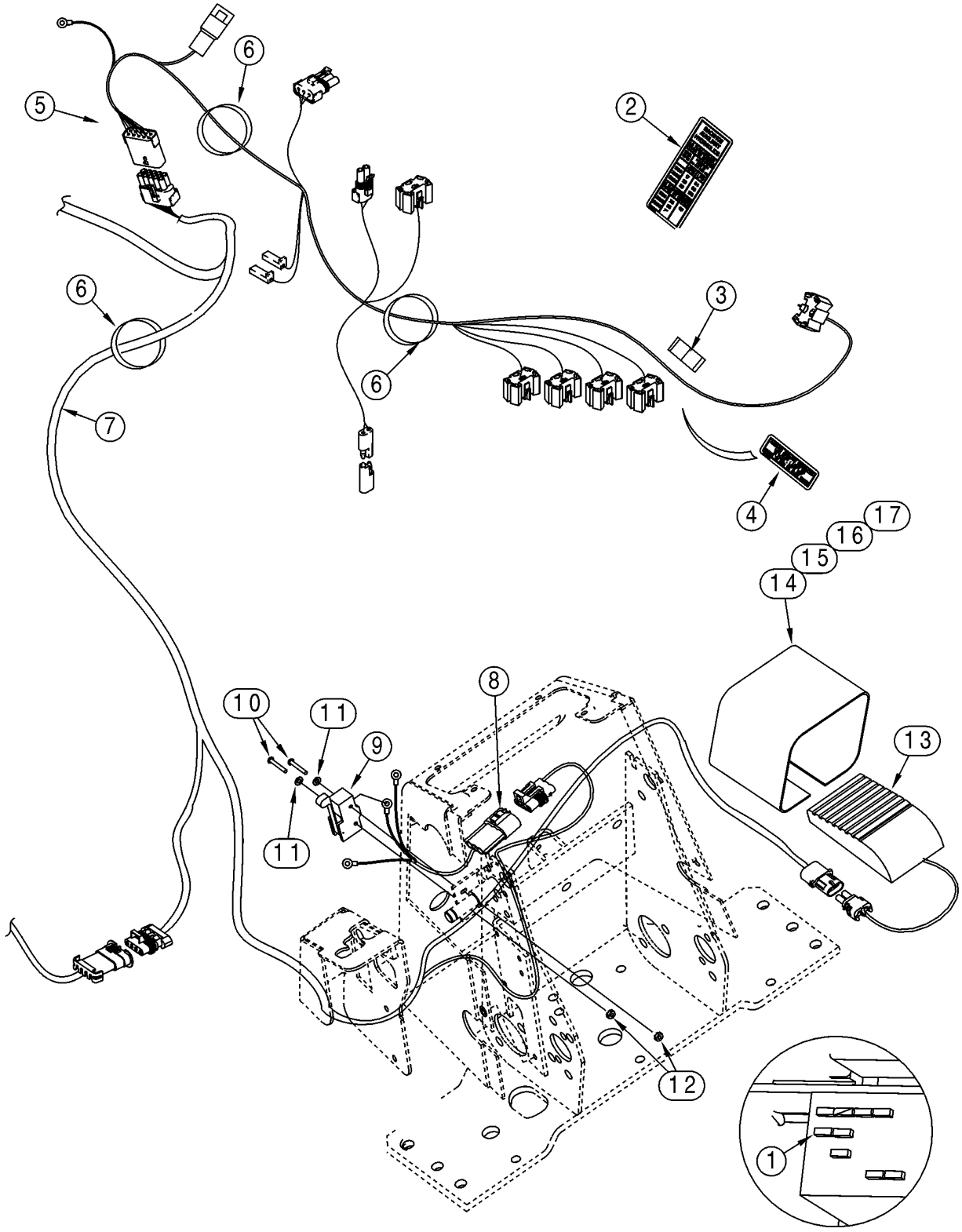

ELECTRICAL - BACKHOE AUXILIARY HYDRAULIC

REF	FN	PART NUMBER	YR/SN	QTY	DESCRIPTION
1		121413A1		1	FUSE 15 amp
2		284480A1		1	DECAL Backhoe Auxiliary Hydraulics; Hi Flow/Low Flow
3		284058A1		1	SWITCH Backhoe Auxiliary Hydraulics
4		284627A1		1	DECAL Backhoe Auxiliary Hydraulics; Low Flow - Light On/Hi Flow - Light Off
5		390518A3		1	HARNESS Side Console Options; Attaches To Side Console Harness and Chassis Options Harness
6		L18337		4	STRAP 15 in
7		390520A2		1	HARNESS Chassis Options
8		298681A1		1	HARNESS Detent Lever
9		D137363		1	SWITCH Contact; Limit Switch
10		440-10616		2	SCREW No. 6 x 1
11		895-11004		2	WASHER 4,3 x 9 x 0,8 mm
12		193-1003		2	NUT No. 6; With External Tooth Lock Washer
13		137219A1		1	SWITCH Foot
14		300030A1		1	COVER
15		843-1516		2	SCREW M5 x 16
16		892-11005		2	WASHER, LOCK M5
17		824-1405		2	NUT M5

NOTES

SECTION INDEX

05 -01	STEERING WHEEL - COLUMN
05 -02	HYDRAULICS - STEERING
05 -03	STEERING COLUMN
05 -04	CYLINDER ASSY - STEERING (D148413 / 441647A1 FRONT AXLE) (IF USED)
05 -05	AXLE, FRONT (D148413 / 441647A1) - SPINDLES (IF USED)
05 -06	AXLE, FRONT (D148413 / 441647A1) - HUB AND BEARINGS (IF USED)
05 -07	AXLE, FRONT (377979A1 / 86990837) - MOUNTING (IF USED)
05 -08	AXLE, FRONT (377979A1 / 86990837) - HOUSING (IF USED)
05 -09	AXLE, FRONT (377979A1 / 86990837) - HOUSING, SWIVEL (IF USED)
05 -10	AXLE, FRONT (377979A1 / 86990837) - CYLINDER, STEERING (IF USED)
05 -11	AXLE, FRONT (377979A1 / 86990837) - HUB AND BEARINGS (IF USED)
05 -12	WHEELS, FRONT - TIRES

STEERING WHEEL - COLUMN

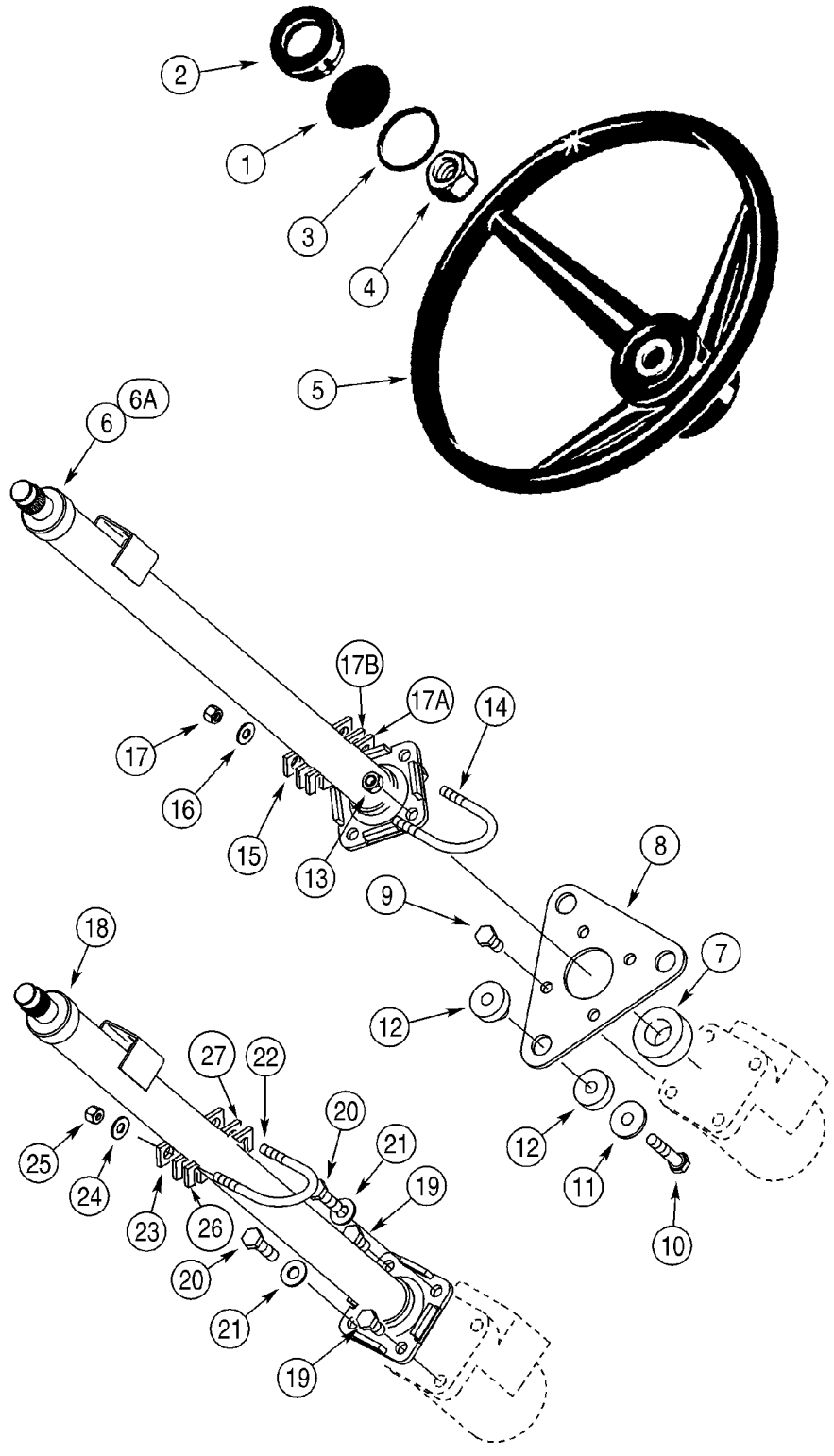

BC00B038

STEERING WHEEL - COLUMN

REF	FN	PART NUMBER	YR/SN	QTY	DESCRIPTION
1		1342054C1		1	PLASTIC PLUG Insert, Black Plastic
2		114882A2		1	CAP Replaces 114882A1
3		238-5227		1	O-RING 2-1/8 ID x 2-3/8
4		1959509C1		1	NUT
5		A65544		1	WHEEL (STEERING)
6		352568A1		1	COLUMN-STEERING Cab Models, Without Tilt Steering, See Figure 05-03
6A		352569A4		1	COLUMN-STEERING Cab Models, With Tilt Steering, 712 mm Long, See Figure 05-03; Replaces 352569A3 706 mm Long Column
7		352401A1		1	SEAL 25 x 40 x 19 mm, Sound Insulation
8		388116A2		1	PLATE
9		614-10020		4	CAPSCREW M10 x 20
10		814-10050		3	CAPSCREW M10 x 50
11		496-81028		3	WASHER 13/32 x 1-1/4 x 1/8 in
12		141747A1		3	ISOLATOR
13		832-10410		2	NUT M10
14		379846A1		1	BOLT "U"
15		352727A1		1	SPACER
16		895-15008		2	WASHER 9 x 20 x 1,6 mm
17		832-10408		2	NUT M8
17A		401524A1		X	SPACER 1.6 mm thk, No Longer Used
17B		401523A1		X	SPACER 3.8 mm thk, No Longer Used
18		348794A1		1	COLUMN-STEERING Canopy Models, See Figure 05-03
19		614-10020		2	CAPSCREW M10 x 20
20		614-10035		2	SCREW M10 x 35
21		895-15010		2	WASHER 11 x 24 x 2 mm
22		379846A1		1	BOLT "U"
23		352727A1		1	SPACER
24		895-15008		2	WASHER 9 x 20 x 1,6 mm
25		832-10408		2	NUT M8
26		401524A1		X	SPACER 1.6 mm thk, No Longer Used
27		401523A1		X	SPACER 3.8 mm thk, No Longer Used

HYDRAULICS - STEERING

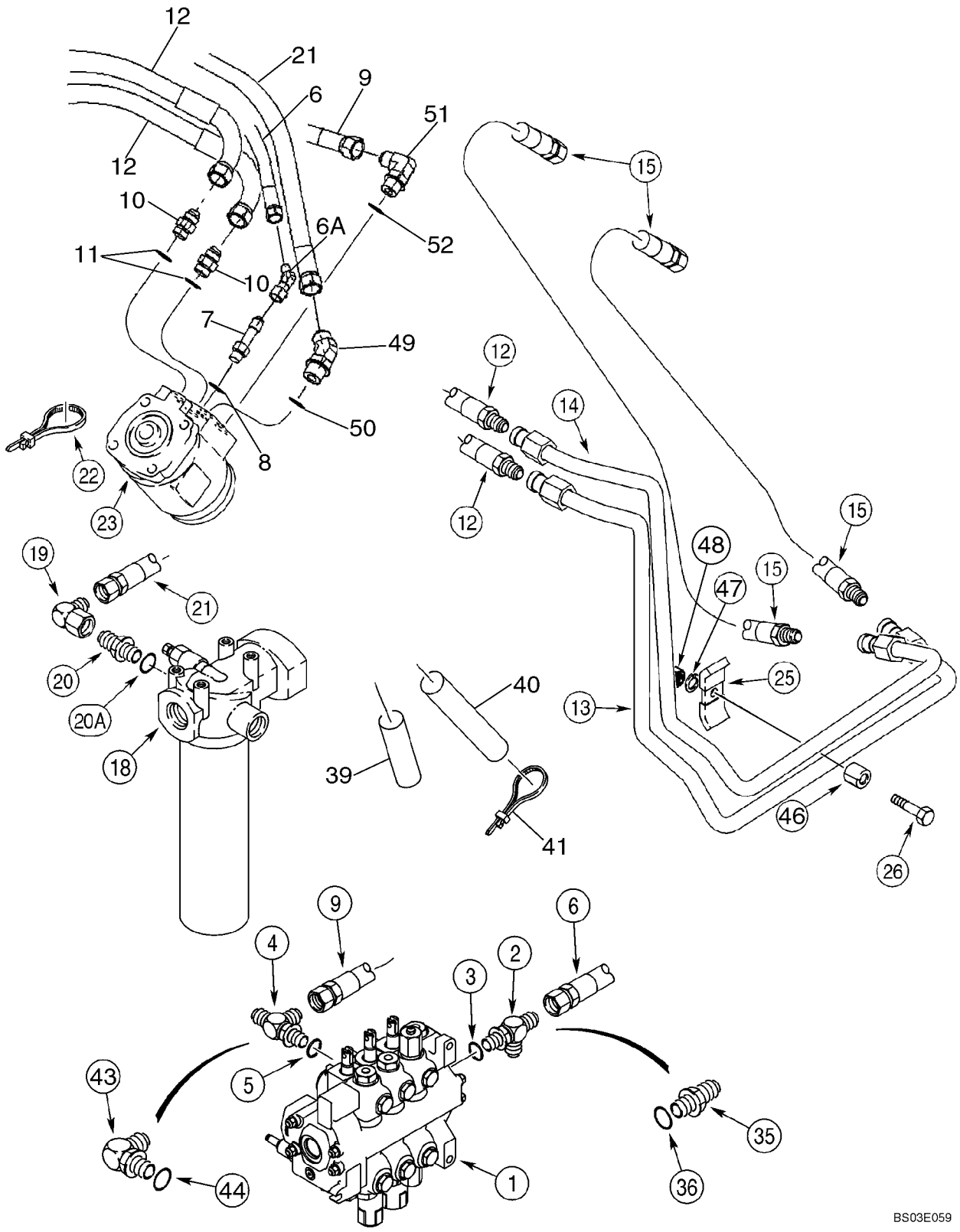

HYDRAULICS - STEERING

REF	FN	PART NUMBER	YR/SN	QTY	DESCRIPTION
1		REF		1	INSTRUCTION For Loader Control Valve Options, See Figures 08-27, 08-28
2		282428A1		1	POPPET, VALVE Check Valve, Incl. Ref 3, Models With Hand Held Auxiliary Hydraulics, If Used
3		237-6006		1	O-RING 15/32 ID x 5/64
4		218-5576		1	TEE Incl. Ref 5, Lower Inlet Port; Models With Hand Held Auxiliary Hydraulics
4		218-5292		1	FITTING Tee, Incl. Ref 5; Models With Loader Tool Quick Coupler, See Figure 08-21, 08-22
5		237-6010		1	O-RING 3/4 ID x 3/32
6		409403A1		1	HOSE ASSY. 1605 mm (63-3/16 in), Steering Pilot, Steering Control Valve Small Center Port to Loader Control Valve
6A		218-5170		1	FITTING Elbow, 45 deg, 7/16 fl x fem
7		218-5027		1	CONNECTOR 7/16 fl x Or, Incl. Ref 8
8		237-6004		1	O-RING 23/64 ID x 5/64
9		224423A1		1	HOSE 1300 mm (51-3/16 in), Steering Pressure, Loader Control Valve to Steering Control Valve Lower Right-Hand Port
10		218-5059		2	CONNECTOR 3/4 fl x Or, Incl. Ref 11
11		237-6008		1	O-RING 41/64 ID x 3/32
12		409402A1		2	HOSE ASSY. 700 mm (27-9/16 in)
13		414755A1		1	TUBE ASSY. Lower, To Steering Cylinder Right-Hand Port Hose; Replaces 397949A2
14		414753A1		1	TUBE ASSY. Upper, To Steering Cylinder Left-Hand Port Hose; Replaces 397947A3
15		144219A1		2	HOSE 485 mm (19-1/8 in), To Steering Cylinder
18		181001A1		1	FILTER ASSY. Hydraulic Oil, See Figure 08-52
19		218-5230		1	ELBOW 90 deg, 3/4 fl x sw
20		218-5351		1	CONNECTOR 3/4 fl x 9/16 Or, Incl. Ref 20A
20A		237-6006		1	O-RING 15/32 ID x 5/64
21		409404A1		1	HOSE ASSY. 1570 mm (61-13/16 in), Return, Steering Control Valve Upper Right-Hand Port to Filter
22		L18337		1	STRAP 15 in, If Used

HYDRAULICS - STEERING

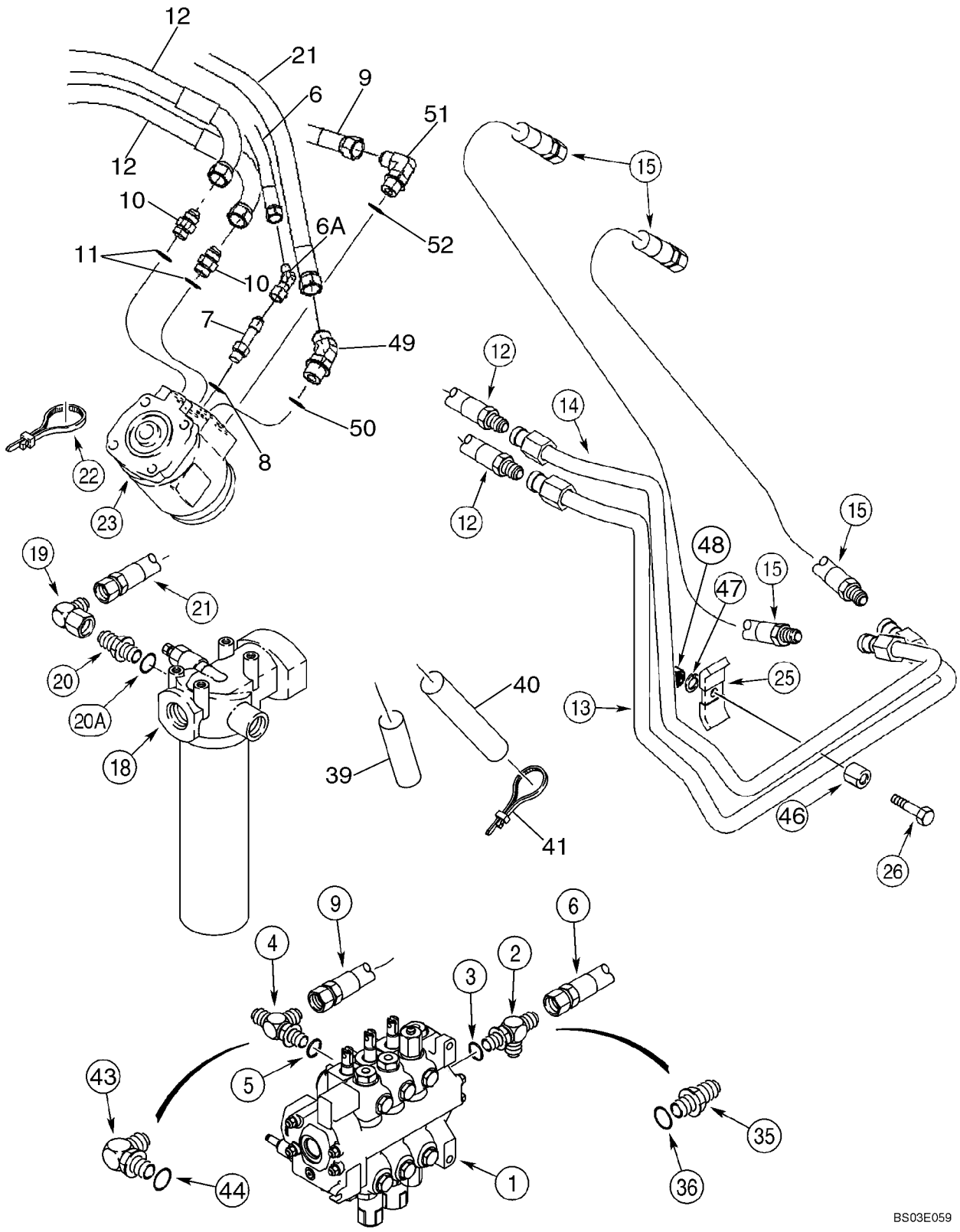

HYDRAULICS - STEERING

REF	FN	PART NUMBER	YR/SN	QTY	DESCRIPTION
23		377807A1		1	PUMP Steering Control Valve, Includes 396591A1, 396592A1, 396593A1
		396591A1		1	KIT Seal
		396592A1		1	KIT Anticavitation
		396593A1		1	KIT Bolt
25		D143846		2	SHIN Clamp
26		711-10050		2	BOLT M10 x 50
35		218-5057		1	CONNECTOR 9/16 fl x Or, Incl. Ref 36, Models Without Auxiliary Hydraulics, If Used
36		237-6006		1	O-RING 15/32 ID x 5/64
39		D132982		3	LOOM Sleeve, 400 mm (15-3/4 in)
40		191704A1		2	LOOM Sleeve, 460 mm (18-1/8 in)
41		L18337		1	STRAP 15 in
43		218-5121		1	FITTING Elbow, 90 deg, 3/4 fl x 7/8 Or, Incl. Ref 44, Models Without Auxiliary Hydraulics, If Used
44		237-6008		1	O-RING 41/64 ID x 3/32
46		120303A1		2	SPACER
47		892-11010		2	WASHER, LOCK M10
48		829-1410		2	NUT M10; 10.9
49		218-5136		1	ELBOW 45 deg, 3/4 Or, Incl. Ref 50
50		237-6008		1	O-RING
51		218-5106		1	FITTING Elbow, 90 deg, 3/4 Or; Incl. Ref 52
52		237-6008		1	O-RING

STEERING COLUMN

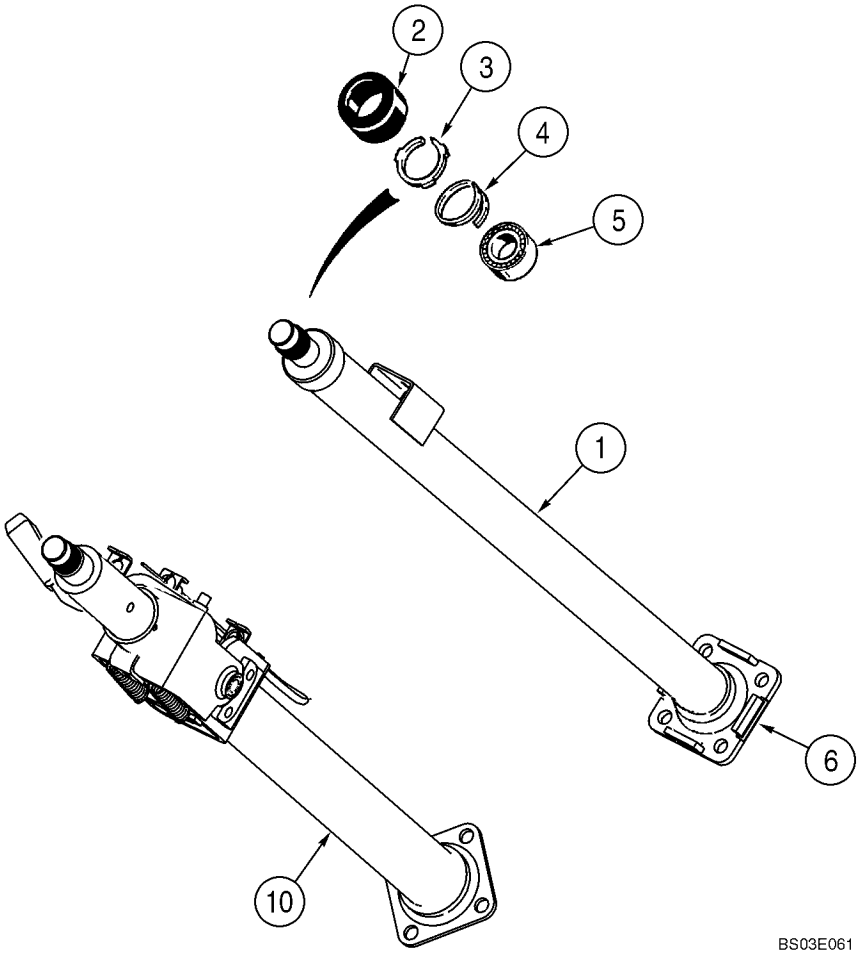

STEERING COLUMN

REF	FN	PART NUMBER	YR/SN	QTY	DESCRIPTION
		348794A1		1	COLUMN-STEERING Canopy Models, Incl. Ref 1 - 6
		352568A1		1	COLUMN-STEERING Cab Models, Without Tilt Steering, Incl. Ref 1 - 6
1		NSS		1	NOT SERVICED SEPARATELY Column
2		S115351		1	CAP
3		NSS		1	NOT SERVICED SEPARATELY Retainer
4		102-1387		1	RING SNAP No. 87
5		NSS		1	NOT SERVICED SEPARATELY Bearing
6		NSS		1	NOT SERVICED SEPARATELY Flange
10		352569A4		1	COLUMN-STEERING 712 mm Long, Cab Models, With Tilt Steering, Component Parts Not Serviced Separately; Replaces 352569A3 706 mm Long Column

05 -04		p1	05/03

CYLINDER ASSY - STEERING (D148413 / 441647A1 FRONT AXLE) (IF USED)

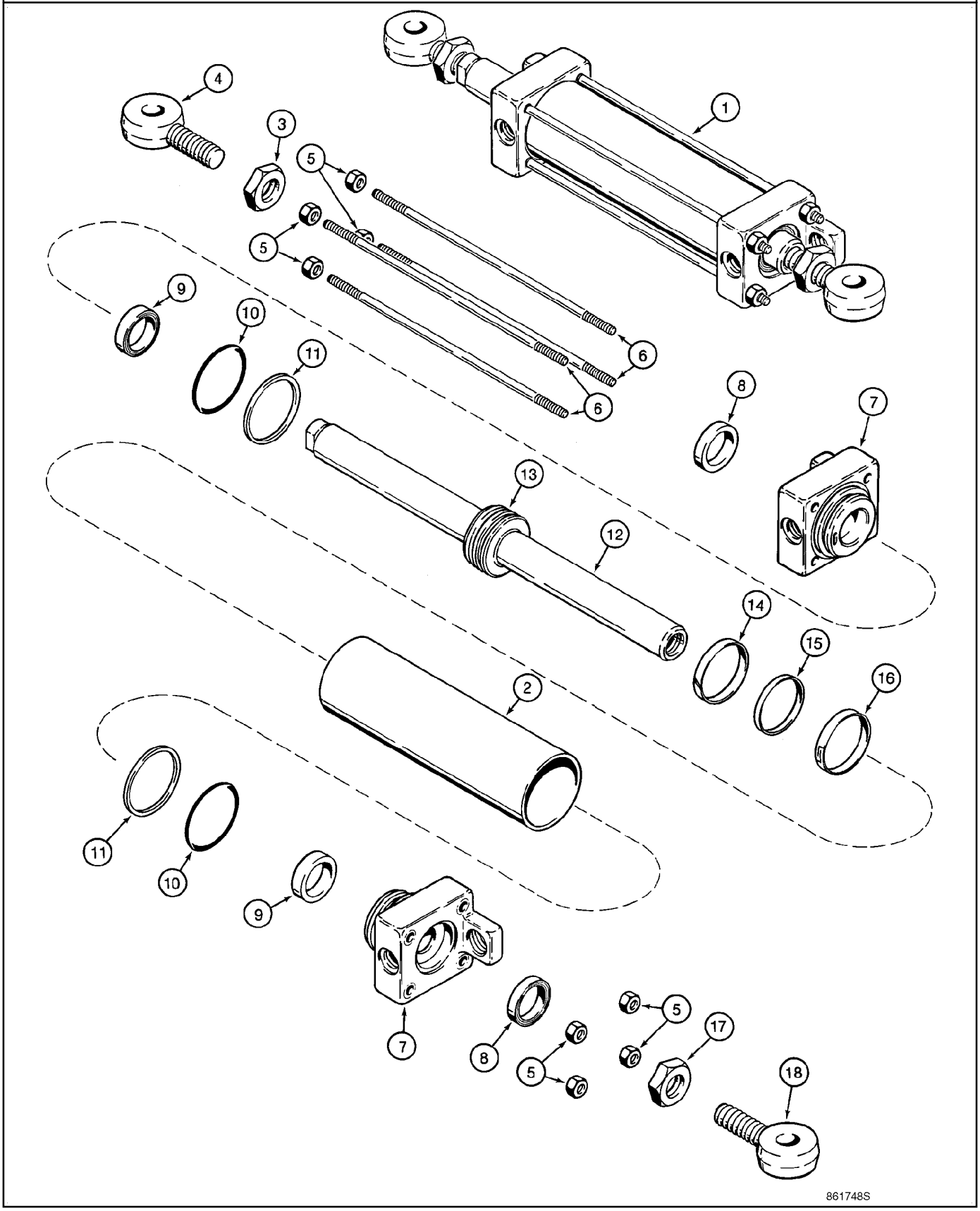

CYLINDER ASSY - STEERING (D148413 / 441647A1 FRONT AXLE) (IF USED)

REF	FN	PART NUMBER	YR/SN	QTY	DESCRIPTION
1		1986518C2		1	CYLINDER STEERING 70 ID x 170 strk, Incl. Ref 1 - 18
2		G106808		1	JACK BODY Tube
3		129-369		1	NUT 7/8 NF
4		1542550C1		1	BALL JOINT Eye, Left-Hand Thread
5		425-106		8	NUT 3/8
6		G106817		4	TIE ROD 338 mm (13-5/16 in)
7		1986520C1		2	CAP CYLINDER END Gland
8		D95142		1	SEAL Wiper
9		G107921		1	SEAL
10		238-5230		1	O-RING 2-1/2 ID x 1/8
11		G32129		1	RING Backup
		G107721		1	ROD ASSY. Piston, 38 mm (1-1/2 in) dia; Incl. Ref 12, 13
12		NSS		1	NOT SERVICED SEPARATELY Piston Rod
13		NSS		1	NOT SERVICED SEPARATELY Piston
14		G105187		1	RING Wear
15		G104439		1	RING
16		G104454		1	SEAL
17		425-1514		1	NUT 7/8 NF
18		1542549C1		1	BALL JOINT Eye, Right-Hand Thread
		G110045		1	KIT Seal, Incl. Ref 8 - 11, 14 - 16

05 -05		p1	05/03

AXLE, FRONT (D148413 / 441647A1) - SPINDLES (IF USED)

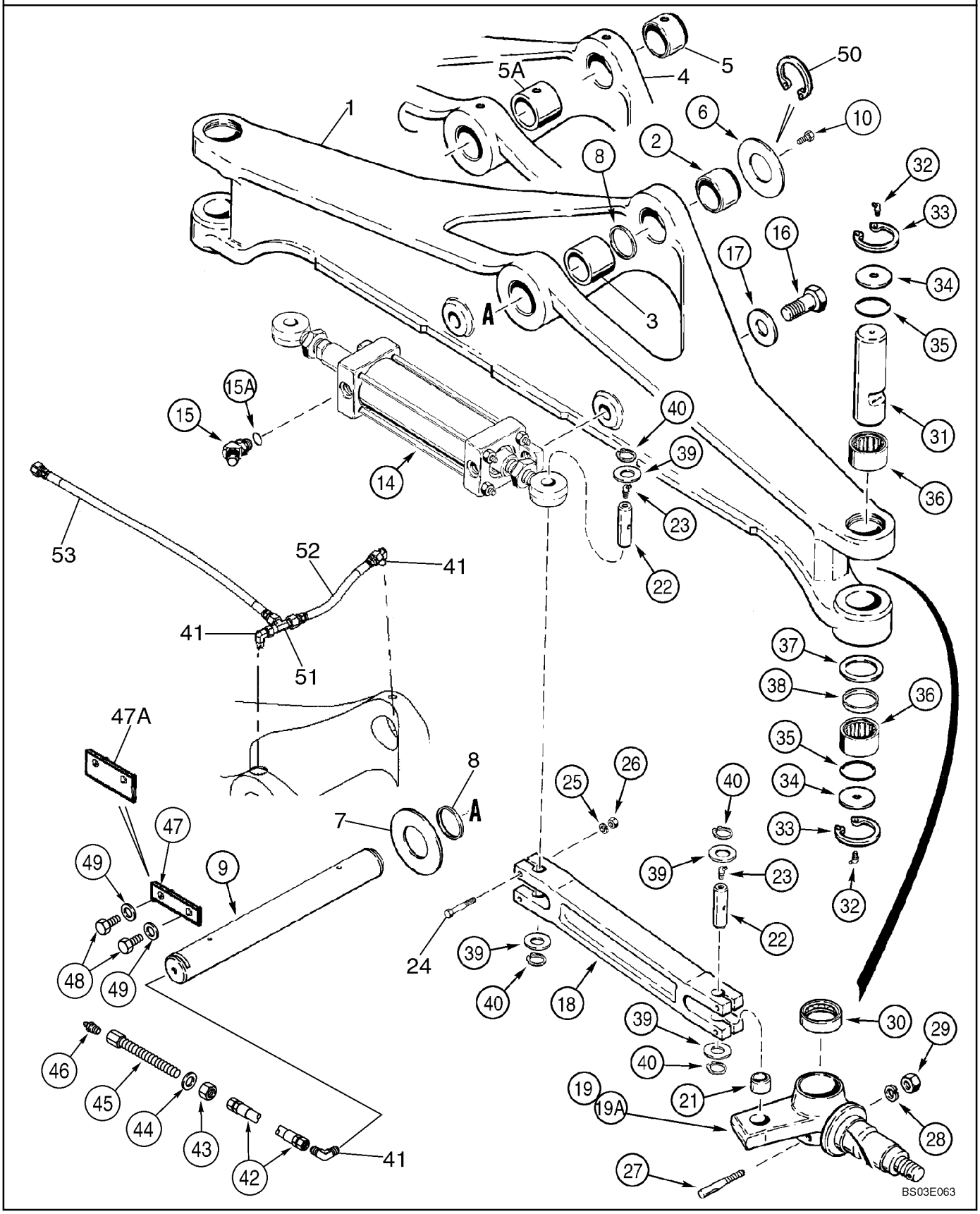

AXLE, FRONT (D148413 / 441647A1) - SPINDLES (IF USED)

REF	FN	PART NUMBER	YR/SN	QTY	DESCRIPTION
		111662A1			AXLE, FRONT Used In Production, For Service Order D148413 Axle, Ref 1
1		D148413		1	AXLE, FRONT Incl. Ref 2, 3, 8; If Used
2		D137345		1	BUSHING 36 mm (1-13/32 in) lg
3		D138047		1	BUSHING 54 mm (2-1/8 in) lg
4		441647A1		1	AXLE, FRONT Incl. Ref 5, 5A; If Used
5		441132A1		1	BUSHING, LARGE 36 mm (1-13/32 in) lg
5A		441131A1		1	BUSHING, LARGE 65 mm (2-9/16 in) lg
6		191796A1		X	WASHER 2 x 4 x 1/16
7		D123684		1	WASHER 2-1/2 x 4-1/2 x 3/16
8		D123655		2	SEAL Grease, 2 ID x 2-3/8 OD x 11/64
9		397783A1		1	PIN, PIVOT 427 mm (16-13/16 in) lg; Holes on Both Ends, Plus Two On Top; If Used
9		378290A1		1	PIN Pivot, 431.5 mm (17 in) lg; Holes on Both Ends, Plus Two On Top; If Used
9		391451A1		1	PIN, PIVOT 431.5 mm (17 in) lg; One Hole Opposite Tapered End; If Used
10		614-12025		1	CAPSCREW M12 x 25, If Used
14		1986518C2		1	CYLINDER STEERING 70 ID x 170 strk, See Figure 05-04
15		218-5136		2	ELBOW 45 deg, 3/4 fl x Or, Incl. Ref 13
15A		237-6008		1	O-RING 41/64 ID x 3/32
16		13-1838		2	CAPSCREW 1-1/8 x 2-3/8, If Used
16		446107A1		2	BOLT (MACHINE) Lock, 1-1/8 x 2-3/8; If Used
17		D74949		2	WASHER Hardened
18		D123806		2	LINK, CONNECTING
19		320977A1		1	SPINDLE Right-Hand, .137 Inch Radius, Does Not Include Bushing, Order Bushing Separately, For Service Order 335130A1, Ref 19A
19A		335130A1		1	SPINDLE Right-Hand, .137 Inch Radius, Incl. Ref 21
20		303428A1		1	SPINDLE Left-Hand, .137 Inch Radius, Does Not Include Bushing, Order Bushing Separately, For Service Order 335132A1, Ref 20A, Not Illustrated
20A		335132A1		1	SPINDLE Left-Hand, .137 Inch Radius, Incl. Ref 21, Not Illustrated
21		D127507		1	BUSHING

05 -05		p2	05/03

AXLE, FRONT (D148413 / 441647A1) - SPINDLES (IF USED)

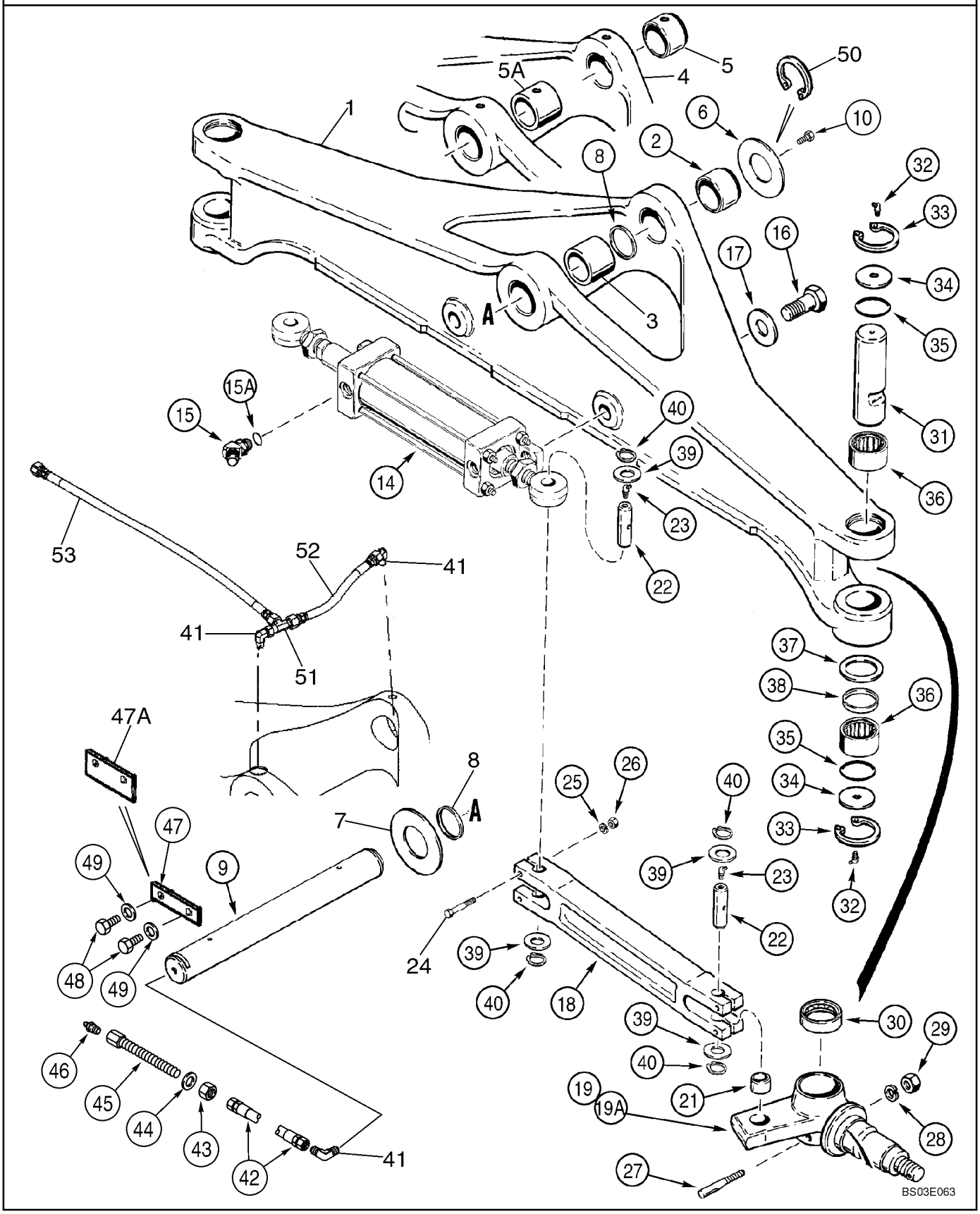

AXLE, FRONT (D148413 / 441647A1) - SPINDLES (IF USED)

REF	FN	PART NUMBER	YR/SN	QTY	DESCRIPTION
22		D150155		4	PIN, LARGE
23		219-89		4	NIPPLE 1/8 PT x 25/32 Grease Fitting
24		413-632		8	BOLT 3/8 x 2
25		492-11038		8	WASHER, LOCK 3/8
26		425-106		8	NUT 3/8
27		D57486		2	PIN, LARGE
28		492-11050		2	WASHER, LOCK 1/2
29		425-118		2	NUT 1/2 NF
30		A27602		2	BEARING
31		D123865		2	PIN, PIVOT
32		219-89		4	NIPPLE 1/8 PT x 25/32
33		100-21237		4	CIRCLIP No. 237
34		D72371		4	WASHER Spacer
35		238-5139		4	O-RING 2-3/16 ID x 3/32
36		A28230		4	BEARING
37		D72372		2	WASHER Thrust
38		D61297		2	SEAL
39		495-11094		8	WASHER 15/16 x 1-3/4 x 1/8
40		103-1687		8	RING SNAP No. 87
41		218-481		1-2	ELBOW 90 deg, 7/16 fl x 1/8
42		399554A1		1	HOSE ASSY. 550 mm (21-21/32 in) lg, Lubrication Line; If Used
43		218-1275		1	NUT, LOCK 7/16
44		495-11047		1	WASHER 15/32 x 59/64 x 1/16
45		381442A1		1	CONNECTOR
46		219-1		1-2	NIPPLE, LUBE 1/8 PT x 21/32
47		377009A1		1	PLATE, BACK No Longer Available, Order 377009A2, Ref 47A
47A		377009A2		1	PLATE, BACK If Used
48		607-10020		2	BOLT Lock, M10 x 20; Replaces 627-10020 Non-Locking Bolt Used On Some Models
49		896-11010		2	WASHER 11 x 21 x 2,5 mm, If Used
50		800-44050		2	RING SNAP If Used
51		218-5478		1	FITTING Tee, If Used
52		447737A1		1	HOSE ASSY. 210 mm (8-9/32 in) lg, Remote Lube; If Used

05 -05		p3	05/03

AXLE, FRONT (D148413 / 441647A1) - SPINDLES (IF USED)

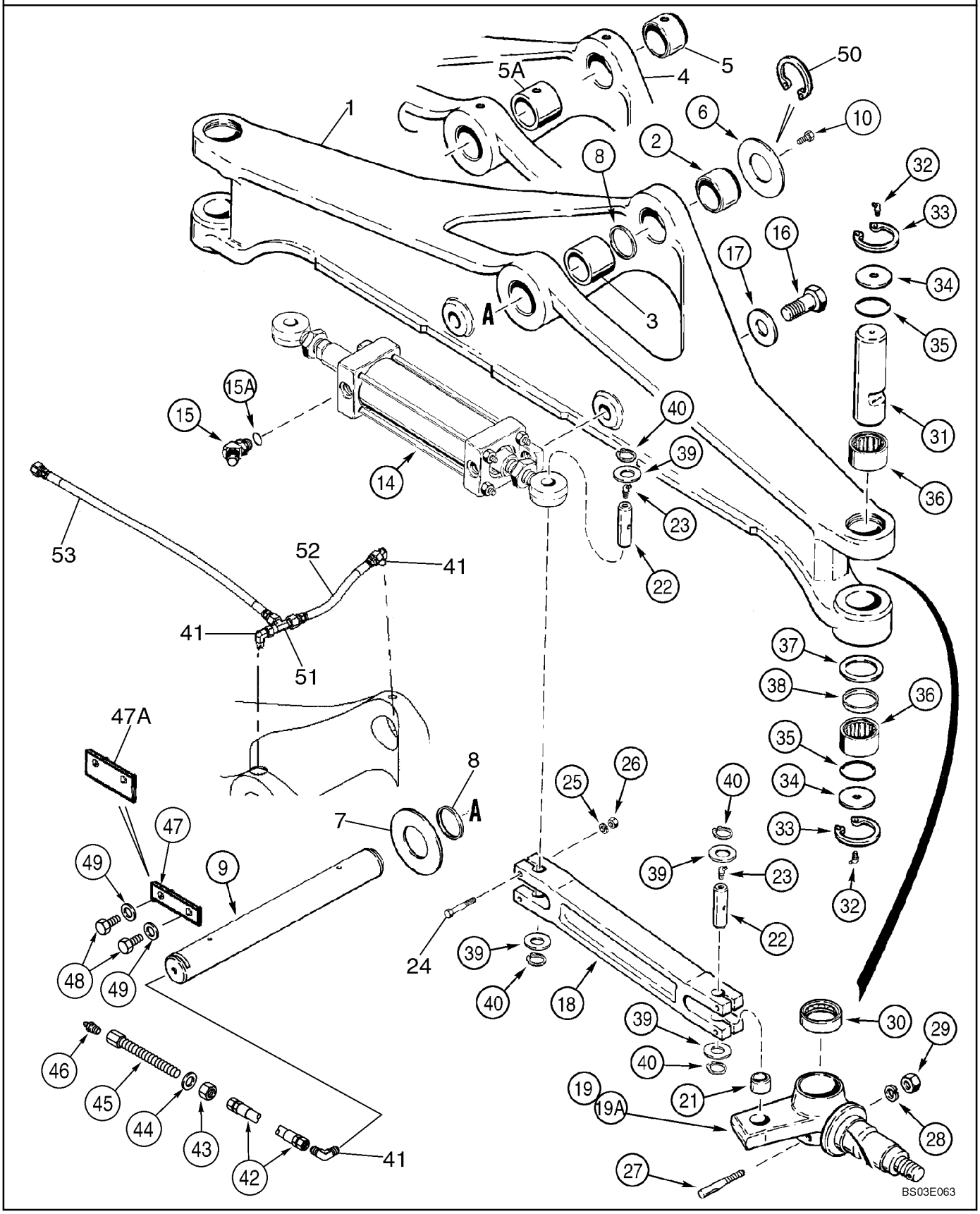

AXLE, FRONT (D148413 / 441647A1) - SPINDLES (IF USED)

REF	FN	PART NUMBER	YR/SN	QTY	DESCRIPTION
53		381386A1		1	HOSE ASSY. 500 mm (19-11/16 in) lg, Remote Lube; If Used
		D103626		1	PACKAGE King Pin, Incl. Ref 27, 30 - 38

AXLE, FRONT (D148413 / 441647A1) - HUB AND BEARINGS (IF USED)

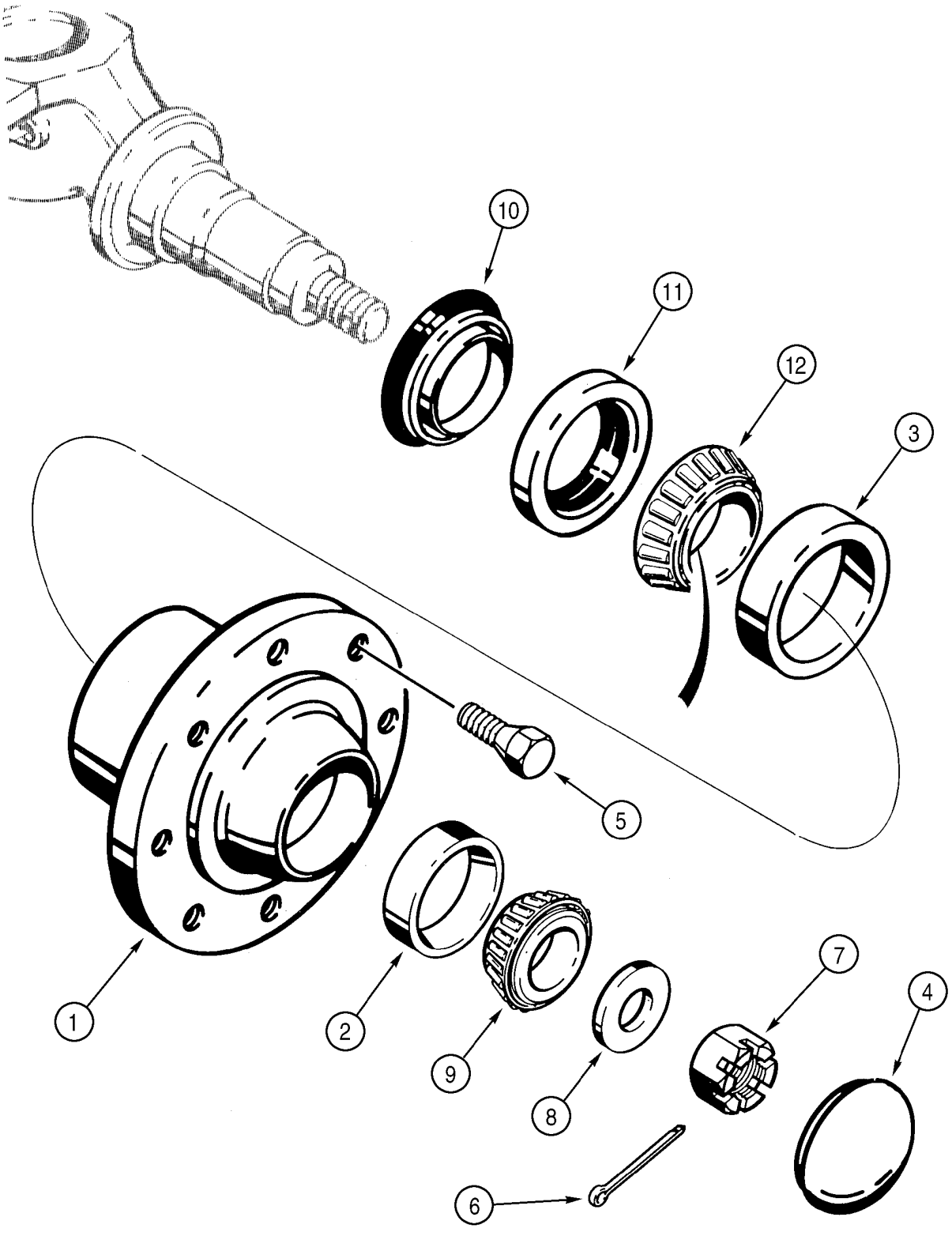

AXLE, FRONT (D148413 / 441647A1) - HUB AND BEARINGS (IF USED)

REF	FN	PART NUMBER	YR/SN	QTY	DESCRIPTION
		D75103		2	HUB Assembly, Incl. Ref 1 - 3, 11, 12; Order Ref 1 - 3
1		A66759		1	HUB
2		619387R1		1	BEARING, CUP 3-1/16 OD
3		625743C1		1	BEARING, CUP 3-35/64 OD
4		D143405		2	CAP
5		A38208		16	BOLT Wheel Bolts
6		432-1232		2	PIN, SPLIT (COTTER) 3/16 x 2
7		425-1918		2	NUT 1-1/8 NF
8		D74949		2	WASHER
9		G15215		2	BEARING, CONE
10		A61449		2	SEAL Spindle
11		A61448		2	SEAL Hub
12		296824A1		2	BEARING

05 -07		p1	05/03

AXLE, FRONT (377979A1 / 86990837) - MOUNTING (IF USED)

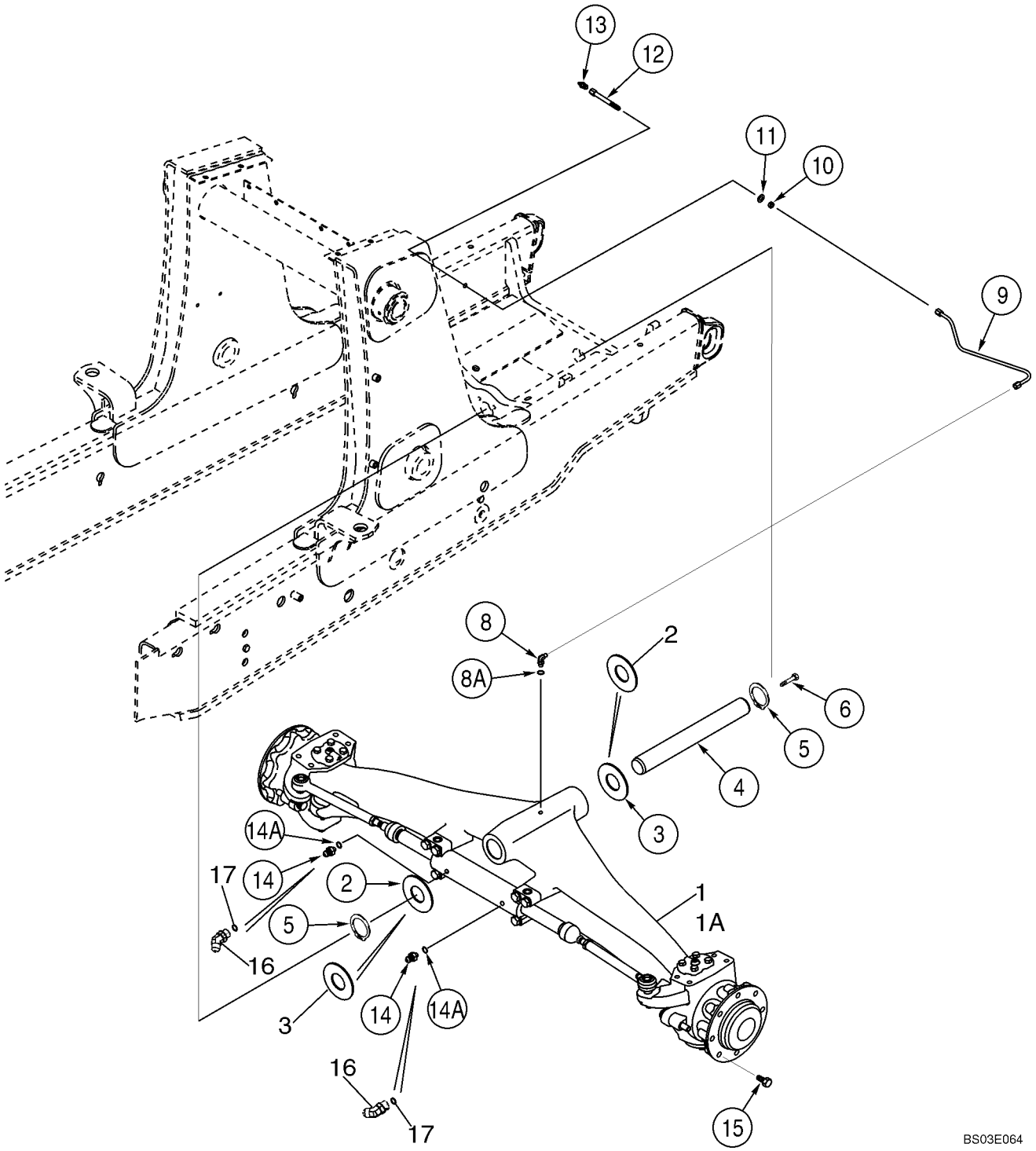

AXLE, FRONT (377979A1 / 86990837) - MOUNTING (IF USED)

REF	FN	PART NUMBER	YR/SN	QTY	DESCRIPTION
1		377979A1		1	AXLE, FRONT Steering, Two Wheel Drive, See Figure 05-08 - 05-11; If Used
1A		86990837		1	AXLE, STEERING Front, Two Wheel Drive, See Figure 05-08 - 05-11; If Used
2		191796A1		X	WASHER 2 x 4 x 1/16
3		D123684		1	WASHER Thrust, 2-1/2 x 4-1/2 x 3/16
4		391451A1		1	PIN, PIVOT 431.5 mm (17 in) lg; One Hole Opposite Tapered End
5		800-44050		2	RING SNAP No. 50
6		614-12025		1	CAPSCREW M12 x 25
8		218-5103		1	ELBOW 90 deg, 7/16 fl x adj Or; Incl. Ref 8A
8A		237-6004		1	O-RING 23/64 ID x 5/64
9		381386A1		1	HOSE ASSY. 500 mm (19-11/16 in), Lubrication Line
10		218-1275		1	NUT, LOCK 7/16
11		495-11047		1	WASHER 15/32 x 59/64 x 1/16
12		381442A1		1	CONNECTOR
13		219-1		1	NIPPLE, LUBE 1/8 PT x 21/32 Grease Fitting
14		218-5351		2	CONNECTOR 3/4 fl x 9/16 Or, Incl. Ref 14A; If Used
14A		237-6006		1	O-RING 15/32 ID x 5/64
15		A38208		16	BOLT Wheel Bolt
16		218-5529		2	ELBOW 45 deg, 3/4 fl x 9/16 adj Or, Incl. Ref 17; If Used
17		237-6006		1	O-RING 15/32 ID x 5/64

AXLE, FRONT (377979A1 / 86990837) - HOUSING (IF USED)

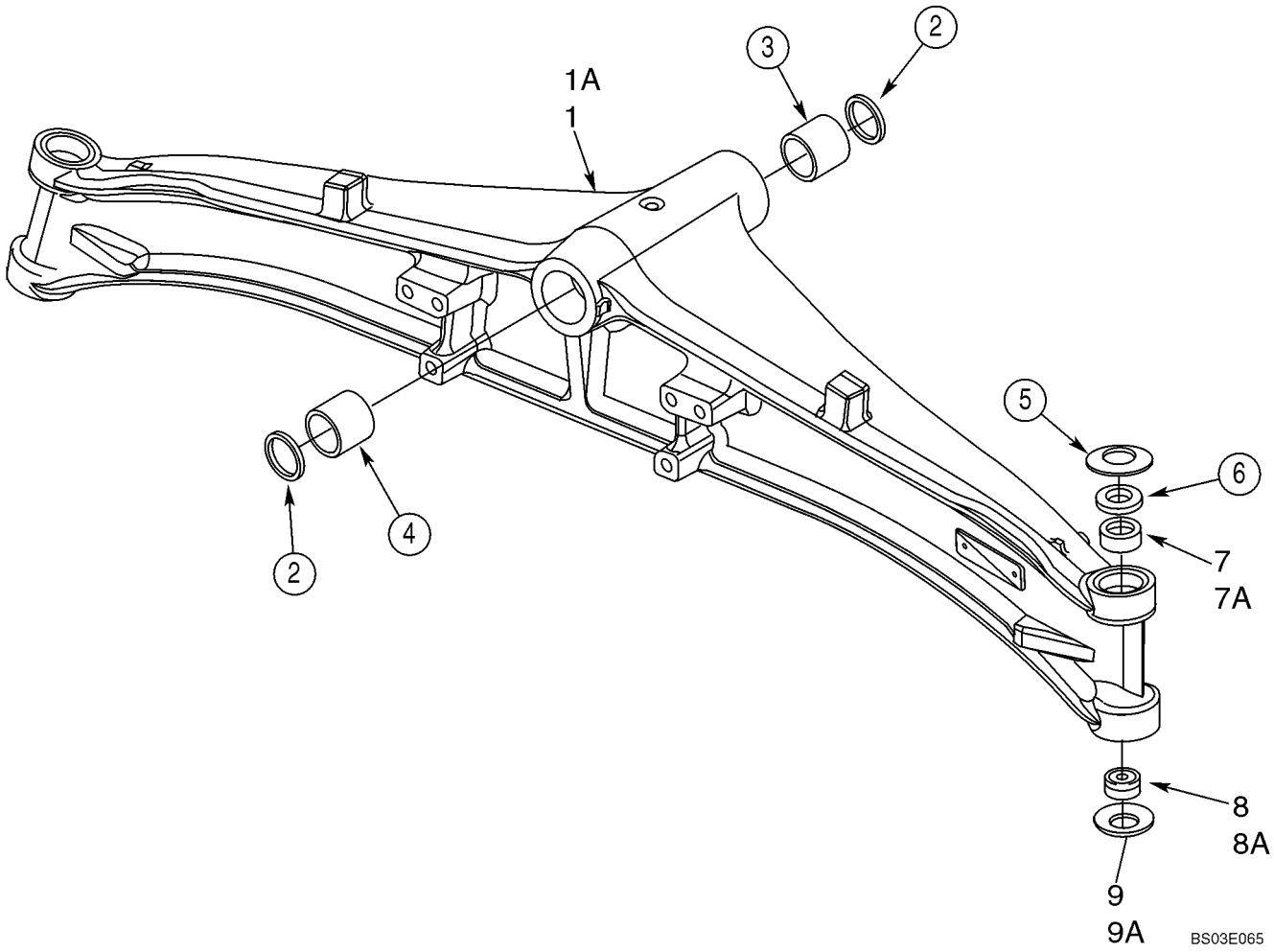

AXLE, FRONT (377979A1 / 86990837) - HOUSING (IF USED)

REF	FN	PART NUMBER	YR/SN	QTY	DESCRIPTION
		377979A1		1	AXLE, FRONT Steering, Two Wheel Drive, Incl. Figures 05-08 - 05-11; If Used
		86990837		1	AXLE, STEERING Front, Two Wheel Drive, Incl. Figures 05-08 - 05-11; If Used
1		401050A1		1	HOUSING, AXLE 377979A1 Axle
1A		429230A1		1	HOUSING, AXLE 86990837 Axle
2		N14367		2	SEAL
3		D149726		1	BUSHING Front
4		D149725		1	BUSHING Rear
5		122270A1		2	WASHER Belleville
6		136990A1		2	DISC Washer; 377979A1 Axle Only; No Washer Used in This Location on 86990837 Axle
7		100522A1		2	BUSHING, LARGE 377979A1 Axle
7A		87400286		2	BUSHING 86990837 Axle
8		100520A1		2	BALL JOINT Bushing; 377979A1 Axle
8A		N14373		2	BEARING Bushing; Two Piece; 28 ID x 50 OD x 16; 86990837 Axle
9		122268A1		2	WASHER Belleville; 377979A1 Axle
9A		122261A1		2	WASHER Belleville; 86990837 Axle

AXLE, FRONT (377979A1 / 86990837) - HOUSING, SWIVEL (IF USED)

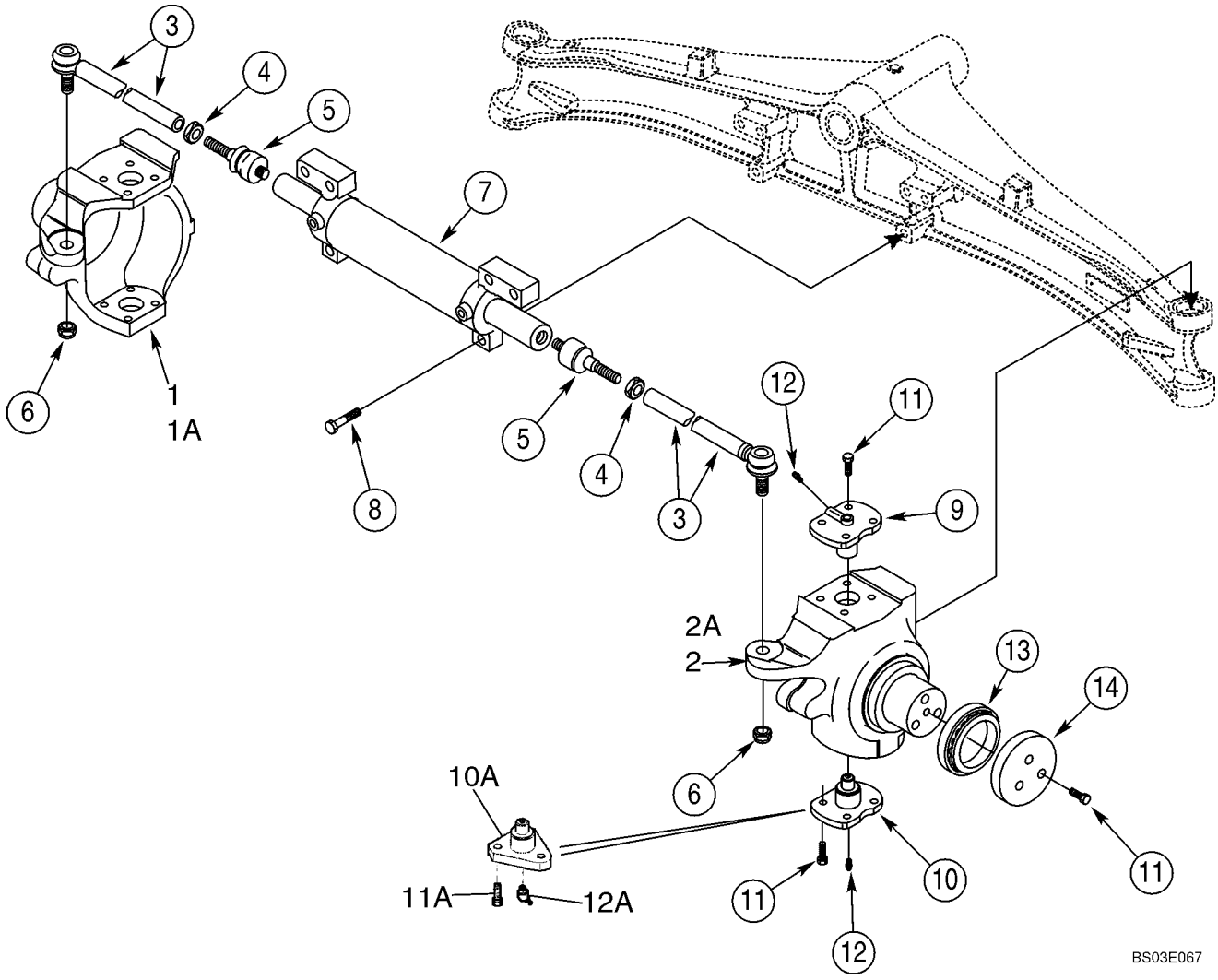

AXLE, FRONT (377979A1 / 86990837) - HOUSING, SWIVEL (IF USED)

REF	FN	PART NUMBER	YR/SN	QTY	DESCRIPTION
		377979A1		1	AXLE, FRONT Steering, Two Wheel Drive, Incl. Figures 05-08 - 05-11; If Used
		86990837		1	AXLE, STEERING Front, Two Wheel Drive, Incl. Figures 05-08 - 05-11; If Used
1		401051A1		1	HOUSING Swivel, Left-Hand; 377979A1 Axle
1A		429231A1		1	HOUSING Swivel, Left-Hand; 86990837 Axle
2		401058A1		1	HOUSING Swivel, Right-Hand; 377979A1 Axle
2A		429232A1		1	HOUSING Swivel, Right-Hand; 86990837 Axle
		401052A1		2	STEERING ASSY Arm, Incl. Ref 3 - 5
3		401054A1		1	TIE ROD
4		934727R1		1	NUT M18
5		112509A1		1	BALL JOINT
6		905839R1		2	NUT M18
7		401055A1		1	CYLINDER STEERING See Figure 05-10
8		863-16070		6	BOLT Socket Head, M16 x 70; 12.9
9		122265A1		2	PIN, LARGE King Pin, Upper
10		122264A1		2	PIN, LARGE King Pin, Lower; 377979A1 Axle
10A		122259A1		2	PIVOT King Pin, Lower; 86990837 Axle, Triangular Shape
11		100533A1		14-22	BOLT Lock, M12 x 30; (14) 86990837 Axle; (22) 377979A1 Axle
11A		D150214		6	SCREW Lock, M14 x 35; Lower King Pin, 86990837 Axle
12		712998R91		2-4	NIPPLE M6x1 Grease Fitting; (2) 86990837 Axle; (4) 377979A1 Axle
12A		N13505		2	NIPPLE M6x1 45 deg Grease Fitting; Lower King Pin, 86990837 Axle
13		401059A1		2	BEARING, ROLLER Thrust
14		401060A1		2	WASHER, THRUST

AXLE, FRONT (377979A1 / 86990837) - CYLINDER, STEERING (IF USED)

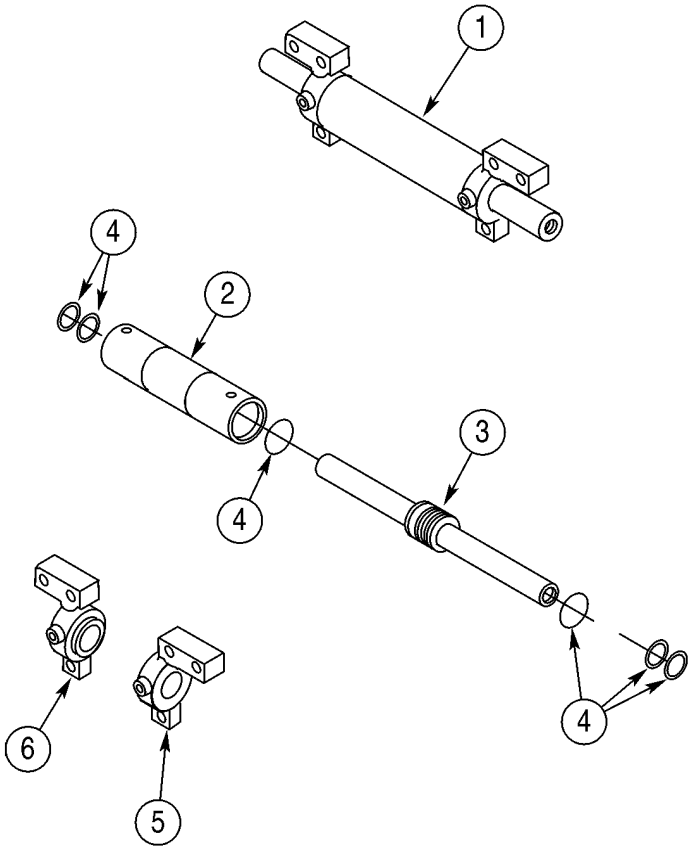

BC00G065

AXLE, FRONT (377979A1 / 86990837) - CYLINDER, STEERING (IF USED)

REF	FN	PART NUMBER	YR/SN	QTY	DESCRIPTION
		377979A1		1	AXLE, FRONT Steering, Two Wheel Drive, Incl. Figures 05-08 - 05-11; If Used
		86990837		1	AXLE, STEERING Front, Two Wheel Drive, Incl. Figures 05-08 - 05-11; If Used
1		401055A1		1	CYLINDER STEERING Incl. Ref 2 - 6
2		NSS		1	NOT SERVICED SEPARATELY Tube, Cylinder
3		401062A1		1	ROD, PISTON
4		401061A1		1	PACKAGE, SEALS Seal, Component Parts Not Serviced Separately
5		401063A1		1	HEAD ASSY. Right-Hand
6		401064A1		1	HEAD ASSY. Left-Hand

AXLE, FRONT (377979A1 / 86990837) - HUB AND BEARINGS (IF USED)

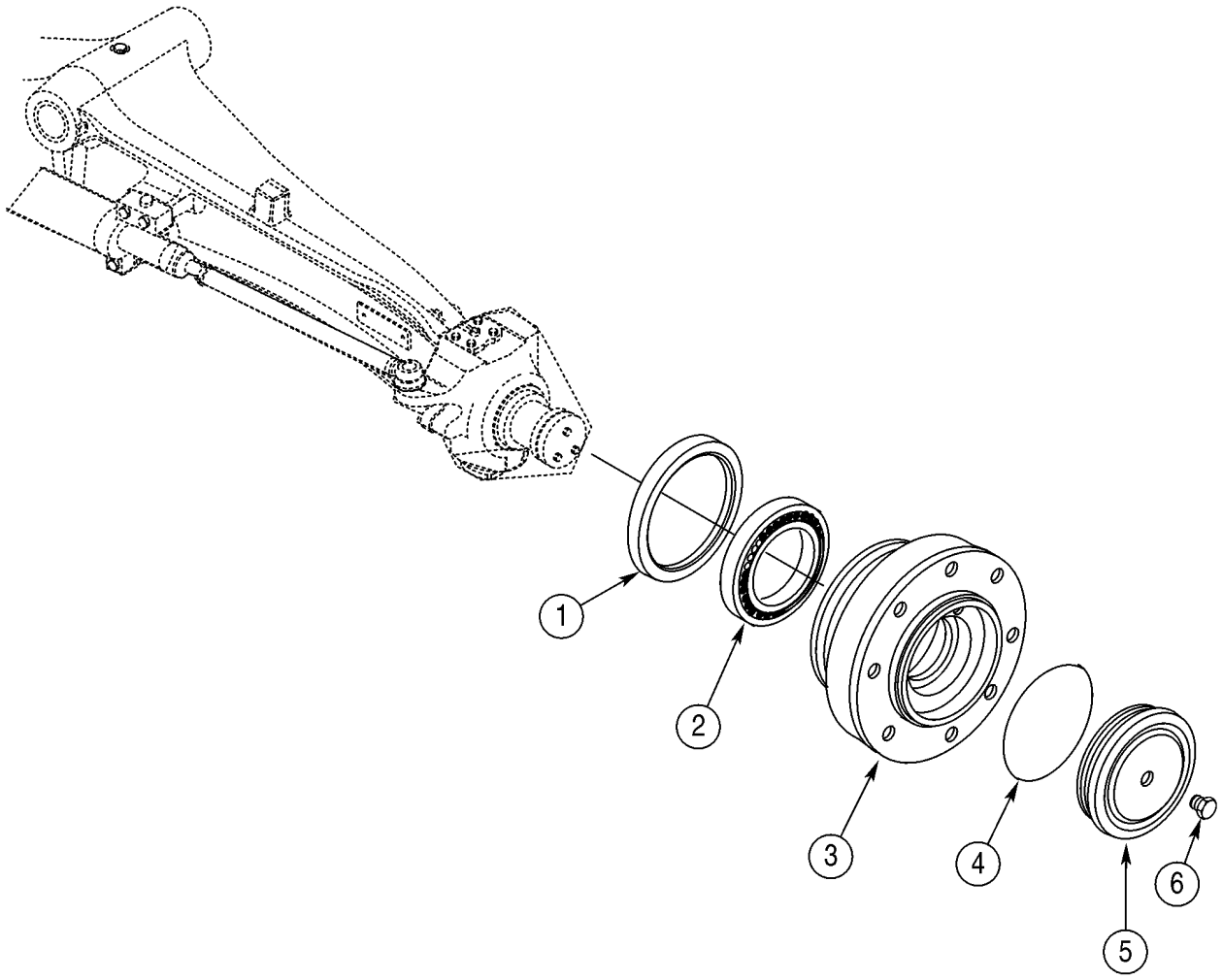

BC00G066

AXLE, FRONT (377979A1 / 86990837) - HUB AND BEARINGS (IF USED)

REF	FN	PART NUMBER	YR/SN	QTY	DESCRIPTION
		377979A1		1	AXLE, FRONT Steering, Two Wheel Drive; Incl. Figures 05-08 - 05-11; If Used
		86990837		1	AXLE, STEERING Front, Two Wheel Drive; Incl. Figures 05-08 - 05-11; If Used
1		311569A1		2	OIL-SEAL
2		324213A1		2	BEARING
3		401065A1		2	HUB
4		401066A1		2	O-RING
5		401067A1		2	COVER
6		D142898		2	PLUG 10 x 1 mm

WHEELS, FRONT - TIRES

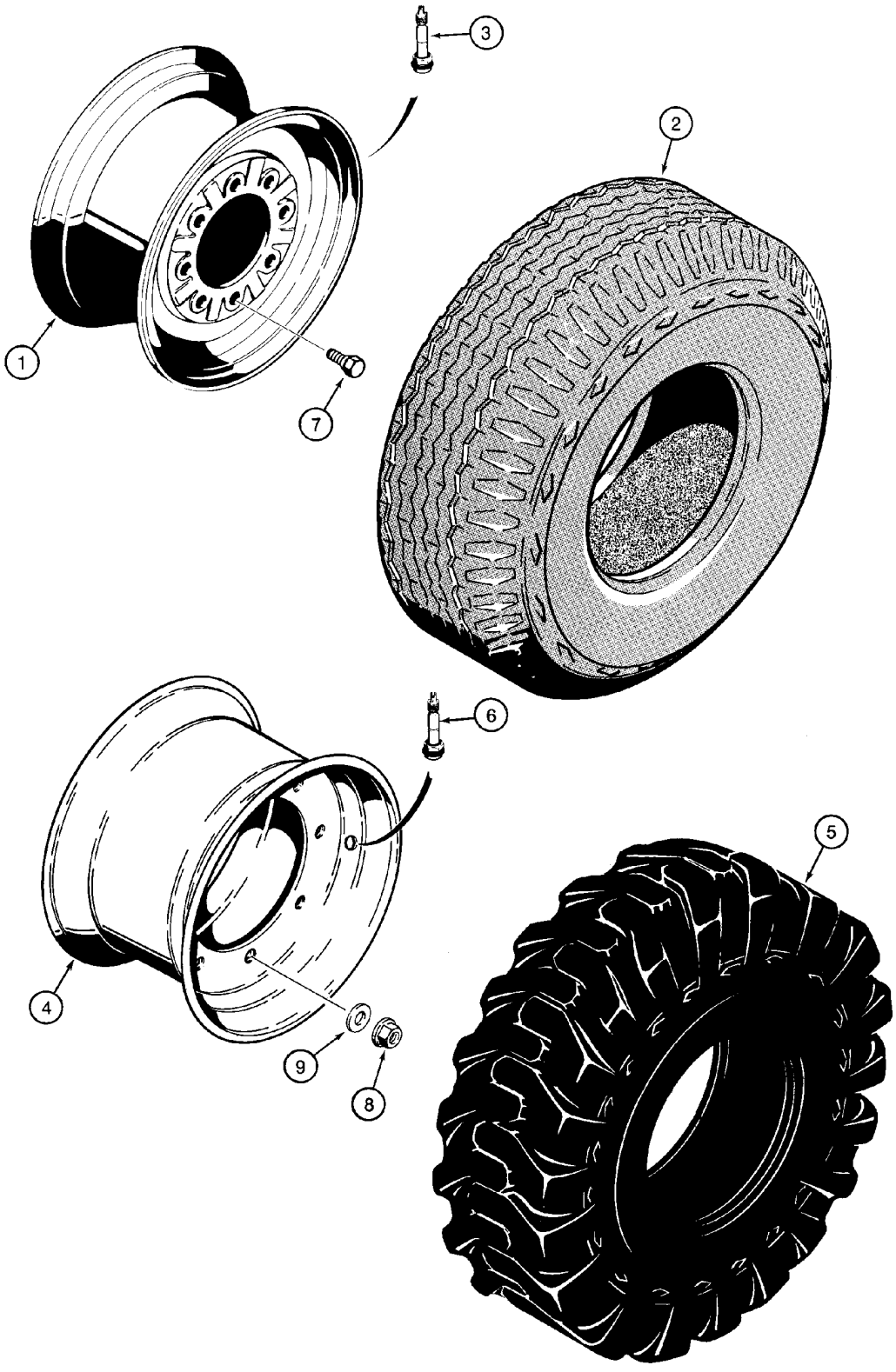

WHEELS, FRONT - TIRES

REF	FN	PART NUMBER	YR/SN	QTY	DESCRIPTION
1		247104A1		2	WHEEL For 14.5/.75 x 16.1 - 10 Ply Tires; Two Wheel Drive Models
2		REF		2	INSTRUCTION Tire, Purchase Locally
3		A38261		2	VALVE
4		132952A1		2	WHEEL For 14 x 17.5 - 10 PR Tires; Four Wheel Drive Models
5		REF		2	INSTRUCTION Tire, Purchase Locally
6		A38261		2	VALVE
7		A38208		16	BOLT Wheel Bolts, Two Wheel Drive Models
8		825-11418		16	NUT M18, Wheel Nuts, Four Wheel Drive Models
9		496-81000		16	WASHER 25/32 x 1-3/8 x 1/8; Four Wheel Drive Models

SECTION INDEX

06 -01	AXLE, FRONT DRIVE - MOUNTING
06 -02	AXLE, FRONT DRIVE - HOUSING
06 -03	AXLE, FRONT DRIVE - HOUSING, SWIVEL
06 -04	AXLE, FRONT DRIVE - CYLINDER, STEERING
06 -05	AXLE, FRONT DRIVE - SHAFTS, AXLE
06 -06	AXLE, FRONT DRIVE - PLANETARY
06 -07	AXLE, FRONT DRIVE - DIFFERENTIAL
06 -08	AXLE, FRONT DRIVE - RING AND PINION
06 -09	DRIVE SHAFT, FRONT AXLE
06 -10	COOLING SYSTEM - TRANSMISSION (MODELS WITHOUT POWERSHIFT)
06 -11	COOLING SYSTEM - TRANSMISSION (MODELS WITH POWERSHIFT)
06 -12	TRANSMISSION - MOUNTING (MODELS WITHOUT POWERSHIFT)
06 -13	TRANSMISSION - MOUNTING (MODELS WITH POWERSHIFT)
06 -14	TRANSMISSION ASSY - FILTER, OIL (MODELS WITHOUT POWERSHIFT)
06 -15	TRANSMISSION ASSY (2WD) - HOUSING (MODELS WITHOUT POWERSHIFT)
06 -16	TRANSMISSION ASSY (4WD) - HOUSING (MODELS WITHOUT POWERSHIFT)
06 -17	TRANSMISSION ASSY - PUMP, OIL (MODELS WITHOUT POWERSHIFT)
06 -18	TRANSMISSION ASSY - SHIFTER MECHANISM (MODELS WITHOUT POWERSHIFT)
06 -19	TRANSMISSION ASSY - SHAFT, IDLER AND PRIMARY (MODELS WITHOUT POWERSHIFT)
06 -20	TRANSMISSION ASSY - SHAFT, INPUT (MODELS WITHOUT POWERSHIFT)
06 -21	TRANSMISSION ASSY - SHAFT, SECONDARY (MODELS WITHOUT POWERSHIFT)
06 -22	TRANSMISSION ASSY (4WD) - SHAFT, OUTPUT (MODELS WITHOUT POWERSHIFT)
06 -23	TRANSMISSION ASSY - VALVE, CONTROL (MODELS WITHOUT POWERSHIFT)
06 -24	TRANSMISSION ASSY (4WD) - VALVE, SOLENOID (MODELS WITHOUT POWERSHIFT)
06 -25	TRANSMISSION ASSY, POWERSHIFT - HOUSING
06 -26	TRANSMISSION ASSY, POWERSHIFT - HOUSING, REAR
06 -27	TRANSMISSION ASSY, POWERSHIFT - TORQUE CONVERTER
06 -28	TRANSMISSION ASSY, POWERSHIFT - PUMP, OIL
06 -29	TRANSMISSION ASSY, POWERSHIFT - CLUTCH, FORWARD DRIVE
06 -30	TRANSMISSION ASSY, POWERSHIFT - CLUTCH, REVERSE DRIVE
06 -31	TRANSMISSION ASSY, POWERSHIFT - CLUTCH, PUMP DRIVE
06 -32	TRANSMISSION ASSY, POWERSHIFT - CLUTCH, SECOND GEAR
06 -33	TRANSMISSION ASSY, POWERSHIFT - CLUTCH, OUTPUT SHAFT
06 -34	TRANSMISSION ASSY, POWERSHIFT - MOUNTING, VALVE
06 -35	TRANSMISSION ASSY, POWERSHIFT - VALVE, CONTROL
06 -36	TRANSMISSION ASSY, POWERSHIFT - PLATE, DRIVE
06 -37	WHEELS, REAR - TIRES
06 -38	AXLE, REAR DRIVE - MOUNTING
06 -39	AXLE, REAR - DIFFERENTIAL LOCK
06 -40	AXLE, REAR DRIVE - HOUSING
06 -41	AXLE, REAR DRIVE - DIFFERENTIAL (CLOCKWISE INPUT, MODELS WITHOUT POWERSHIFT)
06 -42	AXLE, REAR DRIVE - DIFFERENTIAL (COUNTER CLOCKWISE INPUT, MODELS WITH POWERSHIFT)
06 -43	AXLE, REAR DRIVE - RING AND PINION
06 -44	AXLE, REAR DRIVE - DIFFERENTIAL LOCK (CLOCKWISE INPUT, MODELS WITHOUT POWERSHIFT)
06 -45	AXLE, REAR DRIVE - DIFFERENTIAL LOCK (COUNTER CLOCKWISE INPUT, MODELS WITH POWERSHIFT)

SECTION INDEX

06 -46	AXLE, REAR DRIVE - PLANETARY
06 -47	DRIVE SHAFT, REAR AXLE

AXLE, FRONT DRIVE - MOUNTING

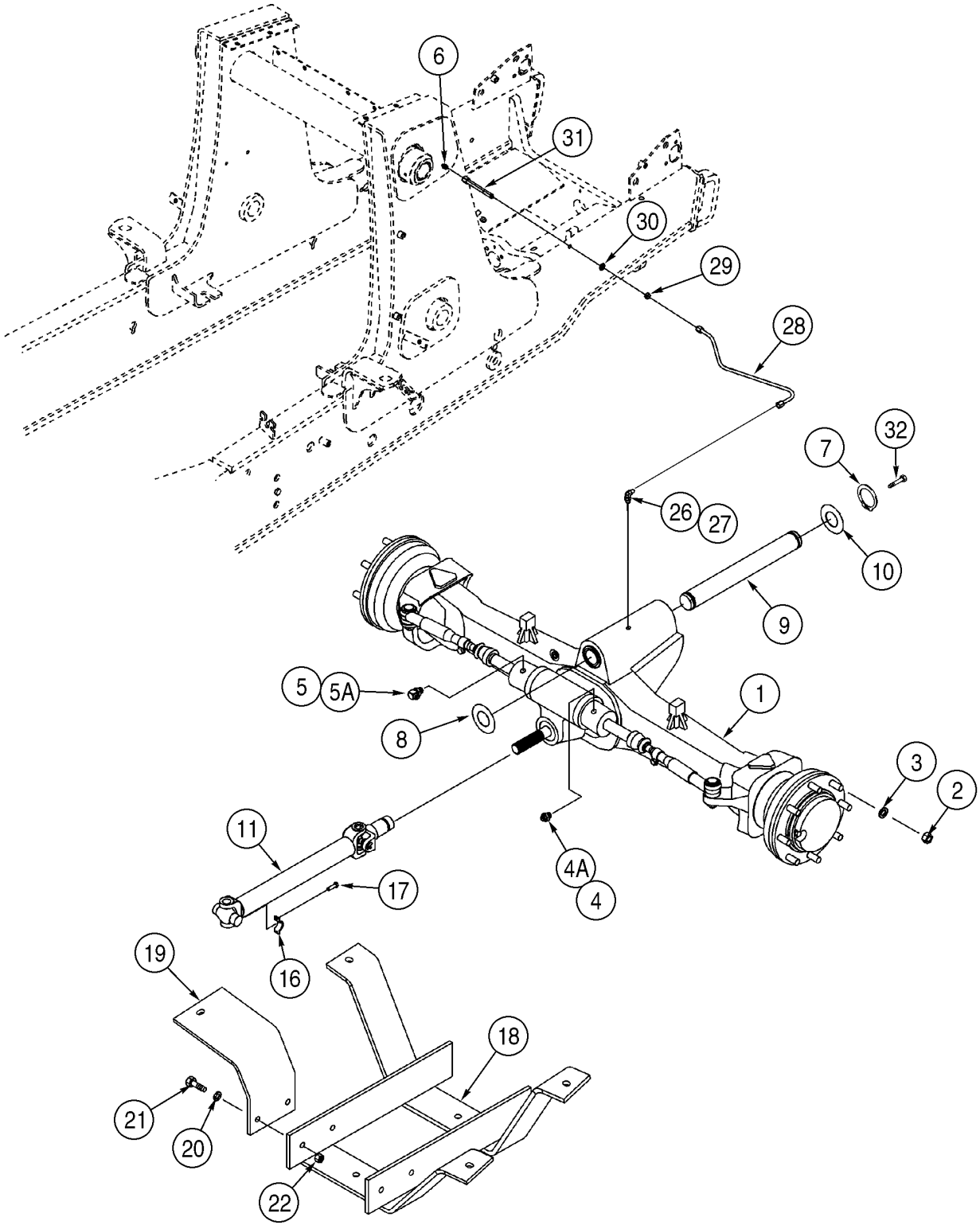

AXLE, FRONT DRIVE - MOUNTING

REF	FN	PART NUMBER	YR/SN	QTY	DESCRIPTION
1		381382A1		1	AXLE ASSY, 4WD Front, Models Without Powershift Transmission, See Figures 06-02 - 06-08
1		381383A1		1	AXLE ASSY, 4WD Front, Models With Powershift Transmission, See Figures 06-02 - 06-08
2		825-11418		16	NUT M18
3		496-81000		16	WASHER 25/32 x 1-3/8 x 1/8
4		218-5351		1	CONNECTOR 3/4 fl x 9/16 Or, Incl. Ref 4A
4A		237-6006		1	O-RING 15/32 ID x 5/64
5		218-5280		1	FITTING Elbow, 90 deg, 3/4 fl x 9/16 Or, Incl. Ref 5A
5A		237-6006		1	O-RING 15/32 ID x 5/64
6		219-1		1	NIPPLE, LUBE 1/8 PT x 21/32
7		800-44050		2	RING SNAP No. 50
8		191796A1		X	WASHER 2 x 4 x 1/16
9		391451A1		1	PIN, PIVOT
10		D123684		X	WASHER Thrust, 2-1/2 x 4-1/2 x 3/16
11		367861A2		1	SHAFT, DRIVE See Figure 06-09; Replaces 367861A1
16		90-6682T1		2	CLAMP
17		D137627		4	BOLT
18		282038A2		1	GUARD ASSY. Drive Shaft
19		282033A1		1	BRACKET
20		495-21056		8	WASHER 9/16 x 1-3/8 x 7/64
21		827-12045		6	SCREW M12 x 45; 10.9
22		829-1412		2	NUT M12; 10
26		218-5103		1	ELBOW 90 deg, 7/16 fl x adj Or, Incl. Ref 27
27		237-6004		1	O-RING 23/64 ID x 5/64
28		381386A1		1	HOSE ASSY. 500 mm (19-11/16 in), Lubrication Line
29		218-1275		1	NUT, LOCK 7/16
30		495-11047		1	WASHER 15/32 x 59/64 x 1/16
31		381442A1		1	CONNECTOR Lubrication Line
32		614-12025		1	CAPSCREW M12 x 25

AXLE, FRONT DRIVE - HOUSING

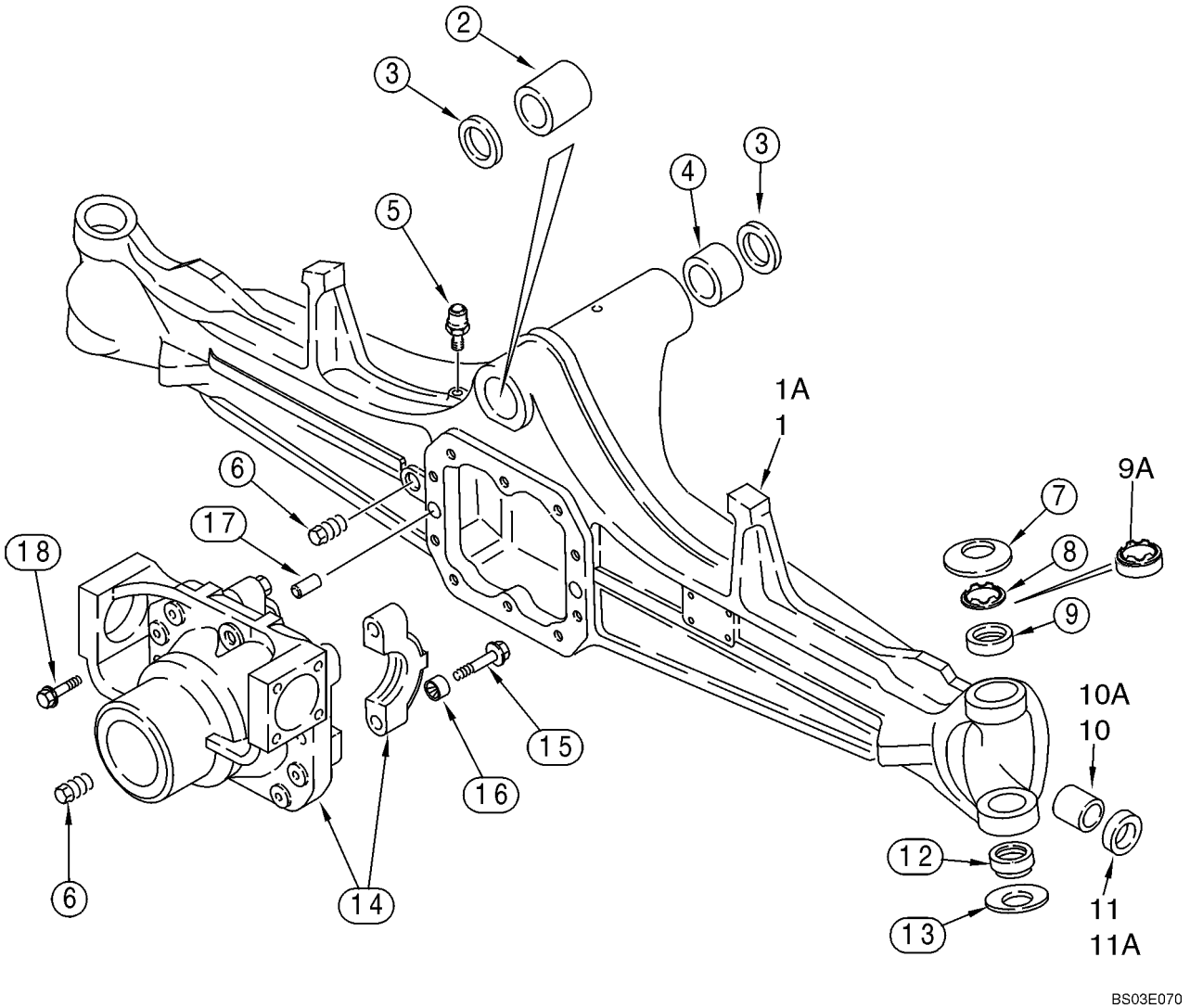

AXLE, FRONT DRIVE - HOUSING

REF	FN	PART NUMBER	YR/SN	QTY	DESCRIPTION
		381382A1		1	AXLE ASSY, 4WD Front, Models Without Powershift Transmission, Incl. Ref 1 - 18; Also Includes Parts On Figures 06-02 - 06-08
		381383A1		1	AXLE ASSY, 4WD Front, Models With Powershift Transmission, Incl. Ref 1 - 18; Also Includes Parts On Figures 06-02 - 06-08
1		381410A1		1	HOUSING, AXLE Used With K395123 Hub and 1349265C1 Seal, See Figure 06-06, Ref 1; When Stock of 381410A1 Housing Is Exhausted, Order (1) 87415748 Housing, (2) 87415749 Oil Seal, (2) D142950 Bushing, (2) 87415750 Axle Shaft
1A		87415748		1	HOUSING, AXLE Used With 87415747 Hub and 247546A1 Seal, See Figure 06-06, Ref 1A
		B17575		X	FLUID 89 ml, Black RTV Silicone, Differential Carrier to Axle Housing
2		D149725		1	BUSHING
3		N14367		2	SEAL
4		D149726		1	BUSHING
5		1966149C2		1	BREATHER
6		A156873		2	PLUG, DRAIN 22 mm
7		122262A1		2	WASHER Belleville
8		144611A1		2	SHIM Washer, If Used
9		N14372		2	BUSHING, LARGE If Used
9A		{87417600}		2	Bushing, Replaces Two Piece Bushing (Ref 8, 9) Used On Some Models
10		K395019		2	BUSHING Used With 381410A1 Housing, Ref 1
10A		D142950		2	BUSHING Used With 87415748 Housing, Ref 1A
11		K395103		2	SEAL Used With 381410A1 Housing, Ref 1
11A		87415749		2	OIL-SEAL Used With 87415748 Housing, Ref 1A
12		N14373		2	BEARING Bushing, Two Piece
13		122261A1		2	WASHER Belleville
		144454A1		1	SUPPORT ASSY. Differential Carrier, Incl. Ref 14 - 16
14		NSS		1	NOT SERVICED SEPARATELY Carrier
15		S301065		4	SCREW 14 x 75 mm
16		1966136C1		4	NUT, SPECIAL Bushing

AXLE, FRONT DRIVE - HOUSING

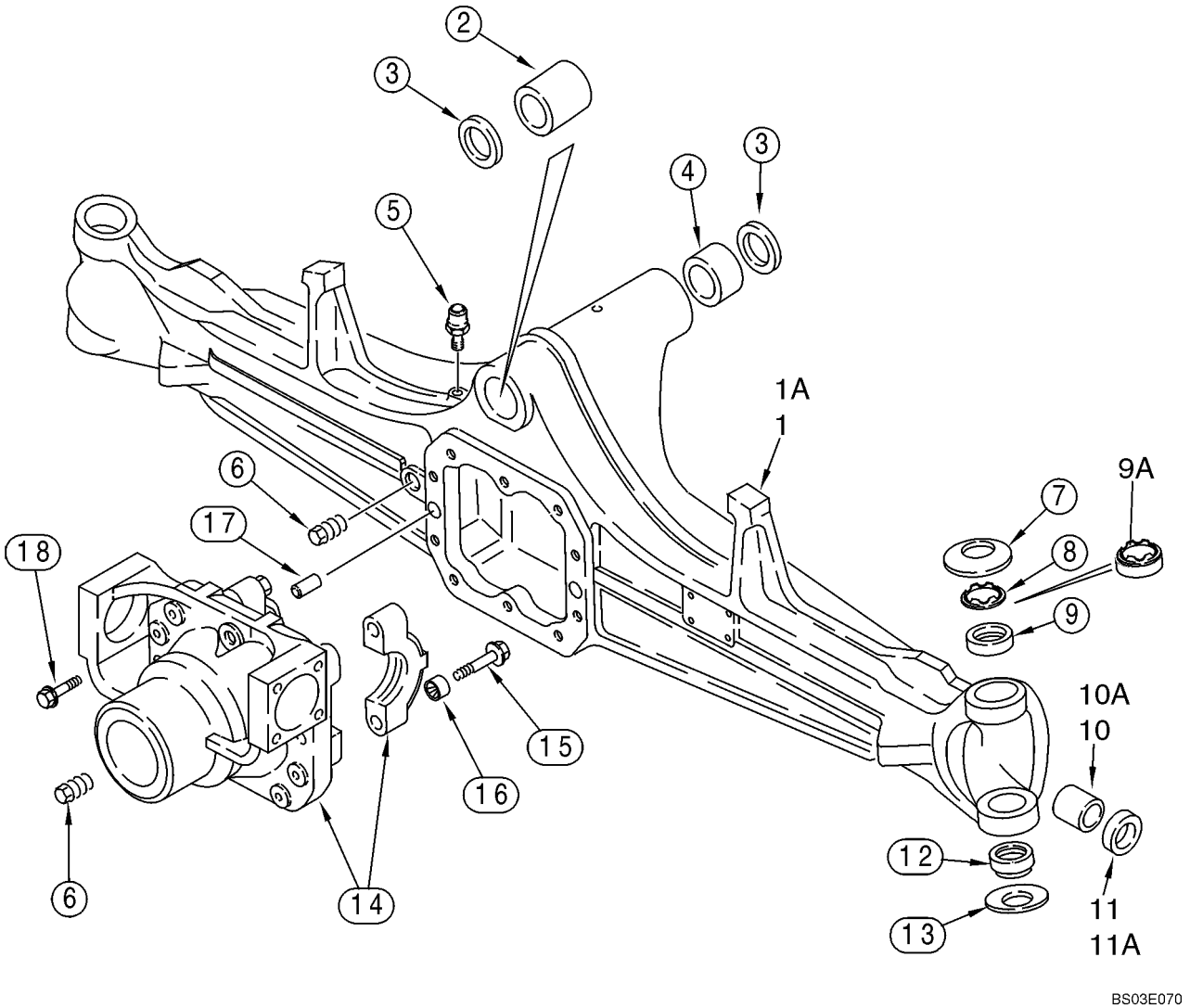

AXLE, FRONT DRIVE - HOUSING

REF	FN	PART NUMBER	YR/SN	QTY	DESCRIPTION
17		1966138C1		2	PIN, LARGE
18		S301064		10	SCREW Flange, M12 x 33; 12.9
		B17575		X	FLUID 89 ml, Black RTV Silicone, Differential Carrier to Axle Housing

AXLE, FRONT DRIVE - HOUSING, SWIVEL

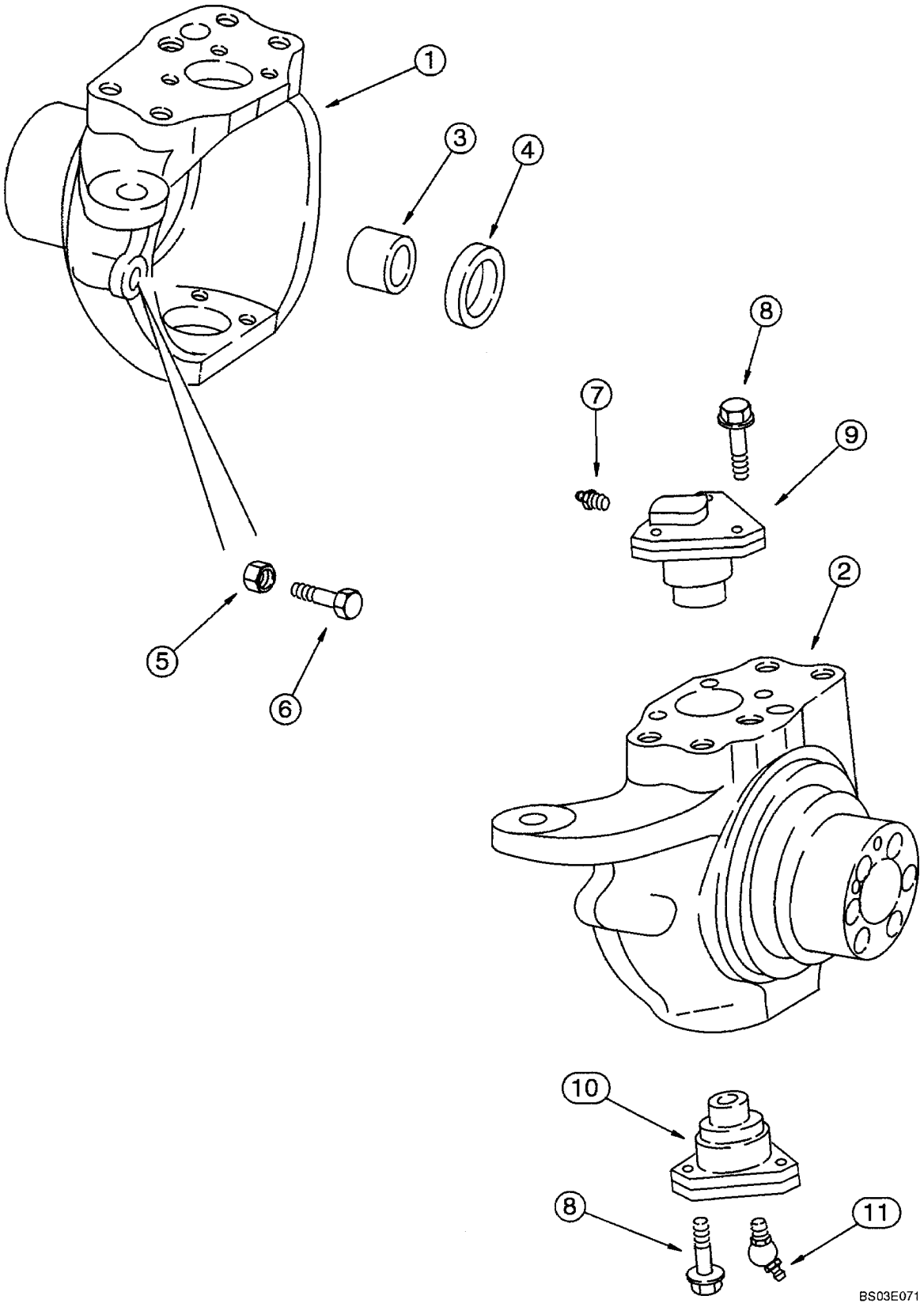

AXLE, FRONT DRIVE - HOUSING, SWIVEL

REF	FN	PART NUMBER	YR/SN	QTY	DESCRIPTION
		381382A1		1	AXLE ASSY, 4WD Front, Models Without Powershift Transmission, Incl. Ref 1 - 11; Also Includes Parts On Figures 06-02 - 06-08
		381383A1		1	AXLE ASSY, 4WD Front, Models With Powershift Transmission, Incl. Ref 1 - 11; Also Includes Parts On Figures 06-02 - 06-08
1		295576A1		1	HOUSING Left-Hand
2		295575A1		1	HOUSING Right-Hand
		B17575		X	FLUID 89 ml, Black RTV Silicone, Wear Ring to Swivel Housing
3		1967535C1		2	BUSHING Used With Right-Hand or Left-Hand Swivel Housing, Not Included With Housing, Purchase Separately
4		K262143		2	SEAL Oil
5		1537663C1		2	NUT M16
6		1537664C1		2	SCREW
7		712998R91		2	NIPPLE M6 x 1 Grease Fitting
8		D150214		12	SCREW Lock, M14 x 35
9		122260A1		2	PIVOT King Pin, Upper
10		122259A1		2	PIVOT King Pin, Lower
11		N13505		2	NIPPLE 45 deg, M6x1, Grease Fitting

AXLE, FRONT DRIVE - CYLINDER, STEERING

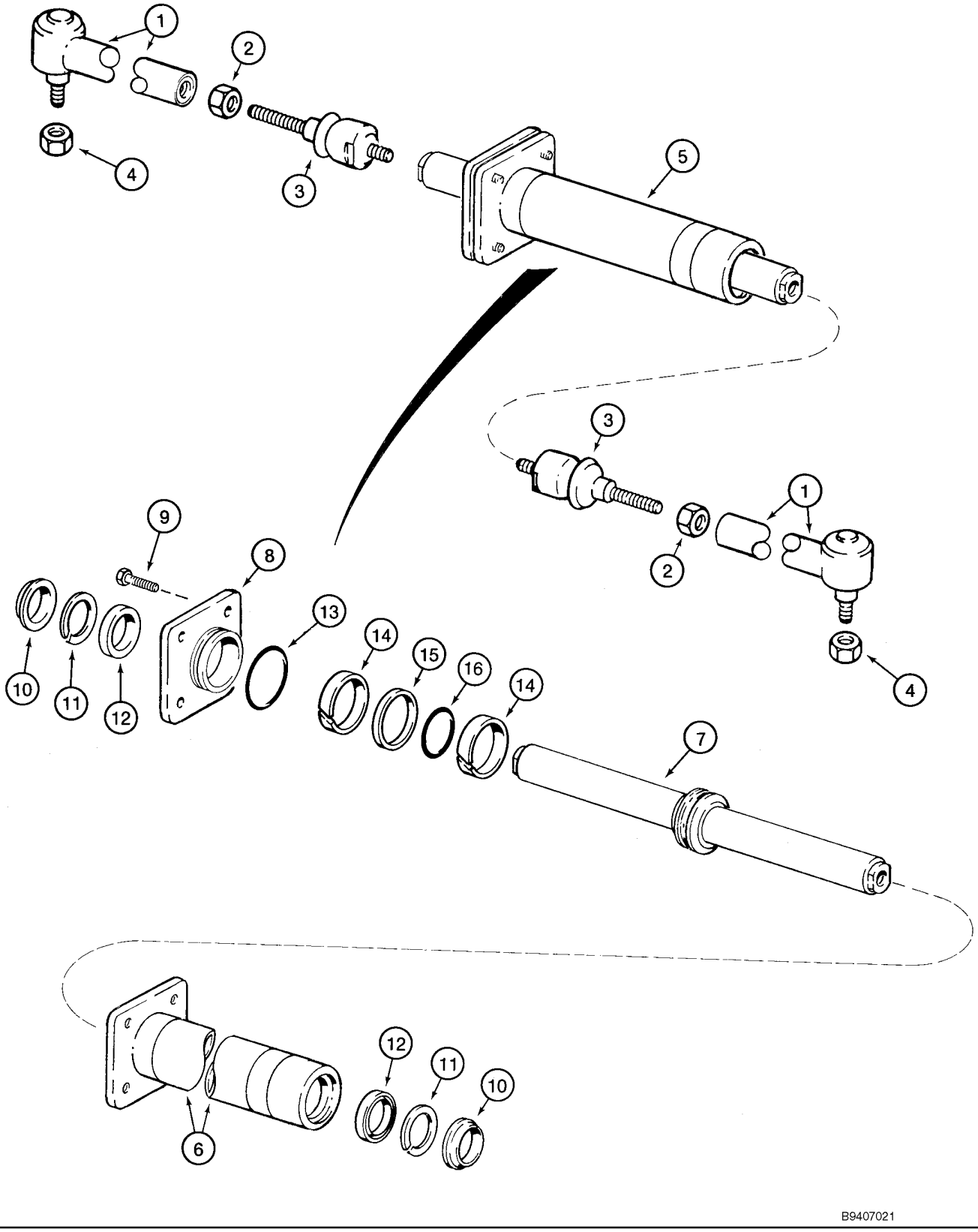

AXLE, FRONT DRIVE - CYLINDER, STEERING

REF	FN	PART NUMBER	YR/SN	QTY	DESCRIPTION
		381382A1		1	AXLE ASSY, 4WD Front, Models Without Powershift Transmission, Incl. Ref 1 - 16; Also Includes Parts On Figures 06-02 - 06-08
		381383A1		1	AXLE ASSY, 4WD Front, Models With Powershift Transmission, Incl. Ref 1 - 16; Also Includes Parts On Figures 06-02 - 06-08
		D142916		2	BALL JOINT Arm, Steering; Incl. Ref 1 thru N14380
1		183677A1		1	BALL JOINT
		D142924		1	CLASP Clamp
2		1966126C1		1	NUT Lock
3		N14377		1	BALL JOINT
		D142926		1	BOLT
		732-4036		1	PIN, COTTER 4 x 36 mm
		N14380		1	NUT Jam
4		107070A1		2	SAFETY NUT M20
5		D149729		1	CYLINDER STEERING Incl. Ref 6 - 16; Order D149739 Kit to Service Seals
6		D149738		1	CYLINDER STEERING TUBE
7		D149736		1	ROD Piston
8		D149737		1	GLAND Gland
		B17575		X	FLUID 89 ml, Black RTV Silicone, Cylinder Flange to Cylinder
9		114296A1		4	SCREW For Service Order 100524A1 Bolt and 892-11012 Washer
10		NSS		2	NOT SERVICED SEPARATELY Seal, Wiper
11		NSS		2	NOT SERVICED SEPARATELY Ring, Backup
12		NSS		2	NOT SERVICED SEPARATELY Seal
13		NSS		1	NOT SERVICED SEPARATELY O-Ring
14		NSS		2	NOT SERVICED SEPARATELY Ring, Wear
15		NSS		1	NOT SERVICED SEPARATELY Seal
16		NSS		1	NOT SERVICED SEPARATELY O-Ring
		D149739		1	PACKAGE, SEALS Incl. Ref 10 - 16

AXLE, FRONT DRIVE - SHAFTS, AXLE

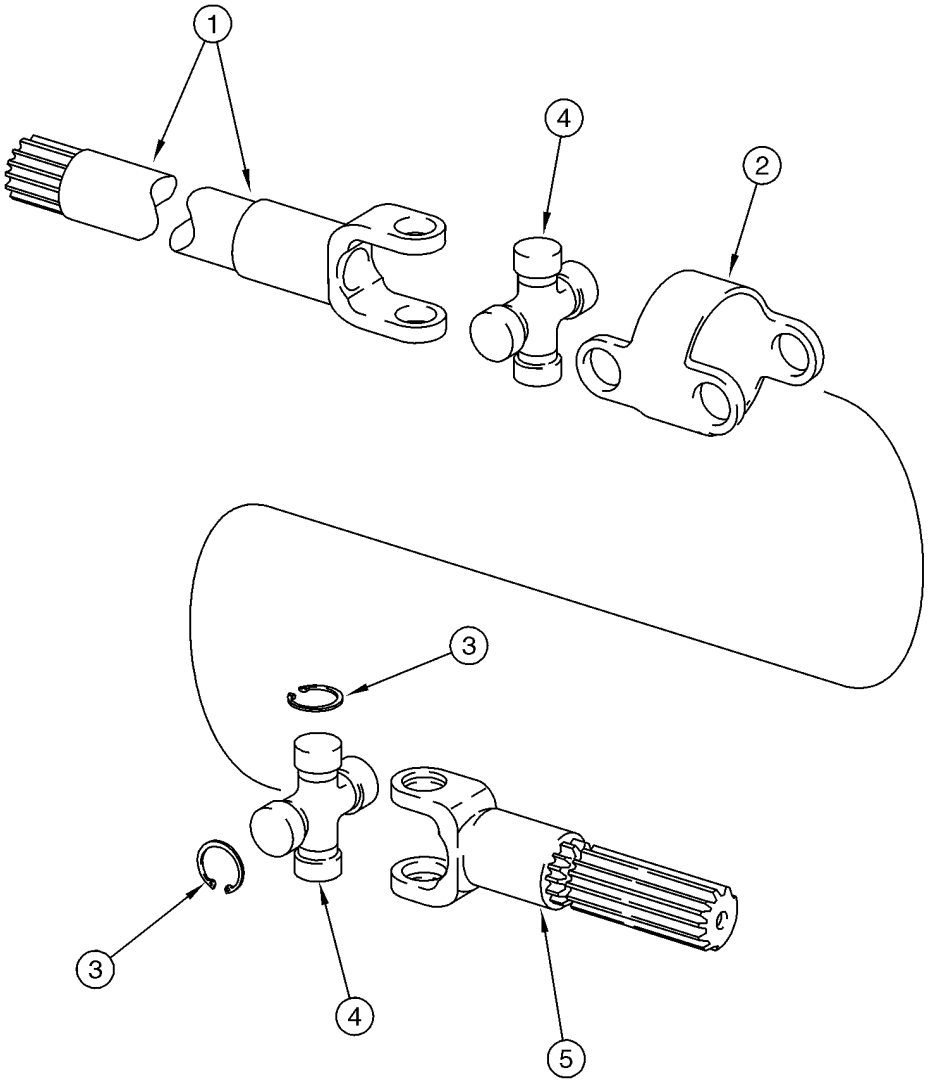

B9407022

AXLE, FRONT DRIVE - SHAFTS, AXLE

REF	FN	PART NUMBER	YR/SN	QTY	DESCRIPTION
		381382A1		1	AXLE ASSY, 4WD Front, Models Without Powershift Transmission, Incl. Ref 1 - 5; Also Includes Parts On Figures 06-02 - 06-08
		381383A1		1	AXLE ASSY, 4WD Front, Models With Powershift Transmission, Incl. Ref 1 - 5; Also Includes Parts On Figures 06-02 - 06-08
		195211A1		2	SHAFT, DRIVE Axle, Incl. Ref 1 - 5; Used With K395123 Hub and 1349265C1 Seal, See Figure 06-06; If Used
1		195212A1		1	HALF SHAFT Long, Differential Side
2		195213A1		1	BODY
3		N14410		8	RING
4		195215A1		2	SPIDER ,U-JOINT Incl. Ref 3
5		N14409		1	SHAFT Short, Wheel Side
		87415750		2	SHAFT, ARTICULATED Axle, Incl. Ref 1 - 5; Used With 87415747 Hub and 247546A1 Seal, See Figure 06-06; If Used
1		87416066		1	FORK Half Shaft, Long Differential Side
2		390029A1		1	BODY
3		N14410		8	RING
4		144465A1		2	SPIDER ,U-JOINT
5		N14409		1	SHAFT Short, Wheel Side

AXLE, FRONT DRIVE - PLANETARY

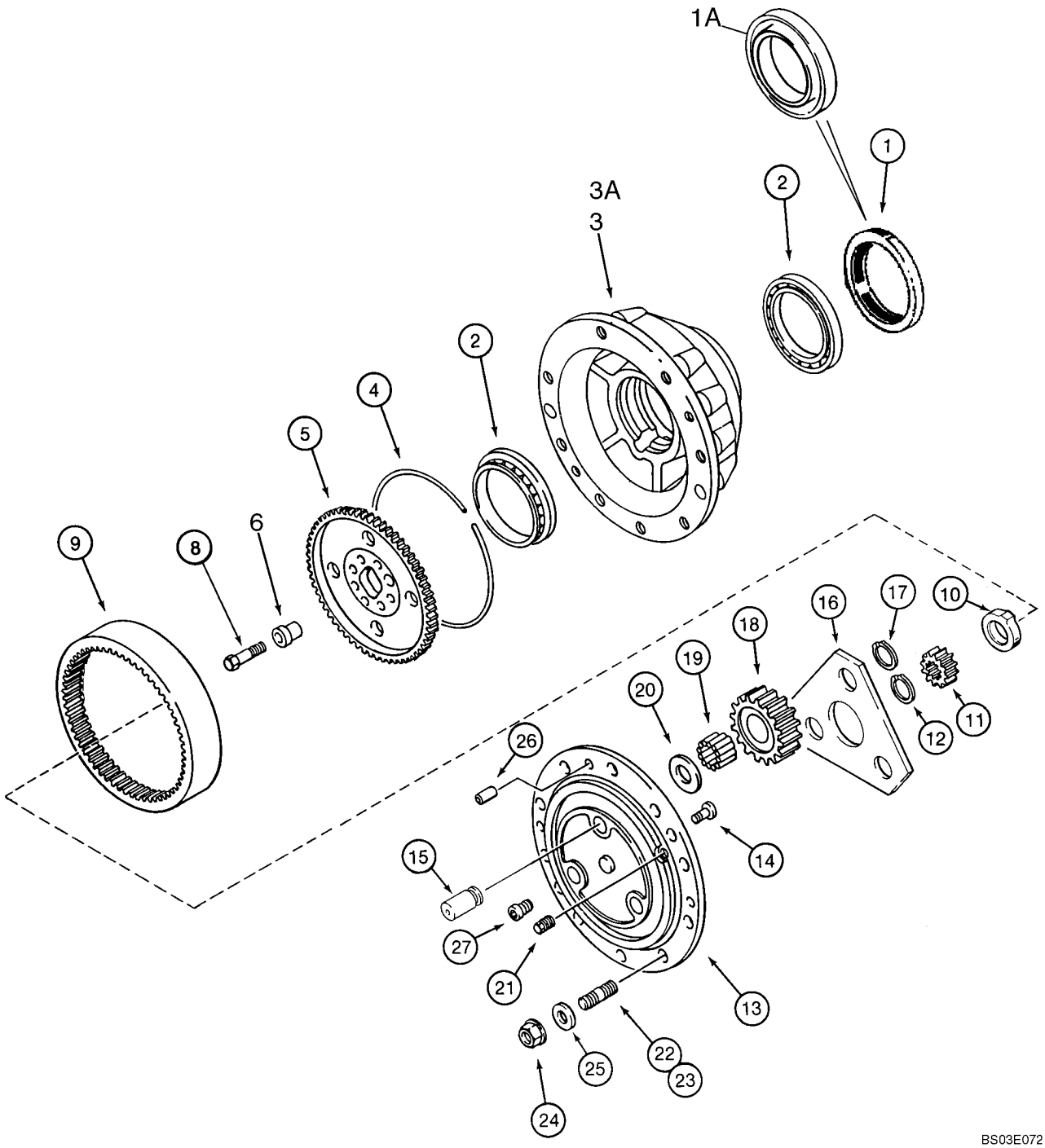

AXLE, FRONT DRIVE - PLANETARY

REF	FN	PART NUMBER	YR/SN	QTY	DESCRIPTION
		381382A1		1	AXLE ASSY, 4WD Front, Models Without Powershift Transmission, Incl. Ref 1 - 27; Also Includes Parts On Figures 06-02 - 06-08
		381383A1		1	AXLE ASSY, 4WD Front, Models With Powershift Transmission, Incl. Ref 1 - 27; Also Includes Parts On Figures 06-02 - 06-08
1		1349265C1		2	SEAL Oil, Used With Ref 3, K395123 Hub; If Used
1A		247546A1		2	SEAL Oil, With Internal Garter Spring Seal; Used With Ref 3A, 87415747 Hub; If Used
2		K395101		4	BEARING
3		K395123		2	HUB Used With Ref 1 Seal and 195211A1 Axle Shaft On Figure 06-05; For Bushing Used On The Axle Housing With This Hub, See Figure 06-02, Ref 10, 11
3A		87415747		2	HUB Used With Ref 1A Seal and 87415750 Axle Shaft On Figure 06-05; For Bushing Used On The Axle Housing With This Hub, See Figure 06-02, Ref 10A, 11A
		B17575		X	FLUID 89 ml, Black RTV Silicone, Planetary Cover to Hub
4		H437679		2	RING SNAP
5		295581A1		2	CARRIER, GEARS
6		107071A1		8	CENTERING RING Bushing, 20 mm OD
8		K395131		8	BOLT M14 x 65
9		H437677		2	RING, GEAR Planetary Gear
10		107073A1		2	WASHER Spacer
11		K395114		2	GEAR Pinion Gear
12		800-1129		2	CIRCLIP No. 29
		K262251		2	PINION CARRIER Planetary Carrier, Incl. Ref 13 - 15
13		NSS		1	NOT SERVICED SEPARATELY Carrier
14		K395093		2	PIN, HEADED Lock
15		NSS		3	NOT SERVICED SEPARATELY Shaft, Pinion Gear
		B17575		X	FLUID 89 ml, Black RTV Silicone, Planetary Cover to Hub
16		K395122		2	PLATE Thrust Washer
17		800-1134		6	RING SNAP No. 34

AXLE, FRONT DRIVE - PLANETARY

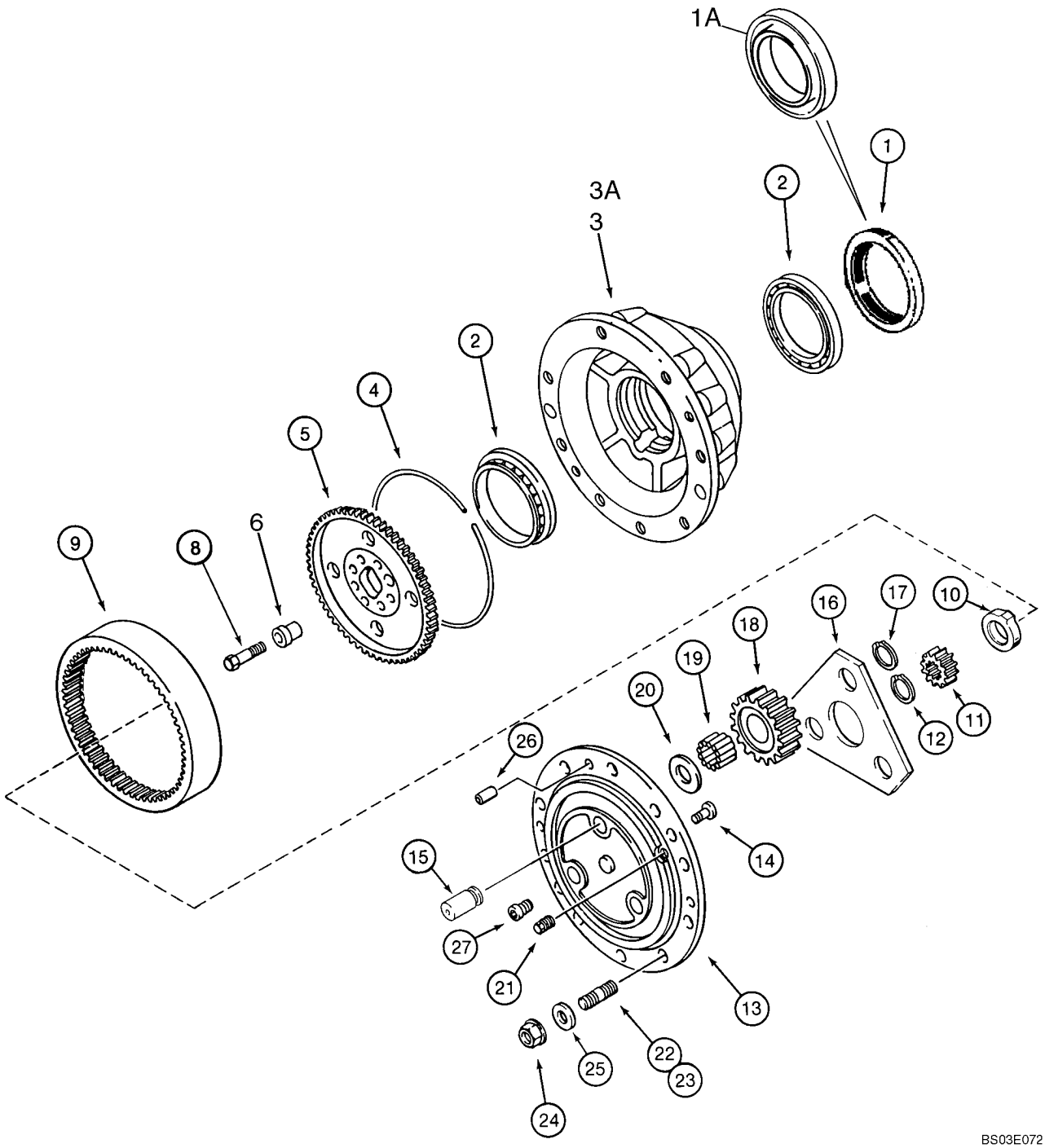

AXLE, FRONT DRIVE - PLANETARY

REF	FN	PART NUMBER	YR/SN	QTY	DESCRIPTION
18		K395110		6	GEAR Pinion
19		119685A1		18	KIT OF 10 NEEDLE BRG
20		K395091		6	WASHER Thrust
21		A156873		2	PLUG, DRAIN 22 mm
22		K260218		12	STUD Without Flanged Collar
23		N13515		4	STUD With Flanged Collar
24		825-11418		16	NUT M18, Wheel Mounting, Purchase Separately
25		496-81000		16	WASHER 25/32 x 1-3/8 x 1/8, Wheel Mounting, Purchase Separately
26		K395094		4	PIN Dowel
27		K395029		4	SCREW

AXLE, FRONT DRIVE - DIFFERENTIAL

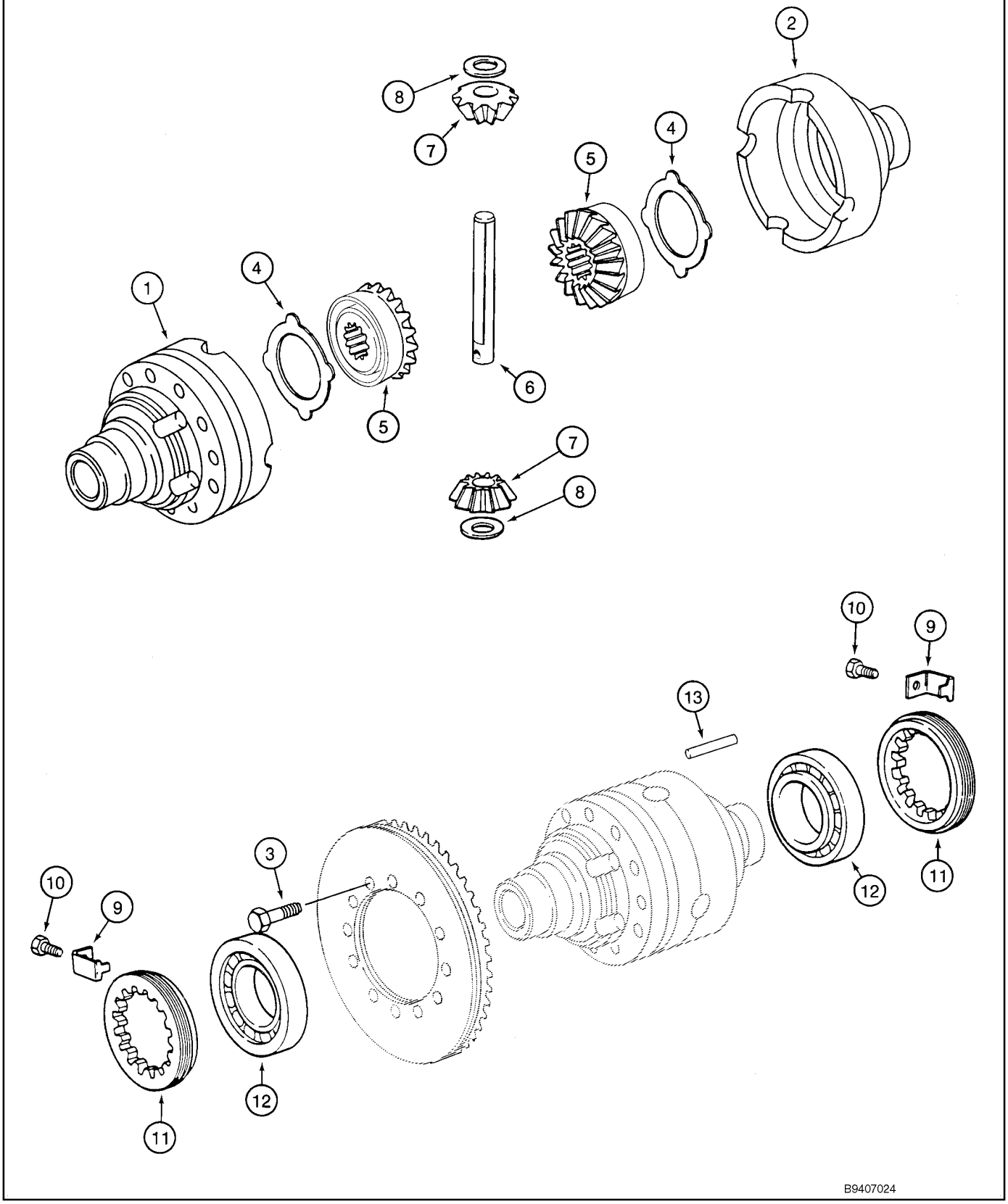

AXLE, FRONT DRIVE - DIFFERENTIAL

REF	FN	PART NUMBER	YR/SN	QTY	DESCRIPTION
		381382A1		1	AXLE ASSY, 4WD Front, Models Without Powershift Transmission, Incl. Ref 1 - 13; Also Includes Parts On Figures 06-02 - 06-08
		381383A1		1	AXLE ASSY, 4WD Front, Models With Powershift Transmission, Incl. Ref 1 - 13; Also Includes Parts On Figures 06-02 - 06-08
		294933A1		1	SUPPORT ASSY. Differential Housing, Incl. Ref 1, 2
1		NSS		1	NOT SERVICED SEPARATELY Housing, Flange Half
2		NSS		1	NOT SERVICED SEPARATELY Housing, Plain Half
		B17575		X	FLUID 89 ml, Black RTV Silicone, Bolt to Differential Housing
3		827-10075		12	SCREW M10 x 75; 10.9
4		1967003C1		2	WASHER, THRUST
		231397A1		1	SET OF PARTS Differential Gear Set, Service Replacement, Incl. Ref 5 - 8, 13
5		N14407		2	GEAR Side, No Longer Available, Order 231397A1 Differential Gear Set Kit
6		K395087		1	PIN, LARGE Shaft, Pinion Gear, No Longer Available, Order 231397A1 Differential Gear Set Kit
7		N14408		2	SUN GEAR Pinion Gear, No Longer Available, Order 231397A1 Differential Gear Set Kit
8		K395075		2	WASHER Thrust, No Longer Available, Order 231397A1 Differential Gear Set Kit
9		1966153C1		2	PLATE, LOCKING Bracket
10		112486A1		2	SCREW M6 x 12
11		1966559C1		2	NUT Lock Ring
12		K395027		2	BEARING
13		K395086		1	PIN, LARGE Dowel, No Longer Available, Order 231397A1 Differential Gear Set Kit

AXLE, FRONT DRIVE - RING AND PINION

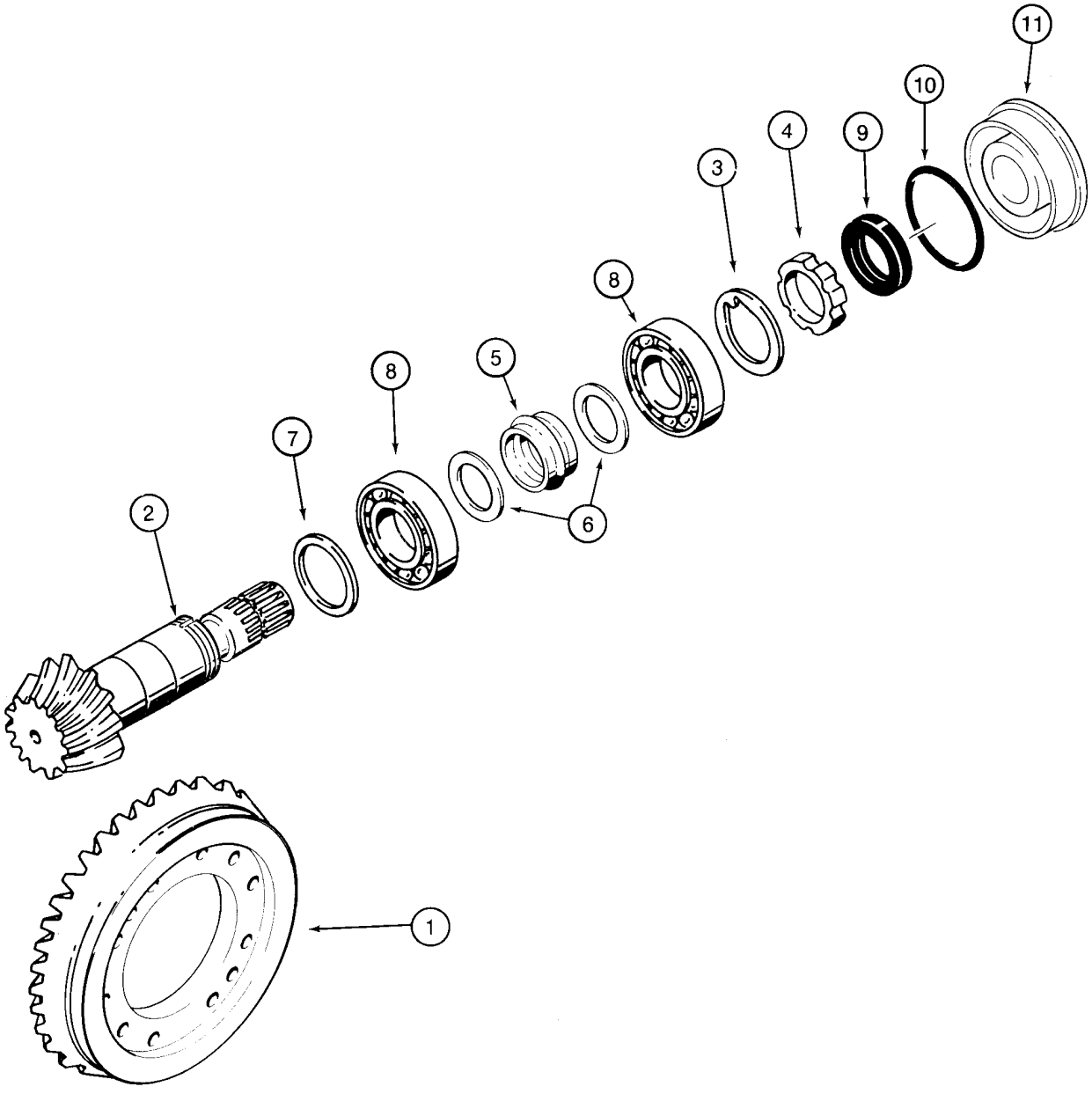

B9407025

AXLE, FRONT DRIVE - RING AND PINION

REF	FN	PART NUMBER	YR/SN	QTY	DESCRIPTION
		381382A1		1	AXLE ASSY, 4WD Front, Models Without Powershift Transmission, Incl. Ref 1 - 11; Also Includes Parts On Figures 06-02 - 06-08
		381383A1		1	AXLE ASSY, 4WD Front, Models With Powershift Transmission, Incl. Ref 1 - 11; Also Includes Parts On Figures 06-02 - 06-08
		195210A1		1	KIT Ring and Pinion Gear Set, Incl. Ref 1 - 6; 381382A1 Axle
		311047A1		1	BEVEL GEAR Ring and Pinion Gear Set, Incl. Ref 1 - 6; 381383A1 Axle
1		NSS		1	NOT SERVICED SEPARATELY Ring, Gear
2		NSS		1	NOT SERVICED SEPARATELY Gear, Pinion Gear
3		K261065		1	WASHER
4		K261014		1	NUT Ring
5		1349058C1		1	SPACER Collapsible
6		1349059C1		2	WASHER
7		140954A1		X	SHIM 2,5 mm (0,098 in)
7		140953A1		X	SHIM 2,6 mm (0,102 in)
7		140951A1		X	SHIM 2,7 mm (0,106 in)
7		140949A1		X	SHIM 2,8 mm (0,110 in)
7		140948A1		X	SHIM 2,9 mm (0,114 in)
7		140943A1		X	SHIM 3,0 mm (0,118 in)
7		140944A1		X	SHIM 3,1 mm (0,122 in)
7		140945A1		X	SHIM 3,2 mm (0,125 in)
7		140946A1		X	SHIM 3,3 mm (0,129 in)
7		140947A1		X	SHIM 3,4 mm (0,133 in)
8		K395090		2	BEARING, BALL
9		K262143		1	SEAL Oil
10		238-5152		1	O-RING 3-1/4 ID x 3/32
11		128570A1		1	FLANGE Cover, Differential
		B17575		X	FLUID 89 ml, Black RTV Silicone, Differential Cover to Differential Carrier

DRIVE SHAFT, FRONT AXLE

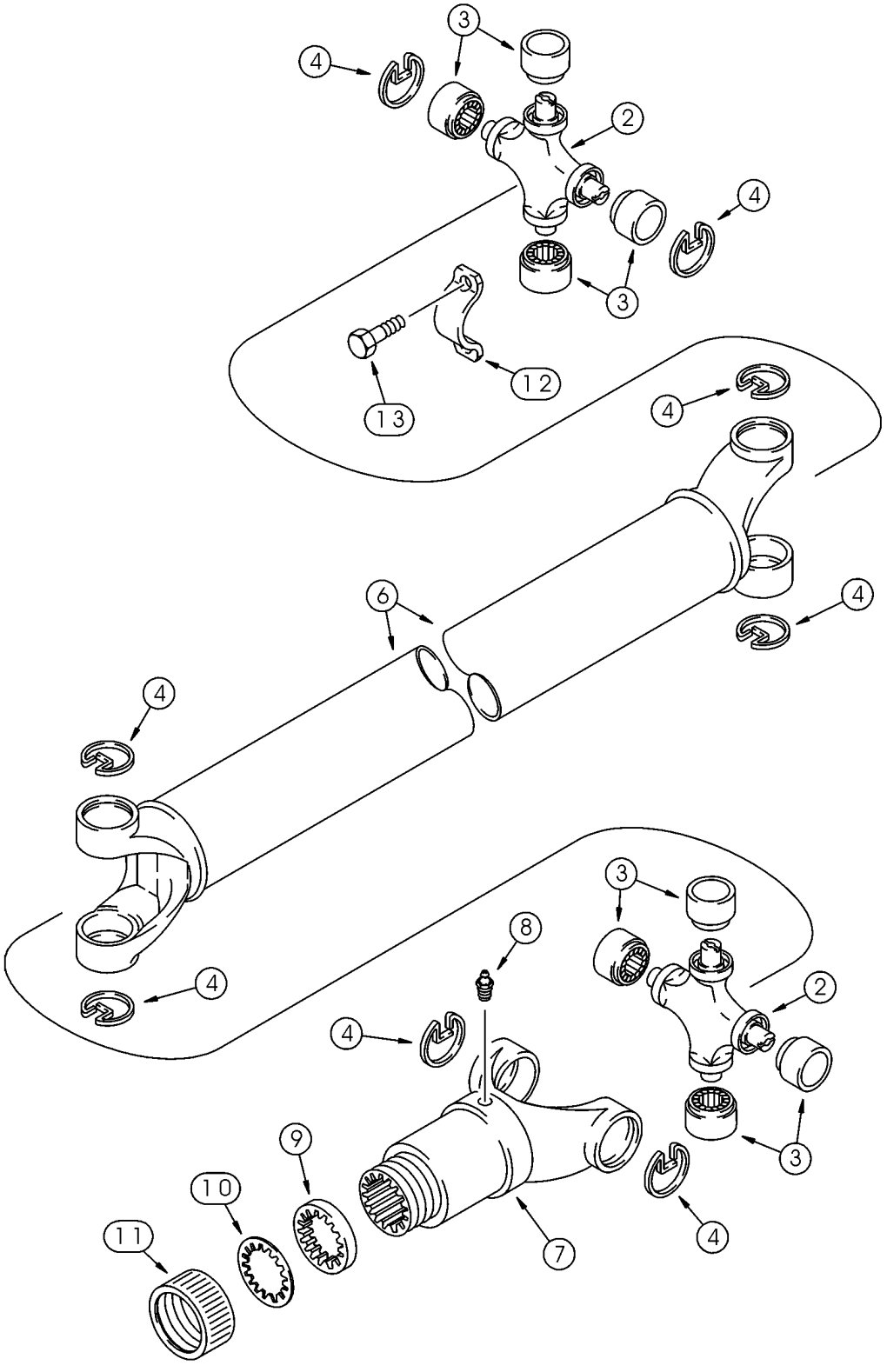

DRIVE SHAFT, FRONT AXLE

REF	FN	PART NUMBER	YR/SN	QTY	DESCRIPTION
		367861A2		1	SHAFT, DRIVE With or Without Powershift Transmission, Incl. 393231A1, Ref 2 - 13; Replaces 367861A1
		393231A1		2	KIT Universal Joint, Incl. Ref 2 - 4
2		NSS		1	NOT SERVICED SEPARATELY Joint, Universal
3		NSS		4	NOT SERVICED SEPARATELY Bearing, Journal
4		NSS		4	NOT SERVICED SEPARATELY Ring, Retaining
6		393234A1		1	SHAFT, DRIVE
7		144279A1		1	UNIVERSAL JOINT YOKE
8		219-10		1	NIPPLE 1/4 tpr x 11/16
		D149860		1	PACKAGE,SERVICE Incl. Ref 9 - 11
9		NSS		1	NOT SERVICED SEPARATELY Washer, Cork
10		NSS		1	NOT SERVICED SEPARATELY Washer, Steel
11		NSS		1	NOT SERVICED SEPARATELY Cap
12		90-6682T1		2	CLAMP
13		D137627		4	BOLT

COOLING SYSTEM - TRANSMISSION (MODELS WITHOUT POWERSHIFT)

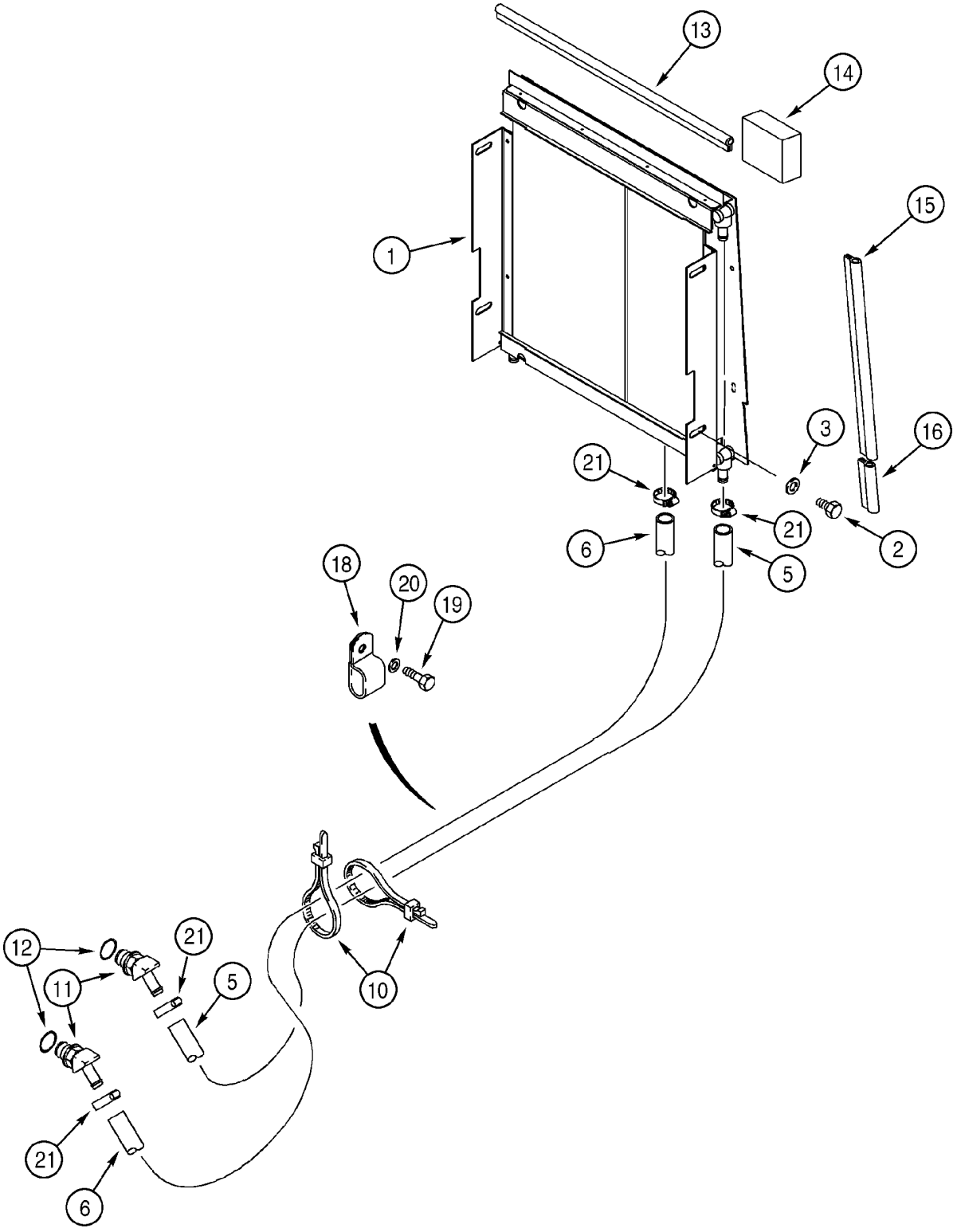

COOLING SYSTEM - TRANSMISSION (MODELS WITHOUT POWERSHIFT)

REF	FN	PART NUMBER	YR/SN	QTY	DESCRIPTION
1		383355A2		1	COOLER ASSY. For Mounting Hardware, See Figure 09-36; For Additional Hydraulic Routing, See Figure 08-03
2		614-10020		2	CAPSCREW M10 x 20
3		896-11010		2	WASHER 11 x 21 x 2,5 mm
5		319889A2		1	HOSE 1360 mm (53-9/16 in), Transmission to Cooler Inlet
6		301340A2		1	HOSE 2000 mm (78-3/4 in), Cooler Outlet to Transmission
10		L18337		2	STRAP 15 in
11		217-314		2	ELBOW 45 deg, 5/8 stem x 7/8 Or; Incl. Ref 12
12		237-6010		1	O-RING 3/4 ID x 3/32
13		233972A1		1	SEAL 564 mm (22-7/32 in), Horizontal
14		234719A1		2	FOAM Seal, 70 x 100 x 32 mm, Upper Corner, Use With 345-44 Adhesive
		345-44		1	ADHESIVE Spray Can, 3M No. 74, 23 ounce
15		233970A1		2	SEAL 472 mm (18-5/8 in), Vertical, Cooler to Radiator Wrapper
16		233971A1		2	SEAL 103 mm (4-1/16 in), Lower
18		D39696		1	CLAMP
19		614-12025		1	CAPSCREW M12 x 25
20		895-11012		1	WASHER 13,5 x 24 x 2,5 mm
21		328186A1		4	CLAMP, HOSE

COOLING SYSTEM - TRANSMISSION (MODELS WITH POWERSHIFT)

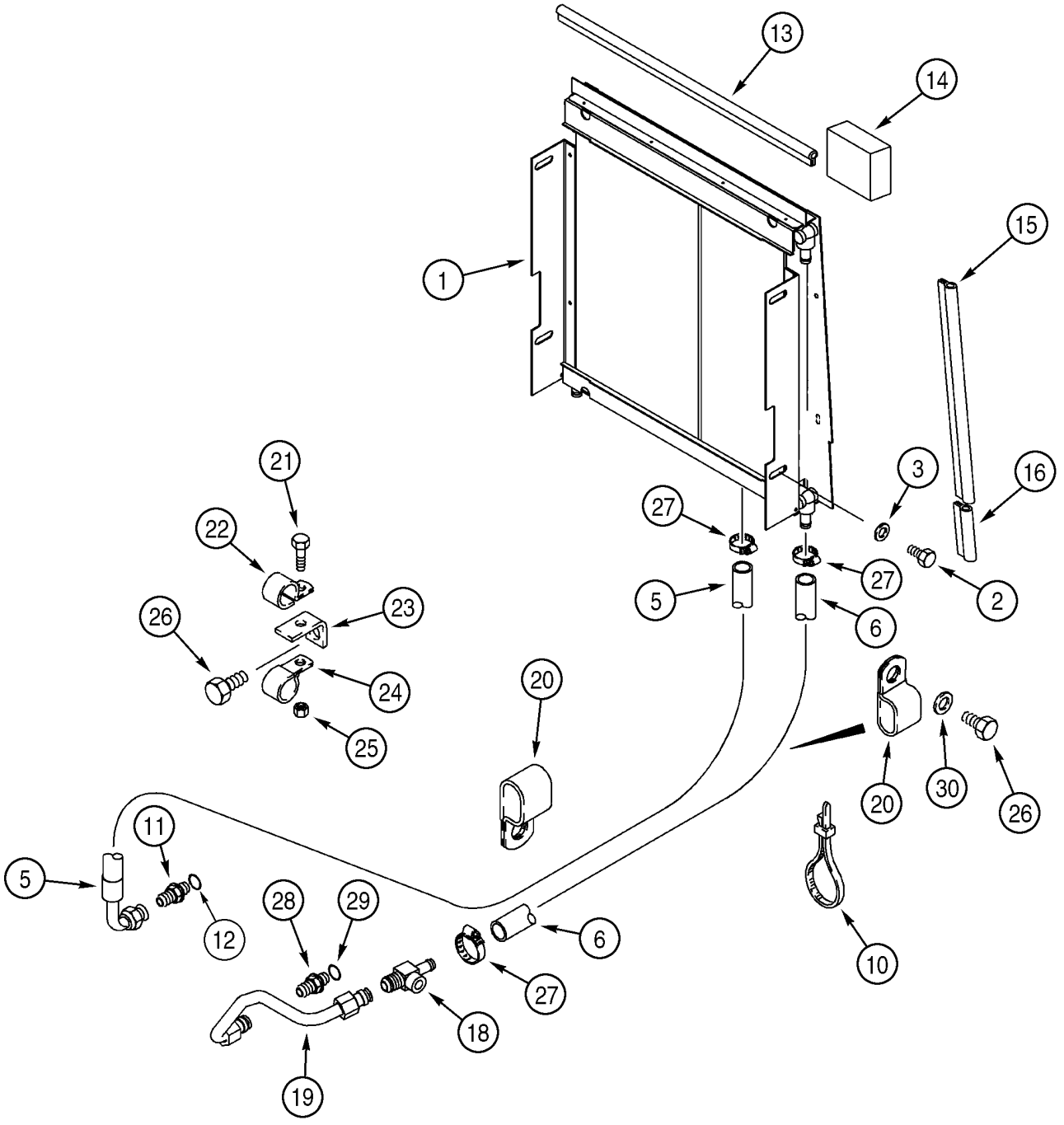

COOLING SYSTEM - TRANSMISSION (MODELS WITH POWERSHIFT)

REF	FN	PART NUMBER	YR/SN	QTY	DESCRIPTION
1		383355A2		1	COOLER ASSY. For Mounting Hardware, See Figure 09-36; For Additional Hydraulic Routing, See Figure 08-03
2		614-10020		2	CAPSCREW M10 x 20
3		895-11010		2	WASHER 11 x 21 x 2 mm
5		303987A2		1	HOSE 2075 mm (81-11/16 in), Transmission to Cooler Inlet
6		301340A2		1	HOSE 2000 mm (78-3/4 in), Cooler Outlet to Transmission
10		L18337		5	STRAP 15 in
11		218-5063		1	CONNECTOR 7/8 fl x 1-1/16 Or; Incl. Ref 12
12		237-6012		1	O-RING 59/64 ID x 7/64
13		233972A1		1	SEAL 564 mm (22-7/32 in), Horizontal
14		234719A1		2	FOAM Seal, 70 x 100 x 32 mm, Upper Corner, Use With 345-44 Adhesive
		345-44		1	ADHESIVE Spray Can, 3M No. 74, 23 ounce
15		233970A1		2	SEAL 472 mm (18-5/8 in), Vertical
16		233971A1		2	SEAL 103 mm (4-1/16 in), Lower
18		359210A1		1	FITTING Tee
19		241001A4		1	PIPE Tube At Transmission
20		D39696		1	CLAMP
21		614-10030		1	SCREW M10 x 30
22		515-25238		1	CLAMP 15/16 in ID
23		234442A1		1	SUPPORT
24		515-25190		1	CLAMP 3/4 ID
25		829-1410		1	NUT M10; 10.9
26		614-12025		1	CAPSCREW M12 x 25
27		328186A1		3	CLAMP, HOSE
28		218-5064		1	CONNECTOR 1-1/16 fl x Or; Incl. Ref 29
29		237-6012		1	O-RING 59/64 ID x 7/64
30		896-11012		1	WASHER 13,5 x 24 x 3 mm

TRANSMISSION - MOUNTING (MODELS WITHOUT POWERSHIFT)

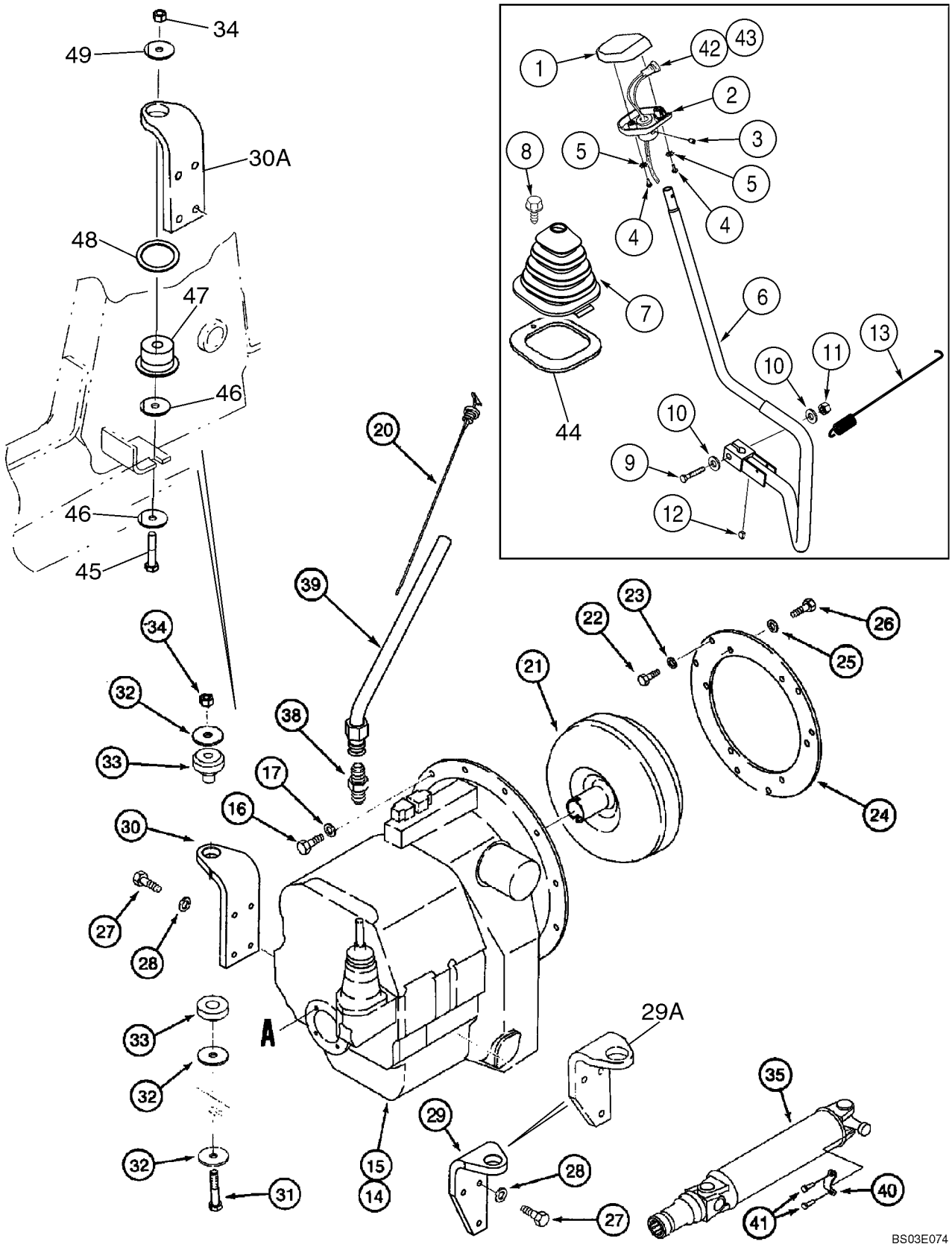

TRANSMISSION - MOUNTING (MODELS WITHOUT POWERSHIFT)

REF	FN	PART NUMBER	YR/SN	QTY	DESCRIPTION
		309747A1		1	KNOB Gear Shift Lever, Includes NSS Gasket, Incl. Ref 1, 2, 4, 5
		NSS		2	NOT SERVICED SEPARATELY GASKET, Knob
1		187714A1		1	BUTTON Knob, Upper
2		187715A1		1	BUTTON Knob, Lower
3		484-6316		1	SCREW Setscrew, 5/16 NF x 3/8; hdg pt
4		459-11014		2	SCREW No. 10 NF x .875, Use With Loctite 242
5		493-41020		2	WASHER, LOCK 3/16
6		379314A4		1	LEVER ASSY. Gear Shift Lever
7		400588A2		1	BOOT
8		233724A1		1	SCREW M6 x 25
9		827-12065		1	BOLT M12 x 65; 10.9
10		896-11012		2	WASHER 13,5 x 24 x 3 mm
11		832-10412		1	NUT M12
12		126-116		1	KEY,BUCKET TOOTHRT 3/16 x 3/4
13		380537A2		1	SPRING
14		329076A3		1	TRANSMISSION Two Wheel Drive Models, Replaces 329076A1, 329076A2; See Figure 06-14 - 06-23
15		329079A3		1	TRANSMISSION Four Wheel Drive Models, Replaces 329079A1, 329079A2; See Figure 06-14 - 06-24
16		627-10030		12	SCREW M10 x 30; 10.9
17		496-21041		12	WASHER 13/32 x 13/16 x 3/32
20		370630A1		1	DIPSTICK
21		1995137C1		1	CONVERTER Torque Converter, New
21		1995137C1C		1	CORE-TORQUE CONVERTR RETURN NUMBER, Use To Return Core For Credit When Using a Remanufactured Assembly
21		1995137C1R		1	REMAN-TORQUE CONVERT Remanufactured, North America Only, Component Parts Not Serviced Separately
22		428-510		6	CAPSCREW 5/16 NF x 5/8; 8
23		A15672		6	WASHER
24		A178706		1	PLATE Adapter, Torque Converter to Engine Flywheel

TRANSMISSION - MOUNTING (MODELS WITHOUT POWERSHIFT)

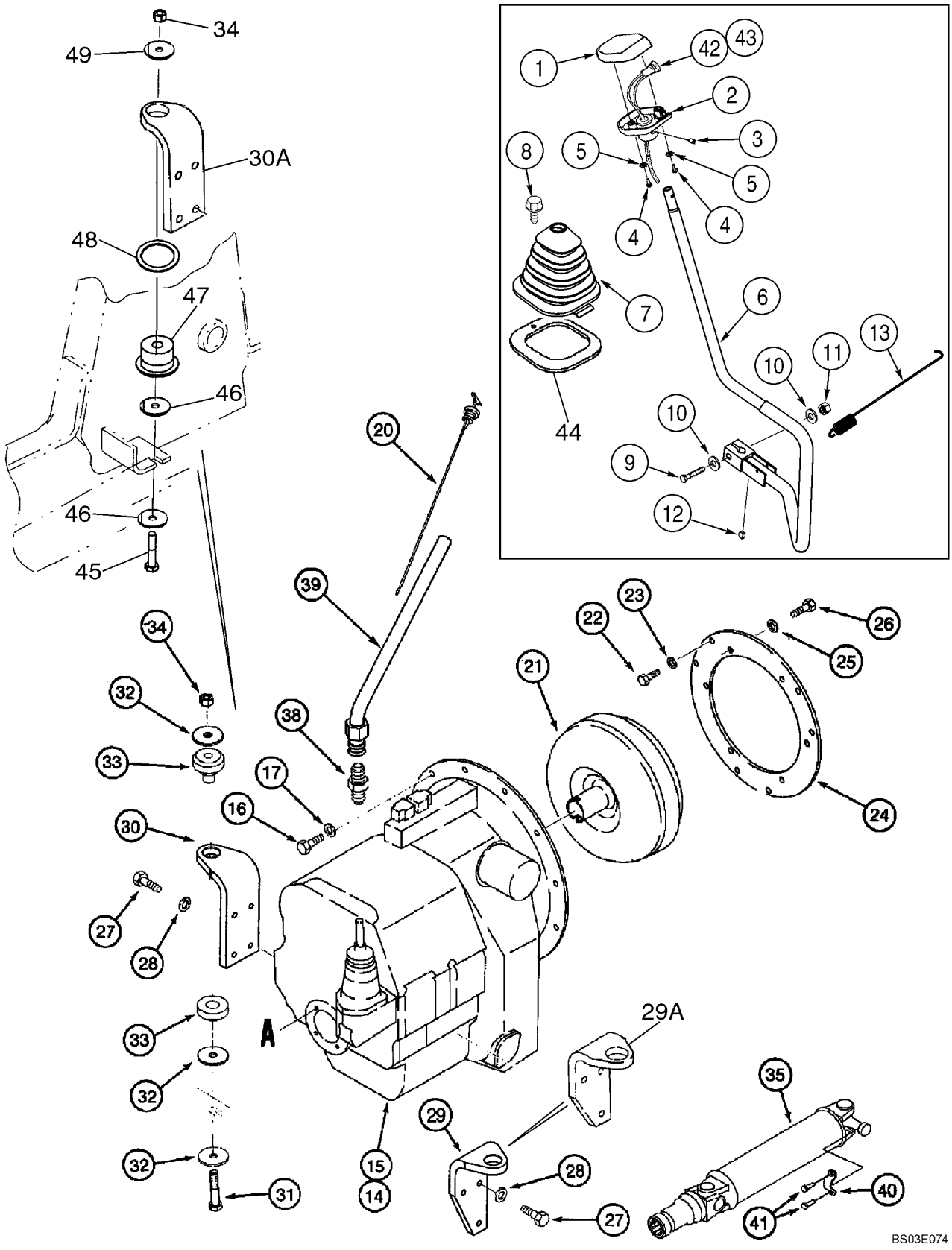

TRANSMISSION - MOUNTING (MODELS WITHOUT POWERSHIFT)

REF	FN	PART NUMBER	YR/SN	QTY	DESCRIPTION
25		496-21041		6	WASHER 13/32 x 13/16 x 3/32
26		626-10016		6	SCREW M10 x 16; 10.9
27		614-12035		7	CAPSCREW M12 x 35; Replaces 614-12040 40 mm Long Bolt Used On Some Models
28		896-15012		7	WASHER 13,5 x 28 x 4 mm
29		371729A1		1	MOUNTING Right-Hand Bracket, 38.29 mm (1-1/2 in) Diameter Hole, If Used
29A		411713A1		1	MOUNTING Right-Hand Bracket, 60.5 mm (2-3/8 in) Diameter Hole, If Used
30		371728A1		1	MOUNTING Left-Hand Bracket, 38.29 mm (1-1/2 in) Diameter Hole, If Used
30A		411714A1		1	MOUNTING Left-Hand Bracket, 60.5 mm (2-3/8 in) Diameter Hole, If Used
31		814-16110		2	CAPSCREW M16 x 110; If Used
32		D35009		6	WASHER Special, If Used
33		117846A1		2	RUBBER BLOCK Engine Mounting, Rear; If Used
34		832-10416		2	NUT Lock, M16
35		367860A3		1	SHAFT, DRIVE Transmission to Rear Axle, See Figure 06-47
38		218-459		1	FITTING 1-5/16 fl x 3/4 PT
39		395344A1		1	TUBE ASSY. Dipstick
40		90-6682T1		2	CLAMP
41		D137627		4	BOLT
42		123097A1		1	SWITCH Push Button, Clutch Cutout
43		123809A2		1	HARNESS Clutch Cutout, Transmission Gear Shift Lever
44		410561A1		1	SEAL Shift Lever Boot, Cab Models
45		814-16100		2	SCREW M16 x 100; If Used
46		186977A1		4	WASHER Flat, 70 x 16,25 x 4,5 mm; If Used
47		411623A1		2	MOUNTING,RUBBER Two Piece, If Used
48		413459A1		2	SHIM If Used
49		413460A1		2	WASHER If Used

06 -13		p1	05/03

TRANSMISSION - MOUNTING (MODELS WITH POWERSHIFT)

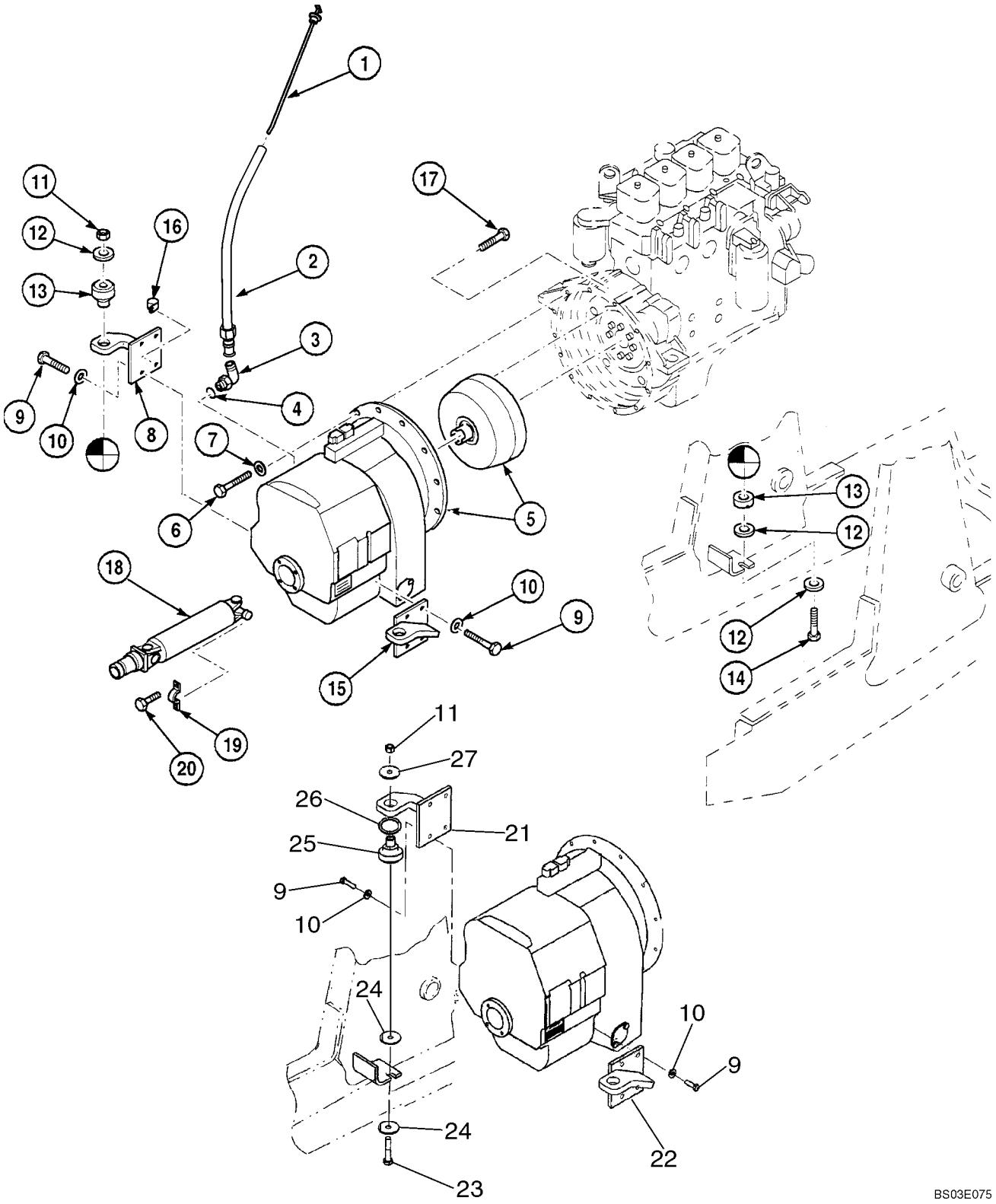

TRANSMISSION - MOUNTING (MODELS WITH POWERSHIFT)

REF	FN	PART NUMBER	YR/SN	QTY	DESCRIPTION
1		370630A1		1	DIPSTICK
2		393999A1		1	TUBE ASSY. Dipstick
3		218-5110		1	FITTING Elbow, 90 deg, 1-5/16 fl x Or; Incl. Ref 4
4		237-6016		1	O-RING 1-11/64 ID x 7/64
5		336896A1		1	GEARBOX ASSY TRANSMISSION, New, Four Wheel Drive Models, See Figure 06-25 - 06-36; No Longer Available, Order 445174A1 Transmission
		87425578		1	CORE-TRANSMISSION RETURN NUMBER, 336896A1 Transmission Core, Use To Return Core For Credit When Using A Remanufactured Assembly
		87425577		1	REMAN-TRANSMISSION Remanufactured 336896A1 Transmission, North America Only, Component Parts Not Serviced Separately
5		445174A1		1	TRANSMISSION New, Four Wheel Drive Models, See Figure 06-25 - 06-36
		87425579		1	CORE-TRANSMISSION RETURN NUMBER, 445174A1 Transmission Core, Use To Return Core For Credit When Using A Remanufactured Assembly
		87425577		1	REMAN-TRANSMISSION Remanufactured 445174A1 Transmission, North America Only, Component Parts Not Serviced Separately
6		627-10030		12	SCREW M10 x 30; 10.9
7		496-21041		12	WASHER 13/32 x 13/16 x 3/32
8		371724A1		1	MOUNTING Left-Hand Bracket, 38.29 mm (1-1/2 in) Diameter Hole; No Longer Available, Order 411834A1 Bracket, Ref 21
9		614-12035		8	CAPSCREW M12 x 35
10		896-15012		8	WASHER 13,5 x 28 x 4 mm
11		832-10416		2	NUT M16
12		D35009		6	WASHER Special, If Used
13		117846A1		2	RUBBER BLOCK Insulator, If Used
14		814-16110		2	CAPSCREW M16 x 110; If Used
15		371726A1		1	MOUNTING Right-Hand Bracket, 38.29 mm (1-1/2 in) Diameter Hole; No Longer Available, Order 411832A1 Bracket, Ref 22
16		D35908		1	CLAMP

TRANSMISSION - MOUNTING (MODELS WITH POWERSHIFT)

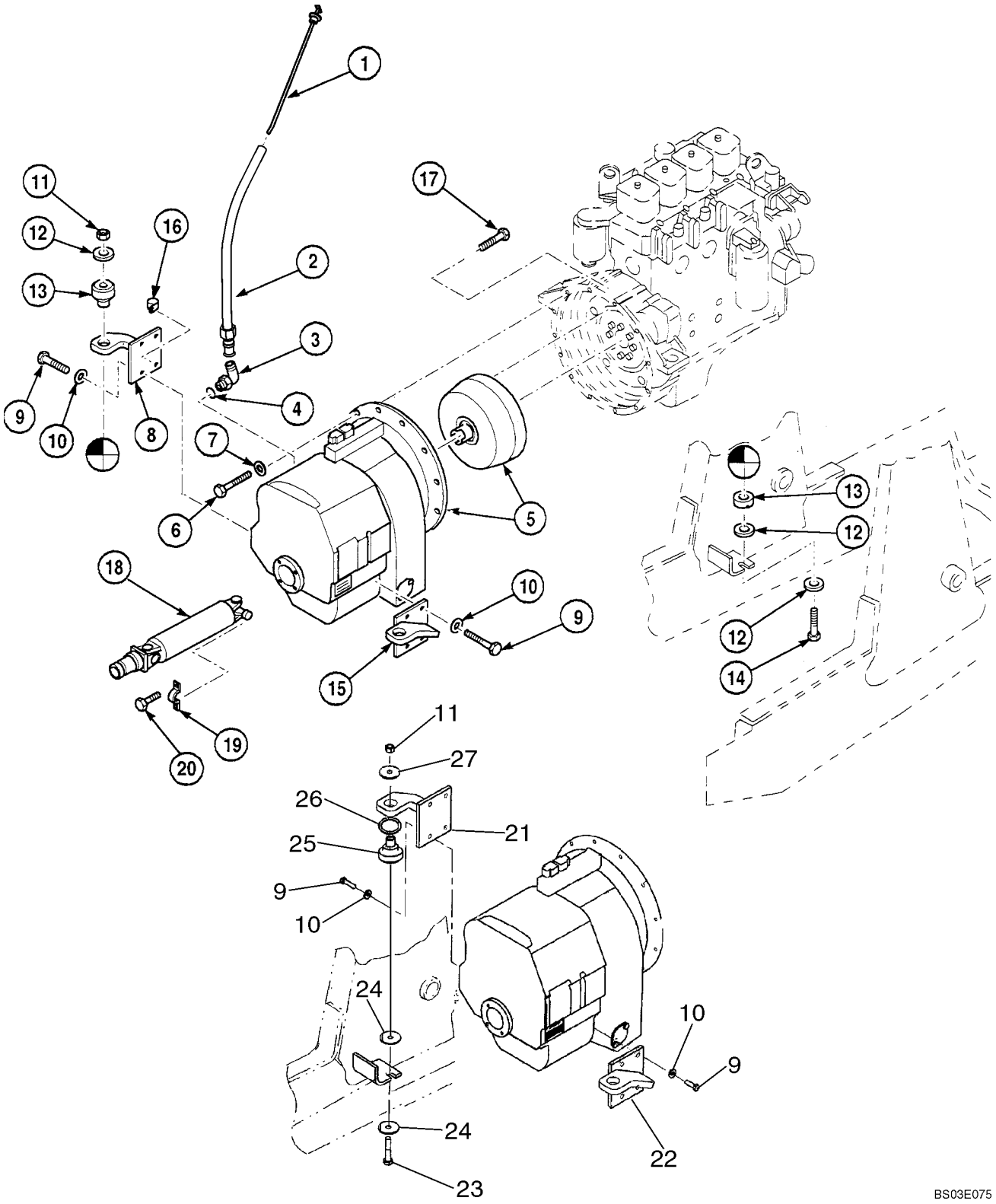

TRANSMISSION - MOUNTING (MODELS WITH POWERSHIFT)

REF	FN	PART NUMBER	YR/SN	QTY	DESCRIPTION
17		340968A1		8	SCREW
18		367859A2		1	SHAFT, DRIVE Transmission to Rear Axle, See Figure 06-47
19		90-6682T1		2	CLAMP
20		D137627		4	BOLT
21		411834A1		1	MOUNTING Left-Hand Bracket, 60.5 mm (2-3/8 in) Diameter Hole
22		411832A1		1	MOUNTING Right-Hand Bracket, 60 mm (2-23/64 in) Diameter Hole
23		814-16100		2	SCREW M16 x 100; If Used
24		186977A1		4	WASHER Flat, 70 x 16,25 x 4,5 mm; If Used
25		411623A1		2	MOUNTING,RUBBER Two Piece; If Used
26		413459A1		2	SHIM If Used
27		413460A1		2	WASHER If Used

TRANSMISSION ASSY - FILTER, OIL (MODELS WITHOUT POWERSHIFT)

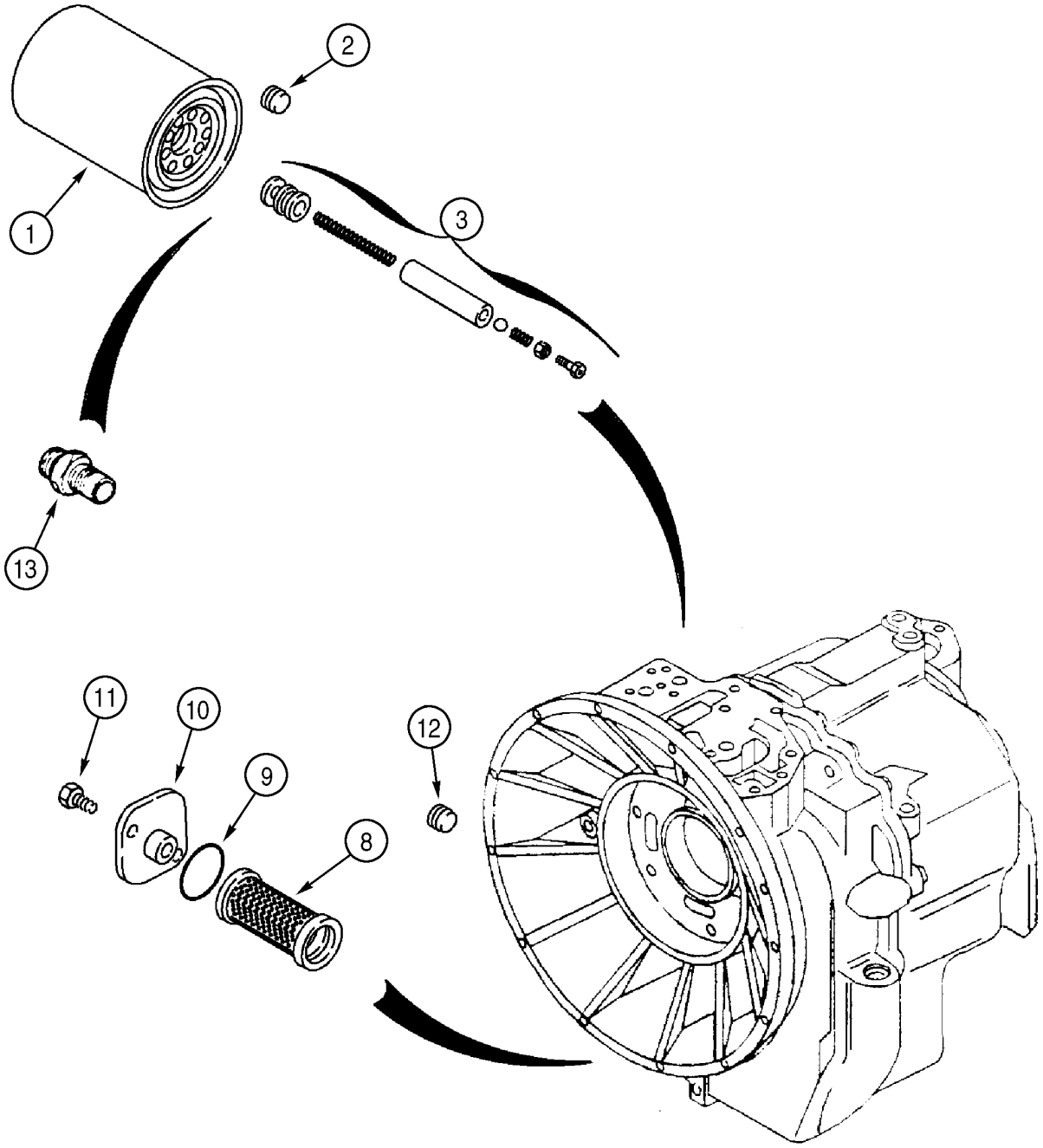

TRANSMISSION ASSY - FILTER, OIL (MODELS WITHOUT POWERSHIFT)

REF	FN	PART NUMBER	YR/SN	QTY	DESCRIPTION
		329076A3		1	TRANSMISSION Two Wheel Drive, Incl. Ref 1, 8 - 11, 13; Also Includes Parts On Figures 06-14 - 06-23; Replaces 329076A1, 329076A2
		329079A3		1	TRANSMISSION Four Wheel Drive, Incl. Ref 1 - 13; Also Includes Parts On Figures 06-14 - 06-24; Replaces 329079A1, 329079A2
1		254686A2		1	FILTER Oil; Replaces 254686A1
2		181101A1		1	PLUG 14 - 1.5 mm; Four Wheel Drive Models Only
3		181274A1		1	SET OF PARTS Valve; Four Wheel Drive Models Only
8		278534A1		1	SCREEN, FILTER Oil
9		100748A1		1	O-RING
10		181219A1		1	COVER
11		614-8018		2	SCREW M8 x 18
12		181102A1		1	PLUG Four Wheel Drive Models Only
13		181202A1		1	FITTING

TRANSMISSION ASSY (2WD) - HOUSING (MODELS WITHOUT POWERSHIFT)

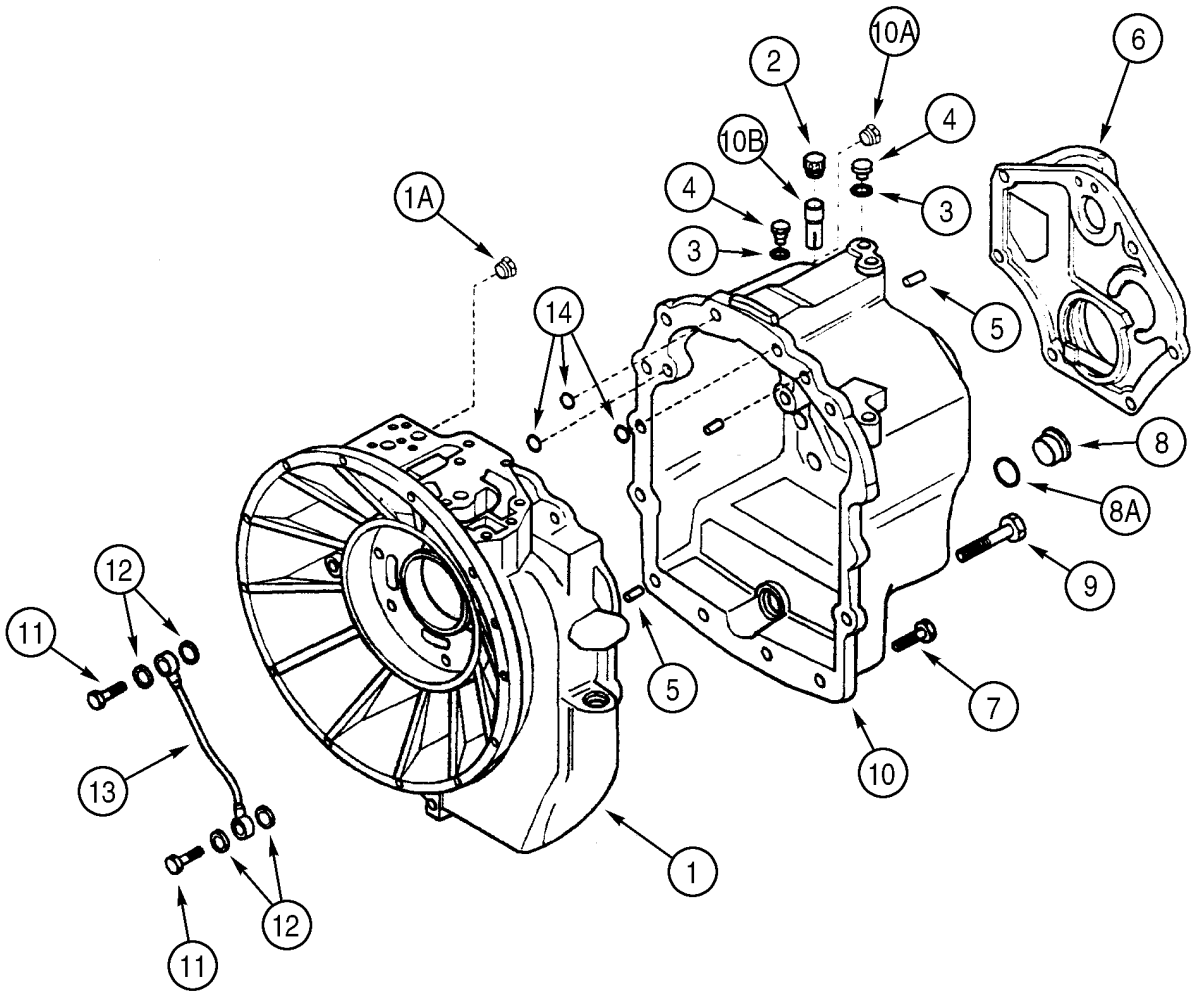

BS99H171

TRANSMISSION ASSY (2WD) - HOUSING (MODELS WITHOUT POWERSHIFT)

REF	FN	PART NUMBER	YR/SN	QTY	DESCRIPTION
		329076A3		1	TRANSMISSION Two Wheel Drive, Incl. Ref 1 - 14; Also Includes Parts On Figures 06-14 - 06-23; Replaces 329076A1, 329076A2
1		310768A1		1	HOUSING HOUSING, Front Half, Use With Loctite 510 or 518 as a Gasket Eliminator; Incl. Ref 1A
1A		E135809		1	PLUG If Used
2		1530028C1		1	BREATHER ASSY.
		310772A1		1	PIPE 18 OD x 42 mm lg, Breather, Not Illustrated
3		934667R1		3	WASHER, COPPER Copper Washer, 10 x 14 x 1.5 mm
4		181100A1		3	PLUG
5		K260177		3	PIN Dowel, 10 x 25 mm
6		181197A1		1	COVER Rear Half, Use With Superbond 539 as a Gasket Eliminator
7		614-10030		19	SCREW M10 x 30
8		100557A1		1	PLUG, DRAIN Incl. Ref 8A
8A		238-6121		1	O-RING 1-1/16 ID x 3/32
9		814-10150		2	SCREW M10 x 150
10		310767A1		1	HOUSING HOUSING, Rear Half, Use With Superbond 539 as a Gasket Eliminator; Incl. Ref 10A, 10B
10A		E135809		1	PLUG If Used
10B		310772A1		1	PIPE 18 OD x 42 mm lg, Breather, Not Illustrated
11		181179A1		2	JACK SCREW
12		181105A1		4	WASHER, COPPER 14 x 20 x 1.5 mm
13		181232A1		1	PIPE Lubrication Tube
14		181141A1		3	O-RING

TRANSMISSION ASSY (4WD) - HOUSING (MODELS WITHOUT POWERSHIFT)

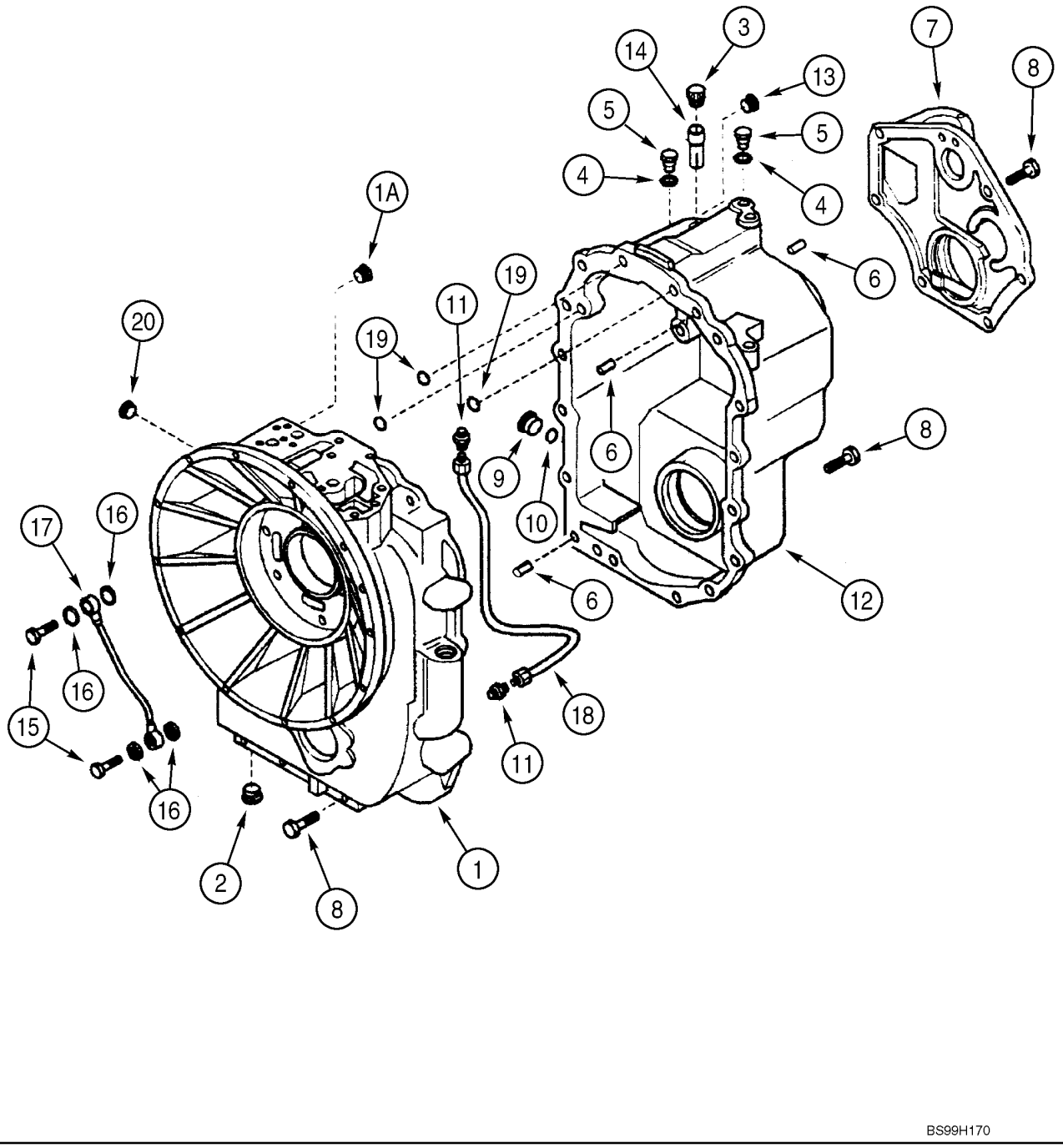

TRANSMISSION ASSY (4WD) - HOUSING (MODELS WITHOUT POWERSHIFT)

REF	FN	PART NUMBER	YR/SN	QTY	DESCRIPTION
		329079A3		1	TRANSMISSION Four Wheel Drive, Incl. Ref 1 - 20; Also Includes Parts On Figures 06-14 - 06-24; Replaces 329079A1, 329079A2
1		310766A1		1	HOUSING HOUSING, Front Half, Use With Loctite 510 or 518 as a Gasket Eliminator; Incl. Ref 1A
1A		E135809		1	PLUG
2		239606A1		1	PLUG
3		1530028C1		1	BREATHER ASSY.
		310772A1		1	PIPE 18 OD x 42 mm lg, Breather, Not Illustrated
4		934667R1		3	WASHER, COPPER Copper Washer, 10 x 14 x 1.5 mm
5		181100A1		3	PLUG
6		K260177		3	PIN Dowel, 10 x 25 mm
7		181197A1		1	COVER Rear Half, Use With Superbond 539 as a Gasket Eliminator
8		614-10030		23	SCREW M10 x 30
9		100557A1		1	PLUG, DRAIN Incl. Ref 10
10		238-6121		1	O-RING 1-1/16 ID x 3/32
11		218-1023		2	CONNECTOR 1/2 fl x 1/4 PT
12		310765A1		1	HOUSING HOUSING, Rear Half, Use With Superbond 539 as a Gasket Eliminator; Incl. Ref 13, 14
13		E135809		1	PLUG If Used
14		310772A1		1	PIPE 18 OD x 42 mm lg, Breather
15		181179A1		2	JACK SCREW
16		181105A1		4	WASHER, COPPER 14 x 20 x 1.5 mm
17		181232A1		1	PIPE Lubrication Tube
18		181176A1		1	PIPE Oil Tube
19		181141A1		3	O-RING
20		181101A1		1	PLUG 14 - 1.5 mm

TRANSMISSION ASSY - PUMP, OIL (MODELS WITHOUT POWERSHIFT)

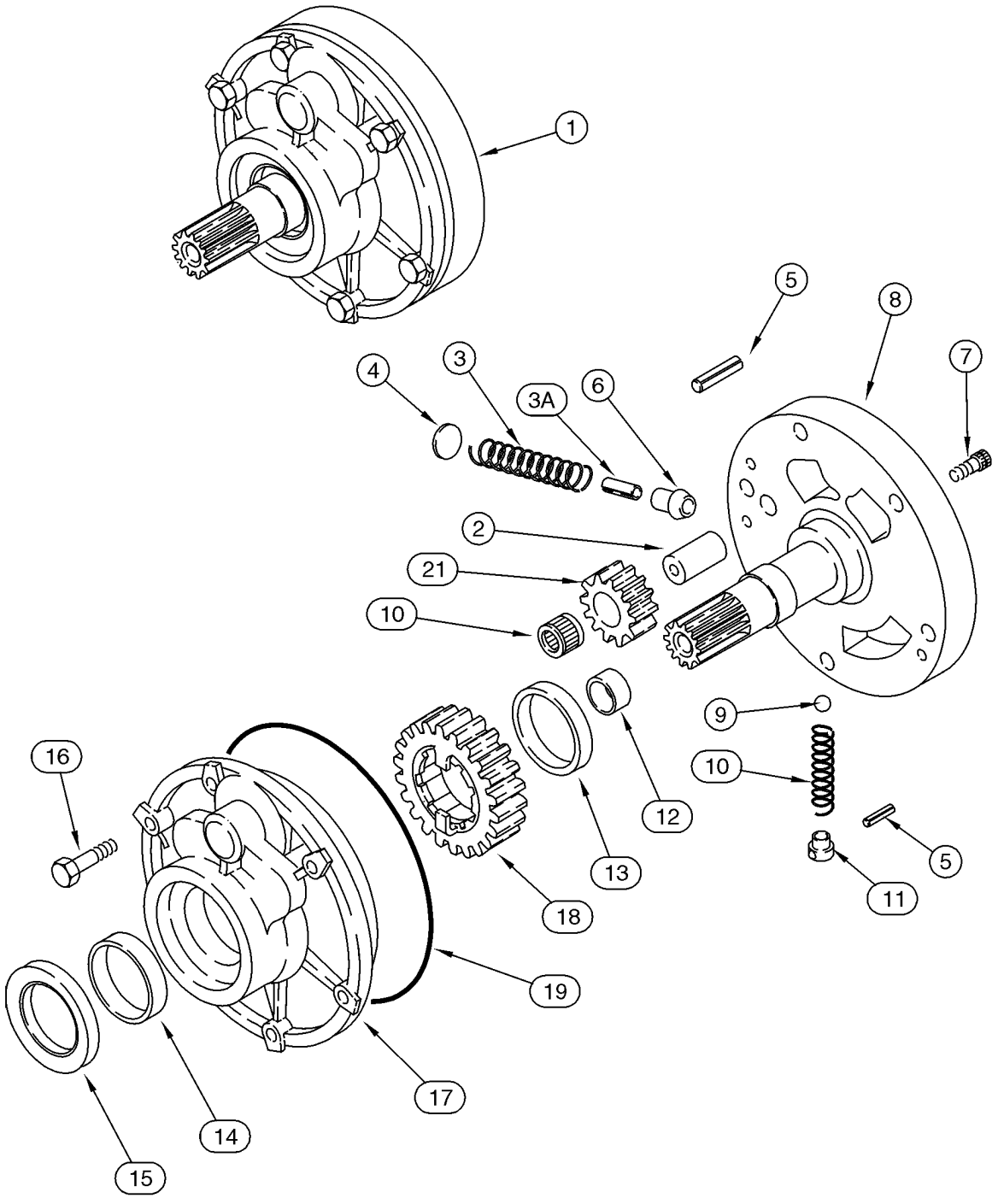

TRANSMISSION ASSY - PUMP, OIL (MODELS WITHOUT POWERSHIFT)

REF	FN	PART NUMBER	YR/SN	QTY	DESCRIPTION
		329076A3		1	TRANSMISSION Two Wheel Drive, Incl. Ref 1 - 21; Also Includes Parts On Figures 06-14 - 06-23; Replaces 329076A1, 329076A2
		329079A3		1	TRANSMISSION Four Wheel Drive, Incl. Ref 1 - 21; Also Includes Parts On Figures 06-14 - 06-24; Replaces 329079A1, 329079A2
1		181199A4		1	PUMP Incl. Ref 2 - 21
2		NSS		1	NOT SERVICED SEPARATELY Shaft
3		NSS		1	NOT SERVICED SEPARATELY Spring
3A		NSS		1	NOT SERVICED SEPARATELY Pin
4		NSS		1	NOT SERVICED SEPARATELY Stop
5		NSS		2	NOT SERVICED SEPARATELY Pin, Roll
6		NSS		1	NOT SERVICED SEPARATELY Piston
7		NSS		2	NOT SERVICED SEPARATELY Bolt
8		NSS		1	NOT SERVICED SEPARATELY Support
9		NSS		1	NOT SERVICED SEPARATELY Ball
10		NSS		1	NOT SERVICED SEPARATELY Spring
11		NSS		1	NOT SERVICED SEPARATELY Guide
12		NSS		1	NOT SERVICED SEPARATELY Bushing
13		NSS		1	NOT SERVICED SEPARATELY Bushing
14		181216A1		1	BUSHING, LARGE
15		181205A1		1	OIL-SEAL
16		814-8060		6	CAPSCREW M8 x 60
17		NSS		1	NOT SERVICED SEPARATELY Housing
18		NSS		1	NOT SERVICED SEPARATELY Gear, 23T
19		181142A1		1	O-RING
20		NSS		1	NOT SERVICED SEPARATELY Bearing, Needle
21		NSS		1	NOT SERVICED SEPARATELY Gear, 12T

TRANSMISSION ASSY - SHIFTER MECHANISM (MODELS WITHOUT POWERSHIFT)

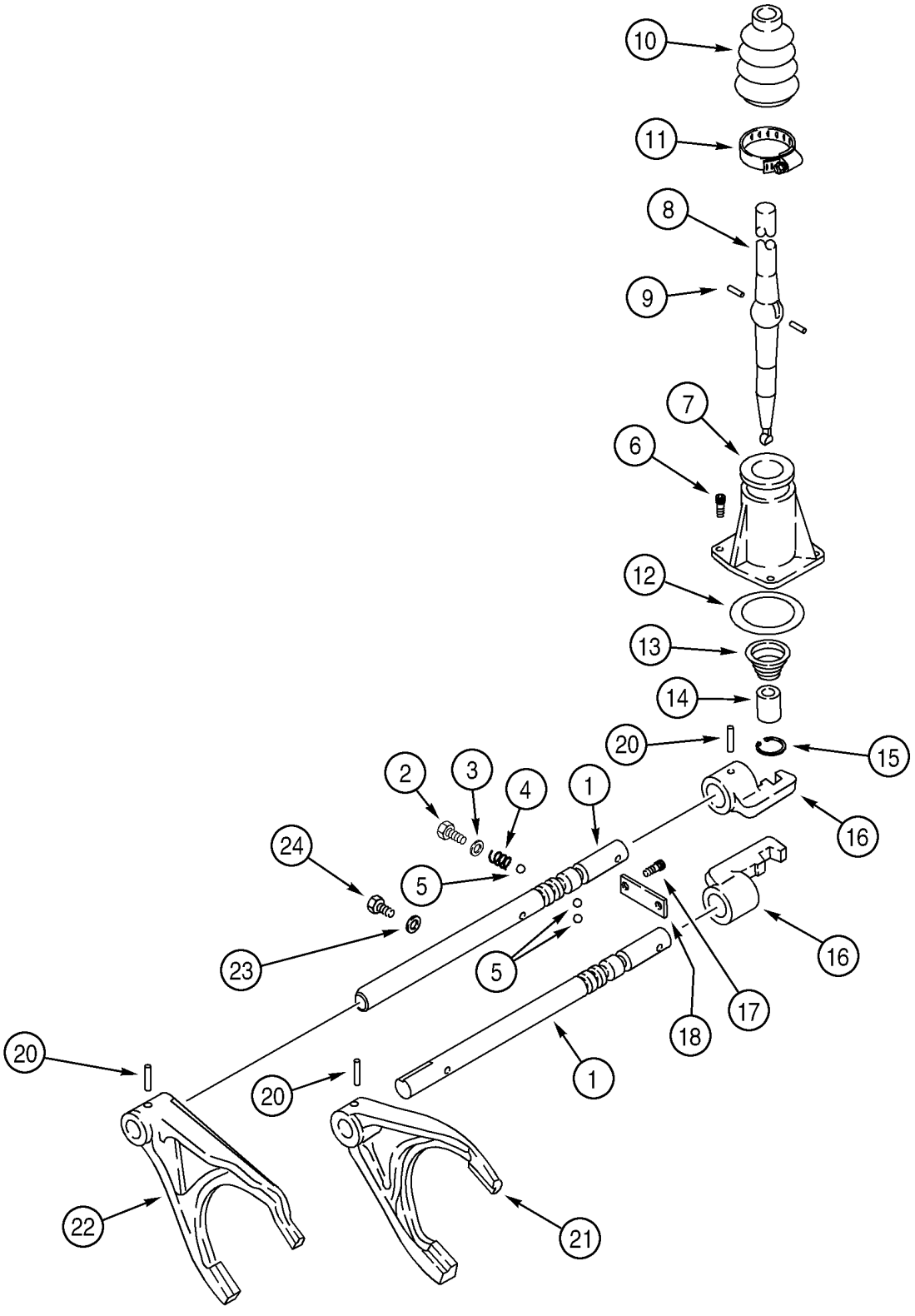

TRANSMISSION ASSY - SHIFTER MECHANISM (MODELS WITHOUT POWERSHIFT)

REF	FN	PART NUMBER	YR/SN	QTY	DESCRIPTION
		329076A3		1	TRANSMISSION Two Wheel Drive, Incl. Ref 1 - 24; Also Includes Parts On Figures 06-14 - 06-23; Replaces 329076A1, 329076A2
		329079A3		1	TRANSMISSION Four Wheel Drive, Incl. Ref 1 - 24; Also Includes Parts On Figures 06-14 - 06-24; Replaces 329079A1, 329079A2
1		181245A2		2	ROD Shifter Fork Rail
2		614-12016		2	SCREW M12 x 16
3		1966835C1		2	WASHER 12 x 16 x 1.5 mm
4		1966993C1		2	SPRING
5		181139A1		4	BALL
6		864-8025		3	SCREW M8 x 25
7		181171A1		1	COVER
8		190428A3		1	LEVER, CONTROL
9		1967585C1		2	PIN Pin
10		1967581C1		1	BOOT Boot
11		181177A1		1	CLAMP
12		181138A1		1	O-RING
13		278533A1		1	SPRING
14		278532A1		1	BUSHING, LARGE
15		279039A1		1	RING SNAP
16		181173A1		2	SELECTOR
17		864-10025		2	SCREW M10 x 25
18		181175A1		1	PLATE, LARGE
20		905794R1		4	PIN 6 x 30 mm
21		181203A1		1	FORK, SHIFTER First and Second
22		366909A1		1	FORK, SHIFTER Third and Fourth
23		181104A1		1	WASHER, COPPER
24		614-8016		1	CAPSCREW M8 x 16

TRANSMISSION ASSY - SHAFT, IDLER AND PRIMARY (MODELS WITHOUT POWERSHIFT)

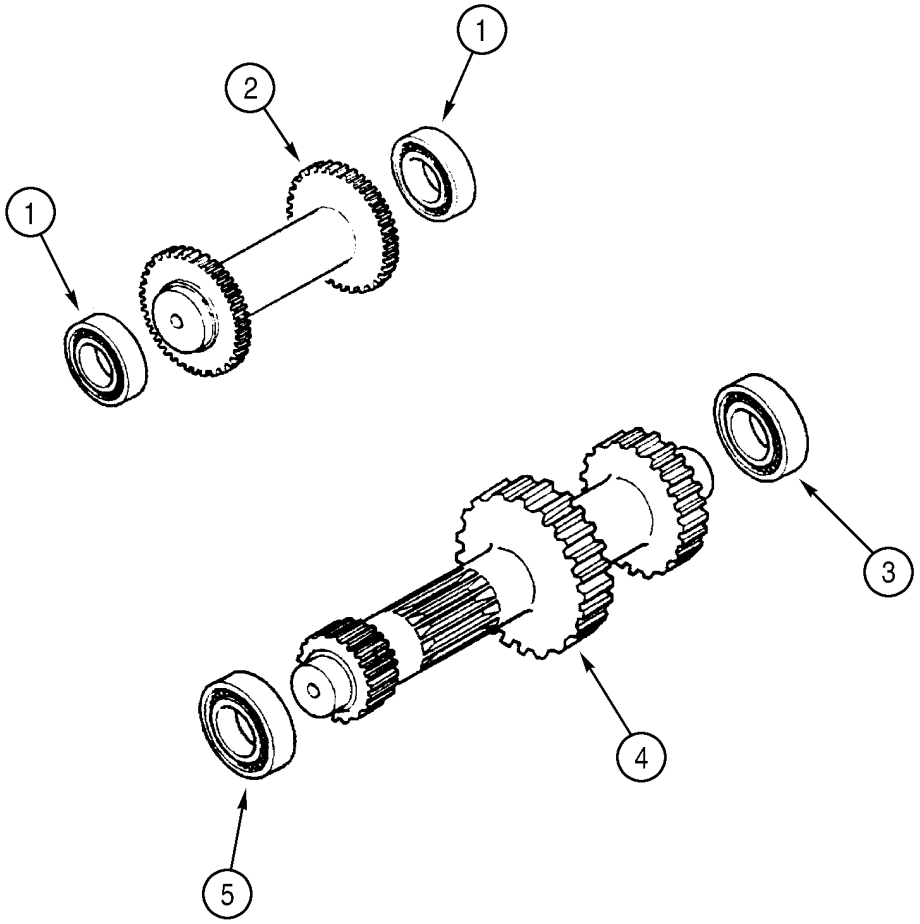

BS99H168

TRANSMISSION ASSY - SHAFT, IDLER AND PRIMARY (MODELS WITHOUT POWERSHIFT)

REF	FN	PART NUMBER	YR/SN	QTY	DESCRIPTION
		329076A3		1	TRANSMISSION Two Wheel Drive, Incl. Ref 1 - 6; Also Includes Parts On Figures 06-14 - 06-23; Replaces 329076A1, 329076A2
		329079A3		1	TRANSMISSION Four Wheel Drive, Incl. Ref 1 - 6; Also Includes Parts On Figures 06-14 - 06-24; Replaces 329079A1, 329079A2
1		ST205A		2	BEARING, BALL
2		358636A1		1	SHAFT Idler Shaft
3		181126A1		1	BEARING, BALL
4		358646A1		1	SHAFT Primary Shaft
5		181132A1		1	BEARING, BALL
6		A48041		1	CIRCLIP

TRANSMISSION ASSY - SHAFT, INPUT (MODELS WITHOUT POWERSHIFT)

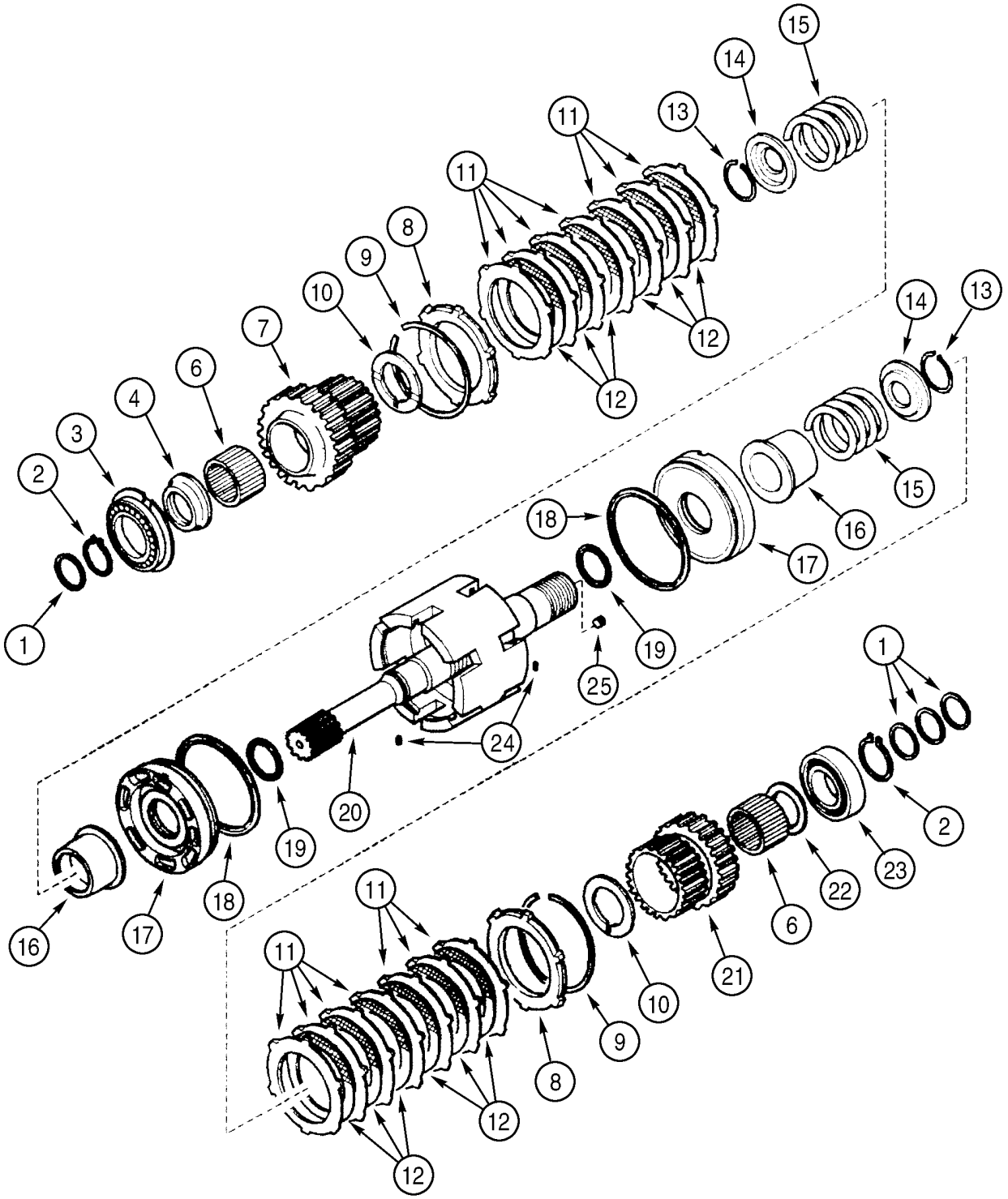

TRANSMISSION ASSY - SHAFT, INPUT (MODELS WITHOUT POWERSHIFT)

REF	FN	PART NUMBER	YR/SN	QTY	DESCRIPTION
		329076A3		1	TRANSMISSION Two Wheel Drive, Incl. Ref 1 - 25; Also Includes Parts On Figures 06-14 - 06-23; Replaces 329076A1, 329076A2
		329079A3		1	TRANSMISSION Four Wheel Drive, Incl. Ref 1 - 25; Also Includes Parts On Figures 06-14 - 06-24; Replaces 329079A1, 329079A2
1		358645A1		4	OIL-SEAL
2		A48041		2	CIRCLIP
3		181128A1		1	BEARING, BALL
4		358635A1		1	SPACER 68 x 45 x 105 mm
6		358633A1		2	BEARING, NEEDLE
7		358632A1		1	PINION Gear, 35T
8		310519A1		2	PLATE
9		181116A1		2	RING, LOCK
10		358640A1		2	WASHER Thrust
11		181159A1		14	DISC Plate
12		181158A1		12	DISC, CLUTCH Plate
13		181111A1		2	RING, LOCK
14		181161A1		2	PLATE, THRUST Pressure
15		358637A1		2	SPRING
16		358641A1		2	SLEEVE, TRANSMISSION
17		358644A1		2	PISTON
18		358643A1		2	RING SNAP
19		358642A1		2	SEALRING
20		358631A1		1	SHAFT Input Shaft
21		358638A1		1	PINION Gear, 29T
22		358639A1		1	WASHER Thrust, 68 x 45 x 4 mm
23		181126A1		1	BEARING, BALL
24		181108A1		2	SPLIT PIN
25		D142898		2	PLUG 10 x 1 mm

TRANSMISSION ASSY - SHAFT, SECONDARY (MODELS WITHOUT POWERSHIFT)

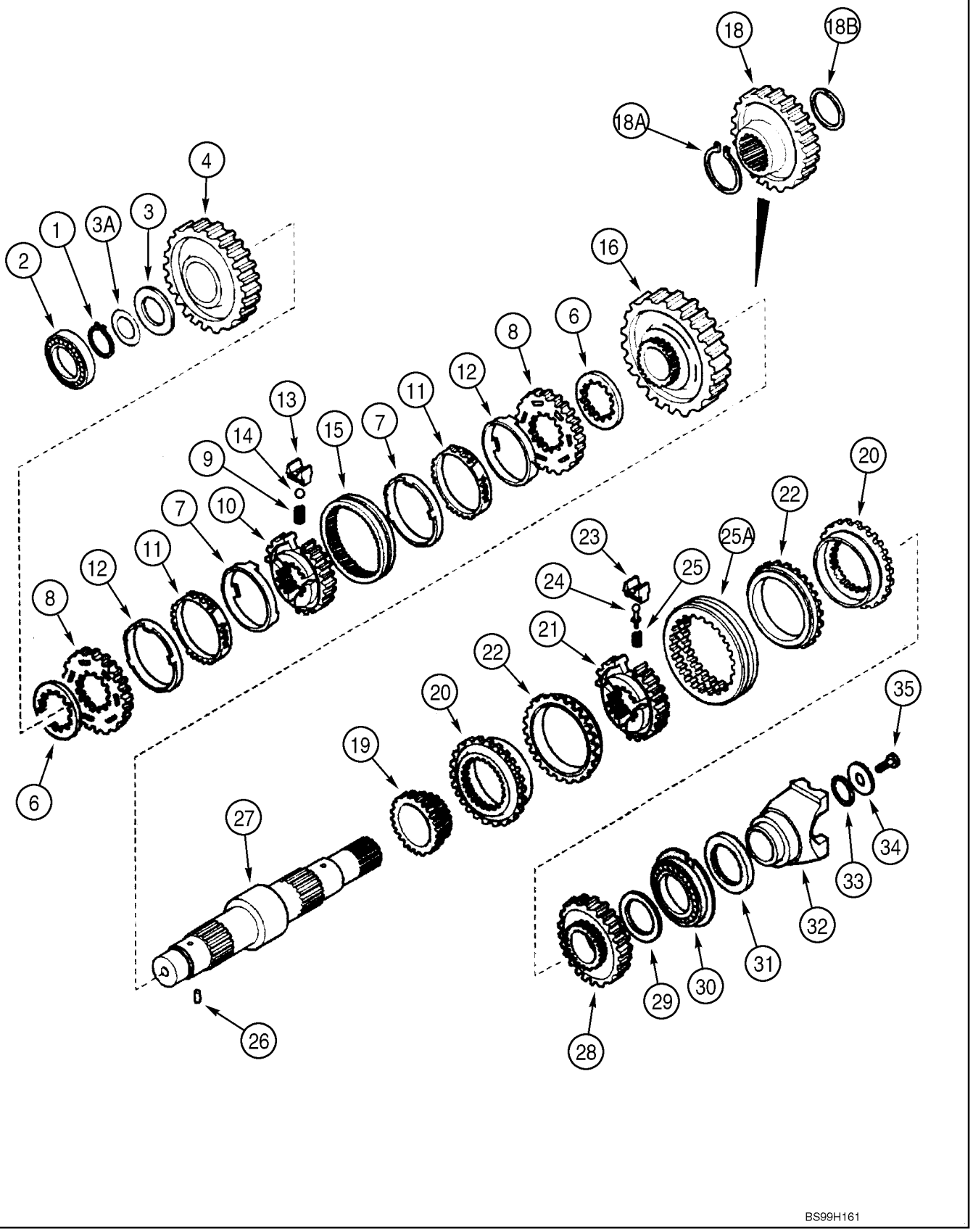

TRANSMISSION ASSY - SHAFT, SECONDARY (MODELS WITHOUT POWERSHIFT)

REF	FN	PART NUMBER	YR/SN	QTY	DESCRIPTION
		329076A3		1	TRANSMISSION Two Wheel Drive, Incl. Ref 1 - 35; Also Includes Parts On Figures 06-14 - 06-23; Replaces 329076A1, 329076A2
		329079A3		1	TRANSMISSION Four Wheel Drive, Incl. Ref 1 - 35; Also Includes Parts On Figures 06-14 - 06-24; Replaces 329079A1, 329079A2
1		181118A1		1	RING, LOCK
2		181132A1		1	BEARING, BALL
3		358649A1		1	WASHER Thrust
3A		358650A1		X	SHIM 0,05 mm
3A		358651A1		X	SHIM 0,10 mm
3A		358652A1		X	SHIM 0,30 mm
3A		196454A1		X	SHIM 0,50 mm
4		358648A1		1	PINION Gear, Driven, Second, 43T
6		244109A1		4	SPACER
		190427A1		1	SYNCHRONIZER Synchronizing Service Kit, Incl. Ref 7 - 15
7		NSS		2	NOT SERVICED SEPARATELY Ring
8		NSS		2	NOT SERVICED SEPARATELY Ring
9		384773A1		3	SPRING (COIL)
10		NSS		1	NOT SERVICED SEPARATELY Hub
11		NSS		2	NOT SERVICED SEPARATELY Ring
12		NSS		2	NOT SERVICED SEPARATELY Ring
13		326865A1		3	PLATE,SPACER Replaces 384772A1
14		384769A1		3	BALL
15		NSS		1	NOT SERVICED SEPARATELY Sleeve
16		358647A1		1	PINION Gear, Driven, First, 49T
18		358656A1		1	GEAR Drive, Four Wheel Drive Models
18A		358654A1		1	RING SNAP Four Wheel Drive Models
18B		358655A1		1	RING SNAP Four Wheel Drive Models
19		358282A1		1	GEAR Driven, Fourth, 23T
		366398A1		1	SYNCHRONIZER Synchronizing Service Kit, Incl. Ref 20 - 25A
20		NSS		2	NOT SERVICED SEPARATELY Ring
21		NSS		1	NOT SERVICED SEPARATELY Hub
22		NSS		2	NOT SERVICED SEPARATELY Ring

TRANSMISSION ASSY - SHAFT, SECONDARY (MODELS WITHOUT POWERSHIFT)

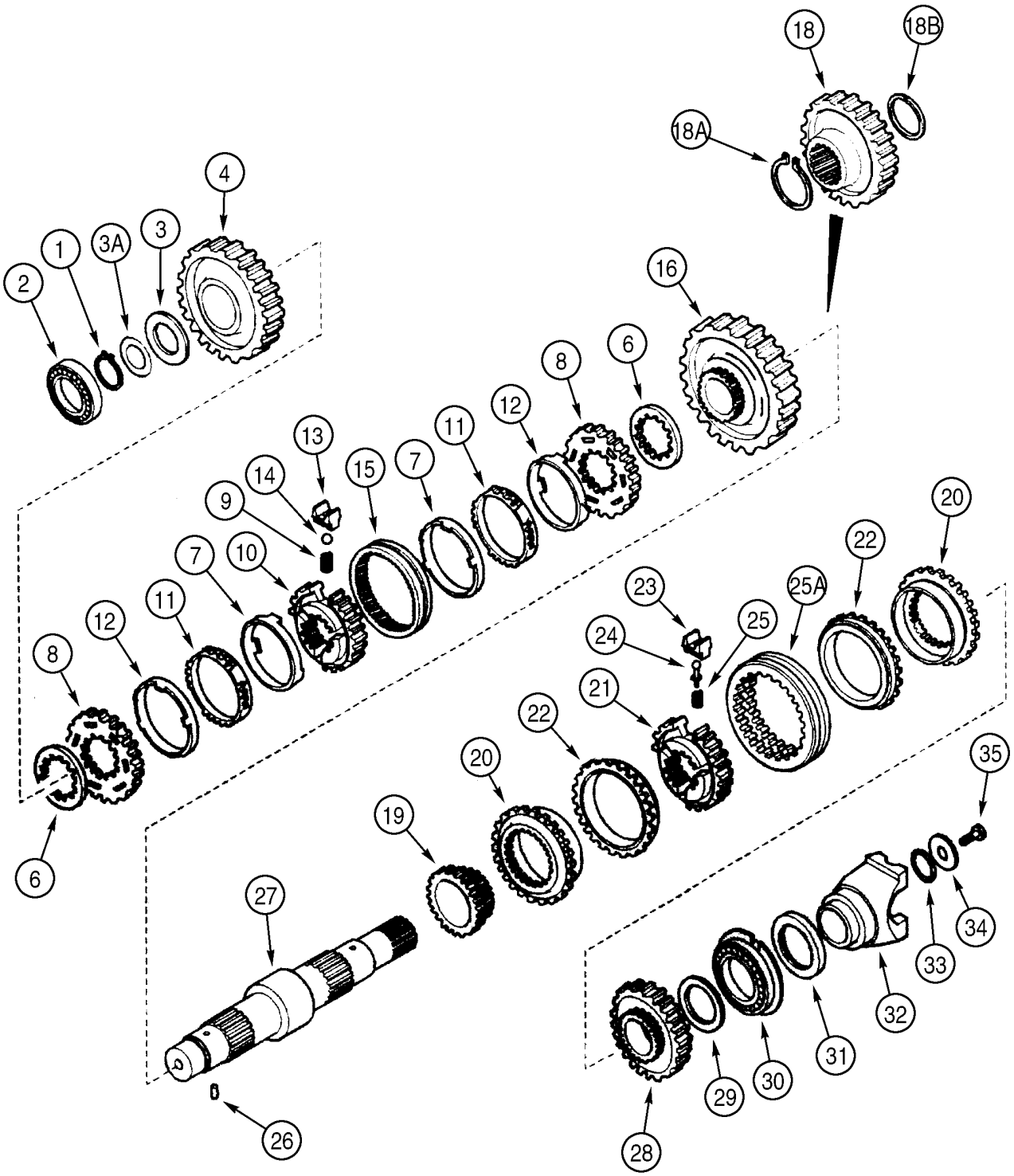

TRANSMISSION ASSY - SHAFT, SECONDARY (MODELS WITHOUT POWERSHIFT)

REF	FN	PART NUMBER	YR/SN	QTY	DESCRIPTION
23		NSS		3	NOT SERVICED SEPARATELY Plate
24		NSS		3	NOT SERVICED SEPARATELY Pin
25		NSS		3	NOT SERVICED SEPARATELY Spring
25A		NSS		1	NOT SERVICED SEPARATELY Sleeve
26		181108A1		1	SPLIT PIN
27		366366A1		1	SHAFT Secondary, Two Wheel Drive Models
27		358653A1		1	SHAFT Secondary, Four Wheel Drive Models
28		358283A1		1	PINION Gear, Driven, Third, 33T
29		358639A1		1	WASHER Thrust, 68 x 45 x 4 mm
30		181130A1		1	BEARING, BALL
31		181123A1		1	OIL-SEAL 60 x 75 x 8 mm
32		233284A1		1	FORK Yoke
33		181144A1		1	O-RING
34		181165A1		1	WASHER 52 x 12.5 x 5 mm
35		P3533055		1	SCREW 12 x 25 mm

TRANSMISSION ASSY (4WD) - SHAFT, OUTPUT (MODELS WITHOUT POWERSHIFT)

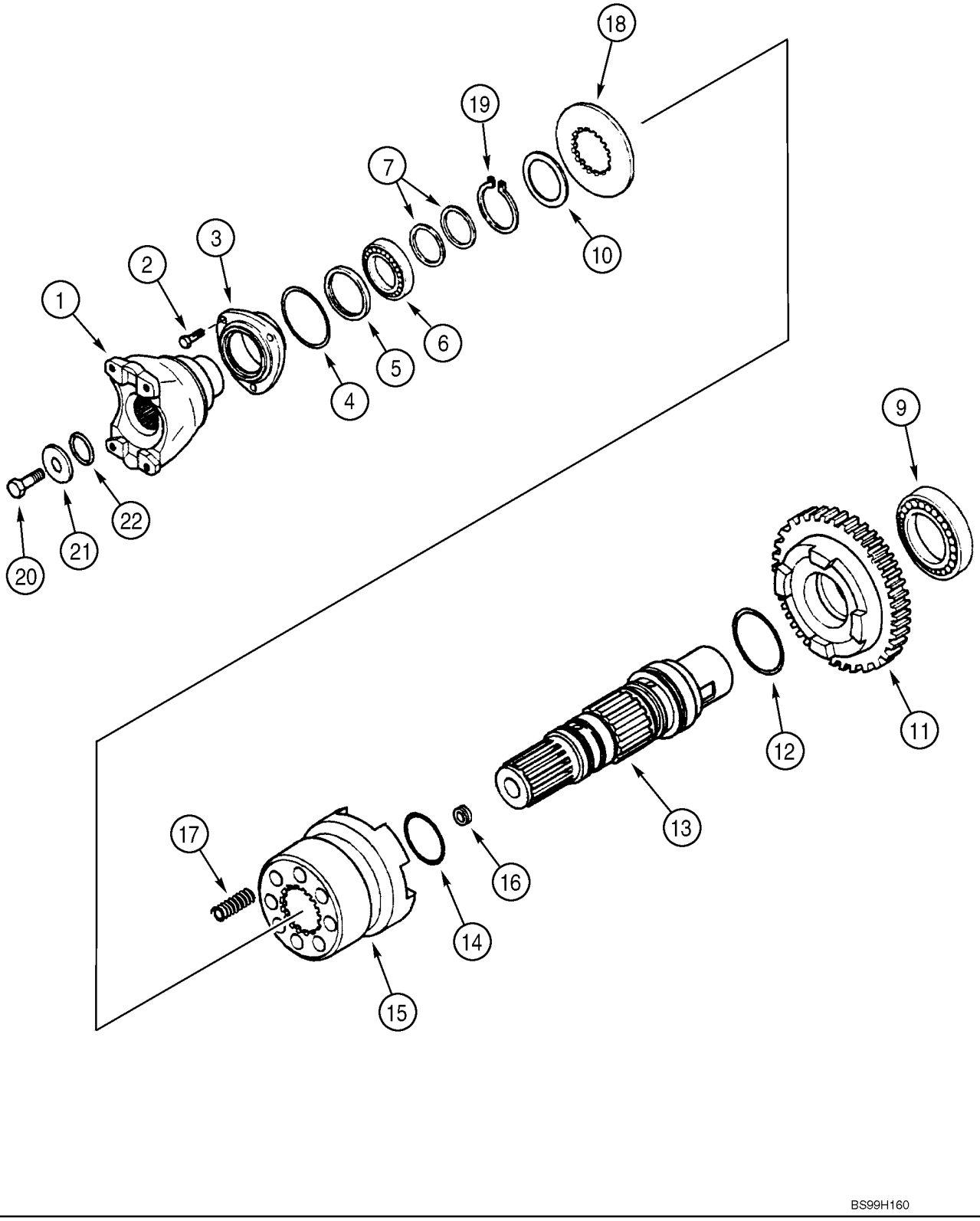

TRANSMISSION ASSY (4WD) - SHAFT, OUTPUT (MODELS WITHOUT POWERSHIFT)

REF	FN	PART NUMBER	YR/SN	QTY	DESCRIPTION
		329079A3		1	TRANSMISSION Four Wheel Drive, Incl. Ref 1 - 22; Also Includes Parts On Figures 06-14 - 06-24; Replaces 329079A1, 329079A2
1		233283A1		1	FORK Yoke, Front
2		614-8022		3	SCREW M8 x 22
3		181198A1		1	COVER
4		112517A1		1	O-RING
5		181122A1		1	OIL-SEAL 50 x 65 x 8 mm
6		ST205A		1	BEARING, BALL
7		358645A1		2	OIL-SEAL
9		181126A1		1	BEARING, BALL
10		P2745478		1	WASHER
11		366234A1		1	PINION Gear, Driven, 36T
12		366235A1		1	O-RING
13		366230A1		1	SHAFT Output Shaft
14		366236A1		2	O-RING
15		366232A1		1	SLEEVE, TRANSMISSION
16		D142898		1	PLUG 10 x 1 mm
17		100753A1		8	SPRING
18		366231A1		1	WASHER
19		800-5145		1	RING SNAP
20		P3533055		1	SCREW 12 x 25 mm
21		P2745466		1	WASHER
22		238-8217		1	O-RING 1-3/16 ID x 1/8

TRANSMISSION ASSY - VALVE, CONTROL (MODELS WITHOUT POWERSHIFT)

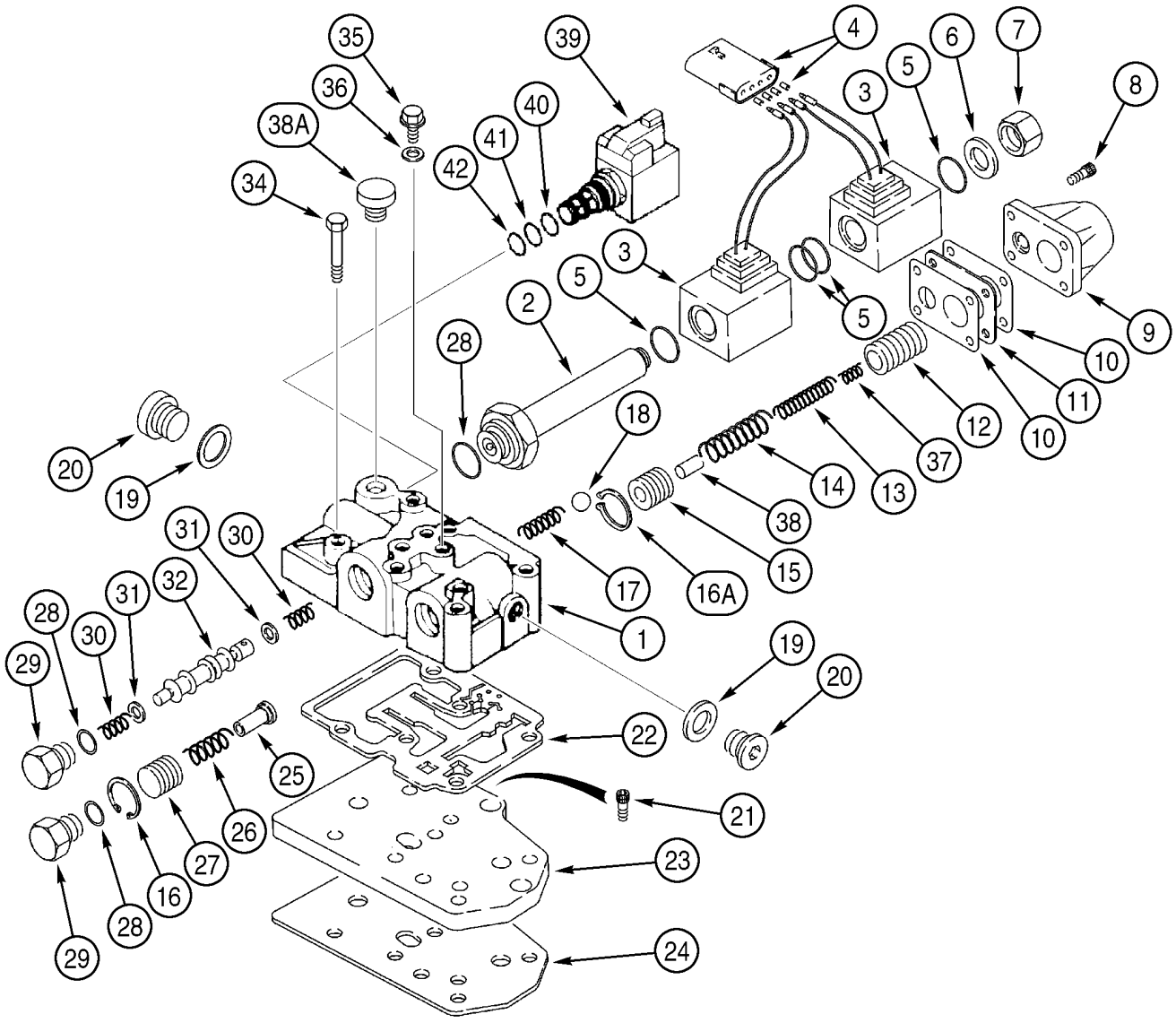

TRANSMISSION ASSY - VALVE, CONTROL (MODELS WITHOUT POWERSHIFT)

REF	FN	PART NUMBER	YR/SN	QTY	DESCRIPTION
		329076A3		1	TRANSMISSION Two Wheel Drive, Incl. Ref 1 - 45; Also Includes Parts On Figures 06-14 - 06-23; Replaces 329076A1, 329076A2
		329079A3		1	TRANSMISSION Four Wheel Drive, Incl. Ref 1 - 45; Also Includes Parts On Figures 06-14 - 06-24; Replaces 329079A1, 329079A2
		335640A2		1	VALVE Transmission Control, Incl. Ref 1 - 45
1		NSS		1	NOT SERVICED SEPARATELY Housing
2		190442A1		1	PLUNGER
3		190443A1		2	COIL
4		190437A1		1	FITTING
5		181136A1		4	O-RING
6		181273A1		1	WASHER, COPPER
7		181272A1		1	PLUG
8		864-6020		4	SCREW M6 x 20
9		181251A1		1	COVER
10		181256A1		2	SEAL Cover Gasket
11		190439A2		1	SPACER
12		190438A2		1	PISTON
13		190436A1		1	SPRING
14		190441A1		1	SPRING
15		181234A2		1	PISTON
16		299324A1		1	CIRCLIP
16A		368436A1		1	CIRCLIP
17		181261A1		1	SPRING
18		181146A1		1	BALL
19		181107A1		2	WASHER, COPPER
20		181103A1		2	PLUG
21		864-8020		3	SCREW M8 x 20, Not Included In Assembly, Purchase Separately
22		181166A1		1	SEAL Not Included In Assembly, Purchase Separately
23		181207A1		1	PLATE, LARGE Not Included In Assembly, Purchase Separately
24		181208A1		1	SEAL Not Included In Assembly, Purchase Separately

TRANSMISSION ASSY - VALVE, CONTROL (MODELS WITHOUT POWERSHIFT)

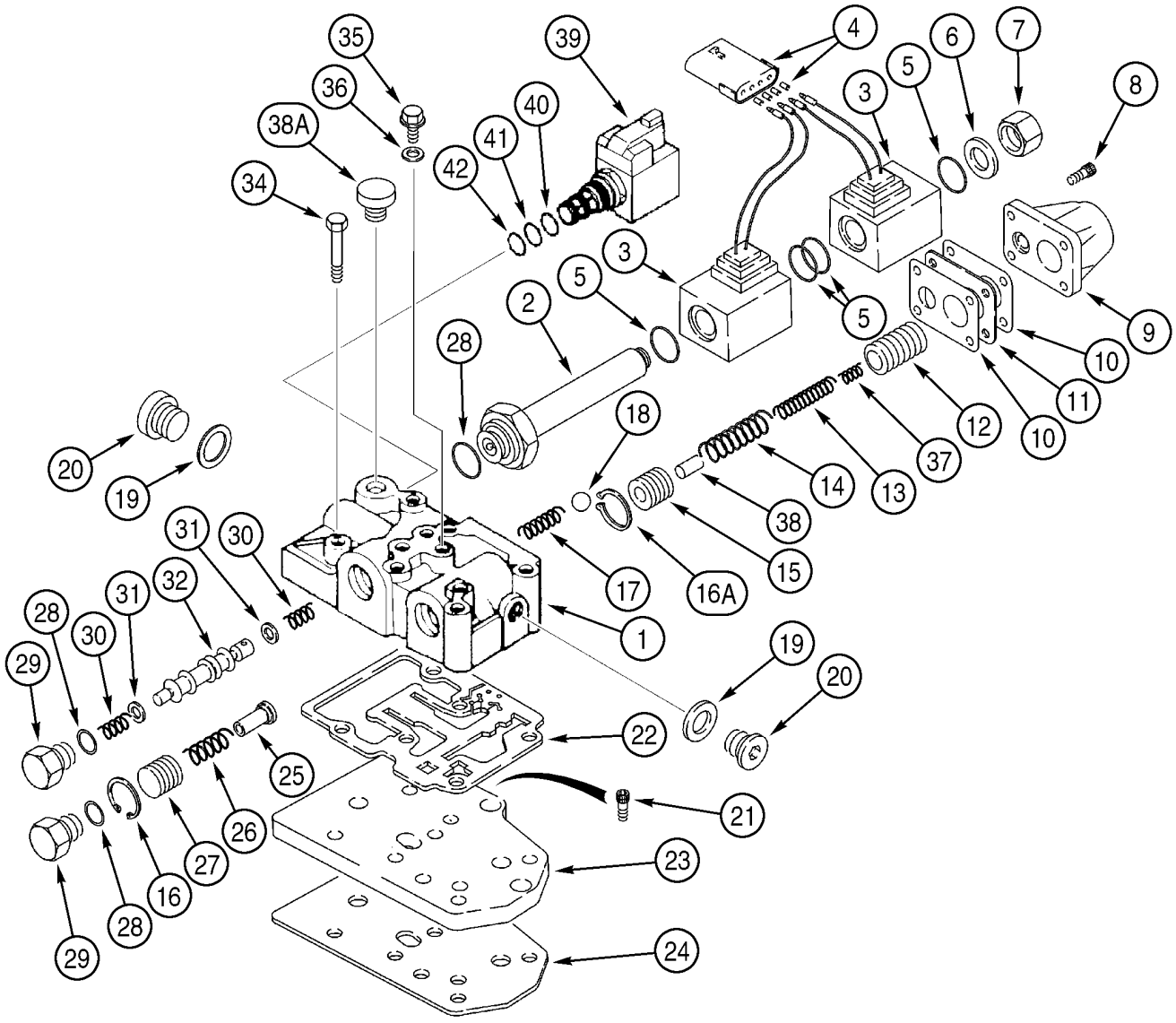

TRANSMISSION ASSY - VALVE, CONTROL (MODELS WITHOUT POWERSHIFT)

REF	FN	PART NUMBER	YR/SN	QTY	DESCRIPTION
25		181254A1		1	SHAFT
26		181260A1		1	SPRING
27		181255A2		1	PISTON Flow Divider
28		181137A1		3	O-RING
29		181258A1		2	PLUG PLUG
30		334724A1		2	SPRING
31		181253A1		2	SPACER
32		334725A1		1	PLUNGER Spool, Forward/Reverse
34		814-8080		6	CAPSCREW M8 x 80, Not Included In Assembly, Purchase Separately
35		181100A1		4	PLUG
36		934667R1		4	WASHER, COPPER Copper Washer, 10 x 14 x 1.5 mm
37		190435A1		1	SPRING
38		190440A1		1	PIN
38A		NSS		1	NOT SERVICED SEPARATELY Plug
39		349295A1		1	SOLENOID Differential Lock Solenoid Valve; Incl. Ref 40 - 45
40		237-6008		1	O-RING 41/64 ID x 3/32
41		238-5014		1	O-RING 1/2 ID x 1/16
42		238-5013		1	O-RING 7/16 ID x 1/16
43		NSS		1	NOT SERVICED SEPARATELY Solenoid Valve, Cartridge, Component Parts Not Serviced Separately, Not Illustrated
44		298614A1		1	COIL ASSY. Not Illustrated
45		NSS		1	NOT SERVICED SEPARATELY Nut, Not Illustrated
		368437A2		1	KIT Snap Ring, Without Tools, Includes 10, 15, 16A, 22, 25, Plus Instructions; Replaces 368437A1
		368438A2		1	KIT Snap Ring, With Tools, Includes 10, 15, 16A, 22, 25, Plus 368439A1 Guide Tool and 368440A1 Pushing Tool for Snap Ring Service; Replaces 368438A1

TRANSMISSION ASSY (4WD) - VALVE, SOLENOID (MODELS WITHOUT POWERSHIFT)

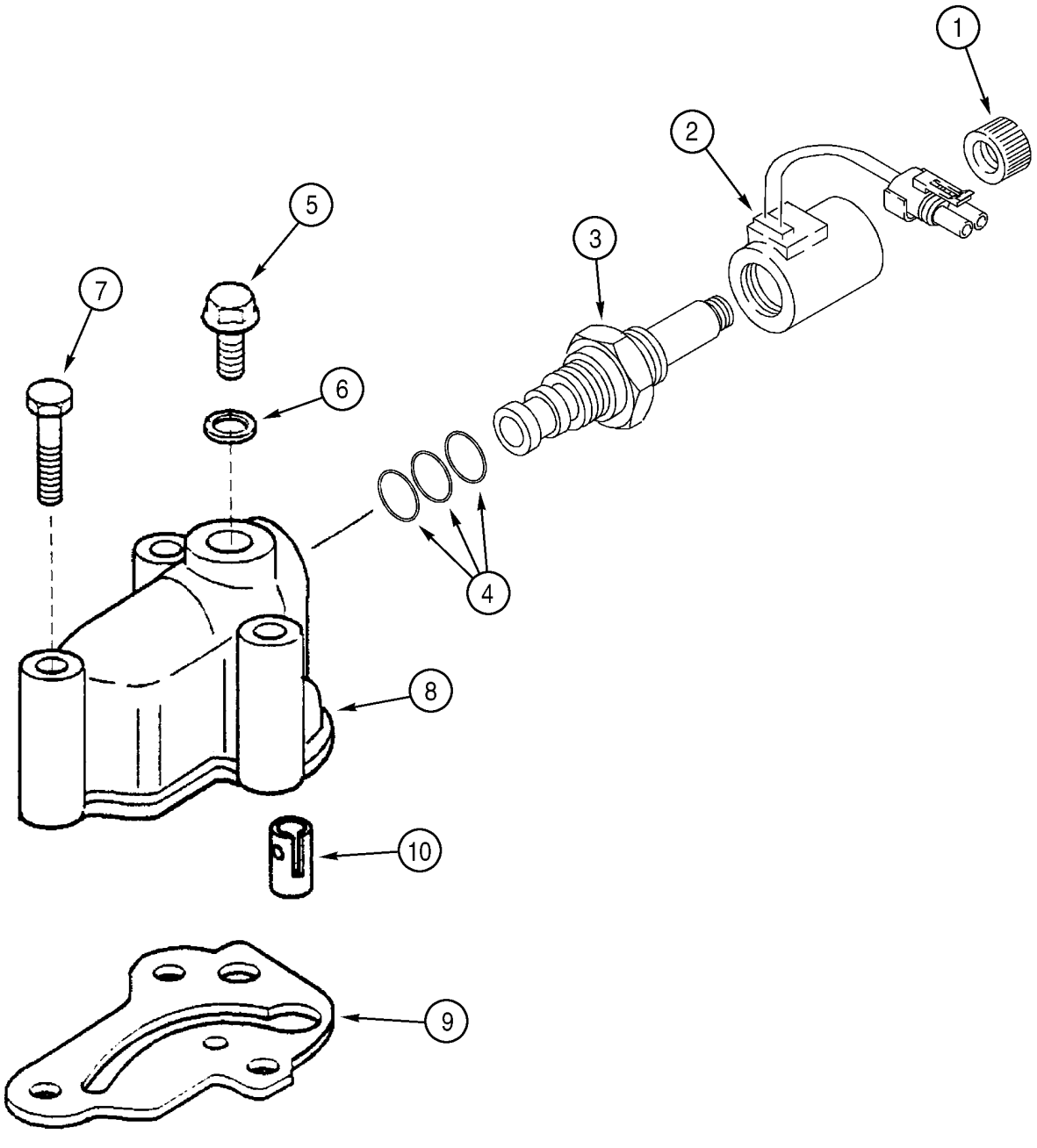

BS99H154

TRANSMISSION ASSY (4WD) - VALVE, SOLENOID (MODELS WITHOUT POWERSHIFT)

REF	FN	PART NUMBER	YR/SN	QTY	DESCRIPTION
		329079A3		1	TRANSMISSION Four Wheel Drive, Incl. Ref 1 - 10; Also Includes Parts On Figures 06-14 - 06-24; Replaces 329079A1, 329079A2
		190432A1		1	SOLENOID VALVE, Incl. Ref 1 - 4
1		NSS		1	NOT SERVICED SEPARATELY Nut
2		NSS		1	NOT SERVICED SEPARATELY Coil
3		NSS		1	NOT SERVICED SEPARATELY Valve, Solenoid
4		181149A1		1	PACKAGE, SEALS Incl. 238-5014, 238-5015, 237-6010 O-Rings, Kit Not Serviced Separately, Order 190432A1 Solenoid Valve
5		181100A1		1	PLUG
6		934667R1		1	WASHER, COPPER Copper Washer, 10 x 14 x 1.5 mm
7		814-8060		3	CAPSCREW M8 x 60
8		321428A1		1	HOUSING
9		366910A1		1	SEAL
10		190431A1		1	VALVE Installed Between Ref 8 and 9

06 -25		p1	05/03

TRANSMISSION ASSY, POWERSHIFT - HOUSING

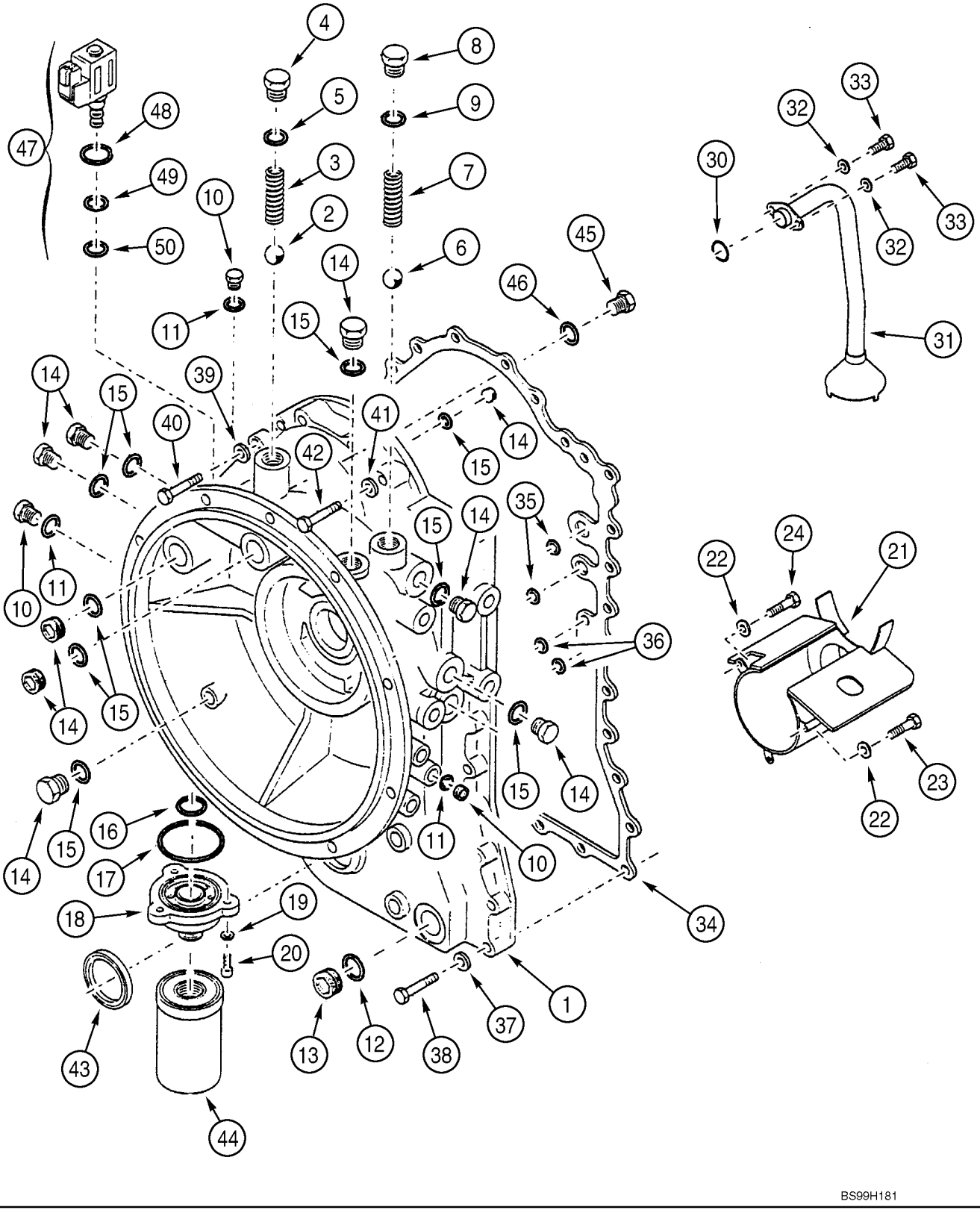

TRANSMISSION ASSY, POWERSHIFT - HOUSING

REF	FN	PART NUMBER	YR/SN	QTY	DESCRIPTION
		336896A1		1	GEARBOX ASSY Powershift Transmission, Four Wheel Drive, Incl. Ref 1 - 53; Also Includes Parts On Figures 06-25 - 06-36; No Longer Available, Order 445174A1 Transmission
		445174A1		1	TRANSMISSION Powershift Transmission, Four Wheel Drive, Incl. Ref 1 - 53; Also Includes Parts On Figures 06-25 - 06-36
1		361940A1		1	HOUSING Converter
2		211-1024		1	BALL 3/4; 24,CRS
3		291568A1		1	SPRING
4		292413A1		1	PLUG Incl. Ref 5
5		238-9119		1	O-RING 15/16 ID x 3/32
6		511-10250		1	BALL 25 mm; 28, CRS
7		291525A1		1	SPRING
8		292166A1		1	PLUG Incl. Ref 9
9		238-7123		1	O-RING 1-3/16 ID x 3/32
10		292164A1		3	PLUG Incl. Ref 11
11		238-7011		1	O-RING 5/16 ID x 1/16
12		NSS		1	NOT SERVICED SEPARATELY Seal, Not Used
13		NSS		1	NOT SERVICED SEPARATELY Plug, Not Used
14		292165A1		9	PLUG Incl. Ref 15
15		238-7116		1	O-RING 3/4 ID x 3/32
16		292419A1		1	O-RING
17		238-5150		1	O-RING 2-7/8 ID x 3/32
18		362140A1		1	SUPPORT Adapter
19		892-10010		3	WASHER, LOCK M10
20		863-10025		3	SCREW M10 x 25; 12.9
21		305725A1		1	BAFFLE
22		892-10010		3	WASHER, LOCK M10
23		863-10016		2	SCREW M10 x 16; 12.9
24		615-10016		1	BOLT M10 x 16
30		238-7218		1	O-RING 1-1/4 ID x 1/8
31		291565A1		1	PIPE, SUCTION Tube
32		892-10010		2	WASHER, LOCK M10
33		863-10016		2	SCREW M10 x 16; 12.9
34		291543A1		1	GASKET

TRANSMISSION ASSY, POWERSHIFT - HOUSING

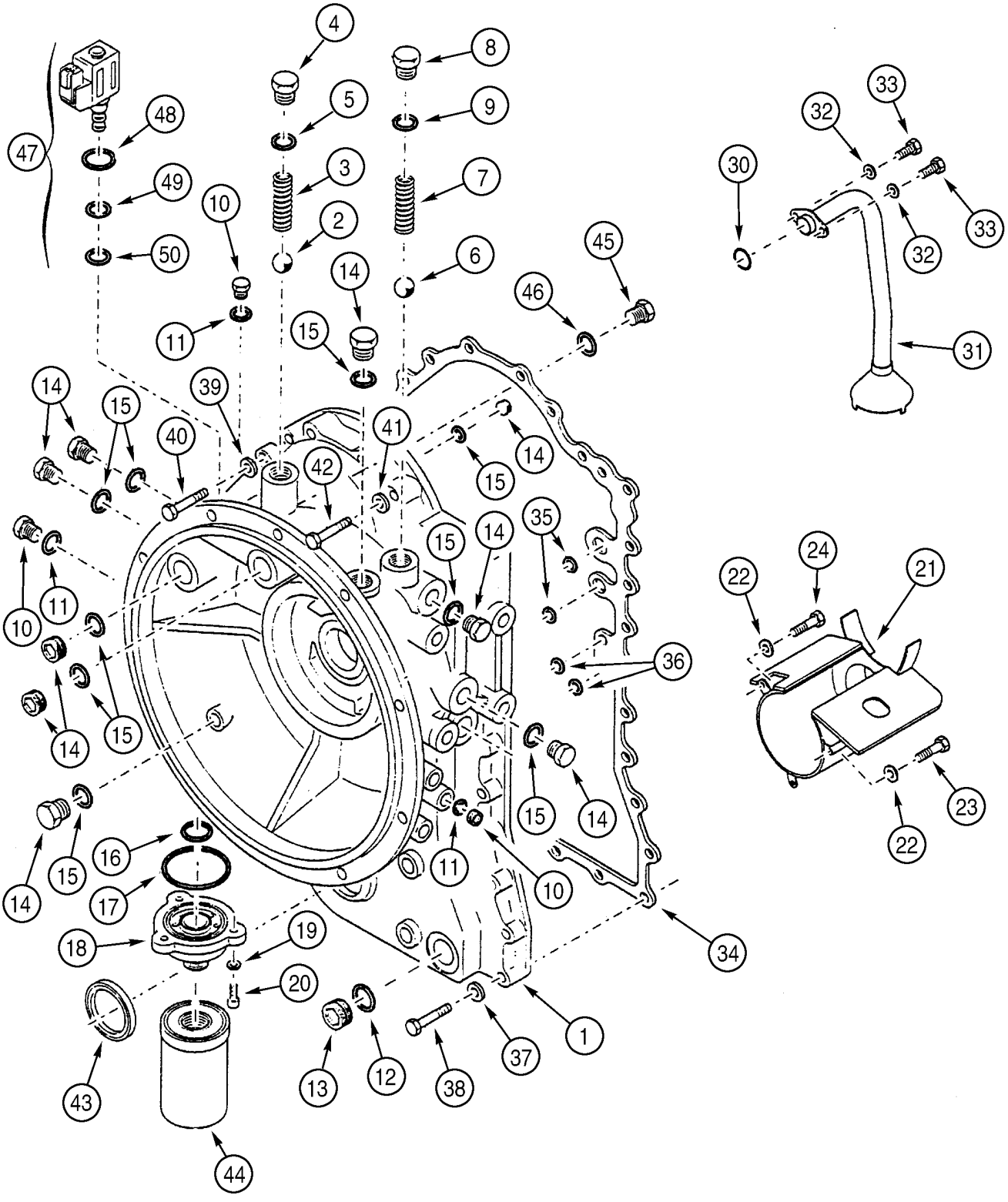

TRANSMISSION ASSY, POWERSHIFT - HOUSING

REF	FN	PART NUMBER	YR/SN	QTY	DESCRIPTION
35		238-5020		2	O-RING 7/8 ID x 1/16
36		238-7013		2	O-RING 7/16 ID x 1/16
37		892-10010		14	WASHER, LOCK M10
38		828-10050		14	SCREW M10 x 50; 10.9
39		892-10010		2	WASHER, LOCK M10
40		628-10030		2	SCREW M10 x 30; 10.9
41		892-10010		4	WASHER, LOCK M10
42		828-10080		4	SCREW M10 x 80; 10.9
43		291527A1		1	SEAL, SHAFT
44		372246A1		1	FILTER ASSY. Replaces 291538A1
45		218-5209		1	PLUG 9/16 Or; Incl. Ref 46
46		237-6006		1	O-RING 15/32 ID x 5/64
47		349295A1		1	SOLENOID Differential Lock Solenoid Valve; Incl. Ref 48 - 53
48		237-6008		1	O-RING 41/64 ID x 3/32
49		238-5014		1	O-RING 1/2 ID x 1/16
50		238-5013		1	O-RING 7/16 ID x 1/16
51		349291A1		1	SOLENOID Valve, Cartridge, Component Parts Not Serviced Separately, Not Illustrated
52		298614A1		1	COIL ASSY. Not Illustrated
53		349292A1		1	NUT Not Illustrated

TRANSMISSION ASSY, POWERSHIFT - HOUSING, REAR

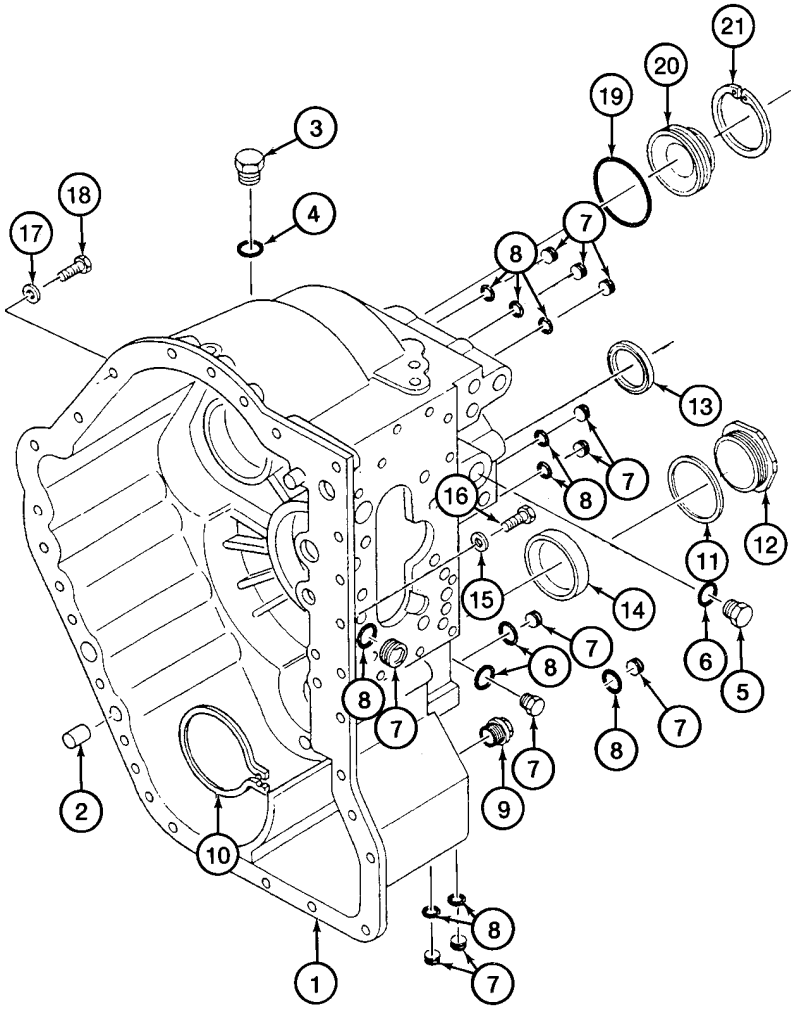

BS98D042

TRANSMISSION ASSY, POWERSHIFT - HOUSING, REAR

REF	FN	PART NUMBER	YR/SN	QTY	DESCRIPTION
		336896A1		1	GEARBOX ASSY Powershift Transmission, Four Wheel Drive, Incl. Ref 1 - 21; Also Includes Parts On Figures 06-25 - 06-36; No Longer Available, Order 445174A1 Transmission
		445174A1		1	TRANSMISSION Powershift Transmission, Four Wheel Drive, Incl. Ref 1 - 21; Also Includes Parts On Figures 06-25 - 06-36
1		291570A1		1	HOUSING
2		292412A1		2	DOWEL
3		292165A1		1	PLUG Incl. Ref 4
4		238-7116		1	O-RING 3/4 ID x 3/32
5		292170A1		1	PLUG Incl. Ref 6
6		238-7210		1	O-RING 3/4 ID x 9/64
7		292164A1		11	PLUG Incl. Ref 8
8		238-7011		1	O-RING 5/16 ID x 1/16
9		292414A1		1	PLUG Drain, Magnetic
10		292417A1		1	CIRCLIP
11		L30039		1	GASKET
12		292171A1		1	PLUG
13		291527A1		1	SEAL, SHAFT Output
14		292173A1		1	BUSHING, LARGE PLUG, Output Shaft
15		892-10010		2	WASHER, LOCK M10
16		628-10035		2	SCREW M10 x 35; 10,9
17		892-10010		7	WASHER, LOCK M10
18		628-10030		7	SCREW M10 x 30; 10.9
19		238-5224		1	O-RING 1-3/4 ID x 1/8
20		366661A1		1	PLUG COVER
21		800-2168		1	CIRCLIP No. 68

TRANSMISSION ASSY, POWERSHIFT - TORQUE CONVERTER

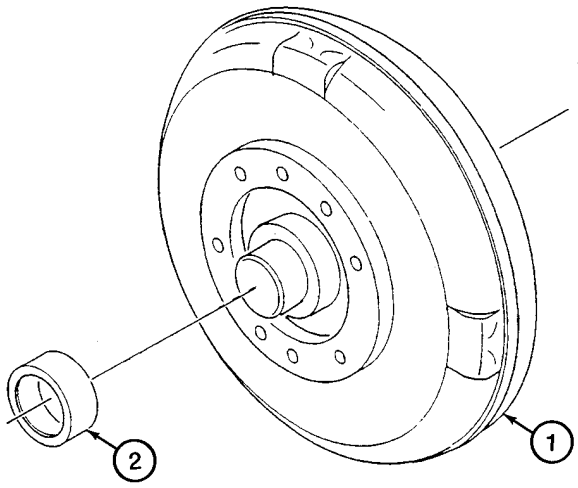

BS98D043

TRANSMISSION ASSY, POWERSHIFT - TORQUE CONVERTER

REF	FN	PART NUMBER	YR/SN	QTY	DESCRIPTION
		336896A1		1	GEARBOX ASSY Powershift Transmission, Four Wheel Drive, Incl. Ref 1, 2; Also Includes Parts On Figures 06-25 - 06-36; No Longer Available, Order 445174A1 Transmission
		445174A1		1	TRANSMISSION Powershift Transmission, Four Wheel Drive, Incl. Ref 1, 2; Also Includes Parts On Figures 06-25 - 06-36
1		87421904		1	CONVERTER Incl. Ref 2; Replaces 291546A1
2		291859A1		1	BUSHING, LARGE

TRANSMISSION ASSY, POWERSHIFT - PUMP, OIL

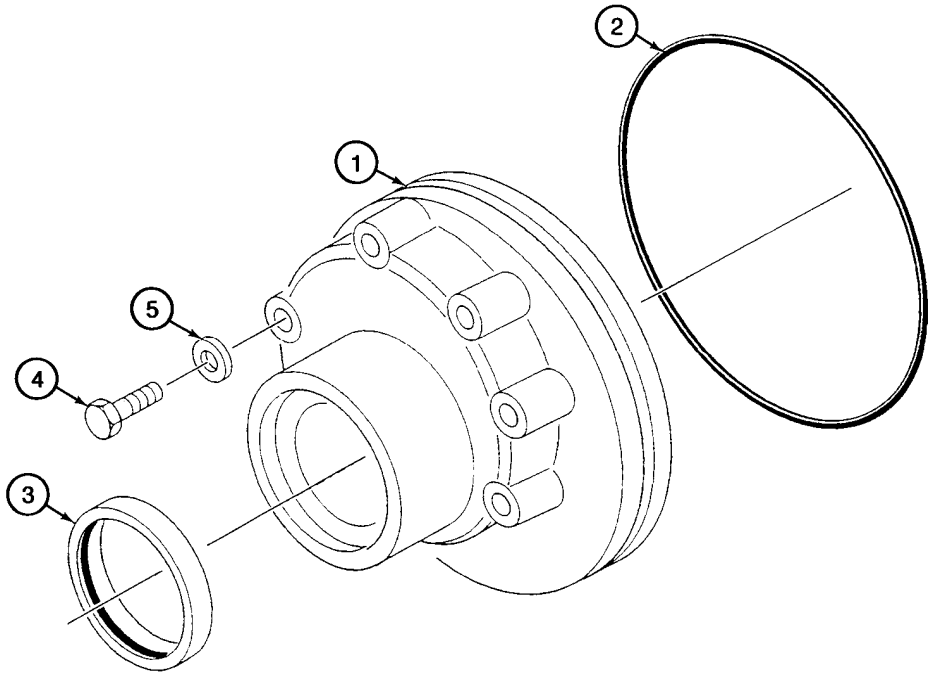

BS98D044

TRANSMISSION ASSY, POWERSHIFT - PUMP, OIL

REF	FN	PART NUMBER	YR/SN	QTY	DESCRIPTION
		336896A1		1	GEARBOX ASSY Powershift Transmission, Four Wheel Drive, Incl. Ref 1 - 5; Also Includes Parts On Figures 06-25 - 06-36; No Longer Available, Order 445174A1 Transmission
		445174A1		1	TRANSMISSION Powershift Transmission, Four Wheel Drive, Incl. Ref 1 - 5; Also Includes Parts On Figures 06-25 - 06-36
1		291523A1		1	PUMP Charge, Incl. Ref 2 - 5
2		292420A1		1	O-RING Seal
3		292174A1		1	SEAL, SHAFT
4		815-8055		6	SCREW M8 x 55
5		291535A1		6	WASHER

TRANSMISSION ASSY, POWERSHIFT - CLUTCH, FORWARD DRIVE

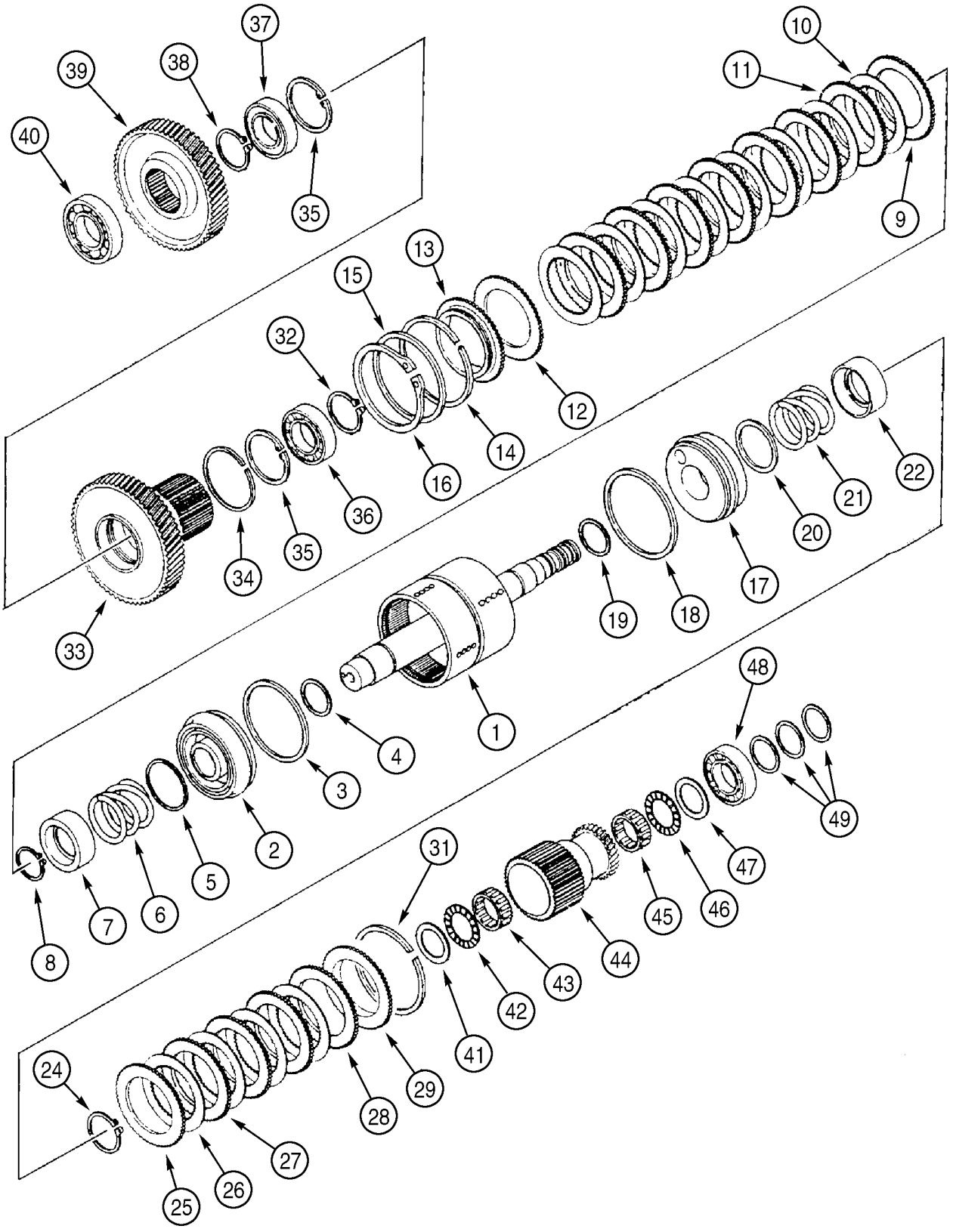

TRANSMISSION ASSY, POWERSHIFT - CLUTCH, FORWARD DRIVE

REF	FN	PART NUMBER	YR/SN	QTY	DESCRIPTION
					High and Low Speed - Forward Drive, Clutch and Pinions
		336896A1		1	GEARBOX ASSY Powershift Transmission, Four Wheel Drive, Incl. Ref 1 - 49; Also Includes Parts On Figures 06-25 - 06-36; No Longer Available, Order 445174A1 Transmission
		445174A1		1	TRANSMISSION Powershift Transmission, Four Wheel Drive, Incl. Ref 1 - 49; Also Includes Parts On Figures 06-25 - 06-36
1		305726A1		1	SHAFT Drum, High and Low, Forward; 336896A1 Transmission
1		445310A1		1	SHAFT ASSY. Drum, High and Low, Forward; 445174A1 Transmission
2		291520A1		1	PISTON Incl. Ref 3, 4
3		E114385		1	SEAL Ring
4		E114386		1	SEAL
5		291529A1		1	WASHER Wear Ring
6		291531A1		1	SPRING
7		291530A1		1	CLIP,ELECTRICAL Seat
8		100-11196		1	RING No. 196
9		291578A1		1	DISC Friction
10		291580A1		8	DISC Friction, Clutch Separator Plate
11		291579A1		7	DISC Friction
12		291578A1		1	DISC Friction
13		291566A1		1	DISC Backing Plate; 336896A1 Transmission
13		445312A1		1	PLATE, CLUTCH, DRIVI Backing Plate; 445174A1 Transmission
14		292415A1		1	BUSHING, LARGE RETAINING RING
15		291567A1		1	SPACER
16		800-11115		1	RING SNAP No. 115
17		291520A1		1	PISTON Incl. Ref 18, 19
18		E114385		1	SEAL Ring
19		E114386		1	SEAL
20		291529A1		1	WASHER Wear Ring
21		291531A1		1	SPRING
22		291530A1		1	CLIP,ELECTRICAL Seat

TRANSMISSION ASSY, POWERSHIFT - CLUTCH, FORWARD DRIVE

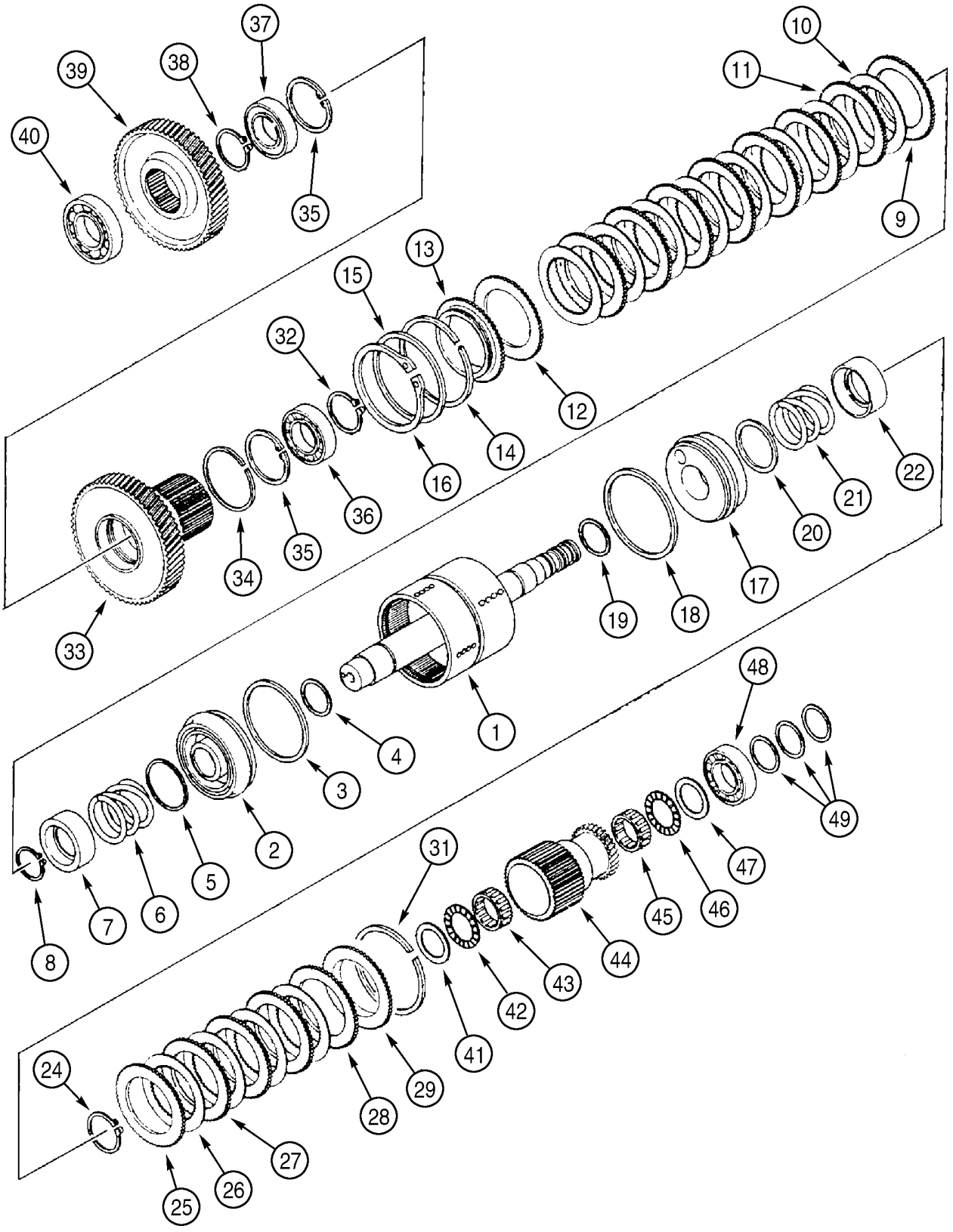

TRANSMISSION ASSY, POWERSHIFT - CLUTCH, FORWARD DRIVE

REF	FN	PART NUMBER	YR/SN	QTY	DESCRIPTION
24		100-11196		1	RING No. 196
25		291578A1		1	DISC Friction
26		291580A1		4	DISC Friction, Clutch Separator Plate
27		291579A1		3	DISC Friction
28		291578A1		1	DISC Friction
29		291571A1		1	DISC Backing Plate
31		292415A1		1	BUSHING, LARGE Retaining Ring
32		800-1150		1	CIRCLIP No. 50
33		291558A1		1	PINION Gear, Forward/Reverse Clutch, 54T; 336896A1 Transmission
33		445311A1		1	GEAR Forward/Reverse Clutch, 54T; 445174A1 Transmission
34		291573A1		1	CIRCLIP Retaining Ring; 336896A1 Transmission
34		445313A1		1	SEAL Lip Seal; 445174A1 Transmission
35		800-2180		2	CIRCLIP No. 80
36		292426A1		1	BEARING
37		292431A1		1	BEARING
38		800-1150		1	CIRCLIP No. 50
39		291551A1		1	PINION Gear, Driven, 42T
40		292432A1		1	BEARING
41		294080A1		1	SPACER Thrust Washer
42		A183452		1	BEARING
43		A178460		1	BEARING
44		291556A1		1	PINION Gear, High Clutch, 34T
45		A178460		1	BEARING
46		A183452		1	BEARING
47		294080A1		1	SPACER Thrust Washer
48		292429A1		1	BEARING
49		291528A1		3	BUSHING, LARGE Seal Ring

TRANSMISSION ASSY, POWERSHIFT - CLUTCH, REVERSE DRIVE

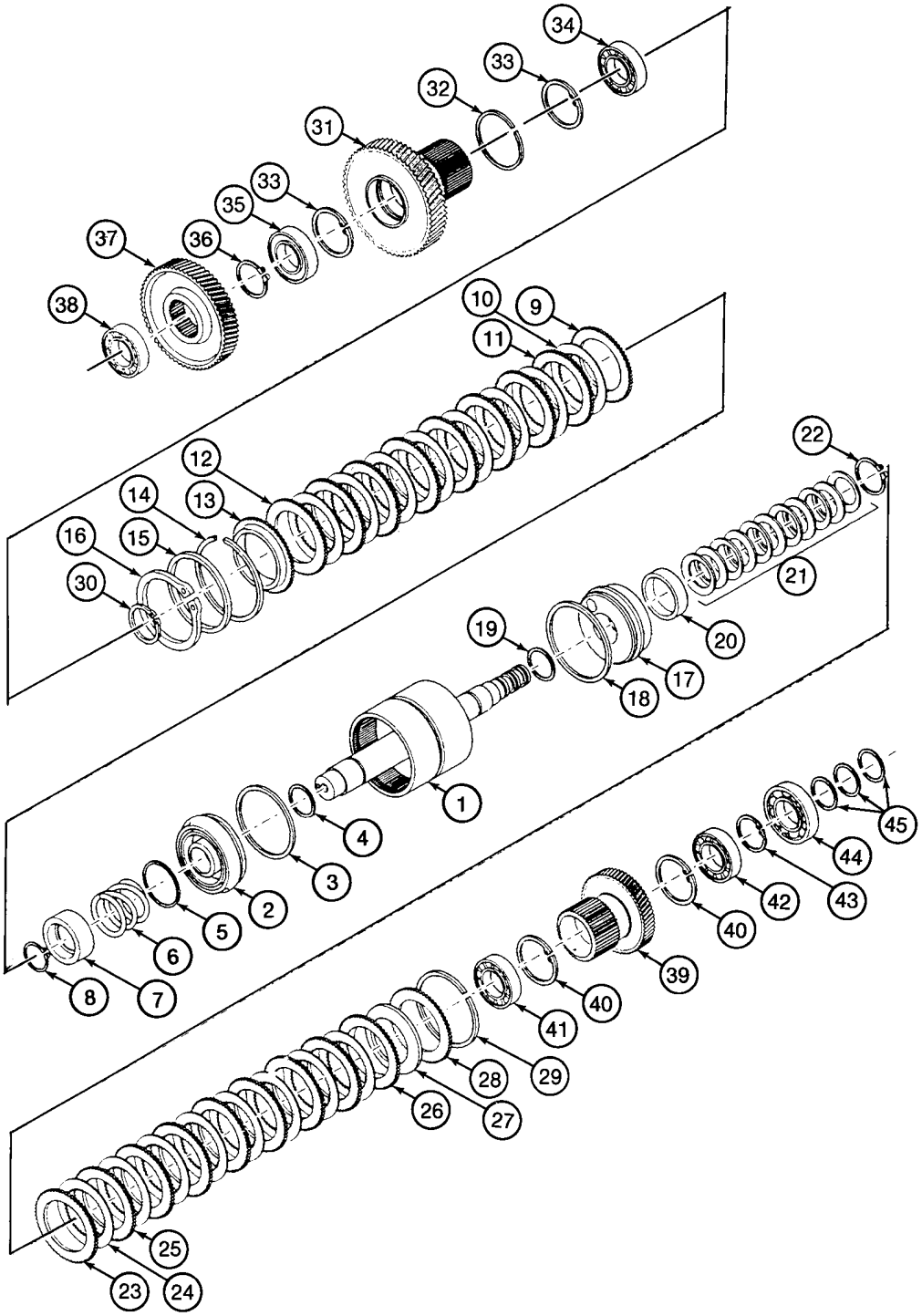

BS98D046

TRANSMISSION ASSY, POWERSHIFT - CLUTCH, REVERSE DRIVE

REF	FN	PART NUMBER	YR/SN	QTY	DESCRIPTION
					First Gear - Reverse Drive, Clutch and Pinions
		336896A1		1	GEARBOX ASSY Powershift Transmission, Four Wheel Drive, Incl. Ref 1 - 45; Also Includes Parts On Figures 06-25 - 06-36; No Longer Available, Order 445174A1 Transmission
		445174A1		1	TRANSMISSION Powershift Transmission, Four Wheel Drive, Incl. Ref 1 - 495 Also Includes Parts On Figures 06-25 - 06-36
1		305727A1		1	SHAFT Drum, First Gear - Reverse; 336896A1 Transmission
1		445314A1		1	SHAFT ASSY. Drum, First Gear - Reverse; 445174A1 Transmission
2		291520A1		1	PISTON Incl. Ref 3, 4
3		E114385		1	SEAL Ring
4		E114386		1	SEAL
5		291529A1		1	WASHER Wear Ring
6		291531A1		1	SPRING
7		291530A1		1	CLIP,ELECTRICAL Seat
8		100-11196		1	RING No. 196
9		291578A1		1	DISC Friction
10		291580A1		8	DISC Friction
11		291579A1		7	DISC Friction
12		291578A1		1	DISC Friction
13		291566A1		1	DISC Backing Plate
14		292415A1		1	BUSHING, LARGE Retaining Ring
15		291567A1		1	SPACER 336896A1 Transmission; If Used
16		800-11115		1	RING SNAP No. 115
17		291520A1		1	PISTON Incl. Ref 18, 19
18		E114385		1	SEAL Ring
19		E114386		1	SEAL
20		305730A1		1	PLATE Wear Ring
21		291591A1		1	WASHER Kit, Belleville Springs
22		100-11196		1	RING No. 196
23		291578A1		1	DISC Friction
24		291580A1		8	DISC Friction
25		291579A1		7	DISC Friction

TRANSMISSION ASSY, POWERSHIFT - CLUTCH, REVERSE DRIVE

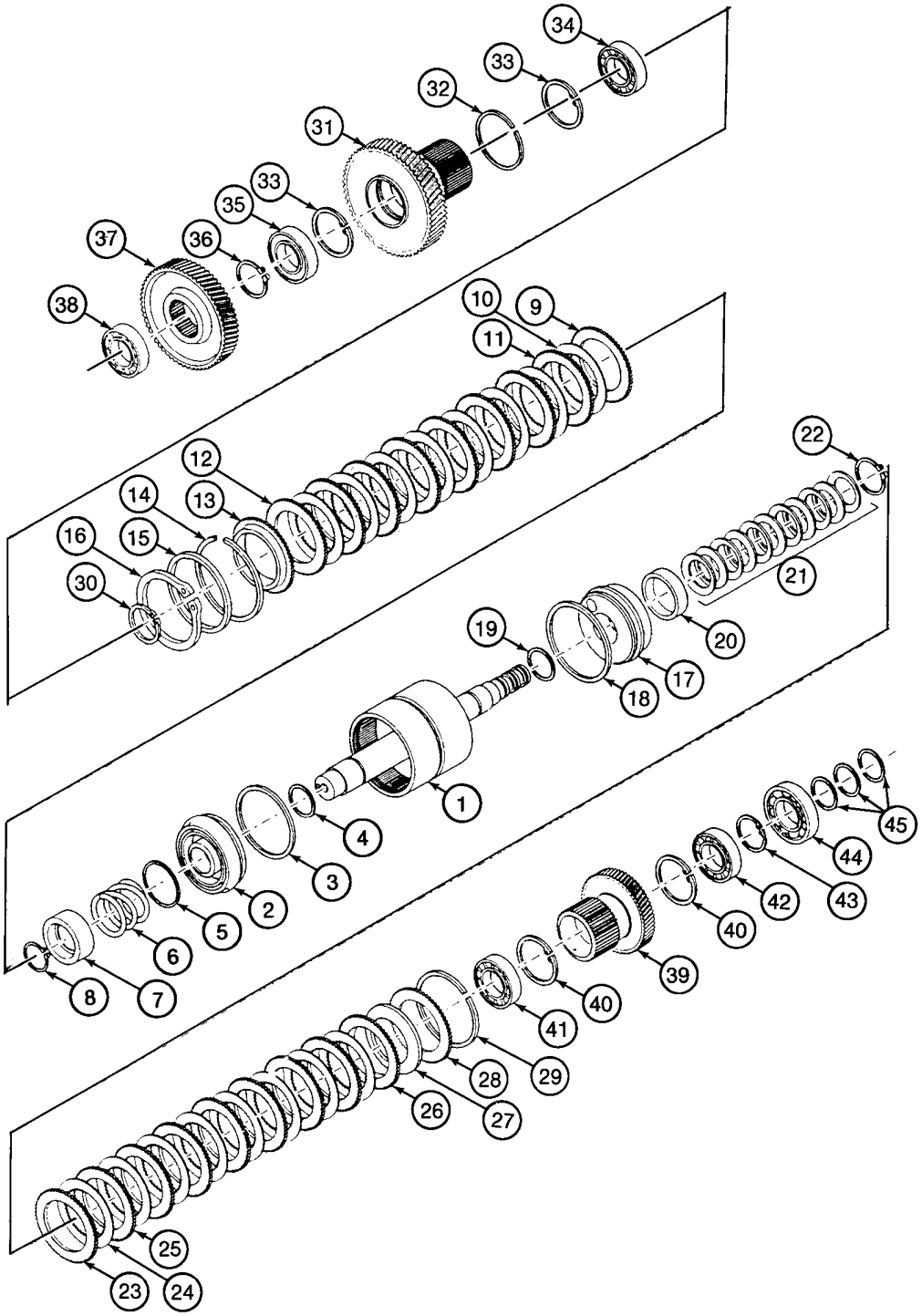

BS98D046

TRANSMISSION ASSY, POWERSHIFT - CLUTCH, REVERSE DRIVE

REF	FN	PART NUMBER	YR/SN	QTY	DESCRIPTION
26		291578A1		1	DISC Friction
27		291533A1		1	WASHER Spacer
28		291571A1		1	DISC Backing Plate
29		292415A1		1	BUSHING, LARGE Retaining Ring
30		800-1150		1	CIRCLIP No. 50
31		291558A1		1	PINION Gear, Forward/Reverse Clutch, 54T
32		291573A1		1	CIRCLIP Retaining Ring
33		800-2180		2	CIRCLIP No. 80
34		292426A1		1	BEARING
35		292431A1		1	BEARING
36		800-1150		1	CIRCLIP No. 50
37		291552A1		1	PINION Gear, Reverse Driven, 50T
38		292432A1		1	BEARING
39		291557A1		1	PINION Gear, First Clutch, 30T
40		800-2175		2	RING, SNAP No. 75
41		292425A1		1	BEARING
42		292428A1		1	BEARING
43		800-1145		1	CIRCLIP No. 45
44		292423A1		1	BEARING
45		291528A1		3	BUSHING, LARGE Seal Ring

TRANSMISSION ASSY, POWERSHIFT - CLUTCH, PUMP DRIVE

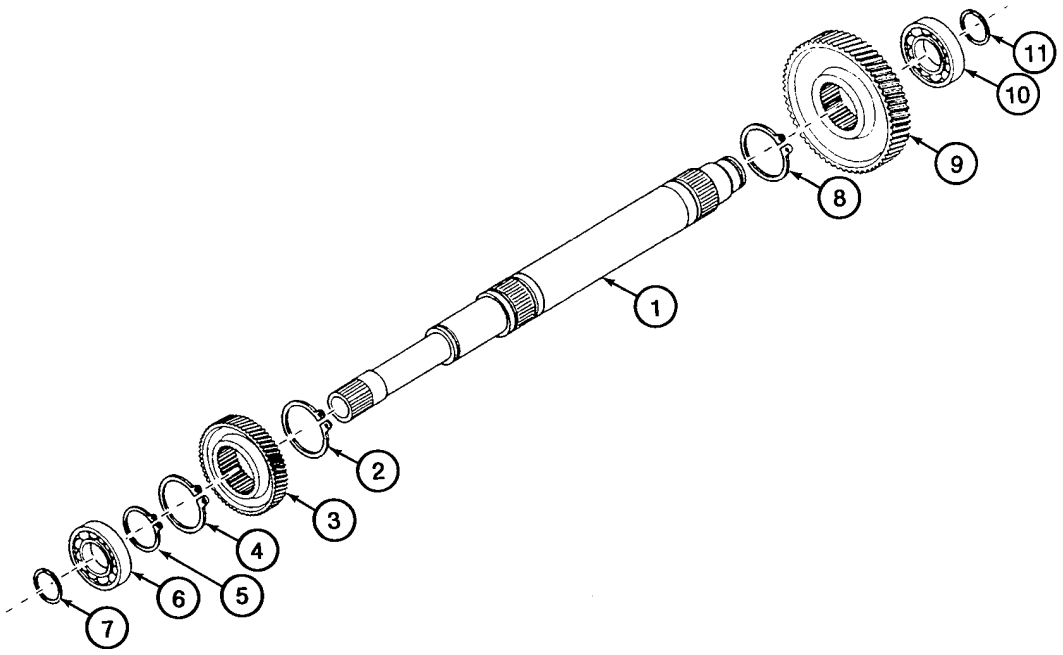

BS98D047

TRANSMISSION ASSY, POWERSHIFT - CLUTCH, PUMP DRIVE

REF	FN	PART NUMBER	YR/SN	QTY	DESCRIPTION
		336896A1		1	GEARBOX ASSY Powershift Transmission, Four Wheel Drive, Incl. Ref 1 - 11; Also Includes Parts On Figures 06-25 - 06-36; No Longer Available, Order 445174A1 Transmission
		445174A1		1	TRANSMISSION Powershift Transmission, Four Wheel Drive, Incl. Ref 1 - 11; Also Includes Parts On Figures 06-25 - 06-36
1		291563A1		1	SHAFT Input Shaft
2		800-5150		1	CIRCLIP No. 50
3		291549A1		1	PINION Gear, Forward Low, 26T
4		800-1150		1	CIRCLIP No. 50
5		800-1140		1	RING SNAP
6		292423A1		1	BEARING
7		291528A1		1	BUSHING, LARGE Seal Ring
8		800-1150		1	CIRCLIP No. 50
9		291548A1		1	PINION Gear, Forward High, 62T
10		292423A1		1	BEARING
11		291528A1		1	BUSHING, LARGE Seal Ring

TRANSMISSION ASSY, POWERSHIFT - CLUTCH, SECOND GEAR

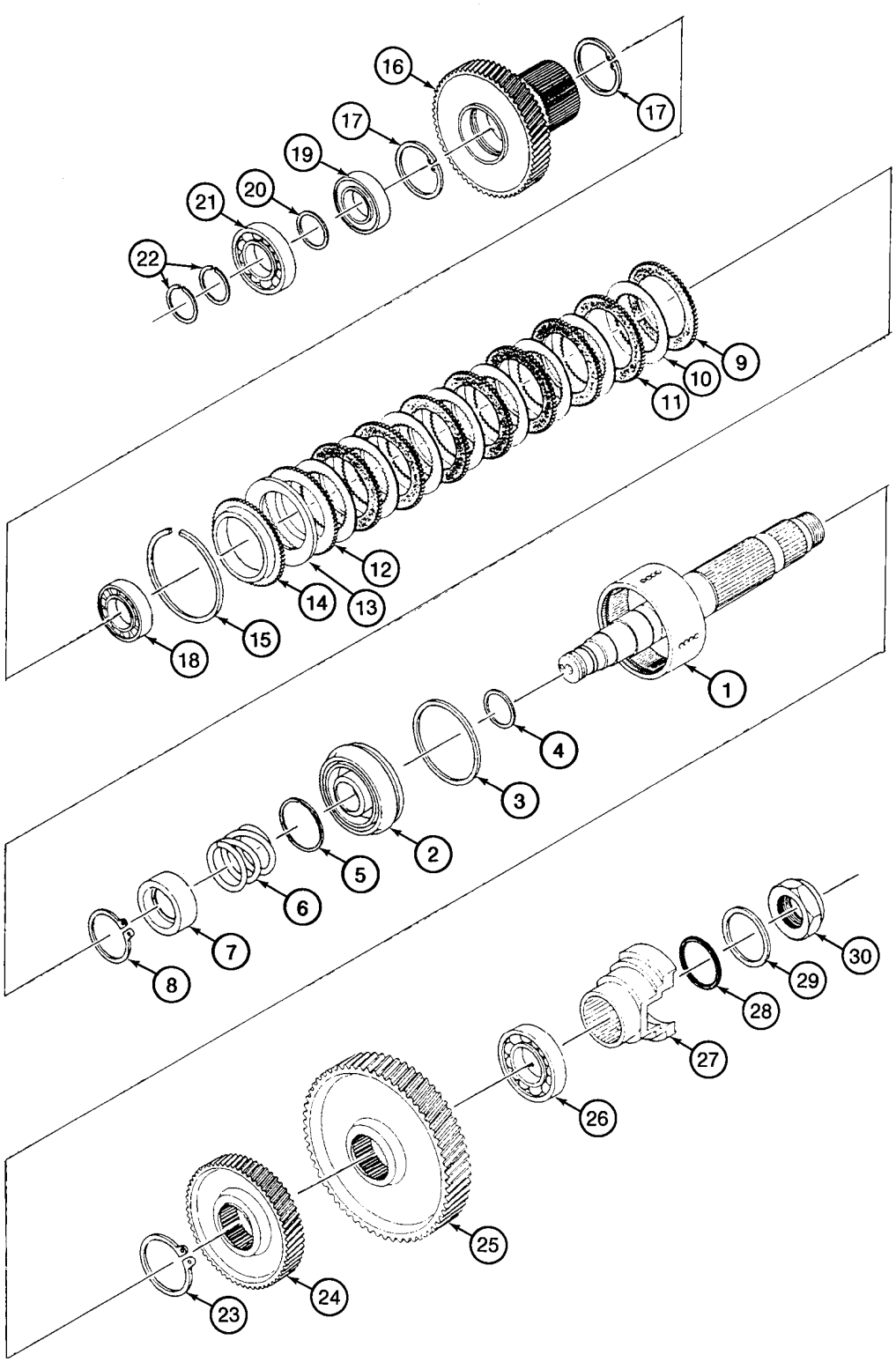

BS98D048

TRANSMISSION ASSY, POWERSHIFT - CLUTCH, SECOND GEAR

REF	FN	PART NUMBER	YR/SN	QTY	DESCRIPTION
		336896A1		1	GEARBOX ASSY Powershift Transmission, Four Wheel Drive, Incl. Ref 1 - 30; Also Includes Parts On Figures 06-25 - 06-36; No Longer Available, Order 445174A1 Transmission
		445174A1		1	TRANSMISSION Powershift Transmission, Four Wheel Drive, Incl. Ref 1 - 30; Also Includes Parts On Figures 06-25 - 06-36
1		305728A1		1	SHAFT Drum, Second Clutch
2		291520A1		1	PISTON Incl. Ref 3, 4
3		E114385		1	SEAL Ring
4		E114386		1	SEAL
5		291529A1		1	WASHER Wear Ring
6		291531A1		1	SPRING
7		291530A1		1	CLIP,ELECTRICAL Seat
8		100-11196		1	RING No. 196
9		291578A1		1	DISC Friction
10		291580A1		8	DISC Friction
11		291579A1		7	DISC Friction
12		291578A1		1	DISC Friction
13		291533A1		1	WASHER Spacer
14		291571A1		1	DISC Backing Plate
15		292415A1		1	BUSHING, LARGE Retaining Ring
16		291555A1		1	PINION Gear, Second Clutch, 52T
17		800-2175		2	RING, SNAP No. 75
18		292425A1		1	BEARING
19		292428A1		1	BEARING
20		291541A1		1	SPACER Ring
21		292423A1		1	BEARING
22		291528A1		2	BUSHING, LARGE Seal Ring
23		800-5160		1	CIRCLIP No. 60
24		291550A1		1	PINION Gear, Drive, Lower Output, 41T
25		291553A1		1	PINION Gear, Upper Output, 59T
26		292433A1		1	BEARING
27		291524A1		1	SHIN YOKE, Output
28		238-5336		1	O-RING 2-7/8 ID x 3/16
29		S89696		1	WASHER

TRANSMISSION ASSY, POWERSHIFT - CLUTCH, SECOND GEAR

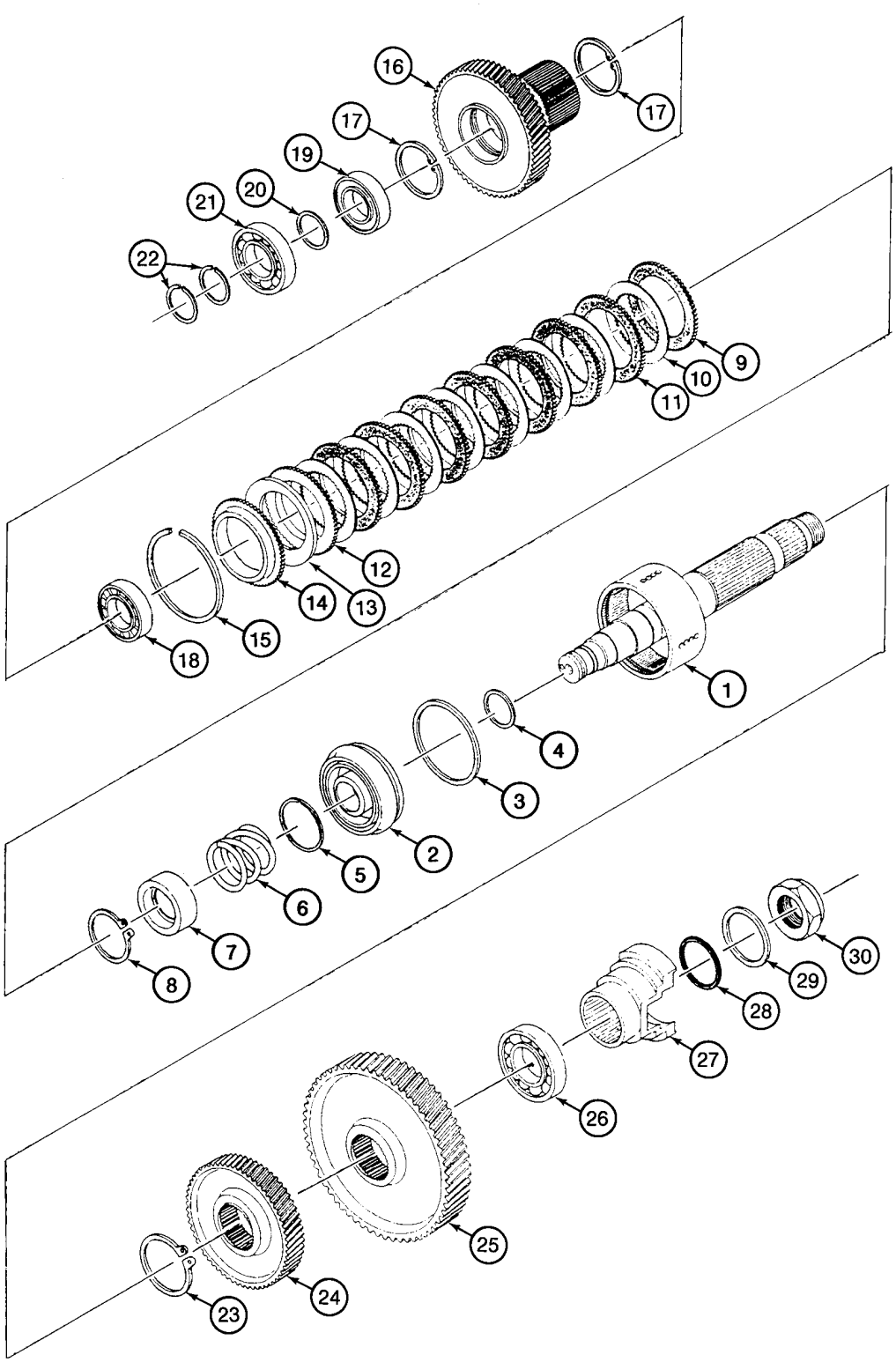

BS98D048

TRANSMISSION ASSY, POWERSHIFT - CLUTCH, SECOND GEAR

REF	FN	PART NUMBER	YR/SN	QTY	DESCRIPTION
30		S89695		1	NUT 1-1/4 NF

TRANSMISSION ASSY, POWERSHIFT - CLUTCH, OUTPUT SHAFT

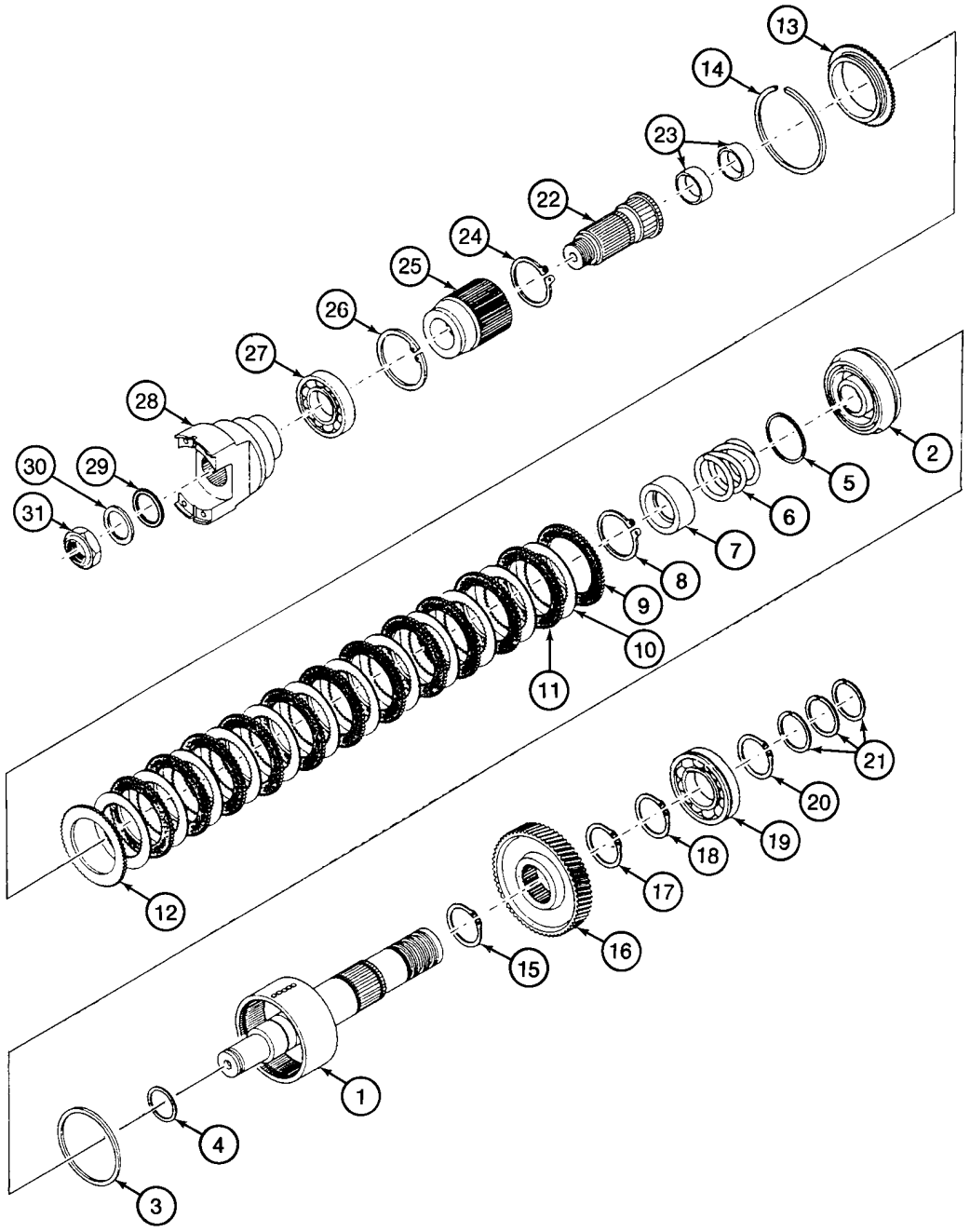

BS98D049

TRANSMISSION ASSY, POWERSHIFT - CLUTCH, OUTPUT SHAFT

REF	FN	PART NUMBER	YR/SN	QTY	DESCRIPTION
		336896A1		1	GEARBOX ASSY Powershift Transmission, Four Wheel Drive, Incl. Ref 1 - 31; Also Includes Parts On Figures 06-25 - 06-36; No Longer Available, Order 445174A1 Transmission
		445174A1		1	TRANSMISSION Powershift Transmission, Four Wheel Drive, Incl. Ref 1 - 31; Also Includes Parts On Figures 06-25 - 06-36
1		305729A1		1	SHAFT Drum, Front Output, Rear Assy
2		291520A1		1	PISTON Incl. Ref 3, 4
3		E114385		1	SEAL Ring
4		E114386		1	SEAL
5		291529A1		1	WASHER Wear Ring
6		291531A1		1	SPRING
7		291530A1		1	CLIP,ELECTRICAL Seat
8		100-11196		1	RING No. 196
9		291578A1		1	DISC Friction
10		291580A1		12	DISC Friction
11		291579A1		11	DISC Friction
12		291578A1		1	DISC Friction
13		291571A1		1	DISC Backing Plate
14		292415A1		1	BUSHING, LARGE Retaining Ring
15		800-1165		1	CIRCLIP No. 65
16		291554A1		1	PINION Gear, Lower Output, 39T
17		800-1165		1	CIRCLIP No. 65
18		800-1160		1	CIRCLIP No. 60
19		292434A1		1	BEARING
20		800-1160		1	CIRCLIP No. 60
21		291540A1		3	WASHER Seal Ring
22		291575A1		1	PINION Shaft, Front Output, Front Assy; Incl. Ref 23
23		292175A1		2	BUSHING, LARGE
24		800-5160		1	CIRCLIP No. 60
25		291559A1		1	PINION HUB
26		800-21100		1	CIRCLIP No. 100
27		292424A1		1	BEARING
28		291524A1		1	SHIN YOKE
29		238-5336		1	O-RING 2-7/8 ID x 3/16

TRANSMISSION ASSY, POWERSHIFT - CLUTCH, OUTPUT SHAFT

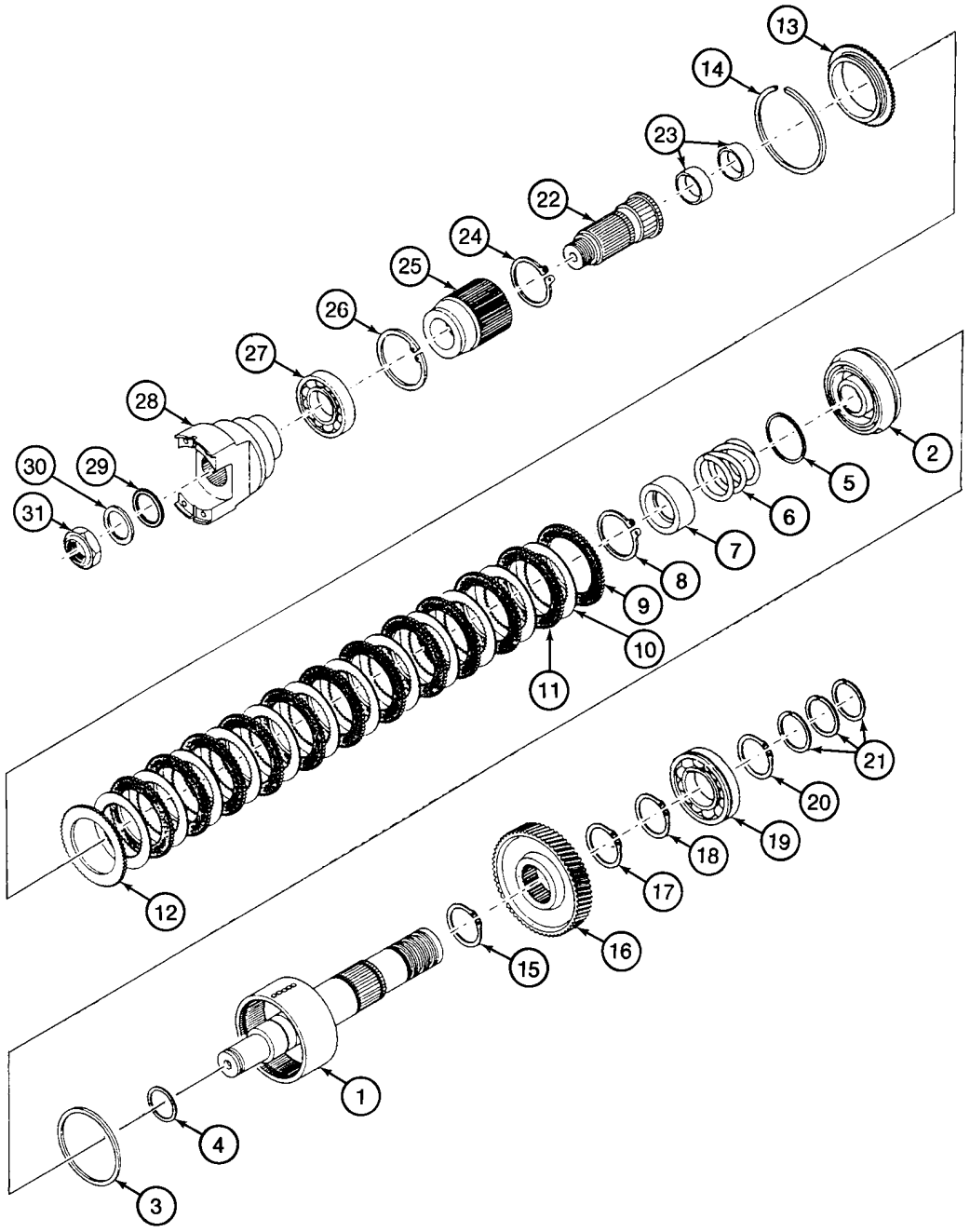

BS98D049

TRANSMISSION ASSY, POWERSHIFT - CLUTCH, OUTPUT SHAFT

REF	FN	PART NUMBER	YR/SN	QTY	DESCRIPTION
30		S89696		1	WASHER
31		S89695		1	NUT 1-1/4 NF

TRANSMISSION ASSY, POWERSHIFT - MOUNTING, VALVE

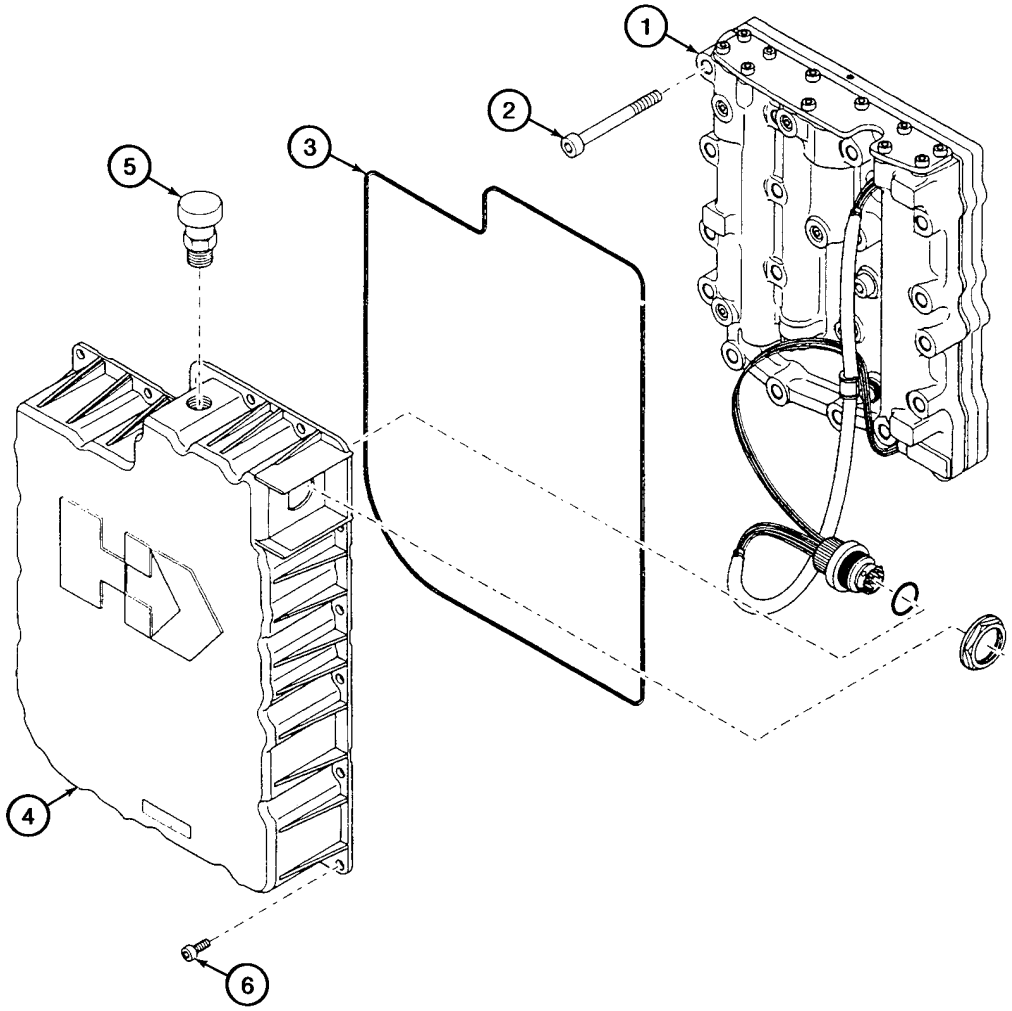

BS98D050

TRANSMISSION ASSY, POWERSHIFT - MOUNTING, VALVE

REF	FN	PART NUMBER	YR/SN	QTY	DESCRIPTION
		336896A1		1	GEARBOX ASSY Powershift Transmission, Four Wheel Drive, Incl. Ref 1 - 6; Also Includes Parts On Figures 06-25 - 06-36; No Longer Available, Order 445174A1 Transmission
		445174A1		1	TRANSMISSION Powershift Transmission, Four Wheel Drive, Incl. Ref 1 - 6; Also Includes Parts On Figures 06-25 - 06-36
1		380005A1		1	VALVE, CONTROL Transmission Control Valve, See Figure 06-35
2		864-8065		17	SCREW M8 x 65
3		291545A1		1	SEAL
4		291577A1		1	HOUSING Incl. Ref 5
5		294013A1		1	BREATHER
6		864-6012		20	SCREW M6 x 12

TRANSMISSION ASSY, POWERSHIFT - VALVE, CONTROL

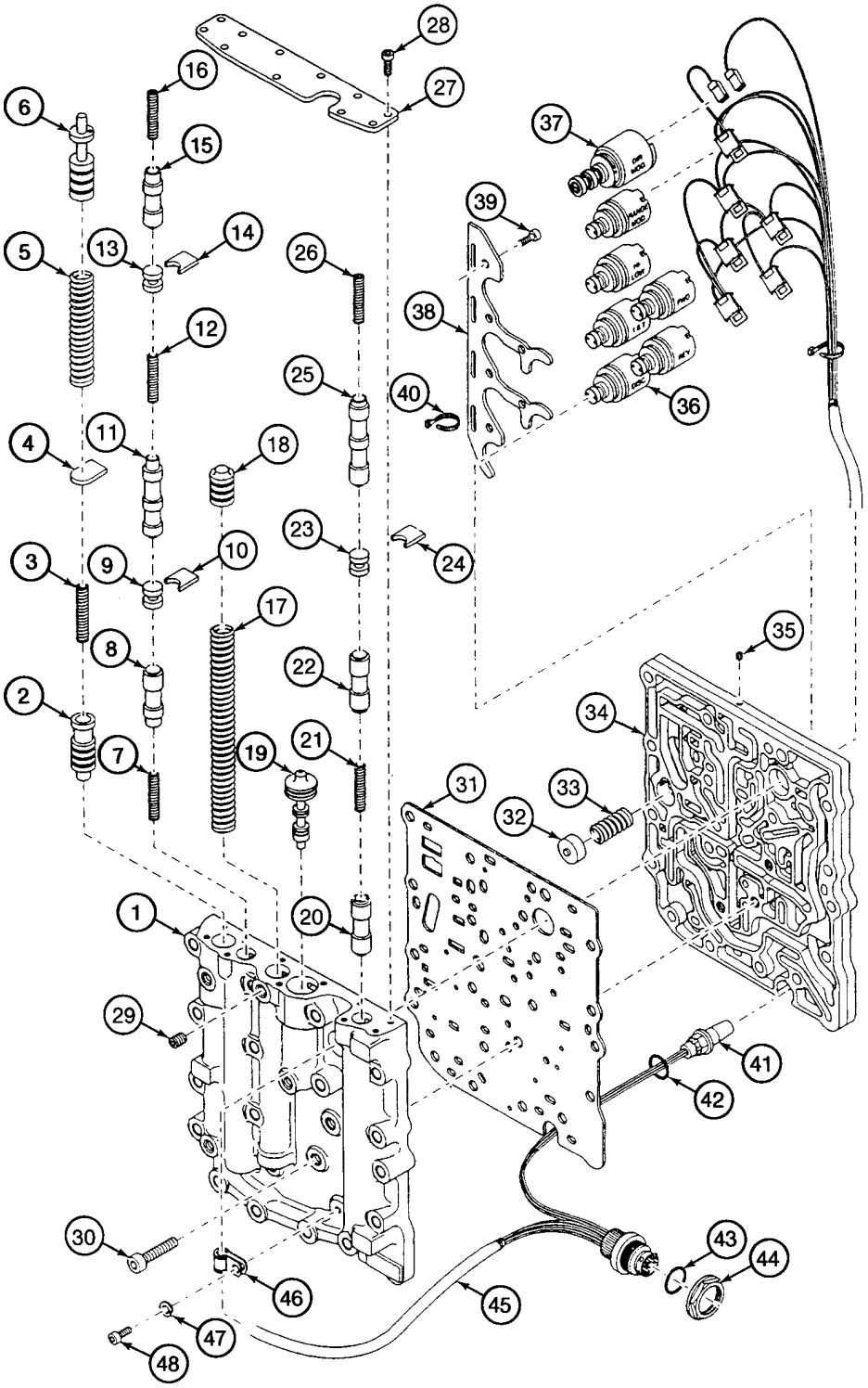

BS98D051

TRANSMISSION ASSY, POWERSHIFT - VALVE, CONTROL

REF	FN	PART NUMBER	YR/SN	QTY	DESCRIPTION
		336896A1		1	GEARBOX ASSY Powershift Transmission, Four Wheel Drive, Incl. Ref 1 - 48; Also Includes Parts On Figures 06-25 - 06-36; No Longer Available, Order 445174A1 Transmission
		445174A1		1	TRANSMISSION Powershift Transmission, Four Wheel Drive, Incl. Ref 1 - 48; Also Includes Parts On Figures 06-25 - 06-36
		380005A1		1	VALVE, CONTROL Transmission Control Valve, Incl. Ref 1 - 48
1		NSS		1	NOT SERVICED SEPARATELY Body
2		NSS		1	NOT SERVICED SEPARATELY Spool, Pressure Reducing
3		NSS		1	NOT SERVICED SEPARATELY Spring
4		NSS		1	NOT SERVICED SEPARATELY Plate
5		NSS		1	NOT SERVICED SEPARATELY Spring
6		NSS		1	NOT SERVICED SEPARATELY Spool, Pressure Regulator
7		NSS		1	NOT SERVICED SEPARATELY Spring
8		NSS		1	NOT SERVICED SEPARATELY Spool, Disconnect
9		NSS		1	NOT SERVICED SEPARATELY Stop
10		NSS		1	NOT SERVICED SEPARATELY Plate
11		NSS		1	NOT SERVICED SEPARATELY Spool, First/Second
12		NSS		1	NOT SERVICED SEPARATELY Spring
13		NSS		1	NOT SERVICED SEPARATELY Stop
14		NSS		1	NOT SERVICED SEPARATELY Plate
15		NSS		1	NOT SERVICED SEPARATELY Spool, Range Modulation
16		NSS		1	NOT SERVICED SEPARATELY Spring
17		NSS		1	NOT SERVICED SEPARATELY Spring
18		NSS		1	NOT SERVICED SEPARATELY Spool, Accumulator
19		NSS		1	NOT SERVICED SEPARATELY Spool, Booster
20		NSS		1	NOT SERVICED SEPARATELY Spool, Reverse
21		NSS		1	NOT SERVICED SEPARATELY Spring
22		NSS		1	NOT SERVICED SEPARATELY Spool, Forward
23		NSS		1	NOT SERVICED SEPARATELY Stop
24		NSS		1	NOT SERVICED SEPARATELY Plate

TRANSMISSION ASSY, POWERSHIFT - VALVE, CONTROL

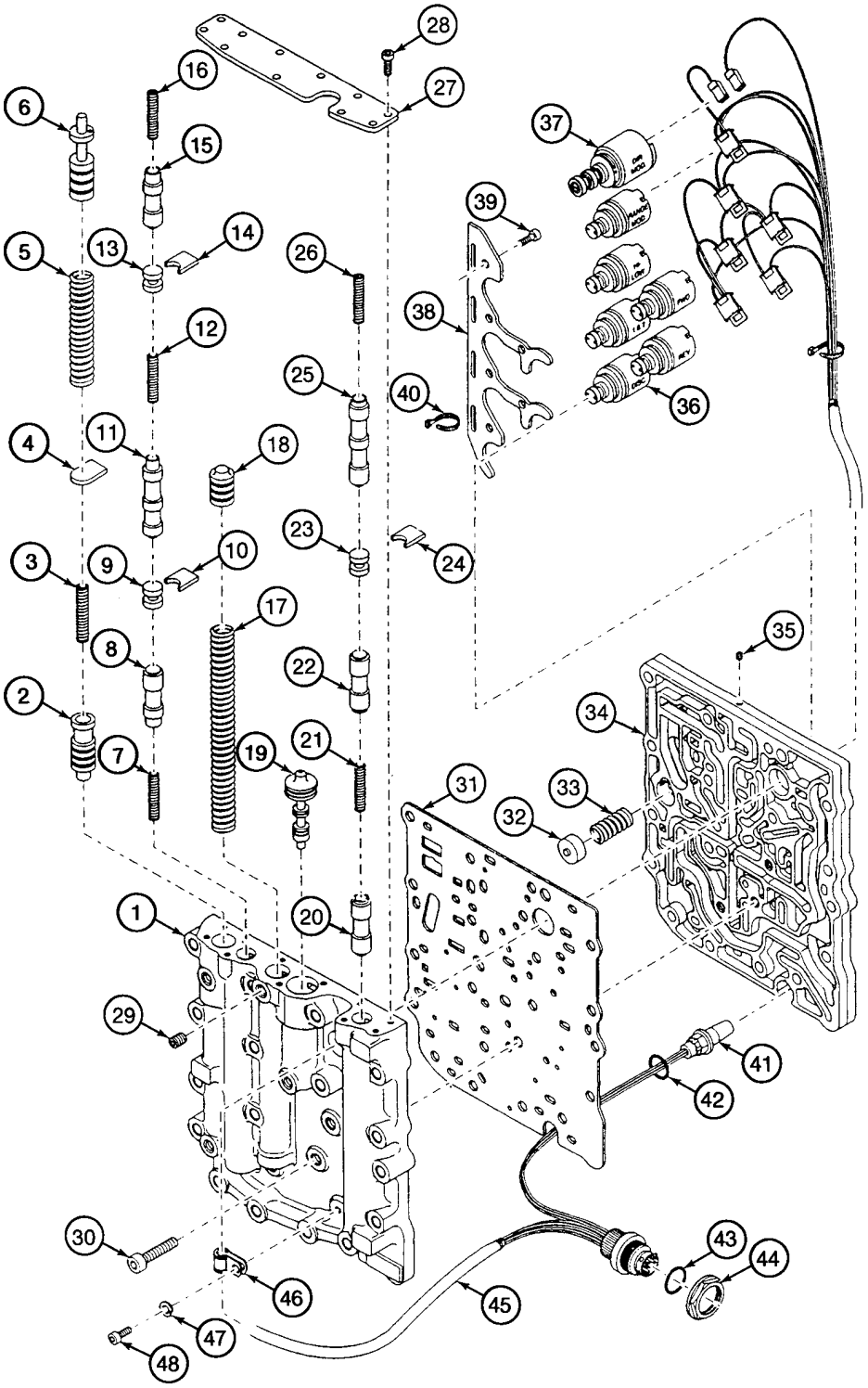

BS98D051

TRANSMISSION ASSY, POWERSHIFT - VALVE, CONTROL

REF	FN	PART NUMBER	YR/SN	QTY	DESCRIPTION
25		NSS		1	NOT SERVICED SEPARATELY Spool, High/Low Forward
26		NSS		1	NOT SERVICED SEPARATELY Spring
27		NSS		1	NOT SERVICED SEPARATELY Cover
28		864-5012		11	SCREW M5 x 12
29		366663A1		2	PLUG Check Port
30		864-8030		3	SCREW M8 x 30
31		NSS		1	NOT SERVICED SEPARATELY Plate, Spacer
32		292176A1		1	POPPET, VALVE Spool, Bypass Valve
33		292177A1		1	DISC
34		NSS		1	NOT SERVICED SEPARATELY Plate
35		319597A1		6	PLUG
36		291862A1		6	SOLENOID
37		291861A1		1	SOLENOID MODULE
38		NSS		1	NOT SERVICED SEPARATELY Bail
39		864-5012		6	SCREW M5 x 12
40		319598A1		6	STRAP
41		380004A1		1	SENSOR Speed Sensor
42		238-5115		1	O-RING 11/16 ID x 7/8
43		238-9213		1	O-RING 15/16 ID x 1/8
44		NSS		1	NOT SERVICED SEPARATELY Nut
45		380003A1		1	HARNESS Incl. Ref 41 - 44
46		319599A1		1	CLAMP
47		895-11005		1	WASHER 5,5 x 10 x 1 mm
48		864-5010		1	SCREW M5 x 10

TRANSMISSION ASSY, POWERSHIFT - PLATE, DRIVE

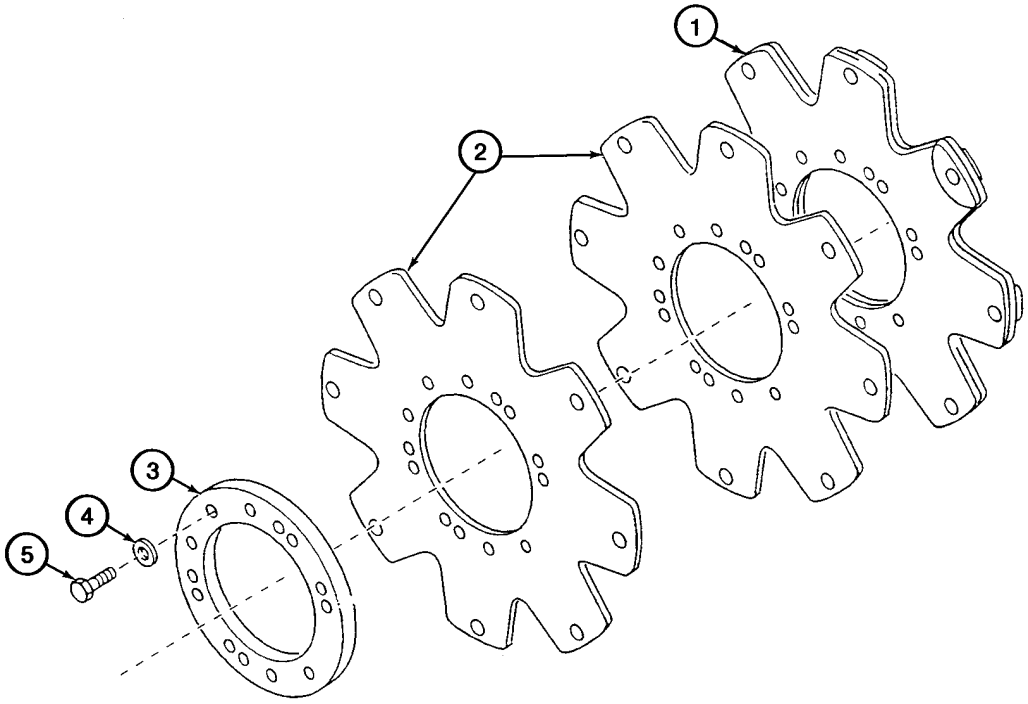

BS98D052

TRANSMISSION ASSY, POWERSHIFT - PLATE, DRIVE

REF	FN	PART NUMBER	YR/SN	QTY	DESCRIPTION
		336896A1		1	GEARBOX ASSY Powershift Transmission, Four Wheel Drive, Incl. Ref 1 - 5; Also Includes Parts On Figures 06-25 - 06-36; No Longer Available, Order 445174A1 Transmission
		445174A1		1	TRANSMISSION Powershift Transmission, Four Wheel Drive, Incl. Ref 1 - 5; Also Includes Parts On Figures 06-25 - 06-36
1		291590A1		1	TRAY ASSY. Drive Plate Assy, Incl. Ref 2 - 5
2		NSS		2	NOT SERVICED SEPARATELY Face Plate
3		217558A1		1	FLANGE Drive Plate Backing Ring
4		92-11038		6	WASHER 3/8
5		14-68		6	SEAL ASSY. 3/8 NF x 1/2

WHEELS, REAR - TIRES

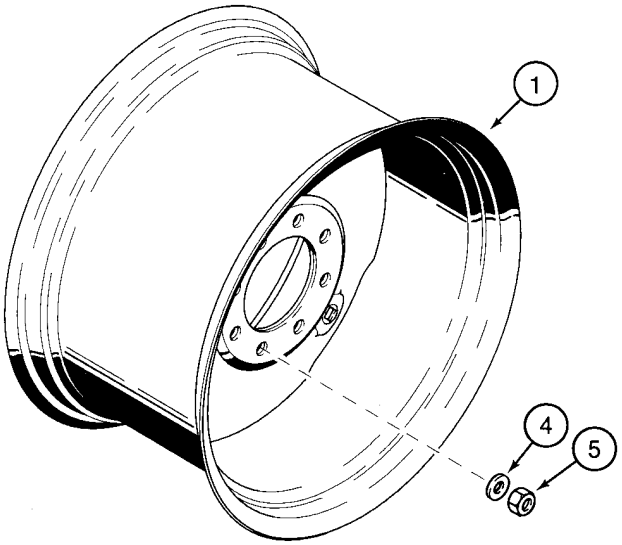

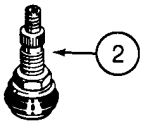

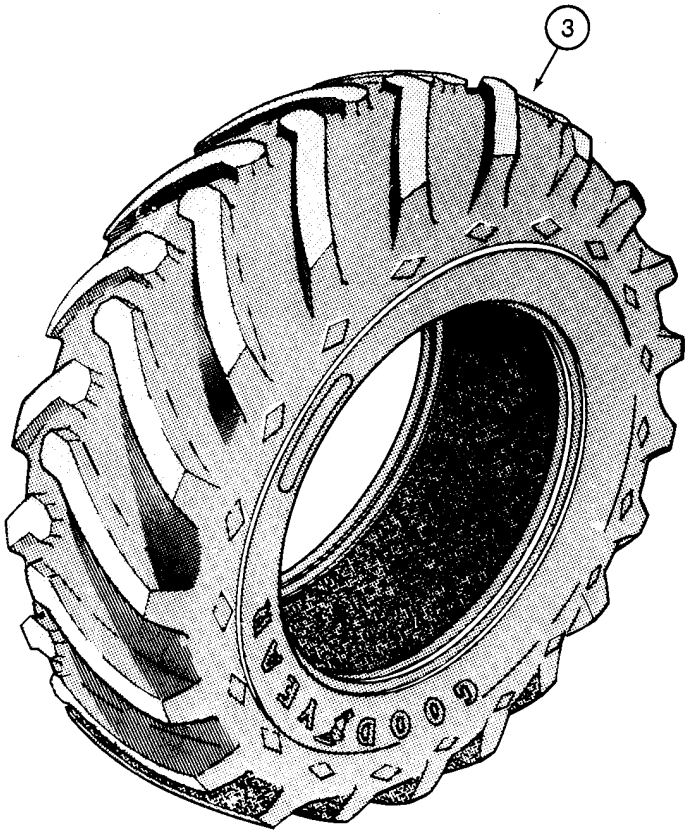

B9408129

WHEELS, REAR - TIRES

REF	FN	PART NUMBER	YR/SN	QTY	DESCRIPTION
1		132953A1		2	RIM, WHEEL 21L x 24 Tires - 10 Ply or 14 Ply; Two Wheel or Four Wheel Drive
2		A20058		2	VALVE
3		REF		2	INSTRUCTION Tire, Purchase Locally
4		D138380		20	WASHER Wheel Nuts
5		D138492		20	NUT 22 mm; Wheel Nuts

AXLE, REAR DRIVE - MOUNTING

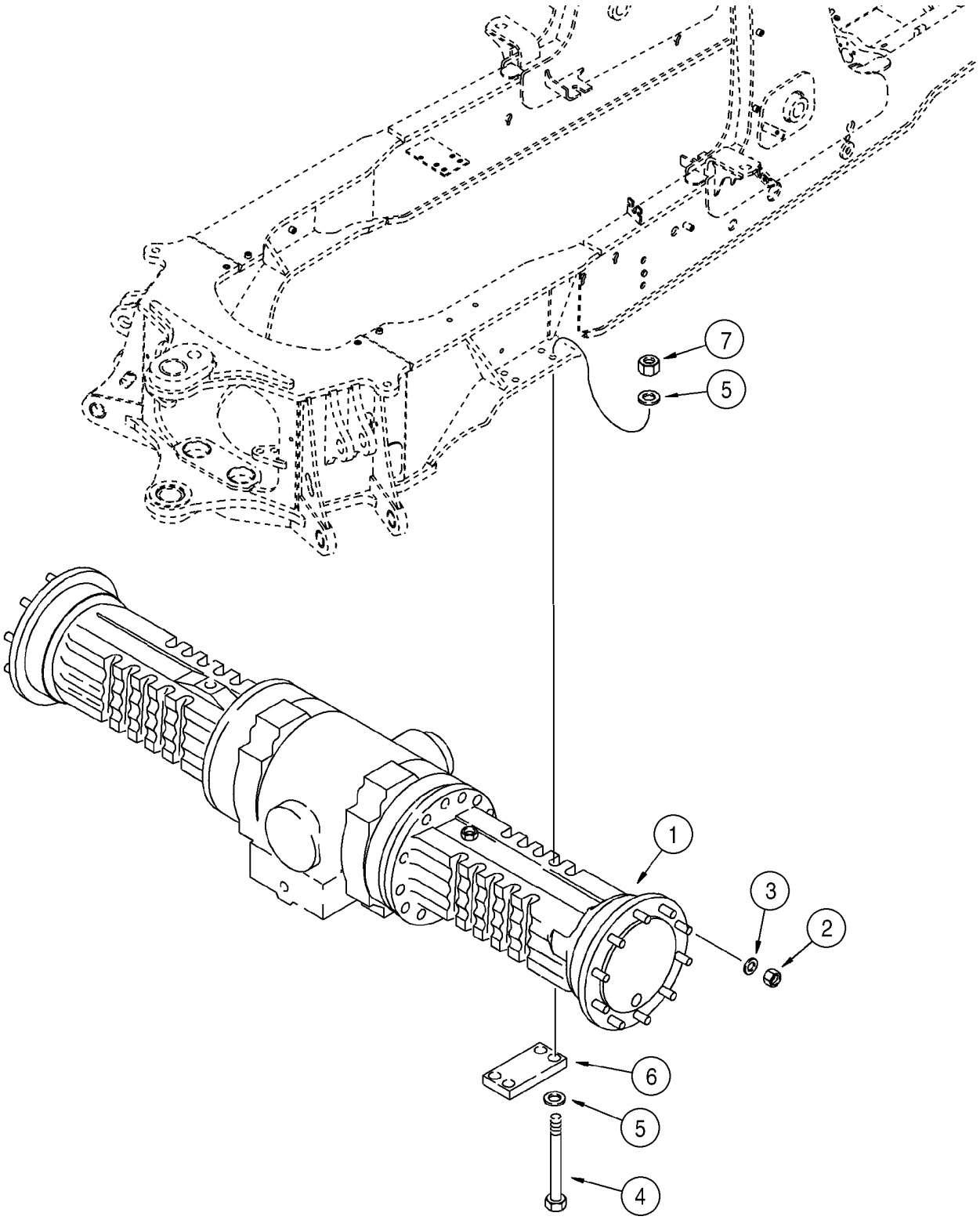

AXLE, REAR DRIVE - MOUNTING

REF	FN	PART NUMBER	YR/SN	QTY	DESCRIPTION
1		384959A1		1	AXLE REAR Models Without Powershift Transmission, See Figures 06-40 - 06-46, 07-01, 07-02
1A		384960A1		1	AXLE REAR Models With Powershift Transmission, See Figures 06-40 - 06-46, 07-01, 07-02, Not Illustrated
2		D138492		20	NUT 22 mm
3		D138380		20	WASHER
4		827-20230		8	SCREW M20 x 230; 10.9
5		896-11020		16	WASHER 22 x 37 x 4 mm, Hardened
6		117933A1		2	PLATE, LARGE
7		829-1420		8	NUT M20; 10

AXLE, REAR - DIFFERENTIAL LOCK

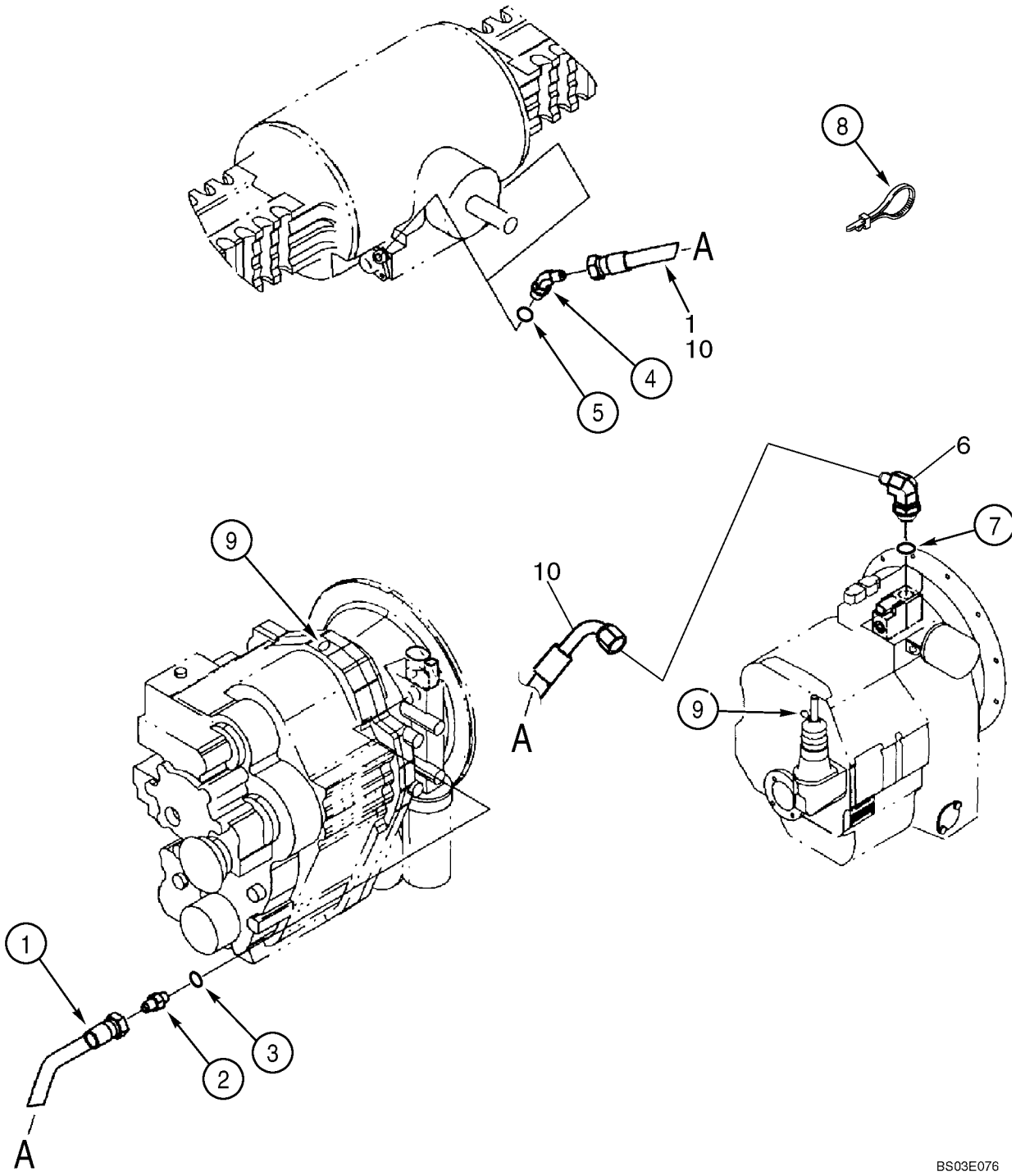

AXLE, REAR - DIFFERENTIAL LOCK

REF	FN	PART NUMBER	YR/SN	QTY	DESCRIPTION
1		304019A1		1	HOSE 1200 mm (47-1/4 in); Models With Powershift Transmission
2		218-5057		1	CONNECTOR 9/16 fl x Or; Incl. Ref 3; Models With Powershift Transmission
3		237-6006		1	O-RING 15/32 ID x 5/64
4		218-5135		1	ELBOW 45 deg, 9/16 fl x Or; Incl. Ref 5; Axle Port Location Shown Is For Models Without Powershift Transmission
5		237-6006		1	O-RING 15/32 ID x 5/64
6		218-5105		1	ELBOW 90 deg, 9/16 fl x Or; Incl. Ref 7; Models Without Powershift Transmission
7		237-6006		1	O-RING 15/32 ID x 5/64
8		L18337		2	STRAP 15 in
9		E135809		1	PLUG If Used
10		408974A1		1	HOSE ASSY. 1200 mm (47-1/4 in); Models Without Powershift Transmission

AXLE, REAR DRIVE - HOUSING

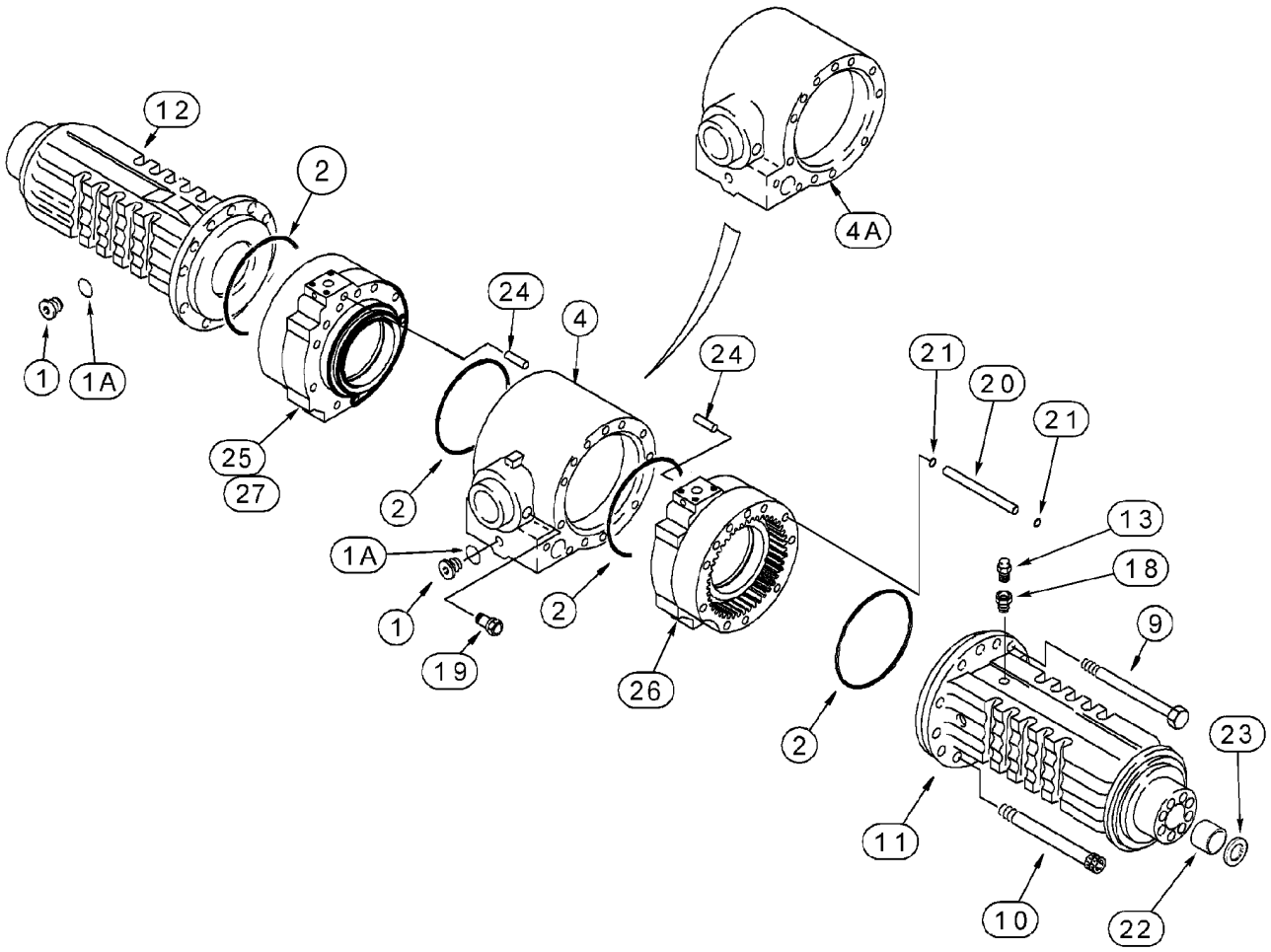

BS00C243

AXLE, REAR DRIVE - HOUSING

REF	FN	PART NUMBER	YR/SN	QTY	DESCRIPTION
		384959A1		1	AXLE REAR Models Without Powershift Transmission, Incl. Ref 1 - 27; Also Includes Parts On Figures 06-40 - 06-46, 07-01, 07-02
		384960A1		1	AXLE REAR Models With Powershift Transmission, Incl. Ref 1 - 27; Also Includes Parts On Figures 06-40 - 06-46, 07-01, 07-02
1		100557A1		2	PLUG, DRAIN Incl. Ref 1A
1A		238-6121		1	O-RING 1-1/16 ID x 3/32
2		238-5276		4	O-RING 11 ID x 1/8
4		284630A1		1	HOUSING Center, 384959A1 Axle
4A		310480A1		1	HOUSING Center, 384960A1 Axle
9		814-14140		22	SCREW M14 x 140
10		864-12130		4	SCREW M12 x 130
11		295578A1		1	HOUSING Left-Hand
12		295577A1		1	HOUSING Right-Hand
13		1966149C2		1	BREATHER
18		E135750		1	PIN (AXLE) Breather Extension
19		393826A1		1	SENDER Oil Temperature, Incl. 237-8008
		237-8008		1	O-RING 41/64 ID x 3/32
20		222688A1		1	TUBE Internal
21		100760A1		2	O-RING
22		196065A1		2	BUSHING, LARGE
23		196066A1		2	OIL-SEAL 38 ID x 50 OD
24		D142898		2	PLUG 10 x 1 mm
25		328554A1		1	SET OF PARTS Brake Cylinder, Right-Hand, 384959A1 Axle
26		328553A1		1	SET OF PARTS Brake Cylinder, Left-Hand, 384959A1 / 384960A1 Axle
27		328555A1		1	SET OF PARTS Brake Cylinder, Right-Hand, 384960A1 Axle

AXLE, REAR DRIVE - DIFFERENTIAL (CLOCKWISE INPUT, MODELS WITHOUT POWERSHIFT)

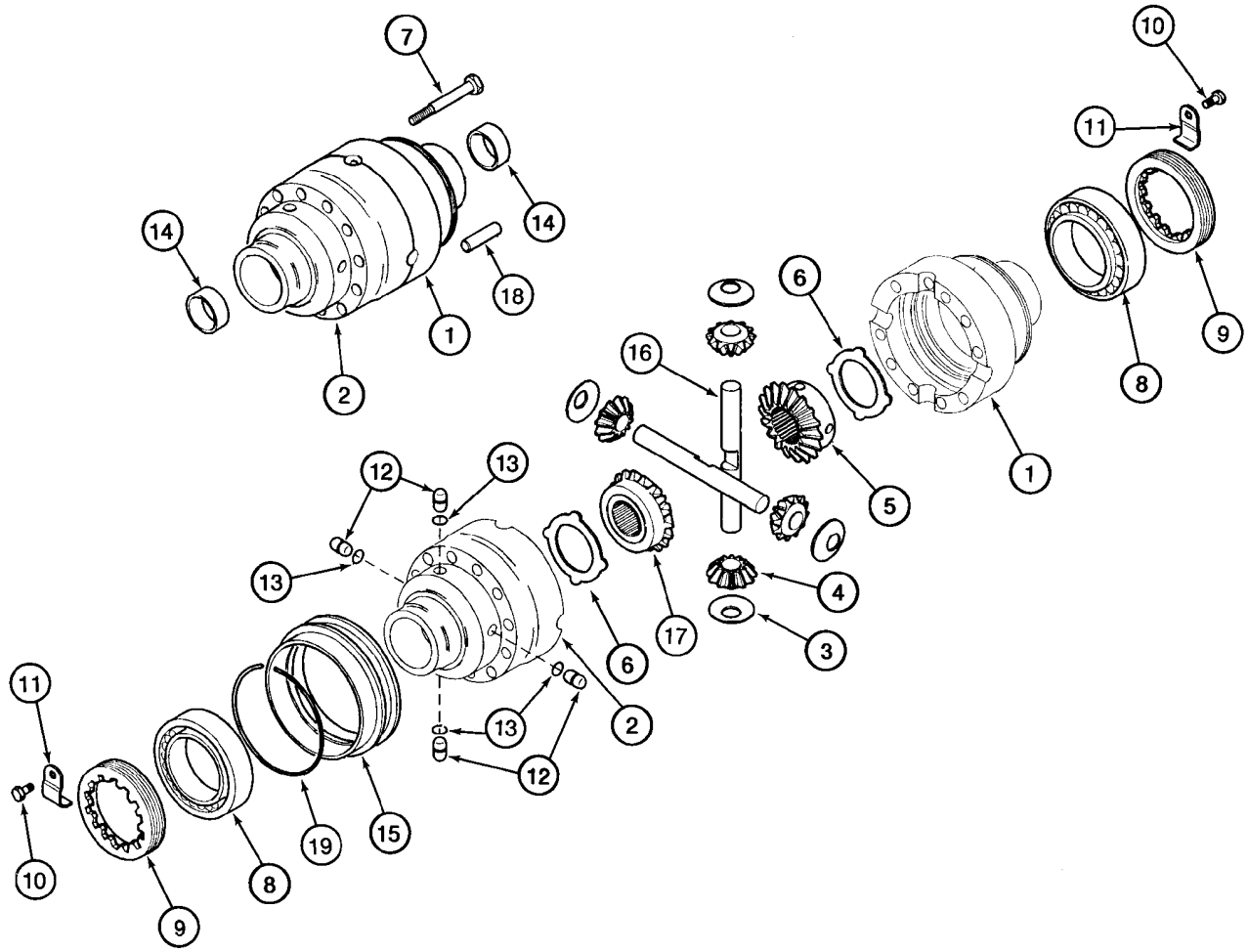

BS98D053

AXLE, REAR DRIVE - DIFFERENTIAL (CLOCKWISE INPUT, MODELS WITHOUT POWERSHIFT)

REF	FN	PART NUMBER	YR/SN	QTY	DESCRIPTION
		384959A1		1	AXLE REAR Incl. Ref 1 - 19; Also Includes Parts On Figures 06-40 - 06-46, 07-01, 07-02
		310482A1		1	HOUSING Differential, Incl. Ref 1, 2
1		NSS		1	NOT SERVICED SEPARATELY Housing, Flange Half
2		NSS		1	NOT SERVICED SEPARATELY Housing, Plain Half
		310481A1		1	SET OF PARTS Differential Gear Set, Service Replacement, Incl. Ref 3 - 6, 16, 17
3		E135777		4	WASHER Thrust
4		190471A1		4	PINION Sun Gear, 12T, No Longer Sold Separately, Must Be Replaced As a Set, For Service, Order 310481A1 Gear Set Kit
5		E135780		1	GEAR WHEEL Side Pinion Gear, No Longer Sold Separately, Must Be Replaced As a Set, For Service, Order 310481A1 Gear Set Kit
6		190469A1		2	WASHER, THRUST
7		S300976		10	SCREW M12 x 90; 12.9
8		E135785		2	BEARING
9		P3034505		2	NUT Lock Ring
10		112486A1		2	SCREW M6 x 12
11		175959A1		2	BRACKET Bracket
12		292207A1		4	PIN, LARGE
13		292208A1		4	O-RING
14		1966875C1		2	BUSHING, LARGE
15		191067A1		1	SLEEVE
		310481A1		1	SET OF PARTS Differential Gear Set, Service Replacement, Incl. Ref 3 - 6, 16, 17
16		190468A1		2	SHAFT Sun Gear, No Longer Sold Separately, Must Be Replaced As a Set, For Service, Order 310481A1 Gear Set Kit
17		311204A1		1	PINION Side Pinion Gear, No Longer Sold Separately, Must Be Replaced As a Set, For Service, Order 310481A1 Gear Set Kit
18		D143033		2	DOWEL 12 x 40 mm
19		175961A1		1	RING, LOCK

AXLE, REAR DRIVE - DIFFERENTIAL (COUNTER CLOCKWISE INPUT, MODELS WITH POWERSHIFT)

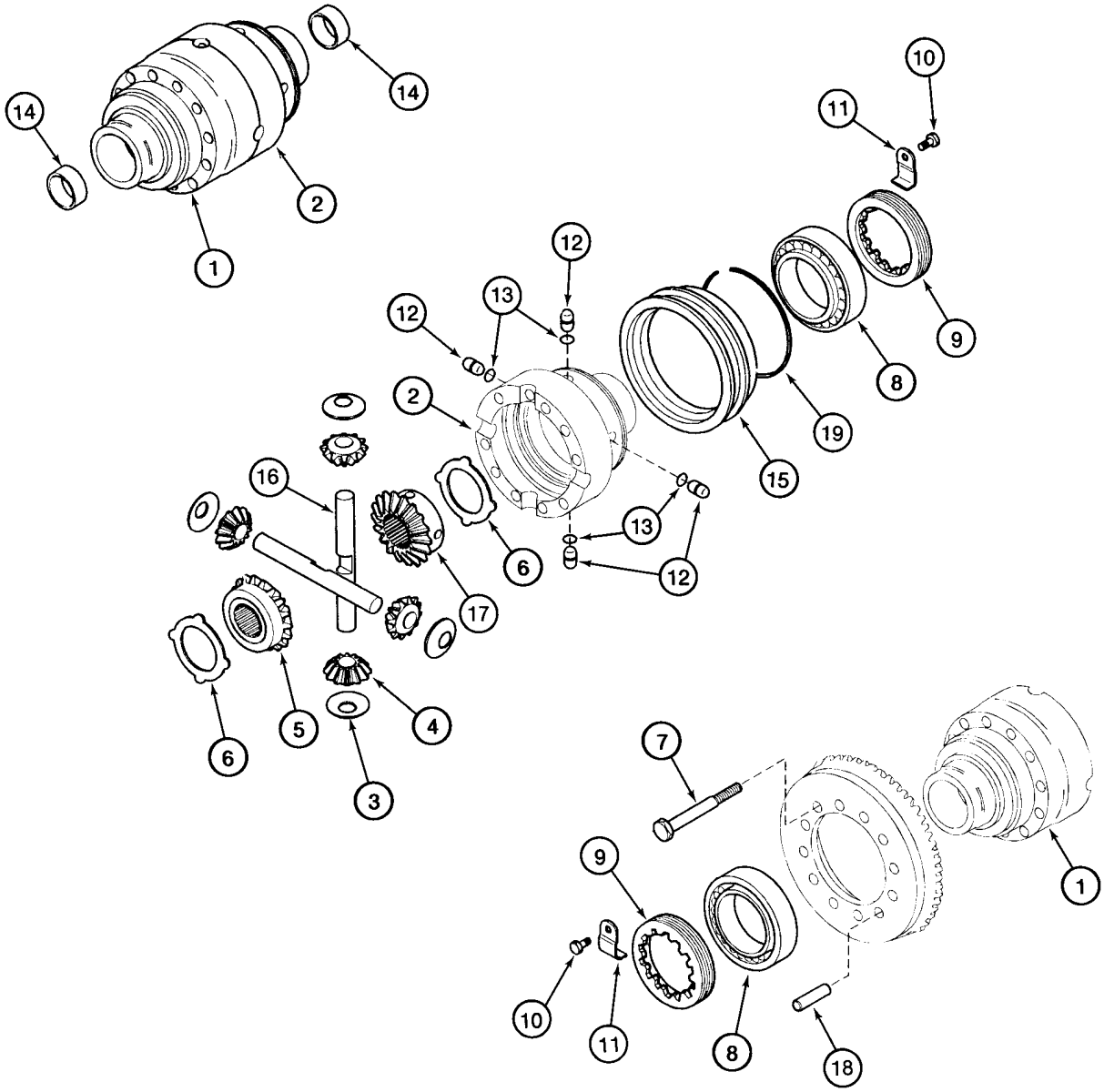

AXLE, REAR DRIVE - DIFFERENTIAL (COUNTER CLOCKWISE INPUT, MODELS WITH POWERSHIFT)

REF	FN	PART NUMBER	YR/SN	QTY	DESCRIPTION
		384960A1		1	AXLE REAR Incl. Ref 1 - 19; Also Includes Parts On Figures 06-40 - 06-46, 07-01, 07-02
		310482A1		1	HOUSING Differential, Incl. Ref 1, 2
1		NSS		1	NOT SERVICED SEPARATELY Housing, Flange Half
2		NSS		1	NOT SERVICED SEPARATELY Housing, Plain Half
		310481A1		1	SET OF PARTS Differential Gear Set, Service Replacement, Incl. Ref 3 - 6, 16, 17
3		E135777		4	WASHER Thrust
4		190471A1		4	PINION Sun Gear, 12T, No Longer Sold Separately, Must Be Replaced As a Set, For Service, Order 310481A1 Gear Set Kit
5		E135780		1	GEAR WHEEL Side Pinion Gear, No Longer Sold Separately, Must Be Replaced As a Set, For Service, Order 310481A1 Gear Set Kit
6		190469A1		2	WASHER, THRUST
7		S300976		10	SCREW M12 x 90; 12.9
8		E135785		2	BEARING
9		P3034505		2	NUT Lock Ring
10		112486A1		2	SCREW M6 x 12
11		175959A1		2	BRACKET Bracket
12		292207A1		4	PIN, LARGE
13		292208A1		4	O-RING
14		1966875C1		2	BUSHING, LARGE
15		191067A1		1	SLEEVE
		310481A1		1	SET OF PARTS Differential Gear Set, Service Replacement, Incl. Ref 3 - 6, 16, 17
16		190468A1		2	SHAFT Sun Gear, No Longer Sold Separately, Must Be Replaced As a Set, For Service, Order 310481A1 Gear Set Kit
17		311204A1		1	PINION Side Pinion Gear, No Longer Sold Separately, Must Be Replaced As a Set, For Service, Order 310481A1 Gear Set Kit
18		D143033		2	DOWEL 12 x 40 mm
19		175961A1		1	RING, LOCK

AXLE, REAR DRIVE - RING AND PINION

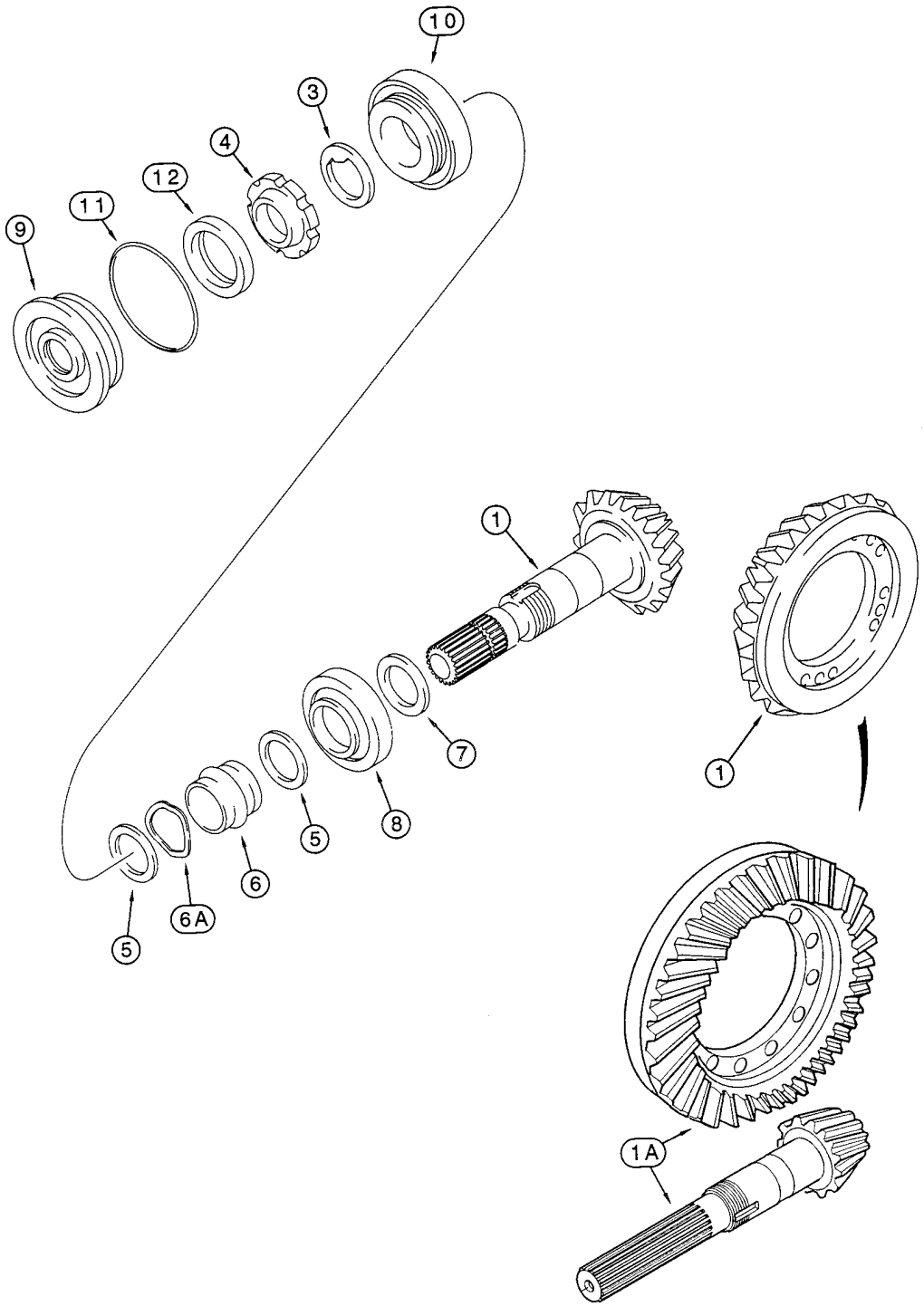

AXLE, REAR DRIVE - RING AND PINION

REF	FN	PART NUMBER	YR/SN	QTY	DESCRIPTION
		384959A1		1	AXLE REAR Models Without Powershift Transmission, Incl. Ref 1 - 12; Also Includes Parts On Figures 06-40 - 06-46, 07-01, 07-02
		384960A1		1	AXLE REAR Models With Powershift Transmission, Incl. Ref 1 - 12; Also Includes Parts On Figures 06-40 - 06-46, 07-01, 07-02
		196068A1		1	GEAR Ring and Pinion, Clockwise, Incl. Ref 1, 3 - 6A, 384959A1 Axle
		311208A1		1	SET OF PARTS Ring and Pinion, Counter Clockwise, Incl. Ref 1A, 3 - 6A, 384960A1 Axle
1		NSS		1	NOT SERVICED SEPARATELY Gear Set, 196068A1 Gear Set
1A		NSS		1	NOT SERVICED SEPARATELY Gear Set, 311208A1 Gear Set
3		E135827		1	WASHER
4		E135765		1	NUT
5		P2745478		2	WASHER
6		P3428532		1	SPACER Collapsible
6A		D150105		1	WASHER Collapsible
7		190506A1		X	SHIM 2,5 mm (0,098 in)
7		190508A1		X	SHIM 2,6 mm (0,102 in)
7		190509A1		X	SHIM 2,7 mm (0,106 in)
7		190510A1		X	SHIM 2,8 mm (0,110 in)
7		190511A1		X	SHIM 2,9 mm (0,114 in)
7		190512A1		X	SHIM 3,0 mm (0,118 in)
7		190513A1		X	SHIM 3,1 mm (0,122 in)
7		190514A1		X	SHIM 3,2 mm (0,125 in)
7		190515A1		X	SHIM 3,3 mm (0,129 in)
7		190516A1		X	SHIM 3,4 mm (0,133 in)
8		E135762		1	BEARING 45 x 100 mm
9		196069A1		1	COVER
10		E135762		1	BEARING 45 x 100 mm
11		238-5154		1	O-RING 3-3/4 ID x 3/32
12		295151A1		1	SEAL

AXLE, REAR DRIVE - DIFFERENTIAL LOCK (CLOCKWISE INPUT, MODELS WITHOUT POWERSHIFT)

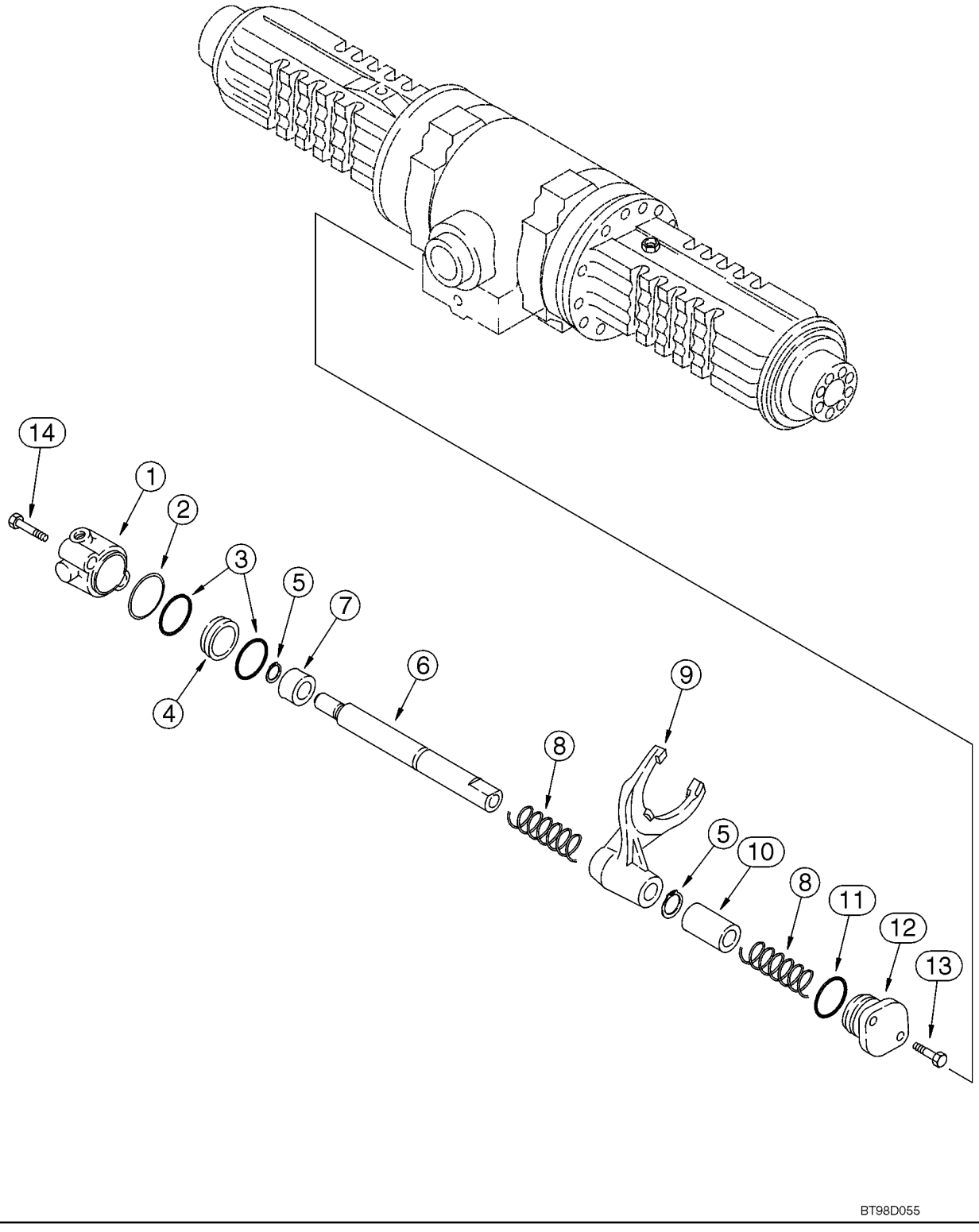

AXLE, REAR DRIVE - DIFFERENTIAL LOCK (CLOCKWISE INPUT, MODELS WITHOUT POWERSHIFT)

REF	FN	PART NUMBER	YR/SN	QTY	DESCRIPTION
		384959A1		1	AXLE REAR Incl. Ref 1 - 14; Also Includes Parts On Figures 06-40 - 06-46, 07-01, 07-02
1		292213A1		1	CYLINDER
2		305152A1		1	O-RING
3		292210A1		2	SEAL
4		292212A1		1	PISTON
5		800-5120		2	RING SNAP No. 20
6		292214A1		1	SHAFT Rail, Shifter Fork
7		292902A1		1	RING Bushing
8		175966A1		2	SPRING
9		196072A2		1	FORK, SHIFTER
10		175965A1		1	BUSHING, LARGE
11		128376A1		1	O-RING
12		175968A1		1	SUPPORT Cover
13		614-8030		2	CAPSCREW M8 x 30
14		814-8080		2	CAPSCREW M8 x 80

AXLE, REAR DRIVE - DIFFERENTIAL LOCK (COUNTER CLOCKWISE INPUT, MODELS WITH POWERSHIFT)

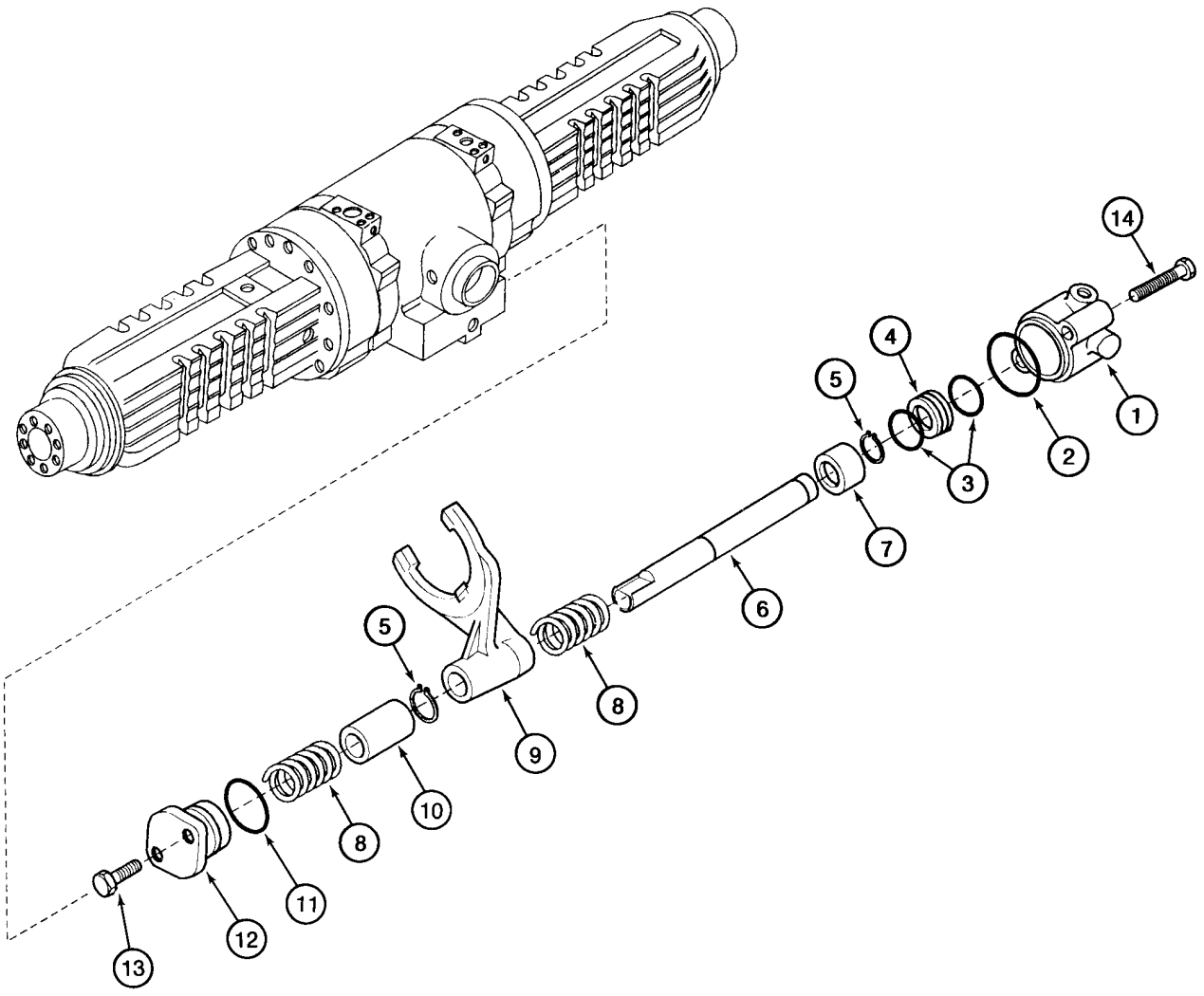

BS98D056

AXLE, REAR DRIVE - DIFFERENTIAL LOCK (COUNTER CLOCKWISE INPUT, MODELS WITH POWERSHIFT)

REF	FN	PART NUMBER	YR/SN	QTY	DESCRIPTION
		384960A1		1	AXLE REAR Incl. Ref 1 - 14; Also Includes Parts On Figures 06-40 - 06-46, 07-01, 07-02
1		305153A1		1	CYLINDER
2		305152A1		1	O-RING
3		292210A1		2	SEAL
4		292212A1		1	PISTON
5		800-5120		2	RING SNAP No. 20
6		292214A1		1	SHAFT Rail, Shifter Fork
7		292902A1		1	RING Bushing
8		175966A1		2	SPRING
9		295152A2		1	FORK, SHIFTER
10		175965A1		1	BUSHING, LARGE
11		128376A1		1	O-RING
12		175968A1		1	SUPPORT Cover
13		614-8030		2	CAPSCREW M8 x 30
14		814-8080		2	CAPSCREW M8 x 80

AXLE, REAR DRIVE - PLANETARY

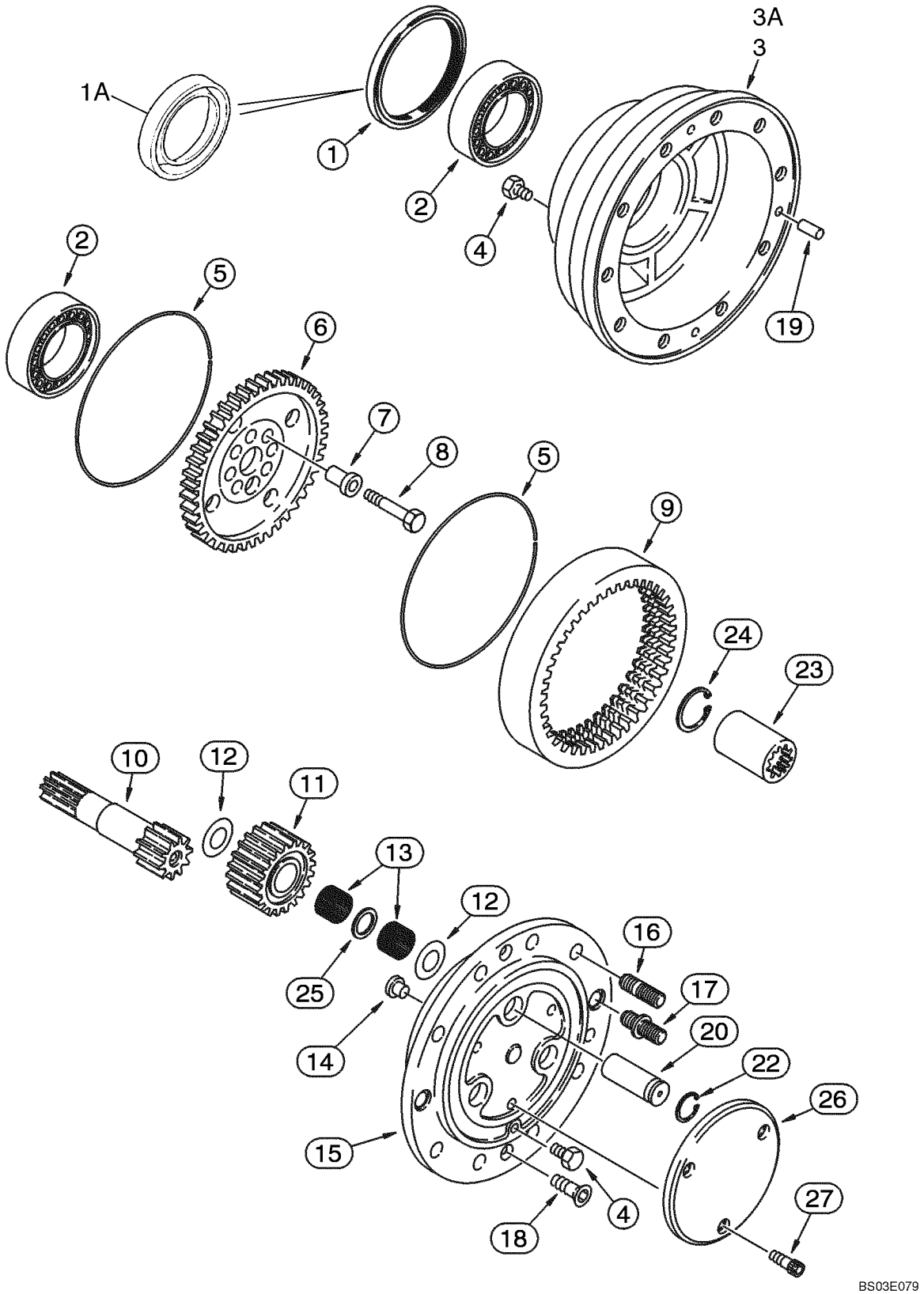

AXLE, REAR DRIVE - PLANETARY

REF	FN	PART NUMBER	YR/SN	QTY	DESCRIPTION
		384959A1		1	AXLE REAR Models Without Powershift Transmission, Incl Ref 1 - 27; Also Includes Parts On Figures 06-40 - 06-46, 07-01, 07-02
		384960A1		1	AXLE REAR Models With Powershift Transmission, Incl Ref 1 - 27; Also Includes Parts On Figures 06-40 - 06-46, 07-01, 07-02
1		1349265C1		2	SEAL Oil; Used With Ref 3, D143084 Hub; If Used
1A		247546A1		2	SEAL Oil; With Internal Garter Spring Seal; Used With Ref 3A, 87415733 Hub; If Used
2		K395101		4	BEARING
3		D143084		2	HUB Used With 1349265C1 Seal, Ref 1; If Used; When Stock Of D143084 Hub Is Exhausted, Order 87415733 Hub and 87415728 Seal
3A		87415733		2	HUB Used With 247546A1 Seal, Ref 1A; If Used
4		A156873		8	PLUG, DRAIN 22 mm
5		D142979		4	RING SNAP Lock Ring
6		295579A1		2	PINION Hub
7		107071A1		16	CENTERING RING Bushing, 20 mm OD
8		K395131		16	BOLT M14 x 65
9		E135755		2	GEAR WHEEL Ring
10		292218A1		2	HALF SHAFT Pinion
11		292217A1		6	SUN GEAR Pinion Gear
12		E135788		12	WASHER, THRUST
13		295040A1		36	KIT OF 10 NEEDLE BRG Package of 10 Needles, 360 Needles Required
14		295094A1		2	PIN Lock
15		295039A1		2	COVER Planetary Carrier; Incl. Ref 20; Use With Liquid Gasket Silastic 732, Carrier to Hub
16		D142986		16	STUD Without Flanged Collar
17		E135795		4	STUD With Flanged Collar, For Recessed Bolt Holes
18		K395029		4	SCREW
19		K395094		2	PIN Dowel
22		295093A1		6	RING SNAP
20		NSS		6	NOT SERVICED SEPARATELY Shaft, Included With Ref 15
23		196092A1		2	BUSHING, LARGE

AXLE, REAR DRIVE - PLANETARY

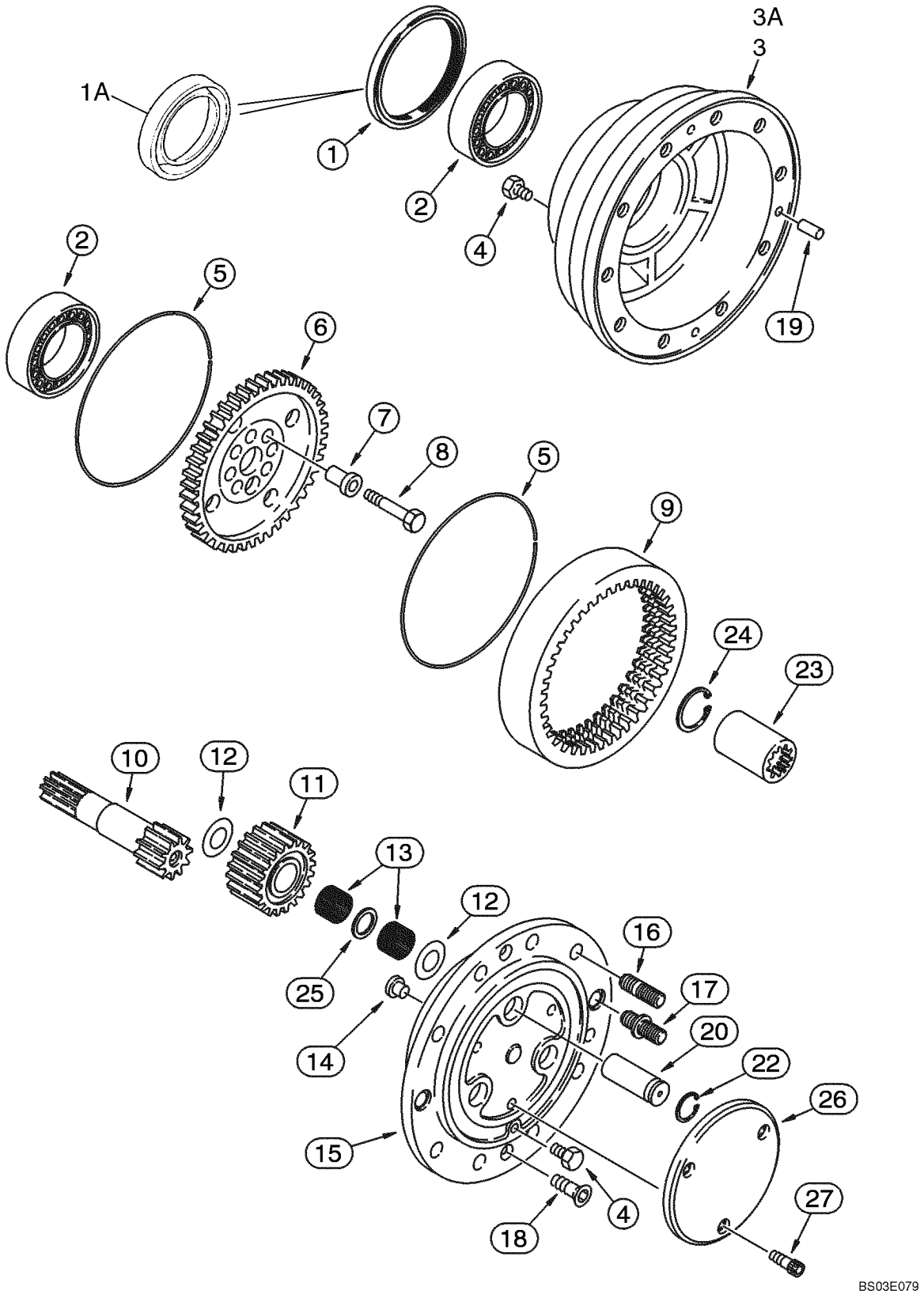

AXLE, REAR DRIVE - PLANETARY

REF	FN	PART NUMBER	YR/SN	QTY	DESCRIPTION
24		800-2136		2	RING SNAP No. 36
25		295038A1		6	WASHER, THRUST
26		295033A2		2	COVER With Oil Level Indicator
27		864-8020		6	SCREW M8 x 20

DRIVE SHAFT, REAR AXLE

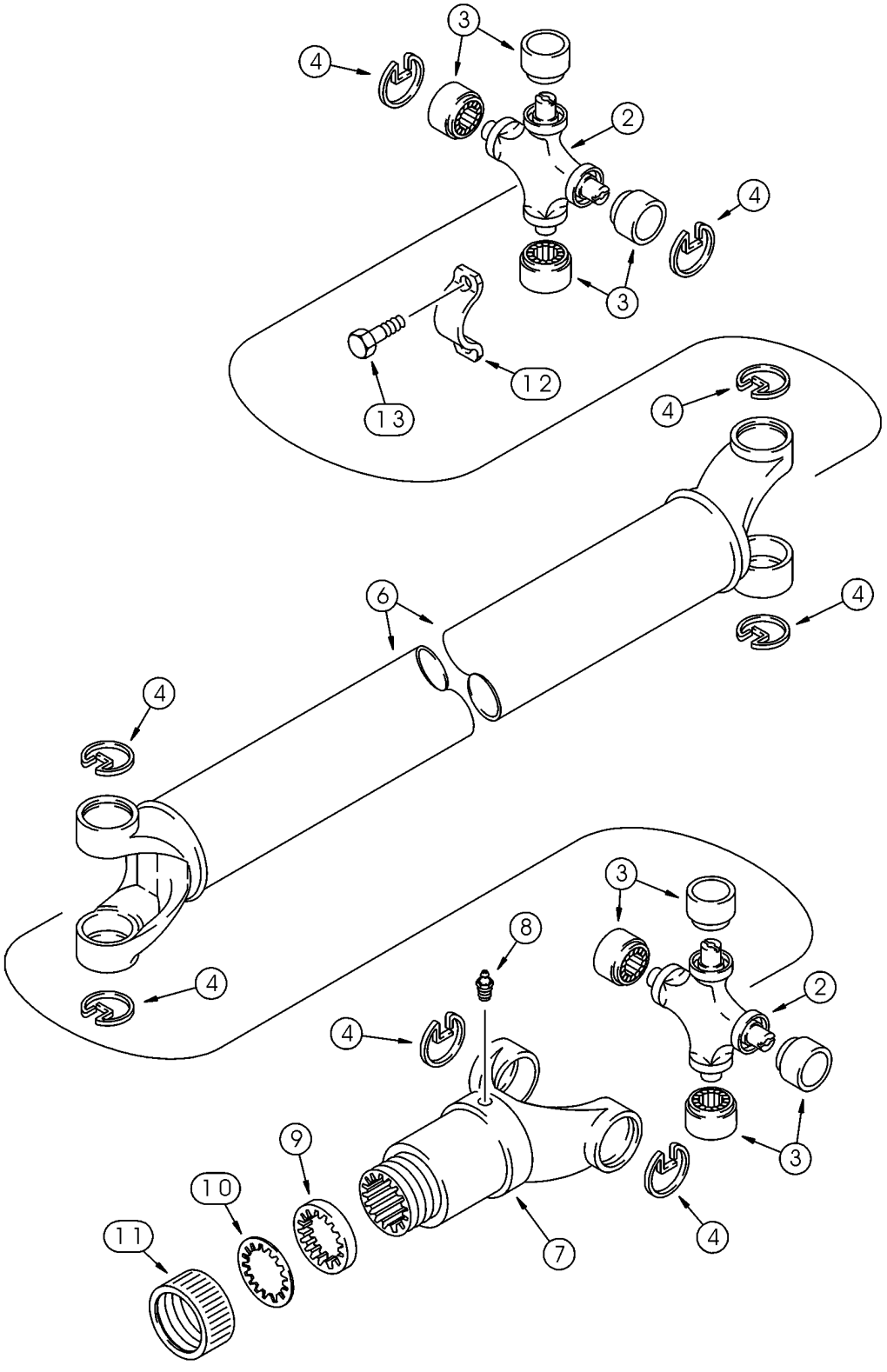

DRIVE SHAFT, REAR AXLE

REF	FN	PART NUMBER	YR/SN	QTY	DESCRIPTION
		367860A3		1	SHAFT, DRIVE Models Without Powershift Transmission, Incl. 393231A1, Ref 2 - 13
		367859A2		1	SHAFT, DRIVE Models With Powershift Transmission, Incl. 393231A1, Ref 2 - 13
		393231A1		2	KIT Universal Joint, Incl. Ref 2 - 4
2		NSS		1	NOT SERVICED SEPARATELY Joint, Universal
3		NSS		4	NOT SERVICED SEPARATELY Bearing, Journal
4		NSS		4	NOT SERVICED SEPARATELY Ring
6		393233A1		1	SHAFT, DRIVE 367860A3 Drive Shaft
6		393232A1		1	SHAFT, DRIVE 367859A2 Drive Shaft
7		144279A1		1	UNIVERSAL JOINT YOKE
8		219-10		1	NIPPLE 1/4 tpr x 11/16
		D149860		1	PACKAGE,SERVICE Incl. Ref 9 - 11
9		NSS		1	NOT SERVICED SEPARATELY Washer, Cork
10		NSS		1	NOT SERVICED SEPARATELY Washer, Steel
11		NSS		1	NOT SERVICED SEPARATELY Cap
12		90-6682T1		2	CLAMP
13		D137627		4	BOLT

NOTES

SECTION INDEX

07 -01	AXLE, REAR DRIVE - BRAKE, DIFFERENTIAL
07 -02	AXLE, REAR DRIVE - BRAKE, PARKING
07 -03	BRAKE - PEDALS
07 -04	HYDRAULICS - BRAKE MASTER CYLINDER
07 -05	CYLINDER ASSY - BRAKE MASTER
07 -06	CONTROLS - BRAKE, PARKING

AXLE, REAR DRIVE - BRAKE, DIFFERENTIAL

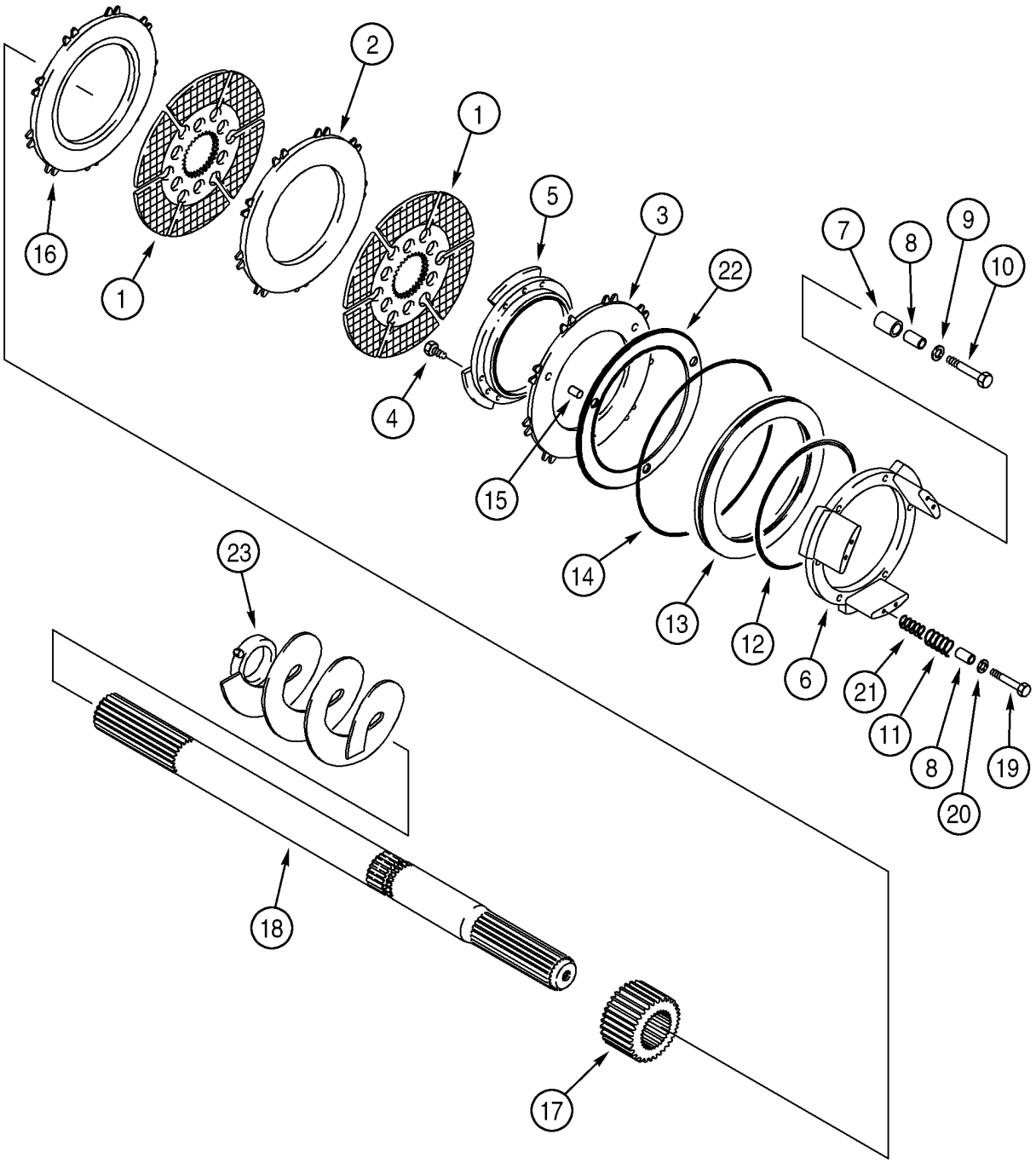

AXLE, REAR DRIVE - BRAKE, DIFFERENTIAL

REF	FN	PART NUMBER	YR/SN	QTY	DESCRIPTION
		384959A1		1	AXLE REAR Models Without Powershift Transmission, Incl. Ref 1 - 25; Also Includes Parts On Figures 06-40 - 06-46, 07-01, 07-02
		384960A1		1	AXLE REAR Models With Powershift Transmission, Incl. Ref 1 - 25; Also Includes Parts On Figures 06-40 - 06-46, 07-01, 07-02
		243894A1		1	SET OF PARTS Brake Discs and Plates; Service Replacement, Incl. Ref 1 - 3, 11, 16, 21; No Longer Available, Order Components
1		237017A1		4	DISC, BRAKE
2		237018A1		2	WASHER,FRICTION
3		237019A1		2	PLATE, LARGE Piston
4		864-8016		18	SCREW M8 x 16
5		196076A1		2	FLANGE
6		196077A1		2	FLANGE
		248071A1		1	SET OF PARTS Brake Self Adjuster, Incl. Ref 7, 8, Plus An Instruction Sheet
7		190449A1		6	SPLIT PIN Spacer, 18 x 20 mm, No Longer Sold Separately, Order 248071A1 Kit
8		190496A1		12	BUSHING, LARGE No Longer Sold Separately, Order 248071A1 Kit
9		190450A1		6	WASHER
10		864-6035		6	SCREW M6 x 35
11		237026A1		6	SPRING
12		196078A1		2	O-RING
13		196079A1		2	PISTON
14		238-8274		2	O-RING
15		190447A1		6	SPLIT PIN 6 x 14 mm
16		237020A1		2	PLATE, LARGE Friction
17		196082A1		2	SLEEVE
18		196083A1		2	HALF SHAFT
19		864-6035		6	SCREW M6 x 35
20		190500A1		6	COVER
21		237025A1		6	SPRING
22		192911A1		2	SHIM

AXLE, REAR DRIVE - BRAKE, DIFFERENTIAL

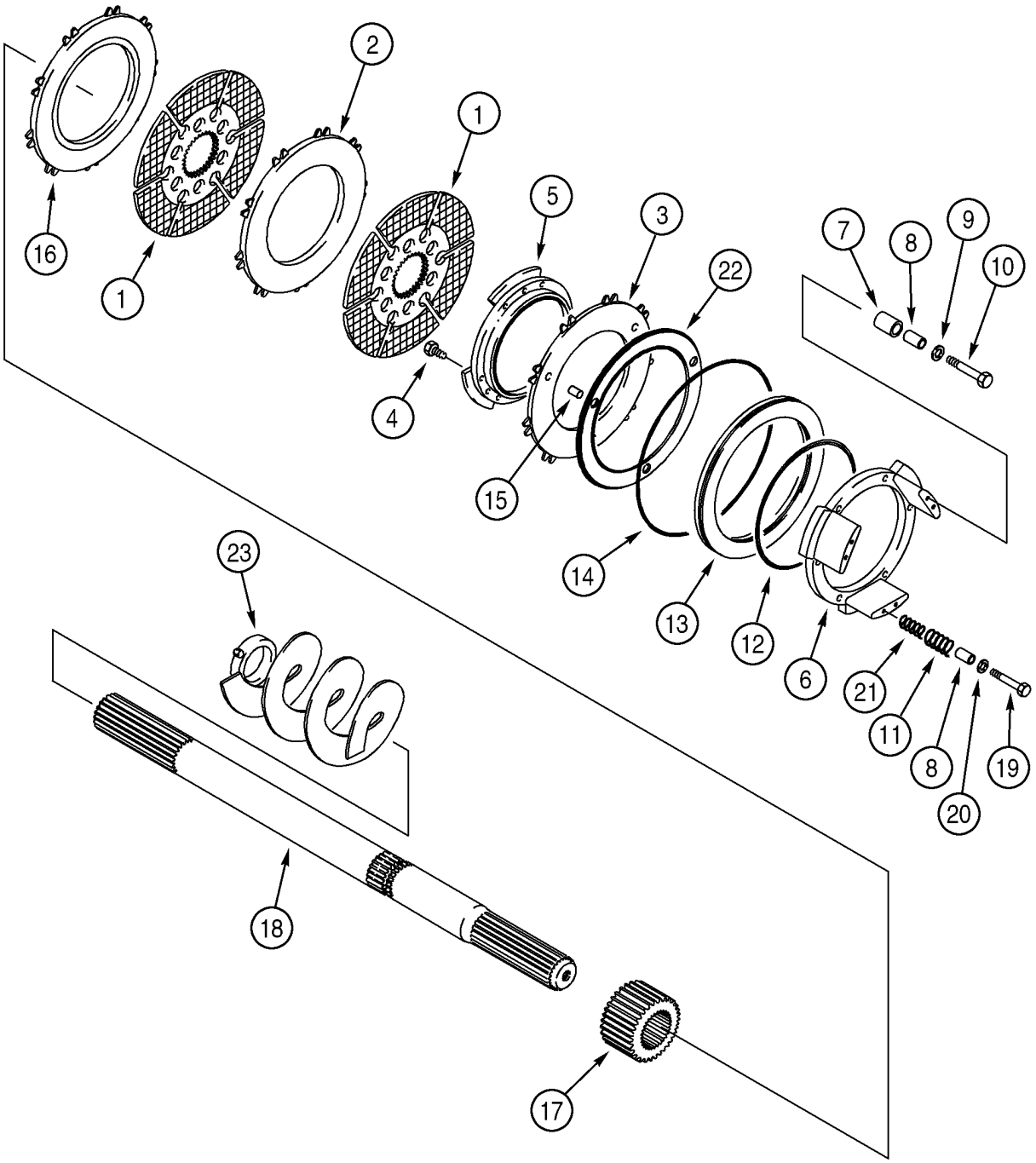

AXLE, REAR DRIVE - BRAKE, DIFFERENTIAL

REF	FN	PART NUMBER	YR/SN	QTY	DESCRIPTION
23		193491A1		1	AUGER Auger, Oil, Right-Hand, Incl. Ref 25; Also Includes Welded-On Clamp and Bolt, Plus Welded-On Drive Coupling, Includes 25
24		193493A1		1	AUGER Auger, Oil, Left-Hand, Incl. Ref 25; Also Includes Welded-On Clamp and Bolt, Plus Welded-On Drive Coupling, Includes 25
25		863-6020		2	SCREW M6 x 20; 12.9, Not Illustrated
		243894A1		1	SET OF PARTS Brake Discs and Plates, Service Replacement, Incl. Ref 1 - 3, 11, 16, 21

AXLE, REAR DRIVE - BRAKE, PARKING

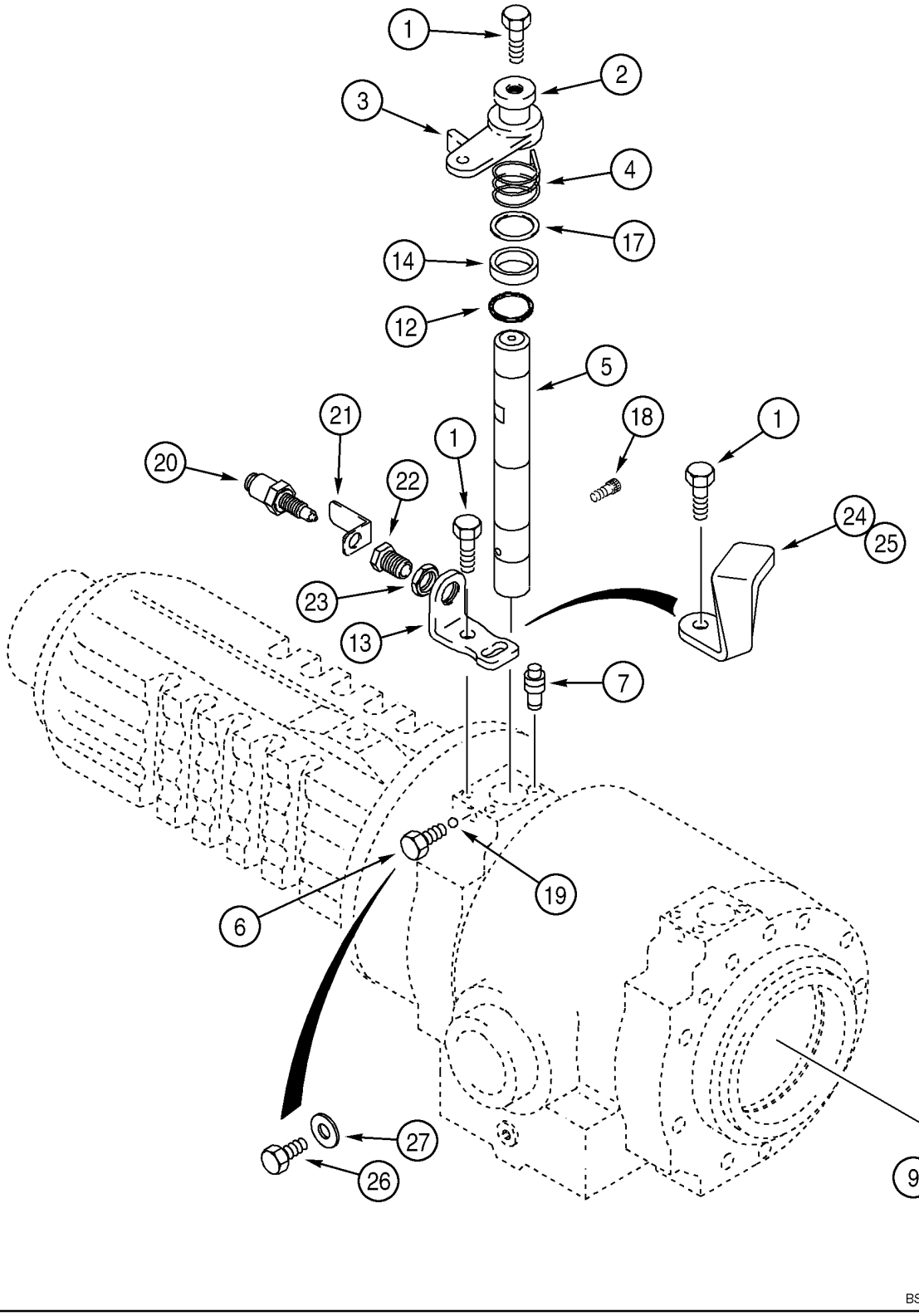

AXLE, REAR DRIVE - BRAKE, PARKING

REF	FN	PART NUMBER	YR/SN	QTY	DESCRIPTION
		384959A1		1	AXLE REAR Models Without Powershift Transmission, Incl. Ref 1 - 27; Also Includes Parts On Figures 06-40 - 06-46, 07-01, 07-02
		384960A1		1	AXLE REAR Models With Powershift Transmission, Incl. Ref 1 - 27; Also Includes Parts On Figures 06-40 - 06-46, 07-01, 07-02
1		190451A1		6	SCREW M8 x 20
2		190463A1		2	WASHER
3		280436A1		2	LEVER Brake
4		190476A2		1	SPRING Left-Hand
4		190477A2		1	SPRING Right-Hand, Not Illustrated
5		256484A1		2	SHAFT
6		283462A1		2	SCREW M8 x 23.5
7		E135810		2	SCREW, VENTING Brake Bleeder
8		190473A1		2	SPRING
9		196085A1		2	CAM
12		321183A1		2	O-RING
13		256478A1		2	SUPPORT Stop
14		256481A1		2	SPACER Bushing
17		256482A1		2	SHIM Shim
18		256485A1		2	SCREW M6 x 16
19		283466A1		2	BALL
		281952A1		2	KIT Kit, Switch, Incl. Ref 20 - 23
20		280450A1		1	SWITCH,IGNITION
21		280452A1		1	BRACKET
22		280457A1		1	LEVER Sleeve
23		281960A1		1	NUT
		279645A1		1	PACKAGE, REPAIR Parking Brake, External Adjustment Parts, Incl. Ref 1, 12 - 17, 281952A1, 20 - 23, 24 - 27; Includes Instructions; If Used
24		259254A1		1	RETAINER Left-Hand
25		280443A1		1	RETAINER Right-Hand
26		514-634		2	SCREW M8 x 16
27		181104A1		2	WASHER, COPPER

07 -03		p1	05/03

BRAKE - PEDALS

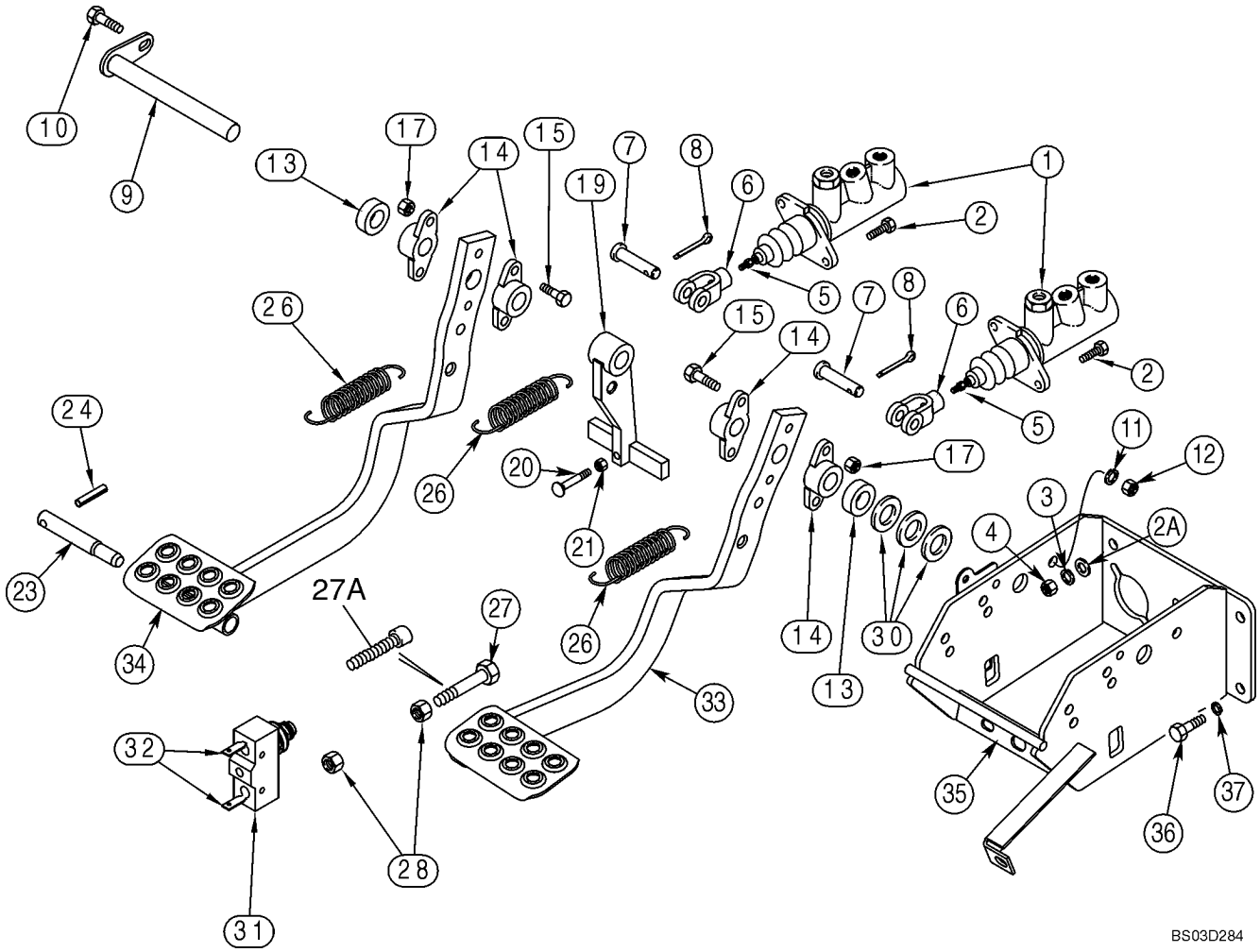

BRAKE - PEDALS

REF	FN	PART NUMBER	YR/SN	QTY	DESCRIPTION
1		182445A1		2	CYLINDER,MASTER See Figure 07-05
2		614-8030		4	CAPSCREW M8 x 30
2A		895-11008		4	WASHER 9 x 17 x 1,6 mm
3		892-11008		4	WASHER M8
4		829-1408		4	NUT M8; 10
5		425-156		2	NUT 3/8 NF
6		D137077		2	CLEVIS
7		L26209		2	PIN 3/8
8		432-612		2	PIN, COTTER 3/32 x 3/4
9		D140035		1	PIN, LARGE Shaft
10		614-10025		1	BOLT M10 x 25
11		892-11010		1	WASHER, LOCK M10
12		829-1410		1	NUT M10; 10.9
13		D124529		2	SPACER
14		A77310		4	PIVOT
15		814-8040		4	CAPSCREW M8 x 40
17		832-10408		4	NUT M8
19		D124528		1	LEVER Brake Lamp
20		121-145		1	SCREW 5/16 X 2-1/2, Flat Countersunk Head
21		425-105		1	NUT 5/16
23		D124530		1	PIN
24		438-12040		1	SPLIT PIN/SAFETY PIN 5/16 x 2-1/2
26		230973A1		3	SPRING
27		614-8040		2	CAPSCREW M8 x 40; If Used
27A		413870A1		2	ISOLATOR Rubber Head, M8 x 45, Brake Pedal, If Used
28		829-1408		4	NUT M8; 10
30		495-81261		X	WASHER 13/16 x 1-1/2 x 1/16
31		D148108		1	SWITCH Push Button, Brake Lamp, Attaches To Front Console Wiring Harness
32		A187990		2	TERMINAL CONNECTOR Male
33		339047A3		1	PEDAL ASSY. Right-Hand; Replaces 339047A2
34		339046A3		1	PEDAL ASSY. Left-Hand; Replaces 339046A2
35		338886A4		1	BRACKET Brake Pedal and Brake Master Cylinder Mounting
36		614-8020		4	CAPSCREW M8 x 20

BRAKE - PEDALS

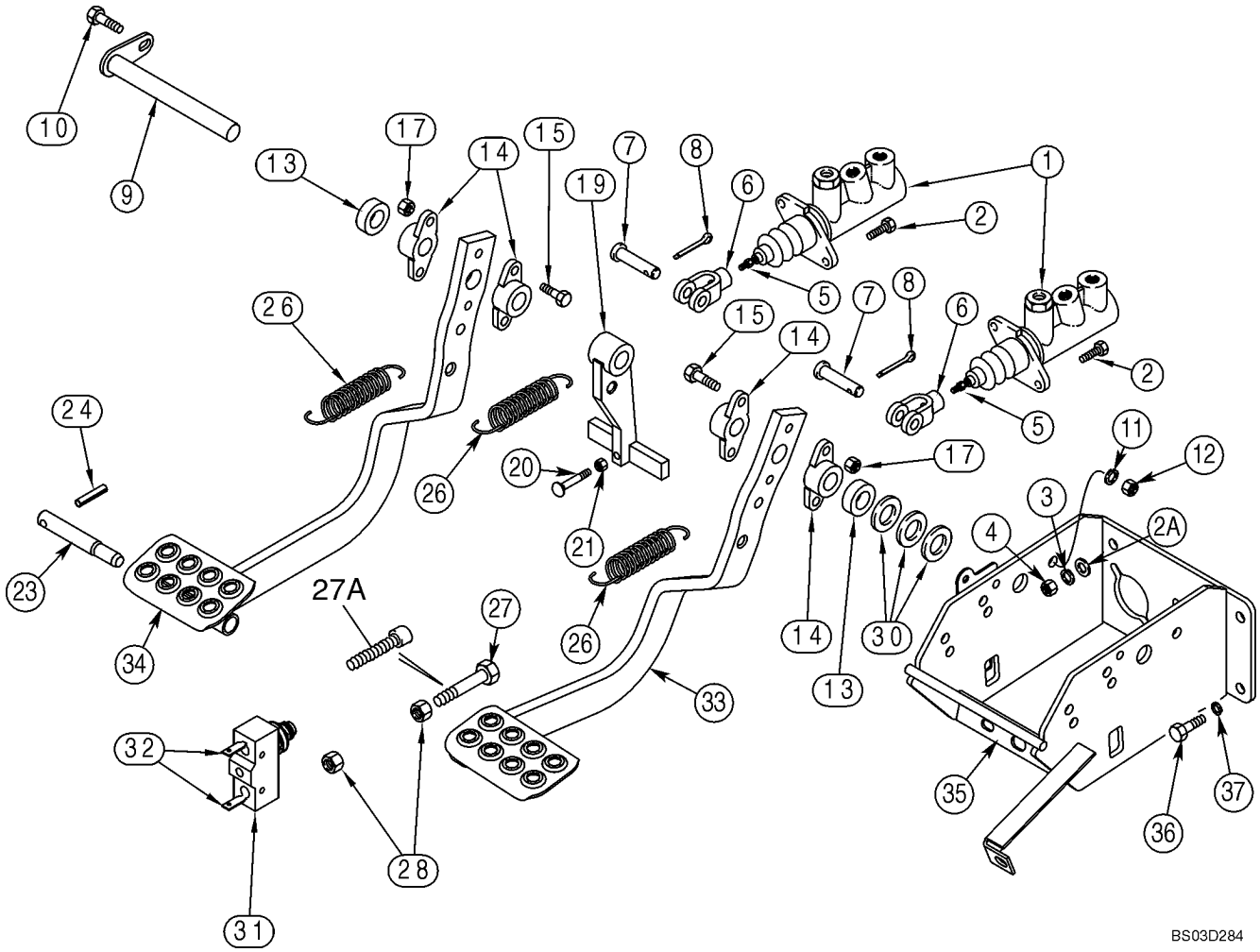

BRAKE - PEDALS

REF	FN	PART NUMBER	YR/SN	QTY	DESCRIPTION
37		892-11008		4	WASHER M8

HYDRAULICS - BRAKE MASTER CYLINDER

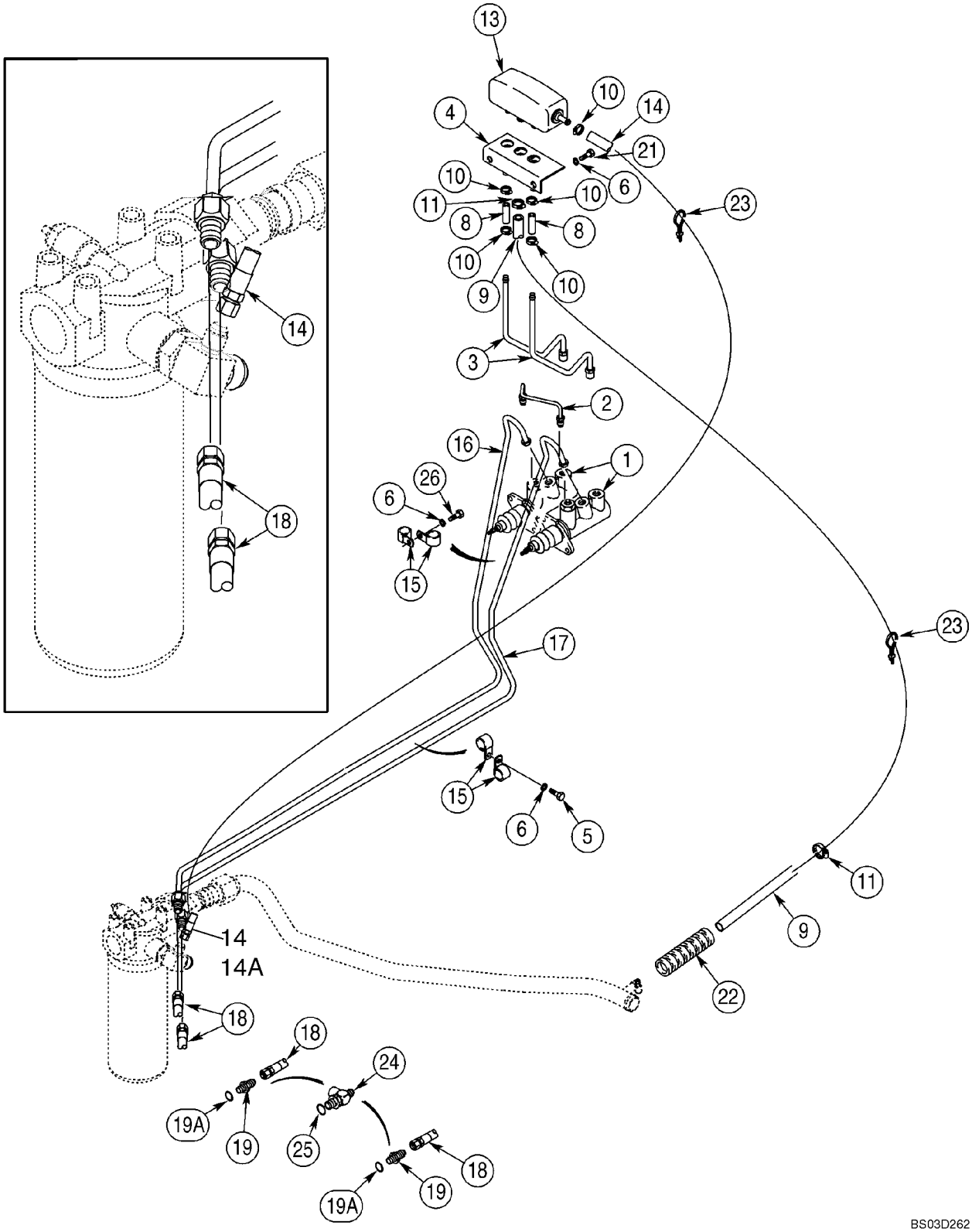

HYDRAULICS - BRAKE MASTER CYLINDER

REF	FN	PART NUMBER	YR/SN	QTY	DESCRIPTION
1		182445A1		2	CYLINDER,MASTER See Figure 07-05
2		345061A2		1	TUBE ASSY.
3		345325A2		2	TUBE ASSY.
4		345382A1		1	SUPPORT If Used
5		614-8020		1	CAPSCREW M8 x 20
6		892-11008		2-4	WASHER M8
8		121729A1		2	HOSE 52 mm (2-3/64 in)
9		397076A1		1	HOSE 1500 mm (59-1/16 in), Reservoir Outlet, Attaches To Return To Tank Tube, See Figure 08-03
10		214-1704		5	CLAMP 1/4 - 5/8
11		214-1706		2	CLAMP 7/16 - 3/4
13		1976943C1		1	RESERVOIR
14		131676A1		1	HOSE 1590 mm (62-5/8 in), Reservoir Inlet, Attaches To Tee At Hydraulic Oil Filter, See Figure 08-03; No Longer Used, Order 86991496, Ref 14A
14A		86991496		1	HOSE ASSY. 1666 mm (65-19/32 in), Reservoir Inlet; Replaces 131676A1, Ref 14, Used On Some Models; See Figure 08-03
15		515-2379		4	CLAMP 7,9 mm
16		397177A2		1	TUBE ASSY. Left-Hand; Replaces 397177A1
17		396620A2		1	TUBE ASSY. Right-Hand; Replaces 396620A1
18		409318A1		2	HOSE ASSY. 565 mm (22-1/4 in), Brake Tube To Adapter On Rear Axle; Replaces 142007A1 625 mm Long Hose Used On Some Models
19		218-5053		2	CONNECTOR 7/16 fl x Or, Incl. Ref 19A; Models Without Powershift Transmission
19A		237-6004		1	O-RING 23/64 ID x 5/64
21		614-8020		2	CAPSCREW M8 x 20; If Used; Replaces 614-8016 M8 x 16 Bolt Used On Some Models
22		D132982		1	LOOM 400 mm (15-3/4 in)
23		L18337		1-3	STRAP 15 in
24		222889A1		2	FITTING Tee, Incl. Ref 25; Models With Powershift Transmission
25		237-6004		1	O-RING 23/64 ID x 5/64
26		614-8030		1	CAPSCREW M8 x 30

07 -05		p1	05/03

CYLINDER ASSY - BRAKE MASTER

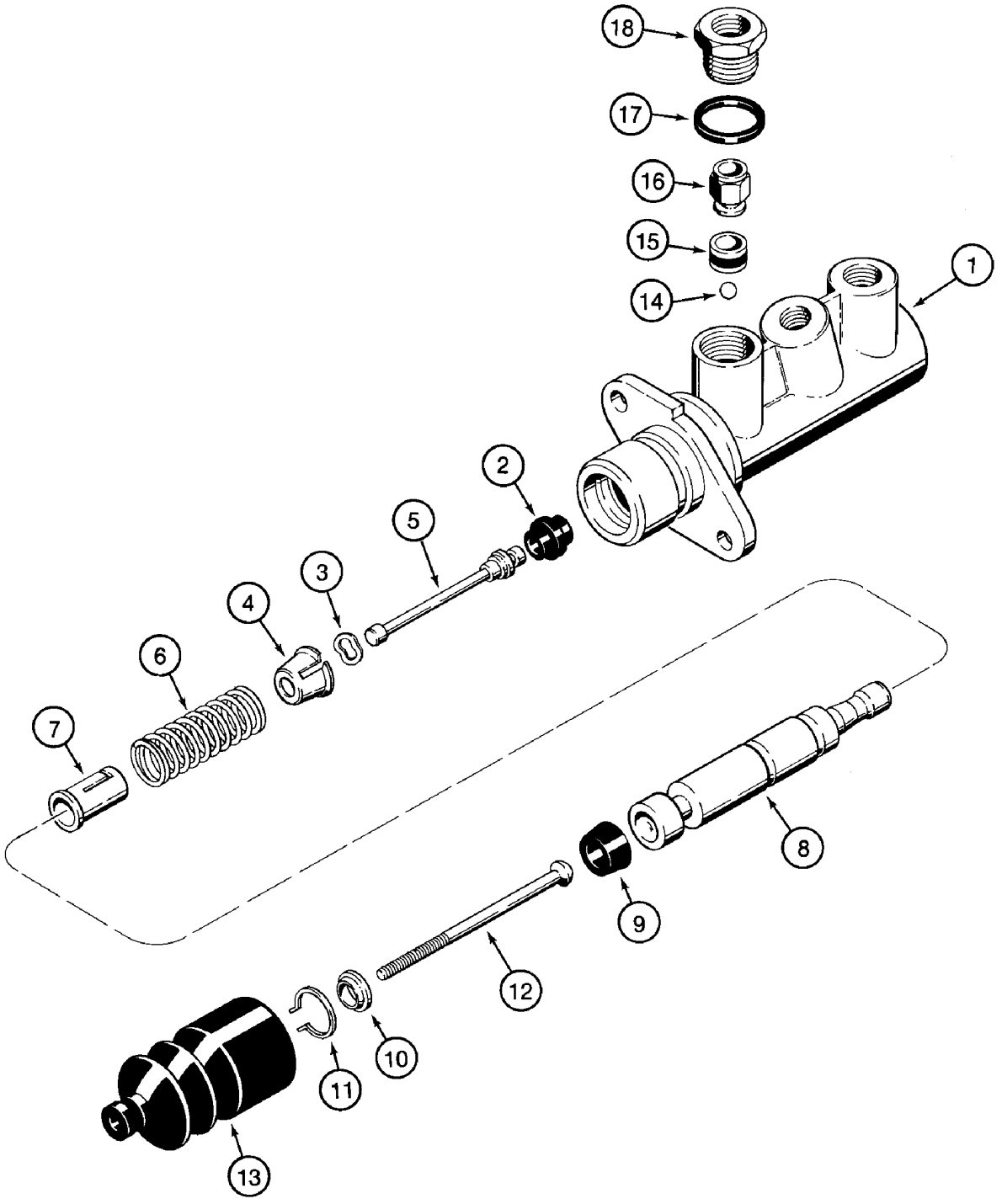

CYLINDER ASSY - BRAKE MASTER

REF	FN	PART NUMBER	YR/SN	QTY	DESCRIPTION
		182445A1		2	CYLINDER,MASTER Incl. Ref 1 - 18
1		NSS		1	NOT SERVICED SEPARATELY Housing
2		NSS		1	NOT SERVICED SEPARATELY Seal
3		NSS		1	NOT SERVICED SEPARATELY Washer
4		NSS		1	NOT SERVICED SEPARATELY Seat
5		NSS		1	NOT SERVICED SEPARATELY Plunger
6		NSS		1	NOT SERVICED SEPARATELY Spring
7		NSS		1	NOT SERVICED SEPARATELY Seat
8		NSS		1	NOT SERVICED SEPARATELY Piston
9		NSS		1	NOT SERVICED SEPARATELY Seal
10		NSS		1	NOT SERVICED SEPARATELY Washer
11		NSS		1	NOT SERVICED SEPARATELY Ring, Retaining
12		NSS		1	NOT SERVICED SEPARATELY Rod
13		NSS		1	NOT SERVICED SEPARATELY Boot
14		NSS		1	NOT SERVICED SEPARATELY Ball
15		NSS		1	NOT SERVICED SEPARATELY Seal
16		NSS		1	NOT SERVICED SEPARATELY Valve, Check
17		NSS		1	NOT SERVICED SEPARATELY Seal
18		NSS		1	NOT SERVICED SEPARATELY Adapter
		N14784		1	KIT Seal, Incl. Ref 2, 3, 9, 11, 13 - 15, 17

CONTROLS - BRAKE, PARKING

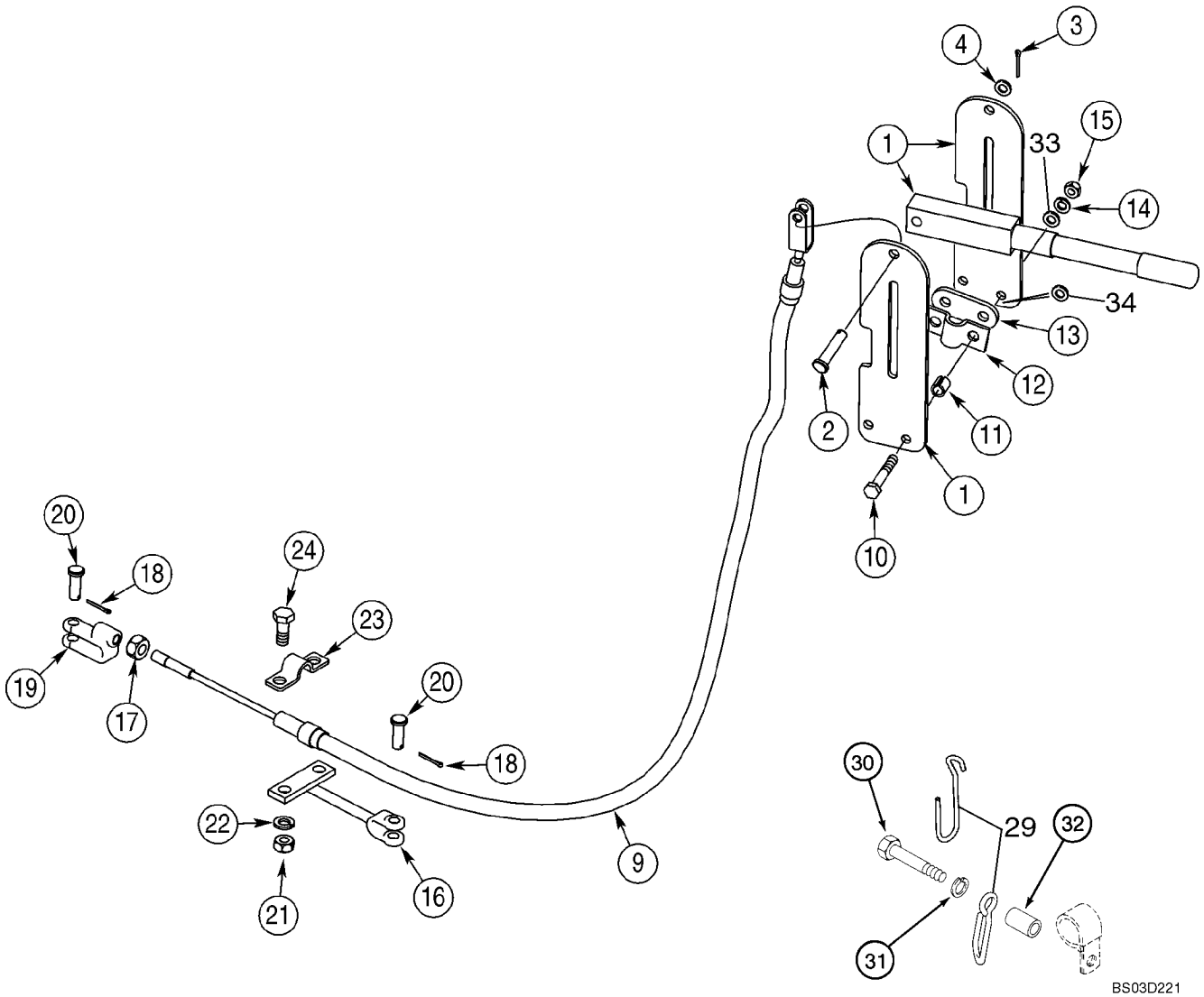

CONTROLS - BRAKE, PARKING

REF	FN	PART NUMBER	YR/SN	QTY	DESCRIPTION
		367977A1		1	LEVER Incl. Ref 1 - 4
1		NSS		1	NOT SERVICED SEPARATELY Lever
2		NSS		1	NOT SERVICED SEPARATELY Pin, Clevis
3		432-612		1	PIN, COTTER 3/32 x 3/4
4		495-21038		1	WASHER 3/8 x 7/8 x 3/32
9		280681A1		1	CABLE 1325 mm (52-3/16 in)
10		827-8050		2	SCREW M8 x 50; 10.9
11		D150633		2	SPACER
12		D121608		1	CLAMP
13		D129747		1	PLATE
14		892-11008		2	WASHER M8
15		829-1408		2	NUT M8; 10
16		280886A1		1	SUPPORT Yoke
17		425-156		1	NUT 3/8 NF
18		432-612		2	PIN, COTTER 3/32 x 3/4
19		L11182		1	UNIVERSAL JOINT YOKE Offset
20		D149288		2	PIN, LARGE
21		829-1410		2	NUT M10; 10.9
22		892-11010		2	WASHER, LOCK M10
23		A188028		1	CLAMP
24		614-10025		2	BOLT M10 x 25
29		223722A1		1	SUPPORT For Clamp, See Figure 04-04
30		814-10060		1	CAPSCREW M10 x 60
31		895-11010		1	WASHER 11 x 21 x 2 mm
32		130245A1		1	SPACER
33		896-15008		2	WASHER 9 x 21 x 2,5 mm
34		895-11008		X	WASHER 9 x 16 x 1,6 mm

SECTION INDEX

08 -01	HYDRAULICS - PUMP, FILTER AND LOADER VALVE
08 -02	HYDRAULICS - PUMP AND LOADER VALVE TO BACKHOE VALVE
08 -03	HYDRAULICS - COOLER, RETURN LINES AND FILTER
08 -04	HYDRAULICS - CYLINDER, LOADER LIFT
08 -05	HYDRAULICS - CYLINDER, LOADER BUCKET
08 -06	HYDRAULICS - CYLINDER, LOADER CLAM
08 -07	HYDRAULICS - CYLINDER, LOADER CLAM
08 -08	HYDRAULICS - CYLINDER, BACKHOE STABILIZER
08 -09	HYDRAULICS - CYLINDER, BACKHOE SWING
08 -10	HYDRAULICS - CYLINDER, BACKHOE BOOM
08 -11	HYDRAULICS - CYLINDER, BACKHOE DIPPER
08 -12	HYDRAULICS - CYLINDER, BACKHOE BUCKET (MODELS WITHOUT EXTENDABLE DIPPER)
08 -13	HYDRAULICS - CYLINDER, BACKHOE BUCKET (MODELS WITH EXTENDABLE DIPPER)
08 -14	HYDRAULICS - CYLINDER, BACKHOE EXTENDABLE DIPPER
08 -15	HYDRAULICS - HAND HELD AUXILIARY (MODELS WITH OR WITHOUT EXTENDABLE DIPPER)
08 -16	HYDRAULICS - HAND HELD AUXILIARY
08 -17	HYDRAULICS - HAND HELD AUXILIARY
08 -18	HYDRAULICS - BACKHOE AUXILIARY
08 -19	HYDRAULICS - BACKHOE AUXILIARY
08 -19A	HYDRAULICS - BACKHOE BOOM LOCK AND ELECTRICAL CIRCUIT
08 -20	HYDRAULICS - RIDE CONTROL (297977A4 SOLENOID VALVE)
08 -20A	HYDRAULICS - RIDE CONTROL (86983598 SOLENOID VALVE)
08 -21	HYDRAULICS - COUPLER, LOADER TOOL QUICK
08 -22	HYDRAULICS - COUPLER, LOADER TOOL QUICK
08 -23	HYDRAULICS - COUPLER, BACKHOE BUCKET
08 -24	HYDRAULICS - COUPLER, BACKHOE BUCKET
08 -25	CYLINDER - COUPLER, BACKHOE BUCKET
08 -26	PUMP, EQUIPMENT HYDRAULIC
08 -27	VALVE ASSY - LOADER CONTROL, TWO SPOOL
08 -28	VALVE ASSY - LOADER CONTROL, THREE SPOOL
08 -29	VALVE - SECTION INLET
08 -30	VALVE SECTION - LOADER BUCKET
08 -31	VALVE SECTION - LOADER LIFT
08 -32	VALVE - SECTION OUTLET
08 -33	VALVE SECTION - LOADER CLAM
08 -34	VALVE ASSY - RELIEF, CIRCUIT
08 -35	VALVE ASSY - BACKHOE CONTROL, 6 SPOOL
08 -36	VALVE ASSY - BACKHOE CONTROL, 7 SPOOL
08 -37	VALVE ASSY - BACKHOE CONTROL, 7 SPOOL
08 -38	VALVE ASSY - BACKHOE CONTROL, 8 SPOOL
08 -39	VALVE SECTION - INLET AND OUTLET
08 -40	VALVE SECTION - BACKHOE BUCKET
08 -41	VALVE SECTION - BACKHOE DIPPER
08 -42	VALVE SECTION - BACKHOE STABILIZER
08 -43	VALVE SECTION - BACKHOE BOOM
08 -44	VALVE SECTION - BACKHOE SWING
08 -45	VALVE ASSY - SWING CUSHION
08 -46	VALVE SECTION - EXTENDABLE DIPPER

SECTION INDEX

08 -47	VALVE SECTION - OPTIONS, AUXILIARY HYDRAULICS
08 -48	VALVE, AUXILIARY - HAND HELD HYDRAULICS
08 -49	VALVE SECTION - HAND HELD AUXILIARY
08 -50	VALVE ASSY - AUXILIARY BACKHOE
08 -50A	SOLENOID VALVE - BOOM LOCK
08 -51	ACCUMULATOR ASSY - RIDE CONTROL
08 -52	FILTER ASSY, OIL
08 -53	CYLINDER ASSY - LOADER LIFT
08 -54	CYLINDER ASSY - LOADER BUCKET
08 -55	CYLINDER ASSY - LOADER CLAM
08 -56	CYLINDER ASSY - BACKHOE STABILIZER
08 -57	CYLINDER ASSY - BACKHOE SWING
08 -58	CYLINDER ASSY - BACKHOE BOOM
08 -59	CYLINDER ASSY - BACKHOE DIPPER
08 -60	CYLINDER ASSY - BACKHOE BUCKET
08 -61	CYLINDER ASSY - BACKHOE EXTENDABLE DIPPER

08 -01		p1	05/03

HYDRAULICS - PUMP, FILTER AND LOADER VALVE

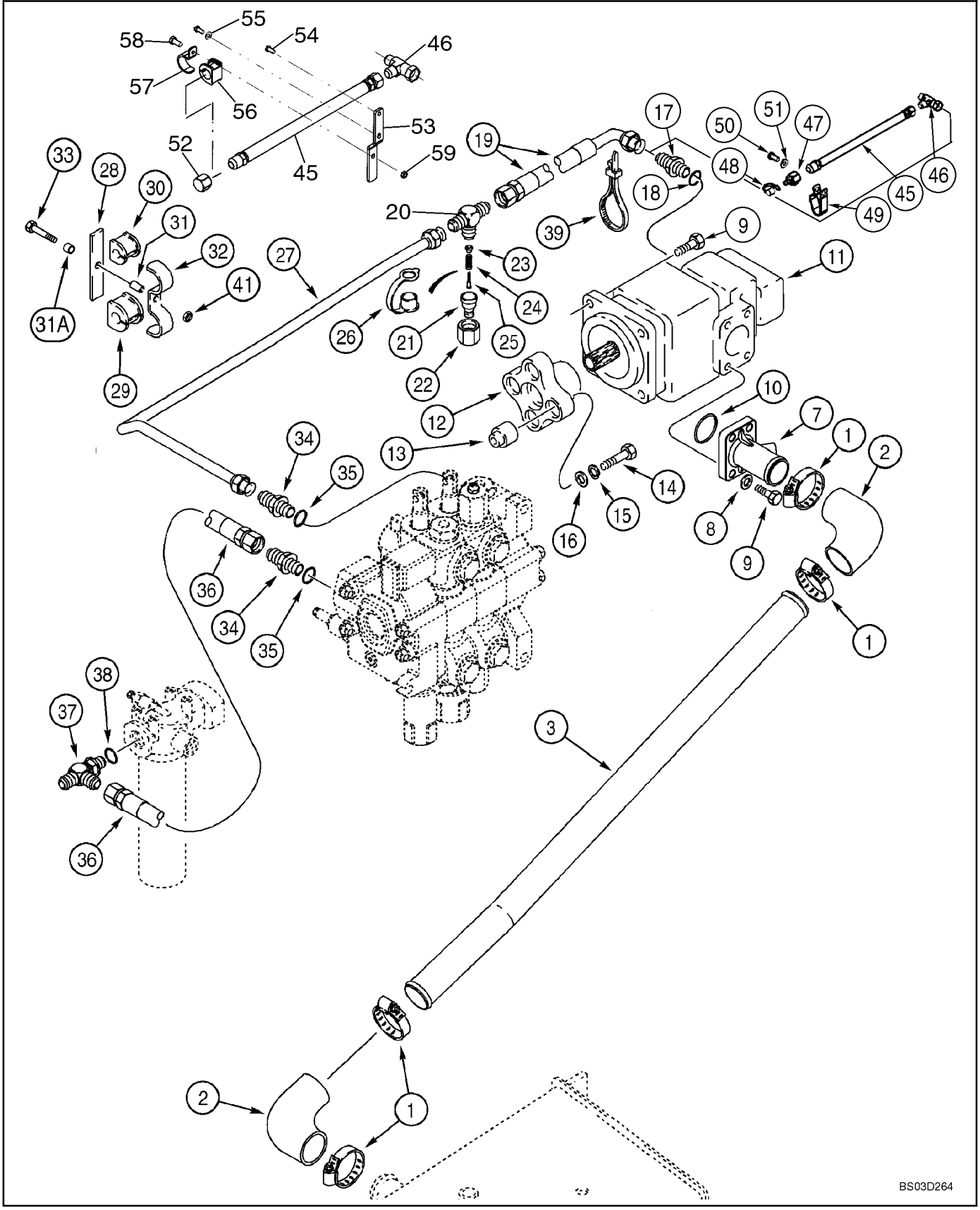

HYDRAULICS - PUMP, FILTER AND LOADER VALVE

REF	FN	PART NUMBER	YR/SN	QTY	DESCRIPTION
		REF			INSTRUCTION Reservoir To Loader Control Valve and Loader Valve To Filter
1		259044A1		4	CLAMP
2		282497A1		2	HOSE Suction; At Hydraulic Tank and Pump
3		346198A1		1	PIPE Suction
7		308441A1		1	CLAMP
8		895-15012		4	WASHER 13,5 x 28 x 2,5 mm
9		614-12035		8	CAPSCREW M12 x 35
10		238-5228		1	O-RING 2-1/4 ID x 1/8
11		257955A1		1	PUMP, HYDRAULIC Hydraulic Equipment; See Figure 08-26
		257948A1		1	COUPLING Incl. Ref 12, 13
12		NSS		1	NOT SERVICED SEPARATELY Coupling
13		N14330		4	BUSHING
14		413-728		4	CAPSCREW 7/16 x 1-3/4
15		492-11044		4	WASHER, LOCK 7/16
16		A30013		4	WASHER
17		218-5077		1	CONNECTOR 1-1/16 fl x 1-5/16 Or; Incl. Ref 18
18		237-6016		1	O-RING 1-11/64 ID x 7/64, Boss Seal
19		144215A1		1	HOSE 576 mm (22-3/4 in); Large Pump Section Port
20		218-587		1	TEE Pump Outlet Hose To Loader Valve Inlet Tube
		D137625		1	COUPLING, BREAK AWAY Quick Disconnect Coupling; Incl. Ref 21 - 25
21		NSS		1	NOT SERVICED SEPARATELY Housing
22		425-1120		1	NUT 1-1/4 NF
23		NSS		1	NOT SERVICED SEPARATELY Seat
24		NSS		1	NOT SERVICED SEPARATELY Spring
25		NSS		1	NOT SERVICED SEPARATELY Poppet, Valve
26		H434163		1	CAP
27		370137A1		1	PIPE To Loader Valve Inlet; Used Without Loader Hydraulic Tool Quick Coupler; For Tube Clamps Near Loader Valve, See Figure 08-05, Ref 19 - 23
28		115507A1		1	SUPPORT
29		D67297		1	BLOCK

HYDRAULICS - PUMP, FILTER AND LOADER VALVE

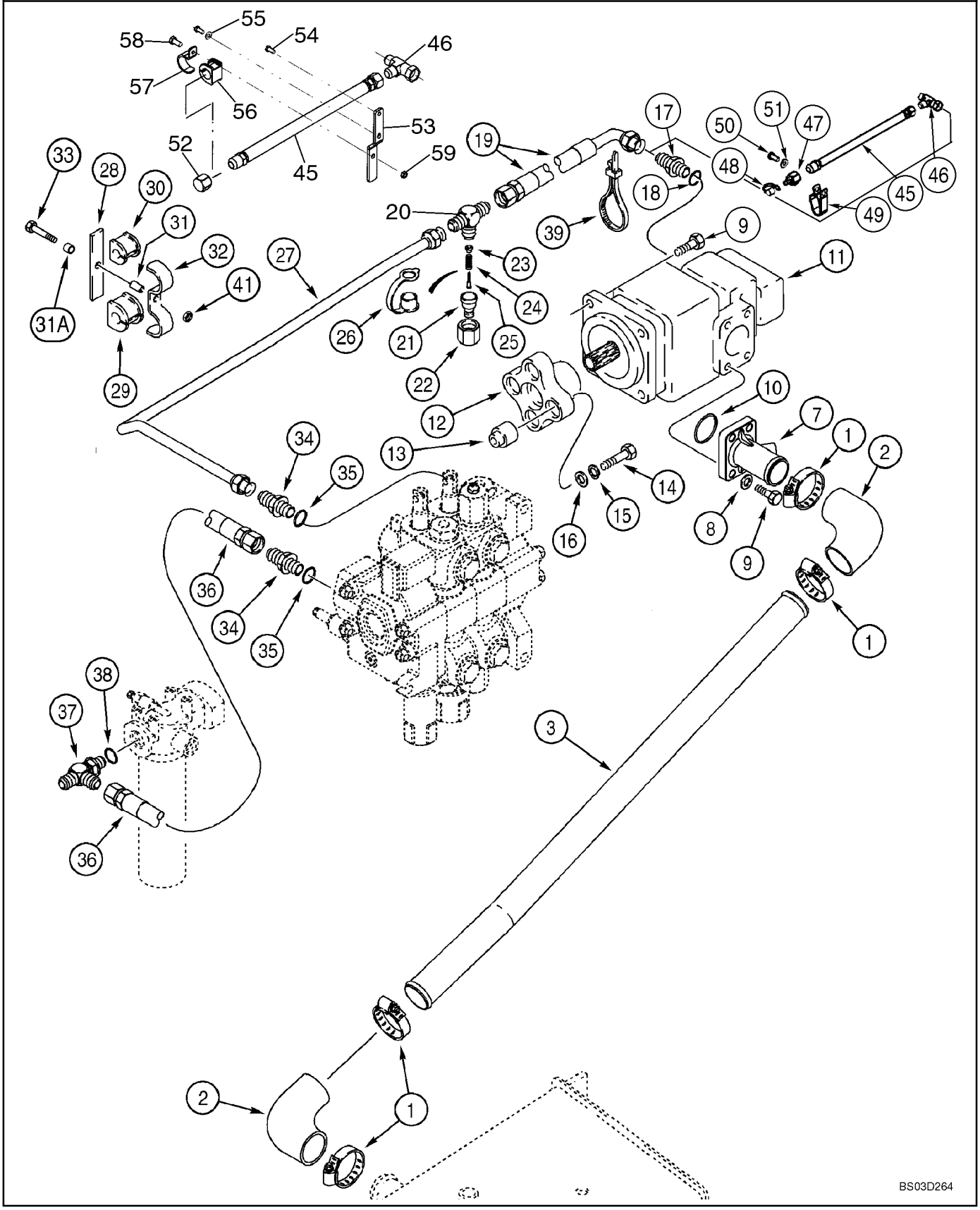

HYDRAULICS - PUMP, FILTER AND LOADER VALVE

REF	FN	PART NUMBER	YR/SN	QTY	DESCRIPTION
30		D143797		1	SHOCK ABSORBER 5/8; Small Pump Section Tube To Backhoe Valve; For Tube and Insulator, See Figure 08-02, Ref 4, 5
31		R46493		1	SPACER
31A		120303A1		1	SPACER
32		D143422		1	SHIN
33		711-10070		1	BOLT M10 x 70
34		218-5069		2	CONNECTOR 1-5/16 fl x Or; At Loader Valve Inlet and Outlet Ports; Incl. Ref 35
35		237-6016		1	O-RING 1-11/64 ID x 7/64, Boss Seal
36		144227A2		1	HOSE 472 mm (18-19/32 in); Loader Valve To Filter; Models Without Ride Control; For Parts Used On Models With Ride Control, See Figure 08-20
37		218-5245		1	FITTING Loader Valve To Filter and Filter To Backhoe Control Valve; Incl. Ref 38
38		237-6016		1	O-RING 1-11/64 ID x 7/64, Boss Seal
39		L18337		1	STRAP 15 in
41		829-1410		1	NUT M10; 10.9
		REF			INSTRUCTION Cab Models Only
45		397309A3		1	HOSE ASSY. 700 mm; To Hose At Large Pump Section Port
46		218-5221		1	CONNECTOR 1-1/16 fl x fl x adj
47		D137625		1	COUPLING, BREAK AWAY Quick Disconnect Coupling; Component Parts Not Serviced Separately; Incl. 425-1120; If Used
		425-1120		1	NUT 1-1/4 NF
48		H434163		1	CAP If Used
49		515-25317		1	CLAMP 1-1/4 ID; If Used
50		614-12025		1	CAPSCREW M12 x 25; If Used
51		496-21053		1	WASHER 17/32 x 1-1/16 x 1/8; If Used
52		218-335		1	CAP 1-1/16; If Used
53		408757A1		1	BRACKET If Used
54		614-8020		2	CAPSCREW M8 x 20; If Used
55		892-11008		1	WASHER M8; Lock; If Used
56		D67298		1	INSULATOR If Used
57		D68845		1	MOUNTING CLIP If Used

HYDRAULICS - PUMP, FILTER AND LOADER VALVE

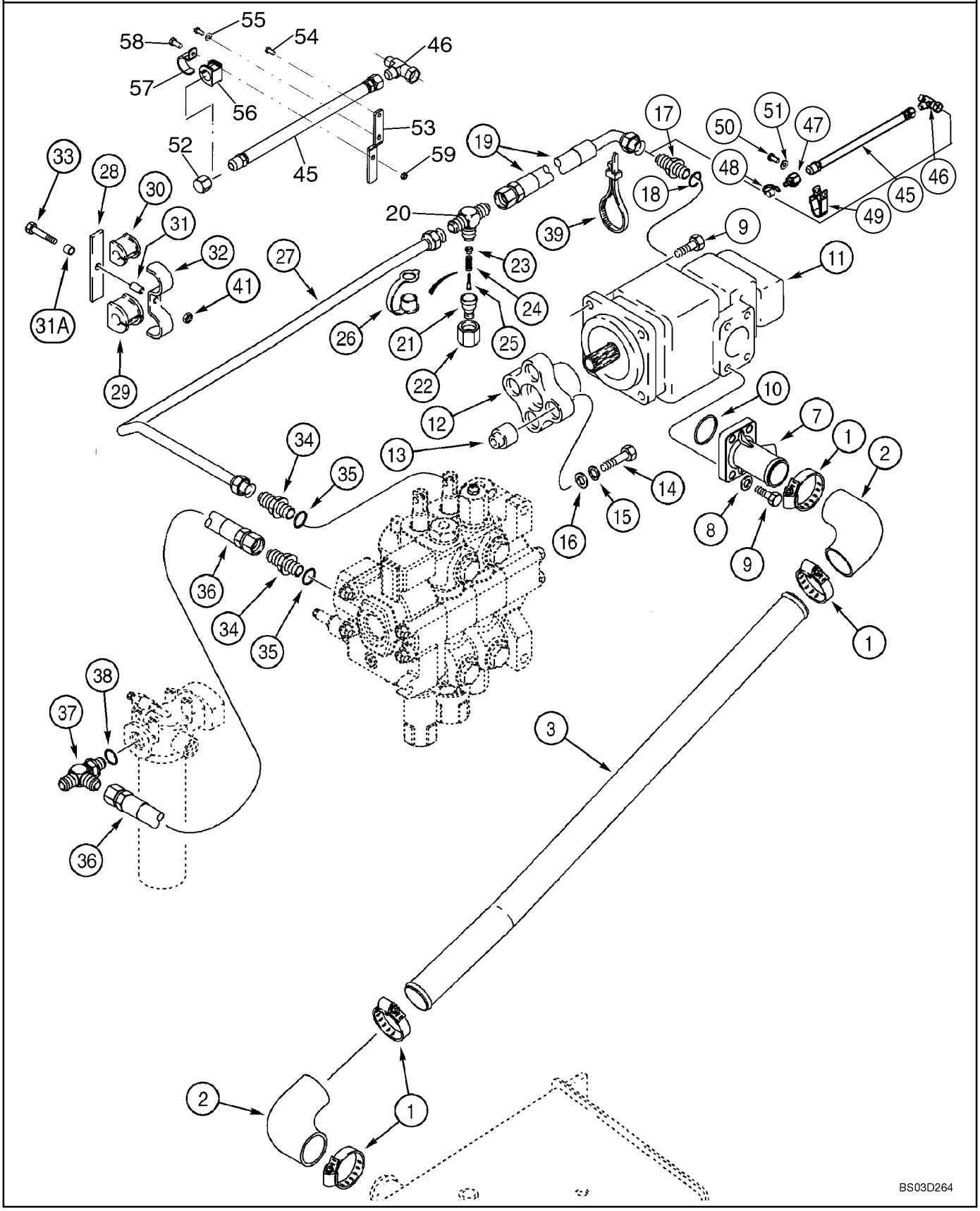

HYDRAULICS - PUMP, FILTER AND LOADER VALVE

REF	FN	PART NUMBER	YR/SN	QTY	DESCRIPTION
58		614-10025		1	BOLT M10 x 25; If Used
59		832-10410		1	NUT M10; Lock; If used

08 -02		p1	05/03

HYDRAULICS - PUMP AND LOADER VALVE TO BACKHOE VALVE

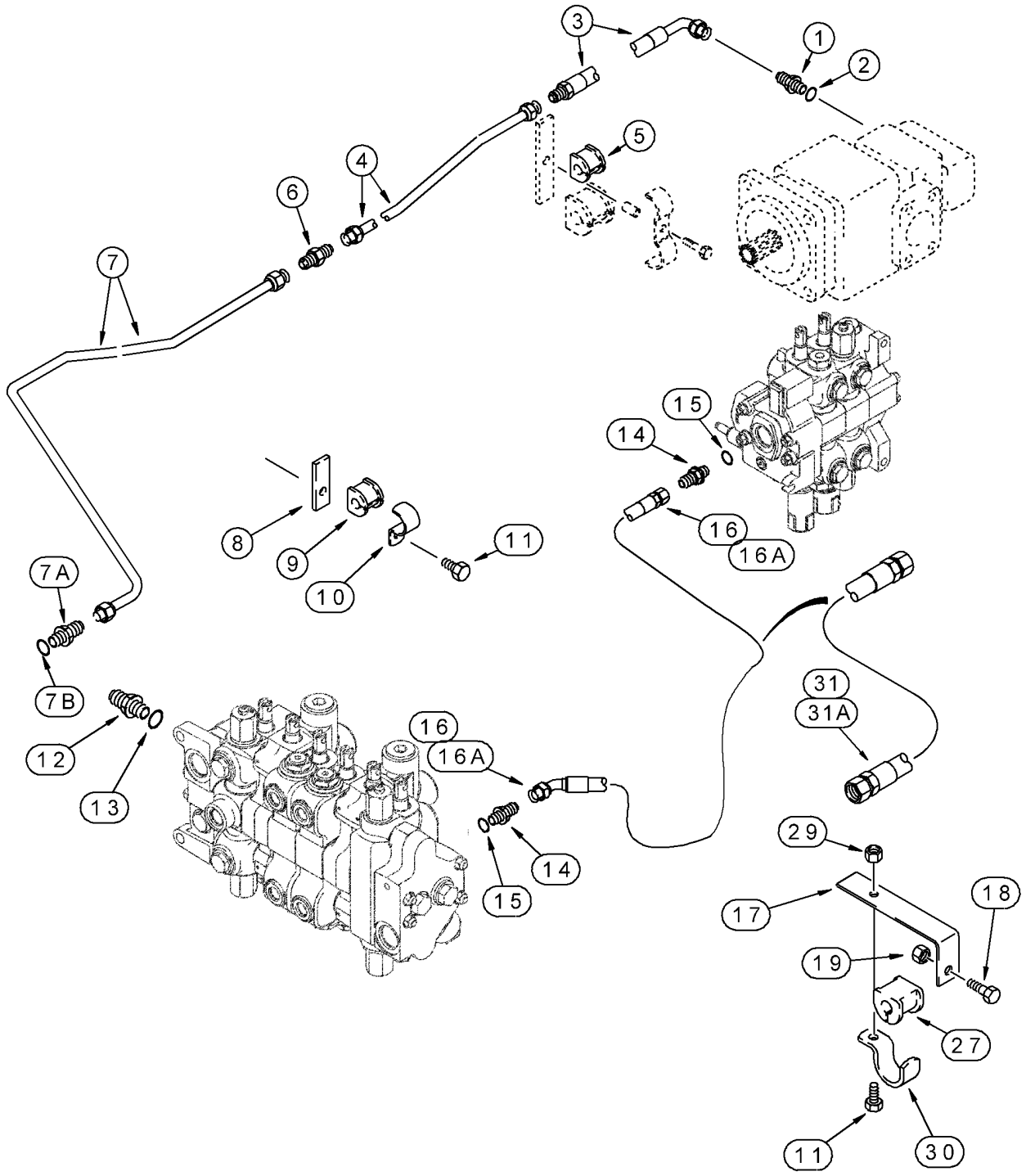

HYDRAULICS - PUMP AND LOADER VALVE TO BACKHOE VALVE

REF	FN	PART NUMBER	YR/SN	QTY	DESCRIPTION
		REF			INSTRUCTION Equipment Pump and Loader Control Valve To Backhoe Control Valve
1		218-5063		1	CONNECTOR 7/8 fl x 1-1/16 Or; Small Pump Section Outlet Port; Incl. Ref. 2
2		237-6012		1	O-RING 59/64 ID x 7/64, Boss Seal
3		144216A1		1	HOSE 800 mm (31-1/2 in); Small Pump Section Outlet Port
4		122127A1		1	PIPE Small Pump Section Hose To Backhoe
5		D143797		1	SHOCK ABSORBER 5/8; For Hardware, See Figure 08-01, Ref 28 - 33
6		218-736		1	FITTING, PIPE
7		243790A1		1	PIPE Swing Supply; Small Pump Tube To Swing Section Inlet
7A		218-5062		1	CONNECTOR 7/8 fl x Or; Incl. Ref 7B
7B		237-6010		1	O-RING 3/4 ID x 3/32, Boss Seal
8		115633A1		1	SUPPORT
9		D143797		1	SHOCK ABSORBER 5/8
10		D143411		1	CLAMP 3/4 ID
11		614-10025		2	BOLT M10 x 25
12		218-5062		1	CONNECTOR 7/8 fl x Or; Incl. Ref 13
13		237-6010		1	O-RING 3/4 ID x 3/32, Boss Seal
14		218-5069		2	CONNECTOR 1-5/16 fl x Or; Incl. Ref 15
15		237-6016		1	O-RING 1-11/64 ID x 7/64, Boss Seal
16		144240A1		1	HOSE 1028 mm (40-1/2 in); Loader Valve Power Beyond Port; To Backhoe Control Valve Inlet; Models With Two Spool Loader Control Valve; With Hand Held And/Or Backhoe Auxiliary Hydraulics
16A		144241A1		1	HOSE 977 mm (38-15/32 in); Loader Valve Power Beyond Port; To Backhoe Control Valve Inlet; Models With Three Spool Loader Control Valve; With Hand Held And/Or Backhoe Auxiliary Hydraulics
17		136008A1		1	SUPPORT
18		614-12035		1	CAPSCREW M12 x 35
19		829-1412		1	NUT M12; 10
27		144477A1		1	SHOCK ABSORBER Power Beyond Hose

HYDRAULICS - PUMP AND LOADER VALVE TO BACKHOE VALVE

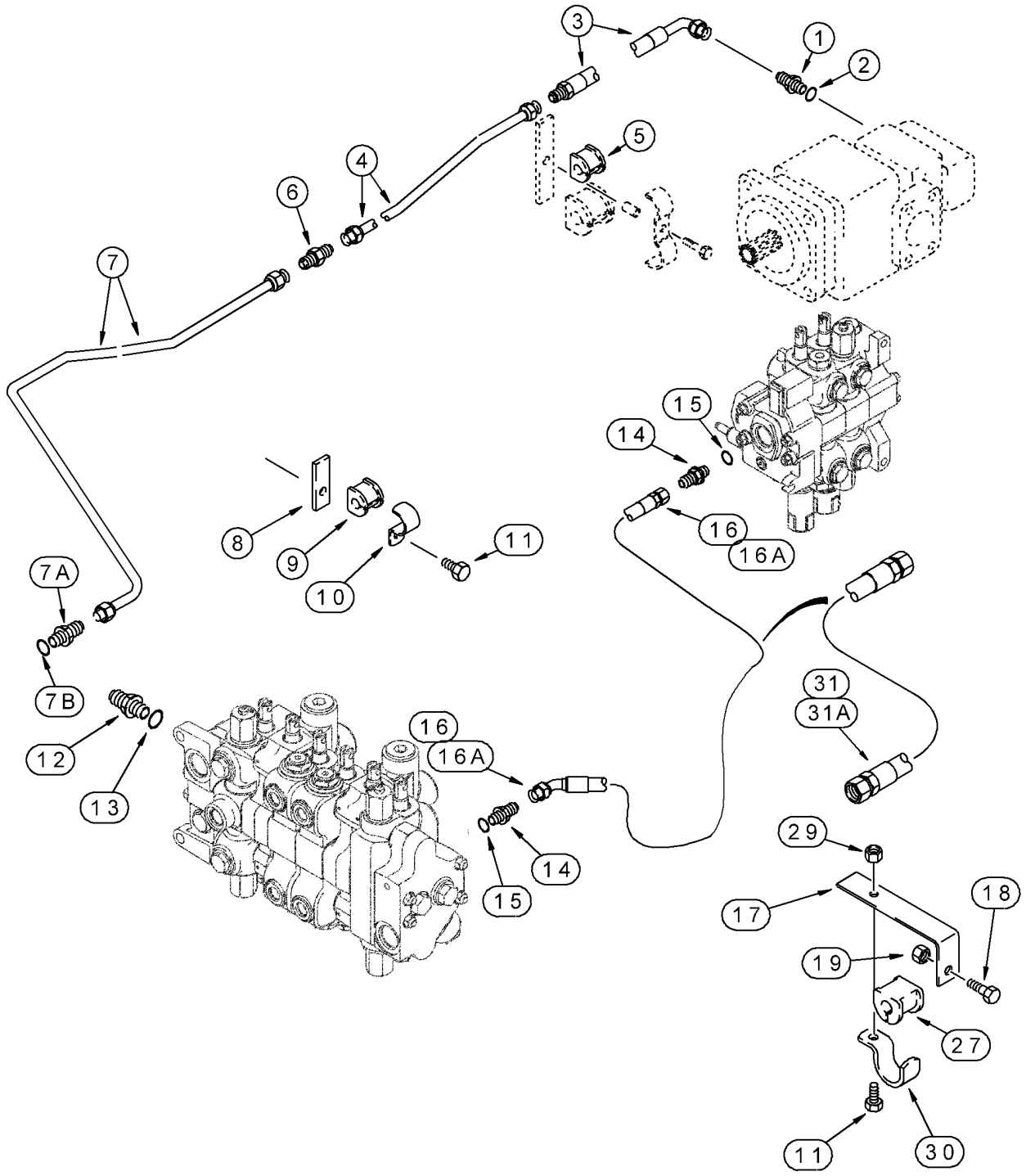

HYDRAULICS - PUMP AND LOADER VALVE TO BACKHOE VALVE

REF	FN	PART NUMBER	YR/SN	QTY	DESCRIPTION
29		829-1410		1	NUT M10; 10.9
30		144479A1		1	CLAMP
31		315284A1		1	HOSE ASSY. 1006 mm (39-5/8 in); Loader Valve Power Beyond Port; To Backhoe Control Valve Inlet; Models With Two Spool Loader Control Valve; Without Hand Held Or Backhoe Auxiliary Hydraulics
31A		325662A1		1	HOSE ASSY. 956 mm (37-21/32 in); Loader Valve Power Beyond Port; To Backhoe Control Valve Inlet; Models With Three Spool Loader Control Valve; Without Hand Held Or Backhoe Auxiliary Hydraulics

HYDRAULICS - COOLER, RETURN LINES AND FILTER

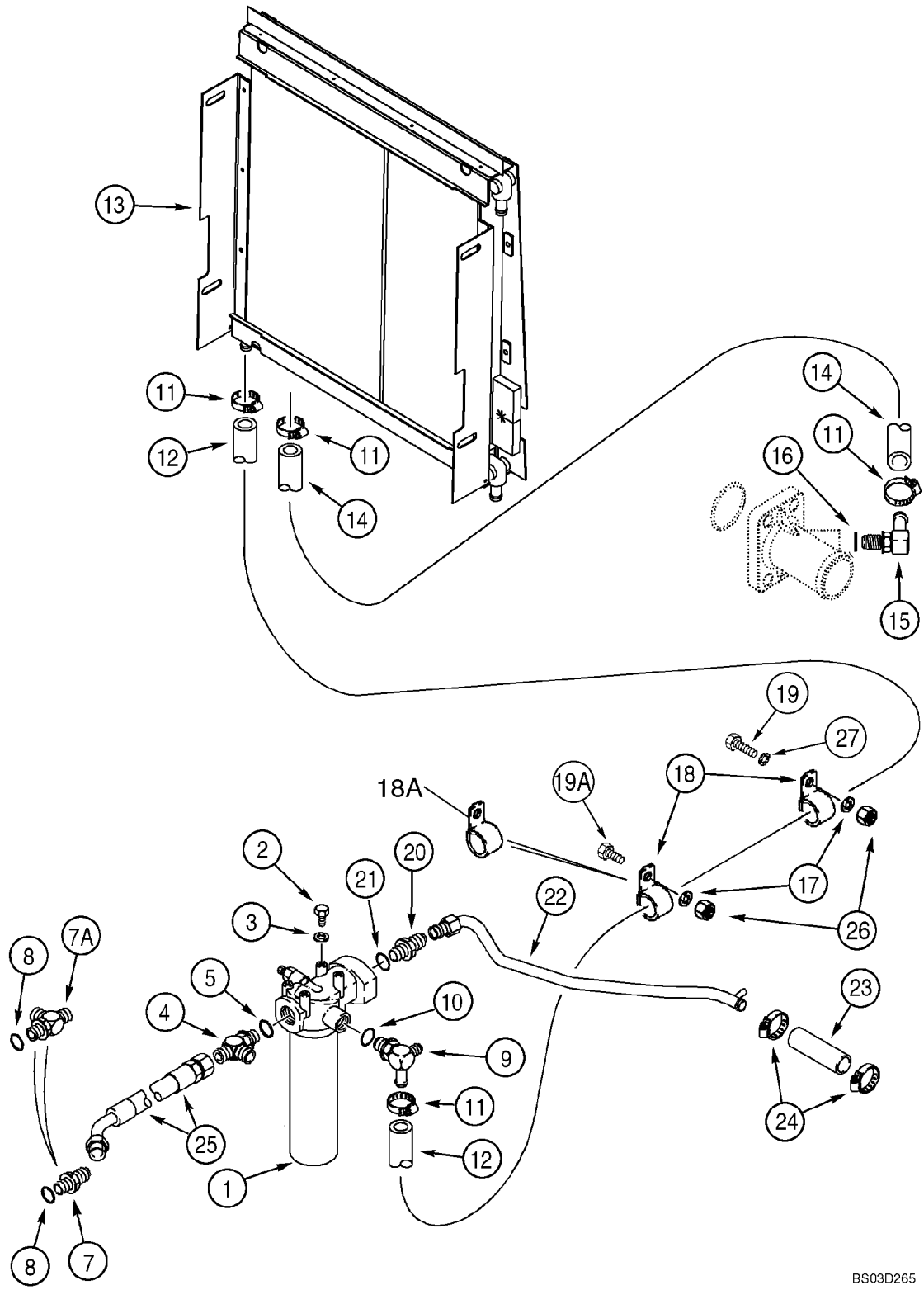

HYDRAULICS - COOLER, RETURN LINES AND FILTER

REF	FN	PART NUMBER	YR/SN	QTY	DESCRIPTION
1		181001A1		1	FILTER ASSY. Hydraulic Oil; See Figure 08-52
2		614-10020		4	CAPSCREW M10 x 20
3		895-11010		4	WASHER 11 x 21 x 2 mm
4		218-5245		1	FITTING Loader Valve To Filter and Filter To Backhoe Control Valve; Incl. Ref 5
5		237-6016		1	O-RING 1-11/64 ID x 7/64, Boss Seal
7		218-5069		1	CONNECTOR 1-5/16 fl x Or; Backhoe Control Valve Outlet Port; Models Without Extendable Dipper; Incl. Ref 8
7A		218-5245		1	FITTING Backhoe Control Valve Outlet Port; Models With Extendable Dipper; If Used; Incl. Ref 8
8		237-6016		1	O-RING 1-11/64 ID x 7/64, Boss Seal
9		301104A1		1	FITTING Incl. Ref 10
10		237-6010		1	O-RING 3/4 ID x 3/32, Boss Seal
11		328186A1		4	CLAMP, HOSE
12		301341A1		1	HOSE 2500 mm (98-7/16 in); Includes 300 mm Hose Sleeve; Used With (2) Ref 18 Clamps; If Used
12		407635A1		1	HOSE 2500 mm (98-7/16 in); Includes 1100 mm Hose Sleeve; Used With (1) Ref 18 and (1) Ref 18 Clamp
13		383355A2		1	COOLER ASSY. Heavy Duty; For Attaching Parts, See Figure 06-10, 06-11
14		301342A2		1	HOSE 530 mm (20-7/8 in)
15		217-342		1	FITTING 5/8 stem x 9/16 Or; To Pump Flange; Incl. Ref 16
16		237-6006		1	O-RING 15/32 ID x 5/64, Boss Seal
17		895-11010		2	WASHER 11 x 21 x 2 mm
18		515-25238		1-2	CLAMP 15/16 in ID
18A		515-25317		1	CLAMP 1-1/4 ID; Used With 407635A1 Hose; If Used
19		711-10050		1	BOLT M10 x 50
19A		711-10030		1	SCREW M10 x 30
20		218-5086		1	CONNECTOR 5/16-12 fl x 1-5/8; Incl. Ref 21
21		237-6020		1	O-RING 1-15/32 ID x 1/8, Boss Seal
22		295172A1		1	PIPE Return To Tank

HYDRAULICS - COOLER, RETURN LINES AND FILTER

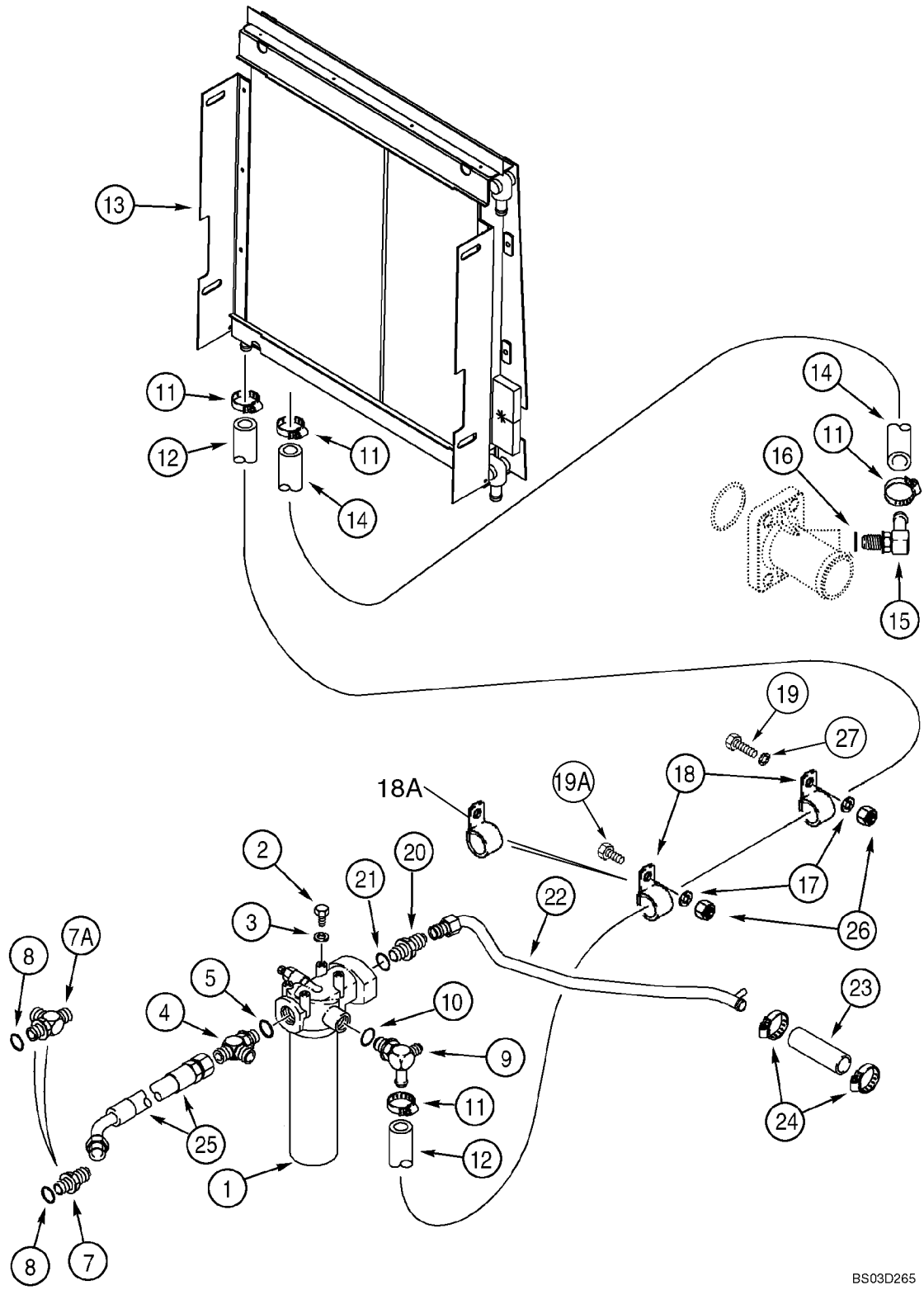

HYDRAULICS - COOLER, RETURN LINES AND FILTER

REF	FN	PART NUMBER	YR/SN	QTY	DESCRIPTION
23		D38435		1	HOSE, LARGE 89 mm (3-5/8 in); Cut From S118383X; Return To Tank; For Attaching Brake Line Clamp, See Figure 07-04
24		214-1420		2	CLAMP No. 20
25		313648A1		1	HOSE 910 mm (35-27/32 in); Return; Backhoe Control Valve To Filter
26		829-1410		2	NUT M10; 10.9
27		120303A1		1	SPACER

08 -04		p1	05/03

HYDRAULICS - CYLINDER, LOADER LIFT

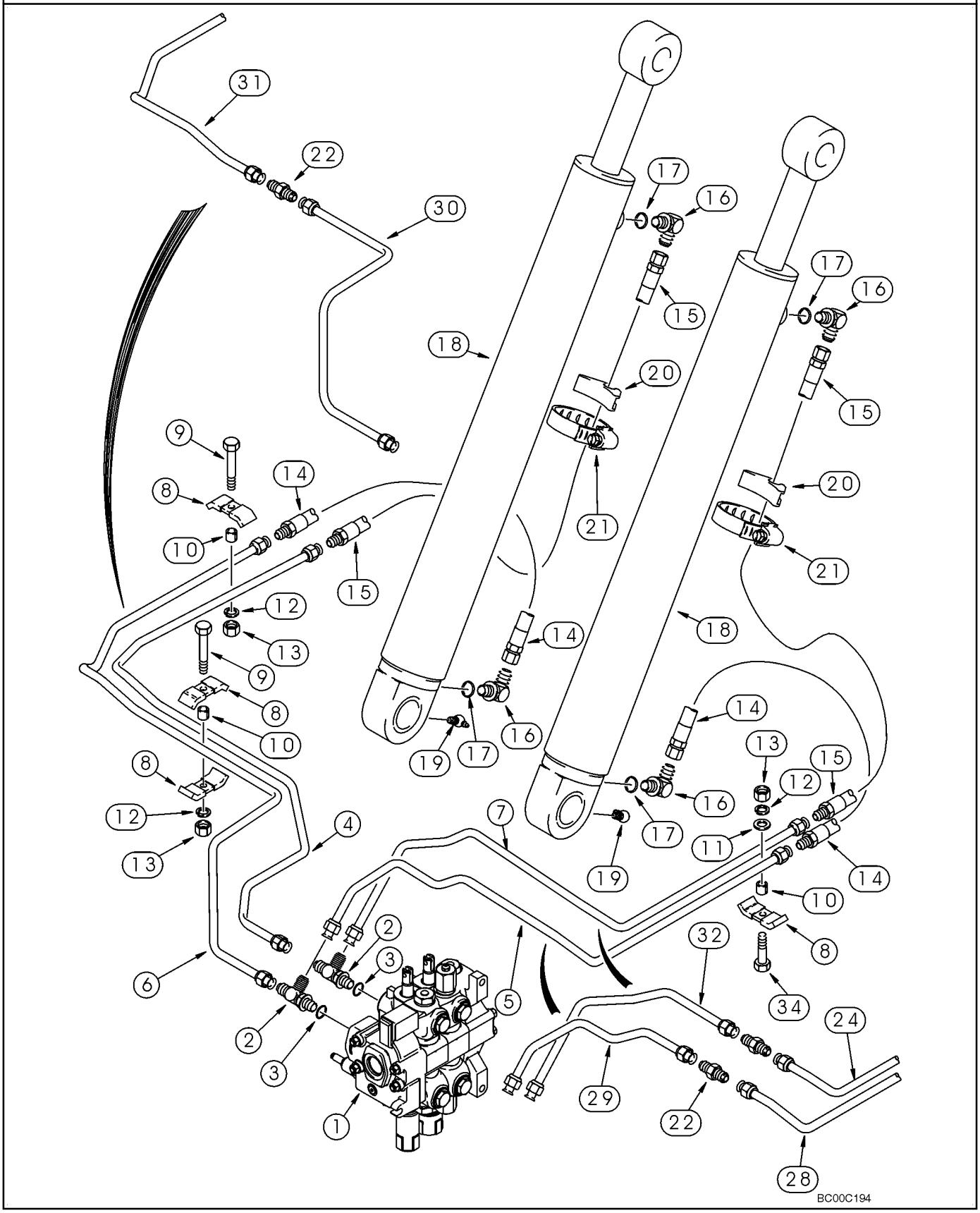

HYDRAULICS - CYLINDER, LOADER LIFT

REF	FN	PART NUMBER	YR/SN	QTY	DESCRIPTION
1		REF		1	INSTRUCTION Valve Assy, Control; Loader Control Valve; For Correct Assembly and Components, See Figure(s) 08-27 - 08-28
2		218-5241		2	FITTING 7/8 fl br x fl x Or; Incl. Ref 3
3		237-6010		1	O-RING 3/4 ID x 3/32, Boss Seal
4		225330A1		1	TUBE ASSY. Upper Lift Port; Models Without Ride Control; For Parts Used On Models With Ride Control, See Figure 08-20
5		231984A1		1	PIPE Lower Lift Port; For Service, Order 22, 28, 29
6		225332A1		1	PIPE Lower Lift Port; For Service, Order 22, 30, 31; Models Without Ride Control; For Parts Used On Models With Ride Control, See Figure 08-20
7		231982A1		1	PIPE Upper Lift Port; For Service, Order 22, 24, 32
8		D138055		4	CLAMP
9		814-10040		2	CAPSCREW M10 x 40
10		120303A1		3	SPACER
11		895-11010		1	WASHER 11 x 21 x 2 mm
12		892-11010		3	WASHER, LOCK M10
13		829-1410		3	NUT M10; 10.9
14		378172A1		2	HOSE ASSY. 720 mm (28-11/32 in)
15		378173A1		2	HOSE ASSY. 1090 mm (43 in)
16		218-5107		4	ELBOW 7/8 fl x adj Or; Incl. Ref 17
17		237-6010		1	O-RING 3/4 ID x 3/32, Boss Seal
18		133936A1		2	CYLINDER ASSY. 89 ID x 766 mm strk; Loader Lift Cylinder; See Figure 08-53
19		219-55		2	NIPPLE, LUBE 90 deg, 1/8 PT x 27/32
20		D142787		2	SPACER
21		214-1472		2	CLAMP 4-1/16 - 5
22		218-435		1-3	FITTING
24		221162A1		1	PIPE
28		221158A1		1	PIPE
29		232929A1		1	PIPE Lower Lift Port
30		232939A1		1	PIPE Lower Lift Port; Models Without Ride Control; For Parts Used On Models With Ride Control, See Figure 08-20

HYDRAULICS - CYLINDER, LOADER LIFT

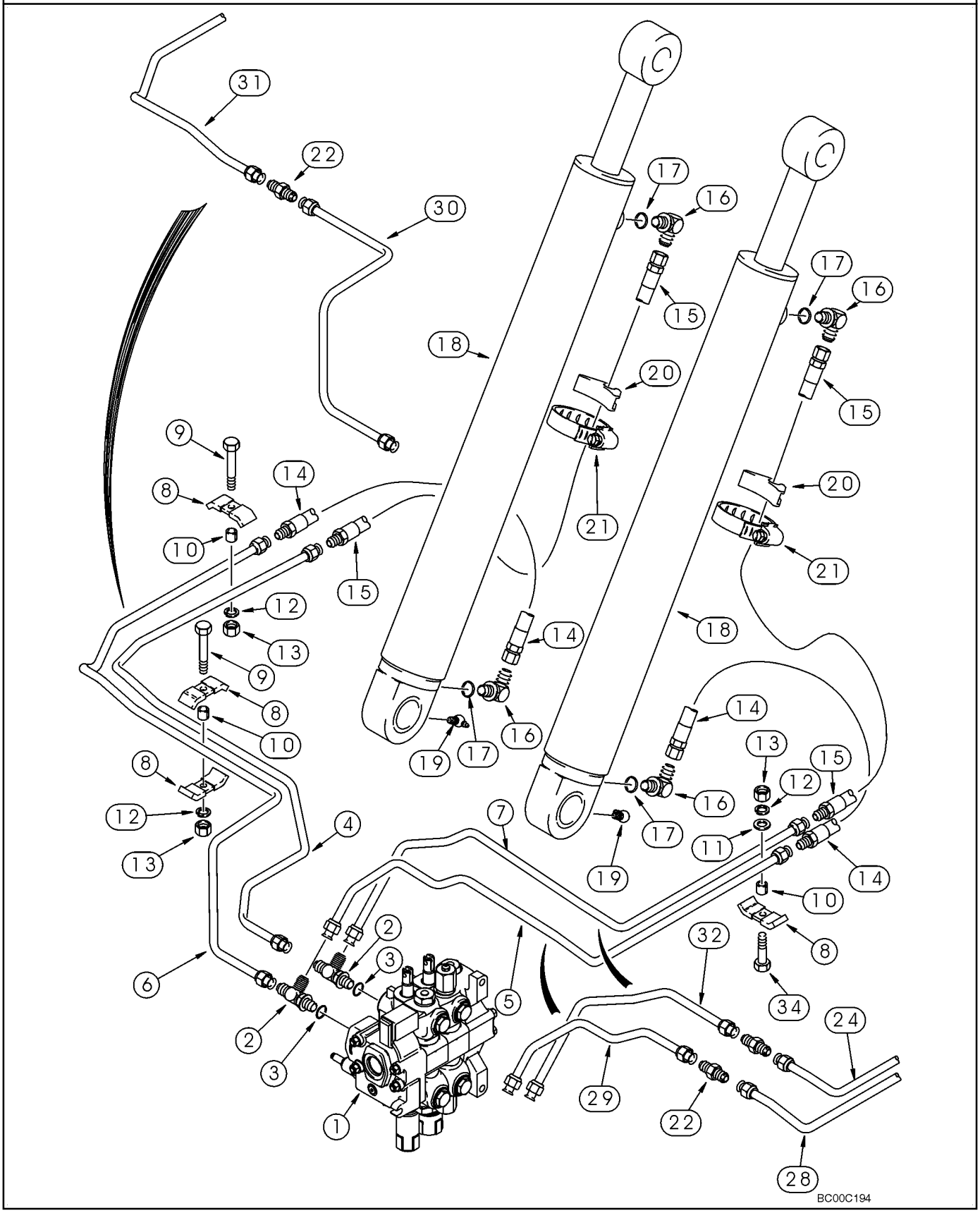

HYDRAULICS - CYLINDER, LOADER LIFT

REF	FN	PART NUMBER	YR/SN	QTY	DESCRIPTION
31		232941A1		1	PIPE Models Without Ride Control; For Parts Used On Models With Ride Control, See Figure 08-20
32		232931A1		1	PIPE Upper Lift Port
34		814-10045		1	CAPSCREW M10 x 45

HYDRAULICS - CYLINDER, LOADER BUCKET

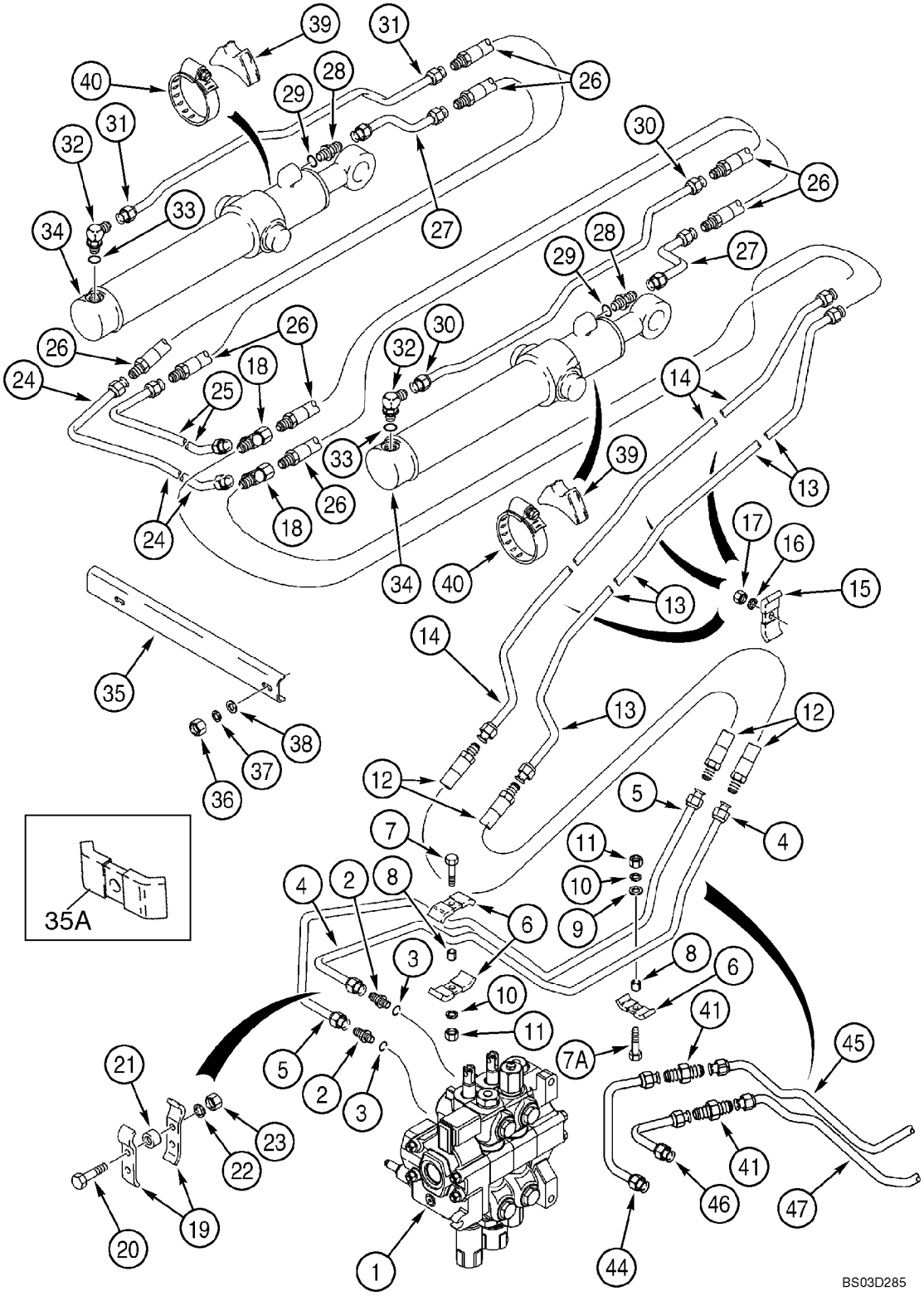

HYDRAULICS - CYLINDER, LOADER BUCKET

REF	FN	PART NUMBER	YR/SN	QTY	DESCRIPTION
1		REF		1	INSTRUCTION Valve Assy, Control; Loader Control Valve; For Correct Assembly and Components, See Figure(s) 08-27 - 08-28; For Mounting, See Figure 09-01
2		218-5062		2	CONNECTOR 7/8 fl x Or; Incl. Ref 3
3		237-6010		1	O-RING 3/4 ID x 3/32, Boss Seal
4		232447A1		1	PIPE Upper Bucket Port; For Service, Order 41, 46, 47
5		220169A1		1	PIPE Lower Bucket Port; For Service, Order 41, 44, 45
6		D138055		3	CLAMP
7		814-10040		1	CAPSCREW M10 x 40
7A		814-10045		1	CAPSCREW M10 x 45
8		120303A1		2	SPACER
9		895-11010		1	WASHER 11 x 21 x 2 mm
10		892-11010		2	WASHER, LOCK M10
11		829-1410		2	NUT M10; 10.9
12		138467A1		2	HOSE 680 mm (26-3/4 in)
13		196817A1		1	PIPE Lower; BSN JJG0286979
13		418789A1		1	TUBE ASSY. Lower; ASN JJG0286978
14		196819A1		1	PIPE Upper; BSN JJG0286979
14		418791A1		1	TUBE ASSY. Upper: ASN JJG0286978
15		D138055		3	CLAMP
16		892-11010		3	WASHER, LOCK M10
17		829-1410		3	NUT M10; 10.9
18		218-5220		2	TEE 7/8 fl br x fl x sw
19		221733A1		2	SHIN
20		814-10040		2	CAPSCREW M10 x 40
21		120303A1		2	SPACER
22		892-11010		2	WASHER, LOCK M10
23		829-1410		2	NUT M10; 10.9
24		196815A1		1	PIPE Rear
25		196813A1		1	PIPE Front
26		371031A1		4	HOSE ASSY. 840 mm (33 in)
27		192152A1		2	PIPE
28		218-5062		2	CONNECTOR 7/8 fl x Or; Incl. Ref 29

HYDRAULICS - CYLINDER, LOADER BUCKET

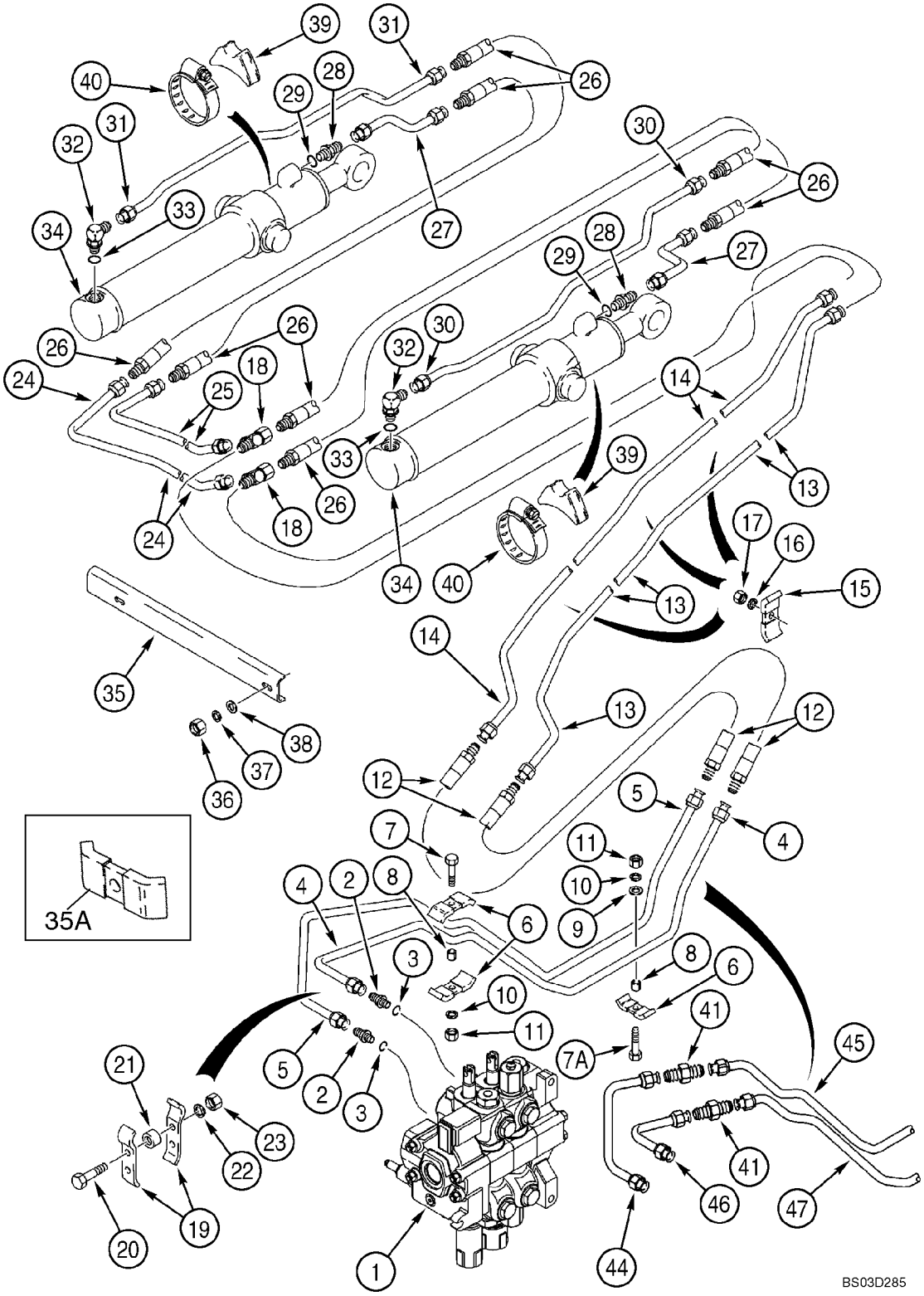

HYDRAULICS - CYLINDER, LOADER BUCKET

REF	FN	PART NUMBER	YR/SN	QTY	DESCRIPTION
29		237-6010		1	O-RING 3/4 ID x 3/32, Boss Seal
30		192156A1		1	PIPE Right-Hand Cylinder
31		192154A1		1	PIPE Left-Hand Cylinder
32		218-5107		2	ELBOW 7/8 fl x adj Or; Incl. Ref 33
33		237-6010		1	O-RING 3/4 ID x 3/32, Boss Seal
34		255756A1		2	CYLINDER ASSY. 83 ID x 538 mm strk; Loader Bucket Cylinder; See Figure 08-54
35		250648A1		1	PROTECTOR No Longer Used; Order D138055, Ref 35A
35A		D138055		2	CLAMP Replaces 250648A1
36		829-1410		2	NUT M10; 10.9
37		892-11010		2	WASHER, LOCK M10
38		895-11010		2	WASHER 11 x 21 x 2 mm
39		L79937		2	SADDLE
40		214-1472		2	CLAMP 4-1/16 - 5
41		218-435		1-2	FITTING
44		221143A1		1	PIPE Lower Bucket Port
45		221146A1		1	PIPE
46		232934A1		1	PIPE Upper Bucket Port
47		232936A1		1	PIPE

HYDRAULICS - CYLINDER, LOADER CLAM

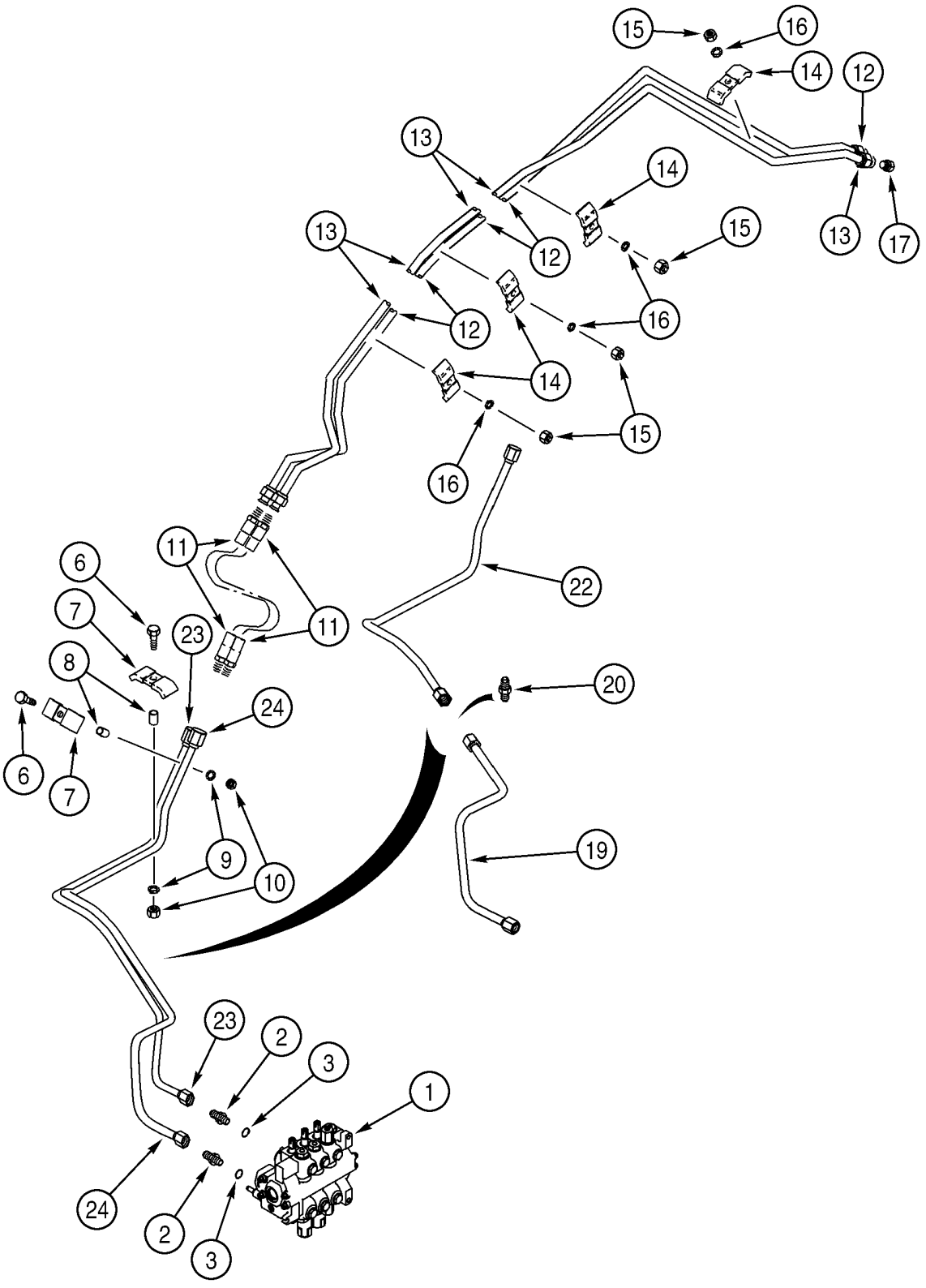

HYDRAULICS - CYLINDER, LOADER CLAM

REF	FN	PART NUMBER	YR/SN	QTY	DESCRIPTION
1		358237A1		1	VALVE Loader Control Valve; Three Spool; See Figure 08-28; For Mounting, See Figure 09-01
2		218-5062		2	CONNECTOR 7/8 fl x Or; Incl. Ref 3
3		237-6010		1	O-RING 3/4 ID x 3/32, Boss Seal
6		814-10040		2	CAPSCREW M10 x 40
7		D138055		2	CLAMP
8		120303A1		2	SPACER
9		892-11010		2	WASHER, LOCK M10
10		829-1410		2	NUT M10; 10.9
11		138467A1		2	HOSE 680 mm (26-3/4 in)
12		196824A1		1	PIPE Upper Clam Port
13		196821A1		1	PIPE Lower Clam Port
14		D138055		4	CLAMP
15		829-1410		4	NUT M10; 10.9
16		892-11010		4	WASHER, LOCK M10
17		218-776		2	PLUG 7/8 fl; Not Used On Models With Clam Bucket
19		232945A1		1	PIPE Lower Clam Port
20		218-435		1	FITTING
22		360937A1		1	TUBE ASSY. Lower Clam Port
23		360916A1		1	TUBE ASSY. Upper Clam Port
24		360918A1		1	TUBE ASSY. Lower Clam Port; For Service, Order 19, 20, 22

08 -07		p1	05/03

HYDRAULICS - CYLINDER, LOADER CLAM

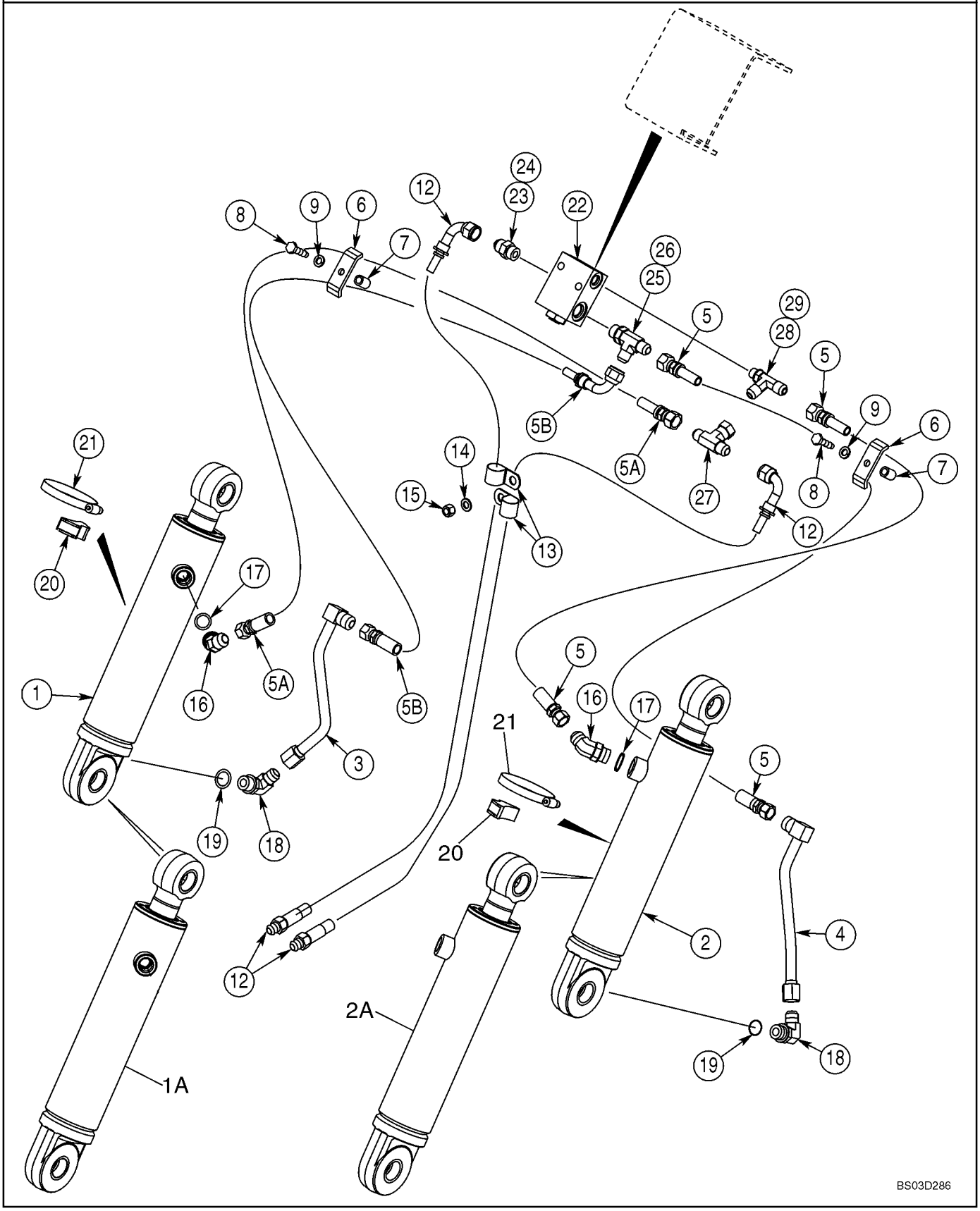

HYDRAULICS - CYLINDER, LOADER CLAM

REF	FN	PART NUMBER	YR/SN	QTY	DESCRIPTION
		REF			INSTRUCTION At Loader Bucket
1		1346190C1		1	CYLINDER ASSY. 76 ID x 231 mm strk; Loader Clam Cylinder; Left-Hand; See Figure 08-55; If Used
1A		1346190C2		1	CYLINDER ASSY. 76 ID x 231 mm strk; With Welded Bushing; Loader Clam Cylinder; Left-Hand; See Figure 08-55; If Used
2		1346189C1		1	CYLINDER ASSY. 76 ID x 231 mm strk; Loader Clam Cylinder; Right-Hand; See Figure 08-55; If Used
2A		1346189C2		1	CYLINDER ASSY. 76 ID x 231 mm strk; With Welded Busing; Loader Clam Cylinder; Right-Hand; See Figure 08-55; If Used
3		192352A1		1	PIPE Left-Hand Cylinder
4		192345A1		1	PIPE Right-Hand Cylinder
5		376157A1		2	HOSE ASSY. 1240 mm (48-7/8 in); Right-Hand Cylinder
5A		353102A1		1	HOSE ASSY. 1340 mm (52-13/16 in); Left-Hand Cylinder
5B		376158A1		1	HOSE ASSY. 1340 mm (52-13/16 in); Left-Hand Cylinder
6		D143846		2	SHIN
7		R46493		2	SPACER
8		814-10040		2	CAPSCREW M10 x 40
9		892-11010		2	WASHER, LOCK M10
12		356743A1		2	HOSE ASSY. 1170 mm (46-1/16 in); Lift Frame
13		515-25254		2	CLAMP 1 in ID
14		895-11010		1	WASHER 11 x 21 x 2 mm
15		832-10410		1	NUT M10
16		218-5137		2	FITTING 7/8 fl x Or; Incl. Ref 17
17		237-6010		1	O-RING 3/4 ID x 3/32, Boss Seal
18		218-5107		2	ELBOW 7/8 fl x adj Or; Incl. Ref 19
19		237-6010		1	O-RING 3/4 ID x 3/32, Boss Seal
20		D38648		2	BLOCK
21		214-1464		2	CLAMP 3-9/16 - 4-1/2 in dia

HYDRAULICS - CYLINDER, LOADER CLAM

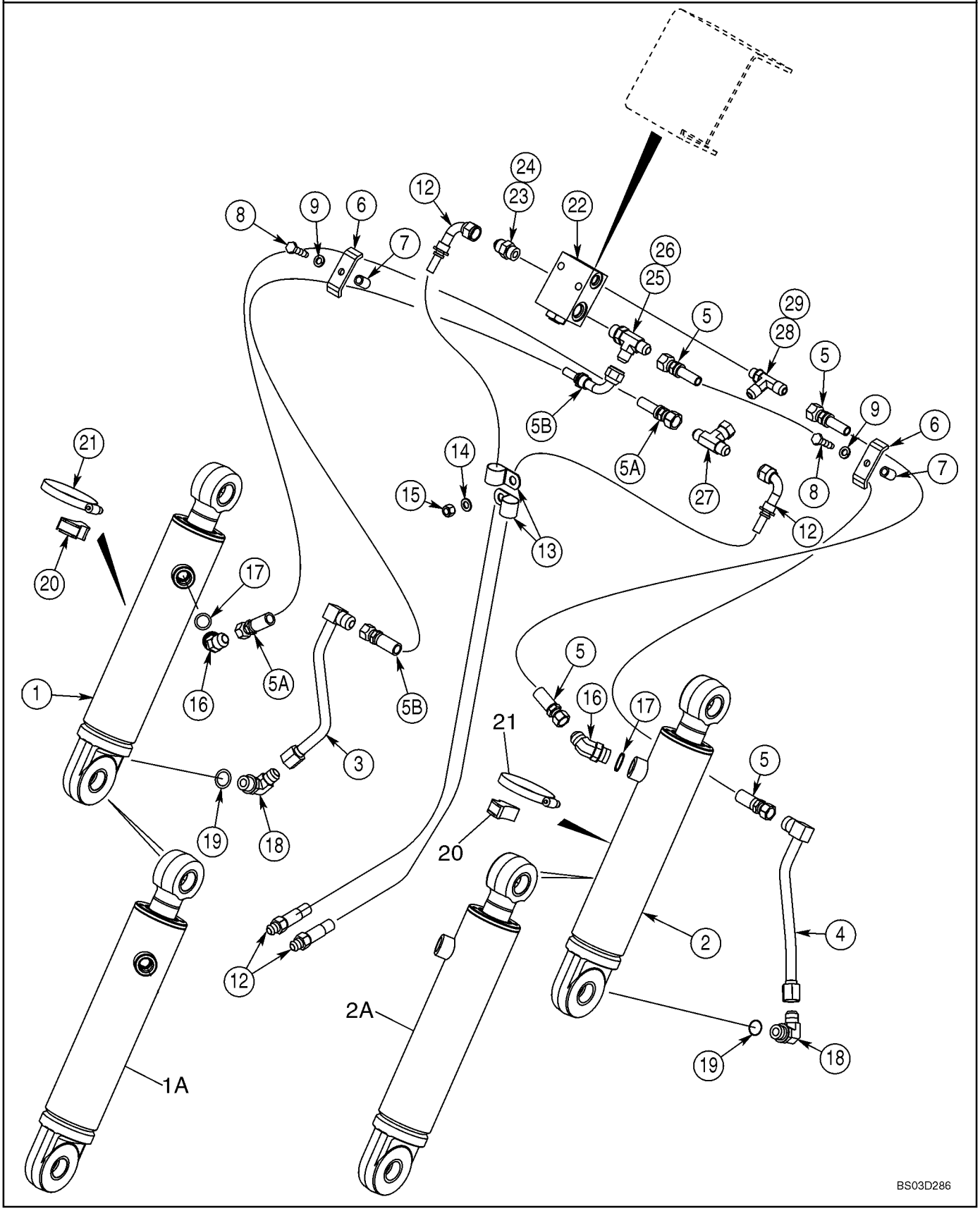

HYDRAULICS - CYLINDER, LOADER CLAM

REF	FN	PART NUMBER	YR/SN	QTY	DESCRIPTION
22		325465A2		1	VALVE, CHECK Pilot Operated Check Valve; Component Parts Not Serviced Separately; For Service Of External Seals, Order 399963A1; For Mounting, See Figure 09-07
		399963A1		1	KIT Seal; For Use With 325465A2 Valve; Includes (1) Piston, (1) Backup Ring, (2) O-Rings and Instructions
23		218-5059		1	CONNECTOR 3/4 fl x Or; Incl. Ref 24
24		237-6008		1	O-RING 41/64 ID x 3/32, Boss Seal
25		218-5242		1	CONNECTOR 3/4 fl br x fl x Or; Incl. Ref 26
26		237-6008		1	O-RING 41/64 ID x 3/32, Boss Seal
27		218-840		1	TEE 3/4 NF sw x fl x fl
28		218-5650		1	TEE 3/4 fl x fl x 9/16 Or; Incl. 29
29		237-6006		1	O-RING 15/32 ID x 5/64, Boss Seal

HYDRAULICS - CYLINDER, BACKHOE STABILIZER

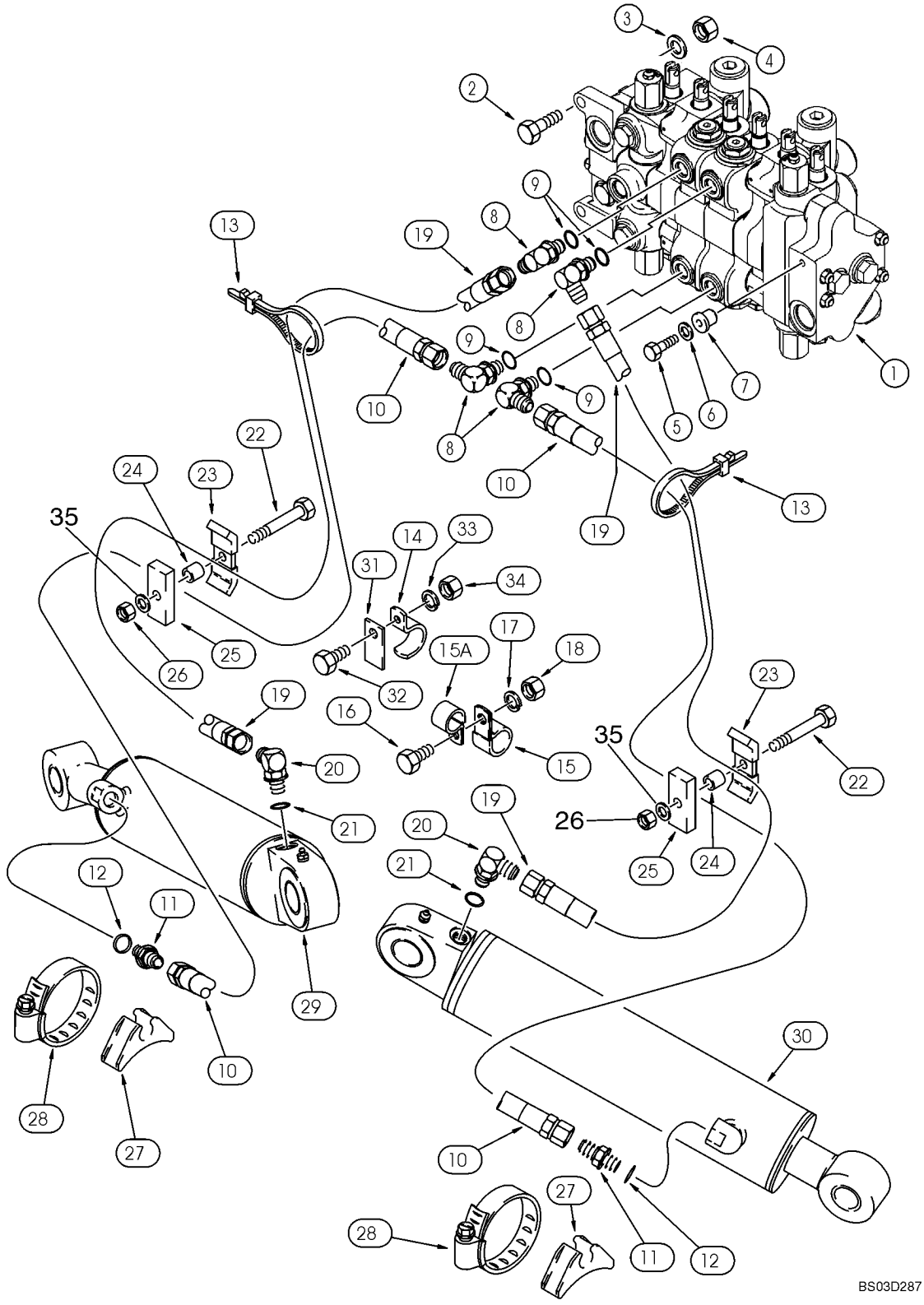

HYDRAULICS - CYLINDER, BACKHOE STABILIZER

REF	FN	PART NUMBER	YR/SN	QTY	DESCRIPTION
1		REF		1	INSTRUCTION Valve Assy; Control, Backhoe Control Valve; For Correct Assembly and Components, See Figure(s) 08-35 - 08-38
2		814-12045		2	CAPSCREW M12 x 45
3		896-11012		2	WASHER 13,5 x 24 x 3 mm
4		829-1412		2	NUT M12; 10
5		614-10035		1	SCREW M10 x 35
6		496-41041		1	WASHER 13/32 x 1-1/8 x 9/64
7		D52276		1	ISOLATOR
8		218-5106		4	FITTING 3/4 fl x Or; Incl. Ref 9
9		237-6008		1	O-RING 41/64 ID x 3/32, Boss Seal
10		144251A2		2	HOSE ASSY. 1240 mm (48-13/16 in); Replaces 144251A1
11		218-5059		2	CONNECTOR 3/4 fl x Or; Incl. Ref 12
12		237-6008		1	O-RING 41/64 ID x 3/32, Boss Seal
13		L18337		2	STRAP 15 in
14		D143411		1	CLAMP 3/4 ID
15		515-23254		1	CLAMP 1 in ID
15A		515-23190		1	CLAMP 3/4 ID
16		614-8025		1	CAPSCREW M8 x 25
17		892-11008		1	WASHER M8
18		829-1408		1	NUT M8; 10
19		390821A2		2	HOSE ASSY. 954 mm (37-9/16 in); Replaces 390821A1 918 mm Hose
20		218-5106		2	FITTING 3/4 fl x Or; Incl. Ref 21
21		237-6008		1	O-RING 41/64 ID x 3/32, Boss Seal
22		814-10060		2	CAPSCREW M10 x 60
23		D143846		2	SHIN
24		D146035		2	BUSHING, LARGE
25		D150099		2	SHIN
26		829-1410		2	NUT M10; 10.9
27		D142787		2	SPACER
28		214-14104		2	CLAMP 6-1/8 - 7 in dia
29		177257A1		1	CYLINDER ASSY. 127 ID x 519 mm strk; Stabilizer Cylinder; Left-Hand; See Figure 08-56

HYDRAULICS - CYLINDER, BACKHOE STABILIZER

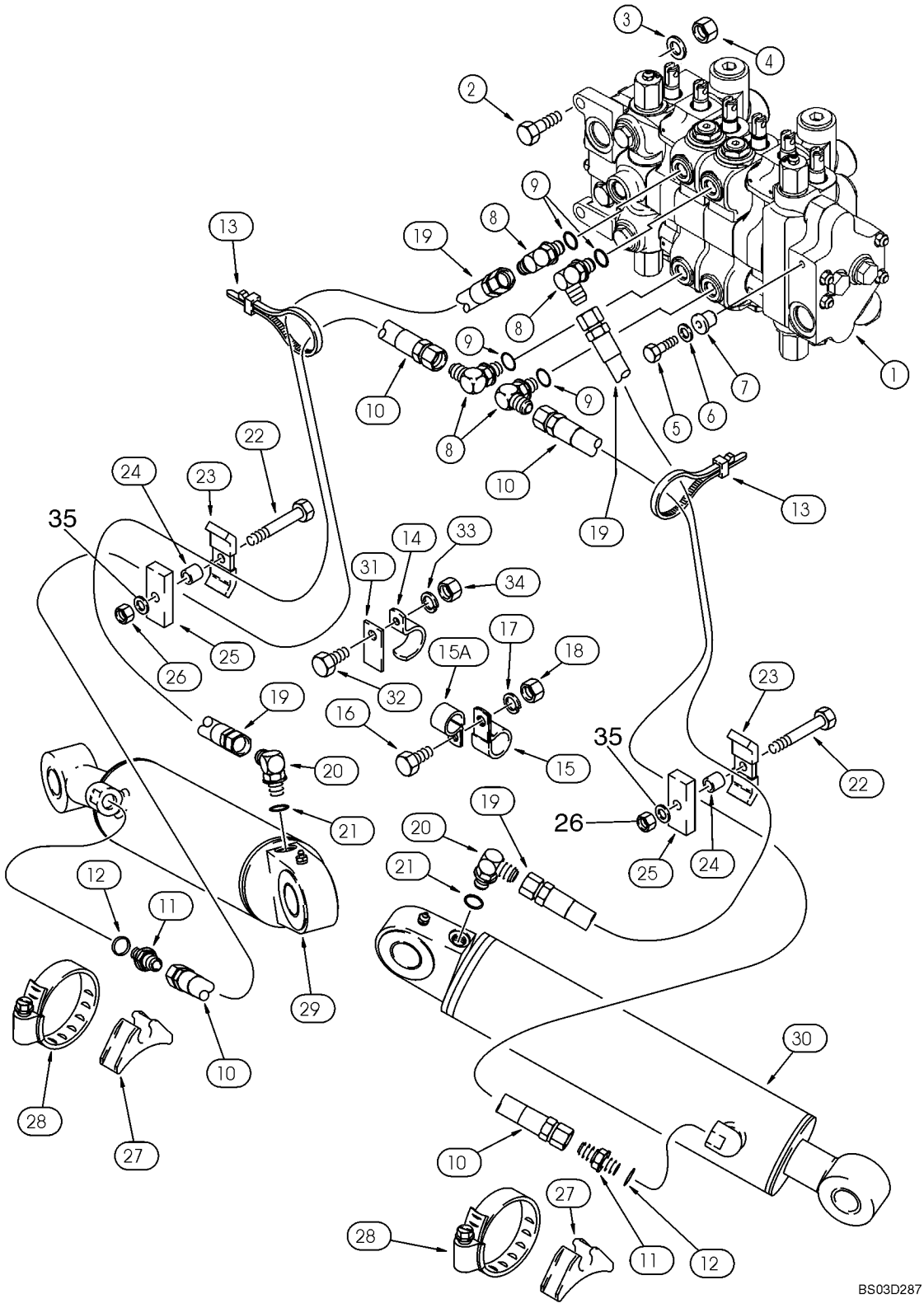

HYDRAULICS - CYLINDER, BACKHOE STABILIZER

REF	FN	PART NUMBER	YR/SN	QTY	DESCRIPTION
30		177256A1		1	CYLINDER 127 ID x 519 mm strk; Stabilizer Cylinder; Right-Hand; See Figure 08-56
31		191758A1		1	PLATE
32		614-10030		1	SCREW M10 x 30
33		892-11010		1	WASHER, LOCK M10
34		829-1410		1	NUT M10; 10.9
35		896-15012		2	WASHER 13,5 x 28 x 4 mm

HYDRAULICS - CYLINDER, BACKHOE SWING

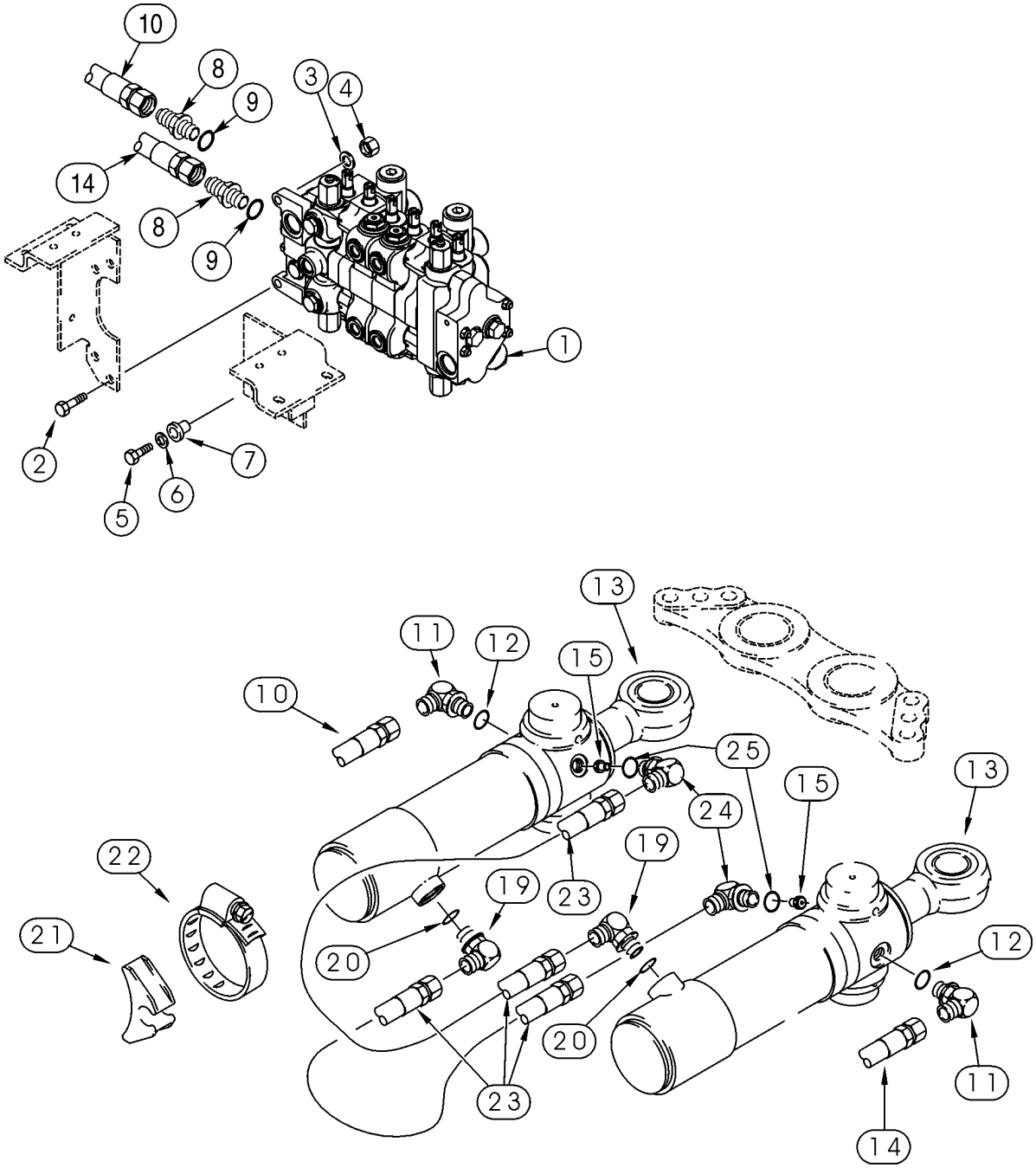

HYDRAULICS - CYLINDER, BACKHOE SWING

REF	FN	PART NUMBER	YR/SN	QTY	DESCRIPTION
1		REF		1	INSTRUCTION Valve Assy, Control; Backhoe Control Valve; For Correct Assembly and Components, See Figure(s) 08-35 - 08-38
2		814-12045		2	CAPSCREW M12 x 45
3		896-11012		2	WASHER 13,5 x 24 x 3 mm
4		829-1412		2	NUT M12; 10
5		614-10035		1	SCREW M10 x 35
6		496-41041		1	WASHER 13/32 x 1-1/8 x 9/64
7		D52276		1	ISOLATOR
8		218-5062		2	CONNECTOR 7/8 fl x Or; Incl. Ref 9
9		237-6010		1	O-RING 3/4 ID x 3/32, Boss Seal
10		396389A1		1	HOSE ASSY. 650 mm (25-5/8 in); Upper Valve Port; Left-Hand Cylinder
11		218-5106		2	FITTING 3/4 fl x Or; Incl. Ref 12
12		237-6008		1	O-RING 41/64 ID x 3/32, Boss Seal
13		139808A2		2	CYLINDER ASSY. 102 ID x 292 mm strk; Swing Cylinder; See Figure 08-38
14		183243A1		1	HOSE 1400 mm (55-1/8 in); Lower Valve Port; Right-Hand Cylinder
15		124690A1		2	RESTRICTOR
19		218-5119		2	FITTING 7/8 fl x 1-1/16 Or; Incl. Ref 20
20		237-6012		1	O-RING 59/64 ID x 7/64, Boss Seal
21		D142787		2	SPACER
22		214-1488		2	CLAMP 5-1/8 - 6 in dia
23		255659A1		2	HOSE 815 mm (32-3/32 in)
24		218-5106		2	FITTING 3/4 fl x Or; Incl. Ref 25
25		237-6008		1	O-RING 41/64 ID x 3/32, Boss Seal

HYDRAULICS - CYLINDER, BACKHOE BOOM

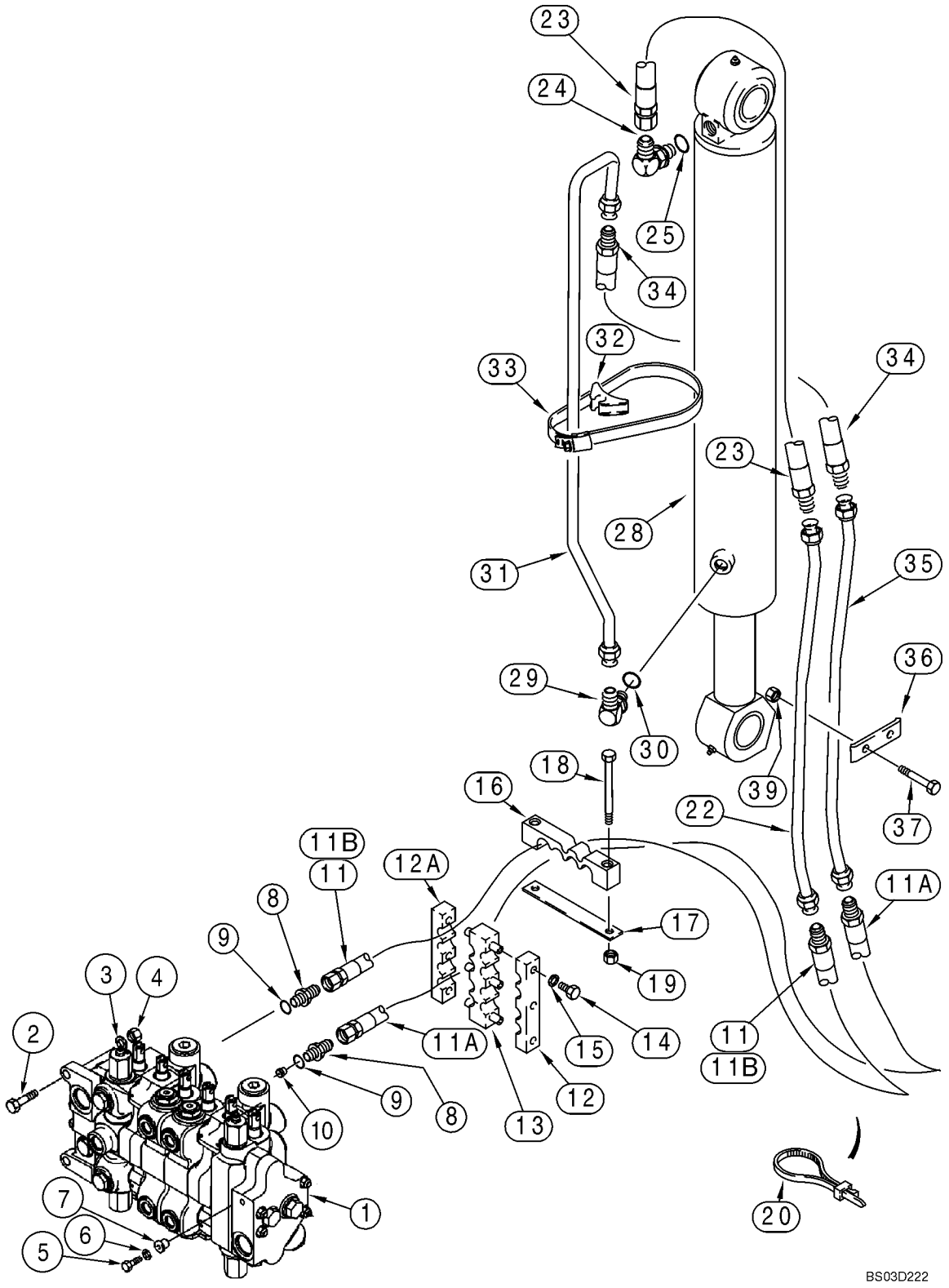

HYDRAULICS - CYLINDER, BACKHOE BOOM

REF	FN	PART NUMBER	YR/SN	QTY	DESCRIPTION
1		REF		1	INSTRUCTION Valve Assy, Control; Backhoe Control Valve; For Correct Assembly and Components, See Figure(s) 08-35 - 08-38
2		814-12045		2	CAPSCREW M12 x 45
3		896-11012		2	WASHER 13,5 x 24 x 3 mm
4		829-1412		2	NUT M12; 10
5		614-10035		1	SCREW M10 x 35
6		496-41041		1	WASHER 13/32 x 1-1/8 x 9/64
7		D52276		1	ISOLATOR
8		218-5064		2	CONNECTOR 1-1/16 fl x Or; Incl. Ref 9
9		237-6012		1	O-RING 59/64 ID x 7/64, Boss Seal
10		402331A1		1	RESTRICTOR Lower Valve Port
11		393375A1		1	HOSE ASSY. 1313 mm (51-23/32 in); Upper Valve Port; No Longer Used; Order 393372A1, Ref 11B
11A		393373A1		1	HOSE ASSY. 1268 mm (50 in); Lower Valve Port
11B		393372A1		1	HOSE ASSY. 1313 mm (51-23/32 in) With Spiratex; Upper Valve Port
12		179404A1		1	CLAMP
12A		176268A1		1	CLAMP
13		176266A1		1	CLAMP
14		614-8025		6	CAPSCREW M8 x 25
15		892-11008		6	WASHER M8
16		372481A1		1	CLAMP
17		132212A1		1	PLATE, LARGE
18		814-12110		2	SCREW M12 x 110
19		832-10412		2	NUT M12
20		L18337		1	STRAP 15 in
22		220277A1		1	TUBE
23		189976A1		1	HOSE 1125 mm (44-5/16 in)
24		218-5110		1	FITTING 1-5/16 fl x Or; Incl. Ref 25
25		237-6016		1	O-RING 1-11/64 ID x 7/64, Boss Seal
28		175785A1		1	CYLINDER 140 ID x 976 mm strk; Boom Cylinder; See Figure 08-58
29		218-5123		1	FITTING 1-1/16 fl x 7/8 Or; Incl. Ref 30
30		237-6010		1	O-RING 3/4 ID x 3/32, Boss Seal
31		179605A1		1	TUBE

HYDRAULICS - CYLINDER, BACKHOE BOOM

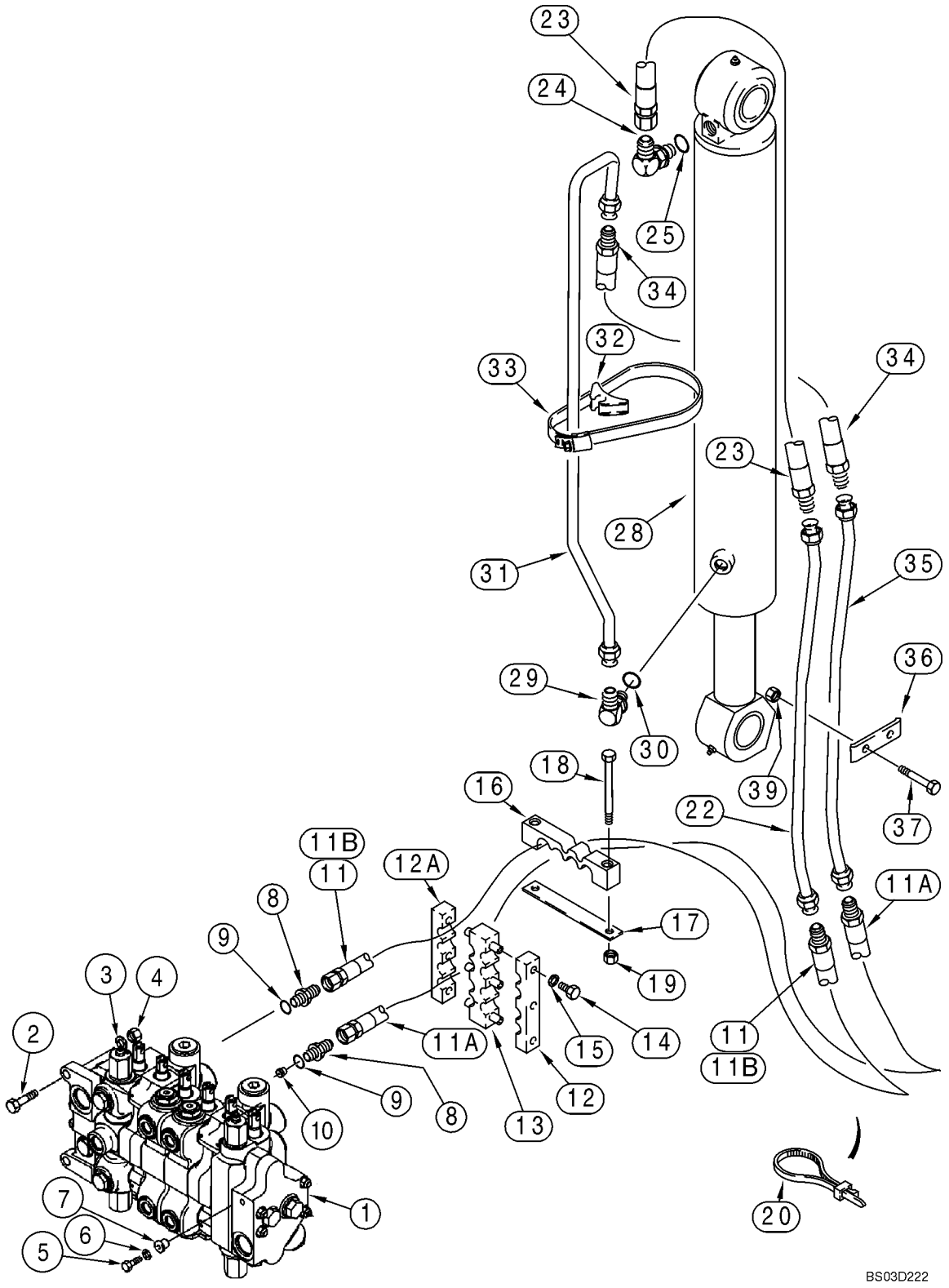

HYDRAULICS - CYLINDER, BACKHOE BOOM

REF	FN	PART NUMBER	YR/SN	QTY	DESCRIPTION
32		D142787		1	SPACER
33		214-14112		1	CLAMP 6-1/16 - 7-1/2 in dia
34		179615A1		1	HOSE 560 mm (22-3/64 in)
35		222027A1		1	TUBE
36		182035A1		2	CLAMP
37		814-12080		4	SCREW M12 x 80
39		832-10412		4	NUT M12

08 -11		p1	05/03

HYDRAULICS - CYLINDER, BACKHOE DIPPER

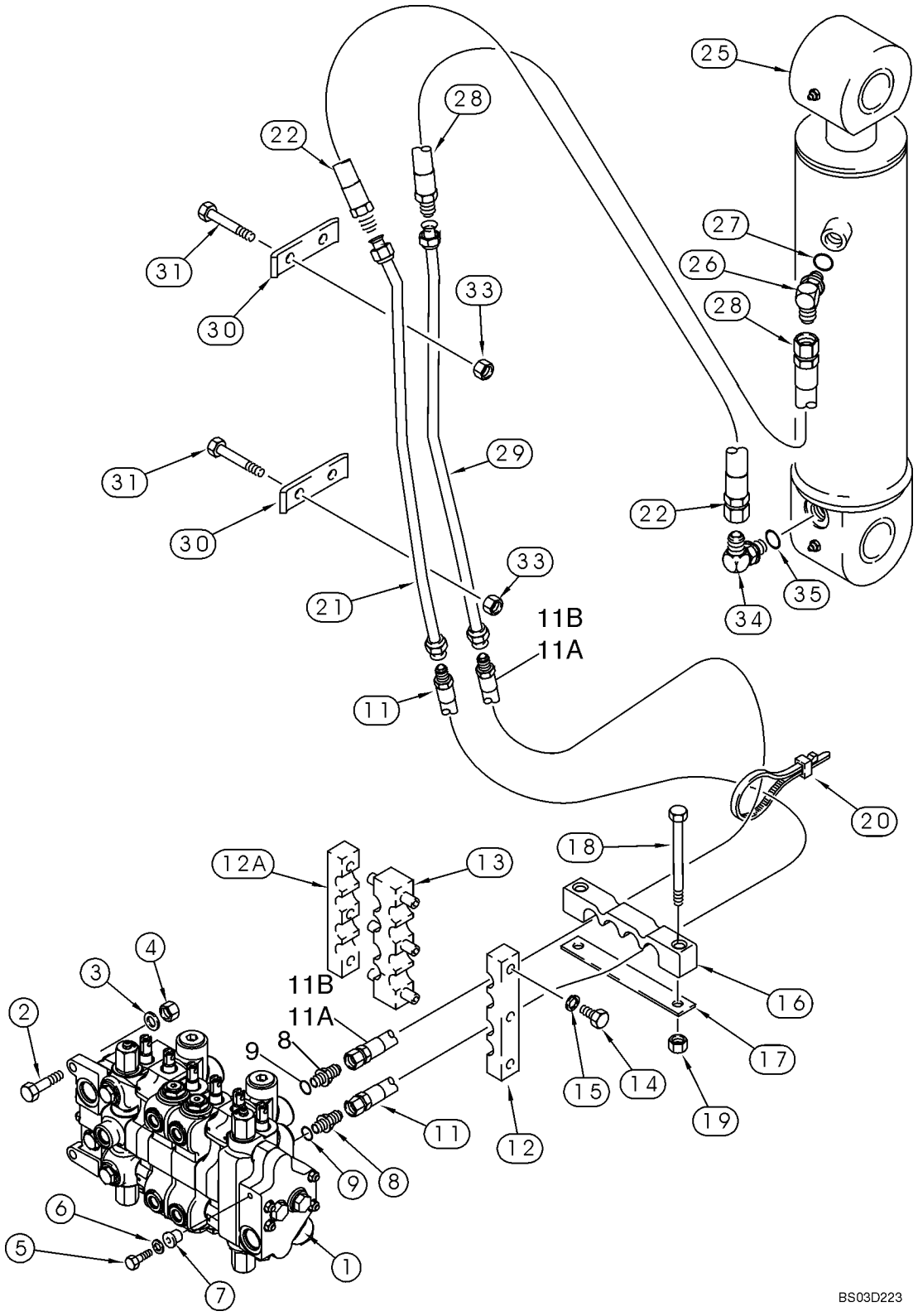

HYDRAULICS - CYLINDER, BACKHOE DIPPER

REF	FN	PART NUMBER	YR/SN	QTY	DESCRIPTION
1		REF		1	INSTRUCTION Valve Assy, Control; Backhoe Control Valve; For Correct Assembly and Components, See Figure(s) 08-35 - 08-38
2		814-12045		2	CAPSCREW M12 x 45
3		896-11012		2	WASHER 13,5 x 24 x 3 mm
4		829-1412		2	NUT M12; 10
5		614-10035		1	SCREW M10 x 35
6		496-41041		1	WASHER 13/32 x 1-1/8 x 9/64
7		D52276		1	ISOLATOR
8		218-5064		2	CONNECTOR 1-1/16 fl x Or; Incl. Ref 9
9		237-6012		1	O-RING 59/64 ID x 7/64, Boss Seal
11		393372A1		1	HOSE ASSY. 1313 mm (51-3/4 in); Lower Valve Port
11A		393377A1		1	HOSE ASSY. 1268 mm (50 in); Upper Valve Port; No Longer Used; Order 393373A1, Ref 11B
11B		393373A1		1	HOSE ASSY. 1268 mm (50 in); With Spiratex; Upper Valve Port
12		179404A1		1	CLAMP
12A		176268A1		1	CLAMP
13		176266A1		1	CLAMP
14		614-8025		6	CAPSCREW M8 x 25
15		892-11008		6	WASHER M8
16		372481A1		1	CLAMP
17		132212A1		1	PLATE, LARGE
18		814-12110		2	SCREW M12 x 110
19		832-10412		2	NUT M12
20		L18337		1	STRAP 15 in
21		220278A1		1	TUBE
22		195115A1		1	HOSE 750 mm (29-17/32 in)
25		140965A1		1	CYLINDER 140 ID x 564 mm strk; Dipper Cylinder; See Figure 08-59
26		218-5108		1	ELBOW 1-1/16 fl x 0r; Incl. Ref 27
27		237-6012		1	O-RING 59/64 ID x 7/64, Boss Seal
28		397782A1		1	HOSE ASSY. 780 mm (30-3/4 in)
29		179608A1		1	TUBE
30		182035A1		2	CLAMP
31		814-12080		4	SCREW M12 x 80

HYDRAULICS - CYLINDER, BACKHOE DIPPER

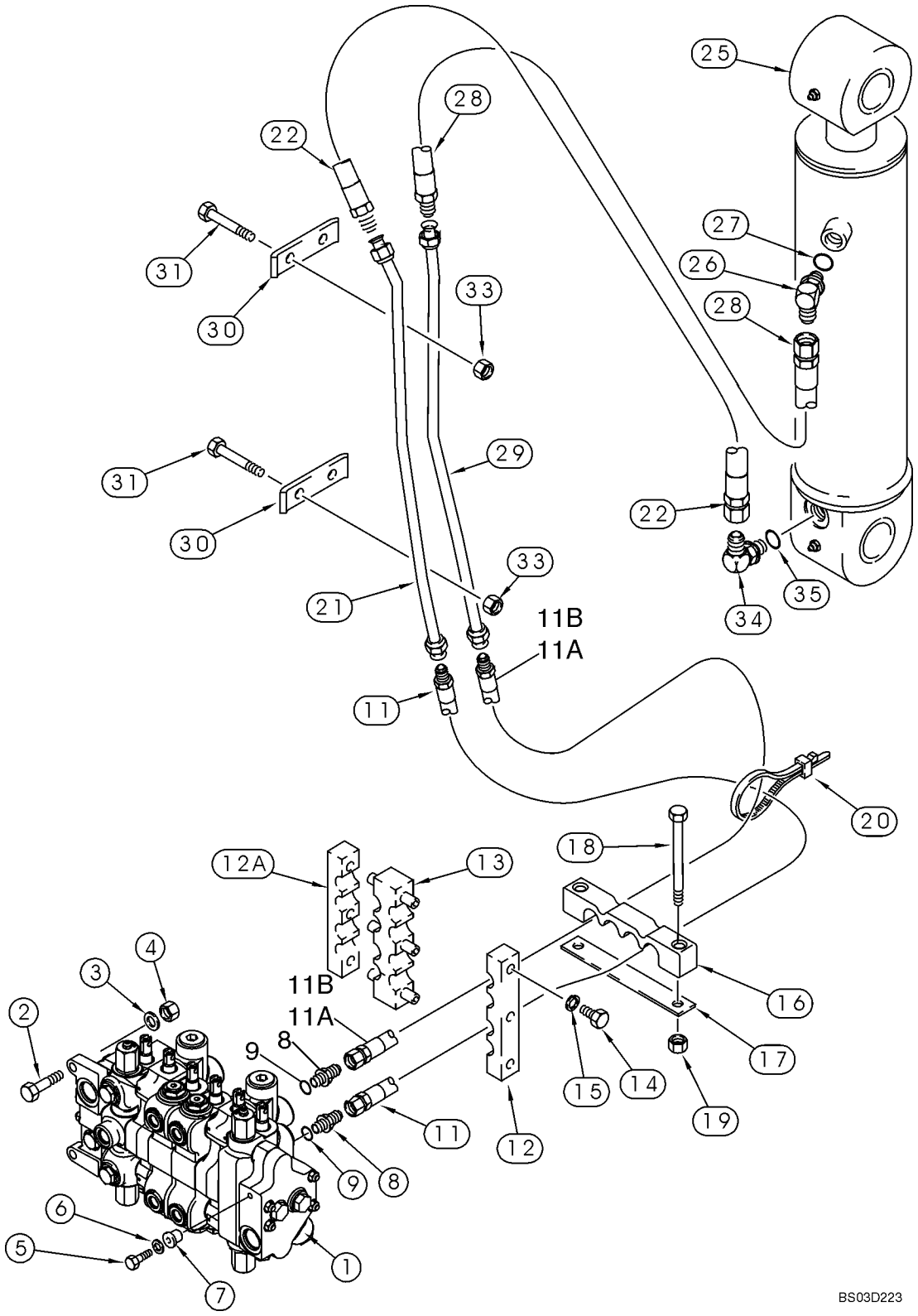

HYDRAULICS - CYLINDER, BACKHOE DIPPER

REF	FN	PART NUMBER	YR/SN	QTY	DESCRIPTION
33		832-10412		4	NUT M12
34		218-5110		1	FITTING 1-5/16 fl x Or; Incl. Ref 35
35		237-6016		1	O-RING 1-11/64 ID x 7/64, Boss Seal

HYDRAULICS - CYLINDER, BACKHOE BUCKET (MODELS WITHOUT EXTENDABLE DIPPER)

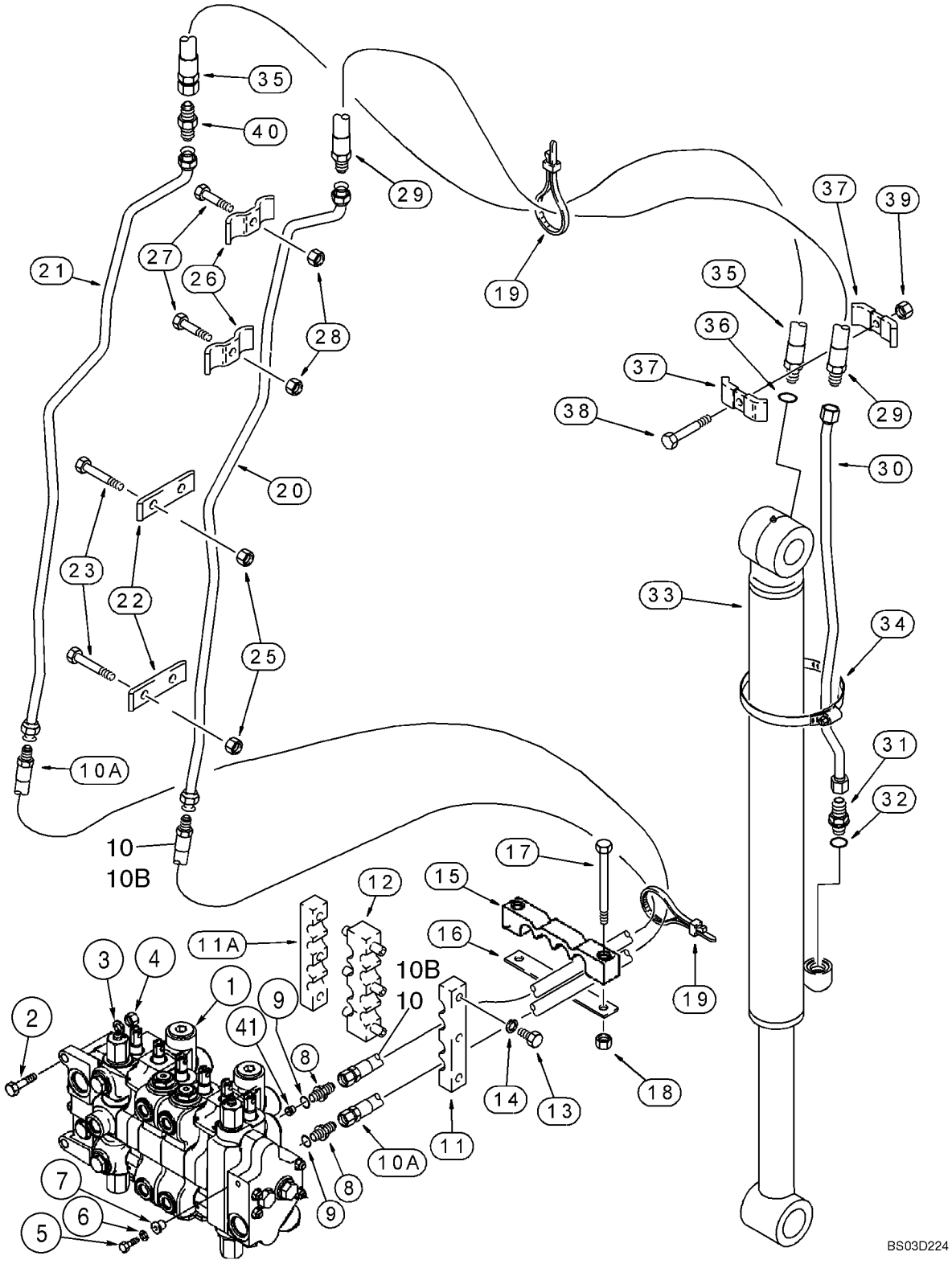

HYDRAULICS - CYLINDER, BACKHOE BUCKET (MODELS WITHOUT EXTENDABLE DIPPER)

REF	FN	PART NUMBER	YR/SN	QTY	DESCRIPTION
1		REF		1	INSTRUCTION Valve Assy, Control; Backhoe Control Valve; For Correct Assembly and Components, See Figure(s) 08-35 - 08-36
2		814-12045		2	CAPSCREW M12 x 45
3		896-11012		2	WASHER 13,5 x 24 x 3 mm
4		829-1412		2	NUT M12; 10
5		614-10035		1	SCREW M10 x 35
6		496-41041		1	WASHER 13/32 x 1-1/8 x 9/64
7		D52276		1	ISOLATOR
8		218-5064		2	CONNECTOR 1-1/16 fl x Or; Incl. Ref 9
9		237-6012		1	O-RING 59/64 ID x 7/64, Boss Seal
10		393365A1		1	HOSE ASSY. 1235 mm (48-5/8 in); No Longer Used; Order 393365A2, Ref 10B
10A		393364A1		1	HOSE ASSY. 1200 mm (47-1/4 in)
10B		{393365A2}		1	HOSE 1235 mm (48-5/8 in) With Spiratex
11		179404A1		1	CLAMP
11A		176268A1		1	CLAMP
12		176266A1		1	CLAMP
13		614-8025		6	CAPSCREW M8 x 25
14		892-11008		6	WASHER M8
15		372481A1		1	CLAMP
16		132212A1		1	PLATE, LARGE
17		814-12110		2	SCREW M12 x 110
18		832-10412		2	NUT M12
19		L18337		X	STRAP 15 in
20		176362A1		1	TUBE
21		176366A1		1	TUBE
22		182035A1		4	CLAMP
23		814-12080		8	SCREW M12 x 80
25		832-10412		8	NUT M12
26		221525A1		4	CLAMP
27		814-12060		4	SCREW M12 x 60
28		832-10412		4	NUT M12
29		144499A1		1	HOSE 1210 mm (47-5/8 in)
30		396634A1		1	TUBE ASSY. Models Without Backhoe Auxiliary Hydraulics

HYDRAULICS - CYLINDER, BACKHOE BUCKET (MODELS WITHOUT EXTENDABLE DIPPER)

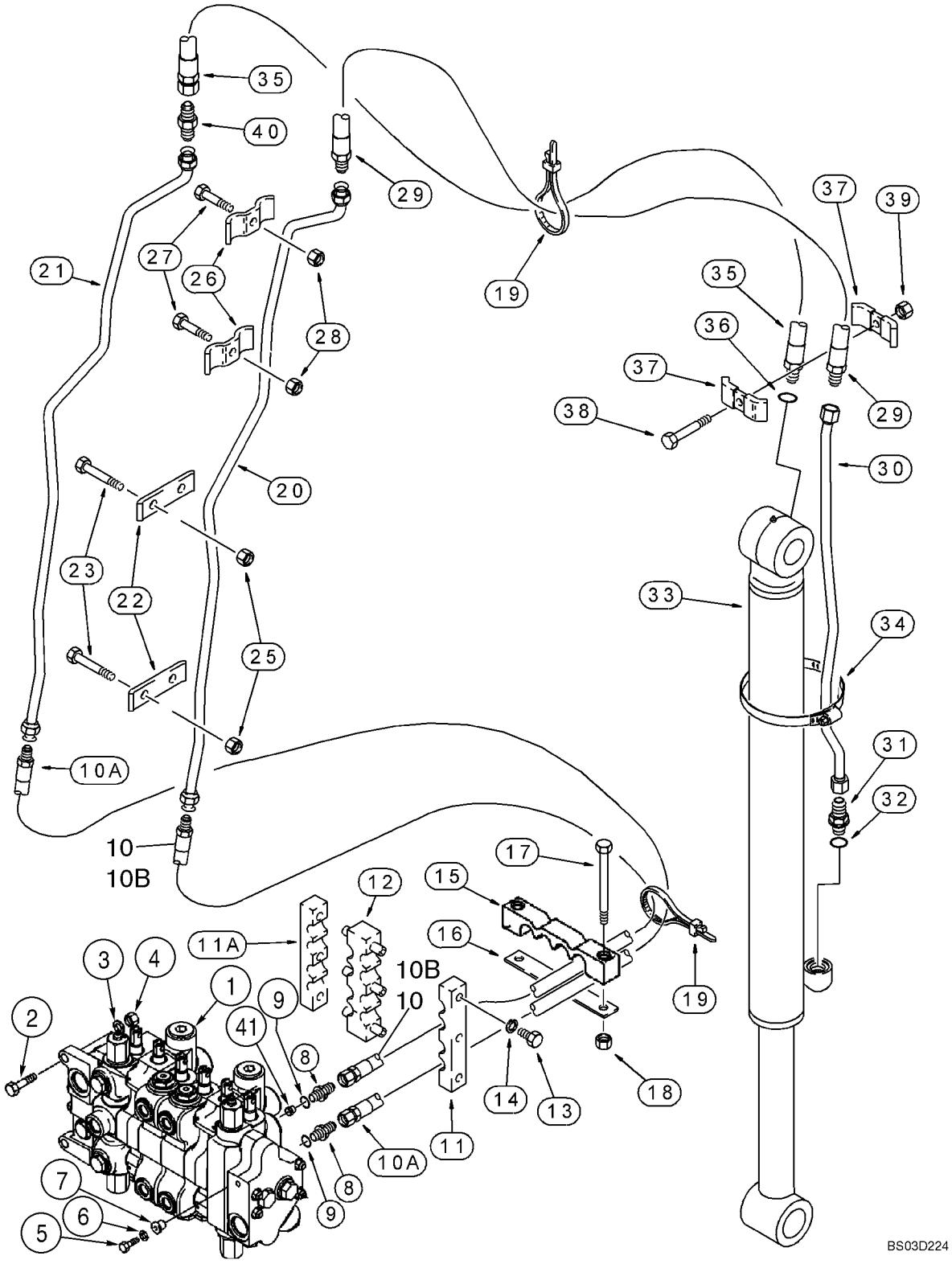

HYDRAULICS - CYLINDER, BACKHOE BUCKET (MODELS WITHOUT EXTENDABLE DIPPER)

REF	FN	PART NUMBER	YR/SN	QTY	DESCRIPTION
30		314772A1		1	PIPE Models With Backhoe Auxiliary Hydraulics
31		218-5064		1	CONNECTOR 1-1/16 fl x Or; Incl. Ref 32
32		237-6012		1	O-RING 59/64 ID x 7/64, Boss Seal
33		296434A1		1	CYLINDER 95 ID x 872 mm strk; Bucket Cylinder; See Figure 08-60
34		214-1472		1	CLAMP 4-1/16 - 5
35		141656A1		1	HOSE 1185 mm (46-21/32 in); Incl. Ref 36
36		237-6012		1	O-RING 59/64 ID x 7/64, Boss Seal
37		D143846		2	SHIN
38		814-10055		1	CAPSCREW M10 x 55
39		832-10410		1	NUT M10
40		218-745		1	FITTING 1-5/16 x 1-1/16
41		182222A1		1	FITTING

HYDRAULICS - CYLINDER, BACKHOE BUCKET (MODELS WITH EXTENDABLE DIPPER)

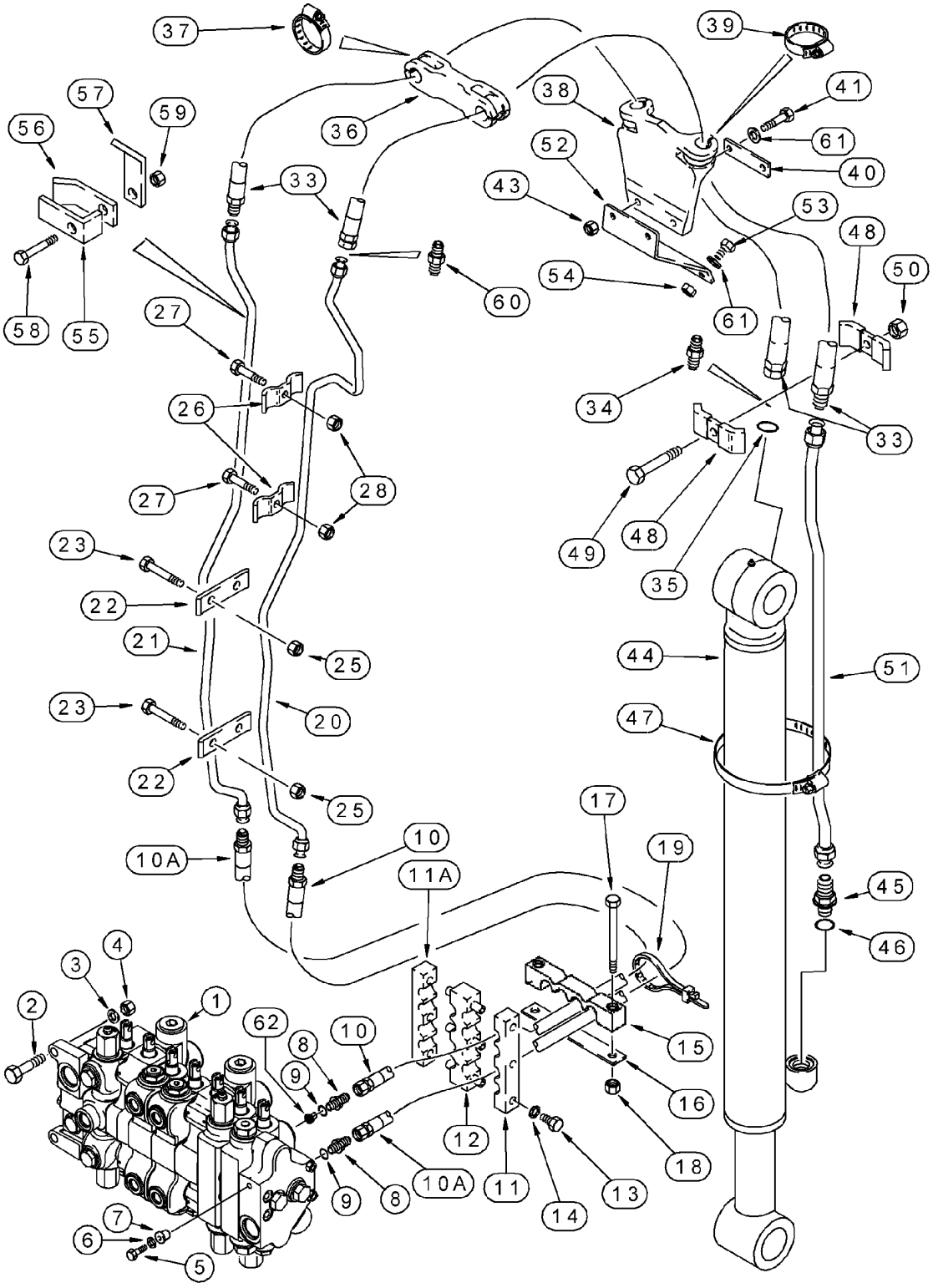

HYDRAULICS - CYLINDER, BACKHOE BUCKET (MODELS WITH EXTENDABLE DIPPER)

REF	FN	PART NUMBER	YR/SN	QTY	DESCRIPTION
1		REF		1	INSTRUCTION Valve Assy, Control; Backhoe Control Valve; For Correct Assembly and Components, See Figure(s) 08-37 - 08-38
2		814-12045		2	CAPSCREW M12 x 45
3		896-11012		2	WASHER 13,5 x 24 x 3 mm
4		829-1412		2	NUT M12; 10
5		614-10035		1	SCREW M10 x 35
6		496-41041		1	WASHER 13/32 x 1-1/8 x 9/64
7		D52276		1	ISOLATOR
8		218-5064		2	CONNECTOR 1-1/16 fl x Or; Incl. Ref 9
9		237-6012		1	O-RING 59/64 ID x 7/64, Boss Seal
10		{393365A2}		1	1235 mm (48-5/8 in); Replaces 393365A1
10A		393364A1		1	HOSE ASSY. 1200 mm (47-1/4 in)
11		179404A1		1	CLAMP
11A		176268A1		1	CLAMP
12		176266A1		1	CLAMP
13		614-8025		6	CAPSCREW M8 x 25
14		892-11008		6	WASHER M8
15		372481A1		1	CLAMP
16		132212A1		1	PLATE, LARGE
17		814-12110		2	SCREW M12 x 110
18		832-10412		2	NUT M12
19		L18337		X	STRAP 15 in
20		142976A1		1	TUBE
21		142982A1		1	TUBE
22		182035A1		4	CLAMP
23		814-12080		8	SCREW M12 x 80
25		832-10412		8	NUT M12
26		221525A1		4	CLAMP
27		814-12060		4	SCREW M12 x 60
28		832-10412		4	NUT M12
33		109020A1		2	HOSE 2300 mm (90-9/16 in)
34		218-5064		1	CONNECTOR 1-1/16 fl x Or; Incl. Ref 35
35		237-6012		1	O-RING 59/64 ID x 7/64, Boss Seal
36		103670A1		1	CLAMP, HOSE
37		214-3132		2	CLAMP 2,0 in; If Used

HYDRAULICS - CYLINDER, BACKHOE BUCKET (MODELS WITH EXTENDABLE DIPPER)

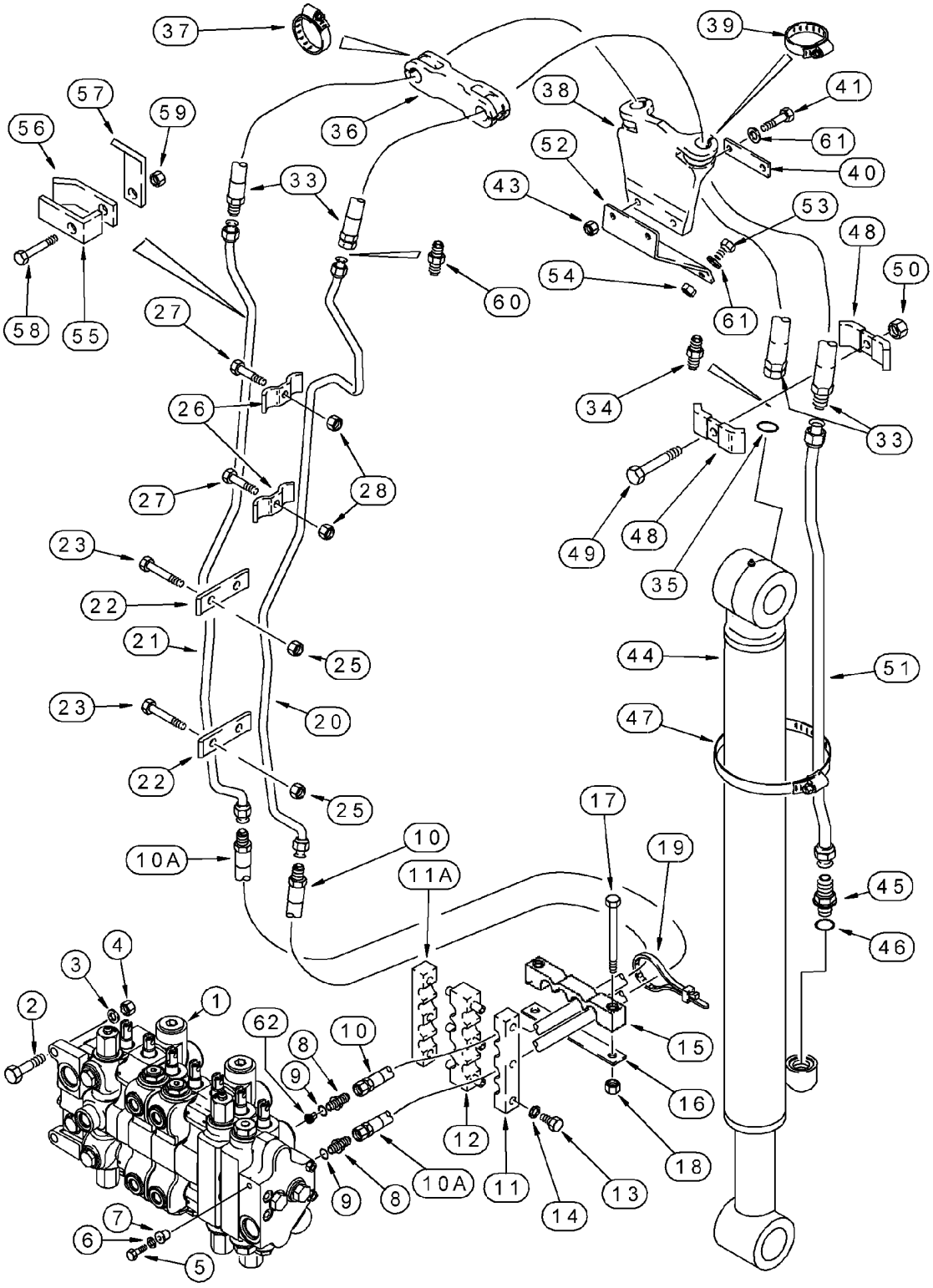

HYDRAULICS - CYLINDER, BACKHOE BUCKET (MODELS WITH EXTENDABLE DIPPER)

REF	FN	PART NUMBER	YR/SN	QTY	DESCRIPTION
37		214-3140		2	CLAMP 2,5 in; If Used
38		184297A1		1	SUPPORT
39		214-3132		2	CLAMP 2,0 in; If Used
39		214-3140		2	CLAMP 2,5 in; If Used
40		101479A1		1	SUPPORT
41		814-10045		2	CAPSCREW M10 x 45
43		832-10410		2	NUT M10
44		296434A1		1	CYLINDER 95 ID x 872 mm strk; Bucket Cylinder; See Figure 08-60
45		218-5050		1	FITTING 1-5/16 fl x 1-1/16 Or; Incl. Ref 46
46		237-6012		1	O-RING 59/64 ID x 7/64, Boss Seal
47		214-1472		1	CLAMP 4-1/16 - 5
48		D143846		2	SHIN
49		814-10055		1	CAPSCREW M10 x 55
50		832-10410		1	NUT M10
51		396708A1		1	TUBE ASSY. Models Without Auxiliary Hydraulics
51		314957A1		1	TUBE ASSY. Models With Auxiliary Hydraulics
52		183736A1		1	SUPPORT
53		614-10030		2	SCREW M10 x 30
54		832-10410		2	NUT M10
55		D149310		2	CLAMP
56		D149308		2	CLAMP
57		D149309		2	CLAMP
58		814-10060		2	CAPSCREW M10 x 60
59		832-10410		2	NUT M10
60		218-737		1	FITTING, PIPE 1-1/16 fl
61		895-18010		4	WASHER 11 x 18 x 1,6 mm
62		182222A1		1	FITTING

HYDRAULICS - CYLINDER, BACKHOE EXTENDABLE DIPPER

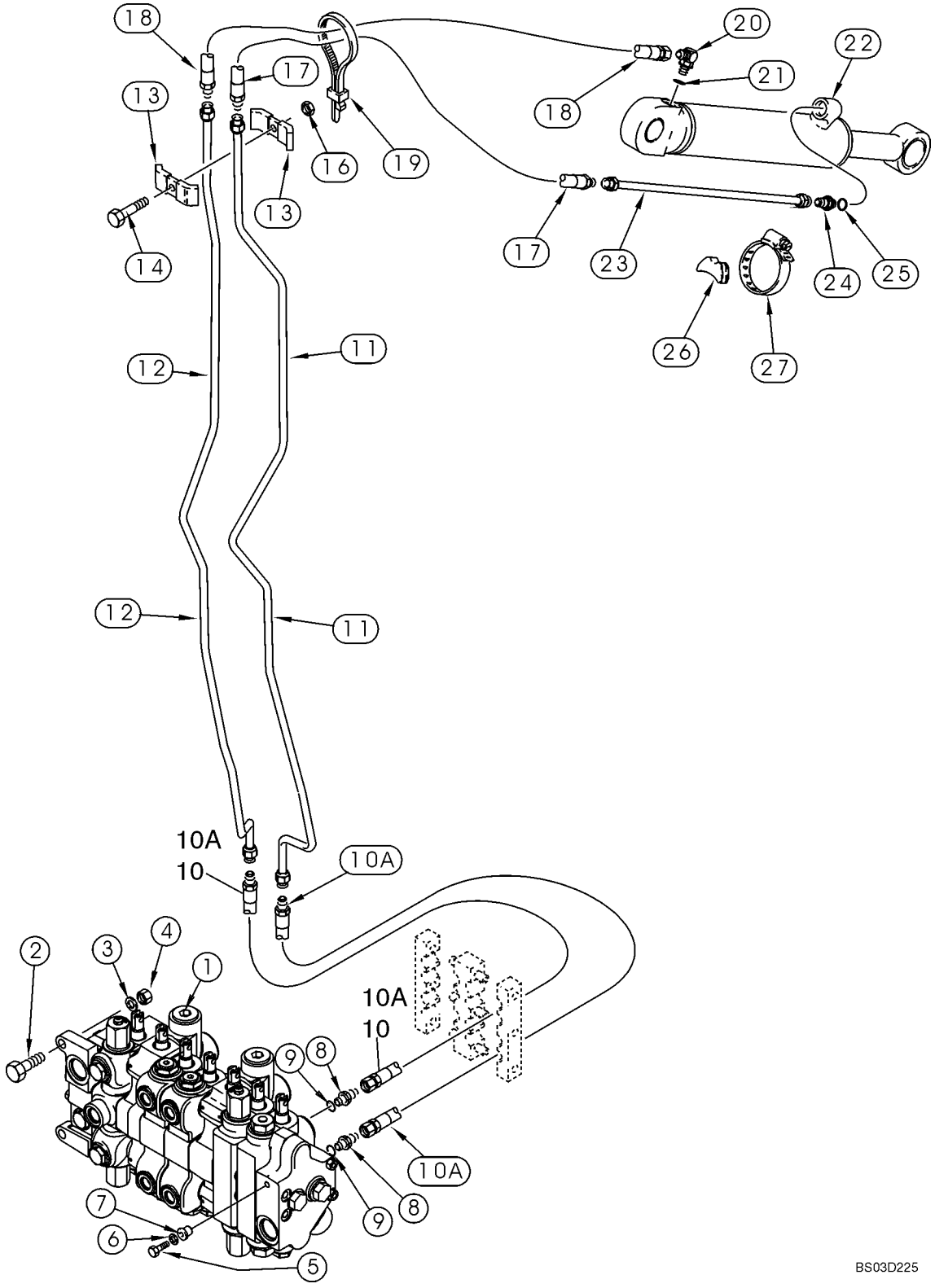

HYDRAULICS - CYLINDER, BACKHOE EXTENDABLE DIPPER

REF	FN	PART NUMBER	YR/SN	QTY	DESCRIPTION
1		REF		1	INSTRUCTION Valve Assy, Control; Backhoe Control Valve; For Correct Assembly and Components, See Figure(s) 08-37 - 08-38
2		814-12045		2	CAPSCREW M12 x 45
3		896-11012		2	WASHER 13,5 x 24 x 3 mm
4		829-1412		2	NUT M12; 10
5		614-10035		1	SCREW M10 x 35
6		496-41041		1	WASHER 13/32 x 1-1/8 x 9/64
7		D52276		1	ISOLATOR
8		218-5064		2	CONNECTOR 1-1/16 fl x Or; Incl. Ref 9
9		237-6012		1	O-RING 59/64 ID x 7/64, Boss Seal
10		393366A1		1	HOSE ASSY. 1210 mm (47-21/32 in); For Hardware, See Figure 08-13, Ref 11-19; No Longer Used; Order 393363A1, Ref 10A
10A		393363A1		1-2	HOSE ASSY. 1210 mm (47-21/32 in); Includes Spiratex; For Hardware, See Figure 08-13, Ref 11-19
11		142951A1		1	TUBE
12		142960A1		1	TUBE
13		D40236		2	CLAMP
14		814-10050		1	CAPSCREW M10 x 50
16		832-10410		1	NUT M10
17		181960A1		1	HOSE 938 mm (36-15/16 in)
18		181961A1		1	HOSE 788 mm (31-1/32 in)
19		L18337		1	STRAP 15 in
20		218-5107		1	ELBOW 7/8 fl x adj Or; Incl. Ref 21
21		237-6010		1	O-RING 3/4 ID x 3/32, Boss Seal
22		1340853C2		1	CYLINDER 76 ID x 1220 mm strk; Extendable Dipper Cylinder; See Figure 08-61
23		175817A1		1	TUBE
24		218-5062		1	CONNECTOR 7/8 fl x Or; Incl. Ref 25
25		237-6010		1	O-RING 3/4 ID x 3/32, Boss Seal
26		D38648		1	BLOCK
27		214-1464		1	CLAMP 3-9/16 - 4-1/2 in dia

HYDRAULICS - HAND HELD AUXILIARY (MODELS WITH OR WITHOUT EXTENDABLE DIPPER)

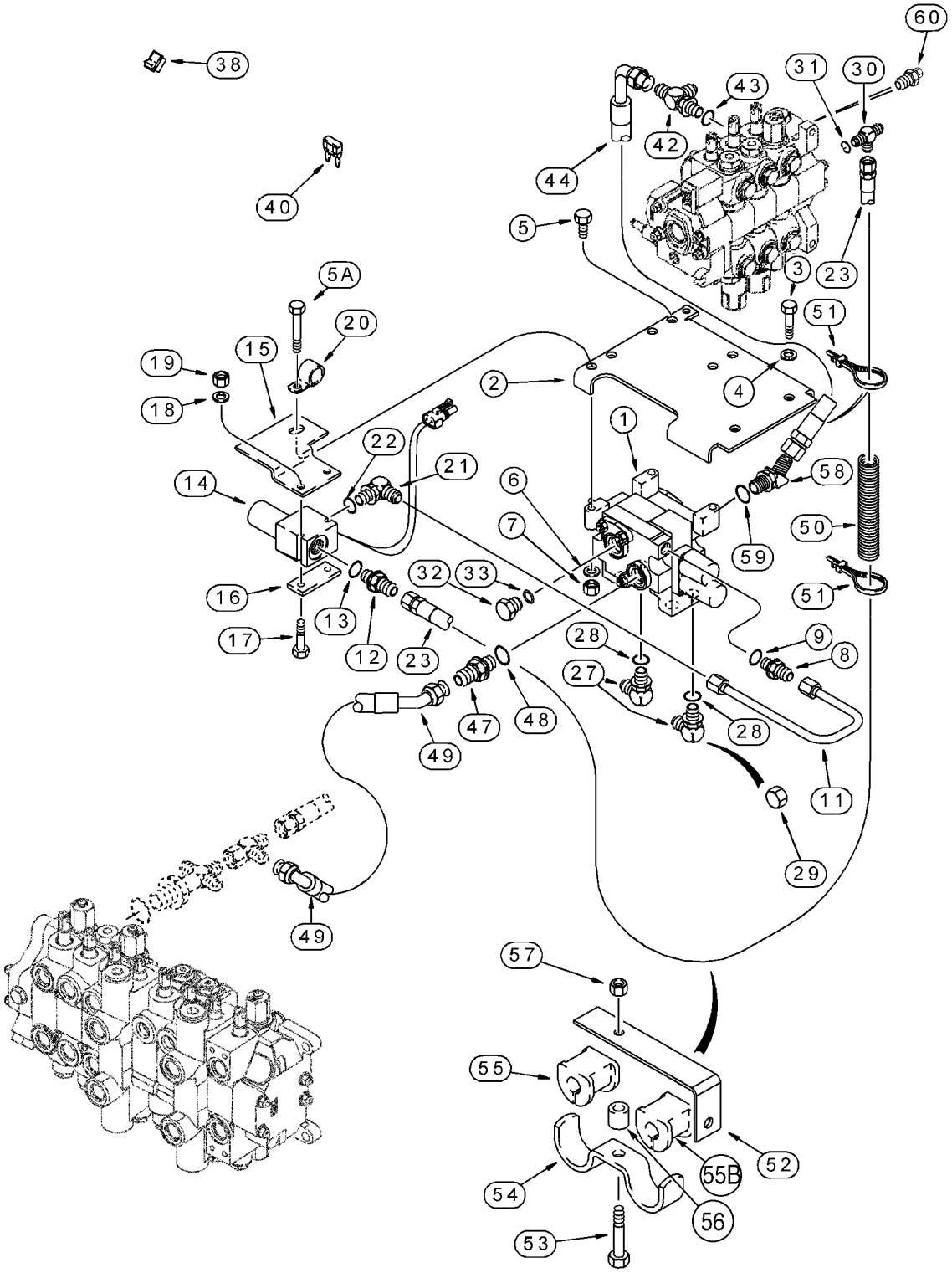

BS00D045

HYDRAULICS - HAND HELD AUXILIARY (MODELS WITH OR WITHOUT EXTENDABLE DIPPER)

REF	FN	PART NUMBER	YR/SN	QTY	DESCRIPTION
1		121741A1		1	VALVE, CONTROL Auxiliary Valve, One Spool; Hand Held Auxiliary Hydraulics; See Figure 08-48; Also Includes Ref 32
2		224788A3		1	SUPPORT
3		814-12050		2	SCREW M12 x 50
4		896-11012		2	WASHER 13,5 x 24 x 3 mm
5		814-10060		3	CAPSCREW M10 x 60
5A		614-10025		1	BOLT M10 x 25
6		895-11010		4	WASHER 11 x 21 x 2 mm
7		829-1410		4	NUT M10; 10.9
8		218-5057		1	CONNECTOR 9/16 fl x Or; Incl. Ref 9
9		237-6006		1	O-RING 15/32 ID x 5/64, Boss Seal
11		300983A1		1	TUBE Auxiliary Valve To Solenoid Valve Inlet
12		218-5058		1	CONNECTOR 9/16 fl x 3/4 Or; Incl. Ref 13
13		237-6008		1	O-RING 41/64 ID x 3/32, Boss Seal
14		137012A1		1	VALVE,ELECTRIC Component Parts Not Serviced Separately; Attaches To Chassis Options Harness
15		137713A1		1	SUPPORT
16		136977A1		1	PLATE, LARGE
17		814-6060		2	CAPSCREW M6 x 60
18		895-11006		2	WASHER 6,6 x 12 x 1,6 mm
19		829-1406		2	NUT M6; 10.9
20		515-2379		1	CLAMP 7,9 mm
21		218-5128		1	ELBOW 9/16 fl x 3/4 Or; Incl. Ref 22
22		237-6008		1	O-RING 41/64 ID x 3/32, Boss Seal
23		192693A1		1	HOSE 1490 mm (58-11/16 in); Solenoid Valve Outlet To Check Valve At Loader Valve Inlet
27		218-5107		2	ELBOW 7/8 fl x adj Or; Incl. Ref 28; For Attaching Parts, See Figure 08-16
28		237-6010		1	O-RING 3/4 ID x 3/32, Boss Seal
29		218-756		2	CAP 7/8; Not Required When Hoses Are Attached To Fittings
30		282428A1		1	POPPET, VALVE Steering Check Valve; Incl. Ref 31; Loader Valve Inlet Section; For Attaching Parts, See Figure 05-02
31		237-6006		1	O-RING 15/32 ID x 5/64, Boss Seal

HYDRAULICS - HAND HELD AUXILIARY (MODELS WITH OR WITHOUT EXTENDABLE DIPPER)

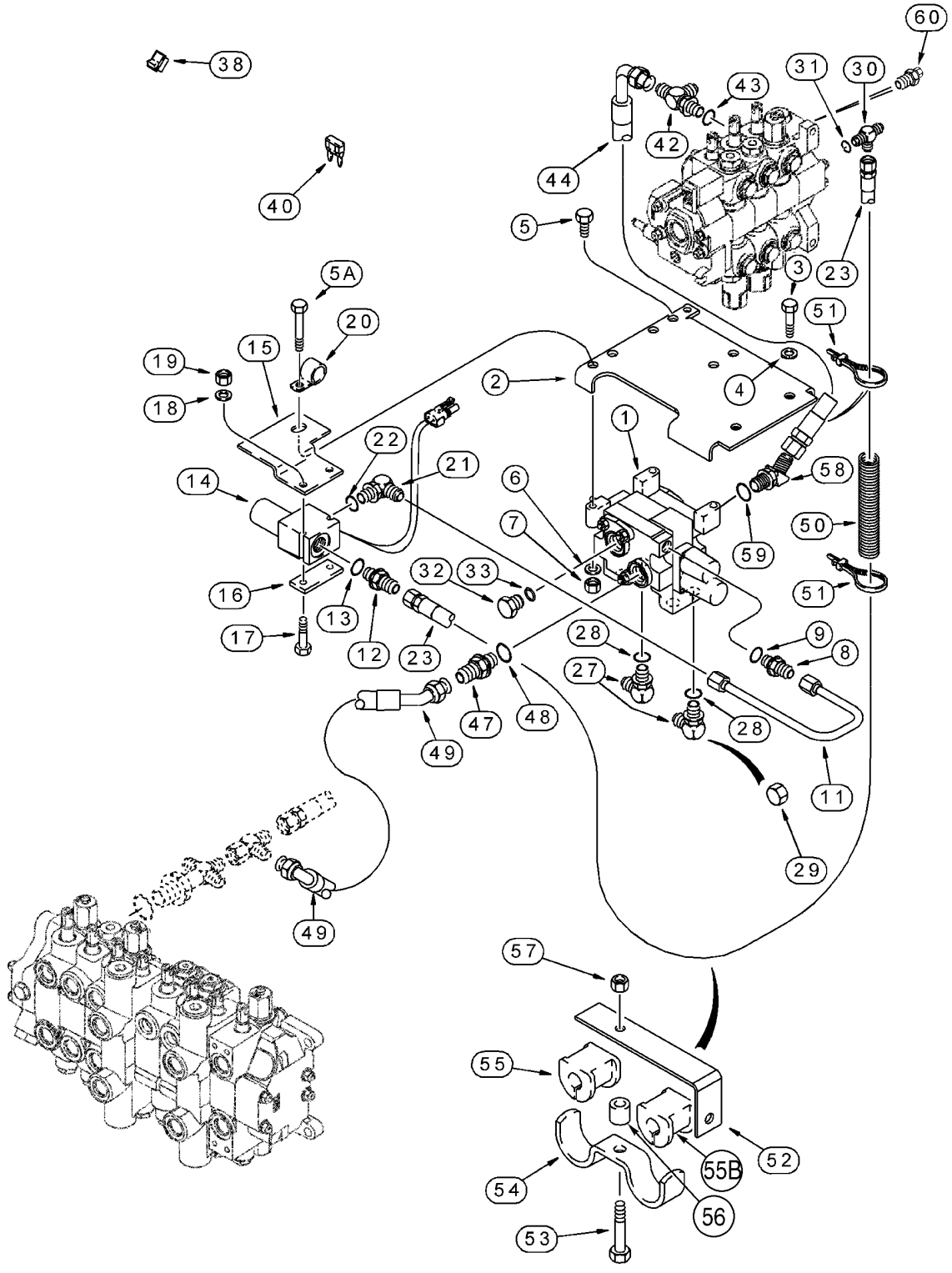

BS00D045

HYDRAULICS - HAND HELD AUXILIARY (MODELS WITH OR WITHOUT EXTENDABLE DIPPER)

REF	FN	PART NUMBER	YR/SN	QTY	DESCRIPTION
32		218-5158		1	PLUG 1-1/16 Or; Incl. Ref 33; Inlet Port; Included With Ref 1
33		237-6012		1	O-RING 59/64 ID x 7/64, Boss Seal
38		191532A1		1	SWITCH Auxiliary Hydraulics; Attaches To Side Options Harness
40		121413A1		1	FUSE 15 amp
42		218-5576		1	TEE Incl. Ref 43; Inlet Section; Lower Valve Port; For Attaching Parts, See Figure 05-02
43		237-6010		1	O-RING 3/4 ID x 3/32, Boss Seal
44		243338A1		1	HOSE 910 mm (35-7/8 in)
47		218-5064		1	CONNECTOR 1-1/16 fl x Or; Incl. Ref 48
48		237-6012		1	O-RING 59/64 ID x 7/64, Boss Seal
49		302474A1		1	HOSE 500 mm (19-11/16 in); Return, Outlet Port; To Tee At Backhoe Control Valve
50		D132982		2	LOOM 400 mm (15-3/4 in)
51		L18337		4	STRAP 15 in
52		136008A1		1	SUPPORT
53		814-10050		1	CAPSCREW M10 x 50
54		D143422		1	SHIN
55		D143797		1	SHOCK ABSORBER 5/8
55B		144477A1		1	SHOCK ABSORBER
56		R46493		1	SPACER
57		829-1410		1	NUT M10; 10.9
58		218-5138		1	FITTING 1-1/16-12 fl x Or; Incl. Ref 59
59		237-6012		1	O-RING 59/64 ID x 7/64, Boss Seal
60		130060A2		1	VALVE, PRESSURE RELIEF 19,000 kPa; Pilot Relief; See Figure 08-29; Remove Plug At Loader Valve Inlet Section and Replace With This Valve

08 -16		p1	05/03

HYDRAULICS - HAND HELD AUXILIARY

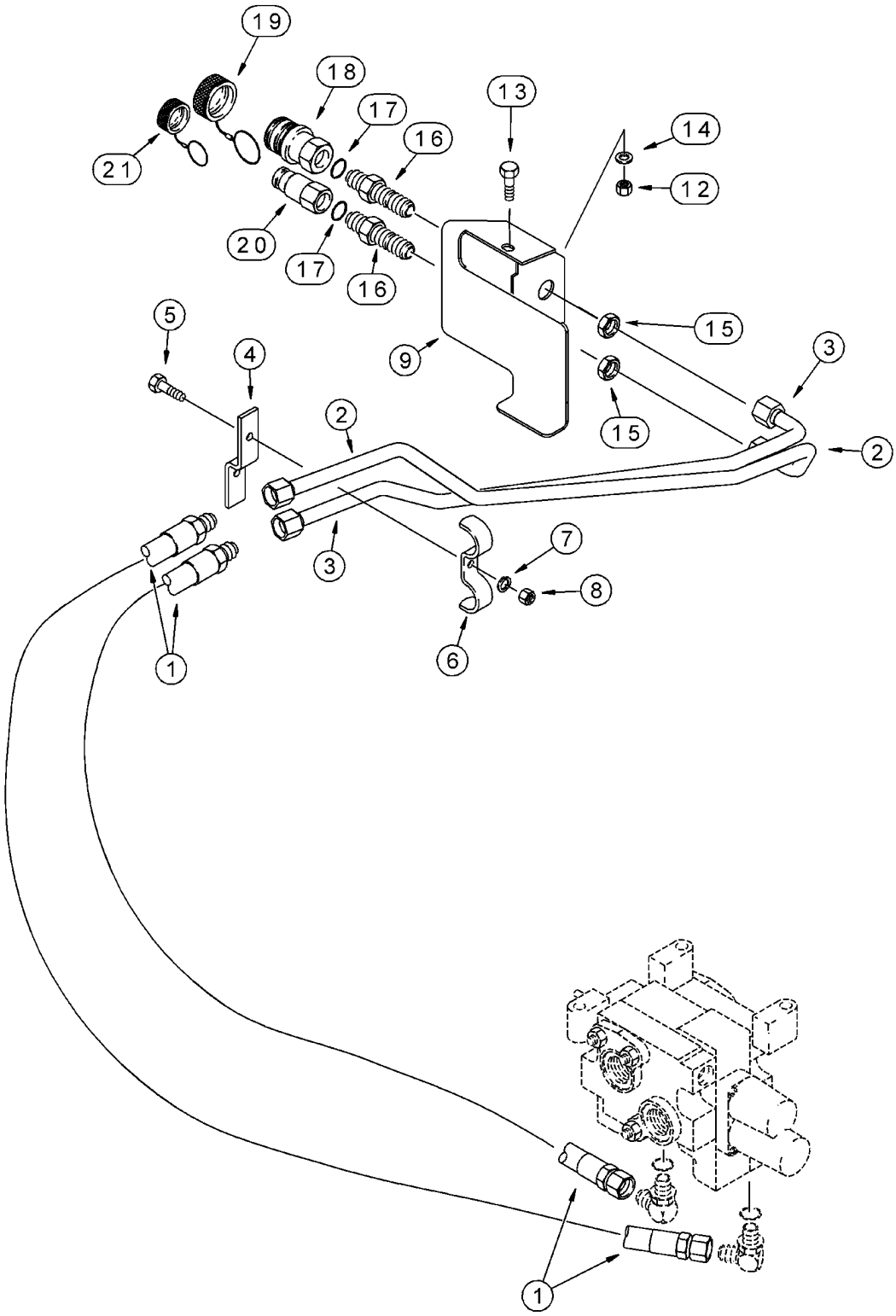

HYDRAULICS - HAND HELD AUXILIARY

REF	FN	PART NUMBER	YR/SN	QTY	DESCRIPTION
		REF			INSTRUCTION Auxiliary Valve To Quick Disconnect Couplings
1		302501A1		2	HOSE 1340 mm (52-13/16 in); For Attaching Parts, See Figure 08-15
2		301700A1		1	TUBE ASSY. Male Coupling
3		301698A1		1	TUBE ASSY. Female Coupling
4		301355A1		1	BRACKET
5		814-10050		1	CAPSCREW M10 x 50
6		D42833		1	CLAMP
7		892-11010		1	WASHER, LOCK M10
8		829-1410		1	NUT M10; 10.9
9		370374A1		1	BRACKET
12		829-1410		1	NUT M10; 10.9
13		614-10025		1	BOLT M10 x 25
14		895-11010		1	WASHER 11 x 21 x 2 mm
15		218-1256		2	NUT, LOCK 1-1/16
16		126155A1		2	FITTING 1-1/16 blkhd fl x OR; Incl. Ref 17
17		237-6012		2	O-RING 59/64 ID x 7/64, Boss Seal
18		122179A1		1	COUPLING, BREAK AWAY Quick Disconnect; Female; Component Parts Not Serviced Separately
19		137343A1		1	PLUG Female Coupling, Aluminum; If Used
19		193261A1		1	PLUG Female Coupling, Black Rubber; If Used
20		122178A2		1	COUPLING, BREAK AWAY Quick Disconnect, Male; Component Parts Not Serviced Separately
21		137344A1		1	PLUG Male Coupling, Aluminum; If Used
21		193262A1		1	PLUG Male Coupling, Black Rubber; If Used

HYDRAULICS - HAND HELD AUXILIARY

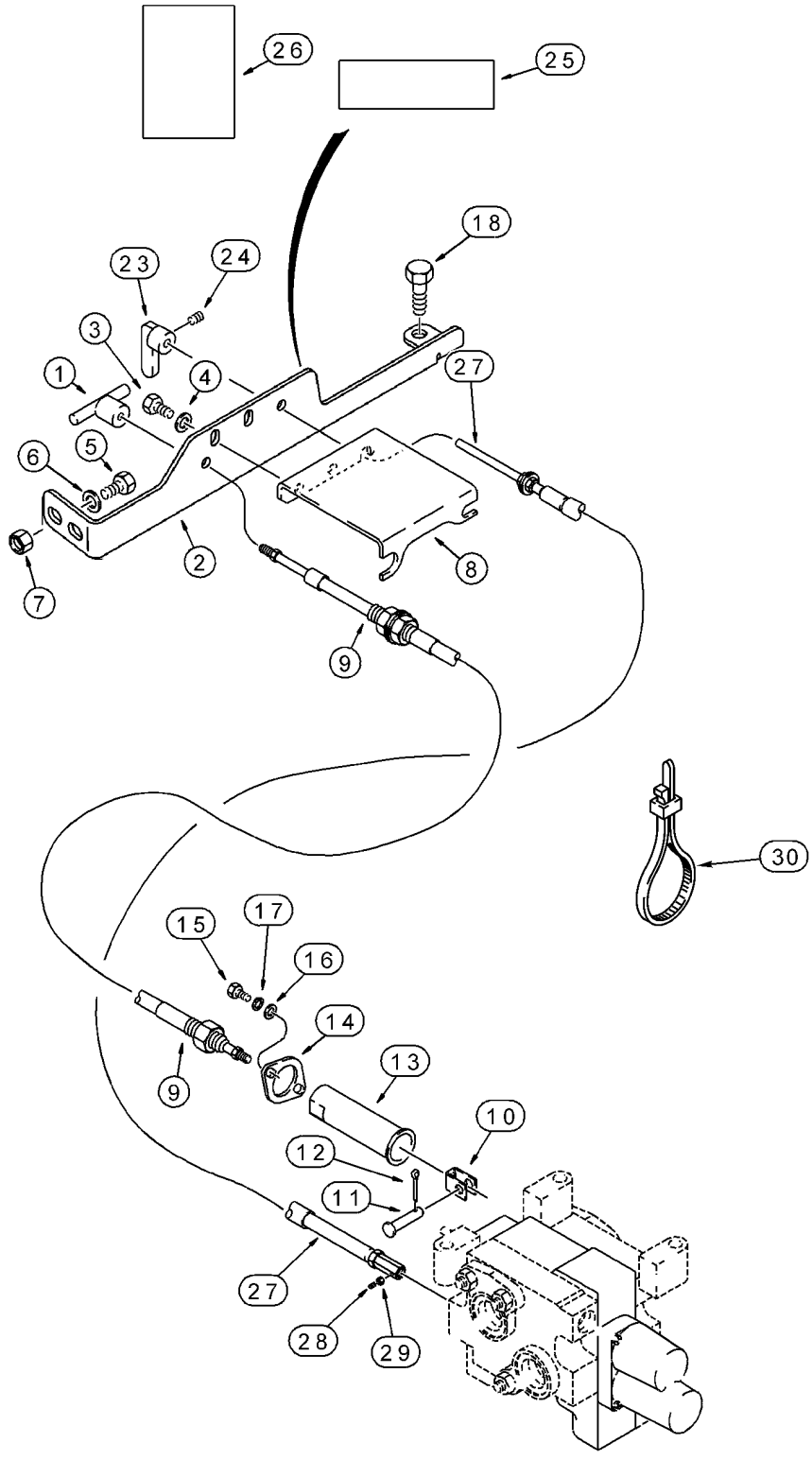

HYDRAULICS - HAND HELD AUXILIARY

REF	FN	PART NUMBER	YR/SN	QTY	DESCRIPTION
		REF			INSTRUCTION Control Cables To Auxiliary Valve
1		139227A1		1	BUTTON Detent
2		386187A1		1	PLATE
3		614-8025		2	CAPSCREW M8 x 25
4		895-11008		2	WASHER 9 x 17 x 1,6 mm
5		614-10025		2	BOLT M10 x 25
6		895-11010		2	WASHER 11 x 21 x 2 mm
7		829-1410		2	NUT M10; 10.9
8		139043A1		1	SUPPORT
9		123942A1		1	CABLE
10		96790C2		1	CLEVIS COUPLING
11		96846C2		1	PIN (AXLE)
12		733-2012		1	PIN, SPLIT (COTTER) M2 x 12
13		1340478C1		1	HOUSING
14		1280055C2		1	FLANGE
15		614-6016		2	CAPSCREW M6 x 16
16		895-11006		2	WASHER 6,6 x 12 x 1,6 mm
17		892-11006		2	WASHER, LOCK M6
18		814-10045		1	CAPSCREW M10 x 45
23		139230A1		1	HANDLE Flow Control
24		83-1108		1	SCREW No. 10 x 1/2 cp pt
25		179683A1		1	DECAL Hand Held Auxiliary Hydraulics; Control Panel Plate; For Decal, See Figure 09-75
26		192300A1		1	DECAL Remote Auxiliary Hydraulics; For Decal, See Figure 09-75
27		123943A1		1	CABLE
28		84-2106		1	SCREW No. 10 NF x 3/8 cn pt
29		225-14210		1	NUT No. 10 NF
30		L18337		2	STRAP 15 in

HYDRAULICS - BACKHOE AUXILIARY

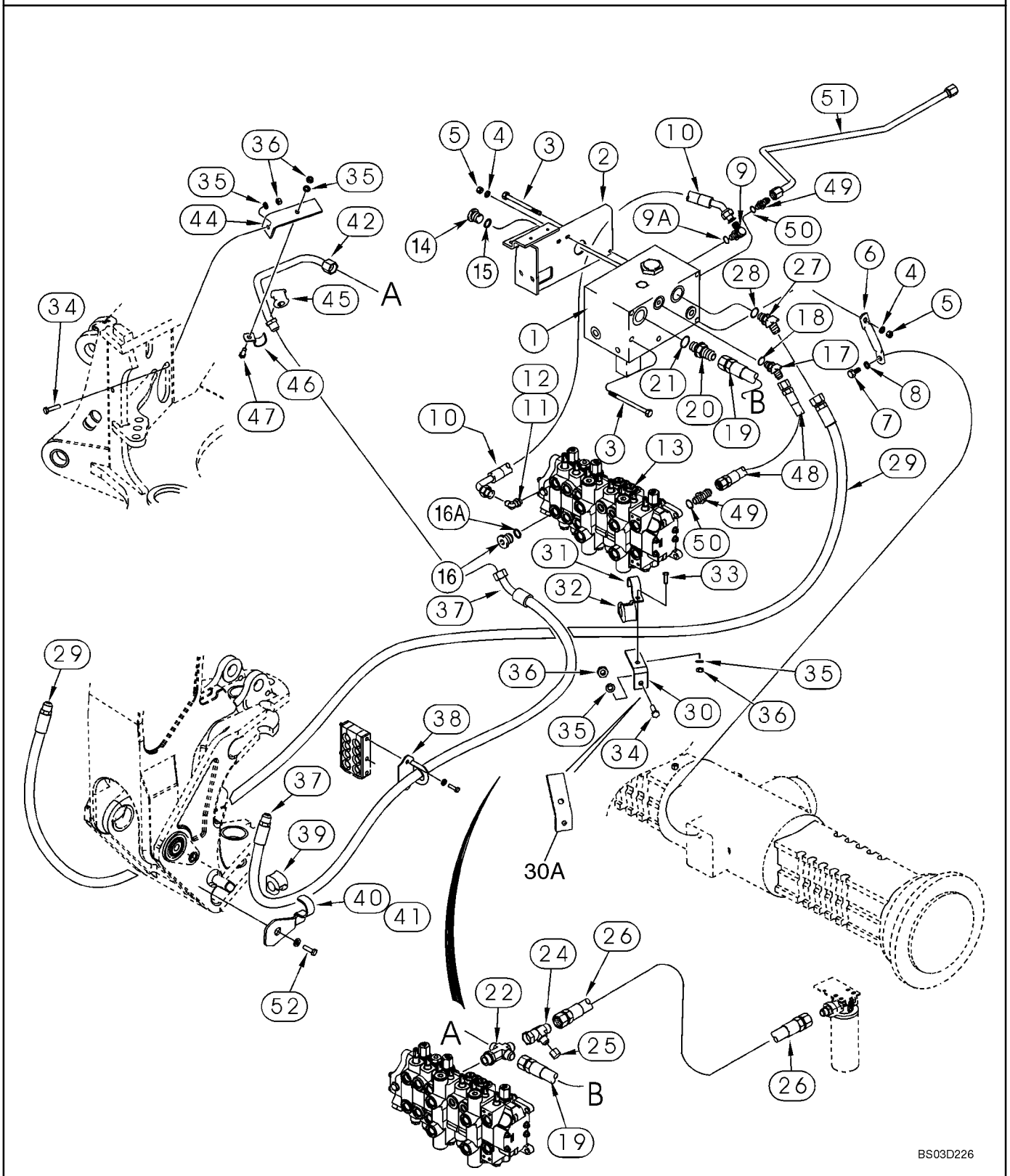

HYDRAULICS - BACKHOE AUXILIARY

REF	FN	PART NUMBER	YR/SN	QTY	DESCRIPTION
		REF			INSTRUCTION Auxiliary and Backhoe Control Valves To Swing Tower
1		298772A1		1	VALVE Backhoe Auxiliary Valve; See Figure 08-50
2		301114A1		1	BRACKET
3		814-10180		2	BOLT M10 x 180
4		895-11010		2	WASHER 11 x 21 x 2 mm
5		829-1410		2	NUT M10; 10.9
6		302680A1		1	STRUT
7		614-18035		1	BOLT M18 x 35
8		892-11018		1	WASHER 18 mm
9		218-5108		1	ELBOW 1-1/16 fl x 0r; Incl. Ref 9A
9A		237-6012		1	O-RING 59/64 ID x 7/64, Boss Seal
10		300905A1		1	HOSE 610 mm (24 in); Auxiliary Valve To Upper Port Of Auxiliary Section Backhoe Valve
11		218-5108		1	ELBOW 1-1/16 fl x 0r; Incl. Ref 12
12		237-6012		1	O-RING 59/64 ID x 7/64, Boss Seal
13		REF		1	INSTRUCTION Valve Assy, Control; Backhoe Control Valve; 7 or 8 Spool Valve With Auxiliary Hydraulics; For Correct Assembly and Components, See Figure 08-36 - 08-38
14		218-5211		1	PLUG 7/8 Or; Incl. Ref 15
15		237-6010		1	O-RING 3/4 ID x 3/32, Boss Seal
16		218-5158		1	PLUG 1-1/16 Or; Incl. Ref 16A
16A		237-6012		1	O-RING , 59/64 ID x 7/64, Boss Seal
17		218-5137		1	FITTING 7/8 fl x Or; Incl. Ref 18
18		237-6010		1	O-RING 3/4 ID x 3/32, Boss Seal
19		300907A1		1	HOSE 720 mm (28-3/8 in); Return
20		218-5069		1	CONNECTOR 1-5/16 fl x Or, Incl. Ref 21
21		237-6016		1	O-RING 1-11/64 ID x 7/64, Boss Seal
22		302097A1		1	FITTING Incl. Ref 23
23		237-6016		1	O-RING 1-11/64 ID x 7/64, Boss Seal
24		218-5490		1	FITTING
25		218-756		1	CAP 7/8; If Used; Not Required On Models With Hand Held Auxiliary Hydraulics
26		293269A1		1	HOSE ASSY. 755 mm (29-3/4 in); Main Return
27		218-5138		1	FITTING 1-1/16-12 fl x Or; Incl. Ref 28

HYDRAULICS - BACKHOE AUXILIARY

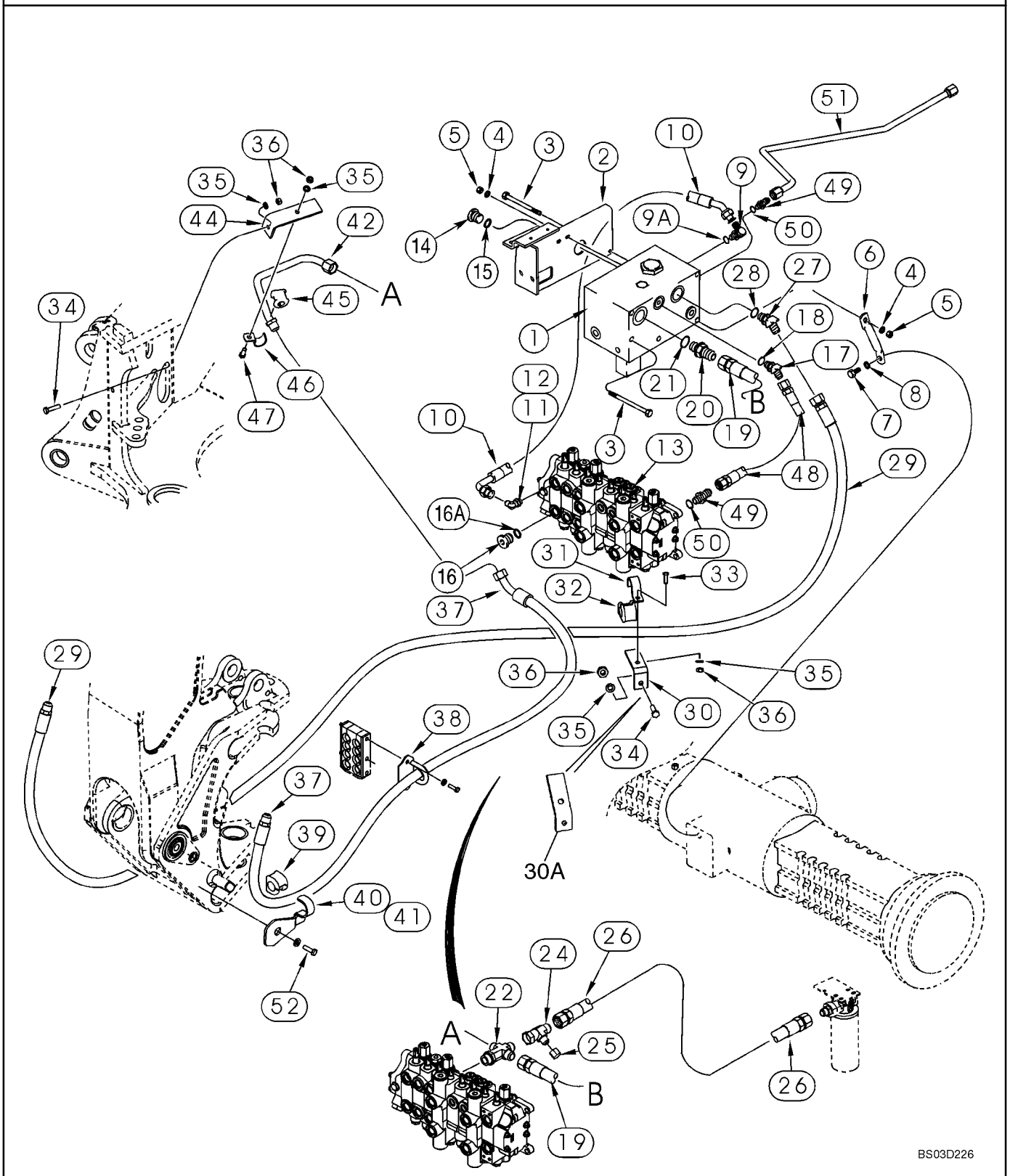

HYDRAULICS - BACKHOE AUXILIARY

REF	FN	PART NUMBER	YR/SN	QTY	DESCRIPTION
28		237-6012		1	O-RING 59/64 ID x 7/64, Boss Seal
29		302472A1		1	HOSE 2603 mm (102-1/2 in); Pressure Port
30		256412A1		1	BRACKET No Longer Available; Order 413778A1, Ref 30A
30A		413778A1		1	BRACKET
31		144479A1		1	CLAMP
32		144477A1		1	SHOCK ABSORBER
33		614-10030		1	SCREW M10 x 30
34		814-10040		2	CAPSCREW M10 x 40
35		892-11010		4	WASHER, LOCK M10
36		829-1410		4	NUT M10; 10.9
37		253740A1		1	HOSE 1760 mm (69-5/16 in); Lower Port Auxiliary Section Of Backhoe Valve to Dipper
38		252737A1		2	BRACKET
39		144477A1		2	SHOCK ABSORBER
40		249775A1		1	BRACKET Left-Hand
41		249773A1		1	BRACKET Right-Hand
42		300939A1		1	TUBE Low Pressure Return
44		282842A1		1	BRACKET
45		D74182		1	GROMMET
46		D143411		1	CLAMP 3/4 ID
47		614-10025		1	BOLT M10 x 25
48		300952A1		1	HOSE 335 mm (13-3/16 in)
49		218-5062		2	CONNECTOR 7/8 fl x Or; Incl. Ref 50
50		237-6010		1	O-RING 3/4 ID x 3/32, Boss Seal
51		386379A1		1	TUBE ASSY. Small Pump Supply
52		604-20045		2	BOLT M20 x 45

HYDRAULICS - BACKHOE AUXILIARY

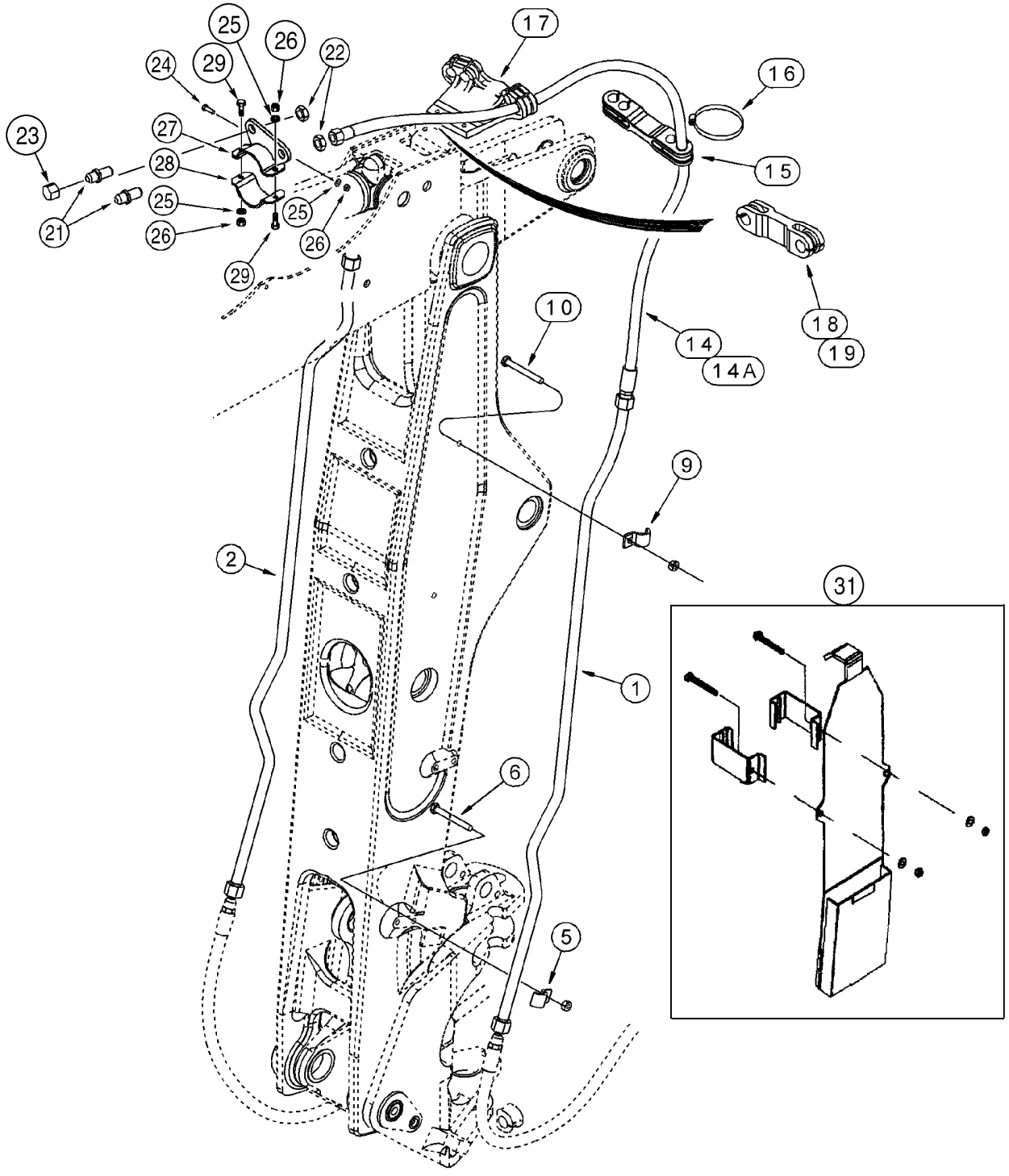

HYDRAULICS - BACKHOE AUXILIARY

REF	FN	PART NUMBER	YR/SN	QTY	DESCRIPTION
		REF			INSTRUCTION At Boom and Dipper
1		280441A1		1	TUBE
2		278748A1		1	TUBE
5		242459A1		2	SHIN
6		814-12090		2	CAPSCREW M12 x 90
9		242459A1		2	SHIN
10		814-10070		2	CAPSCREW M10 x 70
14		243679A2		2	HOSE 2665 mm (104-15/16 in); Models With Extendable Dipper
14A		317749A1		2	HOSE ASSY. 1475 mm (58-3/32 in); Models Without Extendable Dipper
15		246158A1		1	SHIN Models With Extendable Dipper
16		214-3156		4	CLAMP 2-3/4 x 3-5/8; Models With Extendable Dipper
17		246151A1		1	SUPPORT Models With Extendable Dipper
18		103670A1		1	CLAMP, HOSE Rubber
19		214-3132		2	CLAMP
21		218-676		2	UNION 1-1/16 fl x bkhd fl
22		218-1256		2	NUT, LOCK 1-1/16
23		218-335		2	CAP 1/16
24		614-10030		1	SCREW M10 x 30
25		896-11010		2	WASHER 11 x 21 x 2,5 mm
26		832-10410		2	NUT M10
27		314733A1		1	CLAMP,SPECIAL
28		314734A1		1	STRAP
29		614-10035		2	SCREW M10 x 35
30		284928A1		2	BRACKET
31		317990A1		1	GUARD Boom; Component Parts Not Serviced Separately

08 -19A		p1	06/03

HYDRAULICS - BACKHOE BOOM LOCK AND ELECTRICAL CIRCUIT

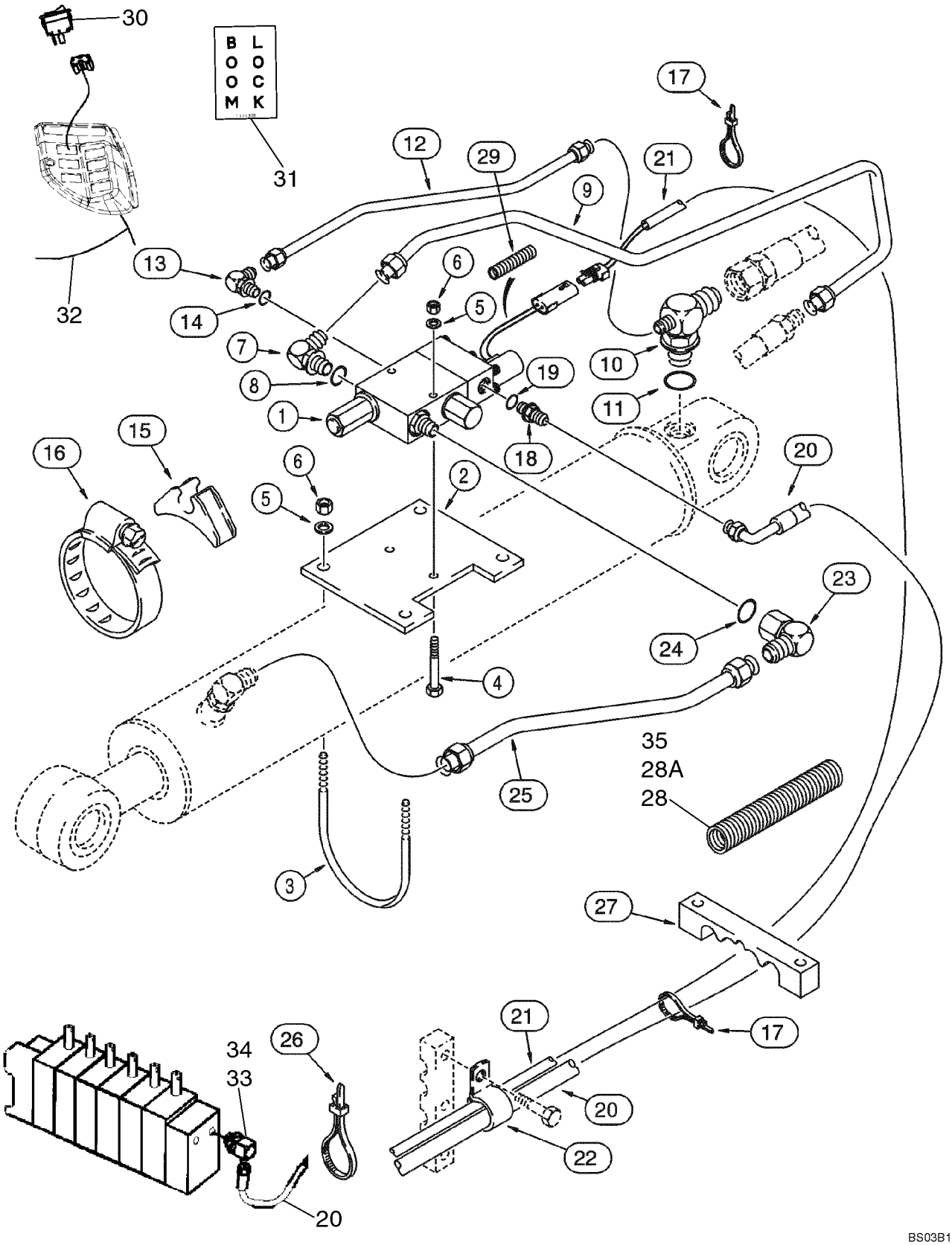

HYDRAULICS - BACKHOE BOOM LOCK AND ELECTRICAL CIRCUIT

REF	FN	PART NUMBER	YR/SN	QTY	DESCRIPTION
		399225A1		1	KIT Backhoe Boom Lock; Incl. Ref 1 - 35 and Instruction Sheet; Order Components
1		189957A1		1	VALVE Solenoid; Backhoe Boom Lock; Incl. (2) 321-6046 Warning Decals; See Figure 08-50A
2		D150054		1	PLATE, LARGE Valve Mounting
3		D150053		2	BOLT 3/8 in
4		413-648		2	BOLT 3/8 NC x 3 in; Hex
5		495-11041		6	WASHER 13/32 x 13/16 x 1/16 in; Flat
6		231-1446		6	NUT, LOCK 3/8 NC
7		218-5118		1	FITTING 90 deg, 1-11/64 ID fl x 1-5/16 in adj, Incl. Ref 8
8		237-6016		1	O-RING 1-11/64 ID x 7/64, Boss Seal
9		192025A1		1	TUBE Valve Port; Attaches to Ref 34 Hose on Figure 8-11
10		198421A1		1	ELBOW Reducer; Boom Cylinder Closed End; Attaches to Ref 22 Hose on Figure 08-11; Incl. Ref 11
11		237-6016		1	O-RING 1-11/64 ID x 7/64, Boss Seal
12		189709A1		1	TUBE Pilot Port
13		218-5283		1	ELBOW 90 deg, 7/16 fl x 9/16 in adj, Incl. Ref 14
14		237-6006		1	O-RING 15/32 x 5/64, Boss Seal
15		D142787		1	SPACER Rubber
16		214-31104		1	CLAMP 5-3/4 - 6-5/8 in dia adj
17		L18337		15	STRAP 15 in
18		218-5359		1	UNION 7/16 fl x 3/16 in; Incl. Ref 19
19		237-6008		1	O-RING 41/64 ID x 3/32, Boss Seal
20		189103A1		1	HOSE 3700 mm (145-11/16 in), Return; Attaches to Elbow at Backhoe Valve
21		189263A1		1	HARNESS Boom Lock Valve to Control Tower Harness
22		515-25190		1	CLAMP 3/4 in ID; Return Hose
23		218-5382		1	FITTING 90 deg, 1-1/16 fl x 1-5/16 in swl; Incl. Ref 24
24		237-6016		1	O-RING 1-11/64 ID x 7/64, Boss Seal
25		198532A1		1	TUBE ASSY. Boom Lock Valve to Boom Cylinder Rod End; See Figure 08-11 For Elbow
26		D147773		1	CLAMP 11 in

08 -19A		p2	06/03

HYDRAULICS - BACKHOE BOOM LOCK AND ELECTRICAL CIRCUIT

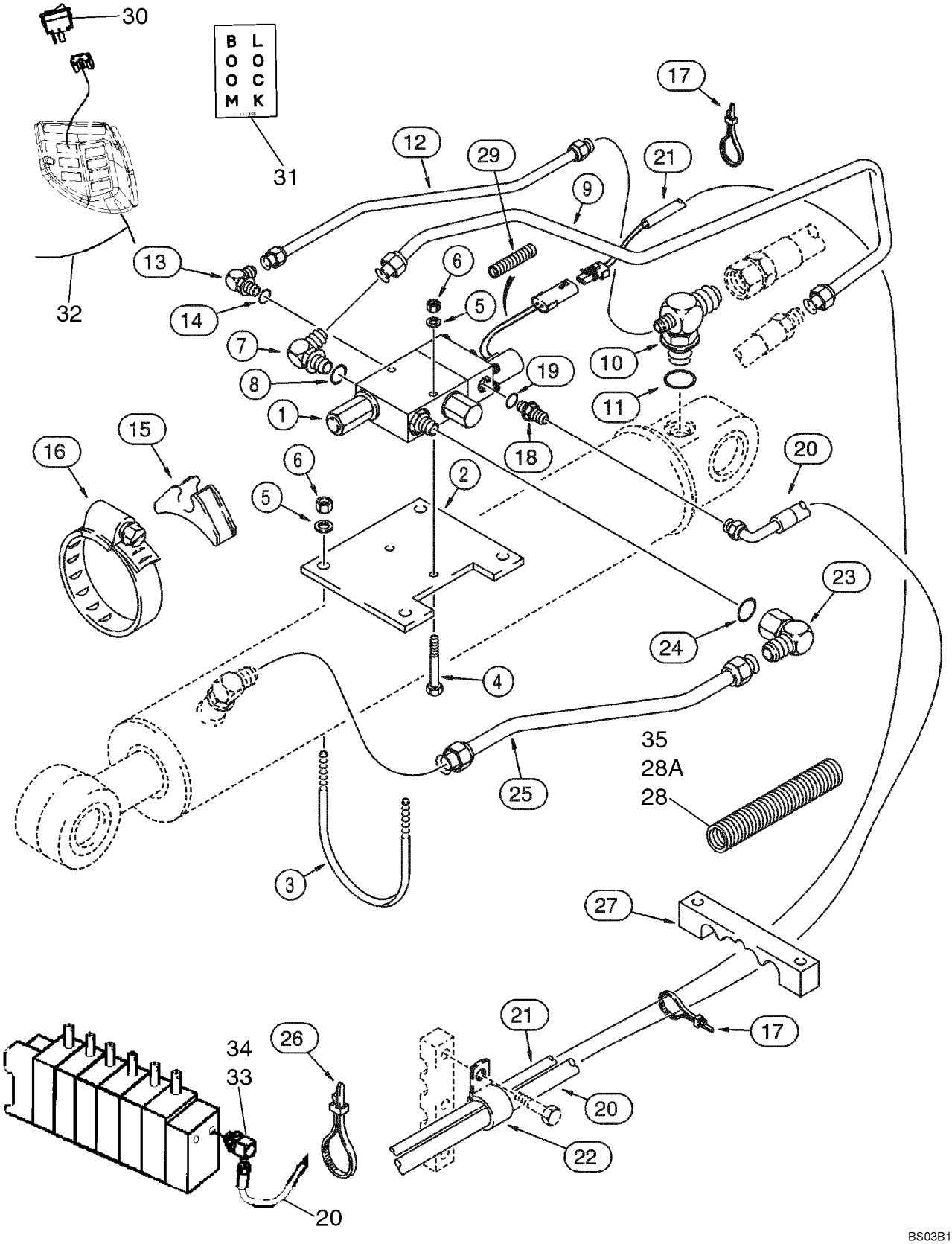

HYDRAULICS - BACKHOE BOOM LOCK AND ELECTRICAL CIRCUIT

REF	FN	PART NUMBER	YR/SN	QTY	DESCRIPTION
27		221329A1		1	CLAMP Hose and Harness
28		220276A1		1	SLEEVE 610 mm long, Hose Guard; Ref 20 Hose and Ref 21 Harness, Ahead of Clamp
28A		404907A1		1	SLEEVE 740 mm long, Hose Guard; Ref 20 Hose and Ref 21 Harness, Behind Clamp
29		1999528C1		1	CABLE SHEATH. 455 mm long; Harness Protection
30		400016A1		1	SWITCH Rocker; Boom Lock
31		L111356		1	DECAL Boom Lock
32		399246A1		1	HARNESS Cab to Solenoid
33		189414A1		1	ELBOW 90 deg; Incl. Ref 34
34		237-6010		1	O-RING 7/8 - 14, Boss Seal
35		226582A1		1	PROTECTOR 1850 mm long; Harness Below Floor Plate

08 -20		p1	05/03

HYDRAULICS - RIDE CONTROL (297977A4 SOLENOID VALVE)

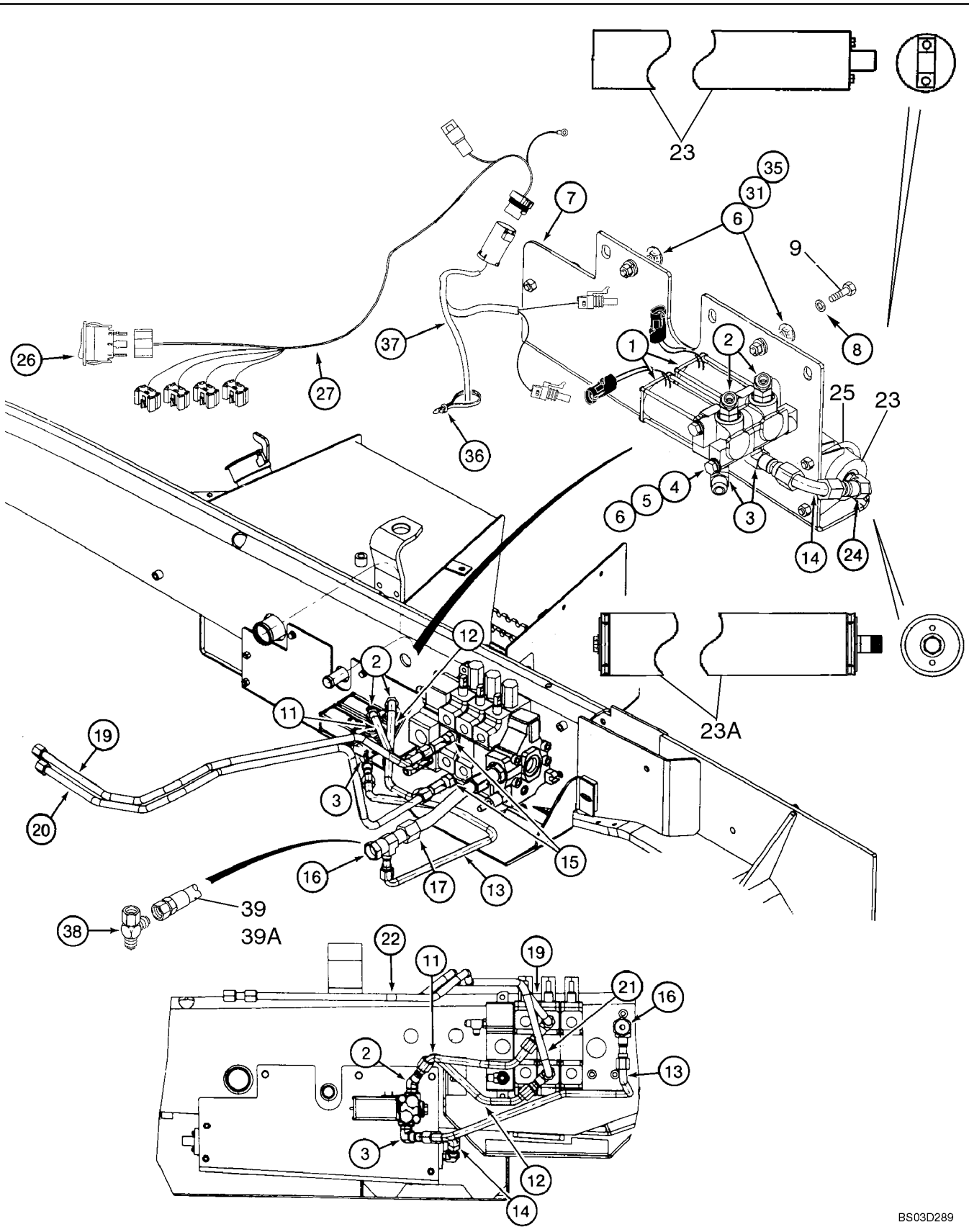

HYDRAULICS - RIDE CONTROL (297977A4 SOLENOID VALVE)

REF	FN	PART NUMBER	YR/SN	QTY	DESCRIPTION
		REF			INSTRUCTION Ride Control Hydraulic and Electrical Circuit
1		297977A4		1	VALVE,ELECTRIC Ride Control; Includes Two Valves; Incl. 313310A1, 391138A1, 392401A1; If Used; Replaces 297977A3
		434560A1		1	KIT Service Upgrade For 297977A3 Solenoid Valve; Includes Two Valves; If Used
		313310A1		2	KIT, GASKET Seal; Incl. (4) O-rings Which Are Not Serviced Separately; (One Kit Per Valve)
		391138A1		2	KIT Incl. (1) Poppet, (2) Springs, (1) Guide Tube and Case Assembly Which Are Not Serviced Separately, Incl. 392401A1
		392401A1		1	COIL
2		218-5145		2	FITTING 7/8 fl x 3/4 Or; Incl. Ref 2A
2A		237-6008		1	O-RING 41/64 ID x 3/32, Boss Seal
3		218-5117		2	FITTING 7/8 fl x 3/4 adj Or; Incl. Ref 3A
3A		237-6008			O-RING 41/64 ID x 3/32, Boss Seal
4		814-10140		2	CAPSCREW M10 x 140
5		895-11010		2	WASHER 11 x 21 x 2 mm
6		892-11010		4	WASHER, LOCK M10
7		278169A1		1	PLATE ASSY.
8		330083A1		2	SPACER 11 x 40 x 10 mm thk
9		711-10040		2	BOLT M10 x 40
11		240709A4		1	PIPE Left-Hand Solenoid Valve Upper Port To Tee At Loader Valve Upper Lift Section
12		377997A1		1	TUBE ASSY. Right-Hand Solenoid Valve Upper Port To Tee At Loader Valve Lower Lift Section
13		240706A2		1	PIPE To Tee At Filter, Models With Ride Control, But Without Hydraulic Tool Quick Coupler; See Ref 39 For Models With Both
14		240703A2		1	PIPE Accumulator To Right-Hand Solenoid Valve Lower Port
15		218-5220		2	TEE 7/8 fl br x fl x sw; Attaches To Tees At Loader Valve Lift Section; For Tees At Loader Valve Lift Section, See Figure 08-04
16		218-5490		1	FITTING To Tee At Filter; See Figure 08-03

HYDRAULICS - RIDE CONTROL (297977A4 SOLENOID VALVE)

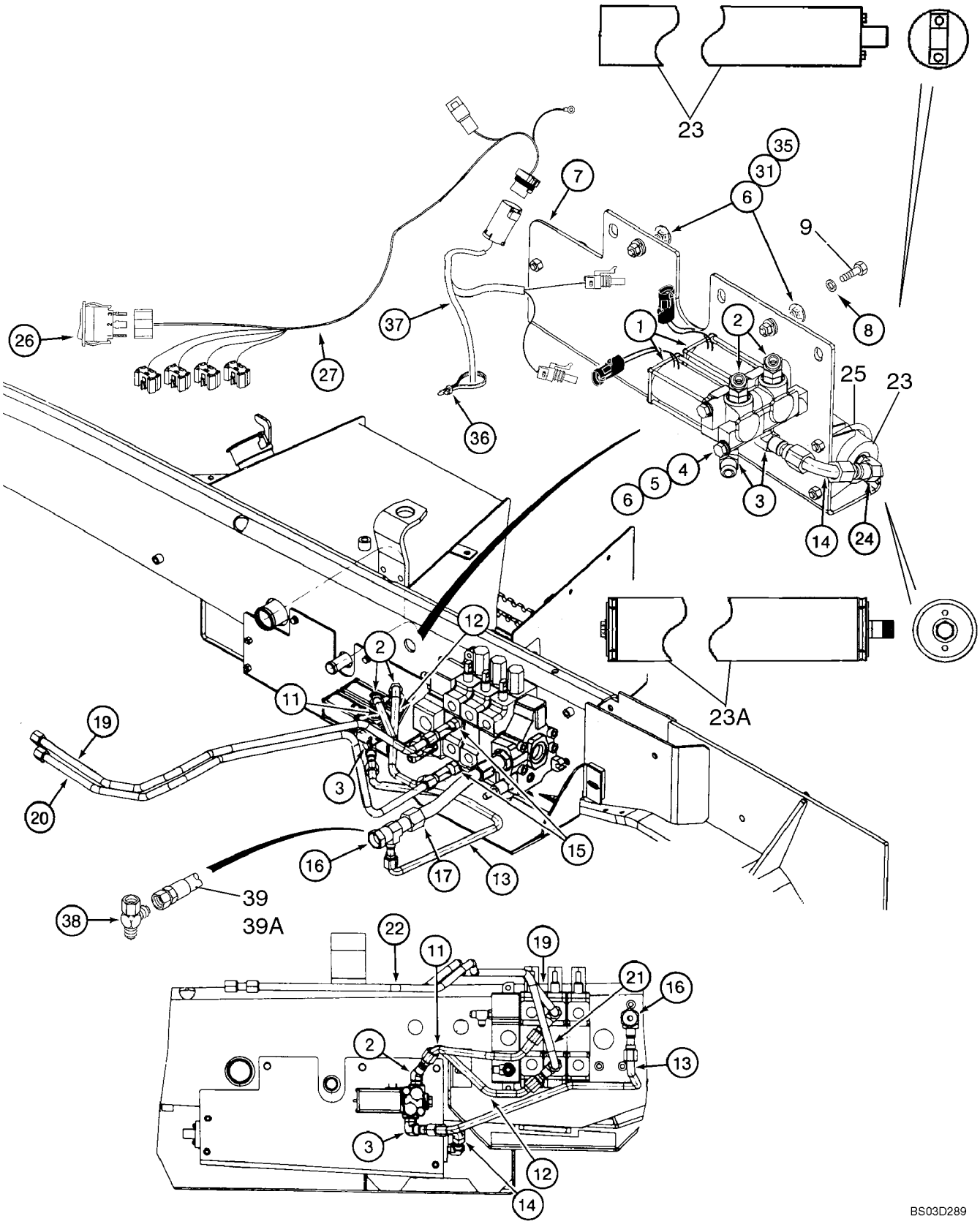

HYDRAULICS - RIDE CONTROL (297977A4 SOLENOID VALVE)

REF	FN	PART NUMBER	YR/SN	QTY	DESCRIPTION
17		230078A2		1	HOSE 415 mm (16-3/8 in); Replaces Existing Hose From Loader Valve To Filter; See Figure 08-03
19		230072A1		1	PIPE Replaces Existing Tube At Loader Valve Upper Lift Port To Left-Hand Loader Lift Cylinder Rod End; See Figure 08-04
20		230073A1		1	PIPE Replaces Existing Tube At Loader Valve Lower Lift Port To Left-Hand Loader Lift Cylinder Closed End; See Figure 08-04
23		234412A1		1	ACCUMULATOR Ride Control; See Figure 08-51
23A		448284A1		1	ACCUMULATOR Component Parts Not Serviced Separately; Used For Production Only; For Service, Order 234412A1, Ref. 23
24		218-5600		1	FITTING 7/8 fl x 3/4 Or; Incl. Ref 24A
24A		237-6008		1	O-RING 41/64 ID x 3/32, Boss Seal; Not Illustrated
25		A13240		2	CLAMP Two Piece; Includes Hardware
26		235002A1		1	SWITCH Ride Control
27		390518A3		1	HARNESS Side Console Options
31		829-1410		2	NUT M10; 10.9
32		121413A1		1	FUSE 15 amp; Not Illustrated
35		895-15010		2	WASHER 11 x 24 x 2 mm
36		L18337		2	STRAP 15 in
37		390520A2		1	HARNESS Chassis Options
38		218-5220		1	TEE 7/8 fl br x fl x sw; Models With Both Ride Control and Hydraulic Tool Quick Coupler
39		293037A1		1	TUBE ASSY. 374 mm (14-23/32 in); Left-Hand Solenoid Valve Lower Port To Tee At Filter; Models With Both Ride Control and Hydraulic Tool Quick Coupler; If Used
39A		87416314		1	TUBE ASSY. 442 mm (17-13/32 in); Left-Hand Solenoid Valve Lower Port To Tee At Filter; Models With Both Ride Control and Hydraulic Tool Quick Coupler; If Used

08 -20A		p1	05/03

HYDRAULICS - RIDE CONTROL (86983598 SOLENOID VALVE)

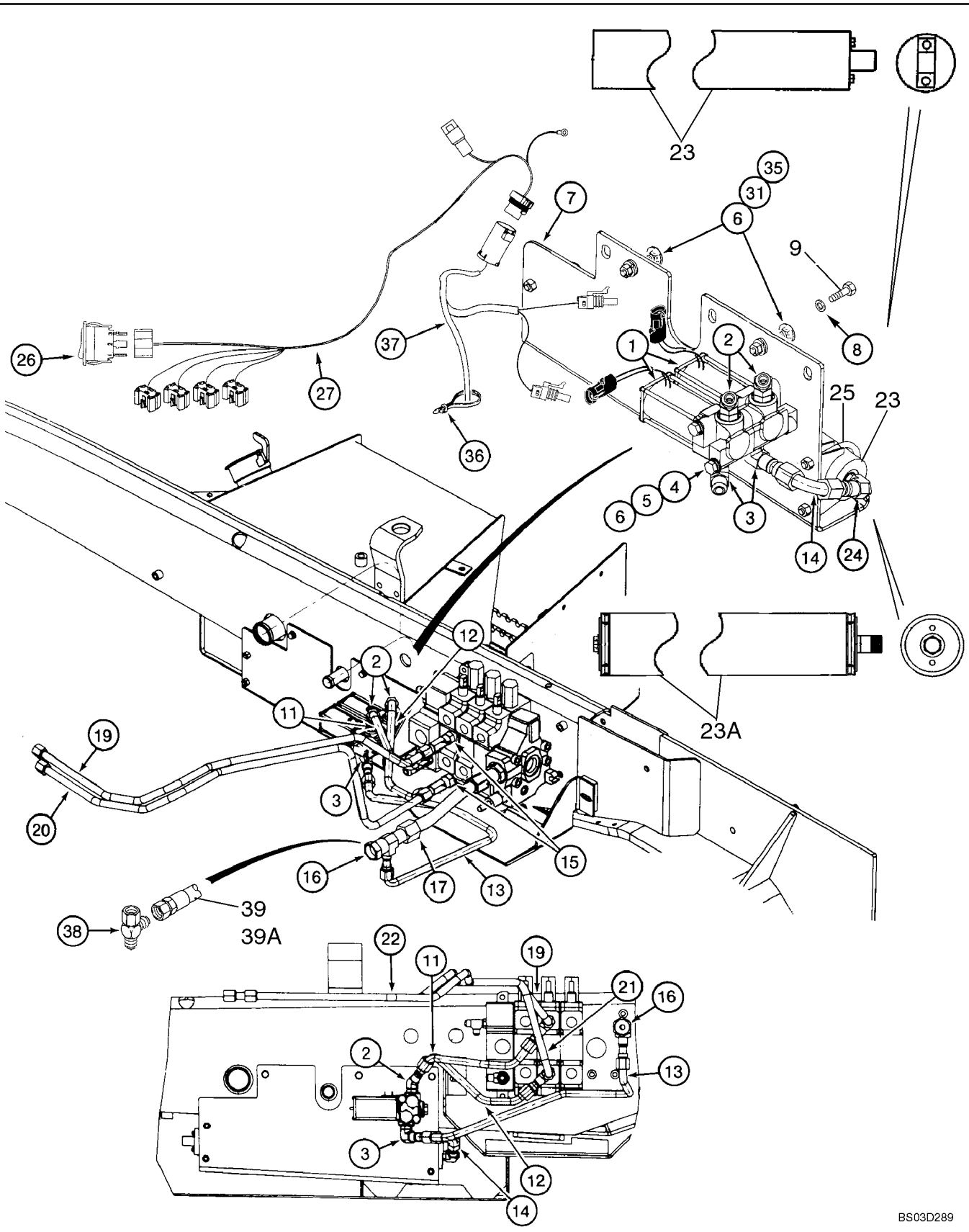

HYDRAULICS - RIDE CONTROL (86983598 SOLENOID VALVE)

REF	FN	PART NUMBER	YR/SN	QTY	DESCRIPTION
		REF			INSTRUCTION Ride Control Hydraulic and Electrical Circuit
1		{86993598}		1	Ride Control; Includes Two Valves; Component Parts Not Services Separately
3		218-5117		4	FITTING 7/8 fl x 3/4 adj Or; Incl. Ref 3A
3A		237-6008		1	O-RING 41/64 ID x 3/32, Boss Seal
4		814-10080		1	SCREW M10 x 80
5		895-11010		1	WASHER 11 x 21 x 2 mm
6		892-11010		3	WASHER, LOCK M10
7		86993690		1	PLATE, MOUNTING
8		330083A1		2	SPACER 11 x 40 x 10 mm thk
9		711-10040		2	BOLT M10 x 40
11		87403130		1	TUBE ASSY. Left-Hand Solenoid Valve Upper Port To Tee At Loader Valve Upper Lift Section
12		87403132		1	TUBE ASSY. Right-Hand Solenoid Valve Upper Port To Tee At Loader Valve Lower Lift Section
13		86994193		1	TUBE ASSY. To Tee At Filter; Models With Ride Control, But Without Hydraulic Tool Quick Coupler; See Ref 39 For Models With Both
14		86994190		1	TUBE ASSY. Accumulator To Right-Hand Solenoid Valve Lower Port
15		218-5220		2	TEE 7/8 fl br x fl x sw; Attaches To Tees At Loader Valve Lift Section; For Tees At Loader Valve Lift Section, See Figure 08-04
16		218-5490		1	FITTING To Tee At Filter; See Figure 08-03
17		230078A2		1	HOSE 415 mm (16-3/8 in); Replaces Existing Hose From Loader Valve To Filter; See Figure 08-03
19		230072A1		1	PIPE Replaces Existing Tube At Loader Valve Upper Lift Port To Left-Hand Loader Lift Cylinder Rod End; See Figure 08-04
20		230073A1		1	PIPE Replaces Existing Tube At Loader Valve Lower Lift Port To Left-Hand Loader Lift Cylinder Closed End; See Figure 08-04
23		234412A1		1	ACCUMULATOR Ride Control; See Figure 08-52

08 -20A		p2	05/03

HYDRAULICS - RIDE CONTROL (86983598 SOLENOID VALVE)

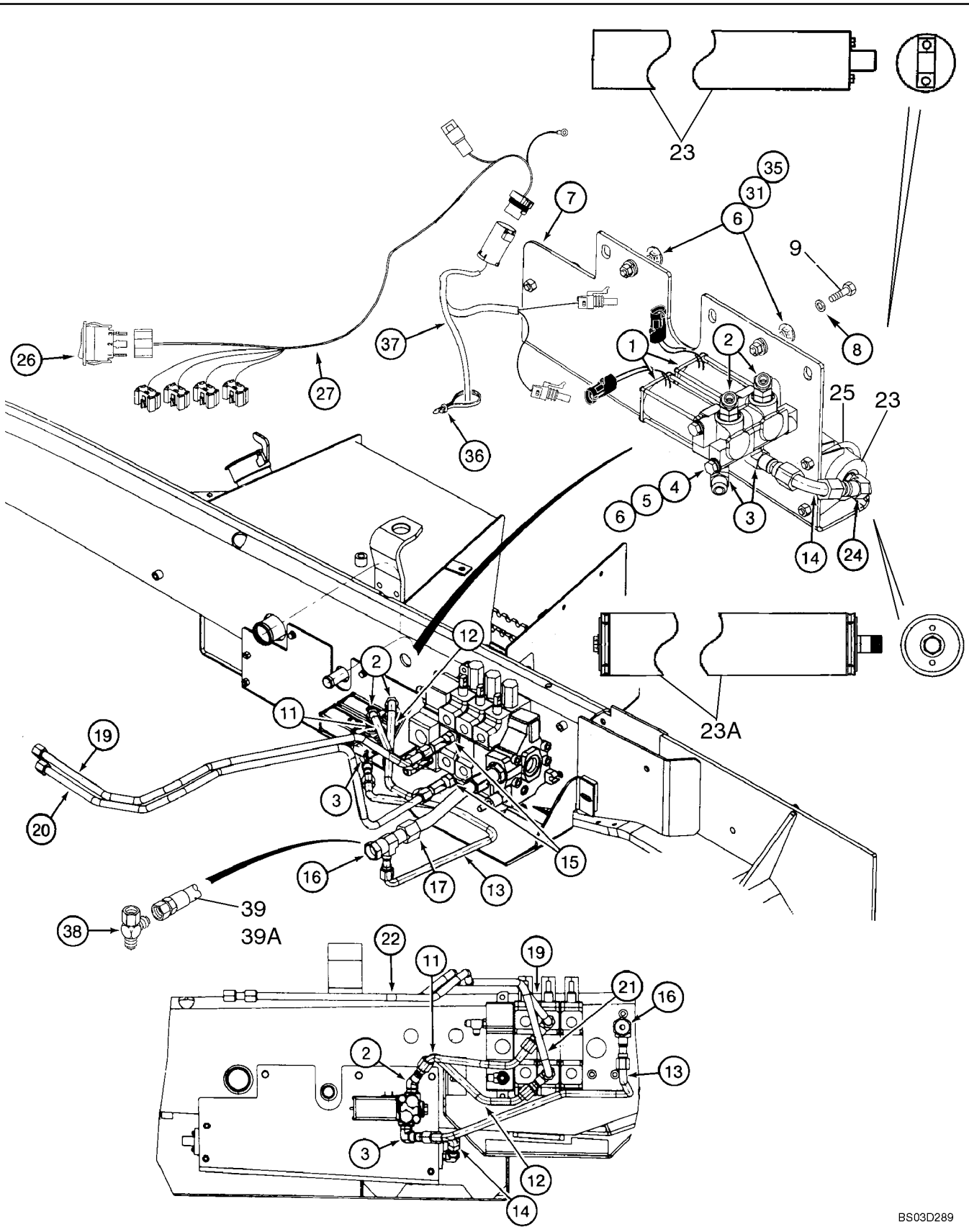

HYDRAULICS - RIDE CONTROL (86983598 SOLENOID VALVE)

REF	FN	PART NUMBER	YR/SN	QTY	DESCRIPTION
23A		448284A1		1	ACCUMULATOR Component Parts Not Serviced Separately; Used In Production; For Service, Order 234412A1, Ref. 23
24		218-5600		1	FITTING 7/8 fl x 3/4 Or; Incl. Ref 24A
24A		237-6008		1	O-RING 41/64 ID x 3/32, Boss Seal; Not Illustrated
25		A13240		2	CLAMP Two Piece; Includes Hardware
26		235002A1		1	SWITCH Ride Control
27		390518A3		1	HARNESS Side Console Options
31		829-1410		2	NUT M10; 10.9
32		121413A1		1	FUSE 15 amp; Not Illustrated
35		895-15010		2	WASHER 11 x 24 x 2 mm
36		L18337		2	STRAP 15 in
37		390520A2		1	HARNESS Chassis Options
38		218-5220		1	TEE 7/8 fl br x fl x sw; Models With Both Ride Control and Hydraulic Tool Quick Coupler
39		293037A1		1	TUBE ASSY. 374 mm (14-23/32 in); Left-Hand Solenoid Valve Lower Port To Tee At Filter; Models With Both Ride Control and Hydraulic Tool Quick Coupler; If Used
39A		87416314		1	TUBE ASSY. 442 mm (17-13/32 in); Left-Hand Solenoid Valve Lower Port To Tee At Filter; Models With Both Ride Control and Hydraulic Tool Quick Couplter; If Used

HYDRAULICS - COUPLER, LOADER TOOL QUICK

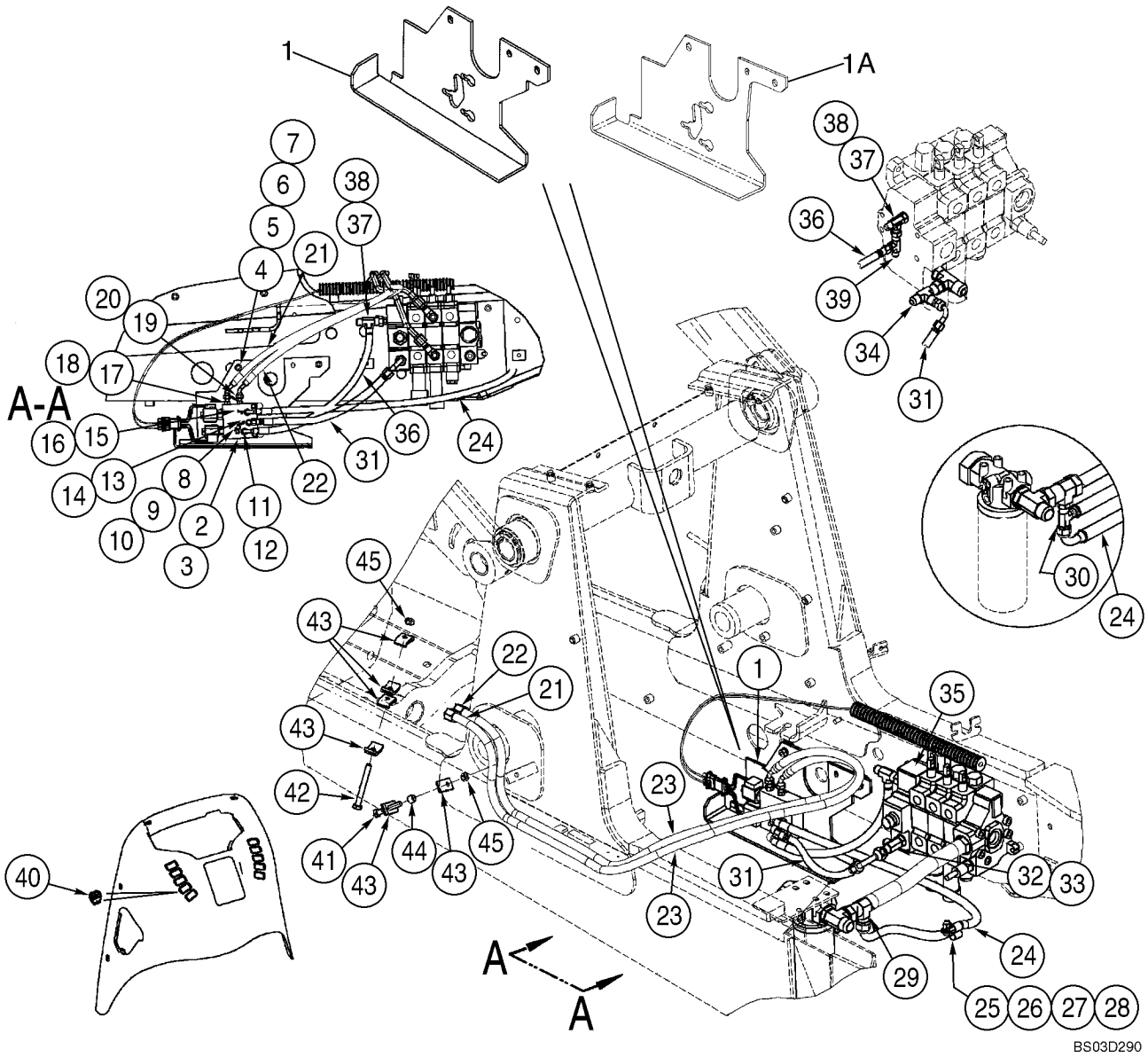

HYDRAULICS - COUPLER, LOADER TOOL QUICK

REF	FN	PART NUMBER	YR/SN	QTY	DESCRIPTION
1		362851A1		1	BRACKET If Used
1A		86993692		1	PLATE, MOUNTING If Used
2		386988A3		1	VALVE Four-Way; Two Position; Incl. 396695A1, 396696A1
		396695A1		1	KIT Seal; Includes (10) O-Rings and (2) Cartridge Seal Kits Which Are Not Serviced Separately
		396696A1		1	KIT Coil
3		239-5020		3	RING Quad Ring; Not Illustrated; When Backhoe Coupler Valve and Loader Coupler Valves Are Used Together, O-Rings Are To Be Placed Between The Valves At The Tank, Pressure and Load Sense Ports
4		711-10050		2	BOLT M10 x 50
5		895-11010		2	WASHER 11 x 21 x 2 mm
6		330083A1		2	SPACER 11 x 40 x 10 mm thk
7		832-10410		2	NUT M10
8		811-10060		3	BOLT M10 x 60; Models With Loader Coupler Valve Only
8		811-10100		3	BOLT M10 x 100; Models With Both Backhoe Bucket Coupler Valve and Loader Coupler Valve
9		895-11010		3	WASHER 11 x 21 x 2 mm
10		832-10410		3	NUT M10
11		218-5057		1	CONNECTOR 9/16 fl x Or; Incl. Ref 12
12		237-6006		1	O-RING 15/32 ID x 5/64, Boss Seal
13		218-5105		1	ELBOW 9/16 fl x Or; Incl. Ref 14
14		237-6006		1	O-RING 15/32 ID x 5/64, Boss Seal
15		218-5351		1	CONNECTOR 3/4 fl x 9/16 Or; Incl. Ref 16
16		237-6006		1	O-RING 15/32 ID x 5/64, Boss Seal
17		218-5056		1	CONNECTOR 1/2 fl x Or; Incl. Ref 18
18		237-6005		1	O-RING 13/32 ID x 5/64
19		218-5053		1	CONNECTOR 7/16 fl x Or; Incl. Ref 20
20		237-6004		1	O-RING 23/64 ID x 5/64, Boss Seal
21		387954A2		1	HOSE ASSY. 2677 mm (105-13/32 in); Solenoid Valve Lower Port; For Attaching Parts, See Figure 08-22

HYDRAULICS - COUPLER, LOADER TOOL QUICK

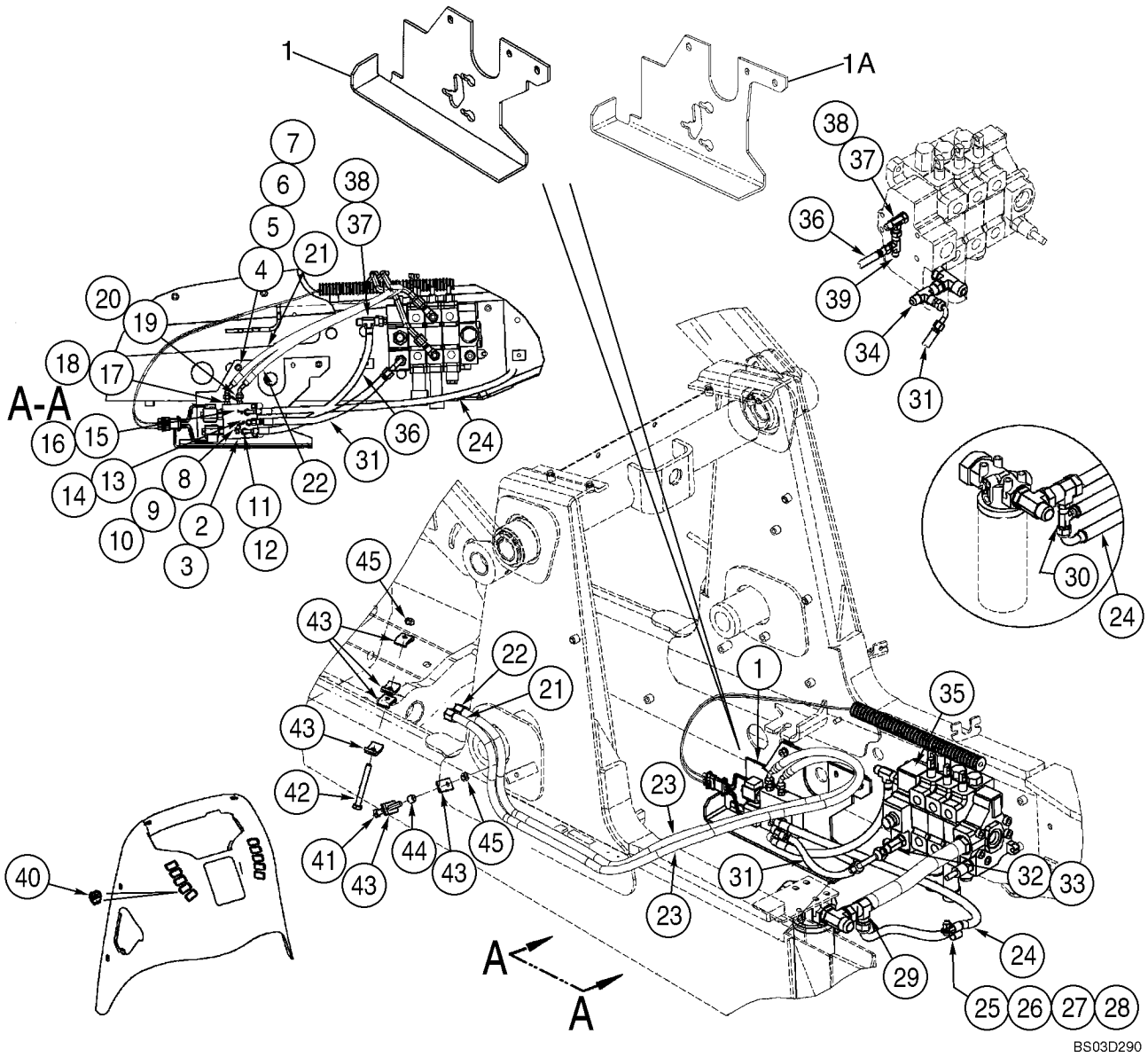

HYDRAULICS - COUPLER, LOADER TOOL QUICK

REF	FN	PART NUMBER	YR/SN	QTY	DESCRIPTION
22		387953A1		1	HOSE ASSY. 2677 mm (105-13/32 in); Solenoid Valve Upper Port; For Attaching Parts, See Figure 08-22
23		L18337		14	STRAP 15 in
24		363220A2		1	HOSE ASSY. 1170 mm (46-1/16 in); Return
25		515-25190		1	CLAMP 3/4 ID
26		515-25159		1	CLAMP
27		614-12025		1	CAPSCREW M12 x 25; If Used
27		614-12030		1	CAPSCREW M12 x 30; If Used
28		832-10412		1	NUT M12
29		218-5490		1	FITTING
30		218-5220		1	TEE 7/8 fl br x fl x sw; Models With Ride Control
31		391459A1		1	HOSE ASSY. 580 mm (22-27/32 in); Pressure
32		218-5292		1	FITTING 1/2 x 5/8 x 1/2; Incl. Ref 33; Models Without Hand Held Auxiliary Hydraulics
33		237-6010		1	O-RING 3/4 ID x 3/32, Boss Seal
34		218-845		1	TEE 3/4 fl br x fl x sw; Models With Hand Held Auxiliary Hydraulics; See Hand Held Auxiliary Hydraulics For Tee At Loader Valve
35		130060A2		1	VALVE, PRESSURE RELIEF 19,000 kPa; Pilot Relief; See Figure 08-29
36		363222A2		1	HOSE ASSY. 645 mm (25-13/32 in); Load Sensing
37		282428A1		1	POPPET, VALVE Incl. Ref 38
38		237-6006		1	O-RING 15/32 ID x 5/64, Boss Seal
39		218-5222		1	FITTING 9/16 x 18; Models With Hand Held Auxiliary Hydraulics
40		398675A2		1	SWITCH Loader Tool Quick Coupler
41		814-10070		1	CAPSCREW M10 x 70
42		814-10080		1	SCREW M10 x 80
43		D138055		6	CLAMP
44		120303A1		1	SPACER
45		832-10410		2	NUT M10

HYDRAULICS - COUPLER, LOADER TOOL QUICK

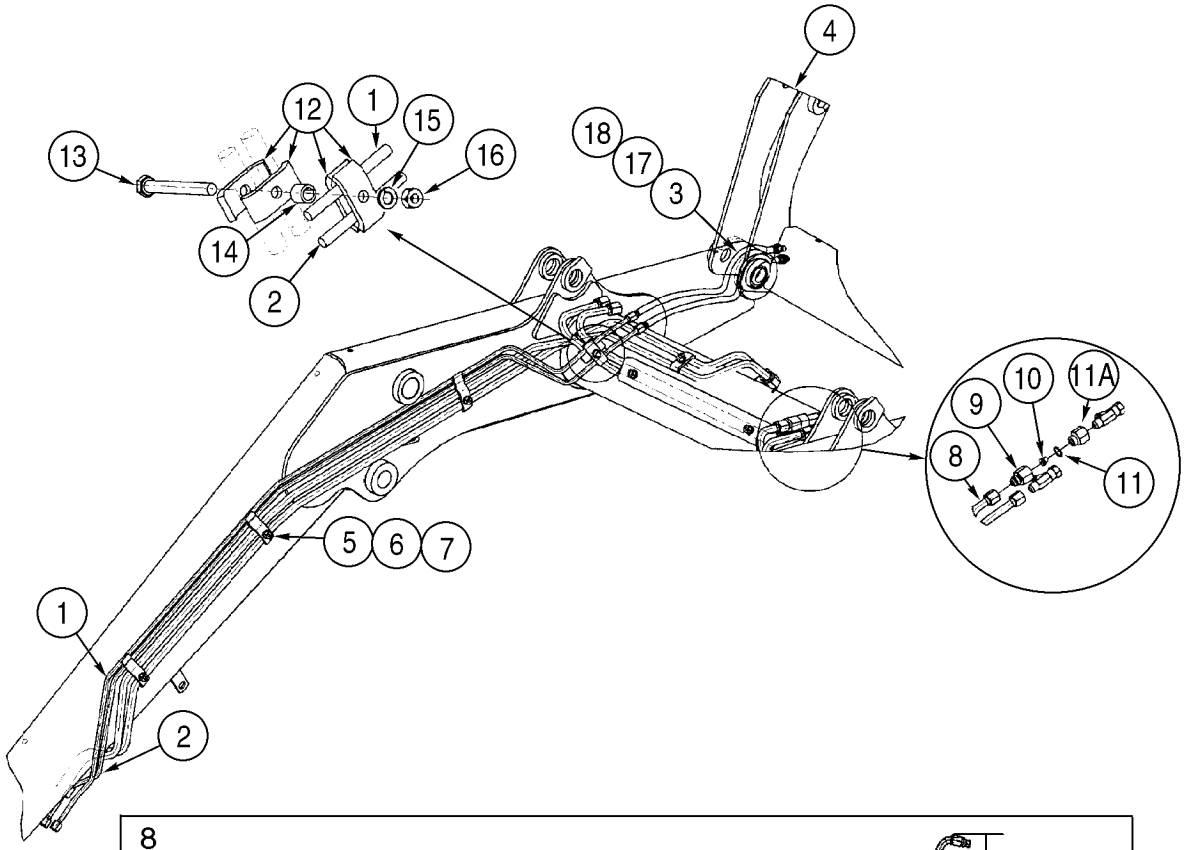

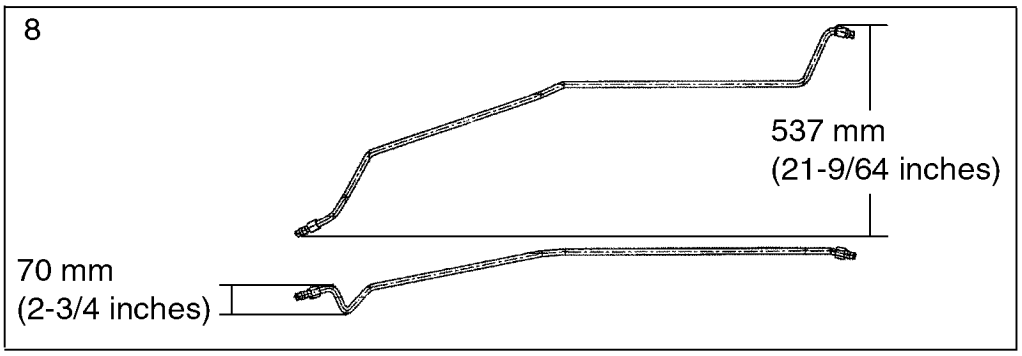

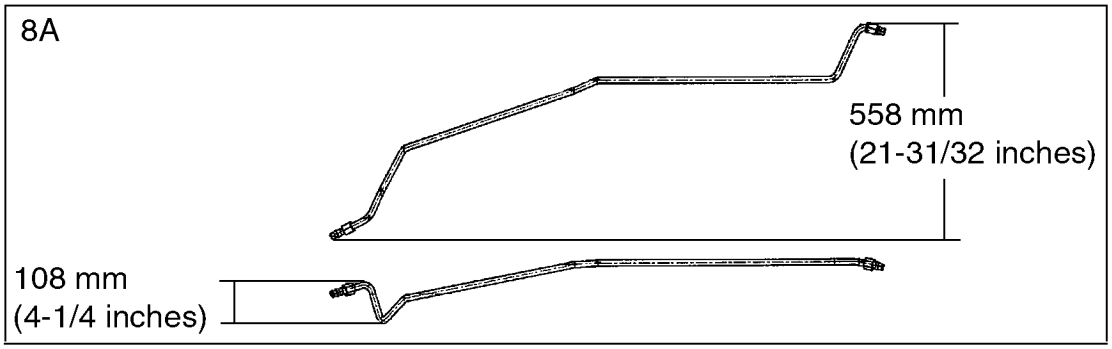

BS03D291

HYDRAULICS - COUPLER, LOADER TOOL QUICK

REF	FN	PART NUMBER	YR/SN	QTY	DESCRIPTION
					At Loader Lift Frame
1		308255A1		1	TUBE ASSY.
2		308254A1		1	TUBE ASSY.
3		300996A3		2	HOSE ASSY. 772 mm (30-13/32 in)
4		REF		1	INSTRUCTION Coupler, Hydr.; Loader Tool Quick Coupler; For Complete Assembly, See Figure 09-09; Order From Machinery Price List; Use Standard Loader Bucket Pins To Mount Coupler
5		302820A1		3	CLAMP Painted; If Used
5A		302820A2		3	CLAMP Zinc Coated; If Used
6		892-11010		3	WASHER, LOCK M10
7		829-1410		3	NUT M10; 10.9
8		309673A1		1	TUBE ASSY. If Used
8A		434605A1		1	TUBE ASSY. If Used
9		304424A1		1	CONNECTOR
10		304890A1		1	RESTRICTOR
11		237-6010		1	O-RING 3/4 ID x 3/32
11A		309674A1		1	CONNECTOR
12		D138055		4	CLAMP
13		814-10090		1	CAPSCREW M10 x 90
14		120303A1		1	SPACER
15		892-11010		1	WASHER, LOCK M10
16		829-1410		1	NUT M10; 10.9
17		307277A1		1	SLEEVE
18		L18337		2	STRAP 15 in

HYDRAULICS - COUPLER, BACKHOE BUCKET

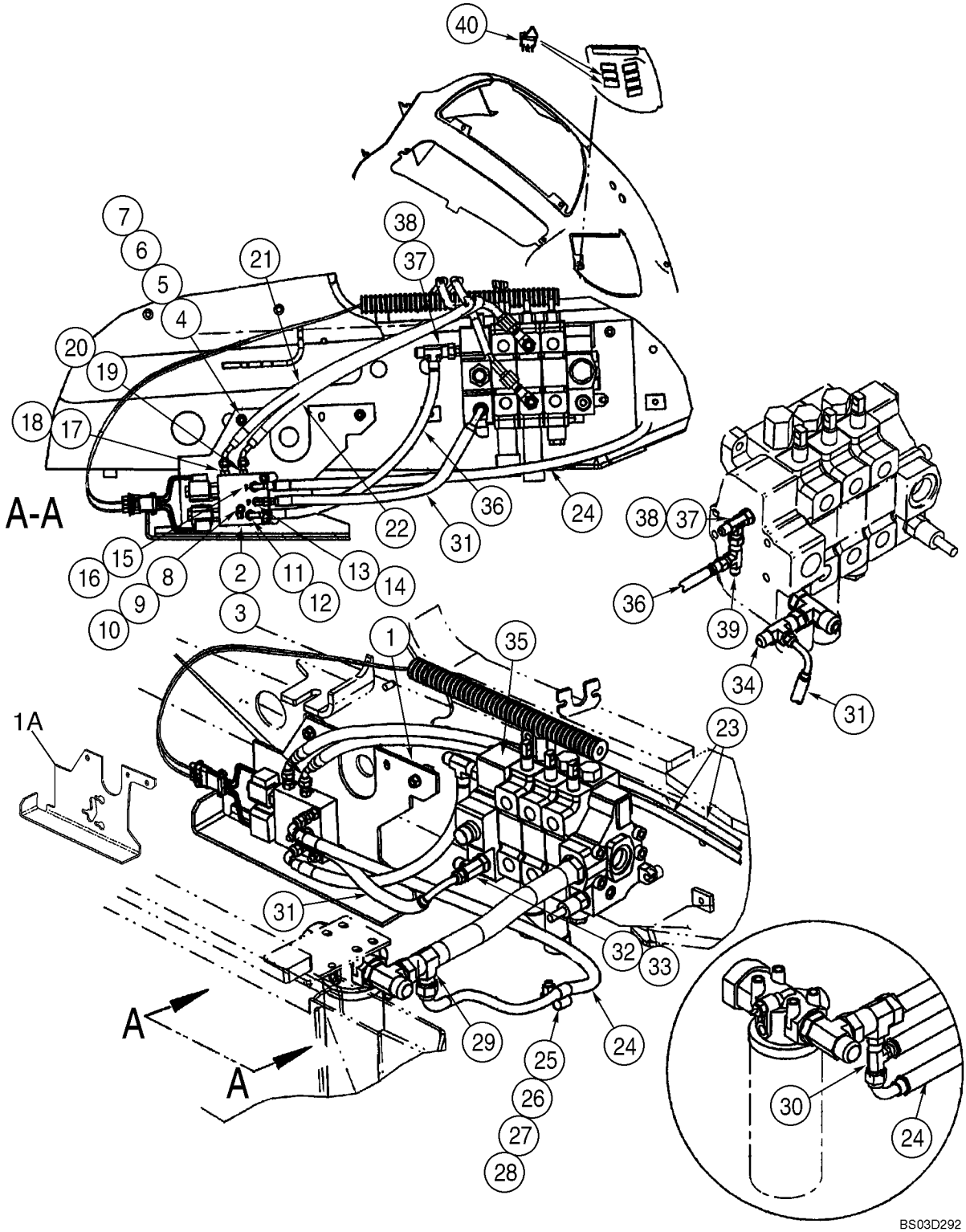

HYDRAULICS - COUPLER, BACKHOE BUCKET

REF	FN	PART NUMBER	YR/SN	QTY	DESCRIPTION
1		362851A1		1	BRACKET If Used
1A		86993692		1	PLATE, MOUNTING If Used
2		386988A3		1	VALVE Four-Way; Two Position; Incl. 396695A1, 396696A1
		396695A1		1	KIT Seal; Includes (10) O-Rings and (2) Cartridge Seal Kits Which Are Not Serviced Separately
		396696A1		1	KIT Coil
3		239-5020		3	RING Quad Ring; Not Illustrated; When Backhoe Coupler Valve and Loader Coupler Valves Are Used Together, O-Rings Are To Be Placed Between The Valves At The Tank, Pressure and Load Sense Ports
4		711-10050		2	BOLT M10 x 50
5		895-11010		2	WASHER 11 x 21 x 2 mm
6		330083A1		2	SPACER 11 x 40 x 10 mm thk
7		832-10410		2	NUT M10
8		811-10060		3	BOLT M10 x 60; Models With Backhoe Coupler Valve Only
8		811-10100		3	BOLT M10 x 100; Models With Both Backhoe Bucket Coupler Valve and Loader Coupler Valve
9		895-11010		3	WASHER 11 x 21 x 2 mm
10		832-10410		3	NUT M10
11		218-5057		1	CONNECTOR 9/16 fl x Or; Incl. Ref 12
12		237-6006		1	O-RING 15/32 ID x 5/64, Boss Seal
13		218-5105		1	ELBOW 9/16 fl x Or; Incl. Ref 14
14		237-6006		1	O-RING 15/32 ID x 5/64, Boss Seal
15		218-5351		1	CONNECTOR 3/4 fl x 9/16 Or; Incl. Ref 16
16		237-6006		1	O-RING 15/32 ID x 5/64, Boss Seal
17		218-5318		1	FITTING 9/16 fl x 1/2 Or; Incl. Ref 18
18		237-6005		1	O-RING 13/32 ID x 5/64
19		218-5053		1	CONNECTOR 7/16 fl x Or; Incl. Ref 20
20		237-6004		1	O-RING 23/64 ID x 5/64, Boss Seal
21		405649A2		1	HOSE ASSY. 3650 mm (143-3/4 in); Solenoid Valve Lower Port To Coupler Cylinder; For Attaching Parts, See Figure 08-24; Replaces 405649A1 (3545 mm Hose)

HYDRAULICS - COUPLER, BACKHOE BUCKET

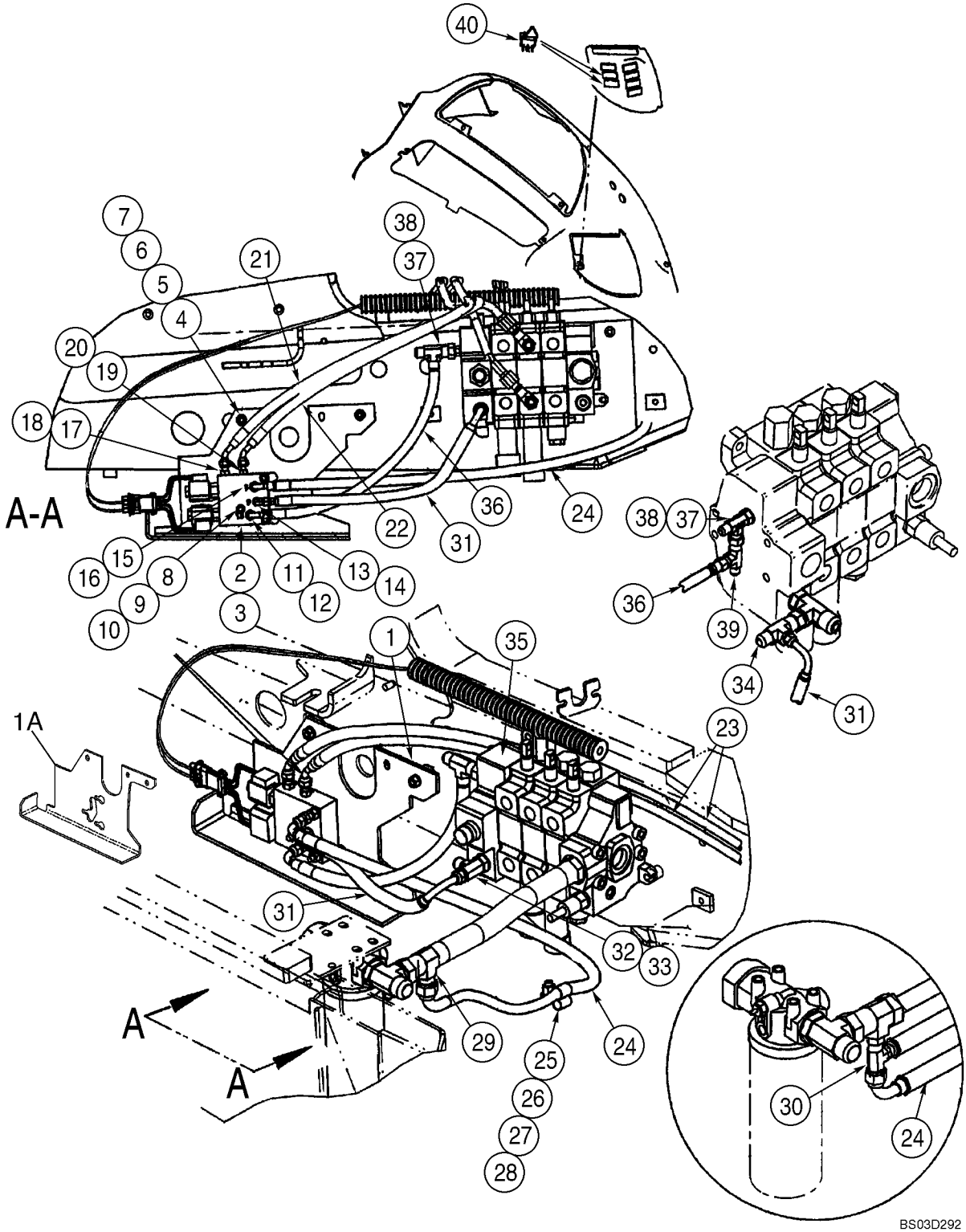

HYDRAULICS - COUPLER, BACKHOE BUCKET

REF	FN	PART NUMBER	YR/SN	QTY	DESCRIPTION
22		405648A2		1	HOSE ASSY. 3545 mm (139-5/8 in); Solenoid Valve Upper Port To Coupler Cylinder; For Attaching Parts, See Figure 08-24; Replaces 405648A1 (3420 mm Hose)
23		L18337		2	STRAP 15 in
24		363220A2		1	HOSE ASSY. 1170 mm (46-1/16 in); Return
25		515-25190		1	CLAMP 3/4 ID
26		515-25159		1	CLAMP
27		614-12025		1	CAPSCREW M12 x 25; If Used
27		614-12030		1	CAPSCREW M12 x 30; If Used
28		832-10412		1	NUT M12
29		218-5490		1	FITTING
30		218-5220		1	TEE 7/8 fl br x fl x sw; Models With Ride Control
31		391459A1		1	HOSE ASSY. 580 mm (22-27/32 in); Pressure
32		218-5292		1	FITTING 1/2 x 5/8 x 1/2; Incl. Ref 33; Models Without Hand Held Auxiliary Hydraulics
33		237-6010		1	O-RING 3/4 ID x 3/32
34		218-845		1	TEE 3/4 fl br x fl x sw; Models With Hand Held Auxiliary Hydraulics; See Hand Held Auxiliary Hydraulics For Tee At Loader Valve
35		130060A2		1	VALVE, PRESSURE RELIEF 19,000 kPa; Pilot Relief; See Figure 08-29
36		363222A2		1	HOSE ASSY. 645 mm (25-13/32 in); Load Sensing
37		282428A1		1	POPPET, VALVE Incl. Ref 38
38		237-6006		1	O-RING 15/32 ID x 5/64, Boss Seal
39		218-5222		1	FITTING 9/16 x 18; Models With Hand Held Auxiliary Hydraulics
40		386789A2		2	SWITCH Backhoe Bucket Hydraulic Coupler

HYDRAULICS - COUPLER, BACKHOE BUCKET

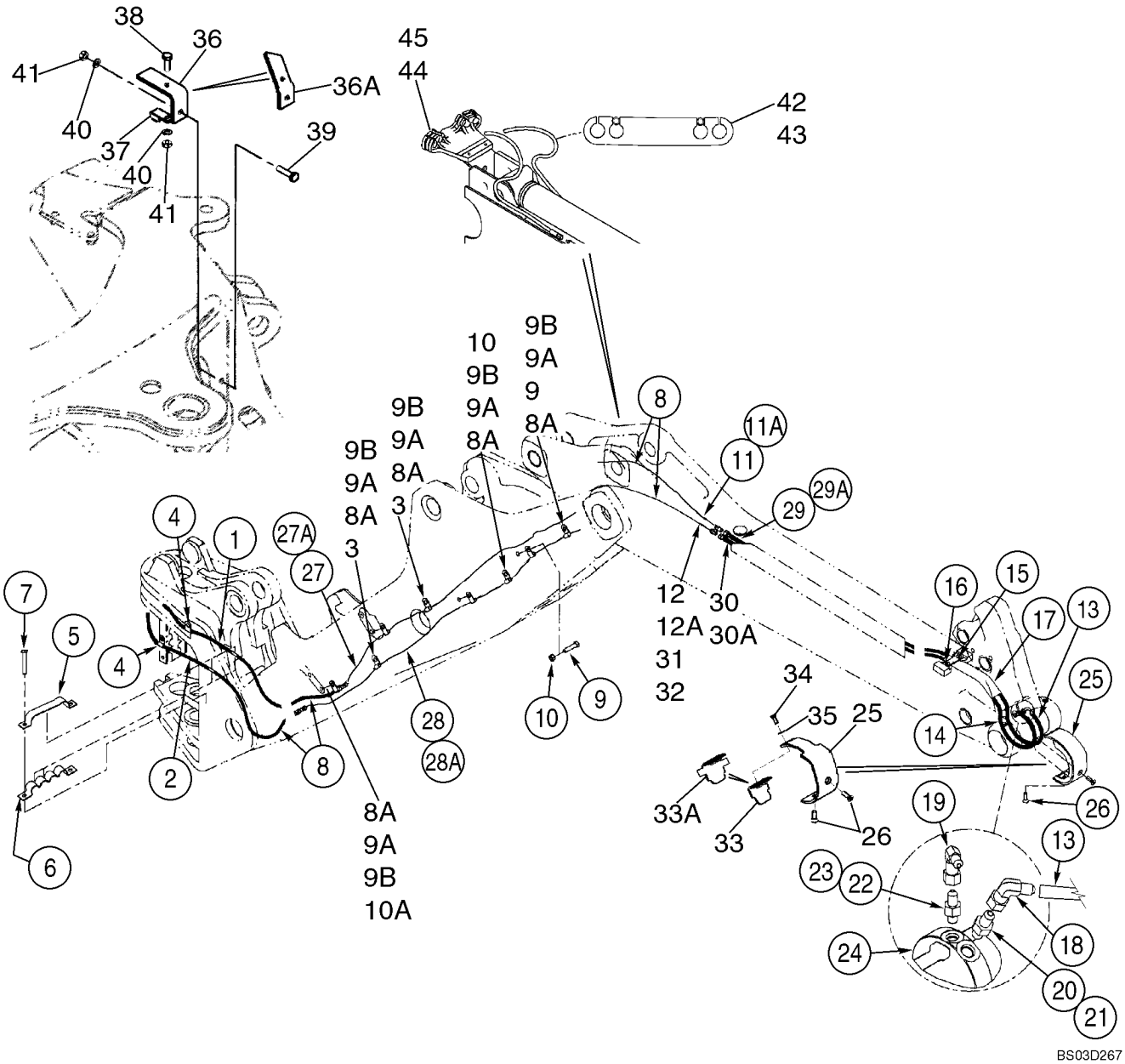

HYDRAULICS - COUPLER, BACKHOE BUCKET

REF	FN	PART NUMBER	YR/SN	QTY	DESCRIPTION
					At Boom and Dipper
1		405649A2		1	HOSE ASSY. 3650 mm (143-3/4 in); Solenoid Valve Lower Port; Replaces 405649A1 3545 mm Hose
2		405648A2		1	HOSE ASSY. 3545 mm (139-5/8 in); Solenoid Valve Upper Port; Replaces 405648A1 3420 mm Hose
3		515-2595		2	CLAMP 3/8 ID; If Used
3		414415A1		4	CLAMP 3/8 ID; If Used; Closed "P" Clamp
4		515-2595		2	CLAMP 3/8 ID; If Used
4		515-22127		2	CLAMP 1/2 ID; If Used; Half "P" Clamp
5		385420A2		1	STRAP At Swing Tower
6		393156A1		1	CLAMP
7		814-12070		2	SCREW M12 x 70
8		L18337		X	STRAP 15 in; If Used
8A		409499A1		8-10	CLAMP Extendable Dipper Model
9		409595A1		2	CLAMP Extendable Dipper Model
9A		614-8016		8-10	CAPSCREW M8 x 16
9B		892-11008		8-10	WASHER M8; Lock
10		409594A1		4	CLAMP
10A		409593A1		2	CLAMP BRACKET
11		405653A1		1	HOSE ASSY. 1880 mm (74-1/32 in); Standard Dipper
11A		405659A1		1	HOSE ASSY. 2770 mm (109-3/32 in); Extendable Dipper
12		405652A1		1	HOSE ASSY. 1880 mm (74-1/32 in); Standard Dipper
12A		405656A1		1	HOSE ASSY. 2770 mm (109-3/32 in); Extendable Dipper
13		405650A1		1	HOSE ASSY. 1080 mm (42-9/16 in); To Coupler Cylinder
14		405651A1		1	HOSE ASSY. 1120 mm (44-1/8 in); To Coupler Cylinder
15		374521A2		1	CLAMP
16		407975A1		2	SCREW M8 x 16
17		378464A2		1	SLEEVE 406 mm (16 in)
18		402855A1		1	ELBOW Attaches To Ref 13 Hose
19		402854A1		1	ELBOW Attaches To Ref 14 Hose

HYDRAULICS - COUPLER, BACKHOE BUCKET

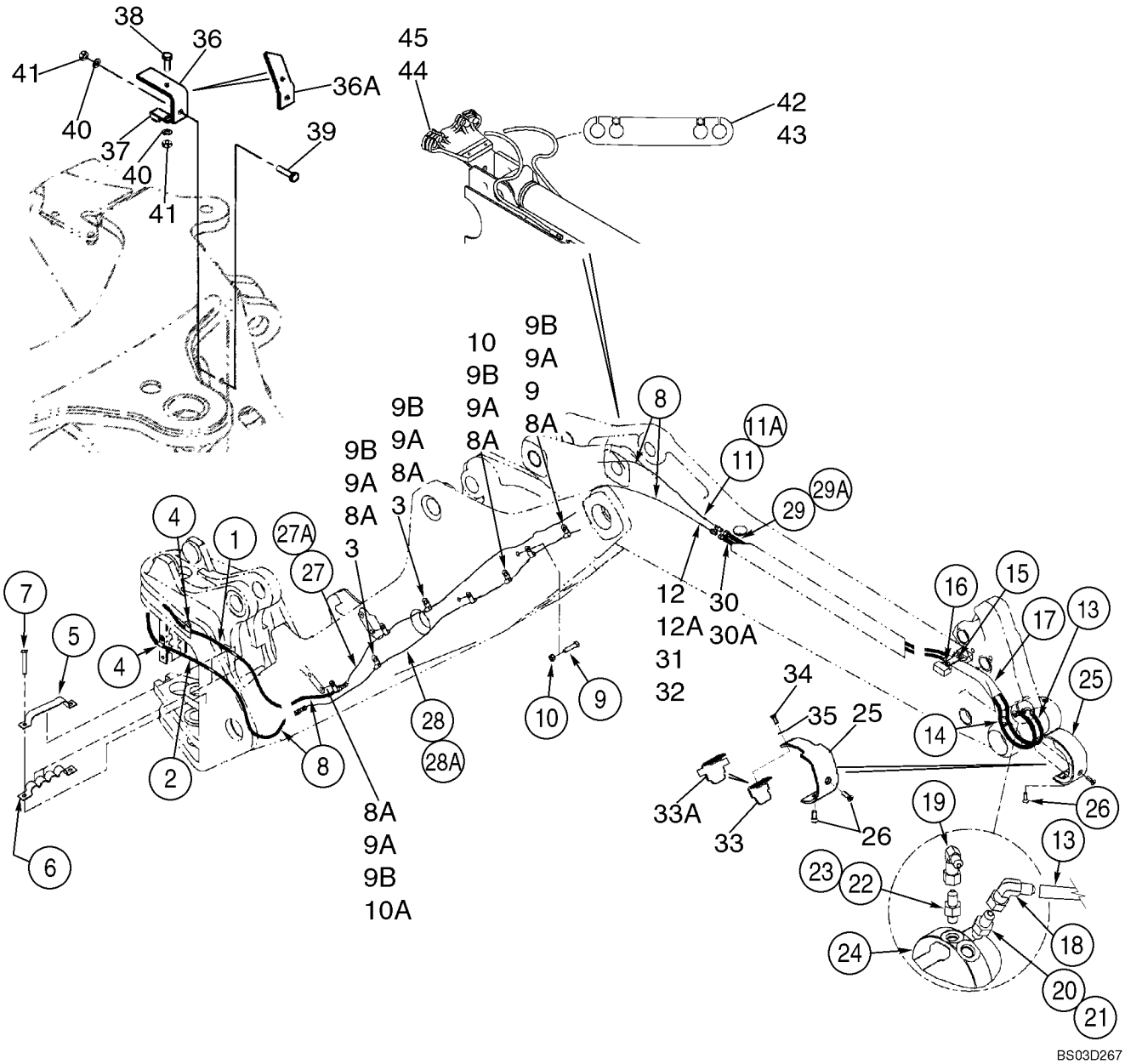

BS03D267

HYDRAULICS - COUPLER, BACKHOE BUCKET

REF	FN	PART NUMBER	YR/SN	QTY	DESCRIPTION
20		218-5053		1	CONNECTOR 7/16 fl x Or; Incl. Ref 21
21		237-6004		1	O-RING 23/64 ID x 5/64, Boss Seal
22		218-5052		1	CONNECTOR 3/8 fl x Or; Incl. Ref 23
23		237-6003		1	O-RING 5/16 ID x 1/16
24		402919A3		1	CYLINDER ASSY. Backhoe Bucket Coupler Cylinder; See Figure 08-25; Replaces 402919A2
25		402940A2		1	GUARD ASSY.
26		402361A3		2	SCREW
27		406953A1		1	TUBE ASSY. Standard Dipper; Left-Hand
27A		406957A1		1	TUBE ASSY. Extendable Dipper; Left-Hand
28		406955A1		1	TUBE ASSY. Standard Dipper; Right-Hand
28A		406959A1		1	TUBE ASSY. Extendable Dipper; Right-Hand
29		406172A1		1	TUBE ASSY. Standard Dipper; For Mounting, See Figure 09-25
29A		403840A1		1	TUBE ASSY. Extendable Dipper; For Mounting, See Figure 09-25
30		406971A1		1	TUBE ASSY. Standard Dipper
30A		403400A1		1	TUBE ASSY. Extendable Dipper
31		408159A1		1	SLEEVE 800 mm (31-1/2 in); Standard Dipper
31		408160A1		2	SLEEVE 2200 mm (86-5/8 in); Extendable Dipper
32		L18337		4	STRAP
33		409691A1		1	GUARD If Used
33A		409691A2		1	GUARD If Used
34		607-8020		2	BOLT M8 x 20; Lock
35		896-11008		2	WASHER
36		256412A1		1	BRACKET No Longer Available; Order 413778A1, Ref 36A
36A		413778A1		1	BRACKET
37		D48438		1	CLAMP
38		614-10030		1	SCREW M10 x 30
39		814-10040		1	CAPSCREW M10 x 40
40		892-11010		2	WASHER, LOCK M10
41		829-1410		2	NUT M10
42		407745A1		1	CLAMP, HOSE Extendable Dipper; Models With Hydraulic Coupler

HYDRAULICS - COUPLER, BACKHOE BUCKET

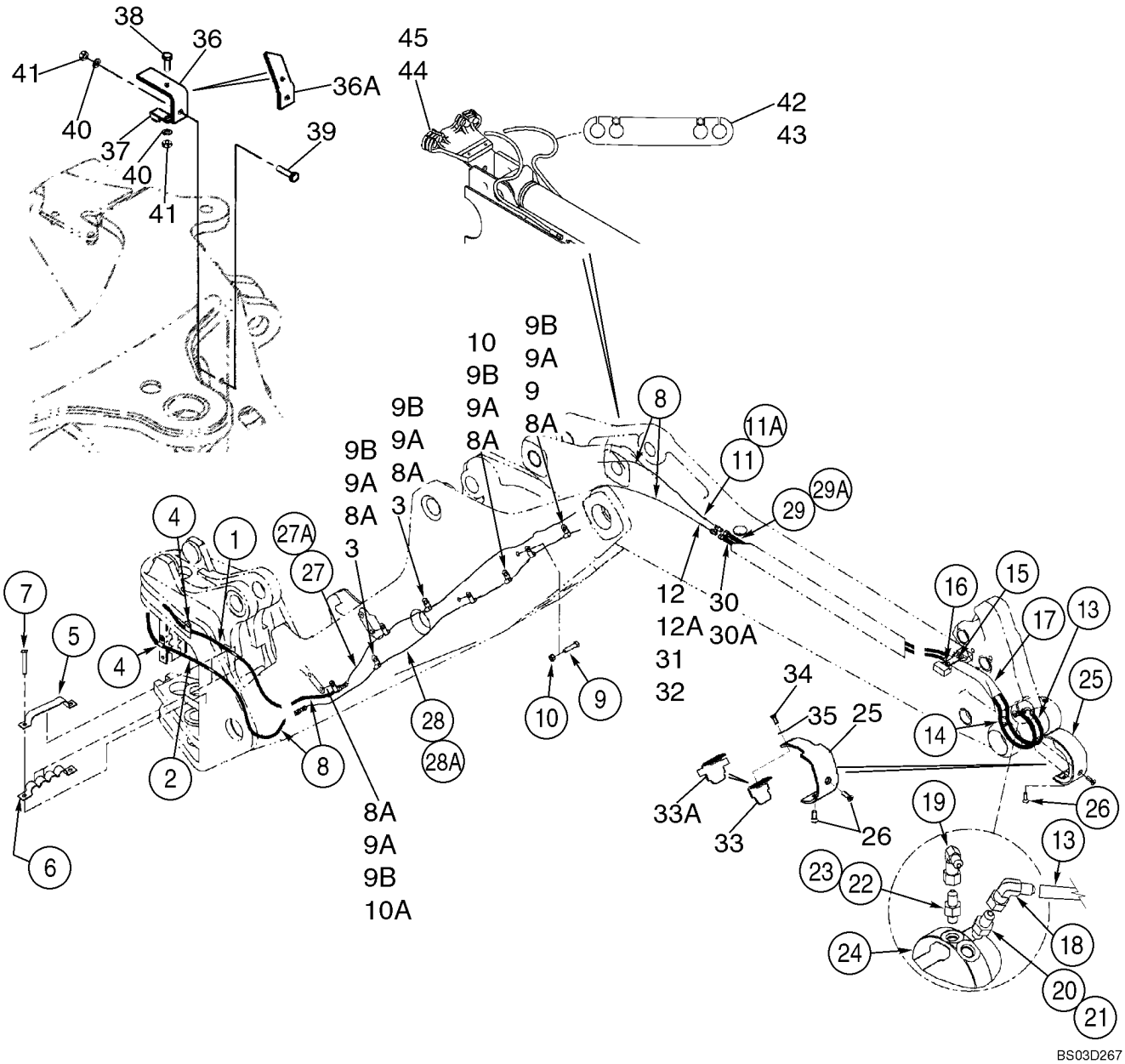

HYDRAULICS - COUPLER, BACKHOE BUCKET

REF	FN	PART NUMBER	YR/SN	QTY	DESCRIPTION
43		407746A1		1	CLAMP, HOSE Extendable Dipper; Models With Hydraulic Coupler and Auxiliary Hydraulics
44		407734A1		1	SUPPORT Extendable Dipper; Models With Hydraulic Coupler
45		407735A1		1	SUPPORT Extendable Dipper; Models With Hydraulic Coupler and Auxiliary Hydraulics

CYLINDER - COUPLER, BACKHOE BUCKET

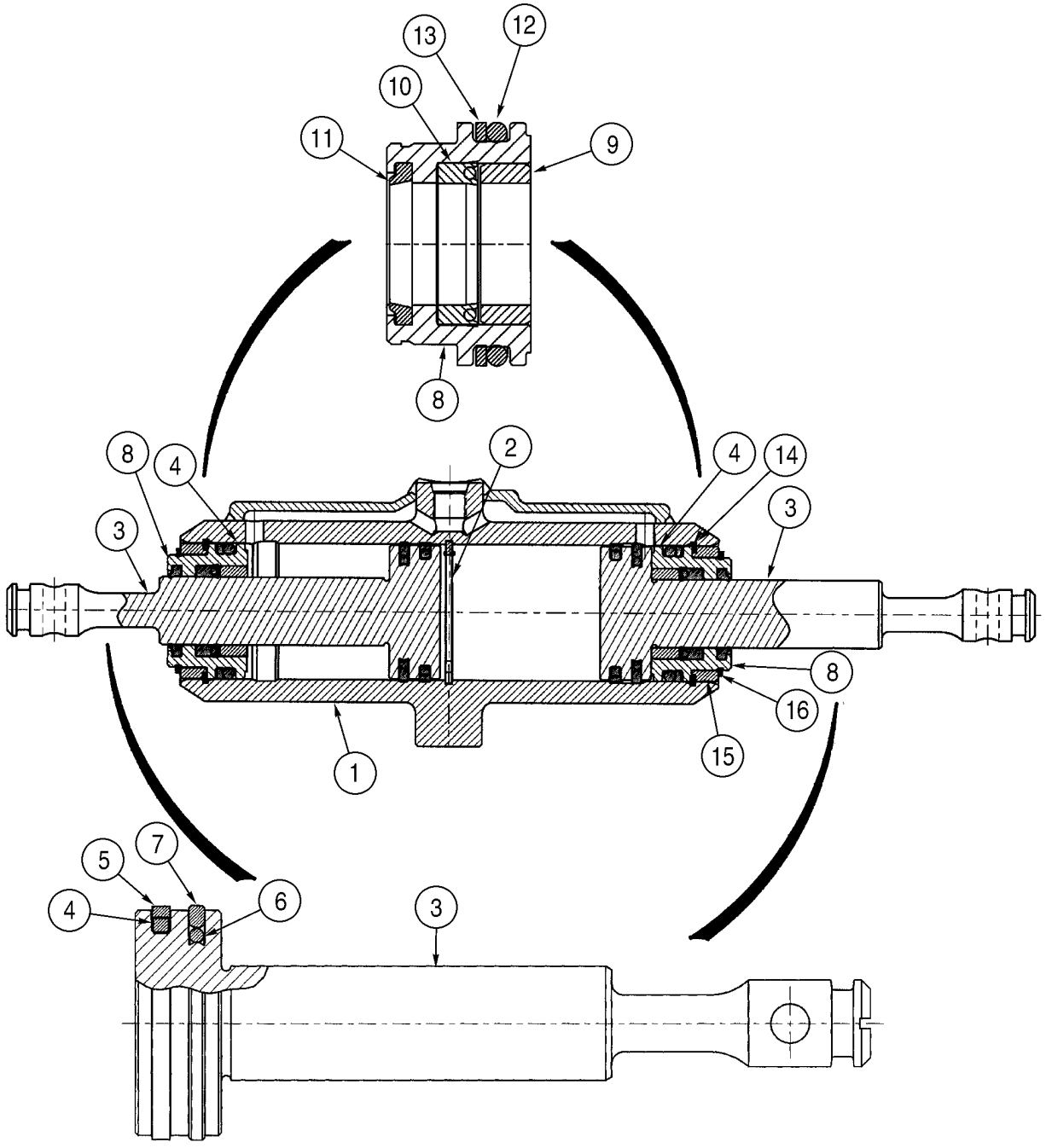

CYLINDER - COUPLER, BACKHOE BUCKET

REF	FN	PART NUMBER	YR/SN	QTY	DESCRIPTION
		402919A3		1	CYLINDER ASSY. Backhoe Bucket Coupler Cylinder; Incl. Ref 1 - 16, 390320A2; Replaces 402919A2
1		402930A1		1	TUBE Includes 369263A1
		369263A1		4	PLUG
2		800-6138		1	RETAINER
		NSS		2	NOT SERVICED SEPARATELY Rod Assy; Incl. Ref 3 - 7
3		399907A2		1	ROD
4		353078A1		1	RING
5		353079A1		1	SEAL 38,1 dia; Replaces 404203A1 Seal, Used In Some Cylinders
6		395609A1		1	O-RING
7		384844A1		1	RING
		311459A2		2	GLAND Incl. Ref 8 - 13
8		NSS		1	NOT SERVICED SEPARATELY Gland, Cylinder
9		NSS		1	NOT SERVICED SEPARATELY Bushing
10		D83187		1	SEAL
11		A44651		1	WIPER
12		238-6218		1	O-RING 1-1/4 ID x 1/8 in
13		A45035		1	O-RING
14		102-23150		2	RING SNAP
15		A44641		2	BUSHING
16		102-12125		2	CIRCLIP
		390320A4		1	KIT, SEALS Seal; Incl. Ref 4 - 16; Also Includes (2) 390317A1 Rings, 38.1 dia; (1) 445364A1 81 mm dia, Service Ring For Cylinder Tube and Coupler Outer Sleeve End; Replaces 390320A3

PUMP, EQUIPMENT HYDRAULIC

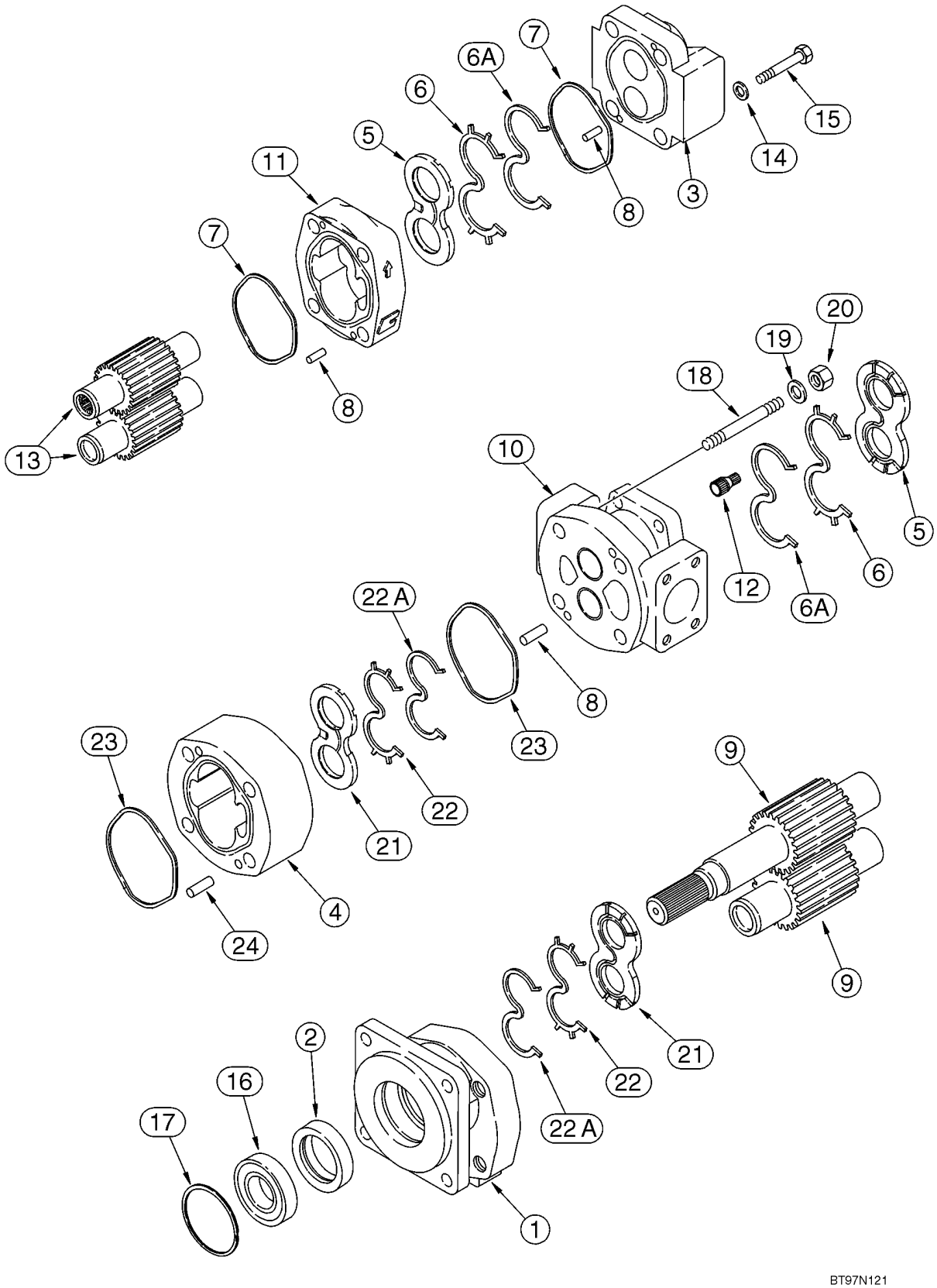

PUMP, EQUIPMENT HYDRAULIC

REF	FN	PART NUMBER	YR/SN	QTY	DESCRIPTION
		257955A1		1	PUMP, HYDRAULIC Incl. Ref 1 - 24
1		NSS		1	NOT SERVICED SEPARATELY Cover; Shaft End
2		L32318		1	SEAL
3		NSS		1	NOT SERVICED SEPARATELY Cover; Closed End
4		NSS		1	NOT SERVICED SEPARATELY Housing
5		111594A1		2	PLATE, LARGE
6		293926A1		2	SEAL
6A		293925A1		2	SEAL
7		111596A1		2	SEAL 3-1/4 ID x 3/32 in
8		111597A1		4	PIN, ELECTRIC TERM' 1/4 x 1/16
9		NSS		1	NOT SERVICED SEPARATELY 17 T; Gear, Set
10		NSS		1	NOT SERVICED SEPARATELY Housing
11		111585A1		1	HOUSING
12		111593A1		1	SHAFT
13		NSS		1	NOT SERVICED SEPARATELY Gear, Set
14		111588A1		4	WASHER 17/32 x 15/16 x 3/16
15		326-852		4	CAPSCREW 1/2 x 3-1/4; 8
16		S88754		1	BEARING, BALL
17		S88756		1	RING SNAP
18		111583A1		4	STUD
19		19-488		4	WASHER 11/16 x 1-11/32 x 3/16
20		429-1010		4	NUT 5/8; 8
21		111589A1		2	PLATE, LARGE
22		293927A1		2	SEAL
22A		293928A1		2	SEAL
23		111592A1		2	SEAL 4-31/64 ID x 1/8 in
24		W16323		4	DOWEL
		293924A1		1	PACKAGE, SEALS Seal; Incl. Ref 2, 5 - 7, 21 - 23
		428651A1		1	KIT Gear Set; Pump; Incl. Ref 2, 6, 6A, 21, 23 and 257948A1, Coupler, Flex; Also 482649A1, Gear Set; See Figure 08-01; Kit No Longer Available; Order Components

VALVE ASSY - LOADER CONTROL, TWO SPOOL

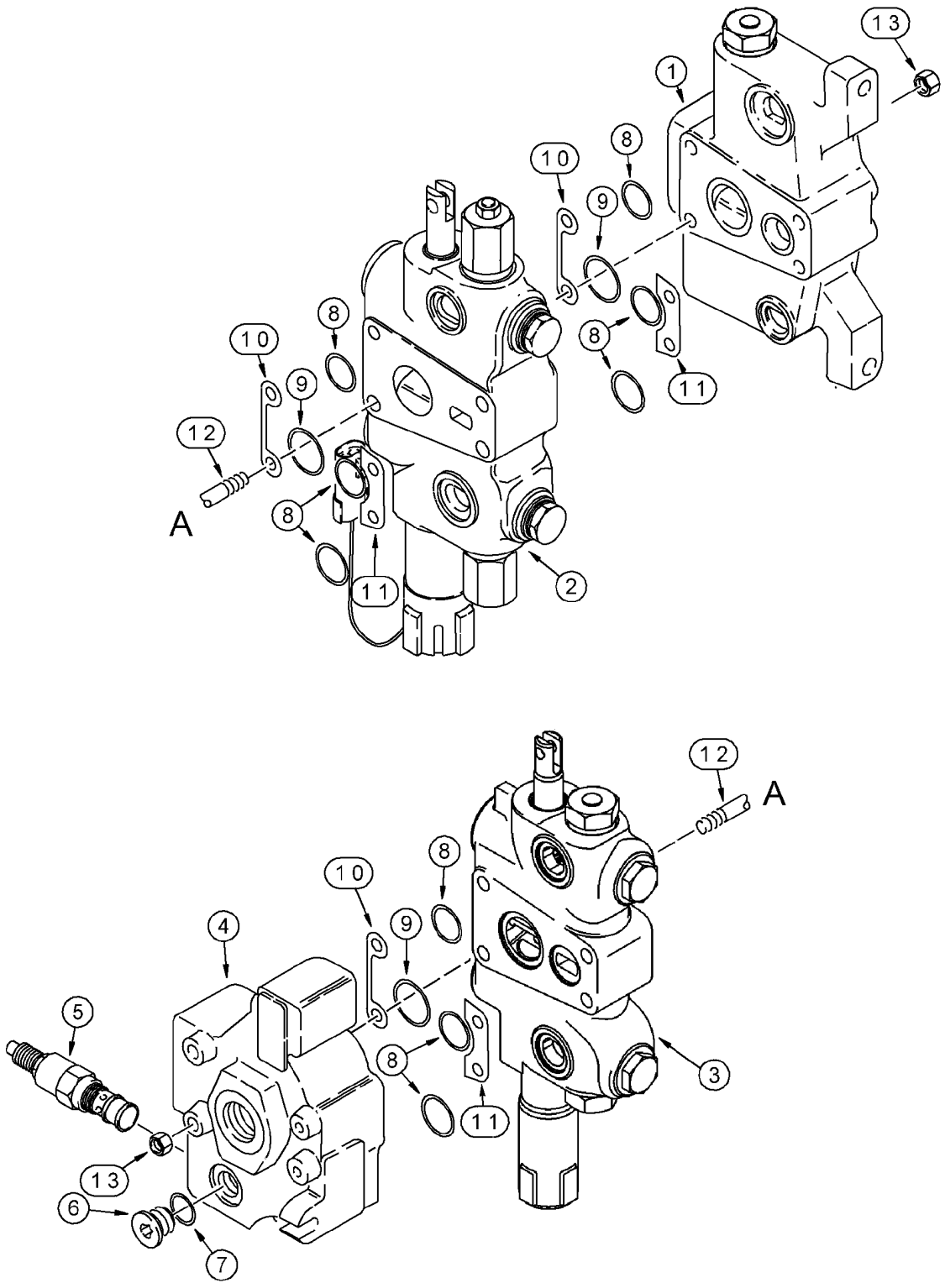

VALVE ASSY - LOADER CONTROL, TWO SPOOL

REF	FN	PART NUMBER	YR/SN	QTY	DESCRIPTION
		358236A1		1	VALVE Incl. Ref 1 - 13
1		364148A1		1	VALVE SECTION (HYDR) Inlet; With Pilot Relief Plug; See Figure 08-29
2		328443A1		1	VALVE SECTION (HYDR) Bucket; With Magnetic Detent and Circuit Relief Valve; See Figure 08-30
3		357817A1		1	VALVE BLOCK Lift; With Manual Detent; See Figure 08-31
4		132004A2		1	VALVE SECTION (HYDR) Outlet; See Figure 08-32
5		129842A2		1	VALVE, PRESSURE RELIEF Component Parts Not Serviced Separately; For Service Of External Seals, Order G110098
6		218-5207		1	PLUG 7/16 Or; Incl. Ref 7; Diagnostic Port
7		237-6004		1	O-RING 23/64 ID x 5/64, Boss Seal
8		238-6119		9	O-RING 15/16 ID x 3/32
9		238-6127		3	O-RING 1-7/16 ID x 3/32
10		G107251		3	SHIM
11		G33965		3	SHIM
12		G108870		4	STUD 3/8 x 9-3/4 in
13		425-106		8	NUT 3/8
		1346108C2		1	KIT, GASKET Seal; Incl. Ref 8, 9; Plus Additional O-Rings Not Required For This Application

08 -28		p1	05/03

VALVE ASSY - LOADER CONTROL, THREE SPOOL

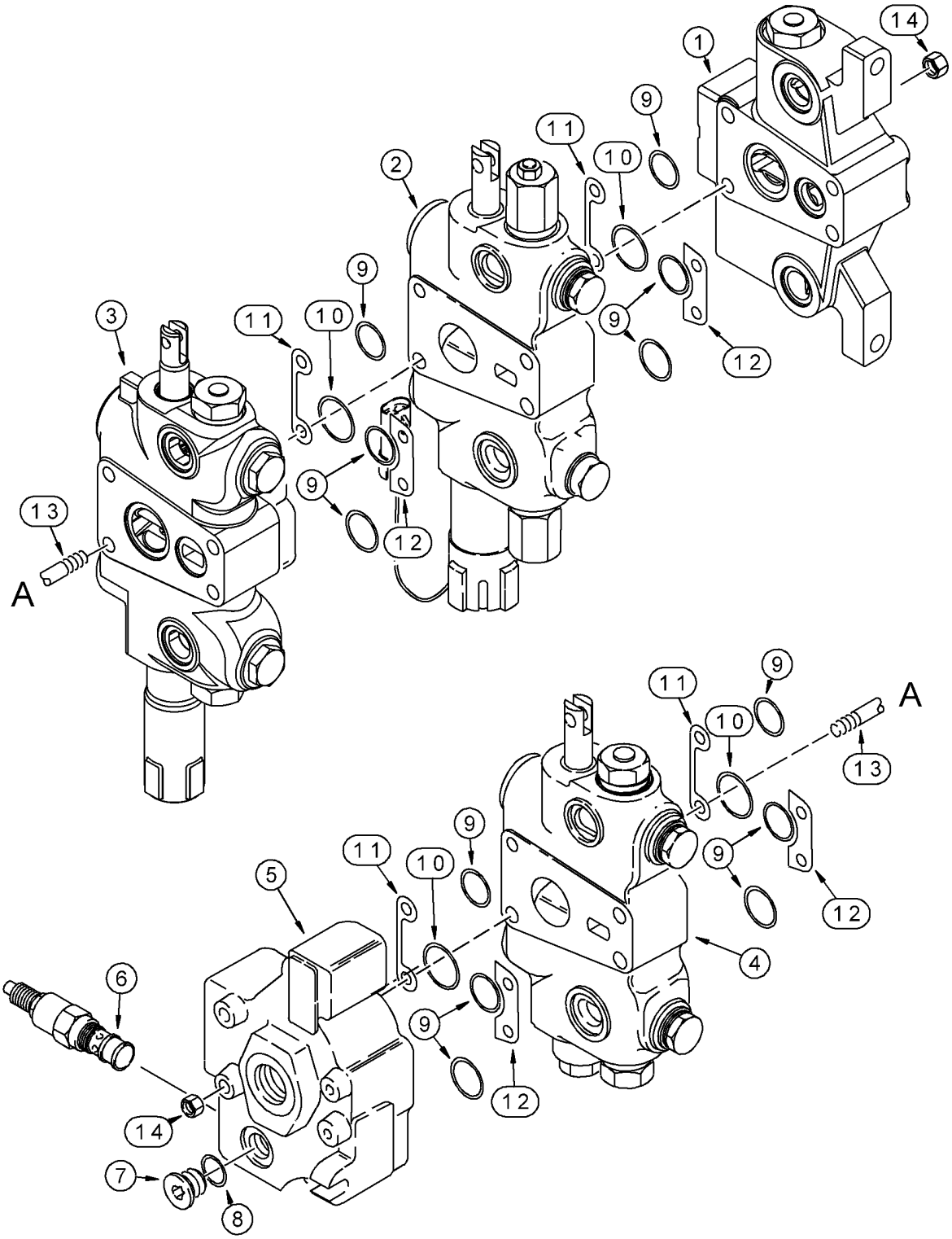

VALVE ASSY - LOADER CONTROL, THREE SPOOL

REF	FN	PART NUMBER	YR/SN	QTY	DESCRIPTION
		358237A1		1	VALVE Incl. Ref 1 - 14
1		364148A1		1	VALVE SECTION (HYDR) Inlet; With Pilot Relief Plug; See Figure 08-29
2		328443A1		1	VALVE SECTION (HYDR) Bucket; With Magnetic Detent and Circuit Relief Valve; See Figure 08-30
3		357817A1		1	VALVE BLOCK Lift; With Manual Detent; See Figure 08-31
4		332754A2		1	VALVE SECTION (HYDR) Clam; See Figure 08-33
5		132004A2		1	VALVE SECTION (HYDR) Outlet; See Figure 08-32
6		129842A2		1	VALVE, PRESSURE RELIEF Component Parts Not Serviced Separately; For Service Of External Seals, Order G110098
7		218-5207		1	PLUG 7/16 Or; Incl. Ref 8; Diagnostic Port
8		237-6004		1	O-RING 23/64 ID x 5/64, Boss Seal
9		238-6119		9	O-RING 15/16 ID x 3/32
10		238-6127		3	O-RING 1-7/16 ID x 3/32
11		G107251		3	SHIM
12		G33965		3	SHIM
13		G108805		4	STUD 3/8 x 11-3/4
14		425-106		8	NUT 3/8
		1346108C2		1	KIT, GASKET Seal; Incl. Ref 9, 10; Plus Additional O-Rings Not Required For This Application

VALVE - SECTION INLET

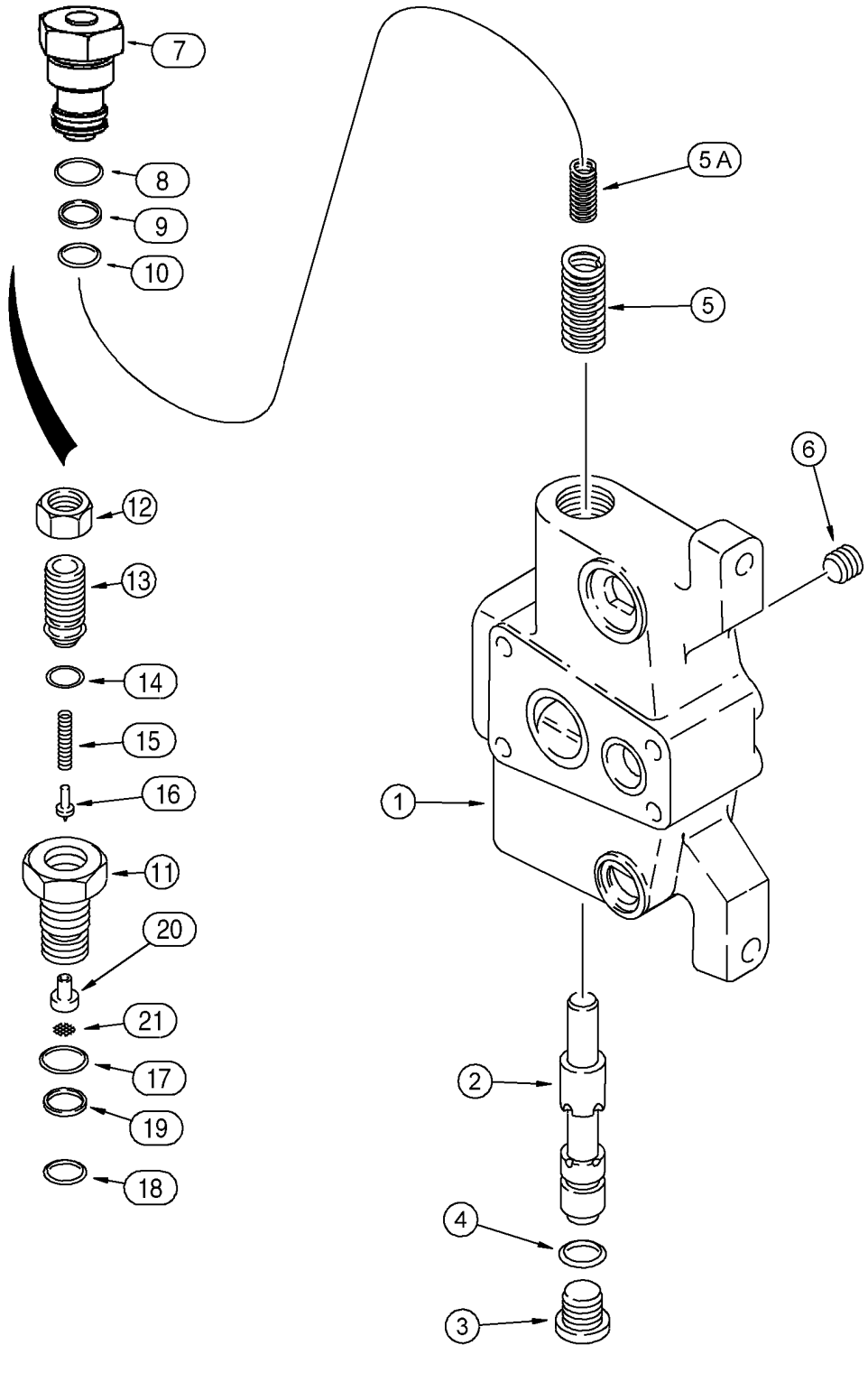

VALVE - SECTION INLET

REF	FN	PART NUMBER	YR/SN	QTY	DESCRIPTION
		364148A1		1	VALVE SECTION (HYDR) Inlet; With Pilot Relief Plug; Incl. Ref 1 - 10
1		NSS		1	NOT SERVICED SEPARATELY Housing
2		NSS		1	NOT SERVICED SEPARATELY Spool
3		218-5211		1	PLUG 7/8 Or; Incl. Ref 4
4		237-6010		1	O-RING 3/4 ID x 3/32, Boss Seal
5		122140A1		1	SPRING
5A		122141A1		1	SPRING Inner
6		114903A1		1	PLUG Steering Port
		380691A1		1	PLUG Pilot Relief; Incl. Ref 7 - 10
7		380678A1		1	PLUG
8		237-6012		1	O-RING 59/64 ID x 7/64, Boss Seal
9		G35540		1	RING
10		238-6018		1	O-RING 3/4 ID x 1/16, Face Seal
		130060A2		1	VALVE, PRESSURE RELIEF Pilot Relief Valve; With Screen Filter; Used In Place Of 380691A1 Plug On Models With Hand Held Auxiliary Hydraulics Or Hydraulic Backhoe Bucket Coupler; Incl. Ref 11 - 21
11		G108866		1	HOUSING
12		425-1510		1	NUT 5/8 NF
13		G108867		1	PLUG
14		238-6012		1	O-RING 3/8 ID x 1/16, Face Seal
15		130059A1		1	SPRING
16		G108556		1	POPPET, VALVE
17		237-6012		1	O-RING 59/64 ID x 7/64, Boss Seal
18		238-6018		1	O-RING 3/4 ID x 1/16, Face Seal
19		G35540		1	RING
20		196095A1		1	SEAT
21		196096A1		1	SCREEN

VALVE SECTION - LOADER BUCKET

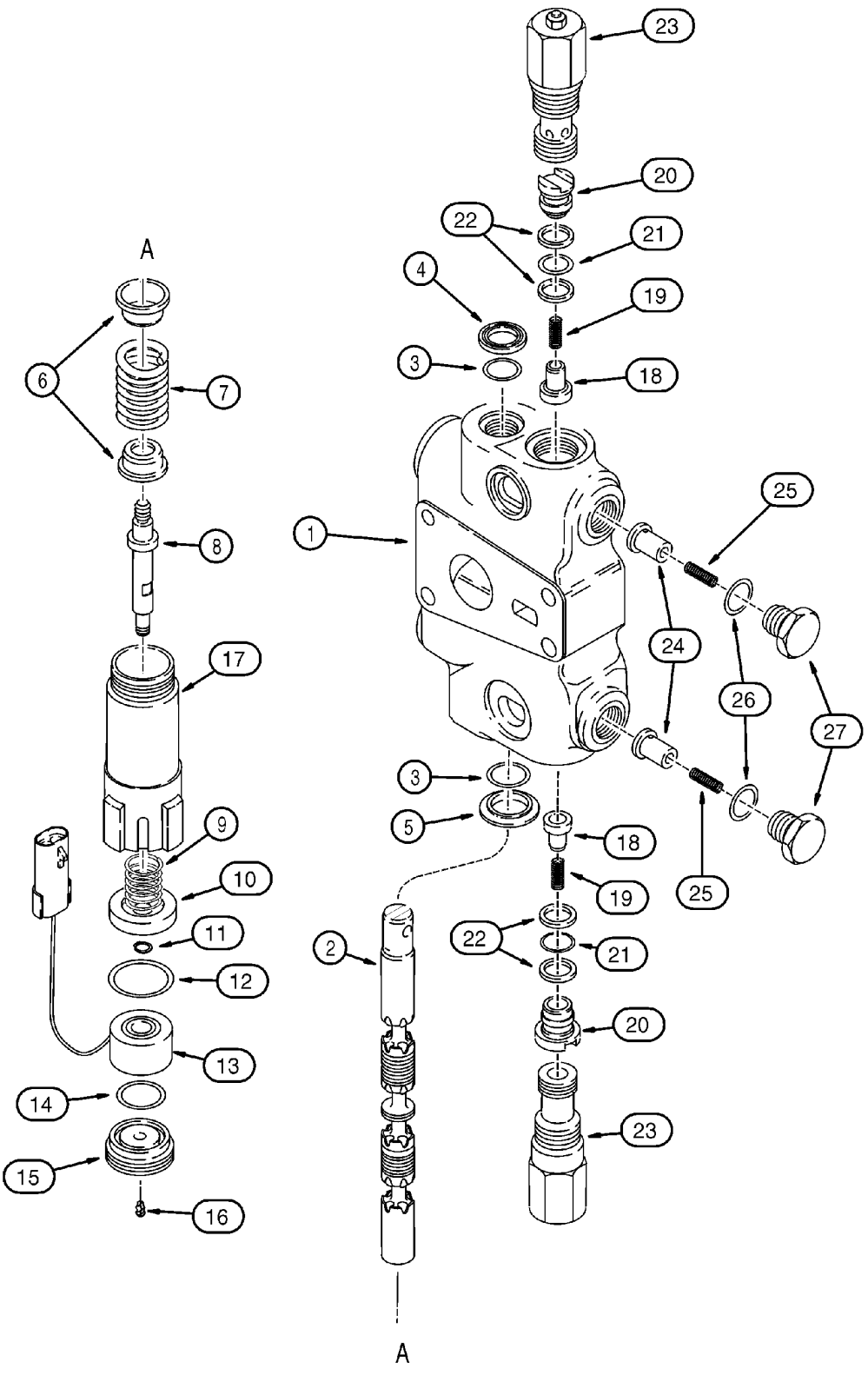

VALVE SECTION - LOADER BUCKET

REF	FN	PART NUMBER	YR/SN	QTY	DESCRIPTION
		328443A1		1	VALVE SECTION (HYDR) Bucket; With Magnetic Detent and Circuit Relief Valve; Incl. Ref 1 - 27
1		NSS		1	NOT SERVICED SEPARATELY Housing
2		NSS		1	NOT SERVICED SEPARATELY Spool
3		1994608C1		2	O-RING
4		65457C1		1	SEAL
5		G102711		1	RETAINER
6		G33075		2	RETAINER
7		302326A1		1	SPRING
8		118318A1		1	TAPPET Replaces 307214A1 Shaft Used In Production
9		G107447		1	SPRING
10		G109295		1	WASHER
11		100-1125		1	RING SNAP No. 25
12		238-5127		1	O-RING 1-7/16 ID x 3/32
13		120148A3		1	MAGNET
14		238-5120		1	O-RING 1 ID x 3/32
		1346105C2		1	KIT, SEALS Seal; Incl. Ref 3, 4, 21, 22; Plus Additional O-Rings Not Required For This Application
		328443A1		1	VALVE SECTION (HYDR) Bucket; With Magnetic Detent and Circuit Relief Valve; Incl. Ref 1 - 27
15		122330A1		1	PLUG Magnetic Detent
16		G107780		1	VALVE, CHECK
17		113787A3		1	BODY
		1346219C3		2	VALVE, CHECK Load Check Valve; Incl. Ref 18 - 22
18		1343777C1		1	POPPET, VALVE Hollow Poppet Pin With Orifice
19		1346175C1		1	SPRING
20		1343708C1		1	PLUG
21		238-6010		1	O-RING 1/4 ID x 1/16
22		G103862		2	RING
		1346105C2		1	KIT, SEALS Seal; Incl. Ref 3, 4, 21, 22; Plus Additional O-Rings Not Required For This Application
		328443A1		1	VALVE SECTION (HYDR) Bucket; With Magnetic Detent and Circuit Relief Valve; Incl. Ref 1 - 27

VALVE SECTION - LOADER BUCKET

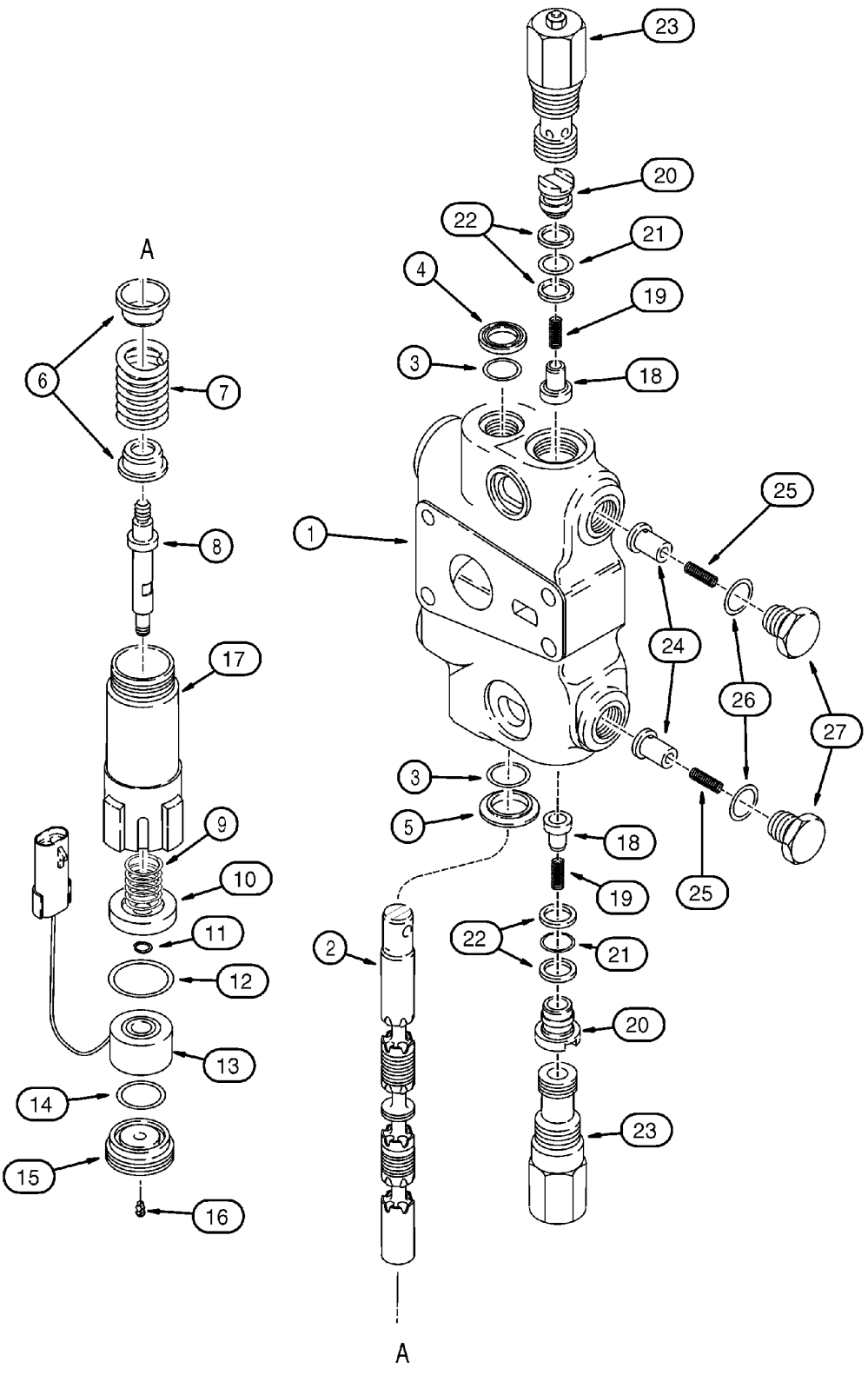

VALVE SECTION - LOADER BUCKET

REF	FN	PART NUMBER	YR/SN	QTY	DESCRIPTION
23		G109391		2	VALVE 3200 psi; Circuit Relief Valve; Used In Production; See Figure 08-34; Order G109449 Circuit Relief Valve Kit For Service, See Figure 08-34
		1346221C3		2	VALVE Anticavitation Valve; Incl. Ref 24 - 27
24		G34938		1	POPPET, VALVE
25		G34458		1	SPRING
26		237-6010		1	O-RING 3/4 ID x 3/32
27		332473A1		1	PLUG

VALVE SECTION - LOADER LIFT

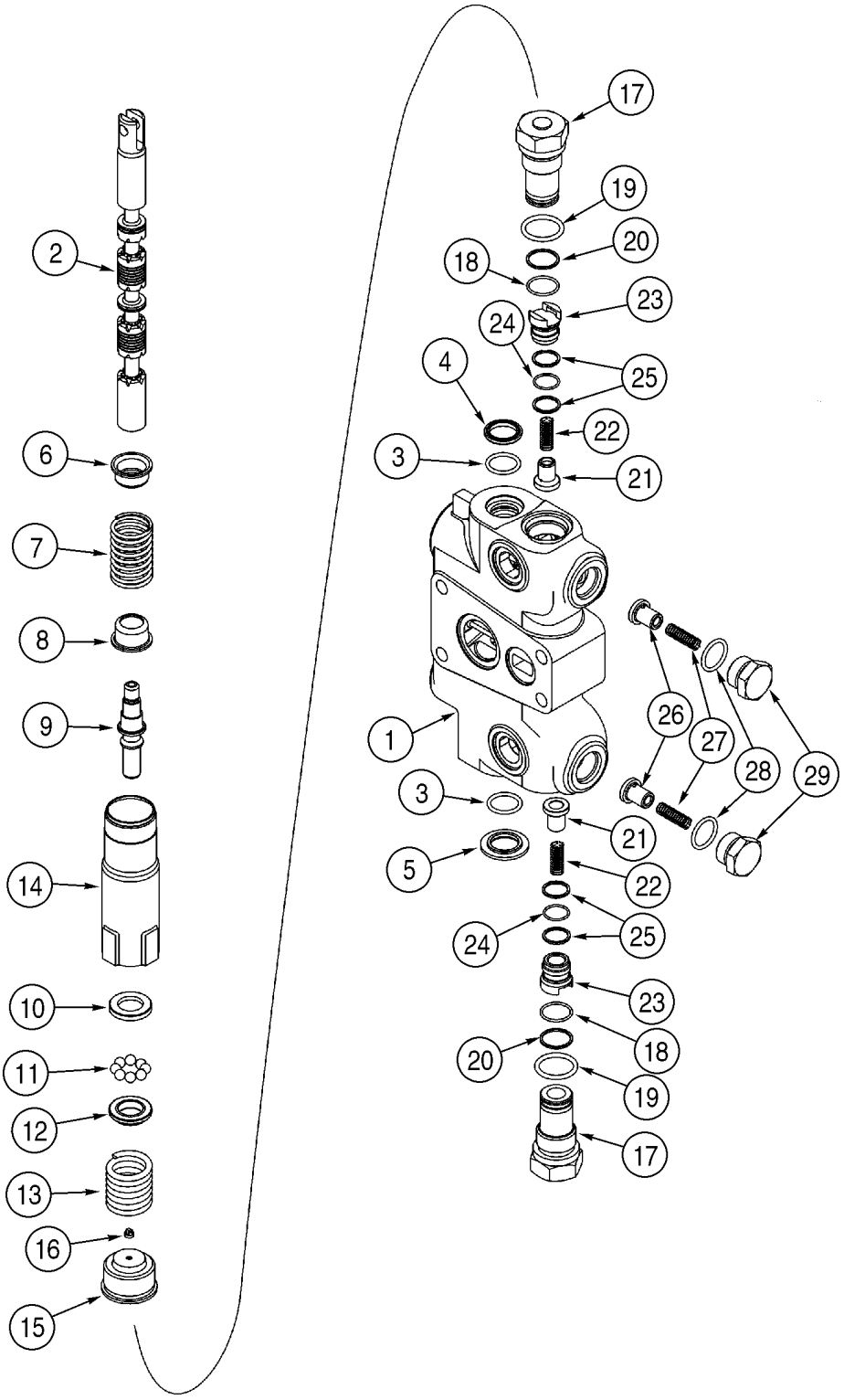

BS00C185

VALVE SECTION - LOADER LIFT

REF	FN	PART NUMBER	YR/SN	QTY	DESCRIPTION
		357817A1		1	VALVE BLOCK Lift; With Manual Detent; Incl. Ref 1 - 29
1		NSS		1	NOT SERVICED SEPARATELY Housing
2		NSS		1	NOT SERVICED SEPARATELY Spool
3		1994608C1		2	O-RING
4		65457C1		1	SEAL
5		G102711		1	RETAINER
6		G33075		1	RETAINER
7		1986612C1		1	SPRING
8		G106395		1	RETAINER
9		G106396		1	SHAFT Replaces 307215A1 Shaft Used In Production
10		G109127		1	WASHER
11		211-1009		8	BALL 9/32; 24,CRS
12		G106398		1	RETAINER
13		1986568C1		1	SPRING
14		G106425		1	HOUSING
15		G109384		1	PLUG Magnetic Detent
16		G107780		1	VALVE, CHECK
		G33122		2	PLUG Load Check Valve Port; Incl. Ref 17 - 20
17		NSS		1	NOT SERVICED SEPARATELY Plug
18		238-6018		1	O-RING 3/4 ID x 1/16, Face Seal
19		237-6012		1	O-RING 59/64 ID x 7/64, Boss Seal
20		G35540		1	RING
		1346219C3		2	VALVE, CHECK Load Check Valve; Incl. Ref 21 - 25
21		1343777C1		1	POPPET, VALVE Hollow Poppet Pin With Orifice
22		1346175C1		1	SPRING
23		1343708C1		1	PLUG
24		238-6016		1	O-RING 5/8 ID x 1/16, Face Seal
25		G103862		2	RING
		1346221C3		2	VALVE Anticavitation Valve; Incl. Ref 26 - 29
26		G34938		1	POPPET, VALVE
27		G34458		1	SPRING
28		237-6010		1	O-RING 3/4 ID x 3/32, Boss Seal
29		332473A1		1	PLUG

VALVE SECTION - LOADER LIFT

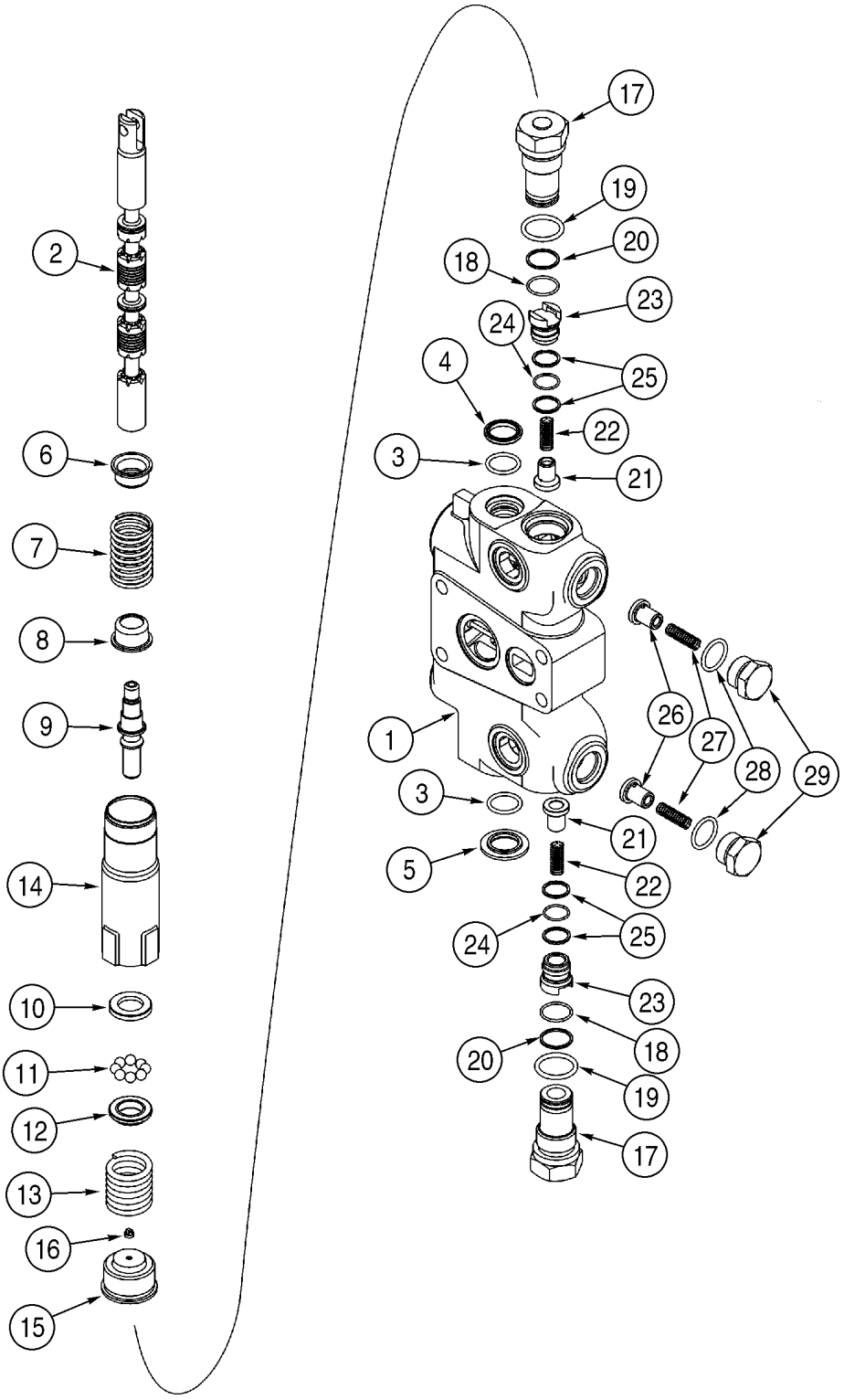

BS00C185

VALVE SECTION - LOADER LIFT

REF	FN	PART NUMBER	YR/SN	QTY	DESCRIPTION
		1346105C2		1	KIT, SEALS Seal; Incl. Ref 3, 4, 18 - 20, 24, 25; Plus Additional O-Rings Not Required For This Application

VALVE - SECTION OUTLET

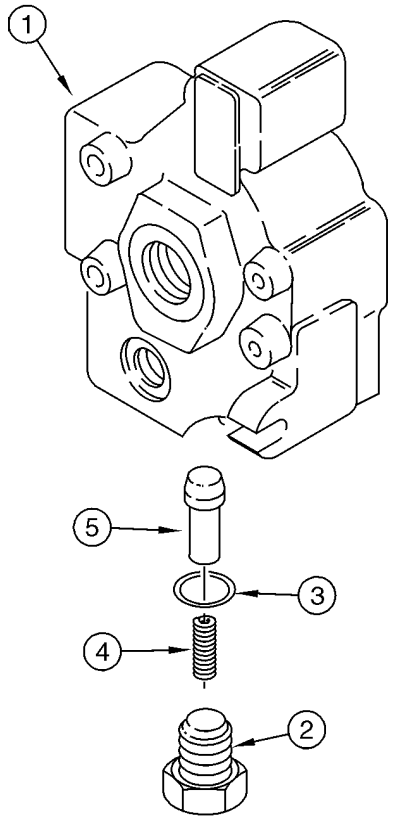

B9405134

VALVE - SECTION OUTLET

REF	FN	PART NUMBER	YR/SN	QTY	DESCRIPTION
		132004A2		1	VALVE SECTION (HYDR) Outlet; Incl. Ref 1 - 5
1		NSS		1	NOT SERVICED SEPARATELY Housing
2		293787A1		1	PLUG Load Check; Incl. Ref 3
3		237-6008		1	O-RING 41/64 ID x 3/32, Boss Seal
4		G109646		1	SPRING
5		283417A1		1	POPPET, VALVE

VALVE SECTION - LOADER CLAM

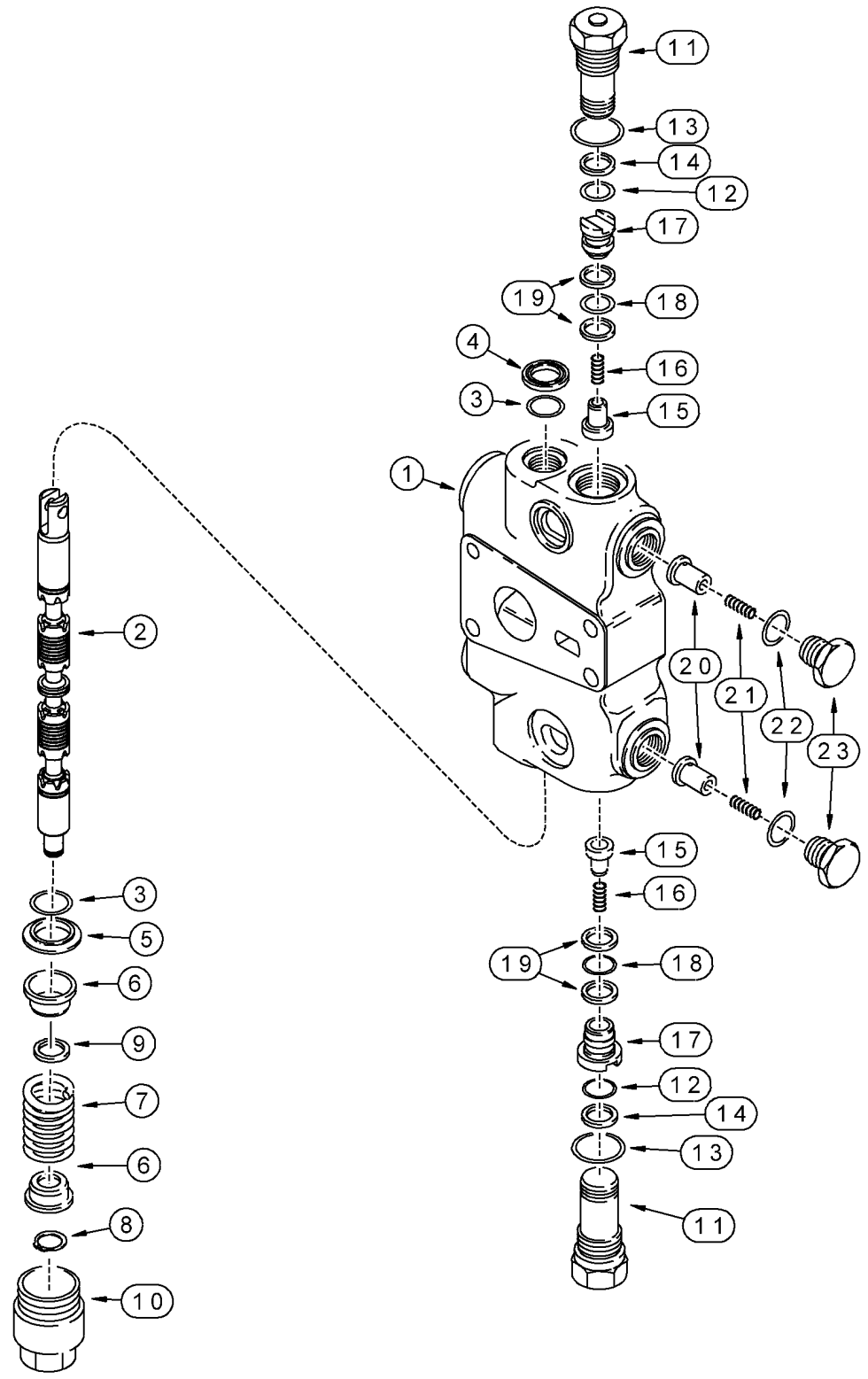

VALVE SECTION - LOADER CLAM

REF	FN	PART NUMBER	YR/SN	QTY	DESCRIPTION
		332754A2		1	VALVE SECTION (HYDR) Clam; Incl. Ref 1 - 23
1		NSS		1	NOT SERVICED SEPARATELY Housing
2		NSS		1	NOT SERVICED SEPARATELY Spool
3		1994608C1		2	O-RING
4		65457C1		1	SEAL
5		G102711		1	RETAINER
6		G33075		2	RETAINER
7		360361A1		1	SPRING
8		100-1647		1	RING SNAP No. 47
9		332753A1		1	SPACER
10		G33080		1	SCREW
		345-601		X	LOCTITE No 203; 1 ml
		G33122		2	PLUG Load Check Valve Port; Incl. Ref 11 - 14
11		NSS		1	NOT SERVICED SEPARATELY Plug
12		238-6018		1	O-RING 3/4 ID x 1/16, Face Seal
13		237-6012		1	O-RING 59/64 ID x 7/64, Boss Seal
14		G35540		1	RING
		1346219C3		2	VALVE, CHECK Load Check Valve; Incl. Ref 15 - 19
15		1343777C1		1	POPPET, VALVE Hollow Poppet Pin With Orifice
16		1346175C1		1	SPRING
17		1343708C1		1	PLUG
18		238-6016		1	O-RING 5/8 ID x 1/16, Face Seal
19		G103862		2	RING
		1346221C3		2	VALVE Anticavitation Valve; Incl. Ref 20 - 23
20		G34938		1	POPPET, VALVE
21		G34458		1	SPRING
22		237-6010		1	O-RING 3/4 ID x 3/32, Boss Seal
23		332473A1		1	PLUG
		1346105C2		1	KIT, SEALS Seal; Incl. Ref 3, 4, 12 - 14, 18, 19; Plus Additional O-Rings Not Required For This Application

VALVE ASSY - RELIEF, CIRCUIT

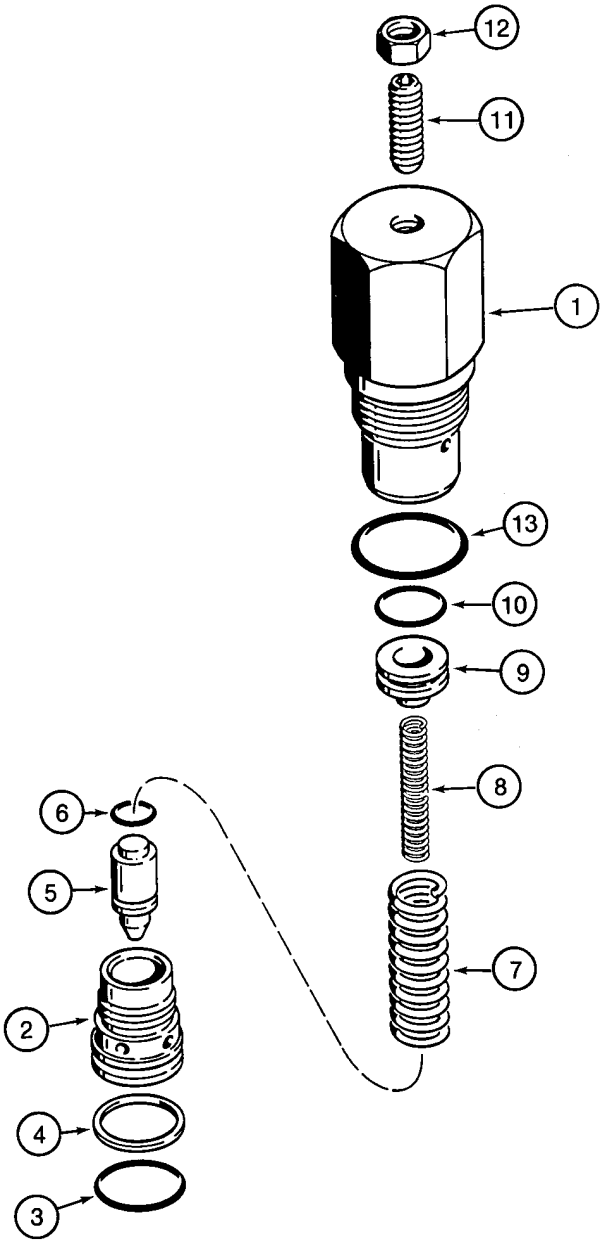

861823S

VALVE ASSY - RELIEF, CIRCUIT

REF	FN	PART NUMBER	YR/SN	QTY	DESCRIPTION
		REF			INSTRUCTION Bucket Section Circuit Relief Valve
		G109391		2	VALVE 3200 psi; Circuit Relief Valve; Incl. Ref 1 - 13; Used In Production; Order G109449 Circuit Relief Valve Kit For Service
1		NSS		1	NOT SERVICED SEPARATELY Housing
2		NSS		1	NOT SERVICED SEPARATELY Seat
3		238-6018		1	O-RING 3/4 ID x 1/16, Face Seal
		G109449		1	KIT Service For G109391 Circuit Relief Valve; Kit Includes Instruction Sheet and G109447 Circuit Relief Valve, Which Is The Same As G109391 Except With A Different Pressure Setting
4		G35540		1	RING
5		NSS		1	NOT SERVICED SEPARATELY Poppet, Valve
6		NSS		1	NOT SERVICED SEPARATELY O-Ring
7		NSS		1	NOT SERVICED SEPARATELY Spring
8		NSS		1	NOT SERVICED SEPARATELY Spring
9		NSS		1	NOT SERVICED SEPARATELY Piston
10		NSS		1	NOT SERVICED SEPARATELY O-Ring
11		484-43116		1	SCREW 5/16 NF x 1 in; ov pt
12		425-155		1	NUT 5/16 NF
13		237-6012		1	O-RING 59/64 ID x 7/64, Boss Seal

08 -35		p1	05/03

VALVE ASSY - BACKHOE CONTROL, 6 SPOOL

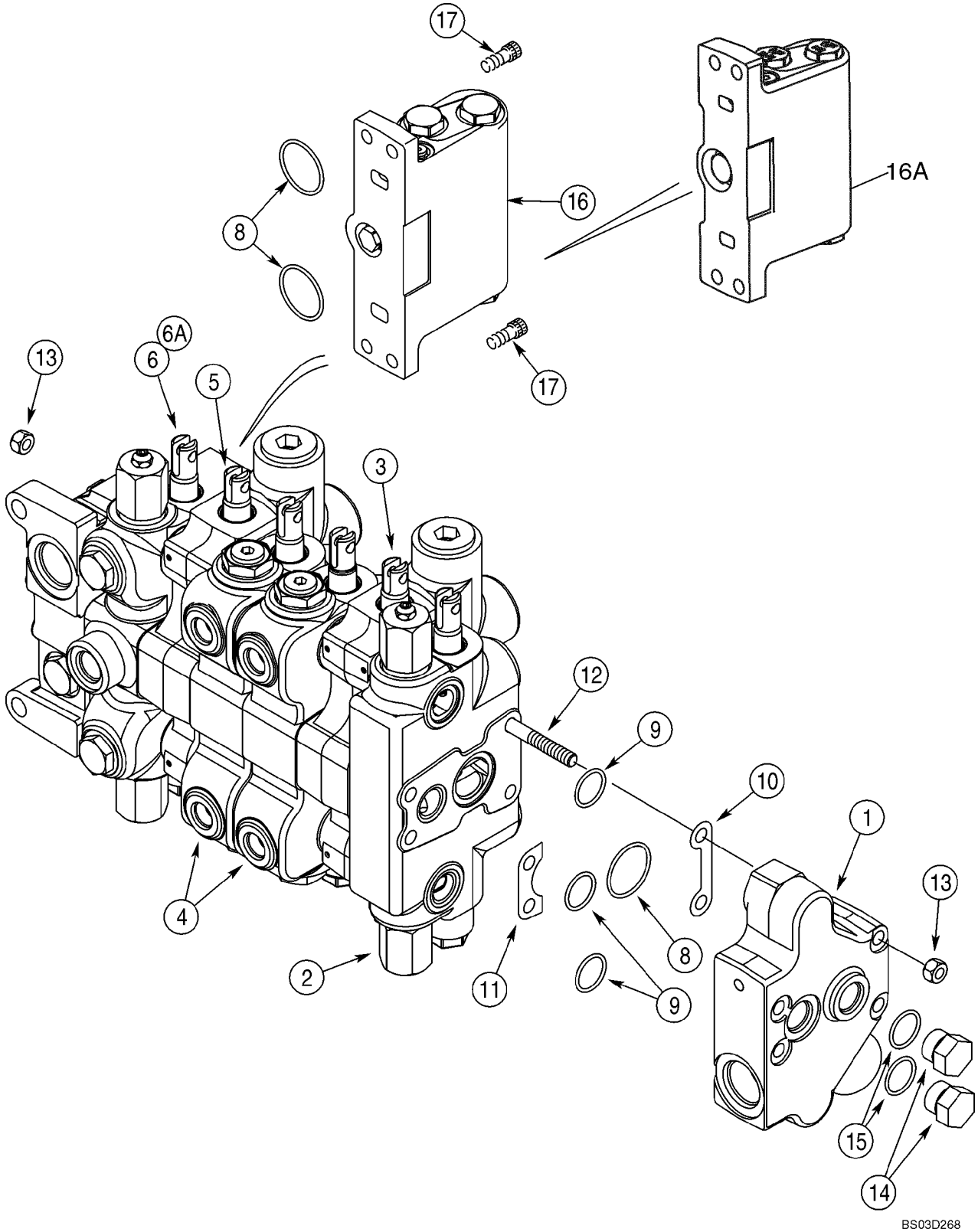

VALVE ASSY - BACKHOE CONTROL, 6 SPOOL

REF	FN	PART NUMBER	YR/SN	QTY	DESCRIPTION
		REF			INSTRUCTION Models Without Extendable Dipper and Without Auxiliary Hydraulics
		324993A3		1	VALVE, CONTROL Foot Swing; Incl. Ref 1 - 6, 7 - 17; If Used
		353814A3		1	VALVE, CONTROL Hand Swing; Incl. Ref 1 - 5, 6A - 17; If Used
1		400454A1		1	VALVE SECTION (HYDR) Outlet; See Figure 08-39
2		396919A1		1	VALVE SECTION (HYDR) Bucket; See Figure 08-40
3		375783A2		1	VALVE SECTION (HYDR) Dipper; See Figure 08-41
4		316416A1		2	VALVE BLOCK Stabilizer; Left-Hand and Right-Hand; See Figure 08-42
5		375782A2		1	VALVE SECTION (HYDR) Boom; See Figure 08-43
6		241088A5		1	VALVE SECTION (HYDR) Swing; Foot Swing Control Valve; See Figure 08-44
6B		243145A5		1	VALVE SECTION (HYDR) Swing; Hand Swing Control Valve; See Figure 08-44
7		1542829C1		1	VALVE SECTION (HYDR) Inlet; See Figure 08-39
8		238-6127		9	O-RING 1-7/16 ID x 3/32
9		238-6119		21	O-RING 15/16 ID x 3/32
10		G107251		7	SHIM
11		G33965		7	SHIM
12		G108900		4	STUD 3/8 x 16-15/16 in
13		425-106		8	NUT 3/8
14		218-5157		2	PLUG 7/8 Or; Incl. Ref 15
15		237-6010		1	O-RING 3/4 ID x 3/32, Boss Seal
16		387627A1		1	VALVE, CUSHION Swing; See Figure 08-45; No Longer Available; Order 387627A2, Ref 16A
16A		387627A2		1	VALVE, CUSHION Swing; See Figure 08-45
17		863-10030		4	BOLT M10 x 30; 12.9
		1346107C2		1	KIT, GASKET Seal; Incl. Ref 8, 9; Plus Additional O-Rings Not Required For This Application; No Longer Used
		437754A1		1	KIT, SEALS Incl. 8, 9; Plus Additional O-Rings Not Required For This Application

VALVE ASSY - BACKHOE CONTROL, 7 SPOOL

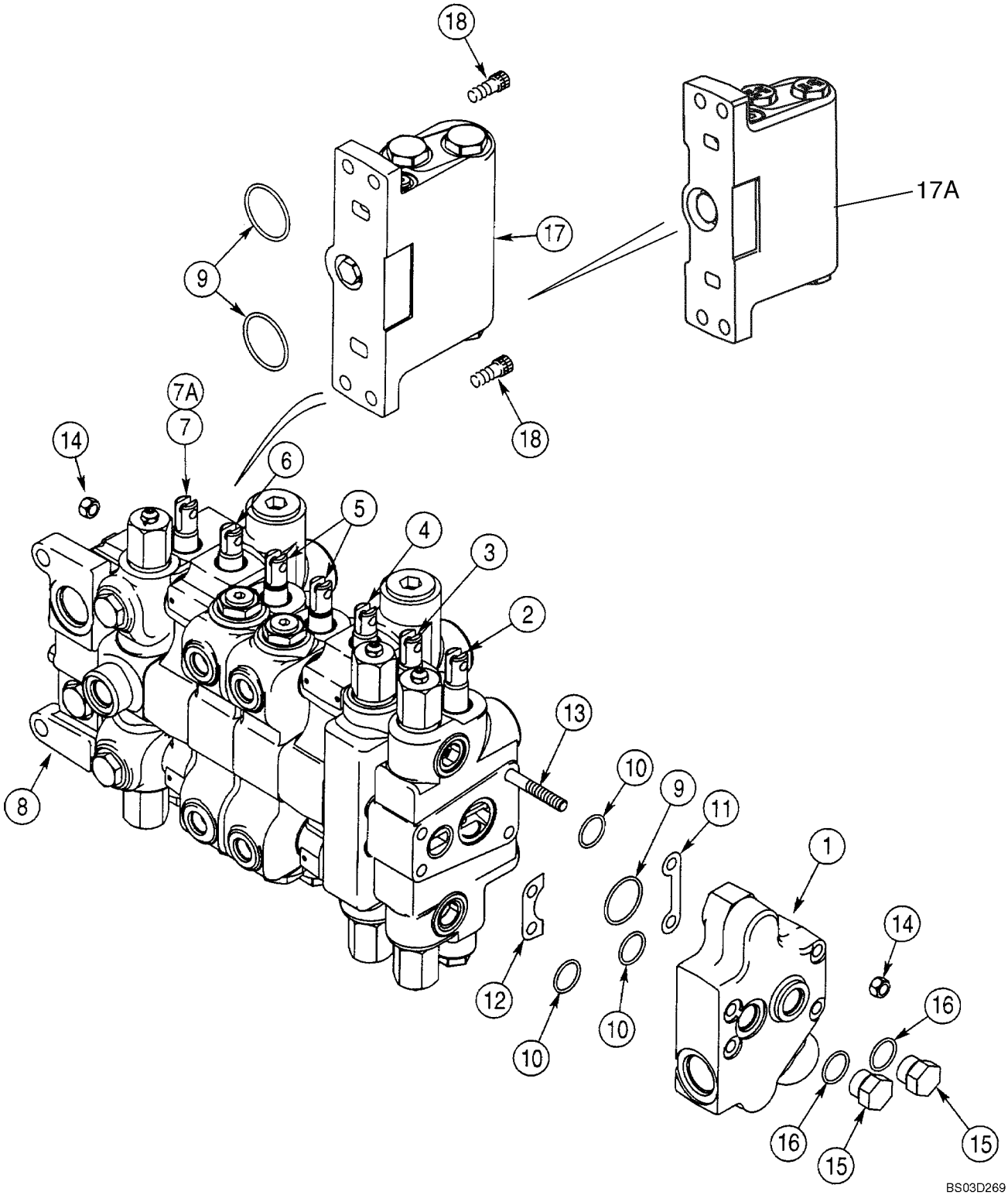

VALVE ASSY - BACKHOE CONTROL, 7 SPOOL

REF	FN	PART NUMBER	YR/SN	QTY	DESCRIPTION
		REF			INSTRUCTION Models Without Extendable Dipper and With Auxiliary Hydraulics
		353806A3		1	VALVE, CONTROL Foot Swing; Incl. Ref 1 - 7, 8-18; If Used
		353807A3		1	VALVE, CONTROL Hand Swing; Incl. Ref 1 - 6, 7A - 18; If Used
1		400454A1		1	VALVE SECTION (HYDR) Outlet; See Figure 08-39
2		396997A1		1	VALVE SECTION (HYDR) Options; Auxiliary Hydraulics; See Figure 08-47
3		396919A1		1	VALVE SECTION (HYDR) Bucket; See Figure 08-40
4		375783A2		1	VALVE SECTION (HYDR) Dipper; See Figure 08-41
5		316416A1		2	VALVE BLOCK Stabilizer; Left-Hand and Right-Hand; See Figure 08-42
6		375782A2		1	VALVE SECTION (HYDR) Boom; See Figure 08-43
7		241088A5		1	VALVE SECTION (HYDR) Swing; Foot Swing Control Valve; See Figure 08-44
7A		243145A5		1	VALVE SECTION (HYDR) Swing; Hand Swing Control Valve; See Figure 08-44
8		1542829C1		1	VALVE SECTION (HYDR) Inlet; See Figure 08-39
9		238-6127		10	O-RING 1-7/16 ID x 3/32
10		238-6119		24	O-RING 15/16 ID x 3/32
11		G107251		8	SHIM
12		G33965		8	SHIM
13		G108899		4	STUD 3/8 x 18-15/16 in
14		425-106		8	NUT 3/8
15		218-5157		2	PLUG 7/8 Or; Incl. Ref 16
16		237-6010		1	O-RING 3/4 ID x 3/32, Boss Seal
17		387627A1		1	VALVE, CUSHION Swing; See Figure 08-45; No Longer Available; Order 387627A2, Ref 17A
17A		387627A2		1	VALVE, CUSHION Swing; See Figure 08-45
18		863-10030		4	BOLT M10 x 30; 12.9
		1346107C2		1	KIT, GASKET Seal; Incl. Ref 9, 10; Plus Additional O-Rings Not Required For This Application; If Used
		437754A1		1	KIT, SEALS Incl. 9, 10; Plus Additional O-Rings Not Required For This Application; If Used

VALVE ASSY - BACKHOE CONTROL, 7 SPOOL

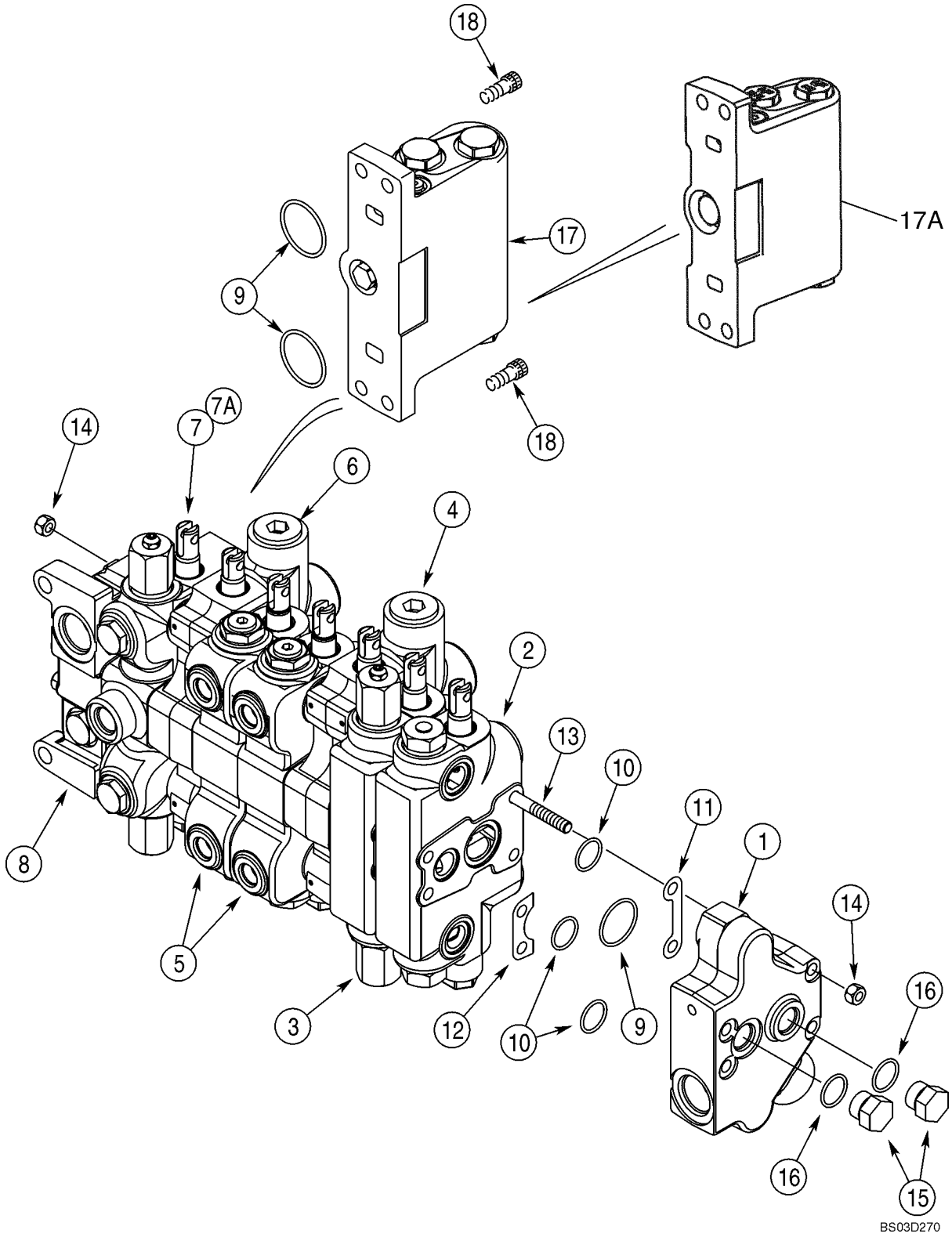

VALVE ASSY - BACKHOE CONTROL, 7 SPOOL

REF	FN	PART NUMBER	YR/SN	QTY	DESCRIPTION
		REF			INSTRUCTION Models With Extendable Dipper and Without Auxiliary Hydraulics
		353815A3		1	VALVE, CONTROL Foot Swing; Incl. Ref 1 - 7, 8-18; If Used
		353816A3		1	VALVE, CONTROL Hand Swing; Incl. Ref 1 - 6, 7A - 18; If Used
1		400454A1		1	VALVE SECTION (HYDR) Outlet; See Figure 08-39
2		144324A5		1	VALVE SECTION (HYDR) Extendable Dipper; See Figure 08-46
3		396919A1		1	VALVE SECTION (HYDR) Bucket; See Figure 08-40
4		375783A2		1	VALVE SECTION (HYDR) Dipper; See Figure 08-41
5		316416A1		2	VALVE BLOCK Stabilizer; Left-Hand and Right-Hand; See Figure 08-39
6		375782A2		1	VALVE SECTION (HYDR) Boom; See Figure 08-43
7		241088A5		1	VALVE SECTION (HYDR) Swing; Foot Swing Control Valve; See Figure 08-44
7A		243145A5		1	VALVE SECTION (HYDR) Swing; Hand Swing Control Valve; See Figure 08-44
8		1542829C1		1	VALVE SECTION (HYDR) Inlet; See Figure 08-39
9		238-6127		10	O-RING 1-7/16 ID x 3/32
10		238-6119		24	O-RING 15/16 ID x 3/32
11		G107251		8	SHIM
12		G33965		8	SHIM
13		G108899		4	STUD 3/8 x 18-15/16 in
14		425-106		8	NUT 3/8
15		218-5157		2	PLUG 7/8 Or; Incl. Ref 16
16		237-6010		1	O-RING 3/4 ID x 3/32, Boss Seal
17		387627A1		1	VALVE, CUSHION Swing; See Figure 08-45; No Longer Available; Order 387627A2, Ref 17A
17A		387627A2		1	VALVE, CUSHION Swing; See Figure 08-45
18		863-10030		4	BOLT M10 x 30; 12.9
		1346107C2		1	KIT, GASKET Seal; Incl. Ref 9, 10; Plus Additional O-Rings Not Required For This Application; If Used
		437754A1		1	KIT, SEALS Incl. Ref 9, 10; Plus Additional O-Rings Not Required For This Application

08 -38		p1	05/03

VALVE ASSY - BACKHOE CONTROL, 8 SPOOL

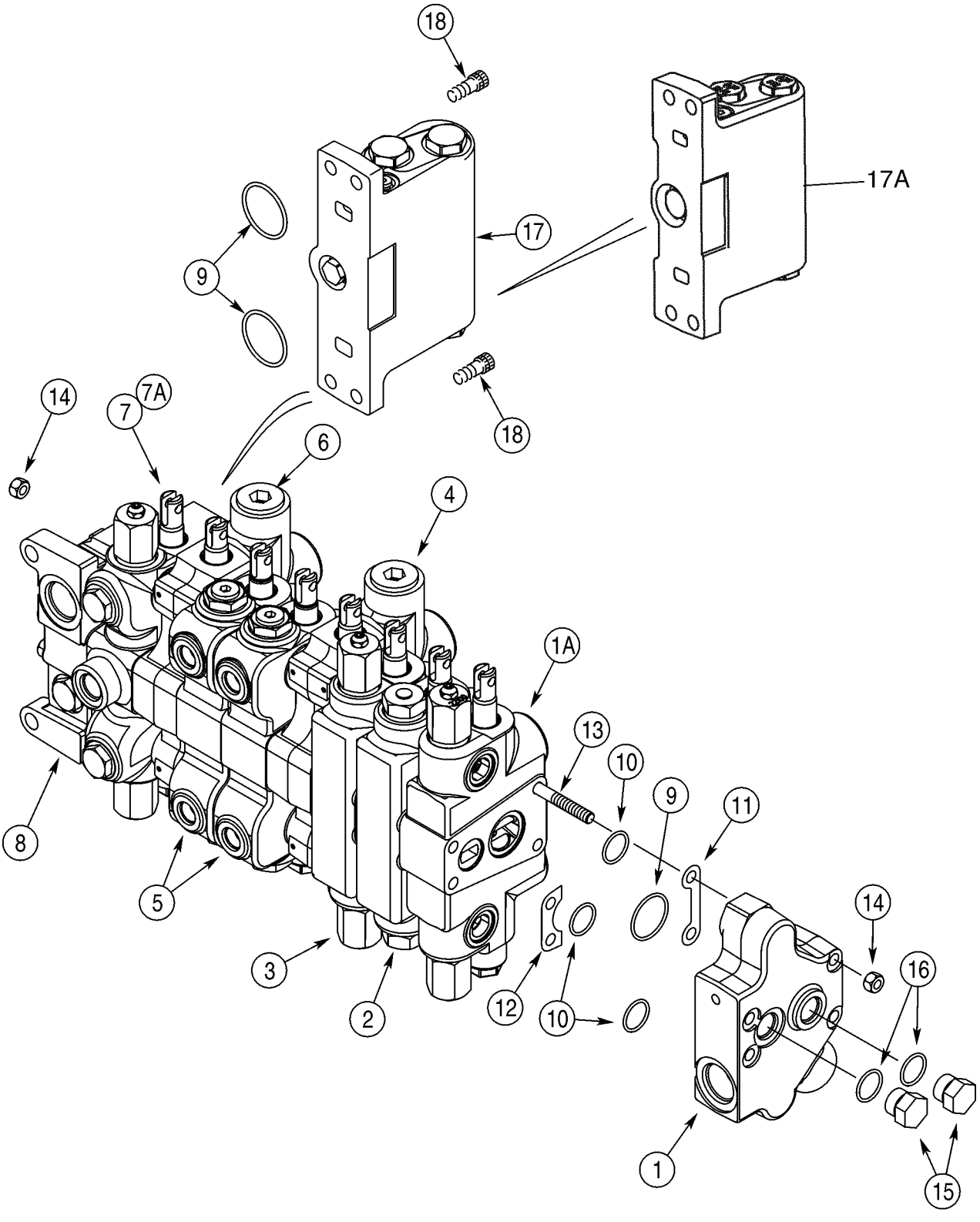

VALVE ASSY - BACKHOE CONTROL, 8 SPOOL

REF	FN	PART NUMBER	YR/SN	QTY	DESCRIPTION
		REF			INSTRUCTION Models With Extendable Dipper and With Auxiliary Hydraulics
		353808A3		1	VALVE, CONTROL Foot Swing; Incl. Ref 1 - 7, 8-18; If Used
		353809A3		1	VALVE, CONTROL Hand Swing; Incl. Ref 1 - 6, 7A - 18; If Used
1		400454A1		1	VALVE SECTION (HYDR) Outlet; See Figure 08-39
1A		396997A1		1	VALVE SECTION (HYDR) Options; Auxiliary Hydraulics; See Figure 08-47
2		144324A5		1	VALVE SECTION (HYDR) Extendable Dipper; See Figure 08-46
3		396919A1		1	VALVE SECTION (HYDR) Bucket; See Figure 08-40
4		375783A2		1	VALVE SECTION (HYDR) Dipper; See Figure 08-41
5		316416A1		2	VALVE BLOCK Stabilizer; Left-Hand and Right-Hand; See Figure 08-42
6		375782A2		1	VALVE SECTION (HYDR) Boom; See Figure 08-43
7		241088A5		1	VALVE SECTION (HYDR) Swing; Foot Swing Control Valve; See Figure 08-44
7A		243145A5		1	VALVE SECTION (HYDR) Swing; Hand Swing Control Valve; See Figure 08-44
8		1542829C1		1	VALVE SECTION (HYDR) Inlet; See Figure 08-39
9		238-6127		11	O-RING 1-7/16 ID x 3/32
10		238-6119		27	O-RING 15/16 ID x 3/32
11		G107251		9	SHIM
12		G33965		9	SHIM
13		229684A1		4	STUD
14		425-106		8	NUT 3/8
15		218-5157		2	PLUG 7/8 Or; Incl. Ref 16
16		237-6010		1	O-RING 3/4 ID x 3/32, Boss Seal
17		387627A1		1	VALVE, CUSHION Swing; See Figure 08-45; No Longer Available; Order 387627A2, Ref 17A
17A		387627A2		1	VALVE, CUSHION Swing; See Figure 08-45
18		863-10030		4	BOLT M10 x 30; 12.9
		1346107C2		1	KIT, GASKET Seal; Incl. Ref 9, 10; Plus Additional O-Rings Not Required For This Application; If Used

VALVE ASSY - BACKHOE CONTROL, 8 SPOOL

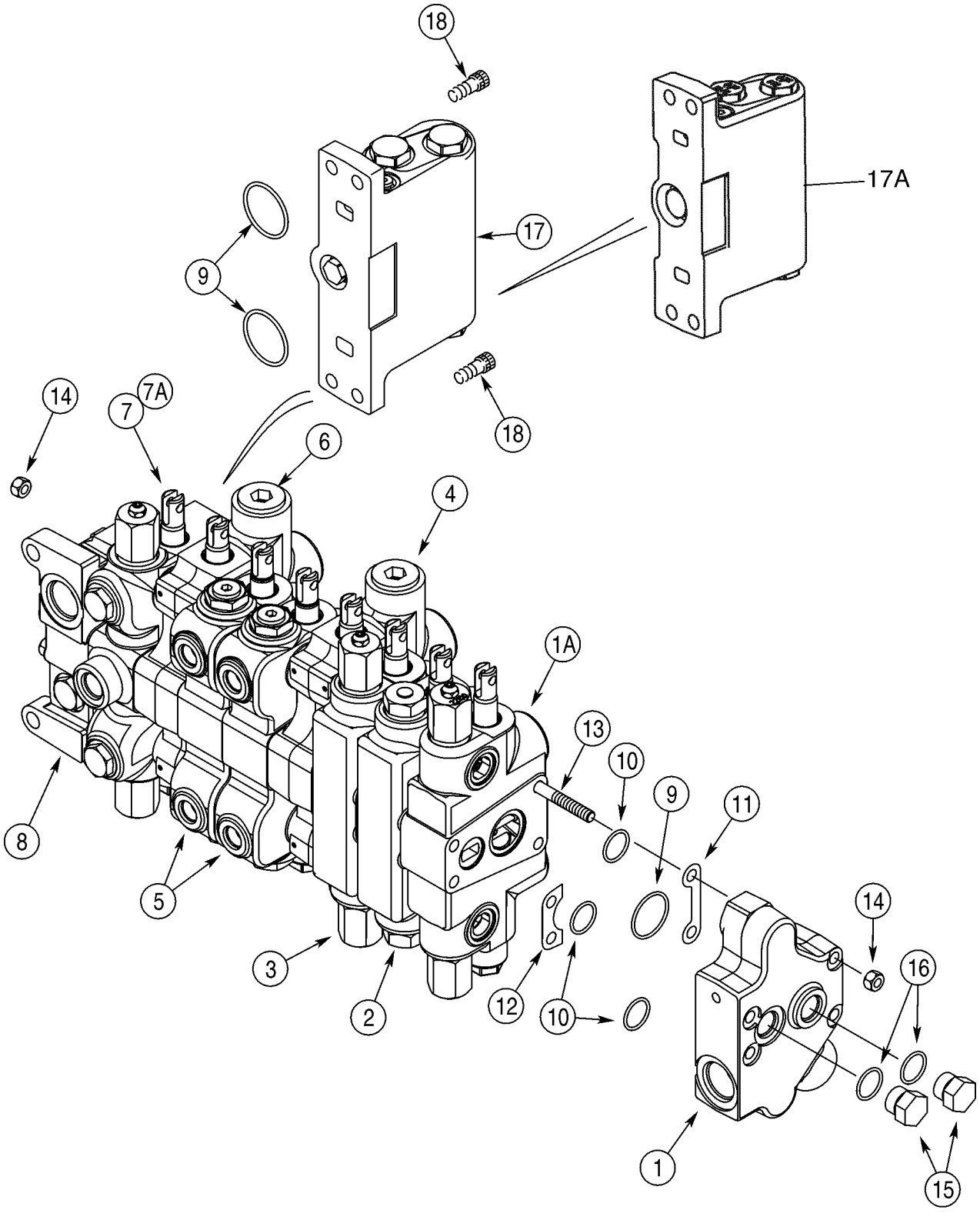

VALVE ASSY - BACKHOE CONTROL, 8 SPOOL

REF	FN	PART NUMBER	YR/SN	QTY	DESCRIPTION
		437754A1		1	KIT, SEALS Incl. Ref 9, 10; Plus Additional O-Rings Not Required For This Application; If Used

VALVE SECTION - INLET AND OUTLET

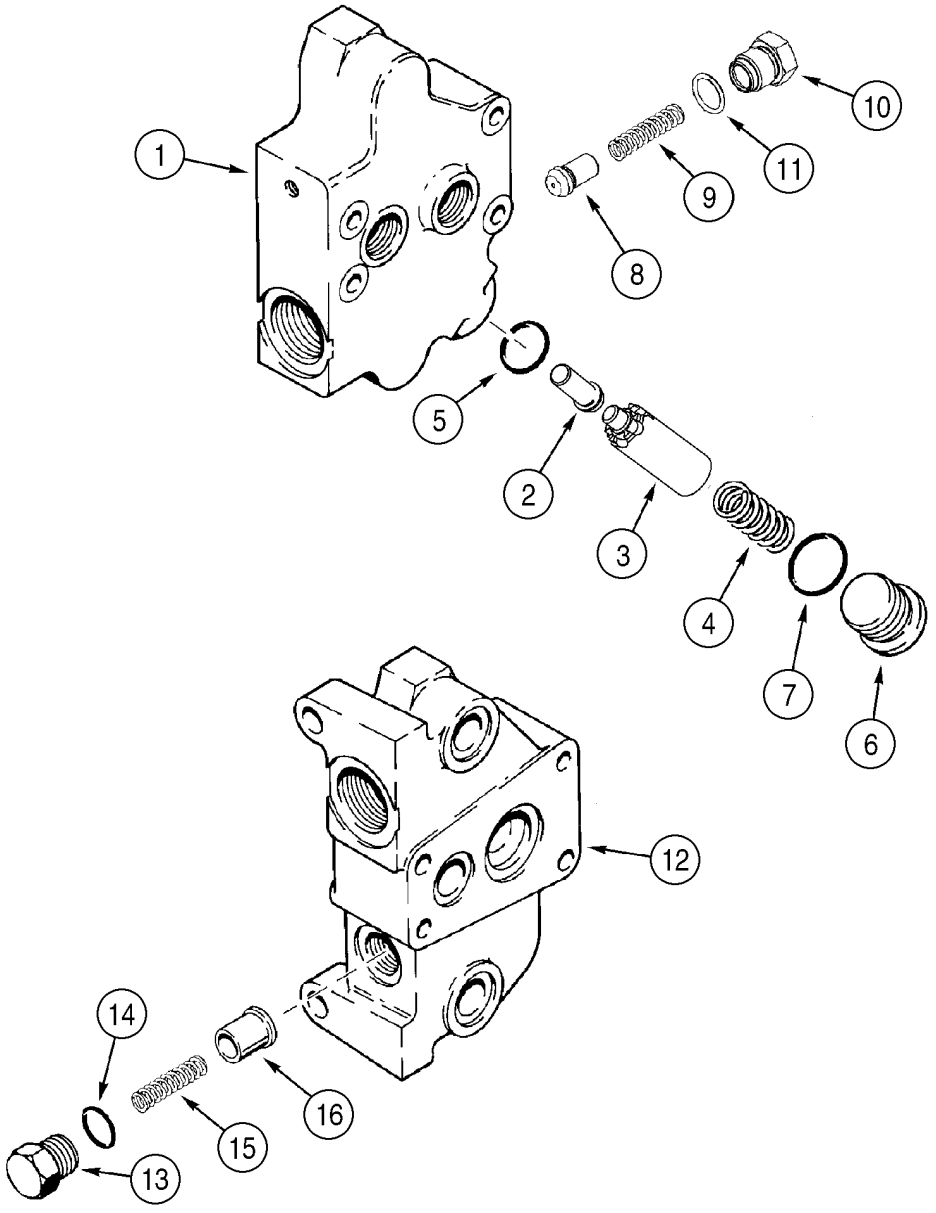

BS00C179

VALVE SECTION - INLET AND OUTLET

REF	FN	PART NUMBER	YR/SN	QTY	DESCRIPTION
		REF			INSTRUCTION Outlet Section
		400454A1		1	VALVE SECTION (HYDR) Outlet; With Hex Plug and Check Valve; Incl. Ref 1 - 11
1		NSS		1	NOT SERVICED SEPARATELY Manifold
2		321735A1		1	PISTON
3		321350A1		1	SPOOL
4		396992A1		1	SPRING (COIL)
5		238-5118		1	O-RING 7/8 ID x 3/32
		365750A1		1	PLUG Regeneration; Incl. Ref 6, 7
6		327150A1		1	PLUG
7		237-6014		1	O-RING 1-3/64 ID x 7/64
8		283417A1		1	POPPET, VALVE Check Valve
9		G34458		1	SPRING
10		293787A1		1	PLUG Incl. Ref 11
11		237-6008		1	O-RING 41/64 ID x 3/32, Boss Seal
		REF			INSTRUCTION Inlet Section
		1542829C1		1	VALVE SECTION (HYDR) Inlet; Incl. Ref 12 - 16
12		NSS		1	NOT SERVICED SEPARATELY Manifold
		1346221C3		1	VALVE Anticavitation Valve; Incl. Ref 13 - 16
13		332473A1		1	PLUG
14		237-6010		1	O-RING 3/4 ID x 3/32, Boss Seal
15		G34458		1	SPRING
16		G34938		1	POPPET, VALVE

VALVE SECTION - BACKHOE BUCKET

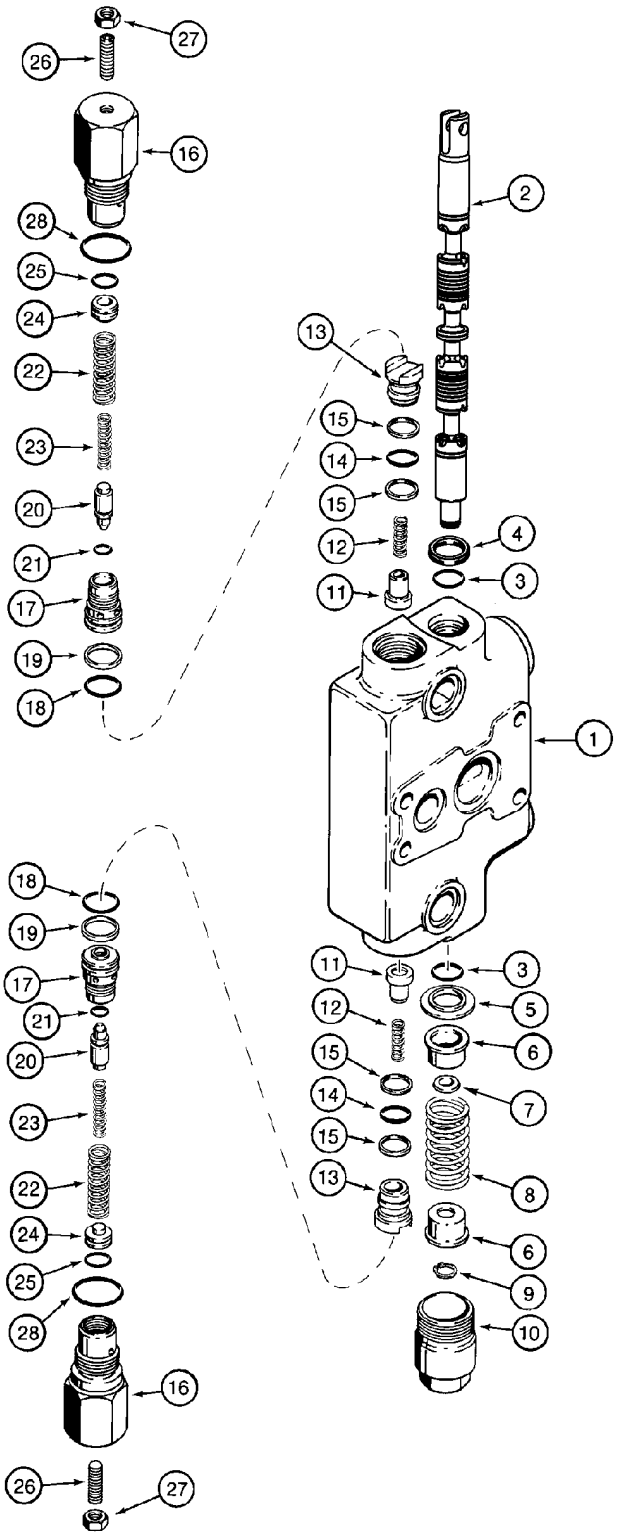

BS00G057

VALVE SECTION - BACKHOE BUCKET

REF	FN	PART NUMBER	YR/SN	QTY	DESCRIPTION
		396919A1		1	VALVE SECTION (HYDR) Bucket; Incl. Ref 1 - 28
1		NSS		1	NOT SERVICED SEPARATELY Housing
2		NSS		1	NOT SERVICED SEPARATELY Spool
3		1994608C1		2	O-RING
4		65457C1		1	SEAL
5		G102711		1	RETAINER
6		G33075		2	RETAINER
7		332753A1		1	SPACER
8		1994596C1		1	SPRING
9		100-1647		1	RING SNAP No. 47
10		G33080		1	SCREW
		345-601		X	LOCTITE No. 203; 1 ml
		1346219C3		2	VALVE, CHECK Load Check; Incl. Ref 11 - 15
11		1343777C1		1	POPPET, VALVE
12		1346175C1		1	SPRING
13		1343708C1		1	PLUG
14		238-6016		1	O-RING 5/8 ID x 1/16, Face Seal
15		G103862		2	RING
		129861A1		1	VALVE Circuit Relief Valve, Lower; Incl. Ref 16 - 28; Used In Production; Order G110077 Circuit Relief Valve Kit For Service
		396771A1		1	VALVE, PRESSURE RELIEF Circuit Relief Valve, Upper; Incl. Ref 16 - 28; Used In Production; Order G110077 Circuit Relief Valve Kit For Service
16		NSS		1	NOT SERVICED SEPARATELY Housing
		G110077		1	KIT Service For 129861A1 and 396771A1 Circuit Relief Valves; Kit Incl. An Instruction Sheet and G110078 Circuit Relief Valve, Which Is The Same As 129861A1 and 396771A1 Except With A Different Pressure Setting
17		NSS		1	NOT SERVICED SEPARATELY Seat
18		238-6018		1	O-RING 3/4 ID x 1/16, Face Seal
19		G35540		1	RING
20		NSS		1	NOT SERVICED SEPARATELY Poppet, Valve
21		NSS		1	NOT SERVICED SEPARATELY O-Ring
22		NSS		1	NOT SERVICED SEPARATELY Spring

VALVE SECTION - BACKHOE BUCKET

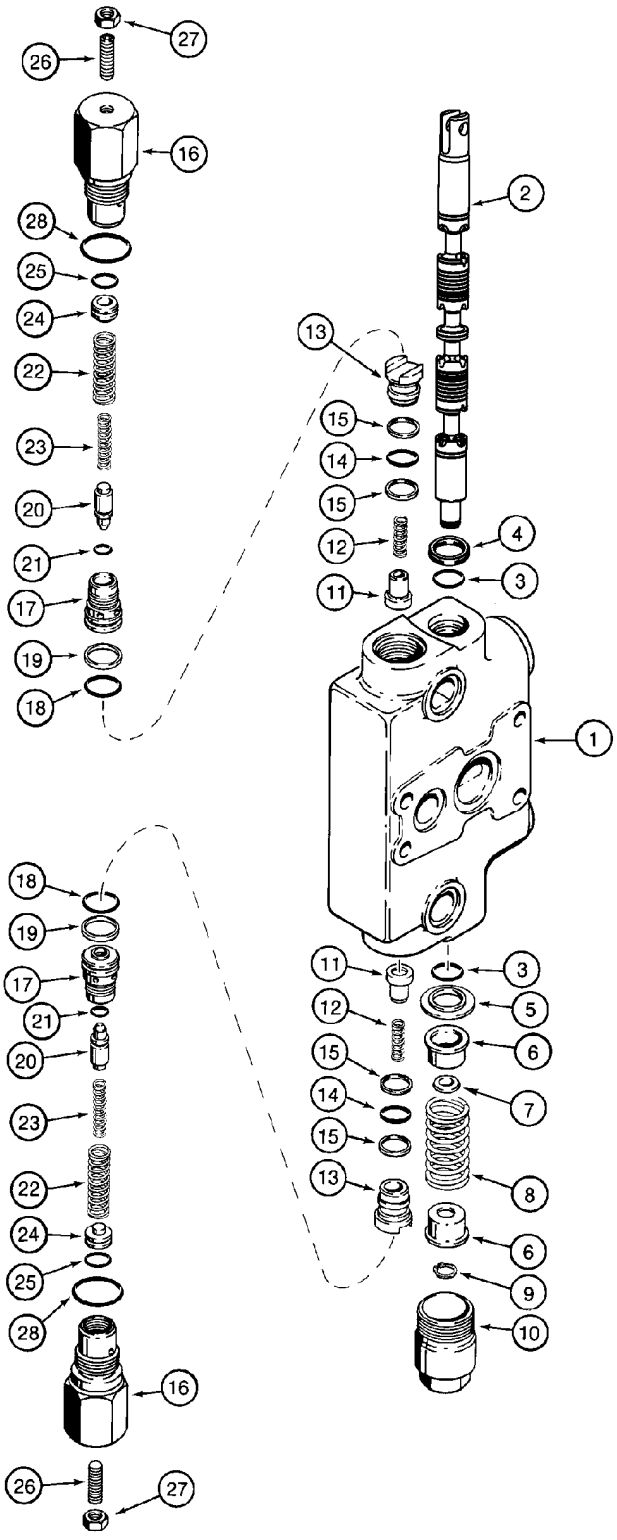

BS00G057

VALVE SECTION - BACKHOE BUCKET

REF	FN	PART NUMBER	YR/SN	QTY	DESCRIPTION
23		NSS		1	NOT SERVICED SEPARATELY Spring
24		NSS		1	NOT SERVICED SEPARATELY Piston
25		NSS		1	NOT SERVICED SEPARATELY O-Ring
26		484-43116		1	SCREW 5/16 NF x 1 in; ov pt; Circuit Relief Valve 129861A1
26		484-43120		1	SCREW 5/16 NFx1-1/4; Circuit Relief Valve 396771a1
27		425-155		1	NUT 5/16 NF
28		237-6012		1	O-RING 59/64 ID x 7/64, Boss Seal
		1346105C2		1	KIT, SEALS Seal; Incl. Ref 3, 4, 14, 15, 18, 19, 28; Plus Additional O-Rings Not Required For This Application

08 -41		p1	05/03

VALVE SECTION - BACKHOE DIPPER

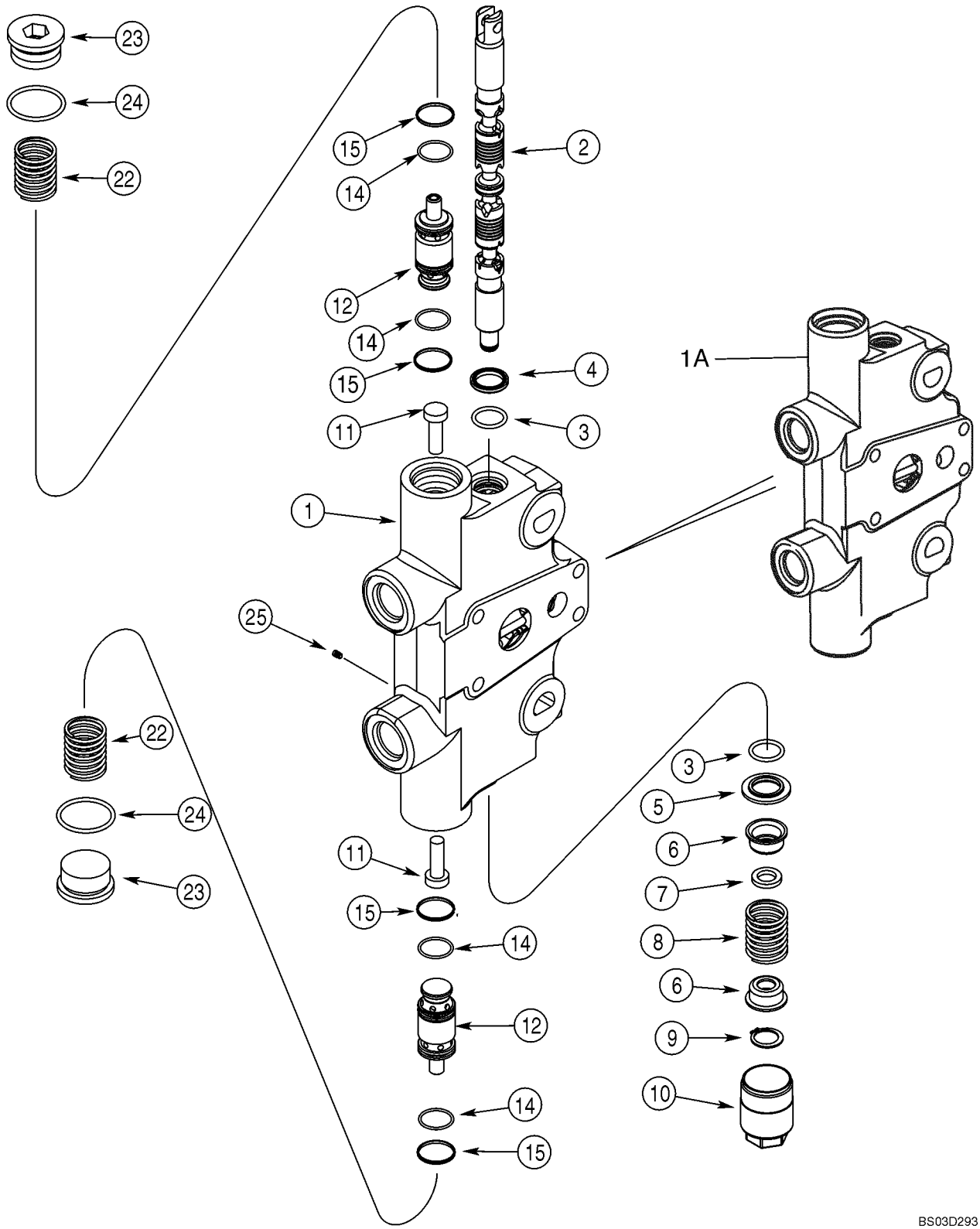

VALVE SECTION - BACKHOE DIPPER

REF	FN	PART NUMBER	YR/SN	QTY	DESCRIPTION
		375783A2		1	VALVE SECTION (HYDR) Dipper; Incl. Ref 1 - 25
1		NSS		1	NOT SERVICED SEPARATELY Housing
1A		NSS		1	NOT SERVICED SEPARATELY Housing
2		NSS		1	NOT SERVICED SEPARATELY Spool
3		1994608C1		2	O-RING
4		65457C1		1	SEAL
5		G102711		1	RETAINER
6		G33075		2	RETAINER
7		332753A1		1	SPACER
8		1994596C1		1	SPRING
9		100-1647		1	RING SNAP No. 47
10		G33080		1	SCREW
		345-601		X	LOCTITE No. 203; 1 ml
11		375787A2		2	PISTON
12		345297A5		2	VALVE, CHECK 23,800 kPa; Relief and Anticavitation; Component Parts Not Serviced Separately; Incl. Ref 14, 15
14		238-5019		2	O-RING 13/16 ID x 1/16; Replaces 411401A1, Brown O-Ring
15		345501A1		2	SEAL
22		411317A1		2	SPRING
23		218-5214		2	PLUG 1-5/16 OR; Incl. Ref 24
24		237-6016		1	O-RING 1-11/64 ID x 7/64, Boss Seal
25		369263A1		8	PLUG 4 mm dia

VALVE SECTION - BACKHOE STABILIZER

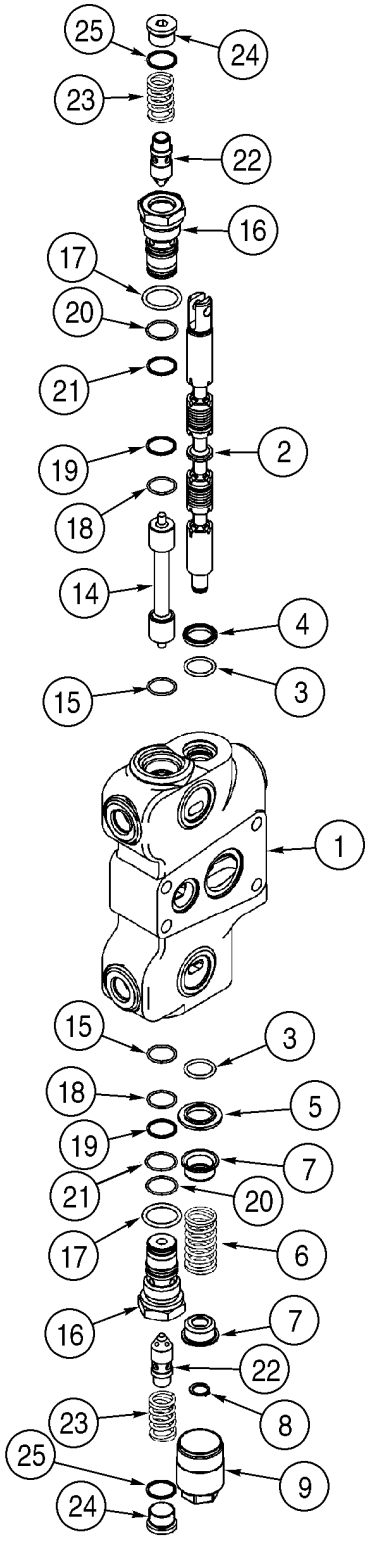

BS00C190

VALVE SECTION - BACKHOE STABILIZER

REF	FN	PART NUMBER	YR/SN	QTY	DESCRIPTION
		316416A1		2	VALVE BLOCK Stabilizer; Left-Hand and Right-Hand; Incl. Ref 1 - 25
1		NSS		1	NOT SERVICED SEPARATELY Housing
2		NSS		1	NOT SERVICED SEPARATELY Spool
3		1994608C1		2	O-RING
4		65457C1		1	SEAL
5		G102711		1	RETAINER
6		1986722C1		1	SPRING 2-1/4
7		G33075		2	RETAINER
8		100-1647		1	RING SNAP No. 47
9		G33080		1	SCREW
		345-601		X	LOCTITE No. 203; 1 ml
14		316412A1		1	PISTON
15		238-6018		2	O-RING 3/4 ID x 1/16, Face Seal
		G109627		2	PLUG Lock Check; Incl. Ref 16 - 25
16		NSS		1	NOT SERVICED SEPARATELY Seat
17		237-6012		1	O-RING 59/64 ID x 7/64, Boss Seal
18		238-6018		1	O-RING 3/4 ID x 1/16, Face Seal
19		G35540		1	RING
20		238-6019		1	O-RING 13/16 ID x 1/16
21		G110468		1	RING
22		NSS		1	NOT SERVICED SEPARATELY Poppet, Valve
23		G109630		1	SPRING
24		218-5210		1	PLUG 3/4 Or; Incl. Ref 25
25		237-6008		1	O-RING 41/64 ID x 3/32, Boss Seal

08 -43		p1	05/03

VALVE SECTION - BACKHOE BOOM

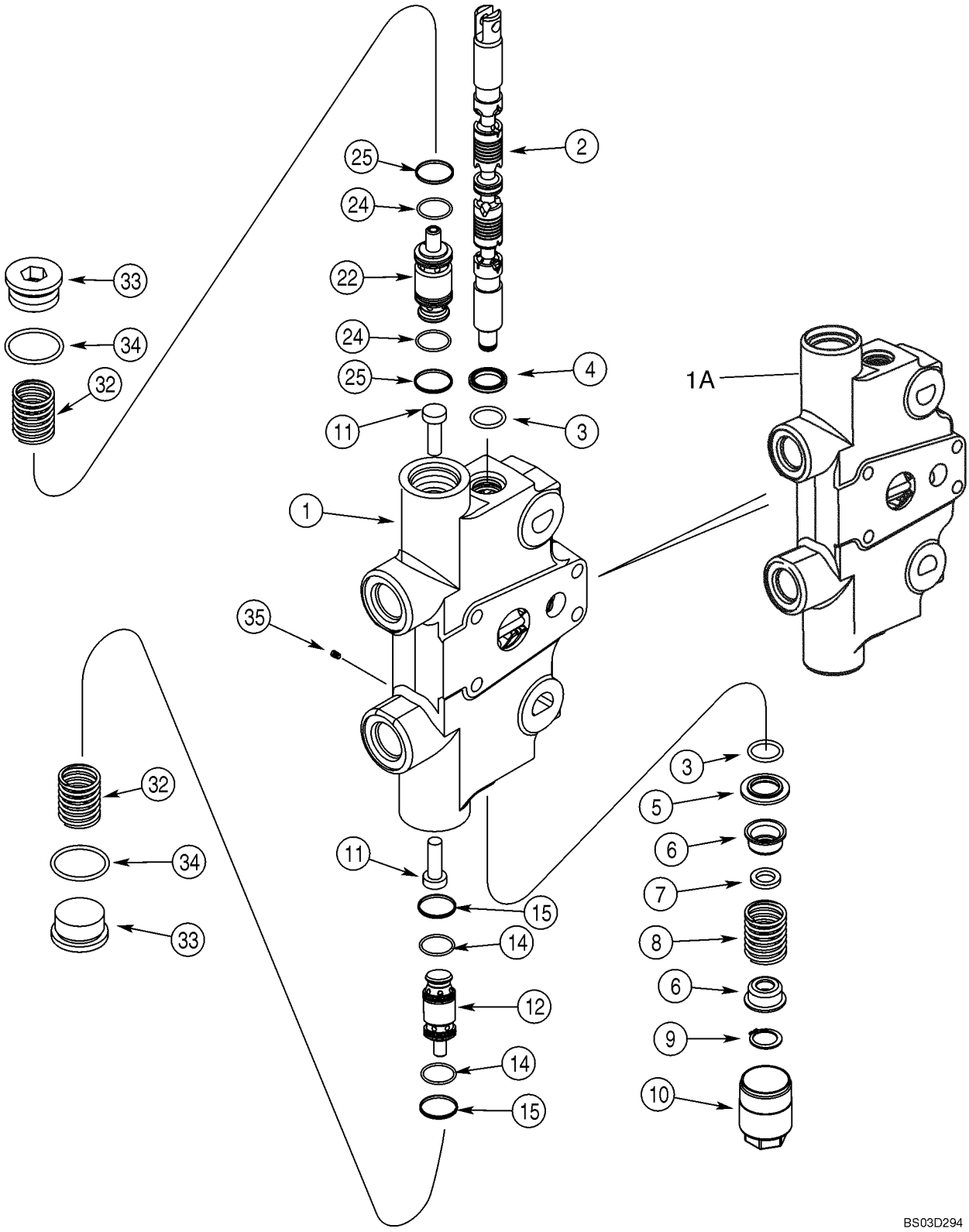

VALVE SECTION - BACKHOE BOOM

REF	FN	PART NUMBER	YR/SN	QTY	DESCRIPTION
		375782A2		1	VALVE SECTION (HYDR) Boom; Incl. Ref 1 - 35
1		NSS		1	NOT SERVICED SEPARATELY Housing
1A		NSS		1	NOT SERVICED SEPARATELY Housing
2		NSS		1	NOT SERVICED SEPARATELY Spool
3		1994608C1		2	O-RING
4		65457C1		1	SEAL
5		G102711		1	RETAINER
6		G33075		2	RETAINER
7		332753A1		1	SPACER
8		1994596C1		1	SPRING
9		100-1647		1	RING SNAP No. 47
10		G33080		1	SCREW
		345-601		X	LOCTITE No. 203; 1 ml
11		375787A2		2	PISTON
12		355477A6		1	VALVE, CHECK 33,100 kPa; Relief and Anticavitation; Lower; Component Parts Not Serviced Separately; Incl. Ref. 14, 15; Replaces 355477A5
14		238-5019		2	O-RING 13/16 ID x 1/16; Replaces 411401A1, Brown O-Ring
15		345501A1		2	SEAL
22		355473A5		1	VALVE, CHECK 22,100 kPa; Relief and Anticavitation; Upper; Component Parts Not Serviced Separately, Incl. 24, 25
24		238-5019		2	O-RING 13/16 ID x 1/16; Replaces 411401A1, Brown O-Ring
25		345501A1		2	SEAL
32		411317A1		2	SPRING
33		218-5214		2	PLUG 1-5/16 OR; Incl. Ref 34
34		237-6016		1	O-RING 1-11/64 ID x 7/64, Boss Seal
35		369263A1		8	PLUG 4 mm dia

VALVE SECTION - BACKHOE SWING

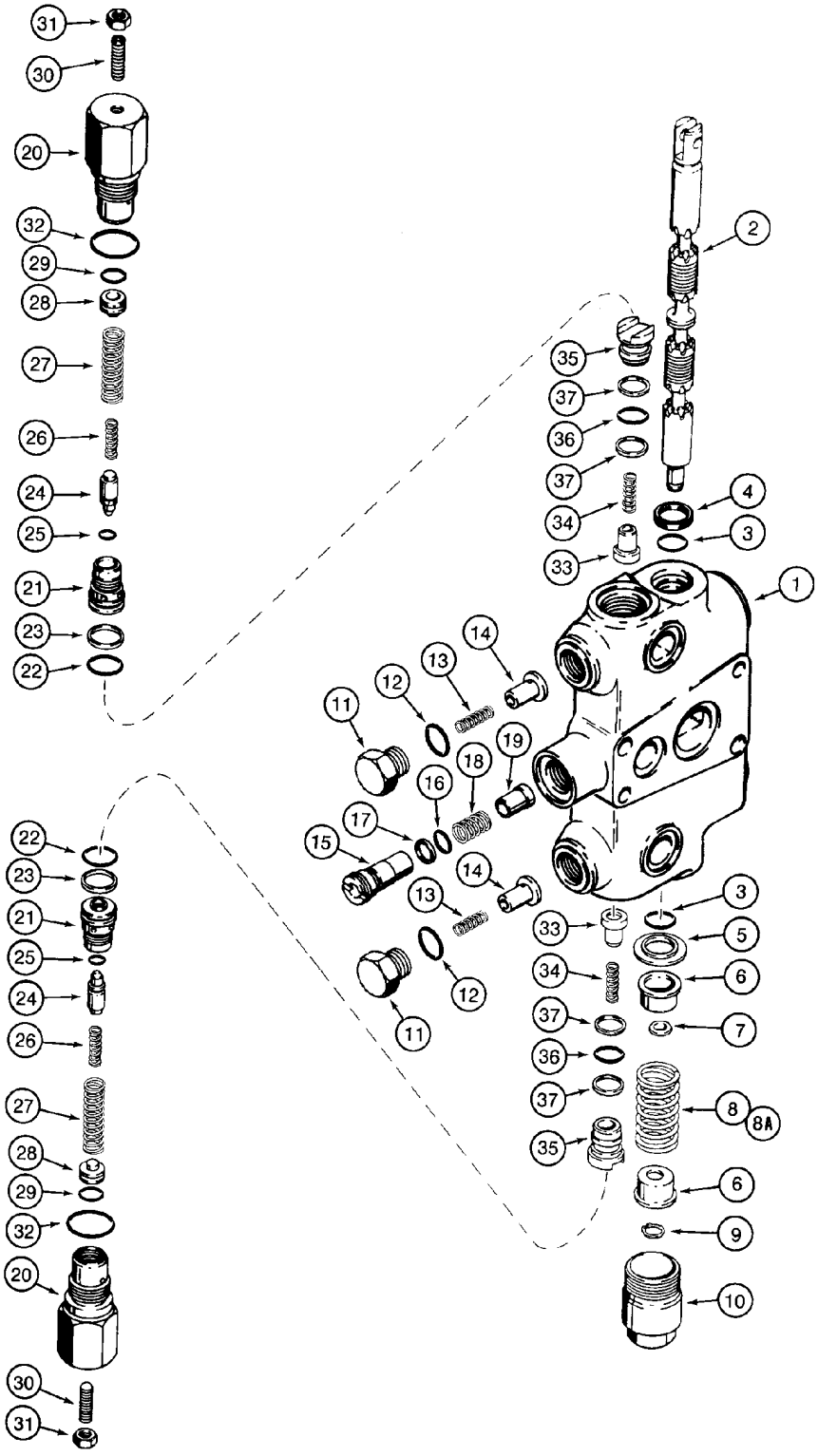

VALVE SECTION - BACKHOE SWING

REF	FN	PART NUMBER	YR/SN	QTY	DESCRIPTION
		241088A5		1	VALVE SECTION (HYDR) Swing; Foot Swing Control Valve; Incl. Ref 1 - 8, 9 - 37
		243145A5		1	VALVE SECTION (HYDR) Swing; Hand Swing Control Valve; Incl. Ref 1 - 7, 8A - 37
1		NSS		1	NOT SERVICED SEPARATELY Housing
2		NSS		1	NOT SERVICED SEPARATELY Spool
3		1994608C1		2	O-RING
4		65457C1		1	SEAL
5		G102711		1	RETAINER
6		G33075		2	RETAINER
7		332753A1		1	SPACER
8		1986722C1		1	SPRING 2-1/4; 241088A5 Foot Swing Section
8A		1994596C1		1	SPRING 243145A5 Hand Swing Section
9		100-1647		1	RING SNAP No. 47
10		G33080		1	SCREW
		345-601		X	LOCTITE No. 203; 1 ml
		1346221C3		2	VALVE Anticavitation Valve; Incl. Ref 11 - 14
11		332473A1		1	PLUG
12		237-6010		1	O-RING 3/4 ID x 3/32, Boss Seal
13		G34458		1	SPRING
14		G34938		1	POPPET, VALVE
		1346222C1		1	VALVE Incl. Ref 15 - 17
15		G109964		1	HOUSING
16		238-6015		1	O-RING 9/16 ID x 1/16
17		G108723		1	RING
18		G109971		1	SPRING
19		1978068C1		1	POPPET, VALVE
		G107786		2	VALVE, PRESSURE RELIEF Circuit Relief Valve; Incl. Ref 20 - 32; Used In Production; Order G109449 Circuit Relief Valve Kit For Service
20		NSS		1	NOT SERVICED SEPARATELY Housing
21		NSS		1	NOT SERVICED SEPARATELY Seat
		G109449		1	KIT Service For G107786 Circuit Relief Valve; Kit Includes Instruction Sheet and G109447 Circuit Relief Valve, Which Is The Same As G107786 Except With A Different Pressure Setting

VALVE SECTION - BACKHOE SWING

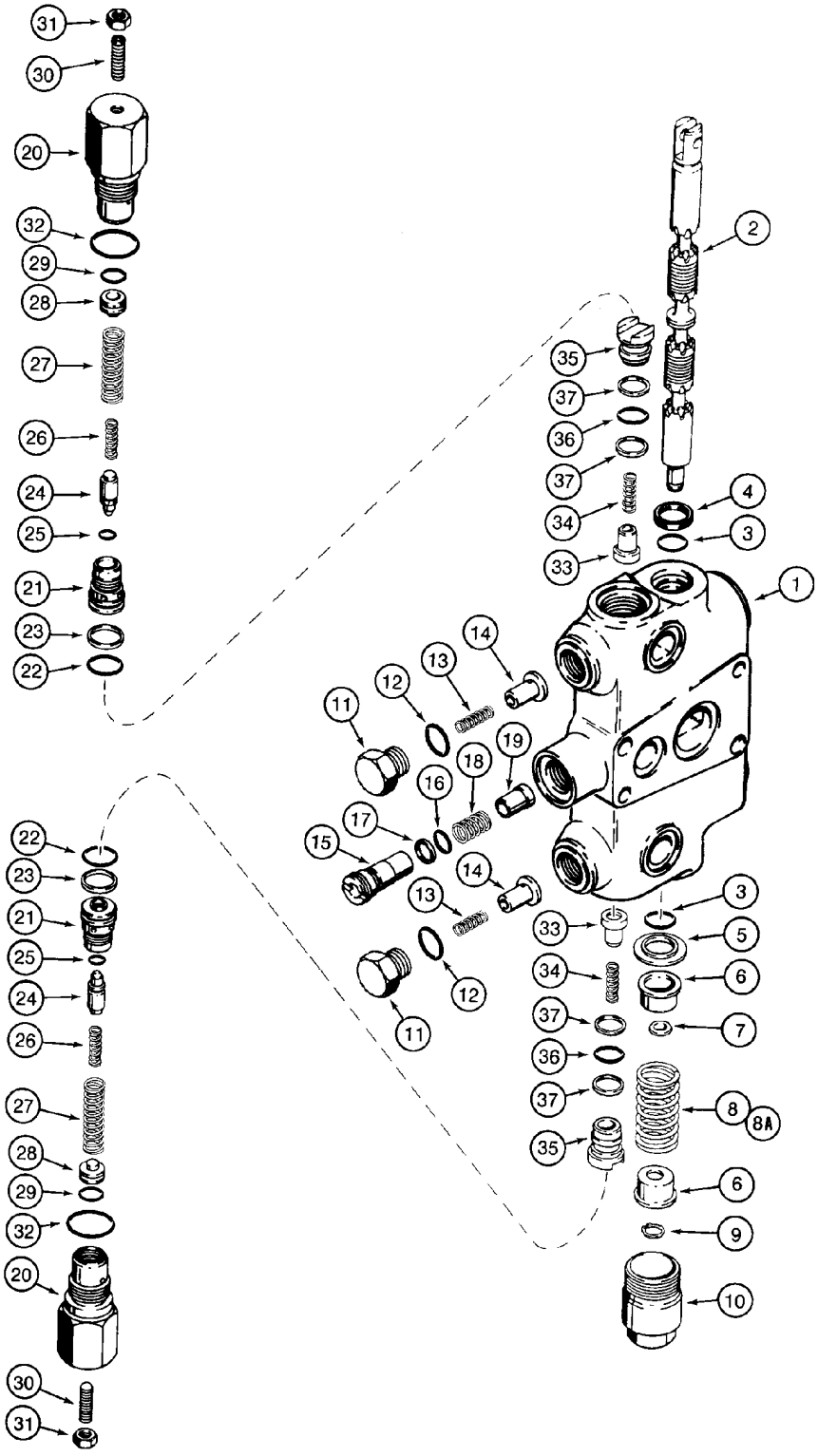

VALVE SECTION - BACKHOE SWING

REF	FN	PART NUMBER	YR/SN	QTY	DESCRIPTION
22		238-6018		1	O-RING 3/4 ID x 1/16, Face Seal
23		G35540		1	RING
24		NSS		1	NOT SERVICED SEPARATELY Poppet, Valve
25		NSS		1	NOT SERVICED SEPARATELY O-Ring
26		NSS		1	NOT SERVICED SEPARATELY Spring
27		NSS		1	NOT SERVICED SEPARATELY Spring
28		NSS		1	NOT SERVICED SEPARATELY Piston
29		NSS		1	NOT SERVICED SEPARATELY O-Ring
30		484-43116		1	SCREW 5/16 NF x 1 in; ov pt
31		425-155		1	NUT 5/16 NF
32		237-6012		1	O-RING 59/64 ID x 7/64, Boss Seal
		1346219C3		2	VALVE, CHECK Load Check Valve; Incl. Ref 33 - 37
33		1343777C1		1	POPPET, VALVE
34		1346175C1		1	SPRING
35		1343708C1		1	PLUG
36		238-6016		1	O-RING 5/8 ID x 1/16, Face Seal
37		G103862		1	RING
		1346105C2		1	KIT, SEALS Seal; Incl. Ref 3, 4, 12, 16, 17, 22, 23, 32, 36, 37; Plus Additional O-Rings Not Required For This Application

VALVE ASSY - SWING CUSHION

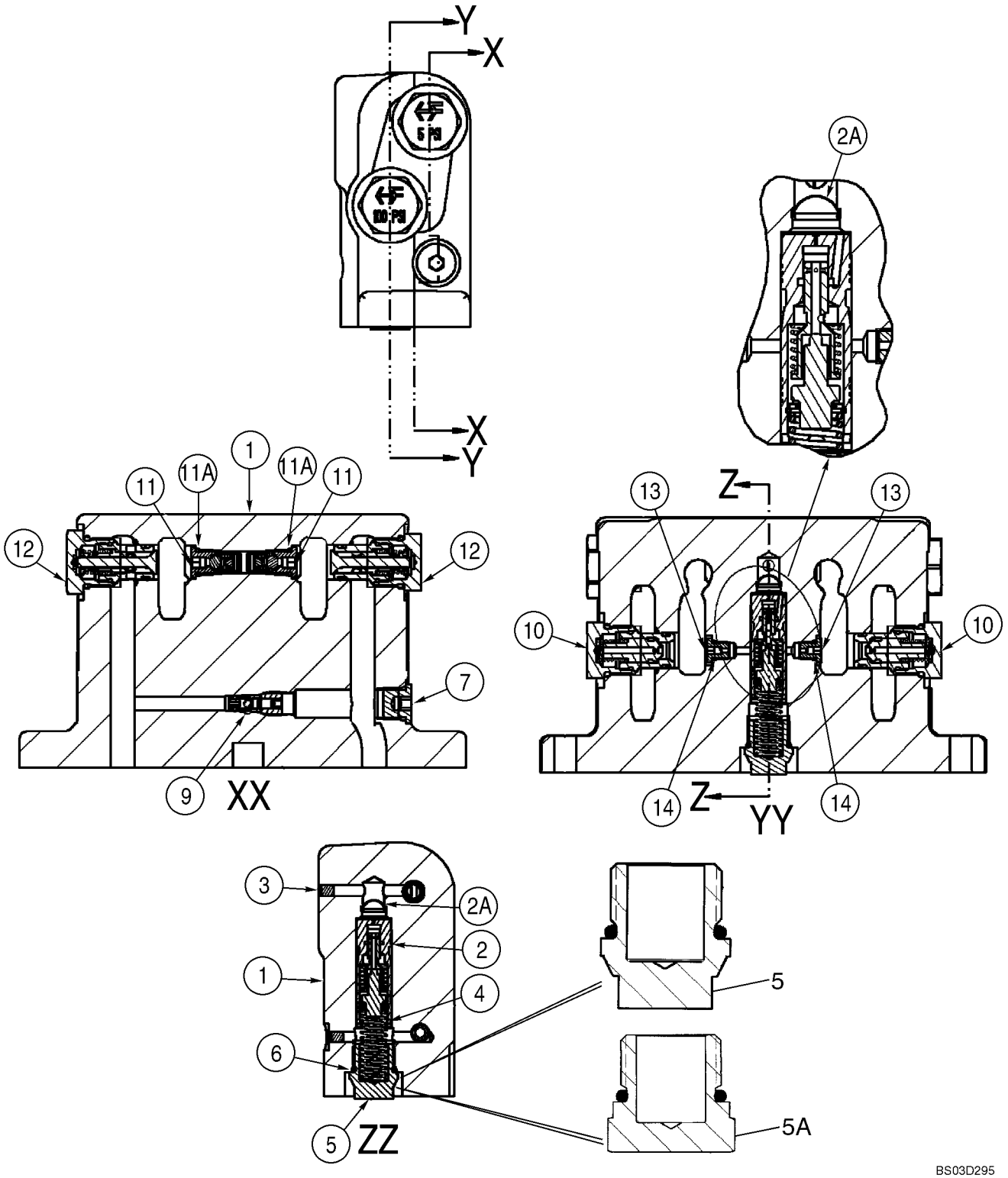

VALVE ASSY - SWING CUSHION

REF	FN	PART NUMBER	YR/SN	QTY	DESCRIPTION
		REF			INSTRUCTION Backhoe Control Valve Swing Cushion Valve
		387627A2		1	VALVE, CUSHION Swing; Incl. Ref 1 - 14; Replaces 387627A1
1		NSS		1	NOT SERVICED SEPARATELY Housing
2		388876A6		1	SPOOL Thermal Compensating; Component Parts Not Serviced Separately
2A		1976955C1		1	FILTER CARTRIDGE
3		NSS		2	NOT SERVICED SEPARATELY M5; Plug, Expansion
4		388881A1		1	SPRING (COIL)
5		387782A1		1	PLUG Incl. Ref 6; If Used
5A		409025A1		1	PLUG Incl. Ref 6; If Used
6		237-6008		1	O-RING 41/64 ID x 3/32, Boss Seal
7		218-5209		1	PLUG 9/16 Or; Incl. Ref 8
8		237-6006		1	O-RING 15/32 ID x 5/64, Boss Seal
9		388712A2		1	VALVE Bi-Directional Check Valve; Incl. 388713A1
		388713A1		1	KIT Seal; Incl. An O-Ring and Backup Ring; Component Parts Not Serviced Separately
10		396422A2		2	VALVE, CHECK 100 psi; Orifice Check Valve; Component Parts Not Serviced Separately; Order 1542830C2 Seal Kit To Service External Seals
11		400296A2		2	VALVE, CHECK In-Line Check Valve; Component Parts Not Serviced Separately; Incl. Ref 11A
11A		237-6004		1	O-RING 23/64 ID x 5/64, Boss Seal
12		389541A1		2	VALVE, CHECK 5 psi; Component Parts Not Serviced Separately; Order 1542830C2 Seal Kit To Service External Seals
13		400657A1		2	PLUG Orifice 1.85 mm; Incl. Ref 14
14		237-6002		1	O-RING 1/4 ID x 1/16
		1542830C2		1	KIT, GASKET For Servicing External Seals on Ref 10 or 12 Valve; If Used
		443432A1		1	KIT, SEALS For Services External Seals on Ref 9, 10, 11 or 12 Valve; If Used

VALVE SECTION - EXTENDABLE DIPPER

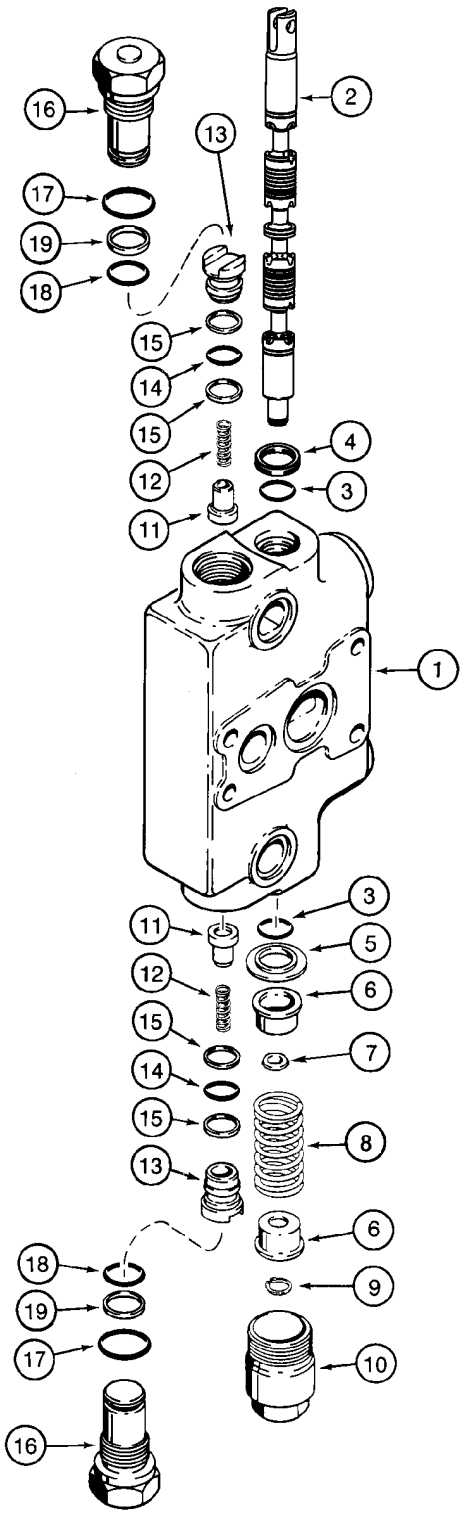

BS00C181

VALVE SECTION - EXTENDABLE DIPPER

REF	FN	PART NUMBER	YR/SN	QTY	DESCRIPTION
		144324A5		1	VALVE SECTION (HYDR) Extendable Dipper; Incl. Ref 1 - 19
1		NSS		1	NOT SERVICED SEPARATELY Housing
2		NSS		1	NOT SERVICED SEPARATELY Spool
3		1994608C1		2	O-RING
4		65457C1		1	SEAL
5		G102711		1	RETAINER
6		G33075		2	RETAINER
7		332753A1		1	SPACER
8		1994596C1		1	SPRING
9		100-1647		1	RING SNAP No. 47
10		G33080		1	SCREW
		345-601		X	LOCTITE No. 203; 1 ml
		1346219C3		2	VALVE, CHECK Load Check Valve; Incl. Ref 11 - 15
11		1343777C1		1	POPPET, VALVE
12		1346175C1		1	SPRING
13		1343708C1		1	PLUG
14		238-6016		1	O-RING 5/8 ID x 1/16, Face Seal
15		G103862		2	RING
		G33122		2	PLUG Relief; Incl. Ref 16 - 19
16		NSS		1	NOT SERVICED SEPARATELY Plug
17		237-6012		1	O-RING 59/64 ID x 7/64, Boss Seal
18		238-6018		1	O-RING 3/4 ID x 1/16, Face Seal
19		G35540		1	RING
		1346105C2		1	KIT, SEALS Incl. Ref 3, 4, 14, 15, 17 - 19; Plus Additional O-Rings Not Required For This Application

VALVE SECTION - OPTIONS, AUXILIARY HYDRAULICS

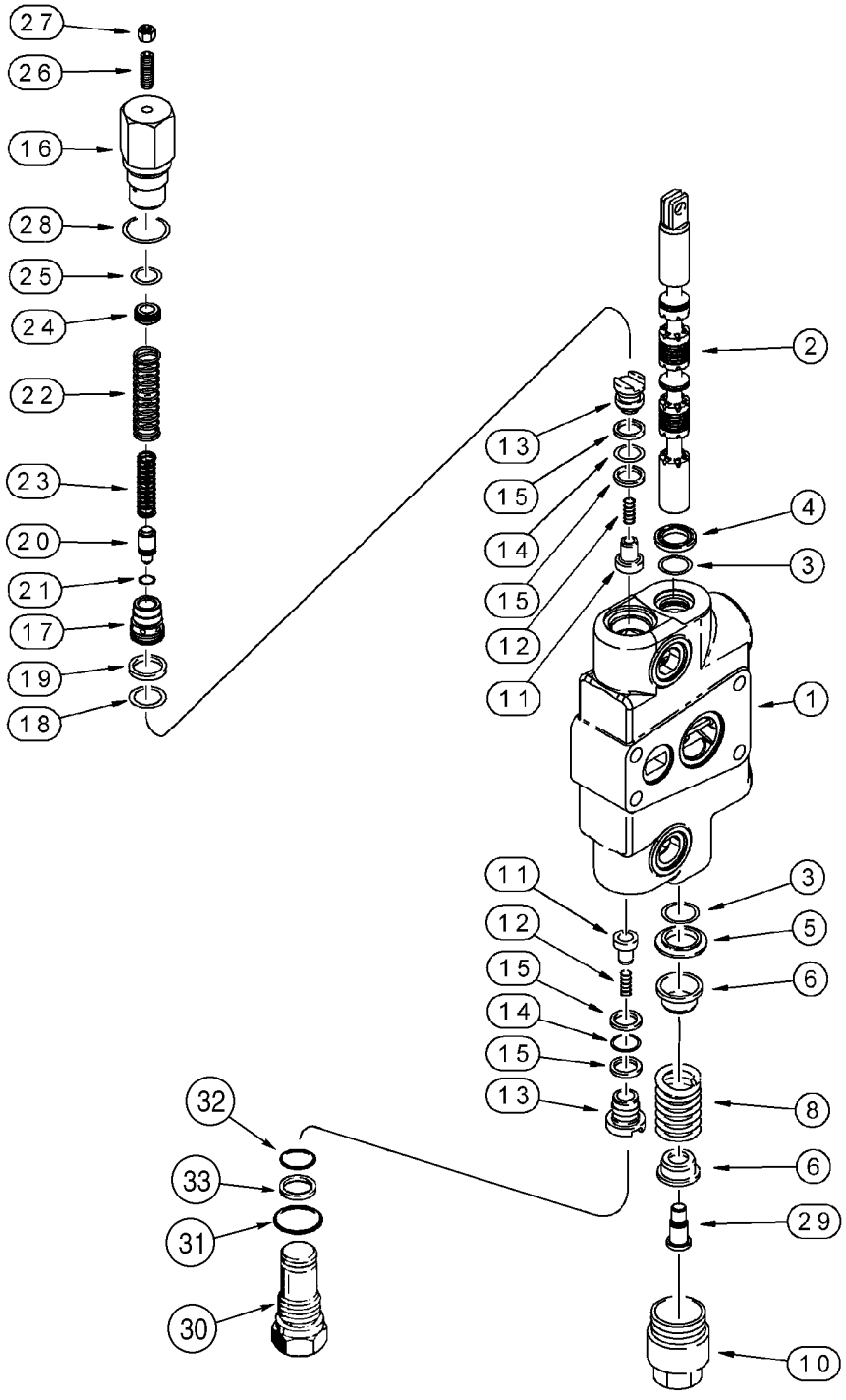

BS00C184

VALVE SECTION - OPTIONS, AUXILIARY HYDRAULICS

REF	FN	PART NUMBER	YR/SN	QTY	DESCRIPTION
		396997A1		1	VALVE SECTION (HYDR) Options; Auxiliary Hydraulics; Incl. Ref 1 - 33
1		NSS		1	NOT SERVICED SEPARATELY Housing
2		NSS		1	NOT SERVICED SEPARATELY Spool
3		1994608C1		2	O-RING
4		65457C1		1	SEAL
5		G102711		1	RETAINER
6		G33075		2	RETAINER
8		1994596C1		1	SPRING
10		G33080		1	SCREW
		345-601		X	LOCTITE No. 203; 1 ml
		1346219C3		2	VALVE, CHECK Load Check Valve; Incl. Ref 11 - 15
11		1343777C1		1	POPPET, VALVE
12		1346175C1		1	SPRING
13		1343708C1		1	PLUG
14		238-6016		1	O-RING 5/8 ID x 1/16, Face Seal
15		G103862		2	RING
		G109391		1	VALVE 3200 psi; Circuit Relief Valve; Incl. Ref 16 - 28; Used In Production; Order G109449 Circuit Relief Valve Kit For Service
16		NSS		1	NOT SERVICED SEPARATELY Housing
17		NSS		1	NOT SERVICED SEPARATELY Seat
18		238-6018		1	O-RING 3/4 ID x 1/16, Face Seal
		G109449		1	KIT Service For G109391 Circuit Relief Valve; Kit Incl. Instruction Sheet and G109447 Circuit Relief Valve; Which Is The Same As G109391 Except With A Different Pressure Setting
19		G35540		1	RING
20		NSS		1	NOT SERVICED SEPARATELY Poppet, Valve
21		NSS		1	NOT SERVICED SEPARATELY O-Ring
22		NSS		1	NOT SERVICED SEPARATELY Spring
23		NSS		1	NOT SERVICED SEPARATELY Spring
24		NSS		1	NOT SERVICED SEPARATELY Piston
25		NSS		1	NOT SERVICED SEPARATELY O-Ring
26		484-43116		1	SCREW 5/16 NF x 1 in; ov pt
27		425-155		1	NUT 5/16 NF

VALVE SECTION - OPTIONS, AUXILIARY HYDRAULICS

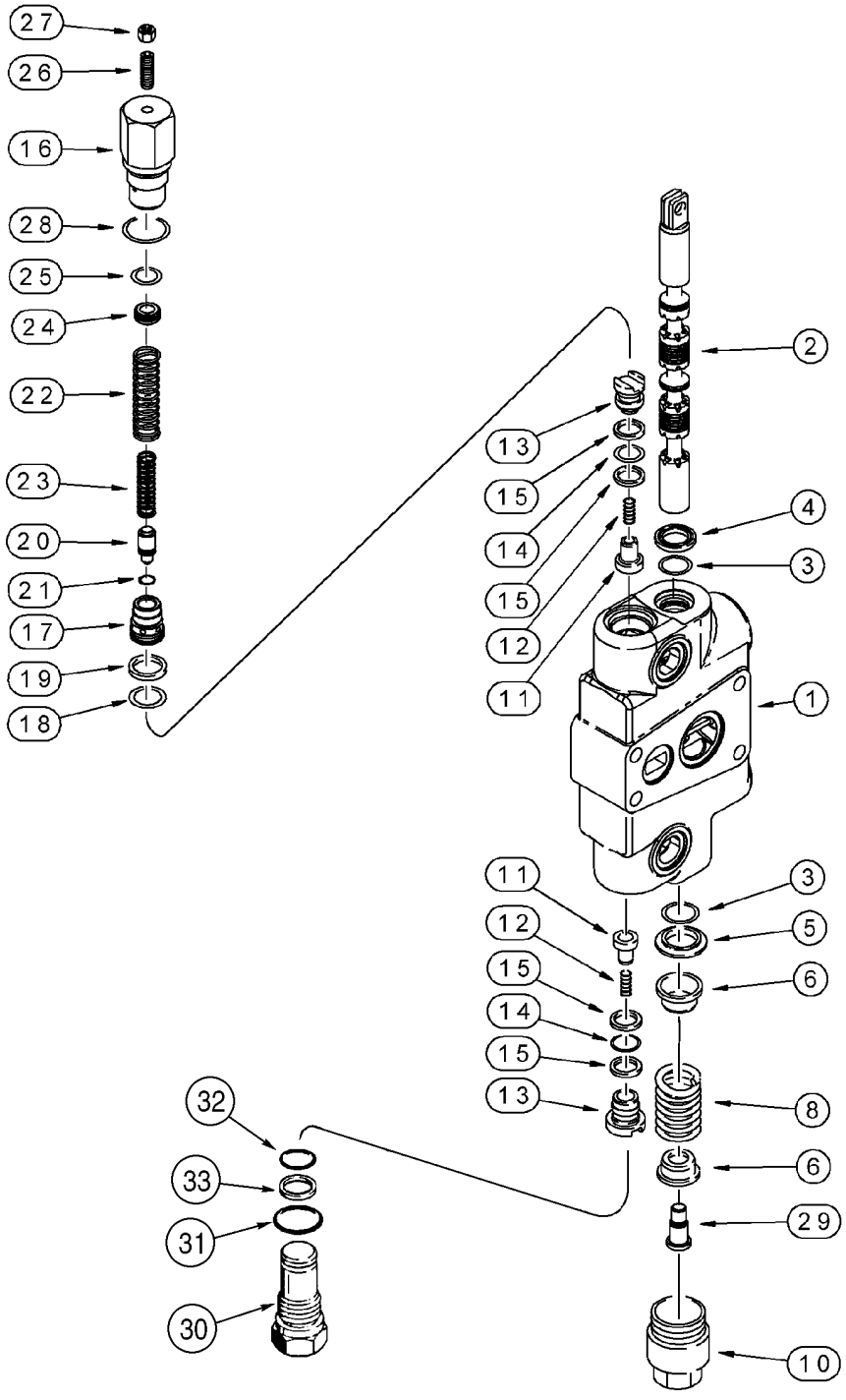

BS00C184

VALVE SECTION - OPTIONS, AUXILIARY HYDRAULICS

REF	FN	PART NUMBER	YR/SN	QTY	DESCRIPTION
28		237-6012		1	O-RING 59/64 ID x 7/64, Boss Seal
29		G106409		1	SEAT Use With Loctite 345-601
		G33122		1	PLUG Relief; Incl. Ref 30 - 33
30		NSS		1	NOT SERVICED SEPARATELY Plug
31		237-6012		1	O-RING 59/64 ID x 7/64, Boss Seal
32		238-6018		1	O-RING 3/4 ID x 1/16, Face Seal
33		G35540		1	RING
		1346105C2		1	KIT, SEALS Seal; Incl. Ref 3, 4, 14, 15, 18, 19, 28, 31 - 33

VALVE, AUXILIARY - HAND HELD HYDRAULICS

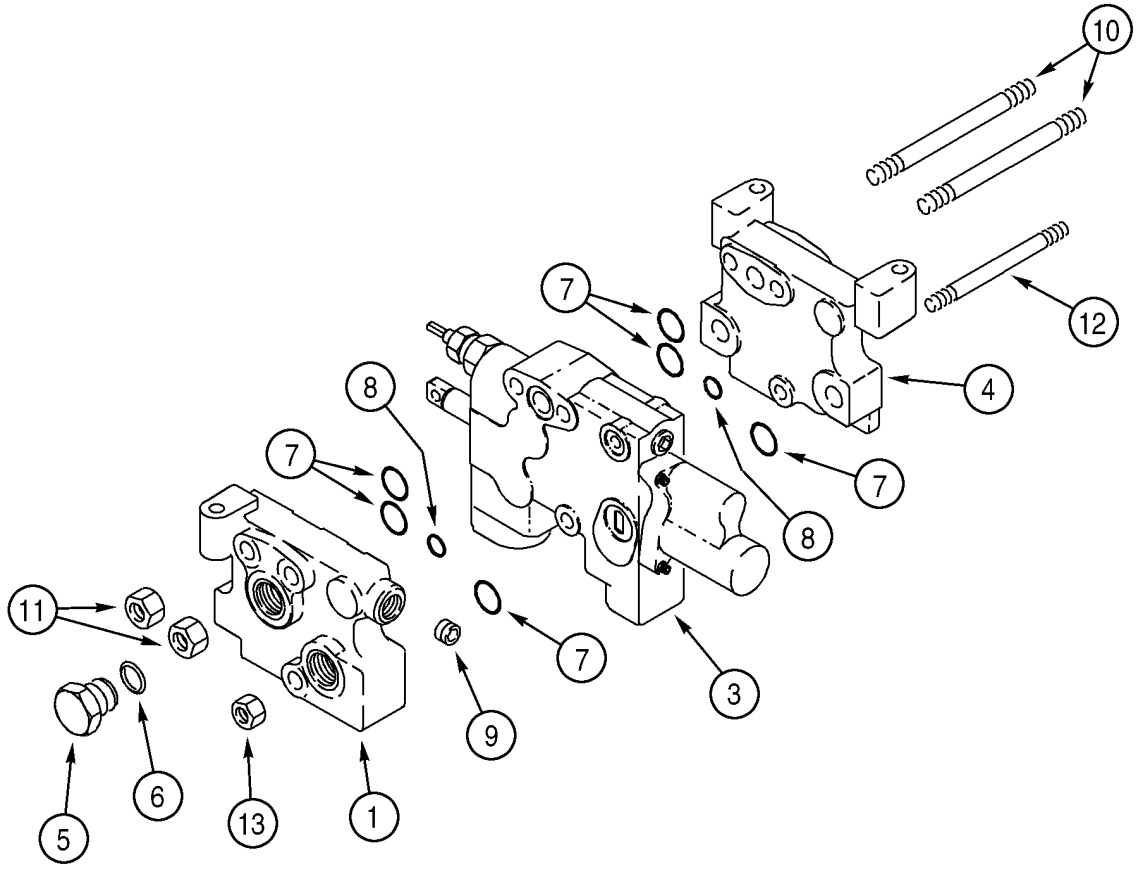

BS99G159

VALVE, AUXILIARY - HAND HELD HYDRAULICS

REF	FN	PART NUMBER	YR/SN	QTY	DESCRIPTION
		121741A1		1	VALVE, CONTROL Auxiliary Valve; Incl. Ref 1 - 13
1		121638A2		1	ELEMENT Inlet/Outlet Manifold
3		131197A1		1	VALVE SECTION (HYDR) Hand Held Auxiliary Hydraulics; See Figure 08-49
4		121639A2		1	ELEMENT Manifold; Power Beyond
5		218-5158		1	PLUG 1-1/16 Or; Incl. Ref 6
6		237-6012		1	O-RING 59/64 ID x 7/64, Boss Seal
7		238-6117		6	O-RING 13/16 ID x 3/32
8		238-6112		2	O-RING 1/2 ID x 3/32
9		137039A1		1	PLUG
10		1346129C3		2	TRUSS ROD
11		829-1312		4	NUT M12; 10
12		1346128C3		1	TRUSS ROD
13		304951A1		2	NUT M10

08 -49		p1	05/03

VALVE SECTION - HAND HELD AUXILIARY

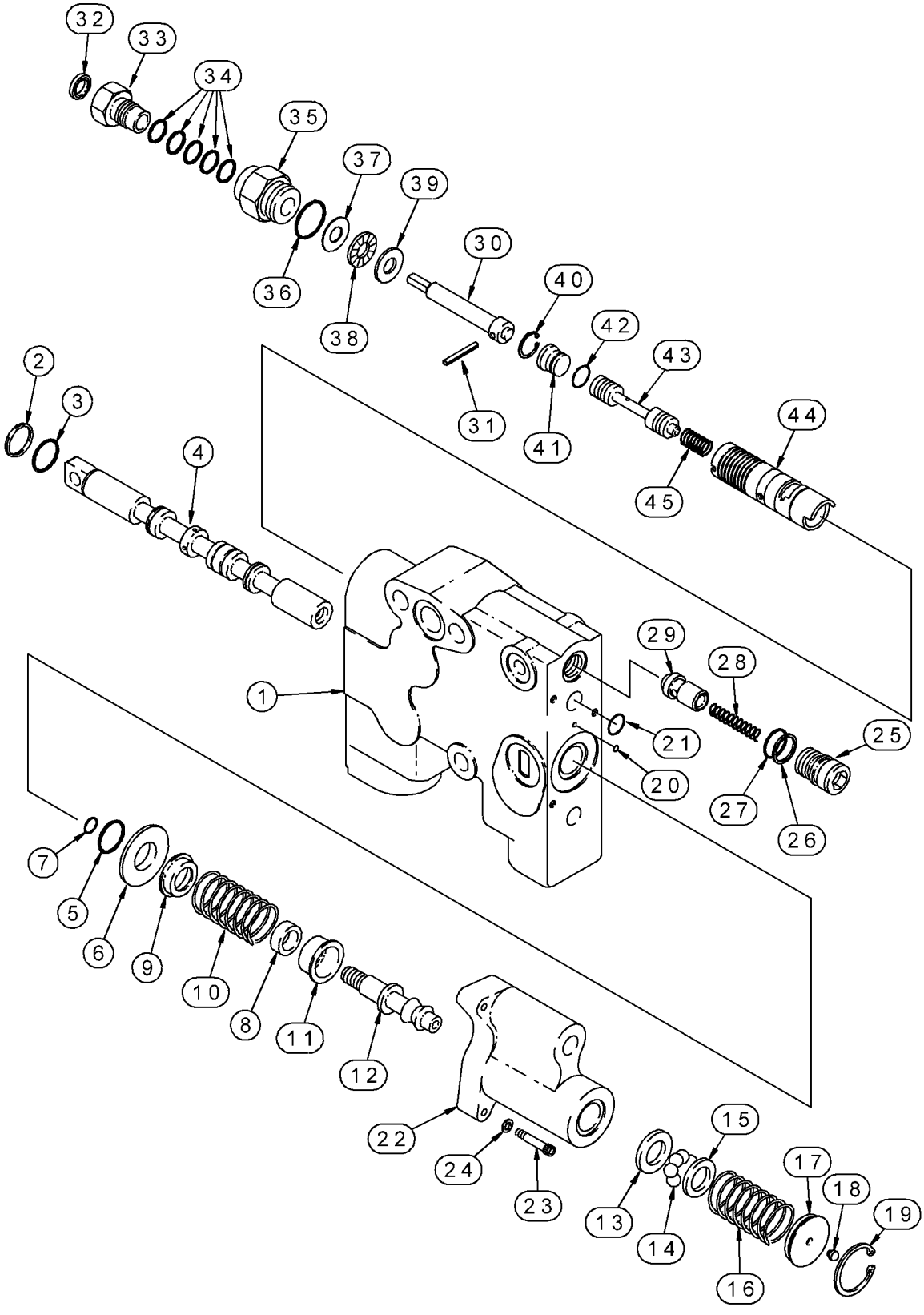

VALVE SECTION - HAND HELD AUXILIARY

REF	FN	PART NUMBER	YR/SN	QTY	DESCRIPTION
		131197A1		1	VALVE SECTION (HYDR) Hand Held Auxiliary Hydraulics; Incl. Ref 1 - 45
1		NSS		1	NOT SERVICED SEPARATELY Housing
2		71121		1	SEAL
3		G110391		1	O-RING
		131196A1		1	SPOOL Incl. Ref 4 - 12
4		NSS		1	NOT SERVICED SEPARATELY Spool
5		G110391		1	O-RING
6		G108630		1	HOLDER
7		237-6002		1	O-RING 1/4 ID x 1/16
8		1980085C1		1	SPACER
9		G108914		1	CUP, SPRING
10		130932A1		1	SPRING
11		G108913		1	CUP, SPRING
12		307208A1		1	STUD
13		G108912		1	WASHER
14		211-1007		8	BALL 7/32; 24,CRS
15		G108911		1	WASHER
16		130919A1		1	SPRING
17		321361A1		1	RETAINER Incl. 321360A1, G107780
		321360A1		1	O-RING
18		G107780		1	VALVE, CHECK
19		100-21118		1	RING, SNAP No. 118
20		238-6011		1	O-RING 5/16 ID x 1/16, Face Seal
21		238-6015		1	O-RING 9/16 ID x 1/16
22		129391A1		1	CAP
23		61-31016		3	SCREW No. 10 x 1
24		495-11022		3	WASHER 7/32 x 7/16 x 3/64
		1542563C1		1	VALVE, CHECK Incl. Ref 25 - 29
25		NSS		1	NOT SERVICED SEPARATELY Plug
26		G108723		1	RING
27		238-6015		1	O-RING 9/16 ID x 1/16
28		1994581C1		1	SPRING
29		1543329C1		1	POPPET, VALVE
		1343791C2		1	SET OF PARTS Flow Control; Incl. Ref 30 - 39; Order Ref 30 - 39

08 -49		p2	05/03

VALVE SECTION - HAND HELD AUXILIARY

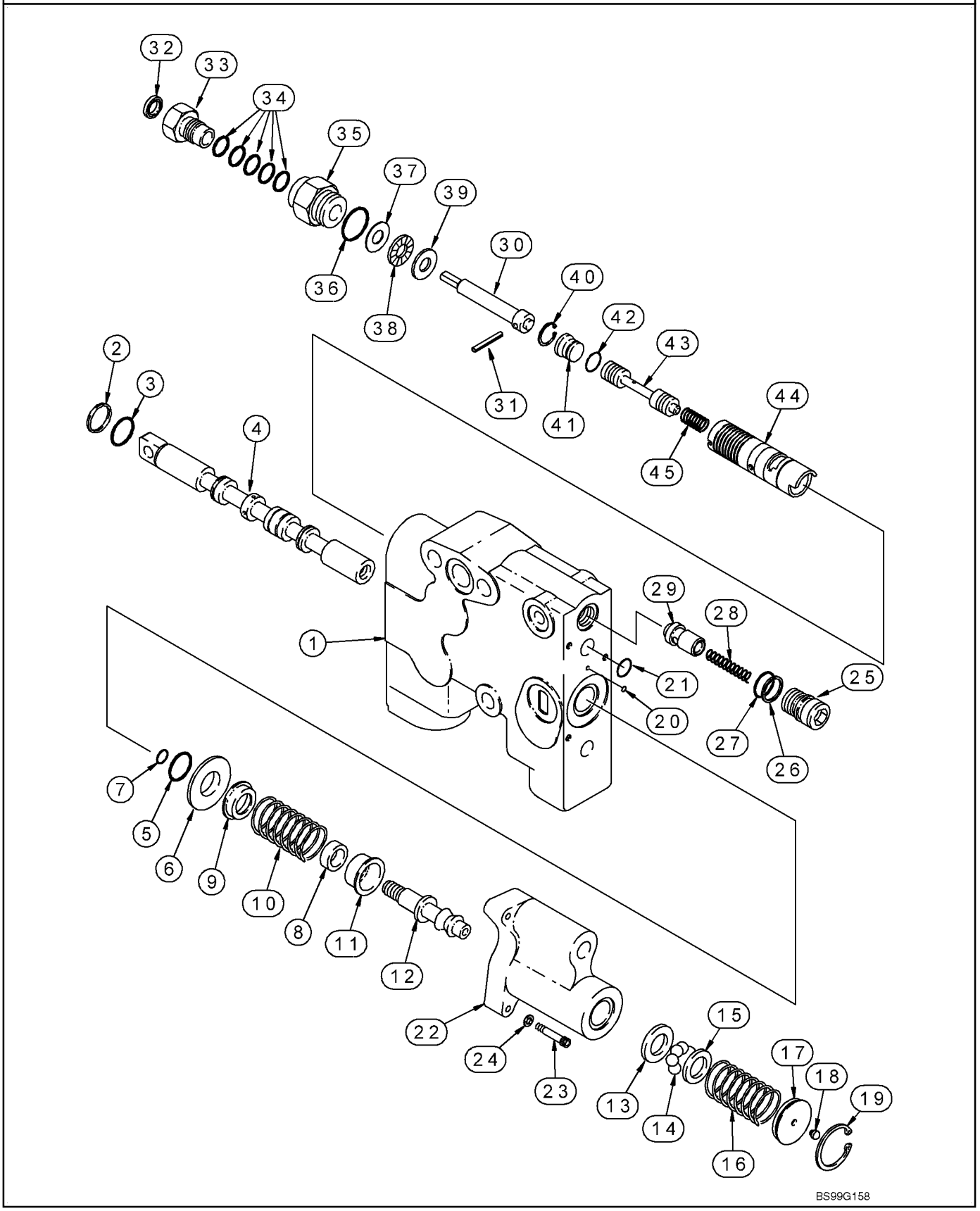

VALVE SECTION - HAND HELD AUXILIARY

REF	FN	PART NUMBER	YR/SN	QTY	DESCRIPTION
30		1980302C2		1	ROD Incl. Ref 31
31		38-1812		1	PIN 1/8 x 3/8 in
32		G101066		1	SEAL
33		1980227C1		1	PLUG
34		1986628C1		5	O-RING 3/8 ID x 3/32
35		1980226C1		1	PLUG
36		237-6010		1	O-RING 3/4 ID x 3/32, Boss Seal
37		G108956		1	RACE
38		F13537		1	BEARING
39		G108957		1	RACE
		1994677C1		1	SLEEVE ASSY Incl. Ref 40 - 44
40		100-2156		1	RING, SNAP No. 56
41		1346312C2		1	PLUG
42		238-6012		1	O-RING 3/8 ID x 1/16, Face Seal
43		NSS		1	NOT SERVICED SEPARATELY Spool
44		NSS		1	NOT SERVICED SEPARATELY Sleeve
45		1957887C1		1	SPRING

08 -50		p1	05/03

VALVE ASSY - AUXILIARY BACKHOE

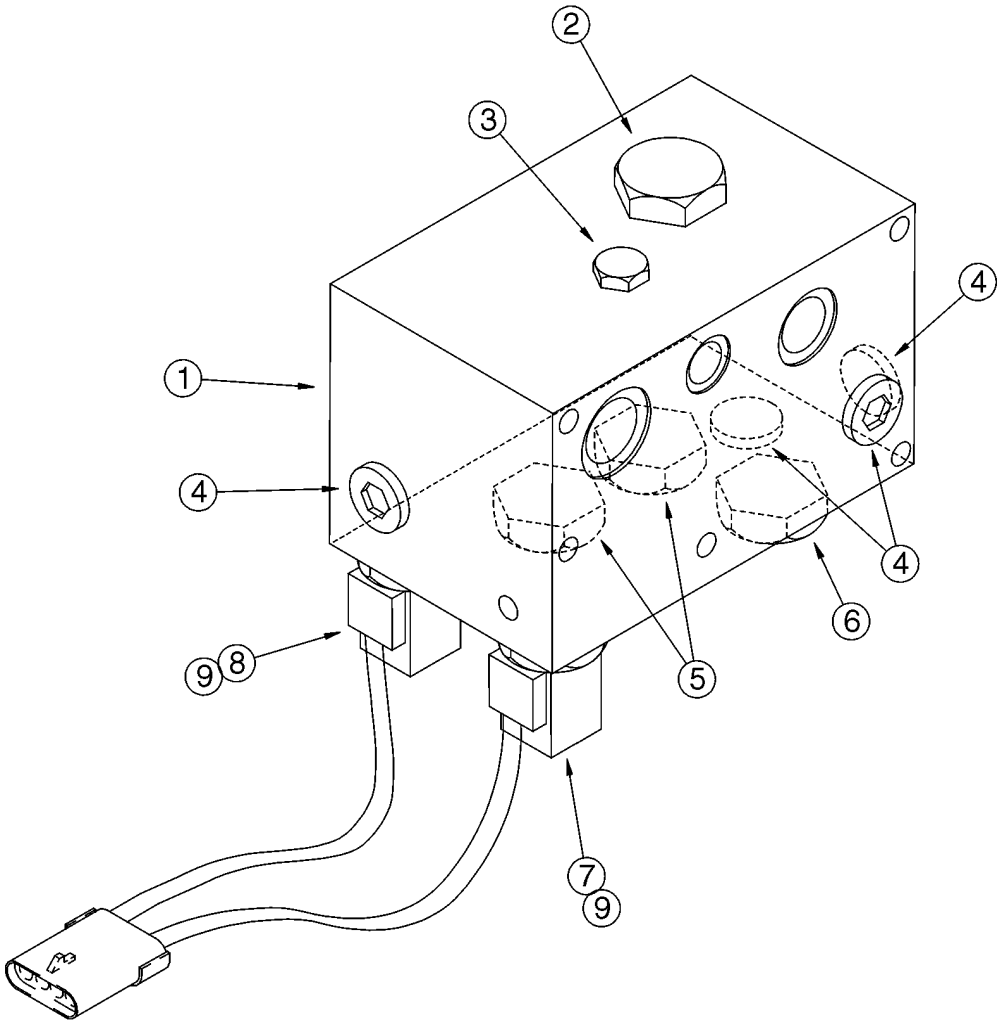

BT98D060

VALVE ASSY - AUXILIARY BACKHOE

REF	FN	PART NUMBER	YR/SN	QTY	DESCRIPTION
		298772A1		1	VALVE Auxiliary Backhoe Valve; Incl. Ref 1 - 9
1		NSS		1	NOT SERVICED SEPARATELY Housing
2		309785A1		1	VALVE Component Parts Not Serviced Separately
3		304371A1		1	VALVE Component Parts Not Serviced Separately
4		218-5212		4	PLUG 1-1/16 Or; Incl. 237-6012
		237-6012		1	O-RING 59/64 ID x 7/64, Boss Seal
5		309789A1		2	VALVE Component Parts Not Serviced Separately
6		309788A1		1	VALVE Component Parts Not Serviced Separately
7		309784A1		1	VALVE Component Parts Not Serviced Separately
8		309790A1		1	VALVE Component Parts Not Serviced Separately
9		309791A1		2	COIL
		309787A1		5	PACKAGE, SEALS Incl. (2) O-Rings and (1) Backup Ring; Component Parts Not Serviced Separately; For Use With Ref 2 and 5 - 7
		149942C1		2	KIT, SEALS Incl. (2) O-Rings and (1) Backup Ring; Component Parts Not Serviced Separately, For Use With Ref 3 and 8

08 -50A		p1	05/03

SOLENOID VALVE - BOOM LOCK

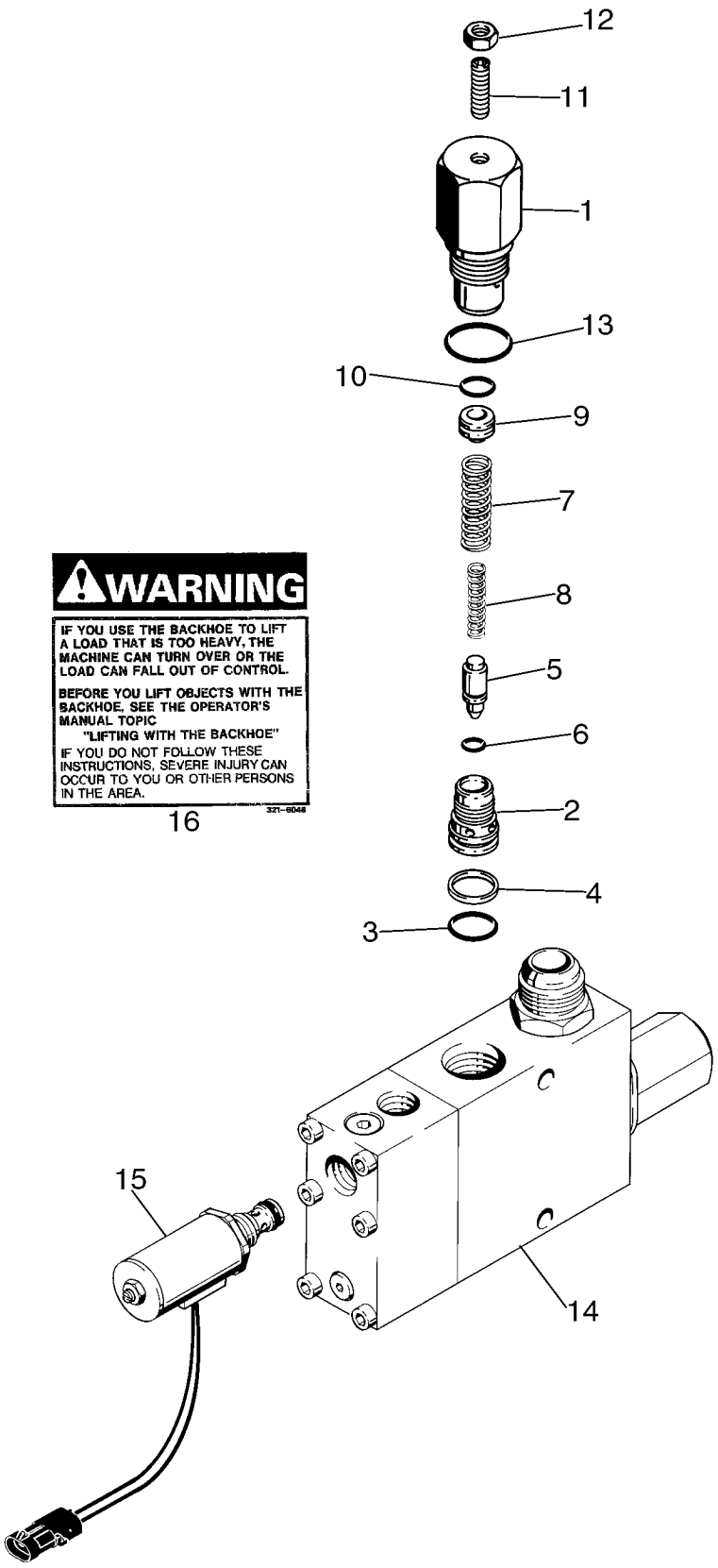

SOLENOID VALVE - BOOM LOCK

REF	FN	PART NUMBER	YR/SN	QTY	DESCRIPTION
		189957A1		1	VALVE Solenoid, Backhoe Boom Lock; Incl. Ref 1 - 16
		G110467		1	VALVE, PRESSURE RELIEF Circuit, Solenoid; Used In Production; Order G110077, Kit For Service
1		NSS		1	NOT SERVICED SEPARATELY Body, Relief Valve
2		NSS		1	NOT SERVICED SEPARATELY Seat, Relief Valve
3		238-6018		1	O-RING 3/4 ID x 1/16 in, Face Seal
4		G35540		1	RING Backup, Seat
5		NSS		1	NOT SERVICED SEPARATELY Poppet
6		NSS		1	NOT SERVICED SEPARATELY O-Ring
7		NSS		1	NOT SERVICED SEPARATELY Spring, Relief, Outer
8		NSS		1	NOT SERVICED SEPARATELY Spring, Relief, Inner
9		NSS		1	NOT SERVICED SEPARATELY Piston
10		NSS		1	NOT SERVICED SEPARATELY O-Ring
11		484-43120		1	SCREW 5/16 NF x 1-1/4 in, Hex Socket, Headless
12		425-155		1	NUT 5/16 in NF
13		237-6012		1	O-RING 59/64 ID x 7/64, Boss Seal
14		NSS		1	NOT SERVICED SEPARATELY Body, Solenoid
15		221168A1		1	SOLENOID 12 Volt; Relief, With Connector
		D150781		1	KIT Repair; Incl. (3) Springs, (1) Ball, (1) Poppet, (1) Plug; Not Serviced Separately; and D150810 Seal Kit, Not Shown
		D150810		1	SEAL Kit, Incl. (8) O-Rings and (2) Backup Rings; Which Are Not Serviced Separately, Not Shown
		G110077		1	KIT Service For G110467, Circuit Relief Valve; Incl. G110078, Circuit Relief Valve Assembly (Ref. 1 - 13) and Instruction Sheet
16		321-6046		2	DECAL Warning, If You Use The Backhoe To Lift A Load That Is Too Heavy

ACCUMULATOR ASSY - RIDE CONTROL

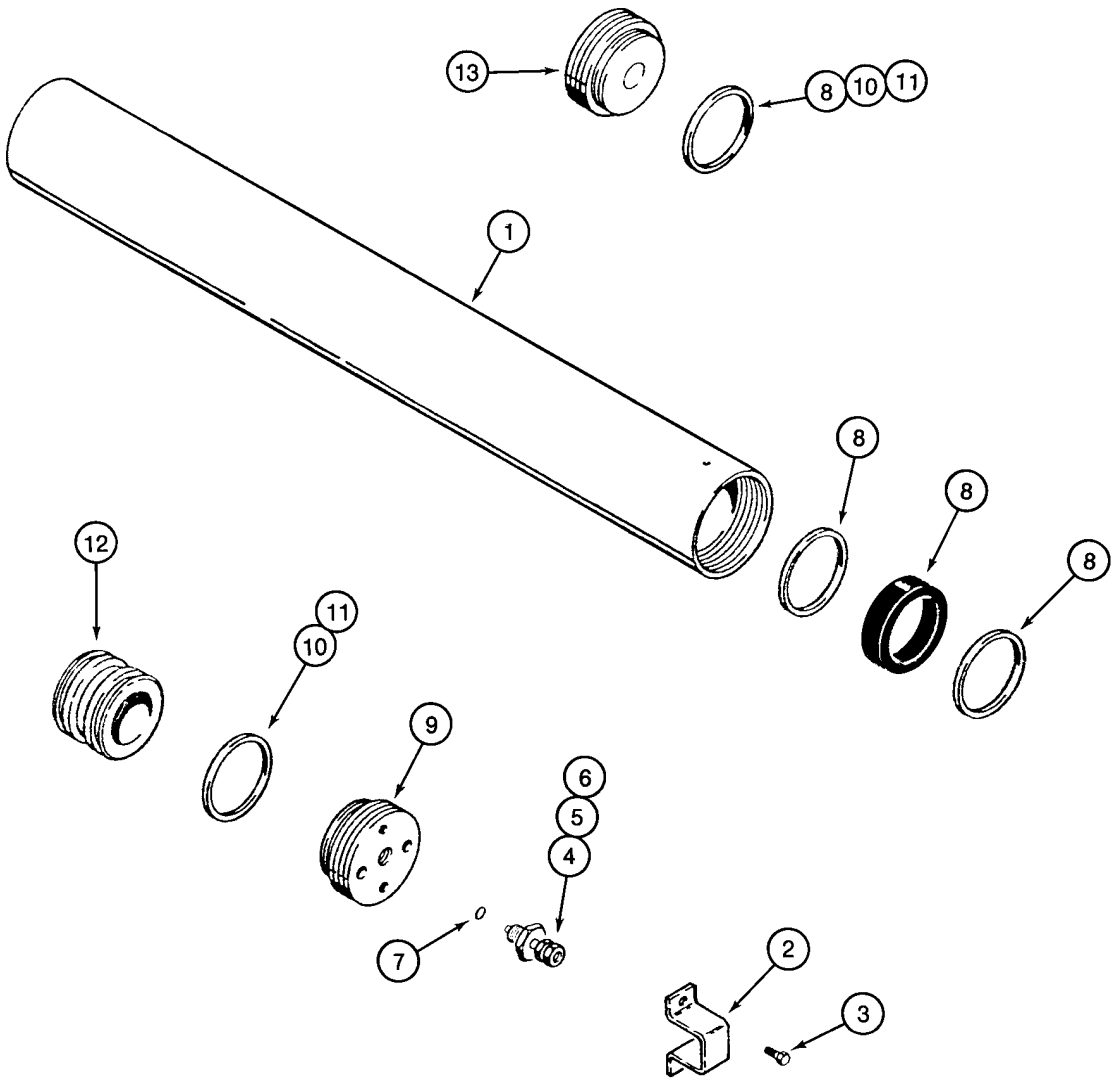

BS97C154

ACCUMULATOR ASSY - RIDE CONTROL

REF	FN	PART NUMBER	YR/SN	QTY	DESCRIPTION
		234412A1		1	ACCUMULATOR Incl. Ref 1 - 13
1		NSS		1	NOT SERVICED SEPARATELY Body
2		192895A1		1	PROTECTOR
3		276-2456		2	SCREW No. 10 x 3/8
		1978142C1		1	VALVE Incl. Ref 4 - 6
4		NSS		1	NOT SERVICED SEPARATELY Valve, Pressure
5		1978143C1		1	PISTON
6		1978144C1		1	CAP
7		1978158C1		1	GASKET
8		1978141C1		1	PACKAGE, SEALS Incl. (1) V-Type O-Ring, (2) Teflon Bearing Rings and (1) Body End Seal Ring; Component Parts Not Serviced Separately
9		NSS		1	NOT SERVICED SEPARATELY Gland, Cylinder
10		NSS		2	NOT SERVICED SEPARATELY O-Ring
11		NSS		2	NOT SERVICED SEPARATELY Ring, Backup; If Used
12		NSS		1	NOT SERVICED SEPARATELY Piston
13		NSS		1	NOT SERVICED SEPARATELY Cap

08 -52		p1	05/03

FILTER ASSY, OIL

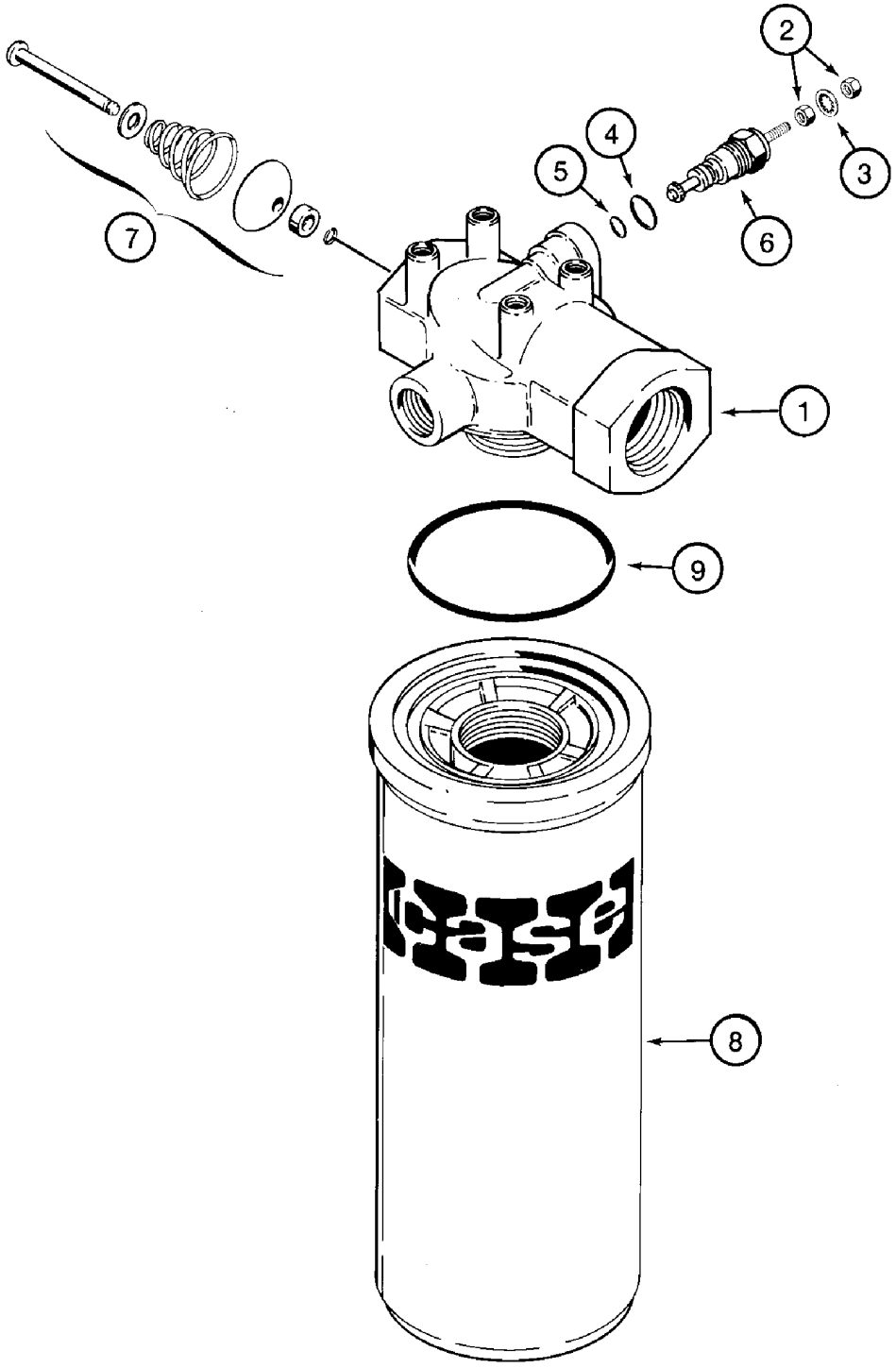

FILTER ASSY, OIL

REF	FN	PART NUMBER	YR/SN	QTY	DESCRIPTION
		181001A1		1	FILTER ASSY. Hydraulic Oil Filter; Incl. Ref 1 - 9
1		NSS		1	NOT SERVICED SEPARATELY Head, Filter
		N6755		1	INDICATOR Restriction; Incl. N6941, Ref 6
		N6941		1	KIT Restriction Indicator Repair; Incl. Ref 2 - 5; Order Ref 2 - 5
2		129-667		2	NUT No. 10 NF
3		493-21020		1	WASHER, LOCK 3/16
4		237-6006		1	O-RING 15/32 ID x 5/64, Boss Seal
5		238-5011		1	O-RING 5/16 ID x 1/16
6		NSS		1	NOT SERVICED SEPARATELY Indicator
7		NSS		1	NOT SERVICED SEPARATELY Valve, By-Pass
		D149921		1	ELEMENT, FILTER Incl. Ref 8, 9
8		NSS		1	NOT SERVICED SEPARATELY Element
9		238-5230		1	O-RING 2-1/2 ID x 1/8

08 -53		p1	05/03

CYLINDER ASSY - LOADER LIFT

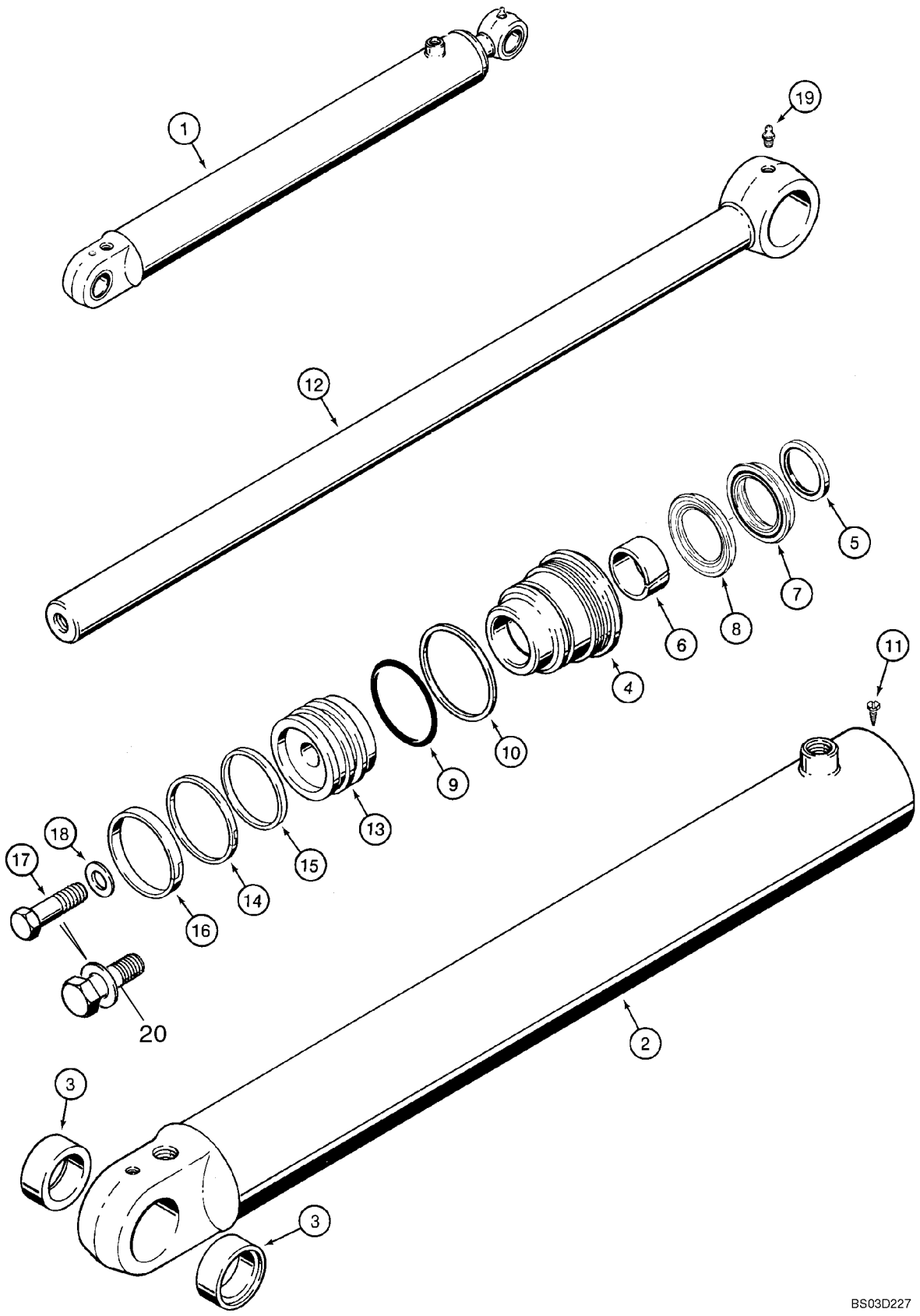

CYLINDER ASSY - LOADER LIFT

REF	FN	PART NUMBER	YR/SN	QTY	DESCRIPTION
1		133936A1		2	CYLINDER ASSY. 89 ID x 766 mm strk; Loader Lift; Incl. Ref 2- 19
2		133937A1		1	SLEEVE, HYD' CYL' Incl. Ref 3
3		1980335C1		2	BUSHING, LARGE
		NSS		1	NOT SERVICED SEPARATELY Gland, Cylinder; Incl. Ref 4 - 10
4		1971707C2		1	CAP CYLINDER END
5		D95143		1	SEAL
6		G102425		1	BUSHING, LARGE
		1542875C1		1	SET OF PARTS Incl. Ref 7, 8; Not Serviced Separately; Order 1543266C1 Seal Kit
7		NSS		1	NOT SERVICED SEPARATELY Rod Seal; Order 1543266C1 Seal Kit
8		NSS		1	NOT SERVICED SEPARATELY Buffer Seal; Order 1543266C1 Seal Kit
9		238-5235		1	O-RING 3-1/8 ID x 1/8
10		D38858		1	GASKET Backup Ring
11		276-2446		1	SCREW No. 8 x 3/8
12		133083A1		1	ROD, PISTON 44 mm (1-3/4 in) dia
13		135259A1		1	PISTON
14		G102286		1	SEAL
15		G100710		1	RING
16		G100711		1	RING
17		25974R1		1	SCREW 1 NF x 2-1/2; 8; No Longer Used; Order 86982437 Ref 20
18		G32303		1	WASHER No Longer Used; Order 86982437 Ref 20
19		219-1		1	NIPPLE, LUBE 1/8 PT x 21/32
20		86982437		1	BOLT, SPECIAL 1,0 x 2,5 lg; Incl. Washer; Replaces Ref 17 and 18
		1543266C1		1	KIT, GASKET Seal; Incl. Ref 5 - 10, 14 - 16

08 -54		p1	05/03

CYLINDER ASSY - LOADER BUCKET

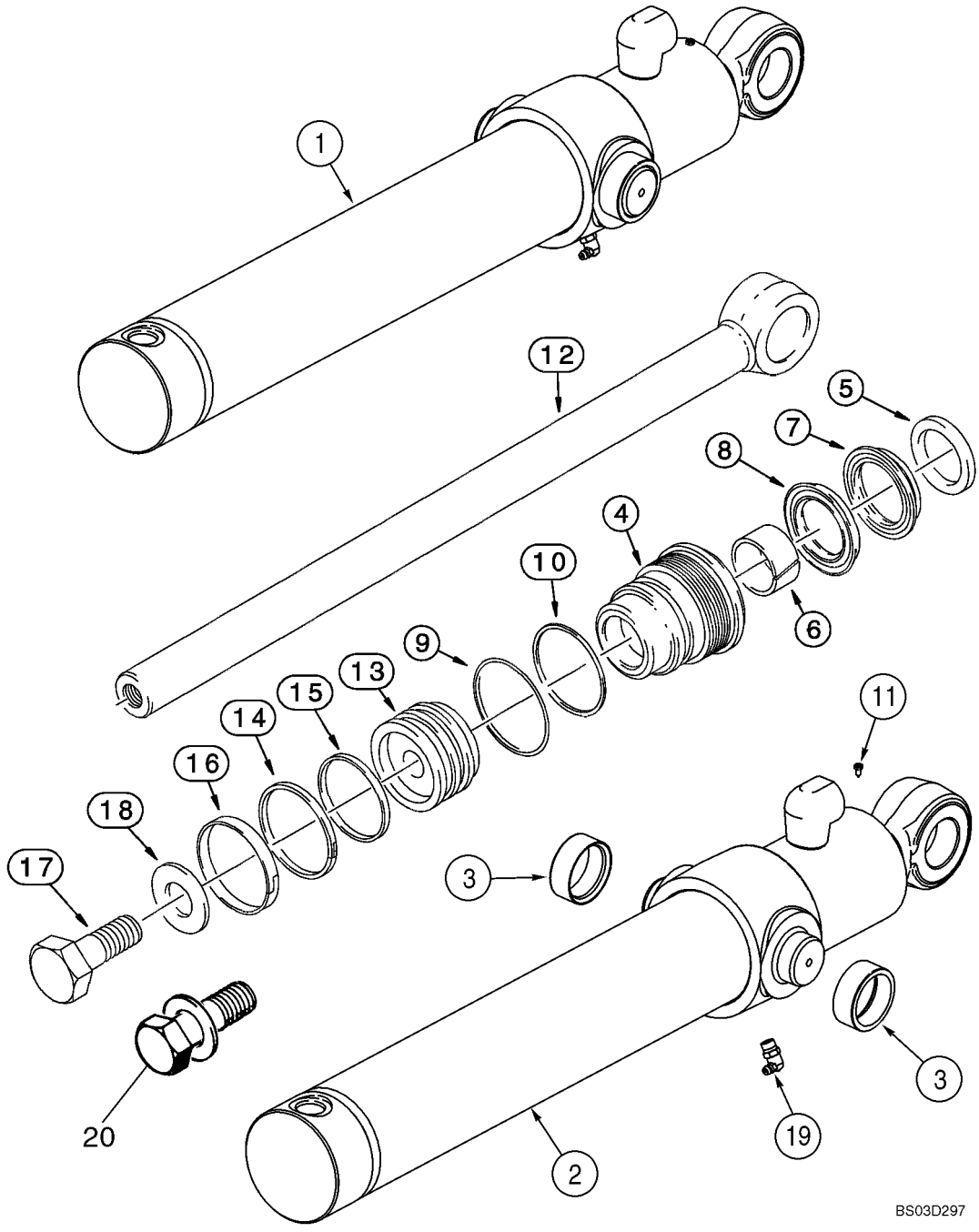

CYLINDER ASSY - LOADER BUCKET

REF	FN	PART NUMBER	YR/SN	QTY	DESCRIPTION
1		255756A1		2	CYLINDER ASSY. 83 ID x 538 mm strk; Loader Bucket; Incl. Ref 2- 19
2		251861A1		1	TUBE Incl. Ref 3
3		G108512		2	BUSHING
		NSS		1	NOT SERVICED SEPARATELY Gland, Cylinder; Incl. Ref 4 - 10
4		1980321C3		1	GLAND
5		D95143		1	SEAL
6		G102425		1	BUSHING, LARGE
		1542875C1		1	SET OF PARTS Incl. Ref 7, 8; Not Serviced Separately; Order 1543260C1 Seal Kit
7		NSS		1	NOT SERVICED SEPARATELY Rod Seal; Order 1543260C1 Seal Kit
8		NSS		1	NOT SERVICED SEPARATELY Buffer Seal; Order 1543260C1 Seal Kit
9		238-5233		1	O-RING 2-7/8 ID x 1/8 in
10		G32122		1	RING
11		276-2446		1	SCREW No. 8 x 3/8
12		255760A1		1	ROD ASSY. 44 mm (1-3/4 in) dia
13		135161A1		1	PISTON
14		G102287		1	SEAL
15		S109444		1	RING
16		S109445		1	RING
17		25974R1		1	SCREW 1 NF x 2-1/2; 8; No Longer Used; Order 86982437 Ref 20
18		G32303		1	WASHER No Longer Used; Order 86982437 Ref
19		219-55		1	NIPPLE, LUBE 90 deg, 1/8 PT x 27/32
20		86982437		1	BOLT, SPECIAL 1,0 x 2,5 lg; Incl. Washer; Replaces Ref 17 and 18
		1543260C1		1	KIT, GASKET Seal; Incl. Ref 5 - 10, 14 - 16

08 -55		p1	05/03

CYLINDER ASSY - LOADER CLAM

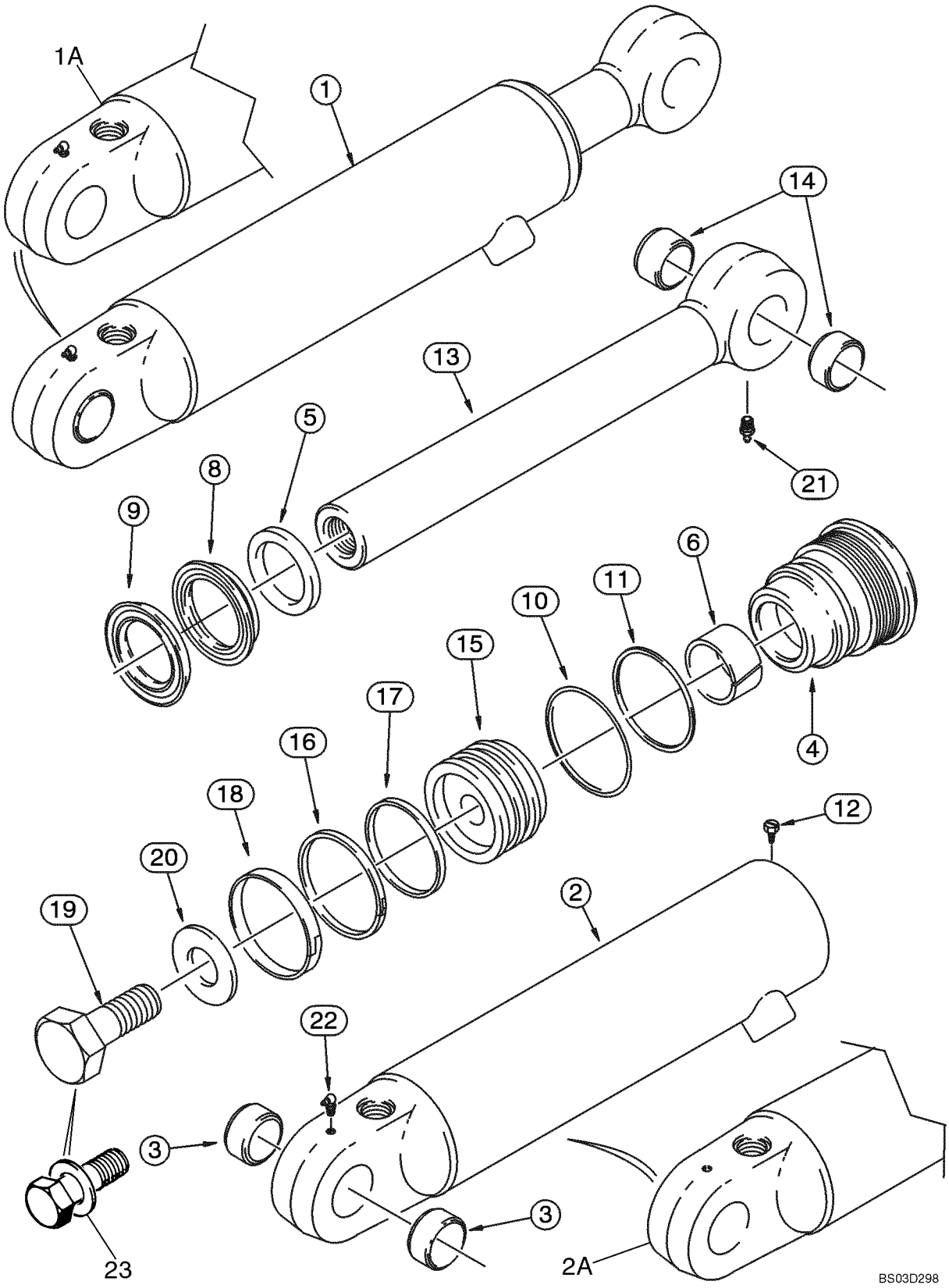

CYLINDER ASSY - LOADER CLAM

REF	FN	PART NUMBER	YR/SN	QTY	DESCRIPTION
1		1346189C1		1	CYLINDER ASSY. 76 ID x 231 mm strk; Right-Hand; Incl. Ref 2- 22; If Used
1		1346190C1		1	CYLINDER ASSY. 76 ID x 231 mm strk; Left-Hand; Incl. Ref 2 - 22; If Used
1A		1346189C2		1	CYLINDER ASSY. 76 ID x 231 mm strk; With Welded Bushing; Right-Hand; Incl. Ref 2, 4 - 22
1A		1346190C2		1	CYLINDER ASSY. 76 ID x 231 mm strk; With Welded Bushing; Left-Hand; Incl. Ref 2, 4 - 22
2		1346191C1		1	SLEEVE, HYD' CYL' Right-Hand; Incl. Ref 3; If Used
2		1346192C1		1	SLEEVE, HYD' CYL' Left-Hand; Incl. Ref 3; If Used
2A		1346191C2		1	SLEEVE, HYD' CYL' Right-Hand; With Welded Bushing; If Used
2A		1346192C2		1	SLEEVE, HYD' CYL' Left-Hand; With Welded Bushing; If Used
3		30634		2	BUSHING
		NSS		1	NOT SERVICED SEPARATELY Gland, Cylinder; Incl. Ref 4 - 11
4		297281A1		1	CAP CYLINDER END
5		D95143		1	SEAL
6		G102425		1	BUSHING, LARGE
		1542875C1		1	SET OF PARTS Incl. Ref 8, 9; Not Serviced Separately; Order 1543267C1 Seal Kit
8		NSS		1	NOT SERVICED SEPARATELY Rod Seal; Order 1543267C1 Seal Kit
9		NSS		1	NOT SERVICED SEPARATELY Buffer Seal; Order 1543267C1 Seal Kit
10		238-5231		1	O-RING 2-5/8 ID x 1/8
11		G109298		1	RING
12		276-2446		1	SCREW No. 8 x 3/8
13		1346195C1		1	ROD, PISTON 44 mm (1-3/4 in) dia; Incl. Ref 14
14		30634		2	BUSHING
15		1340798C1		1	PISTON
16		G102288		1	SEAL ASSY.
17		G100444		1	SEAL
18		G100449		1	RING, WEAR

08 -55		p2	05/03

CYLINDER ASSY - LOADER CLAM

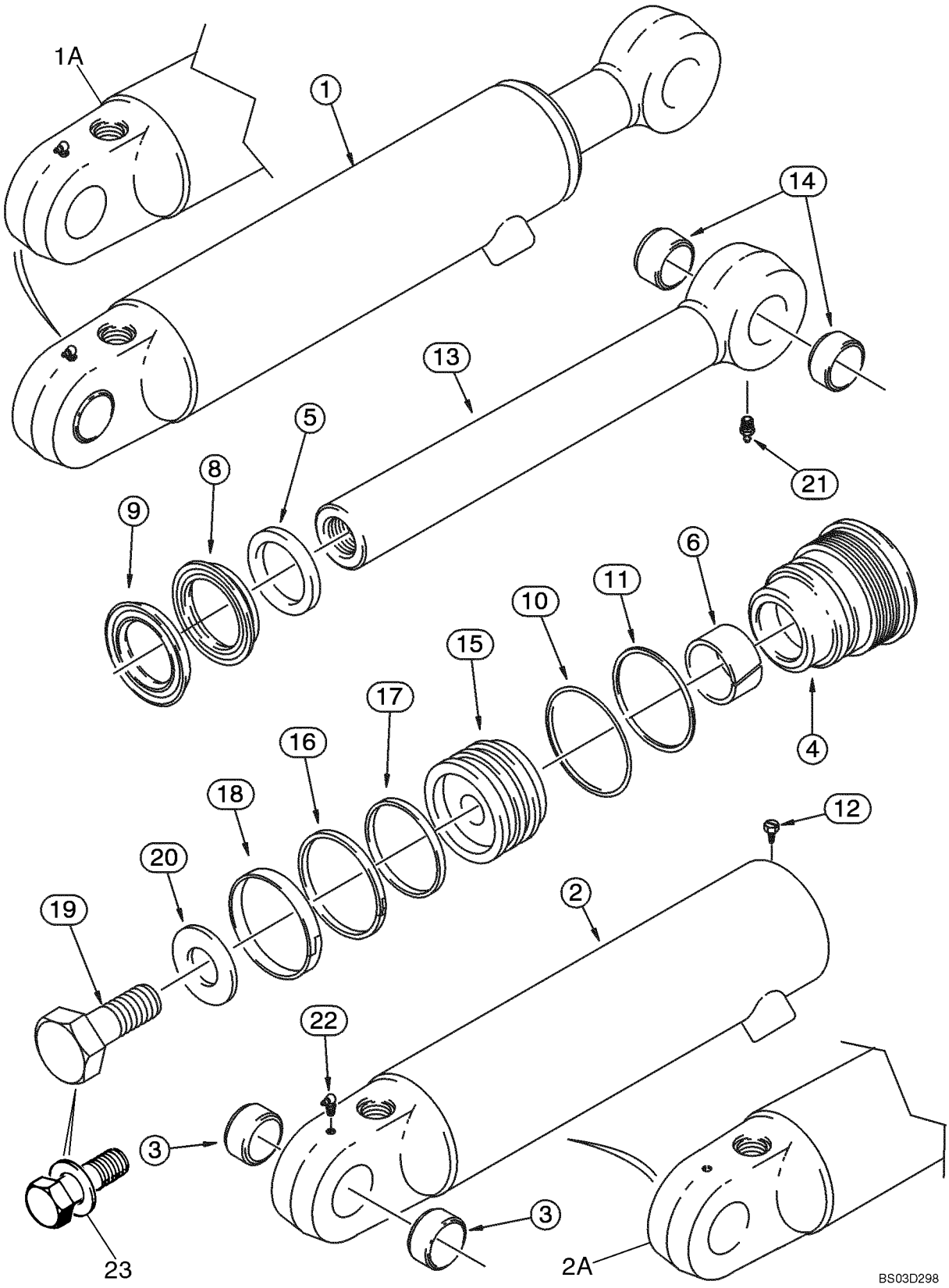

CYLINDER ASSY - LOADER CLAM

REF	FN	PART NUMBER	YR/SN	QTY	DESCRIPTION
19		25974R1		1	SCREW 1 NF x 2-1/2; 8; No Longer Used; Order 86982437 Ref 23
20		G32303		1	WASHER No Longer Used; Order 86982437 Ref 23
21		219-1		1	NIPPLE, LUBE 1/8 PT x 21/32
22		219-55		1	NIPPLE, LUBE 90 deg, 1/8 PT x 27/32
23		86982437		1	BOLT, SPECIAL 1,0 x 2,5 lg; Incl. Washer; Replaces Ref 19 and 20
		1543267C1		1	KIT, GASKET Seal; Incl. Ref 5 - 11, 16 - 18

08 -56		p1	05/03

CYLINDER ASSY - BACKHOE STABILIZER

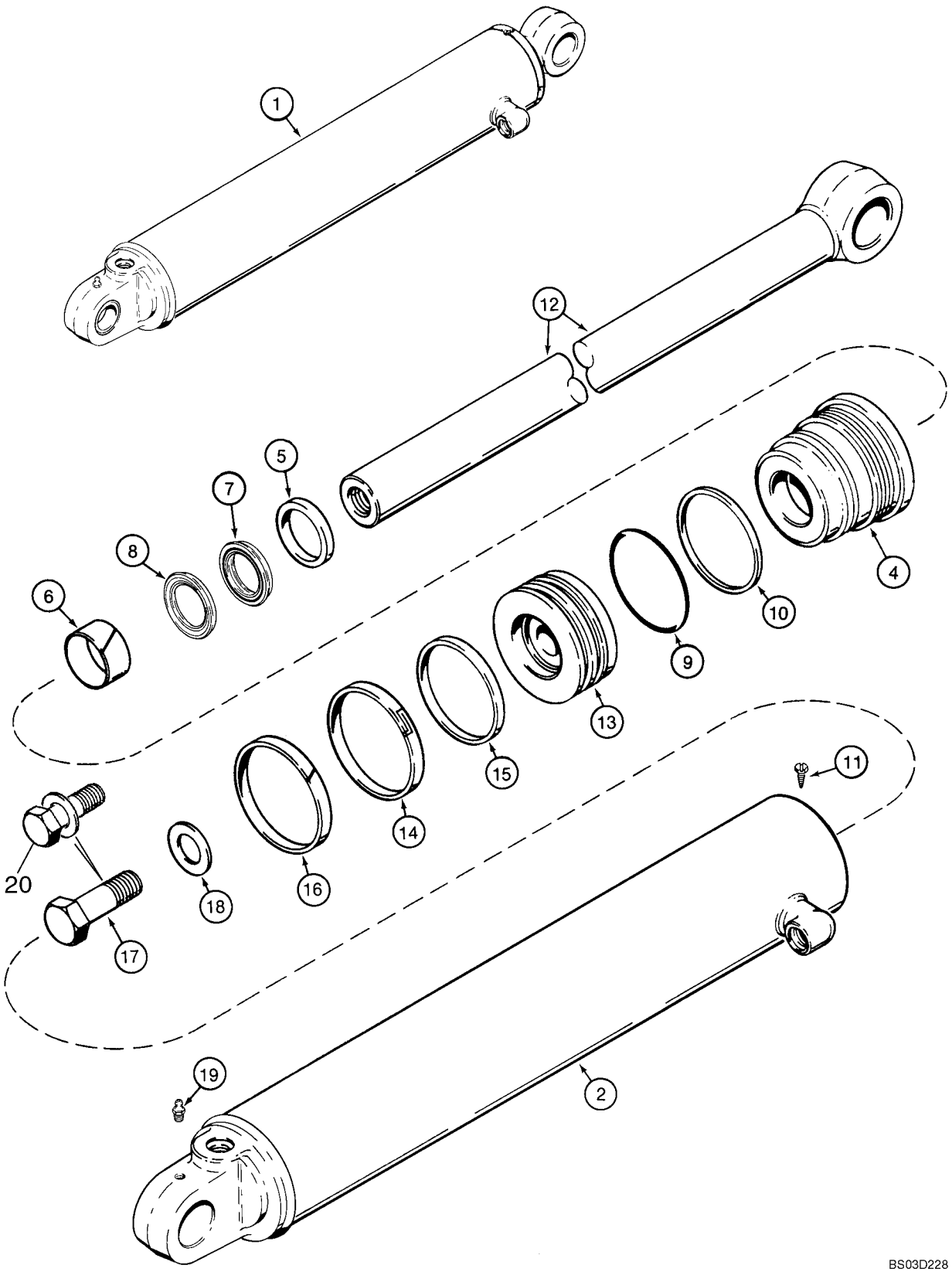

CYLINDER ASSY - BACKHOE STABILIZER

REF	FN	PART NUMBER	YR/SN	QTY	DESCRIPTION
1		177256A1		1	CYLINDER 127 ID x 519 mm strk; Right-Hand; Incl. Ref 2- 19
1		177257A1		1	CYLINDER ASSY. 127 ID x 519 mm strk; Left-Hand; Incl. Ref 2 - 19
2		177258A1		1	TUBE Right-Hand
2		177259A1		1	TUBE Left-Hand
		NSS		1	NOT SERVICED SEPARATELY Gland, Cylinder; Incl. Ref 4 - 10
4		1542918C3		1	CAP CYLINDER END
5		D95145		1	WIPER
6		G102426		1	BUSHING, LARGE
		1542877C1		1	KIT Incl. Ref 7, 8; Not Serviced Separately; Order 1543289C2 Seal Kit
7		NSS		1	NOT SERVICED SEPARATELY Rod Seal; Order 1543289C2 Seal Kit
8		NSS		1	NOT SERVICED SEPARATELY Buffer Seal; Order 1543289C2 Seal Kit
9		238-5247		1	O-RING 4-5/8 ID x 1/8
10		G107970		1	RING
11		276-2446		1	SCREW No. 8 x 3/8
12		177261A1		1	ROD 57 mm (2-1/4 in) dia
13		G110594		1	PISTON
14		1986753C1		1	SEAL
15		G102092		1	RING
16		G102090		1	RING
17		28-2052		1	SCREW 1-1/4 NF x 3-1/4; 8; No Longer Used; Order 86982442 Ref 20
18		G104989		1	WASHER No Longer Used; Order 86982442 Ref
19		219-1		1	NIPPLE, LUBE 1/8 PT x 21/32
20		86982442		1	BOLT, SPECIAL 1,25 x 3,25 lg; Incl. Washer; Replaces Ref 17 and 18
		1543289C2		1	PACKAGE, SEALS Seal; Incl. Ref 5 - 10, 14 - 16

08 -57		p1	05/03

CYLINDER ASSY - BACKHOE SWING

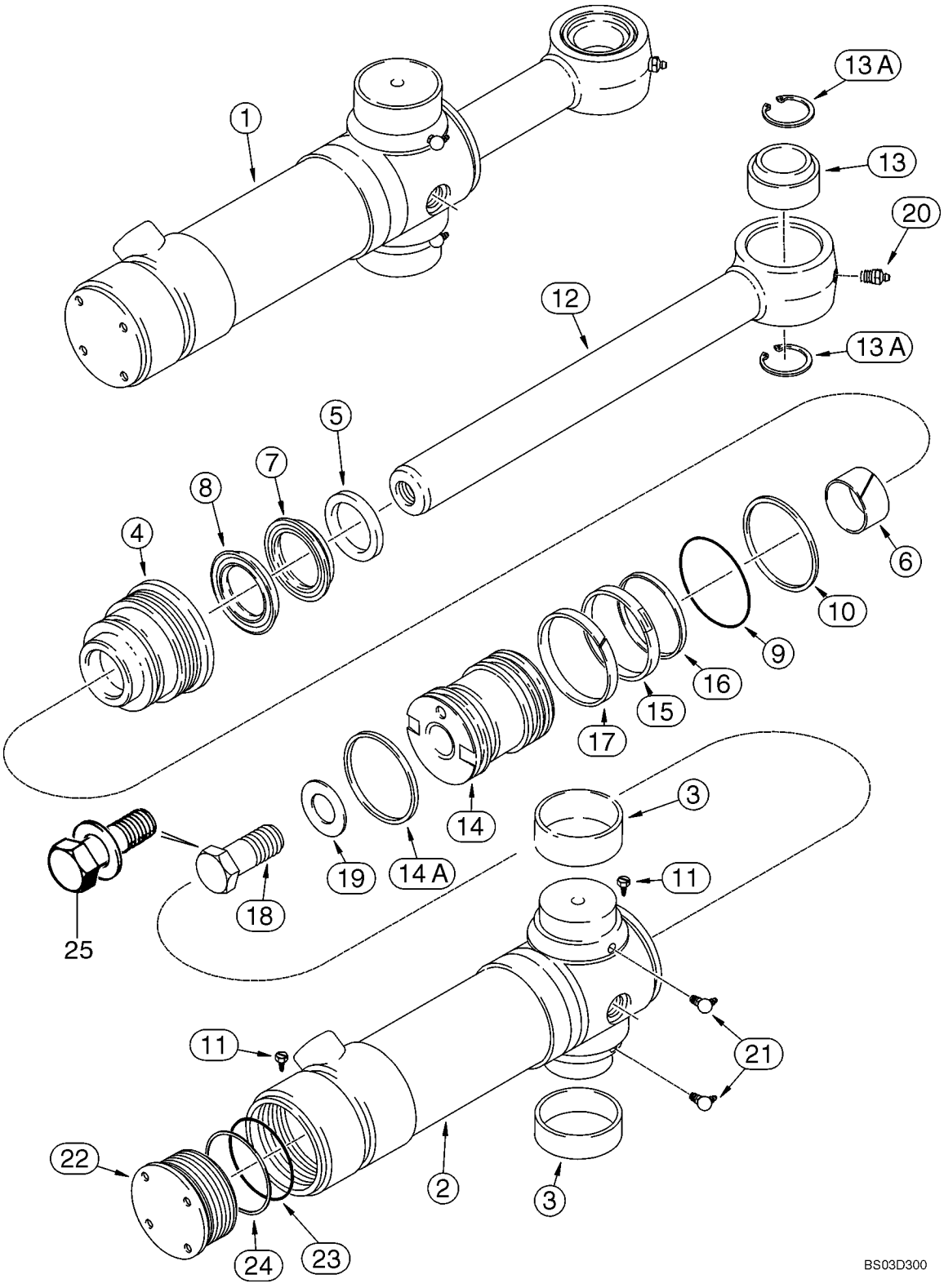

CYLINDER ASSY - BACKHOE SWING

REF	FN	PART NUMBER	YR/SN	QTY	DESCRIPTION
1		139808A2		2	CYLINDER ASSY. 102 ID x 292 mm strk; Incl. Ref 2- 24
2		199953A2		1	TUBE Incl. Ref 2, 3, 11, 22 - 24; Not Available As An Assembly; Order Components
2		139810A2		1	SLEEVE, HYD' CYL' Incl. Ref 3
3		124568A2		2	RING
		NSS		1	NOT SERVICED SEPARATELY Gland, Cylinder; Incl. Ref 4 - 10
4		297283A1		1	CAP CYLINDER END
5		D95144		1	SEALRING
6		G101533		1	BUSHING, LARGE
		1542876C1		1	PACKAGE,SERVICE Incl. Ref 7, 8; Not Serviced Separately; Order 122535A1 Seal Kit
7		NSS		1	NOT SERVICED SEPARATELY Rod Seal; Order 122535A1 Seal Kit
8		NSS		1	NOT SERVICED SEPARATELY Buffer Seal; Order 122535A1 Seal Kit
9		238-5239		1	O-RING 3-5/8 x 1/8
10		G109299		1	RING
11		276-2446		2	SCREW No. 8 x 3/8
12		177518A1		1	ROD, PISTON 51 mm (2 in) dia; Incl. Ref 13, 13A
13		137248A1		1	RING
13A		100-21315		2	RING SNAP No. 315
14		112370A3		1	JACK PISTON
14A		121478A1		1	RING 4 in OD
15		G102285		1	SEAL
16		G100440		1	RING
17		G100448		1	RING
18		28-1664		1	SCREW 1 x 4; 8; No Longer Used; Order 86982439, Ref 25
19		G32303		1	WASHER No Longer Used; Order 86982439 Ref 25
20		219-1		1	NIPPLE, LUBE 1/8 PT x 21/32
21		219-55		2	NIPPLE, LUBE 90 deg, 1/8 PT x 27/32
		{124462A1}		1	End Cap Assembly, Incl. Ref 22 - 24; Order Components
22		124463A1		1	BOTTOM

CYLINDER ASSY - BACKHOE SWING

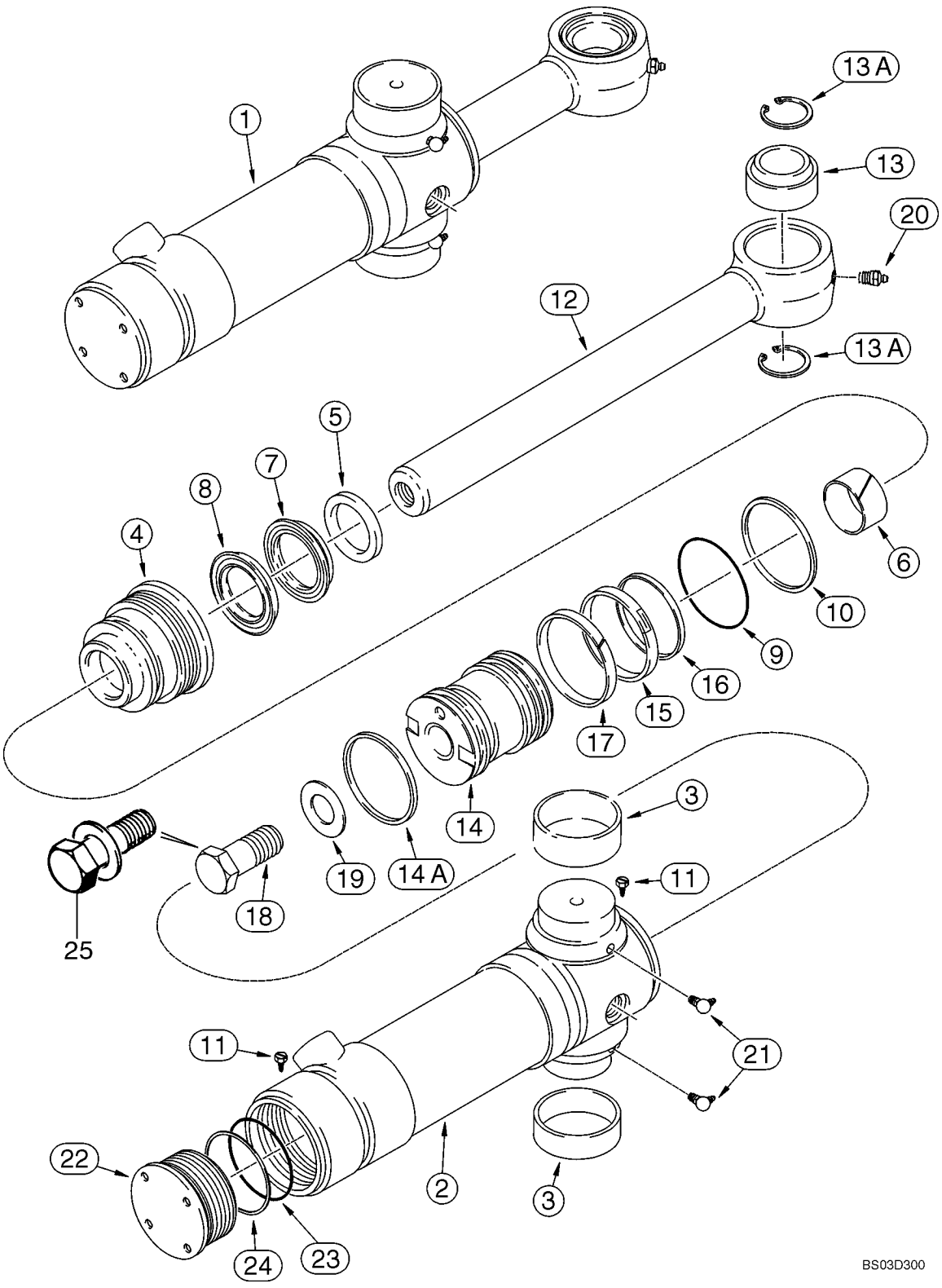

CYLINDER ASSY - BACKHOE SWING

REF	FN	PART NUMBER	YR/SN	QTY	DESCRIPTION
23		238-5242		1	O-RING 4 ID x 1/8
24		G32176		1	RING
25		86982439		1	BOLT, SPECIAL 1 x 4 lg; Includes Washer; Replaces Ref 18 and 19
		122535A1		1	KIT, GASKET Seal; Incl. Ref 5 - 10, 14A - 17

08 -58		p1	05/03

CYLINDER ASSY - BACKHOE BOOM

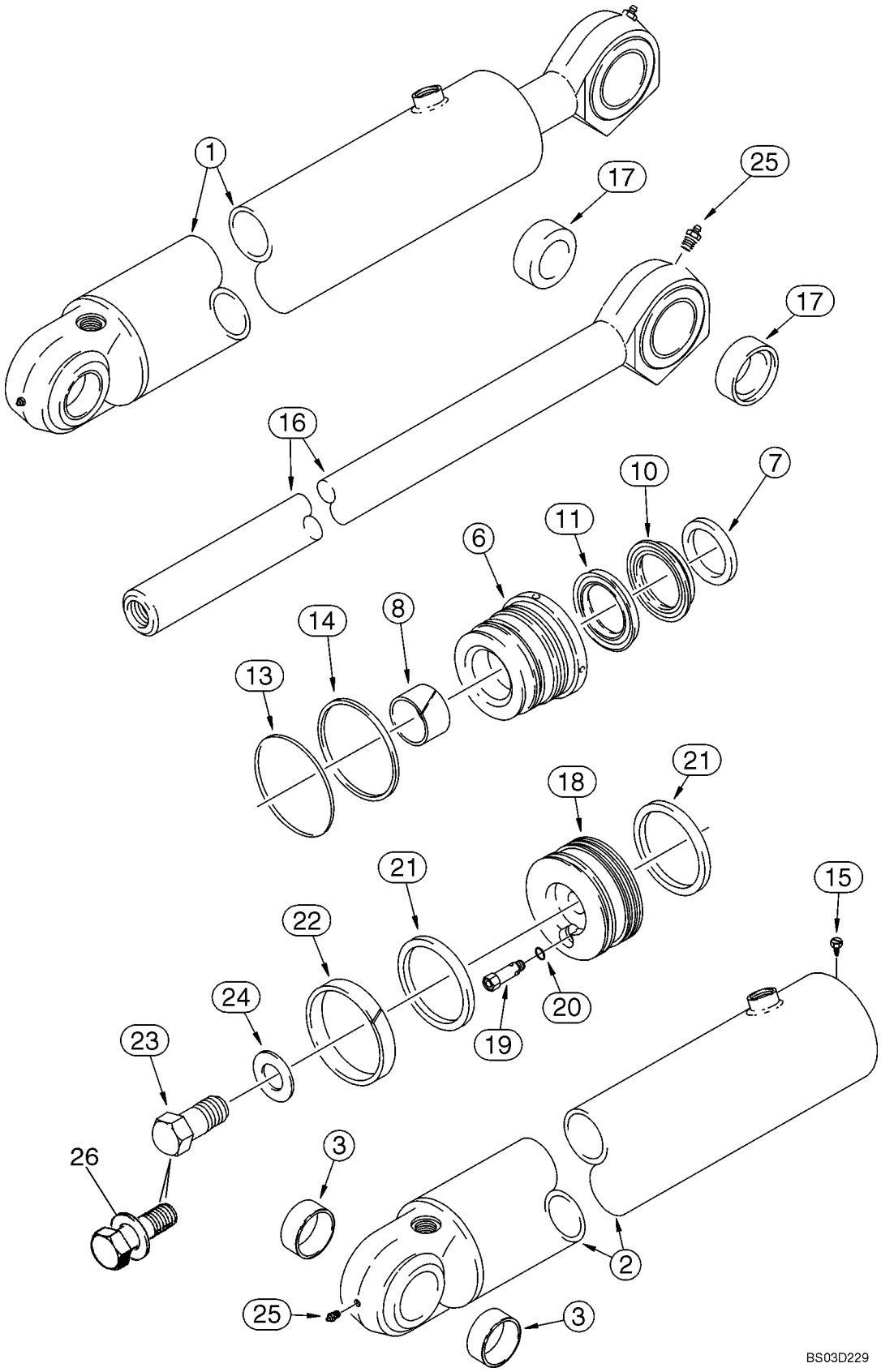

CYLINDER ASSY - BACKHOE BOOM

REF	FN	PART NUMBER	YR/SN	QTY	DESCRIPTION
1		175785A1		1	CYLINDER 140 ID x 976 mm strk; Incl. Ref 2- 25
2		175787A1		1	TUBE Incl. Ref 3
3		1980371C1		2	BUSHING
		NSS		1	NOT SERVICED SEPARATELY Gland, Cylinder; Incl. Ref 6 - 14
6		1542982C2		1	CAP CYLINDER END
7		D95146		1	WIPER
8		G102427		1	BUSHING
		1542879C1		1	KIT Incl. Ref 10, 11; Not Serviced Separately; Order 1980412C2 Seal Kit
10		NSS		1	NOT SERVICED SEPARATELY Rod Seal; Order 1980412C2 Seal Kit
11		NSS		1	NOT SERVICED SEPARATELY Buffer Seal; Order 1980412C2 Seal Kit
13		238-5251		1	O-RING 5-1/2 ID x 1/8 in
14		G107971		1	RING
15		276-2446		1	SCREW No. 8 x 3/8
16		133570A1		1	ROD 63 mm (2-1/2 in) dia; Incl. Ref 17
17		D151062		2	BUSHING
18		1346497C2		1	PISTON
19		1958028C1		1	VALVE Cartridge; Component Parts Not Serviced Separately; Incl. Ref 20
20		237-6006		1	O-RING 15/32 ID x 5/64; Boss Seal
21		1980401C1		2	SEAL
22		1980266C1		1	OIL-SEAL
23		28-2256		1	SCREW 1-3/4 NF x 3-1/2; 8; No Longer Used; Order 86982443, Ref 26
24		G32559		1	WASHER No Longer Used; Order 86982443 Ref 26
25		219-1		2	NIPPLE, LUBE 1/8 PT x 21/32
26		86982443		1	BOLT, SPECIAL 1-3/8 x 3-1/2 lg; Incl. Washer; Replaces Ref 23 and 24
		1980412C2		1	KIT, GASKET Seal; Incl. Ref 7 - 14, 21, 22

08 -59		p1	05/03

CYLINDER ASSY - BACKHOE DIPPER

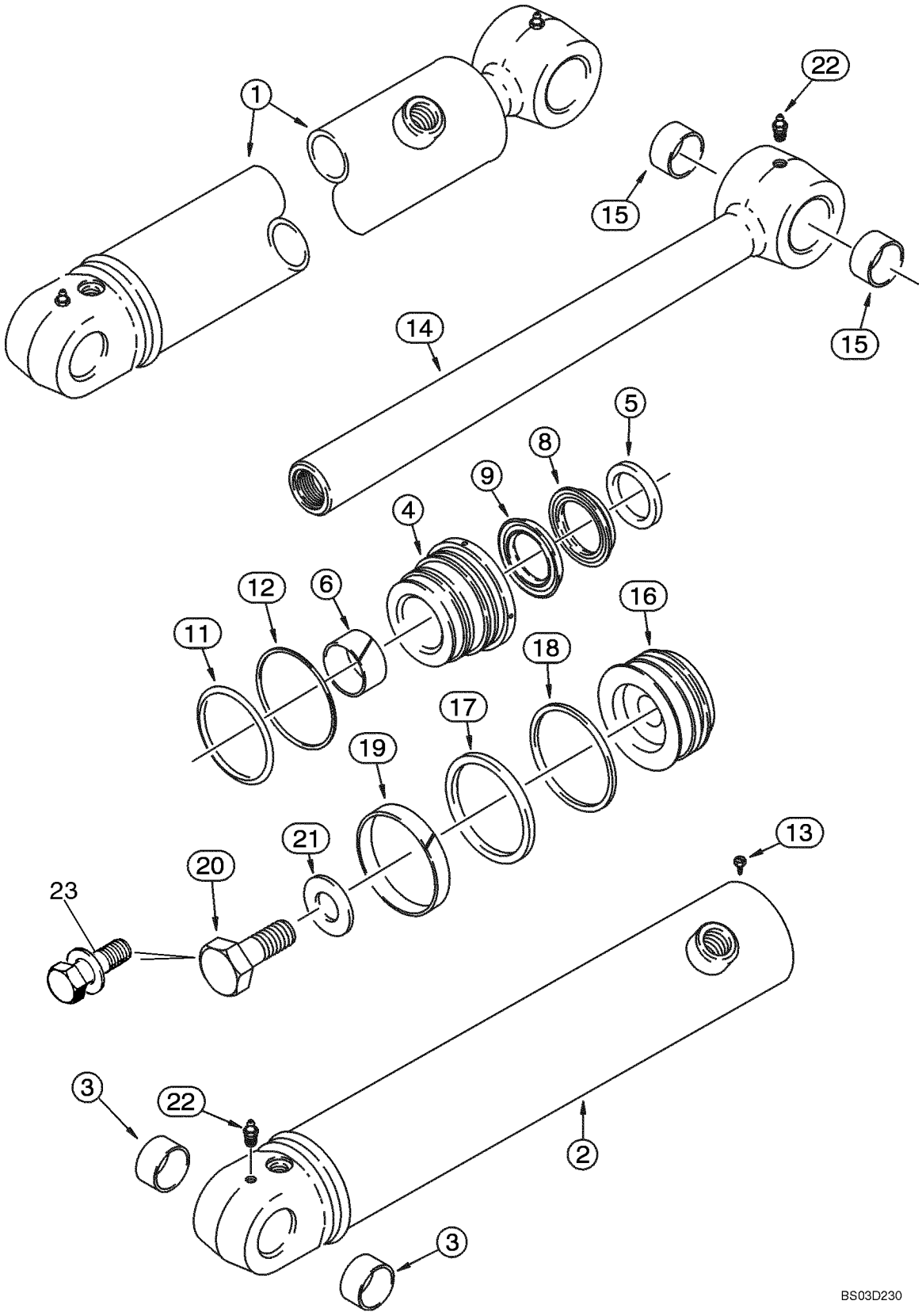

CYLINDER ASSY - BACKHOE DIPPER

REF	FN	PART NUMBER	YR/SN	QTY	DESCRIPTION
1		140965A1		1	CYLINDER 140 ID x 564 mm strk; Incl. Ref 2- 22
2		141179A1		1	TUBE Incl. Ref 3
3		1980371C1		2	BUSHING
		NSS		1	NOT SERVICED SEPARATELY Gland, Cylinder; Incl. Ref 4 - 12
4		1980369C2		1	CAP CYLINDER END
5		D95147		1	WIPER
6		G102428		1	BUSHING, LARGE
		1542880C1		1	PACKAGE Incl. Ref 8, 9; Not Serviced Separately; Order 179011A1 Seal Kit
8		NSS		1	NOT SERVICED SEPARATELY Rod Seal; Order 179011A1 Seal Kit
9		NSS		1	NOT SERVICED SEPARATELY Buffer Seal; Order 179011A1 Seal Kit
11		238-5251		1	O-RING 5-1/8 ID x 1/8 in
12		G107971		1	RING
13		276-2446		1	SCREW No. 8 x 3/8
14		132976A1		1	ROD 70 mm (2-3/4 in) dia; Incl. Ref 15
15		1980371C1		2	BUSHING
16		140967A1		1	PISTON
17		1980401C1		1	SEAL
18		140968A1		1	RING
19		1980266C1		1	OIL-SEAL
20		25987R1		1	SCREW 1-1/2 NF x 3-1/2; 8; No Longer Used; Order 86982444 Ref 23
21		G104990		1	WASHER No Longer Used; Order 86982444, Ref 23
22		219-1		2	NIPPLE, LUBE 1/8 PT x 21/32
23		86982444		1	BOLT, SPECIAL 1,5 x 3,5 lg; Incl. Washer; Replaces Ref 20 and 21
		179011A1		1	SEAL Seal; Incl. Ref 5 - 12, 17 - 19

08 -60		p1	05/03

CYLINDER ASSY - BACKHOE BUCKET

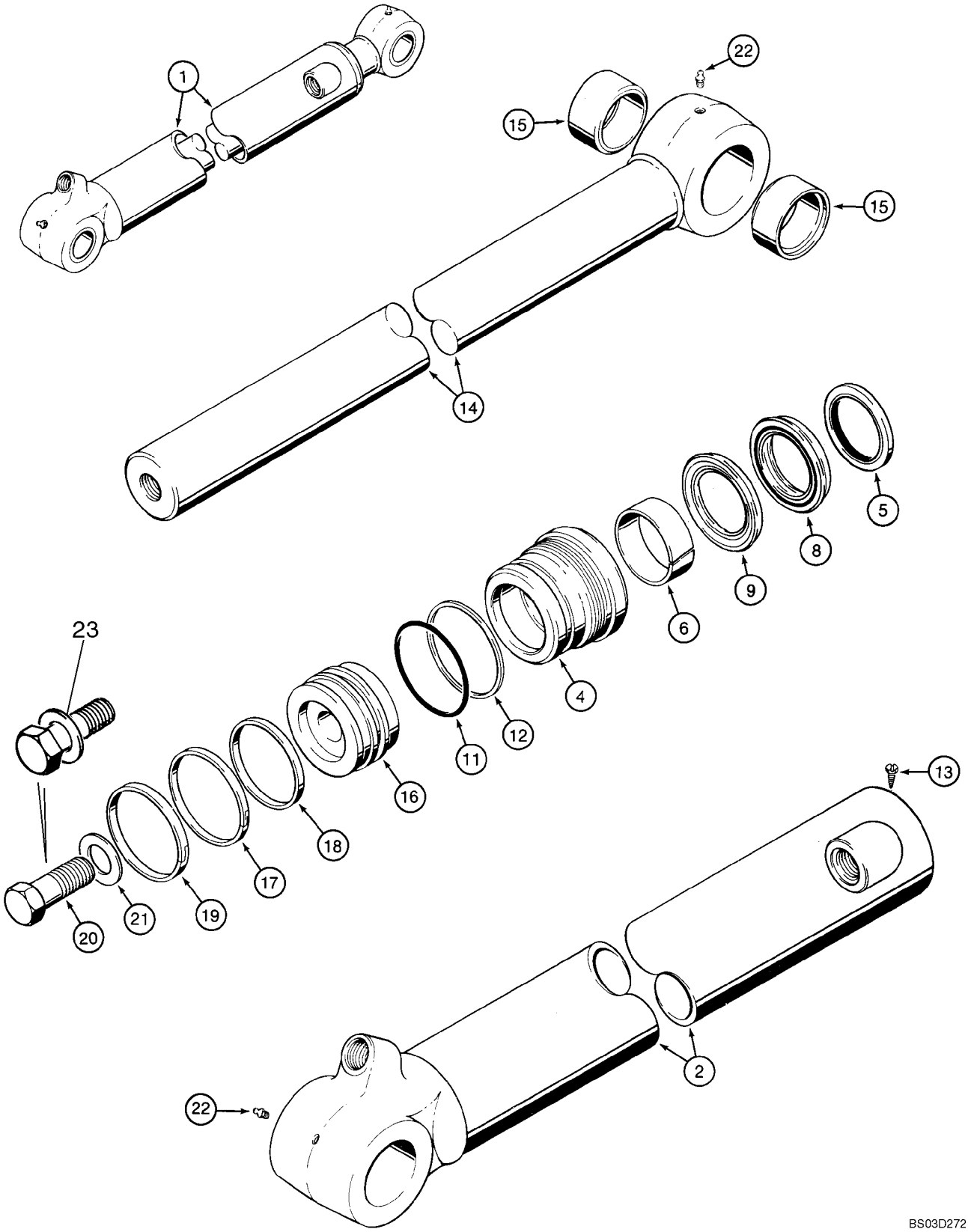

CYLINDER ASSY - BACKHOE BUCKET

REF	FN	PART NUMBER	YR/SN	QTY	DESCRIPTION
1		296434A1		1	CYLINDER 95 ID x 872 mm strk; Incl. Ref 2- 22
2		296435A1		1	TUBE
		NSS		1	NOT SERVICED SEPARATELY Gland, Cylinder; Incl. Ref 4 - 12
4		296445A1		1	GLAND
5		D95147		1	WIPER
6		252790A1		1	BEARING
		1542880C1		1	PACKAGE Incl. Ref 8, 9; Not Serviced Separately; Order 297895A1 Seal Kit
8		NSS		1	NOT SERVICED SEPARATELY Rod Seal; Order 297895A1 Seal Kit
9		NSS		1	NOT SERVICED SEPARATELY Buffer Seal; Order 297895A1 Seal Kit
11		238-5237		1	O-RING 3-3/8 ID x 1/8
12		G32126		1	RING
13		276-2446		1	SCREW No. 8 x 3/8
14		296439A1		1	ROD ASSY. 70 mm (2-3/4 in) dia; Incl. Ref 15
15		D140029		2	BUSHING, LARGE
16		296443A1		1	PISTON
17		1340762C1		1	SEAL
18		1340763C1		1	RING
19		1980245C1		1	OIL-SEAL
20		28-2052		1	SCREW 1-1/4 NF x 3-1/4; 8; No Longer Used; Order 86982442 Ref 23
21		G104989		1	WASHER No Longer Used; Order 86982442, Ref 23
22		219-1		2	NIPPLE, LUBE 1/8 PT x 21/32
23		86982442		1	BOLT, SPECIAL 1,25 x 3,25 lg; Incl. Washer; Replaces Ref 20 and 21
		297895A1		1	SEAL Seal; Incl. Ref 4 - 12, 17 - 19

08 -61		p1	05/03

CYLINDER ASSY - BACKHOE EXTENDABLE DIPPER

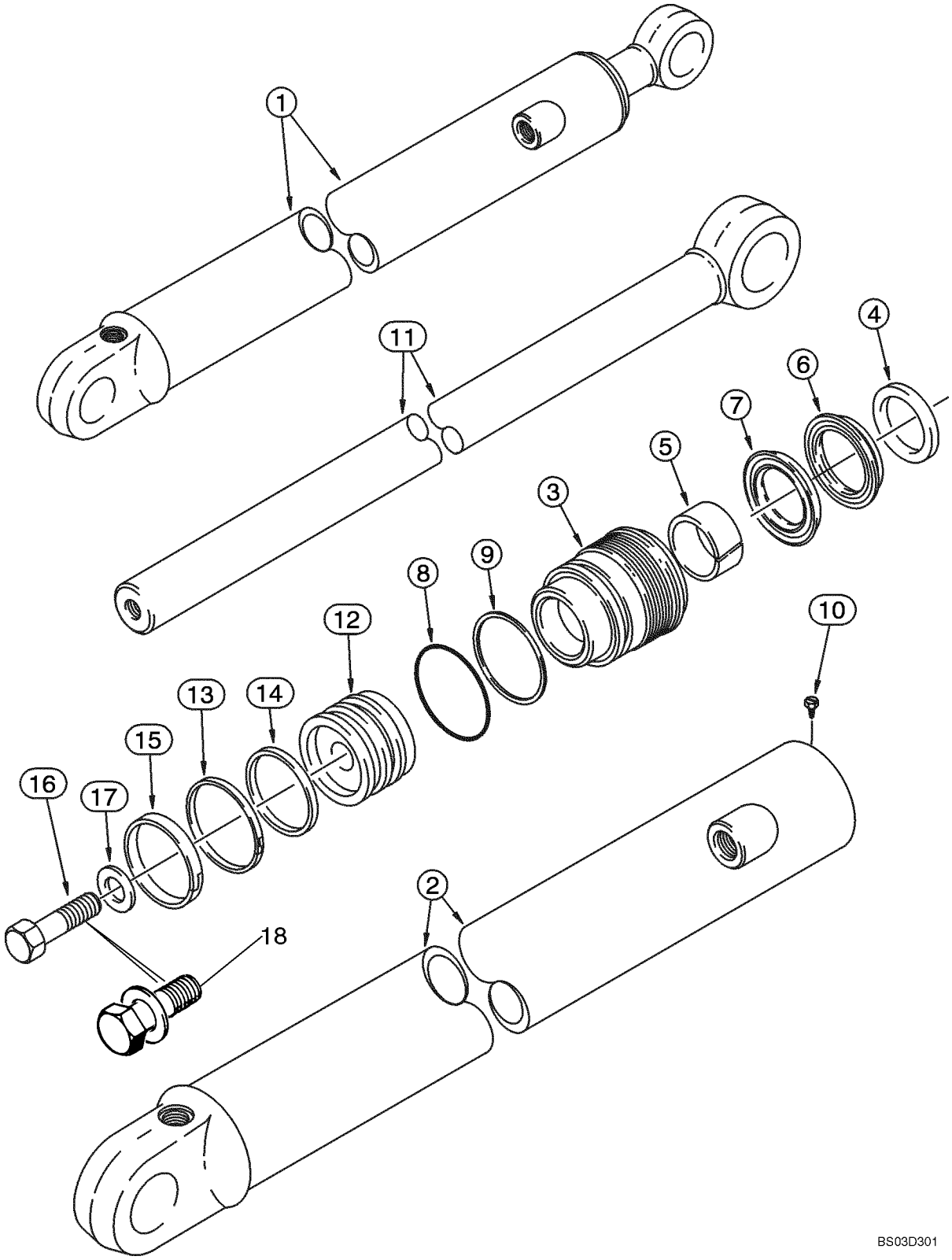

CYLINDER ASSY - BACKHOE EXTENDABLE DIPPER

REF	FN	PART NUMBER	YR/SN	QTY	DESCRIPTION
1		1340853C2		1	CYLINDER 76 ID x 1220 mm strk; Incl. Ref 2- 17; Also Incl. 1346076C1
		1346076C1		1	SPACER 7-1/2 in lg; Located Between Gland and Piston
2		1340854C2		1	TUBE
		NSS		1	NOT SERVICED SEPARATELY Gland, Cylinder; Incl. Ref 3 - 9
3		297281A1		1	CAP CYLINDER END
4		D95143		1	SEAL
5		G102425		1	BUSHING, LARGE
		1542875C1		1	SET OF PARTS Incl. Ref 6, 7; Not Serviced Separately; Order 1543267C1 Seal Kit
6		NSS		1	NOT SERVICED SEPARATELY Rod Seal; Order 1543267C1 Seal Kit
7		NSS		1	NOT SERVICED SEPARATELY Buffer Seal; Order 1543267C1 Seal Kit
8		238-5231		1	O-RING 2-5/8 ID x 1/8
9		G109298		1	RING
10		276-2446		1	SCREW No. 8 x 3/8
11		1346077C1		1	ROD 44 mm (1-3/4 in) dia
12		G107277		1	PISTON
13		G102288		1	SEAL ASSY.
14		G100444		1	SEAL
15		G100449		1	RING, WEAR
16		28-1240		1	SCREW 3/4 NF x 2-1/2; 8; No Longer Used; Order 86982444, Ref 18
17		S94643		1	WASHER No Longer Used; Order 86982444 Ref 18
18		86982444		1	BOLT, SPECIAL 1,5 x 3,5 lg; Incl. Washer; Replaces Ref 16 and 17
		1543267C1		1	KIT, GASKET Seal; Incl. Ref 4 - 9, 13 - 15

SECTION INDEX

09 -01	CONTROLS - LOADER LIFT AND BUCKET
09 -02	CONTROLS - LOADER CLAM
09 -03	CONTROLS - LOADER SELF-LEVELING
09 -04	FRAME - LOADER LIFT
09 -05	FRAME - LOADER LINKAGE
09 -06	BUCKETS, LOADER LONG LIP
09 -07	BUCKET, LOADER CLAM
09 -08	GUARD - VALVE, LOADER
09 -09	COUPLER, TOOL QUICK
09 -10	COVERS - BACKHOE CONTROL TOWER
09 -11	BACKHOE CONTROL TOWER SUPPORT AND SEALS
09 -12	CONTROLS - BACKHOE, WITH FOOT SWING (MODELS WITHOUT EXTENDABLE DIPPER)
09 -13	CONTROLS - BACKHOE, WITH FOOT SWING (MODELS WITH EXTENDABLE DIPPER)
09 -14	CONTROLS - BACKHOE, WITH HAND SWING (MODELS WITHOUT EXTENDABLE DIPPER)
09 -15	CONTROLS - BACKHOE, WITH HAND SWING (MODELS WITHOUT EXTENDABLE DIPPER)
09 -16	CONTROLS - BACKHOE, EXCAVATOR CONTROL PATTERN
09 -17	CONTROLS - BACKHOE, WITH HAND SWING (MODELS WITH EXTENDABLE DIPPER)
09 -18	CONTROLS - BACKHOE AUXILIARY HYDRAULICS
09 -19	BACKHOE - STABILIZERS, PLATES AND PADS
09 -20	BACKHOE - SWING TOWER AND SWING CYLINDERS
09 -21	BACKHOE - BOOM AND SWING TOWER
09 -22	BOOM LATCH
09 -23	BACKHOE - ARM AND BUCKET
09 -24	BACKHOE - DIPPER, EXTENDABLE
09 -25	DIPPER, BACKHOE - COUPLER, HYDRAULIC (MODELS WITH HYDRAULIC BACKHOE BUCKET COUPLER)
09 -26	BUCKET, UNIVERSAL BACKHOE (305 MM (12 INCH) WIDE)
09 -27	BUCKET, UNIVERSAL BACKHOE (406 MM (16 INCH) WIDE)
09 -28	BUCKET, UNIVERSAL BACKHOE (457 MM (18 INCH) WIDE)
09 -29	BUCKET, UNIVERSAL BACKHOE (610 MM (24 INCH) AND 762 MM (30 INCH) WIDE)
09 -30	BUCKET, UNIVERSAL BACKHOE (914 MM (36 INCH) WIDE)
09 -31	BUCKET, UNIVERSAL BACKHOE (610 MM (24 INCH) AND 762 MM (30 INCH) WIDE)
09 -32	FROST POINT ASSEMBLY
09 -33	COUNTERWEIGHT, FRONT
09 -34	CHASSIS - MOUNTS, POD
09 -35	TANK, OIL - BOX, BATTERY AND TOOL
09 -36	RADIATOR WRAPPER
09 -37	GUARD, PUMP
09 -38	BAFFLE - PLATE (MODELS WITH AIR CONDITIONING)
09 -39	BAFFLE - PLATE (MODELS WITHOUT AIR CONDITIONING)
09 -40	HOOD - PANELS, SIDE
09 -41	HOOD - GRILLE AND CHAFF SCREEN
09 -42	PLATES, FLOOR - FLOORMATS
09 -43	FENDER COVER, LEFT-HAND - PANEL, REAR CLOSURE (STORAGE TRAY WITH CUP HOLDER)
09 -44	FENDER EXTENSIONS
09 -45	GUARD, MUD
09 -46	SEAT - MOUNTING

SECTION INDEX

09 -47	SEAT ASSY, STANDARD
09 -48	SEAT SUPPORT AND PEDESTAL, STANDARD
09 -49	SEAT ASSY, MECHANICAL SUSPENSION
09 -50	SEAT PEDESTAL AND SUSPENSION, MECHANICAL SUSPENSION
09 -51	SEAT ASSY, AIR SUSPENSION
09 -52	SEAT PEDESTAL AND SUSPENSION, AIR SUSPENSION
09 -53	CAB - GLASS, MIRROR AND HOLD OPEN
09 -54	CAB - FRAME AND COVERS
09 -55	CAB - DOORS
09 -56	CAB - DOOR MOUNTING
09 -57	CAB - WINDOW, RIGHT-HAND, FOR SINGLE DOOR CAB FRAMES
09 -58	CAB - WINDOW, REAR
09 -59	CAB - WASHER, WINDSHIELD
09 -60	CAB - WIPERS
09 -61	CAB HEADLINER - FILTER, LOUVERS, DOME LAMP
09 -62	CAB - FILTER, AIR
09 -63	CAB - BLOWER HOUSING, VENTILATION DUCTS, DRAIN LINES
09 -64	CAB - HEATER
09 -65	CAB - AIR CONDITIONING LINES, EVAPORATOR CORE
09 -66	CAB - AIR CONDITIONING, CONDENSER, RECEIVER-DRIER
09 -67	CAB - AIR CONDITIONING COMPRESSOR
09 -68	CANOPY, ROPS - FRAME, COVERS, MIRROR, VISOR
09 -69	CANOPY, ROPS - GLASS
09 -70	CANOPY, ROPS - WIPER, FRONT AND WINDSHIELD WASHER
09 -71	MIRROR, REAR VIEW - MOUNTING, CAB MODELS
09 -72	SLOW MOVING VEHICLE EMBLEM
09 -73	DECALS
09 -74	DECALS
09 -75	DECALS
09 -76	DECALS - ENGLISH
09 -77	DECALS - LATIN AMERICAN SPANISH
09 -78	DECALS - CANADIAN FRENCH
09 -79	DECALS - ENGLISH
09 -80	DECALS - LATIN AMERICAN SPANISH
09 -81	DECALS - CANADIAN FRENCH

09 -01		p1	05/03

CONTROLS - LOADER LIFT AND BUCKET

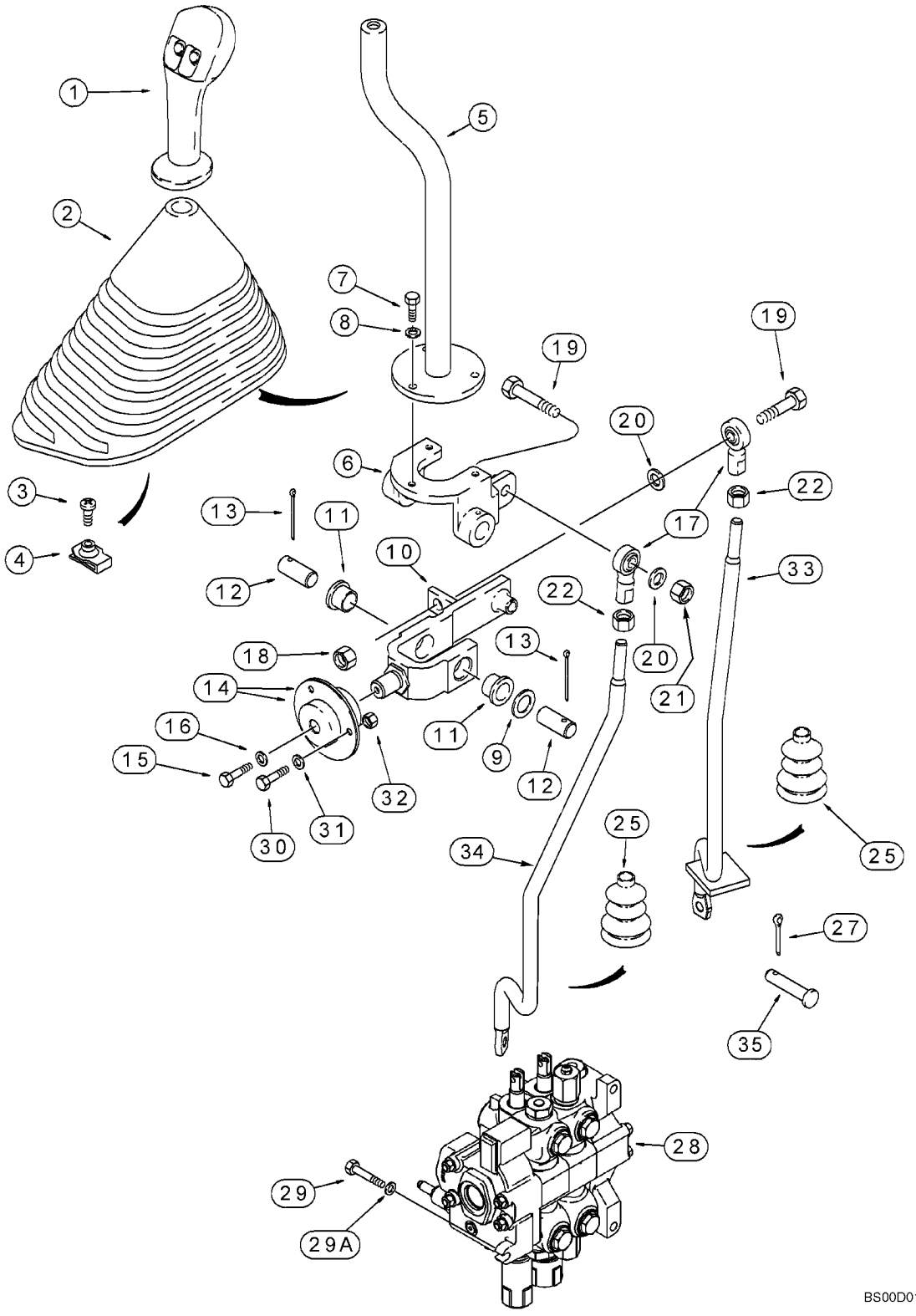

CONTROLS - LOADER LIFT AND BUCKET

REF	FN	PART NUMBER	YR/SN	QTY	DESCRIPTION
1		292904A1		1	HANDLE Loader Control Lever, Two Button; Declutch and Differential Lock Switches; Models Without Powershift Transmission
1A		293262A1		1	HANDLE Loader Control Lever, Two Button; Declutch and Differential Lock Switches; Models With Powershift Transmission; Not Illustrated
		256347A1		1	CONNECTOR
		258616A1		1	LOCK
		298176A1		1	PLUG Not Used With Ref 1A
		345-133		X	GLUE Superbonder 409, 1 ml
2		133615A1		1	BELLOWS
3		140-107		1	SCREW No. 10 x 3/4
4		131-861		1	NUT No. 10
5		132661A1		1	LEVER
6		195615A1		1	SUPPORT
7		614-6016		3	CAPSCREW M6 x 16
8		495-11028		3	WASHER 9/32 x 5/8 x 1/16
9		495-81184		1	WASHER
10		176311A1		1	JOINT Incl. Ref 11
11		108088A1		2	BUSHING
12		102761A1		2	PIN, LARGE
13		432-828		2	PIN, COTTER 1/8 x 1-3/4
14		112380A1		2	BEARING Incl. Ref 14A
14A		465004R91		1	BEARING
15		614-6016		1	CAPSCREW M6 x 16
16		396-41028		1	WASHER 9/32 x 7/8 x 3/32
17		D136773		2	BALL JOINT 3/8 NF
18		231-1446		1	NUT, LOCK 3/8
19		413-628		2	BOLT 3/8 x 1-3/4
20		496-21041		2	WASHER 13/32 x 13/16 x 3/32
21		425-106		1	NUT 3/8
22		425-116		2	NUT 3/8 NF
25		132931A1		2	BELLOWS
		189109A1		2	SPRING Boot Retainer; Cab Models
27		432-612		2	PIN, COTTER 3/32 x 3/4

CONTROLS - LOADER LIFT AND BUCKET

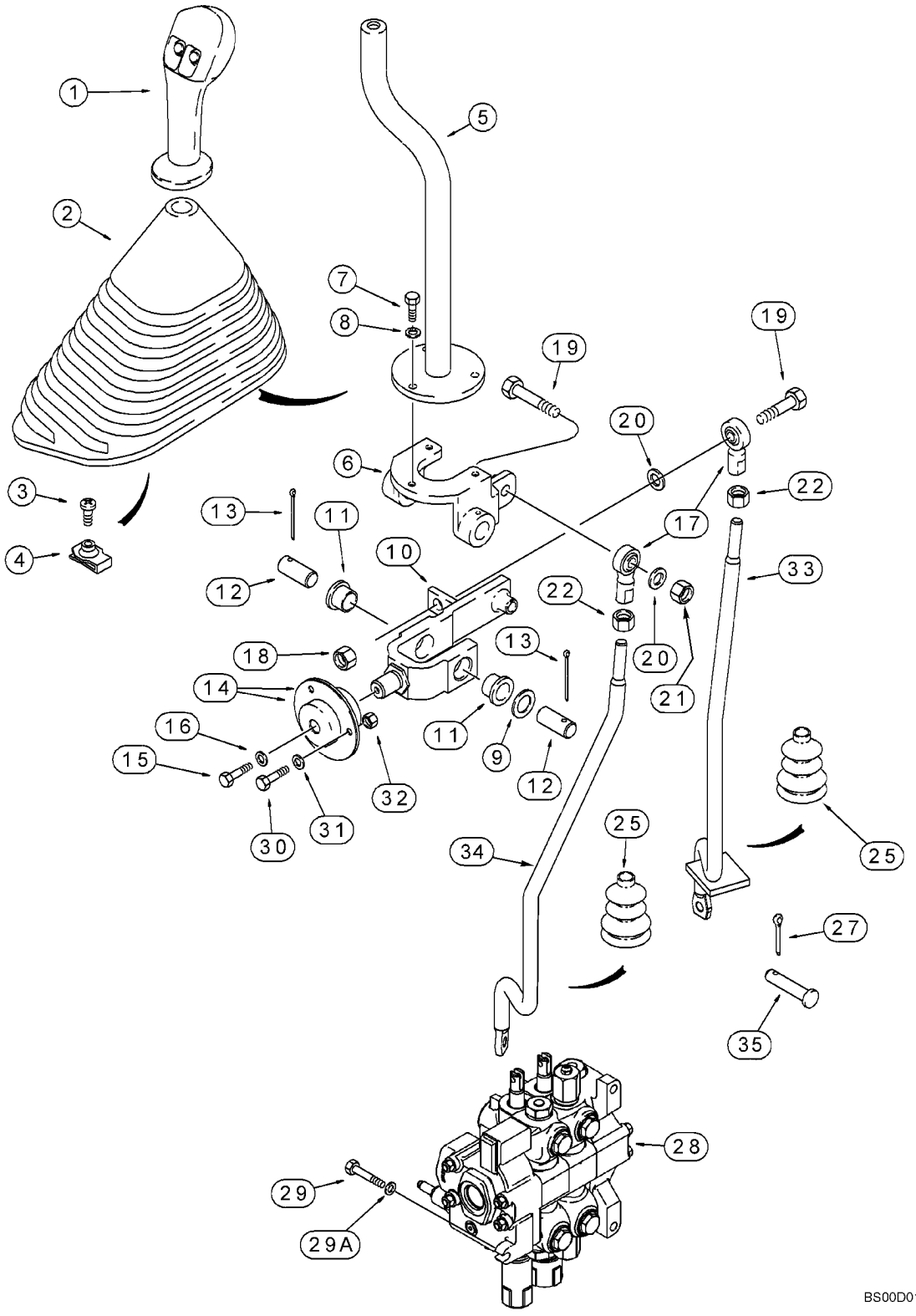

CONTROLS - LOADER LIFT AND BUCKET

REF	FN	PART NUMBER	YR/SN	QTY	DESCRIPTION
28		358236A1		1	VALVE Loader Control Valve, Two Spool; See Figure 08-27
29		814-10040		3	CAPSCREW M10 x 40
29A		896-11010		3	WASHER 11 x 21 x 2,5 mm
30		614-6020		3	BOLT M6 x 20
31		396-41028		3	WASHER 9/32 x 7/8 x 3/32
32		829-1406		3	NUT M6; 10.9
33		301045A1		1	THREADED ROD Bucket Control
34		382063A1		1	ROD Lift Control
35		D149287		2	PIN, LARGE

CONTROLS - LOADER CLAM

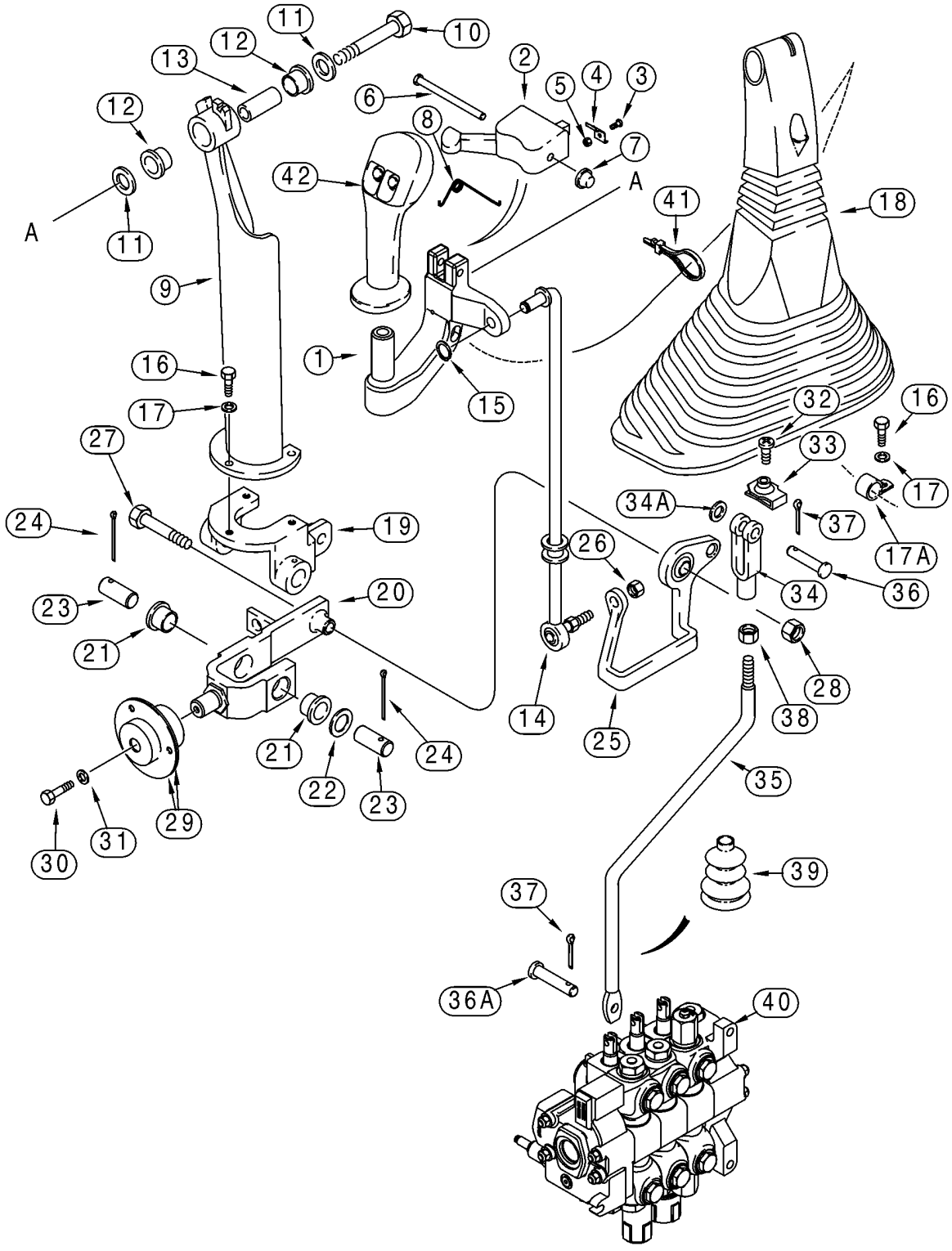

CONTROLS - LOADER CLAM

REF	FN	PART NUMBER	YR/SN	QTY	DESCRIPTION
1		297615A1		1	HANDLE
2		123815A1		1	LATCH
3		170-104		2	SCREW No. 5 x 3/8
4		129914A1		2	SPRING
5		225-14105		2	NUT No. 5
6		439-5436		1	SPLIT PIN/SAFETY PIN 1/4 x 2-1/4
7		143210A1		1	BLANK-OFF PLUG
8		124243A1		1	SPRING
9		123493A1		1	SUPPORT
10		413-632		1	BOLT 3/8 x 2
11		495-21044		2	WASHER 7/16 x 1 x 5/64
12		108088A1		2	BUSHING
13		133989A1		1	PIN, LARGE
14		239306A1		1	THREADED ROD
15		103-1437		1	CLIP,ELECTRICAL
16		614-6016		3	CAPSCREW M6 x 16
17		495-11028		3	WASHER 9/32 x 5/8 x 1/16
17A		515-2295		1	CLAMP 3/8 ID
18		133617A1		1	BELLOWS
19		195615A1		1	SUPPORT
20		176311A1		1	JOINT Incl. Ref 21
21		108088A1		2	BUSHING
22		495-81184		1	WASHER
23		102761A1		2	PIN, LARGE
24		432-828		2	PIN, COTTER 1/8 x 1-3/4
25		112382A1		1	JOINT
26		425-116		1	NUT 3/8 NF
27		413-632		1	BOLT 3/8 x 2
28		231-1446		1	NUT, LOCK 3/8
29		112380A1		2	BEARING
30		614-6016		1	CAPSCREW M6 x 16
31		396-41028		1	WASHER 9/32 x 7/8 x 3/32
32		140-107		1	SCREW No. 10 x 3/4
33		131-121		1	NUT, SPECIAL No. 10
34		213-126		1	CLEVIS 3/8 NF
34A		495-11041		1	WASHER 13/32 x 13/16 x 1/16

CONTROLS - LOADER CLAM

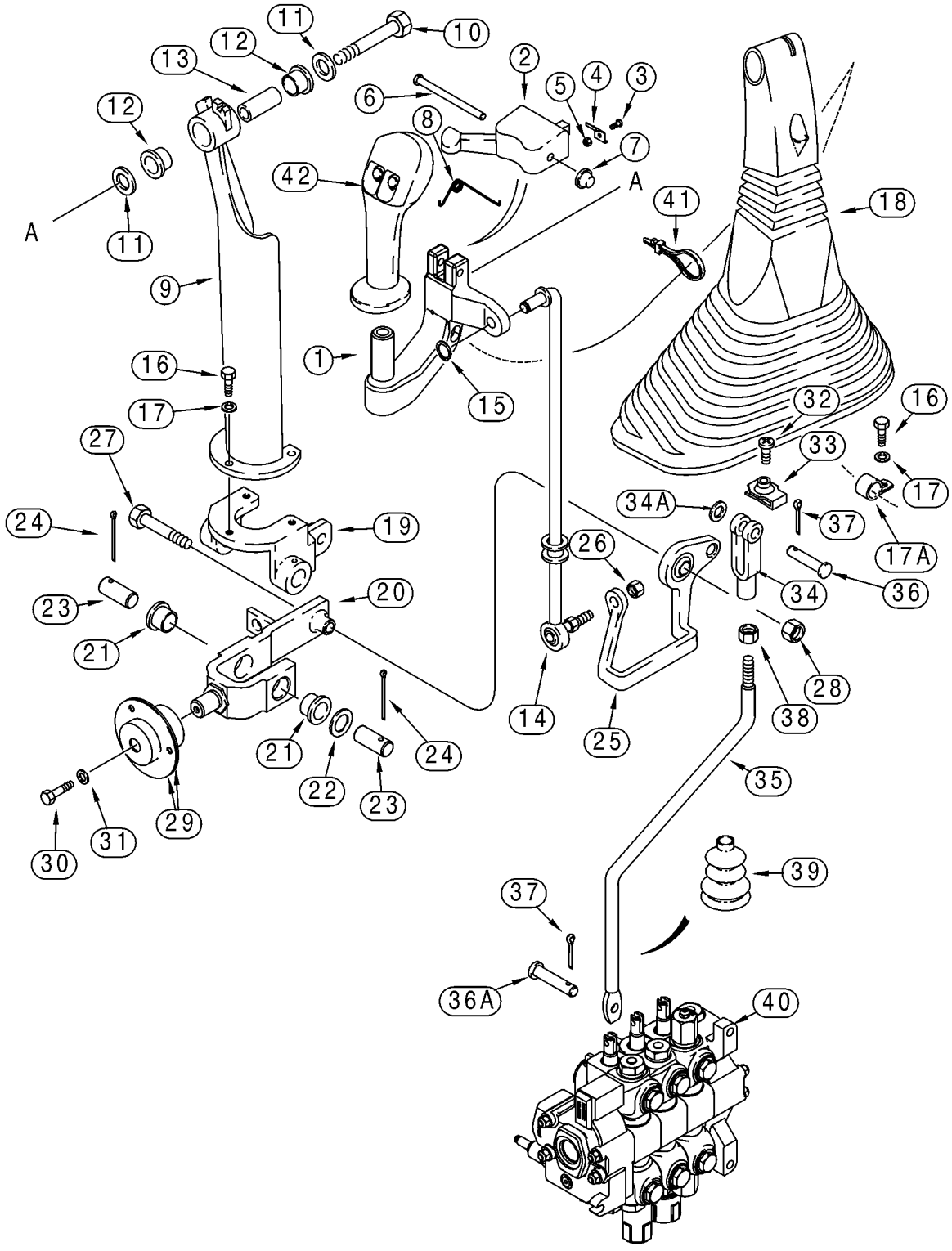

CONTROLS - LOADER CLAM

REF	FN	PART NUMBER	YR/SN	QTY	DESCRIPTION
35		187438A1		1	THREADED ROD
36		D149288		1	PIN, LARGE
36A		D149287		1	PIN, LARGE
37		432-612		2	PIN, COTTER 3/32 x 3/4
38		425-116		1	NUT 3/8 NF
39		132873A1		1	BELLOWS
		189109A1		2	SPRING Boot Retainer
40		358237A1		1	VALVE Loader Control Valve, Three Spool; See Figure 08-28
41		L18337		1	STRAP 15 in
42		292904A1		1	HANDLE Loader Control Lever; Two Button; Declutch and Differential Lock Switches; Models Without Powershift Transmission
42A		293262A1		1	HANDLE Loader Control Lever; Two Button; Declutch and Differential Lock Switches; Models With Powershift Transmission, Not Illustrated
		256347A1		1	CONNECTOR
		258616A1		1	LOCK
		298176A1		1	PLUG
		345-133		X	GLUE Superbonder 409, 1 ml; For Attaching Ref 1 to Ref 42

09 -03		p1	05/03

CONTROLS - LOADER SELF-LEVELING

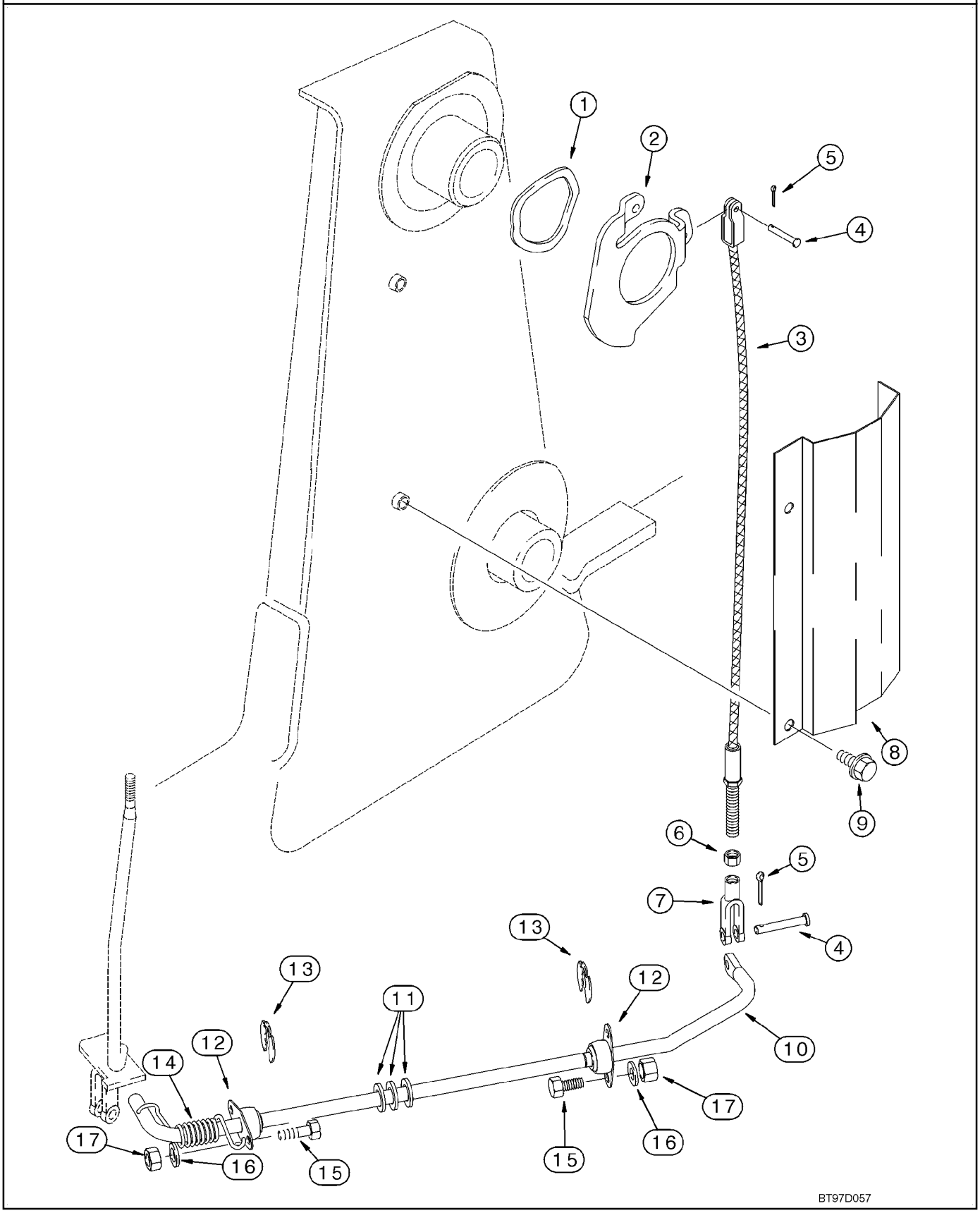

CONTROLS - LOADER SELF-LEVELING

REF	FN	PART NUMBER	YR/SN	QTY	DESCRIPTION
1		137283A1		1	WASHER
2		142404A1		1	CAM
3		193854A1		1	CABLE
4		D149287		2	PIN, LARGE
5		432-612		2	PIN, COTTER 3/32 x 3/4
6		425-115		1	NUT 5/16 NF
7		213-125		1	CLEVIS, ADJUSTABLE 5/16 NF
8		139865A1		1	PROTECTOR
9		844-10020		2	SCREW M10 x 20
		128580A1		1	THREADED ROD Incl. Ref 10 - 12
10		NSS		1	NOT SERVICED SEPARATELY Rod
11		A30881		3	WASHER
12		L15401		2	BEARING
13		D95096		2	RING
14		124721A1		1	SPRING
15		614-8025		4	CAPSCREW M8 x 25
16		895-11008		4	WASHER 9 x 17 x 1,6 mm
17		829-1408		4	NUT M8; 10

09 -04		p1	05/03

FRAME - LOADER LIFT

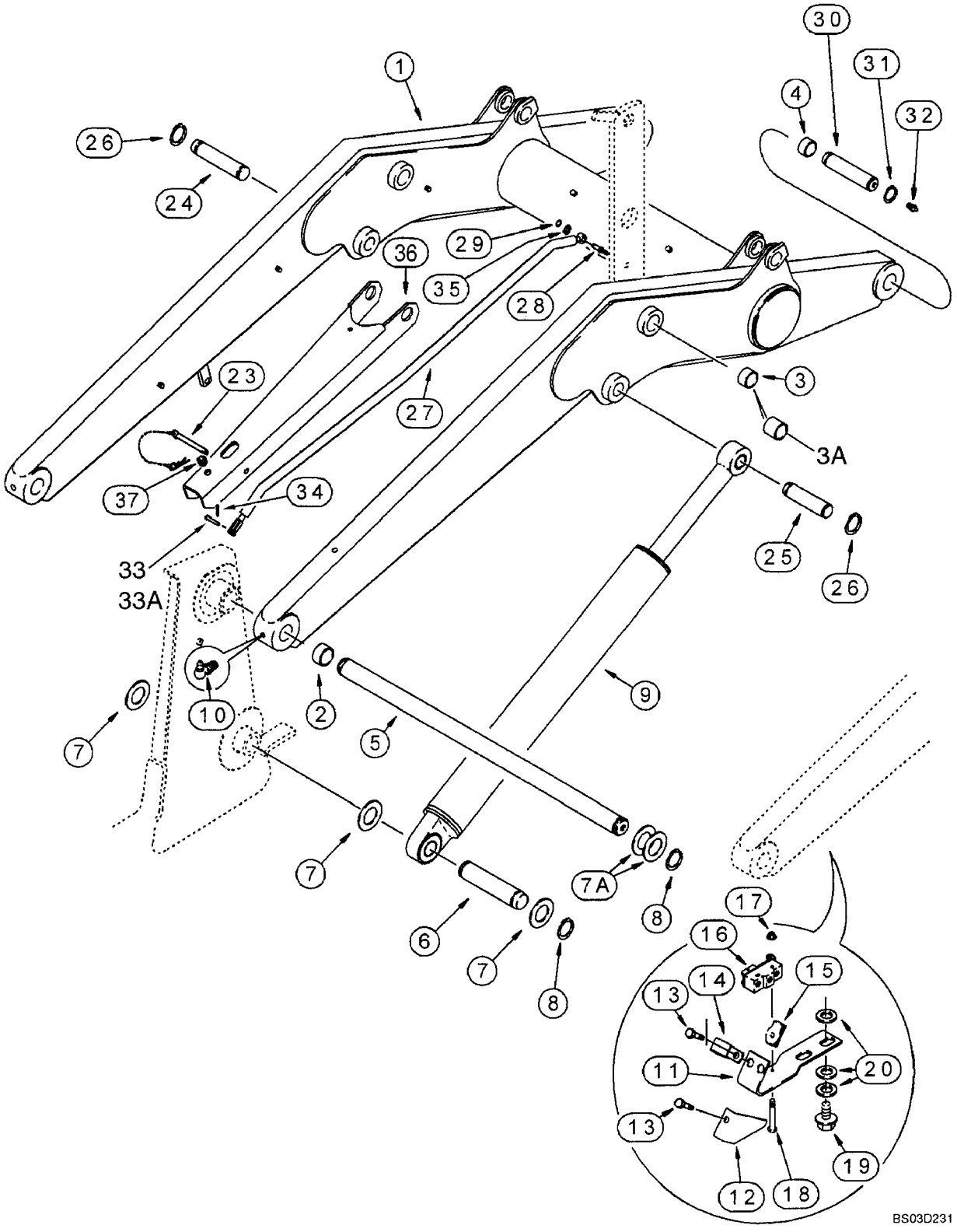

FRAME - LOADER LIFT

REF	FN	PART NUMBER	YR/SN	QTY	DESCRIPTION
		REF			INSTRUCTION Lift Cylinder, Support Strut, Return-To-Dig and Antirollback
1		283736A1		1	ARM ASSY. Incl. Ref 2 - 4
2		D127542		4	BUSHING
3		D49429		4	BUSHING 1,5 ID, 1-7/8 OD, 1-3/8 lg; Bucket Cylinder Link Pivot; No Longer Included With Frame; Purchase Separately; If Used
3A		450614A1		1	BUSHING, GUIDE 1,5 ID, 1-7/8 OD, 2-5/32 lg; Guide Link Pivot; If Used
4		109268A1		4	BUSHING
5		111522A1		1	PIN
6		335177A1		2	PIN
7		495-81282		6	WASHER 2-1/16 x 3 x 3/32
7A		181842A1		X	WASHER
8		800-44050		6	RING SNAP No. 50
9		133936A1		2	CYLINDER ASSY. 89 ID x 766 mm strk; Loader Lift; See Figure 08-53
10		219-55		2	NIPPLE, LUBE 90 deg, 1/8 PT x 27/32
11		128818A1		1	SUPPORT Return-To-Dig
12		142524A1		1	PROTECTOR
13		614-6016		2	CAPSCREW M6 x 16
14		515-2179		1	CLAMP 7,9 mm
15		833-40406		2	NUT M6
16		D137363		1	SWITCH Return-To-Dig
17		193-1003		2	NUT No. 6
18		440-10616		2	SCREW No. 6 x 1
19		128312A1		2	BOLT M10 x 15
20		895-11010		6	WASHER 11 x 21 x 2 mm
23		104824A1		1	PIN, LARGE
24		118900A1		1	PIN, LARGE
25		113629A1		1	PIN, LARGE
26		800-44040		4	RING SNAP
27		311200A1		1	ROD ASSY. Antirollback
28		192815A1		1	PIN
29		103-3350		1	RING, SNAP No. 50
30		118901A1		2	PIN, LARGE

09 -04		p2	05/03

FRAME - LOADER LIFT

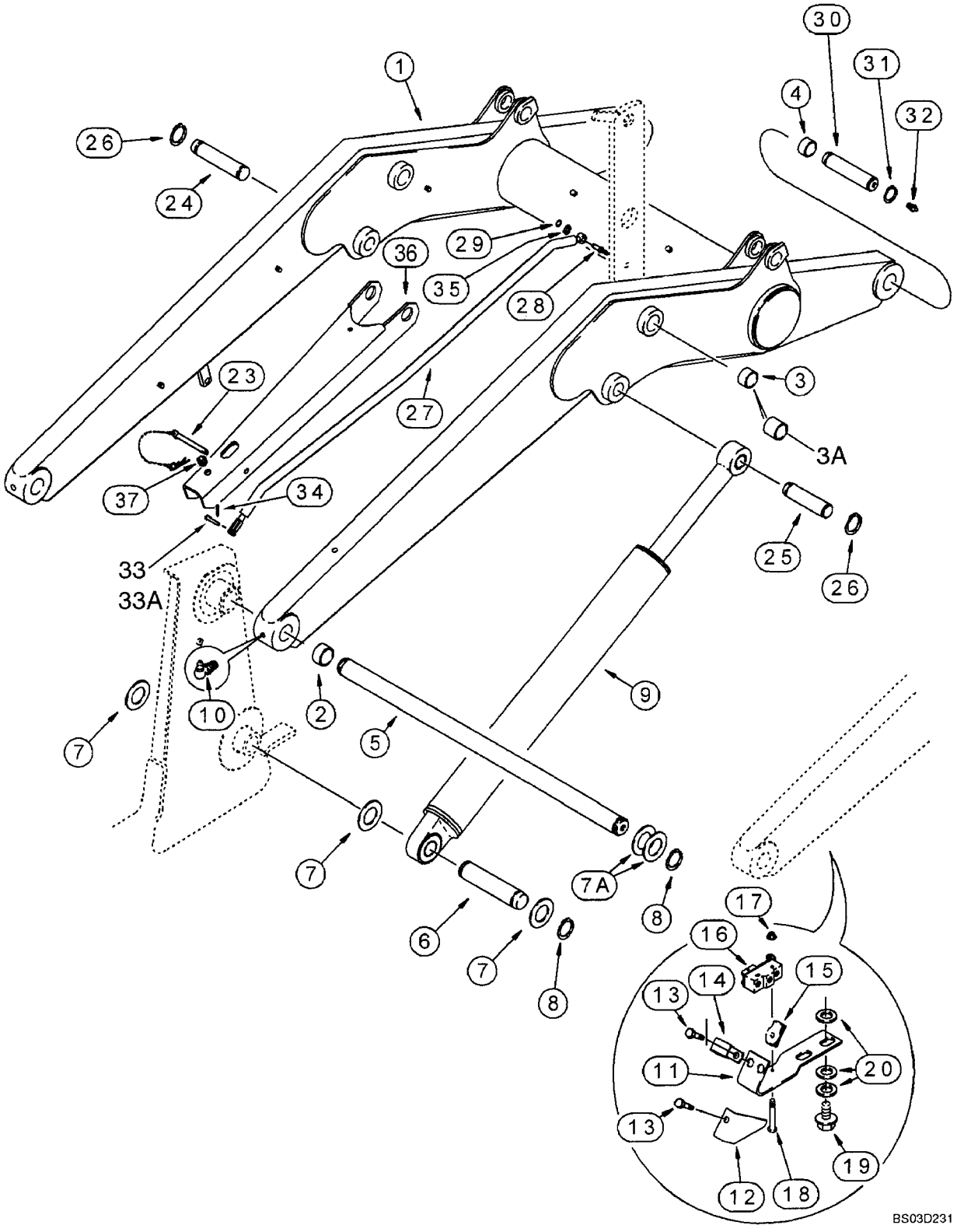

FRAME - LOADER LIFT

REF	FN	PART NUMBER	YR/SN	QTY	DESCRIPTION
31		800-44040		4	RING SNAP
32		219-1		2	NIPPLE, LUBE 1/8 PT x 21/32
33		427-6088		1	PIN, LARGE 3/8 x 7/8; If Used
33A		427-6100		1	PIN, CLEVIS 3/8 x 1; If Used
34		432-612		1	PIN, COTTER 3/32 x 3/4
35		495-11053		1	WASHER 17/32 x 1-1/16 x 3/32
36		341564A2		1	STRUT
37		344892A1		1	GROMMET

09 -05		p1	05/03

FRAME - LOADER LINKAGE

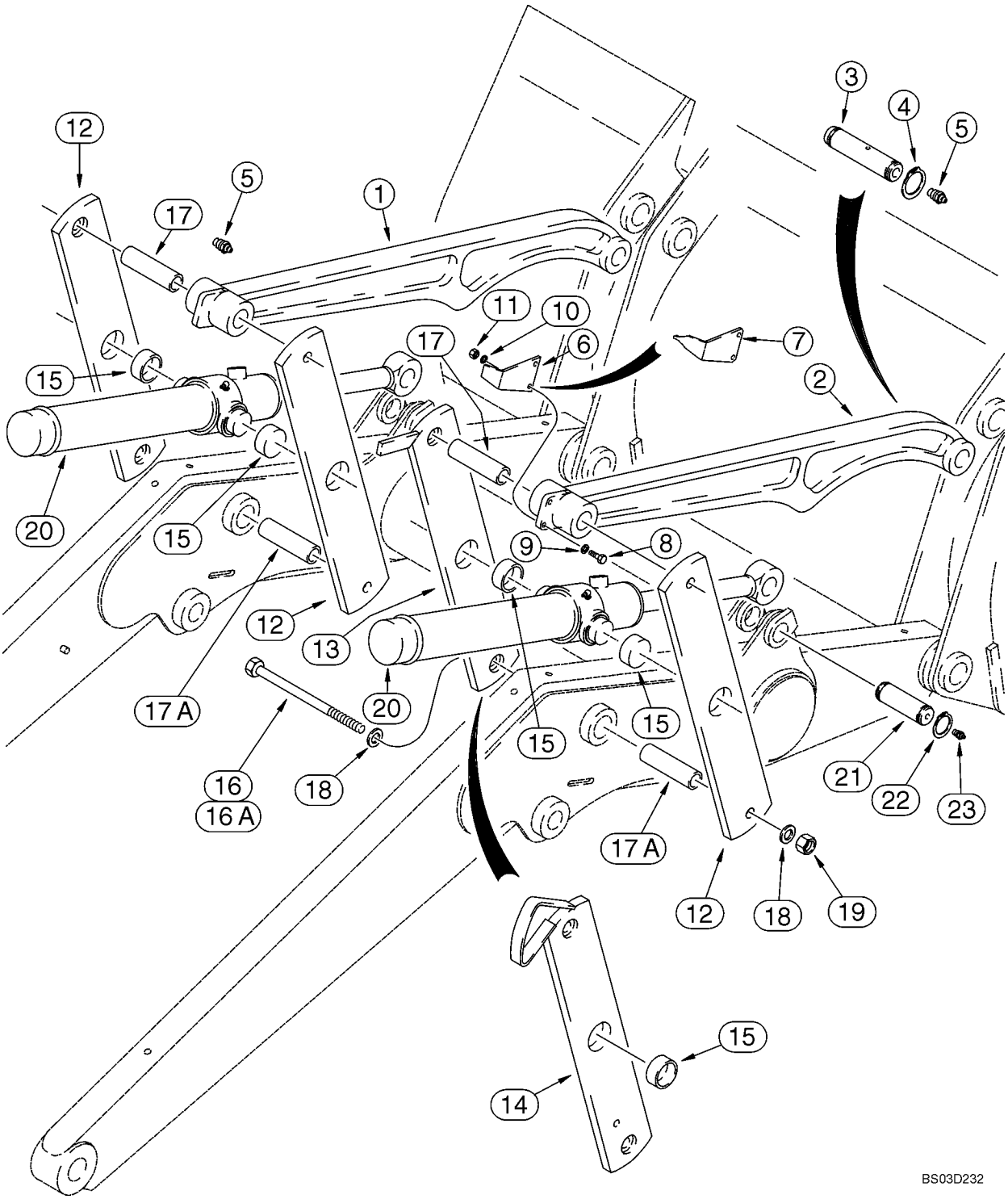

FRAME - LOADER LINKAGE

REF	FN	PART NUMBER	YR/SN	QTY	DESCRIPTION
1		331621A1		1	PITMAN Bucket; Left-Hand; Without Mounting Holes For Bucket Position Pointer; For Service, Order 331620A1
2		331620A1		1-2	PITMAN Bucket; Left-Hand or Right-Hand; With Mounting Holes For Bucket Position Pointer
3		118901A1		2	PIN, LARGE
4		800-44040		4	RING SNAP
5		219-1		2-6	NIPPLE, LUBE 1/8 PT x 21/32
6		D121194		1	POINTER Models Without Clam Bucket
7		250851A1		1	POINTER Models With Clam Bucket
8		614-8030		2	CAPSCREW M8 x 30
9		895-11008		2	WASHER 9 x 17 x 1,6 mm
10		892-11008		2	WASHER M8
11		829-1408		2	NUT M8; 10
12		275935A1		3	LINK ASSY. Bucket Cylinder; Outer Right-Hand; Inner and Outer Left-Hand; Incl. Ref 15
13		275939A1		1	LINK ASSY. Bucket Cylinder; Inner Right-Hand; With Extra Hole For Antirollback Rod; Models Without Clam Bucket, Incl. 15
14		275937A1		1	LINK ASSY. Bucket Cylinder; Inner Right-Hand; With Extra Hole For Antirollback Rod; Models With Clam Bucket, Incl. 15
15		D151034		1	BUSHING, LARGE
16		827-20190		2-4	SCREW M20 x 190; 10.9; Upper and Lower; If Used
16A		276735A1		2	BOLT Special; Lower; If Used
17		D132076		2-4	SPACER Upper and Lower; If Used
17A		276817A1		2	BUSHING Lower; If Used
18		896-11020		8	WASHER 22 x 37 x 4 mm
19		829-1420		4	NUT M20; 10
20		255756A1		2	CYLINDER ASSY. 83 ID x 538 mm strk; Loader Bucket; See Figure 08-54
21		116339A1		2	PIN, LARGE
22		800-44040		4	RING SNAP
23		219-1		2	NIPPLE, LUBE 1/8 PT x 21/32

BUCKETS, LOADER LONG LIP

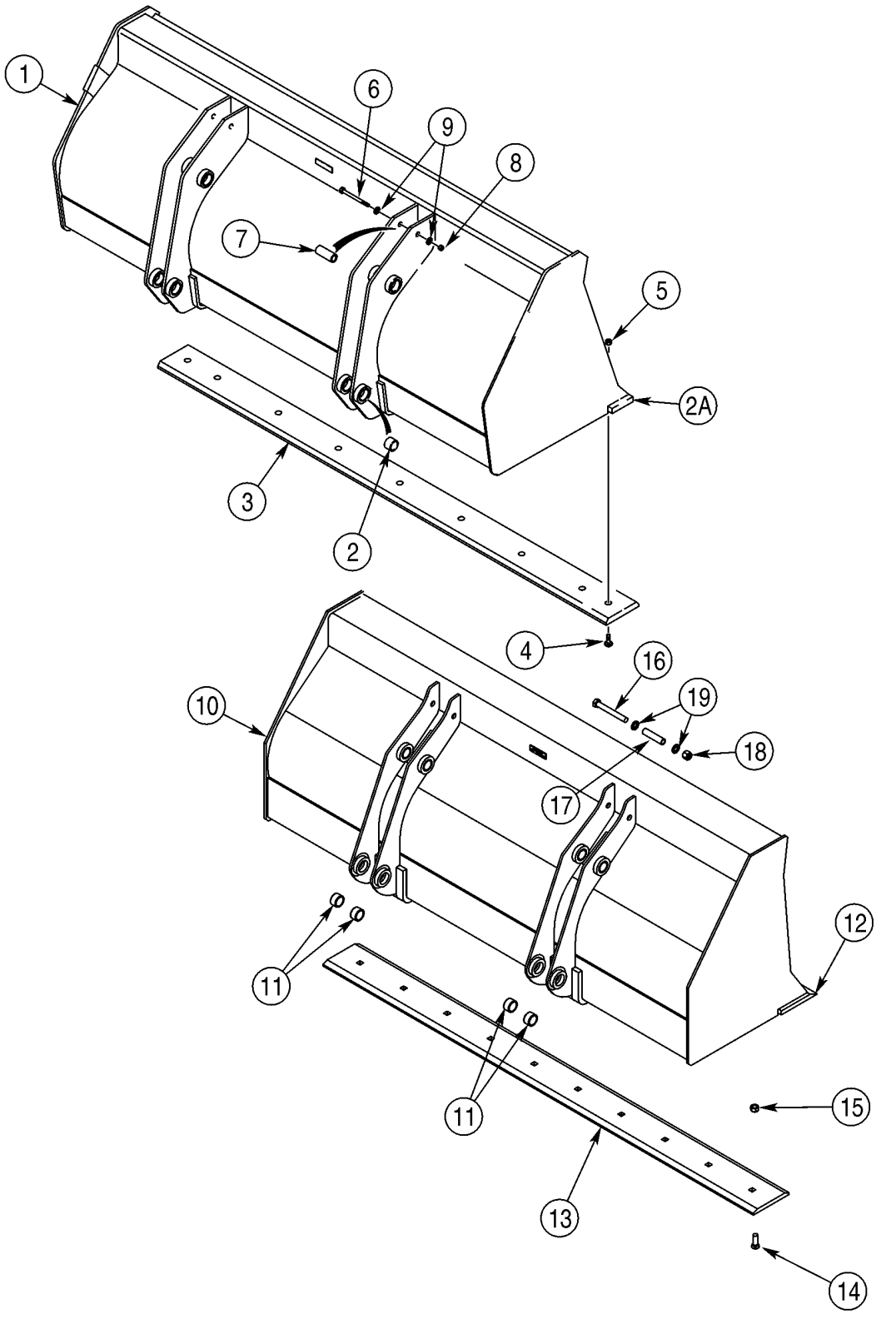

BUCKETS, LOADER LONG LIP

REF	FN	PART NUMBER	YR/SN	QTY	DESCRIPTION
		198539A1		1	BUCKET 2362 mm (93 in); Assembly Incl. Bolt-On Cutting Edge; Without Bucket Teeth; Incl. Ref 1 - 9; Order Through Parts Marketing
1		NSS		1	NOT SERVICED SEPARATELY Bucket; Incl. Ref 2, 2A
2		D129264		8	BUSHING
2A		134844A1		1	PLATE, LARGE Weld-On
3		185506A1		1	EDGE Bolt-On
4		20-21232		10	SCREW
5		429-1012		10	NUT 3/4; 8
6		828-20160		2	SCREW M20 x 160; 10.9
7		142538A1		1	SPACER
8		832-10420		2	NUT M20
9		896-11020		4	WASHER 22 x 37 x 4 mm
		341130A2		1	BUCKET 2438 mm (96 in); Assembly Incl. Bolt-On Cutting Edge; Without Bucket Teeth; Incl. Ref 10 - 19; Order Through Parts Marketing
10		NSS		1	NOT SERVICED SEPARATELY Bucket; Incl. Ref 11, 12
11		D129264		8	BUSHING
12		332448A1		1	PLATE Weld-On
13		332449A1		1	BLADE, HALF Bolt-On
14		420-21236		10	BOLT 3/4 x 2-1/4 in
15		429-1012		10	NUT 3/4; 8
16		828-20160		2	SCREW M20 x 160; 10.9
17		142538A1		2	SPACER
18		832-10420		2	NUT M20
19		896-11020		2	WASHER 22 x 37 x 4 mm

09 -07		p1	05/03

BUCKET, LOADER CLAM

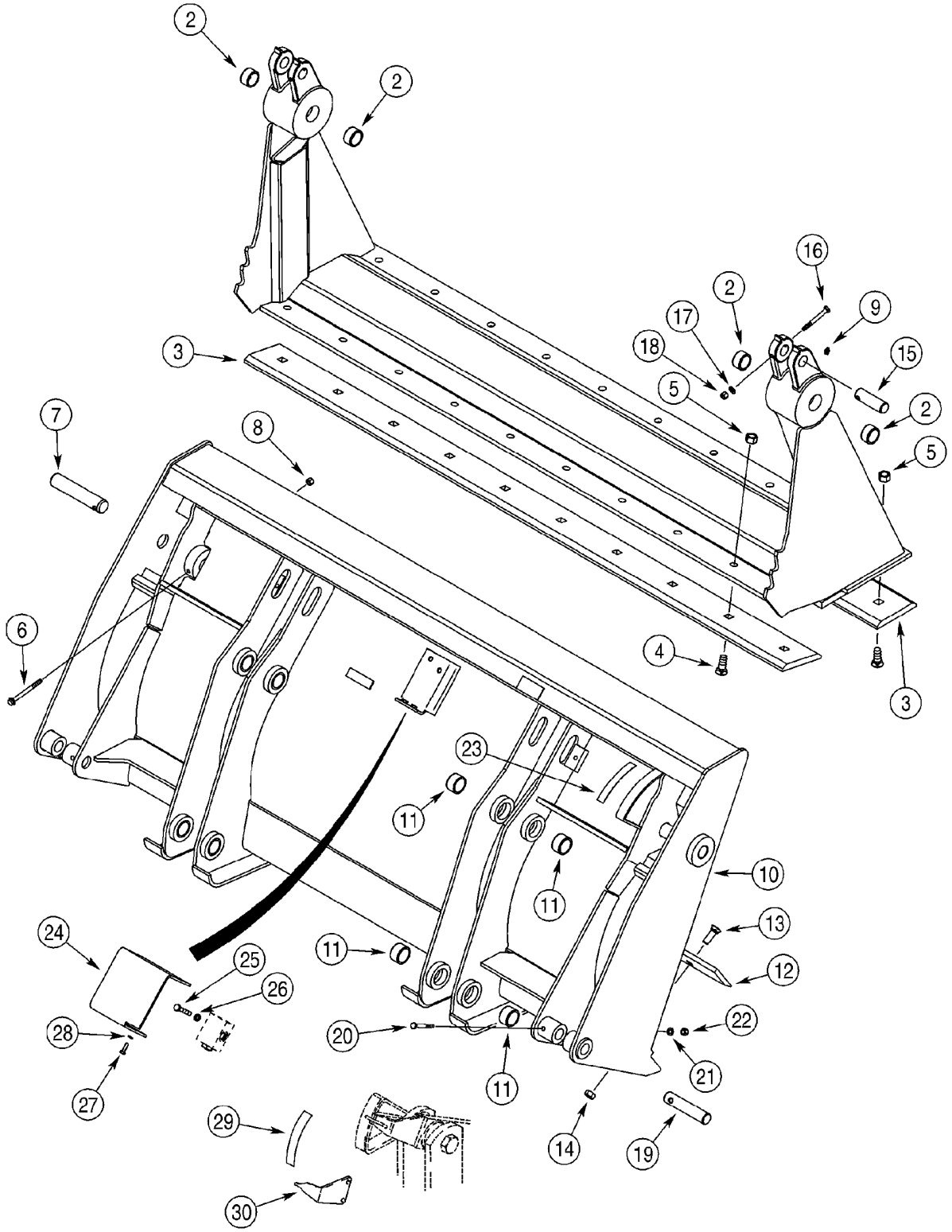

BUCKET, LOADER CLAM

REF	FN	PART NUMBER	YR/SN	QTY	DESCRIPTION
		376526A3		1	BUCKET 2362 mm (93 in); Incl. 376287A2, 144210A1, 1 - 28; With Hydraulics; Also Figure 08-07, Ref 1 - 29; Order Through Parts Marketing
		{376287A2}		1	BUCKET, 2362 mm (93 in); Incl. 144210A1, Ref 1 - 14; Without Hydraulics; Order Through Parts Marketing
		144210A1		1	CLAW Incl. Ref 1, 2
1		NSS		1	NOT SERVICED SEPARATELY Clam Assy
2		D31140		4	BUSHING
3		142301A1		2	EDGE
4		20-21232		20	SCREW
5		29-1012		20	NUT 3/4; 8
6		844-10110		2	SCREW
7		D51391		2	PIN, LARGE
8		832-10410		2	NUT M10
9		219-1		2	NIPPLE, LUBE 1/8 PT x 21/32
		376285A2		1	BUCKET Incl. Ref 10, 11
10		NSS		1	NOT SERVICED SEPARATELY Blade Assy; Dozer
11		D129264		8	BUSHING
12		133542A1		1	EDGE
13		20-21032		10	BOLT
14		29-1010		10	NUT
15		D51392		2	PIN
16		814-10090		2	CAPSCREW M10 x 90
17		895-11010		2	WASHER 11 x 21 x 2 mm
18		832-10410		2	NUT M10
19		D51393		2	PIN, LARGE
20		814-10080		2	SCREW M10 x 80
21		895-11010		2	WASHER 11 x 21 x 2 mm
22		832-10410		2	NUT M10
23		321-1708		1	DECAL
24		388848A1		1	GUARD Pilot Operated Check Valve
25		814-10060		2	CAPSCREW M10 x 60
26		892-11010		2	WASHER, LOCK M10
27		614-8025		2	CAPSCREW M8 x 25
28		892-11008		2	WASHER M8

09 -07		p2	05/03

BUCKET, LOADER CLAM

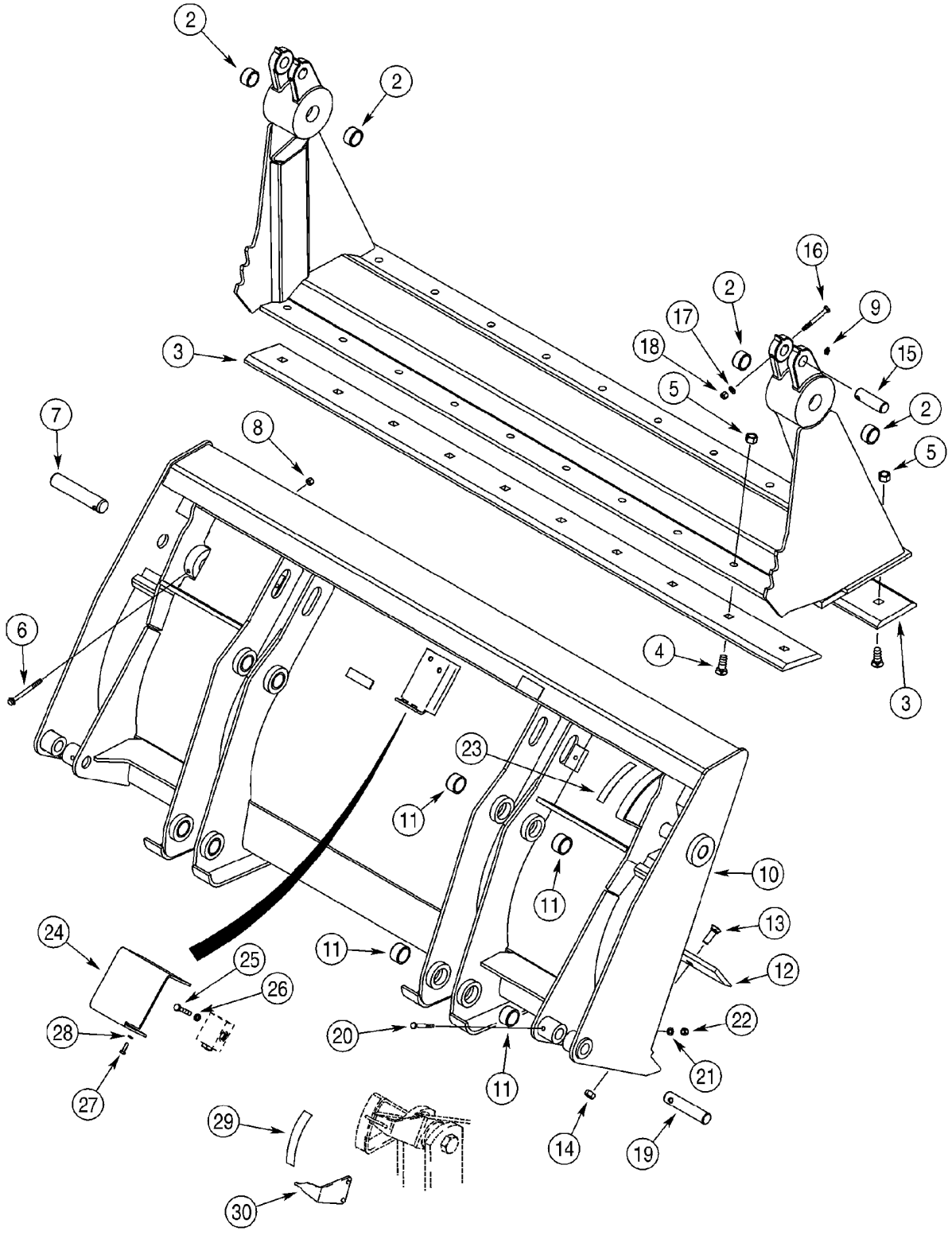

BUCKET, LOADER CLAM

REF	FN	PART NUMBER	YR/SN	QTY	DESCRIPTION
29		321-1707		1	DECAL
30		250851A1		1	POINTER

09 -08		p1	05/03

GUARD - VALVE, LOADER

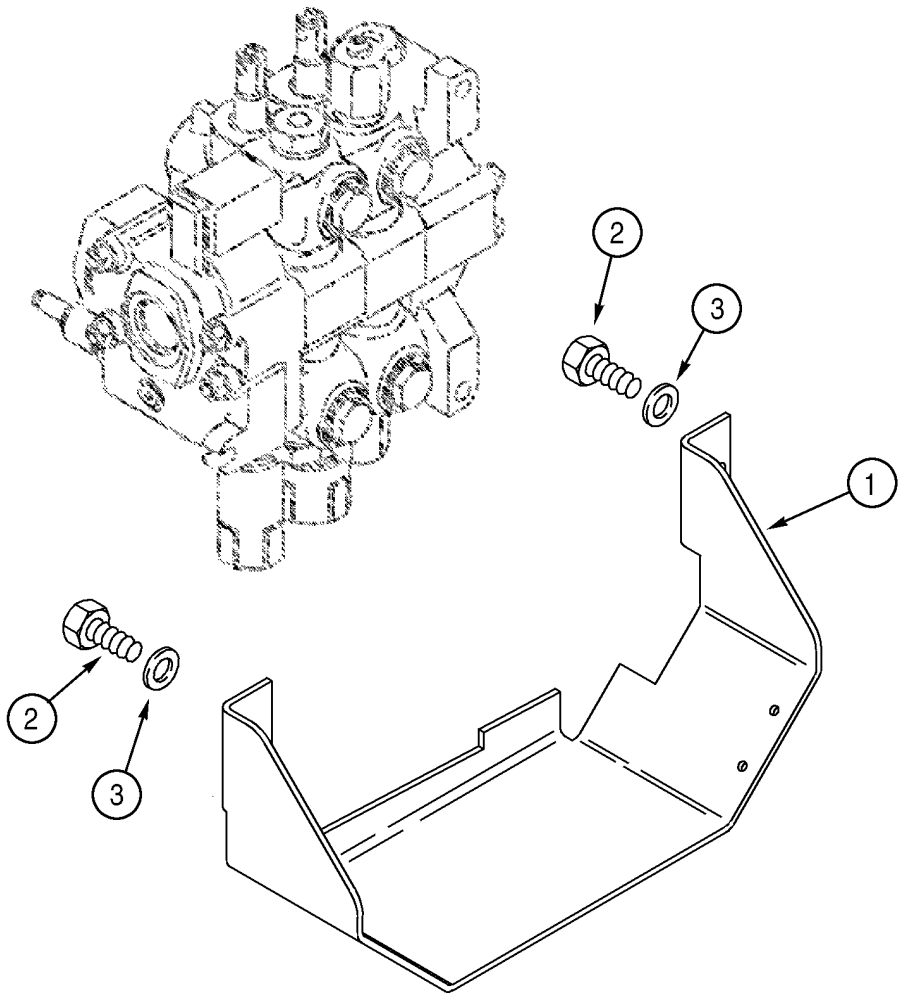

BS00D023

GUARD - VALVE, LOADER

REF	FN	PART NUMBER	YR/SN	QTY	DESCRIPTION
1		330100A1		1	SHIELD
2		614-10025		2	BOLT M10 x 25
3		896-15010		2	WASHER 11 x 24 x 3 mm; Replaces 896-11010, 2, 5 mm Washer

09 -09		p1	05/03

COUPLER, TOOL QUICK

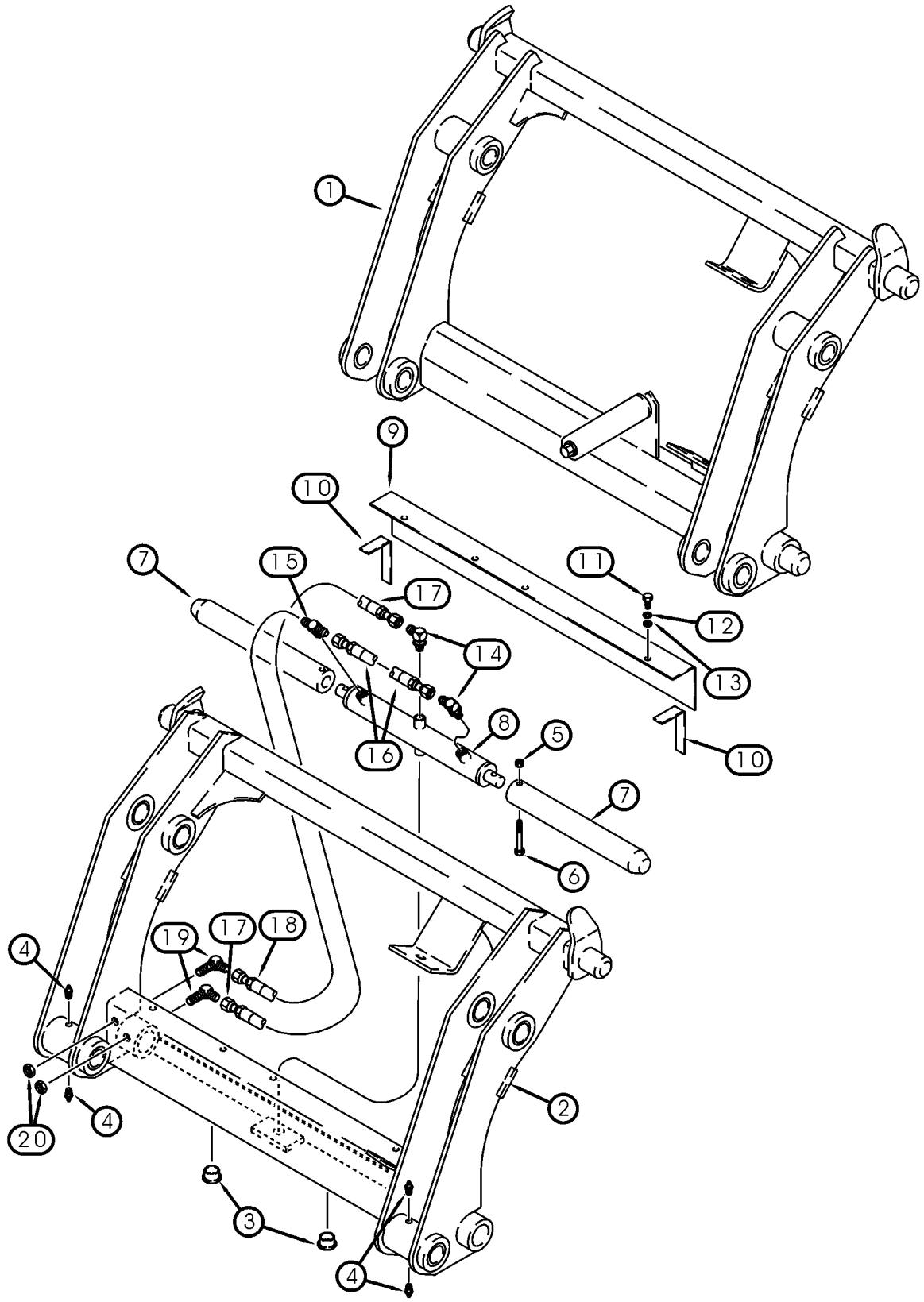

COUPLER, TOOL QUICK

REF	FN	PART NUMBER	YR/SN	QTY	DESCRIPTION
		REF			INSTRUCTION Manual Coupler
1		191239A1		1	COUPLING Loader; Complete; Component Parts Not Serviced Separately; Used With D121194 Bucket Position Pointer and 275939A1 Bucket Cylinder Link; See Figure 09-05; Ref 6, 13
		REF			INSTRUCTION Hydraulic Coupler
		292969A2		1	COUPLING Loader; Incl. Ref 2 - 35; With Auxiliary Hydraulics; For Complete Assembly; Order From Machinery Price List; Category III; For Hydraulic Tool Quick Coupler Hydraulics; See Figure 08-21
2		NSS		1	NOT SERVICED SEPARATELY Frame
3		305497A1		2	PLUG 1-1/4 ID x 1/2 in OD; Plastic
4		219-87		4	FITTING 1/4 st x 9/16
5		231-4246		2	NUT 3/8
6		326-640		2	CAPSCREW 3/8 x 2-1/2; 8
7		305496A1		2	PIN 1-15/16 OD x 15 in lg
8		305499A1		1	CYLINDER ASSY. Double Acting; Component Parts Not Serviced Separately
9		305495A1		1	COVER
10		NSS		2	NOT SERVICED SEPARATELY Seal; Foam
11		413-516		3	BOLT 5/16 x 1
12		492-11031		3	WASHER, LOCK 5/16
13		495-11034		3	WASHER 11/32 x 11/16 x 1/16
14		218-5105		2	ELBOW 9/16 fl x Or; Incl. 237-6006
		237-6006		1	O-RING 15/32 ID x 5/64, Boss Seal
15		218-5182		1	TEE 9/16 adj Or x fl x fl; Incl. 237-6006
		237-6006		1	O-RING 15/32 ID x 5/64, Boss Seal
16		305492A1		1	HOSE ASSY. 260 mm (10-1/4 in)
17		305494A1		1	HOSE ASSY. 387 mm (15-1/4 in)
18		305493A1		1	HOSE ASSY. 235 mm (9-1/4 in)
19		218-693		2	ELBOW 9/16 fl x blkhd fl
20		218-1254		2	NUT, LOCK 9/16 NF
21		305508A1		1	KIT Decal; Includes Four Decals; Not Illustrated
22		307385A1		2	HOSE ASSY. 387 mm (15-1/4 in); Not Illustrated
23		307386A1		1	HOSE ASSY. 629 mm (24-3/4 in); Not Illustrated
24		307387A1		1	HOSE ASSY. 718 mm (28-1/4 in); Not Illustrated

COUPLER, TOOL QUICK

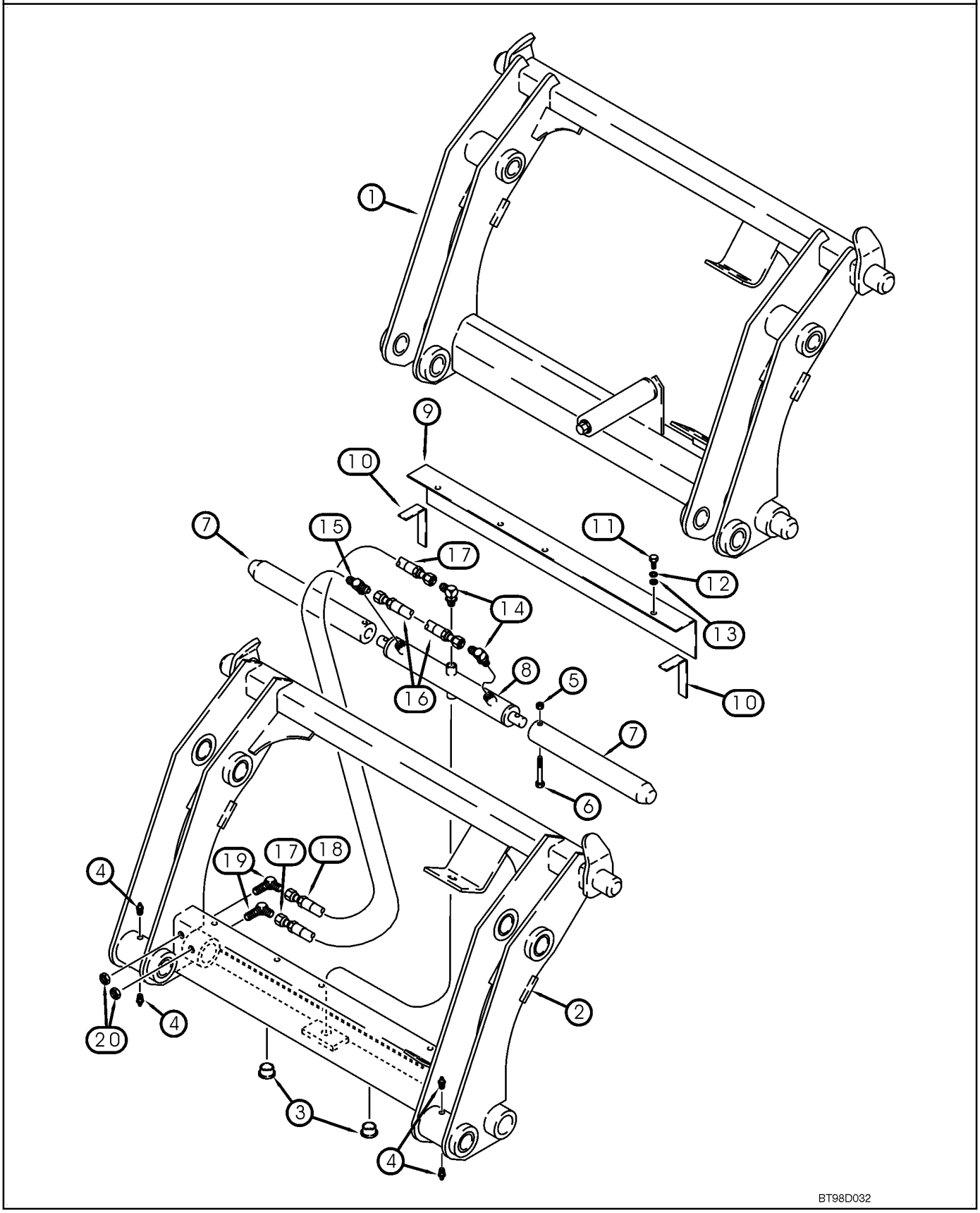

COUPLER, TOOL QUICK

REF	FN	PART NUMBER	YR/SN	QTY	DESCRIPTION
25		307388A1		1	HOSE 660 mm (26 in); Not Illustrated
26		307389A1		2	PIVOT Not Illustrated
27		137344A1		1	PLUG Male Coupling; Not Illustrated
28		137343A1		1	PLUG Female Coupling; Not Illustrated
29		123537A1		1	FITTING Quick Disconnect; Female; Not Illustrated
30		245423A1		1	FITTING Not Illustrated
31		126155A1		2	FITTING 1-1/16 blkhd fl x OR; Not Illustrated
32		218-695		2	FITTING 7/8 fl x bkhd fl; Not Illustrated
33		218-1256		2	NUT, LOCK 1-1/16; Not Illustrated
34		218-1279		2	NUT 7/8; Not Illustrated
35		237-6012		2	O-RING 59/64 ID x 7/64, Boss Seal; Not Illustrated

09 -10		p1	05/03

COVERS - BACKHOE CONTROL TOWER

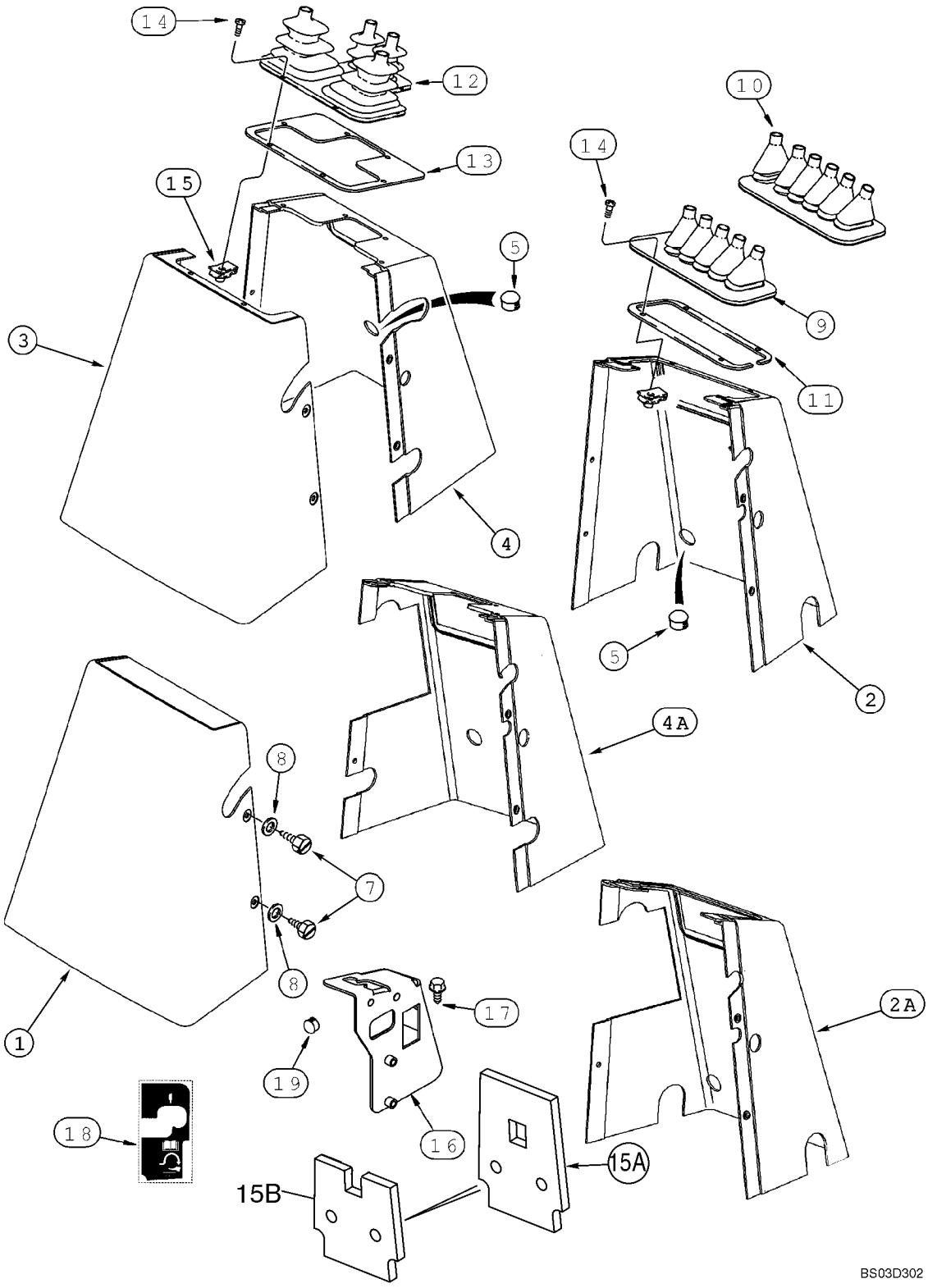

COVERS - BACKHOE CONTROL TOWER

REF	FN	PART NUMBER	YR/SN	QTY	DESCRIPTION
1		363607A2		1	COVER Rear; All Models With Foot Swing
2		363606A2		1	COVER Front; Foot Swing; Without Auxiliary Hydraulics
2A		364790A2		1	COVER Front; Foot Swing; With Auxiliary Hydraulics
3		363609A2		1	COVER Rear; All Models With Hand Swing
4		363608A2		1	COVER Front; Hand Swing; Without Auxiliary Hydraulics
4A		364789A2		1	COVER Front; Hand Swing; With Auxiliary Hydraulics
5		353-411		1-2	PLUG 1 in dia
7		779-37616		5	SCREW,POINTED M6.3 x 16 st
8		195-140		5	WASHER
9		D149866		1	BOOT 5 Control Levers
10		D149867		1	BOOT 6 Control Levers
11		136822A1		1	RING,SPECIAL
12		D149868		1	BELLOWS 4 Control Levers
13		136824A1		1	PLATE, LARGE Used With Ref 12 Only
14		140-106		4	SCREW No. 10 x 1/2
14		140-107		6	SCREW No. 10 x 3/4; Used With Ref 13 Retainer
15		131-861		4-6	NUT No. 10; (4) Used With Ref 11 Retainer; (6) Used With Ref 13 Retainer
15A		397870A2		2	SEAL Front and Rear Console Covers; Noise Barrier; Adhesive Back; No Longer Available; Order 397870A3, Ref 15B
15B		397870A3		2	SEAL Front and Rear Console Covers; Noise Barrier; Adhesive Back
		REF			INSTRUCTION Models With Backhoe Auxiliary Hydraulics
16		397488A1		1	BRACKET
17		281-14716		2	SCREW
18		397489A1		1	DECAL Backhoe Auxiliary Hydraulic Control
19		353-408		1	PLUG 3/4

09 -11		p1	05/03

BACKHOE CONTROL TOWER SUPPORT AND SEALS

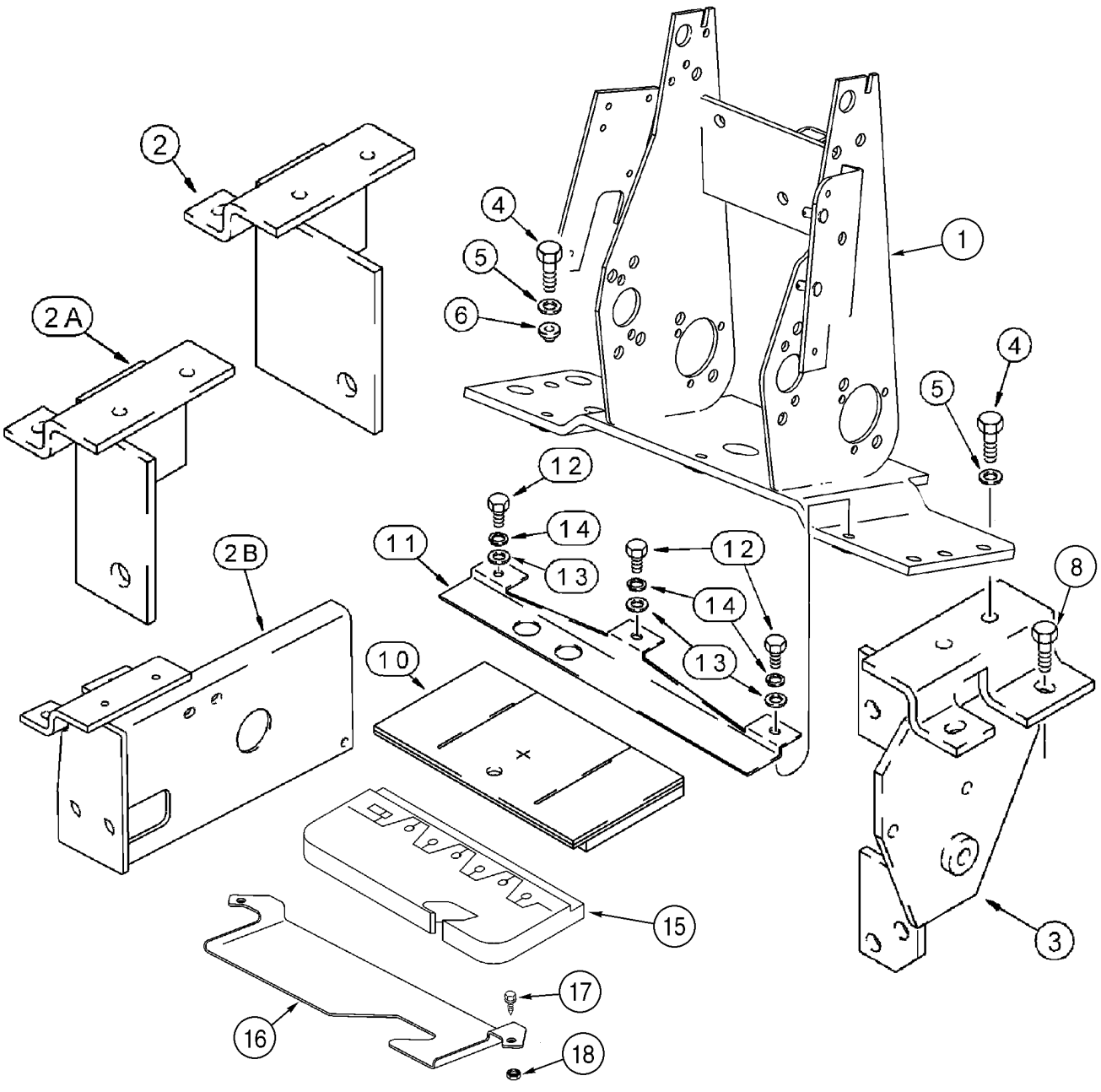

BACKHOE CONTROL TOWER SUPPORT AND SEALS

REF	FN	PART NUMBER	YR/SN	QTY	DESCRIPTION
1		380646A2		1	BRACKET
2		224952A1		1	BRACKET Left-Hand; 6 Spool Valve
2A		224949A1		1	BRACKET Left-Hand; 7 Spool Valve; Without Auxiliary Hydraulics
2B		301114A1		1	BRACKET Left-Hand; 7 or 8 Spool Valve; With Auxiliary Hydraulics
3		224946A1		1	BRACKET Right-Hand; Valve Mounting
4		614-10035		8	SCREW M10 x 35
5		496-41041		8	WASHER 13/32 x 1-1/8 x 9/64
6		179956A1		2	SHOCK ABSORBER
8		814-10060		2	CAPSCREW M10 x 60; Left-Hand Bracket
8		614-10030		2	SCREW M10 x 30; Right-Hand Bracket
10		400069A1		1	FOAM Foam; Cab Models
11		184695A1		1	SUPPORT Cab Models
12		614-8020		3	CAPSCREW M8 x 20
13		895-11008		3	WASHER 9 x 17 x 1,6 mm
14		892-11008		3	WASHER M8
15		399966A1		1	FOAM
16		397911A1		1	BRACKET
17		233724A1		2	SCREW M6 x 25
18		833-40406		2	NUT M6

09 -12		p1	05/03

CONTROLS - BACKHOE, WITH FOOT SWING (MODELS WITHOUT EXTENDABLE DIPPER)

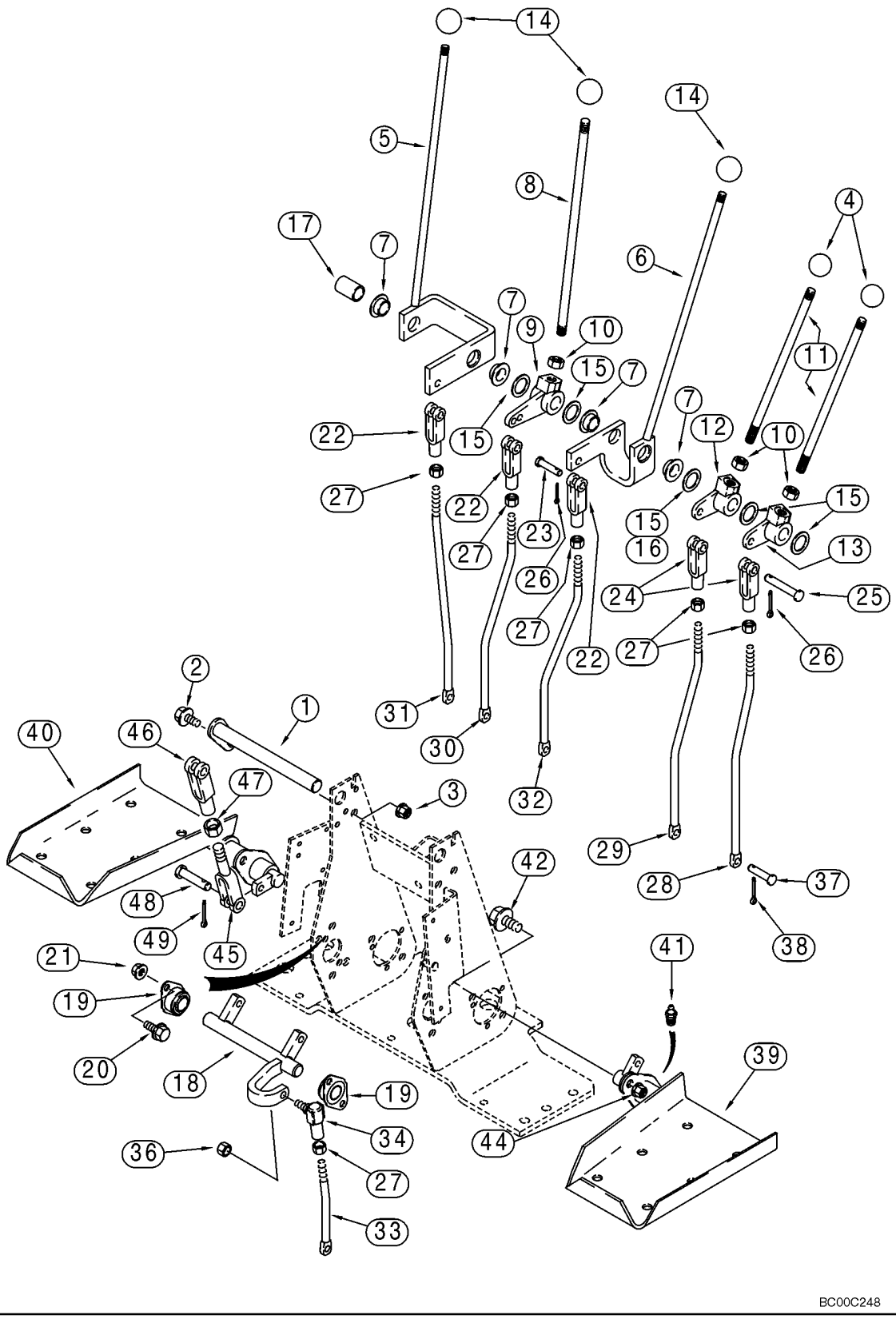

CONTROLS - BACKHOE, WITH FOOT SWING (MODELS WITHOUT EXTENDABLE DIPPER)

REF	FN	PART NUMBER	YR/SN	QTY	DESCRIPTION
1		129015A1		1	SHAFT
2		844-8025		1	SCREW M8 x 25
3		825-2408		1	NUT M8
4		D59912		2	KNOB Stabilizer Control Levers
5		136267A1		1	LEVER Boom; Incl. Ref 7
6		136269A1		1	LEVER Bucket; Incl. Ref 7
7		D148992		2	BUSHING, LARGE
8		136263A1		1	ROD Dipper
9		D150397		1	LEVER, CRANK Dipper
10		425-118		3	NUT 1/2 NF
11		136261A1		2	THREADED ROD Stabilizer
12		D150435		1	LEVER, CRANK Right-Hand Stabilizer Control
13		D150434		1	LEVER, CRANK Left-Hand Stabilizer Control
		REF			INSTRUCTION Models Without Extendable Dipper
14		L54563		3	KNOB Boom, Dipper, and Bucket
15		A30881		X	WASHER 49/64 x 1-15/64 x 1/32; Used As A Shim
16		D34666		1	WASHER 25/32 x 1-3/8 x 9/64; May Be Used In Place Of Ref 15
17		D150486		1	SPACER Not Used On Models With Extendable Dipper
18		D148994		1	SHAFT Swing
19		D148993		2	BEARING
20		844-8025		4	SCREW M8 x 25
21		825-2408		4	NUT M8
22		213-126		3	CLEVIS 3/8 NF
23		D149288		3	PIN, LARGE Special
24		D150493		2	CLEVIS
25		427-6088		2	PIN, LARGE 3/8 x 7/8
26		432-612		5	PIN, COTTER 3/32 x 3/4
27		425-156		6	NUT 3/8 NF
28		189297A1		1	ROD Left-Hand Stabilizer Control
29		189296A1		1	ROD Right-Hand Stabilizer Control
30		189295A1		1	ROD Dipper
31		189298A1		1	ROD Boom
32		189294A1		1	ROD Bucket
33		189299A1		1	ROD Swing

09 -12		p2	05/03

CONTROLS - BACKHOE, WITH FOOT SWING (MODELS WITHOUT EXTENDABLE DIPPER)

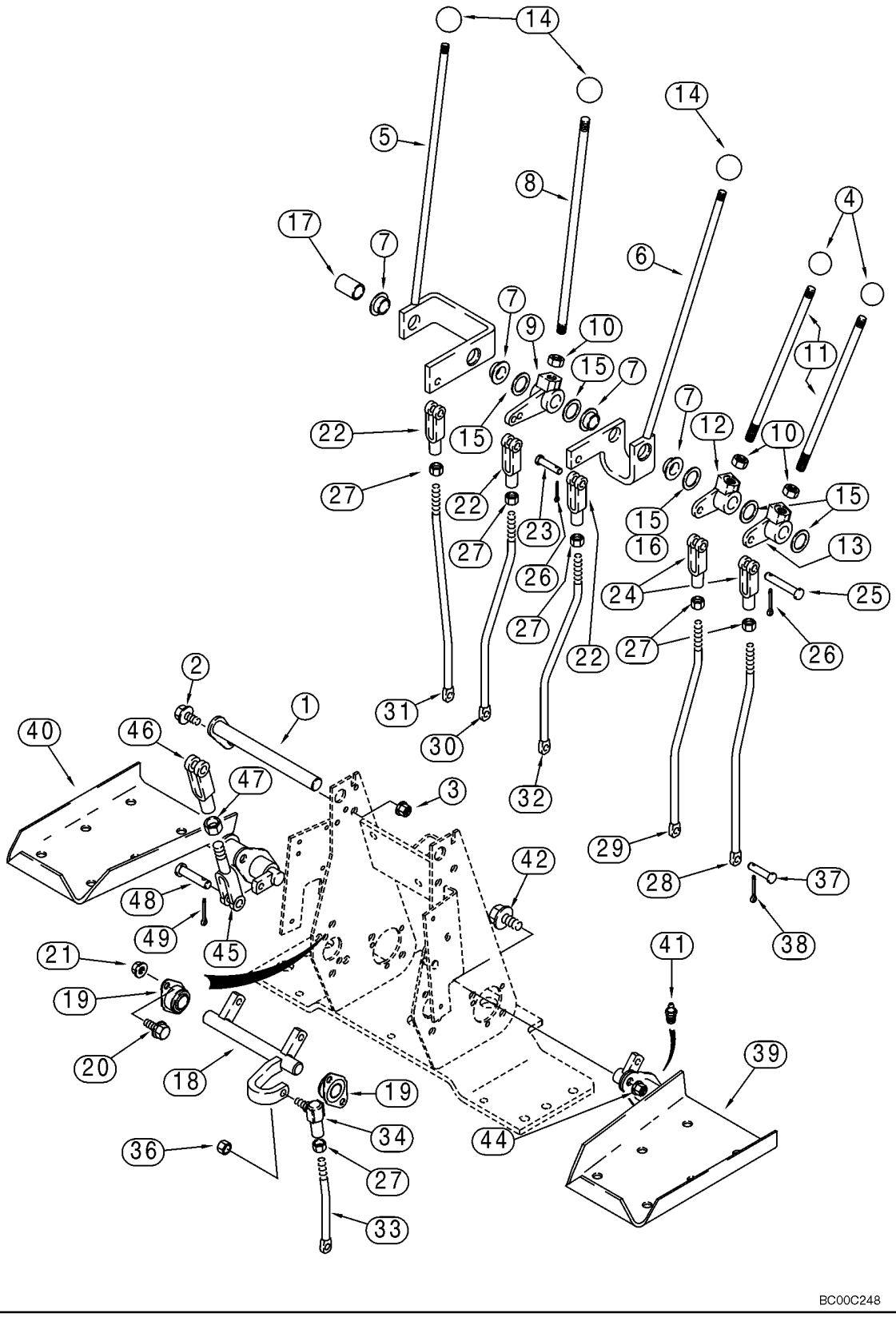

CONTROLS - BACKHOE, WITH FOOT SWING (MODELS WITHOUT EXTENDABLE DIPPER)

REF	FN	PART NUMBER	YR/SN	QTY	DESCRIPTION
34		D149295		1	BALL JOINT
36		425-116		1	NUT 3/8 NF
37		D149287		6	PIN, LARGE
38		432-612		6	PIN, COTTER 3/32 x 3/4
39		136271A1		1	PEDAL Left-Hand Swing
40		136270A1		1	PEDAL Right-Hand Swing
41		219-1		2	NIPPLE, LUBE 1/8 PT x 21/32
42		614-10025		4	BOLT M10 x 25
44		825-2410		4	NUT M10
45		D150503		2	END
46		D149262		2	CLEVIS
47		425-156		2	NUT 3/8 NF
48		D149288		4	PIN, LARGE
49		432-612		4	PIN, COTTER 3/32 x 3/4

09 -13		p1	05/03

CONTROLS - BACKHOE, WITH FOOT SWING (MODELS WITH EXTENDABLE DIPPER)

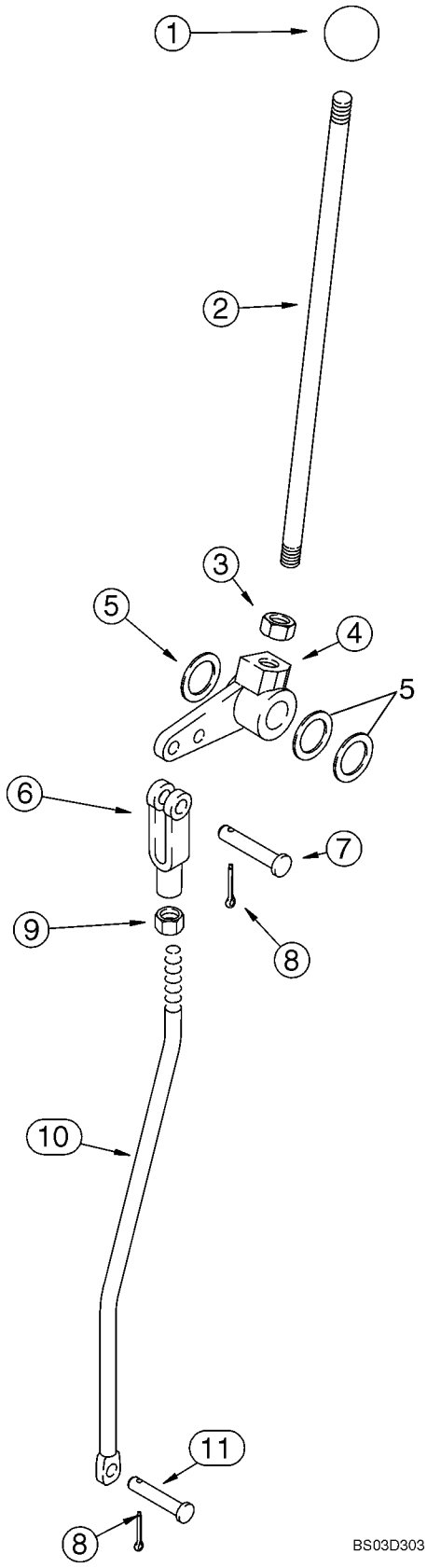

CONTROLS - BACKHOE, WITH FOOT SWING (MODELS WITH EXTENDABLE DIPPER)

REF	FN	PART NUMBER	YR/SN	QTY	DESCRIPTION
1		L54563		1	KNOB Extendahoe
2		136263A1		1	ROD Extendahoe
3		425-118		1	NUT 1/2 NF
4		182006A1		1	LEVER
5		A30881		X-4	WASHER 49/64 x 1-15/64 x 1/32
6		213-126		1	CLEVIS 3/8 NF
7		427-6088		1	PIN, LARGE 3/8 x 7/8
8		432-612		2	PIN, COTTER 3/32 x 3/4
9		425-156		1	NUT 3/8 NF
10		320989A1		1	ROD, CONNECTING
11		D149287		1	PIN, LARGE

09 -14		p1	05/03

CONTROLS - BACKHOE, WITH HAND SWING (MODELS WITHOUT EXTENDABLE DIPPER)

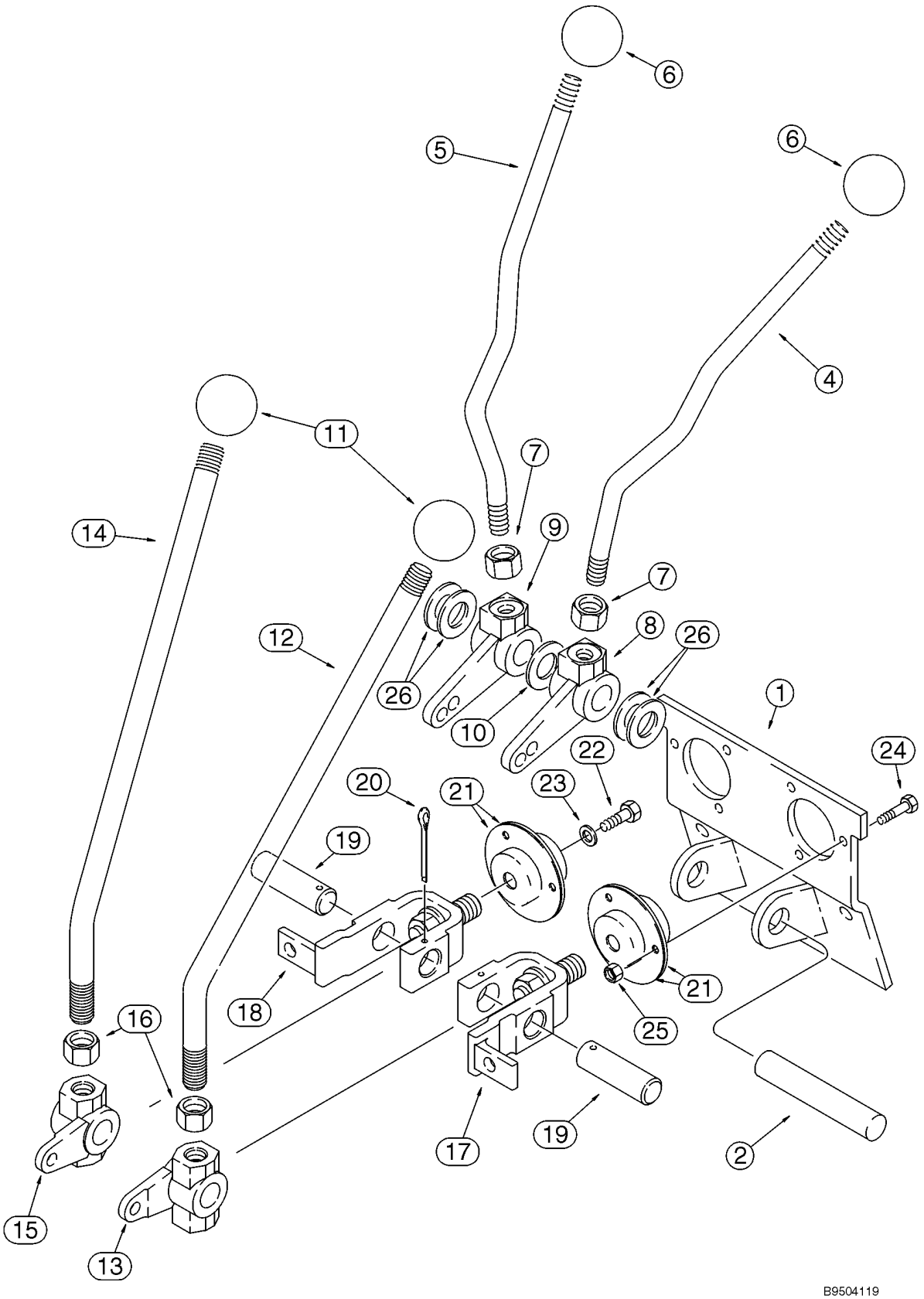

CONTROLS - BACKHOE, WITH HAND SWING (MODELS WITHOUT EXTENDABLE DIPPER)

REF	FN	PART NUMBER	YR/SN	QTY	DESCRIPTION
		REF			INSTRUCTION Upper Control Levers
1		108864A1		1	SUPPORT
2		D148947		1	PIN, LARGE Stabilizer
4		409672A1		1	LEVER Left-Hand; Stabilizer; Replaces 109131A1
5		409673A1		1	LEVER Right-Hand; Stabilizer; Replaces 109132A1
6		D59912		2	KNOB Stabilizer
7		425-118		2	NUT 1/2 NF
8		108924A1		1	LEVER
9		108923A1		1	LEVER
10		495-11081		1	WASHER 13/16 x 1-15/32 x 1/8
11		D39118		2	KNOB
12		125113A1		1	LEVER Boom and Swing
13		106989A1		1	LEVER Left-Hand Boom and Swing Lever
14		125113A1		1	LEVER Bucket and Dipper
15		106990A1		1	LEVER Right-Hand Bucket and Dipper Lever
16		425-1110		2	NUT 5/8 NF
17		178006A1		1	LEVER Boom and Swing
18		178004A1		1	LEVER Bucket and Dipper
19		102765A1		2	PIN, LARGE Bellcrank
20		432-828		2	PIN, COTTER 1/8 x 1-3/4
21		112380A1		4	BEARING
22		614-6016		2	CAPSCREW M6 x 16
23		396-41028		2	WASHER 9/32 x 7/8 x 3/32
24		614-6020		6	BOLT M6 x 20
25		829-1406		6	NUT M6; 10.9
26		A30881		X	WASHER 49/64 x 1-15/64 x 1/32

CONTROLS - BACKHOE, WITH HAND SWING (MODELS WITHOUT EXTENDABLE DIPPER)

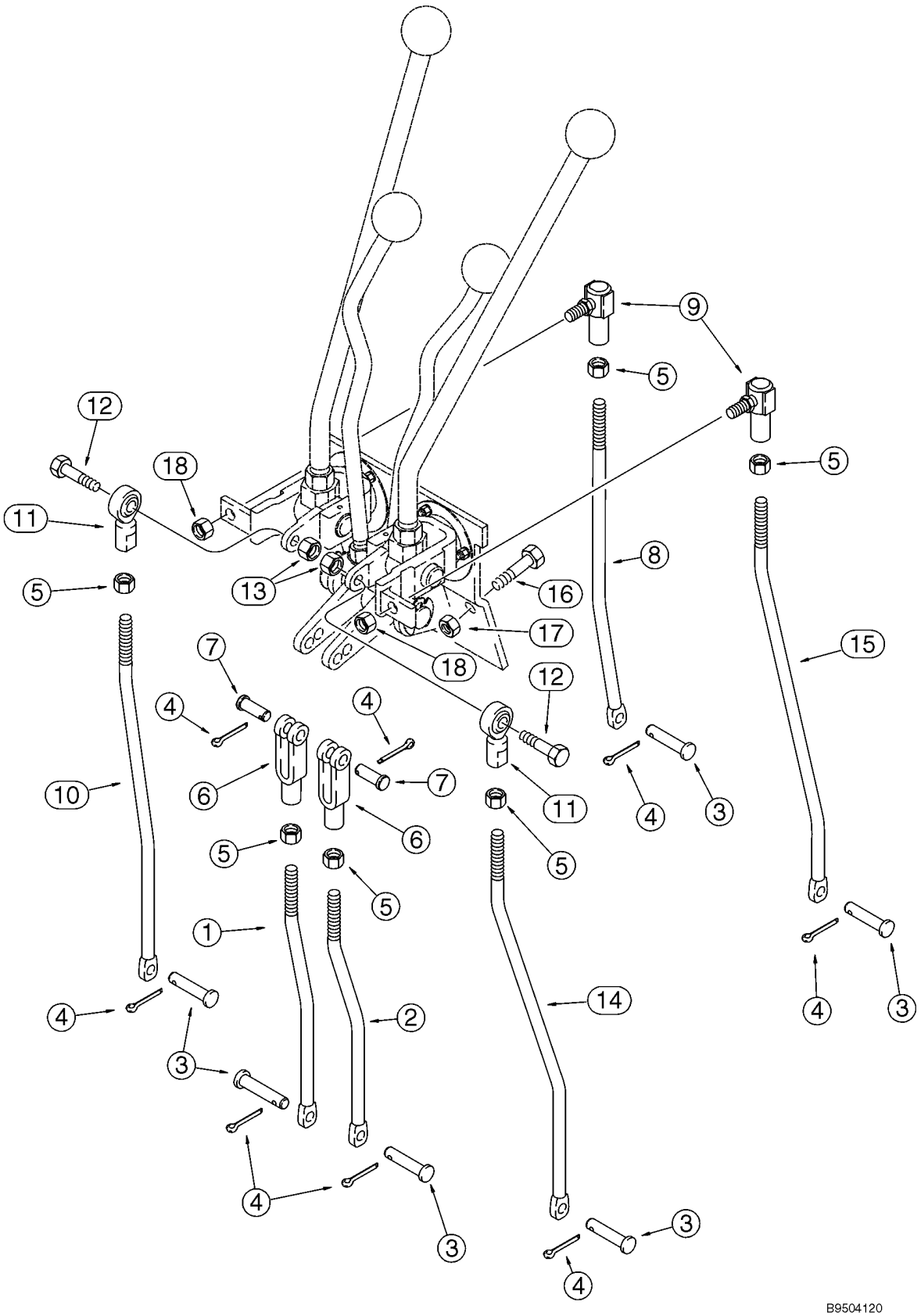

CONTROLS - BACKHOE, WITH HAND SWING (MODELS WITHOUT EXTENDABLE DIPPER)

REF	FN	PART NUMBER	YR/SN	QTY	DESCRIPTION
		REF			INSTRUCTION Lower Control Levers
1		185981A1		1	THREADED ROD Right-Hand; Stabilizer
2		185982A1		1	THREADED ROD Left-Hand; Stabilizer
3		D149287		6	PIN, LARGE
4		432-612		8	PIN, COTTER 3/32 x 3/4
5		425-116		6	NUT 3/8 NF
6		213-126		2	CLEVIS 3/8 NF
7		D149288		2	PIN, LARGE Special
8		185977A1		1	THREADED ROD Bucket
9		D149295		2	BALL JOINT
10		185978A1		1	THREADED ROD Dipper
11		D136773		2	BALL JOINT 3/8 NF
12		413-624		2	BOLT 3/8 x 1-1/2
13		425-106		2	NUT 3/8
14		185979A1		1	THREADED ROD Boom
15		185980A1		1	THREADED ROD Swing
16		614-10025		2	BOLT M10 x 25
17		832-10410		2	NUT M10
18		231-2446		2	NUT 3/8 NF

CONTROLS - BACKHOE, EXCAVATOR CONTROL PATTERN

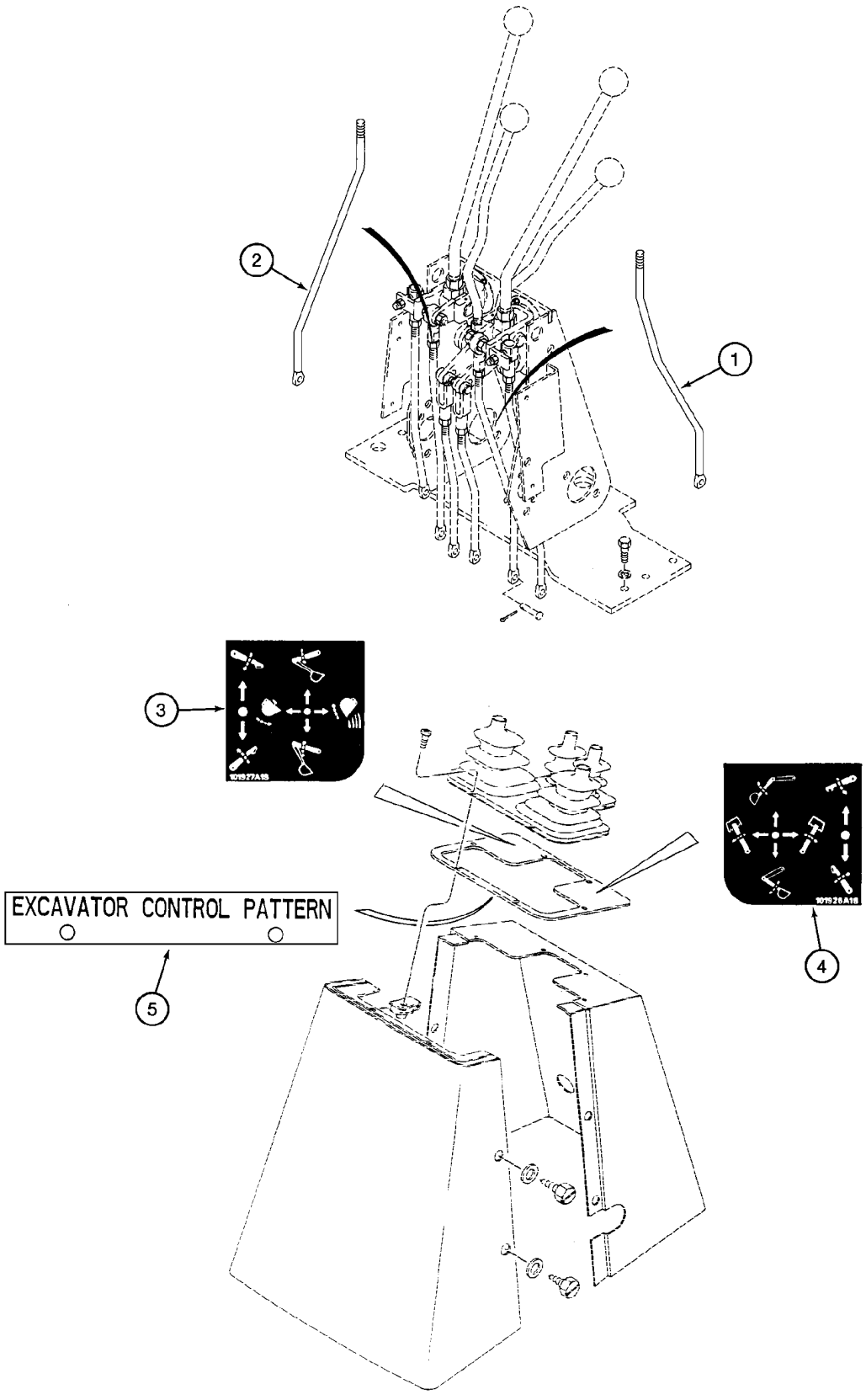

CONTROLS - BACKHOE, EXCAVATOR CONTROL PATTERN

REF	FN	PART NUMBER	YR/SN	QTY	DESCRIPTION
		403042A1		1	KIT Excavator Control Pattern; Incl. Ref 1 - 5; Purchase From Parts and Components; Machine Must Be Equipped With Hand Swing Controls; If Machine Is Equipped With Foot Swing Controls, Foot Swing to Hand Swing Controls Kit Must Be Ordered and Installed First
1		195030A2		1	ROD Dipper; Replaces Existing Boom Control Rod; Right-Hand Control Lever Which Used To Control The Dipper, Now Controls The Boom
2		195032A1		1	ROD Boom; Replaces Existing Dipper Control Rod; The Left-Hand Control Lever Which Used To Control The Boom, Now Controls The Dipper
3		E49498		1	DECAL Control; Right-Hand
4		E49497		1	DECAL Control; Left-Hand
5		198410A1		1	PLATE, LARGE Excavator Control Pattern

09 -17		p1	05/03

CONTROLS - BACKHOE, WITH HAND SWING (MODELS WITH EXTENDABLE DIPPER)

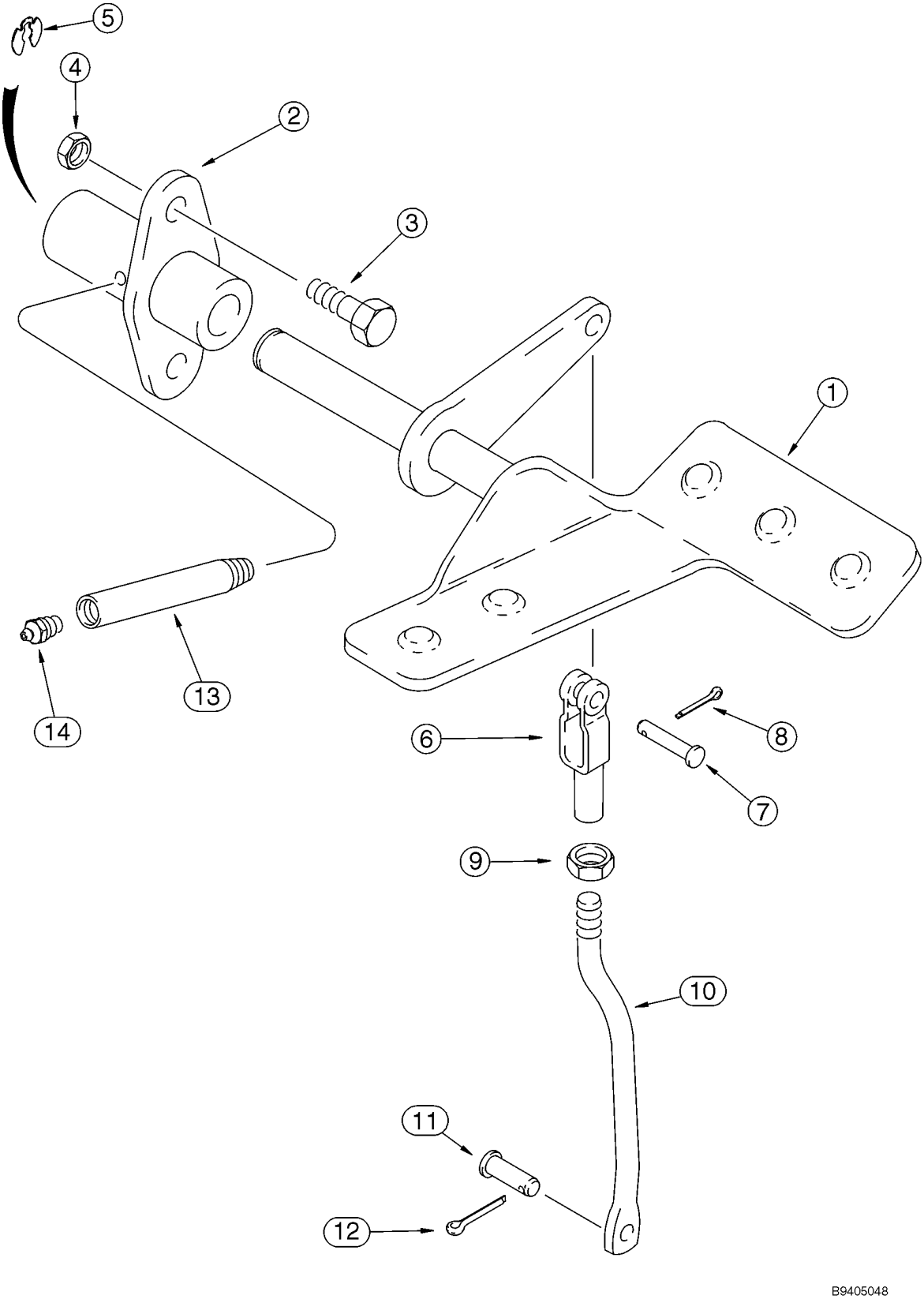

CONTROLS - BACKHOE, WITH HAND SWING (MODELS WITH EXTENDABLE DIPPER)

REF	FN	PART NUMBER	YR/SN	QTY	DESCRIPTION
1		179029A1		1	PEDAL Right-Hand; Extendahoe
2		126918A1		1	CAP CYLINDER END
3		614-10025		2	BOLT M10 x 25
4		832-10410		2	NUT M10
5		D143416		1	RING SNAP
6		D134900		1	CLEVIS
7		427-6088		1	PIN, LARGE 3/8 x 7/8
8		432-612		1	PIN, COTTER 3/32 x 3/4
9		425-156		1	NUT 3/8 NF
10		185976A1		1	ROD
11		D149287		1	PIN, LARGE
12		432-612		1	PIN, COTTER 3/32 x 3/4
13		D150032		1	TUBE Lube
14		219-1		1	NIPPLE, LUBE 1/8 PT x 21/32

CONTROLS - BACKHOE AUXILIARY HYDRAULICS

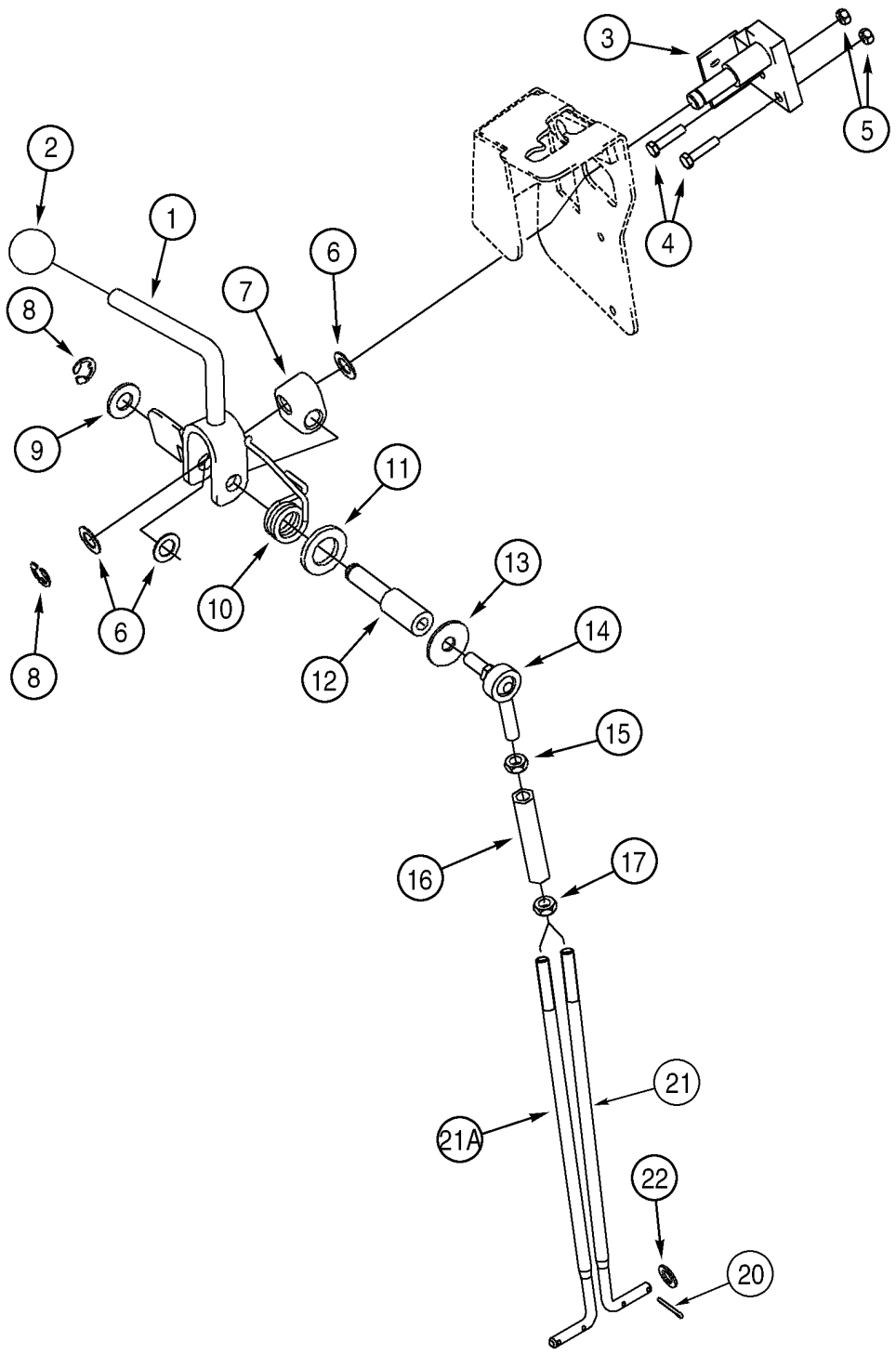

CONTROLS - BACKHOE AUXILIARY HYDRAULICS

REF	FN	PART NUMBER	YR/SN	QTY	DESCRIPTION
1		275820A3		1	LEVER, CRANK Auxiliary Control; Detent Lever; Uni-Directional Flow; Activates Flow To The Attachment Through The Use Of The Foot Switch; For Foot Switch, See Figure 04-20
2		D59912		1	KNOB
3		275677A1		1	PIVOT ASSY. 7 or 8 Spool Valve
4		614-6025		2	SCREW M6 x 25
5		829-1406		2	NUT M6; 10.9
6		195-81013		3	WASHER Used As A Shim
7		D136635		1	BLOCK
8		103-3350		2	RING, SNAP No. 50
9		495-11053		1	WASHER 17/32 x 1-1/16 x 3/32
10		283226A1		1	SPRING
11		896-11020		1	WASHER 22 x 37 x 4 mm
12		276070A1		1	SHAFT
13		495-81002		1	WASHER 7/16 x 1-3/8 x 5/64
14		R47941		1	JOINT TURNING
15		425-156		1	NUT 3/8 NF
16		259410A1		1	TURNBUCKLE
17		129-289		1	NUT 3/8 NF; Left-Hand Thread
20		432-612		1-2	PIN, COTTER 3/32 x 3/4
21		333737A1		1	ROD 7 Spool Valve; If Used
21A		333739A1		1	ROD 8 Spool Valve; If Used
22		895-11008		2	WASHER 9 x 17 x 1,6 mm

BACKHOE - STABILIZERS, PLATES AND PADS

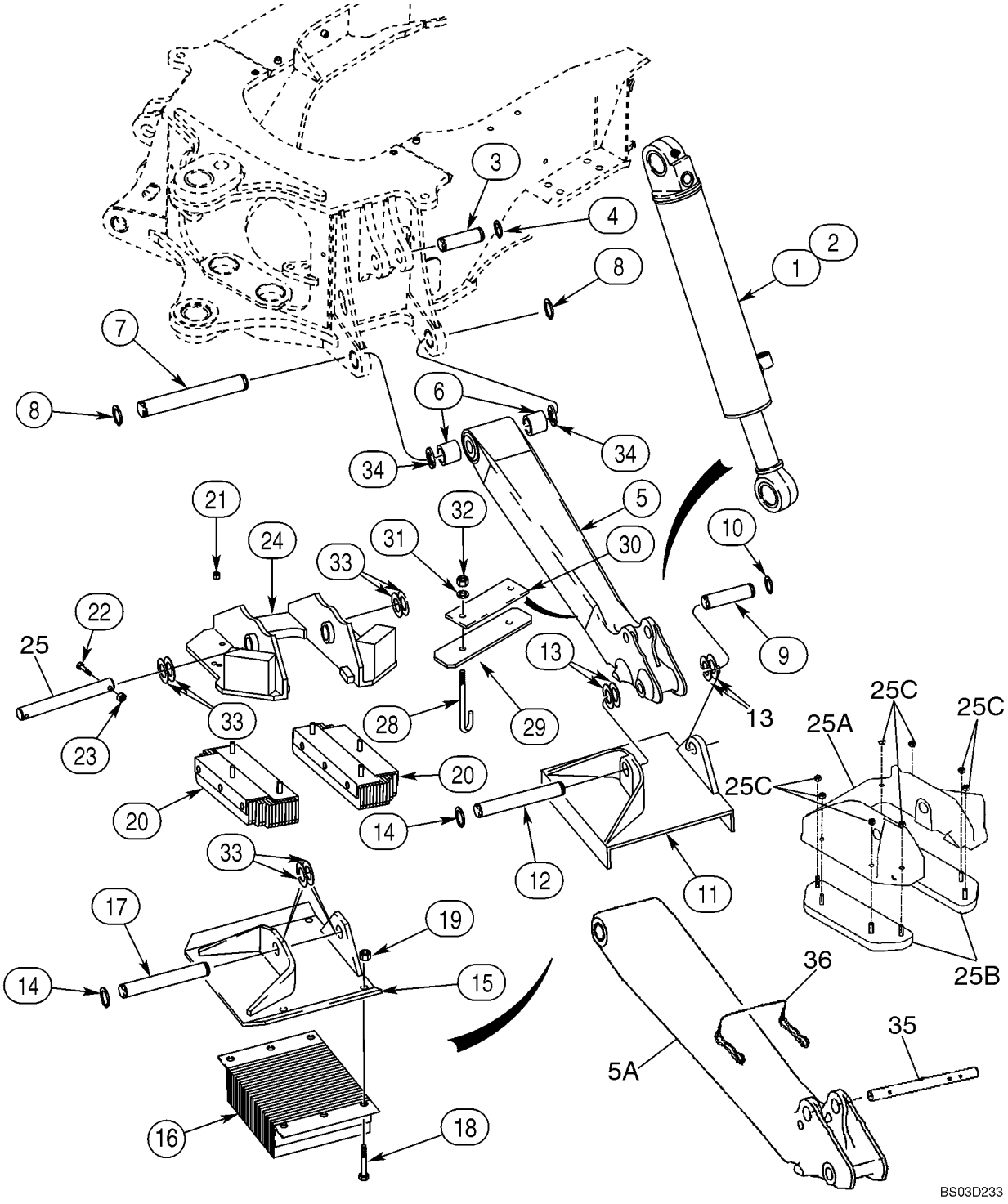

BACKHOE - STABILIZERS, PLATES AND PADS

REF	FN	PART NUMBER	YR/SN	QTY	DESCRIPTION
1		177256A1		1	CYLINDER 127 ID x 519 mm strk; Stabilizer; Right-Hand; See Figure 08-56
2		177257A1		1	CYLINDER ASSY. 127 ID x 519 mm strk; Stabilizer; Left-Hand; See Figure 08-56
3		D38907		2	PIN
4		103-16175		4	RING SNAP No. 175
5		192111A1		2	ASSEMBLY Incl. Ref 6; No Longer Used; Order 446220A1, Ref 5A
5A		446220A1		2	STABLILIZER 1307 mm (51-7/16 in); Incl. Ref 6; Replaces 192111A1
6		D50146		2	BUSHING, LARGE
7		121665A1		2	PIN, LARGE
8		103-16175		4	RING SNAP No. 175
9		R26725		2	PIN, LARGE
10		D25279		4	RING SNAP
11		D88427		2	PLATE Cleated; If Used
12		D28648		2	PIN
13		D143406		X	WASHER Used as a Spacer
14		D25279		4	RING SNAP
15		D142519		2	SHOE (ASSY) Street or Cemetery; If Used
16		D61368		2	SHOCK ABSORBER Rubber; If Used
17		D39256		2	PIN (AXLE)
18		413-1228		8	CAPSCREW 3/4 x 1-3/4
19		425-1012		8	NUT 3/4
		{400974A1}		2	Pad/A, Flip Over; Incl. Ref 20 - 25; No Longer Used; Order 416670a1
20		395753A2		2	PAD, RUBBER
21		231-4247		6	NUT
22		413-632		2	BOLT 3/8 x 2
23		230-4216		2	NUT 3/8
24		400880A1		1	PAD Flip Over
25		D149033		1	PIN, LARGE If Used
		{416670A1}		2	Pad/A, Stabilizer Flip; Incl. Ref 25A - 25C
25A		416668A1		1	PAD Stabilizer; If Used
25B		339680A2		2	PAD, RUBBER Flip
25C		832-41312		8	NUT M12

BACKHOE - STABILIZERS, PLATES AND PADS

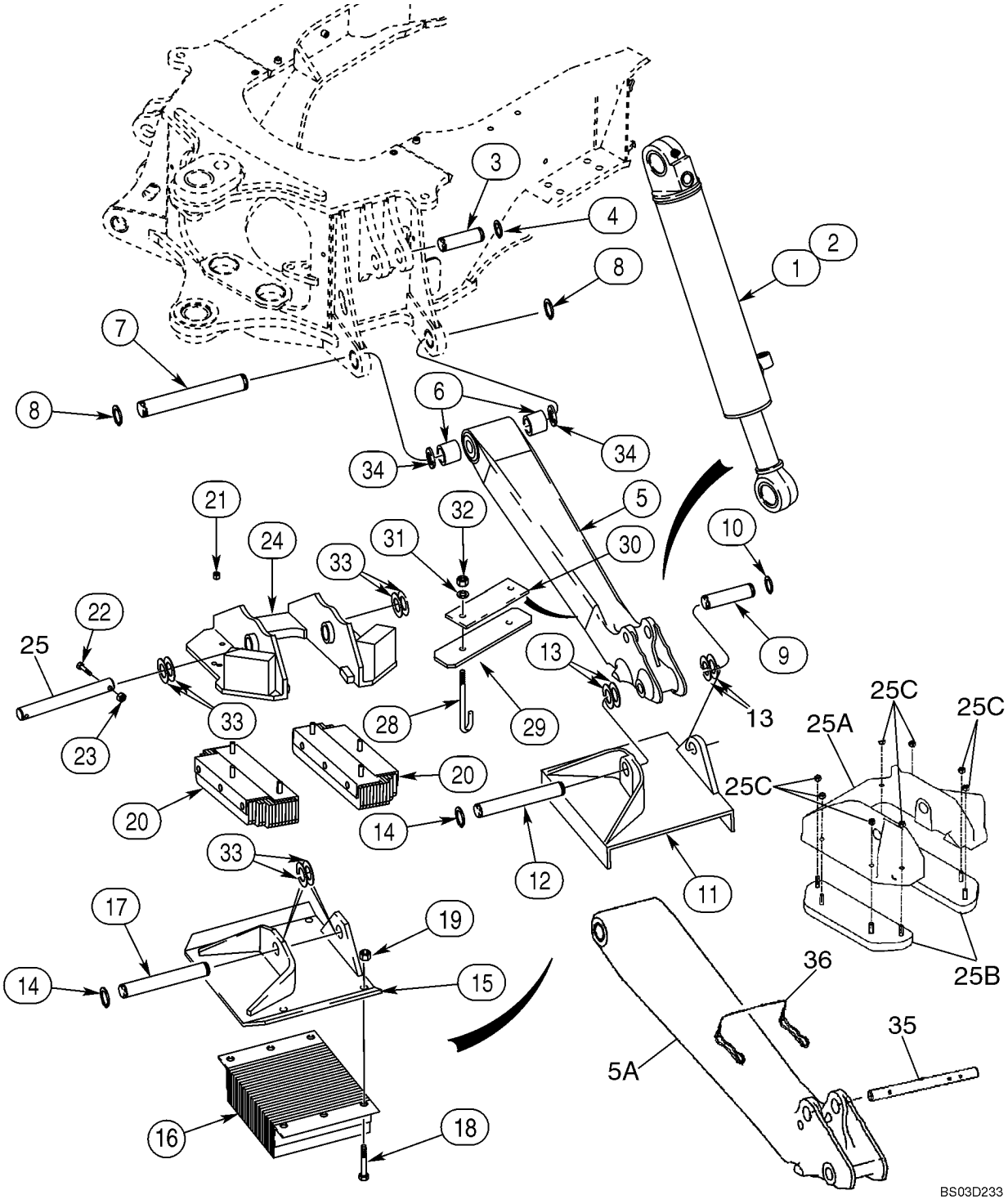

BACKHOE - STABILIZERS, PLATES AND PADS

REF	FN	PART NUMBER	YR/SN	QTY	DESCRIPTION
28		190057A1		2	BOLT
29		190037A1		1	PAD
30		192050A1		1	BAR
31		495-21044		2	WASHER 7/16 x 1 x 5/64
32		230-4216		2	NUT 3/8
33		D143406		X	WASHER Used as a Spacer
34		495-81282		X	WASHER 2-1/16 x 3 x 3/32
35		408405A1		1	PIN, PIVOT Used With 416670A1 Only; If Used
36		446454A1		1	PIN, LOCK Used With 416670A1 Only; If Used

BACKHOE - SWING TOWER AND SWING CYLINDERS

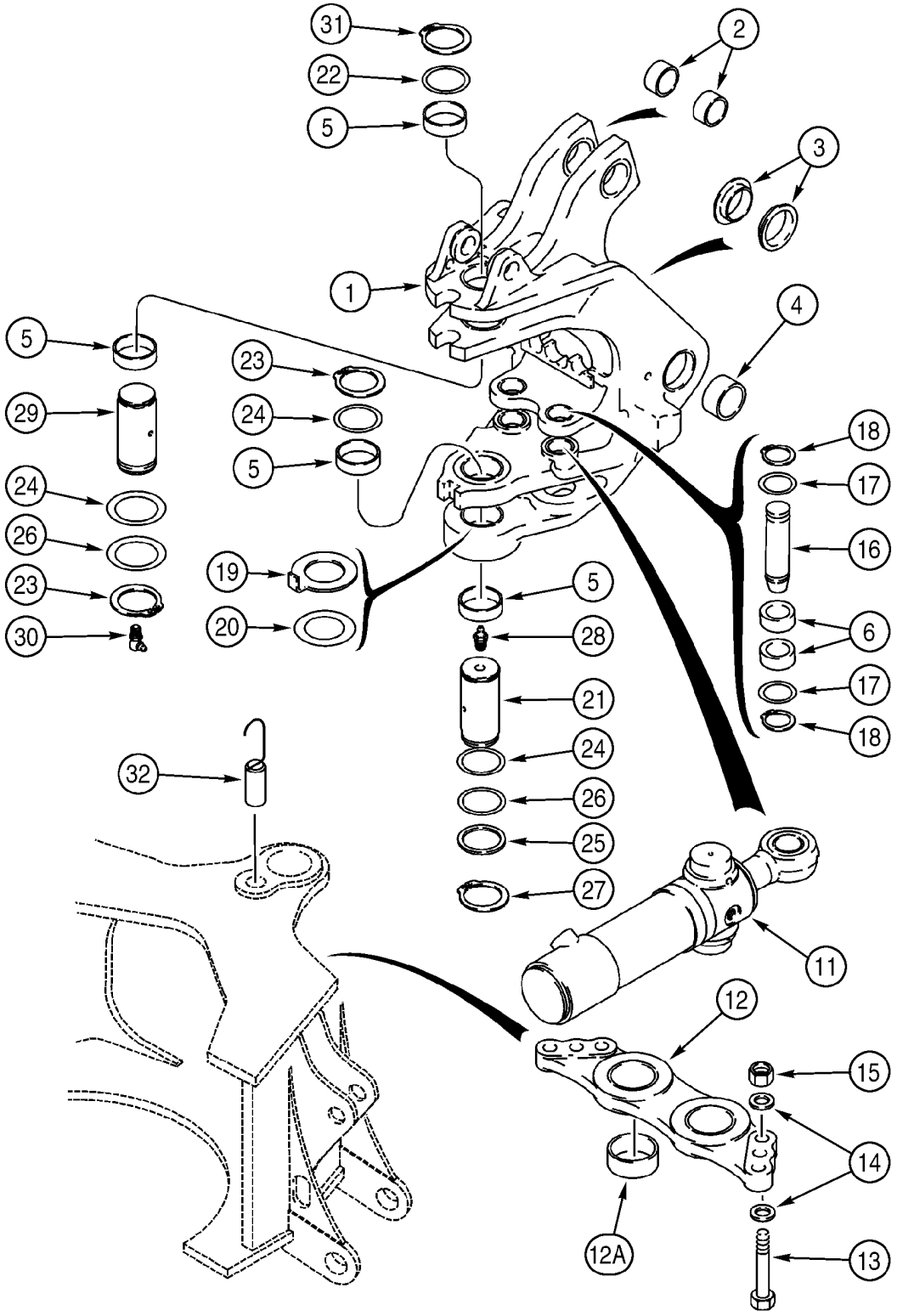

BACKHOE - SWING TOWER AND SWING CYLINDERS

REF	FN	PART NUMBER	YR/SN	QTY	DESCRIPTION
1		140515A1		1	BOOM Swing Tower; Incl. Ref 2 - 6
2		D151061		2	BUSHING
3		221476A1		2	BUSHING
4		D144170		2	BUSHING
5		D151060		4	BUSHING
6		135249A1		4	BUSHING 28.6 mm lg
11		139808A2		2	CYLINDER ASSY. 102 ID x 292 mm strk; Swing; See Figure 08-57
12		198976A1		1	PLATE, LARGE Incl. Ref 12A
12A		114318A1		2	BUSHING 80 x 90 x 29.3 mm
13		827-20075		6	SCREW M20 x 75; 10.9
14		896-11020		12	WASHER 22 x 37 x 4 mm
15		829-1420		6	NUT M20; 10
16		386092A2		2	PIN, LARGE Replaces 386092A1
17		495-81227		X	WASHER 2-1/16 x 2-15/16 x 1/16
18		103-16200		4	RING SNAP No. 200
19		220489A1		1	WASHER 5 mm thk
20		134167A1		X	SHIM 2.05 mm (.08 in) thk
21		175597A1		1	PIN
22		D136700		X	SHIM 1.57 mm thk; Replaces 175323A1, 1,6 mm thk Shim
23		800-40070		2	RING SNAP
24		D136392		X	SHIM 72 x 89 x 3.0 mm; Upper
25		D136704		1	ROD 1.57 mm thk; Replaces 175323A1 1,6 mm thk Shim
26		D136391		X	SHIM 72 x 89 x 1.6 mm
27		800-40065		1	RING SNAP
28		219-1		1	NIPPLE, LUBE 1/8 PT x 21/32
29		139262A1		1	PIN
30		219-55		1	NIPPLE, LUBE 90 deg, 1/8 PT x 27/32
31		800-40065		1	RING SNAP
32		384967A1		1	PIN ASSY.

09 -21		p1	05/03

BACKHOE - BOOM AND SWING TOWER

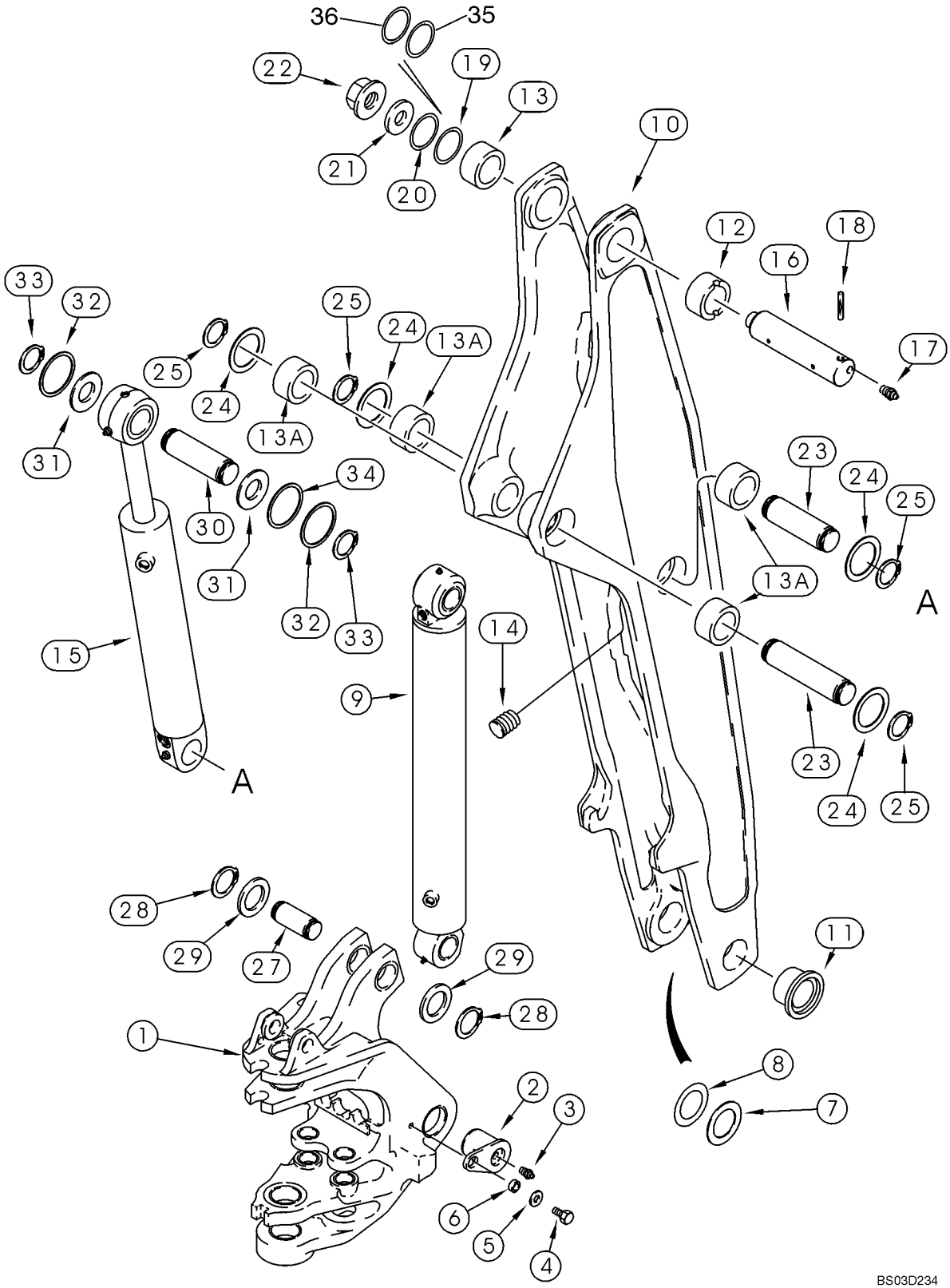

BACKHOE - BOOM AND SWING TOWER

REF	FN	PART NUMBER	YR/SN	QTY	DESCRIPTION
1		140515A1		1	BOOM Swing Tower; See Figure 09-20
2		175596A1		2	PIN
3		219-1		2	NIPPLE, LUBE 1/8 PT x 21/32
4		604-20040		2	SCREW M20 x 40; Models With Backhoe Auxiliary Hydraulics Use 604-20045
		604-20045		2	BOLT M20 x 45
5		496-41081		2	WASHER 13/16 x 1-3/4 x 7/32 in
6		122897A1		2	SPACER
7		D144485		X	SHIM 3.0 mm thk
8		D144486		X	SHIM 1.5 mm thk
9		175785A1		1	CYLINDER 140 ID x 976 mm strk; Boom; See Figure 08-58
10		140505A1		1	BOOM Incl. Ref 11 - 14
11		D151059		2	BUSHING 80 ID x 46 mm lg
12		D144197		1	BUSHING 80 ID x 56 mm lg; With Slot For Groove Pin; Right-Hand Side
13		D144168		1	BUSHING 80 ID x 44 mm lg; Without Slot For Groove Pin; Left-Hand Side
13A		D144161		4	BUSHING 70 ID x 50 mm lg
14		D120450		7	PLUG
15		140965A1		1	CYLINDER 140 ID x 564 mm strk; Dipper; See Figure 08-59
16		175313A1		1	PIN
17		219-1		2	NIPPLE, LUBE 1/8 PT x 21/32
18		300014A1		1	SPLIT PIN/SAFETY PIN
19		D144486		X	SHIM 1.5 mm thk; Flat; No Longer Used; Order 404304A1, Ref 35
20		D144485		X	SHIM 3.0 mm thk; Flat; No Longer Used; Order 404302A1, Ref 36
21		D133632		1	WASHER
22		181042A1		1	NUT
23		175581A1		2	PIN
24		D136700		4	SHIM 1.57 mm thk; Replaces 175323A1
25		800-40065		4	RING SNAP
27		175315A1		1	PIN
28		800-40080		2	RING SNAP

BACKHOE - BOOM AND SWING TOWER

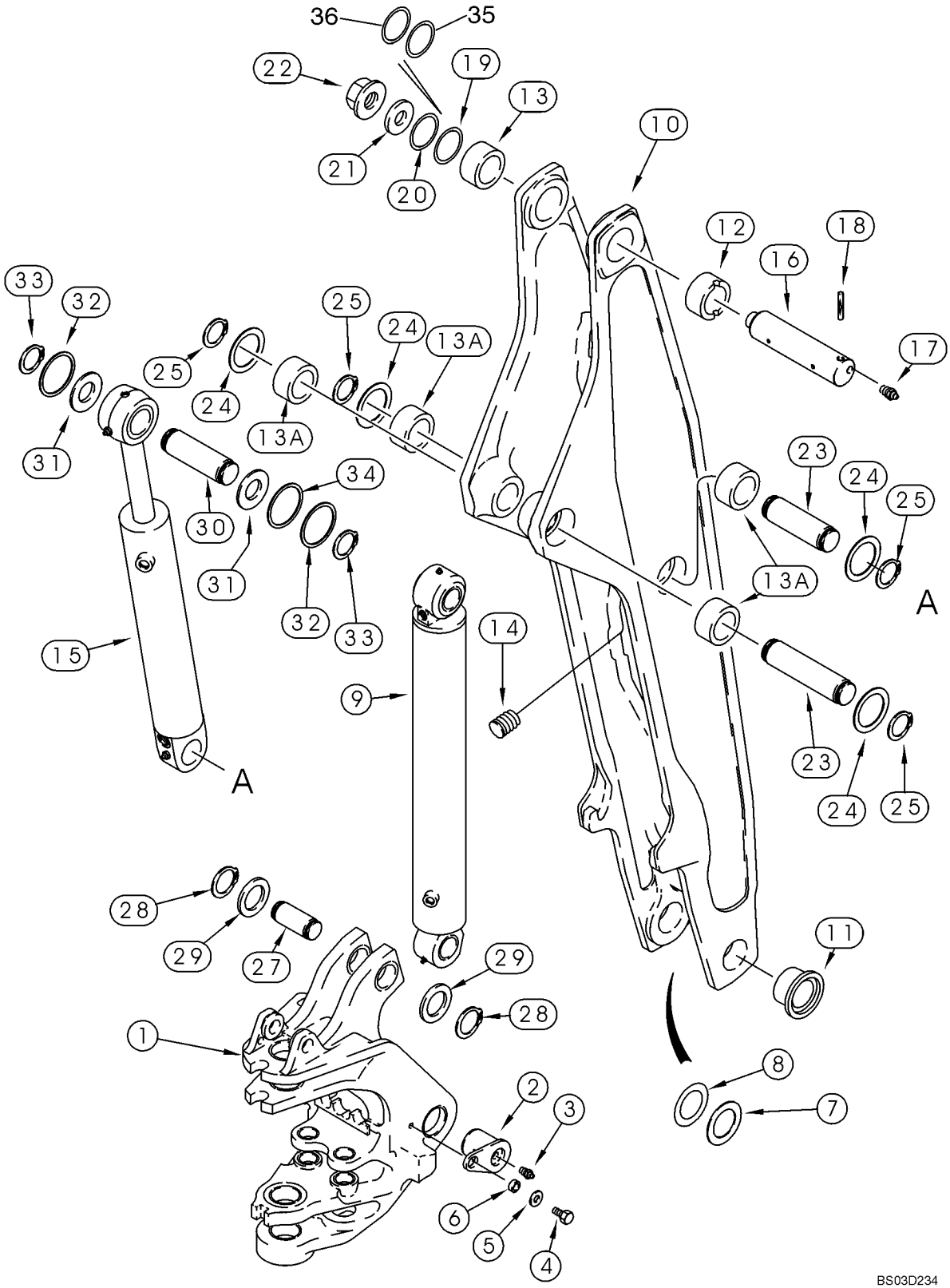

BACKHOE - BOOM AND SWING TOWER

REF	FN	PART NUMBER	YR/SN	QTY	DESCRIPTION
29		D144486		X	SHIM 1.5 mm thk
30		175581A1		1	PIN
31		D136392		X	SHIM 72 x 89 x 3.0 mm
32		D136700		X	SHIM 1.57 mm thk; Replaces 175323A1
33		800-40065		2	RING SNAP
34		D136391		X	SHIM 72 x 89 x 1.6 mm; Right-Hand Side
35		404303A1		X	SHIM 5,0 mm thk; Concave
36		404302A1		X	SHIM 5,0 mm thk; Concave

BOOM LATCH

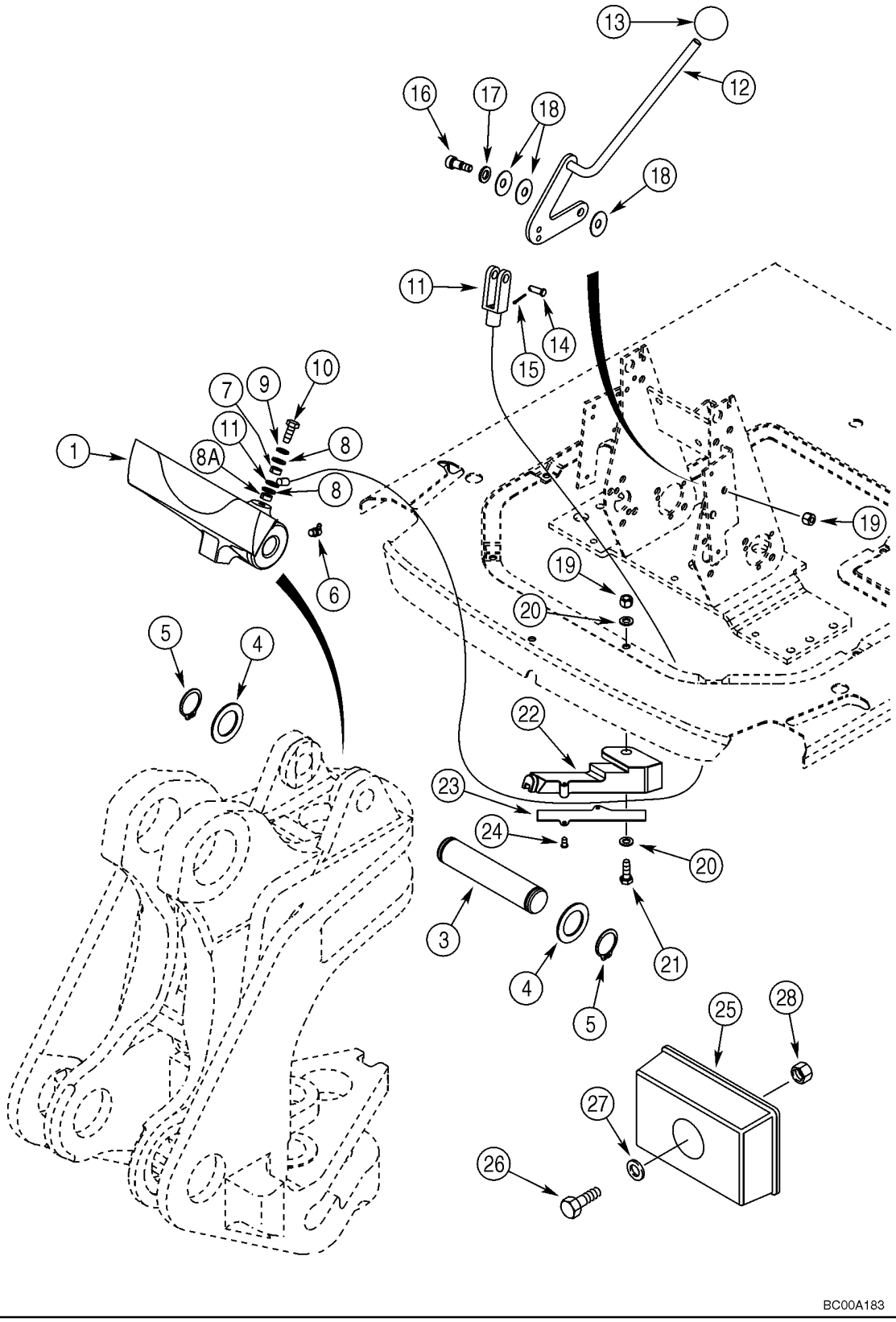
13
12
16
17
18
18
11
14
15
10
7
9
11
8
1
8A
8
6
19
19
20
5
4
22
23
24
20
3
4
5
21
25
28
27
26
BC00A183

BOOM LATCH

REF	FN	PART NUMBER	YR/SN	QTY	DESCRIPTION
1		122974A1		1	LATCH ASSY.
3		D129227		1	PIN, LARGE
4		D144592		2	WASHER
5		800-44040		2	RING SNAP
6		219-55		1	NIPPLE, LUBE 90 deg, 1/8 PT x 27/32
7		D143417		1	SPACER
8		895-15010		2	WASHER 11 x 24 x 2 mm
8A		396092A1		1	SPACER
9		892-11010		1	WASHER, LOCK M10
10		614-10050		1	CAPSCREW M10 x 50
11		395832A2		1	CABLE
12		394291A1		1	LEVER
13		D59912		1	KNOB
14		D149287		1	PIN, LARGE
15		432-612		1	PIN, COTTER 3/32 x 3/4
16		561-706		1	SCREW
17		896-11012		1	WASHER 13,5 x 24 x 3 mm
18		D148962		3	WASHER Belleville
19		832-10410		2	NUT M10
20		895-11010		2	WASHER 11 x 21 x 2 mm
21		614-10030		1	SCREW M10 x 30
22		363276A2		1	GUIDE
23		363277A1		1	RETAINER, CABLE
24		187-1917		2	SCREW
25		102924A1		1	BUMPER
26		814-10055		1	CAPSCREW M10 x 55
27		895-11010		1	WASHER 11 x 21 x 2 mm
28		832-10410		1	NUT M10

09 -23		p1	05/03

BACKHOE - ARM AND BUCKET

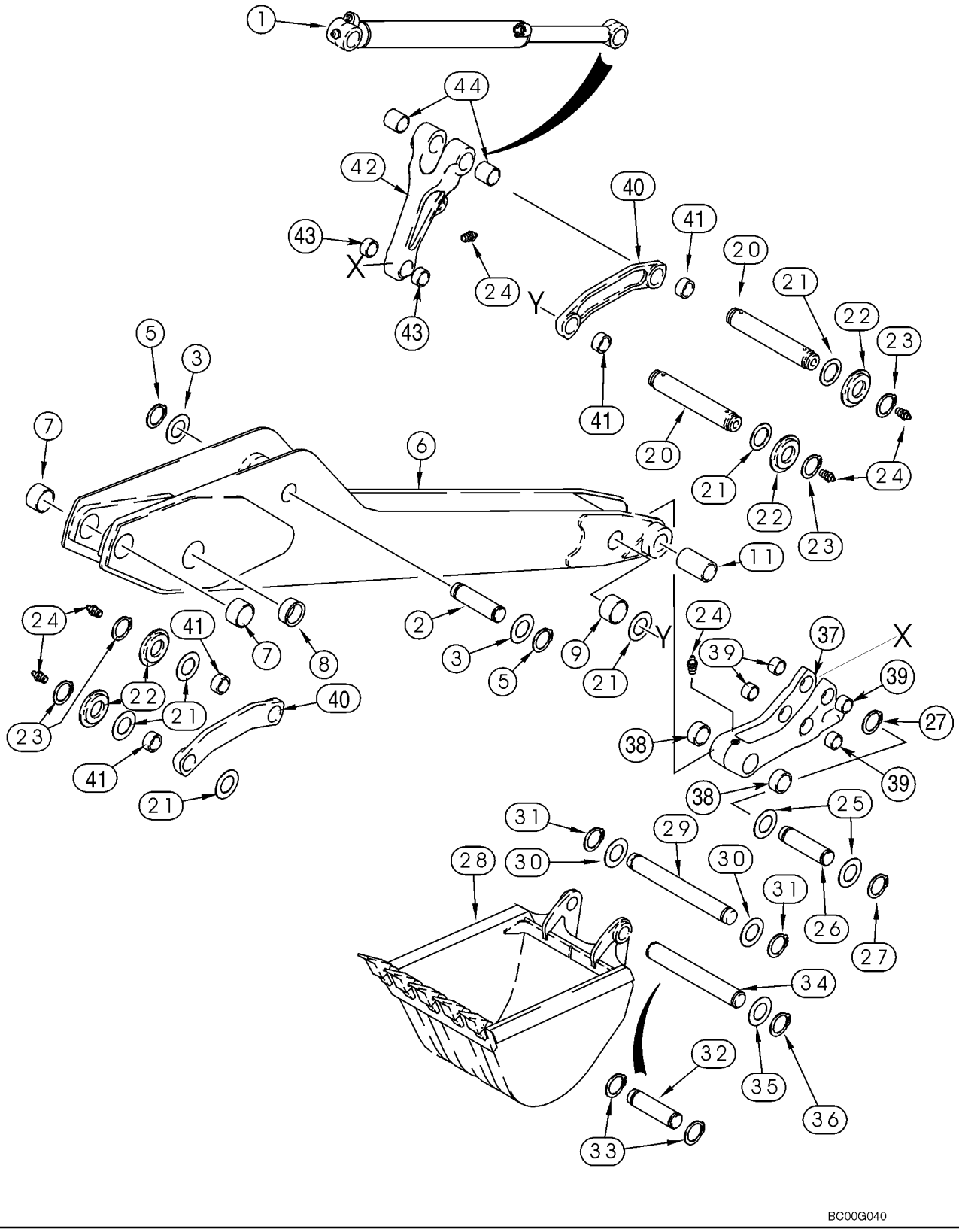

BACKHOE - ARM AND BUCKET

REF	FN	PART NUMBER	YR/SN	QTY	DESCRIPTION
1		296434A1		1	CYLINDER 95 ID x 872 mm strk; Bucket; See Figure 08-60
2		175316A1		1	PIN
3		H433285		X	SPACER 57 x 76 x 1.5 mm
5		800-4155		2	RING SNAP
		302070A1		1	DIPPERSTICK Incl. Ref 6 - 9; Models Without Hydraulic Backhoe Bucket Coupler; For Models With Hydraulic Backhoe Bucket Coupler, See Figure 09-25
6		NSS		1	NOT SERVICED SEPARATELY Dipper
7		D144161		2	BUSHING 70 ID x 50 mm lg
8		D151059		2	BUSHING 80 ID x 46 mm lg
9		D140029		2	BUSHING, LARGE 50 x 60 x 25.5 mm lg
11		307186A1		2	BUSHING 104 mm lg; Not Included In Assembly; Purchase Separately
20		D141142		2	PIN, LARGE 306 mm lg; Guide Link
21		495-81282		X	WASHER 2-1/16 x 3 x 3/32
22		D141164		4	SPACER
23		103-16175		4	RING SNAP No. 175
24		219-1		6	NIPPLE, LUBE 1/8 PT x 21/32
25		495-81226		2	WASHER 1-13/16 x 2-1/2 x 1/8
26		D146288		1	PIN, LARGE
27		103-16175		2	RING SNAP No. 175
28		REF		1	INSTRUCTION Bucket; See Figure(s) 09-26 - 09-31
29		D37614		1	PIN, LARGE
30		D143324		2	WASHER
31		D25279		2	RING SNAP
32		D149298		1	PIN 305 mm (12 inch); Universal Bucket Only
33		103-16175		2	RING SNAP No. 175
34		D150619		1	PIN, LARGE All Buckets Except 12 Inch (305 mm) Buckets
35		495-81226		X	WASHER 1-13/16 x 2-1/2 x 1/8
36		103-16175		2	RING SNAP No. 175
		294195A1		1	COUPLING Bucket; Incl. Ref 37 - 39
37		NSS		1	NOT SERVICED SEPARATELY Coupler, Quick
38		D127167		2	BUSHING 30 mm lg

BACKHOE - ARM AND BUCKET

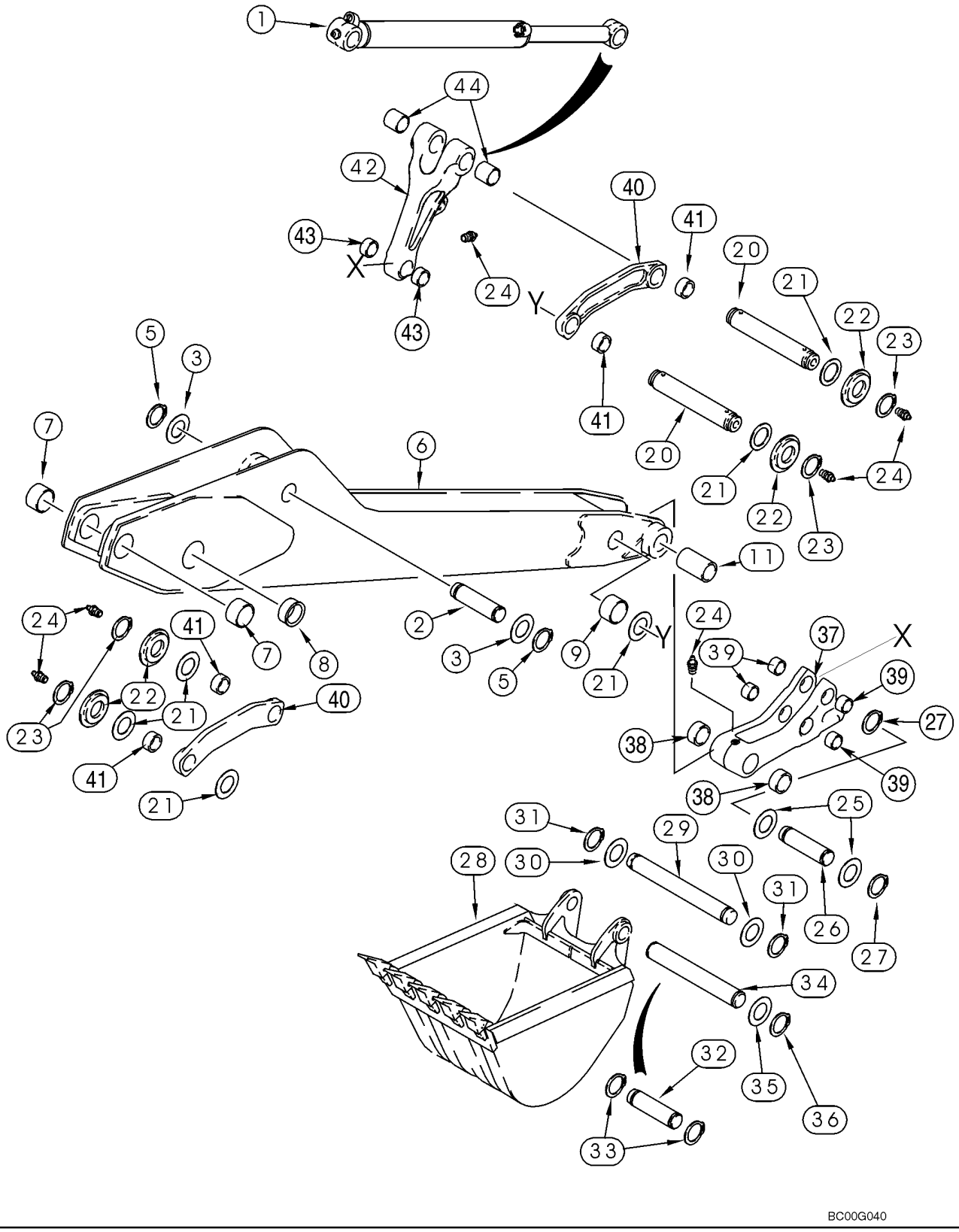

BACKHOE - ARM AND BUCKET

REF	FN	PART NUMBER	YR/SN	QTY	DESCRIPTION
39		D127172		4	BUSHING 28 mm lg
40		348706A1		2	LINK ASSY. Bucket Guide; Incl. Ref 41
41		D149079		2	BUSHING 50 x 34 mm lg
42		400398A1		1	LINK ASSY. Bucket Dump; Incl. Ref 43, 44
43		107124A1		2	BUSHING
44		D138047		2	BUSHING 54 mm (2-1/8 in) lg

09 -24		p1	05/03

BACKHOE - DIPPER, EXTENDABLE

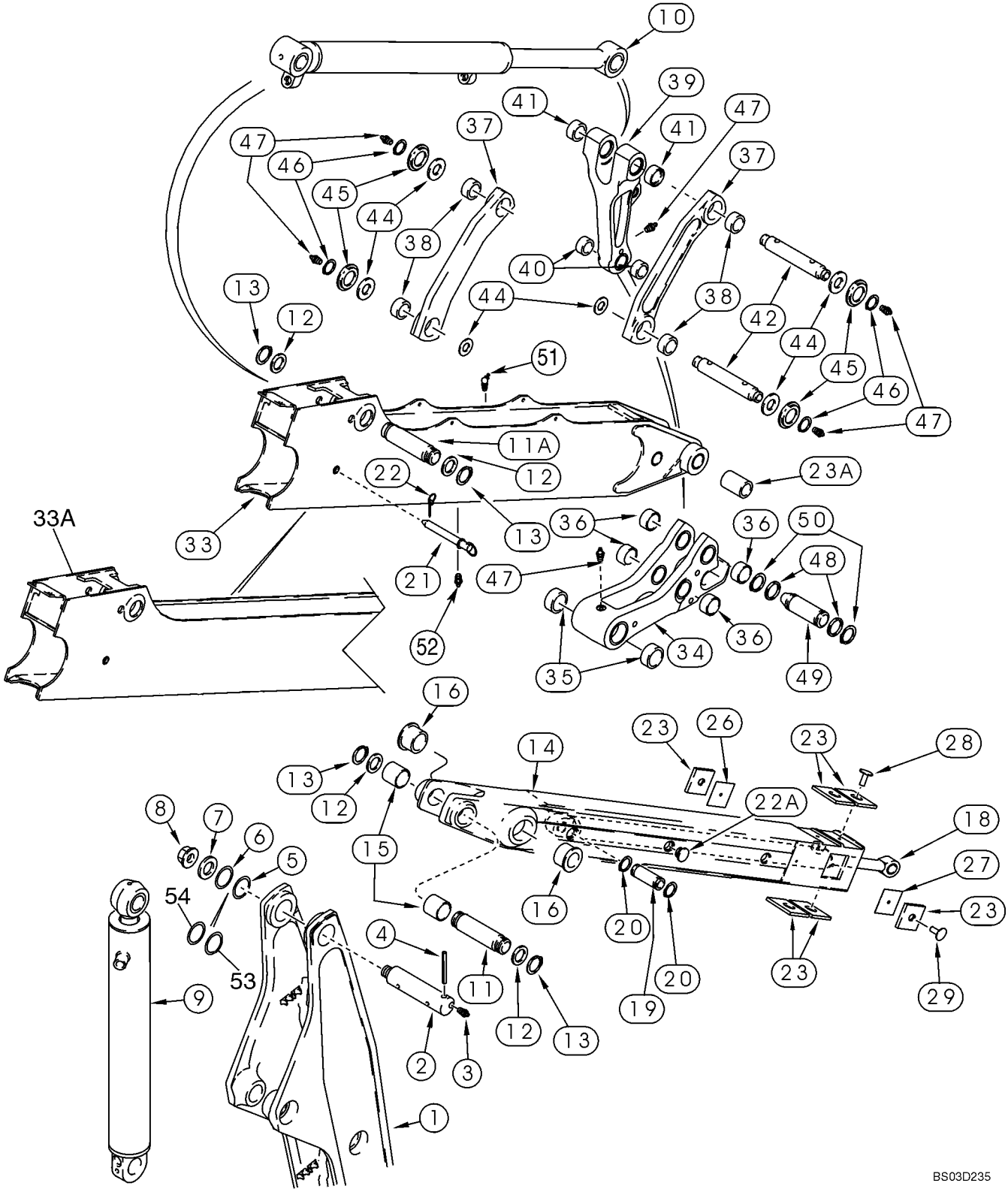

BACKHOE - DIPPER, EXTENDABLE

REF	FN	PART NUMBER	YR/SN	QTY	DESCRIPTION
1		140505A1		1	BOOM See Figure 09-21
2		175313A1		1	PIN
3		219-1		2	NIPPLE, LUBE 1/8 PT x 21/32
4		300014A1		1	SPLIT PIN/SAFETY PIN
5		D144486		X	SHIM 1.5 mm thk; Flat; No Longer Used; Order 404303A1, Ref 53
6		D144485		X	SHIM 3.0 mm thk; Flat No Longer Used; Order 404302A1, Ref 54
7		D133632		1	WASHER
8		181042A1		1	NUT
9		140965A1		1	CYLINDER 140 ID x 564 mm strk; Dipper; See Figure 08-59
10		296434A1		1	CYLINDER 95 ID x 872 mm strk; Bucket; See Figure 08-60
11		175581A1		1	PIN
11A		175316A1		1	PIN
12		D136392		X	SHIM 72 x 89 x 3.0 mm
13		800-1155		2	CIRCLIP
		294300A1		1	DIPPERSTICK Inner; Incl. Ref 14 - 16
14		NSS		1	NOT SERVICED SEPARATELY Dipper
15		D144161		2	BUSHING 70 ID x 50 mm lg
16		D151059		2	BUSHING 80 ID x 46 mm lg
18		1340853C2		1	CYLINDER 76 ID x 1220 mm strk; Extendable Dipper; See Figure 08-61
19		300588A1		1	PIN, LARGE
20		800-44040		2	RING SNAP
21		D140247		1	PIN, LARGE Lock; Transport
22		A33509		1	PIN, LARGE
22A		D133865		4	PLUG
23		451384A1		6	PLATE, WEARING Plastic; Replaces 132716A1
23A		307186A1		2	BUSHING 104 mm lg
26		132842A1		1	SHIM 1.6 mm thk
27		132844A1		1	SHIM 0.8 mm thk
28		183443A1		4	PIN, LARGE
29		183509A1		2	PIN, LARGE
32		495-81282		2	WASHER 2-1/16 x 3 x 3/32

09 -24		p2	05/03

BACKHOE - DIPPER, EXTENDABLE

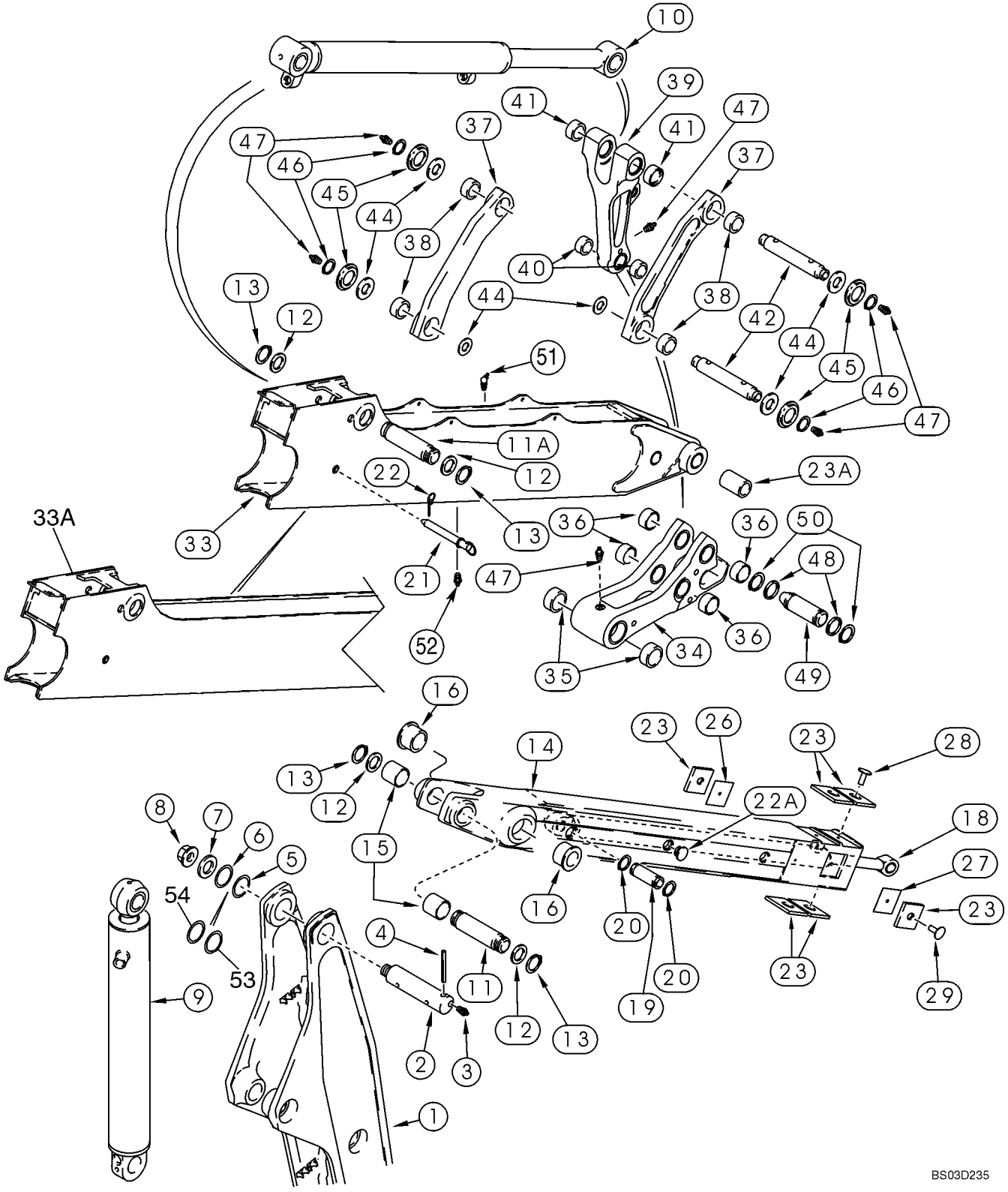

BACKHOE - DIPPER, EXTENDABLE

REF	FN	PART NUMBER	YR/SN	QTY	DESCRIPTION
33		108942A4		1	DIPPERSTICK Outer; Incl. Ref 51, 52; Models Without Hydraulic Backhoe Bucket Coupler; For Models With Hydraulic Backhoe Bucket Coupler, See Figure 09-25; No Longer Available; Order 108942A5, Ref 33A
33A		108942A5		1	DIPPERSTICK Housing; Outer; Incl. Ref 51, 52; Models Without Hydraulic Backhoe Bucket Couplter; For Models With Hydraulic Backhoe Bucket Coupler, See Figure 09-25
		294195A1		1	COUPLING Bucket; Incl. Ref 34 - 36
34		NSS		1	NOT SERVICED SEPARATELY Coupler; Quick
35		D127167		2	BUSHING 30 mm lg
36		D127172		4	BUSHING 28 mm lg
37		348706A1		2	LINK ASSY. Bucket Guide; Incl. Ref 38
38		D149079		2	BUSHING 50 x 34 mm lg
39		400398A1		1	LINK ASSY. Bucket Dump; Incl. Ref 40, 41
40		107124A1		2	BUSHING
41		D138047		2	BUSHING 54 mm (2-1/8 in) lg
42		D141142		2	PIN, LARGE 306 mm lg
44		495-81227		X	WASHER 2-1/16 x 2-15/16 x 1/16
45		D141164		4	SPACER
46		103-16175		4	RING SNAP No. 175
47		219-1		6	NIPPLE, LUBE 1/8 PT x 21/32
48		495-81226		2	WASHER 1-13/16 x 2-1/2 x 1/8
49		D146288		1	PIN, LARGE
50		103-16175		2	RING SNAP No. 175
51		219-89		1	NIPPLE 1/8 PT x 25/32
52		219-86		1	FITTING 1/8 PT x 5/8
53		404303A1		X	SHIM 5 mm thk; Concave
54		404302A1		X	SHIM 5 mm thk; Concave

DIPPER, BACKHOE - COUPLER, HYDRAULIC (MODELS WITH HYDRAULIC BACKHOE BUCKET COUPLER)

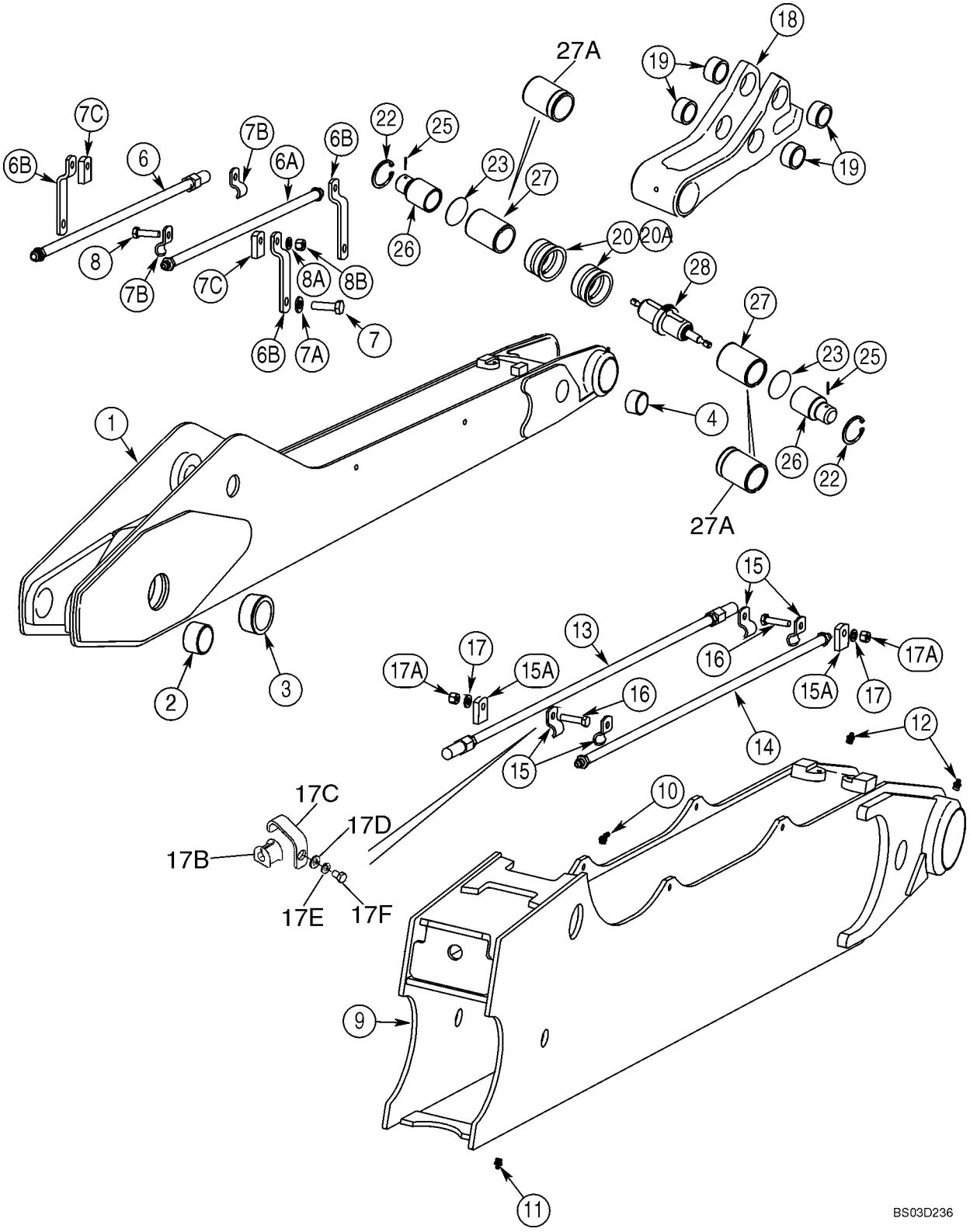

DIPPER, BACKHOE - COUPLER, HYDRAULIC (MODELS WITH HYDRAULIC BACKHOE BUCKET COUPLER)

REF	FN	PART NUMBER	YR/SN	QTY	DESCRIPTION
		REF			INSTRUCTION Standard Dipper
1		341352A6		1	DIPPERSTICK Incl. Ref 2 - 5, 20A
2		D144161		2	BUSHING 70 ID x 50 mm lg
3		D151059		2	BUSHING 80 ID x 46 mm lg
4		D140029		2	BUSHING, LARGE 50 x 60 x 25.5 mm lg
5		219-1		2	NIPPLE, LUBE 1/8 PT x 21/32; Bucket End; Not Illustrated
6		406172A1		1	TUBE ASSY. See Figure 08-24
6A		406971A1		1	TUBE ASSY. See Figure 08-24
6B		405235A1		4	BRACKET
7		604-10035		4	BOLT M10 x 35; Lock
7A		896-11010		4	WASHER 11 x 21 x 2,5 mm
7B		409462A1		4	CLIP
7C		406569A1		4	PLATE, BACK
8		607-8030		4	BOLT M8 x 30; 10.9; Lock
8A		895-11008		4	WASHER 9 x 17 x 1,6 mm
8B		829-1408		4	NUT M8
		REF			INSTRUCTION Extendable Dipper
9		392563A2		1	DIPPERSTICK Outer; Incl. Ref 10 - 12, 20
10		219-89		1	NIPPLE 1/8 PT x 25/32
11		219-86		1	FITTING 1/8 PT x 5/8
12		219-1		2	NIPPLE, LUBE 1/8 PT x 21/32
13		403840A1		1	TUBE ASSY. See Figure 08-24
14		403400A1		1	TUBE ASSY. See Figure 08-24
15		409462A1		4	CLIP If Used
15A		406569A1		4	PLATE, BACK If Used
16		627-8030		4	SCREW M8 x 30; Lock
17		895-11008		4	WASHER 9 x 17 x 1,6 mm; If Used
17A		829-1408		4	NUT M8; If Used
17B		445757A1		4	BRACKET If Used
17C		D67296		4	GROMMET 1/2 Tube; If Used
17D		896-15010		4	WASHER 11 x 24 x 3 mm; If Used
17E		892-11010		4	WASHER, LOCK M10; If Used
17F		607-10020		4	BOLT M10; If Used
		REF			INSTRUCTION Hydraulic Backhoe Bucket Coupler
18		417681A1		1	COUPLING Incl. Ref 19; Replaces 402528A3

DIPPER, BACKHOE - COUPLER, HYDRAULIC (MODELS WITH HYDRAULIC BACKHOE BUCKET COUPLER)

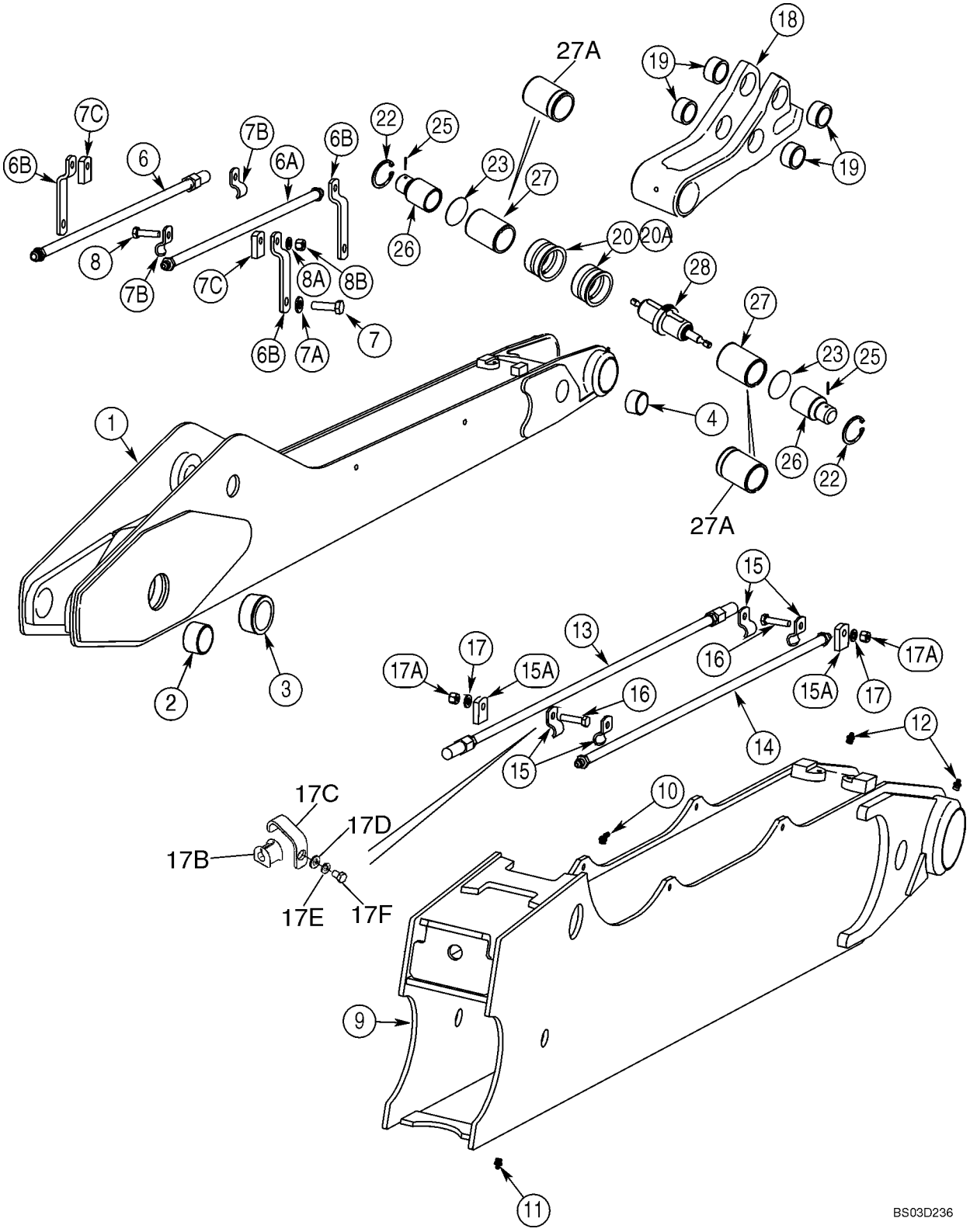

DIPPER, BACKHOE - COUPLER, HYDRAULIC (MODELS WITH HYDRAULIC BACKHOE BUCKET COUPLER)

REF	FN	PART NUMBER	YR/SN	QTY	DESCRIPTION
19		107124A1		4	BUSHING
20		400934A2		2	BUSHING Models With Extendable Dipper
20A		400936A1		2	BUSHING Models Without Extendable Dipper
22		406624A1		2	RING
23		401342A2		2	O-RING If Used
25		135-1233		2	PIN, GROOVE 7/32 x 1-1/2
26		400932A3		2	PIN Replaces 400932A3; No Longer Available; Order Ref 30-32
27		404803A3		2	SLEEVE No Longer Available; Order 407680A2; No Longer Available; Order Ref 30 - 32
27A		417680A2		2	SLEEVE No Longer Available; Order Ref 30 - 32
28		402919A3		1	CYLINDER ASSY. Coupler; See Figure 08-25; Replaces 402919A2
29		418070A1		4	SET SCREW M10 x 20; Hex Socket
30		448676A1		2	SLEEVE, HYD' CYL' Outer
31		400932A4		2	PIN Stepped; Coupler
32		434891A1		2	SEAL,HYD-CYLINDER Wiper; Stepped Pin; Coupler
33		445364A1		2	SEALRING Service Ring; Included With Couplter Cylinder Seal Kit

09 -26		p1	05/03

BUCKET, UNIVERSAL BACKHOE (305 MM (12 INCH) WIDE)

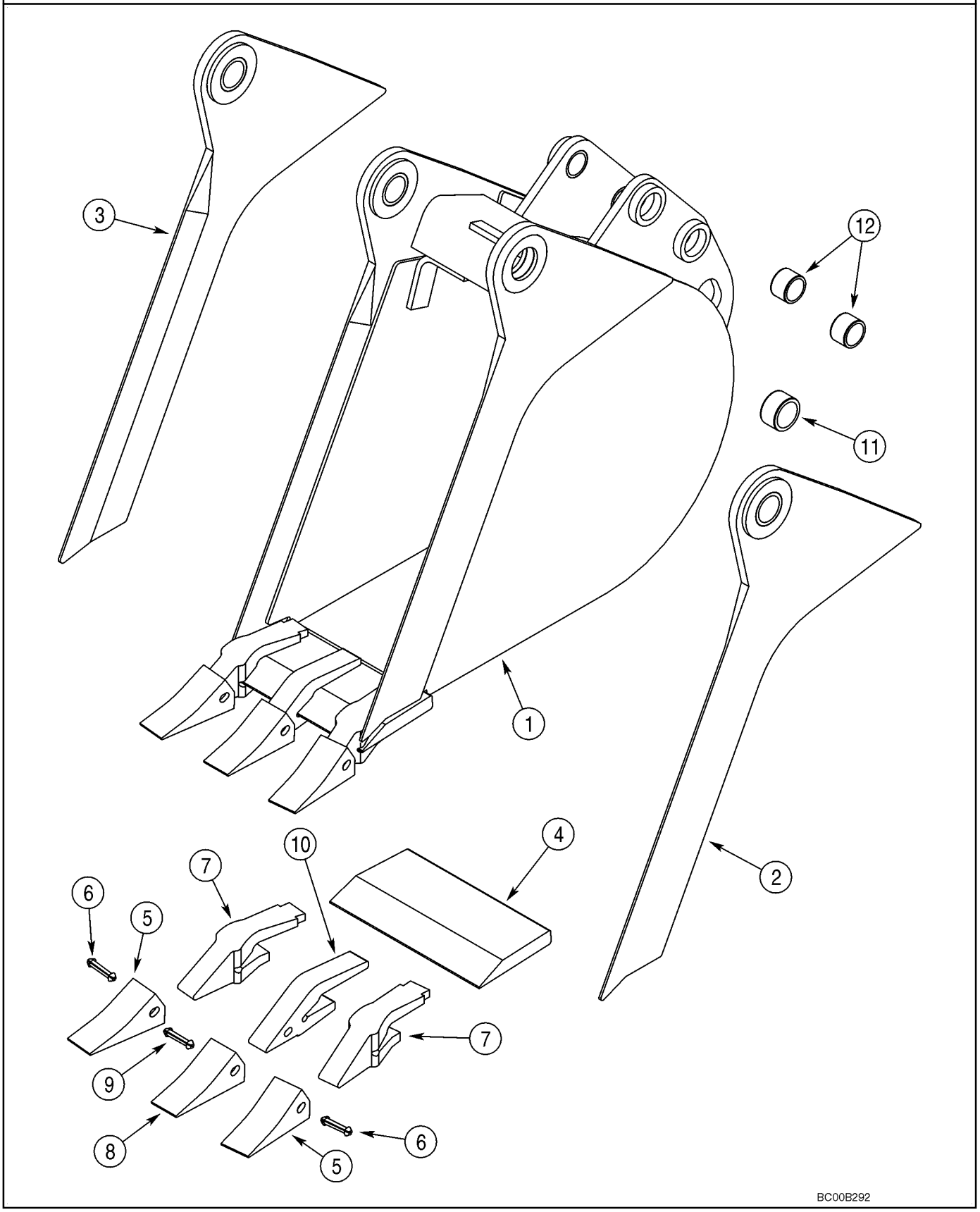

BUCKET, UNIVERSAL BACKHOE (305 MM (12 INCH) WIDE)

REF	FN	PART NUMBER	YR/SN	QTY	DESCRIPTION
1		381488A4		1	BUCKET 305 mm (12 in); With 3 Teeth; Order Through Parts Marketing; Incl. Ref 2 - 12
2		NSS		1	NOT SERVICED SEPARATELY Edge; Right-Hand; Incl. Ref 11
3		NSS		1	NOT SERVICED SEPARATELY Edge; Left-Hand; Incl. Ref 11
4		D147409		1	EDGE, CUTTING
		D139851		2	TOOTH Outer; Incl. Ref 5 - 7
5		D51750		1	POINT
6		245466A1		1	SPLIT PIN/SAFETY PIN
7		D138157		1	SHANK
		D139849		1	TOOTH Center; Incl. Ref 8 - 10; Order Ref 8 - 10
8		D51750		1	POINT
9		245466A1		1	SPLIT PIN/SAFETY PIN
10		D48212		1	SHANK
11		D43940		2	BUSHING 1-3/4 x 2-1/4 x 1
12		D30933		4	BUSHING

BUCKET, UNIVERSAL BACKHOE (406 MM (16 INCH) WIDE)

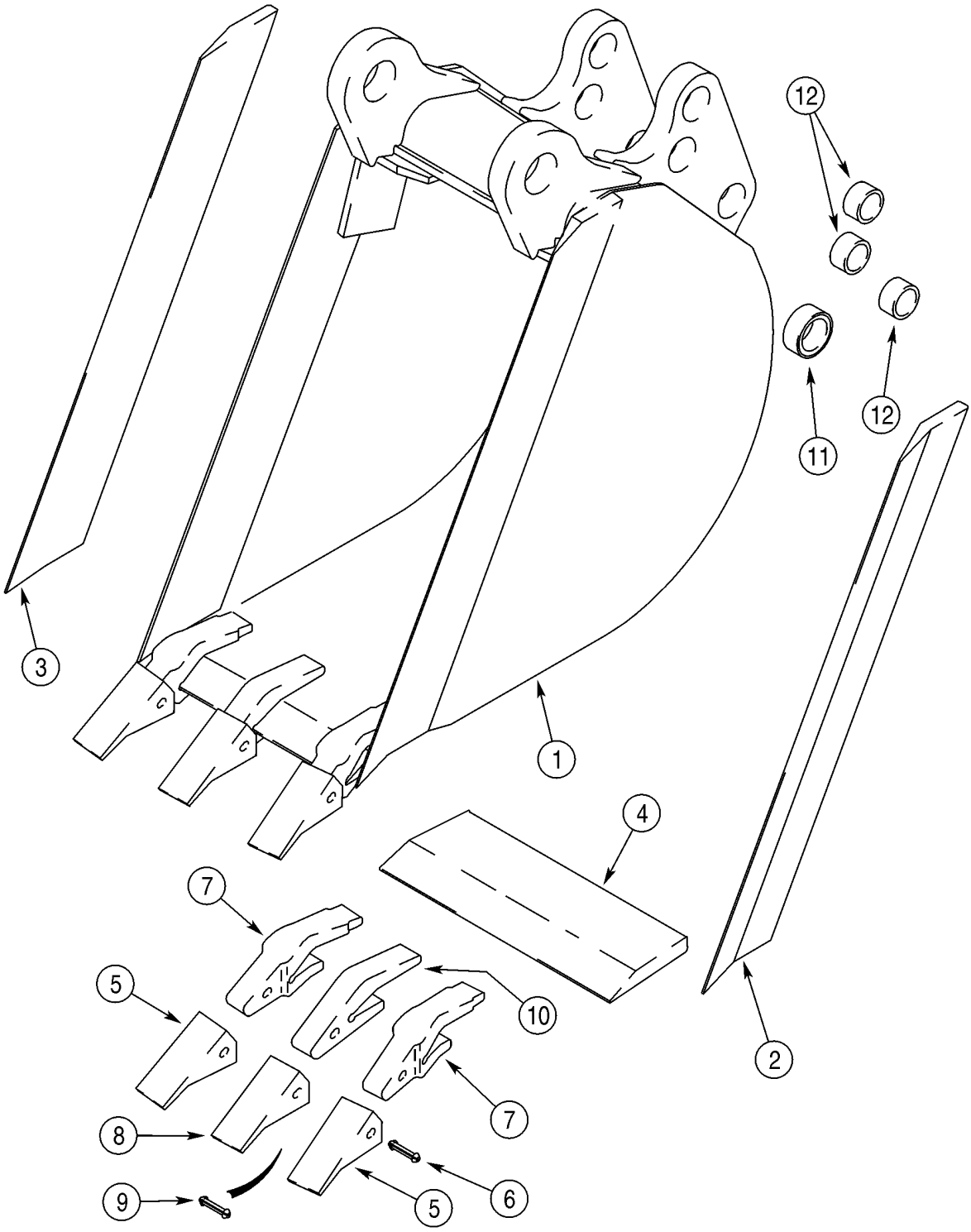

BUCKET, UNIVERSAL BACKHOE (406 MM (16 INCH) WIDE)

REF	FN	PART NUMBER	YR/SN	QTY	DESCRIPTION
1		388843A1		1	BUCKET 406 mm (16 in); With 3 Teeth; Order Through Parts Marketing; Incl. Ref 2 - 12
2		D146421		1	EDGE, CUTTING Right-Hand
3		D146420		1	EDGE, CUTTING Left-Hand
4		D147249		1	EDGE
		D139851		2	TOOTH Outer; Incl. Ref 5 - 7
5		D51750		1	POINT
6		245466A1		1	SPLIT PIN/SAFETY PIN
7		D138157		1	SHANK
		D139849		1	TOOTH Center; Incl. Ref 8 - 10; Order Ref 8 - 10
8		D51750		1	POINT
9		245466A1		1	SPLIT PIN/SAFETY PIN
10		D48212		1	SHANK
11		D37495		2	BUSHING
12		D30933		6	BUSHING

09 -28		p1	05/03

BUCKET, UNIVERSAL BACKHOE (457 MM (18 INCH) WIDE)

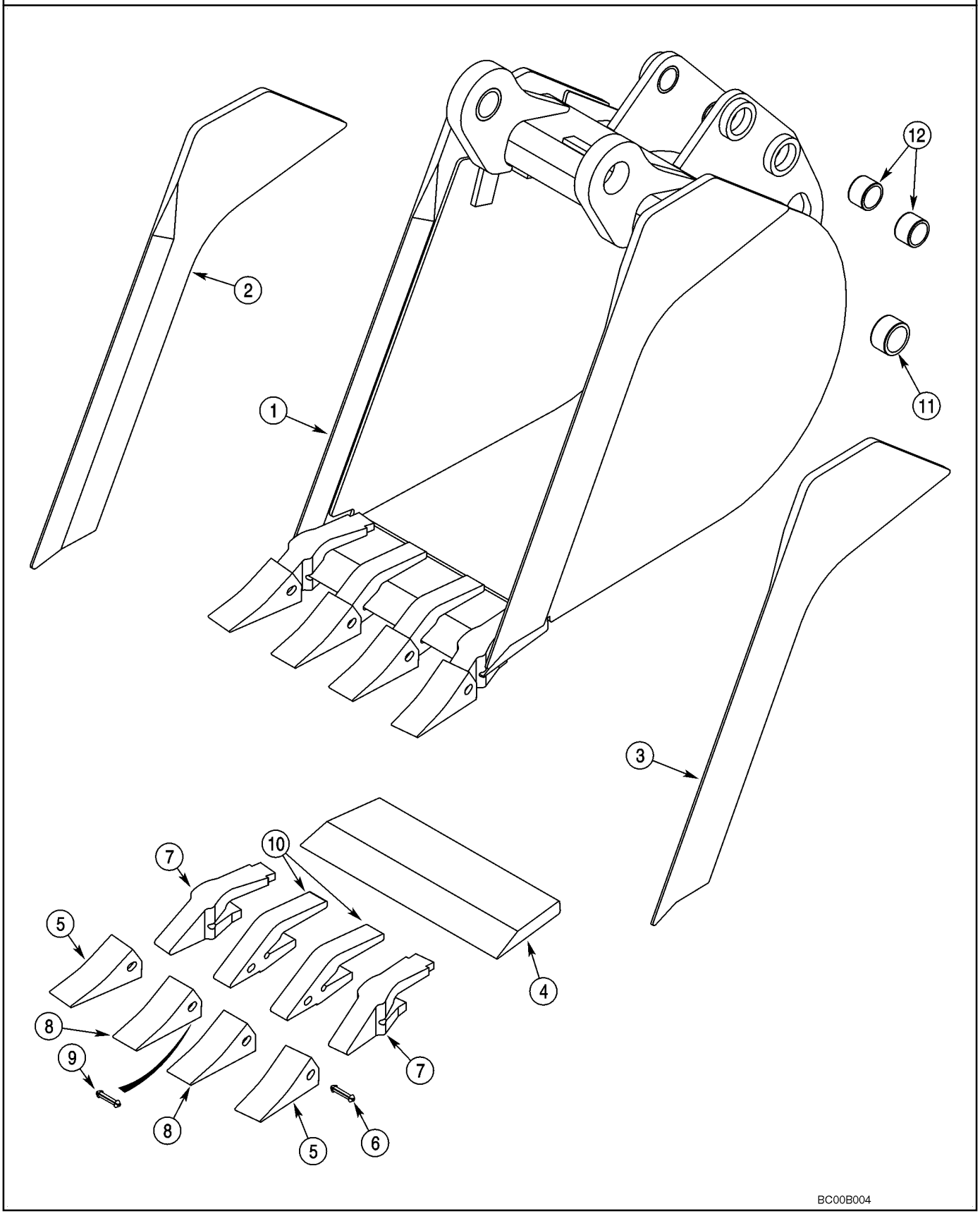

BUCKET, UNIVERSAL BACKHOE (457 MM (18 INCH) WIDE)

REF	FN	PART NUMBER	YR/SN	QTY	DESCRIPTION
1		376384A1		1	BUCKET 457 mm (18 in); With 4 Teeth; Order Through Parts Marketing; Incl. Ref 2 - 12
2		NSS		1	NOT SERVICED SEPARATELY Edge; Right-Hand
3		NSS		1	NOT SERVICED SEPARATELY Edge; Left-Hand
4		NSS		1	NOT SERVICED SEPARATELY Edge
		D139851		2	TOOTH Outer; Incl. Ref 5 - 7
5		D51750		1	POINT
6		245466A1		1	SPLIT PIN/SAFETY PIN
7		D138157		1	SHANK
		D139849		2	TOOTH Center; Incl. Ref 8 - 10; Order Ref 8 - 10
8		D51750		1	POINT
9		245466A1		1	SPLIT PIN/SAFETY PIN
10		D48212		1	SHANK
11		D37495		2	BUSHING
12		D30933		4	BUSHING

BUCKET, UNIVERSAL BACKHOE (610 MM (24 INCH) AND 762 MM (30 INCH) WIDE)

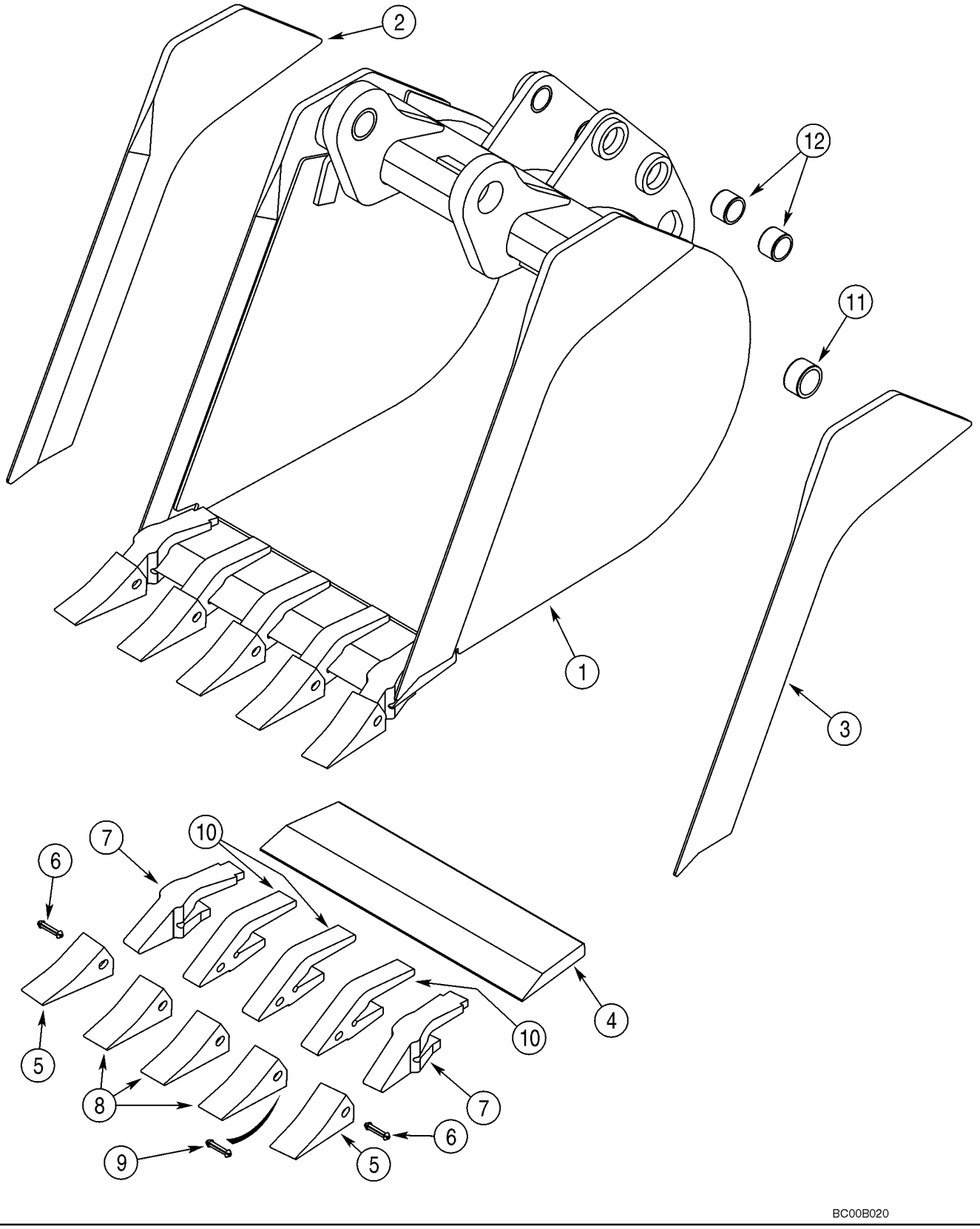

BUCKET, UNIVERSAL BACKHOE (610 MM (24 INCH) AND 762 MM (30 INCH) WIDE)

REF	FN	PART NUMBER	YR/SN	QTY	DESCRIPTION
1		365328A1		1	BUCKET 610 mm (24 in); With 5 Teeth; Order Through Parts Marketing; Incl. Ref 2 - 12
2		NSS		1	NOT SERVICED SEPARATELY Edge; Right-Hand
3		NSS		1	NOT SERVICED SEPARATELY Edge; Left-Hand
4		NSS		1	NOT SERVICED SEPARATELY Edge
		D139851		2	TOOTH Outer; Incl. Ref 5 - 7
5		D51750		1	POINT
6		245466A1		1	SPLIT PIN/SAFETY PIN
7		D138157		1	SHANK
		D139849		3	TOOTH Center; Incl. Ref 8 - 10; Order Ref 8 - 10
8		D51750		1	POINT
9		245466A1		1	SPLIT PIN/SAFETY PIN
10		D48212		1	SHANK
11		D37495		2	BUSHING
12		D30933		4	BUSHING
		REF			INSTRUCTION 610 mm (24 Inch) and 762 mm (30 Inch) Wide
1		376385A1		1	BUCKET 762 mm (30 in); With 6 Teeth; Not Illustrated; Order Through Parts Marketing; Incl. Ref 2 - 12
2		NSS		1	NOT SERVICED SEPARATELY Edge; Right-Hand
3		NSS		1	NOT SERVICED SEPARATELY Edge; Left-Hand
4		NSS		1	NOT SERVICED SEPARATELY Edge
		D139851		2	TOOTH Outer; Incl. Ref 5 - 7
5		D51750		1	POINT
6		245466A1		1	SPLIT PIN/SAFETY PIN
7		D138157		1	SHANK
		D139849		4	TOOTH Center; Incl. Ref 8 - 10; Order Ref 8 - 10
8		D51750		1	POINT
9		245466A1		1	SPLIT PIN/SAFETY PIN
10		D48212		1	SHANK
11		D37495		2	BUSHING
12		D30933		4	BUSHING

09 -30		p1	05/03

BUCKET, UNIVERSAL BACKHOE (914 MM (36 INCH) WIDE)

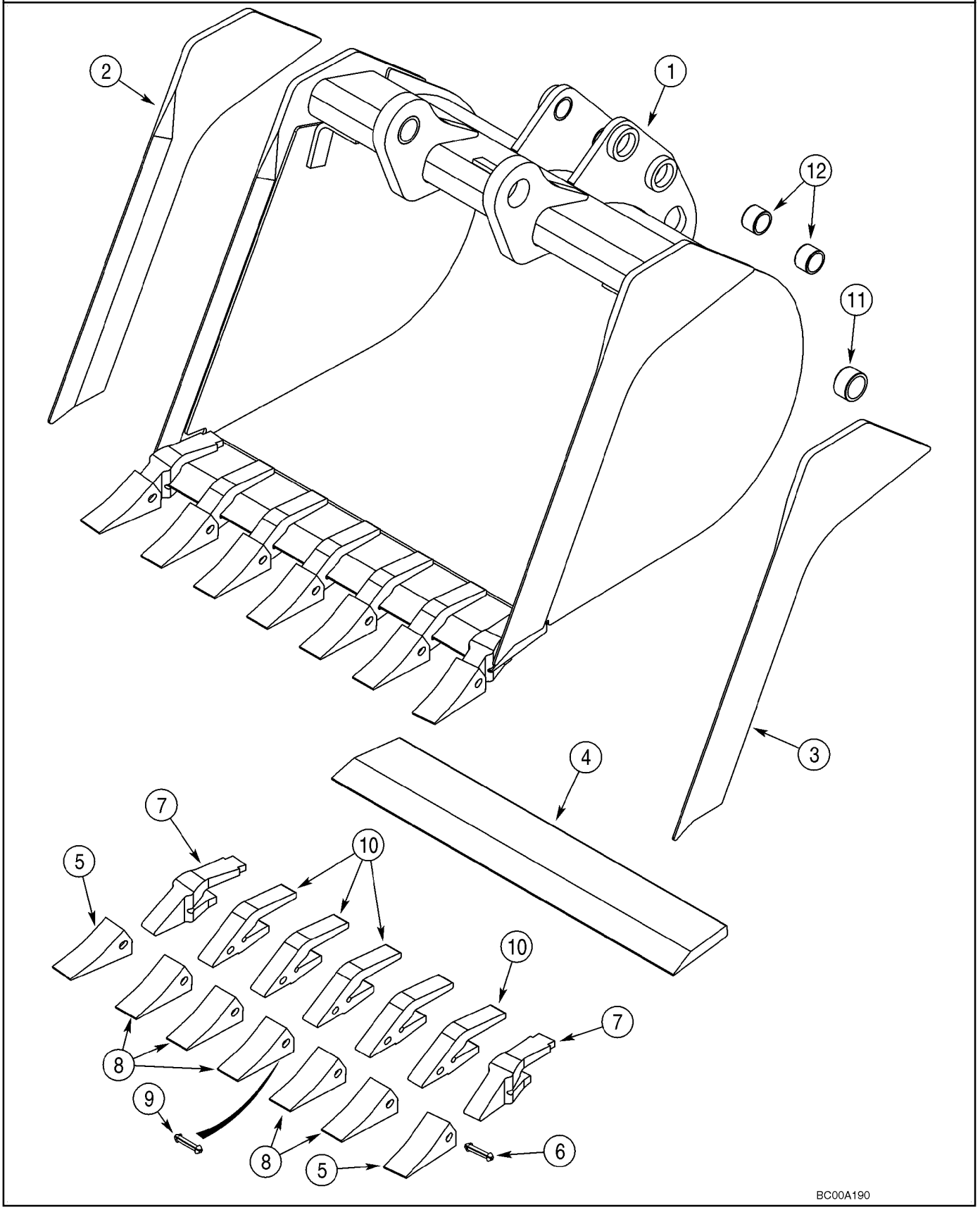

BUCKET, UNIVERSAL BACKHOE (914 MM (36 INCH) WIDE)

REF	FN	PART NUMBER	YR/SN	QTY	DESCRIPTION
1		376386A1		1	BUCKET 914 mm (36 in); With 7 Teeth; Order Through Parts Marketing; Incl. Ref 2 - 12
2		NSS		1	NOT SERVICED SEPARATELY Edge; Right-Hand
3		NSS		1	NOT SERVICED SEPARATELY Edge; Left-Hand
4		NSS		1	NOT SERVICED SEPARATELY Edge
		D139851		2	TOOTH Outer; Incl. Ref 5 - 7
5		D51750		1	POINT
6		245466A1		1	SPLIT PIN/SAFETY PIN
7		D138157		1	SHANK
		D139849		5	TOOTH Center; Incl. Ref 8 - 10; Order Ref 8 - 10
8		D51750		1	POINT
9		245466A1		1	SPLIT PIN/SAFETY PIN
10		D48212		1	SHANK
11		D37495		2	BUSHING
12		D30933		4	BUSHING

BUCKET, UNIVERSAL BACKHOE (610 MM (24 INCH) AND 762 MM (30 INCH) WIDE)

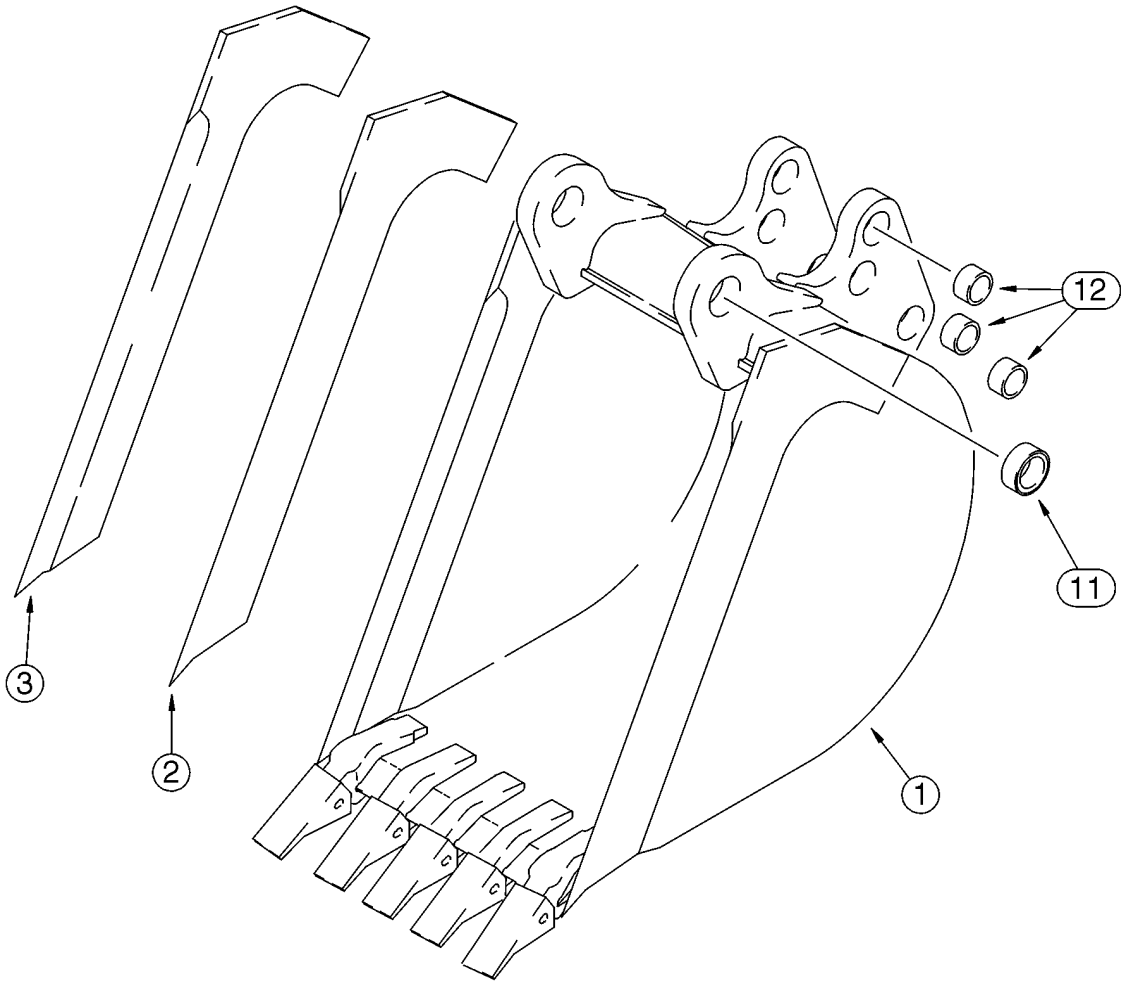

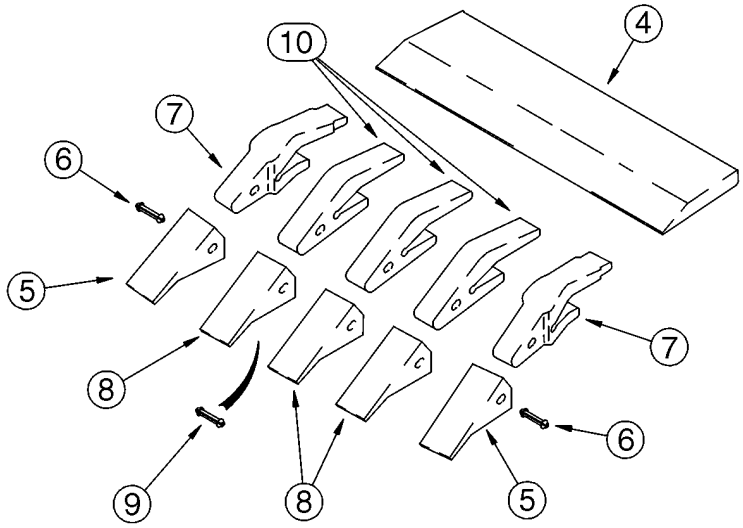

B9405159

BUCKET, UNIVERSAL BACKHOE (610 MM (24 INCH) AND 762 MM (30 INCH) WIDE)

REF	FN	PART NUMBER	YR/SN	QTY	DESCRIPTION
1		141232A2		1	BUCKET 610 mm (24 in); With 5 Teeth; Order Through Parts Marketing; Incl. Ref 2 - 12
2		141234A1		1	EDGE, CUTTING Right-Hand
3		141233A1		1	EDGE, CUTTING Left-Hand
4		D142012		1	EDGE, CUTTING
		D139851		2	TOOTH Outer; Incl. Ref 5 - 7
5		D51750		1	POINT
6		245466A1		1	SPLIT PIN/SAFETY PIN
7		D138157		1	SHANK
		D139849		3	TOOTH Center; Incl. Ref 8 - 10; Order Ref 8 - 10
8		D51750		1	POINT
9		245466A1		1	SPLIT PIN/SAFETY PIN
10		D48212		1	SHANK
11		D37495		2	BUSHING
12		D30933		6	BUSHING
1		190267A2		1	BUCKET 762 mm (30 in); With 5 Teeth; Not Illustrated; Order Through Parts Marketing; Incl. Ref 2 - 12
2		141234A1		1	EDGE, CUTTING Right-Hand
3		141233A1		1	EDGE, CUTTING Left-Hand
4		D145061		1	EDGE, CUTTING
		D139851		2	TOOTH Outer; Incl. Ref 5 - 7
5		D51750		1	POINT
6		245466A1		1	SPLIT PIN/SAFETY PIN
7		D138157		1	SHANK
		D139849		3	TOOTH Center; Incl. Ref 8 - 10; Order Ref 8 - 10
8		D51750		1	POINT
9		245466A1		1	SPLIT PIN/SAFETY PIN
10		D48212		1	SHANK
11		D37495		2	BUSHING
12		D30933		6	BUSHING

FROST POINT ASSEMBLY

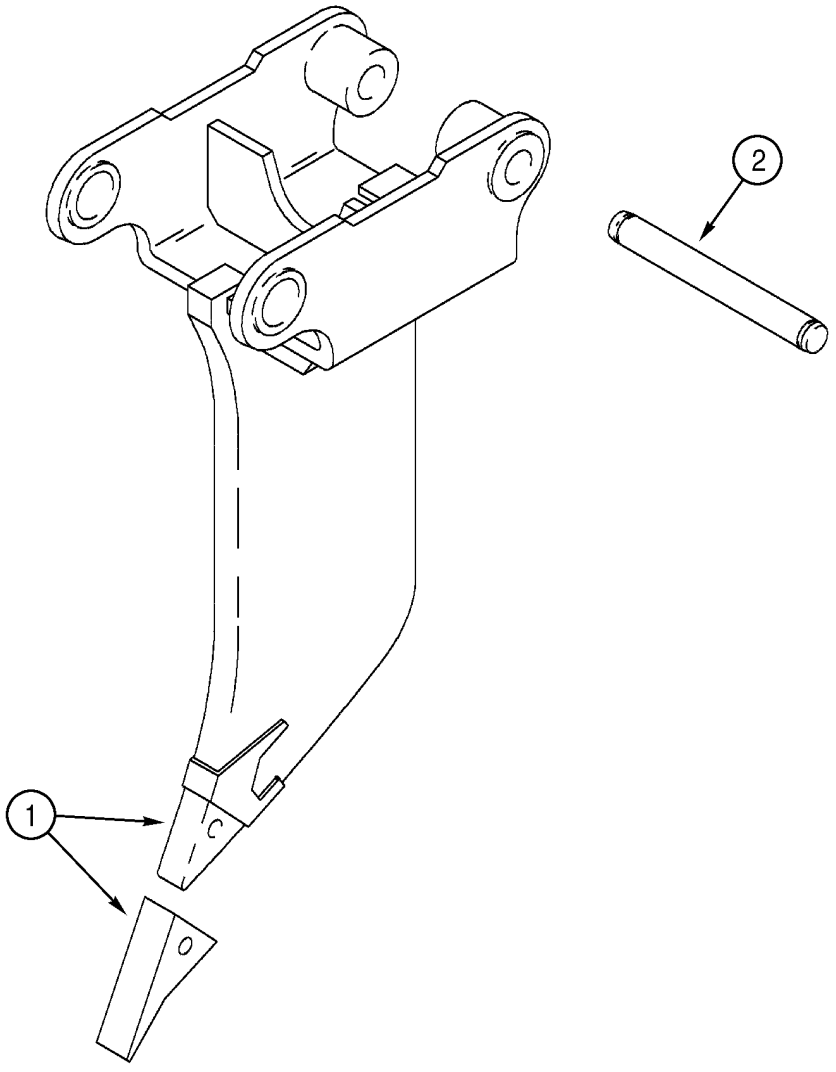

BS00H128

FROST POINT ASSEMBLY

REF	FN	PART NUMBER	YR/SN	QTY	DESCRIPTION
1		319467A1		1	POINT Frost Point Assembly; Incl. (2) Pin Retaining Bolts; Component Parts Not Serviced Separately
2		D50696		1	PIN

COUNTERWEIGHT, FRONT

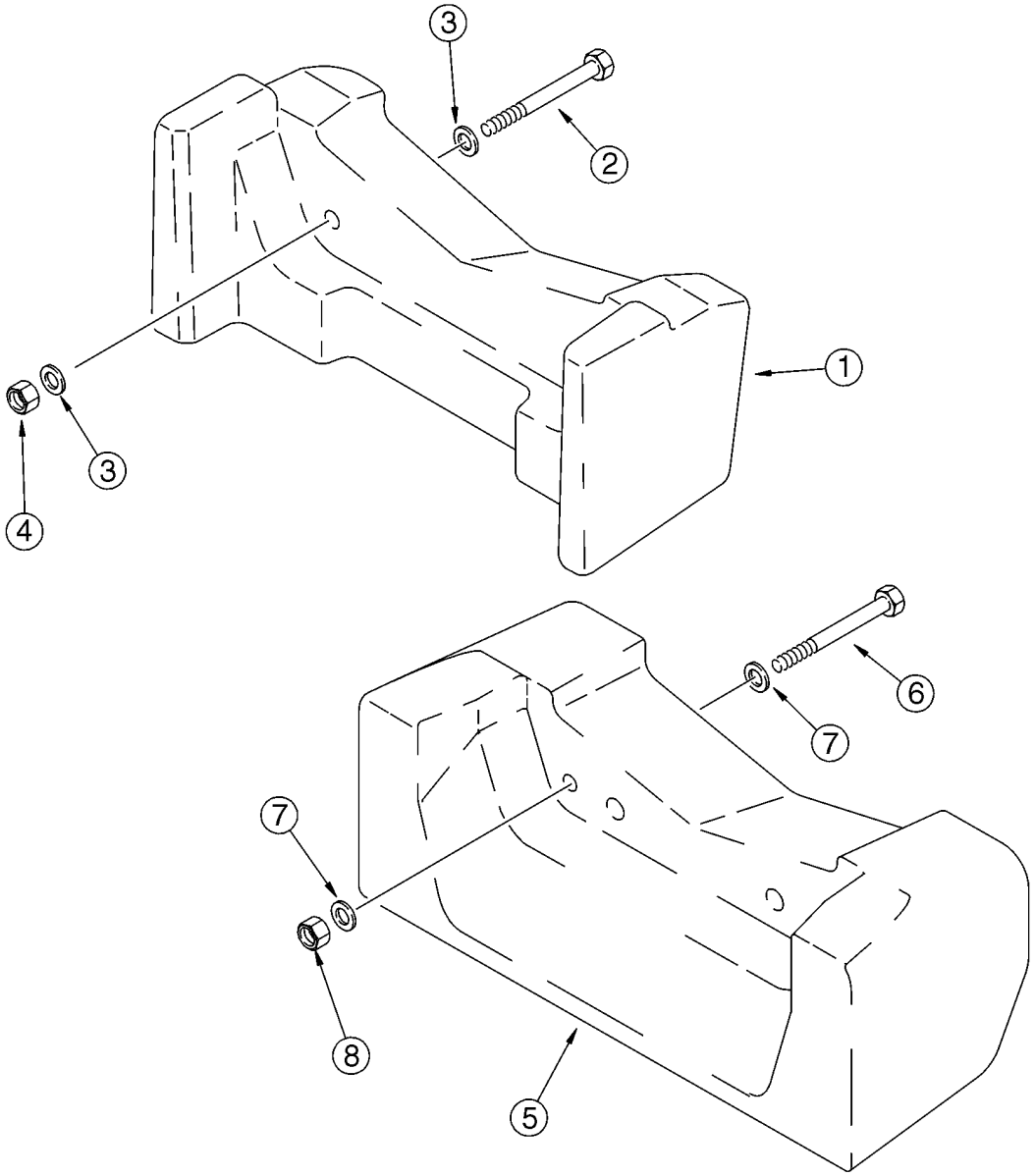

BT97N084

COUNTERWEIGHT, FRONT

REF	FN	PART NUMBER	YR/SN	QTY	DESCRIPTION
1		360867A1		1	WEIGHT 200 kg (441 lbs); If Used
2		827-20170		2	SCREW
3		896-11020		4	WASHER 22 x 37 x 4 mm
4		829-1420		2	NUT M20; 10
5		230513A1		1	BALANCER 408 kg (900 lbs); If Used
6		827-20170		2	SCREW
7		896-11020		4	WASHER 22 x 37 x 4 mm
8		829-1420		2	NUT M20; 10

CHASSIS - MOUNTS, POD

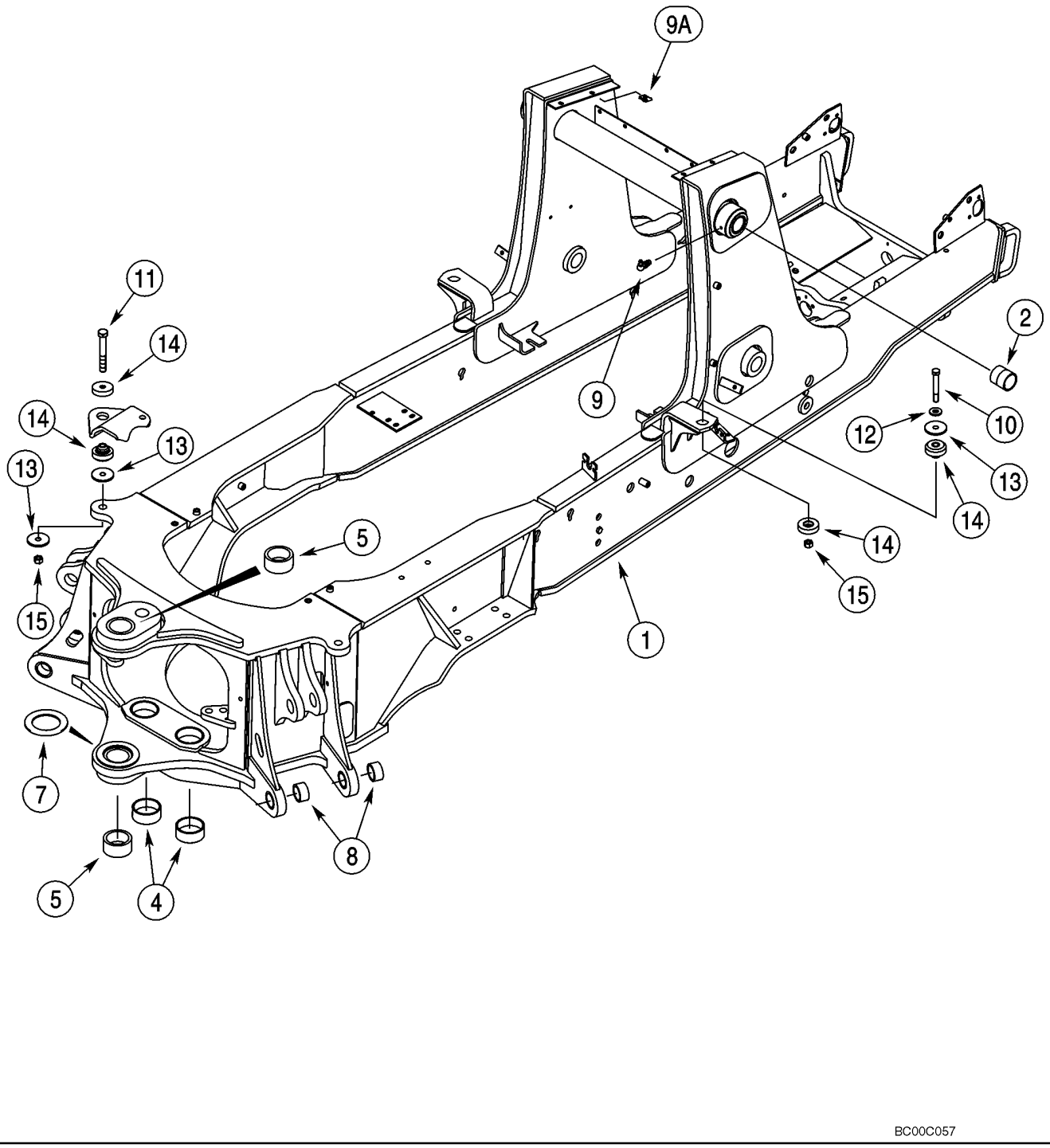

CHASSIS - MOUNTS, POD

REF	FN	PART NUMBER	YR/SN	QTY	DESCRIPTION
		REF			INSTRUCTION Chassis
1		359711A1		1	CHASSIS Incl. Ref 2 - 8
2		180427A1		2	BUSHING
4		114318A1		2	BUSHING 80 x 90 x 29.3 mm
5		D151058		1	BUSHING 70 mm ID
7		220413A1		1	SPACER 93 x 135 x 5 mm
8		107124A1		4	BUSHING
9		219-55		2	NIPPLE, LUBE 90 deg, 1/8 PT x 27/32
9A		833-40310		4	NUT M10
		REF			INSTRUCTION Operator Compartment Pod Mounts
10		827-16085		2	BOLT M16 x 85; 10.9
11		827-16100		2	BOLT M16 x 100; 10.9
12		896-11016		2	WASHER 17,5 x 30 x 4 mm
13		186977A1		6	WASHER
14		411892A1		4	MOUNTING,RUBBER Replaces 380724A2
15		829-1416		4	NUT M16; 10

09 -35		p1	05/03

TANK, OIL - BOX, BATTERY AND TOOL

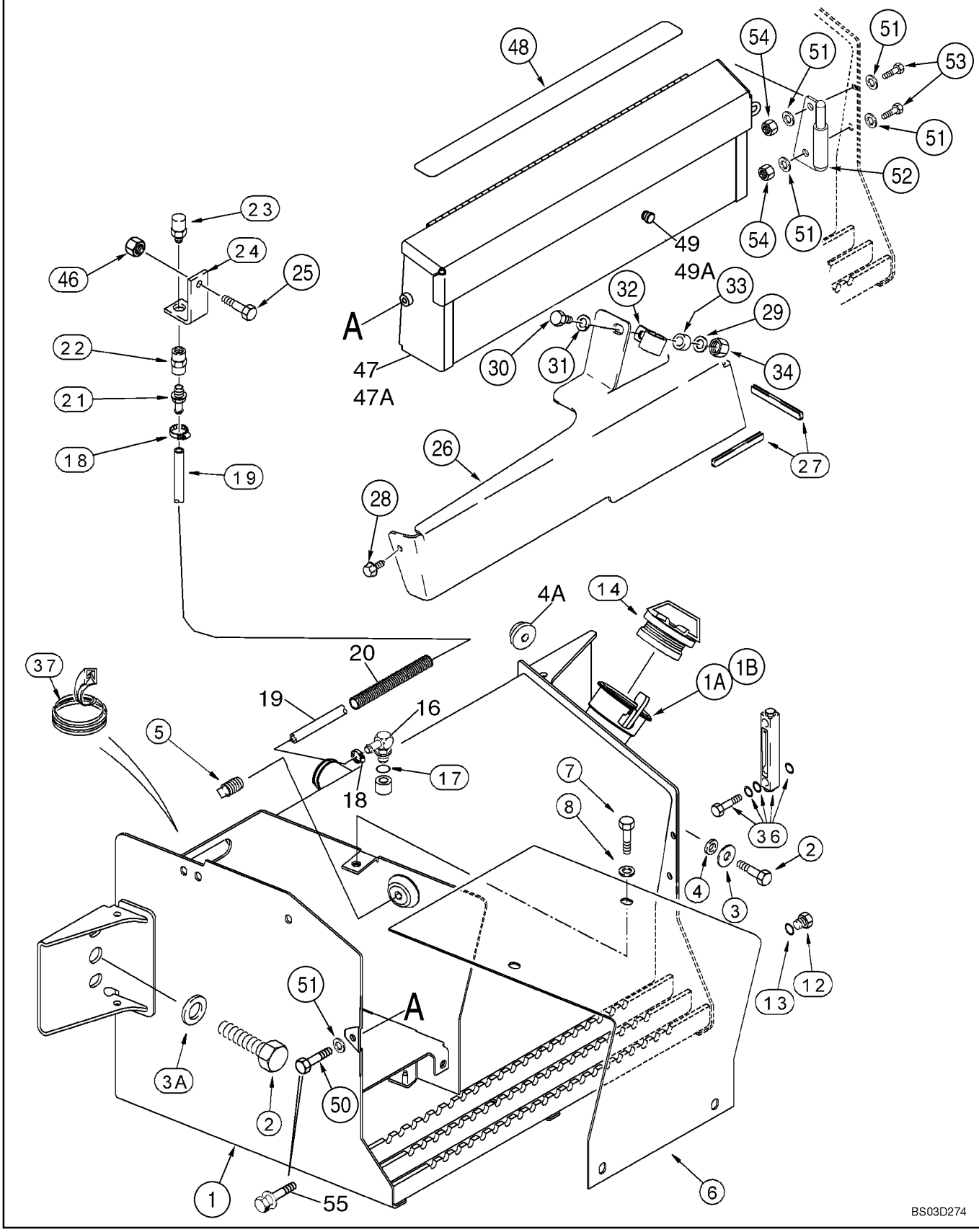

TANK, OIL - BOX, BATTERY AND TOOL

REF	FN	PART NUMBER	YR/SN	QTY	DESCRIPTION
1		353389A4		1	TANK, HYDRAULIC OIL Right-Hand Side Of Chassis; Incl. Ref 1A, 1B, 12; If Used
1		87408255		1	TANK, HYDRAULIC OIL Right-Hand Side of Chassis; Incl. Ref 1A, 1B, 12; If Used
1A		230857A1		1	SCREEN, FILTER Strainer; Fill Tube
1B		440-1066		2	SCREW No. 6 x 3/8
2		627-20060		4	SCREW M20 x 60; 10.9; Use With Loctite 345-49
3		302358A1		2	WASHER Right-Hand
3A		896-11020		2	WASHER 22 x 37 x 4 mm; Left-Hand
4		185926A1		1	SPACER Right-Hand; Upper
4A		409473A1		1	SPACER Right-Hand; Lower
5		217-436		1	PLUG 3/8 PT; If Used
6		231656A1		1	COVER Battery
7		614-10020		4	CAPSCREW M10 x 20; Use With 345-56 Loctite No. 767; Replaces 614-10025 25mm lg Bolt Used On Some Models
8		495-21044		4	WASHER 7/16 x 1 x 5/64
12		218-5211		1	PLUG 7/8 Or, Drain; Incl. Ref 13
13		237-6010		1	O-RING 3/4 ID x 3/32, Boss Seal
14		138595A1		1	PLUG
16		217-347		1	FITTING 3/8 stem x 9/16 Or; Incl. Ref 17
17		237-6006		1	O-RING 15/32 ID x 5/64, Boss Seal
18		214-1406		2	CLAMP 7/16 - 25/32
19		393161A1		1	HOSE 912 mm (35-29/32 in); Vent
20		143219A1		1	PROTECTOR
21		217-380		1	FITTING 3/8 stem x PT; Use With 345-147 Sealant
22		217-1102		1	FITTING 3/8 in
23		361776A1		1	BREATHER 3/5 PSI; Use With 345-147 Sealant; Replaces 120943A1, 6/12 PSI Breather
24		122603A1		1	SUPPORT
25		711-10030		1	SCREW M10 x 30
26		399959A2		1	COVER Right-Hand Loader Lift Frame Tubing
27		191047A1		1	MOLDING 315 mm (12-13/32 in) lg; Apply 75 mm (3 in) of Trim to Front Lower Edge and 575 mm (22-41/64 in) of Trim to Outside Lower Edge of Cover

09 -35		p2	05/03

TANK, OIL - BOX, BATTERY AND TOOL

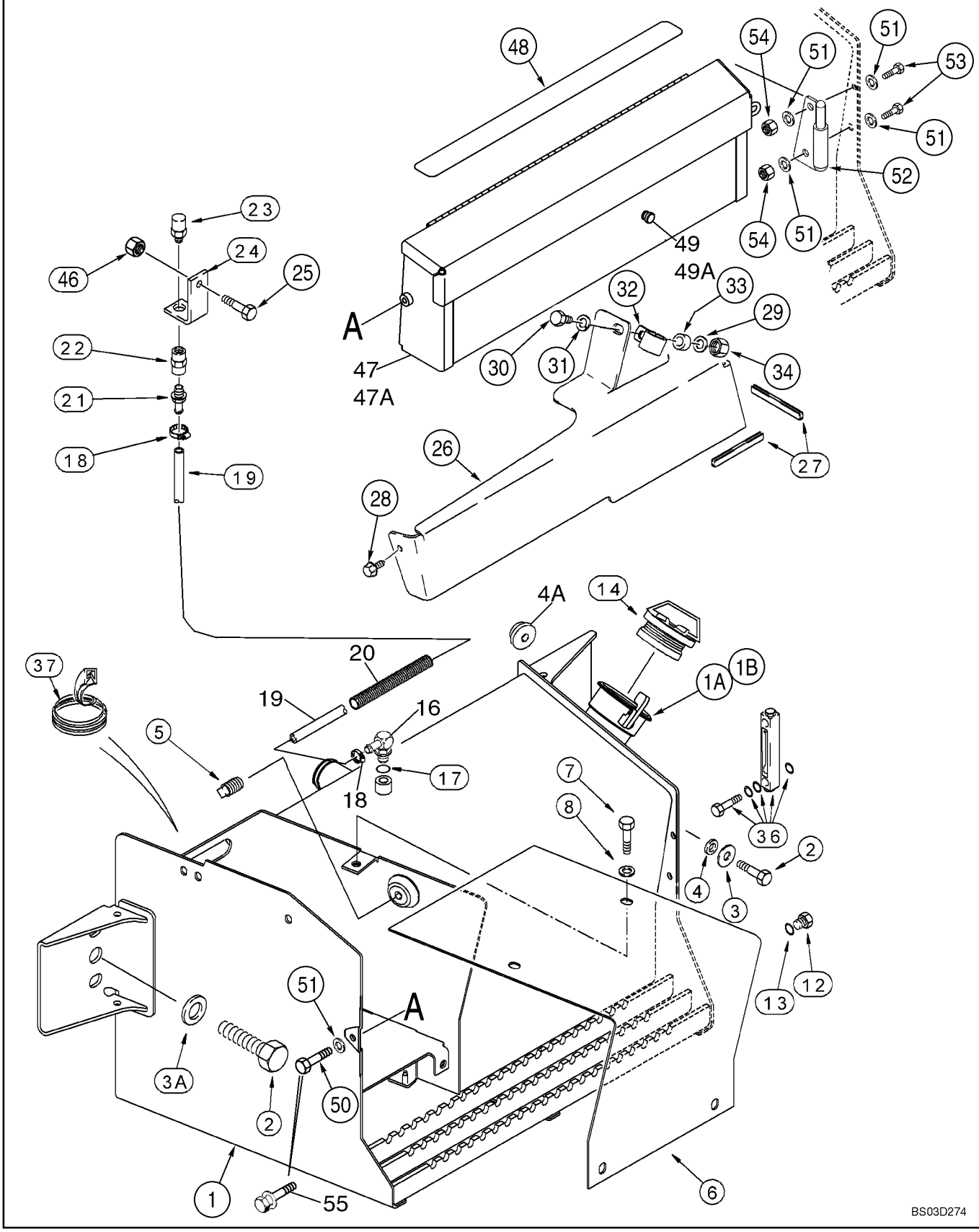

TANK, OIL - BOX, BATTERY AND TOOL

REF	FN	PART NUMBER	YR/SN	QTY	DESCRIPTION
28		307577A1		1	BOLT M8 x 20
29		895-11010		1	WASHER 11 x 21 x 2 mm
30		814-10045		1	CAPSCREW M10 x 45
31		892-11010		1	WASHER, LOCK M10
32		D138055		1	CLAMP
33		120303A1		1	SPACER
34		829-1410		1	NUT M10; 10.9
35		345-49		1	LOCTITE Loctite, 1 ml
36		226456A1		1	GAUGE Aluminum; Includes (2) Hollow Head Bolts and (4) O-Rings; Component Parts Not Serviced Separately; Used With Ref 35
37		D40442		1	MOLDING 305 mm (12 in); Cut From F42827
46		829-1410		1	NUT M10; 10.9
47		380807A3		1	BOX, TOOL No Longer Available; Order 380807A4, Ref 47A
47A		380807A4		1	BOX, TOOL Use With L60224 Ref 49A, Bumper
48		D80270		1	STRIP 635 mm (25 in)
49		356283A1		1	GROMMET For 5/16 in Hole; Used With 380807A3 Ref 47, Tool Box; If Used
49A		L60224		1	DAMPER, HITCH For 1/2 in Hole; Used With 380807A4 Ref 47A, Tool Box
50		614-10025		1	BOLT M10 x 25; If Used
51		895-11010		4-5	WASHER 11 x 21 x 2 mm
52		382202A2		1	HINGE
53		614-10025		2	BOLT M10 x 25
54		829-1410		2	NUT M10; 10.9
55		121856A1		1	SCREW M10 x 30; Pointed Self-Aligning With Washer; If Used

09 -36		p1	05/03

RADIATOR WRAPPER

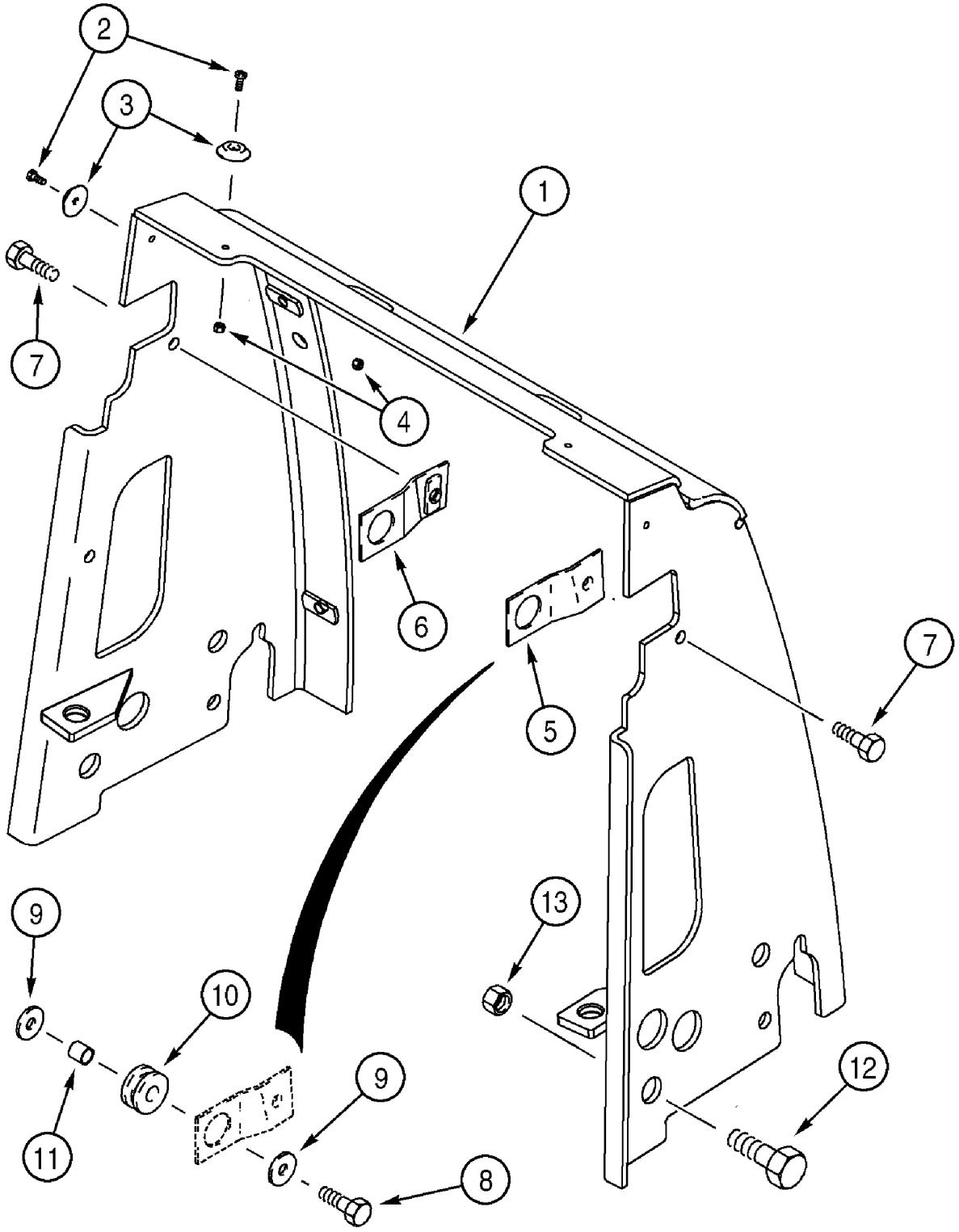

RADIATOR WRAPPER

REF	FN	PART NUMBER	YR/SN	QTY	DESCRIPTION
1		363388A1		1	SHROUD ASSY.
2		440-11010		4	SCREW No. 10 x 5/8
3		109879A1		4	SPACER Hood
4		231-14109		4	NUT No. 10
5		176952A1		1	PLATE, LARGE Radiator; Right-Hand
6		176957A1		1	PLATE, LARGE Radiator; Left-Hand
7		614-10020		2	CAPSCREW M10 x 20
8		614-10035		2	SCREW M10 x 35
9		K691987		4	WASHER
10		D132895		2	GROMMET
11		D146035		2	BUSHING, LARGE
12		614-20035		4	CAPSCREW M20 x 35
13		829-1420		4	NUT M20; 10

09 -37		p1	05/03

GUARD, PUMP

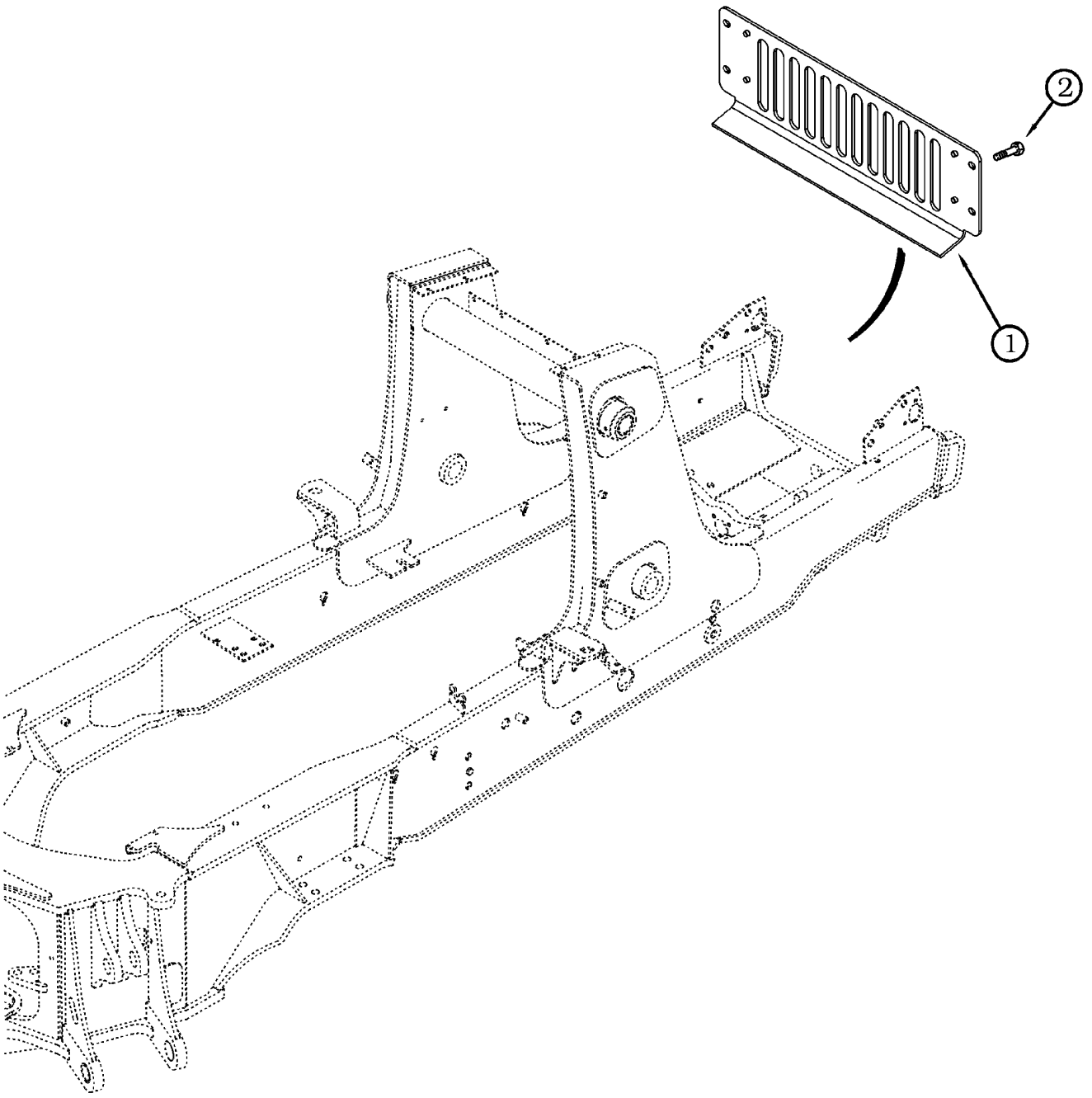

GUARD, PUMP

REF	FN	PART NUMBER	YR/SN	QTY	DESCRIPTION
1		336857A1		1	PLATE
2		392828A2		4	BOLT

BAFFLE - PLATE (MODELS WITH AIR CONDITIONING)

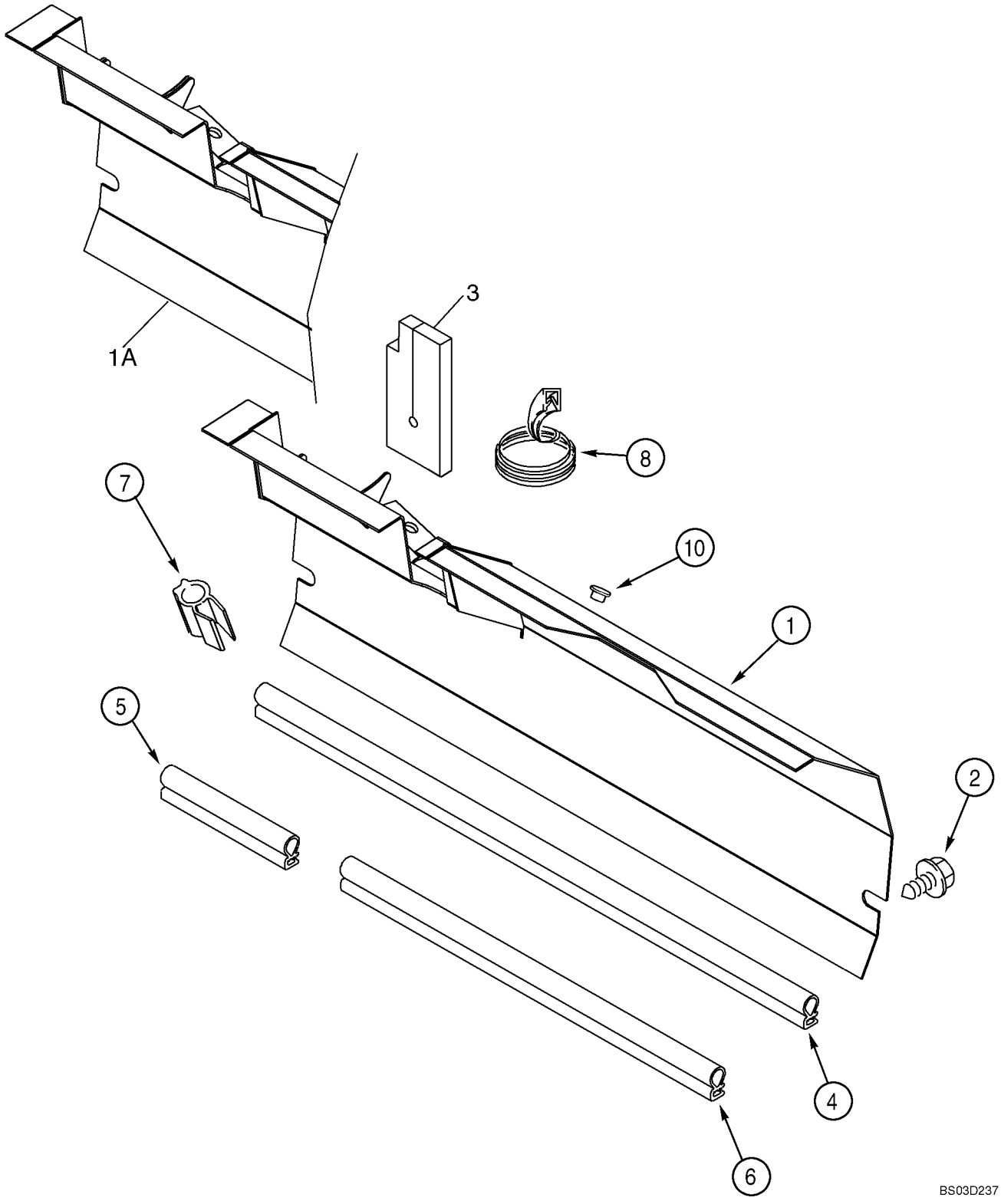

BAFFLE - PLATE (MODELS WITH AIR CONDITIONING)

REF	FN	PART NUMBER	YR/SN	QTY	DESCRIPTION
1		313534A1		1	PLATE If Used
1A		313534A2		1	PLATE ASSY. If Used
2		121856A1		2	SCREW M10 x 30
3		305690A1		1	SEAL Foam; Adhesive Back
4		245450A1		1	SEAL 571 mm (22-1/2 in)
5		246063A1		1	SEAL 170 mm (6-11/16 in); Cut From 233749A1
6		246064A1		1	SEAL 365 mm (14-3/8 in); Cut From 233749A1
7		185493A1		2	SEAL 160 mm (6-5/16 in); Cut From 137315A1
8		D36179		1	LINING 108 mm (4-1/4 in); Cut From F42827
10		353-402		1	PLUG 3/8; If Used

BAFFLE - PLATE (MODELS WITHOUT AIR CONDITIONING)

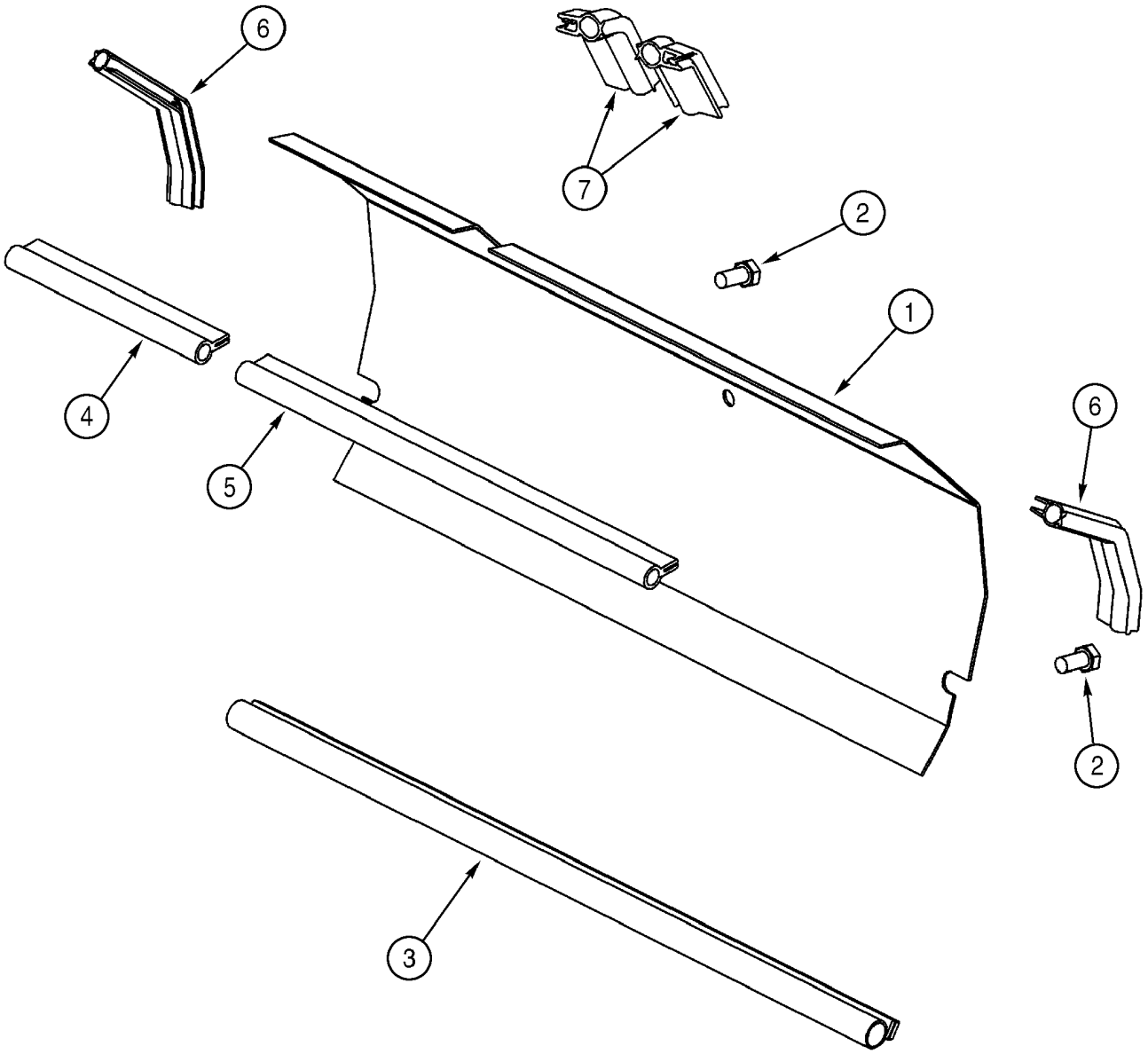

BS99H111

BAFFLE - PLATE (MODELS WITHOUT AIR CONDITIONING)

REF	FN	PART NUMBER	YR/SN	QTY	DESCRIPTION
		REF			INSTRUCTION Used With Fuel Cooler
1		362006A1		1	PLATE
2		121856A1		2	SCREW M10 x 30
3		245450A1		1	SEAL 571 mm (22-1/2 in)
4		246063A1		1	SEAL 170 mm (6-11/16 in); Cut From 233749A1
5		246064A1		1	SEAL 365 mm (14-3/8 in); Cut From 233749A1
6		185493A1		2	SEAL 160 mm (6-5/16 in); Cut From 137315A1
7		363403A1		2	SEAL 57 mm (2-1/4 in)

HOOD - PANELS, SIDE

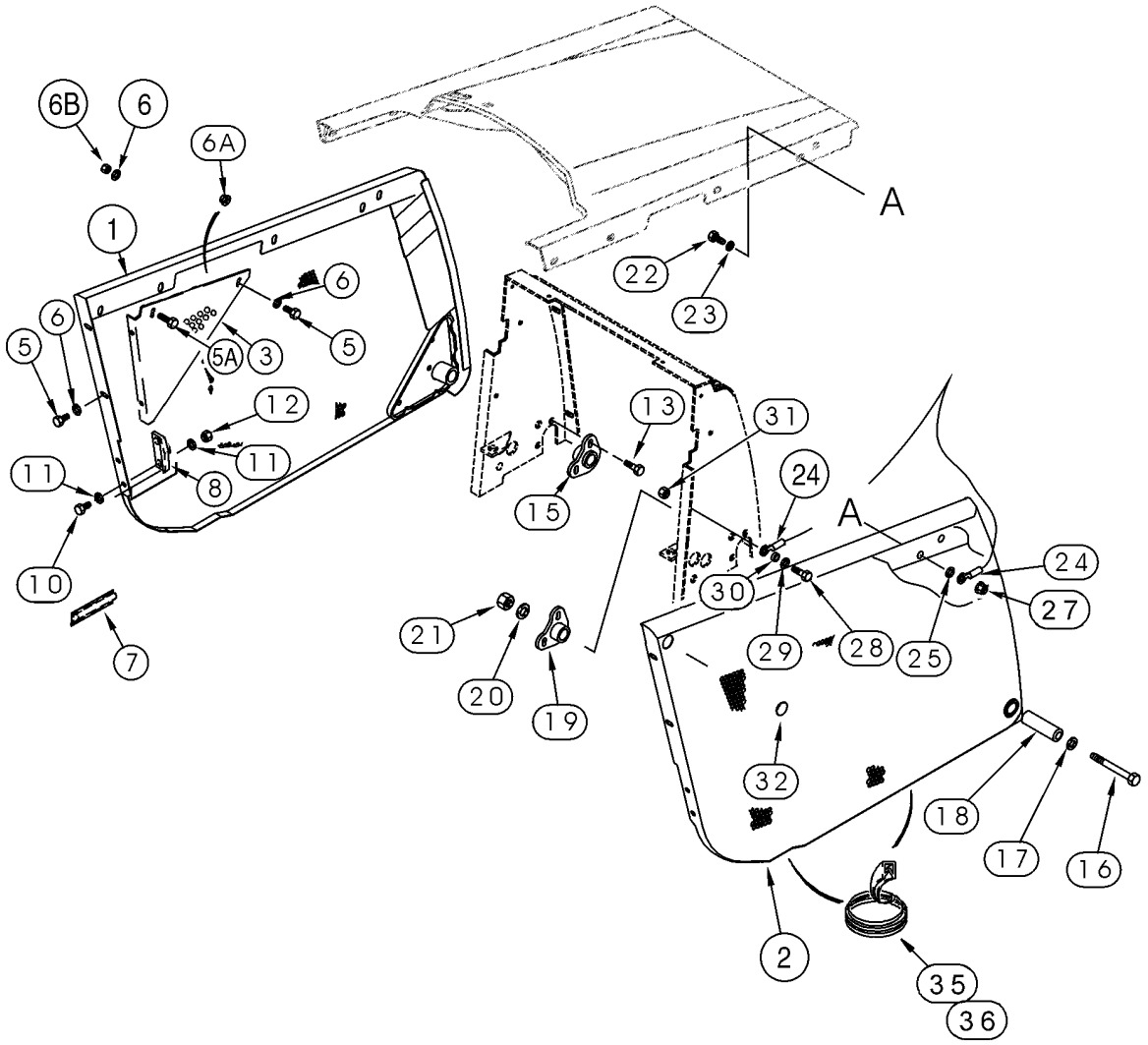

BS00C168

HOOD - PANELS, SIDE

REF	FN	PART NUMBER	YR/SN	QTY	DESCRIPTION
1		380298A4		1	PANEL, SIDE Left-Hand Side; Replaces 380298A3
2		380297A4		1	PANEL, SIDE Right-Hand Side; Replaces 380297A3
3		362609A1		1	BRACE Left-Hand
4		362607A1		1	BRACE Right-Hand; Not Illustrated
5		614-10025		8	BOLT M10 x 25
5A		614-10025		2	BOLT M10 x 25
6		895-11010		8	WASHER 11 x 21 x 2 mm
6A		825-2410		2	NUT M10
6B		829-1410		2	NUT M10; 10.9
7		183168A1		1	HANDLE Left-Hand
8		D143715		1	SUPPORT Left-Hand
9		D143714		1	SUPPORT Right-Hand; Not Illustrated
10		614-10025		4	BOLT M10 x 25
11		895-11010		8	WASHER 11 x 21 x 2 mm
12		832-10410		4	NUT M10
13		121856A1		4	SCREW M10 x 30
15		310843A1		1	PIVOT Left-Hand
16		814-12120		2	SCREW
17		896-15012		2	WASHER 13,5 x 28 x 4 mm
18		299249A1		2	SPACER
19		310842A1		1	PIVOT
20		896-15012		2	WASHER 13,5 x 28 x 4 mm
21		829-1412		2	NUT M12; 10
22		614-10025		1	BOLT M10 x 25
23		895-11010		1	WASHER 11 x 21 x 2 mm
24		144908A2		1	CABLE Replaces 144908A1
25		D143417		1	SPACER
27		825-2410		1	NUT M10
28		614-10030		1	SCREW M10 x 30
29		895-11010		1	WASHER 11 x 21 x 2 mm
30		396605A1		1	SPACER
31		825-2410		1	NUT M10
32		D140267		2	PLUG
35		234923A1		2	PROTECTOR 150 mm (5-29/32 in); Models With Air Conditioning

HOOD - PANELS, SIDE

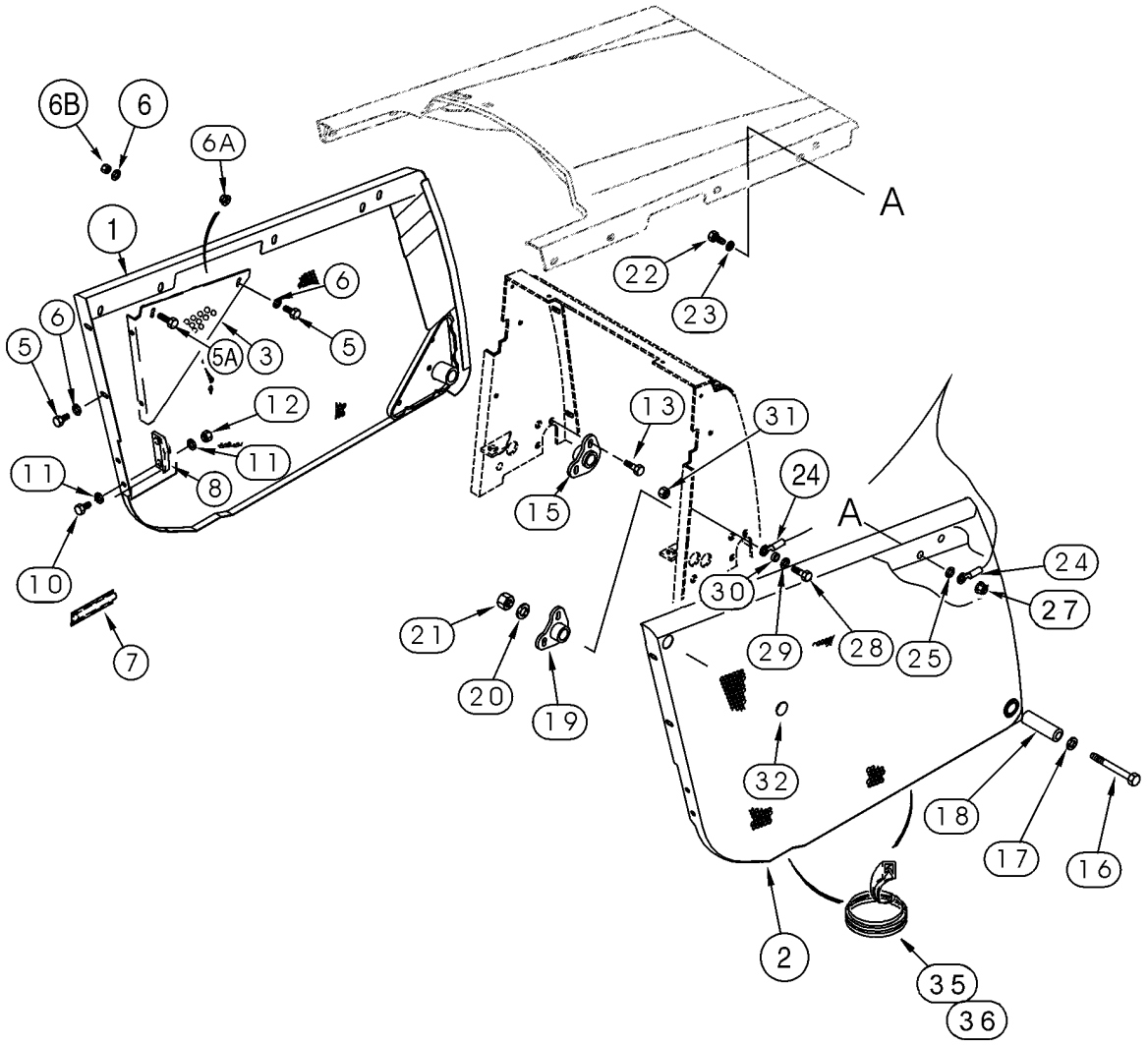

BS00C168

HOOD - PANELS, SIDE

REF	FN	PART NUMBER	YR/SN	QTY	DESCRIPTION
36		363078A2		2	MOLDING 830 mm (32-11/16 in); Models With Air Conditioning

09 -41		p1	05/03

HOOD - GRILLE AND CHAFF SCREEN

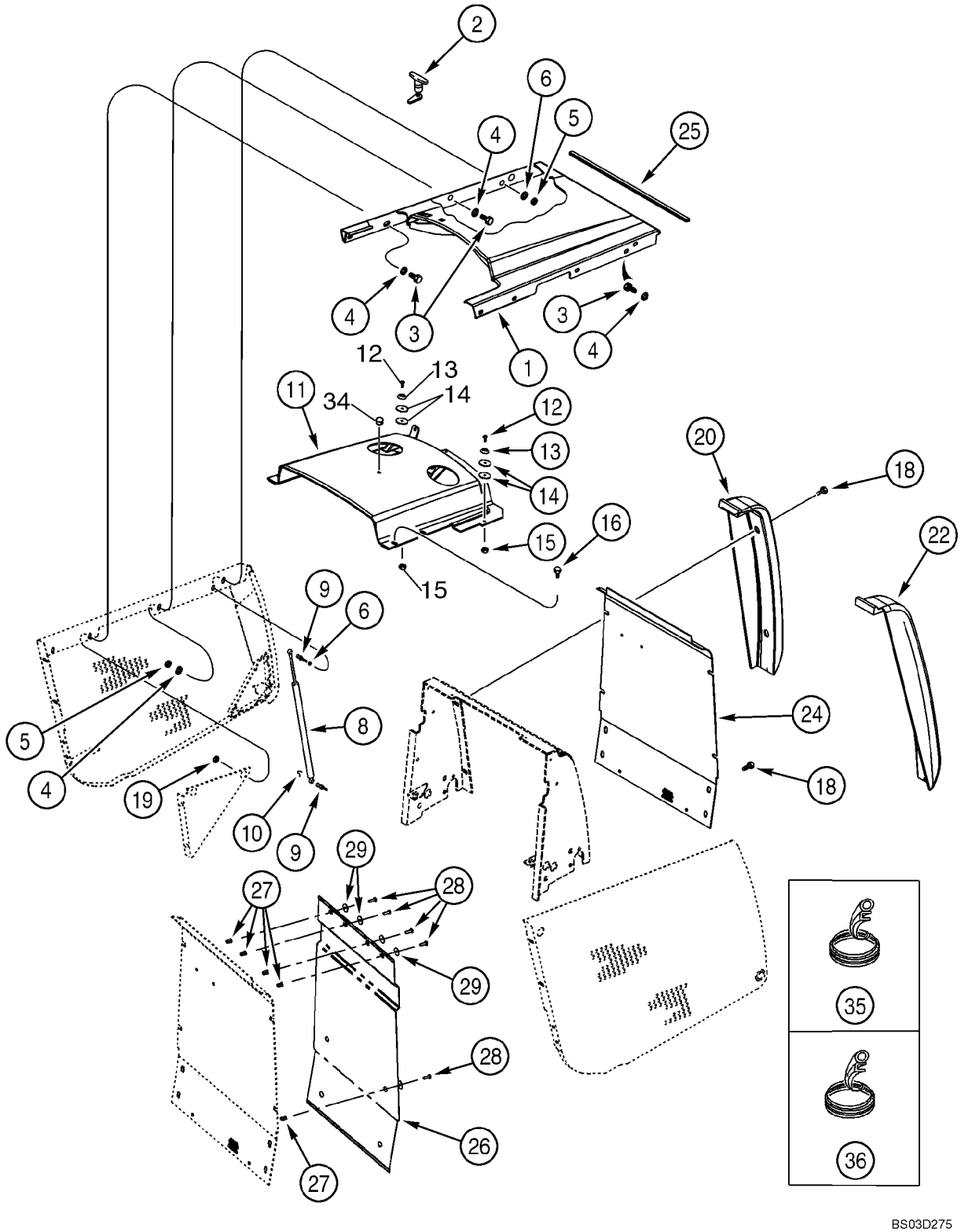

HOOD - GRILLE AND CHAFF SCREEN

REF	FN	PART NUMBER	YR/SN	QTY	DESCRIPTION
1		362340A6		1	HOOD Replaces 362340A4
2		175599A1		1	LATCH
3		614-10025		6	BOLT M10 x 25
4		895-11010		7	WASHER 11 x 21 x 2 mm
5		825-2410		6	NUT M10
6		895-11010		4	WASHER 11 x 21 x 2 mm
8		114980A1		2	SHOCK ABSORBER Spring
9		139363A1		4	BALL JOINT
10		F44883		4	CLIP,ELECTRICAL
11		356800A8		1	HOOD Replaces 356800A5 and 356800A7
12		440-11012		3	SCREW No. 10 x 3/4
13		109879A1		3	SPACER
14		185325A1		4	SPACER
15		231-14109		3	NUT No. 10
16		392828A2		4	BOLT
18		392828A2		8	BOLT
19		825-2410		4	NUT M10
20		381927A1		1	BUMPER Left-Hand
22		381926A1		1	BUMPER Right-Hand
24		355542A2		1	GRILLE
25		233262A1		1	SEAL
26		253889A1		1	PROTECTOR
27		255447A1		8	RIVET
28		257381A1		8	SCREW
29		257382A1		8	WASHER
34		353-402		1	PLUG 3/8; Models Without Windshield Washer
35		234923A1		2	PROTECTOR 150 mm (5-29/32 in); If Used
36		363078A2		2	MOLDING 830 mm (32-11/16 in); If Used

09 -42		p1	05/03

PLATES, FLOOR - FLOORMATS

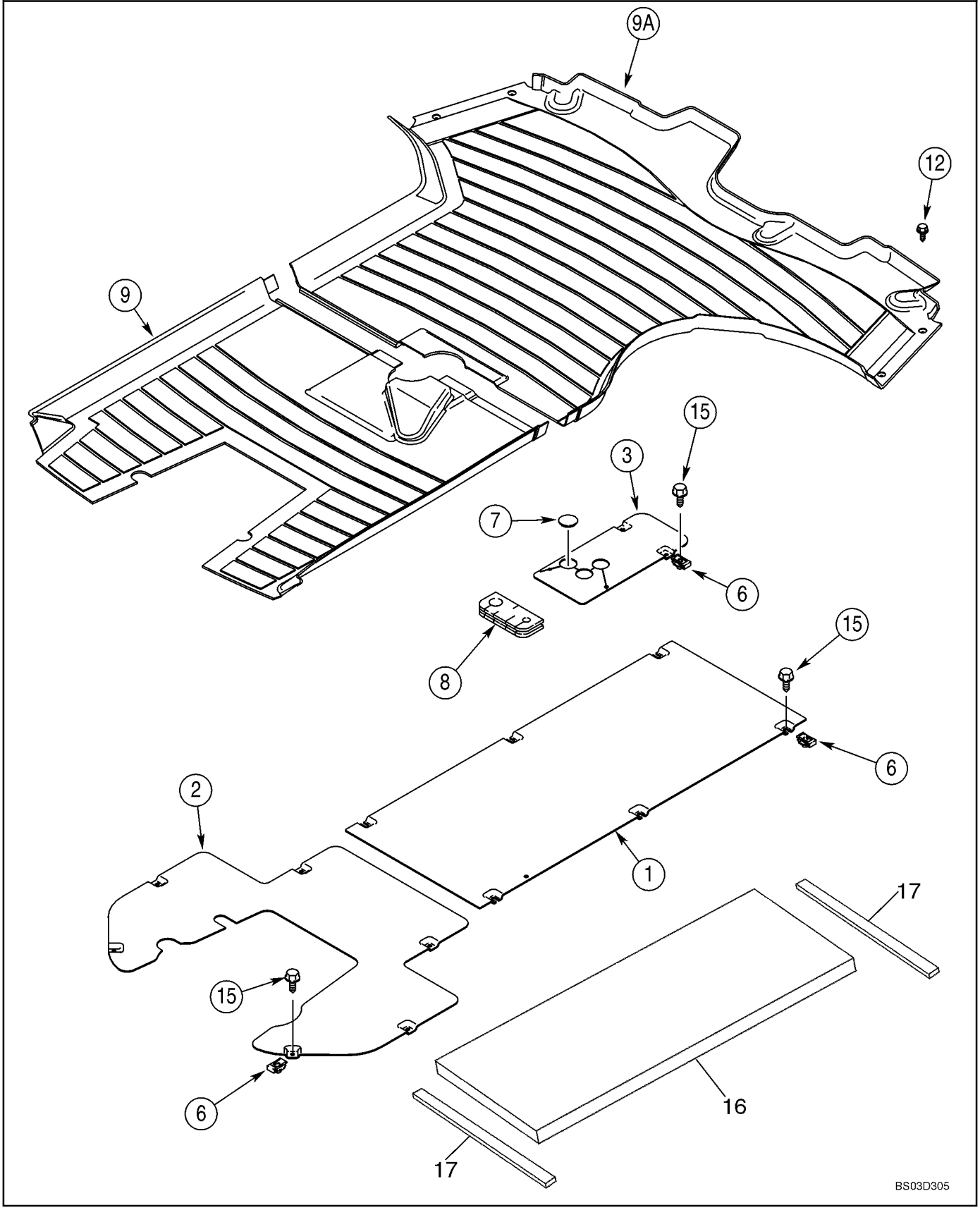

PLATES, FLOOR - FLOORMATS

REF	FN	PART NUMBER	YR/SN	QTY	DESCRIPTION
1		355984A2		1	PLATE, LARGE Front
2		355983A3		1	PLATE, LARGE Rear
3		127377A1		1	PLATE, LARGE Loader Control Lever
6		833-40406		16	NUT M6
7		353-422		1	PLUG Models Without Clam Bucket
8		393623A1		1	BLOCK Floor
9		391626A1		1	MAT, FLOOR Floormat; Rear; Cab Models
9A		391625A2		1	MAT, FLOOR Floormat; Front; Cab Models
12		280-16516		4	SCREW No. 10 x 1
15		233724A1		16	SCREW M6 x 25
16		411074A1		1	SEAL Cab Models
17		181981A1		2	GASKET Strip; Foam; Adhesive Back; Cab Models

09 -43		p1	05/03

FENDER COVER, LEFT-HAND - PANEL, REAR CLOSURE (STORAGE TRAY WITH CUP HOLDER)

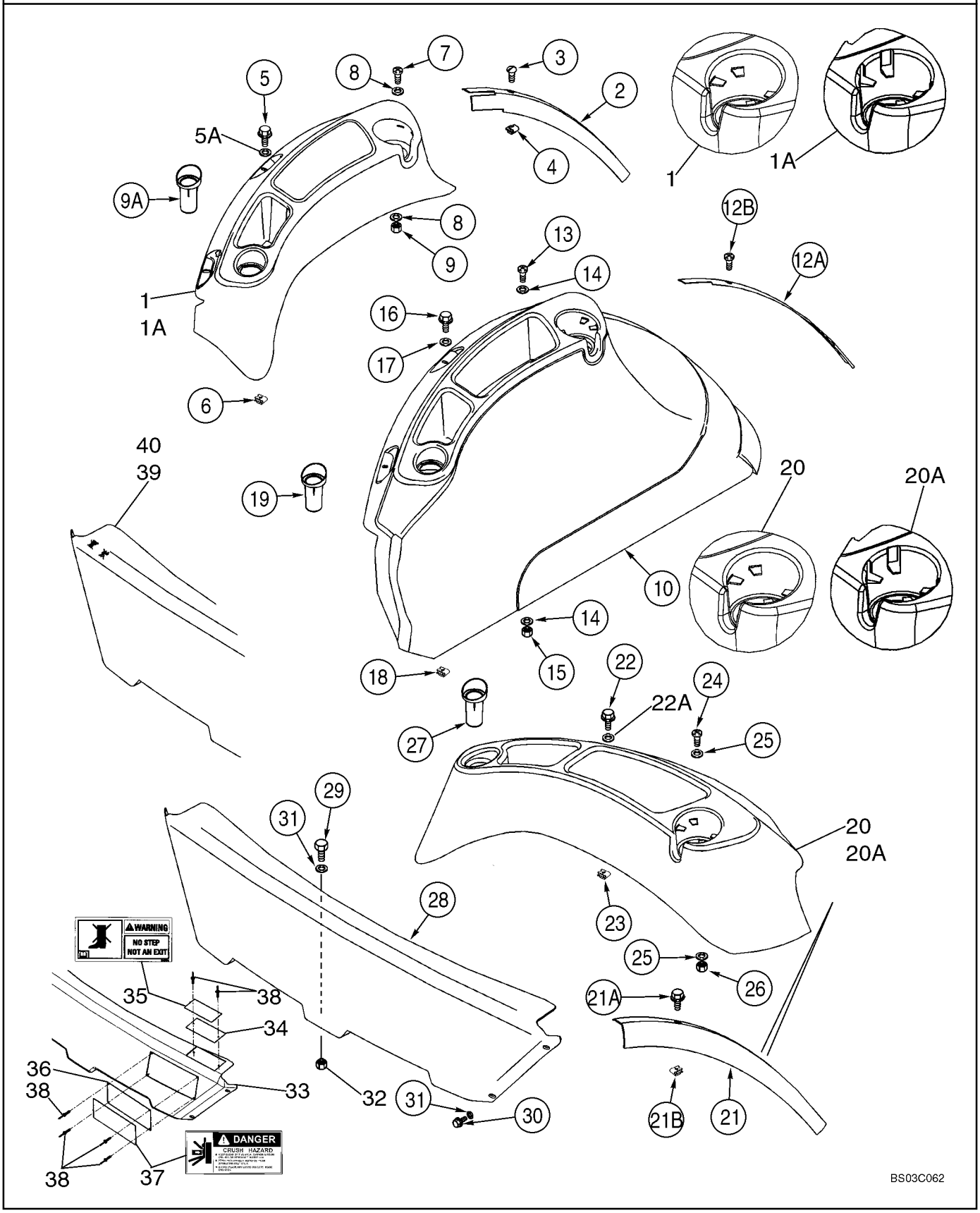

FENDER COVER, LEFT-HAND - PANEL, REAR CLOSURE (STORAGE TRAY WITH CUP HOLDER)

REF	FN	PART NUMBER	YR/SN	QTY	DESCRIPTION
		REF			INSTRUCTION Standard Interior/Cab Models
1		400545A2		1	TRAY Incl. 378740A3, 304061A1, 400077A1; No Longer Available, Order 86992247, Ref 1A
		378740A3		1	TRAY
		304061A1		4	BUMPER
		400077A1		1	STRIP, METRES 1300 mm (51-3/16 in); Cut From 1977224C1
1A		86992247		1	TRAY Incl. 86992284, 400077A1
		NSS		1	NOT SERVICED SEPARATELY Tray
		86992284		4	BUMPER
		400077A1		1	STRIP, METRES 1300 mm (51-3/16 in); Cut From 1977224C1
2		397026A3		1	STRIP,PROTECTION
3		398113A1		3	SCREW No. 10 x 3/4
4		131-869		3	NUT No. 10
5		555-2		2	SCREW M6 x 20
5A		895-30109		2	WASHER 6,6 x 25 x 1,6 mm
6		833-40406		2	NUT M6
7		440-11014		2	SCREW No. 10 x 7/8; If Used
7		140-117		2	SCREW No 10 x 1; If Used
8		495-61020		4	WASHER 13/64 x 3/4 x 1/16
9		231-14109		2	NUT No. 10
9A		378742A3		1	INSERT Swing Pin Holder
		REF			INSTRUCTION Deluxe Interior/Cab Models
10		86992248		1	COVER ASSY Replaces 383975A3
12A		397774A3		1	STRIP
12B		398113A1		3	SCREW No. 10 x 3/4
13		440-11014		2	SCREW No. 10 x 7/8; If Used
13		140-117		2	SCREW No 10 x 1; If Used
14		495-61020		4	WASHER 13/64 x 3/4 x 1/16
15		231-14109		2	NUT No. 10
16		555-2		2	SCREW M6 x 20
17		895-30109		2	WASHER
18		833-40406		2	NUT M6
19		378742A3		1	INSERT Swing Pin Holder
		REF			INSTRUCTION Canopy Models

09 -43		p2	05/03

FENDER COVER, LEFT-HAND - PANEL, REAR CLOSURE (STORAGE TRAY WITH CUP HOLDER)

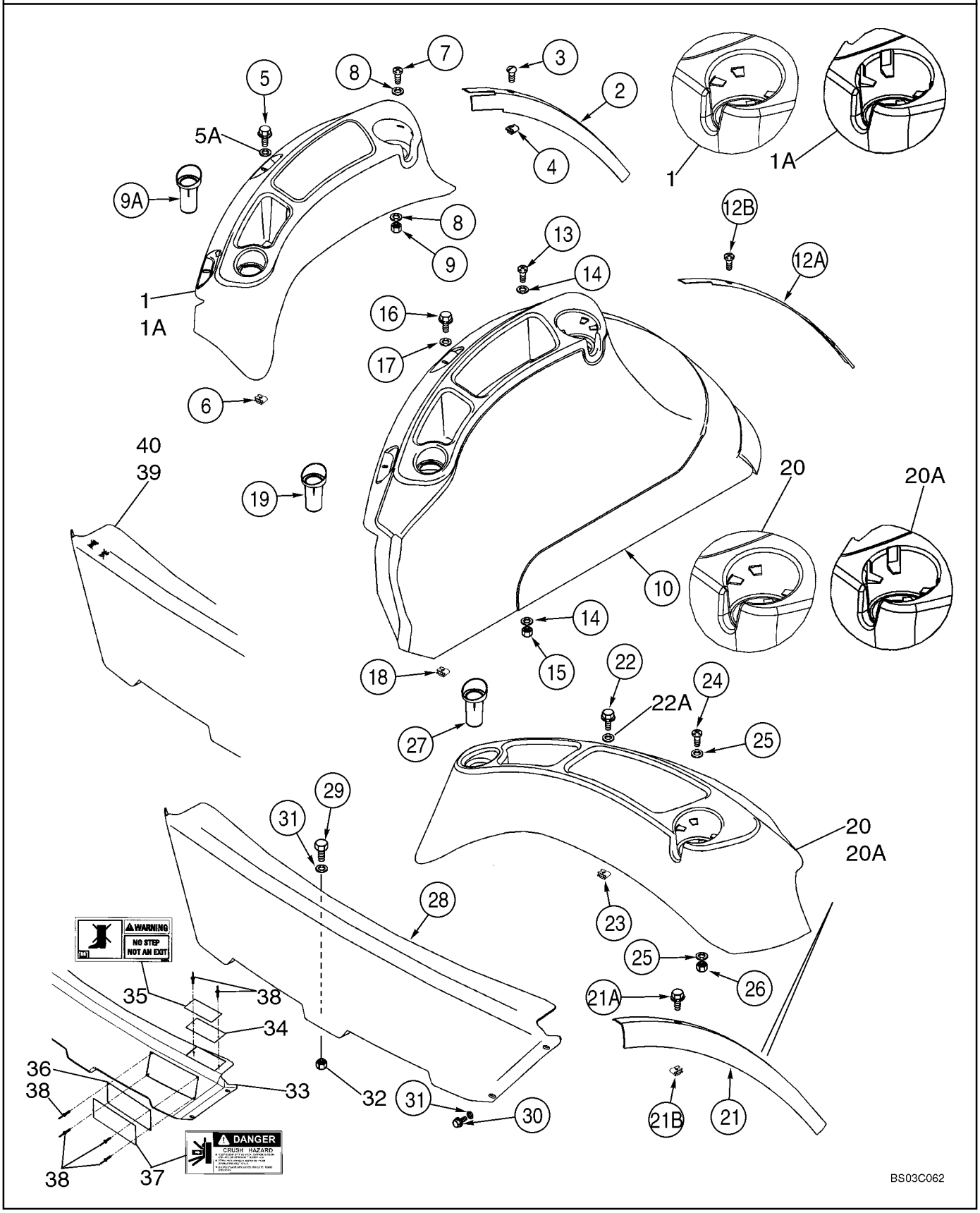

FENDER COVER, LEFT-HAND - PANEL, REAR CLOSURE (STORAGE TRAY WITH CUP HOLDER)

REF	FN	PART NUMBER	YR/SN	QTY	DESCRIPTION
20		400544A2		1	TRAY Incl. 375094A3, 304061A1, 400077A1; No Longer Available; Order 86992243, Ref 20A
		375094A3		1	TRAY
		304061A1		4	BUMPER
		400077A1		1	STRIP, METRES 1300 mm (51-3/16 in); Cut From 1977224C1
20A		86992243		1	TRAY ASSY. Incl. 86992284, 400077A1
		NSS		1	NOT SERVICED SEPARATELY Tray
		86992284		4	BUMPER
		400077A1		1	STRIP, METRES 1300 mm (51-3/16 in); Cut From 1977224C1
21		397025A2		1	STRIP,PROTECTION
21A		398113A1		3	SCREW No. 10 x 3/4
21B		131-869		3	NUT No. 10
22		555-2		2	SCREW M6 x 20
22A		895-30109		2	WASHER 6,6 x 25 x 1,6 mm
23		833-40406		2	NUT M6
24		440-11014		2	SCREW No. 10 x 7/8; If Used
24		140-117		2	SCREW No 10 x 1; If Used
25		495-61020		4	WASHER 13/64 x 3/4 x 1/16
26		231-14109		2	NUT No. 10
27		378742A3		1	INSERT Swing Pin Holder
		REF			INSTRUCTION Rear Closure Panel/Canopy Models
28		360594A2		1	PANEL Used With 313238A1 and 384271A1 Decals; Decals Purchased Separately; No Longer Available; Order 87403455, Service Kit, Ref 40
28A		87403455		1	KIT, SERVICE Rear Closure; Incl. Ref 32 - 38
29		614-8025		1	CAPSCREW M8 x 25
30		781-24820		4	SCREW M8 x 20
31		895-11008		5	WASHER 9 x 17 x 1,6 mm
32		832-10408		1	NUT M8
		411078A1		1	PLATE ASSY. Incl. Ref 33 - 38; No Longer Available; Order 87403455, Service Kit, Ref. 40
33		428407A1		1	PANEL
34		410440A1		2	PLATE Decal Mounting
35		384271A1		2	DECAL Warning; No Step

09 -43		p3	05/03

FENDER COVER, LEFT-HAND - PANEL, REAR CLOSURE (STORAGE TRAY WITH CUP HOLDER)

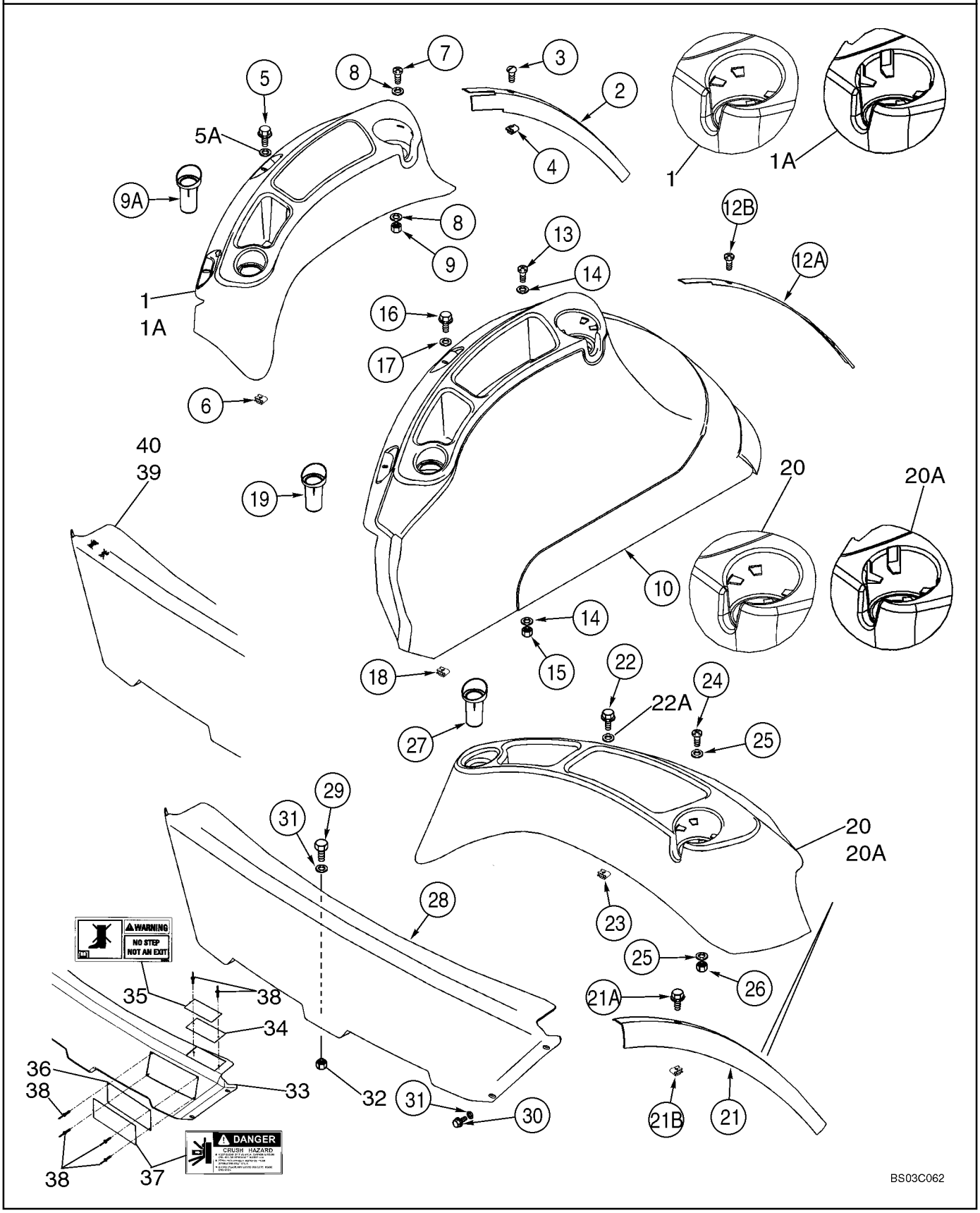

FENDER COVER, LEFT-HAND - PANEL, REAR CLOSURE (STORAGE TRAY WITH CUP HOLDER)

REF	FN	PART NUMBER	YR/SN	QTY	DESCRIPTION
36		410436A1		2	PLATE Decal Mounting
37		313238A1		2	DECAL Danger; Crush Hazard
38		410838A1		12	RIVET
39		86992977		1	PANEL
40		87403455		1	KIT, SERVICE Rear Closure Panel; Incl. Ref 39 Panel, (1) 86992976 Crush Hazard Decal and (2) 86992975 No Step Decal, Plus Latin American Spanish and French Canadian Decals

09 -44		p1	05/03

FENDER EXTENSIONS

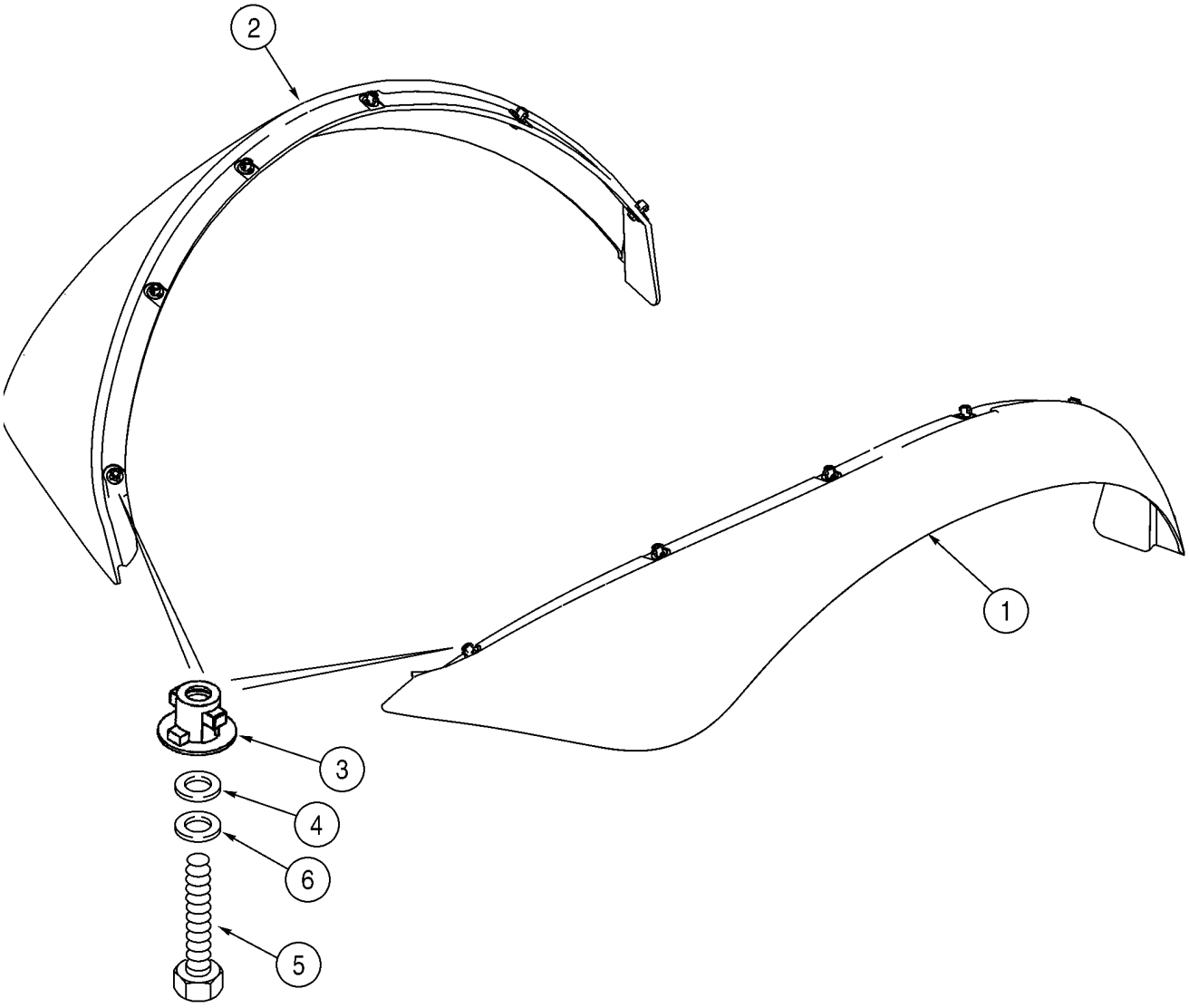

BC00F002

FENDER EXTENSIONS

REF	FN	PART NUMBER	YR/SN	QTY	DESCRIPTION
1		340998A3		1	FENDER Right-Hand
2		340997A3		1	FENDER Left-Hand
3		345231A1		12	FASTENER
4		496-41041		12	WASHER 13/32 x 1-1/8 x 9/64
5		614-8030		12	CAPSCREW M8 x 30
6		892-11008		12	WASHER M8

09 -45		p1	05/03

GUARD, MUD

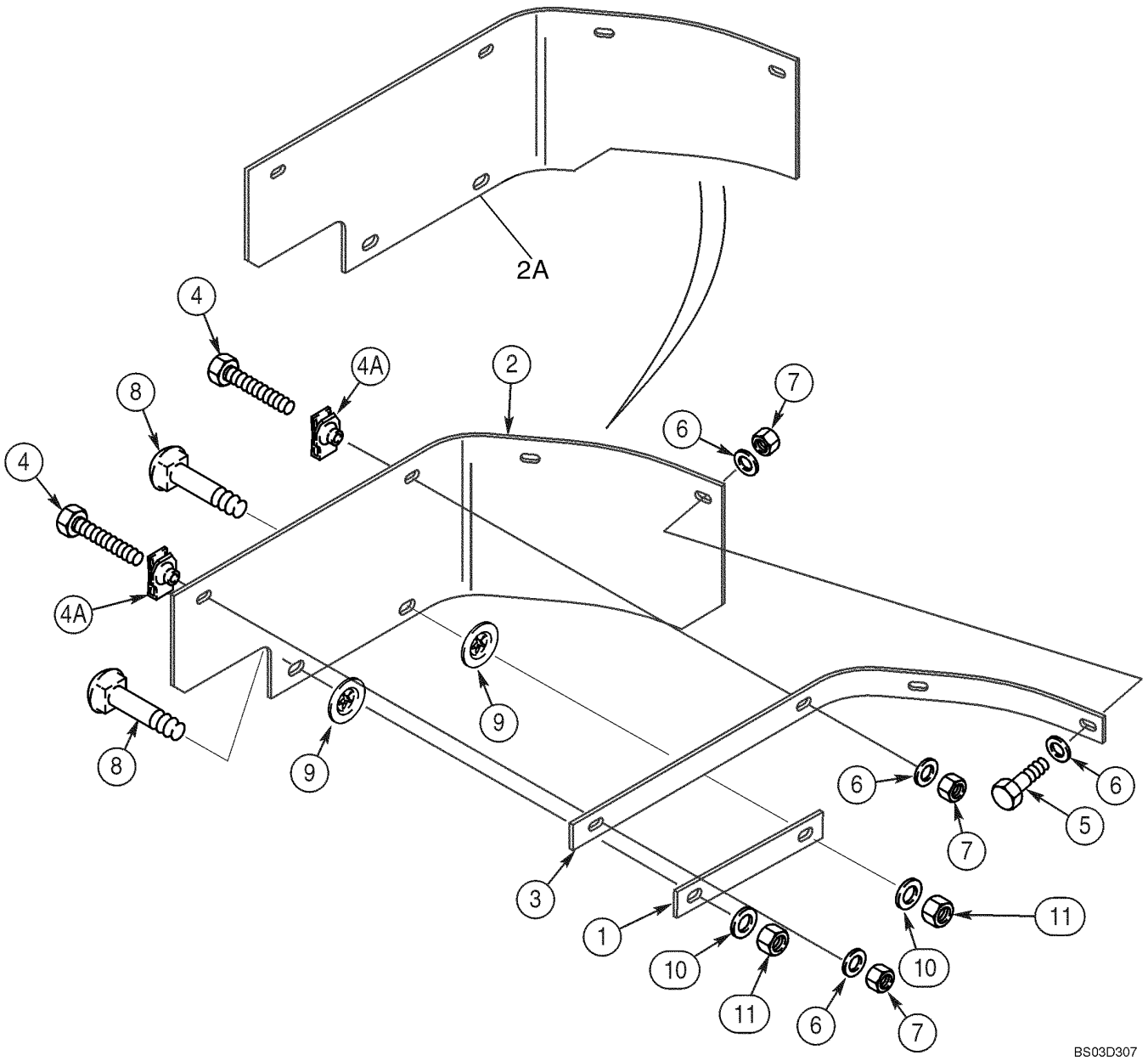

GUARD, MUD

REF	FN	PART NUMBER	YR/SN	QTY	DESCRIPTION
1		362557A1		1	STRIP Plate
2		362556A1		1	GUARD Mounts At Right-Hand Fender; No Longer Available, Order 362556A2, Ref 2A
2A		362556A2		1	GUARD Mounts At Right-Hand Fender
3		362558A1		1	STRIP Angle
4		614-8040		2	CAPSCREW M8 x 40
4A		833-40408		2	NUT M8
5		614-8030		2	CAPSCREW M8 x 30
6		495-21038		6	WASHER 3/8 x 7/8 x 3/32
7		832-10408		4	NUT M8
8		711-10040		2	BOLT M10 x 40
9		368417A1		2	WASHER
10		895-11010		2	WASHER 11 x 21 x 2 mm
11		832-10410		2	NUT M10

09 -46		p1	05/03

SEAT - MOUNTING

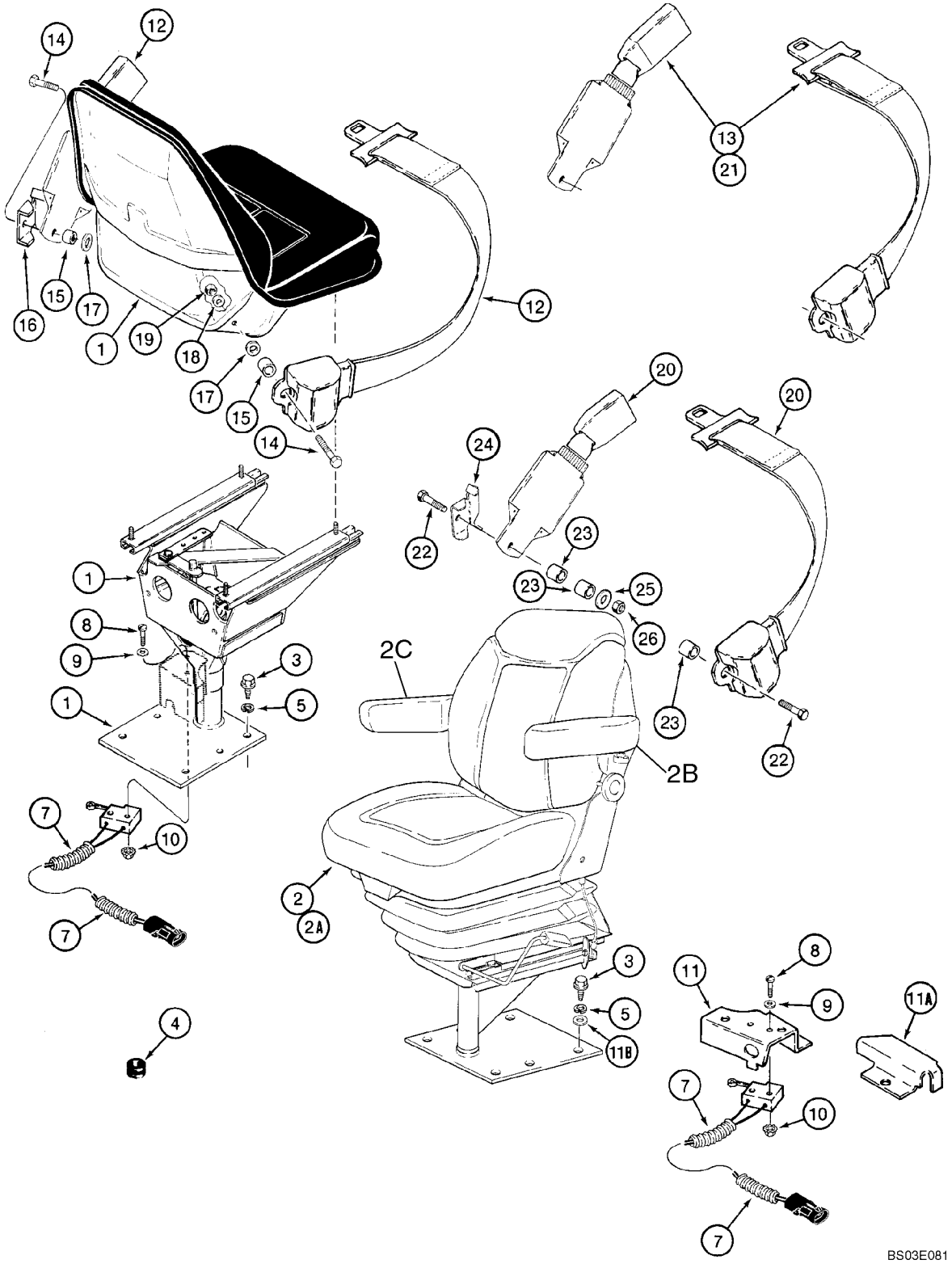

SEAT - MOUNTING

REF	FN	PART NUMBER	YR/SN	QTY	DESCRIPTION
1		397132A1		1	SEAT ASSY. Standard, Vinyl, Without Armrest, Includes Seat, Pedestal, and Support, See Figures 09-47, 09-48
2		397137A1		1	SEAT ASSY. Air Suspension, Cloth, Deluxe, With Armrests On Figure 09-51, See Figures 09-51, 09-52
2A		397136A2		1	SEAT ASSY. Suspension, Cloth, Without Armrests, Includes Seat, Suspension, and Pedestal, See Figures 09-49, 09-50; Replaces 397136A1; Order 397407A1 Service Kit For Seat Assy With Armrests
2A		397134A2		1	SEAT ASSY. Suspension, Vinyl, Without Armrests, Includes Seat, Suspension, and Pedestal, See Figures 09-49, 09-50; Replaces 397134A1; Order 397408A1 Service Kit For Seat Assy With Armrests
2B		292262A1		1	ARMREST ASSY. Kit, Left-Hand
2C		292263A2		1	ARMREST ASSY. Kit, Right-Hand
3		604-12030		4	BOLT M12 x 30
4		248-2373		1	GROMMET 1-1/4
5		896-15012		4	WASHER 13,5 x 28 x 4 mm
7		118769A1		1	SWITCH Limit Switch
8		470-10620		2	SCREW No. 6 x 1-1/4
9		495-31016		2	WASHER 5/32 x 3/8 x 3/64
10		193-1003		2	NUT No. 6
11		119211A1		1	BRACKET Switch Mounting, Suspension Seat
11A		186351A1		1	GUARD Harness
12		87408889		1	SEAT BELT 51 mm (2 in), Replaces D150377; If Used; Standard Seat Belt Mounting
13		87408888		1	SEAT BELT 76 mm (3 in), Retractable, Replaces R58418; If Used; Standard Seat Belt Mounting
14		414-724		2	CAPSCREW 7/16 x 1-1/2; 5
15		D150391		2	SPACER
16		D150392		1	BRACKET Left-Hand; Standard Seat Belt Mounting
17		495-81169		2	WASHER 17/32 x 2,5 x 1/8, Not Used On Deluxe Air Suspension Seat
18		496-81010		4	WASHER 15/32 x 1 x 7/64
19		232-4617		2	NUT 7/16 NF; 8

SEAT - MOUNTING

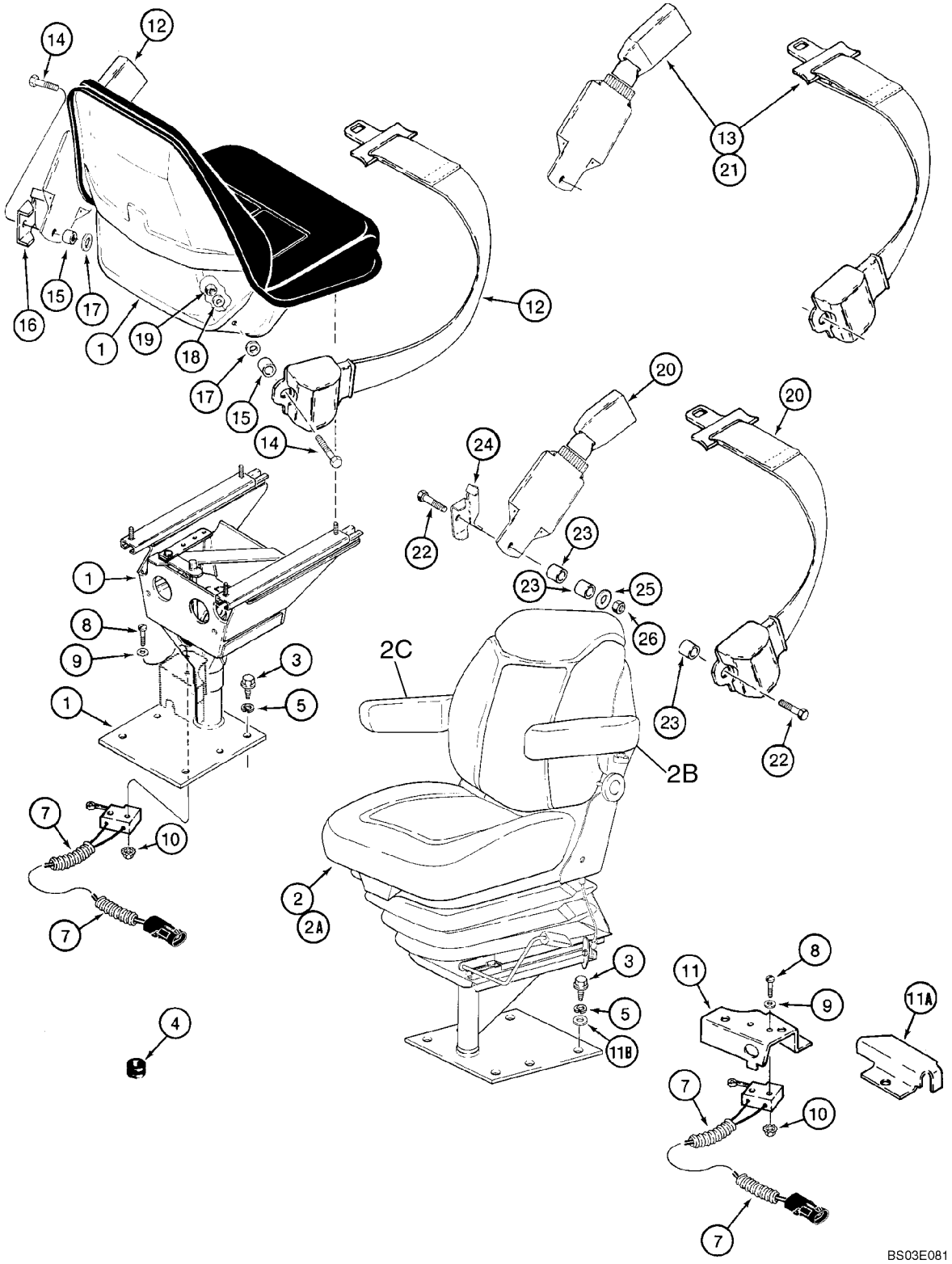

SEAT - MOUNTING

REF	FN	PART NUMBER	YR/SN	QTY	DESCRIPTION
20		87408889		1	SEAT BELT 51 mm (2 in), Replaces D150377; If Used; Suspension Seat Belt Mounting
21		87408888		1	SEAT BELT 76 mm (3 in), Retractable, Replaces R58418; If Used; Suspension Seat Belt Mounting
22		414-724		2	CAPSCREW 7/16 x 1-1/2; 5
23		D150391		2	SPACER
24		D150392		1	BRACKET Left-Hand; Suspension Seat Belt Mounting
25		496-81010		2	WASHER 15/32 x 1 x 7/64
26		232-4617		2	NUT 7/16 NF; 8

SEAT ASSY, STANDARD

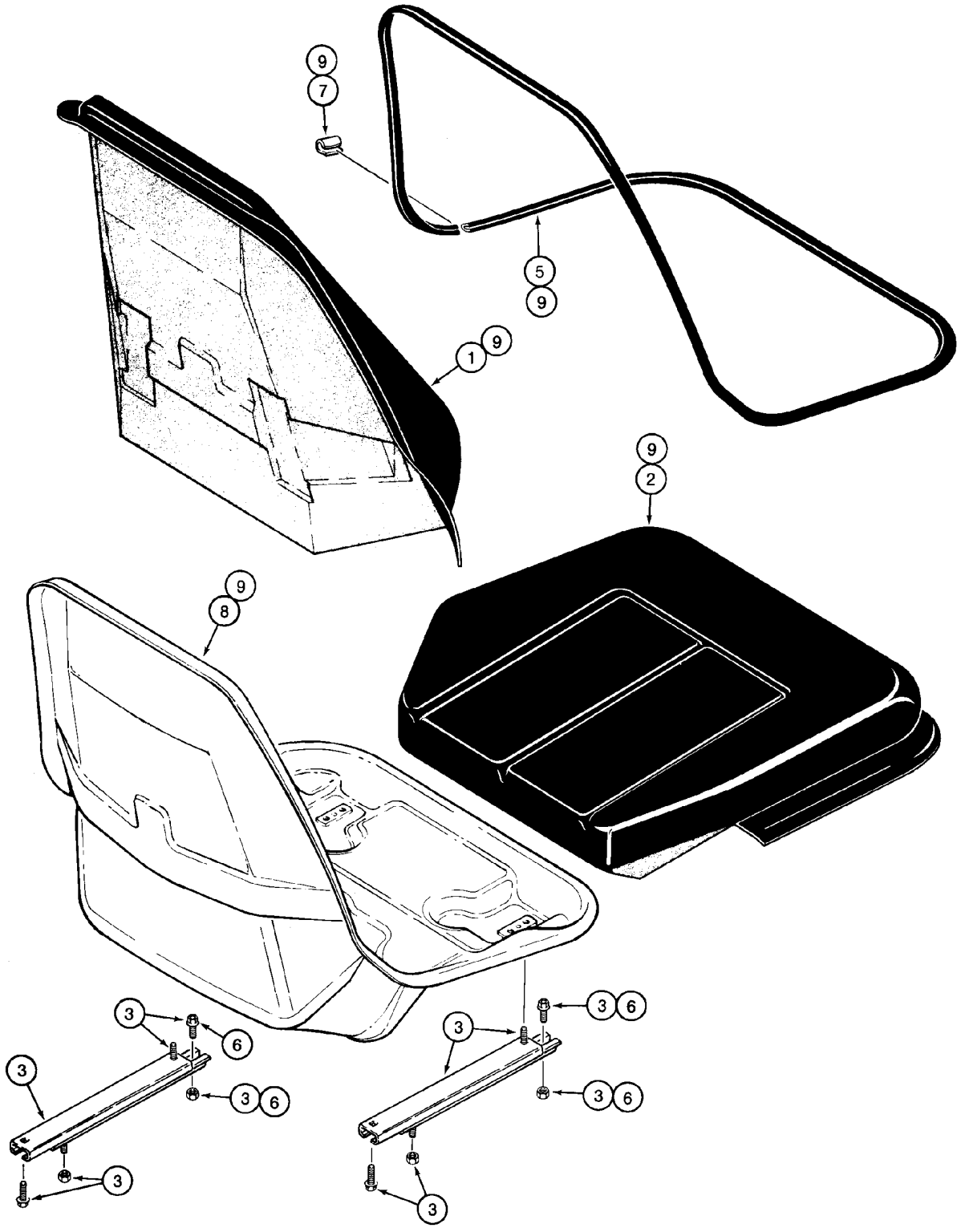

SEAT ASSY, STANDARD

REF	FN	PART NUMBER	YR/SN	QTY	DESCRIPTION
		397132A1		1	SEAT ASSY. Vinyl, Standard Seat; Incl. Ref 1 - 9; Also Includes Parts On Figure 09-48
1		NSS		1	NOT SERVICED SEPARATELY Cushion, Backrest; Order 406700A1 Cushion Assy, Ref 9
2		NSS		1	NOT SERVICED SEPARATELY Cushion, Seat; Order 406700A1 Cushion Assy, Ref 9
3		399777A1		1	KIT Seat Slide Adjusters
5		176924A1		1	SET OF PARTS Trim
6		181169A1		1	KIT Cable, Fore-Aft/Swivel Mechanism, For Cable, See Figure 09-48
7		NSS		1	NOT SERVICED SEPARATELY Clip, Order N7802 Clip Kit
8		NSS		1	NOT SERVICED SEPARATELY Shell, Seat Frame, Order 406700A1 Cushion Assy, Ref 9
9		406700A1		1	CUSHION ASSY. Seat Shell, Cushions, and Trim, Incl. Ref 1, 2, 5, 8
		N7802		1	CLIP Clip, Incl. Ref 7 Clip, Plus 6 Additional Narrow Clips

09 -48		p1	05/03

SEAT SUPPORT AND PEDESTAL, STANDARD

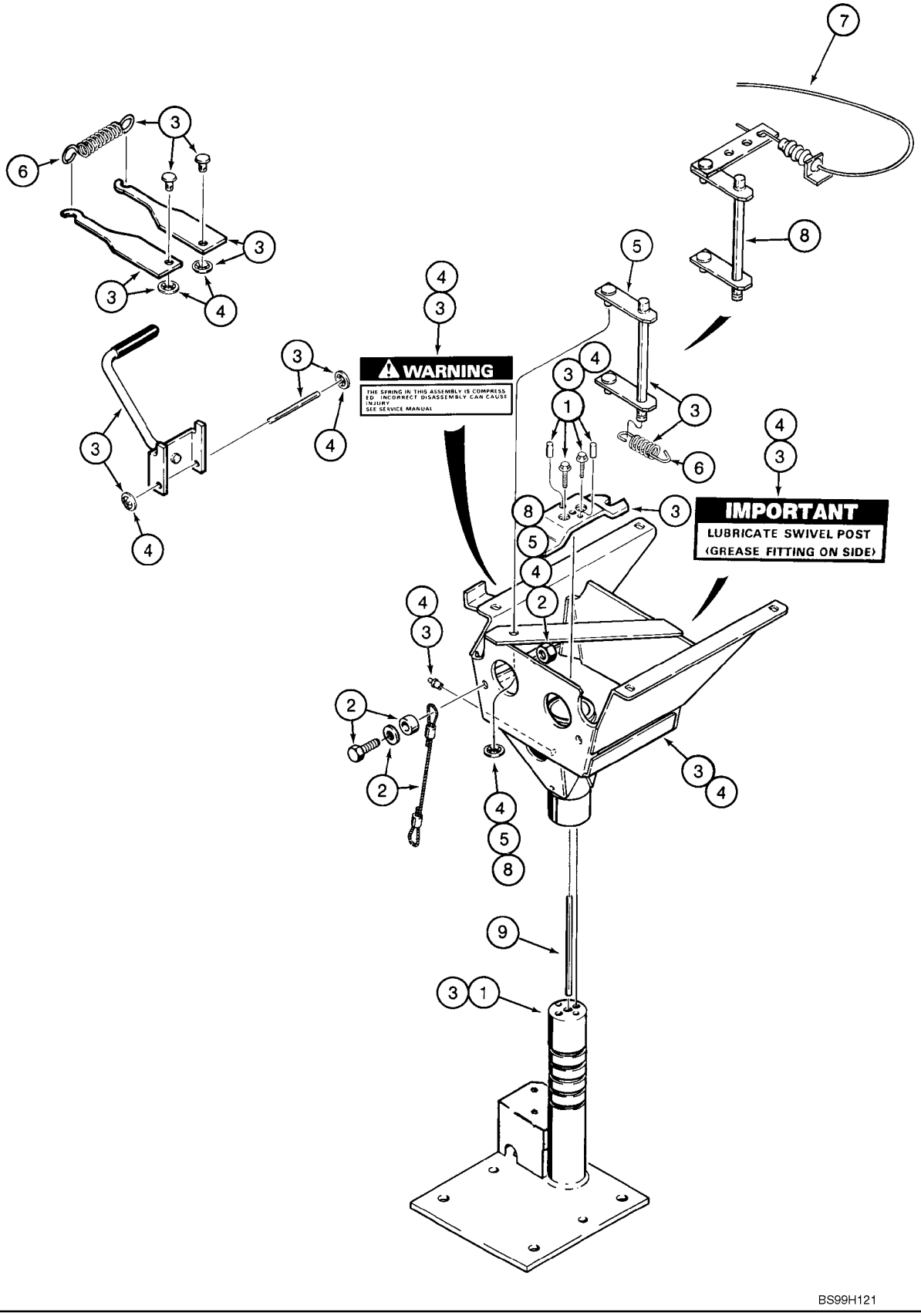

SEAT SUPPORT AND PEDESTAL, STANDARD

REF	FN	PART NUMBER	YR/SN	QTY	DESCRIPTION
		397132A1		1	SEAT ASSY. Vinyl, Standard Seat, Incl. Ref 1 - 9, Also Includes Parts On Figure 09-47
1		116761A3		1	KIT Support, Base, Replaces 116761A2; Also Includes (6) Lock Nuts, (2) Pins, (1) Rivet, (1) Washer, (1) Spacer, 2 Screws
2		116763A1		1	KIT Cable, Anchor, Includes Hardware For Both Ends
3		116764A3		1	KIT Pedestal, Replaces 116764A2; Also Includes (4) Lock Nuts, (1) Rivet, (1) Washer, (1) Spacer, (1) Tie, (2) Screws
		219-16		1	NIPPLE 5/16 dr type x 19/32; If Used
4		116766A2		1	KIT Pedestal Box, Also Includes (4) Lock Nuts For Seat Adjuster Slide, Includes 219-16
		219-16		1	NIPPLE 5/16 dr type x 19/32
5		116767A1		1	KIT Swivel Latch, Includes (6) Lock Nuts, (1) Push Nut, (1) Swivel Latch; Also Includes (4) Lock Nuts For Seat Adjuster Slide
6		119171A1		1	KIT Spring
7		181169A1		1	KIT Cable, Fore-Aft/Swivel Mechanism, Also Includes (4) Nuts
8		253209A1		1	KIT Swivel Latch, Includes (4) Lock Nuts, (1) Rivet, (1) Spacer, (1) Washer, (1) Push Nut, (1) Swivel Latch
9		NSS		1	NOT SERVICED SEPARATELY Pin, Seat

09 -49		p1	05/03

SEAT ASSY, MECHANICAL SUSPENSION

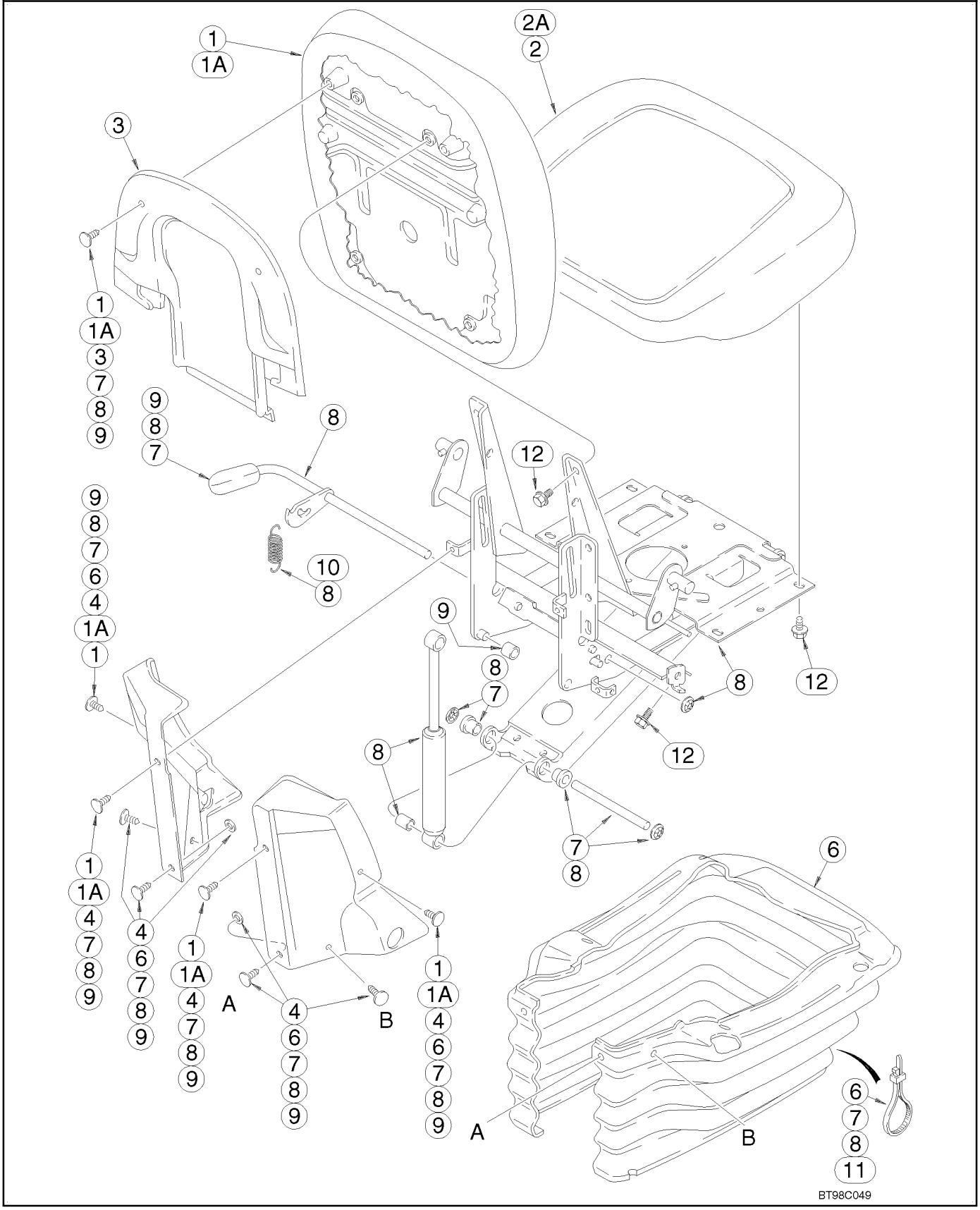

SEAT ASSY, MECHANICAL SUSPENSION

REF	FN	PART NUMBER	YR/SN	QTY	DESCRIPTION
		397136A2		1	SEAT ASSY. Cloth, Includes Seat, Suspension, Pedestal and Weight Adjuster, Without Armrests, Incl. Ref 1 - 11; Also Includes Parts On Figure 09-50; Replaces 397136A1
		397134A2		1	SEAT ASSY. Vinyl, Includes Seat, Suspension, Pedestal and Weight Adjuster, Without Armrests, Incl. Ref 1 - 11; Also Includes Parts On Figure 09-50; Replaces 397134A1
1		399757A1		1	KIT Cushion, Backrest, Cloth, Includes Lumbar Knob, (6) Clips and (4) Screws
1A		399759A1		1	KIT Cushion, Backrest, Vinyl, Includes Lumbar Knob, (6) Clips and (4) Screws
2		399758A1		1	KIT Cushion, Seat, Cloth, Includes (6) Screws
2A		399760A1		1	KIT Cushion, Seat, Vinyl, Includes (6) Screws
3		307091A1		1	ASSEMBLY Kit, Backrest Shroud, Includes (2) Clips
4		307090A1		1	KIT Side Shroud, Left-Hand and Right-Hand, Includes (6) Clips, (2) Washers, (1) Height Adjustment Grip, (1) Back Angle Grip
6		307098A1		1	KIT Boot, Includes (2) Ties, (2) Washers, (4) Clips
7		176919A1		1	KIT Swing Arm Pivot Shaft, Includes (2) Flanged Bearings, (4) Push Nuts, (2) Clips, (2) Washers, (1) Grip, (2) Ties
8		307092A1		1	KIT Suspension, Includes Suspension, Back Angle Adjust, (2) Groove Pins, (1) Handle, (8) Screws, (2) Springs, (3) Washers, (1) Rivet; Includes Parts From Seat Frame To Adjuster Slides; For Additional Kit Parts See Figure 09-51, Ref 1
8		307092A1		1	KIT 307092A1 Suspension Kit Also Includes (1) Spacer, (2) Ties, (8) Clips, (12) Nuts, (1) Height Adjust Grip, (1) Back Angle Grip, (1) Rake Grip, (1) Fore/Aft/Swivel Grip, (1) Decal
9		176921A1		1	KIT Plastic Components, Includes (2) Rollers, (4) Downstops, (2) Roller Guides, (2) Bearings, (1) Bumper, (4) Nuts, (10) Clips, (2) Washers, (1) Grip; For Additional Kit Parts, See Figure 09-51, Ref 2

09 -49		p2	05/03

SEAT ASSY, MECHANICAL SUSPENSION

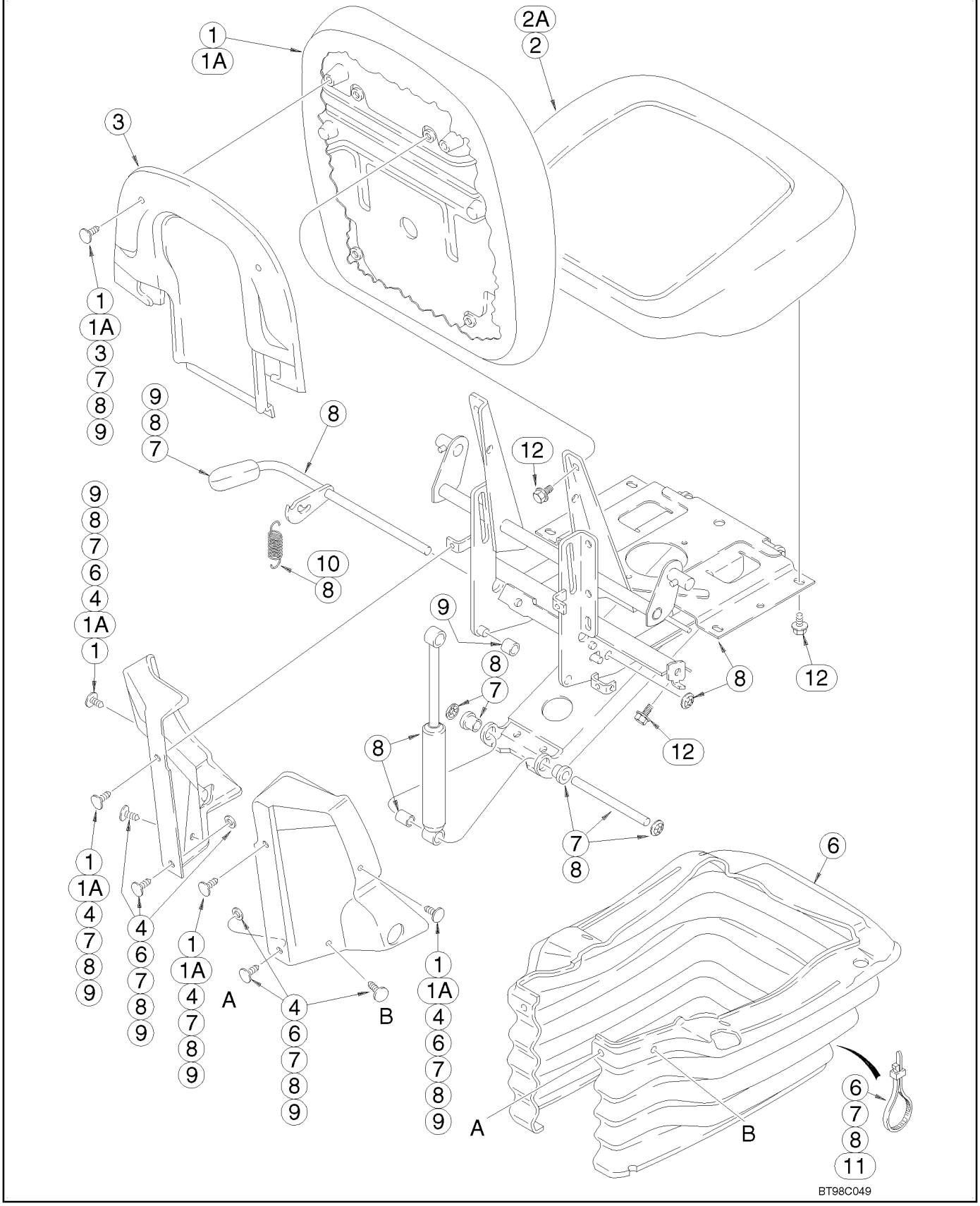

SEAT ASSY, MECHANICAL SUSPENSION

REF	FN	PART NUMBER	YR/SN	QTY	DESCRIPTION
10		116547A1		1	KIT Height Adjusting Spring, Includes (10) Shroud Retainers, (2) Washers, (2) Springs, (1) Wear Strip; For Additional Kit Parts, See Figure 09-50, Ref 6
11		181170A1		1	KIT Cable, Fore-Aft/Swivel Mechanism, Includes (2) Screws, (2) Ties, Cable, (4) Nuts
12		NSS		8	NOT SERVICED SEPARATELY Bolt, 5/16 Inch Thread, Length As Required, Purchase Locally, Seat Cushion and Backrest

09 -50		p1	05/03

SEAT PEDESTAL AND SUSPENSION, MECHANICAL SUSPENSION

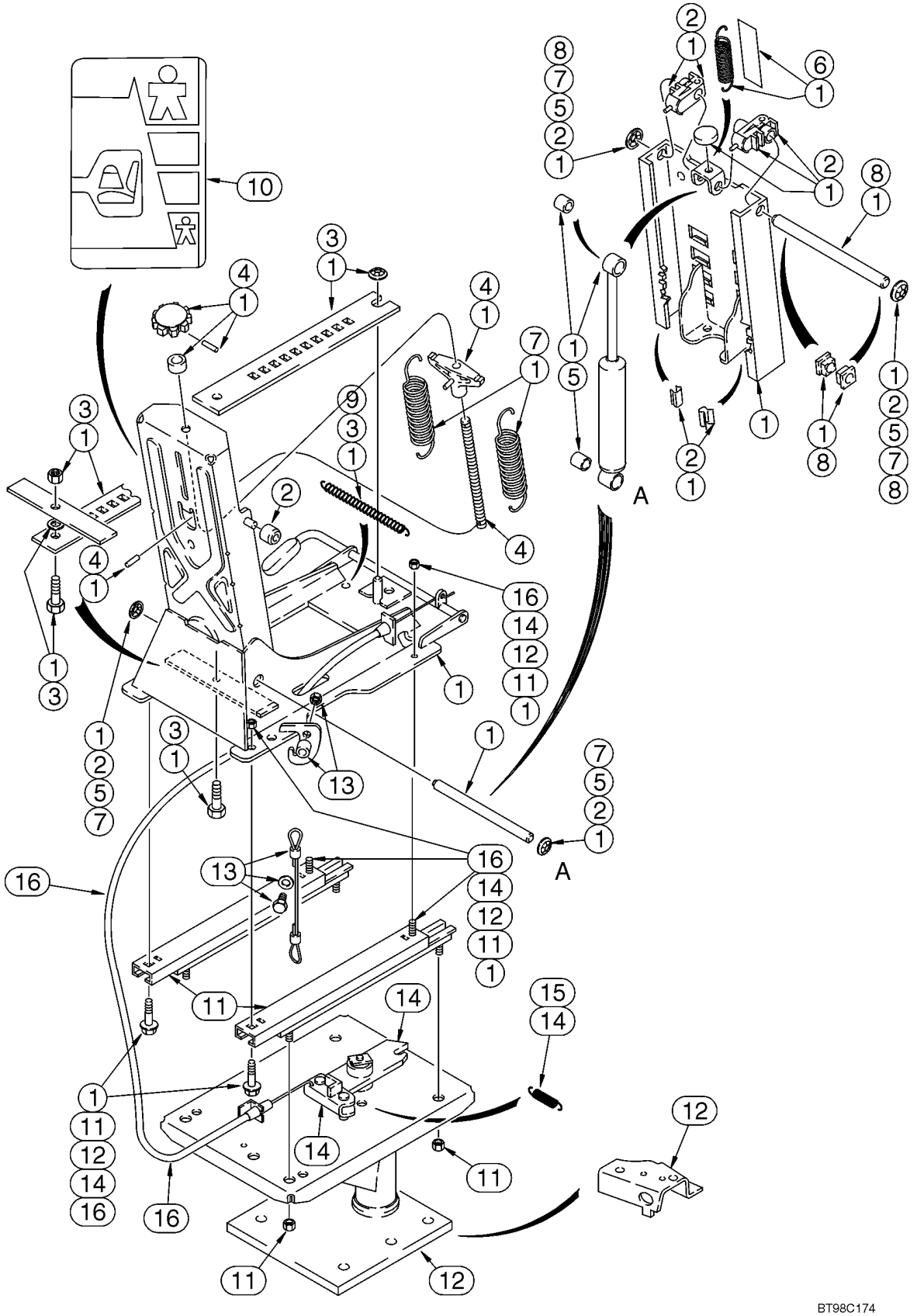

SEAT PEDESTAL AND SUSPENSION, MECHANICAL SUSPENSION

REF	FN	PART NUMBER	YR/SN	QTY	DESCRIPTION
		397136A2		1	SEAT ASSY. Cloth, Includes Seat, Suspension, Pedestal and Weight Adjuster, Without Armrests; Incl. Ref 1 - 16; Also Includes Parts On Figure 09-49; Replaces 397136A1
		397134A2		1	SEAT ASSY. Vinyl, Includes Seat, Suspension, Pedestal and Weight Adjuster, Without Armrests; Incl. Ref 1 - 16; Also Includes Parts On Figure 09-49; Replaces 397134A1
1		307092A1		1	KIT Suspension, Includes Suspension, Back Angle Adjust, (2) Groove Pins, (1) Handle, (8) Screws, (2) Springs, (3) Washers and (1) Rivet; Includes Parts From Seat Frame To Adjuster Slides; For Additional Kit Parts, See Figure 09-50, Ref 8
1		307092A1		1	KIT Suspension; Also Includes (1) Spacer, (2) Ties, (8) Clips, (12) Nuts, (1) Height Adjust Grip, (1) Back Angle Grip, (1) Rake Grip, (1) Fore/Aft/Swivel Grip, (1) Decal
2		176921A1		1	KIT Plastic Components, Includes (2) Rollers, (4) Downstops, (2) Roller Guides, (2) Bearings, (1) Bumper, (4) Nuts, (10) Clips, (2) Washers, (1) Grip; For Additional Kit Parts, See Figure 09-50, Ref 9
3		116521A1		1	KIT Fore/Aft Adjuster Latch, Includes (1) Latch Bar, (1) Bolt, (1) Spacer, (2) Nuts, (1) Spring and (2) Ties, Includes 131-435 Nut
		131-435		X	NUT 3/8
4		176916A1		1	KIT Weight Adjuster, Includes Adjusting Knob, (1) Spacer, (2) Roll Pins, (1) Shaft, (1) Spring, (10) Clips, (2) Washers, (1) Grip and (2) Ties; Also Includes (10) Shroud Retainers, (2) Washers, (2) Ties, See Figure 09-50
5		176914A1		1	KIT Suspension Damper, Includes Damper, (2) Spacers, (4) Nuts, (10) Clips, (2) Washers, (1) Grip and (2) Ties; Also Includes (10) Shroud Retainers, (2) Washers, (2) Ties, See Figure 09-50

SEAT PEDESTAL AND SUSPENSION, MECHANICAL SUSPENSION

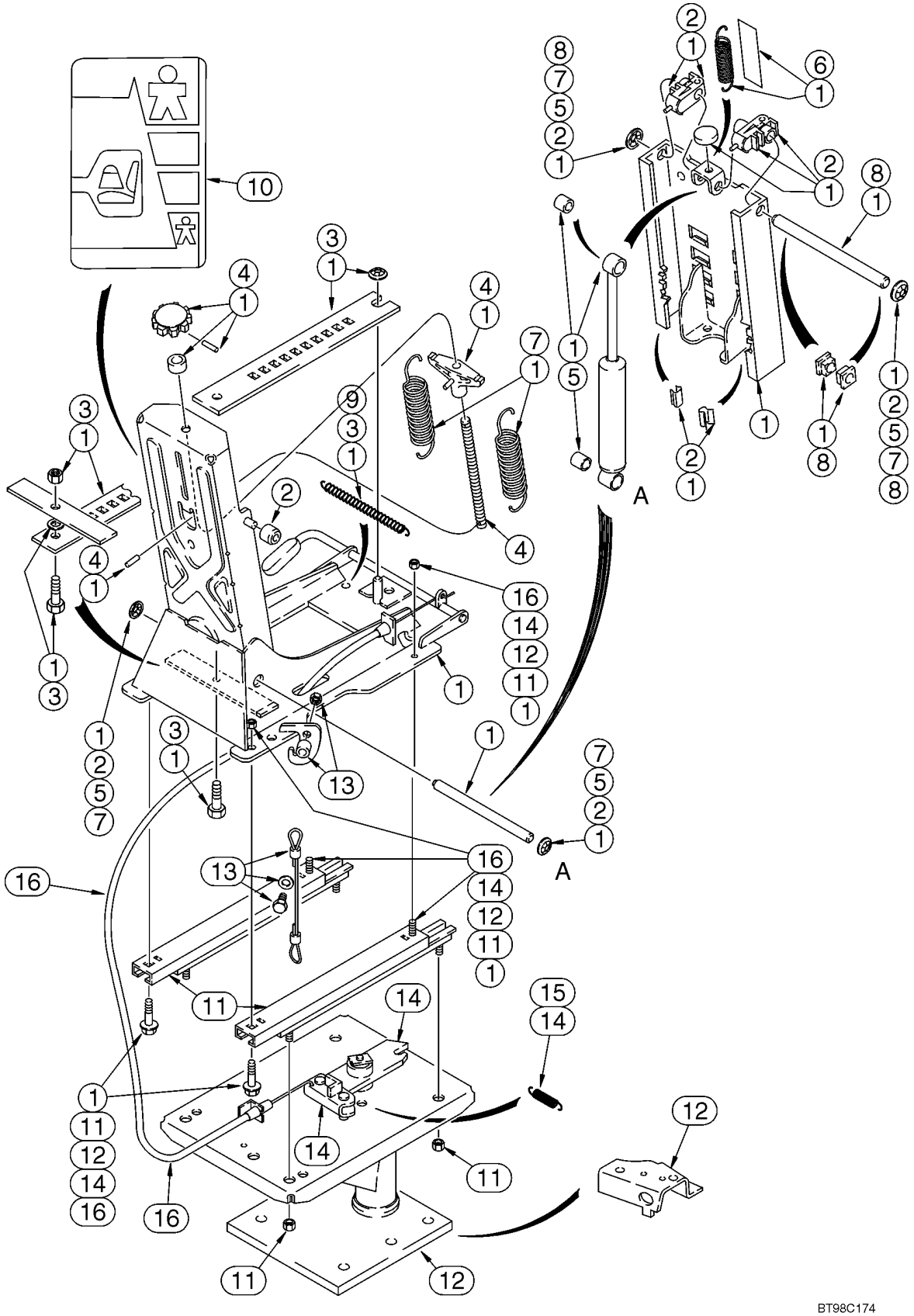

SEAT PEDESTAL AND SUSPENSION, MECHANICAL SUSPENSION

REF	FN	PART NUMBER	YR/SN	QTY	DESCRIPTION
6		116547A1		1	KIT Height Adjusting Spring, Includes (10) Shroud Retainers, (2) Washers, (2) Springs, (1) Wear Strip; For Additional Kit Parts, See Figure 09-49, Ref 10
7		176920A1		1	KIT Main Extension Springs, Includes (2) Springs, (4) Nuts, (2) Washers, (10) Clips, (1) Grip, (2) Ties
8		116551A1		1	KIT Upper Suspension Tower Shaft, Includes Shaft, (2) Bearings, (2) Nuts, (10) Clips, (2) Washers
9		116545A1		1	KIT Fore/Aft Latch Spring, Includes (1) Spring, (2) Ties
10		116534A1		1	KIT Decal, Seat Weight Adjustment
11		399764A1		1	KIT Fore/Aft Adjuster Slides
12		116538A2		1	KIT Pedestal, Includes Pedestal, (4) Screws, (4) Nuts and 119211A1 Bracket
13		116552A1		1	KIT Cable, Includes (2) Cables, (2) Screws, (2) Spacers, (2) Washers, (2) Nuts
14		116550A1		1	KIT Swivel Latch Bar, Includes Latch Bar, (1) Spring, (1) Ring, (4) Screws, (4) Nuts
14		336375A1		1	KIT Swivel Latch Plate, Includes Latch, Swivel Plate Latch, (5) Screws, (6) Nuts, (2) Pins
15		116548A1		1	KIT Swivel Latch Spring Only
16		181170A1		1	KIT Cable, Fore-Aft/Swivel Mechanism, Includes (2) Screws, (2) Ties, Cable, (4) Nuts

09 -51		p1	05/03

SEAT ASSY, AIR SUSPENSION

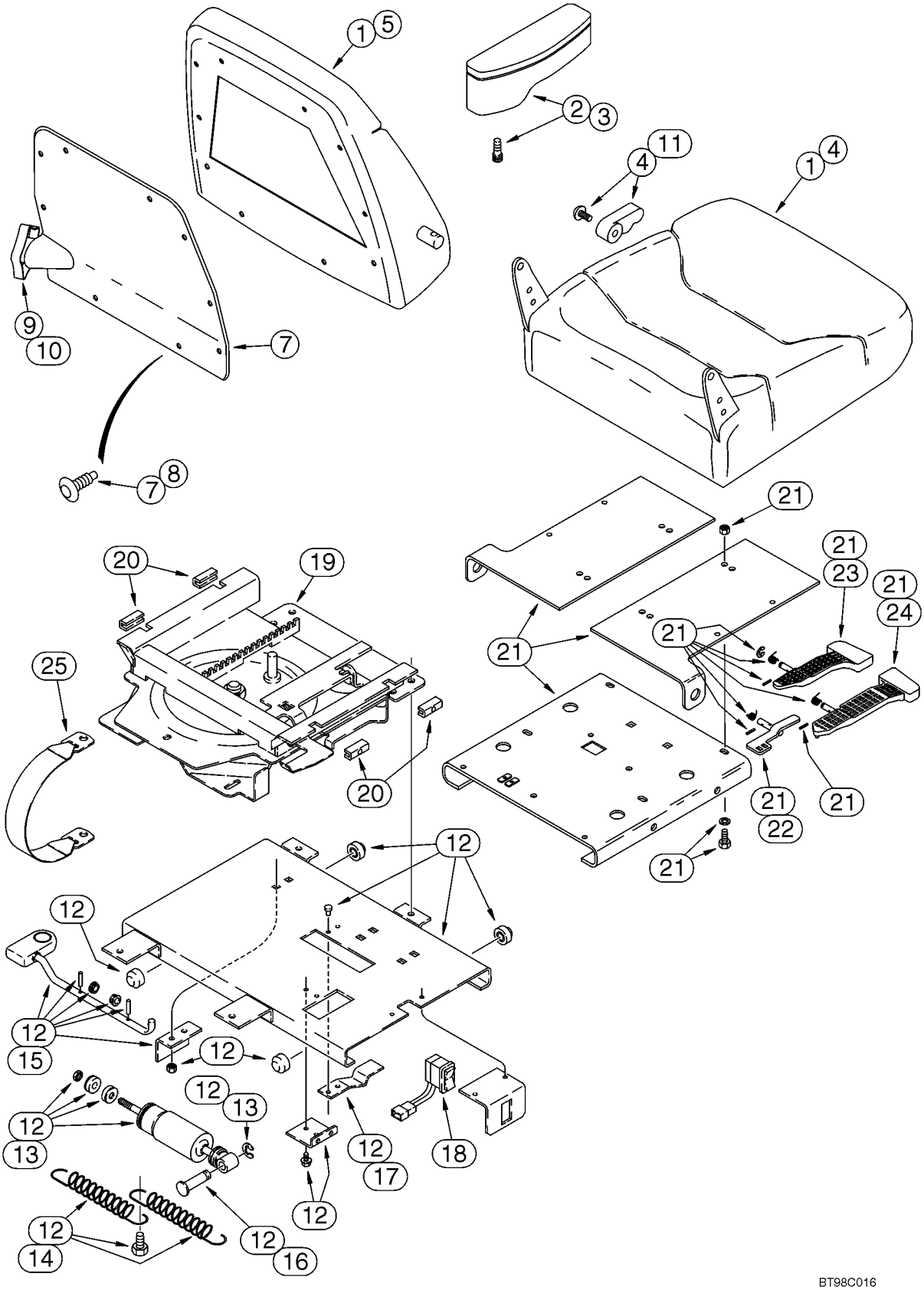

SEAT ASSY, AIR SUSPENSION

REF	FN	PART NUMBER	YR/SN	QTY	DESCRIPTION
		121414A1		1	FUSE 20 amp, Not Illustrated
		614-12030		4	CAPSCREW M12 x 30
		892-11012		4	WASHER, LOCK M12
		397137A1		1	SEAT ASSY. Air Suspension Seat, Cloth, With Armrests, Incl. Ref 1 - 25; Also Includes Parts On Figure 09-52
1		400981A1		1	KIT Seat Cushion and Backrest, Includes Seat, Backrest, Backrest Cover and Hardware
2		300659A1		1	KIT Armrest, Right-Hand, Includes Armrest Knob and Shaft, Groove Pin, Pivot Stud and Screw
3		300661A1		1	KIT Armrest, Left-Hand, Includes Armrest Knob and Shaft, Groove Pin, Pivot Stud and Screw
4		400837A1		1	KIT Seat Cushion, With Frame, Includes (5) Clips, (18) Rings, (1) Screw and Recliner Handle
5		400838A1		1	KIT Backrest Cushion, With Frame, Includes (23) Rings, Lumbar, (2) Screws and (2) Clips
6		176091A1		1	PACKAGE,SERVICE Package of 48 Rings For Cushions, Not Illustrated
7		300664A1		1	KIT Backrest Cover and Retainers, Incl. Ref 8
8		1999693C1		1	KIT Clip, Package of 14
9		300665A1		1	KIT Lumbar, With Knob
10		300667A1		1	KNOB Lumbar Knob, Includes Knob, Actuator and (2) Screws
11		1987212C1		1	PACKAGE Seat Cushion Back Tilt Knob, Includes Knob, Recliner Handle and (1) Screw
12		300670A1		1	KIT Lateral Isolator Assy, Incl. Ref 13 - 17
13		1987219C2		1	SET OF PARTS Lateral Isolator Shock, Includes Shock Absorber, (1) Bearing, (2) Bushings, (1) Nut, (2) Washers, (1) Spacer, (1) Ring
14		1987290C1		1	SET OF PARTS Spring, Includes (2) Springs, (1) Bolt
15		259054A1		1	SET OF PARTS Lock, Includes Latch Rod, Bracket, (2) Bearings, Knob, (2) Roll Pins
16		1344025C1		1	PIN, LARGE Pivot
17		1344026C1		1	SPRING
18		300672A1		1	SWITCH Rocker, Height Adjustment

09 -51		p2	05/03

SEAT ASSY, AIR SUSPENSION

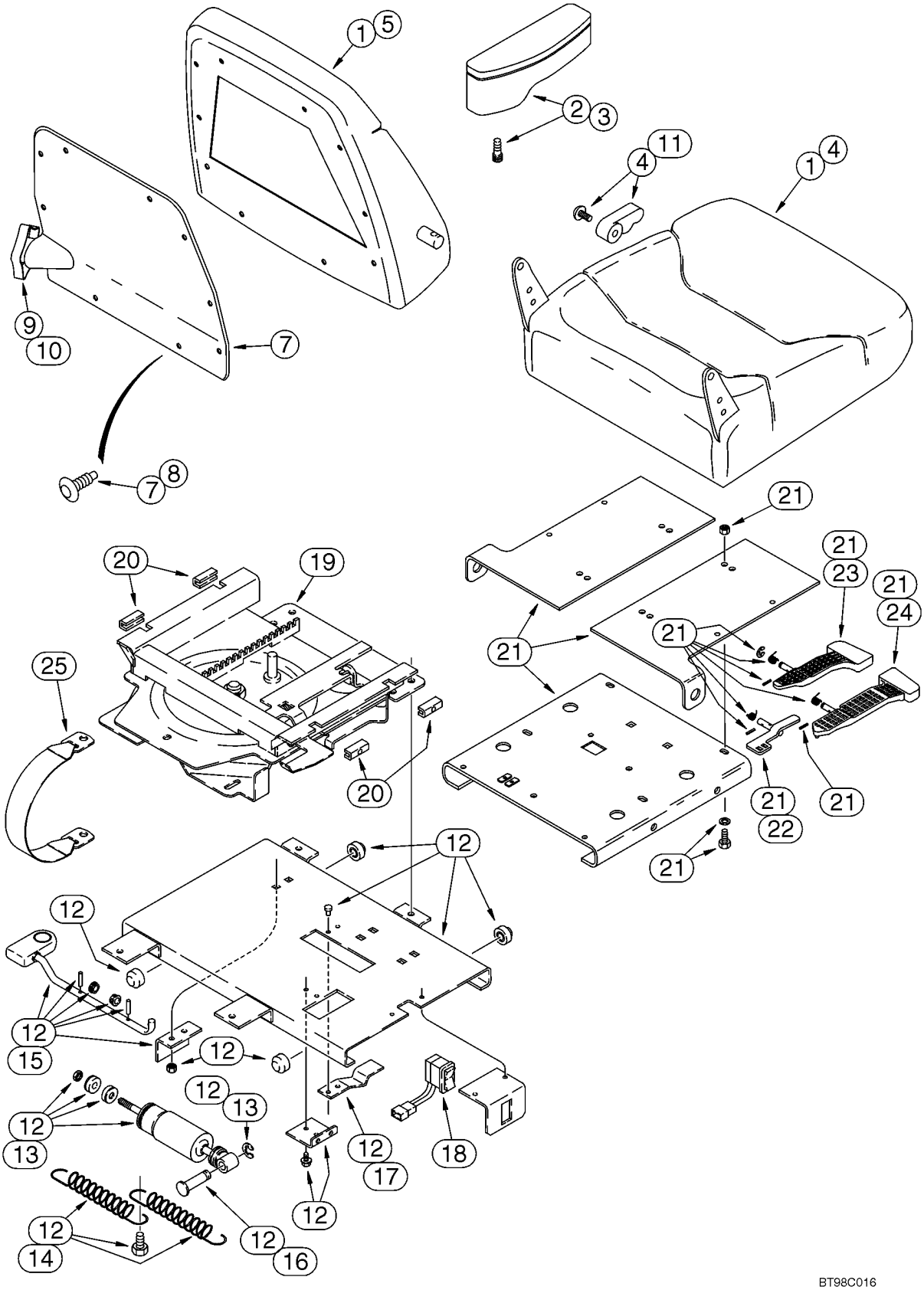

SEAT ASSY, AIR SUSPENSION

REF	FN	PART NUMBER	YR/SN	QTY	DESCRIPTION
		300674A1		1	HARNESS Swivel Switch, Not Illustrated
19		300675A1		1	KIT Slide/Swivel Assy, Incl. Ref 21
20		300680A1		1	KIT Slide Blocks, Includes (2) Adjustable Slider Blocks, (2) Stationary Slider Blocks, (2) Setscrews
21		300677A1		1	KIT Upper Slide Plate Assy, Includes Upper Slide Plate, Slide and Swivel Levers, (3) Springs, (3) Roll Pins, (3) E-Rings and Slide Latch, Incl. Ref 22 - 24
22		300679A1		1	SLIDE Latch
23		300681A1		1	LEVER, CONTROL Slide
24		300683A1		1	LEVER Swivel
25		300684A1		1	BELT, SAFETY Tether

09 -52		p1	05/03

SEAT PEDESTAL AND SUSPENSION, AIR SUSPENSION

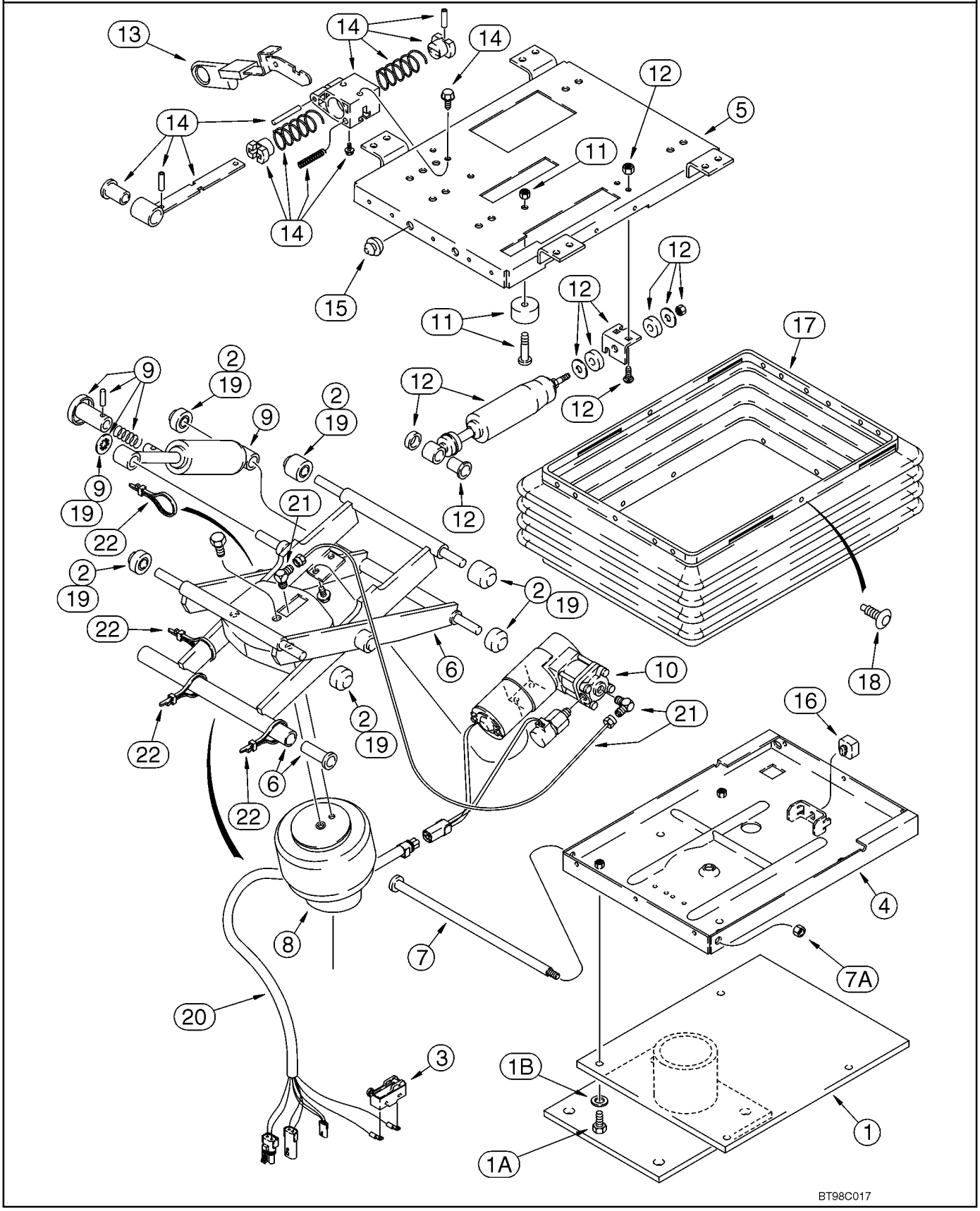

SEAT PEDESTAL AND SUSPENSION, AIR SUSPENSION

REF	FN	PART NUMBER	YR/SN	QTY	DESCRIPTION
		397137A1		1	SEAT ASSY. Air Suspension Seat, Cloth, With Armrests, Incl. Ref 1 - 22; Also Includes Parts On Figure 09-51
1		300669A1		1	PEDESTAL Support, Base
1A		614-8025		4	CAPSCREW M8 x 25
1B		NSS		2	NOT SERVICED SEPARATELY Washer
		300685A1		1	KIT Air Suspension Assembly, Includes Parts From Upper To Lower Housing Plates, Incl. Ref 2 - 16, 18 - 22, Includes all items shown except for the boot and pedestal, Ref 1 and 17
2		135512A3		1	PACKAGE Roller Bearing, Isolator, Includes (4) Narrow Rollers, (2) Wide Rollers, (1) Bushing, (1) Spacer, (1) Retaining Ring, Isolator
3		D137363		1	SWITCH Contact, Swivel Limit Switch
4		226560A1		1	HOUSING Lower, With Upper Stop Bracket
5		300688A1		1	HOUSING Upper
6		132862A1		1	DIPPERSTICK Arm, Suspension
7		143786A1		1	SHAFT
7A		230-4216		1	NUT 3/8
8		197793A1		1	SPRING Air Spring, Includes Air Spring, J-Clip and (3) Ties
9		132866A1		1	SHOCK ABSORBER Kit, Includes Shock, (2) Bearings, Fastener, Actuator Arm, Roll Pin, Bracket and Retaining Ring
		132864A1		1	COMPRESSOR Kit, Compressor/Valve, Includes Compressor, Valve, Mount, Air Line Tubing, (2) Screws, (2) Sleeves and (2) Nuts, Includes 300689A1, 300690A1
10		300689A1		1	KIT Compressor/Valve
		300690A1		1	MOUNTING Compressor
11		180593A1		1	PACKAGE Bumper, Includes 231-1444, 340-12520
		231-1444		2	NUT, LOCK 1/4
		340-12520		2	SCREW 1/4 x 1-1/4
12		300691A1		1	SPARE PART SET Fore/Aft Isolator Latch, Includes Shock Absorber, (3) Nuts, (2) Washers, (2) Grommets, (1) Bearing and (15) Clips

09 -52		p2	05/03

SEAT PEDESTAL AND SUSPENSION, AIR SUSPENSION

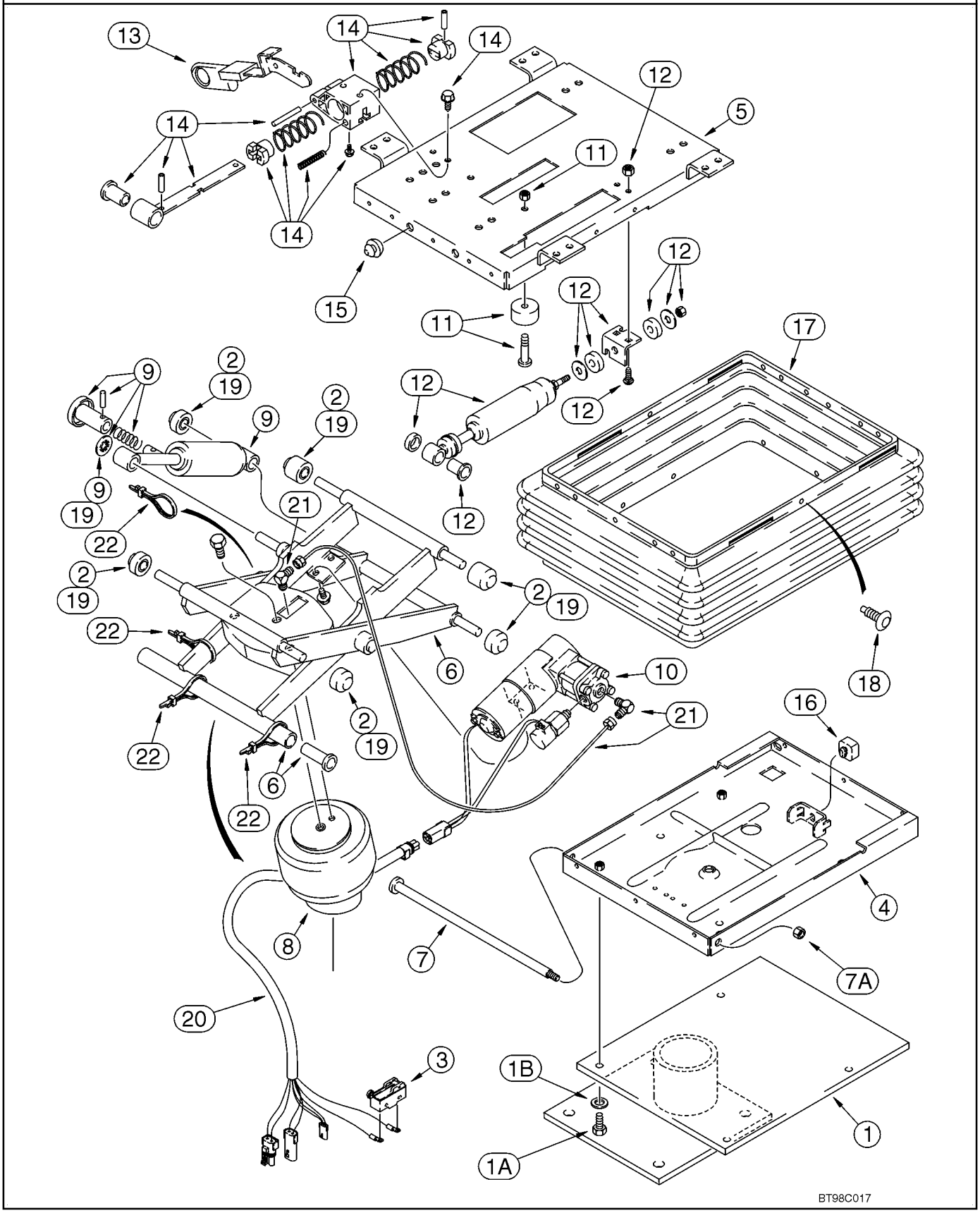

SEAT PEDESTAL AND SUSPENSION, AIR SUSPENSION

REF	FN	PART NUMBER	YR/SN	QTY	DESCRIPTION
13		1981850C1		1	GRIP Knob, Isolator Control, Fore/Aft
14		300692A1		1	SPARE PART SET Fore/Aft Isolator Latch, Includes Latch Assy and (2) Screws
15		133422A1		2	BUMPER Rubber
16		A45054		1	BUMPER Seat
17		133421A1		1	PACKAGE Boot, With Pins
18		132872A1		1	SET OF PARTS Boot Pin, Package of 23 Retainers and (3) Dome Nuts
19		180594A3		1	PACKAGE Rollers and Bearings, Includes (2) Bushings, (6) Rollers, (1) Push Nut, (5) Bearings and (2) Spacers, Includes 131-425 Nut
		131-425		1	NUT 1/2
20		300896A1		1	HARNESS
21		1990548C4		1	PACKAGE Air Line and Fittings, Includes (2) Elbows, (1) Tee, (2) Adapters, 3.5 Feet Nylon Tubing, (5) Ties and (1) J-Clip, Incl. Ref 22
22		L18337		5	STRAP 15 in

09 -53		p1	05/03

CAB - GLASS, MIRROR AND HOLD OPEN

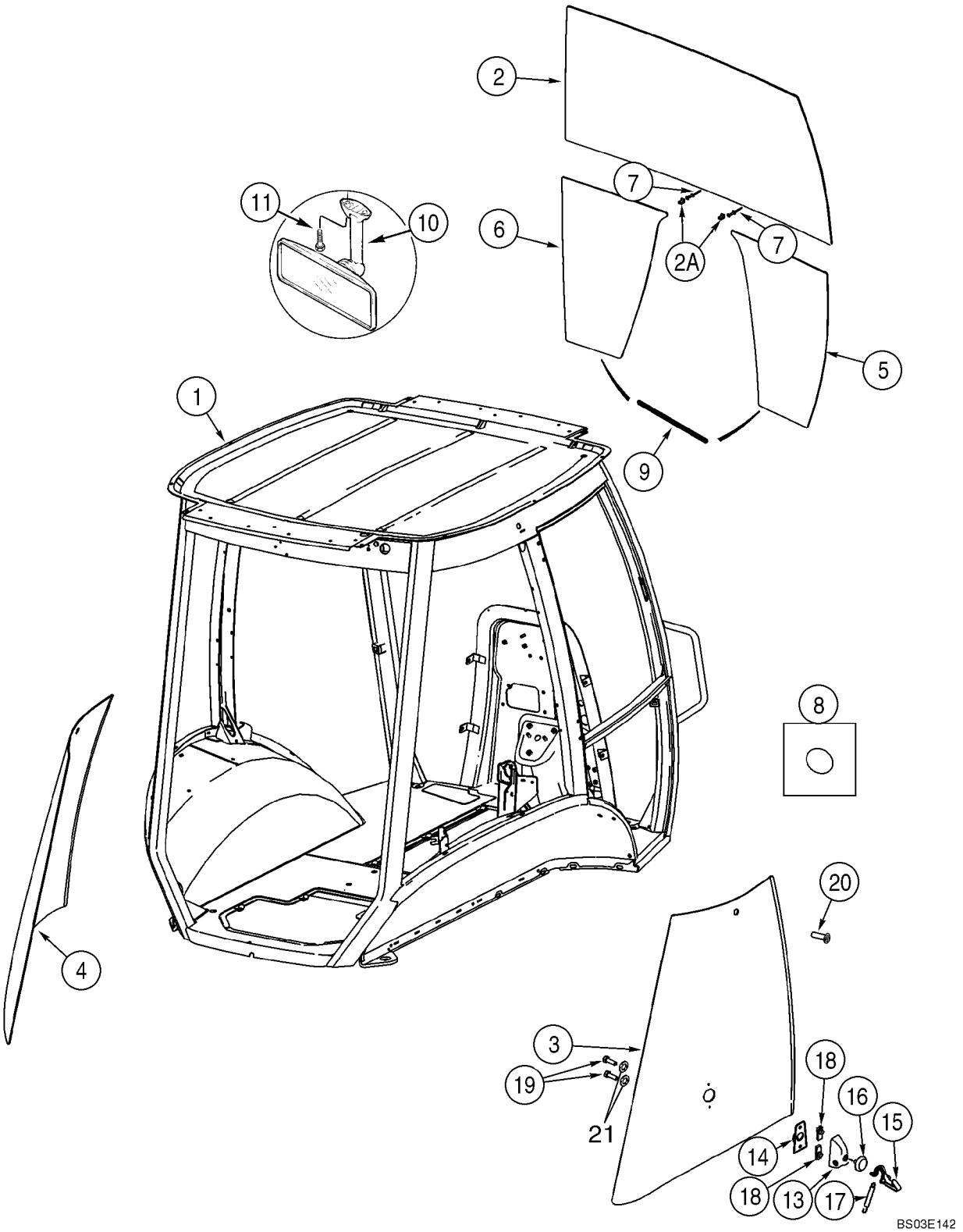

CAB - GLASS, MIRROR AND HOLD OPEN

REF	FN	PART NUMBER	YR/SN	QTY	DESCRIPTION
1		336711A3		1	CAB Single Door; Includes Frame, Left-Hand Door, Right-Hand Window, All Glass, Front and Rear Wipers and Exterior Lamps; Order From Machinery Price List; Replaces 336711A2
1		336709A3		1	CAB Two Door; Includes Frame, Left-Hand and Right-Hand Doors, All Glass, Front and Rear Wipers and Exterior Lamps; Order From Machinery Price List; Replaces 336709A2
2		338418A1		1	WINDSCREEN
2A		279482A1		2	CLAMP Windshield
		411380A1		1	KIT Service; Glass; Right-Hand Quarter; Incl. Ref 3 and Instruction Sheet
3		338425A1		1	WINDOW Right Rear Quarter Panel
		411379A1		1	KIT Service; Glass; Left-Hand Quarter; Incl. Ref 4 and Instruction Sheet
4		338424A1		1	WINDOW Left Rear Quarter Panel
5		338423A1		1	WINDSCREEN Lower Right-Hand
6		338420A1		1	WINDSCREEN Lower Left-Hand
7		151-516		2	RIVET
8		391827A1		36	SPACER
9		395793A1		2	STRIP,PROTECTION Rear View Mirror
10		364574A2		1	MIRROR ASSY. Interior
11		286-56520		2	SCREW Hold Open
13		405740A1		2	COVER
14		405739A1		2	BODY
15		405738A1		2	LEVER Hold Open
16		400573A1		2	GROMMET
17		405741A1		2	SPRING (COIL) Latch Back
18		405742A1		4	NUT M8
19		400572A1		4	BOLT M8; Nylon
20		400571A2		2	BUMPER Replaces 400571A1
21		431801A1		4	WASHER Black Nylon

09 -54		p1	05/03

CAB - FRAME AND COVERS

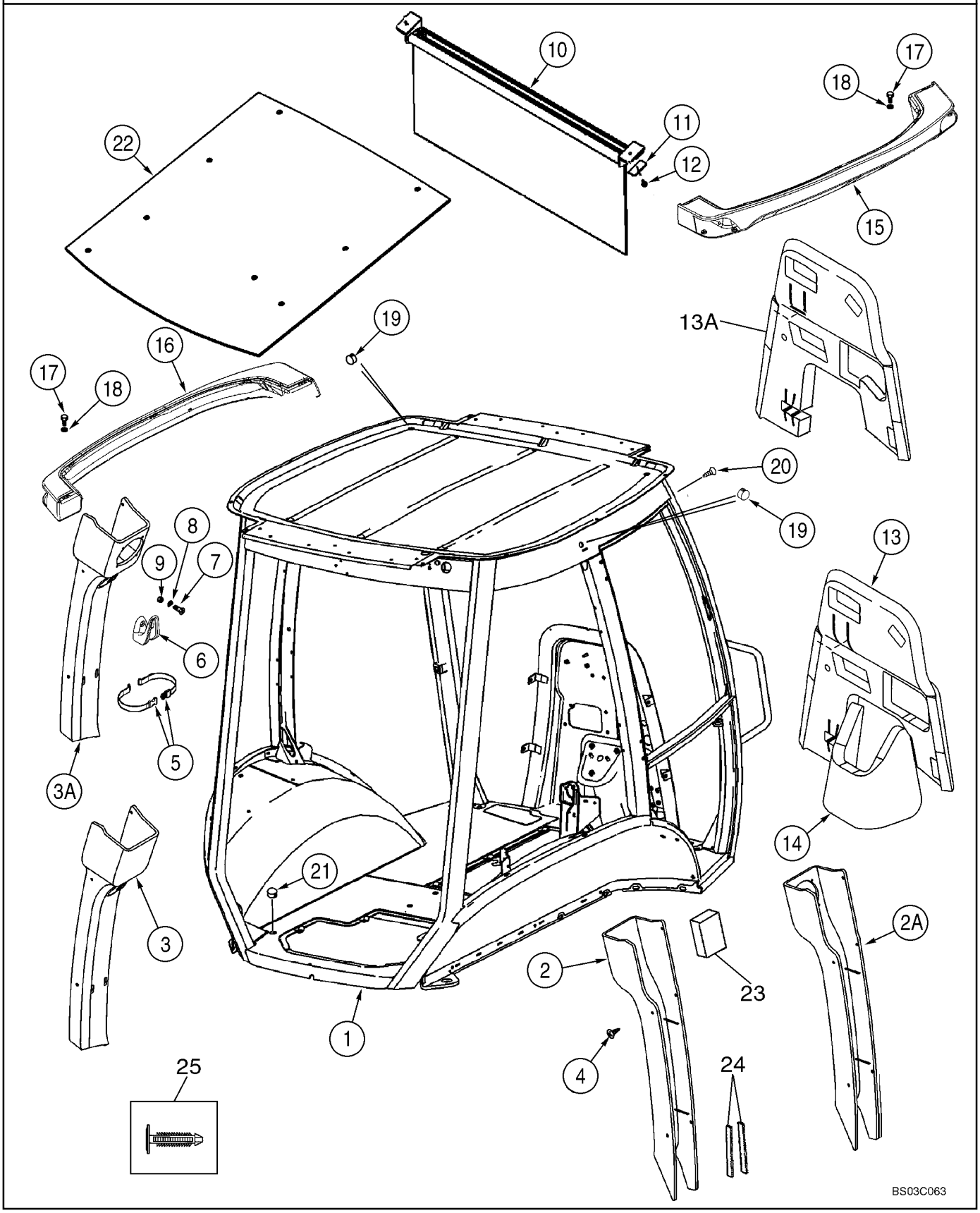

CAB - FRAME AND COVERS

REF	FN	PART NUMBER	YR/SN	QTY	DESCRIPTION
1		360765A2		1	FRAME ASSY Single Door; Replaces 360765A1
1		364059A2		1	FRAME ASSY Two Door; Replaces 364059A1
2		360267A3		1	COVER Plastic; Right-Hand Post; Standard Interior
2A		379425A3		1	COVER Vinyl; With Speaker Holes; Right-Hand Post; Deluxe Interior
3		360266A2		1	COVER Plastic; Left-Hand Post; Standard Interior
3A		379424A2		1	COVER Vinyl; With Speaker Holes; Left-Hand Post; Deluxe Interior
4		401949A1		10	FASTENER
5		378227A1		1	STRAP Garment Strap
6		114549A1		1	COAT HOOK
7		540-720		2	SCREW
8		895-11004		2	WASHER 4,3 x 9 x 0,8 mm
9		832-10404		2	NUT M4
10		364180A1		1	VISOR, SUN
11		409618A1		2	PLATE 1/4 in. Mounting Hole; Replaces 376159A1 Plate With 7/32 in Mounting Hole
12		396516A1		3	SCREW,POINTED No. 10 x 1 st; With Washer; Phillips
13		390601A2		1	COVER Firewall; No Longer Available; Order 390601A5, Ref 13A
13A		390601A5		1	COVER Firewall
14		390602A1		1	COVER Firewall; Lower
15		360247A2		1	LIGHT ASSY. Right-Hand
16		360246A2		1	LIGHT ASSY. Left-Hand
17		394863A1		10	SCREW M6 x 20
18		395387A1		10	WASHER 6.4 ID; Nylon
19		395388A1		3	PLUG
		353-415		1	PLUG 1-1/2 in; Cab Roof; Models Without Radio Antenna
		353-410		1	PLUG 7/8; Upper Windshield Frame; Models Without Radio Antenna
		353-407		1	PLUG 11/16; Rear Filter Plate On Models Without Windshield Washer
		353-425		2	PLUG 7/16 in dia
		353-421		1	PLUG 3/16

09 -54		p2	05/03

CAB - FRAME AND COVERS

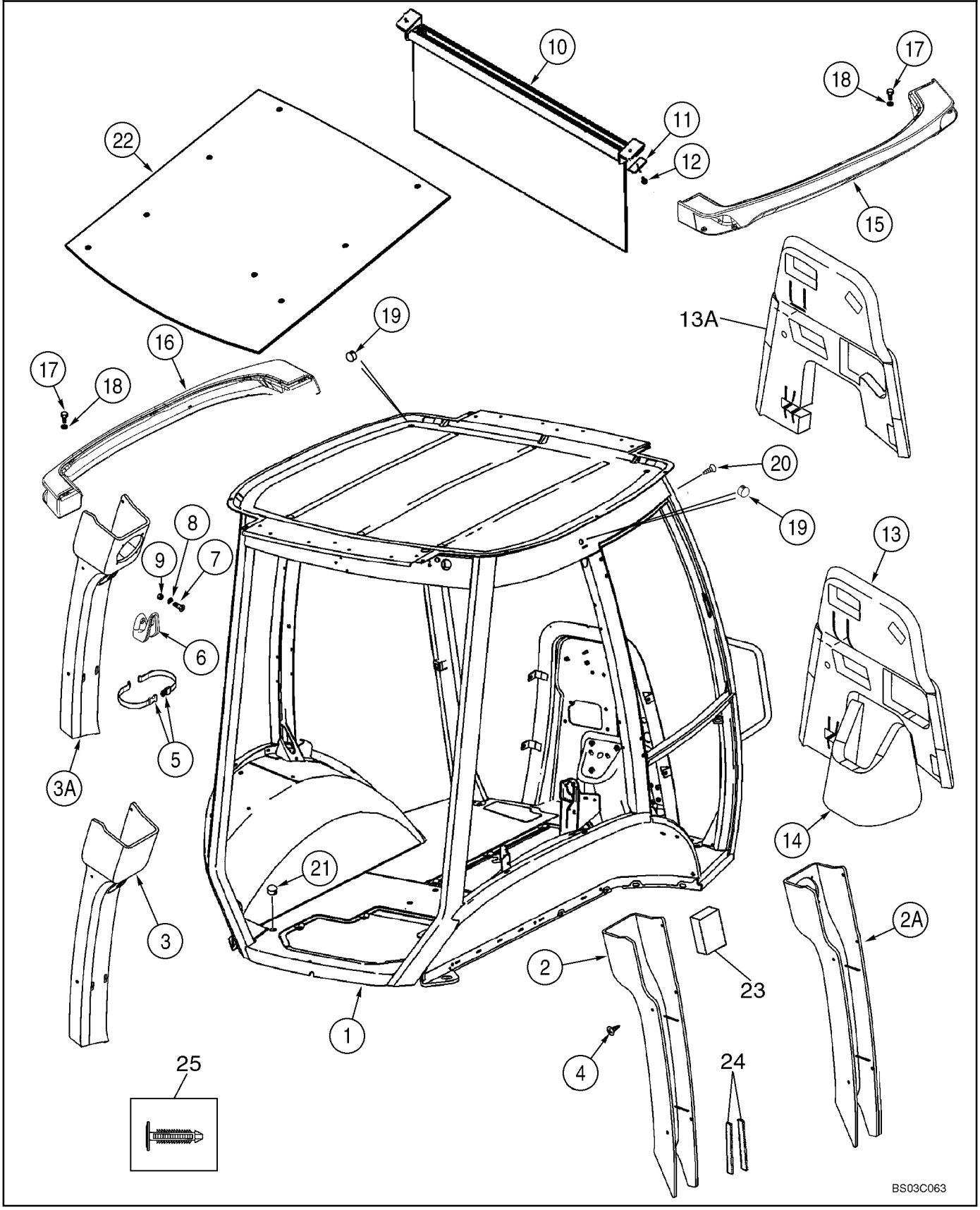

CAB - FRAME AND COVERS

REF	FN	PART NUMBER	YR/SN	QTY	DESCRIPTION
		353-405		1	PLUG 9/16
		353-408		1	PLUG 3/4
20		402610A1		8	FASTENER Cab Frame; Models Without Exterior Mirrors
21		382298A1		2	PLUG
22		368809A1		1	INSULATOR Insulation
23		412285A1		1	STRIP Foam; Adhesive Back; B-Post
24		414939A1		2	STRIP, SEALING Adhesive Back; B-Post
25		411399A1		1	FASTENER For 1/4 in dia Hole; If Used

CAB - DOORS

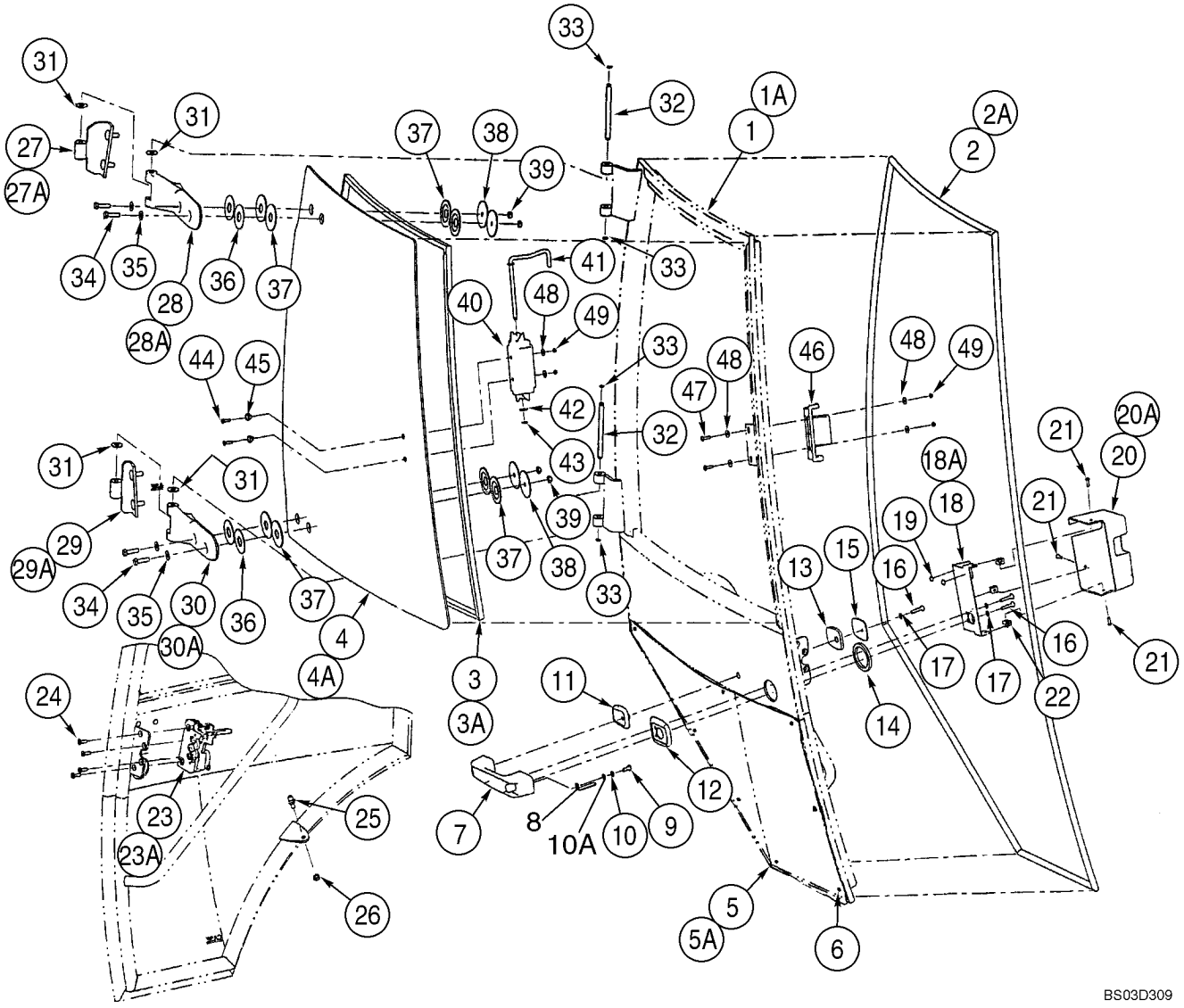

CAB - DOORS

REF	FN	PART NUMBER	YR/SN	QTY	DESCRIPTION
		REF			INSTRUCTION Left-Hand and Right-Hand Cab Doors; Left-Hand Door Not Illustrated
		394585A2		1	CAB DOOR, RH Right-Hand Door; Incl. Ref 1 - 49; Except Where Noted For Left-Hand Door; Replaces 394585A1
		341743A2		1	CAB DOOR, LH Left-Hand Door; Incl. Ref 1A - 49; Except Where Noted For Right-Hand Door; Replaces 341743A1
1		NSS		1	NOT SERVICED SEPARATELY Frame; Right-Hand Door
1A		NSS		1	NOT SERVICED SEPARATELY Frame; Left-Hand Door
2		394707A1		1	STRIP, RUBBER Right-Hand Door
2A		390838A1		1	STRIP, RUBBER Left-Hand Door
3		394708A1		1	SEAL, GLASS Window; Upper; Right-Hand Door
3A		391850A1		1	SEAL, GLASS Window; Upper; Left-Hand Door
4		394700A1		1	GLASS Upper; Right-Hand Door
4A		338429A1		1	GLASS Upper; Left-Hand Door
5		338427A1		1	GLASS, CAB Lower; Right-Hand Door
5A		338426A1		1	GLASS, CAB Lower; Left-Hand Door
6		391827A1		4	SPACER 4 Per Door; Cut Bumpers In Half For 8 Locations
7		60-7083T1		1	HANDLE Outer
8		442718A1		1	BUTTON Release; Replaces 391846A1
9		440-12510		1	SCREW 1/4 x 5/8
10		492-11025		1	WASHER, LOCK 1/4
10A		895-11006		1	WASHER 6,6 x 12,5 x 1,6 mm
11		315276A1		1	BEZEL Small
12		315273A1		1	BEZEL Large
13		391847A1		1	GASKET Small
14		391838A1		1	GASKET Large
15		391848A1		1	PLATE, BACK
16		393203A1		3	SCREW
17		393202A1		3	WASHER 6 mm
18		394704A1		1	BRACKET Cover Mounting; Right-Hand Door
18A		391841A1		1	BRACKET Cover Mounting; Left-Hand Door

CAB - DOORS

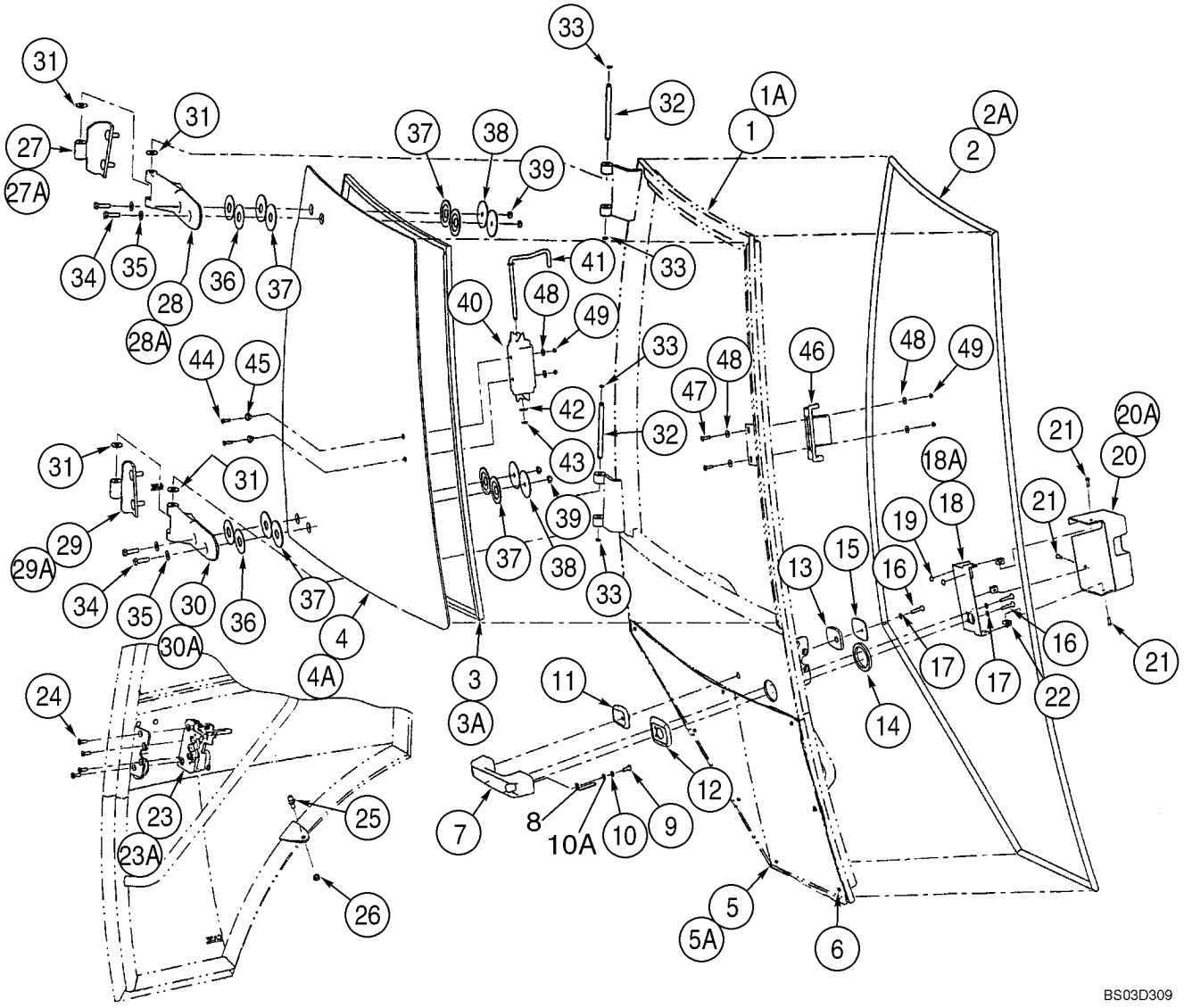

CAB - DOORS

REF	FN	PART NUMBER	YR/SN	QTY	DESCRIPTION
19		391827A1		2	SPACER
20		394705A1		1	COVER Latch; Right-Hand Door
20A		391842A1		1	COVER Latch; Left-Hand Door
21		390-100		3	SCREW
22		393209A1		3	NUT, SPECIAL
23		382777A1		1	LATCH Right-Hand Door; Replaces 394703A1
23A		382775A1		1	LATCH Left-Hand Door; Replaces 391835A1
24		569-4		4	SCREW
25		3234063R1		1	BALL JOINT
26		832-10408		1	NUT M8
27		394701A1		1	HINGE Upper; Right-Hand Door
27A		390840A1		1	HINGE Upper; Left-Hand Door
28		364134A1		1	HINGE Plastic; Upper; Right-Hand Door
28A		364132A1		1	HINGE Plastic; Upper; Left-Hand Door
29		394702A1		1	HINGE Lower; Right-Hand Door
29A		390841A1		1	HINGE Lower; Left-Hand Door
30		364135A1		1	HINGE Plastic; Lower; Right-Hand Door
30A		364133A1		1	HINGE Plastic; Lower; Left-Hand Door
31		391845A1		4	WASHER Nylon
32		391843A1		2	PIN
33		442773A1		4	CIRCLIP Replaces 393330A1
34		514-633		4	SCREW M8 x 30
35		895-30107		4	WASHER
36		376334A1		4	WASHER 55 mm OD; Yellow
37		376336A1		8	WASHER,RUBBER Rubber
38		376332A1		4	WASHER 60 mm OD; Black
39		832-10508		4	NUT M8
40		368147A1		1	HANDLE Slam Latch
41		391849A1		1	ROD
42		906086R1		1	WASHER 8.4 x 16 x 1.6 thk
43		100-39001		1	RING
44		140-104		2	SCREW No. 8 x 3/4
45		F64198		2	BUSHING Nylon
46		368146A1		1	LATCH Slam Latch
47		142-103		2	SCREW
48		195-81023		6	WASHER 1/4 x 9/16 x 3/64

CAB - DOORS

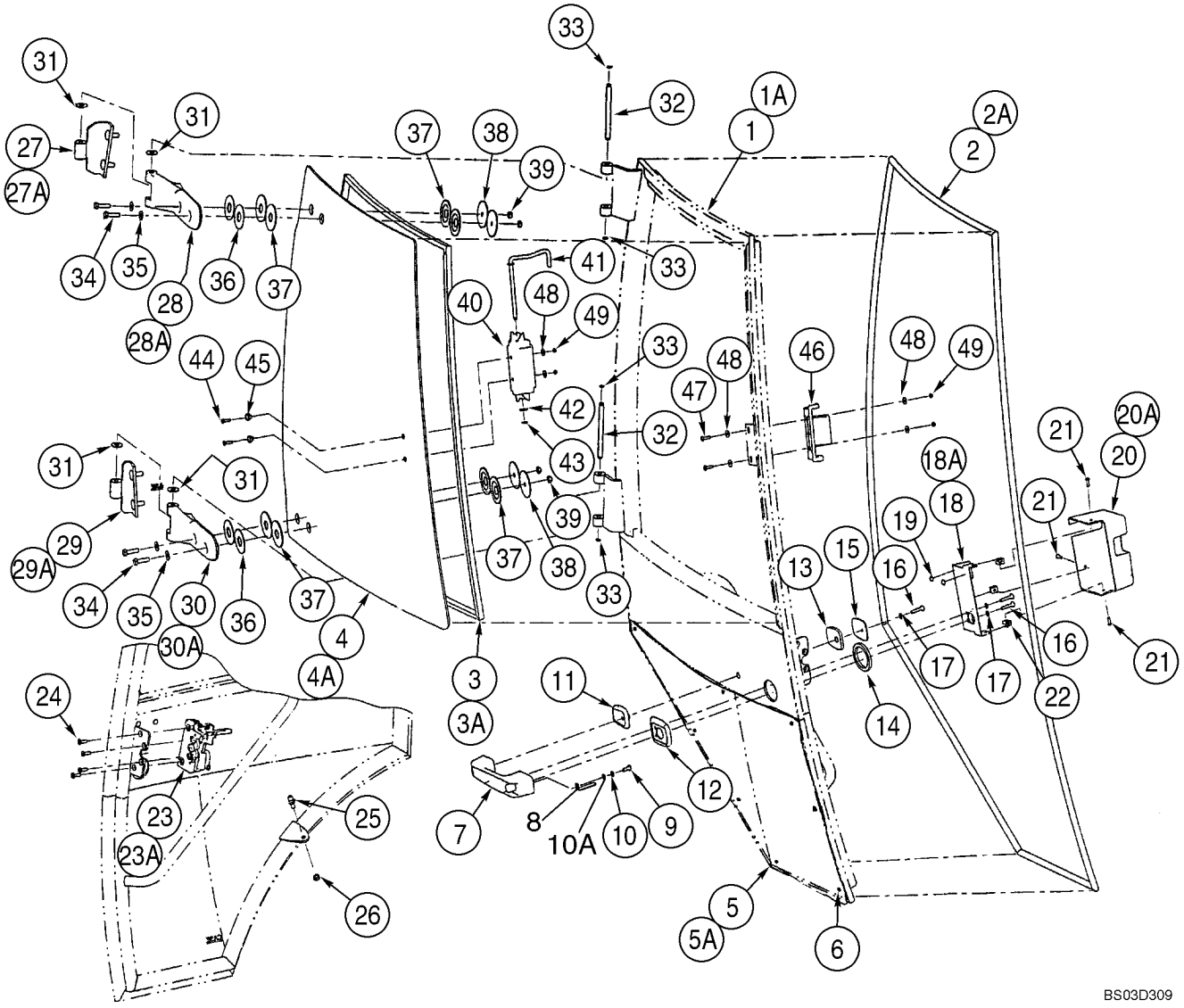

CAB - DOORS

REF	FN	PART NUMBER	YR/SN	QTY	DESCRIPTION
49		F45165		4	SAFETY NUT No. 10

09 -56		p1	05/03

CAB - DOOR MOUNTING

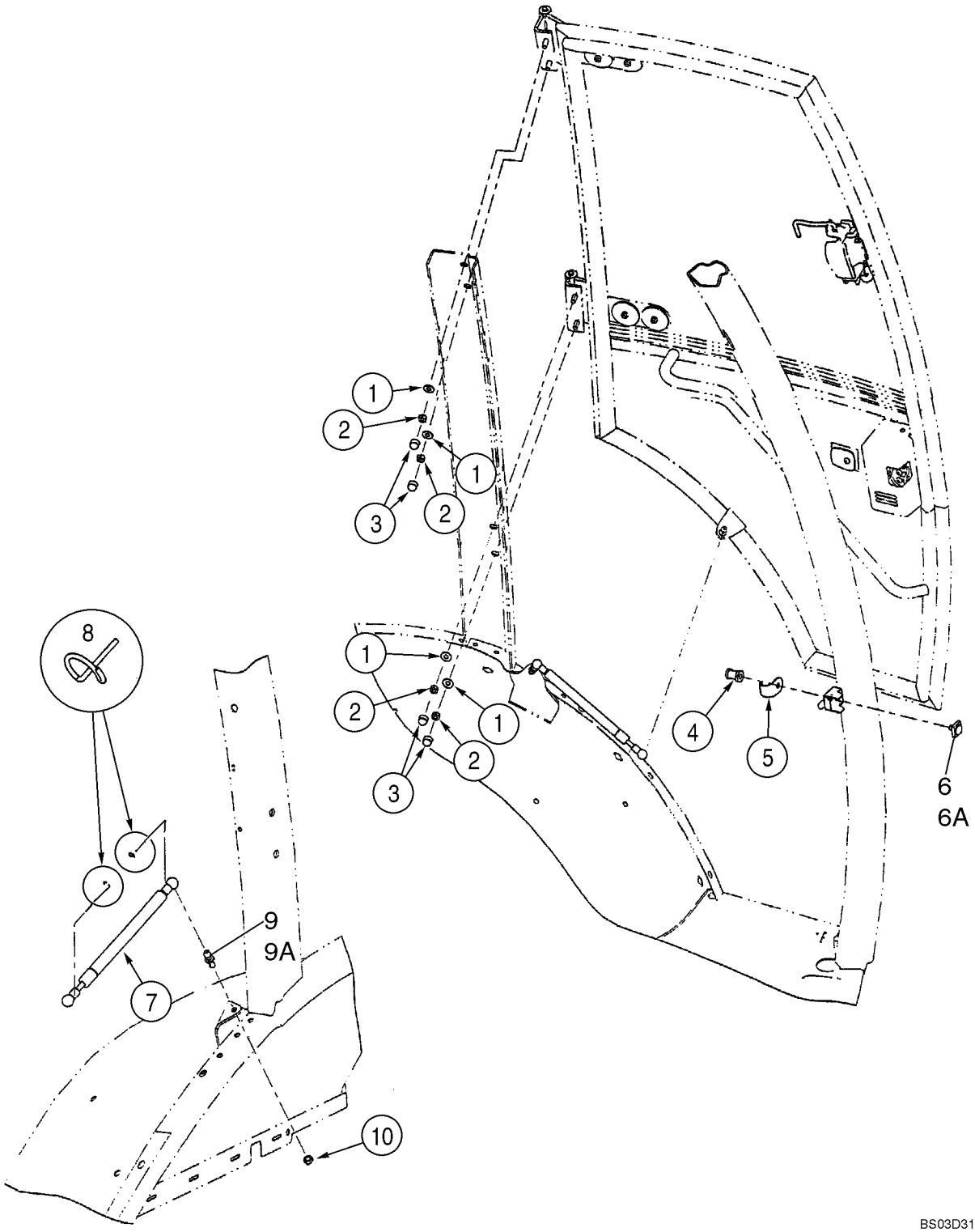

CAB - DOOR MOUNTING

REF	FN	PART NUMBER	YR/SN	QTY	DESCRIPTION
		REF			INSTRUCTION Left-Hand and Right-Hand Cab Doors; Left-Hand Cab Door Shown
1		397064A1		8	WASHER,SPECIAL 3/8 x 7/8 x 1/16 thk
2		232-4246		8	NUT 3/8
3		396841A1		8	CAP
4		321277A1		2	PIN Striker
5		393211A1		2	GUARD
6		393212A1		2	BLOCK If Used
6A		442842A1		1	BLOCK ASSY. Striker; If Used
7		394800A1		2	SPRING Gas Spring
8		3233348R1		4	CLIP,ELECTRICAL
9		3234063R1		2	BALL JOINT If Used
9A		432431A1		1	STUD Ball; If Used
10		832-10408		2	NUT M8

09 -57		p1	05/03

CAB - WINDOW, RIGHT-HAND, FOR SINGLE DOOR CAB FRAMES

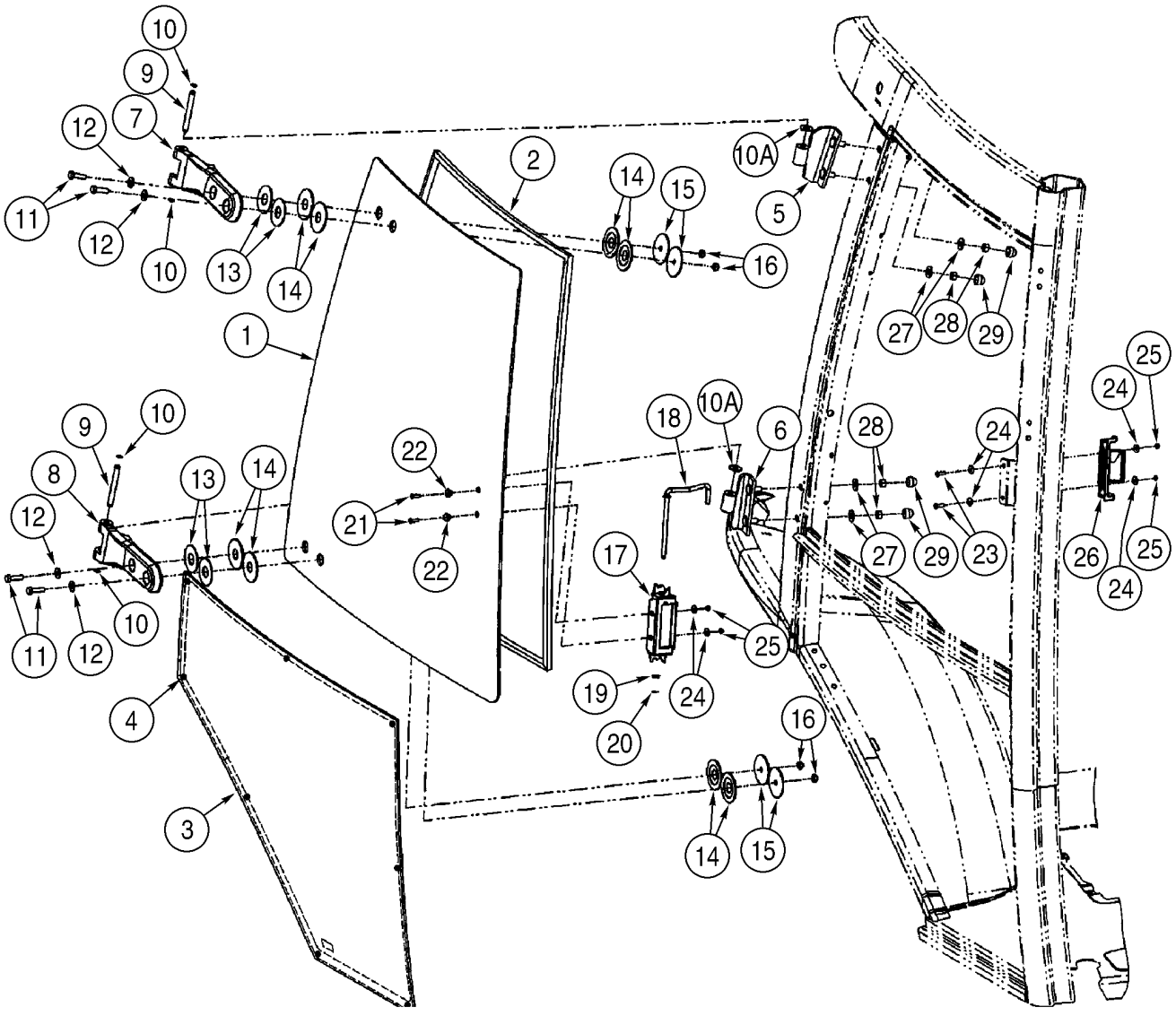

CAB - WINDOW, RIGHT-HAND, FOR SINGLE DOOR CAB FRAMES

REF	FN	PART NUMBER	YR/SN	QTY	DESCRIPTION
		341746A1		1	WINDOW ASSY Right-Hand; Incl. Ref 1 - 29
1		360046A1		1	GLASS, CAB Upper
2		394864A1		1	SEAL, GLASS
3		338428A1		1	WINDOW ASSY Lower
4		391827A1		4	SPACER Cut Bumpers In Half For 8 Locations
5		394701A1		1	HINGE Upper
6		394702A1		1	HINGE Lower
7		364134A1		1	HINGE Plastic; Upper
8		364135A1		1	HINGE Plastic; Lower
9		394865A1		2	PIN
10		393330A1		4	RING
10A		391845A1		2	WASHER Nylon
11		514-633		4	SCREW M8 x 30
12		895-30107		4	WASHER
13		376334A1		4	WASHER 55 mm OD; Yellow
14		376336A1		8	WASHER,RUBBER Rubber
15		376332A1		4	WASHER 60 mm OD; Black
16		832-10508		4	NUT M8
17		368147A1		1	HANDLE Slam Latch
18		391849A1		1	ROD
19		906086R1		1	WASHER 8.4 x 16 x 1.6 thk
20		100-39001		1	RING
21		140-104		2	SCREW No. 8 x 3/4
22		F64198		2	BUSHING Nylon
23		142-103		2	SCREW
24		195-81023		6	WASHER 1/4 x 9/16 x 3/64
25		F45165		4	SAFETY NUT No. 10
26		368146A1		1	LATCH Slam Latch
27		397064A1		4	WASHER,SPECIAL 3/8 x 7/8 x 1/16 thk
28		232-4246		4	NUT 3/8
29		396841A1		4	CAP

09 -58		p1	05/03

CAB - WINDOW, REAR

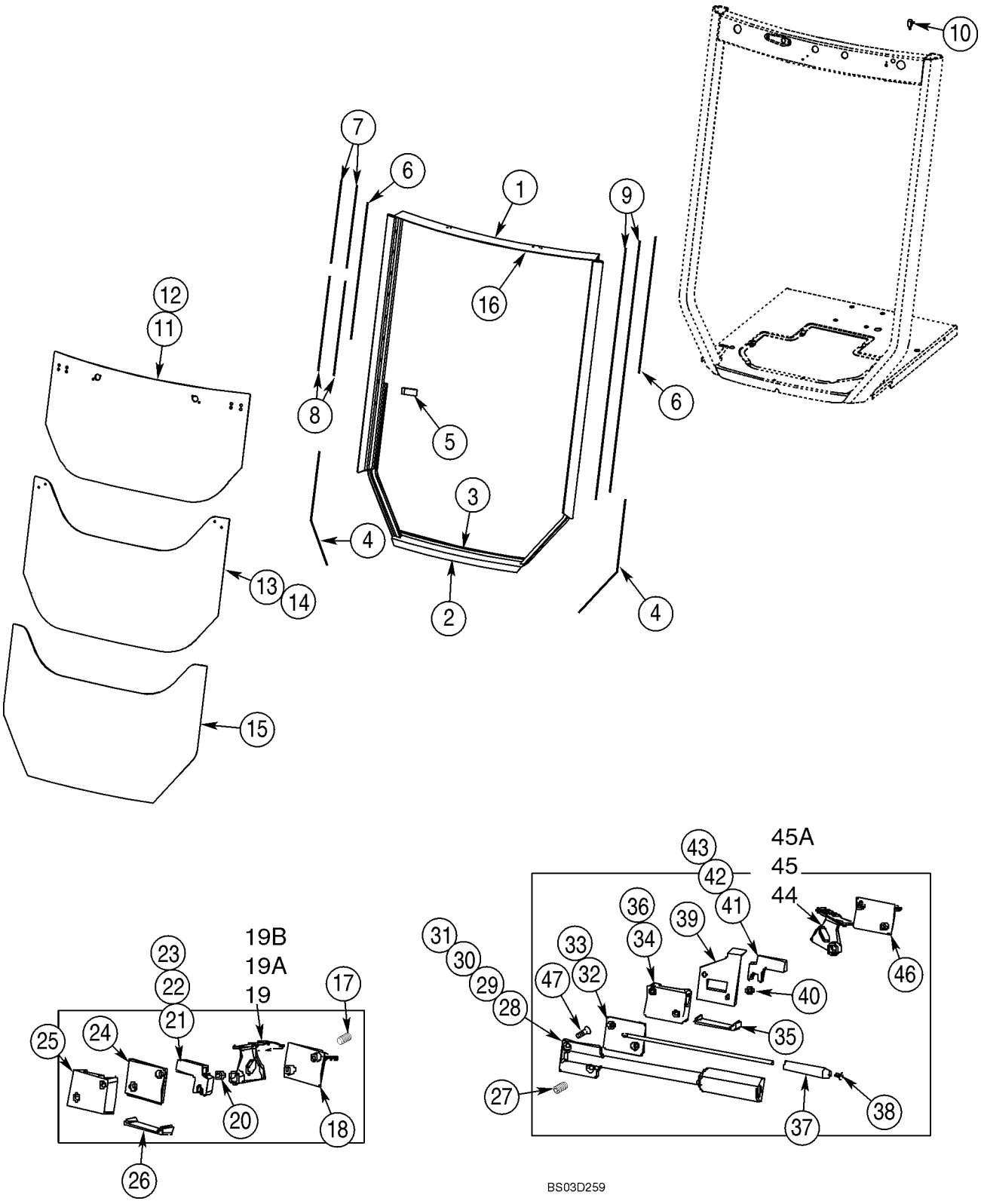

CAB - WINDOW, REAR

REF	FN	PART NUMBER	YR/SN	QTY	DESCRIPTION
		411850A1		1	KIT Frame and Seal; Incl. Ref 1, 4, 7, 8, 9, 16
1		403948A1		1	FRAME ASSY Included in 411850A1 Frame and Seal Kit
2		{404233A1}		1	700 mm (27-1/2 in), Foam; Bottom, Outside; Adhesive Back; Cut From 404425A1, No Longer Available; Order 410867A1
2		410867A1		1	GASKET Rubber Seal; Bulb Type; Replaces 404233A1 and 404232A1 On Some Models
3		{404232A1}		1	700 mm (27-1/2 in), Brush Weather Stripping; Bottom, Inside; Cut From 404424A1; If Used
		411851A1		1	KIT Seal; Incl. Ref 4, 7, 8, 9, 16
4		404228A1		2	SEAL 749 mm (29-1/2 in), Flocked Channel Seals; Cut From 402852A1; Included in 411851A1 Seal Kit and 411850A1 Frame and Seal Kit
5		400200A1		2	STRIP, RUBBER Stop
6		404226A1		2	SEAL 787 mm (31 in), Flocked Channel Seals; Cut From 402852A1
7		404229A1		2	SEAL 508 mm (20 in), Flocked Channel Seals; Cut From 402852A1; Included In 411851A1 Seal Kit and 411850A1 Frame and Seal Kit
8		404228A1		2	SEAL 749 mm (29-1/2 in), Flocked Channel Seals; Cut From 402852A1; Includedi n 411851A1 Seal Kit and 411850A1 Frame and Seal Kit
9		404227A1		2	SEAL 1257 mm (49-1/2 in), Flocked Channel Seals; Cut From 402852A1; Included in 411851A1 Seal Kit and 411850A1 Frame and Seal Kit
10		A187714		1	SWITCH Rear Wiper Cutout
		495-11047		2	WASHER 15/32 x 59/64 x 1/16
		425-147		1	NUT 7/16
11		352208A1		1	GLASS, CAB
12		395348A1		1	STRIP,ORNAMENTAL 1210 mm (47-21/32 in), Lower Glass Edge; Cut From 404426A1; Or Order 412023A1 Kit
		412023A1		1	SEAL, GLASS Weatherstrip; Incl. (2) 395348A1 Seals
13		352209A1		1	GLASS, CAB

CAB - WINDOW, REAR

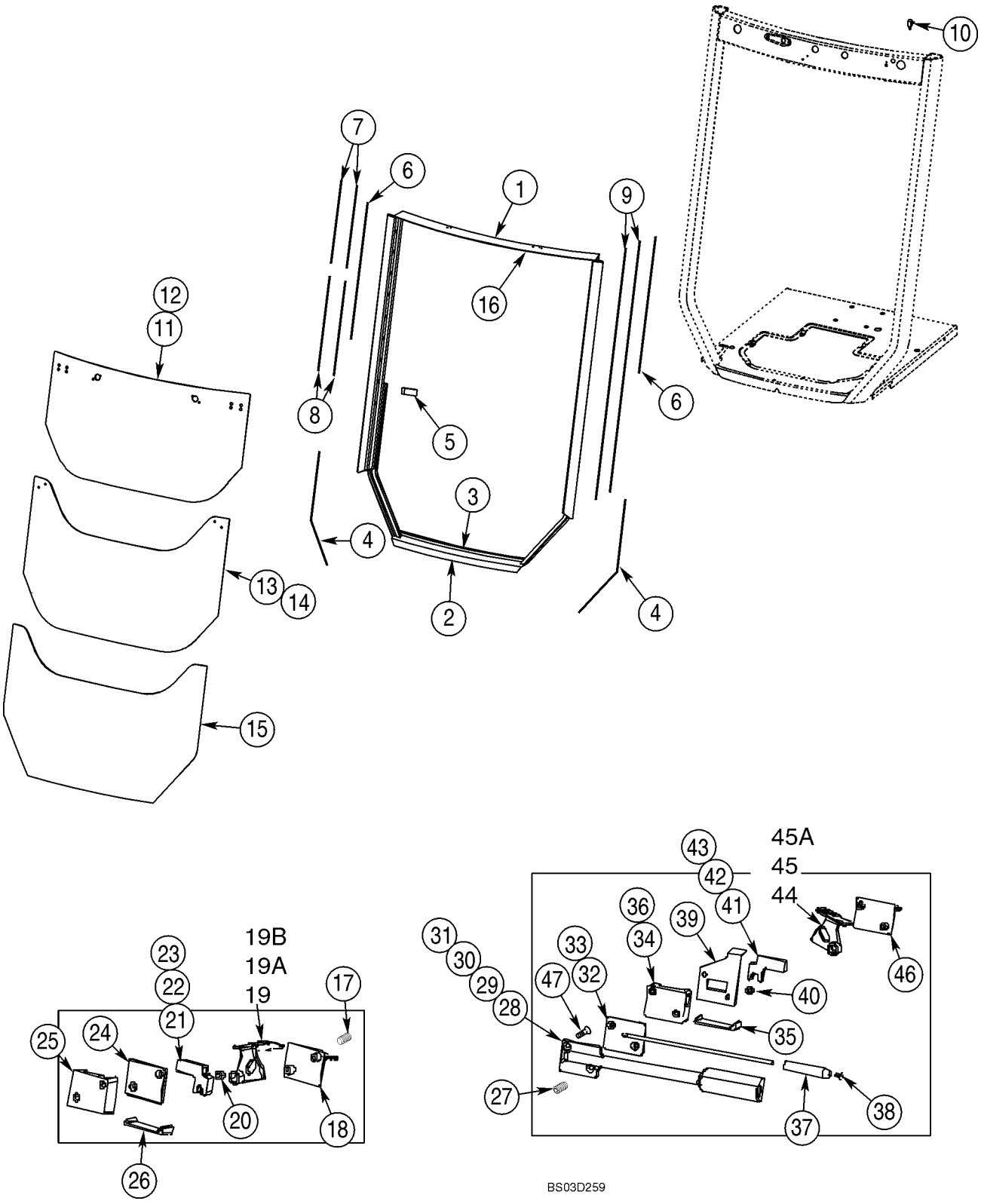

CAB - WINDOW, REAR

REF	FN	PART NUMBER	YR/SN	QTY	DESCRIPTION
14		395348A1		1	STRIP,ORNAMENTAL 1210 mm (47-21/32 in), Lower Glass Edge; Cut From 404426A1; Or Order 412023A1 Kit
		412023A1		1	SEAL, GLASS Weatherstrip; Incl. (2) 395348A1 Seals
15		352210A1		1	GLASS, CAB
16		400494A1		1	SEAL 1057 mm (41-5/8 in), Hollow Seal; Cut From 404231A1; Included in 411851A1 Seal Kit and 411850A1 Frame and Seal Kit
17		409690A1		X	SCREW M5 x 16, Torx Head; Lower Window Latch; If Used
17		409692A1		X	SCREW M5 x 30, Torx Head; Left-Hand; If Used
17		NSS		4	NOT SERVICED SEPARATELY Screw, Allen Head
		411908A1		1	LATCH Kit, Lower Left-Hand; Incl. 402871A1, Ref 18; 402867A1, Ref 19; (1) Ref 20; 402873A1, Ref 21; (1) Ref 22; (1) Ref 23; 402832A1, Ref.25; (1) Ref 26
18		402871A1		1	COVER Left-Hand
		411909A1		1	LATCH Kit, Lower Right-Hand; Incl. 402868A1, Ref. 18; 402867A1, Ref. 19; (1) Ref 20; 402833A1, Ref. 21; (1) Ref. 22; (1) Ref. 23; 402831A1, Ref. 25; (1) Ref. 26
18		402868A1		1	COVER Right-Hand
19		402872A1		1	LEVER Left-Hand; Included in 411908A1, Lower Left-Hand Catch Kit
19		402867A1		1	LEVER Right-Hand; Included in 411909A1, Lower Right-Hand Catch Kit
		411916A1		1	PLATE, BACK Kit; Incl. (1) 402848A1, Plate; (1) 411942A1, Pad
19A		402848A1		1	PLATE, CATCH Left-Hand
		411917A1		1	PLATE, BACK Kit; Incl. (1) 402849A1, Plate; (1) 411942A1, Pad
19A		402849A1		1	PLATE, CATCH Right-Hand
19B		411942A1		2	GASKET Pad, Catch; Adhesive Back; Left-Hand and Right-Hand Sides

CAB - WINDOW, REAR

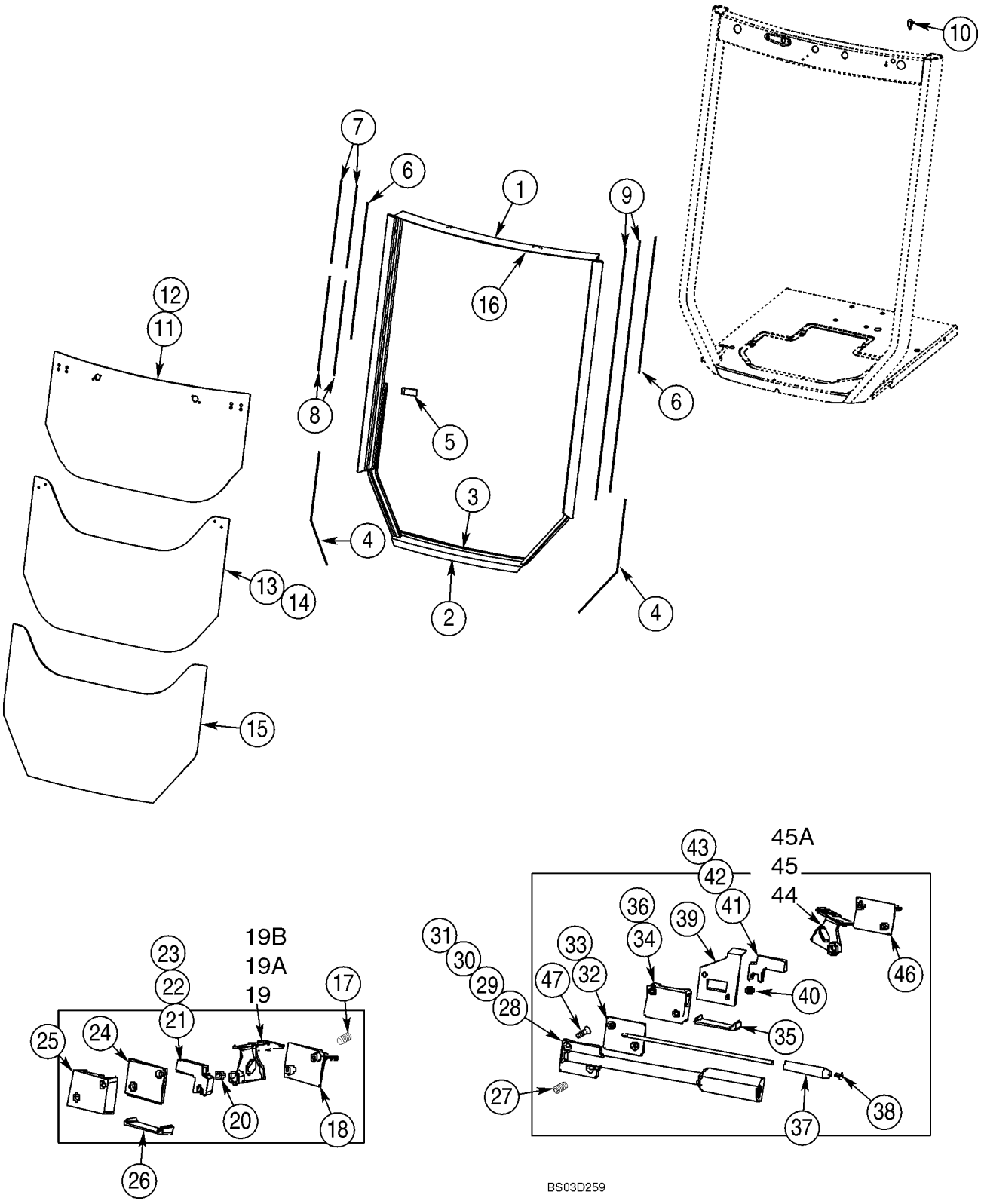

CAB - WINDOW, REAR

REF	FN	PART NUMBER	YR/SN	QTY	DESCRIPTION
20		402830A1		2	BUSHING Nylon; (1) Included in 411909A1, Lower Right-Hand Catch Kit and (1) Included in 411908A1, Lower Left Hand Catch Kit
21		402873A1		1	PLUNGER Left-Hand; Included in 411908A1, Lower Left-Hand Catch Kit
21		402833A1		1	PLUNGER Right-Hand; Included in 411909A1, Lower Right-Hand Catch Kit
22		402869A1		2	RIVET Flat Head; (1) Included in 411909A1, Lower Right-Hand Catch Kit and (1) Included in 411908A1, Lower Left-Hand Catch Kit
23		402870A1		2	SPRING (COIL)
		411915A1		1	KIT Bushing Plate; Incl. (1) 402847A1, (1) 402846A1, Ref. 24; (2) 402843A1, Ref. 31; (1) 402844A1, (1) 402845A1, Ref. 36
24		402847A1		1	PLATE, PLASTIC Left-Hand
24		402846A1		1	PLATE, PLASTIC Right-Hand
25		402832A1		1	BODY Left-Hand; Included in 411908A1, Lower Left-Hand Catch Kit
25		402831A1		1	BODY Right-Hand; Included in 411909A1, Lower Right-Hand Catch Kit
26		402865A1		2	BUFFER, RUBBER Bumper; (1) Included in 411909A1, Lower Right-Hand Catch Kit and (1) Included in 411908A1, Lower Left-Hand Catch Kit
27		409690A1		X	SCREW M5 x 16, Torx Head; Upper Window Latch; If Used
27		409692A1		X	SCREW M5 x 30, Torx Head; Right-Hand; If Used
27		NSS		4	NOT SERVICED SEPARATELY Screw, Allen Head
		411911A1		1	LATCH Kit, Bolt Assy, Upper Left-Hand; Incl. 402863A1, Ref. 28; 402851A1, Ref. 29; (1) Ref. 32; (1) Ref. 33; 402841A1, Ref. 37; (1) Ref. 38
28		402863A1		1	CASTING Left-Hand
		411910A1		1	LATCH Kit, Bolt Assy, Upper Right-Hand; Incl. 402860A1, Ref. 28; 402840A1, Ref. 29; (1) Ref. 32; (1) Ref. 33; 402837A1, Ref. 37; (1) Ref. 38
28		402860A1		1	CASTING Right-Hand

CAB - WINDOW, REAR

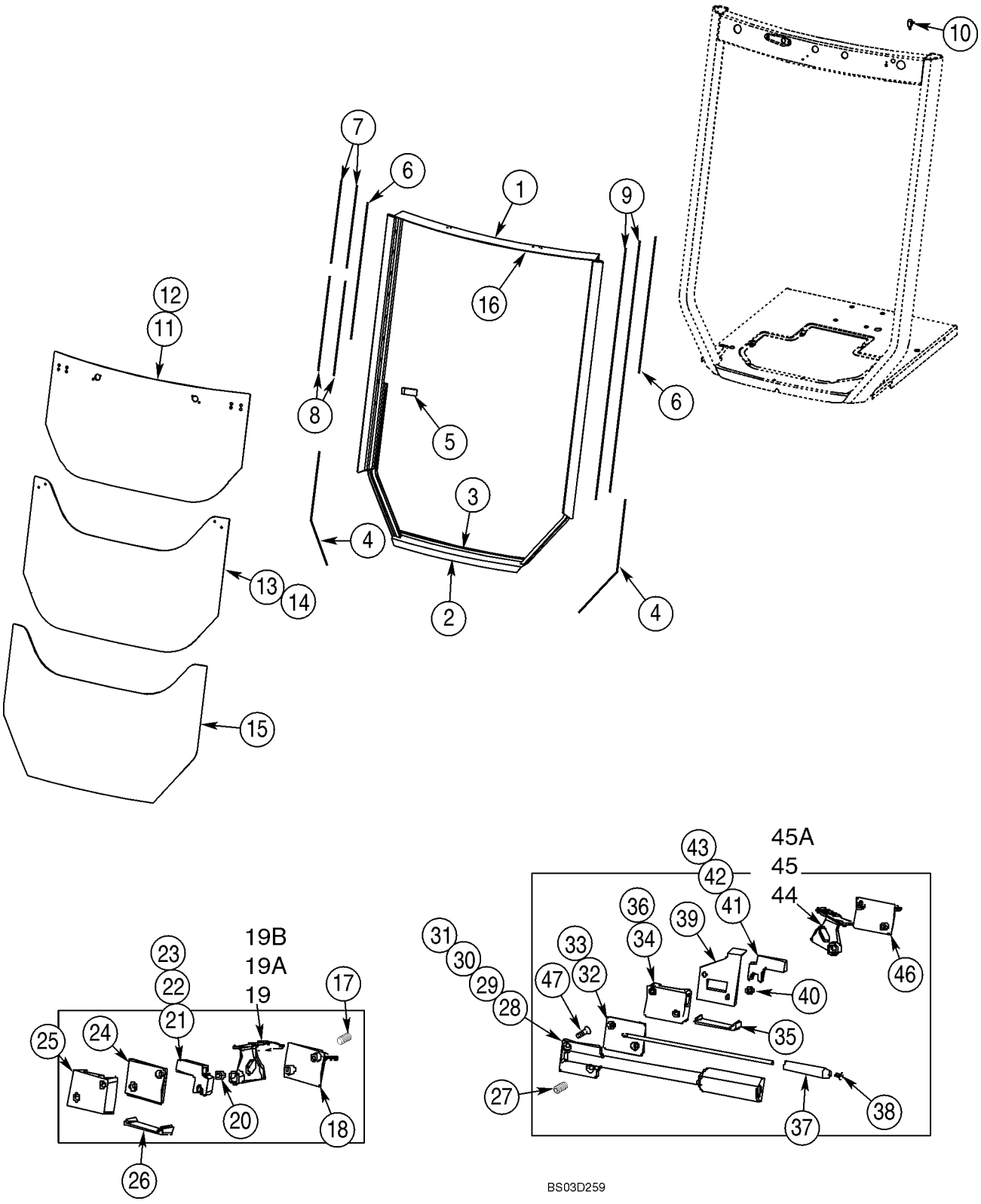

CAB - WINDOW, REAR

REF	FN	PART NUMBER	YR/SN	QTY	DESCRIPTION
29		402851A1		1	GASKET Left-Hand; Included in 411911A1, Upper Left-Hand Bolt Assy Kit
29		402840A1		1	GASKET Right-Hand; Included in 411910A1, Upper Right-Hand Bolt Assy Kit
30		402842A1		2	PLATE, BACK
31		402843A1		2	PLATE, PLASTIC Also Included in 411915A1, Bushing Plate Kit
32		402838A1		2	ROD Included in 411911A1, Upper Left-Hand Bolt Assy Kit
33		402856A1		2	SPRING (COIL) 1) Included in 411911A1, Upper Left-Hand Bolt Assy Kit
		411914A1		1	LATCH Kit, Right-Hand Upper; Incl. 402831A1, Ref. 34; (1) 402866A1, Ref. 35; (1) 402830A1, Ref. 40; 402833A1, Ref. 41; 402867A1, Ref. 44; 402868A1, Ref. 46
34		402831A1		1	BODY Right-Hand
		411912A1		1	LATCH Kit, Left-Hand Upper; Incl. 402832A1, Ref. 34; (1) 402866A1, Ref. 35; (1) 402830A1, Ref. 40; 402873A1, Ref. 41; 402872A1, Ref. 44; 402871A1, Ref. 46
34		402832A1		1	BODY Left-Hand
35		402866A1		2	BUFFER, RUBBER (1) Included in 411912A1, Upper Left-Hand Catch Kit; (1) Included in 411914A1, Upper Right-Hand Catch Kit
		411915A1		1	KIT Bushing Plate; Incl. (1) 402844A1, Ref. 36; (1) 402845A1, Ref. 36; (2) 402843A1, Ref. 31; (1) 402847A1, (1) 402846A1, Ref. 25
36		402844A1		1	PLATE, PLASTIC Right-Hand
36		402845A1		1	PLATE, PLASTIC Left-Hand
37		402841A1		1	BOLT Left-Hand; Included in 411911A1, Upper Left-Hand Bolt Assy Kit
37		402837A1		1	BOLT Right-Hand; Included in 411910A1, Upper Right-Hand Bolt Assy Kit
38		402861A1		2	INSERT Plastic; Included in 411911A1, Upper Left-Hand Bolt Assy Kit

CAB - WINDOW, REAR

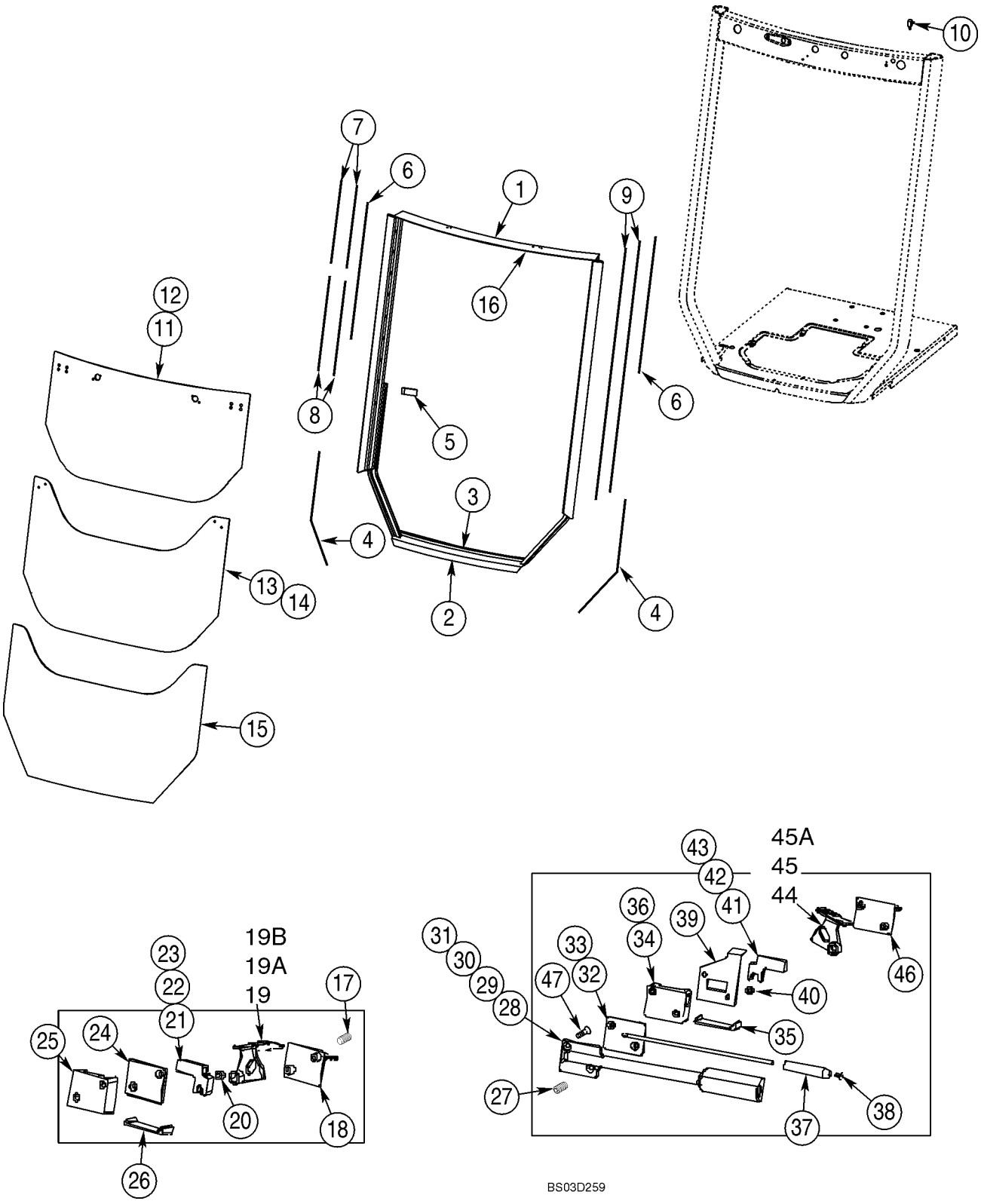

CAB - WINDOW, REAR

REF	FN	PART NUMBER	YR/SN	QTY	DESCRIPTION
39		402836A1		1	BRACKET Rear Wiper Cutout Switch; Right-Hand Side Only
40		402830A1		2	BUSHING Nylon; (1) Included in 411912A1, Upper Left-Hand Catch Kit and (1) Included in 411914A1, Upper Right-Hand Catch Kit
41		402833A1		1	PLUNGER Right-Hand; Included in 411914A1, Upper Right-Hand Catch Kit
41		402873A1		1	PLUNGER Left-Hand; Included in 411912A1, Upper Left-Hand Catch Kit
42		402869A1		2	RIVET Flat Head
43		402870A1		2	SPRING (COIL)
44		402867A1		1	LEVER Right-Hand; Included in 411914A1, Upper Right-Hand Catch Kit
44		402872A1		1	LEVER Left-Hand; Included in 411912A1, Upper Left-Hand Catch Kit
		411917A1		1	PLATE, BACK Kit; Incl. (1) 402849A1, Plate; (1) 411942A1, Pad
45		402849A1		1	PLATE, CATCH Right-Hand
		411916A1		1	PLATE, BACK Kit; Incl. (1) 4028484A1, Plate; (1) 411942A1, Pad
45		402848A1		1	PLATE, CATCH Left-Hand
45A		411942A1		2	GASKET Pad, Catch; Adhesive Back; Left-Hand and Right-Hand Sides
46		402868A1		1	COVER Right-Hand; Included in 411914A1, Upper Right-Hand Catch Kit
46		402871A1		1	COVER Left-Hand; Included in 411912A1, Upper Left-Hand Catch Kit
47		NSS		8	NOT SERVICED SEPARATELY Screw, Phillips Head
		411844A1		1	KIT Upper Right-Hand Bolt Latch; Incl. (1) 402842A1, Ref. 30; (4) 409690A1, Ref. 27; (1) 411910A1, Right-Hand Bolt Kit; (1) 411915A1, Bushing Plate Kit
		411845A1		1	KIT Upper Left-Hand Bolt Latch; Incl. (1) 402842A1, Ref. 30; (4) 409690A1, Ref. 27; (1) 411911A1, Left-Hand Bolt Kit; (1) 411915A1, Bushing Plate Kit

CAB - WINDOW, REAR

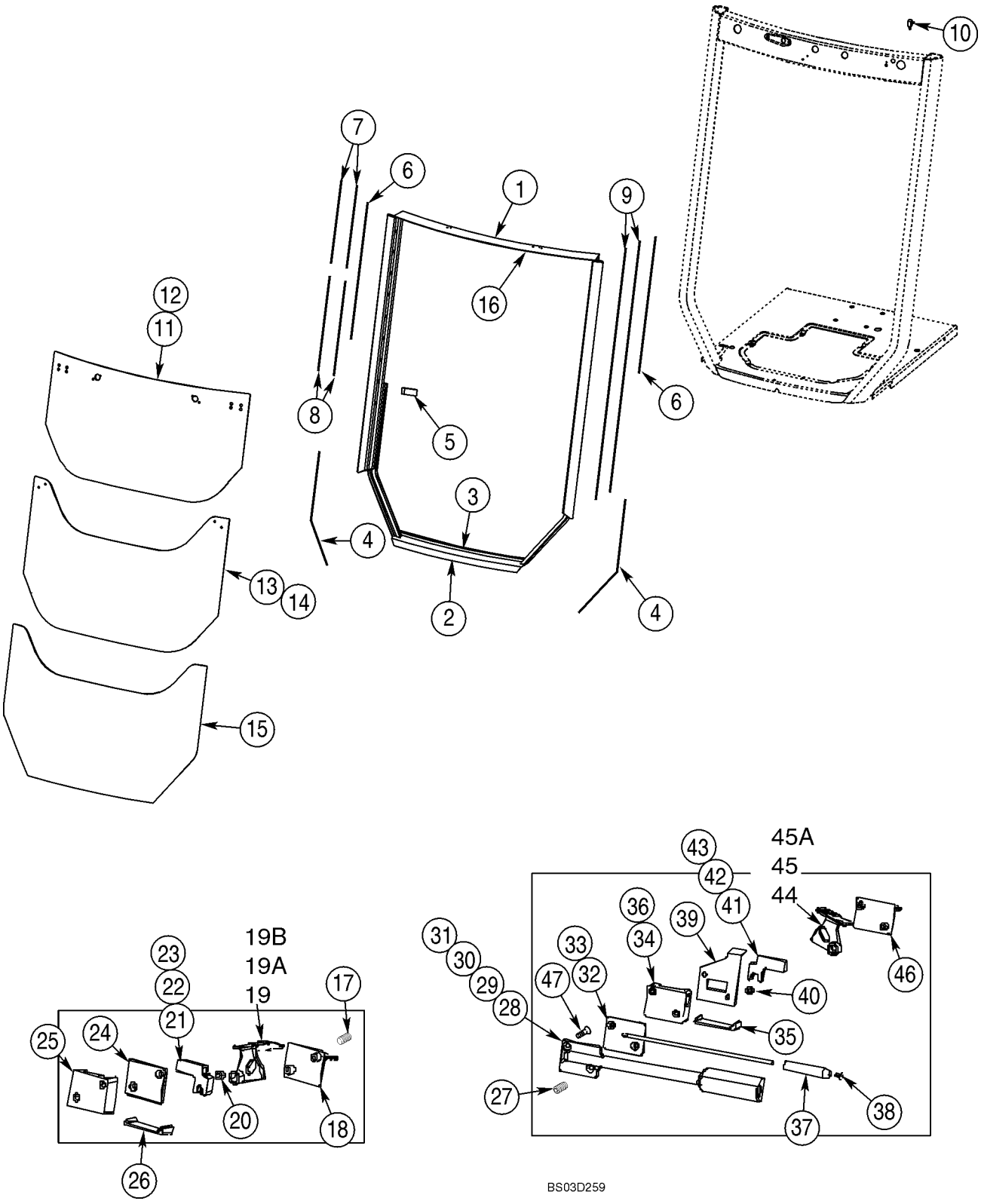

CAB - WINDOW, REAR

REF	FN	PART NUMBER	YR/SN	QTY	DESCRIPTION
		411846A1		1	KIT Left-Hand Mid Catch; Incl. (2) 409692A1, Ref. 27; (1) 411908A1, Lower Left-Hand Catch Kit; (1) 411915A1, Bushing Plate Kit; (1) 411916A1, Left-Hand Backing Plate Kit
		411847A1		1	KIT Right-Hand Mid Catch; Incl. (2) 409692A1, Ref. 17; (1) 411909A1, Lower Right-Hand Catch Kit; (1) 411915A1, Bushing Plate Kit; (1) 411917A1, Right-Hand Backing Plate Kit
		411848A1		1	KIT Upper Left-Hand Catch; Incl. (2) 409692A1, Ref. 27; (1) 411912A1, Upper Left-Hand Catch Kit; (1) 411915A1, Bushing Plate Kit
		411849A1		1	KIT Upper Right-Hand Catch; Incl. (2) 409692A1, Ref. 27; (1) 411914A1, Upper Right-Hand Catch Kit; (1) 411915A1, Bushing Plate Kit

CAB - WASHER, WINDSHIELD

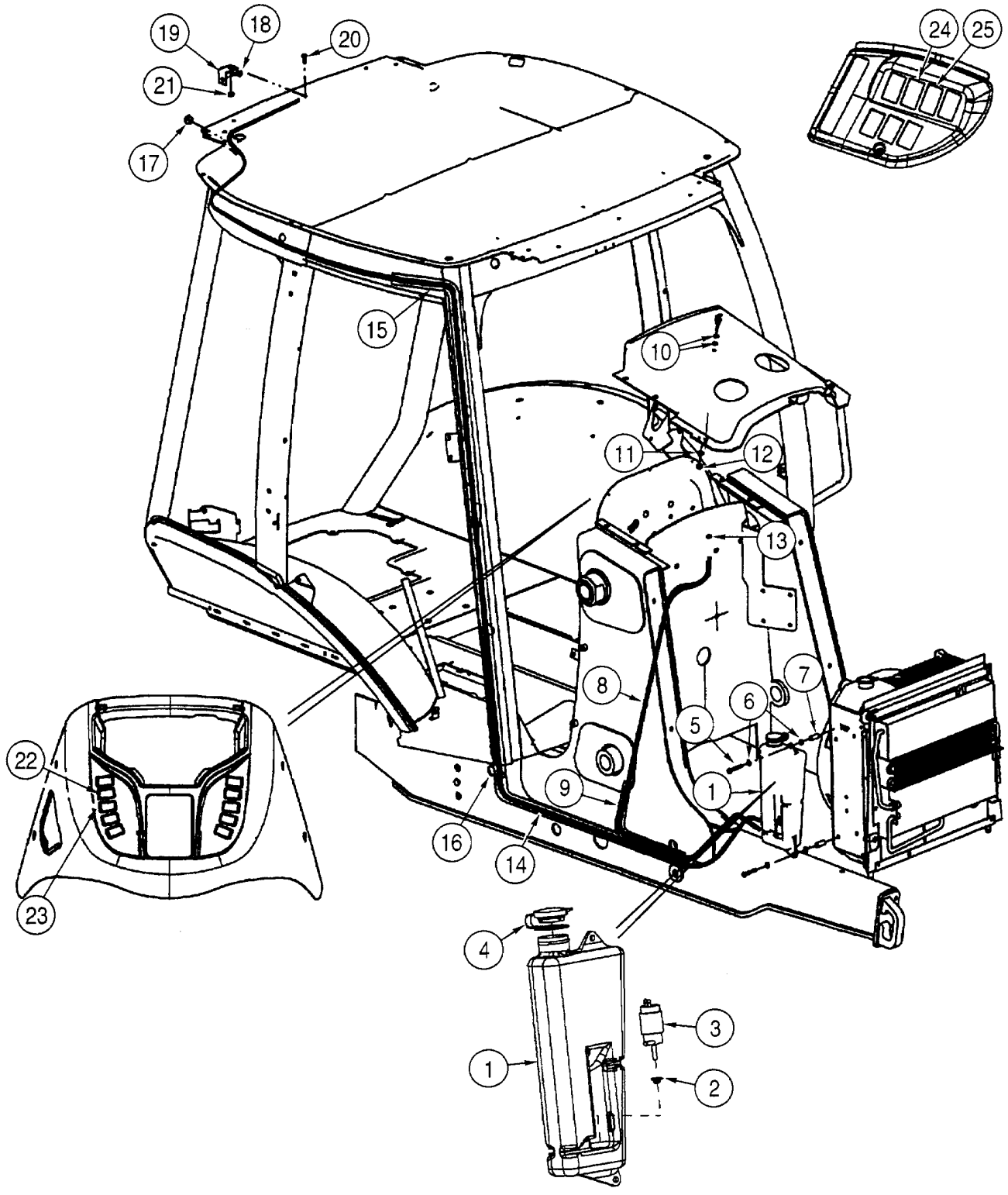

CAB - WASHER, WINDSHIELD

REF	FN	PART NUMBER	YR/SN	QTY	DESCRIPTION
		389423A3		1	RESERVOIR, WINDSHIEL Incl. Ref 1 - 4
1		386721A4		1	RESERVOIR
2		196830A1		2	GROMMET
3		1964696C2		2	MOTOR, WIPER Pump
4		307130A1		1	COVER
5		806-8050		2	SCREW M8 x 50; 10.9
6		895-11008		4	WASHER 9 x 17 x 1,6 mm
7		132215A1		2	SPACER
8		386716A2		1	HOSE 1830 mm (72-3/64 in); Front Washer; Cut From 397154A1; No Longer Used; Order 87412016
8		{87412016}		1	1830 mm (72-3/64 in); Front Washer; Cut From 1968141C1
9		386718A2		1	GUARD 1500 mm (59-1/16 in); Cut From 397155A1; No Longer Used; Order 386718A3
9		386718A3		1	GUARD 1630 mm (64-3/16 in); Cut From 397155A2
10		284154A1		1	NOZZLE INJECTION Includes a Steel and Rubber Washer Which Are Not Serviced Separately
11		492-11038		1	WASHER, LOCK 3/8
12		425-106		1	NUT 3/8
13		305578A1		1	CLAMP If Used
14		386717A2		1	HOSE 4970 mm (195-11/16 in); Rear Washer; Cut From 397154A1; No Longer Used; Order 87412017
14		{87412017}		1	5325 mm (209-11/16 in); Rear Washer; Cut From 1968141C1
15		386719A2		1	GUARD 4000 mm (157-1/2 in); Cut From 397155A1; No Longer Used; Order 408965A1 and 408966A1
15		408965A1		1	GUARD 550 mm (21-11/16 in); Rear Washer Hose, Upper; Cut From 397155A2
15		408966A1		1	GUARD 2200 mm (86-5/8 in); Rear Washer Hose, Lower; Cut From 397155A2
16		L18337		2	STRAP 15 in
17		386722A1		1	GROMMET
18		E43769		1	SPRAY Rear; Includes Rubber Seal Which Is Not Serviced Separately
19		386720A1		1	BRACKET Rear Nozzle
20		614-8020		1	CAPSCREW M8 x 20

CAB - WASHER, WINDSHIELD

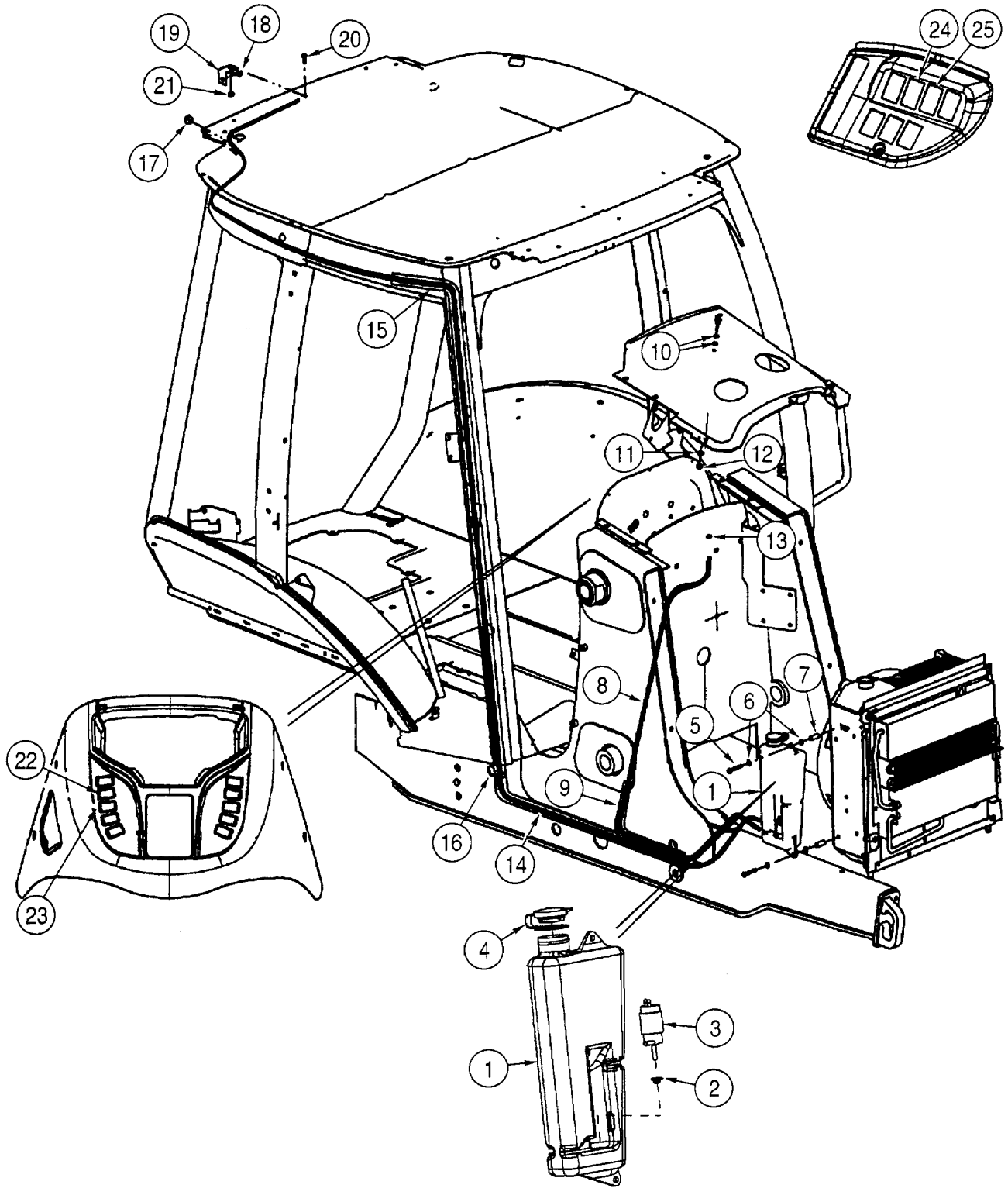

CAB - WASHER, WINDSHIELD

REF	FN	PART NUMBER	YR/SN	QTY	DESCRIPTION
21		825-2408		1	NUT M8
22		386785A1		1	SWITCH Front Wiper
23		386787A1		1	SWITCH Front Washer
24		386786A1		1	SWITCH Rear Wiper
25		386788A1		1	SWITCH Rear Washer

CAB - WIPERS

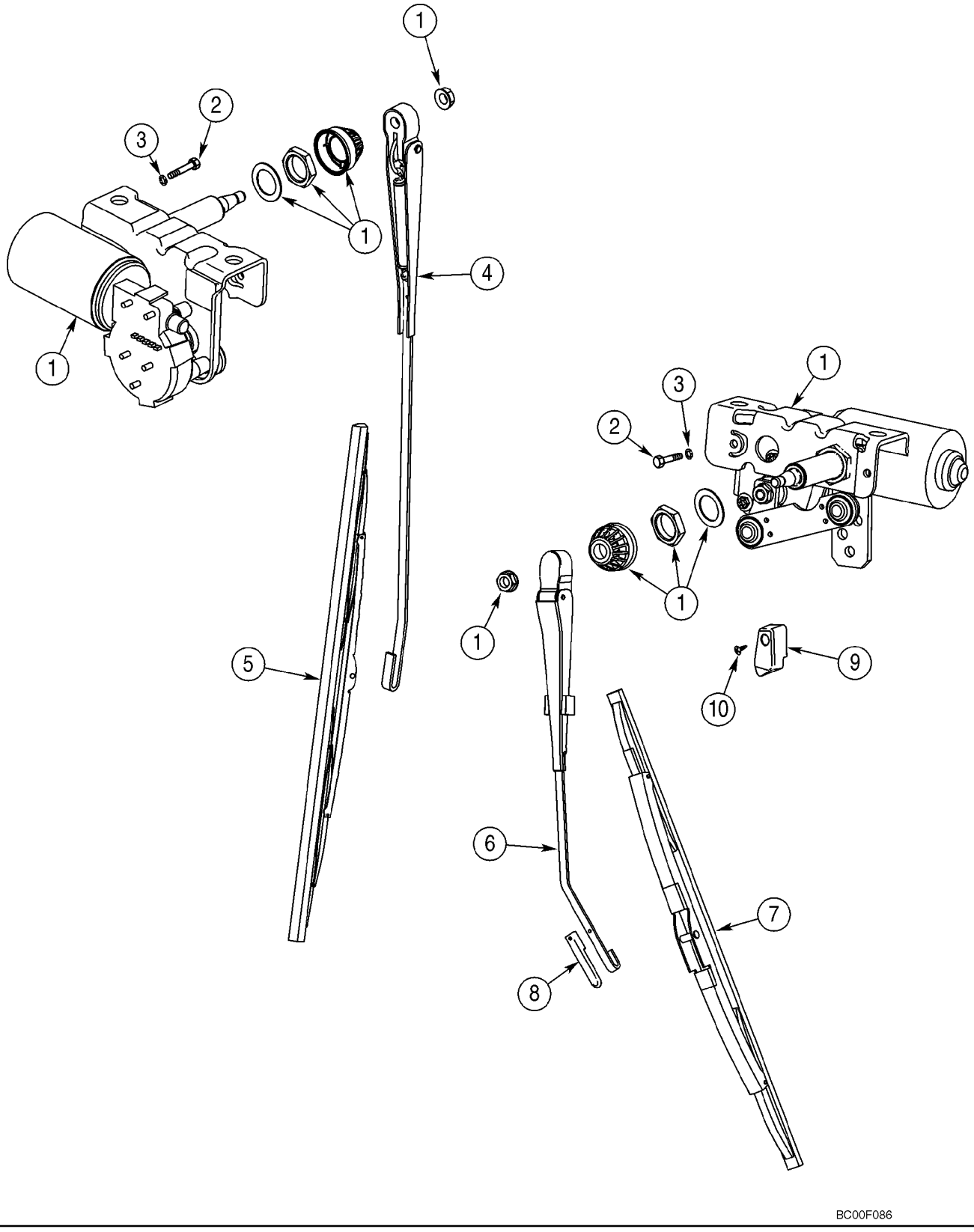

CAB - WIPERS

REF	FN	PART NUMBER	YR/SN	QTY	DESCRIPTION
1		395137A1		2	MOTOR, WIPER 12V
		404617A1		1	HARNESS Front Lamps and Wiper
		396018A2		1	HARNESS Cab, B-Post, Rear Wiper, Radio, Blower, Dome Lamp
		386786A1		1	SWITCH Rear Wiper
		386785A1		1	SWITCH Front Wiper
		A187714		1	SWITCH Rear Wiper Cutout Switch
		495-11047		2	WASHER 15/32 x 59/64 x 1/16
		425-147		1	NUT 7/16
2		814-6050		4	CAPSCREW M6 x 50
3		892-11006		4	WASHER, LOCK M6
4		D128745		1	ARM, WIPER Front Wiper
5		236194A1		1	BLADE, WIPER Front Wiper
6		395136A1		1	ARM, WIPER Rear Wiper
7		D128022		1	BLADE, WIPER Rear Wiper
8		395033A1		1	CLIP
9		395026A1		1	RAMP
10		395389A1		1	SCREW M6

09 -61		p1	05/03

CAB HEADLINER - FILTER, LOUVERS, DOME LAMP

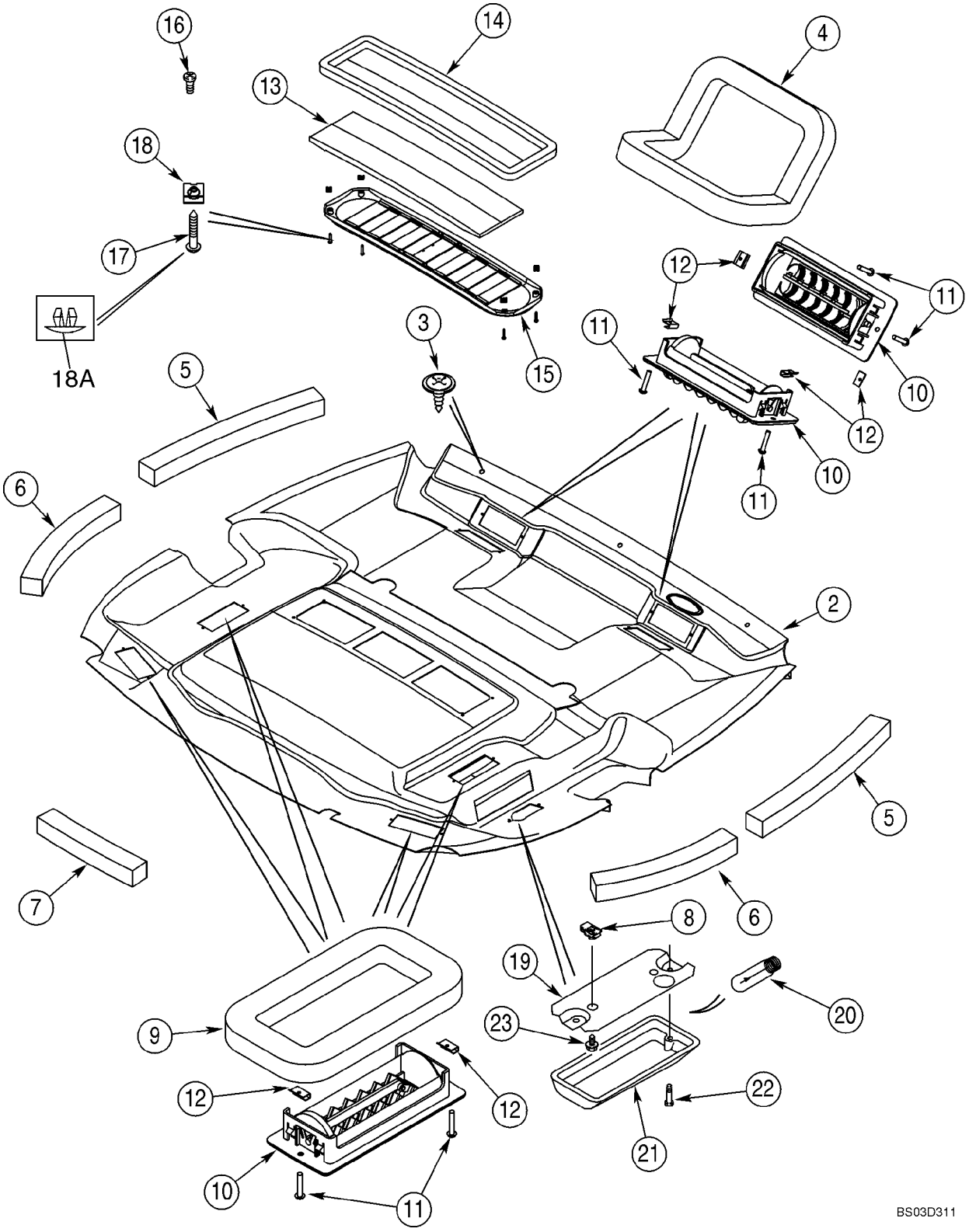

CAB HEADLINER - FILTER, LOUVERS, DOME LAMP

REF	FN	PART NUMBER	YR/SN	QTY	DESCRIPTION
1		367704A4		1	LINING, ROOF Shell; Standard Interior; Not Illustrated
2		381696A5		1	LINING, ROOF With Foam and Fabric Covering; Deluxe Interior; Replaces 381696A3, 381696A4
3		396516A1		3	SCREW,POINTED
4		368813A2		2	SEAL Defrost
5		379160A1		2	SEAL 494 mm; Foam; Adhesive Back; Front
6		379161A1		2	SEAL 379 mm; Foam; Adhesive Back; Rear
7		379209A1		1	SEAL 303 mm; Foam; Adhesive Back; Center Rear
8		131-861		2	NUT No. 10; Dome Lamp
9		377194A1		4	SEAL Heat and Air
10		363883A1		8	GRILLE ASSY
11		140-103		16	SCREW No. 6 x 3/4
12		125749A1		16	NUT
13		377594A4		1	FILTER Air Recirculation; Replaces 377594A4
14		381972A1		1	SEAL
15		369450A1		1	GRILLE Air Recirculation; Incl. Ref 16
16		260-1436		2	SCREW
17		414600A1		4	SCREW
18		177269A1		4	NUT
18A		409723A1		4	PLUG Plastic; Fits 5,5 mm dia Hole
		380719A2		1	LIGHT, INTERIOR Dome Lamp; Incl. Ref 19 - 21; Replaces 380719A1
19		NSS		1	NOT SERVICED SEPARATELY Base
20		N14466		1	BULB
21		NSS		1	NOT SERVICED SEPARATELY Lens; With Switch
22		440-1088		2	SCREW No. 8 x 1/2 in; Base To Lens
23		281-54512		2	SCREW No. 10 x 3/4; Lamp To Headliner

09 -62		p1	05/03

CAB - FILTER, AIR

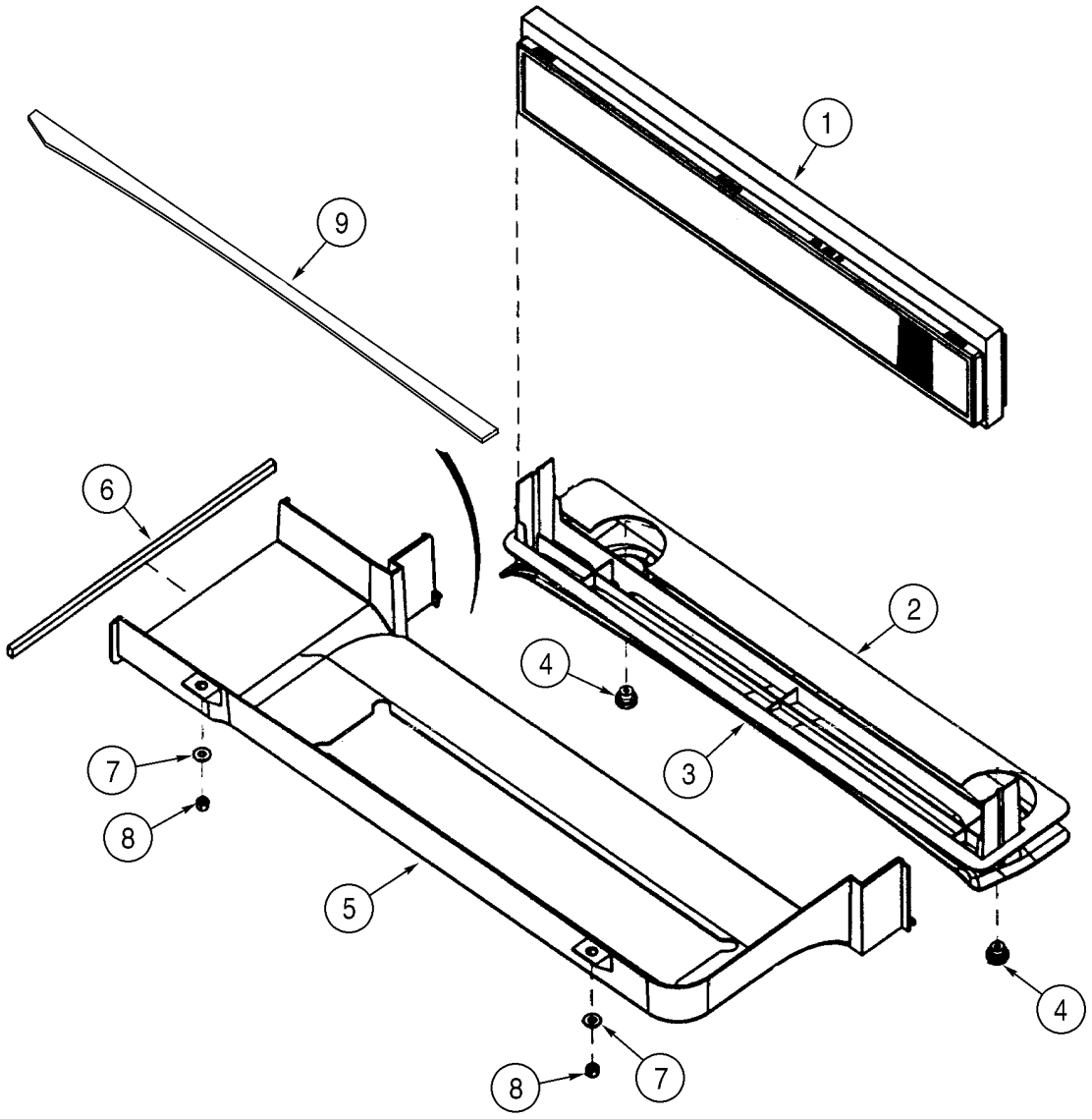

BS00F073

CAB - FILTER, AIR

REF	FN	PART NUMBER	YR/SN	QTY	DESCRIPTION
1		360260A2		1	ELEMENT, FILTER Includes Foam Seal
2		382770A2		1	SEAL Deluxe Interior
3		360261A1		1	TRAY
4		398738A1		2	KNOB Fresh Air Duct Retainer
5		360252A2		1	DUCT Fresh Air Intake
6		368990A1		1	SEAL
7		895-15008		2	WASHER 9 x 20 x 1,6 mm
8		832-10408		2	NUT M8
9		403271A1		1	SEAL 882 mm; Adhesive Back

09 -63		p1	05/03

CAB - BLOWER HOUSING, VENTILATION DUCTS, DRAIN LINES

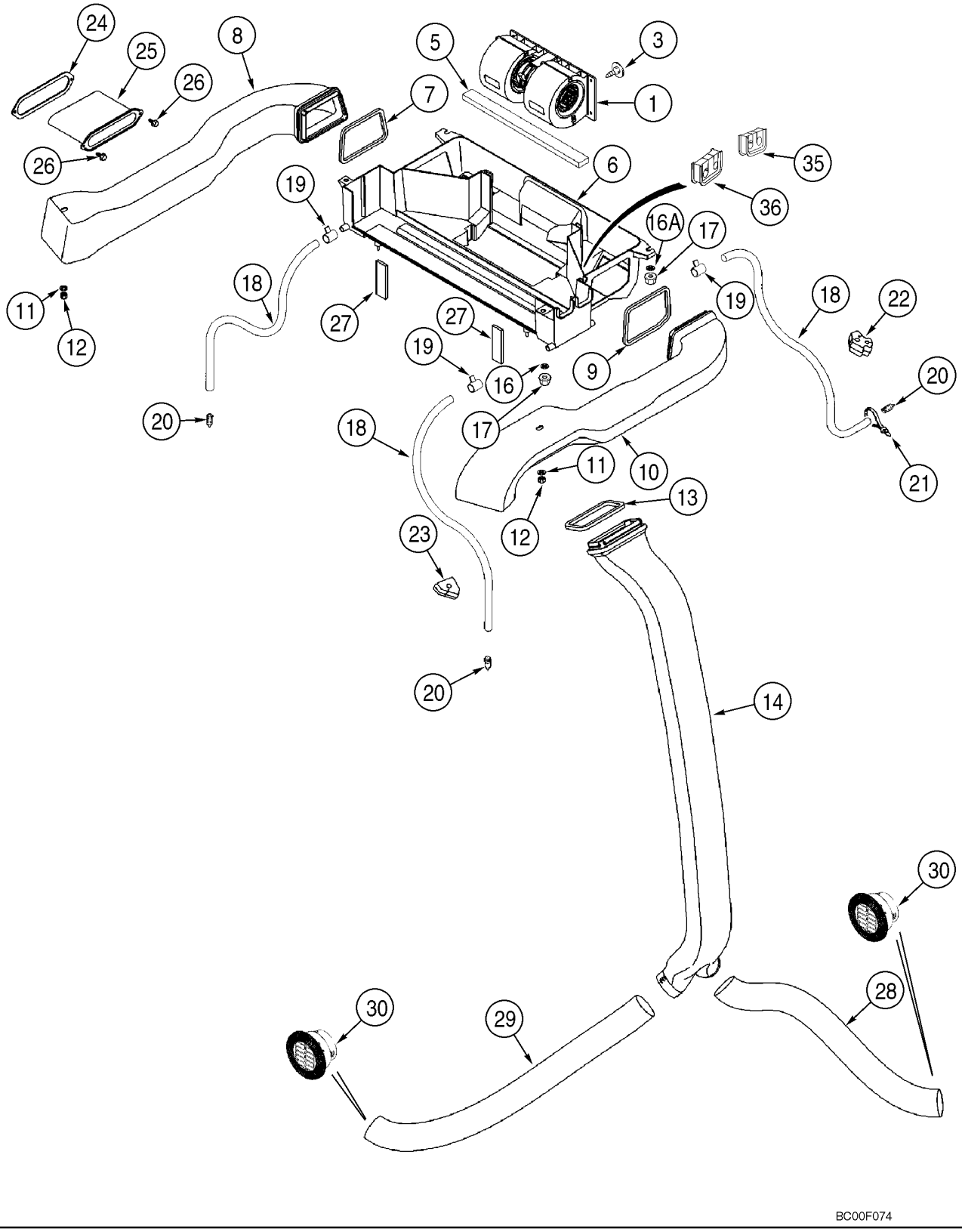

CAB - BLOWER HOUSING, VENTILATION DUCTS, DRAIN LINES

REF	FN	PART NUMBER	YR/SN	QTY	DESCRIPTION
1		{377221A2}		1	Blower Assy; Component Parts Not Serviced Separately; For Blower Switch, See Figure 04-10
3		182697A1		1	CLASP
5		181981A1		1	GASKET 6 x 20 x 355 mm; Adhesive Back; Under Blower
6		360251A3		1	HOUSING ASSY. Heat and Air; Includes 373995A1
		373995A1		2	INSERT
7		368805A1		1	SEAL Left-Hand Duct
8		360253A3		1	DUCT Left-Hand
9		369249A1		1	SEAL Right-Hand Duct
10		360254A3		1	DUCT Right-Hand
11		895-15010		2	WASHER 11 x 24 x 2 mm
12		832-10408		2	NUT M8
13		368807A1		1	SEAL
14		360255A1		1	DUCT
16		895-15008		1	WASHER 9 x 20 x 1,6 mm
17		832-10408		4	NUT M8
18		368821A1		4	HOSE 3050 mm; Drain
19		214-1406		4	CLAMP 7/16 - 25/32
20		365789A1		4	VALVE, DRAIN Drain
21		L18337		2	STRAP 15 in
22		383794A2		2	PLUG
23		395470A1		2	PLUG
24		381113A2		1	SEAL
25		381111A2		1	SLEEVE
26		281-18712		2	SCREW 1/4 st x 3/4
27		377230A3		3	SEAL 16 mm thk; Fresh Air Duct To Ventilation Housing; Replaces 377230A2 8 mm thk Seal
28		375392A1		1	HOSE, LARGE 750 mm; Cut From 236559A1
29		368818A1		1	HOSE, LARGE 1015 mm; Cut From 236559A1
30		398986A1		2	VENT
35		403225A1		1	SEAL Heater Tubes At Housing
36		403193A1		1	SEAL Air Conditioning Tubes At Housing

CAB - HEATER

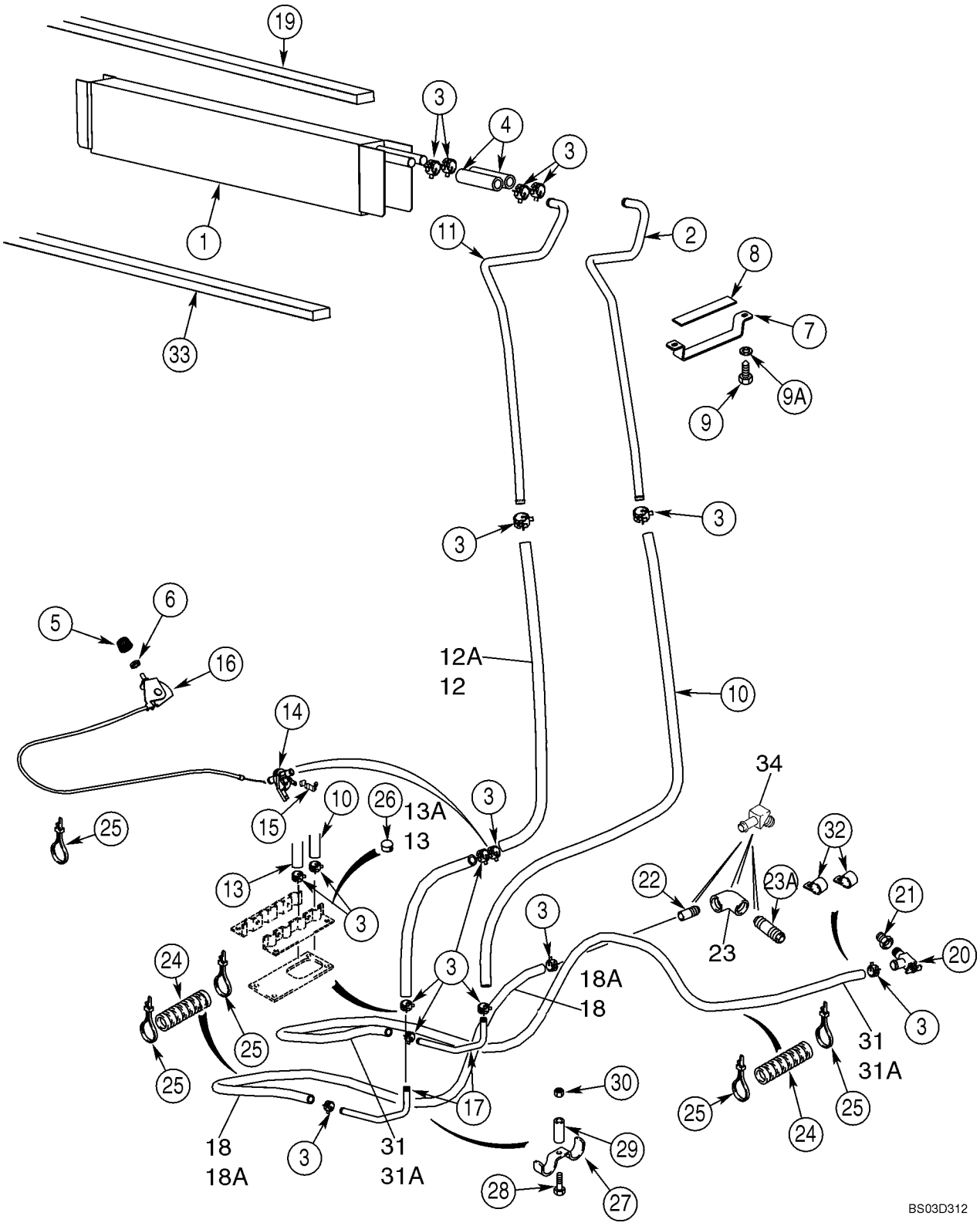
19
3
4
3
1
11
2
8
7
9A
9
33
3
3
6
5
16
12A
12
10
14
34
10
26
13A
3
25
15
13
32
22
23A
21
3
23
20
24
3
18A
18
25
31
31A
25
25
24
25
30
17
18
18A
3
31
31A
29
28
27
BS03D312

CAB - HEATER

REF	FN	PART NUMBER	YR/SN	QTY	DESCRIPTION
1		360262A2		1	HEAT-EXCHANGER Mounts In Blower Housing Box; Seal Mounts On Top Of Core On Models With Heat Only
2		400282A1		1	TUBE Front
3		1954736C1		14	CLAMP No. 24
4		377222A1		2	HOSE 100 mm; Cut From 97252CX
5		400379A1		1	KNOB
6		A42561		1	NUT
7		388762A1		1	BRACKET
8		389402A1		1	SEAL
9		276-26512		2	SCREW No. 10 x 3/4, st; If Used
9		276-14520		2	SCREW No 10 x 1,25; If Used
9A		896-12006		2	WASHER 6,6 x 12,5 x 2 mm
10		368801A2		1	HOSE 1361 mm; Cut From 97252CX
11		400280A1		1	TUBE Rear
12		368799A3		1	HOSE 860 mm (33-27/32 in); Cut From 97252CX; If Used
12A		448428A1		1	HOSE (METRES) 1175 mm (46-1/4 in); Heater Valve to Core; Cut From 97252CX; If Used
13		368800A2		1	HOSE 465 mm (48-5/16 in); Cut From 97252CX; If Used
13A		448429A1		1	HOSE (METRES) 150 mm (5-29/32 in); Floor To Valve; Cut From 97252CX; If Used
14		1331087C1		1	VALVE Heater Control
15		1954626C1		1	CLAMP
16		1999666C1		1	CONTROL Heater; Includes 1999667C1, 1999668C1
		1999667C1		1	CONTROL
		1999668C1		1	CABLE
17		190675A1		2	PIPE
18		377232A1		1	HOSE, LARGE 2840 mm; Cut From 97252CX; No Longer Used; Order 377232A2, Ref 18A
18A		{377232A2}		1	2650 mm (104-21/46 in); Return To Water Pump; Cut From 97252CX
19		406287A1		1	SEAL 19 x 19 x 736 mm; Location Of Seal On Models With Heat Only; On Models With Air Conditioning, Seal Is Located On Evaporator Core

CAB - HEATER

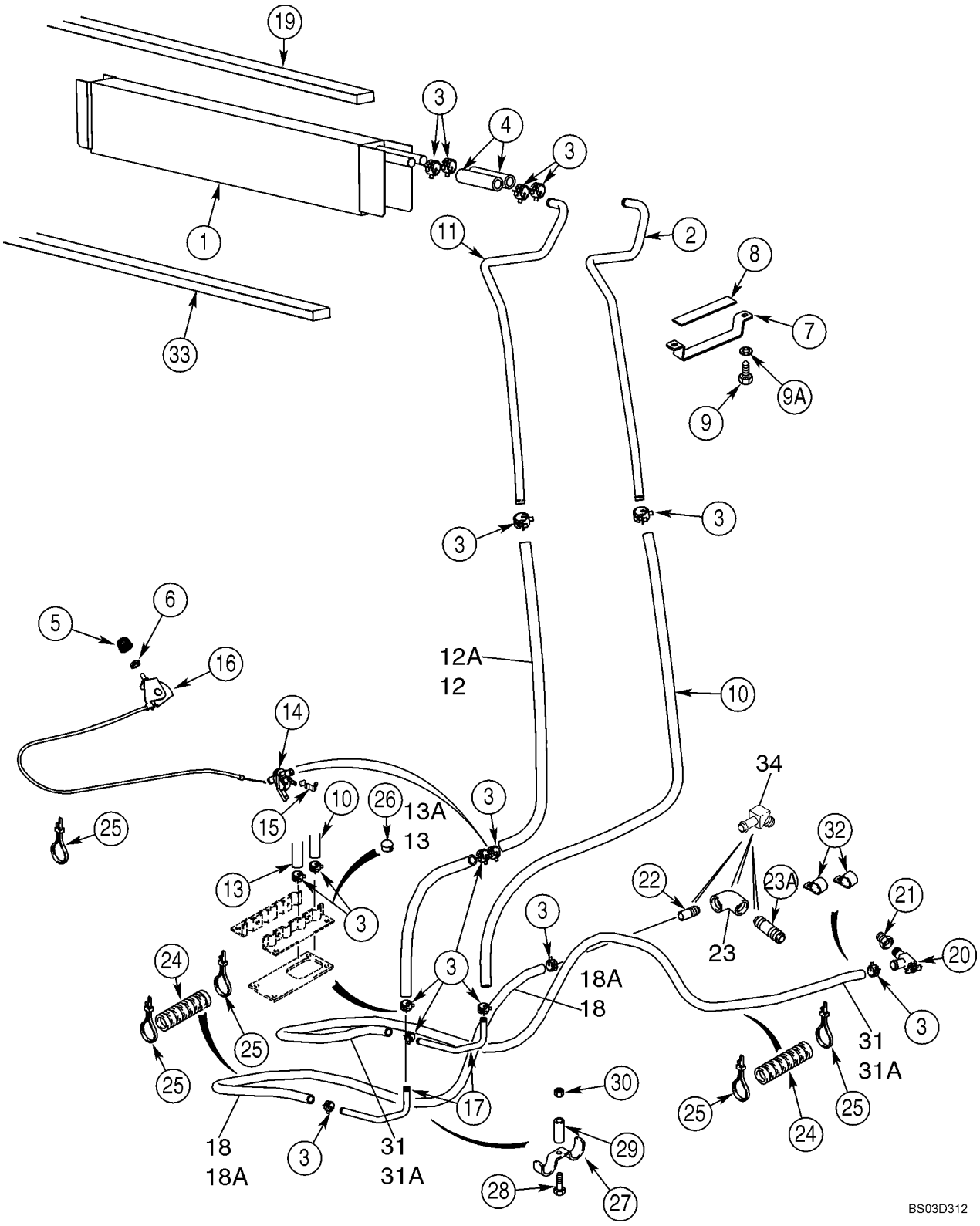
19
3
4
3
1
11
2
8
7
9A
9
33
3
3
6
5
16
12A
12
10
14
34
10
26
13A
3
25
15
13
32
22
23A
21
3
23
20
24
3
18A
18
25
31
31A
25
25
24
25
17
30
18
18A
3
31
31A
29
28
27
BS03D312

CAB - HEATER

REF	FN	PART NUMBER	YR/SN	QTY	DESCRIPTION
20		301803R1		1	VALVE, SHUT-OFF
21		221-89		1	RESTRICTOR 1/2 x 3/8; Replaces Existing Plug
22		L17985		1	FITTING If Used
23		221-1382		1	FITTING If Used
23A		221-190		1	FITTING 1/2 PT x 2; Replaces Existing Plug; If Used
24		D132982		3	LOOM 400 mm (15-3/4 in)
25		L18337		6	STRAP 15 in
26		353-410		2	PLUG 7/8; Models With Heat Only
27		D143427		1	CLAMP
28		614-8030		1	CAPSCREW M8 x 30
29		D143417		1	SPACER
30		825-2408		1	NUT M8
31		377233A1		1	HOSE, LARGE 1970 mm; Cut From 97252CX; No Longer Used; Order 377233A2, Ref 31A
31A		{377233A2}		1	1830 mm (72-3/64 in); Inlet From Engine; Cut From 97252CX
32		D88052		2	CLAMP
33		1987096C1		1	PLATE, LARGE Below Heater Core; Location Of Seal On Models With Heat Only; On Models With Air Conditioning, Seal Is Located At Rear Of Housing
34		217-144		1	ELBOW 45 deg, 5/8 stem x 1/2 NPTF

CAB - AIR CONDITIONING LINES, EVAPORATOR CORE

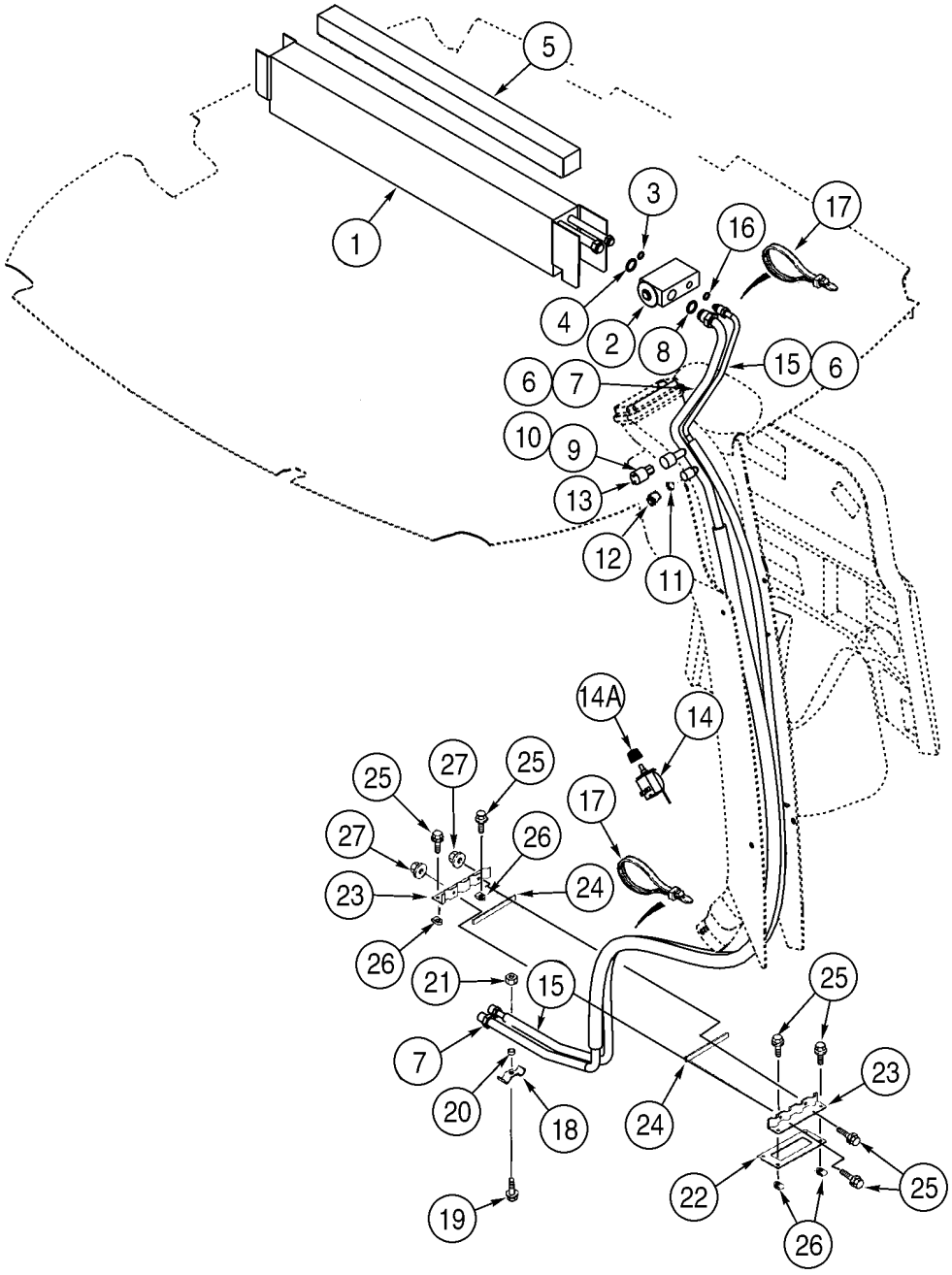

CAB - AIR CONDITIONING LINES, EVAPORATOR CORE

REF	FN	PART NUMBER	YR/SN	QTY	DESCRIPTION
		363832A5		1	EVAPORATOR Incl. Ref 1 - 4; Not Available as An Assembly; Order Components
1		360263A4		1	EVAPORATOR
2		386535A1		1	VALVE
3		128484A1		1	O-RING 7/16 ID x 1/16
4		128485A1		1	O-RING 9/16 ID x 1/16
5		406287A1		1	SEAL 19 x 19 x 736 mm; Adhesive Back; Models With Heat and Air, Locate Seal On Top Of Core
		345-621		2	TAPE 2 x 6 in
7		360257A1		1	TUBE, PLASTIC/RUBBER Suction; Incl. Ref 8 - 12
8		128485A1		1	O-RING 9/16 ID x 1/16
9		128483A1		1	O-RING 5/16 ID x 1/16; Valve Core
10		1250594C1		1	CORE Low Pressure Switch
11		1250594C1		1	CORE Low Side Service Port
12		122553A1		1	CAP
13		122579A1		1	SWITCH Low Pressure
14		370381A1		1	SWITCH Temperature Control; Air Conditioning
14A		400379A1		1	KNOB
15		360256A1		1	TUBE, PLASTIC/RUBBER Pressure; Incl. Ref 16
16		128483A1		1	O-RING 5/16 ID x 1/16
17		L18337		2	STRAP 15 in
18		D143427		1	CLAMP
19		614-8030		1	CAPSCREW M8 x 30
20		D143417		1	SPACER
21		825-2408		1	NUT M8
22		124011A1		1	GASKET
23		123980A1		2	SHIN Heater and Air Conditioning Hoses
24		181979A1		2	GASKET
25		845-6020		6	SCREW M6 x 20
26		833-40406		4	NUT M6
27		825-2406		2	NUT M6

CAB - AIR CONDITIONING, CONDENSER, RECEIVER-DRIER

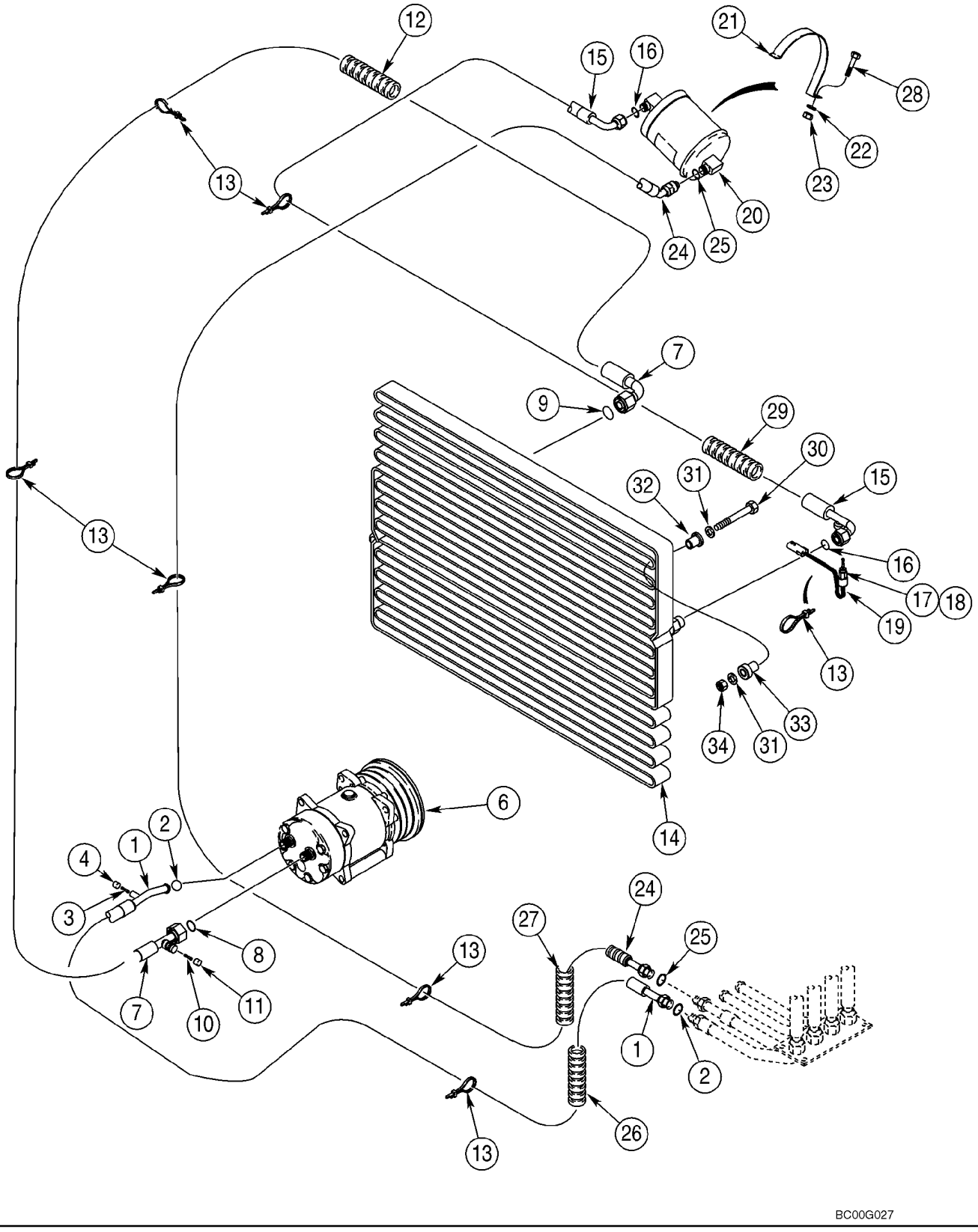

CAB - AIR CONDITIONING, CONDENSER, RECEIVER-DRIER

REF	FN	PART NUMBER	YR/SN	QTY	DESCRIPTION
1		360259A2		1	HOSE ASSY. 2370 mm (93-5/16 in); Compressor To Cab Base; Incl. Ref 2 - 4
2		128485A1		2	O-RING 9/16 ID x 1/16
3		1250594C1		1	CORE Low Side Service Port
4		122553A1		1	CAP
6		1999755C3		1	COMPRESSOR Air Conditioning; See Figure 09-67
7		383563A1		1	HOSE ASSY. Compressor To Condenser; Incl. Ref 8 - 11
8		128485A1		1	O-RING 9/16 ID x 1/16
9		128484A1		1	O-RING 7/16 ID x 1/16
10		1250594C1		1	CORE High Side Charge Port
11		122554A1		1	CAP
12		193913A1		1	PROTECTOR
13		L18337		X	STRAP 15 in
14		370515A1		1	CONDENSER
15		383562A1		1	HOSE ASSY. 650 mm (25-19/32 in); Condenser To Receiver-Drier; Incl. Ref 16 - 18
16		128483A1		2	O-RING 5/16 ID x 1/16
17		1250594C1		1	CORE High Pressure Switch
18		128483A1		1	O-RING 5/16 ID x 1/16
19		232948A1		1	SWITCH, PRESSURE High Pressure Switch
20		1990758C2		1	RECEIVER-DRYER
21		253404A1		1	HALF COLLAR
22		895-11008		1	WASHER 9 x 17 x 1,6 mm
23		832-10408		1	NUT M8
24		360258A1		1	HOSE ASSY. 2730 mm (107-1/2 in); Receiver-Drier To Cab Base; Incl. Ref 25
25		128483A1		2	O-RING 5/16 ID x 1/16
26		191703A1		2	LOOM 400 mm (15-3/4 in)
27		191704A1		2	LOOM 460 mm (18-1/8 in)
28		614-8030		1	CAPSCREW M8 x 30
29		191704A1		1	LOOM 460 mm (18-1/8 in)
30		814-8055		4	SCREW M8 x 55
31		895-15008		8	WASHER 9 x 20 x 1,6 mm
32		383497A1		4	GROMMET 8.6 x 13 x 18.5
33		382989A1		4	GROMMET 8.6 x 13 x 23.5

CAB - AIR CONDITIONING, CONDENSER, RECEIVER-DRIER

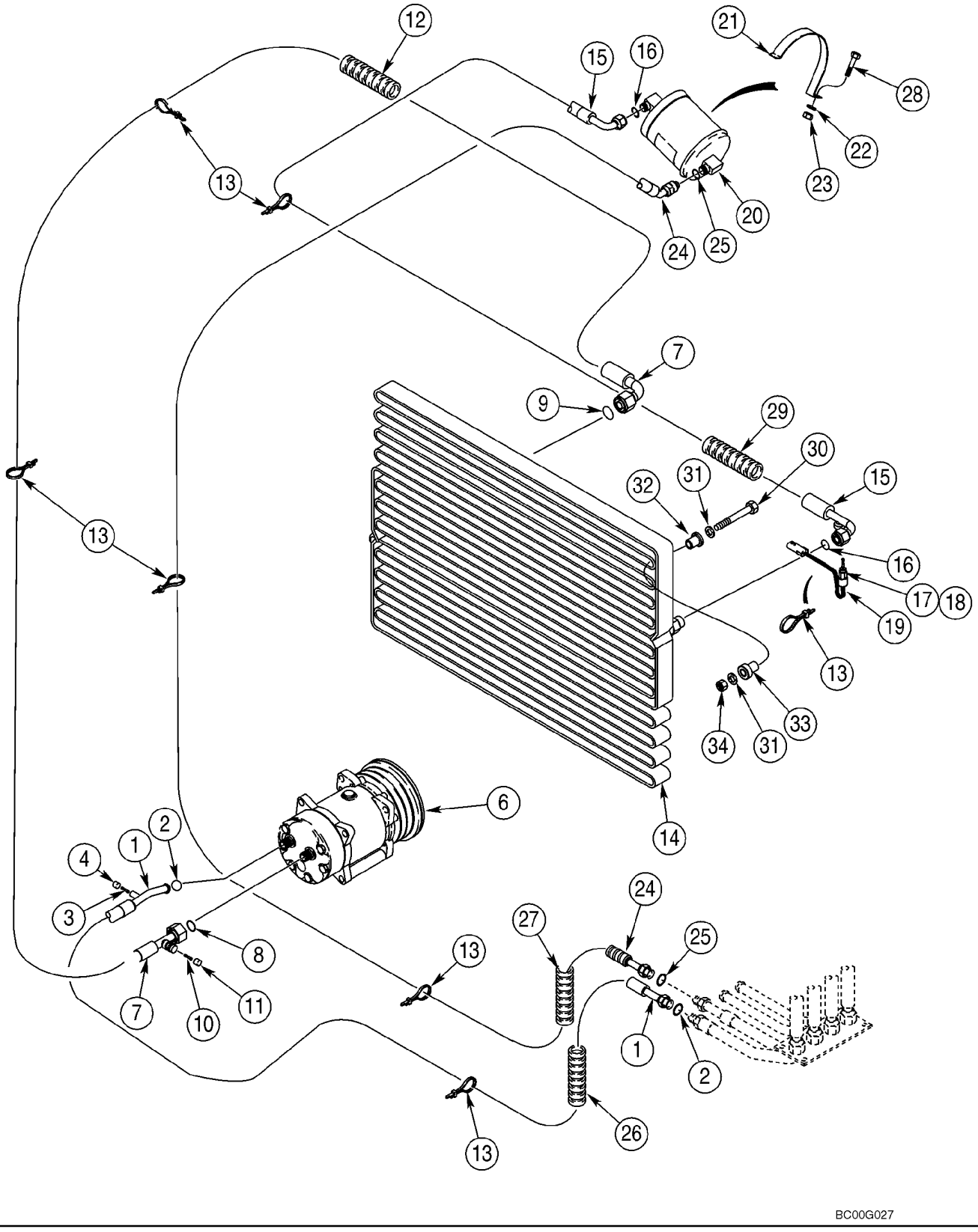

CAB - AIR CONDITIONING, CONDENSER, RECEIVER-DRIER

REF	FN	PART NUMBER	YR/SN	QTY	DESCRIPTION
34		832-10408		4	NUT M8

CAB - AIR CONDITIONING COMPRESSOR

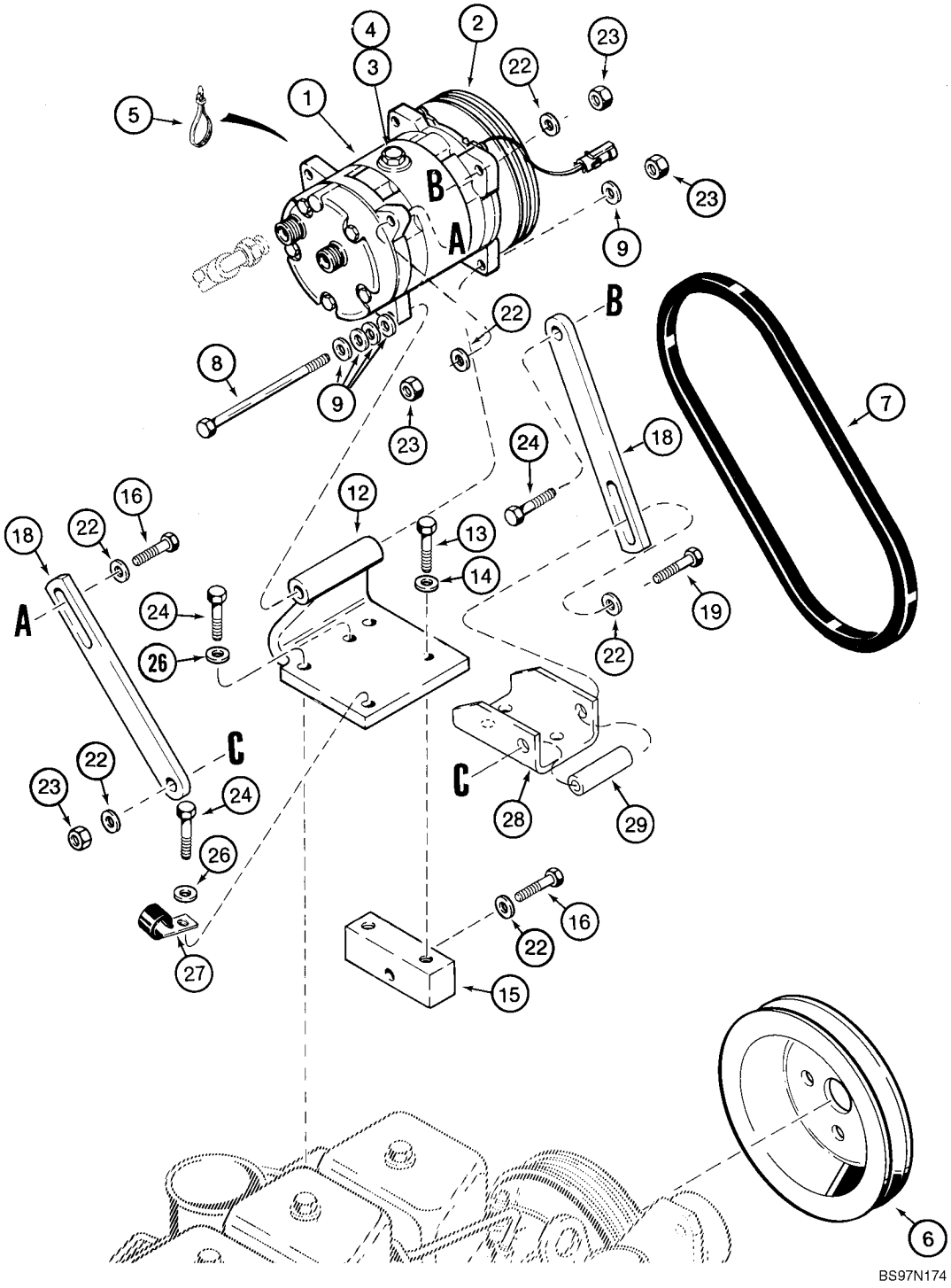

CAB - AIR CONDITIONING COMPRESSOR

REF	FN	PART NUMBER	YR/SN	QTY	DESCRIPTION
		1999755C3		1	COMPRESSOR Incl. Ref 1 - 4
1		NSS		1	NOT SERVICED SEPARATELY Compressor
2		135324A2		1	CLUTCH Replaces 135324A1
3		A49667		1	PLUG Oil Filler
4		128483A1		1	O-RING 5/16 ID x 1/16
5		L18337		2	STRAP 15 in
6		A189284		1	PULLEY Models Without Powershift Transmission
6A		196050A1		1	PULLEY Models With Powershift Transmission; Not Illustrated
7		277546A1		1	BELT Models Without Powershift Transmission
7A		S80928		1	BELT Models With Powershift Transmission; Not Illustrated
8		827-10130		1	SCREW M10 x 130; 10.9
9		896-11010		4	WASHER 11 x 21 x 2,5 mm
12		304530A1		1	SUPPORT
13		627-10025		2	SCREW M10 x 25; 10.9
14		896-11010		2	WASHER 11 x 21 x 2,5 mm
15		A184614		1	SUPPORT
16		827-10040		2	CAPSCREW M10 x 40; 10.9
18		304527A1		2	TENSIONER
19		827-10110		1	BOLT M10 x 110; 10.9
22		896-11010		6	WASHER 11 x 21 x 2,5 mm
23		832-10410		4	NUT M10
24		627-10035		4	SCREW M10 x 35; 10.9
26		896-11010		3	WASHER 11 x 21 x 2,5 mm
27		D147383		1	CLIP
28		304525A1		1	TENSIONER
29		304528A1		1	SPACER

09 -68		p1	05/03

CANOPY, ROPS - FRAME, COVERS, MIRROR, VISOR

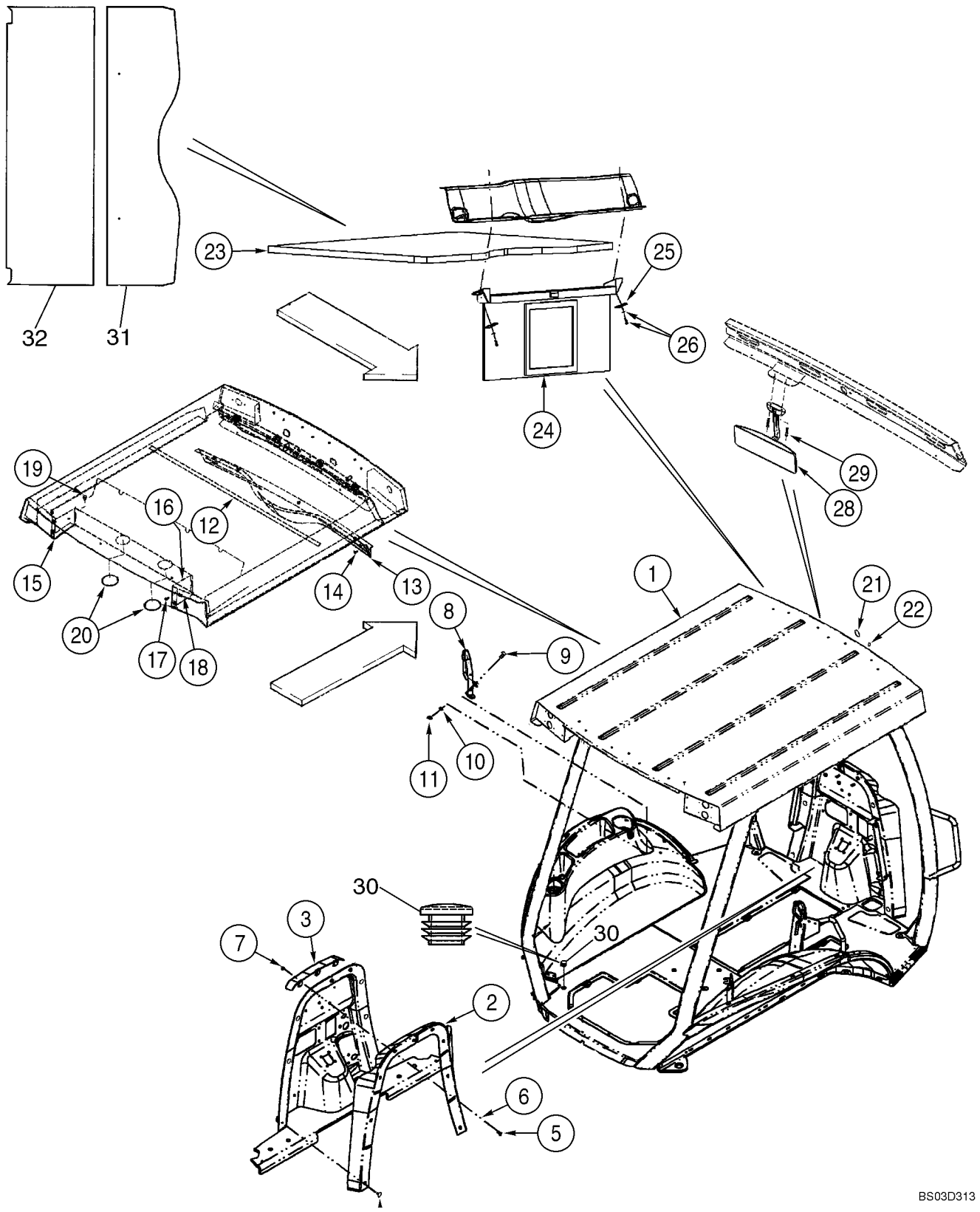

CANOPY, ROPS - FRAME, COVERS, MIRROR, VISOR

REF	FN	PART NUMBER	YR/SN	QTY	DESCRIPTION
1		367847A3		1	ROPS ASSEMBLY Wide; Order From Machinery Price List; Replaces 367847A2
2		396938A3		1	MOLDING Firewall
3		395478A3		1	BRACKET Replaces 395478A2
4		D143242		6	PLUG
5		614-8020		3	CAPSCREW M8 x 20
6		495-81001		3	WASHER
7		832-10408		3	NUT M8
8		392930A1		1	GRAB RAIL Grab Handle
9		811-10025		2	SCREW M10 x 25; 8.8
10		495-81267		2	WASHER
11		832-10410		2	NUT M10
12		385506A1		1	STRIP,PROTECTION 127 mm; Foam; Adhesive Back
13		367712A3		1	COVER Harness
14		F64519		5	SCREW No. 10 x 3/4; For Service, Order 265-16512, F64315
15		357099A1		1	COVER Left-Hand
16		357100A1		1	COVER Right-Hand
17		555-2		4	SCREW M6 x 20
18		833-40406		4	NUT M6
19		353-402		4	PLUG 3/8
20		1302758C1		2	PLUG 3 in
21		353-410		1	PLUG 7/8; Windshield Frame; Models Without Radio Antenna
22		353-421		2	PLUG 3/16; Upper Windshield Frame
23		382160A2		1	PANEL If Used
24		364180A1		1	VISOR, SUN
25		409618A1		2	PLATE 1/4 in Mounting Hole; Replaces 376159A1 Plate With 7/32 in Mounting Hole
26		396516A1		2	SCREW,POINTED No. 10 x 1 st; With Washers; Phillips
28		364574A2		1	MIRROR ASSY.
29		286-56520		2	SCREW
30		382298A1		2	PLUG 7/8 in
31		431583A1		1	PANEL Front Pad; If Used

CANOPY, ROPS - FRAME, COVERS, MIRROR, VISOR

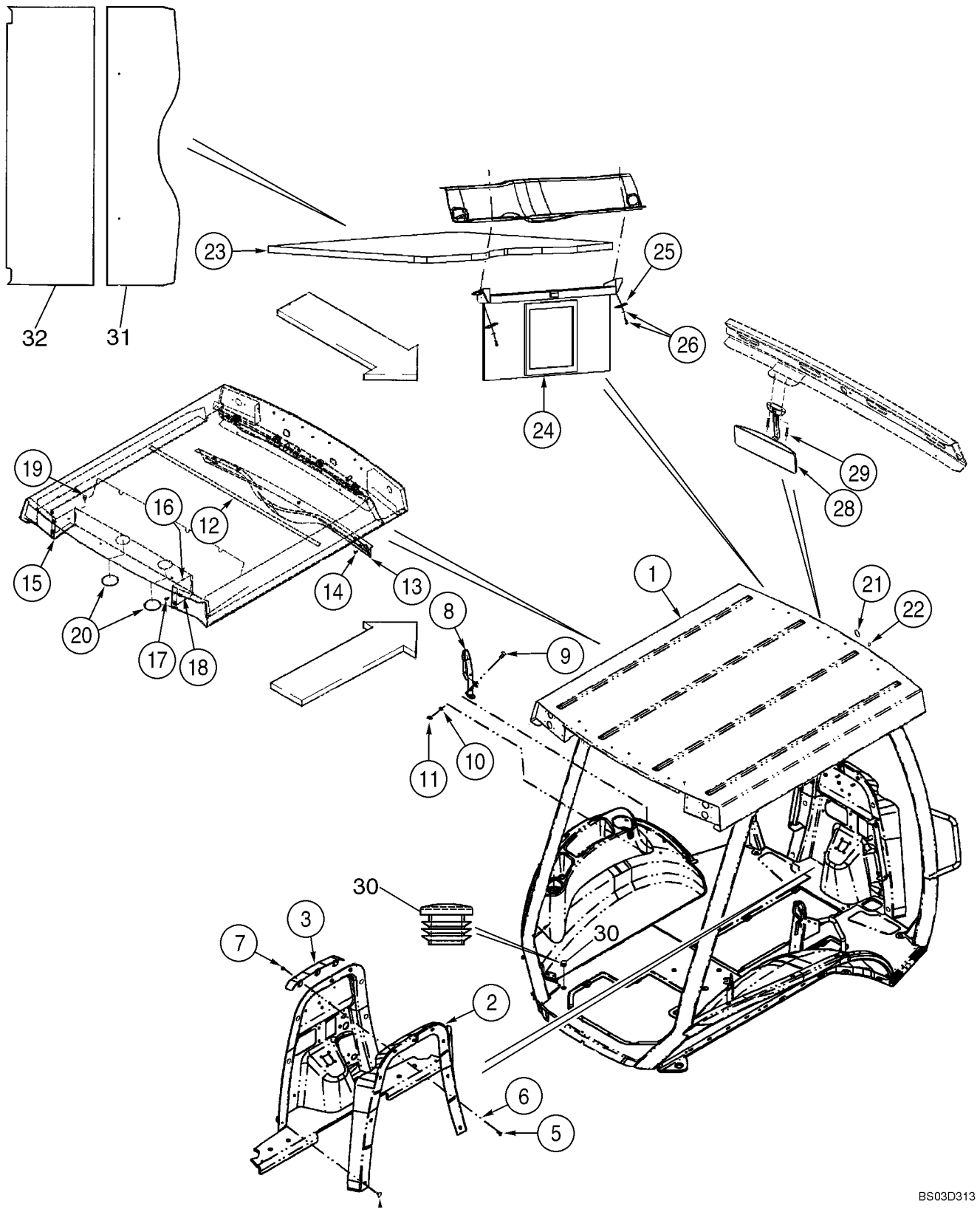

CANOPY, ROPS - FRAME, COVERS, MIRROR, VISOR

REF	FN	PART NUMBER	YR/SN	QTY	DESCRIPTION
32		431584A1		1	PANEL Rear Pad; If Used

CANOPY, ROPS - GLASS

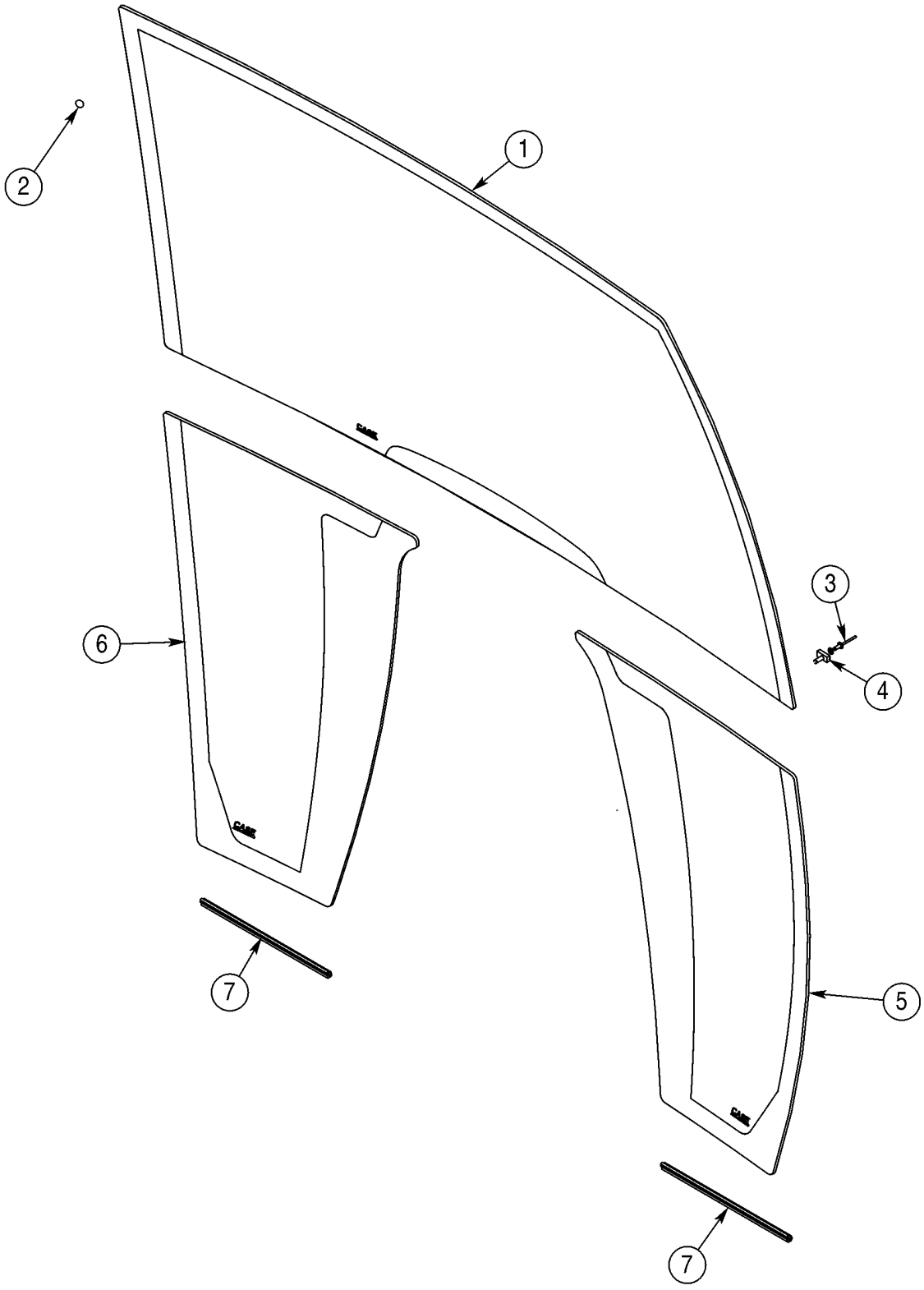

CANOPY, ROPS - GLASS

REF	FN	PART NUMBER	YR/SN	QTY	DESCRIPTION
1		338418A1		1	WINDSCREEN
2		382676A1		28	SPACER Adhesive Back; Black; If Used
2		391827A1		28-36	SPACER Bumper; If Used
3		151-516		2	RIVET
4		279482A1		2	CLAMP
5		338423A1		1	WINDSCREEN Lower; Right-Hand
6		338420A1		1	WINDSCREEN Lower; Left-Hand
7		382677A1		2	SEAL, GLASS 280 mm; If Used
7		395793A1		2	STRIP,PROTECTION Glass Edge Protection; If Used

CANOPY, ROPS - WIPER, FRONT AND WINDSHIELD WASHER

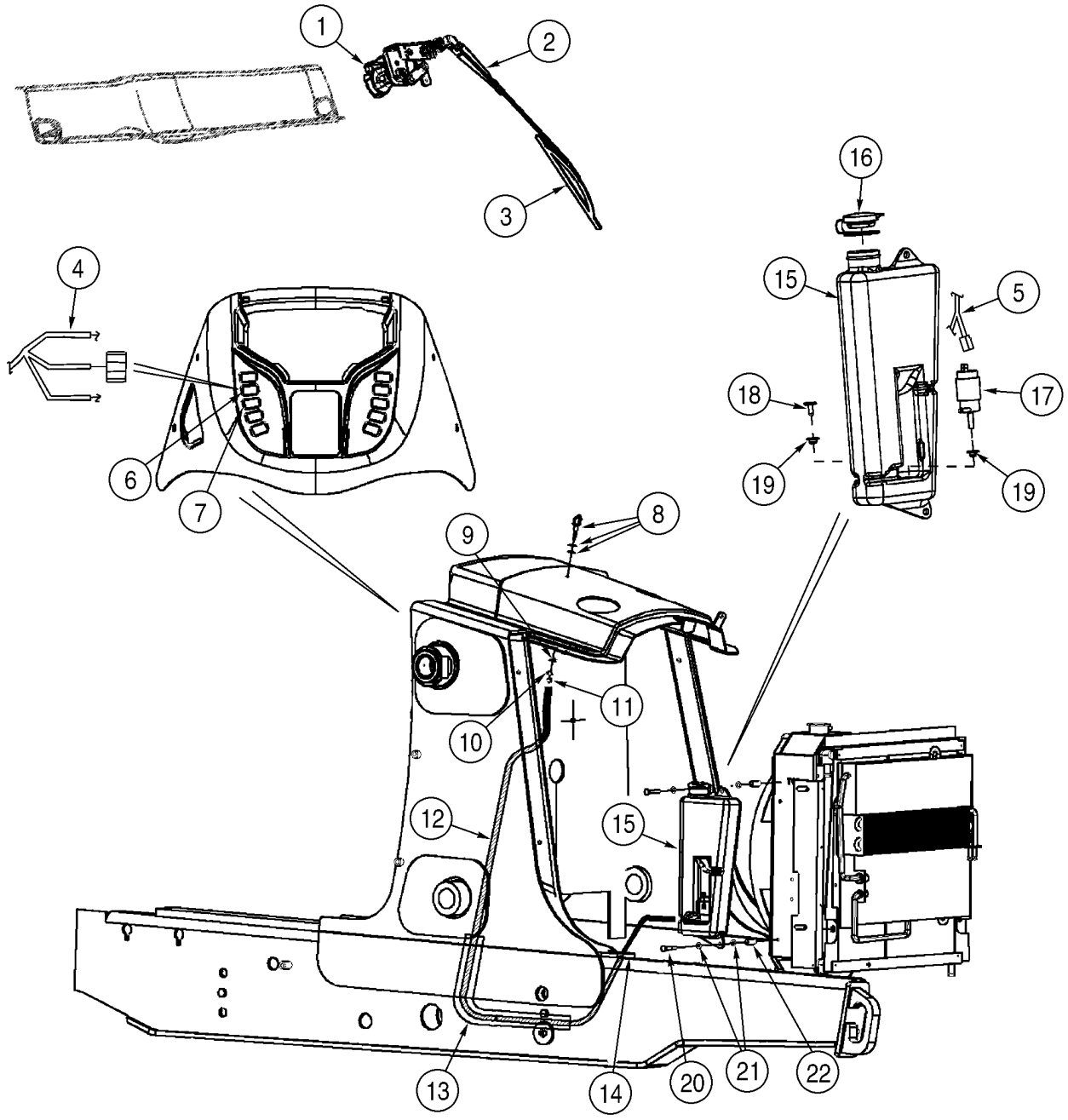

CANOPY, ROPS - WIPER, FRONT AND WINDSHIELD WASHER

REF	FN	PART NUMBER	YR/SN	QTY	DESCRIPTION
1		395137A1		1	MOTOR, WIPER 12V
		814-6050		2	CAPSCREW M6 x 50
		892-11006		2	WASHER, LOCK M6
2		D128745		1	ARM, WIPER
3		236194A1		1	BLADE, WIPER
		404617A1		1	HARNESS Front Lamps and Wiper
4		390519A3		1	HARNESS Front Console Options
5		390520A2		1	HARNESS Chassis Options
6		386785A1		1	SWITCH Front Wiper
7		386787A1		1	SWITCH Windshield Washer
8		284154A1		1	NOZZLE INJECTION Includes a Steel and Rubber Washer Which Are Not Serviced Separately
9		492-11038		1	WASHER, LOCK 3/8
10		425-106		1	NUT 3/8
11		305578A1		1	CLAMP If Used
12		386716A2		1	HOSE 1830 mm (72-3/64 in); Cut From 397154A1; No Longer Used; Order 87412016
12		{87412016}		1	1830 mm (72-3/64 in); Cut From 1968141C1
13		386718A2		1	GUARD 1500 mm (59-1/16 in); Cut From 397155A1; No Longer Used; Order 386718A3
13		386718A3		1	GUARD 1630 (64-3/16 in); Cut From 397155A2
14		L18337		2	STRAP 15 in
		389424A3		1	RESERVOIR Windshield Washer; Incl. Ref 15 - 18
15		386721A4		1	RESERVOIR
16		307130A1		1	COVER
17		1964696C2		1	MOTOR, WIPER Pump
18		196831A1		1	PLUG
19		196830A1		2	GROMMET
20		806-8050		2	SCREW M8 x 50; 10.9
21		132215A1		2	SPACER
22		895-11008		4	WASHER 9 x 17 x 1,6 mm

MIRROR, REAR VIEW - MOUNTING, CAB MODELS

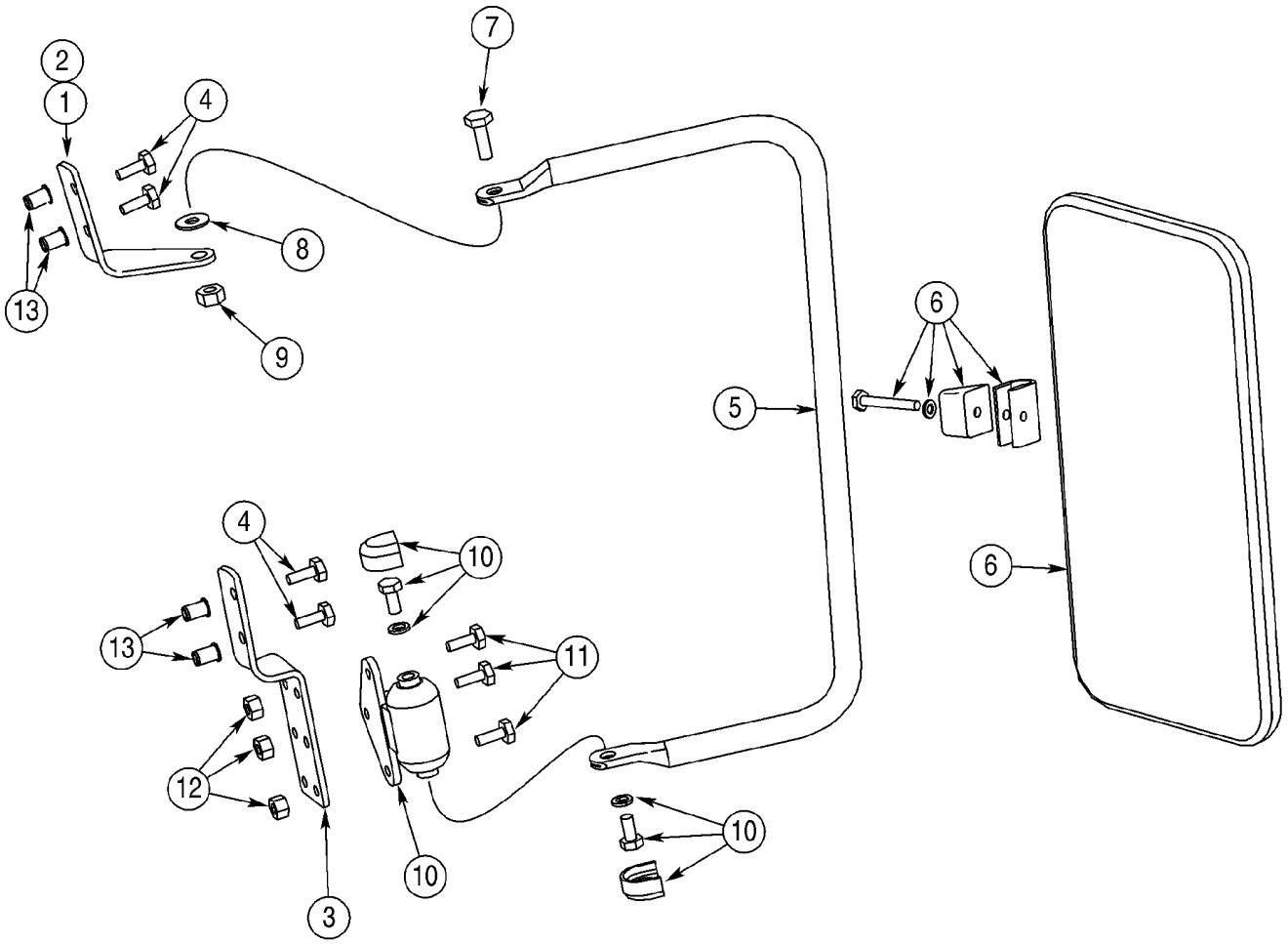

MIRROR, REAR VIEW - MOUNTING, CAB MODELS

REF	FN	PART NUMBER	YR/SN	QTY	DESCRIPTION
1		402933A1		1	BRACKET Upper; Right-Hand
2		402934A1		1	BRACKET Upper; Left-Hand; Not Illustrated
3		402936A1		2	BRACKET Lower
4		281-54712		8	SCREW 1/4 st x 3/4
5		402935A1		2	TUBE, SUPPORT
6		R54682		2	MIRROR Exterior
7		413-516		2	BOLT 5/16 x 1
8		A167037		2	WASHER
9		231-4115		2	NUT, LOCK 5/16
10		D142144		2	KNUCKLE, STEERING Incl. Hardware
11		413-412		6	BOLT 1/4 x 3/4
12		231-1444		6	NUT, LOCK 1/4
13		255447A1		8	RIVET Cab Front ROPS Post

SLOW MOVING VEHICLE EMBLEM

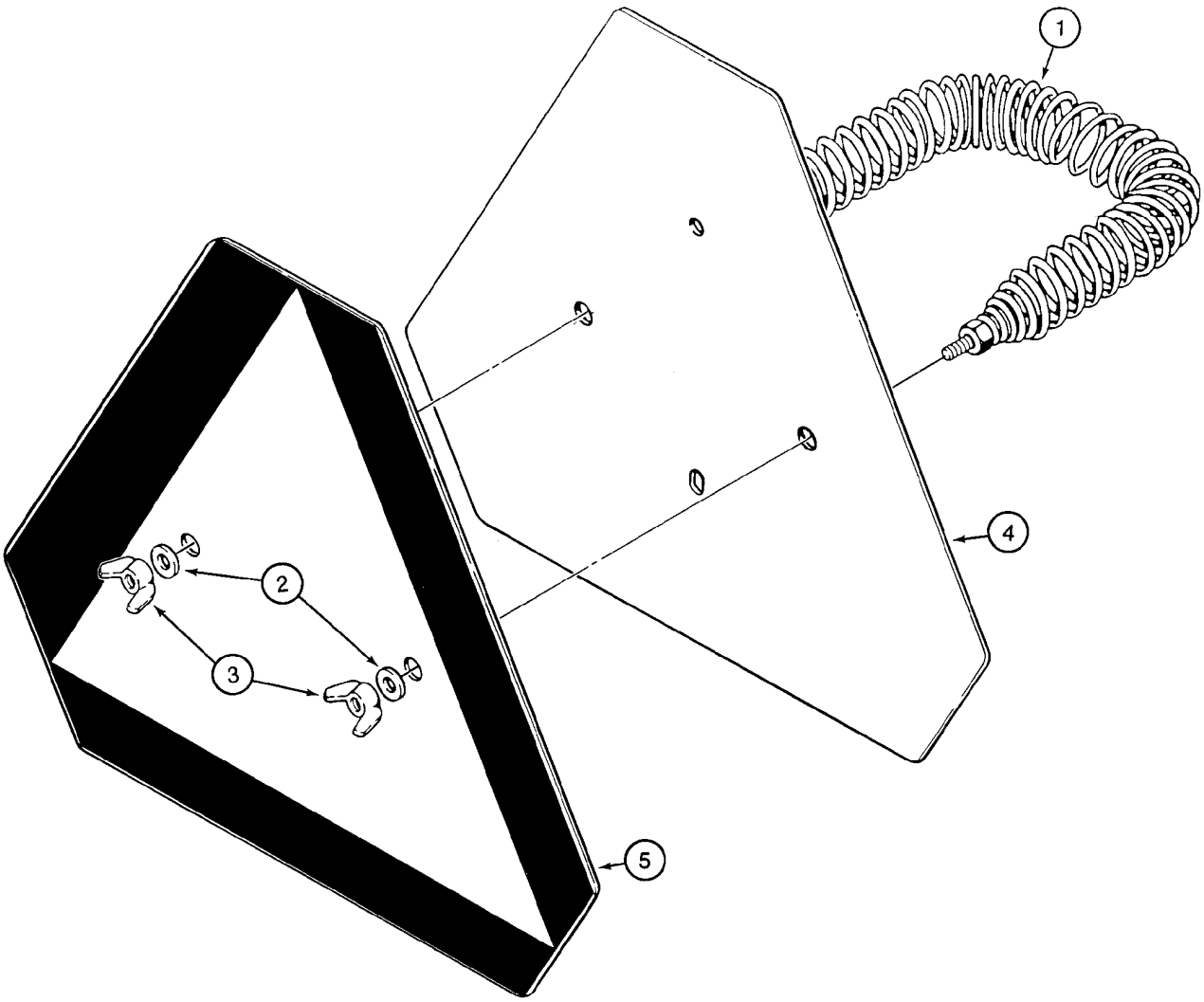

B9409034

SLOW MOVING VEHICLE EMBLEM

REF	FN	PART NUMBER	YR/SN	QTY	DESCRIPTION
1		D52564		1	SPRING
2		495-11028		2	WASHER 9/32 x 5/8 x 1/16
3		126177		2	NUT, WING 1/4
4		D123347		1	SIGN, WARNING Incl. Ref 5
5		321-4311		1	DECAL Slow Moving Vehicle

DECALS



1

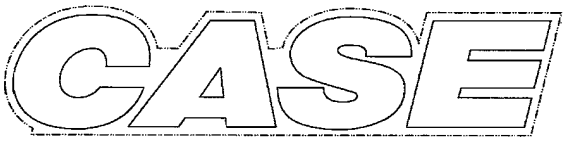

2 3

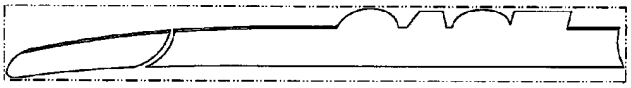

4

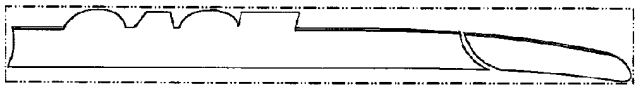

5



6



7



8

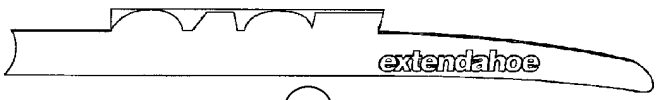

9

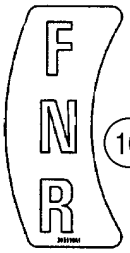

10



10A



11

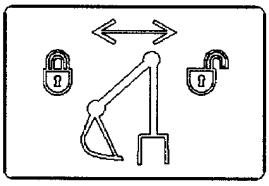

12



13



14

BS00J017

DECALS

REF	FN	PART NUMBER	YR/SN	QTY	DESCRIPTION
1		401464A1		2	DECAL Model Designation
2		401457A1		2	DECAL 525 mm (20-11/16 in); Case Logo; Loader Arm
3		401458A1		2	DECAL 655 mm (25-13/16 in); Case Logo; Backhoe Dipper
4		401459A2		1	DECAL Case; Loader Arm Pin Stripe; Left-Hand Stripe; Replaces 401459A1
5		401460A2		1	DECAL Case; Loader Arm Pin Stripe; Right-Hand Stripe; Replaces 401460A1
6		407315A1		1	DECAL Case; Standard Dipper; Left-Hand Stripe
7		407316A1		1	DECAL Case; Standard Dipper; Right-Hand Stripe
8		373698A2		1	DECAL Case; Extendahoe Dipper; Left-Hand Stripe; Replaces 373698A1
9		373699A2		1	DECAL Case; Extendahoe Dipper; Right-Hand Stripe; Replaces 373699A1
10		395910A2		1	DECAL FNR (Forward/Neutral/Reverse); Shuttle Shift Lever Control Pattern; Replaces 395910A1
10A		373696A1		2	DECAL Powershift
11		321-1708		1	DECAL 0-2-4; Clam Bucket Opening Indicator
12		399862A1		1	DECAL Boom Latch Release
13		186989A1		1	DECAL
14		131-431		2	NUT 1/4

DECALS

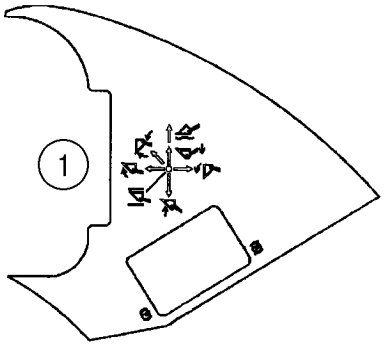

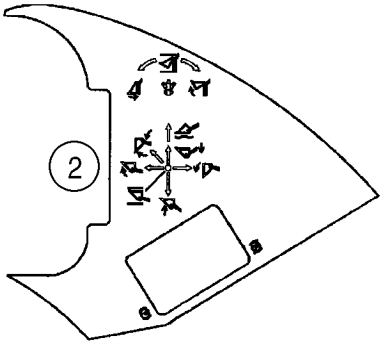





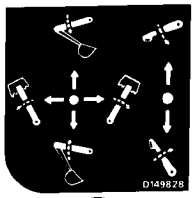

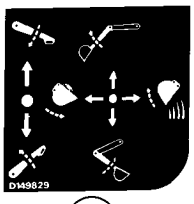



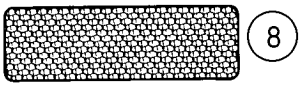

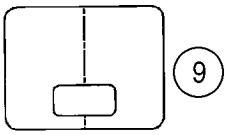







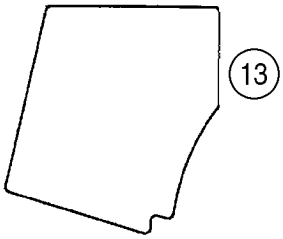

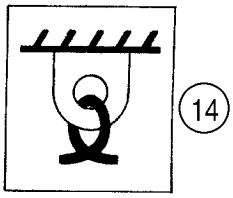

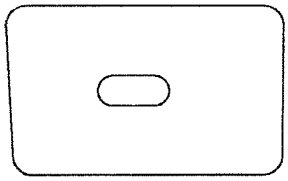

BS03D314

DECALS

REF	FN	PART NUMBER	YR/SN	QTY	DESCRIPTION
1		384930A2		1	DECAL Two Function Loader Control
2		384931A2		1	DECAL Three Function Loader Control
3		D149824		1	DECAL Upper; Standard Backhoe Control Pattern
4		D149825		1	DECAL Upper; Extendahoe Control Pattern; With Foot Swing
5		D149828		1	DECAL Upper; Standard Backhoe Control Pattern; With Hand Swing; Left-Hand Side Of Console
6		D149829		1	DECAL Upper; Standard Backhoe Control Pattern; With Hand Swing; Right-Hand Side Of Console
7		304083A1		2	DECAL Ride Control
8		449842A1		2	DECAL 2 x 6-5/16 in; Red; Reflector; Replaces D87870
9		192450A1		1	DECAL Clear Vinyl; Hood
10		D55216		4-9	PAD 2 x 9 in; Anti-Skid
11		D80270		3-4	STRIP 635 mm (25 in); Anti-Skid
12		307348A1		2	STRIP 700 mm (27-9/16 in); Anti-Skid; 40 gallon fuel tank
13		367848A2		1	PAD Anti-Skid; Canopy Models; Replaces 367848A1
14		139728A1		4	DECAL Tie Down
15		406723A1		1	DECAL Poly Film; Lockup Cover; Canopy Models

DECALS



1



3

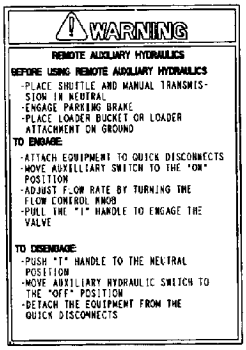

4

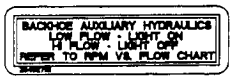

5

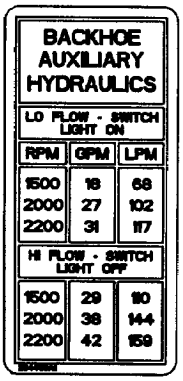

6

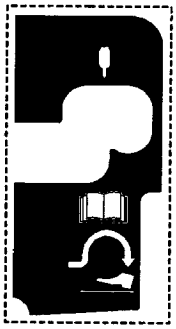

7

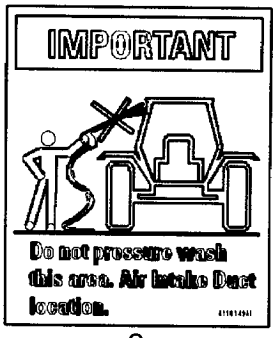

8

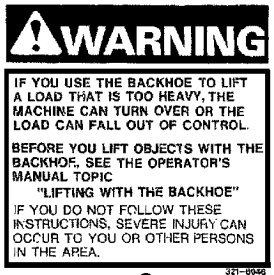

9

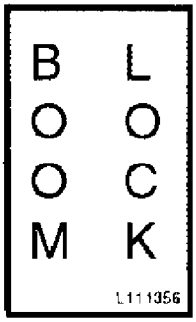

10

BS03D238

DECALS

REF	FN	PART NUMBER	YR/SN	QTY	DESCRIPTION
1		116534A1		1	KIT Decal; Seat Weight Adjustment; Included In Seat Assy
3		179683A1		1	DECAL Hand Held Auxiliary Hydraulics
4		192300A1		1	DECAL Remote Auxiliary Hydraulics
5		284627A1		1	DECAL Backhoe Auxiliary Hydraulics; Low Flow - Light On/Hi Flow - Light Off
6		284480A1		1	DECAL Backhoe Auxiliary Hydraulics
7		397489A1		1	DECAL Backhoe Auxiliary Hydraulic Control
8		411049A1		1	DECAL Important; Do Not Pressure Wash This Area
9		321-6046		2	DECAL Warning; If You Use The Backhoe To Lift a Load That Is Too Heavy
10		L111356		1	DECAL Boom Lock

DECALS - ENGLISH



1

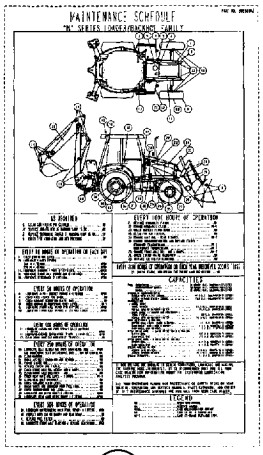

2

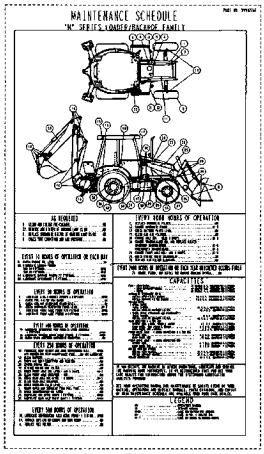

3



4

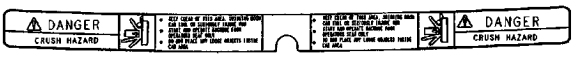

4A



6

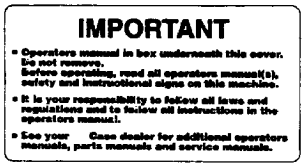

7

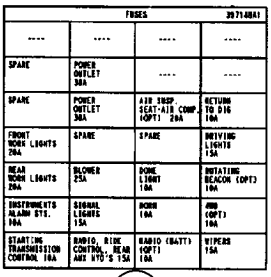

FUSES			
----	----	----	----
SPARE	POWER OUTLET 30A	----	----
SPARE	POWER OUTLET 30A	AIR SUSP. SEAT-AIR COMP. (OPT) 20A	RETURN TO DIG 10A
FRONT WORK LIGHTS 20A	SPARE	SPARE	DRIVING LIGHTS 15A
REAR WORK LIGHTS 20A	BLOWER 25A	DOME LIGHT 10A	ROTATING BEACON (OPT) 10A
INSTRUMENTS ALARM SYS. 10A	SIGNAL LIGHTS 15A	DOME 10A	AUX (OPT) 10A
STARTING TRANSMISSION CONTROL 10A	RADIO, RIDE CONTROL, REAR AUX HYD'S 15A	RADIO (BATT) (OPT) 10A	WIPERS 15A

8

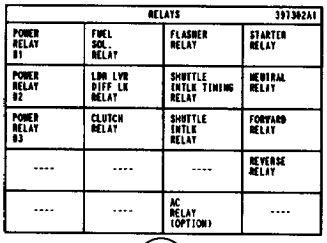

RELAYS			
POWER RELAY 01	FUEL SOL. RELAY	FLASHER RELAY	STARTER RELAY
POWER RELAY 02	LOW LVR DIFF LK RELAY	SHUTTLE INTLK TIMING RELAY	NEUTRAL RELAY
POWER RELAY 03	CLUTCH RELAY	SHUTTLE INTLK RELAY	FORWARD RELAY
----	----	----	REVERSE RELAY
----	----	AC RELAY (OPTION)	----

9

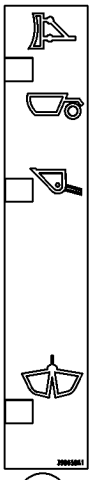

5

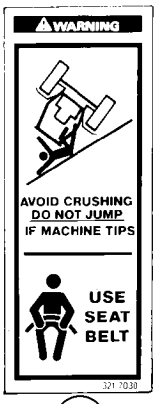

10

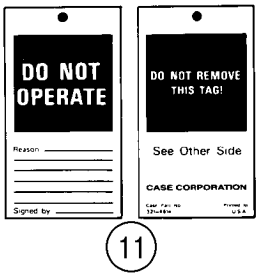

11

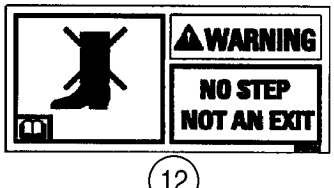

12



12A

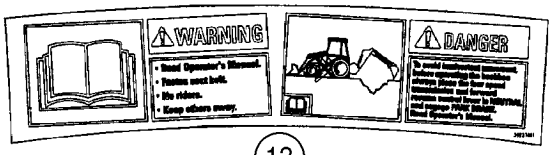

13

BS03D315

DECALS - ENGLISH

REF	FN	PART NUMBER	YR/SN	QTY	DESCRIPTION
1		384264A1		1	DECAL Crush Hazard; Loader Arm Support Strut
2		392568A3		1	DECAL Maintenance Schedule; Supplied by Parts and Components; Used With D138954 2WD Front Axle; If Used
2		419754A1		1	SUPPORT Maintenance Schedule; If Used
2		451597A1		1	DECAL Maintenance Schedule; With Balanced Engine: If Used
2		87410200		1	DECAL Maintenance Schedule; With Balanced Engine: If Used
3		399427A1		1	DECAL Maintenance Schedule; Supplied by Parts and Components; Used With 377979A1 2WD Front Axle
4		313238A1		2	DECAL Crush Hazard; Keep Clear Of This Area; Swinging Boom; If Used
4A		86992976		1	DECAL Crush Hazard; If Used
5		398658A1		1	DECAL Clam Bucket Position
6		383972A1		1	DECAL Do Not Modify or Repair ROPS or FOPS In Any Manner
7		144193A3		1	DECAL Operator's Manual In Box Underneath This Cover; Glove Box Lid; Replaces 144193A3
8		397148A1		1	DECAL Fuse Location
9		397302A1		1	DECAL Relay
10		321-7030		2	DECAL Avoid Crushing; Do Not Jump / Use Seat Belt
11		321-4614		1	DECAL Do Not Operate
12		384271A1		2	DECAL No Step / Not An Exit; If Used
12A		86992975		2	DECAL Warning; No Step/Not An Exit; If Used
13		392374A1		1	DECAL Warning/Danger; Read the Operator's Manual

DECALS - LATIN AMERICAN SPANISH



1

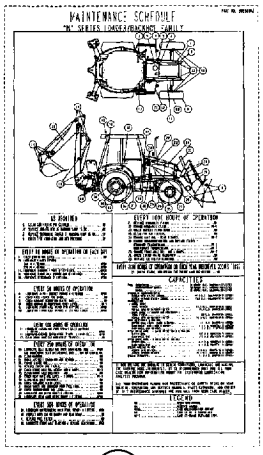

2

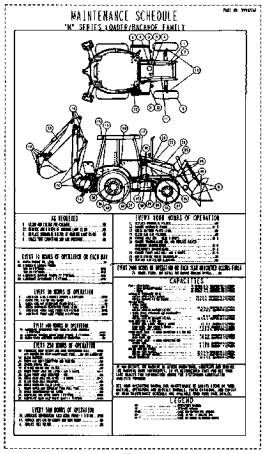

3



4

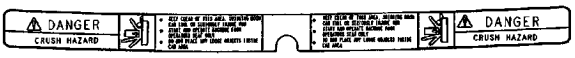

4A



6

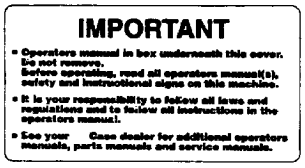

7

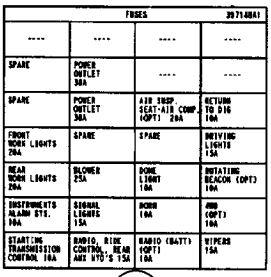

FUSES			
----	----	----	----
SPARE	POWER OUTLET 30A	----	----
SPARE	POWER OUTLET 30A	AIR SUSP. SEAT-AIR COMP. (OPT) 20A	RETURN TO DIG 10A
FRONT WORK LIGHTS 20A	SPARE	SPARE	DRIVING LIGHTS 15A
REAR WORK LIGHTS 20A	BLOWER 25A	DOME LIGHT 10A	ROTATING BEACON (OPT) 10A
INSTRUMENTS ALARM SYS. 10A	SIGNAL LIGHTS 15A	DOME 10A	AUX (OPT) 10A
STARTING TRANSMISSION CONTROL 10A	RADIO, RIDE CONTROL, REAR AUX HYD'S 15A	RADIO (BATT) (OPT) 10A	WIPERS 15A

8

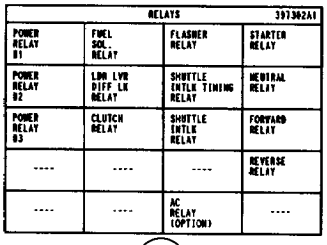

RELAYS			
POWER RELAY 01	FUEL SOL. RELAY	FLASHER RELAY	STARTER RELAY
POWER RELAY 02	LOW LVR DIFF LK RELAY	SHUTTLE INTLK TIMING RELAY	NEUTRAL RELAY
POWER RELAY 03	CLUTCH RELAY	SHUTTLE INTLK RELAY	FORWARD RELAY
----	----	----	REVERSE RELAY
----	----	AC RELAY (OPTION)	----

9

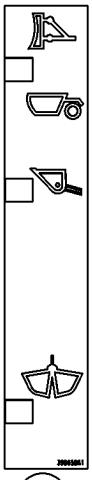

5

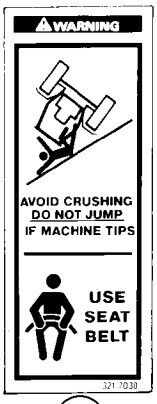

10

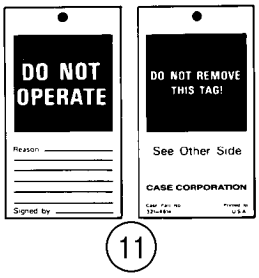

11



12



12A

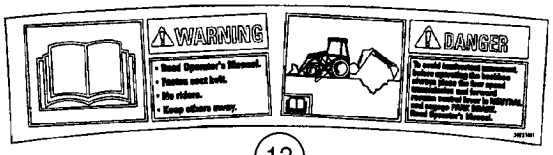

13

BS03D315

DECALS - LATIN AMERICAN SPANISH

REF	FN	PART NUMBER	YR/SN	QTY	DESCRIPTION
1		398576A1		1	DECAL Crush Hazard; Loader Arm Support Strut
2		404804A1		1	DECAL Maintenance Schedule; Supplied by Parts and Components; Used With D138954 2WD Front Axle; If Used
2		419752A1		1	DECAL Maintenance Schedule; If Used
2		451598A1		1	DECAL Maintenance Schedule; With Balanced Engine; If Used
3		{398587A1}		1	Maintenance Schedule; Supplied by Parts and Components; Used With 377979A1 2WD Front Axle
4		398664A1		2	DECAL Crush Hazard; Keep Clear Of This Area; Swinging Boom; If Used
4A		86992981		1	DECAL Danger; Crush Hazard; If Used
5		398658A1		1	DECAL Clam Bucket Position
6		389729A1		1	DECAL Do Not Modify or Repair ROPS or FOPS In Any Manner
7		398662A1		1	DECAL Operator's Manual In Box Underneath This Cover; Glove Box Lid
8		398594A1		1	DECAL Fuse Location
9		398596A1		1	DECAL Relay
10		398672A1		2	DECAL Avoid Crushing; Do Not Jump / Use Seat Belt
11		298521A1		1	TAG Do Not Operate
12		398585A1		2	DECAL 50 x 110 mm; No Step / Not An Exit; If Used
12A		86992980		2	DECAL 54 x 110 mm; Warning; No Step/Not An Exit; If Used
13		398598A1		1	DECAL Warning/Danger; Read the Operator's Manual

DECALS - CANADIAN FRENCH



1

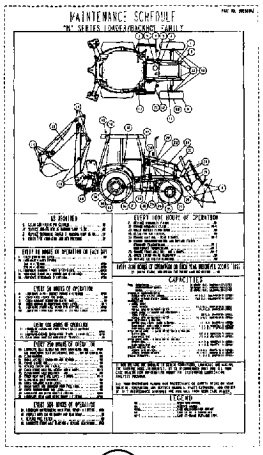

2

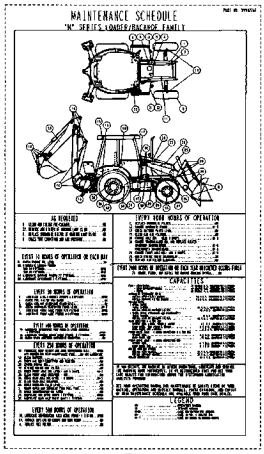

3



4

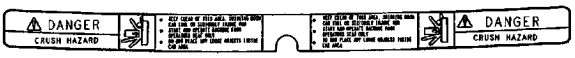

4A



6

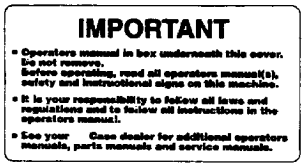

7

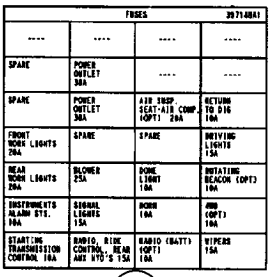

FUSES			
----	----	----	----
SPARE	POWER OUTLET 30A	----	----
SPARE	POWER OUTLET 30A	AIR SUSP. SEAT-AIR COMP. (OPT) 20A	RETURN TO DIG 10A
FRONT WORK LIGHTS 20A	SPARE	SPARE	DRIVING LIGHTS 15A
REAR WORK LIGHTS 20A	BLOWER 25A	DOME LIGHT 10A	ROTATING BEACON (OPT) 10A
INSTRUMENTS ALARM SYS. 10A	SIGNAL LIGHTS 15A	HORN 10A	ASM (OPT) 10A
STARTING TRANSMISSION CONTROL 10A	RADIO, RIDE CONTROL, REAR AUX HTD'S 15A	RADIO (BATT) (OPT) 10A	WIPERS 15A

8

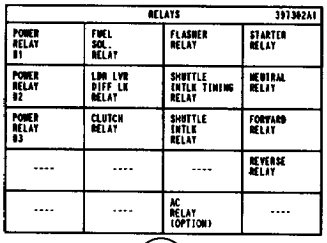

RELAYS			
POWER RELAY 01	FUEL SOL. RELAY	FLASHER RELAY	STARTER RELAY
POWER RELAY 02	LOW LVR DIFF LK RELAY	SHUTTLE INTLK TIMING RELAY	NEUTRAL RELAY
POWER RELAY 03	CLUTCH RELAY	SHUTTLE INTLK RELAY	FORWARD RELAY
----	----	----	REVERSE RELAY
----	----	AC RELAY (OPTION)	----

9

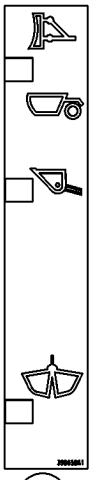

5

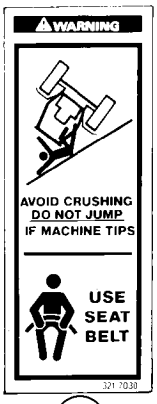

10

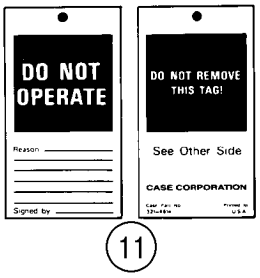

11



12



12A

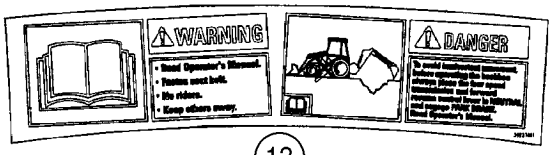

13

BS03D315

DECALS - CANADIAN FRENCH

REF	FN	PART NUMBER	YR/SN	QTY	DESCRIPTION
1		398577A1		1	DECAL Crush Hazard; Loader Arm Support Strut
2		{404805A1}		1	Maintenance Schedule; Supplied by Parts and Components; Used With D138954 2WD Front Axle; If Used
2		419753A1		1	DECAL Maintenance Schedule; If Used
2		451599A1		1	DECAL Maitenance Schedule; With Balanced Engine; If Used
3		{398588A1}		1	Maintenance Schedule; Supplied by Parts and Components; Used With 377979A1 2WD Front Axle
4		398653A1		2	DECAL Crush Hazard; Keep Clear Of This Area; Swinging Boom; If Used
4A		86992979		1	DECAL Danger; Crush Hazard; If Used
5		398658A1		1	DECAL Clam Bucket Position
6		389730A1		1	DECAL Do Not Modify or Repair ROPS or FOPS In Any Manner
7		398663A1		1	DECAL Operator's Manual In Box Underneath This Cover; Glove Box Lid
8		398595A1		1	DECAL Fuse Location
9		398597A1		1	DECAL Relay
10		398673A1		2	DECAL Avoid Crushing; Do Not Jump / Use Seat Belt
11		321-5675		1	DECAL Do Not Operate
12		398586A1		2	DECAL 50 x 110; No Step / Not An Exit; If Used
12A		86992978		2	DECAL 54 x 110; Warning; No Step/Not An Exit; If Used
13		398599A1		1	DECAL Warning/Danger; Read the Operator's Manual

DECALS - ENGLISH

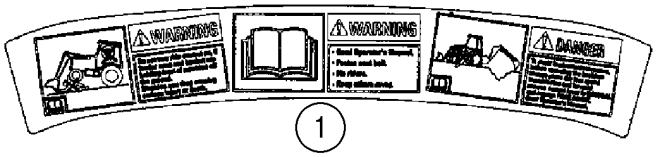

1



2

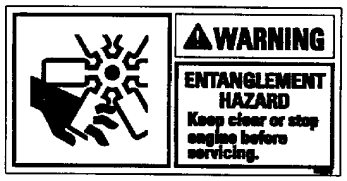

3

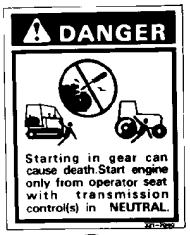

4



5

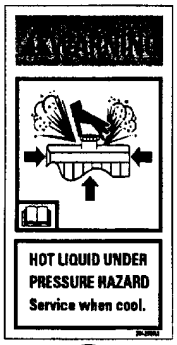

6

DIESEL FUEL

7



8



8A

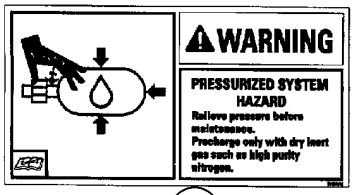

9



10



11



12



13

BS00J024

DECALS - ENGLISH

REF	FN	PART NUMBER	YR/SN	QTY	DESCRIPTION
1		392375A1		1	DECAL Warning/Warning/Danger; Front, With Ride Control; Do Not Turn Ride Control On/Read Operator's Manual/To Avoid Inadvertent Movement
2		384265A1		1	DECAL Crush Hazard; Keep Clear; Support Loader Lift Arms During Maintenance
3		384267A1		2	DECAL Entanglement Hazard, Fan; Keep Clear or Stop Engine Before Servicing
4		321-7040		1	DECAL Starting In Gear
5		384269A1		2	DECAL Jump Start
6		384258A1		2	DECAL Hot Liquid Under Pressure
7		321-230		1	DECAL Diesel Fuel
8		321-229		1	DECAL Hydraulic Fluid; Used In Production; For Service, Order 321-6376, English Decal Only
8A		321-6376		1	DECAL Hydraulic Fluid
9		384260A1		1	DECAL Ride Control Accumulator
10		D149826		1	DECAL For All Models With Foot Swing Backhoe Controls and Standard Backhoe Models With Hand Swing
11		D149827		1	DECAL Extendahoe Backhoe Models With Hand Swing
12		384263A1		1	DECAL Rollover Crush Hazard; If You Use The Backhoe To Lift A Load
13		321-6774		1	DECAL Seat Spring

DECALS - LATIN AMERICAN SPANISH

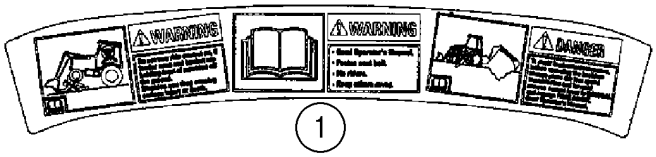

1



2

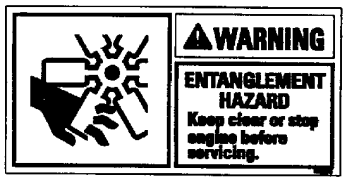

3

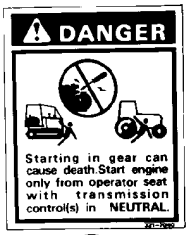

4



5

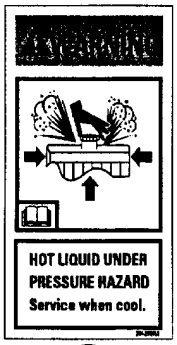

6

DIESEL FUEL

7



8



8A

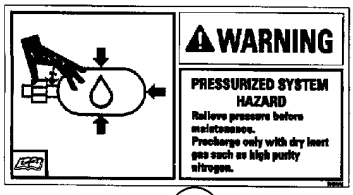

9



10



11



12



13

DECALS - LATIN AMERICAN SPANISH

REF	FN	PART NUMBER	YR/SN	QTY	DESCRIPTION
1		398600A1		1	DECAL Warning/Warning/Danger; Front, With Ride Control; Do Not Turn Ride Control On/Read Operator's Manual/To Avoid Inadvertent Movement
2		398578A1		1	DECAL Crush Hazard; Keep Clear; Support Loader Lift Arms During Maintenance
3		398580A1		2	DECAL Entanglement Hazard, Fan; Keep Clear or Stop Engine Before Servicing
4		398674A1		1	DECAL Starting In Gear
5		398582A1		2	DECAL Jump Start
6		398570A1		2	DECAL Hot Liquid Under Pressure
7		398667A1		1	DECAL Diesel Fuel
8		398665A1		1	DECAL Hydraulic Fluid
8A		321-6376		1	DECAL Hydraulic Fluid, English Decal Only
9		398572A1		1	DECAL Ride Control Accumulator
10		398677A1		1	DECAL For All Models With Foot Swing Backhoe Controls and Standard Backhoe Models With Hand Swing
11		{398669A1}		1	Extendahoe Backhoe Models With Hand Swing
12		398574A1		1	DECAL Rollover Crush Hazard; If You Use The Backhoe To Lift A Load
13		398670A1		1	DECAL Seat Spring

DECALS - CANADIAN FRENCH

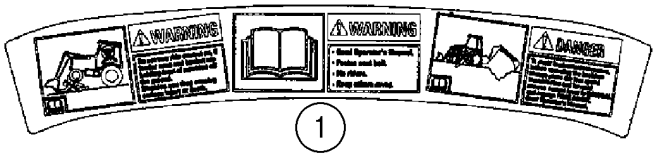

1



2

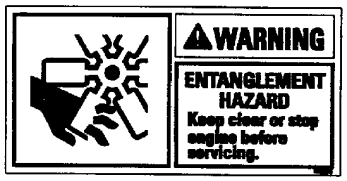

3

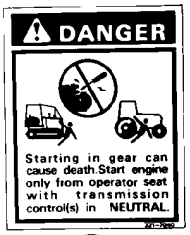

4



5

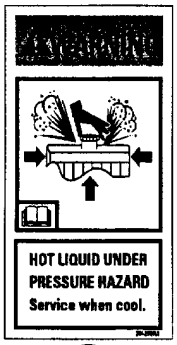

6

DIESEL FUEL

7



8



8A

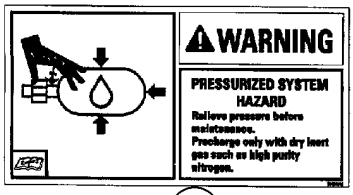

9



10



11



12



13

BS00J024

DECALS - CANADIAN FRENCH

REF	FN	PART NUMBER	YR/SN	QTY	DESCRIPTION
1		398601A1		1	DECAL Warning/Warning/Danger; Front, With Ride Control; Do Not Turn Ride Control On/Read Operator's Manual/To Avoid Inadvertent Movement
2		398579A1		1	DECAL Crush Hazard; Keep Clear; Support Loader Lift Arms During Maintenance
3		398581A1		2	DECAL Entanglement Hazard, Fan; Keep Clear or Stop Engine Before Servicing
4		398676A1		1	DECAL Starting In Gear
5		398583A1		2	DECAL Jump Start
6		398571A1		2	DECAL Hot Liquid Under Pressure
7		398668A1		1	DECAL Diesel Fuel
8		398666A1		1	DECAL Hydraulic Fluid
8A		321-6376		1	DECAL Hydraulic Fluid, English Decal Only
9		398573A1		1	DECAL Ride Control Accumulator
10		398656A1		1	DECAL For All Models With Foot Swing Backhoe Controls and Standard Backhoe Models With Hand Swing
11		398654A1		1	DECAL Extendahoe Backhoe Models With Hand Swing
12		398575A1		1	DECAL Rollover Crush Hazard; If You Use The Backhoe To Lift A Load
13		398671A1		1	DECAL Seat Spring

Number	Figure	Sequence	Ref.
{124462A1}	08 -57		
{376287A2}	09 -07		
{377221A2}	09 -63		1
{377232A2}	09 -64		18A
{377233A2}	09 -64		31A
{393365A2}	08 -12		10B
	08 -13		10
{398587A1}	09 -77		3
{398588A1}	09 -78		3
{398669A1}	09 -80		11
{400974A1}	09 -19		
{404232A1}	09 -58		3
{404233A1}	09 -58		2
{404805A1}	09 -78		2
{404996A1}	04 -14		
	04 -15		
{416670A1}	09 -19		
{86993598}	08 -20A		1
{87412016}	09 -59		8
	09 -70		12
{87412017}	09 -59		14
{87417600}	06 -02		9A
{87425525}	02 -22		15
{87425526}	02 -22		15
{87425527}	02 -22		15
{87425528}	02 -22		15
{87425529}	02 -22		15
{J906376}	02 -15		
{J906377}	02 -15		
100-11196	06 -29		24
	06 -29		8
	06 -30		22
	06 -30		8
	06 -32		8
	06 -33		8
100-1125	08 -30		11
100-1647	08 -33		8
	08 -40		9
	08 -41		9
	08 -42		8
	08 -43		9
	08 -44		9
	08 -46		9
100-21118	08 -49		19
100-21237	05 -05		33
100-21250	02 -08		9
100-21315	08 -57		13A
100-2156	08 -49		40
100-2587	02 -09		15
100-39001	09 -55		43
	09 -57		20
100520A1	05 -08		8
100522A1	05 -08		7
100533A1	05 -09		11
100557A1	06 -15		8
	06 -16		9
	06 -40		1
100748A1	06 -14		9
100753A1	06 -22		17
100760A1	06 -40		21
101479A1	08 -13		40
101531A1	04 -18		9
102-12125	08 -25		16
102-1387	05 -03		4
102-23150	08 -25		14
102761A1	09 -01		12
	09 -02		23
102765A1	09 -14		19
102924A1	09 -22		25
103-1437	09 -02		15
103-1518	03 -03		7
103-16175	09 -19		4
	09 -19		8
	09 -23		23
	09 -23		27
	09 -23		33
	09 -23		36
	09 -24		46
	09 -24		50
103-16200	09 -20		18
103-1687	05 -05		40
103-3350	09 -04		29
103-3350	09 -18		8
103670A1	08 -13		36
	08 -19		18
104587A1	04 -01		14
104588A1	04 -01		3
104824A1	09 -04		23
106989A1	09 -14		13
106990A1	09 -14		15
107070A1	06 -04		4
107071A1	06 -06		6
	06 -46		7
107073A1	06 -06		10
107124A1	09 -23		43
	09 -24		40
	09 -25		19
	09 -34		8
108088A1	09 -01		11
	09 -02		12
	09 -02		21
108366A1	04 -18		4
108864A1	09 -14		1
108923A1	09 -14		9
108924A1	09 -14		8
108942A4	09 -24		33
108942A5	09 -24		33A
109020A1	08 -13		33
109268A1	09 -04		4
109511A1	04 -17		14
109879A1	09 -36		3
	09 -41		13
111522A1	09 -04		5
111583A1	08 -26		18
111585A1	08 -26		11
111588A1	08 -26		14
111589A1	08 -26		21
111592A1	08 -26		23
111593A1	08 -26		12
111594A1	08 -26		5
111596A1	08 -26		7
111597A1	08 -26		8
111662A1	05 -05		
112370A3	08 -57		14
112380A1	09 -01		14
	09 -02		29
	09 -14		21
112382A1	09 -02		25
112486A1	06 -07		10
	06 -41		10
	06 -42		10
112509A1	05 -09		5
112517A1	06 -22		4
113629A1	09 -04		25
113787A3	08 -30		17
114296A1	06 -04		9
114318A1	09 -20		12A
	09 -34		4
114549A1	09 -54		6
114882A2	05 -01		2
114903A1	08 -29		6
114980A1	09 -41		8
115507A1	08 -01		28
115633A1	08 -02		8
116339A1	09 -05		21
116521A1	09 -50		3
116534A1	09 -50		10
	09 -75		1
116538A2	09 -50		12
116545A1	09 -50		9
116547A1	09 -49		10
	09 -50		6
116548A1	09 -50		15
116550A1	09 -50		14
116551A1	09 -50		8
116552A1	09 -50		13
116761A3	09 -48		1
116763A1	09 -48		2
116764A3	09 -48		3
116766A2	09 -48		4
116767A1	09 -48		5
117844A1	02 -07		7
117846A1	06 -12		33
	06 -13		13

Number	Figure	Sequence	Ref.
117933A1	06 -38		6
118318A1	08 -30		8
118769A1	09 -46		7
118900A1	09 -04		24
118901A1	09 -04		30
	09 -05		3
119171A1	09 -48		6
119211A1	09 -46		11
119685A1	06 -06		19
120148A3	08 -30		13
120303A1	02 -06		19
	05 -02		46
	08 -01		31A
	08 -03		27
	08 -04		10
	08 -05		21
	08 -05		8
	08 -06		8
	08 -21		44
	08 -22		14
	09 -35		33
121-145	07 -03		20
121412A1	04 -07		2
	04 -10		
	04 -18		16
121413A1	04 -07		3
	04 -20		1
	08 -15		40
	08 -20		32
	08 -20A		32
121414A1	04 -07		4
	09 -51		
121415A1	04 -10		
121416A1	04 -07		5
121478A1	08 -57		14A
121501A2	02 -01		21
121638A2	08 -48		1
121639A2	08 -48		4
121665A1	09 -19		7
121729A1	07 -04		8
121741A1	08 -15		1
	08 -48		
121856A1	09 -35		55
	09 -38		2
	09 -39		2
	09 -40		13
122127A1	08 -02		4
122140A1	08 -29		5
122141A1	08 -29		5A
122178A2	08 -16		20
122179A1	08 -16		18
122259A1	05 -09		10A
	06 -03		10
122260A1	06 -03		9
122261A1	05 -08		9A
	06 -02		13
122262A1	06 -02		7
122264A1	05 -09		10
122265A1	05 -09		9
122268A1	05 -08		9
122270A1	05 -08		5
122330A1	08 -30		15
122535A1	08 -57		
122553A1	09 -65		12
	09 -66		4
122554A1	09 -66		11
122579A1	09 -65		13
122603A1	09 -35		24
122897A1	09 -21		6
122974A1	09 -22		1
123097A1	04 -04		32
	04 -07		31
	06 -12		42
123493A1	09 -02		9
123537A1	09 -09		29
123809A2	04 -04		31
	04 -07		30
	06 -12		43
123815A1	09 -02		2
123942A1	08 -17		9
123943A1	08 -17		27
123980A1	09 -65		23
124011A1	09 -65		22
124243A1	09 -02		8
124340A1	02 -19		
124463A1	08 -57		22
124568A2	08 -57		3
124690A1	08 -09		15
124721A1	09 -03		14
1250594C1	09 -65		10
	09 -65		11
	09 -66		10
	09 -66		17
	09 -66		3
125113A1	09 -14		12
	09 -14		14
125749A1	09 -61		12
126-112	02 -15		13
126-116	06 -12		12
126155A1	08 -16		16
	09 -09		31
126177	09 -72		3
126844A1	04 -07		17
	04 -10		10
	04 -10		16
126918A1	09 -17		2
127009A1	04 -11		6
127158A1	04 -18		6
127377A1	09 -42		3
1280055C2	08 -17		14
128312A1	04 -08		3
	04 -14		13
	04 -15		3
	09 -04		19
128376A1	06 -44		11
	06 -45		11
128483A1	09 -65		16
	09 -65		9
	09 -66		16
	09 -66		18
	09 -66		25
	09 -67		4
128484A1	09 -65		3
	09 -66		9
128485A1	09 -65		4
	09 -65		8
	09 -66		2
	09 -66		8
128570A1	06 -08		11
128580A1	09 -03		
128818A1	09 -04		11
129-289	09 -18		17
129-369	05 -04		3
129-667	08 -52		2
129015A1	09 -12		1
129391A1	08 -49		22
129842A2	08 -27		5
	08 -28		6
129861A1	08 -40		
129914A1	09 -02		4
13-1838	05 -05		16
130047A1	03 -01		15
130049A1	03 -01		5
130059A1	08 -29		15
130060A2	08 -15		60
	08 -21		35
	08 -23		35
	08 -29		
130245A1	07 -06		32
1302758C1	04 -12		35
	09 -68		20
130919A1	08 -49		16
130932A1	08 -49		10
131-121	04 -11		15
	09 -02		33
131-425	09 -52		
131-431	09 -73		14
131-435	09 -50		
131-619	04 -12		17
	04 -12		20
131-861	04 -11		7
	09 -01		4
	09 -10		15
	09 -61		8

Number	Figure	Sequence	Ref.
131-869	09 -43		21B
	09 -43		4
131084A1	02 -01		8
131196A1	08 -49		
131197A1	08 -48		3
	08 -49		
1312210C2	04 -14		
	04 -14		
	04 -15		
	04 -15		
131676A1	07 -04		14
132004A2	08 -27		4
	08 -28		5
	08 -32		
132212A1	08 -10		17
	08 -11		17
	08 -12		16
	08 -13		16
132215A1	02 -01		12
	09 -59		7
	09 -70		21
132217A1	02 -01		14
132218A1	02 -01		13
132661A1	09 -01		5
132842A1	09 -24		26
132844A1	09 -24		27
132862A1	09 -52		6
132864A1	09 -52		
132866A1	09 -52		9
132872A1	09 -52		18
132873A1	09 -02		39
132931A1	03 -03		2
	09 -01		25
132952A1	05 -12		4
132953A1	06 -37		1
132976A1	08 -59		14
133083A1	08 -53		12
1331087C1	09 -64		14
133421A1	09 -52		17
133422A1	09 -52		15
133542A1	09 -07		12
133570A1	08 -58		16
133615A1	09 -01		2
133617A1	09 -02		18
133715A1	04 -10		11
133716A1	04 -10		13
133936A1	08 -04		18
	08 -53		1
	09 -04		9
133937A1	08 -53		2
133989A1	09 -02		13
1340478C1	08 -17		13
1340762C1	08 -60		17
1340763C1	08 -60		18
1340798C1	08 -55		15
1340853C2	08 -14		22
	08 -61		1
	09 -24		18
1340854C2	08 -61		2
134167A1	09 -20		20
1342054C1	05 -01		1
1343708C1	08 -30		20
	08 -31		23
	08 -33		17
	08 -40		13
	08 -44		35
	08 -46		13
	08 -47		13
1343777C1	08 -30		18
	08 -31		21
	08 -33		15
	08 -40		11
	08 -44		33
	08 -46		11
	08 -47		11
1343791C2	08 -49		
1344025C1	09 -51		16
1344026C1	09 -51		17
1346076C1	08 -61		
1346077C1	08 -61		11
1346105C2	08 -30		
	08 -30		
1346105C2	08 -31		
	08 -33		
	08 -40		
	08 -44		
	08 -46		
	08 -47		
1346107C2	08 -35		
	08 -36		
	08 -37		
	08 -38		
1346108C2	08 -27		
	08 -28		
1346128C3	08 -48		12
1346129C3	08 -48		10
1346175C1	08 -30		19
	08 -31		22
	08 -33		16
	08 -40		12
	08 -44		34
	08 -46		12
	08 -47		12
1346189C1	08 -07		2
	08 -55		1
1346189C2	08 -07		2A
	08 -55		1A
1346190C1	08 -07		1
	08 -55		1
1346190C2	08 -07		1A
	08 -55		1A
1346191C1	08 -55		2
1346191C2	08 -55		2A
1346192C1	08 -55		2
1346192C2	08 -55		2A
1346195C1	08 -55		13
1346219C3	08 -30		
	08 -31		
	08 -33		
	08 -40		
	08 -44		
	08 -46		
	08 -47		
1346221C3	08 -30		
	08 -31		
	08 -33		
	08 -39		
	08 -44		
1346222C1	08 -44		
1346312C2	08 -49		41
1346497C2	08 -58		18
1348264C1	03 -01		18
134844A1	09 -06		2A
1349058C1	06 -08		5
1349059C1	06 -08		6
1349265C1	06 -06		1
	06 -46		1
135-1233	09 -25		25
135161A1	08 -54		13
135249A1	09 -20		6
135259A1	08 -53		13
135324A2	09 -67		2
135512A3	09 -52		2
136-54	04 -18		14
136008A1	08 -02		17
	08 -15		52
136261A1	09 -12		11
136263A1	09 -12		8
	09 -13		2
136267A1	09 -12		5
136269A1	09 -12		6
136270A1	09 -12		40
136271A1	09 -12		39
136822A1	09 -10		11
136824A1	09 -10		13
136977A1	08 -15		16
136990A1	05 -08		6
137012A1	08 -15		14
137039A1	08 -48		9
137219A1	04 -20		13
137248A1	08 -57		13
137283A1	09 -03		1
137343A1	08 -16		19
	09 -09		28

Number	Figure	Sequence	Ref.
137344A1	08 -16		21
	09 -09		27
137713A1	08 -15		15
138467A1	08 -05		12
	08 -06		11
138595A1	09 -35		14
139043A1	08 -17		8
139227A1	08 -17		1
139230A1	08 -17		23
139262A1	09 -20		29
139363A1	09 -41		9
139728A1	09 -74		14
139808A2	08 -09		13
	08 -57		1
	09 -20		11
139810A2	08 -57		2
139865A1	09 -03		8
14-68	06 -36		5
140-103	09 -61		11
140-104	09 -55		44
	09 -57		21
140-106	04 -11		13
	09 -10		14
140-107	04 -09		3
	04 -11		12
	04 -12		16A
	04 -12		19
	09 -01		3
	09 -02		32
	09 -10		14
140-117	09 -43		13
	09 -43		24
	09 -43		7
140-119	04 -10		15
140-120	04 -12		16
	04 -12		30
140505A1	09 -21		10
	09 -24		1
140515A1	09 -20		1
	09 -21		1
140943A1	06 -08		7
140944A1	06 -08		7
140945A1	06 -08		7
140946A1	06 -08		7
140947A1	06 -08		7
140948A1	06 -08		7
140949A1	06 -08		7
140951A1	06 -08		7
140953A1	06 -08		7
140954A1	06 -08		7
140965A1	08 -11		25
	08 -59		1
	09 -21		15
	09 -24		9
140967A1	08 -59		16
140968A1	08 -59		18
141179A1	08 -59		2
141232A2	09 -31		1
141233A1	09 -31		3
	09 -31		3
141234A1	09 -31		2
	09 -31		2
141354A1	04 -01		45
141355A1	04 -01		34
141360A1	04 -01		18
141361A1	04 -01		35
141513A1	02 -01		18
141656A1	08 -12		35
141747A1	05 -01		12
142-103	09 -55		47
	09 -57		23
142301A1	09 -07		3
142404A1	09 -03		2
142524A1	09 -04		12
142538A1	09 -06		17
	09 -06		7
142951A1	08 -14		11
142960A1	08 -14		12
142976A1	08 -13		20
142982A1	08 -13		21
143210A1	09 -02		7
143219A1	03 -01		42
143219A1	09 -35		20
143786A1	09 -52		7
144171A1	04 -05		4
144193A3	09 -76		7
144210A1	09 -07		
144215A1	08 -01		19
144216A1	08 -02		3
144219A1	05 -02		15
144227A2	08 -01		36
144240A1	08 -02		16
144241A1	08 -02		16A
144251A2	08 -08		10
144279A1	06 -09		7
	06 -47		7
144324A5	08 -37		2
	08 -38		2
	08 -46		
144454A1	06 -02		
144465A1	06 -05		4
144477A1	08 -02		27
	08 -15		55B
	08 -18		32
	08 -18		39
144479A1	08 -02		30
	08 -18		31
144499A1	08 -12		29
144611A1	06 -02		8
144908A2	09 -40		24
149942C1	08 -50		
151-516	09 -53		7
	09 -69		3
1530028C1	06 -15		2
	06 -16		3
1530431C1	04 -02		5
1537663C1	06 -03		5
1537664C1	06 -03		6
1542549C1	05 -04		18
1542550C1	05 -04		4
1542563C1	08 -49		
1542829C1	08 -35		7
	08 -36		8
	08 -37		8
	08 -38		8
	08 -39		
1542830C2	08 -45		
1542875C1	08 -53		
	08 -54		
	08 -55		
	08 -61		
1542876C1	08 -57		
1542877C1	08 -56		
1542879C1	08 -58		
1542880C1	08 -59		
	08 -60		
1542918C3	08 -56		4
1542982C2	08 -58		6
1543260C1	08 -54		
1543266C1	08 -53		
1543267C1	08 -55		
	08 -61		
1543289C2	08 -56		
1543329C1	08 -49		29
1546500C1	04 -01		9
1547924C1	02 -01		9
168-71	04 -18		7
170-104	09 -02		3
175161A1	02 -02		1
175162A1	02 -02		4
175163A1	02 -02		3
175164A1	02 -02		5
175165A2	02 -02		6
175313A1	09 -21		16
	09 -24		2
175315A1	09 -21		27
175316A1	09 -23		2
	09 -24		11A
175581A1	09 -21		23
	09 -21		30
	09 -24		11
175596A1	09 -21		2
175597A1	09 -20		21
175599A1	09 -41		2

Number	Figure	Sequence	Ref.
175637A1	02 -07		1
175785A1	08 -10		28
	08 -58		1
	09 -21		9
175787A1	08 -58		2
175817A1	08 -14		23
175959A1	06 -41		11
	06 -42		11
175961A1	06 -41		19
	06 -42		19
175965A1	06 -44		10
	06 -45		10
175966A1	06 -44		8
	06 -45		8
175968A1	06 -44		12
	06 -45		12
176091A1	09 -51		6
176266A1	08 -10		13
	08 -11		13
	08 -12		12
	08 -13		12
176268A1	08 -10		12A
	08 -11		12A
	08 -12		11A
	08 -13		11A
176311A1	09 -01		10
	09 -02		20
176362A1	08 -12		20
176366A1	08 -12		21
176857A1	04 -09		4
176914A1	09 -50		5
176916A1	09 -50		4
176919A1	09 -49		7
176920A1	09 -50		7
176921A1	09 -49		9
	09 -50		2
176924A1	09 -47		5
176952A1	09 -36		5
176957A1	09 -36		6
177256A1	08 -08		30
	08 -56		1
	09 -19		1
177257A1	08 -08		29
	08 -56		1
	09 -19		2
177258A1	08 -56		2
177259A1	08 -56		2
177261A1	08 -56		12
177269A1	04 -19		14
	09 -61		18
177518A1	08 -57		12
178004A1	09 -14		18
178006A1	09 -14		17
179011A1	08 -59		
179029A1	09 -17		1
179404A1	08 -10		12
	08 -11		12
	08 -12		11
	08 -13		11
179605A1	08 -10		31
179608A1	08 -11		29
179615A1	08 -10		34
179683A1	08 -17		25
	09 -75		3
179956A1	09 -11		6
180427A1	09 -34		2
180593A1	09 -52		11
180594A3	09 -52		19
1806233C1	03 -08		10
1806234C1	03 -08		10
1806235C1	03 -08		10
1806236C1	03 -08		10
1806237C1	03 -08		10
1806238C1	03 -08		10
1806239C1	03 -08		10
1806240C1	03 -08		10
1806241C1	03 -08		10
1806242C1	03 -08		10
1806243C1	03 -08		10
1806244C1	03 -08		10
1806245C1	03 -08		10
1806246C1	03 -08		10
1806247C1	03 -08		10
1806248C1	03 -08		10
1806249C1	03 -08		10
1806250C1	03 -08		10
1806251C1	03 -08		10
1806252C1	03 -08		10
1806253C1	03 -08		10
1806254C1	03 -08		10
1806255C1	03 -08		10
1806256C1	03 -08		10
1806257C1	03 -08		10
1806258C1	03 -08		10
1806259C1	03 -08		10
1806260C1	03 -08		10
1806261C1	03 -08		10
1806262C1	03 -08		10
1808728C1	03 -07		10
1808822C1	03 -07		17
181001A1	05 -02		18
	08 -03		1
	08 -52		
181042A1	09 -21		22
	09 -24		8
181100A1	06 -15		4
	06 -16		5
	06 -23		35
	06 -24		5
181101A1	06 -14		2
	06 -16		20
181102A1	06 -14		12
181103A1	06 -23		20
181104A1	06 -18		23
	07 -02		27
181105A1	06 -15		12
	06 -16		16
181107A1	06 -23		19
181108A1	06 -20		24
	06 -21		26
181111A1	06 -20		13
181116A1	06 -20		9
181118A1	06 -21		1
181122A1	06 -22		5
181123A1	06 -21		31
181126A1	06 -19		3
	06 -20		23
	06 -22		9
181128A1	06 -20		3
181130A1	06 -21		30
181132A1	06 -19		5
	06 -21		2
181136A1	06 -23		5
181137A1	06 -23		28
181138A1	06 -18		12
181139A1	06 -18		5
181141A1	06 -15		14
	06 -16		19
181142A1	06 -17		19
181144A1	06 -21		33
181146A1	06 -23		18
181149A1	06 -24		4
181158A1	06 -20		12
181159A1	06 -20		11
181161A1	06 -20		14
181165A1	06 -21		34
181166A1	06 -23		22
181169A1	09 -47		6
	09 -48		7
181170A1	09 -49		11
	09 -50		16
181171A1	06 -18		7
181173A1	06 -18		16
181175A1	06 -18		18
181176A1	06 -16		18
181177A1	06 -18		11
181179A1	06 -15		11
	06 -16		15
181197A1	06 -15		6
	06 -16		7
181198A1	06 -22		3
181199A4	06 -17		1
181202A1	06 -14		13
181203A1	06 -18		21

Number	Figure	Sequence	Ref.
181205A1	06 -17		15
181207A1	06 -23		23
181208A1	06 -23		24
181216A1	06 -17		14
181219A1	06 -14		10
181232A1	06 -15		13
	06 -16		17
181234A2	06 -23		15
181245A2	06 -18		1
181251A1	06 -23		9
181253A1	06 -23		31
181254A1	06 -23		25
181255A2	06 -23		27
181256A1	06 -23		10
181258A1	06 -23		29
181260A1	06 -23		26
181261A1	06 -23		17
181272A1	06 -23		7
181273A1	06 -23		6
181274A1	06 -14		3
181842A1	09 -04		7A
181960A1	08 -14		17
181961A1	08 -14		18
181979A1	09 -65		24
181981A1	09 -42		17
	09 -63		5
182006A1	09 -13		4
182035A1	08 -10		36
	08 -11		30
	08 -12		22
	08 -13		22
182222A1	08 -12		41
	08 -13		62
182276A1	04 -11		5
182445A1	07 -03		1
	07 -04		1
	07 -05		
182594A1	04 -12		11
182697A1	09 -63		3
182721A2	04 -19		11
183168A1	09 -40		7
183243A1	08 -09		14
183443A1	09 -24		28
183509A1	09 -24		29
183677A1	06 -04		1
183736A1	08 -13		52
184297A1	08 -13		38
184497A1	04 -06		3
184498A1	04 -06		2
184695A1	09 -11		11
184726A1	04 -12		10
185325A1	09 -41		14
185493A1	09 -38		7
	09 -39		6
185506A1	09 -06		3
185926A1	03 -01		4
	09 -35		4
185976A1	09 -17		10
185977A1	09 -15		8
185978A1	09 -15		10
185979A1	09 -15		14
185980A1	09 -15		15
185981A1	09 -15		1
185982A1	09 -15		2
186351A1	09 -46		11A
186433A1	02 -01		5
186977A1	06 -12		46
	06 -13		24
	09 -34		13
186989A1	09 -73		13
187-1917	09 -22		24
187281A1	04 -19		12
187438A1	09 -02		35
187714A1	06 -12		1
187715A1	06 -12		2
188009A3	03 -01		29A
188311A2	03 -01		11
189103A1	08 -19A		20
189109A1	03 -03		2A
	09 -01		
	09 -02		
189263A1	08 -19A		21
189294A1	09 -12		32
189295A1	09 -12		30
189296A1	09 -12		29
189297A1	09 -12		28
189298A1	09 -12		31
189299A1	09 -12		33
189414A1	08 -19A		33
189602A3	03 -01		29
189709A1	08 -19A		12
189957A1	08 -19A		1
	08 -50A		
189976A1	08 -10		23
19-488	08 -26		19
190037A1	09 -19		29
190057A1	09 -19		28
190267A2	09 -31		1
190427A1	06 -21		
190428A3	06 -18		8
190431A1	06 -24		10
190432A1	06 -24		
190435A1	06 -23		37
190436A1	06 -23		13
190437A1	06 -23		4
190438A2	06 -23		12
190439A2	06 -23		11
190440A1	06 -23		38
190441A1	06 -23		14
190442A1	06 -23		2
190443A1	06 -23		3
190447A1	07 -01		15
190449A1	07 -01		7
190450A1	07 -01		9
190451A1	07 -02		1
190463A1	07 -02		2
190468A1	06 -41		16
	06 -42		16
190469A1	06 -41		6
	06 -42		6
190471A1	06 -41		4
	06 -42		4
190473A1	07 -02		8
190476A2	07 -02		4
190477A2	07 -02		4
190496A1	07 -01		8
190500A1	07 -01		20
190506A1	06 -43		7
190508A1	06 -43		7
190509A1	06 -43		7
190510A1	06 -43		7
190511A1	06 -43		7
190512A1	06 -43		7
190513A1	06 -43		7
190514A1	06 -43		7
190515A1	06 -43		7
190516A1	06 -43		7
190675A1	09 -64		17
191046A1	03 -01		30
191047A1	09 -35		27
191067A1	06 -41		15
	06 -42		15
191239A1	09 -09		1
191532A1	04 -07		21
	08 -15		38
191703A1	09 -66		26
191704A1	05 -02		40
	09 -66		27
	09 -66		29
191758A1	08 -08		31
191796A1	05 -05		6
	05 -07		2
	06 -01		8
192025A1	08 -19A		9
192050A1	09 -19		30
192111A1	09 -19		5
192152A1	08 -05		27
192154A1	08 -05		31
192156A1	08 -05		30
192196A2	04 -04		22
192300A1	08 -17		26
	09 -75		4
192345A1	08 -07		4
192352A1	08 -07		3

Number	Figure	Sequence	Ref.
192450A1	09 -74		9
192693A1	08 -15		23
192815A1	09 -04		28
192895A1	08 -51		2
192911A1	07 -01		22
193-1000	04 -04		18
	04 -04		3
	04 -07		
	04 -07		12
193-1003	04 -20		12
	09 -04		17
	09 -46		10
193261A1	08 -16		19
193262A1	08 -16		21
193491A1	07 -01		23
193493A1	07 -01		24
193854A1	09 -03		3
193913A1	09 -66		12
194199A1	03 -01		23
195-140	09 -10		8
195-81013	09 -18		6
195-81023	09 -55		48
	09 -57		24
195-81030	02 -07		6A
195030A2	09 -16		1
195032A1	09 -16		2
195115A1	08 -11		22
195210A1	06 -08		
195211A1	06 -05		
195212A1	06 -05		1
195213A1	06 -05		2
195215A1	06 -05		4
1954626C1	09 -64		15
1954736C1	09 -64		3
195552A1	04 -19		3
195615A1	09 -01		6
	09 -02		19
1957887C1	08 -49		45
1958028C1	08 -58		19
1959509C1	05 -01		4
196050A1	09 -67		6A
196065A1	06 -40		22
196066A1	06 -40		23
196068A1	06 -43		
196069A1	06 -43		9
196072A2	06 -44		9
196076A1	07 -01		5
196077A1	07 -01		6
196078A1	07 -01		12
196079A1	07 -01		13
196082A1	07 -01		17
196083A1	07 -01		18
196085A1	07 -02		9
196092A1	06 -46		23
196095A1	08 -29		20
196096A1	08 -29		21
196454A1	06 -21		3A
196466A1	02 -14		14
	02 -19		39
	02 -19		42
1964696C2	09 -59		3
	09 -70		17
1964964C1	04 -02		16
1964966C1	04 -02		14
1964968C1	04 -02		4
1966126C1	06 -04		2
1966136C1	06 -02		16
1966138C1	06 -02		17
1966149C2	06 -02		5
	06 -40		13
1966153C1	06 -07		9
1966559C1	06 -07		11
1966835C1	06 -18		3
1966875C1	06 -41		14
	06 -42		14
1966993C1	06 -18		4
1967003C1	06 -07		4
1967535C1	06 -03		3
1967581C1	06 -18		10
1967585C1	06 -18		9
196803A1	02 -19		
196813A1	08 -05		25
196815A1	08 -05		24
196817A1	08 -05		13
196819A1	08 -05		14
196821A1	08 -06		13
196824A1	08 -06		12
196830A1	09 -59		2
	09 -70		19
196831A1	09 -70		18
1971707C2	08 -53		4
1976943C1	07 -04		13
1976955C1	08 -45		2A
197745A1	04 -19		4
197793A1	09 -52		8
1978068C1	08 -44		19
1978141C1	08 -51		8
1978142C1	08 -51		
1978143C1	08 -51		5
1978144C1	08 -51		6
1978158C1	08 -51		7
1980085C1	08 -49		8
1980226C1	08 -49		35
1980227C1	08 -49		33
1980245C1	08 -60		19
1980266C1	08 -58		22
	08 -59		19
1980302C2	08 -49		30
1980321C3	08 -54		4
1980335C1	08 -53		3
1980369C2	08 -59		4
1980371C1	08 -58		3
	08 -59		15
	08 -59		3
1980401C1	08 -58		21
	08 -59		17
1980412C2	08 -58		
1981850C1	09 -52		13
198410A1	09 -16		5
198421A1	08 -19A		10
198532A1	08 -19A		25
198539A1	09 -06		
1986518C2	05 -04		1
	05 -05		14
1986520C1	05 -04		7
1986568C1	08 -31		13
1986612C1	08 -31		7
1986628C1	08 -49		34
1986722C1	08 -42		6
	08 -44		8
1986753C1	08 -56		14
1987096C1	09 -64		33
1987212C1	09 -51		11
1987219C2	09 -51		13
1987290C1	09 -51		14
198976A1	09 -20		12
1990548C4	09 -52		21
1990758C2	09 -66		20
1994581C1	08 -49		28
1994596C1	08 -40		8
	08 -41		8
	08 -43		8
	08 -44		8A
	08 -46		8
	08 -47		8
1994608C1	08 -30		3
	08 -31		3
	08 -33		3
	08 -40		3
	08 -41		3
	08 -42		3
	08 -43		3
	08 -44		3
	08 -46		3
	08 -47		3
1994677C1	08 -49		
1995137C1	06 -12		21
1995137C1C	06 -12		21
1995137C1R	06 -12		21
1999528C1	08 -19A		29
199953A2	08 -57		2
1999666C1	09 -64		16
1999667C1	09 -64		
1999668C1	09 -64		

Number	Figure	Sequence	Ref.
1999693C1	09 -51		8
1999755C3	09 -66		6
	09 -67		
20-21032	09 -07		13
20-21232	09 -06		4
	09 -07		4
211-1007	08 -49		14
211-1009	08 -31		11
211-1011	04 -01		15
211-1024	06 -25		2
213-123	03 -02		14
	03 -03		17
213-125	09 -03		7
213-126	09 -02		34
	09 -12		22
	09 -13		6
	09 -15		6
214-1406	09 -35		18
	09 -63		19
214-14104	08 -08		28
214-14112	08 -10		33
214-1420	08 -03		24
214-1432	02 -01		17
214-1440	02 -01		19
214-1456	02 -03		9
214-1464	02 -03		15
	02 -04		4
	08 -07		21
	08 -14		27
214-1472	08 -04		21
	08 -05		40
	08 -12		34
	08 -13		47
214-1488	08 -09		22
214-1512	02 -11		13
214-1704	02 -12		5
	03 -01		8
	07 -04		10
214-1706	07 -04		11
214-1708	03 -01		13
	03 -01		7
214-31104	08 -19A		16
214-3132	08 -13		37
	08 -13		39
	08 -19		19
214-3140	08 -13		37
	08 -13		39
214-3156	08 -19		16
214-3240	02 -11		3
217-1102	09 -35		22
217-144	09 -64		34
217-314	06 -10		11
217-342	08 -03		15
217-347	09 -35		16
217-380	09 -35		21
217-402	03 -06		7
217-436	09 -35		5
217-438	02 -19		17
	02 -19		34
217-441	02 -19		9A
217-466	02 -17		3
217-92	02 -01		20
217558A1	06 -36		3
218-1023	06 -16		11
218-1254	09 -09		20
218-1256	08 -16		15
	08 -19		22
	09 -09		33
218-1275	05 -05		43
	05 -07		10
	06 -01		29
218-1279	09 -09		34
218-335	08 -01		52
	08 -19		23
218-435	08 -04		22
	08 -05		41
	08 -06		20
218-459	06 -12		38
218-481	05 -05		41
218-5027	05 -02		7
218-5050	08 -13		45
218-5052	08 -24		22
218-5053	07 -04		19
	08 -21		19
	08 -23		19
	08 -24		20
218-5056	08 -21		17
218-5057	05 -02		35
	06 -39		2
	08 -15		8
	08 -21		11
	08 -23		11
218-5058	08 -15		12
218-5059	05 -02		10
	08 -07		23
	08 -08		11
218-5062	08 -02		12
	08 -02		7A
	08 -05		2
	08 -05		28
	08 -06		2
	08 -09		8
	08 -14		24
	08 -18		49
218-5063	06 -11		11
	08 -02		1
218-5064	06 -11		28
	08 -10		8
	08 -11		8
	08 -12		31
	08 -12		8
	08 -13		34
	08 -13		8
	08 -14		8
	08 -15		47
218-5069	08 -01		34
	08 -02		14
	08 -03		7
	08 -18		20
218-5077	08 -01		17
218-5086	08 -03		20
218-5103	05 -07		8
	06 -01		26
218-5105	06 -39		6
	08 -21		13
	08 -23		13
	09 -09		14
218-5106	05 -02		51
	08 -08		20
	08 -08		8
	08 -09		11
	08 -09		24
218-5107	08 -04		16
	08 -05		32
	08 -07		18
	08 -14		20
	08 -15		27
218-5108	08 -11		26
	08 -18		11
	08 -18		9
218-5110	06 -13		3
	08 -10		24
	08 -11		34
218-5117	08 -20		3
	08 -20A		3
218-5118	08 -19A		7
218-5119	08 -09		19
218-5121	05 -02		43
218-5123	08 -10		29
218-5128	08 -15		21
218-5135	06 -39		4
218-5136	05 -02		49
	05 -05		15
218-5137	08 -07		16
	08 -18		17
218-5138	08 -15		58
	08 -18		27
218-5145	08 -20		2
218-5157	08 -35		14
	08 -36		15
	08 -37		15
	08 -38		15
218-5158	08 -15		32
	08 -18		16

Number	Figure	Sequence	Ref.
218-5158	08 -48		5
218-5170	05 -02		6A
218-5182	09 -09		15
218-5207	08 -27		6
	08 -28		7
218-5209	06 -25		45
	08 -45		7
218-5210	08 -42		24
218-5211	03 -01		6
	08 -18		14
	08 -29		3
	09 -35		12
218-5212	08 -50		4
218-5214	08 -41		23
	08 -43		33
218-5220	08 -05		18
	08 -20		15
	08 -20		38
	08 -20A		15
	08 -20A		38
	08 -21		30
	08 -23		30
218-5221	08 -01		46
218-5222	08 -21		39
	08 -23		39
218-5230	05 -02		19
218-5241	08 -04		2
218-5242	08 -07		25
218-5245	08 -01		37
	08 -03		4
	08 -03		7A
218-5280	06 -01		5
218-5283	08 -19A		13
218-5292	05 -02		4
	08 -21		32
	08 -23		32
218-5318	08 -23		17
218-5351	05 -02		20
	05 -07		14
	06 -01		4
	08 -21		15
	08 -23		15
218-5359	08 -19A		18
218-5382	08 -19A		23
218-5478	05 -05		51
218-5490	08 -18		24
	08 -20		16
	08 -20A		16
	08 -21		29
	08 -23		29
218-5529	05 -07		16
218-5576	05 -02		4
	08 -15		42
218-5600	08 -20		24
	08 -20A		24
218-5650	08 -07		28
218-587	08 -01		20
218-676	08 -19		21
218-693	09 -09		19
218-695	09 -09		32
218-736	08 -02		6
218-737	08 -13		60
218-745	08 -12		40
218-752	03 -07		29
218-756	08 -15		29
	08 -18		25
218-776	08 -06		17
218-840	08 -07		27
218-845	08 -21		34
	08 -23		34
219-1	05 -05		46
	05 -07		13
	06 -01		6
	08 -53		19
	08 -55		21
	08 -56		19
	08 -57		20
	08 -58		25
	08 -59		22
	08 -60		22
	09 -04		32
	09 -05		23
219-1	09 -05		5
	09 -07		9
	09 -12		41
	09 -17		14
	09 -20		28
	09 -21		17
	09 -21		3
	09 -23		24
	09 -24		3
	09 -24		47
	09 -25		12
	09 -25		5
219-10	06 -09		8
	06 -47		8
219-16	09 -48		
	09 -48		
219-55	08 -04		19
	08 -54		19
	08 -55		22
	08 -57		21
	09 -04		10
	09 -20		30
	09 -22		6
	09 -34		9
219-86	09 -24		52
	09 -25		11
219-87	09 -09		4
219-89	05 -05		23
	05 -05		32
	09 -24		51
	09 -25		10
220169A1	08 -05		5
220276A1	08 -19A		28
220277A1	08 -10		22
220278A1	08 -11		21
220413A1	09 -34		7
220489A1	09 -20		19
221-1382	09 -64		23
221-190	09 -64		23A
221-87	03 -06		6
221-89	09 -64		21
221143A1	08 -05		44
221146A1	08 -05		45
221158A1	08 -04		28
221162A1	08 -04		24
221168A1	08 -50A		15
221329A1	08 -19A		27
221425R1	04 -02		26
221476A1	09 -20		3
221525A1	08 -12		26
	08 -13		26
221733A1	08 -05		19
222-41	03 -06		5
222-615	02 -06		
222-650	02 -06		4
222-660	02 -06		5
222-993	02 -25		1
222027A1	08 -10		35
222421A1	02 -04		6
222422A1	02 -04		7
222688A1	06 -40		20
222889A1	04 -09		19
	07 -04		24
223722A1	07 -06		29
223944A1	02 -03		8
224423A1	05 -02		9
224788A3	08 -15		2
224946A1	09 -11		3
224949A1	09 -11		2A
224952A1	09 -11		2
225-14105	09 -02		5
225-14210	03 -02		13
	03 -03		20
	08 -17		29
225033A1	02 -05		5
225033A2	02 -05		5A
225330A1	08 -04		4
225332A1	08 -04		6
226378A1	02 -04		
226456A1	09 -35		36
226560A1	09 -52		4
226582A1	08 -19A		35

Number	Figure	Sequence	Ref.
226586A1	02 -02		
227389A1	04 -19		2
228120A1	02 -03		1
	02 -04		
228133A2	02 -01		27
229684A1	08 -38		13
230-4216	09 -19		23
	09 -19		32
	09 -52		7A
230072A1	08 -20		19
	08 -20A		19
230073A1	08 -20		20
	08 -20A		20
230078A2	08 -20		17
	08 -20A		17
230513A1	09 -33		5
230857A1	09 -35		1A
230973A1	07 -03		26
231-14109	09 -36		4
	09 -41		15
	09 -43		15
	09 -43		26
	09 -43		9
231-1444	09 -52		
	09 -71		12
231-1446	08 -19A		6
	09 -01		18
	09 -02		28
231-24409	04 -08		19
231-2446	09 -15		18
231-4115	09 -71		9
231-4246	09 -09		5
231-4247	09 -19		21
231397A1	06 -07		
231520A2	04 -07		27
	04 -09		10
231656A1	09 -35		6
231982A1	08 -04		7
231984A1	08 -04		5
232-4246	09 -56		2
	09 -57		28
232-4617	09 -46		19
	09 -46		26
232366A1	02 -01		16
232447A1	08 -05		4
232929A1	08 -04		29
232931A1	08 -04		32
232934A1	08 -05		46
232936A1	08 -05		47
232939A1	08 -04		30
232941A1	08 -04		31
232945A1	08 -06		19
232948A1	09 -66		19
233262A1	09 -41		25
233272A1	02 -01		4
233283A1	06 -22		1
233284A1	06 -21		32
233724A1	06 -12		8
	09 -11		17
	09 -42		15
233970A1	06 -10		15
	06 -11		15
233971A1	06 -10		16
	06 -11		16
233972A1	06 -10		13
	06 -11		13
234277A2	02 -19		
234277A2R	02 -19		
234412A1	08 -20		23
	08 -20A		23
	08 -51		
234442A1	06 -11		23
234719A1	06 -10		14
	06 -11		14
234888A1	03 -01		19
234892A1	03 -01		14
234923A1	09 -40		35
	09 -41		35
235002A1	04 -10		12
	08 -20		26
	08 -20A		26
235038A2	02 -01		35
235040A2	02 -01		34
236194A1	09 -60		5
	09 -70		3
237-6002	08 -45		14
	08 -49		7
237-6003	08 -24		23
237-6004	05 -02		8
	05 -07		8A
	06 -01		27
	07 -04		19A
	07 -04		25
	08 -21		20
	08 -23		20
	08 -24		21
	08 -27		7
	08 -28		8
	08 -45		11A
237-6005	08 -21		18
	08 -23		18
237-6006	05 -02		20A
	05 -02		3
	05 -02		36
	05 -07		14A
	05 -07		17
	06 -01		4A
	06 -01		5A
	06 -25		46
	06 -39		3
	06 -39		5
	06 -39		7
	08 -03		16
	08 -07		29
	08 -15		31
	08 -15		9
	08 -19A		14
	08 -21		12
	08 -21		14
	08 -21		16
	08 -21		38
	08 -23		12
	08 -23		14
	08 -23		16
	08 -23		38
	08 -45		8
	08 -52		4
	08 -58		20
	09 -09		
	09 -09		
	09 -35		17
237-6008	05 -02		11
	05 -02		44
	05 -02		50
	05 -02		52
	05 -05		15A
	06 -23		40
	06 -25		48
	08 -07		24
	08 -07		26
	08 -08		12
	08 -08		21
	08 -08		9
	08 -09		12
	08 -09		25
	08 -15		13
	08 -15		22
	08 -19A		19
	08 -20		24A
	08 -20		2A
	08 -20		3A
	08 -20A		24A
	08 -20A		3A
	08 -32		3
	08 -39		11
	08 -42		25
	08 -45		6
237-6010	03 -01		6A
	05 -02		5
	06 -10		12
	08 -02		13
	08 -02		7B
	08 -03		10
	08 -04		17

Number	Figure	Sequence	Ref.
237-6010	08 -04		3
	08 -05		29
	08 -05		3
	08 -05		33
	08 -06		3
	08 -07		17
	08 -07		19
	08 -09		9
	08 -10		30
	08 -14		21
	08 -14		25
	08 -15		28
	08 -15		43
	08 -18		15
	08 -18		18
	08 -18		50
	08 -19A		34
	08 -21		33
	08 -22		11
	08 -23		33
	08 -29		4
	08 -30		26
	08 -31		28
	08 -33		22
	08 -35		15
	08 -36		16
	08 -37		16
	08 -38		16
	08 -39		14
	08 -44		12
	08 -49		36
	09 -35		13
237-6012	06 -11		12
	06 -11		29
	08 -02		2
	08 -09		20
	08 -10		9
	08 -11		27
	08 -11		9
	08 -12		32
	08 -12		36
	08 -12		9
	08 -13		35
	08 -13		46
	08 -13		9
	08 -14		9
	08 -15		33
	08 -15		48
	08 -15		59
	08 -16		17
	08 -18		12
	08 -18		16A
	08 -18		28
	08 -18		9A
	08 -29		17
	08 -29		8
	08 -31		19
	08 -33		13
	08 -34		13
	08 -40		28
	08 -42		17
	08 -44		32
	08 -46		17
	08 -47		28
	08 -47		31
	08 -48		6
	08 -50		
	08 -50A		13
	09 -09		35
237-6014	08 -39		7
237-6016	06 -13		4
	08 -01		18
	08 -01		35
	08 -01		38
	08 -02		15
	08 -03		5
	08 -03		8
	08 -10		25
	08 -11		35
	08 -18		21
	08 -18		23
	08 -19A		11
237-6016	08 -19A		24
	08 -19A		8
	08 -41		24
	08 -43		34
237-6020	08 -03		21
237-8008	06 -40		
237017A1	07 -01		1
237018A1	07 -01		2
237019A1	07 -01		3
237020A1	07 -01		16
237025A1	07 -01		21
237026A1	07 -01		11
237582A1	04 -17		1A
238-5005	04 -18		8
238-5011	08 -52		5
238-5013	02 -25		2
	06 -23		42
	06 -25		50
238-5014	06 -23		41
	06 -25		49
238-5019	08 -41		14
	08 -43		14
	08 -43		24
238-5020	06 -25		35
238-5115	06 -35		42
238-5118	08 -39		5
238-5120	08 -30		14
238-5127	08 -30		12
238-5139	05 -05		35
238-5150	06 -25		17
238-5152	06 -08		10
238-5154	06 -43		11
238-5212	02 -21		7
238-5224	06 -26		19
238-5227	05 -01		3
238-5228	08 -01		10
238-5230	05 -04		10
	08 -52		9
238-5231	08 -55		10
	08 -61		8
238-5233	08 -54		9
238-5235	08 -53		9
238-5237	08 -60		11
238-5239	08 -57		9
238-5242	08 -57		23
238-5247	08 -56		9
238-5251	08 -58		13
	08 -59		11
238-5276	06 -40		2
238-5336	06 -32		28
	06 -33		29
238-5341	02 -08		3
238-6010	08 -30		21
238-6011	08 -49		20
238-6012	08 -29		14
	08 -49		42
238-6015	08 -44		16
	08 -49		21
	08 -49		27
238-6016	08 -31		24
	08 -33		18
	08 -40		14
	08 -44		36
	08 -46		14
	08 -47		14
238-6018	08 -29		10
	08 -29		18
	08 -31		18
	08 -33		12
	08 -34		3
	08 -40		18
	08 -42		15
	08 -42		18
	08 -44		22
	08 -46		18
	08 -47		18
	08 -47		32
	08 -50A		3
238-6019	08 -42		20
238-6112	08 -48		8
238-6117	08 -48		7
238-6119	08 -27		8

Number	Figure	Sequence	Ref.
238-6119	08 -28		9
	08 -35		9
	08 -36		10
	08 -37		10
	08 -38		10
238-6121	06 -15		8A
	06 -16		10
	06 -40		1A
238-6127	08 -27		9
	08 -28		10
	08 -35		8
	08 -36		9
	08 -37		9
	08 -38		9
238-6218	08 -25		12
238-7011	06 -25		11
	06 -26		8
238-7012	02 -11		18
238-7013	06 -25		36
238-7018	02 -19		19A
238-7116	06 -25		15
	06 -26		4
238-7123	06 -25		9
238-7210	06 -26		6
238-7218	06 -25		30
238-8217	06 -22		22
238-8274	07 -01		14
238-9119	06 -25		5
238-9213	06 -35		43
239-5020	08 -21		3
	08 -23		3
239306A1	09 -02		14
239408A1	04 -10		13
239606A1	06 -16		2
239739A2	02 -01		1
	02 -02		
240703A2	08 -20		14
240706A2	08 -20		13
240709A4	08 -20		11
241001A4	06 -11		19
241088A5	08 -35		6
	08 -36		7
	08 -37		7
	08 -38		7
	08 -44		
242459A1	08 -19		5
	08 -19		9
243145A5	08 -35		6B
	08 -36		7A
	08 -37		7A
	08 -38		7A
	08 -44		
243338A1	08 -15		44
243679A2	08 -19		14
243790A1	08 -02		7
243894A1	07 -01		
	07 -01		
244109A1	06 -21		6
244552A1	03 -01		20
245258A1	04 -10		7
245423A1	09 -09		30
245450A1	09 -38		4
	09 -39		3
245466A1	09 -26		6
	09 -26		9
	09 -27		6
	09 -27		9
	09 -28		6
	09 -28		9
	09 -29		6
	09 -29		6
	09 -29		9
	09 -29		9
	09 -30		6
	09 -30		9
	09 -31		6
	09 -31		6
	09 -31		9
	09 -31		9
246063A1	09 -38		5
	09 -39		4
246064A1	09 -38		6
246064A1	09 -39		5
246151A1	08 -19		17
246158A1	08 -19		15
246526A1	04 -04		31A
247104A1	05 -12		1
247546A1	06 -06		1A
	06 -46		1A
247743A1	02 -04		8
248-2373	09 -46		4
248071A1	07 -01		
249773A1	08 -18		41
249775A1	08 -18		40
250648A1	08 -05		35
250851A1	09 -05		7
	09 -07		30
250854A1	04 -06		10
251861A1	08 -54		2
252737A1	08 -18		38
252790A1	08 -60		6
253209A1	09 -48		8
253404A1	09 -66		21
253740A1	08 -18		37
253889A1	09 -41		26
254686A2	06 -14		1
254729A1	02 -06		18
255447A1	09 -41		27
	09 -71		13
255659A1	08 -09		23
255756A1	08 -05		34
	08 -54		1
	09 -05		20
255760A1	08 -54		12
256347A1	09 -01		
	09 -02		
256412A1	08 -18		30
	08 -24		36
256478A1	07 -02		13
256481A1	07 -02		14
256482A1	07 -02		17
256484A1	07 -02		5
256485A1	07 -02		18
256776A1	03 -03		5
257279A1	04 -05		16
	04 -06		11
257381A1	09 -41		28
257382A1	09 -41		29
257434A1	02 -02		2
257948A1	08 -01		
257955A1	08 -01		11
	08 -26		
258616A1	09 -01		
	09 -02		
259044A1	08 -01		1
259054A1	09 -51		15
259254A1	07 -02		24
259410A1	09 -18		16
25974R1	08 -53		17
	08 -54		17
	08 -55		19
25987R1	08 -59		20
260-1358	04 -11		14
260-1436	09 -61		16
261-14310	04 -16		11
	04 -16		4
275677A1	09 -18		3
275820A3	09 -18		1
275935A1	09 -05		12
275937A1	09 -05		14
275939A1	09 -05		13
276-14520	09 -64		9
276-2446	08 -53		11
	08 -54		11
	08 -55		12
	08 -56		11
	08 -57		11
	08 -58		15
	08 -59		13
	08 -60		13
	08 -61		10
276-2456	08 -51		3
276-24924	02 -06		8
	03 -01		17

Number	Figure	Sequence	Ref.
276-26512	04 -19		10
	09 -64		9
276070A1	09 -18		12
276498A1	04 -14		
	04 -15		
276735A1	09 -05		16A
276817A1	09 -05		17A
277016A1	04 -04		30
277377R1	02 -04		2
277546A1	09 -67		7
277800A1	02 -01		39
278169A1	08 -20		7
278183A1	03 -03		28
278316A2	04 -09		
	04 -11		9
278328A1	04 -07		27
278532A1	06 -18		14
278533A1	06 -18		13
278534A1	06 -14		8
278748A1	08 -19		2
279039A1	06 -18		15
279223A1	04 -15		6
279224A1	04 -15		5
279265A2	04 -15		15
279482A1	09 -53		2A
	09 -69		4
279645A1	07 -02		
279916A1	04 -15		16
28-1240	08 -61		16
28-1664	08 -57		18
28-2052	08 -56		17
	08 -60		20
28-2256	08 -58		23
280-16516	09 -42		12
280436A1	07 -02		3
280441A1	08 -19		1
280443A1	07 -02		25
280450A1	07 -02		20
280452A1	07 -02		21
280457A1	07 -02		22
280681A1	07 -06		9
280886A1	07 -06		16
281-14716	09 -10		17
281-18712	09 -63		26
281-54512	09 -61		23
281-54712	09 -71		4
281952A1	07 -02		
281960A1	07 -02		23
282-17512	04 -19		7
282033A1	06 -01		19
282038A2	06 -01		18
282242A1	03 -03		1
282428A1	05 -02		2
	08 -15		30
	08 -21		37
	08 -23		37
282497A1	08 -01		2
282775A1	04 -10		
282842A1	08 -18		44
283226A1	09 -18		10
283417A1	08 -32		5
	08 -39		8
283462A1	07 -02		6
283466A1	07 -02		19
283736A1	09 -04		1
283779A1	04 -10		22
283781A1	04 -10		23
284058A1	04 -10		20
	04 -20		3
284154A1	09 -59		10
	09 -70		8
284480A1	04 -20		2
	09 -75		6
284627A1	04 -20		4
	09 -75		5
284630A1	06 -40		4
284928A1	08 -19		30
286-56520	09 -53		11
	09 -68		29
29-1010	09 -07		14
29-1012	09 -07		5
291010A1	04 -19		6
291520A1	06 -29		17
	06 -29		2
	06 -30		17
	06 -30		2
	06 -32		2
	06 -33		2
291523A1	06 -28		1
291524A1	06 -32		27
	06 -33		28
291525A1	06 -25		7
291527A1	06 -25		43
	06 -26		13
291528A1	06 -29		49
	06 -30		45
	06 -31		11
	06 -31		7
	06 -32		22
291529A1	06 -29		20
	06 -29		5
	06 -30		5
	06 -32		5
	06 -33		5
291530A1	06 -29		22
	06 -29		7
	06 -30		7
	06 -32		7
	06 -33		7
291531A1	06 -29		21
	06 -29		6
	06 -30		6
	06 -32		6
	06 -33		6
291533A1	06 -30		27
	06 -32		13
291535A1	06 -28		5
291540A1	06 -33		21
291541A1	06 -32		20
291543A1	06 -25		34
291545A1	06 -34		3
291548A1	06 -31		9
291549A1	06 -31		3
291550A1	06 -32		24
291551A1	06 -29		39
291552A1	06 -30		37
291553A1	06 -32		25
291554A1	06 -33		16
291555A1	06 -32		16
291556A1	06 -29		44
291557A1	06 -30		39
291558A1	06 -29		33
	06 -30		31
291559A1	06 -33		25
291563A1	06 -31		1
291565A1	06 -25		31
291566A1	06 -29		13
	06 -30		13
291567A1	06 -29		15
	06 -30		15
291568A1	06 -25		3
291570A1	06 -26		1
291571A1	06 -29		29
	06 -30		28
	06 -32		14
	06 -33		13
291573A1	06 -29		34
	06 -30		32
291575A1	06 -33		22
291577A1	06 -34		4
291578A1	06 -29		12
	06 -29		25
	06 -29		28
	06 -29		9
	06 -30		12
	06 -30		23
	06 -30		26
	06 -30		9
	06 -32		12
	06 -32		9
	06 -33		12
	06 -33		9
291579A1	06 -29		11
	06 -29		27

Number	Figure	Sequence	Ref.
291579A1	06 -30		11
	06 -30		25
	06 -32		11
	06 -33		11
291580A1	06 -29		10
	06 -29		26
	06 -30		10
	06 -30		24
	06 -32		10
	06 -33		10
291590A1	06 -36		1
291591A1	06 -30		21
291859A1	06 -27		2
291861A1	06 -35		37
291862A1	06 -35		36
292164A1	06 -25		10
	06 -26		7
292165A1	06 -25		14
	06 -26		3
292166A1	06 -25		8
292170A1	06 -26		5
292171A1	06 -26		12
292173A1	06 -26		14
292174A1	06 -28		3
292175A1	06 -33		23
292176A1	06 -35		32
292177A1	06 -35		33
292207A1	06 -41		12
	06 -42		12
292208A1	06 -41		13
	06 -42		13
292210A1	06 -44		3
	06 -45		3
292212A1	06 -44		4
	06 -45		4
292213A1	06 -44		1
292214A1	06 -44		6
	06 -45		6
292217A1	06 -46		11
292218A1	06 -46		10
292262A1	09 -46		2B
292263A2	09 -46		2C
292412A1	06 -26		2
292413A1	06 -25		4
292414A1	06 -26		9
292415A1	06 -29		14
	06 -29		31
	06 -30		14
	06 -30		29
	06 -32		15
	06 -33		14
292417A1	06 -26		10
292419A1	06 -25		16
292420A1	06 -28		2
292423A1	06 -30		44
	06 -31		10
	06 -31		6
	06 -32		21
292424A1	06 -33		27
292425A1	06 -30		41
	06 -32		18
292426A1	06 -29		36
	06 -30		34
292428A1	06 -30		42
	06 -32		19
292429A1	06 -29		48
292431A1	06 -29		37
	06 -30		35
292432A1	06 -29		40
	06 -30		38
292433A1	06 -32		26
292434A1	06 -33		19
292740A1	02 -04		10
292902A1	06 -44		7
	06 -45		7
292904A1	09 -01		1
	09 -02		42
292969A2	09 -09		
293037A1	08 -20		39
	08 -20A		39
293262A1	09 -01		1A
	09 -02		42A
293269A1	08 -18		26
293571A1	02 -03		2
	02 -04		
293787A1	08 -32		2
	08 -39		10
293924A1	08 -26		
293925A1	08 -26		6A
293926A1	08 -26		6
293927A1	08 -26		22
293928A1	08 -26		22A
294013A1	06 -34		5
294080A1	06 -29		41
	06 -29		47
294195A1	09 -23		
	09 -24		
294300A1	09 -24		
294933A1	06 -07		
295033A2	06 -46		26
295038A1	06 -46		25
295039A1	06 -46		15
295040A1	06 -46		13
295093A1	06 -46		22
295094A1	06 -46		14
295151A1	06 -43		12
295152A2	06 -45		9
295172A1	08 -03		22
295575A1	06 -03		2
295576A1	06 -03		1
295577A1	06 -40		12
295578A1	06 -40		11
295579A1	06 -46		6
295581A1	06 -06		5
296434A1	08 -12		33
	08 -13		44
	08 -60		1
	09 -23		1
	09 -24		10
296435A1	08 -60		2
296439A1	08 -60		14
296443A1	08 -60		16
296445A1	08 -60		4
296824A1	05 -06		12
297281A1	08 -55		4
	08 -61		3
297283A1	08 -57		4
297615A1	09 -02		1
297895A1	08 -60		
297977A4	08 -20		1
298176A1	09 -01		
	09 -02		
298521A1	09 -77		11
298614A1	06 -23		44
	06 -25		52
298681A1	04 -20		8
298772A1	08 -18		1
	08 -50		
299249A1	09 -40		18
299324A1	06 -23		16
300014A1	09 -21		18
	09 -24		4
300030A1	04 -20		14
300588A1	09 -24		19
300659A1	09 -51		2
300661A1	09 -51		3
300664A1	09 -51		7
300665A1	09 -51		9
300667A1	09 -51		10
300669A1	09 -52		1
300670A1	09 -51		12
300672A1	09 -51		18
300674A1	09 -51		
300675A1	09 -51		19
300677A1	09 -51		21
300679A1	09 -51		22
300680A1	09 -51		20
300681A1	09 -51		23
300683A1	09 -51		24
300684A1	09 -51		25
300685A1	09 -52		
300688A1	09 -52		5
300689A1	09 -52		10
300690A1	09 -52		

Number	Figure	Sequence	Ref.
300691A1	09 -52		12
300692A1	09 -52		14
300896A1	09 -52		20
300905A1	08 -18		10
300907A1	08 -18		19
300939A1	08 -18		42
300952A1	08 -18		48
300983A1	08 -15		11
300996A3	08 -22		3
301045A1	09 -01		33
301104A1	08 -03		9
301114A1	08 -18		2
	09 -11		2B
301340A2	06 -10		6
	06 -11		6
301341A1	08 -03		12
301342A2	08 -03		14
301355A1	08 -16		4
301698A1	08 -16		3
301700A1	08 -16		2
301803R1	09 -64		20
302070A1	09 -23		
302097A1	08 -18		22
302326A1	08 -30		7
302358A1	03 -01		3
	09 -35		3
302472A1	08 -18		29
302474A1	08 -15		49
302501A1	08 -16		1
302680A1	08 -18		6
302820A1	08 -22		5
302820A2	08 -22		5A
303192A1	02 -01		36
303195A1	02 -01		42
	02 -01		42
303428A1	05 -05		20
303465A2	04 -11		10B
303466A1	04 -11		10C
303467A1	04 -11		10D
303922A1	03 -01		44
303987A2	06 -11		5
304019A1	06 -39		1
304061A1	09 -43		
	09 -43		
304083A1	09 -74		7
304371A1	08 -50		3
304424A1	08 -22		9
304525A1	09 -67		28
304527A1	09 -67		18
304528A1	09 -67		29
304530A1	09 -67		12
304890A1	08 -22		10
304951A1	08 -48		13
305152A1	06 -44		2
	06 -45		2
305153A1	06 -45		1
305342A1	04 -04		35
305492A1	09 -09		16
305493A1	09 -09		18
305494A1	09 -09		17
305495A1	09 -09		9
305496A1	09 -09		7
305497A1	09 -09		3
305499A1	09 -09		8
305508A1	09 -09		21
305578A1	09 -59		13
	09 -70		11
305690A1	09 -38		3
305725A1	06 -25		21
305726A1	06 -29		1
305727A1	06 -30		1
305728A1	06 -32		1
305729A1	06 -33		1
305730A1	06 -30		20
3057542R91	04 -17		1
30634	08 -55		14
	08 -55		3
307090A1	09 -49		4
307091A1	09 -49		3
307092A1	09 -49		8
	09 -49		8
	09 -50		1
307092A1	09 -50		1
307098A1	09 -49		6
307130A1	09 -59		4
	09 -70		16
307186A1	09 -23		11
	09 -24		23A
307208A1	08 -49		12
307277A1	08 -22		17
307348A1	09 -74		12
307385A1	09 -09		22
307386A1	09 -09		23
307387A1	09 -09		24
307388A1	09 -09		25
307389A1	09 -09		26
307577A1	03 -01		31
	09 -35		28
3078897R1	04 -02		
3079134R1	04 -02		6
308254A1	08 -22		2
308255A1	08 -22		1
308441A1	08 -01		7
309651A1	02 -19		
309652A1	02 -19		
309673A1	08 -22		8
309674A1	08 -22		11A
309747A1	06 -12		
309784A1	08 -50		7
309785A1	08 -50		2
309787A1	08 -50		
309788A1	08 -50		6
309789A1	08 -50		5
309790A1	08 -50		8
309791A1	08 -50		9
310480A1	06 -40		4A
310481A1	06 -41		
	06 -41		
	06 -42		
	06 -42		
310482A1	06 -41		
	06 -42		
310519A1	06 -20		8
310765A1	06 -16		12
310766A1	06 -16		1
310767A1	06 -15		10
310768A1	06 -15		1
310772A1	06 -15		
	06 -15		10B
	06 -16		
	06 -16		14
310842A1	09 -40		19
310843A1	09 -40		15
311047A1	06 -08		
311099A1	03 -07		36
311100A1	03 -07		31
311200A1	09 -04		27
311204A1	06 -41		17
	06 -42		17
311208A1	06 -43		
311459A2	08 -25		
311569A1	05 -11		1
3125705R1	04 -18		10
313238A1	09 -43		37
	09 -76		4
313262A1	02 -11		16
313310A1	08 -20		
313534A1	09 -38		1
313534A2	09 -38		1A
313648A1	08 -03		25
314451A1	04 -07		15
	04 -07		8
314733A1	08 -19		27
314734A1	08 -19		28
314772A1	08 -12		30
314957A1	08 -13		51
315273A1	09 -55		12
315276A1	09 -55		11
315284A1	08 -02		31
316412A1	08 -42		14
316416A1	08 -35		4
	08 -36		5
	08 -37		5
	08 -38		5

Number	Figure	Sequence	Ref.
316416A1	08 -42		
317749A1	08 -19		14A
317990A1	08 -19		31
319467A1	09 -32		1
319597A1	06 -35		35
319598A1	06 -35		40
319599A1	06 -35		46
319889A2	06 -10		5
320977A1	05 -05		19
320989A1	09 -13		10
321-1707	09 -07		29
321-1708	09 -07		23
	09 -73		11
321-229	09 -79		8
321-230	09 -79		7
321-4311	09 -72		5
321-4614	09 -76		11
321-5675	09 -78		11
321-6046	08 -50A		16
	09 -75		9
321-6376	09 -79		8A
	09 -80		8A
	09 -81		8A
321-6774	09 -79		13
321-7030	09 -76		10
321-7040	09 -79		4
321183A1	07 -02		12
321277A1	09 -56		4
321350A1	08 -39		3
321360A1	08 -49		
321361A1	08 -49		17
321428A1	06 -24		8
321735A1	08 -39		2
322860A1	03 -03		4
322984A1	02 -19		43
3233348R1	09 -56		8
3234063R1	09 -55		25
	09 -56		9
323698A1	02 -19		
324213A1	05 -11		2
324993A3	08 -35		
325465A2	08 -07		22
325662A1	08 -02		31A
326-640	09 -09		6
326-852	08 -26		15
326865A1	06 -21		13
327150A1	08 -39		6
328186A1	06 -10		21
	06 -11		27
	08 -03		11
328443A1	08 -27		2
	08 -28		2
	08 -30		
	08 -30		
	08 -30		
328553A1	06 -40		26
328554A1	06 -40		25
328555A1	06 -40		27
329032A1	04 -14		3
329076A3	06 -12		14
	06 -14		
	06 -15		
	06 -17		
	06 -18		
	06 -19		
	06 -20		
	06 -21		
	06 -23		
329079A3	06 -12		15
	06 -14		
	06 -16		
	06 -17		
	06 -18		
	06 -19		
	06 -20		
	06 -21		
	06 -22		
	06 -23		
	06 -24		
330083A1	08 -20		8
	08 -20A		8
	08 -21		6
330083A1	08 -23		6
330100A1	09 -08		1
331620A1	09 -05		2
331621A1	09 -05		1
332448A1	09 -06		12
332449A1	09 -06		13
332467A1	04 -01		10
332468A1	04 -01		44
332473A1	08 -30		27
	08 -31		29
	08 -33		23
	08 -39		13
	08 -44		11
332475A1	04 -01		36
332476A1	04 -01		38
332753A1	08 -33		9
	08 -40		7
	08 -41		7
	08 -43		7
	08 -44		7
	08 -46		7
332754A2	08 -28		4
	08 -33		
333737A1	09 -18		21
333739A1	09 -18		21A
334724A1	06 -23		30
334725A1	06 -23		32
335130A1	05 -05		19A
335132A1	05 -05		20A
335177A1	09 -04		6
335640A2	06 -23		
336375A1	09 -50		14
336709A3	09 -53		1
336711A3	09 -53		1
336857A1	09 -37		1
336896A1	06 -13		5
	06 -25		
	06 -26		
	06 -27		
	06 -28		
	06 -29		
	06 -30		
	06 -31		
	06 -32		
	06 -33		
	06 -34		
	06 -35		
	06 -36		
338418A1	09 -53		2
	09 -69		1
338420A1	09 -53		6
	09 -69		6
338423A1	09 -53		5
	09 -69		5
338424A1	09 -53		4
338425A1	09 -53		3
338426A1	09 -55		5A
338427A1	09 -55		5
338428A1	09 -57		3
338429A1	09 -55		4A
338886A4	07 -03		35
339046A3	07 -03		34
339047A3	07 -03		33
339680A2	09 -19		25B
340-12520	09 -52		
340968A1	06 -13		17
340997A3	09 -44		2
340998A3	09 -44		1
341130A2	09 -06		
341352A6	09 -25		1
341564A2	09 -04		36
341743A2	09 -55		
341746A1	09 -57		
344892A1	09 -04		37
345-133	09 -01		
	09 -02		
345-44	06 -10		
	06 -11		
345-49	09 -35		35
345-601	08 -33		
	08 -40		
	08 -41		

Number	Figure	Sequence	Ref.
345-601	08 -42		
	08 -43		
	08 -44		
	08 -46		
	08 -47		
345-621	09 -65		
345061A2	07 -04		2
345231A1	09 -44		3
345297A5	08 -41		12
345325A2	07 -04		3
345382A1	07 -04		4
345501A1	08 -41		15
	08 -43		15
	08 -43		25
346198A1	08 -01		3
347706A3	04 -07		7
348706A1	09 -23		40
	09 -24		37
348794A1	05 -01		18
	05 -03		
349291A1	06 -25		51
349292A1	06 -25		53
349295A1	06 -23		39
	06 -25		47
350014A3	03 -02		11
352208A1	09 -58		11
352209A1	09 -58		13
352210A1	09 -58		15
352401A1	05 -01		7
352568A1	05 -01		6
	05 -03		
352569A4	05 -01		6A
	05 -03		10
352727A1	05 -01		15
	05 -01		23
353-225	02 -21		12
353-402	09 -38		10
	09 -41		34
	09 -68		19
353-405	09 -54		
353-407	09 -54		
353-408	09 -10		19
	09 -54		
353-410	09 -54		
	09 -64		26
	09 -68		21
353-411	09 -10		5
353-415	09 -54		
353-421	09 -54		
	09 -68		22
353-422	09 -42		7
353-425	09 -54		
353068A2	04 -12		18
353078A1	08 -25		4
353079A1	08 -25		5
353102A1	08 -07		5A
353389A4	09 -35		1
353806A3	08 -36		
353807A3	08 -36		
353808A3	08 -38		
353809A3	08 -38		
353814A3	08 -35		
353815A3	08 -37		
353816A3	08 -37		
355197A2	04 -12		2
355198A2	04 -12		1A
355473A5	08 -43		22
355477A6	08 -43		12
355542A2	09 -41		24
355827A2	04 -11		1
355983A3	09 -42		2
355984A2	09 -42		1
356283A1	09 -35		49
356743A1	08 -07		12
356800A8	09 -41		11
357099A1	09 -68		15
357100A1	09 -68		16
357278A1	04 -08		17
357540A1	04 -15		7
357541A1	04 -15		8
357817A1	08 -27		3
	08 -28		3
357817A1	08 -31		
357966A1	04 -08		16
358236A1	08 -27		
	09 -01		28
358237A1	08 -06		1
	08 -28		
	09 -02		40
358282A1	06 -21		19
358283A1	06 -21		28
358631A1	06 -20		20
358632A1	06 -20		7
358633A1	06 -20		6
358635A1	06 -20		4
358636A1	06 -19		2
358637A1	06 -20		15
358638A1	06 -20		21
358639A1	06 -20		22
	06 -21		29
358640A1	06 -20		10
358641A1	06 -20		16
358642A1	06 -20		19
358643A1	06 -20		18
358644A1	06 -20		17
358645A1	06 -20		1
	06 -22		7
358646A1	06 -19		4
358647A1	06 -21		16
358648A1	06 -21		4
358649A1	06 -21		3
358650A1	06 -21		3A
358651A1	06 -21		3A
358652A1	06 -21		3A
358653A1	06 -21		27
358654A1	06 -21		18A
358655A1	06 -21		18B
358656A1	06 -21		18
359210A1	06 -11		18
359711A1	09 -34		1
360046A1	09 -57		1
360242A2	04 -11		10A
360243A2	04 -11		11
360244A1	04 -11		4
360245A2	04 -11		8
360246A2	09 -54		16
360247A2	09 -54		15
360250A2	04 -12		1
360251A3	09 -63		6
360252A2	09 -62		5
360253A3	09 -63		8
360254A3	09 -63		10
360255A1	09 -63		14
360256A1	09 -65		15
360257A1	09 -65		7
360258A1	09 -66		24
360259A2	09 -66		1
360260A2	09 -62		1
360261A1	09 -62		3
360262A2	09 -64		1
360263A4	09 -65		1
360266A2	09 -54		3
360267A3	09 -54		2
360330A1	04 -02		11
360361A1	08 -33		7
360594A2	09 -43		28
360765A2	09 -54		1
360867A1	09 -33		1
360916A1	08 -06		23
360918A1	08 -06		24
360937A1	08 -06		22
361776A1	09 -35		23
361900A1	04 -07		9
361940A1	06 -25		1
362006A1	09 -39		1
362140A1	06 -25		18
362340A6	09 -41		1
362556A1	09 -45		2
362556A2	09 -45		2A
362557A1	09 -45		1
362558A1	09 -45		3
362607A1	09 -40		4
362609A1	09 -40		3
362851A1	08 -21		1

Number	Figure	Sequence	Ref.
362851A1	08 -23		1
362930A2	04 -08		7
363078A2	09 -40		36
	09 -41		36
363220A2	08 -21		24
	08 -23		24
363222A2	08 -21		36
	08 -23		36
363227A2	04 -09		5
	04 -11		8A
363276A2	09 -22		22
363277A1	09 -22		23
363388A1	09 -36		1
363403A1	09 -39		7
363606A2	09 -10		2
363607A2	09 -10		1
363608A2	09 -10		4
363609A2	09 -10		3
363832A5	09 -65		
363883A1	09 -61		10
364001A5	03 -01		1
364059A2	09 -54		1
364132A1	09 -55		28A
364133A1	09 -55		30A
364134A1	09 -55		28
	09 -57		7
364135A1	09 -55		30
	09 -57		8
364148A1	08 -27		1
	08 -28		1
	08 -29		
364180A1	09 -54		10
	09 -68		24
364574A2	09 -53		10
	09 -68		28
364789A2	09 -10		4A
364790A2	09 -10		2A
365328A1	09 -29		1
365750A1	08 -39		
365789A1	09 -63		20
366230A1	06 -22		13
366231A1	06 -22		18
366232A1	06 -22		15
366234A1	06 -22		11
366235A1	06 -22		12
366236A1	06 -22		14
366366A1	06 -21		27
366398A1	06 -21		
366632A2	04 -12		21
366633A3	04 -12		25
366661A1	06 -26		20
366663A1	06 -35		29
366889A2	04 -07		28
366909A1	06 -18		22
366910A1	06 -24		9
367704A4	09 -61		1
367712A3	09 -68		13
367847A3	09 -68		1
367848A2	09 -74		13
367859A2	06 -13		18
	06 -47		
367860A3	06 -12		35
	06 -47		
367861A2	06 -01		11
	06 -09		
367977A1	07 -06		
368146A1	09 -55		46
	09 -57		26
368147A1	09 -55		40
	09 -57		17
368417A1	09 -45		9
368436A1	06 -23		16A
368437A2	06 -23		
368438A2	06 -23		
368799A3	09 -64		12
368800A2	09 -64		13
368801A2	09 -64		10
368805A1	09 -63		7
368807A1	09 -63		13
368809A1	09 -54		22
368813A2	09 -61		4
368818A1	09 -63		29
368821A1	09 -63		18
368990A1	09 -62		6
369249A1	09 -63		9
369263A1	08 -25		
	08 -41		25
	08 -43		35
369450A1	09 -61		15
370137A1	08 -01		27
370374A1	08 -16		9
370381A1	09 -65		14
370515A1	09 -66		14
370630A1	06 -12		20
	06 -13		1
370755A1	04 -13		1
370756A1	04 -13		2
370758A1	04 -13		3
370759A1	04 -13		4
370760A1	04 -13		5
371031A1	08 -05		26
371724A1	06 -13		8
371726A1	06 -13		15
371728A1	06 -12		30
371729A1	06 -12		29
372167A3	04 -12		1B
372246A1	06 -25		44
372481A1	08 -10		16
	08 -11		16
	08 -12		15
	08 -13		15
373689A2	04 -11		10
373693A1	04 -11		10E
373696A1	09 -73		10A
373698A2	09 -73		8
373699A2	09 -73		9
373995A1	09 -63		
374521A2	08 -24		15
375094A3	09 -43		
375112A1	04 -12		26
375392A1	09 -63		28
375782A2	08 -35		5
	08 -36		6
	08 -37		6
	08 -38		6
	08 -43		
375783A2	08 -35		3
	08 -36		4
	08 -37		4
	08 -38		4
	08 -41		
375787A2	08 -41		11
	08 -43		11
376157A1	08 -07		5
376158A1	08 -07		5B
376285A2	09 -07		
376332A1	09 -55		38
	09 -57		15
376334A1	09 -55		36
	09 -57		13
376336A1	09 -55		37
	09 -57		14
376384A1	09 -28		1
376385A1	09 -29		1
376386A1	09 -30		1
376526A3	09 -07		
377009A1	05 -05		47
377009A2	05 -05		47A
377194A1	09 -61		9
377222A1	09 -64		4
377230A3	09 -63		27
377232A1	09 -64		18
377233A1	09 -64		31
377594A4	09 -61		13
377807A1	05 -02		23
377979A1	05 -07		1
	05 -08		
	05 -09		
	05 -10		
	05 -11		
377997A1	08 -20		12
378172A1	08 -04		14
378173A1	08 -04		15
378227A1	09 -54		5

Number	Figure	Sequence	Ref.
378290A1	05 -05		9
378464A2	08 -24		17
378740A3	09 -43		
378742A3	09 -43		19
	09 -43		27
	09 -43		9A
378955A1	03 -03		8A
378956A3	03 -03		15
378957A3	03 -02		17
378958A1	03 -03		13
378960A1	03 -03		3
379160A1	09 -61		5
379161A1	09 -61		6
379209A1	09 -61		7
379314A4	06 -12		6
379424A2	09 -54		3A
379425A3	09 -54		2A
379499A2	03 -01		40
379846A1	05 -01		14
	05 -01		22
38-1812	08 -49		31
380003A1	06 -35		45
380004A1	06 -35		41
380005A1	06 -34		1
	06 -35		
380021A1	03 -03		21
380297A4	09 -40		2
380298A4	09 -40		1
380442A1	03 -01		10
380460A1	02 -19		
380461A1	02 -19		
380483A2	03 -03		12
380484A3	03 -03		15A
380485A3	03 -02		17A
380537A2	06 -12		13
380646A2	09 -11		1
380678A1	08 -29		7
380691A1	08 -29		
380719A2	09 -61		
380807A3	09 -35		47
380807A4	09 -35		47A
381111A2	09 -63		25
381113A2	09 -63		24
381261A1	04 -05		13
381262A1	04 -04		23
381382A1	06 -01		1
	06 -02		
	06 -03		
	06 -04		
	06 -05		
	06 -06		
	06 -07		
	06 -08		
381383A1	06 -01		1
	06 -02		
	06 -03		
	06 -04		
	06 -05		
	06 -06		
	06 -07		
	06 -08		
381386A1	05 -05		53
	05 -07		9
	06 -01		28
381410A1	06 -02		1
381442A1	05 -05		45
	05 -07		12
	06 -01		31
381488A4	09 -26		1
381659A1	04 -19		5
381696A5	09 -61		2
381926A1	09 -41		22
381927A1	09 -41		20
381972A1	09 -61		14
382063A1	09 -01		34
382160A2	09 -68		23
382202A2	09 -35		52
382298A1	09 -54		21
	09 -68		30
382664A2	04 -19		1
382676A1	09 -69		2
382677A1	09 -69		7
382770A2	09 -62		2
382775A1	09 -55		23A
382777A1	09 -55		23
382989A1	09 -66		33
383355A2	06 -10		1
	06 -11		1
	08 -03		13
383497A1	09 -66		32
383562A1	09 -66		15
383563A1	09 -66		7
383619R1	04 -05		5
383794A2	09 -63		22
383972A1	09 -76		6
384258A1	09 -79		6
384260A1	09 -79		9
384263A1	09 -79		12
384264A1	09 -76		1
384265A1	09 -79		2
384267A1	09 -79		3
384269A1	09 -79		5
384271A1	09 -43		35
	09 -76		12
384769A1	06 -21		14
384773A1	06 -21		9
384844A1	08 -25		7
384930A2	09 -74		1
384931A2	09 -74		2
384959A1	06 -38		1
	06 -40		
	06 -41		
	06 -43		
	06 -44		
	06 -46		
	07 -01		
	07 -02		
384960A1	06 -38		1A
	06 -40		
	06 -42		
	06 -43		
	06 -45		
	06 -46		
	07 -01		
	07 -02		
384967A1	09 -20		32
385420A2	08 -24		5
385506A1	09 -68		12
385614A3	04 -12		31
386092A2	09 -20		16
386187A1	08 -17		2
386368A2	04 -12		29
386369A2	04 -12		28
386379A1	08 -18		51
386502A1	04 -12		
386535A1	09 -65		2
386716A2	09 -59		8
	09 -70		12
386717A2	09 -59		14
386718A2	09 -59		9
	09 -70		13
386718A3	09 -59		9
	09 -70		13
386719A2	09 -59		15
386720A1	09 -59		19
386721A4	09 -59		1
	09 -70		15
386722A1	09 -59		17
386785A1	04 -07		22
	09 -59		22
	09 -60		
	09 -70		6
386786A1	04 -10		19
	09 -59		24
	09 -60		
386787A1	04 -07		23
	09 -59		23
	09 -70		7
386788A1	04 -10		18
	09 -59		25
386789A2	04 -10		21
	08 -23		40
386791A1	02 -06		12
	04 -07		25

Number	Figure	Sequence	Ref.
386849A1	04 -07		18
386850A1	04 -07		19
386851A1	04 -07		20
	04 -18		15
386852A2	04 -10		17
386927A1	04 -19		9
386988A3	08 -21		2
	08 -23		2
387627A1	08 -35		16
	08 -36		17
	08 -37		17
	08 -38		17
387627A2	08 -35		16A
	08 -36		17A
	08 -37		17A
	08 -38		17A
	08 -45		
387782A1	08 -45		5
387953A1	08 -21		22
387954A2	08 -21		21
388053A2	04 -13		6
388116A2	05 -01		8
388712A2	08 -45		9
388713A1	08 -45		
388762A1	09 -64		7
388843A1	09 -27		1
388848A1	09 -07		24
388876A6	08 -45		2
388881A1	08 -45		4
389402A1	09 -64		8
389423A3	09 -59		
389424A3	09 -70		
389487A1	04 -07		13
389541A1	08 -45		12
389729A1	09 -77		6
389730A1	09 -78		6
390-100	09 -55		21
390029A1	06 -05		2
390255A2	04 -12		15A
390258A1	04 -12		
	04 -12		
390320A4	08 -25		
390518A3	04 -20		5
	08 -20		27
	08 -20A		27
390519A3	04 -07		16
	09 -70		4
390520A2	04 -07		
	04 -10		
	04 -20		7
	08 -20		37
	08 -20A		37
	09 -70		5
390601A2	09 -54		13
390601A5	09 -54		13A
390602A1	09 -54		14
390821A2	08 -08		19
390838A1	09 -55		2A
390840A1	09 -55		27A
390841A1	09 -55		29A
391138A1	08 -20		
391451A1	05 -05		9
	05 -07		4
	06 -01		9
391459A1	08 -21		31
	08 -23		31
391625A2	09 -42		9A
391626A1	09 -42		9
391818A2	04 -12		15
391827A1	09 -53		8
	09 -55		19
	09 -55		6
	09 -57		4
	09 -69		2
391838A1	09 -55		14
391841A1	09 -55		18A
391842A1	09 -55		20A
391843A1	09 -55		32
391845A1	09 -55		31
	09 -57		10A
391847A1	09 -55		13
391848A1	09 -55		15
391849A1	09 -55		41
	09 -57		18
391850A1	09 -55		3A
392295A1	02 -05		3
392301A1	02 -05		1
392353A1	04 -08		8
392374A1	09 -76		13
392375A1	09 -79		1
392401A1	08 -20		
392563A2	09 -25		9
392568A3	09 -76		2
392757A3	03 -03		25
392828A2	09 -37		2
	09 -41		16
	09 -41		18
392882A4	04 -09		1
392930A1	09 -68		8
393156A1	08 -24		6
393161A1	09 -35		19
393202A1	09 -55		17
393203A1	09 -55		16
393209A1	09 -55		22
393211A1	09 -56		5
393212A1	09 -56		6
393231A1	06 -09		
	06 -47		
393232A1	06 -47		6
393233A1	06 -47		6
393234A1	06 -09		6
393330A1	09 -57		10
393363A1	08 -14		10A
393364A1	08 -12		10A
	08 -13		10A
393365A1	08 -12		10
393366A1	08 -14		10
393372A1	08 -10		11B
	08 -11		11
393373A1	08 -10		11A
	08 -11		11B
393375A1	08 -10		11
393377A1	08 -11		11A
393623A1	09 -42		8
393826A1	06 -40		19
393827A1	03 -01		25
393999A1	06 -13		2
394020A1	03 -03		29
394291A1	09 -22		12
394585A2	09 -55		
394700A1	09 -55		4
394701A1	09 -55		27
	09 -57		5
394702A1	09 -55		29
	09 -57		6
394704A1	09 -55		18
394705A1	09 -55		20
394707A1	09 -55		2
394708A1	09 -55		3
394800A1	09 -56		7
394863A1	04 -15		9
	09 -54		17
394864A1	09 -57		2
394865A1	09 -57		9
395026A1	09 -60		9
395033A1	09 -60		8
395136A1	09 -60		6
395137A1	09 -60		1
	09 -70		1
395189A2	03 -02		1
395344A1	06 -12		39
395348A1	09 -58		12
	09 -58		14
395387A1	09 -54		18
395388A1	09 -54		19
395389A1	09 -60		10
395470A1	09 -63		23
395478A3	09 -68		3
395609A1	08 -25		6
395753A2	09 -19		20
395793A1	09 -53		9
	09 -69		7
395832A2	09 -22		11
395910A2	09 -73		10

Number	Figure	Sequence	Ref.
395943A1	04 -10		14
	04 -13		
396-41028	09 -01		16
	09 -01		31
	09 -02		31
	09 -14		23
396014A1	04 -04		1
	04 -07		32
	04 -08		14
	04 -17		18
396015A1	04 -07		1
	04 -08		1
396017A1	04 -10		1
396018A2	04 -15		13
	09 -60		
396023A2	04 -14		10
396092A1	09 -22		8A
396389A1	08 -09		10
396422A2	08 -45		10
396516A1	09 -54		12
	09 -61		3
	09 -68		26
396591A1	05 -02		
396592A1	05 -02		
396593A1	05 -02		
396605A1	09 -40		30
396620A2	07 -04		17
396634A1	08 -12		30
396695A1	08 -21		
	08 -23		
396696A1	08 -21		
	08 -23		
396708A1	08 -13		51
396771A1	08 -40		
396841A1	09 -56		3
	09 -57		29
396919A1	08 -35		2
	08 -36		3
	08 -37		3
	08 -38		3
	08 -40		
396938A3	09 -68		2
396992A1	08 -39		4
396997A1	08 -36		2
	08 -38		1A
	08 -47		
397025A2	09 -43		21
397026A3	09 -43		2
397064A1	09 -56		1
	09 -57		27
397065A2	03 -03		22
397076A1	07 -04		9
397132A1	09 -46		1
	09 -47		
	09 -48		
397134A2	09 -46		2A
	09 -49		
	09 -50		
397136A2	09 -46		2A
	09 -49		
	09 -50		
397137A1	09 -46		2
	09 -51		
	09 -52		
397148A1	09 -76		8
397158A2	03 -03		22A
397177A2	07 -04		16
397302A1	09 -76		9
397309A3	08 -01		45
397443A2	04 -09		11
397488A1	09 -10		16
397489A1	09 -10		18
	09 -75		7
397493A2	04 -09		12
397548A3	03 -01		48
397569A1	04 -10		5
397570A1	04 -10		6
397774A3	09 -43		12A
397782A1	08 -11		28
397783A1	05 -05		9
397870A2	09 -10		15A
397870A3	09 -10		15B
397876A1	04 -08		13
397911A1	09 -11		16
397990A1	04 -07		29
398113A1	09 -43		12B
	09 -43		21A
	09 -43		3
398315A1	02 -03		10
398380A3	04 -15		12
398570A1	09 -80		6
398571A1	09 -81		6
398572A1	09 -80		9
398573A1	09 -81		9
398574A1	09 -80		12
398575A1	09 -81		12
398576A1	09 -77		1
398577A1	09 -78		1
398578A1	09 -80		2
398579A1	09 -81		2
398580A1	09 -80		3
398581A1	09 -81		3
398582A1	09 -80		5
398583A1	09 -81		5
398585A1	09 -77		12
398586A1	09 -78		12
398594A1	09 -77		8
398595A1	09 -78		8
398596A1	09 -77		9
398597A1	09 -78		9
398598A1	09 -77		13
398599A1	09 -78		13
398600A1	09 -80		1
398601A1	09 -81		1
398653A1	09 -78		4
398654A1	09 -81		11
398656A1	09 -81		10
398658A1	09 -76		5
	09 -77		5
	09 -78		5
398662A1	09 -77		7
398663A1	09 -78		7
398664A1	09 -77		4
398665A1	09 -80		8
398666A1	09 -81		8
398667A1	09 -80		7
398668A1	09 -81		7
398670A1	09 -80		13
398671A1	09 -81		13
398672A1	09 -77		10
398673A1	09 -78		10
398674A1	09 -80		4
398675A2	04 -07		24
	08 -21		40
398676A1	09 -81		4
398677A1	09 -80		10
398738A1	09 -62		4
398846A2	04 -15		1
398846A3	04 -14		5
398847A2	04 -15		2
398847A3	04 -14		8
398986A1	09 -63		30
399004A1	03 -01		21
399225A1	08 -19A		
399246A1	08 -19A		32
399427A1	09 -76		3
399554A1	05 -05		42
399757A1	09 -49		1
399758A1	09 -49		2
399759A1	09 -49		1A
399760A1	09 -49		2A
399764A1	09 -50		11
399777A1	09 -47		3
399862A1	09 -73		12
399907A2	08 -25		3
399923A1	02 -06		20
	03 -01		52
399959A2	09 -35		26
399963A1	08 -07		
399966A1	09 -11		15
4-390-LBC	02 -19		
4-390-SHBC	02 -19		
400016A1	08 -19A		30
400069A1	09 -11		10

Number	Figure	Sequence	Ref.
400077A1	09 -43		
	09 -43		
	09 -43		
	09 -43		
400200A1	09 -58		5
400280A1	09 -64		11
400282A1	09 -64		2
400296A2	08 -45		11
400376A1	04 -09		13
400379A1	04 -10		9
	09 -64		5
	09 -65		14A
400398A1	09 -23		42
	09 -24		39
400454A1	08 -35		1
	08 -36		1
	08 -37		1
	08 -38		1
	08 -39		
400494A1	09 -58		16
400544A2	09 -43		20
400545A2	09 -43		1
400571A2	09 -53		20
400572A1	09 -53		19
400573A1	09 -53		16
400588A2	06 -12		7
400657A1	08 -45		13
400837A1	09 -51		4
400838A1	09 -51		5
400880A1	09 -19		24
400932A3	09 -25		26
400932A4	09 -25		31
400934A2	09 -25		20
400936A1	09 -25		20A
400981A1	09 -51		1
401050A1	05 -08		1
401051A1	05 -09		1
401052A1	05 -09		
401054A1	05 -09		3
401055A1	05 -09		7
	05 -10		1
401058A1	05 -09		2
401059A1	05 -09		13
401060A1	05 -09		14
401061A1	05 -10		4
401062A1	05 -10		3
401063A1	05 -10		5
401064A1	05 -10		6
401065A1	05 -11		3
401066A1	05 -11		4
401067A1	05 -11		5
401106A1	04 -01		33
401126A1	04 -01		39
401342A2	09 -25		23
401457A1	09 -73		2
401458A1	09 -73		3
401459A2	09 -73		4
401460A2	09 -73		5
401464A1	09 -73		1
401523A1	05 -01		17B
	05 -01		27
401524A1	05 -01		17A
	05 -01		26
401541A1	02 -05		11
401949A1	09 -54		4
402331A1	08 -10		10
402361A3	08 -24		26
402610A1	09 -54		20
402830A1	09 -58		20
	09 -58		40
402831A1	09 -58		25
	09 -58		34
402832A1	09 -58		25
	09 -58		34
402833A1	09 -58		21
	09 -58		41
402836A1	09 -58		39
402837A1	09 -58		37
402838A1	09 -58		32
402840A1	09 -58		29
402841A1	09 -58		37
402842A1	09 -58		30
402843A1	09 -58		31
402844A1	09 -58		36
402845A1	09 -58		36
402846A1	09 -58		24
402847A1	09 -58		24
402848A1	09 -58		19A
	09 -58		45
402849A1	09 -58		19A
	09 -58		45
402851A1	09 -58		29
402854A1	08 -24		19
402855A1	08 -24		18
402856A1	09 -58		33
402860A1	09 -58		28
402861A1	09 -58		38
402863A1	09 -58		28
402865A1	09 -58		26
402866A1	09 -58		35
402867A1	09 -58		19
	09 -58		44
402868A1	09 -58		18
	09 -58		46
402869A1	09 -58		22
	09 -58		42
402870A1	09 -58		23
	09 -58		43
402871A1	09 -58		18
	09 -58		46
402872A1	09 -58		19
	09 -58		44
402873A1	09 -58		21
	09 -58		41
402919A3	08 -24		24
	08 -25		
	09 -25		28
402930A1	08 -25		1
402933A1	09 -71		1
402934A1	09 -71		2
402935A1	09 -71		5
402936A1	09 -71		3
402940A2	08 -24		25
403042A1	09 -16		
403193A1	09 -63		36
403225A1	09 -63		35
403271A1	09 -62		9
403400A1	08 -24		30A
	09 -25		14
403840A1	08 -24		29A
	09 -25		13
403948A1	09 -58		1
404226A1	09 -58		6
404227A1	09 -58		9
404228A1	09 -58		4
	09 -58		8
404229A1	09 -58		7
404302A1	09 -21		36
	09 -24		54
404303A1	09 -21		35
	09 -24		53
404617A1	04 -14		12
	04 -15		10
	09 -60		
	09 -70		
404803A3	09 -25		27
404804A1	09 -77		2
404816A1	04 -07		14
404907A1	08 -19A		28A
405235A1	09 -25		6B
405648A2	08 -23		22
	08 -24		2
405649A2	08 -23		21
	08 -24		1
405650A1	08 -24		13
405651A1	08 -24		14
405652A1	08 -24		12
405653A1	08 -24		11
405656A1	08 -24		12A
405659A1	08 -24		11A
405738A1	09 -53		15
405739A1	09 -53		14
405740A1	09 -53		13
405741A1	09 -53		17

Number	Figure	Sequence	Ref.
405742A1	09 -53		18
406172A1	08 -24		29
	09 -25		6
406287A1	09 -64		19
	09 -65		5
406569A1	09 -25		15A
	09 -25		7C
406624A1	09 -25		22
406700A1	09 -47		9
406723A1	09 -74		15
406953A1	08 -24		27
406955A1	08 -24		28
406957A1	08 -24		27A
406959A1	08 -24		28A
406971A1	08 -24		30
	09 -25		6A
407315A1	09 -73		6
407316A1	09 -73		7
407635A1	08 -03		12
407660A1	04 -12		8A
407734A1	08 -24		44
407735A1	08 -24		45
407745A1	08 -24		42
407746A1	08 -24		43
407975A1	08 -24		16
408159A1	08 -24		31
408160A1	08 -24		31
408405A1	09 -19		35
408535A1	04 -06		12
408757A1	08 -01		53
408965A1	09 -59		15
408966A1	09 -59		15
408974A1	06 -39		10
409025A1	08 -45		5A
409318A1	07 -04		18
409370A1	04 -08		21
409402A1	05 -02		12
409403A1	05 -02		6
409404A1	05 -02		21
409462A1	09 -25		15
	09 -25		7B
409473A1	03 -01		4A
	09 -35		4A
409499A1	08 -24		8A
409593A1	08 -24		10A
409594A1	08 -24		10
409595A1	08 -24		9
409618A1	09 -54		11
	09 -68		25
409672A1	09 -14		4
409673A1	09 -14		5
409690A1	09 -58		17
	09 -58		27
409691A1	08 -24		33
409691A2	08 -24		33A
409692A1	09 -58		17
	09 -58		27
409723A1	09 -61		18A
41-1616	02 -19		8
41-3038	02 -19		11
410436A1	09 -43		36
410440A1	09 -43		34
410561A1	06 -12		44
410838A1	09 -43		38
410847A1	03 -01		24
410867A1	09 -58		2
411049A1	09 -75		8
411074A1	09 -42		16
411078A1	09 -43		
411317A1	08 -41		22
	08 -43		32
411379A1	09 -53		
411380A1	09 -53		
411399A1	09 -54		25
411623A1	06 -12		47
	06 -13		25
411713A1	06 -12		29A
411714A1	06 -12		30A
411832A1	06 -13		22
411834A1	06 -13		21
411844A1	09 -58		
411845A1	09 -58		
411846A1	09 -58		
411847A1	09 -58		
411848A1	09 -58		
411849A1	09 -58		
411850A1	09 -58		
411851A1	09 -58		
411892A1	09 -34		14
411908A1	09 -58		
411909A1	09 -58		
411910A1	09 -58		
411911A1	09 -58		
411912A1	09 -58		
411914A1	09 -58		
411915A1	09 -58		
	09 -58		
411916A1	09 -58		
	09 -58		
411917A1	09 -58		
	09 -58		
411942A1	09 -58		19B
	09 -58		45A
412023A1	09 -58		
	09 -58		
412285A1	09 -54		23
412510A1	04 -12		40
413-1228	09 -19		18
413-412	09 -71		11
413-516	09 -09		11
	09 -71		7
413-624	09 -15		12
413-628	09 -01		19
413-632	05 -05		24
	09 -02		10
	09 -02		27
	09 -19		22
413-648	08 -19A		4
413-728	08 -01		14
413054A1	04 -12		36
413153A1	02 -07		7A
413459A1	06 -12		48
	06 -13		26
413460A1	06 -12		49
	06 -13		27
413778A1	08 -18		30A
	08 -24		36A
413870A1	07 -03		27A
414-724	09 -46		14
	09 -46		22
414033A1	04 -11		18
414034A1	04 -11		17
414071A1	04 -12		39
414092A1	04 -12		38
414174A1	04 -08		22
414415A1	08 -24		3
414572A1	04 -11		16
414600A1	09 -61		17
414753A1	05 -02		14
414755A1	05 -02		13
414939A1	09 -54		24
416668A1	09 -19		25A
417322A1	02 -19		
417322A1R	02 -19		
417680A2	09 -25		27A
417681A1	09 -25		18
418070A1	09 -25		29
418789A1	08 -05		13
418791A1	08 -05		14
419752A1	09 -77		2
419753A1	09 -78		2
419754A1	09 -76		2
420-21236	09 -06		14
425-1012	09 -19		19
425-105	07 -03		21
425-106	04 -08		2
	04 -08		20
	05 -04		5
	05 -05		26
	08 -27		13
	08 -28		14
	08 -35		13
	08 -36		14
	08 -37		14

Number	Figure	Sequence	Ref.
425-106	08 -38		14
	09 -01		21
	09 -15		13
	09 -59		12
	09 -70		10
425-1110	09 -14		16
425-1120	08 -01		
	08 -01		22
425-115	09 -03		6
425-116	09 -01		22
	09 -02		26
	09 -02		38
	09 -12		36
	09 -15		5
425-118	05 -05		29
	09 -12		10
	09 -13		3
	09 -14		7
425-147	09 -58		
	09 -60		
425-1510	08 -29		12
425-1514	05 -04		17
425-154	03 -03		31
	03 -07		34
425-155	08 -34		12
	08 -40		27
	08 -44		31
	08 -47		27
	08 -50A		12
425-156	07 -03		5
	07 -06		17
	09 -12		27
	09 -12		47
	09 -13		9
	09 -17		9
	09 -18		15
425-1918	05 -06		7
427-3058	03 -02		15
	03 -03		18
427-6088	09 -04		33
	09 -12		25
	09 -13		7
	09 -17		7
427-6100	09 -04		33A
428-510	06 -12		22
428407A1	09 -43		33
428651A1	08 -26		
429-1010	08 -26		20
429-1012	09 -06		15
	09 -06		5
429230A1	05 -08		1A
429231A1	05 -09		1A
429232A1	05 -09		2A
430471A1	04 -12		37
431583A1	09 -68		31
431584A1	09 -68		32
431801A1	09 -53		21
432-1232	05 -06		6
432-48	03 -02		10
	03 -02		16
	03 -03		19
432-612	07 -03		8
	07 -06		18
	07 -06		3
	09 -01		27
	09 -02		37
	09 -03		5
	09 -04		34
	09 -12		26
	09 -12		38
	09 -12		49
	09 -13		8
	09 -15		4
	09 -17		12
	09 -17		8
	09 -18		20
	09 -22		15
432-828	09 -01		13
	09 -02		24
	09 -14		20
432013A1	02 -05		
432431A1	09 -56		9A
434560A1	08 -20		
434605A1	08 -22		8A
434891A1	09 -25		32
437754A1	08 -35		
	08 -36		
	08 -37		
	08 -38		
438-12040	07 -03		24
439-5436	09 -02		6
440-10616	04 -20		10
	09 -04		18
440-1066	04 -12		27
	09 -35		1B
440-1088	09 -61		22
440-11010	09 -36		2
440-11012	09 -41		12
440-11014	09 -43		13
	09 -43		24
	09 -43		7
440-12510	09 -55		9
441131A1	05 -05		5A
441132A1	05 -05		5
441647A1	05 -05		4
442718A1	09 -55		8
442773A1	09 -55		33
442842A1	09 -56		6A
443375A1	03 -01		2
443432A1	08 -45		
445174A1	06 -13		5
	06 -25		
	06 -26		
	06 -27		
	06 -28		
	06 -29		
	06 -30		
	06 -31		
	06 -32		
	06 -33		
	06 -34		
	06 -35		
	06 -36		
445310A1	06 -29		1
445311A1	06 -29		33
445312A1	06 -29		13
445313A1	06 -29		34
445314A1	06 -30		1
445364A1	09 -25		33
445757A1	09 -25		17B
446107A1	05 -05		16
446220A1	09 -19		5A
446454A1	09 -19		36
447737A1	05 -05		52
448284A1	08 -20		23A
	08 -20A		23A
448428A1	09 -64		12A
448429A1	09 -64		13A
448676A1	09 -25		30
449842A1	09 -74		8
450614A1	09 -04		3A
451384A1	09 -24		23
451597A1	09 -76		2
451598A1	09 -77		2
451599A1	09 -78		2
452698C1	04 -01		29
459-11014	06 -12		4
465004R91	09 -01		14A
470-10620	09 -46		8
473321C1	03 -07		32
484-43116	08 -34		11
	08 -40		26
	08 -44		30
	08 -47		26
484-43120	08 -40		26
	08 -50A		11
484-6316	06 -12		3
490-11012	04 -08		18
490-1106	04 -07		11A
490-1108	04 -07		
	04 -07		11
492-11025	03 -03		30
	03 -07		35
	09 -55		10

Number	Figure	Sequence	Ref.
492-11031	09 -09		12
492-11038	05 -05		25
	09 -59		11
	09 -70		9
492-11044	08 -01		15
492-11050	05 -05		28
493-11026	04 -18		2
493-11039	04 -03		9
	04 -05		12
493-21020	04 -04		9
	08 -52		3
493-21033	04 -04		7
493-41020	06 -12		5
495-11022	08 -49		24
495-11028	09 -01		8
	09 -02		17
	09 -72		2
495-11034	09 -09		13
495-11041	02 -06		11
	02 -16		6A
	03 -01		17A
	04 -05		9
	04 -06		8
	08 -19A		5
	09 -02		34A
495-11047	05 -05		44
	05 -07		11
	06 -01		30
	09 -58		
	09 -60		
495-11053	09 -04		35
	09 -18		9
495-11081	09 -14		10
495-11094	05 -05		39
495-21031	04 -18		3
495-21038	07 -06		4
	09 -45		6
495-21044	09 -02		11
	09 -19		31
	09 -35		8
495-21056	06 -01		20
495-31016	09 -46		9
495-31022	03 -02		9
	04 -14		4
495-61020	09 -43		14
	09 -43		25
	09 -43		8
495-81001	02 -03		12A
	09 -68		6
495-81002	09 -18		13
495-81153	04 -08		6
495-81169	09 -46		17
495-81184	09 -01		9
	09 -02		22
495-81226	09 -23		25
	09 -23		35
	09 -24		48
495-81227	09 -20		17
	09 -24		44
495-81252	04 -01		37
495-81261	07 -03		30
495-81267	09 -68		10
495-81282	09 -04		7
	09 -19		34
	09 -23		21
	09 -24		32
496-21041	02 -01		29
	06 -12		17
	06 -12		25
	06 -13		7
	09 -01		20
496-21053	08 -01		51
496-41041	08 -08		6
	08 -09		6
	08 -10		6
	08 -11		6
	08 -12		6
	08 -13		6
	08 -14		6
	09 -11		5
	09 -44		4
496-41081	09 -21		5
496-81000	05 -12		9
	06 -01		3
	06 -06		25
	09 -46		18
496-81010	09 -46		25
	02 -07		6
496-81018	03 -02		7
	05 -01		11
496-81028	06 -25		6
511-10250	09 -55		34
514-633	09 -57		11
	07 -02		26
514-634	09 -04		14
515-2179	08 -24		4
515-22127	09 -02		17A
515-2295	03 -01		16
515-23127	04 -04		13
	04 -04		15
	04 -04		26
515-23190	08 -08		15A
515-23254	08 -08		15
515-23444	04 -10		27
515-2379	04 -04		5
	07 -04		15
	08 -15		20
515-25159	08 -21		26
	08 -23		26
515-25190	06 -11		24
	08 -19A		22
	08 -21		25
	08 -23		25
515-25238	06 -11		22
	08 -03		18
515-25254	08 -07		13
515-25317	08 -01		49
	08 -03		18A
515-2595	08 -24		3
	08 -24		4
540-720	09 -54		7
555-10	04 -11		2
	04 -12		6
555-2	04 -12		22
	04 -12		3
	09 -43		16
	09 -43		22
	09 -43		5
	09 -68		17
561-706	09 -22		16
569-4	09 -55		24
60-7083T1	09 -55		7
604-10035	09 -25		7
604-12030	09 -46		3
604-20040	09 -21		4
604-20045	08 -18		52
	09 -21		
607-10020	05 -05		48
	09 -25		17F
607-8020	08 -24		34
607-8030	09 -25		8
61-31016	08 -49		23
613-8016	02 -21		4
614-10020	03 -01		38
	03 -01		49
	05 -01		19
	05 -01		9
	06 -10		2
	06 -11		2
	08 -03		2
	09 -35		7
	09 -36		7
614-10025	07 -03		10
	07 -06		24
	08 -01		58
	08 -02		11
	08 -15		5A
	08 -16		13
	08 -17		5
	08 -18		47
	09 -08		2
	09 -12		42
	09 -15		16
	09 -17		3

Number	Figure	Sequence	Ref.
614-10025	09 -35		50
	09 -35		53
	09 -40		10
	09 -40		22
	09 -40		5
	09 -40		5A
	09 -41		3
614-10030	02 -01		37
	04 -10		28
	06 -11		21
	06 -15		7
	06 -16		8
	08 -08		32
	08 -13		53
	08 -18		33
	08 -19		24
	08 -24		38
	09 -11		8
	09 -22		21
	09 -40		28
614-10035	03 -03		23
	05 -01		20
	08 -08		5
	08 -09		5
	08 -10		5
	08 -11		5
	08 -12		5
	08 -13		5
	08 -14		5
	08 -19		29
	09 -11		4
	09 -36		8
614-10050	09 -22		10
614-12016	06 -18		2
614-12025	05 -05		10
	05 -07		6
	06 -01		32
	06 -10		19
	06 -11		26
	08 -01		50
	08 -21		27
	08 -23		27
614-12030	08 -21		27
	08 -23		27
	09 -51		
614-12035	06 -12		27
	06 -13		9
	08 -01		9
	08 -02		18
614-12040	02 -19		45
614-18035	08 -18		7
614-20035	09 -36		12
614-6016	03 -03		32
	08 -17		15
	09 -01		15
	09 -01		7
	09 -02		16
	09 -02		30
	09 -04		13
	09 -14		22
614-6020	04 -18		13
	09 -01		30
	09 -14		24
614-6025	09 -18		4
614-8012	02 -02		7
614-8016	02 -01		22
	02 -01		40
	03 -01		53
	04 -04		36
	04 -09		15
	06 -18		24
	08 -24		9A
614-8018	06 -14		11
614-8020	02 -03		4
	03 -03		9A
	04 -03		8
	04 -04		36
	04 -08		9
	04 -17		2
	07 -03		36
	07 -04		21
	07 -04		5
614-8020	08 -01		54
	09 -11		12
	09 -59		20
	09 -68		5
614-8022	06 -22		2
614-8025	04 -08		10
	04 -17		15
	08 -08		16
	08 -10		14
	08 -11		14
	08 -12		13
	08 -13		13
	08 -17		3
	09 -03		15
	09 -07		27
	09 -43		29
	09 -52		1A
614-8030	06 -44		13
	06 -45		13
	07 -03		2
	07 -04		26
	09 -05		8
	09 -44		5
	09 -45		5
	09 -64		28
	09 -65		19
	09 -66		28
614-8040	07 -03		27
	09 -45		4
615-10016	06 -25		24
619387R1	05 -06		2
625743C1	05 -06		3
626-10016	06 -12		26
627-10020	02 -05		12
627-10025	09 -67		13
627-10030	02 -05		6
	06 -12		16
	06 -13		6
627-10035	09 -67		24
627-12030	03 -03		26
627-20060	09 -35		2
627-8030	09 -25		16
628-10030	06 -25		40
	06 -26		18
628-10035	06 -26		16
628-6016	03 -07		21
637-62081	02 -25		3
	03 -07		27A
	04 -04		30A
637-72081	02 -19		16A
65457C1	08 -30		4
	08 -31		4
	08 -33		4
	08 -40		4
	08 -41		4
	08 -42		4
	08 -43		4
	08 -44		4
	08 -46		4
	08 -47		4
680187C1	03 -07		9
691292C1	03 -07		8
70973	02 -03		3
711-10030	08 -03		19A
	09 -35		25
711-10040	08 -20		9
	08 -20A		9
	09 -45		8
711-10050	05 -02		26
	08 -03		19
	08 -21		4
	08 -23		4
711-10070	08 -01		33
71121	08 -49		2
712998R91	05 -09		12
	06 -03		7
732-4036	06 -04		
733-2012	08 -17		12
761-17325	04 -19		13
779-37616	09 -10		7
781-24613	04 -04		34
	04 -08		15

Number	Figure	Sequence	Ref.
781-24820	09 -43		30
800-11115	06 -29		16
	06 -30		16
800-1129	06 -06		12
800-1134	06 -06		17
800-1140	06 -31		5
800-1145	06 -30		43
800-1150	06 -29		32
	06 -29		38
	06 -30		30
	06 -30		36
	06 -31		4
	06 -31		8
800-1155	09 -24		13
800-1160	06 -33		18
	06 -33		20
800-1165	06 -33		15
	06 -33		17
800-21100	06 -33		26
800-2136	06 -46		24
800-2168	06 -26		21
800-2175	06 -30		40
	06 -32		17
800-2180	06 -29		35
	06 -30		33
800-40065	09 -20		27
	09 -20		31
	09 -21		25
	09 -21		33
800-40070	09 -20		23
800-40080	09 -21		28
800-4155	09 -23		5
800-44040	09 -04		26
	09 -04		31
	09 -05		22
	09 -05		4
	09 -22		5
	09 -24		20
800-44050	05 -05		50
	05 -07		5
	06 -01		7
	09 -04		8
800-5120	06 -44		5
	06 -45		5
800-5145	06 -22		19
800-5150	06 -31		2
800-5160	06 -32		23
	06 -33		24
800-6138	08 -25		2
806-8016	02 -01		6
806-8025	02 -03		11
806-8050	02 -01		10
	09 -59		5
	09 -70		20
811-10025	09 -68		9
811-10060	08 -21		8
	08 -23		8
811-10100	08 -21		8
	08 -23		8
811-8020	04 -12		32
814-10040	04 -03		2
	08 -04		9
	08 -05		20
	08 -05		7
	08 -06		6
	08 -07		8
	08 -18		34
	08 -24		39
	09 -01		29
814-10045	03 -01		38
	08 -04		34
	08 -05		7A
	08 -13		41
	08 -17		18
	09 -35		30
814-10050	02 -01		23
	05 -01		10
	08 -14		14
	08 -15		53
	08 -16		5
814-10055	08 -12		38
	08 -13		49
814-10055	09 -22		26
814-10060	04 -04		27
	07 -06		30
	08 -08		22
	08 -13		58
	08 -15		5
	09 -07		25
	09 -11		8
814-10070	02 -01		28
	08 -19		10
	08 -21		41
814-10080	08 -20A		4
	08 -21		42
	09 -07		20
814-10090	08 -22		13
	09 -07		16
814-10100	02 -16		17
	04 -03		5
814-10140	08 -20		4
814-10150	06 -15		9
814-10180	08 -18		3
814-10245	04 -05		6
	04 -06		7
814-12045	08 -08		2
	08 -09		2
	08 -10		2
	08 -11		2
	08 -12		2
	08 -13		2
	08 -14		2
814-12050	03 -02		3
	08 -15		3
814-12060	08 -12		27
	08 -13		27
814-12070	08 -24		7
814-12080	08 -10		37
	08 -11		31
	08 -12		23
	08 -13		23
814-12090	02 -07		5
	08 -19		6
814-12110	02 -07		2
	08 -10		18
	08 -11		18
	08 -12		17
	08 -13		17
814-12120	09 -40		16
814-14140	06 -40		9
814-16100	06 -12		45
	06 -13		23
814-16110	06 -12		31
	06 -13		14
814-6050	09 -60		2
	09 -70		
814-6060	08 -15		17
814-8040	07 -03		15
814-8050	03 -01		41
	03 -03		9
814-8055	09 -66		30
814-8060	06 -17		16
	06 -24		7
814-8080	06 -23		34
	06 -44		14
	06 -45		14
815-8055	06 -28		4
824-1405	04 -04		10
	04 -20		17
825-11418	05 -12		8
	06 -01		2
	06 -06		24
825-1410	04 -01		43
825-2406	09 -65		27
825-2408	09 -12		21
	09 -12		3
	09 -59		21
	09 -64		30
	09 -65		21
825-2410	03 -07		24
	09 -12		44
	09 -40		27
	09 -40		31
	09 -40		6A

Number	Figure	Sequence	Ref.
825-2410	09 -41		19
	09 -41		5
827-10040	09 -67		16
827-10075	06 -07		3
827-10110	09 -67		19
827-10130	09 -67		8
827-12045	06 -01		21
827-12065	06 -12		9
827-16085	09 -34		10
827-16100	09 -34		11
827-20075	09 -20		13
827-20170	09 -33		2
	09 -33		6
827-20190	09 -05		16
827-20230	06 -38		4
827-8050	07 -06		10
828-10050	06 -25		38
828-10080	06 -25		42
828-20160	09 -06		16
	09 -06		6
829-1306	03 -07		20
829-1312	08 -48		11
829-1406	08 -15		19
	09 -01		32
	09 -14		25
	09 -18		5
829-1408	02 -03		6
	03 -03		11A
	04 -04		8
	04 -08		12
	04 -17		5
	07 -03		28
	07 -03		4
	07 -06		15
	08 -08		18
	09 -03		17
	09 -05		11
	09 -25		17A
	09 -25		8B
829-1410	02 -05		10
	03 -01		35
	03 -01		51
	04 -10		29
	05 -02		48
	06 -11		25
	07 -03		12
	07 -06		21
	08 -01		41
	08 -02		29
	08 -03		26
	08 -04		13
	08 -05		11
	08 -05		17
	08 -05		23
	08 -05		36
	08 -06		10
	08 -06		15
	08 -08		26
	08 -08		34
	08 -15		57
	08 -15		7
	08 -16		12
	08 -16		8
	08 -17		7
	08 -18		36
	08 -18		5
	08 -20		31
	08 -20A		31
	08 -22		16
	08 -22		7
	08 -24		41
	09 -35		34
	09 -35		46
	09 -35		54
	09 -40		6B
829-1412	03 -02		8
	06 -01		22
	08 -02		19
	08 -08		4
	08 -09		4
	08 -10		4
	08 -11		4
829-1412	08 -12		4
	08 -13		4
	08 -14		4
	09 -40		21
829-1416	09 -34		15
829-1420	06 -38		7
	09 -05		19
	09 -20		15
	09 -33		4
	09 -33		8
	09 -36		13
83-1108	08 -17		24
832-10404	04 -12		14
	09 -54		9
832-10406	04 -07		34
	04 -10		31
	04 -12		9
832-10408	04 -12		34
	04 -17		17
	05 -01		17
	05 -01		25
	07 -03		17
	09 -43		32
	09 -45		7
	09 -55		26
	09 -56		10
	09 -62		8
	09 -63		12
	09 -63		17
	09 -66		23
	09 -66		34
	09 -68		7
832-10410	02 -01		26
	05 -01		13
	08 -01		59
	08 -07		15
	08 -12		39
	08 -13		43
	08 -13		50
	08 -13		54
	08 -13		59
	08 -14		16
	08 -19		26
	08 -21		10
	08 -21		45
	08 -21		7
	08 -23		10
	08 -23		7
	09 -07		18
	09 -07		22
	09 -07		8
	09 -15		17
	09 -17		4
	09 -22		19
	09 -22		28
	09 -40		12
	09 -45		11
	09 -67		23
	09 -68		11
832-10412	02 -07		9
	06 -12		11
	08 -10		19
	08 -10		39
	08 -11		19
	08 -11		33
	08 -12		18
	08 -12		25
	08 -12		28
	08 -13		18
	08 -13		25
	08 -13		28
	08 -21		28
	08 -23		28
832-10416	06 -12		34
	06 -13		11
832-10420	09 -06		18
	09 -06		8
832-10508	09 -55		39
	09 -57		16
832-41306	03 -07		42
832-41312	09 -19		25C
833-40310	09 -34		9A

Number	Figure	Sequence	Ref.
833-40406	04 -11		3
	04 -12		23
	04 -12		4
	09 -04		15
	09 -11		18
	09 -42		6
	09 -43		18
	09 -43		23
	09 -43		6
	09 -65		26
	09 -68		18
833-40408	02 -03		13
	09 -45		4A
836-4065	02 -18		6
838-3640	03 -03		16
838-5310	02 -16		15A
84-2106	08 -17		28
840-1510	04 -02		7
842-1416	04 -12		12
843-1516	04 -20		15
844-10020	04 -04		16
	04 -05		11
	04 -05		3
	04 -10		32
	04 -15		11
	09 -03		9
844-10025	04 -05		11
844-10110	09 -07		6
844-12020	02 -19		29
844-12030	02 -16		8
844-6025	04 -07		33
	04 -10		30
	04 -12		7
844-8025	02 -16		16
	03 -04		21
	09 -12		2
	09 -12		20
844-8030	02 -08		13
845-6012	03 -07		39
845-6020	09 -65		25
845-8016	02 -11		11
	02 -19		21
845-8020	02 -14		5
845-8025	02 -08		15
	03 -04		6
845-8035	02 -13		5
	02 -15		29
	02 -16		14
845-8070	02 -16		13
854-10075	02 -19		33
854-12025	02 -09		17
854-12040	02 -21		2
854-8040	02 -08		12
863-10016	06 -25		23
	06 -25		33
863-10025	06 -25		20
863-10030	08 -35		17
	08 -36		18
	08 -37		18
	08 -38		18
863-16070	05 -09		8
863-6020	07 -01		25
864-10025	06 -18		17
864-10030	02 -15		9
864-12130	06 -40		10
864-5010	06 -35		48
864-5012	06 -35		28
	06 -35		39
864-6012	06 -34		6
864-6020	06 -23		8
864-6035	07 -01		10
	07 -01		19
864-8016	07 -01		4
864-8020	06 -23		21
	06 -46		27
864-8025	06 -18		6
864-8030	06 -35		30
864-8065	06 -34		2
86982437	08 -53		20
	08 -54		20
	08 -55		23
86982439	08 -57		25
86982442	08 -56		20
	08 -60		23
86982443	08 -58		26
86982444	08 -59		23
	08 -61		18
86982450	04 -03		3
86982709	04 -01		1
	04 -03		1
86990837	05 -07		1A
	05 -08		
	05 -09		
	05 -10		
	05 -11		
86991263	03 -07		23
86991496	07 -04		14A
86992193	02 -07		5A
86992243	09 -43		20A
86992247	09 -43		1A
86992248	09 -43		10
86992284	09 -43		
	09 -43		
86992975	09 -76		12A
86992976	09 -76		4A
86992977	09 -43		39
86992978	09 -78		12A
86992979	09 -78		4A
86992980	09 -77		12A
86992981	09 -77		4A
86993690	08 -20A		7
86993692	08 -21		1A
	08 -23		1A
86994190	08 -20A		14
86994193	08 -20A		13
87400286	05 -08		7A
87403130	08 -20A		11
87403132	08 -20A		12
87403209	02 -22		13
87403291	04 -09		2
87403455	09 -43		28A
	09 -43		40
87404692	02 -17		33
	02 -23		13
87405487	02 -07		7B
87405727	02 -19		52
	02 -23		
87408255	09 -35		1
87408480	03 -01		10
87408888	09 -46		13
	09 -46		21
87408889	09 -46		12
	09 -46		20
87409051	03 -04		15
	03 -07		6
87409160	02 -20		9
87410200	09 -76		2
87410702	02 -19		
87410703	02 -19		
87413279	02 -22		
87413283	02 -22		14
87415733	06 -46		3A
87415747	06 -06		3A
87415748	06 -02		1A
87415749	06 -02		11A
87415750	06 -05		
87415913	02 -25		21
	03 -04		8
	03 -06		2
87416027	02 -13		11
87416066	06 -05		1
87416314	08 -20		39A
	08 -20A		39A
87417069	02 -22		
87417070	02 -22		
87418165	02 -07		5B
87418406	04 -10		33
87419601	03 -01		1
87421315	02 -09		22
87421904	06 -27		1
87422908	04 -10		
87425543	02 -19		
87425577	06 -13		

Number	Figure	Sequence	Ref.
87425578	06 -13		
87425579	06 -13		
892-10010	06 -25		19
	06 -25		22
	06 -25		32
	06 -25		37
	06 -25		39
	06 -25		41
	06 -26		15
	06 -26		17
892-11005	04 -20		16
892-11006	03 -03		33
	03 -07		19
	08 -17		17
	09 -60		3
	09 -70		
892-11008	02 -01		41
	03 -03		10
	04 -04		37
	04 -08		11
	04 -09		16
	04 -17		4
	07 -03		3
	07 -03		37
	07 -04		6
	07 -06		14
	08 -01		55
	08 -08		17
	08 -10		15
	08 -11		15
	08 -12		14
	08 -13		14
	08 -24		9B
	09 -05		10
	09 -07		28
	09 -11		14
	09 -44		6
892-11010	03 -01		32
	03 -03		24
	04 -01		42
	05 -02		47
	07 -03		11
	07 -06		22
	08 -04		12
	08 -05		10
	08 -05		16
	08 -05		22
	08 -05		37
	08 -06		16
	08 -06		9
	08 -07		9
	08 -08		33
	08 -16		7
	08 -18		35
	08 -20		6
	08 -20A		6
	08 -22		15
	08 -22		6
	08 -24		40
	09 -07		26
	09 -22		9
	09 -25		17E
	09 -35		31
892-11012	03 -03		27
	09 -51		
892-11018	08 -18		8
893-11005	04 -19		8
895-11004	04 -12		13
	04 -20		11
	09 -54		8
895-11005	03 -03		6
	06 -35		47
895-11006	03 -03		34
	03 -07		18
	08 -15		18
	08 -17		16
	09 -55		10A
895-11008	02 -01		11
	02 -02		8
	02 -03		5
	03 -01		47
	03 -03		11
895-11008	04 -17		16
	04 -17		3
	07 -03		2A
	07 -06		34
	08 -17		4
	09 -03		16
	09 -05		9
	09 -11		13
	09 -18		22
	09 -25		17
	09 -25		8A
	09 -43		31
	09 -59		6
	09 -66		22
	09 -70		22
895-11010	03 -01		34
	03 -01		50
	06 -11		3
	07 -06		31
	08 -03		17
	08 -03		3
	08 -04		11
	08 -05		38
	08 -05		9
	08 -07		14
	08 -15		6
	08 -16		14
	08 -17		6
	08 -18		4
	08 -20		5
	08 -20A		5
	08 -21		5
	08 -21		9
	08 -23		5
	08 -23		9
	09 -04		20
	09 -07		17
	09 -07		21
	09 -22		20
	09 -22		27
	09 -35		29
	09 -35		51
	09 -40		11
	09 -40		23
	09 -40		29
	09 -40		6
	09 -41		4
	09 -41		6
	09 -45		10
895-11012	06 -10		20
895-15006	04 -12		8
895-15008	02 -01		7
	02 -03		12
	04 -12		33
	05 -01		16
	05 -01		24
	09 -62		7
	09 -63		16
	09 -66		31
895-15010	05 -01		21
	08 -20		35
	08 -20A		35
	09 -22		8
	09 -63		11
895-15012	08 -01		8
895-18010	08 -13		61
895-30107	09 -55		35
	09 -57		12
895-30109	09 -43		17
	09 -43		22A
	09 -43		5A
896-11008	08 -24		35
896-11010	02 -01		38
	02 -05		8
	05 -05		49
	06 -10		3
	08 -19		25
	09 -01		29A
	09 -25		7A
	09 -67		14
	09 -67		22
	09 -67		26

Number	Figure	Sequence	Ref.
896-11010	09 -67		9
896-11012	02 -19		46
	03 -02		4
	03 -03		27A
	06 -11		30
	06 -12		10
	08 -08		3
	08 -09		3
	08 -10		3
	08 -11		3
	08 -12		3
	08 -13		3
	08 -14		3
	08 -15		4
	09 -22		17
896-11016	09 -34		12
896-11020	03 -01		3A
	06 -38		5
	09 -05		18
	09 -06		19
	09 -06		9
	09 -18		11
	09 -20		14
	09 -33		3
	09 -33		7
	09 -35		3A
896-12006	09 -64		9A
896-15008	07 -06		33
896-15010	09 -08		3
	09 -25		17D
896-15012	02 -07		3
	02 -07		8
	06 -12		28
	06 -13		10
	08 -08		35
	09 -40		17
	09 -40		20
	09 -46		5
90-6682T1	06 -01		16
	06 -09		12
	06 -12		40
	06 -13		19
	06 -47		12
905794R1	06 -18		20
905839R1	05 -09		6
906086R1	09 -55		42
	09 -57		19
92-11038	06 -36		4
933697R1	03 -07		7
934667R1	06 -15		3
	06 -16		4
	06 -23		36
	06 -24		6
934727R1	05 -09		4
96790C2	08 -17		10
96846C2	08 -17		11
A13240	08 -20		25
	08 -20A		25
A15672	06 -12		23
A156873	06 -02		6
	06 -06		21
	06 -46		4
A166057	04 -04		17
	04 -04		2
A167037	09 -71		8
A170241	02 -01		2
	02 -02		9
A170309	02 -07		4
A170467	02 -05		4
A171099	02 -01		15
A171940	02 -06		6
A172116	02 -06		7
A177435	03 -02		2
A178460	06 -29		43
	06 -29		45
A178706	06 -12		24
A183452	06 -29		42
	06 -29		46
A184545	02 -01		30
A184614	09 -67		15
A186182	04 -02		24
A186183	04 -02		18
A186186	04 -02		15
A186193	04 -02		25
A187504	04 -02		13
A187542	04 -18		5
A187575	04 -18		11
A187714	09 -58		10
	09 -60		
A187873	04 -02		
	04 -03		4
A187899	04 -02		12
A187901	04 -02		17
A187903	04 -02		1
A187904	04 -02		9
A187906	04 -02		2
A187923	02 -06		10
A187990	04 -08		5
	07 -03		32
A188028	07 -06		23
A189154	02 -06		1
A189284	09 -67		6
A20058	06 -37		2
A23870	04 -18		1
A27602	05 -05		30
A28230	05 -05		36
A30013	08 -01		16
A30881	09 -03		11
	09 -12		15
	09 -13		5
	09 -14		26
A33509	09 -24		22
A38208	05 -06		5
	05 -07		15
	05 -12		7
A38261	05 -12		3
	05 -12		6
A41264	04 -16		9
A41852	03 -07		14
A42281	02 -04		3
A42561	04 -10		8
	09 -64		6
A44641	08 -25		15
A44651	08 -25		11
A45035	08 -25		13
A45054	09 -52		16
A46948	04 -01		2
A47230	04 -01		
A47232	04 -01		16
A47233	04 -01		17
A47235	04 -01		19
A47236	04 -01		20
A47239	04 -01		31
A47240	04 -01		
A47242	04 -01		28
A47247	04 -01		30
A47249	04 -01		32
A48041	06 -19		6
	06 -20		2
A49667	09 -67		3
A61448	05 -06		11
A61449	05 -06		10
A65544	05 -01		5
A66759	05 -06		1
A77310	07 -03		14
A77405	02 -19		50
	02 -20		11
A77424	02 -19		30
A77465	02 -19		49
	02 -22		11
A77466	02 -22		11
A77467	02 -22		11
A77468	02 -22		11
A77469	02 -22		11
A77472	02 -20		11
A77473	02 -20		12
A77474	02 -20		11
A77475	02 -20		12
A77476	02 -20		11
A77477	02 -20		12
A77478	02 -20		11
A77479	02 -20		12
A77490	02 -14		
A77512	03 -07		26

Number	Figure	Sequence	Ref.
A77673	02 -14		
	02 -19		54
A77720	03 -07		2
A77736	02 -16		
A77775	03 -07		13
A77782	02 -19		6
A77783	02 -17		2
A77810	02 -20		26
A77840	02 -20		12
A77841	02 -20		12
A77887	02 -19		
A77889	02 -20		13
A77890	02 -20		18
A77896	02 -19		51
	02 -20		12
A77902	02 -17		24
	02 -17		28
A77975	02 -19		52
A77994	02 -25		
A78036	02 -24		
B17575	06 -02		
	06 -02		
	06 -03		
	06 -04		
	06 -06		
	06 -06		
	06 -07		
	06 -08		
BMF28S	04 -06		1
BMF31E	04 -05		1
D103626	05 -05		
D120450	09 -21		14
D121152	04 -14		2
	04 -16		
D121194	09 -05		6
D121608	07 -06		12
D123347	09 -72		4
D123655	05 -05		8
D123684	05 -05		7
	05 -07		3
	06 -01		10
D123806	05 -05		18
D123865	05 -05		31
D124528	07 -03		19
D124529	07 -03		13
D124530	07 -03		23
D124857	03 -03		8
D125079	04 -05		7
D126409	04 -06		4
D127018	04 -05		10
D127167	09 -23		38
	09 -24		35
D127172	09 -23		39
	09 -24		36
D127335	04 -12		24
D127507	05 -05		21
D127542	09 -04		2
D128022	09 -60		7
D128402	02 -06		9
D128745	09 -60		4
	09 -70		2
D129227	09 -22		3
D129264	09 -06		11
	09 -06		2
	09 -07		11
D129747	07 -06		13
D132076	09 -05		17
D132895	09 -36		10
D132982	05 -02		39
	07 -04		22
	08 -15		50
	09 -64		24
D133632	09 -21		21
	09 -24		7
D133865	09 -24		22A
D134900	09 -17		6
D135384	04 -14		1
	04 -16		
D136391	09 -20		26
	09 -21		34
D136392	09 -20		24
	09 -21		31
D136392	09 -24		12
D136635	09 -18		7
D136700	09 -20		22
	09 -21		24
	09 -21		32
D136704	09 -20		25
D136773	09 -01		17
	09 -15		11
D137077	07 -03		6
D137345	05 -05		2
D137363	04 -04		12
	04 -20		9
	09 -04		16
	09 -52		3
D137468	04 -10		26
D137625	08 -01		
	08 -01		47
D137627	06 -01		17
	06 -09		13
	06 -12		41
	06 -13		20
	06 -47		13
D138047	05 -05		3
	09 -23		44
	09 -24		41
D138055	08 -04		8
	08 -05		15
	08 -05		35A
	08 -05		6
	08 -06		14
	08 -06		7
	08 -21		43
	08 -22		12
	09 -35		32
D138157	09 -26		7
	09 -27		7
	09 -28		7
	09 -29		7
	09 -29		7
	09 -30		7
	09 -31		7
	09 -31		7
D138380	06 -37		4
	06 -38		3
D138492	06 -37		5
	06 -38		2
D138955	04 -09		18
D139849	09 -26		
	09 -27		
	09 -28		
	09 -29		
	09 -29		
	09 -30		
	09 -31		
	09 -31		
D139851	09 -26		
	09 -27		
	09 -28		
	09 -29		
	09 -29		
	09 -30		
	09 -31		
	09 -31		
D140029	08 -60		15
	09 -23		9
	09 -25		4
D140035	07 -03		9
D140247	09 -24		21
D140267	09 -40		32
D141142	09 -23		20
	09 -24		42
D141164	09 -23		22
	09 -24		45
D142012	09 -31		4
D142144	09 -71		10
D142519	09 -19		15
D142787	08 -04		20
	08 -08		27
	08 -09		21
	08 -10		32
	08 -19A		15
D142898	05 -11		6

Number	Figure	Sequence	Ref.
D142898	06 -20		25
	06 -22		16
	06 -40		24
D142916	06 -04		
D142924	06 -04		
D142926	06 -04		
D142950	06 -02		10A
D142979	06 -46		5
D142986	06 -46		16
D143033	06 -41		18
	06 -42		18
D143084	06 -46		3
D143242	09 -68		4
D143324	09 -23		30
D143405	05 -06		4
D143406	09 -19		13
	09 -19		33
D143411	08 -02		10
	08 -08		14
	08 -18		46
D143416	09 -17		5
D143417	09 -22		7
	09 -40		25
	09 -64		29
	09 -65		20
D143422	08 -01		32
	08 -15		54
D143427	09 -64		27
	09 -65		18
D143714	09 -40		9
D143715	09 -40		8
D143797	08 -01		30
	08 -02		5
	08 -02		9
	08 -15		55
D143830	04 -04		6
D143846	05 -02		25
	08 -07		6
	08 -08		23
	08 -12		37
	08 -13		48
D144161	09 -21		13A
	09 -23		7
	09 -24		15
	09 -25		2
D144168	09 -21		13
D144170	09 -20		4
D144197	09 -21		12
D144485	09 -21		20
	09 -21		7
	09 -24		6
D144486	09 -21		19
	09 -21		29
	09 -21		8
	09 -24		5
D144592	09 -22		4
D145061	09 -31		4
D145367	02 -06		2
D146035	08 -08		24
	09 -36		11
D146288	09 -23		26
	09 -24		49
D146420	09 -27		3
D146421	09 -27		2
D147166	04 -07		6
D147249	09 -27		4
D147383	04 -04		11
	04 -04		26A
	04 -04		33
	09 -67		27
D147409	09 -26		4
D147773	08 -19A		26
D148108	04 -07		35
	04 -08		4
	07 -03		31
D148413	05 -05		1
D148947	09 -14		2
D148962	03 -02		6
	09 -22		18
D148992	09 -12		7
D148993	09 -12		19
D148994	09 -12		18
D149033	09 -19		25
D149079	09 -23		41
	09 -24		38
D149262	09 -12		46
D149287	09 -01		35
	09 -02		36A
	09 -03		4
	09 -12		37
	09 -13		11
	09 -15		3
	09 -17		11
	09 -22		14
D149288	07 -06		20
	09 -02		36
	09 -12		23
	09 -12		48
	09 -15		7
D149295	09 -12		34
	09 -15		9
D149298	09 -23		32
D149308	08 -13		56
D149309	08 -13		57
D149310	08 -13		55
D149725	05 -08		4
	06 -02		2
D149726	05 -08		3
	06 -02		4
D149729	06 -04		5
D149736	06 -04		7
D149737	06 -04		8
D149738	06 -04		6
D149739	06 -04		
D149824	09 -74		3
D149825	09 -74		4
D149826	09 -79		10
D149827	09 -79		11
D149828	09 -74		5
D149829	09 -74		6
D149860	06 -09		
	06 -47		
D149866	09 -10		9
D149867	09 -10		10
D149868	09 -10		12
D149921	08 -52		
D150032	09 -17		13
D150053	08 -19A		3
D150054	08 -19A		2
D150099	08 -08		25
D150105	06 -43		6A
D150155	05 -05		22
D150214	05 -09		11A
	06 -03		8
D150391	09 -46		15
	09 -46		23
D150392	09 -46		16
	09 -46		24
D150397	09 -12		9
D150434	09 -12		13
D150435	09 -12		12
D150486	09 -12		17
D150493	09 -12		24
D150503	09 -12		45
D150619	09 -23		34
D150633	07 -06		11
D150781	08 -50A		
D150810	08 -50A		
D151034	09 -05		15
D151058	09 -34		5
D151059	09 -21		11
	09 -23		8
	09 -24		16
	09 -25		3
D151060	09 -20		5
D151061	09 -20		2
D151062	08 -58		17
D25279	09 -19		10
	09 -19		14
	09 -23		31
D28648	09 -19		12
D30933	09 -26		12
	09 -27		12
	09 -28		12

Number	Figure	Sequence	Ref.
D30933	09 -29		12
	09 -29		12
	09 -30		12
	09 -31		12
	09 -31		12
D31140	09 -07		2
D34666	09 -12		16
D35009	06 -12		32
	06 -13		12
D35908	06 -13		16
D36179	09 -38		8
D36264	02 -04		11
D37495	09 -27		11
	09 -28		11
	09 -29		11
	09 -29		11
	09 -30		11
	09 -31		11
	09 -31		11
D37614	09 -23		29
D38435	08 -03		23
D38648	08 -07		20
	08 -14		26
D38858	08 -53		10
D38907	09 -19		3
D39118	09 -14		11
D39256	09 -19		17
D39696	06 -10		18
	06 -11		20
D40236	08 -14		13
D40442	03 -01		37
	09 -35		37
D42833	08 -16		6
D43940	09 -26		11
D48212	09 -26		10
	09 -27		10
	09 -28		10
	09 -29		10
	09 -29		10
	09 -30		10
	09 -31		10
	09 -31		10
D48438	08 -24		37
D49429	09 -04		3
D50146	09 -19		6
D50696	09 -32		2
D51391	09 -07		7
D51392	09 -07		15
D51393	09 -07		19
D51750	09 -26		5
	09 -26		8
	09 -27		5
	09 -27		8
	09 -28		5
	09 -28		8
	09 -29		5
	09 -29		5
	09 -29		8
	09 -29		8
	09 -30		5
	09 -30		8
	09 -31		5
	09 -31		5
	09 -31		8
	09 -31		8
D52276	02 -01		25
	08 -08		7
	08 -09		7
	08 -10		7
	08 -11		7
	08 -12		7
	08 -13		7
	08 -14		7
D52564	09 -72		1
D55216	09 -74		10
D55561	04 -05		8
D57486	05 -05		27
D59912	09 -12		4
	09 -14		6
	09 -18		2
	09 -22		13
D61297	05 -05		38
D61368	09 -19		16
D67296	09 -25		17C
D67297	08 -01		29
D67298	08 -01		56
D68845	08 -01		57
D72371	05 -05		34
D72372	05 -05		37
D73383	04 -06		5
D74182	08 -18		45
D74949	05 -05		17
	05 -06		8
D75103	05 -06		
D75465	03 -01		12
D80270	03 -01		39
	09 -35		48
	09 -74		11
D83187	08 -25		10
D83485	04 -05		2
D88052	09 -64		32
D88427	09 -19		11
D95096	09 -03		13
D95142	05 -04		8
D95143	08 -53		5
	08 -54		5
	08 -55		5
	08 -61		4
D95144	08 -57		5
D95145	08 -56		5
D95146	08 -58		7
D95147	08 -59		5
	08 -60		5
E114385	06 -29		18
	06 -29		3
	06 -30		18
	06 -30		3
	06 -32		3
	06 -33		3
E114386	06 -29		19
	06 -29		4
	06 -30		19
	06 -30		4
	06 -32		4
	06 -33		4
E135750	06 -40		18
E135755	06 -46		9
E135762	06 -43		10
	06 -43		8
E135765	06 -43		4
E135777	06 -41		3
	06 -42		3
E135780	06 -41		5
	06 -42		5
E135785	06 -41		8
	06 -42		8
E135788	06 -46		12
E135795	06 -46		17
E135809	06 -15		10A
	06 -15		1A
	06 -16		13
	06 -16		1A
	06 -39		9
E135810	07 -02		7
E135827	06 -43		3
E43769	09 -59		18
E49497	09 -16		4
E49498	09 -16		3
F13537	08 -49		38
F22426	04 -12		
F44883	09 -41		10
F45165	09 -55		49
	09 -57		25
F64198	09 -55		45
	09 -57		22
F64519	09 -68		14
G100440	08 -57		16
G100444	08 -55		17
	08 -61		14
G100448	08 -57		17
G100449	08 -55		18
	08 -61		15
G100710	08 -53		15
G100711	08 -53		16

Number	Figure	Sequence	Ref.
G101066	08 -49		32
G101533	08 -57		6
G102090	08 -56		16
G102092	08 -56		15
G102285	08 -57		15
G102286	08 -53		14
G102287	08 -54		14
G102288	08 -55		16
	08 -61		13
G102425	08 -53		6
	08 -54		6
	08 -55		6
	08 -61		5
G102426	08 -56		6
G102427	08 -58		8
G102428	08 -59		6
G102711	08 -30		5
	08 -31		5
	08 -33		5
	08 -40		5
	08 -41		5
	08 -42		5
	08 -43		5
	08 -44		5
	08 -46		5
	08 -47		5
G103862	08 -30		22
	08 -31		25
	08 -33		19
	08 -40		15
	08 -44		37
	08 -46		15
	08 -47		15
G104439	05 -04		15
G104454	05 -04		16
G104989	08 -56		18
	08 -60		21
G104990	08 -59		21
G105187	05 -04		14
G106395	08 -31		8
G106396	08 -31		9
G106398	08 -31		12
G106409	08 -47		29
G106425	08 -31		14
G106808	05 -04		2
G106817	05 -04		6
G107251	08 -27		10
	08 -28		11
	08 -35		10
	08 -36		11
	08 -37		11
	08 -38		11
G107277	08 -61		12
G107447	08 -30		9
G107721	05 -04		
G107780	08 -30		16
	08 -31		16
	08 -49		18
G107786	08 -44		
G107921	05 -04		9
G107970	08 -56		10
G107971	08 -58		14
	08 -59		12
G108512	08 -54		3
G108556	08 -29		16
G108630	08 -49		6
G108723	08 -44		17
	08 -49		26
G108805	08 -28		13
G108866	08 -29		11
G108867	08 -29		13
G108870	08 -27		12
G108899	08 -36		13
	08 -37		13
G108900	08 -35		12
G108911	08 -49		15
G108912	08 -49		13
G108913	08 -49		11
G108914	08 -49		9
G108956	08 -49		37
G108957	08 -49		39
G109127	08 -31		10
G109295	08 -30		10
G109298	08 -55		11
	08 -61		9
G109299	08 -57		10
G109384	08 -31		15
G109391	08 -30		23
	08 -34		
	08 -47		
G109449	08 -34		
	08 -44		
	08 -47		
G109627	08 -42		
G109630	08 -42		23
G109646	08 -32		4
G109964	08 -44		15
G109971	08 -44		18
G110045	05 -04		
G110077	08 -40		
	08 -50A		
G110391	08 -49		3
	08 -49		5
G110467	08 -50A		
G110468	08 -42		21
G110594	08 -56		13
G15215	05 -06		9
G32122	08 -54		10
G32126	08 -60		12
G32129	05 -04		11
G32176	08 -57		24
G32303	08 -53		18
	08 -54		18
	08 -55		20
	08 -57		19
G32559	08 -58		24
G33075	08 -30		6
	08 -31		6
	08 -33		6
	08 -40		6
	08 -41		6
	08 -42		7
	08 -43		6
	08 -44		6
	08 -46		6
	08 -47		6
G33080	08 -33		10
	08 -40		10
	08 -41		10
	08 -42		9
	08 -43		10
	08 -44		10
	08 -46		10
	08 -47		10
G33122	08 -31		
	08 -33		
	08 -46		
	08 -47		
G33965	08 -27		11
	08 -28		12
	08 -35		11
	08 -36		12
	08 -37		12
	08 -38		12
G34458	08 -30		25
	08 -31		27
	08 -33		21
	08 -39		15
	08 -39		9
	08 -44		13
G34938	08 -30		24
	08 -31		26
	08 -33		20
	08 -39		16
	08 -44		14
G35540	08 -29		19
	08 -29		9
	08 -31		20
	08 -33		14
	08 -34		4
	08 -40		19
	08 -42		19
	08 -44		23
	08 -46		19

Number	Figure	Sequence	Ref.
G35540	08 -47		19
	08 -47		33
	08 -50A		4
H433285	09 -23		3
H434163	08 -01		26
	08 -01		48
H437677	06 -06		9
H437679	06 -06		4
J282159	02 -11		8
J282942	03 -05		12
J283333	02 -16		2
	02 -19		53
J283336	02 -16		2
J283338	02 -16		2
J283767	02 -19		23
	02 -24		8
J284377	02 -17		31
J285102	02 -16		10
J285651	02 -15		1
J285916	02 -14		16
J286277	02 -08		
J286499	02 -11		12
J286503	03 -04		2
J287008	02 -21		
J287096	02 -16		15
J287119	02 -10		1
J330478	02 -19		17D
J591893	02 -12		4
J678603	02 -11		15
J678912	02 -19		17B
J678921	02 -19		17A
J678923	02 -19		16
J802422	02 -22		
J802423	02 -22		
J802746	02 -22		
J802747	02 -19		47
	02 -22		
J802764	02 -22		
J802765	02 -22		
J802998	03 -07		
J806298	02 -12		
J823494	02 -09		
J900068	02 -19		15
	02 -19		3
J900227	02 -08		4
	02 -18		5
J900242	02 -17		19
J900245	02 -17		20
J900250	02 -17		5
J900257	02 -09		9
	02 -19		13
J900269	02 -21		17
J900677	02 -14		2
J900808	02 -23		7
J900919	02 -22		10
J900955	02 -19		10
J900956	02 -19		7
J900958	02 -19		9
J901049	02 -14		6
J901221	02 -17		29
J901352	02 -15		2
J901395	02 -21		14
J901448	02 -10		3
J901774	02 -21		16
J902343	02 -19		14
J902425	02 -14		12
	02 -14		15
	02 -24		13
	02 -25		6
J902469	02 -16		18
	04 -03		6
J903035	03 -06		1
J903089	04 -03		7
J903242	02 -18		3
J903380	02 -23		17
	02 -23		9
	02 -25		7
	03 -05		7
J903463	02 -09		19
J903475	02 -09		20
	02 -24		1
	02 -25		8
J903757	02 -16		9
J903857	02 -20		7
J903924	02 -09		13
J904105	02 -17		13
J904166	02 -22		7
J904230	02 -19		36
J904339	02 -10		4
J904408	02 -17		14
J904409	02 -17		15
J904446	02 -08		18
J904483	02 -20		3
J904701	02 -15		8
J904711	03 -05		11
J905114	02 -14		17
	02 -19		39
	02 -19		42
J905206	02 -14		3
J905307	03 -05		8
J905820	02 -20		6
J905860	03 -04		
J906064	02 -15		11
J906065	02 -15		12
J906066	02 -15		27
J906067	02 -15		28
J906068	02 -15		19
	02 -15		25
J906069	02 -15		17
	02 -15		23
J906072	02 -15		18
	02 -15		24
J906073	02 -15		26
J906206	02 -17		16
J906373	02 -15		16
J906374	02 -15		22
J906378	02 -15		3
J906619	02 -13		13
	02 -17		4
J906696	02 -19		28
	02 -24		14
	02 -25		10
J906697	02 -19		32
	02 -24		10
	02 -25		11
J906698	02 -08		3
	02 -24		7
J906773	02 -10		6
J906854	02 -17		12
J907049	02 -16		6
J907185	02 -10		5
J907201	02 -15		4
J907307	02 -15		30
J907571	02 -15		10
J907572	02 -15		5
J907586	02 -19		24
J907769	02 -08		7
J907998	02 -09		12
J908031	02 -20		1
J908118	02 -16		7
J908560	04 -02		27
J908563	04 -02		28
J908616	02 -13		3
J909355	02 -13		2
J909356	02 -23		11
	02 -25		12
	03 -08		2
J910248	02 -21		6
J910412	02 -17		11
J910517	02 -19		40
	02 -19		40
	02 -25		13
J910530	02 -19		44
J910739	02 -08		10
J910810	02 -17		25
J910811	02 -17		21
J910824	02 -23		21
J911205	02 -08		6
J911446	03 -04		19
J911924	02 -08		11
J912220	02 -23		16
J912473	02 -21		5
	02 -24		16
	02 -25		14

Number	Figure	Sequence	Ref.
J912772	02 -09		21
J912888	03 -07		4
J913689	02 -21		11
J913994	02 -09		14
	02 -24		5
J914284	03 -04		3
J914459	02 -08		5
J914494	02 -20		5
J914856	02 -23		19
J914868	02 -09		18
J915772	02 -09		11
	02 -24		4
J915787	02 -13		9
J916361	03 -04		10
J916438	02 -11		2
J916662	02 -19		38
J917280	03 -04		7
J917717	03 -05		13
J917746	03 -05		14
J918109	02 -10		7
J918188	02 -23		18
	03 -04		9
J918192	03 -04		14
	03 -04		18
J918427	02 -13		7
J918428	02 -13		6
J918536	03 -07		25
J918612	02 -19		35
J918954	02 -13		
J919086	03 -05		17
J919369	02 -23		3
	02 -25		5
J919683	02 -09		10
J920400	02 -14		10
J920691	02 -22		5
	02 -22		5
	02 -22		5
J920706	02 -19		12A
J920773	02 -14		9
J920779	02 -17		17
J920780	02 -17		17
J920781	02 -17		30
J920854	03 -05		15
J920855	03 -05		16
J920867	02 -17		9
J920868	02 -17		10
J921640	02 -17		8
	02 -17		8A
	02 -23		2
J922488	02 -17		18
J922789	02 -11		14
J923044	02 -08		8
J923049	02 -21		13
J923261	02 -23		12
	02 -25		15
J923331	02 -16		11
	02 -23		1
J924147	02 -14		8
J924148	02 -14		11
J924346	03 -07		28
J924725	03 -04		17
J924726	03 -04		11
J924962	02 -09		7
	02 -09		8
J925171	03 -07		33
J925186	02 -08		16
J925234	02 -21		3
J925953	02 -01		31
J925955	03 -04		1
J926047	02 -19		12
J926863	02 -09		6
J927154	02 -10		2
	02 -23		4
	02 -25		16
J927155	02 -18		4
J927633	03 -04		12
	03 -05		6
J927948	02 -19		4
J927949	02 -15		31
J928404	02 -16		3
J928759	02 -19		20
	02 -24		18
J928981	03 -07		3
J928989	02 -19		37
	02 -21		15
J929027	02 -20		2
J929028	02 -18		7
J929456	03 -07		40
J929457	02 -13		8
	02 -24		15
J929490	03 -05		9
	03 -08		1
J929777	02 -11		7
J929885	02 -18		1
J930153	03 -07		1
J930324	02 -23		14
	02 -25		17
J930590	03 -07		38
J930886	02 -21		1
J930906	02 -16		4
	02 -23		8
J931607	02 -24		20
J931623	02 -17		32
J931784	02 -11		1
J931973	02 -19		19
J932012	02 -19		1
J932096	03 -07		6
J932157	03 -05		2
J932158	03 -05		3
J932159	03 -05		4
J932160	03 -05		5
J932296	02 -19		17C
J932321	03 -07		27
J932445	02 -11		17
J932453	02 -17		7
J932475	02 -11		5
	02 -12		2
J932484	02 -11		19
J932529	03 -07		30
J933026	02 -11		2A
J933220	02 -19		
J933262	02 -20		25
J933648	02 -19		
J934022	03 -07		43
J934047	02 -19		48
	02 -22		6
	02 -22		6
	02 -22		6
J934086	02 -17		23
	02 -17		27
J934178	02 -11		6
J934429	02 -13		3
J934459	02 -11		9
J934469	02 -08		14
J934486	02 -20		23
J934636	03 -07		22
J934638	02 -11		10
	02 -12		3
J934877	02 -19		31
J934912	02 -19		27
J934937	02 -21		
J935032	02 -24		19
	02 -25		20
	03 -07		37
J935038	02 -17		6
J935449	02 -16		5
	02 -23		15
J935583	02 -09		1
J936186	02 -19		22
J936209	02 -08		17
J936318	03 -04		5
J936348	03 -04		16
J936365	02 -13		4
J936791	02 -19		2
J936876	02 -23		6
J936904	02 -20		8
J937027	02 -14		1
J937142	02 -23		10
	02 -25		9
	03 -05		10
	03 -08		3
J937214	02 -19		18
J937534	02 -19		26
J937535	02 -19		25

Number	Figure	Sequence	Ref.
J937706	02 -23		20
	02 -25		4
J938153	02 -10		8
	02 -23		5
	02 -25		19
J938156	02 -09		5
	02 -24		3
J938157	02 -14		4
J938159	02 -20		10
	02 -24		9
J938655	02 -09		16
	02 -24		6
J938660	02 -17		
J939258	02 -24		17
	02 -25		18
	03 -04		4
J939570	03 -04		20
J940059	02 -18		2
J941476	02 -22		9
J942581	02 -22		
J942914	02 -13		12
	02 -24		11
J942915	02 -13		10
	02 -24		2
J944869	03 -04		13
J963388	02 -15		
J990881	03 -06		3
J991069	02 -09		4
J991132	03 -07		40A
J991167	03 -07		30A
J991517	03 -06		4
J991962	03 -05		1
	03 -07		1
J992053	02 -19		25A
JC596586	02 -12		
JC901569	02 -22		
JC908031	02 -20		
JC929490	03 -08		
JC930153	03 -07		
JC937027	02 -14		
JC938660	02 -17		
JC991962	03 -07		
JR806298	02 -12		
JR908031	02 -20		
JR929490	03 -08		
JR930153	03 -07		
JR933648	02 -19		
JR937027	02 -14		
JR938660	02 -17		
JR942581	02 -22		
JR991962	03 -07		
K260177	06 -15		5
	06 -16		6
K260218	06 -06		22
K261014	06 -08		4
K261065	06 -08		3
K262143	06 -03		4
	06 -08		9
K262251	06 -06		
K395019	06 -02		10
K395027	06 -07		12
K395029	06 -06		27
	06 -46		18
K395075	06 -07		8
K395086	06 -07		13
K395087	06 -07		6
K395090	06 -08		8
K395091	06 -06		20
K395093	06 -06		14
K395094	06 -06		26
	06 -46		19
K395101	06 -06		2
	06 -46		2
K395103	06 -02		11
K395110	06 -06		18
K395114	06 -06		11
K395122	06 -06		16
K395123	06 -06		3
K395131	06 -06		8
	06 -46		8
K691987	02 -01		24
	09 -36		9
L111356	08 -19A		31
	09 -75		10
L11182	07 -06		19
L15401	09 -03		12
L17985	09 -64		22
L18337	02 -03		14
	02 -06		17
	03 -01		22
	03 -01		43
	03 -02		12
	04 -04		28
	04 -07		26
	04 -14		11
	04 -15		14
	04 -17		6
	04 -20		6
	05 -02		22
	05 -02		41
	06 -10		10
	06 -11		10
	06 -39		8
	07 -04		23
	08 -01		39
	08 -08		13
	08 -10		20
	08 -11		20
	08 -12		19
	08 -13		19
	08 -14		19
	08 -15		51
	08 -17		30
	08 -19A		17
	08 -20		36
	08 -20A		36
	08 -21		23
	08 -22		18
	08 -23		23
	08 -24		32
	08 -24		8
	09 -02		41
	09 -52		22
	09 -59		16
	09 -63		21
	09 -64		25
	09 -65		17
	09 -66		13
	09 -67		5
	09 -70		14
L26209	07 -03		7
L30039	06 -26		11
L32318	08 -26		2
L54563	09 -12		14
	09 -13		1
L60224	04 -12		5
	09 -35		49A
L71879	04 -04		21
	04 -07		
	04 -07		
	04 -07		
	04 -07		10
	04 -08		
	04 -10		
	04 -10		
	04 -10		34
L79937	08 -05		39
N13505	05 -09		12A
	06 -03		11
N13515	06 -06		23
N14283	04 -16		10
N14330	08 -01		13
N14367	05 -08		2
	06 -02		3
N14372	06 -02		9
N14373	05 -08		8A
	06 -02		12
N14377	06 -04		3
N14380	06 -04		
N14407	06 -07		5
N14408	06 -07		7
N14409	06 -05		5
	06 -05		5
N14410	06 -05		3

Number	Figure	Sequence	Ref.
N14410	06 -05		3
N14466	09 -61		20
N14784	07 -05		
N6755	08 -52		
N6836	04 -16		3
N6941	08 -52		
N7802	09 -47		
NSS	02 -02		10
	02 -02		11
	02 -04		1
	02 -04		5
	02 -06		3
	02 -08		1
	02 -08		2
	02 -09		2
	02 -12		1
	02 -13		1
	02 -14		13
	02 -14		7
	02 -16		12
	02 -17		1
	02 -17		22
	02 -17		26
	02 -19		38
	02 -19		41
	02 -19		41
	02 -20		14
	02 -20		15
	02 -20		16
	02 -20		17
	02 -20		19
	02 -20		20
	02 -20		21
	02 -20		22
	02 -20		24
	02 -20		24A
	02 -20		27
	02 -20		28
	02 -20		4
	02 -21		10
	02 -21		8
	02 -21		9
	02 -22		1
	02 -22		1
	02 -22		1
	02 -22		12
	02 -22		2
	02 -22		2
	02 -22		2
	02 -22		3
	02 -22		3
	02 -22		3
	02 -22		4
	02 -22		4
	02 -22		4
	02 -22		8
	03 -07		41
	03 -08		4
	03 -08		5
	03 -08		6
	03 -08		7
	03 -08		8
	03 -08		9
	04 -01		21
	04 -01		22
	04 -01		23
	04 -01		24
	04 -01		25
	04 -01		26
	04 -01		4
	04 -01		5
	04 -01		6
	04 -01		7
	04 -01		8
	04 -02		19
	04 -02		20
	04 -02		21
	04 -02		22
	04 -02		23
	04 -04		31B
	04 -10		2
	04 -10		25
NSS	04 -10		3
	04 -10		4
	04 -13		
	04 -13		
	04 -13		
	04 -16		1
	04 -16		5
	04 -16		6
	04 -16		7
	04 -16		8
	04 -18		12
	05 -03		1
	05 -03		3
	05 -03		5
	05 -03		6
	05 -04		12
	05 -04		13
	05 -10		2
	06 -02		14
	06 -04		10
	06 -04		11
	06 -04		12
	06 -04		13
	06 -04		14
	06 -04		15
	06 -04		16
	06 -06		13
	06 -06		15
	06 -07		1
	06 -07		2
	06 -08		1
	06 -08		2
	06 -09		10
	06 -09		11
	06 -09		2
	06 -09		3
	06 -09		4
	06 -09		9
	06 -12		
	06 -17		10
	06 -17		11
	06 -17		12
	06 -17		13
	06 -17		17
	06 -17		18
	06 -17		2
	06 -17		20
	06 -17		21
	06 -17		3
	06 -17		3A
	06 -17		4
	06 -17		5
	06 -17		6
	06 -17		7
	06 -17		8
	06 -17		9
	06 -21		10
	06 -21		11
	06 -21		12
	06 -21		15
	06 -21		20
	06 -21		21
	06 -21		22
	06 -21		23
	06 -21		24
	06 -21		25
	06 -21		25A
	06 -21		7
	06 -21		8
	06 -23		1
	06 -23		38A
	06 -23		43
	06 -23		45
	06 -24		1
	06 -24		2
	06 -24		3
	06 -25		12
	06 -25		13
	06 -35		1
	06 -35		10
	06 -35		11
	06 -35		12

Number	Figure	Sequence	Ref.	Number	Figure	Sequence	Ref.
NSS	06 -35		13	NSS	08 -32		1
	06 -35		14		08 -33		1
	06 -35		15		08 -33		11
	06 -35		16		08 -33		2
	06 -35		17		08 -34		1
	06 -35		18		08 -34		10
	06 -35		19		08 -34		2
	06 -35		2		08 -34		5
	06 -35		20		08 -34		6
	06 -35		21		08 -34		7
	06 -35		22		08 -34		8
	06 -35		23		08 -34		9
	06 -35		24		08 -39		1
	06 -35		25		08 -39		12
	06 -35		26		08 -40		1
	06 -35		27		08 -40		16
	06 -35		3		08 -40		17
	06 -35		31		08 -40		2
	06 -35		34		08 -40		20
	06 -35		38		08 -40		21
	06 -35		4		08 -40		22
	06 -35		44		08 -40		23
	06 -35		5		08 -40		24
	06 -35		6		08 -40		25
	06 -35		7		08 -41		1
	06 -35		8		08 -41		1A
	06 -35		9		08 -41		2
	06 -36		2		08 -42		1
	06 -41		1		08 -42		16
	06 -41		2		08 -42		2
	06 -42		1		08 -42		22
	06 -42		2		08 -43		1
	06 -43		1		08 -43		1A
	06 -43		1A		08 -43		2
	06 -46		20		08 -44		1
	06 -47		10		08 -44		2
	06 -47		11		08 -44		20
	06 -47		2		08 -44		21
	06 -47		3		08 -44		24
	06 -47		4		08 -44		25
	06 -47		9		08 -44		26
	07 -05		1		08 -44		27
	07 -05		10		08 -44		28
	07 -05		11		08 -44		29
	07 -05		12		08 -45		1
	07 -05		13		08 -45		3
	07 -05		14		08 -46		1
	07 -05		15		08 -46		16
	07 -05		16		08 -46		2
	07 -05		17		08 -47		1
	07 -05		18		08 -47		16
	07 -05		2		08 -47		17
	07 -05		3		08 -47		2
	07 -05		4		08 -47		20
	07 -05		5		08 -47		21
	07 -05		6		08 -47		22
	07 -05		7		08 -47		23
	07 -05		8		08 -47		24
	07 -05		9		08 -47		25
	07 -06		1		08 -47		30
	07 -06		2		08 -49		1
	08 -01		12		08 -49		25
	08 -01		21		08 -49		4
	08 -01		23		08 -49		43
	08 -01		24		08 -49		44
	08 -01		25		08 -50		1
	08 -25				08 -50A		1
	08 -25		8		08 -50A		10
	08 -25		9		08 -50A		14
	08 -26		1		08 -50A		2
	08 -26		10		08 -50A		5
	08 -26		13		08 -50A		6
	08 -26		3		08 -50A		7
	08 -26		4		08 -50A		8
	08 -26		9		08 -50A		9
	08 -29		1		08 -51		1
	08 -29		2		08 -51		10
	08 -30		1		08 -51		11
	08 -30		2		08 -51		12
	08 -31		1		08 -51		13
	08 -31		17		08 -51		4
	08 -31		2		08 -51		9

Number	Figure	Sequence	Ref.
NSS	08 -52		1
	08 -52		6
	08 -52		7
	08 -52		8
	08 -53		
	08 -53		7
	08 -53		8
	08 -54		
	08 -54		7
	08 -54		8
	08 -55		
	08 -55		8
	08 -55		9
	08 -56		
	08 -56		7
	08 -56		8
	08 -57		
	08 -57		7
	08 -57		8
	08 -58		
	08 -58		10
	08 -58		11
	08 -59		
	08 -59		8
	08 -59		9
	08 -60		
	08 -60		8
	08 -60		9
	08 -61		
	08 -61		6
	08 -61		7
	09 -03		10
	09 -06		1
	09 -06		10
	09 -07		1
	09 -07		10
	09 -09		10
	09 -09		2
	09 -23		37
	09 -23		6
	09 -24		14
	09 -24		34
	09 -26		2
	09 -26		3
	09 -28		2
	09 -28		3
	09 -28		4
	09 -29		2
	09 -29		2
	09 -29		3
	09 -29		3
	09 -29		4
	09 -29		4
	09 -30		2
	09 -30		3
	09 -30		4
	09 -43		
	09 -43		
	09 -47		1
	09 -47		2
	09 -47		7
	09 -47		8
	09 -48		9
	09 -49		12
	09 -52		1B
	09 -55		1
	09 -55		1A
	09 -58		17
	09 -58		27
	09 -58		47
	09 -61		19
	09 -61		21
	09 -67		1
P2745466	06 -22		21
P2745478	06 -22		10
	06 -43		5
P3034505	06 -41		9
	06 -42		9
P3428532	06 -43		6
P3533055	06 -21		35
	06 -22		20
R21391	02 -04		9
R26725	09 -19		9
R46493	08 -01		31
	08 -07		7
	08 -15		56
R47941	09 -18		14
R54682	09 -71		6
REF	02 -11		4
	02 -16		1
	02 -19		5
	05 -02		1
	05 -12		2
	05 -12		5
	06 -37		3
	08 -01		
	08 -01		
	08 -02		
	08 -04		1
	08 -05		1
	08 -07		
	08 -08		1
	08 -09		1
	08 -10		1
	08 -11		1
	08 -12		1
	08 -13		1
	08 -14		1
	08 -16		
	08 -17		
	08 -18		
	08 -18		13
	08 -19		
	08 -20		
	08 -20A		
	08 -22		4
	08 -34		
	08 -35		
	08 -36		
	08 -37		
	08 -38		
	08 -39		
	08 -39		
	08 -45		
	09 -04		
	09 -09		
	09 -09		
	09 -10		
	09 -12		
	09 -14		
	09 -15		
	09 -23		28
	09 -25		
	09 -25		
	09 -25		
	09 -29		
	09 -34		
	09 -34		
	09 -39		
	09 -43		
	09 -43		
	09 -43		
	09 -43		
	09 -55		
	09 -56		
S109444	08 -54		15
S109445	08 -54		16
S115351	05 -03		2
S300976	06 -41		7
	06 -42		7
S301064	06 -02		18
S301065	06 -02		15
S80928	09 -67		7A
S88754	08 -26		16
S88756	08 -26		17
S89695	06 -32		30
	06 -33		31
S89696	06 -32		29
	06 -33		30
S94643	08 -61		17
ST205A	06 -19		1
	06 -22		6
T34857	04 -16		2
W16323	08 -26		24

Printed in U.S.A.

CASE CORPORATION
700 STATE STREET
RACINE, WI 53404 U.S.A.

CASE CANADA CORPORATION
3350 SOUTH SERVICE ROAD
BURLINGTON, ON L7N 3M6 CANADA