TOYOTA INDUSTRIAL EQUIPMENT

Repair Manual

MODELS 5FB10,14,15,18,20,25,30

JUNHO 1995

RUTHZIL TRATOR COMERCIAL DE PEÇAS LTDA 11 97083-6812 ROLANDO

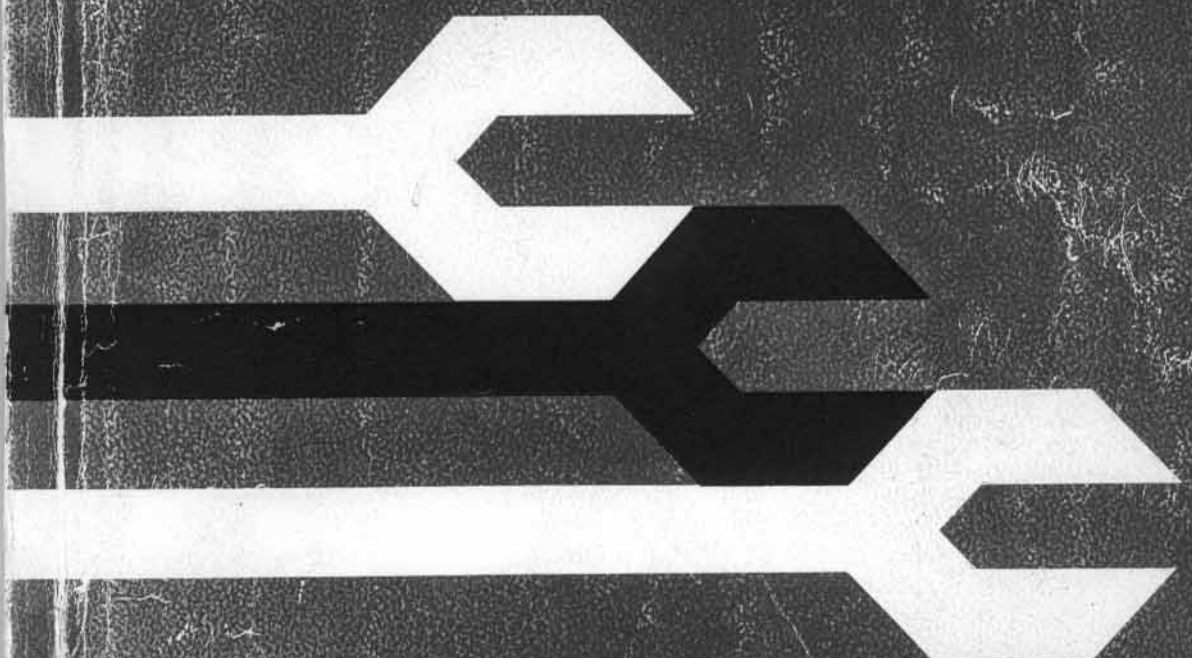

閲覧用 95.6.

FOREWORD

This manual describes the service procedures for the Toyota Forklift 5FB 10 ~ 30 Series. You are encouraged to refer to this manual for accurate, quick servicing of the relevant vehicles.

This publication contains the latest information on the above models as of April, 1990. Please consult the Toyota Industrial Vehicles' Parts & Service News for any changes or modifications thereafter.

TOYOTA MOTOR CORPORATION

SECTION INDEX

NAME	SECTION
GENERAL	0
BATTERY	1
CONTROL CIRCUIT	2
MULTIDISPLAY FUNCTIONS	3
ELECTRICAL SYSTEM TROUBLESHOOTING	4
MOTOR	5
DRIVE UNIT	6
FRONT AXLE	7
REAR AXLE	8
WHEELS	9
STEERING	10
BRAKE	11
BODY	12
MATERIAL HANDLING SYSTEM	13
MAST	14
CYLINDERS	15
OIL PUMPS	16
OIL CONTROL VALVE	17
APPENDIX	18

GENERAL

0

	page
EXTERIOR VIEWS	0-2
VEHICLE MODELS	0-3
FRAME NUMBER	0-3
HOW TO USE THIS MANUAL	0-4
LIST OF ABBREVIATIONS AND SYMBOLS	0-6
TIPS ON OPERATION	0-7
STANDARD BOLT & NUT TIGHTENING TORQUE	0-8
PRECOAT BOLTS	0-10
HIGH PRESSURE HOSE FITTING TIGHTENING TORQUE	0-10
WIRE ROPE SUSPENSION ANGLE LIST	0-11
COMPONENTS WEIGHT	0-12
RECOMMENDED LUBRICANTS AND CAPACITIES	0-13
LUBRICATION CHART	0-14
PERIODIC MAINTENANCE	0-15
PERIODIC REPLACEMENT OF PARTS AND LUBRICANTS	0-20

EXTERIOR VIEWS

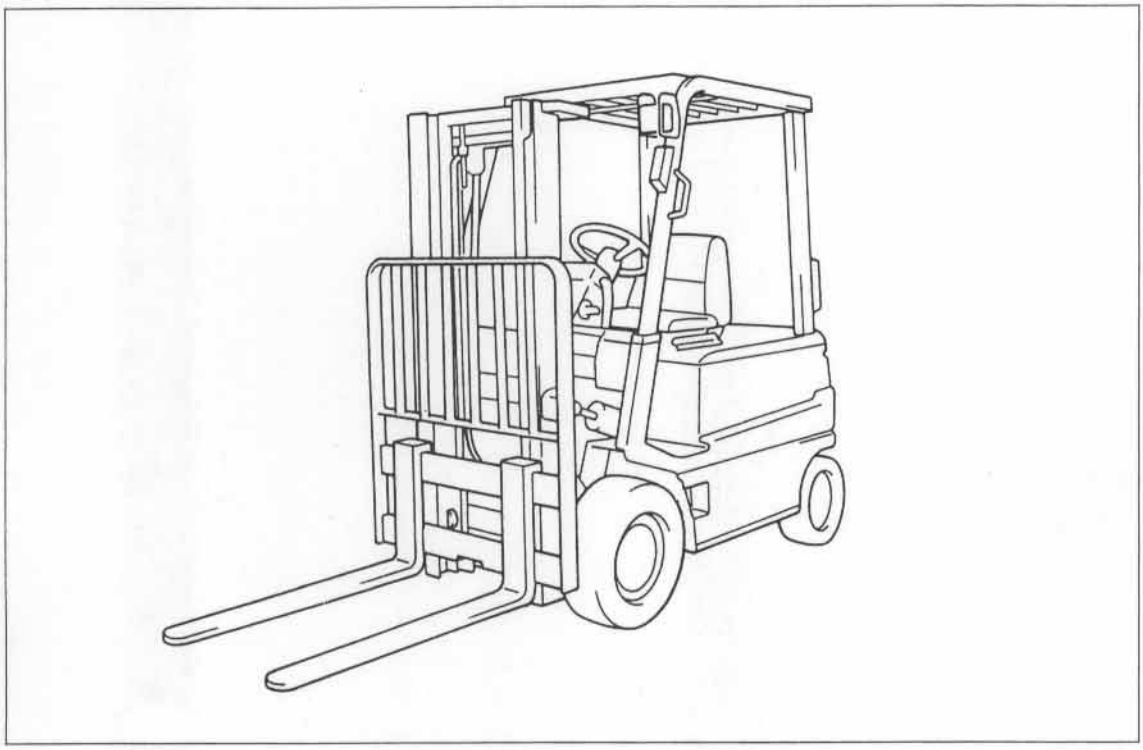

Front View BATS76

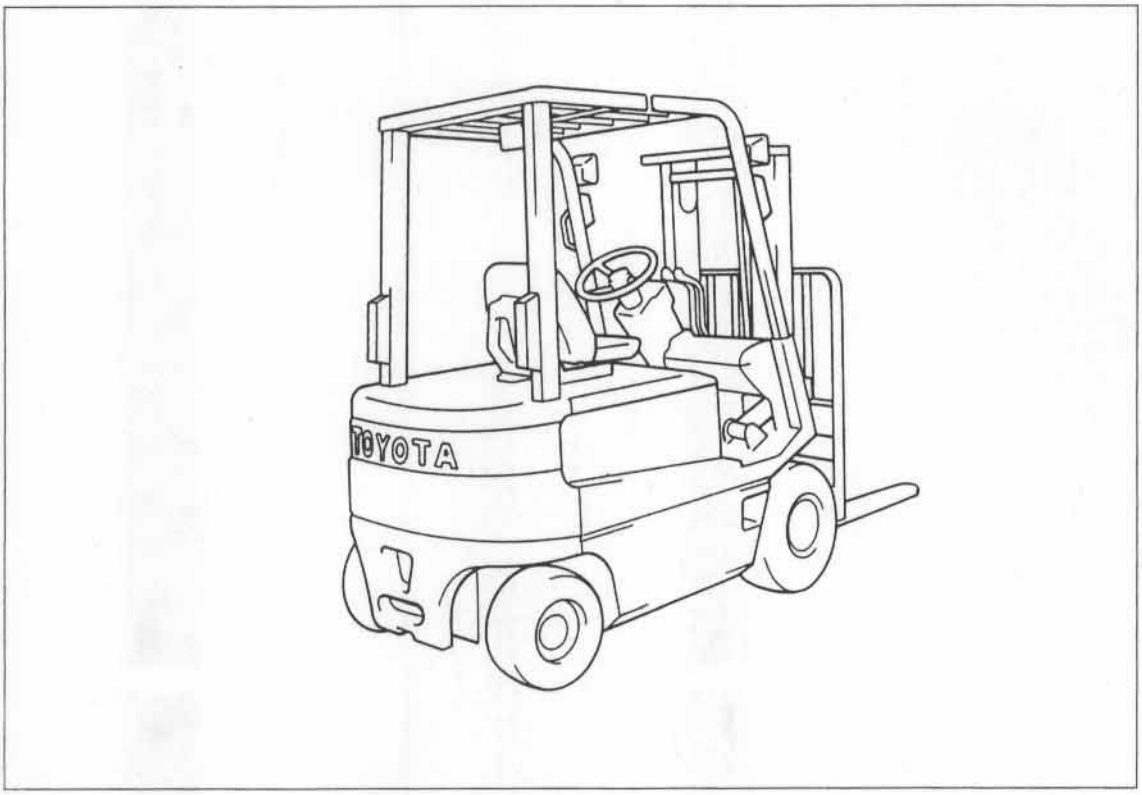

Rear View BATS77

VEHICLE MODELS

Model			Specification	Voltage	Controller type
1 ton series	1.0 ton	5FB10	Standard	48V	MCS-II
		30-5FB10	Dustproof	48V	MCS-II
	1.35 ton	5FB14	Standard	48V	MCS-II
		30-5FB14	Dustproof	48V	MCS-II
	1.5 ton	5FB15	Standard	48V	MCS-II
		30-5FB15	Dustproof	48V	MCS-II
	1.75 ton	5FB18	Standard	48V	MCS-II
		30-5FB18	Dustproof	48V	MCS-II
2 ton series	2.0 ton	5FB20	Standard	48V	MCS-II
		30-5FB20	Dustproof	48V	MCS-II
	2.5 ton	5FB25	Standard	48V	MCS-II
		30-5FB25	Dustproof	48V	MCS-II
3 ton series	3.0 ton	5FB30	Standard	72V	MCS-II
		30-5FB30	Dustproof	72V	MCS-II

FRAME NUMBER

	Motor punching format	Model	Punching format	Punching position
1 ton series	DM12	5FB10	5FB18-10011	 Upper surface in rear part of frame right
		5FB14		
		5FB15		
		5FB18		
	DF09	30-5FB10	305FB18-10011	
		30-5FB14		
		30-5FB15		
		30-5FB18		
2 ton series	DF09	5FB20	5FB25-10011	
		5FB25		
		30-5FB20		
		30-5FB25		
3 ton series	DF11	5FB30	5FB30-10011	
		30-5FB30		

BARS172

HOW TO USE THIS MANUAL

Repair Jobs Described in This Manual
A repair job begins from the time the customer is visited in response to a service call until the vehicle is returned after completion of the necessary repairs.

Diagnosis → Judgement → Actual Job → Final Inspection → Delivery

1. Diagnosis: Rectifying the cause of the problem.
   The time required for the actual job depends largely on the accuracy of the diagnosis, especially for controller related problems.
   Carry out correct diagnosis according to the instructions given in "Electrical system Troubleshooting".

2. Judgement: Judging field or shop repair on the basis of the diagnostic results.
   Make a proper judgement, keeping a quick, safe job in mind.

3. Actual job: From removal to disassembly, inspection, reassembly, inspection and adjustment (including testing). Carry out a quick, safe job according to the procedure described in the corresponding section.

4. Final inspection: Checking the correctness of the repair job and confirming vehicle performance upon job completion.

5. Delivery: Return of the repaired vehicle to the customer along with an explanation of the repair work done.

The repair job consists of the above five processes. This manual mainly describes actual jobs, and diagnoses relating to the controller.

How to Read the Explanations

1. Cautions and notes
   (1) Precautions and key points relevant to the section are given.

2. Operation procedure
   (1) A sectional view or structural drawing is shown at the beginning of each section to enable the reader to easily grasp the installation status of each component.
   (2) Parts which are not to be reused and the tightening torque are shown in the structural drawings.
   (3) All operation steps and outlines are shown by photographs and illustrations.
   (4) The explanations in this manual assume that mechanics have more than 3 years of experience.
   (5) Each explanation describes the method, information, standards and precautions in detail.

3. Troubleshooting
   (1) The diagnostic procedures for electrical system troubleshooting are described in chart form and the methods of diagnosis when using analyzers and circuit testers.

4. Electrical wiring diagrams
   (1) Electrical wiring diagrams are classified into schematic, connection and connector diagrams. They all appear at the end of this manual.

5. Service standards
   (1) All the standard values required for service jobs are listed at the end of this manual.

6. Omissions
   (1) Although descriptions of the following items have been omitted from this manual be sure to carry them out in actual operation.
   Example: Jack operation
   Cleaning and washing of removed parts
   Visual inspection

Definition of terms

Standard value:	Values showing the allowable range at the time of inspection or adjustment.
Limit:	The upper or lower limit which must not be exceeded at the time of inspection or adjustment.
[Caution]:	Description of prohibited operation or matter requiring special attention during job instruction.
[Note]:	Description of key points for operation or on which judgement is based.
[Reference]:	Description of supplementary explanations for facilitating the job which appear separately.

LIST OF ABBREVIATIONS AND SYMBOLS

Symbol	Name	Symbol	Name	Symbol	Name
ANL	Analyzer	EPS	Electrical Power Steering	PL_W	Working Pilot Lamp
ASSY	Assembly			PS	Power Steering
BATT	Battery	F1	Drive Fuse	RAD	Drive Absorber Resistor
B_Z	Buzzer	F2	Pump Fuse	RAP	Pump Absorber Resistor
CAD	Drive Absorber Capacitor	F3	Power Steering Fuse	RCK1/2	Check Resistor, No.1/2
		F4	Lamp Fuse	RAG	Regenerative Absorber Resistor
CAG	Regenerative Absorber Capacitor	F5	Control Circuit Fuse		
		F6	Power supply	ROM	Read Only Memory
CAP	Pump Absorber Capacitor	FR	Flasher Relay	RG	Regenerative Resistor
		GND	Ground	RH	Right Hand
$CHI_{F/R}$	Chime, Forward/Reverse	H	Horn	SA	Surge Absorber
		$L_{BU-R/L}$	Back-Up Lamp, RH/LH	SDD	Drive SIT Driver
$CHI_{F\&R}$	Chime, Forward & Reverse	$L_{C-R/L}$	Clearance Lamp, RH/LH	SDP	Pump SIT Driver
		$L_{F-R/L}$	Flasher Lamp, RH/LH	SLL	Lequid Level Sensor
CO	Overall Capacitor	$L_{F-R/LR}$	Flasher Lamp, RH/LH (Rear)	SN1～5	Snubber, No.1～5
CSD	Drive Current Sensor			SSP1/2	Speed Sensor, No.1/2
CSP	Pump Current Sensor	$L_{H-R/L}$	Head Lamp, RH/LH	SST	Special Service Tool
DAD	Drive Absorber Diode	$L_{L-R/L}$	Licence Lamp, RH/LH	ST	Steering Torque Sensor
DAG	Regenerative Absorber Diode	$L_{R-F/R}$	Rotaly Lamp, Forward/Reverse	STD	Standard
				STH	Thermo Sensor
DAP	Pump Absorber Diode	$L_{ST-R/L}$	Stop Lamp, RH/LH	SUB-ASSY	Subassembly
DC–CD	DC-CD Converter & Contactor Drive	$L_{T-R/L}$	Tail Lamp, RH/LH	SW_{AC}	Accelerator Switch
		L_W	Working Lamp	SW_B	Brake Switch
DCD	Drive Clip Diode	LH	Left Hand	SW_F	Flasher Switch
DCP	Pump Clip Diode	LS_{ATT}	Attachment Limit Switch	SW_H	Horn Switch
DF1～3	Fly-Wheel Diode, No. 1～3	LS_D	Dead Man Limit Switch	SW_{ky}	Key Switch
		LS_L	Lift Limit Switch	SW_L	Light Switch
DG	Regenerative Diode	LS_{PB}	Parking Brake Limit Switch	SW_{SC}	Speed Control Switch
DISP	Display			TG	Regenerative Transistor
DM_D	Drive Motor	LS_{ST}	Stop Lamp Limit Switch	TM	Main Transistor
DM_P	Pump Motor	LS_T	Tilt Limit Switch	TMP	Main Transistor, Pump
DM_{PS}	Power Steering Motor	MCS-II	Multipurpose Computer Control System-II	TM_{PS}	Main Transistor, Power Steering
DRD	Drive Reverse Diode				
DRP	Pump Reverse Diode	MF	Forward Contactor	U/S	Undersize
DS_{BU}	Buck-Up Optional Direction Switch	MG	Regenerative Contactor	VRA	Drive Accel Vari-Ohm
		MP	Pump Contactor	VRAP	Pump Vari-Ohm
DS_F	Forward Direction Switch	MR	Reverse Contactor	VRB	Brake Vari-Ohm
		OPT	Option	W/	With
DS_{FO}	Forward Optional Direction Switch	O/S	Oversize		
		PB_{CPU}	Computer print Board		
DS_R	Reverse Direction Switch	PB_{SPS}	SPS Print Board		

TIPS ON OPERATION

1. Safe operation
   (1) After jacking up, always be sure to support the vehicle a with rigid rack or stand.
   (2) Make sure that correct size wire cable is used when hoisting the vehicle and other heavy materials.
   (3) Be sure to disconnect the battery plug before inspecting or repairing to electrical system.

2. Neat and orderly work
   (1) Prepare the necessary tools, measuring instruments (circuit tester, megger, oil pressure gauge, etc.) and SSTs before starting work.
   (2) Check the cable colors and wiring status before disconnecting wiring.
   (3) When overhauling comple parts and related mechanisms, orderly arrange the disassembled parts to prevent confusion.
   (4) Select clean tools and a clean location when disassembling and inspecting precision parts such as the control panel.
   (5) Follow the specified procedures for disassembly, inspection, assembly and adjustment.
   (6) Always replace qaskets, packings and O-rings after each disassembly.
   (7) Always replace with genuine Toyota parts.
   (8) Use the specified nuts and bolts, and tighten to the torque specified in this manual.
   If not specified, tighten to the torque listed in "Standard Nut & Bolt Tightening Torque".

3. Determining defect status
   Do not start disassembly and replacement immediately. First determine the cause of the defect and the necessity of disassembly and replacement.
   Pay special attention to control circuit defects. For example, do not replace the CPU board (MCS type) when the "Vehicle does not run at all" without first checking other possible causes of the trouble such as the battery charge level, wiring, fuses or limit switches.
   For the MCS type, use an analyzer to check the cause of the defect.

STANDARD BOLT & NUT TIGHTENING TORQUE

Standard bolt and nut tightening torques are not indicated.
Judge the standard tightening torque as shown below.

1. Find out the straight type of bolt from the list below and then find the bolt tightening torque from the table.
2. The nut tightening torque can be judged from the mating bolt type.

BOLT STRENGTH TYPE IDENTIFICATION METHOD

1. Identification by bolt shape

	Shape and class	Class
Hexagon head bolt	 Bolt head No.	4=4T 5=5T 6=6T 7=7T
	 No mark	4T
Hexagon flange bolt	 No mark	4T
Hexagon head bolt	 Two protruding lines	5T
Hexagon flange bolt	 Two protruding lines	6T
Hexagon head bolt	 Three protruding lines	7T
Welded bolt	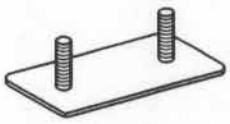	4T
Stud bolt	 No mark	4T
	 Grooved	6T

2. Identification by part No.

Hexagon head bolt

Parts No.
91611-40625
- Length (mm)
- Diameter (mm)
- Class

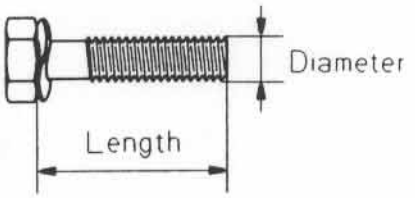

Stud bolt

Parts No.
92132-40614
- Length (mm)
- Diameter (mm)
- Class

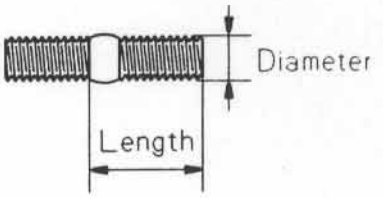

BARM87

TIGHTENING TORQUE TABLE

Class	Diameter	Pitch	Specified torque					
			Hexagon head bolt 			Hexagon flange bolt 		
	mm	mm	kg-cm	ft-lb	N-m	kg-cm	ft-lb	N-m
4T	6	1.0	55	48 in-lb	5.4	60	52 in-lb	5.9
	8	1.25	130	9	13	145	10	14
	10	1.25	260	19	25	290	21	28
	12	1.25	480	35	47	540	39	53
	14	1.5	760	55	75	850	61	83
	16	1.5	1150	83	113	—	—	—
5T	6	1.0	65	56 in-lb	6.4			
	8	1.25	160	12	16			
	10	1.25	330	24	32			
	12	1.25	600	43	59	—	—	—
	14	1.5	930	67	91			
	16	1.5	1400	101	137			
6T	6	1.0	80	69 in-lb	7.8	90	78 in-lb	8.8
	8	1.25	195	14	19	215	16	21
	10	1.25	400	29	39	440	32	43
	12	1.25	730	53	72	810	59	79
	14	1.5	—	—	—	1250	90	123
7T	6	1.0	110	8	11	120	9	12
	8	1.25	260	19	25	290	21	28
	10	1.25	530	38	52	590	43	58
	12	1.25	970	70	95	1050	76	103
	14	1.5	1500	108	147	1700	123	167
	16	1.5	2300	166	226	—	—	—

BARM88

PRECOAT BOLTS

(Bolts with seal lock agent coating on threads)

1. Do not use the precoat bolt as it is in either of the following cases.
   (a) After is is removed.
   (b) When the precoat bolt is moved (loosened or tightened) by tightness check, etc.

   Note:
   For torque check, use the lower limit of the allowable tightening torque range. If the bolt moves, retighten it according to the steps below.

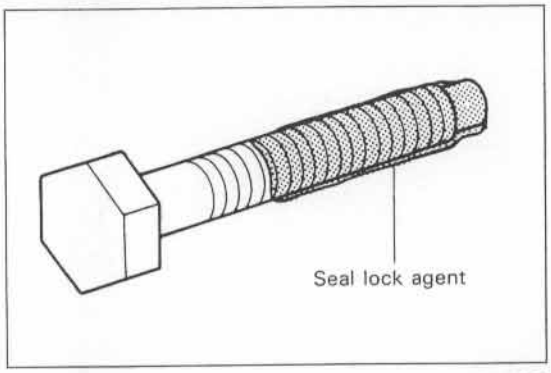

Precoat Bolts B4460

2. Method for reuse of precoat bolts
   (1) Wash the bolt and threaded hole. (The threaded hole must be washed even for replacement of the bolt.)
   (2) Perfectly dry the washed parts by air blowing.
   (3) Coat the specified seal lock agent to the threaded portion of the bolt.

HIGH PRESSURE HOSE FITTING TIGHTENING TORQUE

1. When connecting a high pressure hose, wipe the hose fitting and mating nipple contact surfaces with clean cloth to remove foreign matters and dirt. Also check no dent or other damage on the contact surfaces before installation.

2. When connecting a high pressure hose, hold the hose to align the fitting with the nipple and tighten the fitting.

3. The maximum tightening torque must not exceed twice the standard teghtening torque.

Nominal diameter of screw	Standard tightening torque N·m (kgf-cm) [ft-lbf]		Hose inside diameter mm (in)
	Standard	Tightening range	
7/16 — 20UNF	25 (250) [18.1]	24~26 (240~270) [17.4~19.5]	6 (0.24)
9/16 — 18UNF	49 (500) [36.2]	47~52 (480~530) [34.7~38.3]	9 (0.35)
3/4 — 16UNF	59 (600) [43.4]	56~62 (570~630) [41.2~45.6]	12 (0.47)
7/8 — 14UNF	59 (600) [43.4]	56~62 (570~630) [41.2~45.6]	12(0.47), 15(0.59)
1.1/16 — 12UNF	118 (1200) [86.8]	112~123 (1140~1250) [82.5~90.4]	19 (0.75)
1.5/16 — 12UNF	137 (1400) [101.3]	130~144 (1330~1470) [96.2~106.4]	25 (0.98)
PF1/4	25 (250) [18.1]	24~26 (240~270) [17.4~19.5]	6 (0.24)
PF3/8	49 (500) [36.2]	47~52 (480~530) [34.7~38.3]	9 (0.35)
PF1/2	59 (600) [43.4]	56~62 (570~630) [41.2~45.6]	12 (0.47)
PF3/4	118 (1200) [86.8]	112~123 (1140~1250) [82.5~90.4]	19 (0.75)
PF1	137 (1400) [101.3]	130~144 (1330~1470) [96.2~106.4]	25 (0.98)

WIRE ROPE SUSPENSION ANGLE LIST

Lifting angle	Tension	Compression	Suspension method	Lifting angle	Tension	Compression	Suspension method
0°	1.00 time	0 time	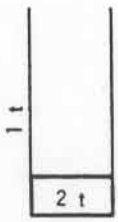	90°	1.41 time	1.00 time	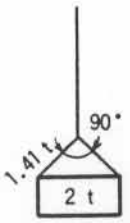
30°	1.04 time	0.27 time	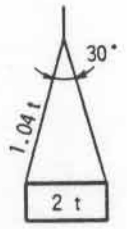	120°	2.00 time	1.73 time	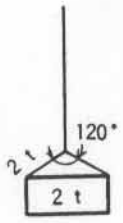
60°	1.16 time	0.58 time	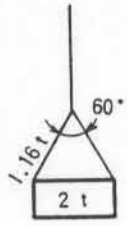				

JAEM88

SAFE LOAD FOR EACH WIRE ROPE SUSPENSION ANGLE

Unit: ton (lb) [N]

Rope diameter	Cutting load	Single-rope suspension	Two-rope suspension				Four-rope suspension			
		0°	0°	30°	60°	90°	0°	30°	60°	90°
6mm (0.24in)	21380 (2.18) [4807]	3040 (0.31) [683.6]	6080 (0.62) [1367]	5880 (0.6) [1323]	5200 (0.53) [1169]	4310 (0.44) [970]	12160 (1.24) [2734]	11770 (1.2) [2646]	10400 (1.06) [2337]	8630 (0.88) [1940]
8mm (0.32 in)	31480 (3.21) [7078]	4410 (0.45) [992.3]	8830 (0.9) [1985]	8530 (0.87) [1918]	7650 (0.78) [1720]	6280 (0.64) [1411]	17650 (1.8) [3969]	17060 (1.74) [3937]	15300 (1.56) [3440]	12550 (1.28) [2322]
10mm (0.4 in)	49230 (5.02) [11.69]	6960 (0.71) [1565.6]	14020 (1.43) [3153]	13440 (1.37) [3021]	11770 (1.2) [2646]	9810 (1.0) [2205]	27460 (2.8) [6174]	26480 (2.7) [5954]	23540 (2.4) [5292]	19610 (2.0) [4410]
12.5mm (0.5 in)	76880 (7.84) [17387]	10980 (1.12) [2469.5]	21570 (2.2) [4851]	21280 (2.1) [4631]	18630 (1.9) [4190]	14710 (1.5) [3308]	43150 (4.4) [9702]	41190 (4.2) [9261]	37270 (3.8) [8379]	29420 (3.0) [6615]
14mm (0.56 in)	96400 (9.83) [21675]	13730 (1.4) [3087]	27460 (2.8) [6174]	26480 (2.7) [5954]	23540 (2.4) [5292]	18630 (1.9) [4190]	54920 (5.6) [12348]	52960 (5.4) [11907]	47070 (4.8) [10584]	37270 (3.8) [8379]

COMPONENTS WEIGHT

Item			Type	Weight kg (lb) [N]
Motor	Drive	DM12	5FB10~18	Approx. 70 (154) [6870]
		DF09	30-5FB10~18	Approx. 110 (240) [1080]
		DF09	5FB20~25	Approx. 110 (240) [1080]
		DF09	30-5FB20~25	Approx. 110 (240) [1080]
		DF11	5FB30	Approx. 120 (260) [1180]
		DF11	30-5FB30	Approx. 120 (260)[1180]
	Material handling		(30-)5FB10~18	Approx. 50 (110) [490]
			(30-)5FB20~25	Approx. 50 (110) [490]
			(30-)5FB30	Approx. 60 (130) [590]
Motor L/ differential ASSY			1.0 ton	Approx. 235 (520) [2300]
			2.0 ton	Approx. 265 (580) [2600]
			3.0 ton	Approx. 295 (650) [2890]
Rear axle ASSY			1.0 ton	Approx. 85 (190) [830]
			2.0 ton	Approx. 80 (180) [780]
			3.0 ton	Approx. 90 (200) [880]
Balance weight			1.0 ton	Approx. 210 (460) [2060]
			1.35 ton	Approx. 430 (950) [4220]
			1.5 ton	Approx. 430 (950) [4220]
			1.75 ton	Approx. 600 (1320) [5880]
			2.0 ton	Approx. 610 (1340) [5980]
			2.5 ton	Approx. 820 (1800) [8040]
			3.0 ton	Approx. 980 (2150) [9610]
Mast W/ lift bracket (with lift cylinder, max. fork height = 3000 mm)			1.0 ton	Approx. 425 (940) [4170]
			2.0 ton	Approx. 495 (1090) [4850]
			3.0 ton	Approx. 610 (1340) [5980]

RECOMMENDED LUBRICANTS AND CAPACITIES

Application	Type	Capacity	
Differential & transmission	Hypoid gear oil SAE85W-90	1 ton series (STD)	5.0 ℓ (1.32 US gal.)
	45S: SAE75W-80	1 ton series (Dust proof) 2~3 ton series	5.5 ℓ (1.45 US gal.)
Steering gear box	Gear oil SAE90	Appox. 0.46 ℓ (0.12 US gal.)	
EPS actuator	TOYOTA Part: 45699-13400-71	Proper quantity	
Hydraulic (total)	STD: Hydraulic oil ISO VG32	1 ton series	16 ℓ (4.2 US gal.)
	45S: MIL-H-5606-D	2 ton series	16 ℓ (4.2 US gal.)
		3 ton series	20 ℓ (5.3 US gal.)
Brake line	STD: SAE J-1703 DOT-3 45S: Brake fluid artic S	Proper quantity	
Chassis part	MP grease 45S: ESSO Beacon 325	Proper quantity	
Battery	Distilled water	Proper quantity	

LUBRICATION CHART

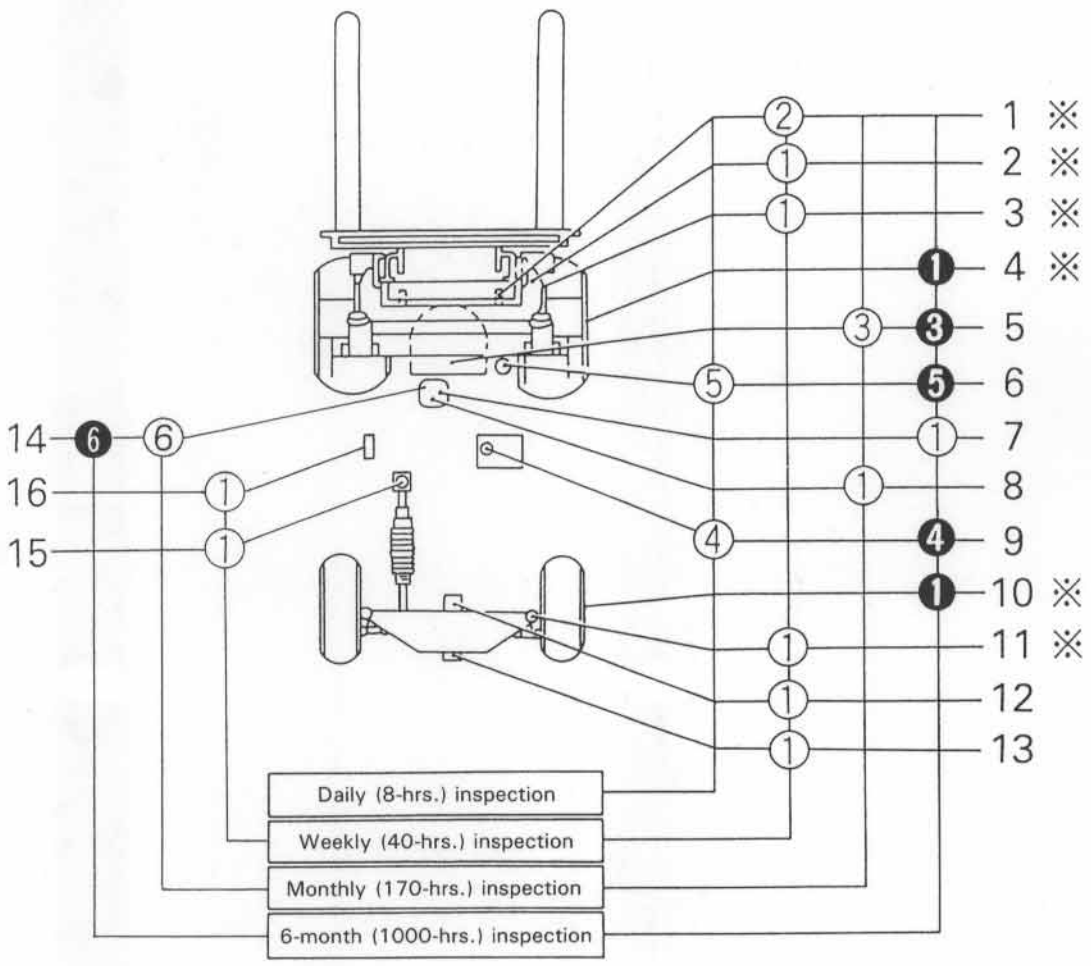

1. Chain
2. Mast support busing
3. Tilt cylinder frontpin
4. Front wheel bearing
5. Differential & transmission
6. Brake fluid reservoir tank
7. Tilt steering locking mechanism
8. Tilt steering universal joint
9. Oil tank
10. Rear wheel bearing
11. Steering knuckle king pin
12. Rear axle beem, front
13. Rear axle beem, rear
14. Steering gear box
15. Steering actuator ball joint
16. Steering link arm

❶ MP grease
❷ Engine oil
❸ Hypoid gear oil
❹ Hydraulic oil
❺ Brake fluid
❻ Gear oil

* : Both RH & LH
○ : Inspection
● : Replacement

Lubrication Chart BATM31

PERIODIC MAINTENANCE

INSPECTION METHOD

I : Inspection. Repair or replacement if required.
M: Measurement. Repair or adjustment if required.
T : Retightening C: Cleaning L: Lubrication
* : For new vehicle *1: Flaw detector

Item \ Inspection Period		Months	1	3	6	12
		Hours	170	500	1000	2000
ELECTRICAL SYSTEM						
Motor	Abnormal sound during revolution	I	○	○	○	○
	Loose terminal	T	○	○	○	○
	Insulation resistance	M		○	○	○
	Brush wear and sliding contact status	I			○	○
	Commutator fouling and damage	I			○	○
	Brush spring fatigue	M				○
Battery	Charge	I	○	○	○	○
	Battery fluid level	I	○	○	○	○
	Battery fluid specific gravity	M	○	○	○	○
	Loose terminal	I	○	○	○	○
	Abnormality at top of battery and battery case	I	○	○	○	○
	Insulation resistance	M		○	○	○
	Cell voltage measurement after charging	M				○
Charger	Timer operation	I	○	○	○	○
	Terminal loosening	I	○	○	○	○
	Operating voltage measurement	M		○	○	○
	Magnet switch function, contact fouling and roughening	I				○
Magnet contactor	Loose contact, damage and wear	I	○	○	○	○
	Auxiliary contact function, fouling and wear	I	○	○	○	○
	Arc chute installation status	I				○
	Timing and functioning	I				○
	Loose coil installation	I				○
	Loose main circuit lead installation	I				○
Microswitch	Timing and operating function	I	○	○	○	○
	Damage and loose installation	I	○	○	○	○

Item	Inspection Period	Months	1	3	6	12
		Hours	170	500	1000	2000
Direction lever	Operating conditions and damage	I	○	○	○	○
Direction switch	Contact inspection	I		○	○	○
Controller	Operation	I	○	○	○	○
	Inside fouling and damage	C	○	○	○	○
	Overcurrent limit valve	M				○
Fuse	Loosening	I	○	○	○	○
Wiring (including charging cord)	Damage of wiring harness and loose clamp	I	○	○	○	○
	Loose connection and taping status	I	○	○	○	○
	Battery connector damage and connection status	I	○	○	○	○
Accelerator	Operating and damage	I	○	○	○	○
POWER TRAIN						
Defferential, Transmission	Oil leak	I	○	○	○	○
	Oil level	I	○	○	○	○
	Loosening of nuts and bolts	T				○
TRAVELING EQUIPMENT						
Wheels	Tire inflation pressure	M	○	○	○	○
	Tire cuts, damage and uneven wearing	I	○	○	○	○
	Loose rim and hub nuts	T	○	○	○	○
	Tire groove depth	M	○	○	○	○
	Metal chips, pebbles and other foreign matter trapped in tire grooves	I	○	○	○	○
	Rim, side bearing and disc wheel damage	I	○	○	○	○
	Abnormal sound and looseness of front wheel bearing	I	○	○	○	○
	Abnormal sound and looseness of rear wheel bearing	I	○	○	○	○
Front axle	Cracks, damage and deformation of housing	I				○
Rear axle	Cracks, damage and deformation of beam	I				○
	Looseness of axle beam in vehicle longitudinal direction	M	○*			○

Item \ Inspection Period		Months	1	3	6	12
		Hours	170	500	1000	2000
STEERING SYSTEM						
Steering wheel	Play and looseness	I	○	○	○	○
	Function	I	○	○	○	○
Gear box	Oil leak	I	○	○	○	○
	Looseness of mounting	T	○	○	○	○
Rods, links and arm	Looseness and damage	I	○	○	○	○
	Linkage wear and mounting condition	I				○
Power steering	Oil leak	I	○	○	○	○
	Damage of power steering hose	I				○
	Sensor function	I				○
Knuckle	King pin looseness	I	○	○	○	○
	Cracks and deformation	I				○
Steering shaft	Wheel aligment	M				○
	Left and right turning angle	M				○
BRAKING SYSTEM						
Brake pedal	Play and reserve	M	○	○	○	○
	Braking effect	I	○	○	○	○
Parking brake	Pull margin	I	○	○	○	○
	Braking effect	I	○	○	○	○
	Rod and cable looseness and damage	I	○	○	○	○
	Ratchet wear and damage	I				○
Brake pipe and hose	Leakage, damage and mounting status	I	○	○	○	○
Brake fluid	Fluid level	I	○	○	○	○
Master cylinder or brake valve and wheel cylinder	Function, wear, damage, leak and mounting looseness	I				○
Brake drum and brake shoe	Clearance between drum and lining	M	○	○	○	○
	Wear of shoe sliding portion and lining	I				○
	Drum wear and damage	I				○
	Shoe operating condition	I				○
	Anchor pin rusting	I				○
	Return spring fatigue	M				○
	Automatic adjuster function	I				○
Backing plate	Deformation, cracks and damage	I				○
	Loose mounting	T				○

Item \ Inspection Period		Months	1	3	6	12
		Hours	170	500	1000	2000
MATERIAL HANDLING SYSTEM						
Forks	Abnormality of fork and stopper pin	I	○	○	○	○
	Misalignment between left and right fork fingers	I	○	○	○	○
	Cracks at fork root and welded part	I*1				○
Mast and fork bracket	Deformation and damage of each part and crack at welded part	I	○	○	○	○
	Mast and lift bracket looseness	I	○	○	○	○
	Wear and damage of mast support bush	I				○
	Wear, damage and rotating condition of rollers	I	○	○	○	○
	Wear and damage of roller pins	I				○
	Wear and damage of mast strip	I	○	○	○	○
Chain and chain wheel	Tension, deformation and damage of chain	I	○	○	○	○
	Chain lubrication	I	○	○	○	○
	Abnormality of chain anchor bolt	I	○	○	○	○
	Wear, damage and rotating condition of chain wheel	I	○	○	○	○
Various attachments	Abnormality and mounting condition of each part	I	○	○	○	○
HYDRAULIC SYSTEM						
Cylinder	Loosening and damage of cylinder mounting	I	○	○	○	○
	Deformation and damage of rod, rod screw and rod end	I	○	○	○	○
	Cylinder operation	I	○	○	○	○
	Natural drop and natural forward tilt (hydraulic drift)	M	○	○	○	○
Cylinder	Oil leak and damage	I	○	○	○	○
	Wear and damage of pin and cylinder bearing	I	○	○	○	○
	Lifting speed	M	○	○	○	○
	Uneven movement	I	○	○	○	○
Oil pump	Oil leak and abnormal sound	I	○	○	○	○
Hydraulic oil tank	Oil level and contamination	I	○	○	○	○
	Tank and oil strainer	C			○	○
	Oil leak	I	○	○	○	○

Item	Inspection Period	Months	1	3	6	12
		Hours	170	500	1000	2000
Control lever	Loose linkage	I	○	○	○	○
	Operation	I	○	○	○	○
Oil control valve	Oil leak	I	○	○	○	○
	Relief pressure measurement	M				○
	Relief valve and tilt lock valve functions	I	○	○	○	○
Hydraulic piping	Oil leak	I	○	○	○	○
	Deformation and damage	I	○	○	○	○
	Loose joint	T	○	○	○	○
	Hoise tension and twisting	I	○	○	○	○
SAFETY DEVICES, ETC.						
Head guard	Cracks at welded portion	I	○	○	○	○
	Deformation and damage	I	○	○	○	○
Back-rest	Loosening of mounting	T	○	○	○	○
	Deformation, crack and damage	I	○	○	○	○
Lighting system	Function and mounting condition	I	○	○	○	○
Horn	Function and mounting condition	I	○	○	○	○
Direction indicator	Function and mounting condition	I	○	○	○	○
Instruments	Functions	I	○	○	○	○
Back up buzzer	Function and mounting condition	I	○	○	○	○
Rear-view mirror	Dirt, damage	I	○	○	○	○
	Rear reflection status	I	○	○	○	○
Seat	Loosening and damage of mounting	I	○	○	○	○
Body	Damage and cracks of frame, cross members, etc.	I				○
	Bolt looseness	T				○
Others	Grease up	L	○	○	○	○

PERIODIC REPLACEMENT OF PARTS AND LUBRICANTS

Inspection (operating hours or months, whichever is earlier)	Months	1	3	6	12
	Hours	170	500	1000	2000
Brake fluid				●	●
Hydraulic oil				●	●
Hydraulic oil filter		● (New vehicle)		●	●
Differential and transmission oil					●
Wheel bearing grease					●
Master cylinder rubber parts					●
Wheel cylinder rubber parts					●
Reserve tank hose					● (Every 2 years)
Steering gear oil					●
EPS actuator greace					● (Every 4 years)
Power steering hose					● (Every 2 years)
Internal rubber parts of power steering system					● (Every 2 years)
Material handling hose					● (Every 2 years)
Chain					● (Every 3 years)

BATTERY

1

	Page
SERVICE STANDARDS	1-2
BATTERY COMPARTMENT & MINIMUM WEIGHT REQUIRED	1-3
TROUBLESHOOTING	1-4
BATTERY ASSY	1-5

SERVICE STANDARDS

Specific gravity in fully charged state		1.280 (20°C)
Specific gravity in fully discharged state		1.150 (20°C)
Discharge end voltage	48V specification	42.5V
	72V specification	61V
Electrolyte		Sulfuric acid diluted with distilled water
Fluid to be supplied		Distilled (deionized) water
Insulation resistance		1 MΩ or more

DISPLAY INDICATION

1. The display indicates the remaining battery charge level in 10 stages. When the remaining charge drops below 20%, the indication flashes the warn the timing for charging.

2. When the battery is discharged fully (100%), the overdischarge alarm function operates as follows:

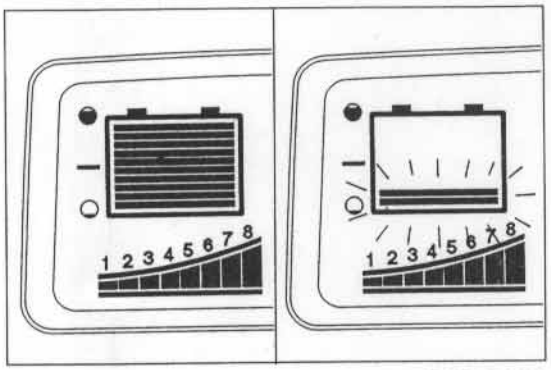

Display Indication BARS73,74

OVERDISCHARGE ALARM FUNCTION

1. Material handling with traveling becomes impossible.
   If simultaneous operation is attempted, priority is given to traveling and material handling is not effected. (For prevention of battery from damage by large current flow)

2. When material handling is attempted, all indicators on the display flash and the buzzer sounds to alarm overdischarge.

BATTERY COMPARTMENT & MINIMUM WEIGHT REQUIRED

When purchasing the battery locally, adjust its weight to satisfy the minimum required weight by referring to the table below.

	Compartment dimensions mm(in)			Minimum required battery weight (with case) kg (lb, N)	Maximum battery weight (with case) kg (lb, N)
	Front to rear length X	Width Y	Height Z		
5FB10~18	665^{+2}_{0} ($26.2^{+0.08}_{0}$)	980^{+2}_{0} ($38.6^{+0.08}_{0}$)	495 (19.5)	615 (1350, 6030)	845 (1860, 8290)
5FB20~25	845^{+2}_{0} ($33.3^{+0.08}_{0}$)	1030^{+2}_{0} ($40.6^{+0.08}_{0}$)	495 (19.5)	815 (1790, 7990)	1100 (2420, 10790)
5FB30	990^{+2}_{0} ($40.0^{+0.08}_{0}$)	1080^{+2}_{0} ($42.5^{+0.08}_{0}$)	495 (19.5)	1165 (2560, 11420)	1275 (2800, 12500)

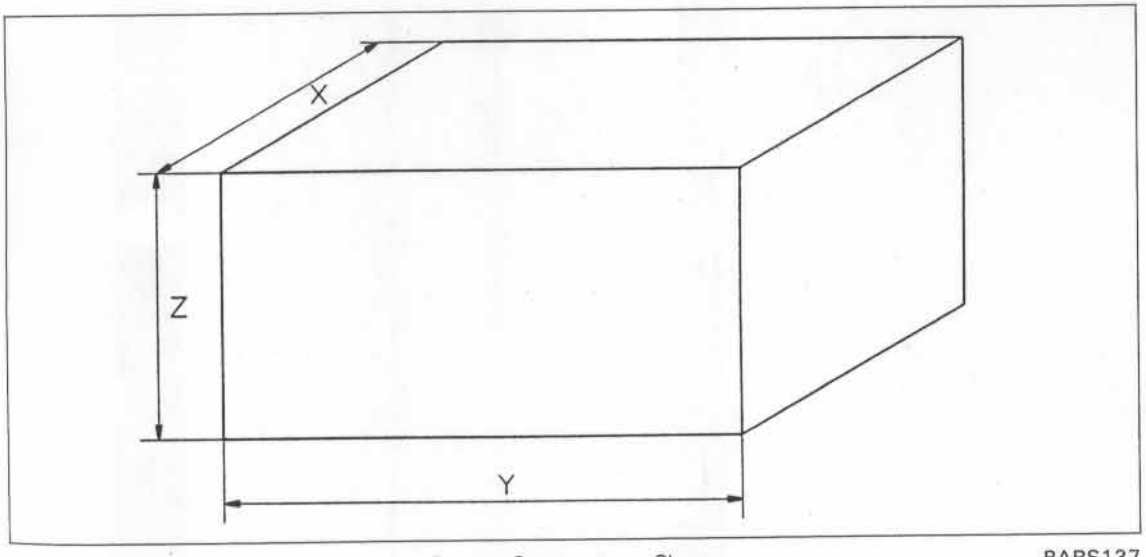

Battery Compartment Shape BARS137

TROUBLESHOOTING

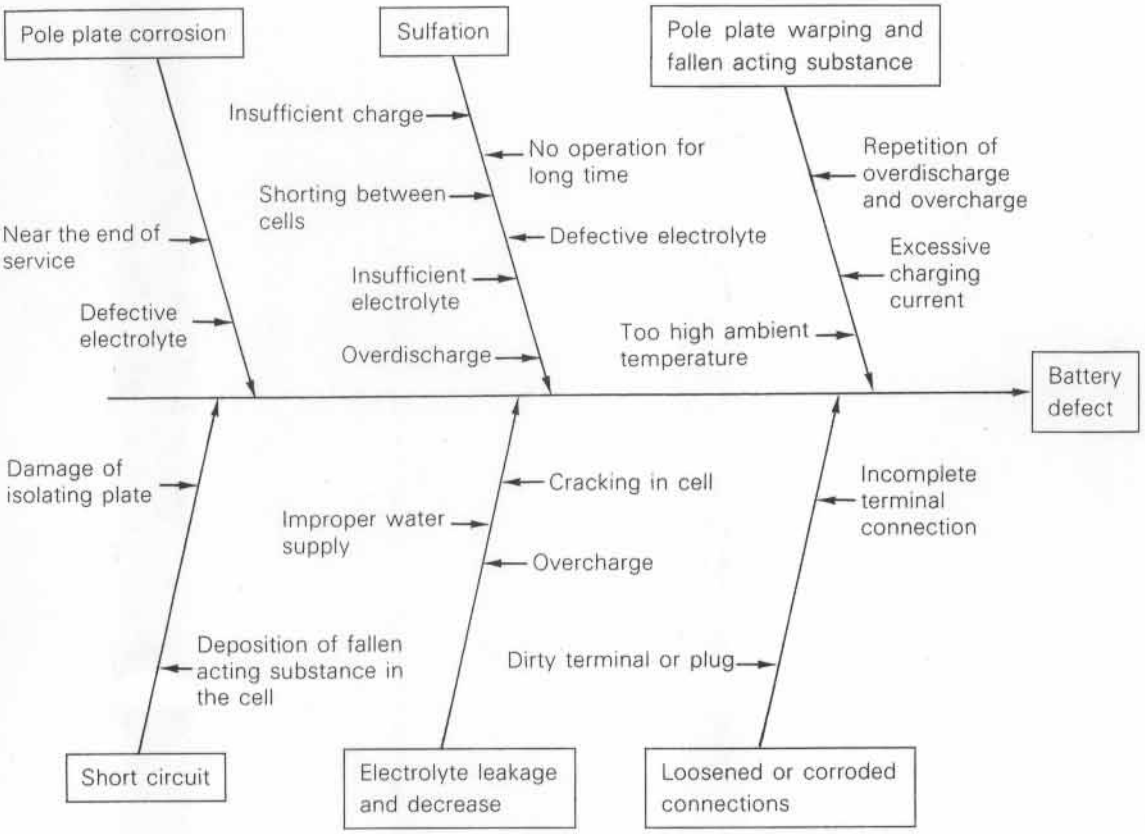

BATTERY ASSY

REMOVAL

1. Disconnect the battery connector.

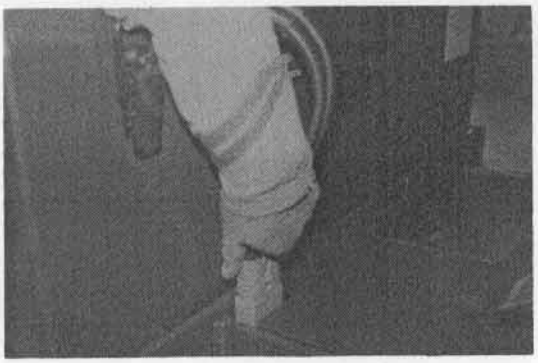

Removing the Connector BAT19-18

2. Remove the battery hood catch.

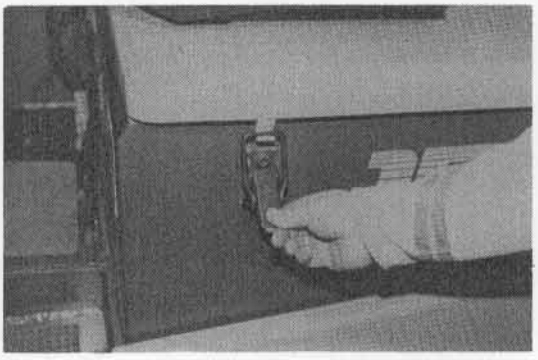

Removing the Hood Catch BAT20-4

3. Remove the battery stopper.

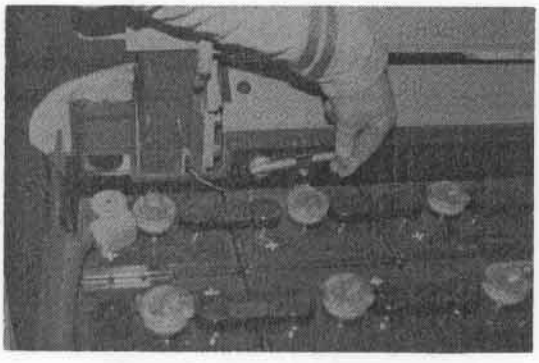

Removing the Battery Stopper BAT3-29

4. Remove the battery
   Attach the battery hanger (SST) to the battery case and unload the battery by hoisting it.
   SST 80201-10250-71

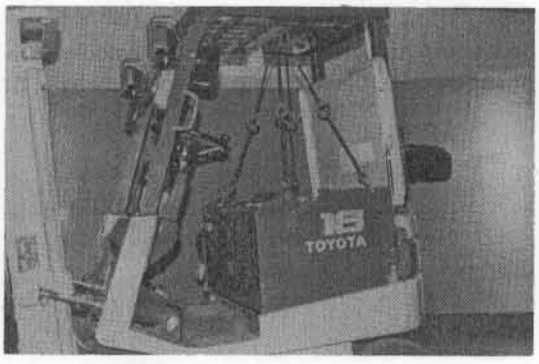

Removing the Battery BAT16-26

INSPECTION

1. Electrolyte level inspection
   Add distilled water if the red float is dropped. Open the cap and add water until the white line on the float appears. Carefully operate as the addition may be slightly excessive if the tip end of the float comes into contact with the stopper. As the level gauge is provided on the side surface of the battery case, the electrolyte level can generally be checked at a glance. However, periodically inspect the level by opening the cap.
   The green indicator of the level gauge is lit to indicate activation of the level gauge sensor, and the red indicator flashes to indicate the necessity of water addition.

	Red indicator	Green indicator
Normal electrolyte level	Off	On
Insufficient electrolyte level	Flashing	On

Caution:
Never change the mounting position of the plug with sensor.

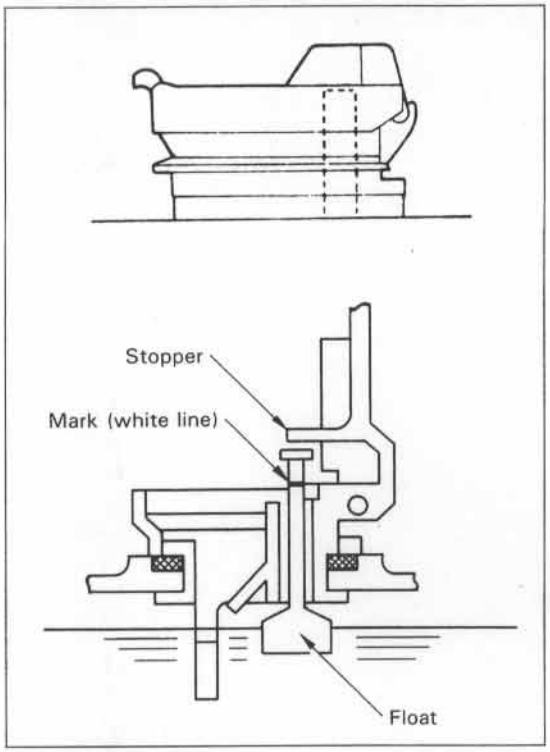

Inspecting the Electrolyte Level BAGS9

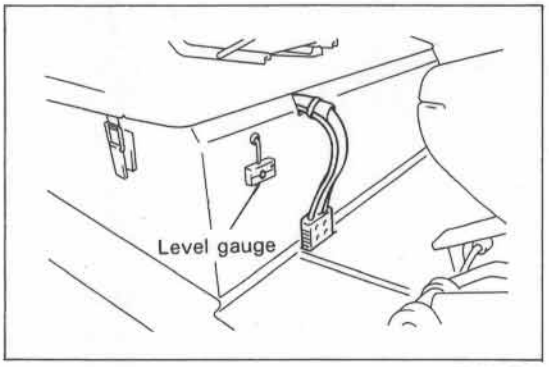

Level Gauge BAT18-2

Note:
The electrolyte consumption can be calculated by the following equation:
Consumption (CC) = 5 hour rating capacity x 0.0336 x number of cells x charging frequency

2. Electrolyte inspection
   (1) The battery electrolyte should be colorless and transparent in normal state. Check turbidity, etc. at the time of specific gravity inspection.
   If clear confirmation is impossible, put in a beaker for inspection.

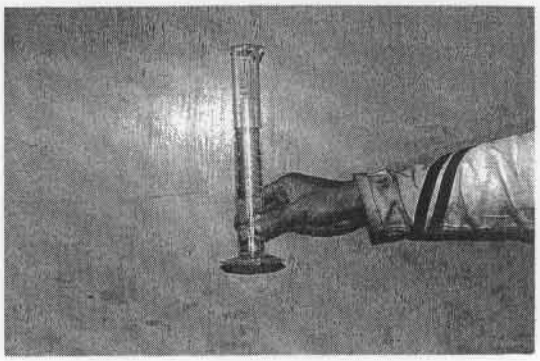

Inspecting the Electrolyte BANS327

3. Inspection of electrolyte specific gravity
   (1) Use a hydrometer and measure the specific gravity of the electrolyte
   Specific gravity in fully charged state:
   ..... 1.280 (at 20°C)
   Specific gravity in fully discharged state:
   ..... 1.150 (at 20°C)
   The specific gravity of the electrolyte is expressed by the value at 20°C as the standard.
   Specific gravity conversion equation
   $S_{20} = St + 0.0007 (t-20)$
   S_{20}: Specific gravity at 20°C
   St : Specific gravity at t°C
   t : Temperature at the time of measurement



Inspecting the Specific Gravity of Electrolyte BAR18-3

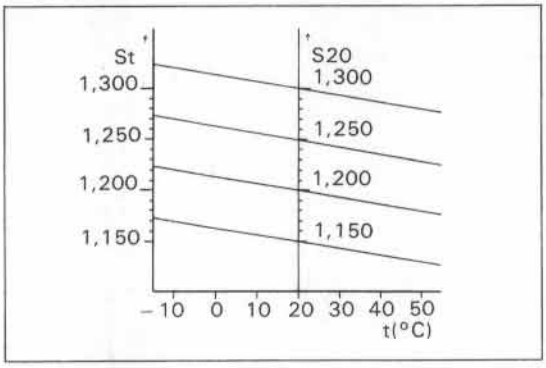

Relationship between Specific Gravity of Electrolyte and Temperature BAGS11

*How to use the hydrometer
   ① Insert the nozzle of the hydrometer into the water supply port and suck the electrolyte into the outer cylinder.
   ② Let the hydrometer in the outer cylinder float correctly without contact with the top, bottom and side wall of the outer cylinder, and read the graduation at the using electrolyte surface as shown at left after disappearance of bubbles in the sucked electrolyte.
   ③ After the measurement wash outside and inside of the hydrometer with clear water and wipe thoroughly with clean cloth for storage.

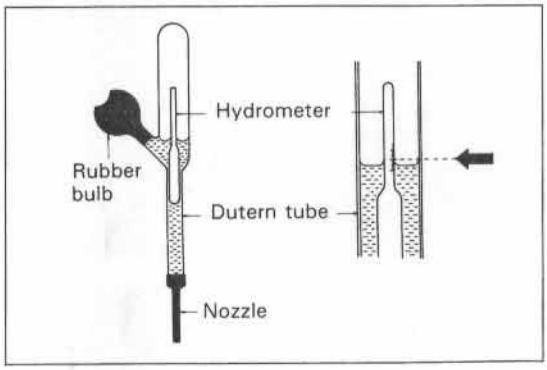

Hydrometer BAGM2

4. Insulation resistance inspection
   Use an insulation resistance meter (megger) and measure the resistance between the battery and battery case.

   Insulation resistance: 1 MΩ or more

   Caution:
   - **If the insulation resistance is less than 1 MΩ, remove the battery from the vehicle and wash it with water.**
   - **Dry the battery case the roughly, and measure the insulation resistance again. Install the battery on the vehicle after checking that the insulation resistance is 1 MΩ or more.**

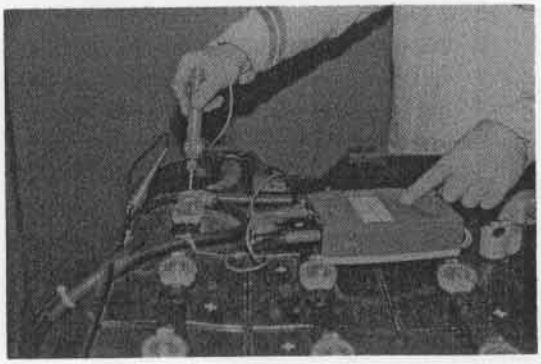

Inspecting the Insulation Resistance **BAT16-24**

* Battery control table

Prepare the control table for each battery to record and retain the inspection result.

Inspection date and time	Inspected cell No.	Specific gravity	Electrolyte temperature	Added water volume	Remarks	Inspector

CONTROL CIRCUIT

	Page
MCS-II CONTROL CIRCUIT	2-2
GENERAL	2-2
SPECIFICATIONS	2-3
COMPONENTS	2-4
CONTROL PANEL ASSY	2-6
OCL VALUE (OVERCURRENT LIMIT VALUE)	2-29
ACCELERATOR POTENTIOMETER ADJUSTMENT	2-31
BRAKE POTENTIOMETER ADJUSTMENT	2-32
LIFT POTENTIOMETER ADJUSTMENT	2-32
DIRECTION SWITCH	2-33
EPS CONTROLLER	2-37

MCS-II (MICROCOMPUTOR TYPE) CONTROL CIRCUIT

GENERAL

The 5FB series has the diagnosis (self-diagnostic) function to sound the buzzer (beep, beep) and indicate the abnormal part by the corresponding "error code" on the multidisplay by automatically detecting any trouble in the main drive and material handling circuits, operating system such as the accelerator, and sensors.

When this display is switched to the analyzer (failure analysis) mode, defecting part detection and functional check of the main circuits for traveling and material handling, each operating system and sensors are carried out.

See page 3-2 in multidisplay for the diagnosis.
See page 3-6 in multidisplay for the analyzer.

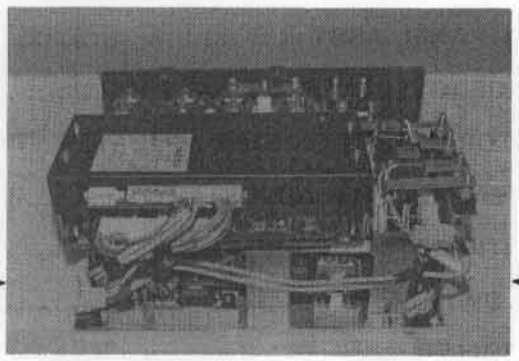

Control Panel ASSY BAT14-25

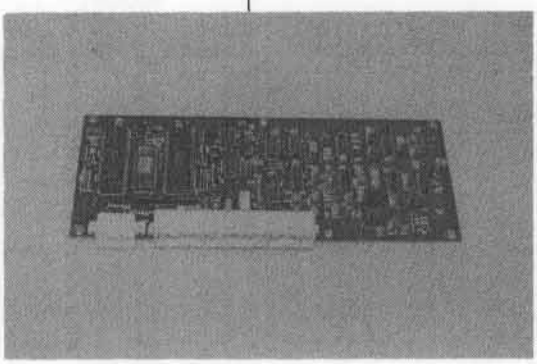

CPU Board BAT17-28

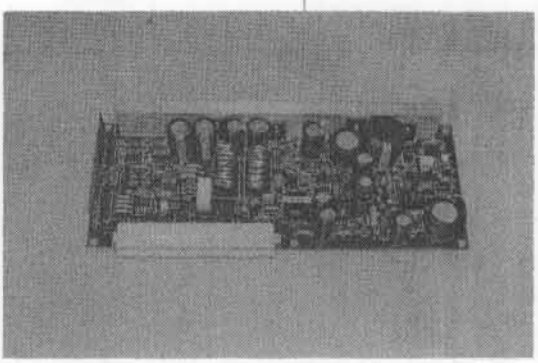

DC-CD Board BAT17-26

SPECIFICATIONS

		1 ton series	2 ton series	3 ton series
Fuses	F_1 (Drive fuse)	350A	400A	⇦
	F_2 (Pump fuse)	200A	⇦	225A
	F_3 (Power steering fuse)	60A	⇦	⇦
	F_4 (Lamp fuse)	10A	⇦	⇦
	F_5 (Control circuit fuse)	10A	⇦	⇦
	F_6 (Power supply)	—	—	10A
Transistors	TM (Main transistor)	TSM001 (2 pcs.)	TSM001 (3 pcs.)	TSM001 (2 pcs.)
	TMP (Main transistor, pump)	TSM001 (2 pcs.)	TSM001 (2 pcs.)	TSM001 (2 pcs.)
	TG (Regenerative transistor)	ET125-05	⇦	⇦
Diodes	DAD (Drive absorber diode)	30MF40	⇦	⇦
	DAP (Pump absorber diode)	30MF40	⇦	⇦
	DG (Regenerative diode)	TDM001	⇦	⇦
	DF1 (DM flywheel)	ESAH73-03C	⇦	⇦
	DF2 (DM flywheel)	TDM001	⇦	⇦
	DF3 (PM flywheel)	TDM001	⇦	⇦
Current sensors	DSC (Drive current sensor)	—	—	—
	CSP (Pump current sensor)	—	—	—
Capacitors	CAD (Drive absorber capacitor)	1.5μF	⇦	⇦
	CAP (Pump absorber capacitor)	16μF	⇦	⇦
	CO (Overall capacitor)	60μF (4 pcs.)	60μF (5 pcs.)	⇦
Contactors	MF (Forward contactor)	MA11M	⇦	⇦
	MR (Reverse contactor)	MA11M	⇦	⇦
	MG (Regenerative contactor)	MA22M	⇦	⇦
	MP (Pump contactor)	MA20M	⇦	⇦

COMPONENTS

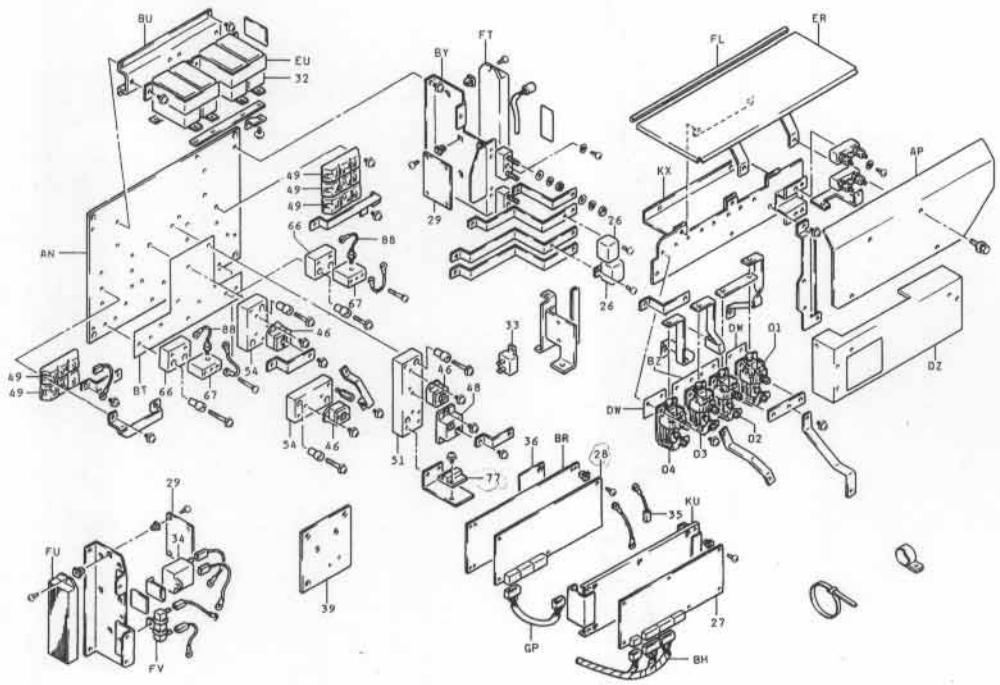

01 MF contactor
02 MR contactor
03 MG contactor
04 MP contactor
26 Current sensor
27 CPU board ASSY
28 DC-CD board ASSY
29 SDD and SDP board
32 Capacitor (CO)
33 Capacitor (CAD)
34 Capacitor (CAP)
35 Sensor ASSY
36 Board
39 Board
46 Diode (DG, DF_2, DF_3)
48 Diode (DF_1)
49 Transistor (TM, TMP)
51 Heatshink, No.1
54 Heatshink, No.2
66 Heatshink
67 Heatshink
77 Transistor (TG)
88 Diode (DAD, DAP)
AN Base
AP Cover
BH Wiring harness ASSY
BR Base
BT Sheet
BU Capacitor bracket
BY Terminal bracket
BZ Sheet
DW Sheet
DZ Cover
ER Stay SUB-ASSY
EU Band
FL Cover Seal
FT Resistor (RAD)
FU Resistor (RG)
FV Resistor (RAP)
GP Wiring harness ASSY
KU Case SUB-ASSY
KX Base SUB-ASSY

Drive Control Panel Components BATM64

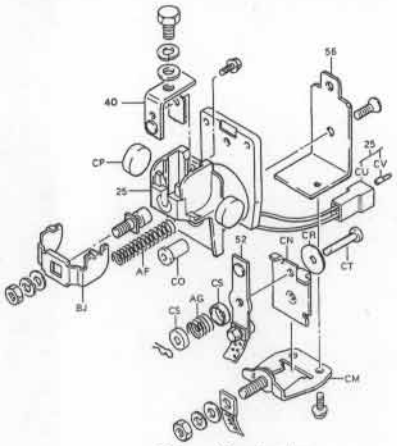

Drive Contactor

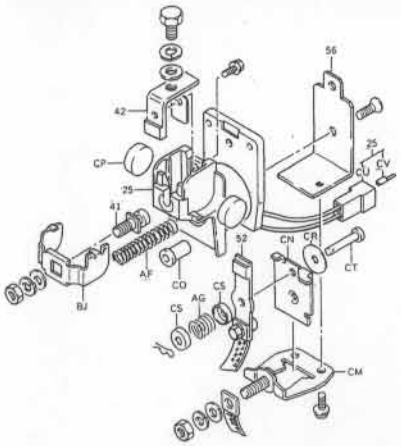

Pump & Regenerative Contactor

25	Coil SUB-ASSY	CM	Support
40	Drive fixed contactor, No.1	CN	Moving core
41	Drive fixed contactor, No.2	CO	Fixed core
42	Short fixed contactor	CP	Magnet
52	Moving contactor	CR	Spacer
56	Frame	CS	Cap
AF	Spring, No.1	CT	Pin
AG	Spring, No.2	CU	Connector
BJ	Support	CV	Tab

Control Components BARM34

CONTROL PANEL ASSY

REMOVAL

1. Disconnect the battery plug.

2. Remove the left side cover.



Disconnecting the Battery Plug BAT3-8

Caution:
Wait at least 3 minutes after battery plug disconnection before removing functional parts.

Note:
- Do not damage the functional parts.
- Put tags when disconnecting the wiring to prevent incorrect wiring later.

3. Remove the drive controller cover.
   (1) Set bolts
   (2) Cover

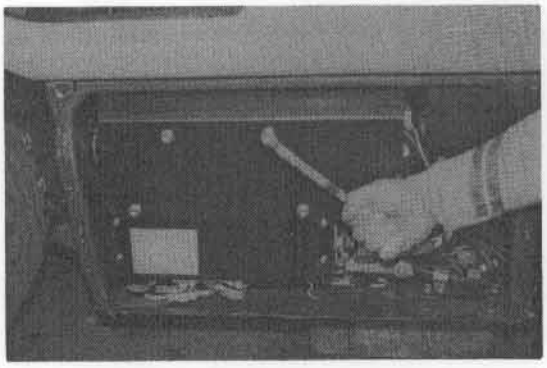

Removing the Covers BAT12-4

4. Disconnect the CPU boad connector.
   (1) Set bolt
   (2) CPU boad cover
   (3) Disconnecting the CPU boad connector.

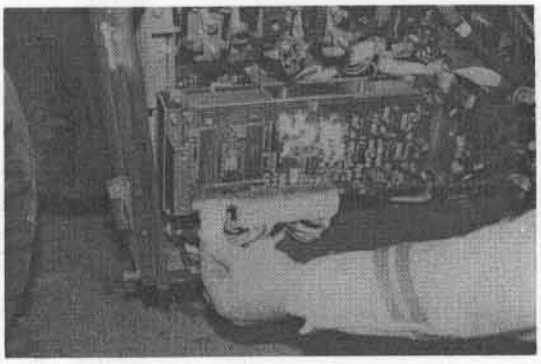

Disconnecting the connector BAT12-8

5. Disconnect the cables.
   (1) Set nuts
   (2) Each cable

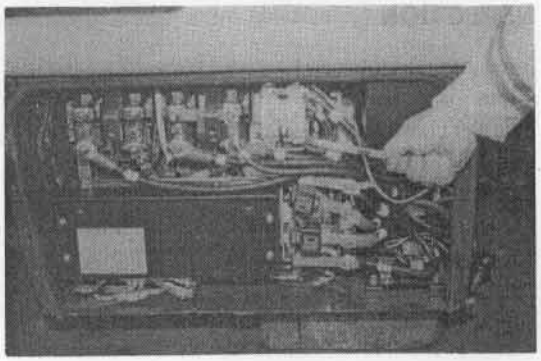

Disconnecting the Cables BAT12-5

6. Remove the drive control panel.
   (1) Set bolts
   (2) Drive control panel

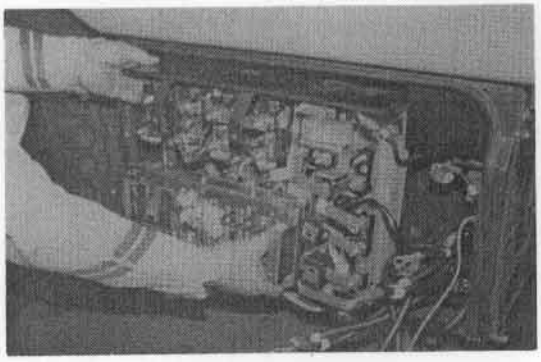

Removing the Control Panel BAT12-11

INSPECTION

Some components can be inspected without removal from the vehicle while other components require removal before inspection.
The CPU board and DC-CD board are inspected on the vehicle because battery voltage application is necessary. (Use SST 09240-13200-71.)
The description here is mainly for inspection after removing control panel from the vehicle.

1. Insulation resistance measurement (always inspect the insulation resistance before starting control panel inspection.)
   (1) Set the battery plug to off and measure the insulation resistance between the battery plug wire harness and body.

Terminals	Battery plug controller and body
Standard	1 MΩ or more The resistance should be as great as possible, but it varies greatly depending on the vehicle operation status, place and weather.

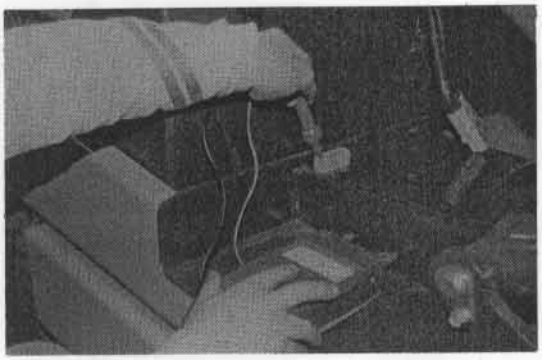

Measuring the Insulation Resistance BAT19-19

2. CAD (drive circuit absorber capacitor) and CAP (material handling circuit absorber capacitor)
   (1) Inspection method
   Disconnect the CAD and CAP wirings after discharging CAD and CAP through a resistance of about 100 Ω.

Inspection point	Terminals	Multimeter range
CAD	Both terminals of CAD (DAD side and TM side)	Ω×1 K
CAP	Both terminals of CAP (DAP side and TMP side)	

Standard

The multimeter pointer deflects when multimeter probes are brought into contact with the terminals of CAD or CAP, gradually returns toward ∞ then, and finally indicates ∞. (∞ Ω results be cause the capacitor is charged by the multimeter current.)

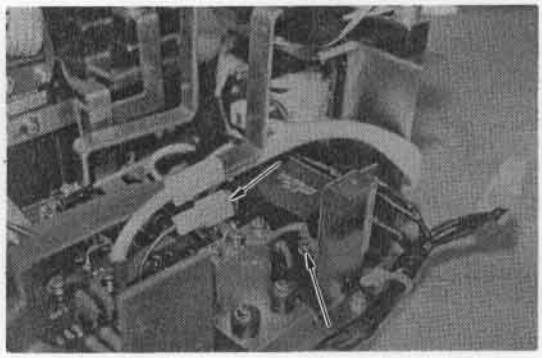

Inspecting CAD BAT20-30

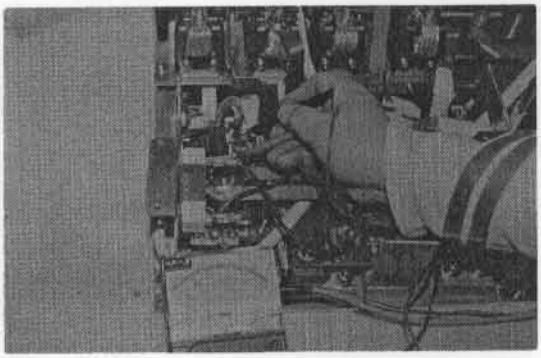

Inspecting CAP BAT14-1

3. TM (main transistor) and TMP (main transistor, pump)
   (1) Inspection method
   Disconnect the TM and TMP wirings.

Inspection point	Terminals		Standard	Multimeter range
TM TMP	Between D and S	D ⊖Probe —— S ⊕Probe D ⊕Probe —— S ⊖Probe	∞Ω ∞Ω	Ω×1 K
	Between D and G	D ⊖Probe —— G ⊕Probe D ⊕Probe —— G ⊖Probe	∞Ω Continuity shall exist.	
	Between G and S	G ⊖Probe —— S ⊕Probe G ⊕Probe —— S ⊖Probe	Continuity shall exist. ∞Ω	

If any abnormality is found in inspection for each of TM and TMP, replace them as a set.

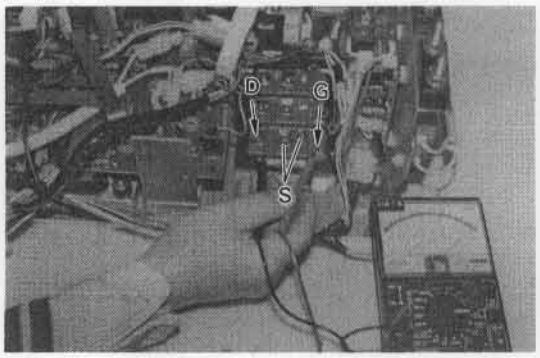

Inspecting TM BAT15-7

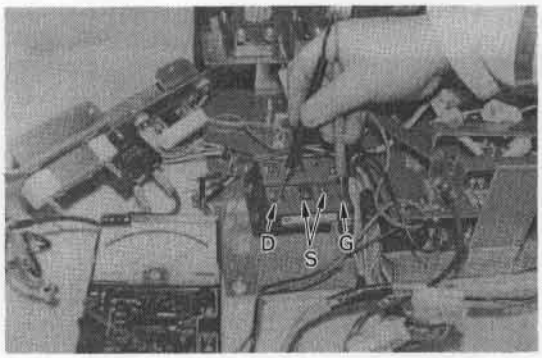

Inspecting TMP BAT15-27

4. TG (regenerative transistor)
   (1) Inspection method
   Disconnect the TG wiring.

Inspection point	Terminals		Standard	Multimeter range
TG	Between B and C	B ⊖Probe —— C ⊕Probe B ⊕Probe —— C ⊖Probe	Continuity shall exist. ∞Ω	Ω×1 K
	Between C and E	C ⊖Probe —— E ⊕Probe C ⊕Probe —— E ⊖Probe	∞Ω Continuity shall exist.	

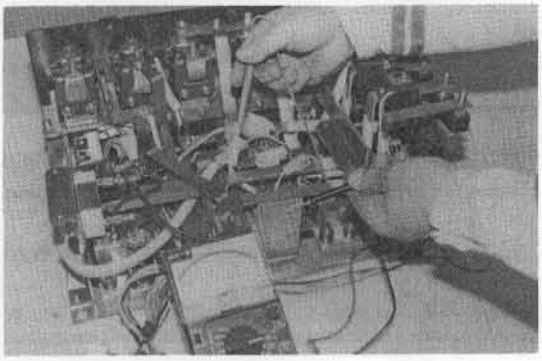

Inspecting TG BAT15-32

5. DF1 (flywheel diode No. 1)
   (1) Inspection method
   Disconnect the DF1 wiring.

Inspection point	Terminals	Standard	Multimeter range
DF1	Forward direction: Anode ⊖probe —— cathode ⊕probe	Approx. 3 kΩ	Ω×1 K
	Reverse direction: Anode ⊕probe —— cathode ⊖probe	∞Ω	

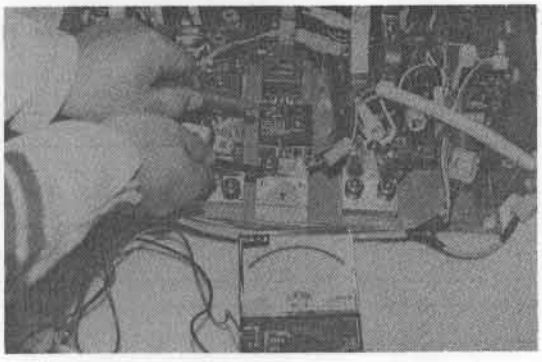

Inspecting DF1 BAT15-15

6. DF2 and DF3 (flywheel diodes No. 2 and No. 3)
   (1) Inspection method
   Disconnect the DF2 and DF3 wirings.

Inspection point	Terminals	Standard	Multimeter range
DF2 DF3	Forward direction: Anode ⊖probe ——— cathode ⊕probe Reverse direction: Anode ⊕probe ——— cathode ⊖probe	Approx. 6 kΩ ∞Ω	Ω×1 K

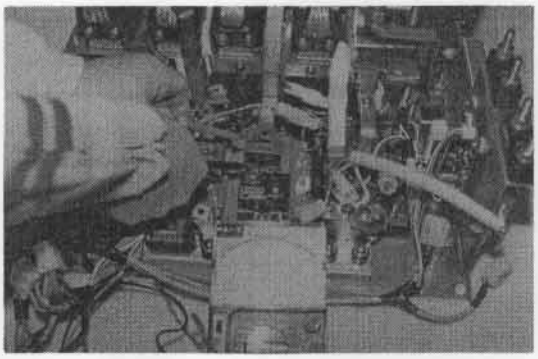

Inspecting DF2 BAT15-17

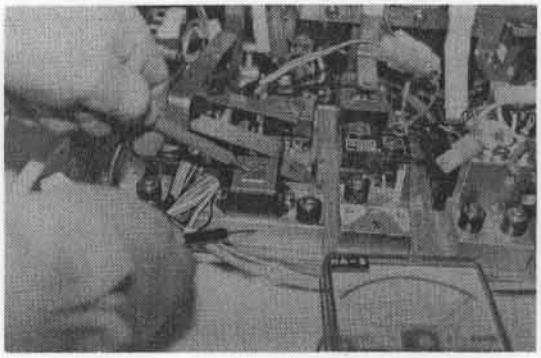

Inspecting DF3 BAT15-13

7. DG (regeneration diode)
   (1) Inspection method
   Disconnect the DG wiring.

Inspection point	Terminals	Standard	Multimeter range
DG	Forward direction: Anode ⊖probe ——— cathode ⊕probe Reverse direction: Anode ⊕probe ——— cathode ⊖probe	Approx. 6 kΩ ∞Ω	Ω×1 K

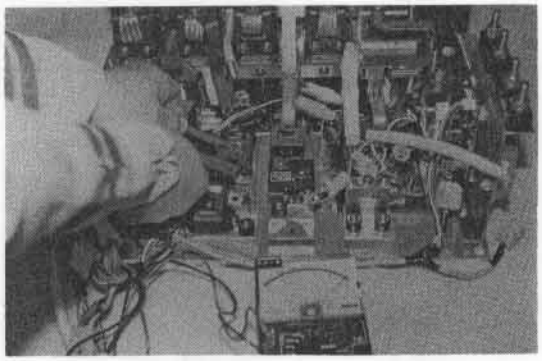

Inspecting DG BAT15-16

8. DAD (drive absorber diode) and DAP (pump absorber diode)
   (1) Inspection method
   Disconnect the DAD and DAP wirings.

Inspection point	Terminals	Standard	Multimeter range
DAD DAP	Forward: Anode ⊖probe —— cathode ⊕probe Reverse: Anode ⊕probe —— cathode ⊖probe	Approx. 6 kΩ ∞Ω	Ω×1 K

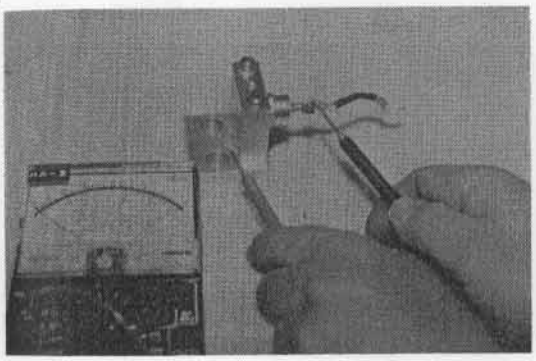

Inspecting DAD BAT15-29

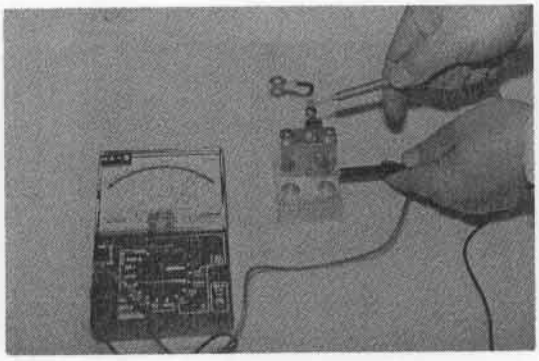

Inspecting DAP BAT15-33

9. MF (forward contactor), MR (reverse contactor), MG (regenerative contactor) and MP (pump contactor)
   (1) Inspection method
   Measure the insulation resistance values of MF, MR, MG and MP coils.

Inspection point	Terminals	Standard	Multimeter range
MF coil MR coil MG coil MP coil	MF coil connector MR coil connector MG coil connector MP coil connector	35Ω (20°C)	Ω×1

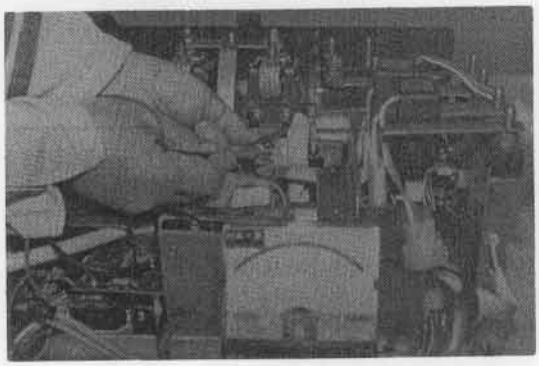

Inspecting the MF Coil BAT14-7

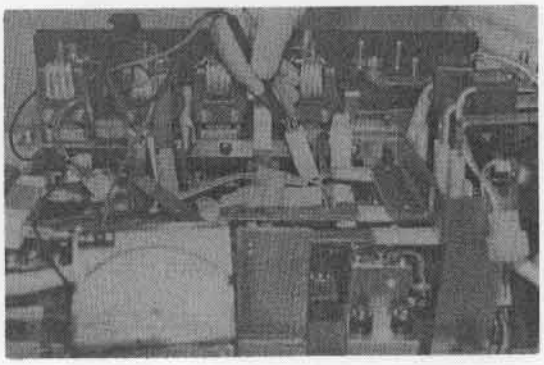

Inspecting the MR Coil BAT14-8

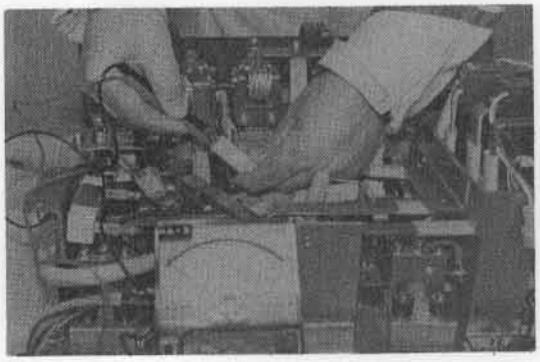

Inspecting the MG Coil BAT14-10

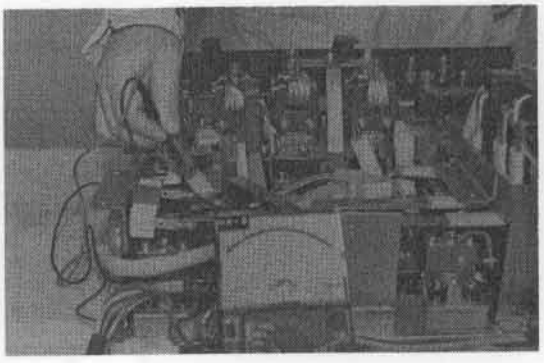

Inspecting the MP Coil BAT14-11

10. RG (regenerative resistor)
    (1) Inspection method
        Disconnect one side of the RG wiring.

A: 1.0~2.5 TON B: 3.0 TON

Inspection point	Terminals	Standard	Multimeter range
RG	Both terminals of RG	A: Approx. 1.0 Ω B: Approx. 1.5 Ω	Ω×1

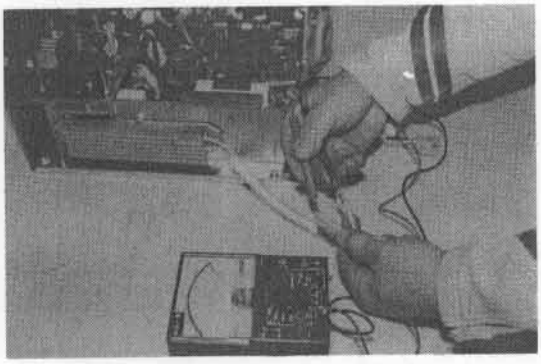

Inspecting RG BAT14-2

11. RAD (drive absorber resistor)
    (1) Inspection method
        Disconnect one side of the RAD wiring.

Inspection point	Terminals	Standard	Multimeter range
RAD	Both terminals of RAD	Approx. 1.5 Ω	Ω×1

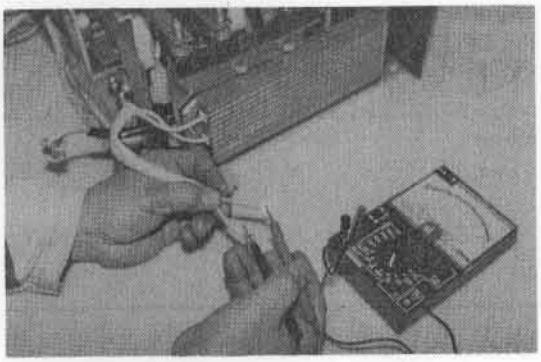

Inspecting RAD BAT14-4

12. RAP (pump absorber resistor)
    (1) Inspection method
        Disconnect one side of the RAP wiring.

Inspection point	Terminals	Standard	Multimeter range
RAP	Both terminals of RAP	Approx. 25 Ω	Ω×1

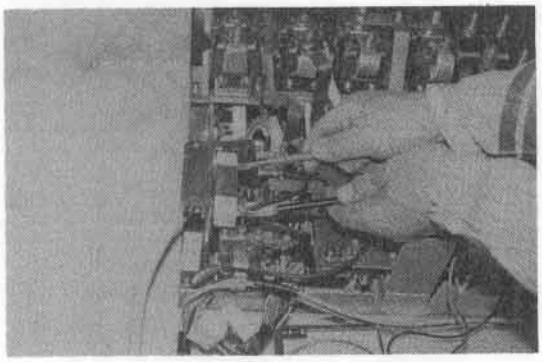

Inspecting RAP BAT15-20

13. CPU board and DC-CD board

When the cause of a trouble is judged to be in the CPU board or DC-CD board, apply the battery voltage, connect SST 09240-13200-71, and measure the applied voltage and resistance value at each connector.

Caution:

Always disconnect the battery plug before removing or installing the CPU board or DC-CD board.

Caution:

- Always carry out measurement before replacing the CPU or DC-CD board according to the judgement of a defect of the CPU or DC-CD board by troubleshooting.
- Use SST 09240-13200-71 for measurement.

(1) SST connection method

① Turn off the key switch.
② Disconnect the battery plug.
③ Disconnect the connectors (CN100-CN102 and CN104-CN107) of the CPU and DC-CD board.
④ Connect the SST.

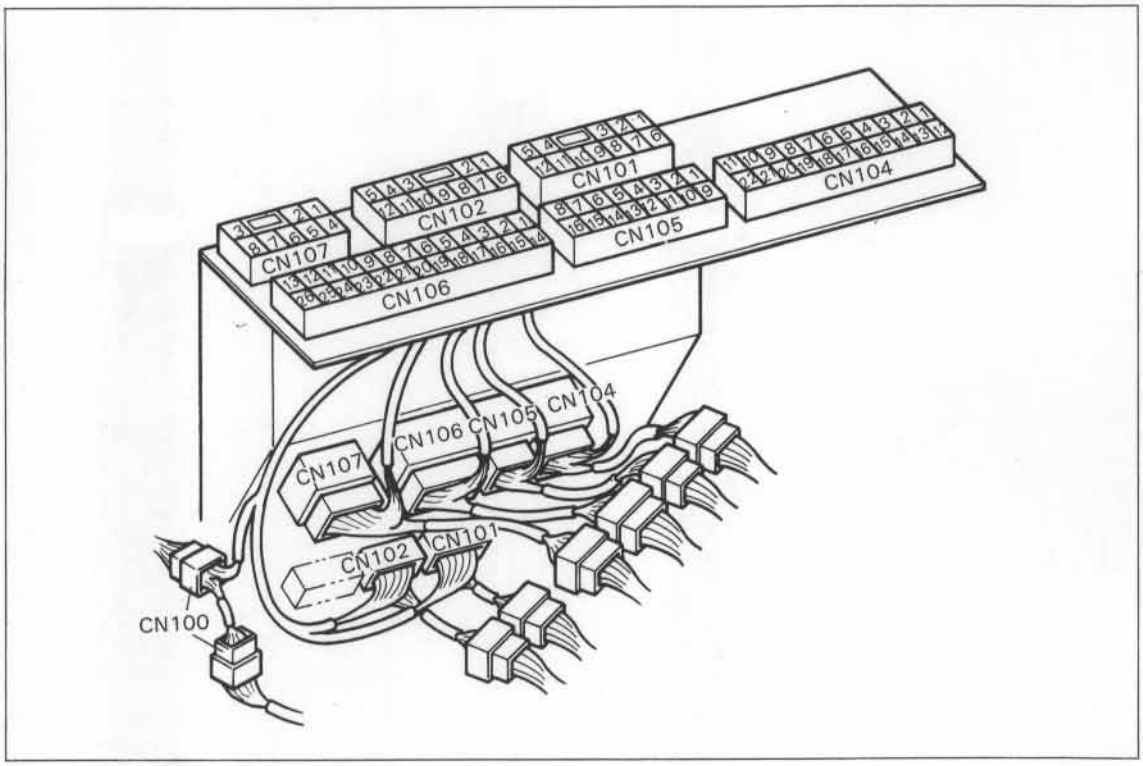

Connecting the SST BARS142

(2) Method for measurement and standard table

① How to read the table

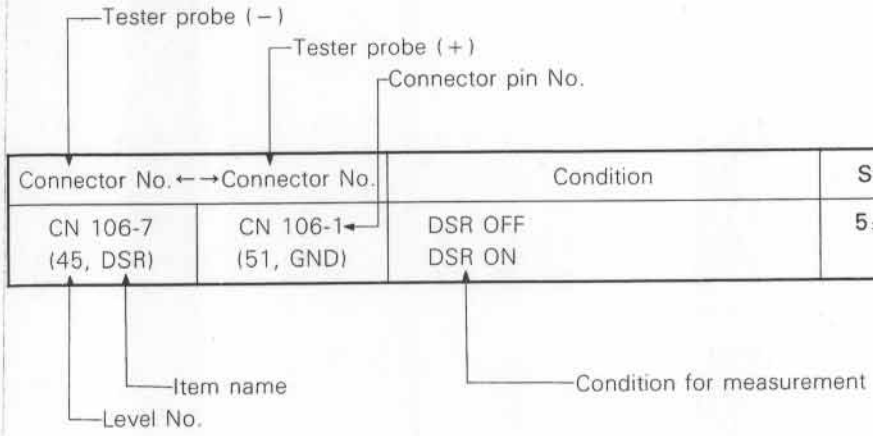

Connector No.←→Connector No.		Condition	Standard	Remarks
CN 106-7 (45, DSR)	CN 106-1 (51, GND)	DSR OFF DSR ON	5±0.25V 0V	

② Table

CN101 connector Basic conditions (battery plug on and key switch off)

Connector No.←→Connector No.		Condition	Standard	Remarks
CN 101-1 (5, MP)	CN 101-5 (1, M+)	Measure the resistance with the ⊖ probe (of multimeter) in contact with CN101-5	Approx. 35Ω	MP contactor
CN 101-2 (4,MG)	CN 101-5 (1, M+)	Measure the resistance with the ⊖ probe (of multimeter) in contact with CN101-5	Approx. 35Ω	MG contactor
CN 101-2 (4,MG)	CN 101-7 (N2, GND)	measure the voltage applied to the MG coil with the ⊕ probe (of multimeter) in contact with CN101-2. Key switch on	Approx. 46V	MG coil
CN 101-3 (2, MF)	CN 101-5 (1, M+)	Measure the resistance with the ⊖ probe (of multimeter) in contact with CN101-5.	Approx. 35Ω	MF contactor
CN 101-3 (2, MF)	CN 101-7 (N2, GND)	Measure the voltage applied to the MF coil with the ⊕ probe (of multimeter) in contact with CN101-3. Key switch on	Approx. 46V	MF coil
CN 101-4 (P2, TGC)	CN 101-7 (N2, GND)		1.0~2.5 TON 48V 3.0 TON 72V	TG collector

CN101 connector: Basic conditions (battery plug on and key switch off)

Connector No. ←→ Connector No.		Condition	Standard	Remarks
CN 101-5 (1, M+)	CN 101-7 (N2, GND)	Key switch on	Approx. 46V	Contactor power supply
CN 101-6 (41, B48V) (18, B80V)	CN 101-7 (N2, GND)		1.0~2.5 TON 48V 3.0 TON 72V	Battery voltage
CN 101-8 (3, MR)	CN 101-5 (1, M+)	Measure the resistance with the ⊖ probe (of multimeter) in contact with CN101-5.	Approx. 35Ω	MR contactor
CN 101-8 (3, MR)	CN 101-7 (N2, GND)	Measure the voltage applied to the MR coil with the ⊕ probe (of multimeter) in contact with CN101-8. Key switch on	Approx. 46V	MR coil
CN 101-9 (43, K48V)	CN 101-7 (N2, GND)	Key switch on	48V	Voltage at after the key switch
CN 101-10 (P10, TGE)	CN 101-7 (N2, GND)		Approx. 0V	TG emitter
CN 101-11 (91, TGB)	CN 101-7 (N2, GND)		Approx. 1V	TG base
CN 101-12 (41, B48V)	CN 101-7 (N2, GND)		48V	Voltage at battery

CN102 Connector Basic conditions (battery plug on and key switch off)

Connector No. ←→ Connector No.		Condition	Standard	Remarks
CN 102-1 CN 102-2		Unused		
CN 102-3 (12, −5V)	CN 102-10 (11, GND)		−5V~−6V	−5V
CN 102-4 (12, −5V)	CN 102-10 (11, GND)		−5V~−6V	−5V
CN 102-5 CN 102-6 CN 102-7		Unused		
CN 102-8 (10, +5V)	CN 102-10 (11, GND)		5.1V~5.3V	+5V
CN 102-9 (10, +5V)	CN 102-10 (11, GND)		5.1V~5.3V	+5V
CN 102-12		Unused		

CN104 Connector Basic conditions (battery plug on and key switch on)

Connector Nb. ←→ Connector No.		Condition	Standard	Remarks
CN 104-1 (15, +30V)	CN 104-22 (N2, GND)		Approx. 25V	
CN 104-2 (15, +30V)	CN 104-22 (N2, GND)		Approx. 25V	
CN 104-3 (21, PRE)	CN 104-22 (N2, GND)		5±0.25V	
CN 104-4 (22,VCON)	CN 104-22 (N2, GND)	Key switch off	0V	
CN 104-5 (27, CHOPC)	CN 104-22 (N2, GND)		1~5V	
CN 104-6 (23, MDMP)	CN 104-22 (N2, GND)	MP OFF (Key Switch OFF) MP ON	0V 5±0.25V	
CN 104-7 (24, MDMG)	CN 104-22 (N2, GND)	MG OFF MG ON	0V 5±0.25V	
CN 104-8 (25, MDMR)	CN 104-22 (N2, GND)	MR OFF MR ON	0V 5±0.25V	
CN 104-9 (26, MDMF)	CN 104-22 (N2, GND)	MF OFF MF ON	0V 5±0.25V	
CN 104-10 (N2, GND)	CN 104-22 (N2, GND)	Unused		
CN 104-11 (N2, GND)	CN 104-22 (N2, GND)	Unused		
CN 104-12 (28, +5V)	CN 104-22 (N2, GND)		5±0.25V	
CN 104-13 (28, +5V)	CN 104-22 (N2, GND)	Unused		
CN 104-14 (OPTO2)	CN 104-22 (N2, GND)	Unused		
CN 104-15 (OPTO1)	CN 104-22 (N2, GND)	Unused		
CN 104-16 CN 104-17		Unused		
CN 104-18 (13, VBBT)	CN-104-22 (N2, GND)		Approx. 48V	
CN 104-19 (14, VBKY)	CN-104-22 (N2, GND)	Key switch on Key switch off	Approx. 48V 0V	

CN104 Connector Basic conditions (Battery plug on and key switch on)

Connector No.←→Connector No.		Condition	Standard	Remarks
CN 104-20 (20, VBP2)	CN 104-22 (N2, GND)	48V: Battery 72V: Battery	Approx. 48V Approx. 72V	
CN 104-21 (N2, GND)	Panel N1 terminals		Continuity shall exist.	

CN105 connector Basic conditions (battery plug on and key switch on)

Connector No.←→Connector No.		Condition	Standard	Remarks
CN 105-1 (75, THC)	CN 105-4 (74, GND)		Greater than 0V and smaller than 5V	
CN 105-2 (36, VDP-)		Not measurable		
CN 105-3 (31, VDD-)		Not measurable		
CN 105-4 (74, GND)	Panel N1 terminal		Continuity shall exist.	
CN 105-5 (73, +5V)	CN 105-4 (74, GND)		5±0.25V	
CN 105-6 (73, +5V)	CN 105-4 (74, GND)		5±0.25V	
CN 105-7 (37, +5V)	CN 105-4 (74, GND)		5±0.25V	
CN 105-8 (32, +5V)	CN 105-4 (74, GND)		5±0.25V	
CN 105-9 (76, +5V)	CN 105-4 (74, GND)		5±0.25V	
CN105-10 (35, VDP+)		Not measurable		
CN 105-11 (30, VDD+)		Not measurable		
CN 105-12 (74, GND)	CN 105-4 (74, GND)		0V	
CN 105-13 (72, CSP)	CN 105-4 (74, GND)	Material handling in stopped state	0~0.1V	

CN105 Connector Basic conditions (battery plug on and key switch on)

Connector No. ←→ Connector No.		Condition	Standard	Remarks
CN 105-14 (71, CSD)	CN 105-4 (74, GND)	Traveling in stopped state	0 ~ 0.1V	
CN 105-15 (38, CHOPP)	CN 105-4 (74, GND)		4V ~ 5V	
CN 105-16 (33, CHOPD)	CN 105-4 (74, GND)		4V ~ 5V	

CN106 Connector Basic conditions (battery plug on and key switch on)

Connector No. ←→ Connector No.		Condition	Standard	Remarks
CN 106-1 (51, GND)	Panel N1 terminal		Continuity shall exist.	
CN 106-2 (84, SS2 −)	CN 106-3 (83, SS2 +)	Traveling in stopped state	0V	
CN 106-3 (83, SS2 +)	CN 106-2 (84, SS2 −)	Traveling in stopped state	0V	
CN 106-4 (82, SS1 −)	CN 106-5 (81, SS1 +)	Traveling in stopped state	0V	
CN 106-5 (81, SS1 +)	CN 106-4 (82, SS1 −)	Traveling in stopped state	0V	
CN 106-6 (46, DSF)	CN 106-1 (51, GND)	DSF OFF DSF ON	5 ± 0.25V 0V	Diagnosis non-operating voltage 2 V or more 0.8 V or less
CN 106-7 (45, DSR)	CN 106-1 (51, GND)	DSR OFF DSR ON	5 ± 0.25V 0V	Diagnosis non-operating voltage 2 V or more 0.8 V or less
CN 106-8 (64, SWAC)	CN 106-1 (51, GND)	SWAC OFF SWAC ON	5 ± 0.25V 0V	Diagnosis non-operating voltage 2 V or more 0.8 V or less
CN 106-9 (65, SWB)	CN 106-1 (51, GND)	SWB OFF SWB ON	0V 5 ± 0.25V	Diagnosis non-operating voltage 2 V or more 0.8 V or less
CN 106-10 (77, SWSC)	CN 106-1 (51, GND)	SWSC OFF SWSC ON	5 ± 0.25V 0V	Diagnosis non-operating voltage 2 V or more 0.8 V or less
CN106-11		Unused		

CN106 Connector Basic conditions (battery plug on and key switch on)

Connector No.←→Connector No.		Condition	Standard	Remarks
CN 106-12		Unused		
CN 106-13 (51, GND)	CN 106-1 (51, GND)		0V	
CN 106-14 (51, GND)	CN 106-1 (51, GND)		0V	
CN 106-15 (53, POT+)	CN 106-1 (51, GND)		3~4V	
CN 106-16 (52, POTA)	CN 106-1 (51, GND)	Shall vary smoothly according to the traveling accelerator operation	0~4V (≠=0V)	See page 3-25 for the analyzer.
CN 106-17 (57, POTB)	CN 106-1 (51, GND)	Shall vary smoothly according to the brake operation.	0~4V (≠=0V)	See page 3-25 for the analyzer.
CN 106-18 (55, POTL)	CN 106-1 (51, GND)	Shall vary smoothly according to the material handling accelerator operation.	0~4V (≠=0V)	See page 3-25 for the analyzer.
CN 106-19 (60, LSL)	CN 106-1 (51, GND)	LSL OFF LSL ON	5±0.25V 0V	
CN 106-20 (61, LST)	CN 106-1 (51, GND)	LST OFF LST ON	5±0.25V 0V	
CN 106-21		Unused		
CN 106-22 (63, LSAT2)	CN 106-1 (51, GND)	LSAT OFF LSAT ON	5±0.25V 0V	
CN 106-23 (66, LSPB)	CN 106-1 (51, GND)	LSPB OFF LSPB ON	5±0.25V 0V	
CN 106-24 (LSAT3)	CN 106-1 (51, GND)		5±0.25V	
CN 106-25 (67, LSD)	CN 106-1 (51, GND)	LSD OFF LSD ON	5±0.25V 0V	
CN 106-26		Unused		

CN107 connector Basic conditions (battery plug on and key switch on)

Connector No. ←→ Connector No.		Condition	Standard	Remarks
CN 107-1 (141, SMTDA)			0 ~ 1V	
CN 107-2 (142, SDTMA)		Not measurable		
CN 107-3		Unused		
CN 107-4 (144, SMTDK)	CN 107-6 (17, GND)		0V	
CN 107-5 (143, SDTMK)		Not measurable		
CN 107-6 (17, GND)	Panel N1 terminal		Continuity shall exist.	
CN 107-7		Unused		
CN 107-8 (16, +30V)	CN 107-6 (17, GND)		Approx. 25V	

14. Display
When the cause of a trouble is judged to exist in the display, apply the battery voltage and measure the voltages applied to each connector.

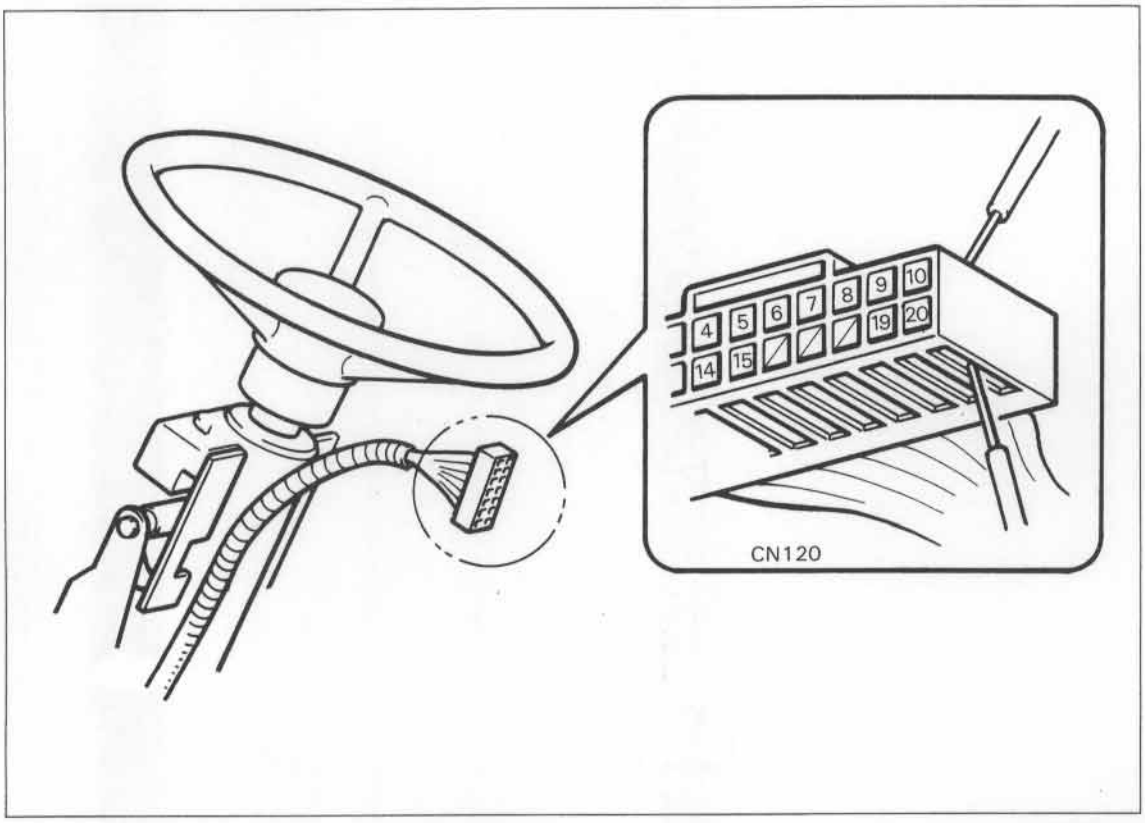

Voltage Measurement Method BARS144

CN120 connector Basic condition (battery plug on)

Connector No. ←→ Connector No.		Condition	Standard	Remarks
CN 120-9 (16, +30V)	CN 120-19 (17, GND)		Approx. 30V	
CN 120-10 (104, BL)	CN 120-20 (N1, GND)		Approx. 48V	

DISASSEMBLY

The controller requires little overhaul operation. Most of service jobs are defective parts replacement after grasping the cause by inspection.

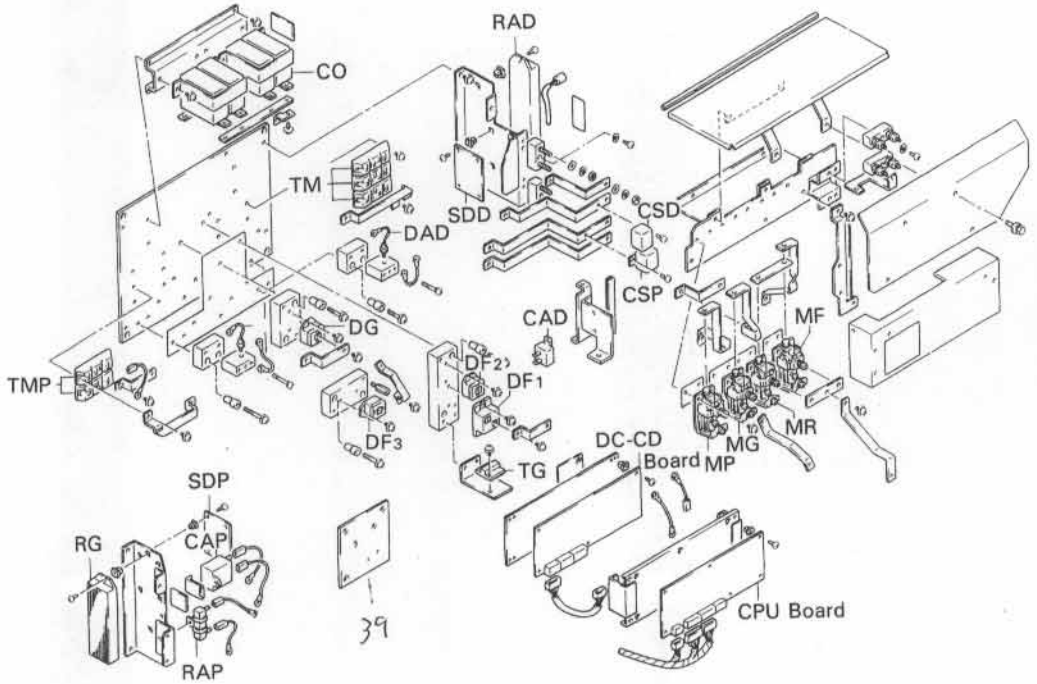

Parts Mounting Positions BATM65

CAUTIONS FOR PARTS REPLACEMENT

- Tighten the bar and harness mounting nuts and screws to the specified torques, and always coat Locktite (thread tightener).
  Loosening or insufficient tightening (tightening failure) will cause new troubles.
- Before disconnecting a bar or harness, always record the mounting position or put a tag showing the position. Check the memo or tag at the time of connection to prevent incorrect installation or wiring.
  In correct installation or wiring will cause new troubles.
- Always coat silicone grease for parts applied with silicone grease. Omission of coating may cause overheating.
- After completion of installation, check no contact of the bar and wiring at unnecessary places.
  Use a multimeter to check continuity at check points before installation on the vehicle.
  (See page (2-28) for the check points with the multimeter.)

ASSEMBLY

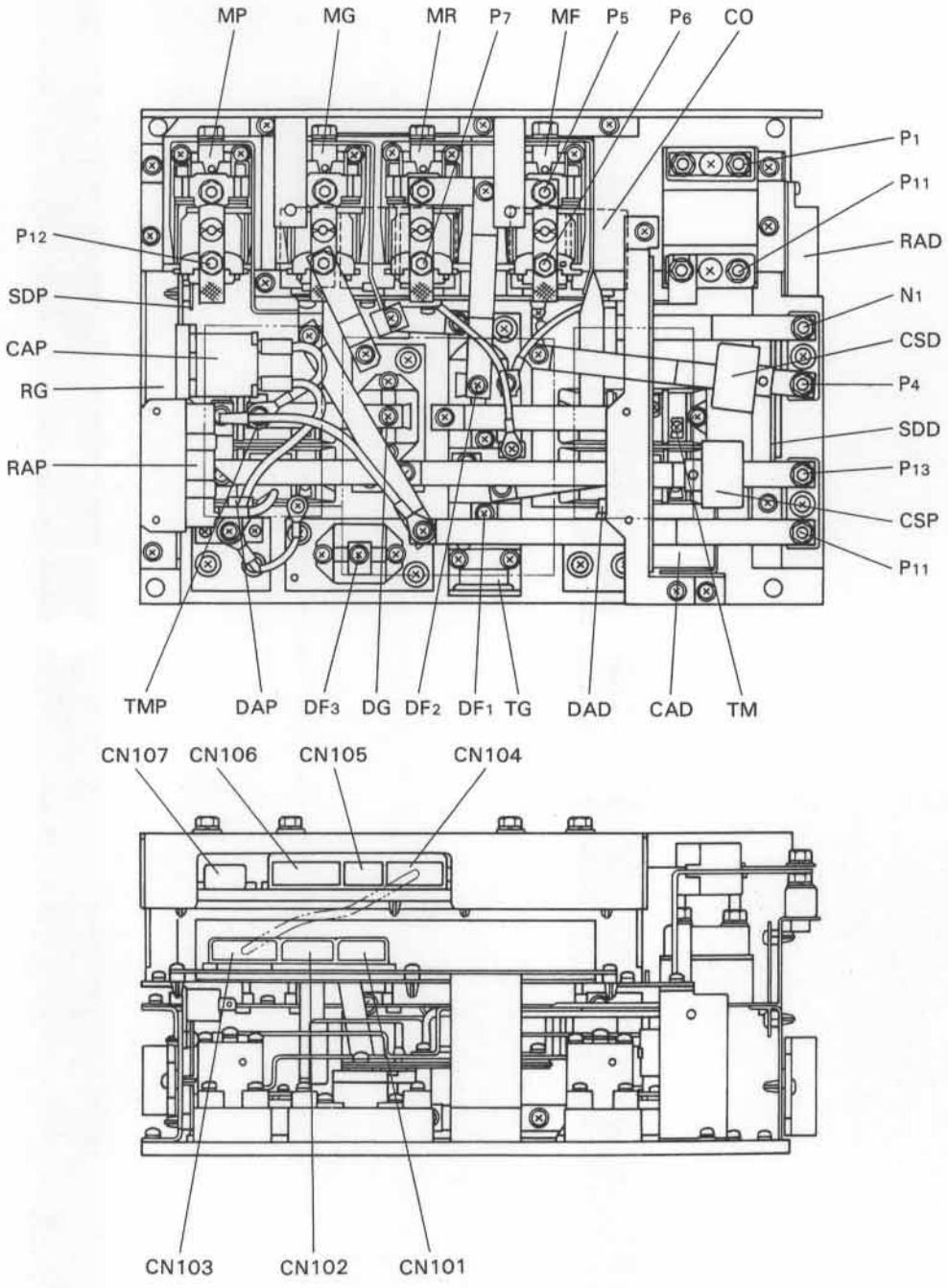

Control Panel Assembly Drawing BATM6

Control Panel Parts Tightening Torques

Item			Tightening torque (ft-lb) [N·m]
TM, TMP	For harness setting	M5	14~26 (1.01~1.88) [1.37~2.55]
		M4	9~17 (0.65~1.23) [0.88~1.67]
	For mounting	M5	20~30 (1.45~2.17) [1.96~2.94]
DF1	For harness setting	M5	18~32 (1.30~2.31) [1.77~3.14]
	For mounting	M5	20~30 (1.45~2.17) [1.96~2.94]
DF2, 3 DG	For harness setting	M5	15~20 (1.08~1.45) [1.47~1.96]
	For mounting	M5	20~30 (1.45~2.17) [1.96~2.94]
DAD, DAP	For mounting	M6	25~30 (1.80~2.17) [2.45~2.94]
TG	For mounting	M5	16~24 (1.16~1.74) [1.57~2.35]
Heat sink	For mounting	M5	20~30 (1.45~2.17) [1.96~2.94]
Terminal bolts for external connection		M8	95~105 (6.87~7.59) [9.32~10.30]

CONTINUITY INSPECTION WITH MULTIMETER

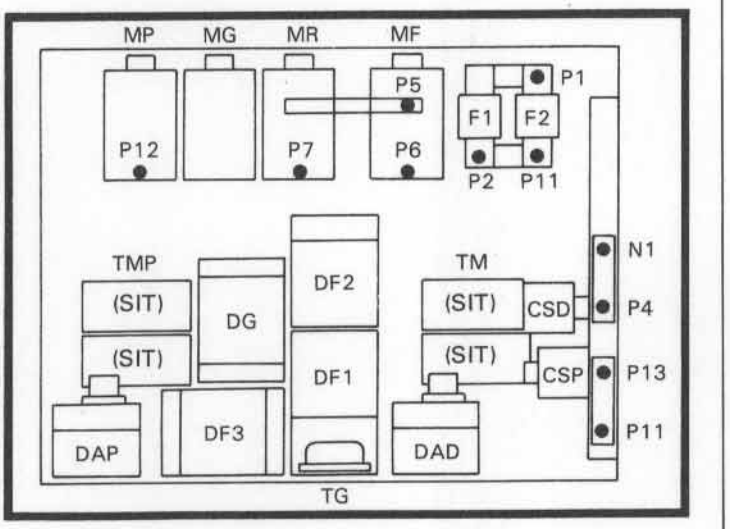

Continuity Inspection Points BATM67

INSPECTION METHOD

+ probe: red, — probe: black

Inspection point		Standard value	Multimeter range
Between P2 and N1	P2 + probe —— N1 — probe	Approx. 10~20 Ω	Ω× 1 K
	P2 — probe —— N1 + probe	∞Ω	
Between P12 and N1	P12 + probe —— N1 — probe	Approx. 10~20 Ω	Ω × 1 K
	P12 — probe —— N1 + probe	∞Ω	
Between P2 and frame	P2 + probe —— Frame — probe	∞Ω	Ω × 1 k
Between N1 and frame	Multimeter probes may be used in either direction.	∞Ω	Ω × 1 K

* Since the capacitor is charged in the first inspection, the pointer indicates the capacitor characteristic. Capacitor characteristic: The pointer deflects to 0 Ohm first and returns to ohm them.

OCL VALUE (OVERCURRENT LIMIT VALUE)

1. Drive circuit OCL value measurement

(1) Measurement

Lock the drive wheels in the operation state and insert a shunt in the drive motor circuit for measurement.

(The parking brake and foot brake shall be released.)

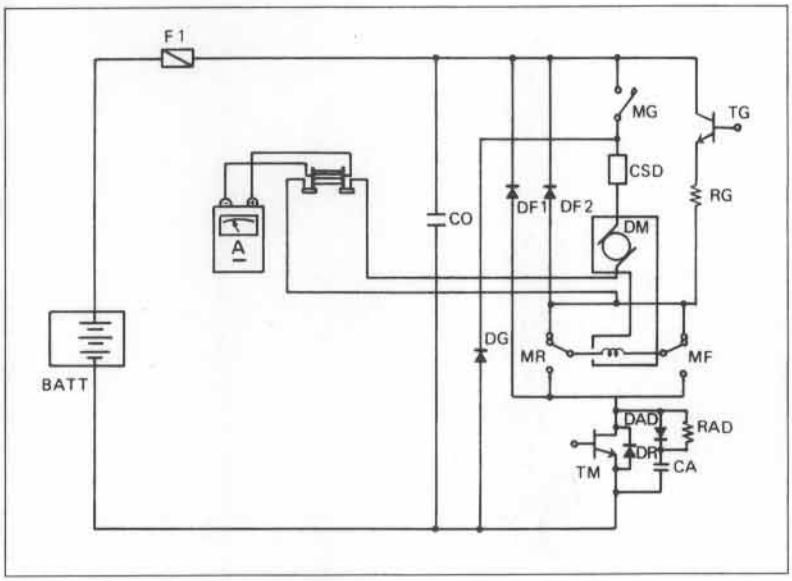

Measuring the OCL Value of Drive Circuit BARS145

	1 ton series	2 ton series	3 ton series
Standard OCL value	380A ± 19A	500A ± 25A	380A ± 19A

Shunt: 50mV, 500A

(2) Method for judgement

If the OCL value is outside the standard, make judgement as follows since it may be caused by a defect of the drive circuit current sensor (CSD) or CPU board:

① Jack up the vehicle until the drive wheels depart from the ground, and support both sides of the frame with wooden blocks.

② Activate the analyzer mode and select category 1 and class 2 (test operation). Set the monitor item No. to 0. (See page 3-25.)

③ Drive the engine with a fixed accelerator pedal depression angle. After the revolution is stabilized, compare the value indicated on the display with the value measured with a shunt.

Standard: If the difference between the displayed value and measured value is within ± 5%, judge the current sensor to be normal.

When the current sensor is judged normal, replace the CPU board because it is considered defective.

Caution:

Never tamper with the OCL adjusting trimmer on the CPU board.

2. Material handling circuit OCL value measurement
   (1) Judgement method
      ① Set the battery plug to on.
      ② Turn the key switch to on.
      ③ Operate the material handling control lever and check the motor revolution at the time of relief.

   Caution:
   - For relief, lift the fork from to 1 m (39.37 in) below the maximum height position.
   - If started and relieved at the uppermost lift position, the OCL value may be exceeded.

      ④ If the pump motor output drops at the time of relief, replace the CPU board by judging it as OCL value setting defect.

   Caution:
   Never tamper with the OCL adjusting trimmer on the CPU board.

ACCELERATOR POTENTIOMETER ADJUSTMENT

1. Temporarily install the potentiometer on the bracket.

2. Make adjustment as shown in the table below while rotating the acceleration sensor.

T (Adjusting clearance)	Switch state
T = 1.0 mm (0.039 in)	OFF
T = 2.0 mm (0.079 in)	ON

Note:
The analyzer switch input test (page 3-30) may be used.

3. Tight the set screws.
T = 0.16 ~ 0.24 kg-m
(1.16 ~ 1.74 ft-lb or 1.57 ~ 2.35 N-m)

Resistance: Between V_C (53) and E_2 (51)
4 ± 0.8 kΩ

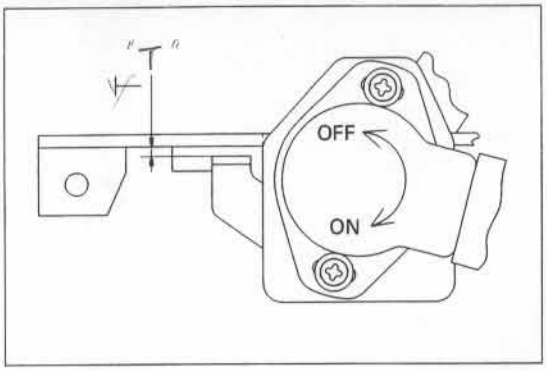

Adjusting the Clearance BARC10

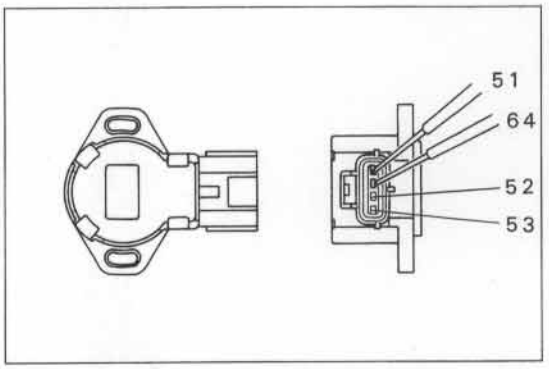

Checking with Multimeter BARS177

BRAKE POTENTIOMETER ADJUSTMENT

1. Temporarily install the potentiometer on the bracket.

2. Insert the thickness gauge between the stopper bolt and stopper, and make adjustment so that the state of the switch in the sensor becomes as shown in the table below.

T (Adjusting clearance)	Switch state
T = 1.8 mm (0.071 in)	ON
T = 2.4 mm (0.094 in)	OFF

Note:
The analyzer switch input test (page 3-30) may be used.

3. Tighten the set screw.
T = 0.16 ~ 0.24 kg-m
(1.16 ~ 1.74 ft-lb 1.57 ~ 2.35 N-m)

Resistance: Between V_C (53) and E_2 (51)
4 ± 0.8 kΩ

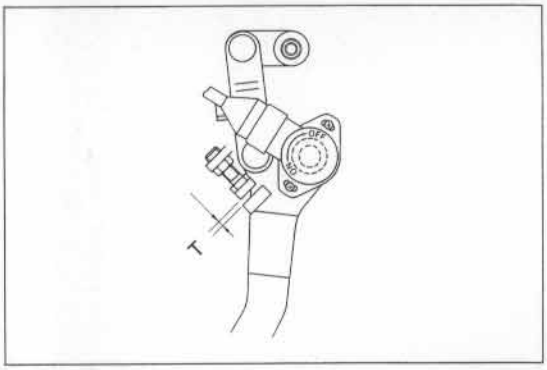

Adjusting the Clearance BATS82

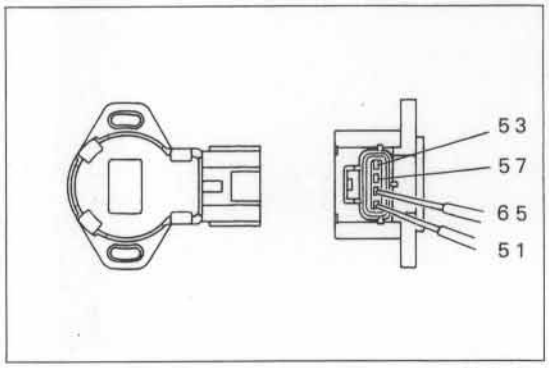

Checking with Multimeter BARS178

LIFT POTENTIOMETER ADJUSTMENT

1. Fit the cap at the stroke sensor fully to the depth.

2. Pull the lift lever as much as its looseness from the neutral position.

3. Determine the adjusting bolt position to push the cap at the sensor in by 0 to 1 mm (0.039 in).

4. Coat MP grease at the position indicated by the arrow in the illustration at right.

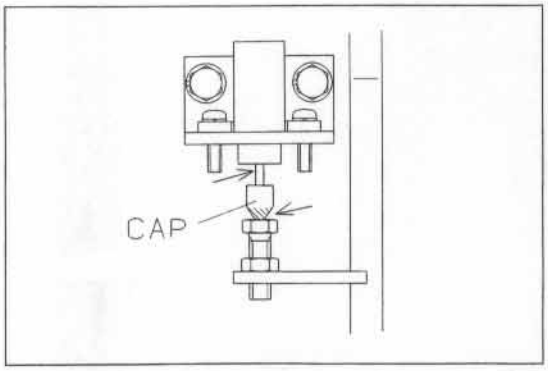

Adjusting the Potentiometer BARC14

DIRECTION SWITCH

COMPONENTS

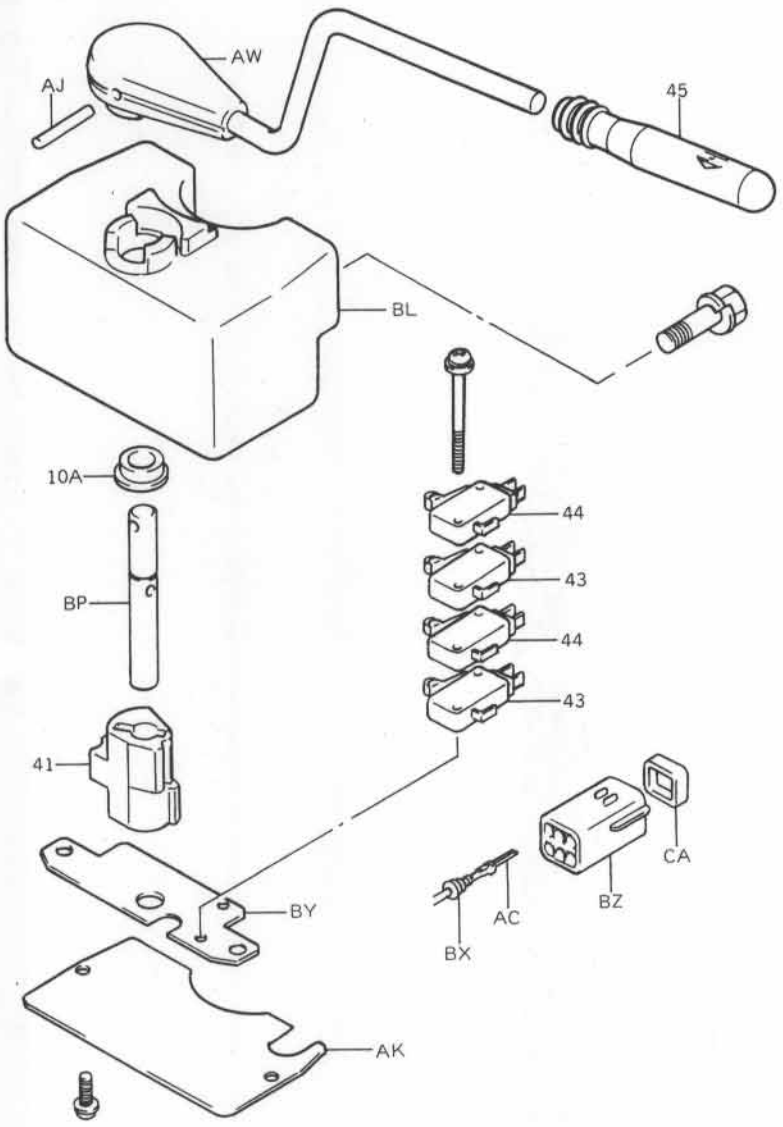

10A Bushing, No.1
41 Cam
43 Micro switch, No.1
44 Micro switch, No.2
45 Knob
AC Tab
AJ Spring pin
AK Plate
AW Lever SUB-ASSY
BL Direction switch case
BP Shaft
BX Cap
BY Base
BZ Connector
CA Connector

Direction Switch Components BARM36

REMOVAL

1. Disconnect the battery plug.

2. Remove the steering rear cover.
   (1) Set bolts
   (2) Steering rear cover

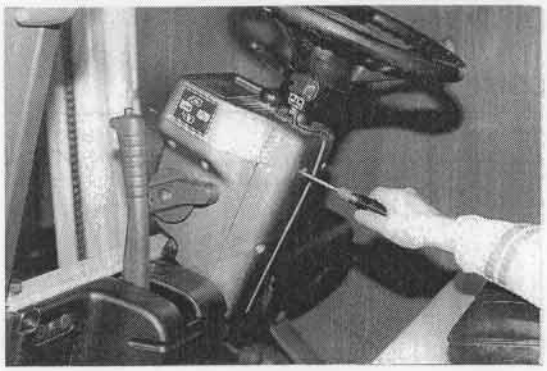

Removing the Steering Rear Cover AR21-25

3. Remove the steering front cover & display
   (1) Connector disconnection
   (2) Set bolts
   (3) Front cover & display

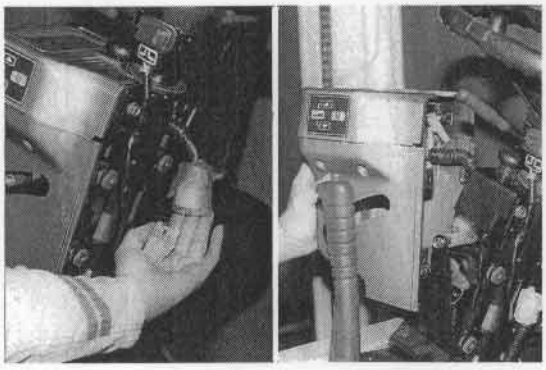

Removing the Front cover BAR21-32,33

4. Remove the direction switch.
   (1) Set bolts
   (2) Direction switch

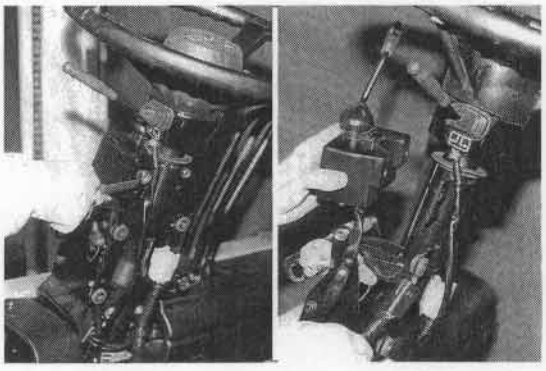

Removing the Direction Switch BAR21-34,35

DISASSEMBLY

1. Remove the cover.
   (1) Set screws
   (2) Cover

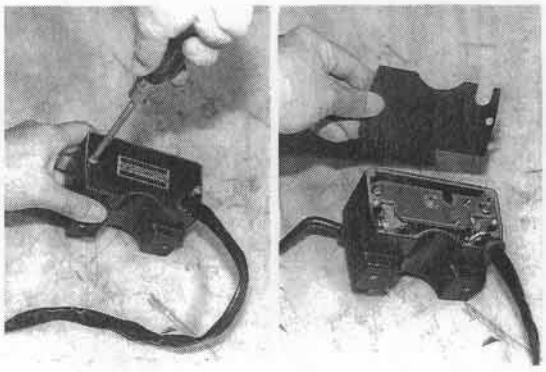

Removing the Microswitch BAR22-13,14

2. Remove the microswitch

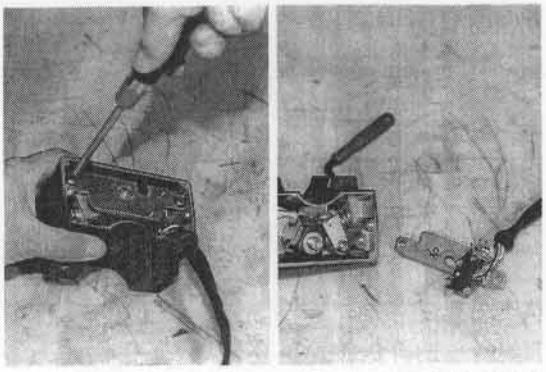

Removing the Microswitch BAR22-15,16

3. Remove the cam.
   (1) Cam
   (2) Spring

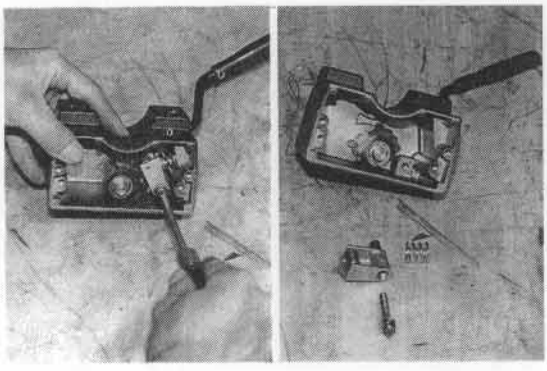

Removing the Cam bAR22-17,18

ASSEMBLY

The assembly procedure is the reverse of the disassembly procedure.

Caution:
Mount the microswitch in the illustrated position.

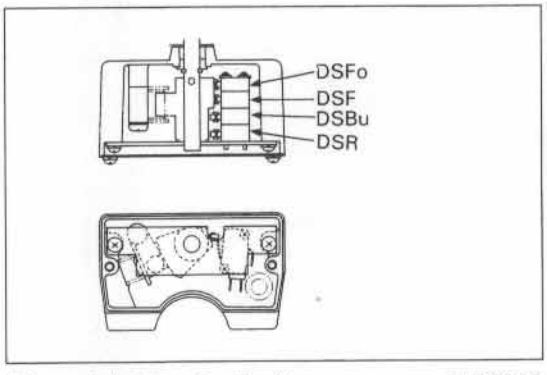

Microswitch Mounting Position BARS146

Caution:
When the microswitch is replaced, connect the leads according to the colors in the table.

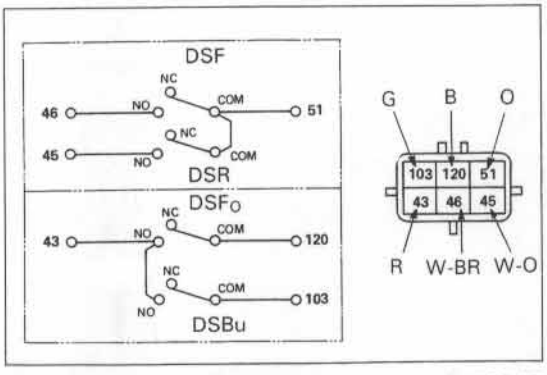

Microswitch Wiring Method BARS147

INSPECTION

Check conduction at CN9 (TAB).

Standard	Lever position		
Check point	Neutral	Forward	Reverse
DS_F	∞Ω	0Ω	∞Ω
DS_R	∞Ω	∞Ω	0Ω
DS_{FO}	∞Ω	0Ω	∞Ω
DS_{BU}	∞Ω	∞Ω	0Ω

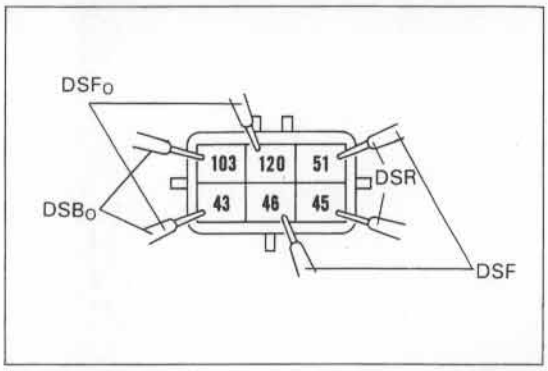

Conduction Check Point BARS148

EPS CONTROLLER
COMPONENTS

02 EPS control panel ASSY
GL Wiring
LT Cover

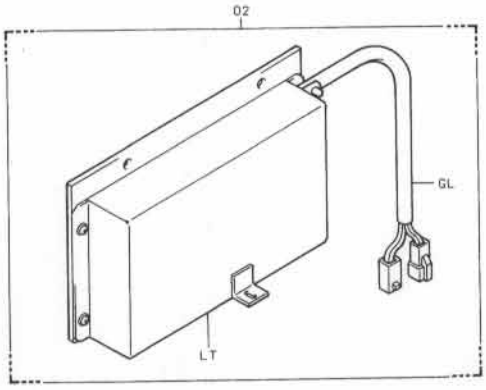

Controller Panel Components BATS83

04 PS contactor ASSY
12 Reactor ASSY
61 Harness
DP Sheet
DW Plate

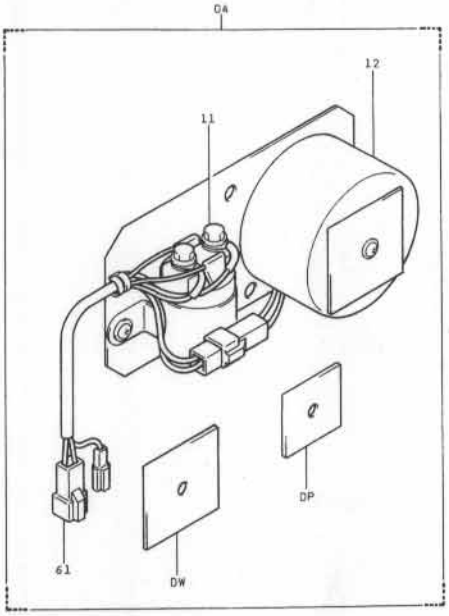

Contactor Panel Components BATS52

REMOVAL

1. Disconnect the battery plug.

2. Remove the side cover RH.
   (1) Set bolts
   (2) Side cover RH

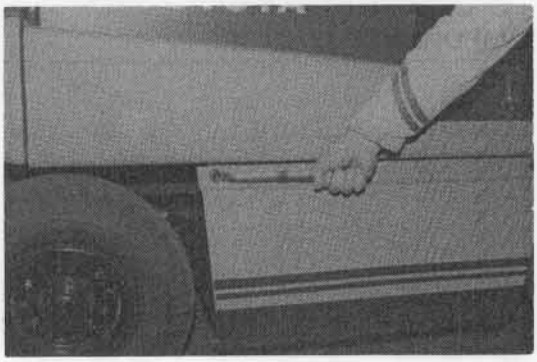

Removing the Side Cover RH BAT19-20

3. Disconnect each connector.

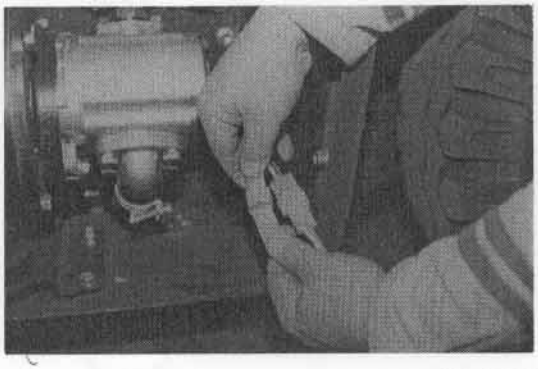

Disconnecting the Connector BAT19-23

4. Remove the controller ASSY.
   (1) Set bolts
   (2) Controller ASSY

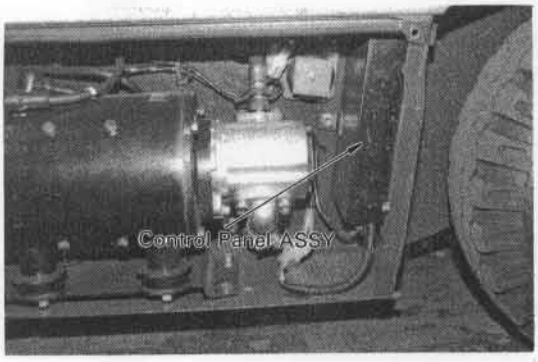

Removing the Control Panel ASSY BAT19-22

5. Remove the contactor ASSY.
   (1) Set bolts
   (2) Contactor ASSY

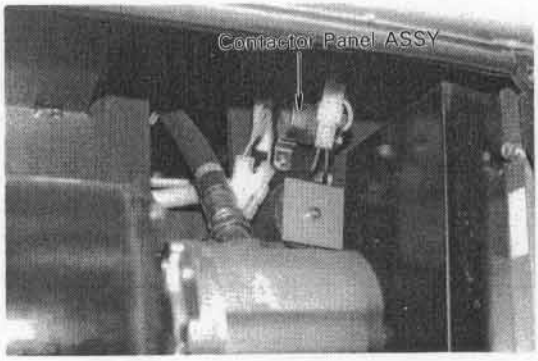

Removing the Contactor Panel ASSY BAT19-24

EPS CONTROLLER VOLTAGE MEASUREMENT

If the EPS controller is judged to be the cause of a trouble, measure the battery voltage and then measure the voltage and continuity at each EPS controller connector.

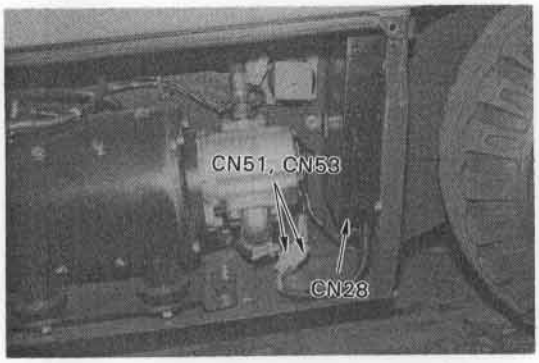

BAT19-22

Controller connectors (CN28, CN51 and CN53)

CN28

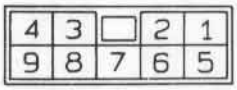

No.	Connecting point	Voltage	No.	Connecting point	Voltage
1	SS	162	6	SSPLS	80
2	S+	161	7	PSAL	151
3	SWky	43	8	GND	17
4	Mps	164	9	Unused (open)	Unused (open)
5	S—	163			

CN51

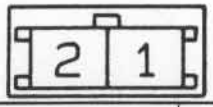

No.	Connecting point	Voltage
1	GND	N1
2	+ power supply	P23

CN53

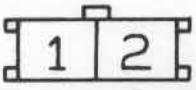

No.	Connecting point	Voltage
1	Motor terminal B	P24
2	Motor terminal A	P25

CN27

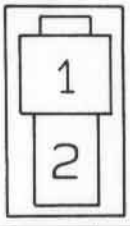

No.	Connecting point	Voltage
1	Coil positive (+) terminal	43
2	Coil negative (—) terminal	164

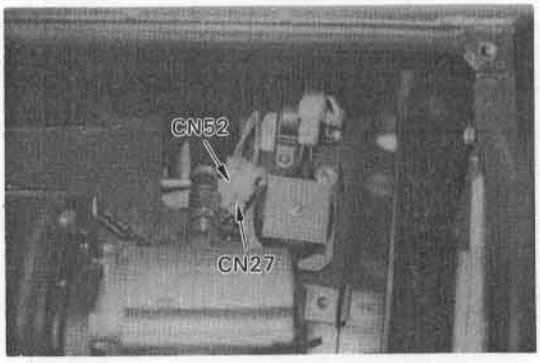

Contactor connectors (CN27, CN52) BAT19-25

CN52

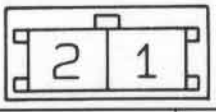

No.	Connecting point	Voltage
1	Contactor positive (+) terminal	P21
2	Contactor negative (—) terminal	P23

EPS Controller Voltage Measurement

TERMINALS TO BE MEASURED

CN28 connector Basic conditions (battery plug on, key switch off)

Connector No. ↔ Conector No.		Conditions	Standard value	Remarks
CN 28-1 (162, torque sensor)	CN 51-1 (N1)	SWky: ON Turn the steering wheel to the left and right.	Variation from -5V to +5V from the left stroke end to the right stroke end	
CN 28-2 (161, torque sensor)	CN 28-5 (163, torque sensor)	SWky: ON SWky: OFF	15 ± 1V 0V	
CN 28-3 (43, + 48V)	CN 28-4 (164, Mps)	SWky: ON SWky: OFF	11V or above 0V	AC range
CN 28-3 (43, + 48V)	CN 51-1 (N1)	SWky: ON SWky: OFF	Approx. 48V 0V	

CN51 connector

Connector No. ↔ Connector No.		Conditions	Standard value	Remarks
CN 51-2 (P_{23}, DMps)	CN 51-1 (N1)	SWky: ON	1 ~ 2.5 ton: Approx. 48V 3 ton Approx. 72V	

CN54 connector (For Relay box)

Connector No. ↔ Connector No.		Conditions	Standard value	Remarks
CN 54-1 (P_{25}, RyB)	CN 54-2 (P_{24}, RyB)	SWky: OFF CN54 disconnection	1 ~ 2.5 ton: Approx. 1.0 Ω 3 ton Approx. 2.0 Ω	Contactor power supply

MULTIDISPLAY FUNCTIONS

	page
DIAGNOSIS	3-2
GENERAL	3-2
DIAGNOSIS TABLE	3-3
ANALYZER	3-6
GENERAL	3-6
USING THE ANALYZER MODE	3-8
PASSWORD ENTRY METHOD	3-9
METHOD FOR SELECTING EACH ITEM	3-11
FUNCTIONAL EXPLANATION OF EACH TEST ITEM	3-16
Simple Test	3-16
Test Operation (Voltage, Current and Temperature Display)	3-26
Test Operation (Traveling Speed Display)	3-28
Diagnosis Monitor	3-29
Switch Input Test: ON/OFF Information Display	3-30
Switch Input Test: Buzzer Check	3-32
Switch Input Test: Momentary Interruption Test	3-33
Switch Input Test: Short-Circuit Test	3-34
MASK FUNCTIONS AND DATA SETTING AT CPU BOAD (METER CONBINATION BOAD ASSY) REPLACEMENT	3-35
GENERAL	3-35
PASSWORD INPUT METHOD	3-36
MCS-II TUNING MODE	3-37
TIRE CONSTANT REWRITING MODE	3-39

DIAGNOSIS

GENERAL

The 5FB series is provided with the diagnosis (self-diagnostic) function to sound the buzzer (beep, beep) and indicate the abnormal part by the corresponding "error code" on the multidisplay by automatically detecting any trouble in the main drive and material handling circuits, operating systems such as the accelerator, and sensors.

At the same time, such an action as traveling stop, material handling operation stop or traveling speed restricted is automatically taken to ensure safety.

Only the error code is indicated on the display depending on the kind of the trouble. In this case, the fork lift may be operated but should be repaired as early as possible.

When this display is switched to the analyzer (failure analysis mode), it is possible to detect the trouble location and to check the functions of the main drive and material handling circuits, operating systems and sensors.

Please use these diagnostic functions fully for early elimination of troubles in the electrical system.

Error code display

The error code is displayed at ① in the illustration together with the buzzer (beep, beep) sound.

Carry out repair as early as possible by referring to the diagnostic error code and troubleshooting.

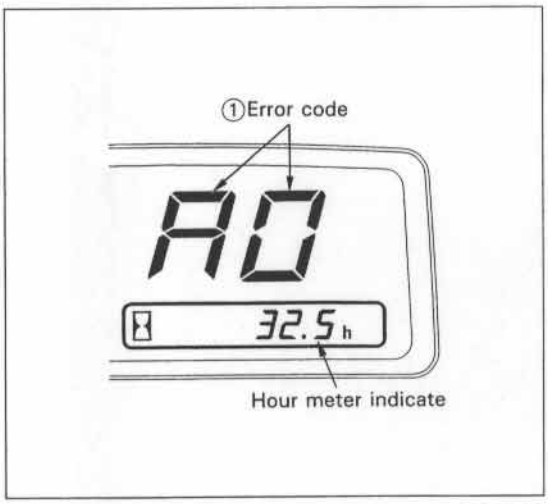

Error code display BARS96

DIAGNOSIS TABLE

*: Item newly provided for the MCS

Error code	Defective part	Failure mode	Phenomenon observed in vehicle	Remedial action (page to be referred to)
*AO	Main MCS circuit	Overheat	Decrease in traveling and material handling speeds (Traveling acceleration at 1/2) (Material handling current limitation to 100A)	Stop the vehicle and set the key switch to OFF (4–4)
*A1	Main MCS circuit	Overvoltage	Stopping of traveling and material handling	Repair (4–5)
*A2	CPU board	Abnormal temperature rise	(Display only)	Repair (4–5)
*A3	Battery	Abnormally high voltage Abnormally low voltage	Stopping of traveling and material handling	Repair (4–6)
*A4	Traveling accelerator	Accelerator potentiometer abnormality	Traveling stop	Repair (4–7)
*A5	Brake	Brake potentiometer abnormality	Traveling stop	Repair (4–8)
*A6	Material handling accelerator	Lift switch abnormality	Material handling stop	Repair (4–9)
*A8	Drive circuit fuse F1	Fuse open	Stopping of travling and material handing	Repair (4–9)
*A9	Material handling circuit fuse F2	Fuse open	Material handling stop	Repair (4–11)
*AA	CPU board	Temperature sensor abnormality	Display only	Repair (4–11)
*AE	CPU board	Excessive analog input detection and processing time	Display only	Repair (4–11)
AF	CPU board	CPU processing data abnormality	Stopping of traveling and material handling	Repair (4–11)
CO	Main drive circuit	Drive SIT short circuit Drive SIT open circuit Drive SD board abnormality	Traveling stop	Repair (4–12)

*: Item newly provided for MCS

Error code	Defective part	Failure mode	Phenomenon observed in forklift	Remedial action (page to be referred to)
C1	Drive current sensor	Current sensor harness short or open circuit	Traveling stop	Repair (4—13)
*C3	Controller temperature sensor	Temperature sensor harness short or open circuit	Decrease in drive and pump motor speeds (Drive acceleration at 1/2) (Pump current limitation to 100A)	Repair (4—14)
C4	Drive accelerator	Accelerator potentiometer short circuit Accelerator potentiometer open circuit	Traveling stop	Repair (4—15)
*C5	Brake	Brake potentiometer short circuit Brake potentiometer open circuit	Traveling stop	Repair (4—16)
*C7	Direction switch	Switch short circuit	Display only	Repair (4—17)
*C8	Speed sensor	Sensor harness open circuit	Traveling stop	Repair (4—17)
*C9	MG contactor	MG contactor short circuit	Traveling stop	Repair (4—18)
CA	MF and MR contactors and their operating circuits	Coil open circuit Coil chopper transistor short or open circuit	Travelingn stop	Repair (4—19)
*CC	CPU board Drive OCL circuit	Drive OCL value abnormal drop	Display only	Repair (4—19)
CE	CPU board	ROM abnormality	Stopping of traveling and material handling	Repair (4—19)
CF	CPU board	RAM abnormality	Stopping of traveling and material handling	Repair (4—19)
EO	Main pump circuit	Pump SIT short circuit Pump SIT open circuit Pump SD board abnormality	Material handling stop	Repair (4—20)

*: Item newly provided for MCS

Error code	Defective part	Failure mode	Phenomenon observed in forklift	Remedial action (page to be referred to)
E1	Pump current sensor	Current sensor harness short circuit or open circuit	Material handling stop	Repair (4—21)
E6	Pump accelerator	Pump potentiometer short circuit Pump potentiometer open circuit	High pump speed (pump accelerator fixation at the maximum level)	Repair (4—22)
EA	MP contactor and its operating circuit	Coil open circuit, or coil chopper transistor short or open circuit	Material handling stop	Repair (4—23)
*EC	CPU board Material handling OCL circuit	Material handling OCL value abnormal drop	Display only	Repair (4—23)
*EE	Display-MCS communication system	MCS received data abnormality	Display only	Repair (4—24)
EF	CPU board	CPU processing time abnormality	Display only	Repair (4—24)
*FO	Power steering	EPS controller	Display only	Repair (4—25)
*F1	Display-MCS communication system	Communication failure	Display only	Repair (4—27)
*F2	Display-MCS communication system	Communication data defect	Display only	Repair (4—27)
*F3	Display-MCS communication system	Improper communication data	Display only	Repair (4—27)
*F4	Display	Power control memory value abnormality	Display only	Repair (4—28)
F5	On-vehicle charger	Charging timer memory abnormality	(Display only) (Automatic equalized charging not allowed)	Repair (4—28)
*F6	On-vehicle charger	Charging safety timer operation	Charging stop	Repair (4—29)
F7	On-vehicle charger	Charging does not start	(Display only) (No buzzer sound)	Repair (4—30)
F8	On-vehicle charger	Charging does not end.	(Display only)	Repair (4—31)

ANALYZER

GENERAL

The 5FB series has the analyzer for function check of and defective part detection in of the main drive and material handling circuits, operating system such as accelerator and sensors by switching the multidisplay into the analyzer mode for quick and easy servicing.
Use these functions fully for early solution of troubles in the electrical system.

General Description of Analyzer Functions

The analyzer supports controller system inspection and locating of defective parts by making full use of the computer function of the MCS-II controller and the communication function between MCS-II and multidisplay. This analyzer, as compared with the one in the conventional MCS, has improve the functions as follows:

(1) Monitoring the history of past errors (diagnosis monitor)
(2) Testing the connections and insulation defects of wiring and connectors (Switch input test)
(3) System check with actual travel and material handling operations (test operation)
(4) No need of conversion from codes as in the past because of direct digital data indication on the display

Test items by analyzer

Category		Class		Description
1	Simple test and test operation	1	Simple test	Past diagnosis display and continuous quality check for main circuits, switch systems and sensor systems
		2	Test operation (voltage, current and temperature display)	Test operation while checking analog input values (motor current, accelerator input voltage, etc.) and error occurrence
		3	Test operation (traveling speed display)	Test operation while checking analog input values (traveling direction and speed) and error occurrence
2	Diagnosis monitor	1	Diagnosis monitor	Past error display with hour meter readings at the time of error occurrences
3	Switch input test	1	Switch ON/OFF information display	Display of each switch on/off state
		2	Buzzer check	Information of one switch on/off state by buzzer sound
		3	Momentary interruption test	Testing defective contacts of wirings and connectors
		4	Short circuit test	Testing defective insulation of wirings and connectors

USING THE ANALYZER MODE

PREPARATION FOR ANALYZER MODE

Caution:
Jack up the vehicle always until the drive (front) wheels depart the ground, support both sides of the frame with wooden blocks, and lower the fork fully for safety.

1. Set the battery plug to ON.

2. Set the key switch to ON.
   If diagnosis error code "AF", "CE", "CF", "EE", F1", "F2" or "F3" is displayed, the analyzer mode cannot be used. Carry out repair according to the troubleshooting (page 4-1).

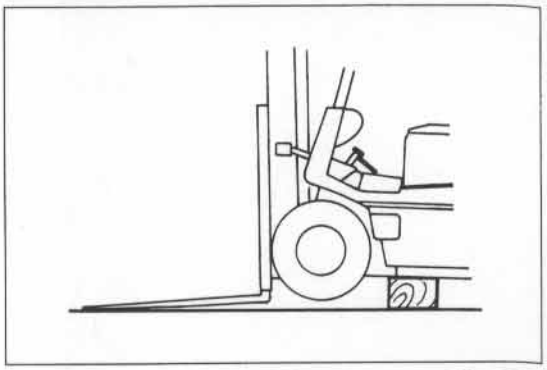

Preparing for the Analyzer Mode BARS134

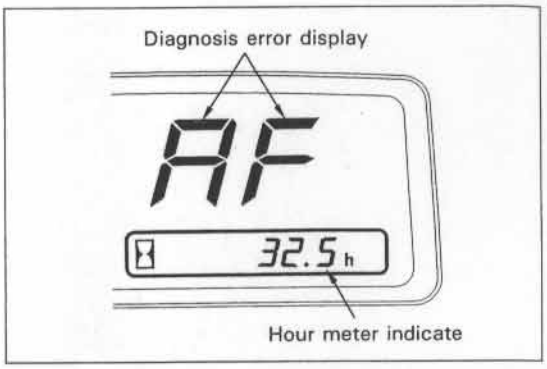

Diagnosis Error Display BARS97

Switching to the analyzer mode

The multidisplay is generally set to the diagnosis mode.

This display is protected by mask functions to prevent the important internal data from being destroyed by incorrect user operation.

Switching to the analyzer mode, therefore, requires password entry from the switch panel.

PASSWORD ENTRY METHOD

Note:
Your finger must be used for the panel switch operation. If sharpened tools are used instead, it would be a cause of damage on switch.

1. Primary password entry

   Operate the display switch panel according to the sequence shown in the illustration.

   If not operated within 10 seconds, the mode returns to the ordinary traveling/material handling mode (diagnosis mode).

   Keep pressing the switch in the final step for 2 seconds The intermediate mode screen is displayed.

   If the operation is mistaken halfway, set the key switch to off once and repeat the operation from the beginning.

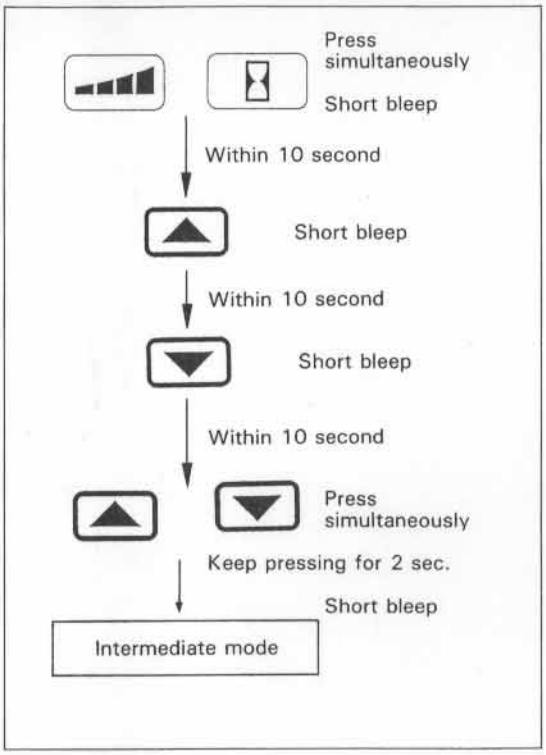

Primary Password Entry BARS94

2. Intermediate mode display

   Transition to the analyzer, hour meter start or MCS tuning mode occurs from this mode.

   See the Mask Functions (page 3-35) for the input methods for these modes.

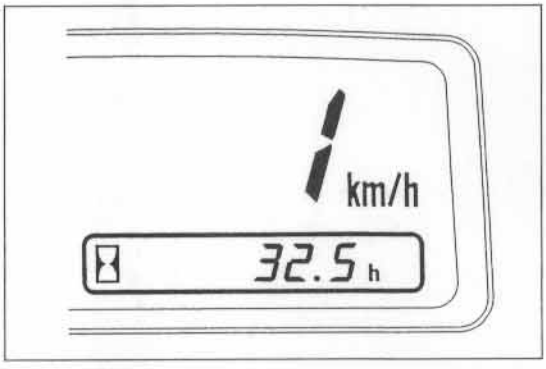

Intermediate Mode Display BARS98

3. Analyzer mode input

   Operate the display switches in the sequence shown in the illustration.

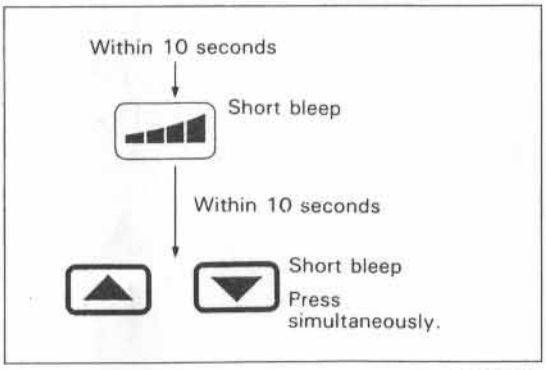

Analyzer Mode Input BARS95

4. Analyzer activation

The display changes as illustrated and the analyzer is activated.

Then the initial screen is displayed.

Note:
If the analyzer cannot be activated by the operation above, turn the key switch to OFF once and repeat from primary password entry again. If activation fails successively, the system may be abnormal.
Carry out repair according to the trouble shooting (page 4-43).

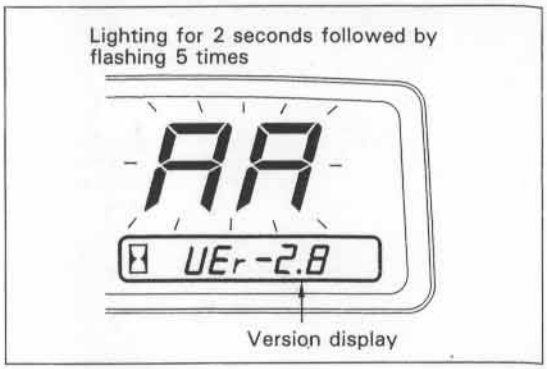

Activating the Analyzer BARS99

5. Initial screen

Transition to each analyzer mode occurs from this screen.

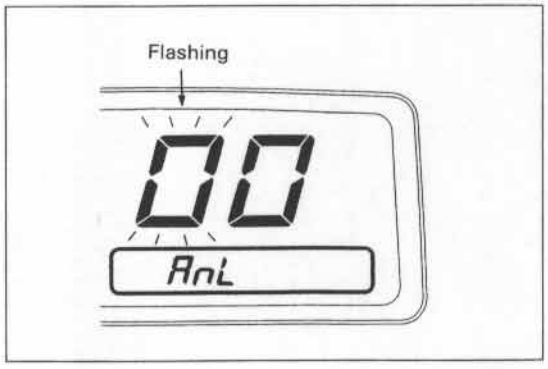

Initial Screen BARS100

METHOD FOR SELECTING EACH ITEM

Each item can be selected by adjusting the speedometer display to the corresponding category and class numbers.

1. Item selection from analyzer activation state (initial screen) (Example: 1.2)

Step	Operation method	Screen display
Initial screen	① End of analyzer activation	Flashing  Indicates the ready state for category number input.
Category selection	② The numeral increase by 1 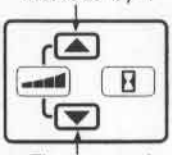 The numeral decrease by 1 Display the desired category number	Flashing 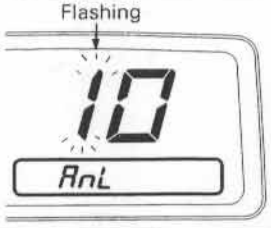
	③ 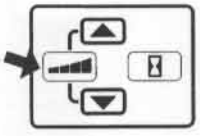 Press this switch when the desired category number is displayed.	Flashing 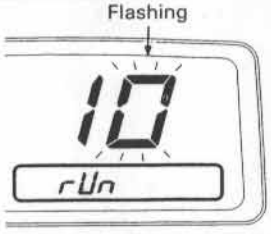 The category number is determined and class number input is enabled.
Class selection	④ The numeral increase by 1 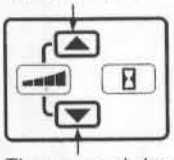 The numeral decrease by 1 Display the desired class number.	Flashing 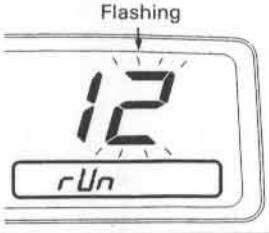
	⑤ 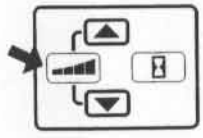 Press this switch when the desired class number is displayed.	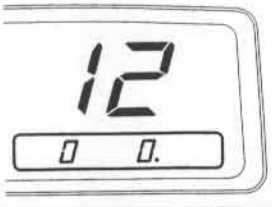 Flashing stops when the class number is determined to complete item selection.

BARS129 BARS100,101,102,103,104

2. To select another item from one item

(1) To select another class in the same category (Example: 1.2⇨1.3)

Step	Operation method	Screen display
Initial screen	① State of testing a certain item (1.2)	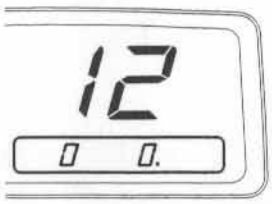
End of test	② Press this switch to end the test. 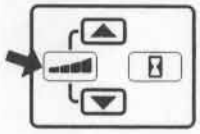	Flashing  The item selection screen is displayed to enable class number input.
Class selection	③ The numeral increase by 1 Display the desired class number. 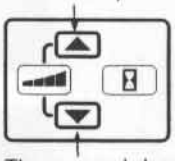 The numeral decrease by 1	Flashing 
	④ Press this switch when the desired class number is displayed. 	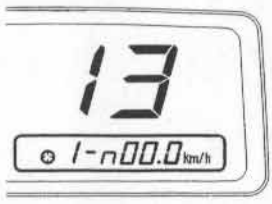 Flashing stops when the class number is determined to complete item selection.

BARS129 BARS104,106,107,108

(2) To select an item in a different category (Example: 1.3⇨New item)

Step	Operation method	Screen display
Initial screen	① State of testing a certain item (1.3)	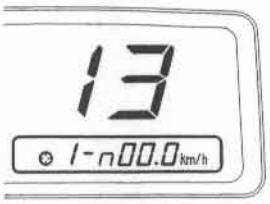
End of test	② 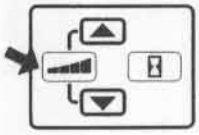 Press this switch to end the test.	Flashing  The item selection screen is displayed to enable class number input.
	③ 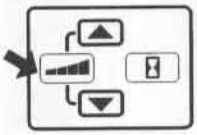 Press this switch to set class number 0.	 Returns to the initial screen upon analyzer activation when class number 0 is set.
Press this switch when the class number is determined to complete item selection.	④ Select the desired item according to the procedure from "1. Analyzer activation state (initial screen)".	

BARS129 BARS108,106,110

3. Ending analyzer mode (transition to diagnosis mode)

Step	Operation method	Screen display
Initial screen	① State of testing a certain item (11)	Category Class 11 ESY-00 ← ESY (simplified) test
End of test	② 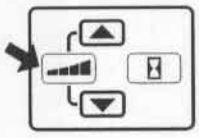 Press this switch to end the test.	Flashing 10 rUn The item selection screen is displayed to enable class number input.
	③ 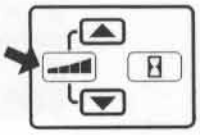 Press this switch and set class number 0.	Flashing 00 AnL Returns to the initial screen upon analyzer activation when class number 0 is set.
Analyzer end screen	④ 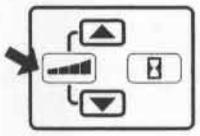 Press this switch and set category number 0.	Flashing Yn End "n" flashes. Analyzer mode completion confirmation Y: Yes to end the analyzer mode n: No to continue the analyzer mode
Analyzer end selection	⑤ 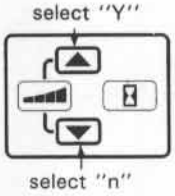 Press this switch and select Y (end the analyzer mode).	Flashing Yn End "Y" flashes.

BARS129 BARS111,106,110,112,113

End of analyzer mode	⑥ 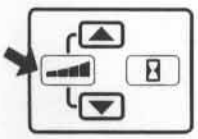	Press this switch to end the analyzer mode.	

BARS129

When the switch in step (6) is pressed in step (4) (flashing of "n"), the display returns to (1) (initial screen). It is also possible to end the analyzer mode by setting the key switch to OFF.

FUNCTIONAL EXPLANATION OF EACH TEST ITEM

Category 1	Class 1	Simple test

The simple test consists of 34 test items ESY-01 to ESY-34, each with its own screen.

Simple test item selection method

1. Initial display

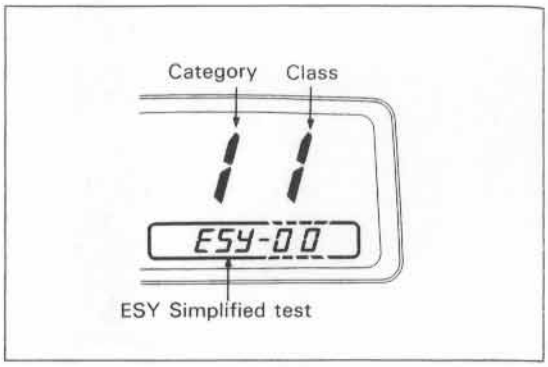

Initial Display BARS111

2. Switch operation method
   - Press ①: Proceeding to the next test item (Ex. ESY01⇨02)
   - Press ②: Returning to the preceding test item (Ex. ESY25⇨24)
   - Press ③: Repeating the same test item
   - Press ④: Ending the simple test (returning to the class selection screen)

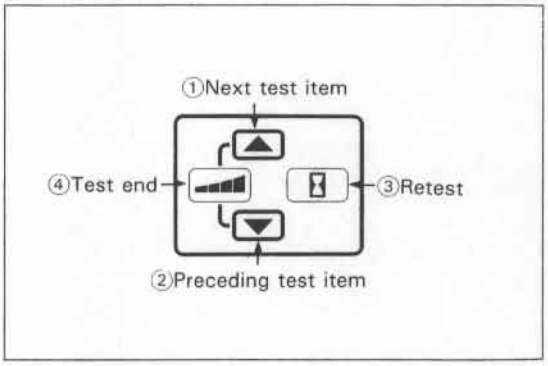

Switch Operation Method BARS130

Simple Test Function Map

Category 1	Class 1

Test No.	Description	
ESY-01	Automatic check of the battery state, main circuits, current and speed sensor	
ESY-02	Reading the memory of past diagnosis errors (10 most recent errors)	The most recent diagnosis error code and corresponding hour meter reading
ESY-03		The second most recent diagnosis error code and corresponding hour meter reading
ESY-04		The third most recent diagnosis error code and corresponding hour meter reading
ESY-05		The 4th most recent diagnosis error code and corresponding hour meter reading
ESY-06		The 5th most recent diagnosis error code and corresponding hour meter reading
ESY-07		The 6th most recent diagnosis error code and corresponding hour meter reading
ESY-08		The 7th most recent diagnosis error code and corresponding hour meter reading
ESY-09		The 8th most recent diagnosis error code and corresponding hour meter reading
ESY-10		The 9th most recent diagnosis error code and corresponding hour meter reading
ESY-11		The 10th most recent diagnosis error code and corresponding hour meter reading
ESY-12	Detected voltage value display (to enable judgement on the performance of the detecting function based on the difference from the actual value measured with a multimeter)	Voltage detected before key switch SWky
ESY-13		Voltage detected after key switch SWky
ESY-14		Voltage detected at P2 terminal
ESY-15	Automatic judgement on abnormality or defective adjustment of the drive accelerator, brake, pump accelerator or lift switch by accelerator, brake or lift lever operation	Check of accelerator switch SW_{AC} and drive accel vari-Ω VRA
ESY-16		Check of brake switch SW_{VB} and brake vari-ohm (potentiometer) VRB
ESY-17		Check of lift switch LS_L and pump vari-ohm (potentiometer) VRAP

Test No.	Description	
ESY-18	Automatic judgement on temperature sensor quality or judgement based on the difference between the detected temperature value and actual temperature	
ESY-19	Judgement on the qualities of the contactor and contactor drive circuit by visual check on contactor closing and opening by outputting each contactor ON/OFF signal	ON/OFF of forward contactor MF
ESY-20		ON/OFF of reverse contactor MR
ESY-21		ON/OFF of regenerative contactor MG
ESY-22		ON/OFF of pump contactor MP
ESY-23	Judgement on the qualities of switch and switch detecting circuit by ON/OFF state display of each switch and buzzer sound	ON/OFF of forward direction switch DS_F
ESY-24		ON/OFF of reverse direction switch DS_R
ESY-25		ON/OFF of accelerator switch SW_{AC}
ESY-26		ON/OFF of brake switch SW_B
ESY-27		ON/OFF of speed control switch SW_{SC}
ESY-28		ON/OFF of parking brake limit switch LS_{PB}
ESY-29		ON/OFF of lift limit switch LS_L
ESY-30		ON/OFF of tilt limit switch LS_T
ESY-31		ON/OFF of deadman limit switch LS_D
ESY-32		ON/OFF of attachment limit switch LS_{ATT}
ESY-33		ON/OFF of attachment limit switch LS_{ATT2}
ESY-34		ON/OFF of attachment limit switch LS_{ATT3}

Test No.: ESY-01

All diagnostic items other them those shown below are detected.
The error code and description are displayed on the screen.
Error codes display, but error description are not displayed : A3 · AE · AF · CE · CF · EE · EF
Error codes not displayed : F0 · F1 ~ F8

1. If the check result is normal, 00 is displayed on the speedometer.
2. If abnormal, the corresponding error code is displayed with buzzer sounding.
3. If multiple errors occur, they are displayed sequentially.

Action: Investigate the error position by referring to the troubleshooting

Note:
See page 3-42 for the list of display by the hour meter.

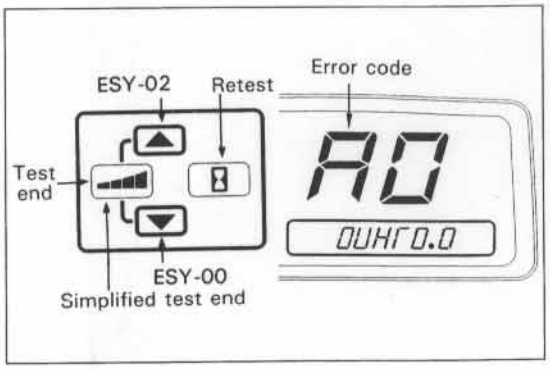

Display and Switch Operation BARS130,114

Test No.: ESY-02 to 11

Past diagnosis errors are displayed.

ESY-02: Most recent error
⋮ ⋮
ESY-11: 10th error from the most recent one

1. Select the function by pressing the switch.
   (1) ESY-xx is displayed with blinking three times on the hour meter.
   (2) The error occurrence time and error code are displayed on the hour meter and speedometer, respectively.

Action: Investigate the error position by referring to the troubleshooting

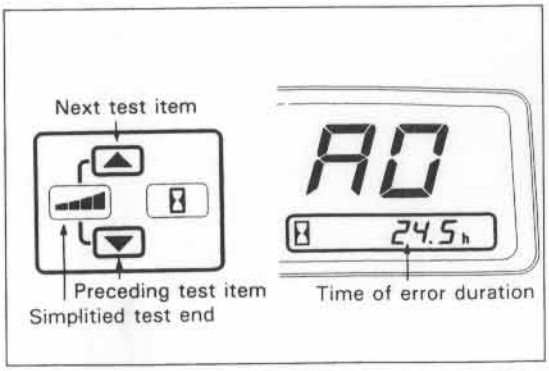

Display and Switch Operation BARS130,115

Test No.: ESY-12 to 14

The voltage at the voltage input terminal is measured and displayed.

ESY-12: Voltage at battery terminal: VBBT (Displayed up to 65V.)
ESY-13: Voltage at key switch terminal: VBKY (Displayed up to 52V.)
ESY-14: Voltage at P2 terminal: VBP2 (Displayed up to 250V.)

1. Select the function by pressing the switch.
   (1) ESY-xx is displayed with blinking three times on the hour meter.
   (2) The voltage is displayed on the hour meter.
   (3) Measure the input voltage at each terminal with a multimeter, and check the difference from the displayed value.
   Standard (See page 2-19; 20.)
   VBBT/VBKY: Within ±1%
   VBP2: Within ±5%
   (4) When the displayed voltage is 52V or less, check the difference between VBBT and VBKY.

Action: ① Abnormality of trimmer potentiometer in CPU ⟶ **Replace the CPU board.**

Caution:
Never tamper with the trimmer potentiometer.

② When the voltage is 0, check the harness.

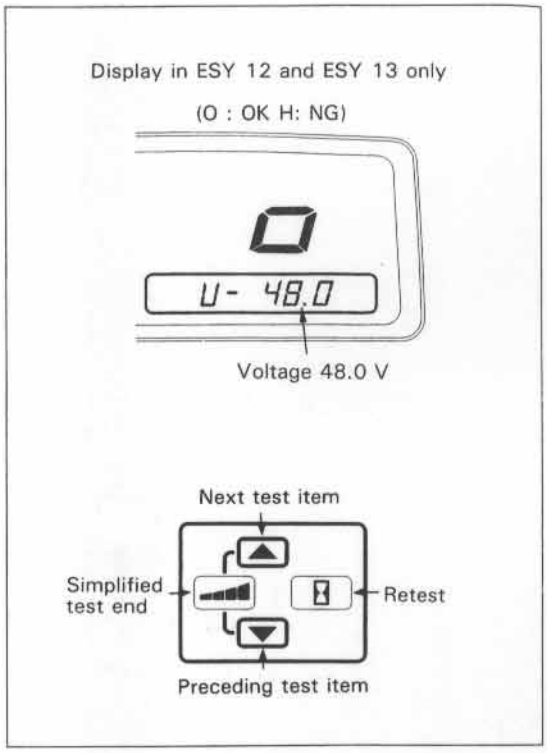

Display and Switch Operation BARS116, 130

Test No.: ESY-15 to 17

The potentiometer voltage with satisfaction or dissatisfaction of the specified range and the properness of the corresponding switch ON/OFF state are displayed.

ESY-15: Accelerator potentiometer (SW_{AC}, VRA)
ESY-16: Brake potentiometer (SW_{B}, VRB)
ESY-17: Lift potentiometer (LS_{L}, VRAP)

1. Press the switch to select the function.
   (1) ESY-xx is displayed with blinking 3 times on the hour meter.
   (2) The potentiometer type and potentiometer voltage are displayed on the hour meter.
   (3) The speedometer displays whether the potentiometer voltage is within the specified range and whether the switch on/off state is proper.

Actions: ① Check the potentiometer installation state. (See pages 2-31 and 2-32.)
② Check the harness.
③ Replace the potentiometer.
④ Replace the CPU board.

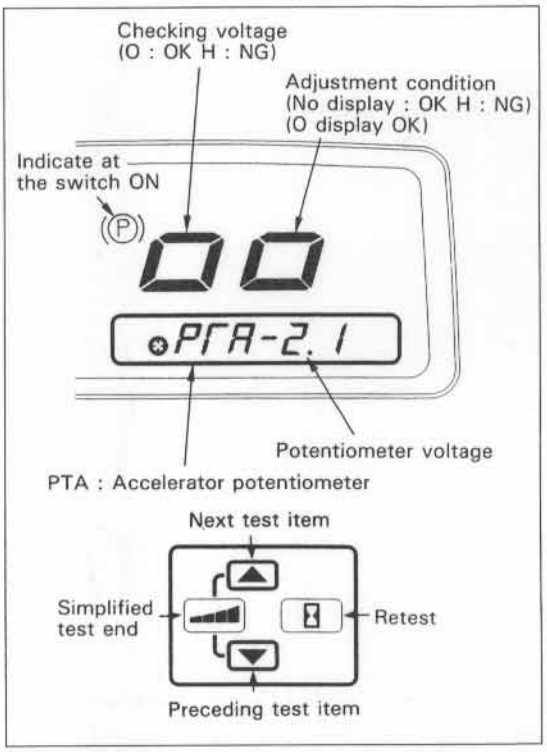

Display and Switch Operation BARS117,130

"O" or "H" for voltage check is displayed only when adjustment is OK. If adjustment is NG, nothing is displayed for voltage check.

"P" mark

"P" mark is displayed when each switch is operated to the on state.
The voltage when the "P" mark is displayed is the ON voltage (hour meter display) which is used as the reference data in checking each potentiometer.

1. "P" mark display
   Whether "P" mark is displayed or not depends on the ROM in the CPU board.
   Please refer to the following.

   5FB10 ~ 30
   "P" mark display not provided : version 2.6 (ROM symbol "C") and 2.7 ((ROM symbol "D")
   "P" mark display provided : version 2.8 (ROM symbol "E") and later.

   FBM16 ~ 30
   "P" mark display not provided : version 2.3 (ROM symbol "D") to 2.7 ((ROM symbol "H")
   "P" mark display provided : version 2.8 (ROM symbol "J") and later.

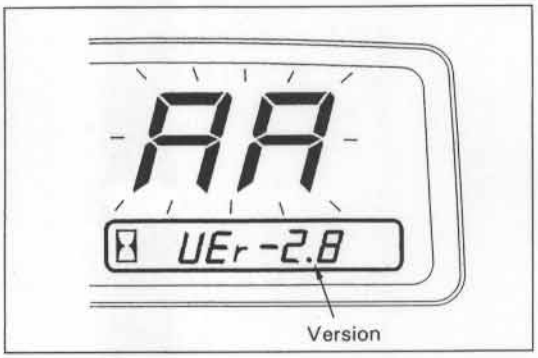

Version Display BARS99

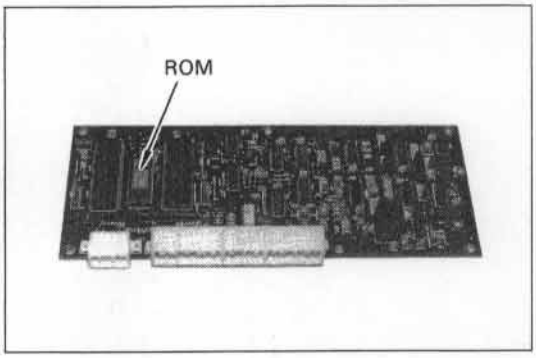

ROM in CPU board

2. Example of accelerator potentiometer check by using "P" mark.
   (1) Operate the accelerator switch and read the voltage (hour meter reading) when "P" mark is displayed (ON indicator).
   (2) Operate the accelerator switch further and read the voltage when the switch is at the stroke end.
   (3) Confirm that the value obtained by subtracting the voltage at the stroke end from the accelerator switch ON voltage satisfies the following.
   Standard: 1.6 V or more

Test No.: ESY-18

Temperature sensor check

The temperature detected by the thermistor on the CPU board is displayed. The properness of the temperature and voltage range is checked and displayed.

1. Press the switch to select the function.
   (1) ESY-18 is displayed with blinking 3 times on the hour meter.
   (2) The temperature on the CPU board is displayed on the hour meter.
   (3) The speedometer displays whether the temperature range is normal and whether the thermistor voltage is normal.

Actions: ① Check the ambient temperature of the CPU board by comparison with the data measured by the thermometer.
② Replace the CPU board.

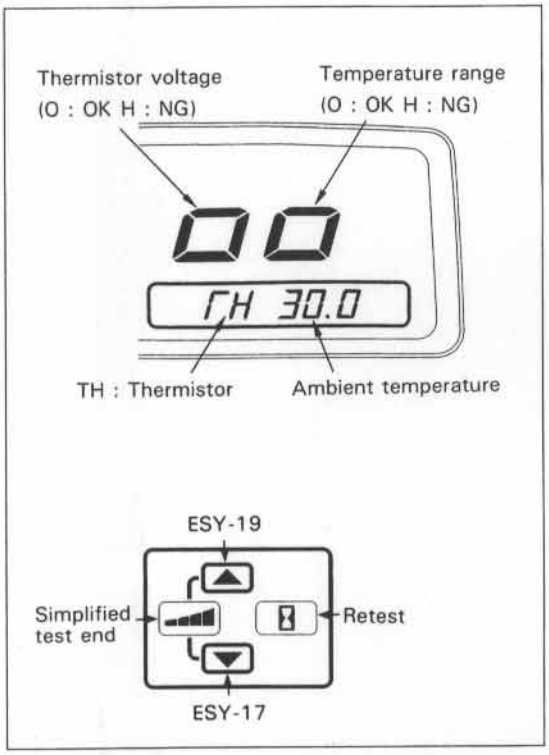

Display and Switch Operation BARS118,130

Test No.: ESY-19 to 22

Contactor closing test

ESY-19: Forward contactor (MF) test
ESY-20: Reverse contactor (MR) test
ESY-21: Regenerative contactor (MG) test
ESY-22: Pump contactor (MP) test

1. Press the switch to select the function.
   (1) ESY-xx is displayed with blinking three times on the hour meter.
   (2) The contactor code is displayed on the hour meter.
   (3) Visually check closing or opening of each contactor.

Actions: ① Check welding of the contactor.
② Check the resistance of the contactor coil. (See page 2-14.)
Check the voltage at the time of contactor closing.
(The contactor is defective if it is 30V or more.)
③ Replace the DC-CD board.
④ Replace the CPU board.

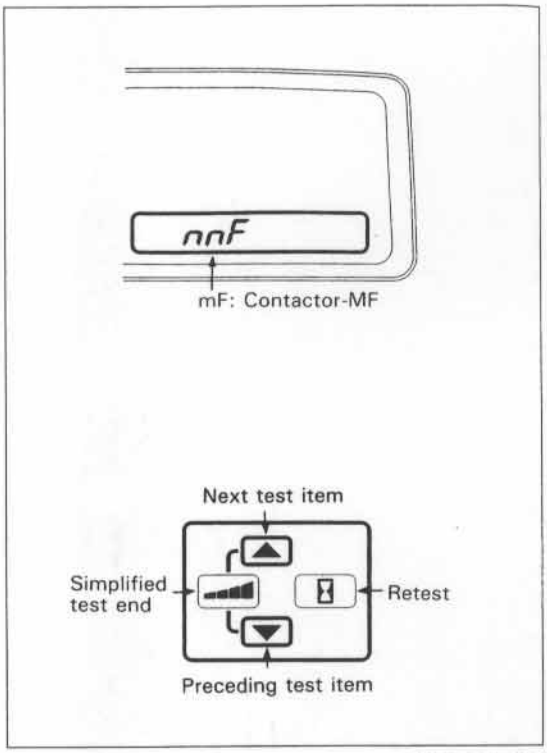

Display and Switch Operation BARS119,130

Test No.: ESY-23 to 34

Switch ON/OFF and buzzer check

ESY-23: Forward direction switch (DS_F)
ESY-24: Reverse direction switch (DS_R)
ESY-25: Accelerator switch (SW_{AC})
ESY-26: Brake switch (SW_B)
ESY-27: Speed control switch (SW_{SC})
ESY-28: Parking brake limit switch (LS_{PB})
ESY-29: Lift limit switch (LS_L)
ESY-30: Tilt limit switch (LS_T)
ESY-31: Deadman limit switch (LS_D)
ESY-32: Attachment limit switch (LS_{ATT})
ESY-33: Attachment limit switch 2 (LS_{ATT2})
ESY-34: Attachment limit switch 3 (LS_{ATT3})

1. Press the switch to select the function.
   (1) ESY-xx is indicated with blinking three times on the hour meter display.
   (2) The switch code is indicated on the hour meter display.
   (3) When the selected switch is set to ON, F on the hour meter display is changed 0 and the buzzer sounds.

Actions: ① Check the switch
② Check the switch harness.
③ Check the CPU board. (See pages 2-22 to 2-24.)
④ Replace the CPU board.

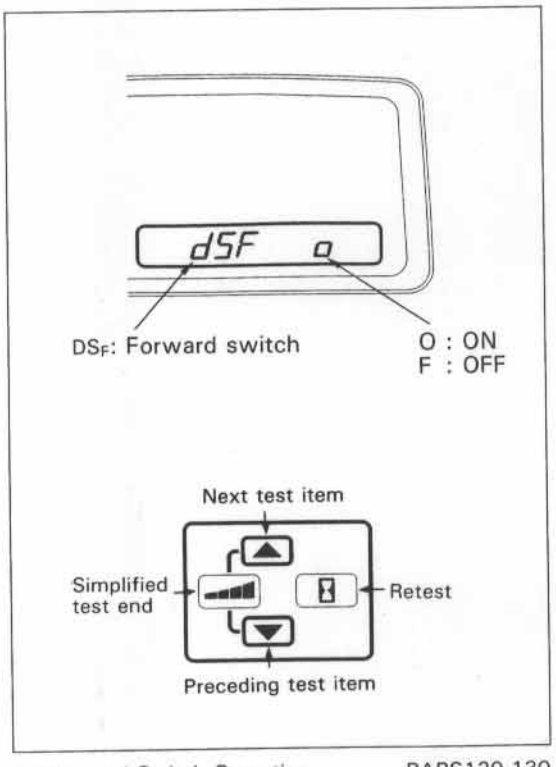

Display and Switch Operation BARS120,130

Category 1	Class 2	Test operation (voltage, current or temperature display)

In the test operation, traveling and/or material handling are possible while monitoring the analog input value of each sensor.

If a diagnosis error occurs during traveling and/or material handling, the error code is displayed to enable very infrequent troubles to be confirmed.

Analog input items to be monitored

No.	Item	Description
0	Drive motor current A	Abnormality of current sensor or current detecting circuit, deviation of OCL value or abnormal forklift load
1	Pump motor current A	Abnormality of current sensor or current detecting circuit or abnormal forklift load
2	Battery terminal voltage V	Abnormality of voltage detecting circuit (excessive charge indicator display error)
3	Key switch terminal voltage V	Abnormality of voltage detecting circuit (excessive charge indicator display error)
4	P2 terminal voltage V	Abnormality in voltage detecting circuit (contactor opening or incorrect detection of A1 error)
5	Accelerator potentiometer voltage V	Abnormality of acceleration sensor, or abnormality in acceleration potentiometer detecting circuit (maximum speed)
6	Brake potentiometer voltage V	Abnormality of brake sensor, or abnormality in brake potentiometer detecting circuit (braking force)
7	Lift potentiometer voltage V	Abnormality of lift potentiometer, or abnormality in lift potentiometer detecting circuit (lifting speed)
8	Atmospheric temperature °C	Abnormality of thermo sensor or abnormality in thermo sensor detecting circuit
9	Controller thermo sensor voltage V	Abnormality of thermo sensor or abnormality in thermo sensor detecting circuit

The analog input value is displayed in the test operation.

The error code is displayed when an error occurs and is retained until the error clear switch is pressed.

1. Press the switch to select the function.
   (1) The test No. is displayed on the hour meter.
   (2) The current value, etc. during the test operation are displayed on the hour meter.
   (3) 12 (Category 1, class 2) is displayed on the speedometer in normal state.
   (4) If an error occurs, the error code is displayed on the speedometer and is retained until the error clear switch is pressed.

Action: Investigate the error position and the part showing an abnormal value by referring to the troubleshooting procedure.

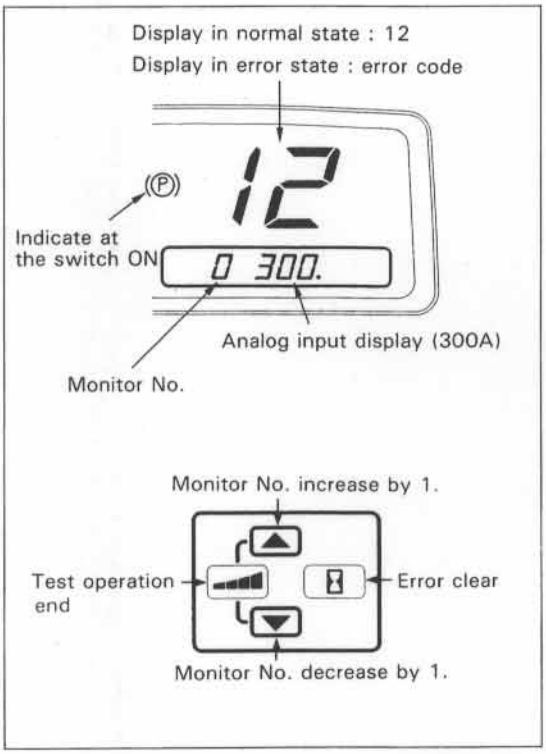

Display and Switch Operation BARS121,131

Category 1	Class 3	Test operation (traveling speed display)

Traveling while monitoring the traveling speed value input from the speed sensor is possible during the test operation.

If a diagnosis error occurs during traveling and/or material handling, the error code is displayed to enable very infrequent troubles to be confirmed.

No.	Item	Description
1	Traveling direction and detected speed value	Check if the drive wheel revolving direction and traveling speed are deviated from the displayed values.
2	Traveling direction and speed sensor No. 1 data	If anormality in traveling speed detection is found in test No. 1, check if the data from speed sensors No. 1 and No. 2 agree with the actual traveling speed.
3	Traveling direction and speed sensor No. 2 data	

1. Press the switch to select the function.
   (1) The test No. is displayed on the hour meter.
   (2) The traveling direction is displayed on the hour meter.
   (3) The traveling speed or speed sensor input data is displayed on the hour meter.
   (4) When an error occurs, the error code is displayed on the speedometer and is retained until the error clear switch is pressed.

Action: Investigate the error position and the part showing an abnormal value by referring to the troubleshooting procedure.

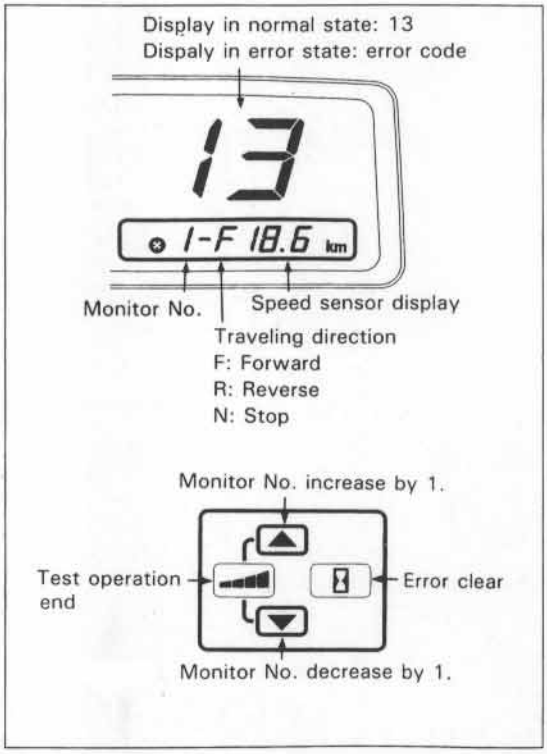

Display and Switch Operation BARS122,131

Category 2	Class 1	Diagnosis monitor

Past errors (10 items in total) are displayed with the corresponding hour meter readings.

Use this test when the user found an error during operation but failed in regeneration.

1. Press the switch to select the function
   (1) The serial number of error occurrence is displayed on the battery charge indicator.
   (2) The time of error occurrence is displayed on the hour meter.
   (3) The error code is displayed on the speedometer.

Action: Investigate the error position by referring to the troubleshooting procedure.

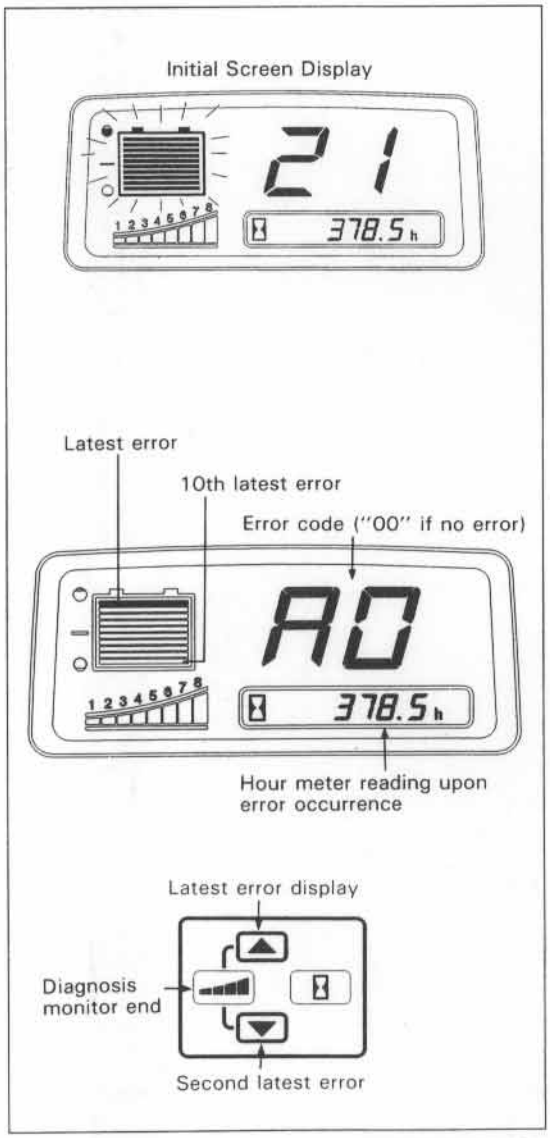

Display and Switch Operation BARS200,123,131

Category 3	Class 1	Switch input test: ON/OFF information display

The ON/OFF state of every switch is displayed to allow confirmation at a glance.

A level line in the battery charge indicator or a level line in the power control level gauge corresponds to each switch.

The corresponding position comes on when a switch is ON.

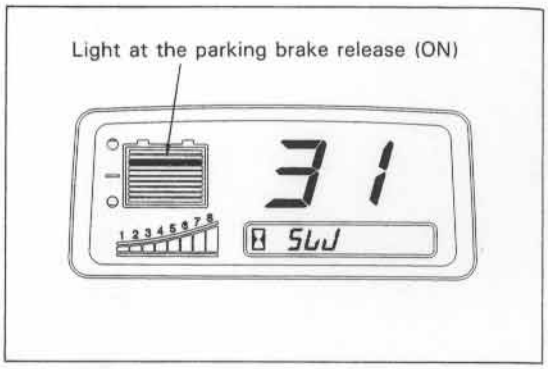

Initial Screen Display BARS201

Display and switch table

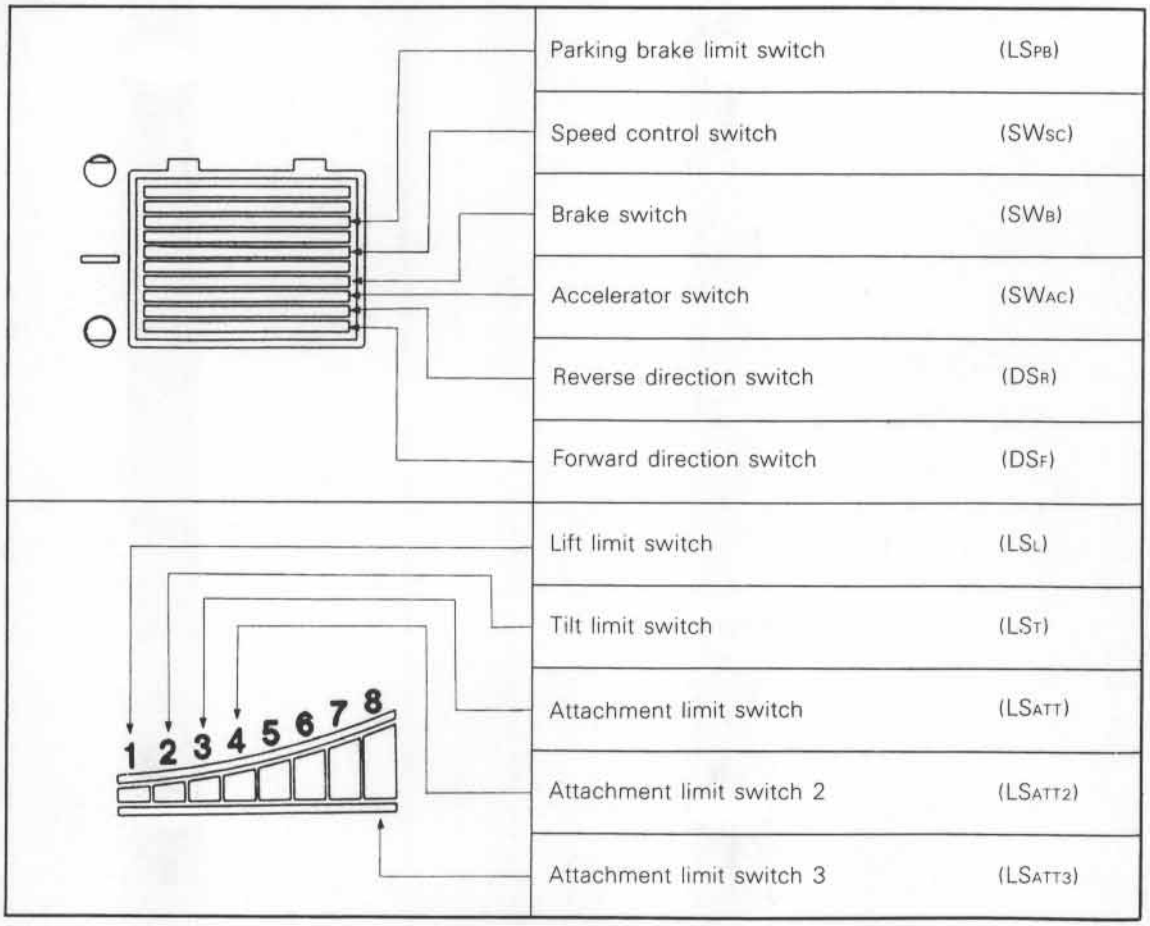

BARS124,125

1. The corresponding part is lit, when a switch is set to ON.

Action: If the switch ON/OFF state differs from the display, check and repair the switch, harness or CPU board.

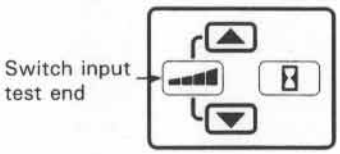

Switch Operation BARS131

Category 3	Class 2	Switch input test: Buzzer check

The ON/OFF state of each switch is informed by the buzzer.

Uses:
(1) Tuning of limit switch or potentiometer
(2) Switch ON/OFF check in a place where the display is invisible

1. Press the switch to select the switch to be tested.
   (1) See page 3-30 "Display and Switch Table" for the types of switches.

2. Operate the switch and check if the buzzer sounds.

Action: If the switch ON/OFF state differs from the buzzer indication, check and repair the switch, harness or CPU board.

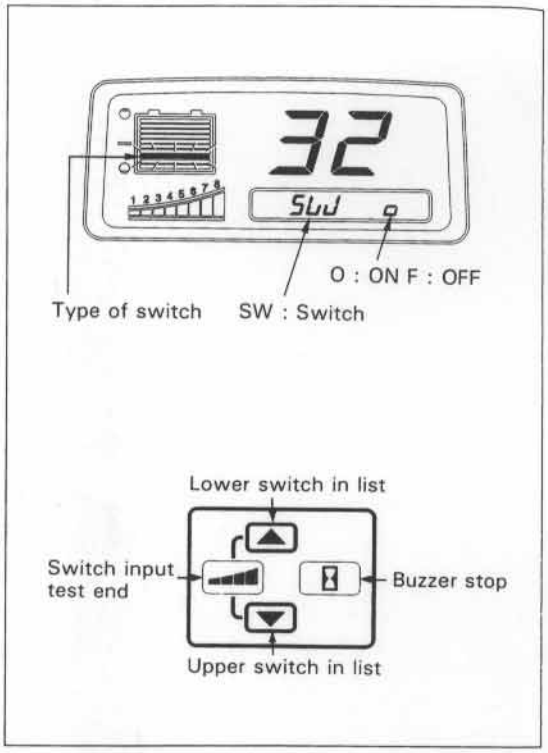

Display and Switch Operation BARS126,131

Category 3	Class 3	Switch input test: Momentary interruption test

Memory interruption (open-circuit) in the switch input line is checked.

1. Set the switch to be checked to ON.

2. Press a display switch to match the display with the desired switch to be checked.
   (1) See page 3-30 "Display and Switch Table" for the switch types.
   (2) When the buzzer is sounding, stop it by pressing the stop switch.

3. Shake or apply vibration to the wiring to be checked.
   (1) The buzzer sounds if momentary interruption (open-circuit) occurs.

Action: Repair the switch or harness.

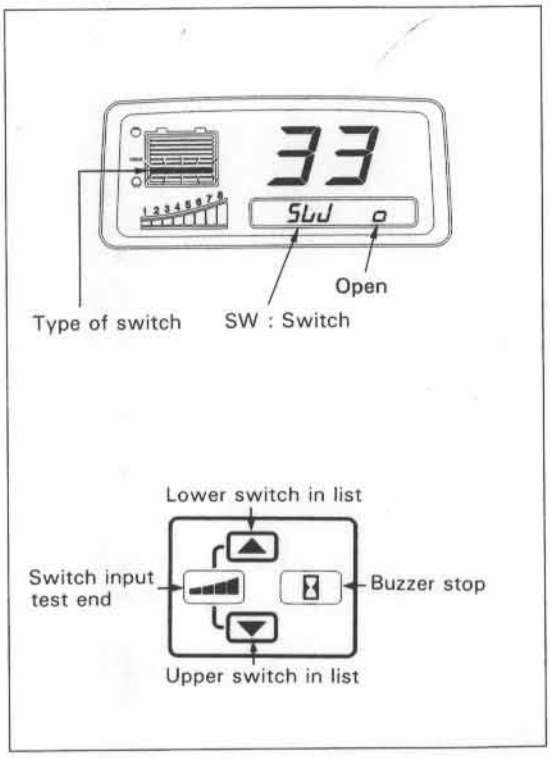

Display and Switch Operation BARS127,131

Category 3	Class 4	Switch input test: Short-circuit test

Short-circuit in the switch input line is checked.

1. Set the switch to be checked to OFF.

2. Press the switch to match the display with the desired switch to be checked.
   (1) See page 3-30 "Display and Switch Table" for the switch types.
   (2) When the buzzer is sounding, stop it by pressing the stop switch.

3. Shake or apply vibration to the wiring to be checked.
   (1) The buzzer sounds if short-circuit occurs.

Action: Repair the switch or harness.

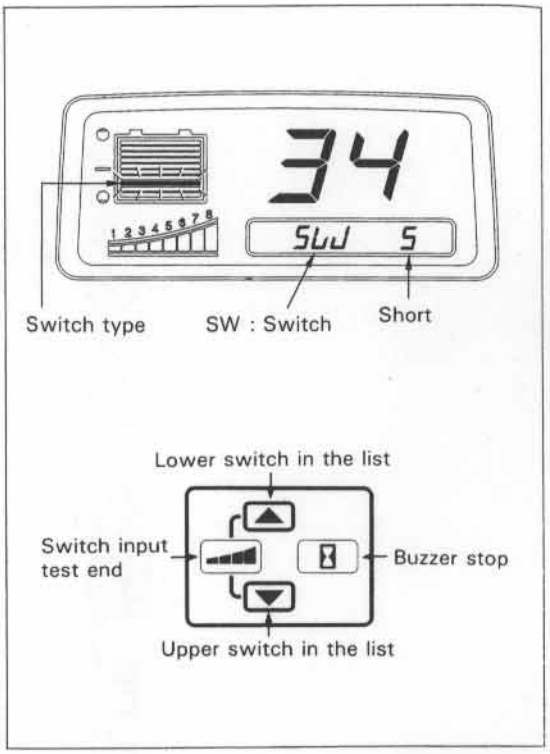

Display and Switch Operation BARS128,131

MASK FUNCTIONS AND DATA SETTING AT CPU BOARD (METER COMBINATION BOARD ASSY) REPLACEMENT

GENERAL

The mask functions are used by the service mechanic in servicing the vehicle.
It is, therefore, necessary to input the password from the switch panel to prevent erroneous operation by general users.
Set the items marked when replacing the display board.

Mask function table

Function name	Description	Time for use
Analyzer	Checking the state of each part of the vehicle and displaying the result in the corresponding alphanumeric code (See the Analyzer section.)	At inspection on repair of the vehicle
★ Hour meter start	Starting incrementation of the hour meter reading	• At CPU board or combination meter ASSY replacement • Vehicle delivery
★ MCS-II tuning	Adjusting soft start, etc. by switch operation	Upon request from the user At CPU board replacement (only when tuning mode is changed)
★ Tire diameter constant rewriting	Correcting the speedometer	Upon tire replacement with another type At CPU board replacement
★ Unit selection (km/mile)	Selecting the unit for display of speed and distance	Upon CPU board replacement (km→mile)
Charge counter reset	Resetting the charge counter reading to 0	Upon battery replacement
★ Battery electrolyte level warning (enable/disable)	Disabling electrolyte level warning when the battery in use has no terminal for the purpose	When the battery without the electrolyte level warning terminal is used At CPU board replacement
Switch panel lock (lock/unlock)	Disabling switch input other than password input	Upon request from the user
Battery (mounted/not mounted)	Corrects the battery capacity indicator when the discharge characteristic is different from that of the standard battery	At board replacement (Only battery not mounted)
Battery (mounted/not mounted)	Correct the battery capacity indicator when the discharge characteristic is different from that of the standard battery.	At board replacement. (Only battery not mounted)

PASSWORD INPUT METHOD

Input the password according to the procedure shown in the table below. (See page 3-8 "Analyzer" for the detailed procedure.)

Note:
Your finger must be used for the panel switch operation. If sharpened tools are used instead, it would be a cause of damage on switch.

Password List

Primary password	Intermediate mode	Secondary password	Processing
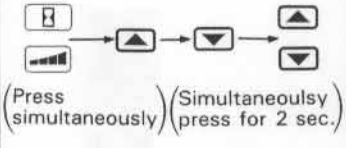	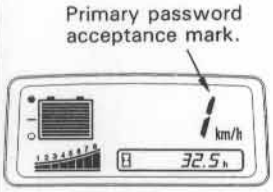	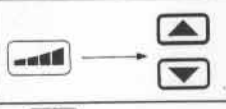	★ Analyzer mode activation See page 3-10.
		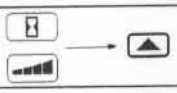	Hour meter start
		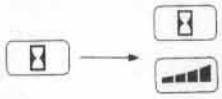	★ MCS-II tuning mode activation See page 3-37.
		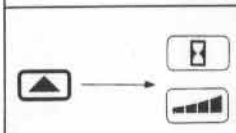	★ Tire constant rewriting mode activation See page 3-39.
		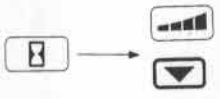	Unit selection km←→mile
		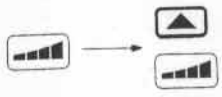	Charge counter reset
			Battery mounted←→not mounted
		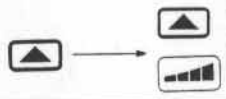	Battery mounted ←→ not mounted
		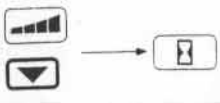	Battery electrolyte level warning Enabler←→Disable
		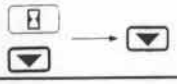	Switch panel lock Unlock←→Lock

BARS88,89, BARM20

For three items with ★, follow the operation procedure on the reference page after inputting the secondary password.
For other items, processing is completed by secondary password input.

MCS-II TUNING MODE

When a user requests "maximum speed limiting" or "weakening of regenerative braking force", tuning is possible in the similar way as power control adjustment.
Record the items to be tuned and their set level that will be required for resetting after replacing the display board.

MCS-II Tuning mode initial level setting list

Tuning mode display	Item	Level (● Initial setting)							
		1	2	3	4	5	6	7	8
C1	Regenerative braking torque: Varying the regenerative braking torque in switchback operation	Weak ←			●				→ Strong
C2	Material handling chopper soft start: Varying the degree of rise of the material handling chopper duty	Small ←				●			→ Great
C3	Material handling chopper duty after activation: Varying the initial duty in soft start of the material handling chopper	Small ←		●					→ Great
C4	Battery charge meter correction: Correcting the decreasing rate of battery charge motor reading	Slow ←					●		→ Quick
C5	Maximum traveling speed limiter: Limiting the maximum traveling speed	Low speed ←							● → No limit
C6	Attachment power control 1: Varying the pump motor revolving speed when attachment switch 1 is ON	Low ←							● → High
*1 C7	Attachment power control 2: Varying the pump motor revolving speed when attachment switch 2 is ON	Low ←							● → High
C8	Lifting power control: Varying the pump motor revolving speed during lifting	Low ←							● → High
C9	Tilting power control: Varying the pump motor revolving speed	Low ←					●		→ High
*2 CA	Battery overdischarge warning level	Small ←						100 % ●	→ No alarm
CC~CF	Reserve								

*1: This is provided as a reserve for a special model because a different main harness is required.
*2: When the set level is varied, the battery overdischarge warning level changes but the lift interrupt level remains unchanged.

Maximum speed limiter

This function limits the maximum speed only when the turtle mark is displayed by pressing of the speed control switch.
The maximum speed can be limited to any of the eight stages shown in the table below.

Set level and limit speed

Set level		1	2	3	4
Limit speed	km/h (mph)	5 ± 1 (3.2 ± 0.6)	6 ± 1 (3.8 ± 0.6)	7 ± 1 (4.4 ± 0.6)	8 ± 1 (5.0 ± 0.6)

Set level		5	6	7	8
Limit speed	km/h (mph)	9 ± 1 (5.6 ± 0.6)	10 ± 1 (6.2 ± 0.6)	11 ± 1 (6.8 ± 0.6)	12 ± 1 (7.4 ± 0.6)

1. Tuning method
   (1) Input from the primary to the secondary password according to the password list on page 3-36
   (2) Press the power control switch.
      ① The tuning mode is displayed on the speedometer.
      ② The current tuning level is displayed on the power control level gauge.
   (3) Set to the desired tuning mode.
      The tuning mode is changed sequentially each time the power control select switch is pressed.
      (C1→C2→····C9→CA→CC→CE→CF→C1)
   (4) Set the tuning level.
      To increase the tuning level: Press the up switch.
      To decrease the tuning level: Press the down switch.
   (5) If any more item is desired to be tuned, repeat steps (3) and (4).
   (6) Return from the tuning mode to the standard display (speedometer display) by any of the three following methods:
      ① Press the hour meter select switch.
      ② Turn the key switch to OFF once and turn it to ON again.
      ③ Wait without any operation. (The standard display starts automatically 2 minutes later.)

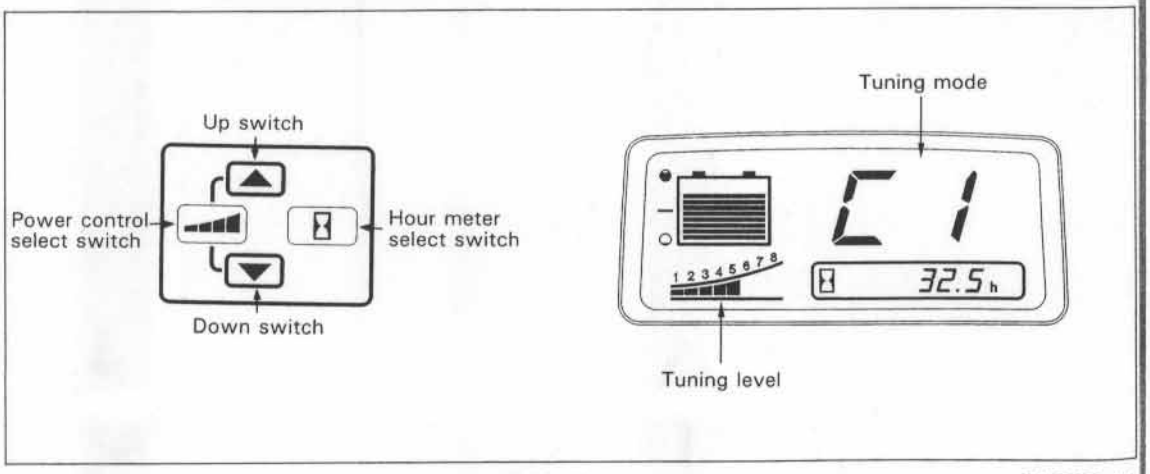

MCS-II Tuning BARS76,91

TIRE CONSTANT REWRITING MODE

The speedometer operation is affected by the tire type (tire diameter). The speedometer display is set to match the tires installed on the vehicle at the time of shipment. Rewrite the tire constant in any of the following cases:

(1) When replaced with new tires having a different diameter
(2) When using special tires
(3) When tires are worn considerably

1. Tire diameter constant rewriting methods

Method A: When replaced with new tires in a different size
Method B: • When replaced with special tires
• When tires are worn considerably
Method C (Note): When tires are worn and the initial outside diameter of the tires is known (Simple setting)

(1) Method A
① Input to the secondary password according to the password list on page 3-36.
② Display
(a) The current tire constant (2 digits) is displayed on the speedometer.
(b) The tire mark is displayed on the hour meter.
③ Check the tire constant by referring to the Tire Size and constant table on page 3-40, and adjust the tire constant displayed on the speedometer accordingly.
(a) The blinking digit of the tire constant alternates between 10's place and 1's place each time the power control select switch is pressed.
(b) Press the level setting switch (up or down switch) to vary the figure in the blinking digit.

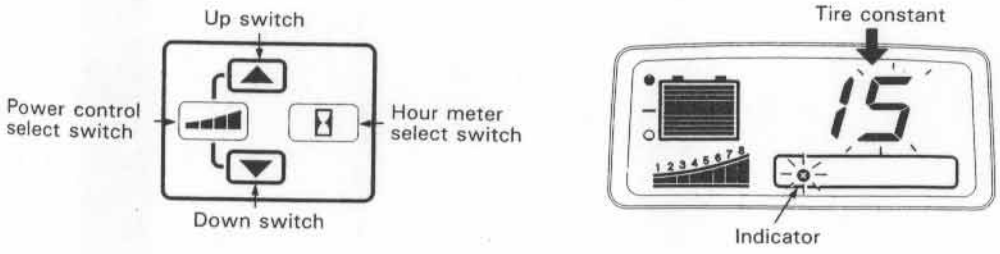

Rewriting the Tire Constant BARS76,93

④ Return from the tire constant rewriting mode to the standard display (speedometer display) by any of the three following methods:
(a) Press the hour meter select switch.
(b) Turn the key switch to OFF once and to ON again.
(c) Wait without any operation. (Standard display starts automatically 2 minutes later.)

Tire size and constant table

5FB10, 14 (Front tires)

		Pneumatic tire		Pneumatic cushion tire		Cushion tire	
		Tire size	Tire constant	Tire size	Tire constant	Tire size	Tire constant
Single tire	Standard	6.00- 9-10PR	34	6.00- 9	39	21×7×15	39
	Oversize	6.50-10-12PR	55	6.50-10	50		
	Wide tread	21×8- 9-10PR	36	21×8- 9	36	21×7×15	39
Double tire	Standard	4.50-12- 8PR	42	4.50-12	44	—	—
	Special	6.00- 9-10PR	38	6.00- 9	39	—	—

5FB15, 18 (Front tires)

		Pneumatic tire		Pneumatic cushion tire		Cushion tire	
		Tire size	Tire constant	Tire size	Tire constant	Tire size	Tire constant
Single tire	Standard	21×8- 9-10PR	34	21×8- 9	36	21×7×15	39
	Oversize	6.50-10-12PR	54	6.50-10	48		
	Wide tread	21×8- 9-10PR	34	21×8- 9	36	21×7×15	39
Double tire	Standard	4.50-12- 8PR	41	4.50-12	44	—	—
	Special	6.00- 9-10PR	37	6.00- 9	39	—	—

5FB20, 25 (Front tires) ( ) : 5FB25

		Pneumatic tire		Pneumatic cushion tire		Cushion tire	
		Tire size	Tire constant	Tire size	Tire constant	Tire size	Tire constant
Single tire	Standard	21×8- 9-14PR	34 (33)	21×8- 9	35 (34)	21×7×15	39 (38)
	Oversize	23×9-10-16PR	51 (50)	23×9-10	47 (46)		
	Wide tread	21×8- 9-14PR	34 (33)	21×8- 9	35 (34)	21×7×15	39 (38)
Double tire	Standard	4.50-12- 8PR	40 (39)	4.50-12	44 (43)	—	—
	Special	6.00- 9-10PR	37 (36)	6.00- 9	38	—	—

5FB30 (Front tires)

		Pneumatic tire		Pneumatic cushion tire		Cushion tire	
		Tire size	Tire constant	Tire size	Tire constant	Tire size	Tire constant
Single tire	Standard	28×9-15-14PR	82	28×9-15	84	21×8×15	34
	Wide tread	23×9-11514PR	82	28×9-15	84	21×8×15	34
Double tire	Standard	6.00-15-10PR	81	6.00-15	85	—	—
	Special	28×8-15-12PR	85	7.00-15	89	—	—

(2) Method B

① The tire constant is rewritten in the same way as in Method A except for the method for obtaining the tire constant.

② Method for obtaining the tire constant

(a) Put half (1/2) of the maximum load on the fork.

(b) Measure dimensions A and B in the illustration.

(c) Calculate tire constant W by the following equation (with rounding of decimal fraction to the nearest integer):

- When the unit of measurement is mm:
  $W = (A \times 0.31) + (B \times 0.23) - 85$
- When the unit of measurement is inch:
  $W = (A \times 7.9) + (B \times 5.8) - 85$

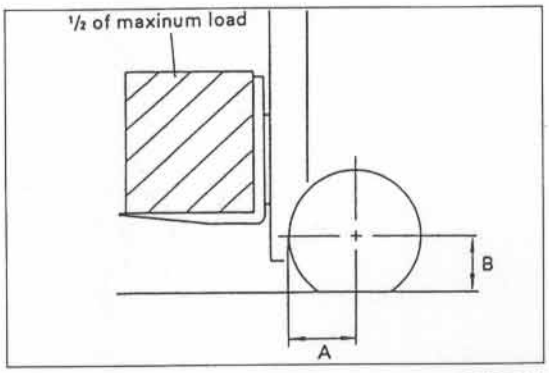

Measuring the Tire Dimensions BARS39

(3) Method C

① The tire constant is rewritten in the same way as in method A except for the method for obtaining the tire constant.

② Method for obtaining the tire constant

(a) Calculate tire wear "C" by the following equation:
C = Initial tire radius − Worn tire radius

(b) Calculate tire constant W' by the following equation (with rounding of the decimal fraction to the nearest integer):

- When the unit of measurement is mm:
  $W' = W - C \div 2$
- When the unit of measurement is inch:
  $W' = W - C \div 0.08$

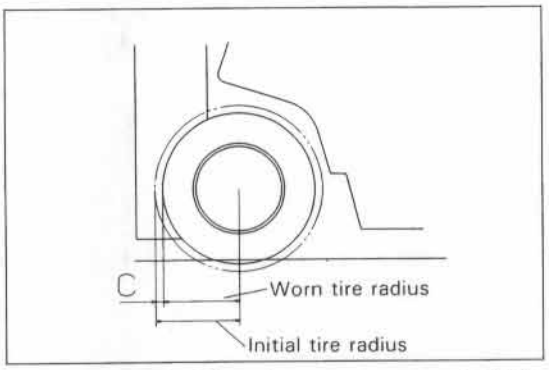

Measuring the Tire Wear Amount BARC15

Battery electrolyte level warning

The warning function can be enabled or disabled by password input. If A1 is indicated on the speed display portion, the warning function is enabled. If A0 is indicated, this function is disabled.

Power control input

The power control input can be locked or unlocked by password input. If P1 is indicated on the speed display portion upon password input, the power control input is set to the locked state. If P0 is displayed, the power control input is unlocked.

Battery (mounted / not mounted)

It is possible to select battery mounted state or not mounted state by password input. The speedometer on the display indicates T1 when the not mounted state is selected, and T0 when the mounted state is set.

Note:

This data is provided for changing over the constant for calculation for the battery charge indicator. Set it to the mounted state when the standard battery is to be used, or to the not mounted state when any other type of battery is to be used.

Battery electrolyte level warning

The warning function can be enabled or disabled by password input. If A1 is indicated on the speed display portion, the warning function is enabled. If A0 is indicated, this function is disabled.

Power control input

The power control input can be locked or unlocked by password input. If P1 is indicated on the speed display portion upon password input, the power control input is set to the locked state. If P0 is displayed, the power control input is unlocked.

Battery (mounted/not mounted)

It is possible to select battery mounted state or not mounted state by password input. The speedometer on the display indicates T1 when the not mounted state is selected, and T0 when the mounted state is set.

Note:
This data is provided for changing over the constant for calculation for the battery charge indicator. Set it to the mounted state when the standard battery is to be used, or to the not mounted state when any other type of battery is to be used.

Error code	Error description	Hour meter display	Hour meter display reading and explanation
A0	Overheat	oUHT 0.0	OVHT 0.0 Controller temperature sensor voltage
A1	Overvoltage	oUU 0.	OVV 0. P2 terminal-VBP2 voltage
A2	Abnormal temperature rise	T 0.0	T 0.0 Controller ambient temperature
A4	Accelerator potentiometer abnormality	SETd0.0	SETD 0.0 Accelerator potentiometer voltage
A5	Brake potentiometer abnormality	SETb0.0	SETB 0.0 Brake potentiometer voltage
A6	Lift switch abnormality	SETL0.0	SETL 0.0 Lift switch potentiometer voltage
A8	F1 fuse open	FUSEd	FUSED F1 fuse open
A9	F2 fuse open	FUSEP	FUSEP F2 fuse open
AA	Temperature sensor abnormality	THA 0.0	THA 0.0 Temperature sensor voltage
C0	Drive SIT abnormality	Udd	VDD TM abnormality
C1	Drive current sensor abnormality	CSd 0.0	CSD 0.0 CSD abnormality
C3	Controller temperature sensor abnormality	THC 0.0	THC 0.0 Controller temperature sensor voltage
C4	Drive accelerator abnormality	Potd0.0	POTD 0.0 Drive accelerator potentiometer voltage
C5	Brake abnormality	Potb0.0	POTB 0.0 Brake potentiometer voltage
C7	Direction switch abnormality	SU	SU Direction switch abnormality
C8	Speed sensor abnormality	rotEn	ROTEN Speed sensor abnormality
C9	MG contactor abnormality	mnG	MG MG contactor abnormality
CA	MF·MR contactor abnormality	mnFr	M FR MF·MR contactor abnormality
CC	CPU board Drive OCL circuit abnormality	oCLd	OCLD Drive OCL circuit abnormality
E0	Material handling SIT abnormality	UdP	VDP TMP abnormality
E1	Material handling current sensor abnormality	CSP 0.0	CSP 0.0 CSP voltage
E6	Material handling accelerator abnormality	PotL0.0	POTL 0.0 Material handling potentiometer voltage
EA	MP contactor abnormality	mnP	MP MP contactor abnormality
EC	CPU board Material handling OCL circuit abnormality	oCLP	OCLP Material handling OCL circuit abnormality

ELECTRICAL SYSTEM TROUBLESHOOTING

	Page
GENERAL	4-2
TROUBLESHOOTING EXPLANATION	4-2
DIAGNOSTIC ERRORS	4-4
DRIVE SYSTEM TROUBLE (NO DIAGNOSTIC DISPLAY)	4-32
NO VEHICLE OPERATION	4-32
FAILURE IN PROPER SPEED CONTROL (ACCELERATION)	4-36
FAILURE IN ATTAINING THE MAXIMUM SPEED	4-37
NO REGENERATIVE BRAKING IN SWITCH BACK OPERATION	4-39
NO REGENERATIVE BRAKING INTERLOCKED WITH BRAKE PEDAL	4-41
TRAVELING ONLY IN FORWARD OR REVERSE DIRECTION	4-42
SPEED LIMITER FAILURE	4-43
MATERIAL HANDLING SYSTEM TROUBLE (NO DIAGNOSTIC DISPLAY)	4-45
PUMP MOTOR FAILURE	4-45
FAILURE IN PROPER MATERIAL HANDLING SPEED CONTROL	4-46
STEERING SYSTEM TROUBLE (NO DIAGNOSTIC DISPLAY)	4-47
DISPLAY TROUBLE (NO DIAGNOSTIC DISPLAY)	4-55
NO INDICATION	4-55
PARTIAL INDICATION FAILURE	4-56
EXCESSIVE SPEEDOMETER INDICATION ERROR	4-56
BACK LIGHT NOT LIT	4-57
NO RESPONSE TO POWER CONTROL SWITCH OPERATION	4-58

GENERAL

This troubleshooting is to pursue the causes of diagnostic error indicated by the error code on the multidisplay and other electric troubles for quick repair.

Measuring instruments such as the megger and multimeter are used for the error check. Some error items may be checked by the analyzer on the vehicle.

Descriptions in this manual are for the mechanics who have mastered handling of measuring instruments, can read wiring and connection diagrams accurately and can make actual measurements using the connector drawing.

Please make use of the attached connection diagram, connector drawing and connector terminal arrangement.

TROUBLESHOOTING EXPLANATION

1. When an error code is displayed:
See the Diagnostic Error section on page 4-4.

2. When the error code is not displayed:

(1) Drive system trouble
See the "drive system trouble (without diagnostic display)" section (page 4—32).

(2) Material handling system trouble.
See the "material handling system trouble (without diagnostic display)" section (page 4—45).

(3) Steering system trouble
See the "steering system trouble (without diagnostic display)" section (page 4—47).

(4) Display trouble
See the "display trouble (without diagnostic display)" section (page 4—55).

(5) Charger trouble
See the "charger trouble (without diagnostic display)" section (page 4—59).

3. TROUBLESHOOTING EXPLANATION

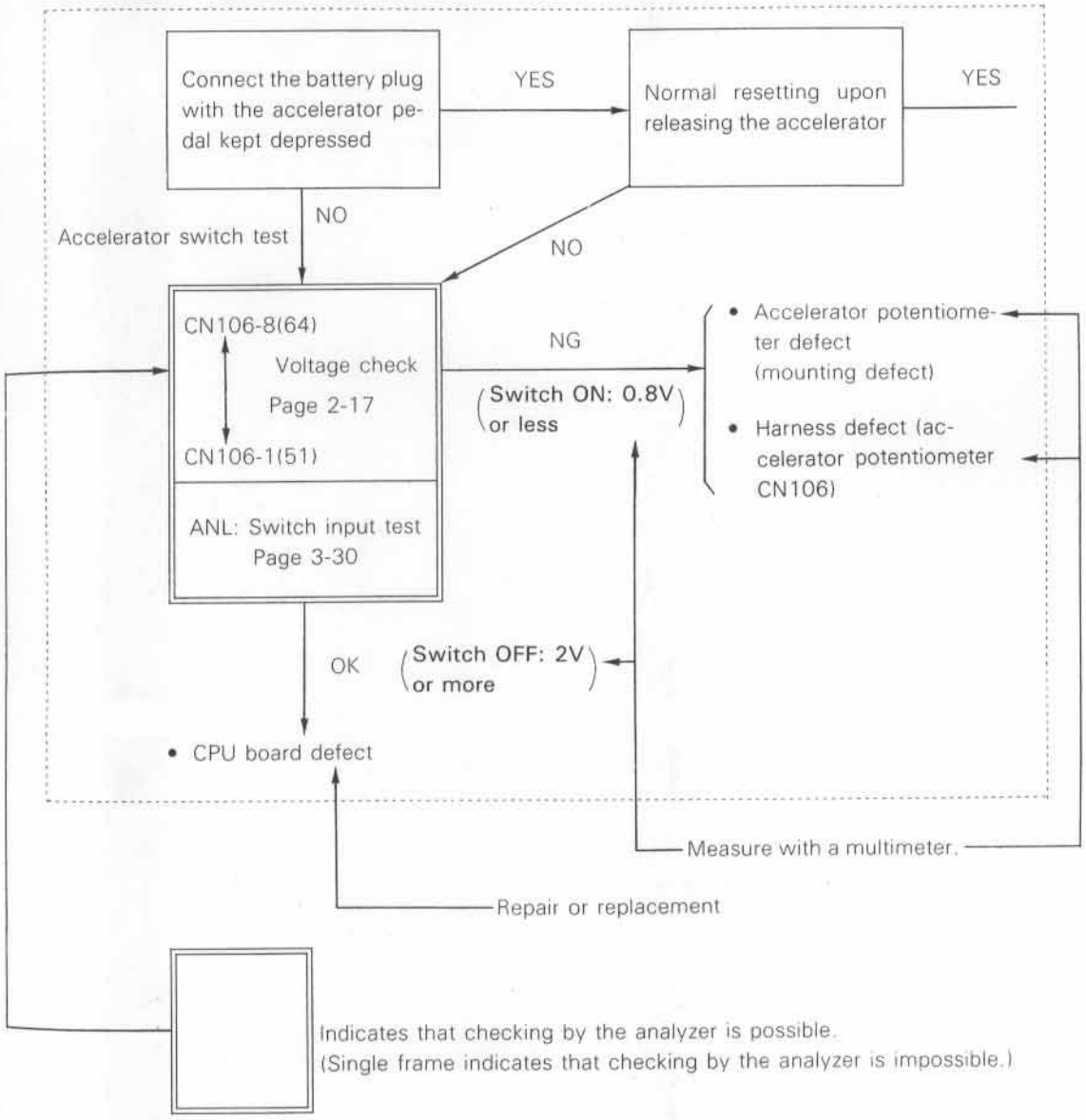

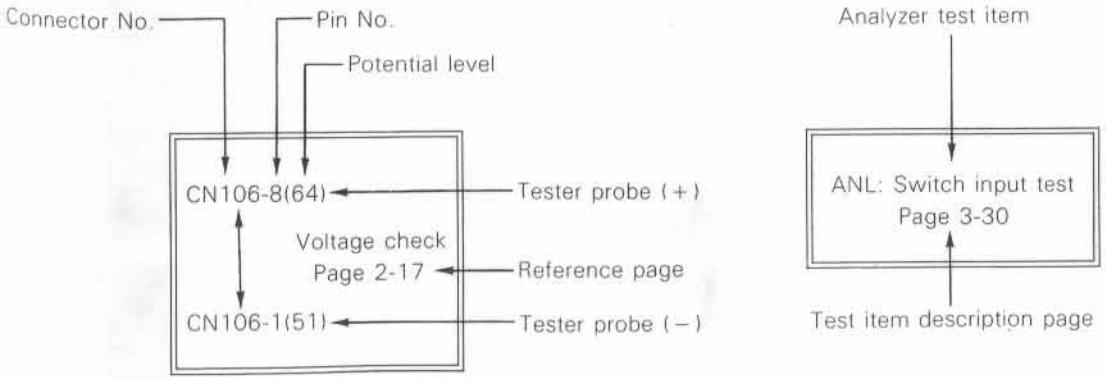

DIAGNOSTIC ERRORS

1. ERROR CODE AO: MCS MAIN CIRCUIT OVERHEATING

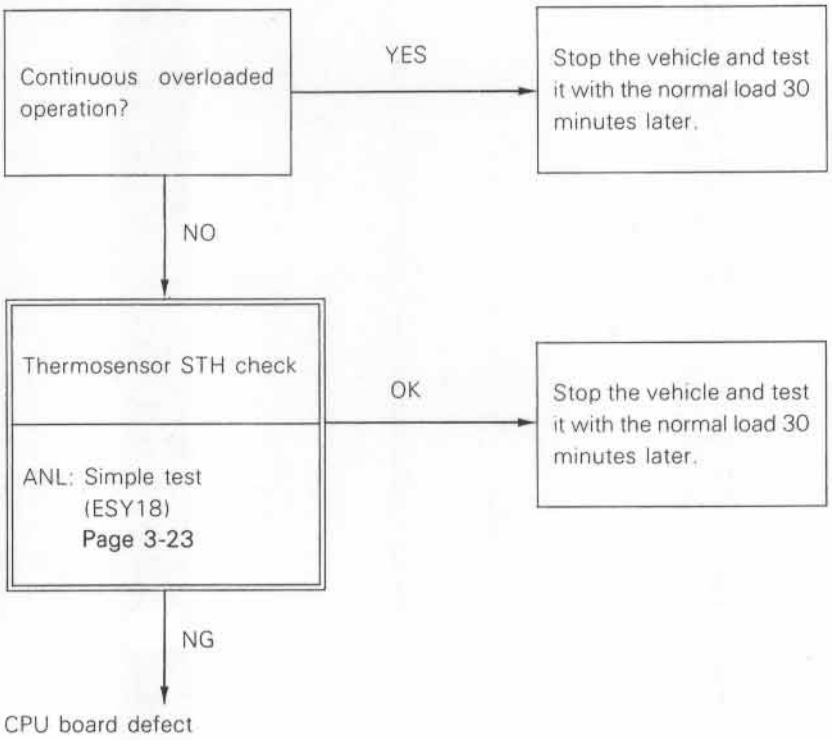

2. ERROR CODE A1: OVERVOLTAGE IN MCS MAIN CIRCUIT

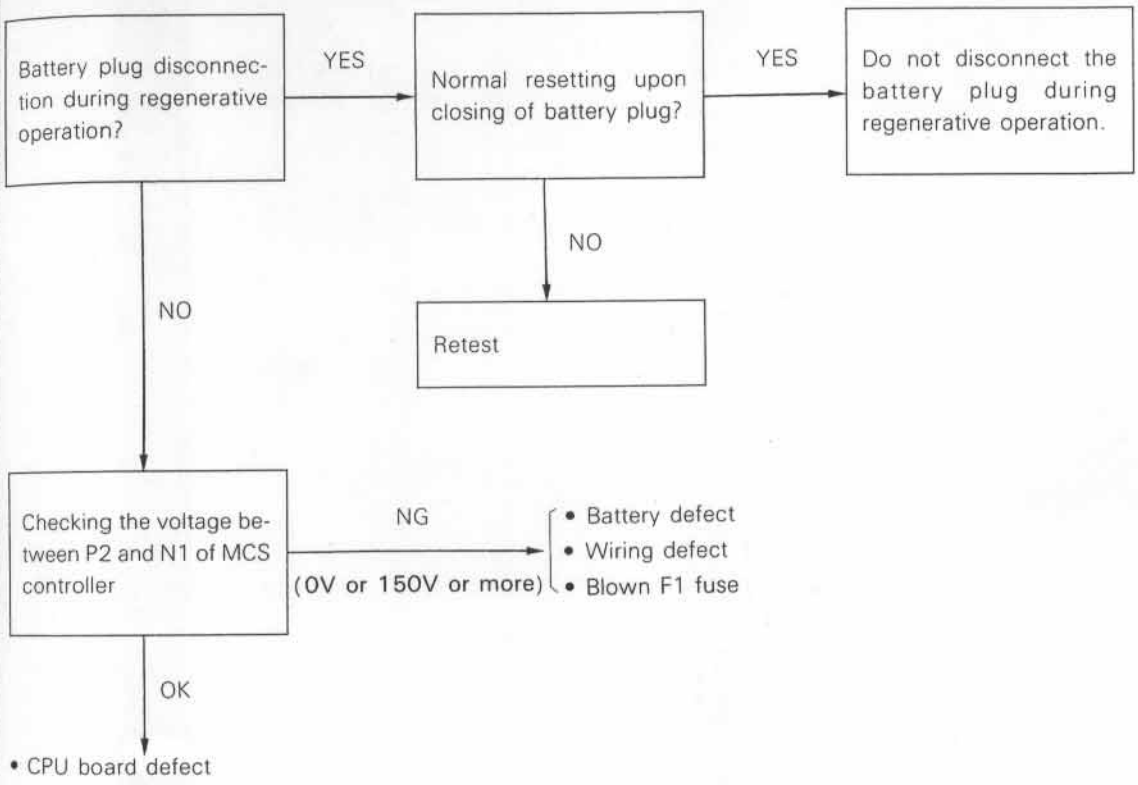

3. ERROR CODE A2: CPU TEMPERATURE ABNORMAL RISE

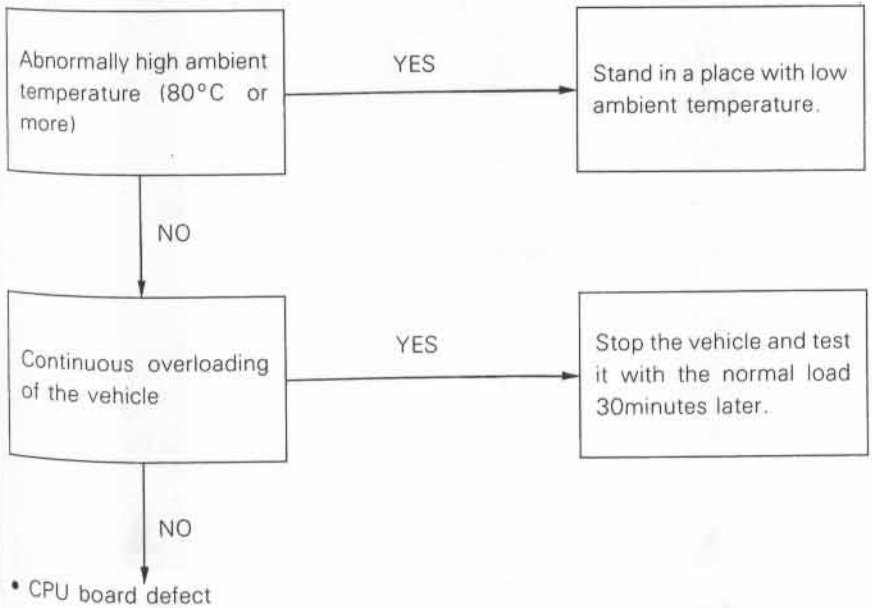

4. ERROR CODE A3: ABNORMAL BATTERY VOLTAGE

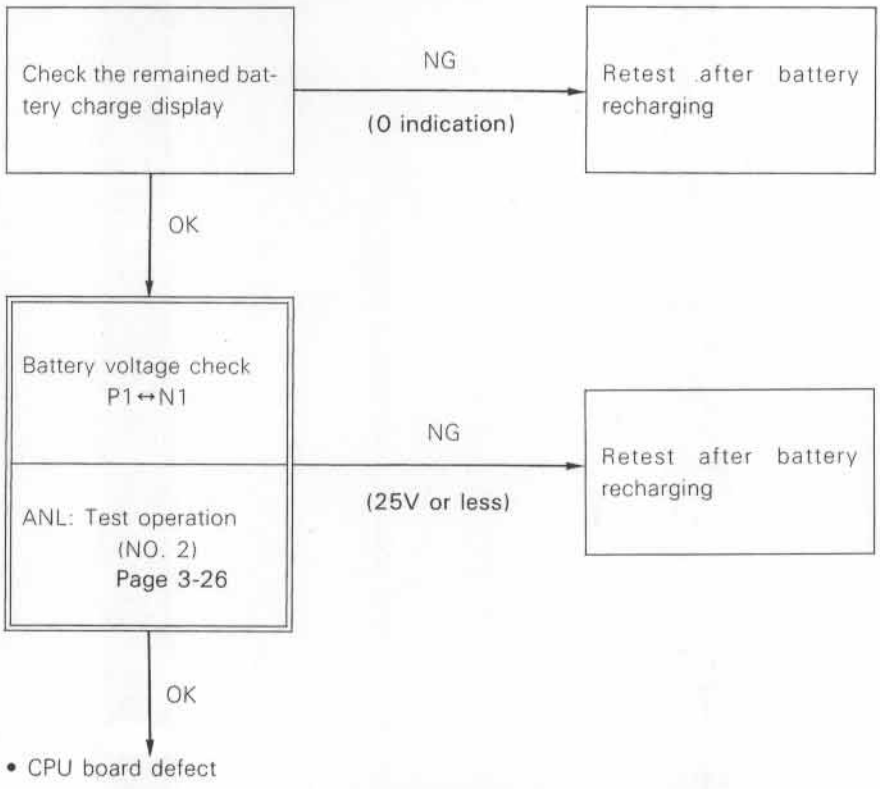

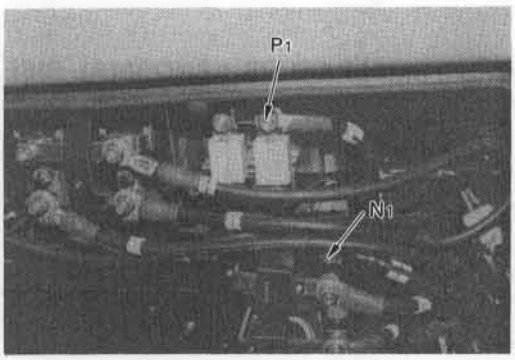

Checking the Battery Voltage BAT19-36

5. ERROR CODE A4: DRIVE ACCELERATOR POTENTIOMETER MOUNTING ABNORMALITY

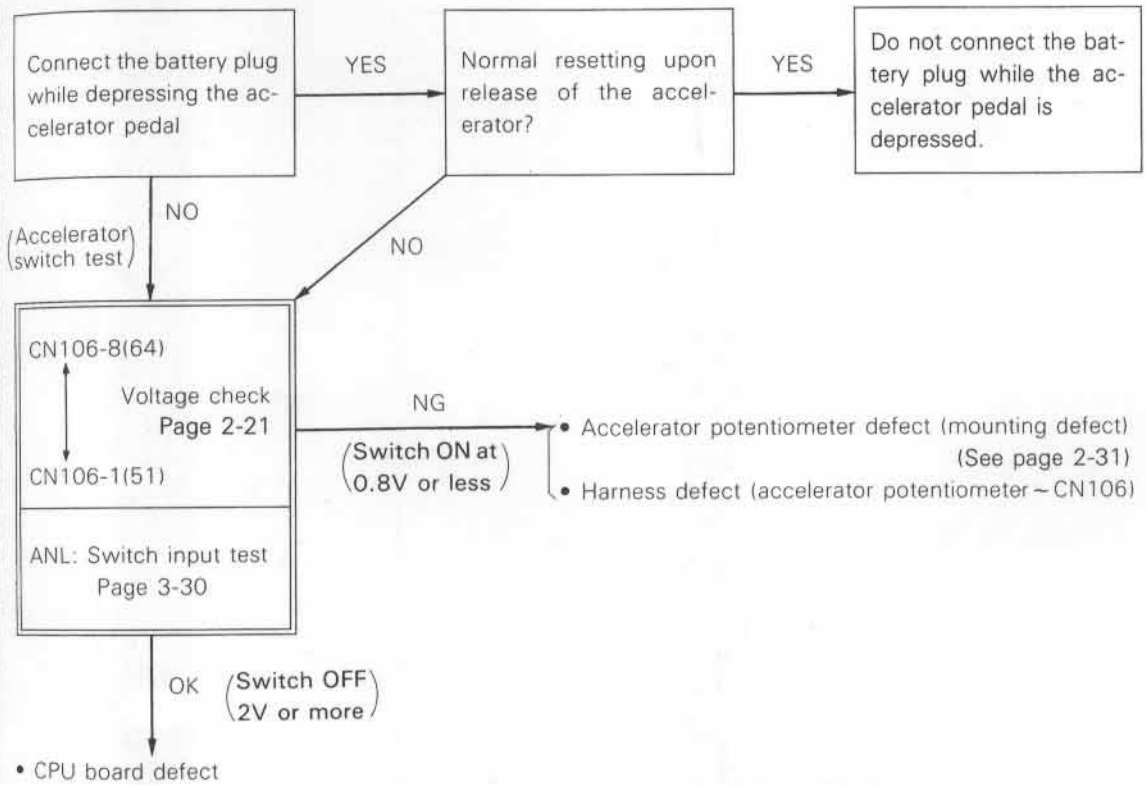

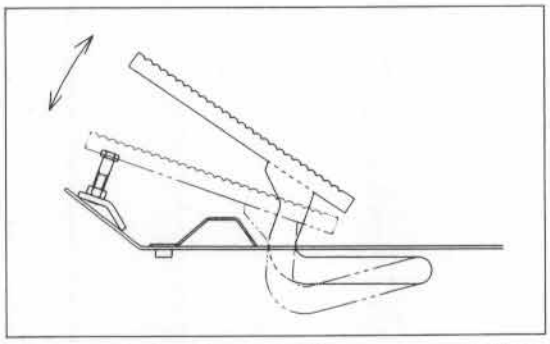

Operating the Accelerator Pedal BARC16

6. ERROR CODE A5: BRAKE POTENTIOMETER MOUNTING DEFECT

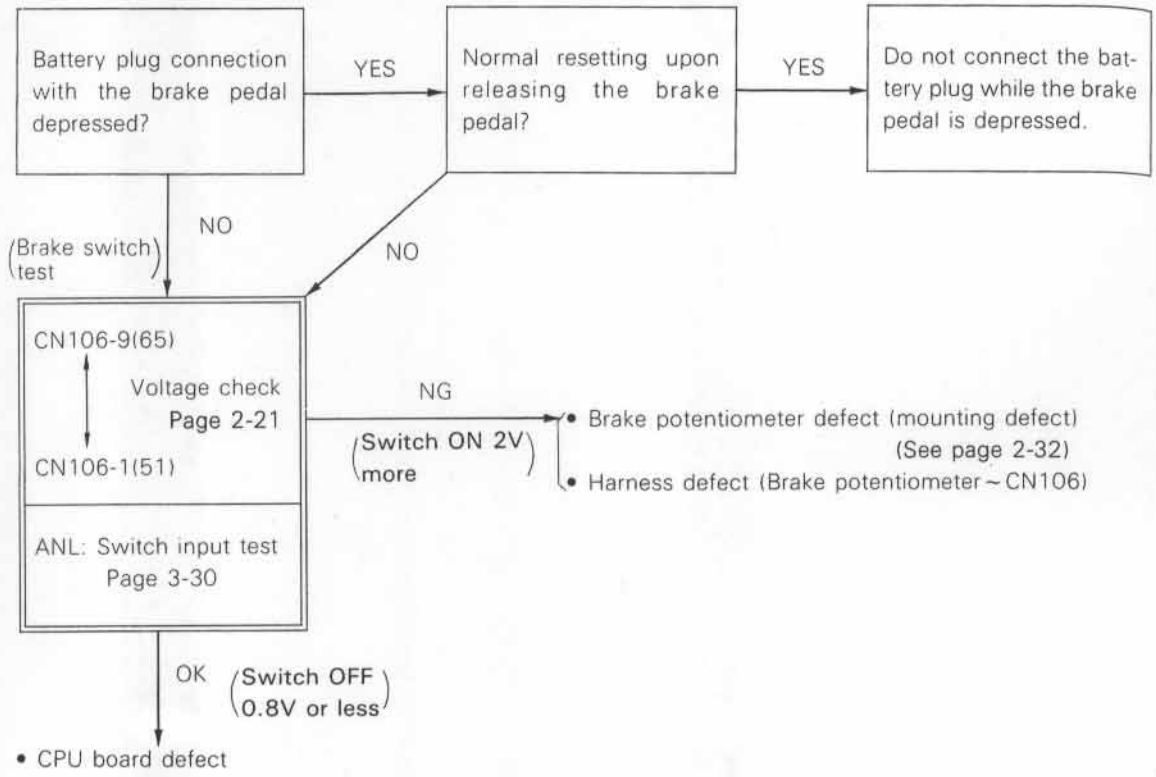

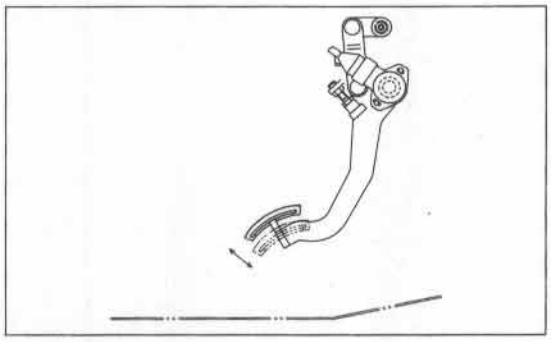

Operating the Brake Pedal BATS78

7. ERROR CODE A6: LIFT/TILT LIMIT SWITCH MOUNTING DEFECT

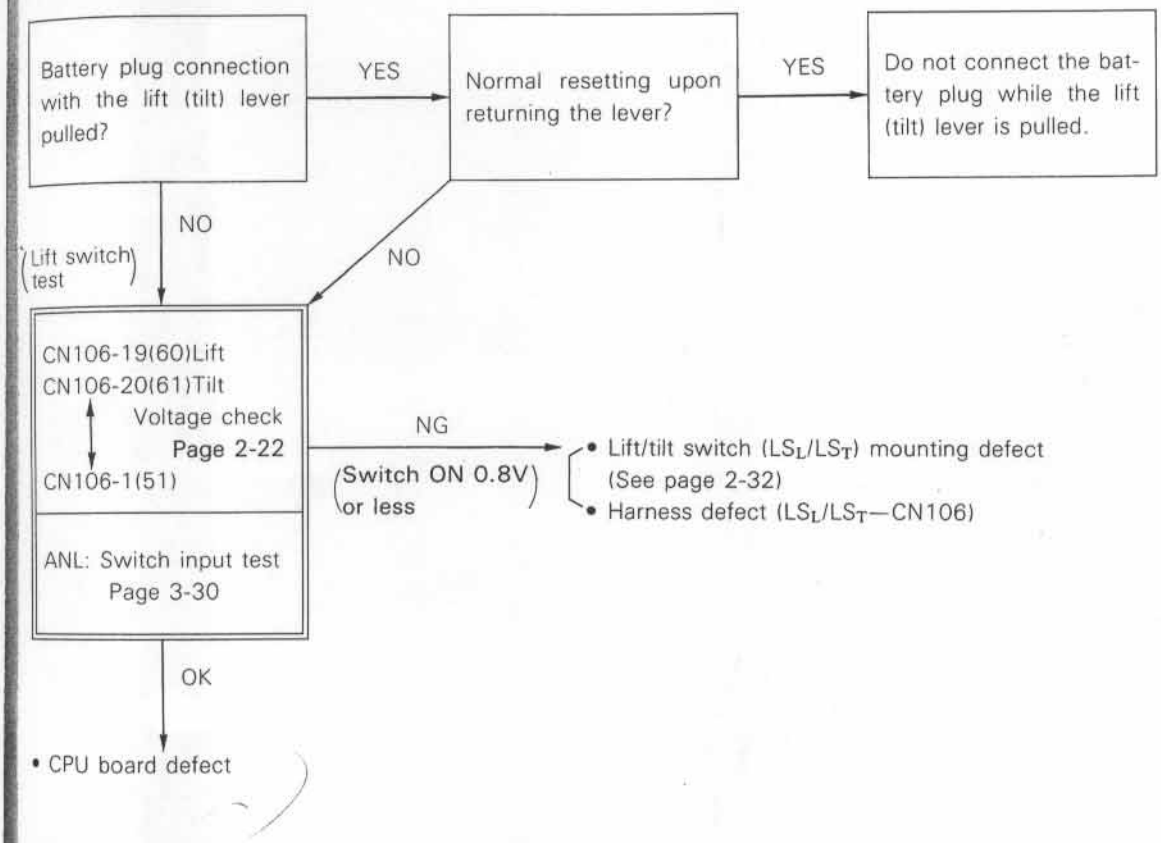

8. ERROR CODE A8: DRIVE FUSE ABNORMALITY

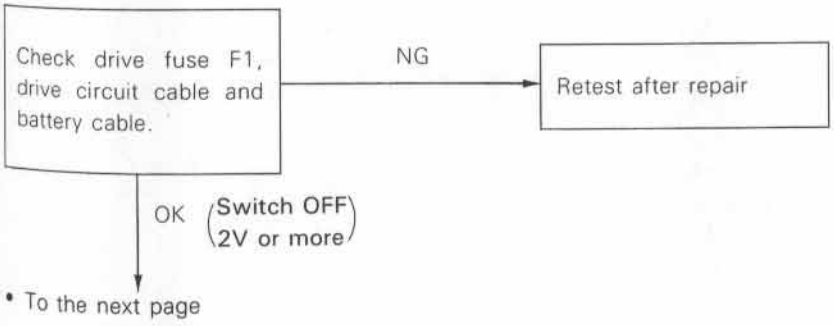

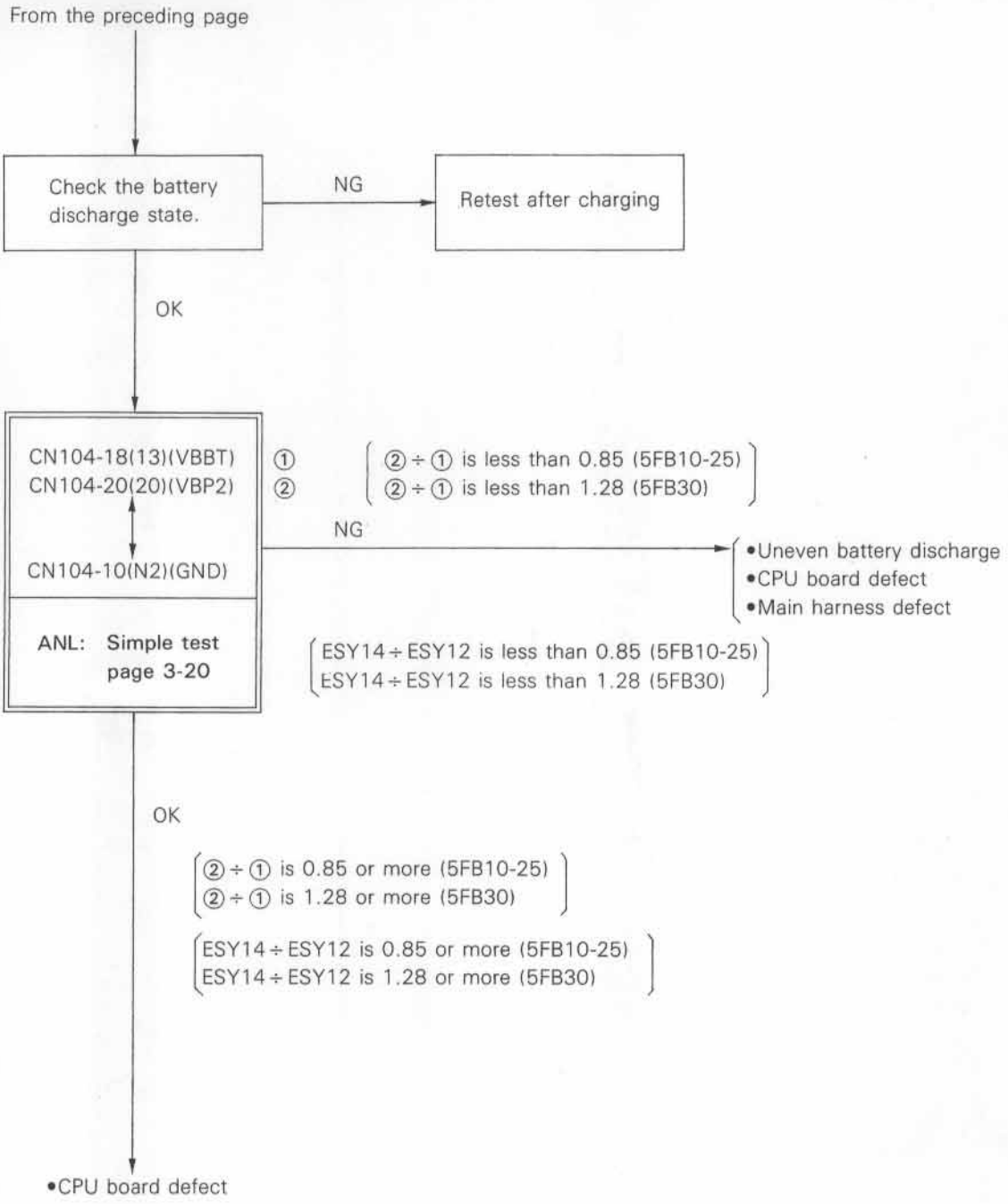
From the preceding page
Check the battery discharge state.
NG
Retest after charging
OK
CN104-18(13)(VBBT) ①
CN104-20(20)(VBP2) ②
② ÷ ① is less than 0.85 (5FB10-25)
② ÷ ① is less than 1.28 (5FB30)
CN104-10(N2)(GND)
NG
•Uneven battery discharge
•CPU board defect
•Main harness defect
ANL: Simple test page 3-20
ESY14 ÷ ESY12 is less than 0.85 (5FB10-25)
ESY14 ÷ ESY12 is less than 1.28 (5FB30)
OK
② ÷ ① is 0.85 or more (5FB10-25)
② ÷ ① is 1.28 or more (5FB30)
ESY14 ÷ ESY12 is 0.85 or more (5FB10-25)
ESY14 ÷ ESY12 is 1.28 or more (5FB30)
•CPU board defect

9. ERROR CODE A9: PUMP FUSE ABNORMALITY
(If E0 error is displayed at the same time, priority is given to E0 error)

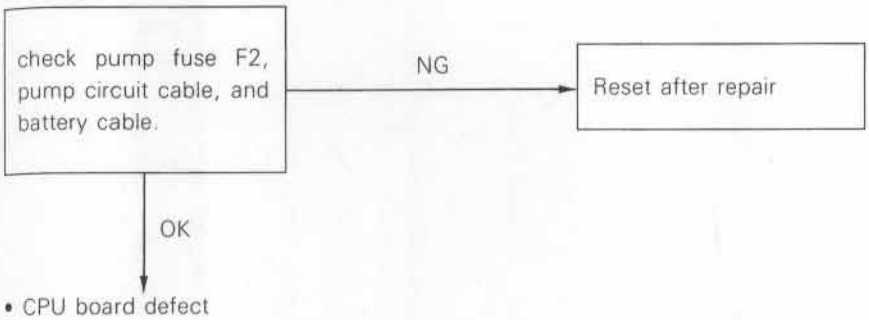

• CPU board defect

10. ERROR CODE AA: CPU THERMO SENSOR OUTPUT ABNORMALITY

• CPU board defect

11. ERROR CODE AE: CPU EXCESSIVE A/D CONVERSION TIME

• CPU board defect

12. ERROR CODE AF: CPU PROCESSING DATA ABNORMALITY

• CPU board defect

13. ERROR CODE CO: DRIVE CIRCUIT TROUBLE
(If A8 error is displayed at the same time, priority is given to A8 error)

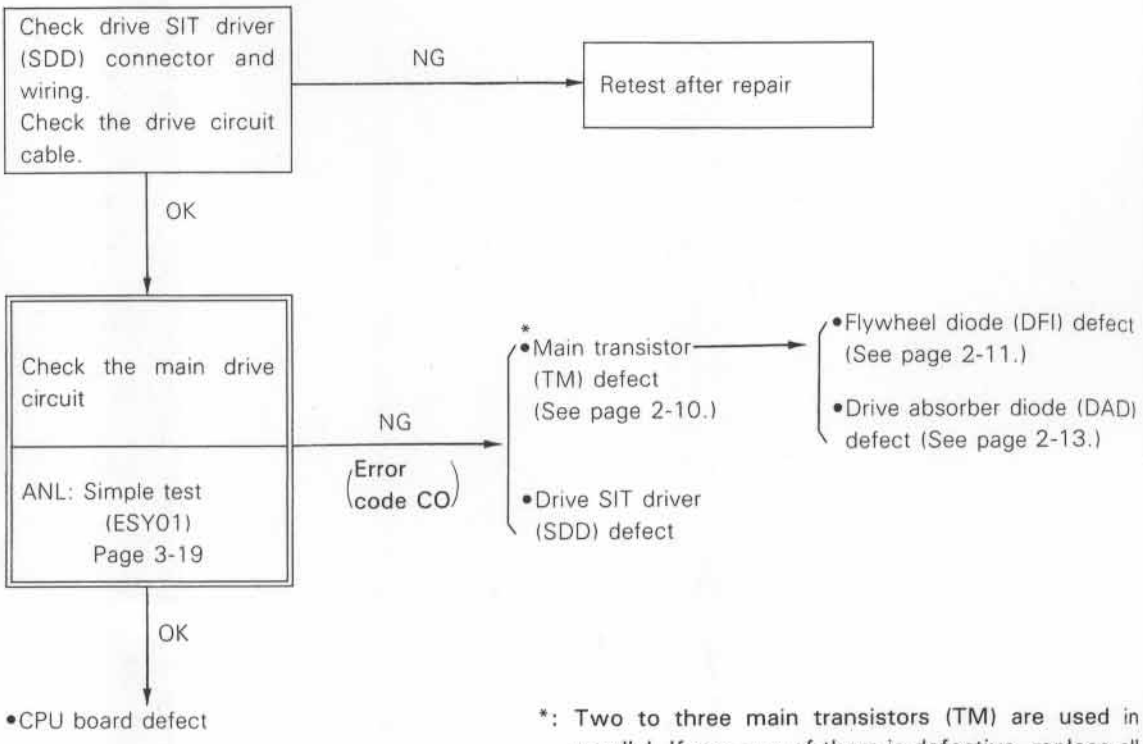

*: Two to three main transistors (TM) are used in parallel. If any one of them is defective, replace all of them.

14. ERROR CODE C1: DRIVE CURRENT SENSOR DEFECT

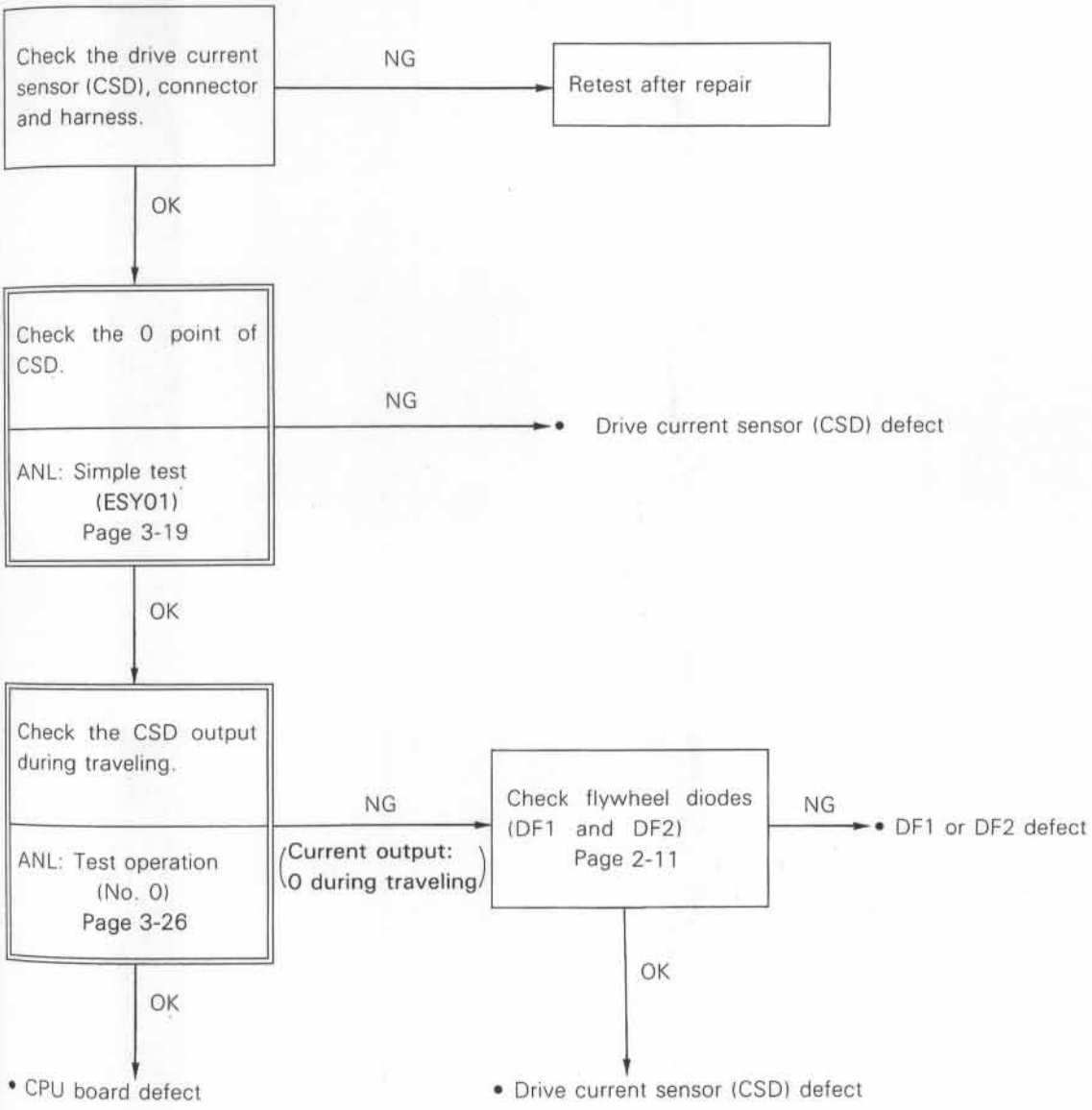

15. ERROR CODE C3: CONTROLLER THERMO SENSOR DEFECT

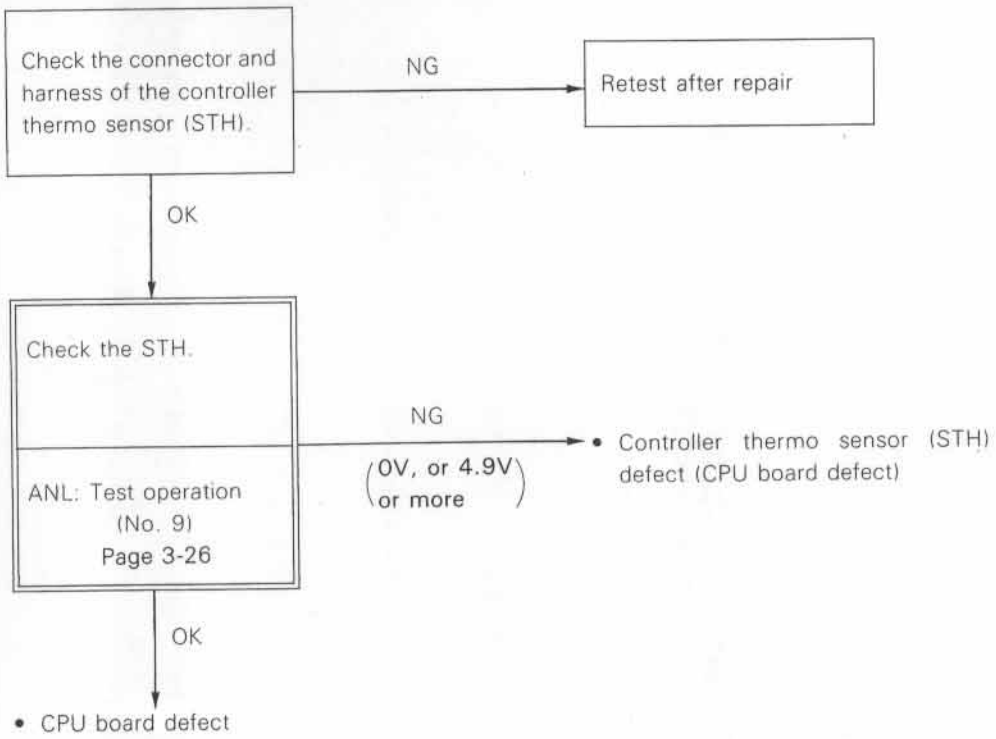

16. ERROR CODE C4: DRIVE ACCELERATOR ABNORMALITY

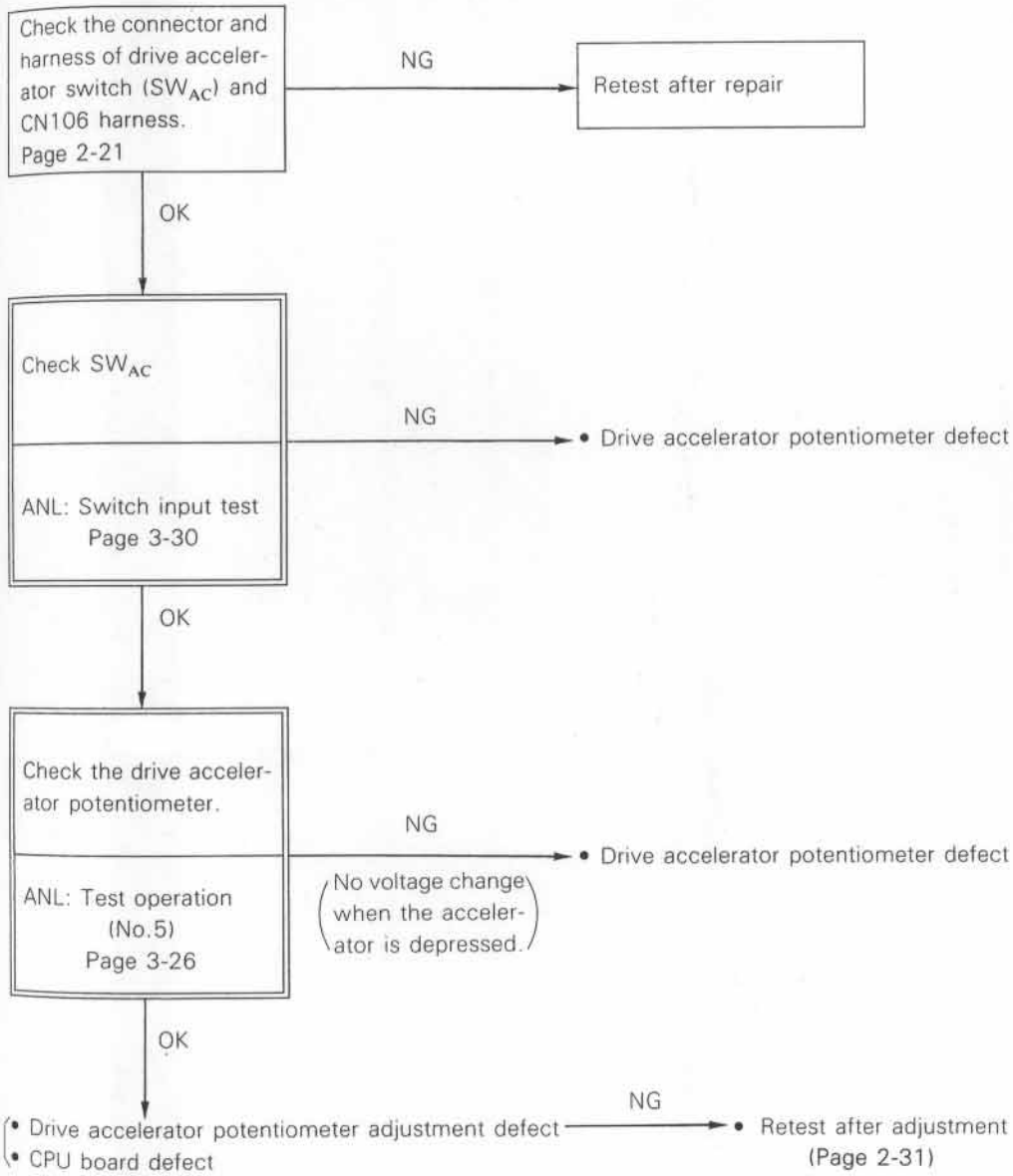

17. ERROR CODE C5: BRAKE ABNORMALITY

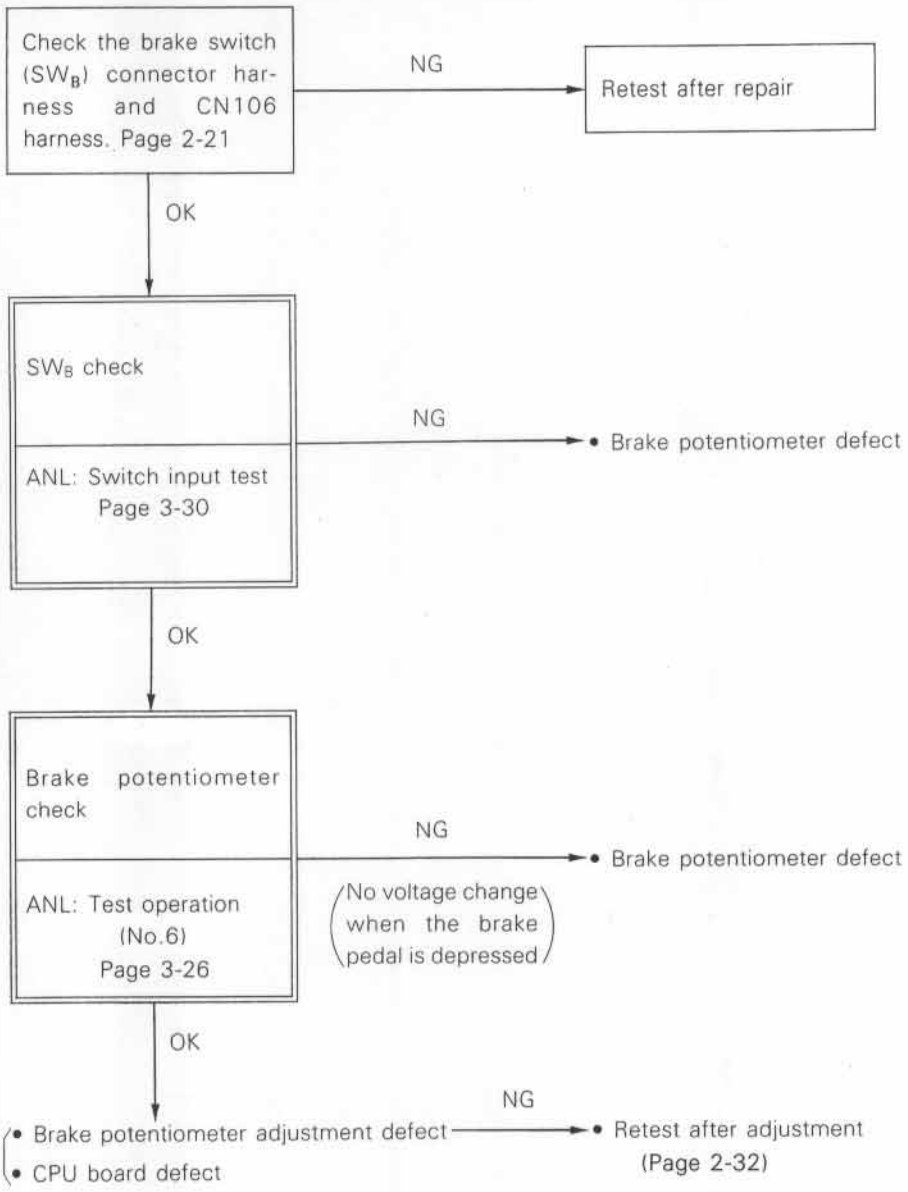

18. ERROR CODE C7: DIRECTION SWITCH ABNORMALITY

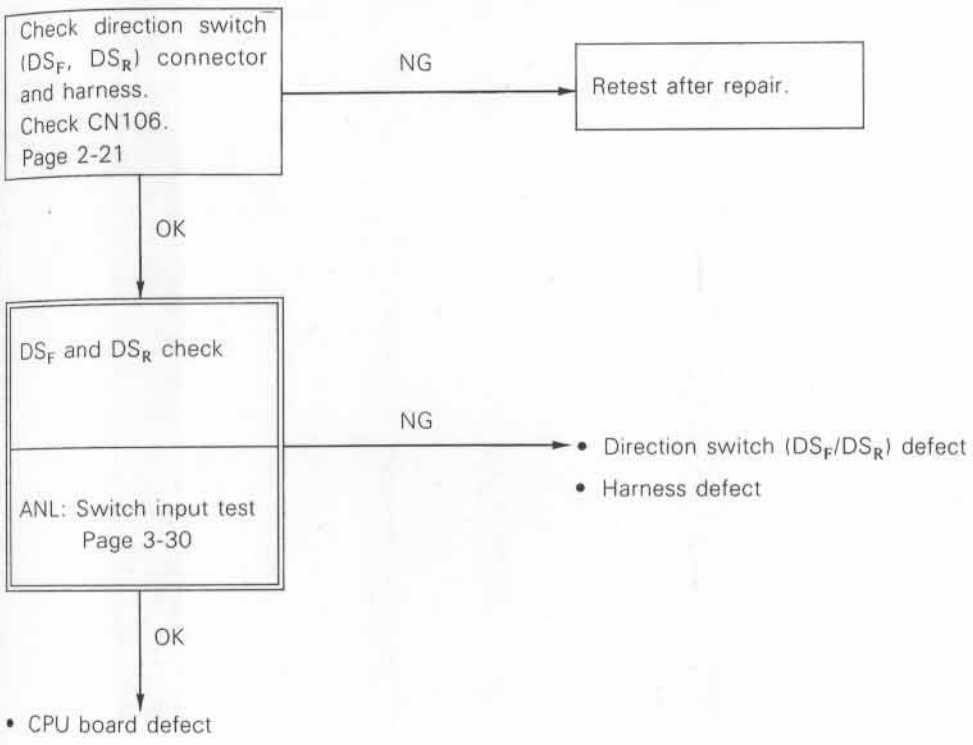

19. ERROR CODE C8: SPEED SENSOR ABNORMALITY

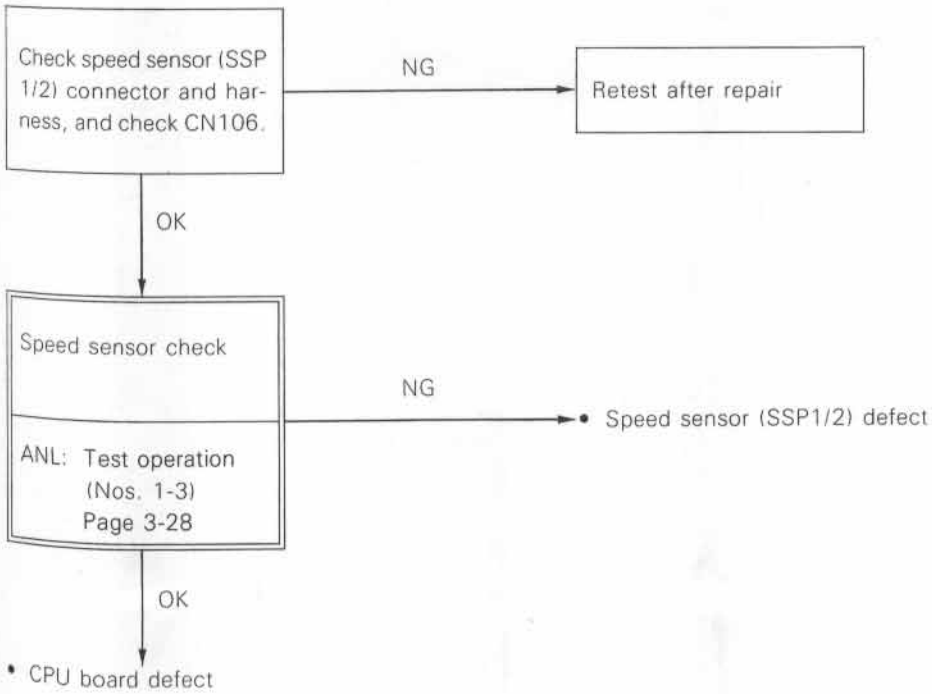

20. ERROR CODE C9: REGENERATIVE CONTACTOR ABNORMALITY

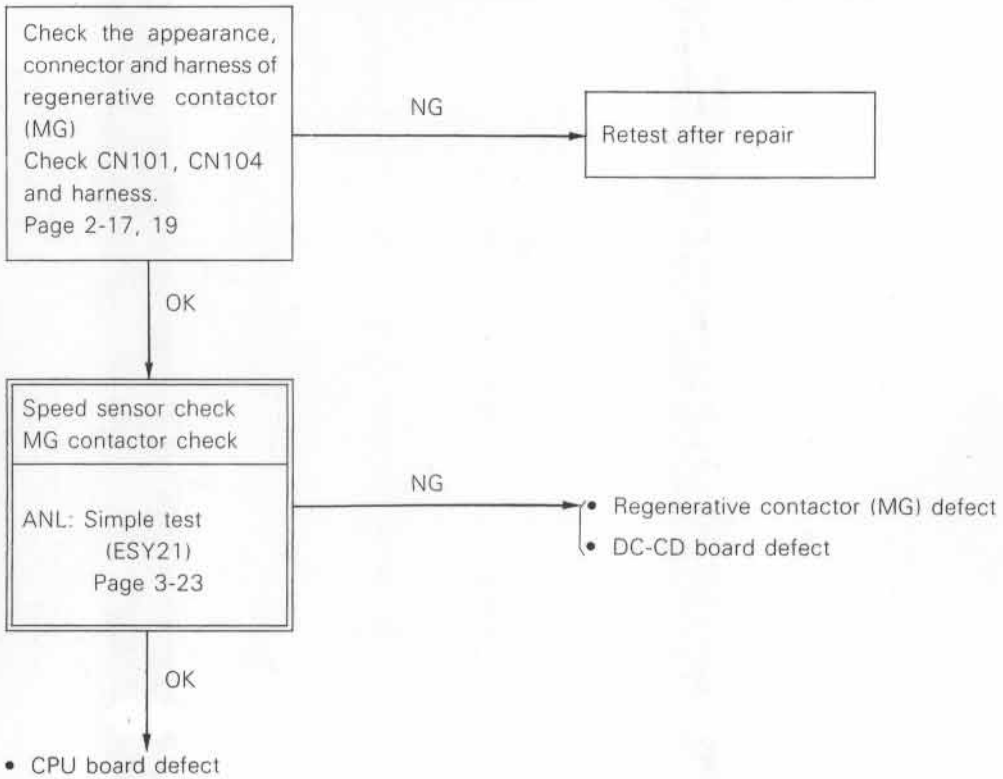

21. ERROR CODE CA: FORWARD/REVERSE CONTACTOR ABNORMALITY

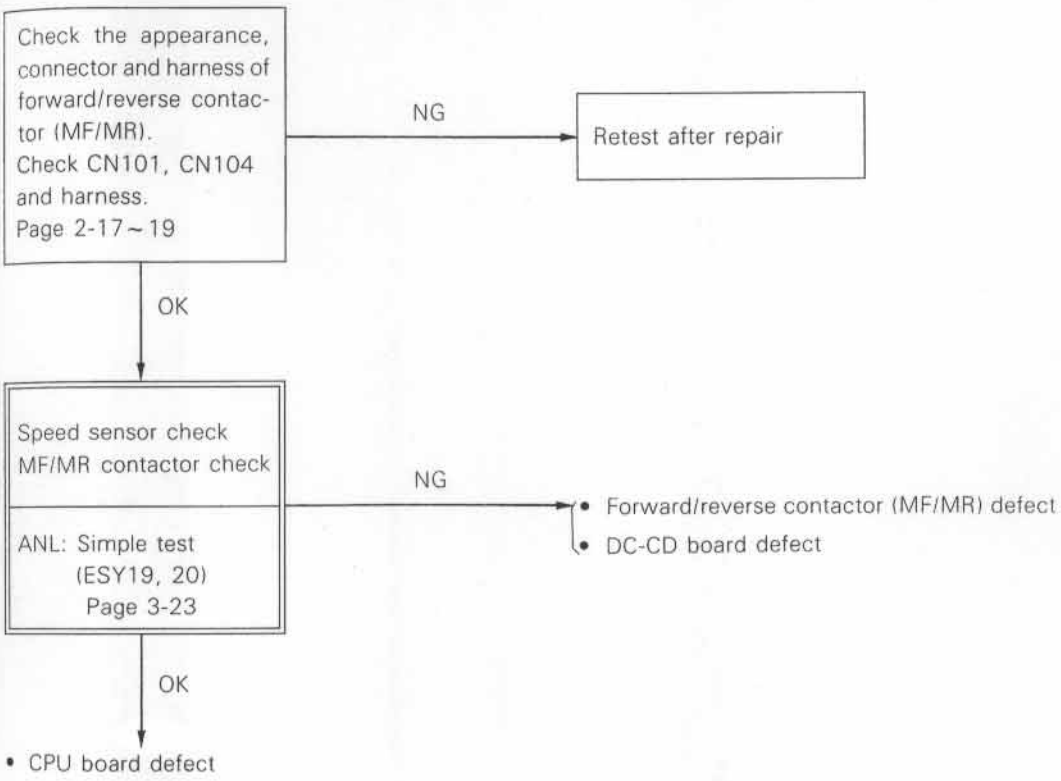

22. ERROR CODE CC: DRIVE OCL VALUE ABNORMAL DROP

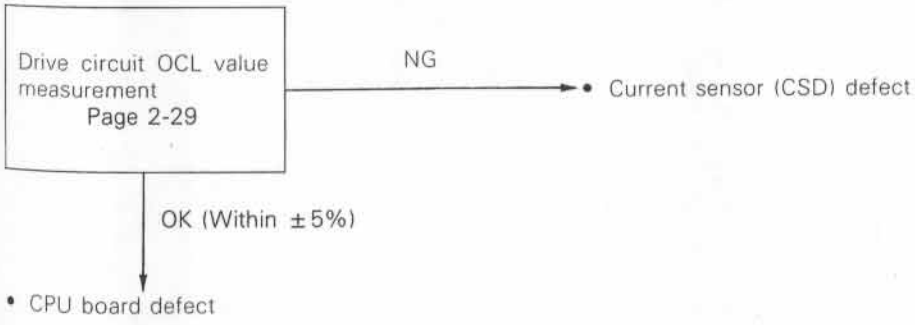

23. ERROR CODE CE: CPU BOARD ROM ABNORMALITY

• CPU board defect

24. ERROR CODE CF: CPU BOARD RAM ABNORMALITY

• CPU board defect

25. ERROR CODE EO: MAIN PUMP CIRCUIT ABNORMALITY

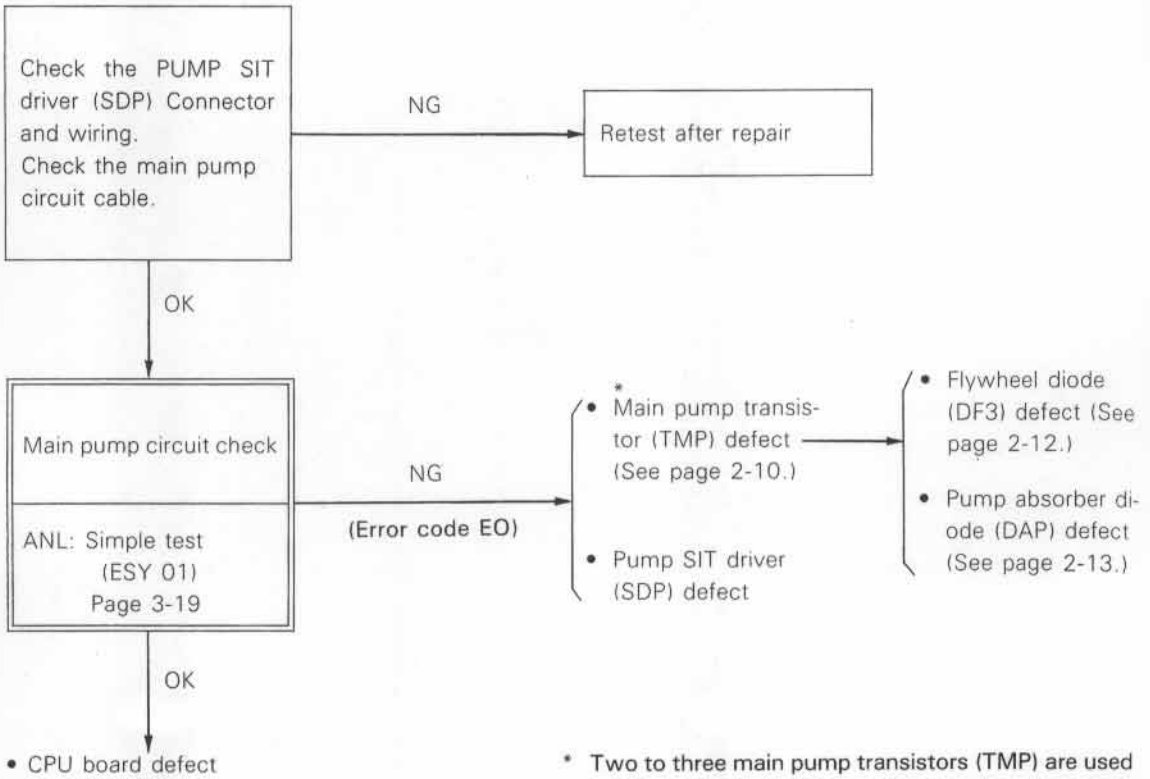

* Two to three main pump transistors (TMP) are used in parallel. When any of them is found faulty, replace all of them even if others are normal.

26. ERROR CODE E1: PUMP CURRENT SENSOR ABNORMALITY

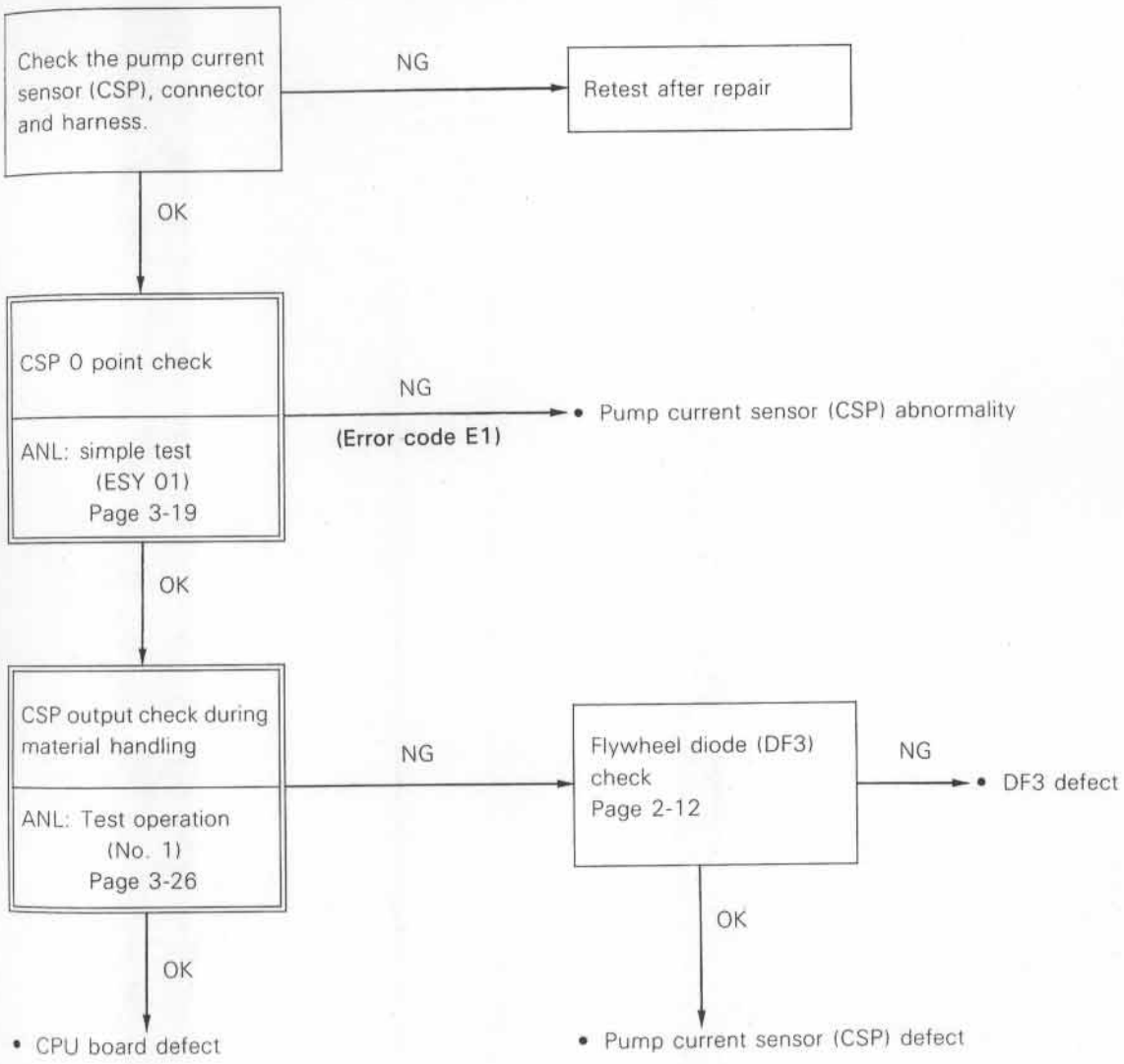

27. ERROR CODE E6: PUMP ACCELERATION POTENTIOMETER DEFECT.

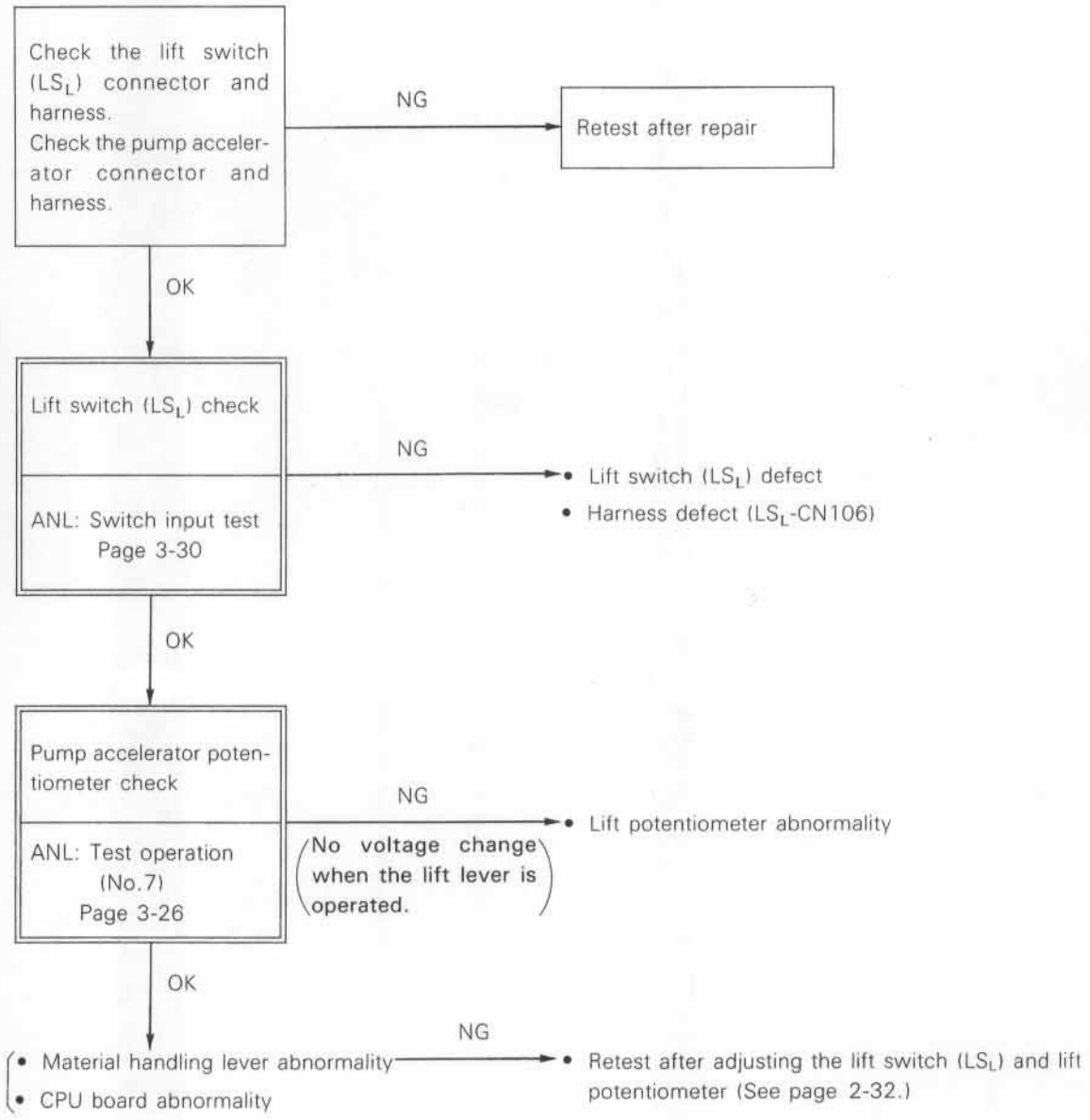

28. ERROR CODE EA: PUMP CONTACTOR ABNORMALITY

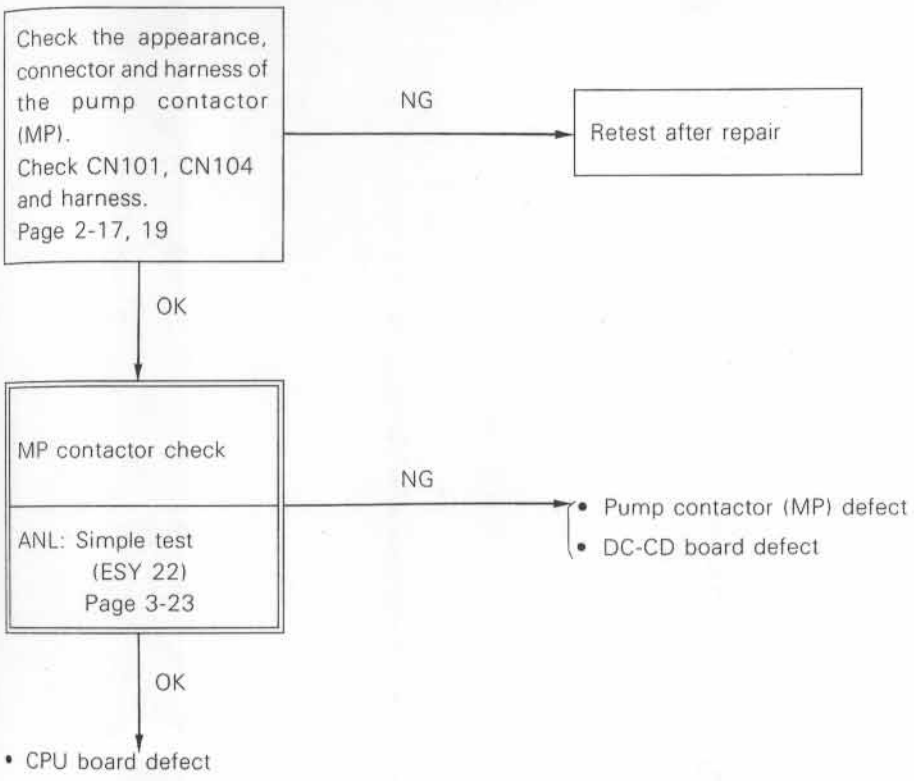

29. ERROR CODE EC: PUMP CIRCUIT OCL VALUE ABNORMAL DROP

(See page 2-29)

• CPU board defect

30. ERROR CODE EE: MCS RECEIVING DATA ABNORMALITY

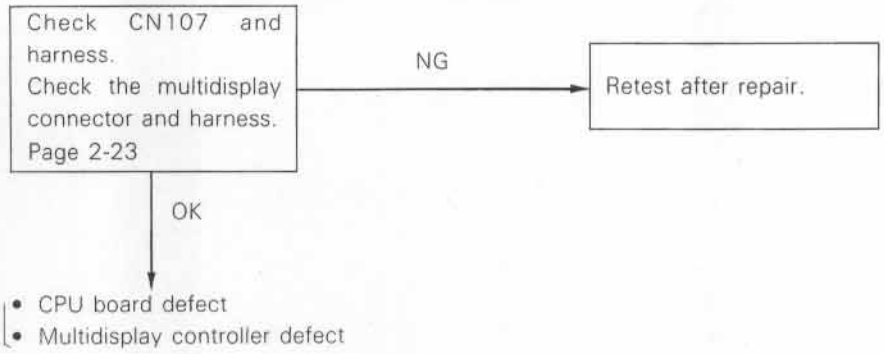

31. ERROR CODE EF: CPU PROCESSING TIME ABNORMALITY

- CPU board defect

32. Error code F0: Power steering controller trouble

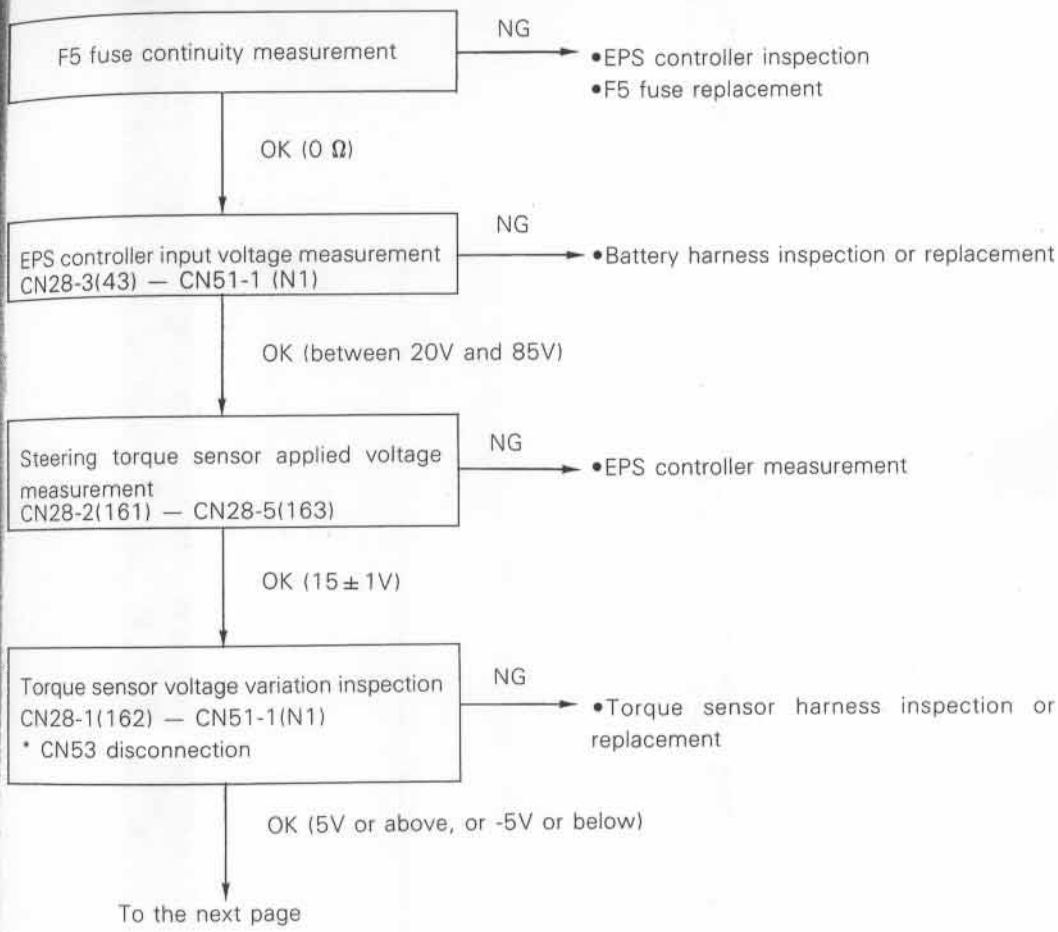

Voltage measurement between torque sensor and EPS controller
Lead frame pin 22 - CN28-5 (163)
* CN53 disconnected, and steering wheel at its stroke end

NG → •EPS controller replacement

(11V or above)

EPS contactor opening check upon SWky on or steering wheel operation

NG (opened) → •EPS controller inspection or replacement

OK (not opened)

- •Inspection of harness between display and EPS controller
- •EPS controller inspection

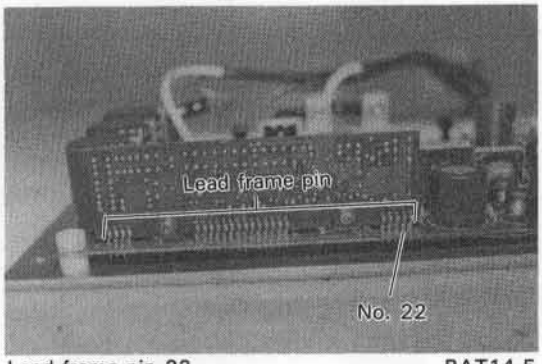

Lead frame pin 22 BAT14-5

33. ERROR CODE F1: FAILURE IN COMMUNICATION BETWEEN MULTIDISPLAY AND MCS

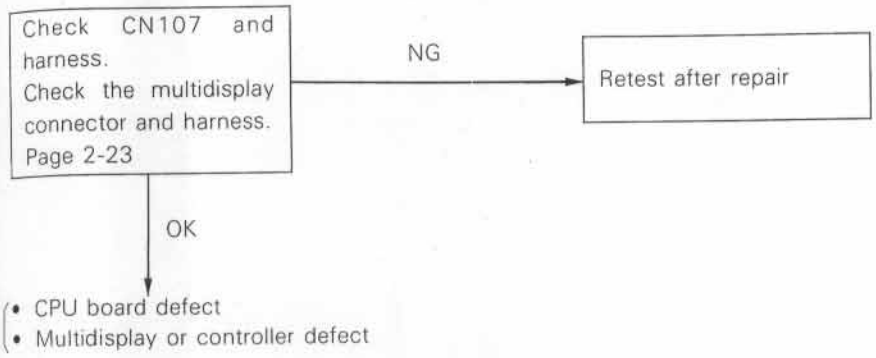

34. ERROR CODE F2: FAILURE IN COMMUNICATION BETWEEN MULTIDISPLAY AND MCS

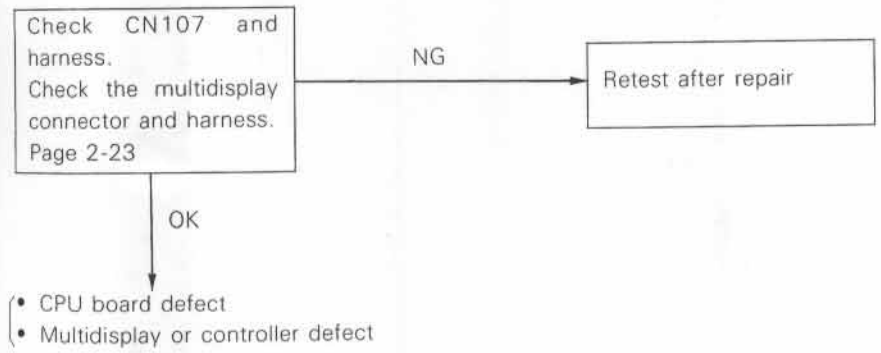

35. ERROR CODE F3: POWER CONTROLLER MEMORY VALUE IN CONSISTENCY

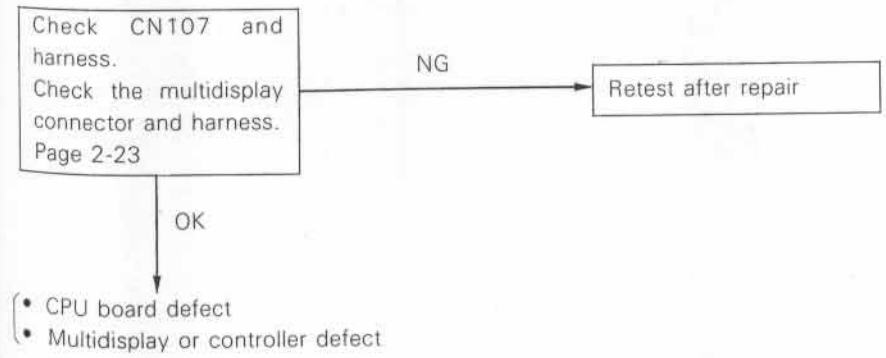

36. Error code F4: Power controller memory value abnormality

•Multidisplay controller defect

Refer to the Charger Repair Manual (No.CE621-3) for troubleshooting of items No.37 to No.40.

37. Ertror code F5: Charging timer memory trouble (For on-truck charger)

Occurred three times or more upon AC power connection

OK

•Multidisplay controller defect

Note) Even if error code F5 is displayed upon AC power connection, charging is possible by pressing the CHARGE switch.

When this error occurs three times or more, the display memory becomes abnormal to make automatic equalized charging impossible.

38. Error code F6: Charging safety timer operation (For on-truck charger)

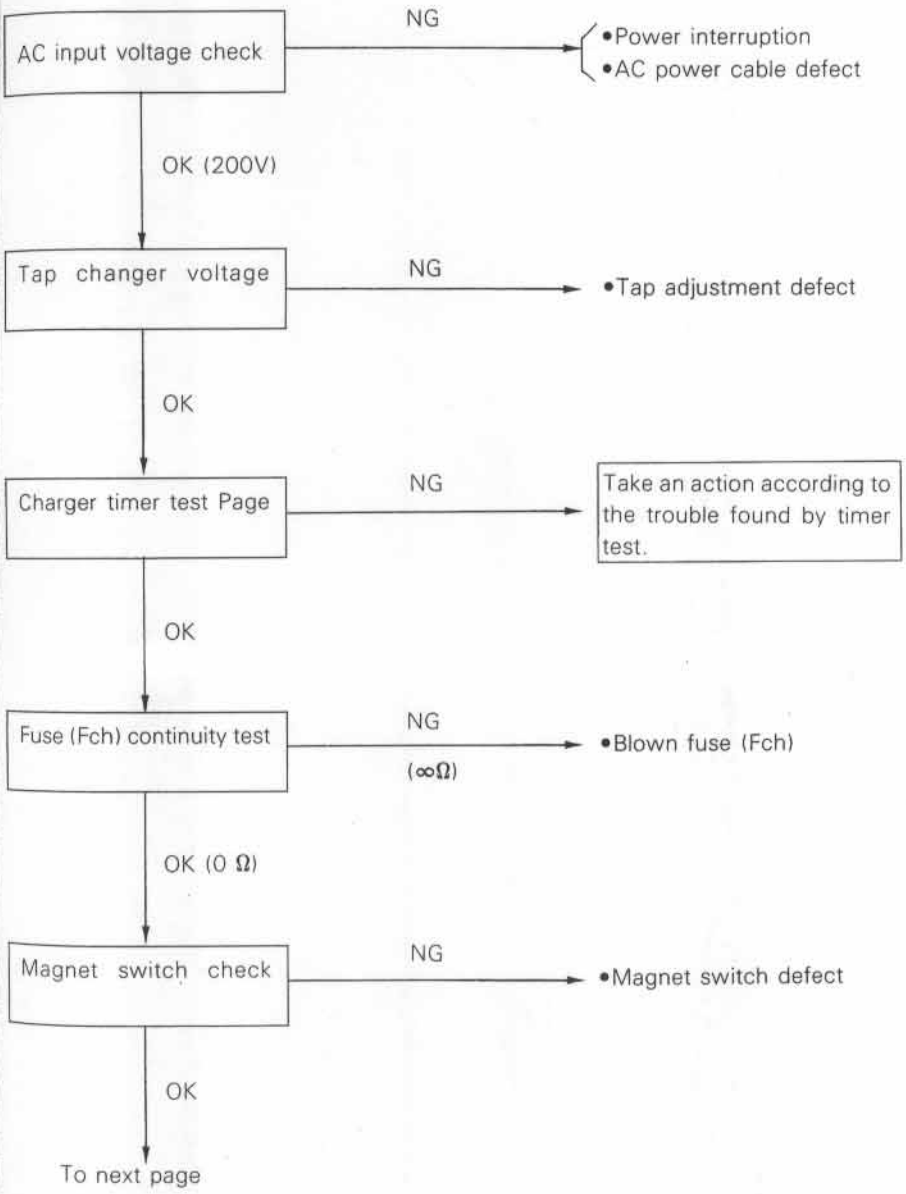

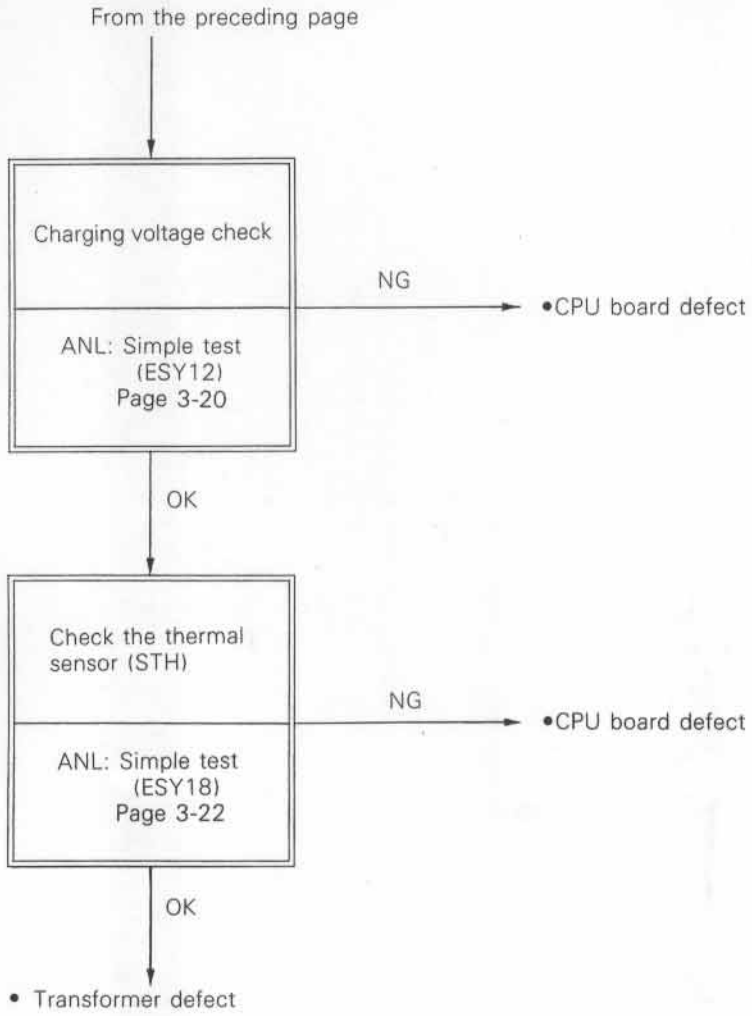

39. Error code F7: Failure in starting charging (For on-truck charger)

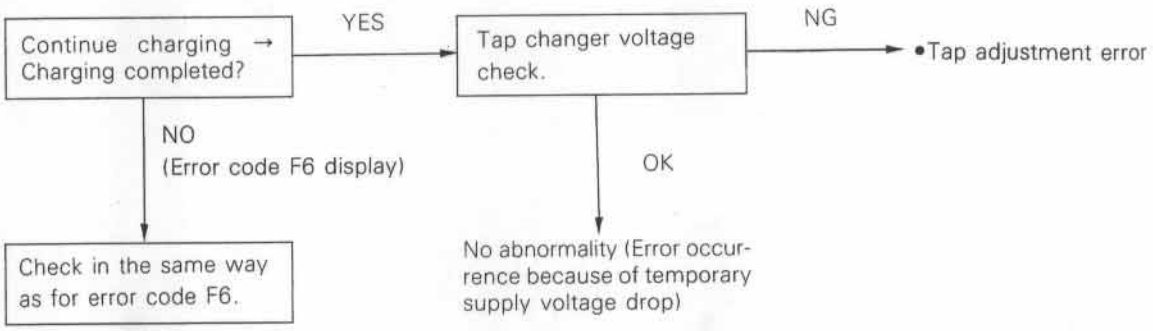

40. Error code F8: Failure in complete charging (For on-truck charger)

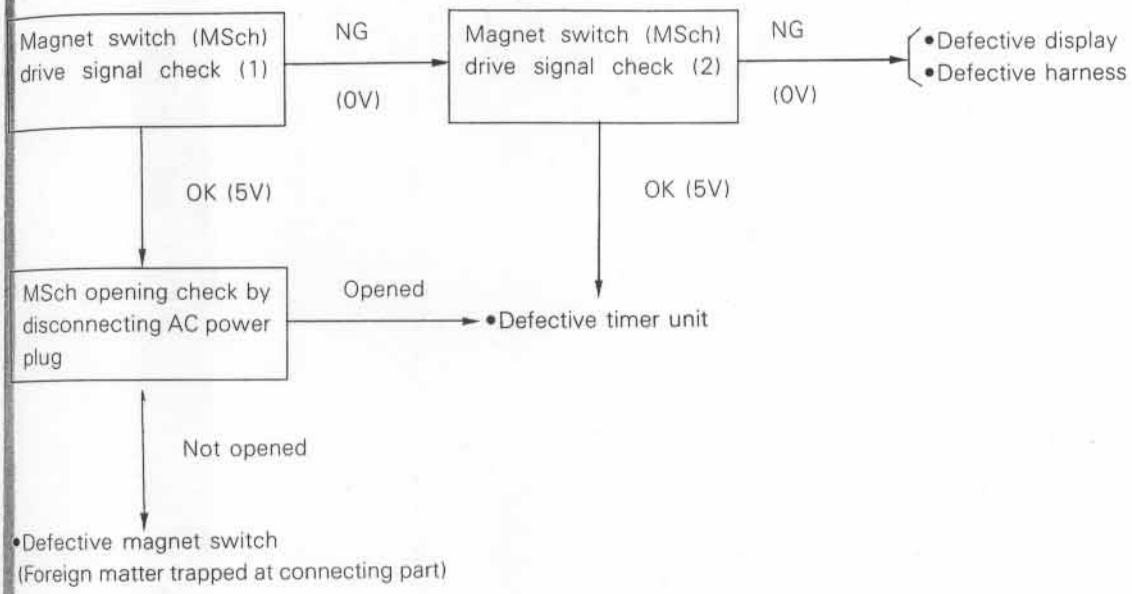

DRIVE SYSTEM TROUBLE (NO DIAGNOSTIC DISPLAY)

1. NO VEHICLE OPERATION (The multidisplay is kept off even when the key switch is set to ON) (1.0 ~ 2.5 TON: 48V check 3.0 TON: 72V check)

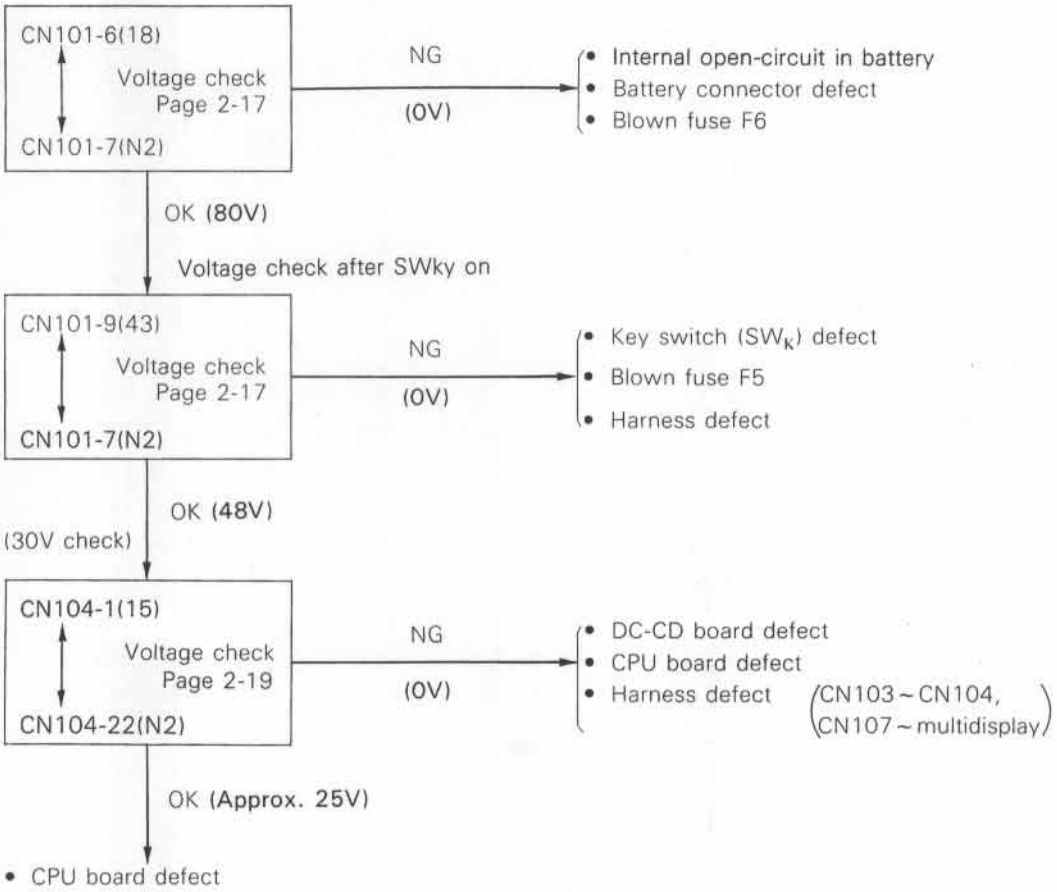

2. NO VEHICLE OPERATION (The MF or MR) contactor is not closed when the direction lever is set to forward (or reverse)

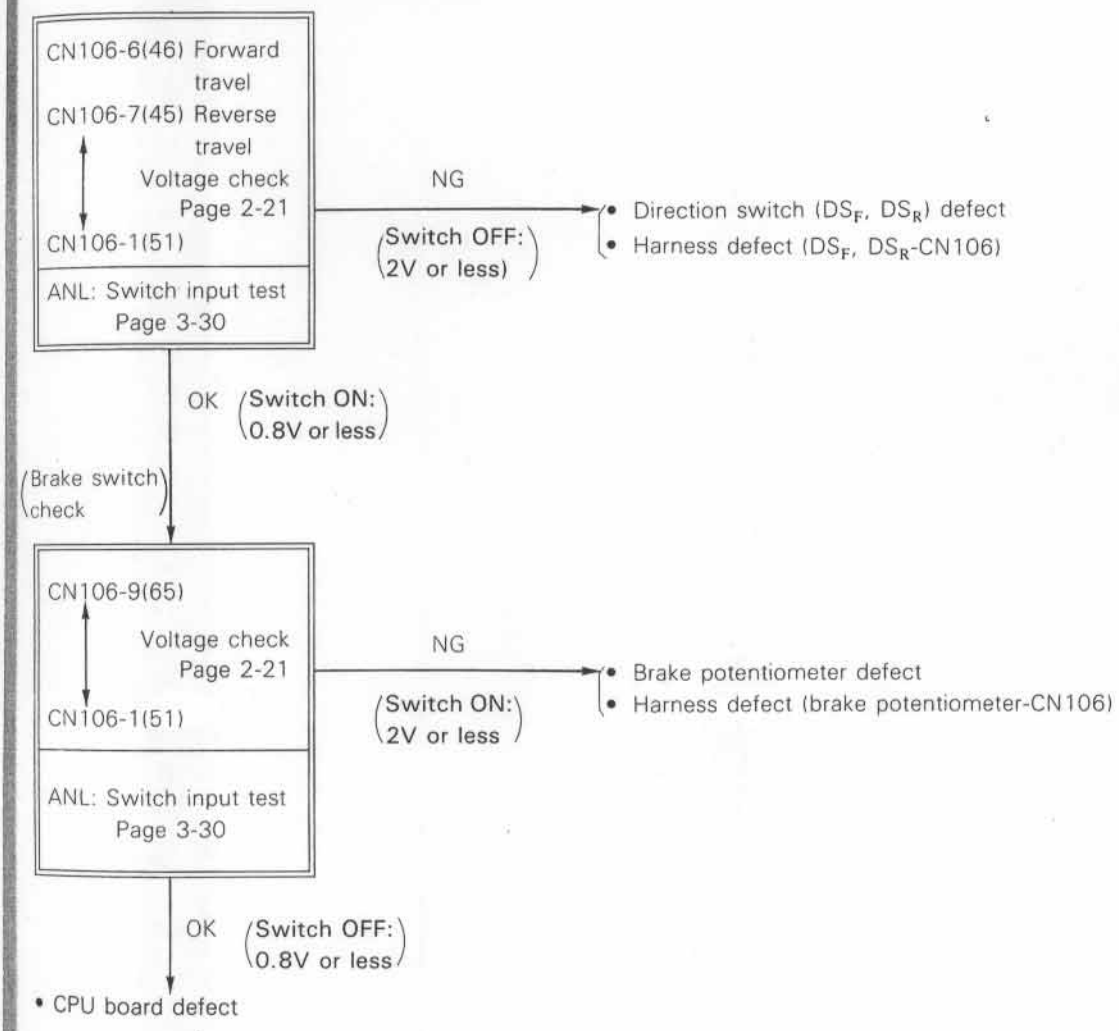

3. NO VEHICLE OPERATION (The MG contactor is not closed when the accelerator is depressed.)

(Accelerator switch check)

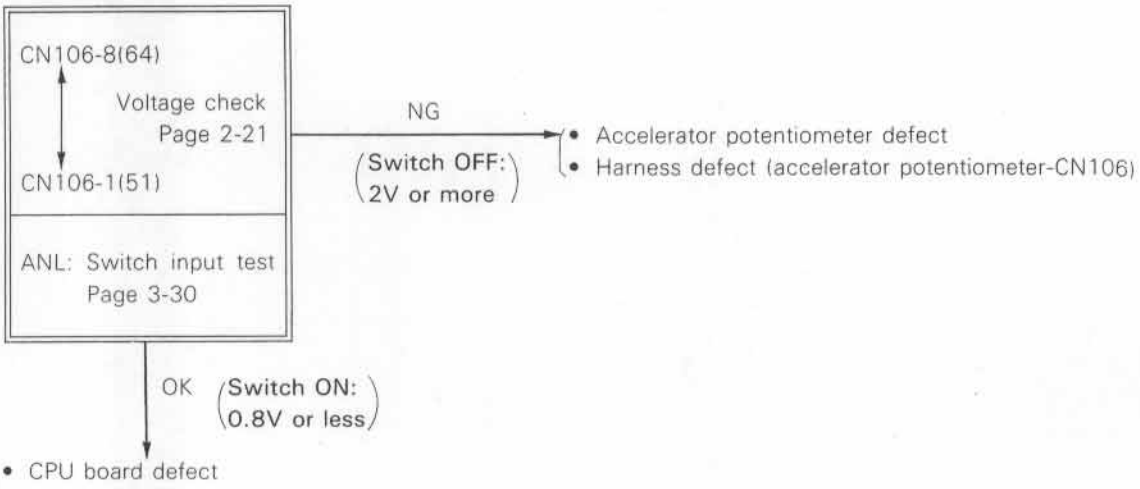

4. NO VEHICLE OPERATION (THE CONTACTOR IS CLOSED.)

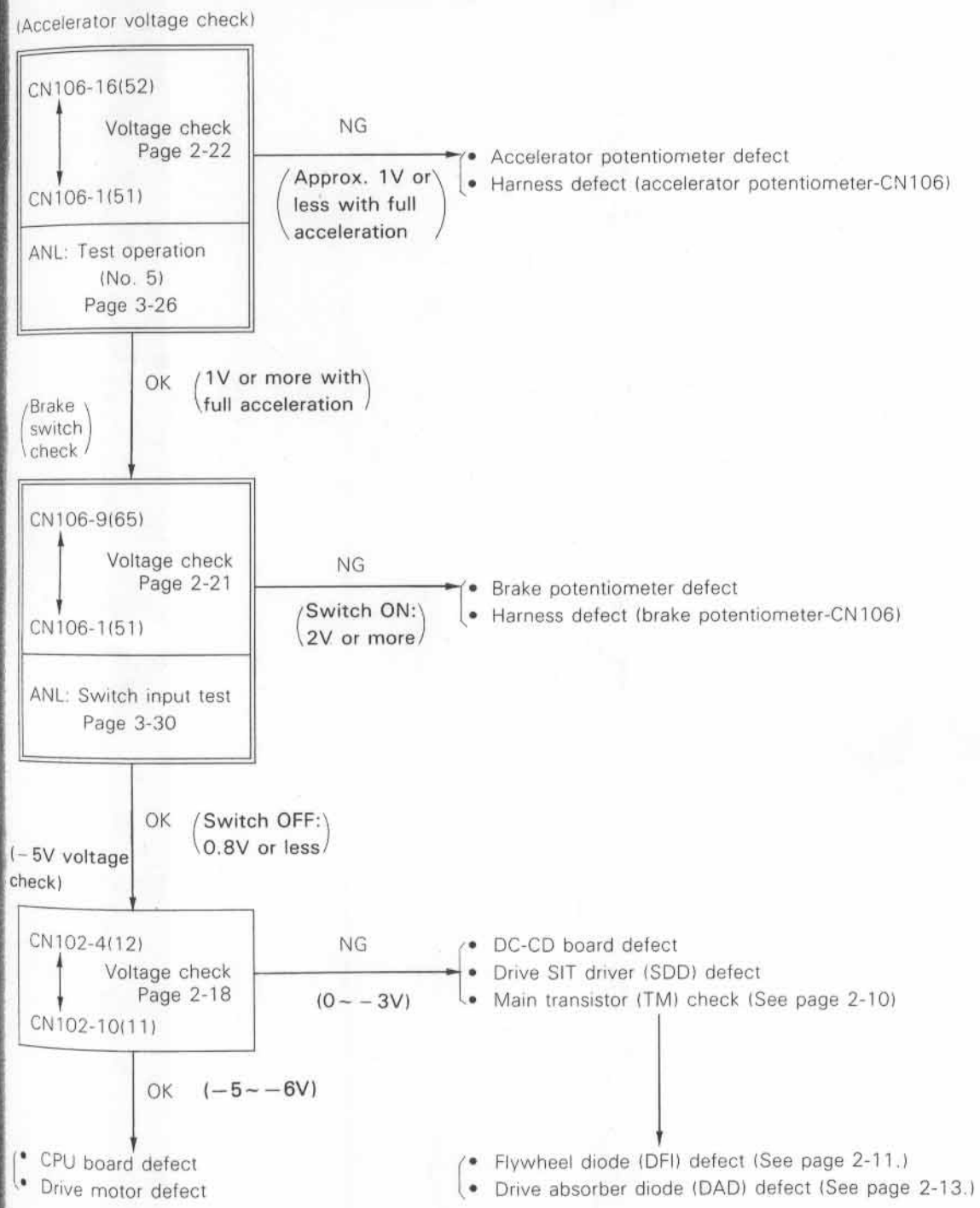

5. FAILURE IN PROPER SPEED CONTROL (NO ACCELERATION)

(Drive accelerator voltage check)

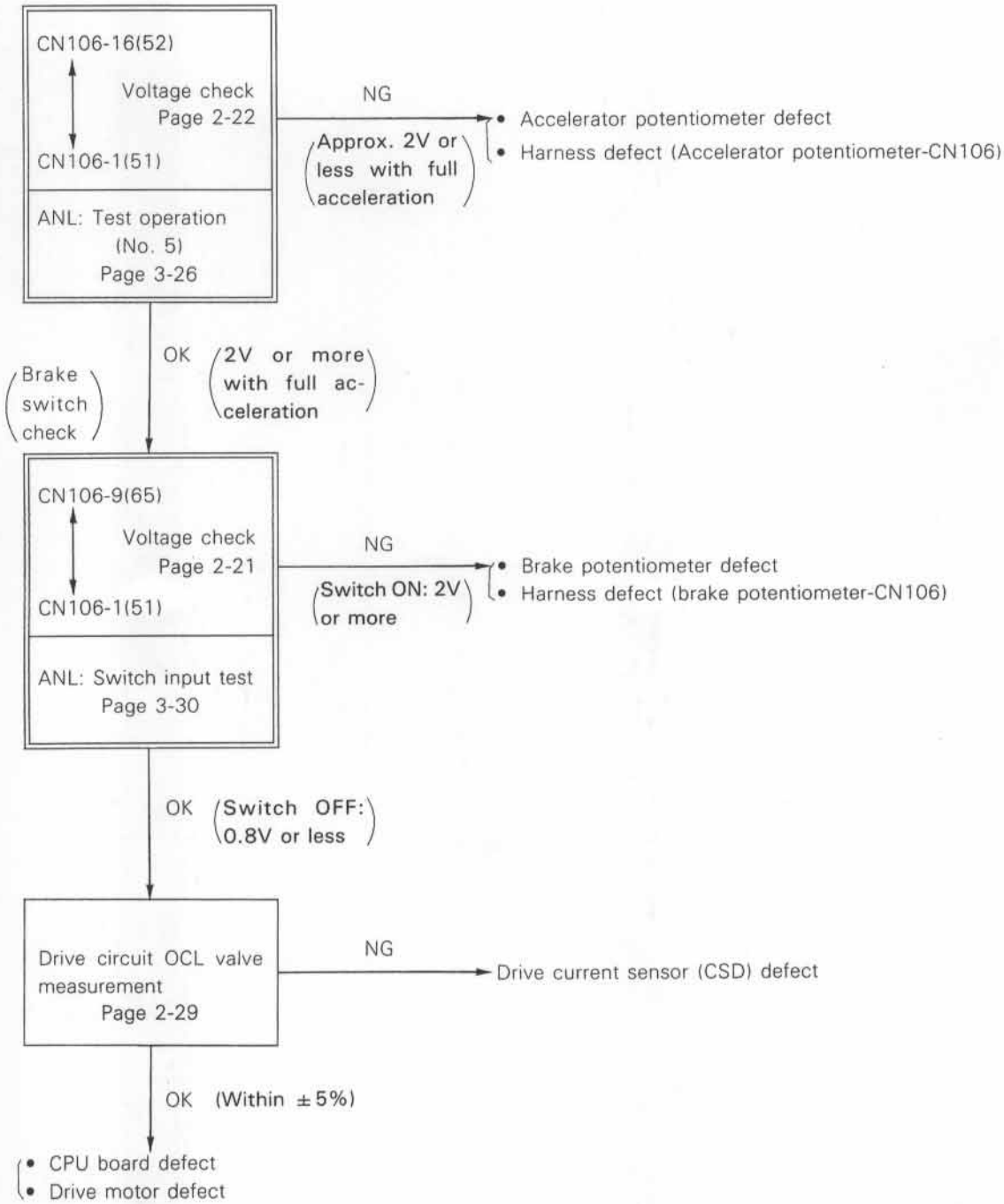

6. FAILURE IN ATTAINING THE MAXIMUM SPEED

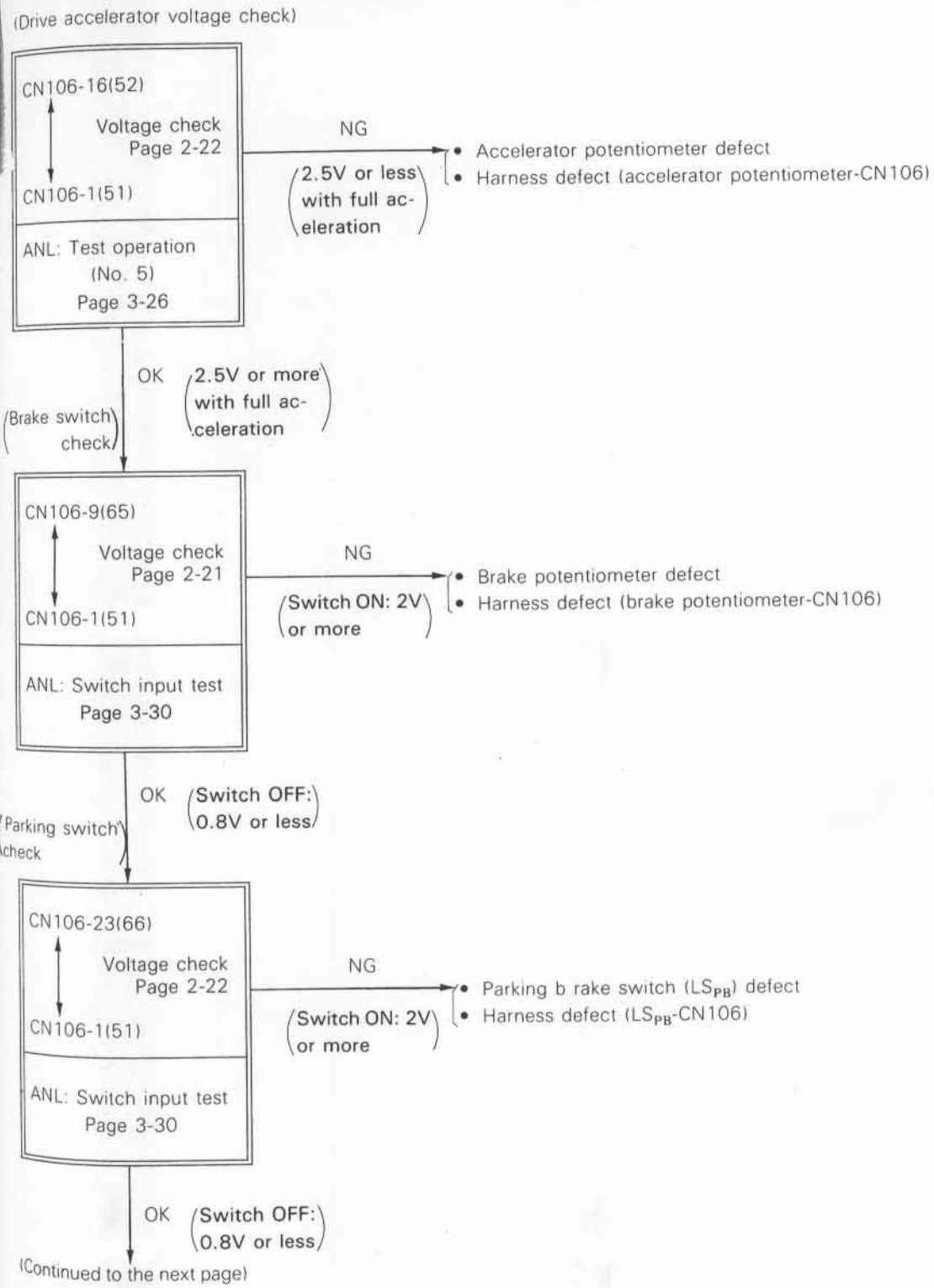

(Continued from the preceding page)

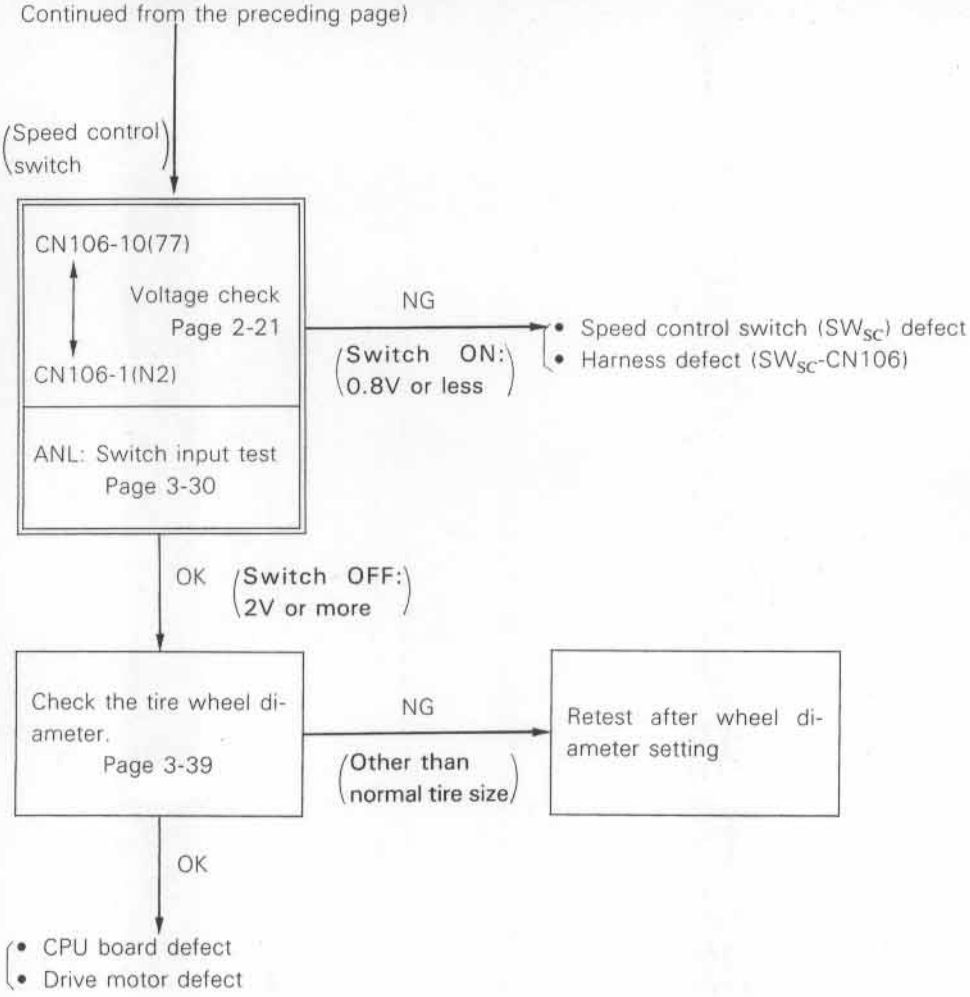

7. NO REGENERATIVE BRAKING IN SWITCH BACK OPERATION

(1) The regenerative contactor (MG) is not set to OFF.

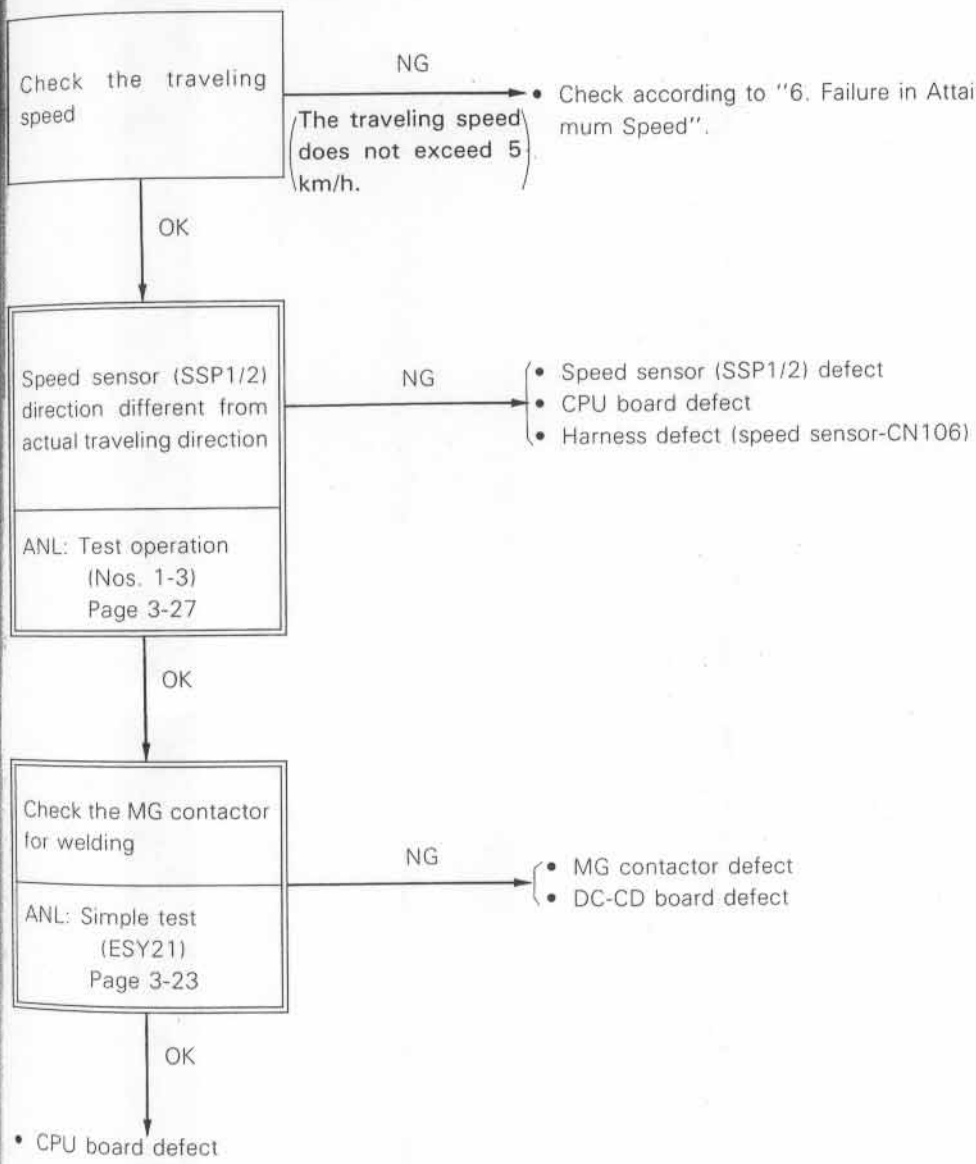

(2) Immediate transition to plugging (The MG contractor is set to OFF once.)

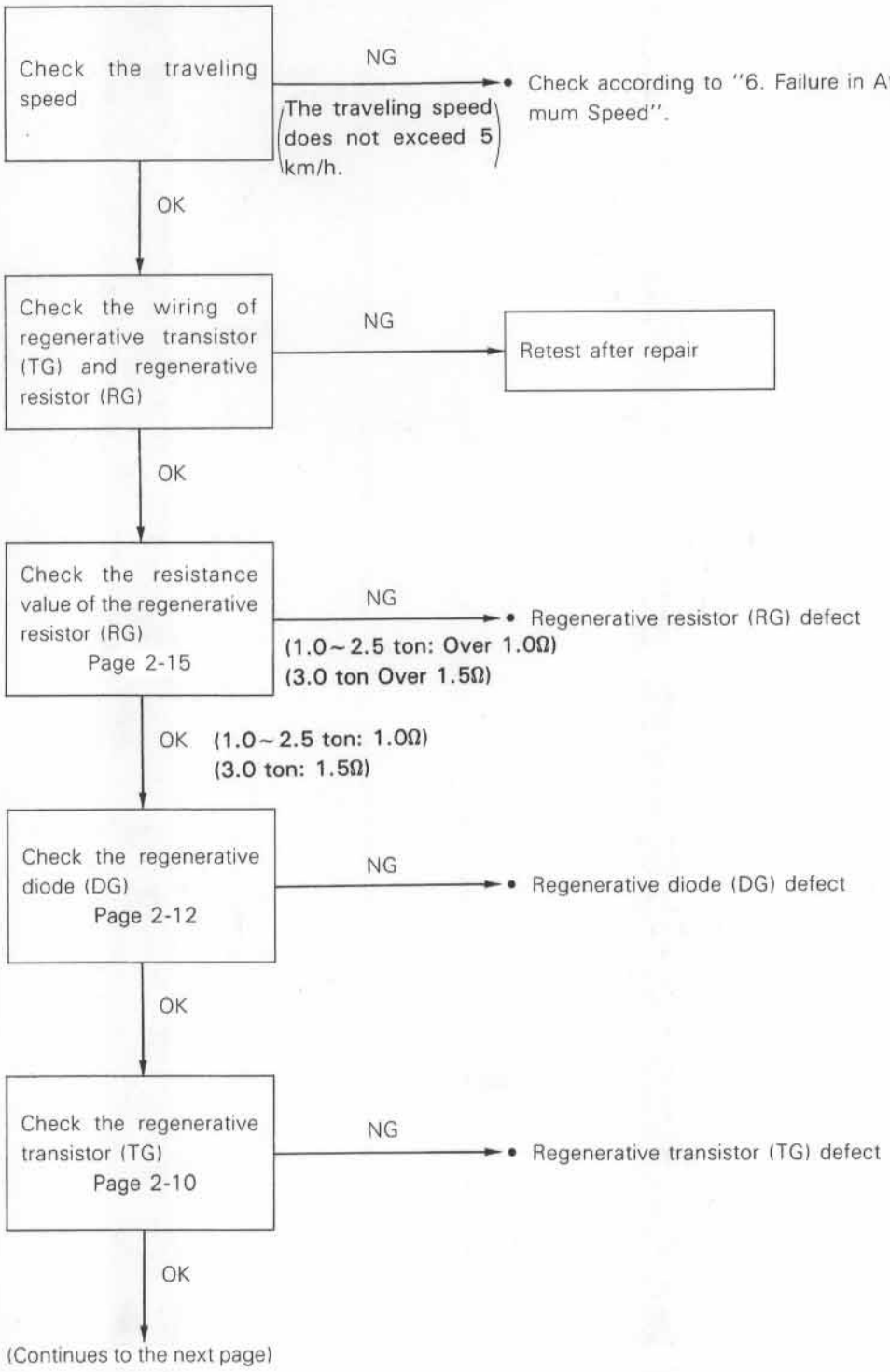

(Continues to the next page)

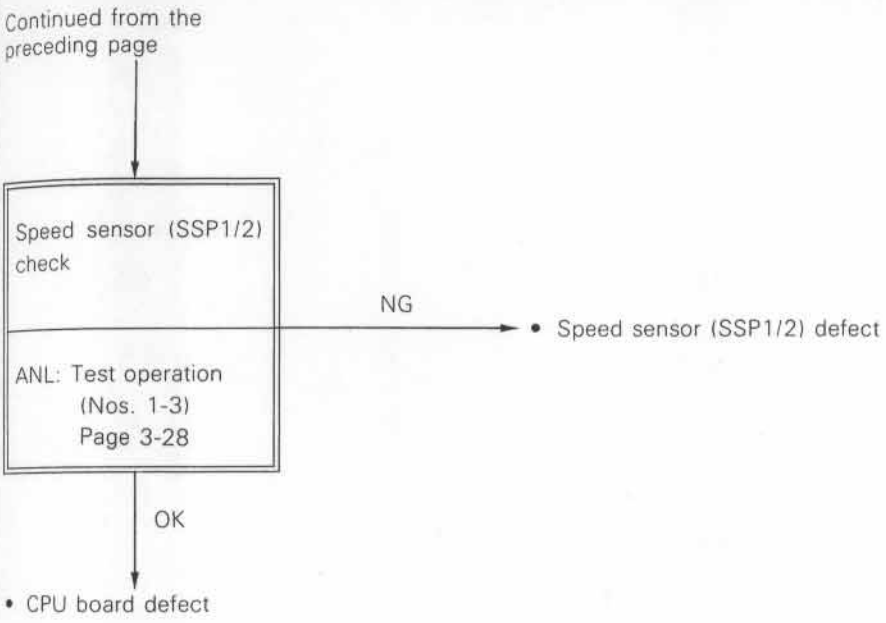

8. NO REGENERATIVE BRAKING INTERLOCKED WITH BRAKE PEDAL

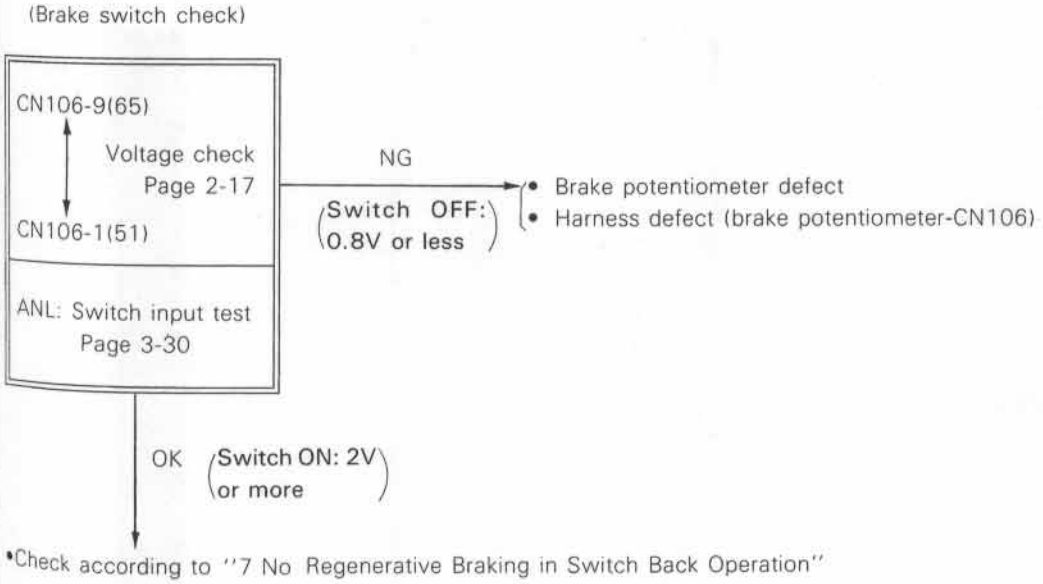

9. TRAVELING ONLY IN FORWARD OR REVERSE DIRECTION

Direction switch check

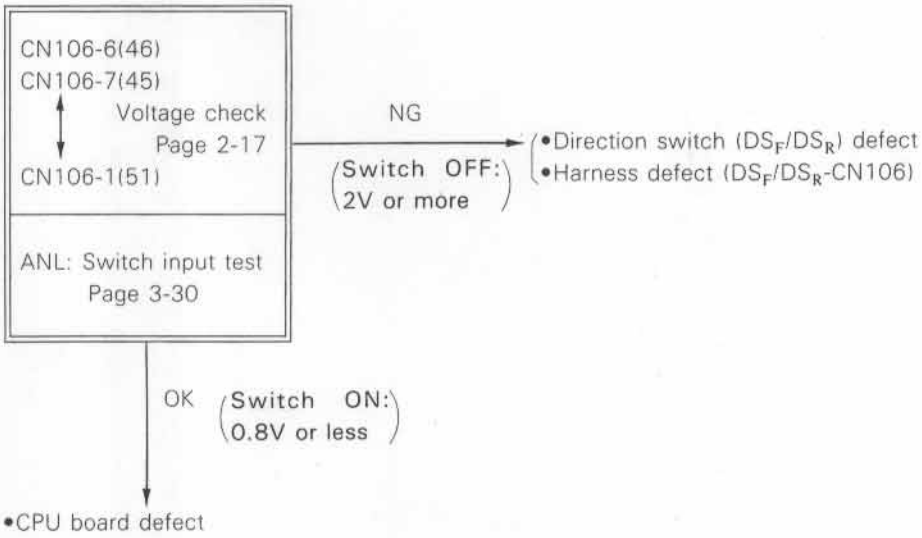

10. SPEED LIMITER FAILURE

(1) The traveling speed rises to the maximum speed.

(Speed control switch check)

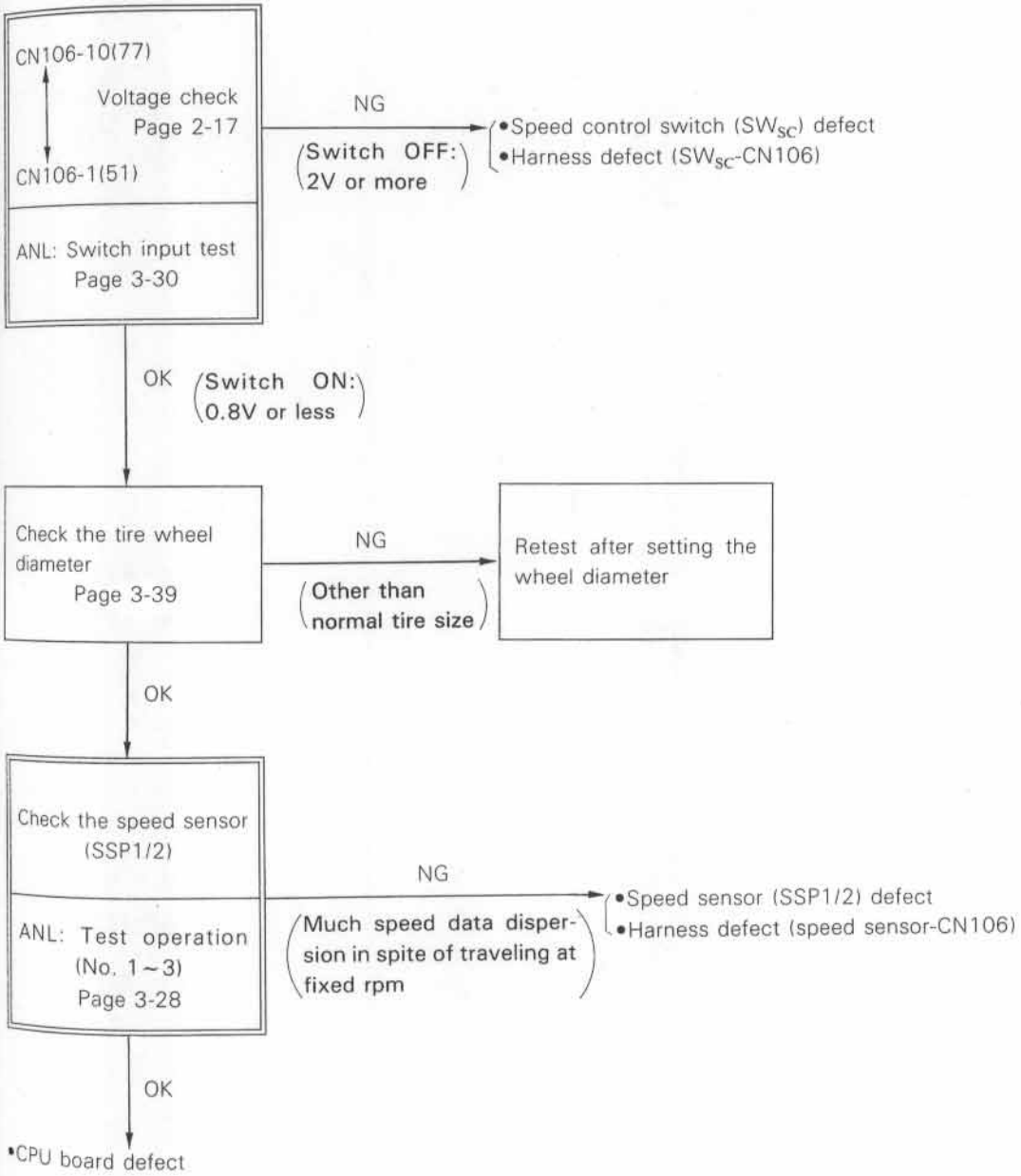

(2) Incorrect limit speed

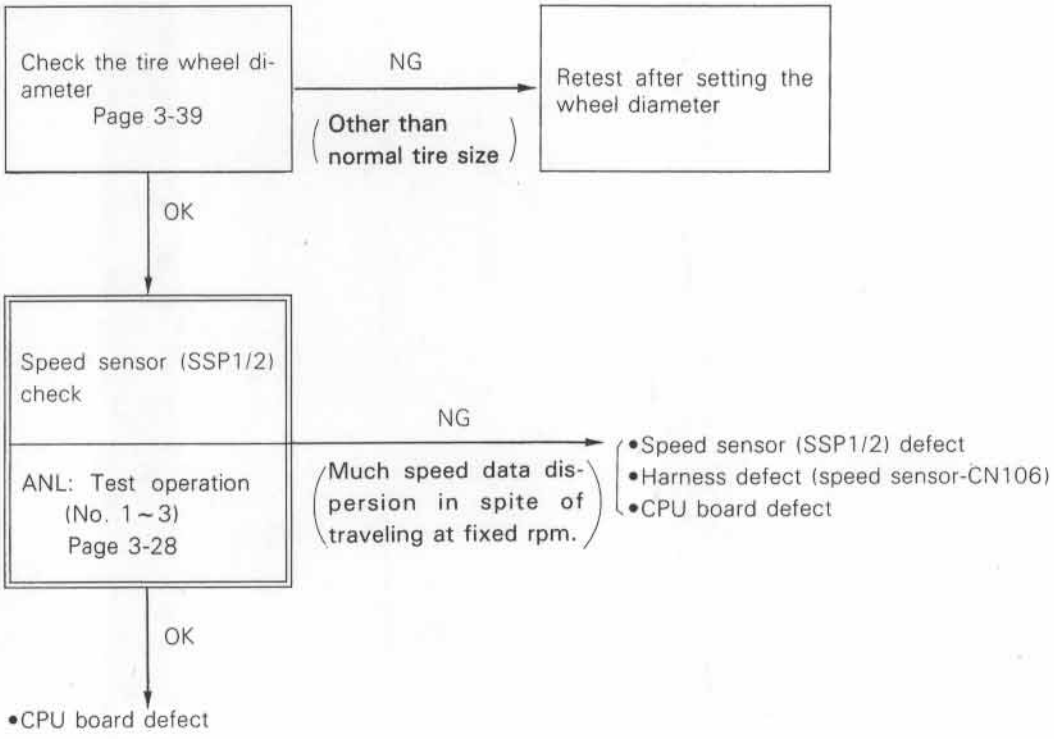

MATERIAL HANDLING SYSTEM TROUBLE (NO DIAGNOSTIC DISPLAY)

1. PUMP MOTOR FAILURE (THE MP CONTACTOR IS NOT CLOSED.)

Same as item 1 (page 4-26) in the Drive System Trouble (No Diagnostic Display).

2. PUMP MOTOR FAILURE (THE MP CONTACTOR IS CLOSED.)

(Lift/tilt switch check)

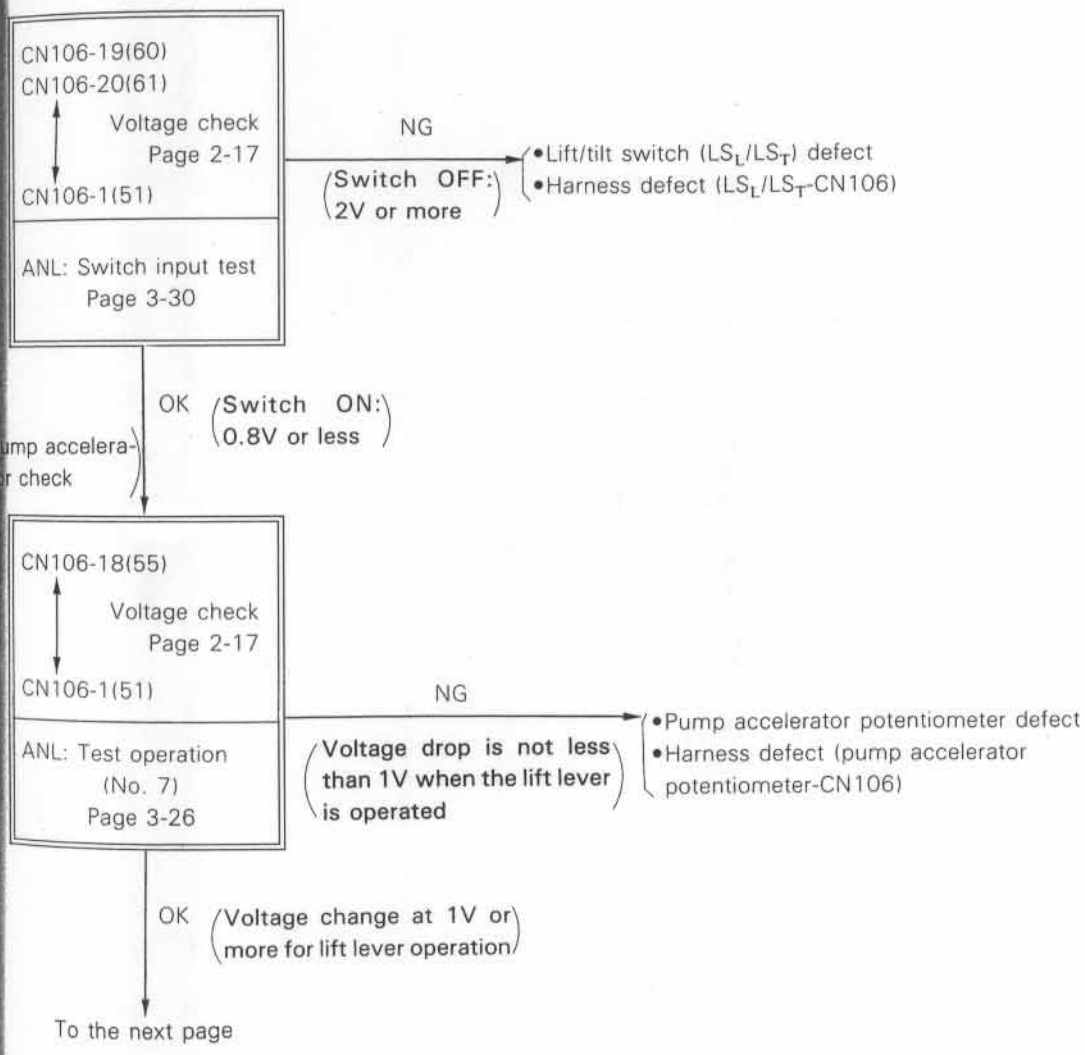

From the preceding page

(−5V voltage check)

CN102-4(12)
Voltage check
Page 2-17
CN102-10(11)

NG (−5V or more)

- DC-CD board defect
- Pump SDP defect
- Pump circuit main transistor (TMP) Check (See page 2-10)

OK (−5 ~ −6V)

- Flywheel diode (DF 3) defect (See page 2-12)
- Pump absorber diode (DAP) defect (See page 2-14.)

- CPU board defect
- Pump motor defect

3. FAILURE IN PROPER MATERIAL HANDLING SPEED CONTROL

(Pump accelerator potentiometer check)

CN106-18(55)
Voltage check
Page 2-17
CN106-1(51)

ANL: Test operation
(No. 7)
Page 3-26

NG
Voltage drop is not less than 1V when the lift lever is operated

- Pump accelerator potentiometer defect
- Harness defect (pump accelerator potentiometer-CN106)

OK **Voltage change at 1V or more for lift lever operation**

- CPU board defect
- Multidisplay controller defect
- Pump motor defect

4. FAILURE IN MATERIAL HANDLING OPERATION DURING TRAVELING

Material handling operation is impossible during traveling when the hour meter is not started for the protection of the electrical circuit.

Start the hour meter.
Page 3-36.

STEERING SYSTEM TROUBLE (NO DIAGNOSTIC DISPLAY)

1. FAILURE IN POWER ASSISTING WHEN SWky IS TURNED TO ON

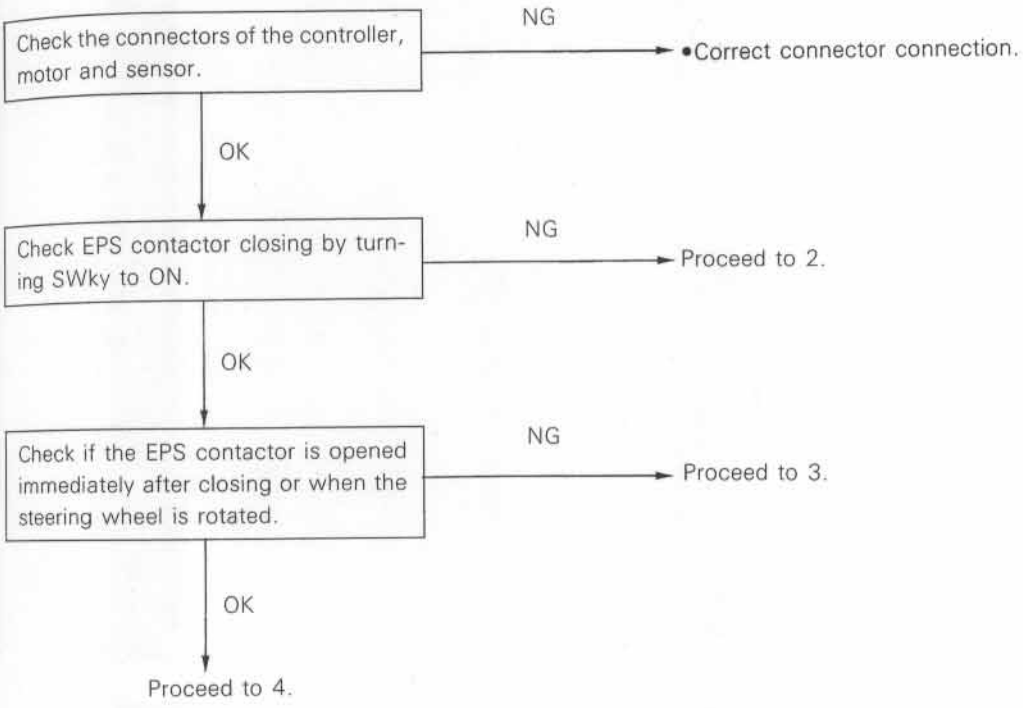

2. FAILURE IN CLOSING EPS CONTACTOR

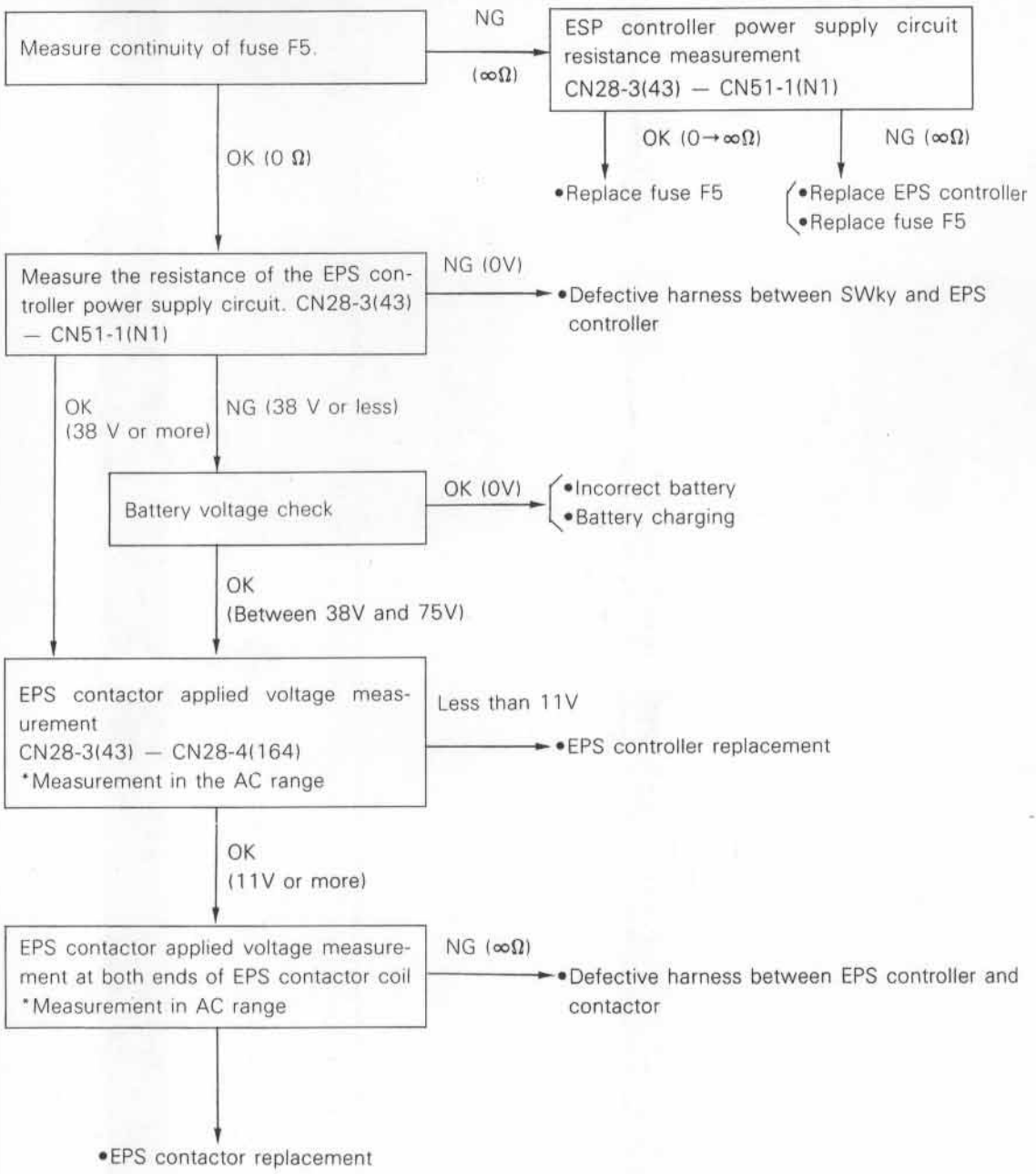

3. EPS contactor opening after closing once

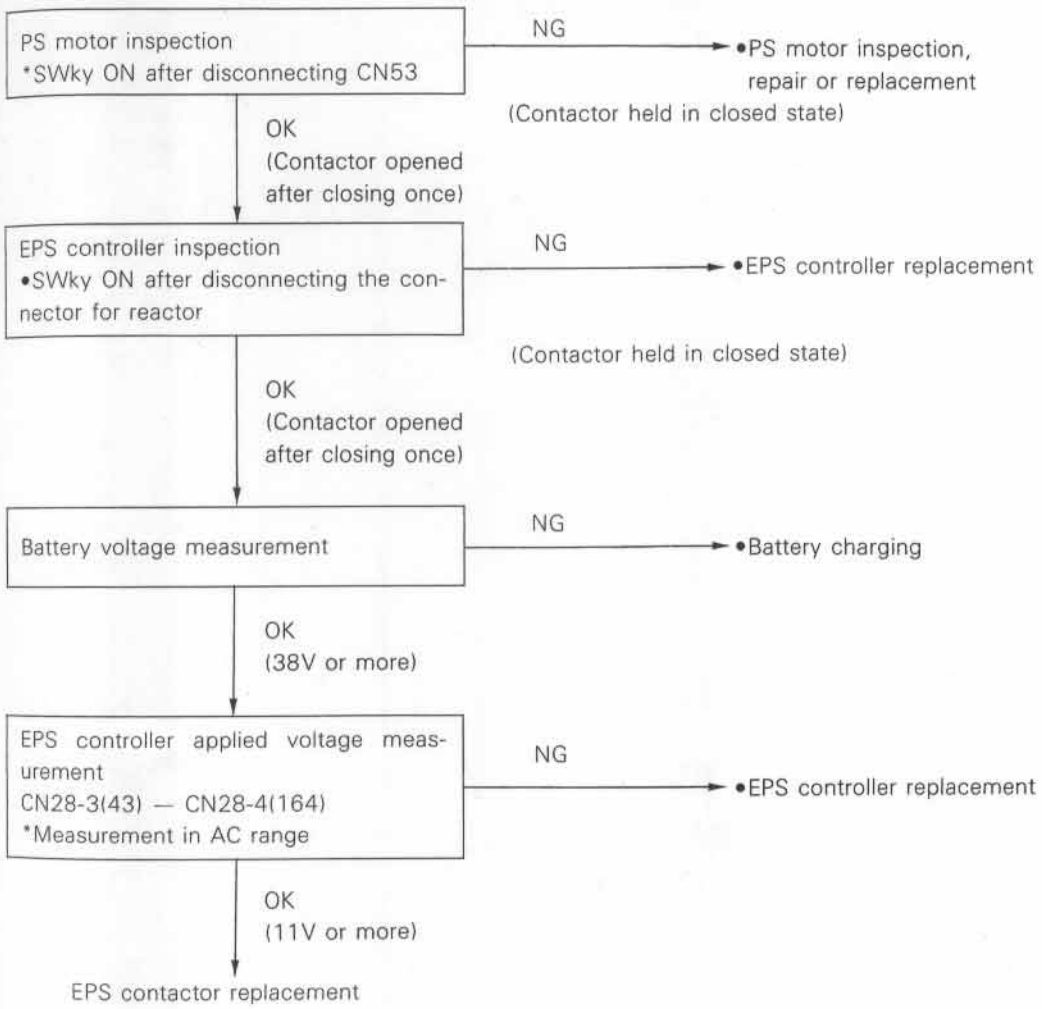

4. EPS CONTACTOR CLOSED BUT NO POWER ASSISTING

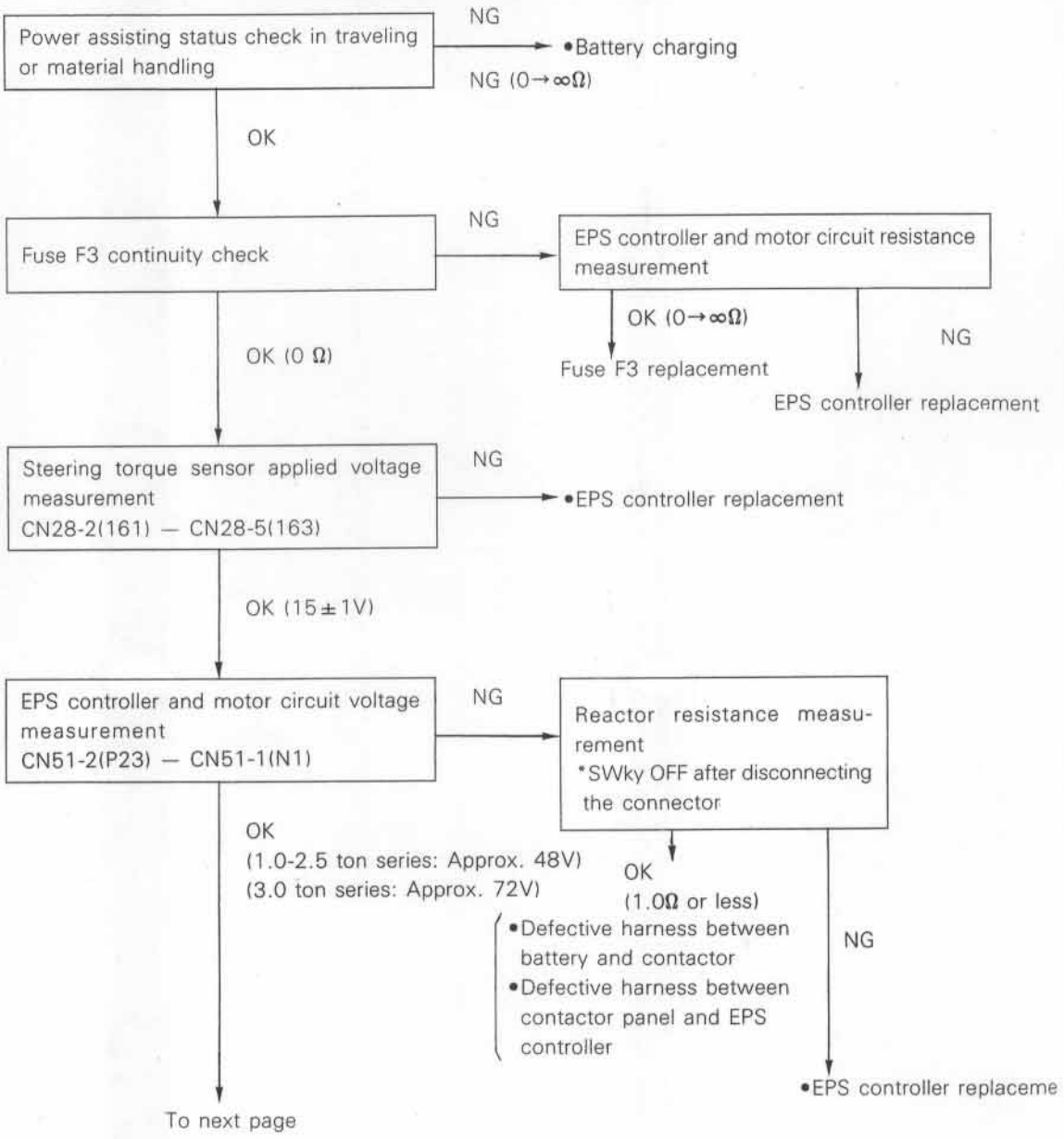

Torque sensor voltage variation check CN28-1(162) — CN51-1(N1)

NG → Torque sensor to EPS controller harness inspection

NG → •Defective harness

OK → •Torque sensor replacement

OK
Variation from —5V to +5V
from left end to right end

Voltage measurement between torque sensor and EPS controller
EPS controller lead frame pin 22 — CN28-5(163)
*CN53 disconnection

NG → •EPS controller replacement

OK (11V or more)

•Defective motor and/or actuator

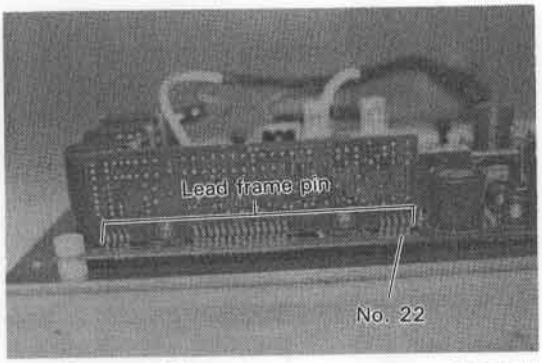

Lead frame pin 22 BAT14-5

5. ABNORMALLY HEAVY STEERING WHEEL REGARDLESS OF POWER ASSISTING

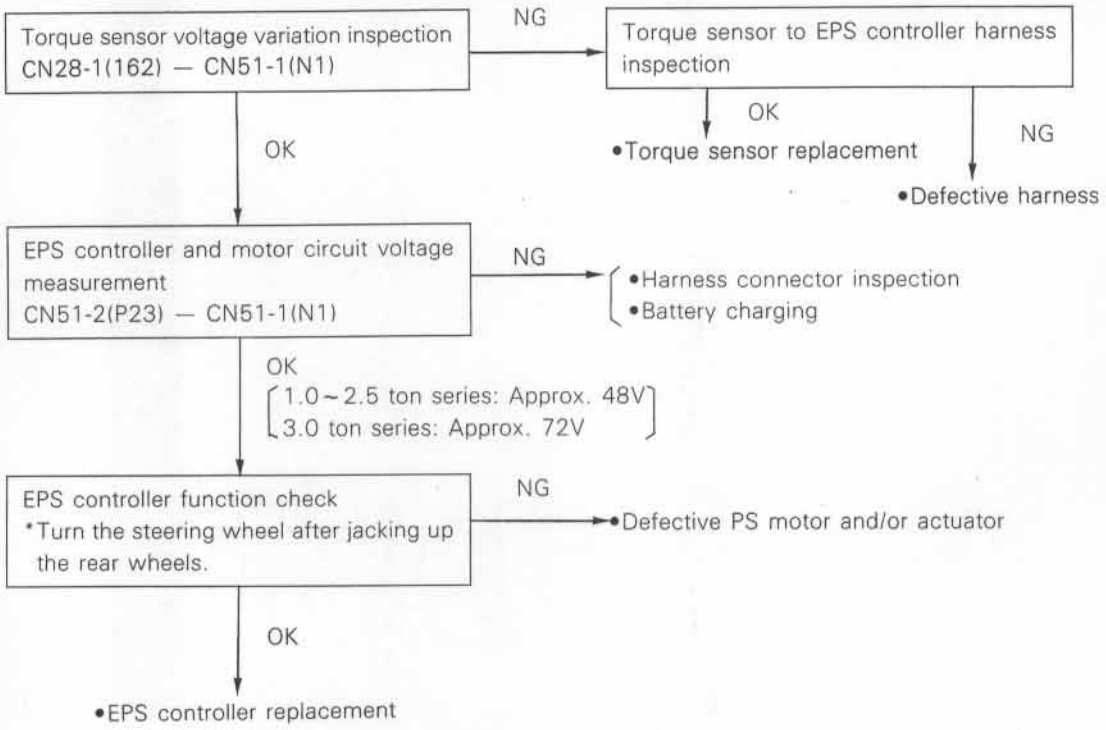

6. STEERING FAILURE WITH STEERING WHEEL VIBRATION

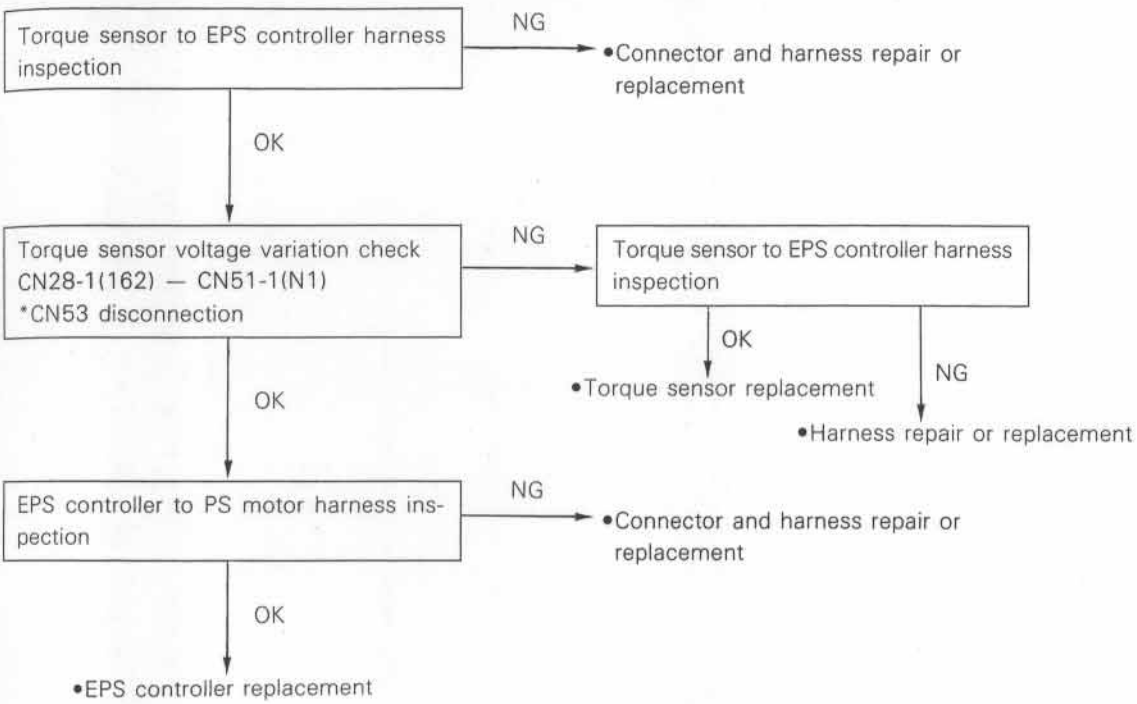

7. STEERING WHEEL TURNING OF ITSELF

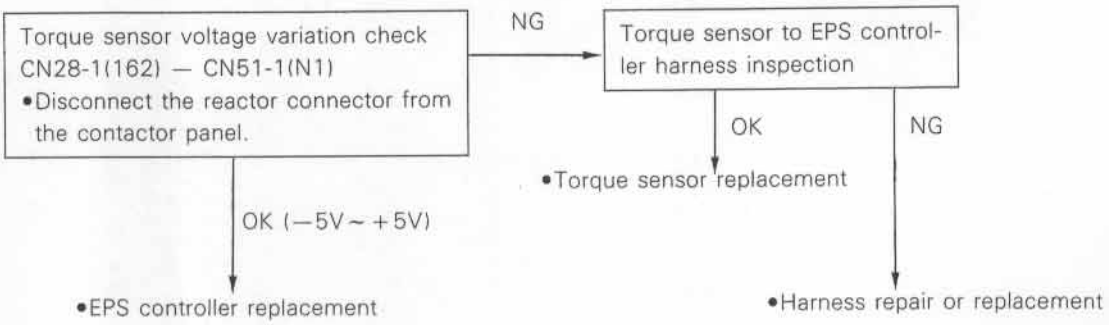

8. EXCESSIVE KICKBACK UPON SWky OFF AFTER TURNING THE STEERING WHEEL WITH THE VEHICLE IN STATIONARY STATE

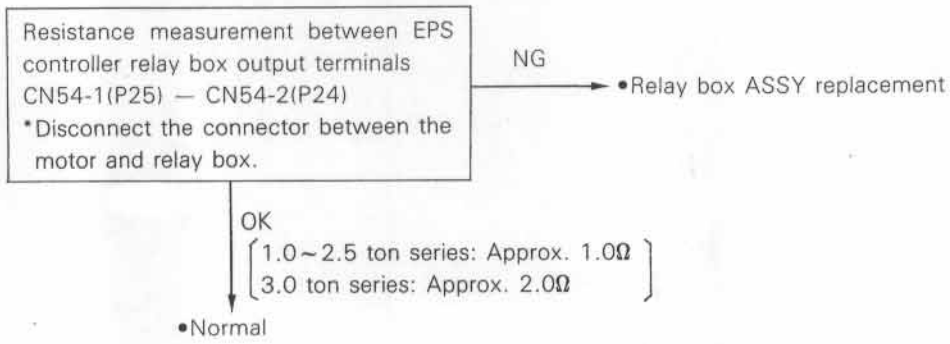

DISPLAY TROUBLE (NO DIAGNOSTIC DISPLAY)

1. NO INDICATION

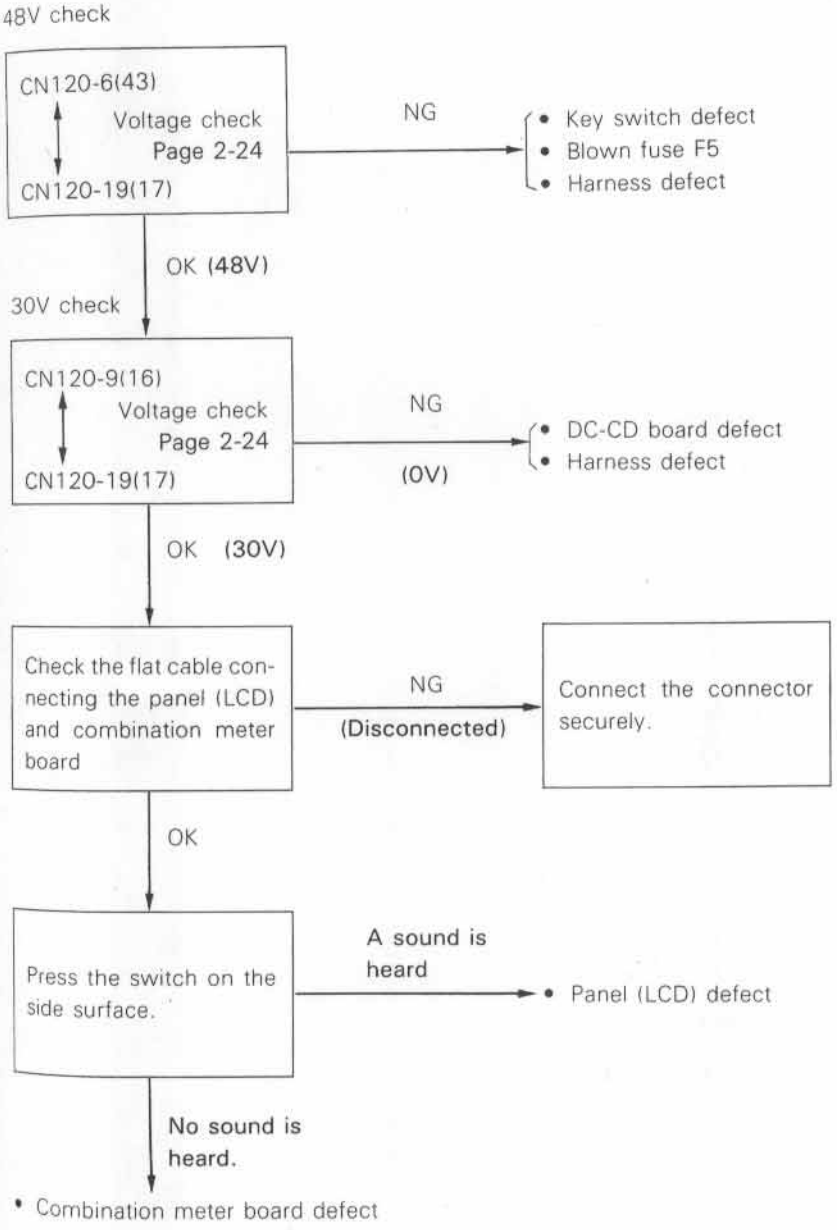

2. PARTIAL INDICATION FAILURE

(All lamp check)

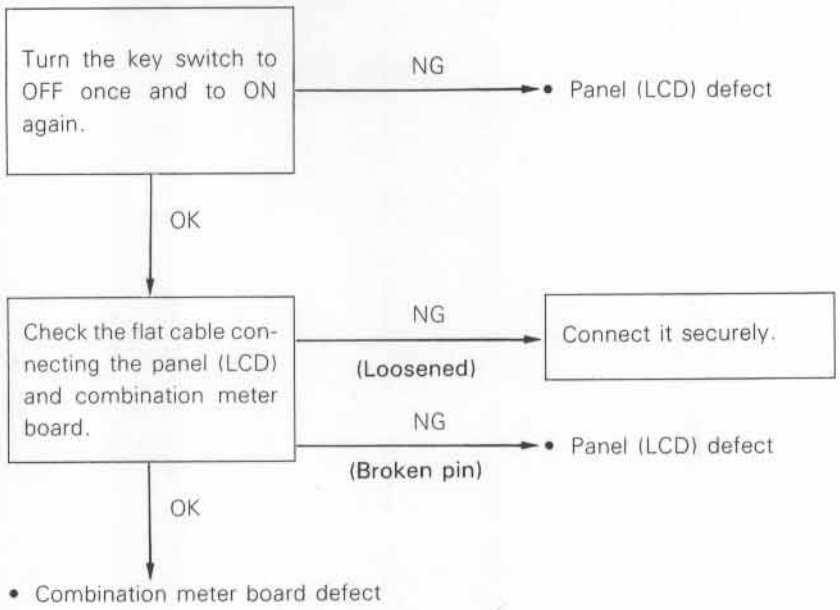

3. EXCESSIVE SPEEDOMETER INDICATION ERROR

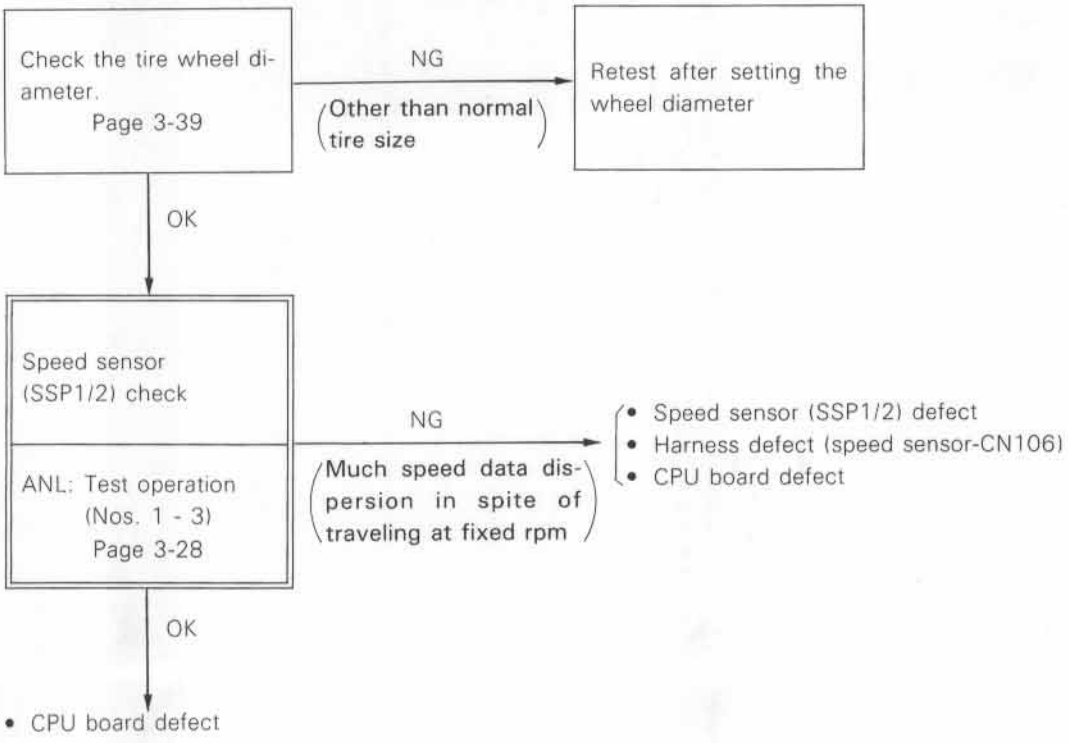

4. BACK LIGHT NOT LIT

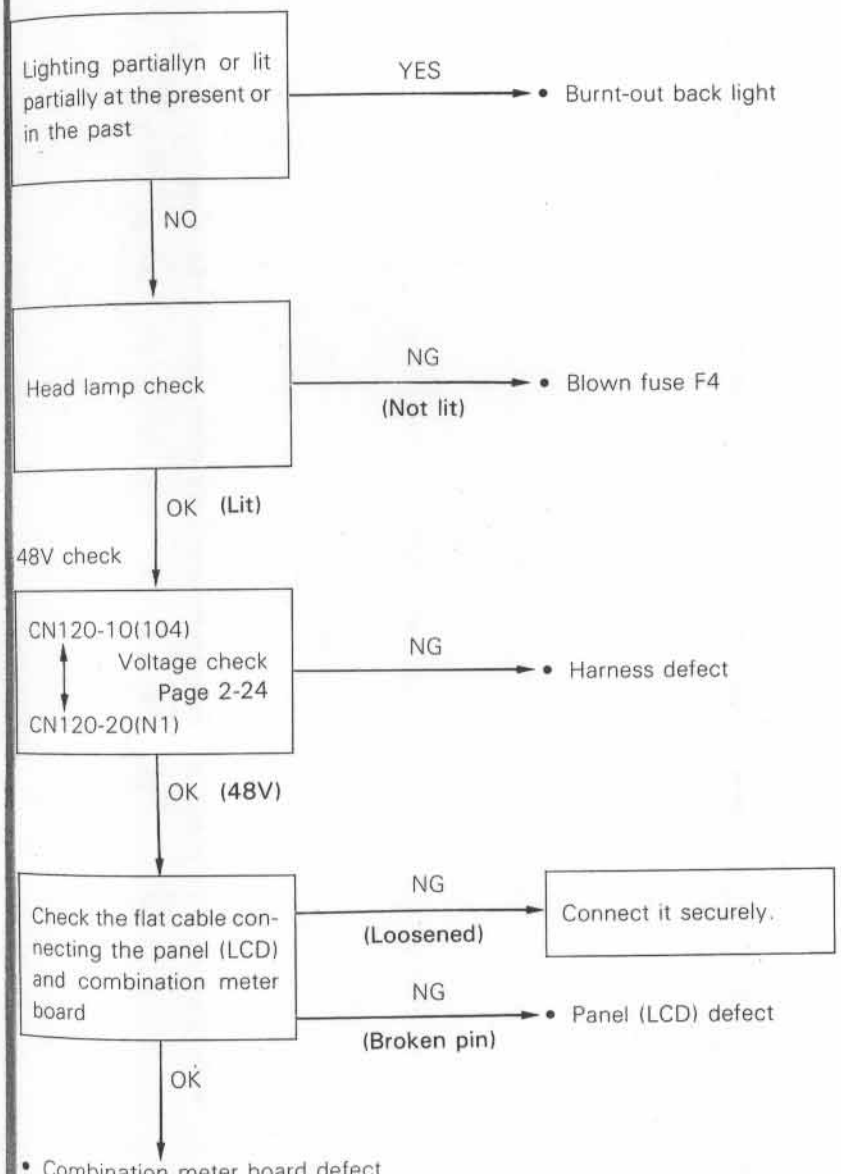

5. NO RESPONSE TO POWER CONTROL SWITCH OPERATION

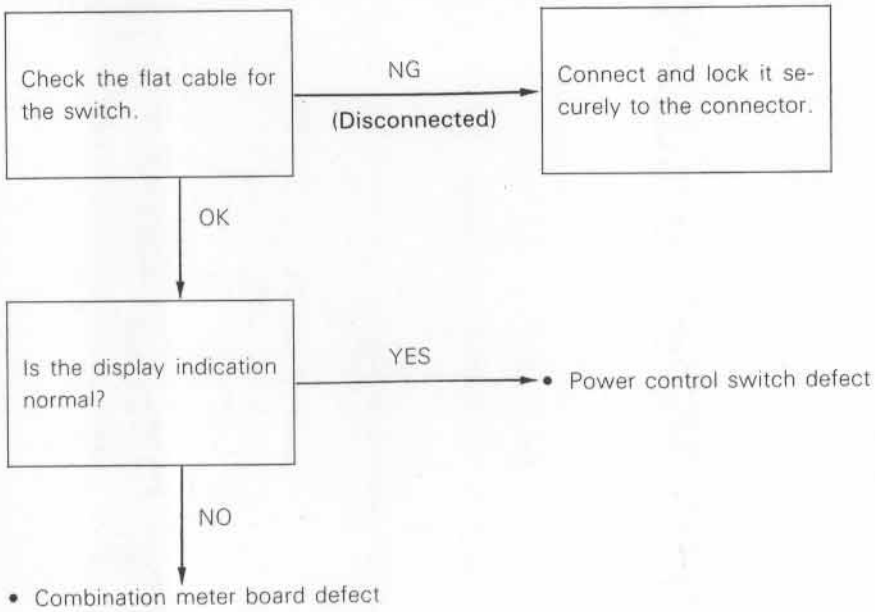

CHARGER TROUBLE (NO DIAGNOSTIC DISPLAY)

(For on-truck Charger)

(For details of this section) Refer to Repair Manual Charger (No. CE621-3).

1. NO VEHICLE OPERATION

(AC detection display even when the AC power plug is not connected.)

Move the vehicle after disconnecting CN65 from the timer unit.

OK (Movement) → •Defective timer unit

NG (No movement)

Move the vehicle after reconnecting CN65 and disconnecting CN64 from the display.

OK (Movement) → •Defective harness

NG (No movement)

•Defective display

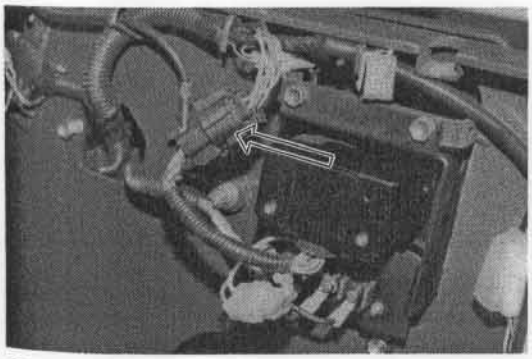

CN65 BAR35-20

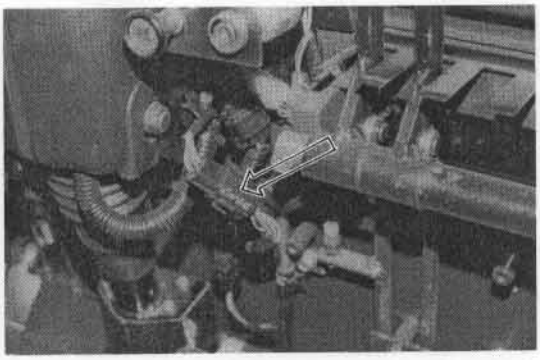

CN64 BAR35-21

2. NO AC DETECTION DISPLAY EVEN WHEN THE AC POWER PLUG IS CONNECTED.

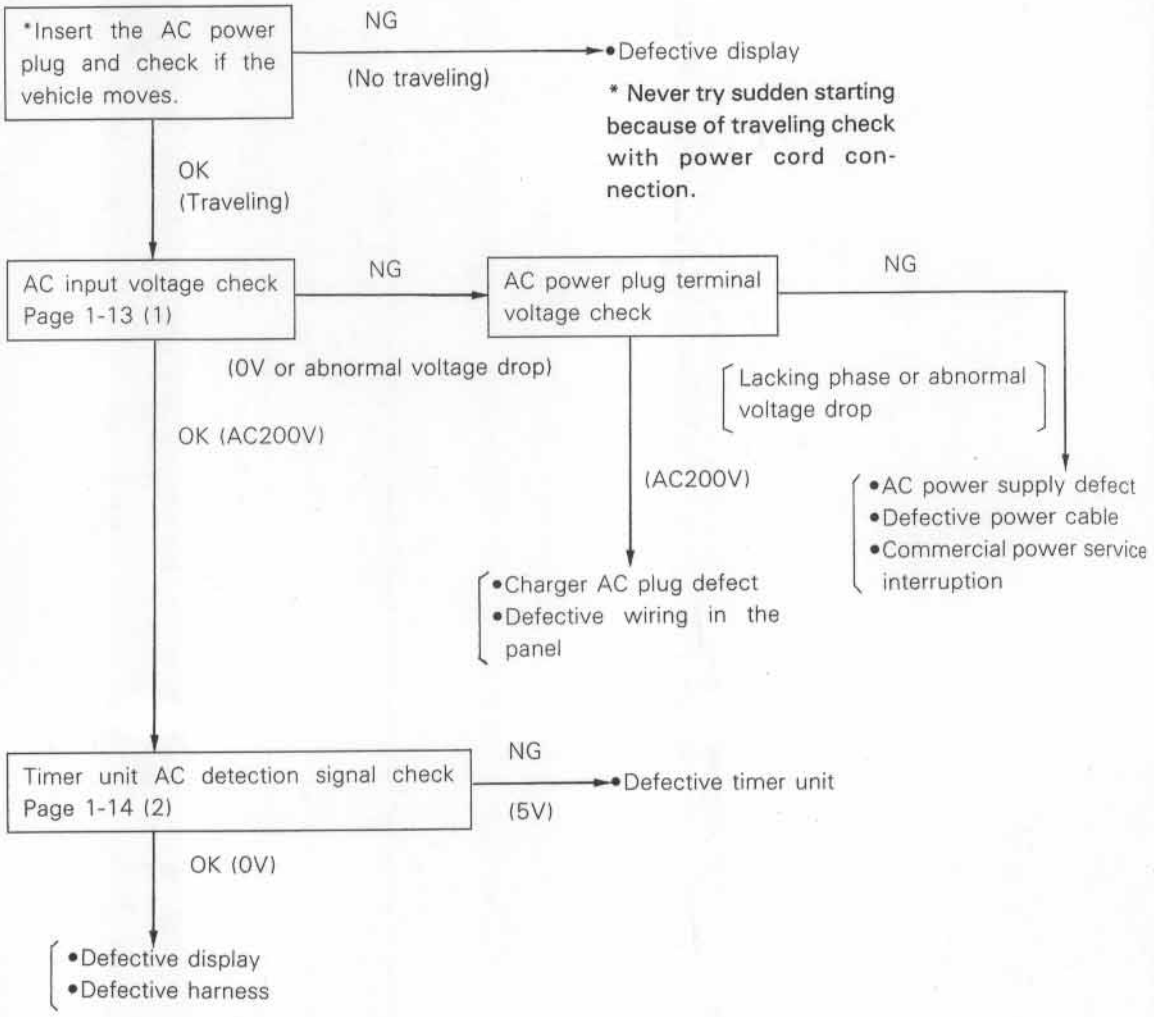

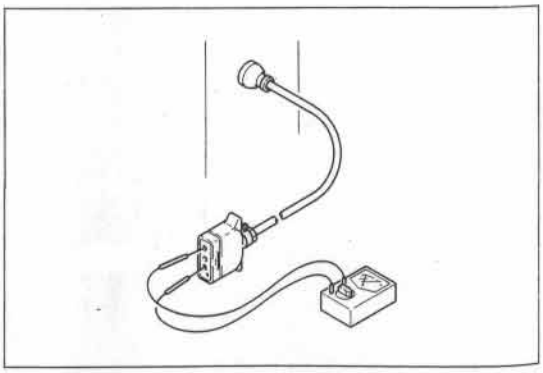

AC Power Plug Terminal Voltage BANS180

3. MAGNET SWITCH IS NOT CLOSED EVEN WHEN THE CHARGE SWITCH IS PRESSED.

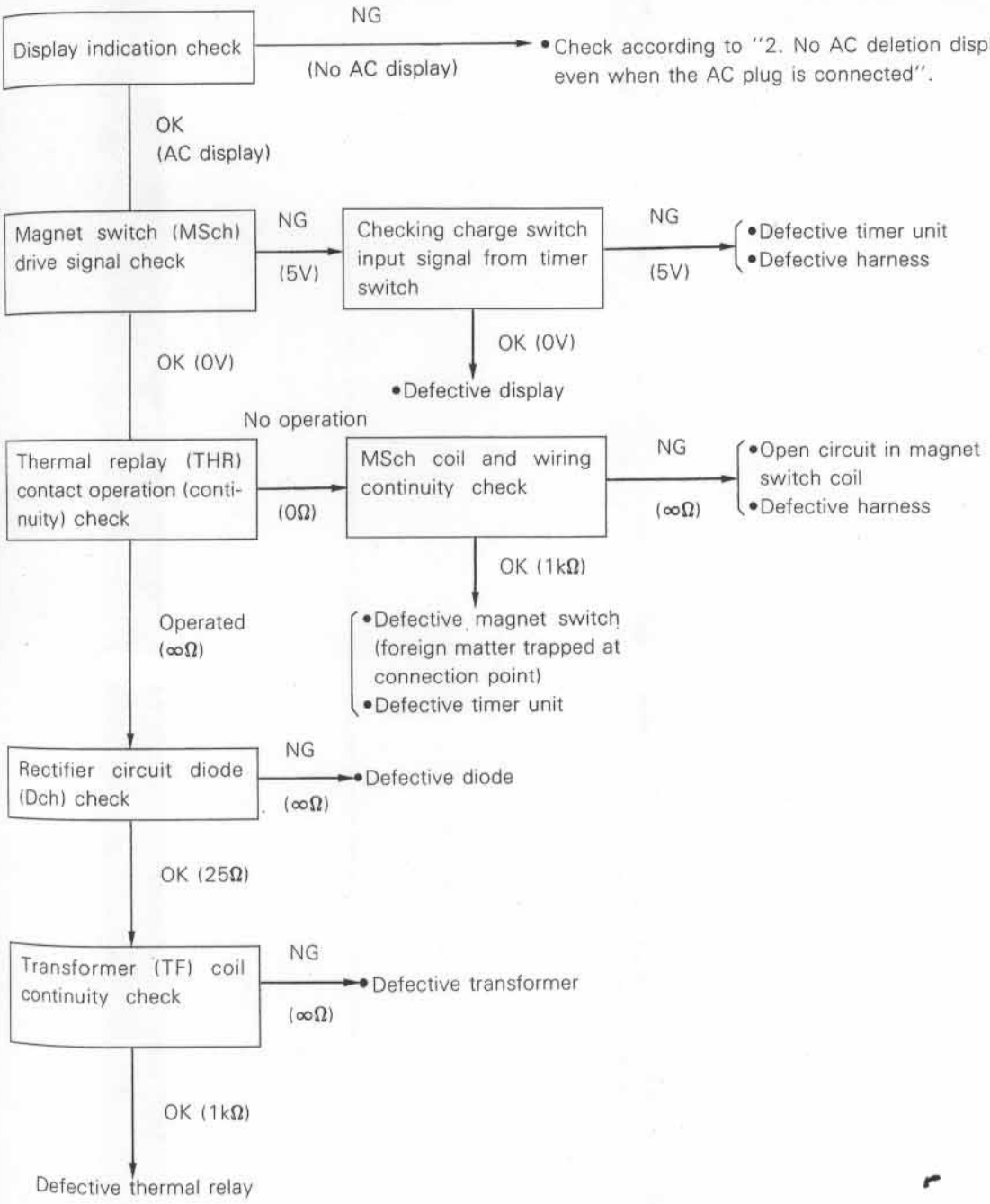

4. MAGNET SWITCH OPENING IMMEDIATELY AFTER THE START OF CHARGING

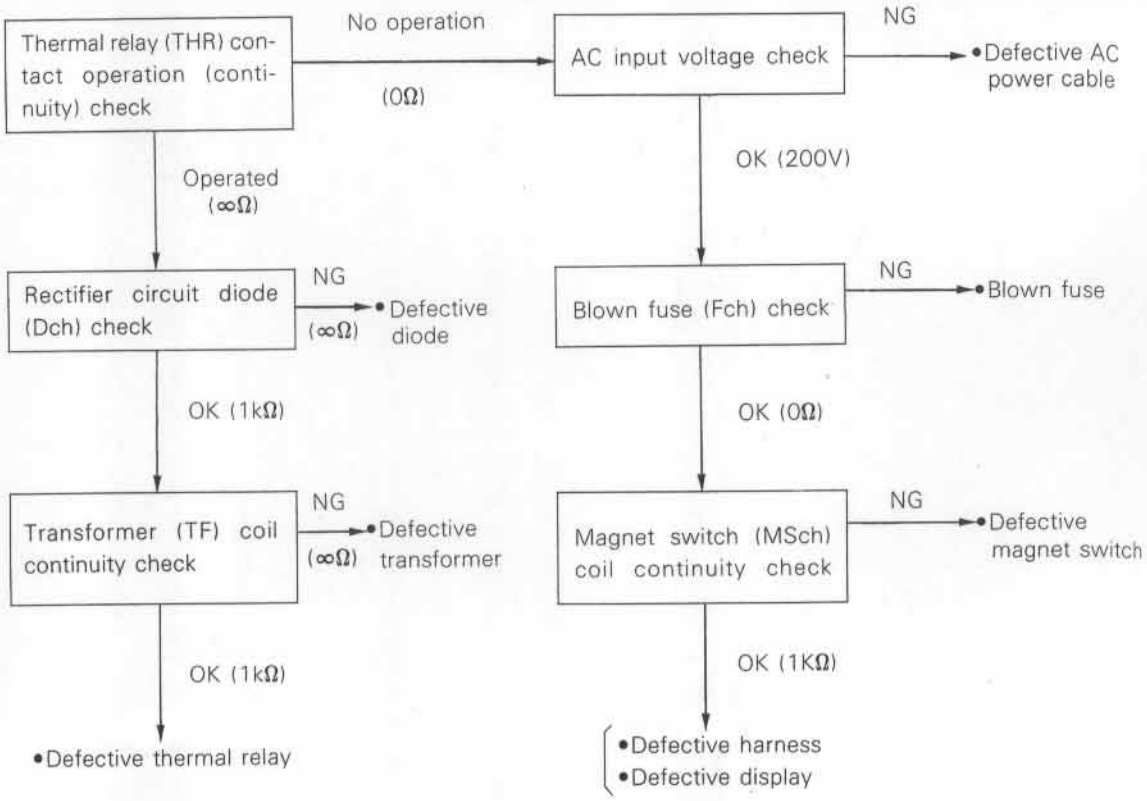

5. FAILURE IN CHARGING WITHIN THE SPECIFIED TIME PERIOD (16 HOURS)

(1) The magnet switch is not opened although UP indicator is lit.

Follow the procedure for "Error code F8: Failure in completing charging".

(2) The magnet switch is not opened and the UP indicator is not lit.

Follow the procedure for "Error code F6: Charging safety timer operation".

(3) The magnet switch is opened but the UP indicator is lit.

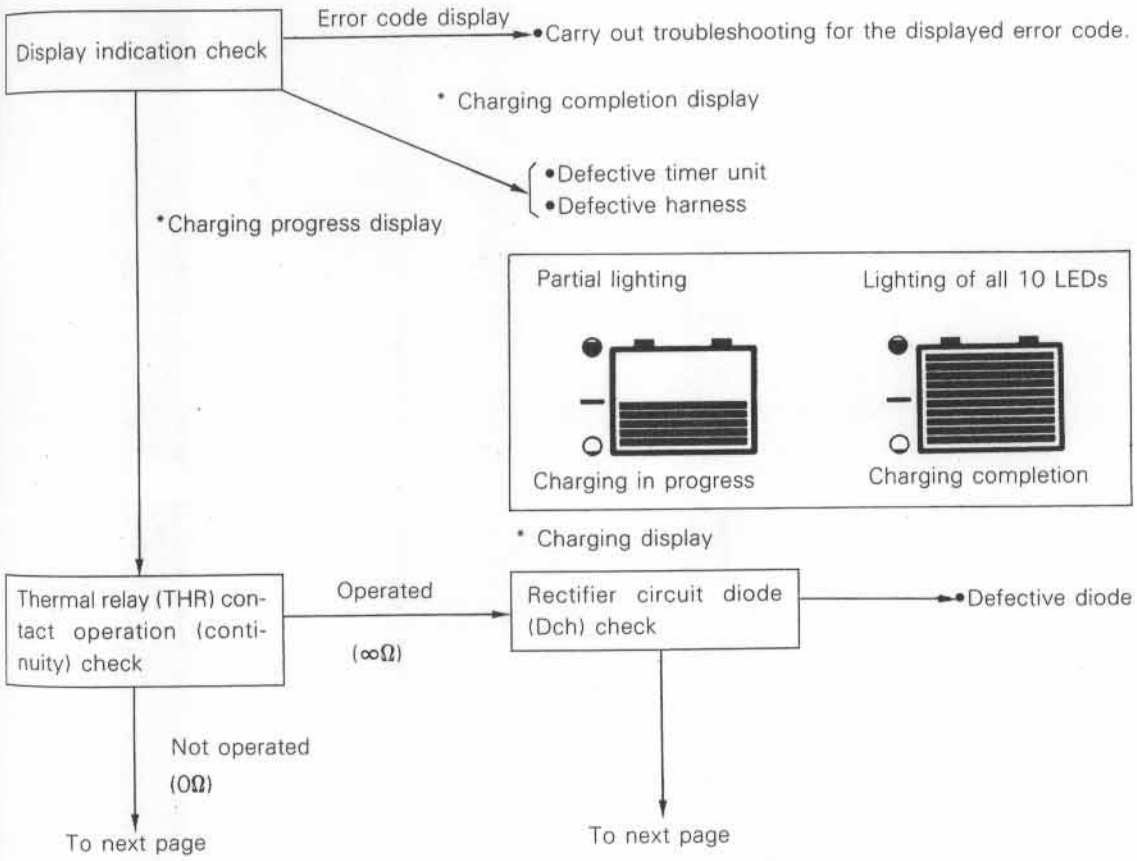

From preceding page

Magnet switch (MSch) drive signal check

OK (0V)

- Defective magnet switch
- Defective harness

NG (5V)

Operation panel indicator check

OPTIMUM or EQUAL indicator lit

- Defective display combination meter board

OPTIMUM or EQUAL indicator flashing

AC input power voltage check Page

NG (0V or abnormal voltage drop)

AC power plug terminal voltage check

NG (Lacking phase or abnormal voltage drop)

- Defective AC power supply
- Defective power cable
- Commercial power service interruption

(AC200V)

- Defective charger AC plug
- Defective wiring in the panel

OK (AC200V)

Timer unit AC detection signal check

NG (5V)

- Defective timer unit

OK (0V)

- Defective display combination meter board
- Defective harness

From preceding page

Transformer (TF) coil continuity check

NG (∞Ω)

- Defective transformer

OK (1kΩ)

- Defective thermal relay

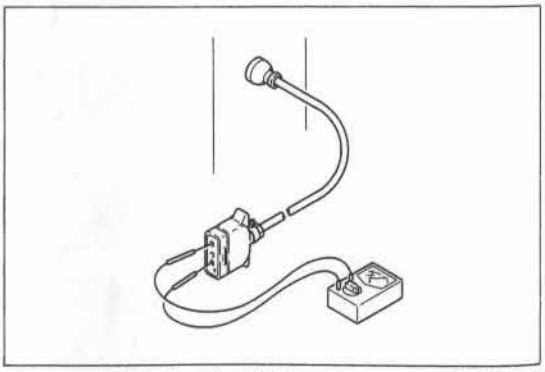

AC Power Plug Terminal Voltage BANS180

6. INSUFFICIENT CHARGING REGARDLESS OF NORMAL END OF CHARGING

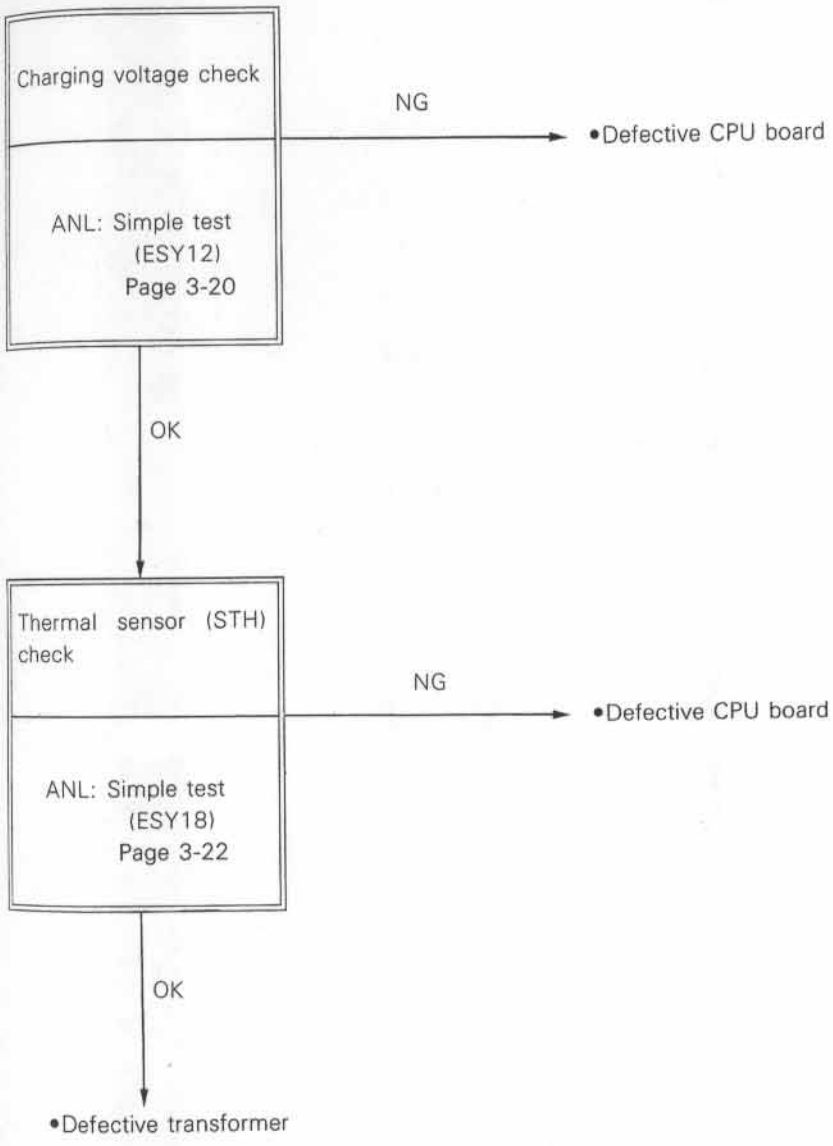

7. NO "7F" DISPLAY AT TIMER TEST

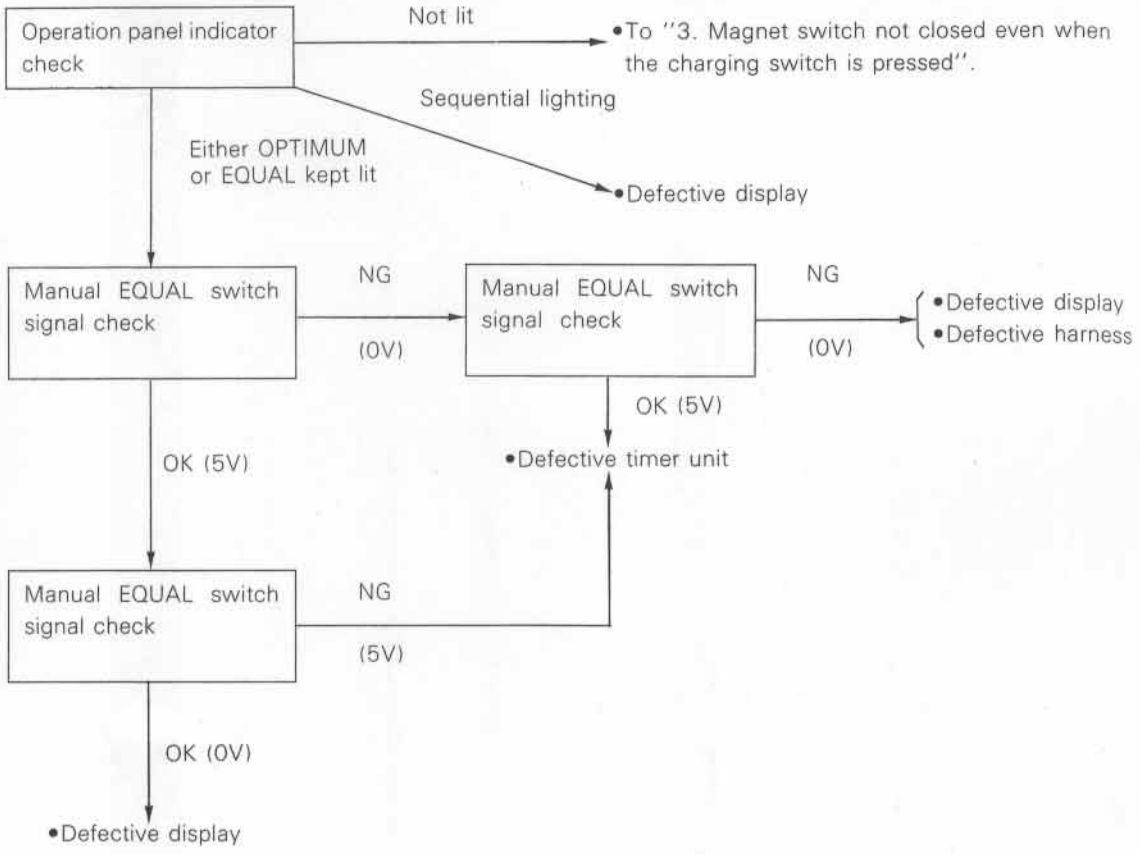

MOTOR

	page
DRIVE MOTOR ASSY	5–2
GENERAL	5–2
SPECIFICATIONS	5–2
REMOVAL	5–3
INSTALLATION	5–3
DISASSEMBLY, INSPECTION AND REASSEMBLY	5–4
PUMP MOTOR ASSY	5–9
GENERAL	5–9
SPECIFICATIONS	5–9
REMOVAL	5–10
INSTALLATION	5–11
DISASSEMBLY, INSPECTION AND REASSEMBLY	5–12
PS MOTOR ASSY	5–17
GENERAL	5–17
SPECIFICATIONS	5–17
REMOVAL	5–18
INSTALLATION	5–18
DISASSEMBLY, INSPECTION AND REASSEMBLY	5–19

DRIVE MOTOR ASSY

GENERAL

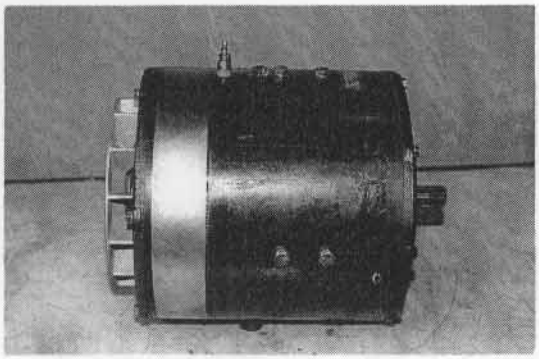

Drive Motor BAR20-2

SPECIFICATIONS

(STD)

Item		1 ton series	2 ton series	3 ton series
Type		DC series-wound open type	←	←
Nominal voltage	V	48	←	72
Rated output	kW	6.6	9.2	9.7
Insulation class		F	←	←
Brush size	mm (in)	40×34×12.5 (1.57×1.34×0.49)	40×34×16 (1.57×1.34×0.63)	←
Number of brushes		4	←	←
Weight	kg (lb) [N]	70 (154) [686]	110 (240) [1080]	120 (260) [1180]

(Dustproof)

Item		1 ton series	2 ton series	3 ton series
Type		DC series-wound closed type	←	←
Nominal voltage	V	48	←	72
Rated output	kW	6.8	7.6	9.2
Insulation class		F	←	←
Brush size	mm (in)	40×34×16 (1.57×1.34×0.63)	←	←
Number of brushes		4	←	←
Weight	kg (lb) [N]	110 (240) [1080]	←	125 (276) [1226]

REMOVAL

1. Disconnect the battery plug.
2. Remove the mast. (See the mast removal section on page 14-5.)
3. Remove the front tires. (See the tire removal section on page 9-7.)
4. Remove the drive unit. (See the drive unit removal section on page 6-5.)
5. Slightly suspend the drive unit with a hoist.
   SST 09010-10260-71

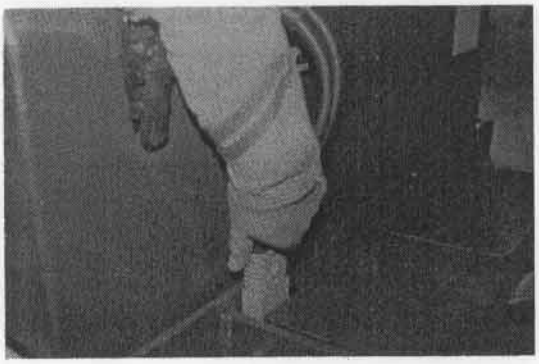

Disconnecting the Battery Plug BAT3-28

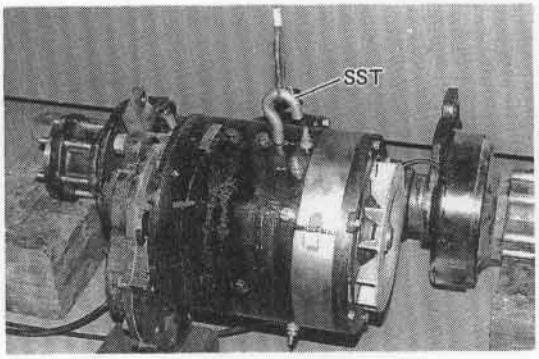

Hoisting the Drive Motor BAR20-4

6. Remove the drive motor.
   (1) Mounting bolts
   (2) Set bolts
   (3) Drive motor

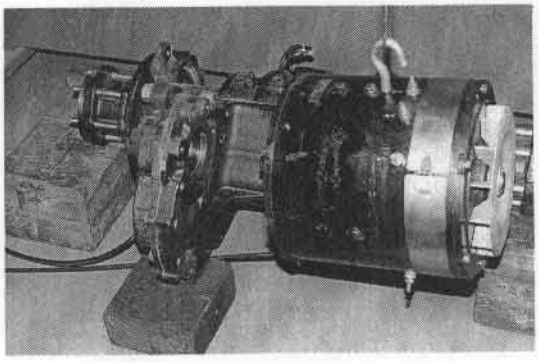

Removing the Drive Motor BAR20-3

INSTALLATION

The installation procedure is the reverse of the removal procedure.

DISASSEMBLY, INSPECTION AND REASSEMBLY

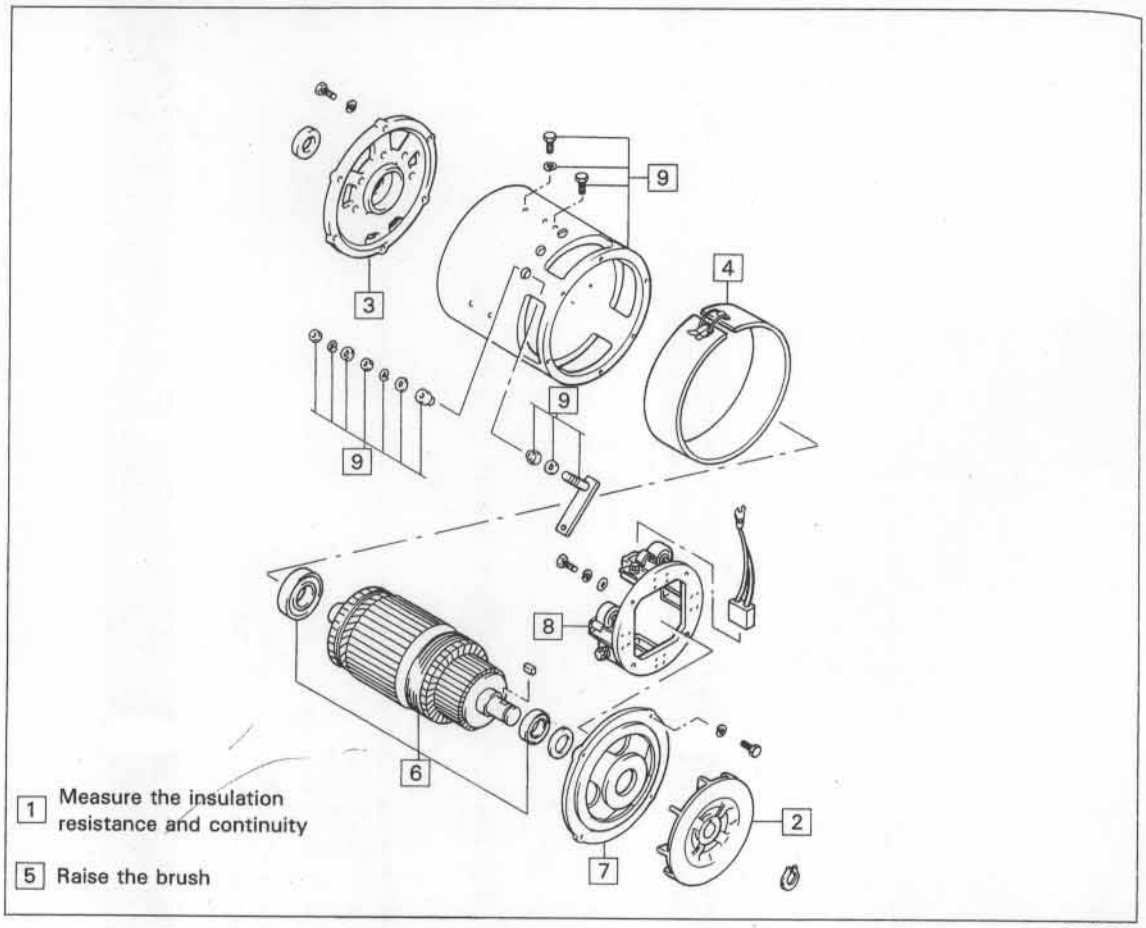

Disassembling the Drive Motor BATM68

DISASSEMBLY PROCEDURE

1. Measure the insulation resistance and continuity **[Point 1]**
2. Remove the fan. **[Point 2]**
3. Remove the front bracket. **[Point 3]**
4. Remove the brush cover.
5. Raise the brush.
6. Remove the armature. **[Point 4]**
7. Remove the rear bracket. **[Point 5]**
8. Remove the brush holder. **[Point 6]**
9. Remove the yoke ASSY. **[Point 7]**

REASSEMBLY PROCEDURE

The reassembly procedure is the reverse of the disassembly procedure.

POINT OPERATIONS

[Point 1]

Disassembly and reassembly: Measure the insulation resistance between each motor terminal and motor body.
Standard: 1 MΩ or more



Measuring the Insulation Resistance BAR31-22

Disassembly and reassembly: Measure the continuity of the field coil.
Between terminal F and E
Standard: 0 Ω

Disassembly and reassembly: Measure the continuity of the armature coil.
Between terminals A and B
Standard: 0 Ω

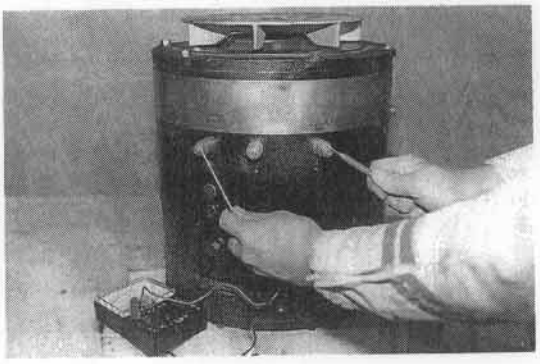

Measuring the Field Coil Continuity BAR31-23

[Point 2]

Disassembly: SST 09950-20017

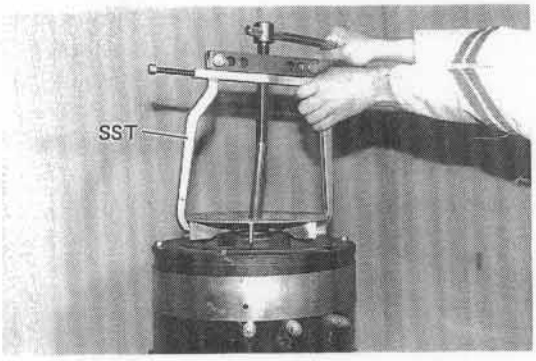

Removing the Fan BAR30-26

[Point 3]

Disassembly: Punch the match mark on the front bracket and yoke.

Reassembly: Perfectly align the match marks on the front bracket and yoke.

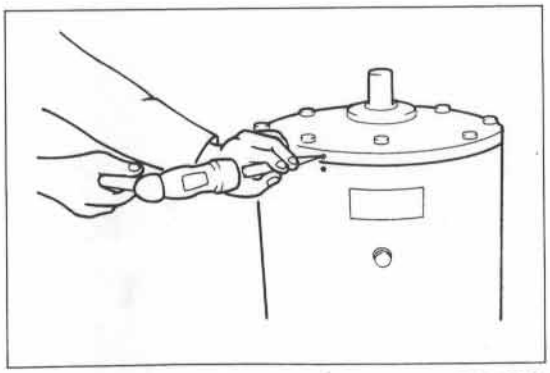

Punching the Match Mark BATS65

[Point 4]

Disassembly and reassembly: Pull out straight to prevent the armature coil and field coil from damage.

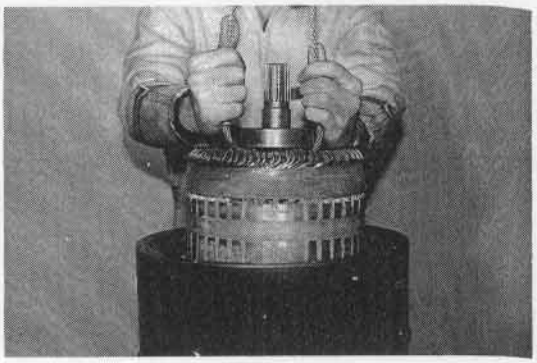

Removing the Armature BAR30-31

Inspection: Inspect the commutator for wear.

	5FB 10-18	30-5FB10-18 5FB/30-5FB20 5FB/30-5FB25 5FB/30-5FB30
Standard	105 mm (4.13 in)	150 mm (5.91 in)
Wear limit	102 mm (4.02 in)	147 mm (5.79 in)

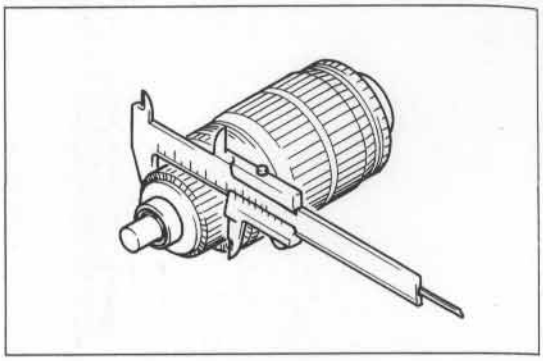

Measuring the Commutator Outside Diameter BATS74

If the commutator surface is roughened, correct it with sandpaper (#600) and clean well with compressed air.
If heavily roughened, correct with a lathe. After correction with a lathe, undercut the mica.
Standard undercut: 1.0 mm (0.039 in)
Undercut limit: 0.5 mm (0.020 in)

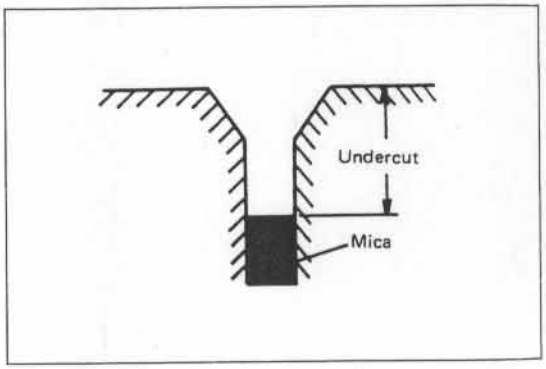

Undercut Dimension BABS11

Inspection: Armature coil insulation resistance measurement
Standard: 1MΩ or more

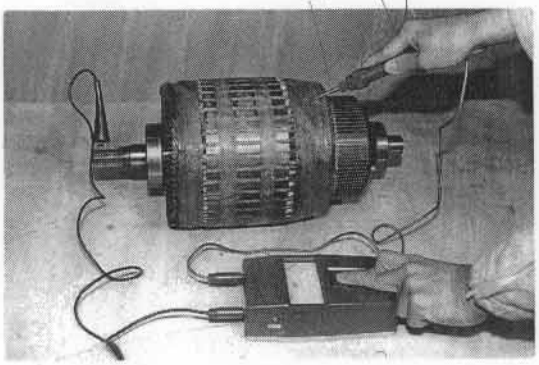

Measuring the Armature Coil Insulation Resistance BAR31-5

Inspection: Inspect the bearing at both ends of the armature, and replace them if any abnormal sound or unsmooth rotation is observed.

Disassembly: SST 09950-20017

Reassembly: (Front)
SST 09608-35014
(1.0 ton series STD)
09370-20270-71
(1.0 ton series Dustproof)
09370-20270-71
(2.0～3.0 ton series)
(Rear)
SST 09411-41800-71

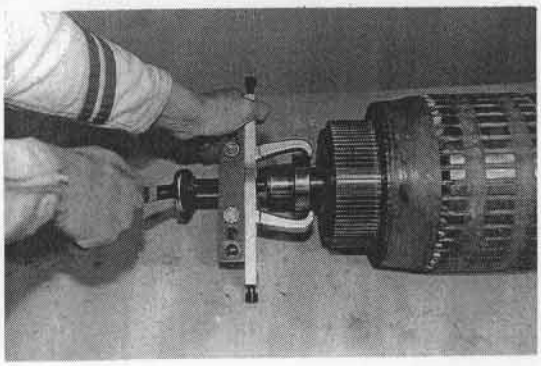

Replacing the Armature Bearing BAR31-6

[Point 5]

Disassembly: Punch the match mark on the rear bracket and yoke.

Reassembly: Perfectly align the match marks on the rear bracket and yoke.

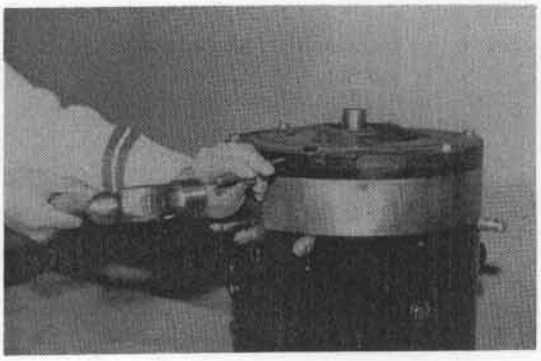

Punching the Match Mark BAR30-27

[Point 6]

Inspection: Measure the brush pressure.

Vehicle type	Standard value
1 ton series	1.22～1.48 kg (2.69～3.26 lb) [11.96～14.51 N]
2, 3 ton series	1.44～1.76 kg (3.16～3.88 lb) [14.12～17.26 N]

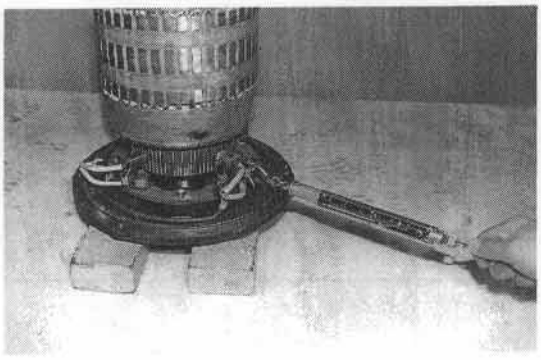

Measuring the Brush Pressure BAR31-13

Inspection: Measure the insulation resistance between the brush holder and bracket.
Standard: 1 MΩ or more

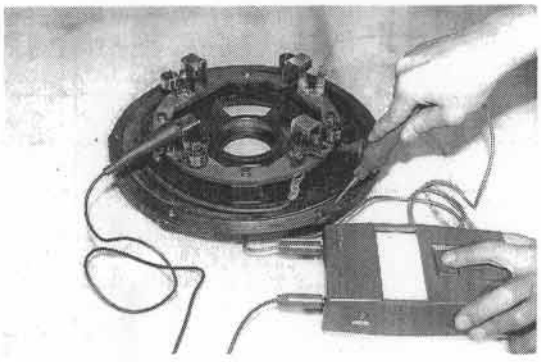

Measuring the Brush Holder Insulation Resistance BAR31-12

Inspection: Measure the brush length
Standard: 34 mm (1.34 in)
Wear limit: 15 mm (0.59 in)

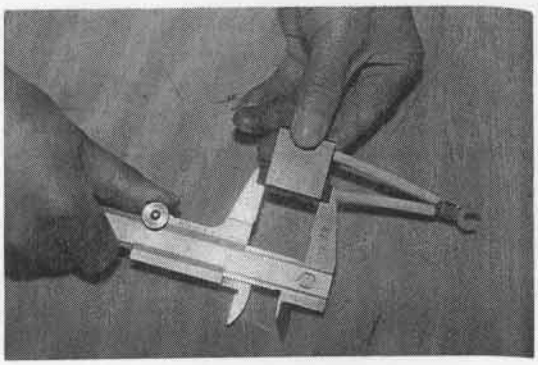

Measuring the Brush Length BAN19-14

[Point 7]

Inspection: Measure the insulation resistance of the field coil
Between terminals E and F
Standard: 1 MΩ or more

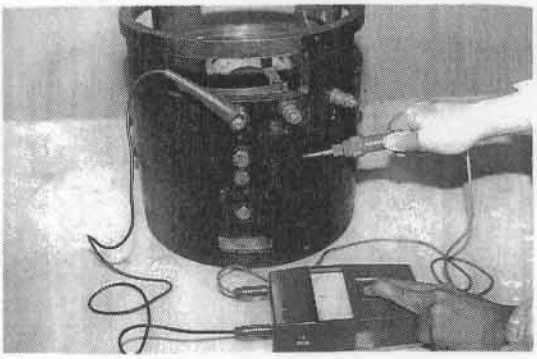

Measuring the Field Coil Insulation Resistance BAR31-7

Inspection: Measure the field coil continuity.
Between terminals E and F
Standard: 0 Ω



Measuring the Field Coil Continuity BAR31-9

PUMP MOTOR ASSY

GENERAL

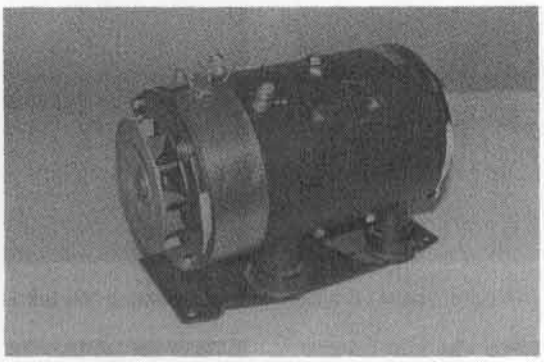

Pump Motor BAT6-29

SPECIFICATIONS

(STD)

Item		1 ton series	2 ton series	3 ton seties
Type		DC series-wound open type	←	←
Nominal voltage	V	48	←	72
Reted output	kW	8.8	10	12.6
Insulation class		F	←	←
Brush size	mm (in)	40×27×12.5 (1.57×1.06×0.49)	40×34×16 (1.57×1.34×0.63) (1990. 4~1992. 5) 40×27×12.5 (1.57×1.06×0.49) (1992. 6~)	←
Number of brushes		4	←	←
Weight	kg (lb) [N]	50 (110) [490]	←	60 (132) [588]

(Dustproof)

Item		1 ton series	2 ton series	3 ton series
Type		DC series-wound closed type	←	←
Nominal voltage	V	48	←	72
Rated output	kW	7.4	9.2	12
Insulation class		F	←	←
Brush size	mm (in)	40×27×12.5 (1.57×1.06×0.49)	40×34×16 (1.57×1.34×0.63)	←
Number of brushes		4	←	←
Weight	kg (lb) [N]	51 (112) [500]	←	61 (135) [598]

REMOVAL

1. Disconnect the battery plug.



Disconnecting the Battery Plug BAT3-28

2. Remove the side frame cover RH.
   (1) Set bolts
   (2) Side frame cover

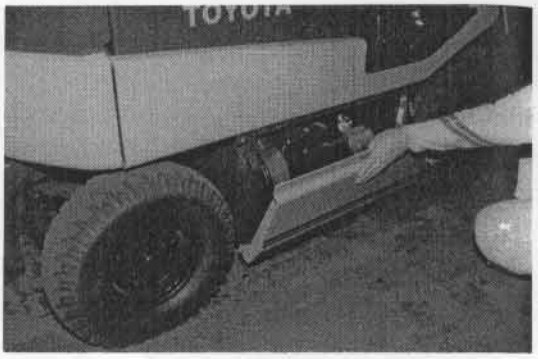

Removing the Frame Cover BAT19-21

3. Disconnect the EPS controller connector.
   (1) Connector

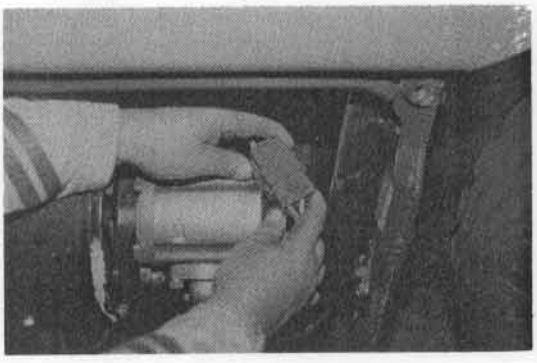

Disconnecting the Connector BAT5-15

4. Remove the oil pump.
   (1) High pressure hose
   (2) Set bolts
   (3) Oil pump

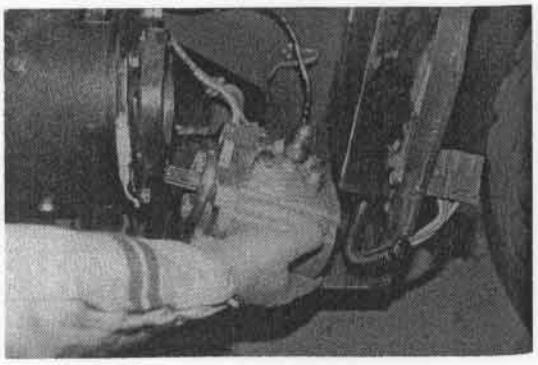

Removing the Oil Pump BAT5-17

5. Disconnect the wiring.
   (1) Boot cover
   (2) Set nut
   (3) Wiring

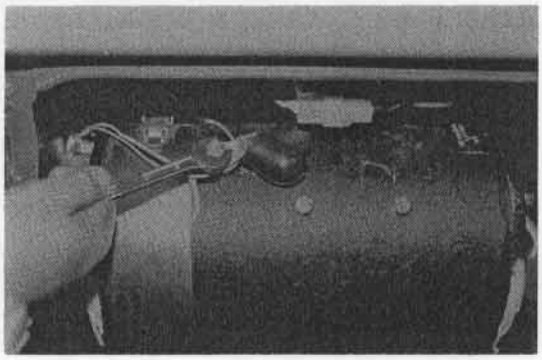

Disconnecting the Wiring BAT5-38

6. Remove the pump motor.
   (1) Mounting set bolts
   (2) Oil pump w/set plate

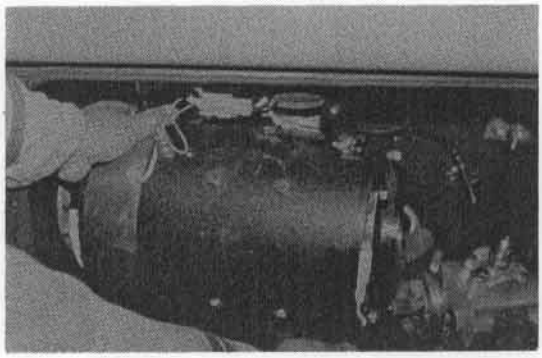

Removing the Pump Motor BAT5-39

INSTALLATION

The installation procedure is the reverse of the removal procedure.

DISASSEMBLY, INSPECTION AND REASSEMBLY

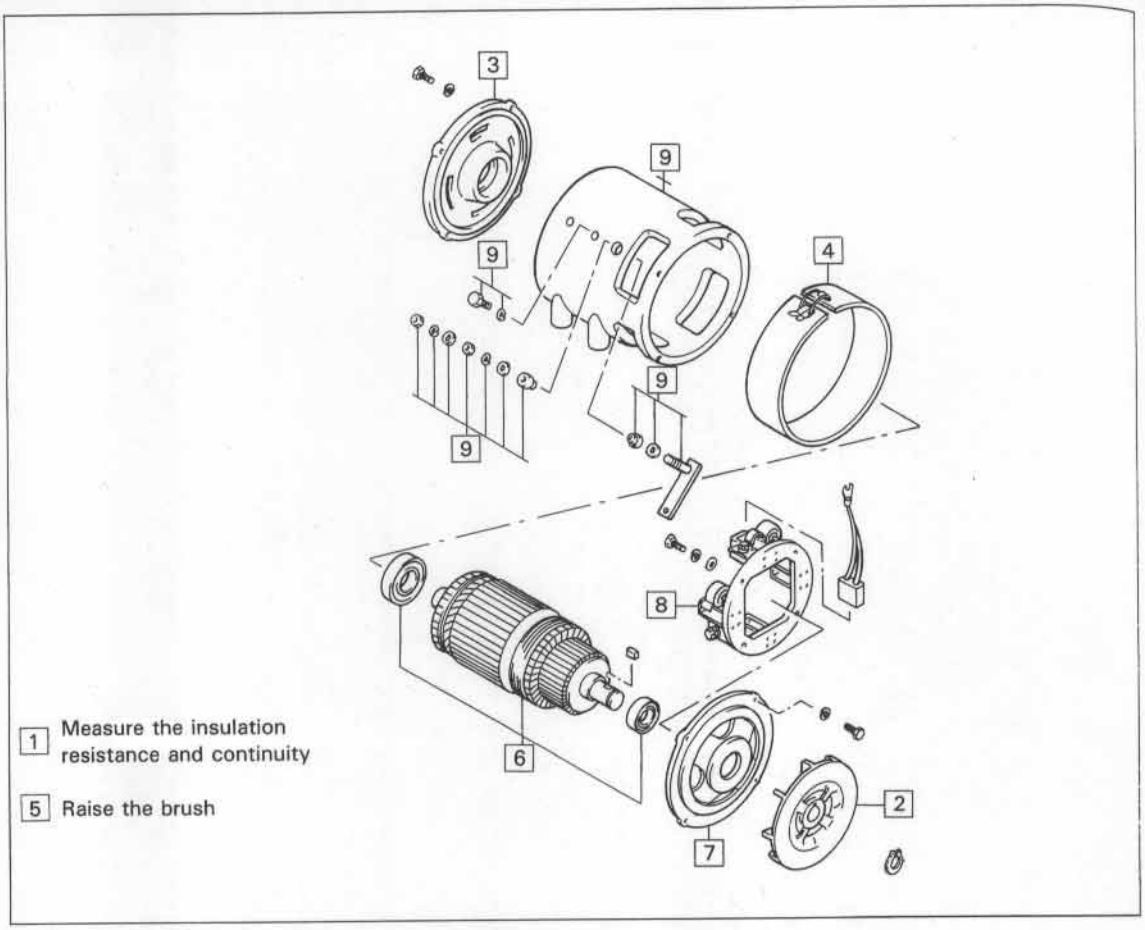

Disassembling the Pump Drive Motor

DISASSEMBLY PROCEDURE

1. Measure the insulation resistance and continuity **[Point 1]**
2. Remove the fan. **[Point 2]**
3. Remove the front bracket. **[Point 3]**
4. Remove the brush cover.
5. Raise the brush.
6. Remove the armature. **[Point 4]**
7. Remove the rear bracket. **[Point 5]**
8. Remove the brush holder. **[Point 6]**
9. Remove the yoke ASSY. **[Point 7]**

REASSEMBLY PROCEDURE

The reassembly procedure is the reverse of the disassembly procedure.

POINT OPERATIONS

[Point 1]

Disassembly and reassembly: Measure the insulation resistance between each motor terminal and motor body.
Standard: 1 MΩ or more

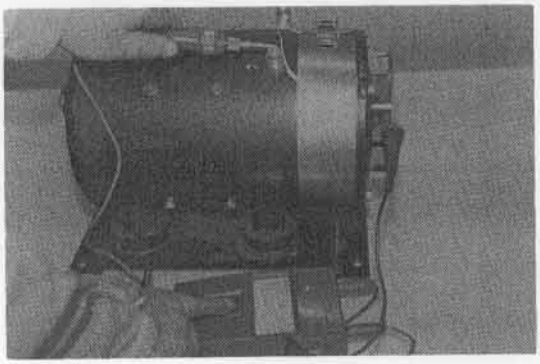

Measuring the Insulation Resistance BAT6-27

Disassembly and reassembly: Measure the field coil continuity.
Between terminals F and E
Standard: 0 Ω

Disassembly and reassembly: Measure the armature coil continuity.
Between terminals A and B
Standard: 0 Ω

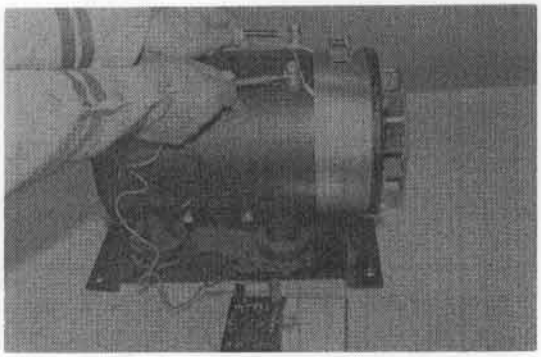

Measuring the Field Coil Continuity BAT6-28

[Point 2]

Disassembly: SST 09950-20017

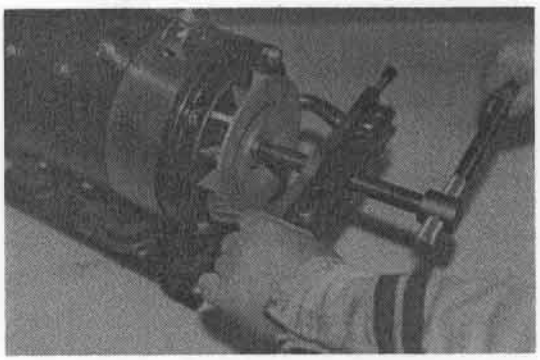

Removing the Fan BAT5-42

[Point 3]

Disassembly: Punch a match mark on the front bracket and yoke.

Reassembly: Perfectly align the match marks on the front bracket and yoke.

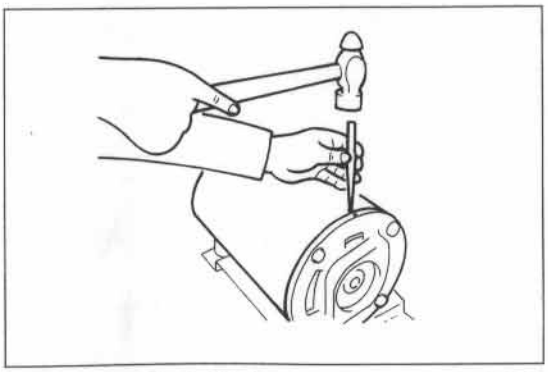

Punching the Match Mark BATS73

[Point 4]

Disassembly and reassembly: Pull out straight to prevent the armature coil and field coil from damage.



Removing the armature BAT5-25

Inspection: Inspect the commutator for war.

	1.0 ton series	2.0 series and 3.0 ton series
Standard	85 mm (3.35 in)	100 mm (3.94 in)
Wear limit	82 mm (3.23 in)	97 mm (3.82 in)

If the commutator surface is roughened, correct with sandpaper (# 600) and clean well with compressed air.

If heavily roughened, correct with a lathe.

Undercut the mica when the commutator is corrected.

Standard undercut: 1.0 mm (0.039 in)
Undercut wear limit: 0.5 mm (0.020 in)

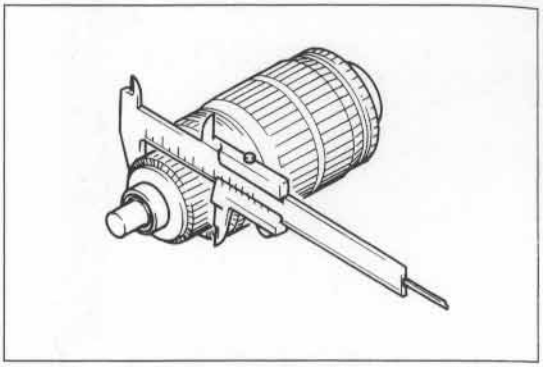

Measuring the Commutator Outside Diameter BATS74

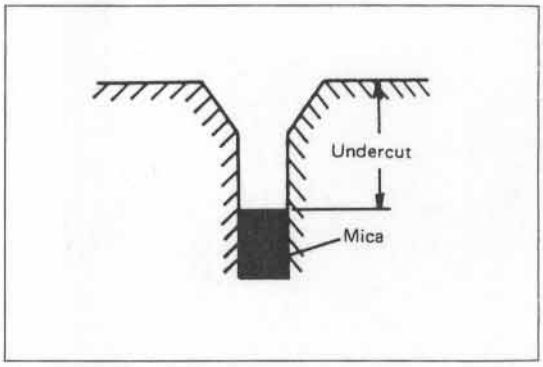

Undercut Dimension BABS11

Inspection: Measure the armature coil insulation resistance.

Standard: 1 MΩ or more

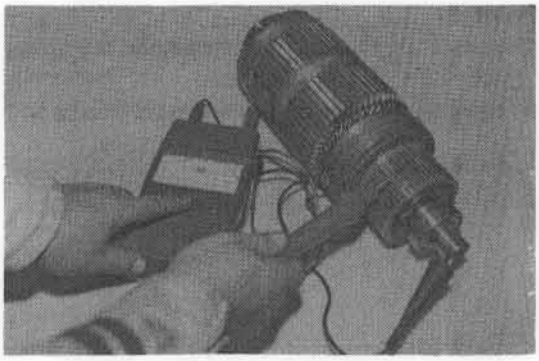

Measuring the Armature Coil Insulation Resistance BAT5-32

Inspection: Inspect the bearing at both ends of the armature, and replace them if abnormal sound or unsmooth rotation is observed.

Disassembly: SST 09950-20017

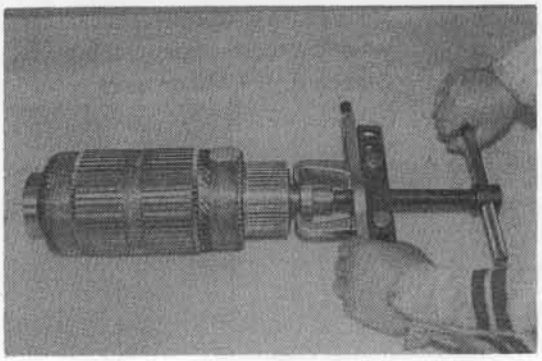

Removing the Armature Bearing BAT6-14

Reassembly: SST 09381-41950-71 (front side)
SST 09223-46011 (rear side)

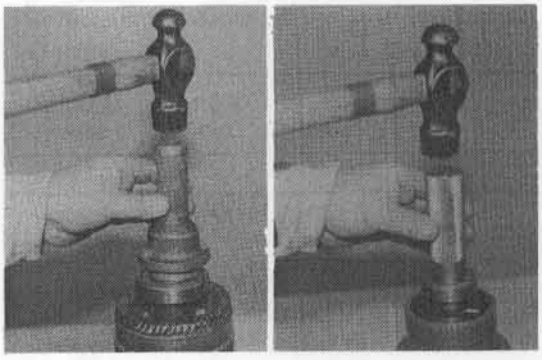

Installing the Armature Bearing BAT6-15, 17

[Point 5]

Disassembly: Punch the match mark on the rear bracket and yoke.

Reassembly: Perfectly align the match marks on the rear bracket and yoke.

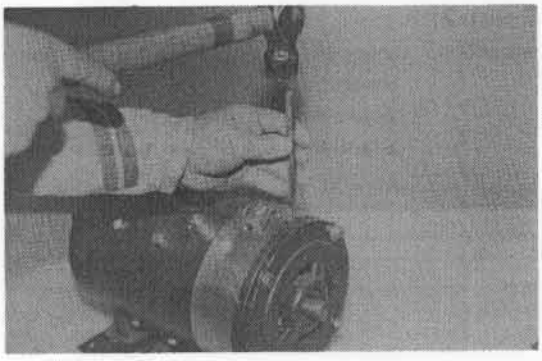

Punching the Match Mark BAT5-20

[Point 6]

Inspection: Measure the brush pressure.

Vehicle type	Standard
1 ton series	1.17 ~ 1.43 kg (2.58 ~ 3.15 lb) [11.47 ~ 14.02 N]
2-ton and 3-ton series	1.44 ~ 1.76 kg (3.16 ~ 3.88 lb) [14.12 ~ 17.26 N]



Measuring the Brush Pressure BAT6-18

Inspection: Measure the insulation resistance between the brush holder and bracket.
Standard: 1 MΩ or more

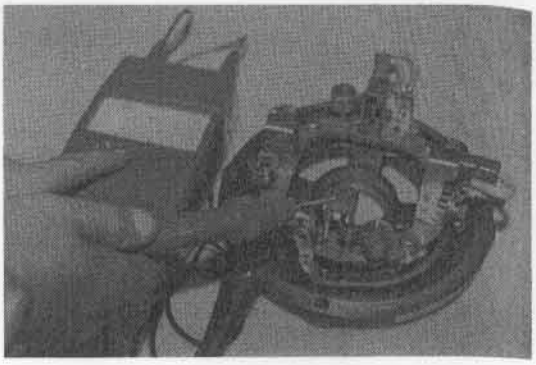

Measuring the Brush Holder Insulation Resistance BAT5-31

Inspection: Measure the brush length.

mm (in)

	1.0 ton series	2.0 ton series	3.0 ton series
Standard	27 (1.06)	34 (1.34) (1990. 4 ~ 1992. 6) 27 (1.06) (1992. 6 ~)	34 (1.34)
Wear Limit	15 (0.59)	15 (0.59)	15 (0.59)

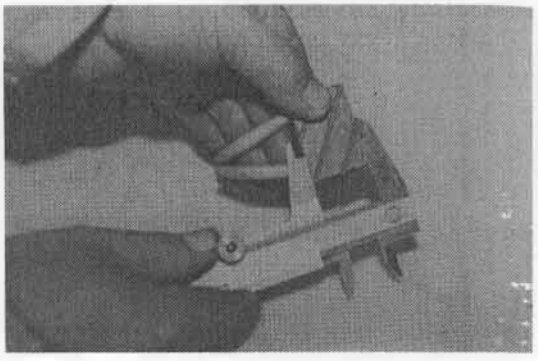

Measuring the Brush Length BAT6-10

[Point 7]

Inspection: Inspect the field coil insulation resistance.
Between terminals E and F
Standard: 1 MΩ or more

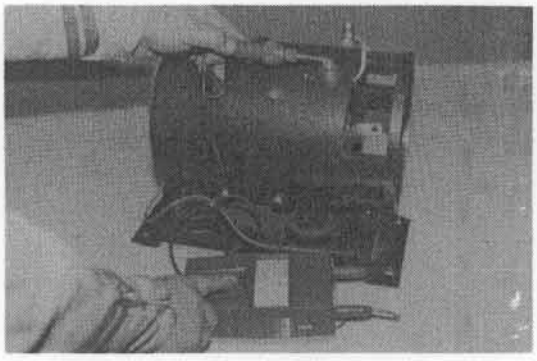

Measuring the Field Coil Insulation Resistance BAT5-34

Inspection: Measure the field coil continuity.
Between terminals E and F
Standard: 0 Ω

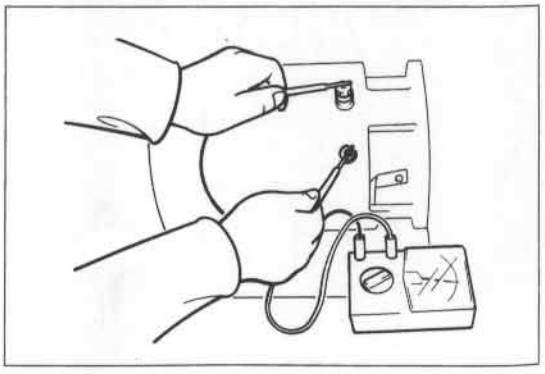

Measuring the Field Coil Continuity BATS72

PS MOTOR ASSY

GENERAL

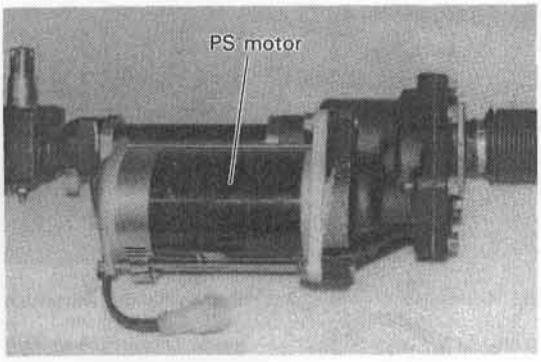

PS Motor

SPECIFICATIONS

Item		1 ton series	2 ton series	3 ton series
Type		DC Permanent magnet type	←	←
Nominal voltage	V	48	←	72
Rated output	kW	0.4	0.5	0.75
Insulation class		F	←	←
Brush size	mm (in)	15×23×6 (0.59×0.91×0.24) (1990. 4~1991. 10) 15×20×6 (0.59×0.79×0.24) (1991. 11~)	30×25×8 (1.18×0.98×0.31) (1990. 4~1991. 10) 30×22×8 (1.18×0.87×0.31) (1991. 11~)	←
Number of brushes		2	←	←
Weight	kg (lb) [N]	3.8 (8.4) [37.3]	5.0 (11.0) [49]	6.0 (13.2) [58.8]

REMOVAL

1. Disconnect the battery plug.
2. Remove the battery ASSY.
   SST 80201-10250-71
3. Remove the toe board.
   (1) Accelerator connector
   (2) Toe board

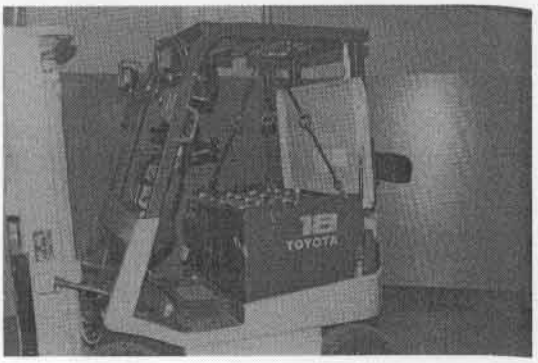

Removing the Battery ASSY BAT16-27

4. Remove the cable cover.
   (1) Set bolts
   (2) Cable cover
5. Disconnect the PS motor connector.
6. Remove the PS actuator ASSY.
   (1) Remove by referring to the PS actuator removal section (page 10 - 22).

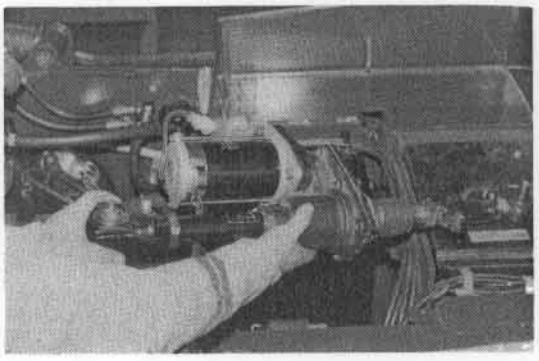

Removing the PS Actuator BAT10-39

7. Punch the match mark on the actuator gear box and PS motor end frame.

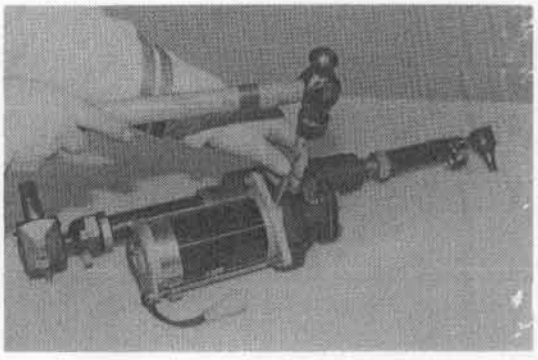

Punching the Match Mark BAT10-14

8. Remove the PS motor ASSY.
   (1) Set bolts
   (2) PS motor ASSY

INSTALLATION

The installation procedure is the reverse of the removal procedure.

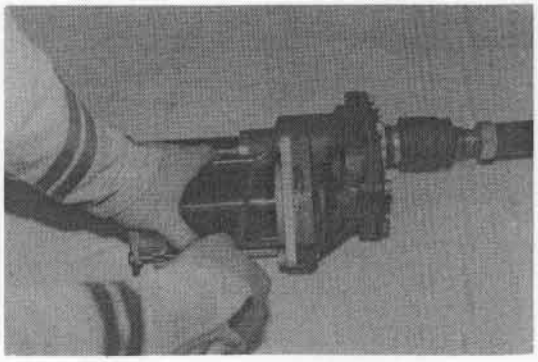

Removing the PS Motor ASSY BAT10-15

DISASSEMBLY, INSPECTION AND REASSEMBLY

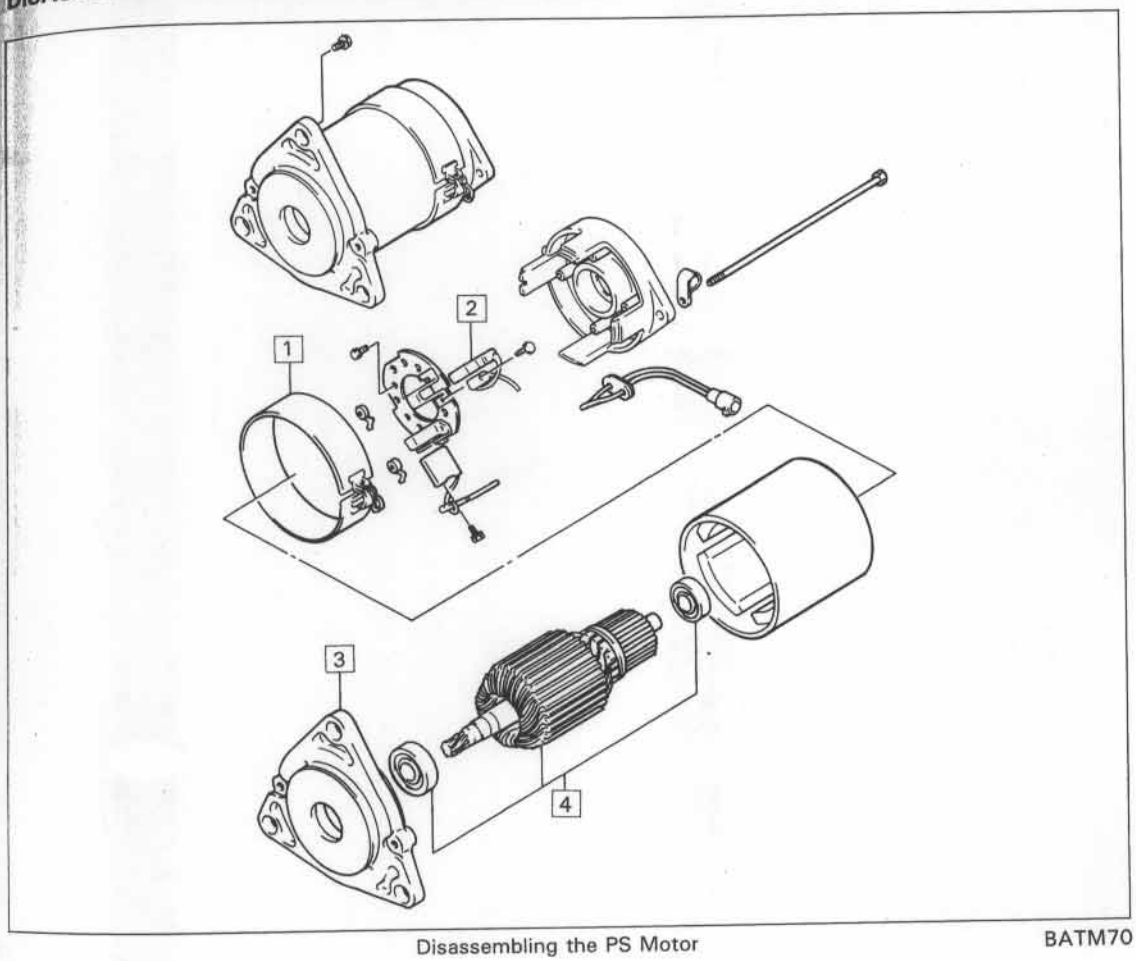

Disassembling the PS Motor BATM70

DISASSEMBLY PROCEDURE

1. Remove the brush cover.
2. Raise the brush **[Point 1]**
3. Remove the end frame and commutator frame. **[Point 2]**
4. Remove the armature. **[Point 3]**

REASSEMBLY PROCEDURE

The reassembly procedure is the reverse of the assembly procedure.

POINT OPERATIONS

[Point 1]

Disassembly: Hook a wire on the brush spring and raise the brush spring from the commutator.

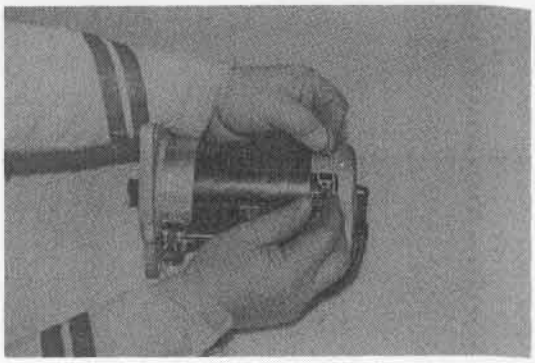

Raising the Brush BAT10-19

Inspection: Measure the brush pressure.

	1.0 ton series	2.0 ton series 3.0 ton series
Standard	0.60 kg (1.32 lb) [5.88 N]	0.62 kg (1.37 lb) [6.08 N]
Limit	0.20 kg (0.44 lb) [1.96 N]	0.30 kg (0.66 lb) [2.94 N]

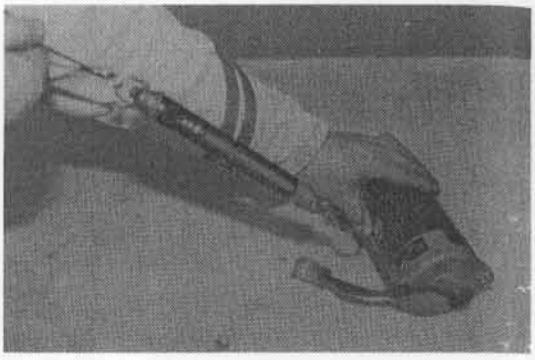

Measuring the Brush Pressure BAT10-18

Inspection: Measure the brush length.

mm (in)

	1.0 ton series	2.0 ton series 3.0 ton series
Standard	23 (0.91) (1990. 4 ~ 1991. 10) 20 (0.79) (1991. 11 ~)	25 (0.98) (1990. 4 ~ 1991. 10) 22 (0.87) (1991. 11 ~)
Wear Limit	14 (0.55) (1990. 4 ~ 1991. 10) 11 (0.43) (1991. 11 ~)	14 (0.55) (1990. 4 ~ 1991. 10) 11 (0.43) (1991. 11 ~)

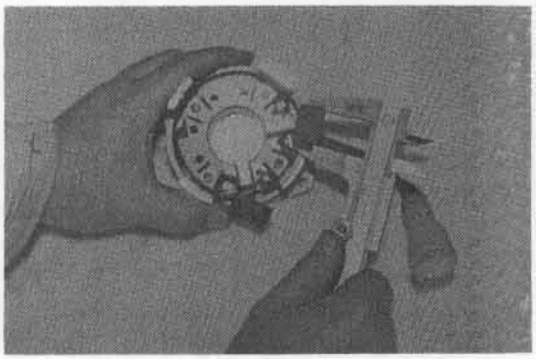

Measuring the Brush Length BAT10-28

Inspection: Measure the insulation resistance between the brush holder and commutator frame.

Standard: 1 MΩ or more

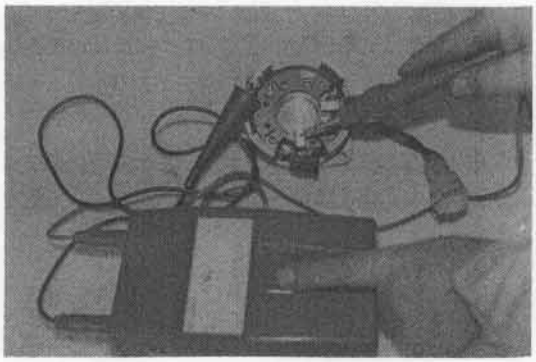

Measuring the Brush Holder Insulation Resistance BAT10-27

[Point 2]

Disassembly: Punch match marks on the end frame, commutator frame and Yoke ASSY.

Reassembly: Perfectly align the match marks on each frame and yoke.

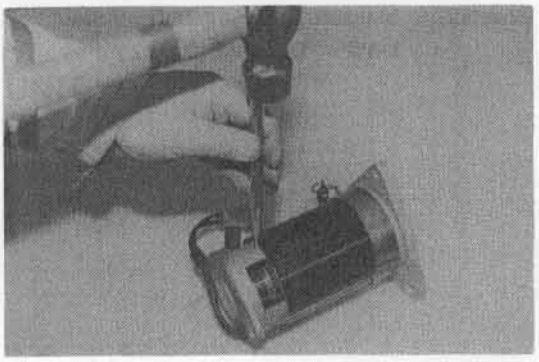

Punching the Match Mark BAT10-20

[Point 3]

Inspection: Inspect the bearings at both ends of the armature, and replace them if any abnormal sound or unsmooth rotation is found.

Disassembly: SST 09950-20017

Reassembly: SST 09620-30010

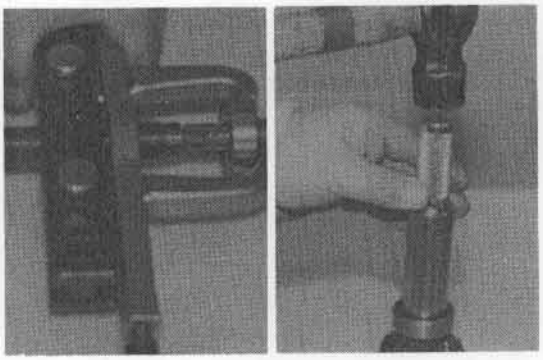

Replacing the Bearing BAT10-29, 31

Inspection: Inspect the commutator for wear.

	1.0 ton series	2.0 ton series 3.0 ton series
Standard	33.0 mm (1.30 in)	40.0 mm (1.57 in)
Wear Limit	31.5 mm (1.24 in)	35.0 mm (1.38 in)

If the commutator surface is roughened, repair it with sandpaper (#600) and clean well with compressed air.

If heavily roughened, correct with a lathe.

Undercut the mica when the commutator is corrected.

Standard undercut: 0.8 mm (0.031 in)

Undercut limit: 0.3 mm (0.012 in)

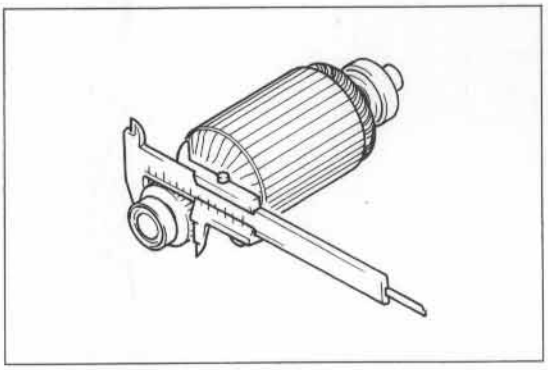

Inspecting the Commutator BATS71

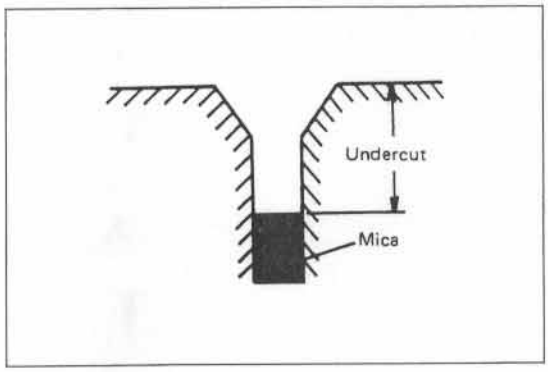

Undercut Dimension BABS11

Inspection: Measure the commutator runout.
Limit: 0.3 mm (0.012 in)

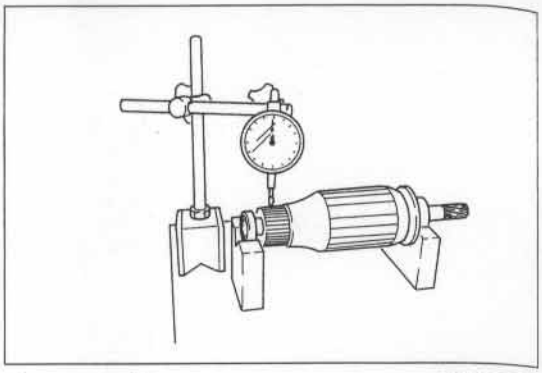

Commutator Runout BANS388

Inspection: Measure the armature coil insulation resistance.
Standard: 1MΩ or more

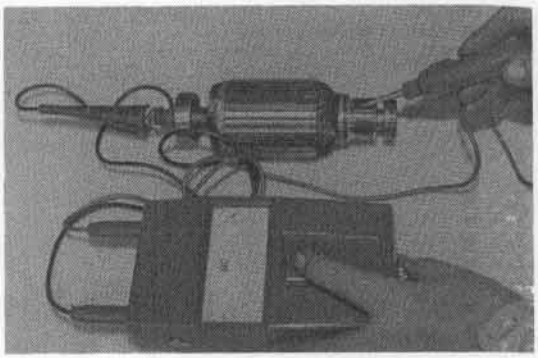

Measuring the Armature Coil Insulation Resistance BAT10-26

DRIVE UNIT

	Page
GENERAL	6-2
SPECIFICATIONS	6-3
COMPONENTS	6-3
DRIVE UNIT	6-5

6

GENERAL

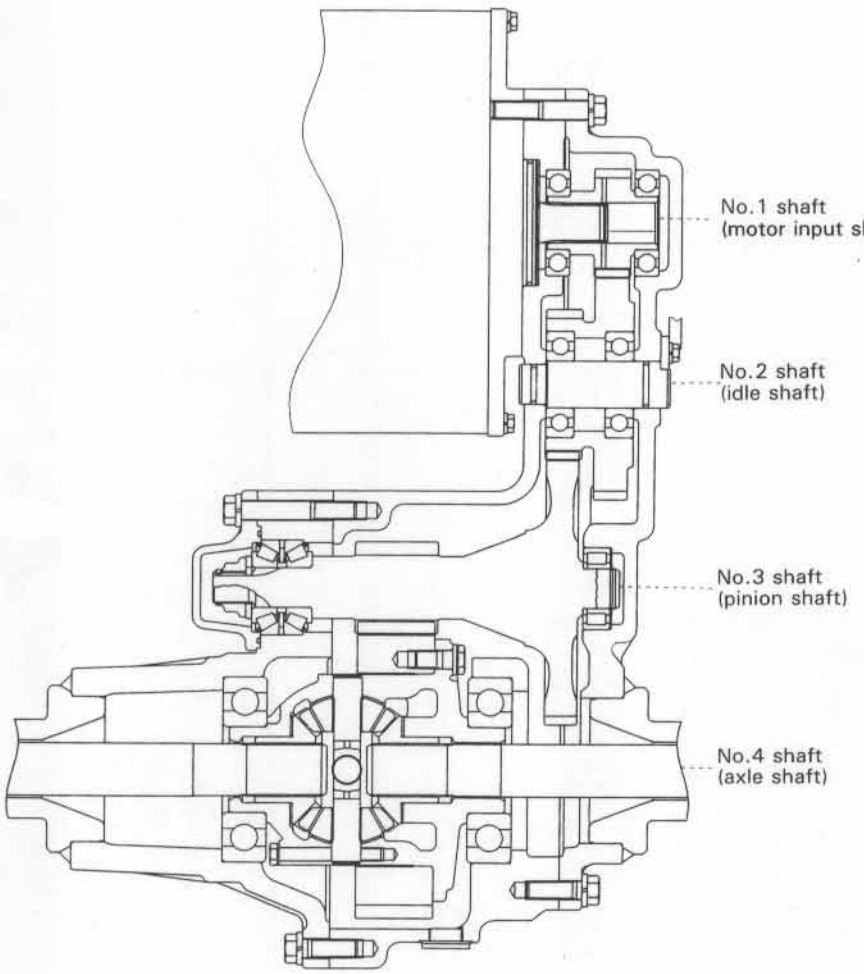

Drive Unit Sectional View BARC 1

SPECIFICATIONS

Item	1 ton series (dustproof)	2 ton series (dustproof)	3 ton series (dustproof)
Overall reduction ratio	18.117 (20.766)	15.929 (20.766)	20.766
Number of drive gear teeth	21 (19)	23 (19)	19
Number of reduction gear teeth	Large 54 (56) Small 33	⇦	Large 56 (56) Small 33
Number of output gear teeth	Large 62 Small 12	⇦	⇦
Number of ring gear teeth	45	⇦	⇦
Differential oil volume	5.0ℓ (1.32 USgal)	5.5ℓ 1.45 USgal	⇦

COMPONENTS

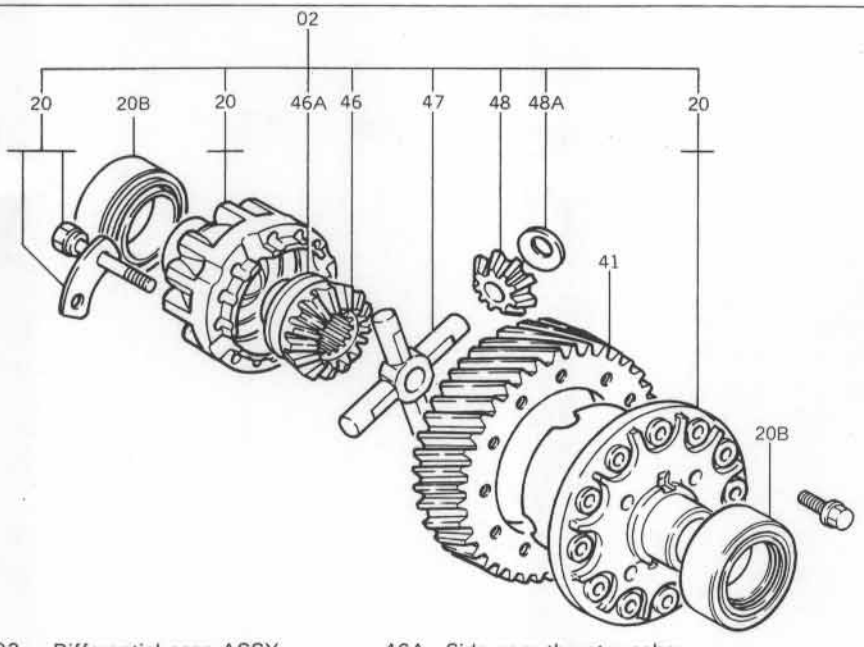

02	Differential case ASSY	46A	Side gear thrust washer
20	Differential case SUB-ASSY	47	Spider
20B	Differential case bearing	48	Pinion
41	Ring gear	48A	Pinion thrust washer
46	Side gear		

Differential Oil Volume BARM 37

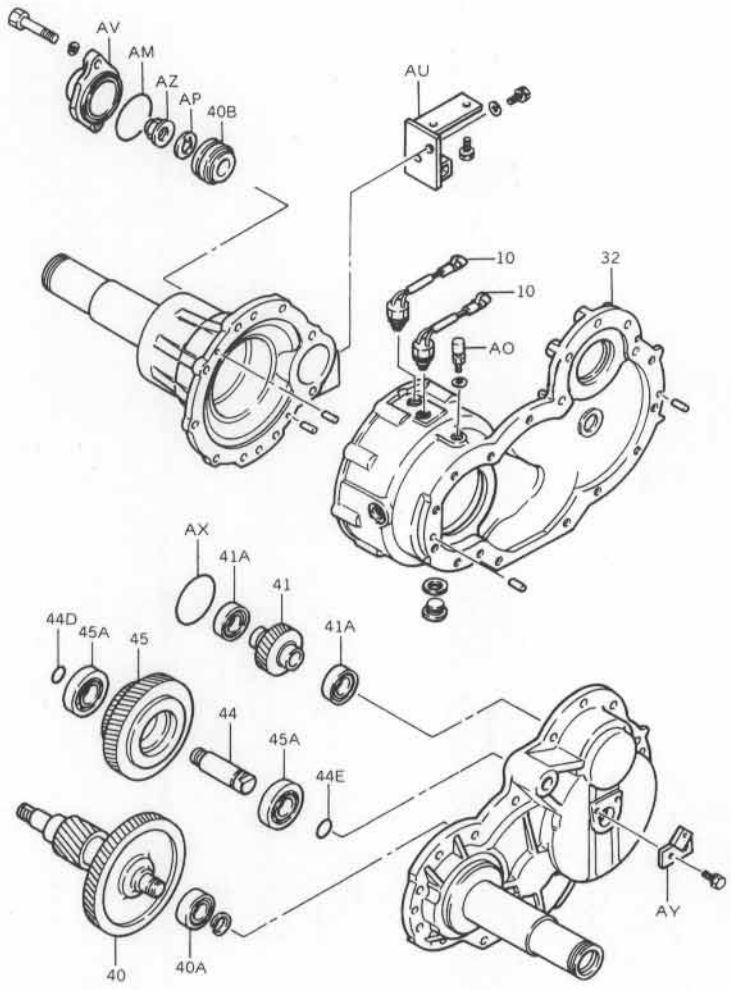

10	Pick up sensor ASSY	45	Reduction gear, No.1
32	Gear case	45A	Bearing
40	Output gear	AM	O ring
40A	Bearing	AO	Breather plug
40B	Bearing	AP	Washer
41	Drive gear	AU	Motor mounting bracket
41A	Bearing	AV	Drive unit cap
44	Reduction gear shaft, No.1	AX	O ring
44D	O ring	AY	Key plate
44E	O ring	AZ	Lock nut

Gear Case & Gear Components BARM 38

DRIVE UNIT

REMOVAL

1. Remove the front axle. (See page 7—14 Front Axle Removal.)

DISASSEMBLY

1. Remove the drive unit cap.
   (1) Set bolts
   (2) Drive unit cap
   (3) O-ring

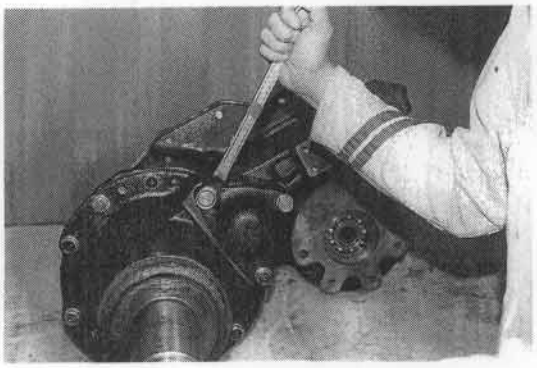

Removing the Cap BAR12-25

2. Remove the drive gear lock nut.
   (1) Install the SST to the input gear spline.
   SST 09330-13200-71
   (2) Lock nut
   (3) Claw washer
   (4) Bearing inner race

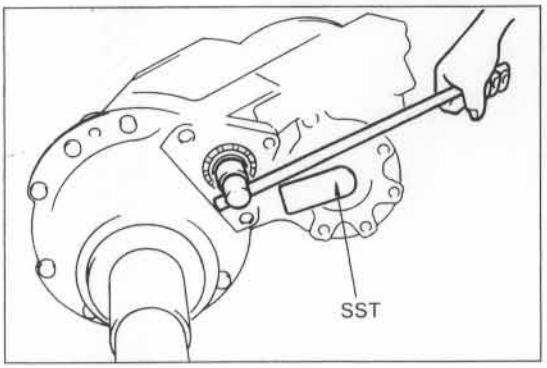

Removing the Gear Lock Nut BARS174

3. Remove the front axle housing RH.
   (1) Set bolts
   (2) Front axle housing RH

   Caution:
   Use the service bolt for removal.

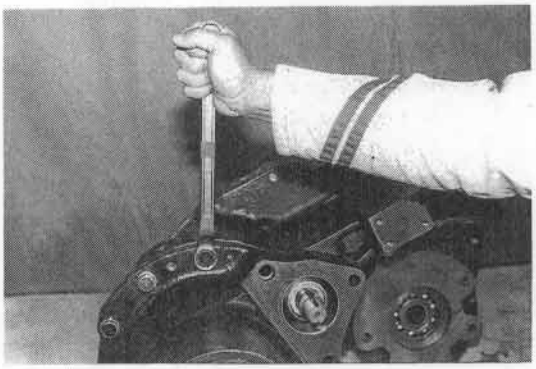

Removing the Housing RH BAR12-20

4. Remove the differential ASSY.
   (1) Differential ASSY

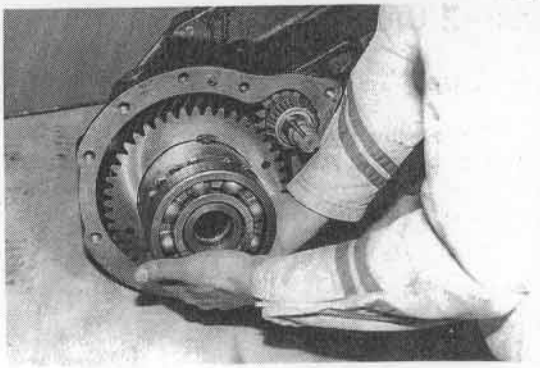

Removing the Differential ASSY BAR12-16

5. Remove the reduction gear key plate.
   (1) Set bolt
   (2) Key plate

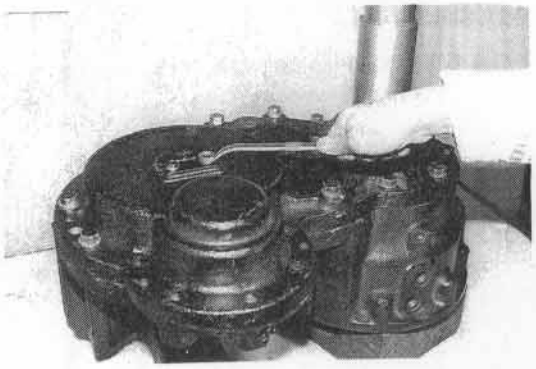

Removing the Key Plate BAR12-14

6. Remove the front axle housing LH.
   (1) Set bolts
   (2) Front axle housing LH

   Caution:
   Use the service bolt for removal.

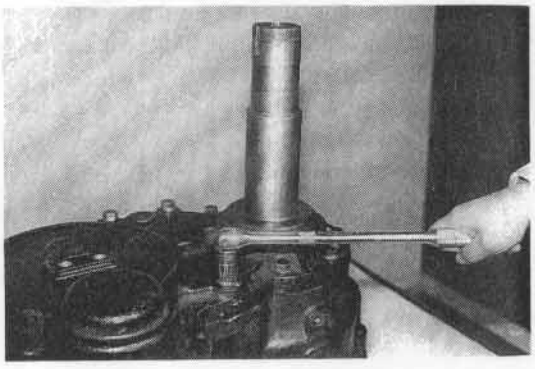

Removing the Housing LH BAR12-13

7. Remove each gear.
   (1) Drive gear ASSY
   (2) Reduction gear ASSY
   (3) Output gear ASSY

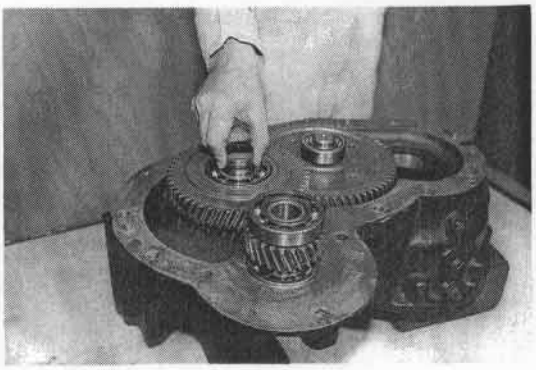

Removing Each Gear BAR12-9

8. Remove the drive gear bearing (when installed on the case side).
   (1) Bearing
   SST 09308-10010

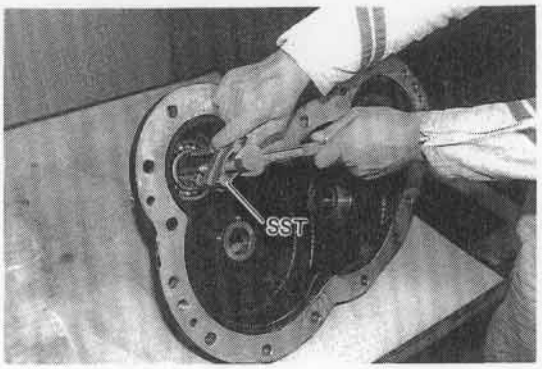

Removing the Bearing BAR10-31

9. Remove the tapered roller bearing inner race.
   (1) Inner race
   SST 09950-20017

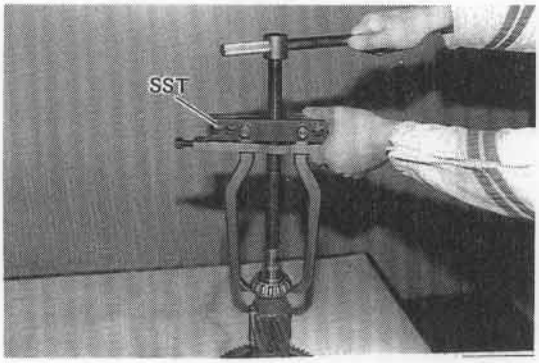

Removing the Inner Race BAR10-33

10. Remove the roller bearing
    (1) Circlip
    (2) Roller bearing

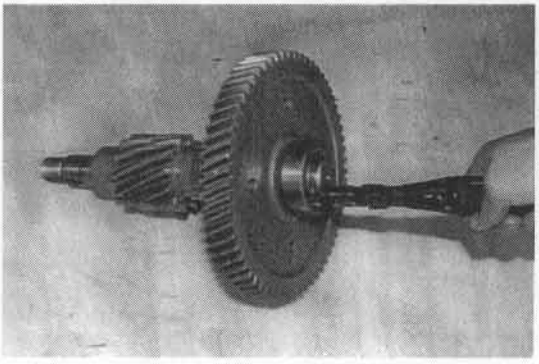

Removing the Bearing BAR11-33

11. Remove the reduction gear bearing.
    (1) Bearing

Caution:
Tap lightly with a brass bar for removal.

12. Remove the differential bearing.
    (1) Bearing
        SST 09950-20017

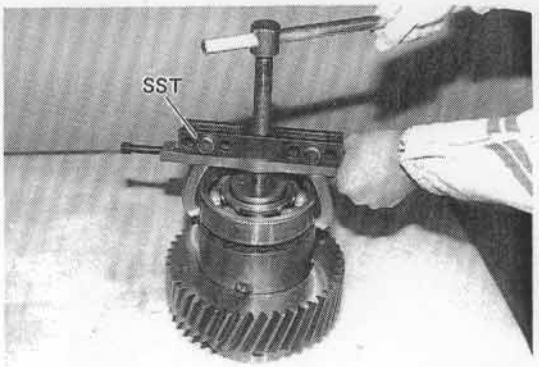

Removing the Bearing BAR11-7

13. Remove the ring gear.
    (1) Set bolt
    (2) Ring gear

    Caution:
    Tap lightly with a brass bar for removal without damaging the teeth.

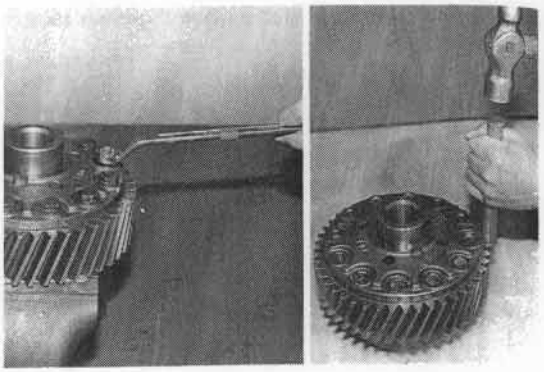

Removing the Ring Gear BAR11-11,12

14. Disassemble the differential case.
    (1) Set bolts
    (2) Case disassembly
    (3) Spider
    (4) Pinion
    (5) Pinion thrust washer
    (6) Side gear
    (7) Side gear thrust washer



Disassembling the Differential Case BAR11-14

INSPECTION

Caution:
Remove the sealant from each part and wash each part with washing fluid before inspection.
Inspect the following points, and repair or replace the part which is found defective.

1. Inspect the drive gear.
   (1) Damage or wear at teeth surfaces
   (2) Damage or wear at spline

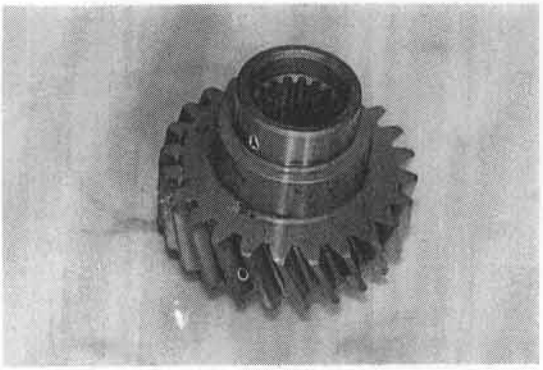

Inspecting the Drive Gear BAR11-32

2. Inspect the reduction gear.
   (1) Damage or wear at teeth surfaces

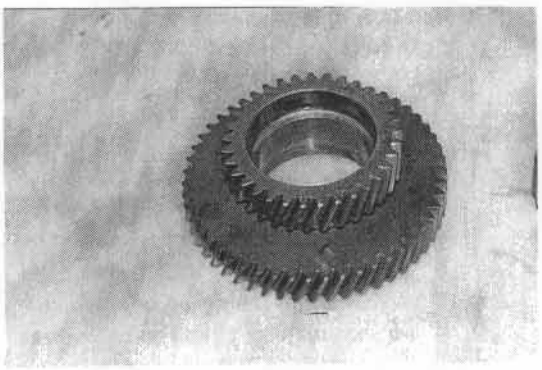

Inspecting the Reduction Gear BAR11-32

3. Inspect the output gear.
   (1) Damage or wear at teeth surfaces
   (2) Damage at threaded part

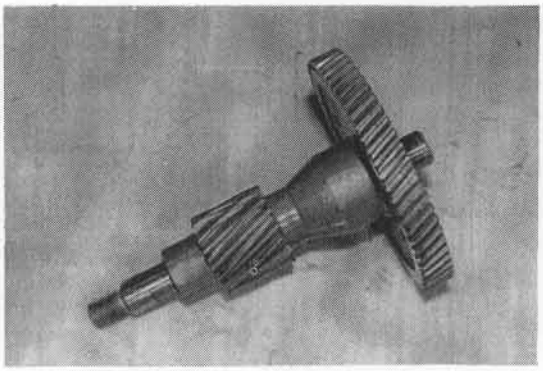

Inspecting the Output Gear BAR11-36

4. Inspect each bearing.
   (1) Wear, damage, unsmooth rotation or abnormal noise of bearing

   Caution:
   Replace the double row tapered roller bearing always as a set.



Inspecting the Bearing BAR11-28,31,35

5. Inspect the differential gear.
   (1) Damage or wear of gear
   (2) Wear of thrust washer

   Caution:
   Judge the wear of the side gear, pinion and thrust washer by inspecting the backlash.

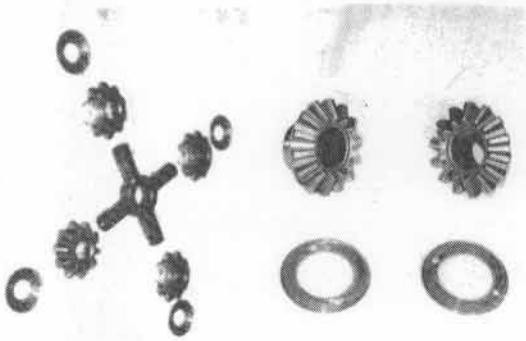

Inspecting the Differential Gear BAR11-17,22

   (3) Backlash measurement
   Standard backlash: 0.2–0.3 mm (0.0079–0.0118 in)
   ① Install the pinion and thrust washer on the spider.
   ② Install the side gear and thrust washer on the case.
   ③ Push the center of the spider lightly with a hand press, and measure the movement of the pinion on the opposite side with the pinion on one side in fixed state.



Measuring the Backlash BAR11-18

   (4) Wear or damage of spider
   Standard outside diameter: 22.00mm (0.8661 in)
   Wear limit: 21.75mm (0.8563 in)

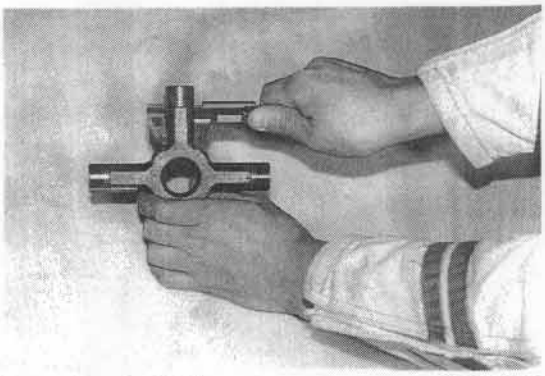

Inspecting the Spider BAR11-19

6. Inspect the differential case.
   (1) Crack or damage of case

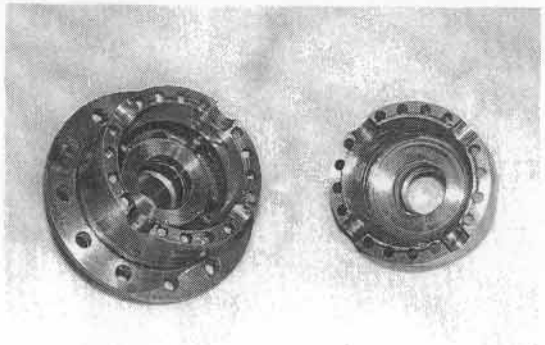

Inspecting the Differential Case BAR11-23

7. Inspect the front axle housing.
   (1) Crack or damage of housing

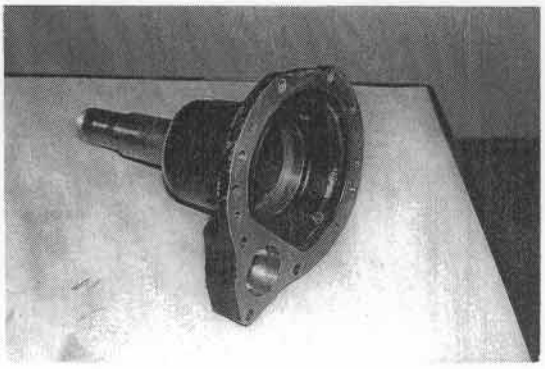

Inspecting the Housing BAR12-4

REASSEMBLY

1. Assemble the differential case.
   (1) Side gear thrust washer

   Caution:
   The oil groove shall face the gear.

   (2) Side gear
   (3) Install the pinion and thrust washer on the spider.
   (4) Assemble the case and spider ASSY.
   (5) Set bolts
   T = 4.5 ~ 5.5 kg-m
   (32.6 ~ 39.8 ft-lb)[44.1 ~ 53.9 N-m]

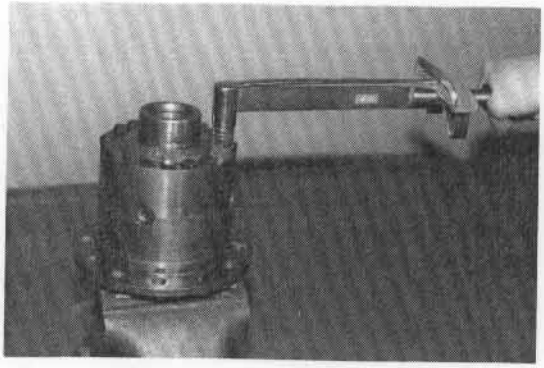

Assembling the Differential Case BAR11-25

2. Install the ring gear.
   (1) Ring gear

   Caution:
   Use a brass bar or copper hammer to drive in the ring gear without damaging it.

   (2) Set bolt
   T = 13~18 kg-m
   (94~130 ft-lb)[127~177 N-m]

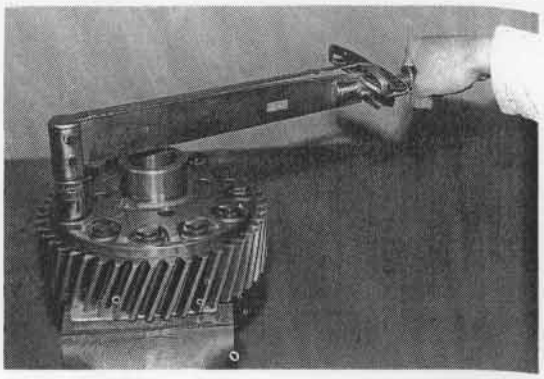

Installing the Ring Gear BAR11-26

3. Install the differential bearing.
   (1) Bearing

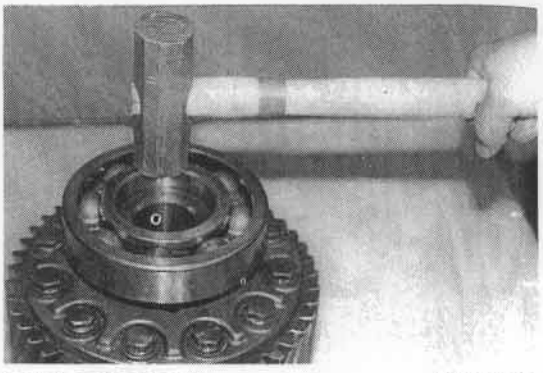

Installing the Bearing BAR11-30

4. Install the reduction gear bearing.
   (1) Bearing

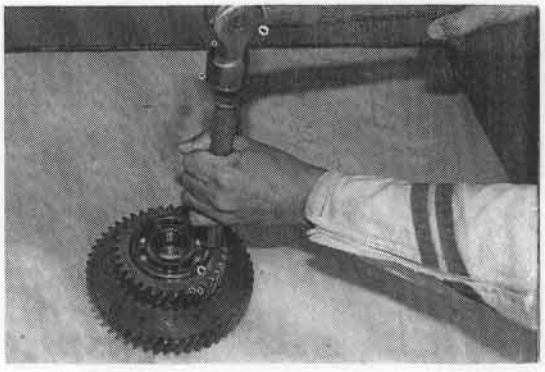

Installing the Bearing BAR11-38

5. Install the roller bearing
   (1) Roller bearing
   (2) Circlip

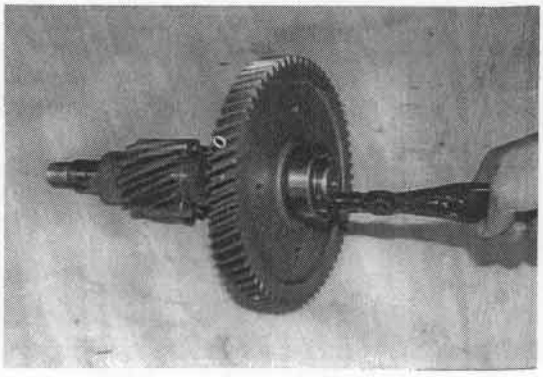

Installing the Inner Race BAR11-33

6. Install the tapered roller bearing inner race.
   (1) Inner race
   SST 09700-30200-71

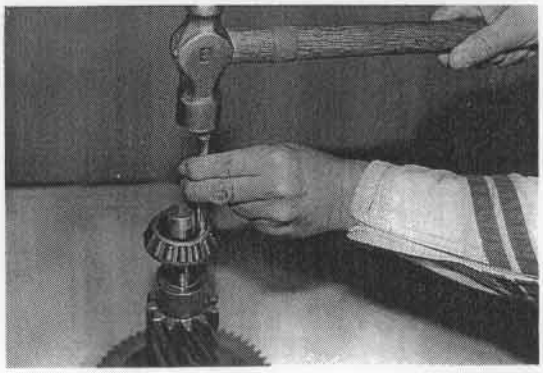

Installing the Inner Race BAR11-40

7. Install the drive gear bearing.
   (1) Bearing



Installing the Bearing BAR12-2

8. Install each gear.
   (1) Drive gear ASSY
   (2) Reduction gear ASSY
   (3) Output gear ASSY
   (4) Drive in the reduction gear shaft.

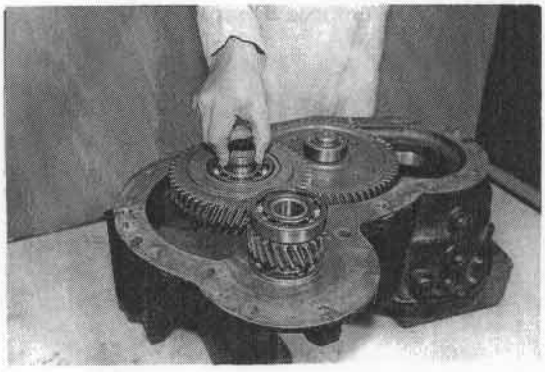

Installing Each Gear BAR12-9

9. Install the front axle housing LH.

   Caution:
   Coat sealant (seal packing 1281 (08826-00090)) on the mating surface.

   (1) Front axle housing LH
   (2) Set bolts
   T = 7.5~11 kg-m
   (54.3~79.6 ft-lb)[73.5~108 N-m]

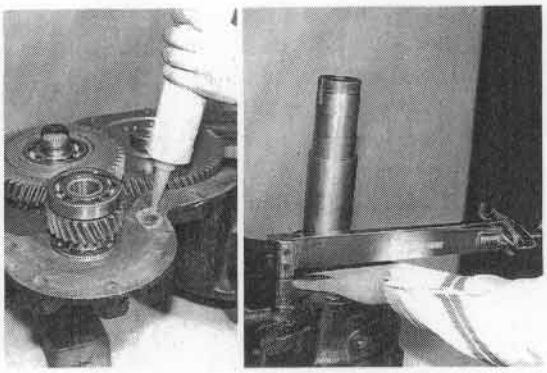

Installing the Housing LH BAR12-10,12

10. Install the key plate
    (1) Key plate
    (2) Set bolt

    Caution:
    Use a new seal bolt.

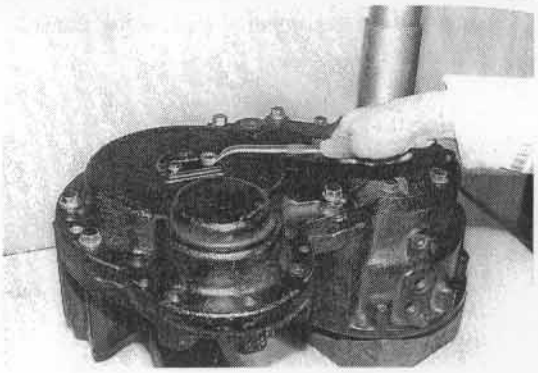

Installing the key plate BAR12-14

11. Install the differential ASSY.
    (1) Differential ASSY

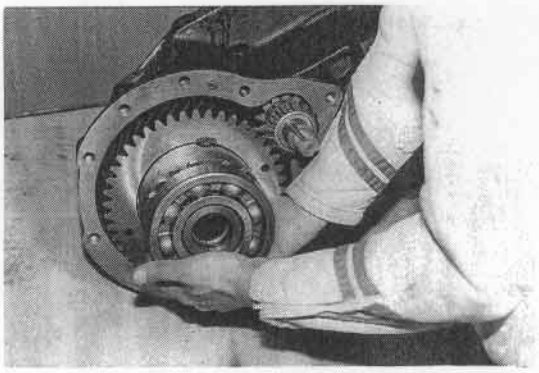

Installing the Differential ASSY BAR12-16

12. Install the front axle housing RH.

    Caution:
    Coat sealant (seal packing 1281 (08826-00090)) on the mating surface.

    (1) Front axle housing RH
    (2) Set bolts
        T = 7.5~11kg-m
        (54.3~79.6 ft-lb)[73.5~108N-m]

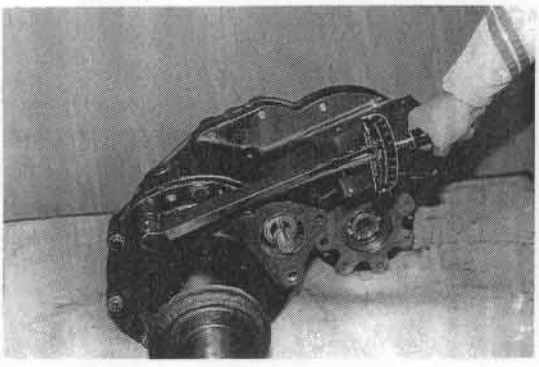

Installing the Housing RH BAR12-19

13. Install the drive gear lock nut.
    (1) Install the SST on the input gear spline.
        SST 09330-13200-71
    (2) Bearing inner race
    (3) Claw washer
    (4) Lock nut
        T = 17~23 kg-m
        (123~166 ft-lb)[167~226 N-m]

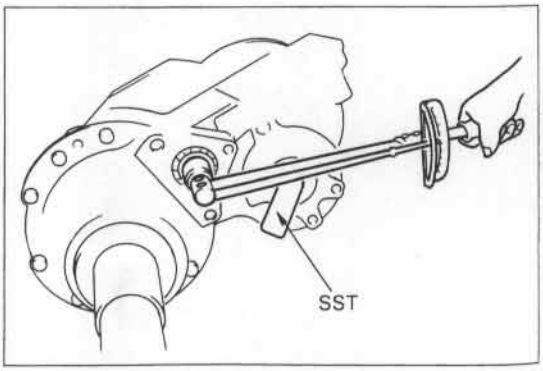

Installing the Lock Nut BARS175

(5) Lock nut caulking

Caution:
Use a screwdriver and caulk the lock nut securely (at 2 places).

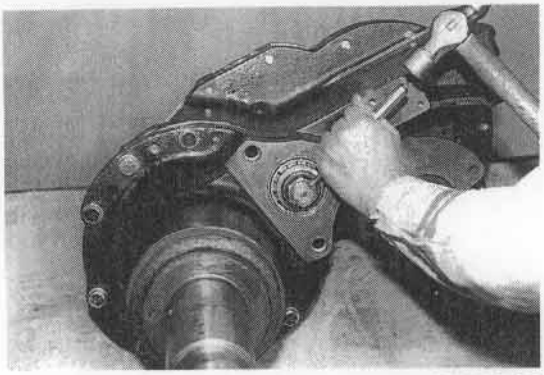

Caulking the Lock Nut BAR12-23

14. Install the drive unit cap.
    (1) O-ring
    (2) Drive unit cap
    (3) Set bolts
        T = 7.5 ~ 11 kg-m
        (54.3 ~ 79.6 ft-lb)[73.5 ~ 108 N-m]

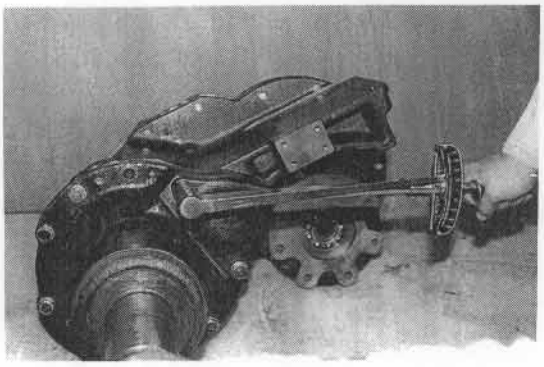

Installing the Cap BAR12-26

INSTALLATION

The installation procedure is the reverse of the removal procedure.

FRONT AXLE

	Page
GENERAL	7-2
COMPONENTS	7-4
FRONT AXLE SHAFT & HUB	7-7
FRONT AXLE ASSY	7-14

7

GENERAL

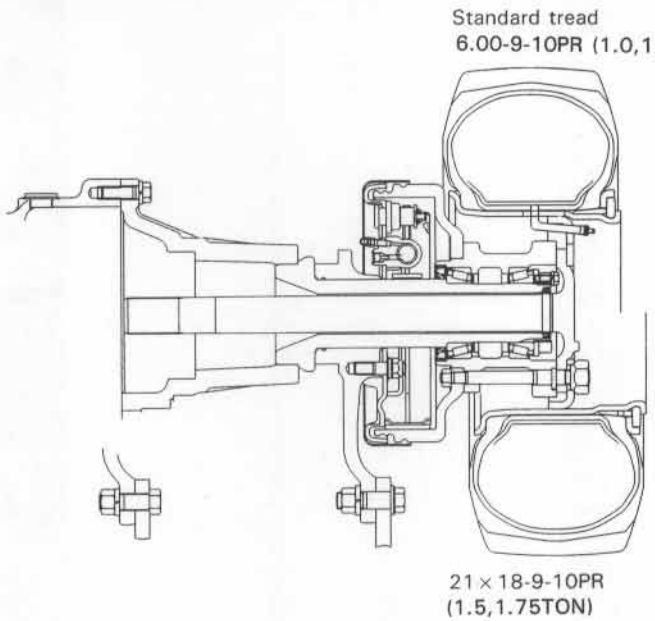

Front Axle Sectional View (1-ton Series) BARC18

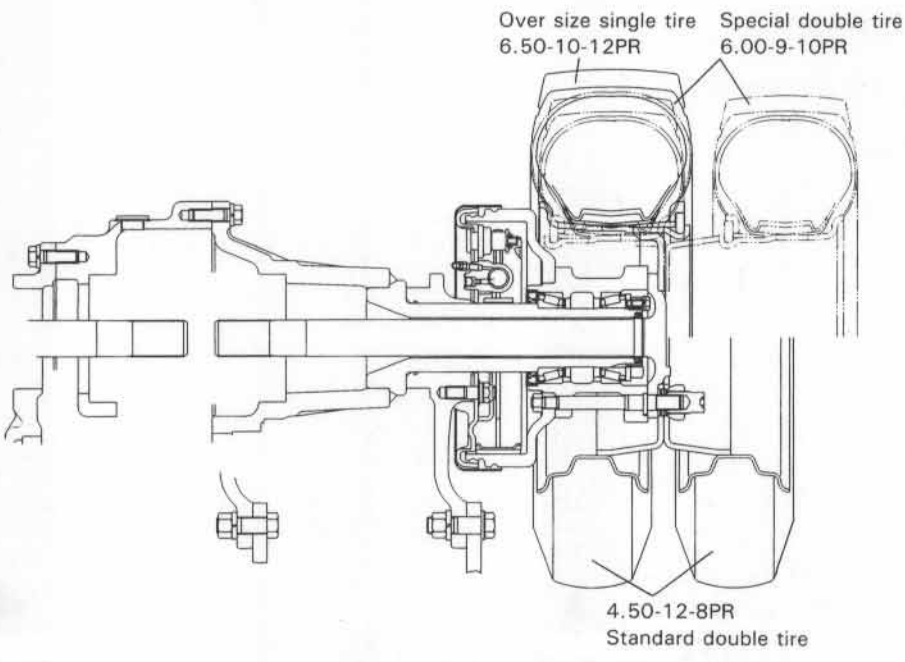

Front Axle Sectional View (1 Ton Series) BARC19

3. Install the front wheels.
   (1) Lightly tighten the hub nuts.
   (2) Jack up the vehicle and remove the supporting wooden blocks.
   (3) Tighten the hub nuts.
   1.0·1.35-ton series
   T = 11 ~ 15 kg-m
   (80 ~ 109 ft-lb)
   [108 ~ 147 N-m]
   1.5 ~ 2.5-ton series
   T = 18 ~ 20 kg-m
   (130 ~ 145 ft-lb)
   [177 ~ 196 N-m]
   3-ton series
   T = 30 ~ 33 kg-m
   (217 ~ 289 ft-lb)
   [294 ~ 392 N-m]

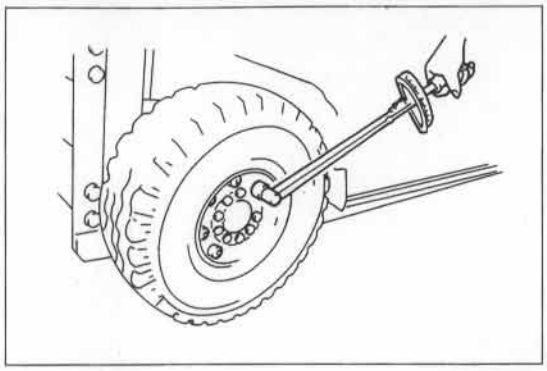

Installing the Front Wheel BARS181

4. Fill differential oil.
   Oil volume = 5.5 ℓ (1.45 USgal)

5. Inspection and adjustment after operation
   (1) Foot brake
   (2) Parking brake
   (3) Abnormal sound, abnormality or oil leakage at each part.

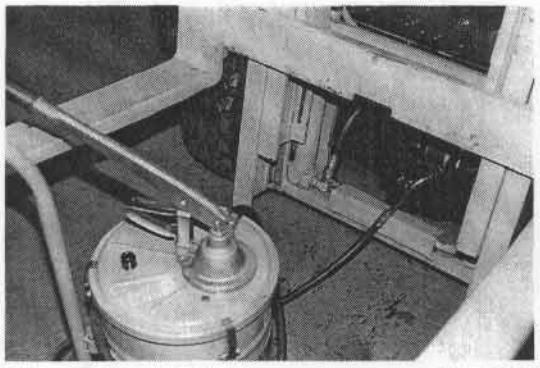

Filling Differential Oil BAR22-23

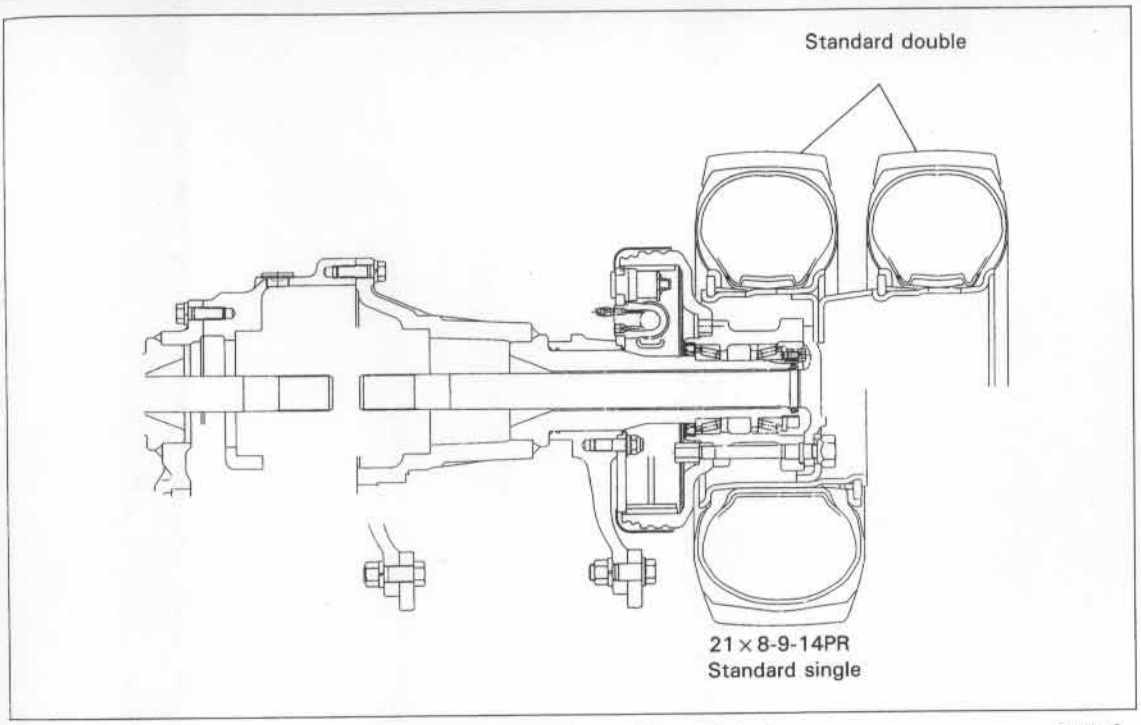

Front Axle Sectional View (2-ton Series) BATL2

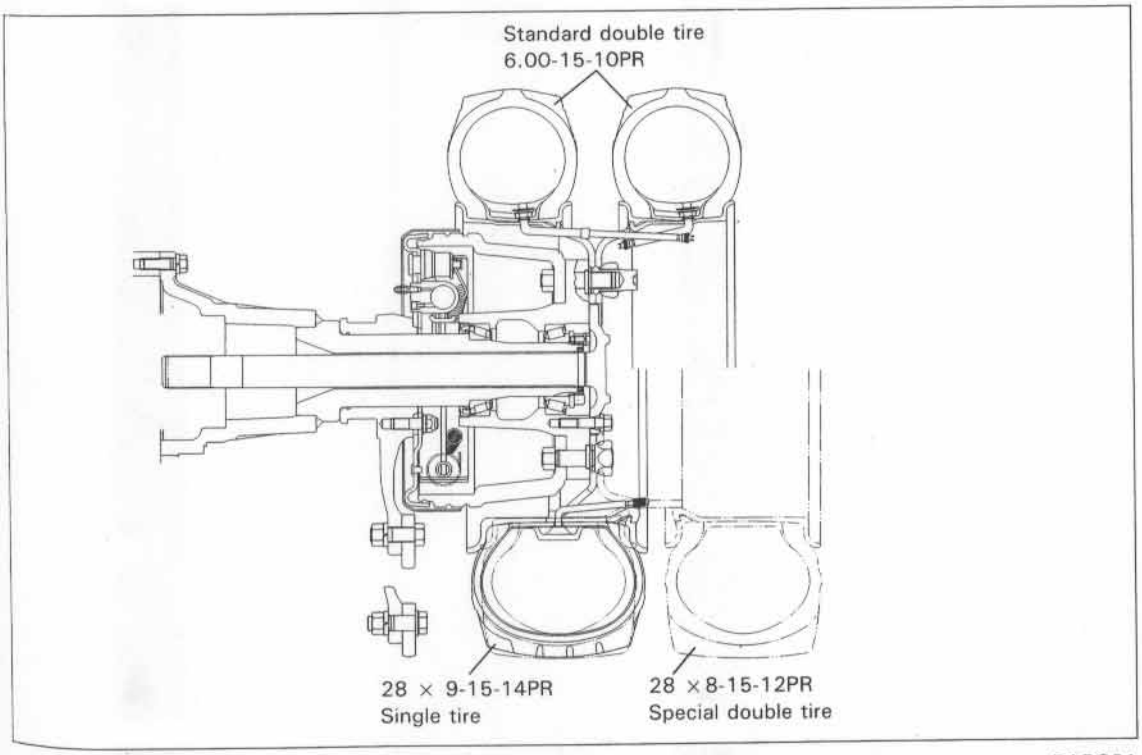

Front Axle Sectional View (3-ton Series) BARC21

COMPONENTS

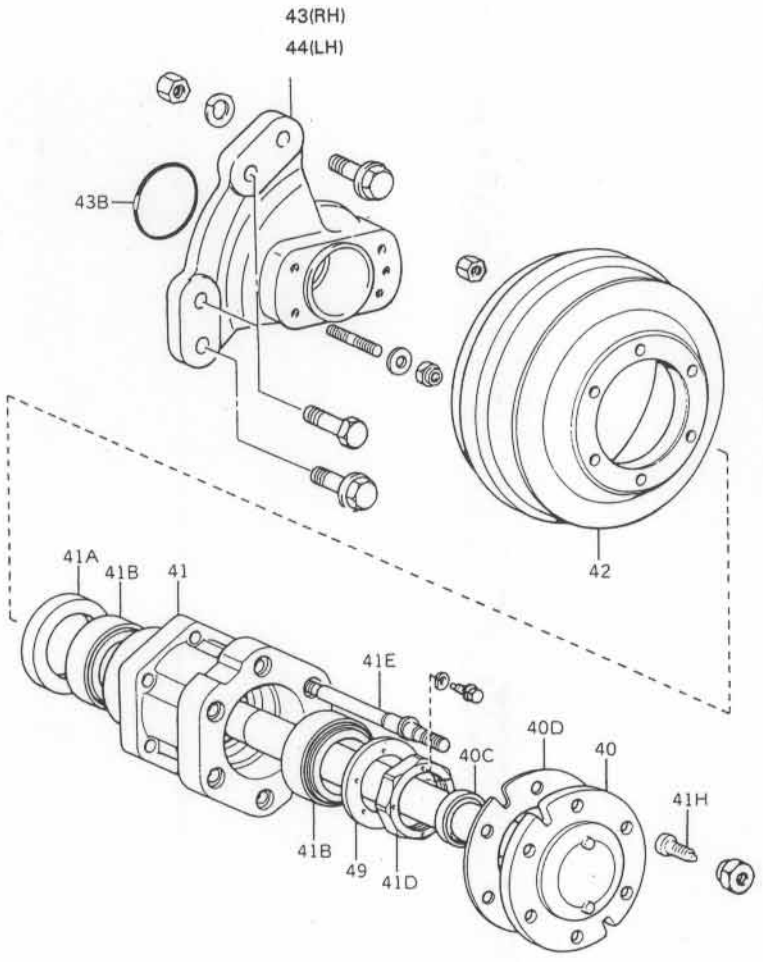

40	Front axle shaft
40C	Oil seal
40D	Front axle shaft gasket
41	Front axle hub
41A	Oil seal
41B	Bearing, No.1
41D	Bearing lock nut
41E	Hub bolt
41H	Double wheel stop bolt (for double wheel)
42	Brake drum
43	Front axle bracket, RH
43B	O ring
44	Front axle bracket, LH
49	Lock nut plate

Front Axle Components (1-ton Series) BATM38

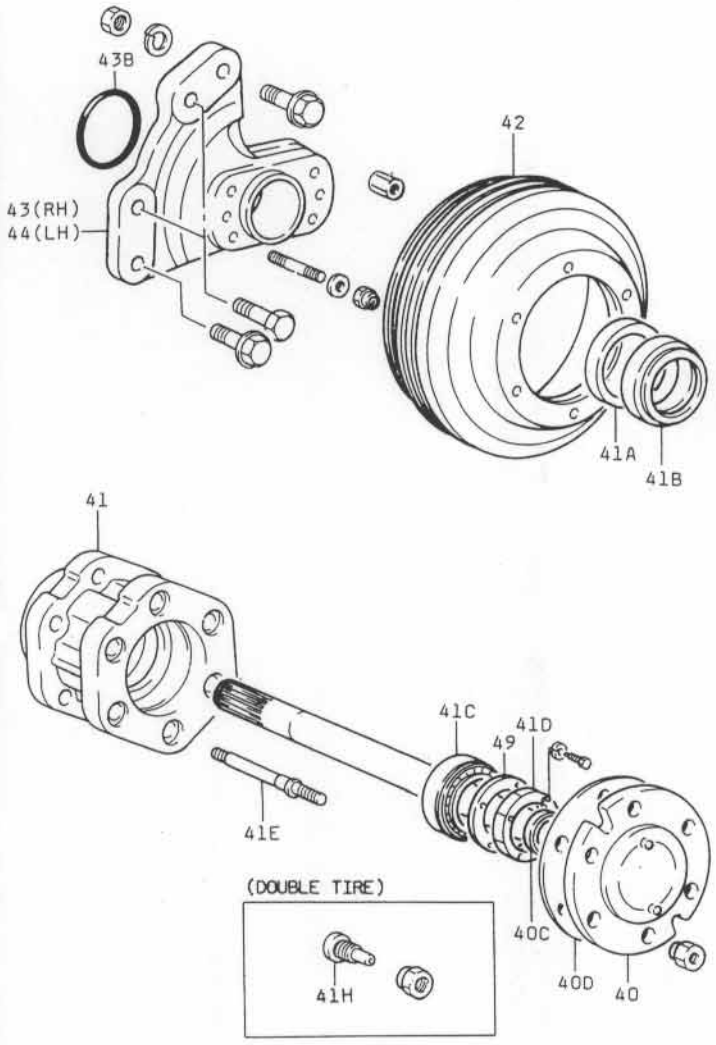

40	Front axle shaft	41E	Hub bolt
40C	Oil seal	41H	Double wheel stop bolt (for double wheel)
40D	Front axle shaft gasket	42	Brake drum
41	Front axle hub	43	Front axle bracket, RH
41A	Oil seal	43B	O ring
41B	Bearing, No.1	44	Front axle bracket, RH
41C	Bearing, No.2	49	Lock nut plate
41D	Bearing lock nut		

Front Axle Components (2-ton Series) BATM83

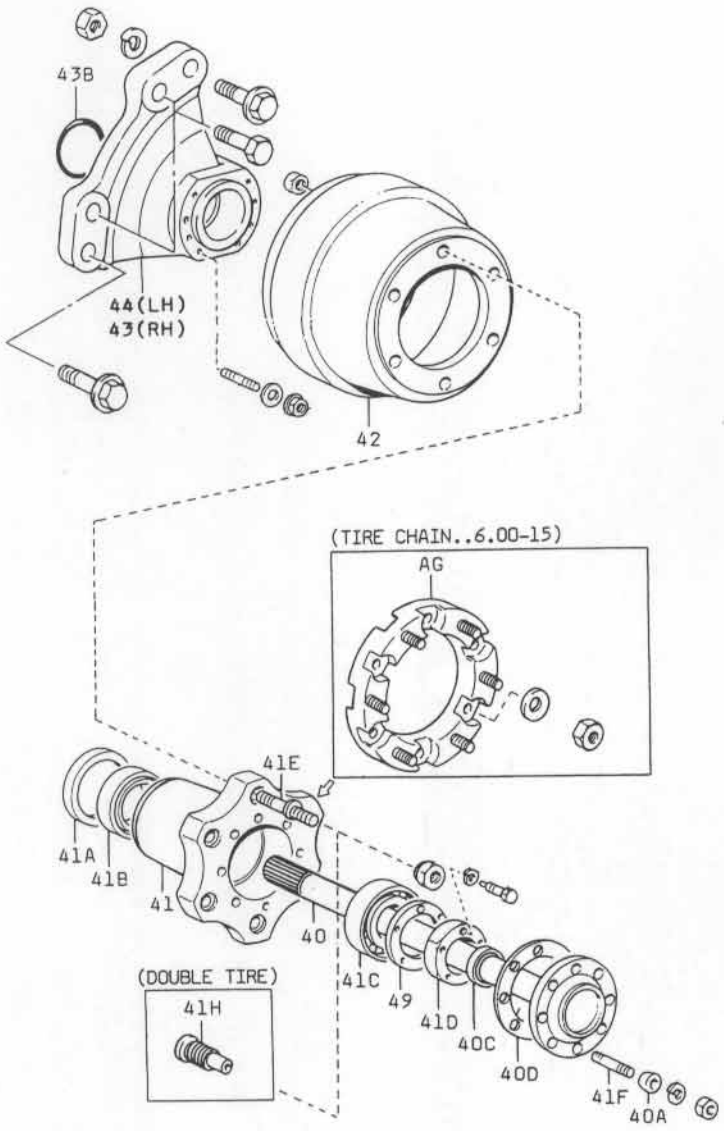

40	Front axle shaft	41E	Hub bolt
40C	Oil seal	41H	Double wheel stop bolt
40D	Front axle shaft gasket	42	Brake drum
41	Front axle hub	43	Front axle bracket, RH
41A	Oil seal	43B	O ring
41B	Bearing, No.1	44	Front axle bracket, LH
41C	Bearing, No.2	49	Lock nut plate
41D	Bearing lock nut		

Front Axle Components (3-ton Series) BATM84

FRONT AXLE SHAFT & HUB

REMOVAL

1. Disconnect the battery plug.



Desconnecting the Battery Plug BAT3-28

2. Remove the front wheels.
   (1) Chock the rear wheels.
   (2) Loosen the front wheel hub nuts.

   (3) Jack up the vehicle.

   Caution:
   Support the frame with wooden blocks under the front part on both sides.

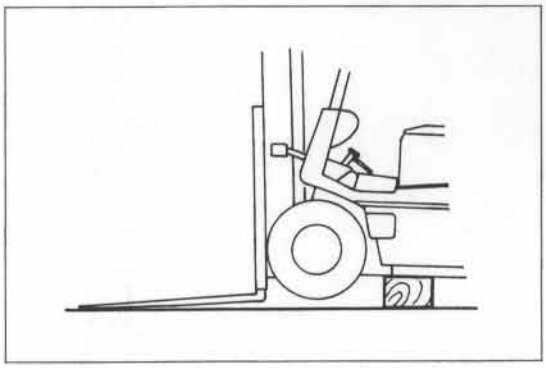

Jacking up the Vehicle BARS134

   (4) Hub nuts
   (5) Front wheels

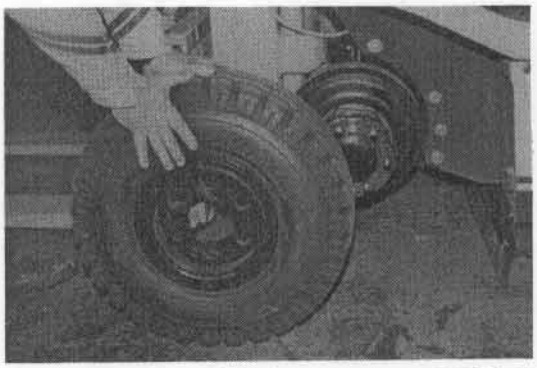

Removing the Front Wheel BAT14-32

3. Drain differential oil.
   (1) Drain plug
   (2) Differential oil
   1.0~1.8 ton : 5.0ℓ (1.32 USgal)
   2.0~3.0 ton : 5.5ℓ (1.45 USgal)

4. Remove the front axle shaft.

   Caution:
   Do not damage the oil seal.

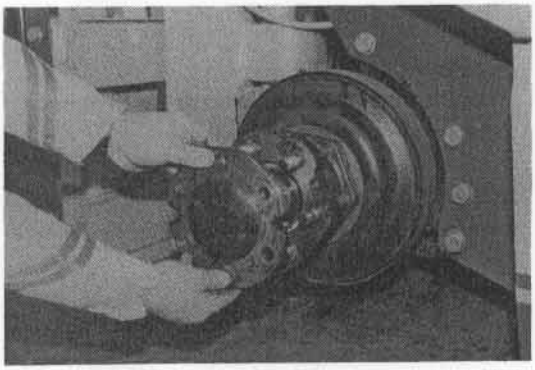

Removing the Axle Shaft BAT14-33

5. Remove the front axle hubs.
   (1) Stopper bolts
   (2) Bearing lock nuts
       SST 09509-55020
   (3) Bearing rings

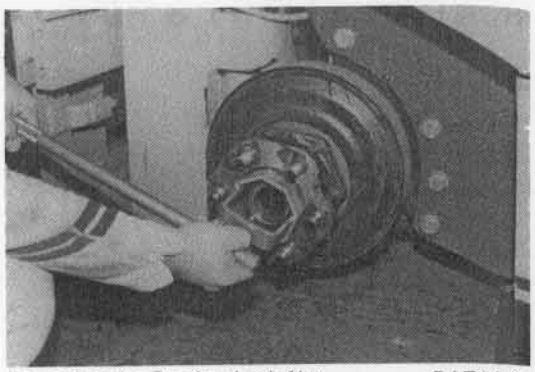

Removing the Bearing Lock Nut BAT14-34

6 Remove the front axle hubs.

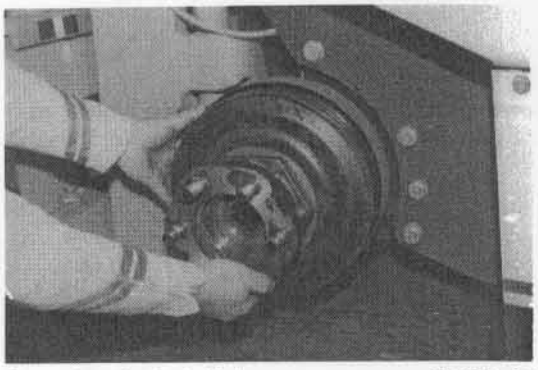

Removing the Axle Hub BAT14-35

DISASSEMBLY

Caution:
Inspect each part and disassembly only when a defect is found in the bearing, axle hub or brake drum.

1. Remove the bearing outer race.

Caution:
Tap the outer race with a brass bar to remove the outer race and oil seal.

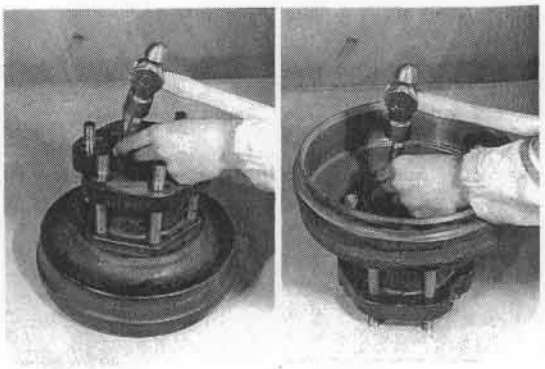

Removing the Outer Race BAA18-3,4

2. Remove the brake drums.
   (1) Set nuts
   (2) Hub bolts
   (3) Brake drums

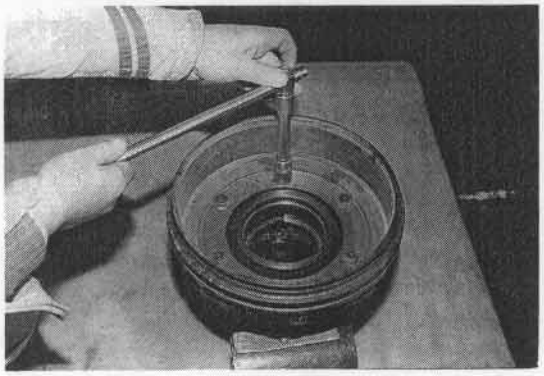

Removing the Brake Drum LA079-17

INSPECTION

1. Inspect the front axle shaft.
   (1) Crack, wear or damage at spline
   (2) Bend

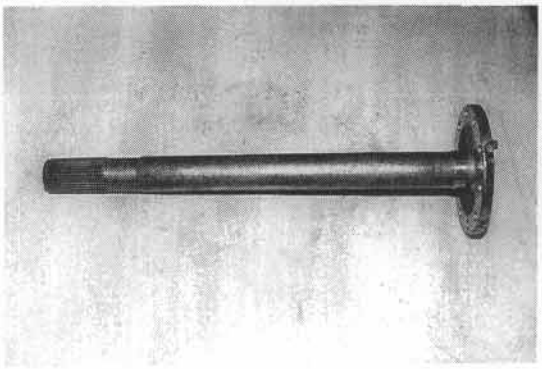

Inspecting the Axle Shaft LA079-21

2. Inspect the front axle hub.
   (1) Damage of hub bolts
   (2) Damage at hub bolt lock groove
   (3) Damage of stud bolt
   (4) Crack or damage of axle hub

3. Inspect the outer and inner bearings.
   (1) Damage, sticking or unsmooth rotation of bearing

4. Inspect the oil seal.
   (1) Damage, deformation or deterioration at lip

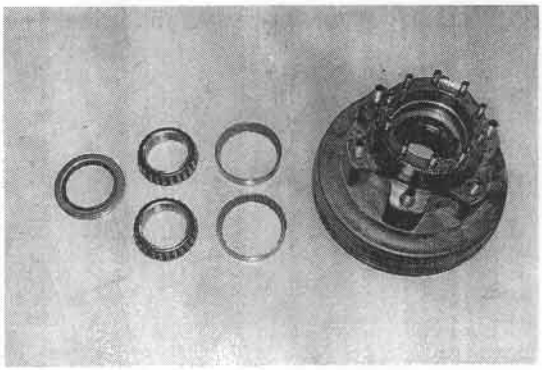

Inspecting the Hub Bearing LS079-18

REASSEMBLY

1. Install each brake drum.
   (1) Drive in the hub bolts in lock grooves.
   (2) Fit the hub and brake drum.
   (3) Set nuts

   1-ton series
   T = 7 ~ 9 kg-m
   (51 ~ 65 ft-lb)
   [69 ~ 88 N-m]

   2-ton series
   T = 8 ~ 11 kg-m
   (58 ~ 80 ft-lb)
   [78 ~ 108 N-m]

   3-ton series
   T = 17 ~ 21 kg-m
   (123 ~ 152 ft-lb)
   [167 ~ 206 N-m]



Installing the Brake Drum LA079-20

(4) Coat Locktite #271 or equivalent before tightening the nuts, or use a chisel to punch the tip end of the set bolt in cross shape.
Caution:
Leave no clearance between the hub and drum.

2. Install the bearing outer race.
   SST 09130-30200-71
   (1) Inner bearing outer race
   (2) Outer bearing outer race

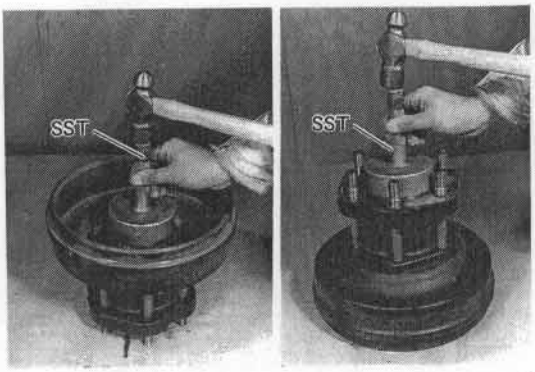

Installing the Outer Race BAA18-12,10

3. Install the oil seal.
   (1) Inner bearing

   Caution:
   Apply a sufficient amount of grease.

   (2) Oil seal
   SST 09130-30200-71

   Caution:
   Coat grease on lip portion.

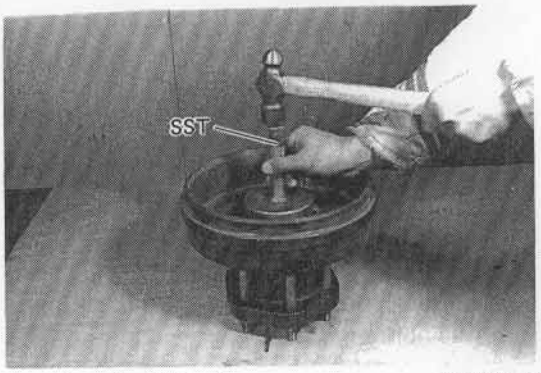

Installing the Oil Seal BAA18-11

INSTALLATION

1. Install each front axle hub.
   (1) Fill grease in the front axle hub.
   (2) Axle hub ASSY

   Caution:
   Install the hub after checking correct positioning of the brake shoe. Contract the brake shoe slightly.

   (3) Inner bearing

   Caution:
   Coat grease

   (4) Install the axle hub by striking the outer bearing.
   SST 09370-10410-71

   Caution:
   Bring the SST into close contact with the bearing and strike the SST so as to push the whole hub.
   Careless striking may damage the oil seal.

   (5) Bearing ring
   (6) Bearing lock nut
   SST 09509-55020

   Caution:
   Use the SST to tighten the bearing lock nut fully, and return the lock nut by 1/12 - 1/6 turn.

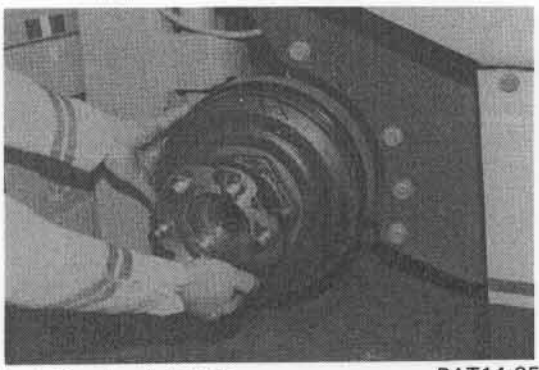
Installing the Axle Hub BAT14-35

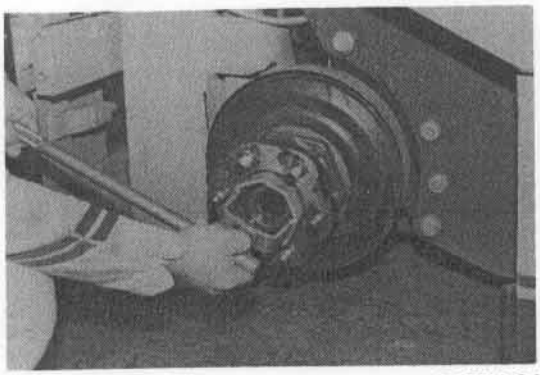
Tightening the Lock Mut BAT14-34

(7) Measure the preload.
Standard: 2.5 ~ 4.5 kg
(18.1 ~ 32.6 lb)
[24.5 ~ 44.1 N]

(8) Stopper bolt

Caution:
Search the place where the bearing hole matches the lock nut threaded hole, and align them to allow sure entrance of the tip end of the bolt.
Coat Locktite # 271 or the equivalent on the stopper bolt.

T = 1.5 ~ 2.2 kg-m
(10.9 ~ 15.9 ft-lb)
[14.7 ~ 21.6 N-m]

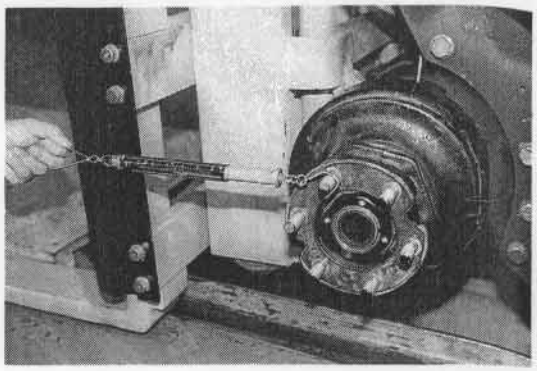

Measuring the Preload BAR18-14

2. Install the axle shaft.
(1) Packing
(2) Axle shaft
(3) Set nuts
1- or 2-ton series
T = 3 ~ 4.5 kg-m
(21.7 ~ 32.6 ft-lb)
[29.4 ~ 44.1 N-m]
3-ton series
T = 6 ~ 8 kg-m
(43 ~ 58 ft-lb)
[59 ~ 78 N-m]

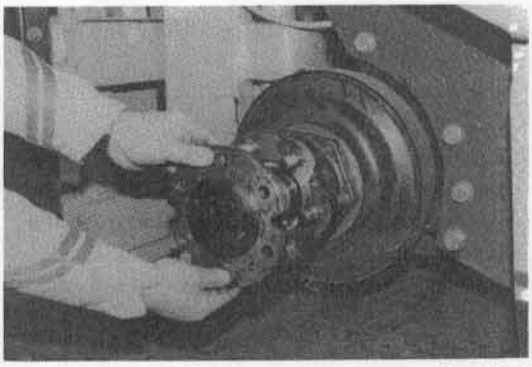

Installing the Axle Shaft BAT14-33

3. Install the front wheels.
   (1) Lightly tighten the hub nuts.
   (2) Jack up the vehicle and remove the supporting wooden blocks.
   (3) Tighten the hub nuts.
   1.0·1.35-ton series
   T = 11 ~ 15 kg-m
   (80 ~ 109 ft-lb)
   [108 ~ 147 N-m]
   1.5 ~ 2.5-ton series
   T = 18 ~ 20 kg-m
   (130 ~ 145 ft-lb)
   [177 ~ 196 N-m]
   3-ton series
   T = 30 ~ 33 kg-m
   (217 ~ 289 ft-lb)
   [294 ~ 392 N-m]

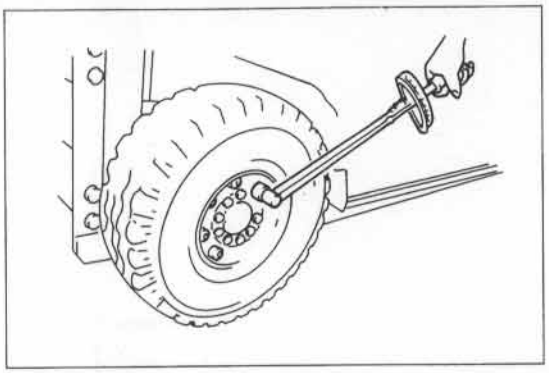

Installing the Front Wheel BARS181

4. Fill differential oil.
   Oil volume = 5.5 ℓ (1.45 USgal)

5. Inspection and adjustment after operation
   (1) Foot brake
   (2) Parking brake
   (3) Abnormal sound, abnormality or oil leakage at each part.

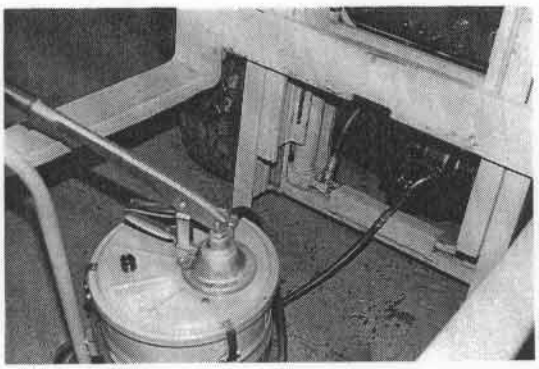

Filling Differential Oil BAR22-23

FRONT AXLE ASSY

REMOVAL

1. Disconnect the battery plug.
2. Remove the mast. (See page 14-5 Mast Removal.)

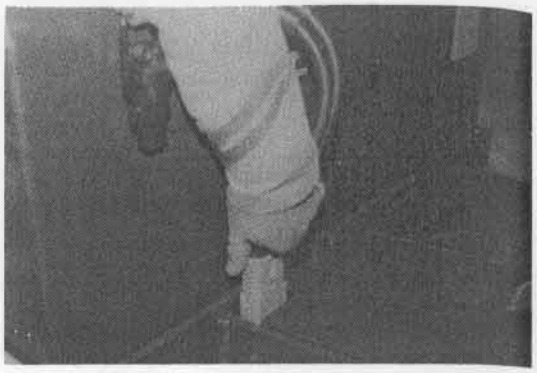

Disconnecting the Battery Plug BAT3-28

3. Remove the front wheels.
   (1) Chock the rear wheels
   (2) Loosen the front wheel hub nuts.
   (3) Jack up the vehicle.

   Caution:
   Support the frame with wooden blocks under the front part on both sides.

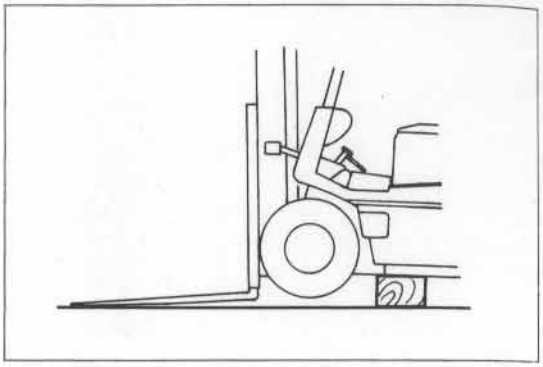

Jacking up the Vehible BARS134

4. Disconnect the brake pipe.

   Caution:
   Place the brake pipe as shown in the photo.

5. Disconnect the sensor connector above the differential.

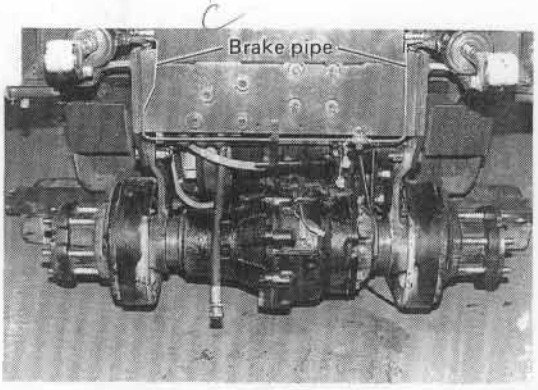

Brake Pipe Setting Position BAR20-8

6. Remove the pad LH.
   (1) Set bolt
   (2) Pad LH

7. Remove the toe board
   (1) Accelerator connector
   (2) Toe board

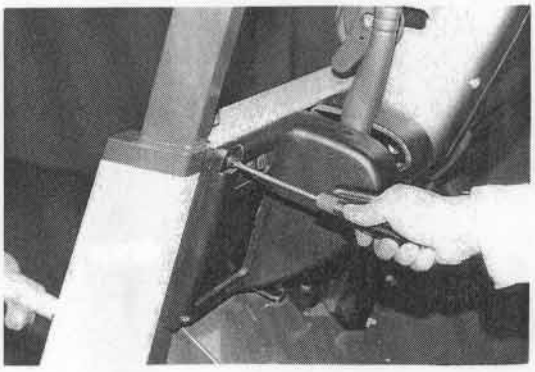

Removing the Pad LH BAR13-11

8. Remove the tilt cover LH.
   (1) Set bolts
   (2) Tilt cover LH

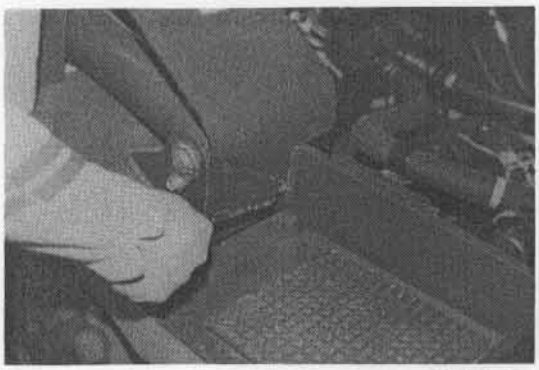

Removing the Tilt Cover LH BAT4-17

9. Disconnect the parking brake wire.
   (1) Lock nut
   (2) Joint
   (3) Lock nut
   (4) parking brake wire

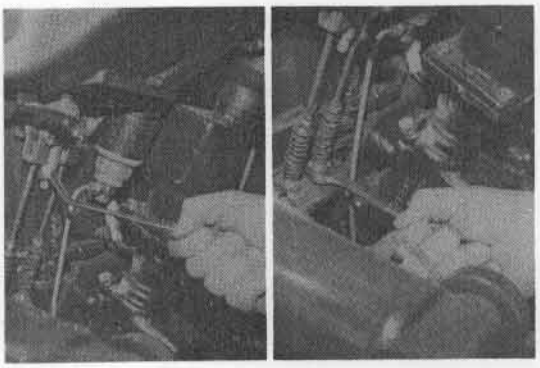

Disconnect the drive motor cables BAT4-18,19

10. Disconnect the drive motor cables.
    (1) Set nuts
    (2) Clamps

    Caution:
    Do not forget the cable and clamp on the lower side of the motor.

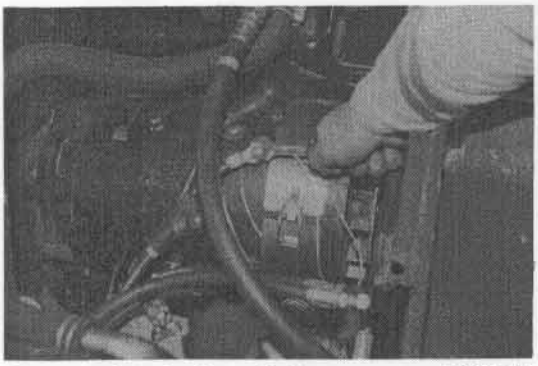

Disconnecting the Motor Cables BAT7-21

11. Remove the front axle ASSY.
    (1) Slightly supend the axle ASSY with a hoist.
    (2) Place wooden blocks under the motor.

    Caution:
    Provide a space for jack entrance.

    (3) Front axle bracket set bolts (2 pcs. on one side at the center)

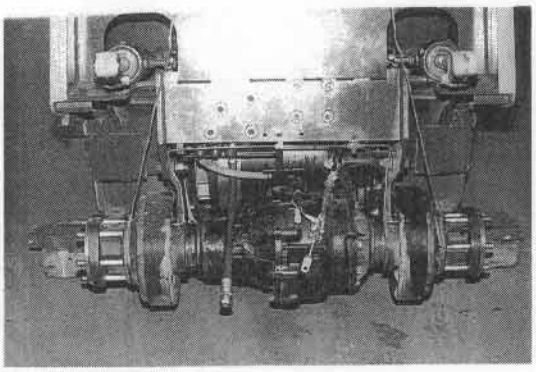

Hoisting the Axle ASSY BAR13-22

(4) Reamer bolts (2 pcs. each at top and bottom on one side)
SST 09310-22000-71

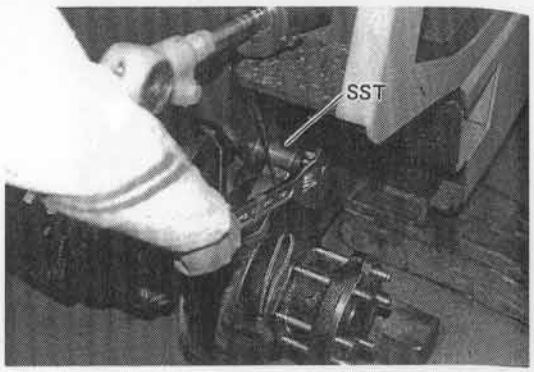

Removing the Reamer Bolts BAT4-31

12. Remove the front axle ASSY with the motor.

Caution:
Place a jack under the motor and carefully remove in the forward direction.

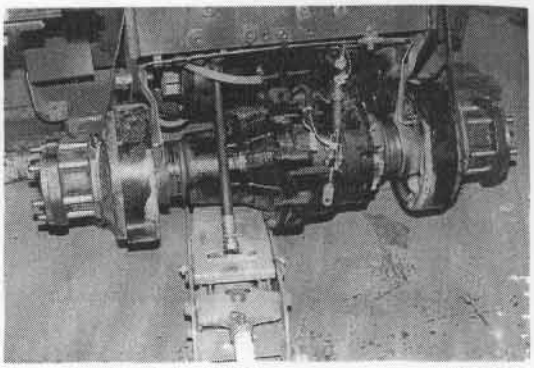
Removing the Axle ASSY BAR13-25

13. Remove the motor
(1) Lightly suspend the motor with a hoist.
(2) Motor set bolts
(3) Mounting bolts

14. Remove the front axle hub. (See page 7-7)

15. Remove the brake ASSY. (See page 11-9)

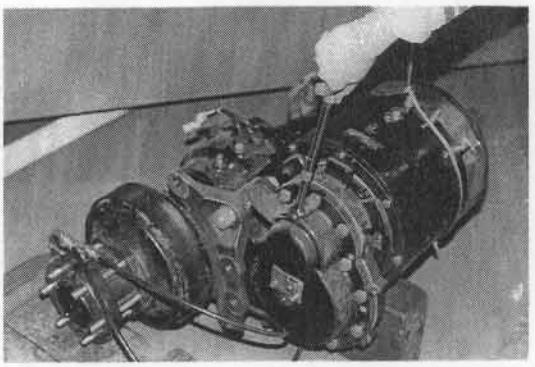
Removing the Motor BAR13-33

16. Remove the front axle bracket RH.

Caution:
Remove the bracket by rotating it with both hands, and remove the O-ring.

INSPECTION

1. Inspect the front axle bracket.
   (1) Damage, crack or deformation of bracket
   (2) Damage or deformation of set bolts

2. Inspect the housing.
   (See page 6-11 Drive Unit Inspection.)

3. Inspect the brake ASSY.
   (See page 11-11 Brake ASSY Inspection.)

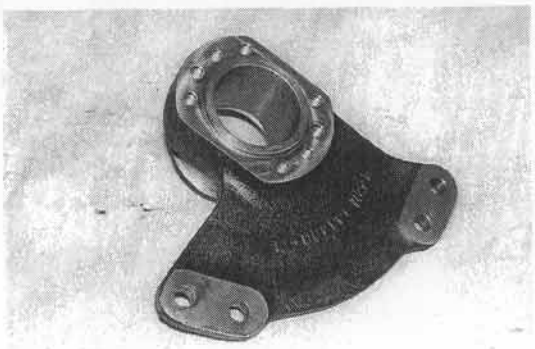

Inspecting the Axle Bracket BAR32-1

INSTALLATION

1. Install the front axle bracket.

2. Install the brake ASSY.
   (See page 11-14 Brake ASSY Installation.)

3. Install the front axle hubs.
   (See page 7-11 Axle Hub Installation)

4. Install the motor
   (1) Motor set bolts
   (2) Mounting bolts

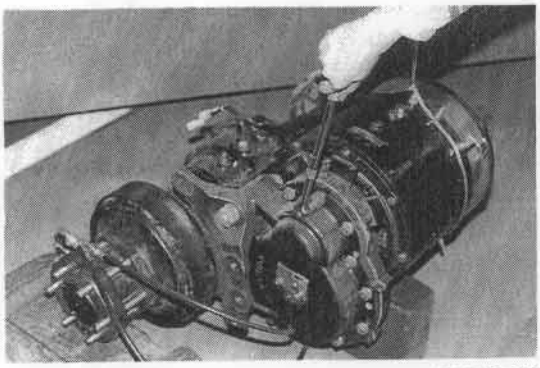

Installing the Motor BAR13-33

5. Install the front axle ASSY with the motor.

   Caution:
   Suspend the front axle ASSY with a hoist, place a jack under the motor, and place them carefully under the frame.

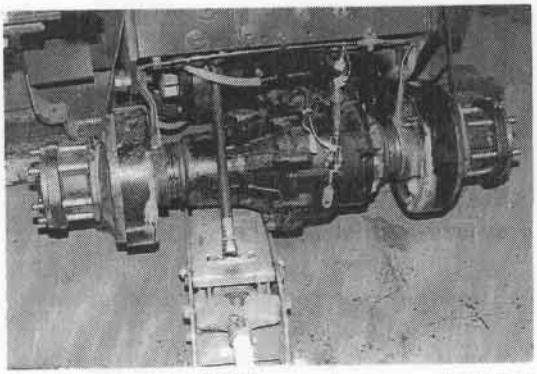

Installing the Axle ASSY BAR13-25

(1) Match the front axle bracket with the holes on the frame.

Caution:
When aligning the bolt holes, never check the level difference by finger insertion as the bracket, etc. are in movable state.

(2) Temporarily install ordinary bolts (2 pcs. on one side at the center).

Caution:
Temporarily install the bolts while shaking the front axle ASSY for alignment.

(3) Drive in reamer bolts (2 pcs. each at the top and bottom on one side)
(4) Set nuts
T = 16 ~ 22 kg-m
(116 ~ 159 ft-lb)
(157 ~ 216 N-m)

6. Connect the drive motor cables.
(1) Set nuts
(2) Clamps

Caution:
Never forget the cable and clamp on the lower side of the motor.

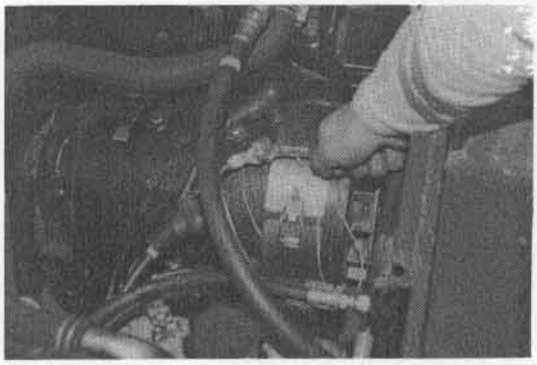

Connecting the Motor Cable BAT7-21

7. Connect the parking brake wire.
(1) Pin
(2) Cotter pin
(3) Lock nut

Caution:
See page 11-24 Parking Brake section for the adjustment method.

8. Then install each part in the reverse order of the removal procedure.

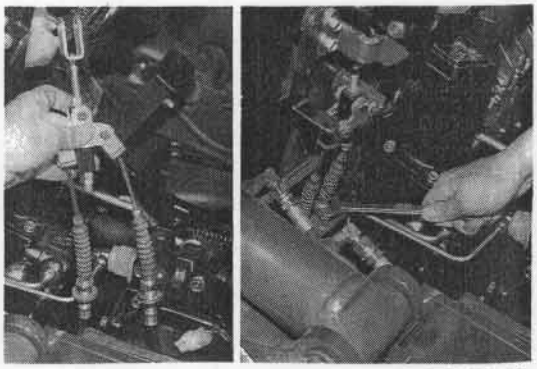

Brake Wire Connection BAT4-18,19

9. Install the front wheels. (See page 7-13)

10. Fill differential oil
    Oil volume:
    1.0 ton series: 5.0ℓ (1.32 USgal)
    2.0~3.0 ton series: 5.5ℓ (1.45 USgal)

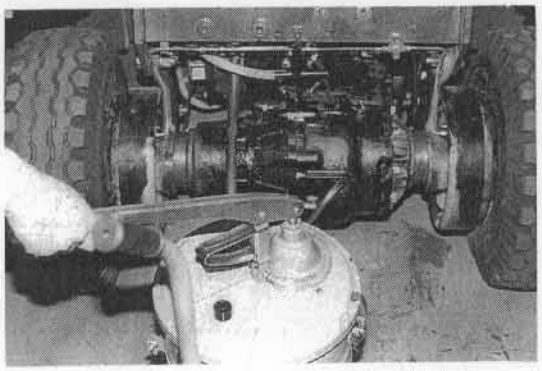

Filling Differential Oil BAR20-15

11. Bleed air from the brake system.

12. Install the mast.

    Caution:
    See page 14-12 Mast Installation.

13. Inspection and adjustment after the end of operation.
    (1) Foot brake
    (2) Parking brake
    (3) Abnormal sound, abnormality or oil leakage at each part

REAR AXLE

	Page
GENERAL	8-2
COMPONENTS	8-3
REAR AXLE ASSY	8-6

8

GENERAL

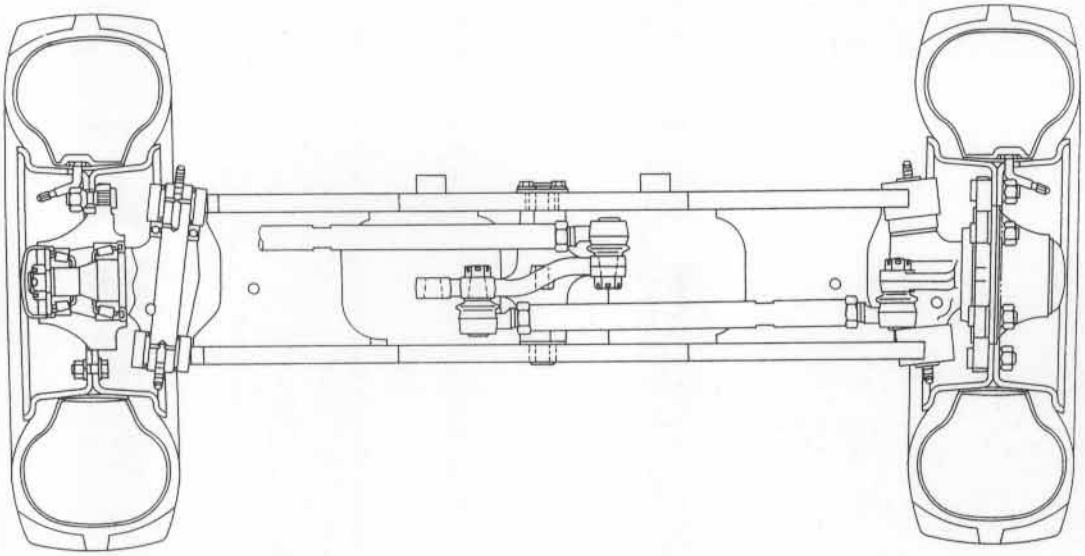

Rear Axle Section View LAOM50

COMPONENTS

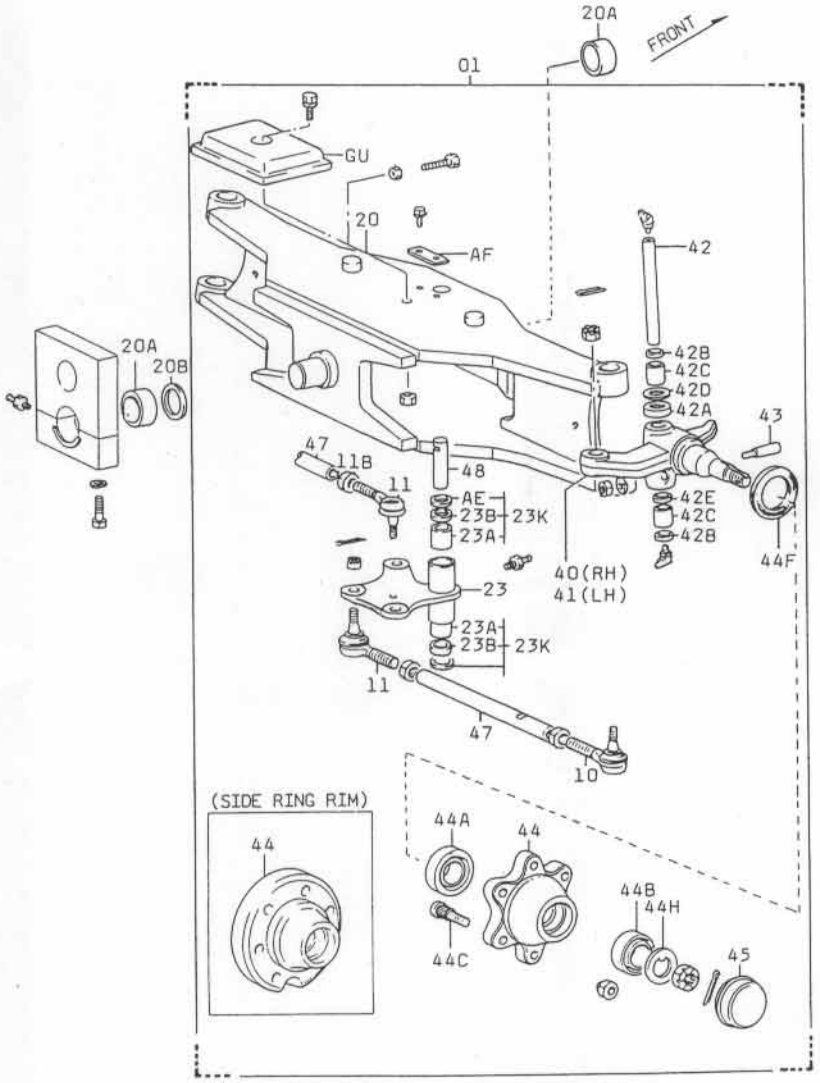

01	Rear axle ASSY	23K	Bell crank pin seal kit	44A	Inner bearing
10	Tie rod end ASSY No. 1	40	Steering knuckle RH	44B	Outer bearing
11	Tie rod end ASSY No. 2	41	Steering knuckle LH	44C	Hub bolt
20	Rear axle beam	42	Steering knuckle king pin	44F	Oil seal
20A	Rear axle beam bushing	42A	Thrust bearing	44H	Claw washer
20B	Rear axle beam shim	42B	Oil seal No. 1	45	Rear axle hub cap
23	Steering bell crank ASSY	42C	Needle bearing	47	Tie rod
23A	Bearing	42D	Steering knuckle shim	48	Bell crank pin
23B	Oil seal	42E	Oil seal No. 2	AE	Shim
		43	King pin lock pin	AF	Stopper plate
		44	Rear axle hub	GU	Rear axle damper

Rear Axle ASSY Components (1-ton series) BATM41

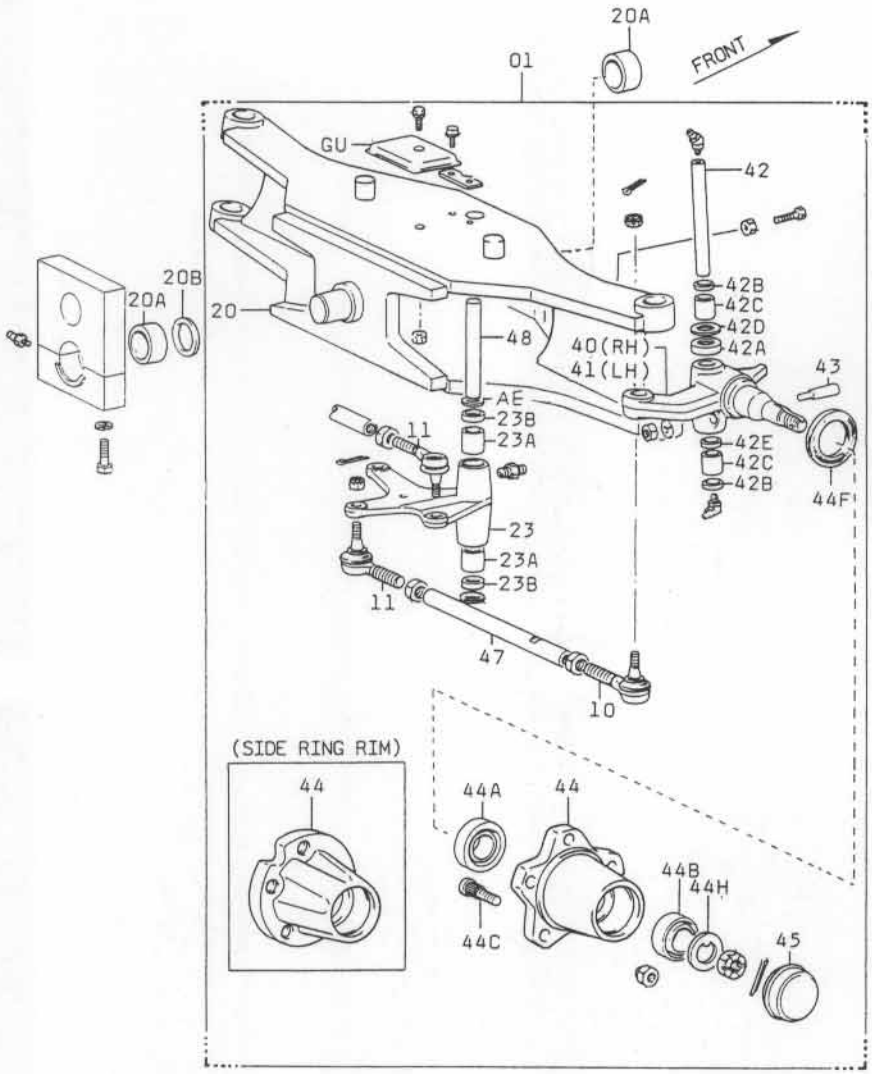

01	Rear axle ASSY	41	Steering knuckle LH	44C	Hub bolt
10	Tie rod end ASSY No. 1	42	Steering knuckle king pin	44F	Oil seal
11	Tie rod end ASSY No. 2	42A	Thrust bearing	44H	Claw washer
20	Rear axle beam	42B	Oil seal No. 1	45	Rear axle hub cap
20A	Rear axle beam bushing	42C	Needle bearing	47	Tie rod
20B	Rear axle beam shim	42D	Steering knuckle shim	48	Bell crank pin
23	Steering bell crank ASSY	42E	Oil seal No. 2	AE	Shim
23A	Bearing	43	King pin lock pin	AF	Stopper plate
23B	Oil seal	44	Rear axle hub	GU	Rear axle damper
23K	Bell crank pin seal kit	44A	Inner bearing		
40	Steering knuckle RH	44B	Outer bearing		

Rear Axle ASSY Components (2-ton series) BATM85

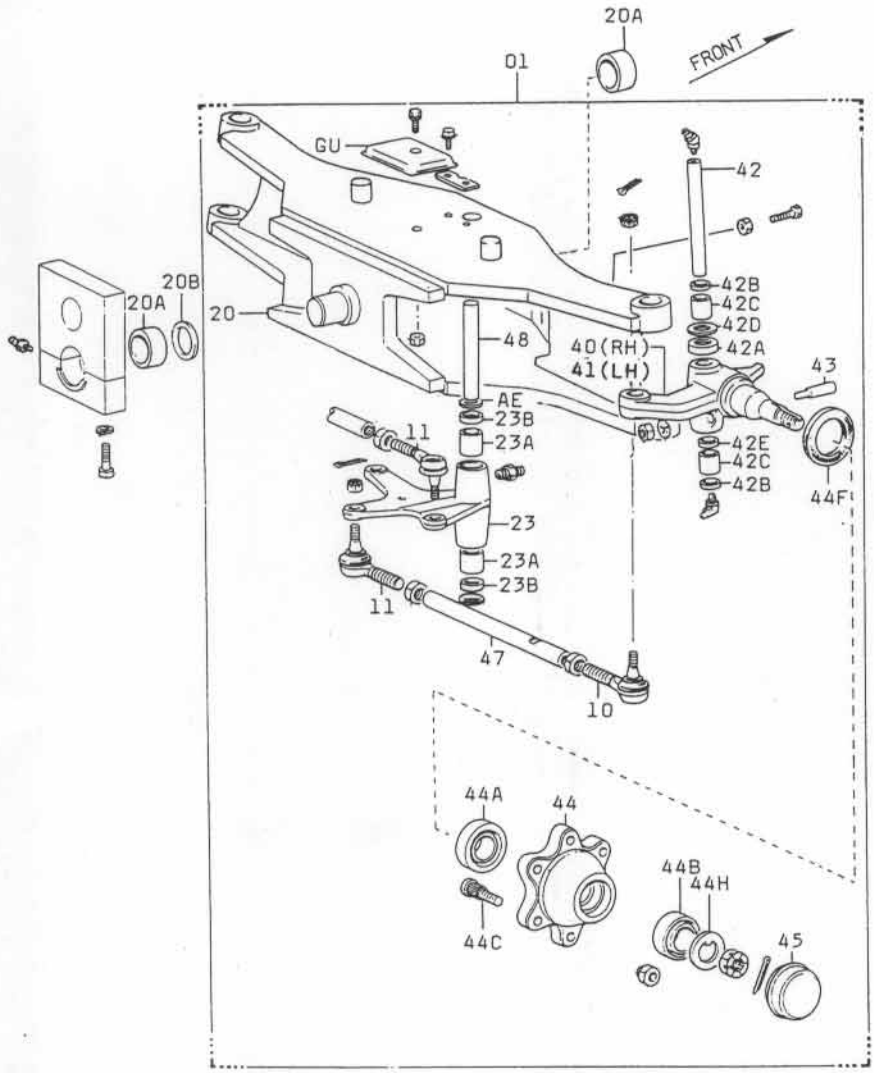

01	Rear axle ASSY	41	Steering knuckle LH	44C	Hub bolt
10	Tie rod end ASSY No. 1	42	Steering knuckle king pin	44F	Oil seal
11	Tie rod end ASSY No. 2	42A	Thrust bearing	44H	Claw washer
20	Rear axle beam	42B	Oil seal No. 1	45	Rear axle hub cap
20A	Rear axle beam bushing	42C	Needle bearing	47	Tie rod
20B	Rear axle beam shim	42D	Steering knuckle shim	48	Bell crank pin
23	Steering bell crank ASSY	42E	Oil seal No. 2	AE	Shim
23A	Bearing	43	King pin lock pin	AF	Stopper plate
23B	Oil seal	44	Rear axle hub	GU	Rear axle damper
23K	Bell crank pin seal kit	44A	Inner bearing		
40	Steering knuckle RH	44B	Outer bearing		

Rear Axle ASSY Components (3-ton series) BATM86

REAR AXLE ASSY

REMOVAL

Caution:
Apply the parking brake, and chock the front wheels.

1. Remove the cover.

2. Remove the balance weight.
   (1) Set bolts (width across flats = 27 mm (1.06 in))
   (2) Balance weight

3. Remove the rear wheels.
   (1) Hub nuts

   Caution:
   Never loosen the rim fitting nut.

   (2) Jack up the vehicle.
   (3) Support the frame with wooden blocks.

   Caution:
   Set wooden blocks under the right and left sides of the frame and check that they are correctly in contact with the frame.

   (4) Rear wheels

4. Disconnect drag link rod No. 2.
   (1) Cotter pin
   (2) Castle nut
   (3) Actuator joint
   SST 09610-20012

5. Disconnect the PS actuator joint.
   (1) Cotter pin
   (2) Castle nut
   (3) Actuator joint
   SST 09610-20012

6. Punch match marks.
   (1) Front bracket
   (2) Rear bracket

7. Measure the rear axle beam play.
   (1) Push the rear axle beam against the front side and measure the clearance on the rear side.
   Standard = 0.5 mm (0.0197 in)

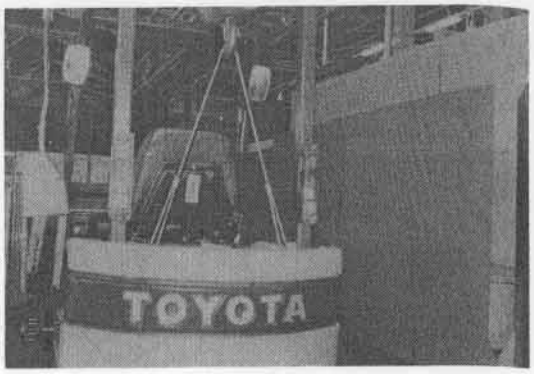

Removing the Balance Weight BAT4-32

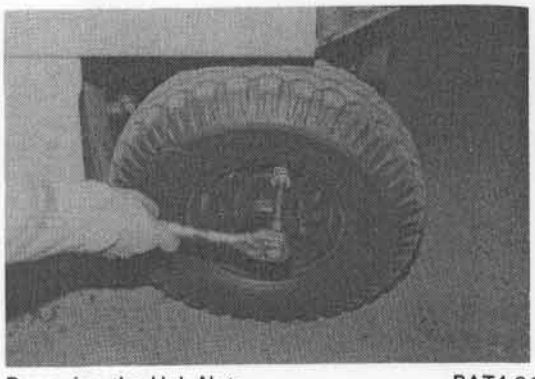
Removing the Hub Nuts BAT4-34

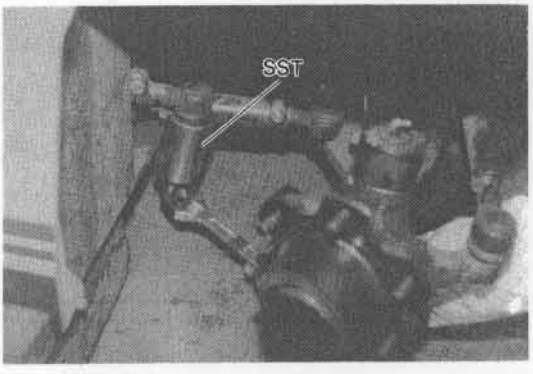

Disconnecting the Drag Link Rod No. 2 BAT4-35

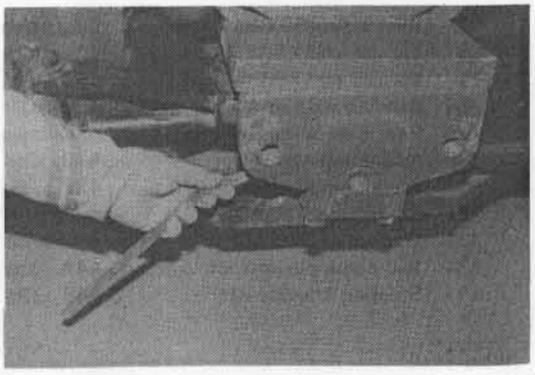
Measuring the Rear Axle Beam Play BAT3-5

8. Remove the rear axle ASSY.
   (1) Loosen the bracket bolts
   (2) Support the rear axle ASSY with a jack so as not to cause lifting up.
   (3) Set bolts and axle bracket.
   (4) Gradually lower the jack.
   (5) Remove the rear axle ASSY backward.

   Caution:
   Carefully operate to prevent the rear axle from coming into contact with the frame.

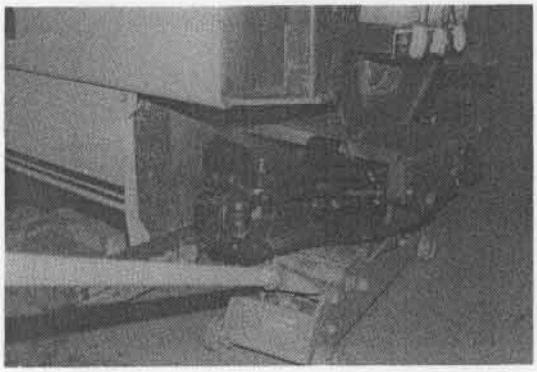

Removing the Rear Axle ASSY BAT2-14

DISASSEMBLY

Caution:
Perfectly remove dirt from each part before starting disassembly. Carefully operate during disassembly to prevent each part from deformation or cracking.

1. Remove each rear axle hub.
   (1) Hub cap
   (2) Cotter pin
   (3) Castle nut
   (4) Claw washer
   (5) Rear axle hub

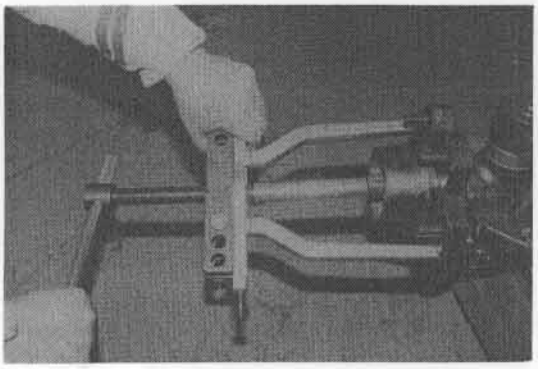

Removing the Rear Axle Hub BAT2-10

2. Remove the inner bearing and oil seal.
   SST 09950-20017

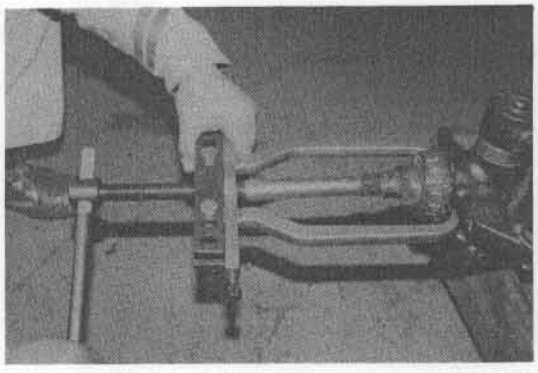

Removing the Inner Bearing BAT2-11

3. Disconnect the tie rod end.
   (1) Cotter pin
   (2) Castle nut
   (3) Tie rod end
   SST 09610-20012

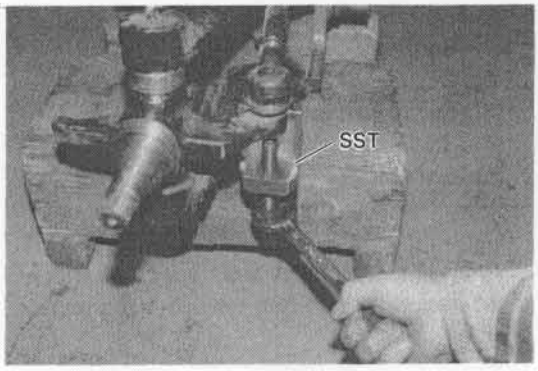

Disconnecting the Tie Rod End BAT3-13

4. Remove the steering knuckle.
   (1) Set nut
   (2) King pin lock pin

   Caution:
   Always use a service nut (which may be damaged) to prevent the threaded portion of the lock pin from damage.

   (3) Grease fitting
   (4) King pin
   (5) Thrust bearing
   (6) Shims
   (7) Steering knuckle

   Caution:
   Keep the shims neatly by separation into those for the left side and those for the right side.

5. Remove the oil seal.

   Caution:
   Remove the oil seal only when the oil seal and needle bearing are damaged or worn.

6. Remove the needle bearing.
   SST 09620-30010

   Caution:
   Remove the needle bearing only when it is damaged or worn.

7. Remove the bell crank w/tie rod.
   (1) Set bolt
   (2) Stopper plate
   (3) Bell crank pin
   (4) Shims
   (5) Bell crank w/tie rod

   Caution:
   Arrange the shims by separation into those for the upper side and those for the lower side.

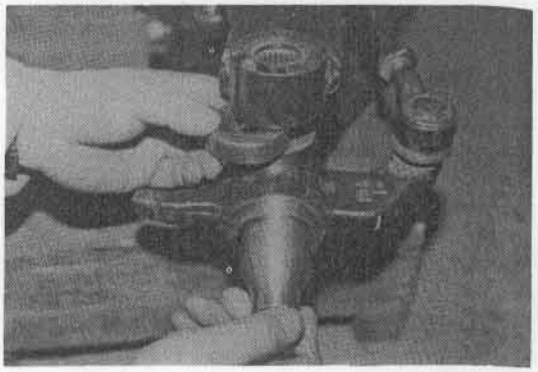

Removing the Knuckle BAT3-36

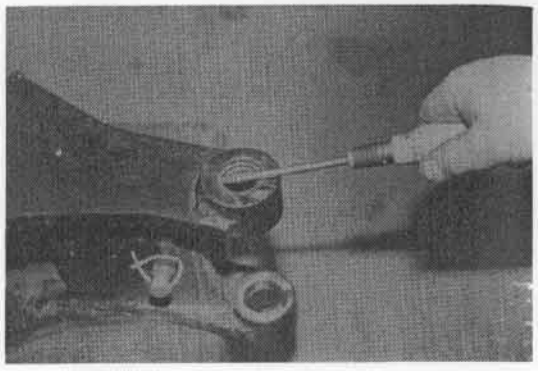

Removing the Oil Seal BAT3-19

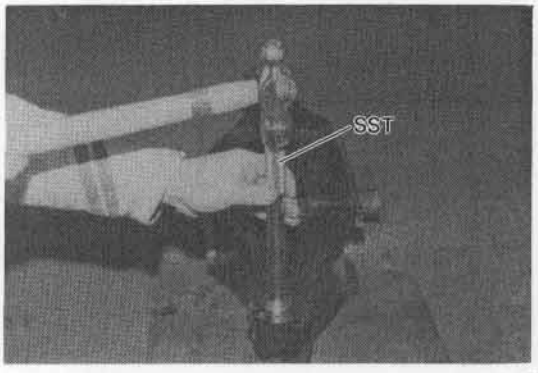

Removing the Needle Bearing BAT3-32

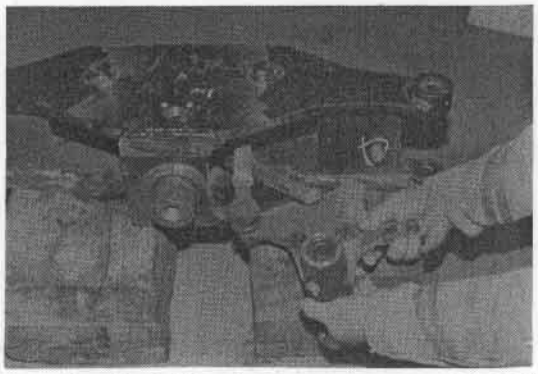

Removing the Bell Crank BAT3-33

8. Remove the tie rod.
   (1) Cotter pin
   (2) Castle nut
   (3) Tie rod
       SST 09610-20012

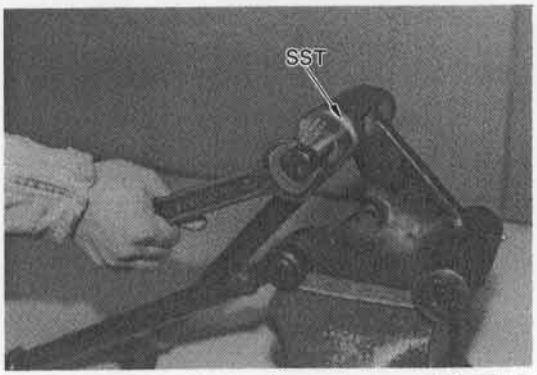

Removing the Tie Rod LAO15-24

INSPECTION

Caution:
Inspect each part after cleaning and washing. Repair or replace each part when any defect is found.
Inspect each bearing for unsmooth rotation, abnormal sound, looseness or damage.

1. Inspect the steering knuckle.
   (1) Crack or damage

Caution:
Carry out color check (for flaw detection).

2. Inspect the king pin.
   (1) Wear or damage
   Standard outside diameter:
   28.0 mm (1.10 in)
   Wear limit: 27.8 mm (1.09 in)

Caution:
Replace the king pin with the needle bearing when the outside diameter is below the wear limit.

3. Inspect the needle bearing and oil seal.
   (1) Damage
   (2) Corrosion of needle bearing

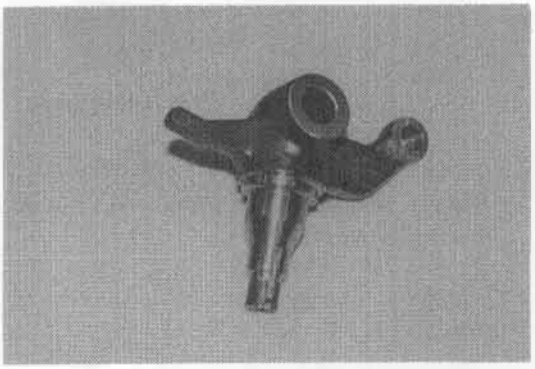
Inspecting the Steering Knuckle BAT3-21

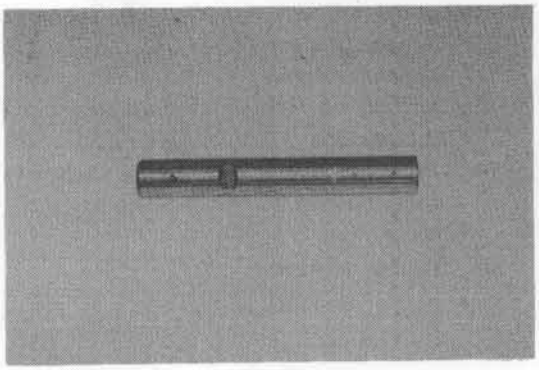
Inspecting the King Pin BAT3-22

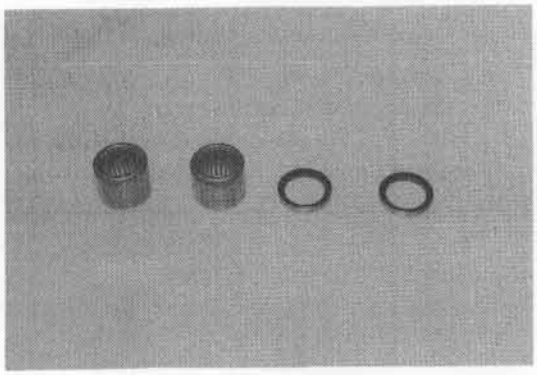
Inspecting the Bearing and Oil Seal LAP16-17

4. Inspect the rear axle bracket.
   (1) Damage or crack
   (2) Excessive wear or rust on inside surface.

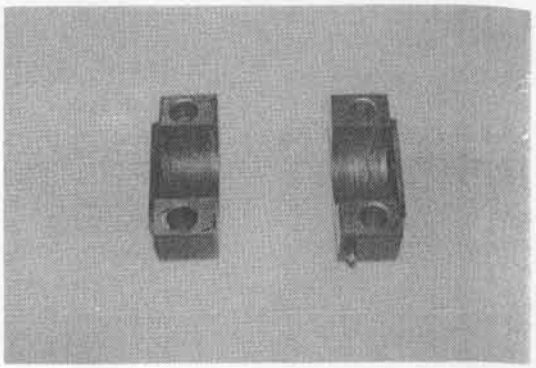

Inspecting the Rear Axle Bracket BAT3-23

5. Inspect the support pin bushing and spacer.
   (1) Wear at bushing inner surface
   Wear limit (inside diameter):
   52.0 mm (2.05 in)

   Caution:
   Always replace the bushing when the oil receiver is worn out.

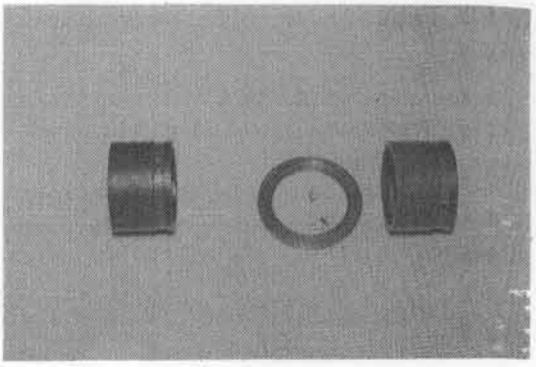

Inspecting the Bushing and Spacer BAT3-26

6. Inspect the hub, wheel bearing and oil seal.
   (1) Damage or crack of hub
   (2) Damage, chipping or bend of hub bolt
   (3) Damage on wheel bearing outer race surface
   (4) Unsmooth rotation or abnormal sound of wheel bearing, or damage of roller or holder
   (5) Damage of oil seal

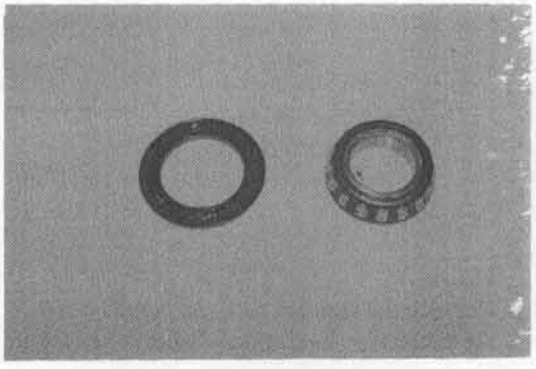

Inspecting the Bearing and Oil Seal BAT3-24

7. Inspect the rear axle beam.
   (1) Bend or crack of beam
   (2) Wear or damage of oil pin
   Standard outside diameter:
   50.0 mm (1.97 in)
   Wear limit: 48.5 mm (1.91 in)

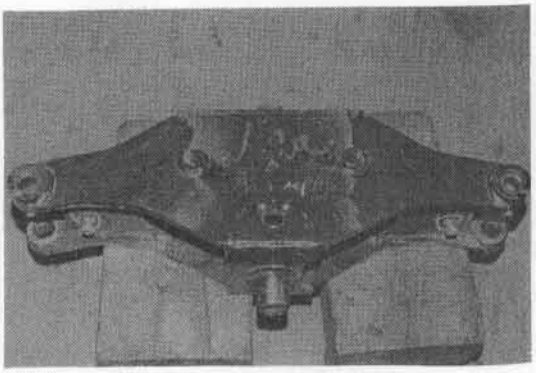

Inspecting the Rear Axle Beam BAT3-20

8. Inspect the tie rod.
   (1) Bend in rod
   (2) Looseness at ball joint
   (3) Damage at threaded part

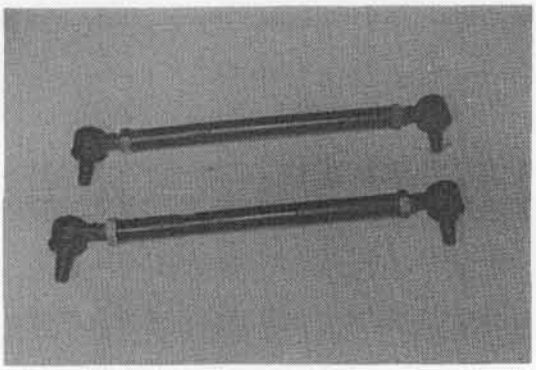

Inspecting the Tie Rod LAO14-9

REASSEMBLY

Caution:
- Always clean each part thoroughly before reassembly.
- Rubber parts such as oil seals shall always be replaced with new ones once they are disassembled.
- Always replace cotter pins with new ones.

1. Install the needle bearing and oil seal on the rear axle beam.
   (1) Needle bearing
   SST 09620-30010
   (2) Oil seal
   SST 09620-30010

Caution:
Install these parts in illustrated positions. Coat grease on bearing rollers and oil seal lip before installation.

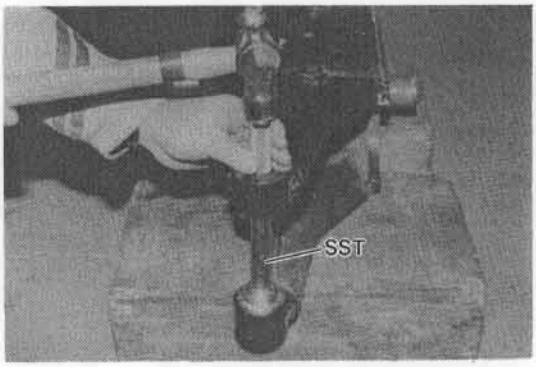

Inspecting the Needle Bearing BAT3-31

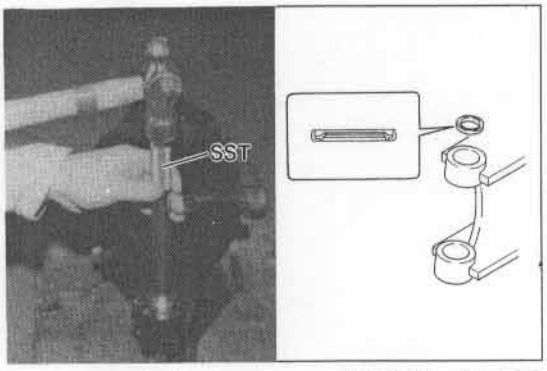

Installing the Oil Seal BAT3-32, LAOS327

2. Install the needle bearing on the bell crank.
   (1) Needle bearing
   SST 09620-30010
   (2) Oil seal
   SST 09620-30010

Caution:
Install the oil seal with its lip on the outer side.

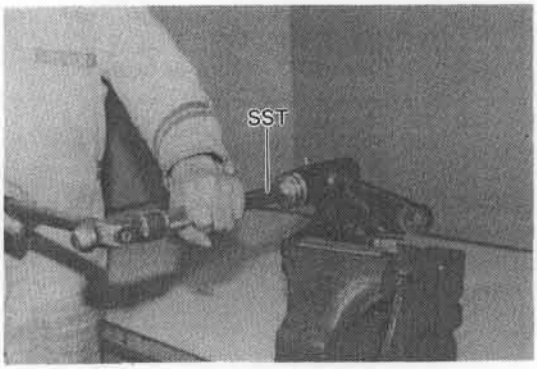

Installing the Needle Bearing LAO14-7

3. Install the tie rod.
   (1) Tie rod
   (2) Castle nut
   T = 7~10 kg-m
   (50.6~72.3 ft-lb)
   [68.6~98.0 N-m]

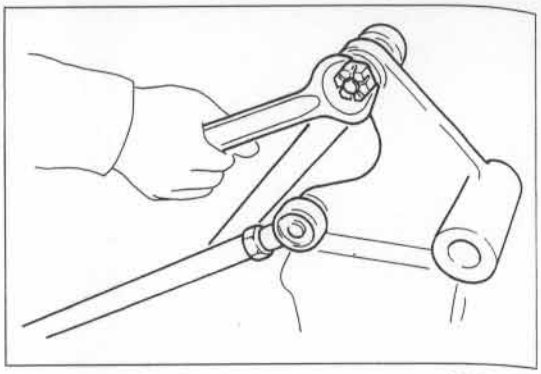

Installing the Tie Rod LAOS325

4. Install the bell crank w/tie rod.
   (1) Place the bell crank w/tie rod in the axle beam.
   (2) Thrust washer (lower side):
   3.0 mm (0.118 in)
   (3) Shims (upper side)
   Standard clearance: 0~0.55 mm
   (0~0.022 in)
   Shim types: 0.5 mm (0.0197 in) and 1.0 mm (0.039 in)
   (4) Check if the bell crank moves smoothly

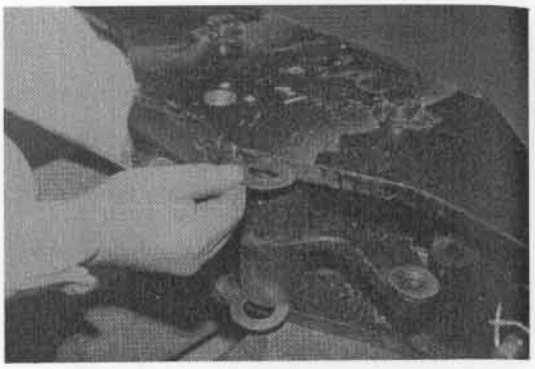

Installing the Bell Crank BAT3-33

   (5) Bell crank pin
   (6) Stopper plate
   (7) Set bolt
   T = 1.9~3.1 kg-m (13.7~22.4 ft-lb)
   [18.6~30.4 N-m]

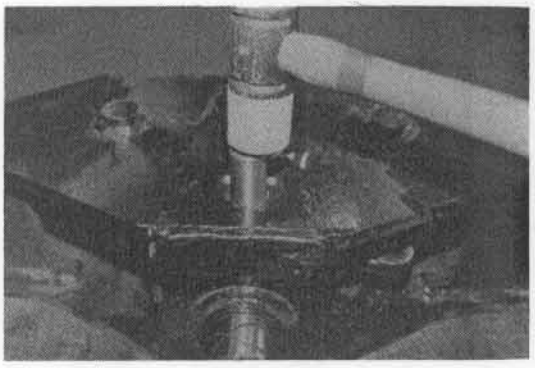

Installing the Bell Crank Pin BAT3-34

5. Install the steering knuckle.
   (1) Steering knuckle
   (2) Thrust bearing

   Caution:
   Install the thrust bearing on the upper side of the knuckle.

   (3) Shim adjustment
   Standard clearance:
   0.1 mm (0.0039 in) or less
   Shim types:
   0.1 mm (0.0039 in), 0.2 mm (0.0079 in), 0.5mm (0.0197 in) and 1.0 mm (0.039 in)

   Caution:
   Make shim adjustment on top of the knuckle.

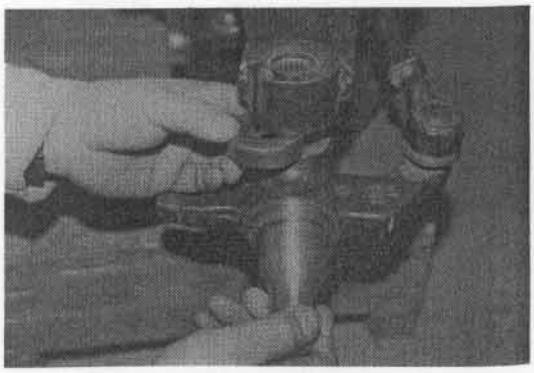

Installing the Steering Knuckle BAT3-36

(4) King pin
(5) Measure the knuckle preload.
Standard preload: 3~5 kg (21.7~36.2 ft-lb) [29.4~49N-m]
(6) Lock pin
(7) Lock nut
T = 1.9~3.1 kg-m (13.7~22.4 ft-lb) [18.6~30.4 N-m]
(8) Tie rod
(9) Castle nut
T = 7~8 kg-m (57.8~50.6 ft-lb) [68.6~78.4 N-m]
(10) Cotton pin

6. Install the inner bearing
(1) Oil seal

Caution:
Coat grease on oil seal lip before installation.

(2) Inner bearing
SST 09370-20270-71

Caution:
Carefully drive in the bearing straight without inclination.

7. Install the bearing outer race.
(1) Inner bearing
SST 09370-10170-71
SST 09608-20012
(2) Outer bearing
SST 09608-20012

8. Install the rear axle hub.
(1) Coat grease on the inner bearing.
(2) Fill grease in the hub and install it onto the steering knuckle.
(3) Coat grease on the outer bearing, and install it in the axle hub.
SST 09370-20270-71
(4) Claw washer
(5) Castle nut

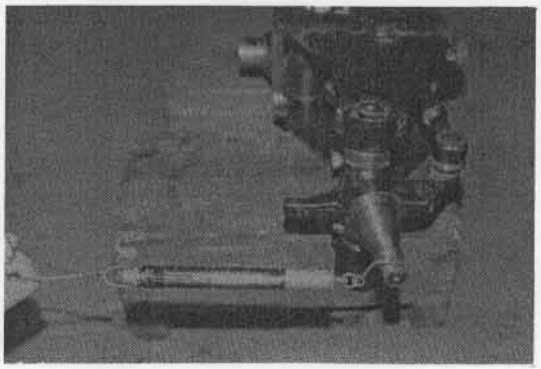

Measuring the Knuckle BAT2-5

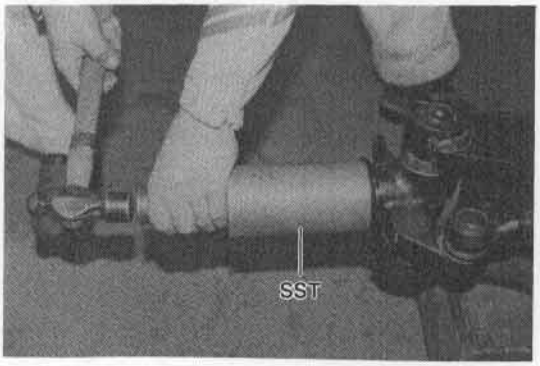

Installing the Bearing BAT2-8

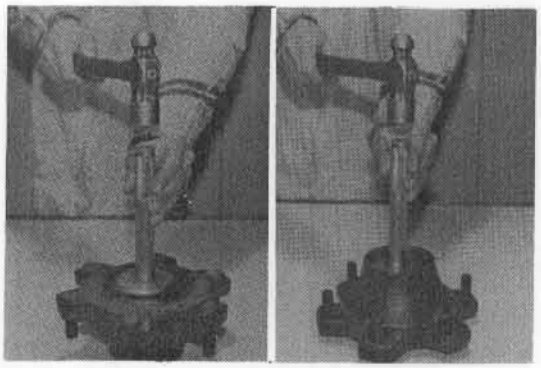

Installing the Outer Race LAO13-22,24

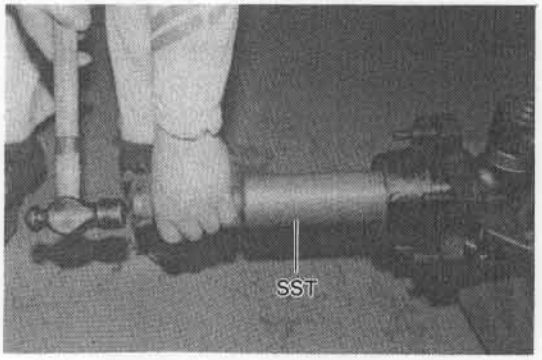

Installing the Rear Axle Hub BAT2-12

9. Measure the rear axle hub preload.
   (1) Attach a spring scale to the hub bolt, and measure the hub rotation starting force:
   1 ton series: 1.5 ~ 4.0 kg (3.3 ~ 8.8 lb) [14.7 ~ 39.2 N]
   2 ~ 3 ton series: 1.5 ~ 4.5 kg (3.3 ~ 9.9 lb) [14.7 ~ 44.1 N]

   Caution:
   When adjusting the preload, tighten the castle nut fully and loosen it by about 1/4 turn.
   Lightly tap with a soft hammer to make rotation easier, and measure the preload after retightening the castle nut again.

   (2) Cotter pin
   (3) Fill grease in the hub cap.
   (4) Hub cap

8. Adjust the toe-in.
   (1) Insert a round rod into the holes in the center of the axle beam and bell crank, and set the straight traveling status.
   (2) Temporarily install the rear wheels.
   (3) Put marks at the centers of the left and right tires, and measure the distance between the marks on each of the front and rear sides of the wheels.
   Measured value on the front side: A
   Measured value on the rear side: B
   Standard A — B = 0 mm
   (4) Adjust the tie rods to equal the center-to-center distances on the front and rear sides.

   Caution:
   Equally adjust the tie rods on the left and right sides.

   (5) Remove the tires after the adjustment.

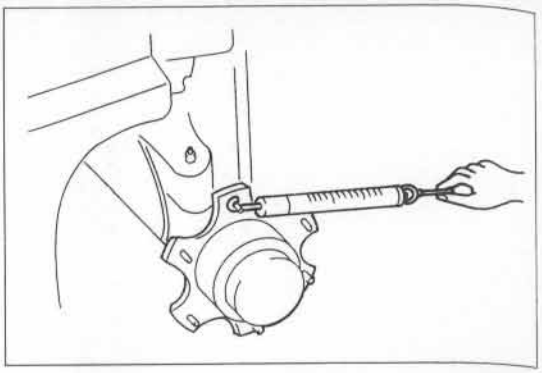

Measuring the Axle Hub Preload BARS185

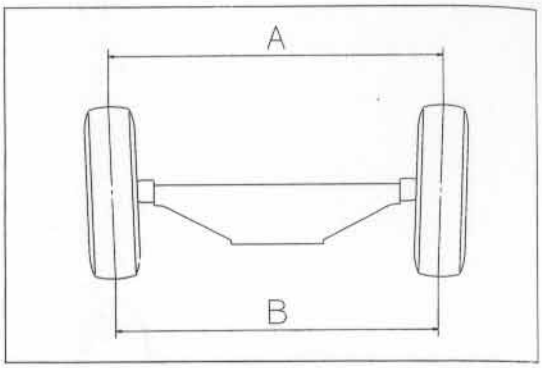

Measuring the Distance between Center Marks on Tires BARS151

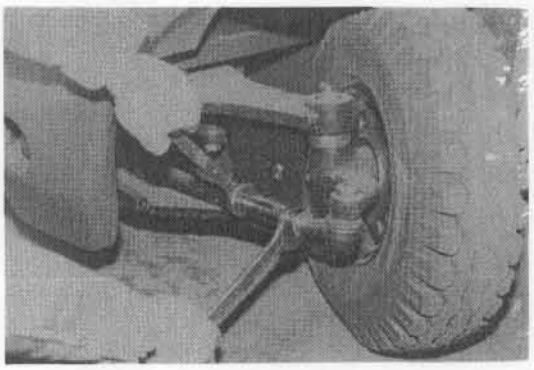

Adjusting the Toe-in LAO17-14

INSTALLATION

1. Install the rear axle ASSY.
   (1) Hoist the rear axle ASSY and place it on a jack.
   (2) Install the spacer on the center pin on the rear side.
   (3) Coat grease on the bushing and fit it on the center pin.
   (4) Place the rear axle ASSY under the frame.
   (5) Install the rear axle bracket cap by aligning the match marks and temporarily install the set bolt.

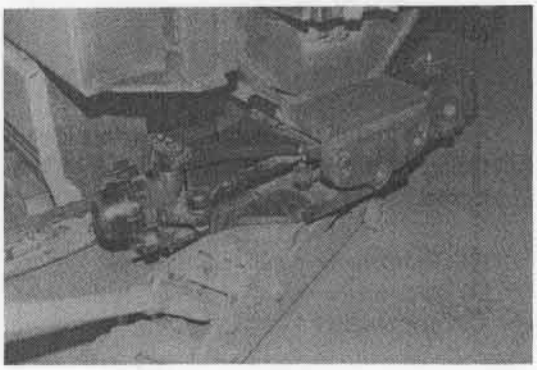

Installing the Rear Axle ASSY BAT3-6

2. Measure the rear axle play in the back and forth direction.
   Standard: 0.5 mm or less
   Spacer types:
   3.0, 3.5, 4.0, 4.5, 5.0 and 5.5 mm

   Caution:
   Adjust the play by changing the spacer on the rear side.

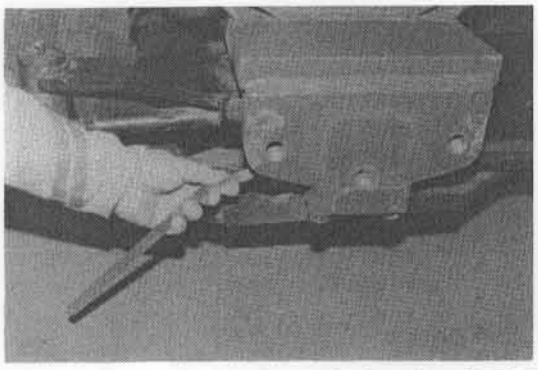

Measuring the Rear Axle Play in Back and Forth Direction BAT3-5

3. Tighten the rear axle bracket set bolts.
   T = 12~17 kg-m
   (86.7~122.9 ft-lb)
   [117.7~166.7 N-m]

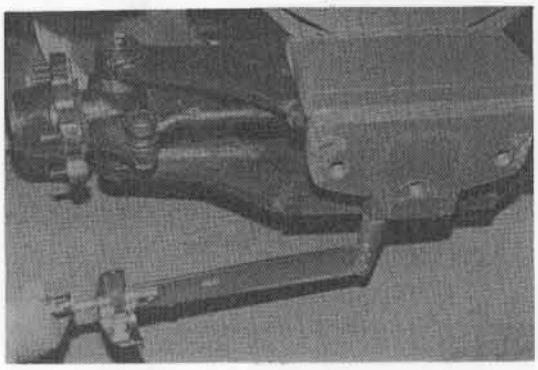

Tightening the Bracket Set Bolt BAT2-16

4. Install the PS actuator joint
   (1) Actuator joint
   (2) Castle nut
   (3) Cotter pin
   (4) Dray link rod
   (5) Castle nut
   (6) Cotter pin

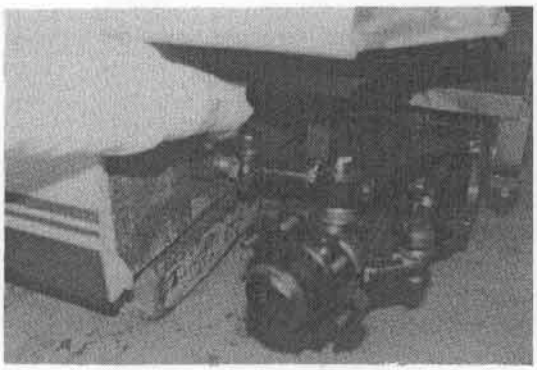

Installing the Joint and Rod BAT11-3

5. Install the rear wheels.
   (1) Rear wheel ASSY

   Caution:
   Always install the rear wheel with the rim fitting bolt facing the outer side of the frame.

   (2) Temporarily install hub nuts.
   (3) Jack up the vehicle and remove the wooden blocks.

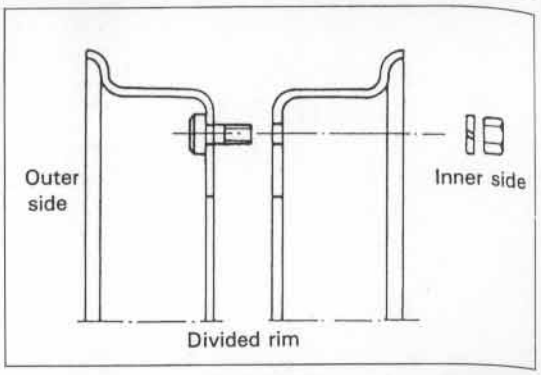

Installing the Rear Wheel ASSY BARS153

   (4) Tighten the hub nuts.
   1 ton series:
   T = 9~11 kg-m
   (65.1~79.5 ft-lb)
   [88.3~107.8 N-m]
   2 ~ 3 ton series:
   T = 12 ~ 15 kg-m
   (86.7 ~ 109 ft-lb)
   [117.7 ~ 156.9 N-m]

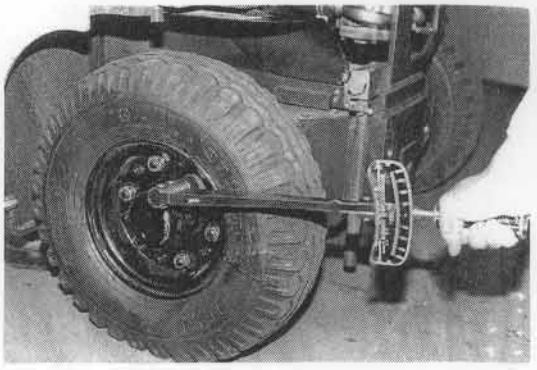

Tightening the Hub Nuts BAR24-3

6. Install the balance weight.
   (1) Balance weight
   (2) Set bolts (Width across flats = 27 mm)

7. Install the cover
   (1) Cover
   (2) Bolts

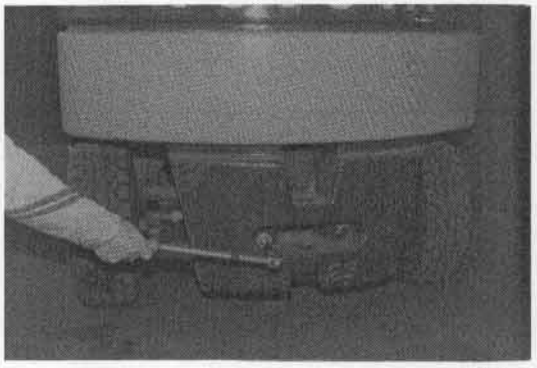

Installing the Balance Weight BAT17-1

REAR WHEEL ALIGNMENT

TOE-IN

Caution:
Measure and adjust the toe-in with the rear axle in removed state.

1. Remove the rear axle.
   (See the rear axle removal section.)

2. Measure the toe-in.
   Standard toe-in: 0 mm

3. If the toe-in does not satisfy the standard, loosen the tie rod lock nut and adjust the tie rod length by turning the tie rod.

   Caution:
   The tie rod length must be adjusted equally on the left and right sides.

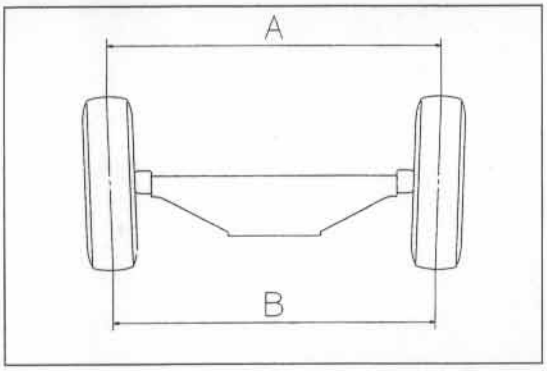

Measuring the Toe-in BARS151

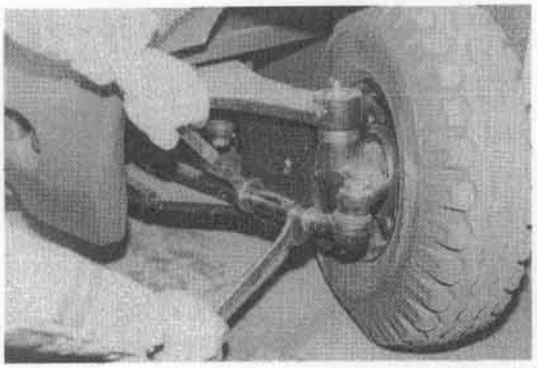

Adjusting the Toe-in BAT20-3

STEERING ANGLE

1. Adjust the rear wheel steering angle by adjusting the knuckle stopper bolt length.
2. After the adjustment, check the steering angle by measuring the minimum turning radius.
   Minimum turning radius

1.0 ton model:	1750 mm (69.0 in)
1.35 ton model:	1760 mm (69.3 in)
1.5 ton model:	1770 mm (69.7 in)
1.75 ton model:	1780 mm (70.0 in)
2.0 ton model:	1980 mm (78.0 in)
2.5 ton model:	2000 mm (78.7 in)
3.0 ton model:	2210 mm (87.0 in)

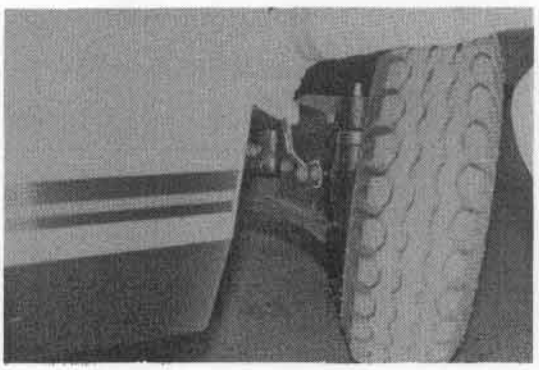

Adjusting the Stopper Bolt BAT20-1

CAMBER, CASTER & KING PIN ANGLE

Measure the camber according to the handling instructions for the wheel alignment tester.
Adjustment, however, is impossible.
Camber: 1°
Caster: 0°
King pin angle: 6°

Caution:
The caster and king pin angle cannot be measured with the camber and caster gauges.

WHEELS

	page
COMPONENTS	9-2
SPECIFICATIONS	9-5
WHEELS	9-7

9

COMPONENTS

Front wheel (single)

(Divided rim)

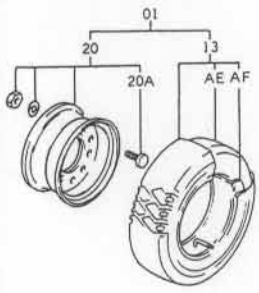

(Side ring rim)

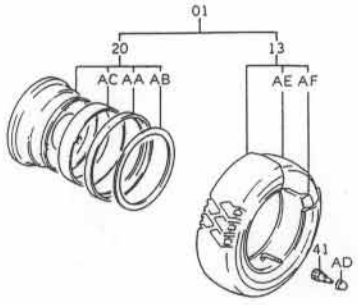

Front wheel (double)

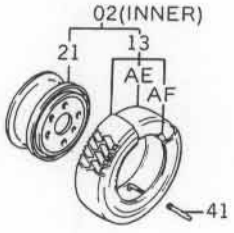

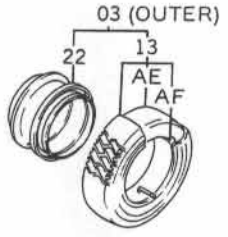

Rear wheel

(Divided rim)

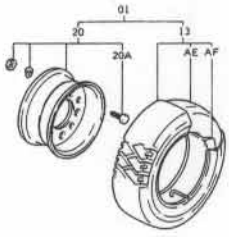

(Side ring rim)

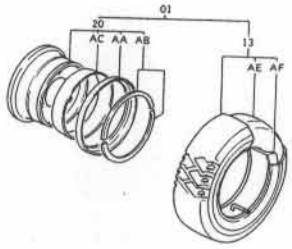

01	Wheel ASSY	21	Inner disc wheel	AC	Bend sheet band
02	Inner wheel ASSY	22	Outer disc wheel	AD	Cap
03	Outer wheel ASSY	41	Tube valve extension	AE	Tube
13	Tire ASSY	AA	Side flange	AF	Flap
20	Disc wheel	AB	Lock ring		

Wheel Components (1-ton Series) BARM107

Front wheel (single)

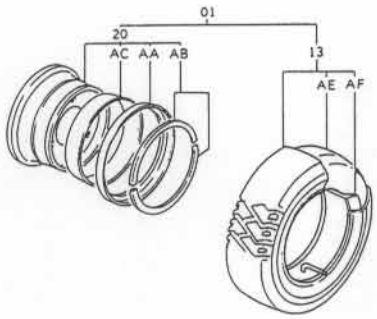

Front wheel (double)

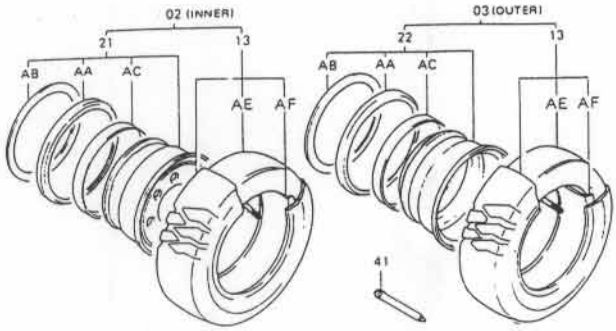

Rear wheel

(Divided rim)

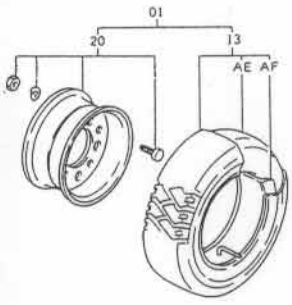

(Side ring rim)

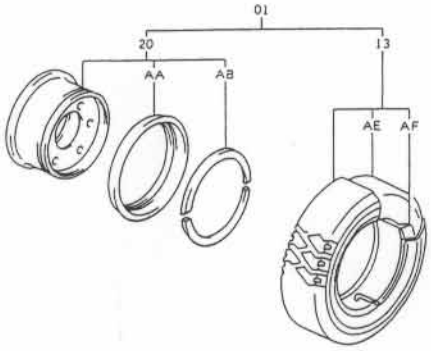

01	Wheel ASSY	AB	Lock ring
13	Tire ASSY	AC	Bend sheet band
20	Disc wheel	AE	Tube ASSY
AA	Side flange	AF	Flap

Wheel Components (2-ton Series) BATM87

Front wheel (single)

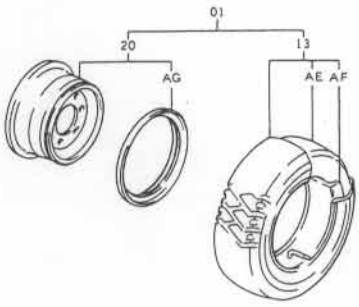

Front wheel (double)

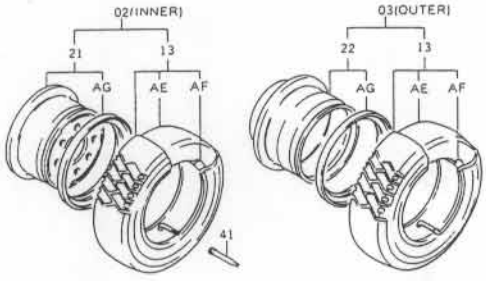

Rear wheel

(divided rim)

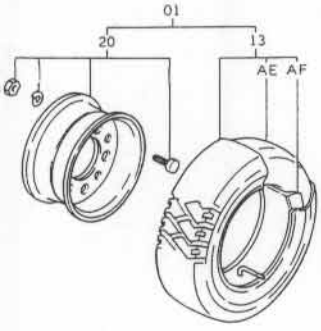

(side ring rim)

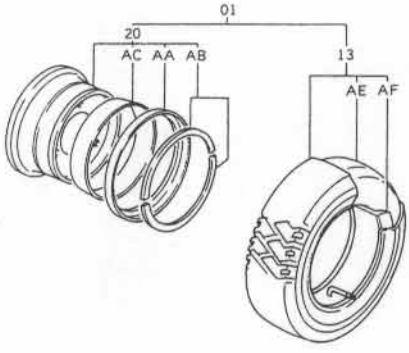

01	Wheel ASSY	21	Inner disc wheel	AE	Tube ASSY
02	Inner wheel ASSY	22	Outer disc wheel	AF	Flap
03	Outer wheel ASSY	41	Tube valve extension	AG	Side ring
13	Tire ASSY	AA	Side flange		
20	Disc wheel	AB	Lock ring		

Wheel Components (3-ton Series) BATM88

SPECIFICATIONS

1.0-TON VEHICLE

		Tire size	Rim size (type)	Inflating pressure
Front	Single	6.00-9-10PR	9X4.00E DT (Divided) 9X4.00E TB (Side ring)	7 kg/cm^2
	Standard double	4.50-12-8PR	12X3.50D DC	7 kg/cm^2
Rear		5.00-8-8PR	8X3.00D DT (Divided) 8X3.00D TB (Side ring)	8 kg/cm^2

1.35-TON VEHICLE

		Tire size	Rim size (type)	Inflating pressure
Front	Single	6.00-9-10PR	9X4.00E DT (Divided) 9X4.00E TB (Side ring)	7 kg/cm^2
	Standard double	4.50-12-8PR	12X3.50D DC	7 kg/cm^2
Rear		5.00-8-8PR	8X3.00D DT (Divided) 8X3.00D TB (Side ring)	8 kg/cm^2

1.5-TON VEHICLE

		Tire size	Rim size (type)	Inflating pressure
Front	Single	21X8-9-10PR	9X6.00E TB (Side ring)	6.25 kg/cm^2
	Standard double	4.50-12-8PR	12X3.50D DC	7 kg/cm^2
Rear		5.00-8-8PR	8X3.00D DT (Divided) 8X3.00D TB (Side ring)	8 kg/cm^2

1.75-TON VEHICLE

		Tire size	Rim size (type)	Inflating pressure
Front	Single	21X8-9-10PR	9X6.00E TB (Side ring)	6.25 kg/cm^2
	Standard double	4.50-12-8PR	12X3.50D DC	7 kg/cm^2
Rear		5.00-8-10PR	8X3.00D TB (Side ring)	9 kg/cm^2

2.0-TON VEHICLE

		Tire size	Rim size (type)	Inflating pressure
Front	Single	21X8-9-14PR	9X6.00E TB (Side ring)	9 kg/cm^2
	Standard double	6.00-9-10PR	9X4.00E TB (Side ring)	7 kg/cm^2
Rear		18X7-8-14PR	8X4.25 DT (Divided) 8X4.33R TB (Side ring)	7 kg/cm^2

2.5-TON VEHICLE

		Tire size	Rim size (type)	Inflating pressure
Front	Single	21X8-9-14PR	9X6.00E TB (Side ring)	9 kg/cm^2
	Standard double	6.00-9-10PR	9X4.00E TB (Side ring)	7 kg/cm^2
Rear		18X7-8-14PR	8X4.33R TB (Side ring)	9 kg/cm^2

3.0-TON VEHICLE

		Tire size	Rim size (type)	Inflating pressure
Front	Single	28X9-15-14PR	15X7.00T IR (Side ring)	8 kg/cm^2
	Standard double	6.00-15-10PR	15X4.50E SDC (Side ring)	7 kg/cm^2
Rear		6.50-10-10PR	10X5.00F DT (Divided) 10X5.00F TB (Side ring)	7 kg/cm^2

WHEEL

CAUTION FOR REMOVAL

Caution:

- Check damage or crack on the rim before removal.
- Do not loosen the set nut in the divided rim.

CAUTION FOR INSTALLATION

Caution:

- In case of the divided rim, fit with the serrated bolts (round head) facing outward.
- Observe the inflation pressure shown in the preceding tables.

STEERING

	Page
GENERAL	10-2
SPECIFICATIONS	10-3
COMPONENTS	10-3
MAST JACKET ASSY	10-6
STEERING WHEEL	10-11
STEERING GEAR ASSY	10-12
PS ACTUATOR ASSY	10-20

GENERAL

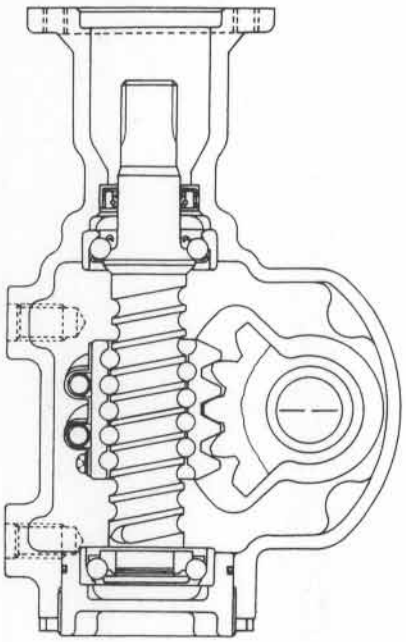

Steering Gear ASSY Sectional View

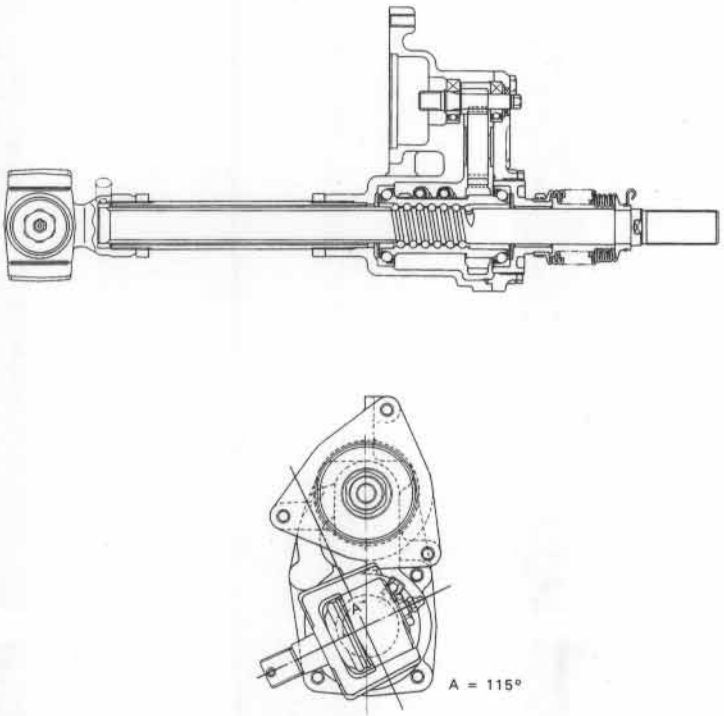

PS Actuator Sectional View

SPECIFICATIONS

Item		Vehicle	1 ton series	2 ton series	3 ton series
Steering wheel mm (in)	Diameter		380 (14.96)	←	←
	Play		20 ~ 40 (0.787 ~ 1.575)	←	←
Steering gear	Gear type		Recirculating ball screw type		
	Gear ratio		1 : 23.748		
	Lock-to-lock		4.3	4.4	4.5
Cross shaft adjusting plate clearance mm (in)			0.1 (0.0039) max.		
Ball screw set starting torque	W/O cross shaft		0.3 ~ 0.7 kg (0.66 ~ 1.54 lb) [2.94 ~ 6.86 N]		
	W/ cross shaft		0.7 ~ 1.5 kg (1.54 ~ 3.3 lb) [6.86 ~ 14.7 N]		
Booster	Type		EPS (electric power steering)		
	Mechanism		Gear-ball screw type PS actuator		
	Controller		Torque sensor-controller		

COMPONENTS

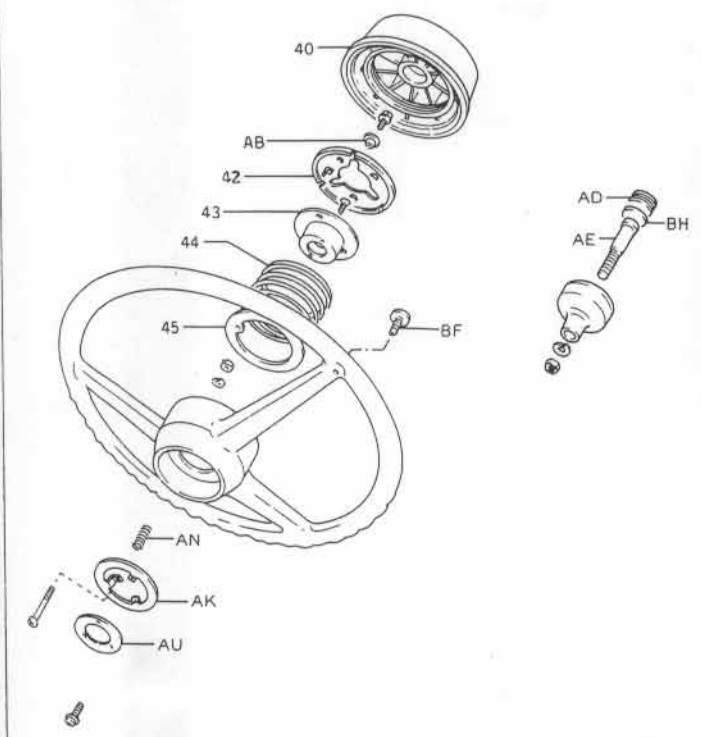

40 Horn button
42 Horn contact plate
43 Horn contact sect
44 Horn spring
45 Reed plate
AB Washer
AD Steering wheel cap
AE Steering wheel knob set bolt
AK Horn contact No. 1 ring
AN Reed spring
AU Horn contact No. 2 ring
BF Cap
BH Packing

Steering Wheel Components BARM42

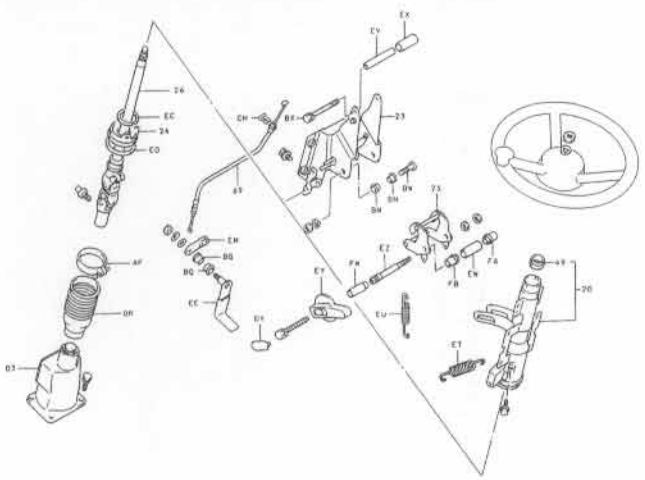

03	Torque sensor ASSY	AF	Clamp	EE	Steering stopper	FA	Adjusting nut RH
20	Mast jacket	BN	Bushing	EM	Hook	FB	Adjusting nut LH
23	Tilt steering bracket	BQ	Bushing	ER	Steering bracket cover	FW	Pipe
24	Steering shaft stopper	BR	Mast jacket boot	ET	Tension spring		
25	Steering stopper	CH	Clip	EV	Pipe		
26	Tilt steering shaft	DO	Grease fitting	EW	Tilt lock collar		
49	Steering column bracket	DY	Cap	EX	Hose		
69	Tilt steering wire	EC	Ring	EY	Tilt lock lever		
AD	Grommet	ED	Ring	EZ	Tilt lock bolt		

Steering Post (Tilt Mechanism) Components

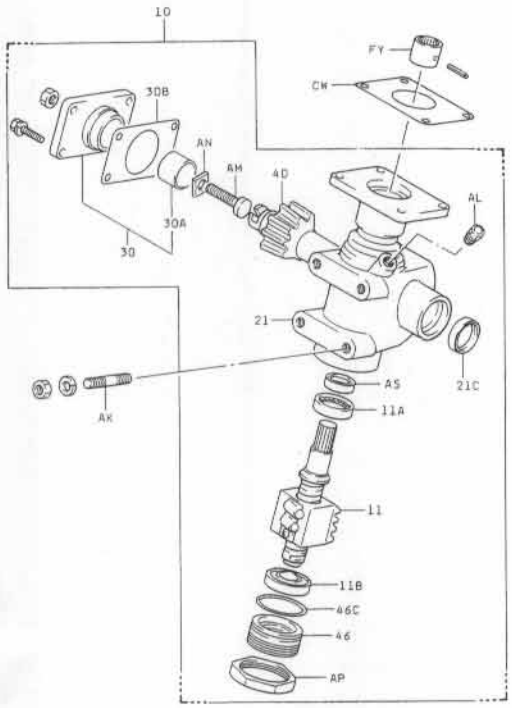

10	Steering gear ASSY
11	Ball screw set
11A	No. 1 bearing
11B	No. 2 bearing
21	Steering gear box
21C	Oil seal
30	Side cover
30A	Sector shaft No. 2 bushing
30B	Side cover packing
46	End cover
46C	O-ring
AK	Bolt
AL	Oil plug
AN	Adjusting plate
AM	Adjusting bolt
AP	Nut
AS	Oil seal
CW	Gasket
FY	Steering gear box coupling

Steering Gear Box Components

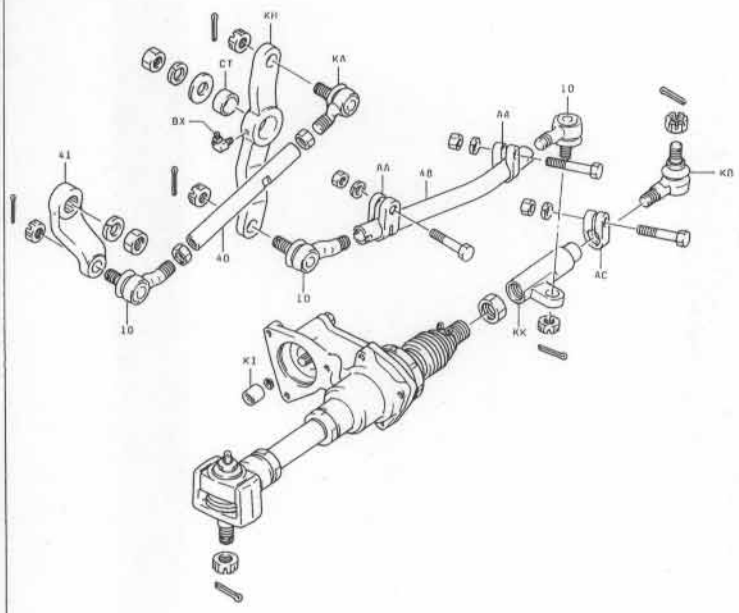

10	Drag link ASSY
40	Drag link No. 1 rod
41	Pitman arm
48	Drag link No. 2 rod
AA	End plug
AC	End clamp
BX	Grease fitting
CT	Bushing
KA	Drag link end ASSY
KB	Drag link end ASSY
KH	Drag link arm
KI	Coupling
KK	Power steering actuator joint

Drag Link & Steering Piping Components

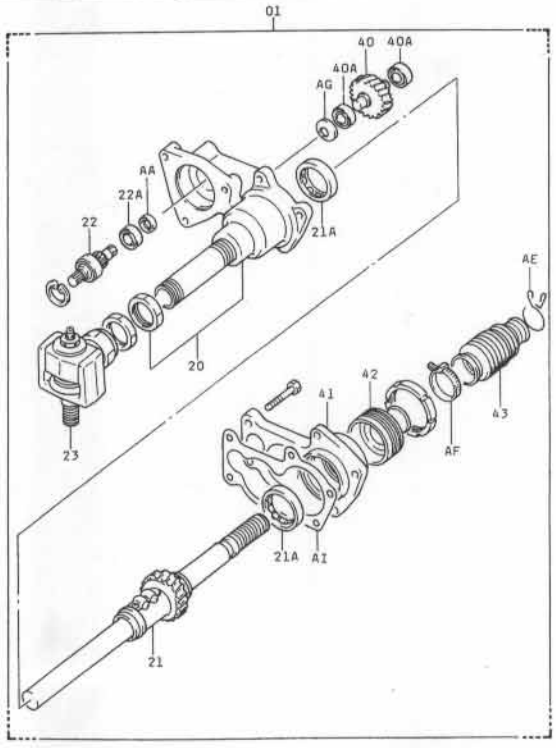

01	Power steering actuator ASSY
20	Gear box
21	Ball screw rod
21A	Bearing
22	Pinion
22A	Bearing
23	Ball joint
40	Counter gear
40A	Bearing
41	Top cover
42	Top plug
43	Boot
AA	Dust seal
AE	Clip
AF	Band
AG	Spring
AI	Packing

Power Steering Actuator Components

MAST JACKET ASSY

REMOVAL

1. Disconnect the battery plug.

2. Remove the toe board.
   (1) Accelerator connector
   (2) Toe board

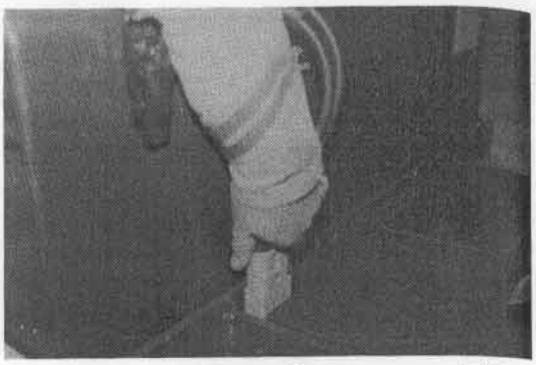

Ddisconnecting the Battery Plug BAT3-28

3. Remove the steering wheel.
   (1) Horn button
   (2) Set screw
   (3) Contact plate w/sheet
   (4) Spring
   (5) Steering wheel
   SST 09609-20011

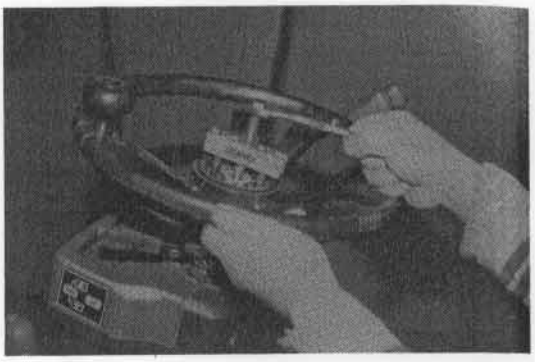

Removing the Steering Wheel BAT9-7

4. Remove the front cover.
   (1) Loosen the knob
   (2) Front cover

5. Remove the pads LH and RH.
   (1) Set bolts
   (2) Pads LH and RH

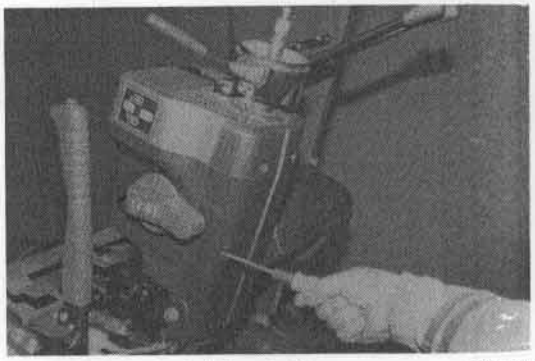

Removing the Pads LH and RH BAT9-8

6. Remove the cover.
   (1) Set bolts
   (2) Cover

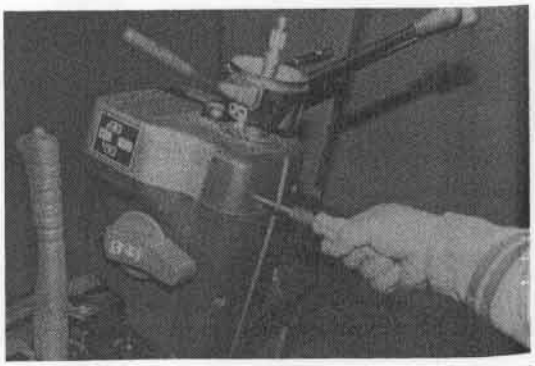

Removing the Cover BAT9-10

7. Remove the turn signal switch ASSY.
   (1) Disconnect the connector
   (2) Loosen the set bolts
   (3) Turn signal switch ASSY

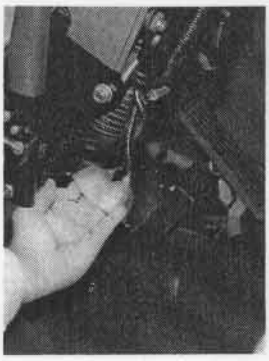


Removing the Turn Signal Switch BAR20-35, 36

8. Remove the tilt lock lever.
   (1) Cap
   (2) Set bolt
   (3) Tilt lock lever

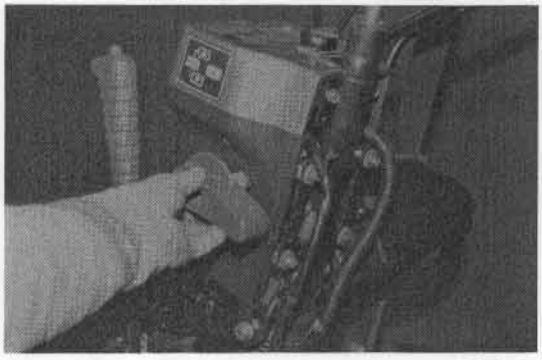

Removing the Tile Lock Lever BAT9-14

9. Remove the display ASSY w/direction switch.
   (1) Disconnect the connector
   (2) Set bolts
   (3) Display ASSY w/direction switch
   (4) Grommet




Removing the Display BAT9-17, 18

10. Remove the direction switch.
    (1) Disconnect the connector
    (2) Set bolt
    (3) Direction switch ASSY

11. Remove the tension spring.
    (1) Tension spring

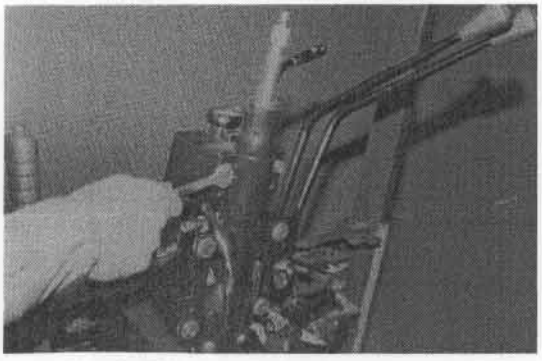

Removing the Direction Switch BAT9-19

12. Remove the tilt lock components.
    (1) Lock nut
    (2) Tilt lock bolt (lefthand screw)
    (3) Adjusting nuts LH and RH
    (4) Collar

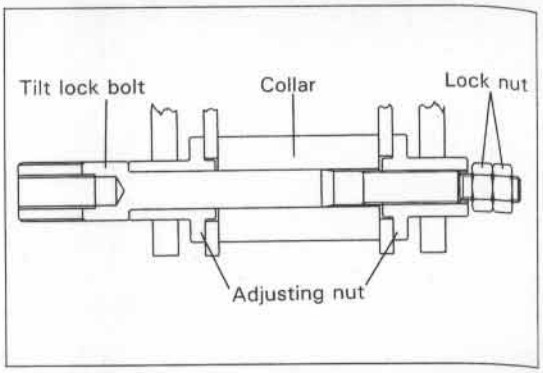

Removing the Tilt Lock Components BARS154

13. Remove the mast jacket ASSY.
    (1) Loosen the boot clamp under the mast jacket
    (2) Set nut
    (3) Set bolt
    (4) Bushing
    (5) Mast jacket ASSY

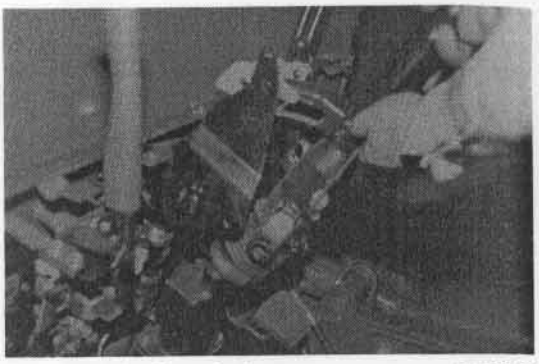

Removing the Mast Jacket BAT9-24

DISASSEMBLY

1. Remove the tilt steering shaft w/shaft stopper
    (1) Boot clamp
    (2) Boot
    (3) Set bolt
    (4) Tilt steering shaft w/shaft stopper

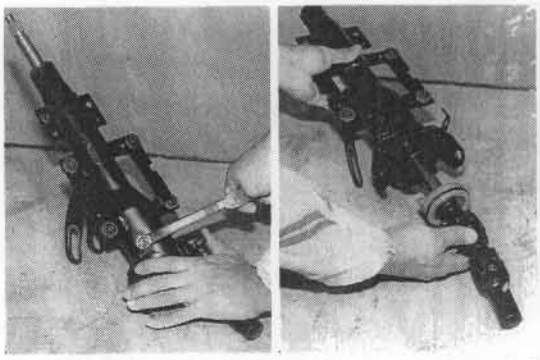

Removing the Tilt Steering Shaft BAR21-6, 7

2. Remove the universal joint.
    (1) Set bolt
    (2) Universal joint

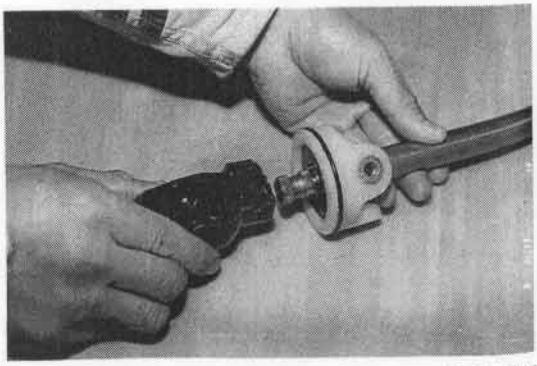

Removing the Universal Joint LAO123-9

3. Remove the steering shaft stopper.
   (1) Snap ring
   (2) Shaft stopper
   SST 09411-41800-71



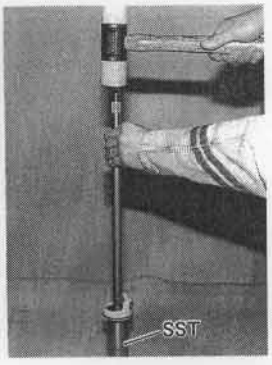

Removing the Stopper LAO123-16, 18

INSPECTION

1. Inspect the mast jacket.
   (1) Deformation or damage of mast jacket tube portion
   (2) Deformation of spring hook or crack at welded part
   (3) Deterioration or damage of grommet



Inspecting the Mast Jacket BAR21-8

2. Inspect the tilt shaft.
   (1) Bend of shaft
   Bend limit: 1.5 mm
   (2) Damage at serration or threaded portion

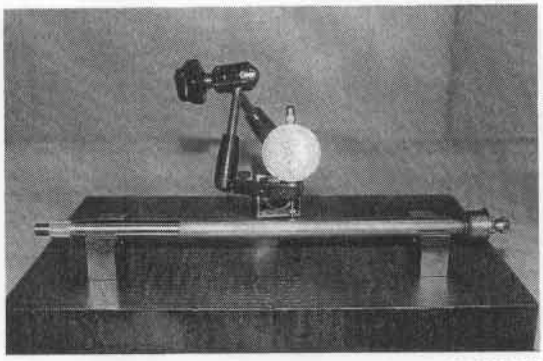

Inspecting the Tilt Shaft LAO123-20

3. Inspect the universal joint.
   (1) Damage at spider
   (2) Damage at serration
   (3) Damage or rusting at spline

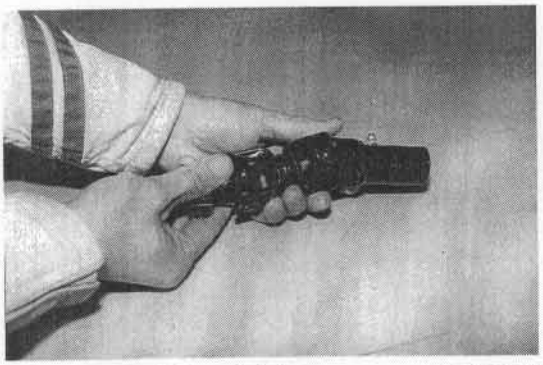

Inspecting the Universal Joint LAO123-23

4. Inspect the shaft stopper.
   (1) Deterioration and damage of resin portion
   (2) Abnormal sound and unsmooth rotation of bearing

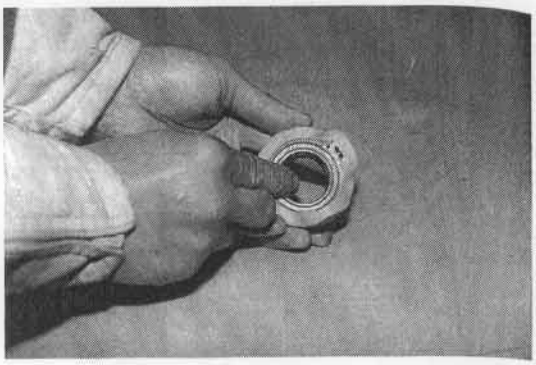

Inspecting the Shaft Stopper LAO123-22

REASSEMBLY

1. Install the shaft stopper.
   (1) Install the shaft stopper on the tilt shaft.
   SST 09700-30200-71
   (2) Snap ring
   SST 09905-00012

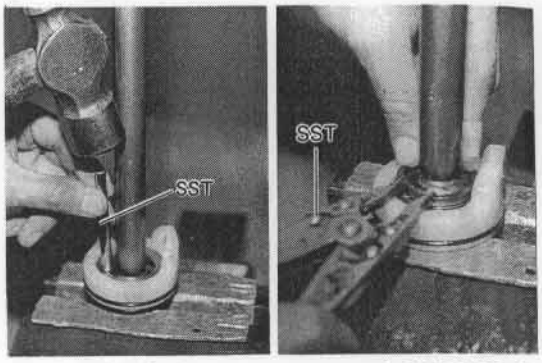

Installing the Stopper LAO123-28, 31

2. Install the universal joint
   (1) Match the bolt set groove on the steering shaft with the bolt hole in the universal joint.
   (2) Set bolt
   T = 1.8~2.5 kg-m (13.0~18.1 ft-lb) [17.65~24.51 N-m]

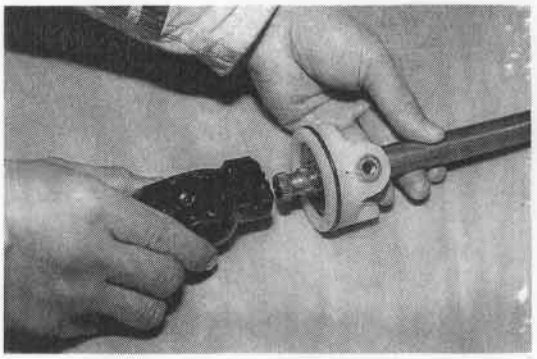

Installing the Universal Joint LAO123-9

3. Install the steering shaft w/universal joint.
   (1) Align the bolt holes in the mast jacket and shaft stopper.
   (2) Set bolt



Installing the Steering Shaft BAR21-6

INSTALLATION

The installation procedure is the reverse of the removal procedure.

Caution
Pay attention to the following points at the time of installation. (Coat grease on rotating parts.)

1. Install the mast jacket ASSY.

Caution
- Coat grease on the splined portion of the universal joint.
- Never forget to use the bushing when installing the set bolt and set nut.

2. Install the tilt lock components.

Caution
Loosen the lock nut by one turn after tightening it fully.

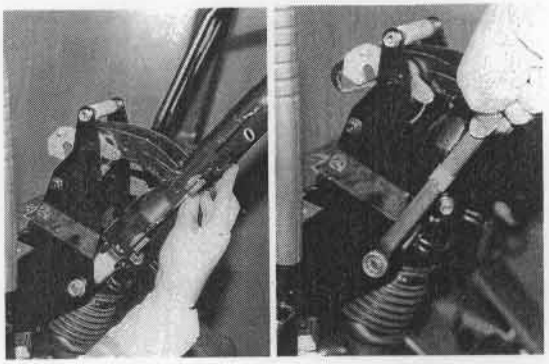

Installing the Mast Jacket BAR21-13, 14

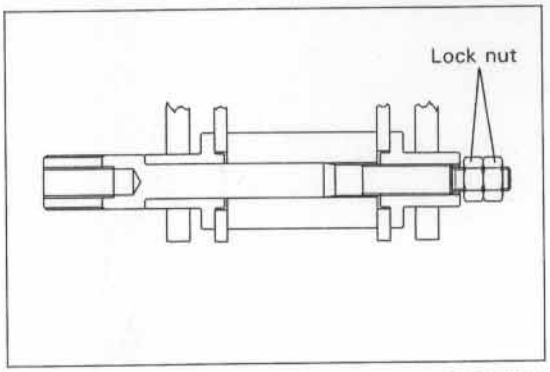

Installing the Tilt Lock Components BARS154

STEERING WHEEL

INSPECTION

1. Inspect the steering wheel for crack, deformation and damage.
2. Inspect the horn contact plate, contact seat for damage and rusting.
3. Inspect the horn contact spring for damage.

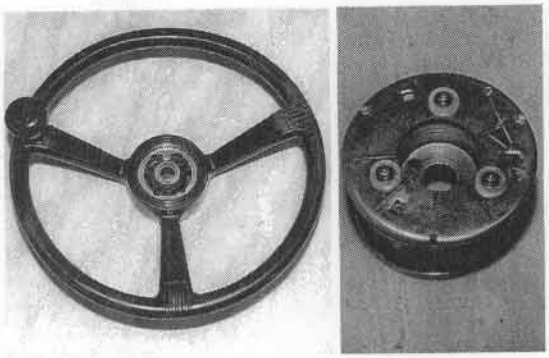

Inspecting the Steering Wheel LAO124-19, 21

STEERING GEAR ASSY

REMOVAL

1. Remove the mast jacket ASSY.
   (1) Remove it by referring to the mast jacket ASSY removal section (on pages 10-9 to 10-11).

2. Jack up the vehicle to enable the rear wheels to move freely.
   (1) Pull the parking brake.
   (2) Jack up the vehicle.
   (3) Move the pitman arm fully toward the front side.

3. Disconnect the connector.
   (1) Torque sensor connector.

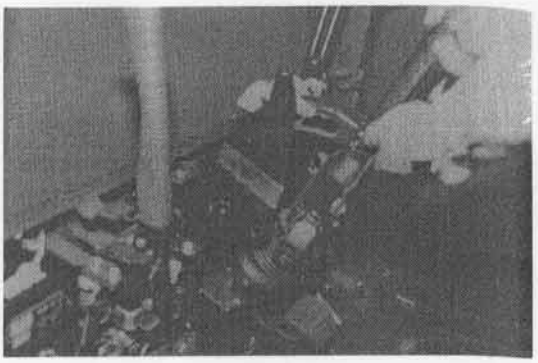

Removing the Mast Jacket BAT9-24

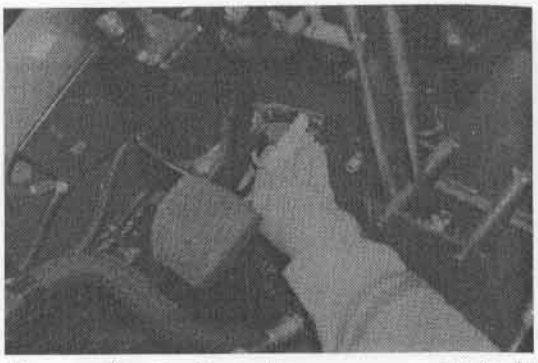

Disconnecting the Connector BAT9–29

4. Disconnect the drag link.
   (1) Cotter pin
   (2) Castle nut
   (3) Drag link
   SST 09610-20012

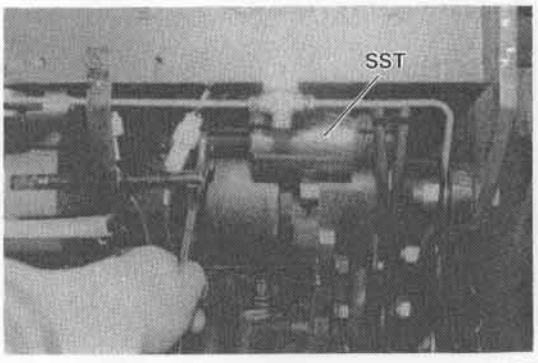

Disconnecting the Drag Link BAT9-28

5. Remove the steering gear ASSY.
   (1) Set nut
   (2) Spring washer
   (3) Steering gear ASSY

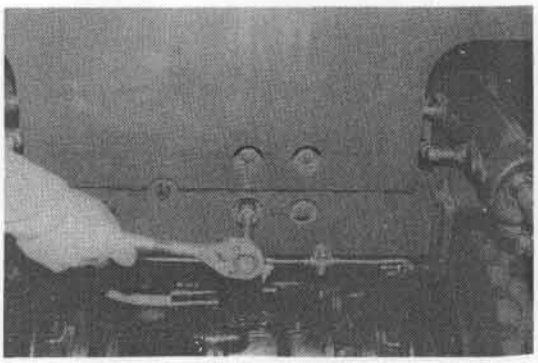

Removing the Steering Gear ASSY BAT9-30

6. Remove the torque sensor ASSY.
   (1) Punch the match mark

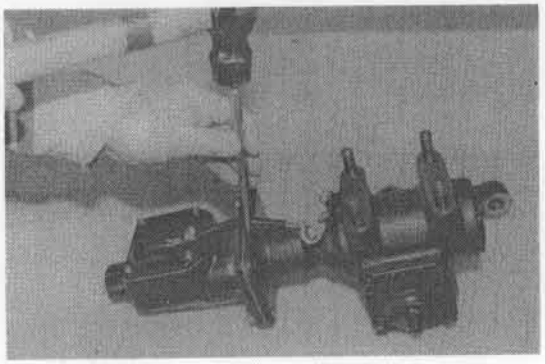

Punching the Match Mark BAT8-1

   (2) Set bolt
   (3) Torque sensor ASSY

Caution
Never disassemble the torque sensor because it requires adjustment with special devices at the time of reassembly.

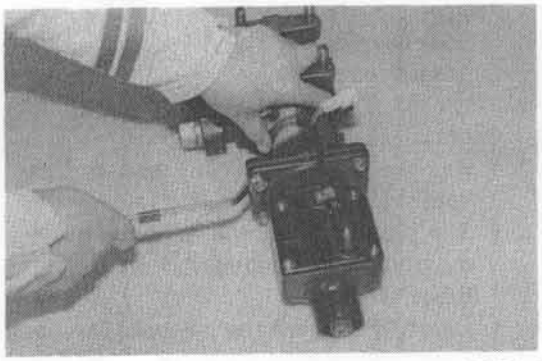

Removing the Torque Sensor BAT8-3

7. Remove the pitman arm.
   (1) Fix the steering gear ASSY in a vise.
   (2) Set nut
   (3) Spring washer

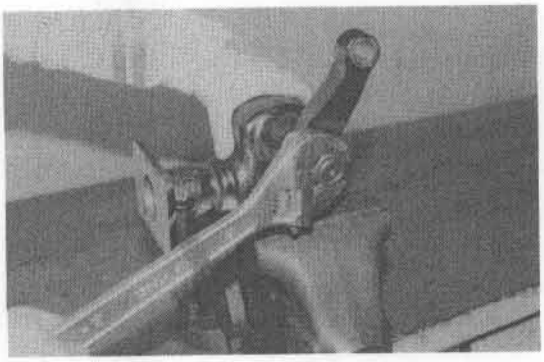

Removing the Set Nut BAT8-4

   (4) Check the match mark
   (5) Pitman arm
   SST 09950-20017

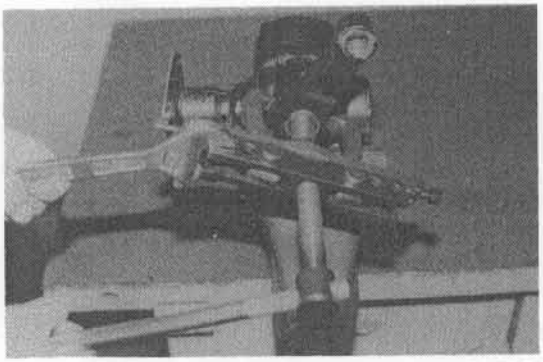

Removing the Pitman Arm BAT8-5

DISASSEMBLY

1. Drain steering gear oil.
   (1) Plug
   (2) Steering oil
   Oil amount: 0.46ℓ (0.12 US gal)

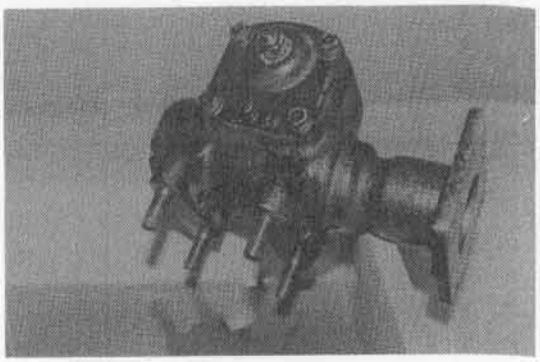

Draining the Gear Oil BAT8-19

2. Remove the cross shaft.
   (1) Set bolt
   (2) Cross shaft w/cover

   Caution
   - **Set the lock nut in the lock-to-lock center position.**
   - **The side cover can be removed easily by turning the adjusting bolt for the cross shaft.**
   - **Carefully prevent the oil seal from being damaged by the serration of the cross shaft.**

   (3) Lock nut
   (4) Adjusting bolt
   (5) Adjusting plate
   (6) Side cover
   (7) Cross shaft

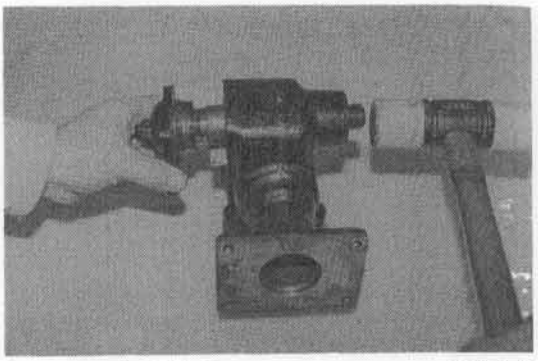

Removing the Side Cover BAT8-22

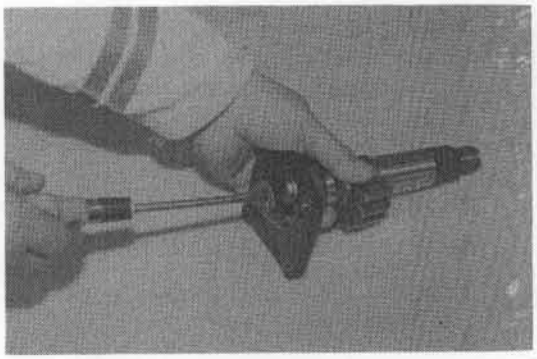

Removing the Cross Shaft BAT8-23

3. Remove the end cover
   (1) Loosen the lock nut
   (2) End cover
   SST 09330-10330-71

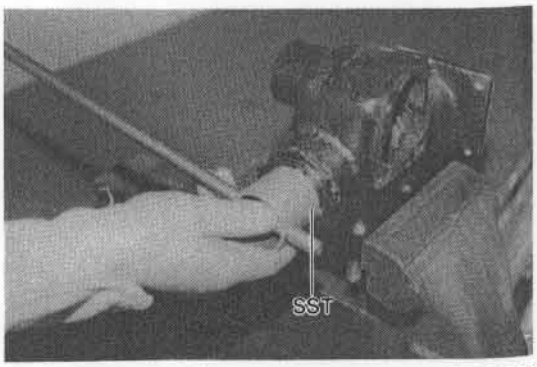

Removing the End Cover BAT8-26

4. Remove the ball screw set.
   (1) Thrust bearing
   (2) Ball screw set
   (3) Thrust bearing

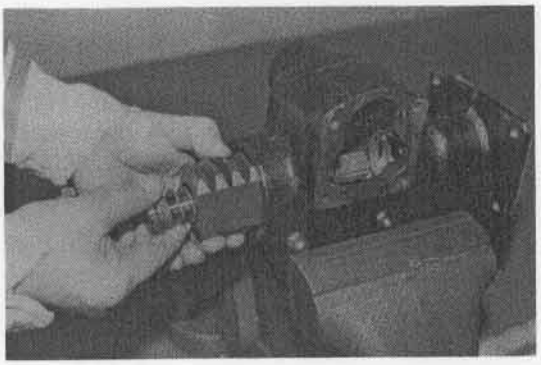

Removing the Ball Screw BAT8-28

INSPECTION

Caution
Inspect each part after cleaning and washing. Repair or replace the part when is found defective.

1. Inspect the ball screw set.
   (1) Damage or crack of main shaft
   (2) Damage on ball nut teeth
   (3) Unsmooth rotation of ball nut
   (4) Damage or unsmooth rotation of bearing

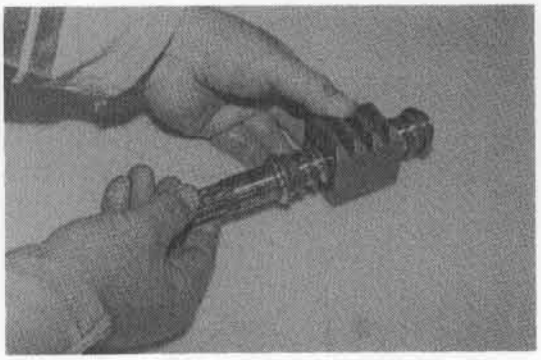

Inspecting the Ball Screw BAT8-33

2. Inspect the cross shaft.
   (1) Damage or crack at cross shaft serration and gear
   (2) Clearance between cross shaft and adjusting plate
   Clearance limit: 0.1 mm (0.0039 in)
   Adjusting plate thickness: 1.95 mm (0.0768 in) and 2.00 mm (0.0787 in)

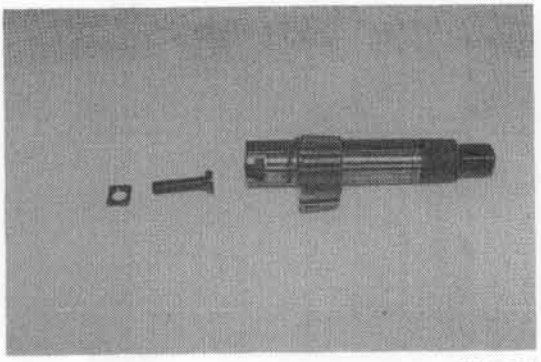

Inspecting the Cross Shaft BAT8-25

3. Inspect the steering gear box.
   (1) Damage or crack of gear box
   (2) Wear or damage of oil seal
   (3) Damage or unsmooth rotation of bearing

Caution
Inspect the oil seal and bearing in the installed state on the gear box, and replace them only when any abnormality is found.

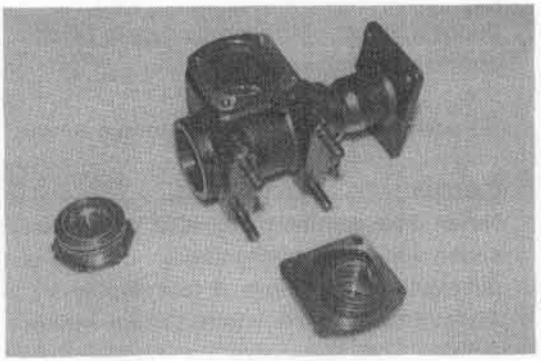

Inspecting the Gear Box BAT8-30

4. Replace the bushing and oil seal.

Caution
Replace the oil seal as follows when it is found to be abnormal in the inspection above.

(1) Gear box
① Oil seal

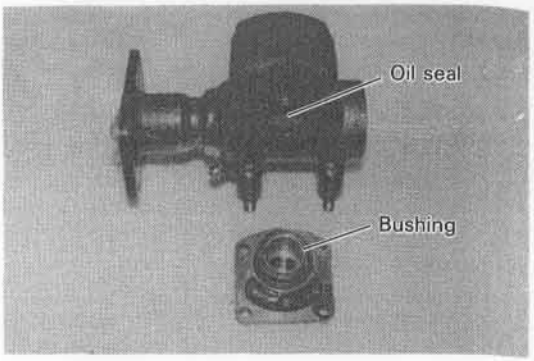

Replacing the Oil Seal BAT8-32

Caution
Drive in the oil seal until it is flush with the outer end surface of the gear box.

(2) Side cover
① Remove the sector shaft bushing
SST 09320-23000-71

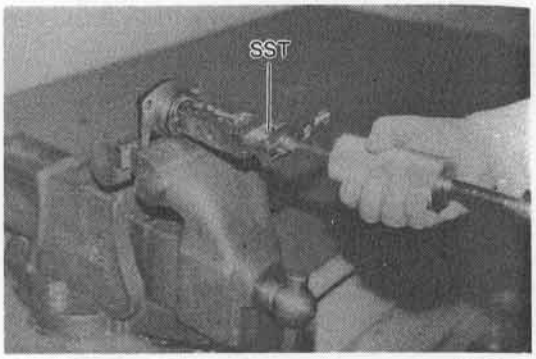

Removing the Bushing BAT8-31

② Drive in the bushing
SST 09620-12010

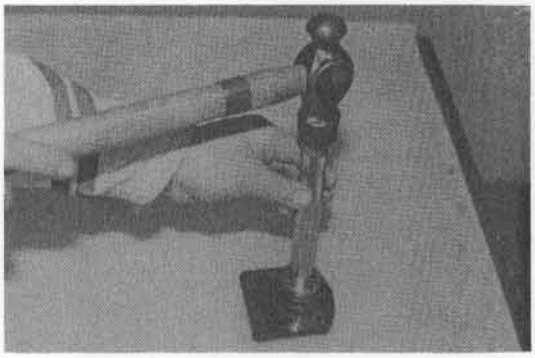
Driving in the Bushing BAT8-36

5. Inspect the torque sensor.
(1) EPS malfunction

Caution
Judge a defect of the torque sensor by any abnormality in actual traveling.

(2) Damage or deformation of torque sensor

Caution
Never disassemble the torque sensor because adjustment with special devices is necessary at the time of reassembly.
Always replace the whole torque sensor ASSY.

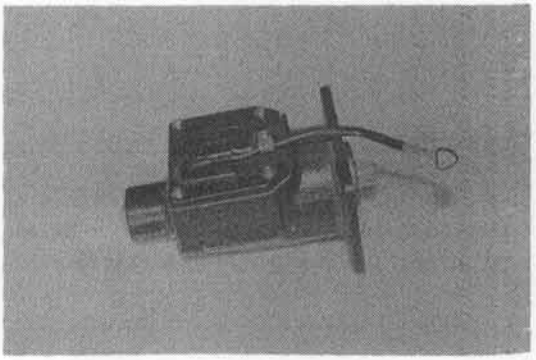
Inspecting the Torque Sensor BAT12-18

REASSEMBLY & ADJUSTMENT

Caution
Clean each part with compressed air before starting disassembly.

1. Install the ball screw set.
   (1) Steering gear box
   (2) Bearing
   (3) Ball screw set

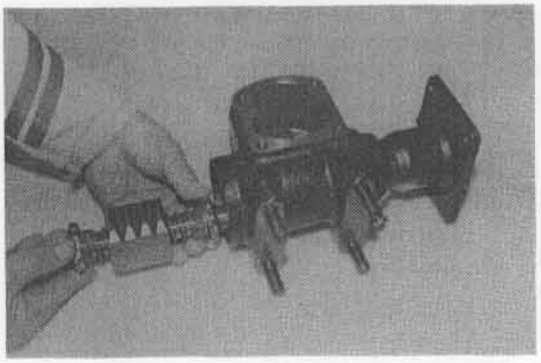

Installing the Ball Screw BAT12-13

   (4) Bearing
   (5) O-ring
   (6) Tentative installation of end cover

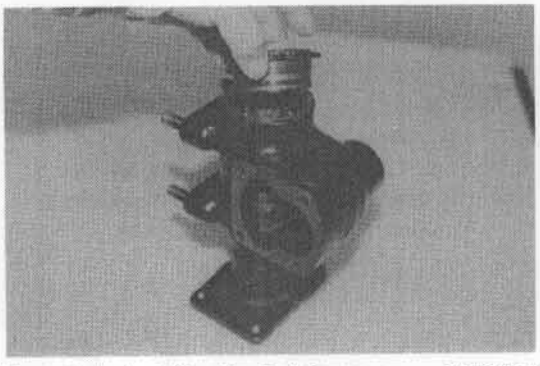

Tentatively Installing the End Cover BAT12-17

2. Install the torque sensor ASSY.
   (1) Steering gear box coupling
   (2) Gasket
   (3) Torque sensor ASSY

Caution
Coat molywhite grease on the spline at the tip end of the torque sensor before installation.

   (4) Set bolt
   T = 1.0 ~ 1.6 kg-m (7.23 ~ 11.7 ft-lb) [9.8 ~ 15.7 N-m]

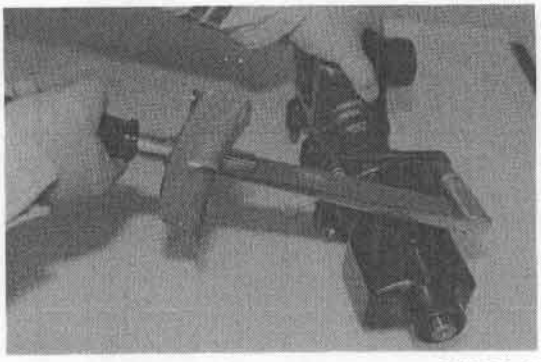

Installing the Torque Sensor BAT12-20

3. Install the end cover.
   (1) End cover
   SST 09330-10330-71

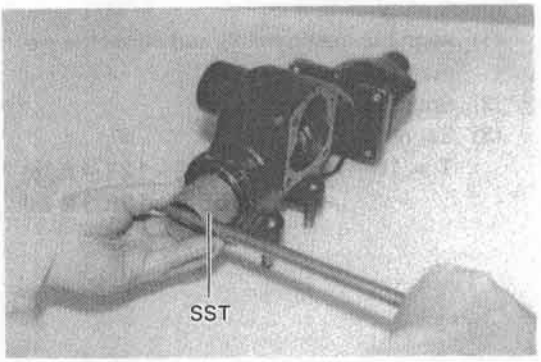

Installing the End Cover BAT12-21

(2) Tentatively install the steering post.
(3) Measure the starting force.
SST 09470-10171-7
Starting force: 0.3~0.7 kg (0.66~1.54 lb) [2.94~6.86 N]
(4) Adjust the end cover tightening until the standard range above is satisfied.
(5) Lock nut

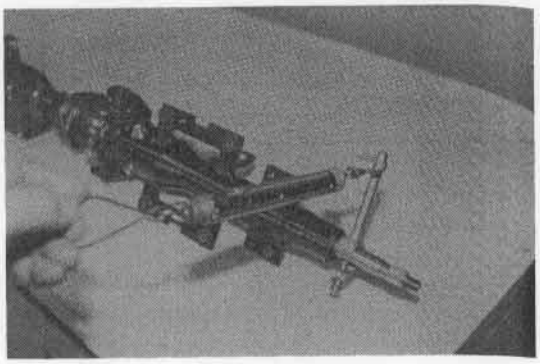

Measuring the Starting Force BAT12-19

4. Install the sector shaft.
(1) Adjusting bolt
(2) Adjusting plate
(3) Set the ball nut in the lock-to-lock center position
(4) Insert the sector shaft to the ball nut by matching its center thread bottom with the center tooth crest of the ball nut.

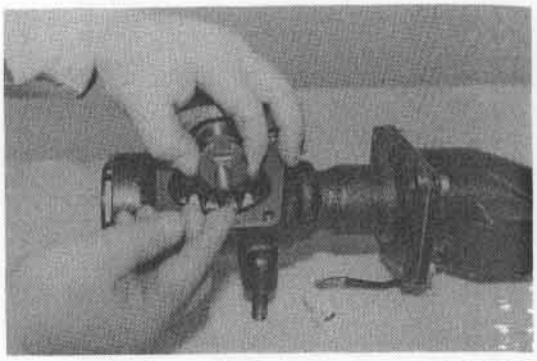

Installing the Sector Shaft BAT12-23

5. Install the side cover
(1) Side cover packing.
(2) Side cover.
(3) Match the tip end of the adjusting screw, and turn it slowly counterclockwise with a screwdriver.
(4) Set bolts
T = 4.5~5.5 kg-m (32.5~39.7 ft-lb) [44.1~53.9 N-m]

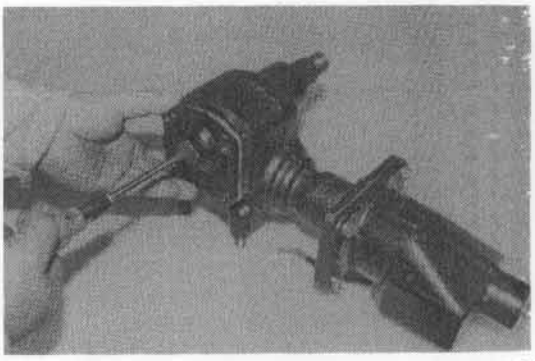

Installing the Side Cover BAT12-24

6. Install the pitman arm.
(1) Align the match marks and install the pitman arm.
(2) Spring washer
(3) Set nut
T = 16~19 kg-m (115.7~137.4 ft-lb) [156.9~186.3 N-m]

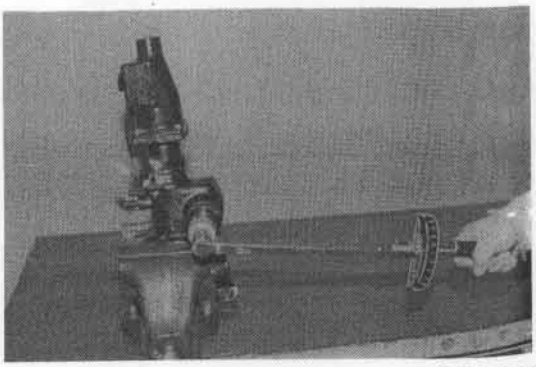

Installing the Pitman Arm BAT12-28

7. Adjust the backlash.
   (1) Set the pitman arm in the lock-to-lock center position, and set a dial gauge.
   (2) Tighten the adjusting screw until the backlash at the tip end of the pitman arm becomes 0 mm.

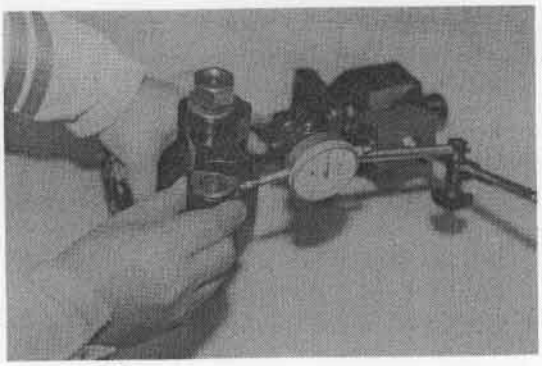

Adjusting the Backlash BAT12-26

   (3) Rotate the ball screw shaft a few turns to bring the pitman arm to the lock-to-lock center position.
   (4) Tentatively install the steering post.
   (5) Measure the overall starting force.
   SST 09470-10171-71
   Starting force: 0.7~1.5 kg (1.54~3.3 lb) [6.86~14.7 N]
   (6) After adjusting the backlash, tighten the lock nut.
   T = 3.0~4.5 kg-m (21.7~32.5 ft-lb) [29.4~44.1 N-m]
   (7) Steering gear oil
   Oil amount: 0.46ℓ (0.12 US gal)

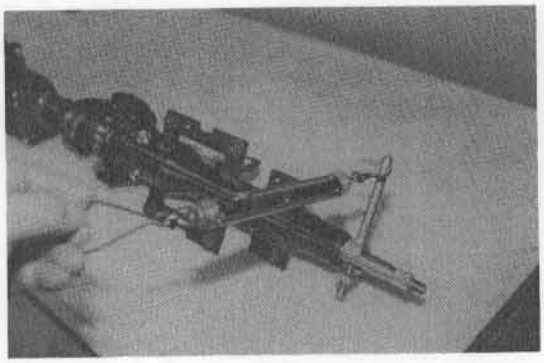

Measuring the Starting Force BAT12-19

INSTALLATION

The installation procedure is the reverse of the removal procedure.

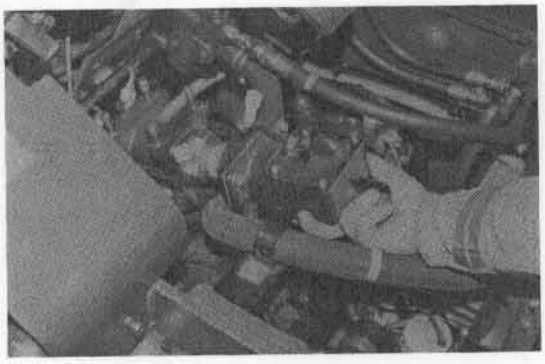

Installing the Steering Gear BAT9-31

PS ACTUATOR ASSY

REMOVAL

1. Remove the battery.
   (1) Move the vehicle to above a pit beforehand to enable the PS front side joint to be removed.
   (2) Disconnect the battery plug
   (3) Open the battery hood
   (4) Battery ASSY
   SST 80201-10250-71

2. Remove the cable cover.
   (1) Set bolts
   (2) Cable cover (upper)
   (3) Cable
   (4) Set bolts
   (5) Cable cover (lower)

3. Remove the toe board.
   (1) Accelerator connector
   (2) Toe board

4. Remove the rear wheel.
   (1) Loosen the rear wheel hub nuts (on the left side)
   (2) Jack up the rear side of the vehicle
   (3) Hub nuts
   (4) Rear wheel (left side)

5. Disconnect drag link No. 2.
   (1) Cotter pin
   (2) Castle nut
   (3) Drag link rod No. 2
   SST 09610-20012

6. Disconnect the PS actuator joint.
   (1) Cotter pin
   (2) Castle nut
   (3) Actuator joint (rear)
   SST 09610-20012

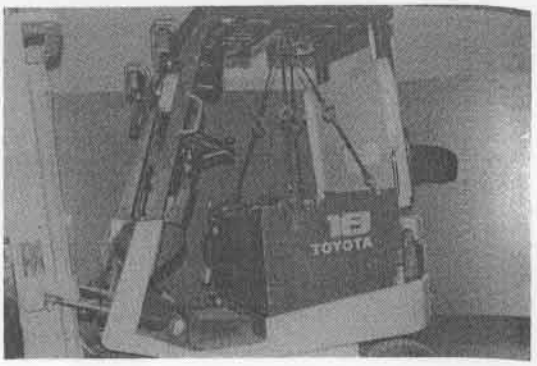

Removing the Battery BAT16-27

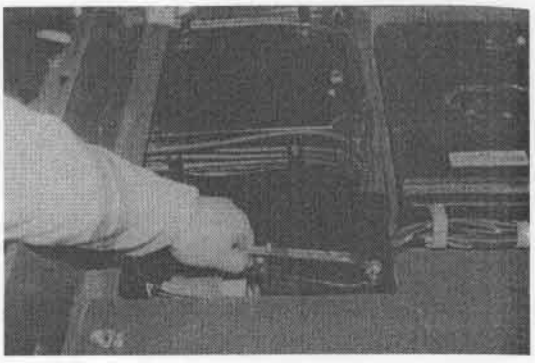

Removing the Cable Cover BAT11-4

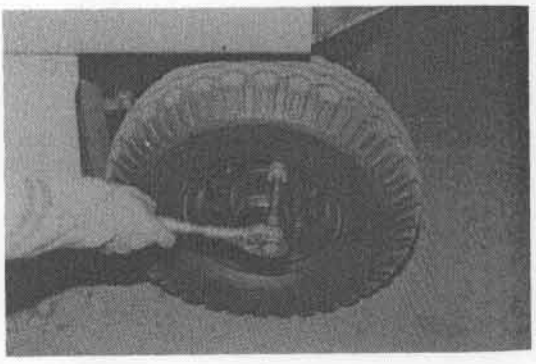

Removing the Rear Wheel BAT4-34

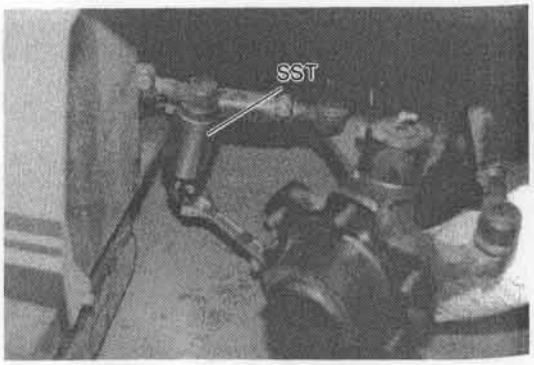

Removing the Drag Link Rod No. 2 BAT4-35

7. Disconnect the PC actuator end.
   (1) Cotter pin
   (2) Castle nut
   (3) EPS actuator end (frame side)



Removing the PS Actuator End BAT11-18

8. Remove the PS actuator ASSY.
   (1) PS motor connector
   (2) Take out the PS actuator from the notched portion of the frame.

   Caution
   Carefully prevent the ball joint bracket from falling.

9. Remove the ball joint bracket.

10. Remove the PS motor ASSY.
    (1) Punch the match mark (on the gear box and motor).
    (2) Set bolts
    (3) PS motor ASSY

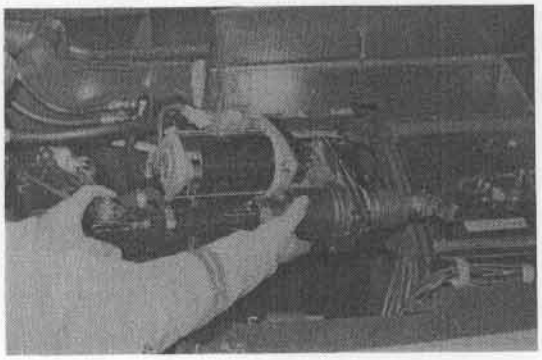

Removing the PS Actuator ASSY BAT10-39

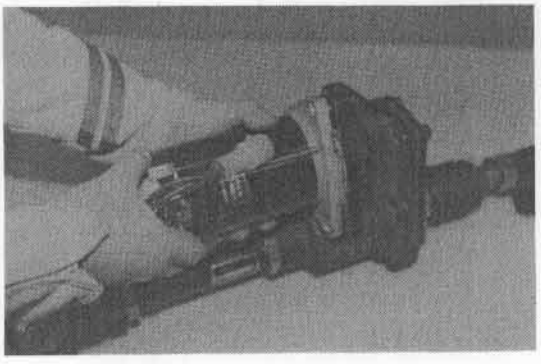

Removing the PS Motor BAT10-17

INSPECTION BEFORE DISASSEMBLY

1. Inspect the ball screw rod for looseness.
   (1) Fix the actuator ASSY in a vise
   (2) Set the ball screw rod to the neutral state.
   (3) Set a dial gauge at 50 mm (2 in) from the end surface of the top cover.

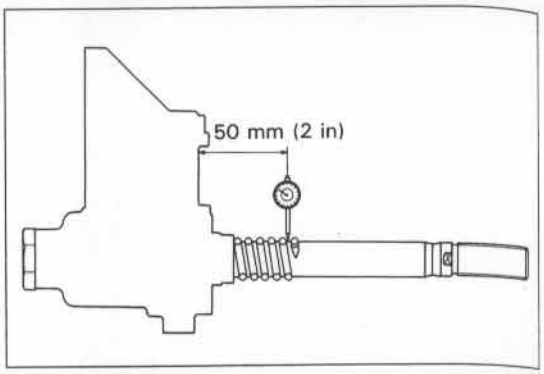

Dial Gauge Setting Position BATM71

   (4) Move the end of the rod lightly with a hand and check the dial gauge reading.
   Rod looseness limit: 2.5 mm (0.0984 in)
   If the rod looseness exceeds the limit, always overhaul the actuator ASSY before trying repair or replacement.

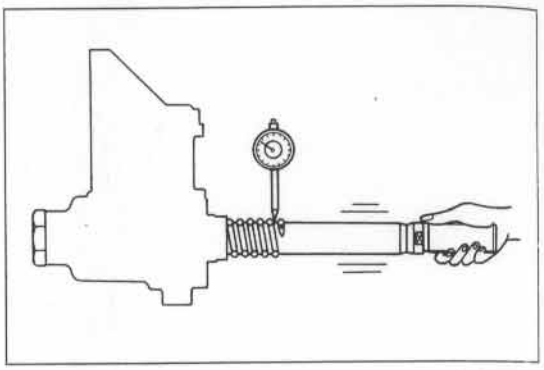

Inspecting the Rod Looseness BATM72

2. Measure the ball screw rod preload.
   (1) Fix the actuator ASSY in a vise.
   (2) Set the SST on the ball screw rod.
   SST 09470-10171-71
   (3) Measure the ball screw rod preload.
   Caution
   After pulling the rod out by rotation toward you until the pinion rotetes together (ball sclew at the stroke end), measure the preload.
   Standard preload: 0.3 ~ 0.5 kg (0.66 ~ 1.1lb) [2.9 ~ 4.9 N]
   standard range, make adjustment or replacement.

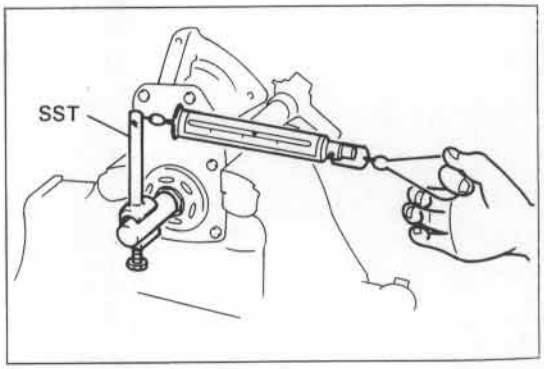

Measuring the Preload BATS56

DISASSEMBLY

Caution
Disassemble the PS actuator ASSY only when an abnormality or an operation trouble of the ball screw rod, gear or bearing is found in the inspection before disassembly.

1. Remove the boot.
   (1) Clip
   (2) Boot
   (3) Tie-wrap

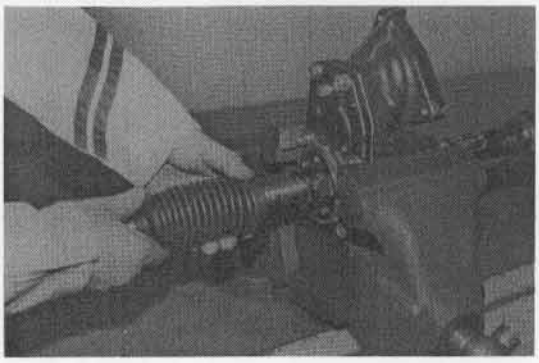

Removing the Boot BAT21-42

2. Remove the top plug.
   (1) Lock nut
   SST 09617-60010
   (2) Top plug
   Nut width across flats: 41 mm (1.61 in)

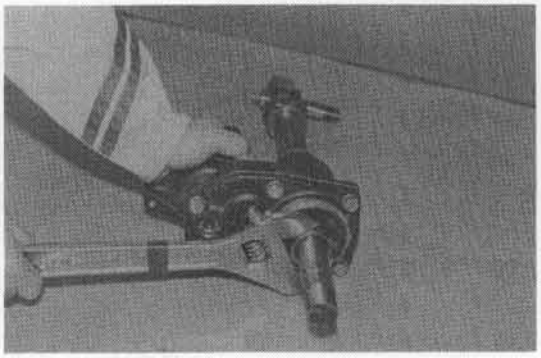

Removing the Top Plug BAT21-39

3. Remove the top cover.
   (1) Thrust bearing
   (2) Set bolts
   (3) Top cover

Caution
Carefully prevent the gear and bearing from falling.

   (4) Packing

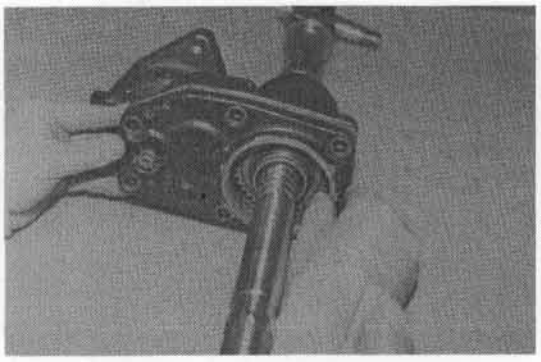

Removing the Top Cover BAT21-36

4. Remove the pinion.
   (1) Snap ring
   (2) Pinion

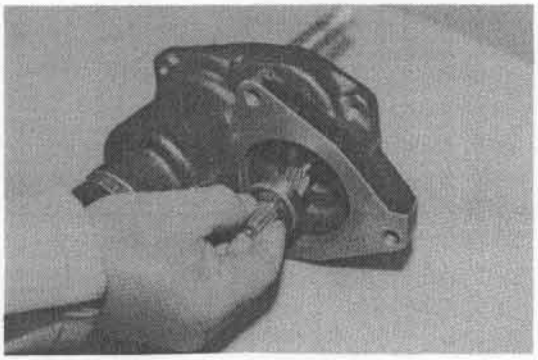

Removing the Pinion BAT21-32

5. Remove the counter gear.
   (1) Counter gear
   (2) Bearing
   (3) Spring washer

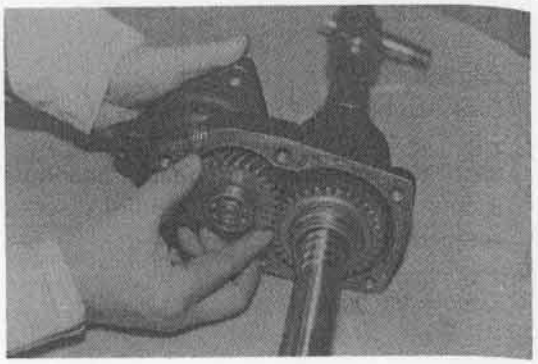

Removing the Counter Gear BAT21-31

6. Remove the ball screw rod.
   (1) Ball screw rod ASSY

   Caution
   Remove the ball screw rod horizontally. Oblique or vertical placement is dangerous because screw nut overrun will be caused and the ball screw rod may be damaged.

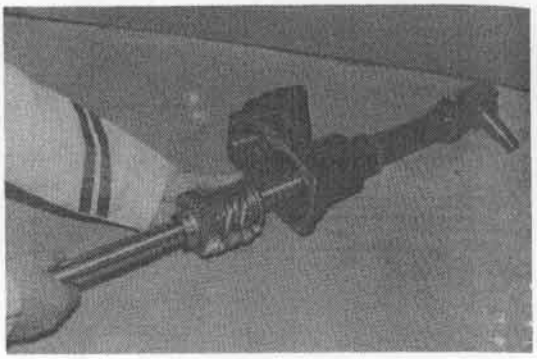

Removing the Ball Screw Rod BAT21-28

7. Remove the ball joint.

   Caution
   Disassemble and replace the ball joint only when an abnormality is found.
   Lock nut width across flats: 50 mm (2 in)

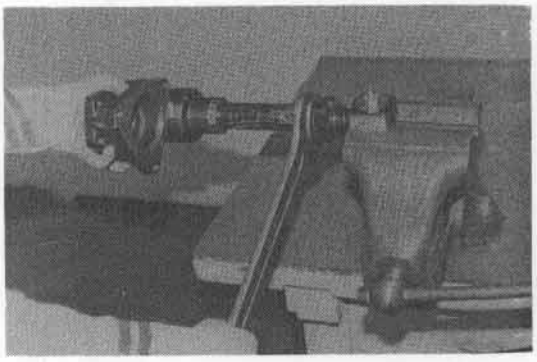

Removing the Ball Joint ASSY BAT21-20

8. Disassemble the ball joint.
   (1) Plug
   (2) Spring
   (3) Seat
   (4) Ball stud
   (5) Seat

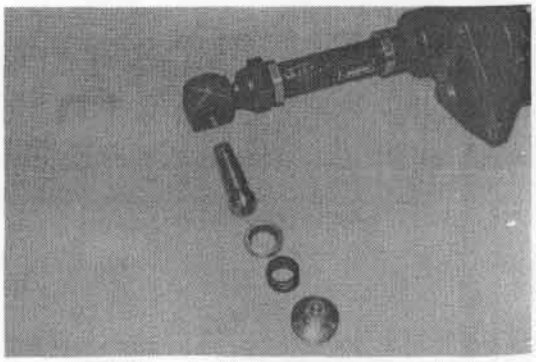

Disassembling the Ball Joint ASSY BATS57

INSPECTION

Caution
Inspect each part after cleaning and washing. Repair or replace the part which is found defective.

1. Inspect the ball screw rod.
   (1) Damage on crack of rod
   (2) Unsmooth rotation of ball nut
   (3) Damage or abnormal staged wear of gear tooth surface
   (4) Flaking or abnormal staged wear of ball screw groove

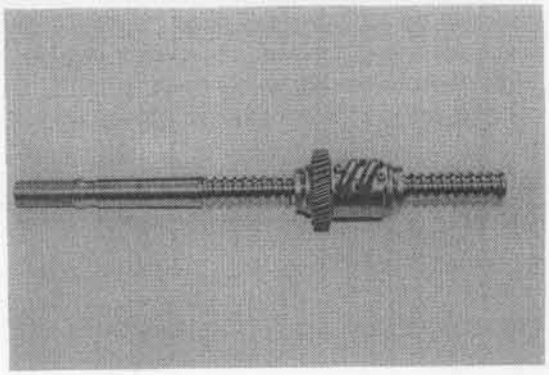

Inspecting the Ball Screw Rod BAT22-3

2. Inspect the bearings.
   (1) Damage or unsmooth rotation of thrust bearing
   (2) Damage or unsmooth rotation of ball bearing

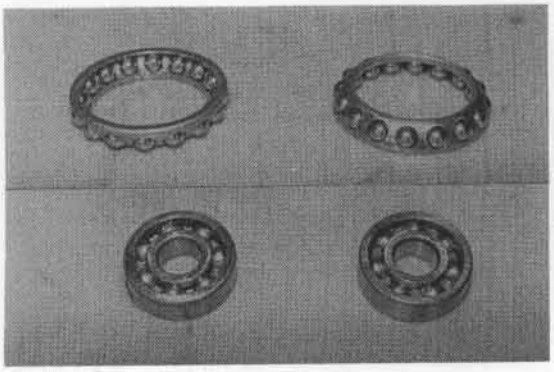

Inspecting the Bearings BAT21-8, 9

3. Inspect the gears.
   (1) Damage, crack or abnormal staged wear of counter gear
   (2) Damage, crack or abnormal staged wear of pinion gear
   (3) Damage or abnormal wear at splined portion of pinion gear
   (4) Damage or unsmooth rotation of bearing

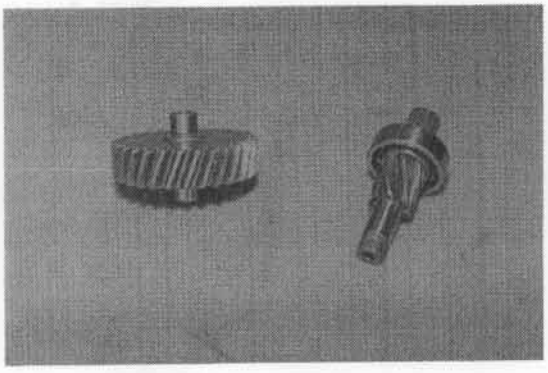

Inspecting the Gears BAT21-6

4. Inspect the gear box.
   (1) Damage or crack of gear box
   (2) Flaking or abnormal staged wear of bearing outer race

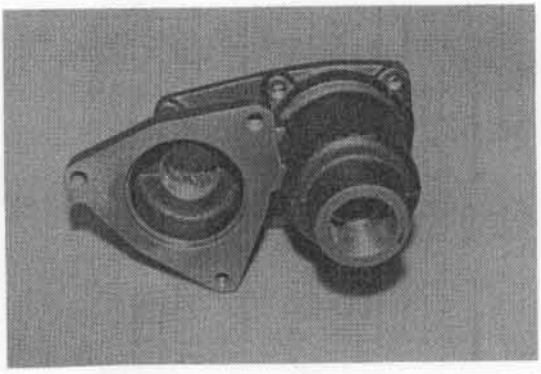

Inspecting the Gear Box BAT21-13

5. Inspect the top cover and plug.
   (1) Damage or crack of top cover or plug
   (2) Wear or damage of dust seal
   (3) Damage at threaded portion of top plug

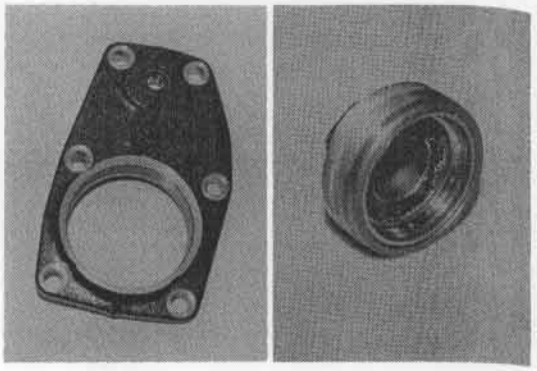

Inspecting the Top Cover and Plug BAT22-11

6. Inspect the ball joint.
   (1) Ball joint looseness
   If the looseness is excessive, retighten the plug to the specified torque.
   T = 5 ~ 7 kg-m (36.2 ~ 50.6 ft-lb) [49.0 ~ 68.6 N-m]
   If the looseness is still excessive as a result of reinspection, disassemble and inspect the ball joint.

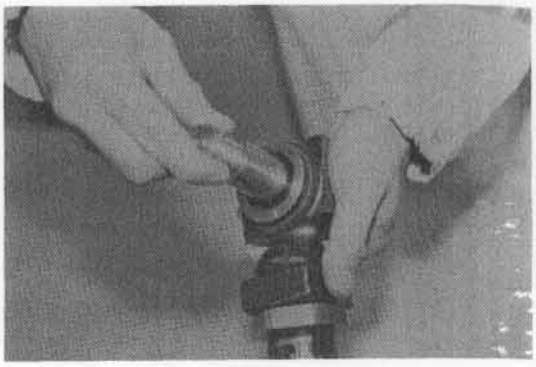

Inspecting the Ball Joint BAT

   (2) Disassemble the ball joint.
   ① Damage of ball stud
   ② Damage at seat
   ③ Fatigue of spring

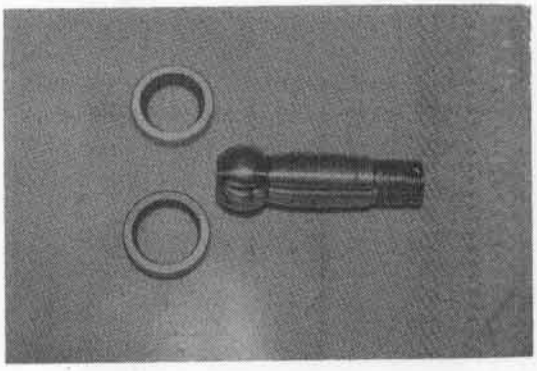

Inspecting the Ball Stud and Seat BAT21-11

7. Inspect the boot.
   (1) Damage or aged deterioration of boot

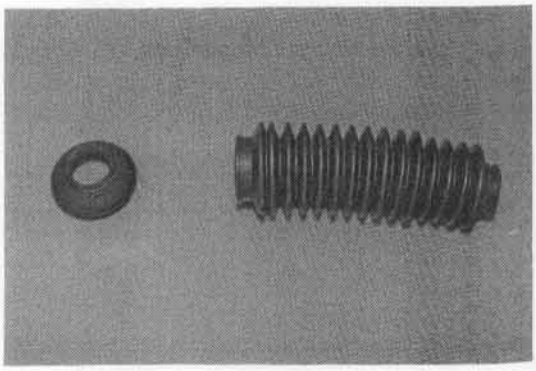

Inspecting the Boot BAT21-14

REASSEMBLY & ADJUSTMENT

Caution
- Clean each part with compressed air before reassembly.
- . Use grease 45699-13400-71.

1. Install the ball screw rod.
   (1) Coat grease sufficiently on the ball screw rod ASSY.

   Caution
   Always handle the ball screw rod in horizontal state.

   (2) Thrust bearing
   (3) Ball screw rod ASSY

2. Install the counter gear and pinion gear.
   (1) Pinion gear w/bearing
   (2) Snap ring
   (3) Bearing

   (4) Spring washer

   Caution
   Install the spring washer with its circumference in contact with the bearing.

   (5) Counter gear w/bearing
   (6) Fill grease in the bearing
   (7) Bearing

3. Install the top cover.
   (1) Fill grease in each gear case
   (2) Coat Three Bond No. 114 or the equivalent sealant on both surfaces of the packing.
   (3) To cover
   (4) Set bolt
   T = 4.5 ~ 5.5 kg-m (32.5 ~ 39.8 ft-lb) [44.1 ~ 54.0 N-m]
   (5) Dust seal

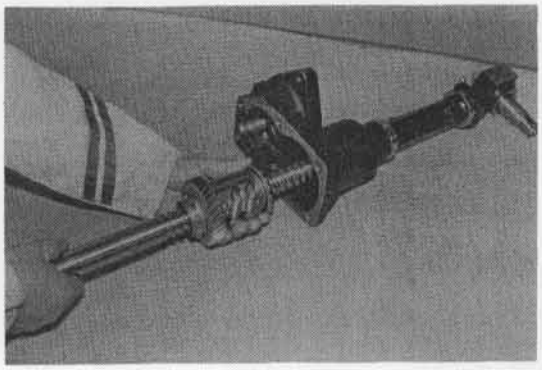

Installing the Ball Screw Rod ASSY BAT21-28

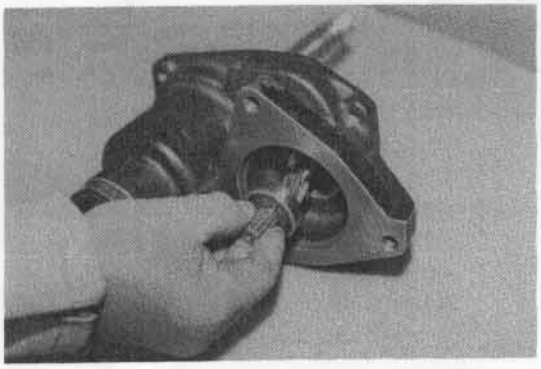

Installing the Pinion Gear BAT21-32

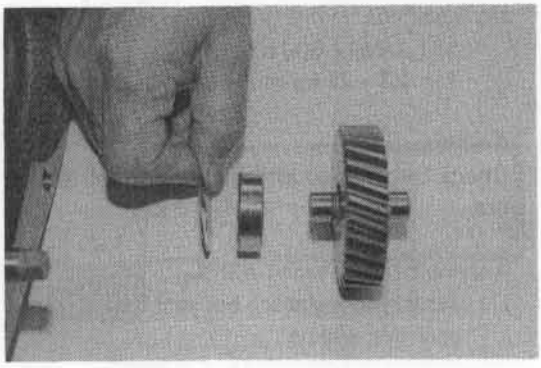

Installing the Counter Gear BAT22-8

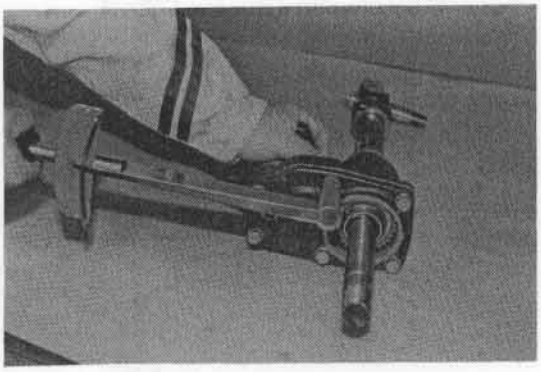

Installing the Top Cover BAT21-37

4. Tentatively install the top plug.
   (1) Thrust bearing
   (2) Coat sealant on the threaded portion of the top plug.
   (3) Top plug

   Caution
   Tighten the top plug until the looseness of the ball screw rod is eliminated.

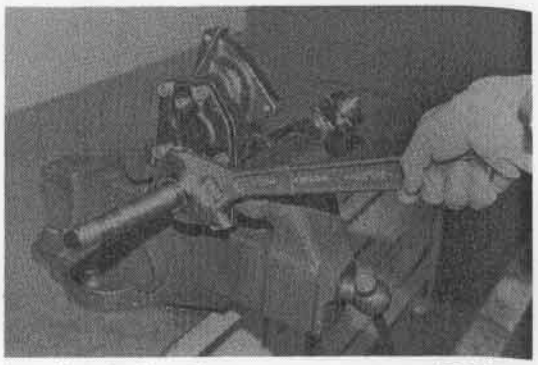

Installing the Top Plug BAT22-26

5. Measure the preload.
   (1) Set the SST on the ball screw rod
   SST 09470-10171-71
   (2) Measure the preload
   Caution
   After pulling the rod out by rotation toward you until the pinion rotetes together (ball sclew at the stroke end), measure the preload.
   Preload: 0.3 ~ 0.5 kg (0.66 ~ 1.1 lb) [2.9 ~ 4.9 N]

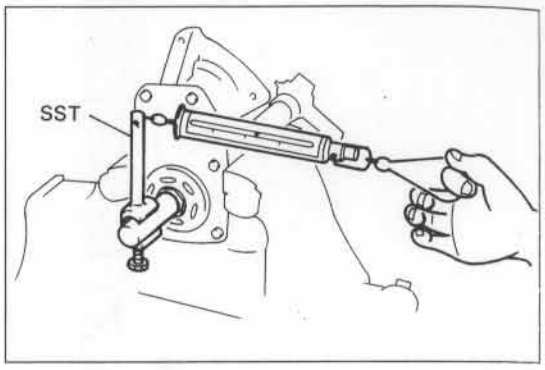

Measuring the Preload BATS58

   (3) Lock nut
   SST 09617-60010
   T = 23~25 kg-m (166.3~180.7 ft-lb) [225.6~245.2 N-m]

   Caution
   Check the preload after tightening the lock nut.

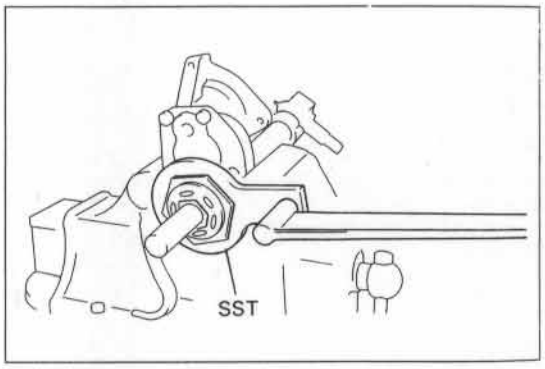

Tightening the Lock Nut BATS59

7. Assemble the ball joint ASSY.
   (1) Tentatively install the ball joint case on the gear box w/pipe.

   Caution
   Coat grease when installing internal components.

   (2) Ball stud and seat
   (3) Spring
   (4) Plug
   T = 5~7 kg-m (36.2~50.6 ft-lb) [49.0~68.6 N-m]

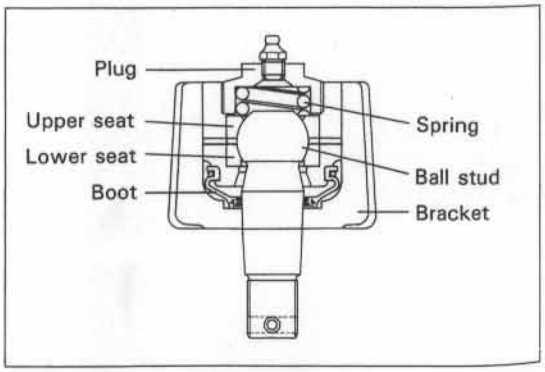

Installing the Ball Joint Case BATS57

6. Set the ball joint ASSY to the specified dimension and angle.
   (1) Specified dimension and angle adjustment
   From motor mounting surface to center of ball joint
   Standard setting length:
   273±1 mm (10.75±0.039 in)
   Ball joint setting angle measurement
   Measure if the ball joint position is at 115° counterclockwise from the center line.
   (2) Lock nut setting
   T = 15~20 kg-m (108.5~144.6 ft-lb) [147.1~196 N-m]

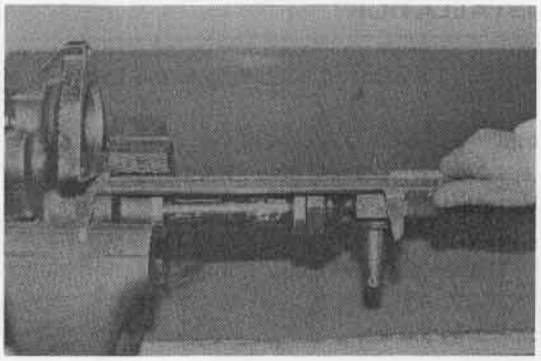

Setting the Ball Joint ASSY BAT22-27

8. Install the boot.
   (1) Coat grease on the threaded portion of the ball screw rod.

   Caution
   Coat silicon grease sufficiently while rotating the rod.

   (2) Boot

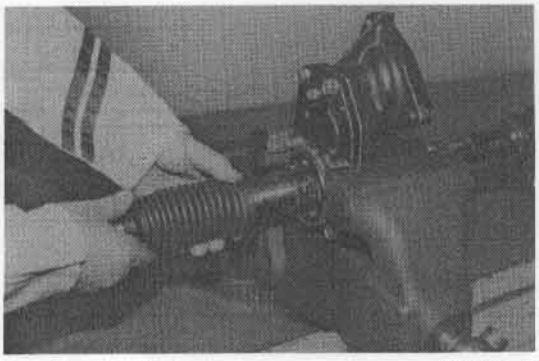

Installing the Boot BAT21-42

   (3) Clip

   Caution
   Install the clip with its folding portion on the rod end side.

   (4) Tie-wrap

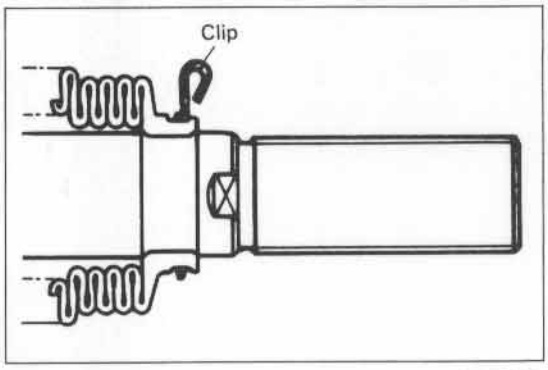

Clip Installing Direction BATS60

9. Install the ball joint bracket.
   (1) Coat grease (MP grease) on the inside surface of the ball joint bracket.
   (2) Ball joint bracket

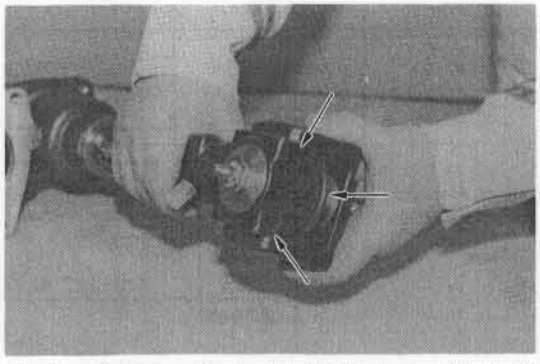

Coating Grease on the Ball Joint Bracket BAT22-32

INSTALLATION

Install the PS actuator according to the following procedure:

Note:
Steps No.1 ~ No.4 will give effect upon the succeeding procedures so that the accurate sequences are imperative.

1. The lengthwise values in the most shortened state of the PS actuator when removed are as shown.

If unlikely, correct.

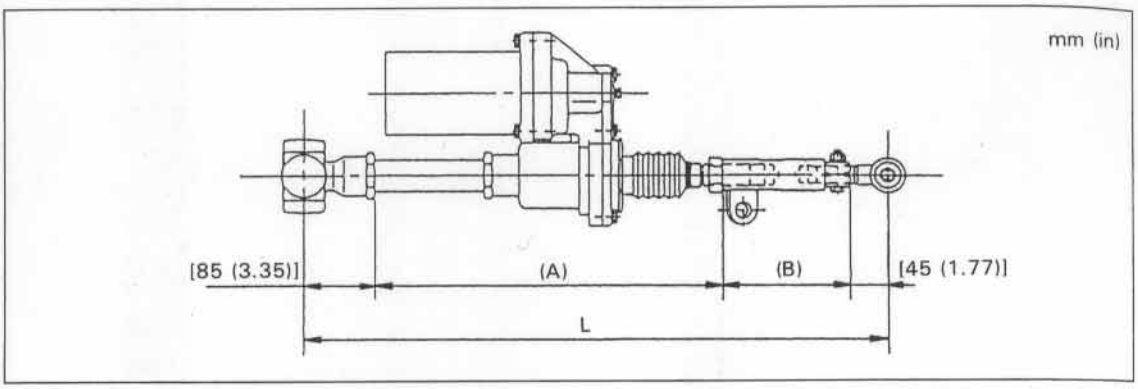

Models	L mm (in)	(A) mm (in)	(B) mm (in)
5FB10 ~ 18	691 (27.20)	411 (16.18)	150 (5.91)
5FB20·25	748 (29.45)	408 (16.06)	210 (8.27)
5FB30	748 (29.45)	408 (16.06)	210 (8.27)

Note:
The values shown in the illustration indicates the figures obtained by PS actuator independently when removed from the truck.
When on the truck, even in the shortest, the figure "L" and "A" become about 10 mm (0.39 in) longer respectively.

2. Adjust the drag link rod No.1 to the figures shown:

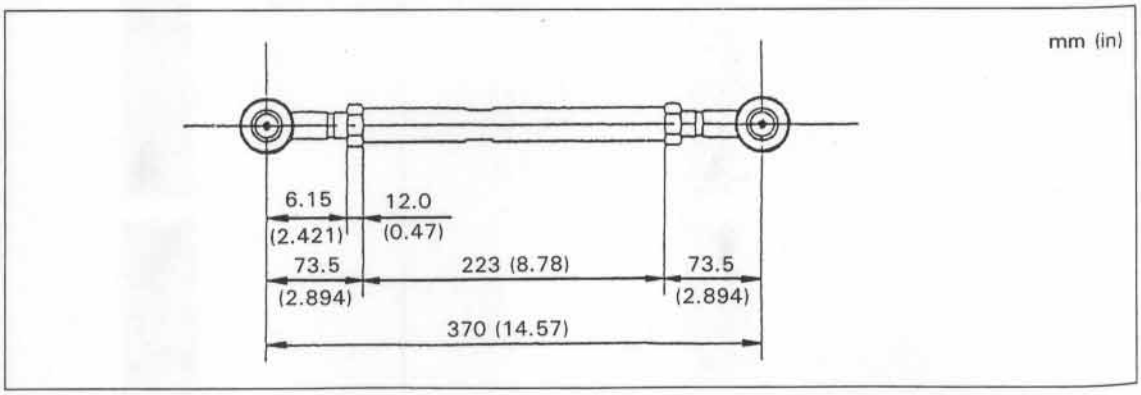

3. Adjust the drag link rod No.2 to the figures shown:

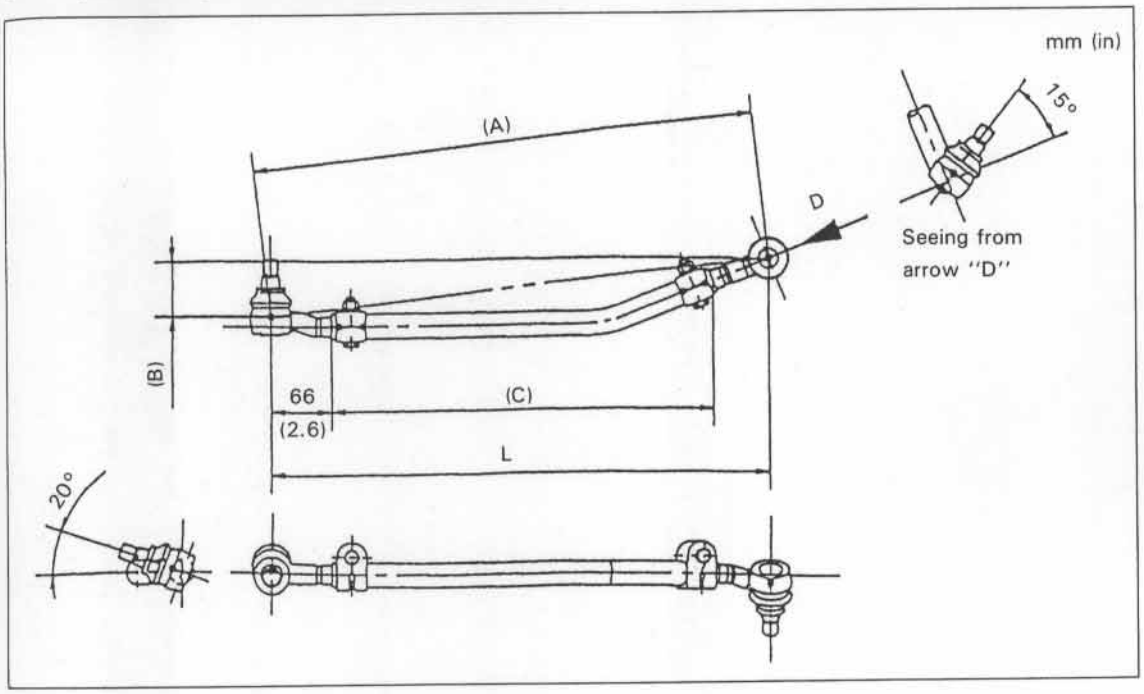

Models	L mm (in)	(A) mm (in)	(B) mm (in)	(C) mm (in)
5FB10~18	499 (19.65)	502 (19.76)	54.5 (2.146)	378 (14.88)
5FB20·25	634.5 (24.980)	637 (25.08)	56.1 (2.209)	513 (20.20)
5FB30	858 (33.78)	860 (33.86)	58.4 (2.299)	737 (29.02)

Note:
Procedure here is only applicable in case that the rear axle beam or stopper bolts are changed. Otherwise disregard here, skip over to the process 5.

4. Adjust the protrusive length "H" of the knuckle stopper bolt on the rear axle beam to the figures as shown:

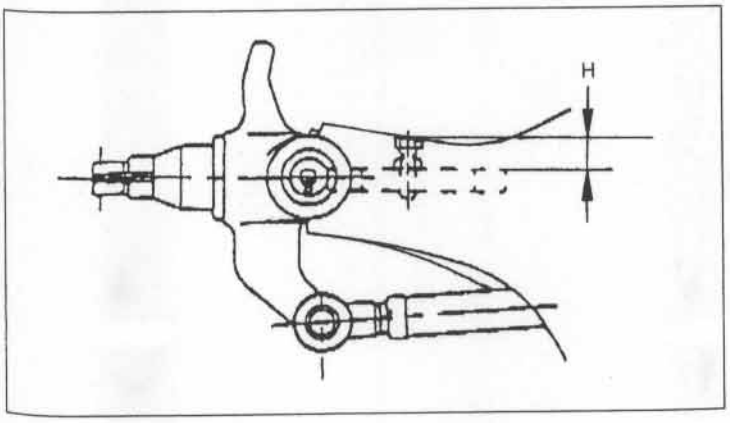

Models	H mm (in)
1 ton series	25 (0.98)
2 ton series	24 (0.94)
3 ton series	28 (1.10)

5. Lift both rear wheels with a jack.

6. Turn the steering wheel fully to counterclockwise and hold that position, then confirm:
   (1) The LH knuckle stopper contacts or not.
   (2) Clearance "A" between the drag link arm and frame is proper or not.

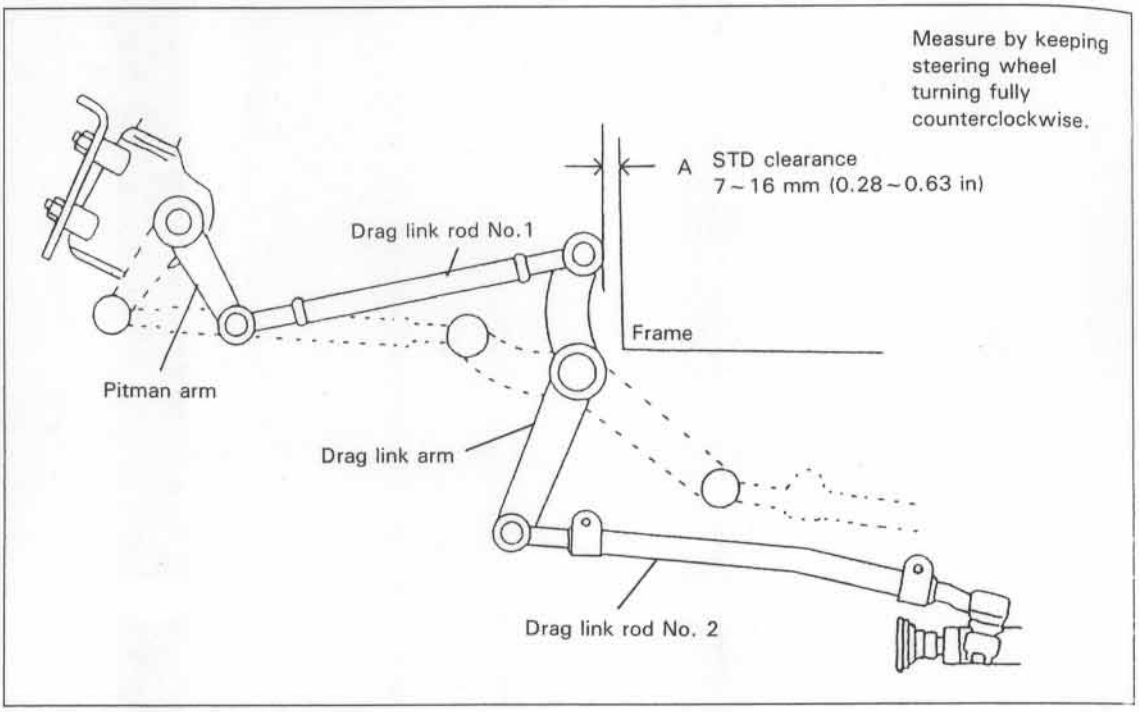

   (3) If the knuckle stopper is not in contact, or the figure "A" is out of standard, correct them by the drag link rod No.2.
   (4) Check if there be a reserve left in the pitman arm angle.
   [Further jerk or the steering wheel to counter clockwise fully moves the knob by a few centimeters (a inch or so), If so OK.]

7. Turn the steering wheel fully to clockwise, and hold that position, then confirm:
   (1) The RH knuckle stopper contacts not.
   (2) If the pitman arm angle has a reserve or not.
   [Further jeck of the steering wheel to clockwise fully will allow the knob to move by a few centimeters (an inch or so), If so OK.]

8. Every bolt and nut should be tightened to specified torque as in the illustration.

Tightening torque unit: N·m (kg-cm) [ft-lb]

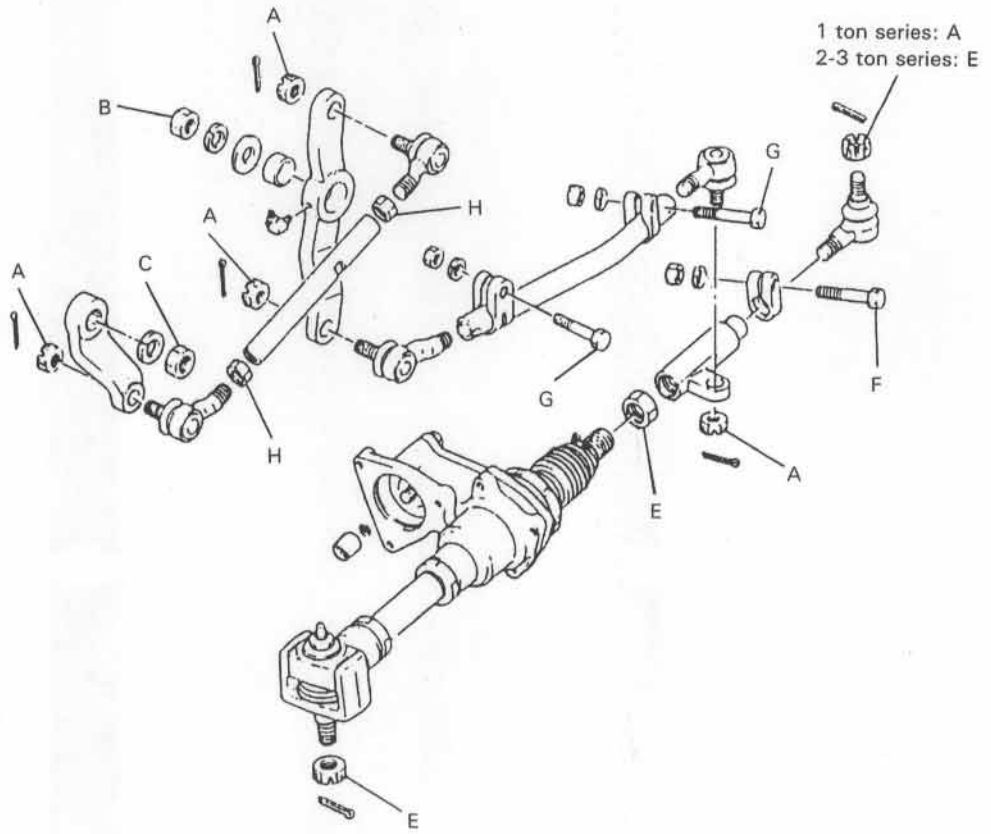

A: 68.65 ~ 98.07 (700 ~ 1000)
B: 127.49 ~ 176.52 (1300 ~ 1800) [94.06 ~ 130.23]
C: 156.91 ~ 186.33 (1600 ~ 1900) [115.76 ~ 137.47]
D: 29.42 ~ 44.13 (300 ~ 450) [21.71 ~ 32.56]
E: 147.10 ~ 196.13 (1500 ~ 2000) [108.53 ~ 144.70]
F: 49.03 ~ 78.45 (500 ~ 800) [36.18 ~ 57.88]
G: 29.42 ~ 44.13 (300 ~ 450) [21.71 ~ 32.56]
H: 117.68 ~ 147.10 (1200 ~ 1500) [86.82 ~ 108.53]

Note:
When inserting the cotter pin into the castle nut slit, aline the hole in tightening turn, not in loosening turn upon reaching to specified torque.

9. Confirm whether the drag link No.2 is free from any adverse contact while in motion, such as to frame wall.

BRAKE

	Page
SPECIFICATIONS	11-2
FRONT BRAKE	11-3
GENERAL	11-3
COMPONENTS	11-5
FRONT BRAKE ASSY	11-8
MASTER CYLINDER	11-17
GENERAL	11-17
COMPONENTS	11-18
MASTER CYLINDER ASSY	11-19
PARKING BRAKE LEVER	11-22
BRAKE PEDAL	11-25

SPECIFICATIONS

mm (in)

Item	1 ton series	2 ton series	3 ton series
Foot brake type	Hydraulic, internal expanding, duo-servo		
Parking brake type	Internal expanding, mechanical		
Brake drum inside diameter	254 (10.00)	279.4 (11.00)	310 (12.20)
Brake lining material	Molded resin (asbestos-free)		
Brake lining dimensions: Length × width × thickness	279 × 48.5 × 4.9 (10.98 × 1.909 × 0.1929)	302 × 55.0 × 5.1 (11.89 × 2.165 × 0.2008)	343 × 60 × 5.7 (13.50 × 2.362 × 0.2244)
Wheel cylinder bore	22.22 (0.8748)	←	28.58 (1.122)
Master cylinder bore	19.05 (0.7500)	←	25.40 (1.0000)

FRONT BRAKE

GENERAL

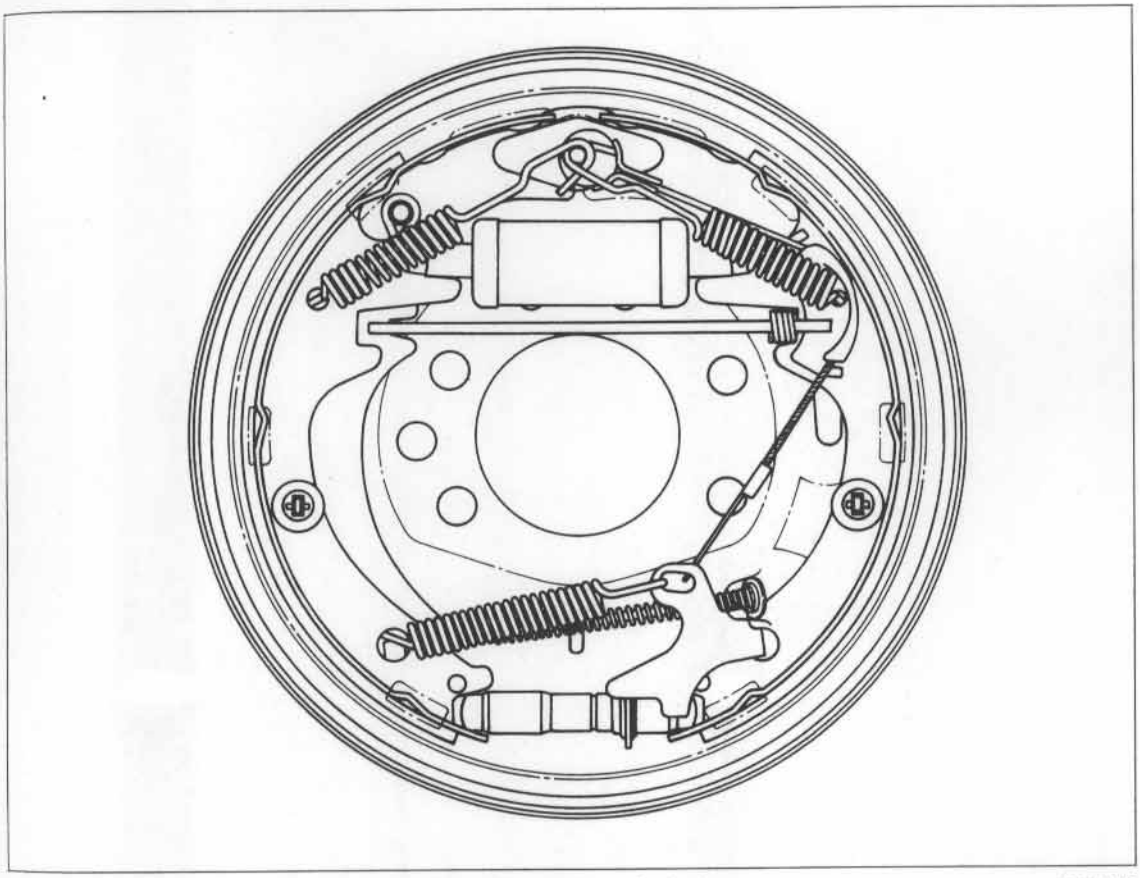

Front Brake (1-ton Series) BAAM3

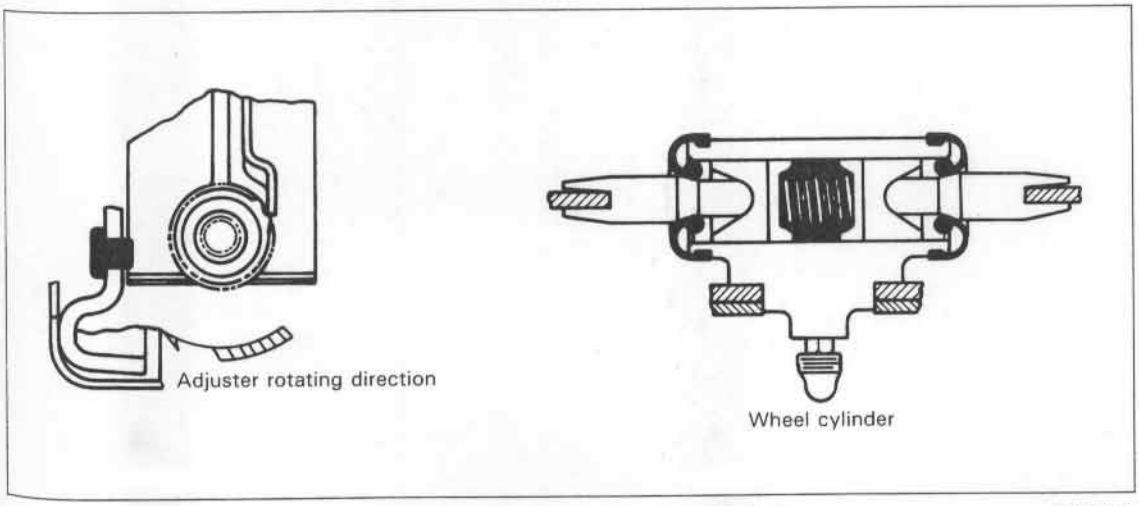

Wheel Cylinder Sectional View (1-ton Series) BAAM8

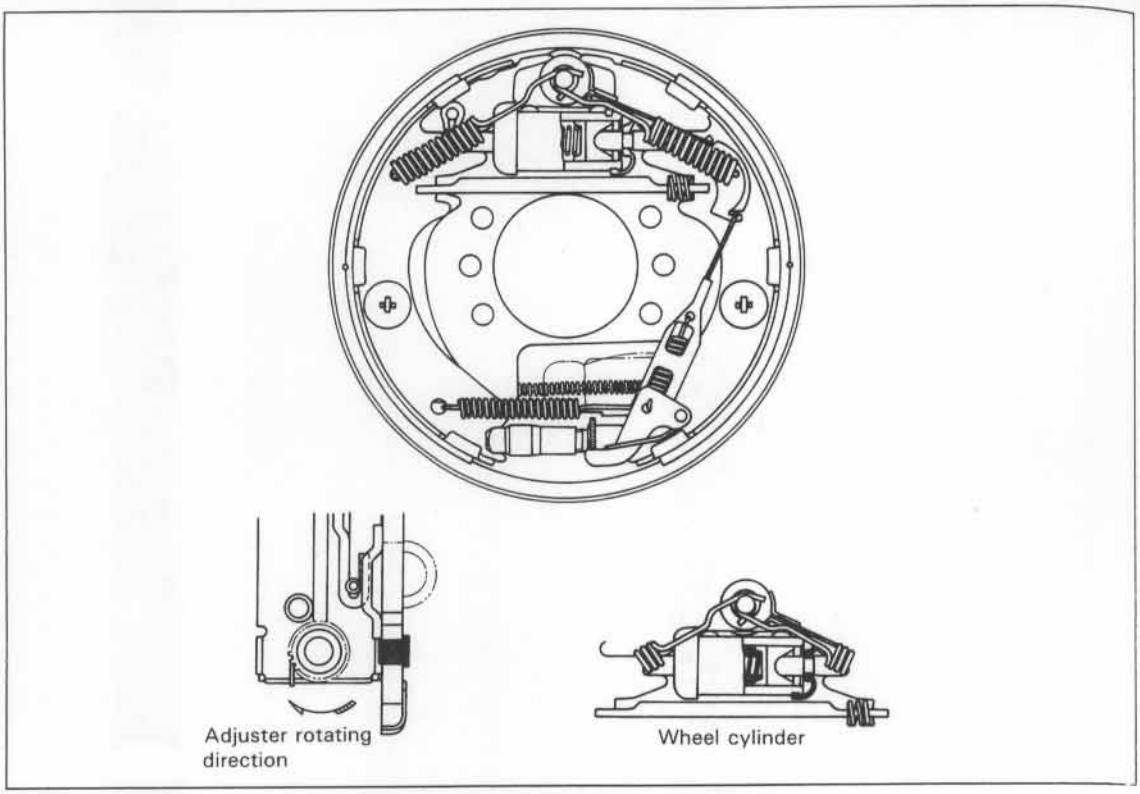

Front Brake & Wheel Cylinder (2-ton Series)

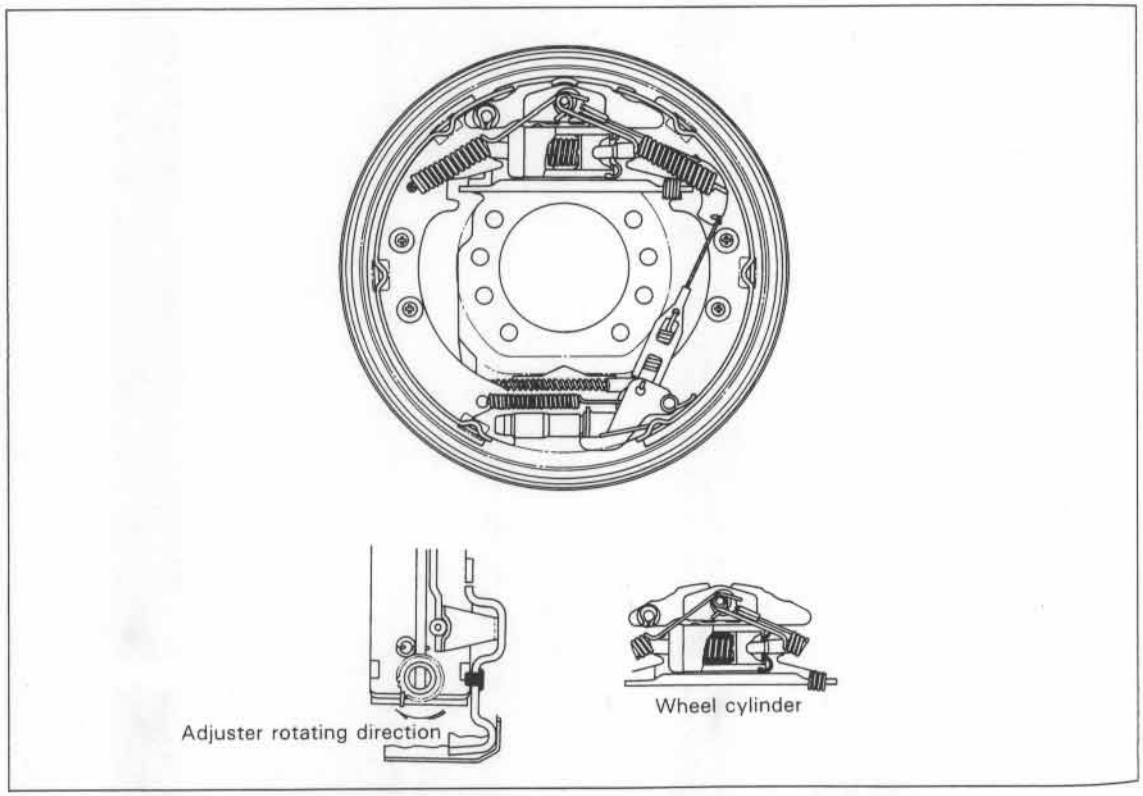

Front Brake & Wheel Cylinder (3-ton Series)

COMPONENTS

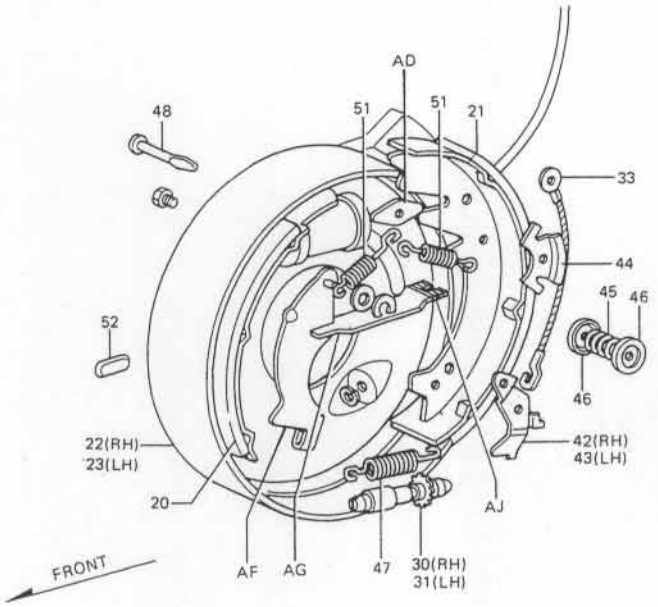

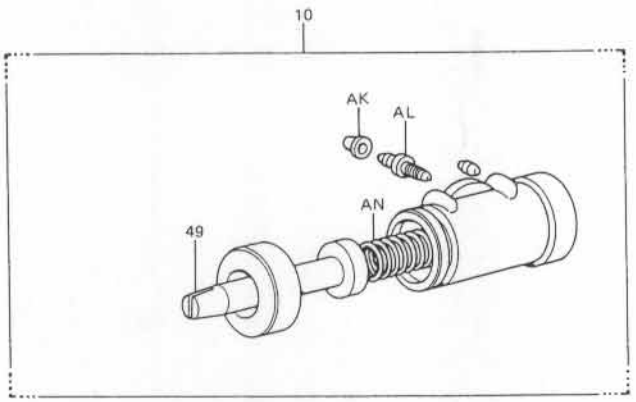

10 Wheel cylinder ASSY
20 Shoe SUB-ASSY
21 Shoe SUB-ASSY
22 Backing plate, RH
23 Backing plate, LH
30 Adjusting screw, RH
31 Adjusting screw, LH
33 Cable fitting SUB-ASSY
42 Automatic adjustment, RH
43 Automatic adjustment, LH
44 Cable guide
45 Shoe hold down spring
46 Shoe hold down cup
47 Adjuster spring
48 Shoe hold down pin
49 Push rod
51 Anchor to shoe spring
52 Adjusting hole cover
AD Shoe guide plate
AF Parking lever SUB-ASSY
AG Lever strut
AJ Strut to shoe spring
AK Bleeder screw cap
AL Bleeder screw
AN Wheel cylinder spring

Brake Components (1-ton Series) BARM53

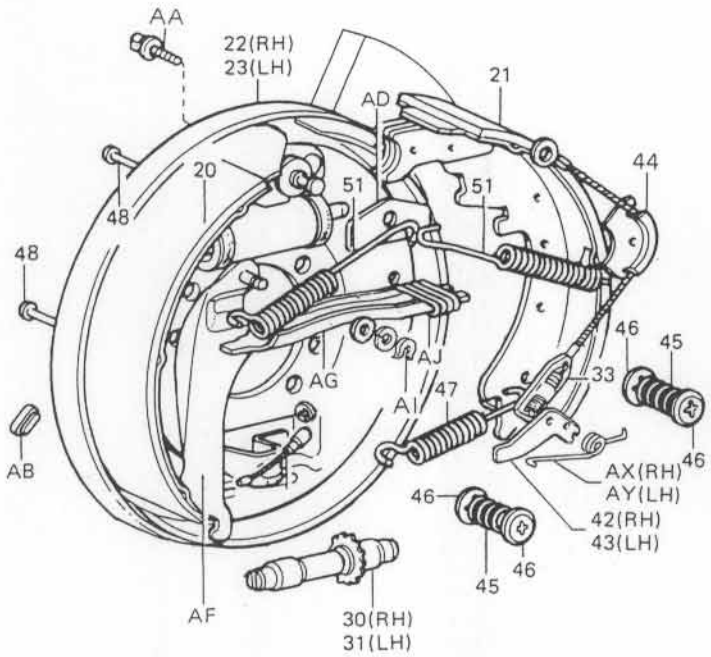

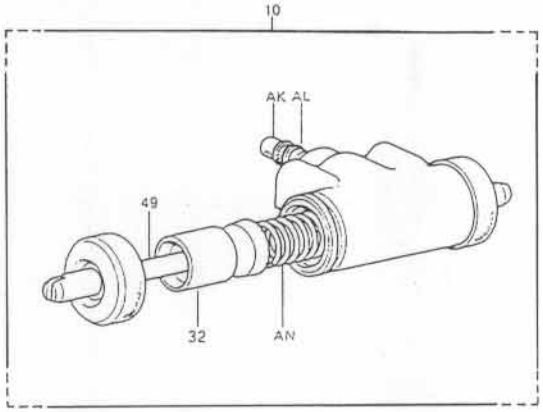

10 Wheel cylinder ASSY
20 Shoe SUB-ASSY
21 Shoe SUB-ASSY
22 Backing plate, RH
23 Backing plate, LH
30 Adjusting screw, RH
31 Adjusting screw, LH
33 Cable & fitting SUB-ASSY
42 Automatic adjustment lever, RH
43 Automatic adjustment lever, LH
44 Cable guide
45 Shoe hold down spring
46 Shoe hold down cup
47 Adjuster spring
48 Shoe hold down pin
49 Push rod
51 Anchor to shoe spring
AA Bolt & washer set
AB Hole cover
AD Shoe guide plate
AF Parking lever SUB-ASSY
AG Lever strut
AI Retainer
AJ Strut to shoe spring
AK Bleeder screw cap
AL Bleeder screw
AN Wheel cylinder spring
AX Lever return spring, RH
AY Lever return spring, LH

Brake Components (2-ton Series) BARM54

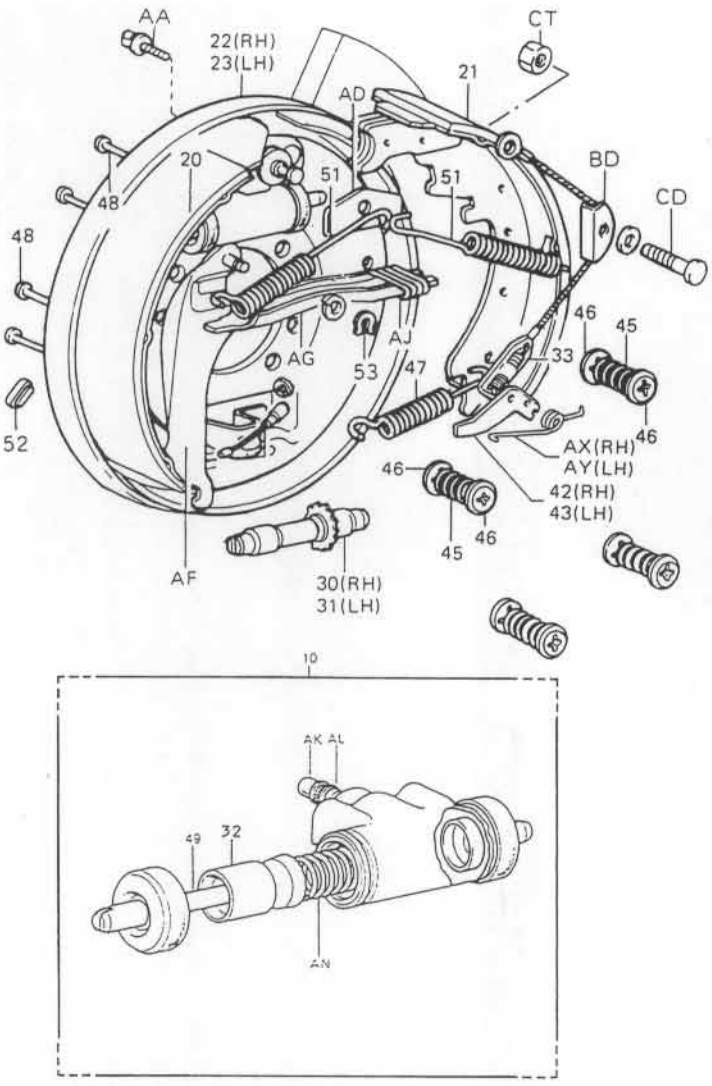

10 Wheel cylinder ASSY
20 Shoe SUB-ASSY
21 Shoe SUB-ASSY
22 Backing plate SUB-ASSY, RH
23 Backing plate SUB-ASSY, LH
30 Adjusting screw SUB-ASSY, RH
31 Adjusting screw SUB-ASSY, LH
33 Cable & fitting SUB-ASSY
42 Automatic adjustment lever, RH
43 Automatic adjustment lever, LH
45 Shoe hold down spring
46 Shoe hold down cup
47 Adjuster spring
48 Shoe hold down pin
49 Push rod
51 Anchor to shoe spring
52 Adjusting hole cover
53 Parking lever retaining ring
AA Bolt & washer set
AD Shoe guide plate
AF Parking lever SUB-ASSY
AG Lever strut
AJ Strut to shoe spring
AK Bleeder screw cap
AL Bleeder screw
AN Wheel cylinder spring
AX Lever return spring, RH
AY Lever return spring, LH
BD Parking brake cable sheave
CD Pin

Brake Components (3-ton Series) BARM55

FRONT BRAKE ASSY

Removal

Caution
Since the brake fluid (vegetable oil) is used, never let rubber parts of brake come into contact with other type of oil.

Note:
- The brake can be disassembled either after removal as the brake ASSY from the vehicle or part by part on the vehicle. Select the proper method according to the kind of the trouble to be repaired.7
- For removal to the axle hub, refer to the front axle section (page7-7).

1. Remove the anchor to shoe spring.
   (1) Anchor to shoe spring
   SST 09717-20010
   (2) Strut lever
   (3) Strut to shoe spring
   (4) Cable guide
   (5) Cable

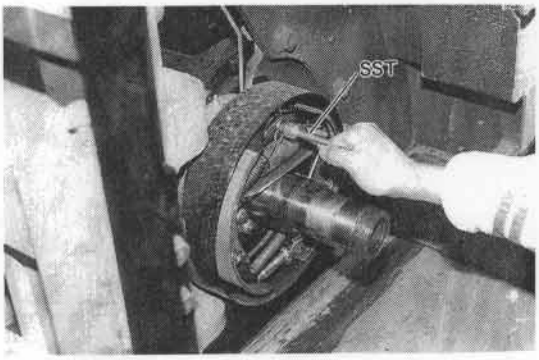

Removing the Spring BAR19-26

2. Remove the adjusting screw.
   (1) Adjuster spring
   (2) Automatic adjustment lever
   (3) Adjusting screw

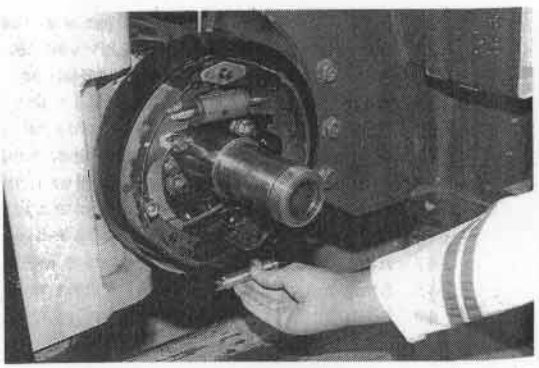
Removing the Adjusting the Spring BAR19-31

3. Remove the shoe hold down spring.
   (1) Shoe hold down cup
   SST 09510-31960-71
   (2) Shoe hold down spring

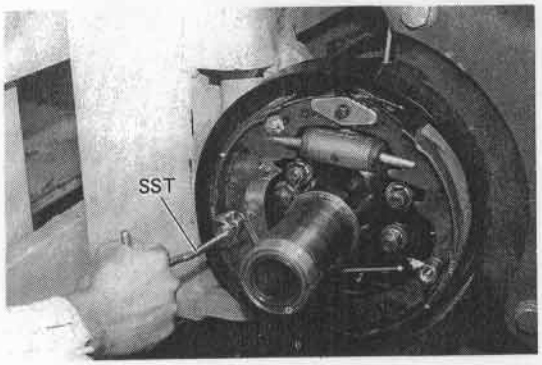

Removing the Primary Shoe BAR19-33

4. Remove the brake shoe.
   (1) Primary shoe
   Caution:
   Disconnect the parking brake cable at the same time.
   (2) Secondary shoe

   Caution:
   When removing the backing plate and wheel cylinder, carefully prevent brake fluid from flowing out from the reserve tank.

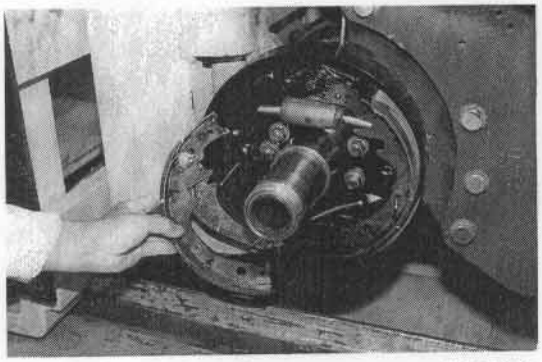

Removing the Primary Shoe BAR19-34

5. Prevent brake fluid from flowing out from the reserve tank.
   (1) Remove the set bolts.
   (2) Disconnect one side of the spring.
   (3) Hook the spring on the reserve tank.
   (4) Remove the clip and disconnect the brake hose.

6. Disconnect the parking brake cable.
   (1) Snap ring
   (2) Parking brake cable

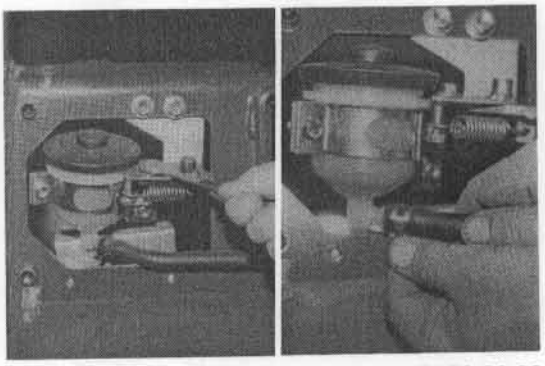

Treating the Reserve Tank BAT9-32,33

7. Remove the backing plate.
   (1) Brake pipe disconnection
   (2) Set nut
   (3) Backing plate

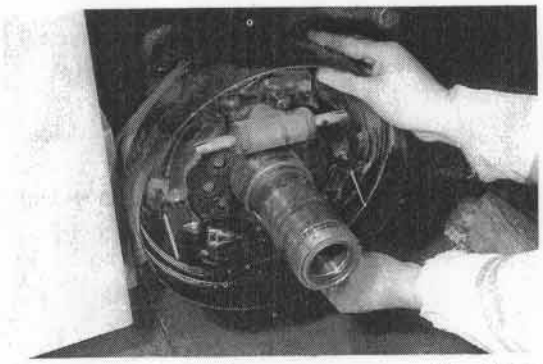

Removing the Baking Plate BAA18-25

8. Remove the wheel cylinder.
   (1) Set bolts
   (2) Wheel cylinder

9. Disassemble the wheel cylinder.
   (1) Wheel cylinder cover
   (2) Cylinder piston, cup, and spring

   Caution:
   - Push the push rod from one side, and remove the piston, cup and spring.
   - Remove the piston and cup on the opposite side by pushing than with a finger from the inner side.

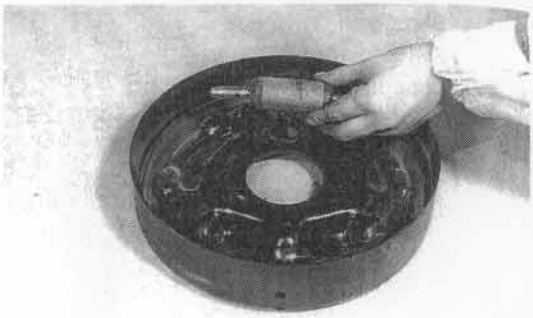

Removing the Wheel Cylinder BAA18-27

INSPECTION

1. Inspect the wheel cylinder.
   (1) Corrosion, damage and wear on cylinder bore and piston
   Piston clearance
   Standard: 1 ~ 2 to series
   0.040 ~ 0.125 mm
   (0.00157 ~ 0.00492 in)
   3 ton series
   0.054 ~ 0.87 mm
   (0.00213 ~ 0.00343 in)
   (2) Wear and damage of piston cup

   Caution:
   Replace the cup (exclusively for vegetable oil) with a new one at the time of overhaul.

   (3) Damage and aged deterioration of cylinder boot
   (4) Damage and deformation of connecting rod
   (5) Deformation and fatigue of spring

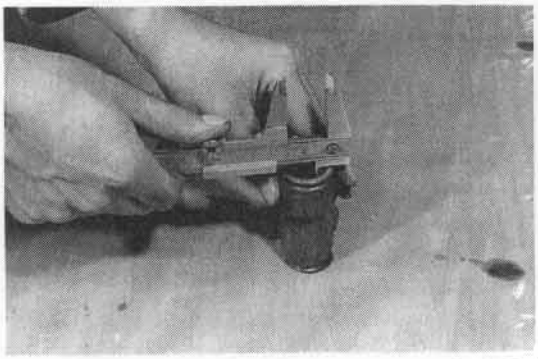

Inspecting the Wheel Cylinder (1) BAA19-1

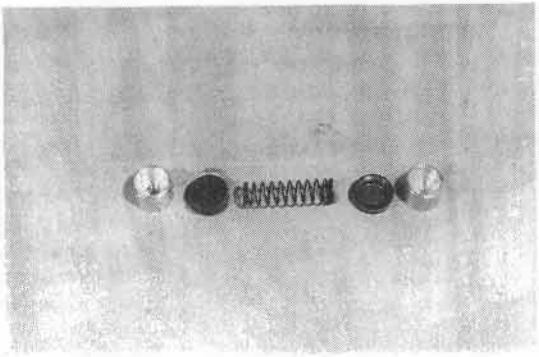

Inspecting the Wheel Cylinder (2) BAA19-3

2. Inpsect the brake drum
   (1) Uneven wear, tapering and streaks on brake drum inside surface.
   1 ton series
   Standard inside diameter:
   254 mm (10.00 in)
   Wear limit: 256 mm (10.08 in)
   2 ton series
   Standard inside diameter:
   279.4 mm (11.00 in)
   Wear limit: 281.4 mm (11.08 in)
   3 ton series
   Standard inside diameter:
   310 mm (12.20 in)
   Wear limit: 312 mm (12.28 in)

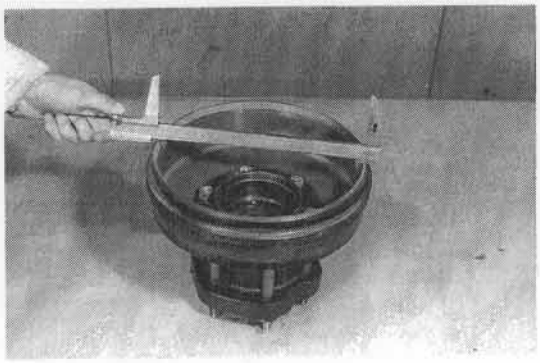

Inspecting the Brake Drum BAA18-6

3. Inspect the brake shoe.
   (1) Wear, damage and oil adhesion on brake shoe lining
   1 ton series
   Standard thickness:
   4.9 mm (0.1929 in)
   Wear limit: 1.0 mm (0.039 in)
   2 ton series
   Standard thickness:
   5.1 mm (0.2008 in)
   Wear limit: 1.0 mm (0.039 in)
   3 ton series
   Standard thickness:
   5.7 mm (0.2244 in)
   Wear limit: 1.0 mm (0.039 in)

   (2) Bend, wear and damage of brake shoe

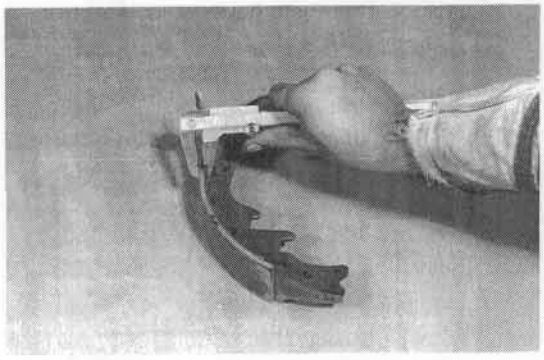

Inspecting the Brake Lining BAA18-33

4. Inspect the springs.
   (1) Deformation and fatigue of return spring
   1 ton series
   Free length: 102 mm (4.02 in)
   2 ton series
   Free length: 106 mm (4.17 in)
   3 ton series
   Free length: 124 mm (4.88 in)
   (2) Deformation and fatigue of adjusting spring
   1 ton series
   Free length: 79 mm (3.11 in)
   2 ton series
   Free length: 98.4 mm (3.89 in)
   3 ton series
   Free length: 88 mm (3.47 in)

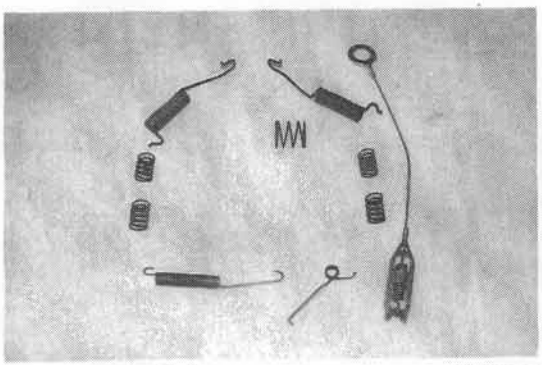

Inspecting the Spring BAA86-8

(3) Deformation and fatigue of strut spring
1 ton series
Free length: 18 mm (0.71 in)
2 ton series
Free length: 29.8 mm (1.17 in)
3 ton series
Free length: 29.8 mm (1.17 in)
(4) Deformation of hold down spring
1 ton series
Free length: 25.7 mm (1.012 in)
2 ton series
Free length: 35.9 mm (1.413 in)
3 ton series
Free length: 25.7 mm (1.012 in)

5. Inspect the adjusting screw
(1) Wear and deformation of teeth
(2) Wear and rotation of threaded portion

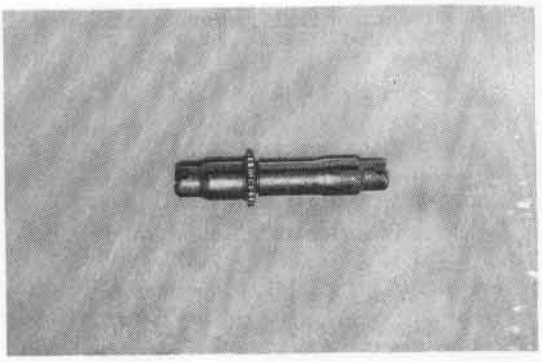

Inspecting the Adjusting Screw LAD86-9

6. Inspect the shoe hold down up.
(2) Deformation and crack of cup

7. Inspect the strut lever.
(2) Bend, damage and deformation of lever

8. Inspect the adjusting parking lever.
(2) Deformation, crack and wear of parking lever

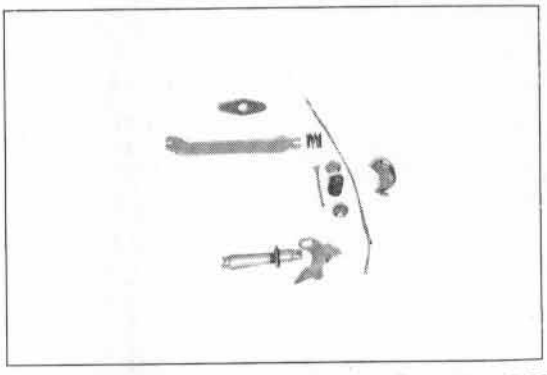

Inspecting the Adjusting Parking Lever Parts BAA18-30

9. Inspect the cable guide.
(2) Deformation and wear of guide

10. Inspect the backing plate.
(2) Deformation, crack and damage of plate

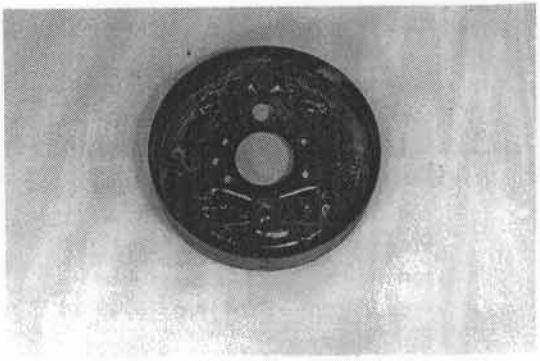

Inspecting the Backing Plate BAA18-28

Reassembly

1. Install the Wheel Cylinder.

   Caution:
   - **Coat brake fluid (vegetable oil) on the piston and piston cup before reassembly.**
   - **Never let hydraulic oil adhere on these parts.**

   (1) Insert the wheel cylinder cup and piston by pushing with a finger from one side of the wheel cylinder.
   (2) Insert the spring from the opposite side, and insert the piston and piston cup.
   (3) Install the boot to the connecting rod, and install them to the cylinder.
   (4) Bleeden screw

2. Install the wheel cylinder ASSY.
   (1) Backing plate
   (2) Wheel cylinder ASSY
   (3) Set bolts
   1 ton series
   T = 0.8 ~ 1.2 kg-m
   (5.8 ~ 8.7 ft-lb 7.8 ~ 11.8 N-m)
   2 - 3 ton series
   T = 1.8 ~ 2.7 kg-m
   (13.0 ~ 19.5 ft-lb 17.7 ~ 26.5 N-m)

3. Install the backing plate.
   (1) Backing plate
   (2) Shoe hold pin
   (3) Set nut
   1 ton series:
   T = 5.0 ~ 8.0 kg-m
   (36.1 ~ 57.9 lb 49.0 ~ 78.5 N-m)
   2 ~ 3 ton series:
   T = 12 ~ 14 kg-m
   (86 ~ 101 ft-lb 118 ~ 137 N-m)
   (4) Connect the brake pipe to the wheel cylinder.

4. Heat resistance grease coating position
   (1) Six places on brake shoe contact surface
   (2) Anchor pin

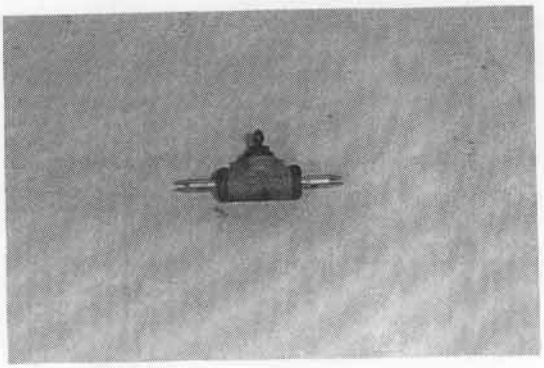

Installing the Wheel Cylinder BAA18-29

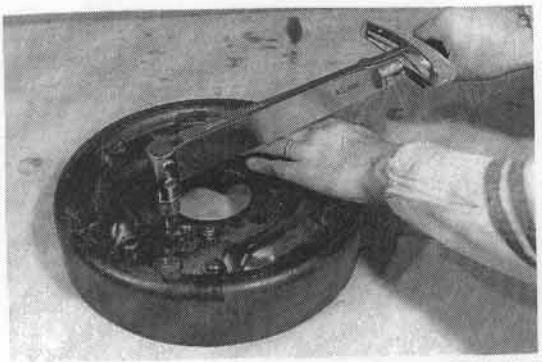

Installing the Wheel Cylinder ASSY BAA19-5

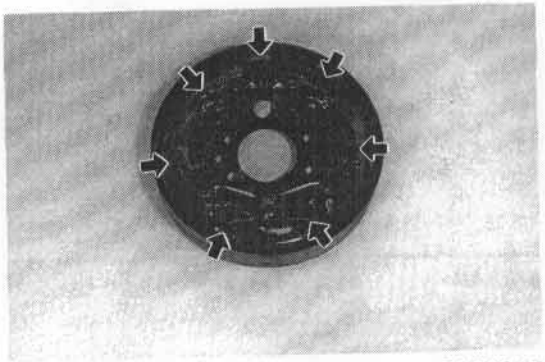

Grease Coating Positions BAA18-28

5. Connect the parking brake cable.
   (1) Rubber packing
   (2) Cable
   (3) U ring

6. Install the parking lever.
   (1) Install the parking lever and lever pin to the brake shoe on the front side, and install the U ring.

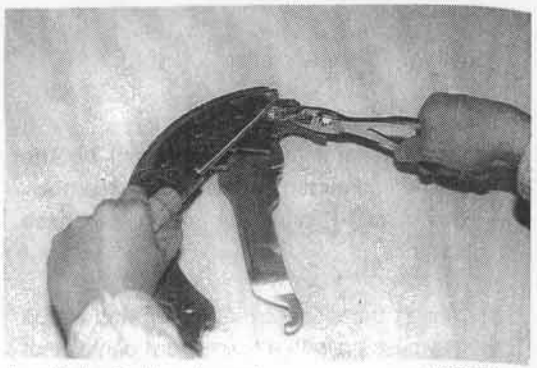

Install the Parking Leverd LAO48—12

7. Install the brake shoe.
   (1) Connect the parking brake cable (on the front side) and install the brake shoe to the hold down pin.
   (2) Cup washer
   (3) Shoe hold down spring
   (4) Cup washer
   SST 09510-31960-71
   (5) Install the strut to shoe spring to the strut, and install than between brake shoes.

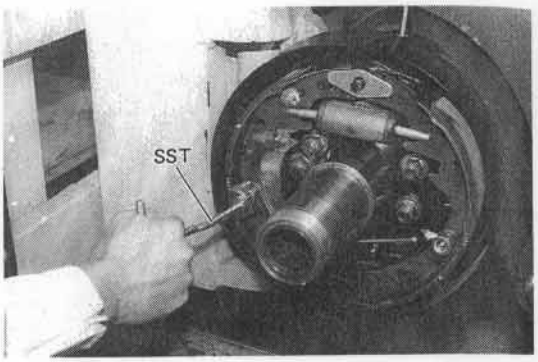

Install the Brake Shoe BAR19-33

8. Install the adjusting screw and spring.
   (1) Adjusting screw
   (2) Adjuster spring

9. Install the adjustment lever and spring.

   Caution:
   Install the adjustment lever and return spring to the brake shoe, and install the cable & fitting.

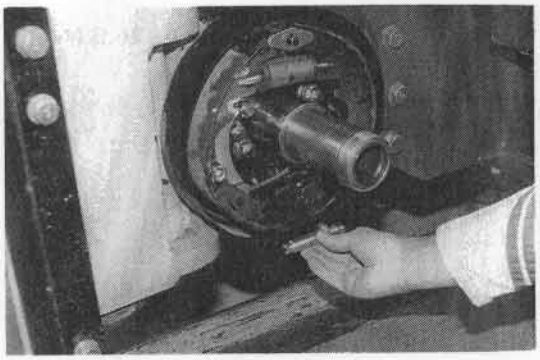

Install the Adjusting Screw BAR19-31

10. Install the return springs
    (1) Return spring (front)
    (2) Return spring (rear)
    SST 09718-20010

11. For the succeeding assembly procedure, see the front axle section (page 7-11).

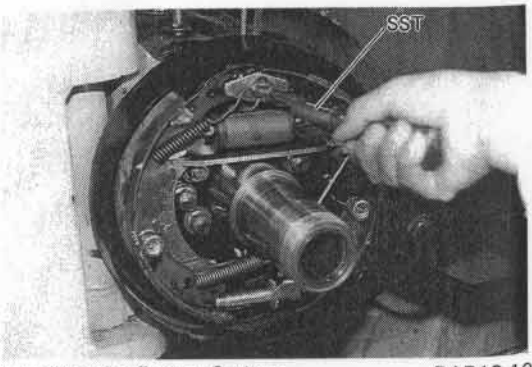

Installing the Return Springs BAR18-10

12. Install the reserve tank to the original state before removal.
    (1) Connect the brake hose to the pipe and fit the clip.
    (2) Install the reserve tank by tightening the set bolts.

Brake air bleeding

1. Bleed air from the master cylinder.
2. Bleed air from the brake system.

Note:

- Bleed air in the order of the master cylinder and brake.
- Air bleeding operation should be carried out by two persons while signaling each other.
- One person should hold the brake pedal after pumping it several times, and the other person should loosen the bleeder plug.
- Tighten the bleeder plus when no air bubble is seen in the brake fluid flowing out from the plug.
- During air bleeding, maintain the brake fluid in the reserve tank above the proper level.

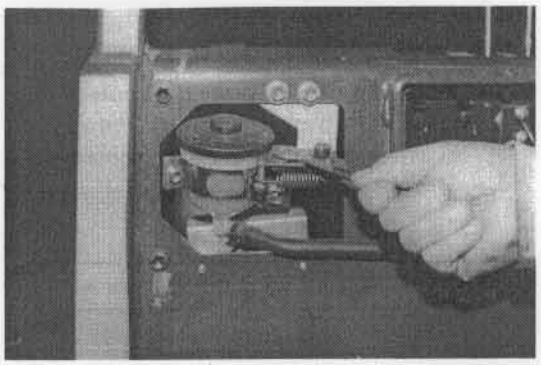

Installing the Reserve Tank BAT9-32



Bleeding Air from Brake System BAT23-2,BAR-29-7

Test (Function Test of Automatic Adjuster)

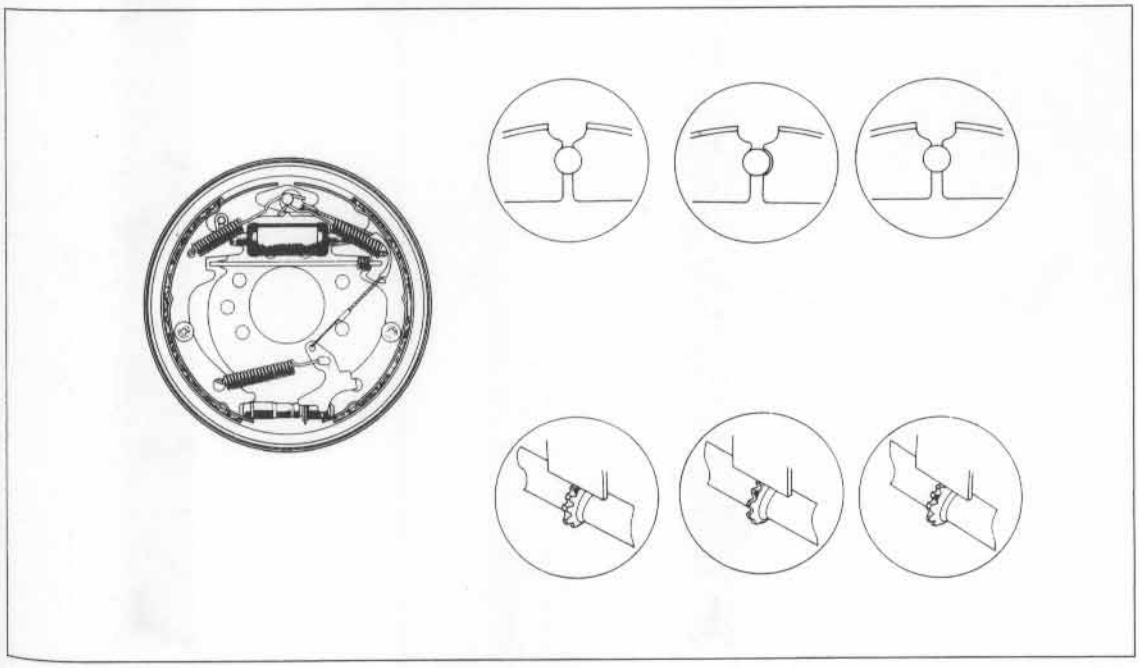

Operation Sequence BAAS14

Function Test

1. Brake shoe diameter adjustment
   (1) Adjust the installed brake shoe outside diameter at 1.0 mm (0.039 in) less than the brake drum inside diameter by turning the adjusting screw.

	Installed shoe outside diameter
1 ton series	253 mm (9.961 in)
2 ton series	278.4 mm (10.961 in)
3 ton series	309 mm (12.165 in)

2. Adjusting screw function test
   (1) Push the fitting cable toward the shoe on the rear side and release it.
   (2) See the adjusting lever then comes into mesh with the next tooth of the adjusting screw.
   (3) When returned, see that the adjusting lever returns to the original position by feeding one tooth of the screw.

3. Inspect the following points in case of any malfunctioning:
   (1) The adjusting lever shall be in vertical contact with the adjusting lever tooth.
   (2) The adjusting lever shall be in contact at 5-7 mm above the center line of the adjusting screw.

   Note:
   If either (1) or (2) is defective, the adjusting screw fails in making adjustment because of improver meshing of the adjusting lever and tooth.

Braking force inspection and adjustment

1. force inspection
   (1) Inspect the braking force with the brake tester or by the traveling test.

No load status	Initial braking speed km/h (mph)	Braking distance m (ft)
1 ton series	16 (9.9)	5.0 (197) or less
2 ton series	17 (10.6)	5.0 (197) or less
3 ton series	15 (9.3)	5.0 (197) or less

2. Adjustment
   (1) Make the following adjustment when the depressed brake pedal height above the toe board is insufficient:
   Repeat forward and backward traveling, and adjust the brake shoe clearance.
   The adjusting screw makes adjustment only when the brake pedal is depressed in backward traveling.
   (2) Insufficient braking is caused by adjuster malfunction, insufficient lining contact, foreign matter adhesion on the lining, or brake fluid leakage. Remove the brake drum and inspect the inside.
   (3) If the braking performance is uneven or depressed brake pedal height is insufficient, same defect as in (2) is conceivable.

MASTER CYLINDER

GENERAL

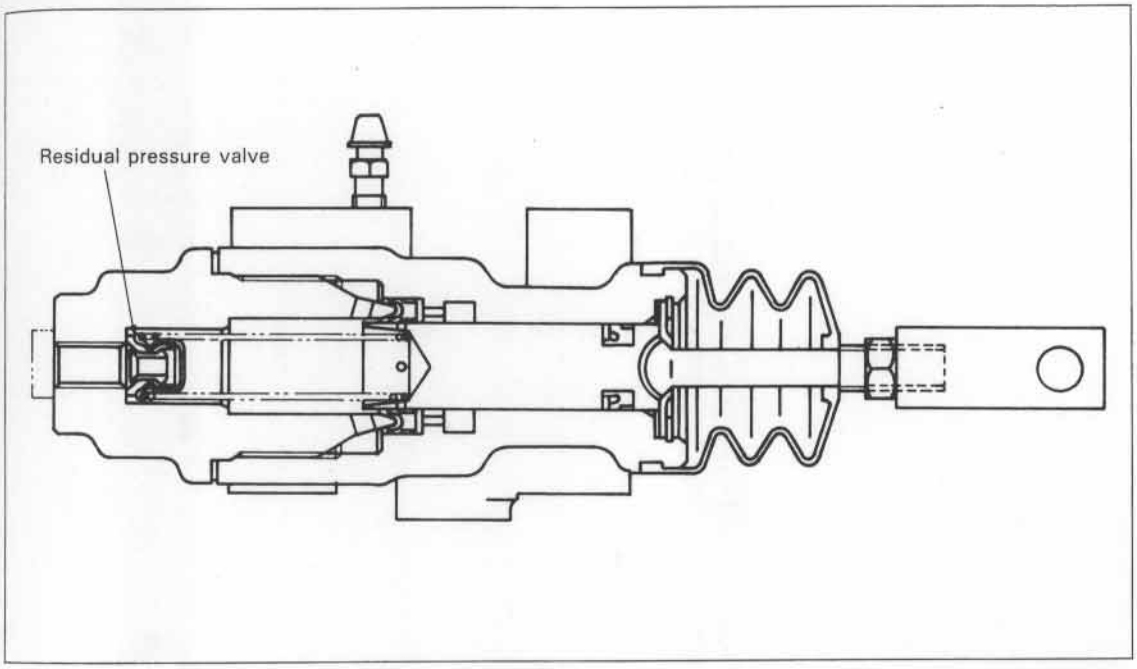

Master Cylinder Sectional View (1 ~ 2 ton Series) BARS46

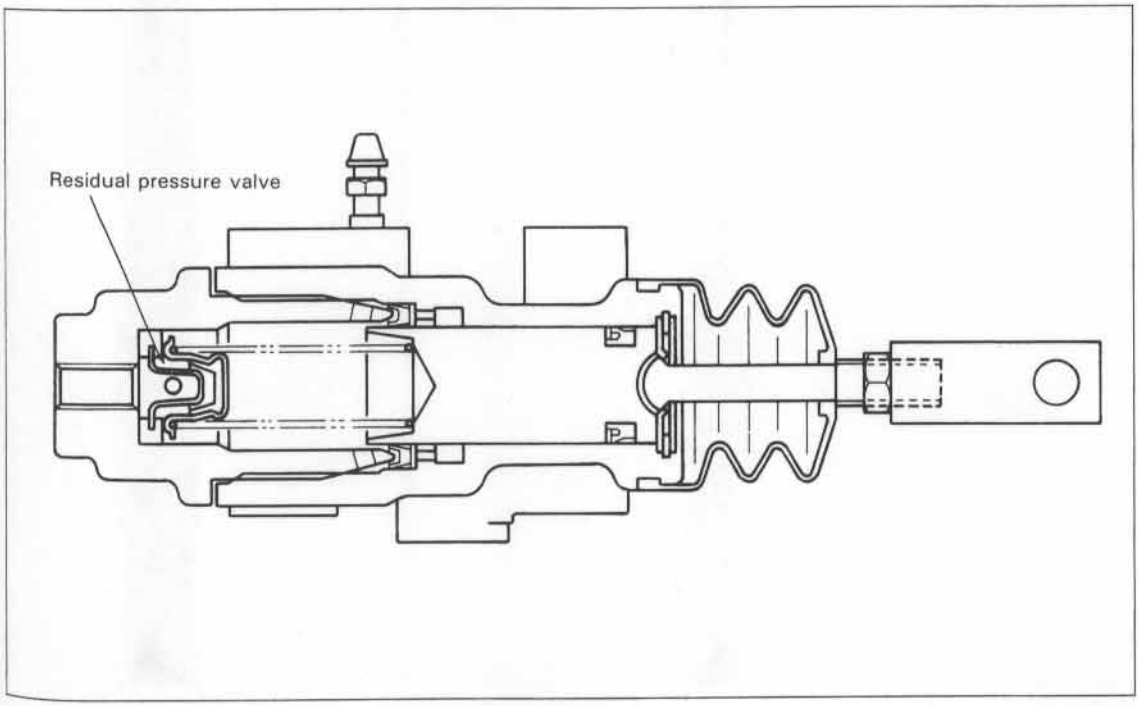

Master Cylinder Sectional View (3 ton Series) BARS156

COMPONENTS

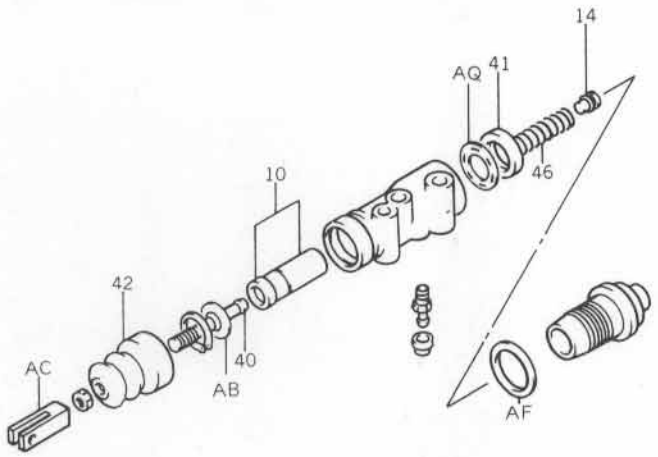

10 Master cylinder piston SUB-ASSY
14 Valve ASSY
40 Push rod
41 Cylinder cup
42 Boot
46 Compresion spring
AB Piston stop plate
AC Push rod clevis
AF Gasket
AQ Spacer

Master Cylinder Components (1 ~ 2 ton Series) BARM56

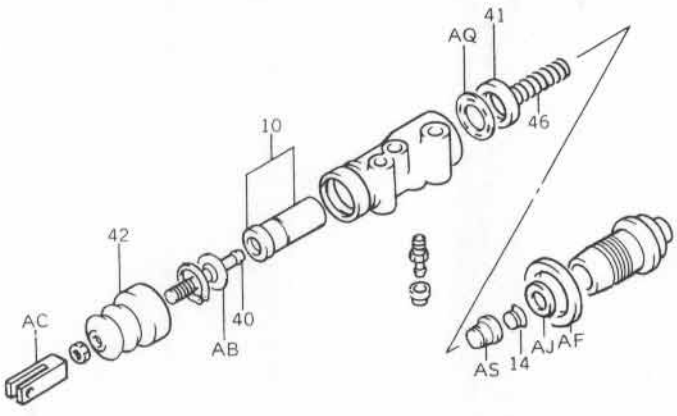

10 Master cylinder piston SUB-ASSY
14 Valve ASSY
40 Push rod
41 Cylinder cup
42 Boot
46 Compresion spring
AB Piston stop plate
AC Push rod clevis
AF Gasket
AJ Gasket
AS Seat
AQ Spacer

Master Cylinder Components (3 ton series) BARM57

MASTER CYLINDER ASSY

Revoval

1. Remove the front cover.

2. Prevent brake fluid from flowing out from the reserve tank.
   (1) Remove the set bolts.
   (2) Disconnect one side of the spring.
   (3) Hook the spring on the reserve tank.
   (4) Remove the clip and disconnect the brake hose.

   Caution:
   Never let brake fluid splash onto the painted surface.

3. Remove the mast jacket ASSY.
   (See the mast jacket removal section on page 10-9).

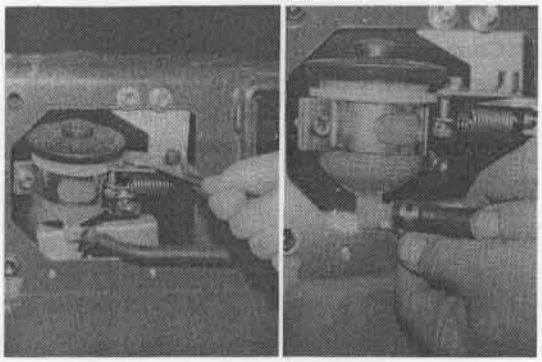

Treating the Reserve Tank BAT9-32,33

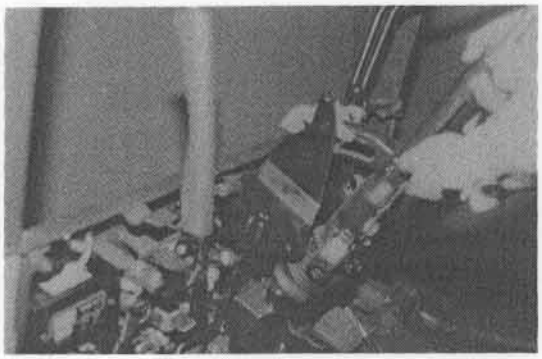

Removing the mast jacket BAT9-24

4. Disconnect the piping.
   (1) Inlet hose
   (2) Outlet pipe

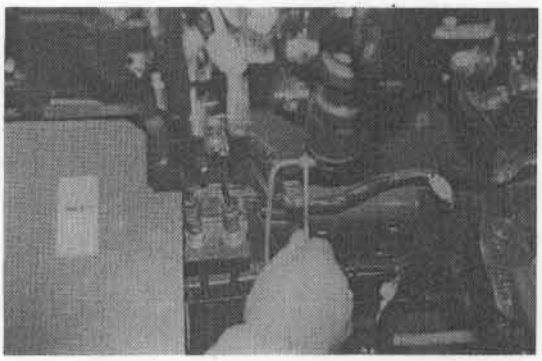

Disconnecting the Piping BAT9-34

5. Removing the master cylinder ASSY
   (1) Loosen the clevis lock nut.
   (2) Set bolts
   (3) Master cylinder ASSY

   Caution:
   Remove the cylinder ASSY from the clevis by rotating the push rod.

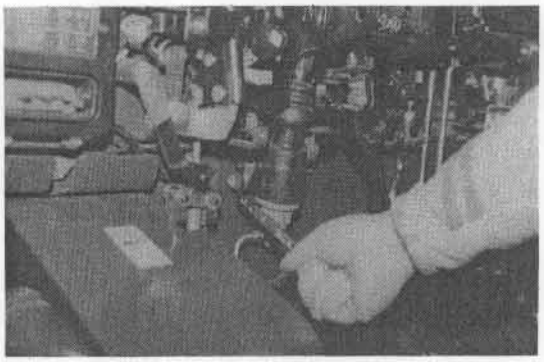

Removing the Cylinder ASSY BAT9-35

Disassembly

Caution:
Never let any oil or grease othe than brake fluid (Castle Brake Fluid Glycol 2500h) contaminate brake components.

1. Remove the master cylinder boot.

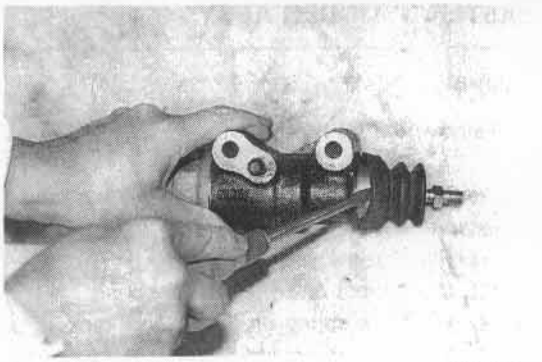

Removing the Boot BAR14-5

2. Remove the push rod.
   (1) Snap ring
   (2) Piston stop plate
   (3) Push rod

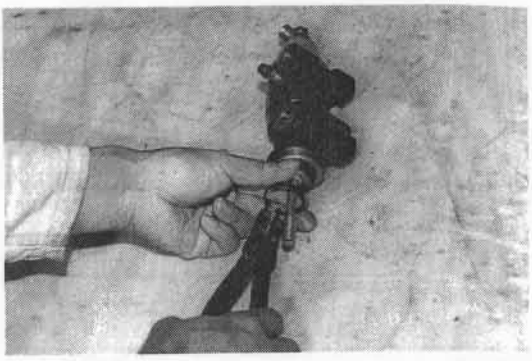

Removing the Push Rod BAR14-6

3. Remove the piston.
   (1) Piston
   (2) Spring
   (3) Spring ASSY

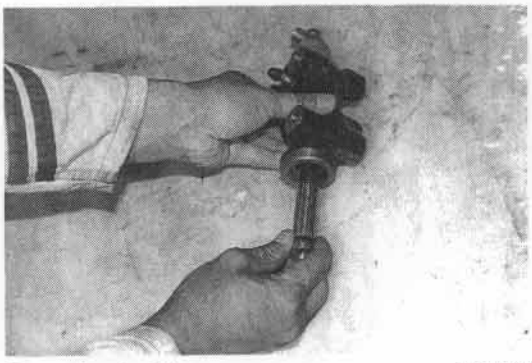

Removing the Piston BAR14-7

4. Remove the end cap.
   (1) End cap
   (2) Gasket
   (3) Cylinder cup
   (4) Plate

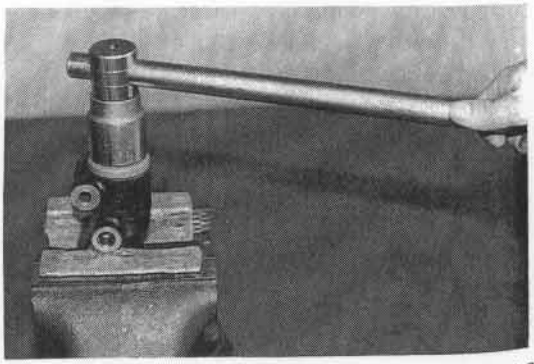

Removing athe End Cap BAR14-8

Inspection

Caution:
- Wash each part with new brake fluid (SAE J-1703, DOT-3), inspect and replace it if defective for any of the following items:
- If the cylinder body or piston is defective, replace the whole master cylinder ASSY.

1. Inspect the cylinder and piston cup.
   (1) Wear, damage and deterioration of piston cup
   (2) Corrosion, damage and wear on piston and cylinder bore
   (3) Damage and deformation of spring

2. Inspect the push rod.
   (1) Deformaiton and damage of push rod
   (2) Tear and deterioration of boot



Inspecting the Master Cylinder BAR14-11

Reassembly

1. Install the end cap.
   (1) Plate
   (2) Cylinder cup
   (3) End cap
   T = 20~28 kg-m
   (145~203 ft-lb) [196~275 N·m]

2. The succeeding procedure is the reverse of the disassembly procedure.

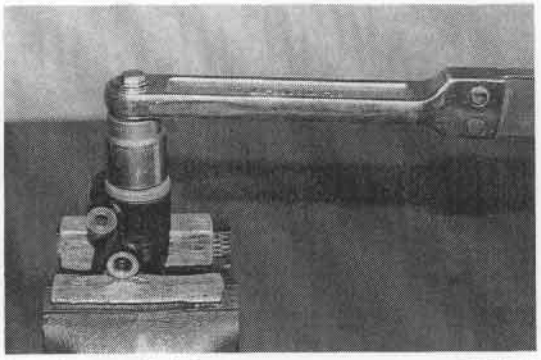

Installing the End Cap BAR14-9

Installation & Adjustment

The installation procedure is the reverse of the removal procedure.

1. See the brake pedal section (page 11-27) for the push rod adjustment.

2. Carry out air bleeding.

PARKING BRAKE LEVER

COMPONENTS

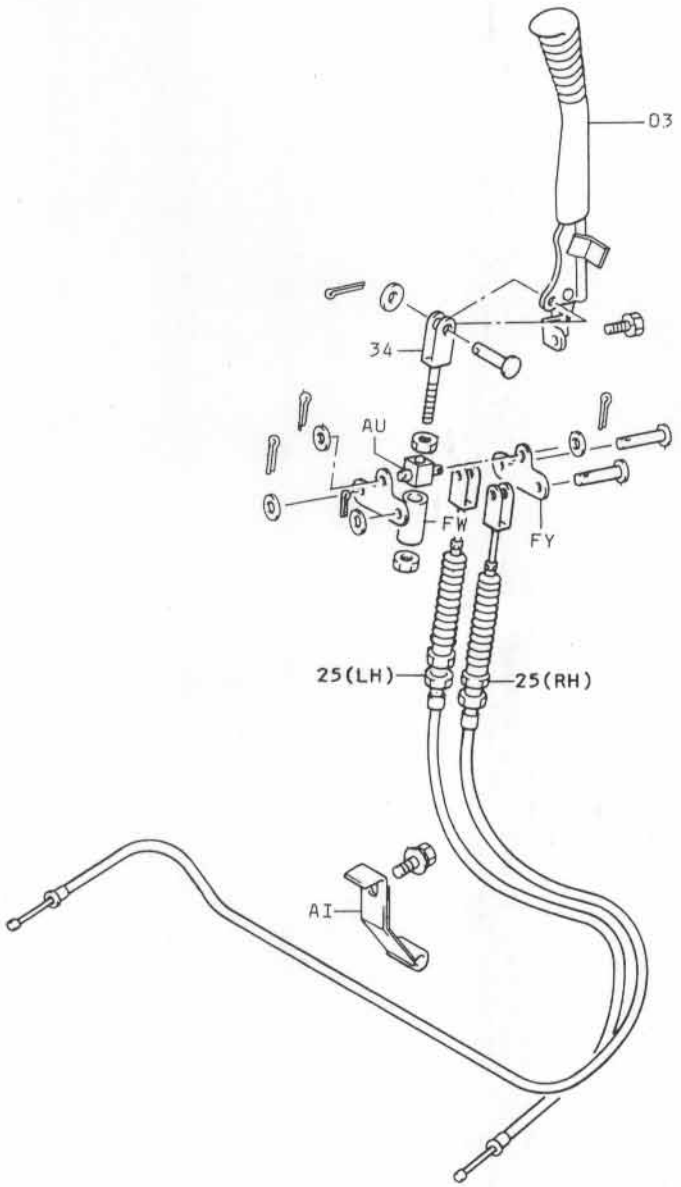

03	Parking brake lever ASSY	AU	Joint
25	Parking brake cable, No.2	EB	Brake cable clamp
34	Parking brake pull rod, No.1	FW	Pipe
AI	Clamp	FY	Parking brake equalizer

Parking Brake Lever Components BARM58

PARKING BRAKE LEVER

Removal

1. Remove the pad LH.
   (1) Set bolt
   (2) Pad

2. Remove the toe board.
   (1) Accelerator connector
   (2) Toe board

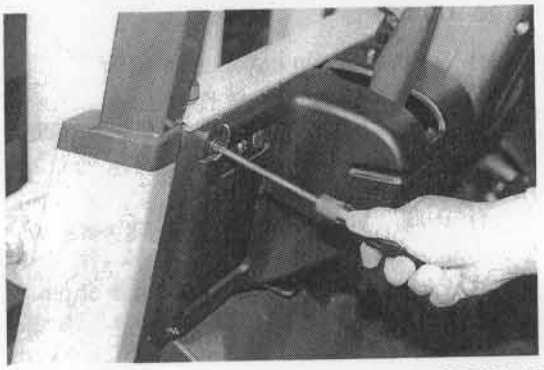

Removing the Pad BAR20-20

3. Loosen the parking brake cable lock nut.

4. Remove the parking brake lever ASSY.
   (1) Cotter pin
   (2) Pin
   (3) Set bolt
   (4) Parking brake ASSY

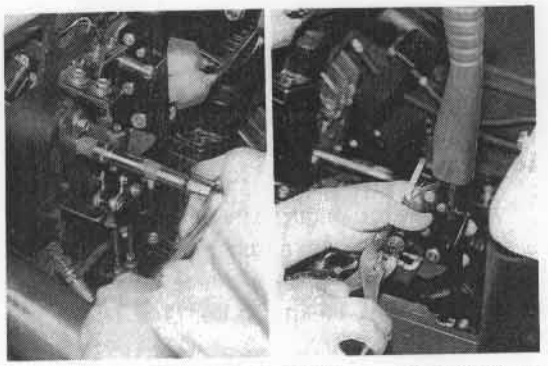

Removing the Brake Lever ASSY BAR20-26, 25

5. Remove the equalizer.
   (1) Cotter pin
   (2) Pin
   (3) Equalizer

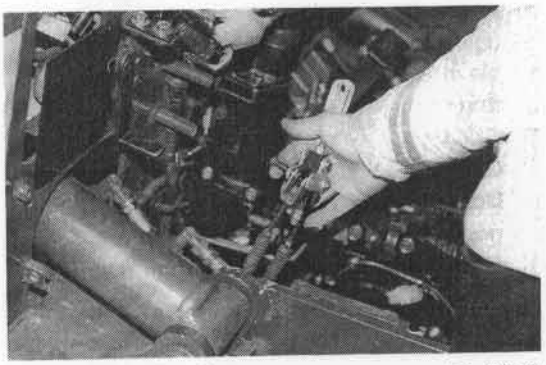

Removing the Equalizer BAr20-24

Inspection

1. Inspect the parking brake lever ASSY.
   (1) Bend and damage of lever
   (2) Damage and deformation of lever knob

2. Inspect the equalizer and pin.
   (1) Wear, deformation and damage of equalizer
   (2) Wear, deformation and damage of pin



Inspecting the Brake Lever ASSY BAR32-3

Installation

The installation procedure is the reverse of the removal procedure.

Caution:
Coat grease on the link portion.

Adjustment

1. Adjust the rod length so that the pawl engages with **the 3rd or 4th notch** on the sector when the parking lever operating force at the illustrated position is **15 kg (33 lb), [147 N].**

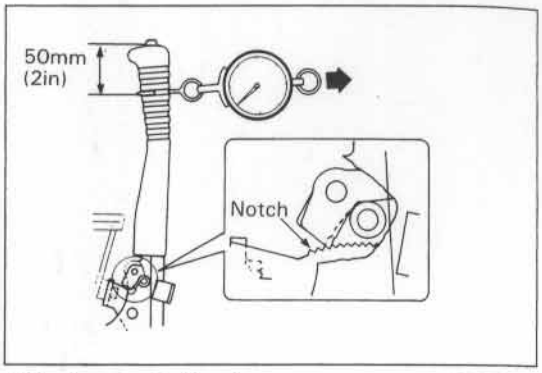

Adjusting the Parking Lever BARS157

Adjust the rod length by moving the equalizer upward or downward to change the brake cable tension. (Loosen the nuts on top and bottom of the equalizer for adjustment.)

Caution:
Do not decrease the number of ratchet notches to 2 or less in adjustment. (Otherwise, brake dragging may result.)

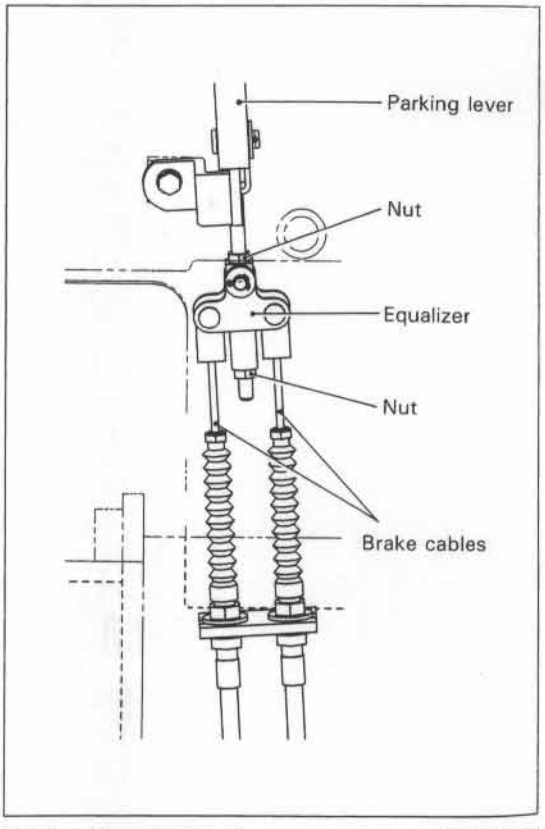

Rod Length Adjustment BARS138

BRAKE PEDAL

COMPONENTS

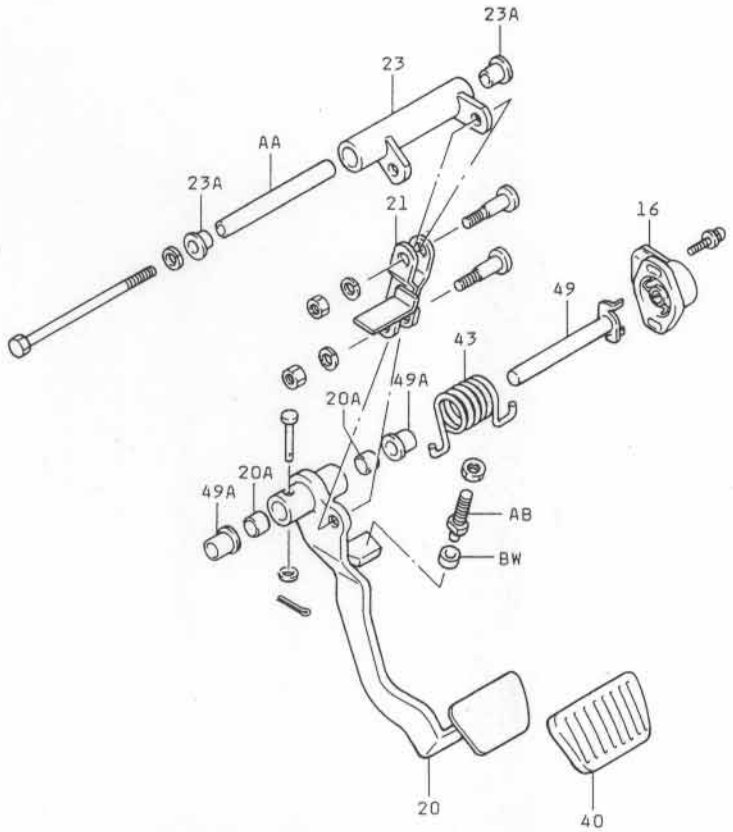

16	Rotary position sensor ASSY (Brake potentiometer)	40	Pedal pad
20	Brake pedal SUB-ASSY	43	Torsion spring
20A	Bushing	49	Brake pedal shaft
21	Brake link SUB-ASSY, No.1	49A	Bushing
23	Brake link SUB-ASSY, No.2	AA	Spacer
23A	Bushing	AB	Bolt
		BW	Cushion

Brake Pedal Components BATM48

Adjustment

1. Brake pedal height and play
   (1) Adjust the brake pedal height from the upper surface of the toe board to the following value by turning the stopper bolt.

   Pedal height A:

   124 mm (4.88 in) (1990.4 ~ 1990.8)
   135 $^{+5}_{0}$ mm (5.31$^{+0.20}_{0}$ in) (1990.8 ~)

   With pad B:

   129 mm (5.08 in) (1990.4 ~ 1990.8)
   140$^{+5}_{0}$ mm (5.51$^{+0.20}_{0}$ in) (1990.8 ~)

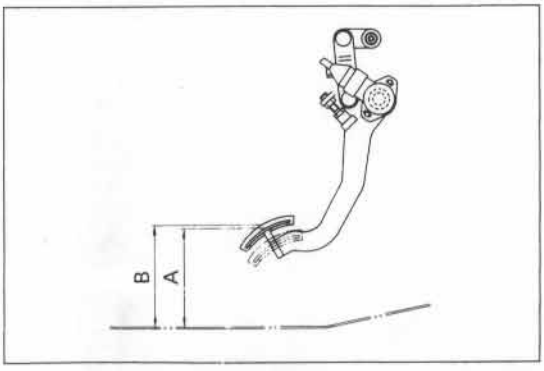

Adjusting the Brake Pedal Height BATS79

(2) Adjust the master cylinder push rod length to adjust the pedal play.
Pedal play:
5 ~ 10 mm (0.20 ~ 0.39 in)
(1990.4 ~ 1990.8)
3 ~ 7 mm (0.12 ~ 0.28 in) (1990.8 ~)

(3) Manually move the master cylinder push rod to confirm the free state.

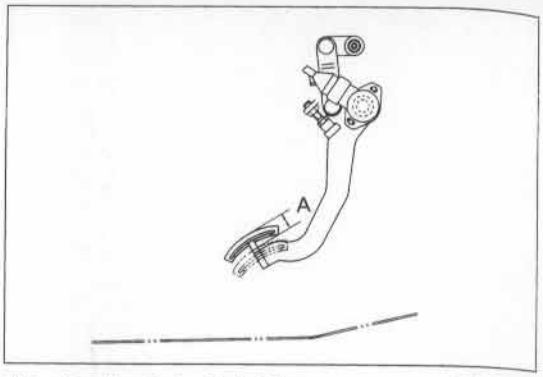

Adjusting the Brake Pedal Play BATS80

(4) Check the depressed brake pedal height.
Standard A:
1.0 ~ 2.5ton
90 mm (3.54 in) or more
(1990.4 ~ 1990.8)
3.0ton
85 mm (3.35 in) or more
(1990.4 ~ 1990.8)

Standard A:
1.0 ~ 1.8ton
90 mm (3.54 in) or more (1990.8 ~)
2.0 ~ 2.5ton
85 mm (3.35 in) or more (1990.8 ~)
3.0ton
80 mm (3.15 in) or more (1990.8 ~)

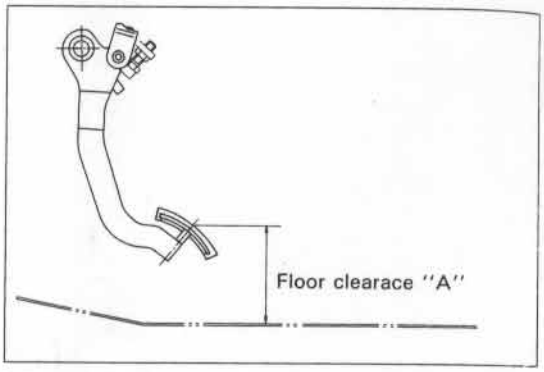

Adjusting the Depressed Brake Pedal Height BATS81

2. Adjust the brake potentiometer.
(1) Loosen the meter set screws.
(2) Insert a thickness gauge between the stopper bolt and stopper, and make adjustment so that the state of the switch in the sensor becomes as shown in the table below.

Thickness gauge thickness	Switch state
1.8 mm (0.071 in)	ON
2.4 mm (0.094 in)	OFF

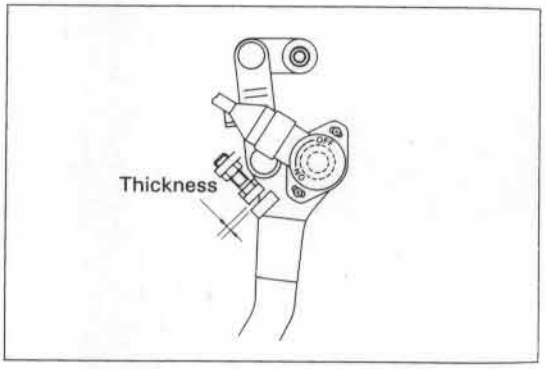

Adjusting the Potentiometer BAST82

(3) Tighten the set screw
T = 0.16 ~ 0.24 kg-m
(1.16 ~ 1.74ft-lb) [1.57 ~ 2.35 N-m]

BODY

	Page
BODY FRAME	12-2
COMPONENTS	12-2
BATTERY HOOD REMOVAL & INSTALLATION	12-5
BALANCE WEIGHT REMOVAL & INSTALLATION ...	12-6
COMBINATION METER	12-7

BODY FRAME

COMPONENTS

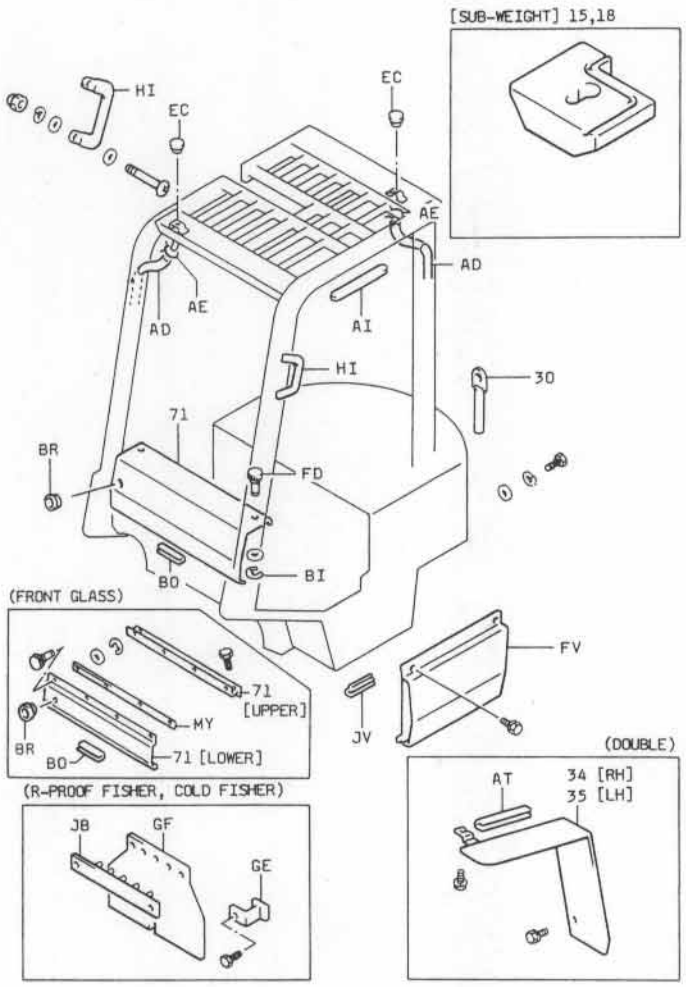

30	Drawbar SUB-ASSY	BR	Grammet
34	Mud guard SUB-ASSY, RH	EC	Cap
35	Mud guard SUB-ASSY, LH	FD	Knob
71	Front cover SUB-ASSY	FV	Side frame cover
AD	Low pressure hose	GE	Bracket
AE	Clamp	GF	Rubber
AI	Sponge	HI	Grip
AT	Sponge	JB	Plate
BI	E-ring	JF	Seal
BO	Collar	MY	Seal

Frame Components BATM49

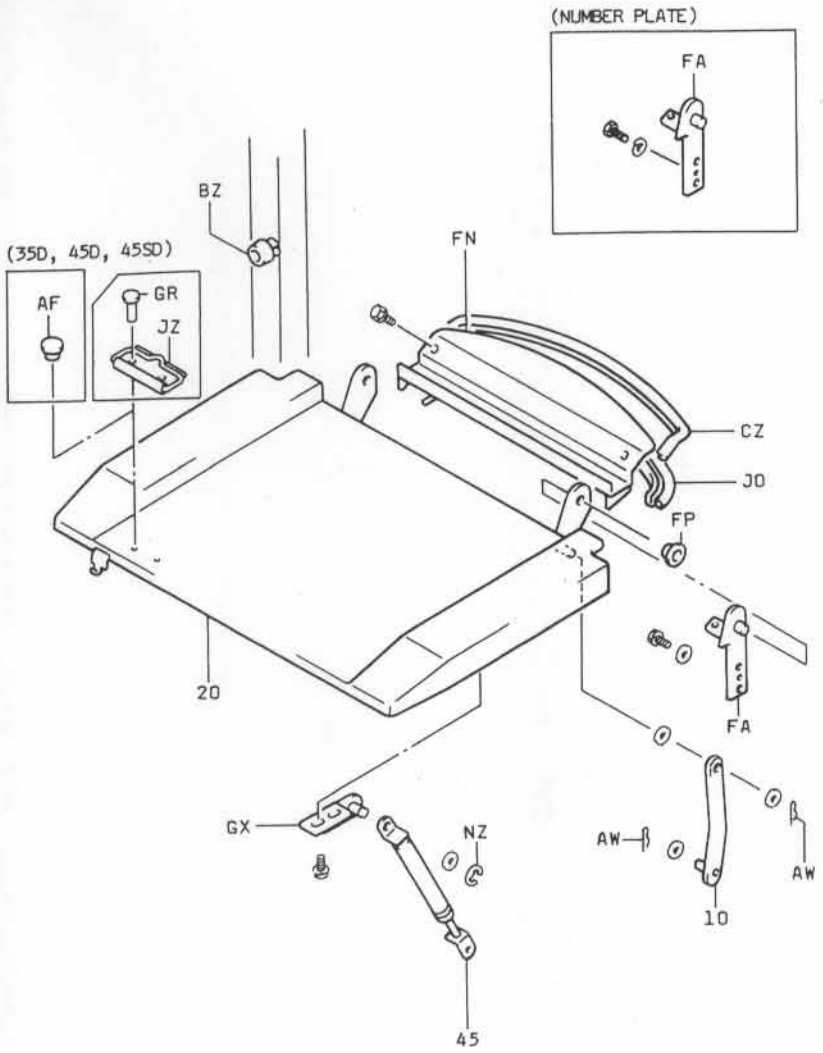

10	Battery hood stay	FA	Bracket
20	Battery hood	FN	Rear hood
45	Battery hood damper	FP	Bushing
AF	Hole plug	GR	Rivet
AW	Snap pin	GX	Damper bracket
AZ	Cushion	JO	Seal
BZ	Cushion	JZ	Clamp
CZ	Rear hood trim	NZ	E-ring

Battery Hood Components BATM50

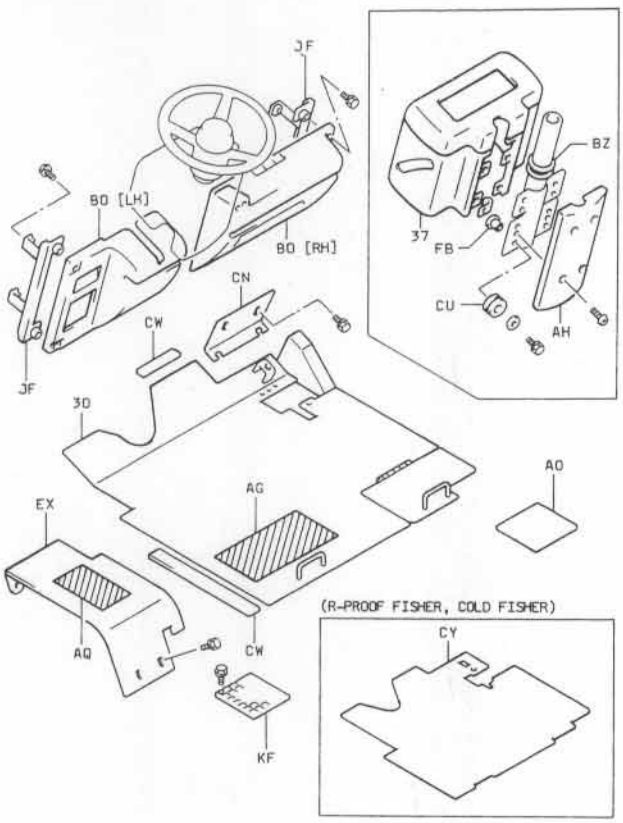

30	Toe-board, No.1	CU	Rubber
37	Meter case cover	CW	Rubber
AG	Safely walk	CY	Rubber
AH	Cover	EX	Bracket
AO	Safety walk	FB	Spacer
AQ	Safety walk	JF	Bracket
BO	Pad	KF	Mat
BZ	Grommet		
CN	Plate		

Instrument Panel & Floor Components BARMA62

BATTERY HOOD REMOVAL & INSTALLATION

1. Tile the steering wheel forward by pulling the tilt steering unlock lever.
2. Disengage the battery hood catch.
3. Remove the rear hood.
   (1) Set bolts.
   (2) Cover
4. Remove the damper.
   (1) E ring
   (2) Battery hood damper

   Caution:
   Tie the battery hood to the headguard pillar with a wire to prevent the hood from falling.
5. Disconnect the battery hood range.
   (1) Set bolt
   (2) Food bracket

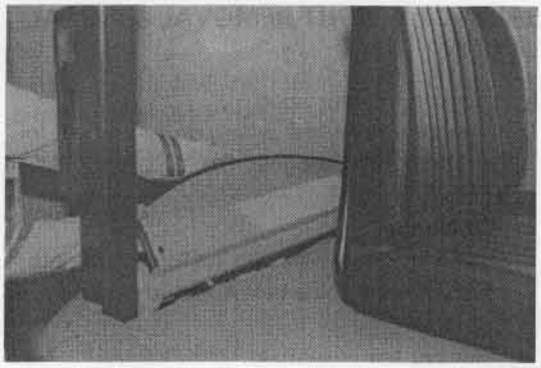

Removing the Rear Hood BAT19-5

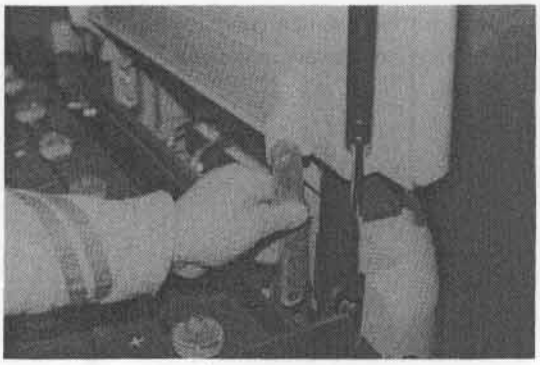

Removing the Damper BAT20-21

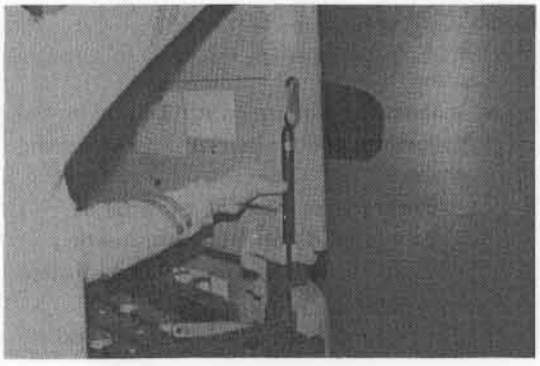

Disconnecting the Hinge BAT20-20

6. Remove the battery hood stay.
   (1) Snap pin
   (2) Battery hood stay
7. Remove the battery hood.
8. Install the battery hood in the reverse order of the removal procedure.

   Caution:
   Install the damper with the battery hood in fully opened state.

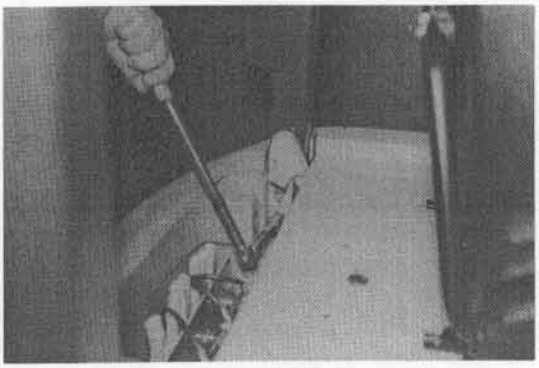

Removing the Hood Stay BAT20-18

BALANCE WEIGHT REMOVAL & INSTALLATION

1. Remove the rear hood.
2. Prepare a hoist and wire rope to prepare for hoisting of the weight.

   Caution:
   Use a lifting wire having sufficient strength. (Observe the table below and <Caution>.)

3. Remove the weight set bolts
   (Bolt width across flats: 27 mm (1.06 in))

4. Remove the balance weight.
   Remove the balance weight by hoisting it slowly.

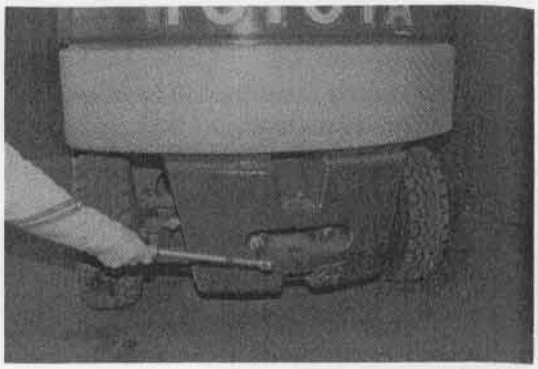

Removing the weight Set Bolts BAT17-1

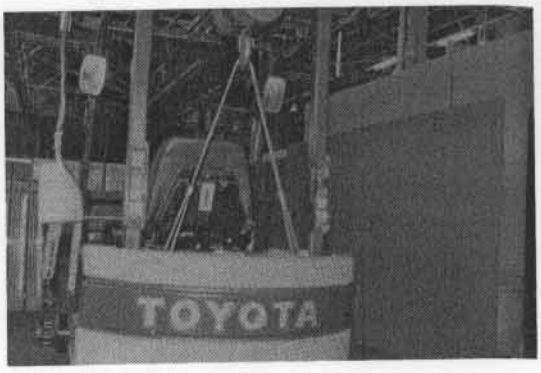

Removing the Balance Weight BAT4-32

Caution:
- Inspect the wire ropes sufficiently for the following points before actually using them:
  - Excessive number of cut strands
  - Excessive deformation and rusting
  - Use a host or chain block with sufficient strength.
- The hoisting angle should be restricted within 30°.
- Always hoist vertically. Do not attempt hoisting in an oblique direction.
- When moving the hoisted weight, the height above the ground should not exceed 30 cm (11.8 in).

Weight of balance weight and applicable wire rope diameter

(for two-rope suspension at a suspension angle of 30°)

Vehicle class	Weight kg (lb) [N]	Wire rope diameter mm (in)
1.0 ton	Approx. 210 (460) [2060]	ϕ6 (0.24) or more
1.4 ton	Approx. 430 (950) [4220]	ϕ6 (0.24) or more
1.5 ton	Approx. 430 (950) [4220]	ϕ6 (0.24) or more
1.75 ton	Approx. 600 (1320) [5880]	ϕ6 (0.24) or more
2.0 ton	Approx. 610 (1340) [5980]	ϕ8 (0.31) or more
2.5 ton	Approx. 820 (1800) [8040]	ϕ8 (0.31) or more
3.0 ton	Approx. 980 (2150) [9610]	ϕ10 (0.39) or more

COMBINATION METER

The combination meter has the diagnosis (self-diagnostic) function and analyzer (failure analysis) function in addition to general indication of the traveling speed, battery charge, hour meter, etc.
See the respective sections for the details of these additional functions.

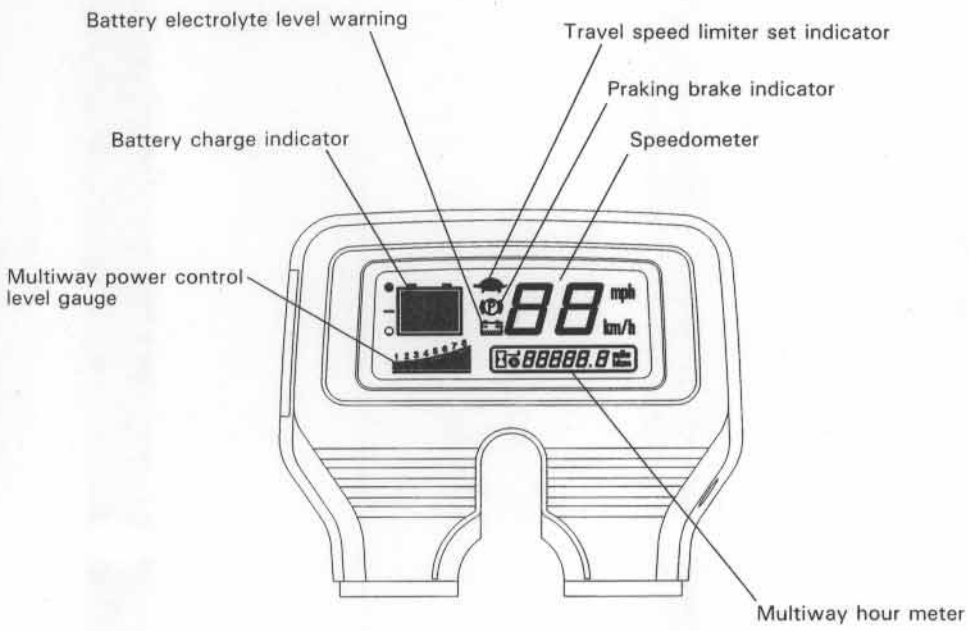

Display

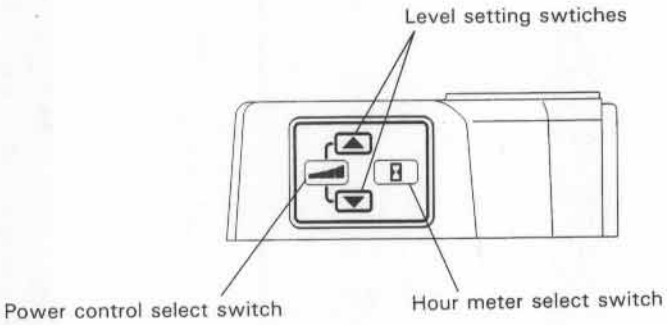

Switch panel

Combination Meter BARC6

COMPONENTS

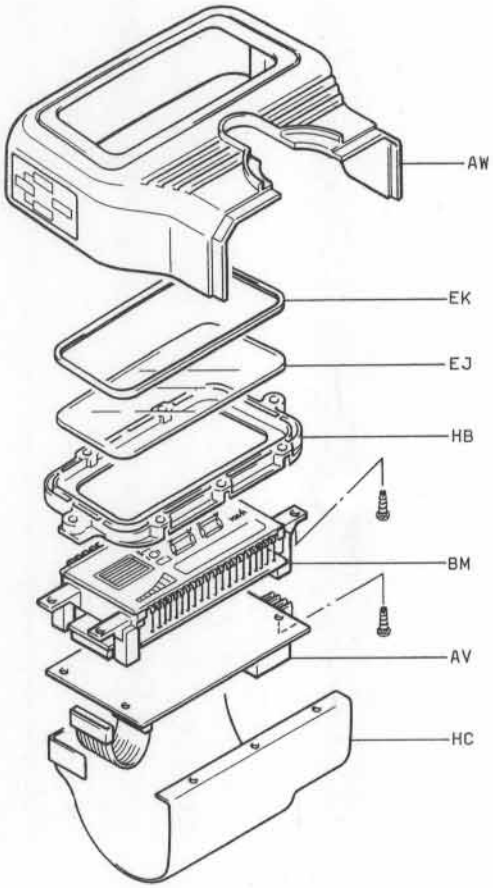

AV Meter combination board ASSY
AW Meter case
BM Panel ASSY
EJ Window glass
EK Seal rubber
HB Window plate
HC Cover sheet

Combination Meter Components BARM63

REMOVAL

1. Remove the tilt lock lever.
   (1) Cap
   (2) Set bolt
   (3) Tilt lock lever bar

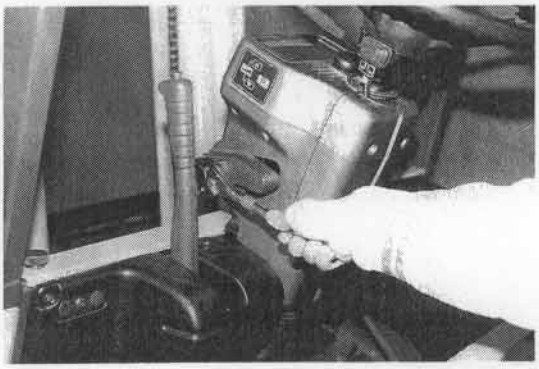

Removing the Tilt Lock Lever BAR21-26

2. Remove the cover
   (1) Set bolts
   (2) Cover

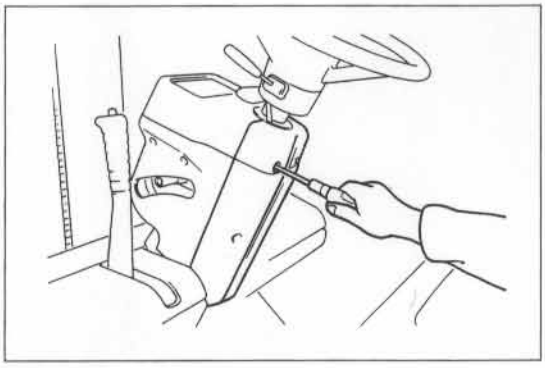

Removing the Cover BARS180

3. Remove the combination meter w/meter case cover.
   (1) Set bolts
   (2) Disconnect the combination meter connector
   (3) Combination meter w/meter case cover

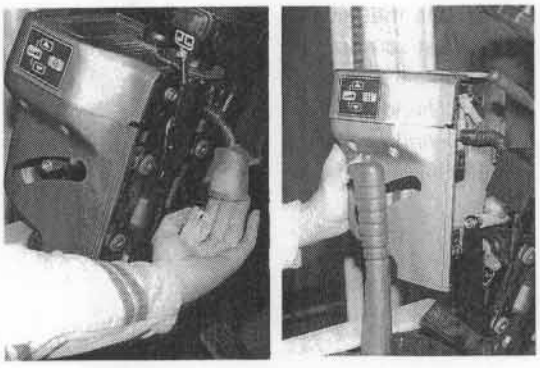

Removing the Combination Meter BAR21-32, 33

4. Remove the meter case cover.
   (1) Screws
   (2) Meter case cover



Removing the Meter Case Cover BAR21-36

DISASSEMBLY

1. Remove the cover sheet.
   (1) Set screws
   (2) Cover sheet

2. Remove the speed control switch.

3. Remove the harness.
   (1) Combination meter harness
   (2) Power control harness disconnection



Removing the Harness BAR22-3

4. Remove the combination meter board.
   (1) Set screws
   (2) Combination meter board

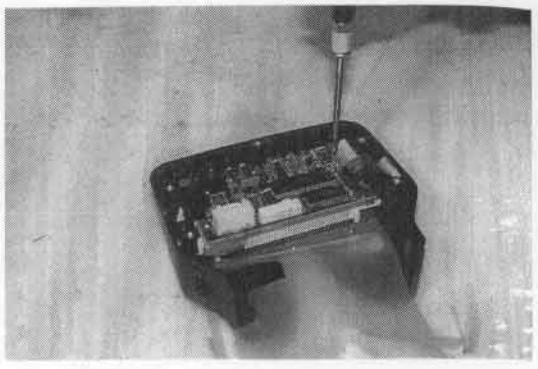

Removing athe Combination Meter Board BAR30-23

5. Remove the pedal ASSY.
   (1) Set screws
   (2) Panel ASSY
   (3) Window plate
   (4) Window glass
   (5) Seal

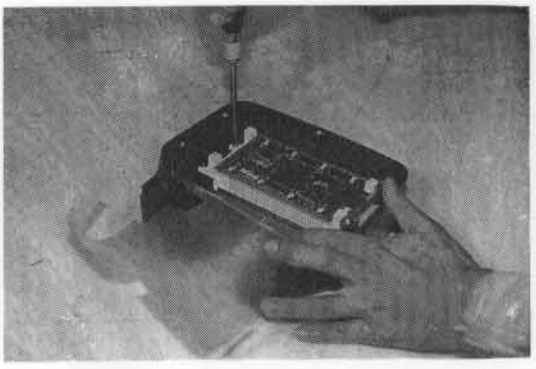

Removing the Panel ASSY BAR30-24

INSPECTION

1. Inspect each part for damage and deterioration

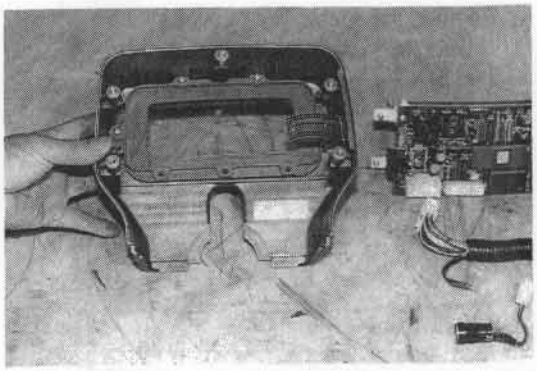

Inspecting the Combination Meter Parts BAR22-6

REASSEMBLY

The reassembly procedure is the reverse of the disassembly procedure.

1. Window plate set screws
   ① T = 3.5 ~ 4 kg-m
   (25.3 ~ 28.9 ft-lb) [34.3 ~ 39.2 N-m]

2. Panel ASSY set screws
   ② T = 3.5 ~ 4 kg-m
   (25.3 ~ 28.9 ft-lb) [34.3 ~ 39.2 N-m]

3. Combination meter board set screws
   ③ T = 7 ~ 8 kg-m
   (50.6 ~ 57.9 ft-lb) [68.6 ~ 78.5 N-m]

INSTALLATION

The installation procedure is the reverse of the removal procedure.

MATERIAL HANDLING SYSTEM

	Page
HYDRAULIC PIPING	13-2
RETURN SUCTION FILTER	13-4
NATURAL DROP TEST	13-5
NATURAL FORWARD TILT TEST	13-5
OIL LEAK TEST	13-6
OIL LEVEL CHECK PROCEDURE	13-7

13

HYDRAULIC PIPING

COMPONENTS

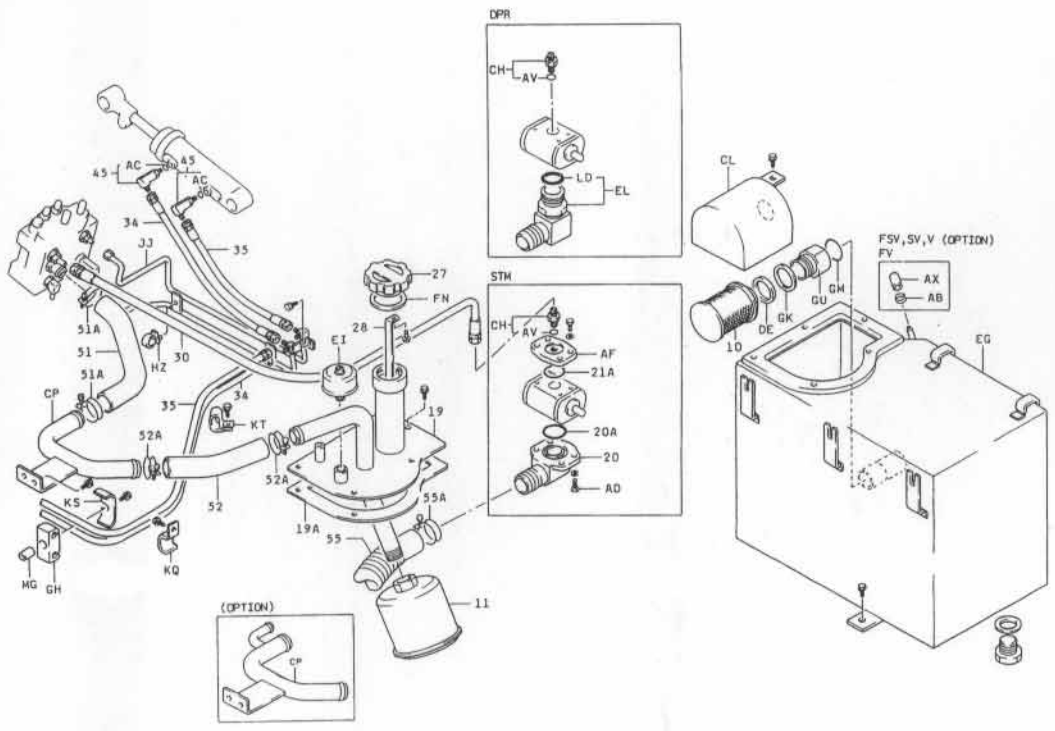

10	Suction filter ASSY	55	Low Pressure hole	GU	Boss
11	Return filter ASSY	55A	Clamp	KQ	Clamp
19	Oil tank cover	AB	Clamp	KS	Clamp
19A	Packing	AC	O-ring	KT	Clamp
20	Pipe SUB-ASSY	AF	Split Frange	JJ	Pipe SUB-ASSY
20A	O ring	AV	O-ring	LD	O-ring
21A	O ring	AX	Overflow hose cap	MG	Pipe
27	Oil tank cap	CH	Fitting		
28	Oil level gage	CL	Oil filter cover		
30	High pressure hose	CP	Pipe SUB-ASSY		
32	High pressure hose	DE	Spacer		
34	High pressure hose	EG	Oil tank SUB-ASSY		
35	High pressure hose	EI	Air breather ASSY		
45	Fitting	EL	Fitting		
51	Low Pressure hose	FN	Oil tank cap packing		
51A	Clamp	GH	Rubber		
52	Low pressure hose	GK	Packing		
52A	Clamp	GM	O-ring		

Hydraulic Piping Components BATL1

HYDRAULIC PIPING DIAGRAM

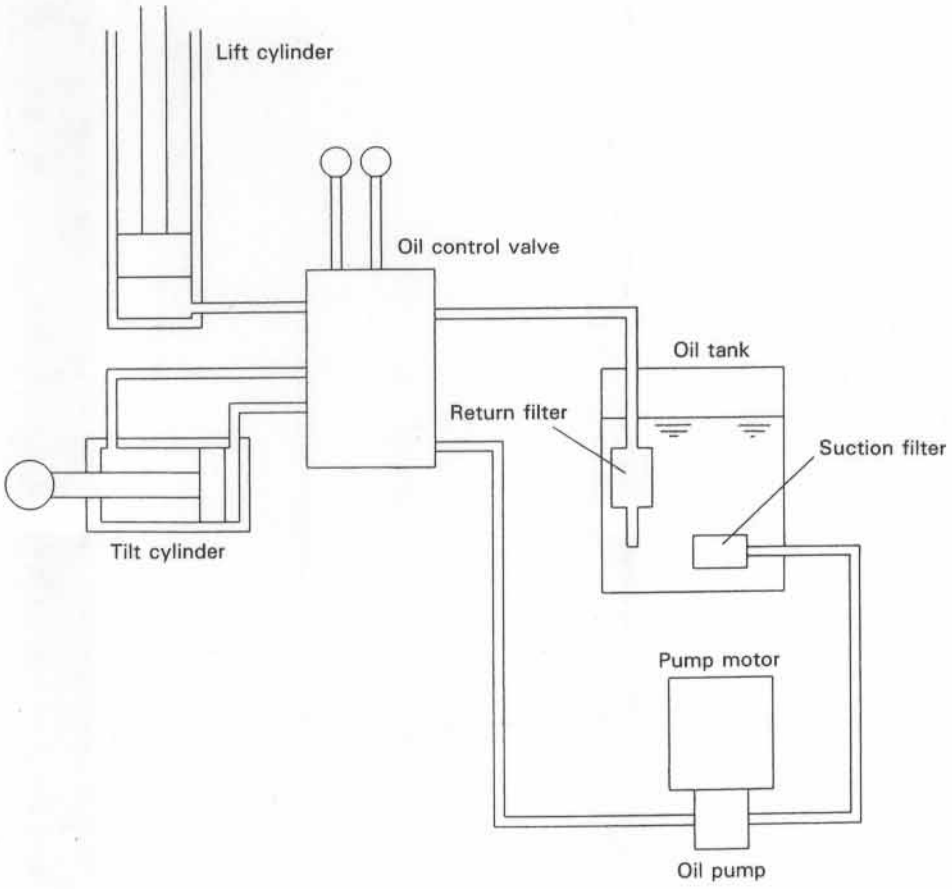

Hydraulic Piping Diagram BATM80

RETURN SUCTION FILTER

REMOVAL

1. Open the battery hood.
2. Remove the battery.
3. Disconnect the suction hose.
4. Remove the oil tank cover w/suction filter.
   (1) Set bolts
   (2) Oil tank cover w/suction filter
   (3) Gasket
5. Remove the suction filter
6. Remove the return filter w/hose.
   (1) Return hose disconnection
   (2) Set bolts
   (3) Return filter w/hose
7. Remove the return filter.

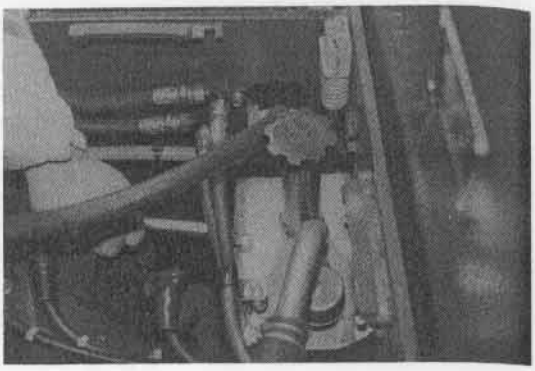

Removing the Return Filter BARS158

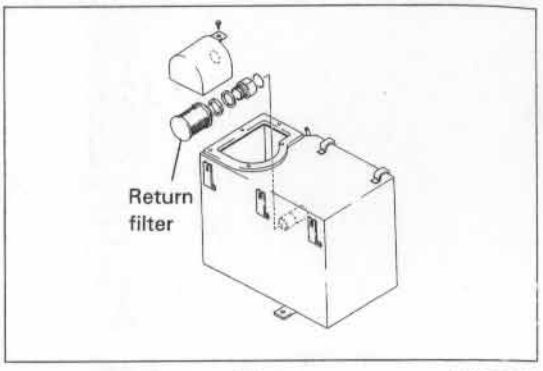

Removing the Suction Filter BATS51

INSPECTION

Caution:
Wash each part and replace any part which is found to be defective or damaged.

1. Inspect the suction filter.
   (1) Clogging of filter
   (2) Damage of filter
2. Inspect the return filter.
   (1) Clogging of filter
   (2) Damage of filter

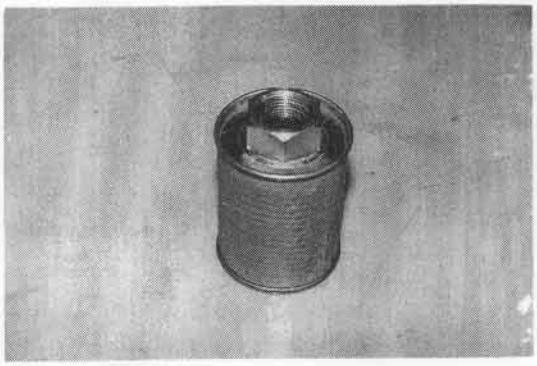

Inspecting the Suction Filter LAO26-21

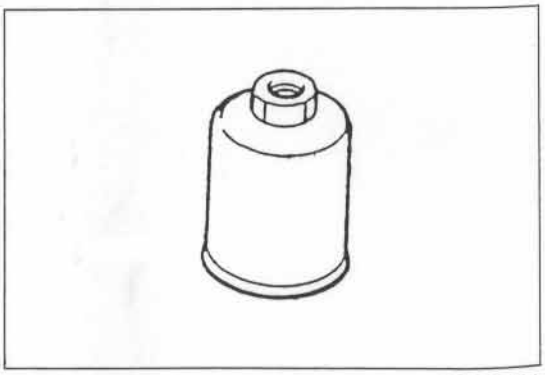

Inspecting the Return Filter BARS193

INSTALLATION

The installation procedure is the reverse of the removal procedure.

Caution:
Coat LOCKTITE 271 on the oil tank cover set bolts.

NATURAL DROP TEST

1. Set the mast in the vertical position with the standard load on the fork. Lift the fork by 1 ~ 1.5 m (40 ~ 60 in), and turn the key switch off.

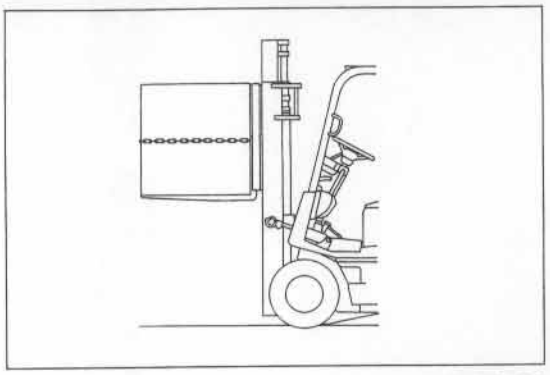

Standard Load State BARS160

2. Draw datum lines on the inner and outer masts, and measure the drop in 15 minutes.
Natural drop amount: 45 mm (1.77 in) or less

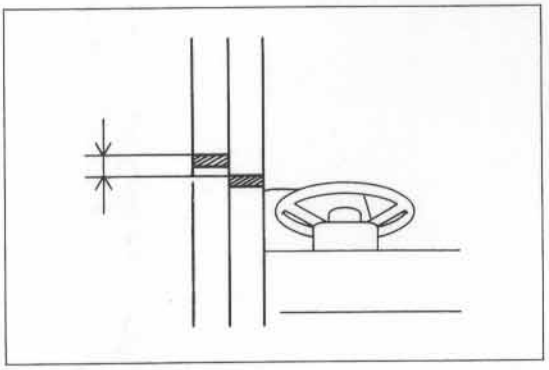

Natural Load State BARS161

NATURAL FORWARD TILT TEST

1. Set the mast in the vertical position with the standard load on the fork. Lift the fork about 50 cm (20 in) and turn the key switch off.

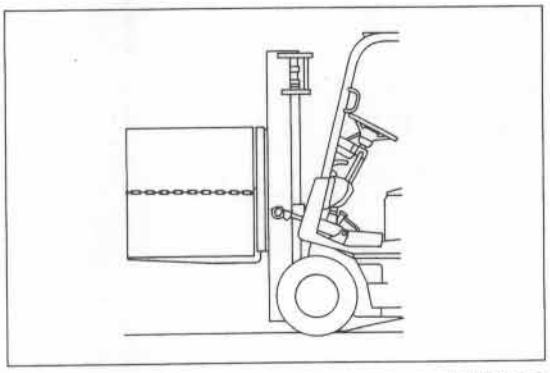

Standard Load State BARS162

2. Measure the tilt cylinder rod extension in 15 minutes.
Natural forward tilt amount:
16 mm (0.63 in) or less

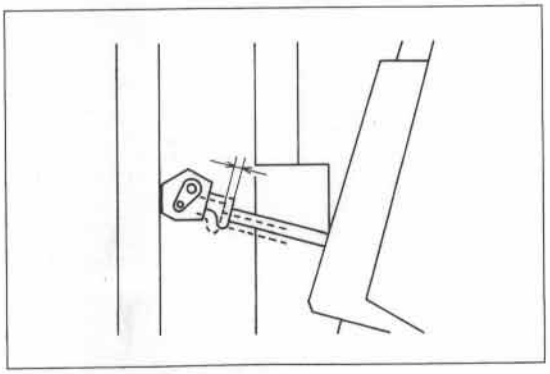

Natural Forward Tilt Test BARS163

OIL LEAK TEST

LIFT CYLINDER

1. Set the mast in the vertical position with the standard load on the fork. Lift the fork by 1 ~ 1.5 m (40 ~ 60 in) and turn the key switch off.

2. Gently tilt the mast fully forward and turn the key switch off. After 5 minutes, disconnect the oil control valve and return hose. Measure the oil leakage amount in one minute by placing a measuring cylinder at the fitting.
   Standard oil leakage amount (at lift port):
   6 ~ 16 cc (0.37 ~ 0.98 in^3)

   NOTE:
   If the natural drop is great though the oil leakage amount is within the standard, the lift cylinder packing is defective.

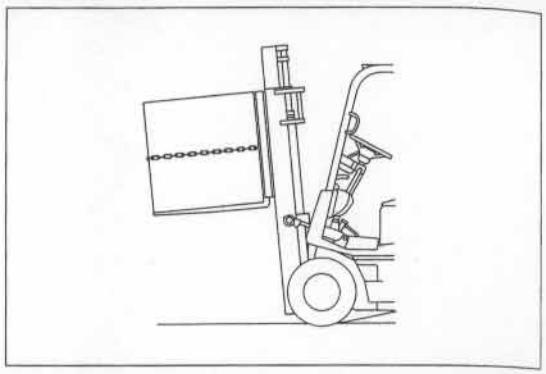

Standard Load State (Forward Tilt) BARS164

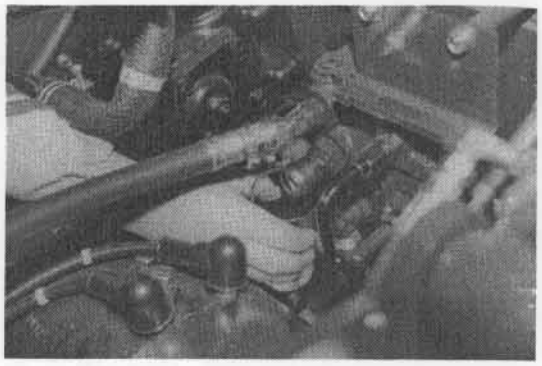

Oil Leak Test (at Lift Port) BAT20-14

TILT CYLINDER

1. Set the mast in the vertical position with the standard load on the fork. Lift the fork by about 50 cm (20 in) and turn the key switch off.

2. After 5 minutes, disconnect the oil control valve and return hose. Measure the oil leakage amount in 1 minute by placing a measuring cylinder at the fitting.

   Standard oil leakage amount
   (total of lift and tilt):
   14 ~ 34 cc (0.85 ~ 2.07 in^3)

3. The leakage amount at the tilt port is the total leakage - leakage at the lift port.

   NOTE:
   If the natural drop is great though the oil leakage amount is within the standard, the lift cylinder packing is defective.

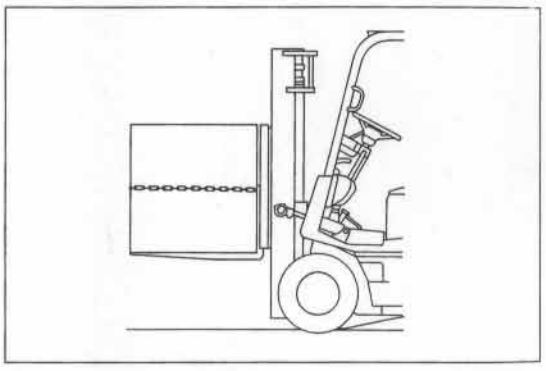

Standard Load State (Neutral) BARS162

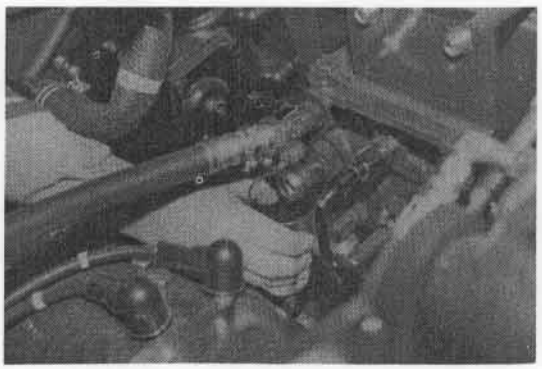

Oil Leak Test (Total Amount) BAT20-14

OIL LEVEL CHECK PROCEDURE

- Check the oil level in the oil tank with the edge of the cap thereaded portion in contact with the upper edge of the retainer.

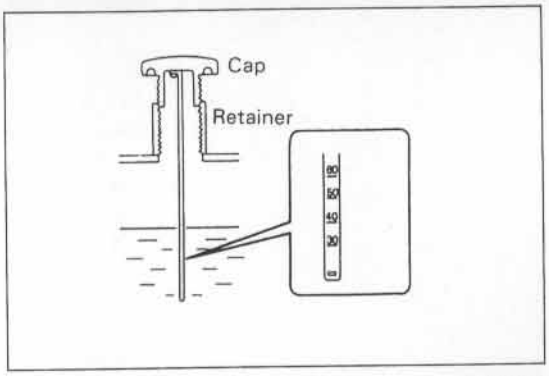

Oil Level Check Procedure LADS186

- Adjust the oil level within 0 ~ 10 mm (0.39 in) from the gauge level mark in the illustration.

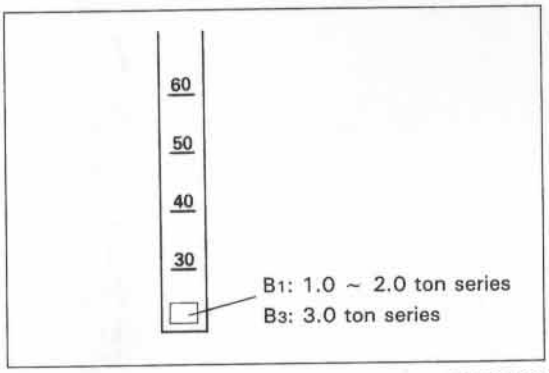

Adjusting the Oil Level BARS166

MAST

	Page
V MAST	14-2
COMPONENTS	14-2
MAST ASSY	14-5
LIFT BRACKET	14-13
CHAIN & CHAIN WHEEL	14-14
FORK	14-16
MAST ADJUSTMENT	14-16
SV MAST	14-25
MAST ROLLER SIZE	14-28
MAST ADJUSTMENT	14-30
FV MAST	14-33
MAST ROLLER SIZE	14-36
MAST ADJUSTMENT	14-38
FSV MAST	14-42
MAST ROLLER SIZE	14-45
MAST ADJUSTMENT	14-47

V MAST

COMPONENTS

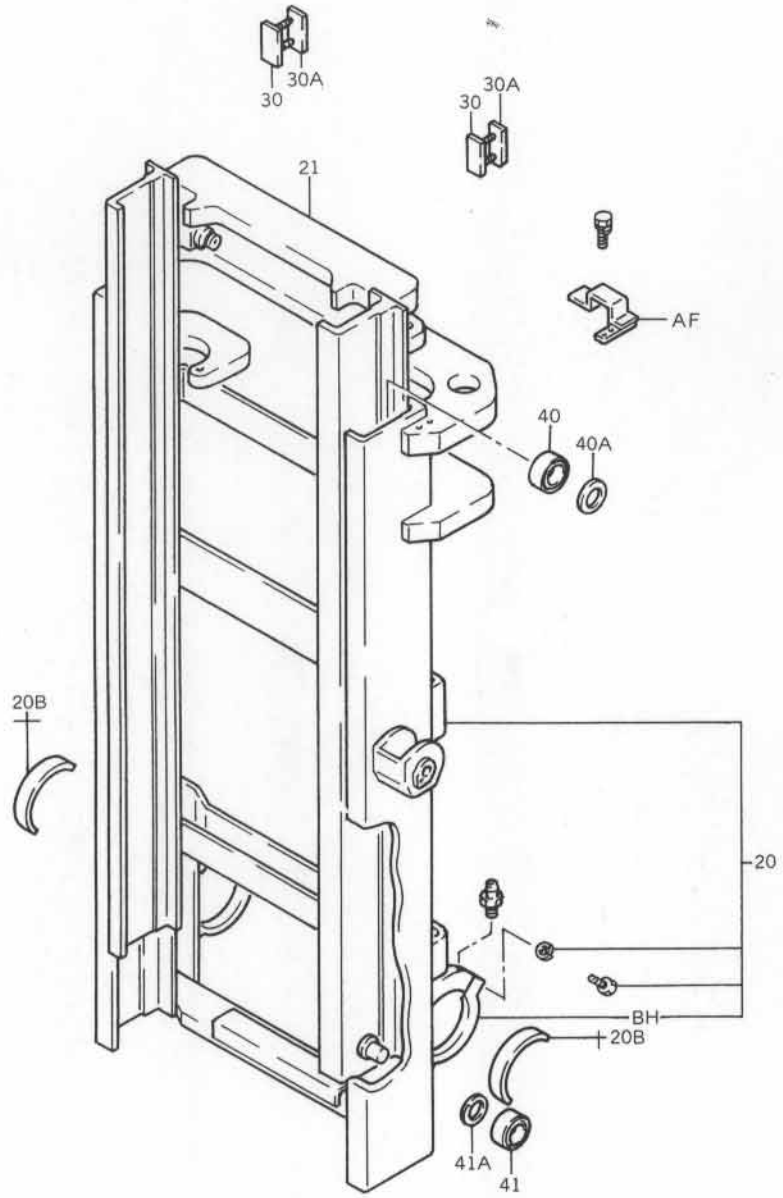

20	Outer mast SUB-ASSY	40A	Lift roller shim
20B	Mast support bushing	41	Lift roller
21	Inner mast SUB-ASSY	41A	Lift roller shim
30	Outer mast strip	AF	Roller cover
30A	Outer mast strip shim	BH	Mast support cap
40	Lift roller		

Mast Components (V) BARM54

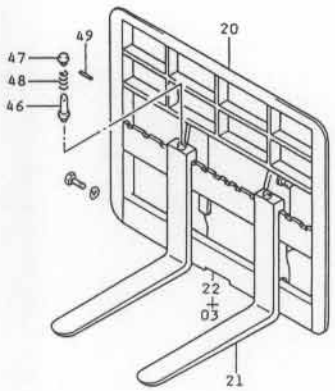

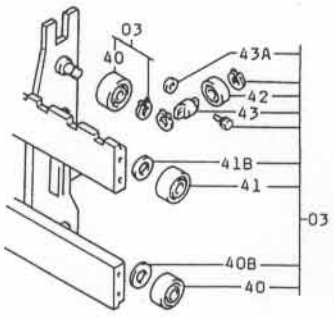

1 ton series

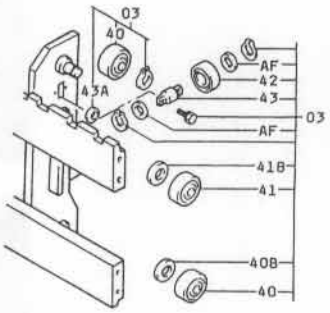

2 ton series

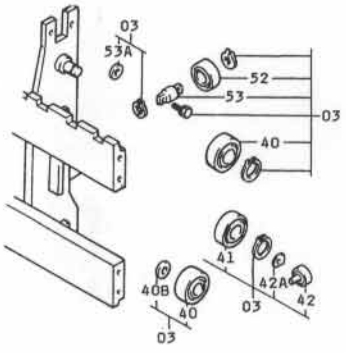

3 ton series

03	Lift bracket ASSY	43	Side roller shaft
20	Backrest SUB-ASSY	43A	Shim
21	Fork SUB-ASSY	46	Fork stopper pin
22	Lift bracket SUB-ASSY	47	Fork stopper pin knob
40	Lift roller	48	Forkstopper pin spring
40B	Lift roller shim	49	Spring pin
41	Lift roller	52	Side roller, No. 2
41B	Shim	AF	Plate
42	Side roller		

Lift Bracket Components (V) BARM66

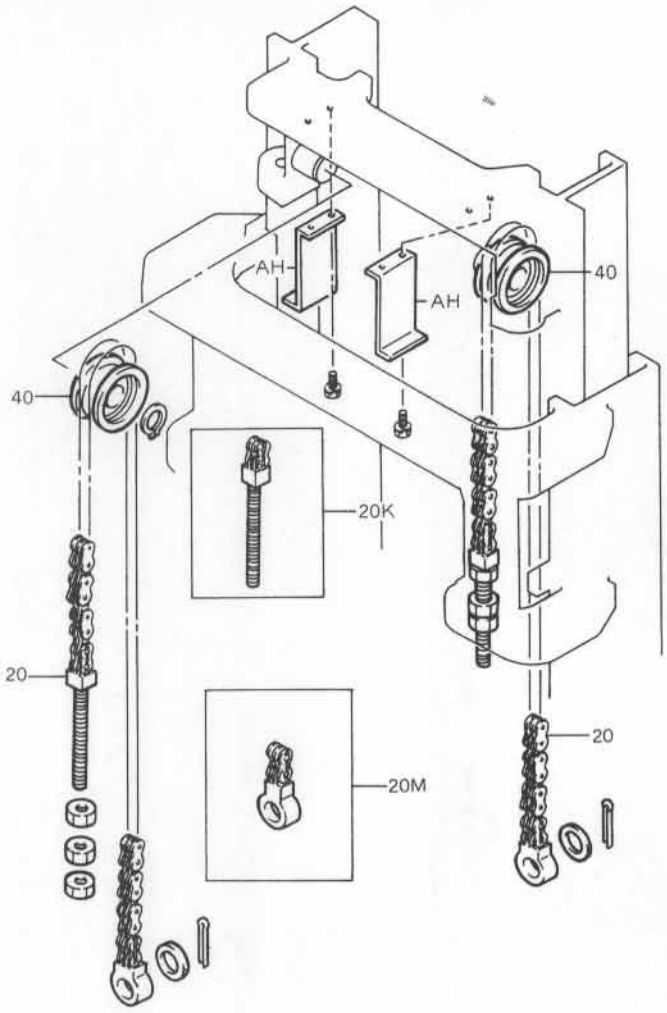

20 Chain SUB-ASSY
20K Chain anchor bolt kit
20M Chain eye bolt kit

40 Chain wheel
AH Chain wheel cover

Chain Components (V) BARM76

MAST ASSY

Removal

Caution:

- Inspect the mast operation status and roller clearance, and remove the mast after proper judgement on the defective position.
- The mast ASSY can be removed relatively easily after the lift bracket is removed.

1. Disconnect the chain.
2. Lower the lift bracket to the bottom position to slacken the chain.
   (2) Chain adjust nut

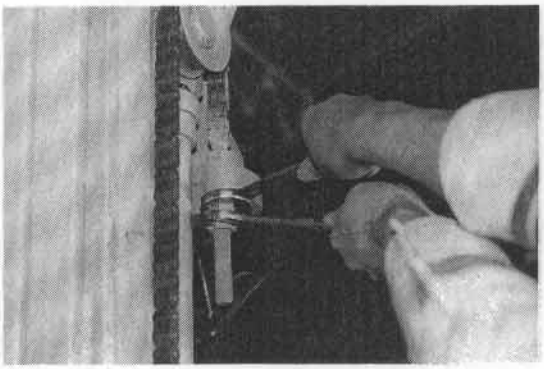

Disconnecting the Chain BAR14-26

2. Remove the chain wheel.
   (1) Snap ring
   (2) Chain wheel

   Caution:
   Use the SST when the fitting is tight.
   SST 09950-20017

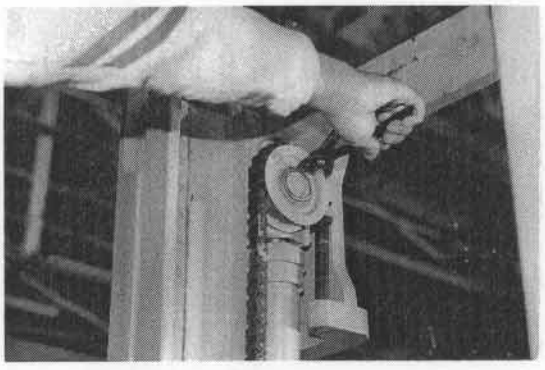

Removing the Chain Wheel BAR14-27

3. Remove the lift bracket.
   (1) Set the mast in the vertical position, and raise the inner mast until it comes off from the lift bracket.

   Caution:
   When raising the inner mast, carefully prevent the slackened chain from entangling with the inner mast.

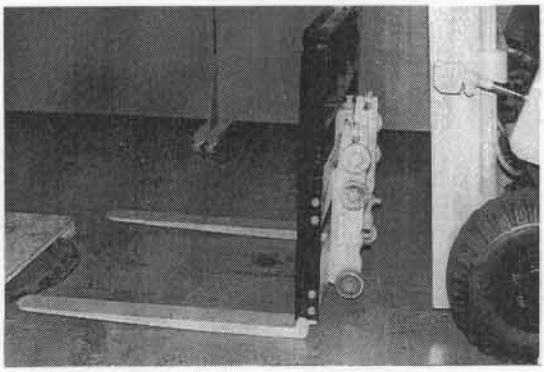

Removing the Lift Bracket BAR14-30

4. Disconnect the hoses.
   (1) Lower the inner mast fully.
   (2) Overflow hose disconnection
   (3) Lift cylinder inlet hose disconnection

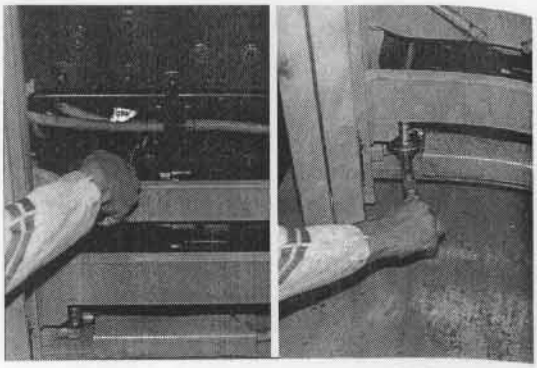

Disconnecting the Hoses BAR14-31, 34

5. slightly suspend the mast with a hoist.

6. Punch the match mark.

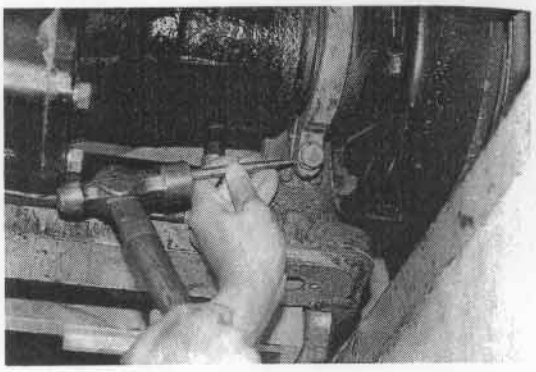

Punching the Match Mark BAR14-23

7. Remove the mast support cap.
   (1) Set bolt
   (2) Mast support cap

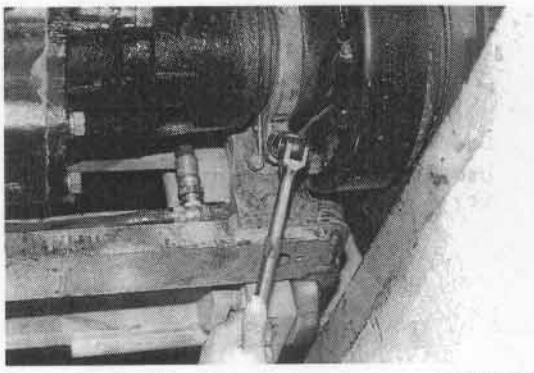

Removing the Mast Support Cap BAR14-22

8. Remove the tilt cylinder front pin.
   (1) Set bolt
   (2) Front pin
   SST 09810-20172-71

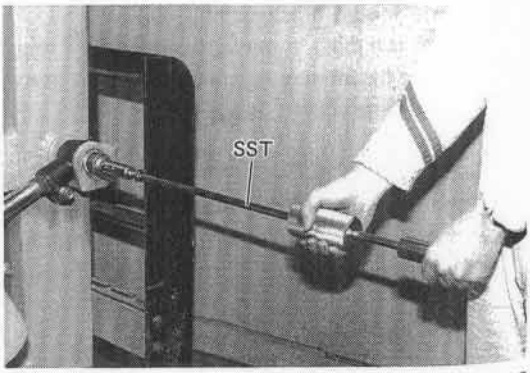

Removing the Front Pin BAR29-16

9. Remove the mast ASSY.

10. Place the mast on the floor.

Caution
- Lay the mast on the floor with the mast tie beam on the upper side and supporting blocks under the outer mast to allow inner mast sliding.
- Provide a sufficient margin (approx. one mast length) in each of the sliding directions to enable easy disassembly.

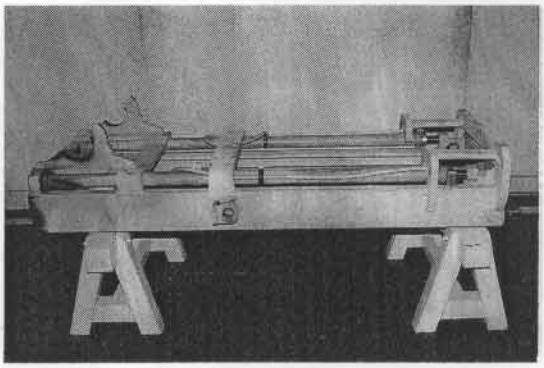

Removing the Mast ASSY LAD115-12

Disassembly

1. Disconnect the hose.
   (1) High pressure hose

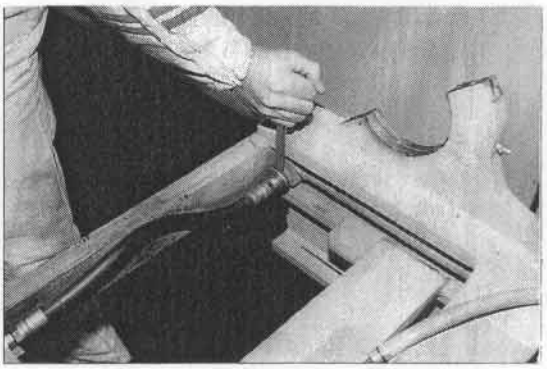

Placing the Mast on the Floor LAD115-13

2. Disconnect the lift cylinder rod end.
   (1) Set bolt

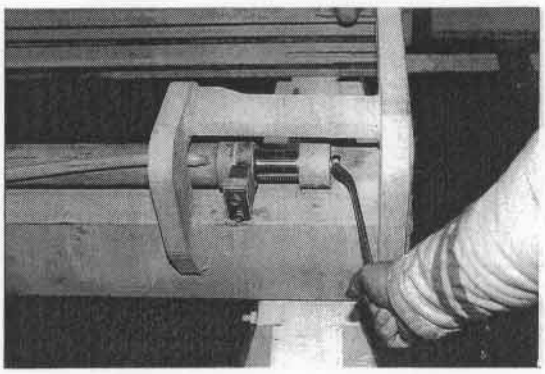

Disconnecting the Hose LAD115-14

(2) Slide the inner mast in the lifting direction.
(3) Extract the cylinder rod from the inner mast.
(4) Shims

Caution:
Record the number of shims at the cylinder rod.

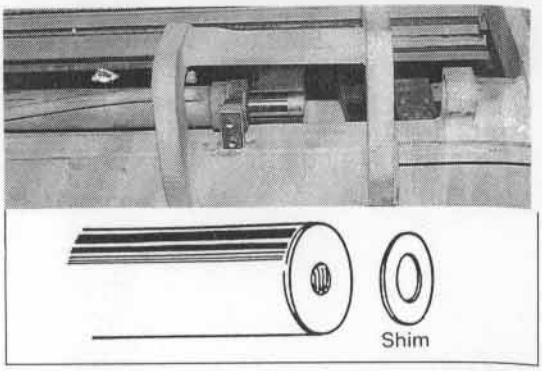

Removing the Shims LAO115-15, LAOS377

3. Remove the lift cylinder support.
(1) Set bolts
(2) Plate
(3) Pipe
(4) Rubber
(5) Shims

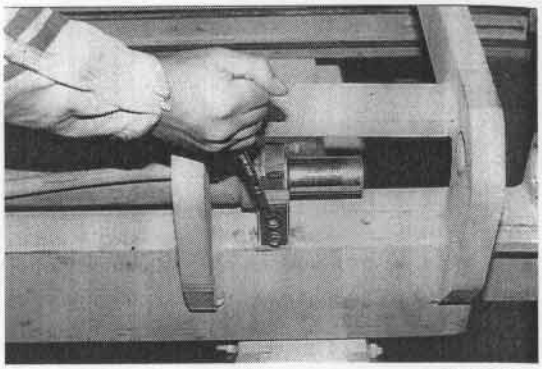

Removing the Cylinder Support LAO115-16

4. Remove the lift cylinder ASSY.
(1) Slide the inner mast in the lifting direction.
(2) Lift cylinder ASSY

Caution:
Carefully remove the lift cylinder so as not to damage the fitting at the lift cylinder bottom.

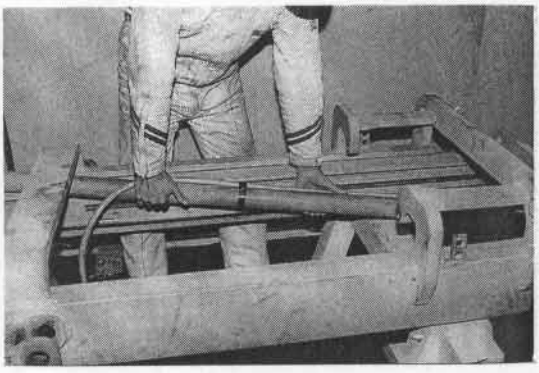

Removing the Lift Cylinder LAO115-18

5. Remove the mast strip.
(1) Mast strip
(2) Shim

Caution:
Replace the mast strip when its oil retainer is worn out.

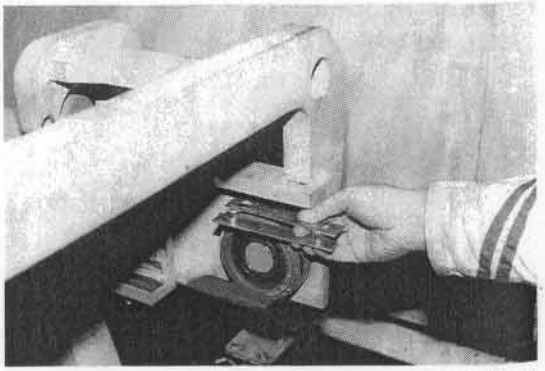

Removing the Mast Strip LAO115-21

6. Remove the lift roller.
   (1) Outer mast lift roller

   Caution:
   Use the SST when the lift roller fitting is tight.
   SST 09950-20017

   (2) Shim

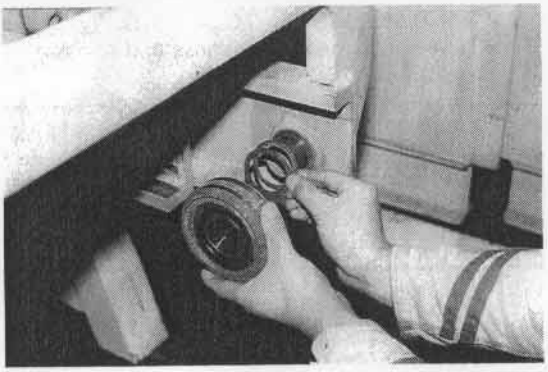

Removing the Outer Roller LAO115-22

   (3) Inner mast lift roller

   Caution:
   Use the SST when fitting is tight.
   SST 09950-20017

   (4) Shim

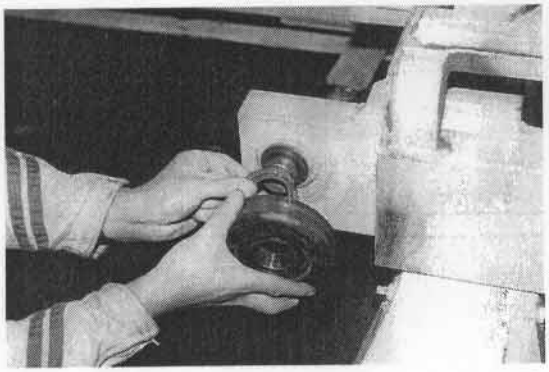

Removing the Inner Roller LAO15-23

7. Pull out the outer mast from the bottom side of the inner mast.

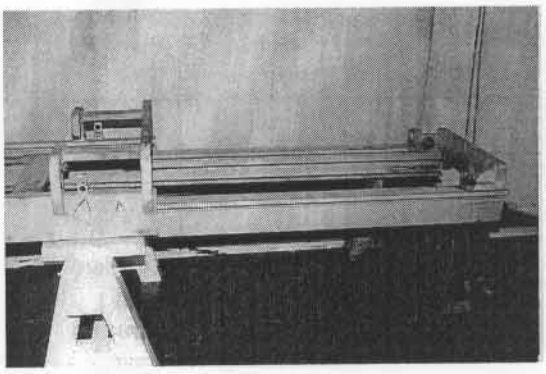

Removing the Outer Mast LAO89-26

Inspection

1. Inspect the outer and inner masts.
   (1) Distortion, bend and scuffing
   (2) Crack at each welded part (visual or colour check)
   (3) Spreading

2. Inspect the lift roller
   (1) Wear, damage, looseness and rotation



Inspecting the Lift Roller LAO89-30

(2) Lift roller list

Unit: mm (in)

Place used	Item		1 ton series	2 ton series	3 ton series
Lift bracket, upper & lower (A) (4 pcs.)	Outside diameter	Standard	94.5 (3.720)	⇦	109.7 (4.319)
		Limit	93.5 (3.681)	⇦	108.7 (4.280)
	Inside diameter	Standard	35.0 (1.3780)	⇦	40.0 (1.5748)
		Limit	35.02(1.3787)	⇦	40.02(1.5756)
Lift bracket, center (2 pcs.)	Outside diamter	Standard	93.3 (3.673)	⇦	108.5 (4.272)
		Limit	92.3 (3.634)	⇦	107.5 (4.232)
	Inside diameter	Standard	35.0 (1.3780)	⇦	65.0 (2.5591)
		Limit	35.02(1.3787)	⇦	65.02(2.5598)
Inner mast, lower (B) (2 pcs.)	Outside diameter	Standard	114.5 (4.508)	⇦	125.5 (4.941)
		Limit	113.5 (4.468)	⇦	124.5 (4.902)
	Inside diameter	Standard	35.0 (1.3780)	⇦	40.0 (1.5748)
		Limit	35.02(1.3787)	⇦	40.02(1.5756)
Outer mast, upper (2 pcs.)	Outside diamter	Standard	94.5 (3.720)	⇦	109.7 (4.319)
		Limit	93.5 (3.681)	⇦	108.7 (4.280)
	Inside diameter	Standard	35.0 (1.3780)	⇦	40.0 (1.5748)
		Limit	35.02(1.3787)	⇦	40.02(1.5756)
Side roller, upper (2 pcs.)	Outside diameter	Standard	65.0 (2.559)	62.0 (2.441)	79.5 (3.130)
		Limit	64.0 (2.520)	61.0 (2.402)	78.5 (3.091)
	Inside diameter	Standard	25.0 (0.9843)	⇦	⇦
		Limit	25.02(0.9850)	⇦	⇦

(3) O/S lift roller list

O/S is provided for lift rollers (A) and (B)

① (A) Lift bracket upper & lower

Unit: mm (in)

Lift roller size (seal color)	1 ton series	2 ton series	3 ton series
No. 1 size standard outside diameter (black)	94.5(3.720)	⇦	109.7(4.319)
No. 2 size standard outside diameter (blue)	95.0(3.740)	⇦	110.2(4.339)
No. 3 size standard outside diameter (black)	95.9(3.776)	⇦	111.1(4.374)

Caution:

- Use No. 2 size normally.
- Use No. 1 size when the mast width is narrow, and No. 3 size when it is wide.
- The roller size may be different between upper and lower and between left and right.

②(B) Inner mast lower

Unit: mm (in)

Lift roller size (seal color)	1 ton series	2 ton series	ton series
No. 1 size standard outside diameter (black)	114.5(4.508)	⇦	125.5(4.941)
No. 2 size standard outside diameter (blue)	115.1(4.531)	⇦	126.1(4.965)

Caution:

- Use No. 2 size normally.
- Use No. 1 size when the mast width is narrow.
- The roller size may be different between the left and right.

3. Inspect the mast strip.
   (1) Damage, scuffing and deformation.
   (2) Wear (Replace when the oil retainer is worn out.)

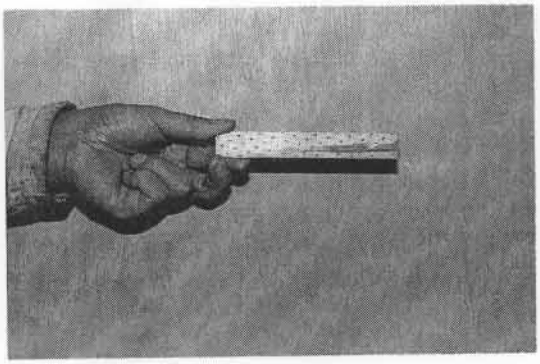

Inspecting the Mast Strip LAO89-32

Reassembly

Caution:
- Install each mast roller sequentially with shim adjustment according to the adjustment standard.
- Coat genuine Toyota Castle MP grease on the mast strip surface in sliding contact with the inner mast.

1. Select the lift roller shims

   Caution:
   - Add shims to stop the gap after the mast clearance measurement.
   - Shim thickness: 1.0 mm (0.039 in)
     0.5 mm (0.020 in)

2. Install the outer mast from the bottom side of the inner mast.

   Caution:
   Place wooden blocks under the outer mast to enable the inner mast to slide as before disassembly.

3. Install the mast strips.

4. Install the lift rollers.

5. Operate in the reverse order of disassembly for succeeding jobs.

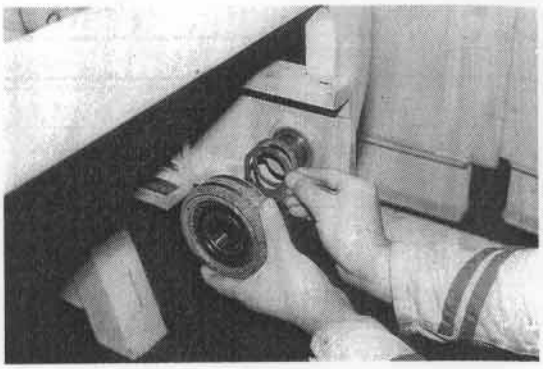

Installing the Lift Roller LAO115-22

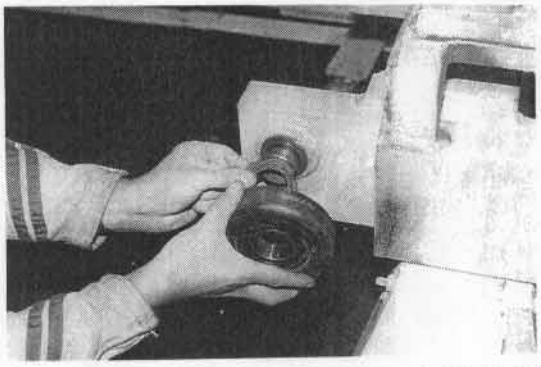

Installing the Lift Roller LAO115-23

Installation

The installation procedure is the reverse of the removal procedure.

Caution:
- Coat MP grease on the inner surfaces of the bushing and cap at the mast support and on the tilt cylinder front pin before reassembly.
- Install the mast support bushing with the greasing port facing upward. (3 ton series only)
- Align the match marks when installing the mast support cap.
- It is necessary to inspect uneven motion of lift cylinders and make necessary adjustment when any of the mast ASSY, outer mast, inner mast and lift cylinders is replaced. (See page 14-24)

LIFT BRACKET

Removal

NOTE:
- Remove the lift bracket before lift bracket roller replacement or shim adjustment.
- **See page 14-5 for the lift bracket removal procedure.**

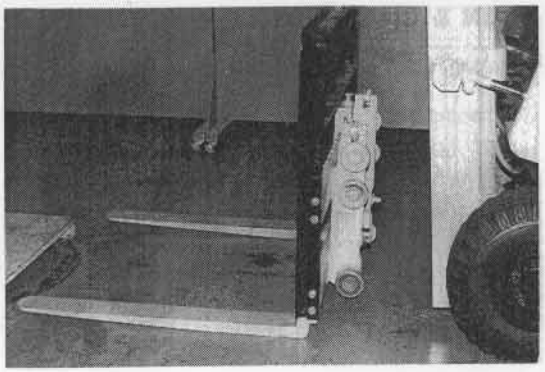

Removing the Lift Bracket BAR14-30

Disassembly

1. Remove the lift roller.
   (1) Snap ring

NOTE:
Lift roller is fixed with or without a snap ring, depending on the mounting position and vehicle type.

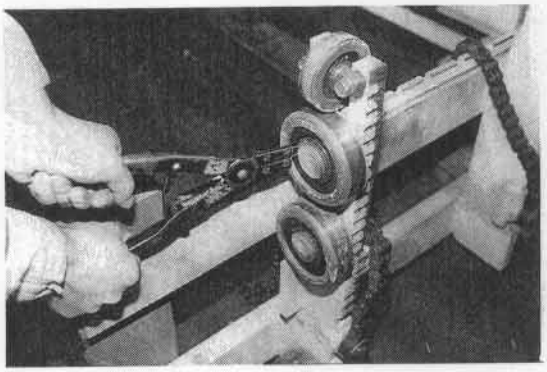

Removing the Snap Ring LAO114-22

   (2) Lift roller
   SST 09950-20017
   (3) Shim

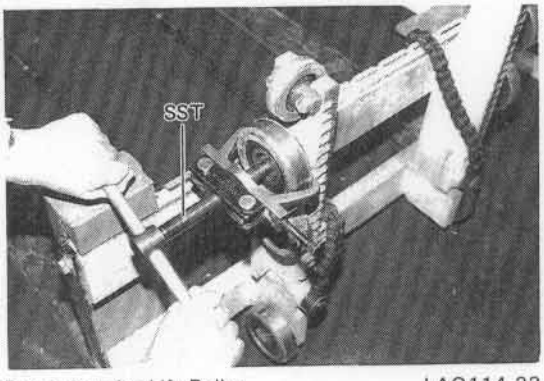

Removing the Lift Roller LAO114-23

Reassembly & Instlalation

The reassembly & installation procedures are the reverse of the disassembly and removal procedures.

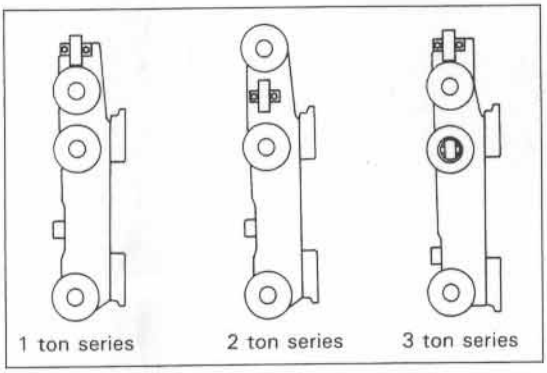

Lift Roller Arrangement BARS167

CHAIN & CHAIN WHEEL

Removal

1. Disconnect the chain.
   (1) Lower the lift bracket fully to slacken the chain.
   (2) Chain adjust nut.

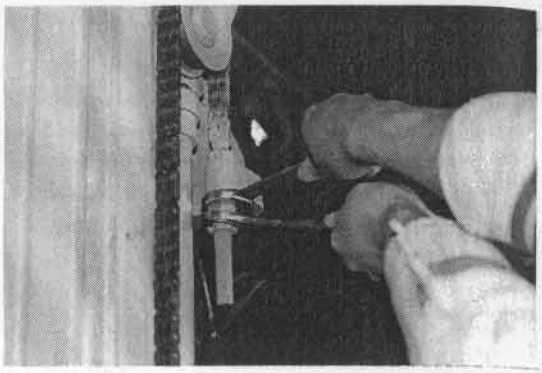

Disconnecting the Chain BAR14-26

2. Remove the chain wheel
   (1) Snap ring
   (2) Chain wheel

   Caution:
   Use the SST when fitting is tight.
   SST 09950-20017

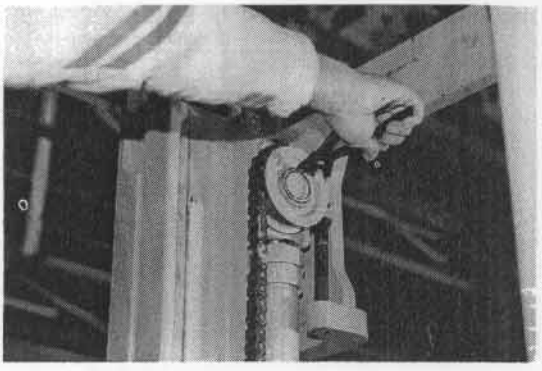

Removing the Chain Wheel BAR14-27

3. Remove the chain
   (1) Cotter pin
   (2) Washer
   (3) Chain

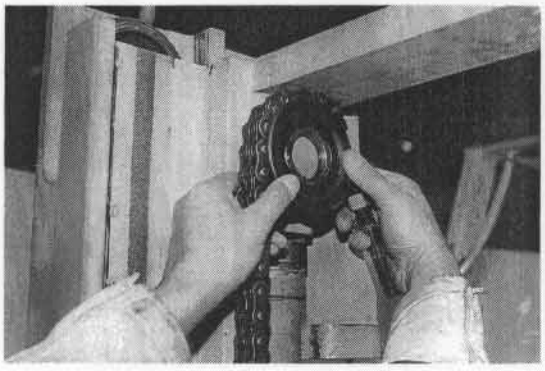

Removing the Chain LAO114-16

Inspection

1. Inspect the chain wheel.
   (1) Damage of wheel
   (2) Unsmooth rotation, abnormal sound and looseness of chain wheel bearing

2. Inspect the chain.
   (1) Elongation, crack, rusting and link movement
   (2) Damage and bend of anchor bolt

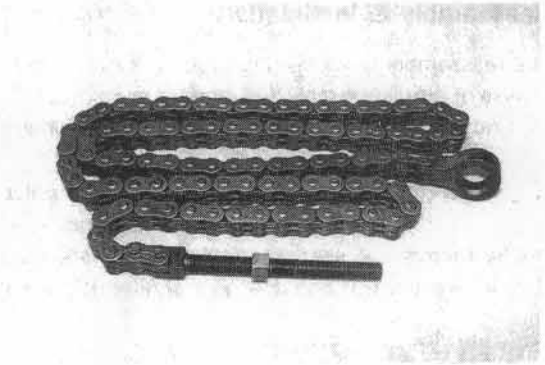

Inspecting the Chain LAO114-21

Installation

The installation procedure is the reverse of the removal procedure.

Caution:
When tightening the chain adjust nut, tighten it in parallel with the chain wheel without any inclination.
T = 5 ~ 8 kg-m
(36 ~ 58 ft-lb) [49 ~ 78 N-m]

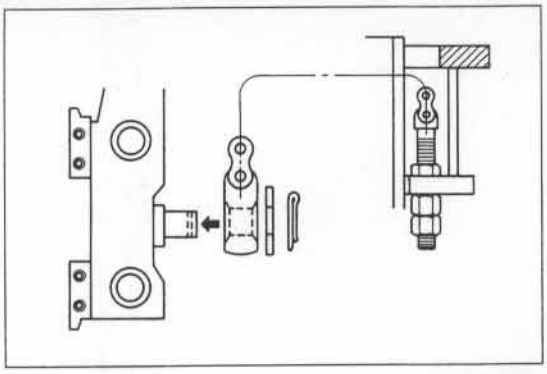

Installing the Chain LAOS380

Adjustment

1. Position the vehicle on a flat place, and set the mast in vertical position.
2. After moving the fork without load up and down for several times, make sure that the chain tensions are equal on the left and right sides.
3. To prevent slackening of the chain, adjust the adjust nut (on the lift cylinder side) to bring the bottom of the fork almost into contact with the ground.

Caution:
- Measure the clearance (h) between the bottom of the fork and the ground at the illustrated position, and it shall be 0 ~ 10 mm (0.39 in).
- with the fork in contact with the ground, the lift bracket roller position shall not exceed dimension A.
- Then raise the fork fully. The chain anchor on the lift bracket side shall be away from the chain wheel at least by dimension B.

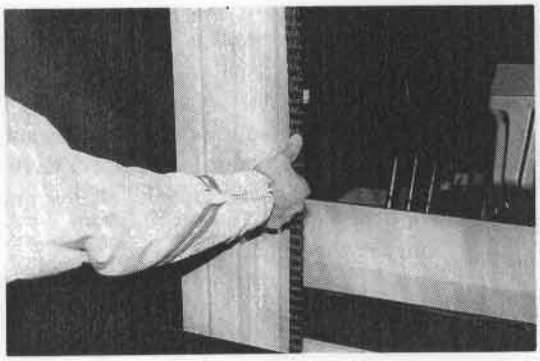

Adjusting the Chain Tension BAR22-28

Vehicle type	A mm(in)	B mm(in)
1 ton series	3 (0.12)	81 (3.19)
2 ton series	33 (1.30)	158 (6.22)
3 ton series	30 (1.18)	150 (5.91)

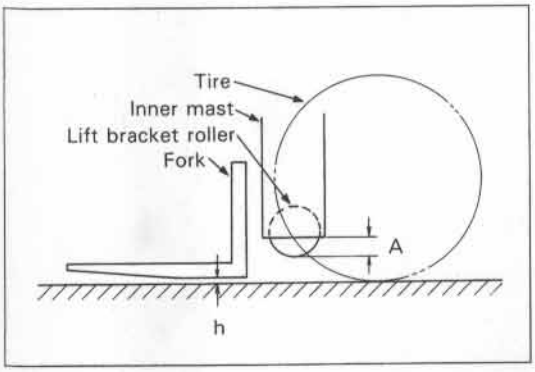

Adjusting the Chain with the Fork at the Ground LAES21

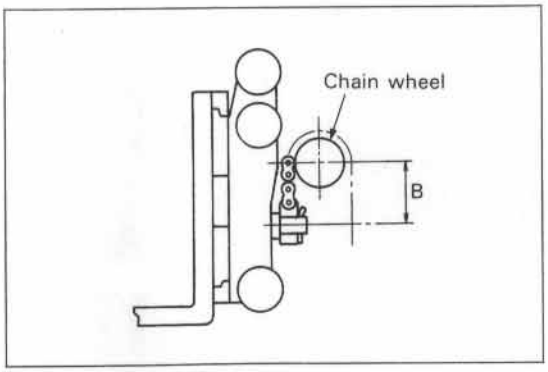

Adjusting the Chain with the Fork at the Top LAOS382

FORK

Removal

1. Raise the fork by approx. 20 cm (0.8 in).
2. Place a wooden block under the notched portion of the fork rail.
3. Move the fork blades one by one to the center.
4. Lower the fork and remove the fork blade.

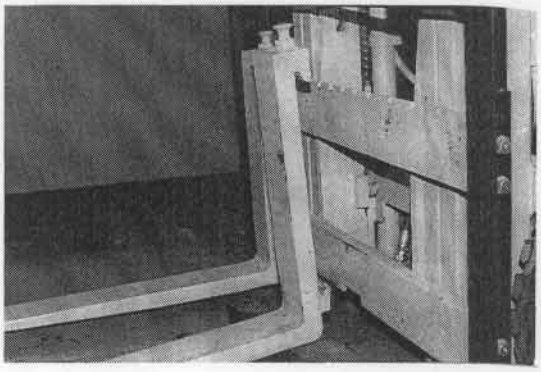

Removing the Fork Blade BAR22-25

Installation

The installation procedure is the reverse of the removal procedure.

Inspection

1. Inspect the fork.
   (1) Bend, crack and front misalignment
   Fork bend limit: 15 mm (0.59 in)
   Front misalignment limit: 10 mm (0.39 in)

   Caution:
   If the front misalignment limit is exceeded, check individual blade bend, loose mounting, and lift bracket finger bar distortion.

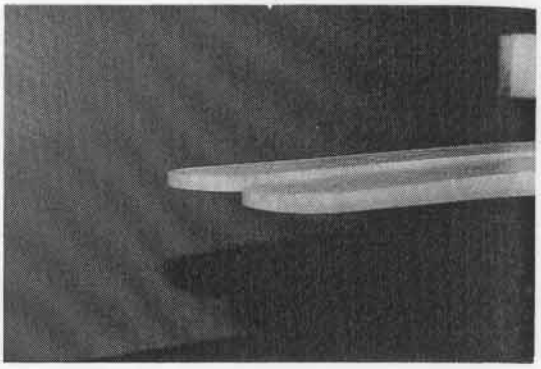

Inspecting the Fork BAR22-24

MAST ADJUSTMENT

Lift Bracket Roller

1. Preparation for adjustment
   (1) Prepare a screwdriver, thickness gauge, dial gauge and wire.
   (2) Fully widen the fork blades, and slightly tilt the mast forward.
   (3) Sling and slightly hoist the back rest for upper roller adjustment, or the lower part of the finger bar for lower roller adjustment.

   Caution:
   Stop hoisting immediately before the upper lift bracket roller comes out from the inner mast.

2. Front to back adjustment
   (1) Measure the clearance between the roller and inner mast rolling contact surfaces with a thickness gauge.
   Standard clearance:
   0.5 ~ 2.0 mm (0.020 ~ 0.079 in)

   Caution:
   Measure after checking the upper/lower roller contact with the inner mast as illustrated.

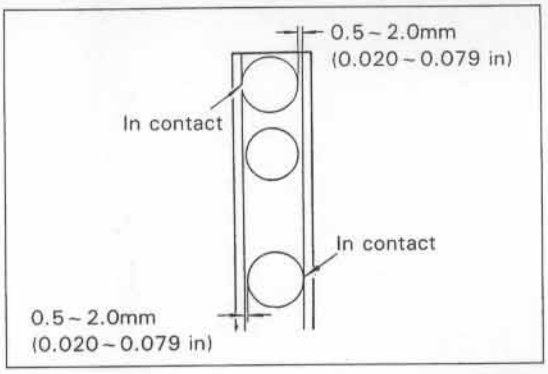

Front to Back Adjustment LAOS384

   (2) If defective, remove the lift roller and measure the outside diameter. Replace the roller with a new standard size roller or O/S roller. See pages 14-7 to 9 for the replacement procedure.

Caution:
- **When replacing with the O/S roller, do not reduce the clearance to below 0.5 mm (0.0020 in).**
- **When replacing with the O/S roller, preparatorily check if the bottom of the mast in rolling contact can pass. If not, the mast requires grinding with a grinder.**

3. Left to right (sideway) adjustment
   (1) Set a dial gauge on the inner mast.
   (2) Push the lift bracket with a screwdriver from the opposite side to bring the lift bracket into contact with the inner mast, and adjust 0 point by bringing the dial gauge into contact with the lift bracket side surface.
   (3) Insert the screwdriver between the lift bracket on the set side and the inner mast to bring the lift bracket center and lower rollers into contact with the inner mast.
   (4) Measure the sideway movement of each center or lower roller.
   Standard movement:
   0 ~ 0.8 mm (0.031 in)
   (5) If defective, make lift roller shim adjustment with even distribution of the shims between the left and right sides.
   Shim thickness: 0.5 mm (0.020in)
   1.0 mm (0.039 in)

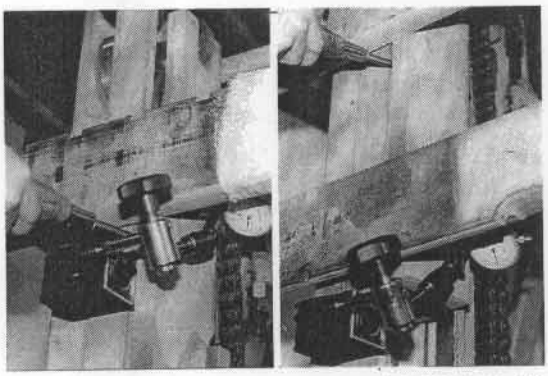

Sideway Adjustment LAO117-21, 22

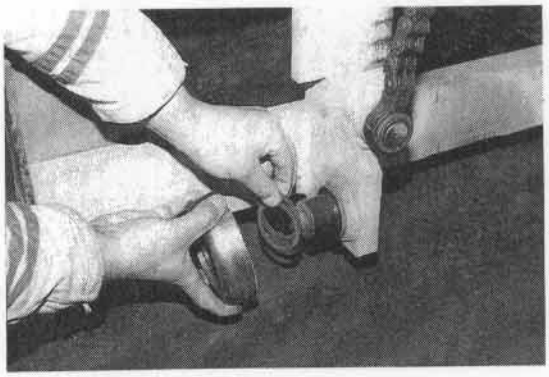

Adjusting the Clearance LAO114-25

(6) Adjust the upper side roller after adjusting the center and lower rollers. Bring the side roller on one side into contact with the mast side surface, and measure the movements of the side roller and inner mast side surface on the opposite side.

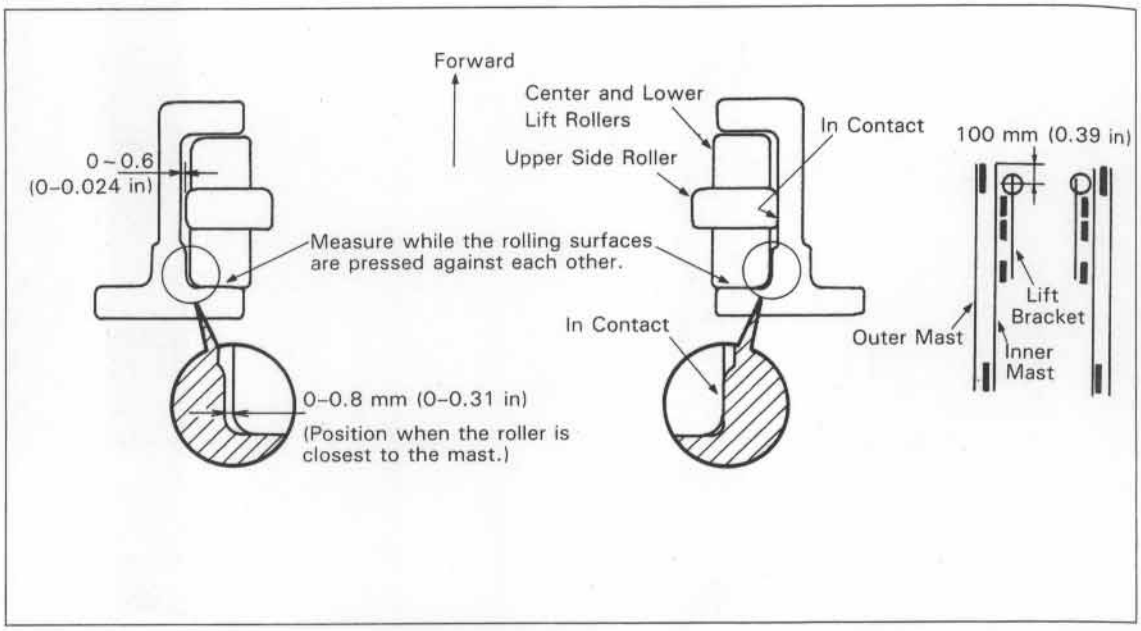

Adjusting the Clearance between Lift Bracket Side Roller and Mast LAOS385

Caution:

- The upper side roller shaft is asymmetric as illustrated at left.
- Shaft mounting direction (as against the lift bracket side)
  1-ton series: 6 mm (0.24 in)
  2-ton series: 8 mm (0.31 in)
  3-ton series: 6 mm (0.24 in)
- Use the 8 mm (0.24 in) side when the shim adjustment is much.

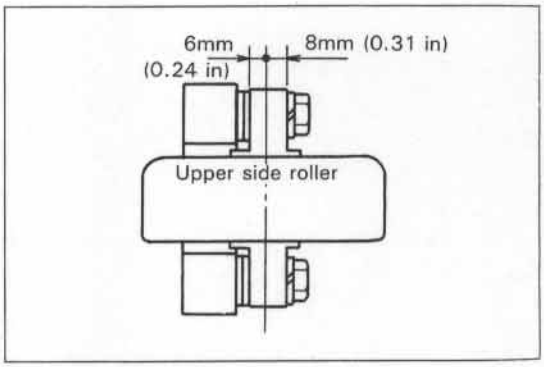

Shaft Mounting Direction LAOS386

Mast Lift Roller Adjustment

1. Preparation for adjustment
   (1) Prepare a screwdriver, dial gauge and wire rope.
   (2) Widen the fork fully and tilt the mast slightly forward.
   (3) Raise the inner mast fully to the top position and turn the key switch to OFF.

   Caution:
   Sling the inner mast lower tie beam with a wire rope and suspend it slightly with a hoist for safety.

2. Adjust the inner mast rollers.
   Front to back adjustment
   (1) Insert a thickness gauge between the roller and outer mast rolling contact surfaces to measure the clearance.
   Standard clearance:
   0.5 ~ 2.0 mm (0.020 ~ 0.079 in)
   (2) If defective, replace the roller with a new standard size roller or the O/S roller.

   Caution:
   - **When replacing with the O/S roller, do not decrease the clearance to below 0.5 mm (0.020 in).**
   - **When replacing with the O/S roller, preparatorily check if the bottom of the mast can pass the clearance. If not, process the mast with a grinder.**

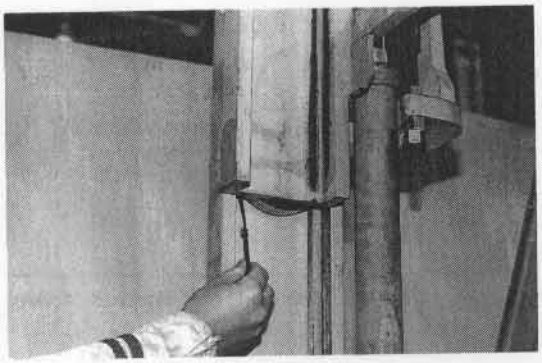

Adjusting the Inner Mast Roller in Front to Back Direction LAO117-23

   Sideway adjustment
   (1) Set a dial gauge on the inside of the outer mast.
   (2) Push in inner mast roller against the outer mast with a screwdriver from the opposite side of the set position, and adjust the 0 point of the dial gauge in contact with the inside of the inner mast.
   (3) Insert the screwdriver between the inner and outer masts on the dial gauge setting side and push the inner mast against the outer mast.

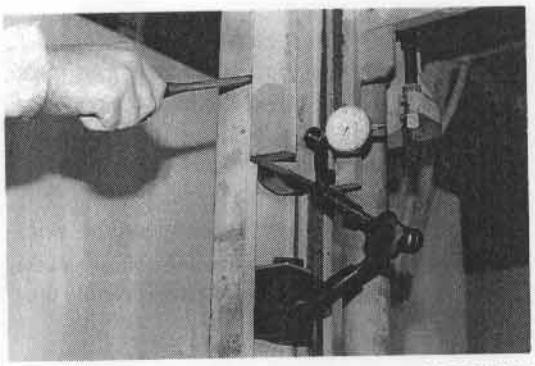

Adjusting the Inner Mast Roller is Sideway Direction LAO117-24

(4) Measure the sideway travel of the inner mast roller.
Standard travel: 0 ~ 0.8 mm (0.031 in)

(5) If defective, make shim adjustment of the inner mast roller.

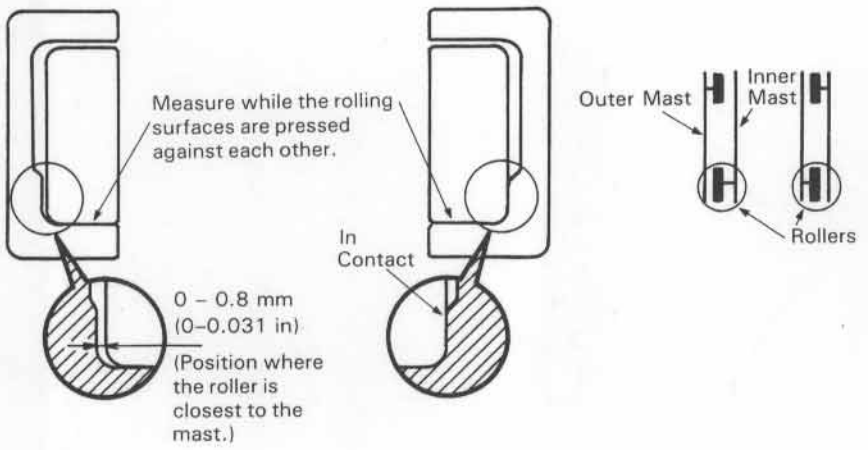

Adjusting the Clearance between Inner Mast Roller and Outer Mast LAOS387

3. Adjust the outer mast roller
Sideway adjustment

(1) Set the dial gauge on the outer mast.
(2) Push the inner mast against the outer mast roller with a screwdriver from the opposite side of the set side and adjust the 0 point of the dial gauge in contact with the inner side of the inner mast.
(3) Insert the screwdriver between the inner and outer masts on the dial gauge setting side to push the inner mast against the outer mast roller.

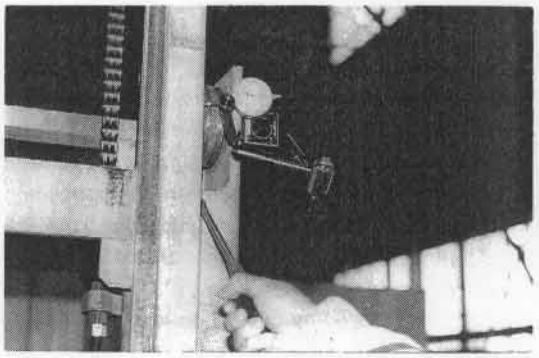

Adjusting the Outer Mast Roller in Sideway Direction LAO117-25

(4) Measure the sideway travel of the inner mast.
Standard travel: 0 ~ 0.8 mm (0.031 in)
(5) Make outer mast roller shim adjustment when the travel does not satisfy the standard.

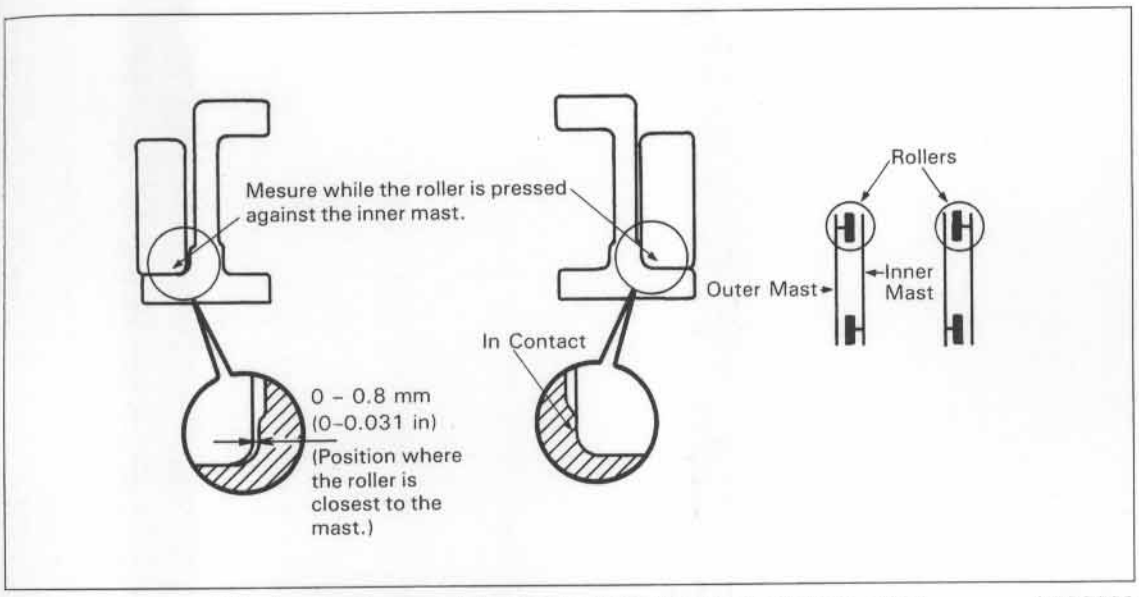

Adjusting the Clearance between the Outer Mast Roller and Inner Mast LAOS388

4. Methods for replacement and shim adjustment of the outer and inner lift rollers

Caution:
Perform lift roller replacement and shim adjustment when the result of measurement in the mast adjustment is judged defective.

(1) Remove the lift bracket. (See page 14-5.)
(2) Remove the lift cylinder. (See page 15-12)
(3) Gently lower the hoisted inner mast.

Caution:
Tilt the mast fully backward.

(4) Remove the inner mast rollers.
SST 09950-20017

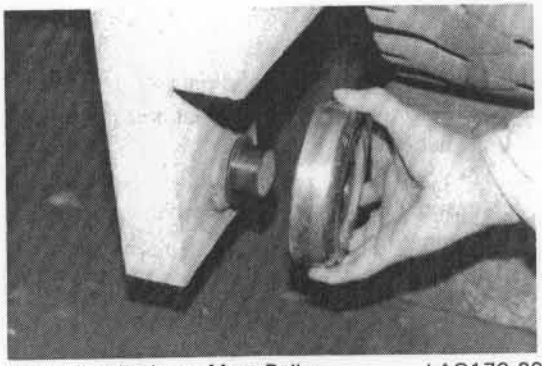

Removing the Inner Mast Roller LAO179-20

(5) Select the inner mast roller shims, and distribute them equally between the left and right sides.
Shim thickness: 0.5 mm (0.020 in)
1.0 mm (0.039 in)

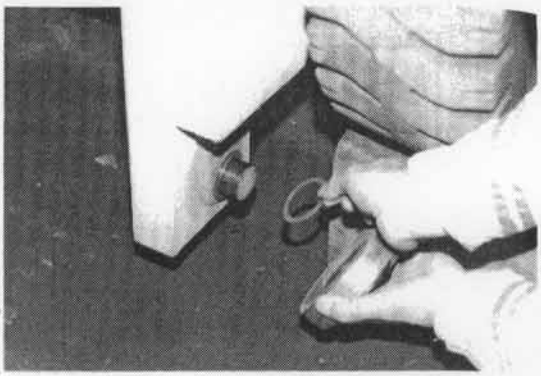

Adjusting the Inner Mast Roller Shims LAO19-18

(6) Remove the outer mast rollers.
SST 09950-20017

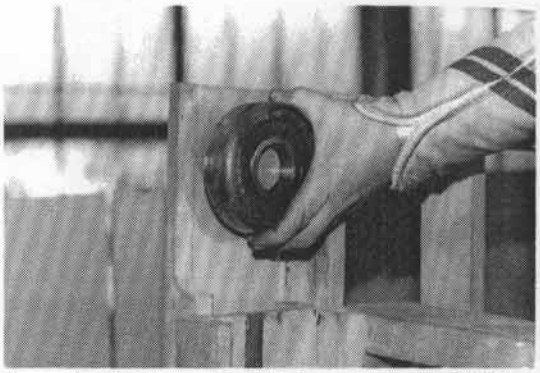

Removing the Outer Mast Rollers LAO179-22

(7) Select the outer mast roller shims, and distribute them equally between the left and right sides.
Shims thickness: 0.5 mm (0.02 in)
1.0 mm (0.039 in)

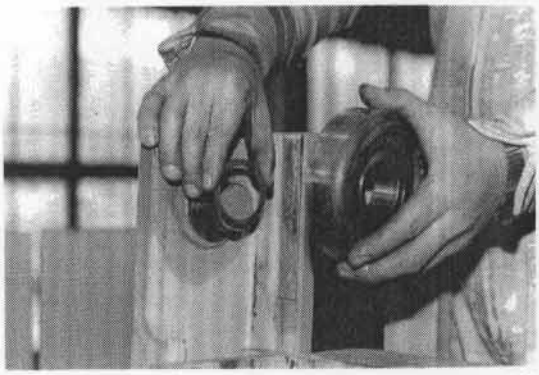

Adjusting the Outer Mast Roller Shims LAO179-23

Mast Strip Adjustment

1. Prepare for adjustment
   (1) Prepare the thickness gauge.
   (2) Fully lower the inner mast and tilt it fully backward.

2. Measure the clearance between the mast strip and inner mast.
   (1) Measure with the thickness gauge.
   Clearance standard:
   0.5 ~ 1.0 mm (0.020 ~ 0.039 in)

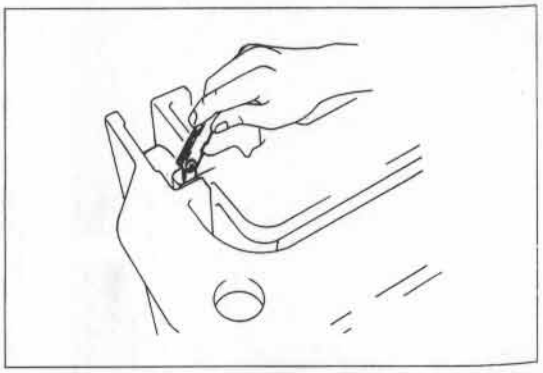

Measuring the Mast Strip Clearance LAOS389

Caution:
Make sure that the inner mast is in contact with the outer mast roller.

(2) If defective, make shim adjustment.
Shim thickness: 0.5 mm (0.020 in)
1.0 mm (0.039 in)

Caution:
Make shim adjustment after removing the lift cylinder and lowering the hoisted inner mast.

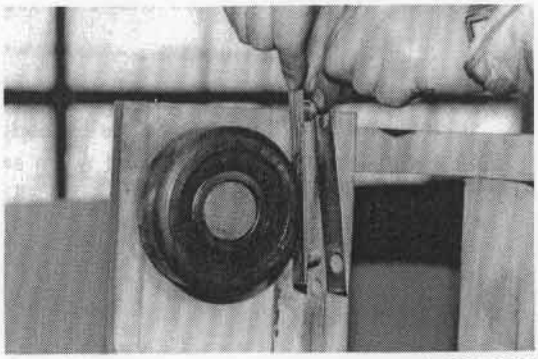

Shim Adjustment LAO179-24

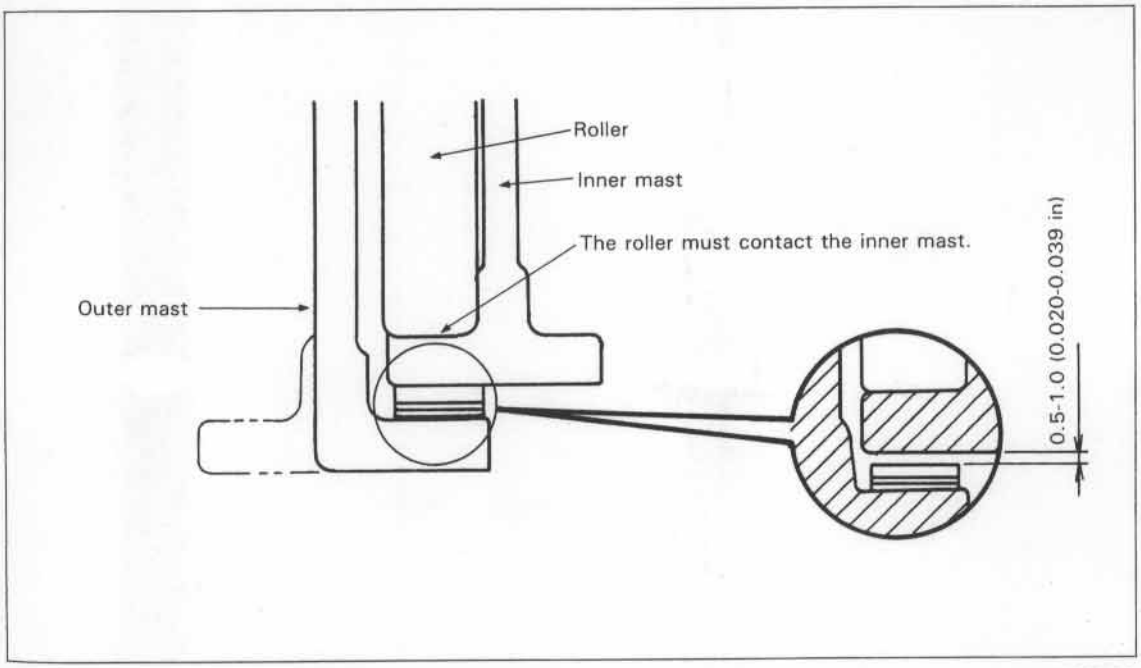

Adjusting the Clearance between Mast Strip and Inner Mast LAOS390

Lift Cylinder Rod Shim Adjustment (Prevention of Uneven Movement)

Caution:

- Inspection and adjustment are always necessary for two lift cylinders to prevent uneven movements on the left and right sides caused by allowances in production, etc.
- Make inspection and adjustment when any of the following parts is replaced:
  (1) Lift cylinder ASSY
  (2) Lift cylinder rod SUB-ASSY
  (3) Lift cylinder SUB-ASSY
  (4) Mast ASSY
  (5) Outer mast SUB-ASSY
  (6) Inner mast SUB-ASSY

1. Inspection method
   Slowly raise the inner mast, and check the stopping states of cylinder roods RH and LH immediately before arrival at the top position.

   (1) Normal
   Both cylinders stop almost simultaneously and the inner mast sways almost none.
   (2) Abnormal
   There is slight deviation between the stopping states at left and right, and the upper part of the inner mast sways when the later cylinder rod stops.
   Shim adjustment is necessary in this case.
   Add shims for the cylinder which has stopped earlier.

2. Adjusting method
   (1) Raise the inner mast first. After setting the SST on the outer mast tie beam, lower the inner mast until it comes into contact with the SST.
   SST 09610-22000-71
   (2) Remove the set bolt at the adjusting side cylinder rod end.
   (3) Slowly lower the lift cylinder rod and disconnect the cylinder rod end.
   (4) Place a shim on the cylinder rod end and raise it slowly until insertion to the inner mast.
   (5) Install the cylinder rod end set bolt.
   (6) Raise the inner mast again for rechecking.
   (7) Repeat inspection and adjustment to determine the necessary number of shims.
   Shim thickness: 0.5 mm (0.020 in)
   1.0 mm (0.039 in)

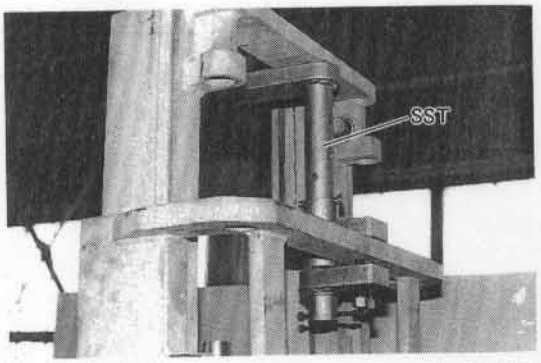

Setting the SST LAO179-5

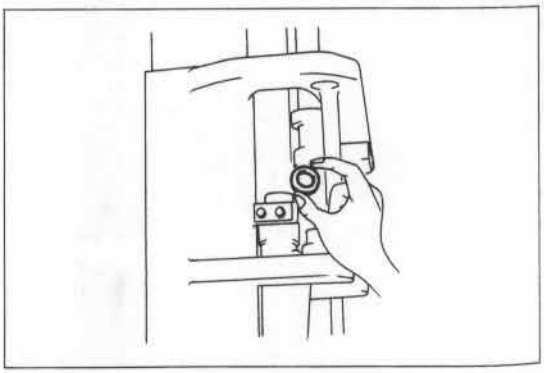
Shim Adjusting LAOS402

SV MAST

COMPONENTS

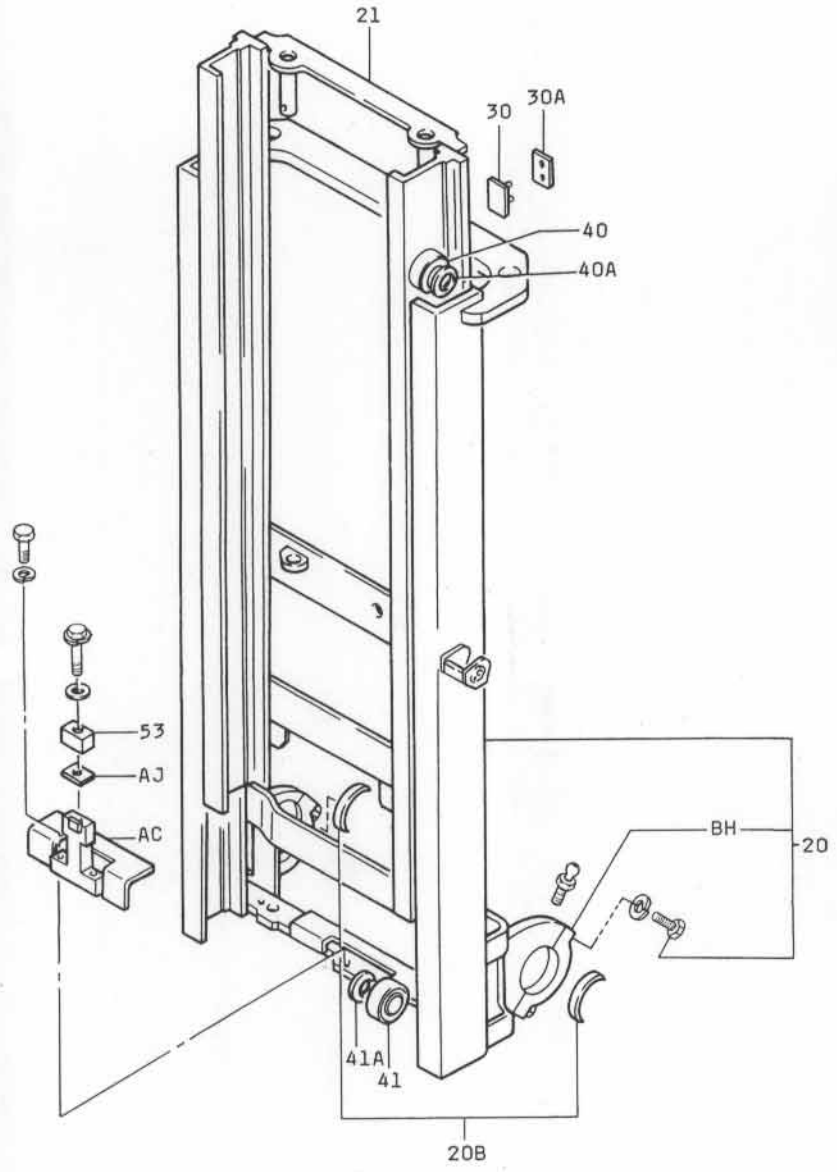

20	Outer mast SUB-ASSY	40A	Lift roller shim
20B	Mast support bushing	41	Lift roller
21	Inner mast SUB-ASSY	41A	Lift roller shim
30	Outer mast strip	53	Mast cushion
30A	Outer mast strip shim	AC	Inner mast stopper
40	Lift roller	AJ	Stopper shim
		BH	Mast support cap

Mast Components (SV) BARM68

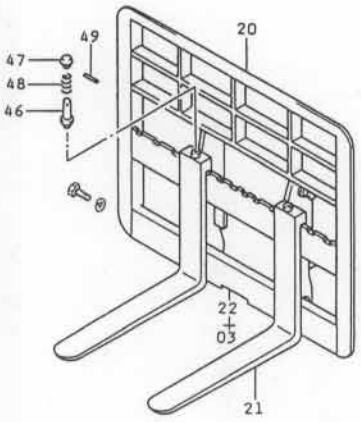

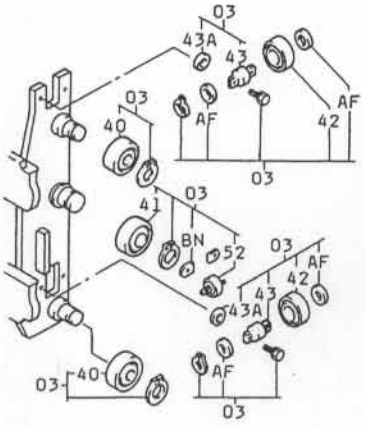

1 ton series

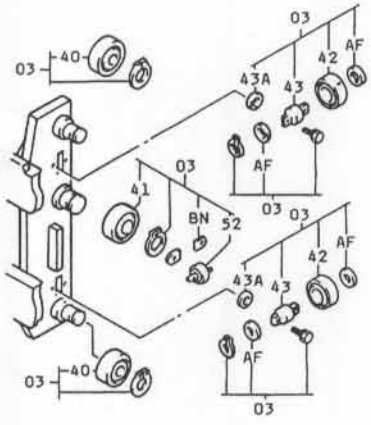

2 ton series

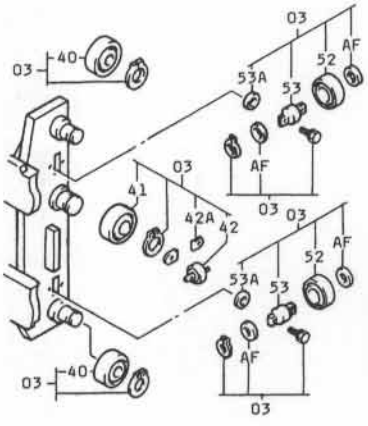

3 ton series

03	Lift bracket ASSY	43A	Shim
20	Backrest SUB-ASSY	46	Fork stopper pin
21	Fork SUB-ASSY	47	Fork stopper pin knob
22	Lift bracket SUB-ASSY	48	Fork stopper pin spring
40	Lift roller	49	Spring pin
41	Lift roller	52	Side roller, No. 2
42	Side roller	AF	Plate
43	Side roller shaft	BN	Shim

Lift Bracket Components (SV) BARM69

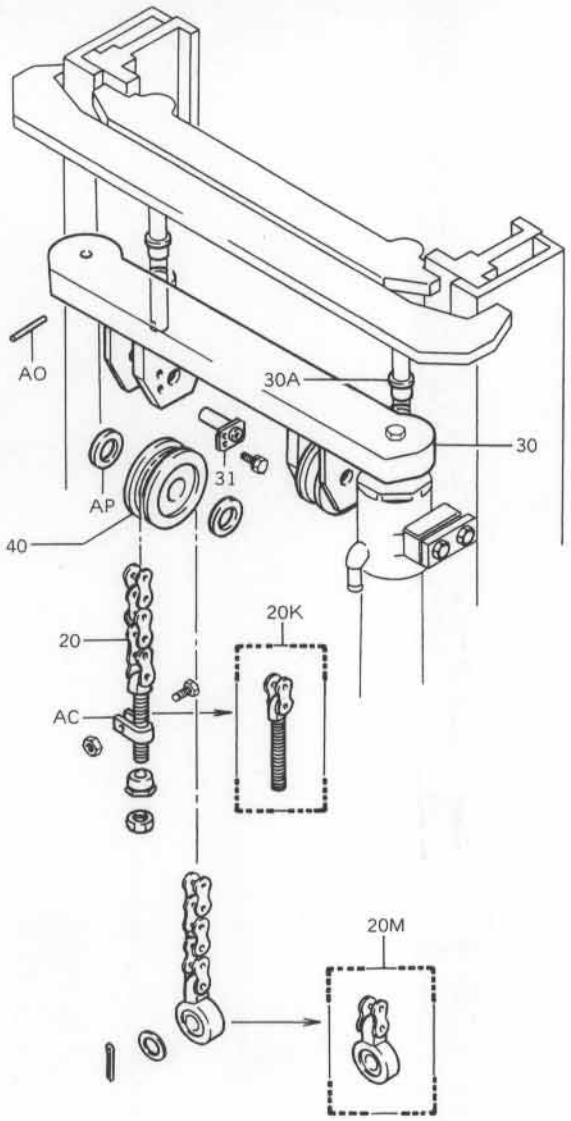

20	Chain SUB-ASSY	31	Chain wheel pin
20K	Chain anchor bolt kit	40	Chain wheel
20M	Chain eye bolt kit	AC	Chain anchor bolt clamp
30	Chain beam SUB-ASSY	AO	Spring pin
30A	Bushing		

Chain Components (SV) BARM70

MAST ROLLER SIZE

1. Lift roller list

Unit: mm (in)

Place used	Item		1 ton series	2 ton series	3 ton series
(A) Lift bracket, upper & lower (4 pcs.)	Outside diameter	Standard	94.5 (3.720)	⇦	109.7 (4.319)
		Limit	93.5 (3.681)	⇦	108.7 (4.280)
	Inside diameter	Standard	35.0 (1.3780)	⇦	40.0 (1.5748)
		Limit	35.02(1.3787)	⇦	40.02(1.5756)
Lift bracket, center (2 pcs.)	Ouside diameter	Standard	93.3 (3.673)	⇦	108.5 (4.272)
		Limit	92.3 (3.634)	⇦	107.5 (4.232)
	Inside diameter	Standard	35.0 (1.3780)	⇦	65.0 (2.5591)
		Limit	35.02(1.3787)	⇦	65.02(2.5598)
(B) Inner mast, lower (2 pcs.)	Outside diameter	Standard	114.5 (4.508)	⇦	125.5 (4.941)
		Limit	113.5 (4.468)	⇦	124.5 (4.902)
	Inside diameterd	Standard	35.0 (1.3780)	⇦	40.0 (1.5748)
		Limit	35.02(1.3787)	⇦	40.02(1.5756)
Outer mast, upper (2 pcs.)	Outside diameter	Standard	94.5 (3.720)	⇦	109.7 (4.319)
		Limit	93.5 (3.681)	⇦	108.7 (4.280)
	Inside diameter	Standard	35.0 (1.3780)	⇦	40.0 (1.5748)
		Limit	35.02(1.3787)	⇦	40.02(1.5756)
Lift bracket rollers, upper and lower (4 pcs.)	Outside diameter	Standard	73.4 (2.980)	⇦	⇦
		Limit	72.3 (2.850)	⇦	⇦
	Inside diameter	Standard	25.0 (0.9843)	⇦	⇦
		Limit	25.02(0.9850)	⇦	⇦
Lift bracket side rollers, center (2 pcs.)	Outside diameter	Standard	38.0 (1.496)	⇦	45.0 (1.772)
		Limit	37.0 (1.457)	⇦	44.0 (1.732)

2. O/S lift roller list
   O/S is provided for lift rollers (A) and (B).

① (A) Lift bracket, upper & lower

Unit: mm (in)

Lift roller size (seal color)	1 ton series	2 ton series	3 ton series
No. 1 size standard outside diameter (black)	94.5(3.720)	⇦	109.7(4.319)
No. 2 size standard outside diameter (blue)	95.0(3.740)	⇦	110.2(4.339)
No. 3 size standard outside diameter (black)	95.9(3.776)	⇦	111.1(4.374)

Caution:
- Use No. 2 size normally.
- Use No. 1 size when the mast with is narrow, and No. 3 size when it is wide.
- The roller size may be different between upper and lower and between left and right.

② (B) Inner mast, lower

Unit: mm (in)

Lift roller size (seal color)	1 ton series	2 ton series	3 ton series
No. 1 size standard outside diameter (black)	114.5(4.508)	⇦	125.5(4.941)
No. 2 size standard outside diameter (blue)	115.1(4.531)	⇦	126.1(4.965)

Caution:
- use No. 2 size normally.
- Use No. 1 size when the mast width is narrow.
- The roller size may be different between the left and right.

MAST ADJUSTMENT

1. Lift bracket portion

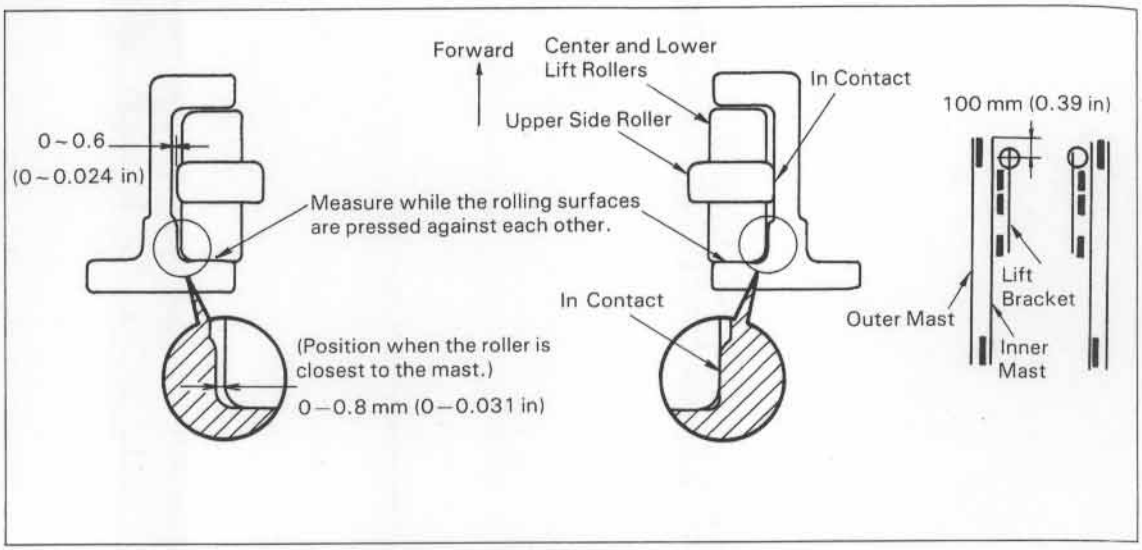

Lift Bracket Side Roller Adjustment (SV) LAOS385

(1) Make adjustment with the center of the lift bracket upper side roller at **100 mm (3.9 in)** from the top of the inner mast.
(2) The upper, lower and center lift rollers need no adjustment as they are stopped by snap rings.
(3) For lower and center side rollers, push the lift bracket to one side to bring the rollers into contact with the mast, and make shim adjustment for a clearance of **0 ~ 0.8 mm(0.031 in)** where the roller is the closest on the opposite side.
(4) Perform upper side roller adjustment after the adjustment in step (3).
Bring one side roller into contact with the mast side surface, and make shim adjustment for a clearance of **0 ~ 0.6 mm (0.024 in)** where the roller is the closest on the opposite side.
(5) After the adjustment, check for smooth movement of the lift bracket.

2. Outer mast and inner mast roller

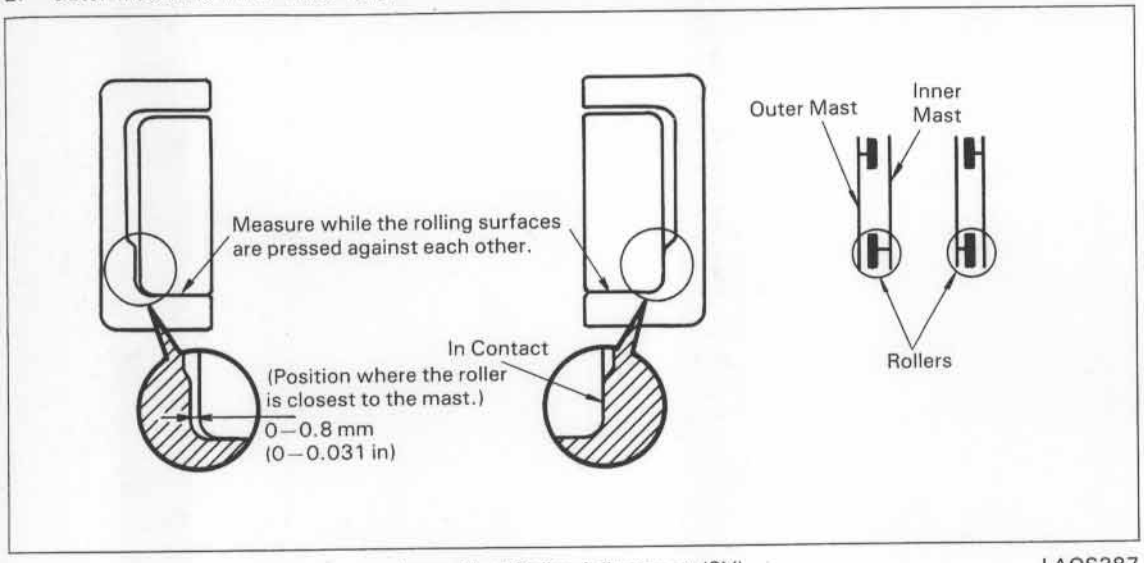

Inner Mast Roller Adjustment (SV) LAOS387

(1) Carry out measurement with the mat overlap at near **450 mm (17.7 in).**
(2) Shift the inner mast to one side to bring the roller into contact with the mast, and adjust the clearance between the roller and mast at the closest position on the opposite side to **0 ~ 0.8 mm (0 ~ 0.31 in)** by adding or decreasing shims.
(3) After the adjustment, check for smooth movement of the inner mast in the outer mast.

3. Inner mat and outer mast roller

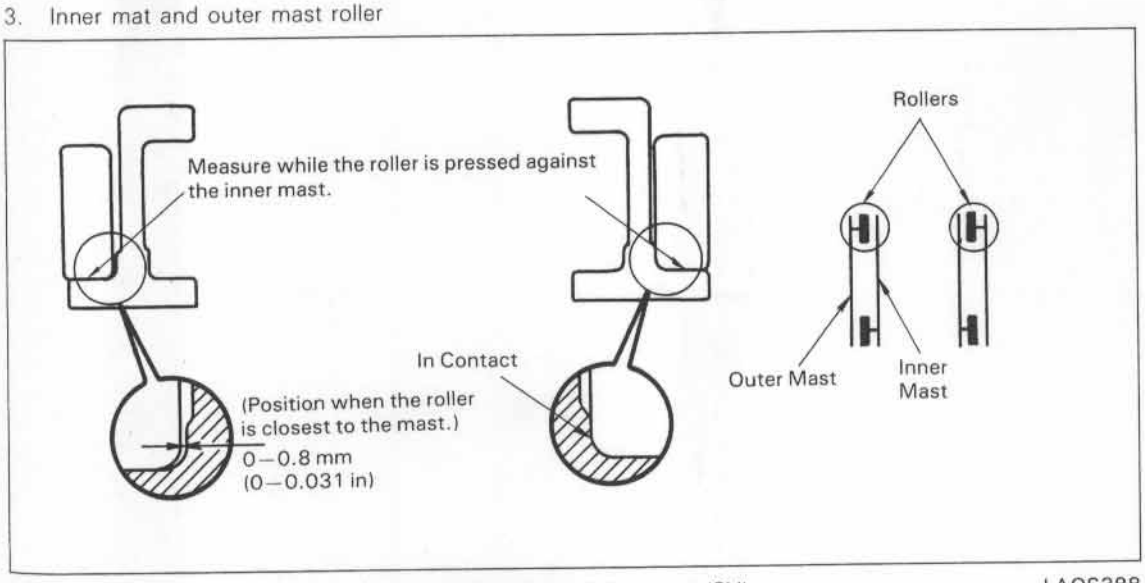

Outer Mast Roller Adjustment (SV) LAOS388

(1) make measurement with the mast overlap at near **450 mm (17.7 in).**
(2) Shift the inner mast to one side to bring the rollerinto contact with the inner mast, and adjust the clearance between the roller and mast on the opposite side when the roller is the closest to the mast to **0~0.8 mm (0.031 in)** by adding or decreasing shims.
(3) After the adjustment, check for smooth movement of the inner mast in the outer mast.

4. Mast Strip Adjustment

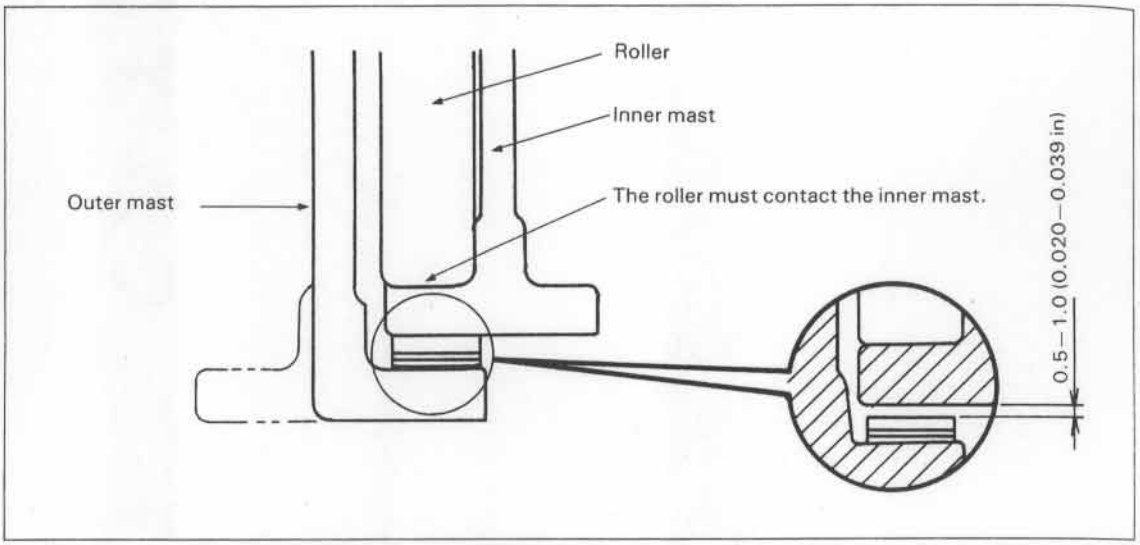

Mast Strip Adjustment (SV) LAOS390

(1) Make adjustment after lowering the inner mast fully.
(2) Make shim adjustment for a clearance of **0.5~1.0 mm (0.020~0.039 in)** between the mast strip and mast with the inner mast in contact with the outer mast.
(3) After the adjustment, check for smooth movement of the inner mast in the outer mast.

FV MAST

COMPONENTS

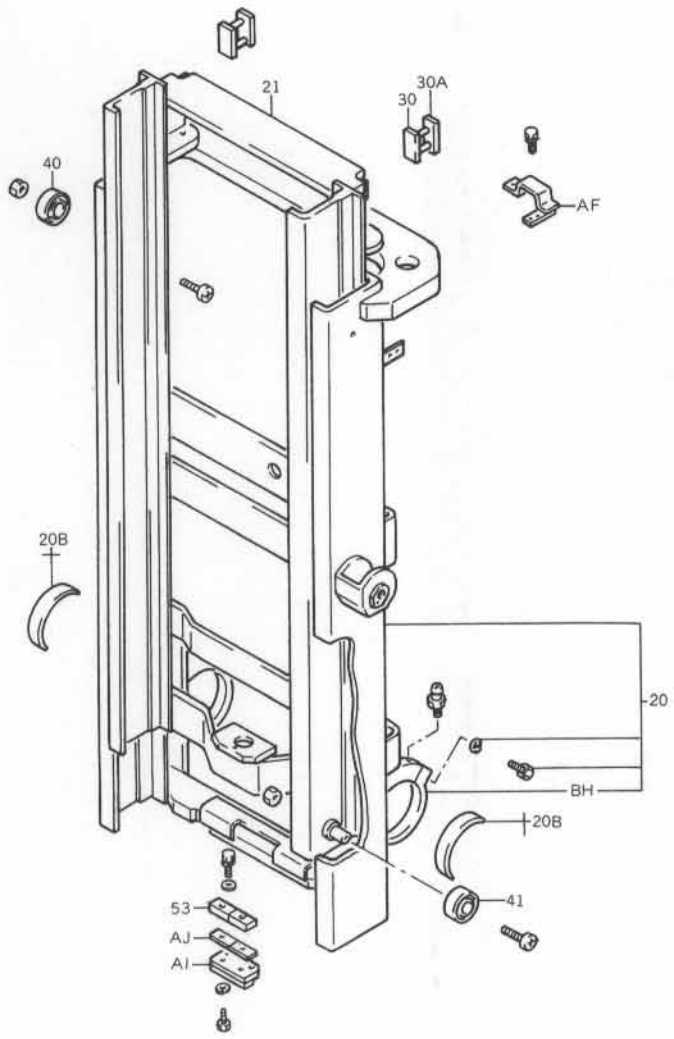

20	Outer mast SUB-ASSY	41	Lift roller
20B	Mast support bushing	53	Mast cushion
21	Inner mast SUB-ASSY	AF	Roller cover
30	Outer mast strip	AI	Stopper
30A	Outer mast strip shim	AJ	Stopper shim
40	Lift roller	BH	Mast support cap

Mast Components (FV Mast) BARM71

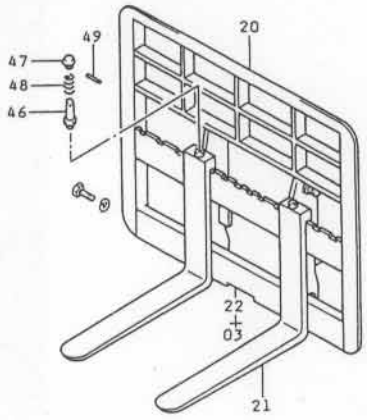

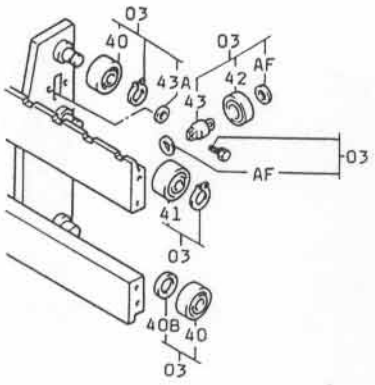

1 ton series

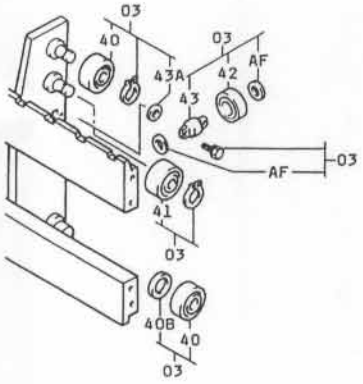

2 ton series

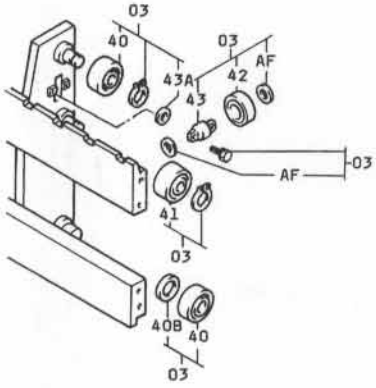

3 ton series

03	Lift bracket ASSY	42	Side roller
20	Backrest SUB-ASSY	43	Side roller shaft
21	Fork SUB-ASSY	43A	Shim
22	Lift bracket SUB-ASSY	46	Fork stopper pin
40	Lift roller	47	Fork stopper pin knob
40B	Lift roller shim	48	Fork stopper pin spring
41	Lift roller	49	Spring pin

Lift Bracket Componenets (FV) BARM72

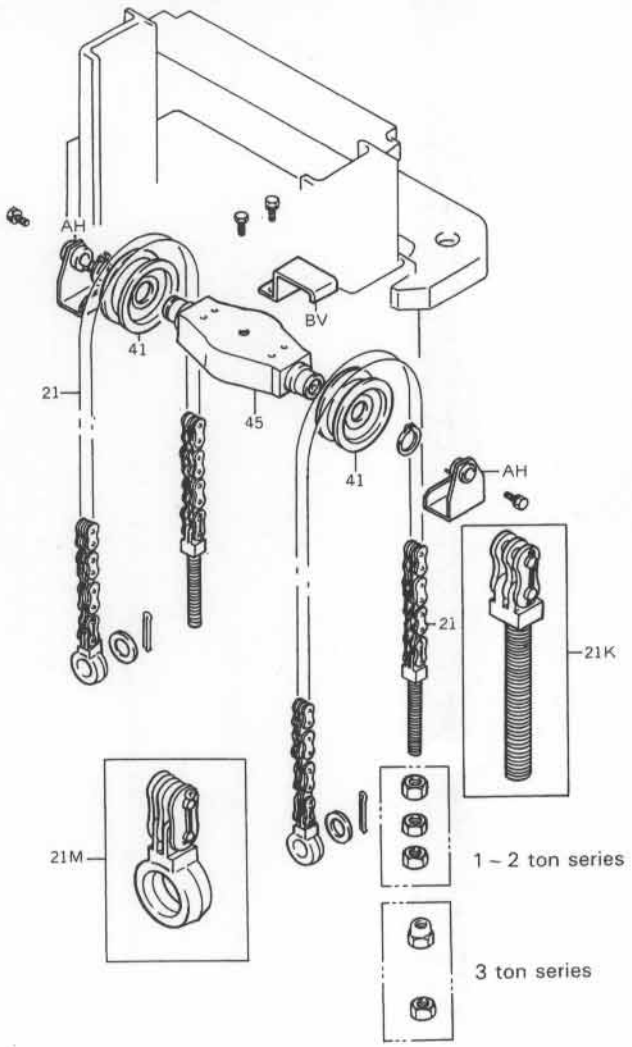

21 Chain SUB-ASSY
21K Chain anchor bolt kit
21M Chain eye bolt kit
41 Chain wheel
45 Chain wheel support
AH Chain wheel cover
BV Chain stopper

Chain Components (FV) BARM73

MAST ROLLER SIZES

1. Lift roller list

Unit: mm (in)

Place used	Item		1 ton series	2 ton series	3 ton series
(A) Lift bracket, upper & lower (4 pcs.)	Outside diameter	Standard	94.5 (3.720)	⇦	109.7 (4.319)
		Limit	93.5 (3.681)	⇦	108.7 (4.280)
	Inside diameter	Standard	35.0 (1.3780)	⇦	40.0 (1.5748)
		Limit	35.02(1.3787)	⇦	40.02(1.5756)
Lift bracket, center (2 pcs.)	Outside diameter	Standard	93.3 (3.673)	⇦	108.5 (4.272)
		Limit	92.3 (3.634)	⇦	107.5 (4.232)
	Inside diameter	Standard	35.0 (1.3780)	⇦	65.0 (2.5591)
		Limit	35.02(1.3787)	⇦	65.02(2.5598)
(B) Inner mast, lower (2 pcs.)	Outside diameter	Standard	114.5 (4.508)	⇦	125.5 (4.941)
		Limit	113.5 (4.468)	⇦	124.5 (4.902)
	Inside diameter	Standard	35.0 (1.3780)	⇦	40.0 (1.5748)
		Limit	35.02(1.3787)	⇦	40.02(1.5756)
Outer mast, upper (2 pcs.)	Outside diameter	Standard	94.5 (3.720)	⇦	109.7 (4.319)
		Limit	93.5 (3.681)	⇦	108.7 (4.280)
	Inside diameter	Standard	35.0 (1.3780)	⇦	40.0 (1.5748)
		Limit	35.02(1.3787)	⇦	40.02(1.5756)
Lift bracket side rollers, upper (2 pcs.)	Outside diameter	Standard	62.0 (2.441)	72.0 (2.835)	⇦
		Limit	61.0 (2.402)	71.0 (2.795)	⇦
	Inside diameter	Standard	25.0 (0.9843)	25.0 (0.9843)	⇦
		Limit	25.02(0.9850)	25.02(0.9850)	⇦

2. O/S lift roller list
O/S is provided for lift rollers (A) and (B)

① (A) Lift bracket, upper & lower

Unit: mm (in)

Lift roller size (seal color)	1 ton series	2 ton series	3 ton series
No. 1 size standard outside diameter (black)	94.5(3.720)	⇦	109.7(4.319)
No. 2 size standard outside diameter (blue)	95.0(3.740)	⇦	110.2(4.339)

Caution:
- Use No. 2 size normally.
- Use No. 1 size when the mast width is narrow.
- The roller size may be difference between upper and lower, and between left and right.

② (B) Inner mast, lower

Unit: mm (in)

Lift roller size (seal color)	1 ton series	2 ton series	3 ton series
No. 1 size standard outside diameter (black)	114.5(4.508)	⇦	125.5(4.941)
No. 2 size standard outside diameter (blue)	115.1(4.531)	⇦	126.1(4.965)

Caution:
- Use No. 2 size normally.
- Use No. 1 size when the mast width is narrow.
- The roller size may be different between upper and lower and between left and right.

MAST ADJUSTMENT

1. Lift bracket portion

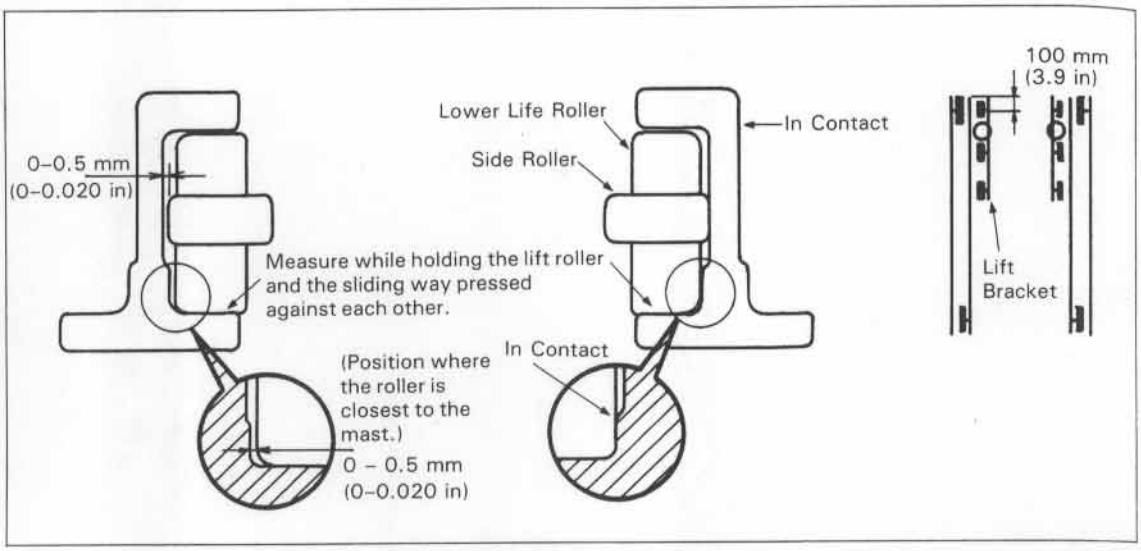

Lift Bracket Side Roller Adjustment (FV) LAOS392

(1) Make adjustment with the center of the lift bracket upper side roller at **100 mm (3.9 in)** from the top of the inner mast.
(2) The upper and center lift rollers need no adjustment because they are stopped by snap rings.
(3) For the lower lift rollers and side rollers, shift the lift bracket to one side to bring the roller into contact with the mast, and make shim adjustment for a clearance of **0 ~ 0.5 mm (0.020 in)** between the mast and the roller on the opposite side where the roller is the closest.
(4) After the adjustment, check for smooth movement of the lift bracket.

2. Outer mast and inner mast roller

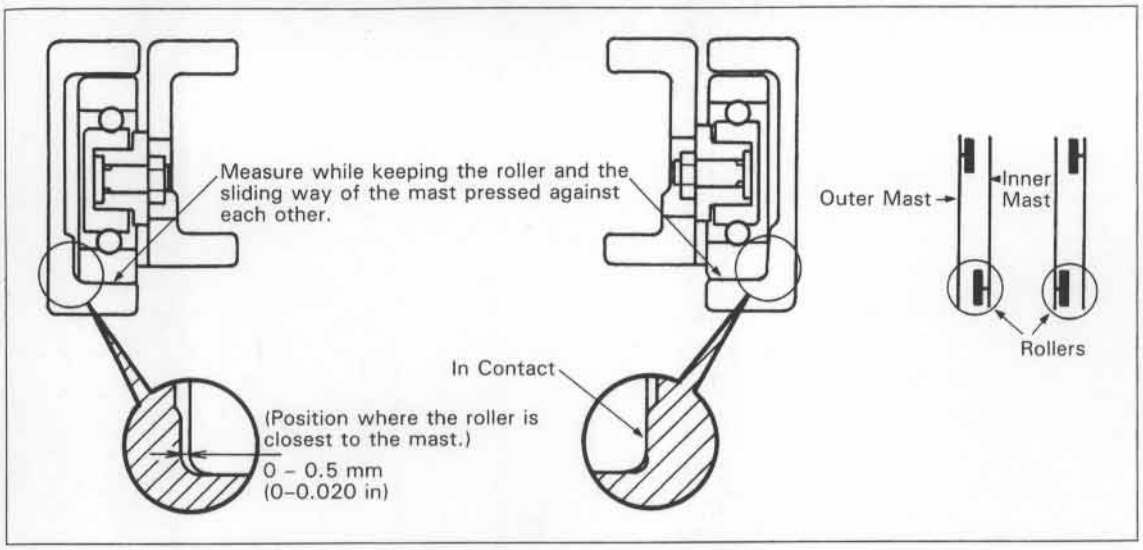

Inner Mast Roller Adjustment (FV) LAOS393

(1) Make measurement near the mast overlap in the table.
(2) Shift the inner mast to one side to bring the roller into contact with the mast, and adjust the clearance between the roller and mast on the opposite side where the roller is the closest to **0 ~ 0.5 mm (0.020 in)** by turning the bolt and lock the bolt by the nut.
The mast clearance, however, should be even between the left and right sides.
(3) After the adjustment, check for smooth movement of the inner mast in the outer mast.

Recommended mast overlap for adjustment

Max. fork height	Mast overlap
3500 or less	400 mm (15.7 in)
3700	500 mm (19.7 in)
4000 or more	600 mm (23.6 in)

3. Inner mast and outer mast rollers

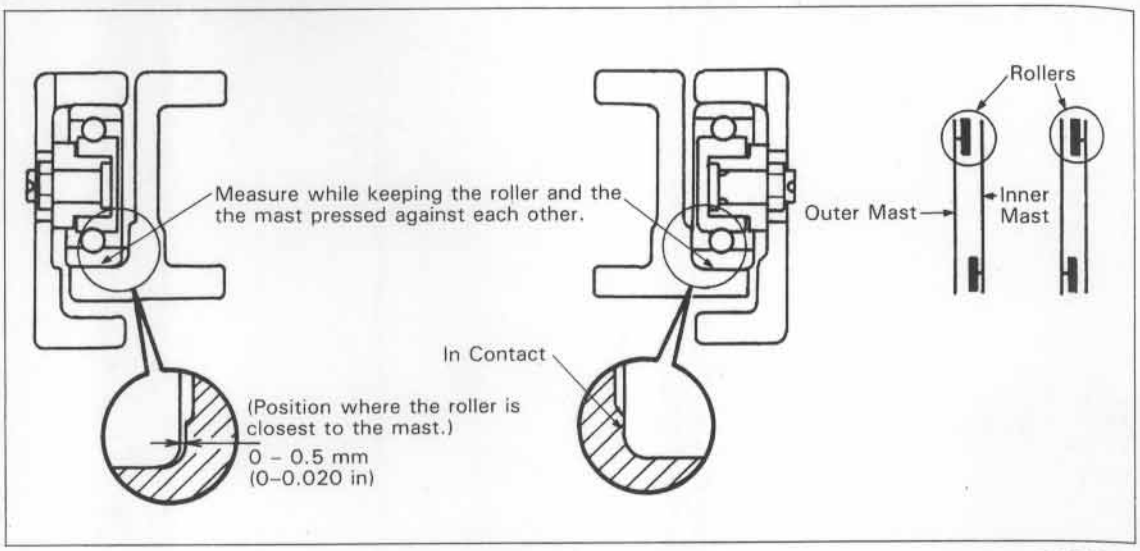

Outer Mast Roller Adjustment (FV) LAOS394

(1) Make measurement near the mast overlap in the table on the preceding page.
(2) Shift the inner mast to one side to bring the roller into contact with the mast, and adjust the clearance between the roller and mast on the opposite side where the roller is the closest to **0 ~ 0.5 mm (0.020 in)** by adding or decreasing shims.
(3) After the adjustment, check for smooth movement of the inner mast in the outer mast.

Caution:
Bottom recessed roller adjustment
If the bottom recessed roller bolt is overtightened to obstruct smooth mast or lift bracket movement, loosen the nut and return the bolt a little.
Make readjustment after moving the mast or lift bracket a few times.
(As the roller does not retract by loosening of the bolt only, always move the mast or lift bracket a few times before making readjustment.

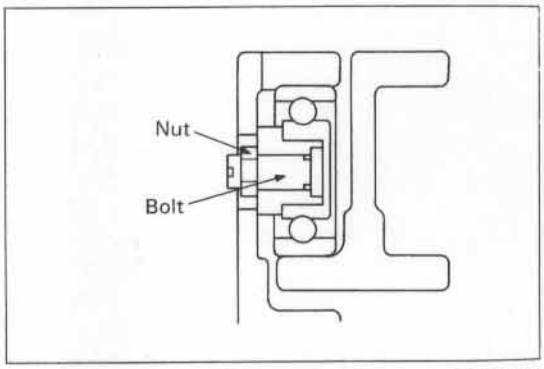

Adjusting the bottom-Recessed Roller BARS168

4. Mast strip adjustment

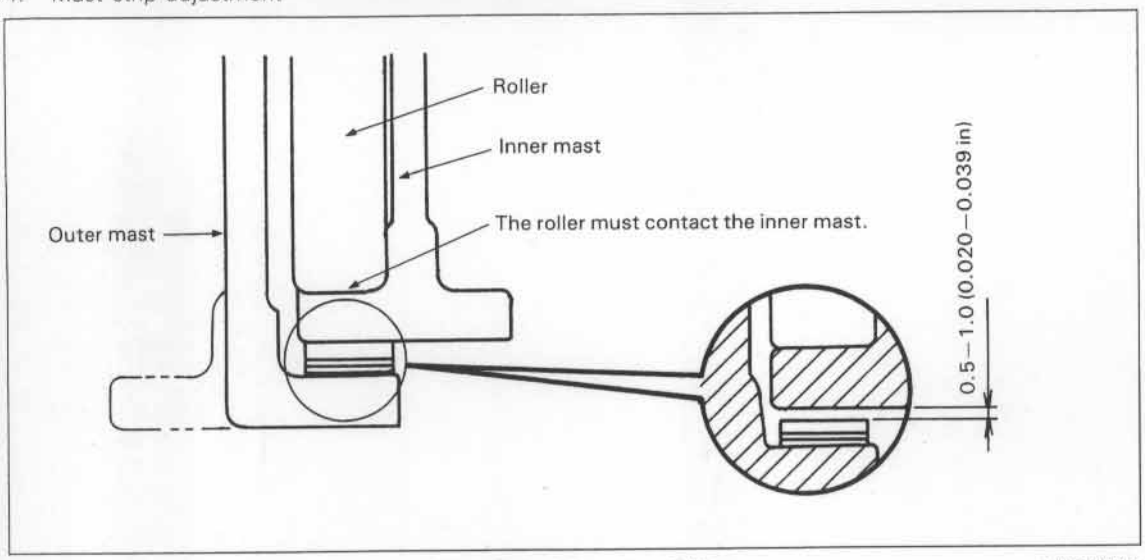

Mast Strip Adjustment (FV) LAOS390

(1) Make adjustment with the inner mast fully lowered.
(2) Make shim adjustment for a clearance of **0.5 ~ 1.0 mm (0.020 in)** between the mast strip and mast with the inner mast in contact with the outer mast.
(3) After the adjustment, check for smooth movement of the inner mast in the outer mast.

FSV MAST

COMPONENTS

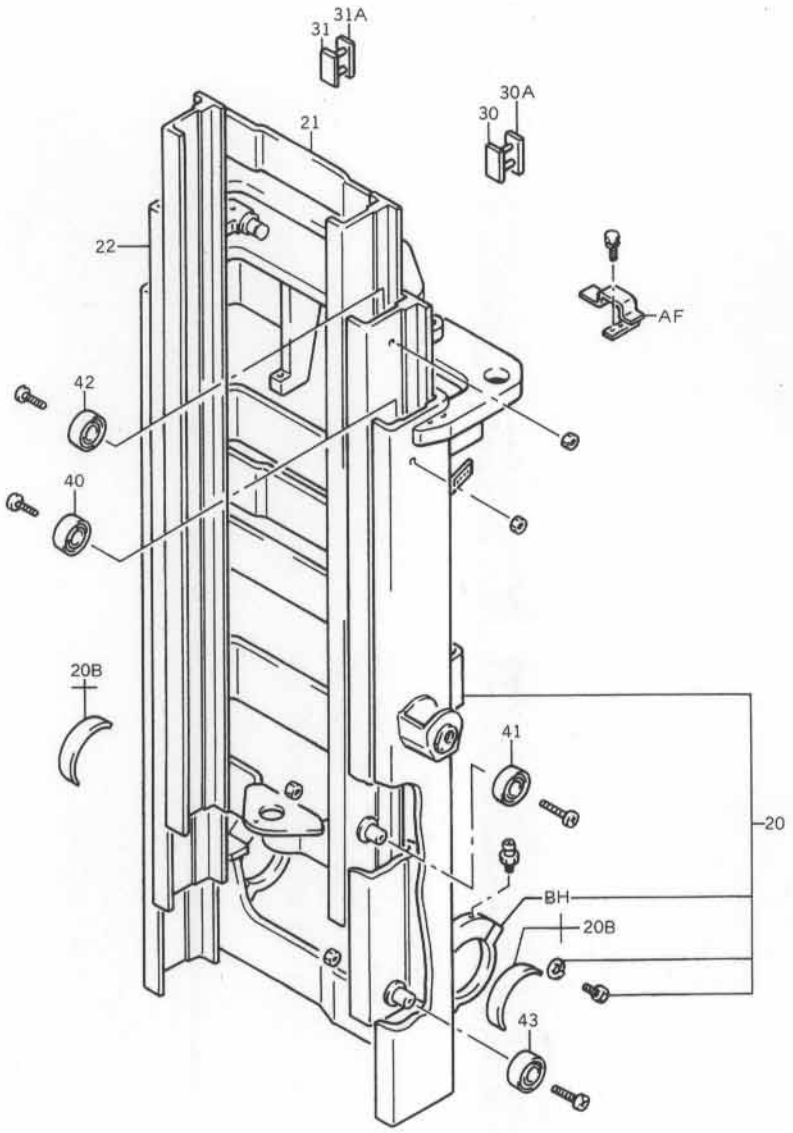

20	Outer mast SUB-ASSY	31A	Middle mast strip shim
20B	Mast support bushing	40	Lift roller
21	Inner mast SUB-ASSY	41	Lift roller
22	Middle mast SUB-ASSY	42	Lift roller
30	Outer mast strip	43	Lift roller
30A	Outer mast strip shim	AF	Roller cover
31	Middle mast strip	BH	Mast support cap

Mast Components (FSV) BARM74

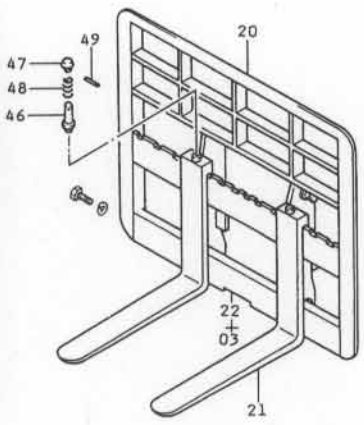

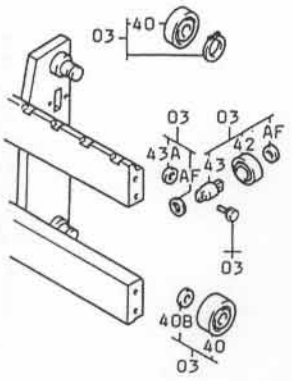

1 ton series

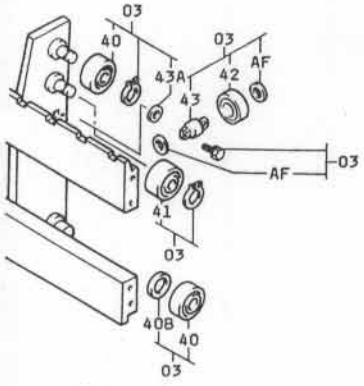

2 ton series

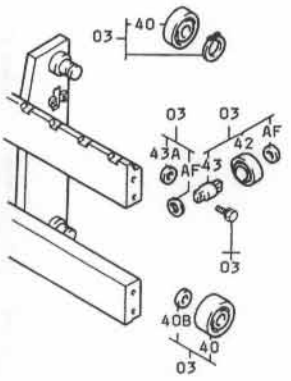

3 ton series

03	Lift bracket ASSY	43	Side roller shaft
20	Backrest SUB-ASSY	43A	Shim
21	Fork SUB-ASSY	46	Fork stopper pin
22	Lift bracket SUB-ASSY	47	Fork stopper pin knob
40	Lift roller	48	Fork stopper pin spring
40B	Lift roller shim	49	Spring pin
41	Lift roller	AF	Plate
42	Side roller		

Lift Bracket Components (FSV) BARM75

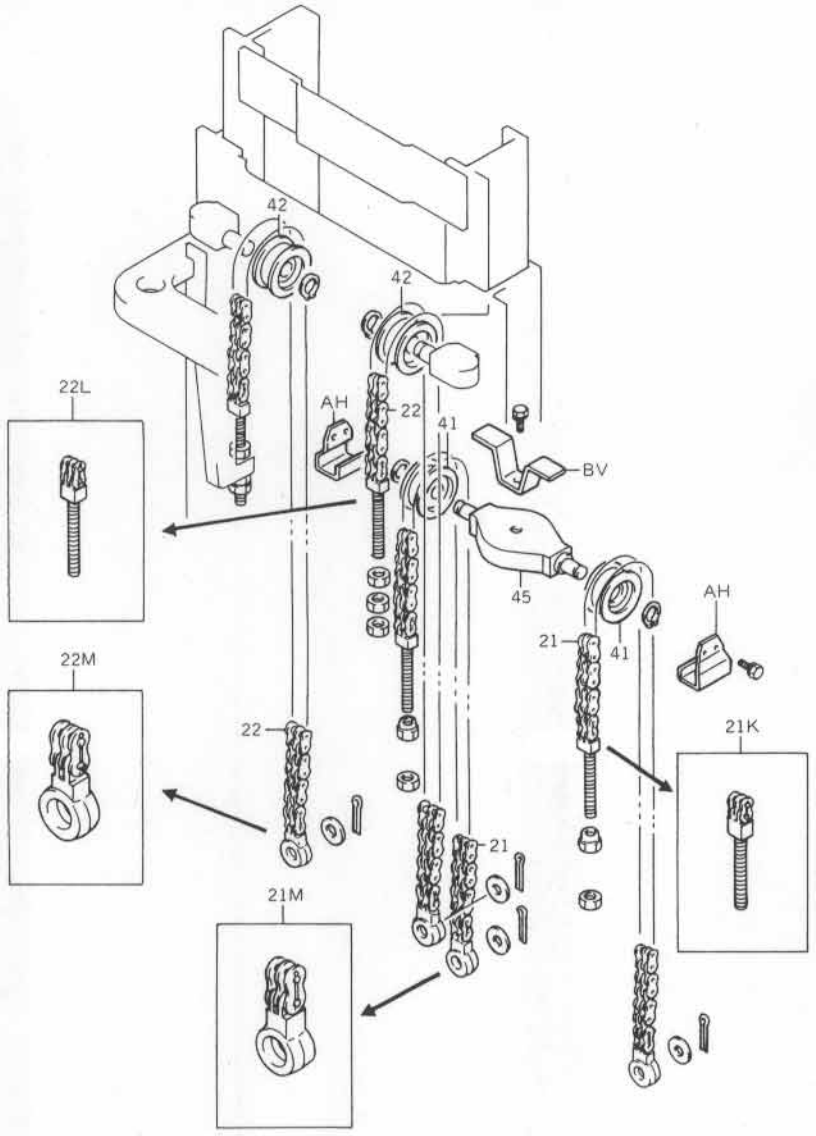

21	Chain SUB-ASSY	22M	Chain eye bolt kit
21K	Chain anchor bolt kit	41	Chain wheel
21M	Chain eye bolt kit	42	Chain wheel
22	Chain SUB-ASSY	45	Chain wheel support
22L	Chain anchor bolt kit	AH	Chain wheel cover
		BV	Chain stopper

Chain Components (FSV) BARM76

MAST ROLLER SIZE

1. Lift roller list

Unit: mm (in)

Place used	Item		1 ton series	2 ton series	3 ton series
(A) Lift bracket, upper & lower (4 pcs.)	Outside diameter	Standard	94.5 (3.720)	⇦	109.7 (4.319)
		Limit	93.5 (3.681)	⇦	108.7 (4.280)
	Inside diameter	Standard	35.0 (1.3780)	⇦	40.0 (1.5748)
		Limit	35.02(1.3787)	⇦	40.02(1.5756)
Lift bracket, center (2 pcs.)	Outside diameter	Standard	——	93.3 (3.673)	——
		Limit		92.3 (3.634)	
	Inside diameter	Standard		35.0 (1.3780)	
		Limit		35.02(1.3787)	
(B) Inner mast, lower (2 pcs.)	Outside diameter	Standard	94.5 (3.720)	⇦	109.7 (4.319)
		Limit	93.5 (3.681)	⇦	108.7 (4.280)
	Inside diameter	Standard	35.0 (1.3780)	⇦	40.0 (1.5748)
		Limit	35.02(1.3787)	⇦	40.02(1.5756)
Outer/middle mast, upper (4 pcs.)	Outside diameter	Standard	94.5 (3.720)	⇦	109.7 (4.319)
		Limit	93.5 (3.681)	⇦	108.7 (4.280)
	Inside diameter	Standard	35.0 (1.3780)	⇦	40.0 (1.5748)
		Limit	35.02(1.3787)	⇦	40.02(1.5756)
(C) Middle mast, lower (2 pcs.)	Outside diameter	Standard	114.5 (4.508)	⇦	125.5 (4.941)
		Limit	113.5 (4.468)	⇦	124.5 (4.902)
	Inside diameter	Standard	35.0 (1.3780)	⇦	40.0 (1.5748)
		Limit	35.02(1.3787)	⇦	40.02(1.5756)
Lift bracket side roller, upper (4 pcs.)	Outside diameter	Standard	62.0 (2.441)	⇦	72.0 (2.835)
		Limit	61.0 (2.402)	⇦	71.0 (2.795)
	Inside diameter	Standard	25.0 (0.9843)	⇦	25.0 (0.9843)
		Limit	25.02(0.9850)	⇦	25.02(0.9850)

2. O/S lift roller list
   O/S is provided for lift rollers (A), (B) and (C).

① (A) Lift bracket, upper & lower

Unit: mm (in)

Lift roller size (seal color)	1 ton series	2 ton series	3 ton series
No. 1 size standard outside diameter (black)	94.5(3.720)	⇦	109.7(4.319)
No. 2 size standard outside diameter (blue)	95.0(3.740)	⇦	110.2(4.339)

Caution:
- Use No. 2 size normally.
- Use No. 1 size when the mast width is narrow.
- The roller size may be different between upper and lower and between be different between upper and lower and between left and right.

② (B) Inner mast, lower

Unit: mm (in)

Lift roller size (seal color)	1 ton series	2 ton series	3 ton series
No. 1 size standard outside diameter (black)	94.5(3.720)	⇦	109.7(4.319)
No. 2 size standard outside diameter (blue)	95.0(3.740)	⇦	110.2(4.339)

Caution:
- Use No. 2 size normally.
- Use No. 1 size when the mast width is narrow.
- The roller size may be different between upper and lower and between left and right.

③ (C) Middle mast, lower

Unit: mm (in)

Lift roller size (seal color)	1 ton series	2 ton series	3 ton series
No. 1 size standard outside diameter (black)	114.5(4.508)	⇦	125.5(4.941)
No. 2 size standard outside diameter (blue)	115.1(4.531)	⇦	126.1(4.965)

MAST ADJUSTMENT

1. Lift bracket

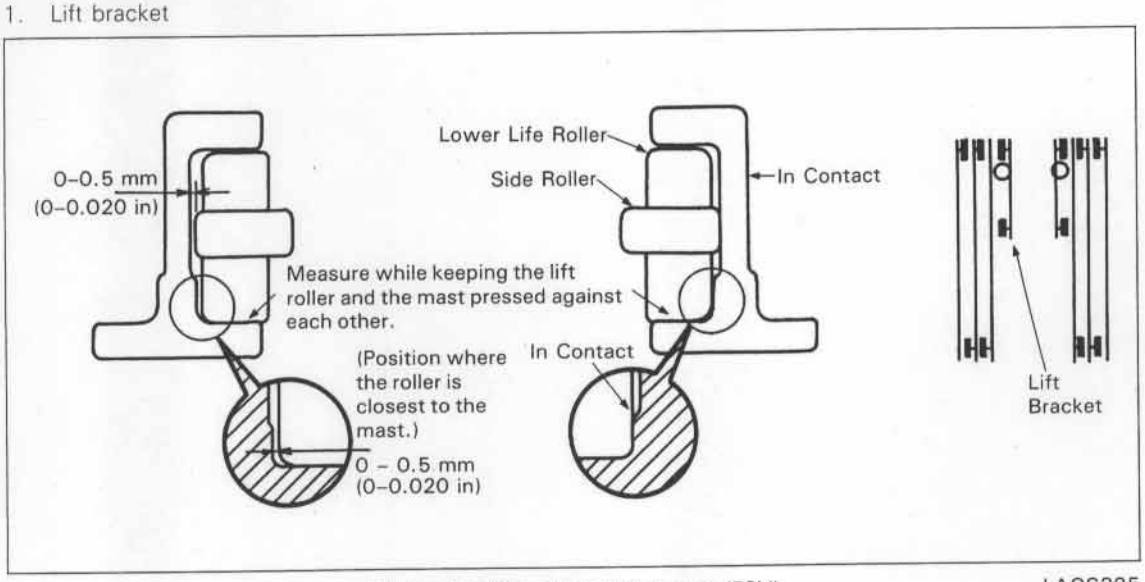

Lift Bracket Side Roller Adjustment (FSV) LAOS395

(1) make adjustment with the lift bracket fully raised.
(2) Upper lift rollers need no adjustment as they are stopped by snap rings.
(3) For lower lift rollers and side rollers, shift the lift bracket to one side to bring the roller into contact with the mast, and make shim adjustment for a clearance of **0 ~ 0.5 mm (0.020 in)** between the roller and mast on the opposite side where the roller is the closest.
(4) After the adjustment, check for smooth movement of the lift bracket.

2. Outer mast and middle mast lower rollers, and middle mast and inner mast rollers.

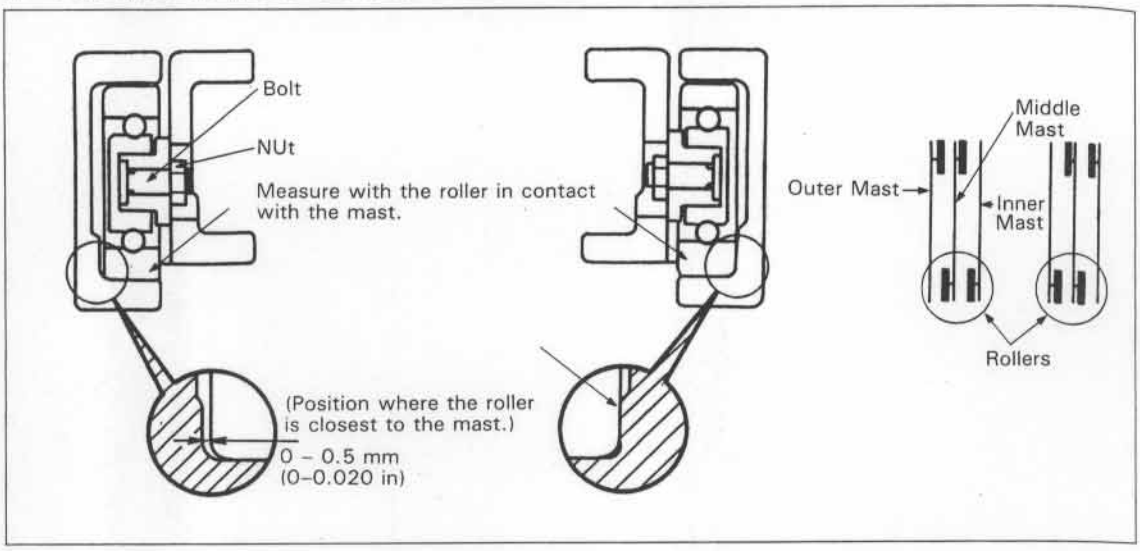

Middle mast Lower and Inner Mast Roller Adjustment (FSV) LAOS396

(1) Make measurement near the overlap shown in the table.
(2) Shift the inner mast to one side to bring the roller into contact with the mast. Adjust the clearance between the roller on and mast the opposite side at the closest position to **0 ~ 0.5 mm (0.020 in)** by turning the bolt and lock by the nut.
The mast clearance, however, shall be equal on the left and right sides.
(3) After the adjustment, check smooth the movement of the inner mast in the outer mast.

Recommended mast overlap for adjustment
(1 ~ 2 ton series)

Max. fork height	Mast overlap
5500 or less	450 mm (17.7 in)
6000	500 mm (19.7 in)
6500 or more	600 mm (23.6 in)

(3 ton series)

Max. fork height	Mast overlap
4700 or less	600 mm (23.6 in)
5000 ~ 5500	700 mm (27.6 in)
6000 or more	900 mm (35.4 in)

3. Middle mast and outer mast rollers
   Inner mast and middle mast upper rollers

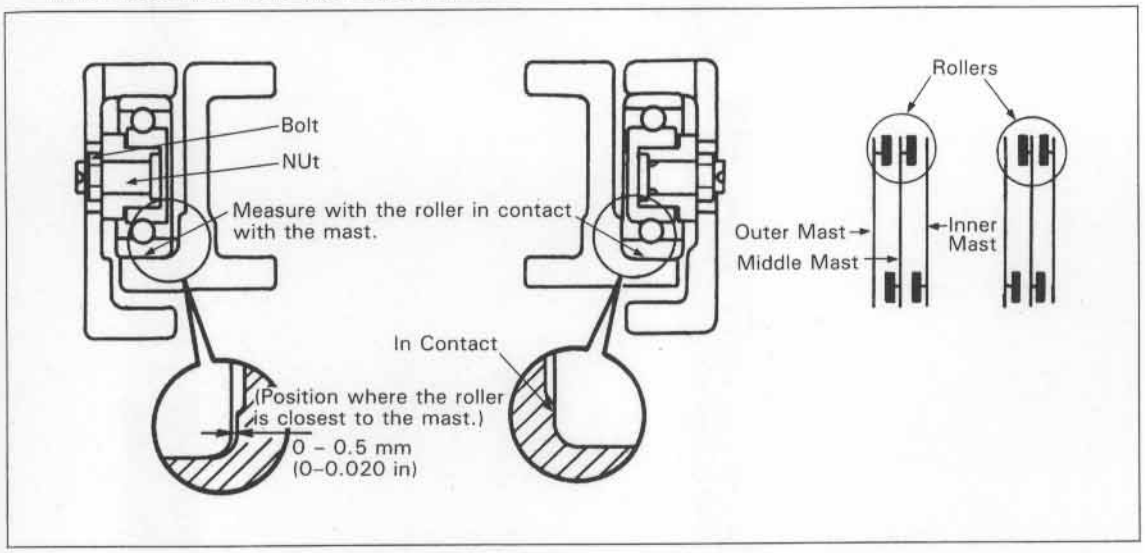

Outer Mast and Middle Mast Upper Roller Adjustment (FSV) LAOS398

(1) Make measurement with the mast overlap near the value shown in the table on the preceding page.
(2) Shift the inner (middle) mast to one side to bring the roller in contact with the mast, and adjust the clearance between the roller and mast on the opposite side at the closest position to **0 ~ 0.5 mm (0.020 in)**, and lock the bolt by the nut.
(3) After the adjustment, check for smooth movement of the inner (middle) mast in the middle (outer) mast.

Caution:
Bottom recessed roller adjustment
If the bottom recessed roller bolt is over-tightened to obstruct smooth mast or lift bracket movement, loosen the nut and return the bolt a little.
Make readjustment after moving the mast or lift bracket a few times.
(As the roller does not retract by loosening of the bolt only, always move the mast or lift bracket a few times before making readjustment.

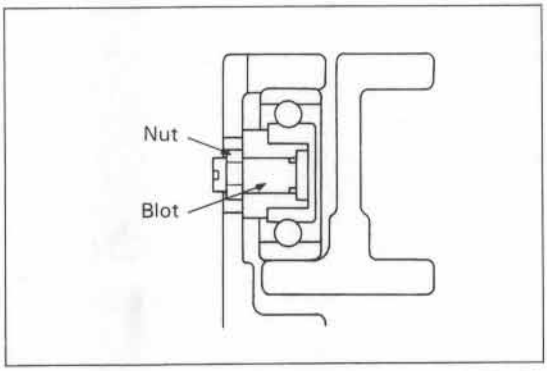

Adjusting the Bottom-Recessed Roller BARS168

4. Mast strip adjustment

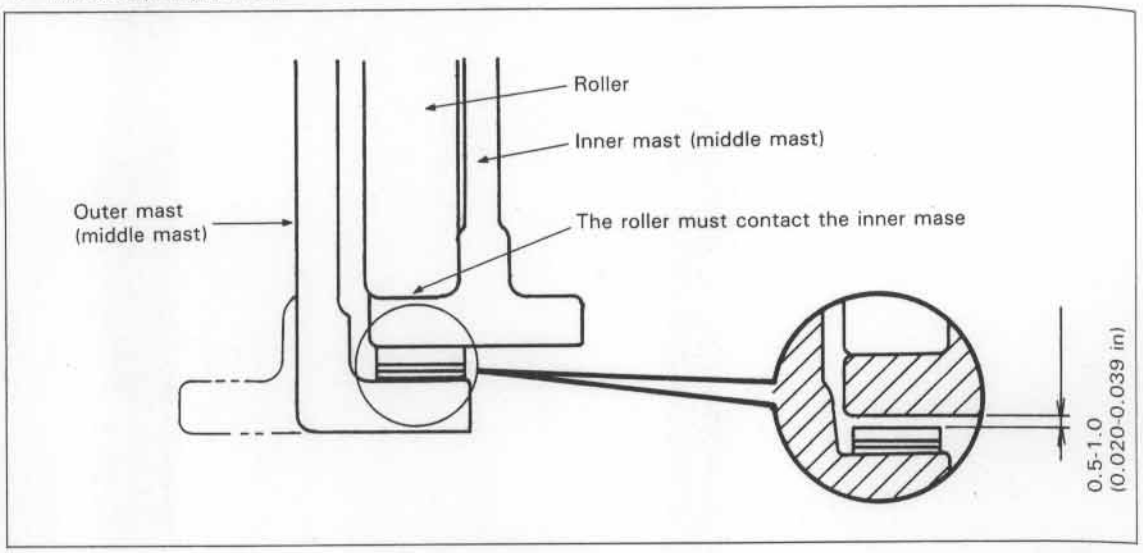

Mast Strip Adjustment (FSV) LAOS390

(1) Make adjustment with the inner (middle) mast fully lowered.
(2) With the inner (middle) mast in contact with the outer mast (middle mast upper) roller, make shim adjustment for a clearance of **0.5 ~ 1.0 mm (0.020 ~ 0.039 in)** between the mast strip and mast.
(3) After the adjustment, check for smooth mast movement.

CYLINDERS

	Page
LIFT CYLINDER	15-2
GENERAL	15-2
SPECIFICATIONS	15-5
COMPONENTS	15-7
LIFT CYLINDER ASSY(V)	15-12
FLOW REGULATOR VALVE	15-18
SAFETY DOWN VALVE(V)	15-20
TILT CYLINDER	15-22
GENERAL	15-22
SPECIFICATIONS	15-22
COMPONENTS	15-23
TILT CYLINDER ASSY	15-24

15

LIFT CYLINDER

GENERAL

LIFT CYLINDER (V, SV)

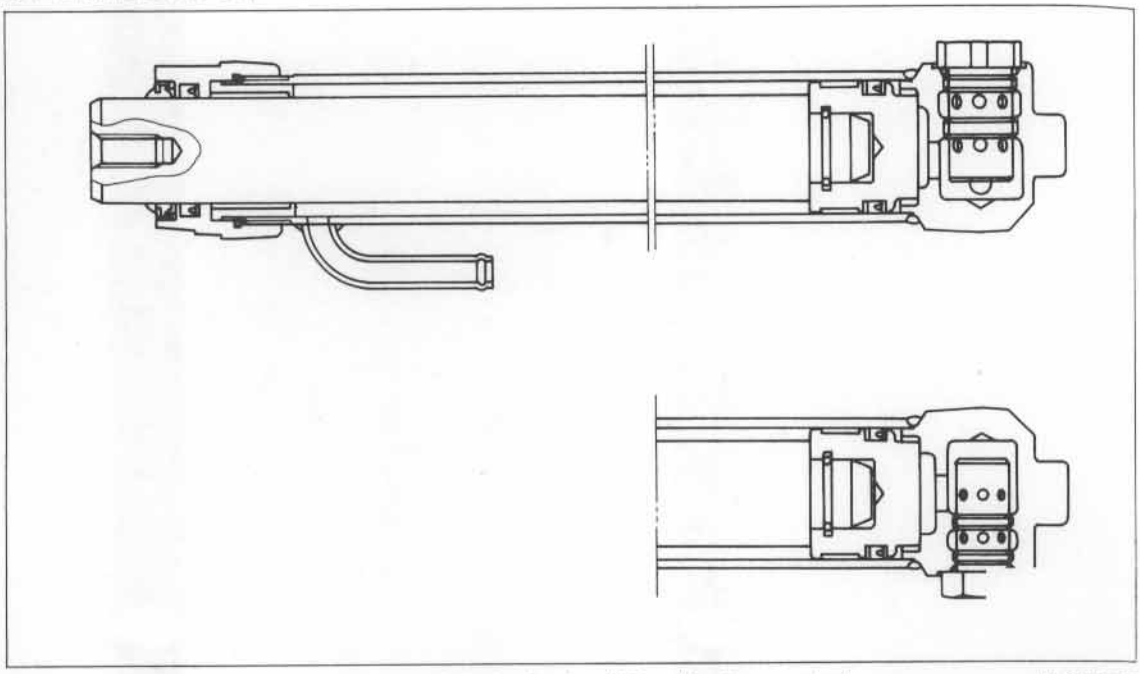

Lift Cylinder Sectional View (1 – 2 ton series) LAOM196

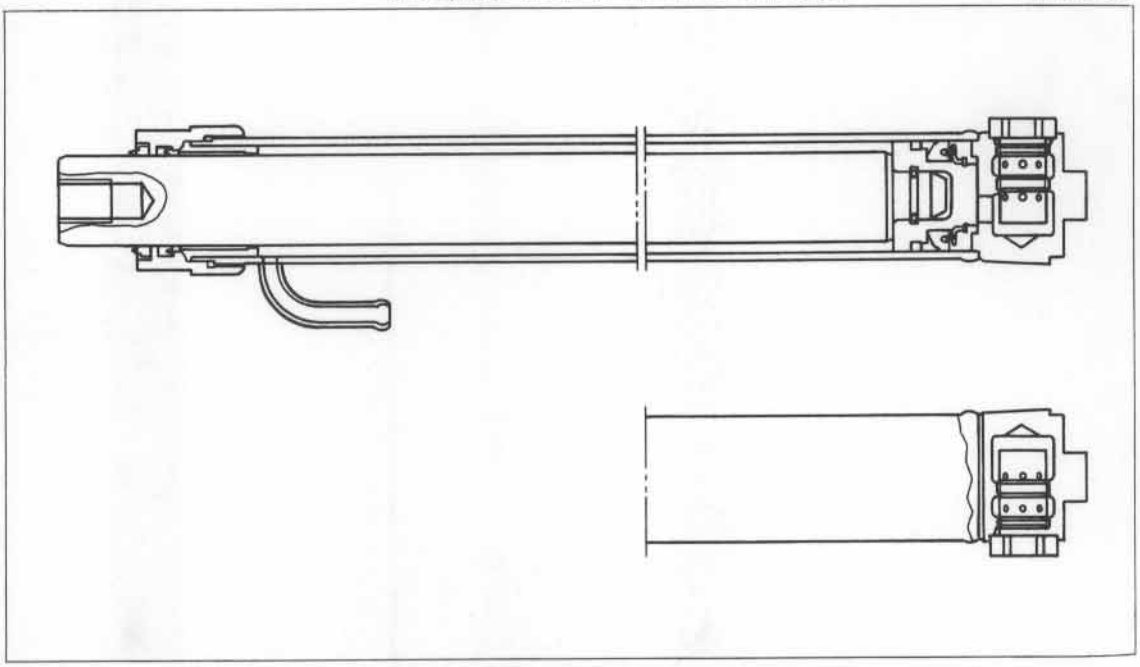

Front Lift Cylinder Sectional View (3 ton series) BARS169

FRONT LIFT CYLINDER (FV)

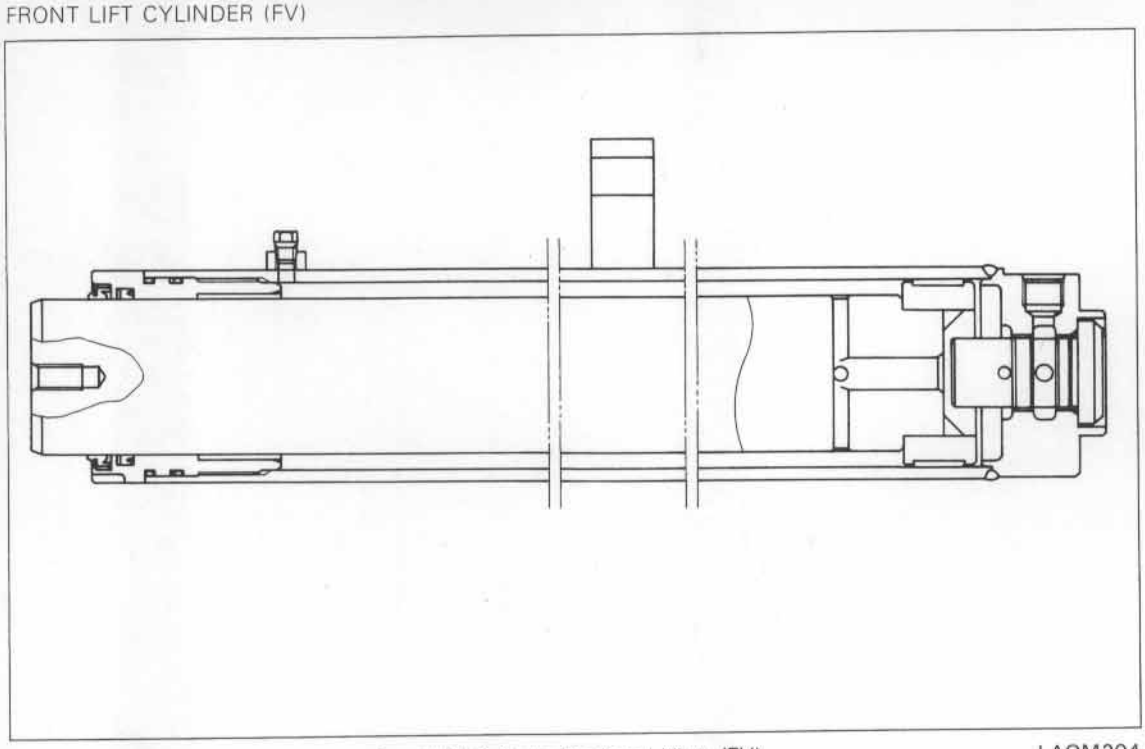

Front Lift Cylinder Sectional View (FV) LAOM204

FRONT LIFT CYLINDER (FSV)

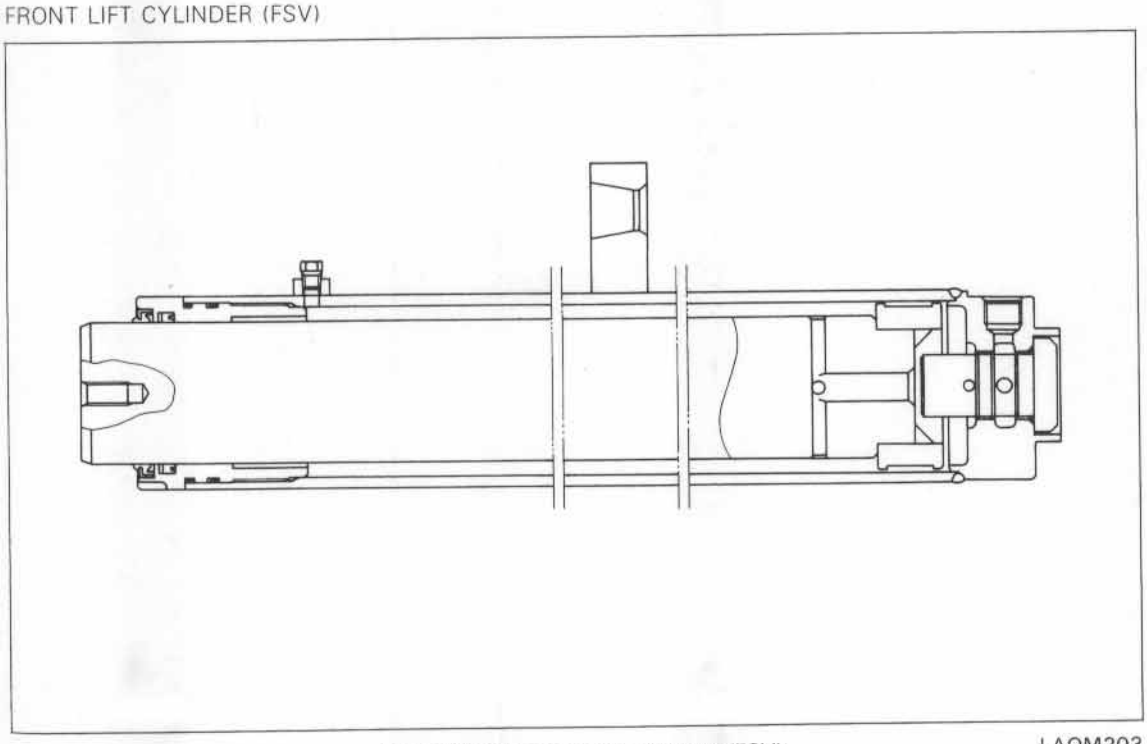

Front Lift Cylinder Sectional View (FSV) LAOM203

REAR LIFT CYLINDER (FV)

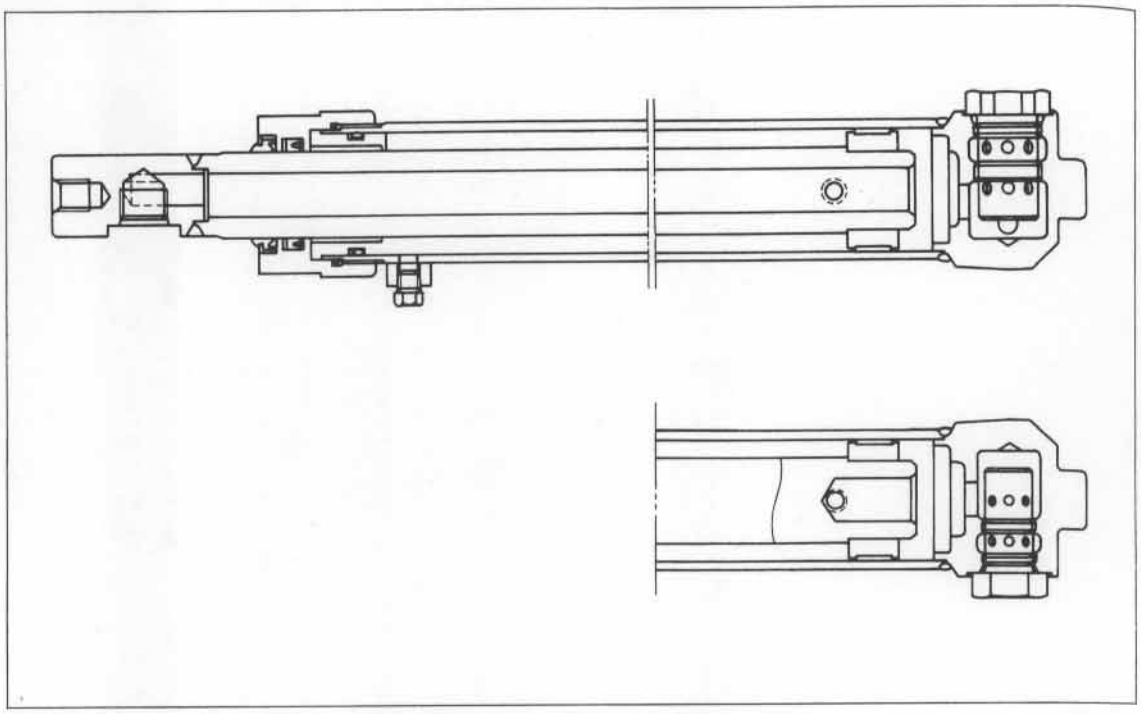

Rear Lift Cylinder Sectional View (FV) LAOM198

REAR LIFT CYLINDER (FSV)

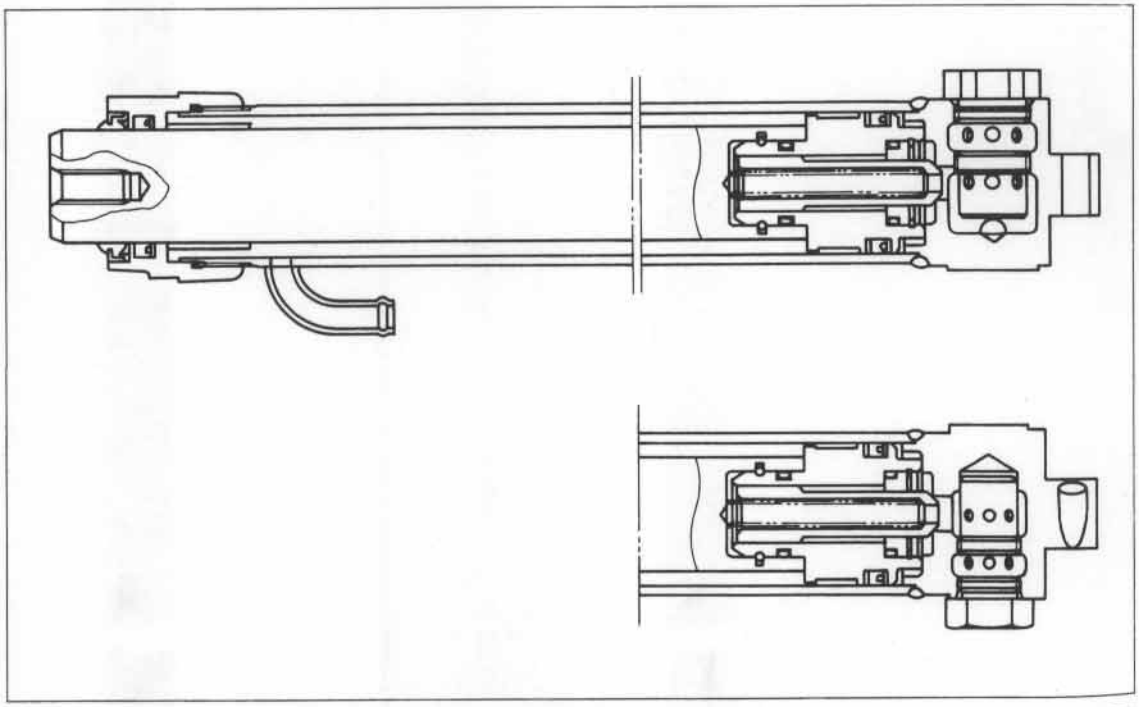

Rear Lift Cylinder Sectional View (FSV) LAOM197

SPECIFICATIONS

LIFT CYLINDER (V, SV)

Item \ Vehicle type	1 ton series	2 ton series	3 ton series
Cylinder type	Single acting	⇦	⇦
Cylinder bore	45 mm (1.8 in)	50 mm (2.0 in)	55 mm (2,2 in)
Cylinder outside diameter	52 mm (2.0 in)	57 mm (2.2 in)	63 mm (2.5 in)
Piston rod outside diameter	35 mm (1.4 in)	40 mm (1.6 in)	45 mm (1.8 in)
Piston seal type	U packing	⇦	⇦
Rod seal type	U packing	⇦	⇦
Others	Built-in flow regulator valve (RH) Built-in safety down valve (LH)		

FRONT LIFT CYLINDER (FV, FSV)

Item \ Vehicle type	1ton series	2 ton series	3 ton series
Cylinder type	Single acting	⇦	⇦
Cylinder bore	90 mm (3.5 in) (1990.4 ~ 1991.8) 85 mm (3.35 in) (1991.9 ~)	90 mm (3.5 in)	105 mm (4.1 in)
Cylinder outside diameter	102 mm (4.0 in) (1990.4 ~ 1991.8) 97 mm (3.82 in) (1991.9 ~)	102 mm (4.0 in)	120 mm (4.7 in)
Piston rod outside diameter	75 mm (3.0 in)	⇦	85 mm (3.3 in)
Piston seal type	U packing	⇦	⇦
Rod seal type	U packing	⇦	⇦
Others	Built-in safety down valve		

REAR LIFT CYLINDER (FV)

Item \ Vehicle type	1 ton series	2 ton series	3 ton series
Cylinder type	Single acting	⇦	⇦
Cylinder bore	50 mm (2.0 in)	⇦	55 mm (2.2 in)
Cylinder outside diameter	57 mm (2.2 in)	⇦	63 mm (2.5 in)
Piston rod outside diameter	35 mm (1.4 in)	⇦	40 mm (1.6 in)
Piston seal type	U packing	⇦	⇦
Rod seal type	U packing	⇦	⇦
Others	Built-in flow regulator valve (RH) Built-in safety down valve (LH)		

REAR LIFT CYLINDER (FSV)

Item \ Vehicle type	1 ton series	2 ton series	3 ton series
Cylinder type	Single acting	⇦	⇦
Cylinder bore	50 mm (2.0 in)	⇦	55 mm (2.2 in)
Cylinder outside diameter	57 mm (2.2 in)	⇦	63 mm (2.5 in)
Piston rod outside diameter	40 mm (1.6 in)	⇦	45 mm (1.8 in)
Piston seal type	U packing	⇦	⇦
Rod seal type	U packing	⇦	⇦
Others	Built-in flow regulator valve (RH) Built-in safety down valve (LH)		

COMPONENTS

LIFT CYLINDER (V, SV)

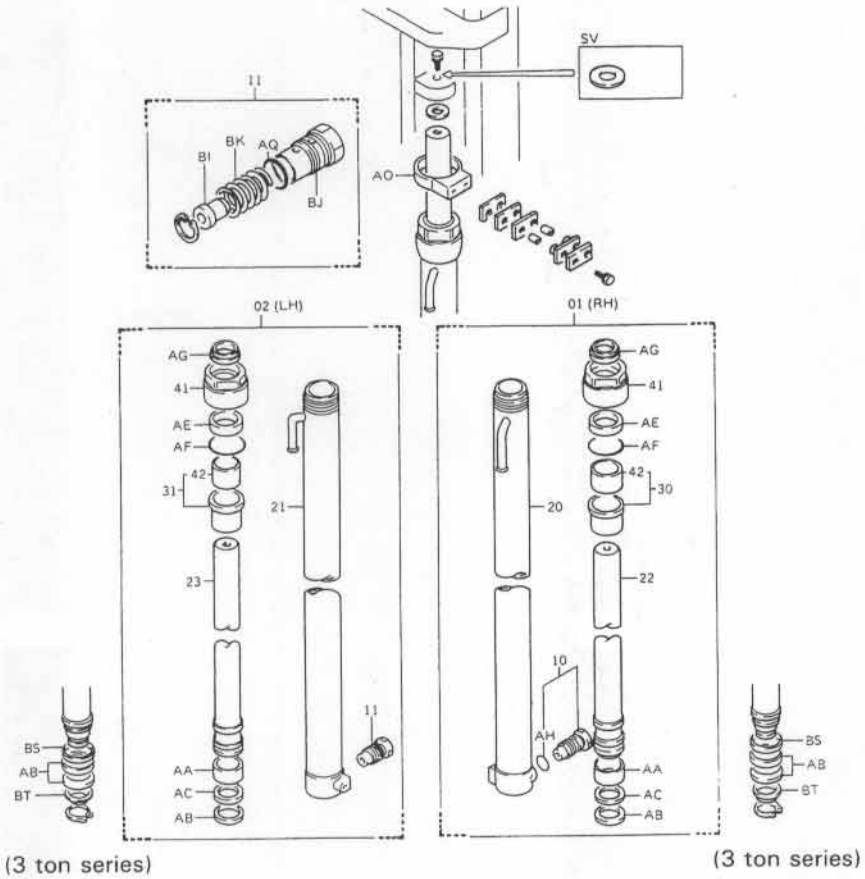

01 Lift cylinder ASSY, RH
02 Lift cylinder ASSY, LH
10 Flow regulator valve ASSY
11 Safety down valve ASSY
20 Lift cylinder SUB-ASSY, RH
21 Lift cylinder SUB-ASSY, LH
22 Lift cylinder rod SUB-ASSY, RH
23 Lift cylinder rod SUB-ASSY, LH
30 Lift cylinder rod guide SUB-ASSY, RH
31 Lift cylinder rod guide SUB-ASSY, LH
41 Lift cylinder cover
42 Lift cylinder rod guide sleeve

AA Wear ring
AB U packing
AC Back up ring
AE U packing
AF O ring
AG Dust seal
AH O ring
AO Lift cylinder support
AQ O ring
BI Piston
BJ Body
BK Spring
BS Piston ring
BT Holder

Lift Cylinder Components (V, SV) BARM77

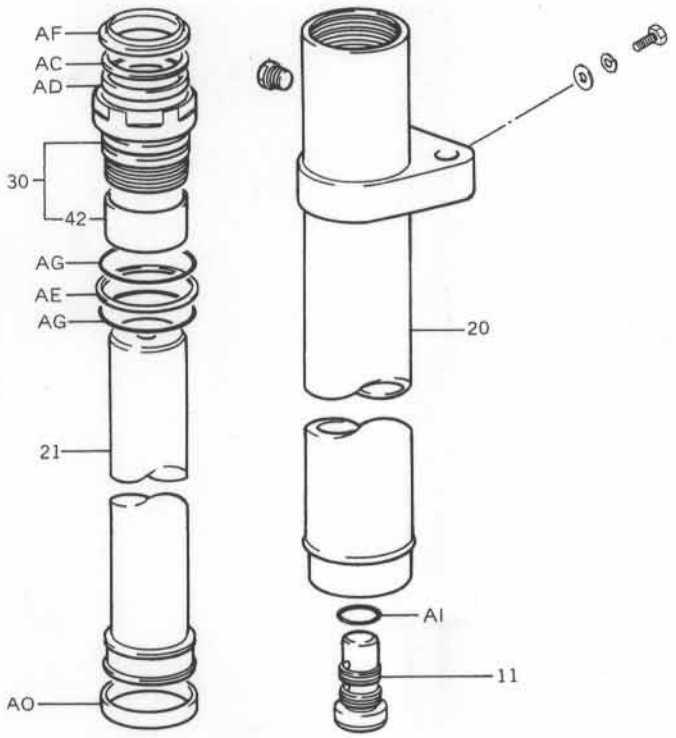

11	Safety down valve	AD	U packing
20	Lift cylinder SUB-ASSY	AE	Back up ring
21	Lift Cylinder rod SUB-ASSY	AF	Dust seal
30	Lift cylinder rod guide SUB-ASSY	AG	O ring
42	Lift cylinder rod guide sleeve	AI	O ring
AC	Back up ring	AO	Wear ring

Front Lift Cylinder Components (FV) BARM78

FRONT LIFT CYLINDER (FSV)

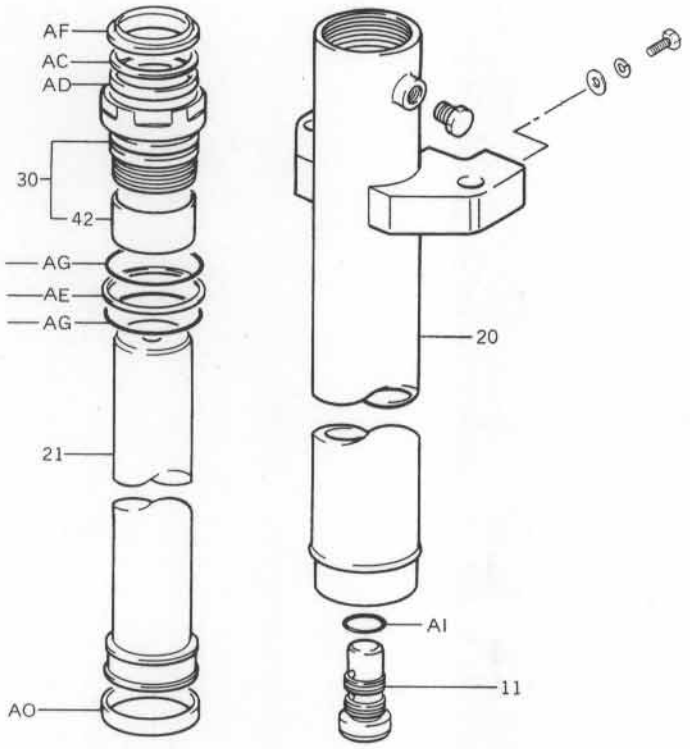

11	Safety down valve	AD	U packing
20	Lift cylinder SUB-ASSY	AE	Back up ring
21	Lift Cylinder rod SUB-ASSY	AF	Dust seal
30	Lift cylinder rod guide SUB-ASSY	AG	O ring
42	Lift cylinder rod guide sleeve	AI	O ring
AC	Back up ring	AO	Wear ring

Front Lift Cylinder Components (FSV) BARMAA79

REAR LIFT CYLINDER (FV)

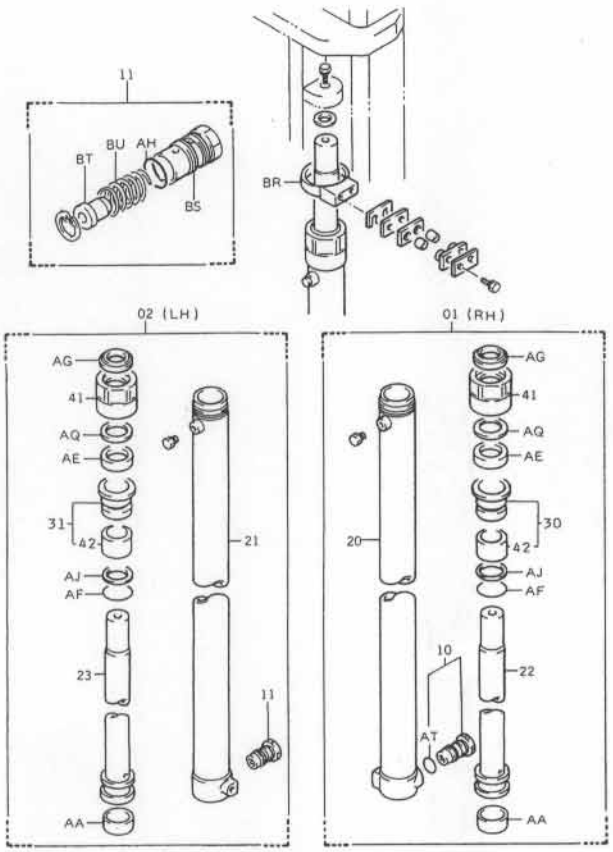

01	Lift cylinder ASSY, RH	AA	Wear ring
02	Lift cylinder ASSY, LH	AE	U packing
10	Flow regulator valve ASSY	AF	O ring
11	Safety down valve ASSY	AG	Dust seal
20	Lift cylinder SUB-ASSY, RH	AH	O ring
21	Lift cylinder SUB-ASSY, LH	AJ	Back up ring
22	Lift cylinder rod SUB-ASSY, RH	AQ	Back up ring
23	Lift cylinder rod SUB-ASSY,LH	AT	O ring
30	Lift cylinder rod guide SUB-ASSY, RH	BR	Support SUB-ASSY
31	Lift cylinder rod guide SUB-ASSY, LH	BS	Body
41	Lift cylinder cover	BT	Holder
42	Lift cylinder rod guide sleeve	BU	Spring

Rear Lift Cylinder Components (FV) BARM80

REAR LIFT CYLINDER (FSV)

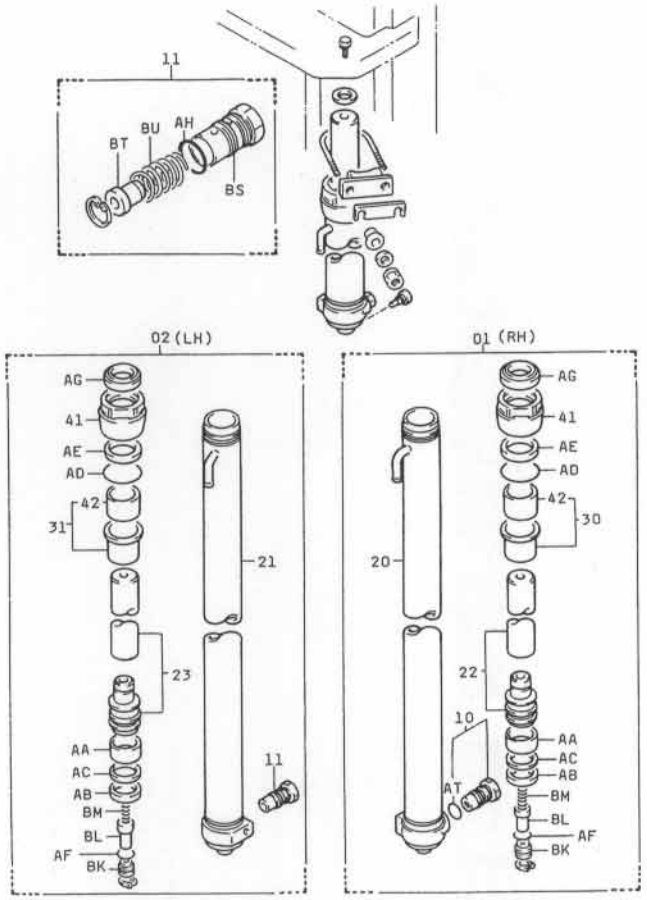

01	Lift cylinder ASSY, RH	AC	Back up ring
02	Lift cylinder ASSY, LH	AD	O ring
10	Flow regulator valve ASSY	AE	U packing
11	Safety down valve ASSY	AF	O ring
20	Lift cylinder SUB-ASSY, RH	AG	Dust seal
21	Lift cylinder SUB-ASSY, LH	AH	O ring
22	Lift cylinder rod SUB-ASSY, RH	AT	O ring
23	Lift cylinder rod SUB-ASSY, LH	BM	Spring
30	Lift cylinder rod guide SUB-ASSY, RH	BL	Piston plunger
31	Lift cylinder rod guide SUB-ASSY, LH	BT	Piston
41	Lift cylinder cover	BS	Body
42	Lift cylinder rod guide sleeve	BU	Spring
AA	Wear ring		
AB	U packing		

Rear Lift Cylinder Components (FSV) BARM81

LIFT CYLINDER ASSY (V)

Removal

1. Disconnect the chain.
   (1) Lower the lift bracket to the bottom position to slacken the chain.
   (2) Chain adjust nut

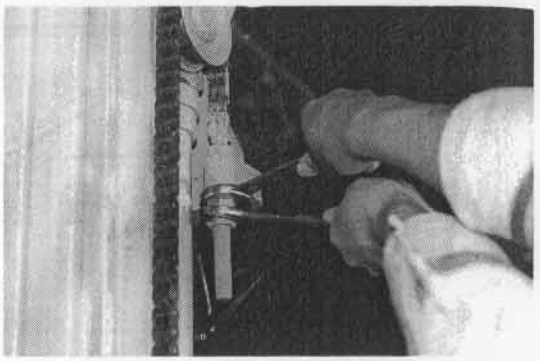

Disconnecting the Chain BAR14-26

2. Remove the chain wheel
   (1) Snap ring
   (2) Chain wheel

   Caution:
   Use the SST if fitting is hard.
   SST 09950-20017

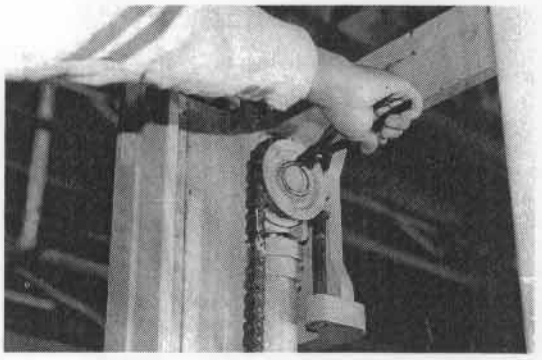

Removing the Chain Wheel BAR14-27

3. Remove the lift bracket.
   (1) Set the mast to the vertical position, and raise the inner mast until it comes off from the lift bracket.

   Caution:
   When raising the inner mast, carefully prevent the slackened chain from entangling with the inner mast.

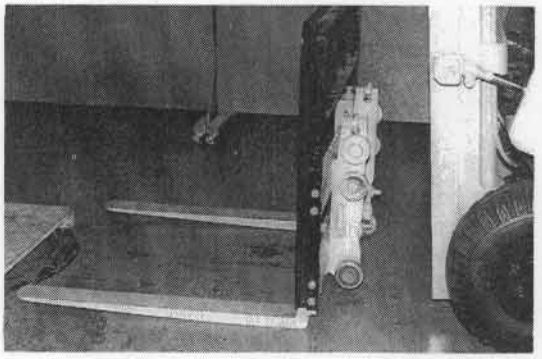

Removing the Lift Bracket BAR14-30

4. Disconnect the hoses.
   (1) Lower the inner mast fully.
   (2) Disconnect the overflow hose.
   (3) Disconnect the lift cylinder inlet hose.

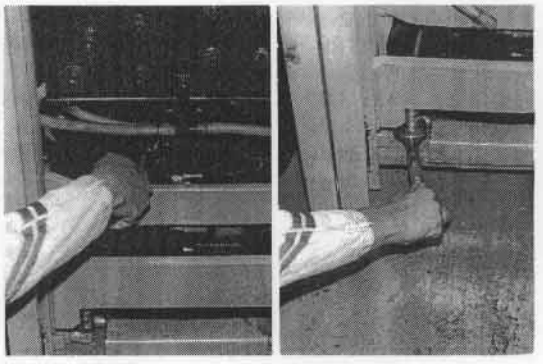

Disconnecting the Hoses BAAR14-31, 34

5. Disconnect the lift cylinder rod end.
   (1) Set bolts

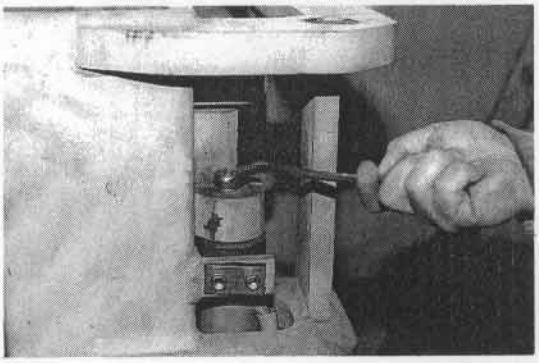

Removing the Set Bolts LAO118-36

   (2) Hoist the inner mast, and set the SST.
   SST 09610-22000-71
   (3) Shims

Caution:
Shim adjustment is made to prevent non-straight movement of lift cylinders RH and LH. Record the numbers of shims on the left and right sides.

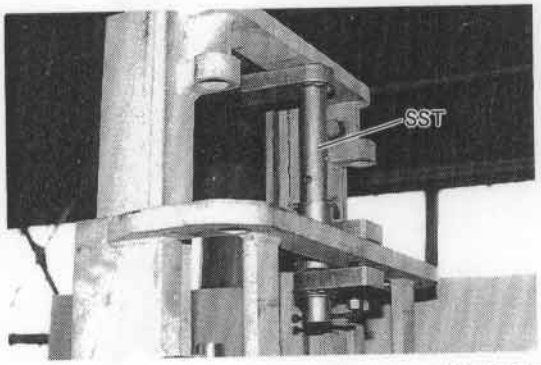

Setting the SST LAO179-5

6. Remove the lift cylinder ASSY.
   (1) Lift cylinder support set bolts
   (2) Plate
   (3) Shims
   (4) Cylinder support

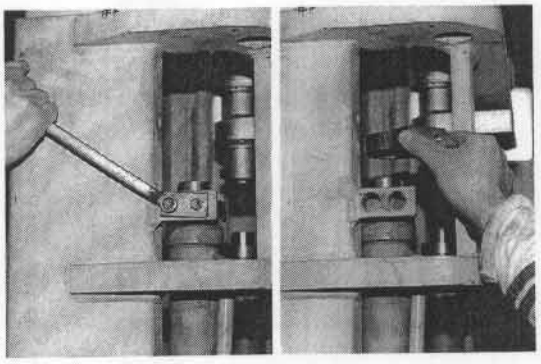

Removing the Support Set Bolts LAO179-8, 9

   (5) Remove the lift cylinder from the front side of the vehicle.

Caution:
Remove the lift cylinder so as not to damage the lift cylinder bottom elbow.

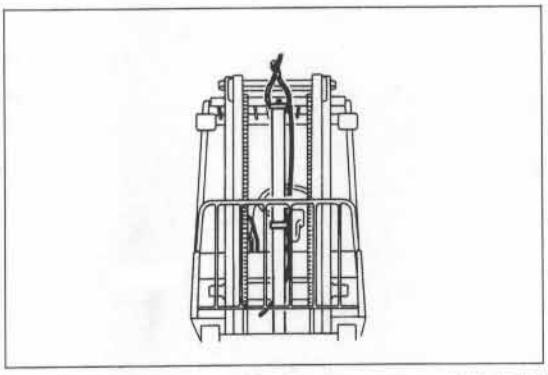

Removing the Cylinder ASSY BARS176

Disassembly

1. Remove the overflow hose.
   (1) Hose clamp
   (2) Overflow hose

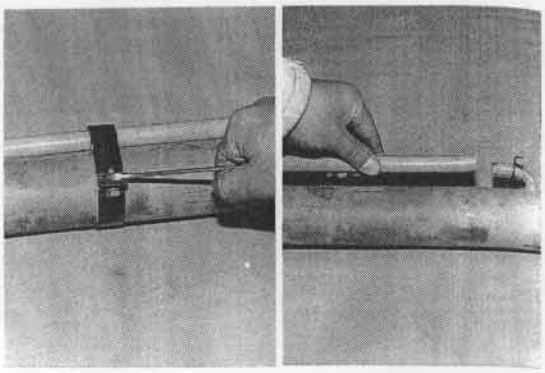

Removing the Overflow Hose LA089-36, 90-5

2. Remove the cylinder top cover.
   SST 09620-10100-71

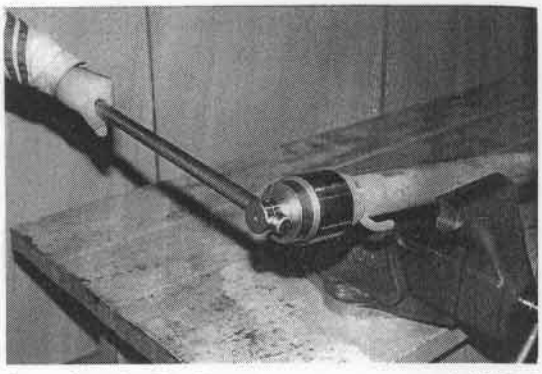

Removing the Top Cover LA090-6

3. Extract the lift cylinder rod.

   Caution:
   Extract the rod in parallel with the cylinder so as not to damage it.

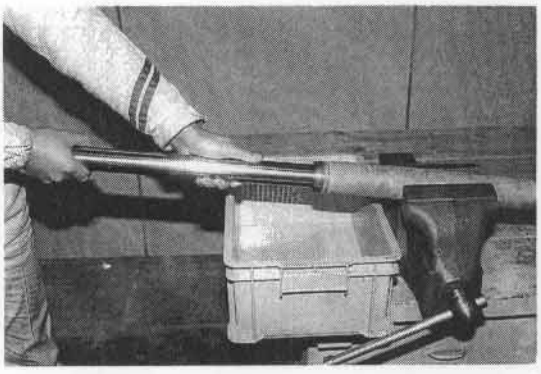

Extracting the Cylinder Rod LA090-18

4. Remove the rod guide.
   (1) rod guide

5. Disassemble the piston.
   (1) Wear ring
   (2) Backup ring
   (3) U packing

   Note:
   The piston and piston rod cannot be disassembled.

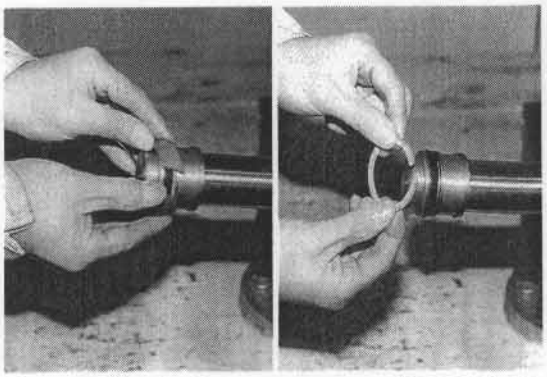

Disassembling the Piston LA090-21, 22

6. Remove the flow regulator valve or safety down valve.

Note:

- The flow regulator valve is installed on the lift cylinder (RH).
- The safety down valve is installed on the lift cylinder (LH).

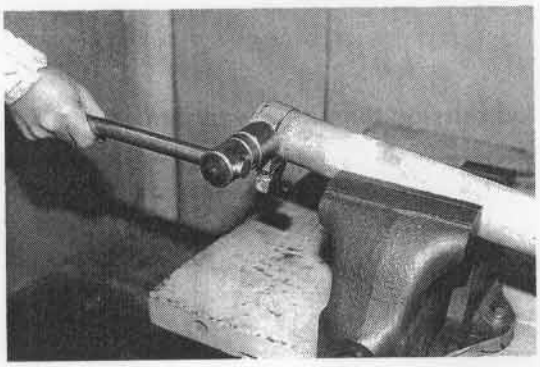

Removing the Valve LA090-14

Inspection

Caution:

- Oil leakage will occur when the U packing or dust seal at the rod guide is defective.
- Natural drop will occur if the U packing at the piston is defective.
- Wash each part, and replace any part which is found defective or damaged.

1. Inspect the lift cylinder.
   (1) Scratch or wear at the sliding contact surface of the cylinder bore

Lift cylinder bore wear limit

Unit: mm (in)

	1 ton series	2 ton series	3 ton series
V-SV	45.20 (1.7795)	50.20 (1.9764)	55.35 (2.1791)
FV (front)	90.40 (3.5590)	⇦	105.40 (4.1496)
FSV (front)	90.40 (3.5590)	⇦	105.40 (4.1496)
FV (rear)	50.30 (1.9803)	⇦	55.35 (2.1791)
FSV (rear)	50.30 (1.9803)	⇦	55.35 (2.1791)

(2) Deformation, damage and corrosion of cylinder
(3) Dent on cylinder exterior surface

2. Inspect the piston rod
   (1) Scratch or wear of rod sliding contact portion

Rod outside diameter wear limit

Unit: mm (in)

	1 ton series	2 ton series	3 ton series
V·SV	34.92 (1.3748)	39.92 (1.5717)	44.92 (1.7685)
FV (front)	74.91 (2.9492)	⇦	84.90 (3.3425)
FSV (front)	74.91 (2.9492)	⇦	84.90 (3.3425)
FV (rear)	34.92 (1.3748)	⇦	39.92 (1.5717)
FSV (rear)	39.92 (1.5717)	⇦	44.92 (1.7685)

   (2) Exfoliation, damage and corrosion of plated surface
   (3) Bend of rod
   Limit: 2.0 mm (0.079 in)

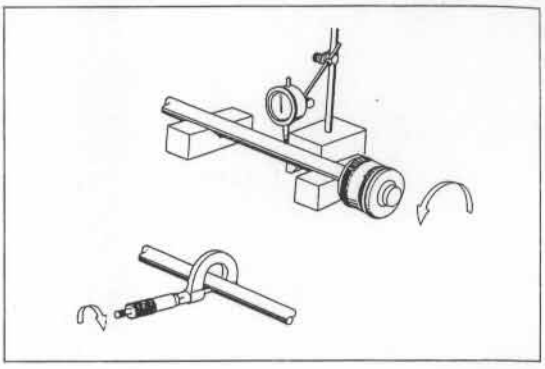

Inspecting the rod Bend LADM25

3. Inspect the rod guide.
   (1) Wear and damage of guide sleeve
   (2) Wear, damage and deterioration of U packing
   (3) Damage and deterioration O-ring

4. Inspect the piston.
   (1) Wear and damage of piston
   (2) Wear and damage of wear ring
   (3) Wear, damage and deterioration of U packing
   (4) Damage of backup ring

5. Inspect the lift cylinder top cover.
   (1) Damage at threaded portion
   (2) Wear and damage of top cover
   (3) Wear and damage of dust seal

6. Inspect the lift cylinder support bracket.
   (1) Damage of bracket
   (2) Damage of bushing
   (3) Damage of spacer

7. Insert the valve.
   (1) Flow regulator valve
   (2) Safety down valve

Reassembly

The reassembly procedure is the reverse of the disassembly procedure.

Caution:

- Do not assemble parts in dry state, but coat hydraulic oil on parts before reassembly.
- For reassembly after disassembly, always use new O-ring, U-packing and dust seal.

Installation (V)

The installation procedure is the reverse of the removal procedure.

Caution:

- Adjust the lift chain tension equally on the left and right sides.
- Repeat full stroke lifting and lowering without load to bleed the air and check normal functioning.
- After the function check, check the hydraulic oil level with the level gauge. If insufficient, add castle hydraulic oil (ISO VG32).
- Check if the fork height is normal.
- When any of the lift cylinder ASSY, lift cylinder SUB-ASSY or lift cylinder rod SUB-ASSY is replaced, it is necessary to inspect and adjust uneven motion of the lift cylinders RH and LH.
  (See page 14—24.)

FLOW REGULATOR VALVE

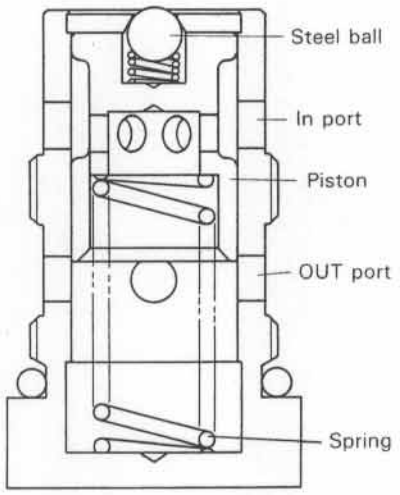

Flow Regulator Valve Sectional View LAOS173

Specifications

Lowering speed table

Unit: mm/sec (fpm)

Vehicle type \ Mast		V	SV	FV	FSV
1 ton series	No load	500 (98)	⇦	350 (69)	380 (75)
	Loaded	500 (98)	⇦	480 (94)	⇦
2 ton series	No load	500 (98)	⇦	380 (75)	⇦
	Loaded	500 (98)	⇦	480 (94)	⇦
3 ton series	No load	450 (89)	⇦	350 (69)	⇦
	Loaded	500 (98)	⇦	460 (91)	⇦

Removal

Note:
- The flow regulator valve may be removed on the vehicle.
- Measure the lowering speed and judge the quality before removal.
- The flow regulator valve is installed on the lift cylinder RH.

1. Hoist the inner mast and set the SST. (See page 15-13.)
   SST 09610-22000-71

   (1) Remove the flow regulator valve.

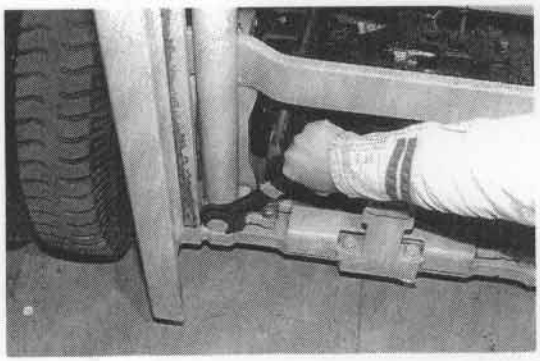

Removing the Regulator Valve BAR29-8

Inspection

1. Freeing and damage of top cover
2. Measurement of check ball and clogging of check hole
3. Movement of piston
4. Chipping of return spring
5. Damage and fatigue of O-ring

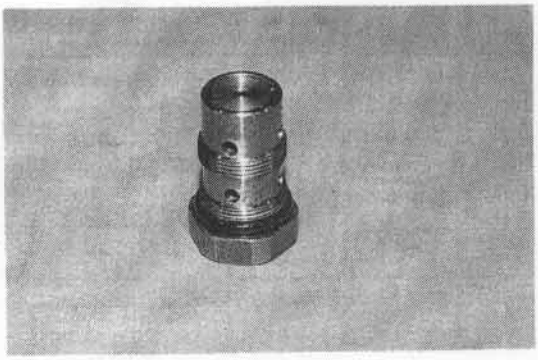

Inspecting the Regulator Valve LAO90-16

Installation

The installation procedure is the reverse of the removal procedure.

Caution:
Flow regulator valve tightening torque
T = 6.0 ~ 7.0 kg-m
(43.4 ~ 50.6 ft-lb) [58.8 ~ 68.6 N-m]

SAFETY DOWN VALVE (V)

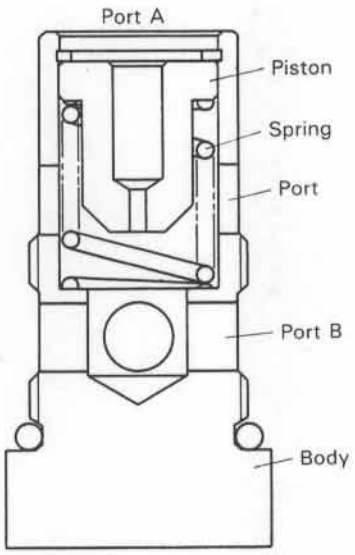

Safety Down Valve Sectional View LAOS174

Specifications

Piston seat flow rate	Mast type	
	V, SV, FV (rear), FSV (rear)	FV (front), FSV (front)
Slow rate at seat	60 ℓ/min (15.8 gal (us))	95 ℓ/min (25.1 gal (us))
Flow rate after seat	15 ℓ/min (4.0 gal (us))	15 ℓ/min (4.0 gal (us)

Removal

Note:
- The safety down valve can be removed on the vehicle.
- The safety down valve is installed on the lift cylinder LH.

1. Hoist the inner mast, and set the SST. (See page 15-13.)
   SST 09610-22000-71
2. Remove the safety down valve.



Removing the Safety Down Valve BAR29-10

Disassembly

1. Remove the snap ring.
   (1) Snap ring
2. Remove the valve and spring.
   (1) Valve
   (2) spring

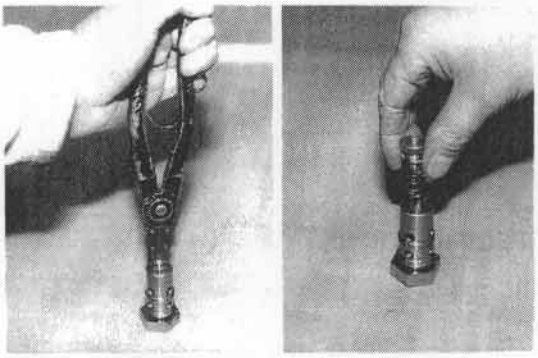

Disassembling the Safety Down Valve LA090-10, 11

Inspection

1. Clogging and damage of valve orifice
2. Damage and fatigue of spring
3. Damage at threaded portion

Installation

The installation procedure is the reverse of the removal procedure.

Caution:
Safety down valve tightening torque
T = 6.0 ~ 7.0 kg-m
(43.4 ~ 50.6 ft-lb) [58.8 ~ 68.6 N-m]

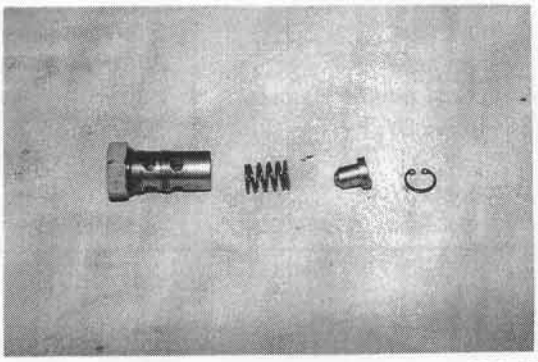

Inspecting the Safety Down Valve LA090-12

TILT CYLINDER

GENERAL

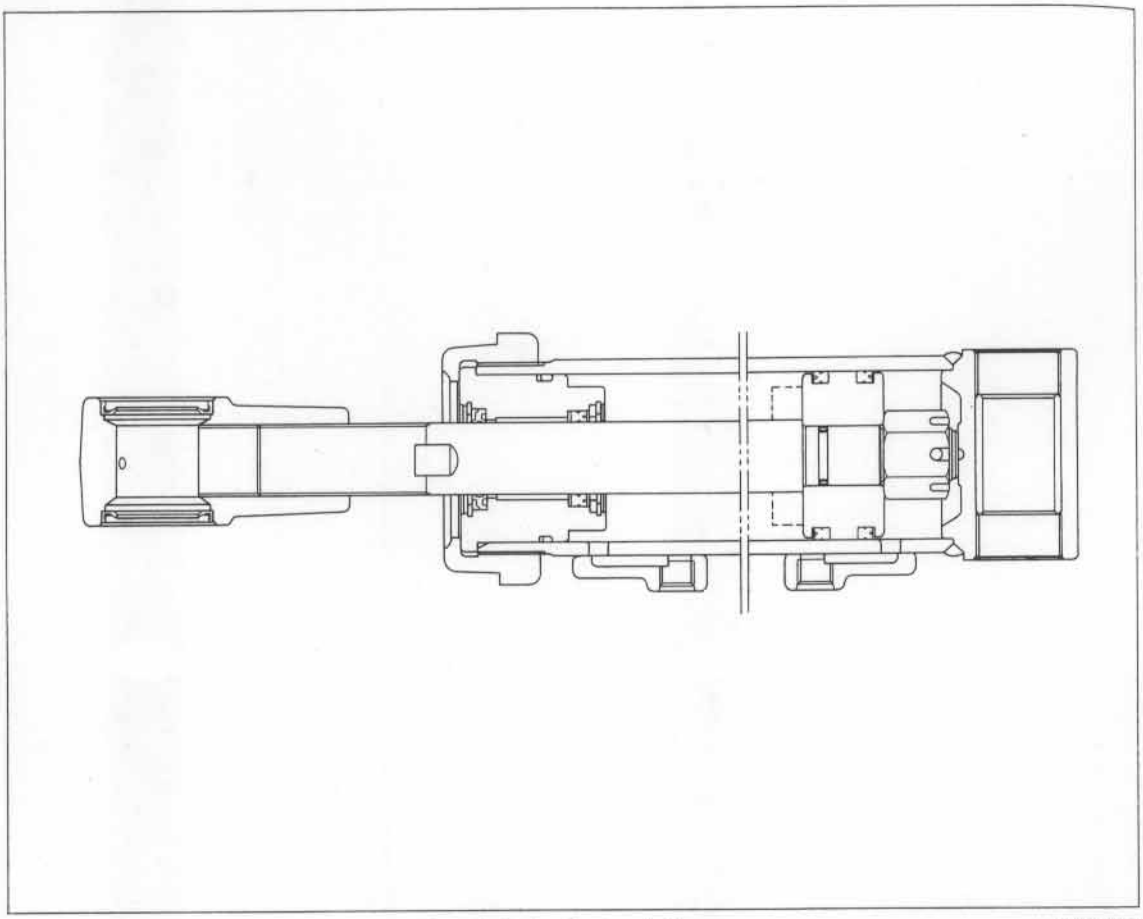

Tilt Cylinder Sectional View BARM18

SPECIFICATIONS

Tilt cylinder

Item \ Vehicle type	1 ton series	2 ton series	3 ton series
Cylinder type	Double acting	⇦	⇦
Cylinder bore	70 mm (2.76 in)	⇦	⇦
Piston rod outside diameter	30 mm (1.18 in)	⇦	⇦
Stroke (V, SV, FV)	146 mm (5.75 in)	⇦	130 mm (5.11 in)
(FSV)	90 mm (3.54 in)	⇦	100.5 mm (3.957 in)
Piston seal type	U packing	⇦	⇦
Rod seal type	U packing	⇦	⇦

COMPONENTS

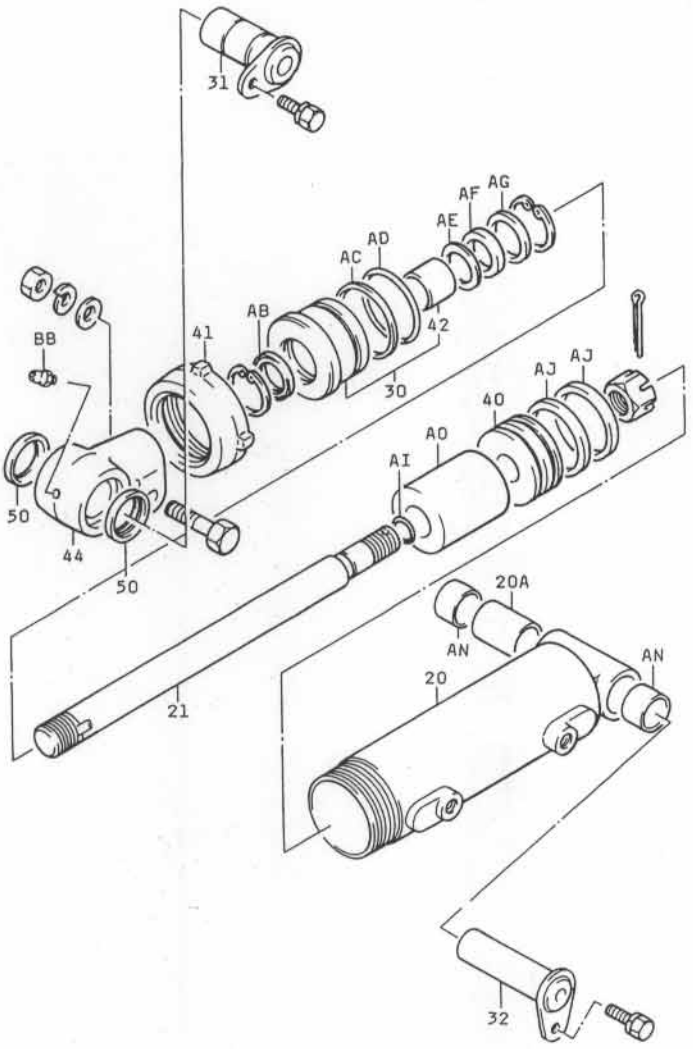

20	Tilt cylinder SUB-ASSY	50	Grease seal
20A	Pin bushing	AB	Dust seal
21	Tilt cylinder piston rod SUB-ASSY	AC	Back up ring
		AD	O ring
30	Tilt cylinder rod guide SUB-ASSY	AE	Back up ring
		AF	U packing
31	Tilt cylinder pin SUB-ASSY, FR	AG	Stopper plate
32	Tilt cylinder pin SUB-ASSY, RR	AI	O ring
40	Tilt cylinder piston	AJ	U packing
41	Tilt cylinder cover	AN	Collar
42	Tilt cylinder rod guide sleeve	AO	Tilt control spacer
44	Piston rod joint	BB	Grease fitting

Tilt Cylinder Components

BARM82

TILT CYLINDER ASSY

Removal

Note:
The U packing replacement and other jobs for the tilt cylinder can be carried out on the vehicle without removing the cylinder ASSY. The explanation here is for disassembly after removal of the cylinder ASSY.

1. Remove the front pin from the tilt cylinder.
   (1) Operate the oil control lever to lower the fork fully and tilt the mast fully forward.

   Caution:
   Suspend the mast ASSY with a wire rope and hoist for safety.

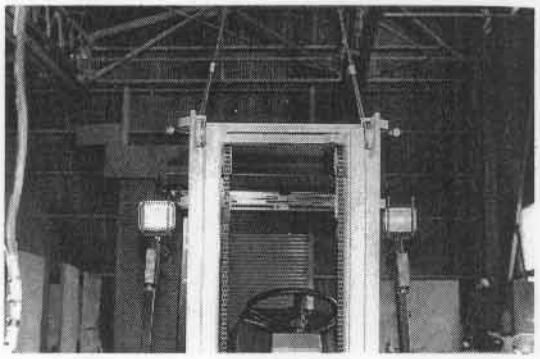

Hoisting the Mast with Wire Rope BAR14-35

   (2) Set bolts
   (3) Front pin
   SST 09810-20172-71

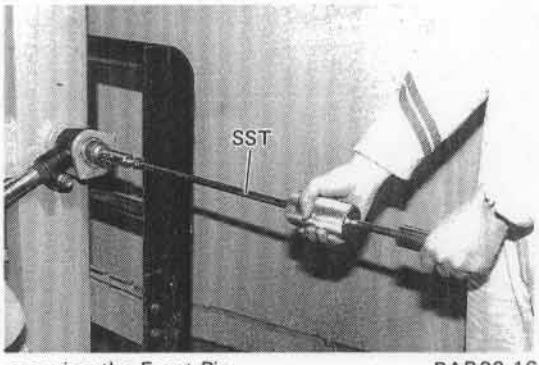

removing the Front Pin BAR29-16

2. Disconnect the piping.
   (1) Rear side high pressure hose

   Caution:
   Pay attention to the hydraulic oil in the piping. Gradually loosen the piping first to lower the pressure before disconnecting the piping.

   (2) Front side high pressure hose

3. Remove the tilt cylinder rear pin.
   (1) Set bolt
   (2) Rear pin

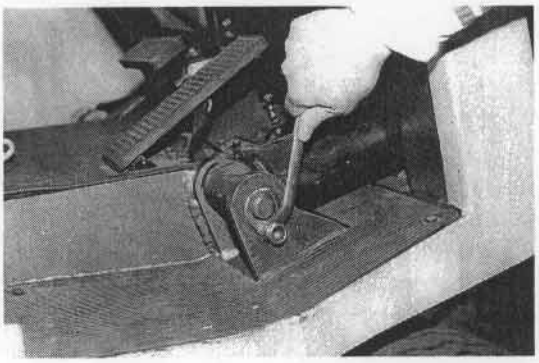

Removing the Rear Pin BAR29-15

4. Remove the tilt cylinder ASSY.

   Caution:
   Remove the tilt cylinder from the front side of the frame so as not to damage the piping.



Removing the Cylinder ASSY BAR29-19

Disassembly

1. Remove the piston rod joint.
   (1) Fix the tilt cylinder ASSY in a vise.
   (2) Set bolts
   (3) Piston rod joint

   Caution:
   Record the joint screwed-in amount.

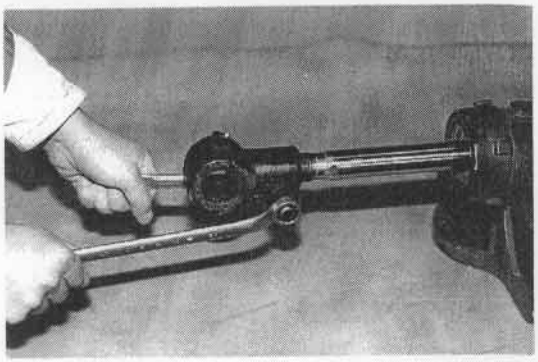

Removing the Rod Joint LAO118-5

2. Remove the tilt cylinder cover.
   (1) Tilt cylinder cover
   SST 09620-10160-71

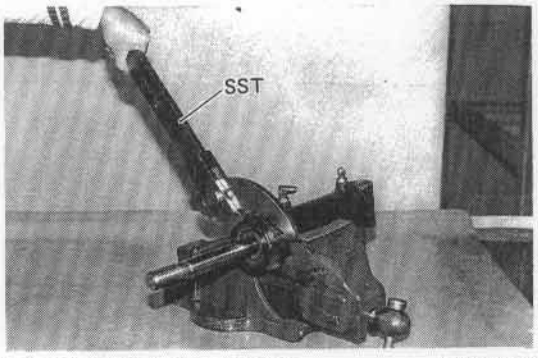

Removing the Cylinder Cover LAO118-6

3. Remove the rod guide.

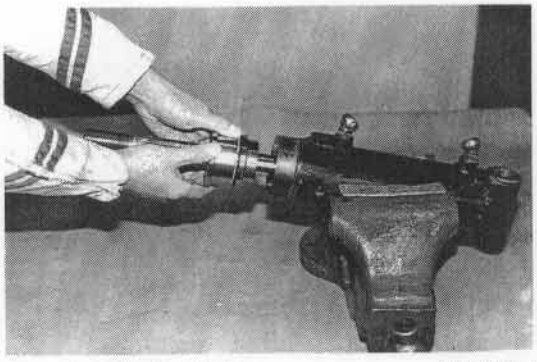

Removing the Rod Guide LAO118-8

4. Extract the piston rod.

   Caution:
   Extract the piston rod in parallel with the cylinder so as not to damage the cylinder bore.

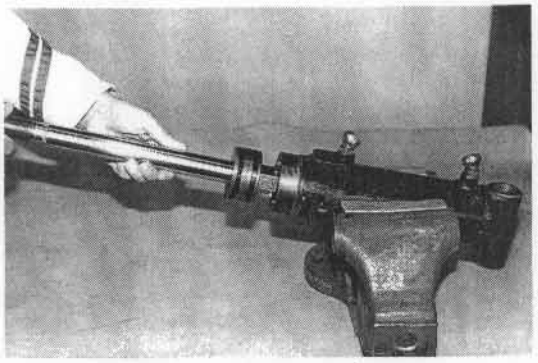

Extracting athe Piston Rod LAO118-11

5. Remove the piston.
   (1) Fix the piston rod in a vise after wrapping waste cloth on it to prevent damage.
   (2) Cotter pin
   (3) Castle nut
   (4) Piston

   Caution:
   Remove the piston only when the piston or piston rod is found to be defective.



Removing the Piston LAO118-13

6. Remove the U packing.
   (1) U packing

   Caution:
   Inspect the U-packing with the piston and replace the U-packing when it is found defective.

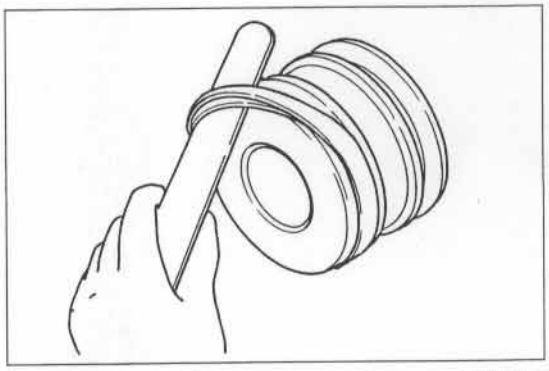

Removing the Packing KADS27

7. Remove the piston rod guide.
   (1) Snap ring
   (2) Stop plate
   (3) U-packing
   (4) Back up ring

   Caution:
   Remove the sleeve with a hand press only when damage is found.

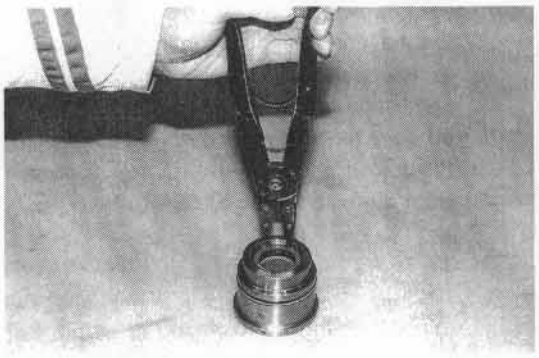

Removing the Rod Guide LAO118-18

8. Remove the dust seal.
   (1) Snap ring
   (2) Dust seal

   Caution:
   Remove the dust seal and replace it with a new one only when a defect such as oil leakage is found.



Removing the Dust Seal LAO118-22

Inspection

Caution:
- Oil leakage is caused when the U packing or dust seal at the rod guide is defective.
- Natural forward tilt is caused when the U packing at the piston is defective.
- Wash each part, and replace any part which is found defective or damaged.

1. Inspect the tilt cylinder.
   (1) Scratch and wear at sliding contact surface on cylinder bore
   Inside diameter wear limit:
   70.35 mm (2.7697 in)
   (2) Deformation, damage and corrosion of cylinder
   (3) Local dent on cylinder outside diameter

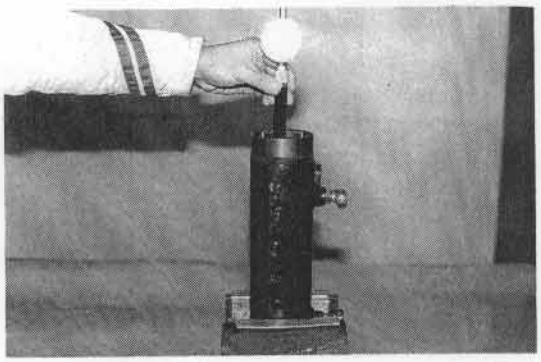

Inspecting the Tilt Cylinder LAO118-27

2. Inspect the piston rod.
   (1) Scratch and wear at piston rod sliding contact surface
   (2) Exfoliation, damage and corrosion of plated surface
   (3) Piston rod bend
   Bent limit: 1.0 mm (0.039 in)

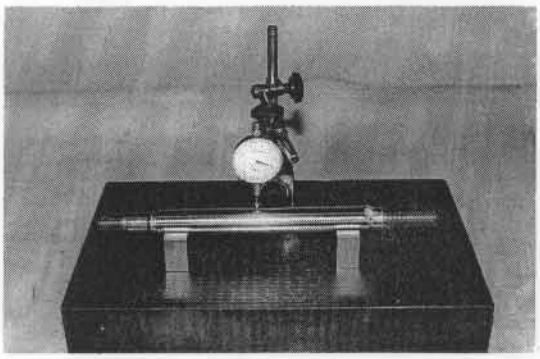

Inspecting the Piston Rod Bend LAO118-24

3. Inspect the piston
   (1) Wear and damage of piston
   (2) Wear, damage and deterioration of U packing

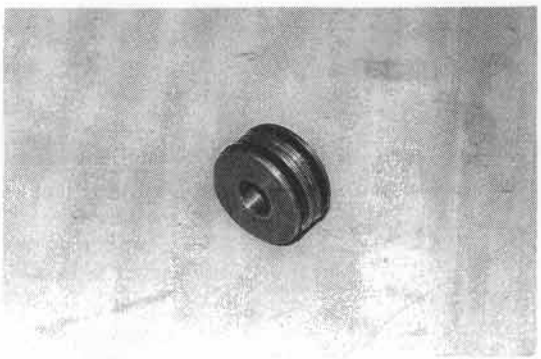

Inspecting the Piston LAO118-16

4. Inspect the rod guide.
   (1) Wear and damage of guide sleeve
   (2) Clearance between rod and sleeve
   Standard: 0.1 mm (0.004 in)
   Limit: 0.4 mm (0.016 in)

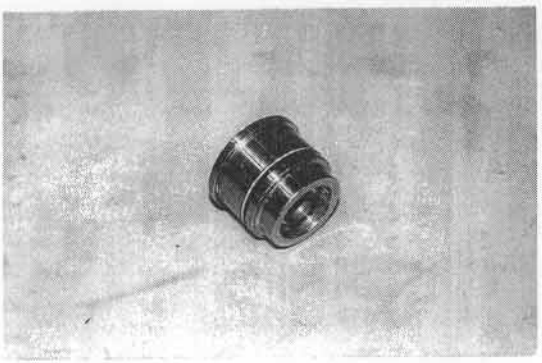

Inspecting the Rod Guide LAO118-23

Reassembly

The reassembly procedure is the reverse of the disassembly procedure.

Caution:
- Do not reassemble parts in dry state, but coat hydraulic oil before reassembly.
- Always replace U packings and O-rings with new ones unless they are used only for a short period and without damage.
- Cylinder cover tightening torque
  T = 29~35 kg-m (210~253 ft-lb) [284~343 N-m]
- Piston castle nut tightening torque
  T = 23~29 kg-m (166~210 ft-lb) [226~284 N-m]

Installation

The installation procedure is the reverse of the removal procedure.

Caution:
- When installing the rod joint, check if the rod joint installed length equals that recorded at the time of disassembly.
- Raise the fork by about 200 mm, and inspect and adjust the forward and backward tilting angles.
- Rod joint set bolt tightening torque
  T = 7.5~11.4 kg-m (54.3~82.5 ft-lb) [73.5~11.8 N-m]
- Put the match mark (red paint) between the joint and rod.
- Slowly tilt the mast forward and backward a few times to check the function.
- Check the hydraulic oil level with a level gauge and add hydraulic oil if insufficient.
- Coat multipurpose grease containing molybdenum disulfide on the tilt cylinder front pin and the hole for its insertion.
- Coat MP grease on the tilt cylinder rear pin and the hole for its insertion.
- Tilt the mast fully forward and backward and check no uneven movement.

OIL PUMPS

	Page
OIL PUMP	16-2
GENERAL	16-2
SPECIFICATIONS	16-3
COMPONENTS	16-3
OIL PUMP ASSY	16-4

16

OIL PUMP

GENERAL

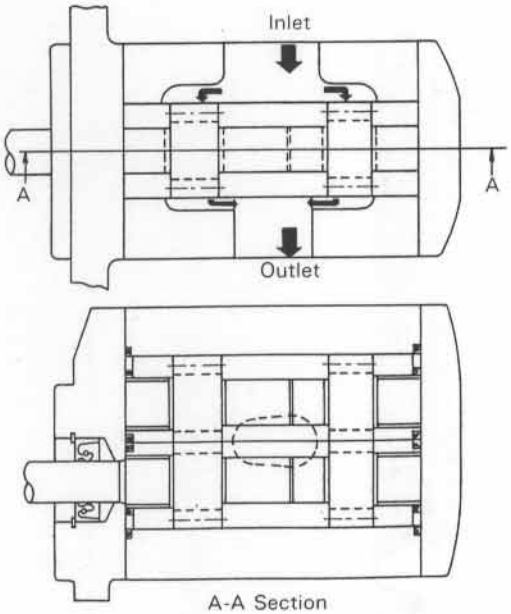

A-A Section

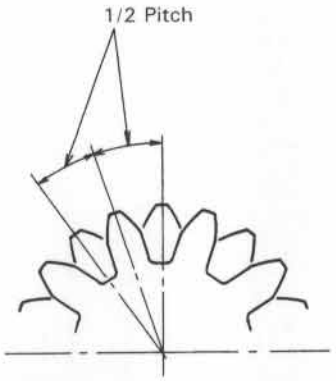

Displacement between front and rear gears.

Oil Pump Sectional View BAHM61, BAHS68

SPECIFICATIONS

Oil pump

Item \ Vehicle type	1 ton series	2 ton series	3 ton series
Oil pump type	DGP4-19	←	←
Discharge (1500 rpm) ℓ/min (USgal/min)	28.4 (7.50)	←	←
Theoretical discharge cc(in³)/rev	19.5 (1.190)	←	←

COMPONENTS

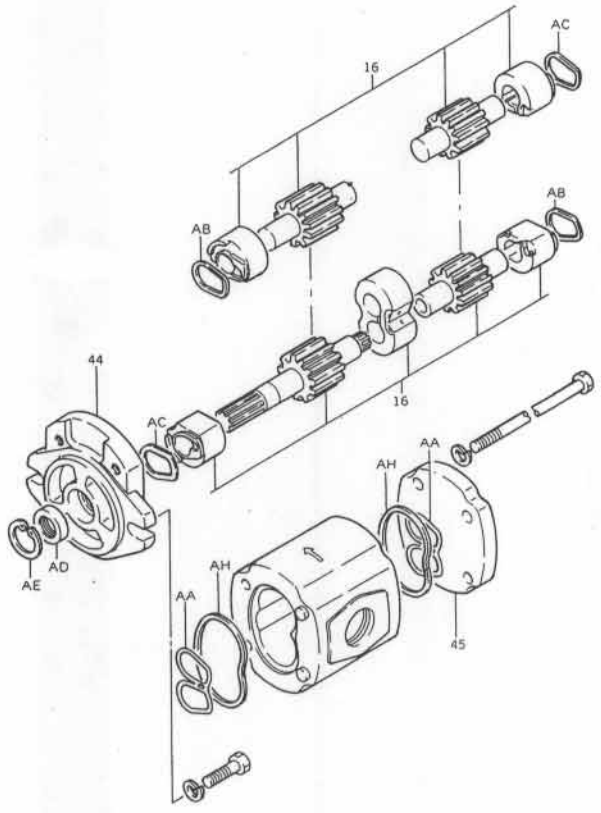

16 Gear & bushing set
44 Mounting flange
45 Cover
AA Bushing seal
AB Backing ring, RH
AC Backing ring, LH
AD Oil seal
AE Snap ring
AH Body seal

Oil Pump Components BATM37

OIL PUMP ASSY

Removal

1. Disconnect the battery plug.

2. Drain hydraulic oil from the oil tank.
   Hydraulic oil volume
   1-2ton series: 16.0 (4.2 USgal)
   3-ton series: 20.0 (5.3 USgal)

3. Remove the side frame cover RH.
   (1) Set bolts
   (2) Side frame cover

4. Disconnect the EPS controller connector.
   (1) Connector

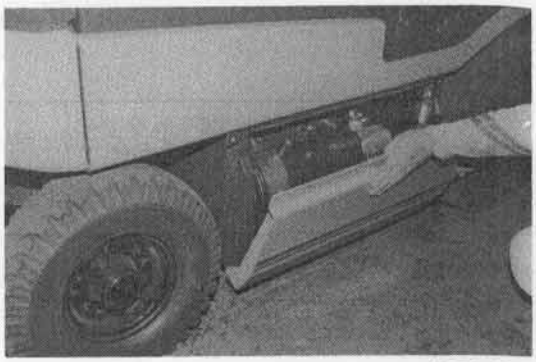

Removing the Side Frame Cover BAT-19-21

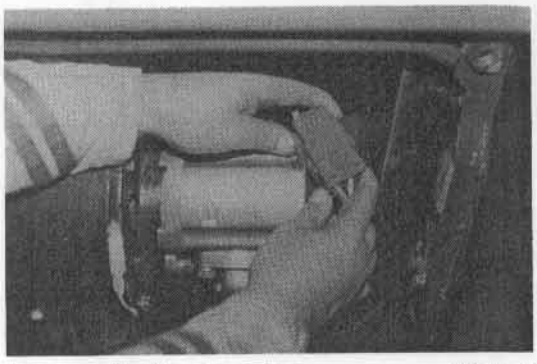

Disconnecting the Connector BAT5-15

5. Disconnect pipings.
   (1) Hose clamps
   (2) Suction hose
   (3) High pressure hose

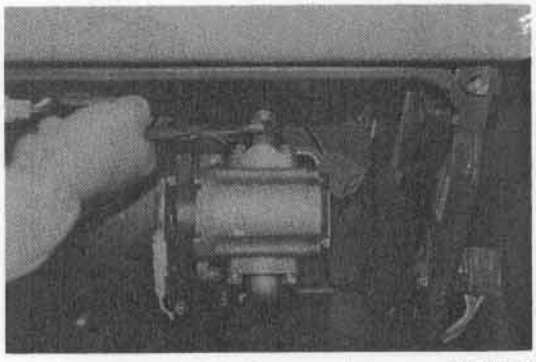

Disconnecting the High Pressure Hose BAT5-16

6. Remove the oil pump.
   (1) Set bolts
   (2) Oil pump

7. Disconnect the high pressure hose
   (1) Set bolts
   (2) Split flange
   (3) Pump inlet pipe

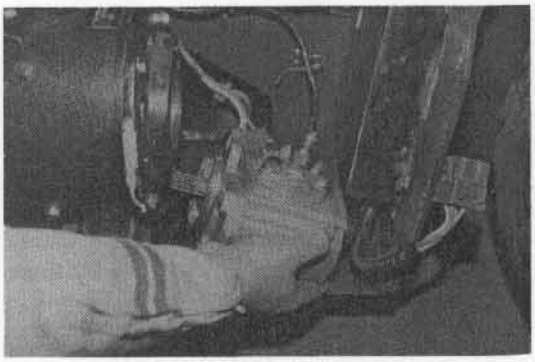

Removing the Oil Pump BAT5-17

Disassembly

Caution:
- Operate in a clean place.
- Use new hydraulic oil for washing parts.

1. Punch the match marks.
   (1) Cover
   (2) Body
   (3) Mounting flange

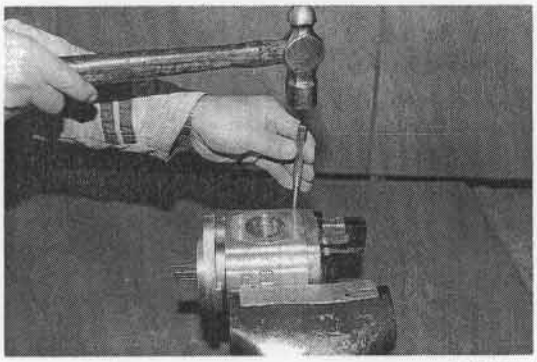

Punching the Match Marks BAH36-3

2. Remove the pump cover.
   (1) Set the pump in a vise.

   Caution:
   Use soft pads and tighten the vise lightly.

   (2) Set bolts
   (3) Pump cover

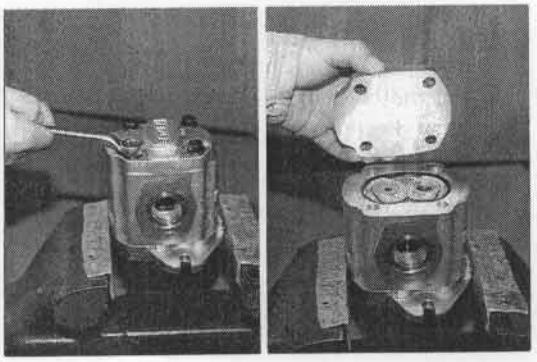

Removing the Pump Cover BAH36-4, 5

3. Remove the seals (on pump cover side).
   (1) Bushing seal
   (2) Body seal

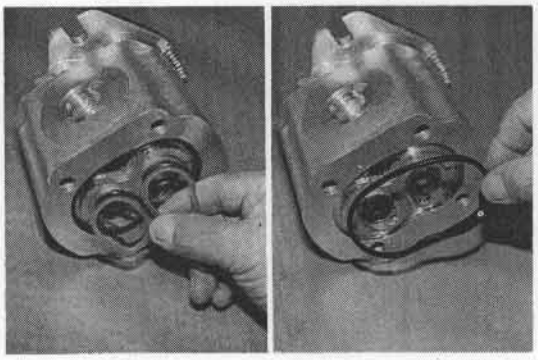

Removing the Seals BAH36-8, 9

4. Remove the mounting flange.

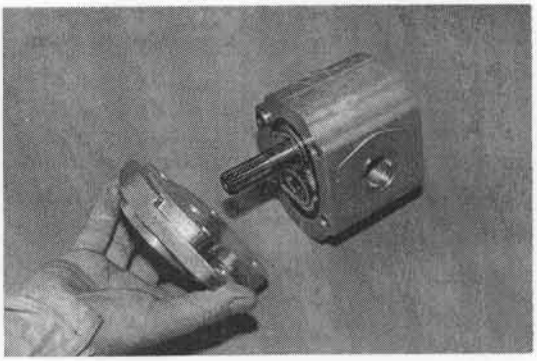

Removing the Flange BAH36-10

5. Remove the seals (on mounting flange side).
   (1) Bushing seal
   (2) Body seal

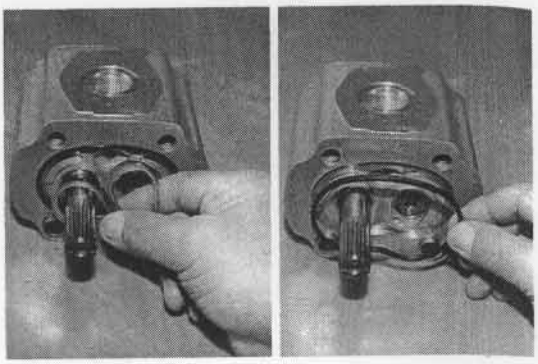

Removing the Seals BAH36-11, 12

6. Remove the gear set and bushing set.

   Caution:
   - Put match marks with a marking pen for easy discrimination of the bushing positions at the time of reassembly.
   - Put a match mark on the teeth of the drive and driven gears with a marking pen.
   - Never damage with a punch.

   (1) Push the gear from one side to remove the gear and bushing as a set.
   (2) Separate the gear and bushing.



Removing the Gear and Bushing Set BAH36-16

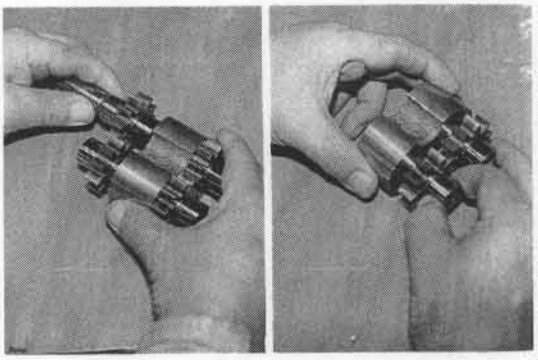

Separating the Gear and Bushing BAH36-17, 18

7. Remove the oil seal.
   (1) Snap ring
   (2) Oil seal

   Caution:
   Remove the oil seal only when it is found defective.

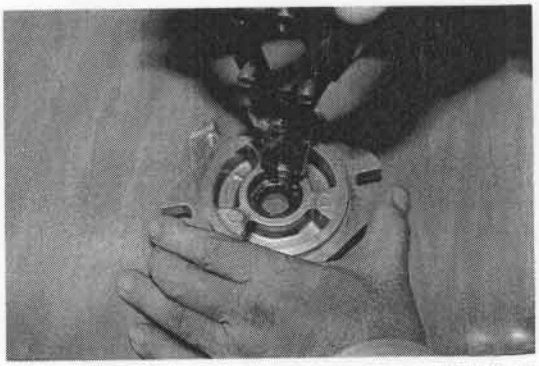

Removing the Oil Seal BAH36-19

Inspection

Caution:
Check the disassembled parts first for stain and discoloration, and then wash and inspect them.

1. Inspect the body, cover and flange.
   (1) Gear contact trace on the suction side body inner surface
   (Normal = contact trace on about 1/3 of the body inner circumference)
   ① Contact trace exceeding half of the circumference
   ② Body inside diameter exceeding the limit
   (dimensions X in illustration)
   Limit: 39.180 mm (1.54252 in)
   (2) Damage on mating surfaces of body, cover and flange
   (3) Damage on mounting and threaded portions
   (4) Flaw on body inner surface
   Flaw depth limit: 0.1 mm (0.004 in)

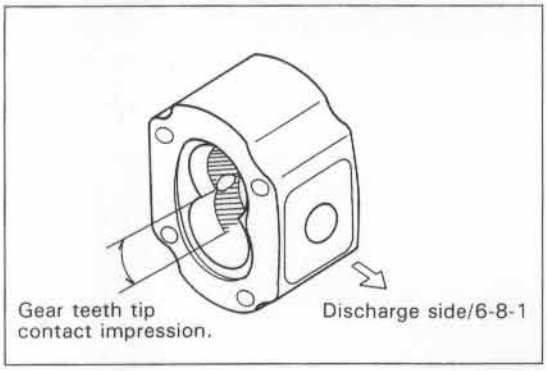

Tooth Top Contact Trace BABS31

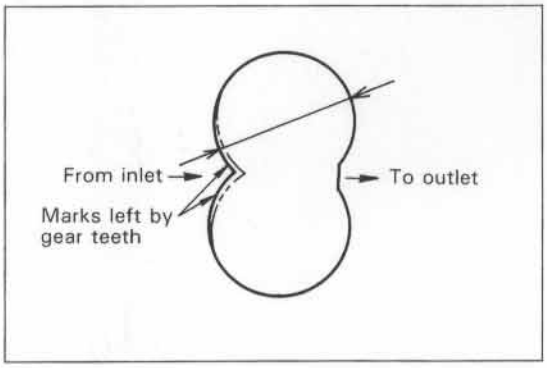

Measuring the Body Inside Diameter BAHS66

2. Inspect the side bushing.
   (1) Contact on bore sliding surface
   (Normal = Glossy contact on about half on the suction side)
   (2) Flaw on bore sliding contract surface

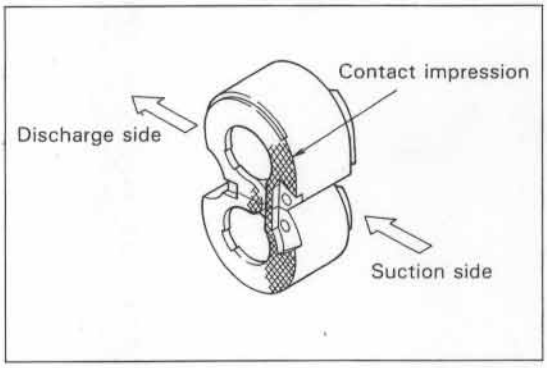

Side Bushing Contact Trace BABS30

   (3) Inside diameter
   Limit: 19.123 mm (0.75287 in)
   (4) Side contact
   (Normal = Slightly stronger contact on suction side and slight contact on discharge side)
   (5) Flaw on side surface(
   (6) Bushing length in axial direction
   Limit: 14.77 mm (0.5815 in)

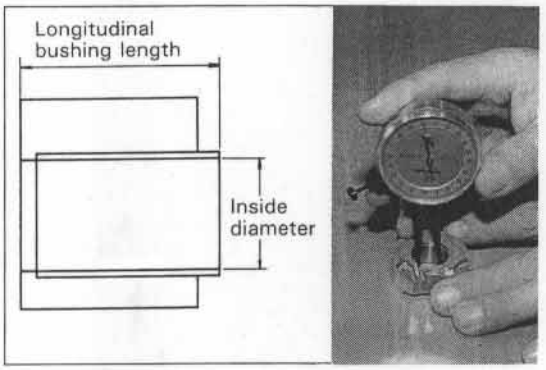

Measuring the Side Bushing BAHS67,BAH36-28

3. Inspecting the center bushing.
   (1) Contanct on bore sliding contact surface (Normal = Glossy contact on about 1/2 on suction side)
   (2) Damage on bore sliding contact surface
   (3) Bore dimension
   Limit: 19.123 mm (0.75287 in)
   (4) Side contact (Normal: Overall contact trace)
   (5) Flaw on side surface
   (6) Bushing length in axial direction
   Limit: 29.68 mm (1.1685 in)

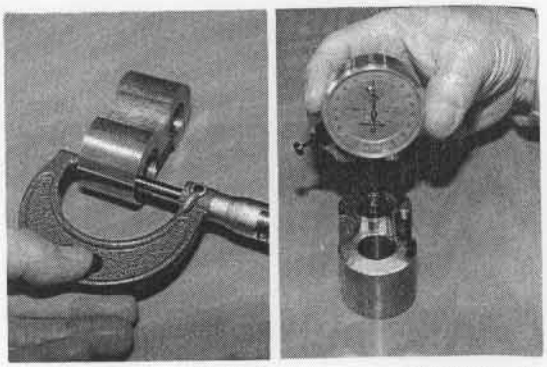

Inspecting the Center Bushing Dimensions BAH36-25, 27

4. Inspect the gear.
   (1) Crack at the root of tooth or flaw on tooth flank
   (2) Damage and discoloration on tooth surfaces
   (3) Wear and damage at spline
   (4) Damage on gear shaft

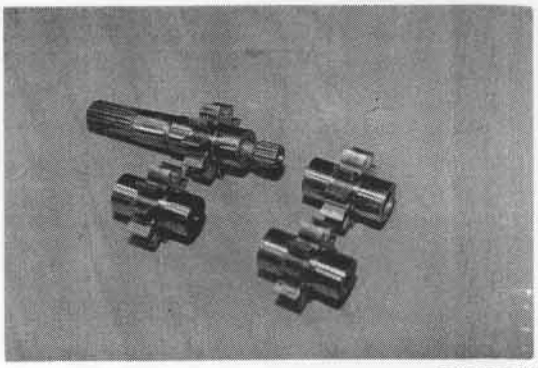

Inspecting the Gear BAH36-22

   (5) Gear shaft outside diameter
   Limit: 18.935 mm (0.74547 in)

Caution:
Replace the gear and bushing as a set when any of them is found defective.

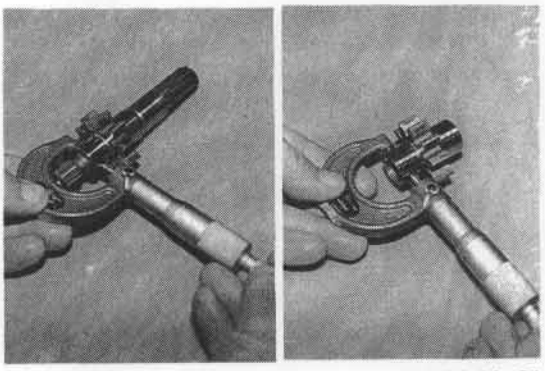

Measuring the Gear Dimensions BAH36-29, 31

5. Inspect the seals.
   (1) Damage, deformation and wear at mounting oil seal lip
   (2) Tear or cut of packings and rings.

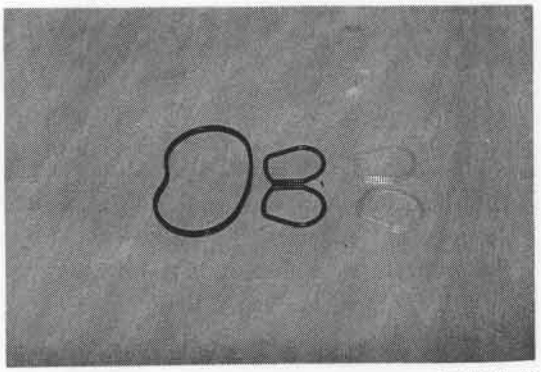

Installing the Oil Seal BAH36-23

Reassembly

Caution:
- Wash the parts, blow them with compressed air and reassemble them after applying hydraulic oil.
- Always use new seals after disassembly.

1. Install the oil seal
   (1) Use a round rod and install the oil seal on the mounting flange.
   (2) Snap ring
   (3) Apply grease thinly on the oil seal lip.

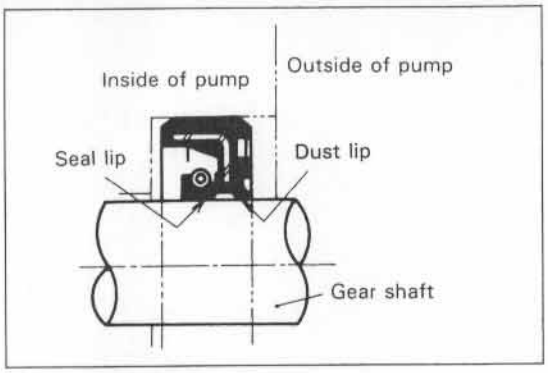

Installing the Oil Seal BAAS55

2. Install the gear set and bushing set.

Caution:
Align the match marks put at the time of disassembly.

(1) Install the front and rear gears with the center bushing in between.

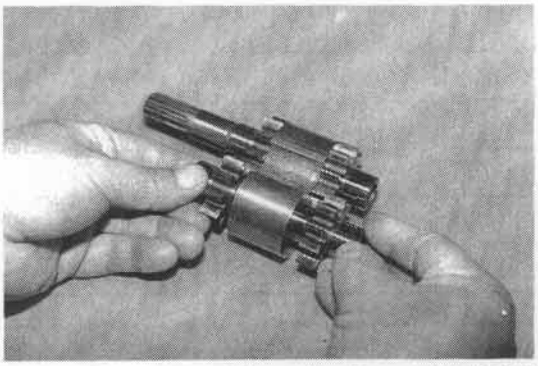
Installing the Gear and Center Bushing BAH36-33

(2) Insert the gear and center bushing set into the body.

Caution:
If the bushing is hard to move because of oblique insertion, retry insertion from the first without trying forced insertion.

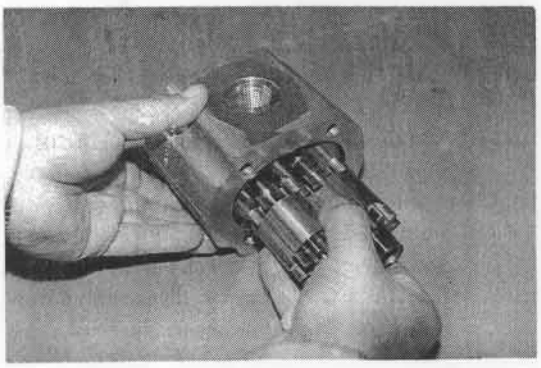
Installing the Gear and Bushing Set BAH36-35

(3) Side bushing

Caution:
- Correctly assemble the bushing.
- The bushing mating surface shall not be offset.
- If the bushing is hard to move because of oblique insertion, retry insertion from the first without trying forced insertion.

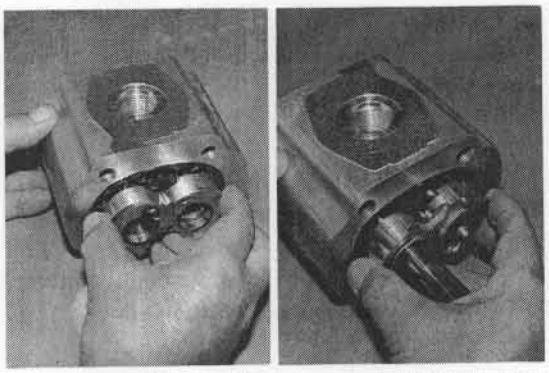
Installing the Side Bushing BAH36-36, 37-2

3. Install the seals

   Caution:
   Apply grease thinly before reassembly.

   (1) Body seal
   (2) Backing ring
   (3) Bushing seal

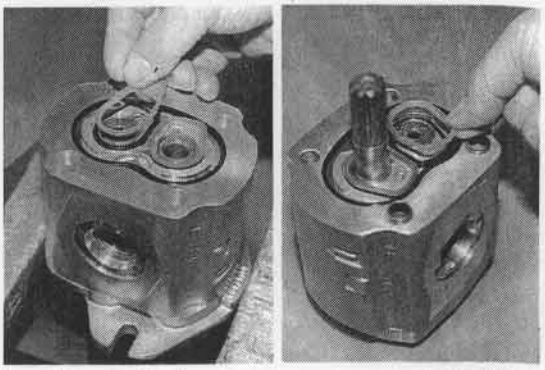

Installing the Seals BAH37-3, 4

4. Install the mounting flange.
   (1) Tape the drive gear spline portion to protect the oil seal from damage.
   (2) Mounting flange
   (3) Peel off the tape.

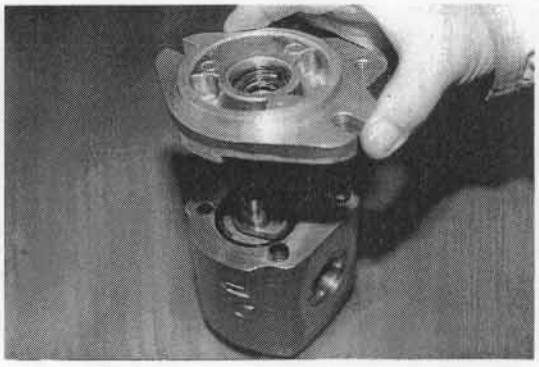

Installing the Flange BAH37-5

5. Install the pump cover.
   (1) Place the cover on the body by aligning the match marks, and tighten the set bolts.
   T = 4.7~4.9 kg-m
   (34.0~35.5 ft-lb) [46.1~48.1 N-m]

6. Check after reassembly.
   (1) Hold the drive gear shaft lighty in the vise, and turn the body to check the rotation status. If rotation is heavy, disassemble the cover to correct the assembly.
   (2) Check that no flaw or dirt exists on the body fitting surface.



Installing the Pump Cover BAH37-6

Installation

The installation procedure is the reverse of the removal procedure.

Caution:
- **Coat paste lubricant containing molybdenum disulfide on the pump spline before installation.**
- **Clean the surface for mounting the fitting to prevent damage on the O-ring.**

Test Method

The bench test shall be conducted as the formal test. Since it is impossible in actual servicing operation, check the vehicle as described below to judge on the properness of the oil pump discharge rate.

Caution:

- Check on the display if the battery charge is sufficient.
- Check if the oil control valve relief pressure is as specified. (See page 17-3.)
- **Raise the hydraulic oil temperature to 50—55°C (122—131°F), and measure the lift cylinder full stroke operation time calculate the liftig speed.**
- Because of the soft start function by the pump chopper circuit, the lifting speed is 10—20 mm/s (2.0—3.9 fpm) lower than the valve in the table below. The accurate lifting time can be measured by exclusion of the soft start period.

Lifting Speed Table

mm/sec (fpm)

V, SV		5FB10	5FB14	5FB15	5FB18	5FB20	5FB25	5FB30
STD	Loaded	320 (63)	310 (61)	300 (59)	280 (55)	270 (53)	250 (49)	220 (43)
	No load	500 (98)	←	←	←	430 (84)	←	340 (67)
Dust-Proof	Loaded	300 (59)	270 (53)	260 (51)	250 (49)	230 (45)	200 (39)	200 (39)
	No load	460 (90)	←	←	←	400 (78)	←	320 (63)

FV, FSV		5FB10	5FB14	5FB15	5FB18	5FB20	5FB25	5FB30
STD	Loaded	290 (57)	270 (53)	260 (51)	250 (49)	240 (47)	210 (41)	190 (37)
	No load	400 (79)	←	←	←	←	←	330 (65)
Dust-Proof	Loaded	250 (49)	240 (47)	220 (43)	210 (41)	←	190 (37)	160 (31)
	No load	350 (69)	←	←	←	360 (71)	←	300 (59)

OIL CONTROL VALVE

	Page
OIL CONTROL VALVE	17-2
GENERAL	17-2
SPECIFICATIONS	17-3
COMPONENTS	17-4
OIL CONTROL VALVE ASSY	17-5
OIL CONTROL VALVE LINK	17-14

17

OIL CONTROL VALVE

GENERAL

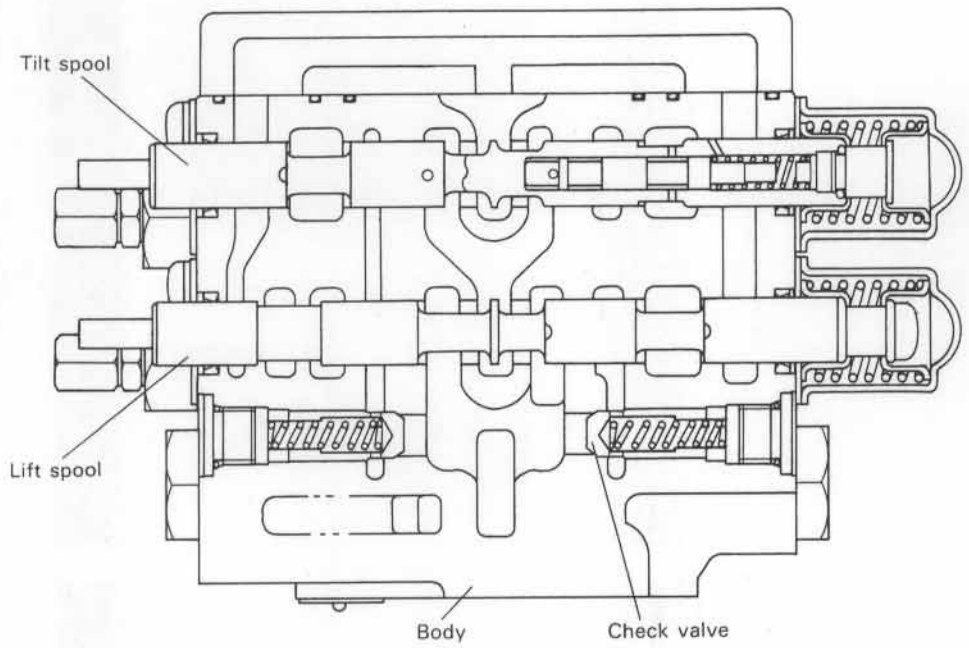

Oil Control Valve Sectional View (in Neutral State) BARM21

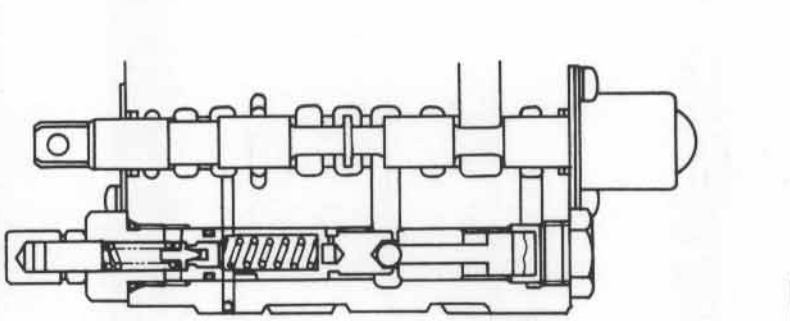

Lift relief valve

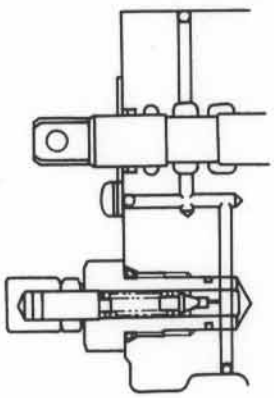

Tilt relief valve

Relief Valve Sectional Views BARS52, 53

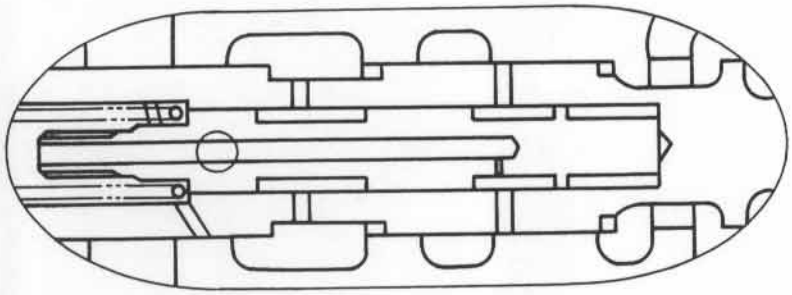

Tilt Lock Valve Sectional View (in Neutral State) BARS171

SPECIFICATIONS

Oil Control Valve Specifications

Item \ Vehicle type		1 ton series	2 ton series	3 ton series
Oil control valve type		Add-on	⇦	⇦
Relief pressure kg/cm² (psi)[kPa]	Lift	155(2200)[15200]	175(2490)[17160]	185(2630)[18140]
	Tilt	120(1710)[11770]	150(2130)[14710]	⇦
Spool outside diameter mm(in)		16.0 (0.630)		
Stroke mm(in)		7.0 (0.276)		
Others		Built-in tilt lock valve		

Spring specifications

	Winding diameter mm(in)	Free length (in)	Spring constant kg/mm (lb/in, N/mm)
For return spool	25.6 (1.008)	47.0 (1.850)	0.683 (0.05929)[6.698]
For check valve	8.0 (0.315)	38.0 (1.496)	0.072 (0.00625)[0.706]
For relief valve	10.5 (0.413)	48.5 (1.791)	0.137 (0.01189)[1.334]
For tilt lock valve	7.7 (0.303)	26.0 (1.024)	0.629 (0.05460)[6.168]

COMPONENTS

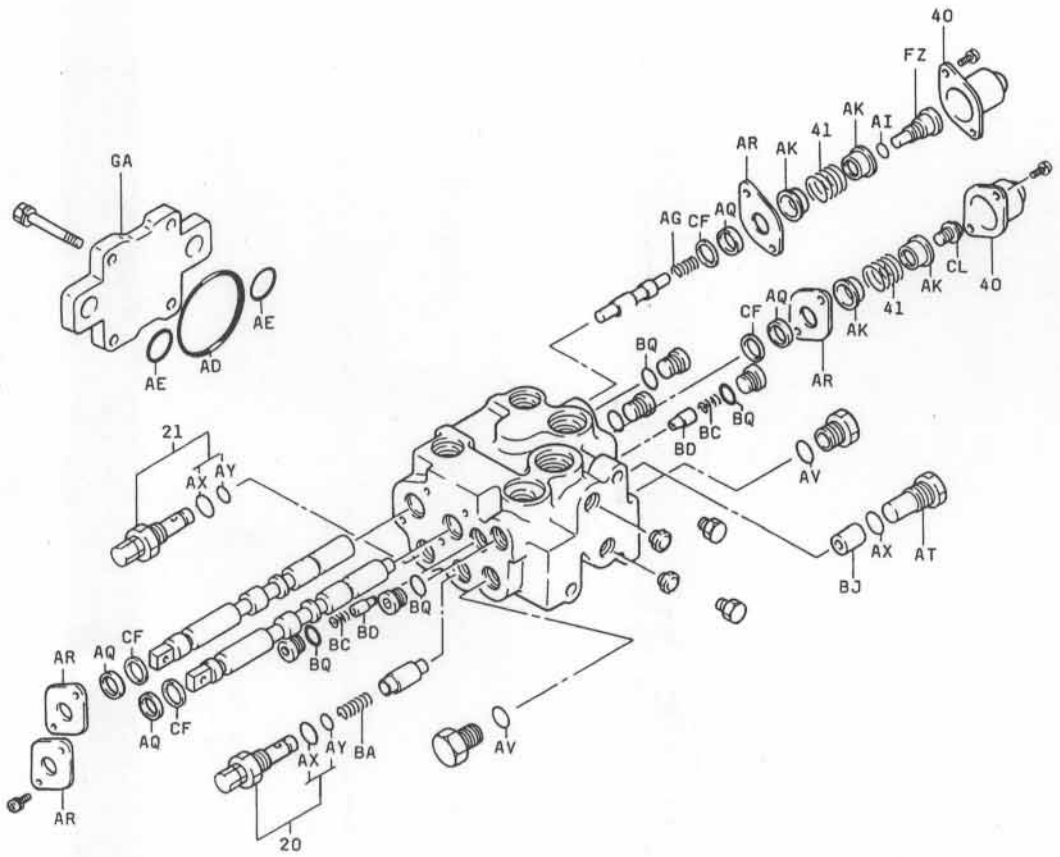

20	Pilot relief valve set (for lift)	AV	O ring
21	Pilot relief valve set (for tilt)	AX	O ring
40	Spring cover	AY	O ring
41	Compression spring	BA	Compression spring
AD	O ring	BC	Compression spring
AE	O ring	BD	Check plunger
AG	Spring	BJ	Valve seat
AI	O ring	BL	Insert seat
AK	Spring holder	BQ	O ring
AQ	Back up ring	CF	Seal
AR	Seal holder	FZ	Spool end
AT	Stopper	GA	Outlet housing

Oil Control Valve Components BATM60

OIL CONTROL VALVE ASSY

Removal

1. Disconnect the accelerator connector.
2. Remove the toe board.
3. Remove the pad RH.

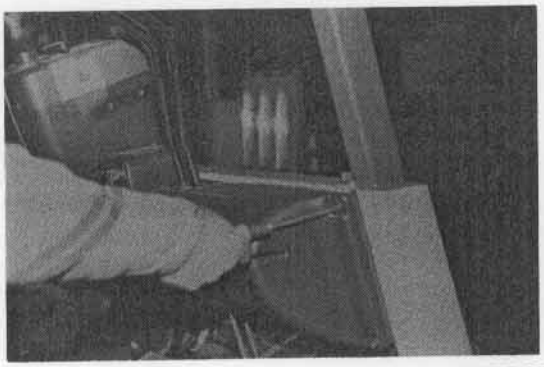

Removing the Pad BAT7-27

4. Remove the control valve lever ASSY.
   (1) Set bolt
   (2) Control valve mounting pin
   (3) Valve lever ASSY

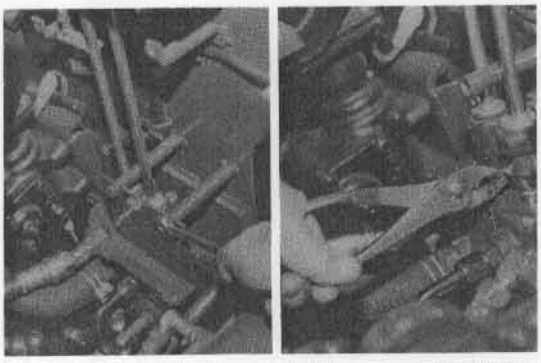

Removing the Valve Lever ASSY BAT7-28,29

5. Disconnect the piping.
   (1) High pressure hose (P port)
   (2) Return hose (T port)
   (3) Hose (to PS valve)
   (4) Pipe (tilt port)
   (5) High pressure hose (lift port)

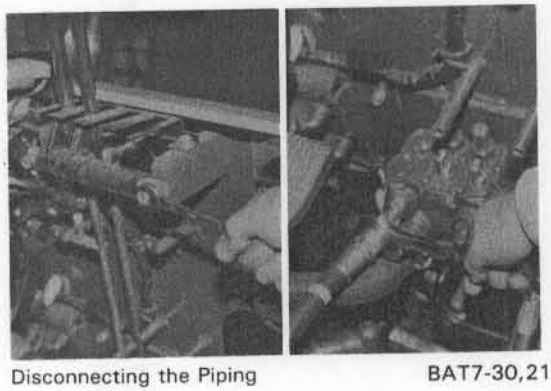

Disconnecting the Piping BAT7-30,21

6. Remove the oil control valve.
   (1) Set bolt
   (2) Oil control valve

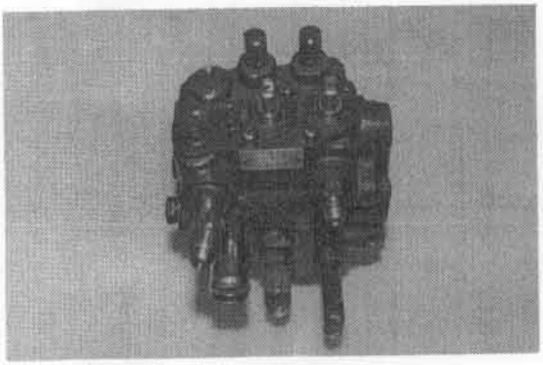

Removing the Oil Control Valve BAT7-41

Disassembly

Caution:
- Select a clean place for disassembly operation.
- As parts are finished with high precision, carefully handle them to prevent damaging.

1. Remove the seal holder.
   (1) Set screws
   (2) Seal holder

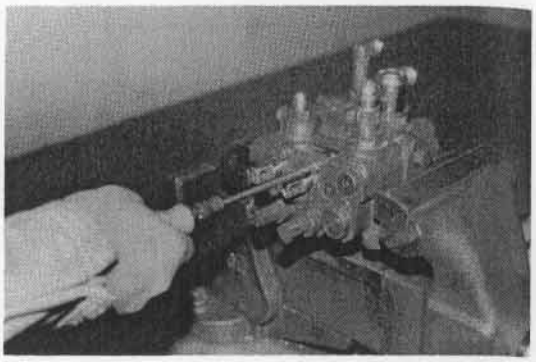

Removing the Seal Holder BAT7-38

2. Remove the spring cover.
   (1) Set screws
   (2) Spring cover

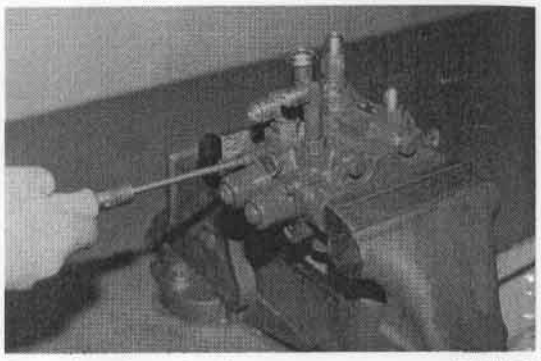

Removing the spring Cover BAT7-40

3. Remove the lift and tilt spools.
   (1) Lift spool ASSY
   (2) Tilt spool ASSY

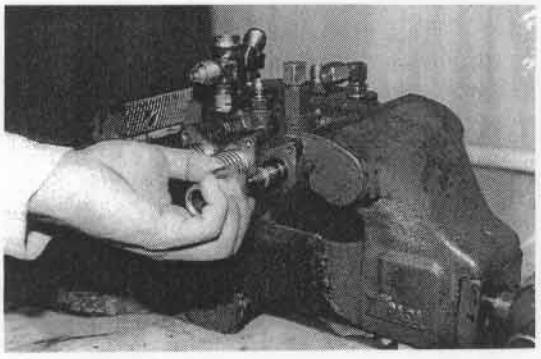

Removing the Spool BAR16-29

4. Disassemble the lift and tilt spools.
   (1) Set the SST
   SST 09610-10160-71
   (2) Set screw
   (3) Spool end
   (4) Spring holder
   (5) Compression spring
   (6) Seal holder
   (7) Backup ring
   (8) O-ring
   (9) Spring (tilt only)
   (10) Tilt lock valve (tilt only)

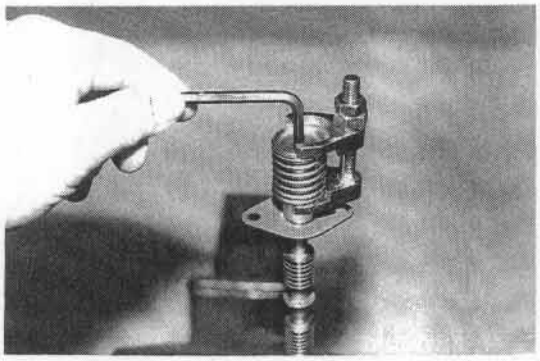

Disassembling the Spool LA036-13

5. Remove the relief valve ASSY.

Caution:
Do not remove the lock nut.

(1) Tilt relief valve

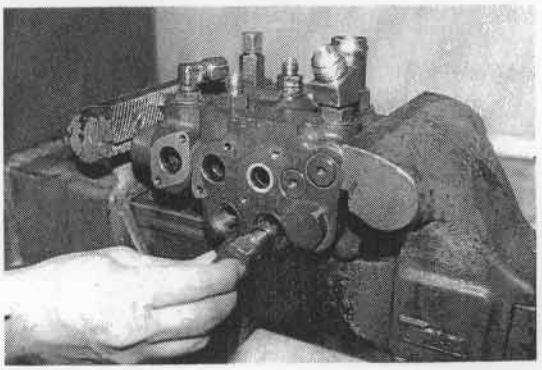

Removing the Relief Valve BAR16-33

(2) Lift relief valve
   ① Spring
   ② Main plunger
(3) Opposite plug
(4) Valve seat
   SST 09700-30200-71

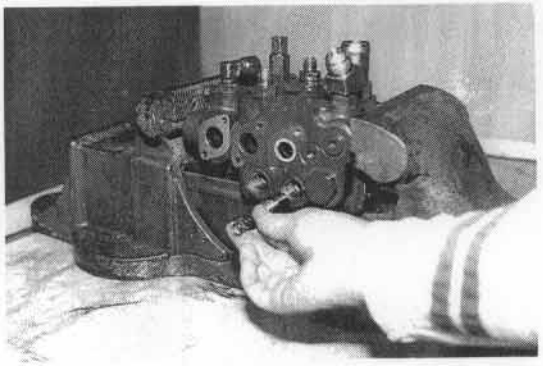

Removing the Main Plunger BAR16-36

6. Remove the check valve.
(1) Plug
(2) Spring
(3) Check plunger

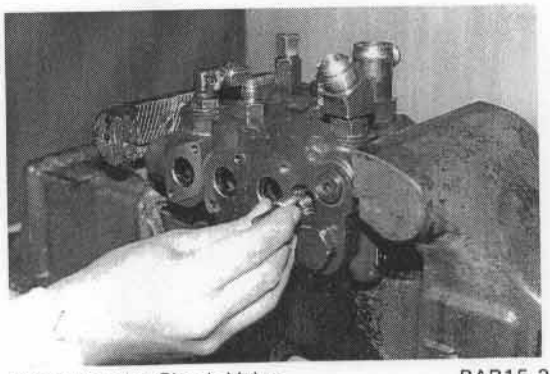

Removing the Check Valve BAR15-2

7. Remove the outlet housing.
(1) Set bolts
(2) Outlet housing

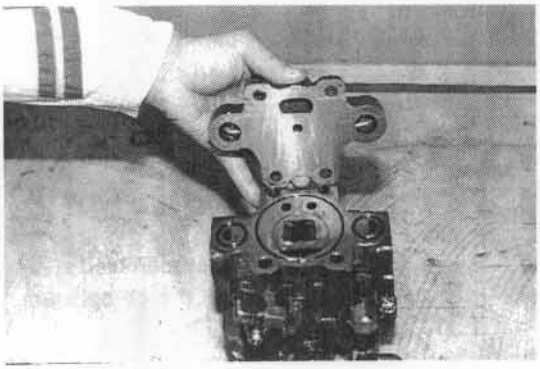

Removing the Housing BAR15-3

Inspection

Caution:
- Wash each part sufficiently. Repair or replace any part which is found defective.
- Some components may be disassembled but require replacement as ASSY, because individual service pars are not available.

1. Inspect the body and outlet housing.
   (1) Damage on sliding contact portion of each spool
   (2) Stepped wear and crack at check valve seat
   (3) Damage of each fitting

2. Inspect the spools.
   (1) Damage of lift spool
   (2) Damage of tilt spool

   Caution:
   Decide on the wear of the spool by means of the oil leak test. (See page 13-6)

3. Inspect the lift relief valve.
   (1) Stopped wear of needle valve
   (2) Defective contact and damage of valve seat
   (3) Fatigue of spool

   Caution:
   Inspect the relief valve in disassembled state when a defect is found in the oil pressure test.

4. Inspect the tilt relief valve.
   (1) Contamination of filter cap
   (2) Stepped wear of needle valve
   (3) Defective contact and damage of valve seat
   (4) Fatigue of spool

   Caution:
   Inspect the relief valve in disassembled state when a defect is found in the oil pressure test.

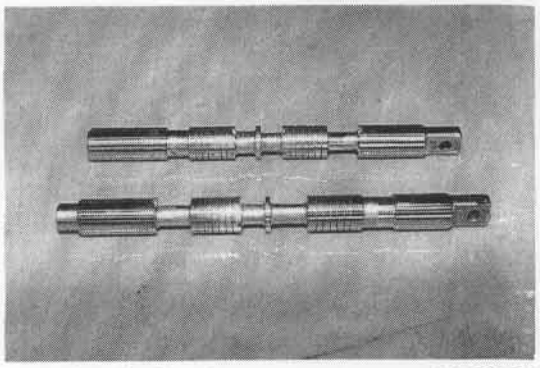

Inspecting the Spool LA036-33

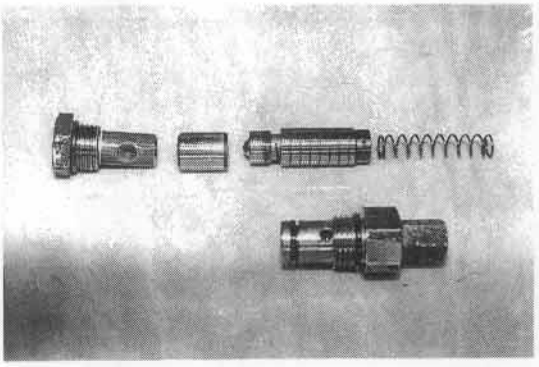

Inspecting the Lift Relief Valve LA036-35



Inspecting the Tilt Relief Valve LA036-36

5. Inspect the tilt lock valve.
   (1) Tilt lock plunger sliding state
   (2) Breakage or fatigue of spring

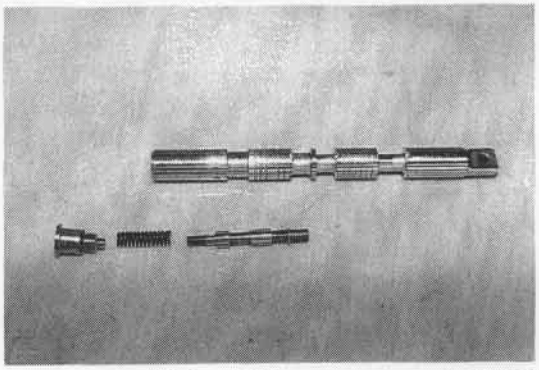

Inspecting the Tilt Lock Valve LAO39-2

6. Inspect the check valve.
   (1) Stepped wear of check valve plunger
   (2) Breakage or fatigue of spring

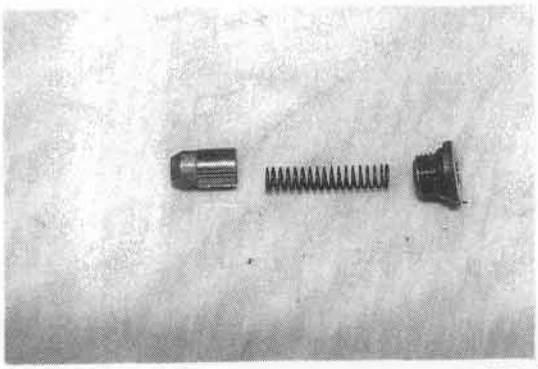

Inspecting the Check Valve LAO39-4

Reassembly

Caution:
Wash the parts thoroughly, blow them with compressed air, and assemble them after coating hydraulic oil.

1. Install the outlet housing.
   (1) Outlet housing
   (2) Set bolts
   T = 3.5~4.5 kg-m
   (25.3~32.6 ft-lb) [34.3~44.1 N-m]

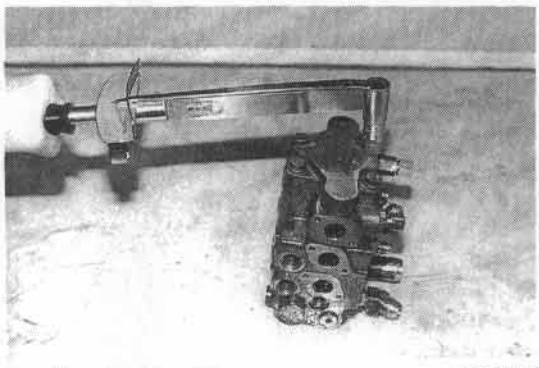

Installing the Housing BAR15-6

2. Install the check valve.
   (1) Check plunger
   (2) Spring
   (3) Plug

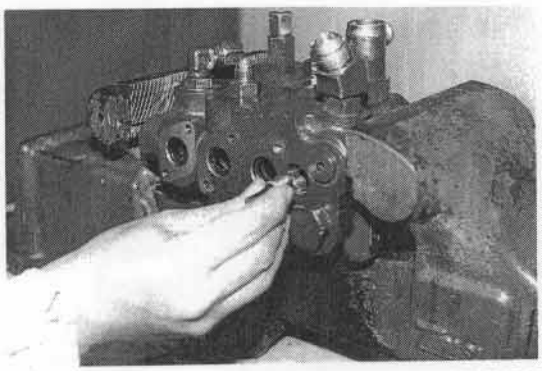

Installing the Check Valve BAR15-2

3. Install the relief valve.

Caution:
When disassembling the relief valve, fully return the adjusting screw without fail.

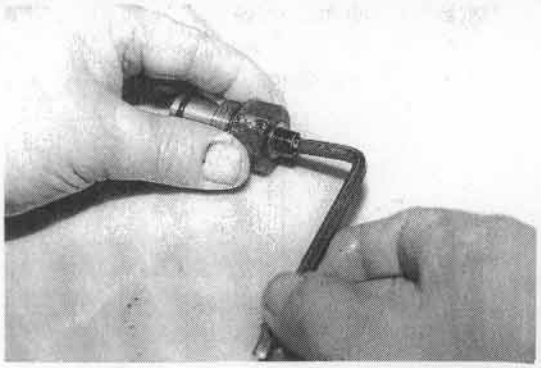

Returning the Adjusting Screw LAO36-34

(1) Plug
(2) Valve seat
SST 09700-30200-71
(3) Main plunger
(4) Spring
(5) Lift relief valve
(6) Tilt relief valve



Installing the Relief Valve BAR16-33

4. Install each spool spring.
(1) Tilt lock valve (tilt only)
(2) Spring (tilt only)
(3) O-ring
(4) Backup ring
(5) Seal holder
(6) Spring holder
(7) Compression spring
(8) Spring holder
(9) Spool end (tilt only)
(10) Set bolt (lift only)
SST 09610-10160-71

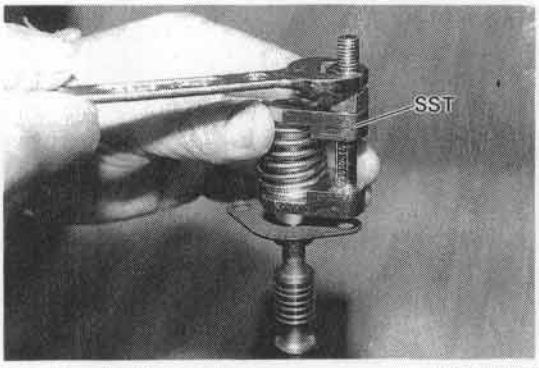

Installing the Spool Spring LAO39-18

5. Install each spool in the oil control valve.
(1) Lift spool
(2) Tilt spool

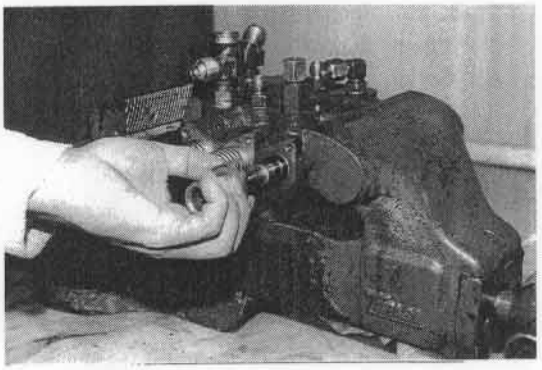

Installing the Spool BAR16-29

6. Install the spring cover.
   (1) Spring cover
   (2) Set screws

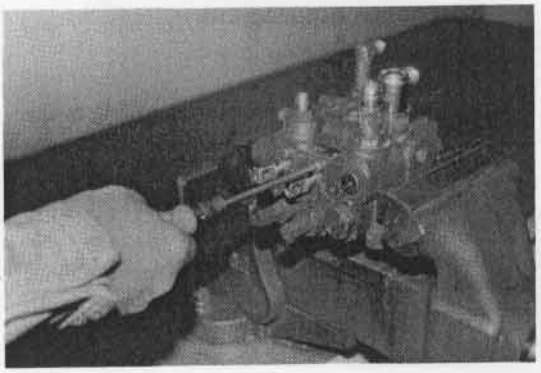

Installing the Spring Cover BAT7-40

7. Install the seal holder.
   (1) Seal holder
   (2) Set screw

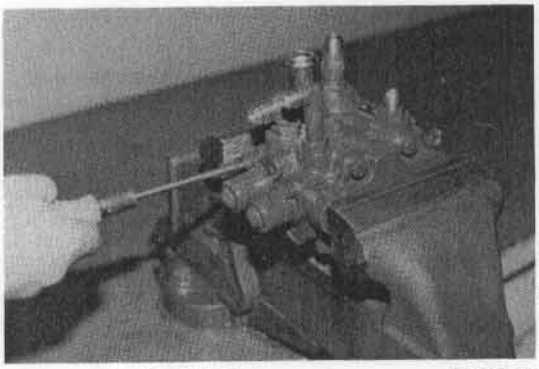

Installing the Seal Holder BAT7-38

Installation

The installation procedure is the reverse of the removal procedure.

Caution:
Inspect the hydraulic oil level, and add hydraulic oil if the level is below the standard.

Adjustment

Limit Switch Adjustment

1. Adjust the switch mounting position so that the switch is turned on rapidly by spool movement when the lever is operated.

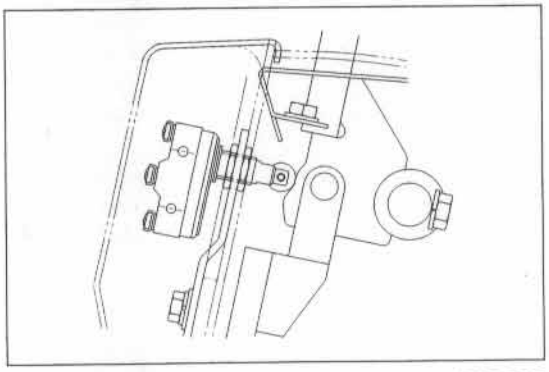

Adjusting the Limit Switch BARC27

Lift Potentiometer Adjustment

1. Fully push in the cap to the depth.
2. Pull the lift lever from the neutral position to climinate looseness.
3. Determine the adjusting bolt position so that the cap is pushed in by **0 ~ 1mm (0.039 in).**
4. Coat MP grease on the portion indicated by the arrow in the illustration.

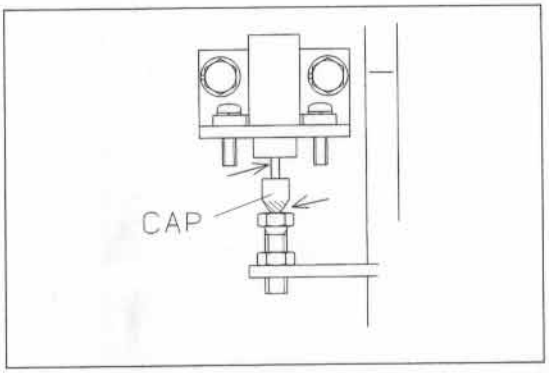

Adjusting the Potentiometer BARC28

Relief pressure adjustment

Caution:
- Make adjustment always according to the following procedure. Random adjustment may generate a high pressure to damage the oil pump and other hydraulic equipment.
- No adjustment is required when the relief valve is not assembled or is replaced with a new part.

1. Remove the plug (9/16-18UNF-2B) on top of the oil control valve, and install an oil pressure gauge.
   Oil pressure gauge: Pressure resistance at 200 kg/cm^2 or more (2840 psi, 19610 kPa)

2. Loosen the lift relief valve adjusting screw.

   Caution:
   Loosen the lock nut, and loosen the adjusting screw to a degree not coming off from the body.

3. Adjust the hydraulic pressure.
   (1) Turn the key switch to ON.
   (2) Set the lift lever slowly to the lift position, and tighten the adjusting screw gradually before the fork starts to rise.
   (3) Lift the fork fully to the maximum height, and read the hydraulic pressure at the position. Tighten the adjusting screw so that the pressure at the time becomes normal.
   (4) Tighten the lock nutând check the hydraulic pressure again.

4. Adjust the tilt relief valve hydraulic pressure.

   Caution:
   - Follow the same procedure as that for lifting.
   - Tilt the mast fully backward when measuring the hydraulic pressure.

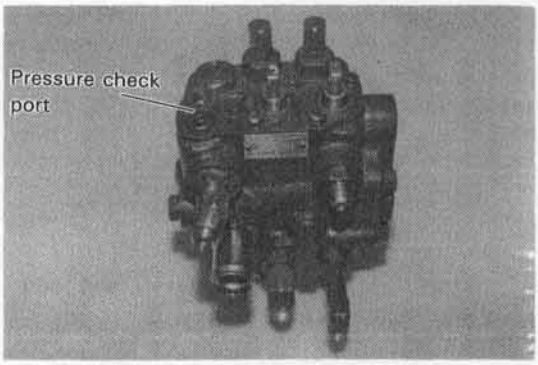

Oil Pressure Gauge Installing Position

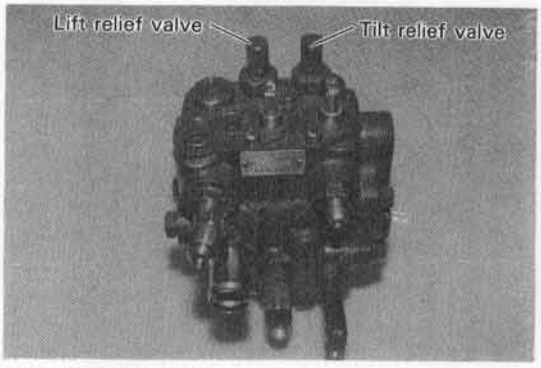

Relief Valve Position

5. Remove the oil pressure gauge, and install the plug.

Relief Pressure Table

kg/cm² (psi)[kpa]

		1.0～1.8 ton series	2.0～2.5 ton series	3.0 ton series
Relief pressure	Lift	155 (2000)[15200]	175 (2490)[17160]	185 (2630)[18140]
	Tilt	120 (1710)[11770]	150 (2130)[14710]	←

OIL CONTROL VALVE LINK

COMPONENTS

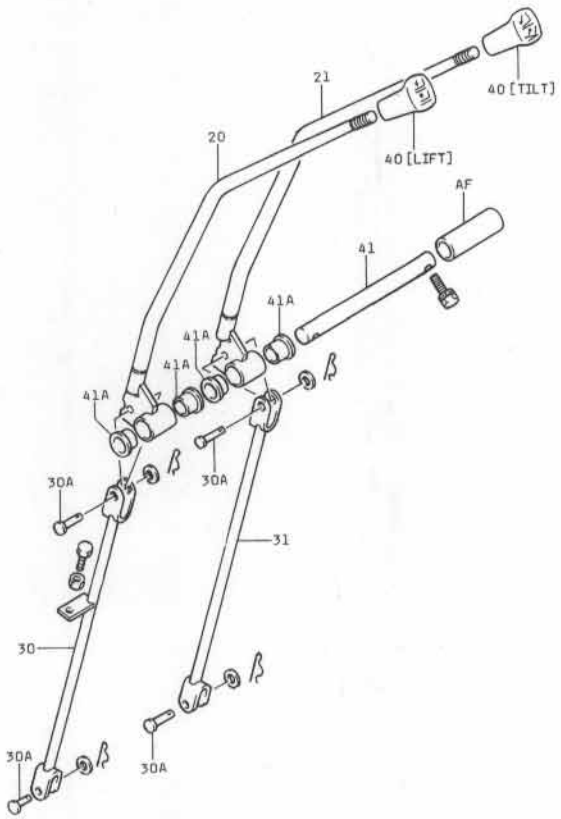

20 Control valve lever, SUB-ASSY (for lift)
21 Control valve lever SUB-ASSY (for tilt)
30 Control valve lever rod SUB-ASSY
30A Pin
31 Control valve lever rod SUB-ASSY
40 Oil control valve lever knob
41 Oil control valve lever pin
41A Bushing
AF Spacer

Oil Control Valve Link Components BATM59

APPENDIX

	page
SST LIST	18-2
SERVICE STANDARDS LIST	18-6
WIRING DIAGRAM	18-26
CONNECTOR DRAWING	18-27
CONNECTING DIAGRAM	18-28

SST LIST

Section / Part Name / Pat No. / Illustration			1	2	5	6	7	8	10	11	14	15	17
	09223-46011	Crank shaft front oil seal replacer			○								
	09308-10010	Oil seal puller				○							
	09509-55020	Rear wheel bearing nut wrench					○						
	09608-20012	Front hub & drive pinion bearing replace set						○					
	09608-35014	Axle hub & drive pinion bearing tool set			○								
	09609-20011	Steering wheel puller							○				
	09610-20012	Pitman arm puller						○	○				
	09617-60010	Worm bearing adjusting screw nut wrench							○				
	09620-30010	Steering gear box replacer			○			○					
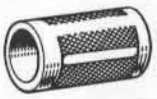	09637-20010	Tie-rod end dust cover replacer						○					
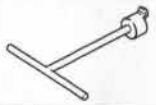	09717-20010	Brake shoe return spring remover								○			
	09718-20010	Brake shoe return spring replacer								○			

Section / Part Name / Pat No. / Illustration			1	2	5	6	7	8	10	11	14	15	17
	09905-00012	Snap ring expander, No.1							○				
	09950-20017	Universal puller			○	○		○	○		○		
	09010-10260-71	Motor hock			○								
	09010-13200-71	Motor hock (Use 2 peaces)			○								
	09130-30200-71	Oil tight replacer					○						
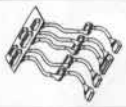	09240-13200-71	MCS-II check sub-harness		○									
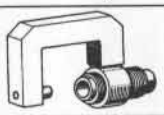	09310-22000-71	Reamer bolt remover					○						
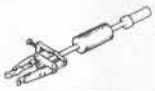	09320-23000-71	Bearing remover							○				
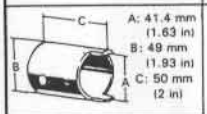	09330-10330-71	Locknut remover and replacer							○				
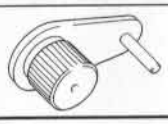	09330-13200-71	Input gear lock plate				○							

Section / Part Name / Pat No. / Illustration			1	2	5	6	7	8	10	11	14	15	17
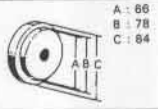	09370-10170-71	Front axle bearing replacer						○					
	09370-10410-71	Front axle bearing replacer					○						
	09370-20270-71	Drive pinion bearing replacer			○			○					
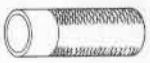	09381-41950-71	HST motor bearing replacer			○								
	09411-41800-71	2nd drive shaft dust seal replacer			○				○				
	09420-20150-71	Needle bearing remover and replacer							○				
	09470-10171-71	Main shaft pre-lood tool							○				
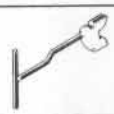	09510-31960-71	Brake hold down spring remover and replacer								○			
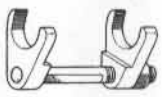	09610-10160-71	Oil control valve spring remover and replacer											○
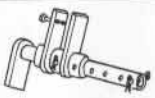	09610-22000-71	Inner mast stopper									○	○	
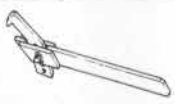	09620-10100-71	Cylinder cap remover and replacer										○	

Section / Part Name / Pat No. / Illustration			1	2	5	6	7	8	10	11	14	15	17
	09620-10160-71	Cylider cap remover and replacer										○	
	09700-30200-71	Spring pin tool remover				○			○				○
	09810-20172-71	Joint pin remover									○	○	
	80201-10250-71	Battery hanger	○		○				○				

SERVICE STANDARDS LIST

BATTERY

Specific gravity full discharge	(at 20°C) (68°F)	1.280
Specific gravity at the end of discharge	(at 20°C) (68°F)	1.150
Filnal discharge voltage	48V model	42.5V
	72V model	61V
Insulation resistance		1 MΩ or more

CONTROLLER

⊕ and ⊖ represent the positive (red) probe and negative (black) probe of the circuit tester

			1 ton series	2 ton series	3 ton series
CPU board & DC-CD board			See text (page 2-16)		
PS controller			See text (page 2-39)		
Display			See text (page 2-24)		
F1 (Drive fuse)		A	350	400	←
F2 (Pump fuse)		A	200		
F3 (Power steering fuse)		A	60		
F4 (Lamp fuse)		A	10		
F5 (Control circuit fuse)		A	10		
F6 (Power supply)		A	—	—	10
TM · TMP conduction Ω (Tester range Ω×1K)	D⊖ —— S⊕ D⊕ —— S⊖		∞ ∞		
	D⊖ —— G⊕ D⊕ —— G⊖		∞ Conduction		
	G⊖ —— S⊕ G⊕ —— S⊖		Conduction ∞		
TG conduction Ω (Tester range Ω×1K)	B⊖ —— C⊕ B⊕ —— C⊖		Conduction ∞		
	C⊖ —— E⊕ C⊕ —— E⊖		∞ Conduction		
DAD · DAP · DG conduction KΩ (Tester range Ω×1K)		Foward	About 6		
		Reverse	∞		

		1 ton series	2 ton series	3 ton series
DF1 conduction (Tester range Ω×1K) KΩ	Foward	About 3		
	Reverse	∞		
DF2 · DF3 conduction (Tester range Ω×1K) KΩ	Foward	About 6		
	Reverse	∞		
CAD · CAP conduction (Tester range Ω×1K) Ω		When the tester probes are brought into contact with the CAD terminals, the pointer initially diflects, then gradually reterns until it finally indicates ∞. (As CAD is charged by the current from the tester.)		
RG conduction (Tester range Ω×1) Ω		About 1.0		About 1.5
RAD conduction (Tester range Ω×1) Ω		About 1.5		
RAP conduction (Tester range Ω×1) Ω		About 25		
MF · MR · MG · MP coil resistance (Tester range Ω×1) Ω		35 (20°C) (68°F)		
OCL value (Drive circuit) A		380±19A	500A±25A	380A±19A

DRIVE CONTROLLER PARTS TIGHTENING TORQUE			kg-cm (ft-lb) [N-m]
TM · TMP	For harness set	M5	14~26 (1.01~1.88) [1.37~2.55]
		M4	9~17 (0.65~1.23) [0.88~1.67]
	For mounting	M5	20~30 (1.45~2.17) [1.96~2.94]
DF1	For harness set	M5	18~32 (1.30~2.31) [1.77~3.14]
	For mounting	M5	20~30 (1.45~2.17) [1.96~2.94]
DF2 · 3 DG	For harness set	M5	15~20 (1.09~1.45) [1.47~1.96]
	For mounting	M5	20~30 (1.45~2.17) [1.96~2.94]
DAD · DAP	For mounting	M6	25~30 (1.81~2.17) [2.45~2.94]
TG	For mounting	M5	16~24 (1.16~1.74) [1.57~2.35]
Heat sink	For mounting		20~30 (1.45~2.17) [1.96~2.94]
Ternimal plate set bolt, nut and screw		M8	95~105 (6.87~7.59) [9.31~10.3]

ACCELERATOR POTENTIOMETER

Gap between accelerator arm and arm bracket	1.0mm (0.039in)	Switch OFF
	2.0mm (0.079in)	Switch ON
Screw	kg-m (ft-lb) [N-m]	0.16 ~ 0.24 (1.16 ~ 1.74) [1.57 ~ 2.35]

BRAKE POTENTIOMETER

Gap between stopper bolt and stopper	1.8mm (0.071in)	Switch ON
	2.4mm (0.094in)	Switch OFF
Screw	kg-m (ft-lb) [N-m]	0.16 ~ 0.24 (1.16 ~ 1.74) [1.57 ~ 2.35]

DIRECTION SWITCH

Inspection point \ Lever position	Neutral	Forward	Reverse
DS_F	∞Ω	0Ω	∞Ω
DS_R	∞Ω	∞Ω	0Ω
DS_{FO}	∞Ω	0Ω	∞Ω
DS_{BU}	∞Ω	∞Ω	0Ω

DRIVE MOTOR

		1 ton series	2 ton series	3 ton series
Armature coil insulation resistance		More than 1 MΩ		
Commutator outside diameter mm (in)	Standerd	105 (4.13)	150 (5.91)	
	Limit	102 (4.02)	147 (5.79)	
Undercut mm (in)	Standerd	1.0 (0.039)		
	Limit	0.5 (0.020)		
Field coil conduction (Tester range Ω×1)	E —— F	0		
Field coil insulation resistance	Field —— E / F	More than 1 MΩ		
Brush length mm (in)	New	34 (1.34)		
	Limit	15 (0.59)		
Brush pressure kg (lb) [N]		1.22~1.48 (2.68~3.25) [11.97~14.51]	1.44~1.76 (3.17~3.87) [14.12~17.26]	
Brush holder insulation resistance		More than 1 MΩ		

PUMP MOTOR

		1 ton series	2 ton series	3 ton series
Armature coil insulation resistance		More than 1 MΩ		
Commutator outside diameter mm (in)	Standard	85 (3.35)	100 (3.94)	
	Limit	82 (3.23)	97 (3.82)	
Undercut mm (in)	Standard	1.0 (0.039)		
	Limit	0.5 (0.020)		
Field coil conduction (Tester range Ω×1) Ω	A —— F	0		
Field coil insulation resistance	Field —— A / F	More than 1 MΩ		
Brush length mm (in)	New	27 (1.06)	34 (1.34)	
	Limit	15 (0.59)	15 (0.59)	
Brush pressure kg (lb) [N]		1.17~1.43 (2.57~3.15) [11.47~14.02]	1.44~1.76 (3.17)~3.15) [14.12~17.26]	
Brush holder insulation resistance		More than 1 MΩ		

POWER STEERING MOTOR

		1 ton series	2 ton series	3 ton series
Armature coil insulation resistance		More than 1 MΩ		
Commutator outside diameter mm (in)	Standard	33 (1.30)	40 (1.57)	
	Limit	31.5 (1.24)	35 (1.38)	
Commutator runout mm (in)	Limit	0.3 mm (0.0118)		
Undercut mm (in)	Standard	0.8 (0.031)		
	Limit	0.3 (0.012)		
Brush length mm (in)	New	23 (0.91) (1990.4~1991. 10) 20 (0.79) (1991. 11~)	25 (0.98) (1990.4~1991. 10) 22 (0.87) (1991. 11~)	←
	Limit	14 (0.55) (1990. 4~1991. 10) 11 (0.43) (1991. 11~)	←	←
Brush pressure kg (lb) [N]	Standard	0.60(1.32)[5.88]	0.62 (1.36) [6.08]	
	Limit	0.20(0.44)[1.96]	0.30 (0.66) [2.94]	
Brush holder insulation resistance		More than 1 MΩ		

TRANSMISSION & DIFFERRENTIAL

Spider outside diameter mm (in)	Standard	22.00 (0.8661)
	Limit	21.75 (0.8563)
Differential gear backlash mm (in)		0.2~0.3 (0.0079~0.0118)
TIGHNENING TORQUE kg-m (ft-lb) [N-m]		
Differential case		4.5~5.5 (32.6~39.8) [44.1~53.9]
Ring gear		13~18 (94~130) [127~177]
Front axle housing		7.5~11 (54.3~79.6) [73.5~108]
Drive unit cap		7.5~11 (54.3~79.6) [73.5~108]
Drive gear lock nut		17~23 (123~166) [167~226]

FRONT AXLE

	1 ton series	2 ton series	3 ton series
Hub starting torque kg-m (ft-lb) [N-m]	2.5~4.5 (18.1~32.6) [24.5~44.1]		
TIGHTENING TORQUE kg-m (ft-lb) [N-m]			
Brake drum	7~9 (51~65) [69~88]	8~11 (58~80) [78~108]	17~21 (123~152) (167~206]
Hub bearing nut stopper bolt	1.5~2.2 (10.9~15.9) [14.7~21.6]		
Front axle shaft	3~4.5 (21.7~32.6) [29.4~44.1]		6~8 (43~58) [59~78]

FRONT AXLE

	1 ton series	2 ton series	3 ton series
Front axle bracket	16~22 (116~159) [157~216]		
Hub nut kg-m (ft-lb) [N-m]	1.0~1.35 ton: 11~15 (79.5~108) [107~147] 1.5~1.75 ton: 18~20 (130~144.6) [176.5~196.1]	18~20 (130~144.6) [176.5~196.1]	30~33 (216.9~289.4) [294.2~392.3]
Divided rim set bolt kg-m (ft-lb) [N-m]	1.0~1.35 ton: 5~7 (36.2~50.6) [49.0~68.6] 1.5~1.75 ton: —	—	—

REAR AXLE

		1 ton seris	2 ton series	3 ton series
Standard play of rear axle front and rear mm (in)		Less than 0.5 (0.020)		
King pin outside diameter mm (in)	Standard	28.0 (1.102)		
	Limit	27.8 (1.094)		
Support pin bush wear limit mm (in)		52.0 (2.047)		
Support pin outside diameter mm (in)	Standard	50.0 (1.969)		
	Limit	48.5 (1.909)		
Clearance between bell crank and frame mm (in)		0.02~0.55 mm (0.00078~0.022)		
Clearance between steering knuckle and rear axle beam mm (in)		Less than 0.1 (0.04)		
Steering knuckle starting torque kg (ft-lb) [N-m]		3~5 (21.7~36.2) [29.4~57.7]		
Toe-in adjustment mm (in)		±4 (0.16)		
hub starting torque kg-m (ft-lb) [N-m]		1.5~4.0 (3.3~8.8) [14.7~39.2]	1.5~4.5 (3.3~9.9) [14.7~44.1]	
TIGHTENING TORQUE kg-m (ft-lb) [N-m]				
King pin lock nut		1.9~3.1 (13.7~22.4) [18.6~30.4]		
Tie rod end castle nut		7~8 (51~57.8) [69~78.4]		
Bell crank stopper plate set bolt kg-m (ft-lb) [N-m]		1.9~3.1 (13.7~22.4) [18.6~30.4]		
Rear axle bracket set bolt		12~17 (87~123) [118~167]		
Hub nut		9~11 (65~80) [88~108]	12~15 (87~109) [118~157]	
Divided rim set bolt kg-m (ft-lb) [N-m]		1.0~1.5 ton 3.0~4.5 (21.7~32.5) [29.4~44.1]	2.0 ton: 8~12 (21.7~32.5) [29.4~44.1] 2.5 ton: —	—

WHEEL

1.0 ton series		Tire size	Air pressure
Front	Single	6.00-9-10PR	7.0kg/cm² 100psi 690kpa
	Standard double	4.50-12-8PR	7.0 kg/cm² 100psi 690kpa
Rear		5.00-8-8PR	8.0kg/cm² 114psi 780kpa

1.35 ton series		Tire size	Air pressure
Front	Single	6.00-9-10PR	7.0kg/cm² 100psi 690kpa
	Standard double	4.50-12-8PR	7.0 kg/cm² 100psi 690kpa
Rear		5.00-8-8PR	8.0kg/cm² 114psi 780kpa

1.5 ton series		Tire size	Air pressure
Front	Single	21×8-15-14PR	6.25kg/cm² 88.9psi 612.9kpa
	Standard double	4.50×15×8PR	7.0kg/cm² 100psi 690kpa
Rear		5.00×8×8PR	8.0kg/cm² 114psi 780kpa

1.75 ton series		Tire size	Air pressure
Front	Single	21×8-9-10PR	6.25kg/cm² 88.9psi 612.9 kPa
	Standard double	4.50-12-8PR	7.0 kg/cm² 100psi 690kpa
Rear		5.00-8-10PR	9.0kg/cm² 128psi 880kpa

2.0 ton series		Tire size	Air pressure
Front	Single	21×8-9-14PR	9kg/cm² 128psi 880kpa
	Standard double	6.00-9-10PR	7.0 kg/cm² 100psi 690kpa
Rear		18×7-8-14PR	7.0kg/cm² 100psi 690kpa

2.5 ton series		Tire size	Air pressure
Front	Single	21×8-9-14PR	9.0kg/cm² 128psi 880kpa
	Standard double	6.00-9-10PR	7.0 kg/cm² 100psi 690kpa
Rear		18×7-8-14PR	9.0kg/cm² 128psi 880kpa

3.0 ton series		Tire size	Air pressure
Front	Single	28×9-15-14PR	8kg/cm² 114psi 780kpa
	Standard double	6.00-15-10PR	7.0 kg/cm² 100psi 690kpa
Rear		6.50-10-10PR	7.0kg/cm² 100psi 690kpa

STEERING

		1 ton series	2 ton series	3 ton series
Steering wheel play mm (in)		20~40 (0.787~1.57)		
Tilt shaft bending limit mm (in)		1.5 (0.059)		
Steering gear ratio		1 : 23.748		
Steering wheel rotation (lock-to-lock)		4.3	4.4	4.5
Cross shaft adjusting plate clearance		0.1 or less		
Ball screw set starting force kg (lb) [N]	w/o cross shaft	0.3~0.7 (0.66~1.54) [2.94~6.86]		
	w/ cross shaft	0.7~1.5 (1.54~3.3) [6.86~14.71]		
TIGHTENING TORQUE kg-m (gt-lb) [N·m]				
Steering gear	Side cover	4.5~5.5 (32.5~39.8) [44.1~53.9]		
	Adjusting bolt lock nut	3.0~4.5 (21.7~32.5) [29.4~44.1]		
	Pitman arm	16~19 (115.7~137.4) [156.9~186.3]		
Universal joint ASSY		1.8~2.5 (13.0~18.1) [17.7~24.5]		
Steering wheel		2.0~3.0 (14.5~21.7) [19.6~29.4]		
Torque sensor ASSY		1.0~1.6 (7.23~11.6) [9.8~15.7]		
Steering gear box		5.0~8.0 (36.2~57.8) [49.0~78.5]		

PS ACTUATOR

	1 ton series	2 ton series	3 ton series
PS actuator rod looseness limit mm (in)	2.5 (0.0984)		
Ball screw standard preload kg (lb) [N]	3~5 (6.6~11) [29.4~49.0]		
From motor mounting surface to center of ball joint mm (in)	273±1 (10.75±0.039)		
TIGHTENING TORQUE kg-m (lb) [N]			
Top cover set bolt	4.5~5.5 (32.5~39.8) [44.1~53.9]		
Top plug lock nut	23~25 (166.3~180.8) [225.6~245.2]		
Ball stud plug	5.0~7.0 (36.2~50.6) [49.0~68.6]		
Gear box lock nut	15~20 (108.5~144.6) [147.1~196.1]		

BRAKE

			1 ton series	2 ton series	3 ton series
Front brake	Clearance between wheel cylinder and piston mm (in)		0.040~0.125 (0.00157~0.00492)		0.054~0.087 (0.00213~0.00343)
	Brake drum inside diameter mm (in)	Standard	254 (10.00)	279.4 (11.00)	310 (12.20)
		Limit	256 (10.08)	281.4 (11.08)	312 (12.28)
	Brake lining thickness mm (in)	Standard	4.9 (0.1929)	5.10 (0.2008)	5.7 (0.2244)
		Limit	1.0 (0.039)		
	Brake Shoe return spring free length mm (in)		102 (4.02)	106 (4.17)	124 (4.88)
	Adjuster actuator spring free length mm (in)		79 (3.11)	98.4 (3.89)	88 (3.47)
	Strut spring free length mm (in)		18 (0.71)	29.8 (1.17)	
	Shoe hold down spring free length mm (in)		25.7 (1.012)	35.9 (1.413)	25.7 (1.012)
	TIGHTENING TORQUE kg-m (ft-lb) [N-m]				
	Wheel cylinder set bolt		0.8~1.2 (5.8~8.7) [7.8~11.8]	1.8~2.7 (13.0~19.5) [17.7~265]	
	Backing plate set nut		5.0~8.0 (36.1~57.9) [49.0~78.5]	12~14 (86~101) [118~137]	
Master cylinder	End cap tightening torque kg-m (ftælb) [N-m]		20~28 (145~203) [196~275]		
Parking brake	Number of parking brake lever notches [operating force]		3~4 [15kg (33lb) [147N]]		
Brake pedal	Pedal hight mm (in) (from toe-board to pedal topsurface at center)	Without pad	124 (4.88) (1990. 4~1990. 8) 135 $^{+5}_{0}$ (5.31 $^{+0.20}_{0}$) (1990. 8~)		
		With pad	129 (5.08) (1990.4~1990. 8) 140 $^{+5}_{0}$ (5.51 $^{+0.20}_{0}$) (1990. 8~)		
	Pedal play mm (in)		5~10 (0.20~0.39) (1990. 4~1990. 8) 3~7 (0.12~0.28) (1990. 8~)		
	Depressed pedal higth mm (in)		90 (3.54) or more	90 (3.54) or more (1990. 4~1990. 8) 85 (3.35) or more (1990. 8~)	85 (3.35) or more (1990. 4~1990. 8) 80 (3.15) or more (1990. 8~)

COMBINATION METER

TIGHTENING TORQUE	kg-m (ft-lb) [N-m]
Window plate set screw	3.5~4 (25.3~28.9) [34.3~39.2]
Panel assy set screw	3.5~4 (25.3~28.9) [34.3~39.2]
Combination meter board set screw	7~8 (50.6~57.9) [68.6~78.5]

MATERIAL HANDLING SYSTEM

Natural drop mm (in)/15 min		45 (1.77) or less
Natural forward tilt mm (in)/15 min		16 (0.63) or less
Oil leak test	Lift cylinder oil leak amount (all lift port) cc (in^3)/min	6~16 (0.37~0.98)
	Tilt cylinder oil leak amount (total of lift and tilt) cc (in^3)/min	14~34 (0.85~2.07)

MAST

V Mast Lift Roller

mm (in)

Place used	Item		1 ton series	2 ton series	3 ton series
Lift bracket, upper & lower (A) (4 pcs.)	Outside diameter	Standard	94.5 (3.720)	⇦	109.7 (4.319)
		Limit	93.5 (3.681)	⇦	108.7 (4.280)
	Inside diameter	Standard	35.0 (1.3780)	⇦	40.0 (1.5748)
		Limit	35.02(1.3787)	⇦	40.02(1.5756)
Lift bracket, center (2 pcs.)	Outside diamter	Standard	93.3 (3.673)	⇦	108.5 (4.272)
		Limit	92.3 (3.634)	⇦	107.5 (4.232)
	Inside diameter	Standard	35.0 (1.3780)	⇦	65.0 (2.5591)
		Limit	35.02(1.3787)	⇦	65.02(2.5598)
Inner mast, lower (B) (2 pcs.)	Outside diameter	Standard	114.5 (4.508)	⇦	125.5 (4.941)
		Limit	113.5 (4.468)	⇦	124.5 (4.902)
	Inside diameter	Standard	35.0 (1.3780)	⇦	40.0 (1.5748)
		Limit	35.02(1.3787)	⇦	40.02(1.5756)
Outer mast, upper (2 pcs.)	Outside diamter	Standard	94.5 (3.720)	⇦	109.7 (4.319)
		Limit	93.5 (3.681)	⇦	108.7 (4.280)
	Inside diameter	Standard	35.0 (1.3780)	⇦	40.0 (1.5748)
		Limit	35.02(1.3787)	⇦	40.02(1.5756)
Side roller, upper (2 pcs.)	Outside diameter	Standard	65.0 (2.559)	62.0 (2.441)	79.5 (3.130)
		Limit	64.0 (2.520)	61.0 (2.402)	78.5 (3.091)
	Inside diameter	Standard	25.0 (0.9843)	⇦	⇦
		Limit	25.02(0.9850)	⇦	⇦

SV Mast Lift Roller

mm (in)

Place used	Item		1 ton series	2 ton series	3 ton series
(A) Lift bracket, upper & lower (4 pcs.)	Outside diameter	Standard	94.5 (3.720)	⇦	109.7 (4.319)
		Limit	93.5 (3.681)	⇦	108.7 (4.280)
	Inside diameter	Standard	35.0 (1.3780)	⇦	40.0 (1.5748)
		Limit	35.02(1.3787)	⇦	40.02(1.5756)
Lift bracket, center (2 pcs.)	Ouside diameter	Standard	93.3 (3.673)	⇦	108.5 (4.272)
		Limit	92.3 (3.634)	⇦	107.5 (4.232)
	Inside diameter	Standard	35.0 (1.3780)	⇦	65.0 (2.5591)
		Limit	35.02(1.3787)	⇦	65.02(2.5598)
(B) Inner mast, lower (2 pcs.)	Outside diameter	Standard	114.5 (4.508)	⇦	125.5 (4.941)
		Limit	113.5 (4.468)	⇦	124.5 (4.902)
	Inside diameterd	Standard	35.0 (1.3780)	⇦	40.0 (1.5748)
		Limit	35.02(1.3787)	⇦	40.02(1.5756)
Outer mast, upper (2 pcs.)	Outside diameter	Standard	94.5 (3.720)	⇦	109.7 (4.319)
		Limit	93.5 (3.681)	⇦	108.7 (4.280)
	Inside diameter	Standard	35.0 (1.3780)	⇦	40.0 (1.5748)
		Limit	35.02(1.3787)	⇦	40.02(1.5756)
Lift bracket rollers, upper and lower (4 pcs.)	Outside diameter	Standard	73.4 (2.980)	⇦	⇦
		Limit	72.3 (2.850)	⇦	⇦
	Inside diameter	Standard	25.0 (0.9843)	⇦	⇦
		Limit	25.02(0.9850)	⇦	⇦
Lift bracket side rollers, center (2 pcs.)	Outside diameter	Standard	38.0 (1.496)	⇦	45.0 (1.772)
		Limit	37.0 (1.457)	⇦	44.0 (1.732)

FV Mast Lift Roller

mm (in)

Place used	Item		1 ton series	2 ton series	3 ton series
(A) Lift bracket, upper & lower (4 pcs.)	Outside diameter	Standard	94.5 (3.720)	⇦	109.7 (4.319)
		Limit	93.5 (3.681)	⇦	108.7 (4.280)
	Inside diameter	Standard	35.0 (1.3780)	⇦	40.0 (1.5748)
		Limit	35.02(1.3787)	⇦	40.02(1.5756)
Lift bracket, center (2 pcs.)	Outside diameter	Standard	93.3 (3.673)	⇦	108.5 (4.272)
		Limit	92.3 (3.634)	⇦	107.5 (4.232)
	Inside diameter	Standard	35.0 (1.3780)	⇦	65.0 (2.5591)
		Limit	35.02(1.3787)	⇦	65.02(2.5598)
(B) Inner mast, lower (2 pcs.)	Outside diameter	Standard	114.5 (4.508)	⇦	125.5 (4.941)
		Limit	113.5 (4.468)	⇦	124.5 (4.902)
	Inside diameter	Standard	35.0 (1.3780)	⇦	40.0 (1.5748)
		Limit	35.02(1.3787)	⇦	40.02(1.5756)
Outer mast, upper (2 pcs.)	Outside diameter	Standard	94.5 (3.720)	⇦	109.7 (4.319)
		Limit	93.5 (3.681)	⇦	108.7 (4.280)
	Inside diameter	Standard	35.0 (1.3780)	⇦	40.0 (1.5748)
		Limit	35.02(1.3787)	⇦	40.02(1.5756)
Lift bracket side rollers, upper (2 pcs.)	Outside diameter	Standard	62.0 (2.441)	72.0 (2.835)	⇦
		Limit	61.0 (2.402)	71.0 (2.795)	⇦
	Inside diameter	Standard	25.0 (0.9843)	25.0 (0.9843)	⇦
		Limit	25.02(0.9850)	25.02(0.9850)	⇦

FSV Mast Lift Roller

mm (in)

Place used	Item		1 ton series	2 ton series	3 ton series
(A) Lift bracket, upper & lower (4 pcs.)	Outside diameter	Standard	94.5 (3.720)	⇦	109.7 (4.319)
		Limit	93.5 (3.681)	⇦	108.7 (4.280)
	Inside diameter	Standard	35.0 (1.3780)	⇦	40.0 (1.5748)
		Limit	35.02(1.3787)	⇦	40.02(1.5756)
Lift bracket, center (2 pcs.)	Outside diameter	Standard	——	93.3 (3.673)	——
		Limit		92.3 (3.634)	
	Inside diameter	Standard		35.0 (1.3780)	
		Limit		35.02(1.3787)	
(B) Inner mast, lower (2 pcs.)	Outside diameter	Standard	94.5 (3.720)	⇦	109.7 (4.319)
		Limit	93.5 (3.681)	⇦	108.7 (4.280)
	Inside diameter	Standard	35.0 (1.3780)	⇦	40.0 (1.5748)
		Limit	35.02(1.3787)	⇦	40.02(1.5756)
Outer/middle mast, upper (4 pcs.)	Outside diameter	Standard	94.5 (3.720)	⇦	109.7 (4.319)
		Limit	93.5 (3.681)	⇦	108.7 (4.280)
	Inside diameter	Standard	35.0 (1.3780)	⇦	40.0 (1.5748)
		Limit	35.02(1.3787)	⇦	40.02(1.5756)
(C) Middle mast, lower (2 pcs.)	Outside diameter	Standard	114.5 (4.508)	⇦	125.5 (4.941)
		Limit	113.5 (4.468)	⇦	124.5 (4.902)
	Inside diameter	Standard	35.0 (1.3780)	⇦	40.0 (1.5748)
		Limit	35.02(1.3787)	⇦	40.02(1.5756)
Lift bracket side roller, upper (4 pcs.)	Outside diameter	Standard	62.0 (2.441)	⇦	72.0 (2.835)
		Limit	61.0 (2.402)	⇦	71.0 (2.795)
	Inside diameter	Standard	25.0 (0.9843)	⇦	25.0 (0.9843)
		Limit	25.02(0.9850)	⇦	25.02(0.9850)

Mast Adjustment Values

	Mast type	Standard
Lift bracket roller front to back clearance standard mm (in)	V·SV FV·FSV	0.5~2.0 (0.020~0.079)
Lift bracket lift roller (center and lower) to inner mast clearance standard mm (in)	V	0~0.8 (0.031)
Lift bracket lift roller (lower) and side roller to inner mast clearance standard mm (in)	FV·FSV	0~0.5 (0.020)
Lift bracket side roller (upper) to inner mast clearance standard mm (in)	V·SV	0~0.6 (0.024)
Lift bracket side roller (center and lower) to inner mast clearance standard mm (in)	SV	0~0.8 (0.031)
Outer mast to inner mast roller clearance standard mm (in)	V·SV	0~0.8 (0.031)
Outer mast to inner mast roller clearance standard mm (in)	FV	0~0.5 (0.020)
Outer mast to midle mast roller (lower) and midle mast to inner mast roller clearance standard mm (in)	FSV	0~0.5 (0.020)
Inner mast to outer mast roller clearance standard mm (in)	V·SV	0~0.8 (0.031)
Inner mast to outer mast roller clearance standard mm (in)	FV	0~0.5 (0.020)
Midle mast to outer mast roller and inner mast to midle mast roller (upper) clearance standard mm (in)	FSV	0~0.5 (0.020)
Mast strip to inner mast clearance standard mm (in)	V·SV FV·FSV	0.5~1.0 (0.020~0.039)

CHAIN

mm (in)

		1 ton series	2 ton series	3 ton series
Chain anchor adjusting nut tightening torque kg-m (in-lb) [N-m]		5 ~ 8 (36 ~ 58) [49 ~ 78]		
Chain tention adjustment standard mm (in)	A	3 (0.12)	33 (1.30)	30 (1.18)
	B	81 (3.19)	158 (6.22)	150 (5.91)
	h	0 ~ 10 (0.39)		

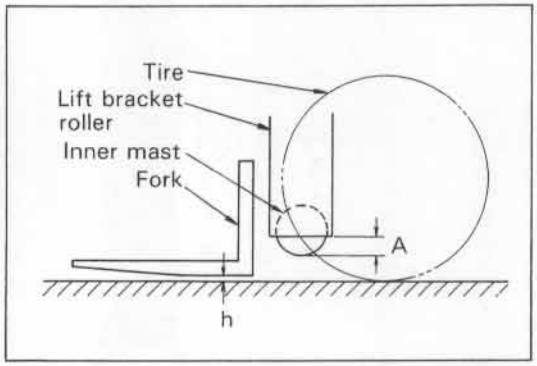

LAES21

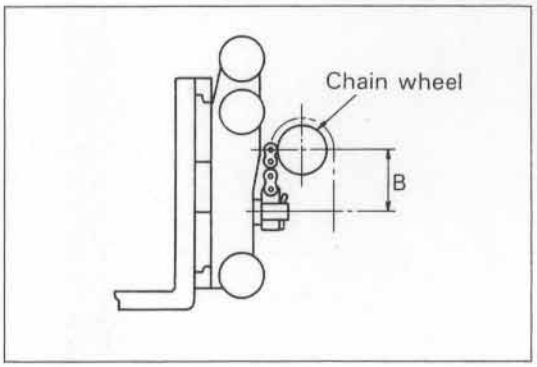

LAOS382

FORK

Individual fork bending limit	mm (in)	15 (0.59)
Fork tip misaligment limit	mm (in)	10 (0.39)

CYLINDER

Lift Cylinder

			1 ton series	2 ton series	3 ton series
Lift cylinder bore mm (in)	V·SV	Standard	45 (1.8)	50 (2.0)	55 (2.2)
		Limit	45.20 (1.7795)	50.20 (1.9764)	55.35 (2.1791)
	FV·FSV (Front)	Standard	90 (3.5)		105 (4.1)
		Limit	90.40 (3.5590)		105.40 (4.1496)
	FV·FSV (Rear)	Standard	50 (2.0)		55 (2.2)
		Limit	50.30 (1.9803)		55.35 (2.1791)

			1 ton series	2 ton series	3 ton series
Lift cylinder rod diameter mm (in)	V·SV	Standard	35 (1.4)	40 (1.6)	45 (1.8)
		Limit	34.92 (1.3748)	39.92 (1.5717)	44.92 (1.7685)
	FV·FSV (Front)	Standard	75 (3.0)		85 (3.3)
		Limit	74.91 (2.9492)		84.90 (3.3425)
	FV (Rear)	Standard	35 (1.4)		40 (1.6)
		Limit	34.92 (1.3748)		39.92 (1.5717)
	FSV (Rear)	Standard	40 (1.6)		45 (1.8)
		Limit	39.92 (1.5717)		44.92 (1.7685)
Lift cylinder rod bending limit mm (in)			2.0 (0.079)		

Flow Regulator Valve

			1 ton series	2 ton series	3 ton series
Lowering speed standard mm/sec (fpm)	V·SV	No-load	500 (98)		450 (89)
		Loaded	500 (98)		
	FV	No-load	350 (69)	380 (75)	350 (69)
		Loaded	480 (94)		460 (91)
	FSV	No-load	380 (75)		350 (69)
		Loaded	480 (94)		460 (91)
Tightening torque kg-m (ft-lb) [N-m]			6.0 ~ 7.0 (43.4 ~ 50.6) [58.8 ~ 68.6]		

Tilt Cylinder

Tilt cylinder bore mm (in)	Standard	70 (2.76)*
	Limit	70.35 (2.7697)
Gap between piston rod and sleeve mm (in)	Standard	0.1 (0.004)
	Limit	0.4 (0.016)
Tilt cylinder rod bending limit mm (in)		1.0 (0.039)
Tightening rorque kg-m (ft-lb) [N-m]	Cylinder cover	29 ~ 35 (210 ~ 253) [284 ~ 343]
	Piston castle nut	23 ~ 29 (166 ~ 210) [226 ~ 284]
	Rodjoint set bolt	7.5 ~ 11.4 (54.3 ~ 82.5) [73.5 ~ 111.8]

OIL PUMP

	1 ton series	2 ton series	3 ton series
Body inside diameter limit mm (in)	39.180 (1.54252)		
Body interior surfase damegedepth limit mm (in)	0.1 (0.004)		
Side bush inside diameter limit mm (in)	19.123 (0.75287)		
Side bush axial length limit mm (in)	14.77 (0.5815)		
Pressure plate thickness limit mm (in)	——		
Center bush inside diameter limit mm (in)	19.123 (0.75287)		
Center bush axial length limit mm (in)	29.68 (1.1685)		
Gear shaft diameter limit mm (in)	18.935 (0.74547)		
Pump cover set bolt tightening torque kg-m (ft-lb) [N-m]	4.7~4.9 (34.0~35.5) [46.1~48.1]		

Lifting Speed

mm/sec (fpm)

V·SV		5FB10	5FB14	5FB15	5FB18	5FB20	5FB25	5FB30
STD	Loaded	320 (63)	310 (61)	300 (59)	280 (55)	270 (53)	250 (49)	220 (43)
	Unload	500 (98)	⇦	⇦	⇦	430 (84)	⇦	340 (67)
Dust proof	Loaded	300 (59)	270 (53)	260 (51)	250 (49)	230 (45)	200 (39)	200 (39)
	Unload	460 (90)	⇦	⇦	⇦	400 (78)	⇦	320 (63)

FV·FSV		5FB10	5FB14	5FB15	5FB18	5FB20	5FB25	5FB30
STD	Loaded	290 (57)	270 (53)	260 (51)	250 (49)	240 (47)	210 (41)	190 (37)
	Unload	400 (79)	⇦	⇦	⇦	⇦	⇦	330 (65)
Dust proof	Loaded	250 (49)	240 (47)	220 (43)	210 (41)	⇦	190 (37)	160 (31)
	Unload	350 (69)	⇦	⇦	⇦	360 (71)	⇦	300 (59)

Down Speed mm/sec (mph)

V·SV		5FB10	5FB14	5FB15	5FB18	5FB20	5FB25	5FB30
STD	Loaded	500 (98)	⇦	⇦	⇦	⇦	⇦	⇦
	Unload	500 (98)	⇦	⇦	⇦	⇦	⇦	450 (89)
Dust proof	Loaded	500 (98)	⇦	⇦	⇦	⇦	⇦	⇦
	Unload	500 (98)	⇦	⇦	⇦	⇦	⇦	450 (89)

FV·FSV		5FB10	5FB14	5FB15	5FB18	5FB20	5FB25	5FB30
STD	Loaded	480 (94)	⇦	⇦	⇦	⇦	⇦	460 (91)
	Unload	380 (69)	⇦	⇦	⇦	⇦	⇦	350 (69)
Dust proof	Loaded	500 (98)	⇦	⇦	⇦	⇦	⇦	⇦
	Unload	500 (98)	⇦	⇦	⇦	⇦	⇦	450 (89)

OIL CONTROL VALVE

		1 ton series	2 ton series	3 ton series
Relief set pressure kg/cm^2 (psi) [kPa]	Lifting	155 (2200) [15200]	175 (2490) [17160]	185 (2630) [18140]
	Tilting	120 (1710) [11770]	150 (2130) [14710]	150 (2130) [14710]
Outlet housing tightening torque kg-m (fr-lb) [N-m]		3.5~4.5 (25.3~32.6) [34.3~44.1]		

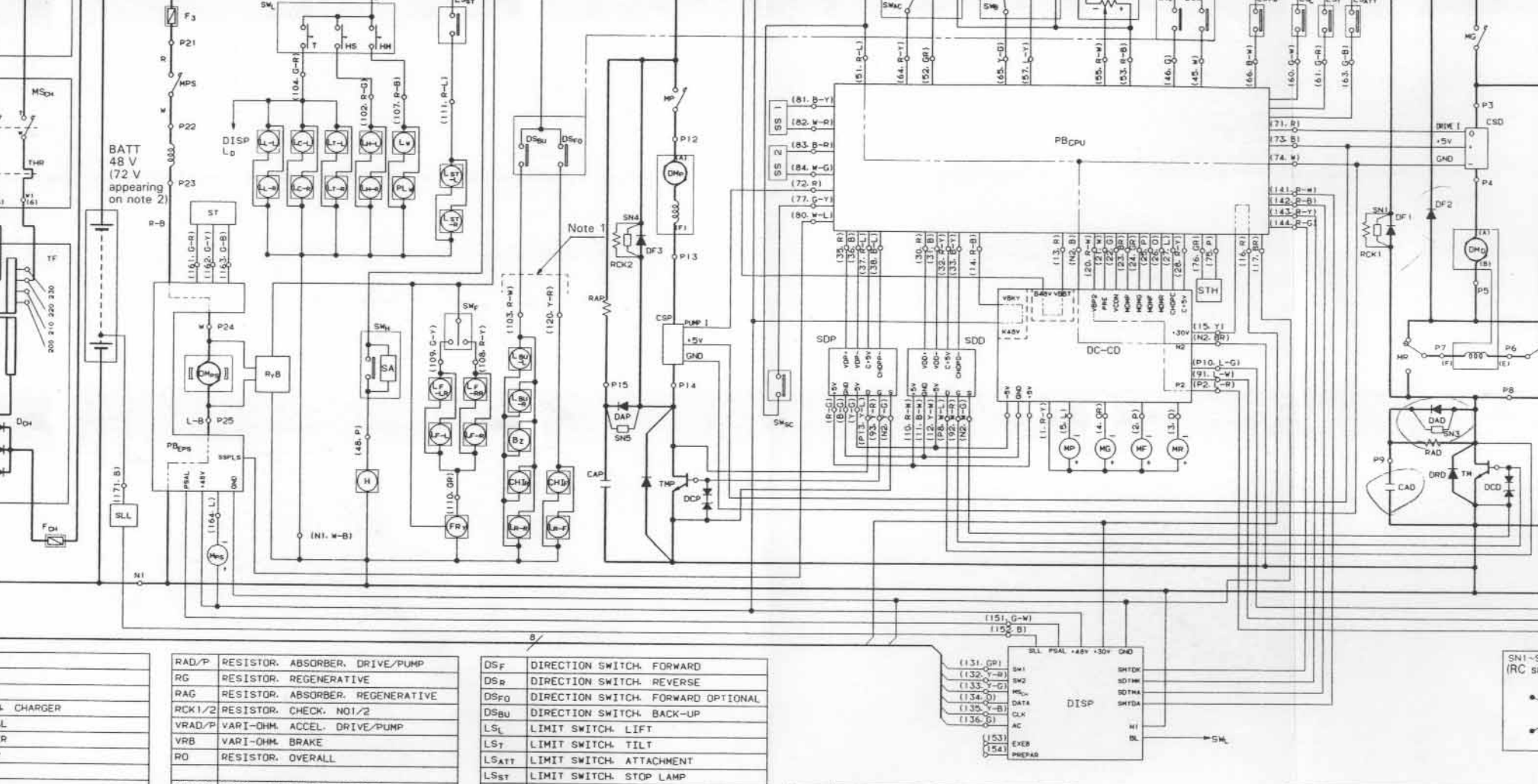

L CHARGER	
L	
R	
TEERING	
CIRCUIT	
COMPUTER	
ER & CONTACTOR DRIVE	
EPS	
RIVE	
UMP	
PUMP	

RAD/P	RESISTOR. ABSORBER. DRIVE/PUMP
RG	RESISTOR. REGENERATIVE
RAG	RESISTOR. ABSORBER. REGENERATIVE
RCK1/2	RESISTOR. CHECK. NO1/2
VRAD/P	VARI-OHM. ACCEL. DRIVE/PUMP
VRB	VARI-OHM. BRAKE
RO	RESISTOR. OVERALL
DF1/2	DIODE. FLY-WHEEL. NO.1/2
DF3/4	DIODE. FLY-WHEEL. NO.3/4
DAD/P	DIODE. ABSORBER. DRIVE/PUMP
DRD/P	DIODE. REVERSE. DRIVE/PUMP
DG	DIODE. REGENERATIVE
DAG	DIODE. ABSORBER. REGENERATIVE
DCD/P	DIODE. CRIP. DRIVE/PUMP
CAD/P	CAPACITOR. ABSORBER. DRIVE/PUMP
CO	CAPACITOR. OVERALL
CAG	CAPACITOR. ABSORBER. REGENERATIVE
CSD/P	CURRENT SENSOR. DRIVE/PUMP
SSP1/2	SENSOR. SPEED. NO.1/2
ST	SENSOR. STEERING TORQUE
SLL	SENSOR. LEQUID LEVEL
STH	SENSOR. THERMO

DS_F	DIRECTION SWITCH. FORWARD
DS_R	DIRECTION SWITCH. REVERSE
DS_{FO}	DIRECTION SWITCH. FORWARD OPTIONAL
DS_{BU}	DIRECTION SWITCH. BACK-UP
LS_L	LIMIT SWITCH. LIFT
LS_T	LIMIT SWITCH. TILT
LS_{ATT}	LIMIT SWITCH. ATTACHMENT
LS_{ST}	LIMIT SWITCH. STOP LAMP
SW_{AC}	SWITCH. ACCEL
SW_B	SWITCH. BRAKE
SW_K	SWITCH. KEY
SW_L	SWITCH. LIGHT
SW_F	SWITCH. FLASHER
SW_H	SWITCH. HORN
SW_{SC}	SWITCH. SPEED CONTROL
PLW	PILOT LAMP. WORKING
L_{H-L}	LAMP. HEAD LH
L_{H-R}	LAMP. HEAD RH
L_{C-L}	LAMP. CLEARANCE LH
L_{C-R}	LAMP. CLEARANCE RH
L_{T-L}	LAMP. TAIL LH
L_{T-R}	LAMP. TAIL RH

L_{F-R}	LAMP. FLASHER RH
L_{ST-L}	LAMP. STOP LH
L_{ST-R}	LAMP. STOP RH
L_{R-F}	LAMP. ROTALY FORWARD
L_{R-R}	LAMP. ROTALY REVERSE
L_{BU-L}	LAMP. BACK-UP LH
L_{BU-R}	LAMP. BACK-UP RH
B_Z	BUZZER
CHI_F	CHIME. FORWARD
CHI_R	CHIME. REVERSE
H	HORN
FR	RELAY. FLASHER
SA	SURGE ABSORBER
FAN	FAN

Note 1

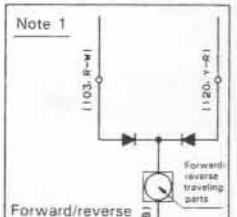

Forward/reverse traveling parts circuit

Note 2

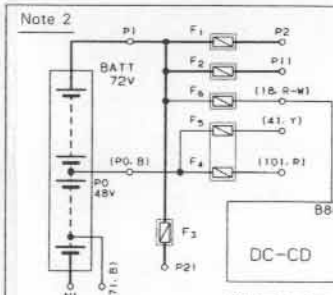

Incase of 5FB30 (72V)

(Circuits other above are the as those for 4

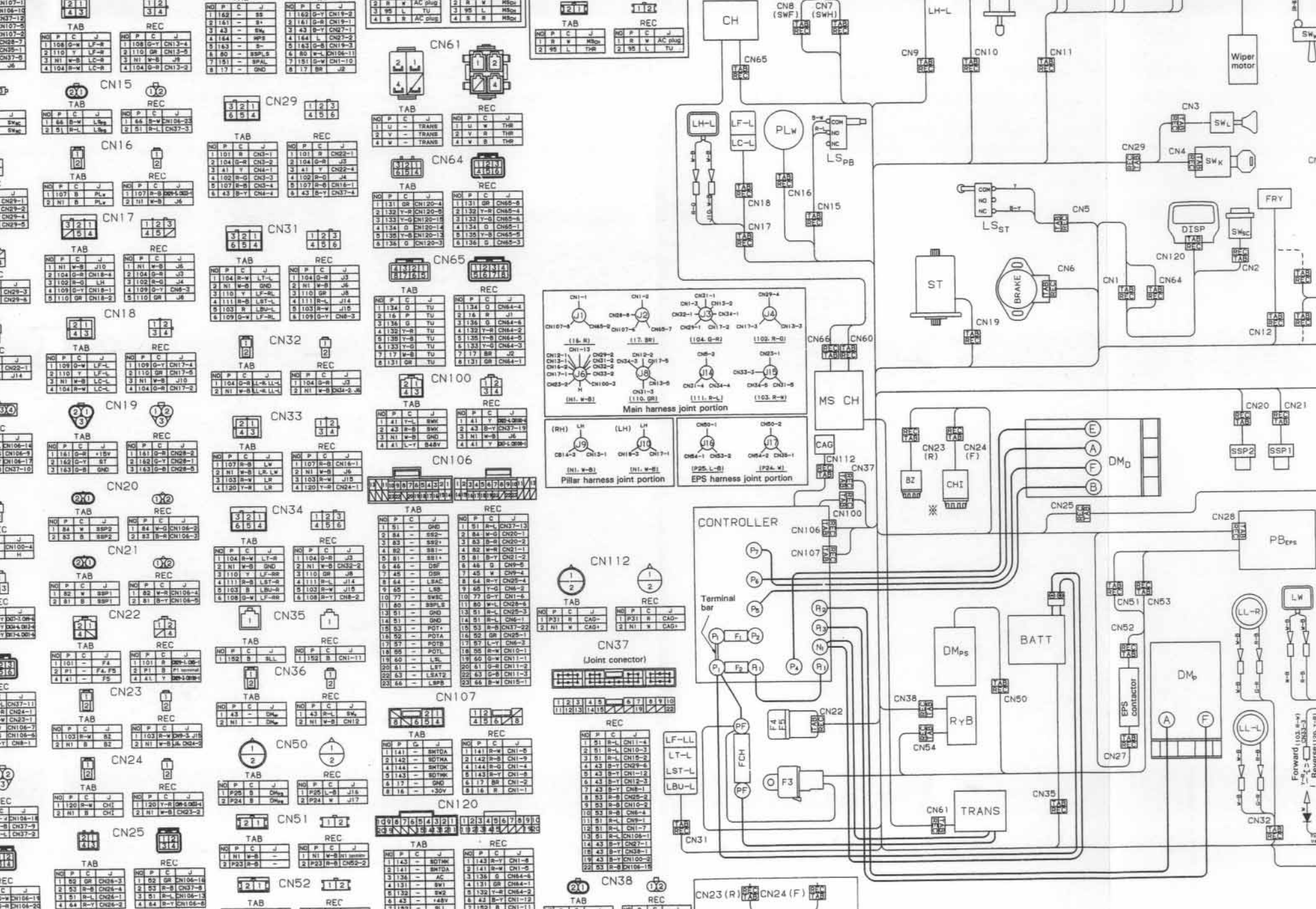
CN15
CN16
CN17
CN18
CN19
CN20
CN21
CN22
CN23
CN24
CN25
CN29
CN31
CN32
CN33
CN34
CN35
CN36
CN50
CN51
CN52
CN61
CN64
CN65
CN100
CN106
CN107
CN120
CN112
CN37
CN38
TAB
REC
Main harness joint portion
Pillar harness joint portion
EPS harness joint portion
CONTROLLER
Terminal bar
CH
MS CH
CAG
BZ
CHI
DM_D
DM_PS
DM_P
BATT
RYB
TRANS
FCH
F3
F4
F5
EPS contactor
PB_EPS
SSP1
SSP2
LH-L
LF-L
LC-L
PLW
LS_PB
LS_ST
SW_L
SW_K
SW_BC
DISP
FRY
ST
BRAKE
Wiper motor
LF-LL
LT-L
LST-L
LBU-L
CN3
CN4
CN5
CN6
CN9
CN10
CN11
CN12
CN18
CN19
CN20
CN21
CN23 (R)
CN24 (F)
CN25
CN27
CN28
CN31
CN32
CN35
CN37
CN38
CN50
CN51
CN52
CN53
CN54
CN60
CN61
CN64
CN66
CN100
CN106
CN107
CN112
CN120
LL-R
LL-L
LW
Forward
Reverse

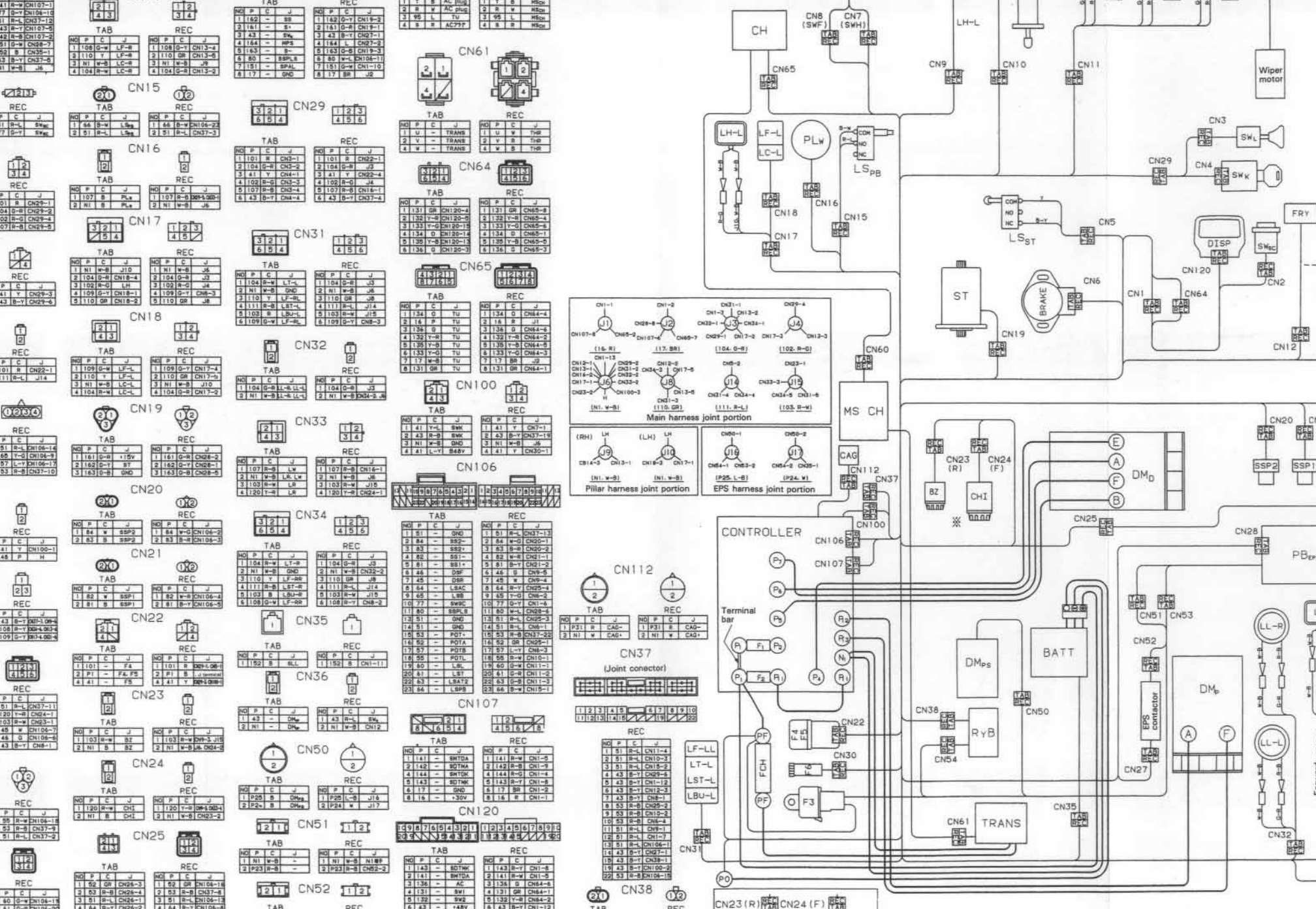
CH
CN8 (SWF)
CN7 (SWH)
LH-L
CN65
CN9
CN10
CN11
Wiper motor
LF-L
LC-L
PLW
LS_PB
CN16
CN18
CN15
CN17
CN3
SW_L
CN29
CN4
SW_K
LS_ST
CN5
DISP
SW_EC
CN120
CN2
FRY
ST
BRAKE
CN6
CN1
CN64
CN19
CN12
CN60
MS CH
CAG
CN112
CN37
CN20
SSP2
SSP1
CN23 (R)
CN24 (F)
BZ
CHI
DM_D
CN25
CONTROLLER
CN106
CN107
CN100
Terminal bar
DM_PS
BATT
CN28
PB_EP
CN51
CN53
CN52
CN50
CN22
CN30
CN38
RyB
CN54
CN27
EPS contactor
DM_P
LL-R
LL-L
CN32
CN35
TRANS
CN61
CN31
LF-LL
LT-L
LST-L
LBU-L
CN23(R)
CN24(F)
Main harness joint portion
Pillar harness joint portion
EPS harness joint portion
CN106
CN120
CN107
CN34
CN33
CN32
CN65
CN64
CN29
CN31
CN61
CN15
CN21
CN22
CN23
CN24
CN25
CN51
CN52
CN50
CN36
CN35
CN100
CN18
CN17
CN16
CN19
CN20
CN21
CN22
CN23
CN24
CN25

Edited by
TOYODA AUTOMATIC LOOM WORKS,LTD.
Published by
TOYOTA MOTOR CORPORATION
1st Printing: June 1990
5th Printing: June 1995

Pub. No. CE304

Printed in Japan

C

OVERSEAS INDUSTRIAL EQUIPMENT DIVISION
TOYOTA MOTOR CORPORATION
PRINTED IN JAPAN (C) Pub. No. CE304