600CLC JOHN DEERE

1A2

INTRODUCTION AND CUSTOMER INFORMATION

T149497 -UN-01FEB02

RUTHZIL TRATOR COMERCIAL DE PEÇAS LTDA 11 97083-6812 ROLANDO

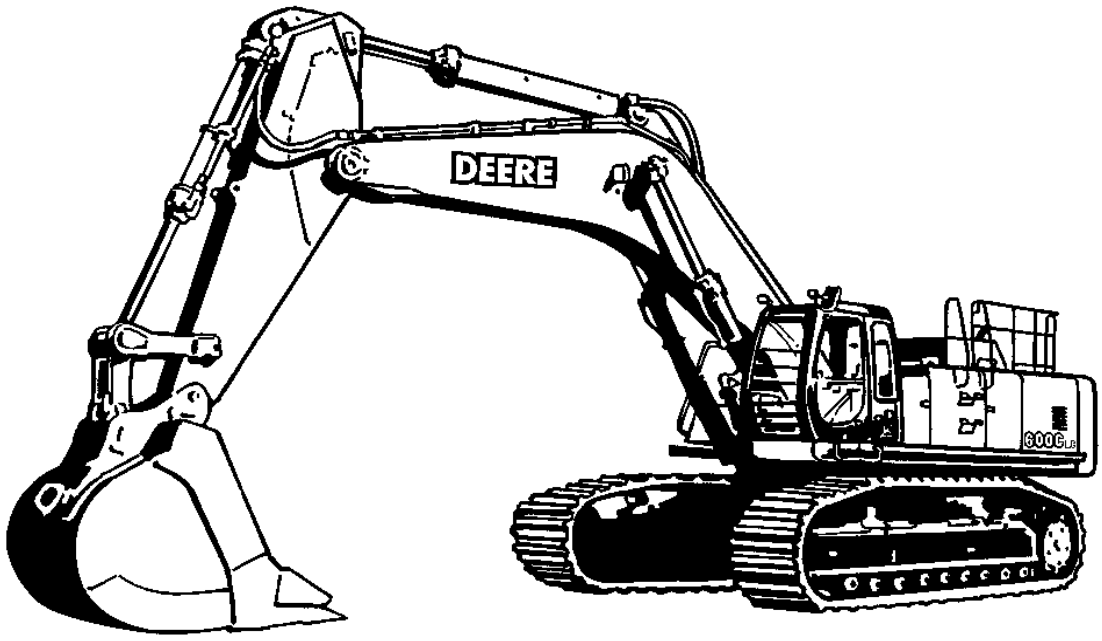

T149497

LEFT-HAND SIDE VIEW OF JOHN DEERE 600C LC EXCAVATOR
(MANUFACTURED 2002-)

TO THE CUSTOMER

THE PART NUMBERS IN THIS PARTS CATALOG WERE CORRECT AT THE TIME YOUR CATALOG WAS PUBLISHED. IT IS OUR POLICY TO CONSTANTLY IMPROVE OUR MACHINES AND, THEREFORE, PART NUMBERS MAY CHANGE. WHEN ORDERING PARTS, VERIFY PART NUMBERS THROUGH YOUR DEALER.

(SPECIFICATIONS AND DESIGN SUBJECT TO CHANGE WITHOUT NOTICE.)

COPYRIGHT © 2005 DEERE & COMPANY Moline, Illinois All rights reserved

SERIAL NUMBER LOCATIONS

EACH 600C LC EXCAVATOR HAS EIGHT SERIAL NUMBER PLATES:

A PRODUCT IDENTIFICATION NUMBER PLATE, AN ENGINE SERIAL NUMBER PLATE, A HYDRAULIC PUMP SERIAL NUMBER PLATE, A LEFT-HAND PROPEL MOTOR SERIAL NUMBER PLATE, A RIGHT-HAND PROPEL MOTOR SERIAL NUMBER PLATE, TWO SWING MOTOR SERIAL NUMBER PLATES AND A CONTROL VALVE SERIAL NUMBER PLATE.

THE PRODUCT IDENTIFICATION PLATE IS LOCATED ON THE RIGHT-HAND SIDE FRAME NEAR THE FRONT SUPPORT.

THE ENGINE SERIAL NUMBER PLATE IS LOCATED ON THE INTAKE SIDE OF THE ENGINE NEAR THE FUEL FUEL INJECTION PUMP.

THE HYDRAULIC PUMP SERIAL NUMBER PLATE IS LOCATED ON THE TOP OF THE HYDRAULIC PUMPS.

THE SWING MOTOR SERIAL NUMBER PLATES ARE LOCATED ON THE TOP OF EACH SWING MOTOR.

THE PROPEL MOTOR SERIAL NUMBER PLATE IS LOCATED ON THE REAR OF THE PROPEL MOTOR BENEATH COVER.

THE CONTROL VALVE SERIAL NUMBER PLATE IS LOCATED ON THE TOP OF THE CONTROL VALVE.

LEFT SIDE, RIGHT SIDE, FRONT AND REAR OF THE EXCAVATOR ARE VIEWED BY FACING IN THE DIRECTION OF THE EXCAVATOR FORWARD TRAVEL.

IF PRODUCT IDENTIFICATION NUMBERS OR SERIAL NUMBERS ARE REQUIRED FOR WARRANTY CLAIMS OR CORRESPONDENCE PERTAINING TO THIS PRODUCT. IT IS EXTREMELY IMPORTANT THAT ALL CHARACTERS BE FURNISHED. THIS POINT CANNOT BE OVEREMPHASIZED.

PRODUCT IDENTIFICATION NUMBER

TP49457 -UN-28AUG96

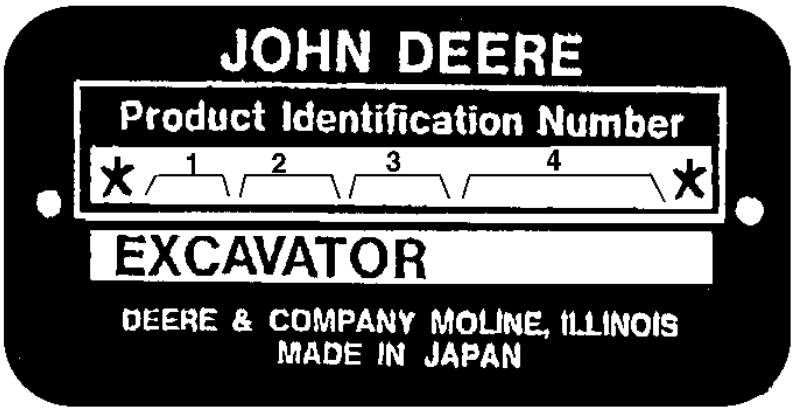

TP49457

1. DESIGNATES EXCAVATOR MANUFACTURER	FF - JOHN DEERE-HITACHI
2. DESIGNATES EXCAVATOR MODEL	600C LC
3. DESIGNATES EXCAVATOR CONFIGURATION	E
4. DESIGNATES EXCAVATOR SERIAL NUMBER	000000
THE BOTTOM SECTION DESIGNATES UNIT TYPE	EXCAVATOR

SERIAL NUMBER LISTING INFORMATION

SERIAL NUMBER INFORMATION IS LISTED TO SHOW ON WHICH MACHINES EACH PART CAN BE USED; FOR EXAMPLE:

- THE PART CAN BE USED ON ALL MACHINES.
000000- THE PART CAN BE USED ON ALL MACHINES BEGINNING WITH THE SERIAL NUMBER LISTED.
-000000 THE PART CAN BE USED ON ALL MACHINES UP TO AND INCLUDING THE SERIAL NUMBER LISTED.
000000-000000 THE PART CAN BE USED ON ALL MACHINES BETWEEN AND INCLUDING THE SERIAL NUMBERS LISTED.

WHEN XXXXXX'S ARE LISTED IN PLACE OF A SERIAL NUMBER, A SERIAL NUMBER CHANGE WAS MADE BUT THE EXACT SERIAL NUMBER WAS NOT AVAILABLE WHEN THE CATALOG WAS PRODUCED.

DIRECTION ARROW

ARROWS ARE USED WITH ILLUSTRATIONS TO INDICATE THE FRONT OF THE UNIT. "RIGHT-HAND" AND "LEFT-HAND" SIDES OF THE LOADER OR TRACTOR PARTS ARE DETERMINED BY FACING IN THE DIRECTION OF MACHINE FORWARD TRAVEL

EXCEPTION: FOR ALL BACKHOE PARTS, "RIGHT-HAND" AND "LEFT-HAND" SIDES, "FRONT" AND "REAR" ARE DETERMINED WHEN SEATED FOR BACKHOE OPERATION.

BOX-ENCLOSED ILLUSTRATIONS

A KEY NUMBER, SHOWN IN THE PARTS LIST, IS ASSIGNED TO A BOX ENCLOSING ALL PARTS SOLD AS A SERVICE ASSEMBLY.

COMPLETE GOODS LISTINGS

COMPLETE GOODS ARE LISTED IN BOLD FACE TYPE. ORDER SEPARATELY. DO NOT INCLUDE ON REPLACEMENT PARTS ORDER.

SI UNITS OF MEASURE

METRIC DIMENSIONS ARE GIVEN, WHERE APPLICABLE, THROUGHOUT THIS PARTS CATALOG.

CHANGE INDICATOR LINE

CHANGES AFFECTING THE ORDERING OF PARTS ARE IDENTIFIED BY VERTICAL LINES MARKED IN THE LEFT-HAND MARGIN OF REVISED PARTS LISTING IMAGES. A LINE IS ALSO AT THE LEFT-HAND EDGE OF THE SAME PART NUMBER IN THE NUMERICAL INDEX TO SHOW THE LOCATION OF REVISED INFORMATION.

ALPHABETICAL INDEX

GRID		PAGE
	A	
1B1	ADJUSTER	0130 - 12
2D5	ADJUSTER,SEAT	1821 - 2
1F16	AIR CLEANER	0520 - 4
2D13	AIR CONDITIONER AIR DUCT	1830 - 2
2D15	AIR CONDITIONER COMPONENTS	1830 - 4
2D17	AIR CONDITIONER COMPONENTS (RELAY, FILTER, BLOWER)	1830 - 6
2E3	AIR CONDITIONER COMPRESSOR	1830 - 16
2E3	AIR CONDITIONER COMPRESSOR BELT	1830 - 16
2E3	AIR CONDITIONER COMPRESSOR BRACKET	1830 - 16
2E3	AIR CONDITIONER COMPRESSOR TO CONDENSER HOSE	1830 - 16
2E3	AIR CONDITIONER CONDENSER	1830 - 16
2E3	AIR CONDITIONER CONDENSER TO COMPRESSOR HOSE	1830 - 16
2E3	AIR CONDITIONER CONDENSER TO RECEIVER/ DRYERHOSE	1830 - 16
2D13	AIR CONDITIONER CONTROL PANEL	1830 - 2
2D23	AIR CONDITIONER CONTROLLER	1830 - 12
2D15	AIR CONDITIONER EVAPORATOR	1830 - 4
2D13	AIR CONDITIONER FITTINGS	1830 - 2
2D13	AIR CONDITIONER HOSE FROM COMPRESSOR	1830 - 2
2D15	AIR CONDITIONER HOSES	1830 - 4
2D15	AIR CONDITIONER INTREGRATED CIRCUIT	1830 - 4
2D15	AIR CONDITIONER LEVERS	1830 - 4
2D15	AIR CONDITIONER MOTOR	1830 - 4
2D15	AIR CONDITIONER PRESSURE SWITCH	1830 - 4
2E3	AIR CONDITIONER RECEIVER/DRYER	1830 - 16
2E3	AIR CONDITIONER RECEIVER/DRYER TO CONDENSER HOSE	1830 - 16
2D15	AIR CONDITIONER THERMOSTAT	1830 - 4
2D13	AIR CONDITIONER UNIT TO RECEIVER/DRYER HOSE	1830 - 2
2D13	AIR CONDITIONER WIRING HARNESS	1830 - 2
2D13	AIR DUCT, AIR CONDITIONER	1830 - 2
2D19	AIR DUCT, HVAC	1830 - 8
2F8	ALARM, MOTION	2004 - 2
2F8	ALARM, MOTION, WIRE HARNESS	2004 - 2
1E13	ALTERNATOR AND STARTER MOUNTING	0423 - 2
3E19	ANGLE SENSOR, PUMP	3361 - 14
2B7	ANTENNA, RADIO	1810 - 12
3D9	ARM CONVENIENCE ASSEMBLY (LONG ARM 5.2M)	3340 - 8
3D9	ARM CYLINDER PIN (LONG ARM 5.2M)	3340 - 8
3D11	ARM CYLINDER PIN (MASS EXCAVATING 2.9M)	3340 - 10
3D7	ARM CYLINDER PIN (SEMI-LONG ARM 4.1M)	3340 - 6
3I17	ARM CYLINDER PIPINGS, MASS EXCAVATING BOOM	3363 - 48
3J7	ARM CYLINDER, HYDRAULIC	3365 - 2
3I15	ARM TO CYLINDER FRONT PIPING	3363 - 46
3D9	ARM, LONG (5.2M)	3340 - 8
3D9	ARM, LONG, BUCKET CYLINDER, HOSES, AND LINKAGE ASSEMBLY (5.2M)	3340 - 8
3D11	ARM, MASS EXCAVATING (2.9M)	3340 - 10
3D11	ARM, MASS EXCAVATING, BUCKET CYLINDER, HOSES AND LINKAGE ASSY (2.9M)	3340 - 10
3D7	ARM, SEMI-LONG (4.1M)	3340 - 6
3D7	ARM, SEMI-LONG, BUCKET CYLINDER, HOSES, AND LINKAGE ASSEMBLY (4.1M)	3340 - 6
3D3	ARM, SHORT (2.9M - 9 FT 6 IN)	3340 - 2
3D3	ARM, SHORT, BUCKET CYLINDER, HOSES AND LINKAGE ASSEMBLY (2.9M - 9 FT 6 IN)	3340 - 2
3D5	ARM, STANDARD (3.5M)	3340 - 4
3D5	ARM, STANDARD, BUCKET CYLINDER, HOSES, AND LINKAGE ASSEMBLY (3.5M)	3340 - 4
2B7	ARM, WINDSHIELD WIPER	1810 - 12
2D5	ARMREST,SEAT	1821 - 2
2A23	ASHTRAY	1810 - 4
3D20	AUXILIARY ELECTRIC FOOT SWITCH	3360 - 8
3D24	AUXILIARY ELECTRIC HAND CONTROLLER	3360 - 12
3C21	AUXILIARY FOOT PEDAL CONTROL	3315 - 12
1B3	AXLE, UPPER ROLLER	0130 - 14
	B	
2D9	BASE, SEAT	1821 - 6
1G7	BATTERIES AND HARNESSES	1671 - 2
2E22	BATTERY COVER	1910 - 18
1H12	BEARING, SWING	1740 - 8
2E3	BELT, AIR CONDITIONER COMPRESSOR	1830 - 16
1C3	BELT, FAN	0400 - 2
1E15	BELT, FAN	0429 - 2
2D11	BELT, SEAT	1821 - 8
2D7	BELT, SEAT (3.00 INCH)	1821 - 4
3C5	BLADE, TRUCK LOADING BUCKET	3302 - 17A
2B7	BLADE, WINDSHIELD WIPER	1810 - 12
1C9	BLOCK, CYLINDER	0404 - 2
2D17	BLOWER, AIR CONDITIONER	1830 - 6
3G13	BOOM CYLINDER LOWERING VALVE COMPONENTS	3362 - 40
3H11	BOOM CYLINDER TO CONTROL VALVE HYDRAULIC LINES	3363 - 18
3J11	BOOM CYLINDER, LEFT	3365 - 6
3J13	BOOM CYLINDER, RIGHT	3365 - 8
3I19	BOOM LUBRICATE PIPING	3363 - 50
3H9	BOOM PIPINGS TO CONTROL VALVE	3363 - 16
3I13	BOOM TO CYLINDER FRONT PIPING	3363 - 44
3D15	BOOM, MASS EXCAVATING	3344 - 4
3C9	BOOT, CONTROL LEVER	3315 - 2
2E3	BRACKET, AIR CONDITIONER COMPRESSOR	1830 - 16
2C1	BRACKET, CAB FLOOR	1810 - 30
1E7	BRACKET, FUEL FILTER AND	0420 - 2
3C15	BRACKET, PILOT SYSTEM CONTROL LEVER	3315 - 6
2D9	BRACKET, SEAT BASE	1821 - 6
2D11	BRACKET, SEAT BELT	1821 - 8
3D9	BUCKET CYLINDER HOSES AND LINKAGE, LONG ARM	3340 - 8
3D7	BUCKET CYLINDER HOSES AND LINKAGE, SEMI-LONG ARM	3340 - 6
3D5	BUCKET CYLINDER HOSES AND LINKAGE, STANDARD ARM	3340 - 4
3D11	BUCKET CYLINDER HOSES AND LINKAGE, MASS EXCAVATING ARM	3340 - 10
3D3	BUCKET CYLINDER HOSES AND LINKAGE, SHORT ARM	3340 - 2
3D11	BUCKET CYLINDER PIN (MASS EXCAVATING 2.9M)	3340 - 10
3D9	BUCKET CYLINDER PIN (LONG ARM 5.2M)	3340 - 8
3D7	BUCKET CYLINDER PIN (SEMI-LONG ARM 4.1M)	3340 - 6
3J9	BUCKET CYLINDER, HYDRAULIC	3365 - 4
3D9	BUCKET LINK (LONG ARM 5.2M)	3340 - 8
3D11	BUCKET LINK (MASS EXCAVATING 2.9M)	3340 - 10
3D7	BUCKET LINK (SEMI-LONG ARM 4.1M)	3340 - 6
3D9	BUCKET LINK PIN (LONG ARM 5.2M)	3340 - 8
3D11	BUCKET LINK PIN (MASS EXCAVATING 2.9M)	3340 - 10
3D7	BUCKET LINK PIN (SEMI-LONG ARM 4.1M)	3340 - 6
3D9	BUCKET PIN (LONG ARM 5.2M)	3340 - 8
3D11	BUCKET PIN (MASS EXCAVATING 2.9M)	3340 - 10
3D7	BUCKET PIN (SEMI-LONG ARM 4.1M)	3340 - 6
3B20	BUCKET, EXTREME DUTY (USE WITH 9'6" ARM)	3302 - 10
3B22	BUCKET, EXTREME DUTY (USE WITH 9'6" ARM)	3302 - 12

ALPHABETICAL INDEX - CONTINUED

GRID		PAGE
3B24	BUCKET, EXTREME DUTY (USE WITH 9'6" ARM)	3302 - 13A
3C1	BUCKET, EXTREME DUTY (USE WITH 11'6" AND 13'5" ARM, AND 9'6" SHORT ARM)	3302 - 14
3C3	BUCKET, EXTREME DUTY (USE WITH 11'6" AND 13'5" ARM, AND 9'6" SHORT ARM)	3302 - 16
3B10	BUCKET, HEAVY DUTY	3302 - 2
3B12	BUCKET, HEAVY DUTY	3302 - 3A
3B14	BUCKET, HEAVY DUTY	3302 - 4
3B16	BUCKET, HEAVY DUTY	3302 - 6
3B18	BUCKET, HEAVY DUTY	3302 - 8
3C7	BUCKET, HEAVY DUTY, TOOTH ASSEMBLY	3302 - 18
3C5	BUCKET, TRUCK LOADING	3302 - 17A
3C5	BUSHING, TRUCK LOADING BUCKET	3302 - 17A
2D1	BUSHINGS, CAB (CAB WITH INTEGRATED HEADGUARD)	1810 - 54

C

2D1	CAB BUSHINGS (CAB WITH INTEGRATED HEADGUARD)	1810 - 54
2B9	CAB COMPONENTS (CAB ROOF, CAB WINDOWS, AND HANDRAILS)	1810 - 14
2B11	CAB COMPONENTS (DOOR AND WINDOWS)	1810 - 16
2B19	CAB COMPONENTS (DOOR)	1810 - 24
2B13	CAB COMPONENTS (FRONT)	1810 - 18
2B15	CAB COMPONENTS (RIGHT WINDOW)	1810 - 20
2B17	CAB COMPONENTS (TOP HATCH)	1810 - 22
2B7	CAB COMPONENTS (WINDSHIELD WIPER, DOME LIGHT, RADIO ANTENNA, RADIO SPEAKER)	1810 - 12
2B13	CAB COMPONENTS(WINDSHIELD)	1810 - 18
2A21	CAB CONSOLE	1810 - 2
2A23	CAB CONSOLE COVER	1810 - 4
2C13	CAB DOOR WINDOW (INTEGRATED HEADGUARD CAB)	1810 - 42
2C19	CAB DOOR WINDOW COMPONENTS (CAB WITH INTEGRATED HEADGUARD)	1810 - 48
2C1	CAB FLOOR BRACKET	1810 - 30
2C1	CAB FLOOR COMPONENTS	1810 - 30
2C1	CAB FLOOR MAT	1810 - 30
2C3	CAB FLOOR PLATE	1810 - 32
2C1	CAB FLOOR SUPPORT	1810 - 30
2E1	CAB HEATER DUCT SENSOR	1830 - 14
2B1	CAB INSIDE COVER, RIGHT	1810 - 6
2B1	CAB INSIDE RIGHT COVER	1810 - 6
2C17	CAB ISOLATORS (CAB WITH INTEGRATED HEADGUARD)	1810 - 46
2B3	CAB MOUNT ISOLATOR	1810 - 8
2B3	CAB MOUNTING	1810 - 8
2C17	CAB MOUNTS (CAB WITH INTEGRATED HEADGUARD)	1810 - 46
2C3	CAB PLATFORM	1810 - 32
2C13	CAB REAR WINDOW (INTEGRATED HEADGUARD CAB)	1810 - 42
2C21	CAB REAR WINDOW COMPONENTS (CAB WITH INTEGRATED HEADGUARD)	1810 - 50
2B15	CAB RIGHT WINDOW	1810 - 20
2B15	CAB RIGHT WINDOW GLASS	1810 - 20
2B15	CAB RIGHT WINDOW GLASS GUARD	1810 - 20
2B9	CAB ROOF	1810 - 14
2B9	CAB TOP, HEADLINER	1810 - 14
2C23	CAB WINDSHIELD (CAB WITH INTEGRATED HEADGUARD)	1810 - 52
2C7	CAB WITH INTEGRATED HEADGUARD	1810 - 36
2C9	CAB WITH INTEGRATED HEADGUARD (COMPONENTS)	1810 - 38
2C13	CAB WITH INTEGRATED HEADGUARD DOOR AND REAR WINDOW	1810 - 42
2C9	CAB WITH INTEGRATED HEADGUARD WINDSHIELD WIPER	1810 - 38
2C11	CAB WITH INTEGRATED HEADGUARD RIGHT SIDE WINDOW GUARDS	1810 - 40
2D3	CAB WITH INTEGRATED HEADGUARD WINDSHIELD GUARD	1810 - 56
2C9	CAB WITH INTEGRATED HEADGUARD WORKLIGHT	1810 - 38
2B5	CAB,COMPLETE	1810 - 10
1F10	CABLE, ENGINE CONTROL	0515 - 2
1F14	CABLE, ENGINE STOP	0515 - 6
1G23	CABLE, MIC (S.N. 951008-)	1674 - 13C
1C7	CAMSHAFT AND VALVE	0402 - 2
3J5	CAP, HYDRAULIC RESERVOIR	3364 - 2
3J20	CAP, SWING DRIVE	4360 - 2
1E19	CASE, TIMING GEAR	0433 - 4
3H7	CENTER JOINT PIPING TO CONTROL VALVE	3363 - 14
3G11	CHECK VALVE (PILOT SYSTEM)	3362 - 38
3G11	CHECK VALVE COMPONENTS (PILOT SYSTEM)	3362 - 38
3I5	CHECK VALVE TO OIL TANK HYDRAULIC LINES	3363 - 36
3I5	CHECK VALVE TO PILOT SIGNAL MANIFOLD HYDRAULIC LINES	3363 - 36
3G11	CHECK VALVE, PILOT	3362 - 38
1F16	CLEANER, AIR	0520 - 4
2B5	COMPLETE CAB	1810 - 10
2C19	COMPONENTS, CAB DOOR WINDOW(CAB WITH INTEGRATED HEADGUARD)	1810 - 48
2C21	COMPONENTS, CAB REAR WINDOW(CAB WITH INTEGRATED HEADGUARD)	1810 - 50
3C13	COMPONENTS, DIG AND SWING PILOT CONTROLLER (SN 951032-)	3315 - 5A
3C11	COMPONENTS, DIG AND SWING PILOT CONTROLLER(SN -951031)	3315 - 4
1G9	COMPONENTS, ELECTRIC	1674 - 2
1G11	COMPONENTS, ELECTRIC	1674 - 4
1G13	COMPONENTS, ELECTRIC	1674 - 6
2C9	COMPONENTS, INTEGRATED HEADGUARD CAB	1810 - 38
3J22	COMPONENTS, SWING DEVICE	4360 - 4
3C19	COMPONENTS,HYD/PILOT CONTROL VALVE	3315 - 10
2E3	COMPRESSOR, AIR CONDITIONER	1830 - 16
2D23	COMPUTER, AIR CONDITIONER CONTROLLER	1830 - 12
2E3	CONDENSER, AIR CONDITIONER	1830 - 16
1C5	CONNECTING RODS	0401 - 2
2A21	CONSOLE	1810 - 2
2A21	CONSOLE COMPONENTS	1810 - 2
2A23	CONSOLE COVER	1810 - 4
3C9	CONTROL LEVER	3315 - 2
3C9	CONTROL LEVER BOOT	3315 - 2
3C9	CONTROL LEVER GRIP	3315 - 2
2D13	CONTROL PANEL, AIR CONDITIONER	1830 - 2
3E1	CONTROL PATTERN SELECTOR KIT	3360 - 14
3D1	CONTROL SYSTEM, COUNTERWEIGHT REMOVAL	3315 - 16
3D17	CONTROL VALVE	3360 - 2
3H9	CONTROL VALVE	3363 - 16
3F11	CONTROL VALVE (5 SPOOL SIDE SECTION)	3362 - 14
3G9	CONTROL VALVE COMPONENTS, FLOW	3362 - 36
3C21	CONTROL VALVE FITTINGS TO PILOT SIGNAL MANIFOLD (FOOT CONTROL, PILOT SYSTEM)	3315 - 12
3C21	CONTROL VALVE HOSE TO PILOT SIGNAL MANIFOLD (FOOT CONTROL,PILOT SYSTEM)	3315 - 12
3D22	CONTROL VALVE HOSE TO PILOT SIGNAL MANIFOLD (PILOT SYSTEM)	3360 - 10
3H17	CONTROL VALVE HYDRAULIC LINES	3363 - 24
3H9	CONTROL VALVE PIPING TO BOOM	3363 - 16
3H7	CONTROL VALVE PIPING TO CENTER JOINT	3363 - 14

ALPHABETICAL INDEX - CONTINUED

GRID		PAGE
3J1	CONTROL VALVE PIPING TO PILOT PIPING REMOVAL DEVICE SHUTTLE VALVE	3363 - 56
3H7	CONTROL VALVE PIPING TO ROTARY MANIFOLD	3363 - 14
3H5	CONTROL VALVE PIPING TO SWING MOTOR	3363 - 12
3J3	CONTROL VALVE PIPINGS TO REMOVAL DEVICE CYLINDER	3363 - 58
3D18	CONTROL VALVE SUPPORT	3360 - 4
3H11	CONTROL VALVE TO BOOM CYLINDERS HYDRAULIC LINES	3363 - 18
3I7	CONTROL VALVE TO OIL TANK HYDRAULIC LINE	3363 - 38
3I1	CONTROL VALVE TO PILOT SIGNAL MANIFOLD HYDRAULIC LINES	3363 - 32
3H15	CONTROL VALVE TO SWING DEVICE HYDRAULIC LINES	3363 - 22
3F5	CONTROL VALVE, MANIFOLD	3362 - 8
3E23	CONTROL VALVE, 4 SPOOL	3362 - 2
3F1	CONTROL VALVE, 4 SPOOL	3362 - 4
3F3	CONTROL VALVE, 4 SPOOL, SIDE SECTION	3362 - 6
3F7	CONTROL VALVE, 5 SPOOL	3362 - 10
3F9	CONTROL VALVE, 5 SPOOL	3362 - 12
2D23	CONTROLLER, AIR CONDITIONER	1830 - 12
1G21	CONTROLLER, MIC (S.N. 951008-)	1674 - 13A
3C11	CONTROLLER, PILOT (COMPONENTS) (DIG AND SWING)(SN -951031)	3315 - 4
3C13	CONTROLLER, PILOT (COMPONENTS) (DIG AND SWING)(SN 951032-)	3315 - 5A
1G19	CONTROLLER, VEHICLE	1674 - 12
1H3	CONVERTER (24-VOLT TO 12-VOLT)	1674 - 18
1C3	COOLANT OVERHEAT SWITCH	0400 - 2
1H10	COUNTERWEIGHT	1740 - 6
1H16	COUNTERWEIGHT (WITH REMOVAL KIT)	1740 - 12
1H16	COUNTERWEIGHT MOUNTING(WITH REMOVAL KIT)	1740 - 12
3D1	COUNTERWEIGHT REMOVAL CONTROL SYSTEM	3315 - 16
1H16	COUNTERWEIGHT REMOVAL DEVICE	1740 - 12
1H18	COUNTERWEIGHT REMOVAL DEVICE	1740 - 14
1H20	COUNTERWEIGHT REMOVAL LIFTING DEVICE	1740 - 16
3D1	COUNTERWEIGHT REMOVAL PILOT VALVE	3315 - 16
3F13	COUNTERWEIGHT REMOVAL PILOT VALVE	3362 - 16
1D17	COUPLING, FUEL INJECTION PUMP	0413 - 10
2E8	COVER	1910 - 4
2E10	COVER	1910 - 6
2E12	COVER	1910 - 8
2E14	COVER	1910 - 10
2E16	COVER	1910 - 12
2E6	COVER FRAME	1910 - 2
2E22	COVER, BATTERY	1910 - 18
2B1	COVER, CAB INSIDE RIGHT	1810 - 6
2D21	COVER, CAB INTERIOR REAR	1830 - 10
2A23	COVER, CONSOLE	1810 - 4
1D5	COVER, CYLINDER HEAD	0409 - 6
2E20	COVER, HEAT SHIELD	1910 - 16
3F13	COVER, PILOT VALVE (COUNTERWEIGHT REMOVAL)	3362 - 16
1B14	COVER, TRAVEL HYDRAULIC LINES	0260 - 6
2C5	COVER, WINDOW	1810 - 34
1C5	CRANKSHAFT, PISTON AND FLYWHEEL	0401 - 2
2D5	CUSHION,SEAT	1821 - 2
3B20	CUTTING EDGE, EXTREME DUTY BUCKET (USE WITH 9'6" ARM)	3302 - 10
3B22	CUTTING EDGE, EXTREME DUTY BUCKET (USE WITH 9'6" ARM)	3302 - 12
3B24	CUTTING EDGE, EXTREME DUTY BUCKET (USE WITH 9'6" ARM)	3302 - 13A
3C1	CUTTING EDGE, EXTREME DUTY BUCKET (USE W/11'6" AND 13'5" ARM, 9'6" SHORT ARM)	3302 - 14
3C3	CUTTING EDGE, EXTREME DUTY BUCKET (USE W/11'6" AND 13'5" ARM, 9'6" SHORT ARM)	3302 - 16
3B10	CUTTING EDGE, HEAVY DUTY BUCKET	3302 - 2
3B12	CUTTING EDGE, HEAVY DUTY BUCKET	3302 - 3A
3B14	CUTTING EDGE, HEAVY DUTY BUCKET	3302 - 4
3B16	CUTTING EDGE, HEAVY DUTY BUCKET	3302 - 6
3B18	CUTTING EDGE, HEAVY DUTY BUCKET	3302 - 8
3C5	CUTTING EDGE, TRUCK LOADING BUCKET	3302 - 17A
1C9	CYLINDER BLOCK	0404 - 2
1D1	CYLINDER HEAD	0409 - 2
1D3	CYLINDER HEAD	0409 - 4
1D5	CYLINDER HEAD COVER	0409 - 6
3J17	CYLINDER REMOVAL DEVICE	3365 - 12
3J7	CYLINDER, ARM	3365 - 2
3J9	CYLINDER, BUCKET, HYDRAULIC	3365 - 4
3J15	CYLINDER, HYDRAULIC BUCKET	3365 - 10
3J11	CYLINDER, LEFT BOOM	3365 - 6
3J3	CYLINDER, REMOVAL DEVICE CYLINDER PIPING TO CONTROL VALVE	3363 - 58
3J13	CYLINDER, RIGHT BOOM	3365 - 8

D

1C3	DC GENERATOR	0400 - 2
3D20	DECAL, AUXILIARY CONTROL	3360 - 8
3D1	DECAL, COUNTERWEIGHT REMOVAL INSTRUCTION	3315 - 16
2A23	DECAL, HYDRAULIC LOCKOUT	1810 - 4
2A23	DECAL, IGNITION	1810 - 4
2F8	DECAL, MOTION ALARM	2004 - 2
1G2	DECAL, PATTERN CHANGER	1322 - 2
3D1	DECAL, UP-DOWN COUNTERWEIGHT REMOVAL	3315 - 16
1G2	DECALS	1322 - 2
2D23	DEFROST FAN	1830 - 12
3H1	DELIVERY HYDRAULIC LINES	3363 - 8
3E7	DEVICE, PUMP	3361 - 2
3J22	DEVICE, SWING	4360 - 4
1B18	DEVICE, TRAVEL	0260 - 10
1B20	DEVICE, TRAVEL	0260 - 11A
1C3	DIESEL ENGINE (WHOLE ASSEMBLY)	0400 - 2
3C13	DIG AND SWING PILOT CONTROLLER COMPONENTS (SN 951032-)	3315 - 5A
3C11	DIG AND SWING PILOT CONTROLLER COMPONENTS(SN -951031)	3315 - 4
1G15	DIODES	1674 - 8
1C11	DIPSTICK, OIL PAN AND	0407 - 2
2B7	DOME LIGHT	1810 - 12
2B7	DOME LIGHT WIRE HARNESS	1810 - 12
2C15	DOOR HOLD OPEN LATCH (CAB WITH CAB WITH INTEGRATED HEADGUARD)	1810 - 44
2B19	DOOR LATCH ASSEMBLY	1810 - 24
2B19	DOOR STOP	1810 - 24
2B11	DOOR, CAB	1810 - 16
2C13	DOOR, CAB WITH INTEGRATED HEADGUARD	1810 - 42
3H3	DRAIN HYDRAULIC LINES	3363 - 10
3J20	DRIVE, SWING	4360 - 2
3D24	DUAL CONTROL HANDLE WITH WIRING	3360 - 12
2E18	DUCT	1910 - 14
2D21	DUCT, REAR TRAY	1830 - 10

E

3B10	EAR ASSEMBLY, HEAVY DUTY BUCKET	3302 - 2
3B12	EAR ASSEMBLY, HEAVY DUTY BUCKET	3302 - 3A
3B14	EAR ASSEMBLY, HEAVY DUTY BUCKET	3302 - 4
3B16	EAR ASSEMBLY, HEAVY DUTY BUCKET	3302 - 6

ALPHABETICAL INDEX - CONTINUED

GRID		PAGE
3B18	EAR ASSEMBLY, HEAVY DUTY BUCKET	3302 - 8
3C5	EDGE, CUTTING, TRUCK LOADING BUCKET	3302 - 17A
1G9	ELECTRIC COMPONENTS	1674 - 2
1G11	ELECTRIC COMPONENTS	1674 - 4
1G13	ELECTRIC COMPONENTS	1674 - 6
1G19	ELECTRIC COMPONENTS (CAB)	1674 - 12
1C3	ENGINE (WHOLE ASSEMBLY)	0400 - 2
1F10	ENGINE CONTROL CABLE	0515 - 2
1F12	ENGINE CONTROL MOTOR	0515 - 4
1C3	ENGINE COOLANT TEMPERATURE SWITCH	0400 - 2
1E21	ENGINE GASKET SET	0452 - 2
1E23	ENGINE GASKET SET	0452 - 4
1F1	ENGINE GASKET SET	0452 - 6
1C15	ENGINE OIL AND VACUUM PIPING	0407 - 6
1C19	ENGINE OIL DRAIN PIPING	0407 - 10
1C17	ENGINE OIL FILTER LINES	0407 - 8
1C21	ENGINE OIL FILTER LINES	0407 - 12
1C3	ENGINE OIL LEVEL SENSOR	0400 - 2
1C3	ENGINE OIL LEVEL SWITCH	0400 - 2
1C3	ENGINE OIL PRESSURE SENSOR	0400 - 2
1C3	ENGINE OIL PRESSURE SWITCH	0400 - 2
1F14	ENGINE STOP CABLE	0515 - 6
1F20	ENGINE SUPPORT	0540 - 2
2E1	ENGINE TO HVAC UNIT HOSE (HEATER HOSE)	1830 - 14
1C3	ENGINE WIRING LEAD	0400 - 2
1C3	ENGINE, ENGINE SENSORS, GENERATOR, AND FAN BELT	0400 - 2
2D15	EVAPORATOR, AIR CONDITIONER	1830 - 4
1D7	EXHAUST MANIFOLD	0410 - 2
3B20	EXTREME DUTY BUCKET (USE WITH 9'6" ARM)	3302 - 10
3B22	EXTREME DUTY BUCKET (USE WITH 9'6" ARM)	3302 - 12
3B24	EXTREME DUTY BUCKET (USE WITH 9'6" ARM)	3302 - 13A
3C1	EXTREME DUTY BUCKET (USE WITH 11'6" AND 13'5" ARM, AND 9'6" SHORT ARM)	3302 - 14
3C3	EXTREME DUTY BUCKET (USE WITH 11'6" AND 13'5" ARM, AND 9'6" SHORT ARM)	3302 - 16

F

1E15	FAN AND FAN BELT	0429 - 2
1E15	FAN BELT PULLEY	0429 - 2
1C3	FAN BELT, ENGINE	0400 - 2
1E15	FAN BELT, FAN AND	0429 - 2
2D23	FAN, DEFROST	1830 - 12
2D17	FILTER, AIR CONDITIONER	1830 - 6
2D19	FILTER, HVAC	1830 - 8
3J5	FILTER, HYDRAULIC	3364 - 2
3H13	FILTER, PILOT	3363 - 20
2D13	FITTINGS, AIR CONDITIONER	1830 - 2
3E1	FITTINGS, CONTROL PATTERN SELECTOR KIT	3360 - 14
3C21	FITTINGS, FROM CONTROL VALVE TO PILOT SIGNAL MANIFOLD (FOOT CONTROL, PILOT)	3315 - 12
3C21	FITTINGS, FROM FOOT PEDAL CONTROL TO PILOT SHUTOFF VALVE (PILOT SYSTEM)	3315 - 12
3C21	FITTINGS, FROM FOOT PEDAL CONTROL TO PILOT SIGNAL MANIFOLD (PILOT SYSTEM)	3315 - 12
3C21	FITTINGS, FROM PILOT SHUTOFF VALVE TO FOOT PEDAL CONTROL (PILOT SYSTEM)	3315 - 12
3C21	FITTINGS, FROM PILOT SIGNAL MANIFOLD TO CONTROL VALVE (FOOT CONTROL,PILOT SYS)	3315 - 12
3C21	FITTINGS, FROM PILOT SIGNAL MANIFOLD TO FOOT PEDAL CONTROL (PILOT SYSTEM)	3315 - 12
3E3	FITTINGS, MECHANICAL PATTERN CHANGER VALVE	3360 - 15A
1B12	FITTINGS, PROPEL DRIVE	0260 - 4
1B12	FITTINGS, TRAVEL DRIVE	0260 - 4
1B12	FLANGE FITTING, PROPEL DRIVE	0260 - 4
2C1	FLOOR MAT	1810 - 30
2C3	FLOOR PLATE	1810 - 32
3G9	FLOW CONTROL VALVE COMPONENTS	3362 - 36
3E5	FLOW CONTROL, SOLENOID CONTROL KIT (1-WAY)	3360 - 16
1C5	FLYWHEEL	0401 - 2
1E17	FLYWHEEL HOUSING	0433 - 2
3C21	FOOT PEDAL CONTROL, HYDRAULIC (2-WAY) (AUXILIARY)	3315 - 12
3C17	FOOT PEDALS,PROPEL PILOT CONTROLLER	3315 - 8
3D20	FOOT SWITCH, AUXILIARY ELECTRIC	3360 - 8
1H6	FRAME	1740 - 2
1H8	FRAME	1740 - 4
2E6	FRAME, COVER	1910 - 2
1A18	FRAME, TRACK	0130 - 2
1A24	FRONT IDLER	0130 - 10
3I15	FRONT PIPING (ARM TO CYLINDER)	3363 - 46
3I13	FRONT PIPING (BOOM TO CYLINDER)	3363 - 44
3I15	FRONT PIPING (HEAVY DUTY ARM)	3363 - 46
3I15	FRONT PIPING (STANDARD ARM)	3363 - 46
3I13	FRONT PIPING, HEAVY DUTY BOOM	3363 - 44
3I13	FRONT PIPING, STANDARD BOOM	3363 - 44
3D11	FRONT PIPINGS, MASS EXCAVATING ARM (2.9M)	3340 - 10
3I17	FRONT PIPINGS, MASS EXCAVATING BOOM	3363 - 48
3D3	FRONT PIPINGS, SHORT ARM (2.9M - 9 FT 6 IN)	3340 - 2
1E7	FUEL FILTER AND BRACKET	0420 - 2
1D17	FUEL INJECTION PUMP COUPLING	0413 - 10
1D9	FUEL INJECTION SYSTEM	0413 - 2
1D11	FUEL INJECTION SYSTEM	0413 - 4
1D13	FUEL INJECTION SYSTEM	0413 - 6
1D15	FUEL INJECTION SYSTEM DRIVE GEAR	0413 - 8
1F24	FUEL LINES	0560 - 4
1E11	FUEL PUMP AND PIPING	0421 - 2
1F22	FUEL TANK	0560 - 2
1D19	FUEL TRANSFER PUMP	0413 - 12
1D19	FUEL TRANSFER PUMP COMPONENTS	0413 - 12
1E9	FUEL/WATER SEPARATOR	0420 - 4
1G19	FUSES	1674 - 12

G

3J20	GEAR BOX, SWING	4360 - 2
3E9	GEAR, HYDRAULIC PUMP DEVICE	3361 - 4
3E21	GEAR, PUMP	3361 - 16
1C3	GENERATOR, DC	0400 - 2
2B11	GLASS, CAB DOOR	1810 - 16
2B13	GLASS, CAB FRONT	1810 - 18
2B9	GLASS, CAB REAR AND LEFT SIDE	1810 - 14
2B15	GLASS, CAB RIGHT WINDOW	1810 - 20
3C9	GRIP, CONTROL LEVER	3315 - 2
3C15	GRIP, PILOT SYSTEM CONTROL LEVER	3315 - 6
3C17	GRIP,PROPEL PILOT CONTROL LEVER	3315 - 8
1B12	GROMMET, PROPEL DRIVE	0260 - 4
2C5	GUARD KIT, VANDAL	1810 - 34
2B15	GUARD, CAB RIGHT WINDOW GLASS	1810 - 20
1A22	GUARD, TRACK	0130 - 6
2D3	GUARD, WINDSHIELD (CAB WITH INTEGRATED HEADGUARD)	1810 - 56

ALPHABETICAL INDEX - CONTINUED

GRID		PAGE
2C11	GUARDS, INTEGRATED HEADGUARD CAB RIGHT SIDE WINDOW	1810 - 40
2C5	GUARDS, WINDOW	1810 - 34

H

2B7	HAMMER, ESCAPE	1810 - 12
2B13	HANDLE, CAB FRONT UPPER	1810 - 18
3D24	HANDLE, PILOT DUAL CONTROL	3360 - 12
2B21	HANDLE, SECONDARY EXIT	1810 - 26
2F1	HANDRAIL	1910 - 22
2B11	HANDRAIL, INSIDE DOOR	1810 - 16
2B9	HANDRAIL, LEFT SIDE	1810 - 14
2D13	HARNESS, AIR CONDITIONER WIRING	1830 - 2
3D24	HARNESS, SOLENOID VALVE DUAL CONTROL	3360 - 12
3D20	HARNESS, WIRE, FOOT SWITCH	3360 - 8
1G15	HARNESS, WIRE, MONITOR	1674 - 8
2F8	HARNESS, WIRE, MOTION ALARM	2004 - 2
1G17	HARNESS, WIRING	1674 - 10
3D15	HARNESS, WIRING, WORK LIGHT, MASS EXCAVATING BOOM	3344 - 4
1G7	HARNESSES, BATTERIES AND	1671 - 2
2B17	HATCH, CAB TOP	1810 - 22
1H1	HEAD LAMP	1674 - 14
1D1	HEAD, CYLINDER	0409 - 2
1D3	HEAD, CYLINDER	0409 - 4
2B9	HEADLINER, CAB TOP	1810 - 14
2E20	HEAT SHIELD COVER	1910 - 16
3D13	HEAVY DUTY BOOM 7.6M	3344 - 2
3B10	HEAVY DUTY BUCKET	3302 - 2
3B12	HEAVY DUTY BUCKET	3302 - 3A
3B14	HEAVY DUTY BUCKET	3302 - 4
3B16	HEAVY DUTY BUCKET	3302 - 6
3B18	HEAVY DUTY BUCKET	3302 - 8
3C7	HEAVY DUTY BUCKET TOOTH ASSEMBLY	3302 - 18
3J3	HIGH PRESSURE PIPINGS	3363 - 58
2B1	HOLDER, BEVERAGE	1810 - 6
2E3	HOSE, AIR CONDITIONER COMPRESSOR TO CONDENSER	1830 - 16
2E3	HOSE, AIR CONDITIONER CONDENSER TO COMPRESSOR	1830 - 16
2E3	HOSE, AIR CONDITIONER CONDENSER TO RECEIVER/DRYER	1830 - 16
2E3	HOSE, AIR CONDITIONER RECEIVER/ DRYER TO CONDENSER	1830 - 16
2D13	HOSE, AIR CONDITIONER UNIT TO RECEIVER/ DRYER	1830 - 2
3I17	HOSE, ARM CYLINDER, MASS EXCAVATING BOOM	3363 - 48
3H9	HOSE, BOOM TO CONTROL VALVE	3363 - 16
3H7	HOSE, CENTER JOINT TO CONTROL VALVE	3363 - 14
3E1	HOSE, CONTROL PATTERN SELECTOR KIT	3360 - 14
3H9	HOSE, CONTROL VALVE TO BOOM	3363 - 16
3H7	HOSE, CONTROL VALVE TO CENTER JOINT	3363 - 14
3J1	HOSE, CONTROL VALVE TO PILOT PIPING REMOVAL DEVICE SHUTTLE VALVE	3363 - 56
3D22	HOSE, CONTROL VALVE TO PILOT SIGNAL MANIFOLD (PILOT SYSTEM)	3360 - 10
3J3	HOSE, CONTROL VALVE TO REMOVAL DEVICE CYLINDER	3363 - 58
3H7	HOSE, CONTROL VALVE TO ROTARY MANIFOLD	3363 - 14
3H5	HOSE, CONTROL VALVE TO SWING MOTOR	3363 - 12
2E1	HOSE, ENGINE TO HVAC UNIT (HEATER HOSE)	1830 - 14
2D13	HOSE, FROM AIR CONDITIONER COMPRESSOR	1830 - 2
3C21	HOSE, FROM CONTROL VALVE TO PILOT SIGNAL MANIFOLD (FOOT CONTROL,PILOT SYSTEM)	3315 - 12
3C21	HOSE, FROM FOOT PEDAL CONTROL TO PILOT SHUTOFF VALVE (PILOT SYSTEM)	3315 - 12
3C21	HOSE, FROM FOOT PEDAL CONTROL TO PILOT SIGNAL MANIFOLD (PILOT SYSTEM)	3315 - 12
3D22	HOSE, FROM PILOT SHUT-OFF VALVE TO SOLENOID (PILOT SYSTEM)	3360 - 10
3C21	HOSE, FROM PILOT SHUTOFF VALVE TO FOOT PEDAL CONTROL (PILOT SYSTEM)	3315 - 12
3C21	HOSE, FROM PILOT SIGNAL MANIFOLD TO CONTROL VALVE (FOOT CONTROL,PILOT SYS)	3315 - 12
3C21	HOSE, FROM PILOT SIGNAL MANIFOLD TO FOOT PEDAL CONTROL (PILOT SYSTEM)	3315 - 12
3E1	HOSE, FROM PILOT SIGNAL MANIFOLDTO SOLENOID VALVE	3360 - 14
3D22	HOSE, FROM SOLENOID TO PILOT SHUT-OFF VALVE (PILOT SYSTEM)	3360 - 10
3E1	HOSE, FROM SOLENOID VALVE TO PILOT SIGNAL MANIFOLD	3360 - 14
3I17	HOSE, FRONT, MASS EXCAVATING BOOM	3363 - 48
2E1	HOSE, HVAC UNIT TO ENGINE (HEATER HOSE)	1830 - 14
3D22	HOSE, HYDRAULIC RESERVOIR TO SOLENOID (PILOT SYSTEM)	3360 - 10
3J1	HOSE, OIL TANK TO PILOT PIPINGS REMOVAL DEVICE PILOT VALVE	3363 - 56
3D22	HOSE, PILOT SIGNAL MANIFOLD TO CONTROL VALVE (PILOT SYSTEM)	3360 - 10
3D22	HOSE, PILOT SIGNAL MANIFOLD TO SOLENOID (PILOT SYSTEM)	3360 - 10
3J1	HOSE, PILOT VALVE, PILOT PIPINGS REMOVAL DEVICE, TO SHUTTLE VALVE	3363 - 56
3J1	HOSE, PILOT VALVE, REMOVAL DEVICE TO OIL TANK	3363 - 56
1B12	HOSE, PROPEL DRIVE	0260 - 4
1B12	HOSE, PROPEL DRIVE TO ROTARY MANIFOLD	0260 - 4
2D13	HOSE, RECEIVER/DRYER TO AIR CONDITIONER UNIT	1830 - 2
3J3	HOSE, REMOVAL DEVICE CYLINDER TO CONTROL VALVE	3363 - 58
3H7	HOSE, ROTARY MANIFOLD TO CONTROL VALVE	3363 - 14
1B12	HOSE, ROTARY MANIFOLD TO PROPEL DRIVE	0260 - 4
3J1	HOSE, SHUTTLE VALVE TO PILOT PIPINGS REMOVAL DEVICE PILOT VALVE	3363 - 56
3J1	HOSE, SHUTTLE VALVE, PILOT PIPING REMOVAL DEVICE TO CONTROL VALVE	3363 - 56
3D22	HOSE, SOLENOID TO HYDRAULIC RESERVOIR (PILOT SYSTEM)	3360 - 10
3D22	HOSE, SOLENOID TO PILOT SIGNAL MANIFOLD (PILOT SYSTEM)	3360 - 10
1H14	HOSE, SWING BEARING LUBE	1740 - 10
3H5	HOSE, SWING MOTOR TO CONTROL VALVE	3363 - 12
1B12	HOSE, TRAVEL DRIVE	0260 - 4
2B7	HOSE, WINDSHIELD WASHER	1810 - 12
2D15	HOSES, AIR CONDITIONER	1830 - 4
3H17	HOSES, CONTROL VALVE HYDRAULIC LINES	3363 - 24
3I7	HOSES, CONTROL VALVE TO OIL TANK	3363 - 38
3I1	HOSES, CONTROL VALVE TO PILOT SIGNAL MANIFOLD	3363 - 32
3H15	HOSES, CONTROL VALVE TO SWING DEVICE	3363 - 22
3H1	HOSES, DELIVERY HYDRAULIC LINES	3363 - 8
3H3	HOSES, DRAIN HYDRAULIC LINES	3363 - 10
3I15	HOSES, FRONT PIPING (ARM TO CYLINDER)	3363 - 46
3I13	HOSES, FRONT PIPING (BOOM TO CYLINDER)	3363 - 44
3H13	HOSES, HYDRAULIC PUMP TO OIL FILTER	3363 - 20
3H11	HOSES, MAIN HYDRAULICS, CONTROL VALVE TO BOOM CYLINDERS)	3363 - 18
3E3	HOSES, MECHANICAL PATTERN CHANGER	3360 - 15A

ALPHABETICAL INDEX - CONTINUED

GRID		PAGE
3H13	HOSES, OIL FILTER TO HYDRAULIC LINES	3363 - 20
3H21	HOSES, OIL FILTER TO SOLENOID VALVE	3363 - 28
3I7	HOSES, OIL TANK TO CONTROL VALVE	3363 - 38
3H21	HOSES, OIL TANK TO SOLENOID VALVE	3363 - 28
3I11	HOSES, PILOT HYDRAULIC (PILOT SIGNAL MANIFOLD TO JOYSTICK)	3363 - 42
3I5	HOSES, PILOT HYDRAULIC (PILOT SIGNAL MANIFOLD, CHECK VALVE, OIL TANK)	3363 - 36
3I9	HOSES, PILOT HYDRAULIC (PILOT SIGNAL MANIFOLD, PILOT VALVE, PILOT SHUTOFF)	3363 - 40
3I3	HOSES, PILOT HYDRAULIC (PILOT SIGNAL MANIFOLD, SWING MOTOR, LOCK VALVE)	3363 - 34
3I1	HOSES, PILOT SIGNAL MANIFOLD TO CONTROL VALVE	3363 - 32
3H19	HOSES, PILOT SIGNAL MANIFOLD TO OIL TANK	3363 - 26
3G23	HOSES, RETURN HYDRAULIC LINES(OIL COOLER TO HYDRAULIC OIL RESERVOIR)	3363 - 6
3H23	HOSES, ROTARY MANIFOLD, SWING DEVICE, OIL TANK, PILOT SIGNAL MANIFOLD	3363 - 30
3H21	HOSES, SOLENOID VALVE TO OIL FILTER	3363 - 28
3H21	HOSES, SOLENOID VALVE TO OIL TANK	3363 - 28
3G19	HOSES, SUCTION HYDRAULIC LINES	3363 - 2
3G21	HOSES, SUCTION HYDRAULIC LINES	3363 - 4
3F19	HOUSING AND GASKETS, MANIFOLD, PILOT SIGNAL	3362 - 22
3F19	HOUSING AND GASKETS, PILOT SIGNAL MANIFOLD	3362 - 22
1E3	HOUSING AND WATER PIPING, THERMOSTAT	0418 - 2
1E17	HOUSING, FLYWHEEL	0433 - 2
2D19	HVAC AIR DUCT	1830 - 8
2D19	HVAC FILTER	1830 - 8
2E1	HVAC UNIT TO ENGINE HOSE (HEATER HOSE)	1830 - 14
3C23	HYD.HOSES,SINGLE PEDAL KIT	3315 - 14
3C19	HYDR./PILOT CONTROL VALVE COMPONENTS	3315 - 10
3J7	HYDRAULIC ARM CYLINDER	3365 - 2
3J11	HYDRAULIC BOOM CYLINDER, LEFT	3365 - 6
3J13	HYDRAULIC BOOM CYLINDER, RIGHT	3365 - 8
3J9	HYDRAULIC BUCKET CYLINDER	3365 - 4
3J15	HYDRAULIC BUCKET CYLINDER	3365 - 10
3J15	HYDRAULIC CYLINDER, BUCKET	3365 - 10
3J11	HYDRAULIC CYLINDER, LEFT BOOM	3365 - 6
3J13	HYDRAULIC CYLINDER, RIGHT BOOM	3365 - 8
3J5	HYDRAULIC FILTER	3364 - 2
3C21	HYDRAULIC FOOT PEDAL CONTROL (2-WAY)	3315 - 12
3I9	HYDRAULIC LINES (PILOT SIGNAL MANIFOLD, PILOT VALVE, PILOT SHUTOFF VALVE)	3363 - 40
3H23	HYDRAULIC LINES (ROTARY MANIFOLD, SWING DEVICE, OIL TANK, SIGNAL MANIFOLD)	3363 - 30
3H17	HYDRAULIC LINES, CONTROL VALVE	3363 - 24
3I1	HYDRAULIC LINES, CONTROL VALVE TO PILOT SIGNAL MANIFOLD	3363 - 32
3H1	HYDRAULIC LINES, DELIVERY	3363 - 8
3H3	HYDRAULIC LINES, DRAIN	3363 - 10
3H5	HYDRAULIC LINES, MAIN	3363 - 12
3H11	HYDRAULIC LINES, MAIN (CONTROL VALVE TO BOOM CYLINDERS)	3363 - 18
3H15	HYDRAULIC LINES, PILOT (CONTROL VALVE TO SWING DEVICE)	3363 - 22
3H13	HYDRAULIC LINES, PILOT (HYDRAULIC PUMP TO OIL FILTER)	3363 - 20
3I11	HYDRAULIC LINES, PILOT (PILOT SIGNAL MANIFOLD TO JOYSTICK)	3363 - 42
3H19	HYDRAULIC LINES, PILOT (PILOT SIGNAL MANIFOLD TO OIL TANK)	3363 - 26
3I5	HYDRAULIC LINES, PILOT (PILOT SIGNAL MANIFOLD, CHECK VALVE, OIL TANK)	3363 - 36
3I3	HYDRAULIC LINES, PILOT (PILOT SIGNAL MANIFOLD, SWING MOTOR, LOCK VALVE)	3363 - 34
3H21	HYDRAULIC LINES, PILOT (SOLENOID VALVE, OIL TANK, OIL FILTER)	3363 - 28
3G21	HYDRAULIC LINES, RETURN	3363 - 4
3G23	HYDRAULIC LINES, RETURN (OIL COOLER TO HYDRAULIC OIL RESERVOIR)	3363 - 6
3G19	HYDRAULIC LINES, SUCTION	3363 - 2
2A23	HYDRAULIC LOCKOUT DECAL	1810 - 4
1B22	HYDRAULIC OIL MOTOR	0260 - 12
1B24	HYDRAULIC OIL MOTOR (CONTINUED)	0260 - 14
3G23	HYDRAULIC OIL RESERVOIR TO OIL COOLER RETURN HYDRAULIC LINES	3363 - 6
3E9	HYDRAULIC PUMP DEVICE GEAR	3361 - 4
3H13	HYDRAULIC PUMP TO OIL FILTER HYDRAULIC LINES	3363 - 20
3J5	HYDRAULIC RESERVOIR	3364 - 2
3J5	HYDRAULIC RESERVOIR CAP	3364 - 2
3D22	HYDRAULIC RESERVOIR HOSE TO SOLENOID (PILOT SYSTEM)	3360 - 10
3J5	HYDRAULIC RESERVOIR STRAINER	3364 - 2
3J5	HYDRAULIC TANK	3364 - 2

I

1A24	IDLER, FRONT	0130 - 10
2A23	IGNITION SWITCH DECAL	1810 - 4
1D21	INTAKE MANIFOLD	0414 - 2
2D15	INTEGRATED CIRCUIT, AIR CONDITIONER	1830 - 4
2C7	INTEGRATED HEADGUARD CAB	1810 - 36
2C9	INTEGRATED HEADGUARD CAB COMPONENTS	1810 - 38
2C13	INTEGRATED HEADGUARD CAB DOOR AND REAR WINDOW	1810 - 42
2C11	INTEGRATED HEADGUARD CAB RIGHT SIDE WINDOW GUARDS	1810 - 40
2B3	ISOLATOR, CAB MOUNT	1810 - 8
2C17	ISOLATORS, CAB (CAB WITH INTEGRATED HEADGUARD)	1810 - 46

J

3I11	JOYSTICK TO PILOT SIGNAL MANIFOLD HYDRAULIC LINES	3363 - 42

K

1G19	KEY	1674 - 12
1G19	KEY, SWITCH	1674 - 12
3E1	KIT, CONTROL PATTERN SELECTOR	3360 - 14
3D1	KIT, COUNTERWEIGHT REMOVAL	3315 - 16
3D9	KIT, LONG ARM, BUCKET CYLINDER, HOSES AND LINKAGE ASSY (5.2M)	3340 - 8
3D11	KIT, MASS EXCAVATING ARM, BUCKET CYLINDER, HOSES AND LINKAGE (2.9M)	3340 - 10
3E3	KIT, MECHANICAL PATTERN CHANGER	3360 - 15A
1G23	KIT, MIC CUSTOMER (S.N. 951008-)	1674 - 13C
1G4	KIT, O-RING, METRIC	1369 - 2
3J7	KIT, SEAL, ARM CYLINDER	3365 - 2
3J9	KIT, SEAL, BUCKET CYLINDER	3365 - 4
3J11	KIT, SEAL, LEFT BOOM CYLINDER	3365 - 6
3J13	KIT, SEAL, RIGHT BOOM CYLINDER	3365 - 8
3J15	KIT, SEAL,HYDRAULIC BUCKET CYLINDER	3365 - 10
2D5	KIT, SEAT LUMBAR	1821 - 2

ALPHABETICAL INDEX - CONTINUED

GRID		PAGE
2D9	KIT, SEAT SLIDE TRACK	1821 - 6
2B21	KIT, SECONDARY EXIT	1810 - 26
3D7	KIT, SEMI-LONG ARM, BUCKET CYLINDER, HOSES AND LINKAGE ASSY (4.1M)	3340 - 6
3D3	KIT, SHORT ARM, BUCKET CYLINDER, HOSES AND LINKAGE ASSEMBLY (2.9 M ARM)	3340 - 2
3C23	KIT, SINGLE PEDAL CONTROL	3315 - 14
3E5	KIT, SOLENOID CONTROL AND FLOW CONTROL (1-WAY)	3360 - 16
3D5	KIT, STANDARD ARM, BUCKET CYLINDER,HOSES AND LINKAGE ASSEMBLY (3.5M)	3340 - 4
2C5	KIT, VANDAL PROTECTION	1810 - 34
2C5	KIT, WINDOW GUARDS	1810 - 34
2D7	KIT, 3.00 INCH SEAT BELT	1821 - 4
3D22	KIT,SOLENOID VALVE, 1WAY/2WAY, WITHOUT PRESSURE SWITCH	3360 - 10

L

3D20	LABEL, AUXILIARY CONTROL	3360 - 8
2A23	LABEL, CONSOLE COVER	1810 - 4
3D1	LABEL, COUNTERWEIGHT REMOVAL INSTRUCTION	3315 - 16
2A23	LABEL, HYDRAULIC LOCKOUT	1810 - 4
2A23	LABEL, IGNITION	1810 - 4
2F8	LABEL, MOTION ALARM	2004 - 2
3E1	LABEL, PILOT CONTROL LEVER	3360 - 14
2B21	LABEL, SECONDARY EXIT	1810 - 26
3D1	LABEL, UP-DOWN COUNTERWEIGHT REMOVAL	3315 - 16
1G2	LABELS	1322 - 2
1H1	LAMP, HEAD	1674 - 14
3D15	LAMP, WORK LIGHT, MASS EXCAVATING BOOM	3344 - 4
2B19	LATCH ASSEMBLY, DOOR	1810 - 24
2C15	LATCH, CAB DOOR HOLD OPEN (CAB WITH INTEGRATED HEADGUARD)	1810 - 44
3J11	LEFT BOOM CYLINDER	3365 - 6
2F3	LEFT REARVIEW MIRROR	1910 - 24
3C9	LEVER, CONTROL	3315 - 2
3D1	LEVER, COUNTERWEIGHT REMOVAL PILOT VALVE	3315 - 16
3C15	LEVER, PILOT SYSTEM SHUTOFF	3315 - 6
3C17	LEVER,PROPEL PILOT CONTROLLER	3315 - 8
2D15	LEVERS, AIR CONDITIONER	1830 - 4
2C9	LIGHT, CAB WITH INTEGRATED HEADGUARD	1810 - 38
2B7	LIGHT, DOME	1810 - 12
3D15	LIGHT, WORK, MASS EXCAVATING BOOM	3344 - 4
2D21	LIGHTER, REAR TRAY	1830 - 10
2A23	LIGHTER,CIGARETTE	1810 - 4
3I17	LINE, ARM CYLINDER, MASS EXCAVATING BOOM	3363 - 48
3H9	LINE, BOOM TO CONTROL VALVE	3363 - 16
3H7	LINE, CENTER JOINT TO CONTROL VALVE	3363 - 14
3H9	LINE, CONTROL VALVE TO BOOM	3363 - 16
3H7	LINE, CONTROL VALVE TO CENTER JOINT	3363 - 14
3J1	LINE, CONTROL VALVE TO PILOT PIPING REMOVAL DEVICE SHUTTLE VALVE	3363 - 56
3J3	LINE, CONTROL VALVE TO REMOVAL DEVICE CYLINDER	3363 - 58
3H7	LINE, CONTROL VALVE TO ROTARY MANIFOLD	3363 - 14
3H5	LINE, CONTROL VALVE TO SWING MOTOR	3363 - 12
3I17	LINE, FRONT, MASS EXCAVATING BOOM	3363 - 48
3I7	LINE, HYDRAULIC, OIL TANK TO CONTROL VALVE	3363 - 38
3J1	LINE, OIL TANK TO PILOT PIPINGS REMOVAL DEVICE PILOT VALVE	3363 - 56
3J1	LINE, PILOT VALVE, PILOT PIPINGS REMOVAL DEVICE, TO SHUTTLE VALVE	3363 - 56
3J1	LINE, PILOT VALVE, REMOVAL DEVICE TO OIL TANK	3363 - 56
3J3	LINE, REMOVAL DEVICE CYLINDER TO CONTROL VALVE	3363 - 58
3H7	LINE, ROTARY MANIFOLD TO CONTROL VALVE	3363 - 14
3J1	LINE, SHUTTLE VALVE TO PILOT PIPINGS REMOVAL DEVICE PILOT VALVE	3363 - 56
3J1	LINE, SHUTTLE VALVE, PILOT PIPING REMOVAL DEVICE TO CONTROL VALVE	3363 - 56
1H14	LINE, SWING BEARING LUBE	1740 - 10
3H5	LINE, SWING MOTOR TO CONTROL VALVE	3363 - 12
3H17	LINES CONTROL VALVE HYDRAULIC	3363 - 24
3I9	LINES PILOT HYDRAULIC (PILOT SIGNAL MANIFOLD, PILOT VALVE, PILOT SHUTOFF)	3363 - 40
3H9	LINES, ARM CYLINDER	3363 - 16
3H9	LINES, BOOM CYLINDER	3363 - 16
3H9	LINES, BUCKET CYLINDER	3363 - 16
3H3	LINES, DRAIN HYDRAULIC	3363 - 10
1C21	LINES, ENGINE OIL FILTER	0407 - 12
3I15	LINES, FRONT PIPING (ARM TO CYLINDER)	3363 - 46
3I13	LINES, FRONT PIPING (BOOM TO CYLINDER)	3363 - 44
1F24	LINES, FUEL	0560 - 4
3H13	LINES, HYDRAULIC (HYDRAULIC PUMP TO OIL FILTER)	3363 - 20
3H1	LINES, HYDRAULIC, DELIVERY	3363 - 8
3H7	LINES, MAIN HYDRAULIC	3363 - 14
3H11	LINES, MAIN HYDRAULICS (CONTROL VALVE TO BOOM CYLINDERS)	3363 - 18
3H9	LINES, MAIN HYRAULIC	3363 - 16
3H13	LINES, OIL FILTER TO HYDRAULIC PUMP	3363 - 20
3H15	LINES, PILOT HYDRAULIC (CONTROL VALVE TO SWING DEVICE)	3363 - 22
3I5	LINES, PILOT HYDRAULIC (PILOT SIGNAL MAIFOLD, CHECK VALVE, OIL TANK)	3363 - 36
3I11	LINES, PILOT HYDRAULIC (PILOT SIGNAL MANIFOLD TO JOYSTICK)	3363 - 42
3H19	LINES, PILOT HYDRAULIC (PILOT SIGNAL MANIFOLD TO OIL TANK	3363 - 26
3I3	LINES, PILOT HYDRAULIC (PILOT SIGNAL MANIFOLD, SWING MOTOR, LOCK VALVE)	3363 - 34
3H21	LINES, PILOT HYDRAULIC (SOLENOID VALVE, OIL TANK, OIL FILTER)	3363 - 28
3I7	LINES, PILOT HYDRAULIC, CONTROL VALVE TO OIL TANK	3363 - 38
3G21	LINES, RETURN HYDRAULIC	3363 - 4
3G23	LINES, RETURN HYDRAULIC (OIL COOLER TO HYDRAULIC OIL RESERVOIR)	3363 - 6
3H23	LINES, ROTARY MANIFOLD, SWING DEVICE, OIL TANK, PILOT SIGNAL MANIFOLD	3363 - 30
3G19	LINES, SUCTION HYDRAULIC	3363 - 2
3D9	LINK, BUCKET (LONG ARM 5.2M)	3340 - 8
3D11	LINK, BUCKET (MASS EXCAVATING 2.9M)	3340 - 10
3D7	LINK, BUCKET (SEMI-LONG ARM 4.1M)	3340 - 6
1B7	LINK, TRACK	0130 - 18
3C5	LOADING BUCKET, TRUCK	3302 - 17A
3G7	LOCK VALVE	3362 - 34
3I3	LOCK VALVE TO PILOT SIGNAL MANIFOLD HYDRAULIC LINES	3363 - 34
3I3	LOCK VALVE TO SWING MOTOR HYDRAULIC LINES	3363 - 34
2B11	LOCK, CAB DOOR	1810 - 16
2B17	LOCK, CAB TOP HATCH	1810 - 22
3D9	LONG ARM (5.2M)	3340 - 8
3D9	LONG ARM, BUCKET CLYLINDER, HOSES AND LINKAGE ASSEMBLY (5.2M)	3340 - 8
1B5	LOWER ROLLER	0130 - 16
3G13	LOWERING VALVE COMPONENTS, BOOM CYLINDER	3362 - 40
1H14	LUBE LINE, SWING BEARING	1740 - 10
1H14	LUBRICANT PIPING, SWING BEARING	1740 - 10

ALPHABETICAL INDEX - CONTINUED

GRID		PAGE
3I23	LUBRICATE PIPING (MASS EXCAVATING BOOM)	3363 - 54
3I21	LUBRICATE PIPING, HEAVY DUTY ARM	3363 - 52
3I19	LUBRICATE PIPING, HEAVY DUTY BOOM	3363 - 50
3I21	LUBRICATE PIPING, STANDARD ARM	3363 - 52
3I19	LUBRICATE PIPING, STANDARD BOOM	3363 - 50

M

3H9	MAIN HYDAULIC LINES	3363 - 16
3H5	MAIN HYDRAULIC LINES	3363 - 12
3H7	MAIN HYDRAULIC LINES	3363 - 14
3H11	MAIN HYDRAULIC LINES (CONTROL VALVE TO BOOM CYLINDERS)	3363 - 18
3H9	MAIN HYDRAULIC LINES, ARM CYLINDER	3363 - 16
3H9	MAIN HYDRAULIC LINES, BOOM CYLINDER	3363 - 16
3H9	MAIN HYDRAULIC LINES, BUCKET CYLINDER	3363 - 16
3G3	MANIFOLD VALVES, PILOT SIGNAL	3362 - 30
3F5	MANIFOLD, CONTROL VALVE	3362 - 8
1D7	MANIFOLD, EXHAUST	0410 - 2
1D21	MANIFOLD, INTAKE	0414 - 2
3G1	MANIFOLD, PILOT SIGNAL (CONTROL VALVE SIDE)	3362 - 28
3F19	MANIFOLD, PILOT SIGNAL (HOUSING AND GASKETS)	3362 - 22
3F23	MANIFOLD, PILOT SIGNAL (PILOT CONTROLLER SIDE)	3362 - 26
3F21	MANIFOLD, PILOT SIGNAL (VALVE SECTION)	3362 - 24
1B10	MANIFOLD, ROTARY	0260 - 2
3F5	MANIFOLD, VALVE, CONTROL	3362 - 8
3D11	MASS EXCAVATING ARM (2.9M)	3340 - 10
3D11	MASS EXCAVATING ARM, BUCKET CYLINDER, HOSES AND LINKAGE ASSY (2.9M)	3340 - 10
3D15	MASS EXCAVATING BOOM	3344 - 4
2C1	MAT, CAB FLOOR	1810 - 30
3E3	MECHANICAL PATTERN CHANGER KIT	3360 - 15A
3E3	MECHANICAL PATTERN CHANGER VALVE	3360 - 15A
1G4	METRIC O-RING KIT	1369 - 2
1G23	MIC CABLE (S.N. 951008-)	1674 - 13C
1G21	MIC CONTROLLER (S.N. 951008-)	1674 - 13A
1G23	MIC CUSTOMER KIT (S.N. 951008-)	1674 - 13C
2F3	MIRROR, REARVIEW, LEFT	1910 - 24
2E22	MIRROR, RIGHT REARVIEW	1910 - 18
3D24	MODUAL RELAY FOR DUAL AUXILIARY CONTROL	3360 - 12
3B10	MOLDBOARD, HEAVY DUTY BUCKET	3302 - 2
3B12	MOLDBOARD, HEAVY DUTY BUCKET	3302 - 3A
3B14	MOLDBOARD, HEAVY DUTY BUCKET	3302 - 4
3B16	MOLDBOARD, HEAVY DUTY BUCKET	3302 - 6
3B18	MOLDBOARD, HEAVY DUTY BUCKET	3302 - 8
1G15	MONITOR	1674 - 8
2F8	MOTION ALARM WIRE HARNESS	2004 - 2
1B22	MOTOR COMPONENTS, PROPEL	0260 - 12
1B24	MOTOR COMPONENTS, PROPEL (CONTINUED)	0260 - 14
2D15	MOTOR, AIR CONDITIONER	1830 - 4
2D17	MOTOR, AIR CONDITIONER	1830 - 6
1F12	MOTOR, ENGINE CONTROL	0515 - 4
1B24	MOTOR, OIL HYDRAULIC (CONTINUED)	0260 - 14
1B22	MOTOR, OIL, HYDRAULIC	0260 - 12
3J20	MOTOR, SWING DRIVE	4360 - 2
3K1	MOTOR, SWING OIL	4367 - 2
1H16	MOUNTING, COUNTERWEIGHT (WITH REMOVAL KIT)	1740 - 12
2C17	MOUNTS, CAB (CAB WITH INTEGRATED HEADGUARD)	1810 - 46
1F18	MUFFLER	0530 - 4

O

1G4	O-RING KIT, METRIC	1369 - 2
1E5	OIL COOLER AND OIL FILTER	0419 - 2
3G23	OIL COOLER TO HYDRAULIC OIL RESERVOIR RETURN HYDRAULIC LINES	3363 - 6
1C19	OIL DRAIN PIPING, ENGINE	0407 - 10
1C17	OIL FILTER LINES, ENGINE	0407 - 8
3H13	OIL FILTER TO HYDRAULIC PUMP LINES	3363 - 20
3H21	OIL FILTER TO SOLENOID VALVE HYDRAULIC LINES	3363 - 28
1E5	OIL FILTER, OIL COOLER AND	0419 - 2
1B22	OIL MOTOR, HYDRAULIC	0260 - 12
1B24	OIL MOTOR, HYDRAULIC (CONTINUED)	0260 - 14
1C11	OIL PAN AND DIPSTICK	0407 - 2
1C13	OIL PUMP AND OIL STRAINER	0407 - 4
1C13	OIL STRAINER, OIL PUMP AND	0407 - 4
3J1	OIL TANK PIPING TO PILOT PIPINGS REMOVAL DEVICE PILOT VALVE	3363 - 56
3I5	OIL TANK TO CHECK VALVE HYDRAULIC LINES	3363 - 36
3I7	OIL TANK TO CONTROL VALVE HYDRAULIC LINES	3363 - 38
3H19	OIL TANK TO PILOT SIGNAL MANIFOLD HYDRAULIC LINES	3363 - 26
3I5	OIL TANK TO PILOT SIGNAL MANIFOLD HYDRAULIC LINES	3363 - 36
3H21	OIL TANK TO SOLENOID VALVE HYDRAULIC LINES	3363 - 28
3D22	ONEWAY/2WAY SOLENOID VALVE KIT, WITHOUT PRESSURE SWITCH	3360 - 10

P

1G2	PATTERN CHANGER DECAL	1322 - 2
3E3	PATTERN CHANGER VALVE, MECHANICAL	3360 - 15A
3E1	PATTERN SELECTOR CONTROL KIT	3360 - 14
3C21	PEDAL CONTROL, HYDRAULIC FOOT (2-WAY)	3315 - 12
3G11	PILOT CHECK VALVE COMPONENTS	3362 - 38
3E1	PILOT CONTROL LEVER LABEL	3360 - 14
3C11	PILOT CONTROLLER VALVE COMPONENTS (DIG AND SWING)(SN -951031)	3315 - 4
3C13	PILOT CONTROLLER VALVE COMPONENTS (DIG AND SWING)(SN 951032-)	3315 - 5A
3D24	PILOT DUAL CONTROL HANDLE	3360 - 12
3H13	PILOT FILTER	3363 - 20
3I1	PILOT HYDRAULIC LINES (CONTROL VALVE TO PILOT SIGNAL MANIFOLD)	3363 - 32
3H15	PILOT HYDRAULIC LINES (CONTROL VALVE TO SWING DEVICE)	3363 - 22
3H13	PILOT HYDRAULIC LINES (HYDRAULIC PUMP TO OIL FILTER)	3363 - 20
3I11	PILOT HYDRAULIC LINES (PILOT SIGNAL MANIFOLD TO JOYSTICK)	3363 - 42
3H19	PILOT HYDRAULIC LINES (PILOT SIGNAL MANIFOLD TO OIL TANK)	3363 - 26
3I5	PILOT HYDRAULIC LINES (PILOT SIGNAL MANIFOLD, CHECK VALVE, OIL TANK)	3363 - 36
3I9	PILOT HYDRAULIC LINES (PILOT SIGNAL MANIFOLD, PILOT VALVE, PILOT SHUTOFF)	3363 - 40
3I3	PILOT HYDRAULIC LINES (PILOT SIGNAL MANIFOLD, SWING MOTOR, LOCK VALVE)	3363 - 34

ALPHABETICAL INDEX - CONTINUED

GRID		PAGE
3H23	PILOT HYDRAULIC LINES (ROTARY MANIFOLD, SWING DEVICE,OIL TANK,SIGNAL MANIFOLD)	3363 - 30
3H21	PILOT HYDRAULIC LINES (SOLENOID VALVE, OIL TANK, OIL FILTER)	3363 - 28
3I7	PILOT HYDRAULIC LINES, CONTROL VALVE TO OIL TANK	3363 - 38
3I11	PILOT HYDRAULIC LINES, LEFT PILOT CONTROLLER	3363 - 42
3I9	PILOT HYDRAULIC LINES, RIGHT PILOT CONTROLLER	3363 - 40
3J1	PILOT PIPINGS REMOVAL DEVICE	3363 - 56
3D22	PILOT SHUT-OFF VALVE HOSE TO SOLENOID (PILOT SYSTEM)	3360 - 10
3C21	PILOT SHUTOFF VALVE FITTINGS TO FOOT PEDAL CONTROL (PILOT SYSTEM)	3315 - 12
3C21	PILOT SHUTOFF VALVE HOSE TO FOOT PEDAL CONTROL (PILOT SYSTEM)	3315 - 12
3I9	PILOT SHUTOFF VALVE TO PILOT SIGNAL MANIFOLD HYDRAULIC LINES	3363 - 40
3I9	PILOT SHUTOFF VALVE TO PILOT VALVE HYDRAULIC LINES	3363 - 40
3G1	PILOT SIGNAL MANIFOLD (CONTROL VALVE SIDE)	3362 - 28
3F19	PILOT SIGNAL MANIFOLD (HOUSING AND GASKETS)	3362 - 22
3F23	PILOT SIGNAL MANIFOLD (PILOT CONTROLLER SIDE)	3362 - 26
3F21	PILOT SIGNAL MANIFOLD (VALVE SECTION)	3362 - 24
3C21	PILOT SIGNAL MANIFOLD FITTINGS TO FOOT PEDAL CONTROL (PILOT SYSTEM)	3315 - 12
3D22	PILOT SIGNAL MANIFOLD HOSE TO CONTROL VALVE (PILOT SYSTEM)	3360 - 10
3C21	PILOT SIGNAL MANIFOLD HOSE TO FOOT PEDAL CONTROL (PILOT SYSTEM)	3315 - 12
3D22	PILOT SIGNAL MANIFOLD HOSE TO SOLENOID (PILOT SYSTEM)	3360 - 10
3I5	PILOT SIGNAL MANIFOLD TO CHECK VALVE HYDRAULIC LINES	3363 - 36
3I1	PILOT SIGNAL MANIFOLD TO CONTROL VALVE HYDRAULIC LINES	3363 - 32
3I11	PILOT SIGNAL MANIFOLD TO JOYSTICK HYDRAULIC LINES	3363 - 42
3H19	PILOT SIGNAL MANIFOLD TO OIL TANK HYDRAULIC LINES	3363 - 26
3I9	PILOT SIGNAL MANIFOLD TO PILOT SHUTOFF VALVE HYDRAULIC LINES	3363 - 40
3I9	PILOT SIGNAL MANIFOLD TO PILOT VALVE HYDRAULIC LINES	3363 - 40
3I3	PILOT SIGNAL MANIFOLD TO SWING MOTOR HYDRAULIC LINES	3363 - 34
3G3	PILOT SIGNAL MANIFOLD VALVES	3362 - 30
3I3	PILOT SIGNAL MONITOR TO LOCK VALVE HYDRAULIC LINES	3363 - 34
3I5	PILOT SINGAL MANIFOLD TO OIL TANK HYDRAULIC LINES	3363 - 36
3C15	PILOT SYSTEM CONTROL LEVER BRACKET	3315 - 6
3C15	PILOT SYSTEM CONTROL LEVER GRIP	3315 - 6
3C15	PILOT SYSTEM SHUTOFF LEVER	3315 - 6
3C9	PILOT VALVE	3315 - 2
3F13	PILOT VALVE (COUNTERWEIGHT REMOVAL)	3362 - 16
3F13	PILOT VALVE COMPONENTS (COUNTERWEIGHT REMOVAL)	3362 - 16
3F13	PILOT VALVE COVER(COUNTERWEIGHT REMOVAL)	3362 - 16
3F13	PILOT VALVE DRAIN PLUG (COUNTERWEIGHT REMOVAL)	3362 - 16
3J1	PILOT VALVE PIPINGS TO SHUTTLE VALVE (PILOT PIPINGS REMOVAL DEVICE)	3363 - 56
3I9	PILOT VALVE TO PILOT SHUTOFF VALVE HYDRAULIC LINES	3363 - 40
3I9	PILOT VALVE TO PILOT SIGNAL MANIFOLD HYDRAULIC LINES	3363 - 40
3D1	PILOT VALVE, COUNTERWEIGHT REMOVAL	3315 - 16
3J1	PILOT VALVE, PILOT PIPINGS REMOVAL DEVICE, PIPINGS TO OIL TANK	3363 - 56
3D9	PIN, ARM CYLINDER (LONG ARM 5.2M)	3340 - 8
3D11	PIN, ARM CYLINDER (MASS EXCAVATING 2.9M)	3340 - 10
3D7	PIN, ARM CYLINDER (SEMI-LONG ARM 4.1M)	3340 - 6
3D9	PIN, BUCKET (LONG ARM 5.2M)	3340 - 8
3D11	PIN, BUCKET (MASS EXCAVATING 2.9M)	3340 - 10
3D7	PIN, BUCKET (SEMI-LONG ARM 4.1M)	3340 - 6
3D11	PIN, BUCKET CYLINDER (MASS EXCAVATING 2.9M)	3340 - 10
3D9	PIN, BUCKET CYLINDER (LONG ARM 5.2M)	3340 - 8
3D7	PIN, BUCKET CYLINDER(SEMI-LONG ARM 4.1M)	3340 - 6
3D9	PIN, BUCKET LINK (LONG ARM 5.2M)	3340 - 8
3D11	PIN, BUCKET LINK (MASS EXCAVATING 2.9M)	3340 - 10
3D7	PIN, BUCKET LINK (SEMI-LONG ARM 4.1M)	3340 - 6
3D9	PIN, BUCKET(LONG ARM 5.2M)	3340 - 8
3I17	PIPING, ARM CYLINDER, MASS EXCAVATING BOOM	3363 - 48
3H9	PIPING, BOOM TO CONTROL VALVE	3363 - 16
3H7	PIPING, CENTER JOINT TO CONTROL VALVE	3363 - 14
3H9	PIPING, CONTROL VALVE TO BOOM	3363 - 16
3H7	PIPING, CONTROL VALVE TO CENTER JOINT	3363 - 14
3J1	PIPING, CONTROL VALVE TO PILOT PIPING REMOVAL DEVICE SHUTTLE VALVE	3363 - 56
3H7	PIPING, CONTROL VALVE TO ROTARY MANIFOLD	3363 - 14
3H5	PIPING, CONTROL VALVE TO SWING MOTOR	3363 - 12
3I15	PIPING, FRONT (ARM TO CYLINDER)	3363 - 46
3I13	PIPING, FRONT (BOOM TO CYLINDER)	3363 - 44
3I17	PIPING, FRONT, MASS EXCAVATING BOOM	3363 - 48
1E11	PIPING, FUEL PUMP AND	0421 - 2
3I19	PIPING, LUBRICATE, BOOM	3363 - 50
3J1	PIPING, OIL TANK TO PILOT PIPINGS REMOVAL DEVICE PILOT VALVE	3363 - 56
3J1	PIPING, PILOT VALVE, PILOT PIPINGS REMOVAL DEVICE, TO SHUTTLE VALVE	3363 - 56
3J3	PIPING, REMOVAL DEVICE CYLINDER TO CONTROL VALVE	3363 - 58
3H7	PIPING, ROTARY MANIFOLD TO CONTROL VALVE	3363 - 14
3J1	PIPING, SHUTTLE VALVE, PILOT PIPING REMOVAL DEVICE TO CONTROL VALVE	3363 - 56
1H14	PIPING, SWING BEARING LUBE	1740 - 10
3H5	PIPING, SWING MOTOR TO CONTROL VALVE	3363 - 12
3J3	PIPINGS, CONTROL VALVE TO REMOVAL DEVICE CYLINDER	3363 - 58
3D11	PIPINGS, FRONT, MASS EXCAVATING ARM (2.9M)	3340 - 10
3D3	PIPINGS, FRONT, SHORT ARM (2.9M - 9 FT 6 IN)	3340 - 2
3J1	PIPINGS, PILOT VALVE, REMOVAL DEVICE TO OIL TANK	3363 - 56
3J1	PIPINGS, SHUTTLE VALVE TO PILOT PIPINGS REMOVAL DEVICE PILOT VALVE	3363 - 56
1C5	PISTON	0401 - 2
1C5	PISTON AND FLYWHEEL, CRANKSHAFT	0401 - 2
3E13	PISTON, PUMP	3361 - 8
2C3	PLATE, CAB FLOOR	1810 - 32
2C3	PLATFORM	1810 - 32
3F13	PLUG, PILOT VALVE DRAIN (COUNTERWEIGHT REMOVAL)	3362 - 16
3E5	PRESSURE REDUCING VALVE (1-WAY)	3360 - 16
2D15	PRESSURE SWITCH, AIR CONDITIONER	1830 - 4

ALPHABETICAL INDEX - CONTINUED

GRID		PAGE
3J1	PRESSURE SWITCH, PILOT PIPING REMOVAL DEVICE	3363 - 56
1B12	PROPEL DRIVE FITTINGS	0260 - 4
1B12	PROPEL DRIVE FLANGE FITTING	0260 - 4
1B12	PROPEL DRIVE GROMMET	0260 - 4
1B12	PROPEL DRIVE HOSE	0260 - 4
1B12	PROPEL DRIVE HOSE TO ROTARY MANIFOLD	0260 - 4
1B22	PROPEL MOTOR	0260 - 12
1B24	PROPEL MOTOR (CONTINUED)	0260 - 14
1B22	PROPEL MOTOR COMPONENTS	0260 - 12
1B24	PROPEL MOTOR COMPONENTS (CONTINUED)	0260 - 14
3C17	PROPEL PILOT CONTROL LEVER GRIP	3315 - 8
3C17	PROPEL PILOT CONTROLLER FOOT PEDALS	3315 - 8
3C17	PROPEL PILOT CONTROLLER LEVER	3315 - 8
3C17	PROPEL PILOT CONTROLLER PEDAL	3315 - 8
2E24	PROTECTION, UNDERNEATH	1910 - 20
1E15	PULLEY, FAN BELT	0429 - 2
3E19	PUMP ANGLE SENSOR	3361 - 14
3E7	PUMP DEVICE	3361 - 2
3E9	PUMP DEVICE GEAR, HYDRAULIC	3361 - 4
3E11	PUMP DEVICE SUPPORT	3361 - 6
1D19	PUMP, FUEL TRANSFER	0413 - 12
1D19	PUMP, FUEL TRANSFER (COMPONENTS)	0413 - 12
3E21	PUMP, GEAR	3361 - 16
3E13	PUMP, PISTON	3361 - 8
1E1	PUMP, WATER	0417 - 2
2B23	PUMP, WINDOW WASHER	1810 - 28

R

1F4	RADIATOR	0510 - 2
1F6	RADIATOR SUPPORT	0510 - 4
2F6	RADIO	2001 - 2
2B7	RADIO ANTENNA	1810 - 12
2B7	RADIO SPEAKER	1810 - 12
2B7	RADIO SPEAKER WIRE HARNESS	1810 - 12
2D21	REAR TRAY	1830 - 10
2B9	REAR WINDOW	1810 - 14
2F3	REARVIEW MIRROR, LEFT	1910 - 24
2E22	REARVIEW MIRROR, RIGHT	1910 - 18
2E3	RECEIVER/DRYER, AIR CONDITIONER	1830 - 16
3E15	REDUCING VALVE	3361 - 10
3E17	REDUCTION VALVE	3361 - 12
3E15	REGULATOR VALVE	3361 - 10
2D17	RELAY, AIR CONDITIONER	1830 - 6
3D24	RELAY, MODUAL FOR DUAL AUXILIARY CONTROL	3360 - 12
3F17	RELIEF VALVE, SOLENOID	3362 - 20
1H16	REMOVABLE COUNTERWEIGHT	1740 - 12
1F8	RESERVE TANK	0510 - 6
3J5	RESERVOIR, HYDRAULIC	3364 - 2
3G21	RETURN HYDRAULIC LINES	3363 - 4
3G23	RETURN HYDRAULIC LINES (OIL COOLER TO HYDRAULIC OIL RESERVOIR)	3363 - 6
3J13	RIGHT BOOM CYLINDER	3365 - 8
2C11	RIGHT SIDE CAB WINDOW GUARDS(INTEGRATED) HEADGUARD CAB	1810 - 40
2C23	RIGHT SIDE WINDOW (CAB WITH INTEGRATED HEADGUARD)	1810 - 52
2B15	RIGHT WINDOW, CAB	1810 - 20
1B5	ROLLER, LOWER	0130 - 16
1B3	ROLLER, UPPER	0130 - 14
1B10	ROTARY MANIFOLD	0260 - 2
1B16	ROTARY MANIFOLD ATTACHMENTS	0260 - 8
1B12	ROTARY MANIFOLD HOSE TO PROPEL DRIVE	0260 - 4
3H7	ROTARY MANIFOLD PIPING TO CONTROL VALVE	3363 - 14

S

3J7	SEAL KIT, ARM CYLINDER	3365 - 2
3J9	SEAL KIT, BUCKET CYLINDER	3365 - 4
3J15	SEAL KIT, BUCKET CYLINDER	3365 - 10
3J11	SEAL KIT, LEFT BOOM CYLINDER	3365 - 6
3J13	SEAL KIT, RIGHT BOOM CYLINDER	3365 - 8
2D5	SEAT	1821 - 2
2D5	SEAT ADJUSTER	1821 - 2
2D9	SEAT BASE	1821 - 6
2D9	SEAT BASE BRACKET	1821 - 6
2D11	SEAT BELT	1821 - 8
2D7	SEAT BELT (3.00 INCH)	1821 - 4
2D11	SEAT BELT BRACKET	1821 - 8
2D7	SEAT BELT KIT, (3.00 INCH)	1821 - 4
2D5	SEAT CUSHION	1821 - 2
2D5	SEAT LUMBAR KIT	1821 - 2
2D9	SEAT SLIDE TRACK KIT	1821 - 6
2D5	SEAT SUSPENSION	1821 - 2
2B21	SECONDARY EXIT HANDLE	1810 - 26
2B21	SECONDARY EXIT KIT	1810 - 26
2B21	SECONDARY EXIT LABEL	1810 - 26
3D7	SEMI-LONG ARM (4.1M)	3340 - 6
3D7	SEMI-LONG ARM, BUCKET CLYLINDER, HOSES AND LINKAGE ASSEMBLY (4.1M)	3340 - 6
2E1	SENSOR, CAB HEATER DUCT	1830 - 14
1C3	SENSOR, ENGINE OIL LEVEL	0400 - 2
1C3	SENSOR, ENGINE OIL PRESSURE	0400 - 2
3E19	SENSOR, PUMP ANGLE	3361 - 14
3E19	SENSOR,REPAIR PARTS	3361 - 14
3E19	SENSOR,TILTING-PROBING	3361 - 14
1E9	SEPARATOR, FUEL/WATER	0420 - 4
1E21	SET, ENGINE GASKET	0452 - 2
1E23	SET, ENGINE GASKET	0452 - 4
1F1	SET, ENGINE GASKET	0452 - 6
3C7	SHANK, HEAVY DUTY BUCKET	3302 - 18
1B7	SHOE, TRACK	0130 - 18
3D3	SHORT ARM (2.9M - 9 FT 6 IN)	3340 - 2
3D3	SHORT ARM, BUCKET CYLINDER, HOSES AND LINKAGE ASSEMBLY (2.9M - 9 FT 6 IN)	3340 - 2
3J3	SHUT-OFF VALVE, HIGH PRESSURE PIPINGS	3363 - 58
3G5	SHUTTLE VALVE	3362 - 32
3J1	SHUTTLE VALVE PIPINGS TO PILOT PIPINGS REMOVAL DEVICE PILOT VALVE	3363 - 56
3J1	SHUTTLE VALVE, PILOT PIPING REMOVAL DEVICE	3363 - 56
3J1	SHUTTLE VALVE, PILOT PIPING REMOVAL DEVICE, PIPING TO CONTROL VALVE	3363 - 56
3B20	SIDE CUTTERS, EXTREME DUTY BUCKET (USE WITH 9'6" ARM)	3302 - 10
3B22	SIDE CUTTERS, EXTREME DUTY BUCKET (USE WITH 9'6" ARM)	3302 - 12
3B24	SIDE CUTTERS, EXTREME DUTY BUCKET (USE WITH 9'6" ARM)	3302 - 13A
3C1	SIDE CUTTERS, EXTREME DUTY BUCKET (USE W/11'6" AND 13'5" ARM, 9'6" SHORT ARM)	3302 - 14
3C3	SIDE CUTTERS, EXTREME DUTY BUCKET (USE W/11'6" AND 13'5" ARM, 9'6" SHORT ARM)	3302 - 16
3B10	SIDE CUTTERS, HEAVY DUTY BUCKET	3302 - 2
3B12	SIDE CUTTERS, HEAVY DUTY BUCKET	3302 - 3A
3B14	SIDE CUTTERS, HEAVY DUTY BUCKET	3302 - 4
3B16	SIDE CUTTERS, HEAVY DUTY BUCKET	3302 - 6
3B18	SIDE CUTTERS, HEAVY DUTY BUCKET	3302 - 8
3C23	SINGLE PEDAL CONTROL KIT	3315 - 14
3C23	SINGLE PEDAL CONTROL KIT HYD.HOSES	3315 - 14

ALPHABETICAL INDEX - CONTINUED

GRID		PAGE
3E5	SOLENOID CONTROL AND FLOW CONTROL KIT (1-WAY)	3360 - 16
3E5	SOLENOID CONTROL VALVE (1-WAY)	3360 - 16
3D22	SOLENOID HOSE TO HYDRAULIC RESERVOIR (PILOT SYSTEM)	3360 - 10
3D22	SOLENOID HOSE TO PILOT SHUT-OFF VALVE (PILOT SYSTEM)	3360 - 10
3D22	SOLENOID HOSE TO PILOT SIGNAL MANIFOLD (PILOT SYSTEM)	3360 - 10
3F17	SOLENOID RELIEF VALVE	3362 - 20
3F15	SOLENOID VALVE	3362 - 18
3F17	SOLENOID VALVE COMPONENTS (CONTINUED)	3362 - 20
3D24	SOLENOID VALVE DUAL CONTROL HARNESS	3360 - 12
3D22	SOLENOID VALVE KIT, 1WAY/2WAY, WITHOUT PRESSURE SWITCH	3360 - 10
3H21	SOLENOID VALVE TO OIL FILTER HYDRAULIC LINES	3363 - 28
3H21	SOLENOID VALVE TO OIL TANK HYDRAULIC LINES	3363 - 28
3E1	SOLENOID VALVE, CONTROL PATTERN SELECTOR KIT	3360 - 14
2B7	SPEAKER, RADIO	1810 - 12
3D5	STANDARD ARM (3.5M)	3340 - 4
3D5	STANDARD ARM, BUCKET CLYLINDER, HOSES AND LINKAGE ASSEMBLY (3.5M)	3340 - 4
1E13	STARTER MOUNTING, ALTERNATOR AND	0423 - 2
1A20	STEP, TRACK	0130 - 4
2B19	STOP, DOOR	1810 - 24
3J5	STRAINER, HYDRAULIC RESERVOIR	3364 - 2
3G19	SUCTION HYDRAULIC LINES	3363 - 2
2C1	SUPPORT, CAB FLOOR	1810 - 30
1F20	SUPPORT, ENGINE	0540 - 2
3E11	SUPPORT, PUMP DEVICE	3361 - 6
1F6	SUPPORT, RADIATOR	0510 - 4
3J24	SUPPORT, SWING DEVICE	4360 - 6
3D18	SUPPORT,CONTROL VALVE	3360 - 4
2D5	SUSPENSION, SEAT	1821 - 2
1H12	SWING BEARING	1740 - 8
1H14	SWING BEARING LUBE LINE	1740 - 10
3J20	SWING DEVICE	4360 - 2
3J22	SWING DEVICE COMPONENTS	4360 - 4
3J24	SWING DEVICE SUPPORT	4360 - 6
3H15	SWING DEVICE TO CONTROL VALVE HYDRAULIC LINES	3363 - 22
3J20	SWING DRIVE	4360 - 2
3J20	SWING DRIVE CAP	4360 - 2
3J20	SWING DRIVE DIPSTICK	4360 - 2
3J20	SWING DRIVE MOTOR	4360 - 2
3J20	SWING GEAR BOX	4360 - 2
3H5	SWING MOTOR PIPING TO CONTROL VALVE	3363 - 12
3I3	SWING MOTOR TO LOCK VALVE HYDRAULIC LINES	3363 - 34
3I3	SWING MOTOR TO PILOT SINGLA MANIFOLD HYD RAULIC LINES	3363 - 34
3K1	SWING OIL MOTOR	4367 - 2
2D13	SWITCH, AIR CONDITIONER CONTROL	1830 - 2
1C3	SWITCH, COOLANT OVERHEAT	0400 - 2
1C3	SWITCH, ENGINE COOLANT TEMPERATURE	0400 - 2
1C3	SWITCH, ENGINE OIL LEVEL	0400 - 2
1C3	SWITCH, ENGINE OIL PRESSURE	0400 - 2
3D20	SWITCH, FOOT, AUXILIARY ELECTRIC	3360 - 8
1G19	SWITCH, KEY	1674 - 12
2F8	SWITCH, MOTION ALARM	2004 - 2
3J1	SWITCH, PRESSURE, PILOT PIPING REMOVAL DEVICE	3363 - 56
1D15	SYSTEM DRIVE GEAR, FUEL INJECTION	0413 - 8
1D9	SYSTEM, FUEL INJECTION	0413 - 2
1D11	SYSTEM, FUEL INJECTION	0413 - 4
1D13	SYSTEM, FUEL INJECTION	0413 - 6
1D23	SYSTEM, TURBOCHARGER	0416 - 2
1C23	SYSTEM, VENTILATION	0408 - 2

T

1F22	TANK, FUEL	0560 - 2
3J5	TANK, HYDRAULIC	3364 - 2
1F8	TANK, RESERVE	0510 - 6
2B23	TANK, WINDOW WASHER	1810 - 28
3C7	TEETH, HEAVY DUTY BUCKET	3302 - 18
3C5	TEETH, TRUCK LOADING BUCKET	3302 - 17A
2D15	THERMOSTAT, AIR CONDITIONER	1830 - 4
1E3	THERMOSTAT, HOUSING AND WATER PIPING	0418 - 2
3E19	TILTING-PROBING SENSOR	3361 - 14
1E19	TIMING GEAR CASE	0433 - 4
2E22	TOOL BOX	1910 - 18
3C7	TOOTH, HEAVY DUTY BUCKET	3302 - 18
1A18	TRACK FRAME	0130 - 2
1A22	TRACK GUARD	0130 - 6
1B7	TRACK LINK	0130 - 18
1B7	TRACK SHOE	0130 - 18
1A20	TRACK STEP	0130 - 4
1D19	TRANSFER PUMP, FUEL	0413 - 12
3E9	TRANSMISSION PUMP	3361 - 4
1B18	TRAVEL DEVICE	0260 - 10
1B20	TRAVEL DEVICE	0260 - 11A
1B12	TRAVEL DRIVE FITTINGS	0260 - 4
1B12	TRAVEL DRIVE HOSE	0260 - 4
1B14	TRAVEL HYDRAULIC LINES COVER	0260 - 6
2F8	TRAVEL MOTION ALARM	2004 - 2
2D21	TRAY, REAR	1830 - 10
3C5	TRUCK LOADING BUCKET	3302 - 17A
1D23	TURBOCHARGER SYSTEM	0416 - 2

U

2E24	UNDERNEATH PROTECTION	1910 - 20
1B3	UPPER ROLLER	0130 - 14

V

1C15	VACUUM PIPING, ENGINE OIL AND	0407 - 6
3G13	VALVE COMPONENTS, BOOM CYLINDER LOWERING	3362 - 40
3G11	VALVE COMPONENTS, CHECK (PILOT SYSTEM)	3362 - 38
3G9	VALVE COMPONENTS, FLOW CONTROL	3362 - 36
3F13	VALVE COMPONENTS, PILOT (COUNTERWEIGHT REMOVAL)	3362 - 16
3C13	VALVE COMPONENTS, PILOT CONTROLLER (DIG AND SWING) (SN 951032-)	3315 - 5A
3C11	VALVE COMPONENTS, PILOT CONTROLLER (DIG AND SWING)(SN -951031)	3315 - 4
3F17	VALVE COMPONENTS, SOLENOID (CONTINUED)	3362 - 20
3D22	VALVE KIT,SOLENOID, 1WAY/2WAY, WITHOUT PRESSURE SWITCH	3360 - 10
3E15	VALVE REPAIR PARTS	3361 - 10
1C7	VALVE, CAMSHAFT AND	0402 - 2
3G11	VALVE, CHECK (PILOT SYSTEM)	3362 - 38
3D17	VALVE, CONTROL	3360 - 2
3H9	VALVE, CONTROL	3363 - 16
3F11	VALVE, CONTROL (5 SPOOL SIDE SECTION)	3362 - 14
3F5	VALVE, CONTROL, MANIFOLD	3362 - 8
3E23	VALVE, CONTROL, 4 SPOOL	3362 - 2

ALPHABETICAL INDEX - CONTINUED

GRID		PAGE
3F1	VALVE, CONTROL, 4 SPOOL	3362 - 4
3F3	VALVE, CONTROL, 4 SPOOL, SIDE SECTION	3362 - 6
3F7	VALVE, CONTROL, 5 SPOOL	3362 - 10
3F9	VALVE, CONTROL, 5 SPOOL	3362 - 12
3D1	VALVE, COUNTERWEIGHT REMOVAL PILOT	3315 - 16
3G15	VALVE, HOLDING (ARM BOTTOM)	3362 - 42
3G17	VALVE, HOLDING (ARM, ROD)	3362 - 44
3G7	VALVE, LOCK	3362 - 34
3E3	VALVE, MECHANICAL PATTERN CHANGER	3360 - 15A
3C9	VALVE, PILOT	3315 - 2
3F13	VALVE, PILOT (COUNTERWEIGHT REMOVAL)	3362 - 16
3G11	VALVE, PILOT CHECK	3362 - 38
3J3	VALVE, SHUT-OFF, HIGH PRESSURE PIPINGS	3363 - 58
3G5	VALVE, SHUTTLE	3362 - 32
3J1	VALVE, SHUTTLE, PILOT PIPING REMOVAL DEVICE	3363 - 56
3F15	VALVE, SOLENOID	3362 - 18
3E1	VALVE, SOLENOID (CONTROL PATTERN SELECTOR KIT)	3360 - 14
3F17	VALVE, SOLENOID RELIEF	3362 - 20
3E17	VALVE,REDUCTION	3361 - 12
3E15	VALVE,REGULATOR	3361 - 10
3G3	VALVES, PILOT SIGNAL MANIFOLD	3362 - 30
2C5	VANDAL COVER KIT	1810 - 34
2C5	VANDAL GUARD KIT	1810 - 34
1G19	VEHICLE CONTROLLER	1674 - 12
1C23	VENTILATION SYSTEM	0408 - 2

W

1E1	WATER PUMP	0417 - 2
3B10	WEAR BARS, HEAVY DUTY BUCKET	3302 - 2
3B12	WEAR BARS, HEAVY DUTY BUCKET	3302 - 3A
3B14	WEAR BARS, HEAVY DUTY BUCKET	3302 - 4
3B16	WEAR BARS, HEAVY DUTY BUCKET	3302 - 6
3B18	WEAR BARS, HEAVY DUTY BUCKET	3302 - 8
3C5	WEARPLATE, TRUCK LOADING BUCKET	3302 - 17A
2B11	WEATHERSTRIP, CAB DOOR	1810 - 16
2B13	WEATHERSTRIP, CAB FRONT	1810 - 18
2B9	WEATHERSTRIP, CAB REAR AND LEFT SIDE	1810 - 14
2B17	WEATHERSTRIP, CAB TOP HATCH	1810 - 22
2C19	WINDOW COMPONENTS, CAB DOOR (CAB WITH INTEGRATED HEADGUARD)	1810 - 48
2C21	WINDOW COMPONENTS, CAB REAR (CAB WITH INTEGRATED HEADGUARD)	1810 - 50
2C5	WINDOW GUARDS	1810 - 34
2C11	WINDOW GUARDS, INTEGRATED HEADGUARD CAB	1810 - 40
2B23	WINDOW WASHER	1810 - 28
2B11	WINDOW, CAB DOOR	1810 - 16
2C13	WINDOW, CAB DOOR (INTEGRATED HEADGUARD CAB)	1810 - 42
2B13	WINDOW, CAB FRONT	1810 - 18
2C13	WINDOW, CAB REAR (INTEGRATED HEADGUARD CAB)	1810 - 42
2B9	WINDOW, CAB REAR AND LEFT SIDE	1810 - 14
2C23	WINDOW, FRONT (CAB WITH INTEGRATED HEADGUARD)	1810 - 52
2C23	WINDOW, RIGHT SIDE (CAB WITH INTEGRATED HEADGUARD)	1810 - 52
2B9	WINDOW,REAR	1810 - 14
2B13	WINDSHIELD	1810 - 18
2C23	WINDSHIELD (CAB WITH INTEGRATED HEADGUARD)	1810 - 52
2D3	WINDSHIELD GUARD (CAB WITH INTEGRATED HEADGUARD)	1810 - 56
2B23	WINDSHIELD WASHER	1810 - 28
2B7	WINDSHIELD WASHER HOSE	1810 - 12
2B7	WINDSHIELD WASHER NOZZLE	1810 - 12
2B7	WINDSHIELD WIPER	1810 - 12
2C9	WINDSHIELD WIPER, CAB WITH INTEGRATED HEADGUARD	1810 - 38
2B7	WIPER, WINDSHIELD	1810 - 12
2C9	WIPER, WINDSHIELD, CAB WITH INTEGRATED HEADGUARD	1810 - 38
2D21	WIRE HARNESS, CIGAR LIGHTER	1830 - 10
2B7	WIRE HARNESS, DOME LIGHT	1810 - 12
3D20	WIRE HARNESS, FOOT SWITCH	3360 - 8
1G15	WIRE HARNESS, MONITOR	1674 - 8
2F8	WIRE HARNESS, MOTION ALARM	2004 - 2
2B7	WIRE HARNESS, RADIO SPEAKER	1810 - 12
1G17	WIRING HARNESS	1674 - 10
2D13	WIRING HARNESS, AIR CONDITIONER	1830 - 2
1G19	WIRING HARNESS, CAB	1674 - 12
3D15	WIRING HARNESS, WORK LIGHT, MASS EXCAVATING BOOM	3344 - 4
1C3	WIRING LEAD, ENGINE	0400 - 2
3D15	WORK LIGHT, MASS EXCAVATING BOOM	3344 - 4
2C9	WORKLIGHT, CAB WITH INTEGRATED HEADGUARD	1810 - 38

TRACK FRAME

T197553 -UN-03FEB04

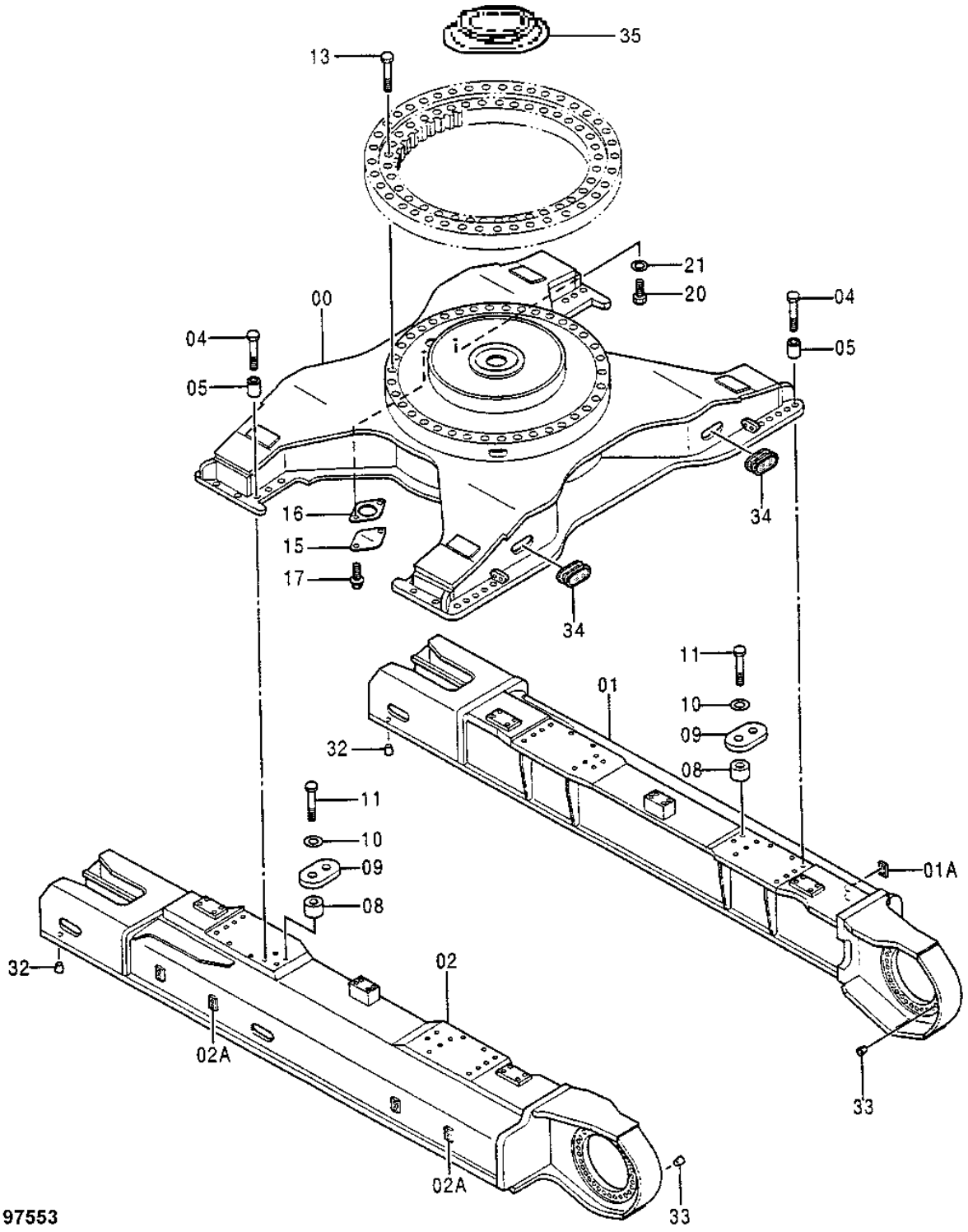

T197553

TRACK FRAME

KEY	PART NO.	PART NAME	QTY	SERIAL NO.	REMARKS
0	.....	FRAME	1		(CONVENIENCE ASSEMBLY)
1	4465899	FRAME	1		(CONVENIENCE ASSEMBLY)
1A	4219513	WELD NUT	4		(SUB FOR TH4219513)
2	4465900	FRAME	1		(CONVENIENCE ASSEMBLY)
2A	4219513	WELD NUT	4		(SUB FOR TH4219513)
4	J833310	BOLT	36		(SUB FOR AT201552)
5	4320218	SPACER	36		(SUB FOR AT201770)
8	4317157	SPACER	8		(SUB FOR TH4317157)
9	4269566	STRAP	4		(SUB FOR AT201729)
10	4083438	WASHER	8		(SUB FOR AT202297)
11	J833306	CAP SCREW	8		(SUB FOR THJ833306)
13	J833011	CAP SCREW	36		(SUB FOR THJ833011)
15	4013896	COVER	1		(SUB FOR TH100633)
16	4244172	GASKET	1		(SUB FOR AT202301)
17	19M7938	CAP SCREW	2		M10 X 20
	12M7066	LOCK WASHER	2		10 MM
20	J901625	BOLT	1	-004149	(SUB FOR AT202272)
21	24M7053	WASHER	1	-004149	17 X 30 X 3 MM
32	.....	PACKING	24		(TH108281 NOT AVAILABLE FOR SERVICE)
33	99M7010	PLUG	4		
34	4268503	GROMMET	2		(SUB FOR AT201726)
35	4610571	SEAL	1		

TRACK STEP

TP66846 -UN-11OCT99

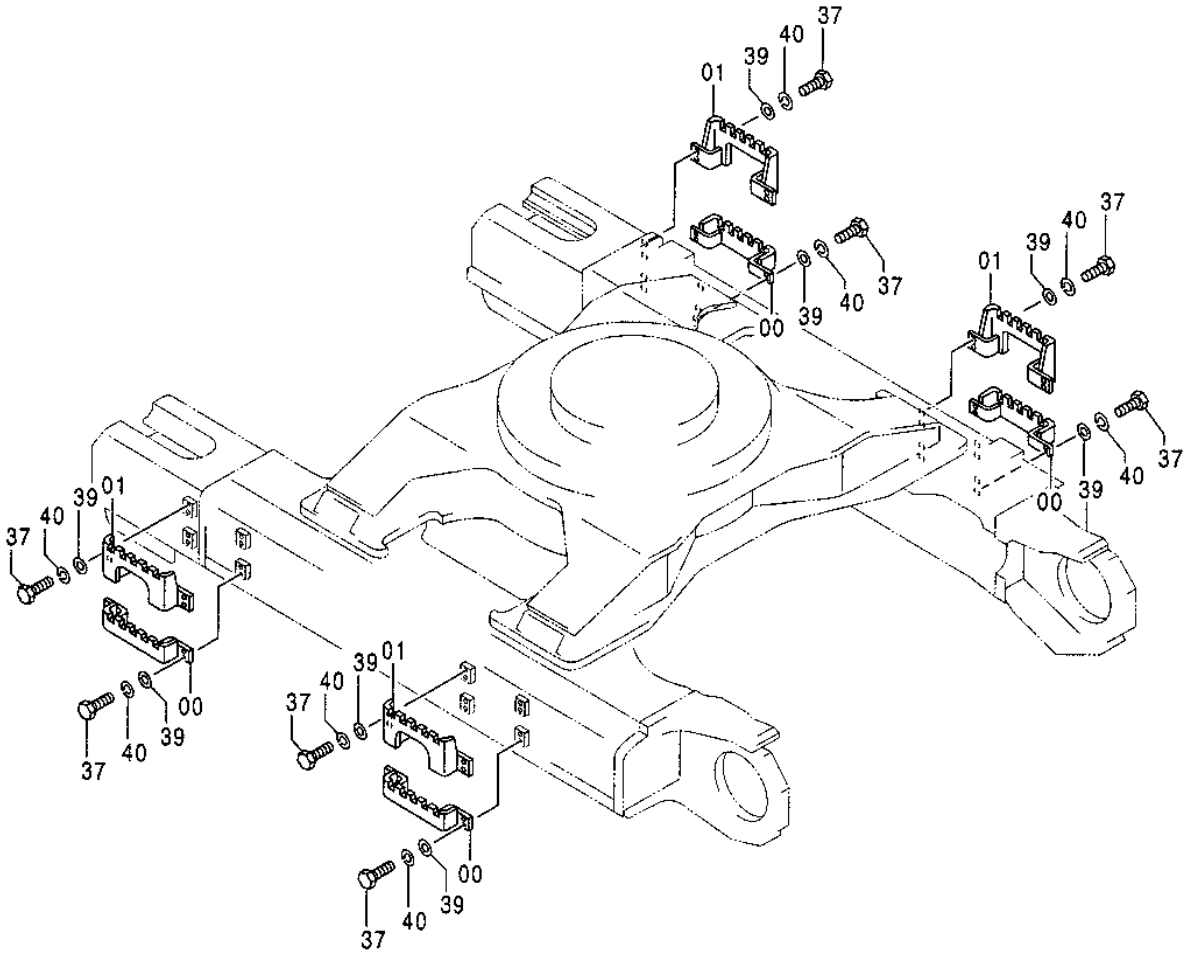

TP66846

TRACK STEP

KEY	PART NO.	PART NAME	QTY	SERIAL NO.	REMARKS
0	8068378	STEP	4		(SUB FOR TH8068378)
1	8068391	STEP	4		(SUB FOR TH8068391)
37	19M7409	CAP SCREW	32		M16 X 50
39	4114405	WASHER	32		(SUB FOR TH101105)
40	12H294	LOCK WASHER	32		5/8"

TRACK GUARD

TP66844 -UN-11OCT99

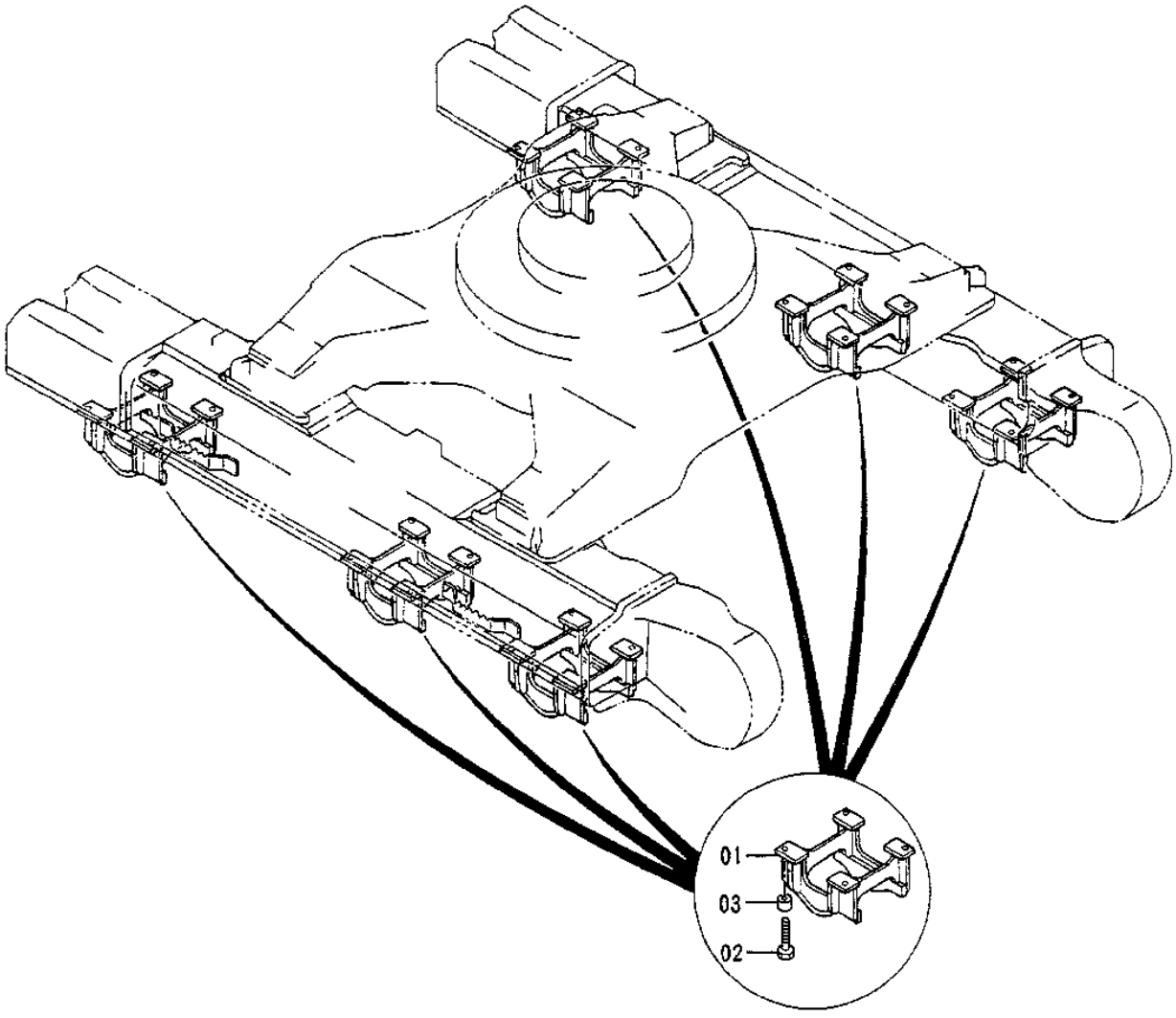

TP66844

TRACK GUARD

KEY	PART NO.	PART NAME	QTY	SERIAL NO.	REMARKS
1	7028306	GUARD	6		(SUB FOR TH7028306)
2	19M7780	CAP SCREW	24		M24 X 110
3	4104838	SPACER	24		(SUB FOR TH4104838)

FRONT IDLER

TP45392 -UN-01JAN94

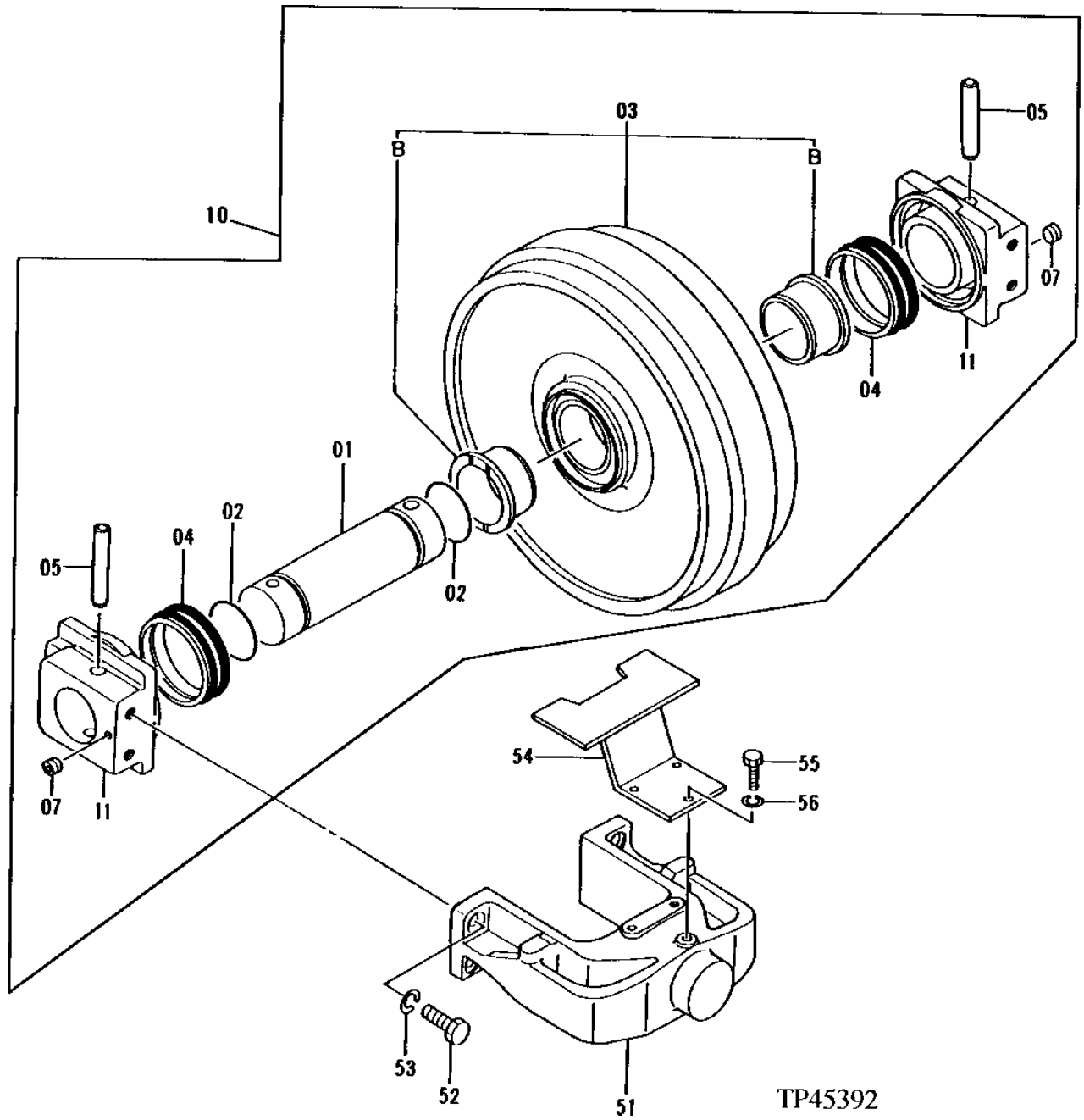

FRONT IDLER

KEY	PART NO.	PART NAME	QTY	SERIAL NO.	REMARKS
1	3086380	AXLE	1		
2	3086381	O-RING	2		
3	3086382	IDLER SPROCKET	1		
3B	3086383	BUSHING	2		
4	3086384	SEAL KIT	2		
5	3086370	DOWEL PIN	2		
7	94-2011	FITTING PLUG	2		(SUB FOR TH100434)
10	9137270	IDLER	1		(SUB FOR 2044041)
11	2044042	BEARING	2		
51	2033636	YOKE	1		(SUB FOR TH2033636)
52	J912460	CAP SCREW	4		(SUB FOR THJ912460)
53	12H234	LOCK WASHER	4		1"
54	8053767	GUARD	1		(SUB FOR TH8053767)
55	19M8011	CAP SCREW	3		M12 X 30
56	12H301	LOCK WASHER	3		1/2"

ADJUSTER

TP66853 -UN-11OCT99

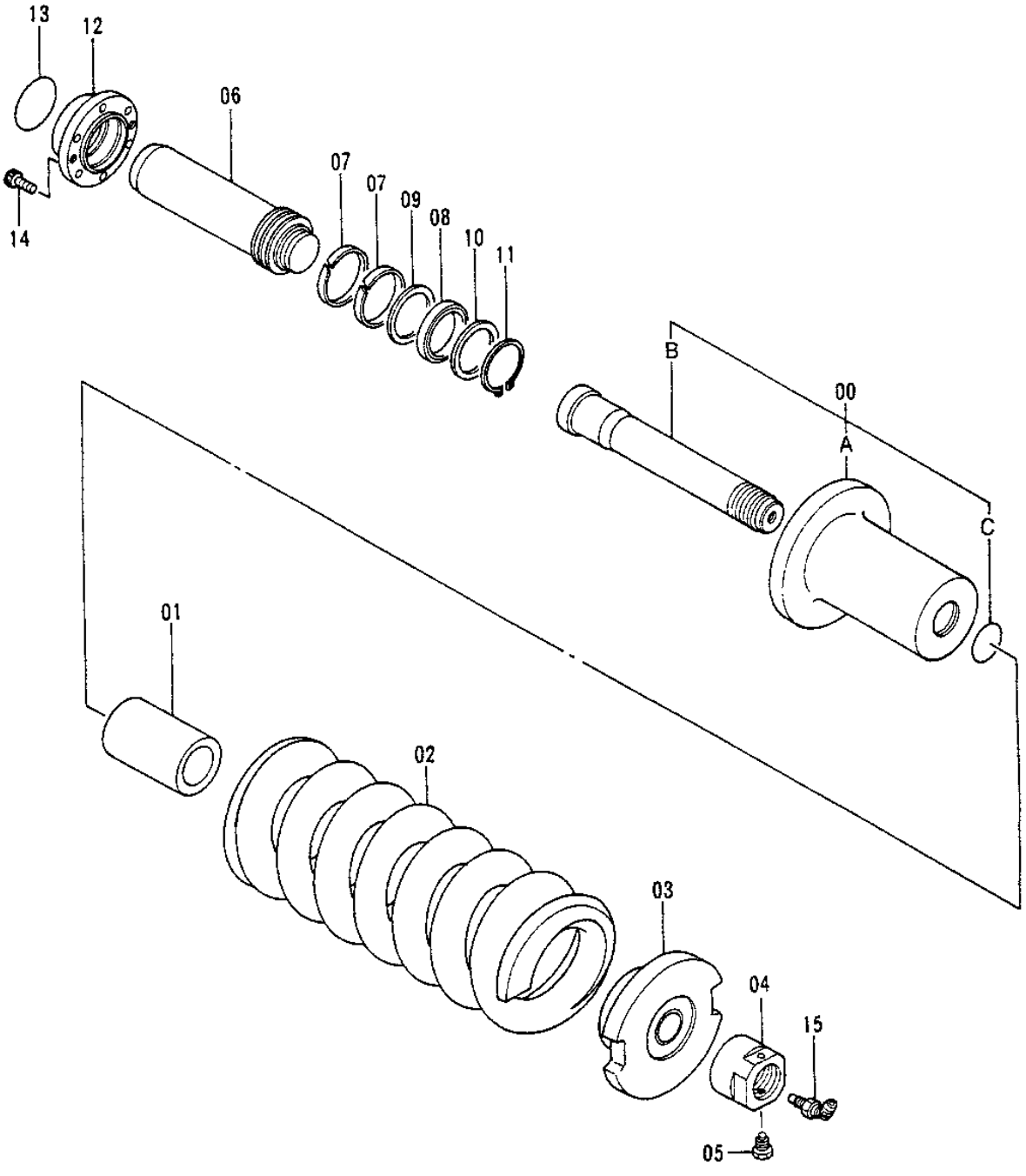

TP66853

ADJUSTER

KEY	PART NO.	PART NAME	QTY	SERIAL NO.	REMARKS
0	.....	CYLINDER	1		(TH9156835 NOT AVAILABLE FOR SERVICE)
0A	2043072	CYLINDER	1		
0B	2040459	ROD	1		(SUB FOR TH2040459)
0C	AT264234	O-RING	1		(SUB FOR AT130595)
1	4379383	SPACER	1		(SUB FOR TH4379383)
2	2033235	COMPRESSION SPRING	1		(SUB FOR TH2033235)
3	3078041	RETAINER	1		(SUB FOR TH3078041)
4	4379384	NUT	1		(SUB FOR TH4379384)
5	4215453	BOLT	1		(SUB FOR TH4215453)
6	2040457	ROD	1		(SUB FOR TH2040457)
7	4379385	WEAR RING	2		(SUB FOR TH4379385)
8	4291852	SEAL	1		(SUB FOR TH4291852)
9	4291853	BACK-UP RING	1		(SUB FOR TH4291853)
10	4291854	RING	1		(SUB FOR TH4291854)
11	991351	SNAP RING	1		(SUB FOR TH102644)
12	3059755	GUIDE	1		(SUB FOR TH3059755)
13	AT264222	O-RING	1		(SUB FOR AT121661, 4502700)
14	19M8531	SCREW	6		M14 X 35
15	4255055	VALVE	1		(SUB FOR AT154223)

UPPER ROLLER

T193545 -UN-14AUG03

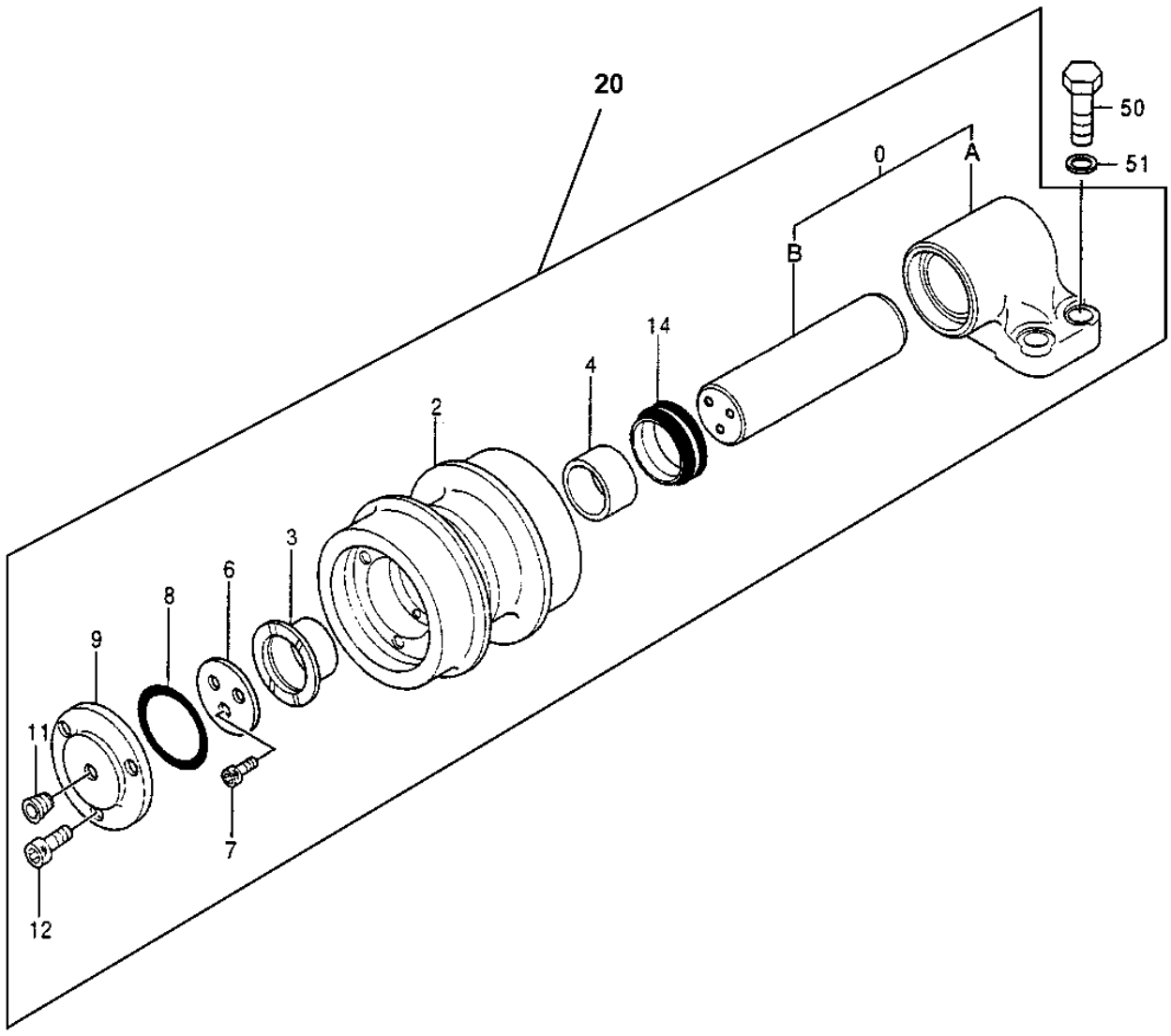

T193545

UPPER ROLLER

KEY	PART NO.	PART NAME	QTY	SERIAL NO.	REMARKS
0	2039915	BRACKET	1		(SUB FOR TH2039915)
0A	2033232	BRACKET	1		
0B	3059758	AXLE	1		
2	2039446	CARRIER ROLLER	1		(SUB FOR TH2039446)
3	3059748	BUSHING	1		
4	3059749	BUSHING	1		
6	3075994	THRUST WASHER	1		(SUB FOR TH3075994)
7	M341018	BOLT	3		(SUB FOR AT131554)
8	AT264234	O-RING	1		(SUB FOR TH3075992, AT130595)
9	2039445	COVER	1		(SUB FOR TH2039445)
11	94-2011	FITTING PLUG	1		(SUB FOR TH100434)
12	19M8440	SCREW	3		M10 X 25
14	AT128492	SEAL KIT	1		(SUB FOR TH3075993)
20	9109492	ROLLER	6		(SUB FOR TH4349517)
50	19M8410	SCREW	24		M20 X 75
51	N231749	WASHER	24		20.625 X 38.100 X 6.350 MM (13/16" X 1-1/2" X 1/4")

LOWER ROLLER

T157611 -UN-19JUL02

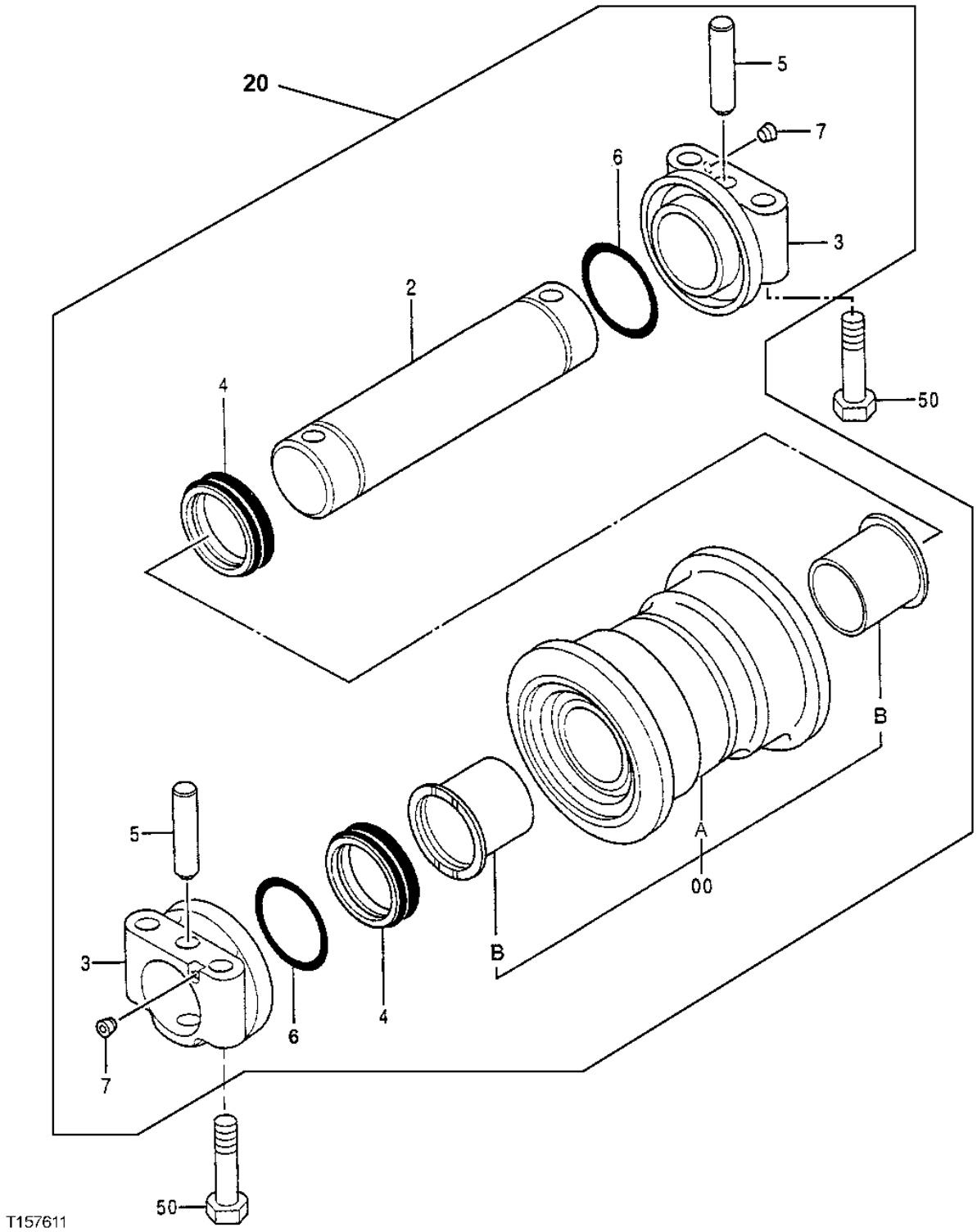

LOWER ROLLER

KEY	PART NO.	PART NAME	QTY	SERIAL NO.	REMARKS
0	4478098	ROLLER	1		
0A	4478112	ROLLER	1		
0B	4478113	BUSHING	2		
2	4478100	SHAFT	1		
3	4478101	BUSHING	2		
4	4478102	SEAL	2		
5	4478105	PIN FASTENER	2		
6	4478111	O-RING	2		
7	4478084	PIPE PLUG	2		
20	4473719	ROLLER	18		
50	J932409	CAP SCREW	72		(SUB FOR THJ932409)

TRACK LINK

TP66860 -UN-12OCT99

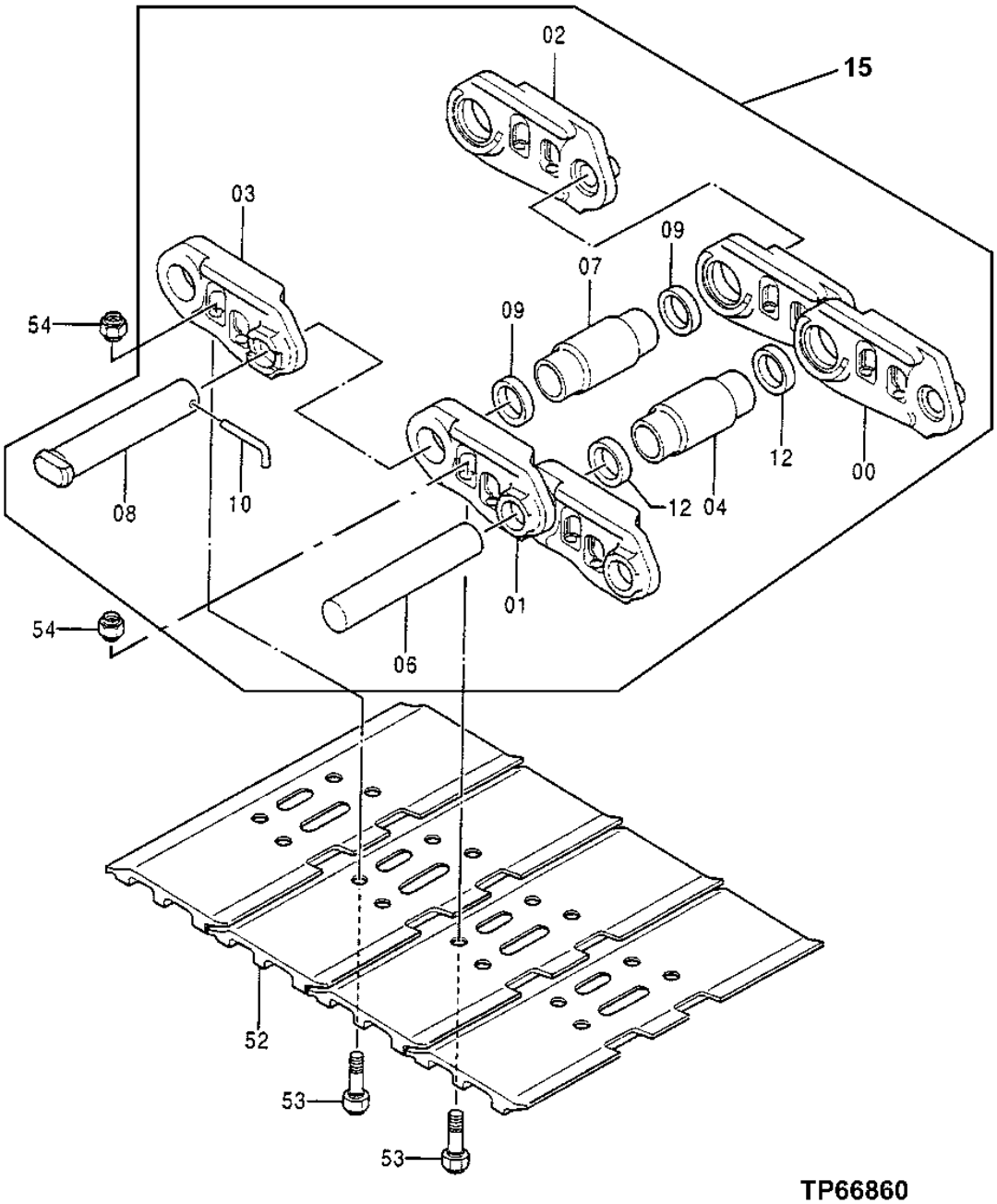

TRACK LINK

KEY	PART NO.	PART NAME	QTY	SERIAL NO.	REMARKS
0	4295788	TRACK LINK	51		(SUB FOR TH4295788) (RIGHT SIDE)
1	4295789	TRACK LINK	51		(SUB FOR TH4295789) (LEFT SIDE)
2	4295790	MASTER TRACK LINK-RH	1		(SUB FOR TH4295790) (MASTER)
3	4295791	MASTER TRACK LINK-LH	1		(SUB FOR TH4295791) (MASTER)
4	4295792	BUSHING	51		(SUB FOR TH4295792)
6	4326065	TRACK PIN	51		(SUB FOR TH4326065)
7	4295795	MASTER TRACK BUSHING	1		(SUB FOR TH4295795) (MASTER)
8	4326066	MASTER TRACK PIN	1		(SUB FOR TH4326066) (MASTER)
9	4512403	TRACK BUSHING	2		(SUB FOR TH4512403)
10	4037584	TRACK PIN	1		(SUB FOR TH4037584)
12	4295798	SEAL	102		(SUB FOR TH4295798)
15	9137494	TRACK CHAIN W/O SHOES	1		(SUB FOR TH9137494)
52	4436000	FLAT SHOE	52		(750 G)
	4436001	FLAT SHOE	52		(900 G)
53	4295784	BOLT	208		(SUB FOR TH4295784)
54	4295785	NUT	208		(SUB FOR TH4295785)

ROTARY MANIFOLD

T149553 -UN-21JAN02

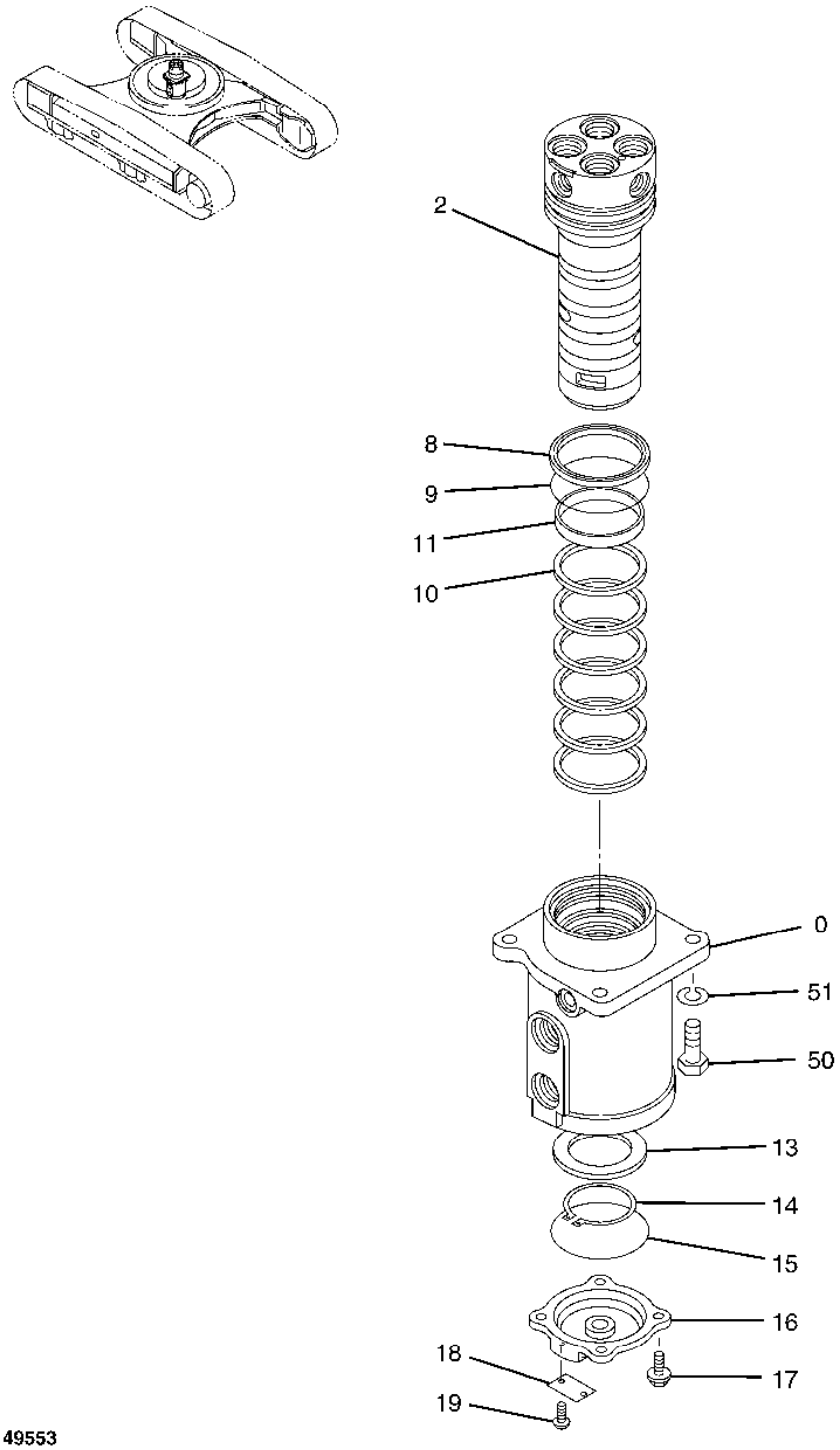

ROTARY MANIFOLD

KEY	PART NO.	PART NAME	QTY	SERIAL NO.	REMARKS
0	.....	HOUSING	1		(1027536 NOT AVAILABLE FOR SERVICE)
	9199789EX	FRAME	1		(SUB FOR TH9183296 OR 9183296EX)
2	.....	SPINDLE	1		(TH9186449 NOT AVAILABLE FOR SERVICE)
8	4408281	SEAL	1		(SUB FOR TH4408281)
9	4430508	O-RING	1		(SUB FOR TH4430508)
10	4359550	SEAL	6		(SUB FOR T165610)
11	4359549	BUSHING	1		(SUB FOR T165611)
13	AT318035	O-RING	1		(SUB FOR 4506424, T165612)
14	40M7150	SNAP RING	1		
15	CH13523	PACKING	1		
16	3074241	COVER	1		(SUB FOR T165613)
17	19M8011	CAP SCREW	4		M12 X 30
	12M7058	LOCK WASHER	4		12 MM, (SUB FOR 12M7067)
18	AT154130	LABEL	1		
19	37H99	SCREW	2		
50	19M7488	CAP SCREW	4		M16 X 40
51	12H294	LOCK WASHER	4		5/8"

PROPEL DRIVE PLUMBING

T142671 -UN-14JUN01

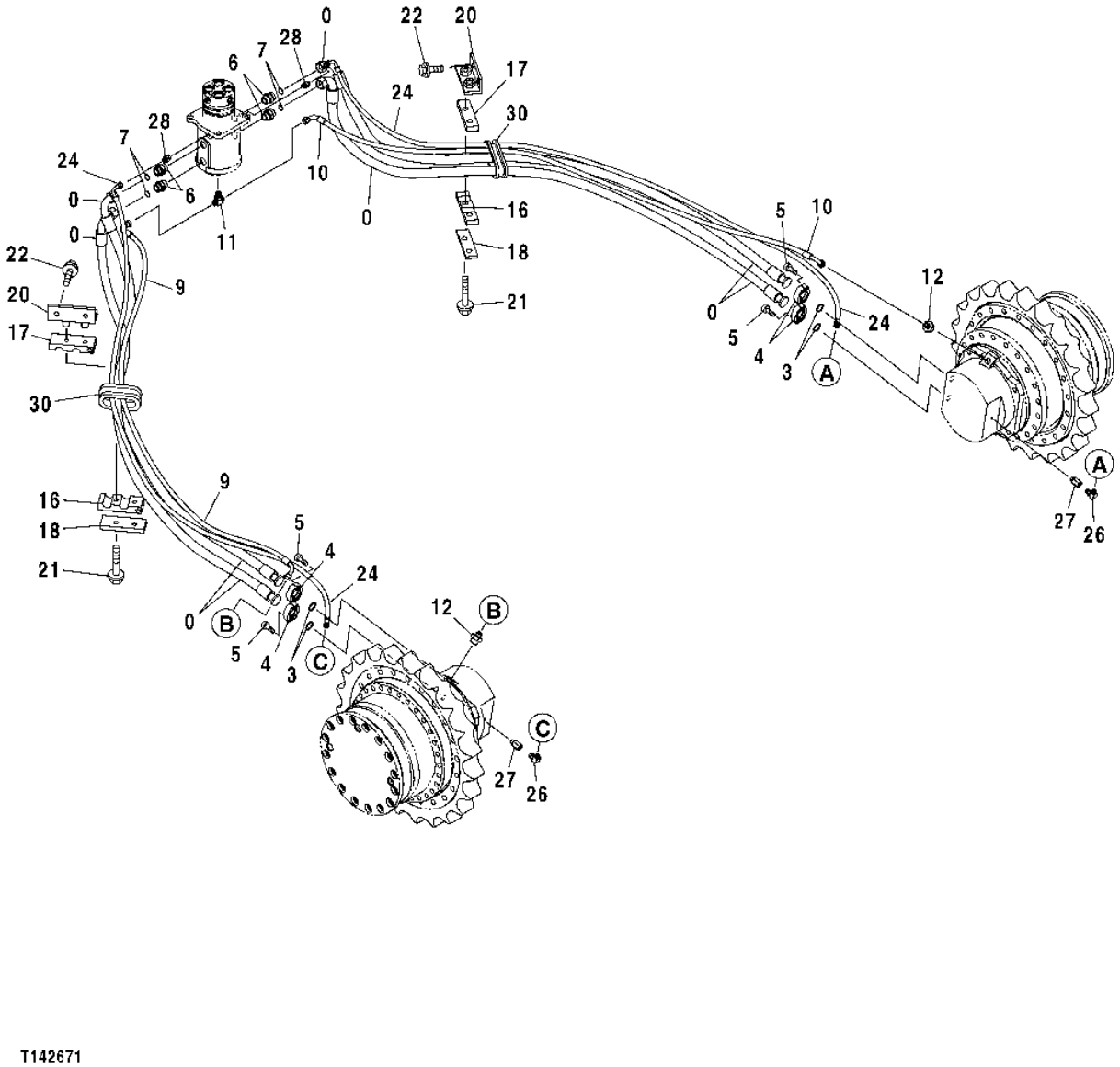

T142671

PROPEL DRIVE PLUMBING

KEY	PART NO.	PART NAME	QTY	SERIAL NO.	REMARKS
0	4435320	HYDRAULIC HOSE	4		(SUB FOR TH4435320)
3	T78313	O-RING	4		
4	4085560	FLANGE FITTING	8		(SUB FOR TH101960)
5	19M8395	SCREW	16		M12 X 40
6	4189535	ADAPTER	4		(SUB FOR AT114853)
6A	TH101926	O-RING	1		(NOT ILLUSTRATED - COMPONENTS OF TH101926)
7	T76938	O-RING	4		
9	4443346	HYDRAULIC HOSE - FABRICATE	1		(SUB FOR TH4443346)
10	4443348	HYDRAULIC HOSE - FABRICATE	1		(SUB FOR TH4443348)
11	A852544	TEE FITTING	1		(SUB FOR THA852544)
11A	4506418	O-RING	1		(SUB FOR U46489) (NOT ILLUSTRATED - COMPONENTS OF THA85244)
12	4279302	ADAPTER	2		(SUB FOR TH4317612 AND 4317612)
12A	AT318035	O-RING	1		(SUB FOR 4506424, TH100055) (NOT ILLUSTRATED - COMPONENTS OF TH4317612)
16	4339413	HOSE CLAMP	2		(SUB FOR AT201818)
17	4267673	HOSE CLAMP	2		(SUB FOR AT201725)
18	4268908	STRAP	2		(SUB FOR AT201727)
20	8061456	BRACKET	2		(SUB FOR AT202373)
21	19M7949	CAP SCREW	4		M12 X 100
	12M7058	LOCK WASHER	4		12 MM, (SUB FOR 12M7067)
22	12M7058	LOCK WASHER	4		12 MM, (SUB FOR 12M7067)
	19M8011	CAP SCREW	4		M12 X 30
	24H1748	WASHER	4		1/2" X 1-1/4" X 0.105"
24	AT134361	HYDRAULIC HOSE - FABRICATE	2		
26	.....	ELBOW FITTING	2		(THA852323 NOT AVAILABLE FOR SERVICE)
26A	M800650	PACKING	1		(NOT ILLUSTRATED - COMPONENTS OF THA852323)
27	4202564	ADAPTER	2		(SUB FOR AT215879)
27A	M800650	PACKING	1		(NOT ILLUSTRATED - COMPONENTS OF AT215879)
28	4200466	ADAPTER	2		(SUB FOR TH108320)
28A	CH11570	O-RING	1		(NOT ILLUSTRATED - COMPONENTS OF THA852133)
30	4343768	GROMMET	2		(SUB FOR AT202351)

TRAVEL HYDRAULIC LINES COVER

T150032 -UN-01FEB02

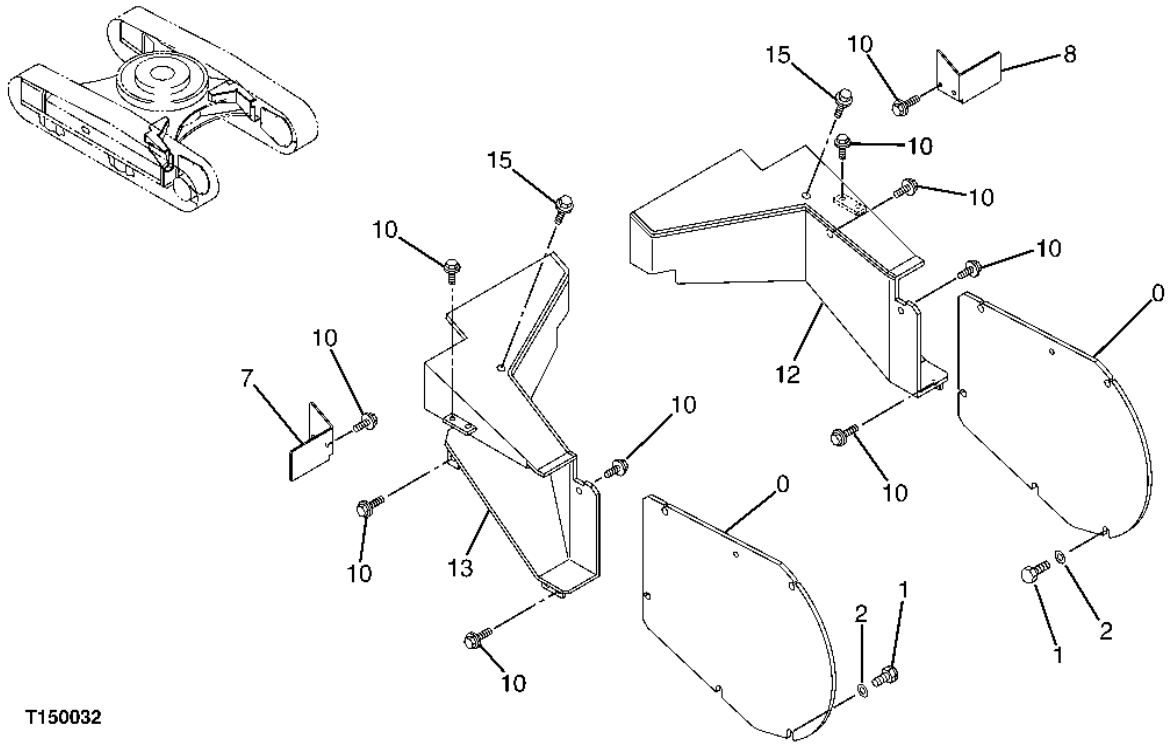

T150032

TRAVEL HYDRAULIC LINES COVER

KEY	PART NO.	PART NAME	QTY	SERIAL NO.	REMARKS
0	3092031	COVER	2		
1	4257968	BOLT	12		(SUB FOR AT202305)
2	12H294	LOCK WASHER	12		5/8"
7	8061381	COVER	1		
8	8061382	COVER	1		
10	19M8011	CAP SCREW	16		M12 X 30
	12H301	LOCK WASHER	16		1/2"
	24M7047	WASHER	16	-951006	13 X 24 X 2.500 MM
	19M8011	CAP SCREW	30	951007-	
	12H301	LOCK WASHER	30	951007-	
	24M7047	WASHER	30	951007-	
12	.....	COVER	1	-951006	(6020346 NO LONGER AVAILABLE) (FURNISH 6021808 ALONG WITH 7044229)
	6021808	COVER	1	951007-	
13	.....	COVER	1	-951006	(6020347 NO LONGER AVAILABLE)
	6021809	COVER	1	951007-	(USE ALONG WITH 7044228)
15	.....	BOLT	2		(AT200005 NOT AVAILABLE FOR SERVICE)
16	7044229	COVER	1	951007-	(NOT ILLUSTRATED)
	7044228	COVER	1	951007-	(NOT ILLUSTRATED)
	9760788	COVER	1	951007-	(NOT ILLUSTRATED)
	9760789	COVER	1	951007-	(NOT ILLUSTRATED)
	9760589	BRACKET	2	951007-	(NOT ILLUSTRATED)

ROTARY MANIFOLD ATTACHMENTS

T149413 -UN-23JAN02

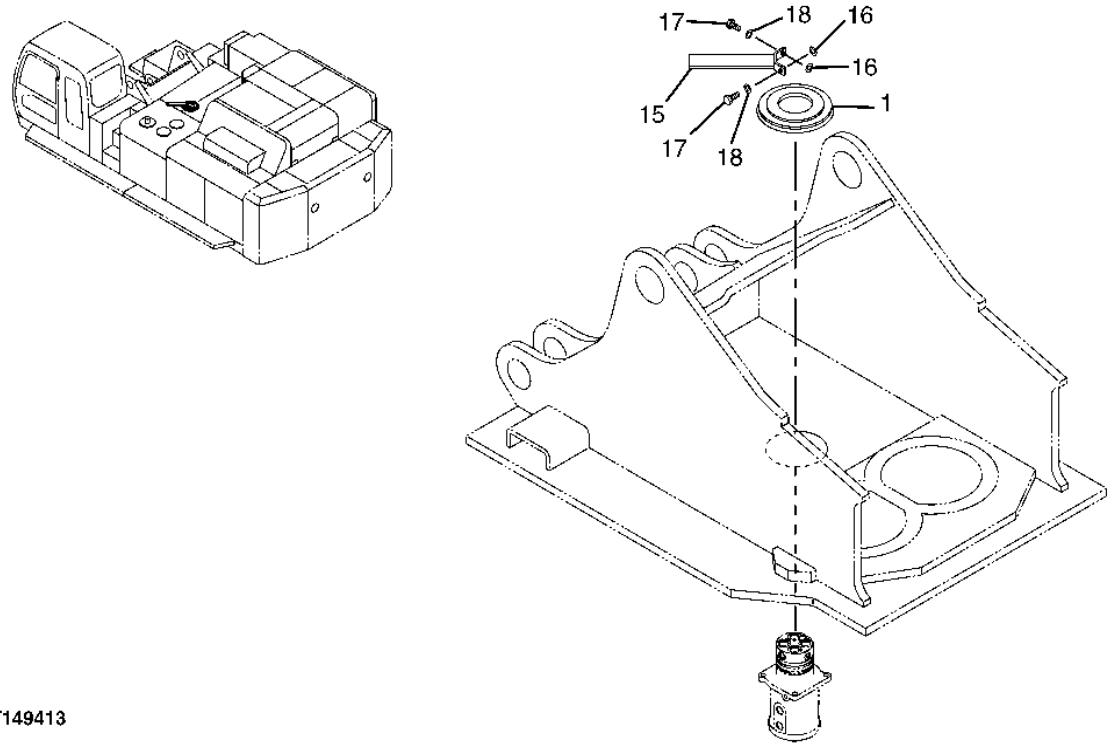

T149413

ROTARY MANIFOLD ATTACHMENTS

KEY	PART NO.	PART NAME	QTY	SERIAL NO.	REMARKS
1	4205476	COVER	1		(SUB FOR AT131790)
15	8039014	STOP	1		(SUB FOR AT132067)
16	4114404	WASHER	2		(SUB FOR AT130666)
17	19M6332	CAP SCREW	2		M14 X 35
18	12H317	LOCK WASHER	2		9/16"

TRAVEL DEVICE

T155070 -UN-22MAY02

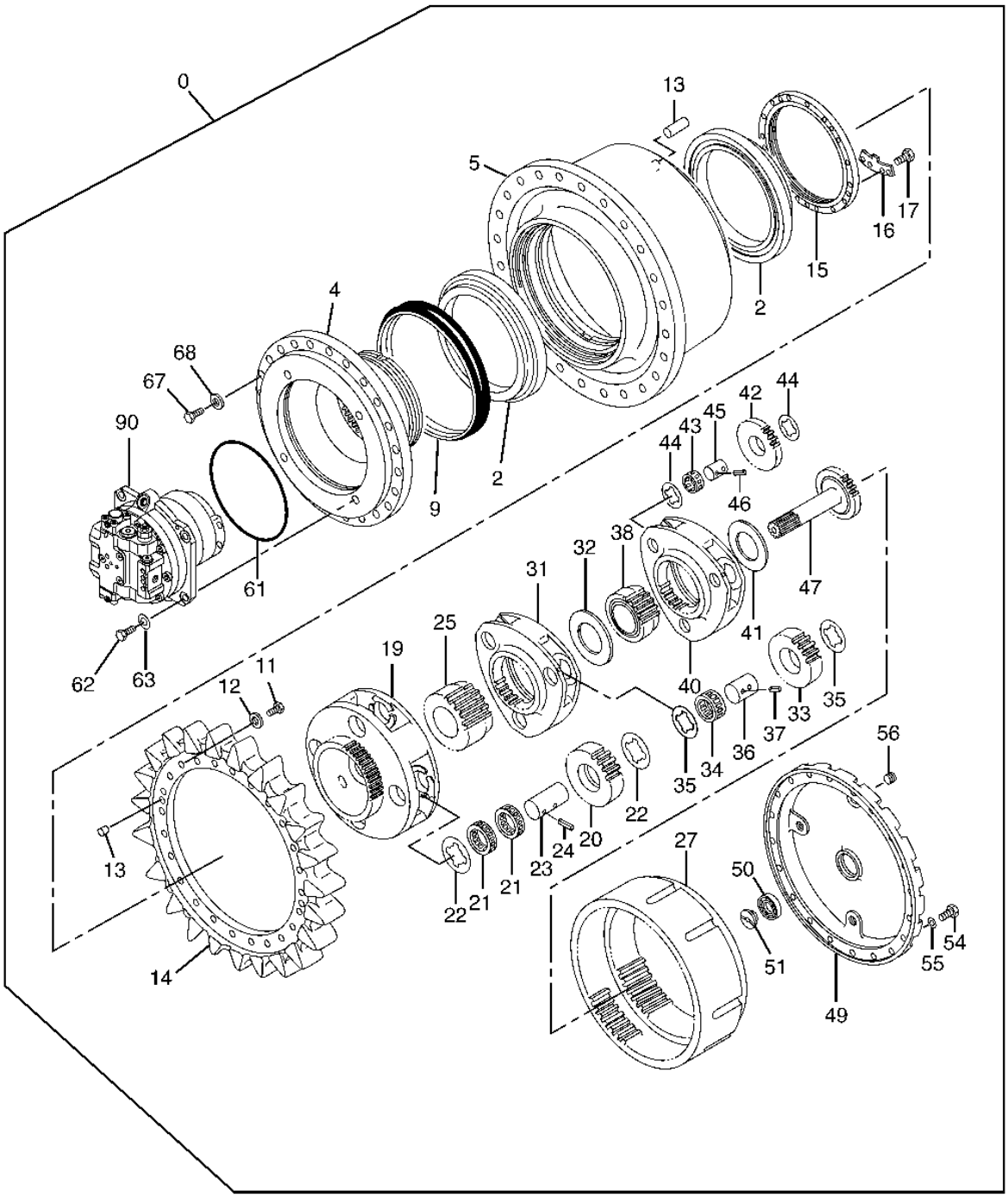

T155070

TRAVEL DEVICE

KEY	PART NO.	PART NAME	QTY	SERIAL NO.	REMARKS
0	9201470	TRANSMISSION	2		
2	4200411	TAPERED ROLLER BEARING	2		(SUB FOR AT131735)
4	4476047	FLANGE	1		
5	4353518	HOUSING	1		
9	4350347	SEAL	1		
11	J932270	BOLT	24		(SUB FOR TH101870)
12	T56006	WASHER	24		
13	99M7010	PLUG	2		
	4353519	PIN FASTENER	4		
14	AT309604	DRIVE SPROCKET	1		(SUB FOR 4388621)
15	4353515	NUT	1		
16	4353516	LOCK PLATE	1		
17	4353517	CAP SCREW	2		
19	4353506	PLANET PINION CARRIER	1		
20	4476044	GEAR	4		
21	4452484	NEEDLE BEARING	8		
22	4353508	THRUST WASHER	8		
23	4472150	SHAFT	4		
24	4144028	SPRING PIN	4		
25	4476043	SUN GEAR	1		
27	4476045	RING GEAR	1		
31	4353501	PLANET PINION CARRIER	1		
32	4353505	WASHER	1		
33	4353502	GEAR	3		
34	4289648	NEEDLE BEARING	3		
35	4353503	THRUST WASHER	6		
36	4353504	PIN FASTENER	3		
37	4144018	SPRING PIN	3		(SUB FOR AT217743)
38	4353511	SUN GEAR	1		
40	4353496	PLANET PINION CARRIER	1		
41	4476041	WASHER	1		
42	4353497	GEAR	3		
43	4246786	NEEDLE BEARING	3		(SUB FOR AT202104)
44	4353498	THRUST WASHER	6		
45	4353499	PIN FASTENER	3		
46	34M7102	SPRING PIN	3		
47	4476046	GEAR	1		
49	4353520	COVER	1		
50	4274541	BALL BEARING	1		(SUB FOR AT160248)
51	4353521	PLUG	1		
54	J931440	BOLT	20		(SUB FOR M221440)
55	12H317	LOCK WASHER	20		9/16"
56	4241426	FITTING PLUG	3		(SUB FOR TH111907)
61	4271596	O-RING	1		(SUB FOR AT131752)
62	J911860	BOLT	4		(SUB FOR AT131543)
63	12H236	LOCK WASHER	4		3/4", (SUB FOR 12H312)
67	J932201	CAP SCREW	48		
68	T56006	WASHER	48		
90	4481829EX	MOTOR	1		

TRAVEL DEVICE

T192621 -UN-03JUL03

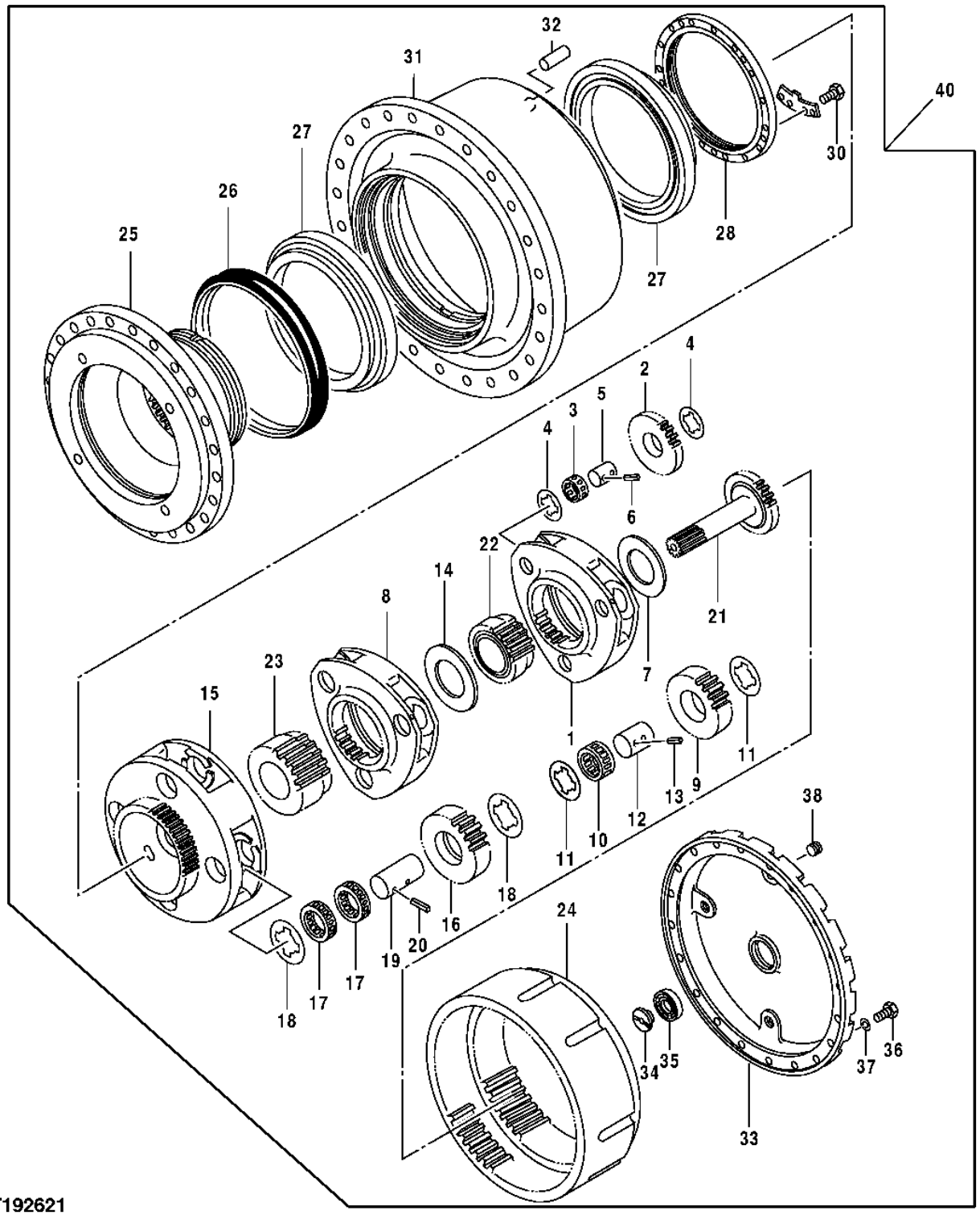

T192621

TRAVEL DEVICE

KEY	PART NO.	PART NAME	QTY	SERIAL NO.	REMARKS
1	4353496	PLANET PINION CARRIER	1		
2	4353497	GEAR	3		
3	4246786	NEEDLE BEARING	3		
4	4353498	THRUST WASHER	6		
5	4353499	PIN FASTENER	3		
6	34M7102	SPRING PIN	3		
7	4476041	WASHER	1		
8	4353501	PLANET PINION CARRIER	1		
9	4353502	GEAR	3		
10	4289648	NEEDLE BEARING	3		
11	4353503	THRUST WASHER	6		
12	4353504	PIN FASTENER	3		
13	4144018	SPRING PIN	3		
14	4353505	WASHER	1		
15	4353506	PLANET PINION CARRIER	1		
16	4476044	GEAR	4		
17	4452484	NEEDLE BEARING	8		
18	4353508	THRUST WASHER	8		
19	4472150	SHAFT	4		
20	4144028	SPRING PIN	4		
21	4476046	GEAR	1		
22	4353511	SUN GEAR	1		
23	4476043	SUN GEAR	1		
24	4476045	RING GEAR	1		
25	4476047	FLANGE	1		
26	4350347	SEAL	1		
27	4200411	TAPERED ROLLER BEARING	2		
28	4353515	NUT	1		
29	4353516	LOCK PLATE	1		
30	4353517	CAP SCREW	2		
31	4353518	HOUSING	1		
32	4353519	PIN FASTENER	4		
33	4353520	COVER	1		
34	4353521	PLUG	1		
35	4274541	BALL BEARING	1		
36	J931440	BOLT	20		
37	12H317	LOCK WASHER	20		
38	4241426	FITTING PLUG	3		
40	9189960	TRANSMISSION	2		

PROPEL MOTOR COMPONENTS

T149555 -UN-05APR02

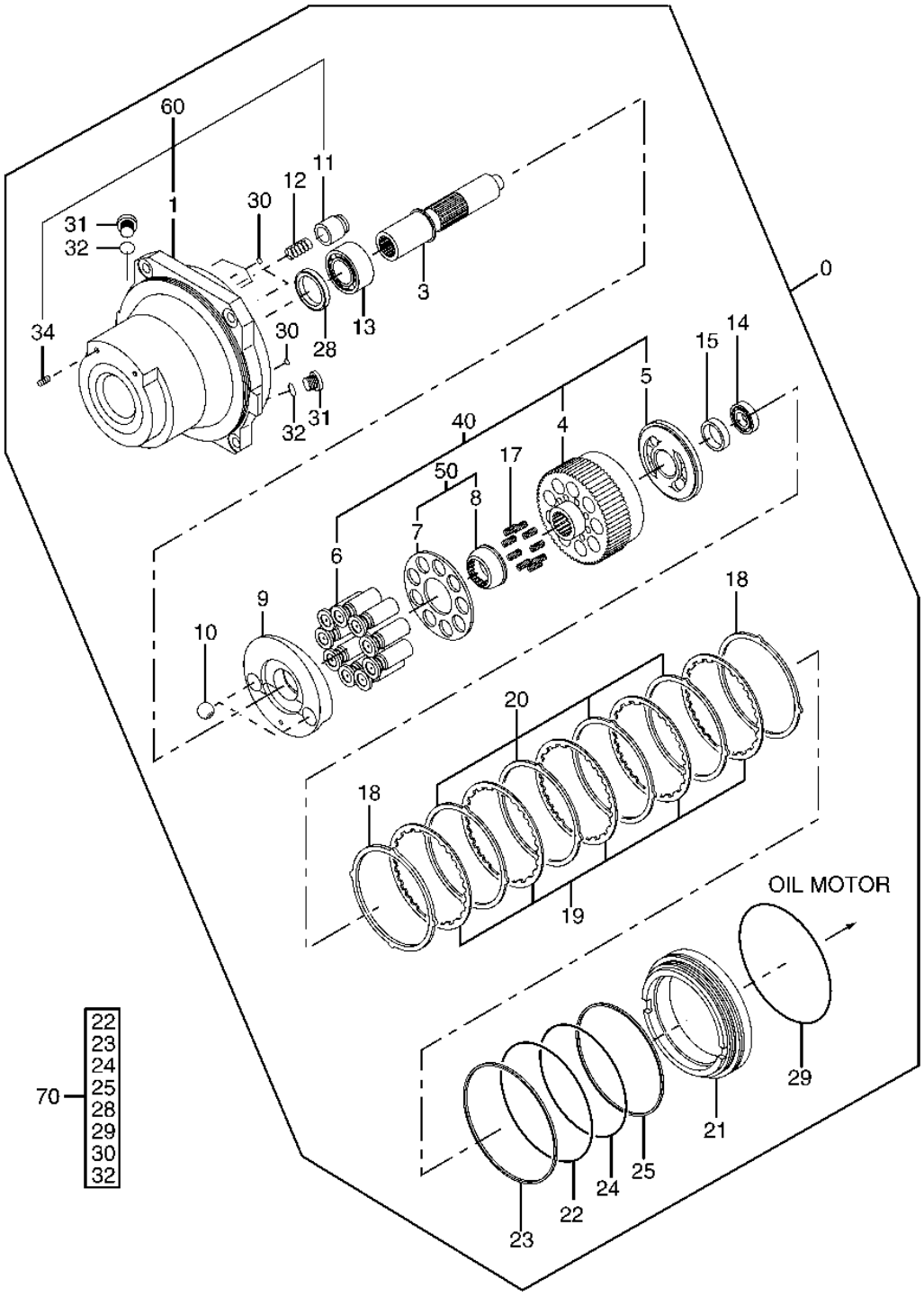

T149555

PROPEL MOTOR COMPONENTS

KEY	PART NO.	PART NAME	QTY	SERIAL NO.	REMARKS
0	4481829EX	MOTOR	1		(REMANUFACTURED) INCLUDES ALL PARTS ON THIS PAGE AND THE FOLLOWING PAGES.
1	.....	CASE	1		
3	0809501	SHAFT	1		(SUB FOR TH0809501)
4	.....	CYLINDER	1		
5	.....	PLATE	1		
6	.....	PISTON	9		
7	.....	PLATE	1		
8	.....	RETAINER	1		
9	0806702	PLATE	1		
10	0682706	BALL	2		(SUB FOR TH0682706)
11	.....	PISTON	2		
12	0809503	SPRING	2		(SUB FOR TH0809503)
13	0809504	CYLINDRICAL ROLLER BEARING	1		(SUB FOR TH0809504)
14	0809505	CYLINDRICAL ROLLER BEARING	1		(SUB FOR TH0809505)
15	0809506	BUSHING	1		(SUB FOR TH0809506)
17	0806502	SPRING	9		
18	0809508	PLATE	2		(SUB FOR TH0809508)
19	0419808	PLATE	5		(SUB FOR AT201978)
20	0352221	PLATE	4		(SUB FOR AT132258)
21	0809509	PISTON	1		(SUB FOR TH0809509)
22	.....	O-RING	1		(K) (AT170304 NOT AVAILABLE FOR SERVICE)
23	0809510	PISTON RING	1		(K) (SUB FOR TH0809510)
24	0419806	O-RING	1		(K) (SUB FOR AT201977)
25	0419812	BACK-UP RING	1		(K) (SUB FOR AT204905)
28	0352218	SEAL	1		(K) (SUB FOR AT132255)
29	A811260	O-RING	1		(K) (SUB FOR THA811260)
30	CH17167	O-RING	4		(K)
31	0809511	PIPE PLUG	2		(SUB FOR TH0809511)
32	AT318035	O-RING	2		(K) (SUB FOR 4506424, TH100055)
34	.....	PIPE PLUG	2		
40	0809512	CYLINDER	1		
50	0809513	RETAINER	1		(SUB FOR TH0809513)
60	0809514	CASE	1		(SUB FOR TH0809514)
70	0809515	SEAL KIT	1		(SUB FOR TH0809515) (INCLUDES ALL (K) PARTS)

PROPEL MOTOR COMPONENTS- CONTINUED

T149589 -UN-24JAN02

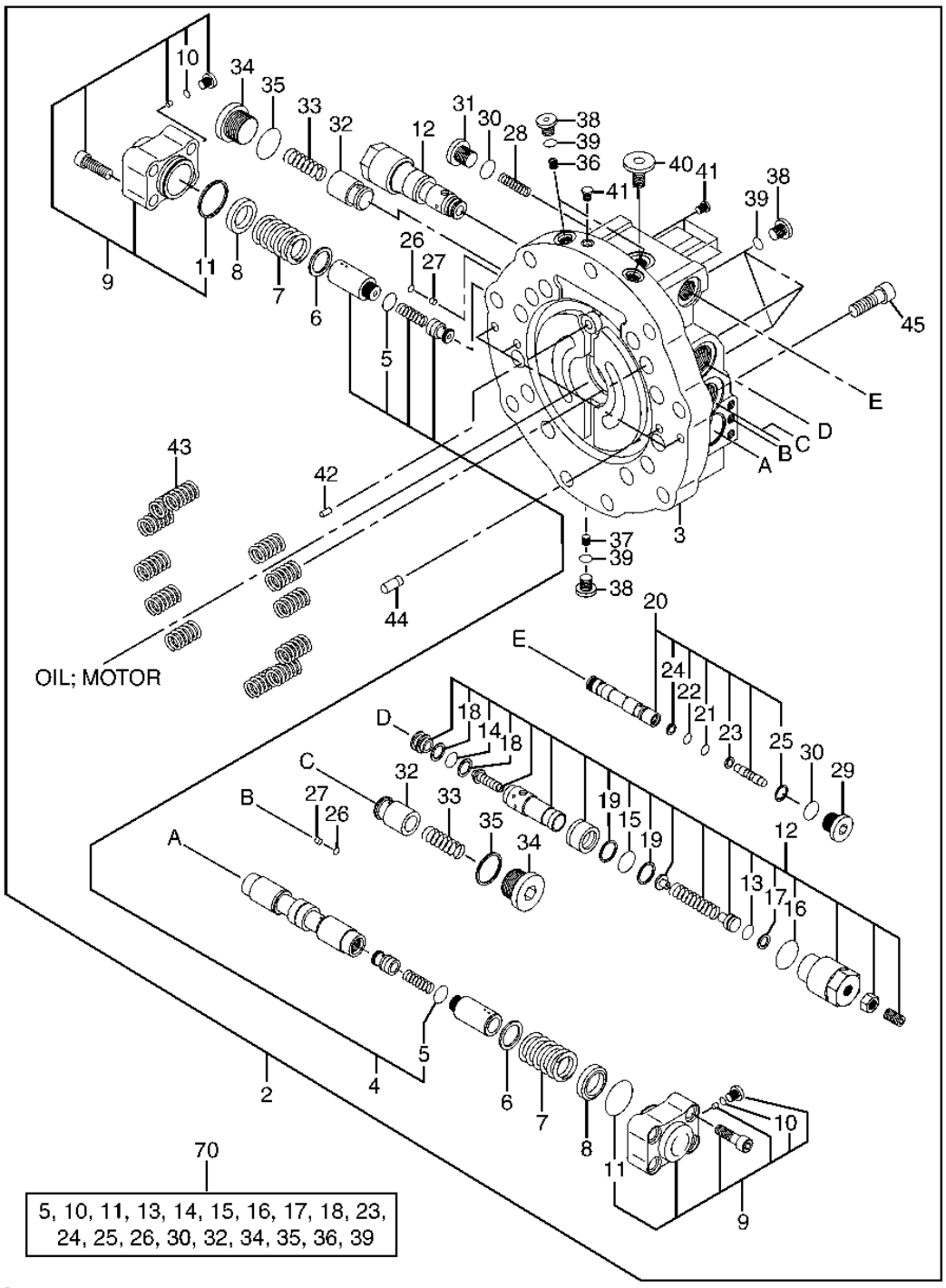

T149589

PROPEL MOTOR COMPONENTS- CONTINUED

KEY	PART NO.	PART NAME	QTY	SERIAL NO.	REMARKS
2	4481829EX	MOTOR	1		(REMANUFACTURED) INCLUDES ALL PARTS ON THIS PAGE AND PRECEDING PAGES.
3	.....	PLATE	1		
4	.....	SPOOL VALVE	1		
5	.....	O-RING	2		(K)
6	0163601	PLATE	2		(SUB FOR AT132163)
7	0420002	SPRING	2		(SUB FOR AT201568)
8	0809601	SPRING	2		(SUB FOR TH0809601)
9	0809602	CAP	2		
10	.....	O-RING	1		(K)
11	.....	O-RING	1		(K)
12	0806602	PRESSURE RELIEF VALVE	2		
13	.....	O-RING	1		(K)
14	.....	O-RING	1		(K)
15	.....	O-RING	1		(K)
16	.....	O-RING	1		(K)
17	.....	PISTON RING	1		(K)
18	.....	PISTON RING	2		(K)
19	.....	PISTON RING	2		
20	.....	VALVE	1		
21	.....	O-RING	1		
22	.....	O-RING	1		
23	.....	BACK-UP RING	1		(K)
24	.....	BACK-UP RING	1		(K)
25	.....	SNAP RING	1		(K)
26	CH11568	PACKING	2		(K)
27	.....	ORIFICE	2		
28	0820203	SPRING	1		(SUB FOR TH0820203)
29	0671002	FITTING PLUG	1		(SUB FOR AT218063)
30	4506418	O-RING	2		(K) (SUB FOR U46489)
31	0820204	PIPE PLUG	1		(SUB FOR TH0820204)
32	0352304	CHECK VALVE	2		(K) (SUB FOR AT132269)
33	0352305	SPRING	2		(SUB FOR AT132270)
34	0352306	PLUG	2		(K) (SUB FOR AT132271)
35	TH101926	O-RING	2		(K)
36	.....	ORIFICE	2		(K)
37	.....	ORIFICE	1		
38	0436608	FITTING PLUG	6		(SUB FOR AT218054)
39	M800650	PACKING	6		(K)
40	.....	PLUG	1		
41	.....	PLUG	7		
42	0682803	PIN	1		(SUB FOR TH0682803)
43	0809604	SPRING	10		(SUB FOR TH0809604)
44	0251319	PIN	4		(SUB FOR AT127988)
45	0168008	BOLT	9		
70	0806601	KIT	1		(INCLUDES ALL (K) PARTS)

ENGINE

T194767 -UN-16SEP03

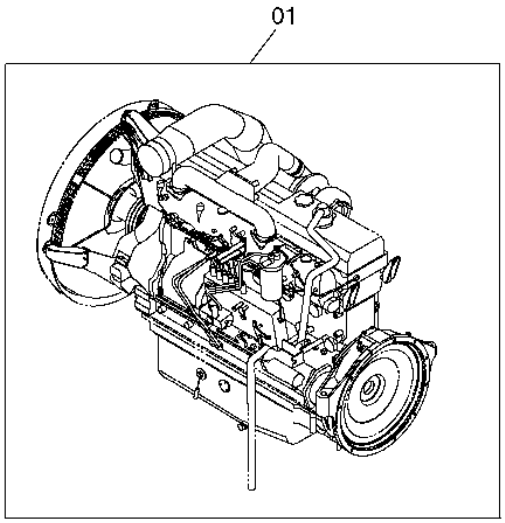

T194767

ENGINE

KEY	PART NO.	PART NAME	QTY	SERIAL NO.	REMARKS
1	6WG1XQA01	DIESEL ENGINE	1		
	4473999	BELT SET	1		(FAN BELT)
	4474619	FLAT BELT	1		(FAN BELT)
	4474629	FLAT BELT	1		(GENERATOR)
	4622562	OIL FILTER	2		(OIL FILTER) (MAIN) (1132402321, AT308576, 1132402290, AND 4484495 NOT USED FOR APPLICATION)
	AT308578	FILTER ELEMENT	1		(SUB FOR 4S00247) (FUEL FILTER)
	.....	SWITCH	1		(LEVEL) (4371903 NOT AVAILABLE)
	4465202	SWITCH	1		(PRESSURE)
	4371318	SWITCH	1		(THERMO)
	4466241	ALTERNATOR	1		

CRANKSHAFT, PISTON AND FLYWHEEL

T150448 -UN-25JAN02

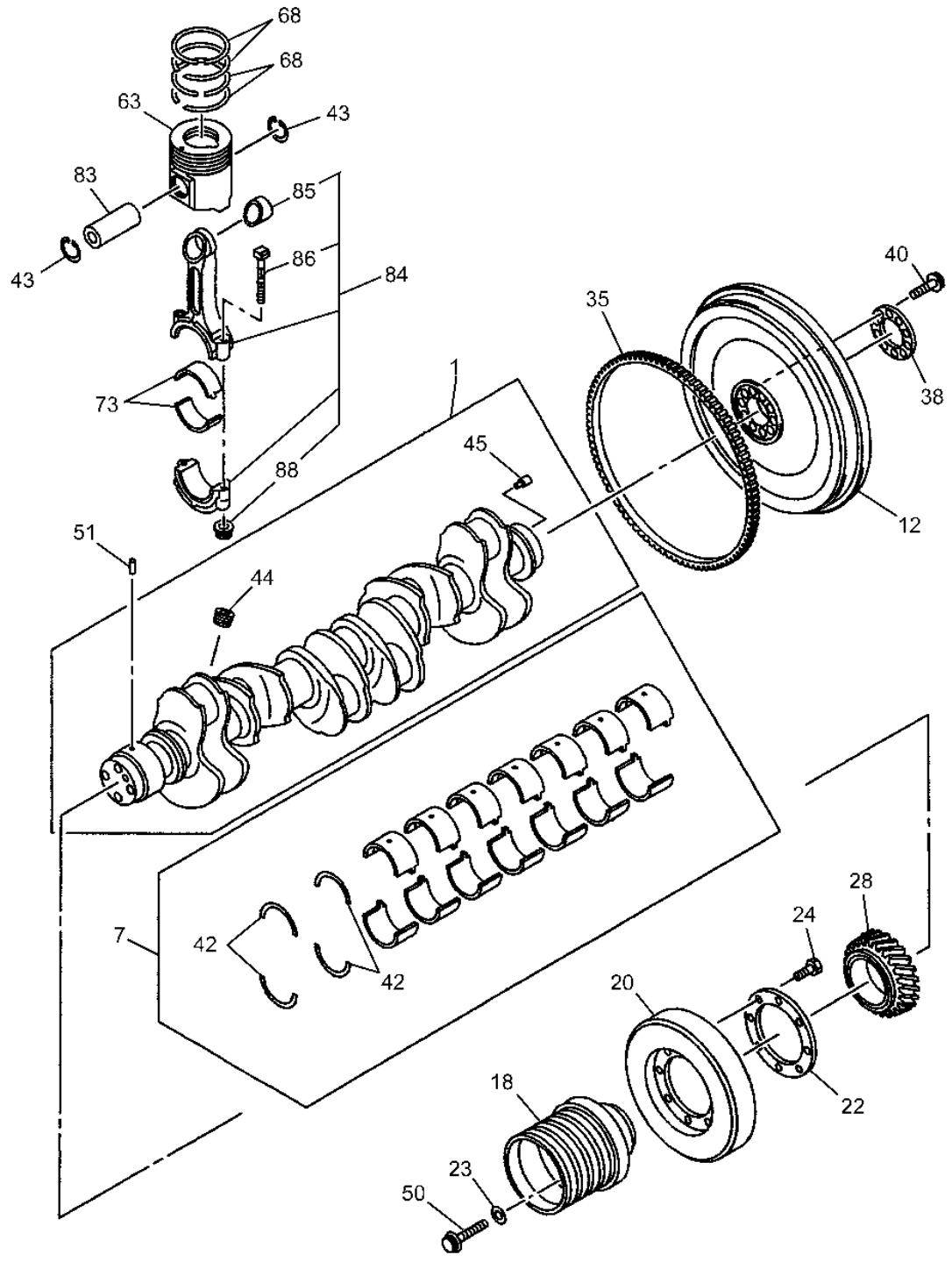

T150448

CRANKSHAFT, PISTON AND FLYWHEEL

KEY	PART NO.	PART NAME	QTY	SERIAL NO.	REMARKS
1	1123106751	CRANKSHAFT	1		(SUB FOR AT263816)
7	1115100931	BEARING	1		(SUB FOR AT263654 OR 1115100930)
12	1123313941	FLYWHEEL	1		(SUB FOR AT263988)
18	.....	PULLEY	1		
20	1123751930	TORSIONAL DAMPER	1		(SUB FOR AT263992)
22	9098518620	LOCK PLATE	4		(SUB FOR AT264153) ID=18
23	1123790390	WASHER	1		(SUB FOR AT263993)
24	0287912300	BOLT	8		(SUB FOR AT263882) M12X30
28	.....	GEAR	1		Z=48
35	1123330131	GEAR	1		(SUB FOR AT263989, 1123330050 OR 1123330130) Z=139
38	1123360110	WASHER	1		(SUB FOR AT263990)
40	1090700171	BOLT	10		(SUB FOR AT263900)
42	1115990090	WASHER	2		(SUB FOR AT263980)
43	1095870820	SNAP RING	12		(SUB FOR AT263760)
44	1096050210	PIPE PLUG	6		(SUB FOR AT263922) PT1
45	.....	PIN FASTENER	1		
50	.....	BOLT	4		
51	.....	PIN FASTENER	1		
63	1121119642	PISTON	6		(SUB FOR AT263790 OR 1121119641)
68	1121211430	PISTON RING KIT	6		(SUB FOR AT263750)
73	1122710721	BEARING	6		(SUB FOR AT263653, 1122710720)
83	1122110291	PIN FASTENER	6		(SUB FOR AT263787)
84	1122301762	CONNECTING ROD	6		(SUB FOR AT263806)
85	1122510374	BUSHING	6		(SUB FOR AT263720)
86	1122350363	BOLT	12		(SUB FOR AT263714)
88	1122390051	NUT	12		(SUB FOR AT263757)

CAMSHAFT AND VALVE

T150449 -UN-25JAN02

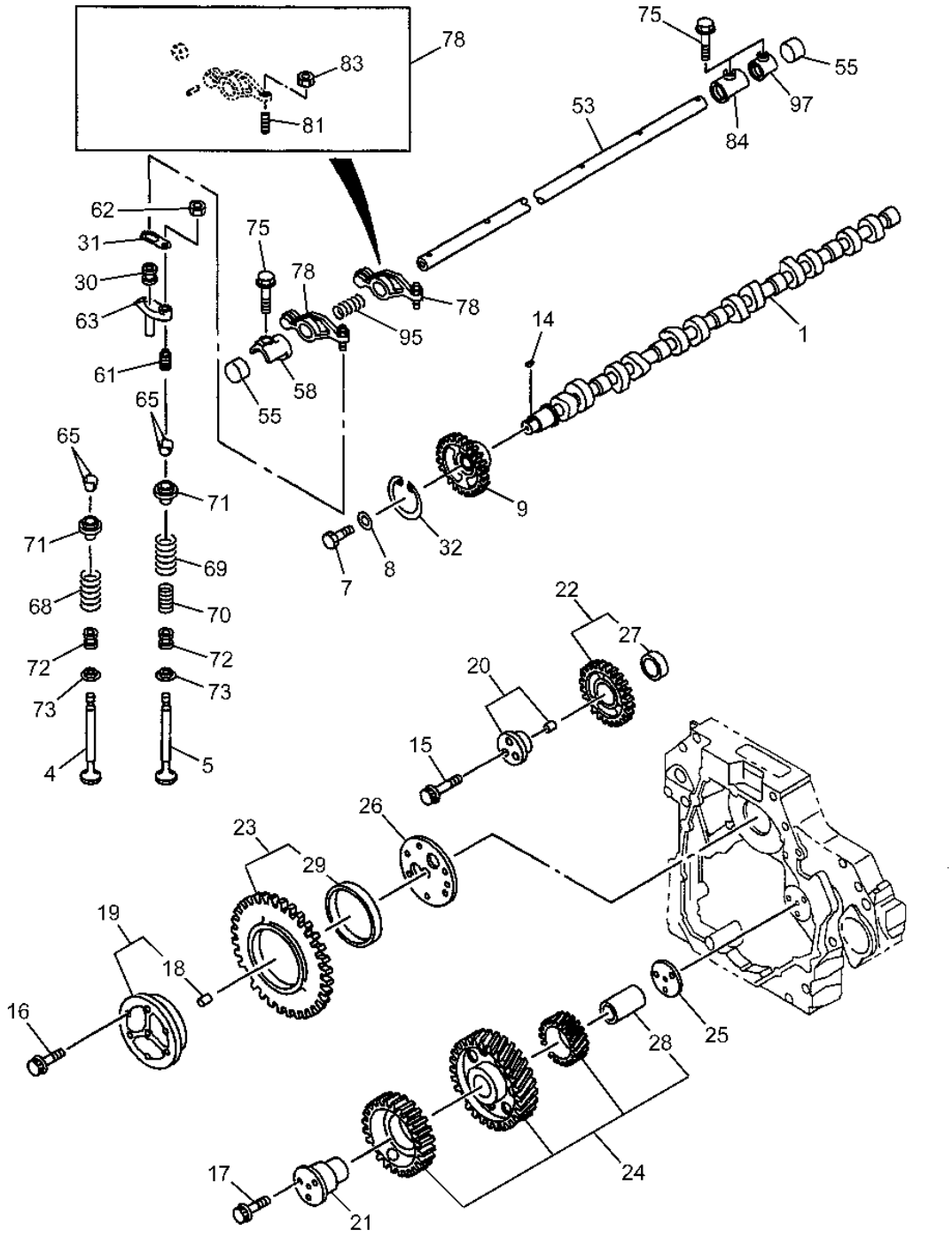

T150449

CAMSHAFT AND VALVE

KEY	PART NO.	PART NAME	QTY	SERIAL NO.	REMARKS
1	1125112552	CAMSHAFT	1		(SUB FOR AT263817)
4	1125511511	INTAKE VALVE	1		(SUB FOR AT263850, 1125511510)
5	1125521091	EXHAUST VALVE	1		(SUB FOR AT263849 OR 1125521090)
7	9920614280	BOLT	1		(SUB FOR AT264164) M14X28
8	9098518503	WASHER	2		(SUB FOR AT264152) ID=14.5
9	1125220600	GEAR	1		(SUB FOR AT263731 OR 1125220552) Z=54
14	9080555160	KEY	12		(SUB FOR AT263746)
15	0281810400	BOLT	1		(SUB FOR AT263710) M10X40 FLANGE
16	19M7742	CAP SCREW	1		(SUB FOR 0168060650) (SUB FOR AT263711) M10X60 FLANGE
17	.....	BOLT	1		M12X114
18	9081612320	DOWEL PIN	1		(SUB FOR AT264140)
19	1125310762	SHAFT	1		(SUB FOR AT263813 OR 1125301761)
20	1125310921	SHAFT	1		(SUB FOR AT263814)
21	1125310931	MOUNTING PARTS	1		(SUB FOR AT263815)
22	1125232153	GEAR	1		(SUB FOR AT263733)
23	1125233130	GEAR	1		(SUB FOR AT263734)
24	1125233340	GEAR	1		(SUB FOR AT263735)
25	1125350081	BUSHING	1		(SUB FOR AT263999)
26	1125350190	BUSHING	12		(SUB FOR AT264000)
27	1093301080	BUSHING	1		(SUB FOR AT263718)
28	1093301130	BUSHING	1		(SUB FOR AT263719)
29	1093301240	BUSHING	12		(SUB FOR AT263906)
30	1126160400	CAP	1		(SUB FOR AT264011)
31	1126190112	PLATE	1		(SUB FOR AT264012)
32	1125290030	SNAP RING	1		(SUB FOR AT263998)
53	1126210900	SHAFT	12		(SUB FOR AT264013)
55	5112190080	PLUG	12		(SUB FOR AT264155, 9111290820)
58	1126280701	BRACKET	48		(SUB FOR AT264015)
61	1126160420	SCREW	12		(SUB FOR AT264157, 9126160530)
62	9098403100	NUT	12		(SUB FOR AT264151) M10
63	1126112773	DRAWER SLIDE	12		(SUB FOR AT264009, 1126112771 OR 1126112772)
65	1125650070	BUSHING	24		(SUB FOR AT264006)
68	1125610920	SPRING	24		(SUB FOR AT264001)
69	1125610930	SPRING	24		(SUB FOR AT264002)
70	1125620600	SPRING	7		(SUB FOR AT264003)
71	1125630550	PLATE	12		(SUB FOR AT264004)
72	1125690200	SEAL	12		(SUB FOR AT264007)
73	1125630562	PLATE	12		(SUB FOR AT264005)
75	1090440871	BOLT	5		(SUB FOR AT263899) M12X97 W/FLANGE
78	1126100611	ROCKER ARM	6		(SUB FOR AT264008)
81	1126160341	SCREW	1		(SUB FOR AT264010)
83	9991105120	NUT	3		(SUB FOR AT264166)
84	1126280681	BRACKET	6		(SUB FOR AT264014) M12
95	1095804721	SPRING	1		(SUB FOR AT263913)
97	1126280721	BRACKET	1		(SUB FOR AT264016)

CYLINDER BLOCK

T149482 -UN-05APR02

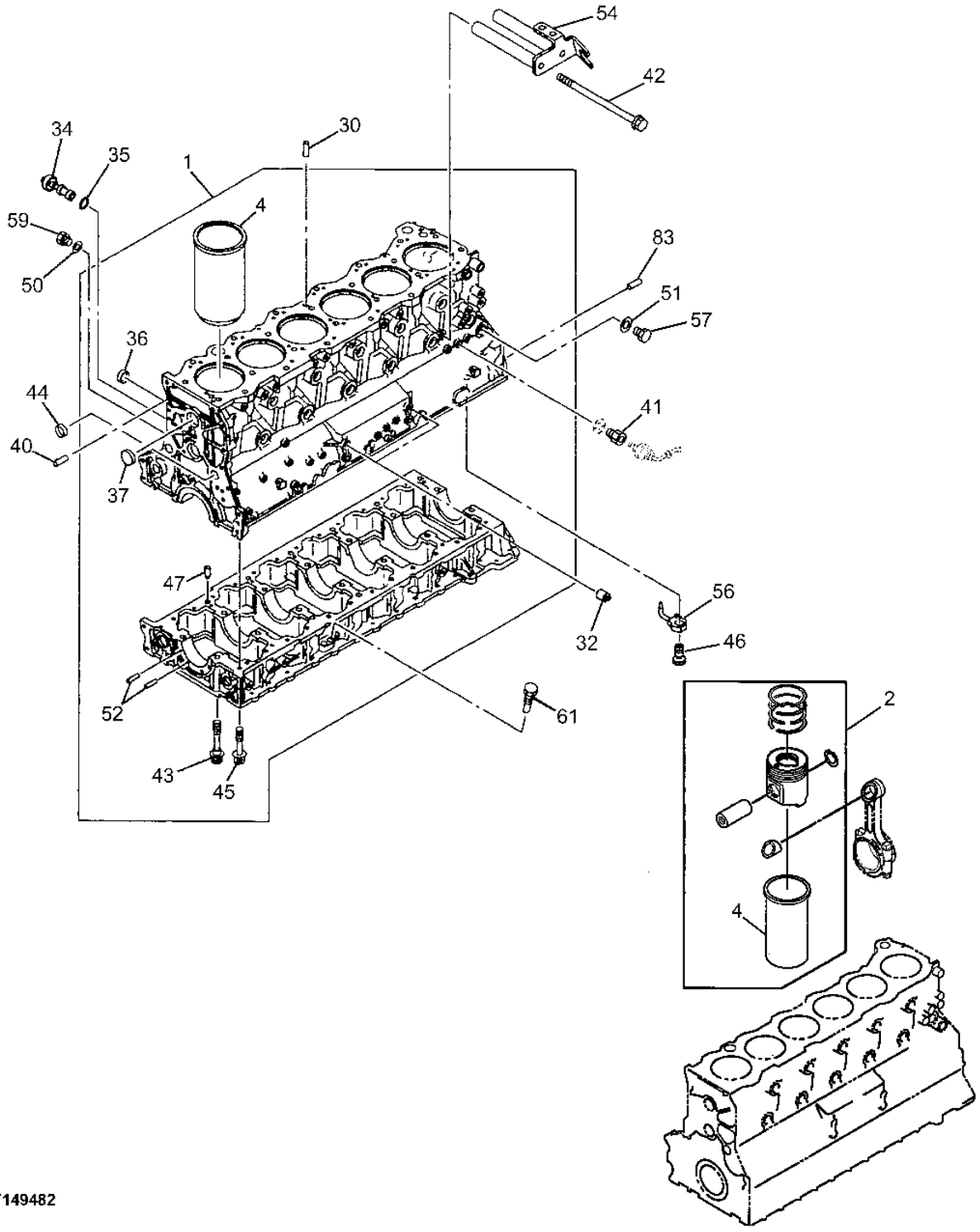

T149482

CYLINDER BLOCK

KEY	PART NO.	PART NAME	QTY	SERIAL NO.	REMARKS
1	.....	CYLINDER BLOCK	1		
2	1878120712	CYLINDER LINER	6		(SUB FOR 1878120711, AT263686, AT263686)
	1878120722	CYLINDER LINER	6		(SUB FOR AT263687, 1878120720 OR 1878120721)
4	.....	CYLINDER LINER	6		OD GRADE=1X,ID GRADE=NON
	.....	CYLINDER LINER	6		OD GRADE=3X,ID GRADE=NON
30	9081510180	DOWEL PIN	3		(SUB FOR AT264138) OD=10 L=18
32	8943255061	DOWEL PIN	2		(SUB FOR AT264114)
34	1131600302	RELIEF VALVE	1		(SUB FOR AT263845)
35	1096232970	GASKET	1		(SUB FOR AT263770)
36	1096000650	PLUG	2		(SUB FOR AT263797) OD=40
40	.....	DOWEL PIN	2		OD=10 L=18
41	8943998582	ADAPTER	1		(SUB FOR AT263688)
42	0281860150	BOLT	2		(SUB FOR AT263871) M10X150 FLANGE
43	1090701510	BOLT	14		(SUB FOR AT263903) M18X150
45	1090700872	BOLT	28		(SUB FOR AT263709) M12X114
46	1133490140	BOLT	6		(SUB FOR AT264047)
47	1097400681	DOWEL PIN	2		(SUB FOR AT263957)
50	1096300840	GASKET	1		(SUB FOR AT263940) ID=12.2
51	1096300890	GASKET	1		(SUB FOR AT263944) ID=22
52	1097490251	DOWEL PIN	2		(SUB FOR AT263958) L=25
54	1233355320	BRACKET	1		(SUB FOR AT264107)
56	1133421390	JET	6		(SUB FOR AT263754)
57	1096040350	PLUG	1		(SUB FOR AT263916) M22X12
59	1096040950	PLUG	1		(SUB FOR AT263920) M12X9
61	1096040980	PLUG	1		(SUB FOR AT263921)
83	9081514280	PIN FASTENER	2		(SUB FOR AT264139)

OIL PAN AND DIPSTICK

T149565 -UN-05APR02

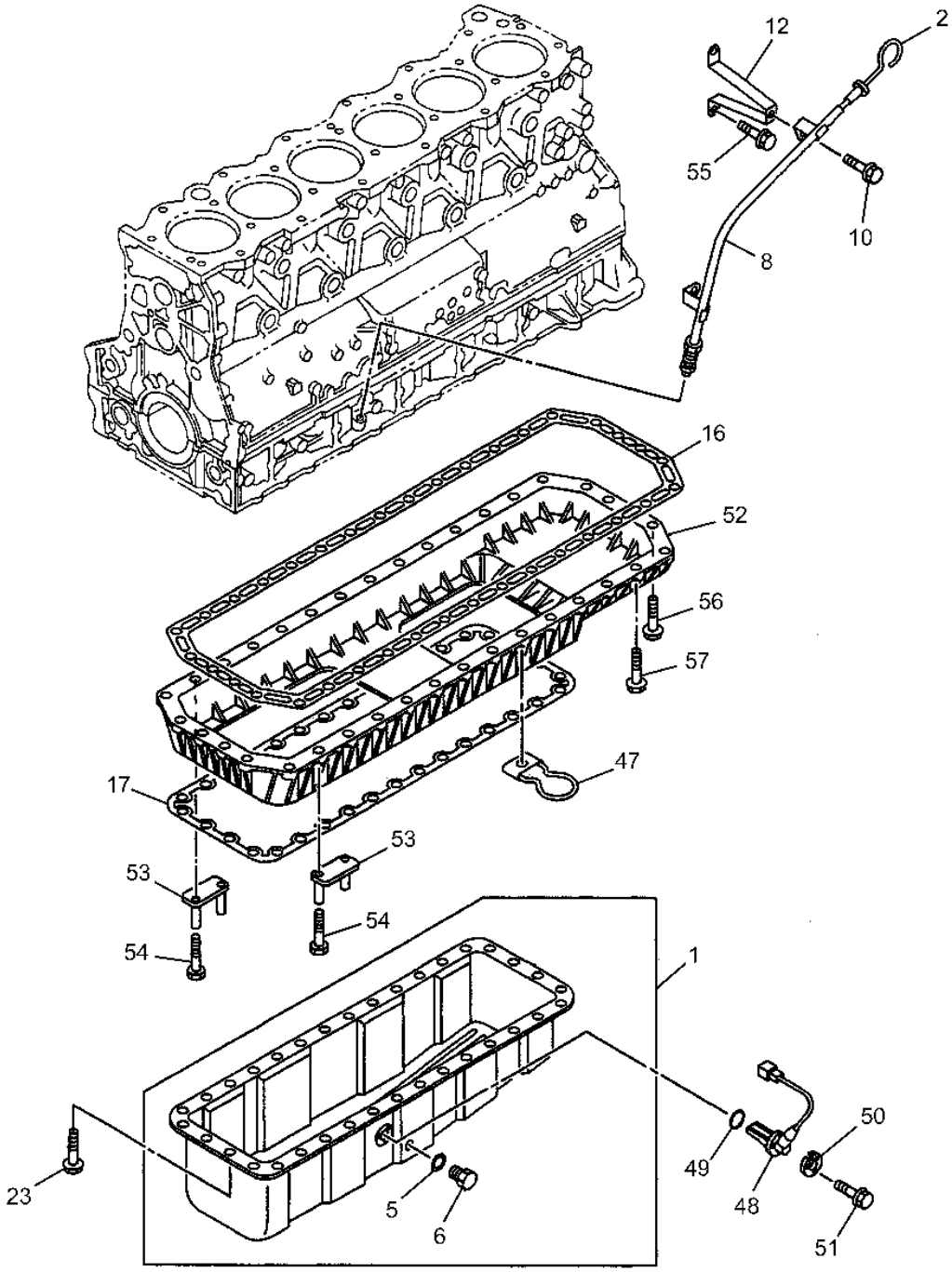

T149565

OIL PAN AND DIPSTICK

KEY	PART NO.	PART NAME	QTY	SERIAL NO.	REMARKS
1	1113608850	OIL PAN	1		(SUB FOR AT263977)
2	1117604430	GAUGE	1		(SUB FOR AT263729, 1117604220, 1117604410)
5	1096231830	GASKET	1		(SUB FOR AT254814)
6	9096620120	PIPE PLUG	1		(SUB FOR AT255027)
8	1117665681	DIPSTICK TUBE	1		(SUB FOR AT263985)
10	4447335	BOLT	1		(SUB FOR AT196259, 0500410200) M10X20 FLANGE
12	1117665460	BRACKET	1		(SUB FOR AT263984)
16	1113671300	GASKET	1		(SUB FOR AT263668)
17	1113671310	GASKET	1		(SUB FOR 1113671210, AT263667)
23	19M7866	SCREW	2		(SUB FOR AT259925) M8X25 FLANGE
47	1113691460	CLIP	3		(SUB FOR AT263979)
48	8971312230	SENSOR	1		(SUB FOR AT263829)
49	8976049160	GASKET	2		ID=27, (SUB FOR 1096233550, AT263771)
50	5113690720	SPACER	4		(SUB FOR AT264111)
51	1099805430	BOLT	2		(SUB FOR AT263889, 0501406280) M6X28
52	1113608982	SPACER	4		(SUB FOR AT263978, 1113615691 OR 1113608980)
53	1154196840	BRACKET	28		(SUB FOR AT264093)
54	0281860110	BOLT	1		(SUB FOR AT263869) M10X110 FLANGE
55	0287810250	BOLT	12		(SUB FOR AT263878) M10X25 FLANGE
56	0281810500	BOLT	12		(SUB FOR AT263865) M10X50 FLANGE
57	0287810350	BOLT	1		(SUB FOR AT263880) M10X35 FLANGE

OIL PUMP AND OIL STRAINER

T150452 -UN-25JAN02

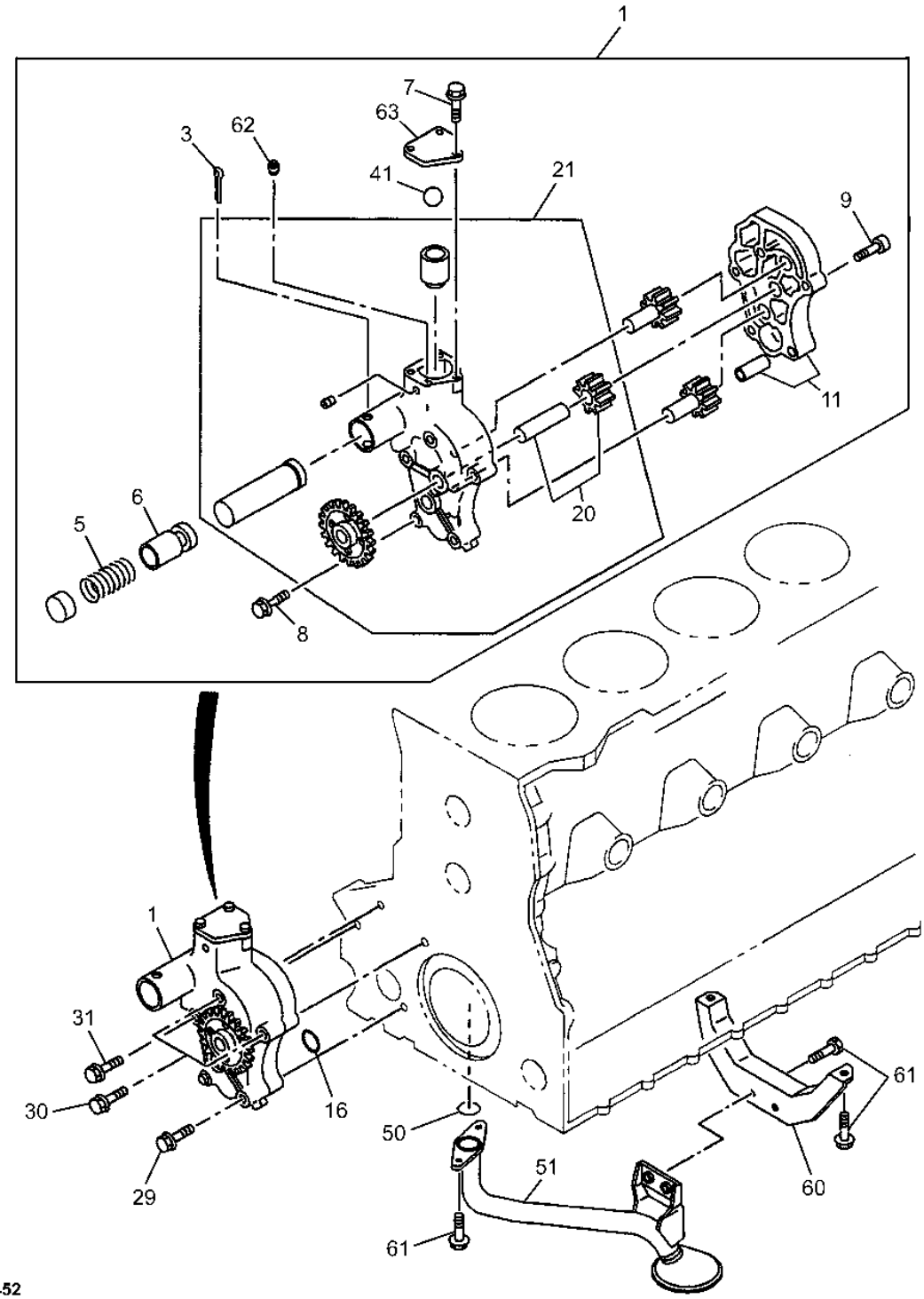

T150452

OIL PUMP AND OIL STRAINER

KEY	PART NO.	PART NAME	QTY	SERIAL NO.	REMARKS
1	1131002751	OIL PUMP	1		(SUB FOR AT263800)
3	.....	COTTER PIN	1		L=60 (AT264136 NOT AVAILABLE FOR SERVICE)
5	1095805340	SPRING	1		(SUB FOR AT263914)
6	.....	RELIEF VALVE	1		(AT264023 NOT AVAILABLE FOR SERVICE)
7	0280808180	BOLT	3		(SUB FOR AT263856) M8X18 FLANGE
8	19M7742	CAP SCREW	1		(SUB FOR 0168060650) (SUB FOR AT263711) M10X60 FLANGE
9	AT264133	BOLT	2		M8X35 HEX SOCKET
11	AT264017	COVER	1		
16	1096235290	SEAL	1		(SUB FOR AT263934)
20	1131200800	GEAR	1		(SUB FOR AT264020)
21	1131200880	GEAR	1		(SUB FOR AT264021 OR 11310200821)
29	8943973591	BOLT	1		(SUB FOR AT264122) M10X85 FLANGE
30	8943994881	BOLT	2		(SUB FOR AT264125) M10X107 FLANGE
31	9059210800	BOLT	1		(SUB FOR AT264134) M10X80
41	AT264022	BALL	1		
50	1096235290	SEAL	1		(SUB FOR AT263934)
51	1133138852	STRAINER	1		(SUB FOR AT264042)
60	1133451801	BRACKET	1		(SUB FOR AT264045)
61	4447337	BOLT	6		(SUB FOR AT259935, 0281810200) M10X20 FLANGE
62	AT264024	PLUG	1		
63	AT264025	COVER	1		

ENGINE OIL AND VACUUM PIPING

T150453 -UN-25JAN02

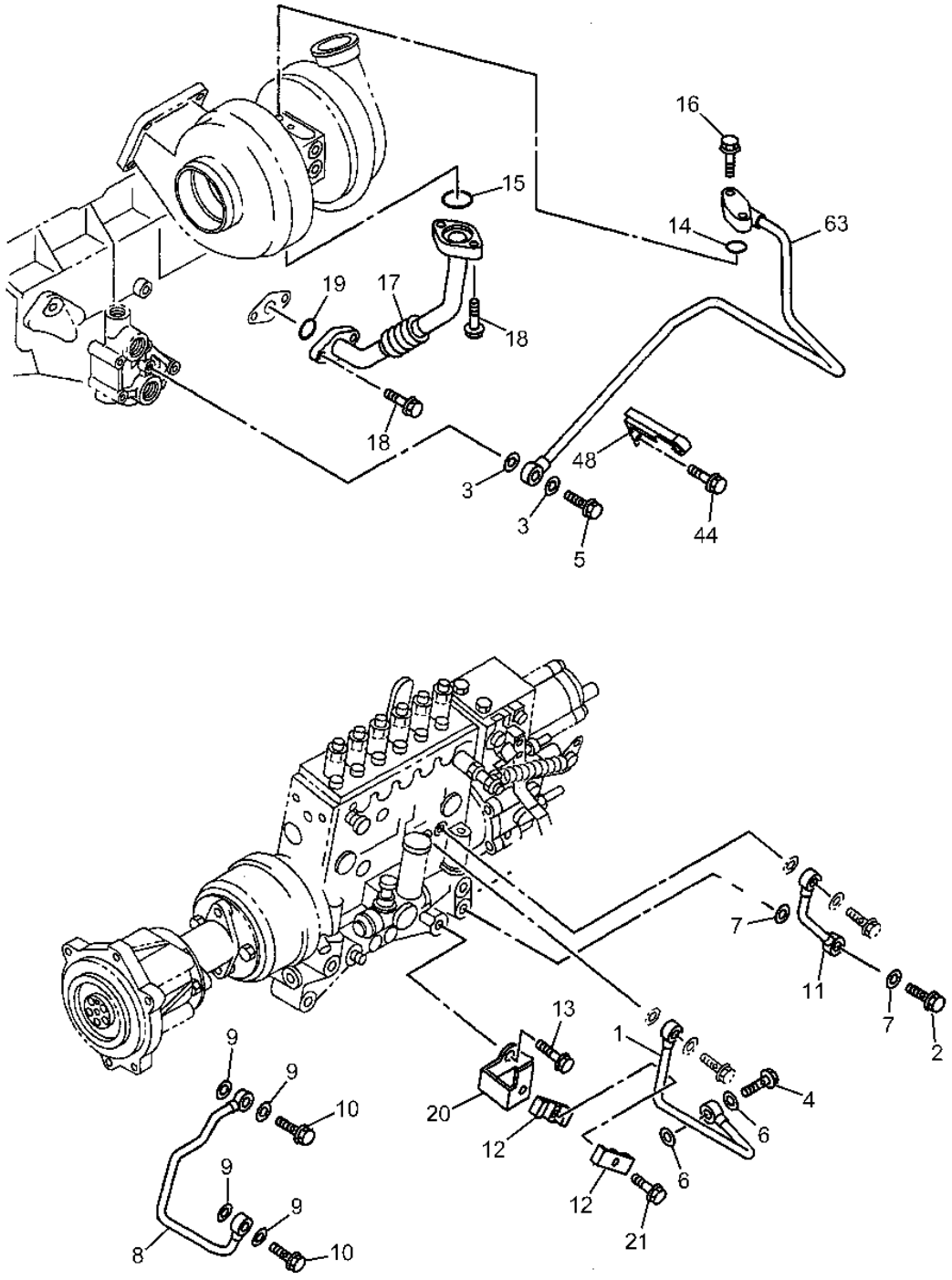

T150453

ENGINE OIL AND VACUUM PIPING

KEY	PART NO.	PART NAME	QTY	SERIAL NO.	REMARKS
1	1133136650	OIL TUBE	1		(SUB FOR AT264039)
2	1096750860	BOLT	1		(SUB FOR AT263712) M14X27 FLANGE
3	1096300840	GASKET	2		(SUB FOR AT263940) ID=12.2
4	1096751200	EYEBOLT	1		(SUB FOR AT263950) M18X26
5	1096751600	BOLT	1		(SUB FOR AT263951) M12X27 FLANGE
6	1096300870	GASKET	2		(SUB FOR AT263942) 1D=18.2 OD=24.4
7	.....	PACKING	2		(SUB FOR AT263852, 4452165) 1D=14.2 OD=19.2
8	1133136420	OIL TUBE	1		(SUB FOR AT264040)
9	1096300830	GASKET	2		(SUB FOR AT263939) ID=10.2
10	1096750770	EYEBOLT	2		(SUB FOR AT263949) M10X21 FLANGE
11	1133134490	OIL TUBE	1		(SUB FOR AT264041)
12	1097011321	CLIP	2		(SUB FOR AT263953 OR 1097011320) ID=15 L=30
13	0281810160	BOLT	1		(SUB FOR AT263862) M10X16 FLANGE
14	1096232740	PACKING	1		(SUB FOR AT263924) ID=10.8
15	1096234500	PACKING	1		(SUB FOR AT263928) ID=27.7
16	0281210350	BOLT	2		(SUB FOR AT263705) M10X35 FLANGE
17	1133133190	OIL TUBE	1		(SUB FOR AT264038)
18	0281810300	BOLT	4		(SUB FOR AT263863) M10X30 FLANGE
19	1096234500	GASKET	1		(SUB FOR AT263928) ID=27.7
20	1133451880	BRACKET	1		(SUB FOR AT264046)
21	0286806350	BOLT	1		(SUB FOR AT263874) M6X35 FLANGE
44	0287810200	BOLT	1		(SUB FOR AT263877) M10X20 FLANGE
48	8943188001	CLIP	1		(SUB FOR AT264113)
63	1133138890	OIL TUBE	1		(SUB FOR AT264043)

ENGINE OIL FILTER LINES

T149415 -UN-21JAN02

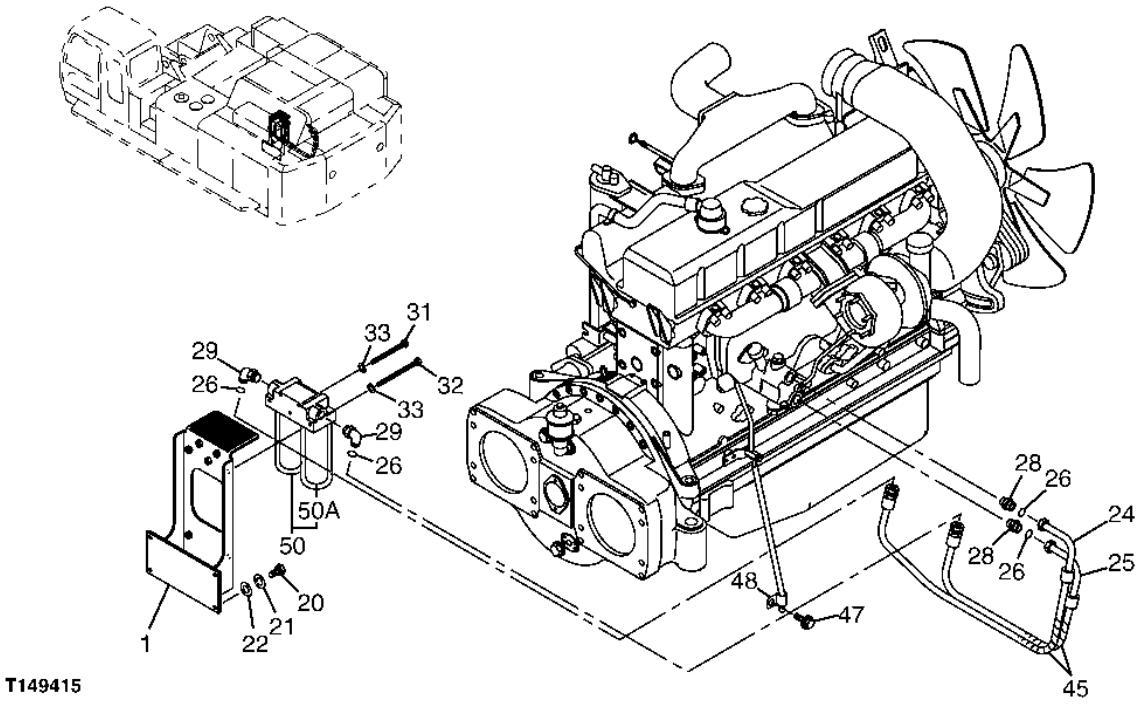

T149415

ENGINE OIL FILTER LINES

KEY	PART NO.	PART NAME	QTY	SERIAL NO.	REMARKS
1	8081398	BRACKET	1		
20	19M8011	CAP SCREW	4		M12 X 30
21	12H301	LOCK WASHER	4		1/2"
22	24M7345	WASHER	4		13.500 X 24 X 2.500 MM
24	4449057	HYDRAULIC HOSE	1		
25	4449058	HYDRAULIC HOSE	1		
26	4420526	O-RING	4		
28	4443904	ADAPTER	2		
	4153108	O-RING	1		(SUB FOR AT202087)
29	4443907	ELBOW FITTING	2		
	4153108	O-RING	1		(SUB FOR AT202087)
31	19M8166	CAP SCREW	2		M10 X 110
32	19M8003	CAP SCREW	3		M10 X 140
33	12M7066	LOCK WASHER	5		10 MM
45	TH100996	HOSE GUARD	13		
47	19M7166	CAP SCREW	1		M10 X 20
	12M7066	LOCK WASHER	1		10 MM
48	AT121321	HOSE CLAMP	1		
50	4466383	FILTER	1		
50A	AT308576	FILTER ELEMENT	2		(SUB FOR 4448336)

ENGINE OIL DRAIN PIPING

T149416 -UN-23JAN02

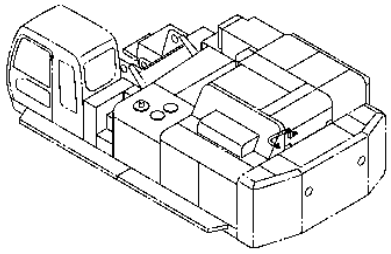

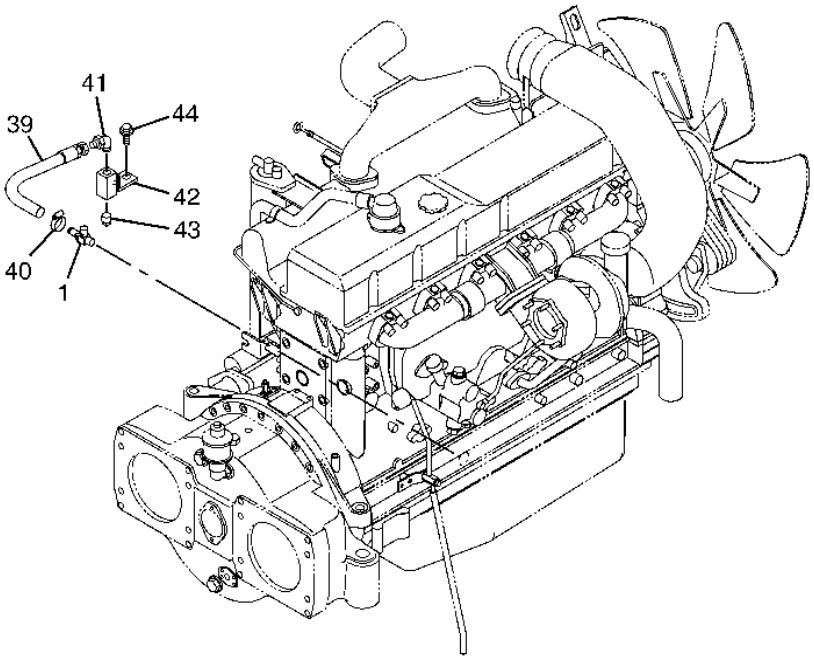

T149416

ENGINE OIL DRAIN PIPING

KEY	PART NO.	PART NAME	QTY	SERIAL NO.	REMARKS
1	4444270	DRAIN VALVE	1		
39	4460904	HYDRAULIC HOSE	1		
40	TY22467	CLAMP	1		(SUB FOR AT145650)
41	94-1404	ELBOW FITTING	1		(SUB FOR TH103730)
42	9730161	MANIFOLD	1		
43	94-2025	FITTING PLUG	1		(SUB FOR TH109497)
44	19M7872	CAP SCREW	2		M12 X 25
	12H301	LOCK WASHER	2		1/2"

ENGINE OIL FILTER

T149528 -UN-05APR02

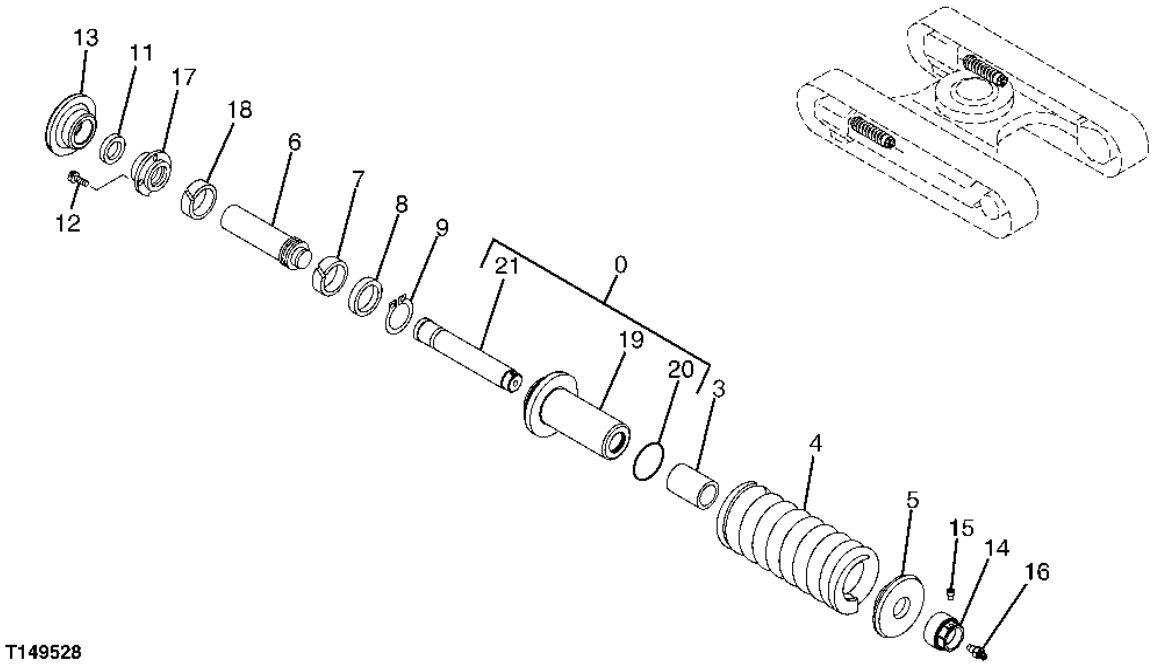

T149528

ENGINE OIL FILTER

KEY	PART NO.	PART NAME	QTY	SERIAL NO.	REMARKS
1	4455394	HYDRAULIC HOSE	1		
25	4455395	HYDRAULIC HOSE	1		
26	4420526	O-RING	4		
28	4443904	ADAPTER	2		
	4153108	O-RING	1		(SUB FOR AT202087)
29	4443907	ELBOW FITTING	2		
	4153108	O-RING	1		(SUB FOR AT202087)
31	.....	BOLT	2		(THJ901002 NOT AVAILABLE FOR SERVICE)
32	19M8003	CAP SCREW	3		M10 X 140
33	12M7066	LOCK WASHER	5		10 MM
50	4466383	FILTER	1		
50A	AT308576	FILTER ELEMENT	2		(SUB FOR 4448336)

VENTILATION SYSTEM

T150455 -UN-25JAN02

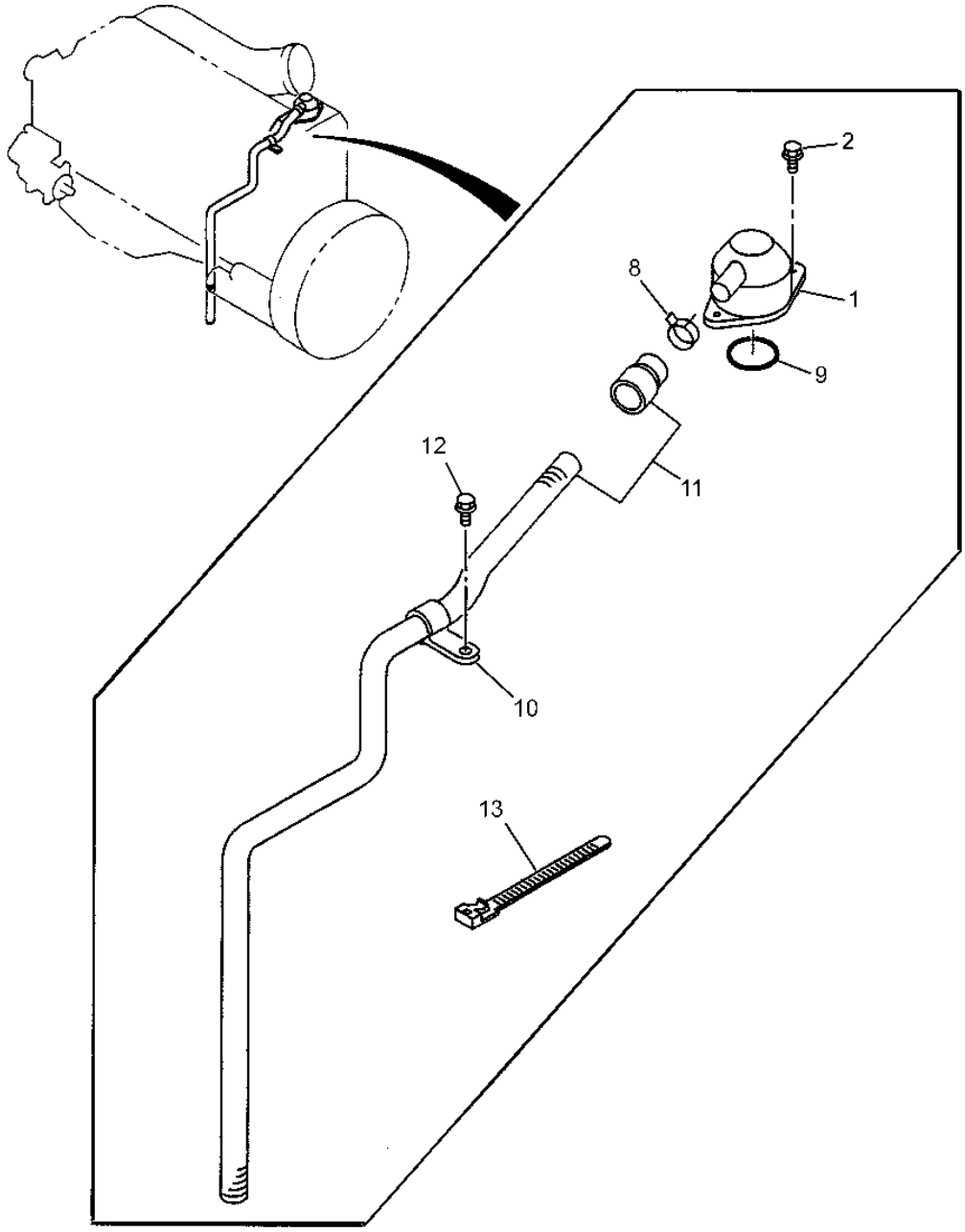

T150455

VENTILATION SYSTEM

KEY	PART NO.	PART NAME	QTY	SERIAL NO.	REMARKS
1	1117401810	BREATHER	1		(SUB FOR AT263717)
2	4447337	BOLT	2		(SUB FOR AT259935, 0281810200) M10X20 FLANGE
8	.....	CLIP	1		ID=28.5
9	1096235650	O-RING	1		(SUB FOR AT263778)
10	1097009690	CLIP	1		(SUB FOR AT263952) ID=31 L=50
11	1117420830	HOSE	1		(SUB FOR AT263982)
12	0280808120	BOLT	1		(SUB FOR AT263855) M8X12 FLANGE
13	5097070301	CLIP	1		(SUB FOR AT264110) L=250

CYLINDER HEAD

T150456 -UN-25JAN02

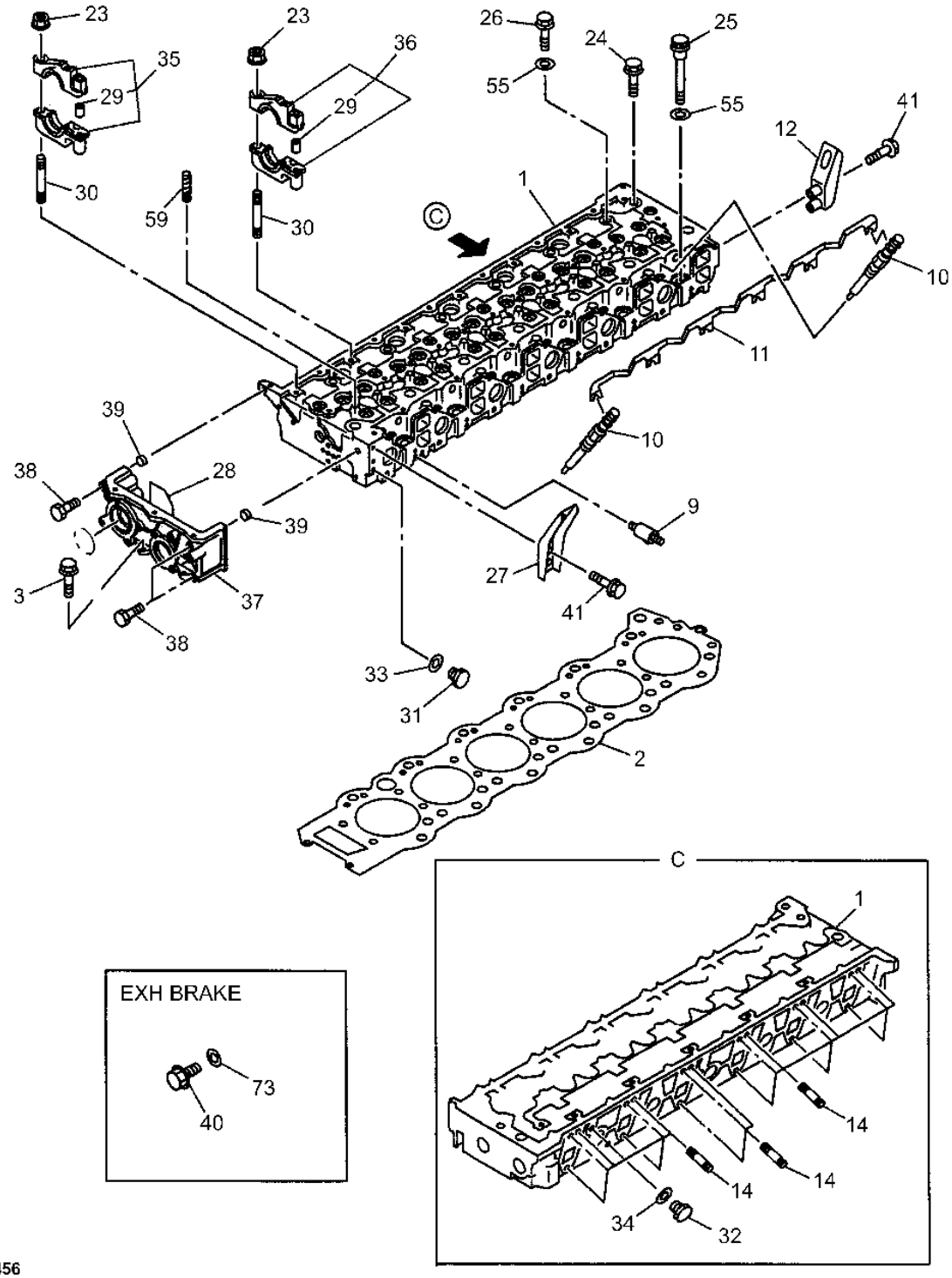

T150456

CYLINDER HEAD

KEY	PART NO.	PART NAME	QTY	SERIAL NO.	REMARKS
1	1111109461	CYLINDER HEAD	1		(SUB FOR 1111108619, AT263738)
2	1111412652	ENGINE CYLINDER HEAD GASKET	1		(SUB FOR AT263664 OR 1111412651)
3	0281210350	BOLT	2		(SUB FOR AT263705) M10X35 FLANGE
9	1093090080	STUD	12		(SUB FOR AT263823) M10X13,M10X17 L=65
10	1825130451	PLUG	6		(SUB FOR AT263675)
11	1197320302	GLOW PLUG	1		(SUB FOR AT263798 OR 1197320301) (GLOW PLUG)
12	1117771493	BRACKET	2		(SUB FOR AT263986 OR 1117771492)
14	1093020630	STUD	18		(SUB FOR AT263824) M10X95 L=110
23	1094400040	NUT	14		(SUB FOR AT263756) M4 FLANGE
24	0281862120	BOLT	1		(SUB FOR AT263706) M12X120 FLANGE
25	1090701410	BOLT	6		(SUB FOR AT263707) M18X115 FLANGE
26	1090701420	BOLT	20		(SUB FOR AT263708) M18X159
27	1117772161	HANGER	1		(SUB FOR AT263987)
28	1096234030	O-RING	1		(SUB FOR AT263767)
29	1131190050	DOWEL PIN	28		(SUB FOR AT264019) OD=16
30	8943973220	STUD	14		(SUB FOR AT264121) M12X100 L=120
31	1096040940	PLUG	1		(SUB FOR AT263919) M10X7
32	8943994210	PLUG	1		(SUB FOR AT264124) M8X6
33	1096300830	GASKET	1		(SUB FOR AT263939) ID=10.2
34	1096300830	GASKET	1		(SUB FOR AT263939) ID=14.2 OD=19.2
35	1125161481	BRACKET	1		(SUB FOR AT263994)
36	1125161521	BRACKET	6		(SUB FOR AT263995)
37	1113100550	CASE	1		(SUB FOR AT263966)
38	9059210800	BOLT	7		(SUB FOR AT264134) M10X80
39	1131190040	DOWEL PIN	2		(SUB FOR AT264018)
40	1096040940	PLUG	1		(SUB FOR AT263919) M14X9
41	0281912500	BOLT	4		(SUB FOR AT263873) M12X50 FLANGE
55	1095030320	WASHER	26		(SUB FOR AT263910)
59	1117290050	GUIDE	12		(SUB FOR AT263981)
73	1096301410	GASKET	2		(SUB FOR AT263946) ID=14.2 OD=25

CYLINDER HEAD - CONTINUED

T150505 -UN-25JAN02

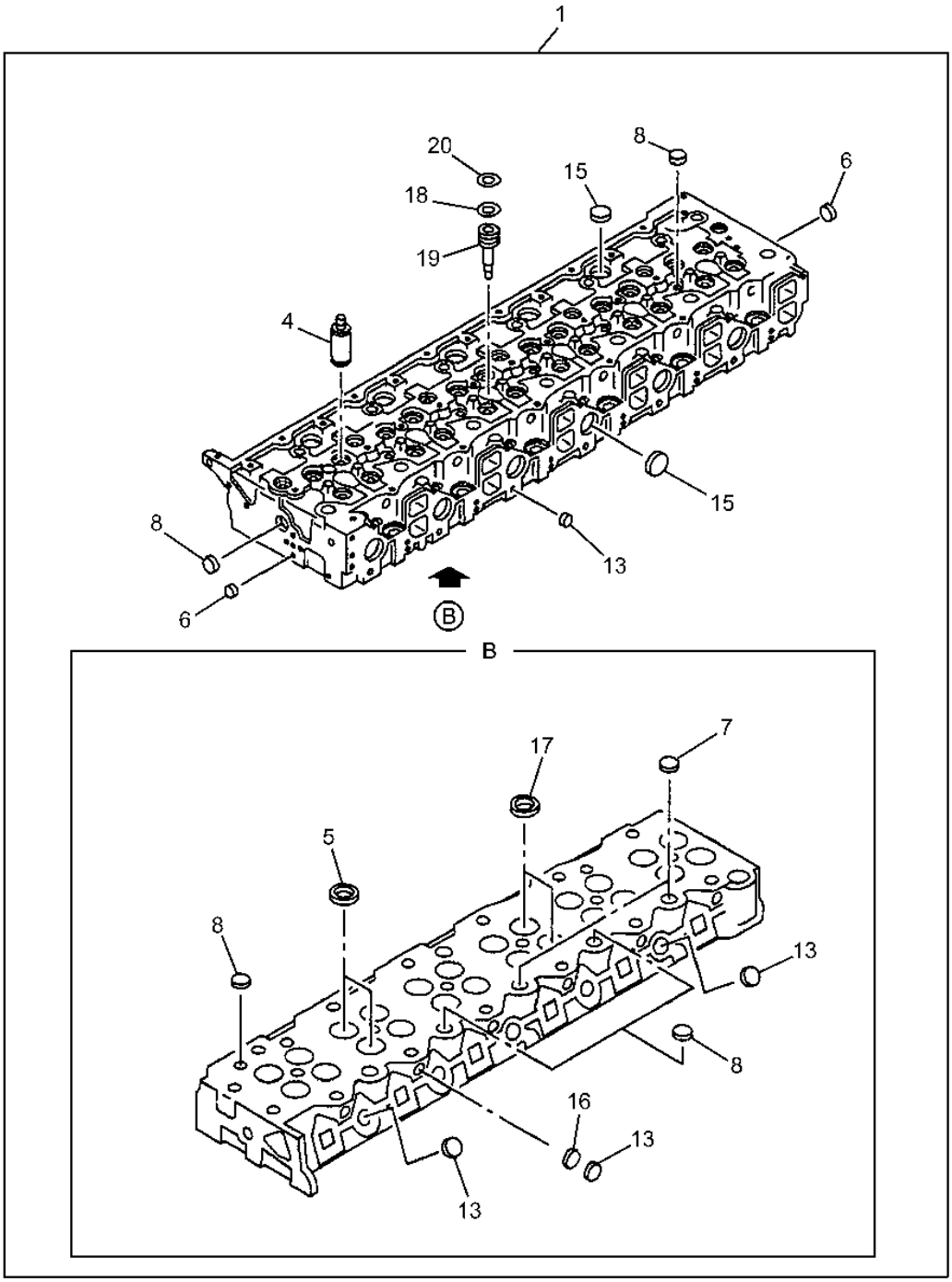

T150505

CYLINDER HEAD - CONTINUED

KEY	PART NO.	PART NAME	QTY	SERIAL NO.	REMARKS
1	1111109461	CYLINDER HEAD	1		(SUB FOR 1111108619, AT263738)
4	1117210120	GUIDE	24		(SUB FOR AT263737)
5	1117110820	MOUNTING PARTS	12		(SUB FOR AT263847) EXHAUST
6	1111290580	HOLDER	2		(SUB FOR AT263741) OD=12.3
7	1096000122	BEARING CUP	2		(SUB FOR AT254809 OR 1096000121) OD=32
8	1096000160	BEARING CUP	10		(SUB FOR AT263792) OD=25
13	5112190080	PLUG	12		(SUB FOR AT263794) OD=18
15	8942416370	PLUG	18		(SUB FOR AT259971) OD=40
16	5111290060	BEARING CUP	6		(SUB FOR AT254831) OD=16
17	1117151120	VALVE SEAT	12		(SUB FOR AT263848) INTAKE
18	8972331260	O-RING	6		(SUB FOR AT263768)
19	1111290580	HOLDER	6		(SUB FOR AT263741)
20	8972331270	O-RING	6		(SUB FOR AT263769)

CYLINDER HEAD COVER

T150454 -UN-25JAN02

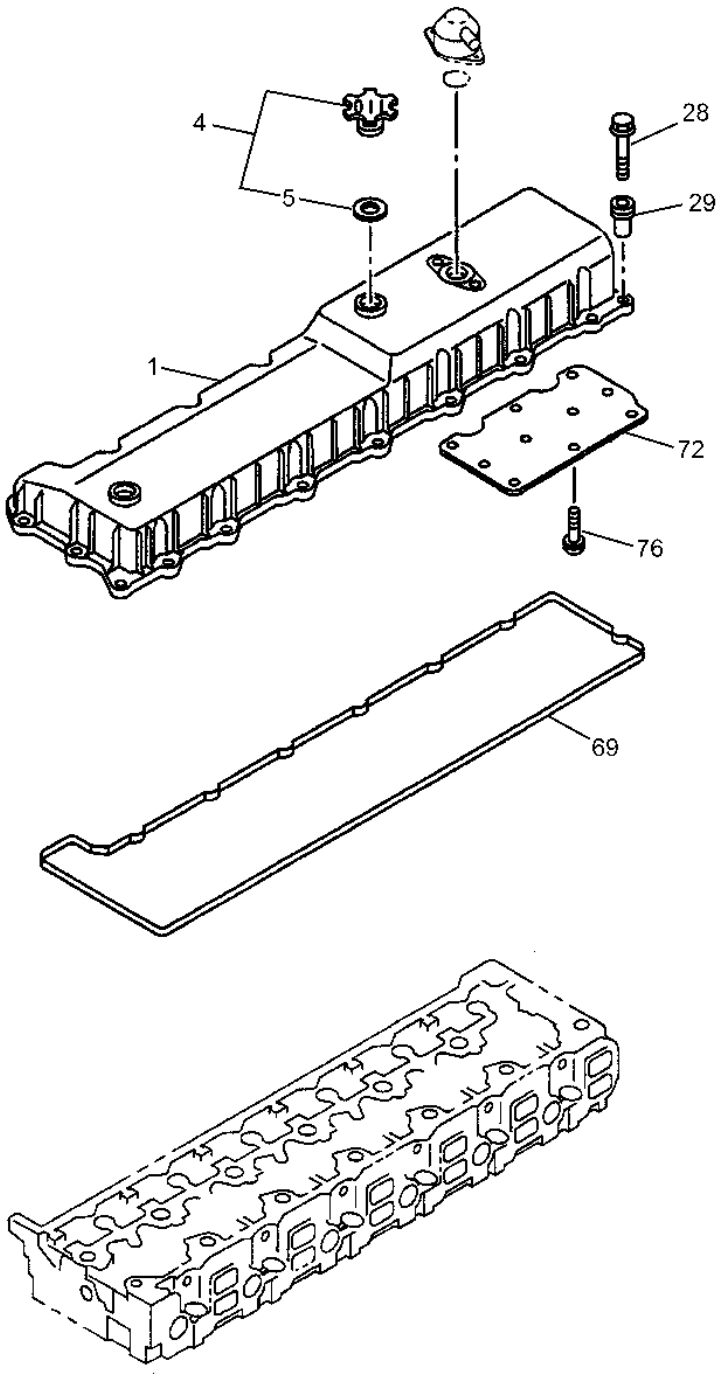

T150454

CYLINDER HEAD COVER

KEY	PART NO.	PART NAME	QTY	SERIAL NO.	REMARKS
1	1111804640	VALVE COVER	1		(SUB FOR AT263961)
4	8943997230	FILLER CAP	1		(SUB FOR AT263658)
5	8943996890	O-RING	1		(SUB FOR AT263785)
28	0286808350	BOLT	20		(SUB FOR AT259941)
29	.....	BUSHING	20		
69	.....	GASKET	1		
72	1111804640	VALVE COVER	1		(SUB FOR AT263962, 1111791050)
76	0280806100	SCREW	10		(SUB FOR AT263853) M6X10 FLANGE

EXHAUST MANIFOLD

T150481 -UN-25JAN02

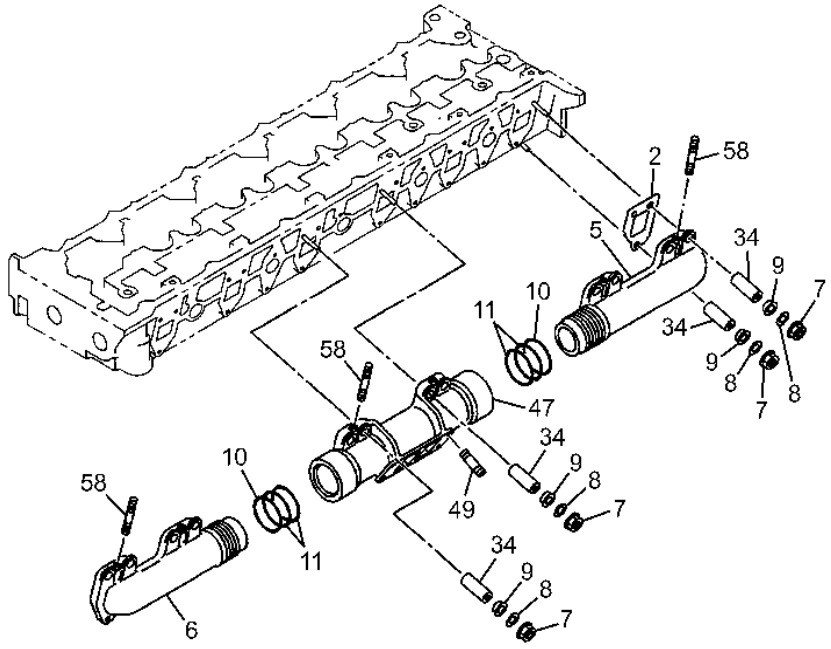

T150481

EXHAUST MANIFOLD

KEY	PART NO.	PART NAME	QTY	SERIAL NO.	REMARKS
2	1141451821	O-RING	6		(SUB FOR AT263777)
5	1141419990	EXHAUST MANIFOLD	1		(SUB FOR AT264079)
6	1141420010	EXHAUST MANIFOLD	1		(SUB FOR AT264080)
7	4447336	NUT	18		(SUB FOR AT259946) M10 FLANGE
8	1095560150	WASHER	18		(SUB FOR AT263911) T=2.2
9	1141490420	WASHER	18		(SUB FOR AT264081) T=5.5
10	1141492010	SEAL	2		(SUB FOR AT264082)
11	9141490260	SEAL	4		(SUB FOR AT264158)
34	8943964060	SPACER	18		(SUB FOR AT264119) L=43
47	1141419380	EXHAUST MANIFOLD	1		(SUB FOR AT264078)
49	8973780710	STUD	4		(SUB FOR AT263905 OR 1093021671)
58	9041108200	STUD	4		(SUB FOR AT255006) M8X20 L=32

FUEL INJECTION SYSTEM

T150459 -UN-25JAN02

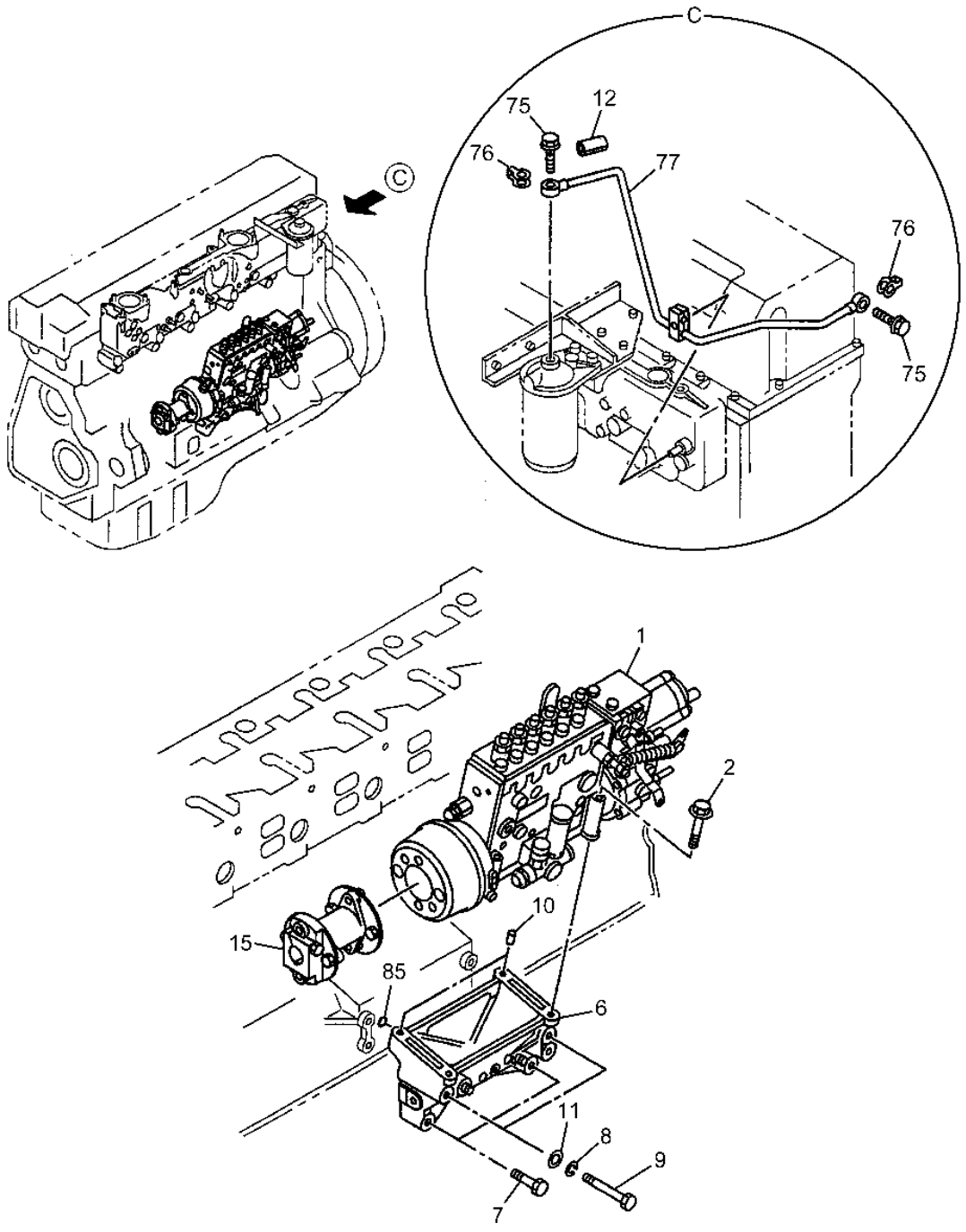

T150459

FUEL INJECTION SYSTEM

KEY	PART NO.	PART NAME	QTY	SERIAL NO.	REMARKS
1	1156033421	FUEL PUMP	1		(SUB FOR AT263678, 1156034280)
2	8943973591	BOLT	4		(SUB FOR AT264122)
6	1197511560	BRACKET	1		(SUB FOR AT264103)
7	0289814900	BOLT	2		(SUB FOR AT263886) M14X90 FLANGE
8	9091508140	LOCK WASHER	2		(SUB FOR AT264141) ID=14
9	9098041931	BOLT	2		(SUB FOR AT264150) M14X117
10	9197590191	DOWEL PIN	2		(SUB FOR AT264159)
11	9091605140	WASHER	2		(SUB FOR AT264143) ID=14 OD=26 T=2.3
12	1093765120	COVER	2		(SUB FOR AT263908) ID=6 OD=10 L=70
15	1157801431	COUPLING	1		(SUB FOR AT263728)
75	1096750371	BOLT	9		(SUB FOR AT263948) M8X18 FLANGE
76	8976009250	GASKET	9		(SUB FOR AT263665) ID=8.6
77	1154166540	OIL TUBE	1		(SUB FOR AT264089)
85	1096234780	GASKET	3		ID=18.8, (SUB FOR AT263931)

FUEL INJECTION SYSTEM - CONTINUED

T150460 -UN-25JAN02

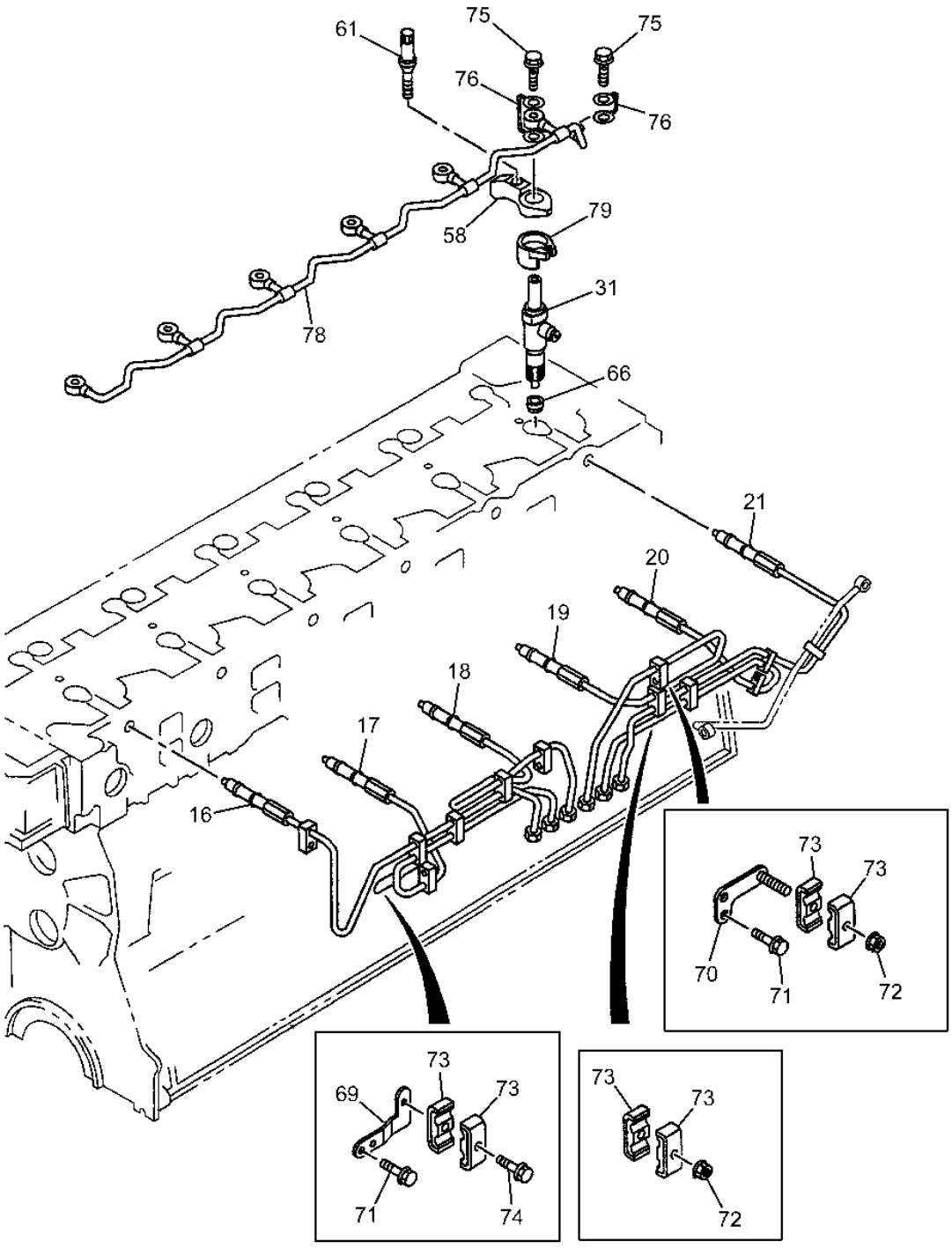

T150460

FUEL INJECTION SYSTEM - CONTINUED

KEY	PART NO.	PART NAME	QTY	SERIAL NO.	REMARKS
16	1154164870	OIL LINE	1		(SUB FOR AT263832)
17	1154164880	OIL LINE	1		(SUB FOR AT263833)
18	1154164890	OIL LINE	1		(SUB FOR AT263834)
19	1154164900	OIL LINE	1		(SUB FOR AT263835)
20	1154164910	OIL LINE	1		(SUB FOR AT263836)
21	1154164920	OIL LINE	1		(SUB FOR AT263837)
31	1153003922	INJECTION NOZZLE	6		(SUB FOR AT263673)
58	1153370290	FLANGE	6		(SUB FOR AT264086 OR 1153370290)
61	1090701210	BOLT	6		(SUB FOR AT263902)
66	1153150110	GASKET	6		(SUB FOR AT263661) OD=15.0
69	1154193340	BRACKET	1		(SUB FOR AT264090)
70	1154195840	BRACKET	1		(SUB FOR AT264091)
71	0280808160	BOLT	4		M8X16 FLANGE, (SUB FOR AT259924)
72	0911501060	NUT	6		(SUB FOR AT263891) M6 FLANGE
73	1097011321	CLIP	14		(SUB FOR AT263953 OR 1097011320) ID=15 L=30
74	0280806400	BOLT	1		(SUB FOR AT263854) M6X40 FLANGE
75	1096750371	BOLT	9		(SUB FOR AT263948) M8X18 FLANGE
76	8976009250	GASKET	9		(SUB FOR AT263665) ID=8.6
78	1154161390	FUEL LINE	1		(SUB FOR AT264087)
79	1153190020	CAP	6		(SUB FOR AT264083)

FUEL INJECTION SYSTEM - CONTINUED

T150461 -UN-25JAN02

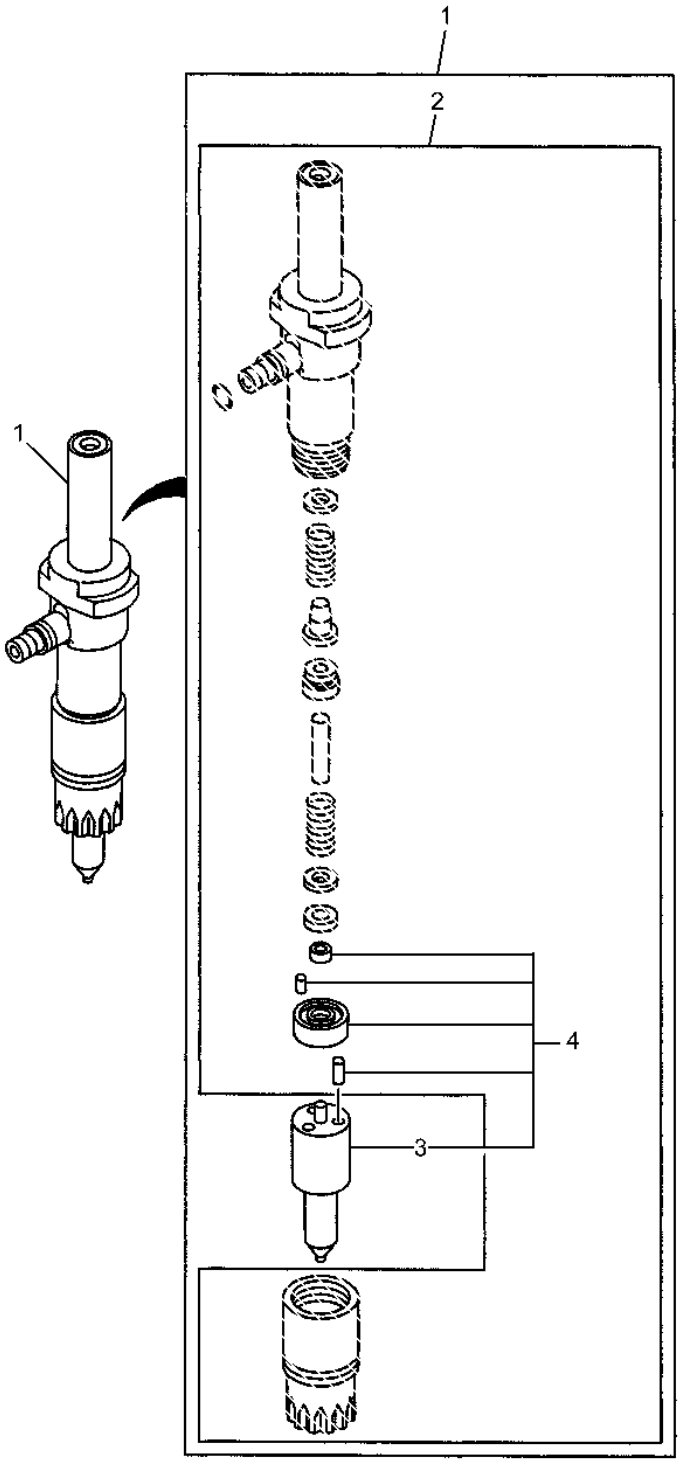

T150461

FUEL INJECTION SYSTEM - CONTINUED

KEY	PART NO.	PART NAME	QTY	SERIAL NO.	REMARKS
1	1153003922	INJECTION NOZZLE	6		(SUB FOR AT263673)
2	1153301281	NOZZLE HOLDER	6		(SUB FOR AT264085 OR 1153301280)
3	1153190100	KIT	6		(SUB FOR AT263753)
4	1153190100	KIT	6		(SUB FOR AT264084)

FUEL INJECTION SYSTEM DRIVE GEAR

T150457 -UN-25JAN02

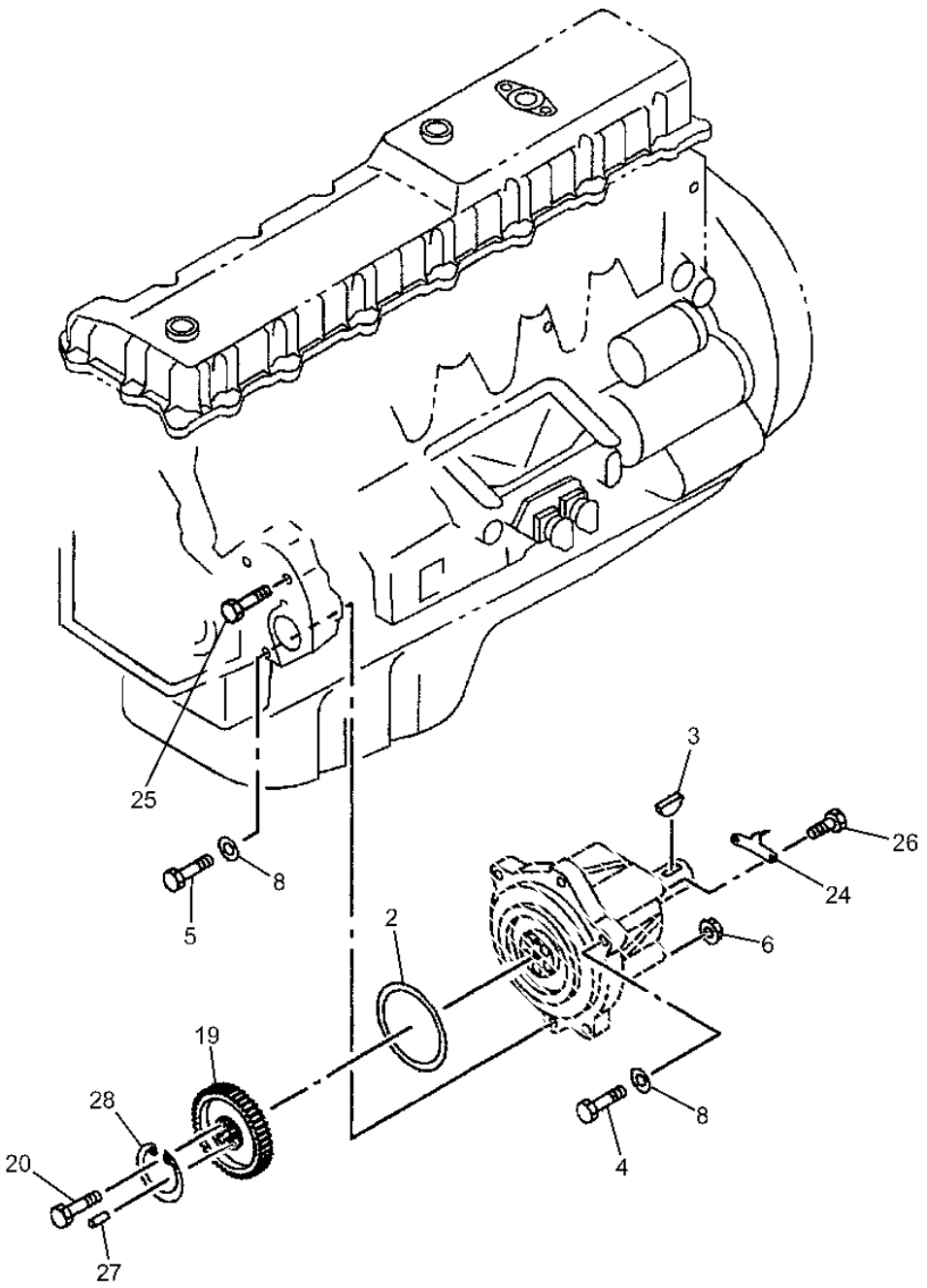

T150457

FUEL INJECTION SYSTEM DRIVE GEAR

KEY	PART NO.	PART NAME	QTY	SERIAL NO.	REMARKS
2	1096234760	O-RING	1		(SUB FOR AT263784)
3	9080556220	SHAFT KEY	1		(SUB FOR AT264135)
4	8943992531	BOLT	5		(SUB FOR AT264123) M14X128
5	9916664900	BOLT	1		(SUB FOR AT264163) M14X90
6	0911501140	NUT	1		(SUB FOR AT263892) M14
8	9091645140	WASHER	3		ID=14, (SUB FOR AT264145)
19	1125241640	GEAR	2		(SUB FOR AT263997 OR 1125241111) Z=54
20	1090701160	BOLT	1		(SUB FOR AT263901) M12X39 FLANGE
24	1113270401	POINTER	1		(SUB FOR AT263969)
25	8943971391	BOLT	1		(SUB FOR AT264120) M10X135
26	0281810160	BOLT	1		(SUB FOR AT263862) M10X16 FLANGE
27	9081505100	PIN	2		(SUB FOR AT264137)
28	1125290030	SNAP RING	1		(SUB FOR AT263998)

FUEL INJECTION PUMP COUPLING

T152982 -UN-05APR02

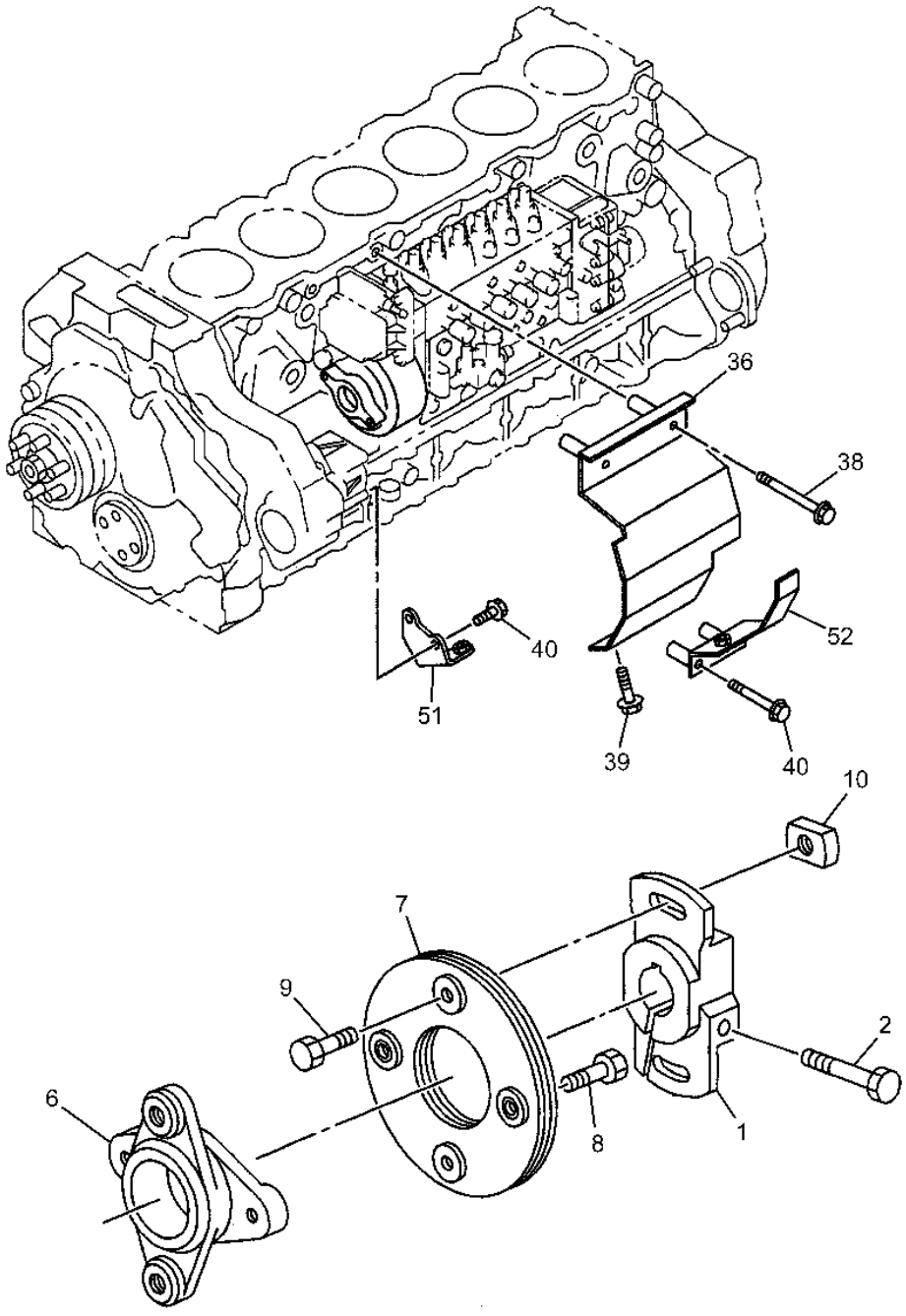

T152982

FUEL INJECTION PUMP COUPLING

KEY	PART NO.	PART NAME	QTY	SERIAL NO.	REMARKS
1	1157820200	COUPLING	1		(SUB FOR AT264094)
2	1157891770	BOLT	1		(SUB FOR AT264100)
6	1157891760	COUPLING	1		(SUB FOR AT264099)
7	1157891730	PLATE	1		(SUB FOR AT264096)
8	1157891750	BOLT	2		(SUB FOR AT264098)
9	1157891720	BOLT	2		(SUB FOR AT264095)
10	1157891740	NUT	2		(SUB FOR AT264097)
36	.....	COVER	1		(SUB FOR AT263965) (1112192010 NO LONGER AVAILABLE) (FURNISH 1112192090)
38	0281810700	BOLT	2		(SUB FOR AT263866) M10X70 FLANGE
39	0286810200	BOLT	2		(SUB FOR AT263875) M10X20 FLANGE
40	0281810120	BOLT	2		(SUB FOR AT263861) M10X12 FLANGE
51	1197552091	BRACKET	1		(SUB FOR AT264105)
52	1197552130	BRACKET	1		(SUB FOR AT264106)

FUEL TRANSFER PUMP

T163586 -UN-10JAN03

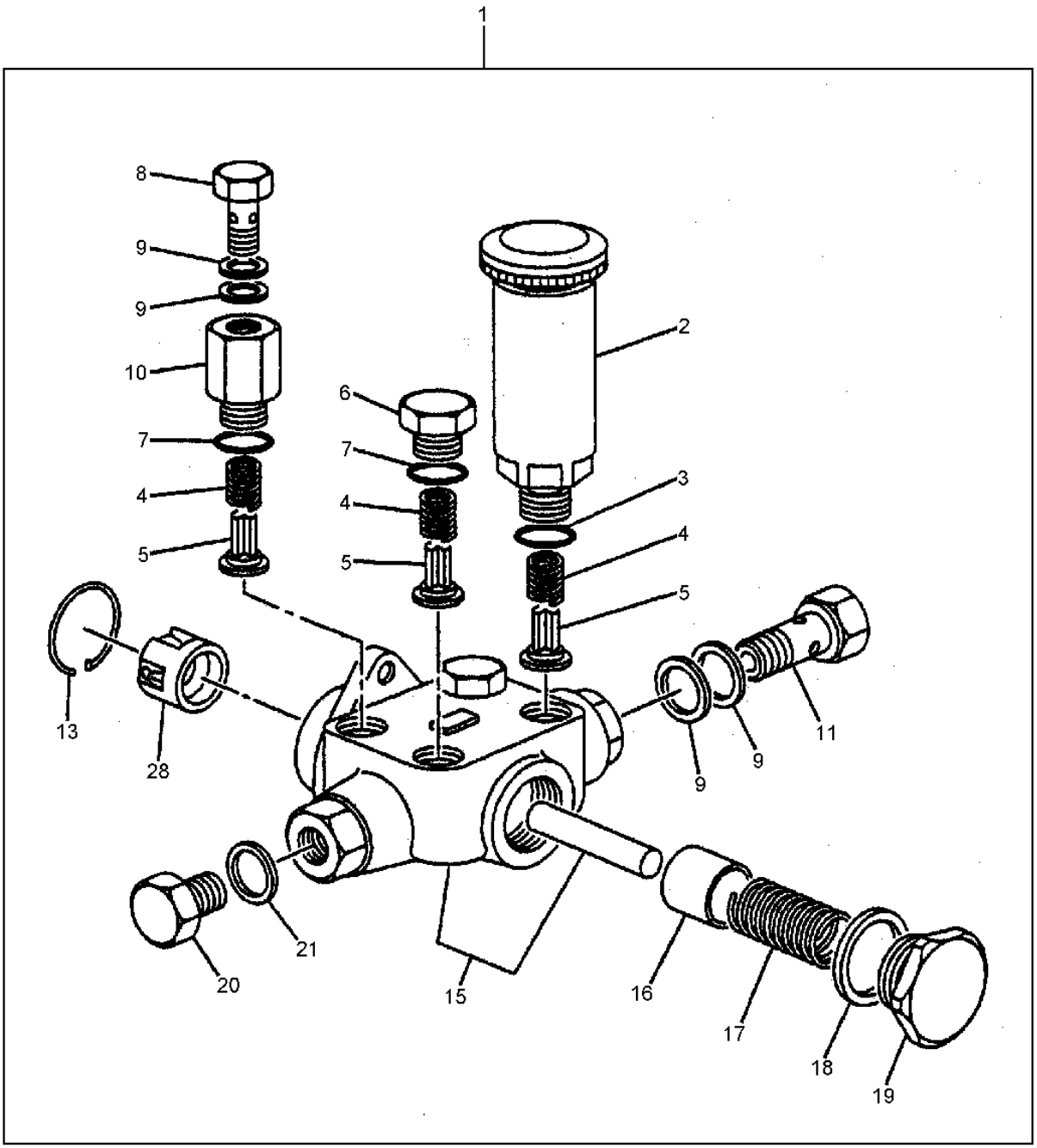

T163586

FUEL TRANSFER PUMP

KEY	PART NO.	PART NAME	QTY	SERIAL NO.	REMARKS
1	1157501671	MOUNTING PARTS	1		
2	1157610061	PUMP	1		(SUB FOR 1157610060)
3	1156230160	O-RING	1		
4	9813517020	SPRING	3		
5	1157550020	FLOW CONTROL HYD. VALVE	3		
6	1157590090	PLUG	1		
7	9813550310	GASKET	2		
8	1096750860	BOLT	1		
9	.....	PACKING	4		(SUB FOR 4452165)
10	1157590520	ADAPTER	1		
11	1157590290	BOLT	1		
13	9813550620	RING	1		
15	.....	HOUSING	1		(1157510380 NOT AVAILABLE)
16	9813512050	PISTON	1		
17	9813515030	SPRING	1		
18	9813550350	GASKET	1		
19	8941711850	PLUG	1		
20	1157590040	PLUG	1		
21	.....	PACKING	1		(SUB FOR 4452165)
28	.....	TAPPET	1		(1157540070 NOT AVAILABLE)

INTAKE MANIFOLD

T150462 -UN-25JAN02

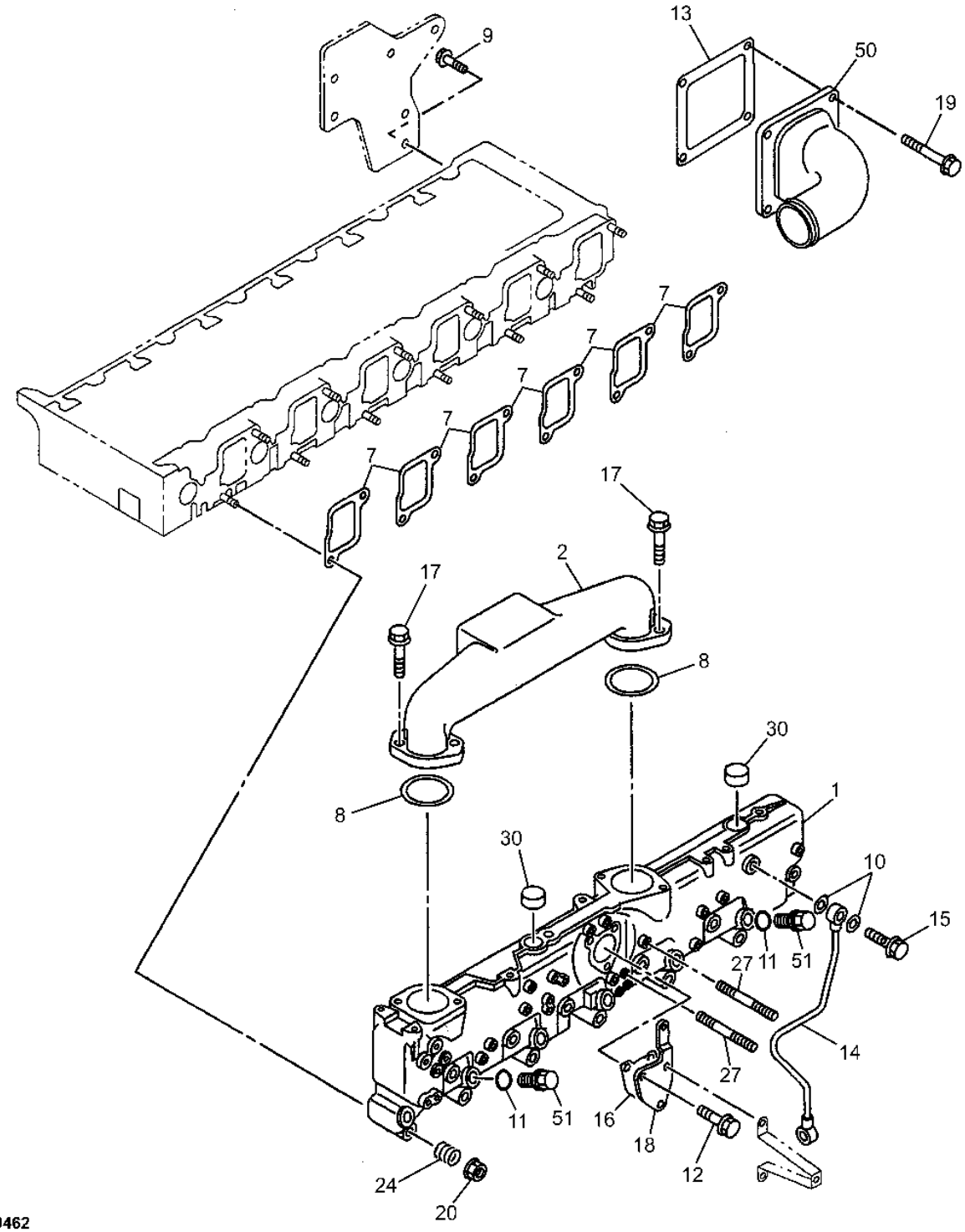

T150462

INTAKE MANIFOLD

KEY	PART NO.	PART NAME	QTY	SERIAL NO.	REMARKS
1	1141127300	INTAKE MANIFOLD	1		(SUB FOR AT264072)
2	1141343610	INTAKE MANIFOLD	1		(SUB FOR AT264077)
7	1141150631	O-RING	6		(SUB FOR AT263774)
8	1096234210	O-RING	2		(SUB FOR AT263773)
9	0281912250	BOLT	2		(SUB FOR AT263872) M12X25 FLANGE
10	1096300830	GASKET	2		(SUB FOR AT263939) ID10.2
11	1096300880	GASKET	6		(SUB FOR AT263943)
12	0287810250	BOLT	1		(SUB FOR AT263878) M10X20 FLANGE
13	1141171010	O-RING	1		(SUB FOR AT263776)
14	1191932390	OIL LINE	1		(SUB FOR AT263838)
15	1096750770	BOLT	1		(SUB FOR AT263949) M10X21 FLANGE
16	1096236590	GASKET	1		(SUB FOR AT263937)
17	0287810250	BOLT	1		(SUB FOR AT263878) M10X20 FLANGE
18	1141127570	COVER	1		(SUB FOR AT264074)
19	1154164900	OIL LINE	4		(SUB FOR AT263835) M10X50 FLANGE
20	4447336	NUT	12		(SUB FOR AT259946) M10 FLANGE
24	1095801560	SPRING	12		(SUB FOR AT263912)
27	9041106300	STUD	8		(SUB FOR AT263825) M6X30 L=38
30	8942416380	PLUG	2		(SUB FOR AT263791) OD=30
50	1141127551	PIPE	1		(SUB FOR AT263789)
51	1096040780	PLUG	6		(SUB FOR AT263918)

TURBOCHARGER SYSTEM

T150463 -UN-25JAN02

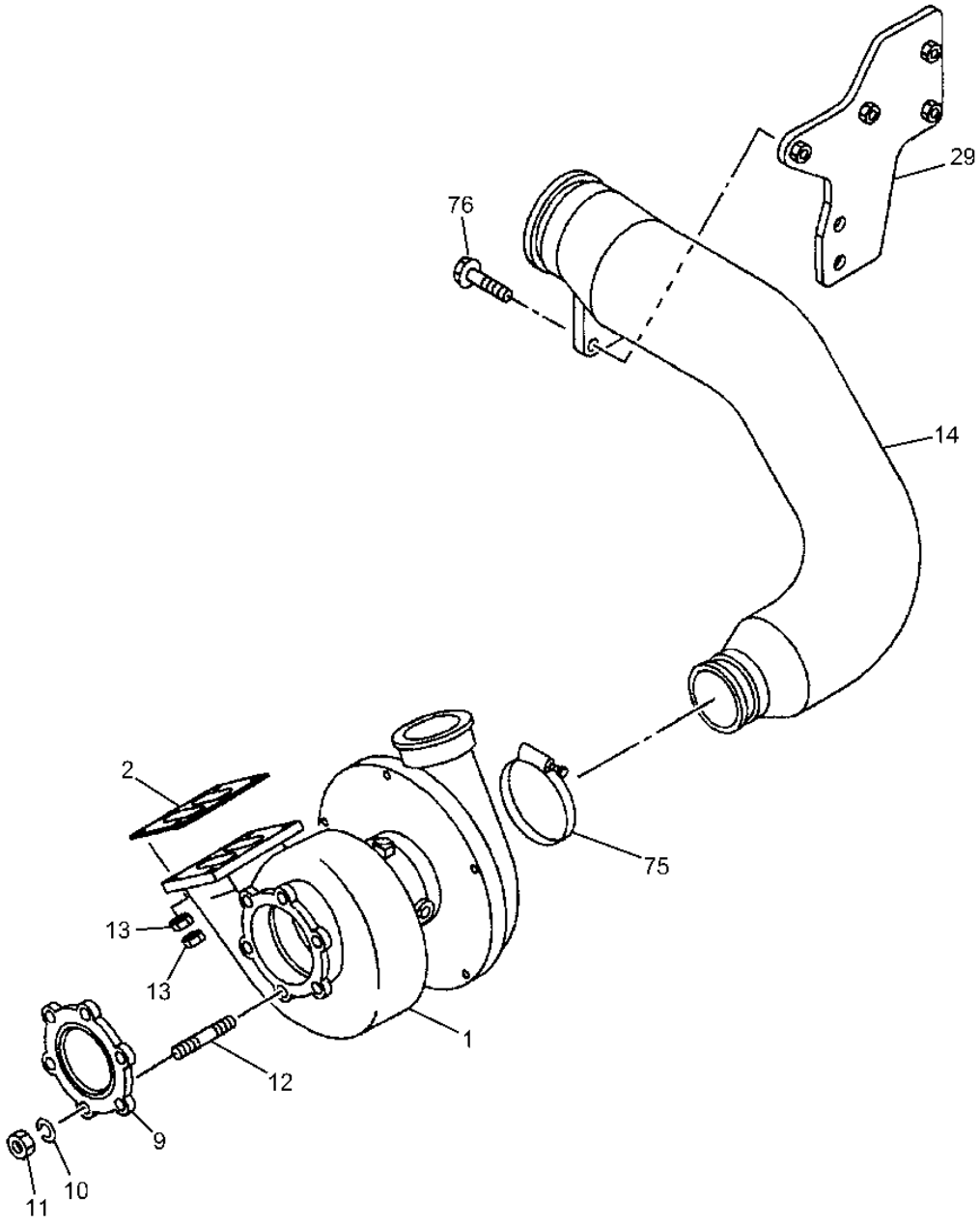

T150463

TURBOCHARGER SYSTEM

KEY	PART NO.	PART NAME	QTY	SERIAL NO.	REMARKS
1	1144003841	TURBOCHARGER	8		(SUB FOR AT263683)
2	1141451870	GASKET	6		(SUB FOR AT263782)
9	1141452030	GASKET	6		(SUB FOR AT263663)
10	1095000070	WASHER	1		(SUB FOR AT263909)
11	1094000270	NUT	6		(SUB FOR AT263758)
12	1093021060	STUD	1		(SUB FOR AT263681) M12X115 L=135
13	1094200050	NUT	8		(SUB FOR AT263674) M10
14	1141343520	HOSE	1		(SUB FOR AT264076)
29	1141194422	BRACKET	1		(SUB FOR AT264075)
75	1097071440	CLIP	1		(SUB FOR AT263955) ID=87-116
76	0280810500	BOLT	1		(SUB FOR AT263859) M10X50 FLANGE

WATER PUMP

T150464 -UN-25JAN02

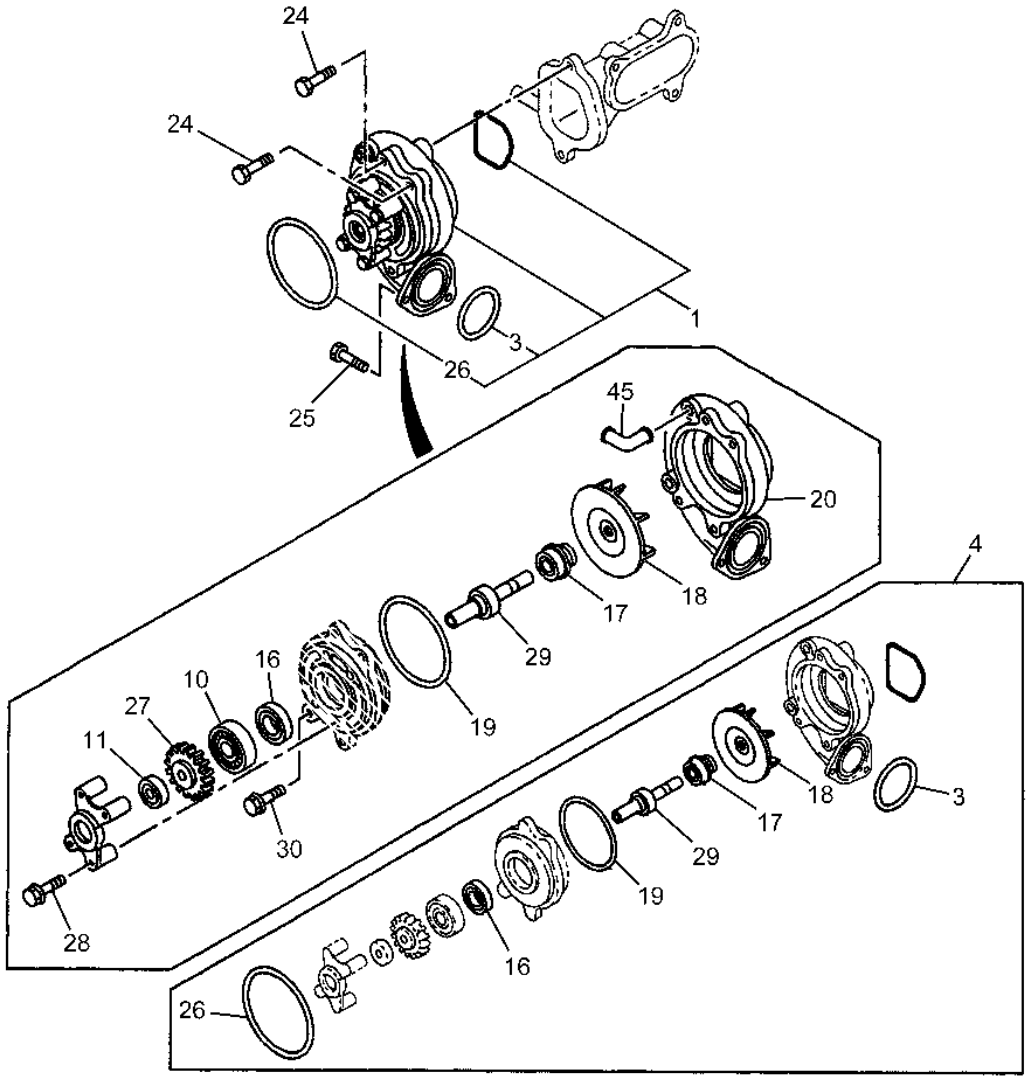

T150464

WATER PUMP

KEY	PART NO.	PART NAME	QTY	SERIAL NO.	REMARKS
1	1136501122	WATER PUMP	1		(SUB FOR AT263676, 1136501120 OR 1136501121)
3	1096235861	O-RING	1		(SUB FOR AT263779)
4	1878118430	KIT	1		(SUB FOR AT263748)
10	AT263959	BEARING	1		
11	AT263960	BEARING	1		
16	AT263938	SEAL	1		
17	AT264116	SEAL	4		
18	AT264049	IMPELLER	1		
19	AT263935	GASKET	1		
20	AT264048	COVER	1		
24	0281810900	BOLT	4		(SUB FOR AT263868) M10X90 FLANGE
25	0281810250	BOLT	2		(SUB FOR AT259936) M10X25 FLANGE
26	1096234940	O-RING	2		(SUB FOR AT263780)
27	AT264052	GEAR	4		
28	AT259927	BOLT	4		M8X40 FLANGE
29	AT264050	SHAFT	2		
30	0281810250	BOLT	1		(SUB FOR AT259936) M10X25 FLANGE
45	8944788692	PIPE ELBOW	1		(SUB FOR AT264126 OR 8944788691)

THERMOSTAT, HOUSING AND WATER PIPING

T150465 -UN-25JAN02

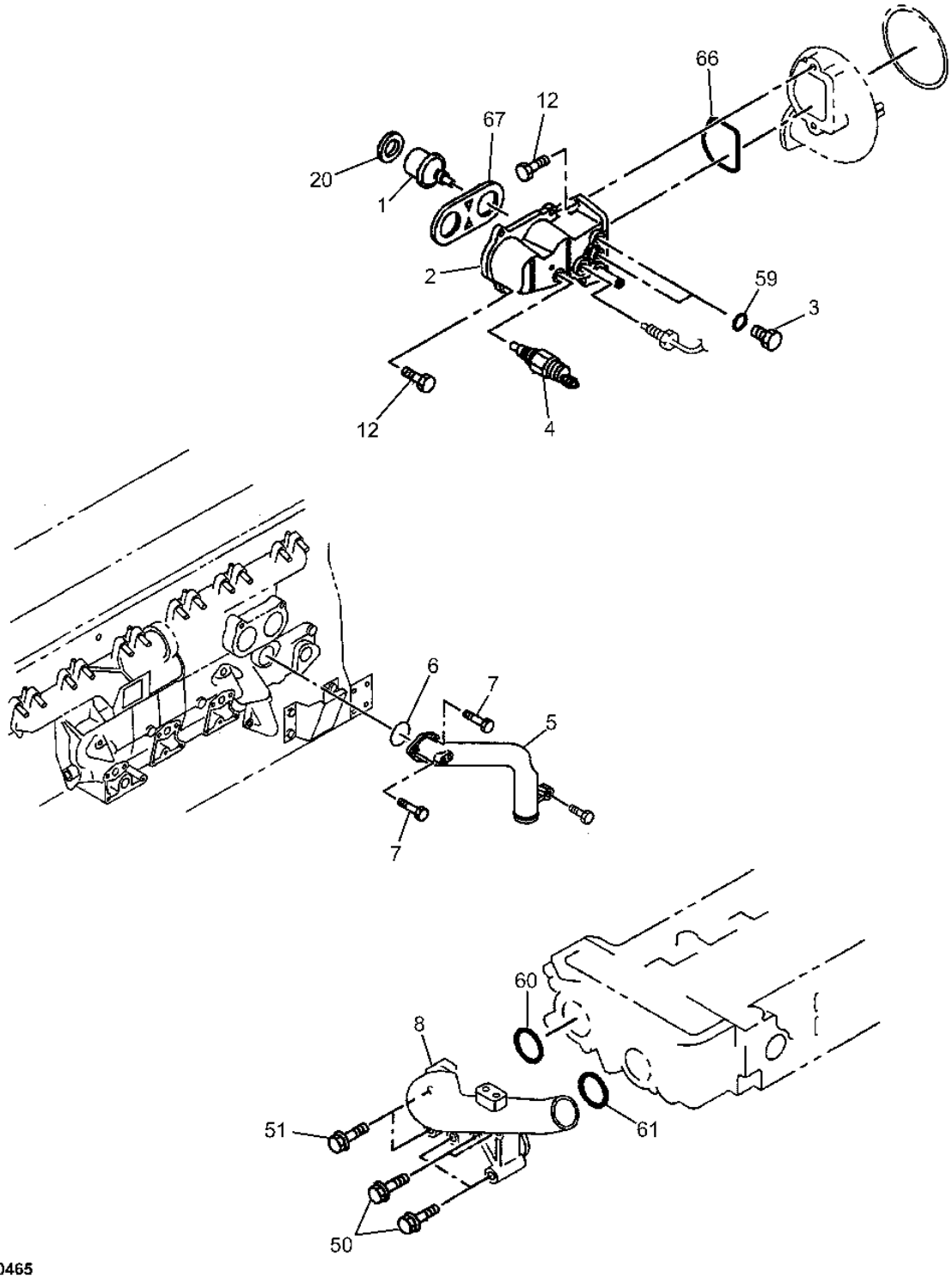

T150465

THERMOSTAT, HOUSING AND WATER PIPING

KEY	PART NO.	PART NAME	QTY	SERIAL NO.	REMARKS
1	1137700891	THERMOSTAT	2		(SUB FOR AT263685 OR 1137700890) 82 C
2	1137105690	HOUSING	1		(SUB FOR AT264067)
3	9992023160	PIPE PLUG	2		(SUB FOR AT264169) M16X12
4	8971256011	SWITCH	1		(SUB FOR AT263830)
5	1137118100	PIPE	1		(SUB FOR AT264068)
6	1096234060	GASKET	1		(SUB FOR AT263926)
7	0281810300	BOLT	1		(SUB FOR AT263863) M10X30 FLANGE
8	1137130611	PIPE	2		(SUB FOR AT264069)
12	0281810250	BOLT	5		(SUB FOR AT259936) M10X25 FLANGE
20	1137790110	SEAL	2		(SUB FOR AT264071)
50	8943973591	BOLT	4		(SUB FOR AT264122) M10X85 FLANGE
51	0281810500	BOLT	2		(SUB FOR AT263865) M10X50 FLANGE
59	1096300860	GASKET	2		(SUB FOR AT263941) ID=16.2
60	1096235420	GASKET	1		(SUB FOR AT263929, 1096234520) ID=55.6
61	1096235050	GASKET	1		(SUB FOR AT263933) ID=62.6
66	1096234230	GASKET	1		(SUB FOR AT263781) ID=105.6
67	1137430361	GASKET	1		(SUB FOR AT263662)

OIL COOLER AND OIL FILTER

T150466 -UN-25JAN02

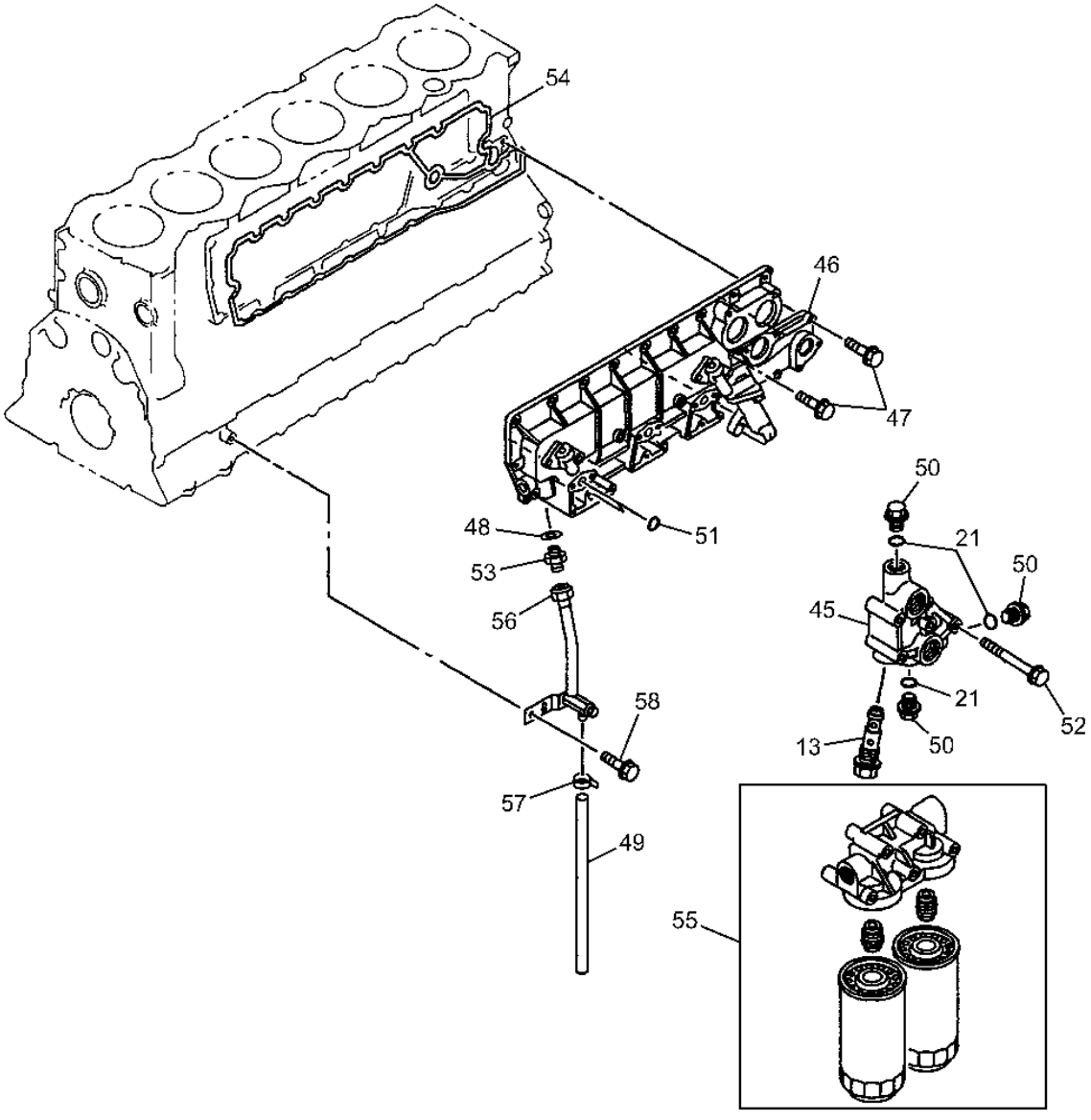

T150466

OIL COOLER AND OIL FILTER

KEY	PART NO.	PART NAME	QTY	SERIAL NO.	REMARKS
13	1132690090	PRESSURE RELIEF VALVE	1		
21	1096231790	O-RING	3		(SUB FOR AT263923)
45	1133412310	COVER	1		(SUB FOR AT264044)
46	1217003570	OIL COOLER	1		(SUB FOR AT263723)
47	8943445401	BOLT	8		(SUB FOR AT264115) M10X65
48	1096300870	GASKET	1		(SUB FOR AT263942) ID=18.2 OD=24.4
49	9099147010	PIPE	1		(SUB FOR AT264154) L=550
50	1096040230	PIPE PLUG	3		(SUB FOR AT263915) M24X17
51	1096234790	GASKET	2		(SUB FOR AT263932) ID=31.2
52	0168060850	BOLT	4		(SUB FOR AT263867) M10X80 FLANGE
53	1096600111	FITTING	1		(SUB FOR AT263947)
54	1112192050	GASKET	1		(SUB FOR AT263964)
55	AT308576	FILTER ELEMENT	2		(SUB FOR 4448336)
56	1137214963	PIPE	1		(SUB FOR AT264070)
57	8971488921	CLIP	1		(SUB FOR AT254828) ID=14
58	4447337	BOLT	1		(SUB FOR AT259935, 0281810200) M10X20 FLANGE

FUEL FILTER AND BRACKET

T150468 -UN-25JAN02

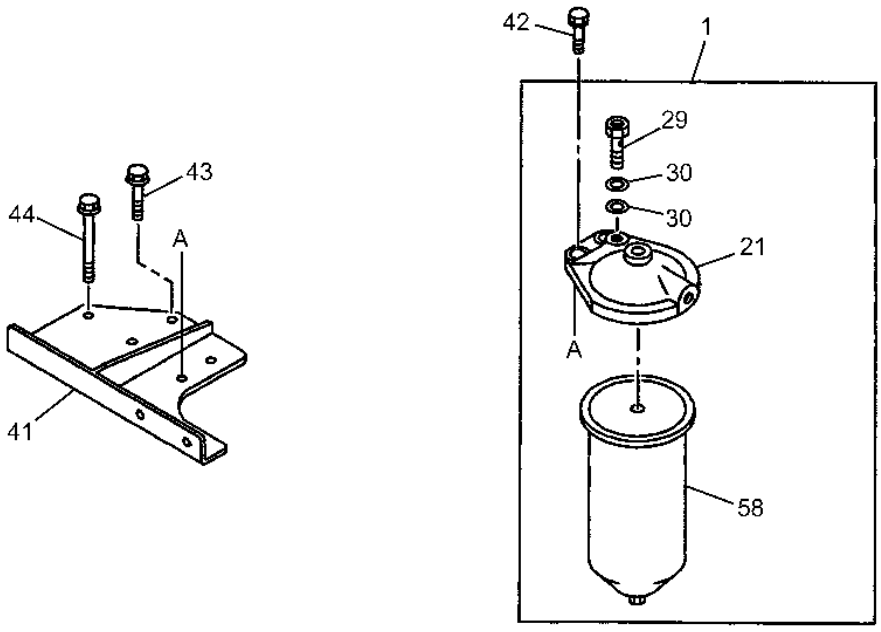

T150468

FUEL FILTER AND BRACKET

KEY	PART NO.	PART NAME	QTY	SERIAL NO.	REMARKS
1	.....	FILTER	1		
21	1132120921	COVER	2		(SUB FOR AT264030)
29	1132600540	FLOW CONTROL HYD. VALVE	1		(SUB FOR AT264037)
30	.....	PACKING	1		(SUB FOR AT263852, 4452165) ID=14.2 OD=19.2
41	1197552061	BRACKET	1		(SUB FOR AT264104)
42	0287810300	BOLT	1		(SUB FOR AT263879) M10X30 FLANGE
43	4447337	BOLT	2		(SUB FOR AT259935, 0281810200) M10X20 FLANGE
44	0281810450	BOLT	1		(SUB FOR AT263864) M10X45 FLANGE
58	1132400441	FILTER ELEMENT	2		(SUB FOR AT263659)

FUEL/WATER SEPARATOR

T149467 -UN-05APR02

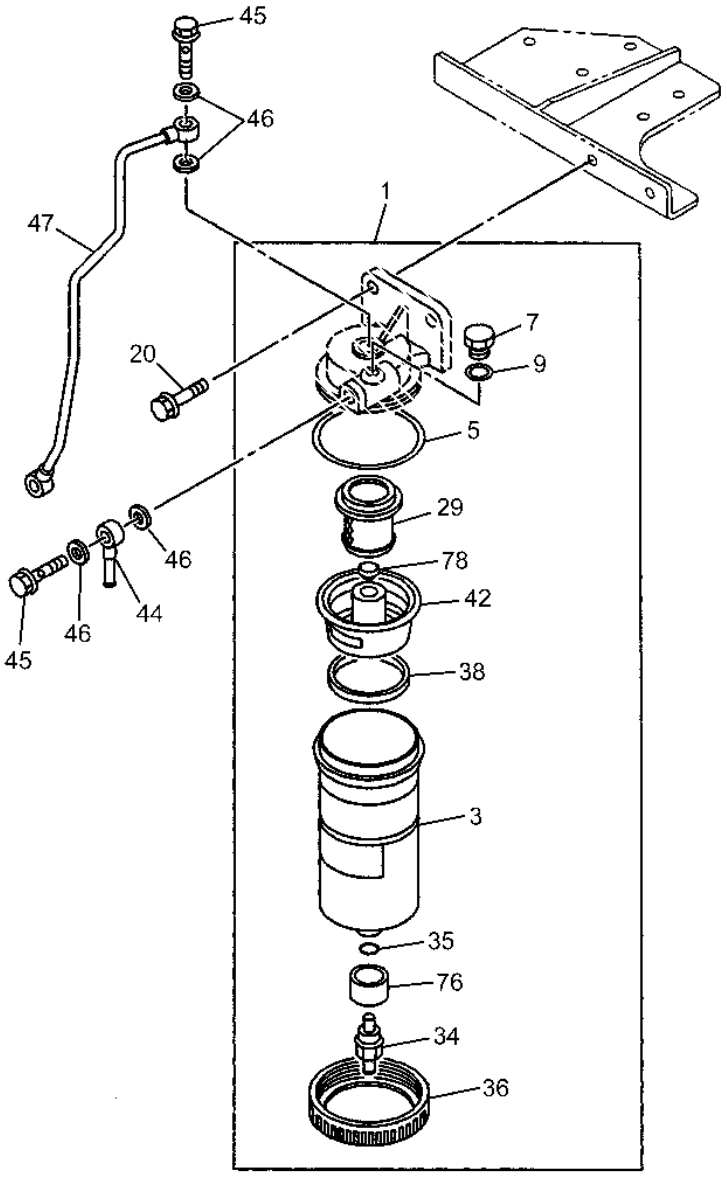

T149467

FUEL/WATER SEPARATOR

KEY	PART NO.	PART NAME	QTY	SERIAL NO.	REMARKS
1	1132009600	FILTER ELEMENT	1		(SUB FOR AT264027)
3	1132112550	CASE	1		
4	.....	FILTER HEAD	1		(SUB AT264027)
5	1096236100	RING	1		(SUB FOR AT263936)
7	1855710160	PLUG	1		(SUB FOR AT263917)
9	1855710160	PIPE PLUG	1		(SUB FOR AT263945)
20	0280810300	BOLT	1		(SUB FOR AT263876) M10X30 FLANGE
29	1855710190	PLATE	1		(SUB FOR AT264035)
34	1855710180	PIPE PLUG	1		(SUB FOR AT264034)
35	1855710170	O-RING	1		(SUB FOR AT263930)
36	1132192081	NUT	1		(SUB FOR AT264031)
38	1132192100	FLOAT	1		(SUB FOR AT264033)
42	1855710190	PLATE	1		(SUB FOR AT264032)
44	4452162	PIPE	1		(SUB FOR AT264112)
45	1096750860	BOLT	2		M14X27 FLANGE, (SUB FOR AT263712)
46	.....	PACKING	4		ID=14.2OD=19.2 (NOT AVAILABLE)
47	1154166410	FUEL LINE	1		(SUB FOR AT264088)
76	1855710180	PIPE PLUG	1		(SUB FOR AT264036)
78	1855710170	O-RING	1		(SUB FOR AT263907)

FUEL PUMP AND PIPING

T150469 -UN-25JAN02

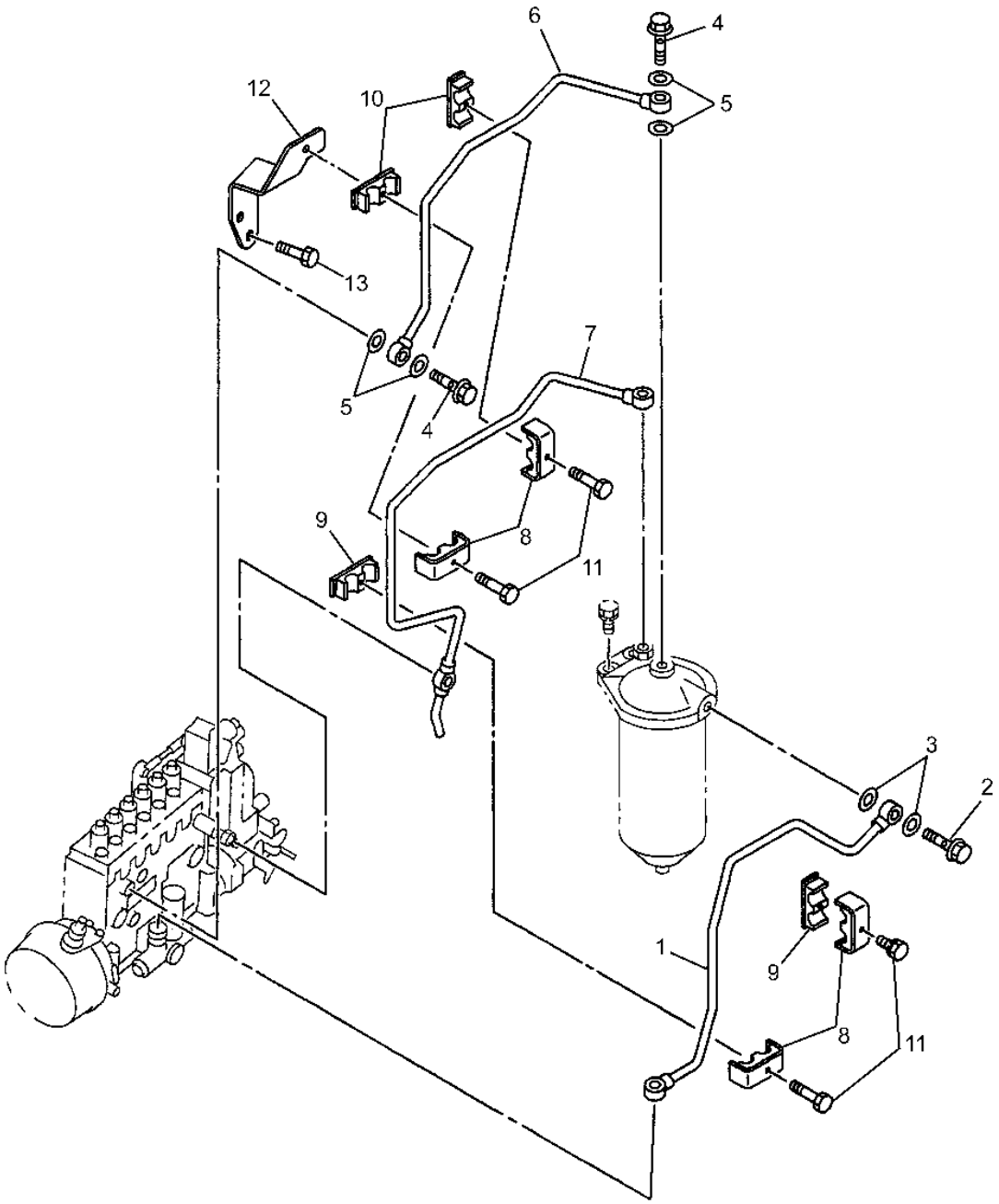

T150469

FUEL PUMP AND PIPING

KEY	PART NO.	PART NAME	QTY	SERIAL NO.	REMARKS
1	1154166400	OIL LINE	1		(SUB FOR AT263839)
2	1096750860	BOLT	1		(SUB FOR AT263712) M14X27 FLANGE
3	.....	PACKING	2		(SUB FOR AT263852, 4452165) ID=14.2 OD=19.2
4	1096750860	BOLT	1		(SUB FOR AT263712) M14X27 FLANGE
5	.....	PACKING	1		(SUB FOR AT263852, 4452165) ID=14.2 OD=19.2
6	1154166390	OIL LINE	5		(SUB FOR AT263840)
7	1154166380	OIL LINE	1		(SUB FOR AT263841)
8	8943932802	CLIP	1		(SUB FOR AT264118, 8943932801) ID=10 & 10 L=25
9	8943930391	CLAMP	3		(SUB FOR AT264117) ID=10 & 10 L=25
10	1097011800	CLAMP	1		(SUB FOR AT263954)
11	0282806300	BOLT	5		(SUB FOR AT191642 AND AT259921) M6X30 FLANGE
12	1154196810	BRACKET	1		(SUB FOR AT264092)
13	0280808160	BOLT	2		(SUB FOR AT259924) M8X16 FLANGE

ALTERNATOR AND STARTER MOUNTING

T150470 -UN-25JAN02

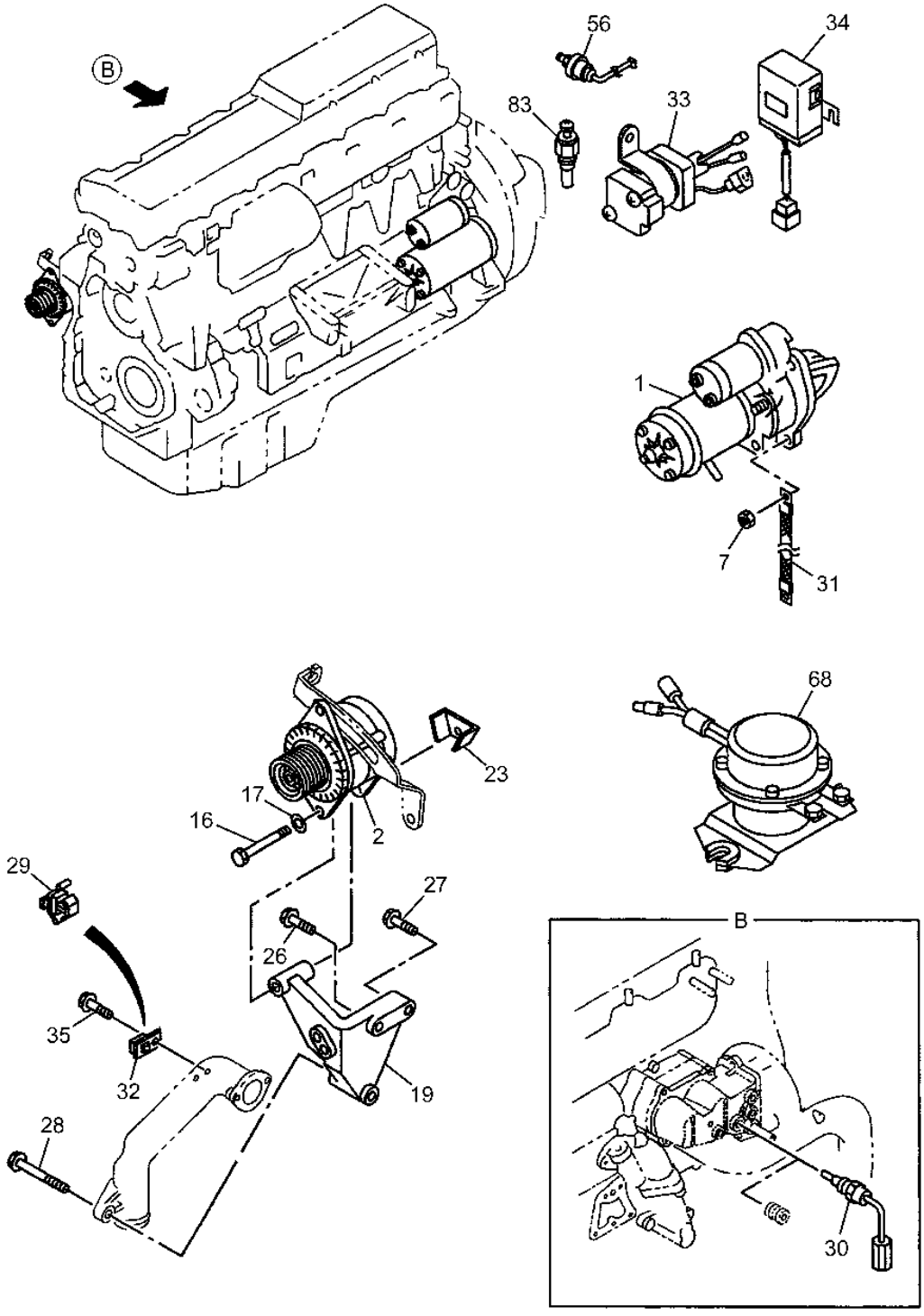

T150470

ALTERNATOR AND STARTER MOUNTING

KEY	PART NO.	PART NAME	QTY	SERIAL NO.	REMARKS
1	1811003413	STARTER MOTOR	1		(SUB FOR AT263672) MITSUBISHI
2	1812005903	ALTERNATOR	1		(SUB FOR AT263669)
	1812006400	GENERATOR	1		(90 AMP ALTERNATOR)
7	0911501140	NUT	3		(SUB FOR AT263892) M14
16	1090401050	BOLT	1		(SUB FOR AT263898) M14X123
17	9091605140	WASHER	1		(SUB FOR AT264143)
19	1197111430	BRACKET	1		(SUB FOR AT264102)
23	1197110290	NUT	1		(SUB FOR AT264101) BRKT W/NUT M14
26	0289814800	BOLT	1		(SUB FOR AT263885)
27	0289914600	BOLT	1		(SUB FOR AT263887)
28	0289964110	BOLT	1		(SUB FOR AT263888) M14X110 W/FLANGE
29	1097091780	CLIP	1		(SUB FOR AT263956) OD=8.5
30	1831610330	SWITCH	1		(SUB FOR AT263831)
31	9829322900	GROUND CABLE	1		(SUB FOR AT264160)
32	1826992390	BRACKET	1		(SUB FOR AT264108)
33	1825530391	RELAY	1		(SUB FOR AT263680, 1825530440, 4279835)
34	1825503250	CENTRAL CONTROL UNIT	1		(SUB FOR AT263671)
35	0280808180	BOLT	1		(SUB FOR AT263856) M8X16 FLANGE
56	1824102010	PRESSURE SWITCH	1		(SUB FOR AT263684)
68	8943795431	RELAY	1		(SUB FOR AT263689, 8943795430 OR 1825501091) BATTERY
83	9831514320	SENSOR	1		(SUB FOR AT263679)

FAN AND FAN BELT

T199667 -UN-04MAY04

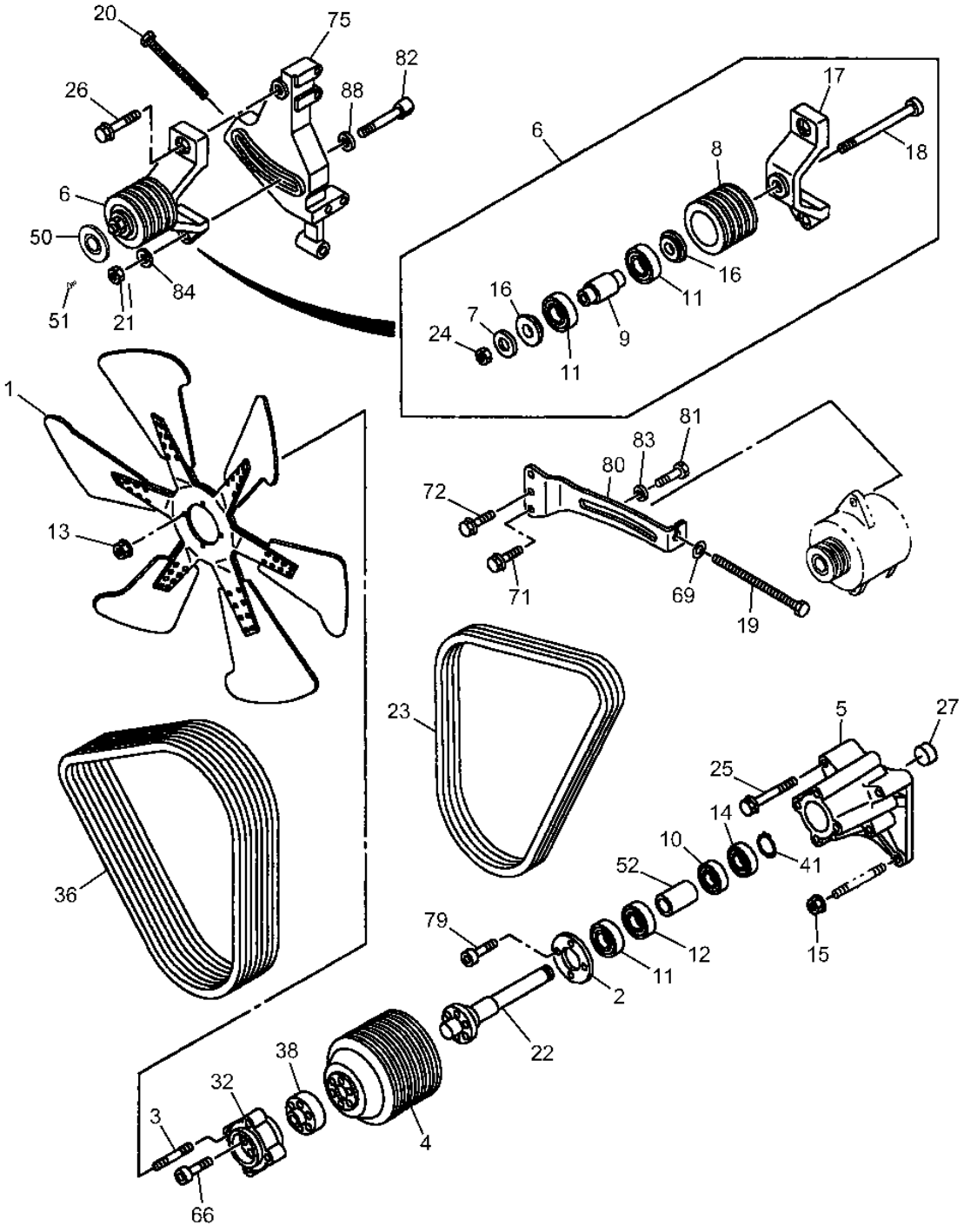

T199667

FAN AND FAN BELT

KEY	PART NO.	PART NAME	QTY	SERIAL NO.	REMARKS
1	1136603311	FAN	1		(SUB FOR AT263725, 1136603310)
2	1136640240	PLATE	1		(SUB FOR AT264056)
3	9098311240	STUD	1		(SUB FOR AT264128) M10X25 L=45
4	1136412020	PULLEY	1		(SUB FOR AT263820)
5	1136610530	HOUSING	1		(SUB FOR AT264055)
6	1136603390	PULLEY	1		
7	9091647240	WASHER	1		
8	1136631220	PULLEY	1		(SUB FOR AT263821)
9	1136660500	SPACER	1		(SUB FOR AT264062)
10	1098002920	BEARING	2		(SUB FOR AT263699)
11	1098002930	BEARING	1		(SUB FOR AT263700)
12	1098002940	BEARING	1		(SUB FOR AT263701)
13	9991115180	NUT	4		(SUB FOR AT264167) M10 FLANGE
14	1098002950	BEARING	1		(SUB FOR AT263702)
15	4447336	NUT	2		(SUB FOR AT259946) M10 FLANGE
16	1136640270	COVER	1		(SUB FOR AT264057)
17	1136680480	BRACKET	1		(SUB FOR AT264063)
18	1136650540	SPINDLE	1		(SUB FOR AT264059)
19	1090004800	BOLT	1		(SUB FOR AT263893) M16X55
20	1090091830	BOLT	1		(SUB FOR AT263894)
21	9991115180	NUT	4		(SUB FOR AT264167) M18
22	1136310920	SHAFT	1		(SUB FOR AT264051)
23	1136714890	V-BELT	1		(SUB FOR AT263704)
24	9991115240	NUT	1		(SUB FOR AT264168) M24
25	0281860120	BOLT	6		(SUB FOR AT263870) M10X120 FLANGE
26	0281860120	BOLT	2		(SUB FOR AT263870) M10X50FLANGE
27	1096000160	PLUG	1		OD=32, (SUB FOR AT263792)
32	1136420770	ADAPTER	1		(SUB FOR AT264053)
36	4474619	FLAT BELT	1		
38	1136420791	SPACER	1		(SUB FOR AT264054)
41	9091800320	SNAP RING	1		(SUB FOR AT264149) ID=29.6
50	.....	ISOLATOR	1		(1112911030 NO LONGER AVAILABLE FOR SERVICE)
51	4488765	CLIP	4		
52	1136660490	SPACER	4		(SUB FOR AT264061)
66	.....	BOLT	6		M10X110 FLANGE
69	9091605100	WASHER	1		(SUB FOR AT264142) ID=10.5
	9091607120	WASHER	1		(SUB FOR AT264144) ID=12
71	0281810250	BOLT	1		(SUB FOR AT259936)
72	0281860110	BOLT	1		(SUB FOR AT263869)
75	1136743011	BRACKET	1		(SUB FOR AT264066 OR 1136743010)
79	0583106140	BOLT	1		(SUB FOR AT263890)
80	1136742950	BRACKET	1		(SUB FOR AT264065)
81	1136741600	PLATE	1		(SUB FOR AT264064) M12X45
82	1136650262	BOLT	1		(SUB FOR AT264058)
83	9091646160	WASHER	4		(SUB FOR AT264146) ID=17 OD=32
84	9091646200	WASHER	1		(SUB FOR AT264147) ID=18
88	1136660211	WASHER	1		(SUB FOR AT264060)

FLYWHEEL HOUSING

T150473 -UN-25JAN02

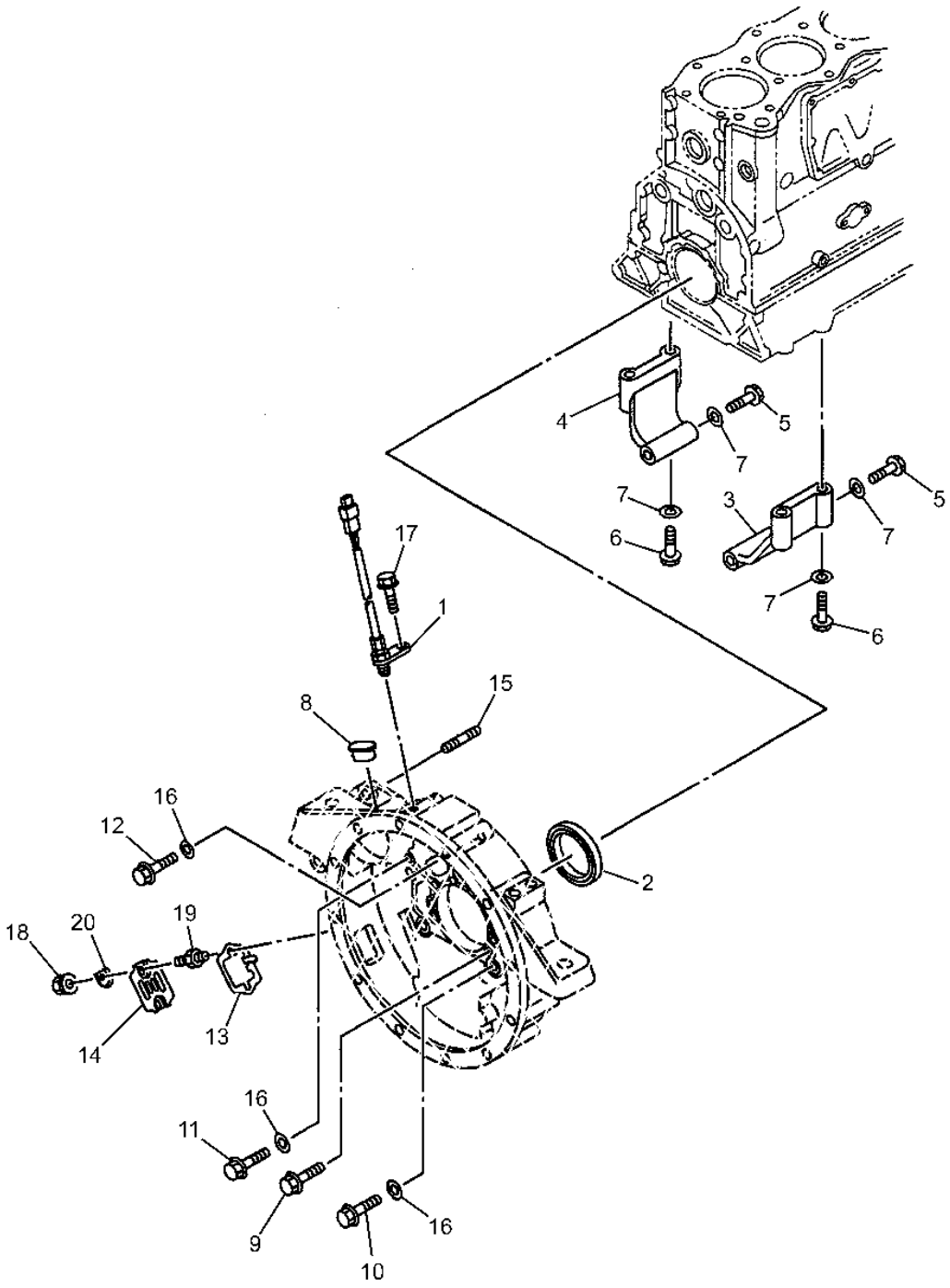

T150473

FLYWHEEL HOUSING

KEY	PART NO.	PART NAME	QTY	SERIAL NO.	REMARKS
1	1815107131	SENSOR	2		(SUB FOR AT263810 OR 1815107130)
2	1096255571	SEAL	4		(SUB FOR AT263809)
3	1113492400	SEAL	1		(SUB FOR AT263975)
4	1113492410	SEAL	8		(SUB FOR AT263976)
5	1090200081	BOLT	1		(SUB FOR AT263896) M14X155
6	9916664000	BOLT	2		(SUB FOR AT264161) M14X100
7	9091645140	WASHER	6		(SUB FOR AT264145) ID=14
8	9113490490	COVER	10		(SUB FOR AT264156)
9	0280808350	BOLT	1		(SUB FOR AT263857) M8X35 FLANGE
10	9916664500	BOLT	3		(SUB FOR AT264162) M14X50
11	9923614450	BOLT	1		(SUB FOR AT264165) M14X45
12	0287914400	BOLT	2		(SUB FOR AT263884) M14X40
13	1113270450	POINTER	4		(SUB FOR AT263970)
14	1113491310	COVER	2		(SUB FOR AT263973)
15	9044114350	STUD	2		(SUB FOR AT264131) M14X35 L=56
16	9091645140	WASHER	13		(SUB FOR AT264145) ID=14
17	0280808160	BOLT	1		(SUB FOR AT259924) M8X16 FLANGE
18	4447338	NUT	4		(SUB FOR AT259945) M8 FLANGE
19	1093000581	STUD	1		(SUB FOR AT263904) M8X14,M8X14 L=33
20	1113491270	WASHER	1		(SUB FOR AT263972)

TIMING GEAR CASE

T150472 -UN-25JAN02

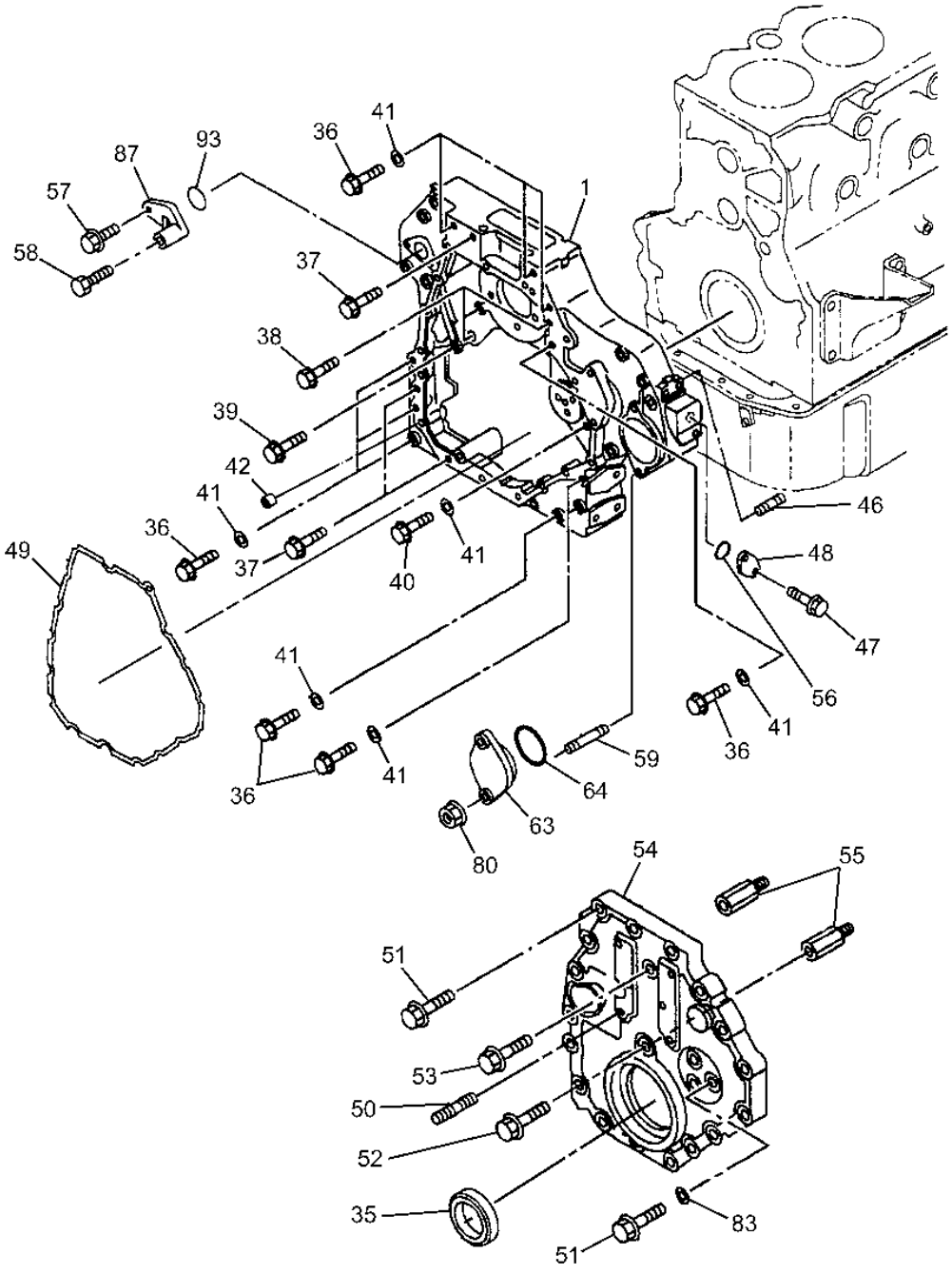

T150472

TIMING GEAR CASE

KEY	PART NO.	PART NAME	QTY	SERIAL NO.	REMARKS
1	1113100534	CASE	1		
35	1096255562	SEAL	11		(SUB FOR AT263808)
36	1090200070	BOLT	1		(SUB FOR AT263895) M14X110
37	0281810000	BOLT	1		(SUB FOR AT263860) M10X100 FLANGE
38	0281810250	BOLT	4		(SUB FOR AT259936) M10X25 FLANGE
39	0281210350	BOLT	1		(SUB FOR AT263705) M10X35 FLANGE
40	1090201460	BOLT	2		(SUB FOR AT263897) M14X60
41	9091645140	WASHER	1		(SUB FOR AT264145) ID=14
42	1131190040	DOWEL PIN	1		(SUB FOR AT264018)
46	9044114450	STUD	19		(SUB FOR AT264132)
47	0280808160	BOLT	2		(SUB FOR AT259924) M8X16 FLANGE
48	1113190120	COVER	6		(SUB FOR AT263967)
49	1113220610	O-RING	1		(SUB FOR AT263772)
50	9044110400	STUD	3		(SUB FOR AT264130) M10X40 L=55
51	0287810400	BOLT	1		(SUB FOR AT263881) M10X40 FLANGE
52	9010658400	BOLT	3		(SUB FOR AT264127) M8X40
53	0281810450	BOLT	1		(SUB FOR AT263864) M10X45 FLANGE
54	1113211681	COVER	1		(SUB FOR AT263968)
55	1113290241	BOLT	1		(SUB FOR AT263971) M10X90
56	1096232990	PACKING	12		(SUB FOR AT263925) ID=38.7
57	0280808600	BOLT	1		(SUB FOR AT263858) M8X20 FLANGE
58	0280808600	BOLT	1		(SUB FOR AT263858) M8X60 FLANGE
59	9044110300	STUD	1		(SUB FOR AT264129) M10X30 L=45
63	1117491860	COVER	1		(SUB FOR AT263983)
64	1096234210	O-RING	1		(SUB FOR AT263773)
80	4447336	NUT	2		(SUB FOR AT259946) M10 FLANGE
83	5095031110	WASHER	1		(SUB FOR AT264109) ID=8.5 OD=20
87	1113491512	COVER	1		(SUB FOR AT263974)
93	1096234160	GASKET	1		(SUB FOR AT263927)

ENGINE GASKET SET

T150474 -UN-25JAN02

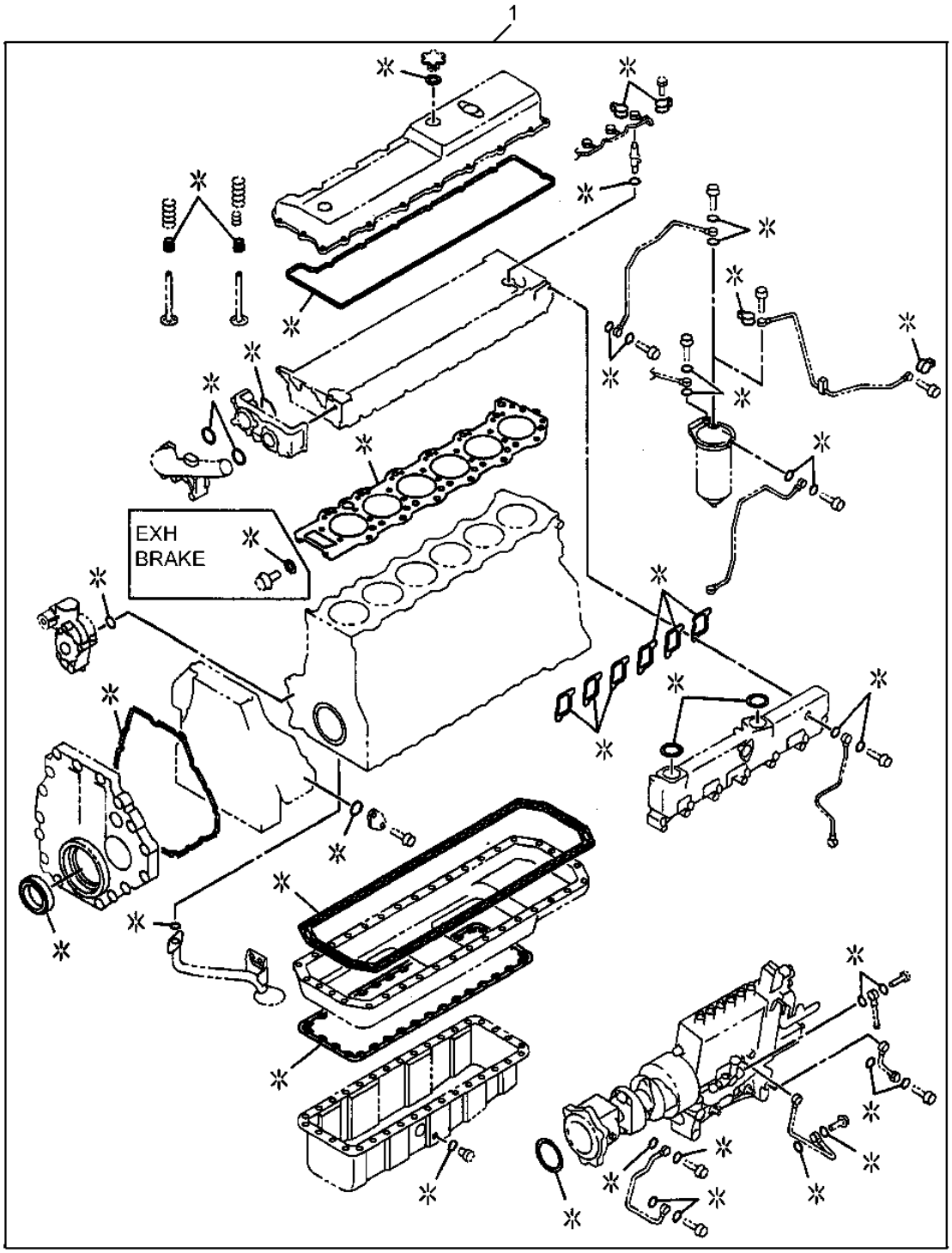

T150474

ENGINE GASKET SET

KEY	PART NO.	PART NAME	QTY	SERIAL NO.	REMARKS
1	1878121361	GASKET	1		(SUB FOR AT263670, 1878121360)

ENGINE GASKET SET

T150475 -UN-25JAN02

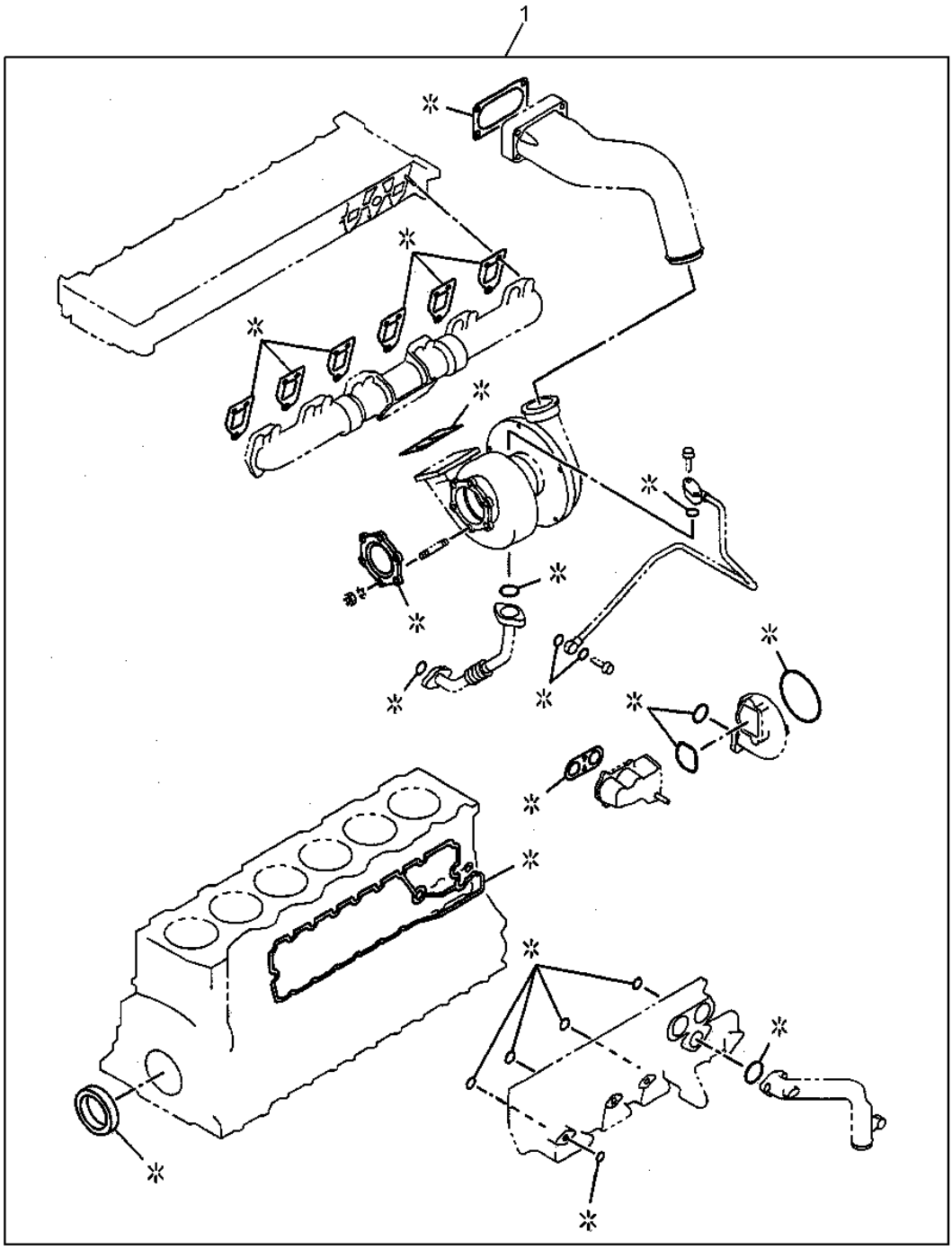

T150475

ENGINE GASKET SET

KEY	PART NO.	PART NAME	QTY	SERIAL NO.	REMARKS
1	1878121361	GASKET	1		(SUB FOR AT263670, 1878121360)

ENGINE GASKET SET

T150476 -UN-25JAN02

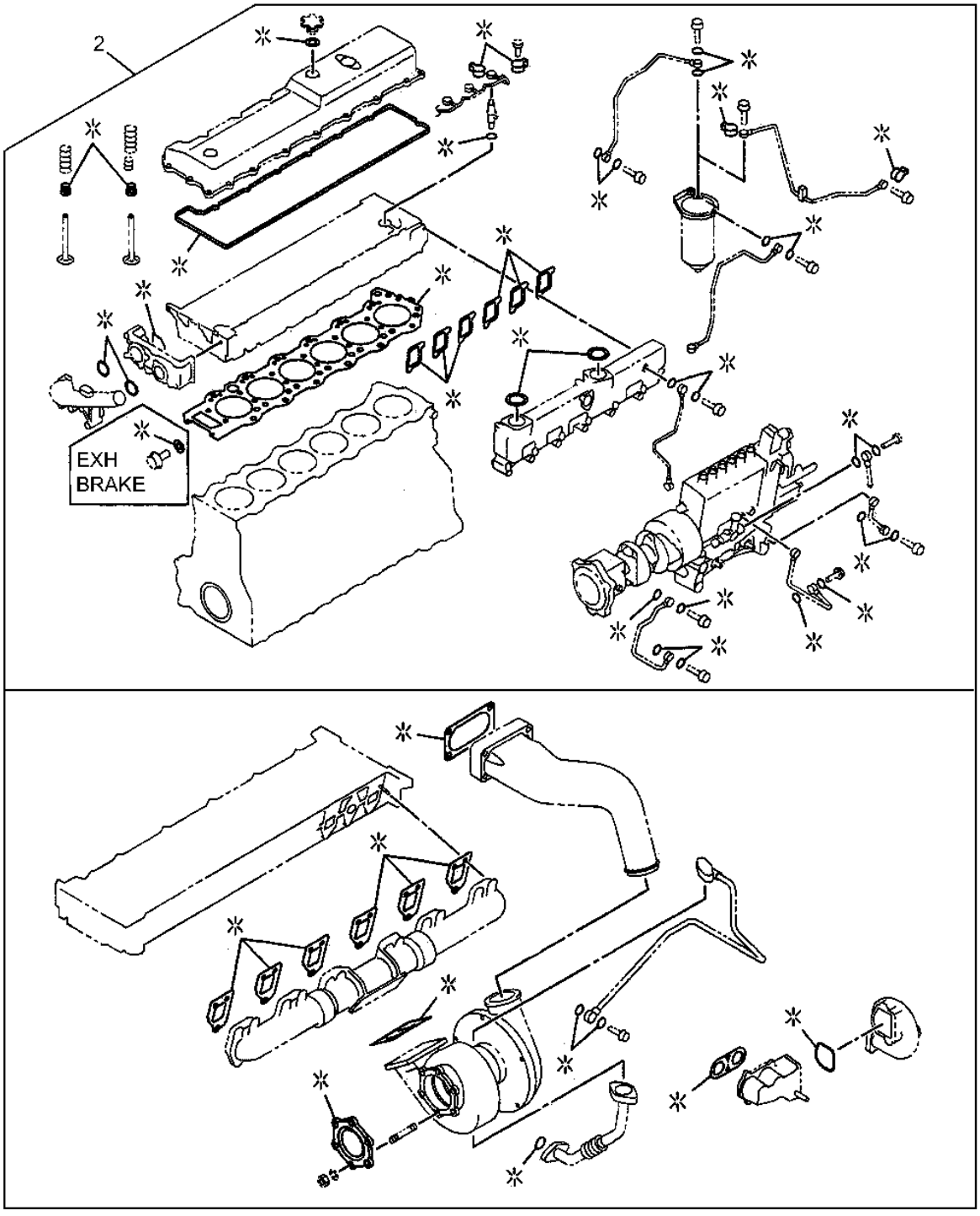

T150476

ENGINE GASKET SET

KEY	PART NO.	PART NAME	QTY	SERIAL NO.	REMARKS
2	1878121371	GASKET KIT	1		(SUB FOR AT263749 OR 1878121370)

RADIATOR

T155073 -UN-22MAY02

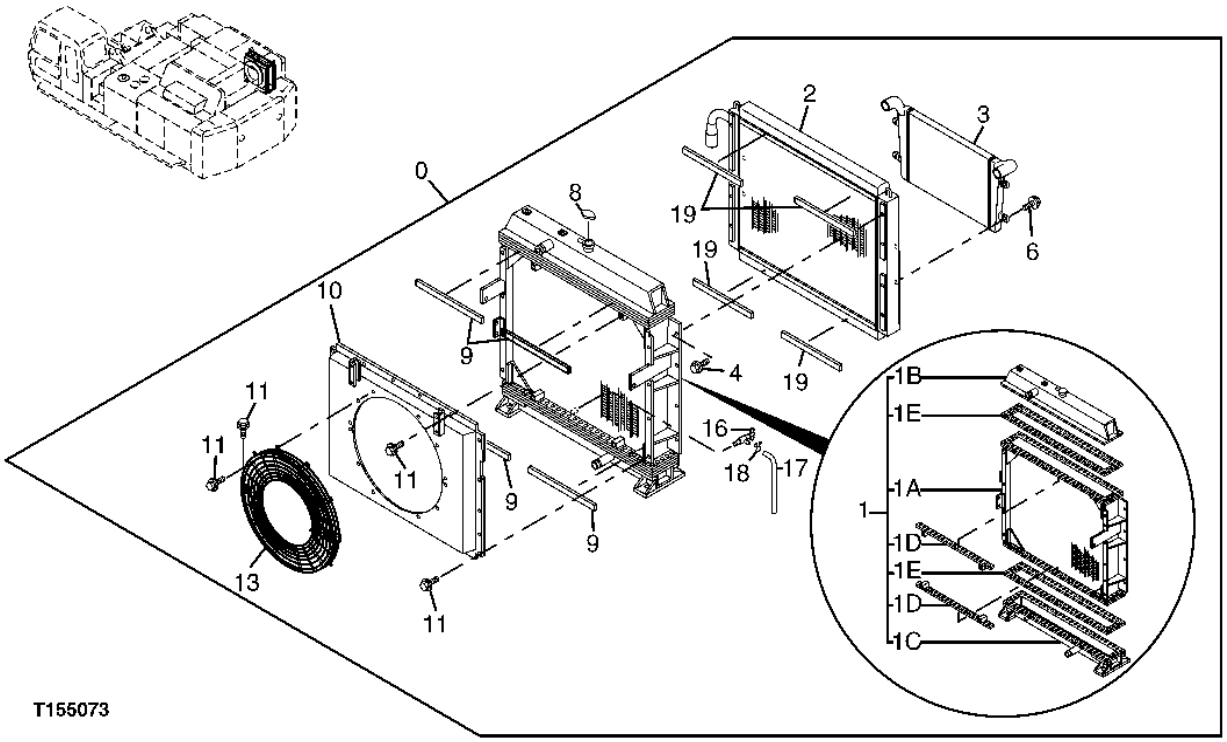

RADIATOR

KEY	PART NO.	PART NAME	QTY	SERIAL NO.	REMARKS
0	4454499	RADIATOR	1		(COMPLETE ASSEMBLY)
1	4474011	RADIATOR	1		
1A	.....	RADIATOR	1		(4476162 NOT AVAILABLE FOR SERVICE)
1B	.....	RADIATOR	1		(4476163 NOT AVAILABLE FOR SERVICE)
1C	.....	RADIATOR	1		(4476164 NOT AVAILABLE FOR SERVICE)
1D	.....	PLATE	2		(4476168 NOT AVAILABLE FOR SERVICE)
1E	.....	GASKET	2		(4476174 NOT AVAILABLE FOR SERVICE)
2	4474003	OIL COOLER	1		
3	4474004	OIL COOLER	1		
4	19M8011	CAP SCREW	8		M12 X 30
	12M7058	LOCK WASHER	8		12 MM, (SUB FOR 12M7067)
6	19M7496	CAP SCREW	4		M12 X 45
	12H301	LOCK WASHER	4		1/2"
8	4231888	FILLER CAP	1		(SUB FOR AT122559)
9	4476175	ISOLATOR	4		
10	4476176	SHROUD	1		
11	19M7662	CAP SCREW	28		M10 X 30
	12M7066	LOCK WASHER	28		10 MM
	24M7028	WASHER	28		10.500 X 20 X 2 MM
13	4436426	GUARD	2		
16	4206315	DRAIN VALVE	1		
17	4206316	RADIATOR HOSE	1		(SUB FOR TH4206316)
18	4143888	HOSE CLAMP	1		(SUB FOR TH4143888)
19	4476177	ISOLATOR	4		

RADIATOR SUPPORT

T193521 -UN-14AUG03

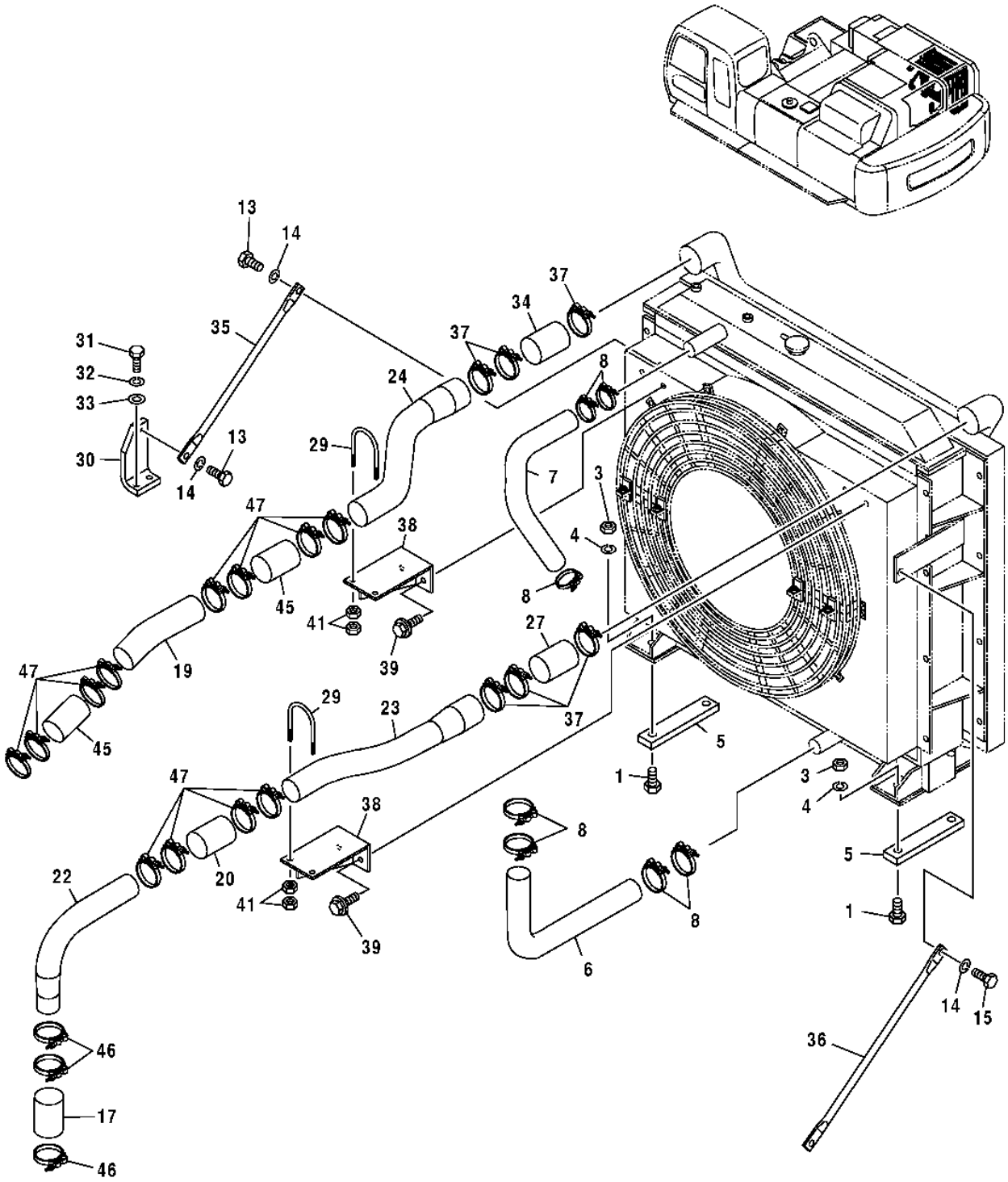

T193521

RADIATOR SUPPORT

KEY	PART NO.	PART NAME	QTY	SERIAL NO.	REMARKS
1	19M8991	CAP SCREW	4		
3	M660027	NUT	4		
4	J222027	WASHER	4		
5	4466664	PLATE	2		
6	3092263	HOSE	1		
7	3092264	HOSE	1		
8	AT39141	HOSE CLAMP	7		
13	19M7489	CAP SCREW	3		M16 X 45
14	12H294	LOCK WASHER	4		5/8"
15	19M7369	CAP SCREW	1		M16 X 60
17	4451480	HOSE	1		
19	3091579	STRUCTURAL TUBING	1		
20	4451481	HOSE	1		
22	8085274	STRUCTURAL TUBING	1		
23	8084400	STRUCTURAL TUBING	1		
24	8084401	STRUCTURAL TUBING	1		
27	4456021	HOSE	1		
29	4366298	BOLT	2		
30	9755251	BRACKET	1		
31	19M7489	CAP SCREW	2		M16 X 45
32	12H294	LOCK WASHER	2		5/8"
33	24M7053	WASHER	2		17 X 30 X 3 MM
34	4468239	HOSE	1		
35	4460590	ARM	1		
36	9757366	ARM	1		
37	AT56657	HOSE CLAMP	6		
38	8085625	BRACKET	2		
39	19M7402	CAP SCREW	4		M10 X 25
	12M7066	LOCK WASHER	4		10 MM
41	14M7275	NUT	8		M12
45	4464923	HOSE	2		
46	AT50923	HOSE CLAMP	3		
47	AT56658	HOSE CLAMP	12		

RESERVE TANK

T155077 -UN-22MAY02

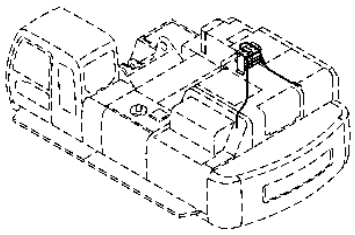

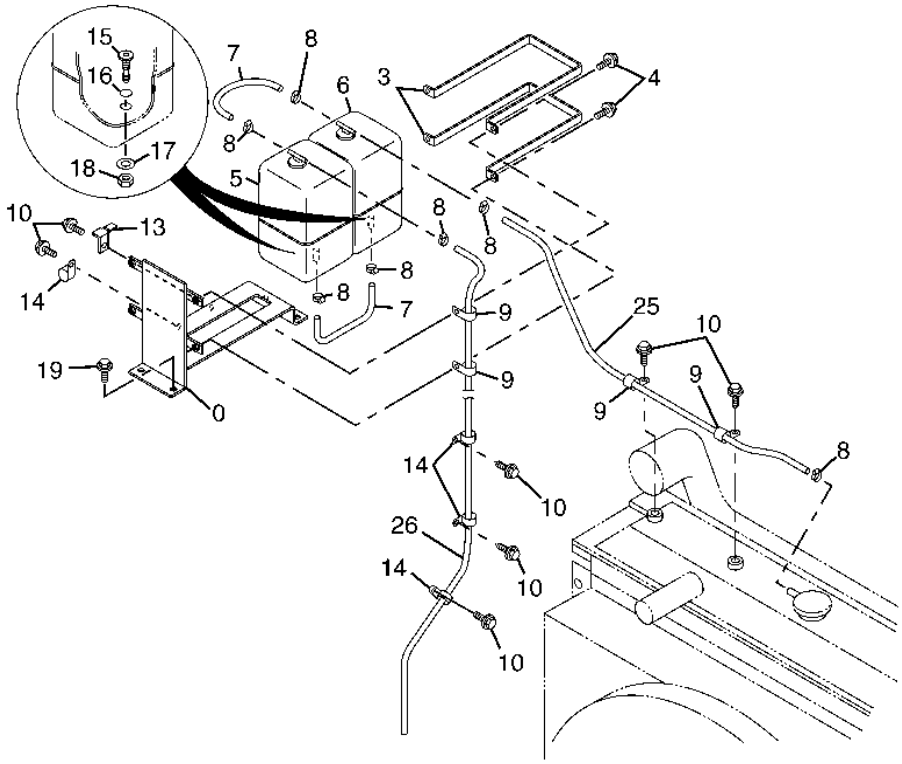

T155077

RESERVE TANK

KEY	PART NO.	PART NAME	QTY	SERIAL NO.	REMARKS
0	8084205	BRACKET	1		
3	4469398	CLAMP	2		
4	19M7402	CAP SCREW	4		M10 X 25
	12M7066	LOCK WASHER	4		10 MM
5	4392068	TANK	1		
6	4361805	TANK	1		
7	4380659	HOSE	2		
8	TY22462	CLAMP	7		(SUB FOR AR48236)
9	4190272	CLIP	7		(SUB FOR TH108600)
10	19M7938	CAP SCREW	7		M10 X 20
	12M7066	LOCK WASHER	7		10 MM
13	4257159	BRACKET	1		(SUB FOR AT154243)
14	4190261	CLIP	4		(SUB FOR TH109649)
15	3080498	FITTING	2		
16	CH10569	PACKING	2		
17	4291332	WASHER	2		
18	M521210	NUT	2		
19	19M7662	CAP SCREW	4		M10 X 30
	12M7066	LOCK WASHER	4		10 MM
	24M7028	WASHER	4		10.500 X 20 X 2 MM
25	4395169	HOSE	1		
26	4353970	HOSE	1		(SUB FOR TH4353970)

ENGINE CONTROL CABLE

T149992 -UN-01FEB02

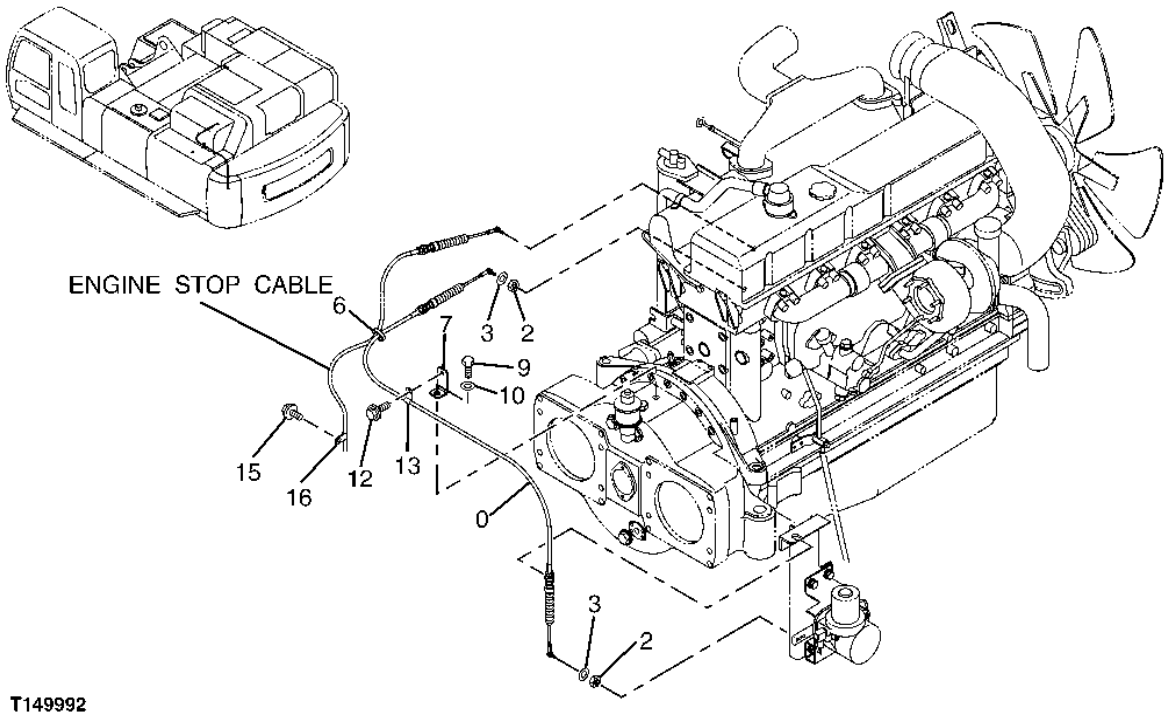

T149992

ENGINE CONTROL CABLE

KEY	PART NO.	PART NAME	QTY	SERIAL NO.	REMARKS
0	4455115	CABLE	1		
2	14M7272	NUT	2		M6
3	12M7006	LOCK WASHER	2		6 MM
6	4146559	GROMMET	1	-951006	(SUB FOR TH108788)
	19M7938	CAP SCREW	1	951007-	(NOT ILLUSTRATED)
	12M7066	LOCK WASHER	1	951007-	(NOT ILLUSTRATED)
7	9758117	BRACKET	1		
9	J901625	BOLT	1		(SUB FOR AT202272)
10	24M7053	WASHER	1		17 X 30 X 3 MM
12	19M7402	CAP SCREW	1		M10 X 25
	12M7066	LOCK WASHER	1		10 MM
13	4190261	CLIP	1	-951006	(SUB FOR TH109649)
	4190261	CLIP	2	951007-	
14	H77698	TIE BAND	2	951007-	(NOT ILLUSTRATED)
15	T30367	CLAMP	1		
16	19M7402	CAP SCREW	1		M10 X 25
	12M7066	LOCK WASHER	1		10 MM
	24M7096	WASHER	1		10.500 X 18 X 1.600 MM

ENGINE CONTROL MOTOR

T197030 -UN-18DEC03

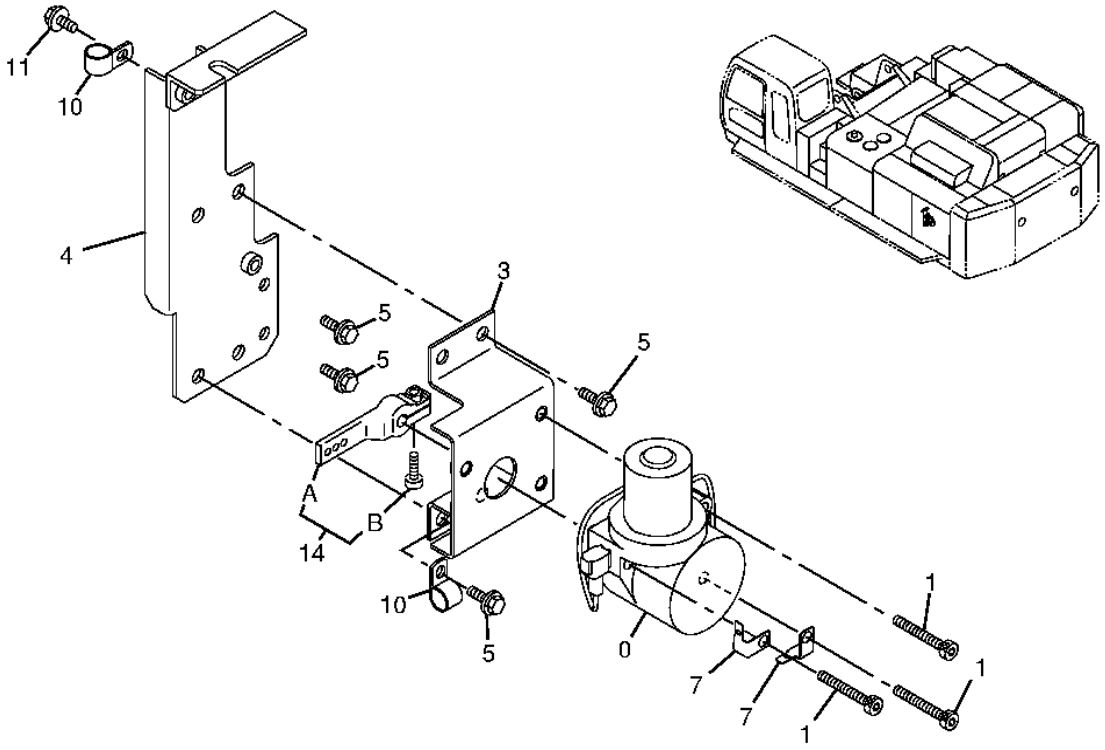

T197030

ENGINE CONTROL MOTOR

KEY	PART NO.	PART NAME	QTY	SERIAL NO.	REMARKS
0	4614911	MOTOR	1		(SUB FOR 4360509)
1	19M8954	SCREW	3		M10 X 60
3	8086575	BRACKET	1		
4	8079753	BRACKET	1		
5	19M7662	CAP SCREW	6		M10 X 30
	12M7066	LOCK WASHER	6		10 MM
	24M7028	WASHER	6		10.500 X 20 X 2 MM
7	4257159	BRACKET	2		(SUB FOR AT154243)
10	T38377	CLAMP	2		
11	19M7402	CAP SCREW	1		M10 X 25
	12M7066	LOCK WASHER	1		10 MM
	24M7028	WASHER	1		10.500 X 20 X 2 MM
14	.....	LEVER	1		(9207252 NO LONGER AVAILABLE FOR SERVICE)
14A	9756079	LEVER	1		
14B	J780820	CAP SCREW	1		

ENGINE STOP CABLE

T149442 -UN-23JAN02

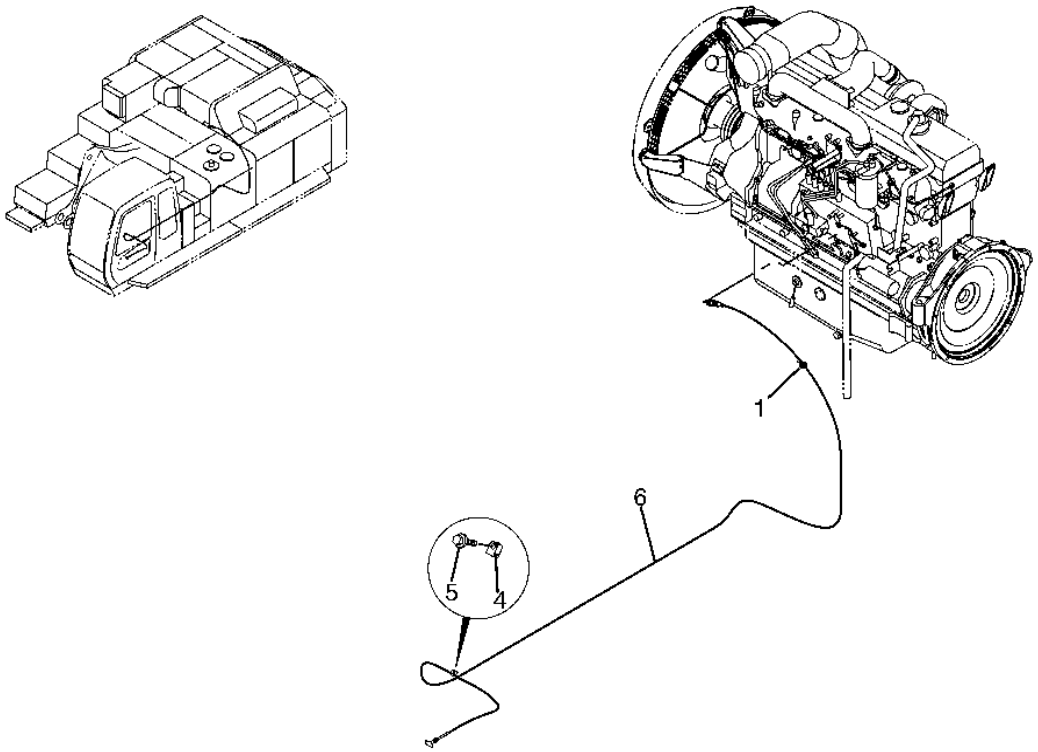

T149442

ENGINE STOP CABLE

KEY	PART NO.	PART NAME	QTY	SERIAL NO.	REMARKS
1	H77698	TIE BAND	5		
4	4441190	CLIP	1		
5	19M7288	CAP SCREW	1		M8 X 30, (SUB FOR 19M7513)
6	4451203	CABLE	1		

AIR CLEANER

T158153 -UN-02AUG02

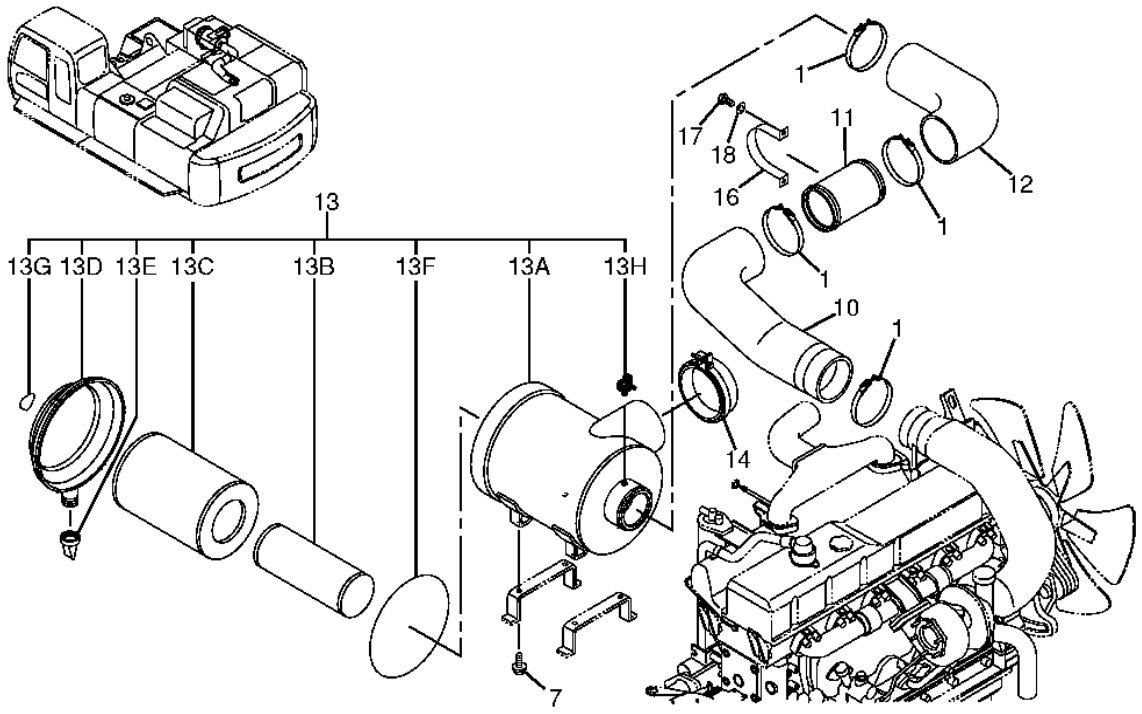

T158153

AIR CLEANER

KEY	PART NO.	PART NAME	QTY	SERIAL NO.	REMARKS
1	4312517	HOSE CLAMP	4		
7	19M7402	CAP SCREW	4		M10 X 25
	12M7066	LOCK WASHER	4		10 MM
10	3094592	HOSE	1		
11	3094593	STRUCTURAL TUBING	1		
12	3094594	HOSE	1		
13	4448989	FILTER	1		
13A	.....	HOUSING	1		
13B	4466268	FILTER ELEMENT	1		(SUB FOR TH4466268)
13C	AT308575	FILTER ELEMENT	1		(SUB FOR 4466269)
13D	4471224	COVER	1		(SUB FOR TH4471224)
13E	4466272	FLOW CONTROL HYD. VALVE	1		
13F	4471211	SEAL	1		(SUB FOR TH4471211)
13G	4466274	PLATE	1		
13H	4477185	INDICATOR	1		
14	4330083	SCREEN	1		(SUB FOR AT202329)
16	4331619	CLAMP	1		
17	19M7402	CAP SCREW	2		M10 X 25
18	12M7066	LOCK WASHER	2		10 MM

MUFFLER

T199261 -UN-22APR04

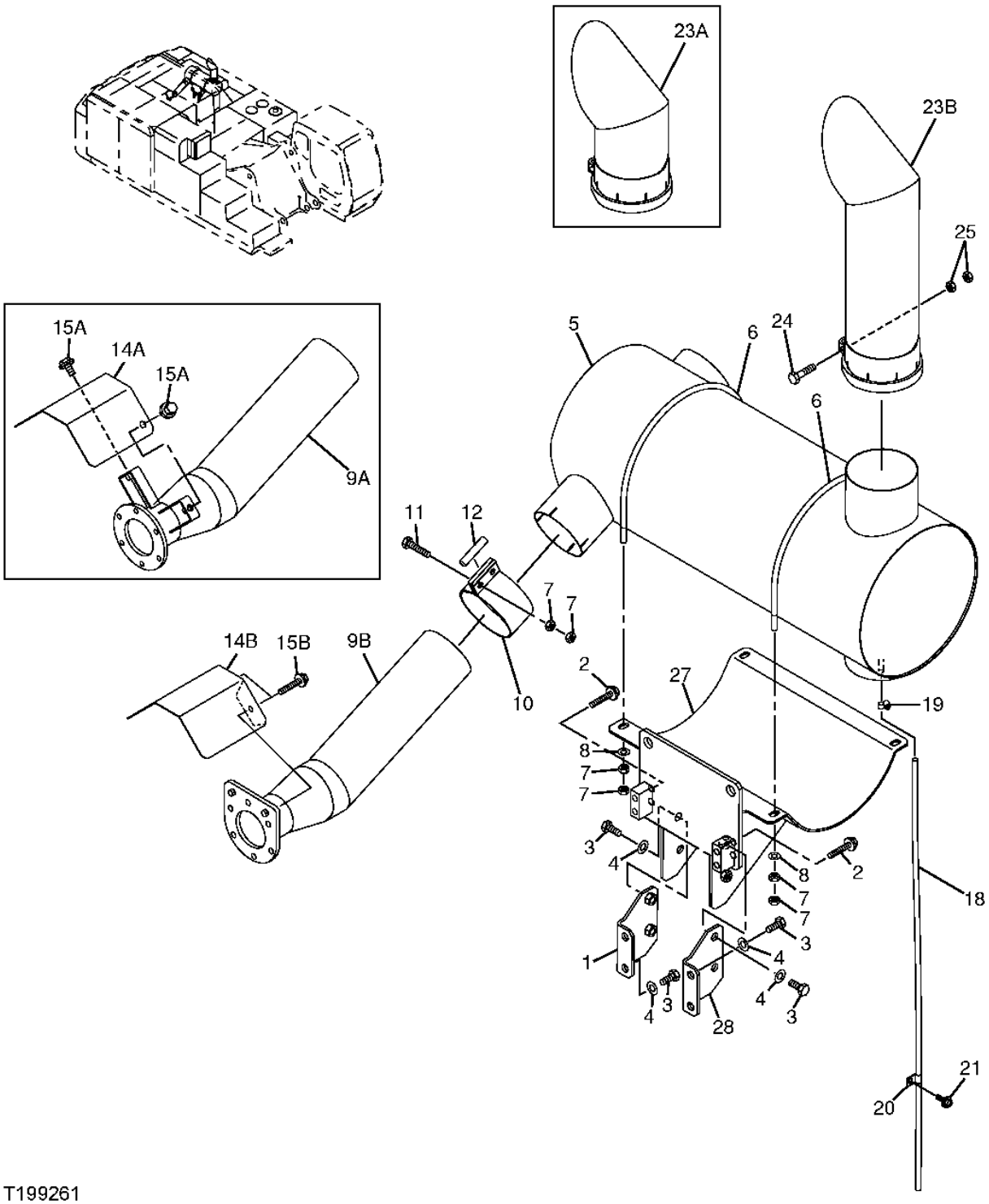

MUFFLER

KEY	PART NO.	PART NAME	QTY	SERIAL NO.	REMARKS
1	9757398	BRACKET	1	-951003	
2	J021270	BOLT	4		(SUB FOR AT200007)
3	19M7877	CAP SCREW	8	-951003	M14 X 30
	19M7877	CAP SCREW	4	951004-	M14 X 30
4	J222014	WASHER	8	-951003	(SUB FOR AT200011)
	J222014	WASHER	4	951004-	
5	4472814	MUFFLER	1	-951023	(SUB FOR 4450955 MUFFLER, ALONG WITH 8088326 EXHAUST PIPE)
	4620385	MUFFLER	1	951024-	
6	4434206	U-BOLT	2		(SUB FOR TH4434206)
7	14M7275	NUT	12		M12
8	24M7047	WASHER	4		13 X 24 X 2.500 MM
9A	.....	EXHAUST PIPE	1		(8083758 NO LONGER AVAILABLE) (FURNISH 8096020 ALONG WITH 4621319)
9B	8096020	EXHAUST PIPE	1		
10	8077064	BAND	1		(SUB FOR TH8077064)
11	19M7363	CAP SCREW	2		M12 X 60
12	T130341	GASKET	1		
14A	.....	COVER	1		(4457084 NO LONGER AVAILABLE) (FURNISH 4621319 ALONG WITH 8096020
14B	4621319	COVER	1		
15A	19M7402	CAP SCREW	2		
	12M7066	LOCK WASHER	2		
	24M7028	WASHER	2		
15B	J271030	BOLT	2		
	19M7662	CAP SCREW	2		
	24M7346	WASHER	2		
18	4375436	HOSE	1		
19	TY22462	CLAMP	1		(SUB FOR AR48236)
20	457793	CLIP	1		
21	19M7402	CAP SCREW	1		M10 X 25
	12M7066	LOCK WASHER	1		10 MM
	24M7028	WASHER	1		10.500 X 20 X 2 MM
23A	8088326	EXHAUST PIPE	1	-951023	
23B	7040954	EXHAUST PIPE	1	951024-	
24	J921050	BOLT	1		
25	14M7274	NUT	2		M10
27	7041956	BRACKET	1	-951003	
	7042893	BRACKET	1	951004-	
28	4467387	BRACKET	1	-951003	

ENGINE SUPPORT

T149414 -UN-23JAN02

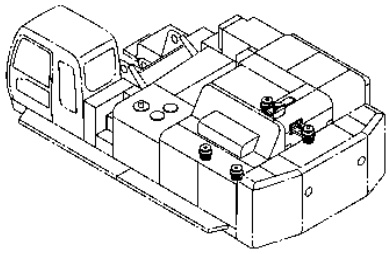

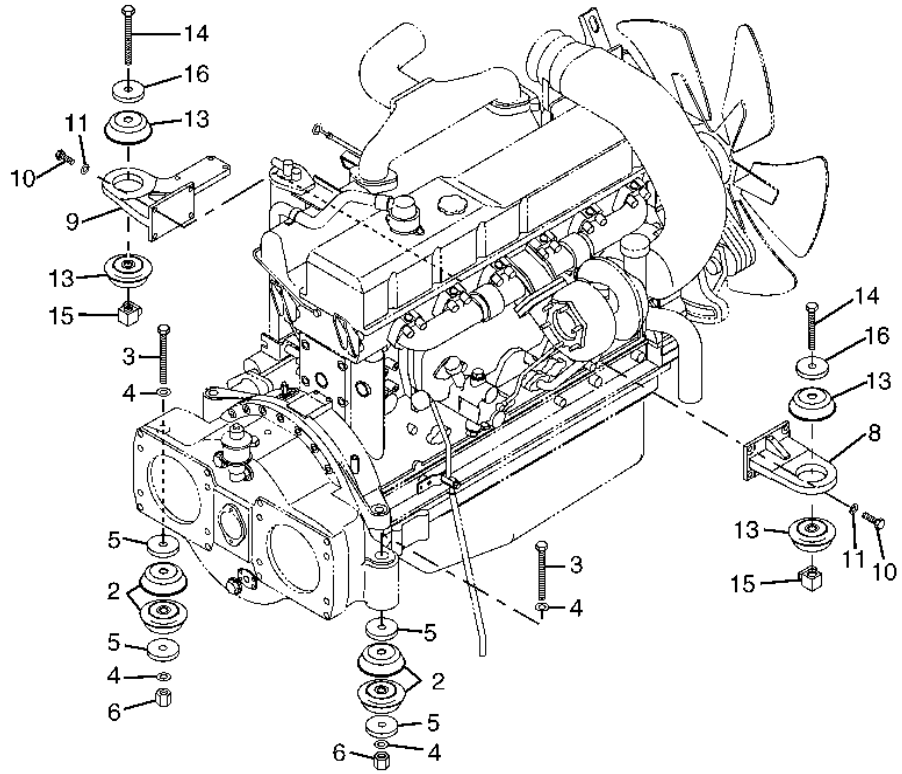

T149414

ENGINE SUPPORT

KEY	PART NO.	PART NAME	QTY	SERIAL NO.	REMARKS
2	4448362	ISOLATOR	2		
3	J833335	BOLT	2		
4	4083438	WASHER	4		(SUB FOR AT202297)
5	4280782	PLATE	4		
6	M663033	NUT	2		
8	8059751	BRACKET	1		
9	7040480	BRACKET	1		
10	4100116	BOLT	8		
11	4114404	WASHER	8		(SUB FOR AT130666)
13	4183995	CUSHION	4		(SUB FOR AT131720)
14	J932215	BOLT	2		(SUB FOR AT131550)
15	9742550	NUT	2		(SUB FOR AT201952)
16	4247426	BUSHING	2		(SUB FOR AT132006)

FUEL TANK

T155078 -UN-22MAY02

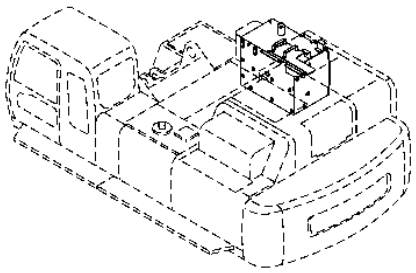

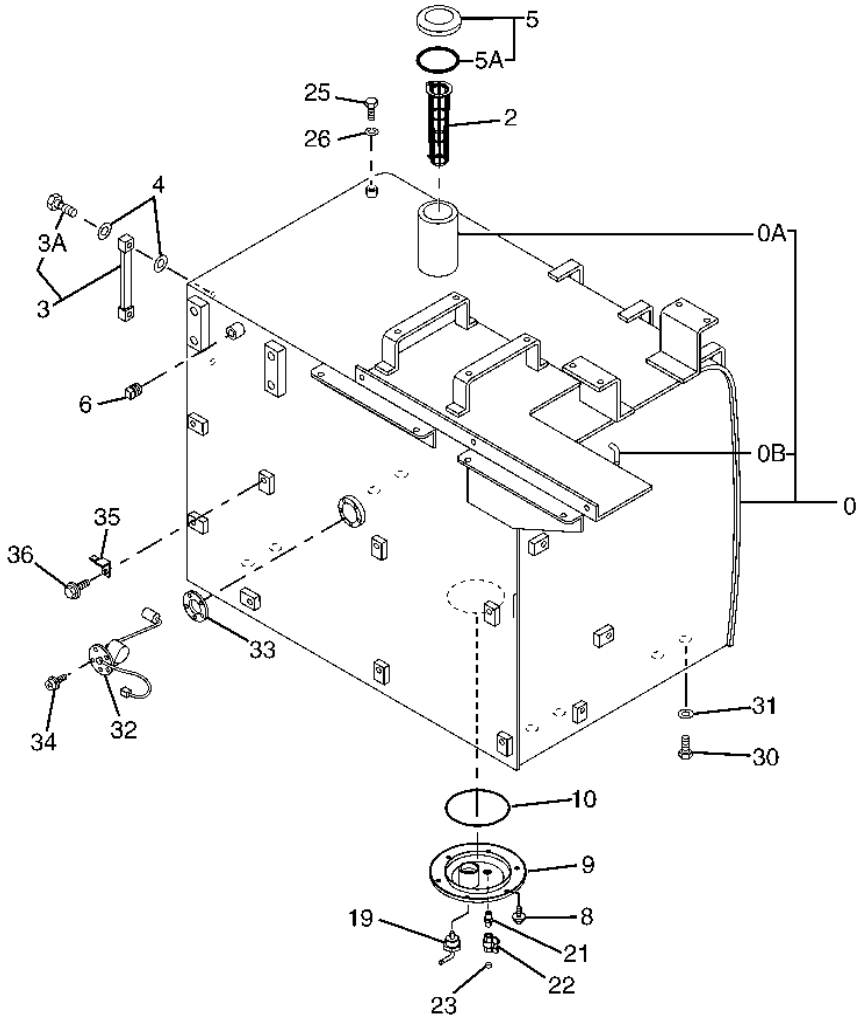

T155078

FUEL TANK

KEY	PART NO.	PART NAME	QTY	SERIAL NO.	REMARKS
0	5007620	FUEL TANK	1		
0A	P61733	STRUCTURAL TUBING	1		
0B	P61614	PIPE	1		
2	4121496	FUEL FILTER	1		(SUB FOR TH100509)
3	8033923	LEVEL GAUGE	1		(SUB FOR TH108250)
3A	4100967	FITTING	2		(SUB FOR TH101894)
4	449558	WASHER	4		(SUB FOR TH100675)
5	4361638	FILLER CAP	1		(SUB FOR AT175989)
5A	4168820	PACKING	1		(SUB FOR TH103384)
6	4187322	PLUG	1		(SUB FOR TH4187322)
8	19M7938	CAP SCREW	6		M10 X 20
	12M7066	LOCK WASHER	6		10 MM
9	8067496	COVER	1		(SUB FOR AT177828)
10	TH100679	O-RING	1		
19	9726772	FITTING	1		(SUB FOR TH108251)
21	94-1901	ADAPTER	1		(SUB FOR TH102106)
22	4374265	DRAIN VALVE	1		(SUB FOR AT177419)
23	94-2011	FITTING PLUG	1		(SUB FOR TH100434)
25	19M8017	CAP SCREW	1		M12 X 20
26	12H301	LOCK WASHER	1		1/2"
30	19M7488	CAP SCREW	8		M16 X 40
31	4114405	WASHER	8		(SUB FOR TH101105)
32	4257128	FLOAT	1		(SUB FOR AT154239)
34	U42323	GASKET	1		
35	21M7278	SCREW	5		M5 X 10
37	4257159	BRACKET	1		(SUB FOR AT154243)
38	19M7938	CAP SCREW	1		M10 X 20

FUEL LINES

T149424 -UN-21JAN02

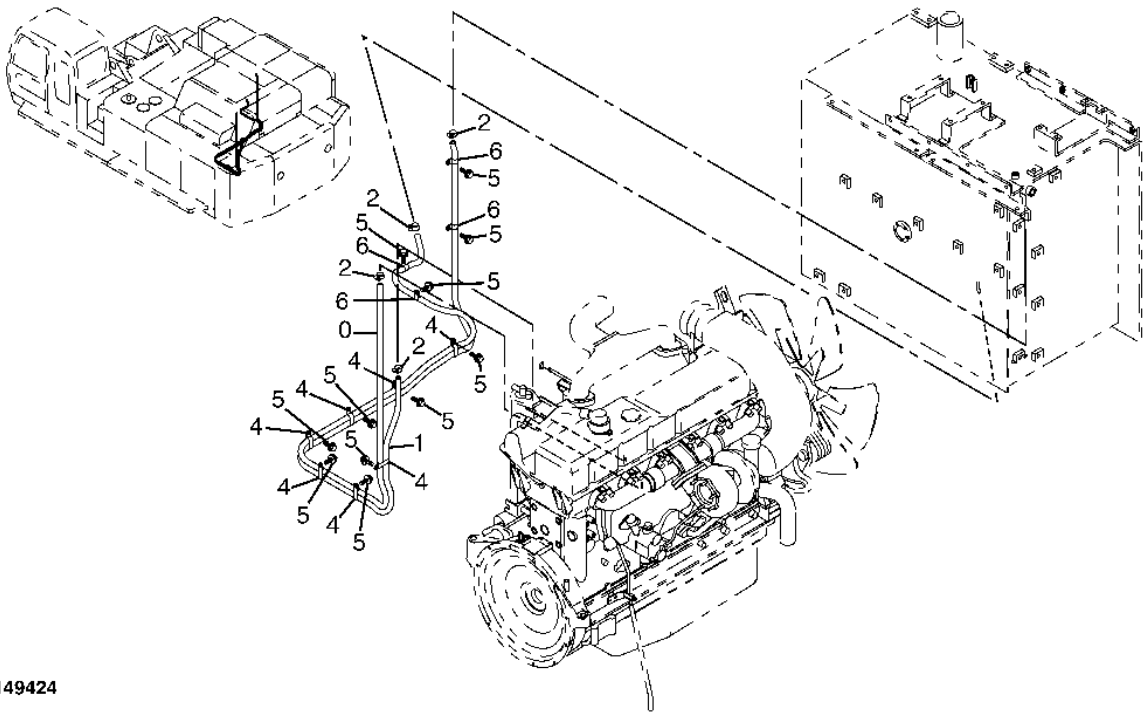

T149424

FUEL LINES

KEY	PART NO.	PART NAME	QTY	SERIAL NO.	REMARKS
0	4478122	HYDRAULIC HOSE	1		
1	4462452	HOSE	1		
2	TY22464	CLAMP	4		(SUB FOR AR21836)
4	4192034	CLIP	7		(SUB FOR TH109445)
5	19M7402	CAP SCREW	11		M10 X 25
	12M7066	LOCK WASHER	11		10 MM
	24M7096	WASHER	11		10.500 X 18 X 1.600 MM
6	4235654	CLIP	4		

LABELS AND DECALS

T188914 -UN-01APR03

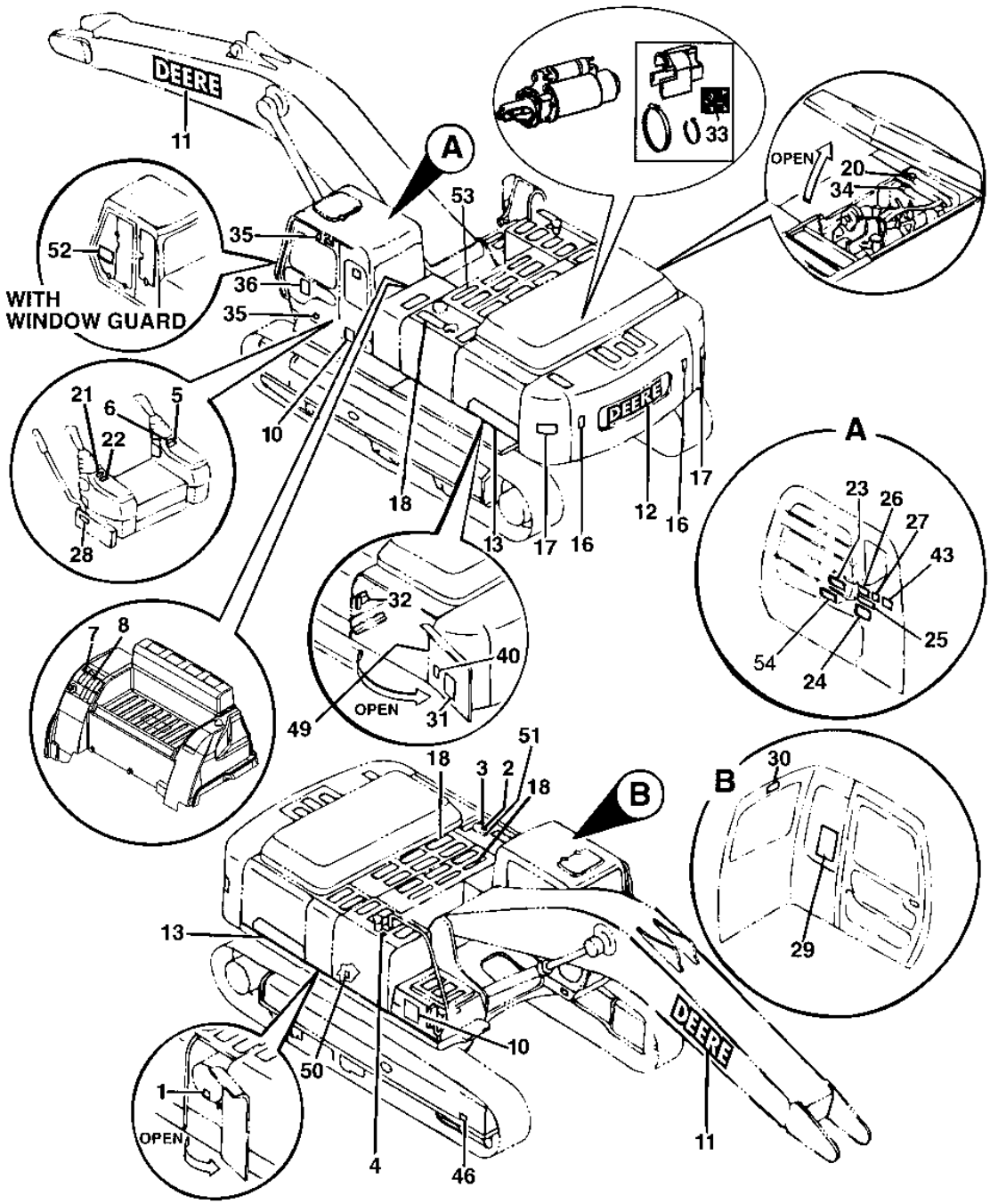

T188914

LABELS AND DECALS

KEY	PART NO.	PART NAME	QTY	SERIAL NO.	REMARKS
1	R56902	LABEL	1		(DRY AIR CLEANER)
2	P63448	LABEL	1		(PUMP BLEED INFORMATION DECAL)
3	T101942	LABEL	1		(HYDRAULIC OIL)
4	T79632	LABEL	1		(DIESEL ONLY)
5	4264805	LABEL	1		(IGNITION KEY SWITCH)
6	.....	LABEL	1		(SUB FOR T159842, THIS APPLICATION) (SUB T201519) (RIGHT CONTROL LEVER - SAE PATTERN) (WHITE BACKGROUND)
	T159843	LABEL	1		(RIGHT CONTROL LEVER - JOHN DEERE PATTERN) (YELLOW BACKGROUND)
7	T187644	MOUNTING PARTS	1		PRECISION MODE
8	T187645	EXCAVATOR BOOM	1		BOOM SELECTOR MODE
10	JD5760	LABEL	2		(LEAPING DEER)
11	T183547	LABEL	2		(DEERE - ON BOOM)
12	T183539	LABEL	1		(DEERE - ON COUNTERWEIGHT)
13	T188821	LABEL	2		(600CLC)
16	T161266	LABEL	2		(RED REFLECTOR TAPE)
17	T190310	SAFETY SIGN	2		(WARNING - STAY CLEAR)
18	H21259	MAT	24		(CLEAT - OPERATORS DECK)
20	T146671	SAFETY SIGN	1		CAUTION - RADIATOR CAP
21	.....	LABEL	1		(SUB FOR T159841, THIS APPLICATION) (SUB T201519) (LEFT CONTROL LEVER - SAE PATTERN) (WHITE BACKGROUND)
	T159844	LABEL	1		(LEFT CONTROL LEVER - JOHN DEERE PATTERN) (YELLOW BACKGROUND)
22	4288971	LABEL	1		(ETHER AID - MOTION CANCEL DECAL)
23	T187536	LABEL	1		ENGINE OPERATION
24	T159887	SAFETY SIGN	1		CAUTION DECAL
25	T146668	SAFETY SIGN	1		(WARNING - AVOID CRUSHING)
26	T146667	SAFETY SIGN	1		(DANGER - ELECTROCUTION)
27	T190393	LABEL	1		(IMPORTANT - BREAK WINDOW FOR SECONDARY EXIT)
28	4299059	LABEL	1		(HYDRAULIC LOCKOUT DECAL)
29	T188871	LABEL	1		(600C LIFT CHART)
30	T187535	LABEL	1		(CAUTION FRONT WINDOW)
	T190799	SAFETY SIGN	1		(CAUTION-FRONT WINDOW LOCK FRENCH)
	T190803	LABEL	1		(CAUTION-FRONT WINDOW LOCK SPANISH)
31	T208052	LABEL	1		ENGLISH (PERIODIC MAINTENANCE) (SUB FOR T188870)
32	T149983	LABEL	1		(IMPORTANT - OIL LEVEL)
33	T146102	LABEL	1		(BYPASS START)
34	T152657	SAFETY SIGN	1		(IMPORTANT - RADIATOR)
35	T187642	STOP	2		DOOR STOPPER
36	.....	PLATE	1		LIFTING (NOT AVAILABLE FOR SERVICE)
40	T152593	INSTRUCTION PLATE	1		(IMPORTANT - COUNTERWEIGHT REMOVAL)
43	4266386	LABEL	1		(992D-LC TRACK FRAME)
46	.....	PLATE	1		AN ARROW (NOT AVAILABLE FOR SERVICE)
49	4241586	LABEL	1		(UP-DOWN)
50	T183425	LABEL	1		(ACCUMULATOR'S WARNING DECAL)
51	T187710	LABEL	1		(HYDRAULIC RESERVOIR CAP)
	T190801	LABEL	1		(HYDRAULIC RESERVOIR CAP FRENCH)
	T190802	LABEL	1		(HYDRAULIC RESERVOIR CAP SPANISH)
52	T188737	LABEL	1		(VANDAL INSTALLATION INSTRUCTION)
53	T25838	MAT	5		(ANTI-SKID)
54	T201519	LABEL	1		(PATTERN CHANGER DECAL) (SUB FOR T159842, T159841)

METRIC O-RING KIT

TP70402 -UN-13JUL00

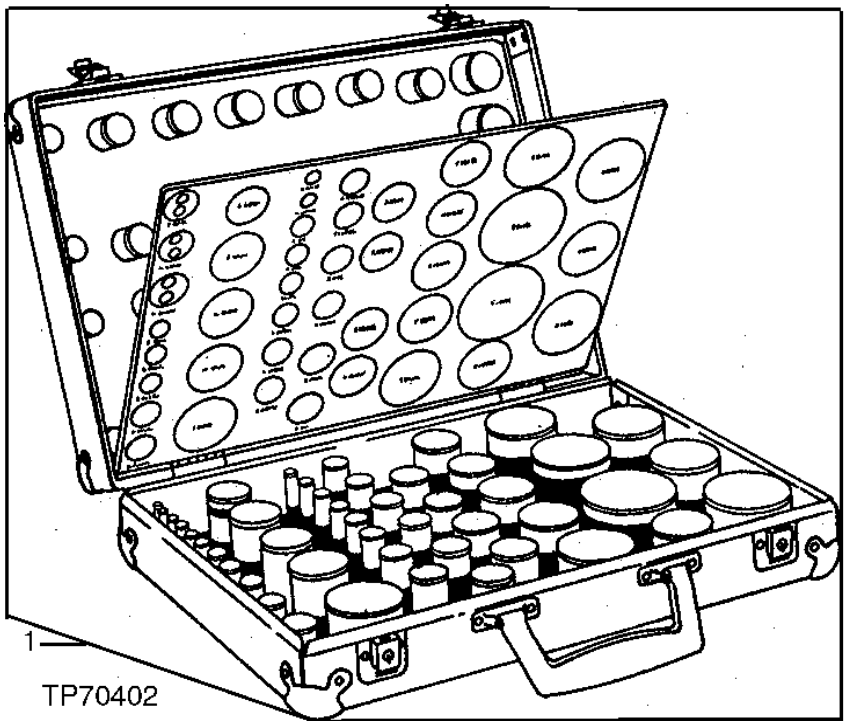

METRIC O-RING KIT

KEY	PART NO.	PART NAME	QTY	SERIAL NO.	REMARKS
1	AT130157	O-RING KIT	1		(CONTAINS ALL ITEMS LISTED BELOW)
..	CH11436	O-RING	5		49.400 X 3.100 MM (1.945" X 0.122")
..	CH11569	PACKING	5		
..	CH11570	O-RING	5		13.800 X 2.400 MM (0.543" X 0.094")
..	CH11571	PACKING	5		
..	CH11572	PACKING	2		
..	CH12329	PACKING	5		
..	CH14634	O-RING	5		17.800 X 2.400 MM (0.701" X 0.094")
..	CH14701	O-RING	5		39.400 X 3.100 MM (1.551" X 0.122")
..	CH17167	O-RING	2		9.800 X 1.900 MM (0.386" X 0.075")
..	CH19111	O-RING	5		7.645 X 1.778 MM (0.301" X 0.070")
..	M800650	PACKING	10		
..	M800893	PACKING	5		
..	AT264324	O-RING	5		(SUB FOR TH100044)
..	AT318035	O-RING	10		(SUB FOR 4506424, TH100055)
..	AT264347	O-RING	5		(SUB FOR TH100136, 4506428)
..	A811030	O-RING	5		29.400 X 3.100 MM (1.157" X 0.122") (SUB FOR TH101300)
..	4506408	O-RING	2		7.800 X 1.900 MM (0.307" X 0.075") (SUB FOR TH101490)
..	TH101926	O-RING	5		28.700 X 3.500 MM (1.130" X 0.138")
..	957474	O-RING	2		39.700 X 3.500 MM (1.563" X 0.138") (SUB FOR TH102706)
..	A811040	O-RING	2		39.400 X 3.100 MM (1.551" X 0.122") (SUB FOR TH102992)
..	4153084	O-RING	2		3.800 X 1.900 MM (0.150" X 0.075") (SUB FOR TH103446)
..	AT264354	O-RING	5		(SUB FOR TH103574)
..	970860	O-RING	2		37.700 X 3.500 MM (1.484" X 0.138") (SUB FOR TH104634)
..	AT264360	O-RING	2		(SUB FOR TH104930, 4506430)
..	T110590	PACKING	5		
..	T110593	PACKING	5		
..	T59014	O-RING	5		24.994 X 3.531 MM (63/64" X 0.139")
..	A811045	O-RING	5		(SUB FOR T74492)
..	U10778	O-RING	5		16.358 X 2.210 MM (0.644" X 0.087")
..	U17409	O-RING	5		26.619 X 2.946 MM (1.048" X 0.116")
..	4506418	O-RING	10		(SUB FOR U46489)

BATTERIES AND HARNESSES

T158185 -UN-05AUG02

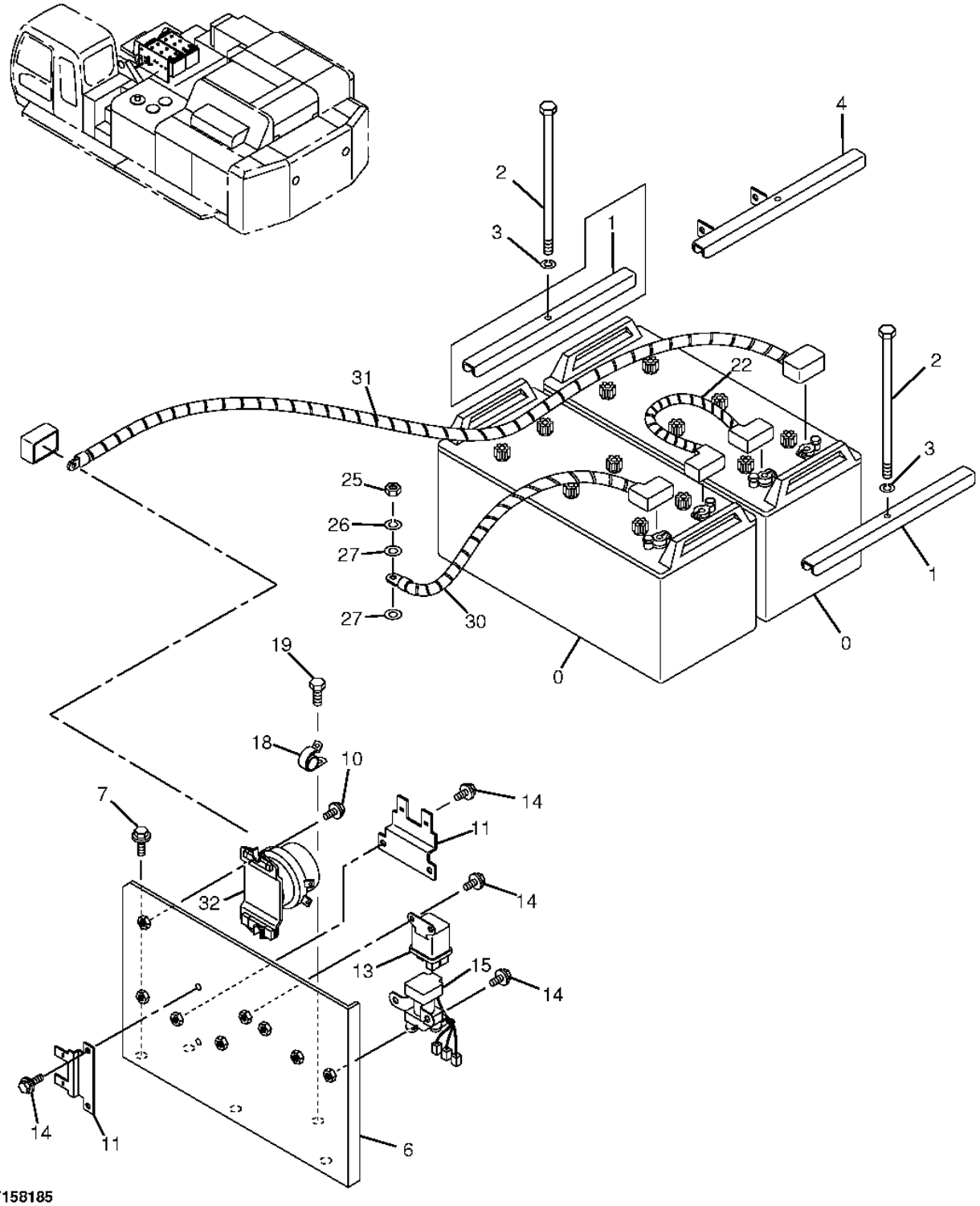

BATTERIES AND HARNESSES

KEY	PART NO.	PART NAME	QTY	SERIAL NO.	REMARKS
0	TY21709	DRY CHARGED BATTERY	2		
1	4145156	HOLDER	2	-951001	(SUB FOR TH102147)
	4145156	HOLDER	1	951002-	(SUB FOR TH102147)
2	4206101	BOLT	2		(SUB FOR AT131796)
3	12H301	LOCK WASHER	2		1/2"
4	8089565	SUPPORT	1	951002-	
6	7039668	BRACKET	1		
7	19M8011	CAP SCREW	3		M12 X 30
	12M7058	LOCK WASHER	3		12 MM, (SUB FOR 12M7067)
10	19M7513	CAP SCREW	2		M8 X 30
11	4297280	BRACKET	2		(SUB FOR AT201752)
13	4251587	RELAY	1		(SUB FOR AT213807)
14	19M7923	CAP SCREW	8		M6 X 12
	12M7006	LOCK WASHER	8		6 MM
	24M7054	WASHER	8		6.400 X 12 X 1.600 MM
15	1825530391	RELAY	1		(SUB FOR AT213815, 4279835)
18	4235654	CLIP	3		
19	19M7402	CAP SCREW	2		M10 X 25
	12M7066	LOCK WASHER	2		10 MM
	24M7028	WASHER	2		10.500 X 20 X 2 MM
22	4294694	WIRING HARNESS	1		(SUB FOR TH4294694)
25	14M7274	NUT	1		M10
26	12M7066	LOCK WASHER	1		10 MM
27	24M7028	WASHER	2		10.500 X 20 X 2 MM
30	4469395	WIRING HARNESS	1		
31	4470168	WIRING HARNESS	1		
32	4031771	RELAY	1		(SUB FOR TH104069)

ELECTRIC COMPONENTS

T149471 -UN-23JAN02

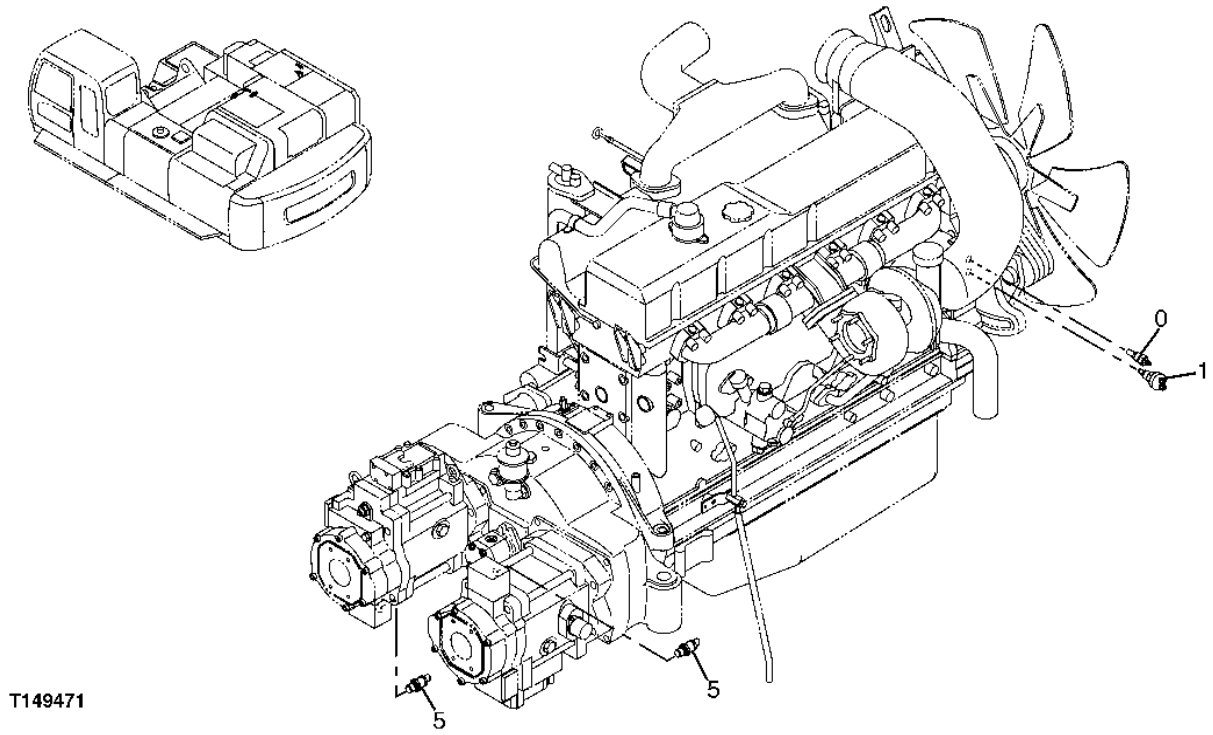

T149471

ELECTRIC COMPONENTS

KEY	PART NO.	PART NAME	QTY	SERIAL NO.	REMARKS
0	4436537	SENSOR	1		
1	4257115	SWITCH	1		(SUB FOR AT202392)
5	4436271	SENSOR	2		(SUB FOR TH4436271)
	TH102560	O-RING	1		(SUB FOR AT175984)

ELECTRIC COMPONENTS

T149473 -UN-23JAN02

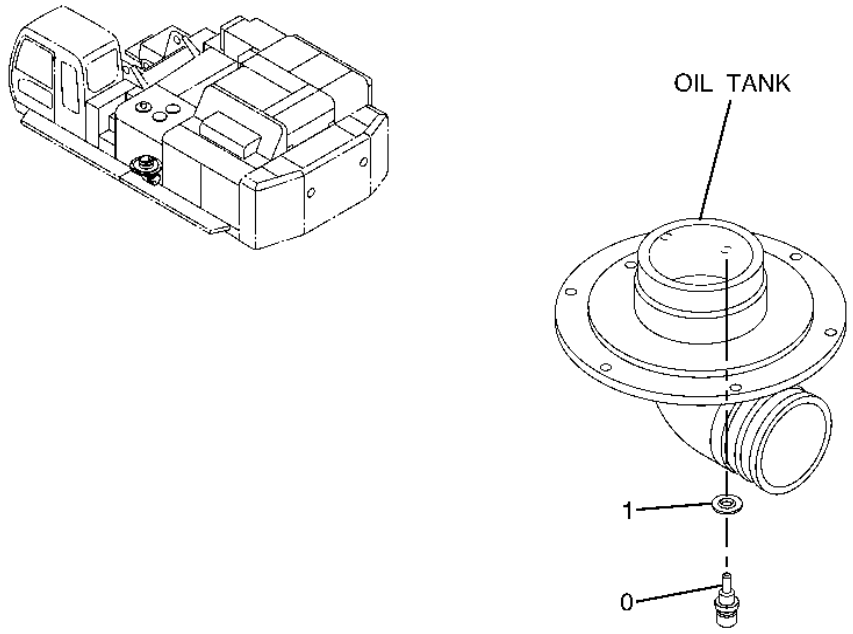

T149473

ELECTRIC COMPONENTS

KEY	PART NO.	PART NAME	QTY	SERIAL NO.	REMARKS
0	4250260	SENSOR	1		(SUB FOR AT154921)
1	4250261	GASKET	1		(SUB FOR AT154922)

ELECTRIC COMPONENTS

T149475 -UN-23JAN02

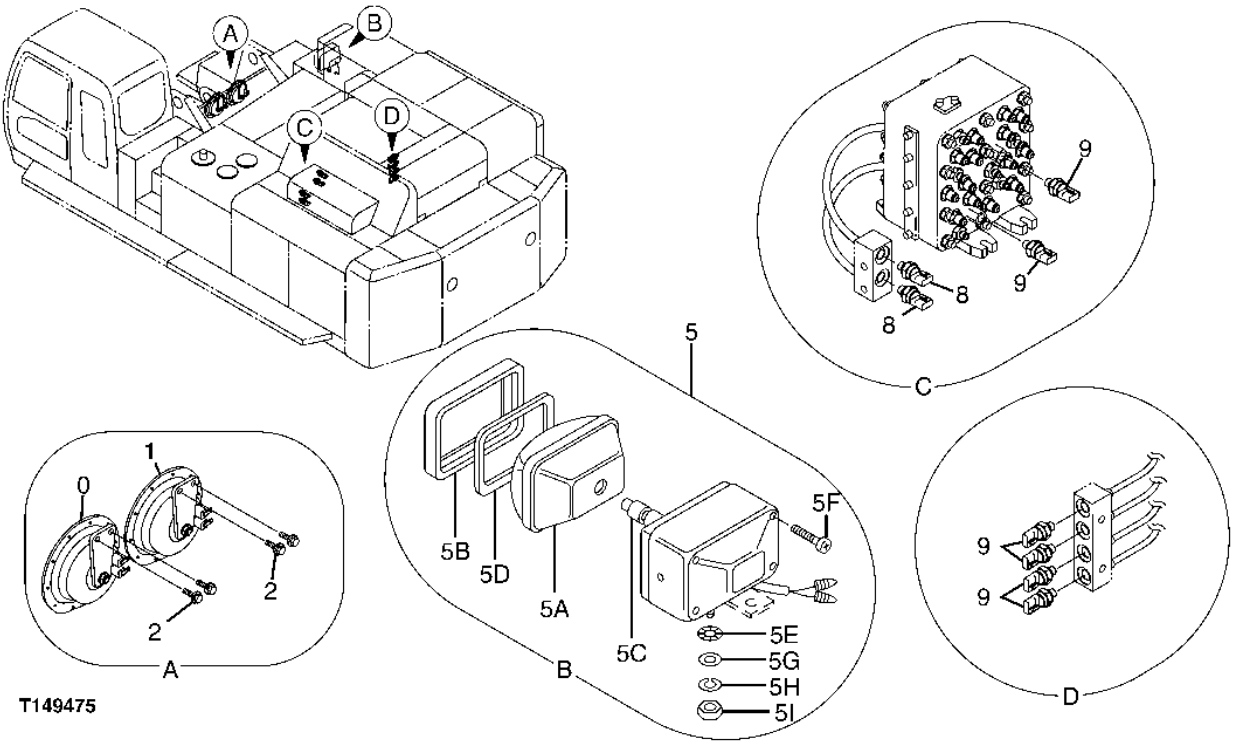

ELECTRIC COMPONENTS

KEY	PART NO.	PART NAME	QTY	SERIAL NO.	REMARKS
0	4449758	HORN	1		(SUB FOR TH4449758)
1	4449757	HORN	1		(SUB FOR TH4449757)
2	19M7163	CAP SCREW	4		M8 X 25
	12M7056	LOCK WASHER	4		8 MM, (SUB FOR 12M7065)
	24M7055	WASHER	4		8.400 X 16 X 1.600 MM
5	4336570	LAMP	1		
5A	4326801	LENS	1		(SUB FOR AT165111)
5B	4326802	FRAME	1		(SUB FOR AT165112)
5C	AT135758	BULB	1		
5D	4326803	GASKET	1		(SUB FOR AT165113)
5E	4307026	WASHER	1		(SUB FOR T144361)
5F	4307027	SCREW	4		(SUB FOR T144362)
5G	24M7085	WASHER	1		15 X 28 X 2.500 MM
5H	12H317	LOCK WASHER	1		9/16"
5I	J952014	NUT	1		(SUB FOR TH103791)
8	4436536	SENSOR	2		(SUB FOR TH4436536)
	CH11570	O-RING	1		
9	4436535	SENSOR	6		(SUB FOR TH4436535)

MONITOR

T143273 -UN-28JUN01

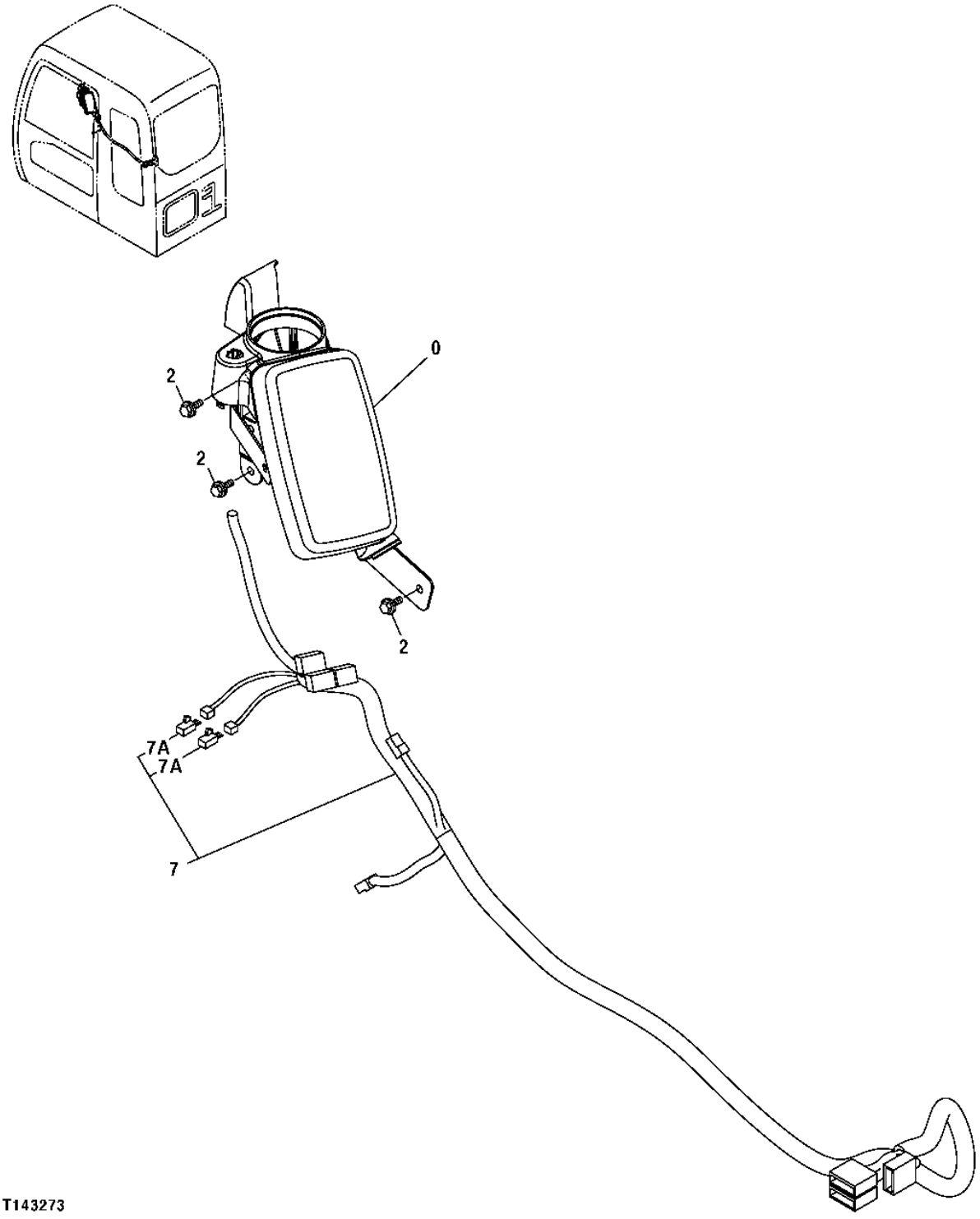

MONITOR

KEY	PART NO.	PART NAME	QTY	SERIAL NO.	REMARKS
0	4463762	MONITOR	1		
2	19M7932	CAP SCREW	3		M8 X 16
	12M7056	LOCK WASHER	3		8 MM, (SUB FOR 12M7065)
7	1028294	WIRING HARNESS	1		(SUB FOR TH1028294)
7A	4456778	DIODE	2		(SUB FOR TH4456778)

WIRING HARNESS

T150001 -UN-01FEB02

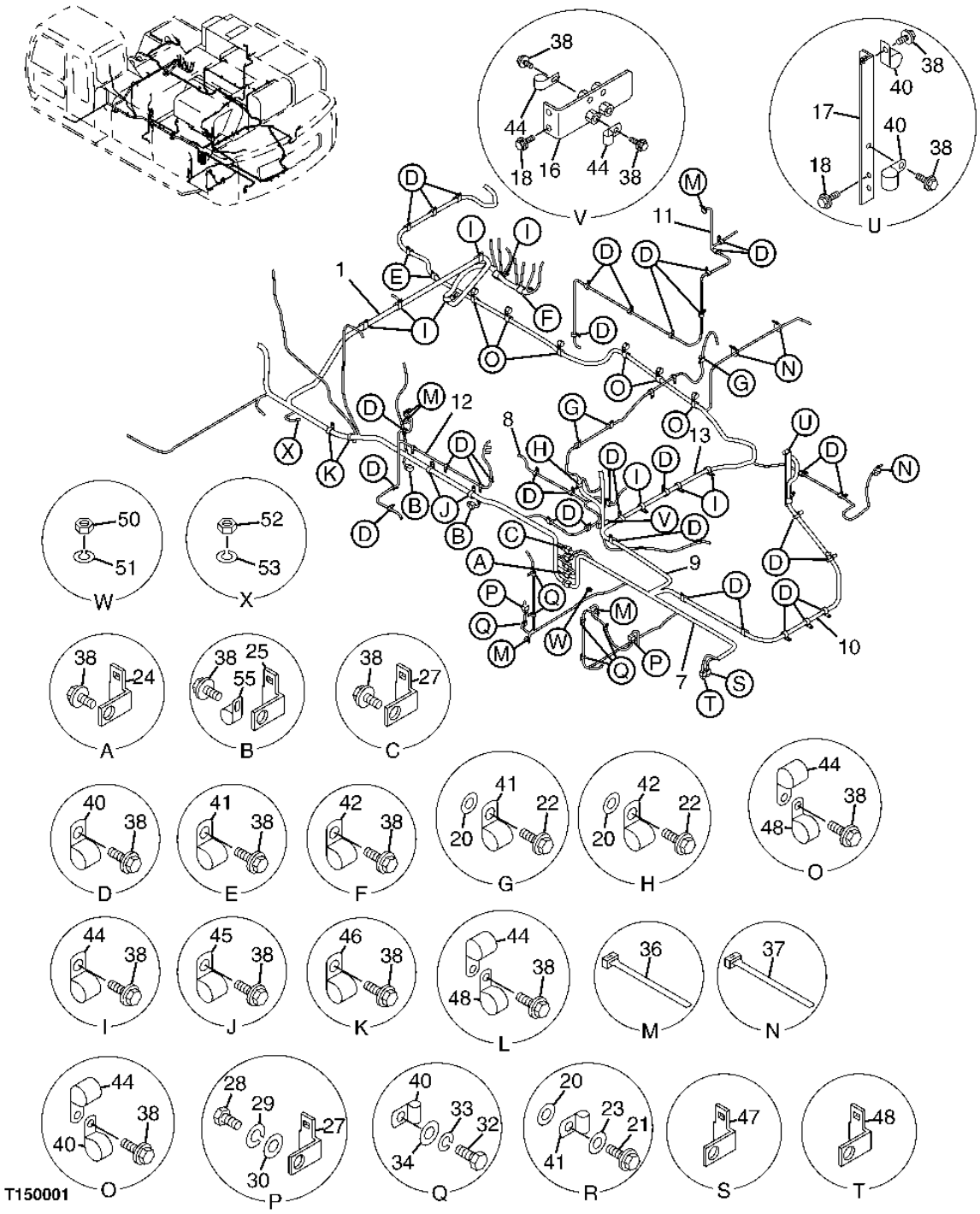

WIRING HARNESS

KEY	PART NO.	PART NAME	QTY	SERIAL NO.	REMARKS
1	1030243	WIRING HARNESS	1		
7	2047517	WIRING HARNESS	1		
8	3093046	WIRING HARNESS	1		
9	2047508	WIRING HARNESS	1	-951004	
	2049711	WIRING HARNESS	1	951005-	
10	3094363	WIRING HARNESS	1		
11	3092898	WIRING HARNESS	1		
12	3092437	WIRING HARNESS	1		
13	4469404	WIRING HARNESS	1		
16	9756816	BRACKET	1		
17	9756826	BRACKET	1		
18	19M7938	CAP SCREW	4		M10 X 20
	12M7066	LOCK WASHER	4		10 MM
20	4322539	SPACER	7		
21	19M8093	CAP SCREW	2		M10 X 100
	12M7066	LOCK WASHER	2		10 MM
22	19M7550	CAP SCREW	5		M10 X 35
	12M7066	LOCK WASHER	5		10 MM
23	24M7346	WASHER	2		11 X 20 X 2 MM
24	4418301	BRACKET	1		(SUB FOR TH4418301)
25	4448037	BRACKET	5		
27	4336874	BRACKET	4		(SUB FOR AT202391)
28	19M7923	CAP SCREW	4		M6 X 12, (SUB FOR 19M6614)
29	12M7006	LOCK WASHER	4		6 MM
30	24M7054	WASHER	4		6.400 X 12 X 1.600 MM
32	19M7932	CAP SCREW	7		M8 X 16, (SUB FOR 19M7162)
33	12M7056	LOCK WASHER	7		8 MM, (SUB FOR 12M7065)
34	24M7055	WASHER	7		8.400 X 16 X 1.600 MM
36	H77698	TIE BAND	13		
37	H77698	TIE BAND	7		
38	19M7938	CAP SCREW	80		M10 X 20
	12M7006	LOCK WASHER	80		6 MM
40	4190261	CLIP	54		(SUB FOR TH109649)
41	4190275	CLIP	11		(SUB FOR TH108598)
42	4190273	CLIP	7		(SUB FOR TH108460)
44-	4235654	CLIP	20		(SUB FOR AT122384)
45	4192035	CLIP	2		(SUB FOR TH108459)
46	AT121321	HOSE CLAMP	3		
47	4257159	BRACKET	1		(SUB FOR AT154243)
48	4336875	BRACKET	1		(SUB FOR TH4336875)
50	14M7141	NUT	1		M14
51	12H317	LOCK WASHER	1		9/16"
52	14M7274	NUT	1		M10
53	12M7066	LOCK WASHER	1		10 MM
55	T32854	CLAMP	1		

ELECTRIC COMPONENTS (CAB)

T161604 -UN-13NOV02

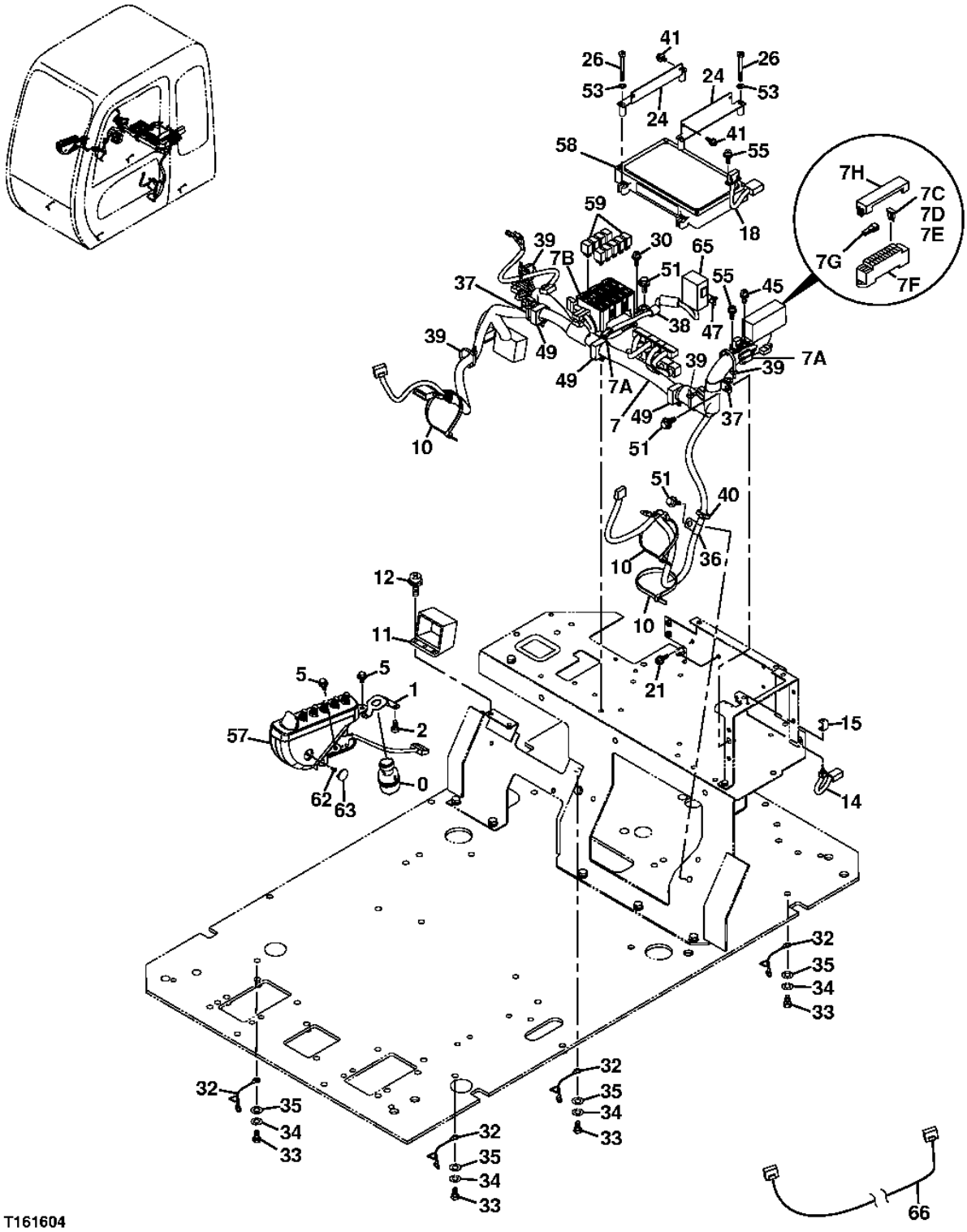

ELECTRIC COMPONENTS (CAB)

KEY	PART NO.	PART NAME	QTY	SERIAL NO.	REMARKS
0	4477373	SWITCH	1		
	AT194969	KEY	1		(SUB FOR AT147803)
1	3087882	BRACKET	1		(SUB FOR TH3087882)
2	4361800	SCREW	3		(SUB FOR AT214011)
5	J010814	SCREW WITH WASHER	3		(SUB FOR AT132457)
7	0004601	WIRING HARNESS	1	-951007	
	0003800	WIRING HARNESS	1	951008-	
7A	4456778	DIODE	5		(SUB FOR TH4456778)
7B	4427429	CIRCUIT BOX	1		(SUB FOR TH4427429)
7C	57M7688	FUSE	10		
7D	57M7689	FUSE	7		
7E	57M7691	FUSE	2		
7F	4456735	FUSE HOLDER	1		(SUB FOR TH4456735)
7G	.....	SPECIAL SERVICE TOOL	1		(TH4436737 NOT AVAILABLE FOR SERVICE)
7H	4443490	COVER	1		(SUB FOR TH4443490)
10	H77698	TIE BAND	3		
11	4431090	ELECTRICAL CONNECTOR ASSY	1		(SUB FOR TH4431090)
12	J460620	SCREW WITH WASHER	2		(SUB FOR AT200012)
14	4359384	SWITCH	1		(SUB FOR AT213984)
15	4367375	BRACKET	1		(SUB FOR AT214036)
18	4439897	WIRING HARNESS	1		(SUB FOR TH4439897)
21	19M8425	CAP SCREW	2		M6 X 16
	12M7006	LOCK WASHER	2		6 MM
	24M7293	WASHER	2		6.500 X 13 X 1.600 MM
24	8082329	BRACKET	2		(SUB FOR TH8082329)
26	M430660	SCREW	4		(SUB FOR AT203691)
30	J460620	SCREW WITH WASHER	4		(SUB FOR AT200012)
32	4281293	GROUND CABLE	4		(SUB FOR AT154961)
33	19M8324	CAP SCREW	4		M10 X 16
34	12M7066	LOCK WASHER	4		10 MM
35	24M7028	WASHER	4		10.500 X 20 X 2 MM
36	4190275	CLIP	1		(SUB FOR TH108598)
37	AT121321	HOSE CLAMP	1		
38	4190253	CLIP	1		(SUB FOR TH108597)
39	H77698	TIE BAND	5		
40	H77698	TIE BAND	1		
41	19M7700	CAP SCREW	4		M5 X 10
	12M7064	LOCK WASHER	4		5 MM
	24M7348	WASHER	4		5.500 X 10 X 1 MM
45	J460620	SCREW WITH WASHER	2		(SUB FOR AT200012)
47	19M7932	CAP SCREW	2		M8 X 16, (SUB FOR 19M7162)
	12M7056	LOCK WASHER	2		8 MM, (SUB FOR 12M7065)
49	4449019	CLIP	3		(SUB FOR TH4449019)
51	19M7938	CAP SCREW	3		M10 X 20
	12M7066	LOCK WASHER	3		10 MM
53	24M7054	WASHER	4		6.400 X 12 X 1.600 MM
55	J460310	SCREW	4		(SUB FOR AT156974)
57	4454518	CONTROL CONSOLE	1		(SUB FOR TH4454518)
58	9227387	VEHICLE CONTROLLER	1		(SUB FOR 4456423)
59	4436534	RELAY	9		(SUB FOR TH4436534)
62	4381572	SCREW	1		(SUB FOR TH4381572)
63	4426354	CAP	1		(SUB FOR FFSB110305)
65	4452160	RELAY	1		(SUB FOR TH4452160)
66	2048203	WIRING HARNESS	1		(2.75M EXTENSION)
	2048184	WIRING HARNESS	1		(4.6M EXTENSION)

MIC CONTROLLER (S.N. 951008-)

T153299 -UN-05APR02

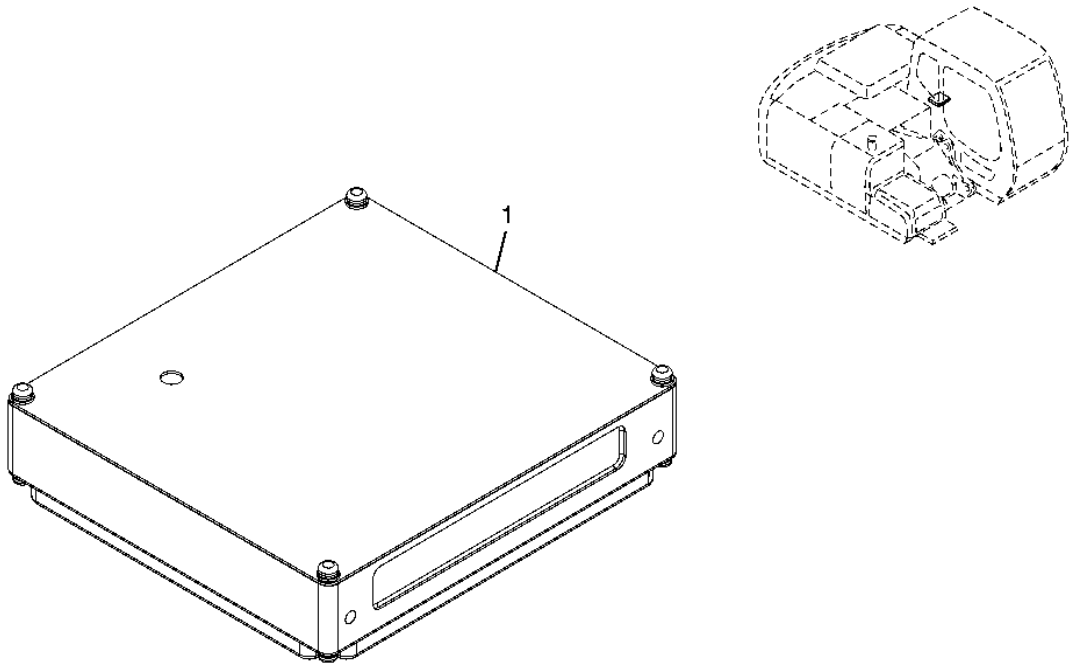

T153299

MIC CONTROLLER (S.N. 951008-)

KEY	PART NO.	PART NAME	QTY	SERIAL NO.	REMARKS
1	9239568	VEHICLE CONTROLLER	1		(MIC CONTROLLER) (SUB FOR 9194416 OR 9212078)

MIC CUSTOMER KIT AND CABLE (S.N. 951008-)

T192372A -UN-19JUN03

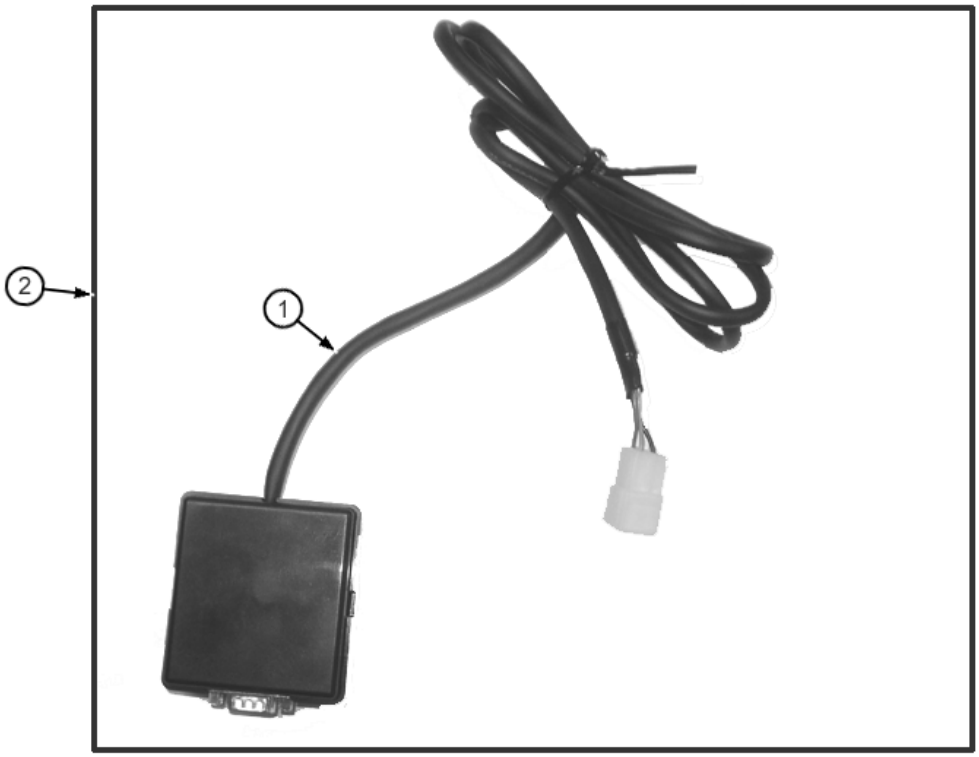

MIC CUSTOMER KIT AND CABLE (S.N. 951008-)

KEY	PART NO.	PART NAME	QTY	SERIAL NO.	REMARKS
1	TH3100010	CABLE	1		
2	AT301723	KIT	1		(WHOLEGOODS)(MIC CUSTOMER KIT)(INCLUDES SOFTWARE AND CABLE)

HEAD LAMP

T149488 -UN-21JAN02

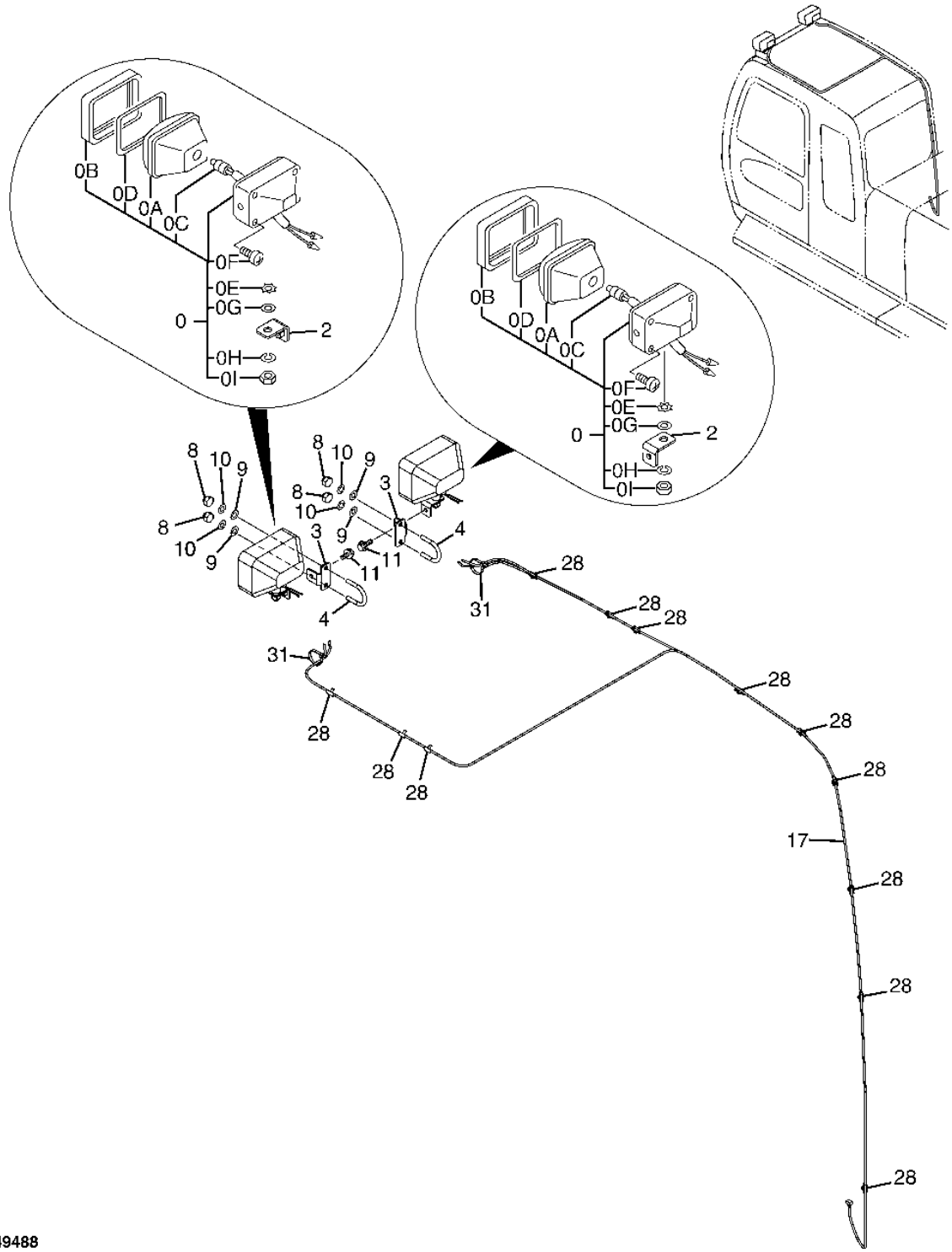

T149488

HEAD LAMP

KEY	PART NO.	PART NAME	QTY	SERIAL NO.	REMARKS
0	4336570	LAMP	2		
0A	4326801	LENS	1		(SUB FOR AT165111)
0B	4326802	FRAME	1		(SUB FOR AT165112)
0C	AT135758	BULB	1		
0D	4326803	GASKET	1		(SUB FOR AT165113)
0E	4307026	WASHER	1		(SUB FOR T144361)
0F	4307027	SCREW	4		(SUB FOR T144362)
0G	24M7085	WASHER	1		15 X 28 X 2.500 MM
0H	12H317	LOCK WASHER	1		9/16"
0I	J952014	NUT	1		(SUB FOR TH103791)
2	9756005	BRACKET	2		(SUB FOR TH9756005)
3	4447765	BRACKET	2		(SUB FOR TH4447765)
4	4447868	U-BOLT	2		
8	4447870	NUT	4		
9	12M7096	LOCK WASHER	4		20.500 MM
10	12M7066	LOCK WASHER	4		10 MM
11	19M7662	CAP SCREW	2		M10 X 30
	12M7056	LOCK WASHER	2		8 MM, (SUB FOR 12M7065)
	24M7055	WASHER	2		8.400 X 16 X 1.600 MM
17	4454484	WIRING HARNESS	1		
28	.....	CLIP	12		(TH102159 NOT AVAILABLE FOR SERVICE)
31	H77698	TIE BAND	2		

CONVERTER
(24-VOLT TO 12-VOLT)

T146946 -UN-22OCT01

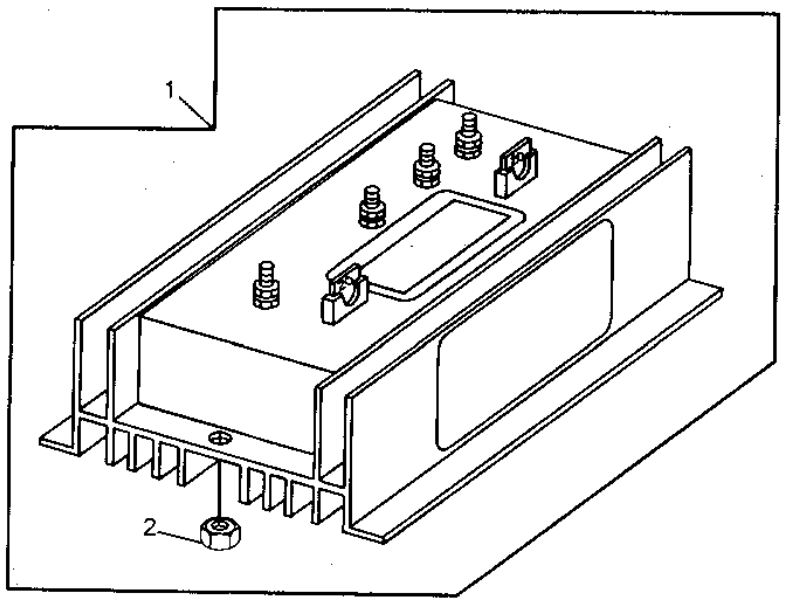

T146946

CONVERTER
(24-VOLT TO 12-VOLT)

KEY	PART NO.	PART NAME	QTY	SERIAL NO.	REMARKS
1	AT142288	CONVERTER	1		(10/20 AMP - 24/12 VOLT)
	14H786	NUT	2		1/4", (NOT ILLUSTRATED)
2	T141022	NUT	2		

FRAME

T192502 -UN-03JUL03

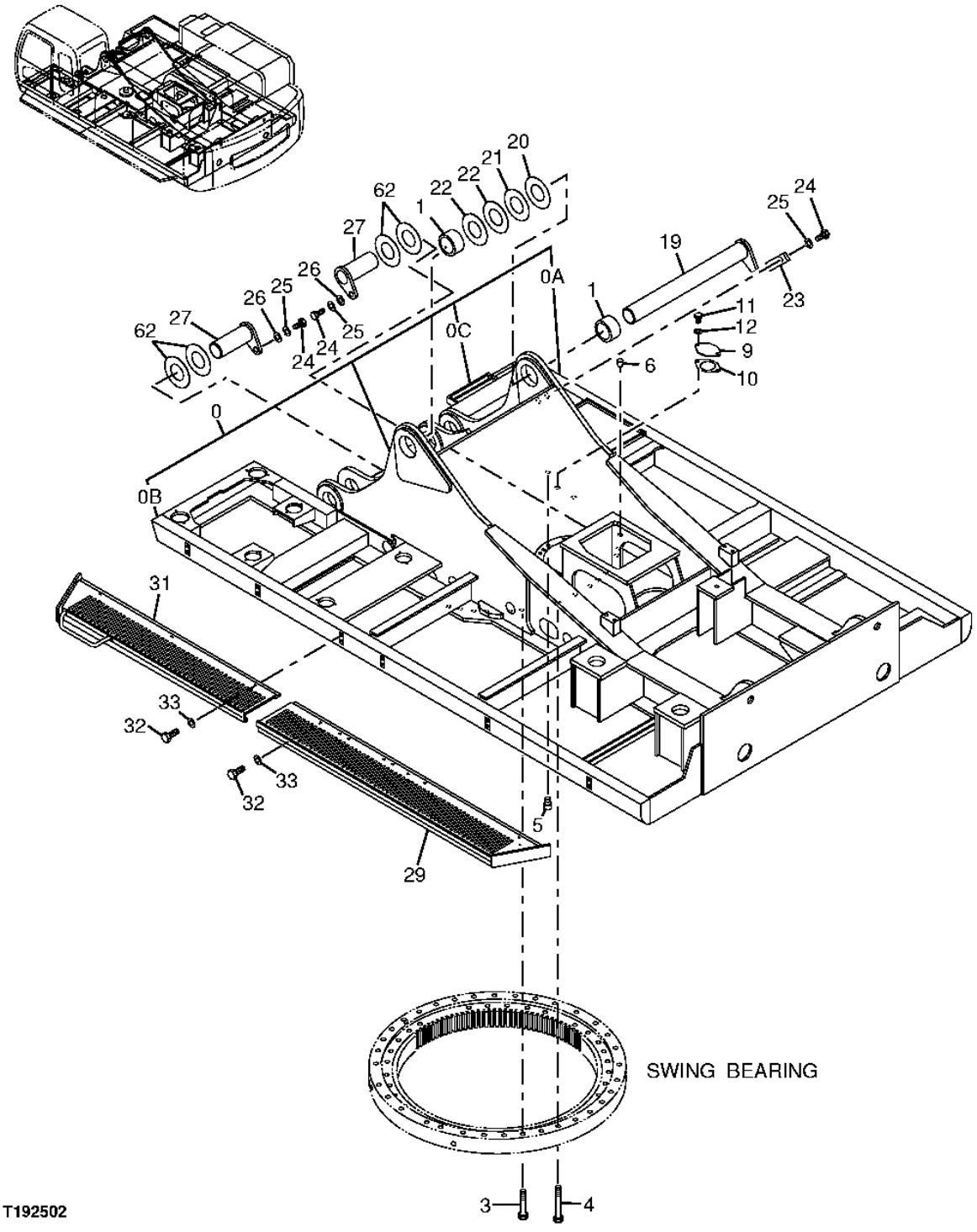

FRAME

KEY	PART NO.	PART NAME	QTY	SERIAL NO.	REMARKS
0	5007665	MAIN FRAME	1		
0A	4454272	FRAME	1		
0B	.....	FRAME	1		(4321855 NO LONGER AVAILABLE)
	4455818	FRAME	1		
0C	8050277	STEP	1		
1	4296258	BUSHING	2		
3	J833012	CAP SCREW	32		
4	J833016	CAP SCREW	4		
5	4292932	PLUG	2		
6	429135	PLUG	8		(SUB FOR TH429135)
9	4292764	COVER	1		
10	4292765	PACKING	1		(SUB FOR TH4292765)
11	19M3142	CAP SCREW	2		M10 X 18
12	4114402	WASHER	2		(SUB FOR TH102181)
19	8053517	PIN FASTENER	1		(SUB FOR TH8053517)
20	4296543	SHIM	1		(SUB FOR TH4296543)
21	4296542	SHIM	1		(SUB FOR TH4296542)
22	4296541	SHIM	2		(SUB FOR TH4296541)
23	4179432	STRAP	1		(SUB FOR TH4179432)
24	19M7950	CAP SCREW	4		M20 X 45
25	12M7070	LOCK WASHER	4		20 MM
26	4040826	BUSHING	2		(SUB FOR AT131671)
27	8053518	PIN FASTENER	2		(SUB FOR TH8053518)
29	.....	STEP	1	-951011	(6020159 NO LONGER AVAILABLE) (SUB 6021931)
	6021931	STEP	1	951012-	(USE WITH 6021929)
31	.....	STEP	1	-951011	(6014819 NO LONGER AVAILABLE) (SUB 6021929) (SUB FOR TH6014819)
	6021929	STEP	1	951012-	(USE WITH 6021931)
32	19M7872	CAP SCREW	12		M12 X 25
	24M7180	WASHER	12	951012-	
33	12H301	LOCK WASHER	12	-951011	1/2"
	12M7067	LOCK WASHER	12	951012-	
62	4482564	SHIM	4	951002-	

FRAME

T149502 -UN-01FEB02

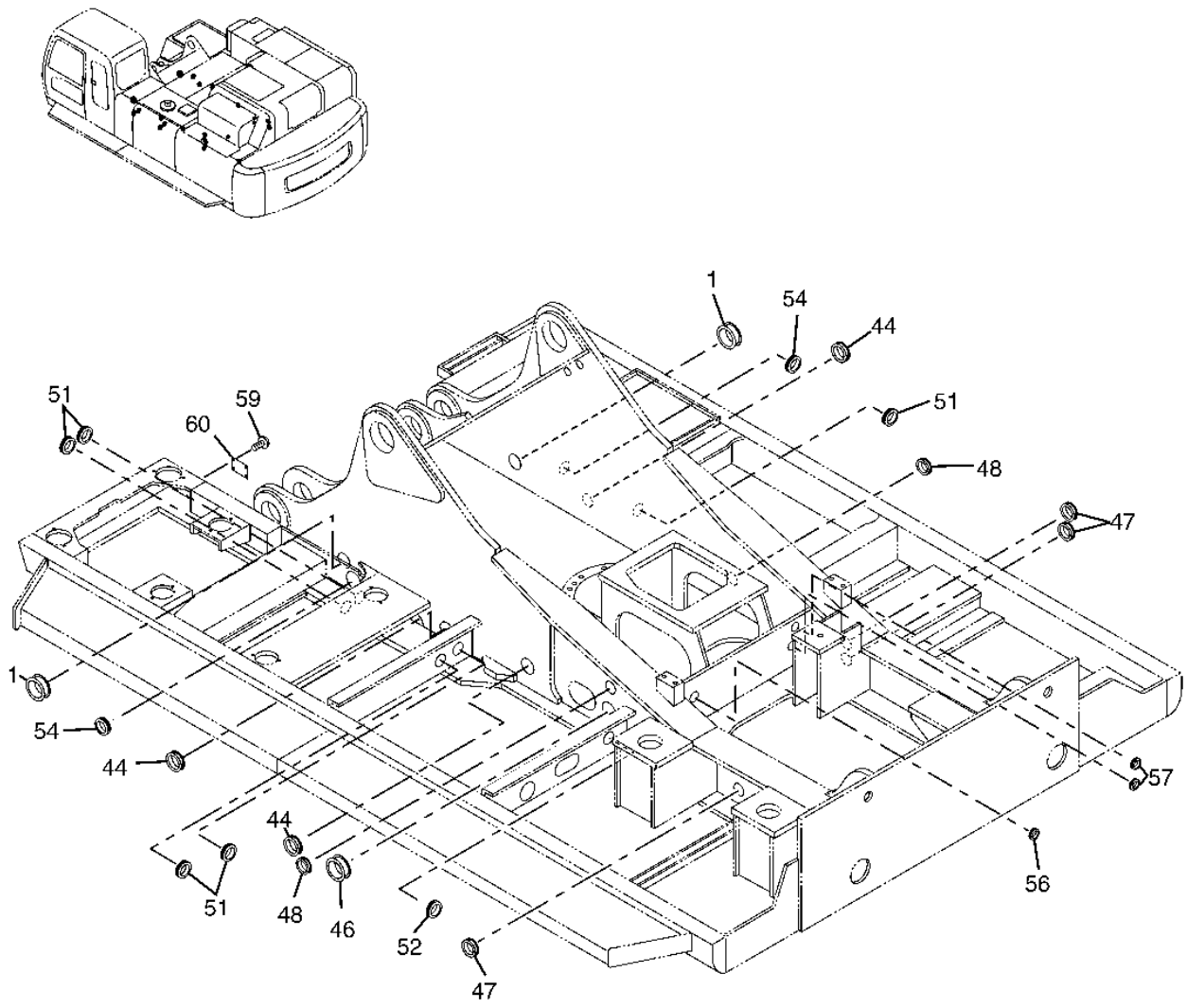

T149502

FRAME

KEY	PART NO.	PART NAME	QTY	SERIAL NO.	REMARKS
1	4292763	BUSHING	2		(SUB FOR TH4292763)
44	4206477	BUSHING	3	-971009	(SUB FOR TH4206477)
	4206477	BUSHING	2	971010-	
46	4190960	GROMMET	1		(SUB FOR AT126283)
47	4255567	BUSHING	3		(SUB FOR TH4255567)
48	4221018	BUSHING	2		(SUB FOR AT203980)
51	4292762	BUSHING	5		(SUB FOR AT202318)
52	4208279	GROMMET	1		(SUB FOR AT131854)
54	4345810	BUSHING	2		(SUB FOR AT217099)
56	4255567	BUSHING	1		(SUB FOR AT155271, 4255530)
57	4200176	GROMMET	2		(SUB FOR TH109397)
59	37H99	SCREW	4		
60	.....	PLATE	1		(TH3082868 NOT AVAILABLE FOR SERVICE)

COUNTERWEIGHT

T149518 -UN-01FEB02

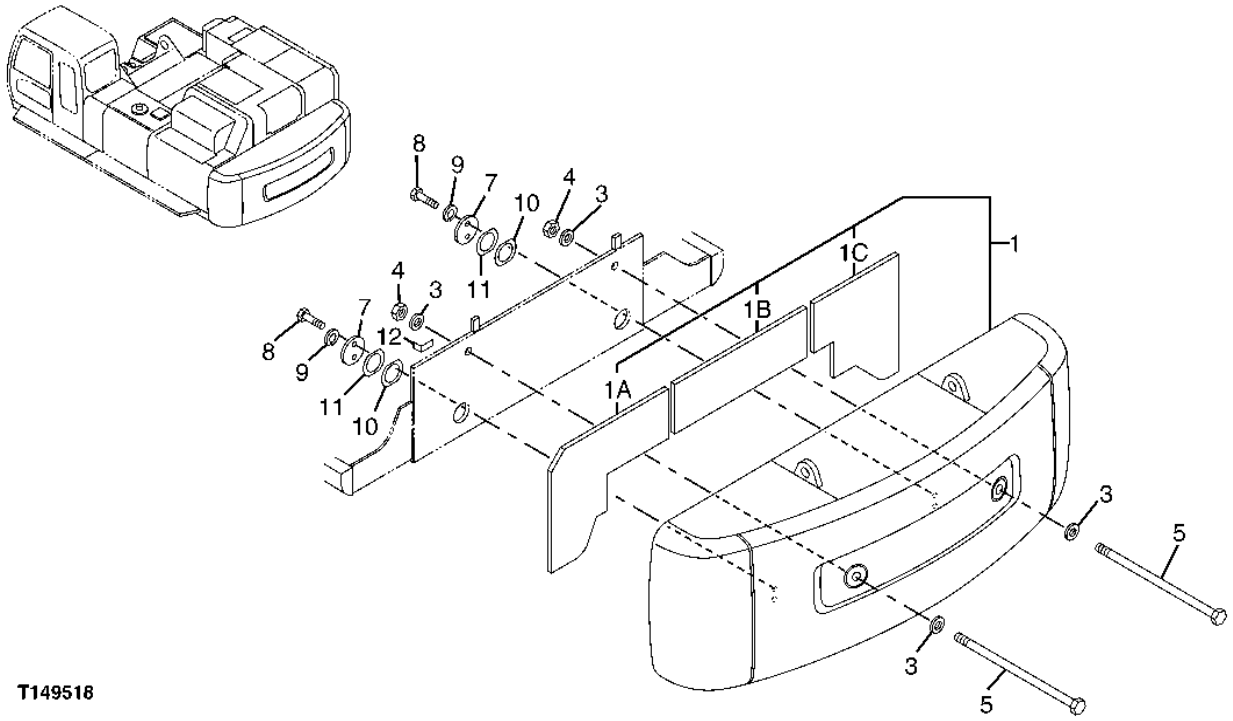

T149518

COUNTERWEIGHT

KEY	PART NO.	PART NAME	QTY	SERIAL NO.	REMARKS
1	5007705	COUNTERWEIGHT	1		
1A	4457845	ISOLATOR	1		
1B	4457846	ISOLATOR	1		
1C	4457847	ISOLATOR	1		
3	4103743	BUSHING	4		(SUB FOR AT131690)
4	M660045	NUT	2		(SUB FOR AT131560)
5	4334933	BOLT	2		(SUB FOR TH4334933)
7	4270269	WASHER	2		(SUB FOR AT201731)
8	J912455	BOLT	4		(SUB FOR AT131548)
9	4070952	STRAP	2		(SUB FOR AT131678)
10	4207762	WASHER	4		(SUB FOR AT131842)
11	4207763	SHIM	2		(SUB FOR AT131843)
12	4345741	SHIM	1		(SUB FOR AT202397)

SWING BEARING

T149543 -UN-23JAN02

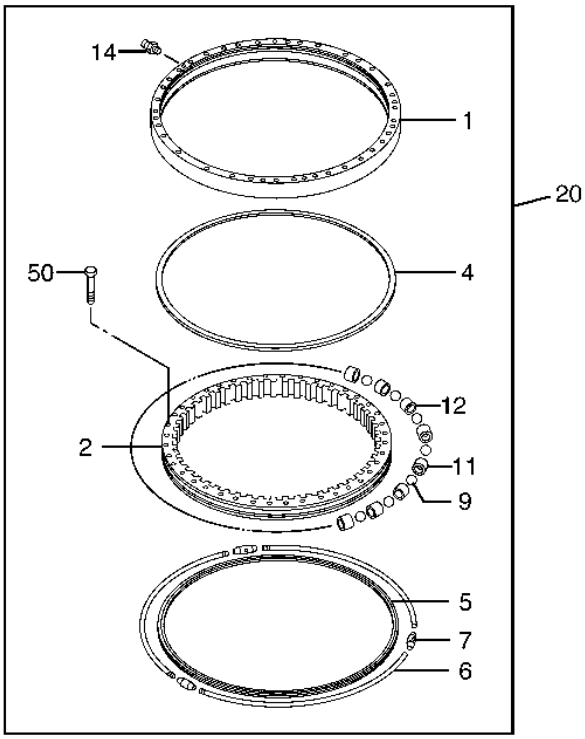

T149543

SWING BEARING

KEY	PART NO.	PART NAME	QTY	SERIAL NO.	REMARKS
1	.....	BEARING RACE	1		
2	.....	BEARING RACE	1		
4	4636079	PACKING	1		(SUB FOR 4216871, TH4216871)
5	4622778	SEAL	1		(SUB FOR TH4245211, 4245211)
6	4338464	ROD	3		(SUB FOR TH4338464)
7	4245212	TURNBUCKLE	3		(SUB FOR AT202102)
9	4292676	BALL	1		(SUB FOR TH4292676)
11	4153983	SPACER	5		(SUB FOR TH4153983)
12	4153982	SPACER	71		(SUB FOR TH4153982)
14	TH100074	LUBRICATION FITTING	1		
20	9229740	SWING BEARING	1		(SUB FOR 6016584)
50	J833011	CAP SCREW	36		(SUB FOR THJ833011)

SWING BEARING LUBRICATE PIPING

TP66866 -UN-12OCT99

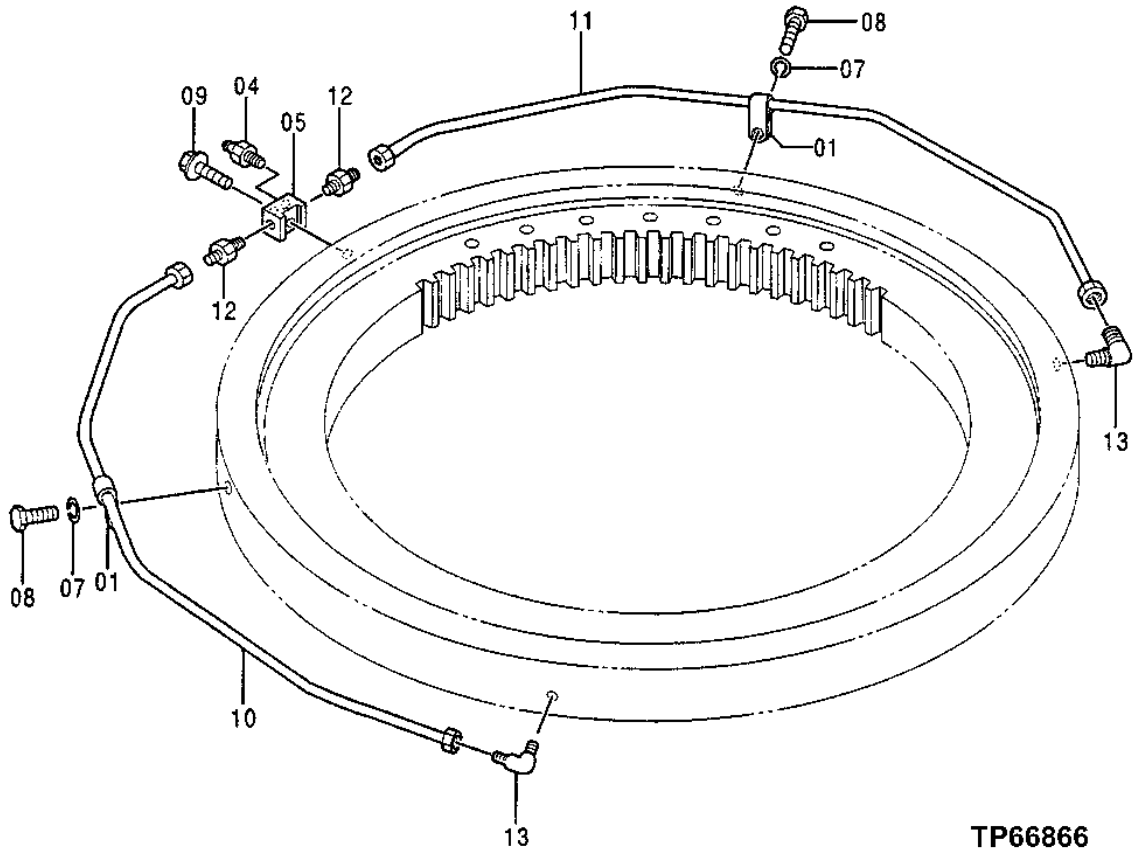

SWING BEARING LUBRICATE PIPING

KEY	PART NO.	PART NAME	QTY	SERIAL NO.	REMARKS
1	484827	CLAMP	2		(SUB FOR AT132014)
4	TH100074	LUBRICATION FITTING	2		
5	4219720	MANIFOLD	1		(SUB FOR AT131900)
7	12M7066	LOCK WASHER	2		10 MM
8	19M8324	CAP SCREW	2		M10 X 16
9	19M7572	CAP SCREW	1		M10 X 45
	12M7066	LOCK WASHER	1		10 MM
10	3060533	OIL LINE	1		(SUB FOR TH3060533)
11	3060534	OIL LINE	1		(SUB FOR TH3060534)
12	4130168	FITTING PLUG	2		(SUB FOR AT131701)
13	4130174	FITTING	2		(SUB FOR TH103262)

COUNTERWEIGHT REMOVAL DEVICE

T158191 -UN-09AUG02

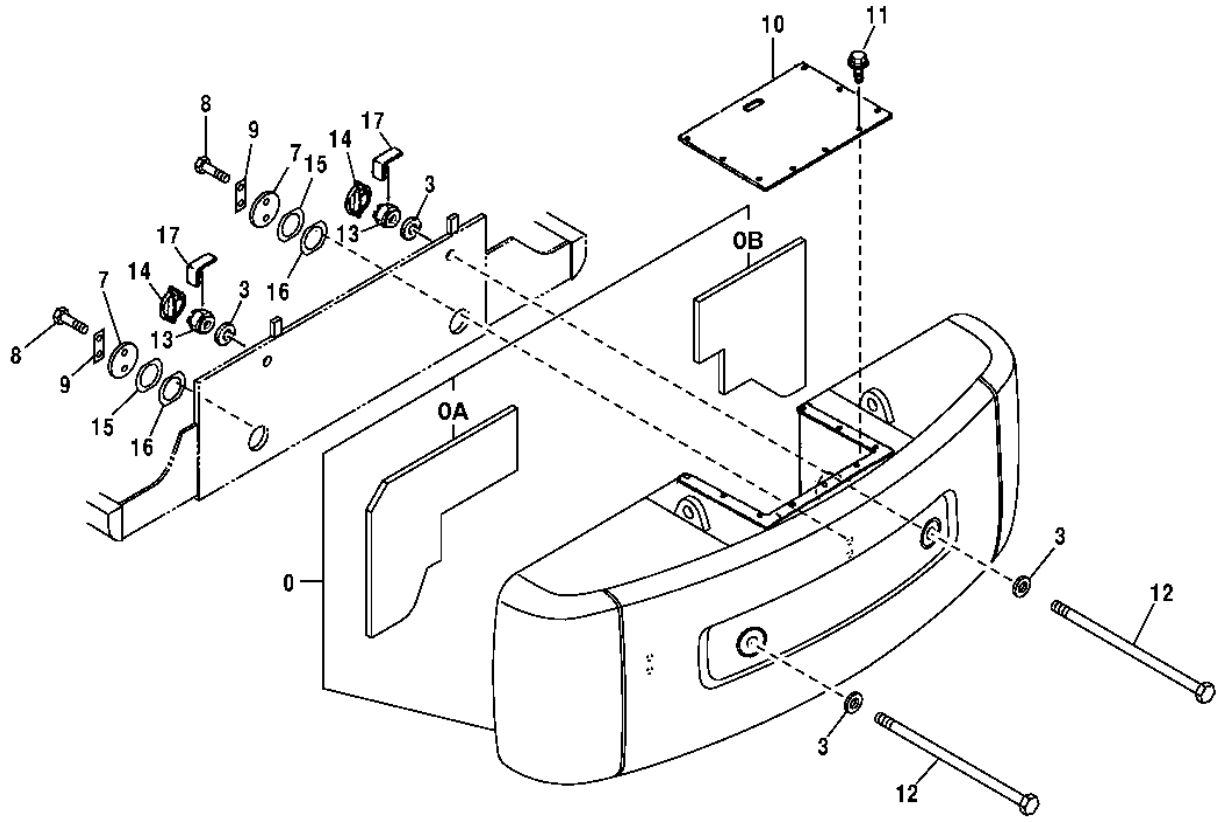

T158191

1H17

COUNTERWEIGHT REMOVAL DEVICE

KEY	PART NO.	PART NAME	QTY	SERIAL NO.	REMARKS
0	5007735	COUNTERWEIGHT	1		
0A	4457845	ISOLATOR	1	-951010	
0B	4457847	ISOLATOR	1	-951010	
3	4103743	BUSHING	4		
7	4270269	WASHER	2		
8	J912455	BOLT	4		
9	4070952	STRAP	2		
10	4338256	COVER	1		
11	19M7932	CAP SCREW	9		M8 X 16
	24H1136	WASHER	9		8.738 X 17.475 X 1.651 MM (11/32" X 11/16" X 0.065")
	12M7056	LOCK WASHER	9		8 MM (0.315") (SUB FOR 12M7065)
12	4341856	CAP SCREW	2		
13	4246150	NUT	2		
14	9701925	QUICK LOCK PIN	2		
15	4207762	WASHER	4		
16	4207763	SHIM	2		
17	4345741	SHIM	2		

COUNTERWEIGHT REMOVAL DEVICE

T160452 -UN-31OCT02

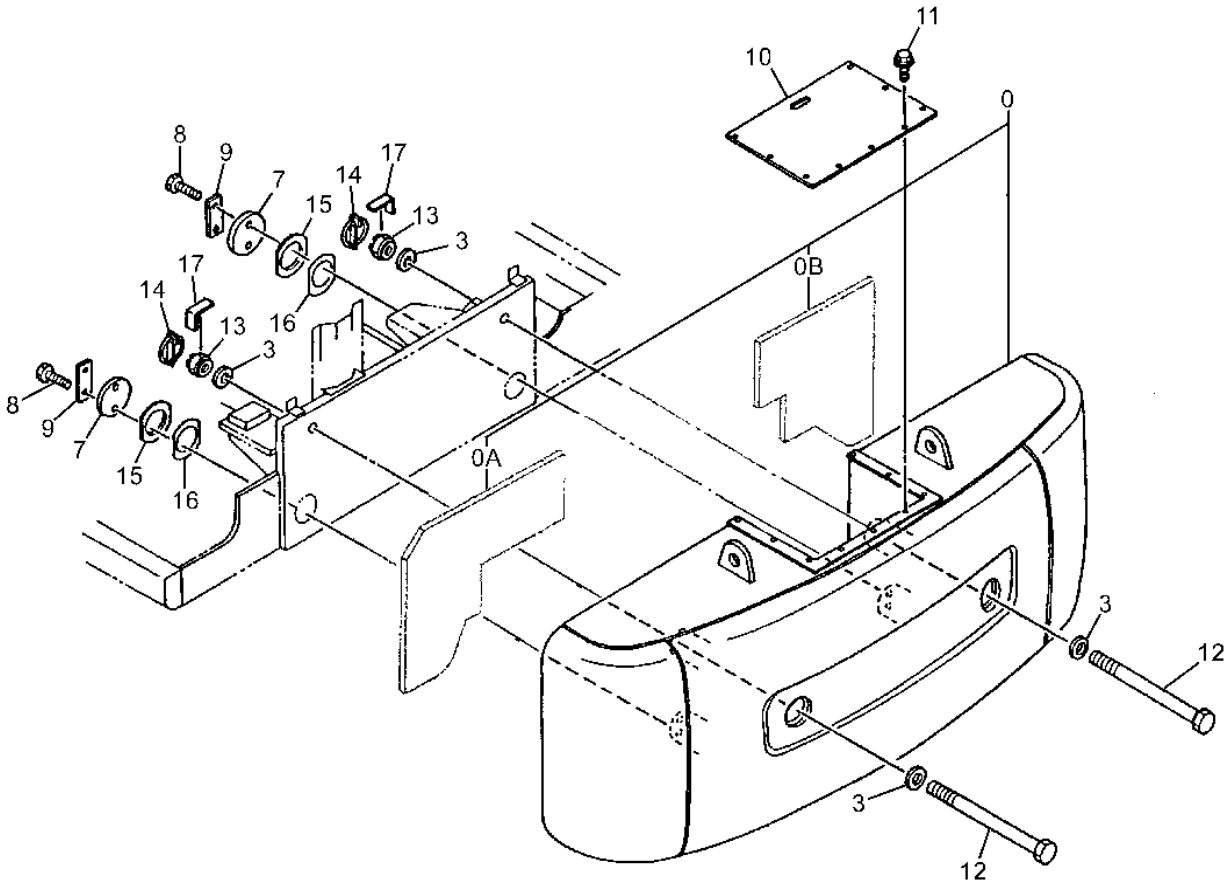

T160452

1H19

COUNTERWEIGHT REMOVAL DEVICE

KEY	PART NO.	PART NAME	QTY	SERIAL NO.	REMARKS
0	5007735	COUNTERWEIGHT	1		
1A	4457845	ISOLATOR	1	-951010	
1B	4457847	ISOLATOR	1	-951010	
3	4103743	BUSHING	4		
7	4270269	WASHER	2		
8	J912455	BOLT	4		
9	4070952	STRAP	2		
10	4338256	COVER	1		
11	19M7162	CAP SCREW	9		M8 X 16
	12M7065	LOCK WASHER	9		8 MM (0.315")
	24H1136	WASHER	9		11/32" X 11/16" X 0.065"
12	4341856	CAP SCREW	2		
13	4246150	NUT	2		
14	9701925	QUICK LOCK PIN	2		
15	4207762	WASHER	4		
16	4207763	SHIM	2		
17	4345741	SHIM	2		

COUNTERWEIGHT REMOVAL LIFTING DEVICE

TP66903 -UN-13OCT99

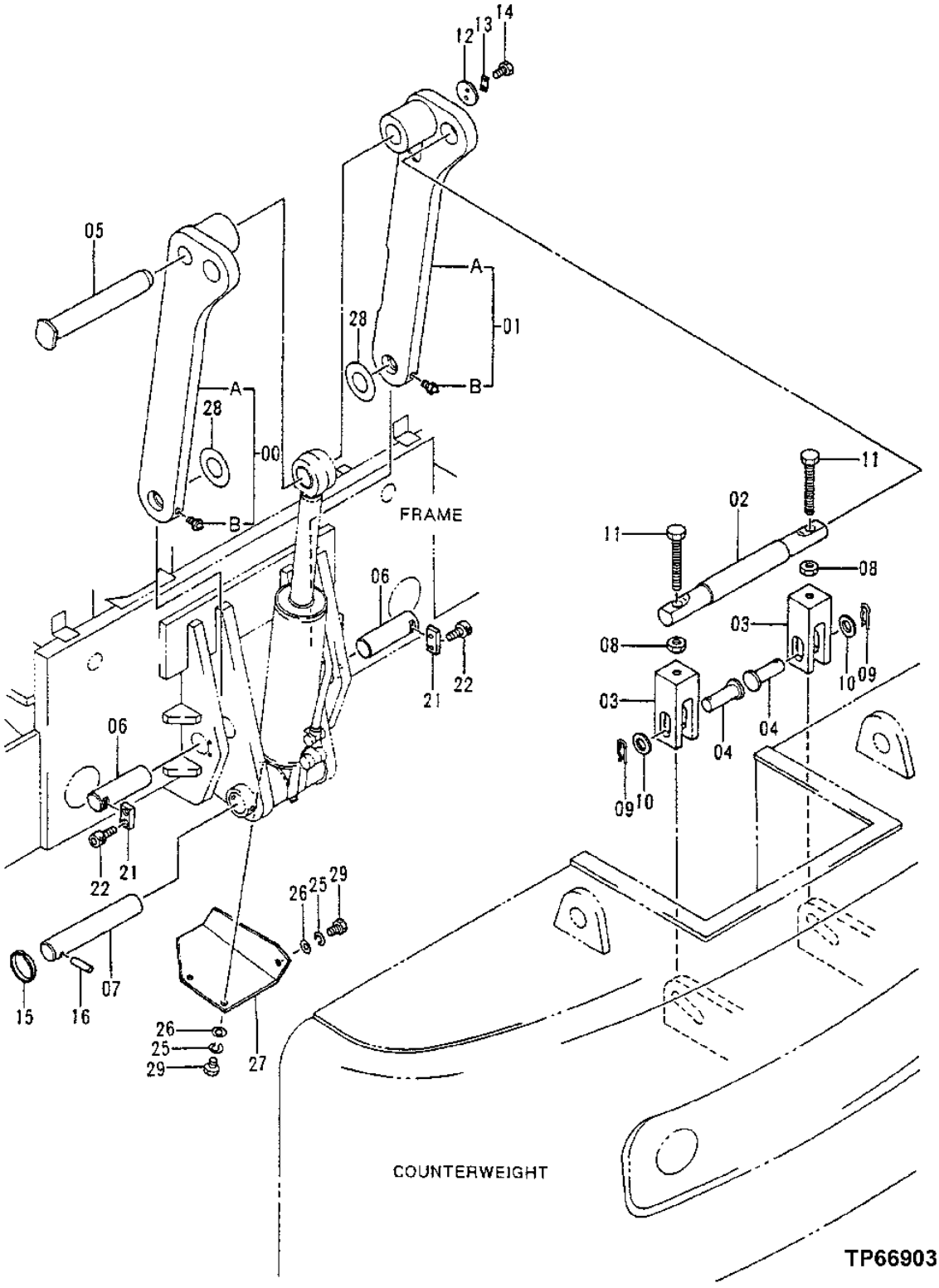

COUNTERWEIGHT REMOVAL LIFTING DEVICE

KEY	PART NO.	PART NAME	QTY	SERIAL NO.	REMARKS
0	9134171	LINK	1		
0A	8059541	LINK	1		
0B	TH100074	LUBRICATION FITTING	1		
1	9134172	LINK	1		
1A	8059544	LINK	1		
1B	TH100074	LUBRICATION FITTING	1		
2	4337811	PIN	1		
3	4337792	FORK	2		
4	4337833	PIN	2		
5	4337830	PIN	1		
6	4337837	PIN	2		
7	4337843	PIN	1		
8	J953030	NUT	2		
9	414322	SPRING LOCKING PIN	2		
10	A590142	WASHER	2		
11	4235221	CAP SCREW	2		
12	492067	WASHER	1		
13	442687	STRAP	1		
14	19M8017	CAP SCREW	2		M12 X 20
15	4065688	RETAINER	1		
16	4186695	PIN	1		
21	4063340	STRAP	2		
22	M341632	BOLT	4		
25	12H317	LOCK WASHER	3		14.288 MM (9/16")
26	24M7085	WASHER	3		15 X 28 X 2.500 MM (0.591" X 1.102" X 0.098")
27	4367157	SHIELD	1		
28	4348458	SHIM	2		
29	19M6332	CAP SCREW	3		M14 X 35

CONSOLE

T142593 -UN-14JUN01

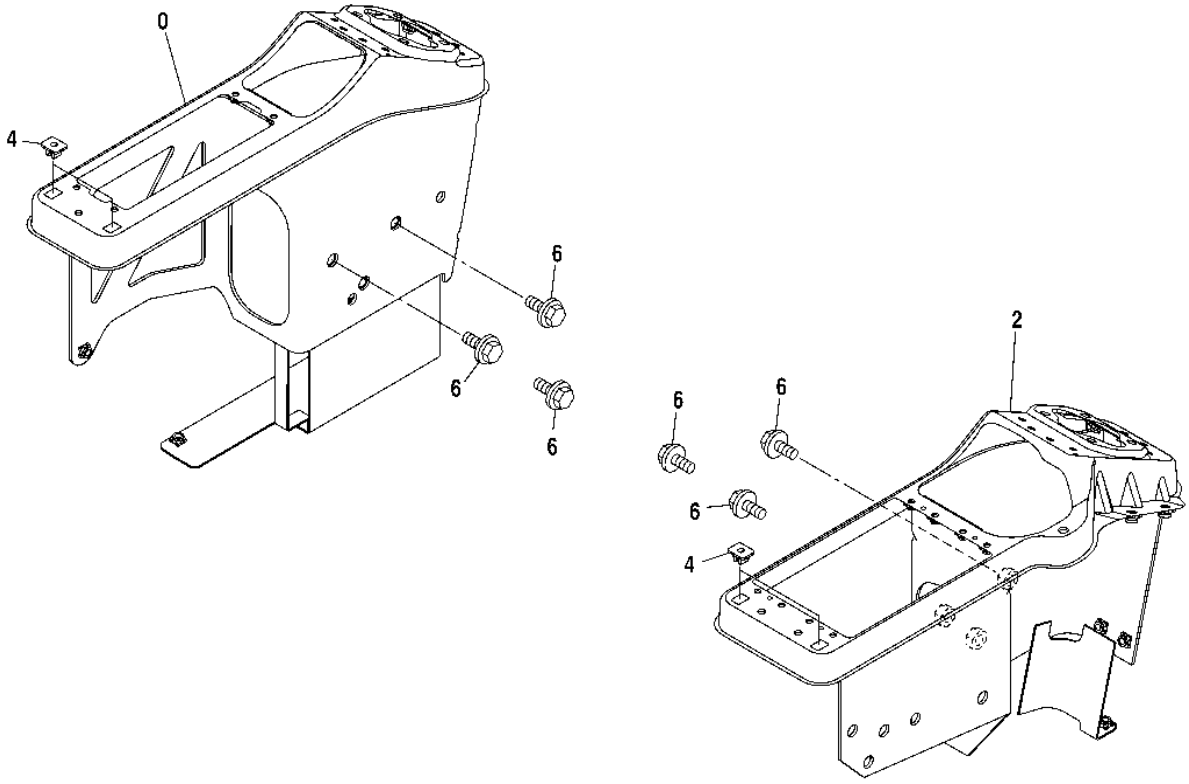

T142593

2A22

CONSOLE

KEY	PART NO.	PART NAME	QTY	SERIAL NO.	REMARKS
0	7036594	CONSOLE	1		(SUB FOR TH7036594) LEFT
2	7036595	CONSOLE	1		(SUB FOR TH7036595) RIGHT
4	4351255	CLIP	4		(SUB FOR AT213958)
6	19M7402	CAP SCREW	6		M10 X 25
	24M7096	WASHER	6		10.500 X 18 X 1.600 MM
	12M7066	LOCK WASHER	6		10 MM

CONSOLE COVER

T142594 -UN-14JUN01

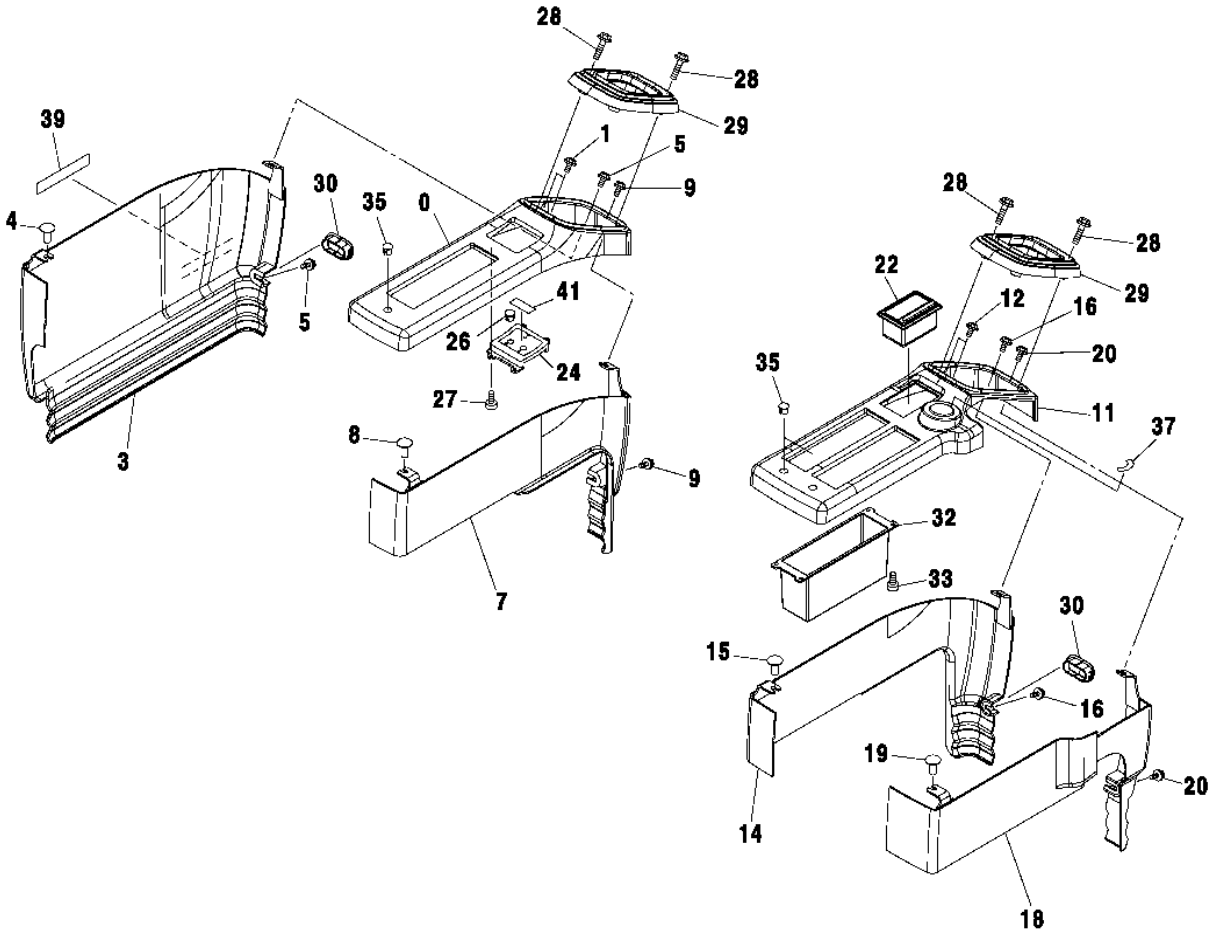

T142594

2A24

CONSOLE COVER

KEY	PART NO.	PART NAME	QTY	SERIAL NO.	REMARKS
0	4420875	COVER	1		(SUB FOR TH4420875)
1	21M7246	SCREW	3		M6 X 16
	12M7006	LOCK WASHER	3		6 MM
	24M7105	WASHER	3		6 X 12 X 1.600 MM
3	4420876	COVER	1		(SUB FOR TH4420876)
4	4361802	SCREW	1		(SUB FOR AT214012)
5	21M7246	SCREW	5		M6 X 16
	12M7006	LOCK WASHER	5		6 MM
	24M7105	WASHER	5		6 X 12 X 1.600 MM
7	4420877	COVER	1		(SUB FOR TH4420877)
8	4361802	SCREW	1		(SUB FOR AT214012)
9	21M7246	SCREW	2		M6 X 16
	12M7006	LOCK WASHER	2		6 MM
	24M7105	WASHER	2		6 X 12 X 1.600 MM
11	4420878	COVER	1		(SUB FOR TH4420878)
12	21M7246	SCREW	4		M6 X 16
	12M7006	LOCK WASHER	4		6 MM
	24M7105	WASHER	4		6 X 12 X 1.600 MM
14	4420879	COVER	1		(SUB FOR TH4420879)
15	4361802	SCREW	1		(SUB FOR AT214012)
16	21M7246	SCREW	2		M6 X 16
	12M7006	LOCK WASHER	2		6 MM
	24M7105	WASHER	2		6 X 12 X 1.600 MM
18	4420880	COVER	1		
19	4361802	SCREW	1		(SUB FOR AT214012)
20	21M7246	SCREW	2		M6 X 16
	12M7006	LOCK WASHER	2		6 MM
	24M7105	WASHER	2		6 X 12 X 1.600 MM
22	4415024	ASHTRAY	1		(SUB FOR TH4415024)
24	3091842	PANEL	1		(SUB FOR TH3091842)
26	4294437	CAP	1		(SUB FOR AT215503)
27	4452613	SCREW	1		(SUB FOR TH4452613)
28	19M7177	CAP SCREW	8		M6 X 35
	12M7006	LOCK WASHER	8		6 MM
	24M7293	WASHER	8		6.500 X 13 X 1.600 MM
29	2045509	COVER	2		(SUB FOR TH2045509)
30	4441117	CAP	2		(SUB FOR TH4441117)
32	3090025	HOLDER	1		(SUB FOR TH3090025)
33	4361800	SCREW	4		(SUB FOR AT214011)
35	4448990	CAP	3		(SUB FOR TH4448990)
37	4264805	LABEL	1		(SUB FOR AT155730) (IGNITION KEY SWITCH)
39	4299059	LABEL	1		(SUB FOR T138886) (LOCKOUT)
41	4462470	LABEL	1		

CAB INSIDE RIGHT COVER

T142595 -UN-06JUL01

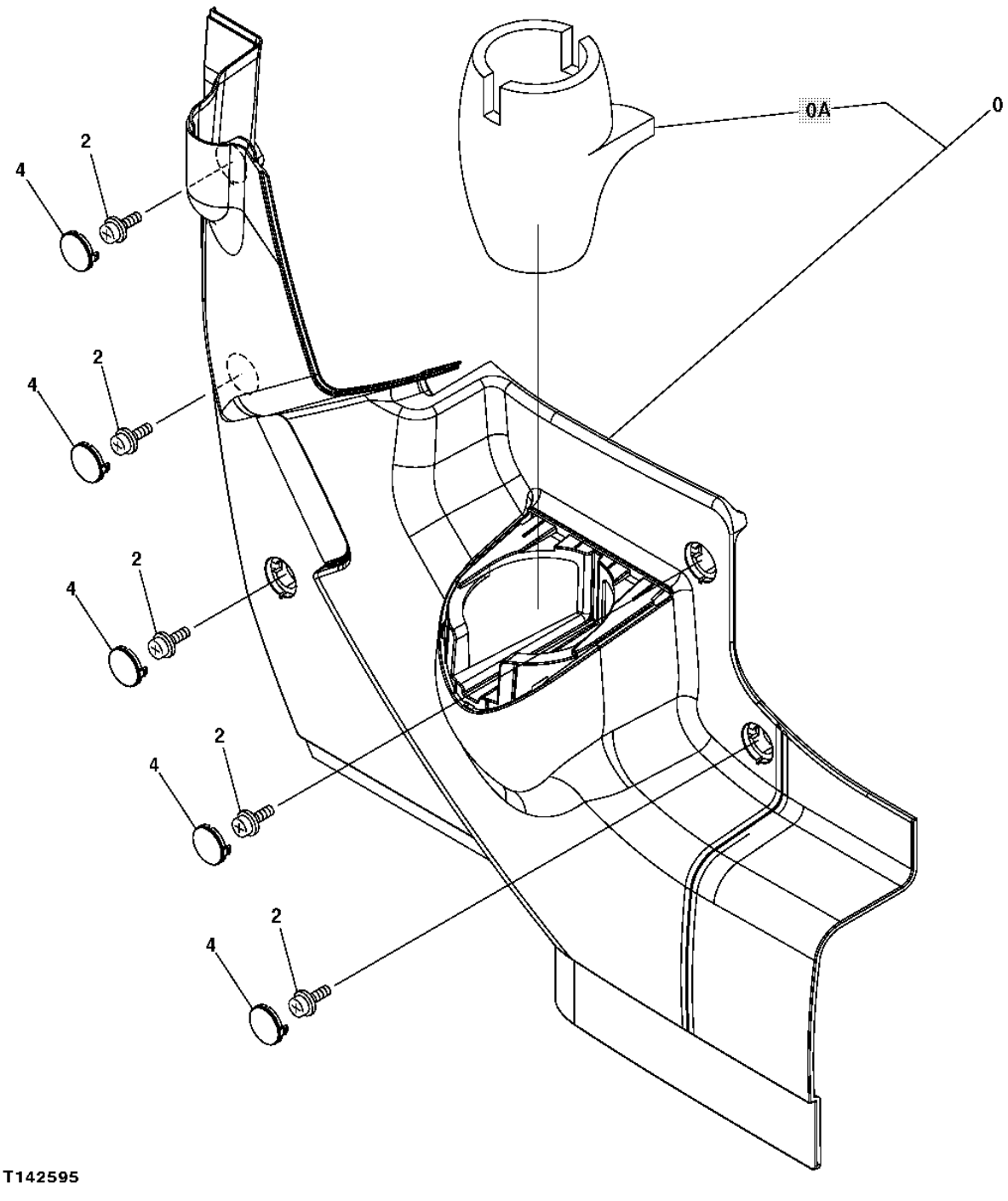

T142595

2B2

CAB INSIDE RIGHT COVER

KEY	PART NO.	PART NAME	QTY	SERIAL NO.	REMARKS
0	4445917	COVER	1		(SUB FOR TH4445917)
0A	4445932	HOLDER	1		(SUB FOR TH4445932)
2	19M8425	CAP SCREW	5		M6 X 16
	12M7006	LOCK WASHER	5		6 MM
	24M7293	WASHER	5		6.500 X 13 X 1.600 MM
4	4426354	CAP	5		(SUB FOR TH4426354)

CAB MOUNTING

T152404 -UN-08MAR02

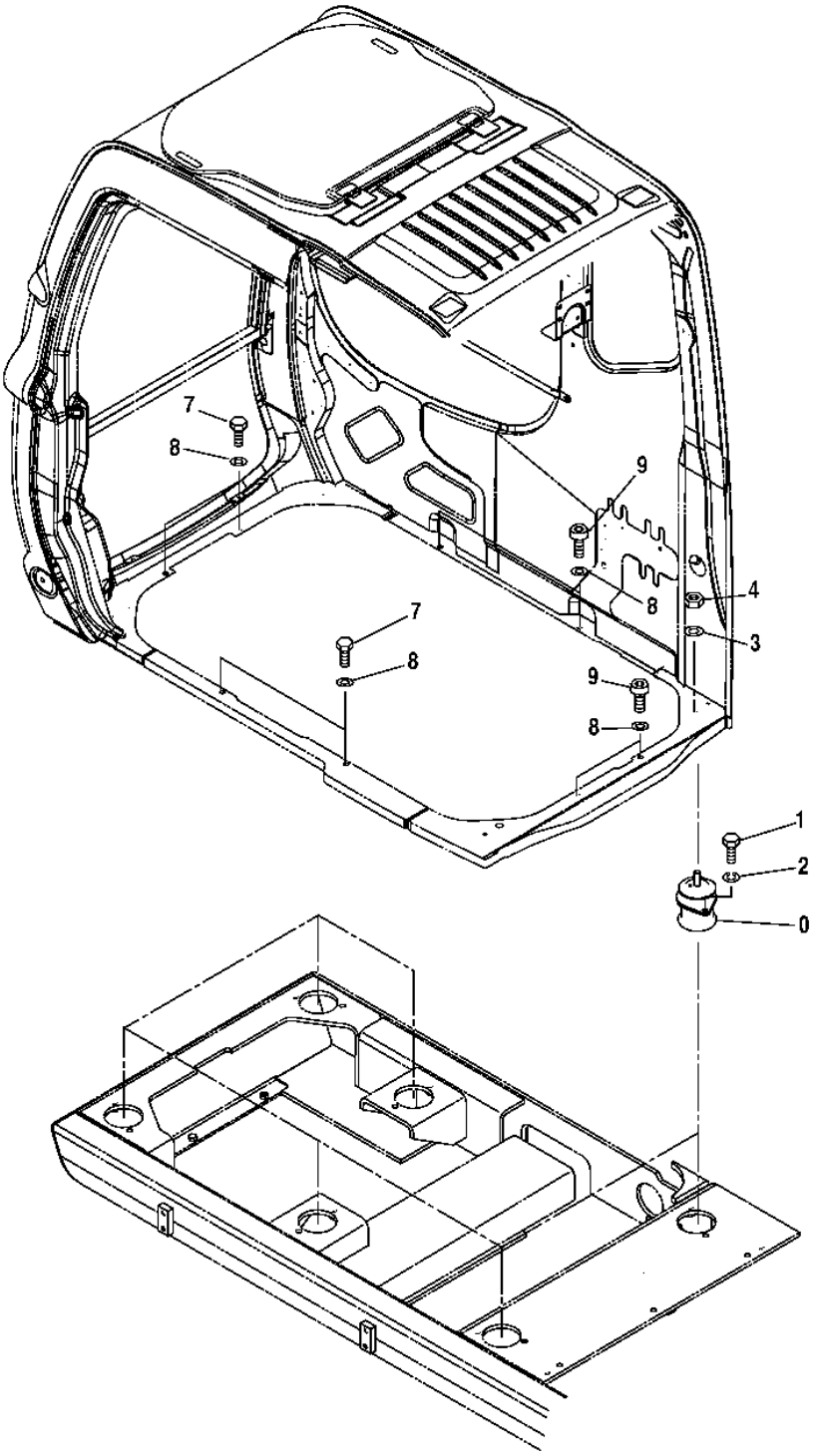

T152404

CAB MOUNTS

KEY	PART NO.	PART NAME	QTY	SERIAL NO.	REMARKS
0	4602034	ISOLATOR	6		(SUB FOR 4368327 AND AT216979)
1	J921240	CAP SCREW	12		(SUB FOR 4330785 AND AT202462)
2	12H301	LOCK WASHER	12		1/2"
3	24M7338	WASHER	6		17 X 30 X 3 MM
4	14M7328	LOCK NUT	6		M16
7	19M7662	CAP SCREW	4		M10 X 30
8	24M7346	WASHER	8		11 X 20 X 2 MM
9	J781030	SCREW	4		(SUB FOR AT213614)

CAB

T150990 -UN-06FEB02

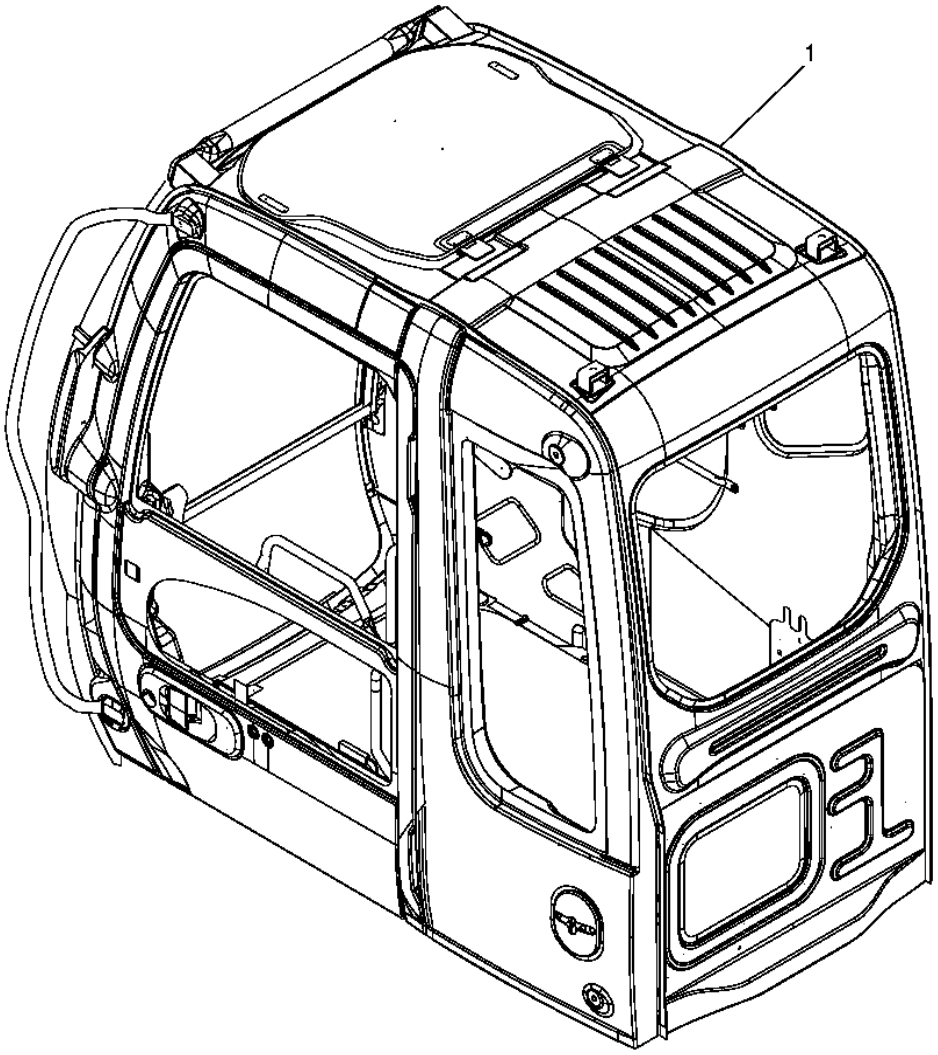

T150990

CAB

KEY	PART NO.	PART NAME	QTY	SERIAL NO.	REMARKS
1	9205229	CAB	1		(SUB FOR TH9205229) (SEE FOLLOWING PAGES FOR COMPONENTS)

CAB COMPONENTS
(WIPER ARMS, WIPER MOTORS, RADIO ANTENNA AND SPEAKERS)

T146534 -UN-22OCT01

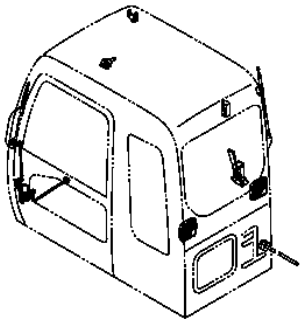

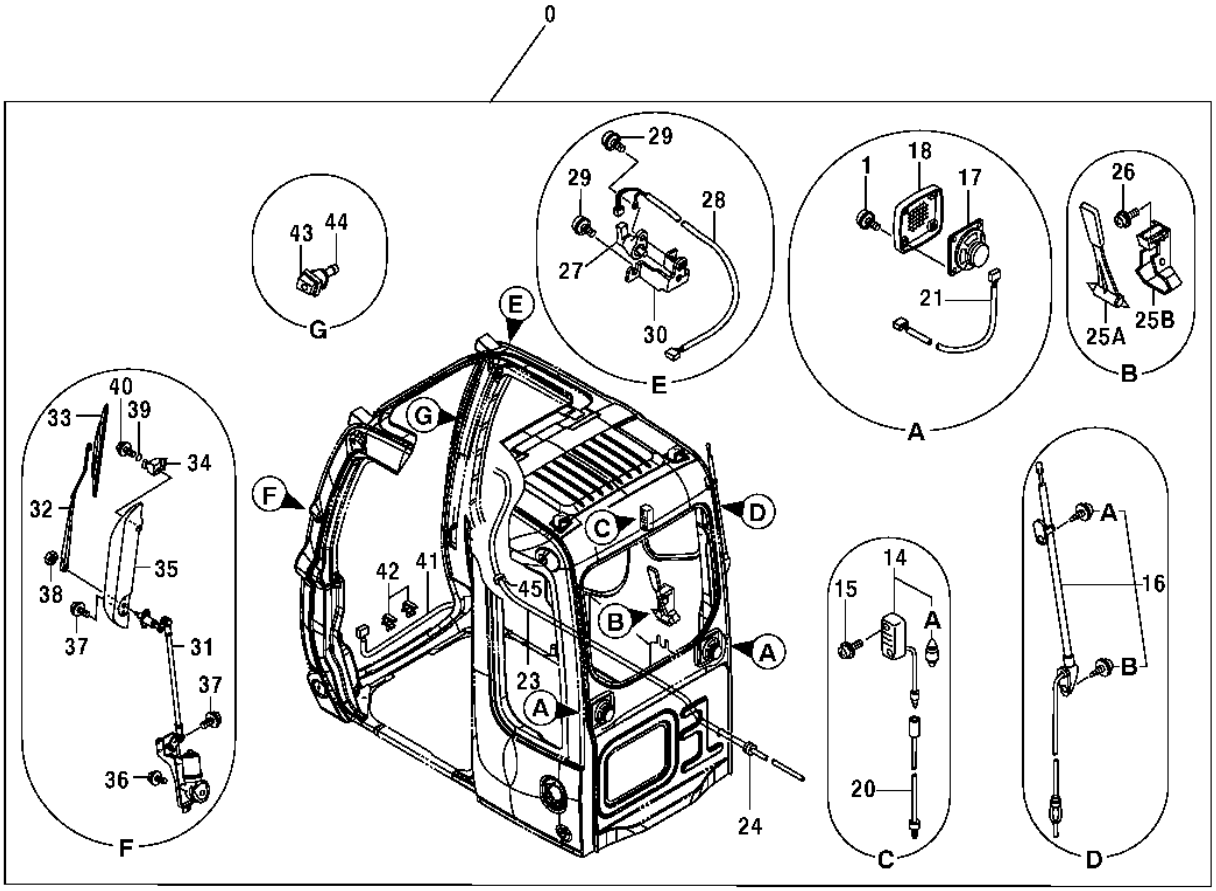

T146534

CAB COMPONENTS
(WIPER ARMS, WIPER MOTORS, RADIO ANTENNA AND SPEAKERS)

KEY	PART NO.	PART NAME	QTY	SERIAL NO.	REMARKS
0	9205229	CAB	1		(SUB FOR TH9205229) (CONTAINS ALL PARTS LISTED ON THIS PAGE - ADDITIONAL COMPONENTS LISTED ON FOLLOWING PAGES)
1	4456427	SCREW	8		(SUB FOR TH4456427)
14	4187082	LAMP	1		(SUB FOR TH108567)
14A	4187083	BULB	1		(SUB FOR TH108568)
15	4456428	SCREW	2		(SUB FOR TH4456428)
16	4123177	ANTENNA	1		(SUB FOR AT131697)
16A	4210412	SCREW	1		(SUB FOR AT131864)
16B	4210413	SCREW	1		(SUB FOR AT131865)
17	4361302	SPEAKER	2		(SUB FOR AT214007)
18	4364504	GRILLE	2		(SUB FOR AT214017)
20	4260369	WIRING HARNESS	1		(SUB FOR AT154278)
21	4369547	WIRING HARNESS	2		(SUB FOR AT214061)
23	4369549	HOSE	1		(SUB FOR AT214063)
24	4287903	GROMMET	1		(SUB FOR AT154413)
25A	4362700	HAMMER	1		(SUB FOR T158020)
25B	2038764	BRACKET	1		(SUB FOR T158021)
26	4456428	SCREW	2		(SUB FOR TH4456428)
27	4387837	SWITCH	1		(SUB FOR AT182625)
28	4402476	WIRING HARNESS	1		(SUB FOR AT182626)
29	.....	SCREW	3		(TH4456456 NOT AVAILABLE FOR SERVICE)
30	4456429	BRACKET	1		(SUB FOR TH4456429)
31	4453690	WIPER MOTOR	1		(SUB FOR TH4453690)
32	4453687	WIPER ARM	1		(SUB FOR TH4453687)
33	4453686	WIPER BLADE	1		(SUB FOR TH4453686)
34	4456433	HOLDER	1		(SUB FOR TH4456433)
35	4456434	GUARD	1		(SUB FOR TH4456434)
36	19M7881	SCREW	3		M8 X 20
	12M7056	LOCK WASHER	3		8 MM, (SUB FOR 12M7065)
	24M7055	WASHER	3		8.400 X 16 X 1.600 MM
37	4456238	BOLT	4		(SUB FOR TH4456238)
38	14M7273	NUT	1		M8
39	4092111	O-RING	1		(SUB FOR AT154150)
40	4456458	BOLT	1		(SUB FOR TH4456458)
41	4456435	WIRING HARNESS	1		(SUB FOR TH4456435)
42	4456436	CLIP	2		(SUB FOR TH4456436)
43	4456450	NOZZLE	1		(SUB FOR TH4456450)
44	.....	VALVE	1		(AT214041 NOT AVAILABLE FOR SERVICE)
45	4369569	GROMMET	1		(SUB FOR AT214079)

CAB COMPONENTS - CONTINUED
(CAB ROOF, CAB WINDOWS AND HANDRAILS)

T146535 -UN-12OCT01

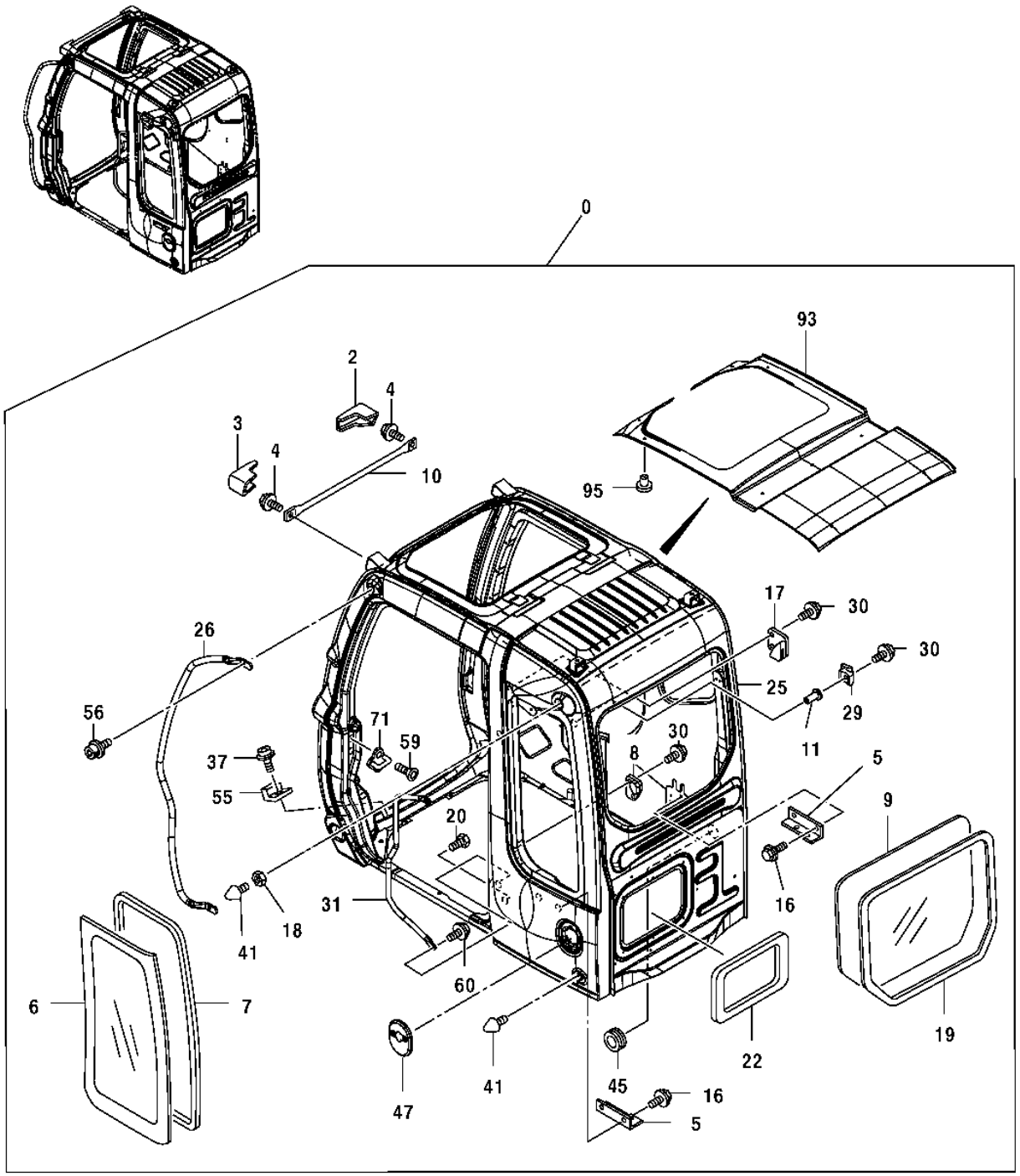

T146535

CAB COMPONENTS - CONTINUED
(CAB ROOF, CAB WINDOWS AND HANDRAILS)

KEY	PART NO.	PART NAME	QTY	SERIAL NO.	REMARKS
0	9205229	CAB	1		(SUB FOR TH9205229) (CONTAINS ALL ITEMS ON THIS PAGE - ADDITIONAL COMPONENTS LISTED ON PREVIOUS AND FOLLOWING PAGES)
2	4456177	COVER	1		(SUB FOR TH4456177)
3	4456178	COVER	1		(SUB FOR TH4456178)
4	4456179	BOLT	2		(SUB FOR TH4456179)
5	4456181	BRACKET	2		(SUB FOR TH4456181)
6	4448311	WINDOWPANE	1		(SUB FOR 4468944 AND TH4468944)
7	4400079	SEAL	1		(SUB FOR AT218190)
8	4456183	ISOLATOR	1		(SUB FOR TH4456183)
9	4448314	WINDOWPANE	1		(SUB FOR TH4448314)
10	4474300	PIPE	1		
11	4456185	NUT	1		(SUB FOR TH4456185)
16	19M7402	CAP SCREW	4		M10 X 25
	12M7066	LOCK WASHER	4		10 MM
	24M7028	WASHER	4		10.500 X 20 X 2 MM
17	4456182	ISOLATOR	1		(SUB FOR TH4456182)
18	4414857	NUT	1		(SUB FOR AT157068)
19	4448319	ISOLATOR	1		(SUB FOR TH4448319)
20	19M8425	CAP SCREW	1		M6 X 16
	24H1287	WASHER	1		9/32" X 5/8" X 0.065"
	12M7006	LOCK WASHER	1		6 MM
22	4453667	ISOLATOR	1		(SUB FOR TH4453667)
25	4456175	ISOLATOR	2		(SUB FOR TH4456175)
26	4474298	HANDRAIL	1		
29	4456184	ISOLATOR	1		(SUB FOR TH4456184)
30	4372224	SCREW WITH WASHER	5		(SUB FOR AT214310)
31	4453663	HANDRAIL	1		(SUB FOR TH4453663)
37	21M7246	SCREW	2		M6 X 16
	12M7006	LOCK WASHER	2		6 MM
	24M7293	WASHER	2		6.500 X 13 X 1.600 MM
41	4304827	BUMPER	2		(SUB FOR AT156970)
45	4369568	GROMMET	1		(SUB FOR AT214078)
47	4474299	COVER	1		
55	4369675	ISOLATOR	2		(SUB FOR AT214173)
56	19M7550	CAP SCREW	2		M10 X 35
	24H1305	WASHER	2		13/32" X 13/16" X 0.065"
	12M7066	LOCK WASHER	2		10 MM
59	4320163	SCREW	2		(SUB FOR AT200584)
60	4372219	SCREW WITH WASHER	2		(SUB FOR AT214305)
71	4369627	STRIKER	1		(SUB FOR AT214129)
93	4453665	SHEET	1		(SUB FOR TH4453665)
95	4453666	CLIP	14		(SUB FOR TH4453666)

CAB COMPONENTS - CONTINUED
(DOOR AND WINDOWPANES)

T146539 -UN-12OCT01

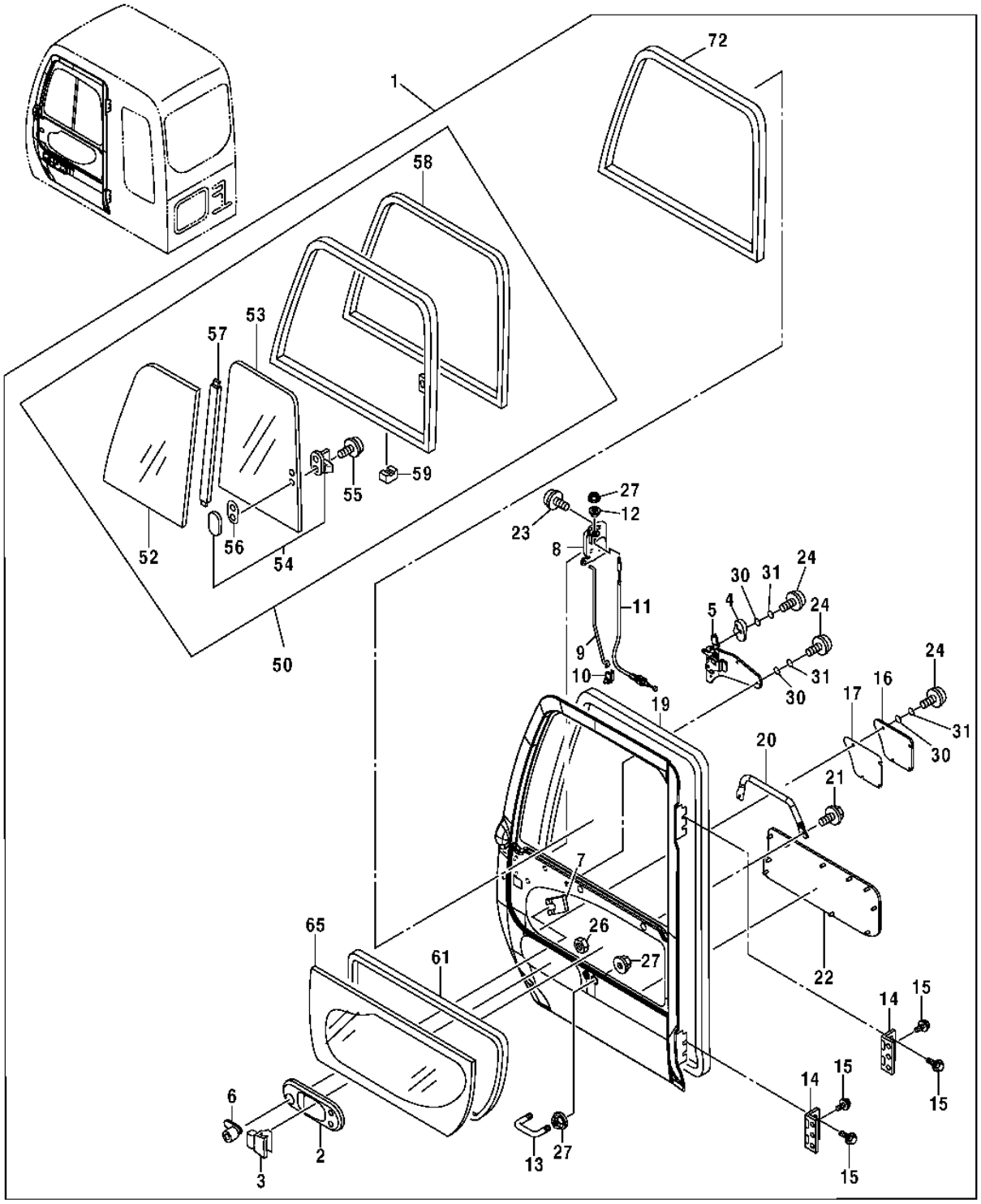

T146539

CAB COMPONENTS - CONTINUED
(DOOR AND WINDOWPANES)

KEY	PART NO.	PART NAME	QTY	SERIAL NO.	REMARKS
0	9205229	CAB	1		(SUB FOR TH9205229) (NOT ILLUSTRATED) (CONTAINS ALL ITEMS ON THIS PAGE - ADDITIONAL COMPONENTS LISTED ON PREVIOUS AND FOLLOWING PAGES)
1	4474301	DOOR	1		(ASSEMBLY)
2	4455979	COVER	1		(SUB FOR TH4455979)
3	4369645	HANDLE	1		(INNER) (SUB FOR AT214145)
4	4455975	HANDLE	1		(SUB FOR TH4455975)
5	4620431	HANDLE	1		(INNER) (SUB FOR 4474302, 4456173)
6	4362135	LOCK	1		(SUB FOR AT176789)
7	4372091	CLIP	1		(SUB FOR AT214290)
8	4455982	LOCK	1		(SUB FOR TH4455982)
9	4455983	ROD	1		(SUB FOR TH4455983)
10	4444664	HOLDER	1		(SUB FOR TH4444664)
11	4456171	WIRE	1		(SUB FOR TH4456171)
12	4455981	BUSHING	1		(SUB FOR TH4455981)
13	4369661	U-BOLT	1		(SUB FOR AT214160)
14	4474303	HINGE	2		
15	4356695	BOLT	6		(SUB FOR AT214313, 4372261)
16	4474304	COVER	1		
17	4455977	ISOLATOR	1		(SUB FOR TH4455977)
19	4455978	WEATHERSTRIP	1		(SUB FOR TH4455978)
20	4453670	HANDRAIL	1		(SUB FOR TH4453670)
21	4372212	SCREW WITH WASHER	2		(SUB FOR AT214299)
22	4453671	SHEET	1		(SUB FOR TH4453671)
23	4382885	BOLT	3		(SUB FOR AT213624, M470625)
	4372560	WASHER	3		(SUB FOR AT214314)
24	21M7246	SCREW	8		M6 X 16
26	4456172	NUT	1		(SUB FOR TH4456172)
27	4414857	NUT	4		(SUB FOR AT157068)
30	12M7006	LOCK WASHER	8		6 MM
31	24M7293	WASHER	8		6.500 X 13 X 1.600 MM
50	4453676	WINDOW	1		(BRONZE) (SUB FOR TH4453676)
	4602582	WINDOW	1		(GREEN)
52	4448308	WINDOWPANE	1		(BRONZE) (SUB FOR TH4448308)
	4602564	WINDOWPANE	1		(GREEN)
53	4448309	WINDOWPANE	1		(BRONZE) (SUB FOR TH4448309)
	4602565	WINDOWPANE	1		(GREEN)
54	4369653	LOCK	1		(SUB FOR AT214152)
55	J680410	SCREW WITH WASHER	2		(SUB FOR AT213608)
56	4420531	SPACER	1		(SUB FOR AT214292, 4372093)
57	4453675	ISOLATOR	1		(SUB FOR TH4453675)
58	4453674	WINDOW	1		(SUB FOR TH4453674)
59	4147896	SPACER	3		(SUB FOR TH108646)
61	4400087	SEAL	1		(SUB FOR AT218141)
65	4448310	WINDOWPANE	1		(BRONZE) (SUB FOR TH4468943, 4468943)
	4602566	WINDOWPANE	1		(GREEN)
72	4448315	ISOLATOR	1		(SUB FOR TH4448315)

CAB COMPONENTS - CONTINUED (WINDSHIELD)

T202795 -UN-10SEP04

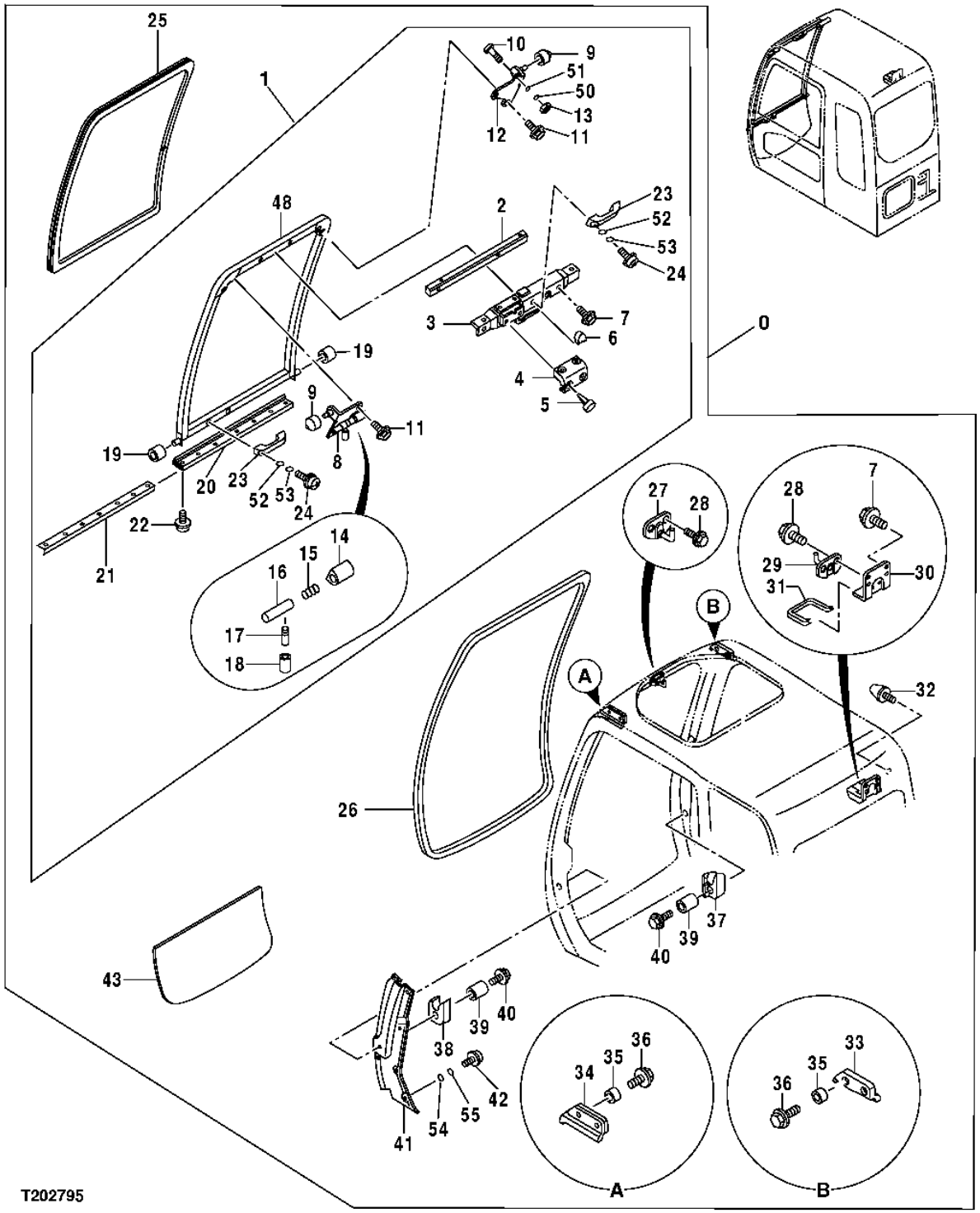

CAB COMPONENTS - CONTINUED (WINDSHIELD)

KEY	PART NO.	PART NAME	QTY	SERIAL NO.	REMARKS
0	9205229	CAB	1		(SUB FOR TH9205229) (CONTAINS ALL ITEMS ON THIS PAGE - ADDITIONAL COMPONENTS LISTED ON PREVIOUS AND FOLLOWING PAGES)
1	4637257	WINDOW	1		(SUB FOR 4624730, 4453689, TH4453689)
2	4456218	WELD NUT	1		(SUB FOR TH4456218)
3	4456219	LOCK	1		(SUB FOR TH4456219)
4	4456220	COVER	1		(SUB FOR TH4456220)
5	4456221	CLIP	4		(SUB FOR TH4456221)
6	4456222	COVER	1		(SUB FOR TH4456222)
7	4372225	SCREW WITH WASHER	4		(SUB FOR AT214311)
8	.....	BRACKET	1		(4456223 NO LONGER AVAILABLE) (FURNISH 4633401 ALONG WITH 4633400) (SUB FOR TH4456223)
	4633401	BRACKET	1		
9	4456224	ROLLER	2		(SUB FOR TH4456224)
10	4456225	SCREW	1		(SUB FOR TH4456225)
11	4372219	SCREW WITH WASHER	4		(SUB FOR AT214305)
12	.....	BRACKET	1		(4456226 NO LONGER AVAILABLE) (FURNISH 4633400 ALONG WITH 4633401) (SUB FOR TH4456226)
	4633400	BRACKET	1		
13	19M7361	CAP SCREW	1		M12 X 50
14	4456227	COVER	1		(SUB FOR TH4456227)
15	494918	SPRING	1		(SUB FOR TH106783)
16	4403327	UNIVERSAL DRIVESHAFT	1		(SUB FOR AT214104, 4369599)
17	4295480	LEVER	1		(SUB FOR AT156993)
18	4295876	COVER	1		(SUB FOR AT156994)
19	4204558	ROLLER	2		(SUB FOR TH108638)
20	4456228	ISOLATOR	1		(SUB FOR TH4456228)
21	4456229	PLATE	1		(SUB FOR TH4456229)
22	4372214	SCREW	4		(SUB FOR AT214301)
23	4204579	HANDLE	2		(SUB FOR TH108661)
24	19M8425	CAP SCREW	4		M6 X 16
25	4448306	WINDOWPANE	1		BRONZE, (SUB FOR 4474531)
	4602562	WINDOWPANE	1		(GREEN)
26	4456230	ISOLATOR	1		(SUB FOR TH4456230)
27	4456231	STRIKER	1		(SUB FOR TH4456231)
28	4372210	SCREW WITH WASHER	4		(SUB FOR AT214297)
29	4456232	STRIKER	1		(SUB FOR TH4456232)
30	4456233	BRACKET	1		(SUB FOR TH4456233)
31	4456234	ISOLATOR	1		(SUB FOR TH4456234)
32	4204586	STOP	1		(SUB FOR TH108668)
33	4456235	ISOLATOR	1		(SUB FOR TH4456235)
34	4456236	ISOLATOR	1		(SUB FOR TH4456236)
35	4456237	BUSHING	4		(SUB FOR TH4456237)
36	4456238	BOLT	4		(SUB FOR TH4456238)
37	4456239	STOP	1		(SUB FOR TH4456239)
38	4456240	STOP	1		(SUB FOR TH4456240)
39	4456241	BUSHING	2		(SUB FOR TH4456241)
40	4456242	BOLT	2		(SUB FOR TH4456242)
41	4474532	COVER	1		
42	21M7246	SCREW	6		M6 X 16
43	4448307	WINDOWPANE	1		(BRONZE) (SUB FOR TH4448307)
	4602563	WINDOWPANE	1		(GREEN)
48	4456217	FRAME	1		
50	12M7068	LOCK WASHER	1		14 MM
51	24M7047	WASHER	1		13 X 24 X 2.500 MM
52	12M7006	LOCK WASHER	4		6 MM
53	24M7293	WASHER	4		6.500 X 13 X 1.600 MM
54	12M7006	LOCK WASHER	6		6 MM
55	24M7293	WASHER	6		6.500 X 13 X 1.600 MM

CAB COMPONENTS - CONTINUED (RIGHT WINDOW)

T158509 -UN-20AUG02

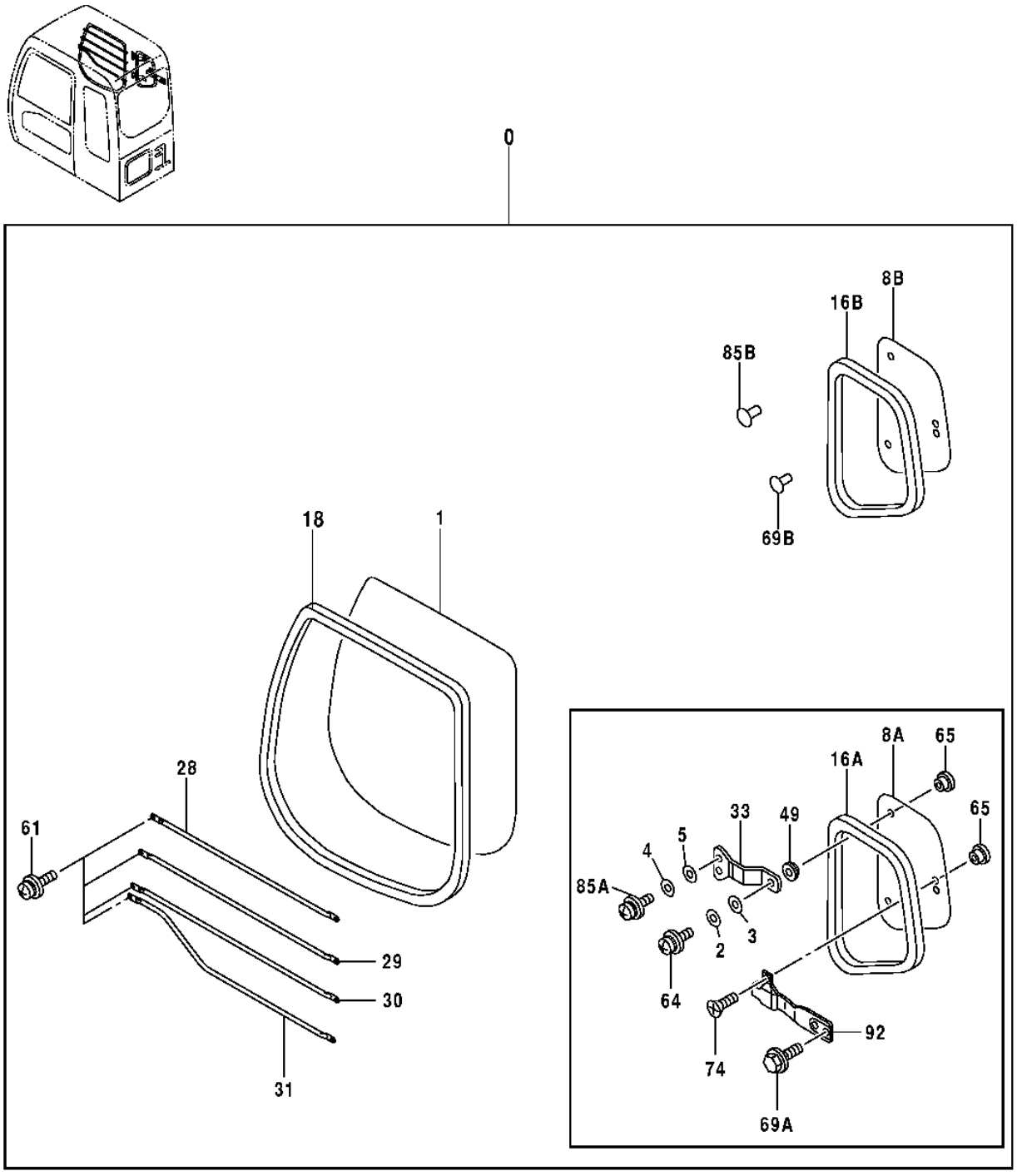

T158509

2B16

CAB COMPONENTS - CONTINUED (RIGHT WINDOW)

KEY	PART NO.	PART NAME	QTY	SERIAL NO.	REMARKS
0	9205229	CAB	1		(SUB FOR TH9205229) (CONTAINS ALL ITEMS ON THIS PAGE - ADDITIONAL COMPONENTS LISTED ON PREVIOUS AND FOLLOWING PAGES)
1	4448312	WINDOWPANE	1	-XXXXXX	(BRONZE TINT)
	4602568	WINDOWPANE	1	XXXXXX-	(GREEN TINT)
2	12M7064	LOCK WASHER	2	-XXXXXX	5 MM
3	24M7348	WASHER	2	-XXXXXX	5.500 X 10 X 1 MM
4	12M7006	LOCK WASHER	4	-XXXXXX	6 MM
5	24M7293	WASHER	4	-XXXXXX	6.500 X 13 X 1.600 MM
8A	4448313	WINDOWPANE	1	-XXXXXX	(BRONZE TINT)
8B	4602570	WINDOWPANE	1	XXXXXX-	(GREEN TINT)
16A	4463390	ISOLATOR	1	-XXXXXX	(SUB FOR 4453680)
16B	4602576	ISOLATOR	1	XXXXXX-	
18	4448318	ISOLATOR	1		(SUB FOR TH4448318)
28	4463391	GUARD	1		(SUB FOR 4453681)
29	4463392	GUARD	1		(SUB FOR 4453682 AND TH4453682)
30	4463393	GUARD	1		(SUB FOR TH4453683 AND 4453683)
31	4463394	GUARD	1		(SUB FOR TH4453684 AND 4453684)
33	4369670	BRACKET	2	-XXXXXX	(SUB FOR AT214169)
49	4369671	BUSHING	2	-XXXXXX	(SUB FOR AT214170)
61	4372212	SCREW WITH WASHER	8		(SUB FOR AT214299)
64	21M7271	SCREW	2	-XXXXXX	M5 X 16, (SUB FOR 21M6070)
65	4369674	BUSHING	4	-XXXXXX	(SUB FOR AT214172)
69A	4372223	SCREW WITH WASHER	2	-XXXXXX	(SUB FOR AT214309)
69B	4377817	CLIP	2	XXXXXX-	
74	4372213	SCREW	2	-XXXXXX	(SUB FOR AT214300)
85A	21M7246	SCREW	4	-XXXXXX	
85B	4372088	CLIP	4	XXXXXX-	
92	4369672	LOCK	1	-XXXXXX	(SUB FOR AT214171)

CAB COMPONENTS - CONTINUED (TOP HATCH)

T188477 -UN-13MAR03

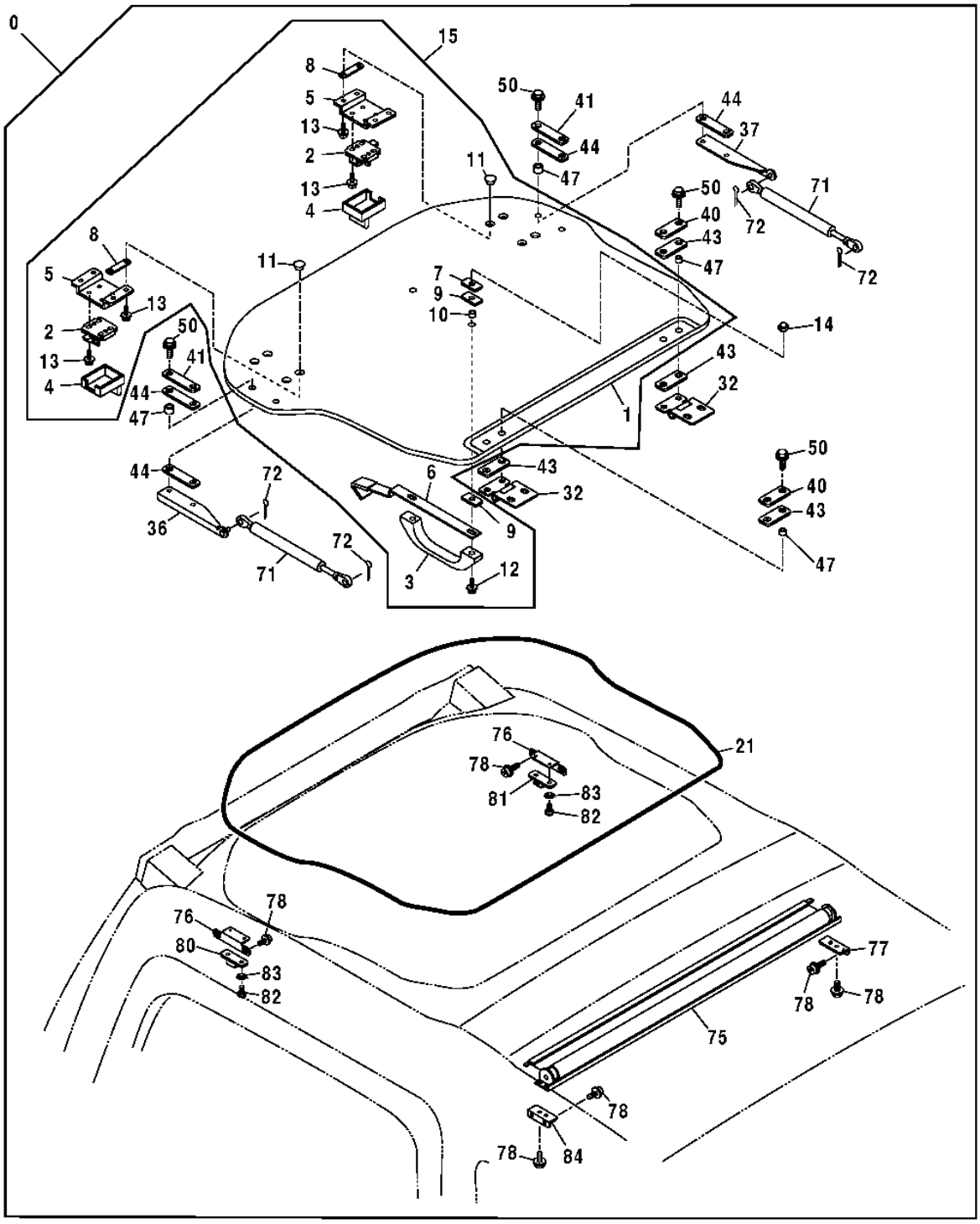

T188477

CAB COMPONENTS

KEY	PART NO.	PART NAME	QTY	SERIAL NO.	REMARKS
0	9205229	CAB	1		(SUB FOR TH9205229) (CONTAINS ALL ITEMS ON THIS PAGE - ADDITIONAL COMPONENTS LISTED ON PREVIOUS AND FOLLOWING PAGES)
1	4460405	WINDOW	1		
2	4369615	LOCK	2		(SUB FOR (2) AT214118)
3	4204579	HANDLE	1		(SUB FOR 4411821)
4	4369616	COVER	2		(SUB FOR (2) AT214119)
5	4474479	BRACKET	2		
6	4474498	BRACKET	1		
7	4386452	PLATE	2		
8	4474480	PACKING	4		
9	4386450	PACKING	4		
10	4474494	BUSHING	2		
11	4369674	BUSHING	8		(SUB FOR (8) AT214172)
12	J680630	SCREW	2		
13	J680514	SCREW WITH WASHER	16		(SUB FOR (16) AT213610)
14	4474493	NUT	2		
15	.....	ROOF	1		KIT(ROOF ASSEMBLY) (4456952 NOT AVAILABLE)
21	4369553	WEATHERSTRIP	1		
32	4474478	HINGE	2		
36	4477219	BRACKET	1		
37	4477218	BRACKET	1		
40	4474477	PLATE	2		
41	4477217	PLATE	2		
43	4474476	PACKING	4		
44	4477216	PACKING	4		
47	4474482	BUSHING	8		
50	4372221	SCREW WITH WASHER	8		(SUB FOR (8) AT214307)
71	4369619	CYLINDER	2		(SUB FOR (2) AT214122)
72	H132922	COTTER PIN	4		
75	4474499	ROLLER	1		
76	4474514	BRACKET	2		
77	4609477	BRACKET	1		(SUB FOR 4474513) (RIGHT BRACKET)
	4609479	SCREW	1		
	4609480	ISOLATOR	1		
78	4444634	SCREW	12		
80	4474518	STOP	1		
81	4474517	STOP	1		
82	21M7258	SCREW	4		
83	4459249	WASHER	4		
84	4609478	BRACKET	1		(SUB FOR 4474513) (LEFT BRACKET)
	4609479	SCREW	1		
	4609480	ISOLATOR	1		

CAB COMPONENTS - CONTINUED (DOOR LATCH)

T142617 -UN-14JUN01

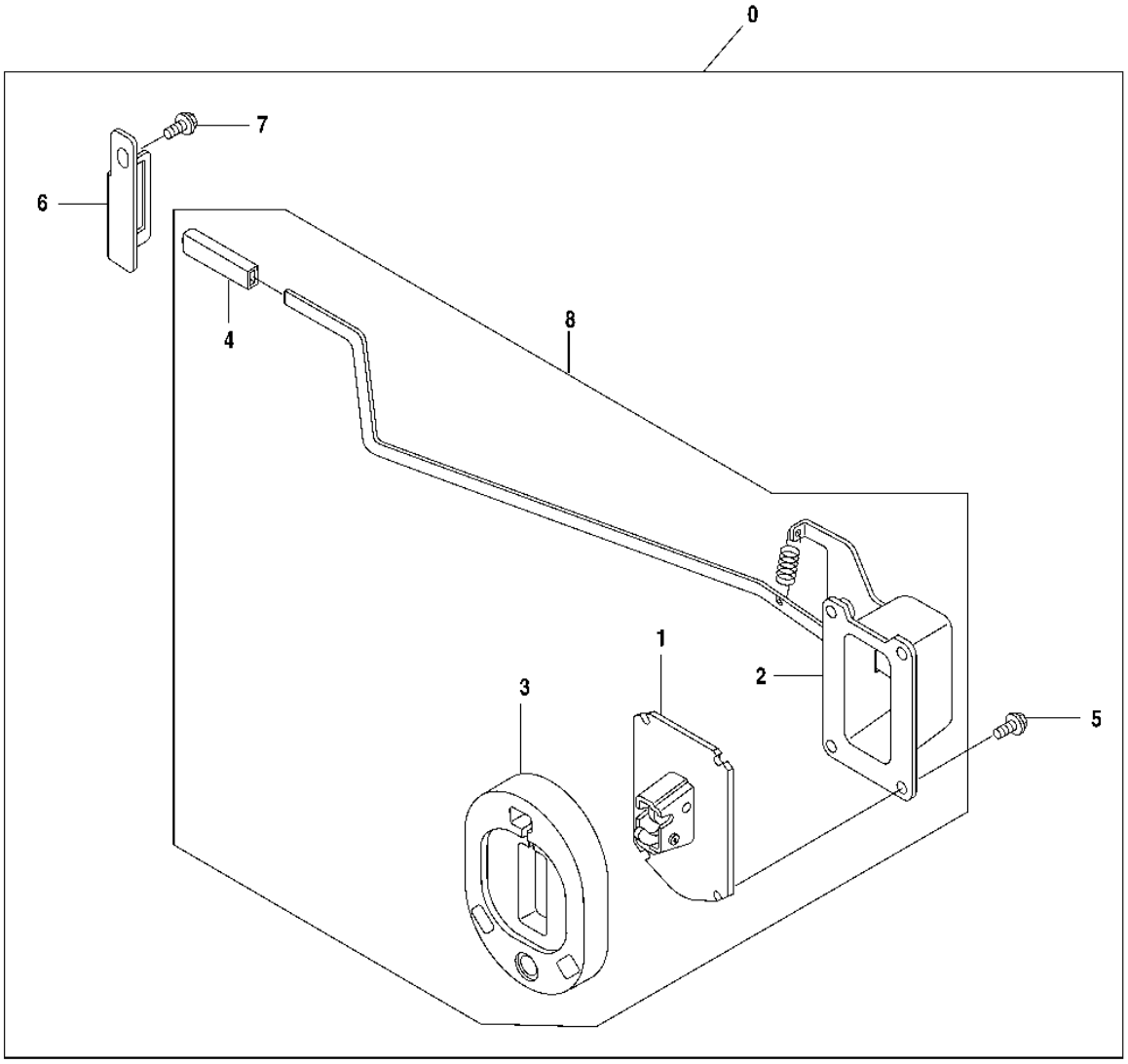

T142617

CAB COMPONENTS - CONTINUED (DOOR LATCH)

KEY	PART NO.	PART NAME	QTY	SERIAL NO.	REMARKS
0	9205229	CAB	1		(CONTAINS ALL ITEMS ON THIS PAGE - ADDITIONAL COMPONENTS ON PREVIOUS PAGES) (SUB FOR TH9205229)
1	4456245	CATCH	1		(ALSO ORDER 4456246, 4456247, 4089012)
2	4456246	CASE	1		(SUB FOR TH4456246)
3	4456247	STOP	1		(SUB FOR TH4456247)
4	4089012	CAP	4		
5	19M7881	SCREW	4		M8 X 20
	12M7056	LOCK WASHER	4		8 MM, (SUB FOR 12M7065)
6	4456248	STOP	1		(SUB FOR TH4456248)
7	19M7402	CAP SCREW	1		M10 X 25
	12M7066	LOCK WASHER	1		10 MM
	24M7028	WASHER	1		10.500 X 20 X 2 MM
8	.....	CATCH	1		DOOR CATCH ASSEMBLY (4456244 NOT AVAILABLE)

SECONDARY EXIT KIT

T150988 -UN-06FEB02

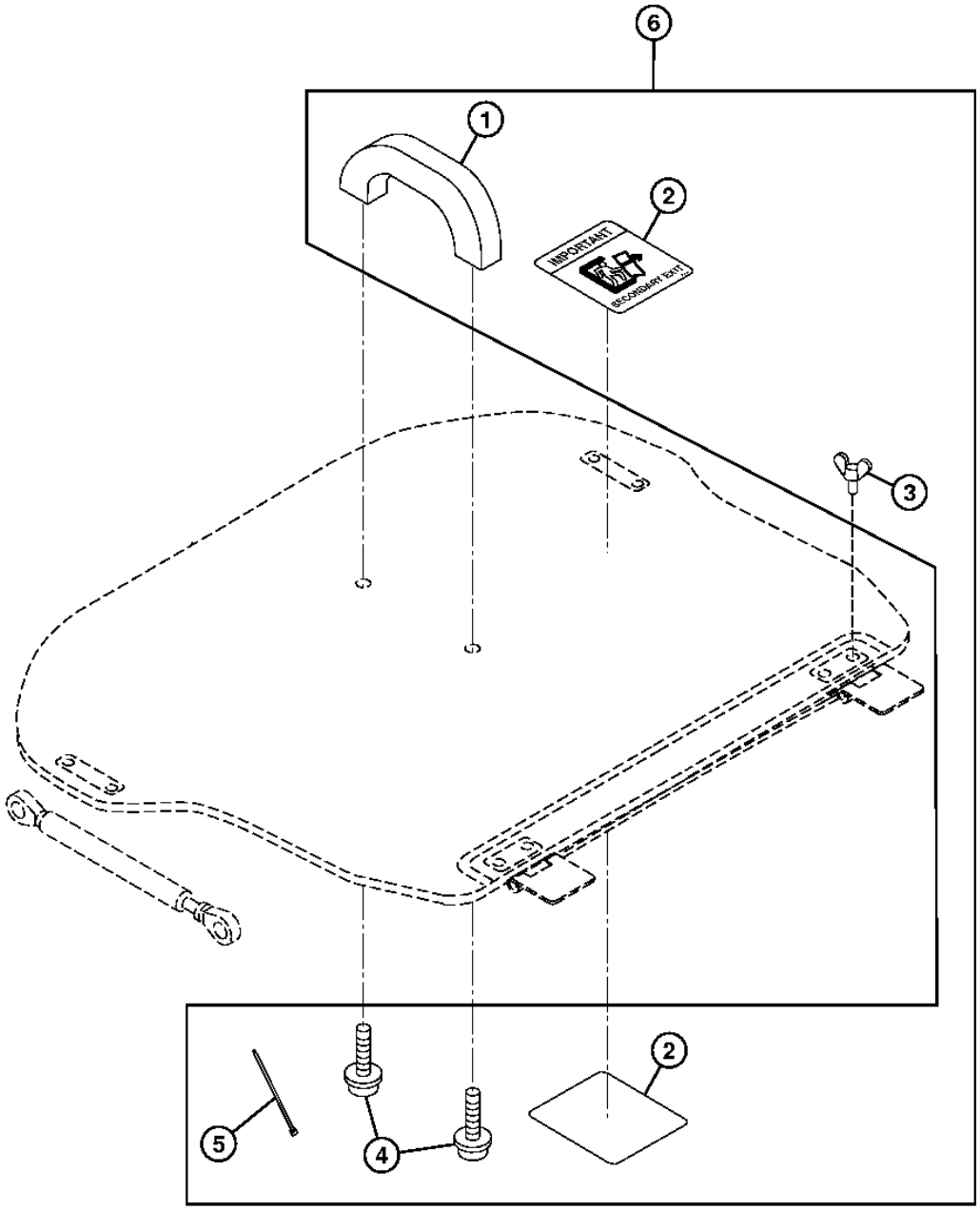

T150988

2B22

SECONDARY EXIT KIT

KEY	PART NO.	PART NAME	QTY	SERIAL NO.	REMARKS
1	4204579	HANDLE	1		(SUB FOR TH108661)
2	T167256	LABEL	2		
3	21M7243	WING SCREW	4		M8 X 16
4	21M7085	SCREW	2		M6 X 20, (SUB FOR 21M7322)
5	R44302	TIE BAND	2		
6	**AT196567**	**KIT**	**1**		**(WHOLEGOODS) (SECONDARY EXIT KIT)**

WINDOW WASHER

T143286 -UN-28JUN01

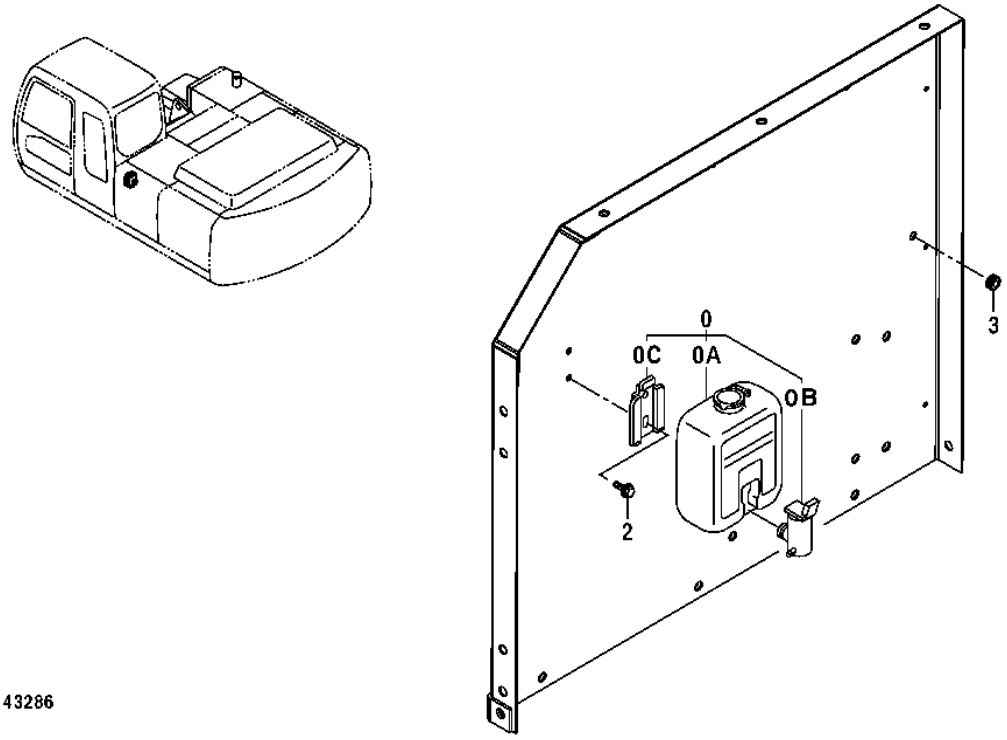

T143286

2B24

WINDOW WASHER

KEY	PART NO.	PART NAME	QTY	SERIAL NO.	REMARKS
0	4333185	WINDSHIELD WASHER	1		(SUB FOR AT177804)
0A	4369472	RESERVOIR	1		(SUB FOR AT177805)
0B	4326095	PUMP	1		(SUB FOR AT187562)
0C	4338974	BRACKET	1		(SUB FOR AT177806)
2	19M7923	CAP SCREW	2		M6 X 12
	24M7054	WASHER	2		6.400 X 12 X 1.600 MM
	12M7006	LOCK WASHER	2		6 MM
3	94-2817	GROMMET	1		(SUB FOR TH102171)

PLATFORM AND MAT

T142627 -UN-14JUN01

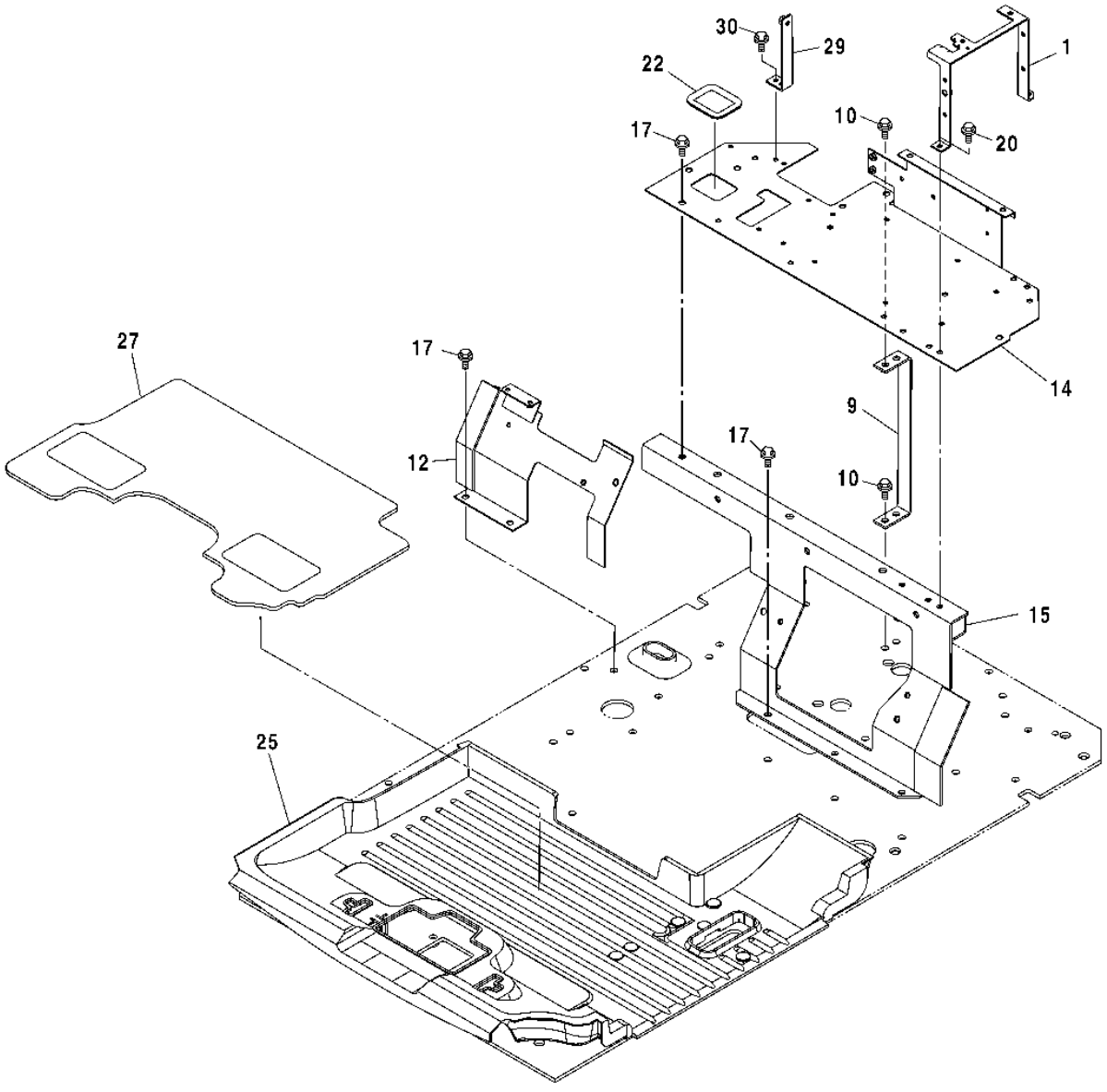

PLATFORM AND MAT

KEY	PART NO.	PART NAME	QTY	SERIAL NO.	REMARKS
1	7039389	BRACKET	1		(SUB FOR TH7039389)
9	8076619	SUPPORT	1		(SUB FOR TH8076619)
10	19M7402	CAP SCREW	3		M10 X 25
	12M7066	LOCK WASHER	3		10 MM
12	6019838	BRACKET	1		(SUB FOR TH6019838)
14	6019252	BRACKET	1		(SUB FOR TH6019252)
15	5007342	BRACKET	1		(SUB FOR TH5007342)
17	19M7402	CAP SCREW	7		M10 X 25
	12M7066	LOCK WASHER	7		10 MM
	24M7028	WASHER	7		10.500 X 20 X 2 MM
20	19M7881	SCREW	2		M8 X 20
	12M7056	LOCK WASHER	2		8 MM, (SUB FOR 12M7065)
22	4445220	BUSHING	1		(SUB FOR TH4445220)
25	0003929	MAT	1		(SUB FOR TH0003929)
27	4448601	MAT	1		(SUB FOR TH4448601)
29	9757192	BRACKET	1		(SUB FOR TH9757192)
30	19M8425	CAP SCREW	2		M6 X 16
	12M7006	LOCK WASHER	2		6 MM
	24M7293	WASHER	2		6.500 X 13 X 1.600 MM

PLATFORM

T197618 -UN-05FEB04

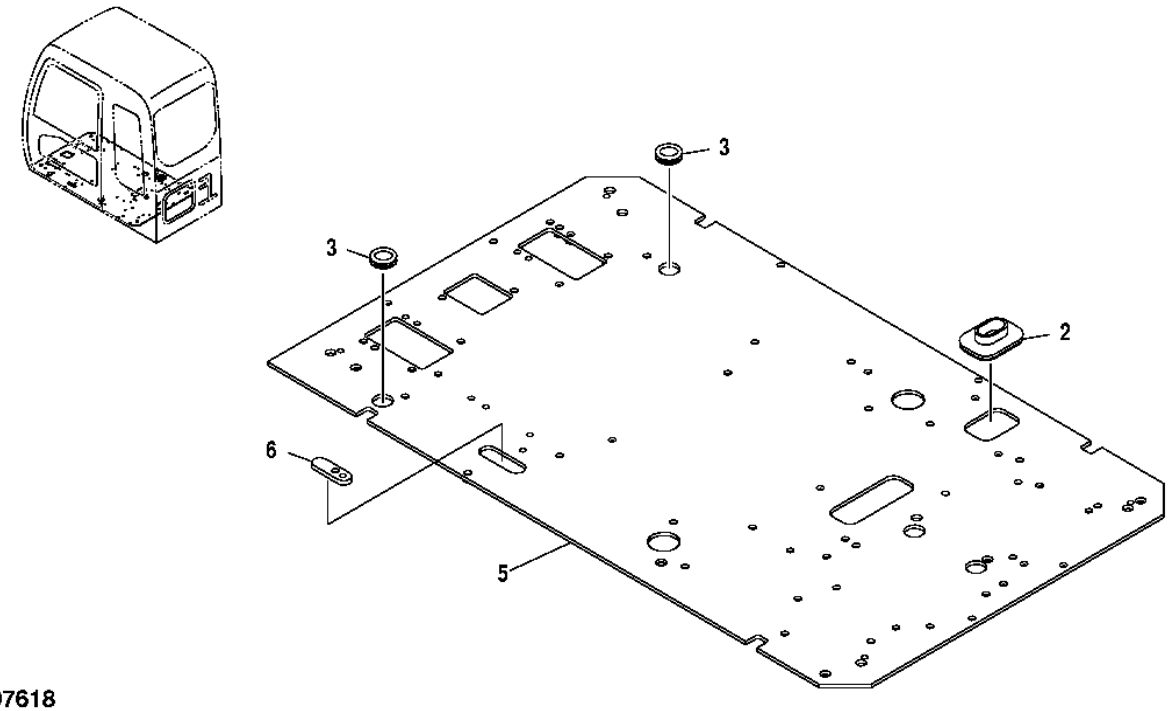

T197618

PLATFORM

KEY	PART NO.	PART NAME	QTY	SERIAL NO.	REMARKS
2	4351011	GROMMET	1		(SUB FOR AT213954)
3	4205084	GROMMET	2		(SUB FOR TH108616)
5	6020352	PLATE	1		(SUB FOR TH6020352)
6	4480216	BUSHING	1		

WINDOW GUARDS

T150991 -UN-06FEB02

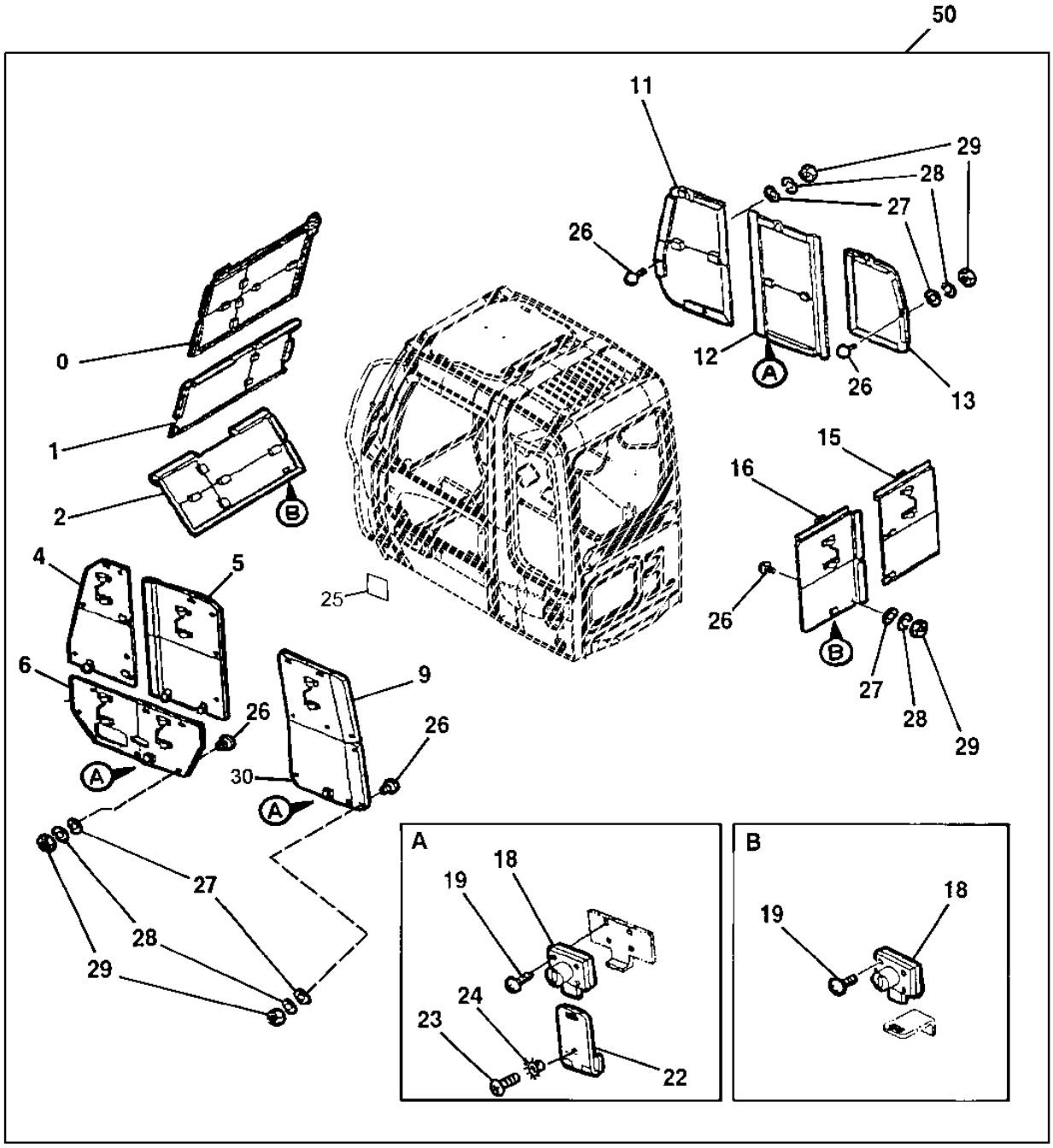

T150991

WINDOW GUARDS

KEY	PART NO.	PART NAME	QTY	SERIAL NO.	REMARKS
0	AP38748	COVER	1		
1	AP38749	COVER	1		
2	AP38750	COVER	1		
4	AP38751	COVER	1		
5	AP38752	COVER	1		
6	AP38753	COVER	1		
9	AP38754	COVER	1		
11	AP38756	COVER	1		
12	AP38757	COVER	1		
13	AP38758	COVER	1		
15	AP38760	COVER	1		
16	AP38759	COVER	1		
18	4361601	LOCK	5		(SUB FOR AT176636)
18A	AT194969	KEY	1		(SUB FOR AT147803) (H800) (NOT ILLUSTRATED)
19	21M7022	SCREW	20		M5 X 20
	12M7064	LOCK WASHER	20		5 MM
22	TH108983	HINGE	3		
23	21M7249	SCREW	6		M5 X 10
24	T205218	WASHER	6		(SUB FOR TH111908, 4107762)
25	T188737	LABEL	1		
26	9738682	STOP	33		(SUB FOR AT155189)
27	24M7027	WASHER	33		5.300 X 10 X 1 MM
28	12M7064	LOCK WASHER	33		5 MM
29	14M7297	NUT	33		M5
30	AP38755	COVER	1		
50	**AP38763**	**KIT**	**1**		**WHOLEGOODS (VANDAL PROTECTION)**

CAB WITH INTEGRATED HEADGUARD

T189178 -UN-21APR03

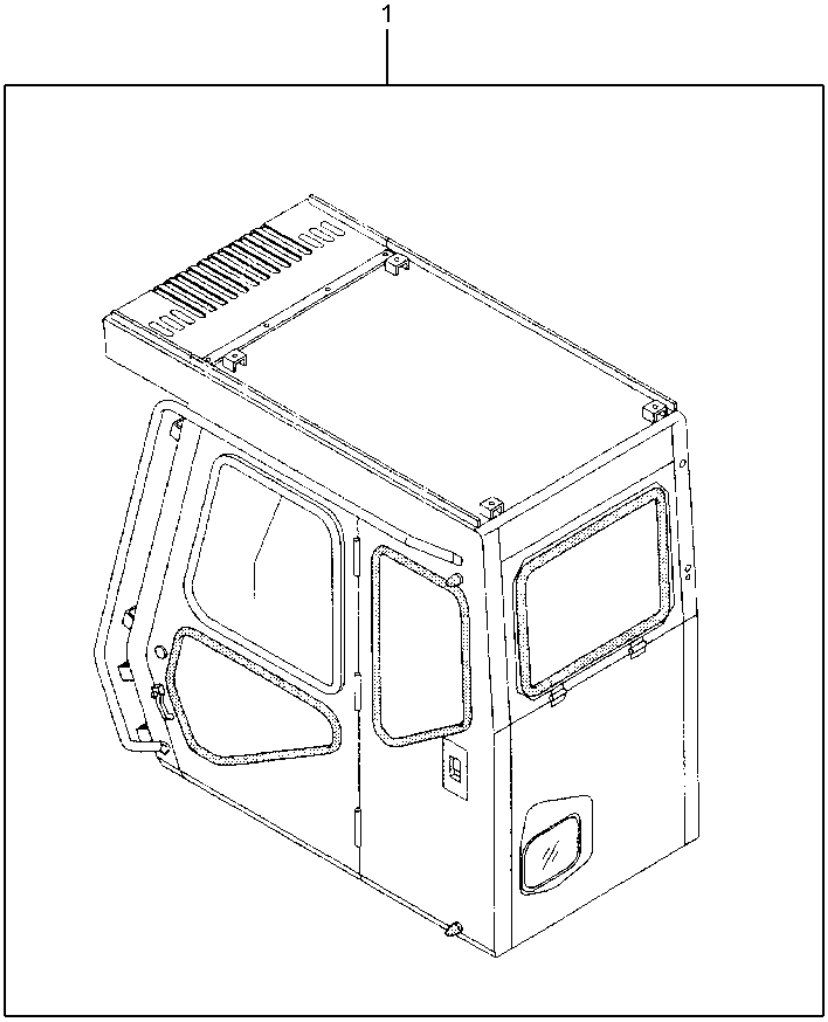

T189178

CAB WITH INTEGRATED HEADGUARD

KEY	PART NO.	PART NAME	QTY	SERIAL NO.	REMARKS
1	4427399	CAB	1		(SUB FOR TH9205229) (SEE FOLLOWING PAGES FOR COMPONENTS)

CAB WITH INTEGRATED HEADGUARD COMPONENTS

T189219 -UN-17APR03

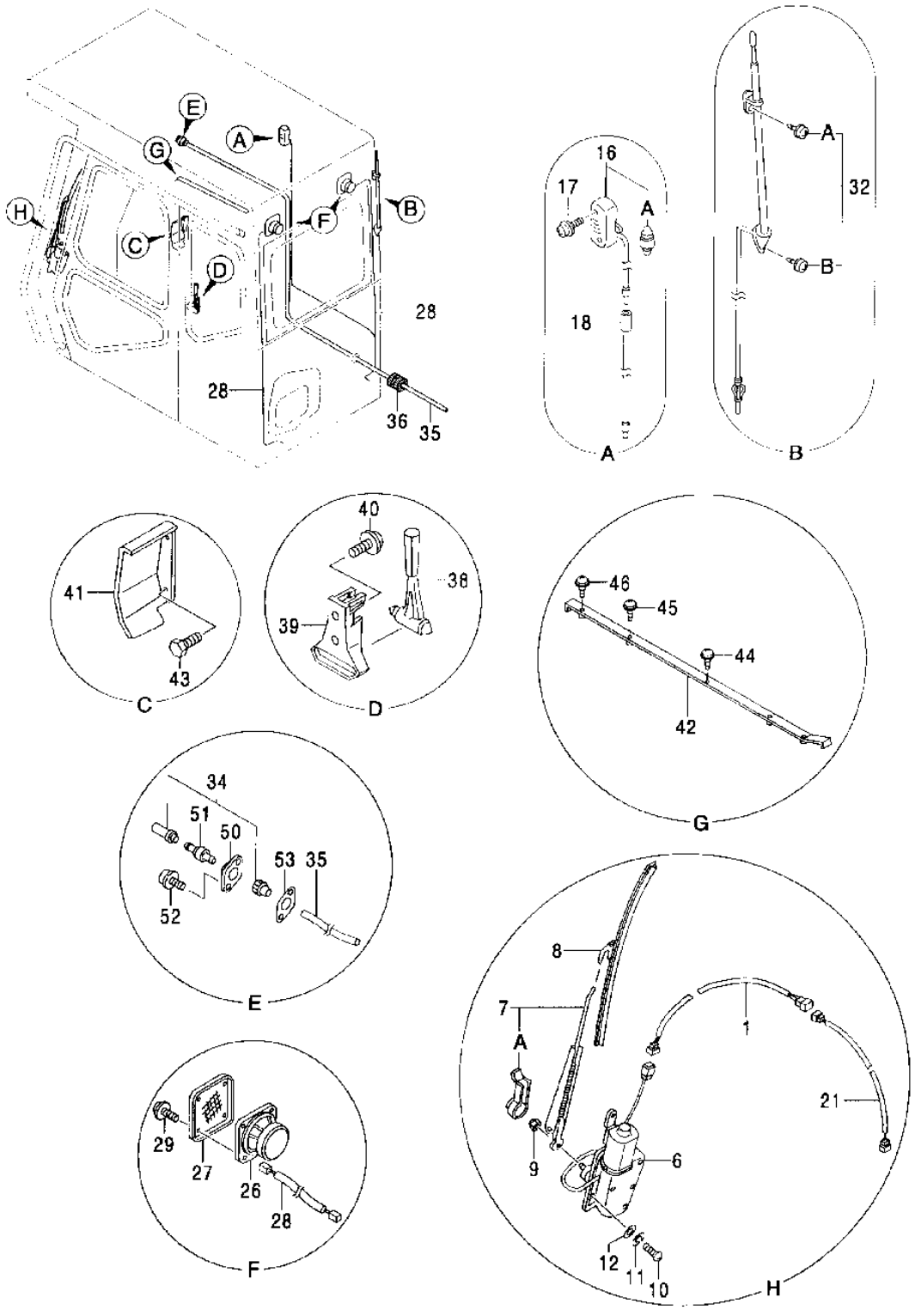

T189219

CAB WITH INTEGRATED HEADGUARD COMPONENTS

KEY	PART NO.	PART NAME	QTY	SERIAL NO.	REMARKS
1	4461542	WIRING HARNESS	1		(SUB FOR TH9205229) (SEE FOLLOWING PAGES FOR COMPONENTS)
6	4256364	WIPER MOTOR	1		
7	4257131	WIPER ARM	1		
7A	4311679	COVER	1		
8	.....	WIPER BLADE	1		(SUB TY16304 AND TY16323)
9	14M7273	NUT	1		M8
10	21M7288	SCREW	3		M6 X 10
11	12M7006	LOCK WASHER	3		6 MM
12	24M7054	WASHER	3		6.400 X 12 X 1.600 MM
16	4187082	LAMP	1		
16A	4187083	BULB	1		
17	12M7064	LOCK WASHER	2		5 MM
18	4260369	WIRING HARNESS	1		
21	4456787	WIRING HARNESS	1		
26	4361302	SPEAKER	2		
27	4364504	GRILLE	2		
28	4372759	WIRING HARNESS	2		
29	J680414	SCREW	8		
32	4280527	ANTENNA	1		
32A	4210412	SCREW	1		
32B	4210413	SCREW	1		
34	4367485	NOZZLE	1		
35	4207832	HOSE	1		
36	4287903	GROMMET	1		
38	4362700	HAMMER	1		
39	2038764	BRACKET	1		
40	21M7265	SCREW	2		M5 X 12, (SUB FOR J460512, ALONG WITH 12M7064 AND 24M7027)
	12M7064	LOCK WASHER	2		5 MM (0.197")
	24M7027	WASHER	2		5.300 X 10 X 1 MM (0.209" X 0.394" X 0.039")
41	9747856	COVER	1		
42	8068295	COVER	1		
43	19M7162	CAP SCREW	2		M8 X 16
44	21M7246	SCREW	1		M6 X 16
45	21M7277	SCREW	2		M6 X 25
46	21M7247	SCREW	2		M6 X 35
50	4367486	ADAPTER	1		
51	4367481	FLOW CONTROL HYD. VALVE	1		
52	4372608	SCREW	2		
53	4369544	GASKET	1		

CAB WITH INTEGRATED HEADGUARD RIGHT SIDE WINDOW GUARDS

T189185 -UN-21APR03

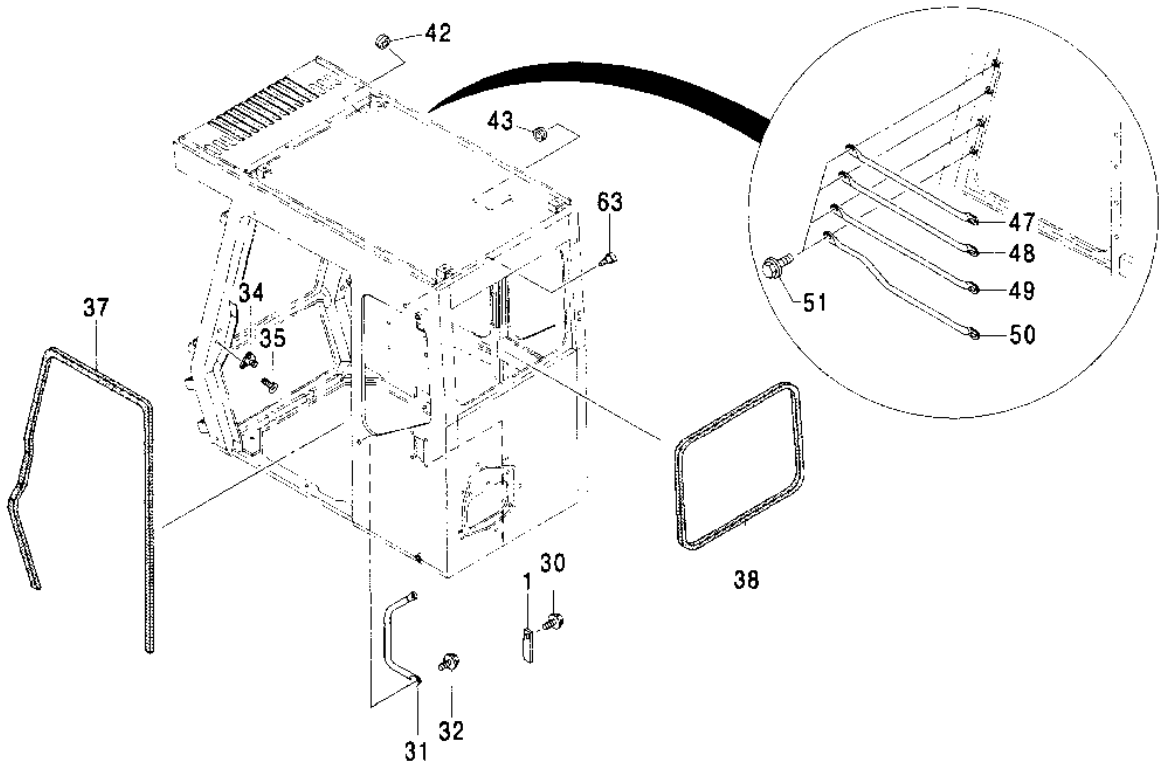

T189185

2C12

CAB WITH INTEGRATED HEADGUARD RIGHT SIDE WINDOW GUARDS

KEY	PART NO.	PART NAME	QTY	SERIAL NO.	REMARKS
1	4420540	GUIDE	1		
30	12M7065	LOCK WASHER	1		8 MM
31	4222359	HANDRAIL	1		
32	12M7066	LOCK WASHER	2		10 MM
34	4128473	STRIKER	1		
35	4320163	SCREW	2		
37	4411588	ISOLATOR	1		
38	4412124	ISOLATOR	1		
42	4385954	BUSHING	1		
43	4476843	BUSHING	1		
47	4476862	GUARD	1		
48	4476863	GUARD	1		
49	4476867	GUARD	1		
50	4476868	GUARD	1		
51	19M7162	CAP SCREW	8		M8 X 16
	12M7065	LOCK WASHER	8		8 MM
	24H1136	WASHER	8		11/32" X 11/16" X 0.065"
63	4386413	HOOK	1		

CAB WITH INTEGRATED HEADGUARD DOOR AND REAR WINDOW

T189189 -UN-21APR03

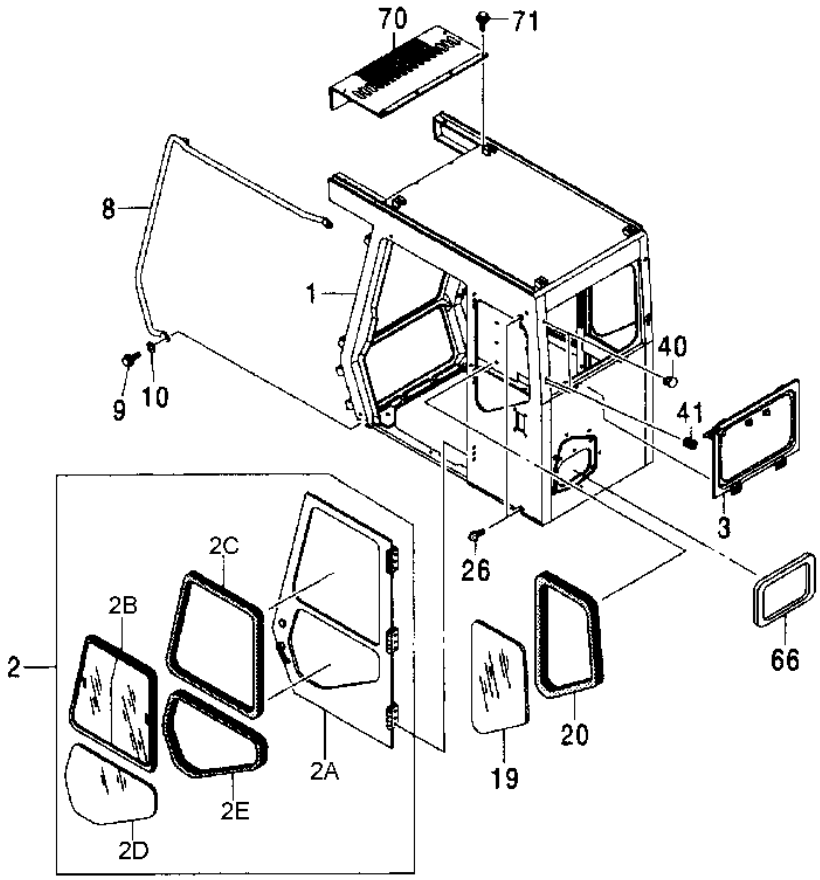

T189189

2C14

CAB WITH INTEGRATED HEADGUARD DOOR AND REAR WINDOW

KEY	PART NO.	PART NAME	QTY	SERIAL NO.	REMARKS
1	4473825	FRAME	1		
2	4474308	DOOR	1		
2A	4474295	DOOR	1		
2B	4474474	WINDOWPANE	1		
2C	4471306	ISOLATOR	1		
2D	4464609	WINDOWPANE	1		
2E	4464599	ISOLATOR	1		
3	4474289	WINDOW	1		
8	4467014	HANDRAIL	1		
9	19M7550	CAP SCREW	3		M10 X 35
10	24M7239	WASHER	3		10.700 X 21 X 2.500 MM
19	4387922	WINDOWPANE	1		
20	4387925	ISOLATOR	1		
26	4204586	STOP	2		
40	4374624	CLIP	2		
41	4266963	PLUG	1		
66	4453667	ISOLATOR	1		
70	4474315	COVER	1		
71	19M7402	CAP SCREW	6		M10 X 25

DOOR HOLD OPEN LATCH (CAB WITH INTEGRATED HEADGUARD)

T189191 -UN-21APR03

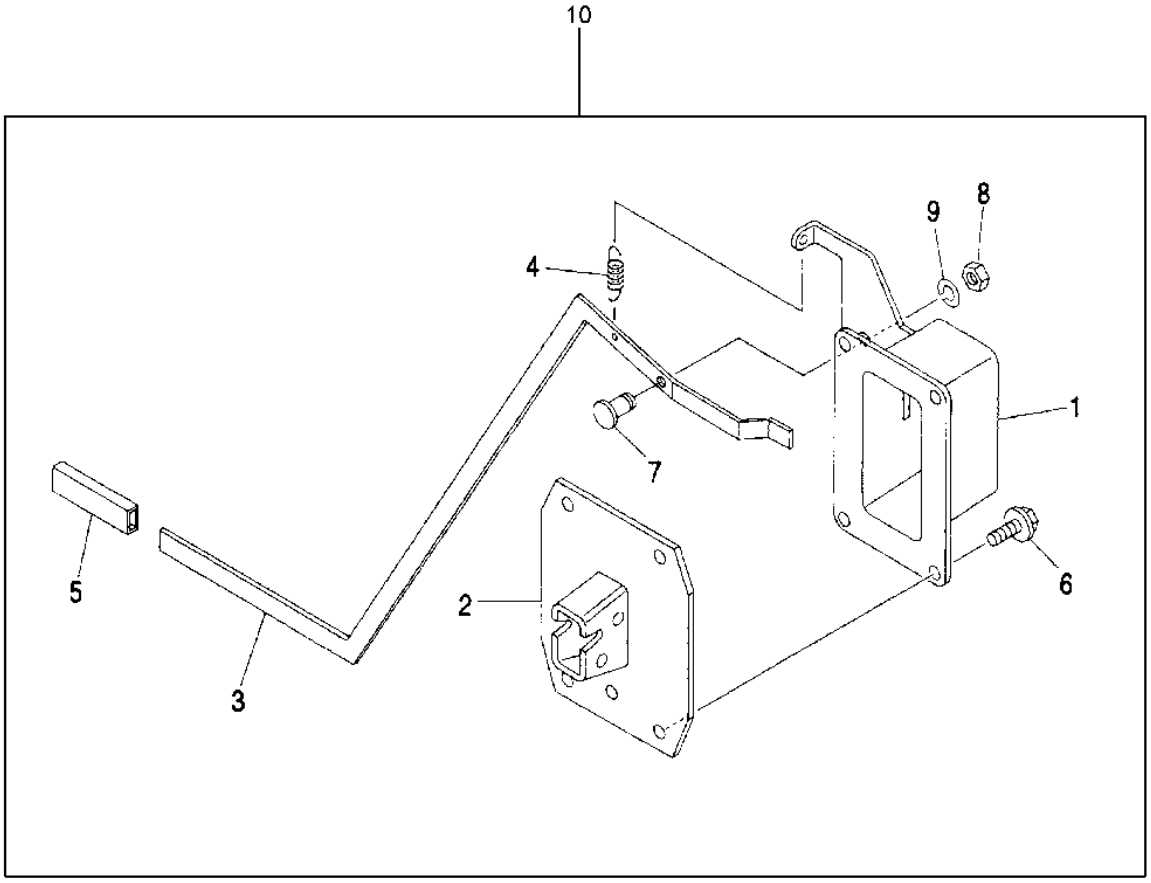

T189191

2C16

CAB WITH INTEGRATED HEADGUARD

KEY	PART NO.	PART NAME	QTY	SERIAL NO.	REMARKS
1	4372095	HOUSING	1		
2	4420798	CATCH	1		
3	4476877	LEVER	1		
4	4208103	SPRING	1		
5	4089012	CAP	1		
6	J900825	CAP SCREW	4		
7	4372209	PIN	1		
8	14M7272	NUT	1		M6, (SUB FOR M500605)
9	12M7006	LOCK WASHER	1		(SUB FOR A590906)
10	4476874	DOOR	1		

CAB MOUNTS (CAB WITH INTEGRATED HEADGUARD)

T189207 -UN-21APR03

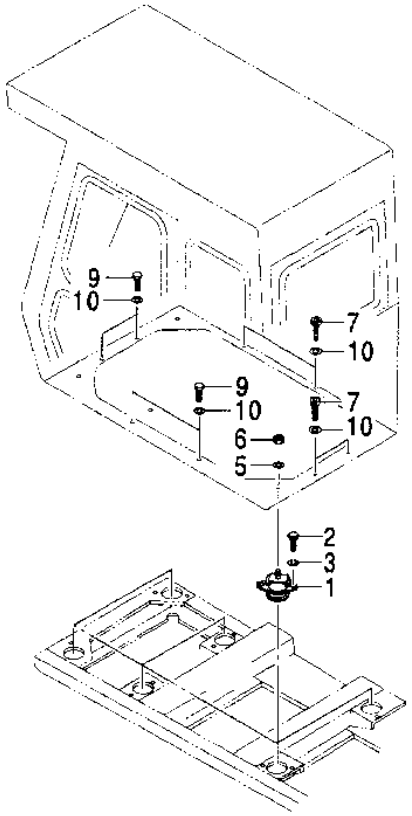

T189207

2C18

CAB MOUNTS (CAB WITH INTEGRATED HEADGUARD)

KEY	PART NO.	PART NAME	QTY	SERIAL NO.	REMARKS
1	4602034	ISOLATOR	6		(SUB FOR 4368327)
2	J921240	CAP SCREW	12		(SUB FOR 4330785)
3	12H301	LOCK WASHER	12		1/2"
5	24M7338	WASHER	6		17 X 30 X 3 MM
6	14M7328	LOCK NUT	6		
7	J781030	SCREW	4		
9	19M7662	CAP SCREW	4		M10 X 30
10	24M7346	WASHER	8		11 X 20 X 2 MM

CAB DOOR WINDOW COMPONENTS (CAB WITH INTEGRATED HEADGUARD)

T189208 -UN-21APR03

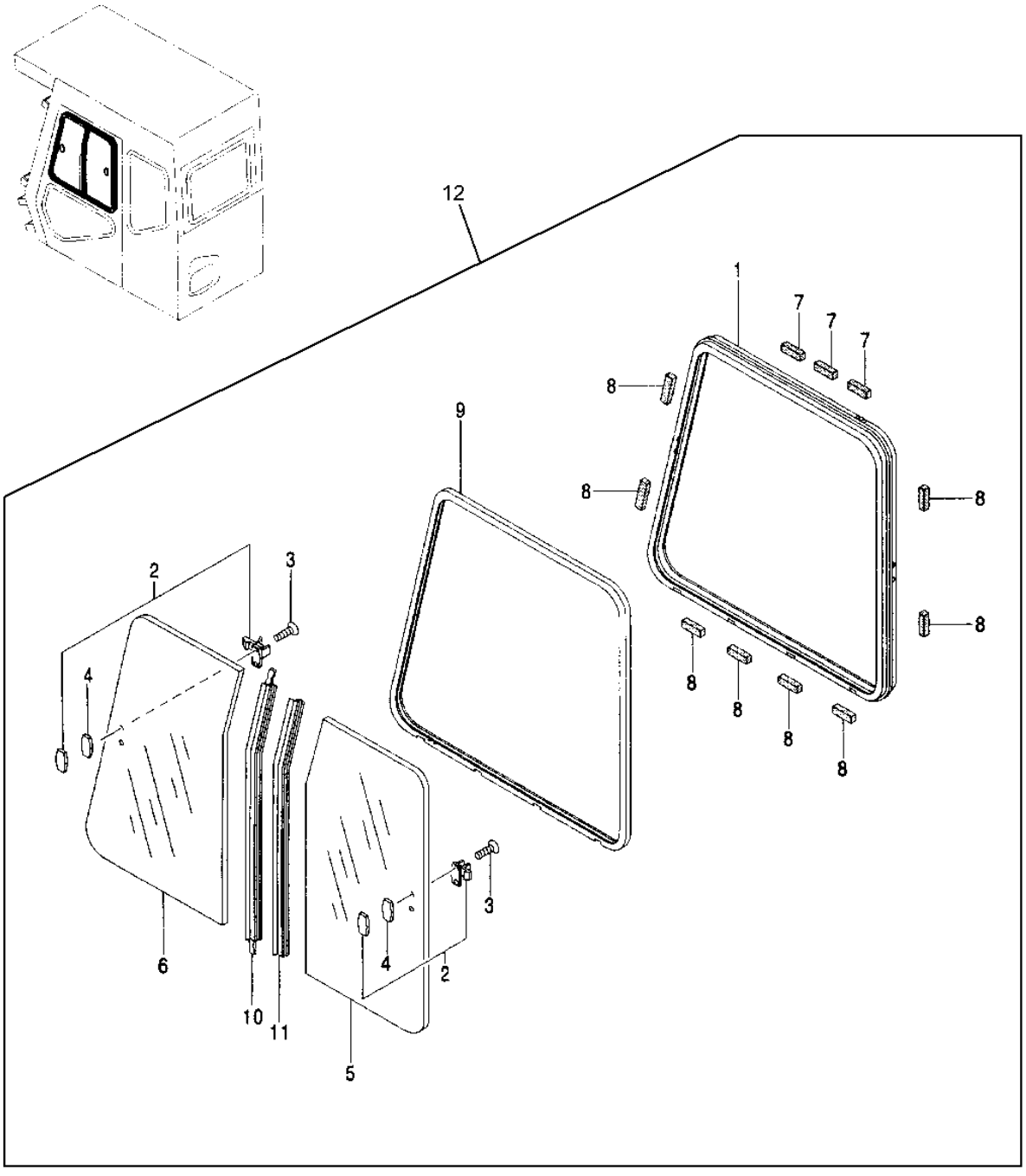

T189208

CAB DOOR WINDOW COMPONENTS (CAB WITH INTEGRATED HEADGUARD)

KEY	PART NO.	PART NAME	QTY	SERIAL NO.	REMARKS
1	4474293	FRAME	1		
2	4369653	LOCK	2		
3	J680410	SCREW WITH WASHER	4		
4	4411679	SPACER	2		
5	4464568	WINDOWPANE	1		
6	4464569	WINDOWPANE	1		
7	4411682	ISOLATOR	3		
8	4411683	ISOLATOR	8		
9	4474294	CHANNEL	1		
10	4464559	SEAL	1		
11	4474469	SEAL	1		
12	4474248	WINDOWPANE	1		

CAB REAR WINDOW COMPONENTS (CAB WITH INTEGRATED HEADGUARD)

T189211 -UN-21APR03

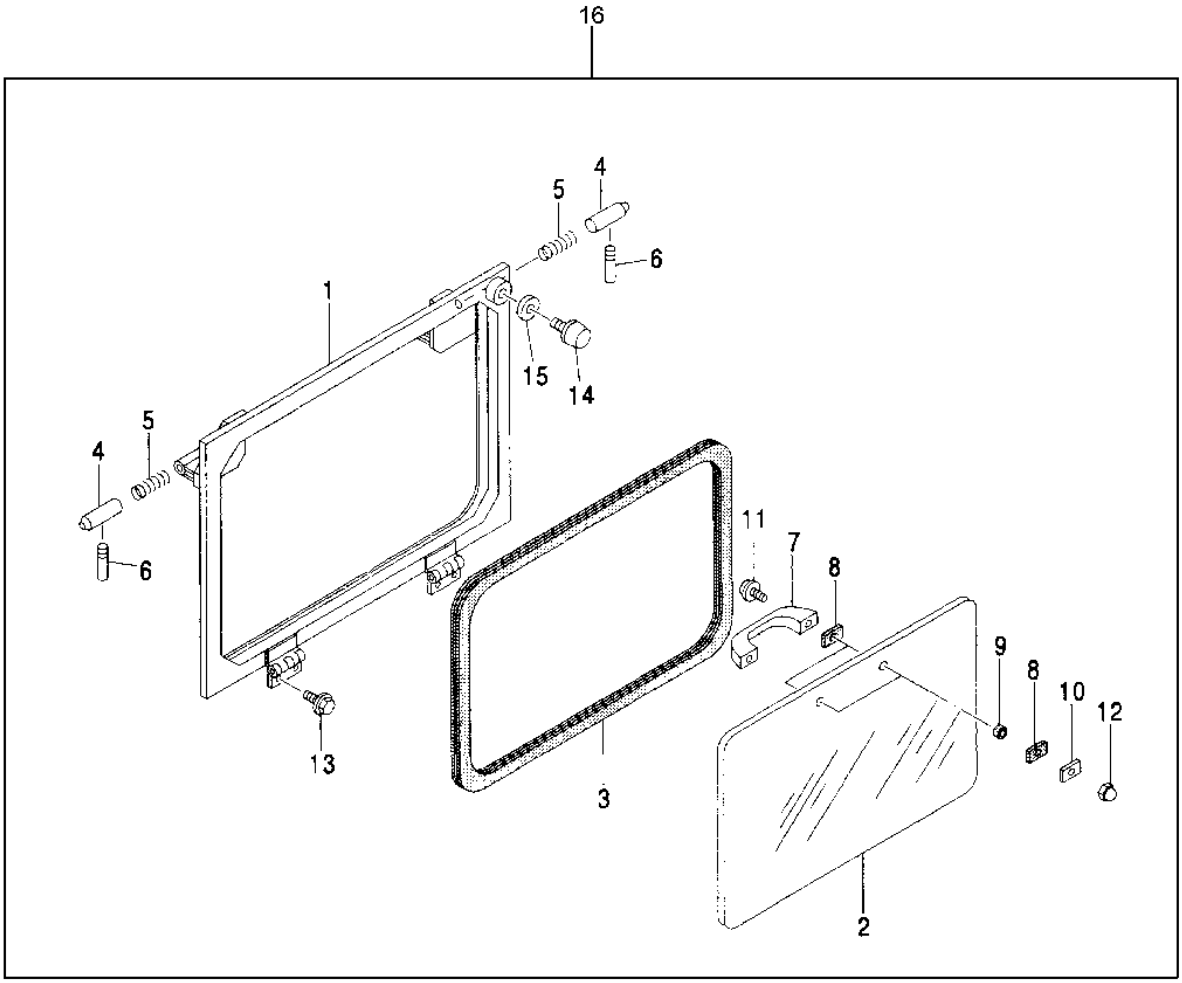

T189211

2C22

CAB REAR WINDOW COMPONENTS (CAB WITH INTEGRATED HEADGUARD)

KEY	PART NO.	PART NAME	QTY	SERIAL NO.	REMARKS
1	4474291	FRAME	1		
2	4387937	WINDOWPANE	1		
3	4387938	ISOLATOR	1		
4	4204556	PIN	2		
5	494918	SPRING	2		
6	4295480	LEVER	2		
7	4204579	HANDLE	1		
8	4386450	PACKING	4		
9	4386451	ISOLATOR	2		
10	4386452	PLATE	2		
11	J460625	SCREW WITH WASHER	2		
12	4386454	NUT	2		
13	19M7139	CAP SCREW	4		M8 X 20
14	4294508	BUMPER	1		
15	4369561	SPACER	1		
16	4474289	WINDOW	1		

CAB WINDSHIELD (CAB WITH INTEGRATED HEADGUARD)

T189212 -UN-21APR03

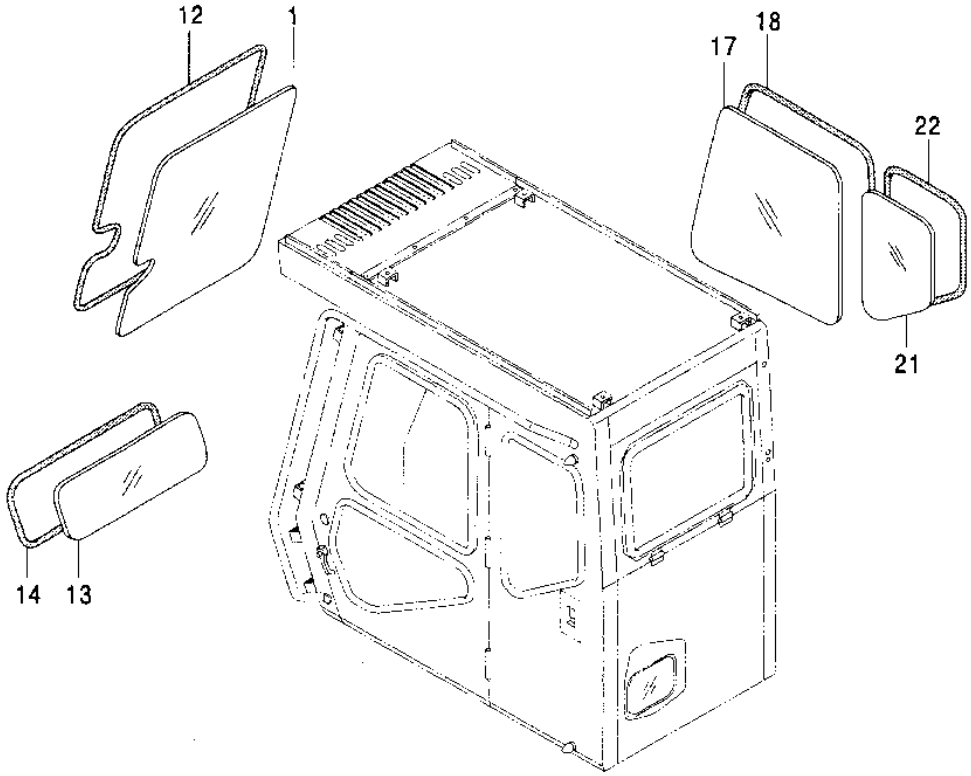

T189212

2C24

CAB WINDSHIELD (CAB WITH INTEGRATED HEADGUARD)

KEY	PART NO.	PART NAME	QTY	SERIAL NO.	REMARKS
1	4387932	WINDOWPANE	1		
12	4387931	ISOLATOR	1		
13	4387933	WINDOWPANE	1		
14	4387935	ISOLATOR	1		
17	4464546	WINDOWPANE	1		
18	4464633	ISOLATOR	1		
21	4387928	WINDOWPANE	1		
22	4411608	ISOLATOR	1		

CAB BUSHINGS (CAB WITH INTEGRATED HEADGUARD)

T189214 -UN-21APR03

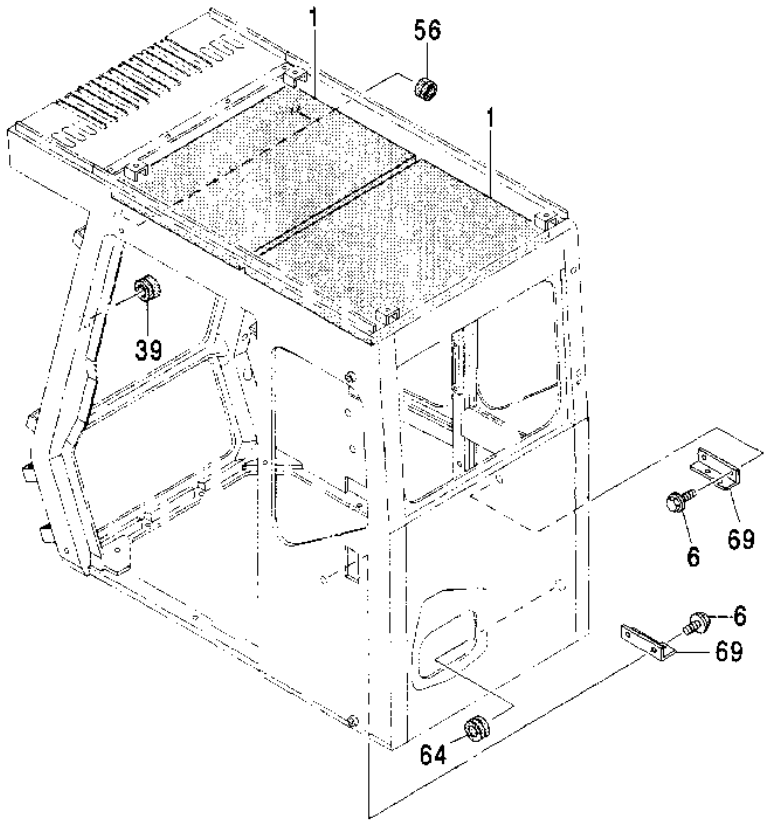

T189214

CAB BUSHINGS (CAB WITH INTEGRATED HEADGUARD)

KEY	PART NO.	PART NAME	QTY	SERIAL NO.	REMARKS
1	4476775	HEADLINER	2		
6	19M7402	CAP SCREW	4		M10 X 25
	12M7066	LOCK WASHER	4		10 MM
	24M7028	WASHER	4		10.500 X 20 X 2 MM
39	4372089	GROMMET	1		
56	4386409	BUSHING	2		
64	4369569	GROMMET	2		
69	4456181	BRACKET	2		

WINDSHIELD GUARD (CAB WITH INTEGRATED HEADGUARD)

T189215 -UN-21APR03

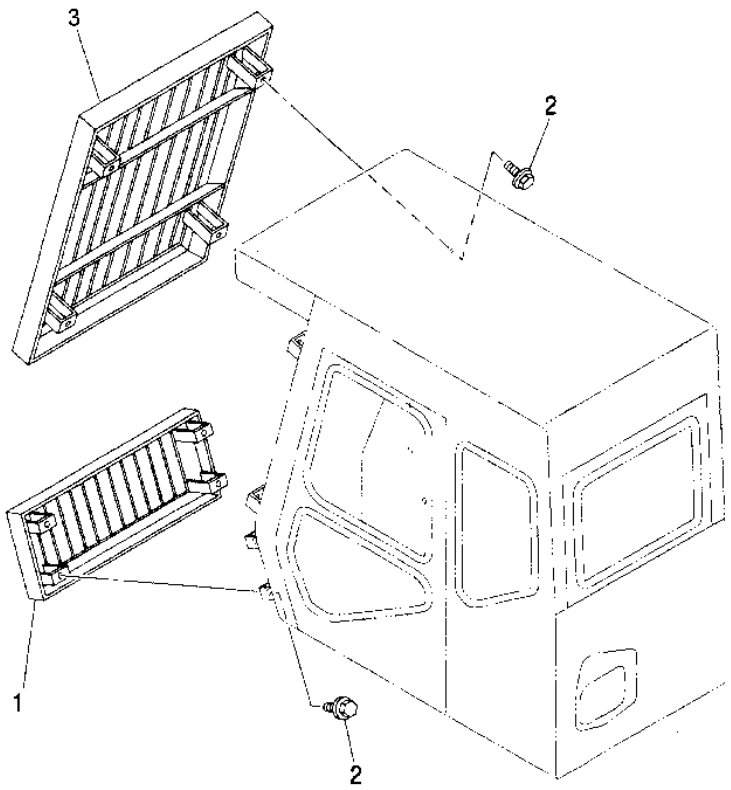

T189215

WINDSHIELD GUARD (CAB WITH INTEGRATED HEADGUARD)

KEY	PART NO.	PART NAME	QTY	SERIAL NO.	REMARKS
1	8085362	GUARD	1		
2	12M7066	LOCK WASHER	8		
	19M7662	CAP SCREW	8		
	24M7028	WASHER	8		
3	6020385	GUARD	1		

SEAT AND SEAT SUSPENSION

T144308 -UN-06AUG01

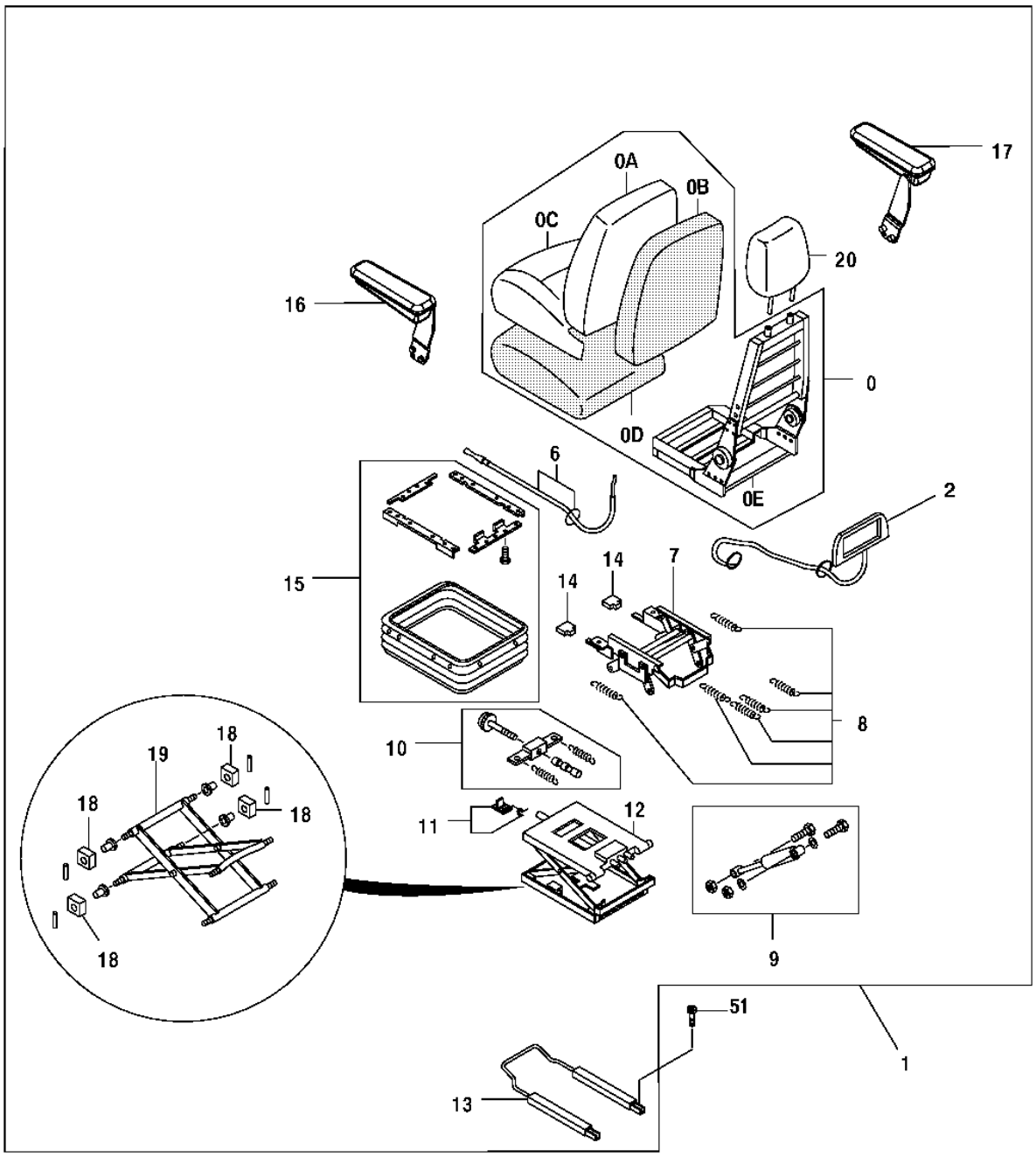

T144308

SEAT AND SEAT SUSPENSION

KEY	PART NO.	PART NAME	QTY	SERIAL NO.	REMARKS
0	AT195286	SEAT BACK	1		SEAT UPPER KIT
0A	AT309263	CUSHION COVER	1		
0B	AT322186	PAD	1		(4392796 NO LONGER AVAILABLE)
0C	AT195278	CUSHION	1		(FABRIC)
0D	AT195279	PAD	1		(SEAT)
0E	AT322187	FRAME	1		(SUB FOR 4392799)
1	AT193964	SEAT	1		FABRIC
2	AT195284	KIT	1		(AIR LUMBAR KIT)
6	AT216522	CABLE	1		
7	4392801	STAND	1		(SUB FOR AT180971) RECLINER CABLE KIT
8	AT195287	SPRING	1		
9	4392803	TORSIONAL DAMPER	1		(KIT) (SUB FOR AT180973)
10	4392804	ADJUSTER	1		(SUB FOR AT180974) HEIGHT RISER SPRING
11	AT322189	LEVER	1		(SUB FOR AT180975 OR 4392805)
12	4392806	SEAT SUSPENSION	1		(SUB FOR AT180976)
13	4392807	ADJUSTER	1		(SUB FOR AT180977)
14	AT216532	KIT	1		(KNOB)
15	4392809	COVER	1		(SUB FOR AT180978) (SUSPENSION COVER KIT)
16	AT199748	ARMREST KIT	1		(SUB FOR AT195282) LEFT
17	AT199749	ARMREST KIT	1		(SUB FOR AT195283) RIGHT
18	4392812	BUSHING	1		KIT, (SUB FOR AT180979)
19	4392813	LINK	1		LEVER/CENTER PIVOT KIT, (SUB FOR AT180980)
20	AT195280	HEAD RESTRAINT	1		
51	19M7647	SCREW	4		M8 X 16

3.00 INCH SEAT BELT KIT

T144006 -UN-13JUL01

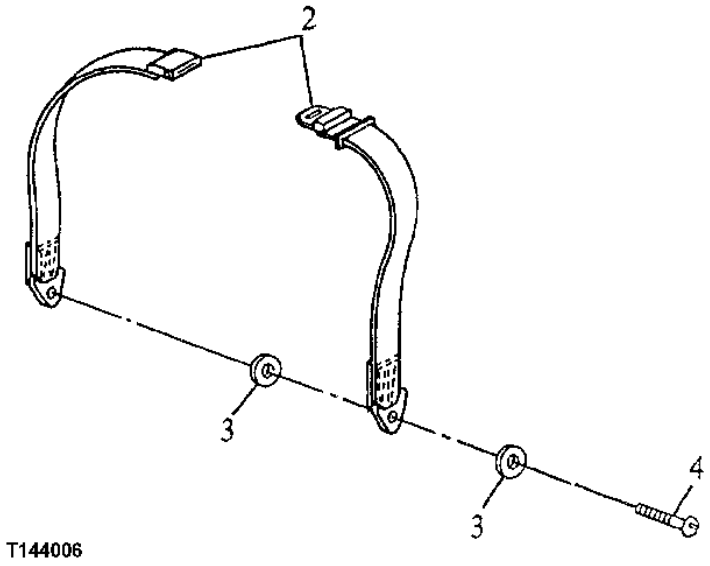

3.00 INCH SEAT BELT KIT

KEY	PART NO.	PART NAME	QTY	SERIAL NO.	REMARKS
2	**AT173678**	**SEAT BELT**	**1**		**WHOLEGOODS (INCLUDES HARDWARE)**
	T157779	FLANGE NUT	2		7/16" (NOT ILLUSTRATED)
3	T105740	WASHER	4		
4	R41778	BOLT	2		11.125 X 31.750 MM

SEAT BASE BRACKETS AND SLIDES

T142631 -UN-28JUN01

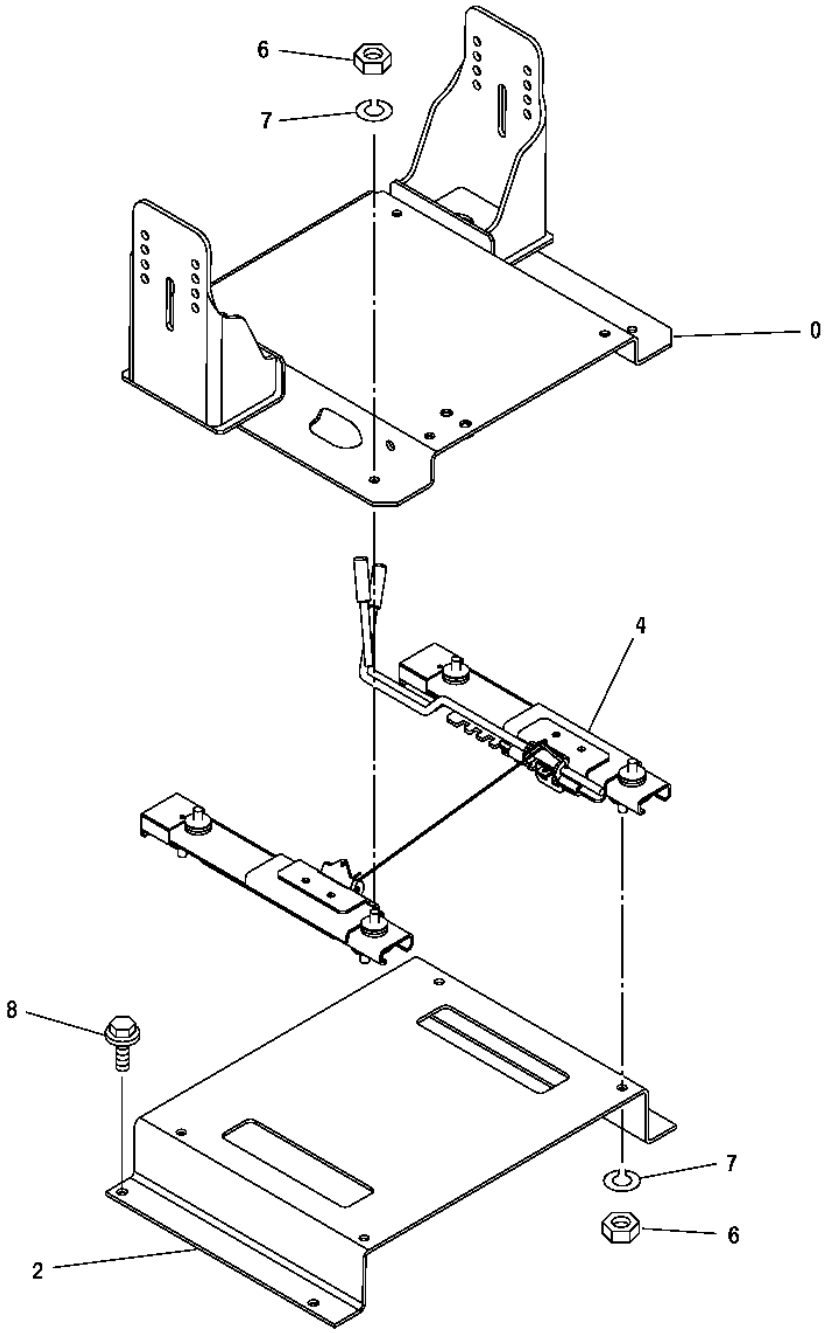

T142631

SEAT BASE BRACKETS AND SLIDES

KEY	PART NO.	PART NAME	QTY	SERIAL NO.	REMARKS
0	6020125	BRACKET	1		(SUB FOR TH6020171)
2	3089486	BRACKET	1		(SUB FOR TH3089486)
4	4405128	SEAT SLIDE TRACK KIT	1		(SUB FOR TH4405128)
6	J952010	NUT	8		(SUB FOR TH104196)
7	12M7066	LOCK WASHER	8		10 MM
8	19M7402	CAP SCREW	4		M10 X 25

RETRACTABLE SEAT BELT

T188984 -UN-26MAR03

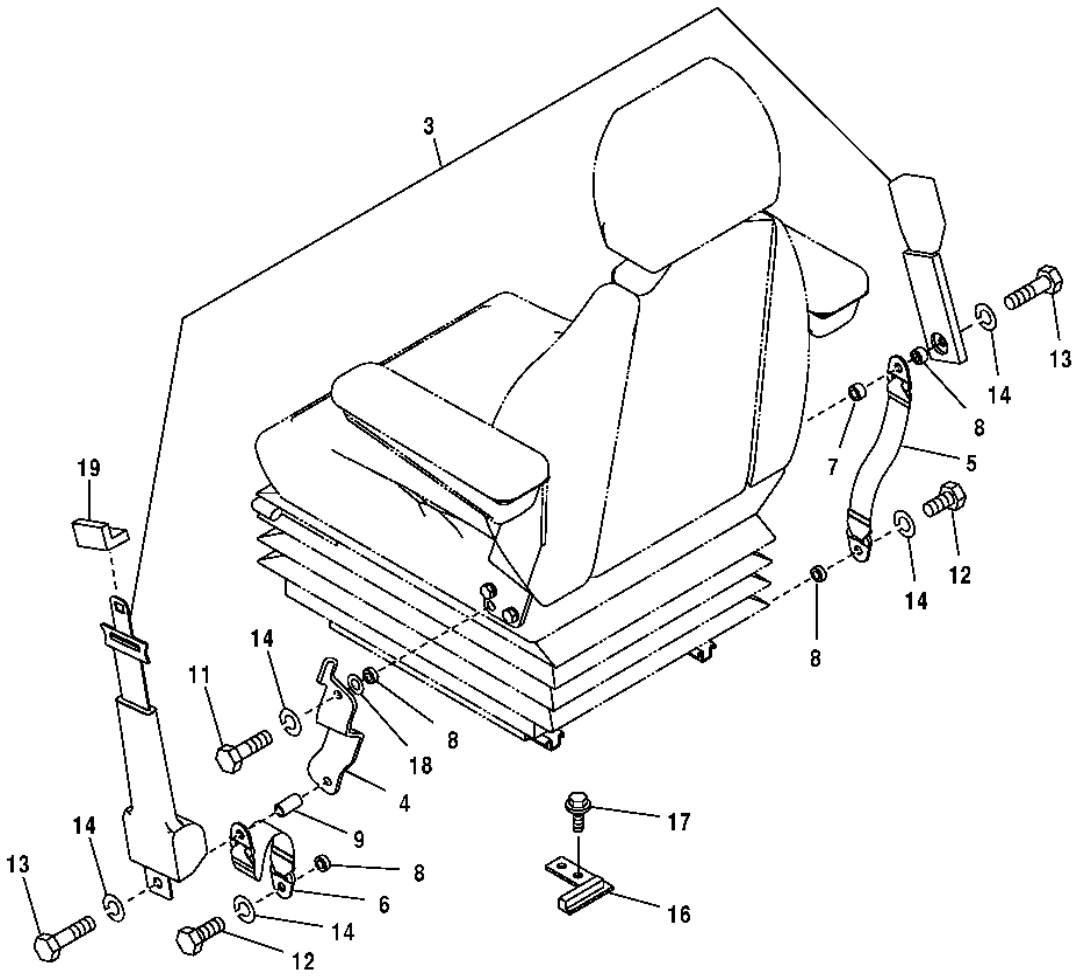

T188984

2D12

RETRACTABLE SEAT BELT

KEY	PART NO.	PART NAME	QTY	SERIAL NO.	REMARKS
3	4384239	SEAT BELT	1		(SUB FOR AT215572)
4	7040505	BRACKET	1		(SUB FOR TH7040505)
5	4382410	SEAT BELT	1		(SUB FOR 4455565, THIS APPLICATION) (SUB FOR TH4455565)
6	4453869	SEAT BELT	1		(SUB FOR 4455566, THIS APPLICATION) (SUB FOR TH4455566)
7	4453874	SPACER	1		(SUB FOR TH4453874)
8	4372200	SPACER	3		(SUB FOR P60915)
9	4382432	SLEEVE	1		(SUB FOR AT215564)
11	4333835	BOLT	1		(SUB FOR TH4333835)
12	19H3187	CAP SCREW	2		7/16" X 1-1/2", (SUB FOR AT215492, 4235232)
13	4380534	CAP SCREW	2		(SUB FOR AT215561)
14	J219167	SPRING WASHER	5		(SUB FOR AT215470)
16	9756736	BRACKET	1		(SUB FOR TH9756736)
17	19M7402	CAP SCREW	2		M10 X 25
	12M7066	LOCK WASHER	2		10 MM
18	24M7047	WASHER	1		
19	3097862	BUSHING	1		

AIR CONDITIONER UNIT AIR DUCTS AND HOSES

T142605 -UN-19JUN01

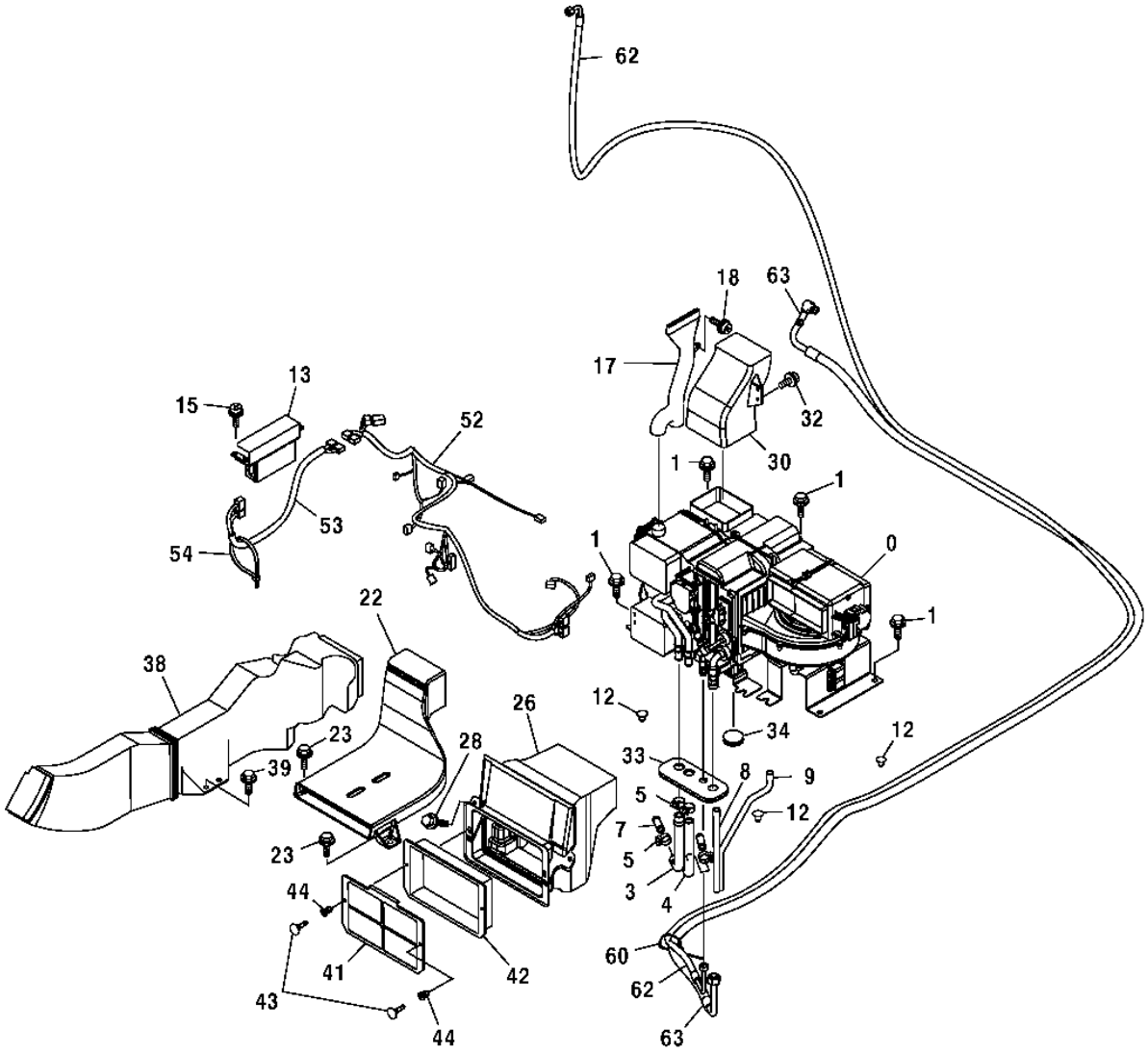

T142605

AIR CONDITIONER UNIT AIR DUCTS AND HOSES

KEY	PART NO.	PART NAME	QTY	SERIAL NO.	REMARKS
0	4436024	AIR CONDITIONER	1		(SUB FOR TH4436024)
1	19M7402	CAP SCREW	8		M10 X 25
	12M7066	LOCK WASHER	8		10 MM
	24M7028	WASHER	8		10.500 X 20 X 2 MM
3	4366623	HOSE	1		(SUB FOR AT214027)
4	4344638	HOSE	1		(SUB FOR AT213898)
5	WZ2141223	HOSE CLAMP	4		(SUB FOR AA34965)
7	4347396	FITTING	2		(SUB FOR TH4347396)
8	4436306	HOSE	1		(SUB FOR TH4436306)
9	4436307	HOSE	1		(SUB FOR TH4436307)
12	4280359	PLUG	5		(SUB FOR AT154351)
13	4439093	AIR HEATER CONTROLLER	1		(SUB FOR TH4439093)
15	21M7265	SCREW	4		M5 X 12
17	4436442	AIR DUCT	1		(SUB FOR TH4436442)
18	19M8425	CAP SCREW	1		M6 X 16
	12M7006	LOCK WASHER	1		6 MM
	24M7293	WASHER	1		6.500 X 13 X 1.600 MM
22	4426155	AIR DUCT	1		(SUB FOR TH4426155)
23	19M7662	CAP SCREW	2		M10 X 30
	12M7066	LOCK WASHER	2		10 MM
	24M7028	WASHER	2		10.500 X 20 X 2 MM
26	4431227	AIR DUCT	1		(SUB FOR TH4431227)
28	19M7881	SCREW	2		M8 X 20
30	4426157	AIR DUCT	1		(SUB FOR TH4426157)
32	19M8425	CAP SCREW	2		M6 X 16
	12M7006	LOCK WASHER	2		6 MM
	24M7293	WASHER	2		6.500 X 13 X 1.600 MM
33	2044923	BUSHING	1		(SUB FOR TH2044923)
34	4205084	GROMMET	1		(SUB FOR TH108616)
38	4426158	AIR DUCT	1		(SUB FOR TH4426158)
39	19M7662	CAP SCREW	2		M10 X 30
	12M7066	LOCK WASHER	2		10 MM
	24M7028	WASHER	2		10.500 X 20 X 2 MM
41	4441139	GRILLE	1		(SUB FOR TH4441139)
42	4484453	FILTER	1		(SUB FOR 4484452 AND 4458781)
43	4441059	CLIP	2		(SUB FOR TH4441059)
44	4441061	CLIP	2		(SUB FOR TH4441061)
52	4454753	WIRING HARNESS	1		(SUB FOR TH4454753)
53	4452188	WIRING HARNESS	1		(SUB FOR TH4452188)
54	H77698	TIE BAND	1		
60	H77698	TIE BAND	1		
62	4478859	HOSE	1		(SUB FOR 4436478)
	CH11568	PACKING	1		
63	4450399	REFRIGERANT HOSE	1		
	CH11570	O-RING	1		
	4475235	CAP	1		(NOT ILLUSTRATED)

2D15

AIR CONDITIONER COMPONENTS

T158382 -UN-19AUG02

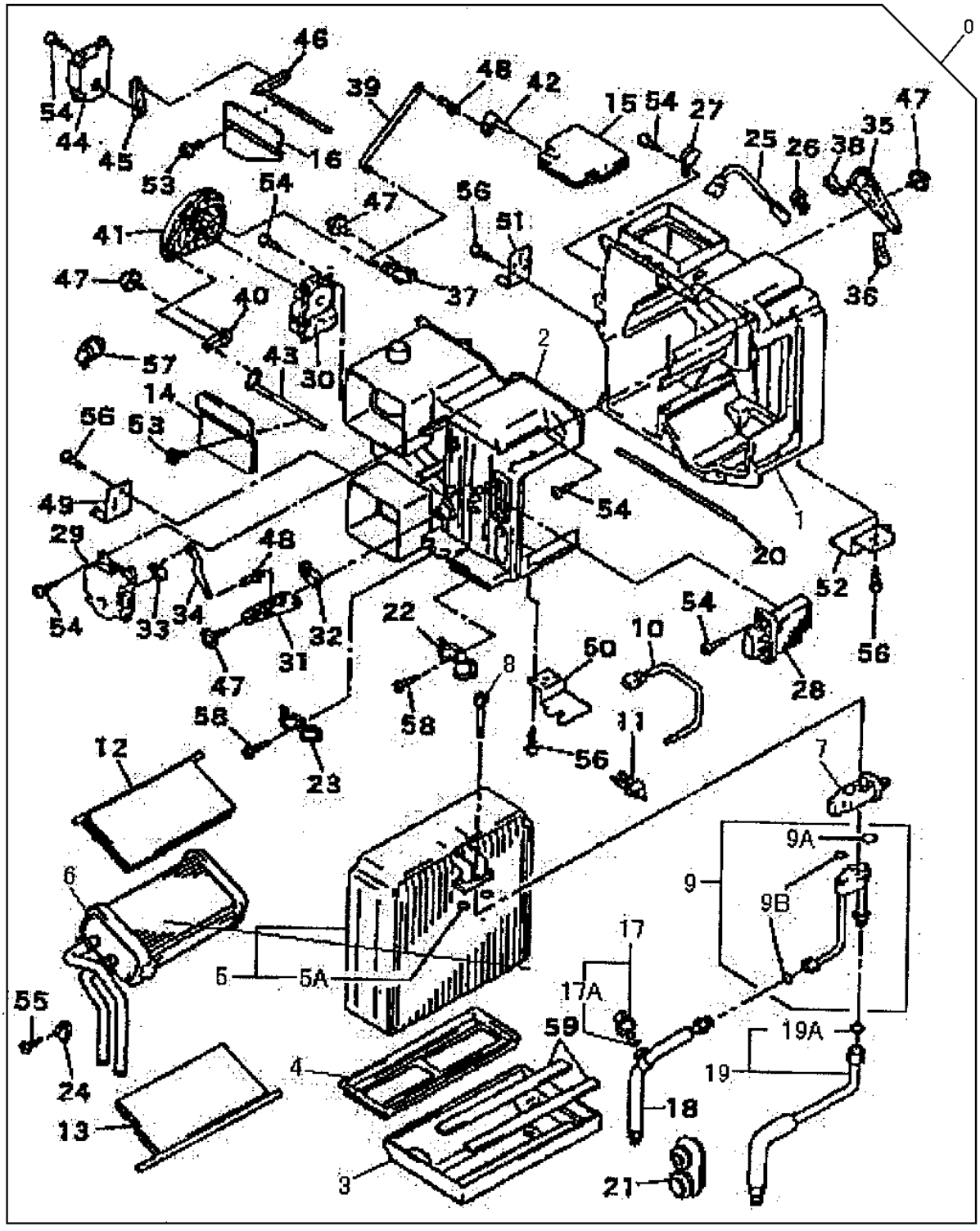

T158382

AIR CONDITIONER COMPONENTS

KEY	PART NO.	PART NAME	QTY	SERIAL NO.	REMARKS
0	4436024	AIR CONDITIONER	1		(COMPLETE) (CONTAINS ALL ITEMS ON THIS PAGE - ADDITIONAL COMPONENTS LISTED ON ANOTHER PAGE)
1	4475264	CASE	1		
2	4475265	CASE	1		
3	4475283	CASE	1		
4	4475284	PLATE	1		
5	4469056	EVAPORATOR	1		
5A	4350206	O-RING	2		
6	4469057	CORE	1		
7	4465995	FLOW CONTROL HYD. VALVE	1		
8	4475285	BOLT	2		
9	4475286	STRUCTURAL TUBING	1		
9A	4450206	ISOLATOR	1		
9B	4350187	O-RING	2		
10	4469058	THERMOSTAT	1		
11	4475287	CLIP	2		
12	4475288	DOOR	1		
13	4475289	DOOR	1		
14	4475290	DOOR	1		
15	4475291	PULLEY WITH DAMPENER	1		
16	4475345	DOOR	1		
17	4469059	SWITCH	1		(PRESSURE)
17A	4475346	O-RING	1		
18	4475347	HOSE	1		
19	4475348	HOSE	1		
19A	4350206	O-RING	1		
20	4475349	PACKING	1		
21	4475350	ISOLATOR	1		
22	4475351	CLIP	1		
23	4475352	CLIP	1		
24	4475353	BRACKET	1		
25	4418144	THERMOSTAT	1		
26	4418143	CLAMP	1		
27	4418142	BRACKET	1		
28	4469060	INTEGRATED CIRCUIT	1		
29	4469061	MOTOR	1		
30	4469062	MOTOR	1		
31	4475364	PLATE	1		
32	4475365	LEVER	1		
33	4475366	LEVER	1		
34	4475367	ROD	1		
35	4475368	PLATE	1		
36	4475369	LEVER	1		
37	4475370	PLATE	1		
38	4475371	LEVER	1		
39	4475372	ROD	1		
40	4475399	PLATE	1		
41	4475400	PLATE	1		
42	4475401	LEVER	1		
43	4475402	LEVER	1		
44	4469063	MOTOR	1		
45	4475403	LEVER	1		
46	4475404	LEVER	1		
47	4475405	BOLT	4		(TAPPING SCREW)
48	4469047	CLAMP	2		
49	4475406	BRACKET	1		
50	4475407	BRACKET	1		
51	4475430	BRACKET	1		
52	4475431	BRACKET	1		
53	4475432	BOLT	4		
54	4382883	SCREW	23		(TAPPING)
55	4236448	SCREW	1		
56	4382882	BOLT	8		(TAPPING SCREW)
57	4475433	BUSHING	1		
58	4475434	BOLT	2		(TAPPING)
59	4475435	PACKING	2		

AIR CONDITIONER COMPONENTS (CONTINUED)

T158385 -UN-21AUG02

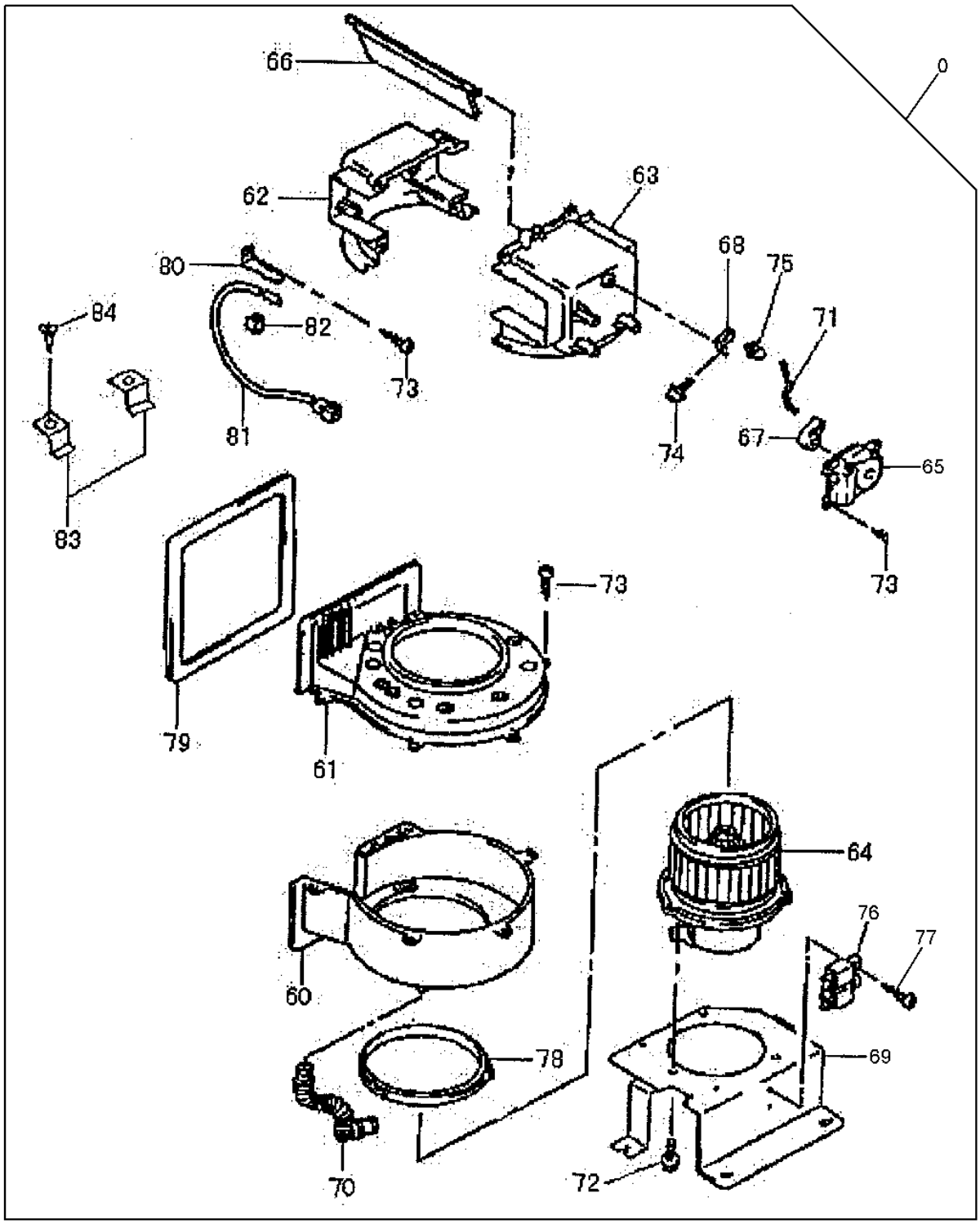

T158385

AIR CONDITIONER COMPONENTS (CONTINUED)

KEY	PART NO.	PART NAME	QTY	SERIAL NO.	REMARKS
0	4436024	AIR CONDITIONER	1		COMPLETE (CONTAINS ALL ITEMS LISTED ON THIS PAGE - ADDITIONAL COMPONENTS LISTED ON ANOTHER PAGE)
60	4475247	CASE	1		
61	4475248	CASE	1		
62	4475249	CASE	1		
63	4475250	CASE	1		
64	4469041	ELECTRIC MOTOR	1		
65	4469063	MOTOR	1		
66	.....	DOOR	1		(4469043 NOT AVAILABLE FOR SERVICE)
67	.....	LEVER	1		(4469044 NOT AVAILABLE FOR SERVICE)
68	.....	LEVER	1		(4469045 NOT AVAILABLE FOR SERVICE)
69	4475257	BRACKET	1		
70	4475258	HOSE	1		
71	.....	SHAFT	1		(4469046 NOT AVAILABLE FOR SERVICE)
72	4475259	BOLT	3		
73	4482883	BOLT	17		
74	4475260	BOLT	1		
75	4469047	CLAMP	1		
76	4382860	RELAY	2		
77	4382832	SCREW	2		
78	4475261	PACKING	1		
79	4475262	PACKING	1		
80	4475263	BRACKET	1		
81	4418147	THERMOSTAT	1		
82	4418149	CLAMP	1		
83	4475229	BRACKET	2		
84	4382882	BOLT	2		

HVAC DUCT WORK AND FILTER

T142608 -UN-14JUN01

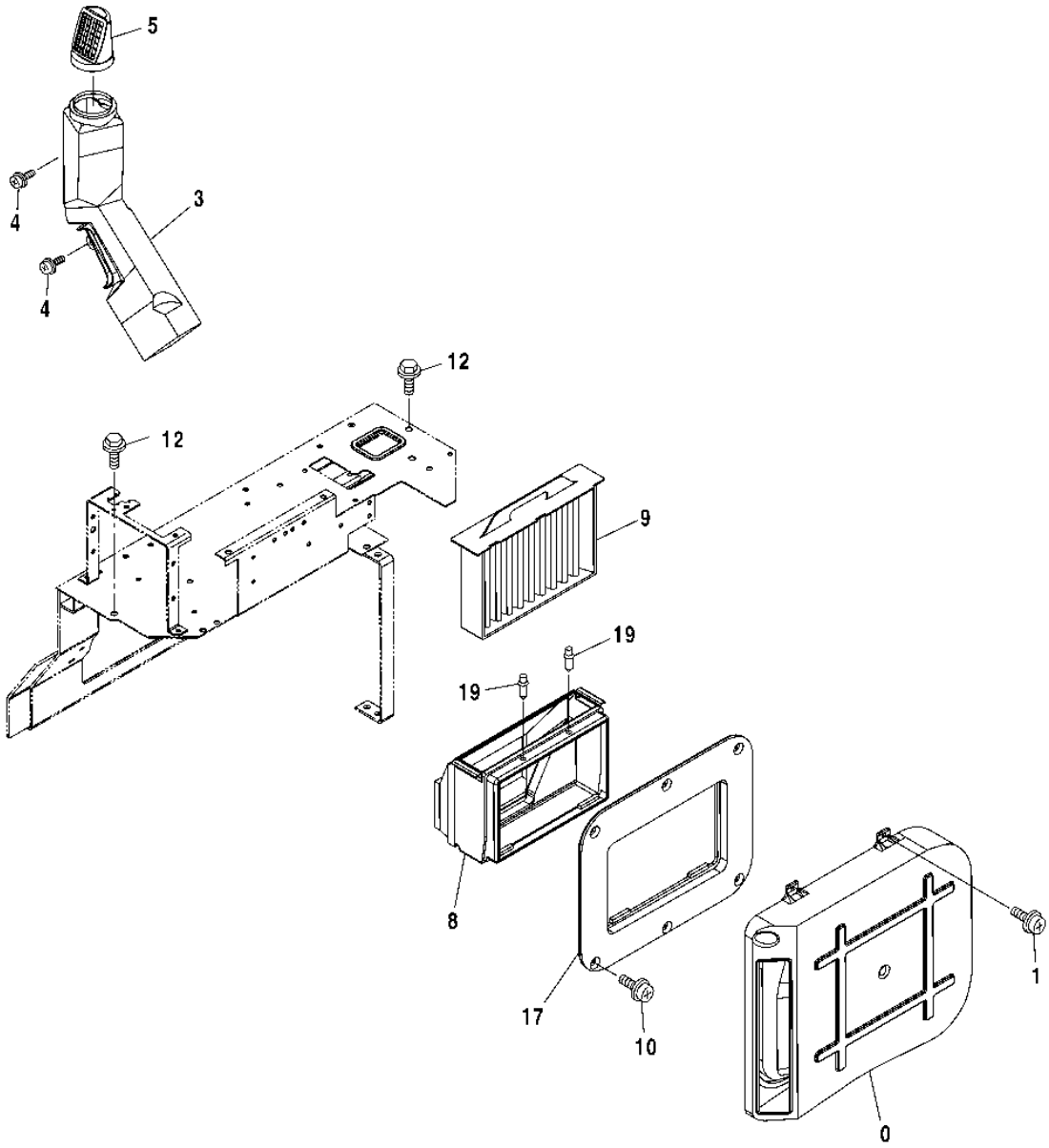

T142608

HVAC DUCT WORK AND FILTER

KEY	PART NO.	PART NAME	QTY	SERIAL NO.	REMARKS
0	4426160	AIR DUCT	1		(SUB FOR TH4426160)
1	19M8425	CAP SCREW	6		M6 X 16
	12M7006	LOCK WASHER	6		6 MM
	24M7293	WASHER	6		6.500 X 13 X 1.600 MM
3	4426159	AIR DUCT	1		(SUB FOR TH4426159)
4	19M8425	CAP SCREW	2		M6 X 16
	12M7006	LOCK WASHER	2		6 MM
	24M7293	WASHER	2		6.500 X 13 X 1.600 MM
5	4449068	AIR DUCT	1		(SUB FOR TH4449068)
8	4433064	AIR DUCT	1		(SUB FOR TH4433064)
9	4350249	FILTER ELEMENT	1		(SUB FOR AT213943)
10	19M8425	CAP SCREW	6		M6 X 16
	12M7006	LOCK WASHER	6		6 MM
	24M7293	WASHER	6		6.500 X 13 X 1.600 MM
12	19M7402	CAP SCREW	2		M10 X 25
	12M7058	LOCK WASHER	2		12 MM, (SUB FOR 12M7067)
	24M7346	WASHER	2		11 X 20 X 2 MM
17	4449348	AIR DUCT	1		(SUB FOR TH4449348)
19	4445916	CLIP	2		(SUB FOR TH4445916)

COVER(12 VOLT POWER SUPPLY)

T196517 -UN-21NOV03

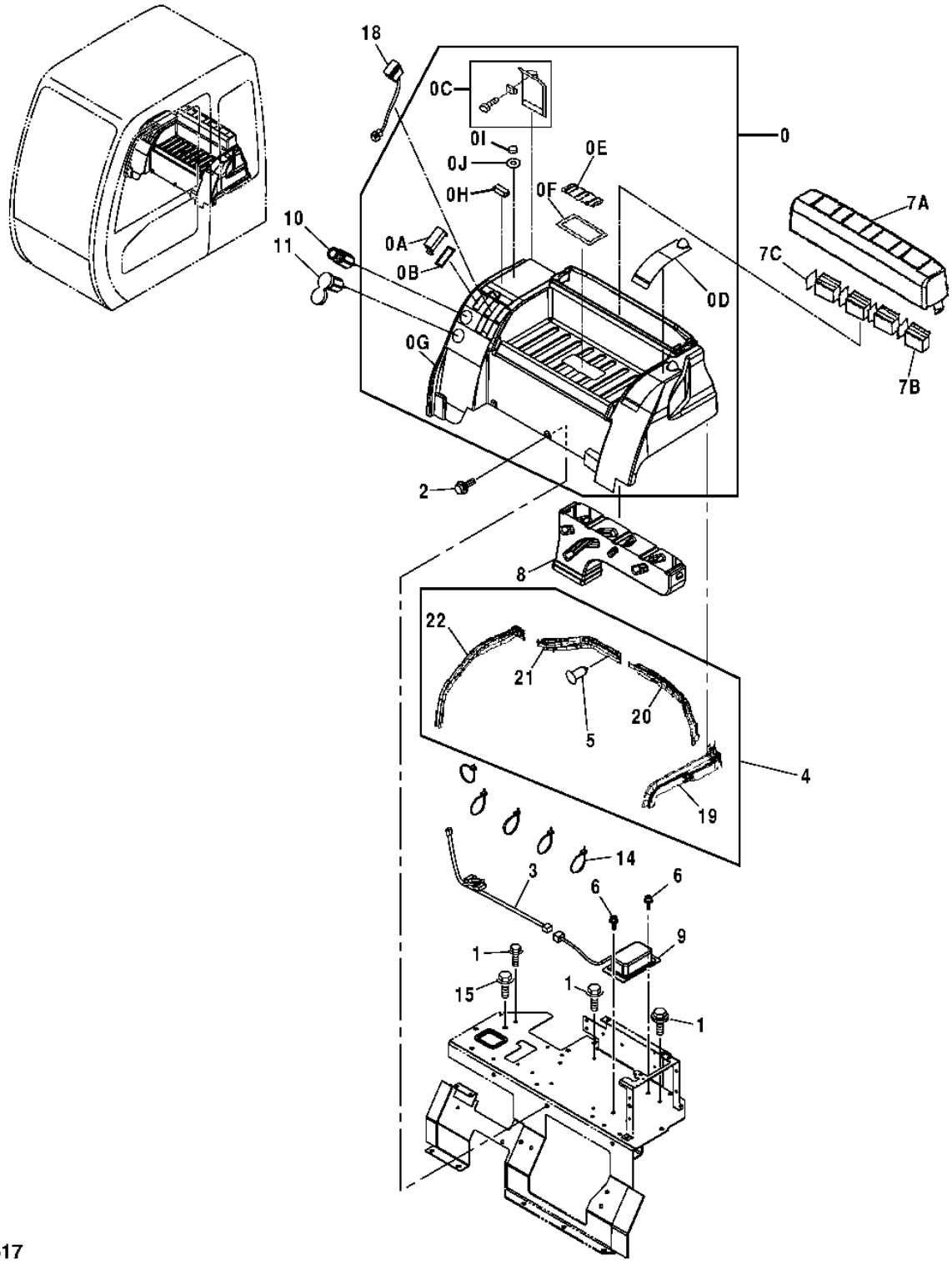

COVER (12V POWER SUPPLY)

KEY	PART NO.	PART NAME	QTY	SERIAL NO.	REMARKS
0	4433793	TRAY	1		(SUB FOR TH4433793)
0A	4456725	COVER	5		(SUB FOR TH4456725)
0B	4456723	ISOLATOR	5		(SUB FOR TH4456723)
0C	4458228	COVER	1		(RELAY)
0D	4458230	COVER	1		(FUSE)
0E	4458231	COVER	1		(CENTER)
0F	4458232	SEAL	1		
0G	4458227	TRAY	1		
0H	4458229	MAGNET	1		
0I	4458233	COVER	1		
0J	4458234	SEAL	1		
1	19M7866	SCREW	3		M8 X 20, (SUB FOR AT213603 OR J050820, ALONG WITH 24M7036 AND 12M7065)
	24M7036	WASHER	3		9 X 16 X 1.600 MM (0.354" X 0.630" X 0.063")
	12M7065	LOCK WASHER	3		8 MM (0.315")
2	19M7402	CAP SCREW	2		M10 X 25
	12M7066	LOCK WASHER	2		10 MM
	24M7028	WASHER	2		10.500 X 20 X 2 MM
3	3091204	WIRING HARNESS	1		(SUB FOR TH3091204)
4	.....	ISOLATOR	1		(4436132 NO LONGER AVAILABLE - FURNISH 4458238, 4458239, 4458240 AND 4458241)
5	4425573	CLIP	13		(SUB FOR TH4425573)
6	19M8425	CAP SCREW	2		M6 X 16
	12M7006	LOCK WASHER	2		6 MM
	24M7293	WASHER	2		6.500 X 13 X 1.600 MM
7	4433794	COVER	1		(SUB FOR TH4433794)
7A	4458235	COVER	1		
7B	4458236	LOUVER	4		
7C	4458237	BRACKET	4		
8	4426156	AIR DUCT	1		(SUB FOR TH4426156)
9	4450008	POWER SUPPLY	1		(SUB FOR TH4450008)
10	AR60937	ELECTRICAL LIGHTER	1		(12 VOLT)
	AU42809	RESISTOR	1		(12 VOLT)
	AT78634	WIRING LEAD	1		(12 VOLT)
	AT78633	HOUSING	1		(12 VOLT)
	.....	ELECTRICAL LIGHTER	1		(4357862 NO LONGER AVAILABLE) (SUB FOR AT190190) (24 VOLT)
11	4432965	ELEC. CONNECTOR TERMINAL	1		(SUB FOR TH4432965)
14	H77698	TIE BAND	5		
15	19M7938	CAP SCREW	1		M10 X 20
	12M7066	LOCK WASHER	1		10 MM
18	4352947	SWITCH	2		(SUB FOR TH4352947)
19	4458238	SEAL	1		
20	4458239	SEAL	1		
21	4458240	SEAL	1		
22	4458241	SEAL	1		

DEFROSTER/AIR CIRCULATION FAN

T144798 -UN-14AUG01

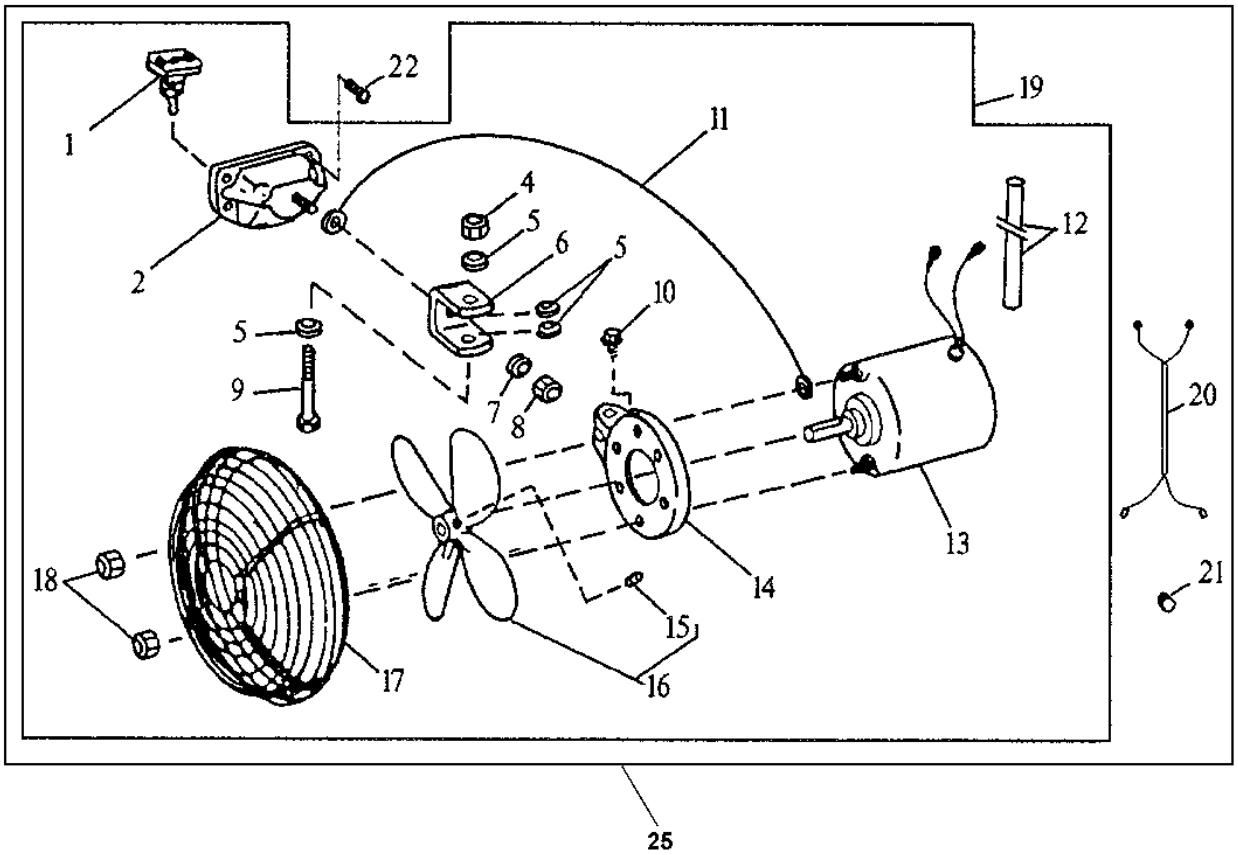

T144798

2D24

DEFROSTER/AIR CIRCULATION FAN

KEY	PART NO.	PART NAME	QTY	SERIAL NO.	REMARKS
1	T55564	TOGGLE/ROCKER SWITCH	1		
2	.....	BASE	1		(NOT AVAILABLE)
4	.....	LOCK NUT	1		(USE E19700 IF AVAILABLE)
5	T27860	WASHER	4		
6	.....	BRACKET	1		
7	24H1136	WASHER	2		11/32" X 11/16" X 0.065"
8	.....	LOCK NUT	1		
9	19H2650	CAP SCREW	1		1/4" X 2"
10	N162946	SCREW	1		
11	.....	WIRING LEAD	1		(MAKE FROM PM797NA WIRE KIT)
12	T105943	CONDUIT	1		
13	.....	MOTOR	1		
14	.....	BRACKET	1		
15	.....	SET SCREW	1		
16	AT101945	FAN BLADE	1		
17	AT101944	GUARD	1		
18	.....	LOCK NUT	2		
19	AT84953	FAN	1		
20	AT159804	WIRING HARNESS	1		
21	R26409	GROMMET	1		
22	37H129	SCREW	4		
25	AT161192	KIT	1		(AIR CIRCULATION FAN)

HEATER UNIT TO ENGINE HOSES

T190214 -UN-06MAY03

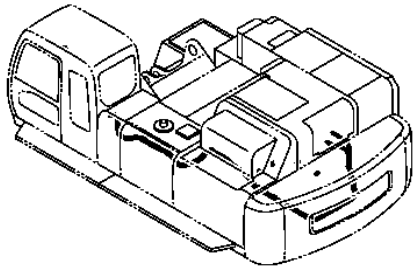

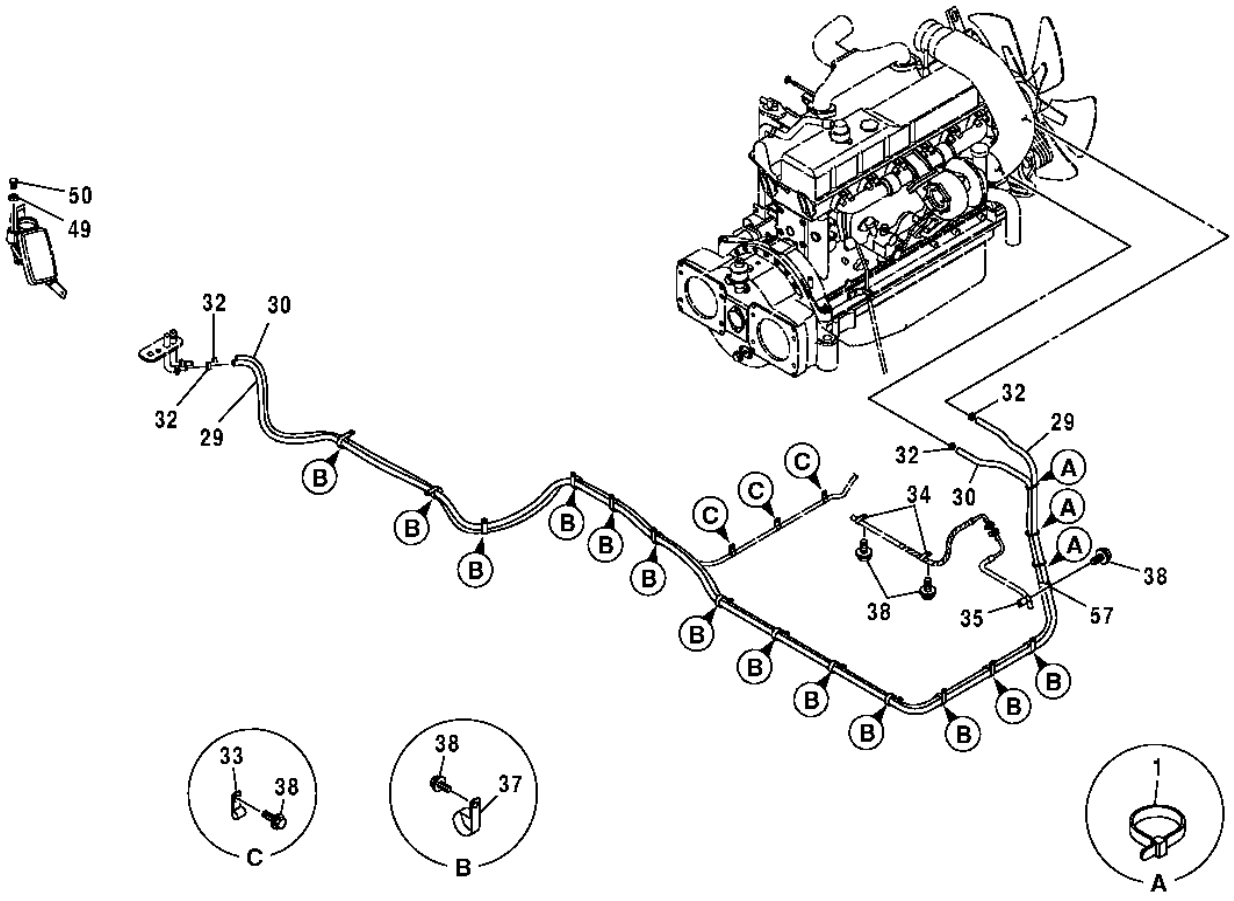

T190214

HEATER UNIT TO ENGINE HOSES

KEY	PART NO.	PART NAME	QTY	SERIAL NO.	REMARKS
1	H77698	TIE BAND	3		(CUT TO LENGTH FROM AT138222 BULK MATERIAL)
29	4386156	HOSE	1		
30	4454666	HOSE	1		
32	AA34965	HOSE CLAMP	4		
33	4190253	CLIP	3		
34	4190274	CLIP	2		
35	T24432	CLAMP	1		
37	4190265	CLIP	13		
38	19M7938	CAP SCREW	19		M10 X 20
	12M7066	LOCK WASHER	19		10 MM
49	4405194	SPACER	1		
50	4405814	SENSOR	1		
57	4192034	CLIP	1		

A/C COMPRESSOR, CONDENSER, RECEIVER/DRYER, AND HOSES

T197027 -UN-08JAN04

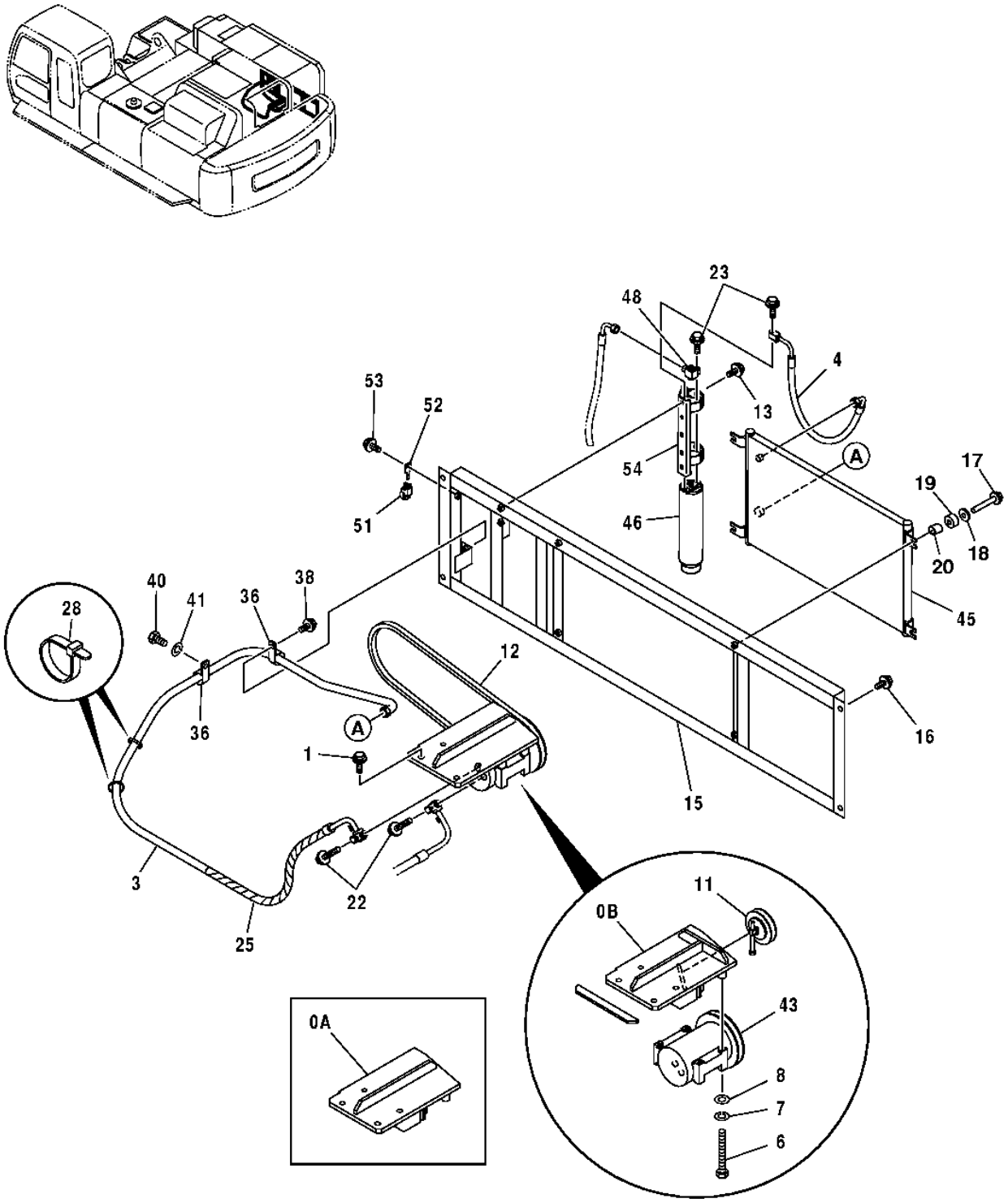

T197027

A/C COMPRESSOR, CONDENSER, RECEIVER/DRYER, AND HOSES

KEY	PART NO.	PART NAME	QTY	SERIAL NO.	REMARKS
0A	.....	BRACKET	1		(7040502 NO LONGER AVAILABLE) (SUB 7044231)
0B	7044231	BRACKET	1		
1	19M7361	CAP SCREW	4		M12 X 50
	12H301	LOCK WASHER	4		1/2"
3	4454684	REFRIGERANT HOSE	1		
	M800650	PACKING	1		(NOT ILLUSTRATED)
	4475232	CAP	1		(NOT ILLUSTRATED)
4	4454683	REFRIGERANT HOSE	1		
6	19M8504	CAP SCREW	4		M8 X 80
7	12M7065	LOCK WASHER	4		8 MM
8	24M7055	WASHER	4		8.400 X 16 X 1.600 MM
11	4252004	PULLEY	1		
12	4612763	V-BELT	1		(SUB FOR 4422178)
13	19M7407	CAP SCREW	2		M8 X 25
	12M7065	LOCK WASHER	2		8 MM
	24M7055	WASHER	2		8.400 X 16 X 1.600 MM
15	7040407	BRACKET	1		
16	19M7872	CAP SCREW	4		M12 X 25
	12H301	LOCK WASHER	4		1/2"
17	19M7288	CAP SCREW	4		M8 X 30
18	4338215	WASHER	4		
19	4618722	CUSHION	4		
20	4620483	SPACER	4		
22	19M7874	CAP SCREW	2		M6 X 30
	24M7054	WASHER	2		6.400 X 12 X 1.600 MM
	12H302	LOCK WASHER	2		1/4"
23	19M7933	CAP SCREW	2		M6 X 25
	24M7054	WASHER	2		6.400 X 12 X 1.600 MM
	12M7006	LOCK WASHER	2		6 MM
25	4327294	HOSE GUARD	2		
28	H77698	TIE BAND	4		
36	4193848	CLIP	2		(SUB FOR 4190264)
38	19M7938	CAP SCREW	1		M10 X 20
	12M7066	LOCK WASHER	1		10 MM
40	19M8017	CAP SCREW	1		M12 X 20
41	12H301	LOCK WASHER	1		1/2"
43	4436025	COMPRESSOR	1		
45	4617327	VAPOR CONDENSER	1		(SUB FOR 4431082)
46	4333461	TANK	1		
48	4374958	ADAPTER	1		
51	4405815	SENSOR	1		
52	4411931	BRACKET	1		
53	19M7139	CAP SCREW	1		M8 X 20
	24M7055	WASHER	1		8.400 X 16 X 1.600 MM
	12M7065	LOCK WASHER	1		8 MM
54	4446657	HOLDER	1		

COVER FRAME

T191334 -UN-01JUL03

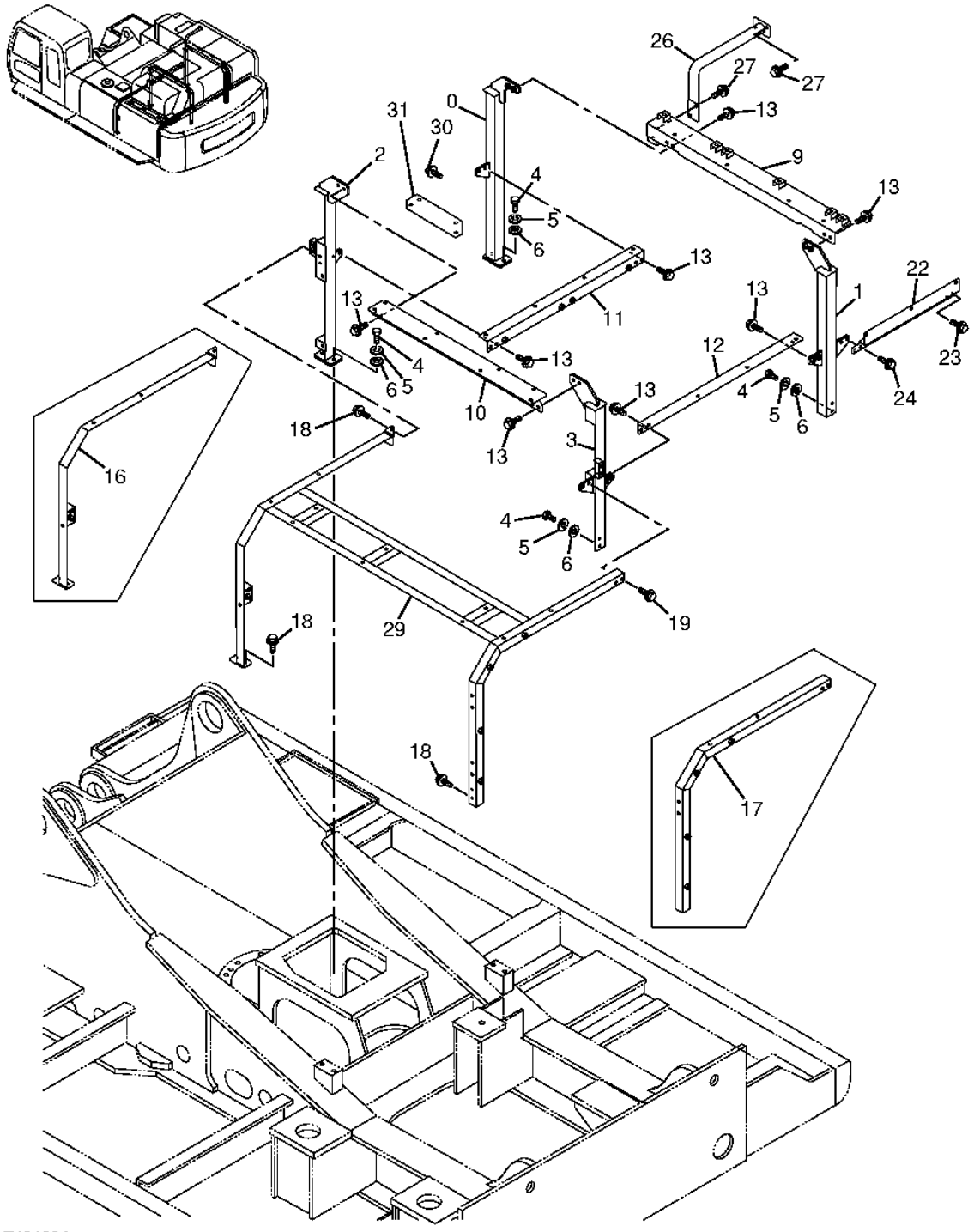

COVER FRAME

KEY	PART NO.	PART NAME	QTY	SERIAL NO.	REMARKS
0	7040625	FRAME	1	-951002	
	7044031	FRAME	1	951003-	
1	7040592	FRAME	1		
2	7040622	FRAME	1	-951002	
	7044030	FRAME	1	951003-	
3	7040591	FRAME	1		
4	J921440	BOLT	8		
5	12H317	LOCK WASHER	8		9/16"
6	J222014	WASHER	8		(SUB FOR AT200011)
9	8084581	BRACKET	1		
10	8084572	BRACKET	1		
11	8084563	BRACKET	1	-951002	
	7044029	BEAM	1	951003-	
12	8084573	BRACKET	1		
13	19M7493	CAP SCREW	16		M12 X 40
	12M7058	LOCK WASHER	16		12 MM, (SUB FOR 12M7067)
	24M7345	WASHER	16		13.500 X 24 X 2.500 MM
16	7040547	SUPPORT	1	-951001	
17	7040548	SUPPORT	1	-951001	
18	19M7403	CAP SCREW	6		M12 X 35
	12H301	LOCK WASHER	6		1/2"
	24M7047	WASHER	6		13 X 24 X 2.500 MM
19	19M7493	CAP SCREW	2		M12 X 40
	12M7058	LOCK WASHER	2		12 MM, (SUB FOR 12M7067)
	24M7345	WASHER	2		13.500 X 24 X 2.500 MM
22	9756851	BRACKET	1		
23	19M7403	CAP SCREW	2		M12 X 35
	12H301	LOCK WASHER	2		1/2"
	24M7047	WASHER	2		13 X 24 X 2.500 MM
24	19M7493	CAP SCREW	2		M12 X 40
	12M7058	LOCK WASHER	2		12 MM, (SUB FOR 12M7067)
	24M7345	WASHER	2		13.500 X 24 X 2.500 MM
26	8084556	BRACKET	1		
27	19M7403	CAP SCREW	4		M12 X 35
	12H301	LOCK WASHER	4		1/2"
	24M7047	WASHER	4		13 X 24 X 2.500 MM
29	6022388	SUPPORT	1	951002-	(SUB FOR 6020971)
30	19M7789	SCREW	8	951003-	M12 X 30, (SUB FOR J031235)
31	4600171	BRACE	2	951003-	

COVER

T193516 -UN-28AUG03

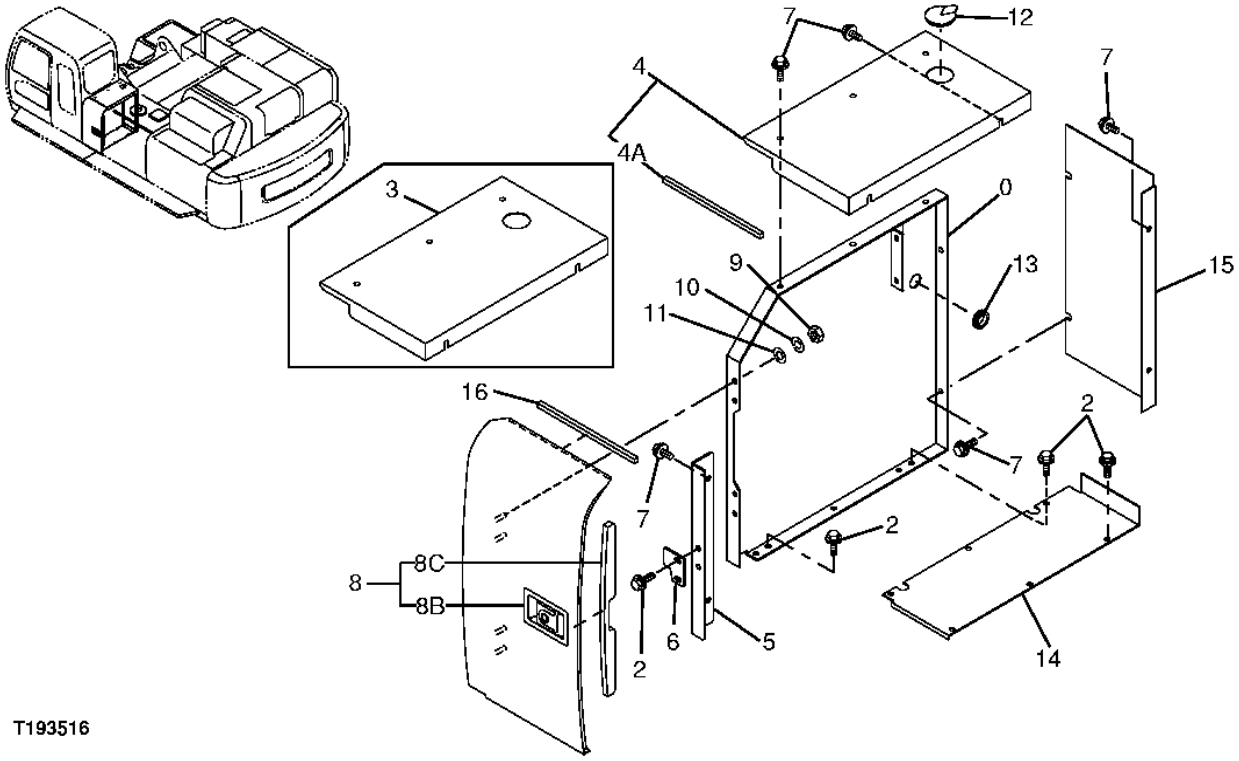

T193516

COVER

KEY	PART NO.	PART NAME	QTY	SERIAL NO.	REMARKS
0	7040435	COVER	1		
2	19M7403	CAP SCREW	10		M12 X 35
	12H301	LOCK WASHER	10		1/2"
	24M7047	WASHER	10		13 X 24 X 2.500 MM
3	3092198	COVER	1	-951001	
4	8090552	COVER	1	951002-	
4A	4485997		1	951002-	
5	8084215	BRACKET	1		
6	4378181	PLATE	1		(SUB FOR AT216988)
7	19M8011	CAP SCREW	11		M12 X 30
	12H301	LOCK WASHER	2		1/2"
	24M7047	WASHER	2		13 X 24 X 2.500 MM
8	7040434	DOOR	1		
8A	.....	DOOR	1		(5007724 NOT AVAILABLE FOR SERVICE)
8B	4409395	LOCK	1		
8C	4446369	ISOLATOR	1		(SUB FOR TH4446369)
8D	4473290	ISOLATOR	1		
9	14M7275	NUT	4		M12
10	12H301	LOCK WASHER	4		1/2"
11	24M7047	WASHER	4		13 X 24 X 2.500 MM
12	3058180	CAP	1		(SUB FOR AT155242)
13	U15091	GROMMET	1		
14	3093859	COVER	1		
15	3029190	COVER	1		
16	4473290	ISOLATOR	1	-951001	

COVER

T196760 -UN-18DEC03

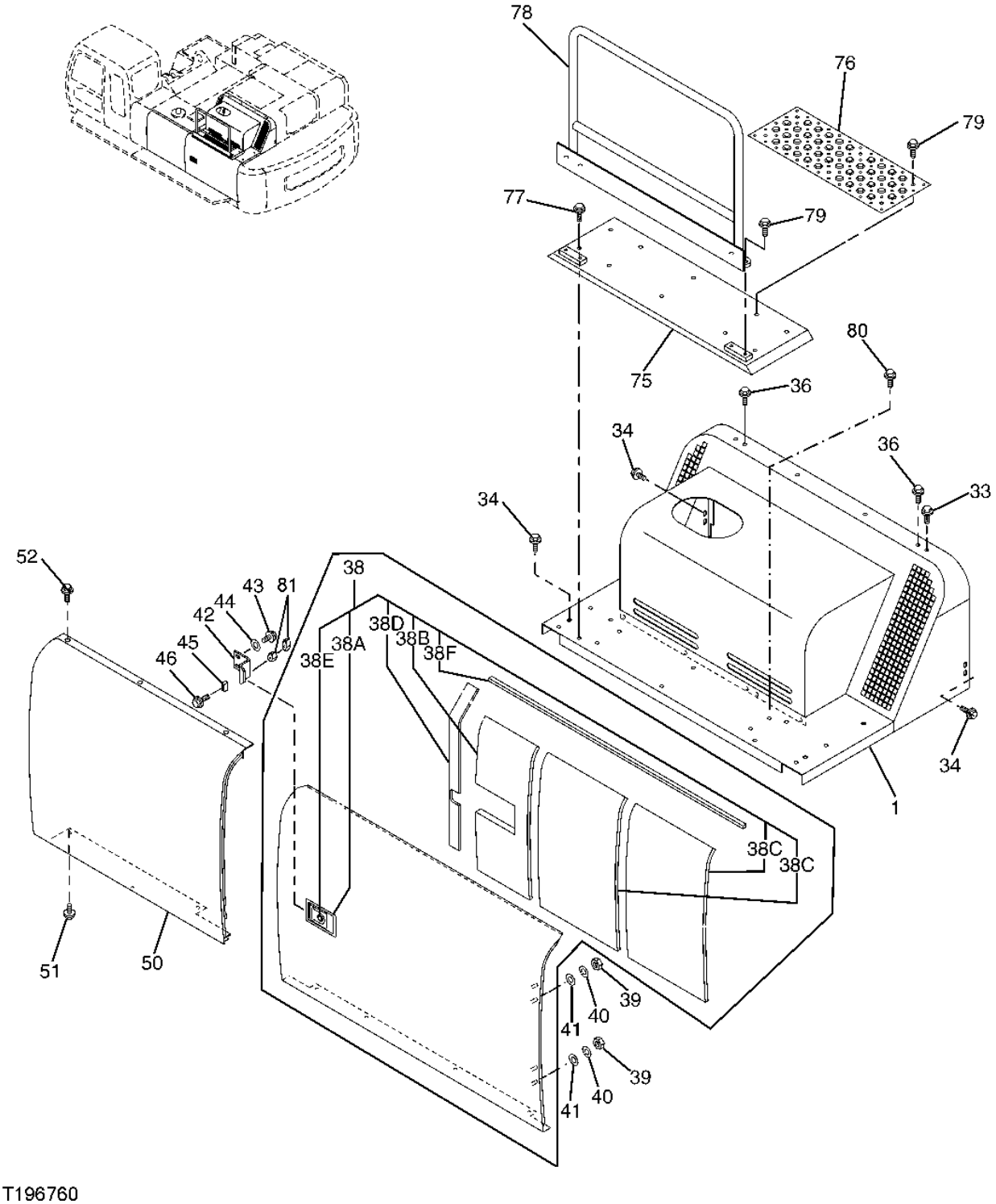

COVER

KEY	PART NO.	PART NAME	QTY	SERIAL NO.	REMARKS
1	.....	COVER	1	-951002	(5008647 NO LONGER AVAILABLE)
	5008709	COVER	1	951003-	
1A	4486001	ISOLATOR	1	951003-	(NOT ILLUSTRATED)
33	19M7330	CAP SCREW	4		M12 X 55, (SUB FOR J021255, ALONG WITH 24M7047 AND 12M7067)
	24M7047	WASHER	4		13 X 24 X 2.500 MM (0.512" X 0.945" X 0.098")
	12M7067	LOCK WASHER	4		12 MM (0.472")
34	19M8011	CAP SCREW	8		M12 X 30
	12H301	LOCK WASHER	8		1/2"
	24M7047	WASHER	8		13 X 24 X 2.500 MM
36	19M7872	CAP SCREW	2		M12 X 25
	12H301	LOCK WASHER	2		1/2"
38	.....	DOOR	1	-951002	(5007773 NO LONGER AVAILABLE) (SUB 5008709 AND 5008706)
	5008706	DOOR	1	951003-	
38A	4409447	LOCK	1		
38B	4446551	ISOLATOR	1		(SUB FOR TH4446551)
38C	4456252	ISOLATOR	2		
38D	4425575	ISOLATOR	1		
38E	4409396	LOCK	1		(SUB FOR TH4409396)
38F	4462413	ISOLATOR	1	-951002	
39	14M7275	NUT	4		M12
40	12H301	LOCK WASHER	4		1/2"
41	24M7345	WASHER	4		13.500 X 24 X 2.500 MM
42	4446694	STOP	1		(SUB FOR TH4446694)
43	19M7403	CAP SCREW	2	-951019	M12 X 35
	19M8011	CAP SCREW	2	951020-	M12 X 30
	12H301	LOCK WASHER	2		
44	4249324	WASHER	2		(SUB FOR TH4249324)
45	4424157	STOP	1		(SUB FOR TH4424157)
46	19M8477	CAP SCREW	1	-951006	M6 X 40
	12M7006	LOCK WASHER	1	-951006	6 MM
	12M7006	LOCK WASHER	1		6 MM
	24M7054	WASHER	1		
50	5007772	COVER	1		
51	19M8011	CAP SCREW	2		M12 X 30
	12H301	LOCK WASHER	2		1/2"
	24M7047	WASHER	2		13 X 24 X 2.500 MM
52	19M8011	CAP SCREW	3		M12 X 30
	12M7058	LOCK WASHER	3		12 MM, (SUB FOR 12M7067)
	24H1748	WASHER	3		
75	8086390	STEP	1		
76	3091338	COVER	1		(SUB FOR TH3091338)
77	19M8088	CAP SCREW	6		M12 X 75
	12M7058	LOCK WASHER	6		12 MM, (SUB FOR 12M7067)
	24M7047	WASHER	6		13 X 24 X 2.500 MM
78	7043130	HANDRAIL	1	951002-	
79	19M7403	CAP SCREW	8		M12 X 35
	12H301	LOCK WASHER	8		1/2"
	24M7047	WASHER	8		13 X 24 X 2.500 MM
80	12M7067	LOCK WASHER	8	-951001	
	19M7403	CAP SCREW	8	-951001	
	24H1748	WASHER	8	-951001	
81	14M7272	NUT	2	951007-	

COVER

T150006 -UN-01FEB02

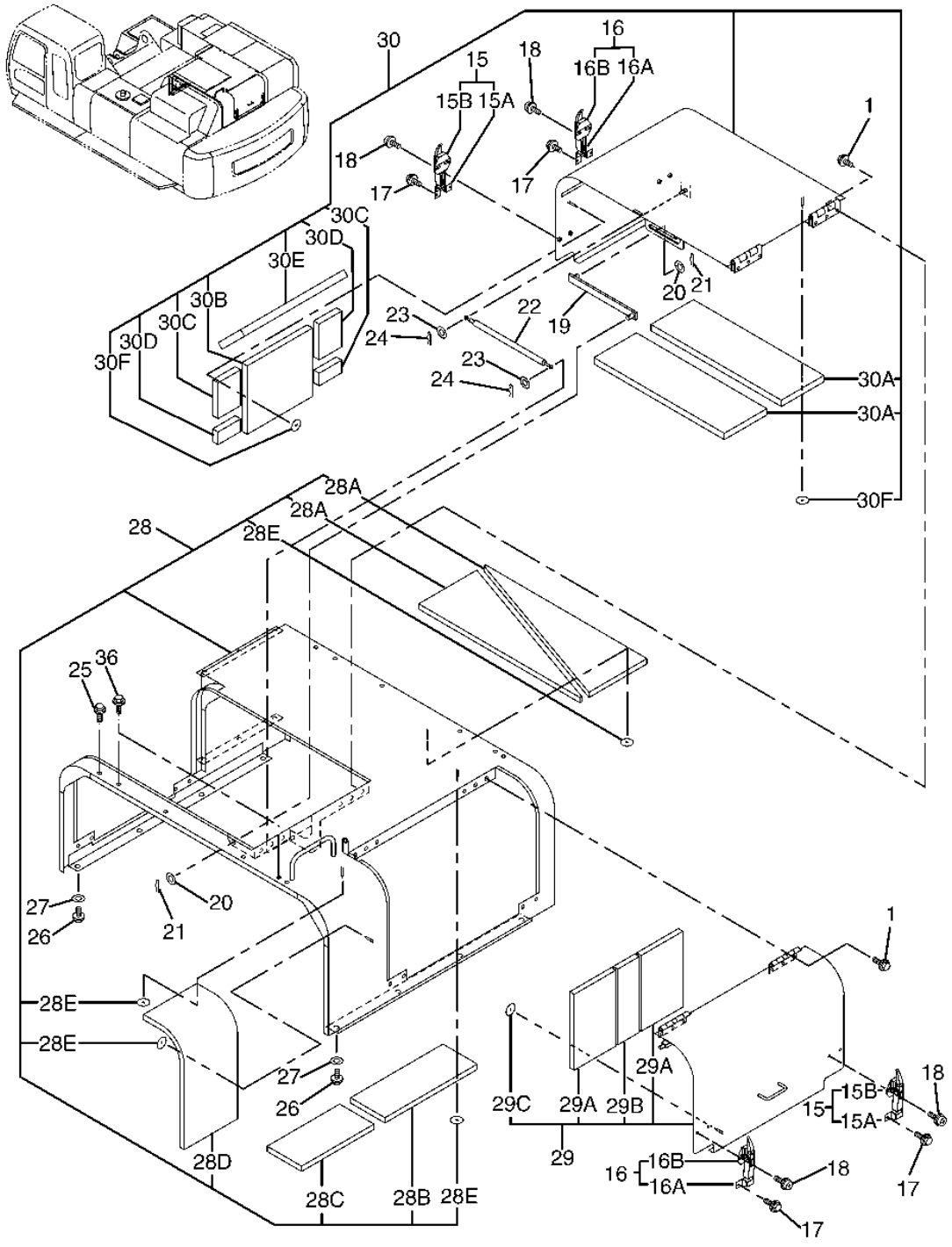

T150006

COVER

KEY	PART NO.	PART NAME	QTY	SERIAL NO.	REMARKS
1	19M7402	CAP SCREW	12		M10 X 25
	12M7066	LOCK WASHER	12		10 MM
15	.....	CATCH	2		(AT131937 NOT AVAILABLE FOR SERVICE)
15A	3074568	CATCH	1		(SUB FOR AT131654)
15B	3021131	ANCHOR	1		(SUB FOR TH102247)
16	.....	CATCH	2		(AT131938 NOT AVAILABLE FOR SERVICE)
16A	3074568	CATCH	1		(SUB FOR AT131654)
16B	3021131	ANCHOR	1		(SUB FOR TH102247)
17	19M7163	CAP SCREW	8		M8 X 25
	12M7056	LOCK WASHER	8		8 MM, (SUB FOR 12M7065)
	24M7055	WASHER	8		8.400 X 16 X 1.600 MM
18	J460825	SCREW	8		
19	9756164	ARM	1		
20	24M7053	WASHER	5		17 X 30 X 3 MM
21	M40461	PIN	2		
22	4344047	CYLINDER	1		(SUB FOR AT202398)
23	24M7055	WASHER	2		8.400 X 16 X 1.600 MM
24	H132922	COTTER PIN	2		
25	19M7330	CAP SCREW	8		M12 X 55, (SUB FOR J021255, ALONG WITH 24M7047 AND 12M7067)
	24M7047	WASHER	8		13 X 24 X 2.500 MM (0.512" X 0.945" X 0.098")
	12M7067	LOCK WASHER	8		12 MM (0.472")
26	19M7493	CAP SCREW	8		M12 X 40
	12H301	LOCK WASHER	8		1/2"
27	4249324	WASHER	8		(SUB FOR TH4249324)
28	6021724	COVER	1		(SUB FOR 6020817)
28A	4469655	ISOLATOR	2		
28B	4471861	ISOLATOR	1		
28C	4471855	ISOLATOR	1		
28D	4471843	ISOLATOR	1		
28E	4156886	SPRING WASHER	22		(SUB FOR AT121962)
29	8087281	COVER	1		
29A	4469657	ISOLATOR	2		
29B	4469660	ISOLATOR	1		
29C	4156886	SPRING WASHER	10		(SUB FOR AT121962)
30	6020827	COVER	1		
30A	4469755	ISOLATOR	2		
30B	4469756	ISOLATOR	1		
30C	4469757	ISOLATOR	2		
30D	4469758	ISOLATOR	2		
30E	4469759	ISOLATOR	1		
30F	4156886	SPRING WASHER	27		(SUB FOR AT121962)
36	19M7872	CAP SCREW	4		M12 X 25
	12H301	LOCK WASHER	4		1/2"

COVER

T191340 -UN-30MAY03

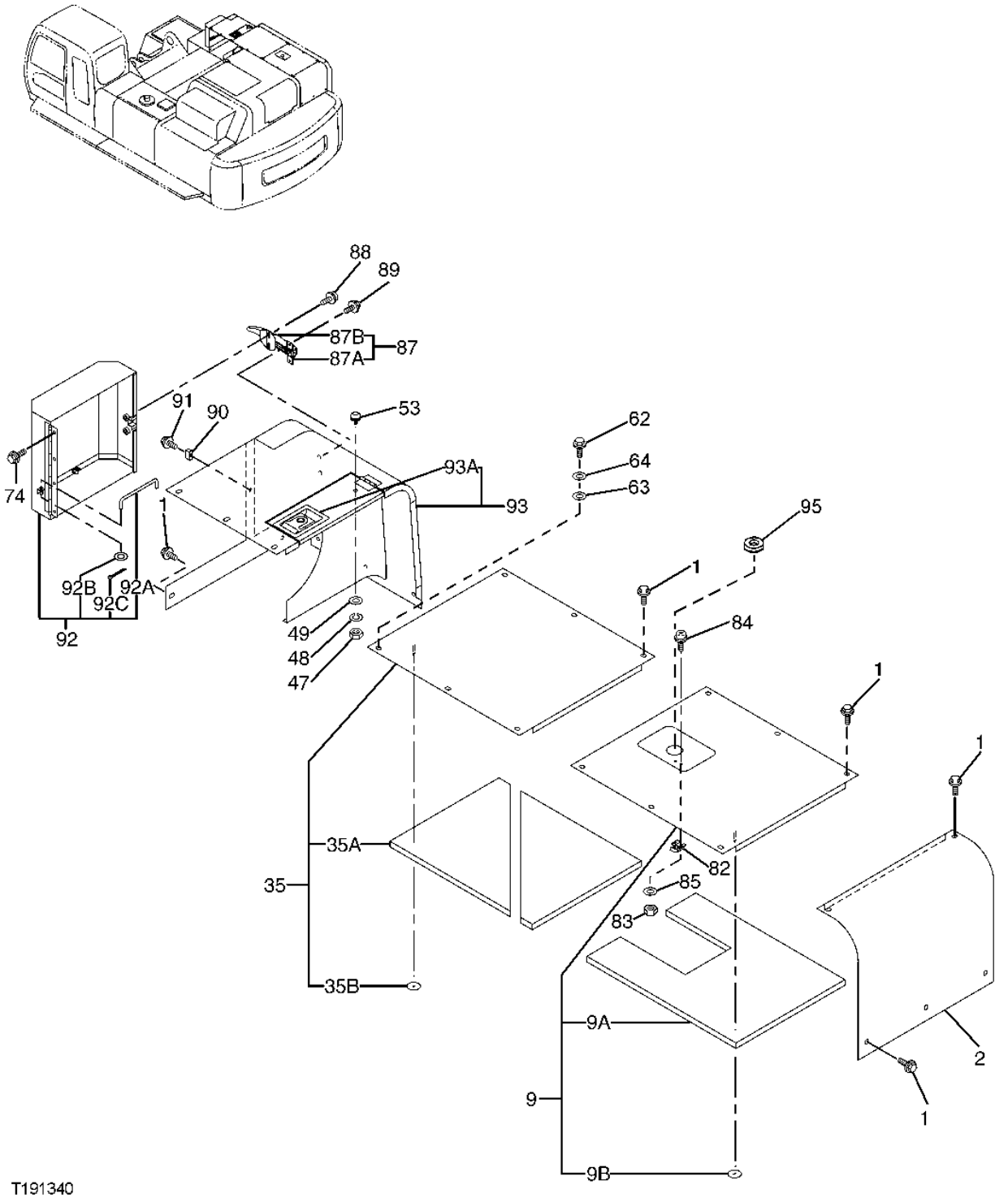

T191340

COVER

KEY	PART NO.	PART NAME	QTY	SERIAL NO.	REMARKS
1	19M8011	CAP SCREW	24		M12 X 30
	12M7058	LOCK WASHER	24		12 MM, (SUB FOR 12M7067)
	24H1748	WASHER	24		
2	7040630	COVER	1		
9	8086769	COVER	1		
9A	3094957	ISOLATOR	1		
9B	4156886	SPRING WASHER	8		(SUB FOR AT121962)
35	7041975	COVER	1		
35A	4471868	ISOLATOR	2		
35B	4156886	SPRING WASHER	8		(SUB FOR AT121962)
47	14M7274	NUT	1		M10
48	12M7066	LOCK WASHER	1		10 MM
49	24M7028	WASHER	1		10.500 X 20 X 2 MM
53	4294508	BUMPER	1		(SUB FOR AT201032)
62	12M7067	LOCK WASHER	1		
	19M7403	CAP SCREW	1		
	24H1748	WASHER	1		
63	4456191	ISOLATOR	1		
64	4435575	SPACER	1		
74	19M7662	CAP SCREW	4		M10 X 30
	12M7066	LOCK WASHER	4		10 MM
	24M7028	WASHER	4		10.500 X 20 X 2 MM
82	4372725	STOP	1		(SUB FOR TH4372725)
83	14M7139	NUT	2		M4, (SUB FOR 14M7100)
84	.....	SCREW	2		(AT156973 NOT AVAILABLE FOR SERVICE)
85	24M7117	WASHER	2		4.300 X 9 X 0.800 MM
87	.....	CATCH	1		(AT131937 NOT AVAILABLE FOR SERVICE)
87A	3074568	CATCH	1		(SUB FOR AT131654)
87B	3021131	ANCHOR	1		(SUB FOR TH102247)
88	J460825	SCREW	2		
89	19M7881	SCREW	2		M8 X 20
	12M7056	LOCK WASHER	2		8 MM, (SUB FOR 12M7065)
90	4424157	STOP	1		(SUB FOR TH4424157)
91	19M7177	CAP SCREW	1		M6 X 35
	12M7012	LOCK WASHER	1		6 MM
	24M7054	WASHER	1		6.400 X 12 X 1.600 MM
92	8086662	COVER	1		
92A	4464982	STOP	1		
92B	24M7055	WASHER	1		8.400 X 16 X 1.600 MM
92C	11M7058	COTTER PIN	1		(SUB FOR 11M7009)
93	6020331	COVER	1		
93A	4361763	LOCK	1		(SUB FOR AT214010)
95	4109823	BUSHING	1		

COVER

T150008 -UN-01FEB02

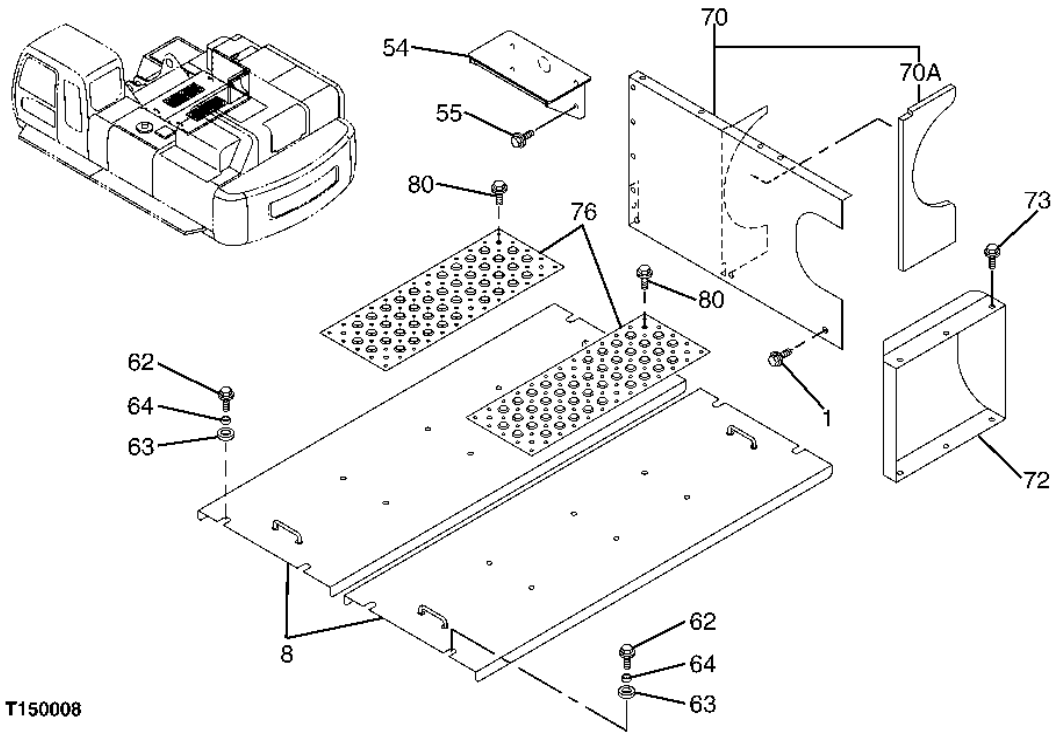

2E17

COVER

KEY	PART NO.	PART NAME	QTY	SERIAL NO.	REMARKS
1	19M8011	CAP SCREW	3		M12 X 30
	12M7058	LOCK WASHER	3		12 MM, (SUB FOR 12M7067)
	24H1748	WASHER	3		
8	.....	COVER	2		(7043449 NOT AVAILABLE FOR SERVICE)
54	8086341	STEP	1		
55	19M8011	CAP SCREW	4		M12 X 30
	12H301	LOCK WASHER	4		1/2"
	24M7047	WASHER	4		13 X 24 X 2.500 MM
62	19M7403	CAP SCREW	8		M12 X 35
	12M7058	LOCK WASHER	8		12 MM, (SUB FOR 12M7067)
	24H1748	WASHER	8		
63	4456191	ISOLATOR	4		
64	4435575	SPACER	4		
70	7040649	COVER	1		
70A	4468345	ISOLATOR	1		
72	7040643	COVER	1		
73	19M8011	CAP SCREW	6		M12 X 30
	12H301	LOCK WASHER	6		1/2"
	24M7047	WASHER	6		13 X 24 X 2.500 MM
76	3091338	COVER	2		
80	19M7662	CAP SCREW	12		M10 X 30
	12M7066	LOCK WASHER	12		10 MM
	24M7028	WASHER	12		10.500 X 20 X 2 MM

DUCT

T193517 -UN-28AUG03

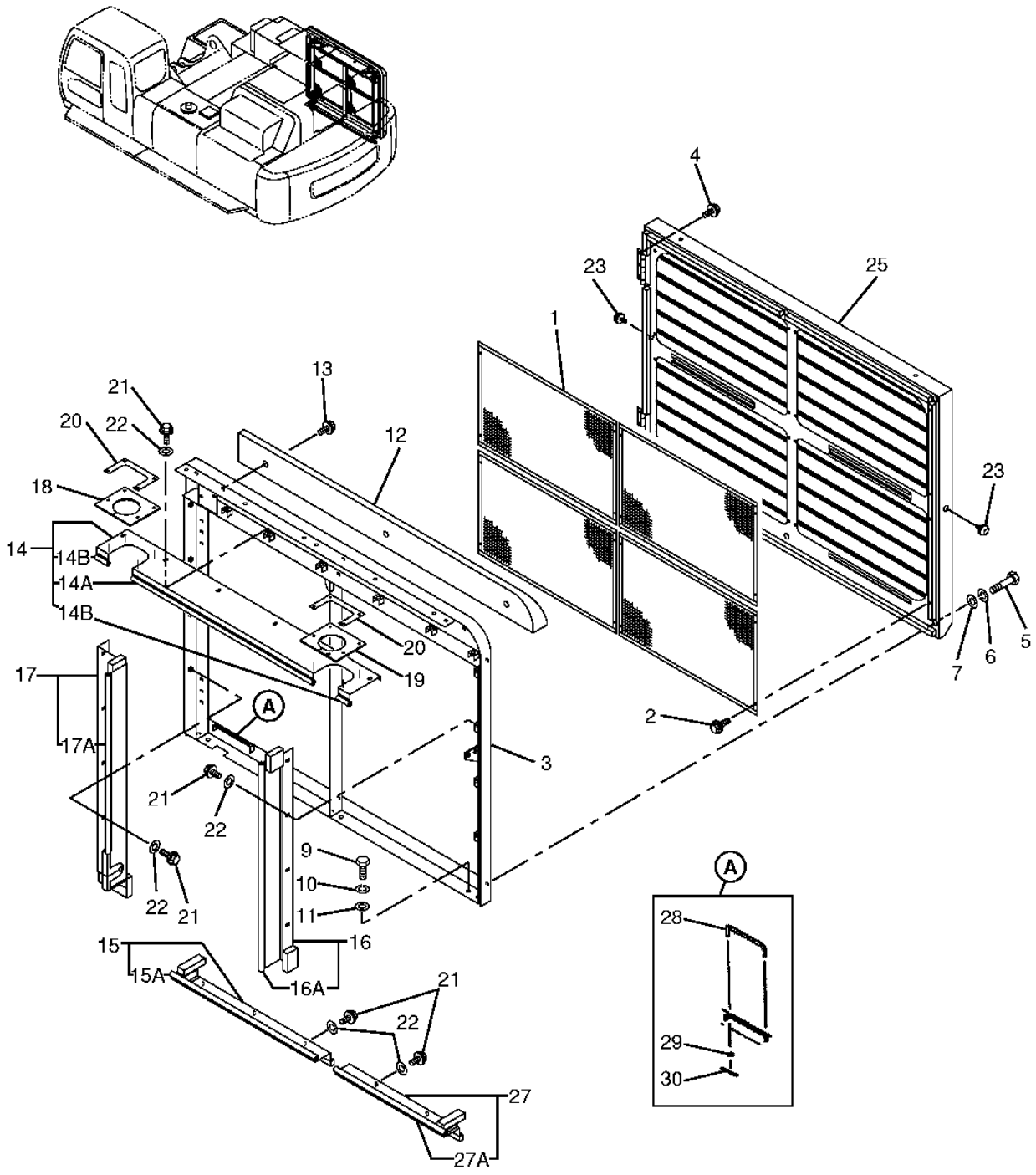

DUCT

KEY	PART NO.	PART NAME	QTY	SERIAL NO.	REMARKS
1	.....	COVER	4	-951007	(8084462 NO LONGER AVAILABLE) (FURNISH 8092805 ALONG WITH 5009001)
	8092805	SCREEN	2	951008-	(USE WITH 5009001)
2	19M7923	CAP SCREW	20		M6 X 12
	12M7006	LOCK WASHER	20		6 MM
	24M7054	WASHER	20		6.400 X 12 X 1.600 MM
3	5007813	FRAME	1		
4	19M7662	CAP SCREW	6		M10 X 30
	12M7066	LOCK WASHER	6		10 MM
5	19M8727	CAP SCREW	6		(SUB FOR J901400)
6	12H317	LOCK WASHER	6		9/16"
7	J222014	WASHER	6		(SUB FOR AT200011)
9	J921435	BOLT	6		
10	12H317	LOCK WASHER	6		9/16"
11	J222014	WASHER	6		(SUB FOR AT200011)
12	7040648	COVER	1	-951007	
13	.....	SCREW WITH WASHER	3	-951007	(AT215469 NOT AVAILABLE FOR SERVICE)
14	8084599	COVER	1		
14A	4456780	ISOLATOR	1		
14B	4452717	ISOLATOR	2		
15	8084600	COVER	1		
15A	4462699	ISOLATOR	1		
16	8084601	COVER	1		
16A	4456781	ISOLATOR	1		
17	8084602	COVER	1		
17A	4456782	ISOLATOR	1		
18	4456745	ISOLATOR	1	-951001	
	4456746	ISOLATOR	1	951002-	
19	4456746	ISOLATOR	1		
20	4456747	PLATE	2		
21	19M7402	CAP SCREW	19	-951019	M10 X 25, (SUB FOR 19M7402, THIS APPLICATION)
	12M7066	LOCK WASHER	19	-951019	10 MM
	19M7938	CAP SCREW	19	951020-	M10 X 20, (SUB FOR J271020)
	24M7346	WASHER	19	951020-	11 X 20 X 2 MM
22	24M7346	WASHER	19		11 X 20 X 2 MM
23	4204586	STOP	2		(SUB FOR TH108668)
25	.....	AIR DUCT	1	-951007	(5008033 NO LONGER AVAILABLE) (FURNISH 5009001 ALONG WITH 8092805)
	5009001	AIR DUCT	1	951008-	(USE WITH 8092805)
	19M7872	CAP SCREW	2	951008-	M12 X 25, (NOT ILLUSTRATED) (USE WITH 5009001)
27	8085751	COVER	1		
27A	4462700	ISOLATOR	1		
28	9759219	BRACKET	1		
29	24M7055	WASHER	2		8.400 X 16 X 1.600 MM
30	H132922	COTTER PIN	1		

HEAT SHIELD COVER

T150010 -UN-01FEB02

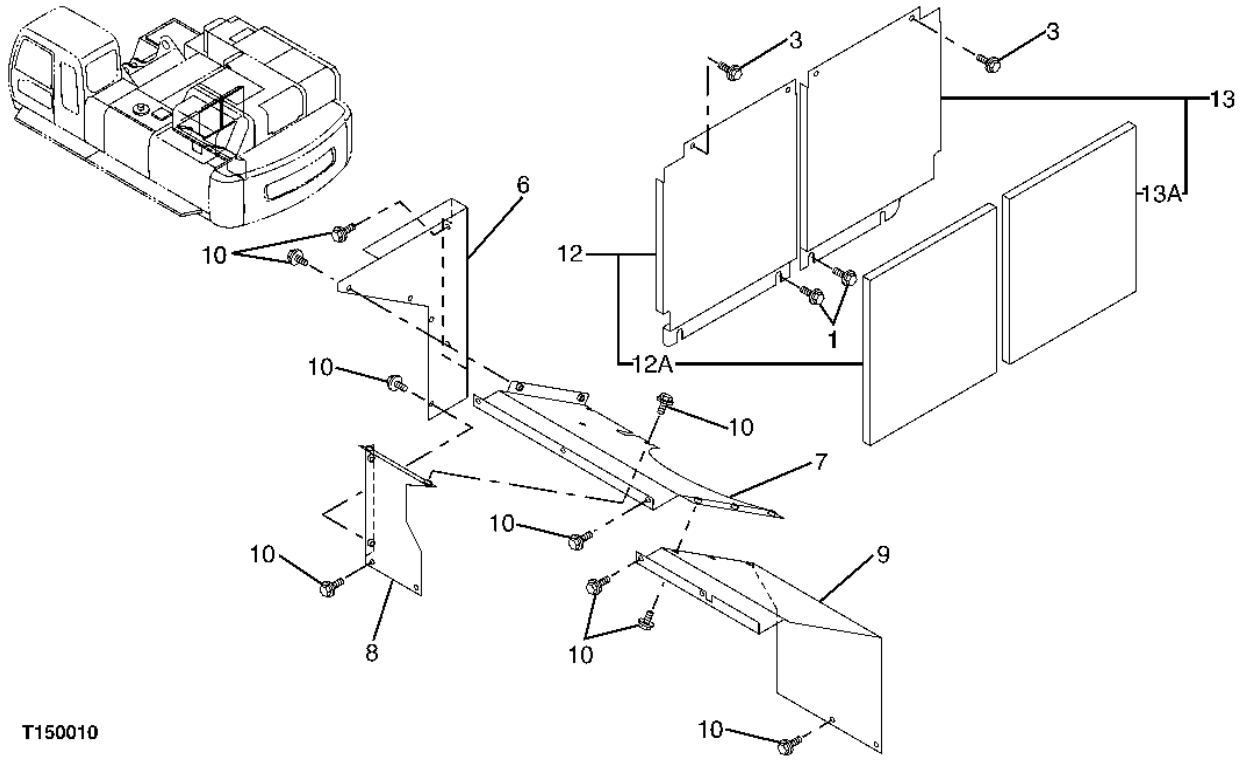

HEAT SHIELD COVER

KEY	PART NO.	PART NAME	QTY	SERIAL NO.	REMARKS
1	19M8011	CAP SCREW	4		M12 X 30
	12M7058	LOCK WASHER	4		12 MM, (SUB FOR 12M7067)
	24H1748	WASHER	4		
3	19M8011	CAP SCREW	4		M12 X 30
	12H301	LOCK WASHER	4		1/2"
	24M7047	WASHER	4		13 X 24 X 2.500 MM
6	2046767	COVER	1		
7	7040581	COVER	1		
8	8084458	COVER	1		
9	2046786	COVER	1		
10	19M8011	CAP SCREW	20		M12 X 30
	12H301	LOCK WASHER	20		1/2"
	24M7047	WASHER	20		13 X 24 X 2.500 MM
12	8087215	COVER	1	-951002	
	8091440	COVER	1	951003-	
12A	4469417	ISOLATOR	1	-951002	
	TH4600281	ISOLATOR	1	951003-	
13	8087222	COVER	1	-951002	
	8091452	COVER	1	951003-	
13A	4469417	ISOLATOR	1	-951002	
	TH4600298	ISOLATOR	1	951003-	

BATTERY COVER, TOOLBOX AND RIGHT REARVIEW MIRROR

T197105 -UN-08JAN04

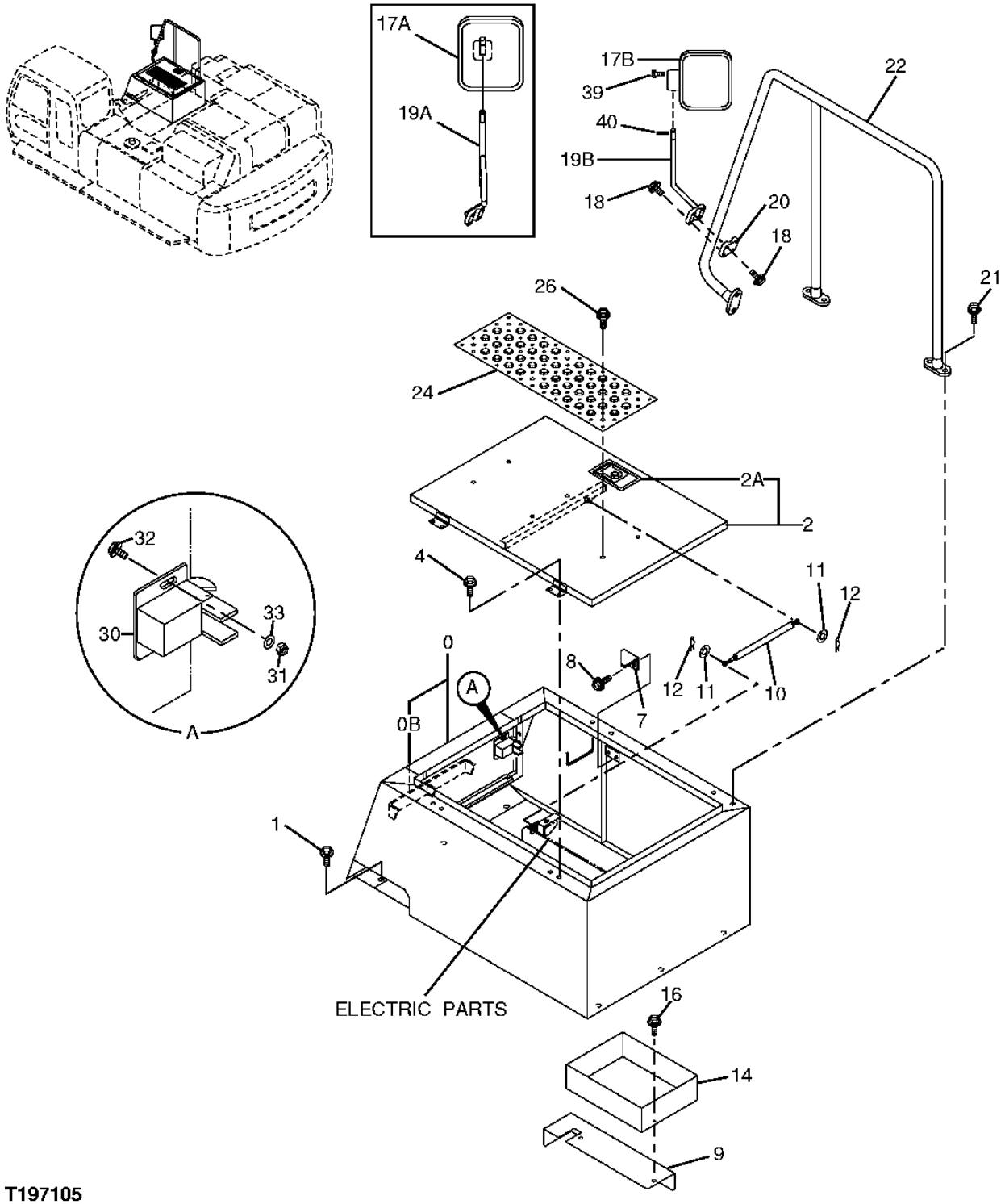

T197105

BATTERY COVER, TOOLBOX AND RIGHT REARVIEW MIRROR

KEY	PART NO.	PART NAME	QTY	SERIAL NO.	REMARKS
0	.....	COVER	1		(5008571 NOT AVAILABLE FOR SERVICE)
0B	.....	STEP	1		(8079985 NOT AVAILABLE FOR SERVICE)
1	19M7403	CAP SCREW	6		M12 X 35
	12M7058	LOCK WASHER	6		12 MM, (SUB FOR 12M7067)
	24H1748	WASHER	6		
2	.....	COVER	1		
2A	4361763	LOCK	1		(SUB FOR TH110898)
4	19M7938	CAP SCREW	4		M10 X 20
	12M7066	LOCK WASHER	4		10 MM
7	4224237	STOP	1		(SUB FOR AT131921)
8	19M7268	CAP SCREW	2		M12 X 25
9	.....	COVER	1		
10	4188366	ABSORBER	1		(SUB FOR TH109684)
11	24M7055	WASHER	2		8.400 X 16 X 1.600 MM
12	H132922	COTTER PIN	2		
14	8053492	TOOLBOX	1		(SUB FOR TH8053492)
16	AT157059	BOLT	2		
17A	.....	REAR VIEW MIRROR	1	-951022	(4426821 NO LONGER AVAILABLE) (FURNISH 4418912 ALONG WITH 8093819)
17B	4418912	REAR VIEW MIRROR	1	951023-	
18	19M8122	CAP SCREW	4		M12 X 85
	12M7058	LOCK WASHER	4		12 MM, (SUB FOR 12M7067)
19A	8067349	ARM	1	-951022	(USE WITH 4426821 MIRROR)
19B	8093819	ARM	1	951023-	(USE WITH 4418912 MIRROR)
20	4376895	CLAMP	1		(SUB FOR TH4376895)
21	19M7403	CAP SCREW	6		M12 X 35
	12M7058	LOCK WASHER	6		12 MM, (SUB FOR 12M7067)
	24H1748	WASHER	6		
22	7040580	HANDRAIL	1		
24	3091338	COVER	1		(SUB FOR TH3091338)
26	19M7662	CAP SCREW	6		M10 X 30
	12M7066	LOCK WASHER	6		10 MM
	24M7028	WASHER	6		10.500 X 20 X 2 MM
30	4372725	STOP	1		(SUB FOR TH4372725)
31	14M7139	NUT	2		M4, (SUB FOR 14M7100)
32	.....	BOLT	2		
33	24M7117	WASHER	2		4.300 X 9 X 0.800 MM
39	19M8280	SCREW	4	951023-	(USE WITH 4418912 MIRROR)
40	4144018	SPRING PIN	1	951023-	(USE WITH 4418912 MIRROR)

UNDERNEATH PROTECTION

T150013 -UN-01FEB02

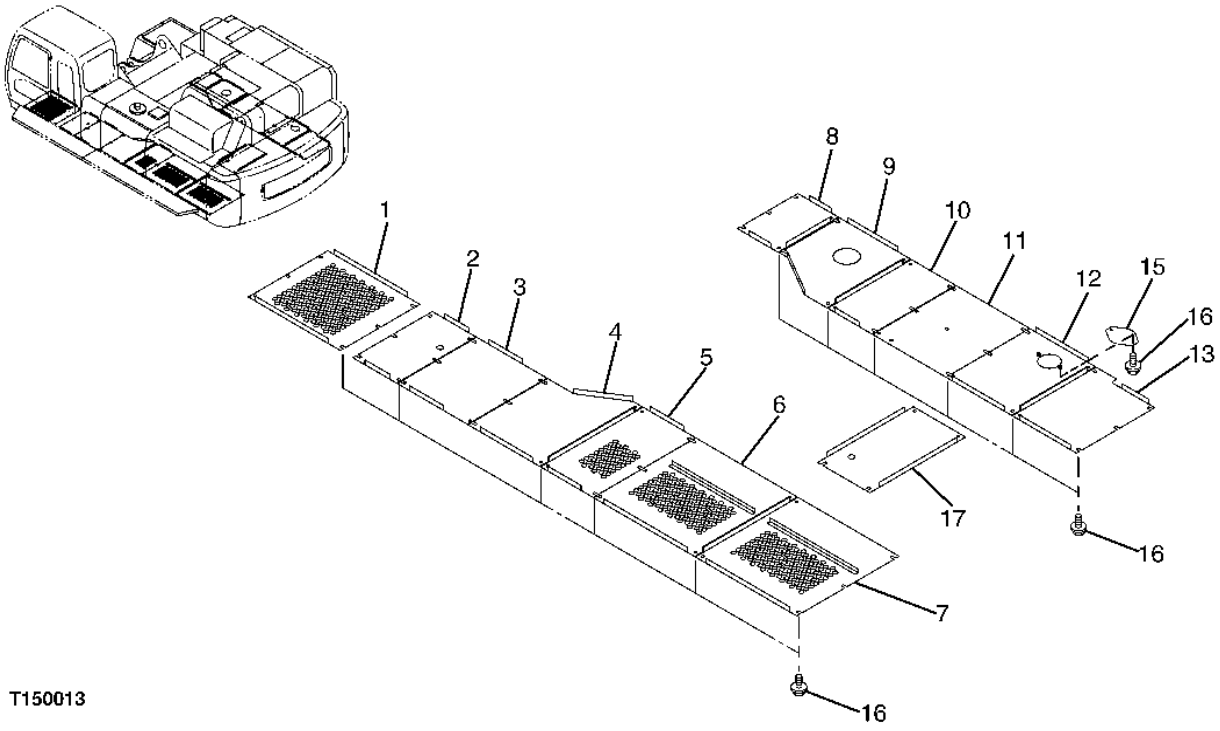

UNDERNEATH PROTECTION

KEY	PART NO.	PART NAME	QTY	SERIAL NO.	REMARKS
1	2040674	GUARD	1		(SUB FOR TH2040674)
2	3078497	GUARD	1		(SUB FOR TH3078497)
3	2046732	COVER	1		
4	2046735	COVER	1		
5	2046734	COVER	1		
6	7040558	COVER	1		
7	7040559	COVER	1		
8	2046738	COVER	1		
9	2046739	COVER	1		
10	2046740	COVER	1		
11	2046744	COVER	1		
12	7040538	COVER	1		
13	2046745	COVER	1		
15	4343333	GUARD	1		(SUB FOR TH4343333)
16	19M7493	CAP SCREW	75		M12 X 40
	12H301	LOCK WASHER	75		1/2"
	24H1748	WASHER	75		
17	3094975	COVER	1		

HANDRAIL

T150014 -UN-01FEB02

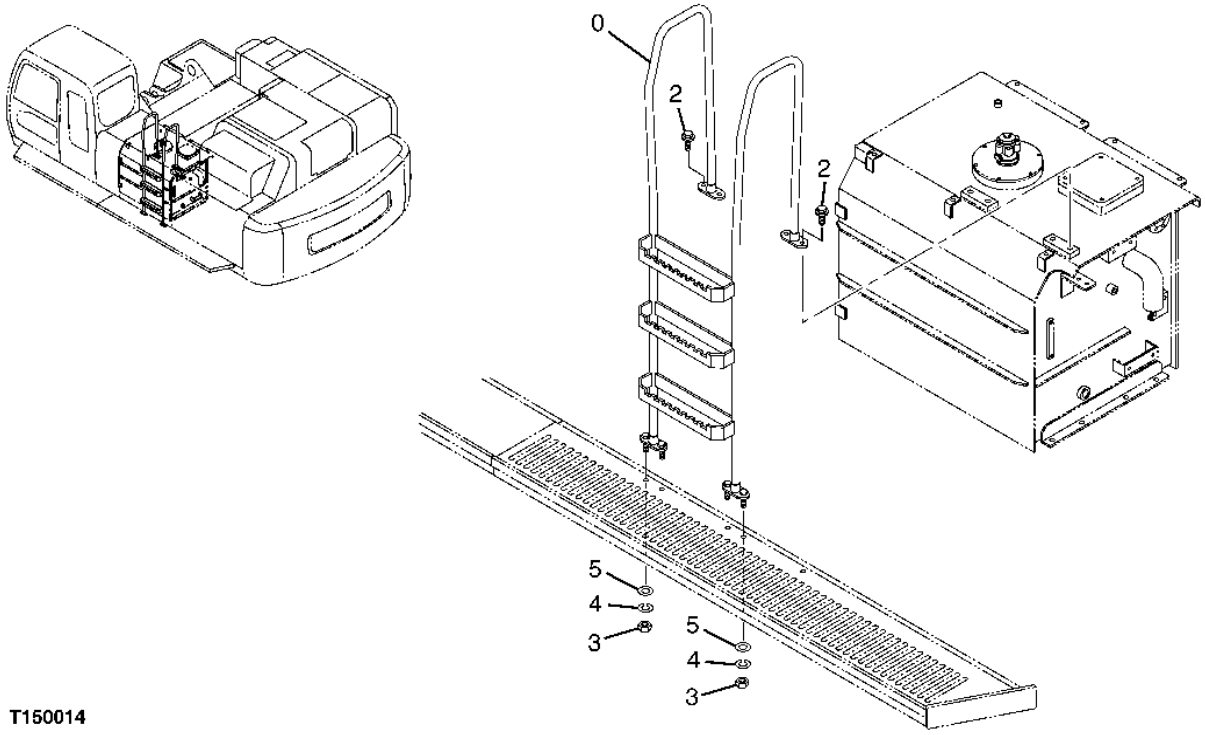

T150014

HANDRAIL

KEY	PART NO.	PART NAME	QTY	SERIAL NO.	REMARKS
0	.....	HANDRAIL	1		(7043120 NOT AVAILABLE FOR SERVICE)
2	19M7268	CAP SCREW	4		M12 X 25
3	.....	NUT	4		(J950012 NOT AVAILABLE FOR SERVICE)
4	.....	WASHER	4		(A590912 NOT AVAILABLE FOR SERVICE)
5	.....	WASHER	4		(A590112 NOT AVAILABLE FOR SERVICE)

LEFT REARVIEW MIRROR

T197663 -UN-05FEB04

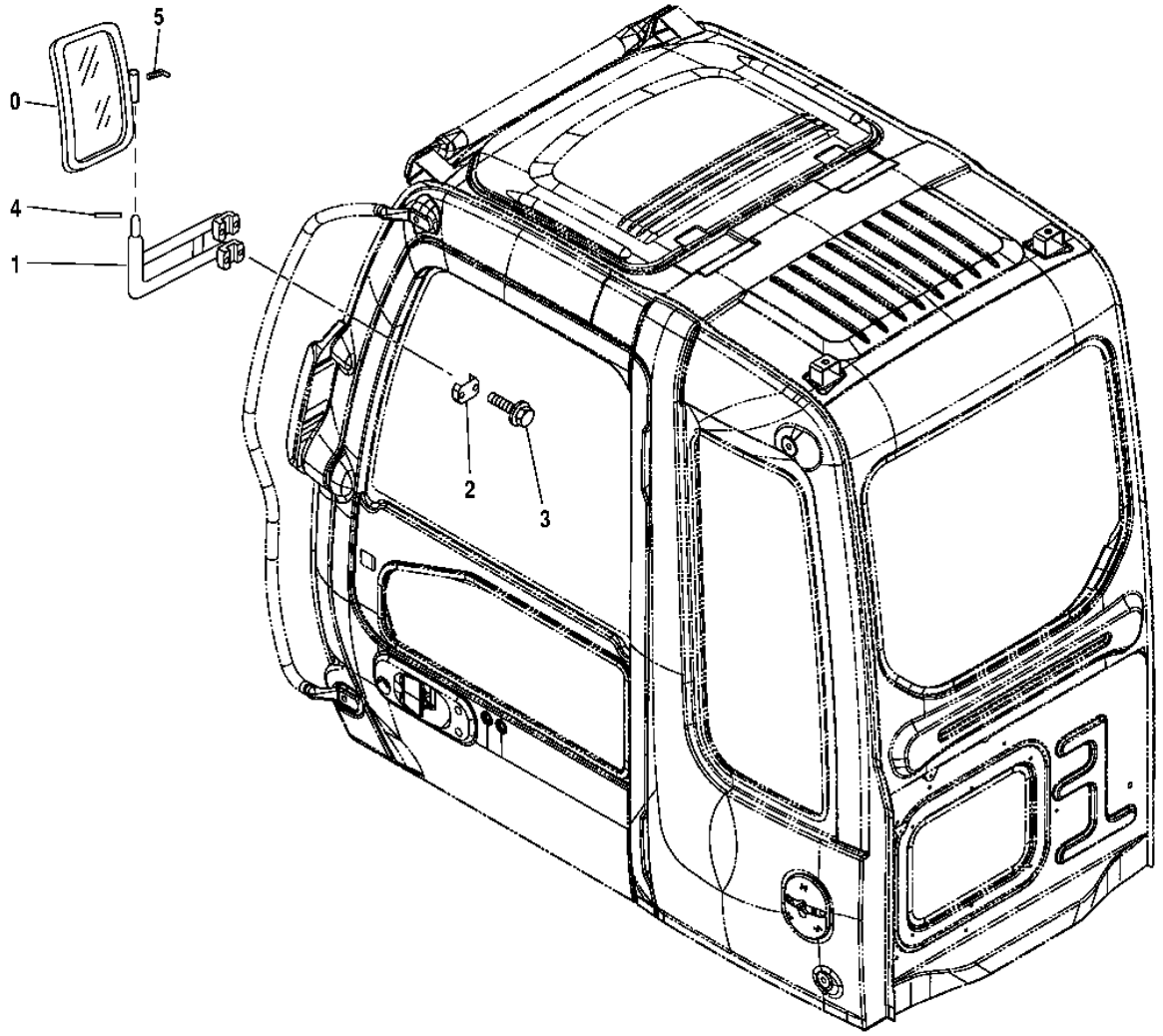

T197663

LEFT REARVIEW MIRROR

KEY	PART NO.	PART NAME	QTY	SERIAL NO.	REMARKS
0	.....	REAR VIEW MIRROR	1	-951022	(4426821 NO LONGER AVAILABLE) (FURNISH 4418912 ALONG WITH 8093827) (SUB FOR TH4426821)
	4418912	REAR VIEW MIRROR	1	951023-	
1	8067350	ARM	1	-951022	(SUB FOR TH8067350)
	8093827	ARM	1	951023-	
2	4201441	CLAMP	2		(SUB FOR AT131743)
3	19M8359	CAP SCREW	4		M8 X 45
	12M7056	LOCK WASHER	4		8 MM, (SUB FOR 12M7065)
4	19M8280	SCREW	4	951023-	
5	4144018	SPRING PIN	1	951023-	

RADIO (AM/FM)

T149468 -UN-23JAN02

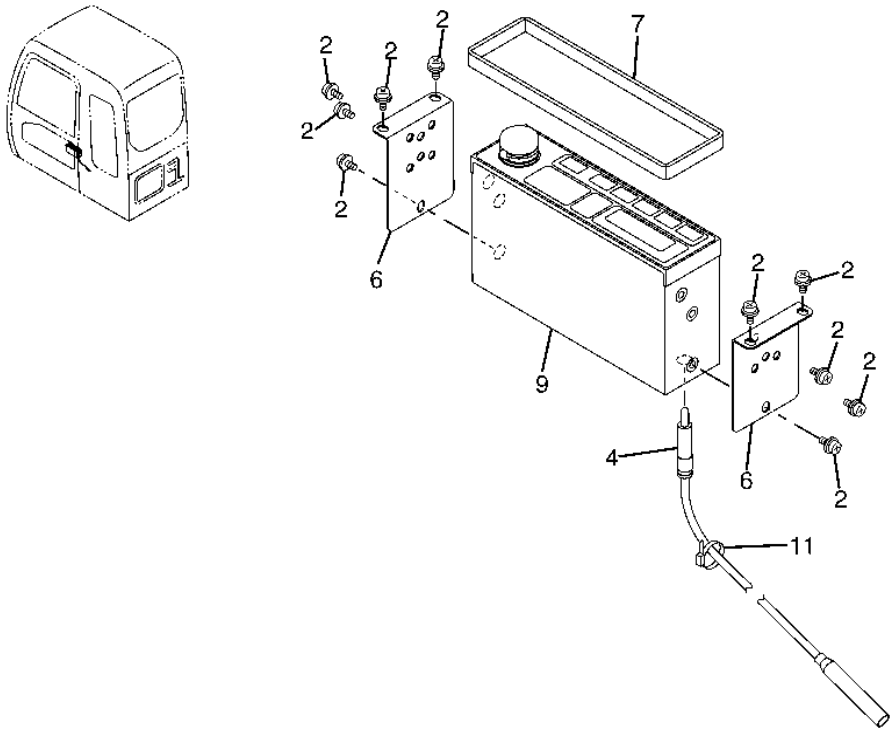

T149468

RADIO (AM/FM)

KEY	PART NO.	PART NAME	QTY	SERIAL NO.	REMARKS
2	19M7700	CAP SCREW	10		M5 X 10
	12M7066	LOCK WASHER	10		10 MM
	24M7028	WASHER	10		10.500 X 20 X 2 MM
4	4102096	WIRING HARNESS	1		(SUB FOR AT154913)
6	4341706	BRACKET	2		(SUB FOR AT213883)
7	4368973	ISOLATOR	1		(SUB FOR AT215533)
9	**AT181125**	**RADIO**	**1**		**WHOLEGOODS, (SUB FOR AT217966)**
	4640468	RADIO	1		(SUB FOR 4613913, 4351187, AT214430)
	TH4353127	RADIO	1		
11	H77698	TIE BAND	1		

TRAVEL MOTION ALARM

T143276 -UN-12OCT01

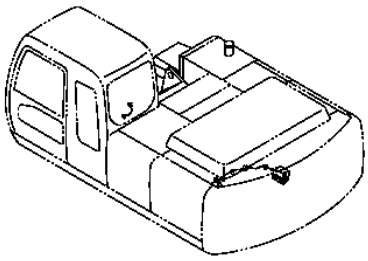

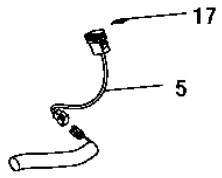

ELECTRIC PARTS

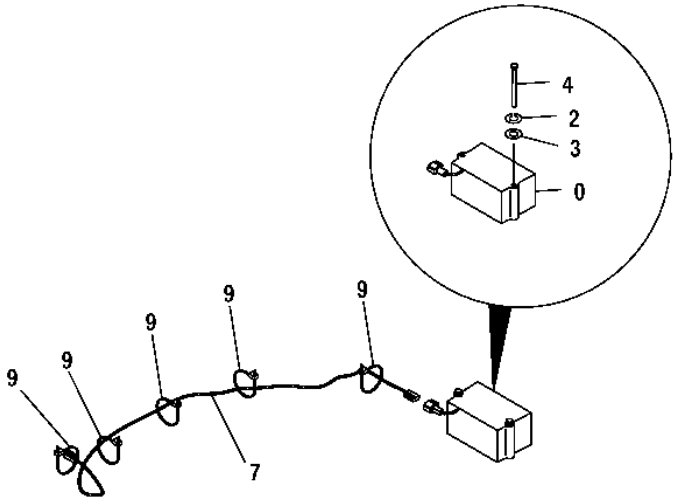

T143276

TRAVEL MOTION ALARM

KEY	PART NO.	PART NAME	QTY	SERIAL NO.	REMARKS
0	AT301074	ALARM SYSTEM	1		(SUB FOR AT154966, 4283028)
2	12M7056	LOCK WASHER	2		8 MM (0.315") (SUB FOR 12M7065)
3	24M7055	WASHER	2		8.400 X 16 X 1.600 MM (0.331" X 0.630" X 0.063")
4	19M7997	CAP SCREW	2		M8 X 110
5	4384758	SWITCH	1		(ROUND STYLE)
7	3088769	WIRING HARNESS	1		(SUB FOR TH3088769)
9	H77698	TIE BAND	6		
17	4450174	LABEL	1		(SUB FOR 4441246 AND TH4441246)

HEAVY DUTY BUCKET
(USE WITH SHORT ARM, STANDARD ARM, OR SEMI-LONG ARM)
(ALSO ORDER BUCKET TOOTH ASSEMBLIES)

TP67401 -UN-11AUG00

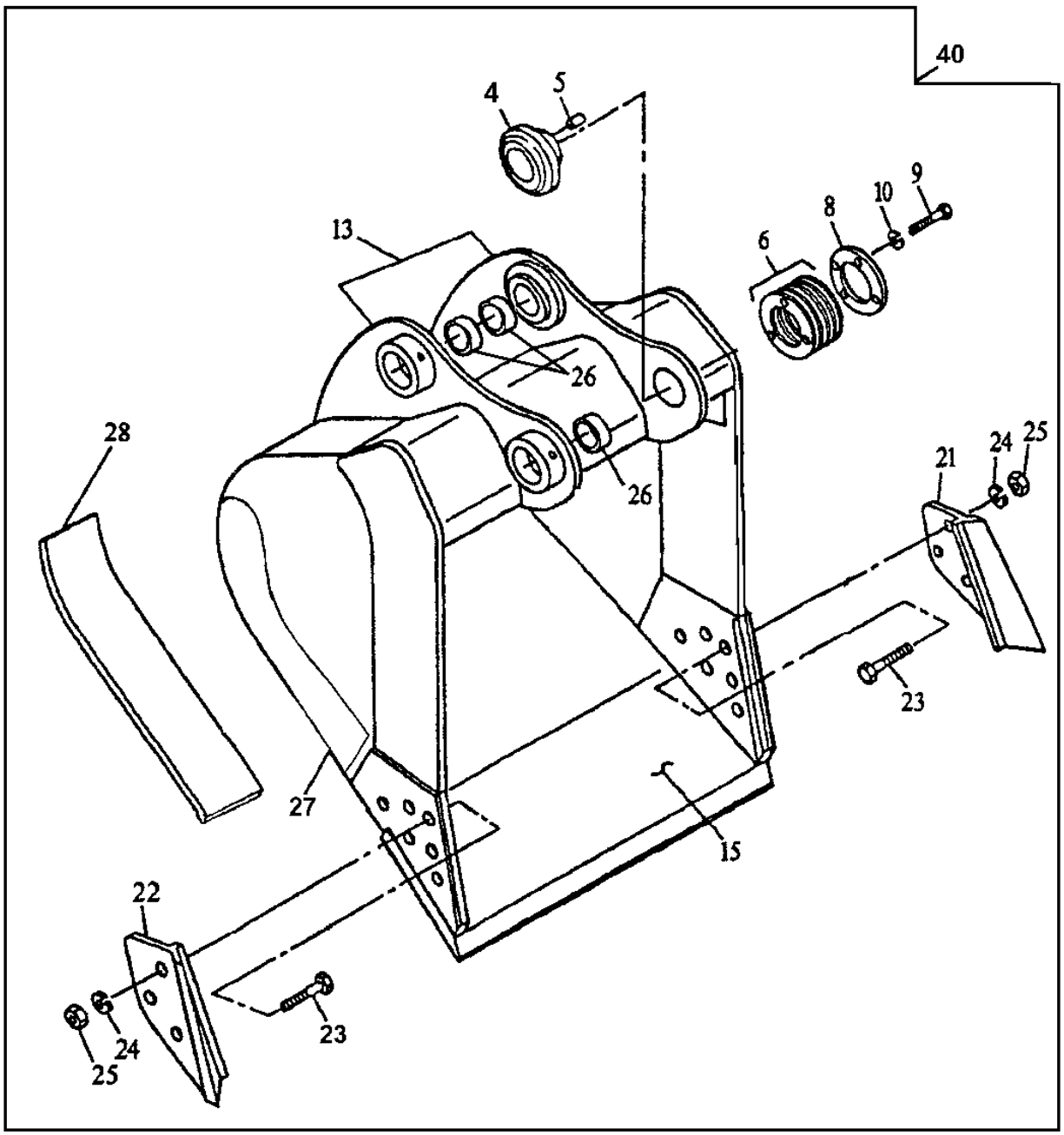

TP67401

50 — 21, 22, 23, 24, 25

HEAVY DUTY BUCKET
(USE WITH SHORT ARM, STANDARD ARM, OR SEMI-LONG ARM)
(ALSO ORDER BUCKET TOOTH ASSEMBLIES)

KEY	PART NO.	PART NAME	QTY	SERIAL NO.	REMARKS
4	AT189904	BUSHING	1		
5	C31732	DOWEL PIN	2		(ORDER DIRECTLY FROM CENTRAL FABRICATORS)
6	AT189905	SHIM	14		
8	AT189906	RETAINER	1		
9	19M7968	CAP SCREW	4		M20 X 130
10	12M7070	LOCK WASHER	4		20 MM (0.787")
13	05673	PIVOT	1		(BUCKET EAR BLANK ASSEMBLY) (USE WITH 36 INCH 1.97 CU. YD. BUCKET) (ORDER DIRECTLY FROM CENTRAL FABRICATORS)
	05868	PIVOT	1		(BUCKET EAR BLANK ASSEMBLY) (USE WITH 36 INCH 2.36 CU. YD. BUCKET) (ORDER DIRECTLY FROM CENTRAL FABRICATORS)
	05674	PIVOT	1		(BUCKET EAR BLANK ASSEMBLY) (USE WITH 42 INCH 2.43 CU. YD. BUCKET) (ORDER DIRECTLY FROM CENTRAL FABRICATORS)
	05869	PIVOT	1		(BUCKET EAR BLANK ASSEMBLY) (USE WITH 42 INCH 2.90 CU. YD. BUCKET) (ORDER DIRECTLY FROM CENTRAL FABRICATORS)
	05675	PIVOT	1		(BUCKET EAR BLANK ASSEMBLY) (USE WITH 48 INCH 2.90 CU. YD BUCKET) (ORDER DIRECTLY FROM CENTRAL FABRICATORS)

HEAVY DUTY BUCKET - CONTINUED)
(USE WITH SHORT ARM, STANDARD ARM, OR SEMI-LONG ARM)
(ALSO ORDER BUCKET TOOTH ASSEMBLIES)

TP67401 -UN-11AUG00

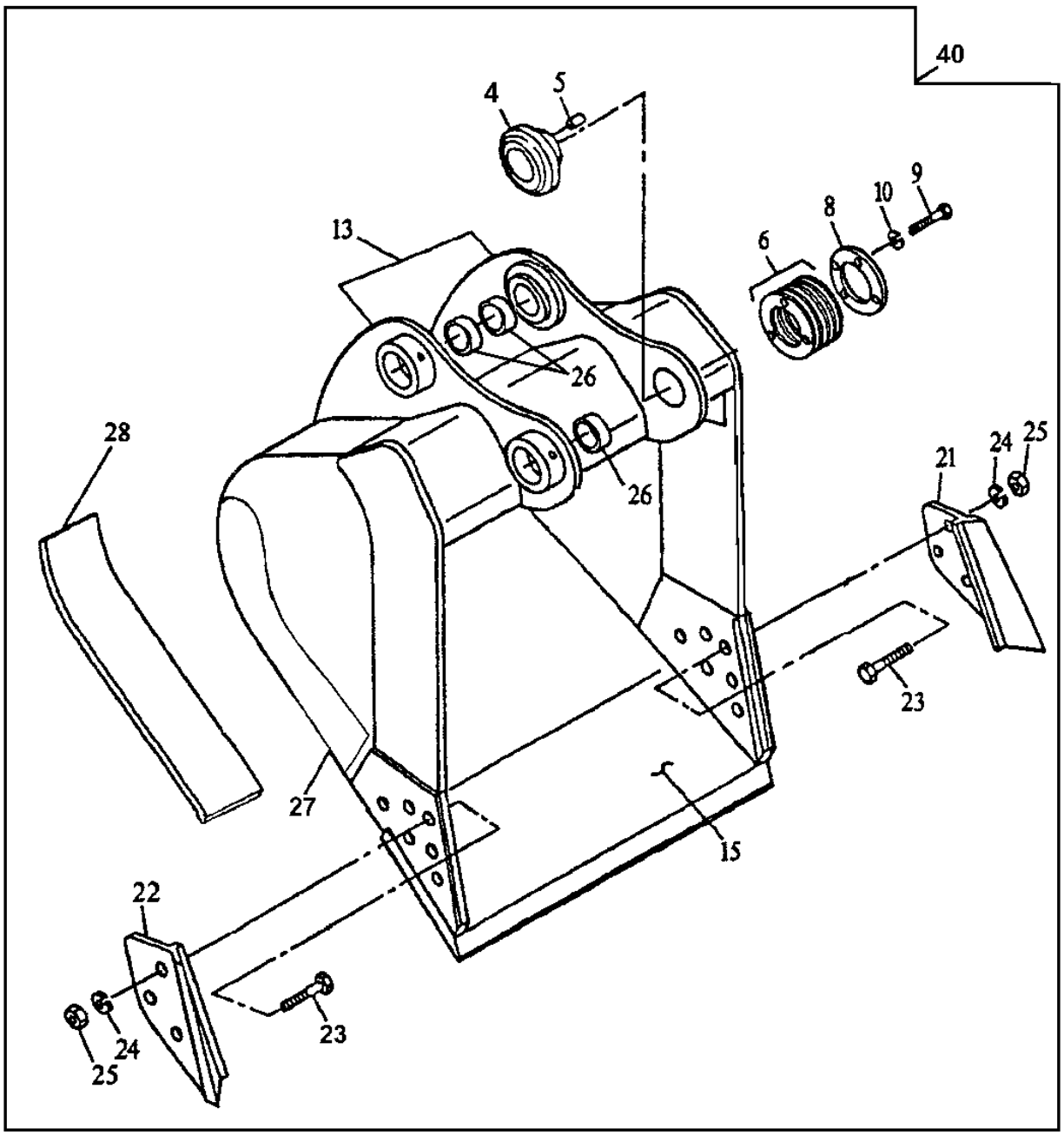

TP67401

50 — 21, 22, 23, 24, 25

HEAVY DUTY BUCKET - CONTINUED
(USE WITH SHORT ARM, STANDARD ARM, OR SEMI-LONG ARM)
(ALSO ORDER BUCKET TOOTH ASSEMBLIES)

KEY	PART NO.	PART NAME	QTY	SERIAL NO.	REMARKS
13	05870	PIVOT	1		(BUCKET EAR BLANK ASSEMBLY) (USE ON 48 INCH 3.47 CU. YD. BUCKET) (ORDER DIRECTLY FROM CENTRAL FABRICATORS)
	05676	PIVOT	1		(BUCKET EAR BLANK ASSEMBLY) (USE ON 54 INCH 3.38 CU. YD. BUCKET) (ORDER DIRECTLY FROM CENTRAL FABRICATORS)
	05871	PIVOT	1		(BUCKET EAR BLANK ASSEMBLY) (USE ON 54 INCH 4.04 CU. YD. BUCKET) (ORDER DIRECTLY FROM CENTRAL FABRICATORS)
	05677	PIVOT	1		(BUCKET EAR BLANK ASSEMBLY) (USE ON 60 INCH 3.86 CU. YD. BUCKET) (ORDER DIRECTLY FROM CENTRAL FABRICATORS)
	05872	PIVOT	1		(BUCKET EAR BLANK ASSEMBLY) (USE ON 60 INCH 4.63 CU. YD. BUCKET) (ORDER DIRECTLY FROM CENTRAL FABRICATORS)
	05679	PIVOT	1		(BUCKET EAR BLANK ASSEMBLY) (USE WITH 72 INCH 4.84 CU. YD. BUCKET) (ORDER DIRECTLY FROM CENTRAL FABRICATORS)
	05874	PIVOT	1		(BUCKET EAR BLANK ASSEMBLY) (USE WITH 72 INCH 5.80 CU. YD. BUCKET) (ORDER DIRECTLY FROM CENTRAL FABRICATORS)
	05680	PIVOT	1		(BUCKET EAR BLANK ASSEMBLY) (USE WITH 80 INCH 5.49 CU. YD. BUCKET) (ORDER DIRECTLY FROM CENTRAL FABRICATORS)
	05875	PIVOT	1		(BUCKET EAR BLANK ASSEMBLY) (USE WITH 80 INCH 6.60 CU. YD. BUCKET) (ORDER DIRECTLY FROM CENTRAL FABRICATORS)
15	C30651	CUTTING EDGE	1		(USE WITH 36 INCH 1.97 CU. YD. OR 36 INCH 2.36 CU. YD. BUCKET) (ORDER DIRECTLY FROM CENTRAL FABRICATORS)
	C30652	CUTTING EDGE	1		(USE WITH 42 INCH 2.43 CU. YD. OR 42 INCH 2.90 CU. YD. BUCKET) (ORDER DIRECTLY FROM CENTRAL FABRICATORS)
	C30653	CUTTING EDGE	1		(USE WITH 48 INCH 2.90 CU. YD. OR 48 INCH 3.47 CU. YD. BUCKET) (ORDER DIRECTLY FROM CENTRAL FABRICATORS)
	C30654	CUTTING EDGE	1		(USE WITH 54 INCH 3.38 CU. YD. OR 54 INCH 4.04 CU. YD. BUCKET) (ORDER DIRECTLY FROM CENTRAL FABRICATORS)
	C30655	CUTTING EDGE	1		(USE WITH 60 INCH 3.86 CU. YD., OR 60 INCH 4.63 CU. YD. BUCKET) (ORDER DIRECTLY FROM CENTRAL FABRICATORS)
	C30657	CUTTING EDGE	1		(USE WITH 72 INCH 4.84 CU. YD., OR 72 INCH 5.80 CU. YD. BUCKET) (ORDER DIRECTLY FROM CENTRAL FABRICATORS)
	C30658	CUTTING EDGE	1		(USE WITH 80 INCH 5.49 CU. YD., OR 80 INCH 6.60 CU. YD. BUCKET) (ORDER DIRECTLY FROM CENTRAL FABRICATORS)
21	.....	CUTTING EDGE	1		(SUB AT189734)
22	.....	CUTTING EDGE	1		(SUB AT189734)
23	.....	BOLT	AR		(SUB AT189734)
24	.....	LOCK WASHER	AR		(SUB AT189734)
25	.....	NUT	AR		(SUB AT189734)
26	.....	BUSHING	3		
27	C317345	PLATE	2		(USE WITH 36 INCH 1.97 CU. YD., 42 INCH 2.43 CU. YD., 48 INCH 2.90 CU. YD., 54 INCH 3.38 CU. YD., 60 INCH 3.86 CU. YD., 72 INCH 4.84 CU. YD., OR 80 INCH 5.49 CU. YD. BUCKET) (ORDER DIRECTLY FROM CENTRAL FABRICATORS)
	C317507	PLATE	2		(USE WITH 36 INCH 2.36 CU. YD., 42 INCH 2.90 CU. YD., 48 INCH 3.47 CU. YD., 54 INCH 4.04 CU. YD., 60 INCH 4.63 CU. YD., 72 INCH 5.80 CU. YD., OR 80 INCH 6.60 CU. YD. BUCKET) (ORDER DIRECTLY FROM CENTRAL FABRICATORS)

HEAVY DUTY BUCKET - CONTINUED
(USE WITH SHORT ARM, STANDARD ARM, OR SEMI-LONG ARM)
(ALSO ORDER BUCKET TOOTH ASSEMBLIES)

TP67401 -UN-11AUG00

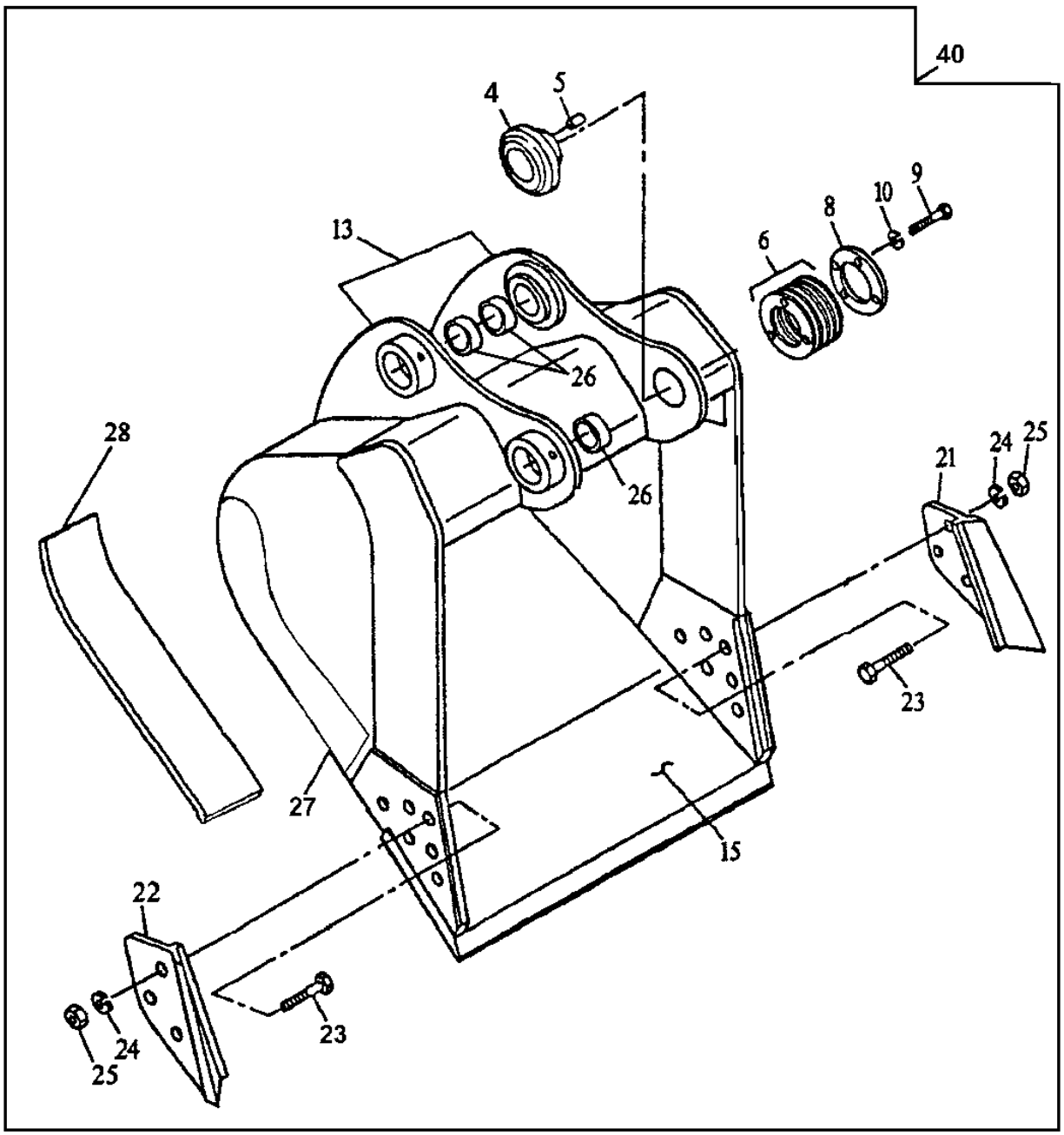

TP67401

50 — 21, 22, 23, 24, 25

HEAVY DUTY BUCKET - CONTINUED
(USE WITH SHORT ARM, STANDARD ARM, OR SEMI-LONG ARM)
(ALSO ORDER BUCKET TOOTH ASSEMBLIES)

KEY	PART NO.	PART NAME	QTY	SERIAL NO.	REMARKS
28	C616777	BAR	1		(USE WITH 36 INCH 1.97 CU. YD. BUCKET) (ORDER DIRECTLY FROM CENTRAL FABRICATORS)
	C616459	BAR	1		(USE WITH 36 INCH 2.36 CU. YD. BUCKET) (ORDER DIRECTLY FROM CENTRAL FABRICATORS)
	C616778	BAR	1		(USE WITH 42 INCH 2.43 CU. YD. BUCKET) (ORDER DIRECTLY FROM CENTRAL FABRICATORS)
	C616460	BAR	1		(USE WITH 42 INCH 2.90 CU. YD. BUCKET) (ORDER DIRECTLY FROM CENTRAL FABRICATORS)
	C616779	BAR	1		(USE WITH 48 INCH 2.90 CU. YD. BUCKET) (ORDER DIRECTLY FROM CENTRAL FABRICATORS)
	C616461	BAR	1		(USE WITH 48 INCH 3.47 CU. YD. BUCKET) (ORDER DIRECTLY FROM CENTRAL FABRICATORS)
	C616780	BAR	1		(USE WITH 54 INCH 3.38 CU. YD. BUCKET) (ORDER DIRECTLY FROM CENTRAL FABRICATORS)
	C616462	BAR	1		(USE WITH 54 INCH 4.04 CU. YD. BUCKET) (ORDER DIRECTLY FROM CENTRAL FABRICATORS)
	C616781	BAR	1		(USE WITH 60 INCH 3.86 CU. YD. BUCKET) (ORDER DIRECTLY FROM CENTRAL FABRICATORS)
	C616463	BAR	1		(USE WITH 60 INCH 4.63 CU. YD. BUCKET) (ORDER DIRECTLY FROM CENTRAL FABRICATORS)
	C616783	BAR	1		(USE WITH 72 INCH 4.84 CU. YD. BUCKET) (ORDER DIRECTLY FROM CENTRAL FABRICATORS)
	C616465	BAR	1		(USE WITH 72 INCH 5.80 CU. YD. BUCKET) (ORDER DIRECTLY FROM CENTRAL FABRICATORS)
	C616784	BAR	1		(USE WITH 80 INCH 5.49 CU. YD. BUCKET) (ORDER DIRECTLY FROM CENTRAL FABRICATORS)
	C616466	BAR	1		(USE WITH 80 INCH 6.60 CU. YD. BUCKET) (ORDER DIRECTLY FROM CENTRAL FABRICATORS)
40	**AT189718**	**EXCAVATOR BUCKET**	**1**		**WHOLEGOODS (36 INCH - 1.97 CUBIC YARD) (HEAVY DUTY PLATE LIP) (AVAILABLE TOOTH ASSEMBLIES ON SEPARATE PAGE)**
	AT189719	**EXCAVATOR BUCKET**	**1**		**WHOLEGOODS (36 INCH - 2.36 CUBIC YARD) (HEAVY DUTY HIGH CAPACITY PLATE LIP) (AVAILABLE TOOTH ASSEMBLIES ON SEPARATE PAGE)**
	AT189720	**EXCAVATOR BUCKET**	**1**		**WHOLEGOODS (42 INCH - 2.43 CUBIC YARD) (HEAVY DUTY PLATE LIP) (AVAILABLE TOOTH ASSEMBLIES ON SEPARATE PAGE)**
	AT189721	**EXCAVATOR BUCKET**	**1**		**WHOLEGOODS (42 INCH - 2.90 CUBIC YARD) (HEAVY DUTY HIGH CAPACITY PLATE LIP) (AVAILABLE TOOTH ASSEMBLIES ON SEPARATE PAGE)**
	AT189722	**EXCAVATOR BUCKET**	**1**		**WHOLEGOODS (48 INCH - 2.90 CUBIC YARD) (HEAVY DUTY PLATE LIP) (AVAILABLE TOOTH ASSEMBLIES ON SEPARATE PAGE)**
	AT189723	**EXCAVATOR BUCKET**	**1**		**WHOLEGOODS (48 INCH - 3.47 CUBIC YARD) (HEAVY DUTY HIGH CAPACITY PLATE LIP) (AVAILABLE TOOTH ASSEMBLIES ON SEPARATE PAGE)**
	AT189724	**EXCAVATOR BUCKET**	**1**		**WHOLEGOODS (54 INCH - 3.38 CUBIC YARD) (HEAVY DUTY PLATE LIP) (AVAILABLE TOOTH ASSEMBLIES ON SEPARATE PAGE)**
	AT189725	**EXCAVATOR BUCKET**	**1**		**WHOLEGOODS (54 INCH - 4.04 CUBIC YARD) (HEAVY DUTY HIGH CAPACITY PLATE LIP) (AVAILABLE TOOTH ASSEMBLIES ON SEPARATE PAGE)**
	AT189726	**EXCAVATOR BUCKET**	**1**		**WHOLEGOODS (60 INCH - 3.86 CUBIC YARD) (HEAVY DUTY PLATE LIP) (AVAILABLE TOOTH ASSEMBLIES ON SEPARATE PAGE)**
	AT189727	**EXCAVATOR BUCKET**	**1**		**WHOLEGOODS (60 INCH - 4.63 CUBIC YARD) (HEAVY DUTY HIGH CAPACITY PLATE LIP) (TOOTH ASSEMBLIES AVAILABLE ON SEPARATE PAGE)**
	AT196576	**EXCAVATOR BUCKET**	**1**		**WHOLEGOODS (72 IN. - 3.5 CU. YD. WITH SOLID EARS) (TOOTH ASSEMBLIES AVAILABLE ON SEPARATE PAGE) (HEAVY DUTY PLATE LIP)**
	AT189728	**EXCAVATOR BUCKET**	**1**		**WHOLEGOODS (72 INCH - 4.84 CUBIC YARD) (HEAVY DUTY PLATE LIP) (TOOTH ASSEMBLIES AVAILABLE ON SEPARATE PAGE)**
	AT198198	**EXCAVATOR BUCKET**	**1**		**(WHOLEGOODS) (66 INCH - 4.45 CUBIC YARD) (HEAVY DUTY PLATE LIP) (AVAILABLE TOOTH ASSEMBLIES ON SEPARATE PAGE)**
50	**AT189734**	**KIT**	**1**		**WHOLEGOODS (SIDE CUTTER)**

HEAVY DUTY BUCKET
(USE WITH SHORT ARM, STANDARD ARM, OR SEMI-LONG ARM)
(ALSO ORDER BUCKET TOOTH ASSEMBLIES)

TP67401 -UN-11AUG00

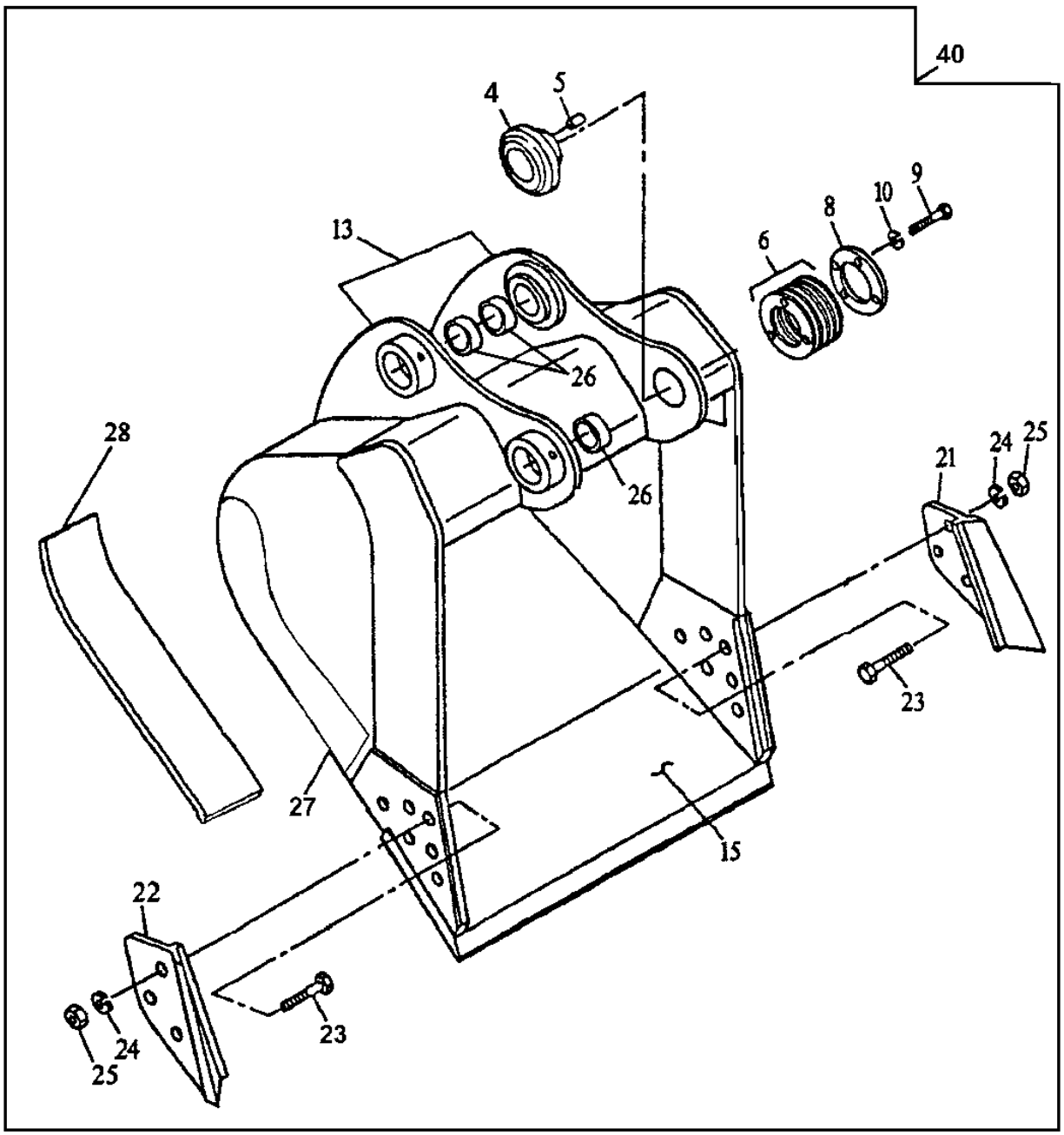

TP67401

50 — 21, 22, 23, 24, 25

HEAVY DUTY BUCKET
(USE WITH SHORT ARM, STANDARD ARM, OR SEMI-LONG ARM)
(ALSO ORDER BUCKET TOOTH ASSEMBLIES)

KEY	PART NO.	PART NAME	QTY	SERIAL NO.	REMARKS
4	C31765	BUSHING	1		(ORDER DIRECTLY FROM CENTRAL FABRICATORS)
5	C31732	DOWEL PIN	2		(ORDER DIRECTLY FROM CENTRAL FABRICATORS)
6	C31768	SHIM	14		(ORDER DIRECTLY FROM CENTRAL FABRICATORS)
8	C31766	RETAINER	1		(ORDER DIRECTLY FROM CENTRAL FABRICATORS)
9	C31767	CAP SCREW	4		(ORDER DIRECTLY FROM CENTRAL FABRICATORS)
10	C17039	WASHER	4		(ORDER DIRECTLY FROM CENTRAL FABRICATORS)
13	10065	PIVOT	1		(36 INCH - 1.70 CUBIC YARD) (BUCKET EAR BLANK ASSEMBLY) (ORDER DIRECTLY FROM CENTRAL FABRICATORS)
	10066	PIVOT	1		(42 INCH - 2.07 CUBIC YARD) (BUCKET EAR BLANK ASSEMBLY) (ORDER DIRECTLY FROM CENTRAL FABRICATORS)
	10067	PIVOT	1		(48 INCH - 2.48 CUBIC YARD) (BUCKET EAR BLANK ASSEMBLY) (ORDER DIRECTLY FROM CENTRAL FABRICATORS)
	10068	PIVOT	1		(54 INCH - 2.87 CUBIC YARD) (BUCKET EAR BLANK ASSEMBLY) (ORDER DIRECTLY FROM CENTRAL FABRICATORS)
	10069	PIVOT	1		(60 INCH - 3.30 CUBIC YARD) (BUCKET EAR BLANK ASSEMBLY) (ORDER DIRECTLY FROM CENTRAL FABRICATORS)
	10071	PIVOT	1		(72 INCH - 4.10 CUBIC YARD) (BUCKET EAR BLANK ASSEMBLY) (ORDER DIRECTLY FROM CENTRAL FABRICATORS)
15	C30651	CUTTING EDGE	1		(36 INCH - 1.70 CUBIC YARD) (ORDER DIRECTLY FROM CENTRAL FABRICATORS)
	C30652	CUTTING EDGE	1		(42 INCH - 2.07 CUBIC YARD) (ORDER DIRECTLY FROM CENTRAL FABRICATORS)
	C30653	CUTTING EDGE	1		(48 INCH - 2.48 CUBIC YARD) (ORDER DIRECTLY FROM CENTRAL FABRICATORS)
	C30654	CUTTING EDGE	1		(54 INCH - 2.87 CUBIC YARD) (ORDER DIRECTLY FROM CENTRAL FABRICATORS)
	C30655	CUTTING EDGE	1		(60 INCH - 3.30 CUBIC YARD) (ORDER DIRECTLY FROM CENTRAL FABRICATORS)
	C30657	CUTTING EDGE	1		(72 INCH - 4.10 CUBIC YARD) (ORDER DIRECTLY FROM CENTRAL FABRICATORS)
21	.....	CUTTING EDGE	1		(SUB AT189734)
22	.....	CUTTING EDGE	1		(SUB AT189734)
23	.....	BOLT	AR		(SUB AT189734) (K2)
24	.....	LOCK WASHER	AR		(SUB AT189734) (K2)
25	.....	NUT	AR		(SUB AT189734)
26	.....	BUSHING	3		
27	C317479	PLATE	2		(ORDER DIRECTLY FROM CENTRAL FABRICATORS)

HEAVY DUTY BUCKET - CONTINUED
(USE WITH LONG ARM)
(ALSO ORDER BUCKET TOOTH ASSEMBLIES)

TP67401 -UN-11AUG00

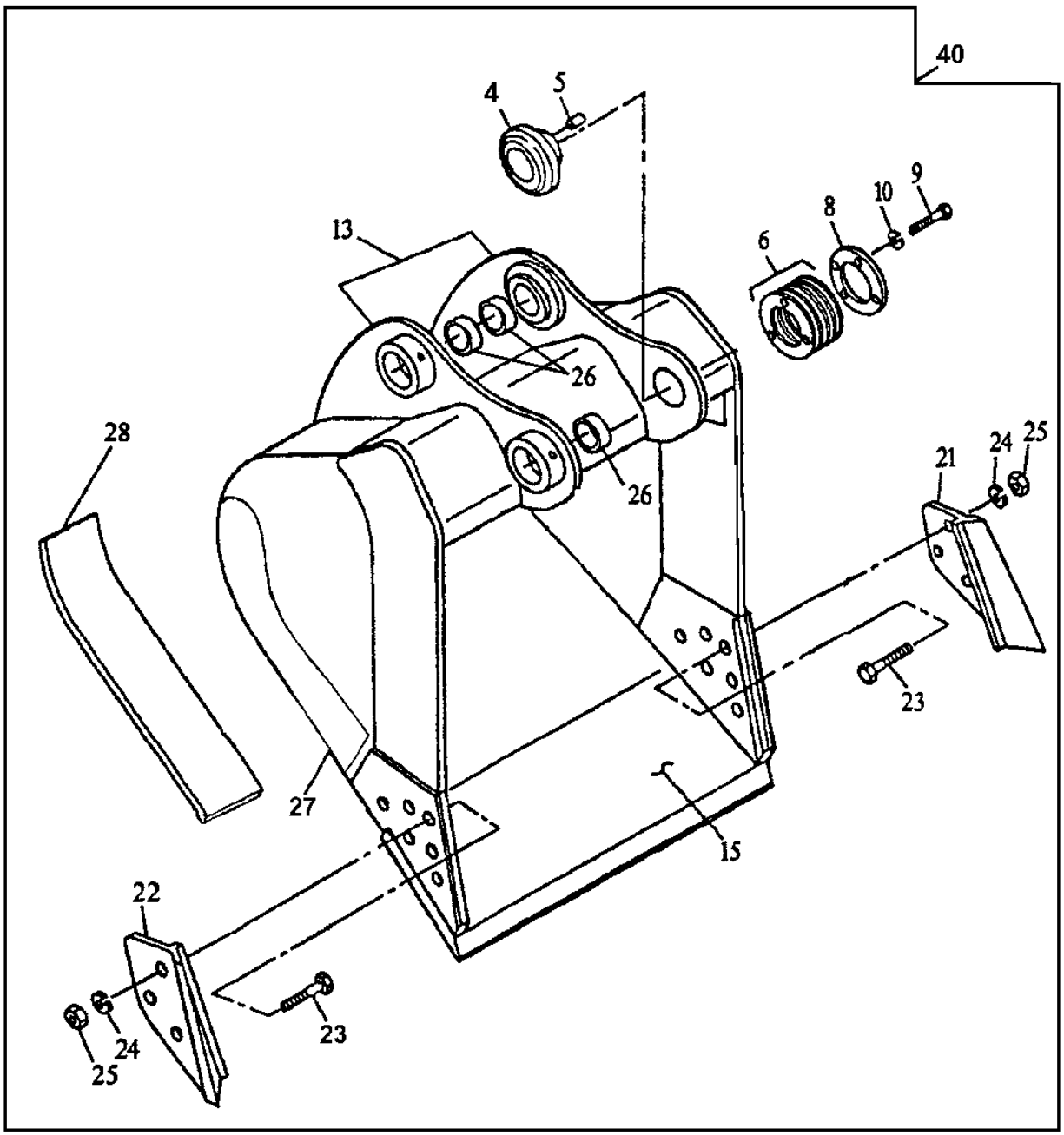

TP67401

50 — 21, 22, 23, 24, 25

HEAVY DUTY BUCKET - CONTINUED
(USE WITH LONG ARM)
(ALSO ORDER BUCKET TOOTH ASSEMBLIES)

KEY	PART NO.	PART NAME	QTY	SERIAL NO.	REMARKS
28	C616412	BAR	1		(36 INCH - 1.70 CUBIC YARD) (ORDER DIRECTLY FROM CENTRAL FABRICATORS)
	C616413	BAR	1		(42 INCH - 2.07 CUBIC YARD) (ORDER DIRECTLY FROM CENTRAL FABRICATORS)
	C616414	BAR	1		(48 INCH - 2.48 CUBIC YARD) (ORDER DIRECTLY FROM CENTRAL FABRICATORS)
	C616415	BAR	1		(54 INCH - 2.87 CUBIC YARD) (ORDER DIRECTLY FROM CENTRAL FABRICATORS)
	C616416	BAR	1		(60 INCH - 3.30 CUBIC YARD) (ORDER DIRECTLY FROM CENTRAL FABRICATORS)
	C616418	BAR	1		(72 INCH - 4.10 CUBIC YARD) (ORDER DIRECTLY FROM CENTRAL FABRICATORS)
40	**AT189755**	**EXCAVATOR BUCKET**	**1**		**WHOLEGOODS (36 INCH - 1.70 CUBIC YARD) (HEAVY DUTY PLATE LIP) (AVAILABLE TOOTH ASSEMBLIES ON SEPARATE PAGE)**
	AT189756	**EXCAVATOR BUCKET**	**1**		**WHOLEGOODS (42 INCH - 2.07 CUBIC YARD) (HEAVY DUTY PLATE LIP) (AVAILABLE TOOTH ASSEMBLIES ON SEPARATE PAGE)**
	AT189757	**EXCAVATOR BUCKET**	**1**		**WHOLEGOODS (48 INCH - 2.48 CUBIC YARD) (HEAVY DUTY PLATE LIP) (AVAILABLE TOOTH ASSEMBLIES ON SEPARATE PAGE)**
	AT189758	**EXCAVATOR BUCKET**	**1**		**WHOLEGOODS (54 INCH - 2.87 CUBIC YARD) (HEAVY DUTY PLATE LIP) (AVAILABLE TOOTH ASSEMBLIES ON SEPARATE PAGE)**
	AT189759	**EXCAVATOR BUCKET**	**1**		**WHOLEGOODS (60 INCH - 3.30 CUBIC YARD) (HEAVY DUTY PLATE LIP) (AVAILABLE TOOTH ASSEMBLIES ON SEPARATE PAGE)**
50	**AT189734**	**ADAPTER**	**1**		**WHOLEGOODS**

SEVERE DUTY PLATE LIP BUCKET
(USE WITH 9'6" ARM)
(ALSO ORDER BUCKET TOOTH ASSEMBLIES)

TP67402 -UN-11OCT00

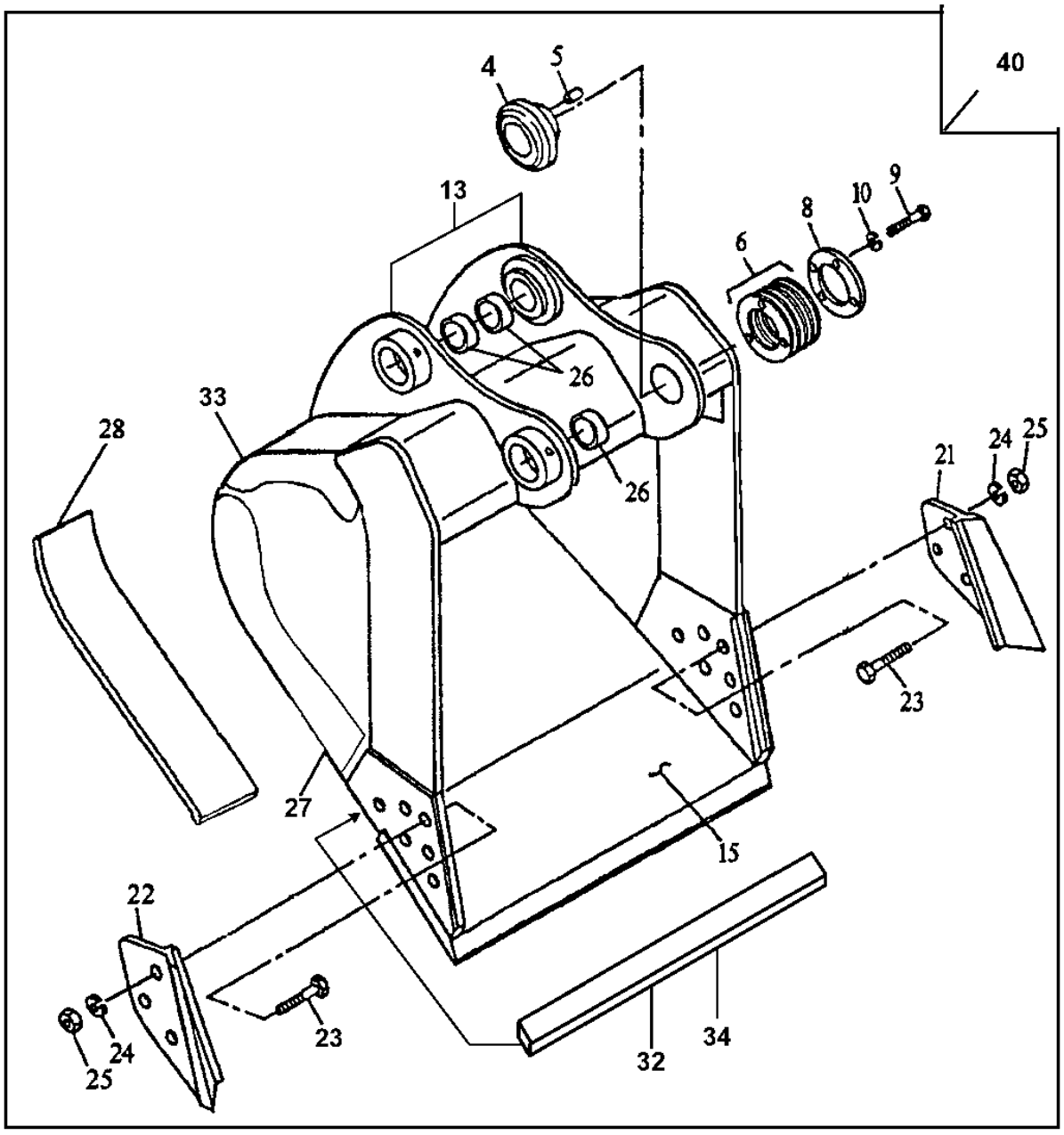

50	21, 22, 23, 24, 25

TP67402

SEVERE DUTY PLATE LIP BUCKET
(USE WITH 9'6" ARM)
(ALSO ORDER BUCKET TOOTH ASSEMBLIES)

KEY	PART NO.	PART NAME	QTY	SERIAL NO.	REMARKS
4	AT189904	BUSHING	1		
5	C31732	DOWEL PIN	2		(ORDER DIRECTLY FROM CENTRAL FABRICATORS)
6	AT189905	SHIM	14		
8	AT189906	RETAINER	1		
9	19M7968	CAP SCREW	4		M20 X 130
10	12M7070	LOCK WASHER	4		20 MM
13	10088	PIVOT	1		(36 INCH - 2.35 CUBIC YARD BUCKET) (BUCKET EAR BLANK ASSEMBLY) (ORDER DIRECTLY FROM CENTRAL FABRICATORS)
	09353	PIVOT	1		(42 INCH - 2.90 CUBIC YARD BUCKET) (BUCKET EAR BLANK ASSEMBLY) (ORDER DIRECTLY FROM CENTRAL FABRICATORS)
	09354	PIVOT	1		(48 INCH - 3.50 CUBIC YARD BUCKET) (BUCKET EAR BLANK ASSEMBLY) (ORDER DIRECTLY FROM CENTRAL FABRICATORS)
	09355	PIVOT	1		(54 INCH - 4.00 CUBIC YARD BUCKET) (BUCKET EAR BLANK ASSEMBLY) (ORDER DIRECTLY FROM CENTRAL FABRICATORS)
	09356	PIVOT	1		(60 INCH - 4.62 CUBIC YARD BUCKET) (BUCKET EAR BLANK ASSEMBLY) (ORDER DIRECTLY FROM CENTRAL FABRICATORS)
	07625	PIVOT	1		(72 INCH - 4.84 CUBIC YARD BUCKET) (BUCKET EAR BLANK ASSEMBLY) (ORDER DIRECTLY FROM CENTRAL FABRICATORS)
	07626	PIVOT	1		(80 INCH - 5.50 CUBIC YARD BUCKET) (BUCKET EAR BLANK ASSEMBLY) (ORDER DIRECTLY FROM CENTRAL FABRICATORS)
	09359	PIVOT	1		(80 INCH - 6.60 CUBIC YARD BUCKET) (BUCKET EAR BLANK ASSEMBLY) (ORDER DIRECTLY FROM CENTRAL FABRICATORS)
15	C30651	CUTTING EDGE	1		(36 INCH - 2.35 CUBIC YARD BUCKET) (ORDER DIRECTLY FROM CENTRAL FABRICATORS)
	C30652	CUTTING EDGE	1		(42 INCH - 2.90 CUBIC YARD BUCKET) (ORDER DIRECTLY FROM CENTRAL FABRICATORS)
	C30653	CUTTING EDGE	1		(48 INCH - 3.50 CUBIC YARD BUCKET) (ORDER DIRECTLY FROM CENTRAL FABRICATORS)
	C30654	CUTTING EDGE	1		(54 INCH - 4.00 CUBIC YARD BUCKET) (ORDER DIRECTLY FROM CENTRAL FABRICATORS)
	C30655	CUTTING EDGE	1		(60 INCH - 4.62 CUBIC YARD BUCKET) (ORDER DIRECTLY FROM CENTRAL FABRICATORS)
	C35401	CUTTING EDGE	1		(72 INCH - 4.84 CUBIC YARD BUCKET) (ORDER DIRECTLY FROM CENTRAL FABRICATORS)
	C35402	CUTTING EDGE	1		(80 INCH - 5.50 CUBIC YARD BUCKET) (ORDER DIRECTLY FROM CENTRAL FABRICATORS)
	C30658	CUTTING EDGE	1		(80 INCH - 6.60 CUBIC YARD BUCKET) (ORDER DIRECTLY FROM CENTRAL FABRICATORS)
21	.....	CUTTING EDGE	1		(SUB AT189734)
22	.....	CUTTING EDGE	1		(SUB AT189734)
23	.....	BOLT	AR		(SUB AT189734)
24	.....	LOCK WASHER	AR		(SUB AT189734)
25	.....	NUT	AR		(SUB AT189734)
26	.....	BUSHING	3		

SEVERE DUTY PLATE LIP BUCKET-CONTINUED
(USE WITH 9'6" ARM)
(ALSO ORDER BUCKET TOOTH ASSEMBLIES)

TP67402 -UN-11OCT00

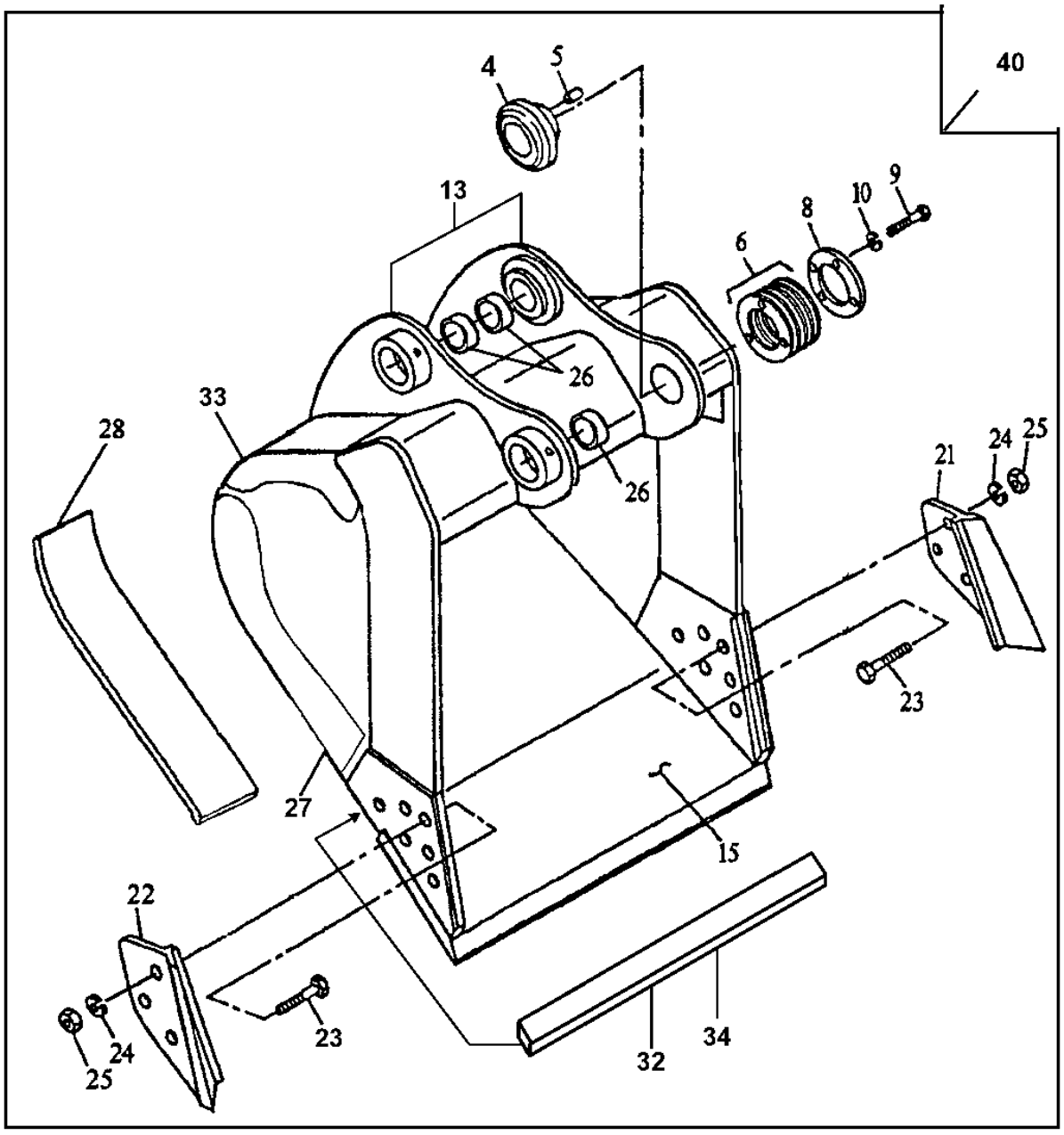

50	21, 22, 23, 24, 25

TP67402

SEVERE DUTY PLATE LIP BUCKET-CONTINUED
(USE WITH 9'6" ARM)
(ALSO ORDER BUCKET TOOTH ASSEMBLIES)

KEY	PART NO.	PART NAME	QTY	SERIAL NO.	REMARKS
27	C619040	PLATE	1		LOWER, RH, (ORDER DIRECTLY FROM CENTRAL FABRICATORS)
	C619041	PLATE	1		LOWER, LH, (ORDER DIRECTLY FROM CENTRAL FABRICATORS)
28	C624486	BAR	1		(36 INCH - 2.35 CUBIC YARD BUCKET) (ORDER DIRECTLY FROM CENTRAL FABRICATORS)
	C619059	BAR	1		(42 INCH - 2.90 CUBIC YARD BUCKET) (ORDER DIRECTLY FROM CENTRAL FABRICATORS)
	C619060	BAR	1		(48 INCH - 3.50 CUBIC YARD BUCKET) (ORDER DIRECTLY FROM CENTRAL FABRICATORS)
	C619061	BAR	1		(54 INCH - 4.00 CUBIC YARD BUCKET) (ORDER DIRECTLY FROM CENTRAL FABRICATORS)
	C619062	BAR	1		(60 INCH - 4.62 CUBIC YARD BUCKET) (ORDER DIRECTLY FROM CENTRAL FABRICATORS)
	C619561	BAR	1		(72 INCH - 4.84 CUBIC YARD BUCKET) (ORDER DIRECTLY FROM CENTRAL FABRICATORS)
	C619562	BAR	1		(80 INCH - 5.50 CUBIC YARD BUCKET) (ORDER DIRECTLY FROM CENTRAL FABRICATORS)
	C619065	BAR	1		(80 INCH - 6.60 CUBIC YARD BUCKET) (ORDER DIRECTLY FROM CENTRAL FABRICATORS)
32	C33125	BAR	6		(36 INCH - 2.35 CUBIC YARD BUCKET) (ORDER DIRECTLY FROM CENTRAL FABRICATORS)
	C33066	BAR	6		(42 INCH - 2.90 CUBIC YARD BUCKET) (ORDER DIRECTLY FROM CENTRAL FABRICATORS)
	C33067	BAR	6		(48 INCH - 3.50 CUBIC YARD BUCKET) (ORDER DIRECTLY FROM CENTRAL FABRICATORS)
	C33068	BAR	6		(54 INCH - 4.00 CUBIC YARD BUCKET) (ORDER DIRECTLY FROM CENTRAL FABRICATORS)
	C33069	BAR	6		(60 INCH - 4.62 CUBIC YARD BUCKET) (ORDER DIRECTLY FROM CENTRAL FABRICATORS)
	C33648	BAR	6		(72 INCH - 4.84 CUBIC YARD BUCKET) (ORDER DIRECTLY FROM CENTRAL FABRICATORS)
	C33649	BAR	6		(80 INCH - 5.50 CUBIC YARD BUCKET) (ORDER DIRECTLY FROM CENTRAL FABRICATORS)
	C33072	BAR	6		(80 INCH - 6.60 CUBIC YARD BUCKET) (ORDER DIRECTLY FROM CENTRAL FABRICATORS)
33	C619038	PLATE	1		UPPER, RH, (ORDER DIRECTLY FROM CENTRAL FABRICATORS)
	C619039	PLATE	1		UPPER, LH, (ORDER DIRECTLY FROM CENTRAL FABRICATORS)
34	C27052	BAR	1		(36 INCH - 2.35 CUBIC YARD BUCKET) (ORDER DIRECTLY FROM CENTRAL FABRICATORS)
	C33124	BAR	1		(42 INCH - 2.90 CUBIC YARD BUCKET) (ORDER DIRECTLY FROM CENTRAL FABRICATORS)

SEVERE DUTY PLATE LIP BUCKET-CONTINUED
(USE WITH 9'6" ARM)
(ALSO ORDER BUCKET TOOTH ASSEMBLIES)

TP67402 -UN-11OCT00

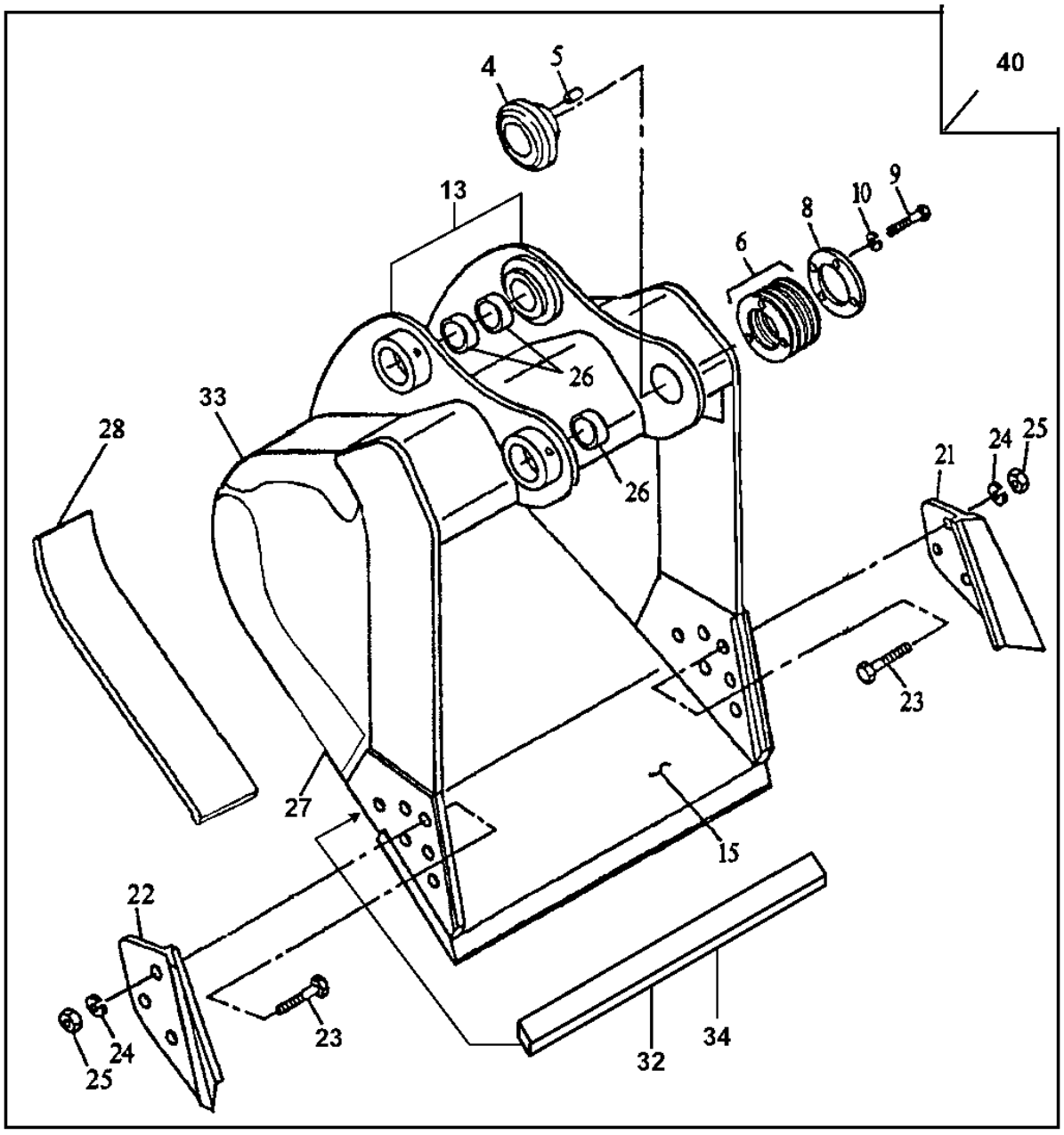

50	21, 22, 23, 24, 25

TP67402

SEVERE DUTY PLATE LIP BUCKET-CONTINUED
(USE WITH 9'6" ARM)
(ALSO ORDER BUCKET TOOTH ASSEMBLIES)

KEY	PART NO.	PART NAME	QTY	SERIAL NO.	REMARKS
34	C33125	BAR	1		(48 INCH - 3.50 CUBIC YARD BUCKET) (ORDER DIRECTLY FROM CENTRAL FABRICATORS)
	C33126	BAR	1		(54 INCH - 4.00 CUBIC YARD BUCKET) (ORDER DIRECTLY FROM CENTRAL FABRICATORS)
	C33127	BAR	1		(60 INCH - 4.62 CUBIC YARD BUCKET) (ORDER DIRECTLY FROM CENTRAL FABRICATORS)
	C23311	BAR	1		(72 INCH - 4.84 CUBIC YARD BUCKET) (ORDER DIRECTLY FROM CENTRAL FABRICATORS)
	C23312	BAR	1		(80 INCH - 5.50 CUBIC YARD BUCKET) (ORDER DIRECTLY FROM CENTRAL FABRICATORS)
	C33130	BAR	1		(80 INCH - 6.60 CUBIC YARD BUCKET) (ORDER DIRECTLY FROM CENTRAL FABRICATORS)
40	**AT189746**	**EXCAVATOR BUCKET**	**1**		**SEVERE DUTY PLATE LIP FOR MASS EXCAVATING ARM (36 INCH - 2.35 CUBIC YARD) (AVAILABLE WHOLEGOODS TOOTH ASSEMBLIES ON SEPARATE PAGE)**
	AT189747	**EXCAVATOR BUCKET**	**1**		**SEVERE DUTY PLATE LIP FOR MASS EXCAVATING ARM (42 INCH - 2.90 CUBIC YARD) (AVAILABLE WHOLEGOODS TOOTH ASSEMBLIES ON SEPARATE PAGE)**
	AT189748	**EXCAVATOR BUCKET**	**1**		**SEVERE DUTY PLATE LIP FOR MASS EXCAVATING ARM (48 INCH - 3.50 CUBIC YARD) (AVAILABLE WHOLEGOODS TOOTH ASSEMBLIES ON SEPARATE PAGE)**
	AT189749	**EXCAVATOR BUCKET**	**1**		**SEVERE DUTY PLATE LIP FOR MASS EXCAVATING ARM (54 INCH - 4.00 CUBIC YARD) (AVAILABLE WHOLEGOODS TOOTH ASSEMBLIES ON SEPARATE PAGE)**
	AT189750	**EXCAVATOR BUCKET**	**1**		**SEVERE DUTY PLATE LIP FOR MASS EXCAVATING ARM (60 INCH - 4.62 CUBIC YARD) (AVAILABLE WHOLEGOODS TOOTH ASSEMBLIES ON SEPARATE PAGE)**
	AT189751	**EXCAVATOR BUCKET**	**1**		**SEVERE DUTY PLATE LIP FOR MASS EXCAVATING ARM (72 INCH - 4.84 CUBIC YARD) (AVAILABLE WHOLEGOODS TOOTH ASSEMBLIES ON SEPARATE PAGE)**
50	AT189734	KIT	1		SIDE CUTTER

SEVERE DUTY PLATE LIP BUCKET
(USE WITH 11'6" AND 13'5" ARM)
(USE WITH 9'6" SHORT ARM)
(ALSO ORDER BUCKET TOOTH ASSEMBLIES)

TP67402 -UN-11OCT00

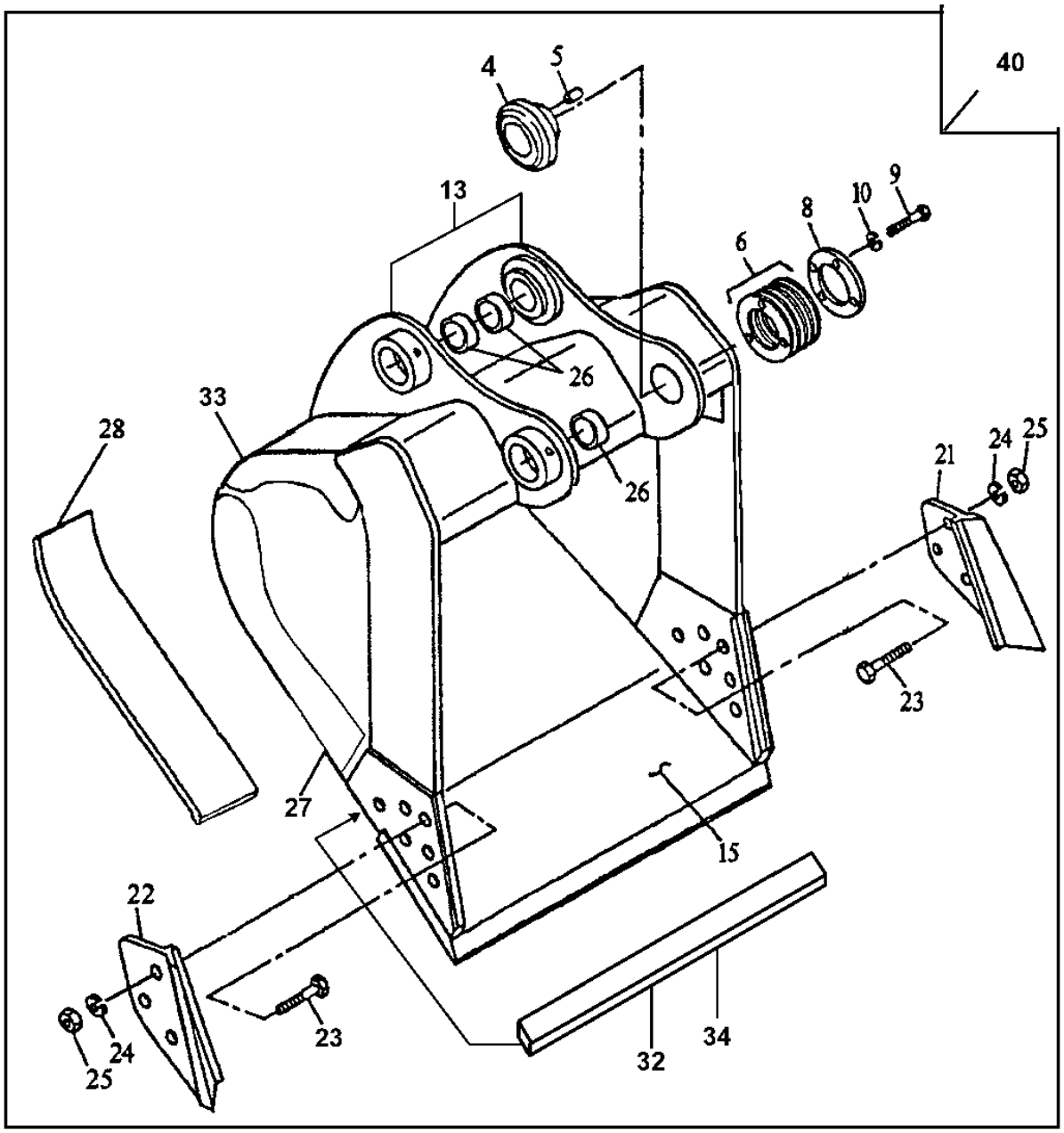

50	21, 22, 23, 24, 25

TP67402

SEVERE DUTY PLATE LIP BUCKET
(USE WITH 11'6" AND 13'5" ARM)
(USE WITH 9'6" SHORT ARM)
(ALSO ORDER BUCKET TOOTH ASSEMBLIES)

KEY	PART NO.	PART NAME	QTY	SERIAL NO.	REMARKS
4	AT189904	BUSHING	1		
5	C31732	DOWEL PIN	2		(ORDER DIRECTLY FROM CENTRAL FABRICATORS)
6	AT189905	SHIM	14		
8	AT189906	RETAINER	1		
9	19M7968	CAP SCREW	4		M20 X 130
10	12M7070	LOCK WASHER	4		20 MM
13	10004	PIVOT	1		(36 INCH - 2.36 CUBIC YARD BUCKET) (BUCKET EAR BLANK ASSEMBLY) (ORDER DIRECTLY FROM CENTRAL FABRICATORS)
	07303	PIVOT	1		(42 INCH - 2.90 CUBIC YARD BUCKET) (BUCKET EAR BLANK ASSEMBLY) (ORDER DIRECTLY FROM CENTRAL FABRICATORS)
	07304	PIVOT	1		(48 INCH - 3.47 CUBIC YARD BUCKET) (BUCKET EAR BLANK ASSEMBLY) (ORDER DIRECTLY FROM CENTRAL FABRICATORS)
	07305	PIVOT	1		(54 INCH - 4.04 CUBIC YARD BUCKET) (BUCKET EAR BLANK ASSEMBLY) (ORDER DIRECTLY FROM CENTRAL FABRICATORS)
	07306	PIVOT	1		(60 INCH - 4.63 CUBIC YARD BUCKET) (BUCKET EAR BLANK ASSEMBLY) (ORDER DIRECTLY FROM CENTRAL FABRICATORS)
	08881	PIVOT	1		(72 INCH - 4.84 CUBIC YARD BUCKET) (BUCKET EAR BLANK ASSEMBLY) (ORDER DIRECTLY FROM CENTRAL FABRICATORS)
15	C30651	CUTTING EDGE	1		(36 INCH - 2.36 CUBIC YARD BUCKET) (ORDER DIRECTLY FROM CENTRAL FABRICATORS)
	C30652	CUTTING EDGE	1		(42 INCH - 2.90 CUBIC YARD BUCKET) (ORDER DIRECTLY FROM CENTRAL FABRICATORS)
	C30653	CUTTING EDGE	1		(48 INCH - 3.47 CUBIC YARD BUCKET) (ORDER DIRECTLY FROM CENTRAL FABRICATORS)
	C30654	CUTTING EDGE	1		(54 INCH - 4.04 CUBIC YARD BUCKET) (ORDER DIRECTLY FROM CENTRAL FABRICATORS)
	C30655	CUTTING EDGE	1		(60 INCH - 4.63 CUBIC YARD BUCKET) (ORDER DIRECTLY FROM CENTRAL FABRICATORS)
	C30657	CUTTING EDGE	1		(72 INCH - 4.84 CUBIC YARD BUCKET) (ORDER DIRECTLY FROM CENTRAL FABRICATORS)
21	.....	CUTTING EDGE	1		(SUB AT189734)
22	.....	CUTTING EDGE	1		(SUB AT189734)
23	.....	BOLT	AR		(SUB AT189734)
24	.....	LOCK WASHER	AR		(SUB AT189734)
25	.....	NUT	AR		(SUB AT189734)
26	.....	BUSHING	3		

SEVERE DUTY PLATE LIP BUCKET-CONTINUED
(USE WITH 11'6" AND 13'5" ARM)
(USE WITH 9'6" SHORT ARM)
(ALSO ORDER BUCKET TOOTH ASSEMBLIES)

TP67402 -UN-11OCT00

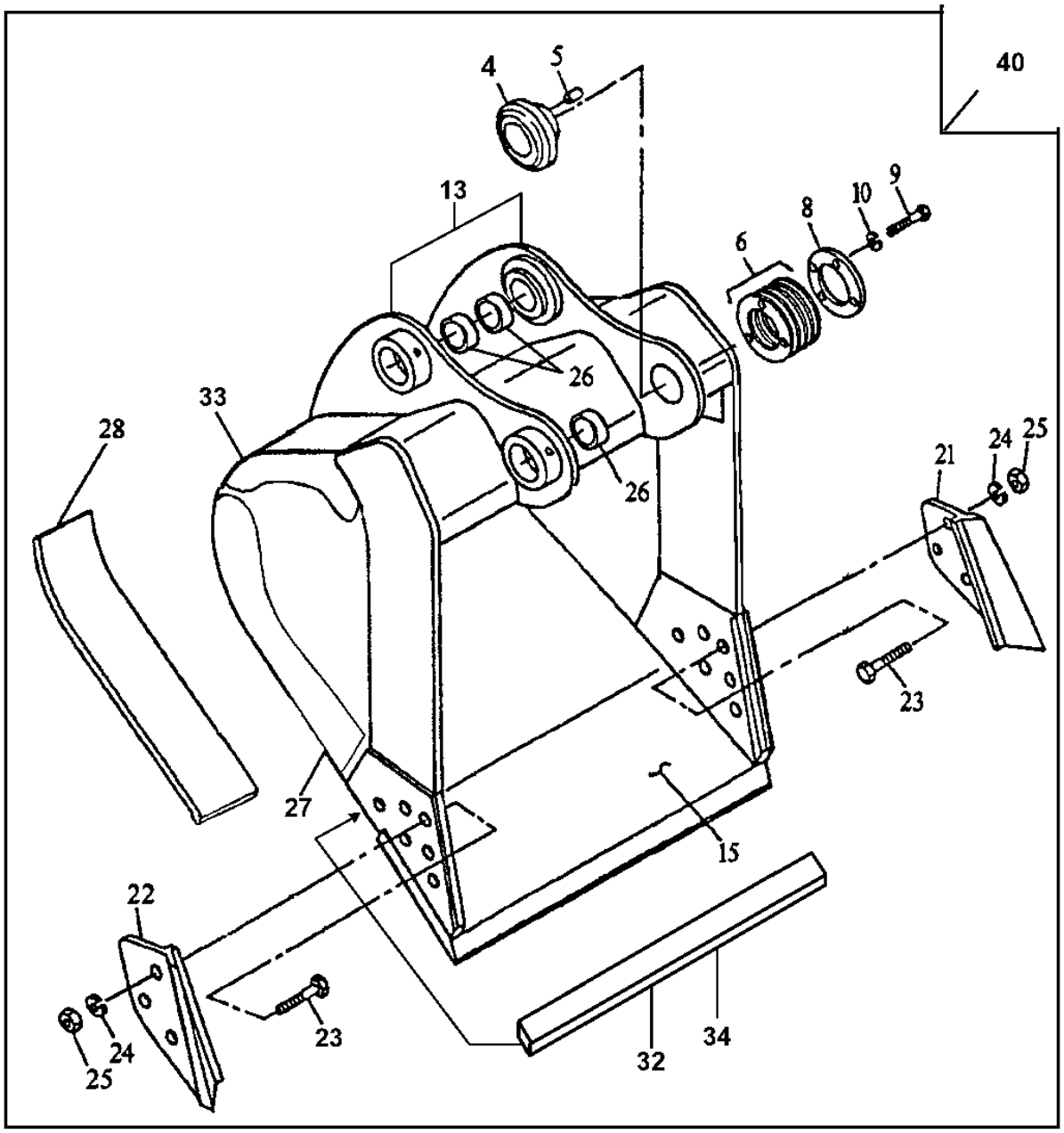

50	21, 22, 23, 24, 25

TP67402

SEVERE DUTY PLATE LIP BUCKET-CONTINUED
(USE WITH 11'6" AND 13'5" ARM)
(USE WITH 9'6" SHORT ARM)
(ALSO ORDER BUCKET TOOTH ASSEMBLIES)

KEY	PART NO.	PART NAME	QTY	SERIAL NO.	REMARKS
27	C619040	PLATE	1		LOWER, RH, (ORDER DIRECTLY FROM CENTRAL FABRICATORS)
	C619041	PLATE	1		LOWER, LH, (ORDER DIRECTLY FROM CENTRAL FABRICATORS)
28	C624486	BAR	1		(36 INCH - 2.36 CUBIC YARD BUCKET) (ORDER DIRECTLY FROM CENTRAL FABRICATORS)
	C619059	BAR	1		(42 INCH - 2.90 CUBIC YARD BUCKET) (ORDER DIRECTLY FROM CENTRAL FABRICATORS)
	C619060	BAR	1		(48 INCH - 3.47 CUBIC YARD BUCKET) (ORDER DIRECTLY FROM CENTRAL FABRICATORS)
	C619061	BAR	1		(54 INCH - 4.04 CUBIC YARD BUCKET) (ORDER DIRECTLY FROM CENTRAL FABRICATORS)
	C619062	BAR	1		(60 INCH - 4.63 CUBIC YARD BUCKET) (ORDER DIRECTLY FROM CENTRAL FABRICATORS)
	C619561	BAR	1		(72 INCH - 4.84 CUBIC YARD BUCKET) (ORDER DIRECTLY FROM CENTRAL FABRICATORS)
32	C33125	BAR	6		(36 INCH - 2.36 CUBIC YARD BUCKET) (ORDER DIRECTLY FROM CENTRAL FABRICATORS)
	C33066	BAR	6		(42 INCH - 2.90 CUBIC YARD BUCKET) (ORDER DIRECTLY FROM CENTRAL FABRICATORS)
	C33067	BAR	6		(48 INCH - 3.47 CUBIC YARD BUCKET) (ORDER DIRECTLY FROM CENTRAL FABRICATORS)
	C33068	BAR	6		(54 INCH - 4.04 CUBIC YARD BUCKET) (ORDER DIRECTLY FROM CENTRAL FABRICATORS)
	C33069	BAR	6		(60 INCH - 4.63 CUBIC YARD BUCKET) (ORDER DIRECTLY FROM CENTRAL FABRICATORS)
	C33648	BAR	6		(72 INCH - 4.84 CUBIC YARD BUCKET) (ORDER DIRECTLY FROM CENTRAL FABRICATORS)
33	C619038	PLATE	1		UPPER, RH, (ORDER DIRECTLY FROM CENTRAL FABRICATORS)
	C619039	PLATE	1		UPPER, LH, (ORDER DIRECTLY FROM CENTRAL FABRICATORS)
34	C27052	BAR	1		(36 INCH - 2.36 CUBIC YARD BUCKET) (ORDER DIRECTLY FROM CENTRAL FABRICATORS)
	C33124	BAR	1		(42 INCH - 2.90 CUBIC YARD BUCKET) (ORDER DIRECTLY FROM CENTRAL FABRICATORS)
	C33125	BAR	1		(48 INCH - 3.47 CUBIC YARD BUCKET) (ORDER DIRECTLY FROM CENTRAL FABRICATORS)
	C33126	BAR	1		(54 INCH - 4.04 CUBIC YARD BUCKET) (ORDER DIRECTLY FROM CENTRAL FABRICATORS)
	C33127	BAR	1		(60 INCH - 4.63 CUBIC YARD BUCKET) (ORDER DIRECTLY FROM CENTRAL FABRICATORS)
	C33910	BAR	1		(72 INCH - 4.84 CUBIC YARD BUCKET) (ORDER DIRECTLY FROM CENTRAL FABRICATORS)
40	**AT189739**	**EXCAVATOR BUCKET**	**1**		**(SEVERE DUTY PLATE LIP) (36 INCH - 2.36 CUBIC YARD) (AVAILABLE TOOTH ASSEMBLIES ON SEPARATE PAGE) WHOLEGOODS**
	AT189741	**EXCAVATOR BUCKET**	**1**		**(SEVERE DUTY PLATE LIP) (42 INCH - 2.90 CUBIC YARD) (AVAILABLE TOOTH ASSEMBLIES ON SEPARATE PAGE) WHOLEGOODS**
	AT189742	**EXCAVATOR BUCKET**	**1**		**(SEVERE DUTY PLATE LIP) (48 INCH - 3.47 CUBIC YARD) (AVAILABLE TOOTH ASSEMBLIES ON SEPARATE PAGE) WHOLEGOODS**
	AT189743	**EXCAVATOR BUCKET**	**1**		**(SEVERE DUTY PLATE LIP) (54 INCH - 4.04 CUBIC YARD) (AVAILABLE TOOTH ASSEMBLIES ON SEPARATE PAGE) WHOLEGOODS**
	AT189744	**EXCAVATOR BUCKET**	**1**		**(SEVERE DUTY PLATE LIP) (60 INCH - 4.63 CUBIC YARD) (AVAILABLE TOOTH ASSEMBLIES ON SEPARATE PAGE) WHOLEGOODS**
50	AT189734	KIT	1		SIDE CUTTER

TRUCK LOADING BUCKET

T201719 -UN-27JUL04

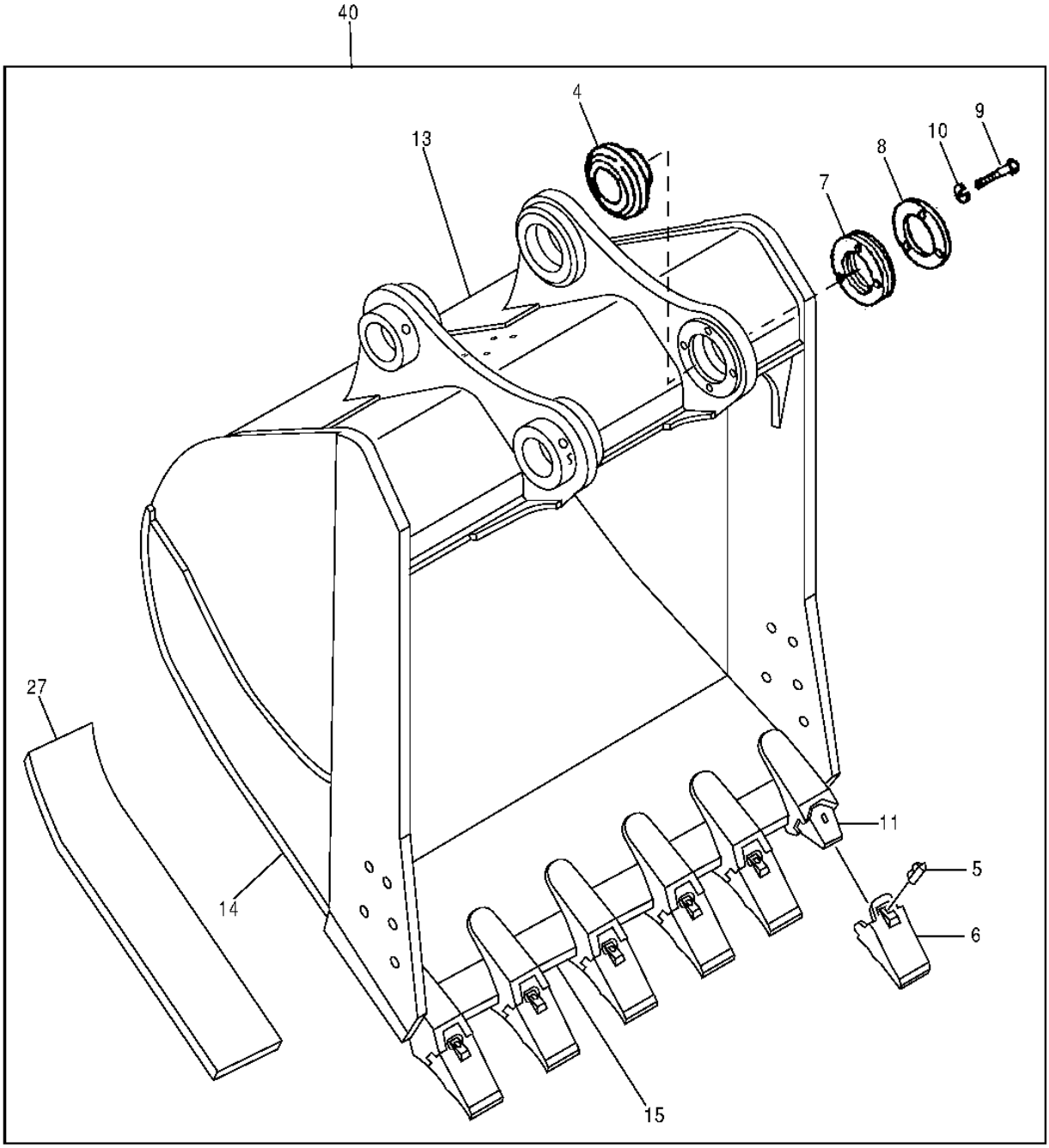

T201719

TRUCK LOADING BUCKET

KEY	PART NO.	PART NAME	QTY	SERIAL NO.	REMARKS
4	C30575	BUSHING	4		(ORDER DIRECTLY FROM CENTRAL FABRICATORS)
5	EV59PN	SPRING PIN	6		
6	EV59SYL	TOOTH	6		
7	C30565	SHIM	2		(ORDER DIRECTLY FROM CENTRAL FABRICATORS)
8	C30571	RETAINER	4		(ORDER DIRECTLY FROM CENTRAL FABRICATORS)
9	C30595	CAP SCREW	16		(ORDER DIRECTLY FROM CENTRAL FABRICATORS)
10	C17146	LOCK WASHER	16		(ORDER DIRECTLY FROM CENTRAL FABRICATORS)
11	EV8845-V59	ADAPTER	6		(WELD ON)
13	AT315740	EXCAVATOR BUCKET	1		(4.9 YARD) (76" WIDE)
14	C326759	WEAR PLATE	2		(ORDER DIRECTLY FROM CENTRAL FABRICATORS) (RIGHT AND LEFT SIDE)
15	C43950	CUTTING EDGE	1		(ORDER DIRECTLY FROM CENTRAL FABRICATORS)
27	C326758	WEAR ANGLE	1		(VERTICLE WEAR BAR) (ORDER DIRECTLY FROM CENTRAL FABRICATORS)
	C43952	WEAR ANGLE	2		(HORIZONTAL WEAR BAR) (ORDER DIRECTLY FROM CENTRAL FABRICATORS)
40	**AT315741**	**EXCAVATOR BUCKET**	**1**		**(COMPLETE 4.9 YARD BUCKET ASSEMBLY)**

HEAVY DUTY BUCKET TOOTH ASSEMBLY

T159009 -UN-30AUG02

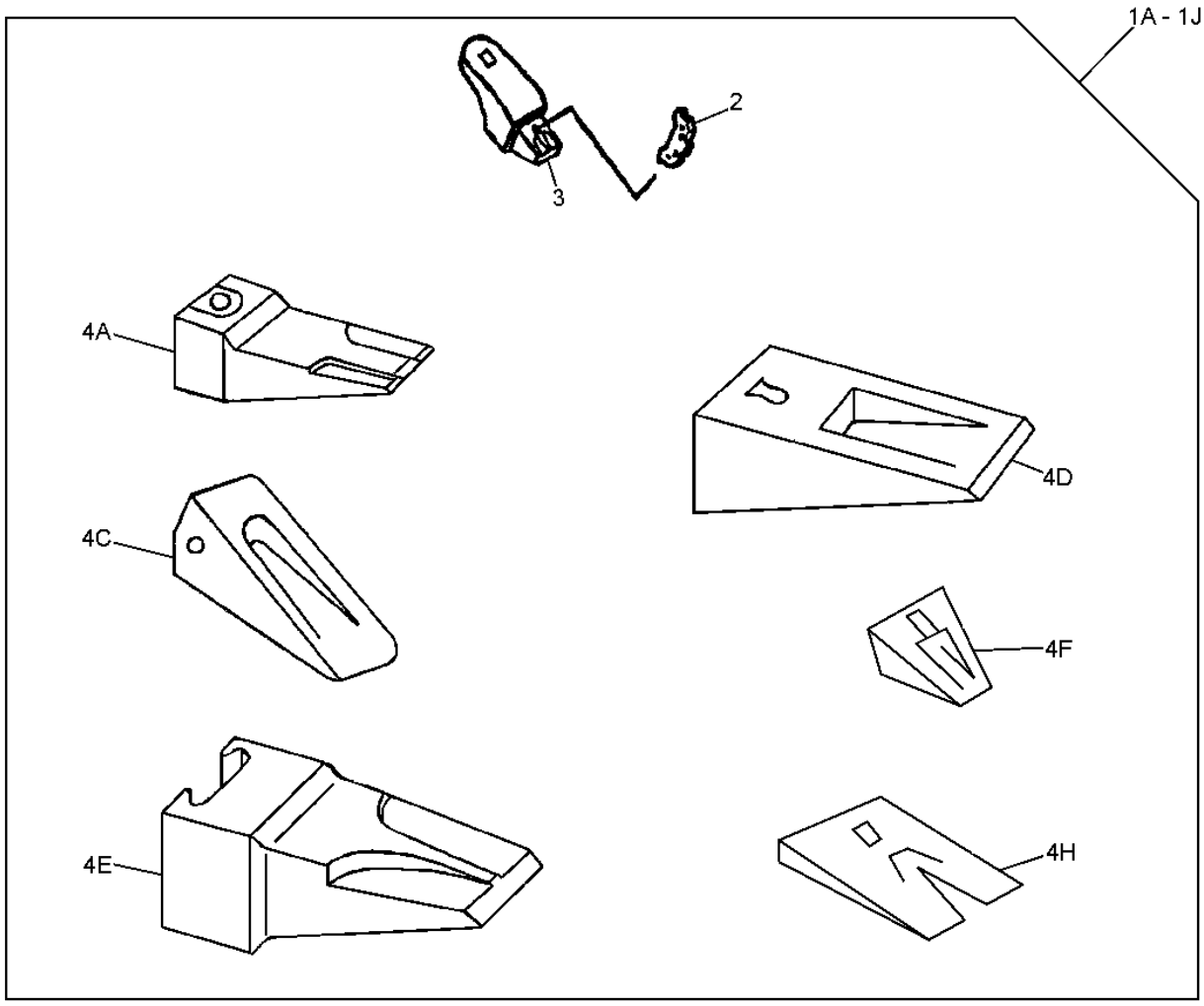

ORDER 3 SETS WITH EACH 36 INCH BUCKET

ORDER 4 SETS WITH EACH 42 INCH BUCKET

ORDER 4 SETS WITH EACH 48 INCH BUCKET

ORDER 5 SETS WITH EACH 54 INCH BUCKET

ORDER 5 SETS WITH EACH 60 INCH BUCKET

ORDER 6 SETS WITH EACH 72 INCH BUCKET

ORDER 6 SETS WITH EACH 80 INCH BUCKET

T159009

HEAVY DUTY BUCKET TOOTH ASSEMBLY
(36 INCH BUCKET)

KEY	PART NO.	PART NAME	QTY	SERIAL NO.	REMARKS
1A	.....	KIT	1		(TOOTH) WHOLEGOODS (SHARP RIBBED) (AT189733 ONLY AVAILABLE WHEN ORDERING BUCKET)
1C	.....	KIT	1		(TOOTH) WHOLEGOODS (ESCO STANDARD) (AT189736 ONLY AVAILABLE WHEN ORDERING BUCKET)
1D	.....	KIT	1		(TOOTH) WHOLEGOODS (CATERPILLAR REPLACEMENT STANDARD TOOTH ASSEMBLY) (AT189735 ONLY AVAILABLE WHEN ORDERING BUCKET)
1E	.....	KIT	1		(TOOTH) WHOLEGOODS (ABRASION PANEL) (AT189835 ONLY AVAILABLE WHEN ORDERING BUCKET)
1F	.....	KIT	1		(TOOTH) WHOLEGOODS (HENSLEY TIGER) (AT192636 ONLY AVAILABLE WHEN ORDERING BUCKET)
1H	.....	KIT	1		(TOOTH) WHOLEGOODS (HENSLEY TWIN TIGER) (AT192638 ONLY AVAILABLE WHEN ORDERING BUCKET)
1K	.....	KIT	1		(TOOTH) WHOLEGOODS (HENSLEY STYLE TX500 TOOTH KIT) (NOT ILLUSTRATED) (AT199428 ONLY AVAILABLE WHEN ORDERING BUCKET)
1L	.....	KIT	1		(TOOTH) WHOLEGOODS (SUPER V-STYLE EV59SYL TOOTH KIT) (NOT ILLUSTRATED) (AT199429 ONLY AVAILABLE WHEN ORDERING BUCKET)
1M	.....	KIT	1		(TOOTH) WHOLEGOODS (SUPER V-STYLE EV61SYL TOOTH KIT) (NOT ILLUSTRATED) (AT199430 ONLY AVAILABLE WHEN ORDERING BUCKET)
2	TK550R	PIN	1		(SHARP RIBBED)
	EX57VPN	PIN	1		(ESCO VERTALOK) (NOT ILLUSTRATED - SEE ESCO TOOTH PAGE)
	T9U9616	PIN	1		(CATERPILLAR REPLACEMENT) (NOT ILLUSTRATED)
	TK500R	PIN	1		(SHARP RIBBED OR ABRASION PANEL)
	TT500	PIN	1		(HENSLEY TIGER, OR TWIN TIGER)
	TK550R	PIN	1		(HENSLEY TIGER, OR TWIN TIGER)
	TK500R	PIN	1		(FOR HENSLEY STYLE TX500 TOOTH KIT)
	EV59PN	SPRING PIN	1		(FOR SUPER V-STYLE EV59SYL TOOTH KIT)
	EV61PNA	PIN FASTENER	1		(FOR SUPER V-STYLE EV61SYL TOOTH KIT)
3	T806X550	SHANK	1		(SHARP RIBBED, HENSLEY TIGER, OR HENSLEY TWIN TIGER)
	EX1856-57V	SHANK	1		(ESCO VERTALOK) (NOT ILLUSTRATED - SEE ESCO TOOTH PAGE)
	T4T4704	SHANK	1		(CATERPILLAR REPLACEMENT) (NOT ILLUSTRATED)
	T806X500	SHANK	1		(ABRASION PANEL, HENSELY TIGER, OR HENSLEY TWIN TIGER)
	T806X500	BUCKET TOOTH ADAPTER	1		(FOR HENSLEY STYLE TX500 TOOTH KIT)
	EV8845-V59	ADAPTER	1		(FOR SUPER V-STYLE EV59SYL TOOTH KIT)
	EV5898-V61	ADAPTER	1		(FOR SUPER V-STYLE EV61SYL TOOTH KIT)
4A	TX550SYL	TOOTH	1		(HENSLEY RIBBED SHARP)
4C	T4T4702	TOOTH	1		(CATERPILLAR STANDARD)
4D	EX57SYL	TOOTH	1		(ESCO STANDARD)
4E	TX500AP	TOOTH	1		(ABRASION PANEL)
4F	AT192636	TOOTH	1		(HENSLEY TIGER)
4G	AT192639	TOOTH	1		(HENSLEY TIGER)
4H	AT192638	TOOTH	1		(HENSLEY TWIN TIGER)
4J	AT192640	TOOTH	1		(HENSLEY TWIN TIGER)
4K	TX500	TOOTH	1		(FOR HENSLEY STYLE TX500 TOOTH KIT)
4L	EV59SYL	TOOTH	1		(FOR SUPER V-STYLE EV59SYL TOOTH KIT)
4M	EV61SYL	TOOTH	1		(FOR SUPER V-STYLE EV61SYL TOOTH KIT)
5	EX57VPL	PLUG	1		(NOT ILLUSTRATED - SEE ESCO TOOTH PAGE)
	T4T4707	RETAINER	1		(CATERPILLAR REPLACEMENT) (NOT ILLUSTRATED)

**CONTROL LEVER
(FRONT AND SWING)**

T146086 -UN-28SEP01

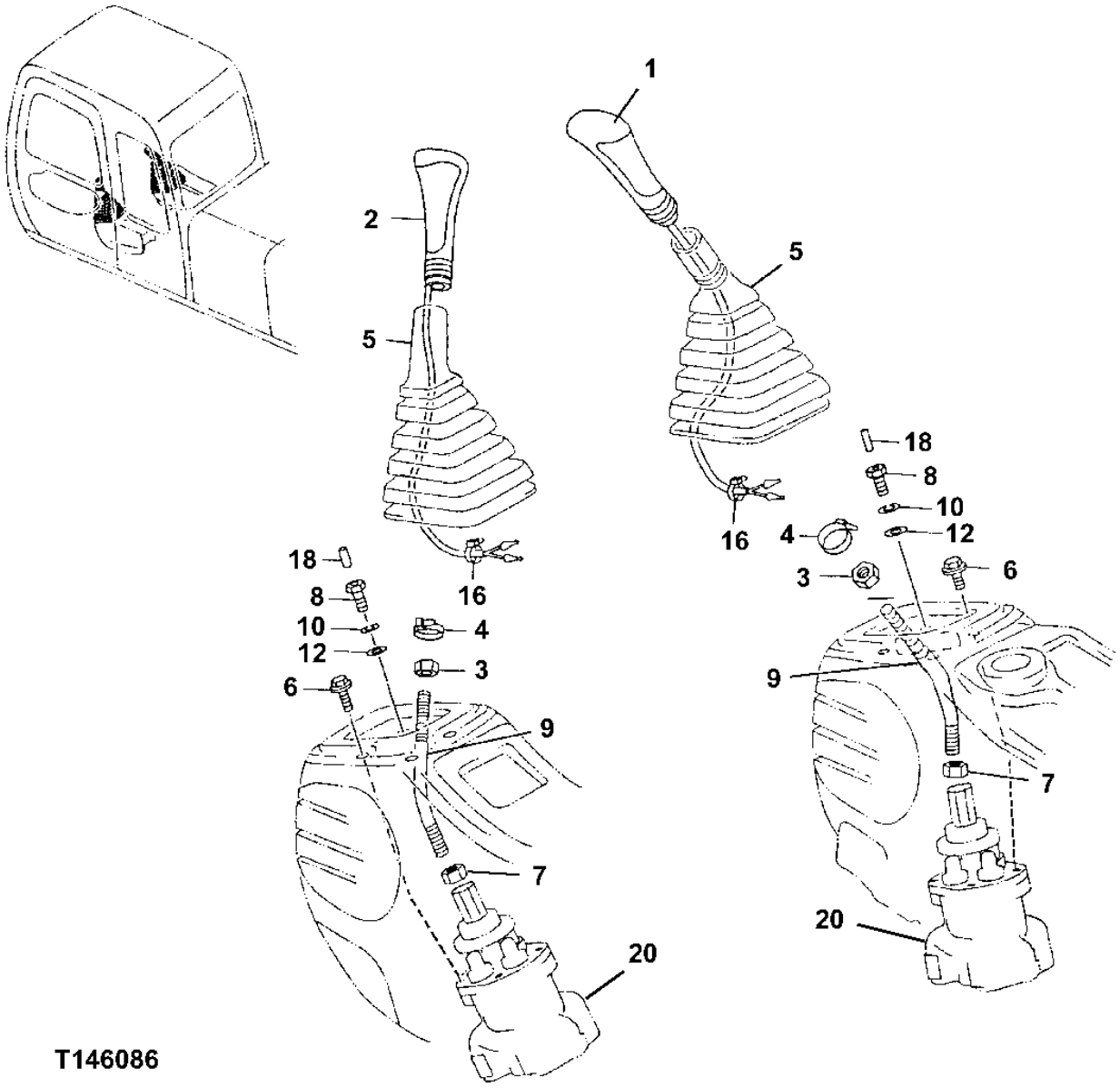

CONTROL LEVER
(FRONT AND SWING)

KEY	PART NO.	PART NAME	QTY	SERIAL NO.	REMARKS
1	2046576	GRIP	1		(INCLUDES POWER LIFT SWITCH)
2	2045472	GRIP	1		(SUB FOR TH2045472) (INCLUDES HORN BUTTON)
3	14M7357	NUT	2		M12
4	H77698	TIE BAND	2		(SUB FOR M88199)
5	2045470	BOOT	2		(SUB FOR TH2045470)
6	12M7056	LOCK WASHER	6	-951031	8 MM, (SUB FOR 12M7065)
	24M7055	WASHER	6	-951031	8.400 X 16 X 1.600 MM
	19M7932	CAP SCREW	6	-951031	M8 X 16, (SUB FOR 19M7162)
	19M7139	CAP SCREW	6	951032-	M8 X 20, (SUB FOR J260820 OR J900820)
	24M7055	WASHER	6	951032-	8.400 X 16 X 1.600 MM (0.331" X 0.630" X 0.063") (SUB FOR A590108)
7	14M7141	NUT	2		M14
8	4438279	BOLT	2	-951031	(SUB FOR TH4438279)
	4609956	BOLT	2	951032-	
9	4445322	LEVER	2		(SUB FOR TH4445322)
10	12M7056	LOCK WASHER	2		8 MM, (SUB FOR 12M7065)
12	24M7055	WASHER	2		8.400 X 16 X 1.600 MM
16	H77698	TIE BAND	2		
18	34M7086	SPRING PIN	2		3 X 32 MM
20	9195304	HYDR./PILOT CONTROL VALVE	2	-951031	(SUB FOR TH9195304) (USE IF AVAILABLE - IF 9195304 NOT AVAILABLE- SUB 9239583, ALONG WITH (3) 19M7139, (3) 24M7055 AND 4609956)
	9239583	HYDR./PILOT CONTROL VALVE	2	951032-	

PILOT CONTROLLER VALVE COMPONENTS(DIG AND SWING)(SN -951031)

T142561 -UN-18JUN01

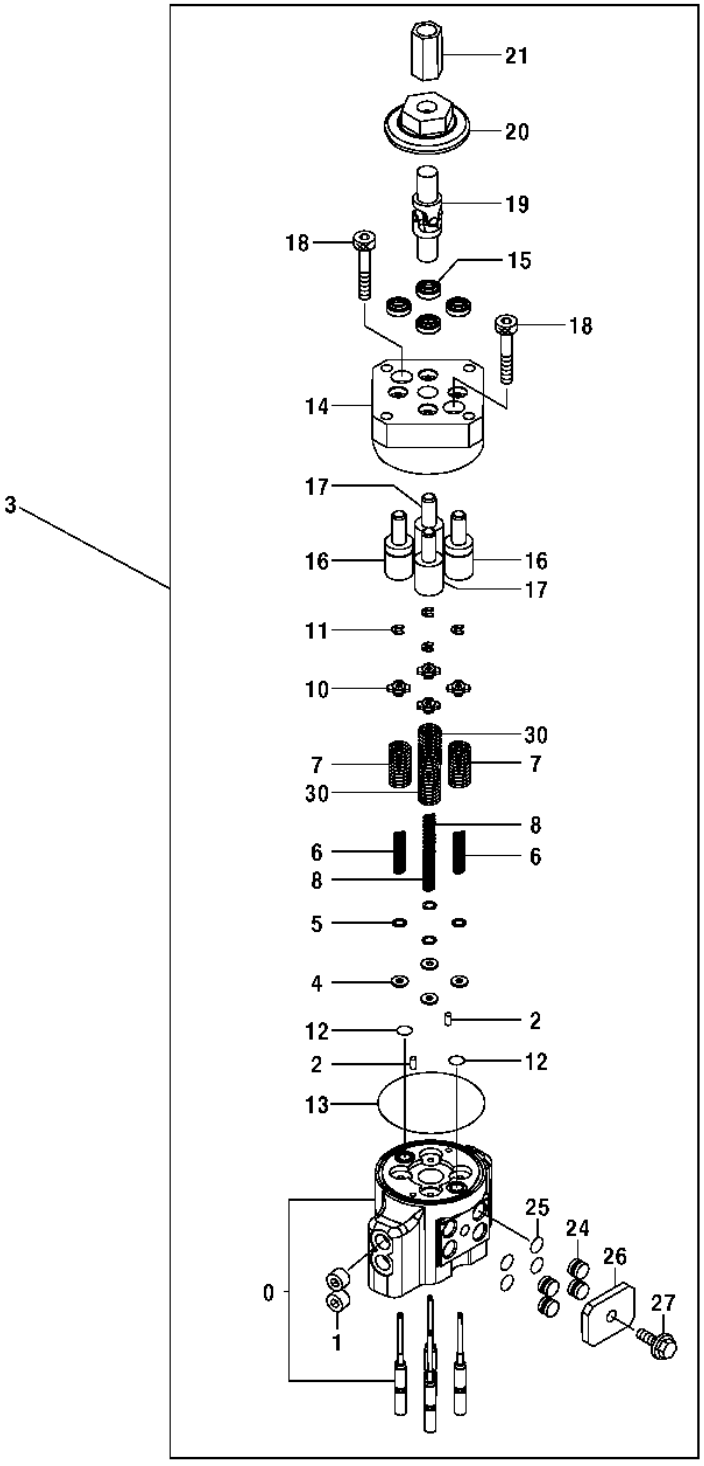

T142561

PILOT CONTROLLER VALVE COMPONENTS(DIG AND SWING)(SN -951031)

KEY	PART NO.	PART NAME	QTY	COMPONENT SERIAL NO.	REMARKS
0	.....	CASE	1		(TH8081319 NOT AVAILABLE)
1	94-2011	FITTING PLUG	2		
2	J400408	PIN	2		
3	9195304	HYDR./PILOT CONTROL VALVE	1	-951031	(USE IF AVAILABLE - IF 9195304 NOT AVAILABLE SUB 9239583, ALONG WITH (3) 19M7139, (3) 24M7055 AND 4609956)
4	4410898	SPACER	4		
5	4173208	SHIM	12		
6	4425414	SPRING	2		
7	4421771	SPRING	2		
8	4429120	SPRING	2		
10	4429119	GUIDE	4		
11	4437333	SNAP RING	4		
12	4431914	O-RING	2		
13	4431915	O-RING	1		
14	.....	MANIFOLD	1	-951020	(2044350 NO LONGER AVAILABLE) (SUB 9234284, (4) 4477852, (2) 9759158 AND (2) 9759157) (MANIFOLD HAS ONE PUNCH MARK ON TOP FACE)
	9234284	MANIFOLD	1	951021-	(SUB FOR 2044350, ALONG WITH (4) 4477852, (2) 9759158 AND(2) 9759157) (MANIFOLD HAS TWO PUNCH MARKS ON TOP FACE)
15	.....	SEAL	4	-951020	(4447050 NO LONGER AVAILABLE) (SUB 9234284, (4) 4477852, (2) 9759158 AND (2) 9759157) (USE WITH 2044350)
	.....	SEAL	4	951021-	(SUB FOR 4447050, ALONG WITH 9234284, (2) 9759158, AND (2) 9759157) (USE WITH 9234284) (4477852 NO LONGER AVAILABLE FOR SERVICE)
16	.....	PISTON	2	-951020	(9754825 NO LONGER AVAILABLE) (SUB 9234284, (4) 4477852, (2) 9759158 AND (2) 9759157) (USE WITH 2044350)
	9759157	PISTON	2	951021-	(SUB FOR 9754825, ALONG WITH (4) 4477852, 9234284, AND (2) 9759158) (USE WITH 9234284)
17	.....	PISTON	2	-951020	(9754826 NO LONGER AVAILABLE) (SUB 9234284, (4) 4477852, (2) 9759158 AND (2) 9759157) (USE WITH 2044350)
	9759158	PISTON	2	951021-	(SUB FOR 9754826, ALONG WITH (4) 4477852, (2)9759158, AND 9234284) (USE WITH 9234284)
18	J780845	BOLT	2		
19	4335060	UNIVERSAL JOINT	1		
20	4437106	CAM	1		
21	4182067	JOINTER	1		
24	4442323	PIPE PLUG	4		
25	CH11560	PACKING	4		
26	4442339	PLATE	1		
27	19M7932	CAP SCREW	1		M8 X 16
30	4446960	SPRING	2		

PILOT CONTROLLER VALVE COMPONENTS (DIG AND SWING)(SN 951032-)

T206912 -UN-31JAN05

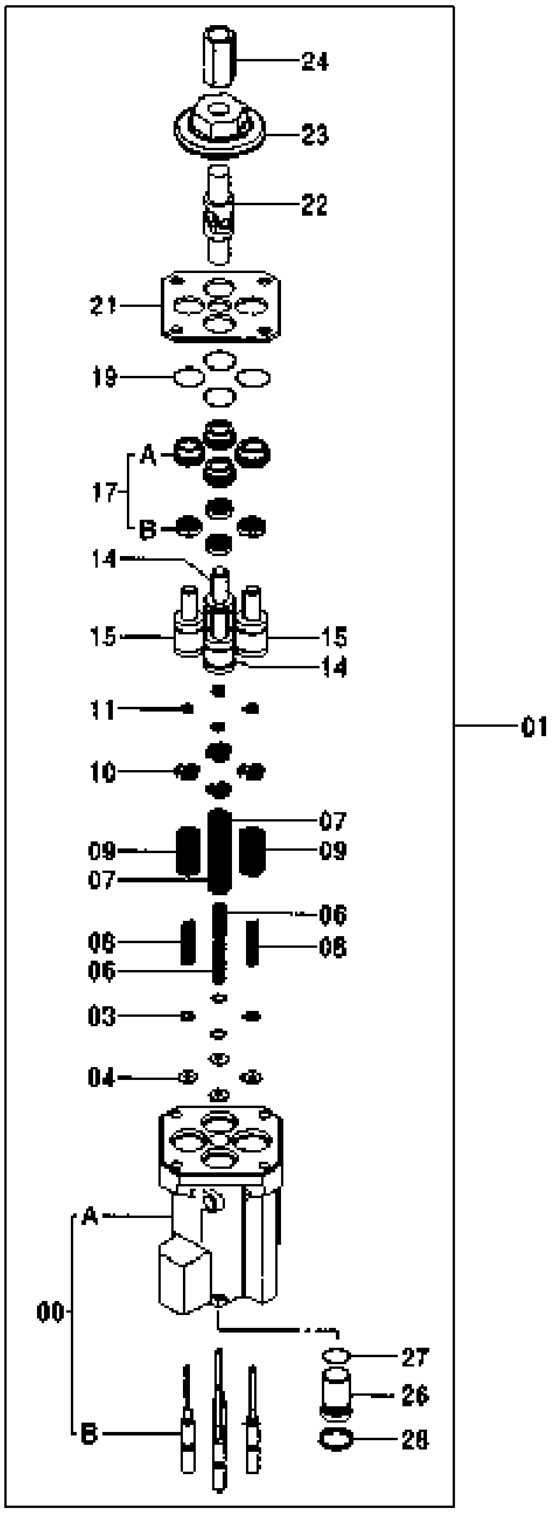

T206912

PILOT CONTROLLER VALVE COMPONENTS (DIG AND SWING)(SN 951032-)

KEY	PART NO.	PART NAME	QTY	COMPONENT SERIAL NO.	REMARKS
0	8094446	CASE	1		
0A	.....	HOUSING	1		(NOT CURRENTLY AVAILABLE)
0B	.....	SPOOL	4		(NOT CURRENTLY AVAILABLE)
3	4203411	SHIM	4		
4	4410898	SPACER	4		
6	4429120	SPRING	2		
7	4446960	SPRING	2		
8	4425414	SPRING	2		
9	4421771	SPRING	2		
10	4615610	GUIDE	4		
11	4437333	SNAP RING	4		
14	9759157	PISTON	2		
15	9759158	PISTON	2		
17	9246436	SLEEVE	4		
17A	.....	SLEEVE	1		(NOT CURRENTLY AVAILABLE)
17B	.....	SEAL	1		(NOT CURRENTLY AVAILABLE)
19	4201993	O-RING	4		
21	4614296	PLATE	1		
22	4335060	UNIVERSAL JOINT	1		
23	4437106	CAM	1		
24	4182067	JOINTER	1		
26	4614286	PLUG	1		
27	4170585	O-RING	1		
28	4614331	SNAP RING	1		

PILOT SYSTEM SHUTOFF LEVER

T142560 -UN-28JUN01

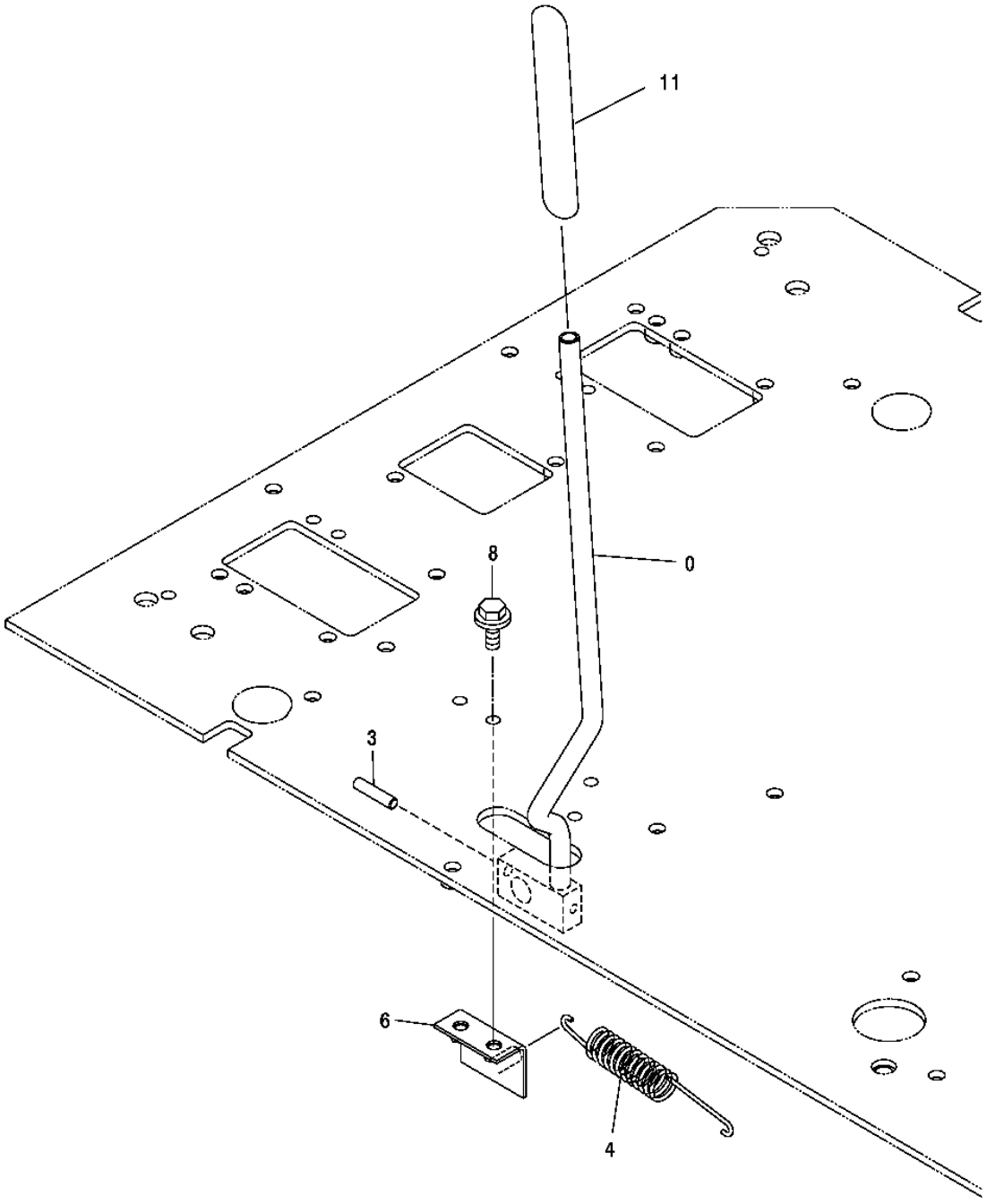

T142560

PILOT SYSTEM SHUTOFF LEVER

KEY	PART NO.	PART NAME	QTY	SERIAL NO.	REMARKS
0	7035503	LEVER	1		(SUB FOR TH7035503)
3	4116310	SPRING PIN	1		(SUB FOR TH4116310)
4	4189184	EXTENSION SPRING	1		(SUB FOR TH108392)
6	8073901	BRACKET	1		(SUB FOR TH8073901)
8	19M7662	CAP SCREW	2		M10 X 30
	12M7066	LOCK WASHER	2		10 MM
	24M7028	WASHER	2		10.500 X 20 X 2 MM
11	3089848	GRIP	1		(SUB FOR TH3089848)

PROPEL PILOT CONTROLLER LEVER AND PEDAL

T142559 -UN-18JUN01

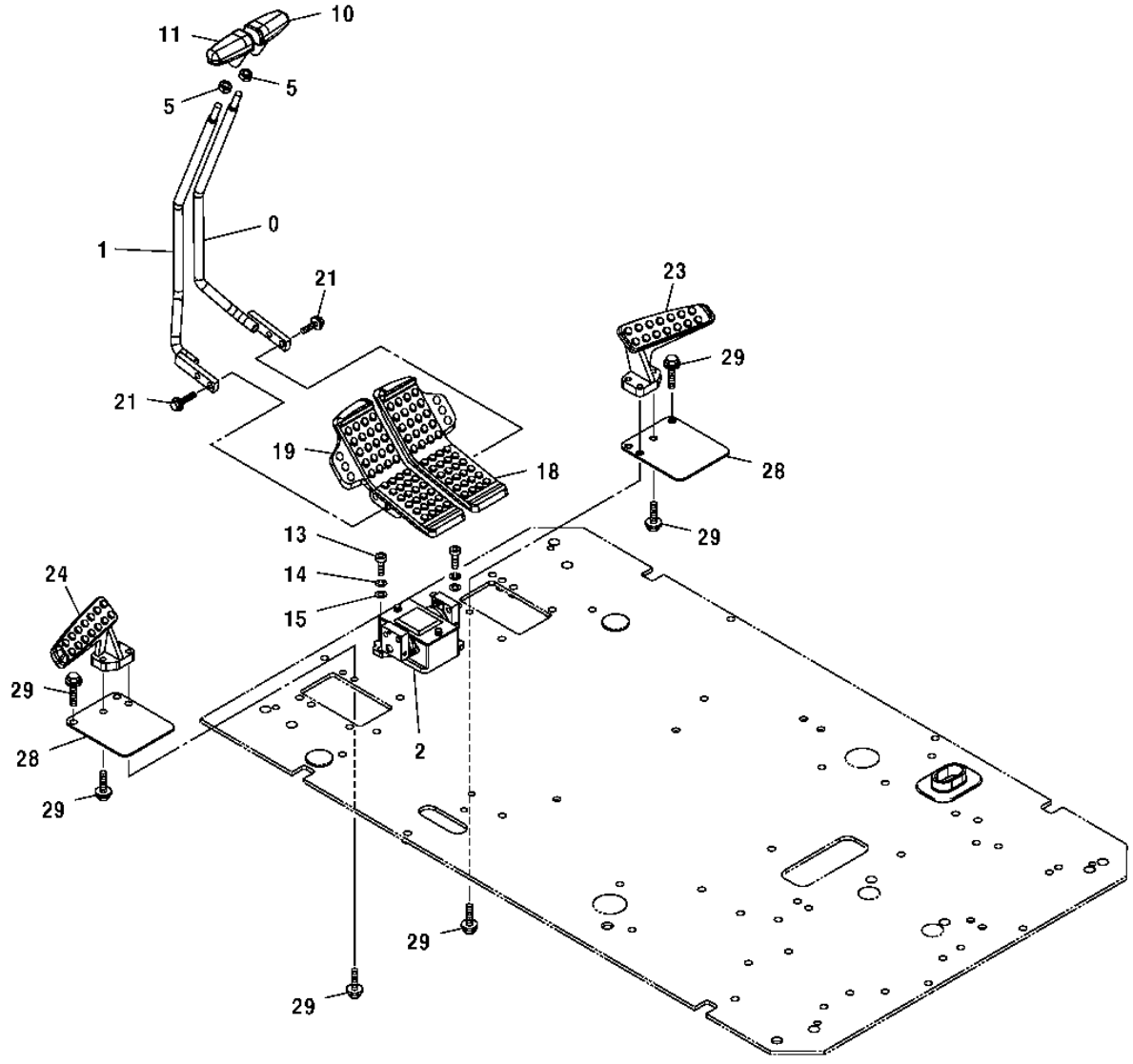

T142559

PROPEL PILOT CONTROLLER LEVER AND PEDAL

KEY	PART NO.	PART NAME	QTY	SERIAL NO.	REMARKS
0	8075450	LEVER	1		(SUB FOR TH8075450)
1	8075449	LEVER	1		(SUB FOR TH8075449)
2	9195307	HYDR./PILOT CONTROL VALVE	1	-XXXXXX	(SUB FOR TH9195307)
	9235551	HYDR./PILOT CONTROL VALVE	1	XXXXXX-	
5	4424185	NUT	2		(SUB FOR TH4424185)
10	2051176	GRIP	1		(SUB FOR TH2045468, 2045468)
11	2051177	GRIP	1		(SUB FOR TH2045469, 2045469)
13	19M8337	SCREW	2		M10 X 30
14	12M7066	LOCK WASHER	2		10 MM
15	24M7028	WASHER	2		10.500 X 20 X 2 MM
18	1024384	PEDAL	1		(SUB FOR AT202292)
19	1024224	PEDAL	1		(SUB FOR AT202291)
21	19M7658	CAP SCREW	4		M10 X 50
	12M7066	LOCK WASHER	4		10 MM
	24M7096	WASHER	4		10.500 X 18 X 1.600 MM
23	1015478	FOOTREST	1		(SUB FOR AT154056)
24	1015477	FOOTREST	1		(SUB FOR AT154055)
28	3052543	COVER	2		(SUB FOR AT154127)
29	19M7550	CAP SCREW	8		M10 X 35
	12M7066	LOCK WASHER	8		10 MM

PILOT VALVE COMPONENTS

T142562 -UN-18JUN01

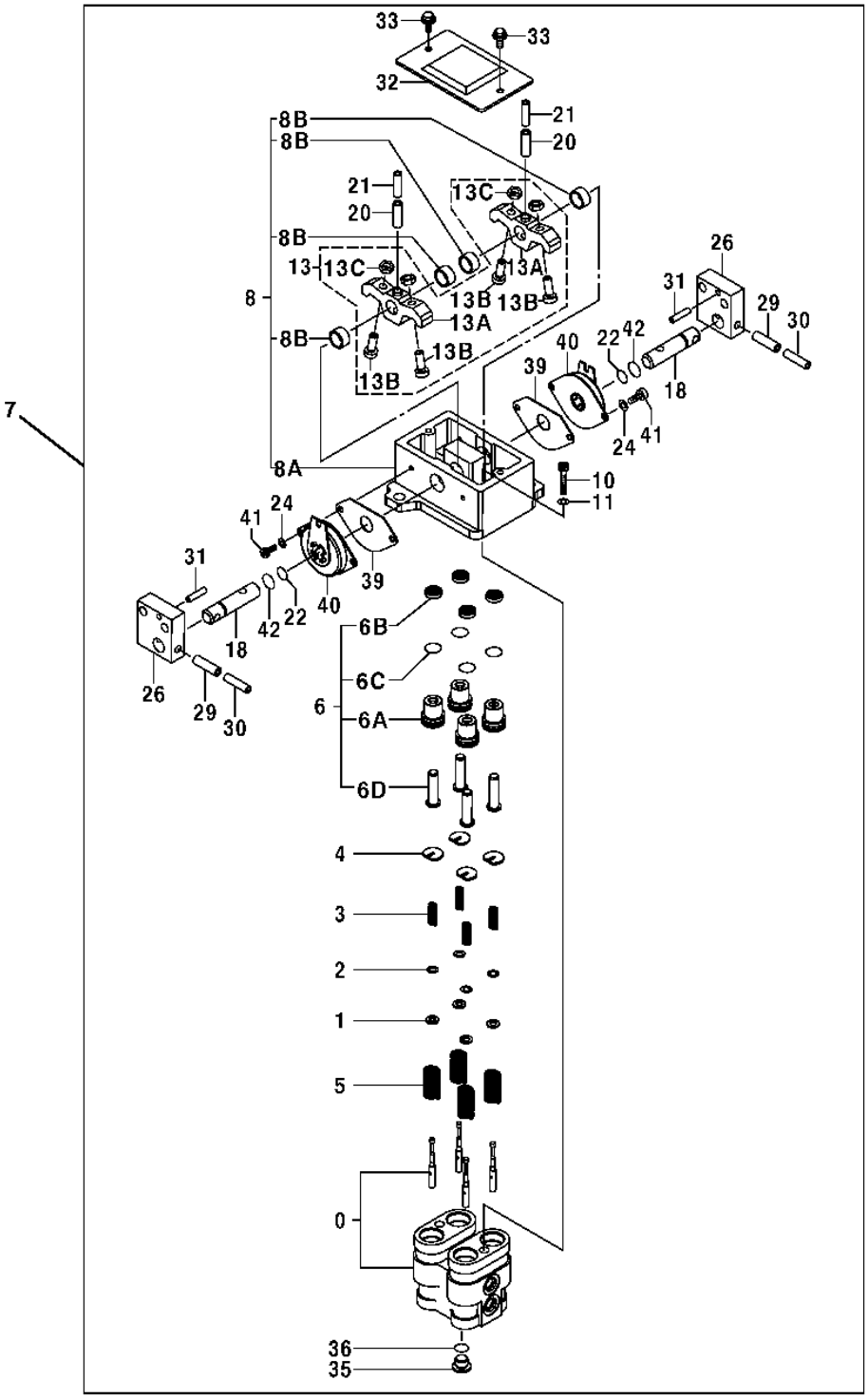

T142562

PILOT VALVE COMPONENTS

KEY	PART NO.	PART NAME	QTY	SERIAL NO.	REMARKS
0	8063718	HOUSING	1		(SUB FOR AT216001)
1	4319299	SPACER	4		(SUB FOR AT215885)
2	4203411	SHIM	12		(SUB FOR T108159)
3	4368629	COMPRESSION SPRING	4		(SUB FOR AT215954)
4	4364970	GUIDE	4		(SUB FOR AT215948)
5	4368630	COMPRESSION SPRING	4		(SUB FOR AT215955)
6	9151724	PLUNGER	4		(SUB FOR AT216016)
6A	.....	BUSHING	1		(AT217942 NOT AVAILABLE FOR SERVICE)
6B	4447050	SEAL	1		(SUB FOR TH4447050)
6C	CH11562	O-RING	1		
6D	3072517	PLUNGER	1		(SUB FOR AT215869)
7	9195307	HYDR./PILOT CONTROL VALVE	1		(SUB FOR TH9195307)
8	9184275	HOLDER	1		(SUB FOR TH9184275)
8A	.....	HOLDER	1		(TH2044332 NOT AVAILABLE FOR SERVICE)
8B	4437433	BUSHING	4		(SUB FOR TH4437433)
10	J781030	SCREW	2		(SUB FOR AT213614)
11	12M7066	LOCK WASHER	2		10 MM
13	9199146	KIT	2		(SUB FOR TH9199146)
13A	.....	CAM	1		(TH3087264 NOT AVAILABLE FOR SERVICE)
13B	4425290	SCREW	2		(SUB FOR TH4425290)
13C	4122395	NUT	2		(SUB FOR TH108364)
18	4425305	PIN FASTENER	2		(SUB FOR TH4425305)
20	34M7225	SPRING PIN	2		8 X 28 MM, (SUB FOR 34M6402)
21	4213419	SPRING PIN	2		(SUB FOR TH111654)
22	4185600	O-RING	2		(SUB FOR TH4185600)
24	12M7006	LOCK WASHER	4		6 MM
26	3087987	BRACKET	2		(SUB FOR TH3087987)
29	34M7124	SPRING PIN	2		8 X 30 MM
30	34M7062	SPRING PIN	2		5 X 32 MM
31	4051262	SPRING PIN	2		(SUB FOR AT213796)
32	8077903	COVER	1		(SUB FOR TH8077903)
33	19M7923	CAP SCREW	2		M6 X 12
	12M7006	LOCK WASHER	2		6 MM
	24M7293	WASHER	2		6.500 X 13 X 1.600 MM
35	4208977	DRAIN PLUG	1		(SUB FOR TH111351)
36	CH11561	PACKING	1		
39	4437432	GASKET	2		(SUB FOR TH4437432)
40	4428902	ABSORBER	2		
41	0209423	BOLT	4		(SUB FOR TH100738)
42	4447067	O-RING	2		(SUB FOR TH4447067)

AUXILIARY 2-WAY HYDRAULIC FOOT PEDAL CONTROL

T158465 -UN-16AUG02

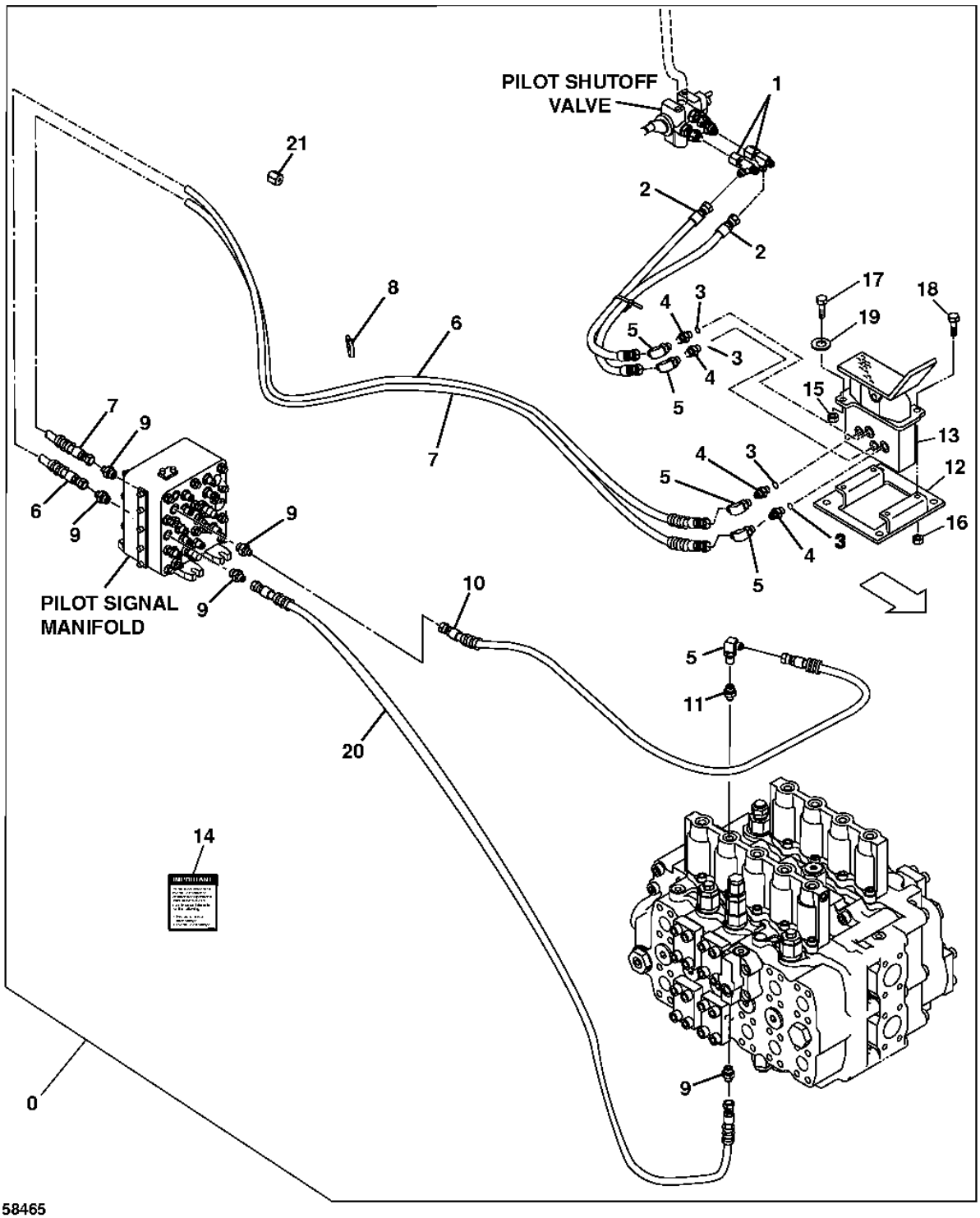

AUXILIARY 2-WAY HYDRAULIC FOOT PEDAL CONTROL

KEY	PART NO.	PART NAME	QTY	SERIAL NO.	REMARKS
0	**AT195684**	**KIT**	**1**		**WHOLEGOODS (AUXILIARY FOOT PEDAL CONTROL)**
1	AT36921	TEE FITTING	2		
2	AH108250	HOSE	2		9/16" X 787 MM (31") X 9/16"
3	R26448	O-RING	4		
4	R27212	FITTING	4		
5	AE24616	ELBOW FITTING	5		
6	AE42067	HYDRAULIC HOSE	1		9/16" X 3 700 MM (145-3/4") X 9/16"
7	AE42067	HYDRAULIC HOSE	1		9/16" X 3 700 MM (145-3/4") X 9/16"
8	H77698	TIE BAND	5		
9	4200466	ADAPTER	5		(SUB FOR TH108320)
	CH11570	O-RING	5		
10	AT68901	HYDRAULIC HOSE - FABRICATE	2		9/16" X 965 MM (38") X 9/16"
11	4202422	ADAPTER	1		(SUB FOR TH108440)
	CH11570	O-RING	1		
12	AT115535	SUPPORT	1		
13	AT152120	HAND OPERATED VALVE	1		
14	T149434	LABEL	1		
15	14M7296	FLANGE NUT	1		M10
16	14M7298	FLANGE NUT	4		M8
17	19M7784	SCREW	2		M10 X 20
18	19M7866	SCREW	4		M8 X 20
19	24M7296	WASHER	2		10.500 X 30 X 2.500 MM
20	AR90081	HYDRAULIC HOSE	1		
21	R31147	FITTING	1		(TANK PORT DRAIN LINE)

SINGLE PEDAL CONTROL KIT

T148421 -UN-06DEC01

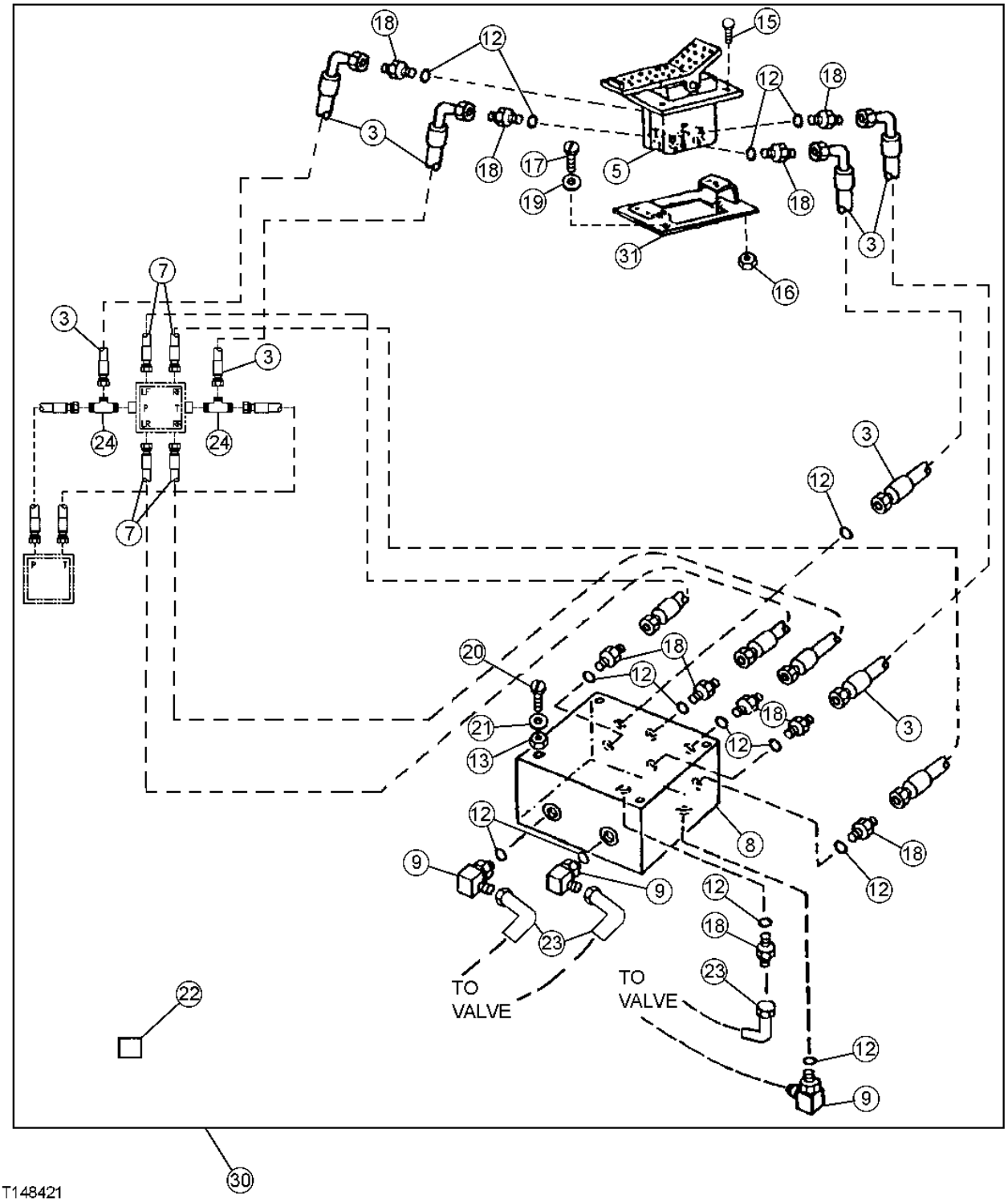

SINGLE PEDAL CONTROL KIT

KEY	PART NO.	PART NAME	QTY	SERIAL NO.	REMARKS
3	AT71082	HYDRAULIC HOSE - FABRICATE	4		9/16" X 711 MM (28") X 9/16"
5	AT152120	HAND OPERATED VALVE	1		(FOOT)
7	AT215538	HYDRAULIC HOSE - FABRICATE	4		9/16" X 880 MM (34-3/4") X 9/16"
8	AT170459	HYD ACTUATED CONTROL VALVE	1		
9	AT35121	ELBOW FITTING	3		
12	R26448	O-RING	14		11.887 X 1.981 MM (0.468" X 5/64")
13	14M7273	NUT	4		M8
15	19M7866	SCREW	4		M8 X 20
16	14M7298	FLANGE NUT	4		M8
17	19M7784	SCREW	2		M10 X 20
18	R27212	FITTING	11		
19	24M7296	WASHER	2		10.500 X 30 X 2.500 MM
20	19M8456	CAP SCREW	4		M8 X 100
21	24M7036	WASHER	4		9 X 16 X 1.600 MM
22	T153674	LABEL	1		(WITHOUT AUXILIARY HYDRAULICS) (LOWER FRONT OF RIGHT SIDE CAB WINDOW)
	T153676	LABEL	1		(WITH AUXILIARY HYDRAULICS) (LOWER FRONT OF RIGHT SIDE CAB WINDOW)
23	AE24616	ELBOW FITTING	3		
24	AT36921	TEE FITTING	2		
30	**AT196435**	**KIT**	**1**		**(WHOLEGOODS) (SINGLE PEDAL PROPEL KIT)**
31	AT115535	SUPPORT	1		

COUNTERWEIGHT REMOVAL CONTROL SYSTEM

T160453 -UN-31OCT02

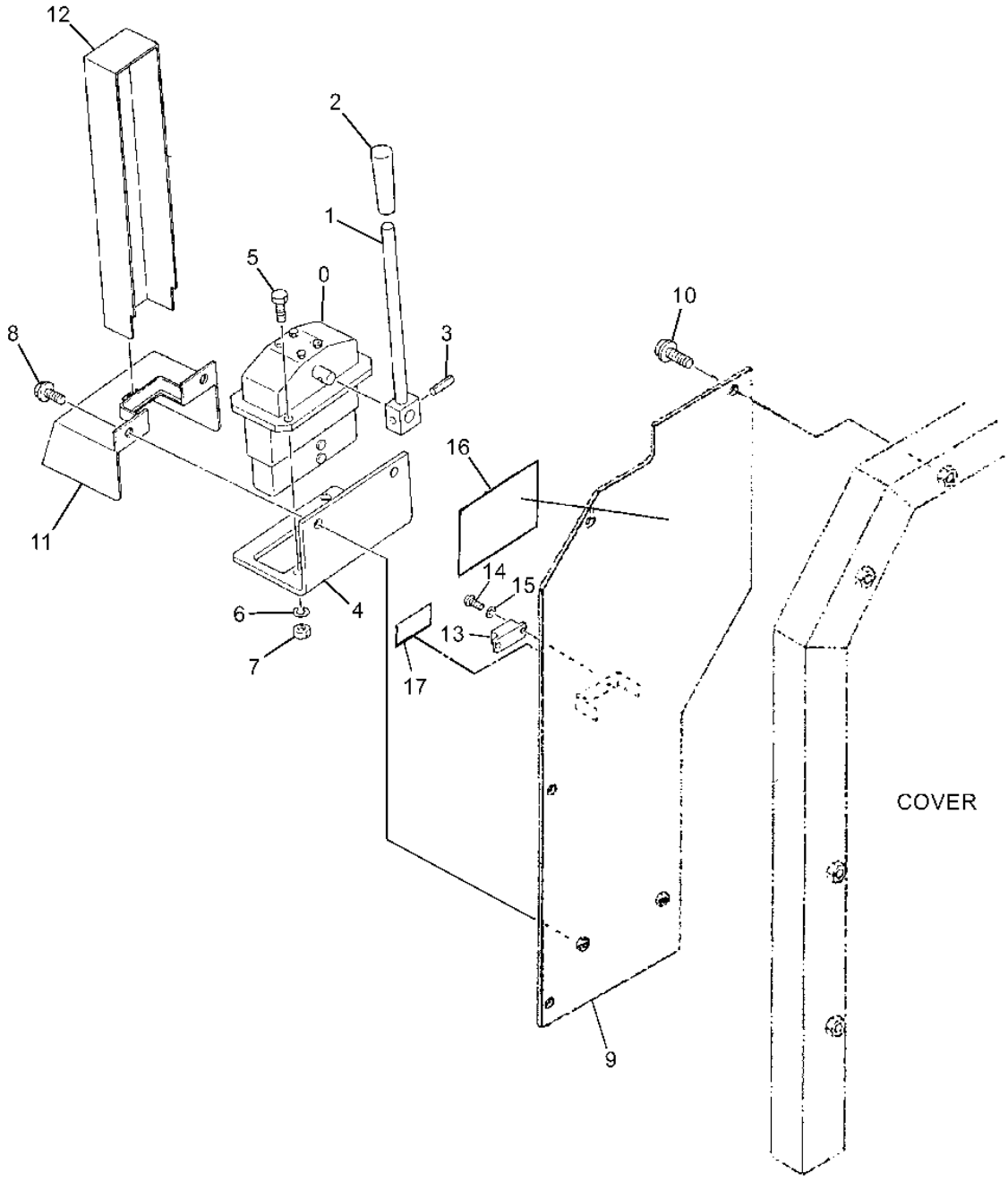

T160453

COUNTERWEIGHT REMOVAL CONTROL SYSTEM

KEY	PART NO.	PART NAME	QTY	SERIAL NO.	REMARKS
0	9074843	HYD ACTUATED CONTROL VALVE	1		
1	9732429	LEVER	1		
2	4122424	GRIP	1		
3	34M7102	SPRING PIN	1		5 X 26 MM (0.197" X 1.024")
4	3046025	BRACKET	1		
5	19M7402	CAP SCREW	2		M10 X 25
6	12M7066	LOCK WASHER	2		10 MM (0.394")
7	14M7274	NUT	2		M10
8	19M7402	CAP SCREW	2		M10 X 25
	12M7066	LOCK WASHER	2		10 MM (0.394")
	24M7028	WASHER	2		10.500 X 20 X 2 MM (0.413" X 0.787" X 0.079")
9	7041316	PLATE	1		
10	19M8011	CAP SCREW	4		M12 X 30
	12H301	LOCK WASHER	4		12.700 MM (1/2")
	24M7047	WASHER	4		13 X 24 X 2.500 MM (0.512" X 0.945" X 0.098")
11	8044683	COVER	1		
12	4240984	COVER	1		
13	4240985	MAGNET	1		
14	21M7394	SCREW	2		M3 X 10
15	12H233	LOCK WASHER	2		3.175 MM (1/8") (SUB FOR 12M7048)
16	T152593	INSTRUCTION PLATE	1		(COUNTERWEIGHT REMOVAL INSTRUCTION LABEL)
17	4241586	LABEL	1		(UP-DOWN FOR COUNTERWEIGHT REMOVAL)

SHORT ARM ASSEMBLY (2.9M - 9 FT 6 IN)

TP66873 -UN-12OCT99

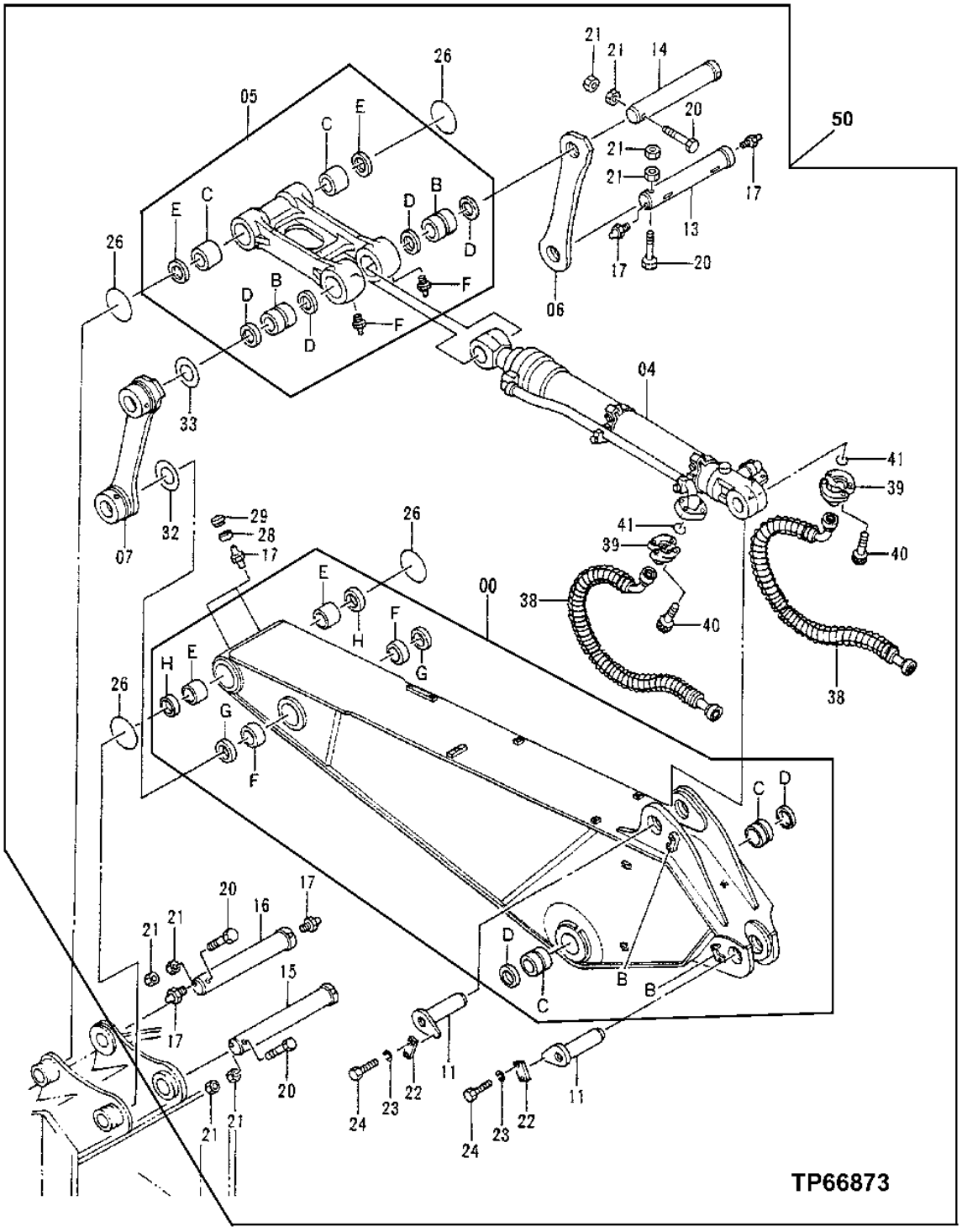

SHORT ARM ASSEMBLY (2.9M - 9 FT 6 IN)

KEY	PART NO.	PART NAME	QTY	SERIAL NO.	REMARKS
0	9142216	LIFT ARM	1		(SUB FOR TH9142216)
0B	4297643	STOP	2		(SUB FOR TH4297643)
0C	3060580	BUSHING	2		(SUB FOR TH3060580)
0D	4251767	SEAL	2		(SUB FOR TH4251767)
0E	3079231	BUSHING	2		(SUB FOR TH3079231)
0F	4295981	BUSHING	2		(SUB FOR TH4295981)
0G	4251212	SEAL	2		(SUB FOR AT202303)
0H	4324194	SEAL	2		(SUB FOR TH4324194)
4	.....	HYDRAULIC CYLINDER	1		(BUCKET) (SEE SEPARATE PAGE FOR DETAIL)
5	9111926	LINK	1		(SUB FOR TH9111926)
5B	3060583	BUSHING	2		(SUB FOR TH3060583)
5C	3060582	BUSHING	2		(SUB FOR TH3060582)
5D	4251767	SEAL	4		(SUB FOR TH4251767)
5E	4251752	SEAL	2		(SUB FOR AT202304)
5F	TH100074	LUBRICATION FITTING	2		
6	8049555	LINK	1		(SUB FOR TH8049555)
7	8050377	LINK	1		(SUB FOR TH8050377)
11	8053519	PIN FASTENER	2		(SUB FOR TH8053519)
13	AT318057	PIN FASTENER	1		(SUB FOR 3060596, TH3060596)
14	3097975	PIN FASTENER	1		(SUB FOR TH3060595 AND 3060595)
15	AT318058	PIN FASTENER	1		(SUB FOR 3079227, TH3079227)
16	AT318054	PIN FASTENER	1		(SUB FOR 3052361, TH3052361)
17	TH100074	LUBRICATION FITTING	6		
20	4295167	CAP SCREW	4		(SUB FOR TH4295167)
21	14M7277	NUT	8		M20
22	4122729	STRAP	2		(SUB FOR AT131696)
23	12M7070	LOCK WASHER	4		20 MM (0.787")
24	19M7950	CAP SCREW	4		M20 X 45
26	4102191	O-RING	4		(SUB FOR AT131687 OR T200731)
28	4130686	BUSHING	2		(SUB FOR AT217082)
29	4105912	CAP	2		(SUB FOR AT217081)
32	4143607	WASHER	1		(SUB FOR TH103208)
33	4296540	SHIM	1		(SUB FOR TH4296540)
38	4326995	HYDRAULIC HOSE - FABRICATE	2		(SUB FOR AT202215)
39	4085560	FLANGE FITTING	4		(SUB FOR TH101960)
40	19M8395	SCREW	8		M12 X 40
41	T78313	O-RING	2		32.918 X 3.531 MM (1.296" X 0.139")
50	**AT188457**	**ARM**	**1**		**WHOLEGOODS (ASSEMBLY INCLUDES ARM, BUCKET CYLINDER, HOSES AND LINKAGE)**

STANDARD ARM ASSEMBLY (3.5M)

TP66963 -UN-08NOV99

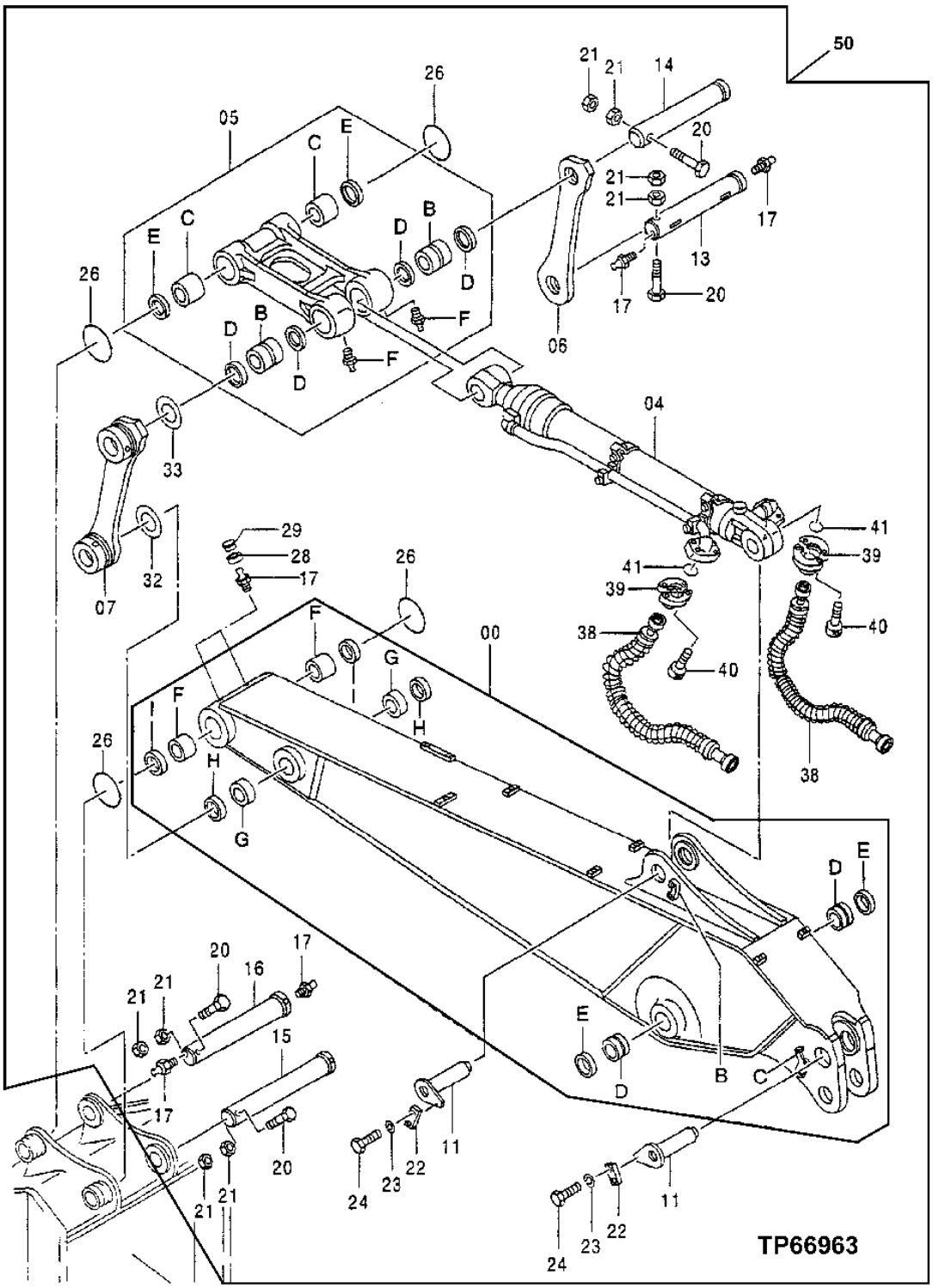

STANDARD ARM ASSEMBLY (3.5M)

KEY	PART NO.	PART NAME	QTY	SERIAL NO.	REMARKS
0	9111839	LIFT ARM	1		(SUB FOR TH9111839)
0B	4297643	STOP	1		(SUB FOR TH4297643)
0C	4297750	STOP	1		(SUB FOR TH4297750)
0D	3060580	BUSHING	2		(SUB FOR TH3060580)
0E	4251767	SEAL	2		(SUB FOR TH4251767)
0F	3079228	BUSHING	2		(SUB FOR TH3079228)
0G	4295981	BUSHING	2		(SUB FOR TH4295981)
0H	4251212	SEAL	2		(SUB FOR AT202303)
0I	4251752	SEAL	2		(SUB FOR AT202304)
4	.....	HYDRAULIC CYLINDER	1		(BUCKET) (SEE SEPARATE PAGE FOR DETAIL)
5	9111926	LINK	1		(SUB FOR TH9111926)
5B	3060583	BUSHING	2		(SUB FOR TH3060583)
5C	3060582	BUSHING	2		(SUB FOR TH3060582)
5D	4251767	SEAL	4		(SUB FOR TH4251767)
5E	4251752	SEAL	2		(SUB FOR AT202304)
5F	TH100074	LUBRICATION FITTING	2		
6	8049555	LINK	1		(SUB FOR TH8049555)
7	8050377	LINK	1		(SUB FOR TH8050377)
11	8053519	PIN FASTENER	2		(SUB FOR TH8053519)
13	AT318057	PIN FASTENER	1		(SUB FOR 3060596, TH3060596)
14	3097975	PIN FASTENER	1		(SUB FOR TH3060595 AND 3060595)
15	AT318058	PIN FASTENER	1		(SUB FOR 3079227, TH3079227)
16	AT318054	PIN FASTENER	1		(SUB FOR 3052361, TH3052361)
17	TH100074	LUBRICATION FITTING	6		
20	4295167	CAP SCREW	4		(SUB FOR TH4295167)
21	14M7277	NUT	8		M20
22	4122729	STRAP	2		(SUB FOR AT131696)
23	12M7070	LOCK WASHER	4		20 MM (0.787")
24	19M7950	CAP SCREW	4		M20 X 45
26	4102191	O-RING	4		(SUB FOR AT131687 OR T200731)
28	4130686	BUSHING	2		(SUB FOR AT217082)
29	4105912	CAP	2		(SUB FOR AT217081)
32	4143607	WASHER	1		(SUB FOR TH103208)
33	4296540	SHIM	1		(SUB FOR TH4296540)
38	AT172097	HYDRAULIC HOSE - FABRICATE	2		
39	4085560	FLANGE FITTING	4		(SUB FOR TH101960)
40	19M8395	SCREW	8		M12 X 40
41	T78313	O-RING	2		32.918 X 3.531 MM (1.296" X 0.139")
50	**AT188458**	**ARM**	**1**		**WHOLEGOODS (INCLUDES ARM, BUCKET CYLINDER, HOSES, AND LINKAGE)**

SEMI-LONG ARM ASSEMBLY (4.1 M)

TP66963 -UN-08NOV99

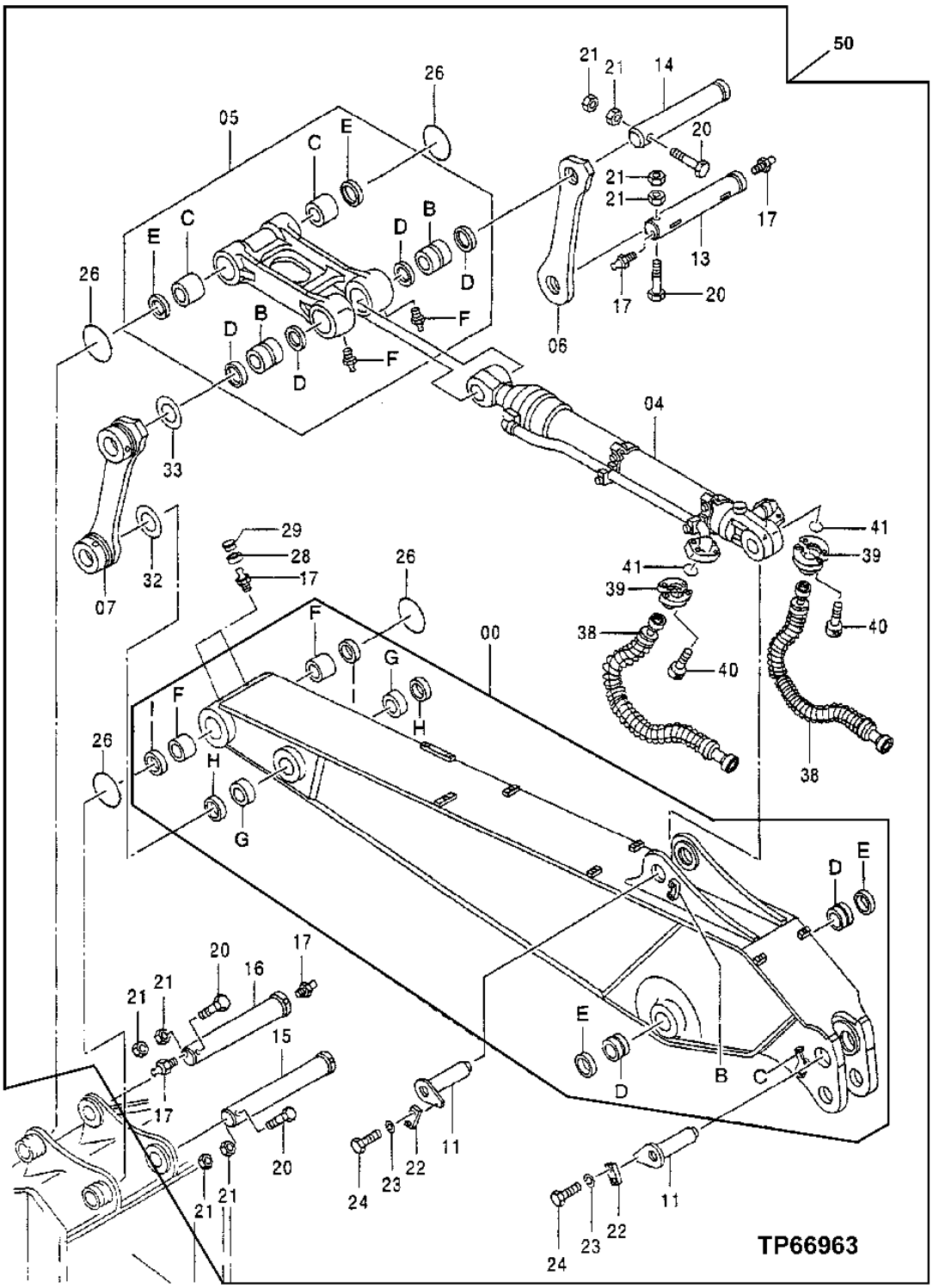

SEMI-LONG ARM ASSEMBLY (4.1M)

KEY	PART NO.	PART NAME	QTY	SERIAL NO.	REMARKS
0	9141367	LIFT ARM	1		(SUB FOR TH9141367)
0B	4297643	STOP	1		(SUB FOR TH4297643)
0C	4297750	STOP	1		(SUB FOR TH4297750)
0D	3060580	BUSHING	2		(SUB FOR TH3060580)
0E	4251767	SEAL	2		(SUB FOR TH4251767)
0F	3079228	BUSHING	2		(SUB FOR TH3079228)
0G	4295981	BUSHING	2		(SUB FOR TH4295981)
0H	4251212	SEAL	2		(SUB FOR AT202303)
0I	4251752	SEAL	2		(SUB FOR AT202304)
4	.....	HYDRAULIC CYLINDER	1		(BUCKET) (SEE SEPARATE PAGE FOR DETAIL)
5	9111926	LINK	1		(SUB FOR TH9111926)
5B	3060583	BUSHING	2		(SUB FOR TH3060583)
5C	3060582	BUSHING	2		(SUB FOR TH3060582)
5D	4251767	SEAL	4		(SUB FOR TH4251767)
5E	4251752	SEAL	2		(SUB FOR AT202304)
5F	TH100074	LUBRICATION FITTING	2		
6	8049555	LINK	1		(SUB FOR TH8049555)
7	8050377	LINK	1		(SUB FOR TH8050377)
11	8053519	PIN FASTENER	2		(SUB FOR TH8053519)
13	AT318057	PIN FASTENER	1		(SUB FOR 3060596, TH3060596)
14	3097975	PIN FASTENER	1		(SUB FOR TH3060595 AND 3060595)
15	AT318058	PIN FASTENER	1		(SUB FOR 3079227, TH3079227)
16	AT318054	PIN FASTENER	1		(SUB FOR 3052361, TH3052361)
17	TH100074	LUBRICATION FITTING	6		
20	4295167	CAP SCREW	4		(SUB FOR TH4295167)
21	14M7277	NUT	8		M20
22	4122729	STRAP	2		(SUB FOR AT131696)
23	12M7070	LOCK WASHER	4		20 MM
24	19M7950	CAP SCREW	4		M20 X 45
26	4102191	O-RING	4		(SUB FOR AT131687 OR T200731)
28	4130686	BUSHING	2		(SUB FOR AT217082)
29	4105912	CAP	2		(SUB FOR AT217081)
32	4143607	WASHER	1		(SUB FOR TH103208)
33	4296540	SHIM	1		(SUB FOR TH4296540)
38	AT202135	HYDRAULIC HOSE - FABRICATE	2		
39	4085560	FLANGE FITTING	4		(SUB FOR TH101960)
40	19M8395	SCREW	8		M12 X 40
41	T78313	O-RING	2		32.918 X 3.531 MM (1.296" X 0.139")
50	**AT188459**	**ARM**	**1**		**WHOLEGOODS (INCLUDES ARM, BUCKET CYLINDER, HOSES, AND LINKAGE)**

LONG ARM ASSEMBLY (5.2 M)

TP66874 -UN-12OCT99

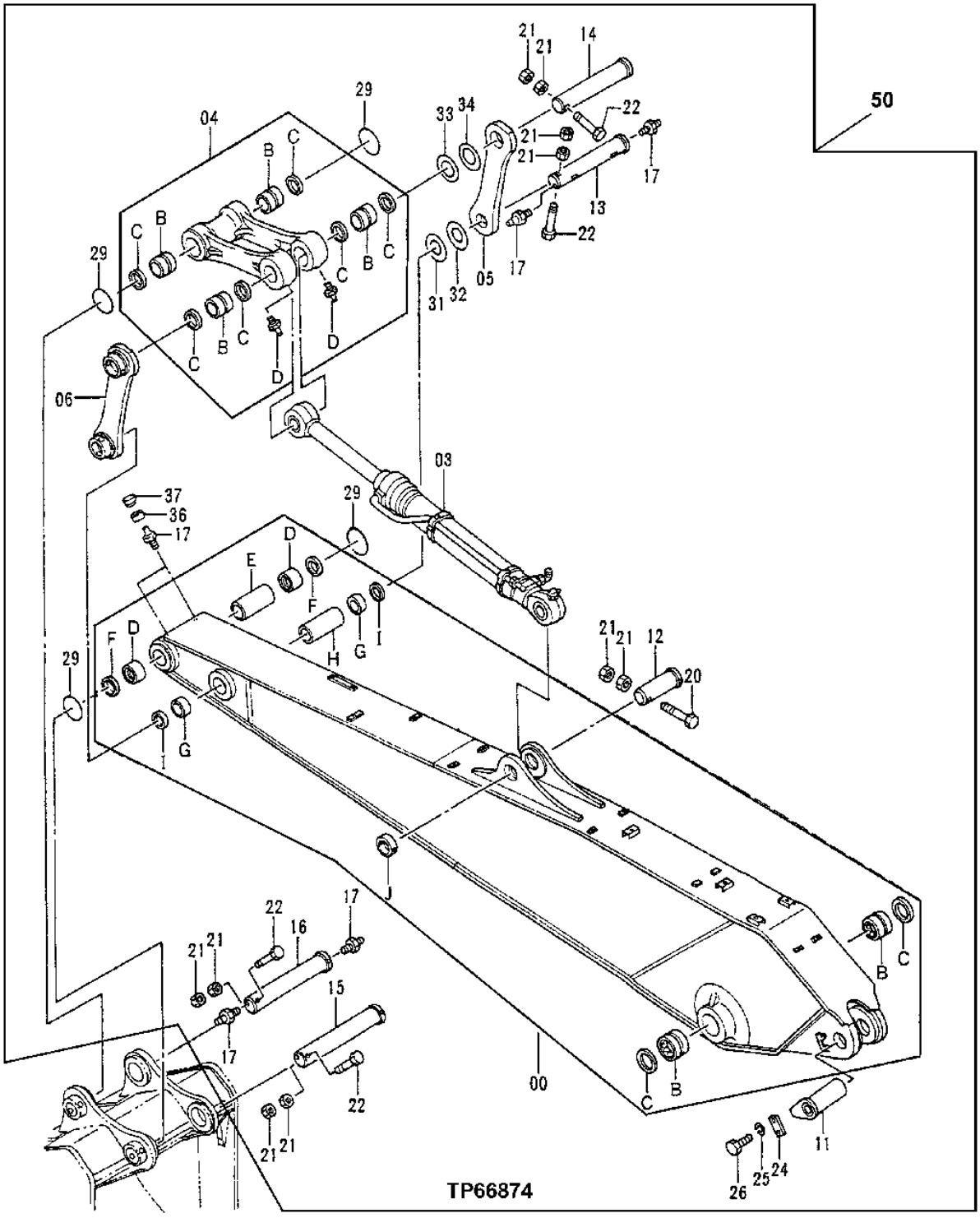

LONG ARM ASSEMBLY (5.2M)

KEY	PART NO.	PART NAME	QTY	SERIAL NO.	REMARKS
0	9142088	LIFT ARM	1		(SUB FOR TH9142088)
0B	3060580	BUSHING	2		(SUB FOR TH3060580)
0C	4251767	SEAL	2		(SUB FOR TH4251767)
0D	AT217078	BUSHING	2		
0E	4334123	SPACER	1		(SUB FOR AT202333)
0F	4251212	SEAL	2		(SUB FOR AT202303)
0G	TH103214	BUSHING	2		100 X 115 X 60 MM (3.937" X 4.528" X 2.362")
0H	4334124	SPACER	1		(SUB FOR AT202334)
0I	TH102411	SEAL	2		
0J	TH103198	BUSHING	1		101.600 X 127 X 49.276 MM (4" X 5" X 1.940")
3	.....	HYDRAULIC CYLINDER	1		(BUCKET) (SEE SEPARATE PAGE FOR DETAIL)
4	9114176	LINK	1		(SUB FOR AT201931)
4B	AT201695	BUSHING	4		
4C	AT131682	SEAL	6		
4D	TH100074	LUBRICATION FITTING	2		
5	8050176	LINK	1		(SUB FOR AT201887)
6	8050178	LINK	1		(SUB FOR AT201888)
11	8053519	PIN FASTENER	1		(SUB FOR TH8053519)
12	AT131627	PIN FASTENER	1		105 X 324 MM (4.134" X 12.756")
13	3055219	PIN FASTENER	1		(SUB FOR AT201687)
14	AT192342	PIN FASTENER	1		(SUB FOR AT201694)
15	AT217077	PIN FASTENER	1		
16	AT201693	PIN FASTENER	1		
17	TH100074	LUBRICATION FITTING	6		
20	19M8100	CAP SCREW	1		M20 X 180
21	14M7277	NUT	10		M20
22	AT202121	BOLT	4		M20 X 200
24	4122729	STRAP	1		(SUB FOR AT131696)
25	12M7070	LOCK WASHER	2		20 MM
26	19M7950	CAP SCREW	2		M20 X 45
29	4487682	O-RING	4		(SUB FOR AT201748) (SUB FOR 4288572, THIS APPLICATION)
31	4134370	WASHER	1		(SUB FOR AT202083)
32	4134371	WASHER	1		(SUB FOR AT131702)
33	4134372	WASHER	1		(SUB FOR AT202084)
34	4134373	WASHER	1		(SUB FOR AT131703)
36	4130686	BUSHING	2		(SUB FOR AT217082)
37	4105912	CAP	2		(SUB FOR AT217081)
50	**AT188460**	**ARM**	**1**		**WHOLEGOODS (INCLUDES ARM, BUCKET CYLINDER, HOSES, AND LINKAGE)**

MASS EXCAVATING ARM ASSEMBLY (2.9 M)

TP66873 -UN-12OCT99

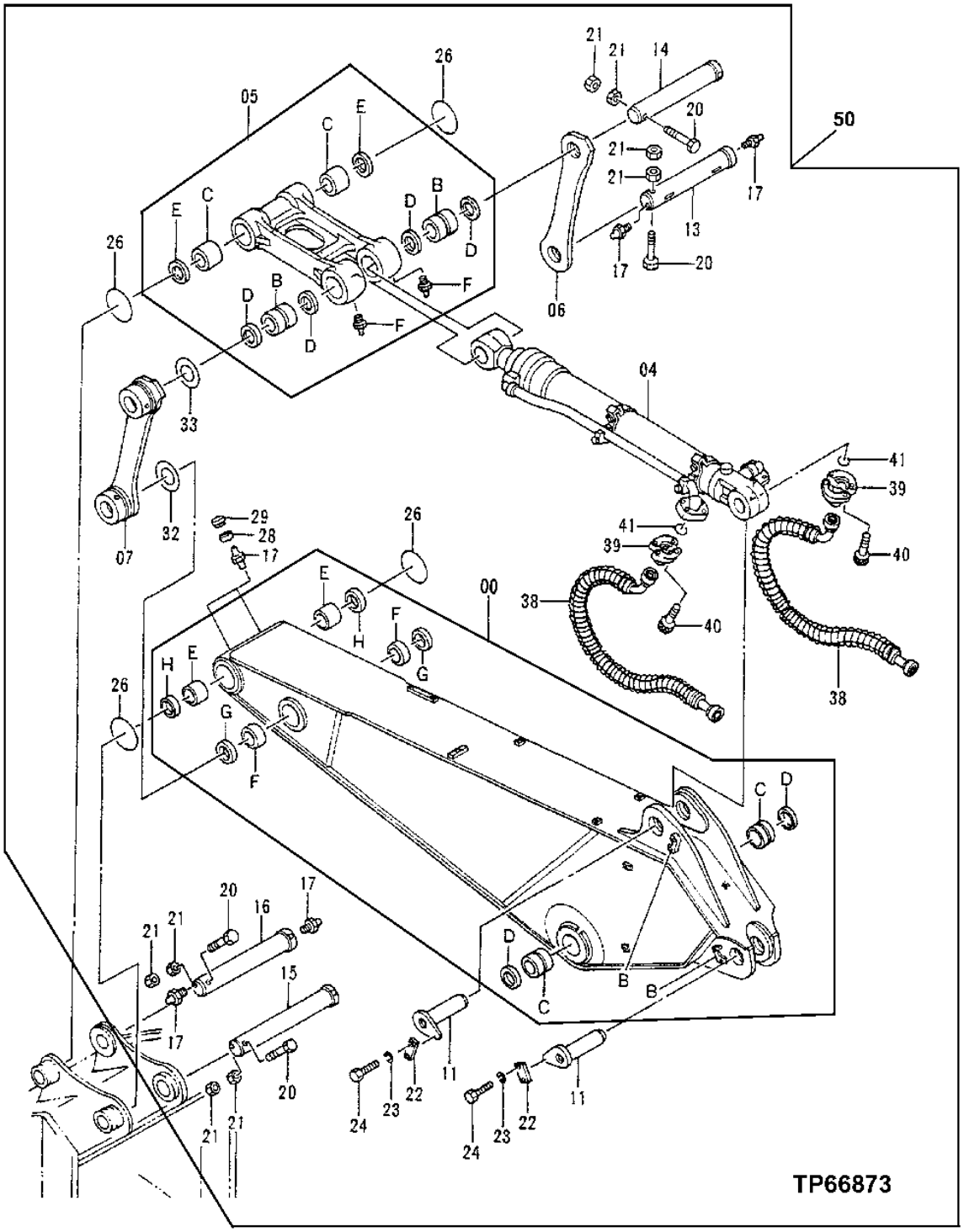

MASS EXCAVATING ARM ASSEMBLY (2.9 M)

KEY	PART NO.	PART NAME	QTY	SERIAL NO.	REMARKS
0	9131217	LIFT ARM	1		(SUB FOR TH9131217)
0B	4297643	STOP	2		(SUB FOR TH4297643)
0C	3060580	BUSHING	2		(SUB FOR TH3060580)
0D	4251767	SEAL	2		(SUB FOR TH4251767)
0E	3079230	BUSHING	2		(SUB FOR TH3079230)
0F	4295981	BUSHING	2		(SUB FOR TH4295981)
0G	4251212	SEAL	2		(SUB FOR AT202303)
0H	4251767	SEAL	2		(SUB FOR TH4251767)
4	.....	HYDRAULIC CYLINDER	1		(BUCKET) (SEE SEPARATE PAGE FOR DETAIL)
5	9111926	LINK	1		(SUB FOR TH9111926)
5B	3060583	BUSHING	2		(SUB FOR TH3060583)
5C	3060582	BUSHING	2		(SUB FOR TH3060582)
5D	4251767	SEAL	4		(SUB FOR TH4251767)
5E	4251752	SEAL	2		(SUB FOR AT202304)
5F	TH100074	LUBRICATION FITTING	2		
6	8049555	LINK	1		(SUB FOR TH8049555)
7	8050377	LINK	1		(SUB FOR TH8050377)
11	8053519	PIN FASTENER	2		(SUB FOR TH8053519)
13	AT318057	PIN FASTENER	1		(SUB FOR 3060596, TH3060596)
14	3097975	PIN FASTENER	1		(SUB FOR TH3060595 AND 3060595)
15	3079229	PIN FASTENER	1		(SUB FOR TH3079229)
16	AT318054	PIN FASTENER	1		(SUB FOR 3052361, TH3052361)
17	TH100074	LUBRICATION FITTING	6		
20	4295167	CAP SCREW	4		(SUB FOR TH4295167)
21	14M7277	NUT	8		M20
22	4122729	STRAP	2		(SUB FOR AT131696)
23	12M7070	LOCK WASHER	4		20 MM
24	19M7950	CAP SCREW	4		M20 X 45
26	4102191	O-RING	4		(SUB FOR AT131687 OR T200731)
28	4130686	BUSHING	2		(SUB FOR AT217082)
29	4105912	CAP	2		(SUB FOR AT217081)
32	4143607	WASHER	1		(SUB FOR TH103208)
33	4296540	SHIM	1		(SUB FOR TH4296540)
38	4326995	HYDRAULIC HOSE - FABRICATE	2		(SUB FOR AT202215)
39	4085560	FLANGE FITTING	4		(SUB FOR TH101960)
40	19M8395	SCREW	8		M12 X 40
41	T78313	O-RING	2		32.918 X 3.531 MM (1.296" X 0.139")
50	**AT188461**	**ARM**	**1**		**WHOLEGOODS (ASSEMBLY INCLUDES ARM, BUCKET CYLINDER, HOSES AND LINKAGE) (USE WITH MASS EXCAVATING BOOM)**

HEAVY DUTY BOOM 7.6M

T150033 -UN-01FEB02

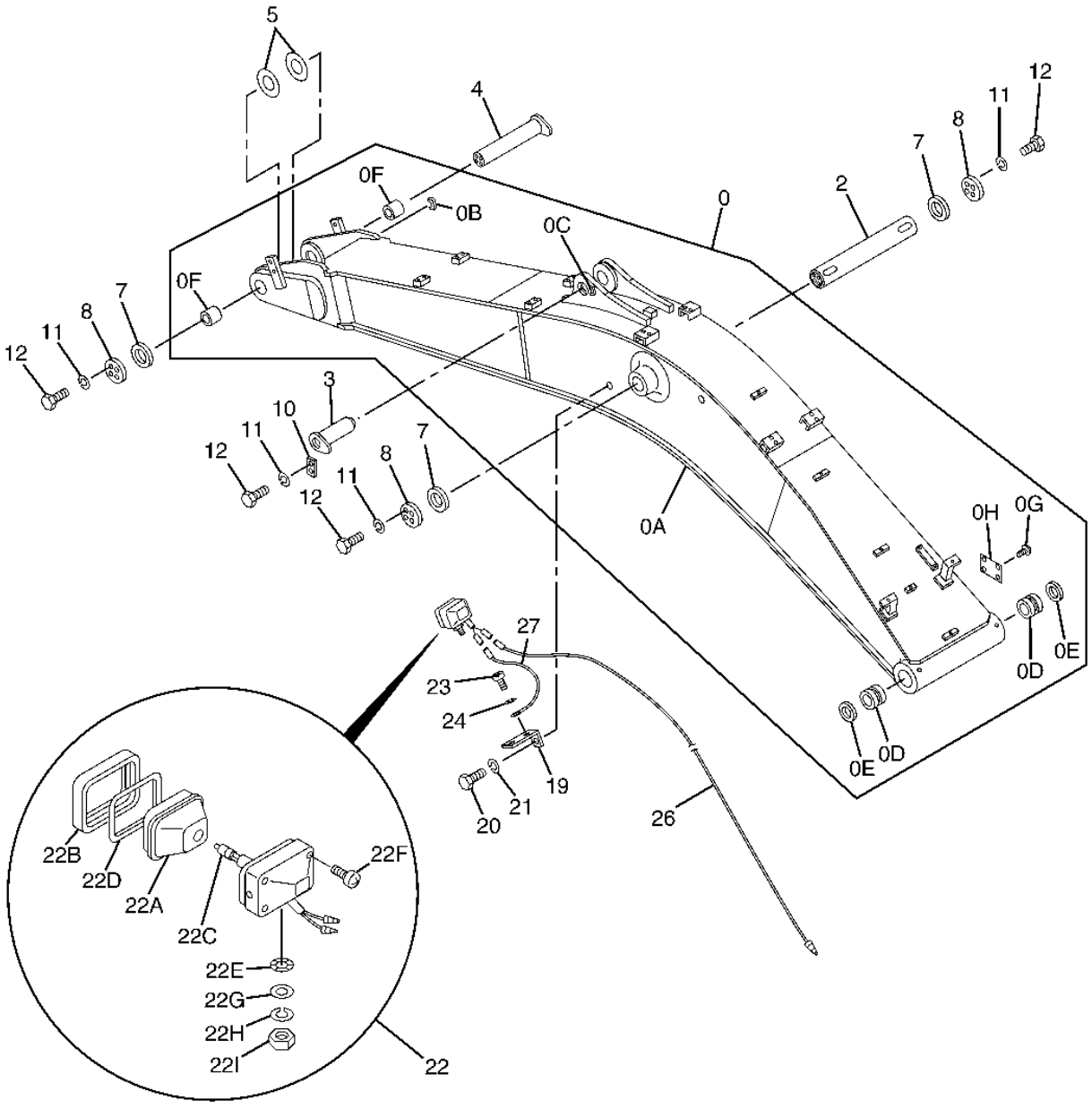

T150033

HEAVY DUTY BOOM 7.6M

KEY	PART NO.	PART NAME	QTY	SERIAL NO.	REMARKS
0	9128709	EXCAVATOR BOOM	1		(SUB FOR TH9128709)
0A	.....	EXCAVATOR BOOM	1		
0B	4297642	STOP	1		(SUB FOR TH4297642)
0C	4297643	STOP	1		(SUB FOR TH4297643)
0D	3060579	BUSHING	2		(SUB FOR TH3060579)
0E	4251753	SEAL	2		(SUB FOR TH4251753)
0F	4457757	BUSHING	2		
0G	37H99	SCREW	4		
0H	.....	PLATE	1		(TH4453777 NOT AVAILABLE FOR SERVICE)
2	3060601	PIN FASTENER	1		(SUB FOR TH3060601)
3	8053519	PIN FASTENER	1		(SUB FOR TH8053519)
4	AT318069	PIN FASTENER	1		(SUB FOR 8053520, TH8053520)
5	4296540	SHIM	2		(SUB FOR TH4296540)
7	4040932	WASHER	3		(SUB FOR TH4040932)
8	4117700	WASHER	3		(SUB FOR AT131693)
10	4122729	STRAP	1		(SUB FOR AT131696)
11	12M7070	LOCK WASHER	14		20 MM
12	19M7950	CAP SCREW	14		M20 X 45
19	4224631	BRACKET	1		(SUB FOR TH111685)
20	J901425	CAP SCREW	1		(SUB FOR TH104071)
21	12H317	LOCK WASHER	1		9/16"
22	4336570	LAMP	1		
22A	4326801	LENS	1		(SUB FOR AT165111)
22B	4326802	FRAME	1		(SUB FOR AT165112)
22C	AT135758	BULB	1		
22D	4326803	GASKET	1		(SUB FOR AT165113)
22E	4307026	WASHER	1		(SUB FOR T144361)
22F	4307027	SCREW	4		(SUB FOR T144362)
22G	24M7085	WASHER	1		15 X 28 X 2.500 MM
22H	12H317	LOCK WASHER	1		9/16"
22I	J952014	NUT	1		(SUB FOR TH103791)
23	21M7288	SCREW	1		M6 X 10
24	12M7006	LOCK WASHER	1		6 MM
26	4299948	WIRING HARNESS	1		(SUB FOR TH4299948)
27	4271788	WIRING HARNESS	1		(SUB FOR AT202117)

MASS EXCAVATING BOOM (6.6 M)

TP66871 -UN-12OCT99

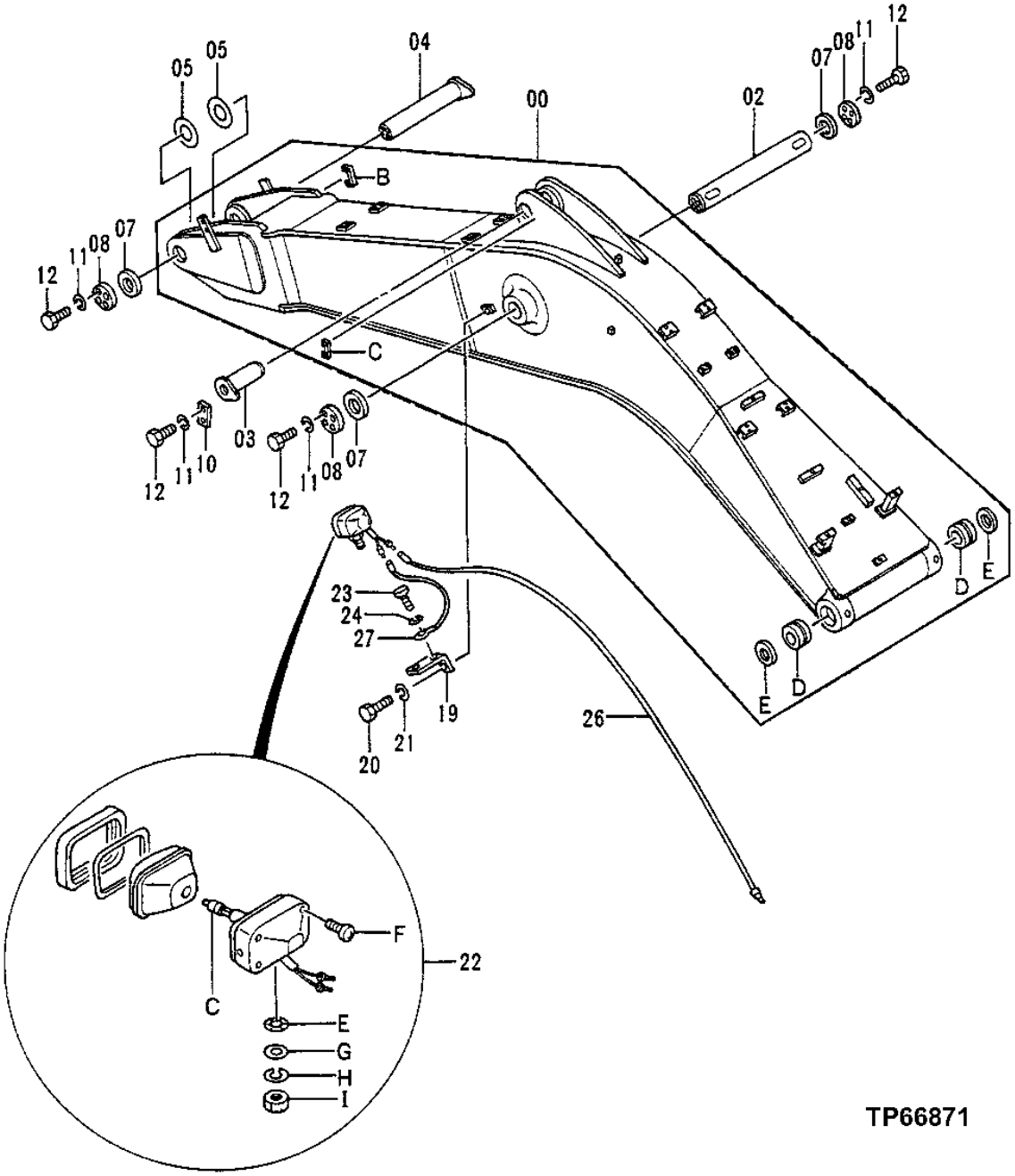

MASS EXCAVATING BOOM (6.6 M)

KEY	PART NO.	PART NAME	QTY	SERIAL NO.	REMARKS
0	9131211	EXCAVATOR BOOM	1		(SUB FOR TH9131211)
0B	4297642	STOP	1		(SUB FOR TH4297642)
0C	4297643	STOP	1		(SUB FOR TH4297643)
0D	3060579	BUSHING	2		(SUB FOR TH3060579)
0E	4251753	SEAL	2		(SUB FOR TH4251753)
2	3060601	PIN FASTENER	1		(SUB FOR TH3060601)
3	8053519	PIN FASTENER	1		(SUB FOR TH8053519)
4	AT318069	PIN FASTENER	1		(SUB FOR 8053520, TH8053520)
5	4296540	SHIM	2		(SUB FOR TH4296540) (1.0)
7	4040932	WASHER	3		(SUB FOR TH4040932)
8	4117700	WASHER	3		(SUB FOR AT131693)
10	4122729	STRAP	1		(SUB FOR AT131696)
11	12M7070	LOCK WASHER	14		20 MM
12	19M7950	CAP SCREW	14		M20 X 45
19	4224631	BRACKET	1		(SUB FOR TH111685)
20	J901425	CAP SCREW	1		(SUB FOR TH104071)
21	12H317	LOCK WASHER	1		9/16"
22	4336570	LAMP	1		
22C	AT135758	BULB	1		
22E	4307026	WASHER	1		(SUB FOR T144361)
22F	4307027	SCREW	1		(SUB FOR T144362)
22G	24M7085	WASHER	1		15 X 28 X 2.500 MM
22H	12H317	LOCK WASHER	1		9/16"
22I	J952014	NUT	1		(SUB FOR TH103791)
23	21M7288	SCREW	1		M6 X 10
24	12M7006	LOCK WASHER	1		6 MM
26	4299948	WIRING HARNESS	1		(SUB FOR TH4299948)
27	4271788	WIRING HARNESS	1		(SUB FOR AT202117)

CONTROL VALVE

T148945 -UN-11DEC01

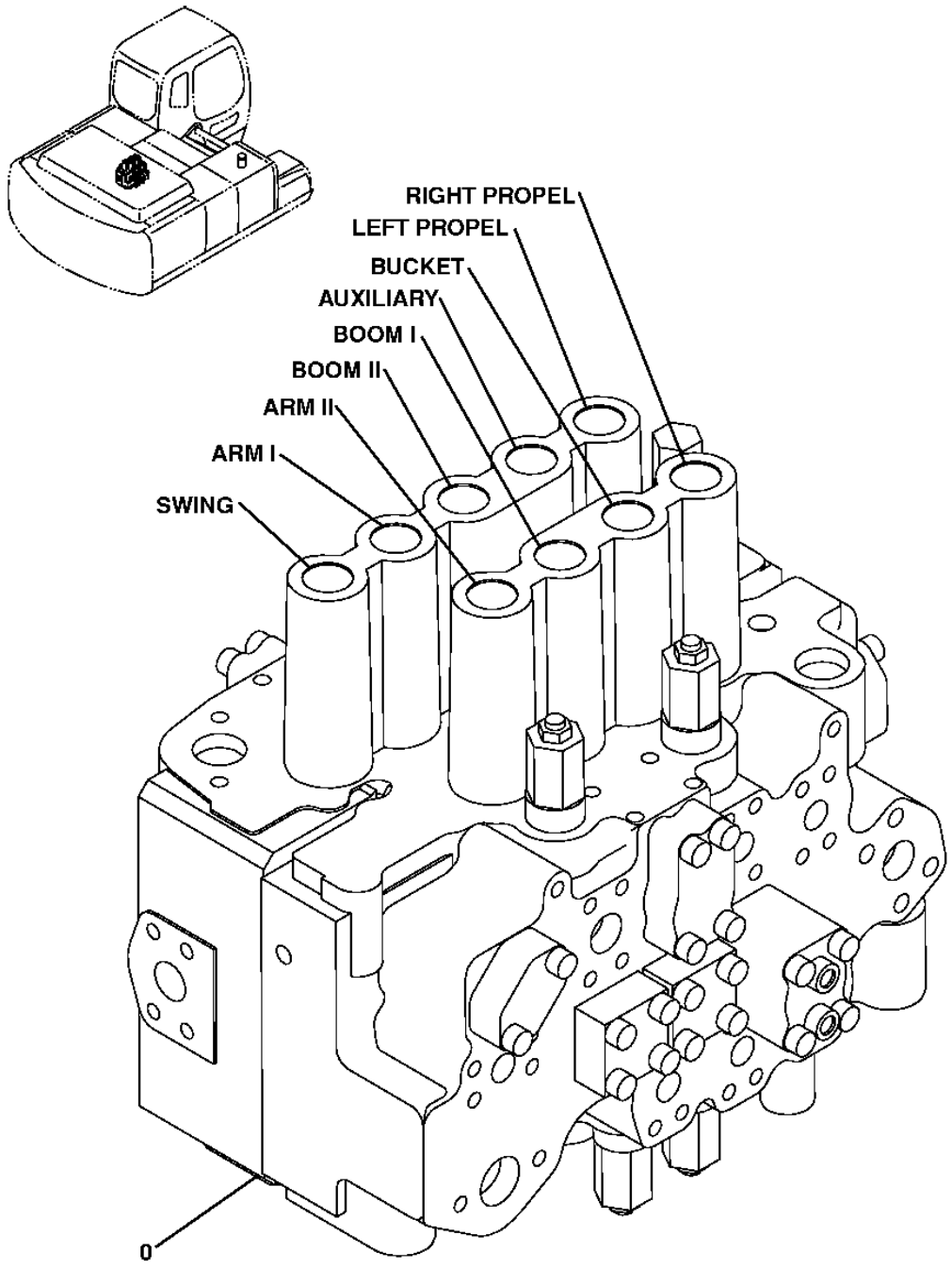

T148945

MEMORANDA

CONTROL VALVE SUPPORT

T143257 -UN-28JUN01

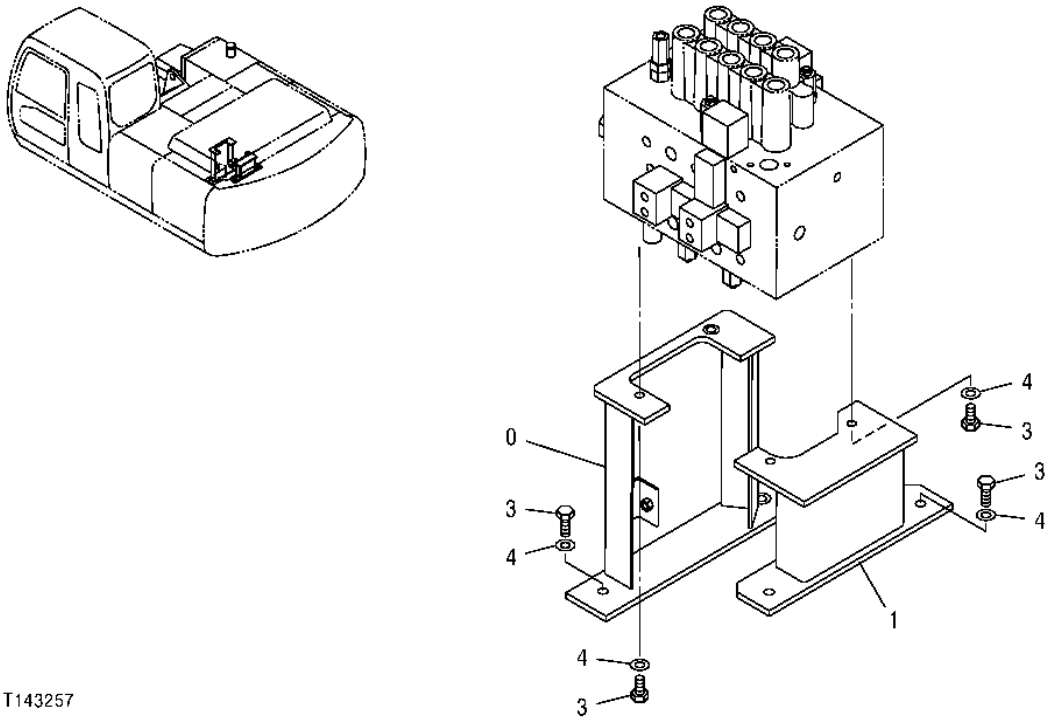

T143257

CONTROL VALVE SUPPORT

KEY	PART NO.	PART NAME	QTY	SERIAL NO.	REMARKS
0	8078454	BRACKET	1		(SUB FOR TH8078454)
1	8074128	BRACKET	1		(SUB FOR TH8074128)
3	19M7488	CAP SCREW	8		M16 X 40
4	12H294	LOCK WASHER	8		5/8"

**ELECTRIC FOOT SWITCH
FOR AUXILIARY CONTROL (ONE SOLENOID)**

TP44347 -UN-01JAN94

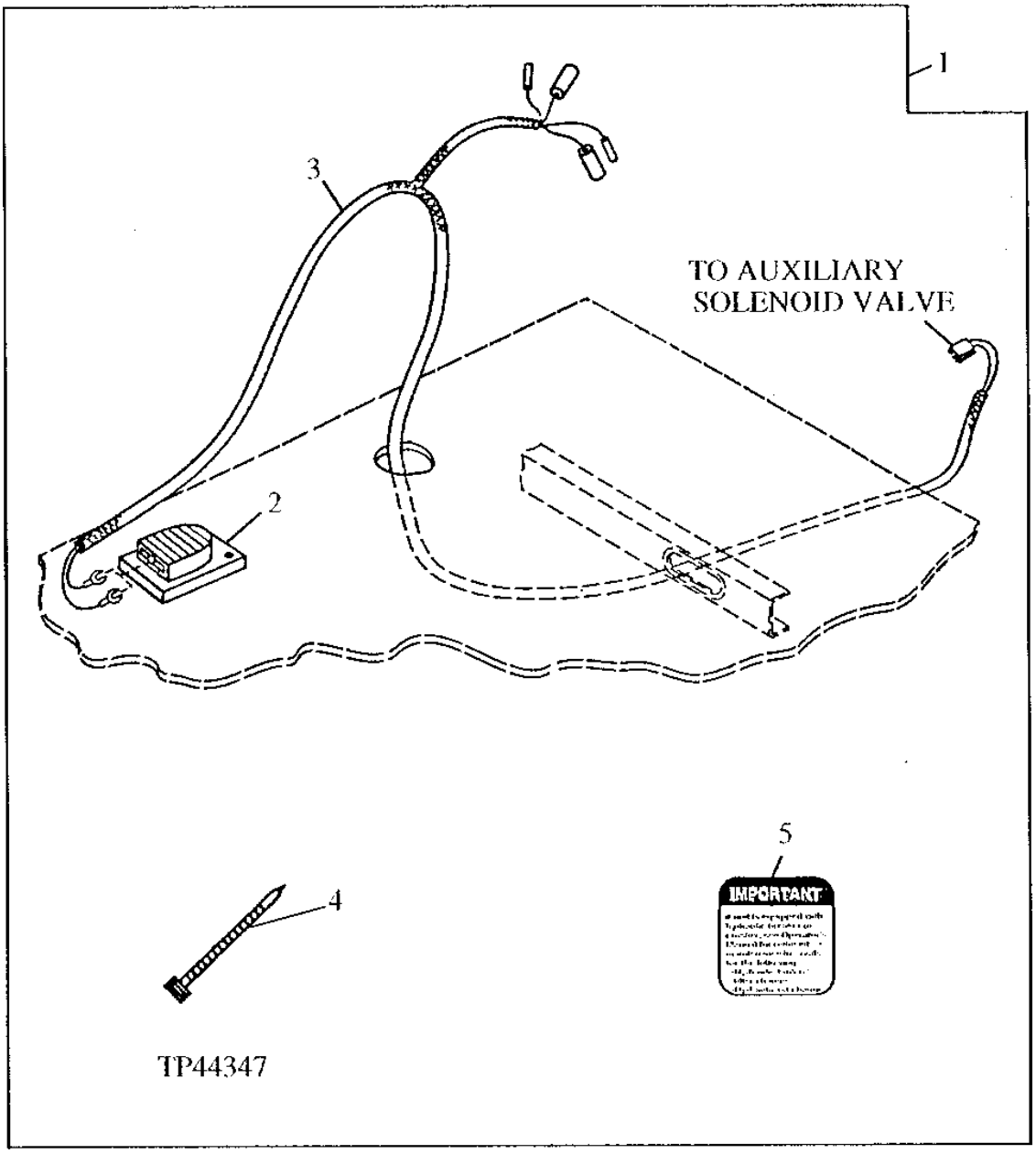

ELECTRIC FOOT SWITCH
FOR AUXILIARY CONTROL (ONE SOLENOID)

KEY	PART NO.	PART NAME	QTY	SERIAL NO.	REMARKS
1	**AT196587**	**SWITCH**	**1**		**WHOLEGOODS (ELECTRIC FOOT SWITCH FOR AUXILIARY VALVE)**
2	AT82210	SWITCH	1		(ELECTRIC FOOT CONTROL)
3	AT196588	WIRING HARNESS	1		
4	R44302	TIE BAND	2		(USE AS REQUIRED)
5	T149434	LABEL	1		(IMPORTANT - AUXILIARY ELECTRIC CONTROL)

ELECTRIC SOLENOID VALVE KIT
(1 WAY/2 WAY)
(WITHOUT PRESSURE SWITCH)

T200912 -UN-14JUN04

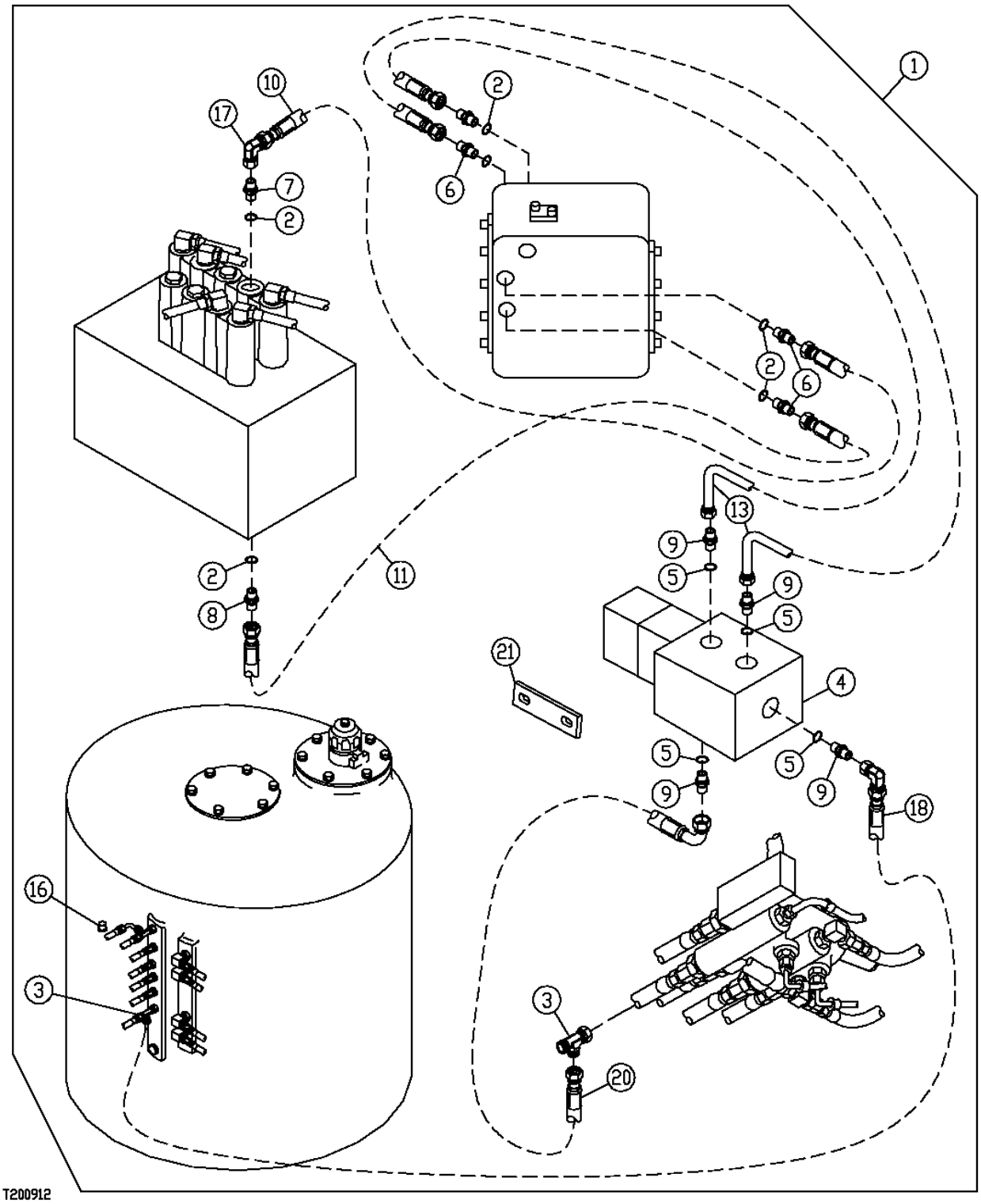

ELECTRIC SOLENOID VALVE KIT
(1 WAY/2 WAY)
(WITHOUT PRESSURE SWITCH)

KEY	PART NO.	PART NAME	QTY	SERIAL NO.	REMARKS
1	**AT195713**	**KIT**	**1**		**(WHOLEGOODS) ELECTRIC SOLENOID VALVE (INCLUDES H102543 FITTING)**
2	CH11570	O-RING	6		13.800 X 2.400 MM (0.543" X 0.094")
3	AT36921	TEE FITTING	2		
4	AT180585	SOLENOID	1		
5	R26448	O-RING	4		11.887 X 1.981 MM (0.468" X 5/64")
6	4200466	ADAPTER	4		(SUB FOR TH108320)
7	AT130053	ADAPTER	1		
8	AT131445	ADAPTER	1		
9	R27212	FITTING	4		
10	AT108783	HYDRAULIC HOSE - FABRICATE	1		9/16" X 567 MM (22-1/4") X 9/16"
11	AR90081	HYDRAULIC HOSE	1		9/16" X 1 270 MM (50") X 9/16"
12	24M7054	WASHER	4		6.400 X 12 X 1.600 MM, (NOT ILLUSTRATED)
13	AT68901	HYDRAULIC HOSE - FABRICATE	2		9/16" X 965 MM (38") X 9/16"
14	14M7272	NUT	2		M6, (NOT ILLUSTRATED)
15	19M7529	CAP SCREW	2		M6 X 55, (NOT ILLUSTRATED)
16	R31147	FITTING	1		
17	AE24616	ELBOW FITTING	1		(NOT ILLUSTRATED)
	E42442	FITTING	1		(FOR USE ON 450CLC - NOT INCLUDED IN KIT) MUST BE ORDERED SEPARATELY
18	AT71732	HYDRAULIC HOSE - FABRICATE	1		9/16" X 1 422 MM (56") X 9/16"
20	AT78124	HYDRAULIC HOSE - FABRICATE	1		9/16" X 3 531 MM (139") X 9/16"

**DUAL CONTROL HANDLE WITH WIRING
FOR AUXILIARY CONTROLS (2 SOLENOIDS)**

T144288 -UN-06AUG01

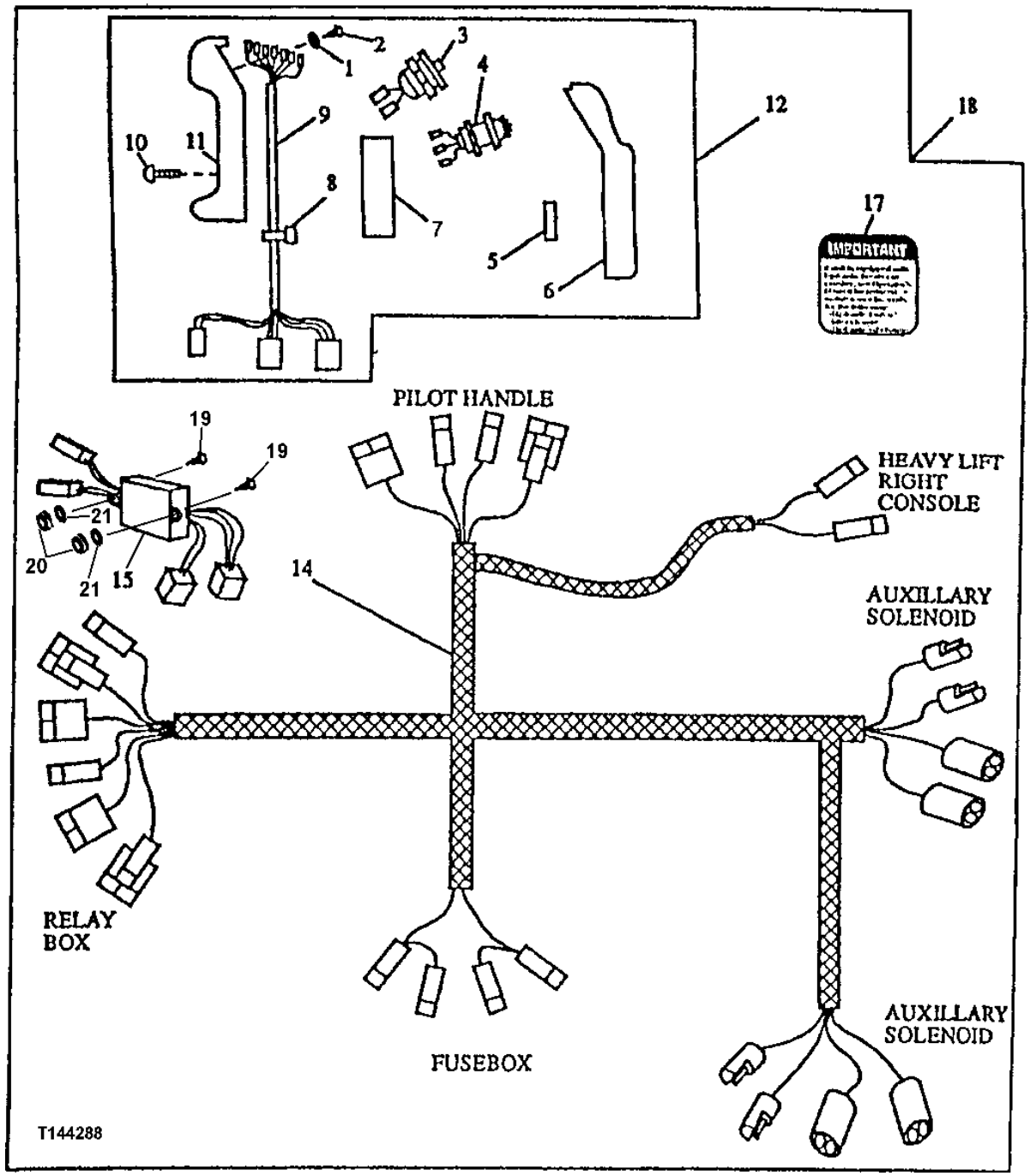

DUAL CONTROL HANDLE WITH WIRING
FOR AUXILIARY CONTROLS (2 SOLENOIDS)

KEY	PART NO.	PART NAME	QTY	SERIAL NO.	REMARKS
1	12H321	WASHER	7		0.138"
2	21H1308	SCREW	7		0.138" X 3/8"
3	AT139383	TOGGLE/ROCKER SWITCH	1		PUSH BUTTON (MOMENTARY)
4	AT139382	TOGGLE/ROCKER SWITCH	2		
5	R71799	NEEDLE ROLLER	2		
6	T114699	HANDLE	1		
7	T114698	SUPPORT	1		
8	R44302	TIE BAND	2		
9	AT195787	WIRING HARNESS	1		
10	T80394	SCREW	6		
11	AT115448	HANDLE	1		
12	AT195786	CONTROL LEVER	1		PILOT CONTROL
14	AT195788	WIRING HARNESS	1		SOLENOID VALVE
15	AT141562	RELAY MODULE	1		
17	T149434	LABEL	1		(IMPORTANT) (BETWEEN ASHTRAY AND OPERATOR'S CAUTION DECAL ON RIGHT SIDE OF CAB)
18	**AT195784**	**KIT**	**1**		**(CONTROL HANDLE WITH SWITCHES) WHOLEGOODS**
19	21M7246	SCREW	2		M6 X 16
20	14M7272	NUT	2		M6
21	24M7293	WASHER	2		6.500 X 13 X 1.600 MM

CONTROL PATTERN SELECTOR KIT

T191711 -UN-04JUN03

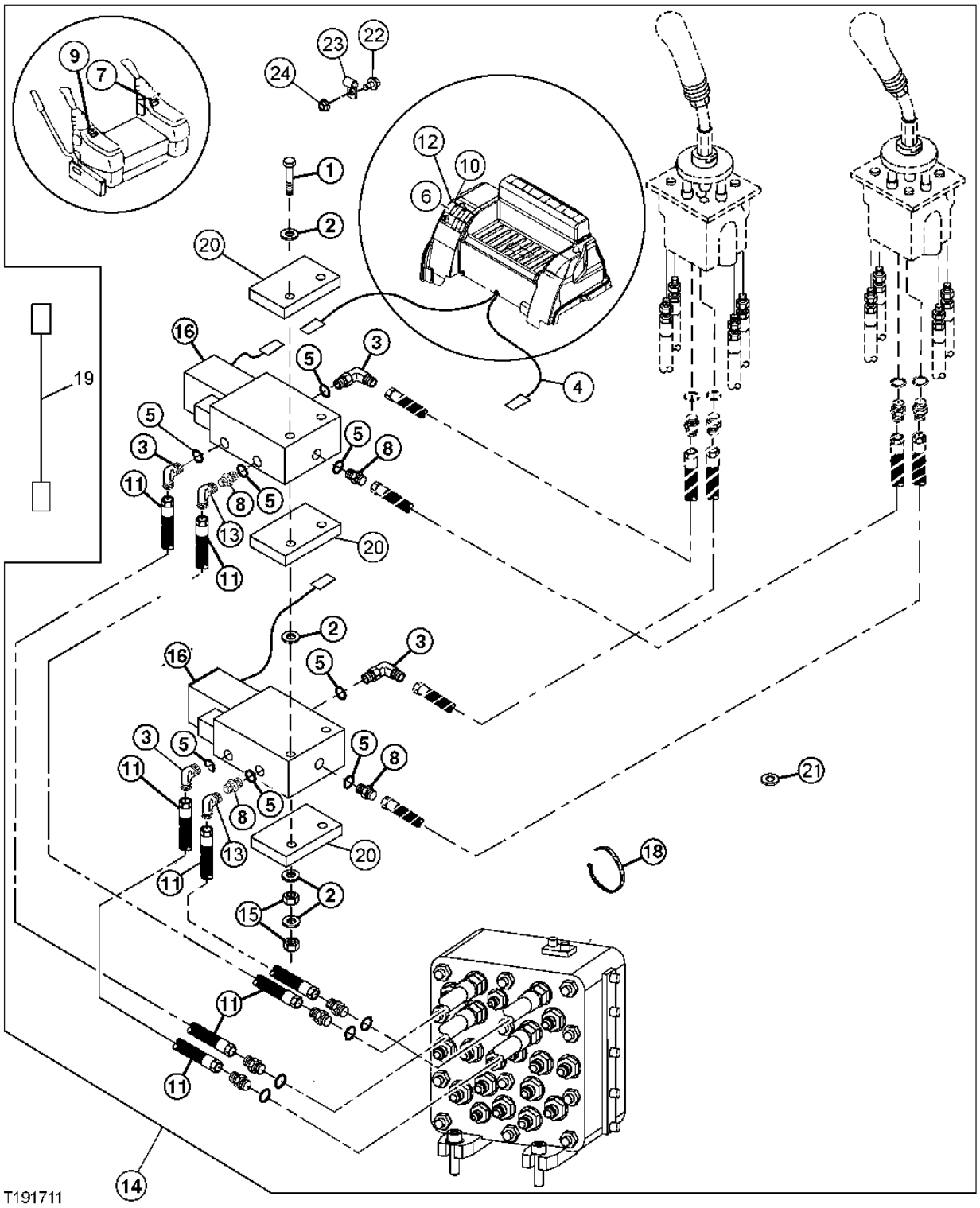

THIS PARTS LISTING IS CONTINUED

CONTROL PATTERN SELECTOR KIT

KEY	PART NO.	PART NAME	QTY	SERIAL NO.	REMARKS
1	19M8332	CAP SCREW	2		M6 X 90
2	24M7100	WASHER	10		6.600 X 22 X 2 MM
3	AT35121	ELBOW FITTING	4		37 DEG FLARE O-RING
4	AT307710	WIRING HARNESS	1		(SUB FOR AT190535)
5	R26448	O-RING	8		
6	AT83721	TOGGLE/ROCKER SWITCH	1		LOCKING
7	T159843	LABEL	4		CONTROL RIGHT
8	R27212	FITTING	4		
9	T159844	LABEL	1		CONTROL LEFT
10	T184858	LABEL	1		CONTROL PATTERN
11	AT71082	HYDRAULIC HOSE - FABRICATE	4		
12	37H43	SCREW	2		DRIVE SELF TAPPING
13	AE24616	ELBOW FITTING	2		
14	.....	KIT	1		(AT307709 NO LONGER AVAILABLE) (WHOLEGOODS) CONTROL PATTERN SELECTOR KIT, (SUB FOR AT191397)
15	14M7272	NUT	4		M6
16	AT306723	ELEC.PROPORTIONAL VALVE	2		(SUB FOR AT116486 AND AT140041) PIN DISCONNECT
	.....	ELECTRICAL COIL	1		(AT140041 NO LONGER AVAILABLE)
18	R44302	TIE BAND	AR		
20	T202379	BRACKET	3		
21	T63817	GROMMET	1		
22	19M7863	SCREW	3		
23	T22645	CLIP	4		
24	14M7272	NUT	3		
25	AR94101	DIODE	1		(NOT ILLUSTRATED)

MECHANICAL PATTERN CHANGER KIT

T197442 -UN-30JAN04

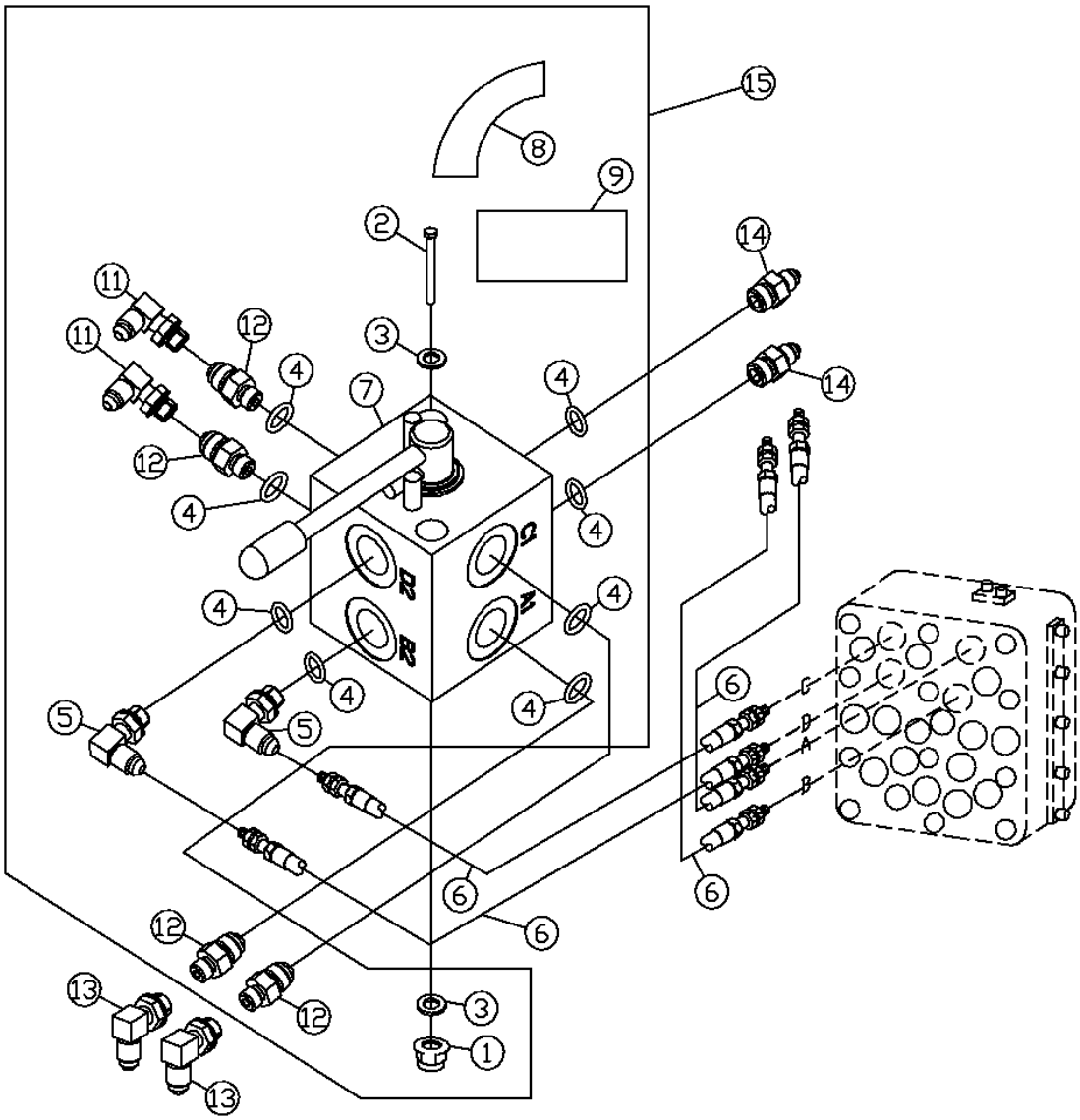

T197442

MECHANICAL PATTERN CHANGER KIT

KEY	PART NO.	PART NAME	QTY	SERIAL NO.	REMARKS
1	14M7396	LOCK NUT	2		M8
2	19M8504	CAP SCREW	2		M8 X 80
3	24M7095	WASHER	4		8.400 X 15 X 1.600 MM
4	R28782	O-RING	8		
5	AH63565	ELBOW FITTING	4		
6	AT307627	HYDRAULIC HOSE - FABRICATE	4		
7	AT306737	MANUAL HYDRAULIC VALVE	1		
8	T205175	LABEL	1		
9	T201519	LABEL	1		
11	AE24616	ELBOW FITTING	2		
12	T61120	ADAPTER	4		
13	AE24616	ELBOW FITTING	2		
14	H75414	ADAPTER	2		
15	**AT306757**	**KIT**	**1**		**(WHOLEGOODS) (ALSO ORDER (4) AT307627, (2) AE24616, (2) H75414)**

SOLENOID CONTROL AND FLOW CONTROL VALVE KIT (1-WAY)

T189701 -UN-21APR03

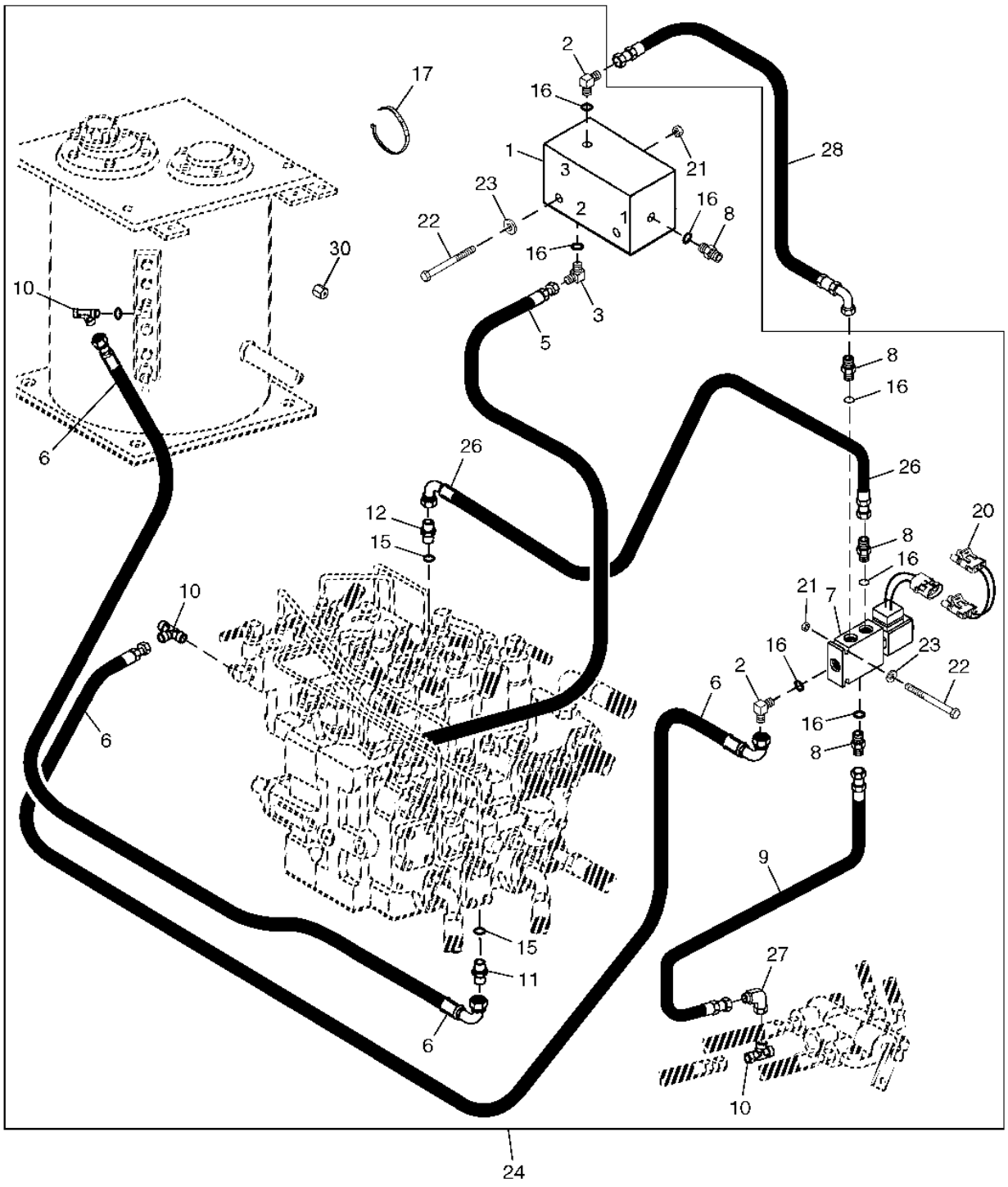

T189701

SOLENOID CONTROL AND FLOW CONTROL VALVE KIT (1-WAY)

KEY	PART NO.	PART NAME	QTY	SERIAL NO.	REMARKS
1	AT186623	HYDRAULIC PRESSURE VALVE	1		(LOAD LOWERING BOOM HOLDING VALVE)
2	AT35121	ELBOW FITTING	4		
3	AH75160	ELBOW FITTING	2		
5	AE42718	HYDRAULIC HOSE	1		
6	AT71732	HYDRAULIC HOSE - FABRICATE	4		
7	AT306723	ELEC.PROPORTIONAL VALVE	1		SOLENOID, (SUB FOR AT116486 AND AT140041)
	.....	ELECTRICAL COIL	1		(AT140041 NO LONGER AVAILABLE)
8	R27212	FITTING	4		
9	AT130684	HYDRAULIC HOSE - FABRICATE	1		
10	AT36921	TEE FITTING	3		
11	4200466	ADAPTER	1		(SUB FOR TH108320)
12	AT130053	ADAPTER	1		
15	CH11570	O-RING	5		13.800 X 2.400 MM (0.543" X 0.094")
16	R26448	O-RING	7		11.887 X 1.981 MM (0.468" X 5/64")
17	R44302	TIE BAND	4		
20	AT191297	WIRING HARNESS	1		
21	14M7272	NUT	4		M6
22	19M7529	CAP SCREW	4		M6 X 55
23	24M7139	WASHER	4		6.400 X 18 X 1.600 MM
24	**AT186622**	**SPOOL VALVE**	**1**		**(WHOLEGOODS) (COMPLETE KIT) (ALSO ORDER T188662 INSTRUCTIONS)**
25	R28782	O-RING	1		8.915 X 1.829 MM (0.351" X 0.072") (NOT ILLUSTRATED)
26	AT71082	HYDRAULIC HOSE - FABRICATE	1		
27	AE24616	ELBOW FITTING	1		
28	AT69806	HYDRAULIC HOSE - FABRICATE	1		
29	E42442	FITTING	2		(NOT ILLUSTRATED)
30	R31147	FITTING	1		

PUMP DEVICE

TP66685 -UN-29SEP99

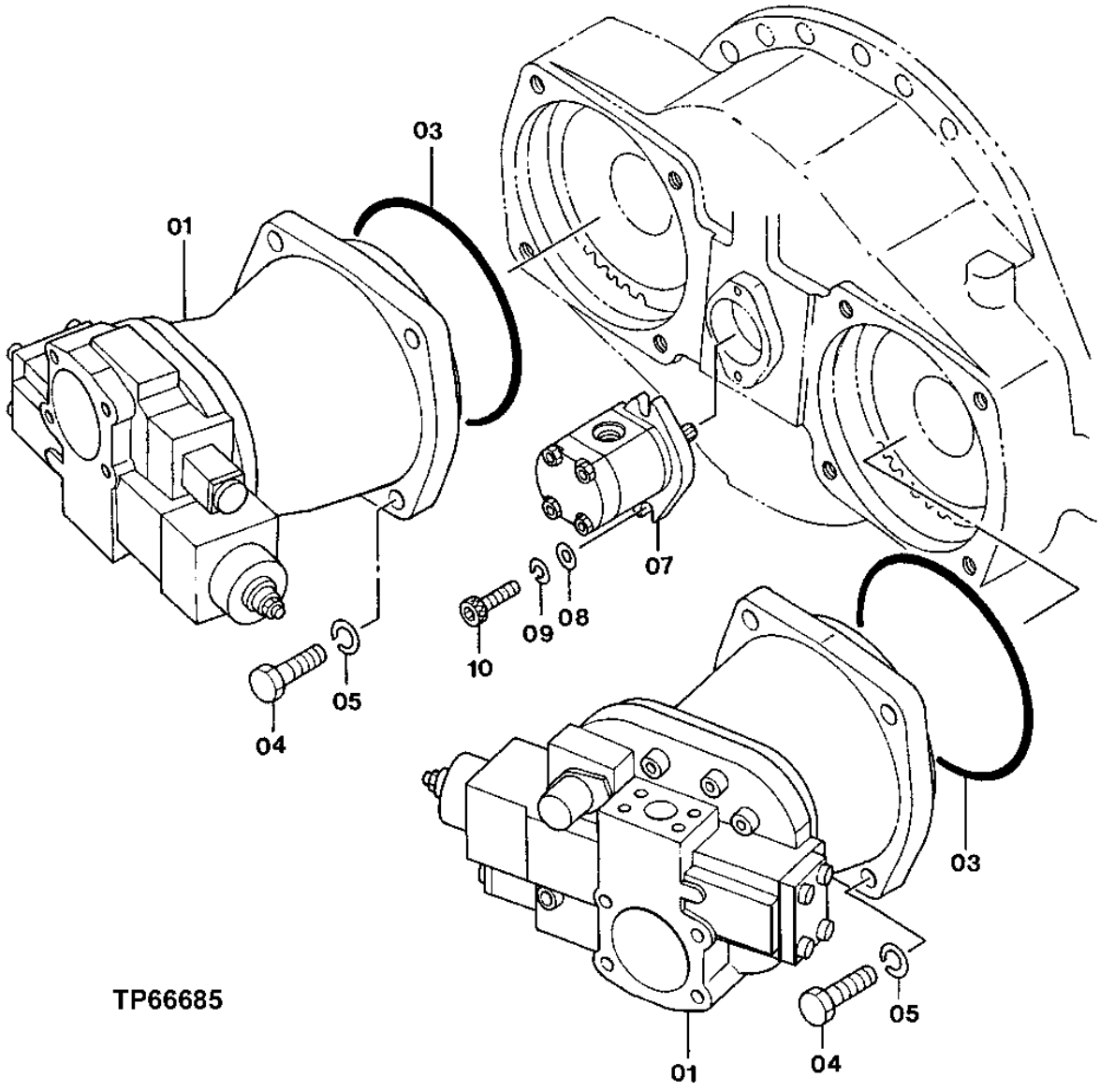

PUMP DEVICE

KEY	PART NO.	PART NAME	QTY	SERIAL NO.	REMARKS
1	9197075	HYDRAULIC PUMP	2		
3	4323631	O-RING	2		
4	.....	SCREW	8		(AT172242 NOT AVAILABLE FOR SERVICE)
5	12M7070	LOCK WASHER	8		20 MM
7	9217993	PUMP	1		(SUB FOR TH109457 AND 4181700)
8	24M7028	WASHER	2		10.500 X 20 X 2 MM
9	12M7135	LOCK WASHER	2	-951019	10 MM, (SUB FOR 12M6791)
10	M341032	SCREW	2	-951019	(SUB FOR TH101301)
	19M8337	SCREW	2	951020-	

HYDRAULIC GEAR PUMP DEVICE

T149427 -UN-23JAN02

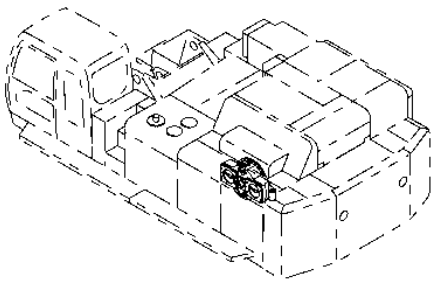

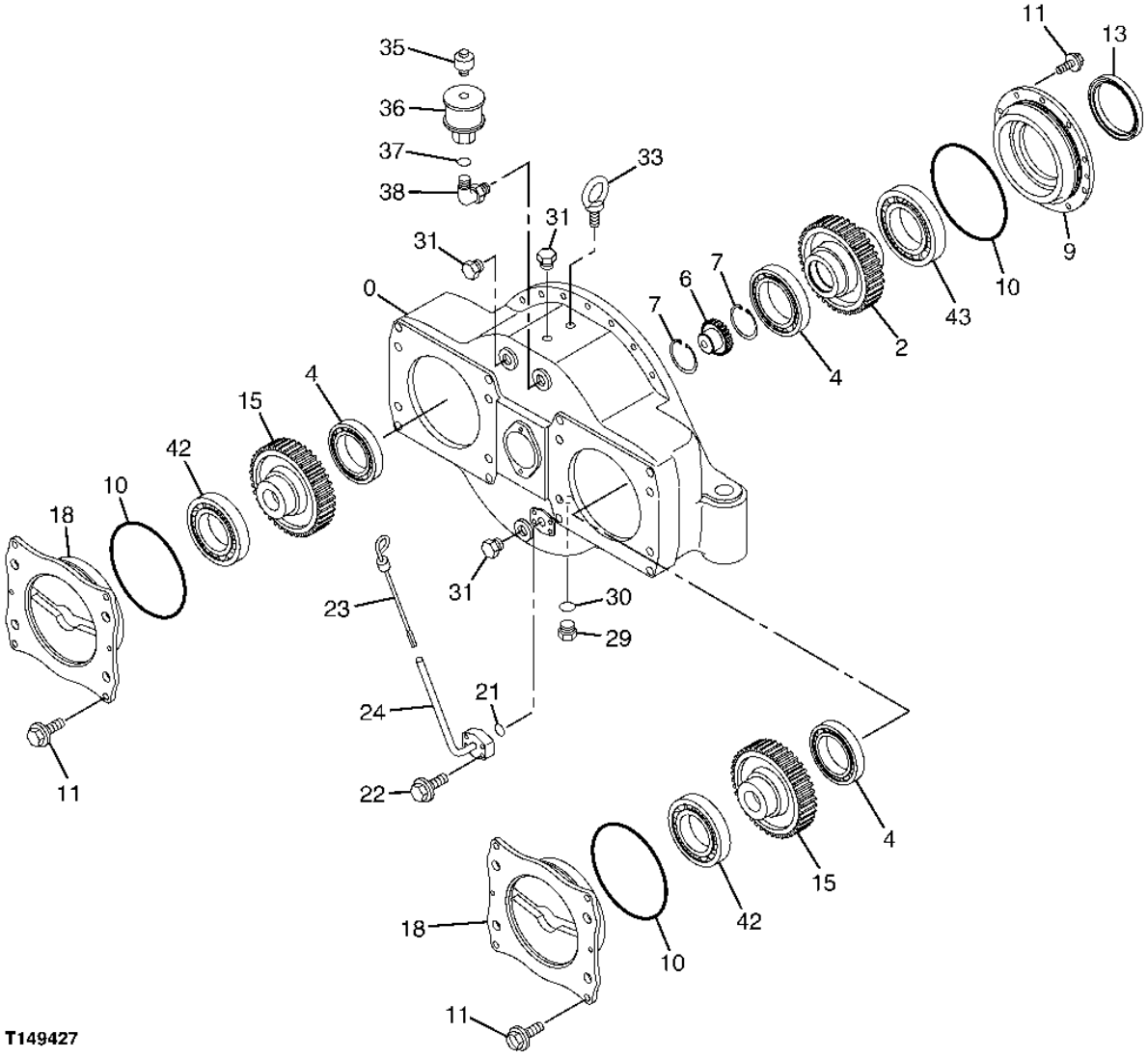

HYDRAULIC GEAR PUMP DEVICE

KEY	PART NO.	PART NAME	QTY	SERIAL NO.	REMARKS
0	0003954	HOUSING	1		
2	2045761	GEAR	1		
4	4160773	BALL BEARING	3		(SUB FOR TH4160773)
6	3040803	COUPLING	1		(SUB FOR TH3040803)
7	40M7044	SNAP RING	2		
9	2045752	COVER	1		
10	4218005	O-RING	3		(SUB FOR TH4218005)
11	19M7403	CAP SCREW	18		M12 X 35
	12H301	LOCK WASHER	18		1/2"
13	4083852	SEAL	1		(SUB FOR TH4083852)
15	2045762	GEAR	2		
18	2045749	COVER	2		
21	A811030	O-RING	1		(SUB FOR TH101300)
22	19M7358	CAP SCREW	4		M10 X 40
	12M7066	LOCK WASHER	4		10 MM
	24M7096	WASHER	4		10.500 X 18 X 1.600 MM
23	4634350	DIPSTICK	1		(SUB FOR 4257236)
24	8087419	DIPSTICK TUBE	1		
29	4074727	DRAIN PLUG	1		(SUB FOR TH100027)
30	R77401	O-RING	1		
31	4174542	DRAIN PLUG	3		(SUB FOR TH110478)
31A	AT318035	O-RING	1		(SUB FOR 4506424, TH100055)
33	4083751	EYEBOLT	1		(SUB FOR TH4083751)
35	4298488	BREATHER	1	-971002	
	4351039	BREATHER	1	971003-971005	
	4298488	BREATHER	1	971006-	
36	8087727	PIPE	1	-971002	
	8089970	PIPE	1	971003-971005	
	.....	PIPE	1	971006-971019	(8087727 NO LONGER AVAILABLE) (SUB 8092124)
	8092124	PIPE	1	971020-	
37	T76938	O-RING	1		
38	A853368	ELBOW FITTING	1		(SUB FOR THA853368)
38A	AT318035	O-RING	1		(SUB FOR 4506424, TH100055)
42	4472548	BALL BEARING	2		
43	4472549	BALL BEARING	1		

PUMP DEVICE SUPPORT

T149428 -UN-23JAN02

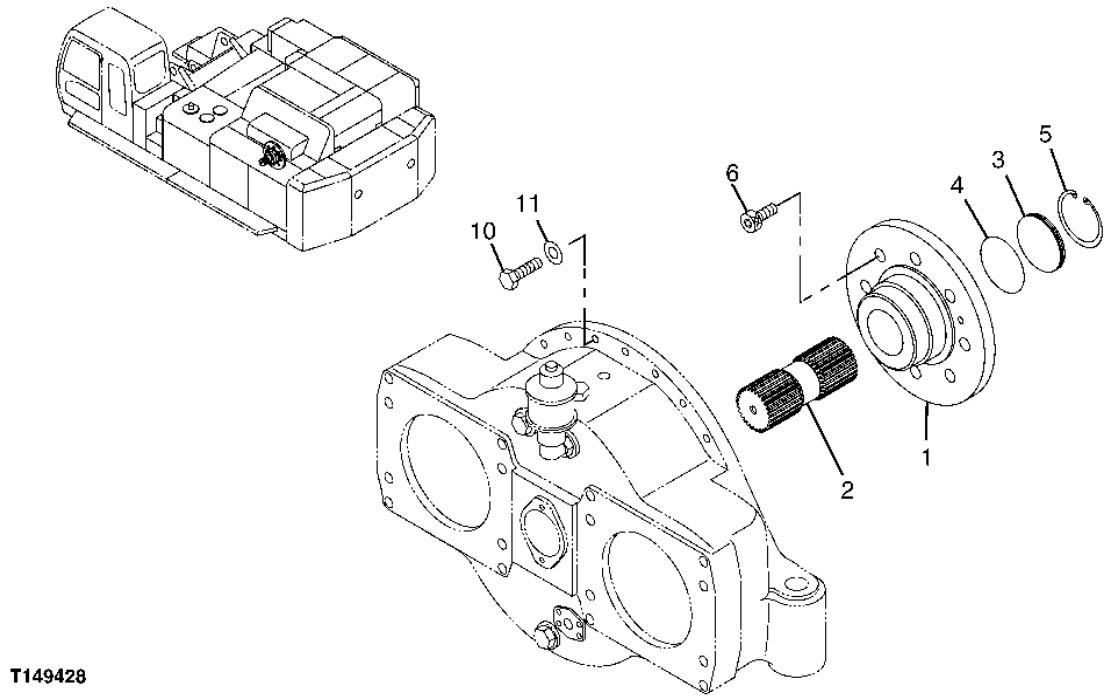

T149428

PUMP DEVICE SUPPORT

KEY	PART NO.	PART NAME	QTY	SERIAL NO.	REMARKS
1	2045798	COUPLING	1		
2	3090707	SHAFT	1		
3	4311619	PLUG	1		(SUB FOR AT201766)
4	4153544	O-RING	1		(SUB FOR AT202091)
5	40M7117	SNAP RING	1		
6	19M7597	CAP SCREW	8		M20 X 50
10	J921250	BOLT	14		
11	24M7345	WASHER	14		13.500 X 24 X 2.500 MM

PISTON PUMP

T149608 -UN-05APR02

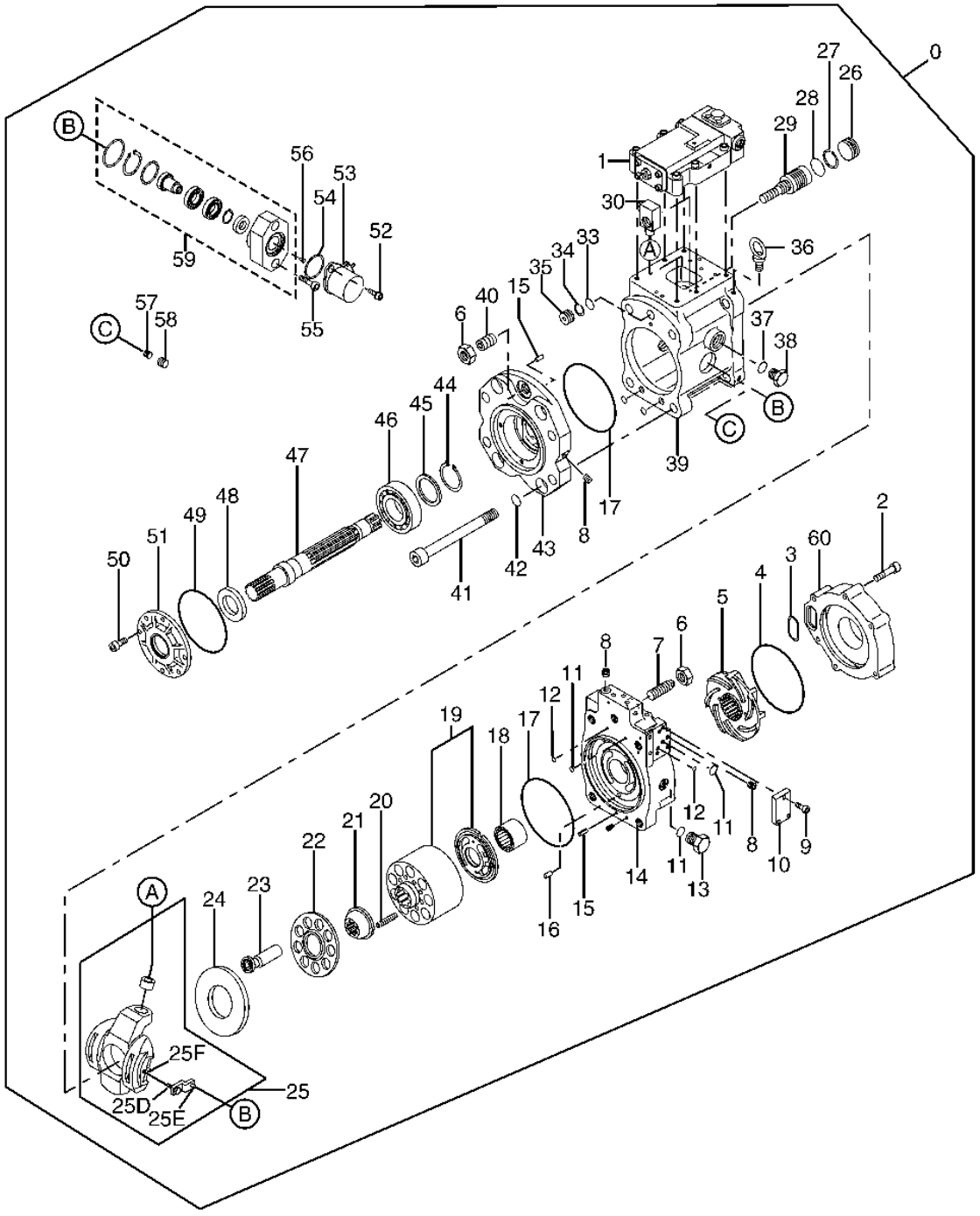

T149608

PISTON PUMP

KEY	PART NO.	PART NAME	QTY	SERIAL NO.	REMARKS
0	9197075	HYDRAULIC PUMP	1		
1	4473273	REGULATOR	1		
2	19M8441	SCREW	6		(SUB FOR 0111530)
3	4292387	O-RING	1		(SUB FOR 0443413)
4	0682323	O-RING	1		
5	0682304	IMPELLER	1		
6	0451038	NUT	2		(SUB FOR AT201632)
7	0682328	SET SCREW	1		(SUB FOR TH0682328)
8	15H560	PIPE PLUG	27		
9	19M8627	SCREW	3		M6 X 20
10	0682315	COVER	1		
11	4297379	O-RING	4		(SUB FOR TH4297379)
12	4366517	O-RING	10		(SUB FOR TH0443801)
13	0236014	FITTING PLUG	2		(SUB FOR TH102650)
14	0682314	COVER	1		
15	4144353	SPRING PIN	2		(SUB FOR TH4144353)
16	0313404	PIN	1		(SUB FOR AT201970)
17	4S00117	O-RING	2		(SUB FOR TH0682322)
18	0800701	NEEDLE BEARING	1		(SUB FOR TH0682303)
19	0703002	CYLINDER	1		(SUB FOR TH0703002)
20	0682307	SPRING	9		(SUB FOR TH0682307)
21	0828401	BUSHING	1		
22	0718002	RETAINER	1		(SUB FOR TH0718002)
23	0718001	PISTON	1		(SUB FOR TH0718001)
24	0682309	PLATE	1		(SUB FOR TH0682309)
25	0719701	SWASH PLATE	1		(SUB FOR TH0719701)
25D	0703004	CAP SCREW	1		(SUB FOR TH0703004)
25E	.....	PIN	1		(0195147 NO LONGER AVAILABLE) (SUB FOR TH104576)
25F	0703005	DOWEL PIN	1		(SUB FOR TH0703005)
26	0682319	STOP	1		(SUB FOR TH0682319)
27	4S00228	RING	1		(SUB FOR TH0682327)
28	4292386	O-RING	1		(SUB FOR TH4292386)
29	0800707	PISTON	1		
30	0800706	PIN FASTENER	1		
33	0682324	O-RING	1		(SUB FOR TH0682324)
34	4S00238	RING	1		(SUB FOR TH0682326)
35	0682320	STOP	1		(SUB FOR TH0682320)
36	0134458	EYEBOLT	2		(SUB FOR AT201963)
37	4297381	O-RING	2		(SUB FOR TH0443408)
38	0195165	PLUG	2		(SUB FOR TH102648)
39	0828402	HOUSING	1		
40	0339847	SET SCREW	1		(SUB FOR TH0339847)
41	J782225	BOLT	4		(SUB FOR TH0682316)
42	0737002	WASHER	4		
43	0815301	SUPPORT	1		
44	40M7066	SNAP RING	1		
45	0339809	SPACER	1		(SUB FOR TH0339809)
46	0682302	CYLINDRICAL ROLLER BEARING	1		
47	0682301	SHAFT	1		
48	0682325	SEAL	1		(SUB FOR TH0682325)
49	4S00121	O-RING	1		(SUB FOR TH0682321)
50	19M8446	SCREW	4		M8 X 20
51	0682311	COVER	1		(SUB FOR TH0682311)
52	0237902	BOLT	2		(SUB FOR AT201967)
	0451204	WASHER	2		(SUB FOR AT201641)
53	4444902	SENSOR	1		(SUB FOR AT154533, 9102385)
54	4274371	O-RING	1		(SUB FOR AT154322)
55	0134701	BOLT	2		(SUB FOR TH0134701)
56	4255077	SPRING	1		(SUB FOR AT154224)
57	0451027	SCREW	2		(SUB FOR AT201621)
58	0451028	FITTING PLUG	2		(SUB FOR AT201622)
59	4366339	SENSOR	1		(SUB FOR AT174500)
60	0682312	COVER	1		

REGULATOR VALVE

T149609 -UN-05APR02

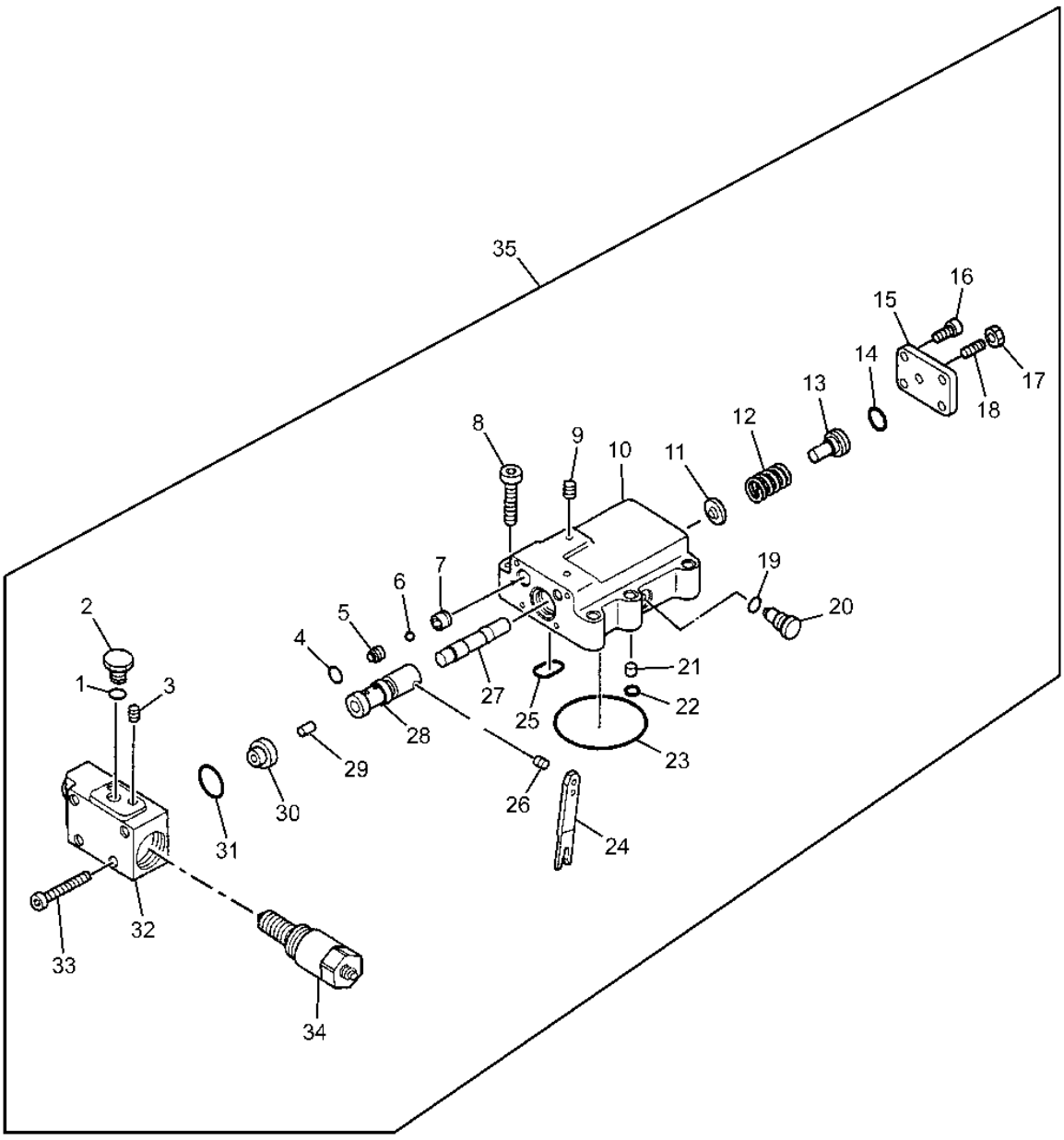

T149609

REGULATOR VALVE

KEY	PART NO.	PART NAME	QTY	ENGINE SERIAL NO.	REMARKS
1	4297379	O-RING	1		(SUB FOR TH4297379)
2	0236014	FITTING PLUG	1		(SUB FOR TH102650)
3	15H560	PIPE PLUG	3		1/16"
4	TH0703102	O-RING	2		
5	0451102	SEAT	2		(SUB FOR AT201636)
6	0451104	BALL	2		(SUB FOR AT201638)
7	0451103	STOP	2		(SUB FOR AT201637)
8	19M8711	SCREW	6		(SUB FOR 0135904)
9	15H560	PIPE PLUG	3		1/16"
10	.....	HOUSING	1		(NOT AVAILABLE SEPARATELY, ORDER 4473273)
11	.....	VALVE SEAT	1		(NOT AVAILABLE SEPARATELY, ORDER 4473273)
12	.....	SPRING	1		(NOT AVAILABLE SEPARATELY, ORDER 4473273)
13	.....	SPRING PIN	1		(NOT AVAILABLE SEPARATELY, ORDER 4473273)
14	4366521	O-RING	1		(SUB FOR TH0443803)
15	.....	COVER	1		
16	0237902	BOLT	4		(SUB FOR AT201967)
17	14M7147	NUT	1		M8
18	22M7148	SET SCREW	1		M8 X 16, (SUB FOR 22M7070)
19	4297379	O-RING	1		(SUB FOR TH4297379)
20	.....	FITTING PLUG	1		(NOT AVAILABLE SEPARATELY, ORDER 4473273)
21	.....	PIN	1		(NOT AVAILABLE SEPARATELY, ORDER 4473273)
22	4366517	O-RING	5		(SUB FOR TH0443801)
23	0682502	O-RING	1		(SUB FOR TH0682502)
24	.....	LEVER	1		(NOT AVAILABLE SEPARATELY, ORDER 4473273)
25	4366521	O-RING	1		(SUB FOR TH0443803)
26	.....	PIN	1		(NOT AVAILABLE SEPARATELY, ORDER 4473273)
27	.....	SPOOL	1		(NOT AVAILABLE SEPARATELY, ORDER 4473273)
28	.....	SLEEVE	1		(NOT AVAILABLE SEPARATELY, ORDER 4473273)
29	.....	PIN	1		(NOT AVAILABLE SEPARATELY, ORDER 4473273)
30	.....	SLEEVE	1		(NOT AVAILABLE SEPARATELY, ORDER 4473273)
31	TH0703101	O-RING	1		
32	0451101	CASE	1		(SUB FOR AT201635)
33	19M8541	SCREW	4		M6 X 50
34	4368974	FLOW CONTROL HYD. VALVE	1		
35	4473273	REGULATOR	1		

REDUCTION VALVE

TP68068 -UN-15OCT99

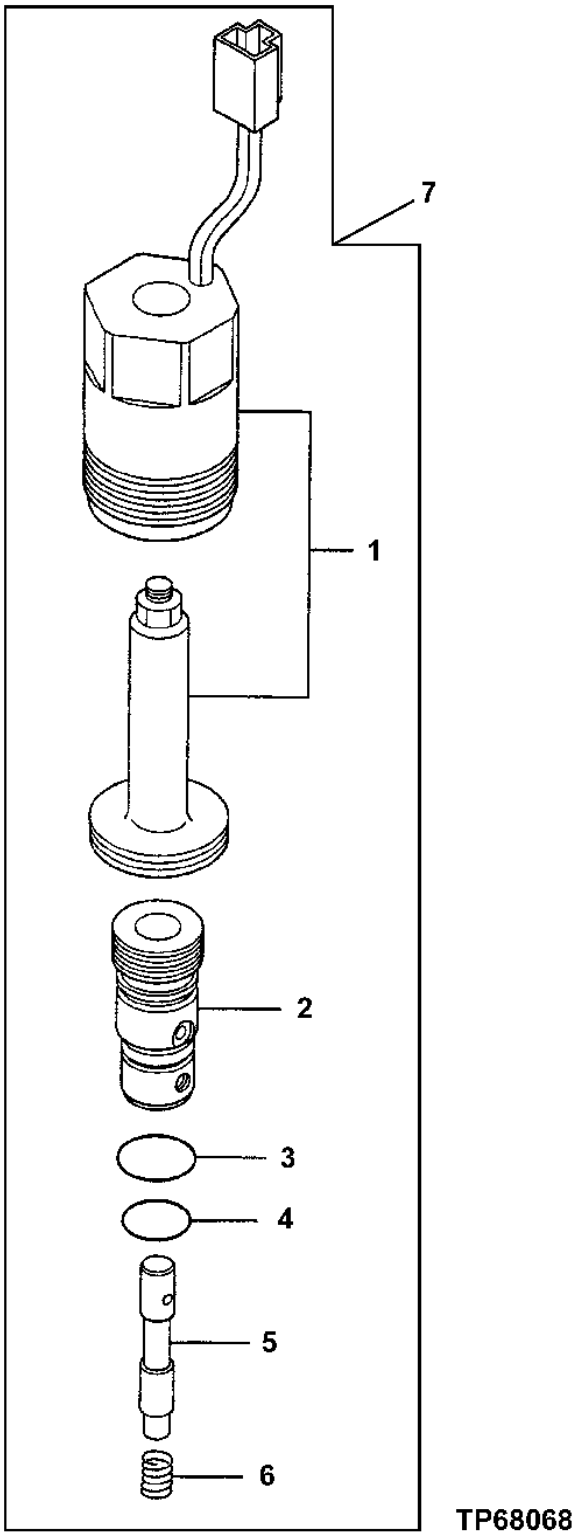

REDUCTION VALVE

KEY	PART NO.	PART NAME	QTY	ENGINE SERIAL NO.	REMARKS
1	0664202	SOLENOID	1		
2	.....	SLEEVE	1		
3	0355401	O-RING	1		
4	T77857	O-RING	1		
5	.....	SPOOL	1		
6	0664201	SPRING	1		
7	4368974	FLOW CONTROL HYD. VALVE	1		

TILTING-PROBING SENSOR

T144126 -UN-20JUL01

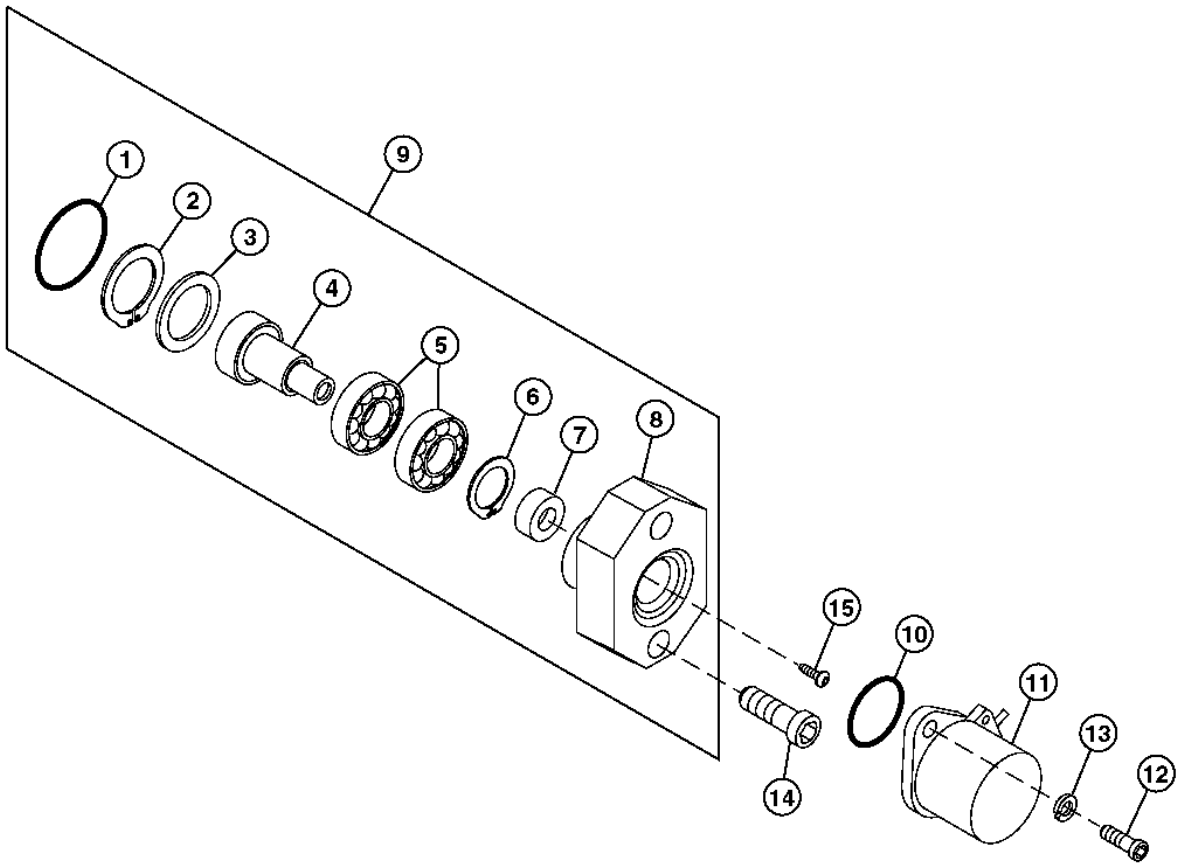

T144126

TILTING-PROBING SENSOR

KEY	PART NO.	PART NAME	QTY	ENGINE SERIAL NO.	REMARKS
1	A811045	O-RING	1		(SUB FOR T74492)
2	40M7225	SNAP RING	1		(SUB FOR 40M1861)
3	.....	SPACER	1		
4	.....	SHAFT	1		
5	0451201	BALL BEARING	2		(SUB FOR AT201639)
6	40M7080	SNAP RING	1		
7	4S00210	SEAL	1		(SUB FOR AT201640)
8	.....	COVER	1		
9	4366339	SENSOR	1		
10	4274371	O-RING	1		(SUB FOR AT154322)
11	4444902	SENSOR	1		(SUB FOR AT154533, 9102385) (PUMP ANGLE SENSOR)
12	0237902	BOLT	2		(SUB FOR AT201967)
13	0451204	WASHER	2		(SUB FOR AT201641)
14	0150809	SCREW	2		(SUB FOR AT204900)
15	4255077	SPRING	1		(SUB FOR AT154224)

PUMP, GEAR

TP68072 -UN-15OCT99

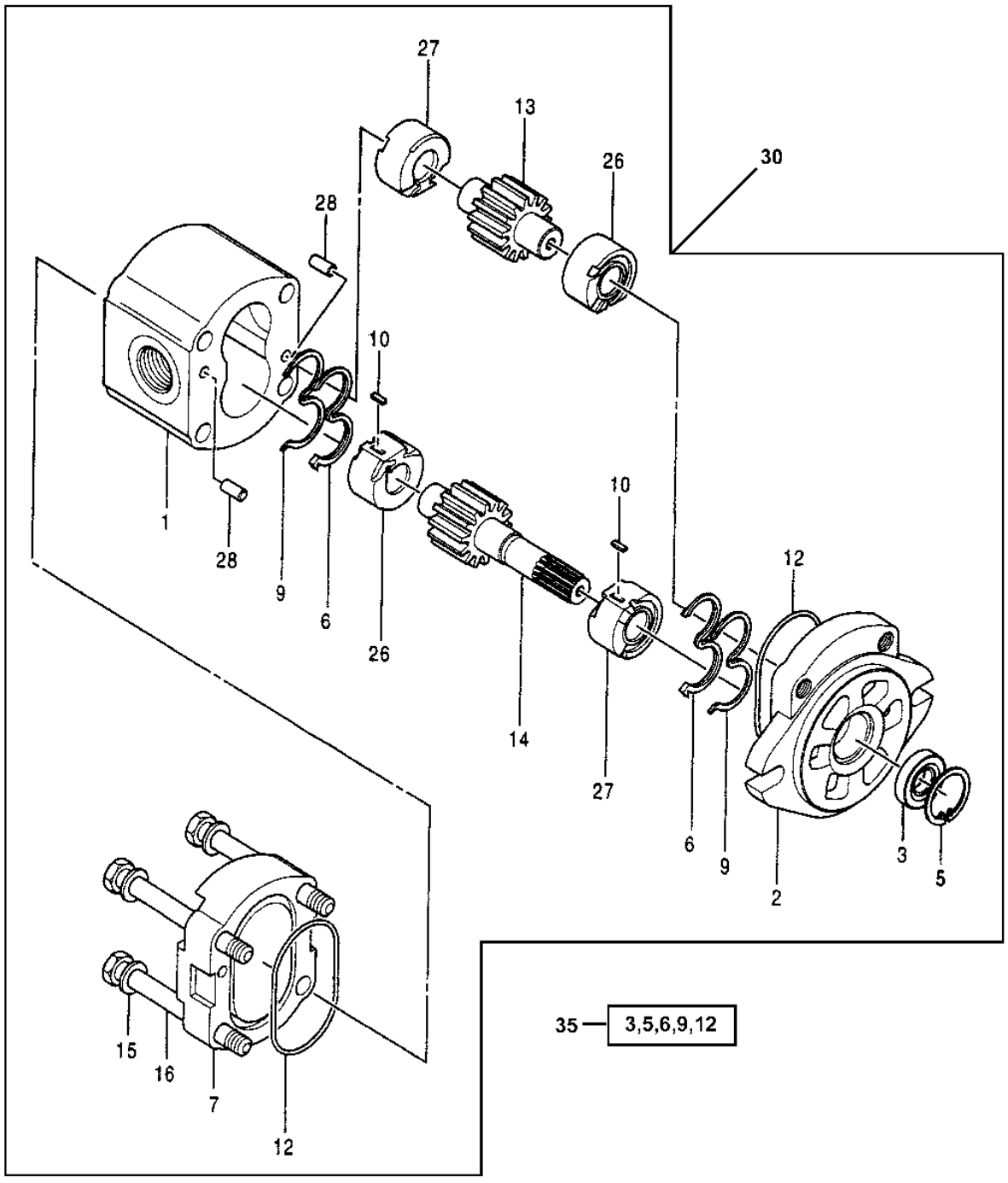

TP68072

PUMP, GEAR

KEY	PART NO.	PART NAME	QTY	SERIAL NO.	REMARKS
1	.....	HOUSING	1		
2	TH109916	FLANGE	1		
3	0408202	SEAL	1		(K)
5	40M1855	SNAP RING	1		(K)
6	TH109918	SEAL	2		(K)
7	TH109919	COVER	1		
9	TH109920	BACK-UP RING	2		(K)
10	4206162	KEY	2		(SUB FOR TH109921)
12	AT153835	O-RING	2		(K) (SUB FOR TH109922)
13	.....	GEAR	1		
14	.....	GEAR	1		
15	0266736	WASHER	4		(SUB FOR TH105196)
16	19M8093	CAP SCREW	4		M10 X 100
26	.....	BUSHING	2		
27	.....	BUSHING	2		
28	4206166	DOWEL PIN	2		(SUB FOR TH109925)
30	9217993	PUMP	1		(SUB FOR 4181700)
35	0408207	SEAL KIT	1		(SUB FOR AT153885) (INCLUDES ALL (K) PARTS)

CONTROL VALVE (4 SPOOL)

T150290 -UN-01FEB02

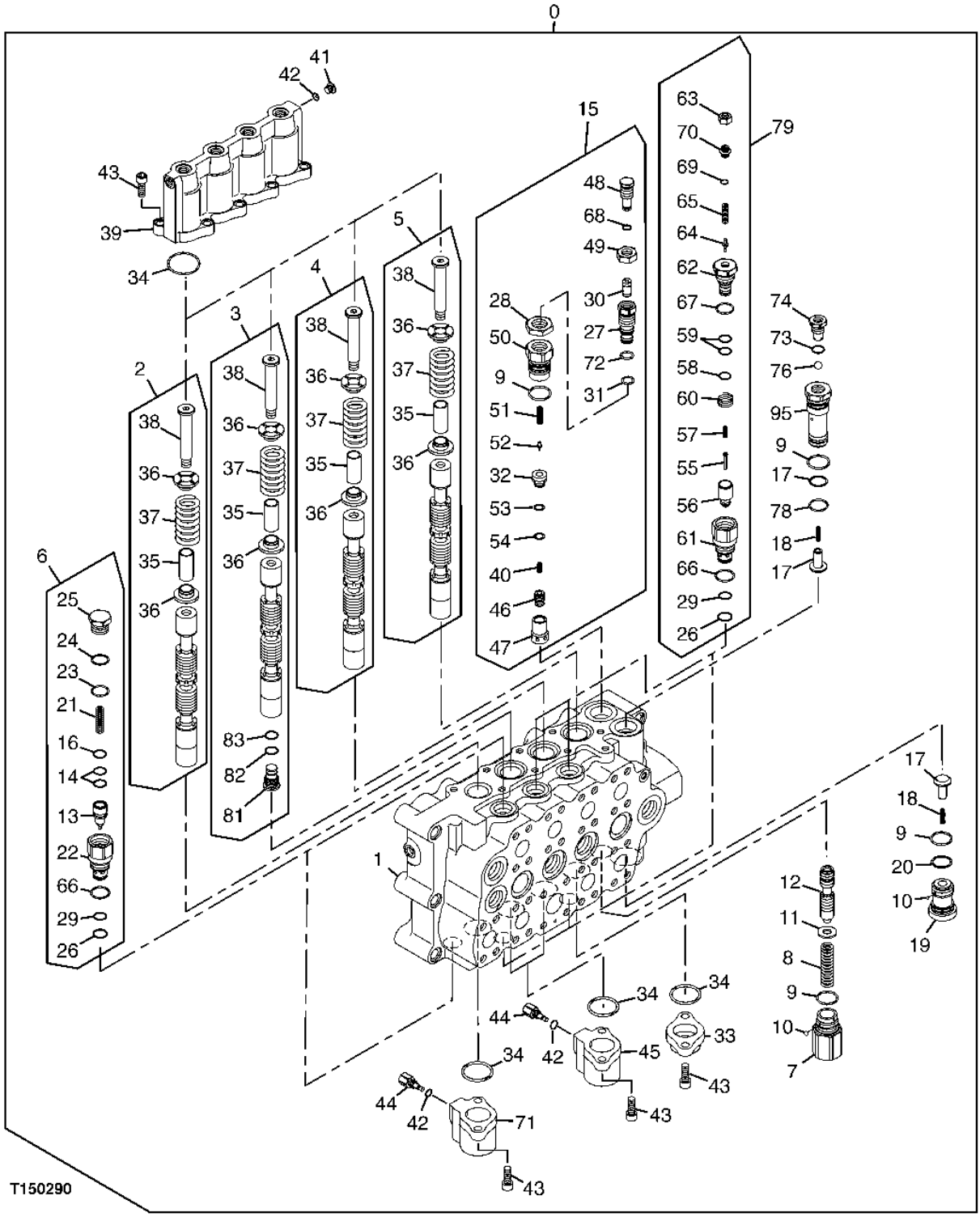

CONTROL VALVE (4 SPOOL)

KEY	PART NO.	PART NAME	QTY	SERIAL NO.	REMARKS
0	4444992	HYD ACTUATED CONTROL VALVE	1		(CONTAINS ALL PARTS ON THIS PAGE AND FOLLOWING PAGES)
1	.....	HOUSING	1		
2	.....	PLUNGER	1		
3	.....	PLUNGER	1		
4	.....	PLUNGER	1		
5	.....	PLUNGER	1		
6	0622843	FLOW CONTROL HYD. VALVE	2		
7	0622817	CAP	1		(SUB FOR AT202001)
8	0810405	SPRING	1		
9	4088425	O-RING	4		(SUB FOR AT202080)
10	0189803	BALL	2		(SUB FOR AT203704)
11	0622816	SPACER	1		(SUB FOR AT202000)
12	0810406	VALVE SPOOL	1		
13	0809734	POPPET	2		
14	0809735	RING	4		
15	4473770	PRESSURE RELIEF VALVE	1		
16	0809736	O-RING	2		
17	0622829	CHECK VALVE	2		
18	0622827	SPRING	2		(SUB FOR AT202011)
19	0622825	CAP	1		(SUB FOR AT202009)
20	0223104	BACK-UP RING	1		(SUB FOR AT217055)
21	0809737	SPRING	2		
22	0809738	SLEEVE	2		
23	0809739	O-RING	2		
24	0212312	BACK-UP RING	2		(SUB FOR TH100241)
25	0809740	CAP	2		
26	4153099	O-RING	6		(SUB FOR AT202086)
27	0809708	SLEEVE	1		
28	0809709	NUT	1		
29	4027959	BACK-UP RING	6		(SUB FOR TH100771)
30	0809710	ORIFICE	1		
31	0809711	O-RING	1		
32	0809712	VALVE SEAT	1		
33	0622803	COVER	1		(SUB FOR AT201987)
34	4073426	O-RING	8		(SUB FOR AT217049)
35	0622805	SLEEVE	4		(SUB FOR AT201989)
36	0622806	GUIDE	8		(SUB FOR AT201990)
37	0622807	SPRING	4		(SUB FOR AT201991)
38	0622808	CAP	4		(SUB FOR AT201992)
39	0809705	COVER	1		
40	0809713	SPRING	1		
41	0622810	CAP	1		(SUB FOR AT201994)
42	M800650	PACKING	4		
43	19M8169	SCREW	16		M12 X 30, (SUB FOR 19M8127)
44	0622875	PLUG	3		(SUB FOR AT172702)
45	0818005	COVER	2		
46	0809714	POPPET	1		
47	0809715	SLEEVE	1		
48	0809716	SCREW	1		
49	0809717	NUT	1		
50	0809718	CAP	1		
51	0135206	SPRING	1		
52	0809719	POPPET	1		
53	4040813	BACK-UP RING	1		(SUB FOR TH110449)
54	0809720	O-RING	1		
55	0809729	PISTON	4		
56	0809728	POPPET	4		
57	0809727	SPRING	4		
58	0809726	O-RING	4		
59	0809725	RING	8		

CONTROL VALVE (4 SPOOL) - CONTINUED

T150290 -UN-01FEB02

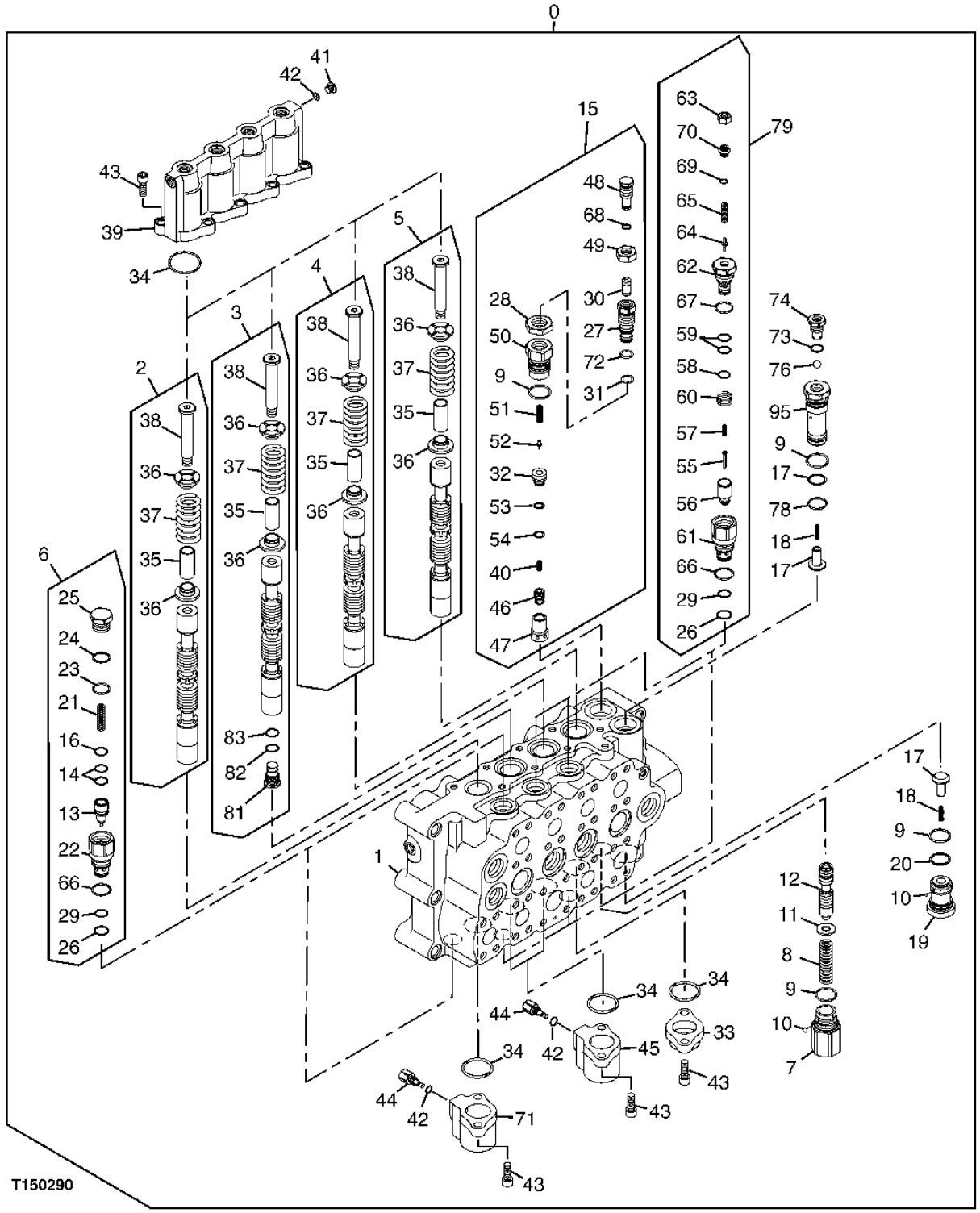

CONTROL VALVE (4 SPOOL) - CONTINUED

KEY	PART NO.	PART NAME	QTY	SERIAL NO.	REMARKS
0	4444992	HYD ACTUATED CONTROL VALVE	1		(CONTAINS ALL PARTS ON THIS PAGE - ADDITIONAL COMPONENTS ON PREVIOUS AND FOLLOWING PAGES)
60	0809724	SPRING	4		
61	0809723	SLEEVE	4		
62	0809722	VALVE SEAT	4		
63	0809721	NUT	4		
64	0809733	POPPET	4		
65	0809732	SPRING	4		
66	4153108	O-RING	6		(SUB FOR AT202087)
67	0809731	O-RING	4		
68	0212416	O-RING	1		
69	4153089	O-RING	4		(SUB FOR AT202085)
70	0809730	SCREW	4		
71	0622876	COVER	1		(SUB FOR AT172703)
72	4153098	O-RING	1		(SUB FOR TH109041)
73	4506418	O-RING	1		(SUB FOR U46489)
74	0622871	SEAT	1		(SUB FOR AT202055)
75	0810407	CAP	1		
76	0622873	BALL	1		(SUB FOR AT202057)
77	4113187	BACK-UP RING	1		(SUB FOR AT131692)
78	966689	O-RING	1		(SUB FOR TH108142)
79	4391660	PRESSURE RELIEF VALVE	4		
81	0622877	CAP (HAT)	1		(SUB FOR AT172704)
82	0166805	BACK-UP RING	1		(SUB FOR AT217051)
83	CH10568	O-RING	1		
95	0810407	CAP	1		

CONTROL VALVE (4 SPOOL SIDE SECTION)

T149591 -UN-24JAN02

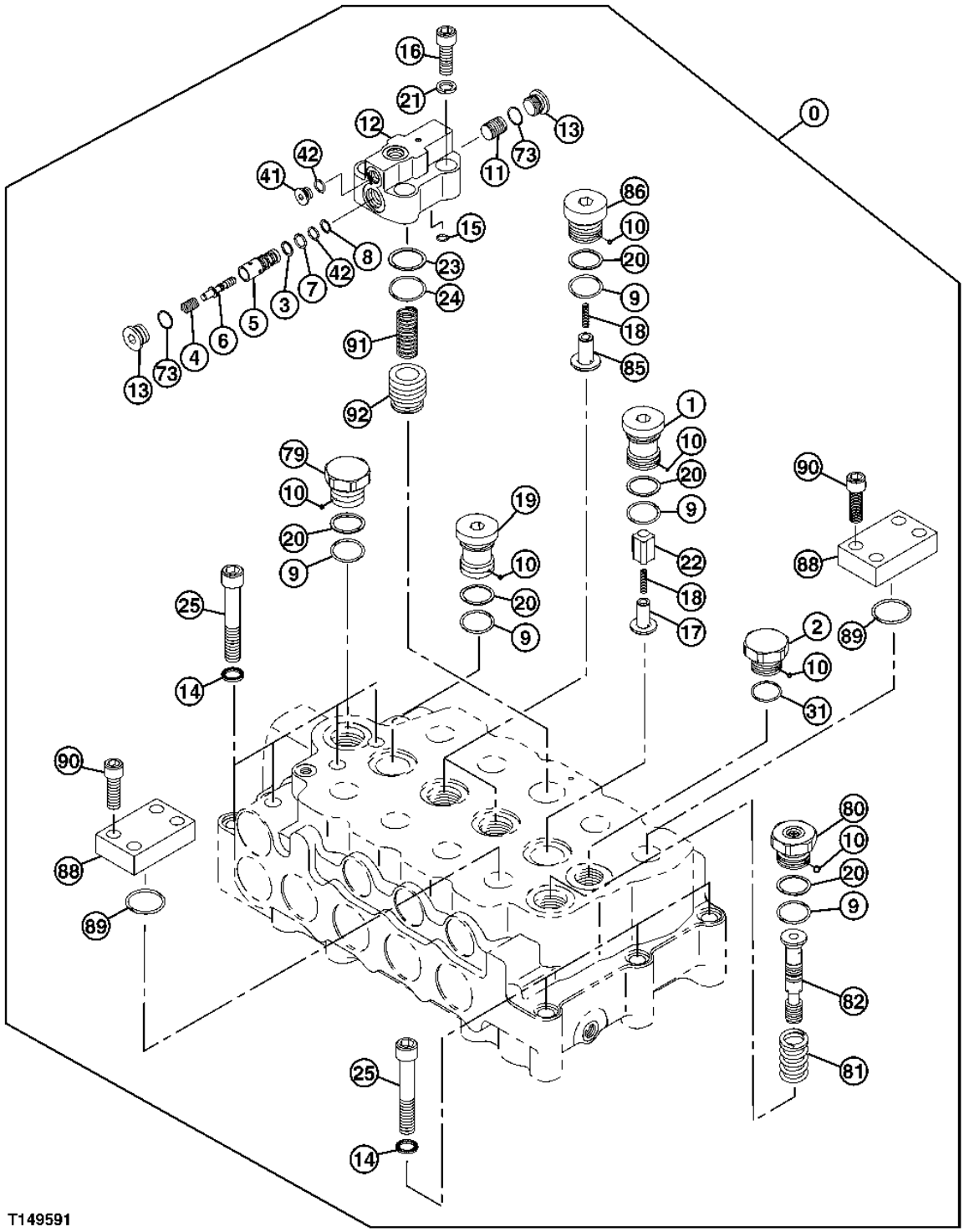

CONTROL VALVE (4 SPOOL SIDE SECTION)

KEY	PART NO.	PART NAME	QTY	SERIAL NO.	REMARKS
0	4444992	HYD ACTUATED CONTROL VALVE	1		(CONTAINS ALL PARTS ON THIS PAGE - ADDITIONAL COMPONENTS ON PREVIOUS AND FOLLOWING PAGES)
1	0622850	CAP	1		(SUB FOR AT202034)
2	0818102	CAP	1		(SUB FOR TH0818102)
3	4040813	BACK-UP RING	1		(SUB FOR TH110449)
4	0622863	SPRING	1		(SUB FOR AT202047)
5	0622866	SLEEVE	1		(SUB FOR AT202050)
6	0622864	POPPET	1		(SUB FOR AT202048)
7	4140470	O-RING	1		(SUB FOR TH109089)
8	4092265	BACK-UP RING	1		(SUB FOR TH102598)
9	4088425	O-RING	6		(SUB FOR AT202080)
10	0189803	BALL	7		(SUB FOR AT203704)
11	0622867	PISTON	1		(SUB FOR AT202051)
12	0809802	COVER	1		(SUB FOR TH0809802)
13	0622822	CAP	2		(SUB FOR AT202006)
14	0189908	WASHER	7		(SUB FOR AT217052)
15	CH17167	O-RING	1		
16	M341440	SCREW	4		(SUB FOR AT201961)
17	0622829	CHECK VALVE	1		
18	0622827	SPRING	3		(SUB FOR AT202011)
19	0622825	CAP	1		(SUB FOR AT202009)
20	0223104	BACK-UP RING	6		(SUB FOR AT217055)
21	0622865	WASHER	4		(SUB FOR AT202049)
22	0622848	CHECK VALVE	1		
23	4138942	BACK-UP RING	1		(SUB FOR AT217083)
24	AT264324	O-RING	1		(SUB FOR TH100044)
25	19M8564	SCREW	7		M16 X 110
31	0624703	O-RING	1		(SUB FOR TH0624703)
41	0622810	CAP	1		(SUB FOR AT201994)
42	M800650	PACKING	2		
73	4506418	O-RING	2		(SUB FOR U46489)
79	0622870	CAP	1		(SUB FOR AT202054)
80	0622846	CAP	1		(SUB FOR AT202030)
81	0622845	SPRING	1		(SUB FOR AT202029)
82	0818101	SPOOL VALVE	1		(SUB FOR TH0818101)
85	0705401	CHECK VALVE	2		
86	0703701	FITTING PLUG	2		(SUB FOR AT217064)
88	0622858	FLANGE	2		(SUB FOR AT202042)
89	0197011	O-RING	2		(SUB FOR AT217054)
90	19M8734	SCREW	8		M14 X 45
91	0622856	SPRING	1		(SUB FOR AT202040)
92	0622855	POPPET	1		(SUB FOR AT202039)

CONTROL VALVE (MANIFOLD)

T150291 -UN-01FEB02

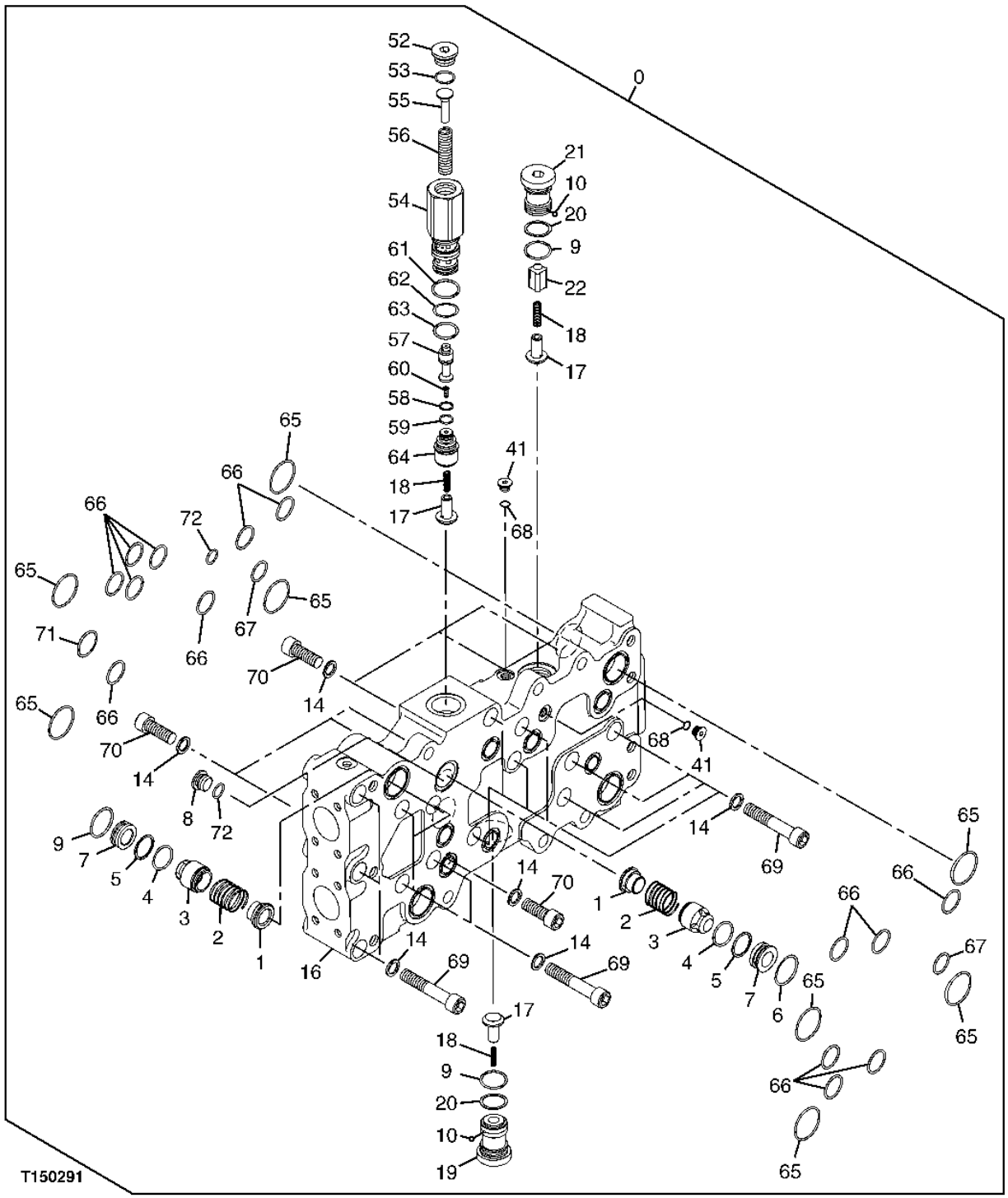

CONTROL VALVE (MANIFOLD)

KEY	PART NO.	PART NAME	QTY	SERIAL NO.	REMARKS
0	4444992	HYD ACTUATED CONTROL VALVE	1		(CONTAINS ALL PARTS ON THIS PAGE - ADDITIONAL COMPONENTS ON PREVIOUS AND FOLLOWING PAGES)
1	0622851	PLATE	2		(SUB FOR AT202035)
2	0622852	SPRING	2		(SUB FOR AT202036)
3	0622853	CHECK VALVE	2		
4	4153110	O-RING	2		(SUB FOR AT202088)
5	4019414	BACK-UP RING	2		(SUB FOR AT202076)
6	4153534	O-RING	2		(SUB FOR AT202089)
7	0622854	SEAT	2		(SUB FOR AT202038)
8	0622822	CAP	1		(SUB FOR AT202006)
9	4088425	O-RING	2		(SUB FOR AT202080)
10	0189803	BALL	2		(SUB FOR AT203704)
14	0189908	WASHER	21		(SUB FOR AT217052)
16	.....	MANIFOLD	1		
17	0622829	CHECK VALVE	3		
18	0622827	SPRING	3		(SUB FOR AT202011)
19	0622825	CAP	1		(SUB FOR AT202009)
20	0223104	BACK-UP RING	2		(SUB FOR AT217055)
21	0818201	CAP	1		
22	0622848	CHECK VALVE	1		
41	0622810	CAP	2		(SUB FOR AT201994)
52	0453932	FITTING PLUG	1		(SUB FOR AT203777)
53	4138931	O-RING	1		
54	0818202	SLEEVE	1		
55	0622831	GUIDE	1		(SUB FOR AT202015)
56	0622830	SPRING	1		(SUB FOR AT202014)
57	0810602	SPOOL VALVE	1		
58	4040814	BACK-UP RING	1		(SUB FOR TH105938)
59	T111819	O-RING	1		
60	0622835	PISTON	1		(SUB FOR AT202019)
61	0810603	O-RING	1		
62	4044839	BACK-UP RING	1		(SUB FOR TH103457)
63	AT264347	O-RING	1		(SUB FOR 4506428)
64	0810604	SLEEVE	1		
65	4153535	O-RING	8		(SUB FOR AT202090)
66	4153108	O-RING	14		(SUB FOR AT202087)
67	T59014	O-RING	2		
68	0212416	O-RING	2		(SUB FOR TH100198)
69	19M8342	SCREW	14		M16 X 90
70	0212405	BOLT	7		
71	0223109	O-RING	1		(SUB FOR AT217056)
72	4153098	O-RING	2		(SUB FOR TH109041)

CONTROL VALVE (5 SPOOL)

T150292 -UN-01FEB02

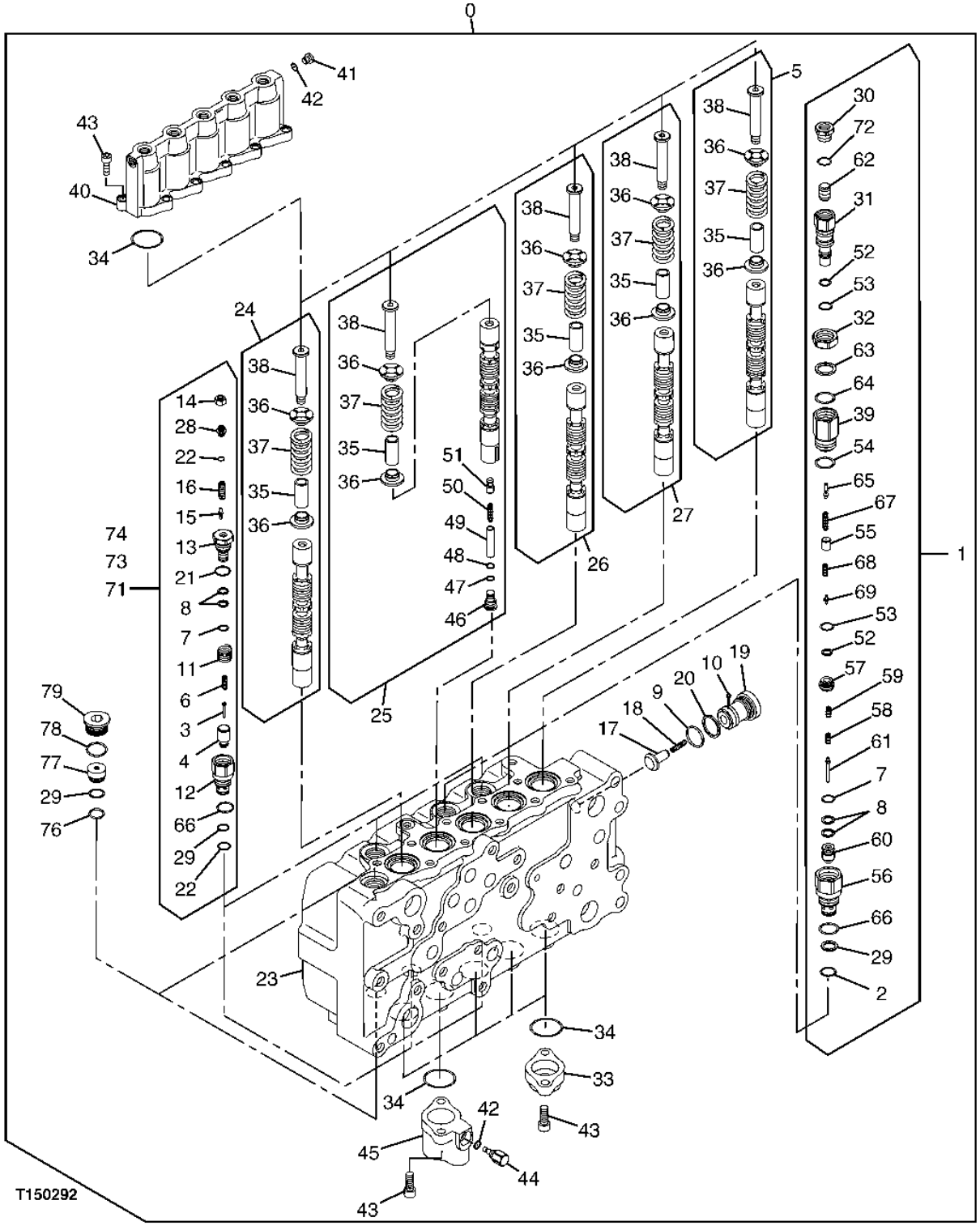

CONTROL VALVE (5 SPOOL)

KEY	PART NO.	PART NAME	QTY	SERIAL NO.	REMARKS
0	4444992	HYD ACTUATED CONTROL VALVE	1		(CONTAINS ALL PARTS ON THIS PAGE - ADDITIONAL COMPONENTS ON PREVIOUS AND FOLLOWING PAGES)
1	4469383	PRESSURE RELIEF VALVE	1		
2	4153099	O-RING	5		(SUB FOR AT202086)
3	0809729	PISTON	4		
4	0809728	POPPET	4		
5	.....	PLUNGER	1		
6	0809727	SPRING	4		
7	0809726	O-RING	5		
8	0809725	RING	10		
9	4088425	O-RING	1		(SUB FOR AT202080)
10	0189803	BALL	1		(SUB FOR AT203704)
11	0809724	SPRING	4		
12	0809723	SLEEVE	4		
13	0809722	VALVE SEAT	4		
14	0809721	NUT	4		
15	0809733	POPPET	4		
16	0809732	SPRING	4		
17	0622829	CHECK VALVE	1		
18	0622827	SPRING	1		(SUB FOR AT202011)
19	0622825	CAP	1		(SUB FOR AT202009)
20	0223104	BACK-UP RING	1		(SUB FOR AT217055)
21	0809731	O-RING	4		
22	4153089	O-RING	4		(SUB FOR AT202085)
23	.....	HOUSING	1		
24	.....	PLUNGER	1		
25	.....	PLUNGER	1		
26	.....	PLUNGER	1		
27	.....	PLUNGER	1		
28	0809730	SCREW	4		
29	4027959	BACK-UP RING	7		(SUB FOR TH100771)
30	0810709	CAP	1		
31	0810710	SLEEVE	1		
32	0810711	NUT	1		
33	0622803	COVER	4		(SUB FOR AT201987)
34	4073426	O-RING	10		(SUB FOR AT217049)
35	0622805	SLEEVE	5		(SUB FOR AT201989)
36	0622806	GUIDE	10		(SUB FOR AT201990)
37	0622807	SPRING	5		(SUB FOR AT201991)
38	0622808	CAP	5		(SUB FOR AT201992)
39	0810712	SLEEVE	1		
40	0810704	COVER	1		
41	0622810	CAP	1		(SUB FOR AT201994)
42	M800650	PACKING	2		
43	19M8169	SCREW	20		M12 X 30, (SUB FOR 19M8127)
44	0622875	PLUG	1		(SUB FOR AT172702)
45	0818005	COVER	1		
46	0622877	CAP (HAT)	1		(SUB FOR AT172704)
47	0166805	BACK-UP RING	1		(SUB FOR AT217051)
48	CH10568	O-RING	1		
49	0703301	SPACER	1		
50	0159214	SPRING	1		
51	0622811	CHECK VALVE	1		
52	0810713	RING	2		
53	0810714	O-RING	2		
54	0810715	O-RING	1		
55	0810716	RETAINER	1		
56	0810717	SLEEVE	1		
57	0810718	VALVE SEAT	1		
58	0810719	SPRING	1		
59	0810720	SPRING	1		

CONTROL VALVE (5 SPOOL) - CONTINUED

T150292 -UN-01FEB02

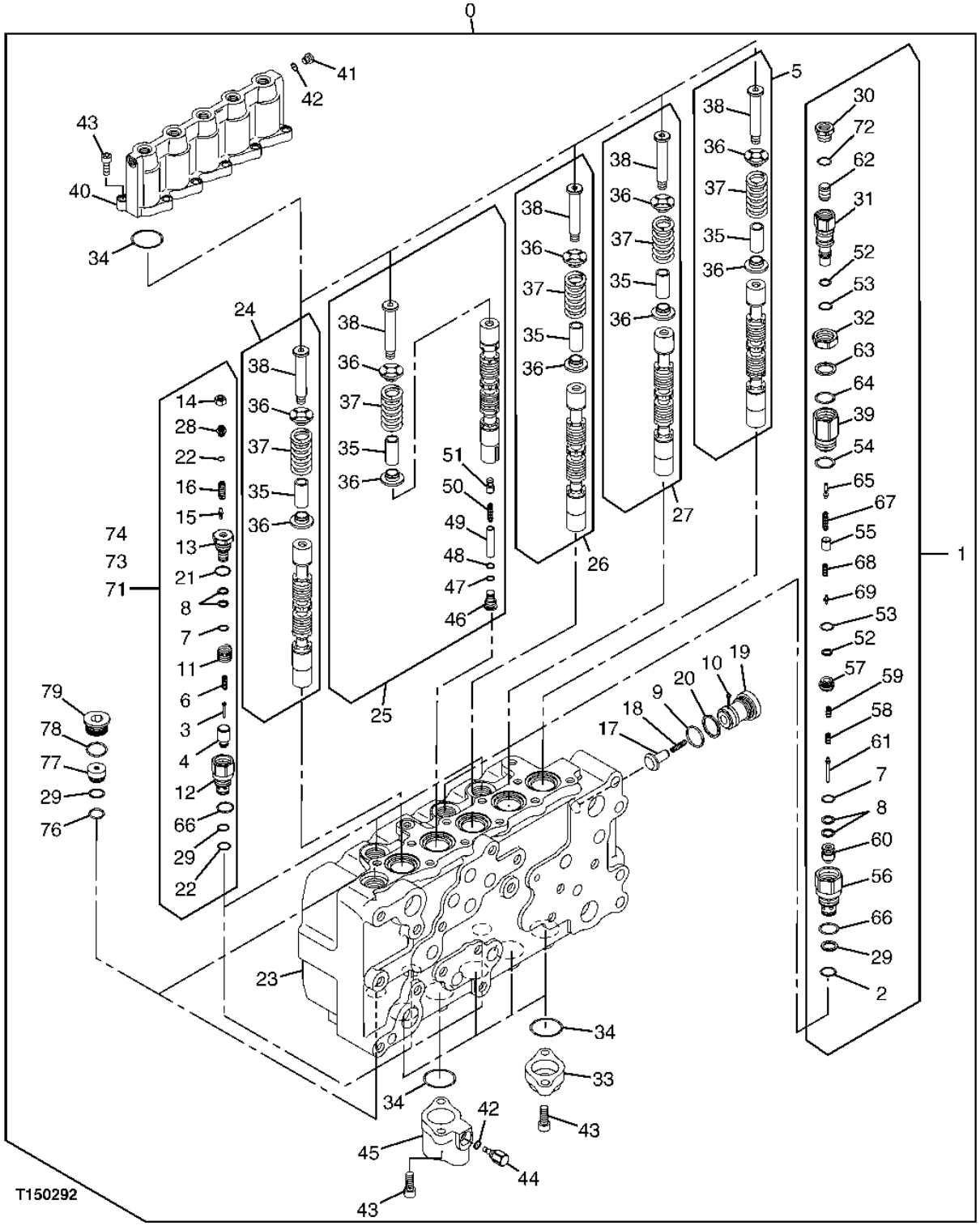

CONTROL VALVE (5 SPOOL) - CONTINUED

KEY	PART NO.	PART NAME	QTY	SERIAL NO.	REMARKS
0	4444992	HYD ACTUATED CONTROL VALVE	1		(CONTAINS ALL PARTS ON THIS PAGE - ADDITIONAL COMPONENTS ON PREVIOUS AND FOLLOWING PAGES)
60	0810721	POPPET	1		
61	0810722	PISTON	1		
62	0810723	PISTON	1		
63	0810724	RING	1		
64	0810725	O-RING	1		
65	0810726	POPPET	1		
66	4153108	O-RING	5		(SUB FOR AT202087)
67	0810727	SPRING	1		
68	0810728	SPRING	1		
69	0810729	POPPET	1		
71	4392200	RELIEF VALVE	1		
72	4153098	O-RING	1		(SUB FOR TH109041)
73	4392199	RELIEF VALVE	1		
74	4391660	PRESSURE RELIEF VALVE	2		
76	CH12329	PACKING	2		
77	0646203	PLUG	2		
78	0624703	O-RING	2		
79	0624702	CAP	2		

CONTROL VALVE (5 SPOOL SIDE SECTION)

T149594 -UN-28JAN02

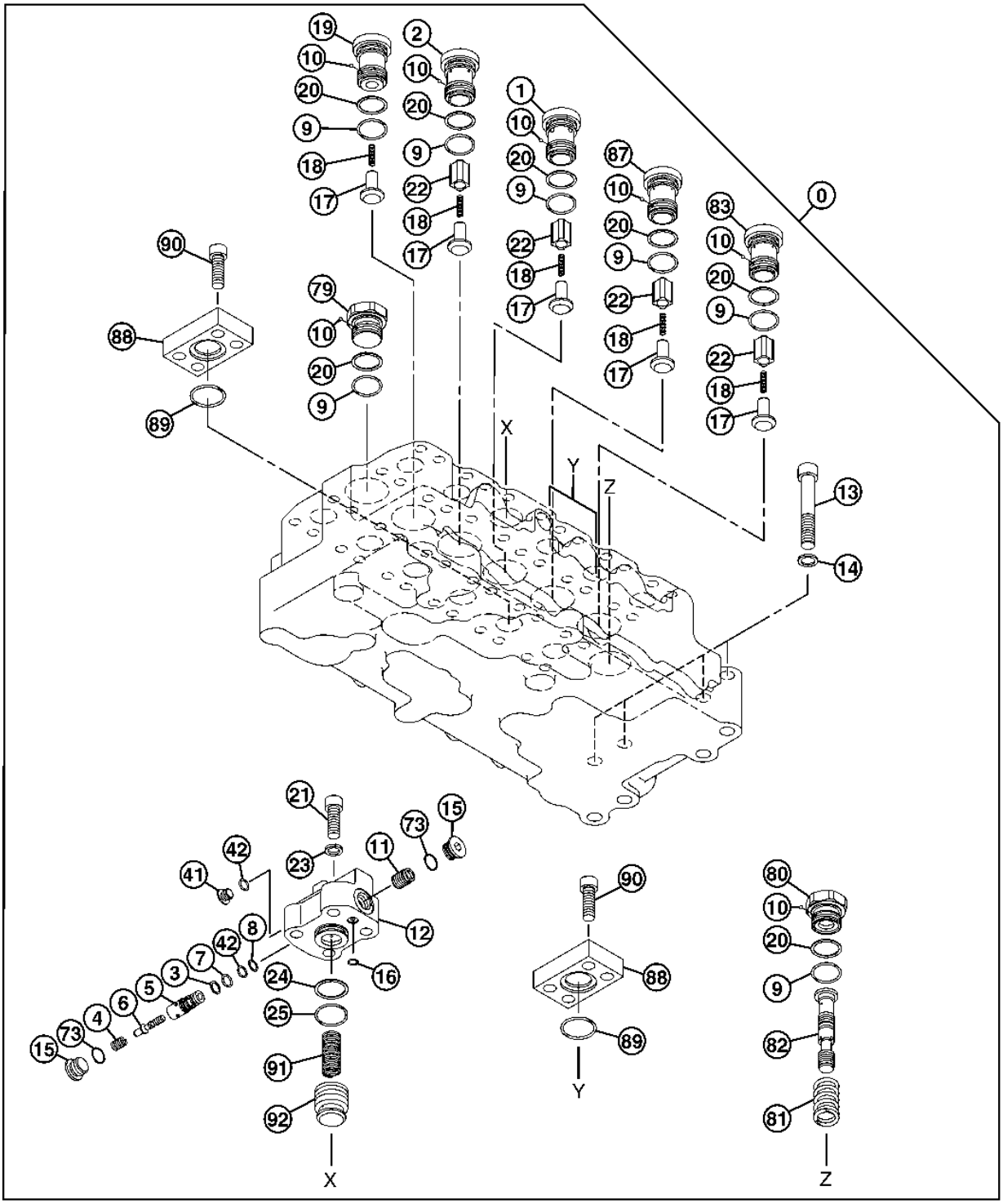

T149594

CONTROL VALVE (5 SPOOL SIDE SECTION)

KEY	PART NO.	PART NAME	QTY	SERIAL NO.	REMARKS
0	4444992	HYD ACTUATED CONTROL VALVE	1		(CONTAINS ALL COMPONENTS ON THIS PAGE - ADDITIONAL COMPONENTS ON PREVIOUS PAGES)
1	0622860	CAP	1		(SUB FOR AT202044)
2	0622849	CAP	1		(SUB FOR AT202033)
3	4040813	BACK-UP RING	1		(SUB FOR TH110449)
4	0622863	SPRING	1		(SUB FOR AT202047)
5	0622866	SLEEVE	1		(SUB FOR AT202050)
6	0622864	POPPET	1		(SUB FOR AT202048)
7	4140470	O-RING	1		(SUB FOR TH109089)
8	4092265	BACK-UP RING	1		(SUB FOR TH102598)
9	4088425	O-RING	7		(SUB FOR AT202080)
10	0189803	BALL	7		(SUB FOR AT203704)
11	0622867	PISTON	1		(SUB FOR AT202051)
12	0809802	COVER	1		(SUB FOR TH0809802)
13	19M8564	SCREW	4		M16 X 110
14	0189908	WASHER	4		(SUB FOR AT217052)
15	0622822	CAP	2		(SUB FOR AT202006)
16	CH17167	O-RING	1		
17	.....	CHECK VALVE	5		
18	0622827	SPRING	5		(SUB FOR AT202011)
19	0622825	CAP	1		(SUB FOR AT202009)
20	0223104	BACK-UP RING	7		(SUB FOR AT217055)
21	M341440	SCREW	4		(SUB FOR AT201961)
22	.....	CHECK VALVE	4		(AT202032 NOT AVAILABLE FOR SERVICE)
23	0622865	WASHER	4		(SUB FOR AT202049)
24	4138942	BACK-UP RING	1		(SUB FOR AT217083)
25	AT264324	O-RING	1		(SUB FOR TH100044)
41	0622810	CAP	1		(SUB FOR AT201994)
42	M800650	PACKING	2		
73	4506418	O-RING	2		(SUB FOR U46489)
79	0622870	CAP	1		(SUB FOR AT202054)
80	0622846	CAP	1		(SUB FOR AT202030)
81	0622845	SPRING	1		(SUB FOR AT202029)
82	0818101	SPOOL VALVE	1		(SUB FOR TH0818101)
83	0622868	CAP	1		(SUB FOR AT202052)
87	0622869	CAP	1		(SUB FOR AT202053)
88	0622858	FLANGE	4		(SUB FOR AT202042)
89	0197011	O-RING	4		(SUB FOR AT217054)
90	19M8734	SCREW	16		M14 X 45
91	0622856	SPRING	1		(SUB FOR AT202040)
92	0622855	POPPET	1		(SUB FOR AT202039)

COUNTERWEIGHT REMOVAL PILOT VALVE COMPONENT

T149611 -UN-05APR02

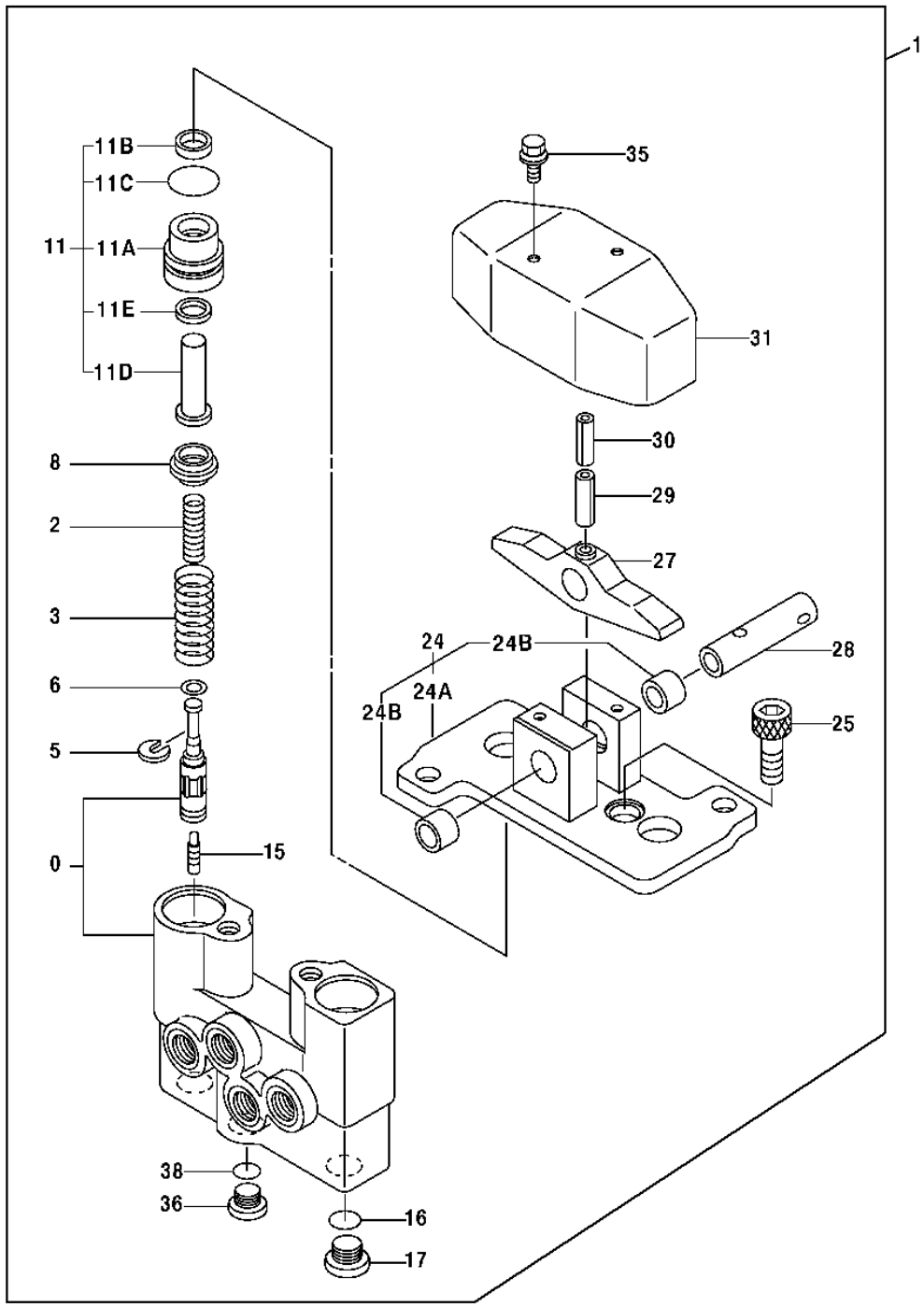

T149611

COUNTERWEIGHT REMOVAL PILOT VALVE COMPONENTS

KEY	PART NO.	PART NAME	QTY	SERIAL NO.	REMARKS
0	.....	CASE	1		(AT127904 NOT AVAILABLE FOR SERVICE)
1	9074843	HYD ACTUATED CONTROL VALVE	1		
2	4190088	COMPRESSION SPRING	2		(SUB FOR AT127601)
3	4213075	COMPRESSION SPRING	2		(SUB FOR AT127623)
5	4177777	SPACER	2		(SUB FOR TH109216)
6	4173208	SHIM	10		(SUB FOR TH109217)
8	4203412	GUIDE	2		(SUB FOR TH109237)
11	9089355	PLUNGER	2		(SUB FOR AT128176)
11A	.....	BUSHING	1		(AT128076 NOT AVAILABLE FOR SERVICE)
11B	4240150	SEAL	1		(SUB FOR TH111960)
11C	U46166	O-RING	1		
11D	.....	PUSH ROD	1		(TH109240 NOT AVAILABLE FOR SERVICE)
11E	4240151	SEAL	1		(SUB FOR TH109224)
15	4184929	PISTON	2		(SUB FOR TH109228)
16	CH10569	PACKING	2		
17	4185057	DRAIN PLUG	2		(SUB FOR TH109241)
24	9086168	HOLDER	1		(SUB FOR AT127963)
24A	AT127574	HOLDER	1		
24B	4238834	BUSHING	2		(SUB FOR TH111963)
25	4198391	STOP	2		(SUB FOR AT127604)
27	3035803	CAM	1		(SUB FOR TH109243)
28	4190983	PIN FASTENER	1		(SUB FOR TH109244)
29	34M7225	SPRING PIN	1		8 X 28 MM, (SUB FOR 34M6402)
30	4213419	SPRING PIN	1		(SUB FOR TH111654)
31	2024717	COVER	1		(SUB FOR AT127571)
35	19M7923	CAP SCREW	2		M6 X 12
	12M7006	LOCK WASHER	2		6 MM
	24M7054	WASHER	2		6.400 X 12 X 1.600 MM
36	4208977	DRAIN PLUG	1		(SUB FOR TH111351)
38	CH11561	PACKING	1		

SOLENOID VALVE

T147712 -UN-03DEC01

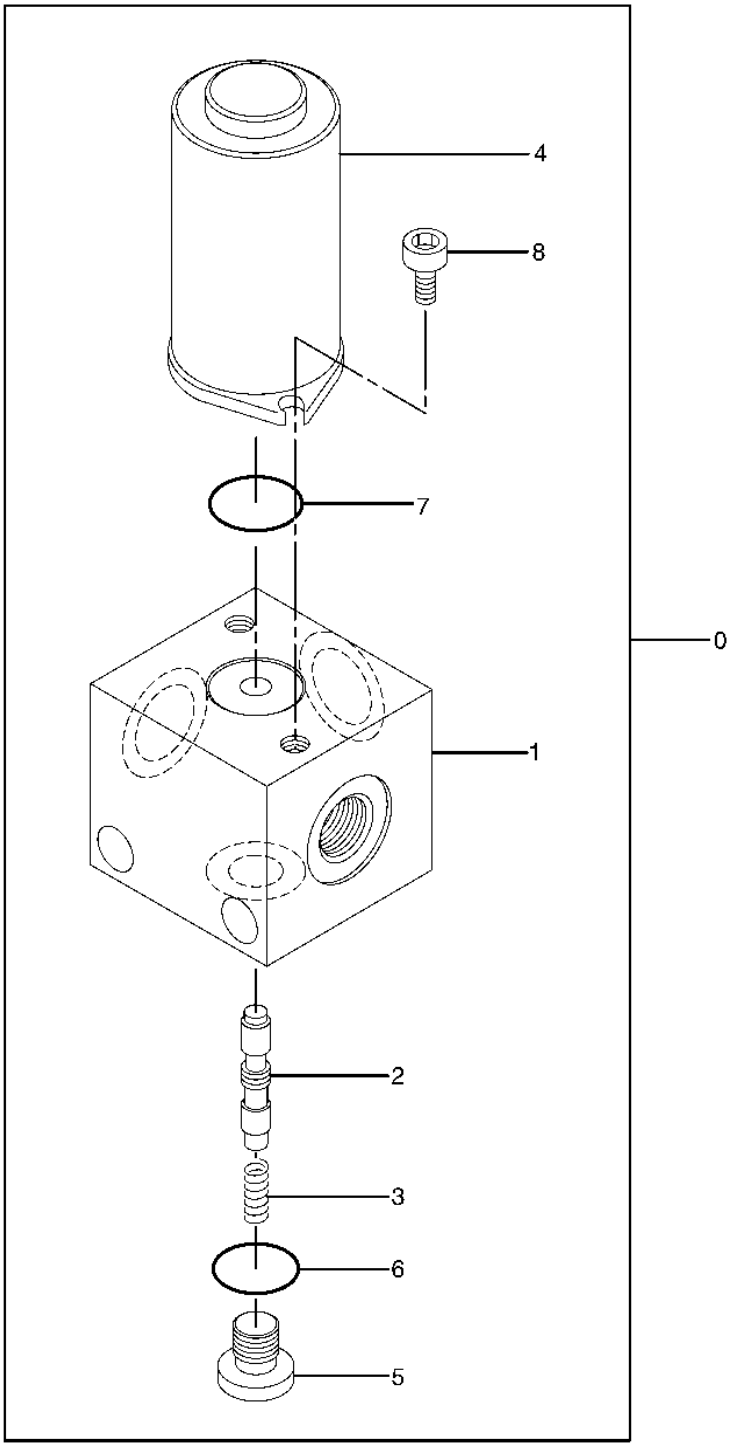

SOLENOID VALVE

KEY	PART NO.	PART NAME	QTY	SERIAL NO.	REMARKS
0	4261289	SOLENOID VALVE	1		(SUB FOR AT202111)
1	.....	HOUSING	1		
2	.....	SPOOL VALVE	1		
3	0444301	SPRING	1		(SUB FOR AT200231)
4	0444302	SOLENOID	1		(SUB FOR AT200232)
5	0215220	FITTING PLUG	1		(SUB FOR TH101485)
6	4506408	O-RING	1		(SUB FOR TH101490)
7	P50883	RING	1		
8	19M7887	SCREW	2		M5 X 10

SOLENOID VALVE COMPONENTS

T142573 -UN-05JUL01

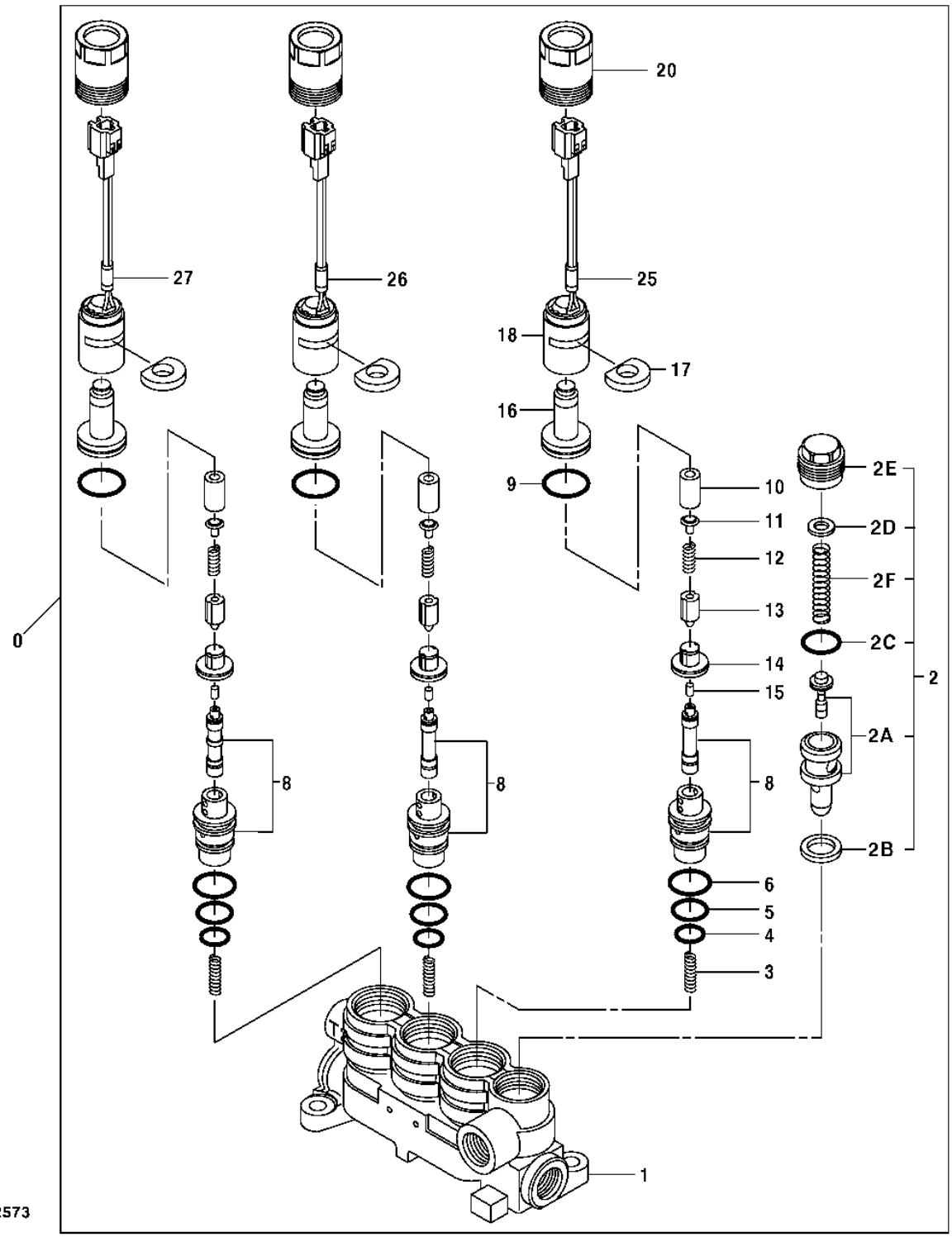

SOLENOID VALVE COMPONENTS

KEY	PART NO.	PART NAME	QTY	SERIAL NO.	REMARKS
0	4436197	SOLENOID VALVE	1		(SUB FOR TH4436197)
1	.....	HOUSING	1		(TH109249 NOT AVAILABLE FOR SERVICE)
2	.....	RELIEF VALVE	1		(TH109250 NOT AVAILABLE FOR SERVICE)
2A	.....	RELIEF VALVE	1		(TH1092451 NOT AVAILABLE FOR SERVICE)
2B	0308704	GASKET	1		(SUB FOR TH109252)
2C	0308705	O-RING	1		(SUB FOR TH109253)
2D	.....	SHIM	1		(TH109254 NOT AVAILABLE FOR SERVICE)
	.....	SHIM	1		(TH109255 NOT AVAILABLE FOR SERVICE)
	.....	WASHER	1		(TH109256 NOT AVAILABLE FOR SERVICE)
2E	.....	FITTING	1		(TH109257 NOT AVAILABLE FOR SERVICE)
2F	0308710	SPRING	1		(SUB FOR TH109258)
3	0308711	SPRING	3		(SUB FOR TH109259)
4	CH11570	O-RING	3		
5	985099	O-RING	3		(SUB FOR TH101479)
6	AT264333	O-RING	3		(SUB FOR TH100096)
8	.....	VALVE SPOOL	3		(TH109260 NOT AVAILABLE FOR SERVICE)
9	0308713	O-RING	3		(SUB FOR TH109261)
10	0397601	PIPE	3		(SUB FOR AT201974)
11	0433302	PLATE	3		(SUB FOR AT201981)
12	0308716	SPRING	3		(SUB FOR TH109264)
13	0308717	PLUNGER	3		(SUB FOR TH109265)
14	0397602	STOP	3		(SUB FOR AT201975)
15	0308719	ROD	3		(SUB FOR TH109267)
16	0397603	HOUSING	3		(SUB FOR AT217058)
17	0308721	WASHER	3		(SUB FOR TH109269)
18	0451501	SOLENOID	3		(SUB FOR AT201642)
20	0308724	SCREW	3		(SUB FOR TH109272)
25	.....	TAPE	1		(TH109273 NOT AVAILABLE FOR SERVICE)
26	.....	TAPE	1		(TH109274 NOT AVAILABLE FOR SERVICE)
27	.....	TAPE	1		(TH109275 NOT AVAILABLE FOR SERVICE)

**PILOT SIGNAL MANIFOLD
(HOUSING AND GASKETS)**

T149601 -UN-17JAN02

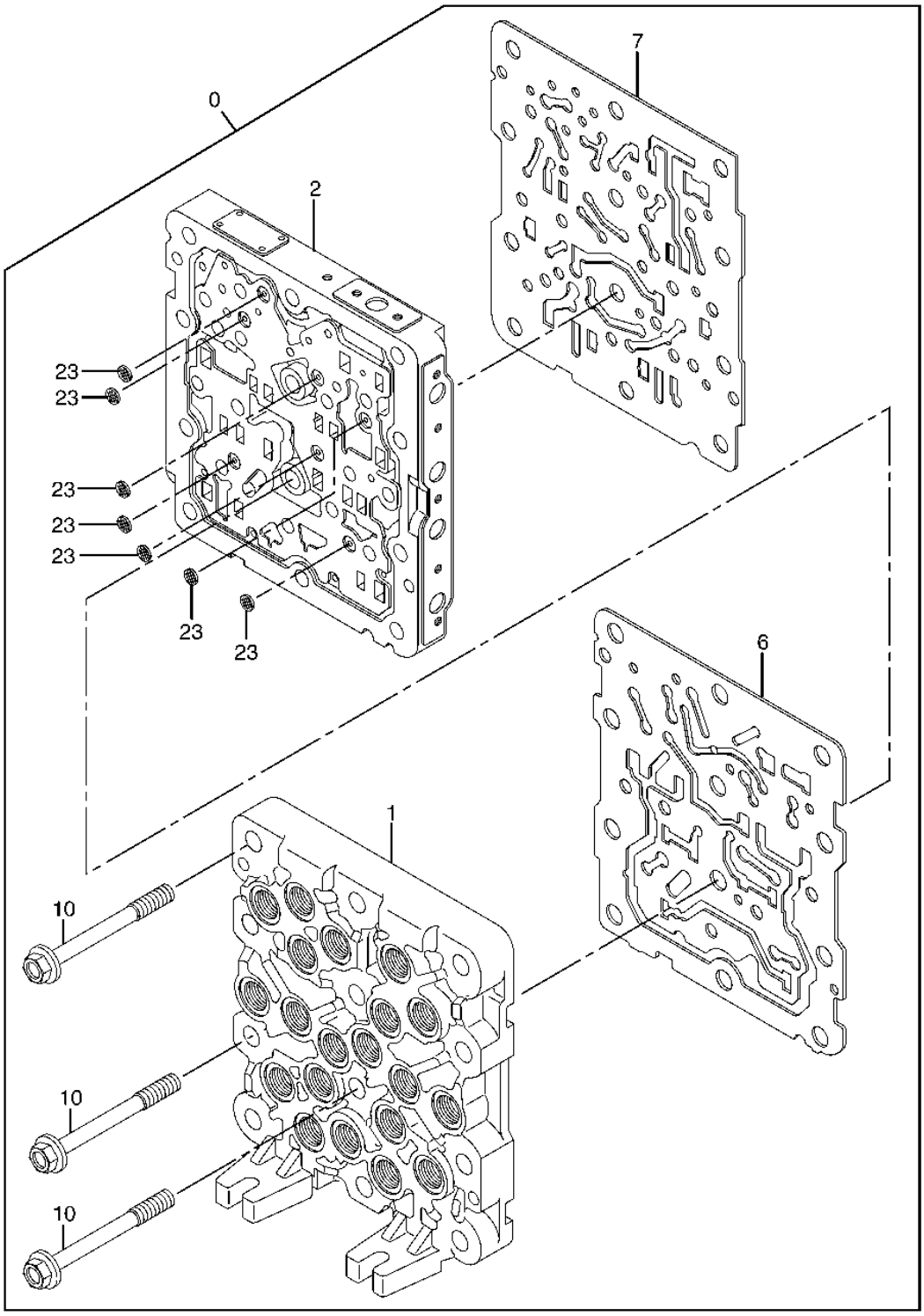

PILOT SIGNAL MANIFOLD
(HOUSING AND GASKETS)

KEY	PART NO.	PART NAME	QTY	SERIAL NO.	REMARKS
0	4470661	FLOW CONTROL HYD. VALVE	1		(ADDITIONAL COMPONENTS LISTED ON FOLLOWING PAGES)
1	.....	HOUSING	1		
2	.....	HOUSING	1		
6	.....	GASKET	1		
7	.....	GASKET	1		
10	.....	BOLSTER	12		
23	.....	FILTER	7		

**PILOT SIGNAL MANIFOLD
(VALVE SECTION)**

T149603 -UN-17JAN02

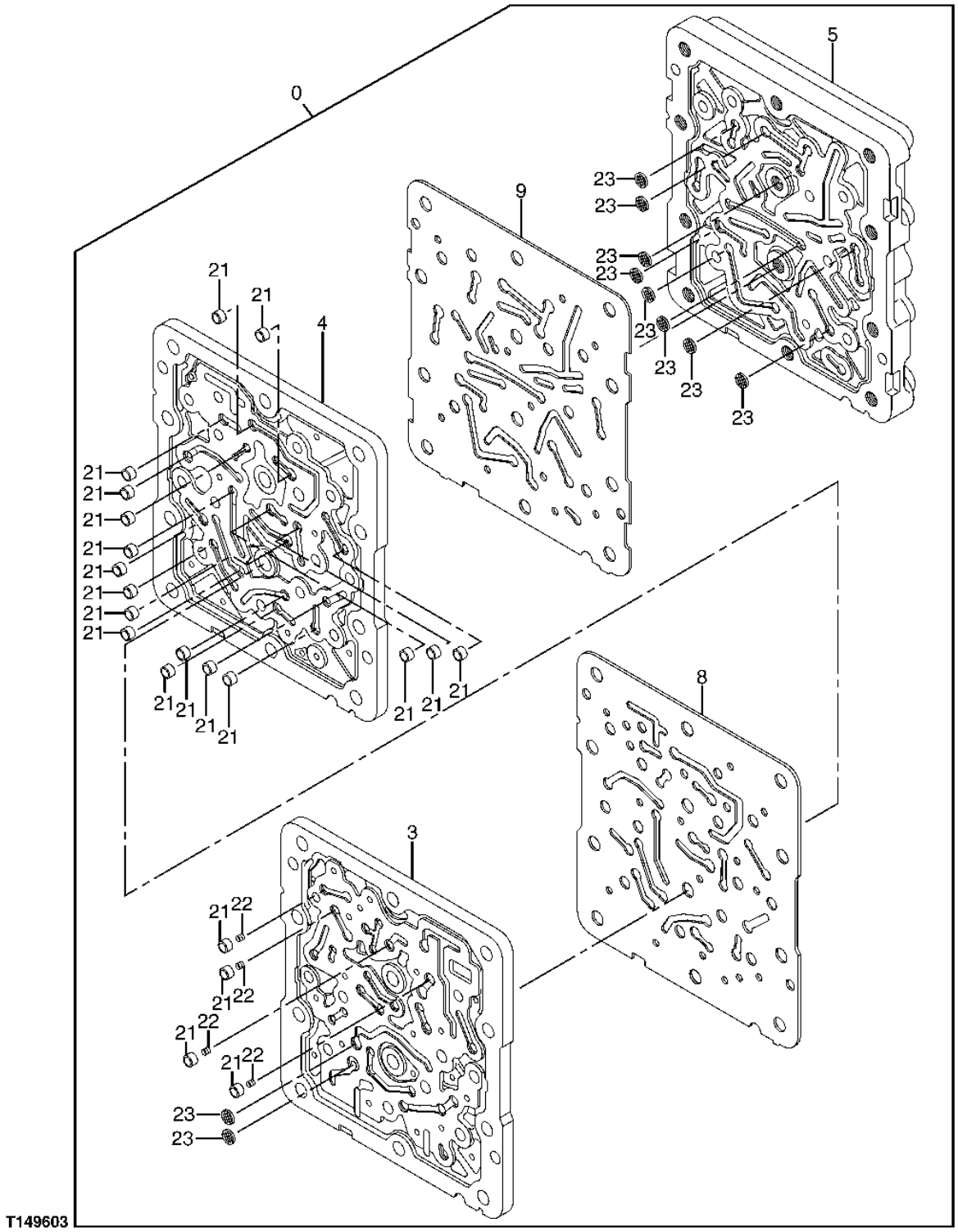

PILOT SIGNAL MANIFOLD
(VALVE SECTION)

KEY	PART NO.	PART NAME	QTY	SERIAL NO.	REMARKS
0	4470661	FLOW CONTROL HYD. VALVE	1		(CONTAINS ALL PARTS ON THIS PAGE - ADDITIONAL COMPONENTS LISTED ON FOLLOWING PAGES)
3	.....	HOUSING	1		
4	.....	HOUSING	1		
5	.....	HOUSING	1		
8	.....	GASKET	1		
9	.....	GASKET	1		
21	.....	SLEEVE	21		
22	.....	SPRING	4		
23	.....	FILTER	10		

PILOT SIGNAL MANIFOLD
(PILOT CONTROLLER SIDE)

T149604 -UN-17JAN02

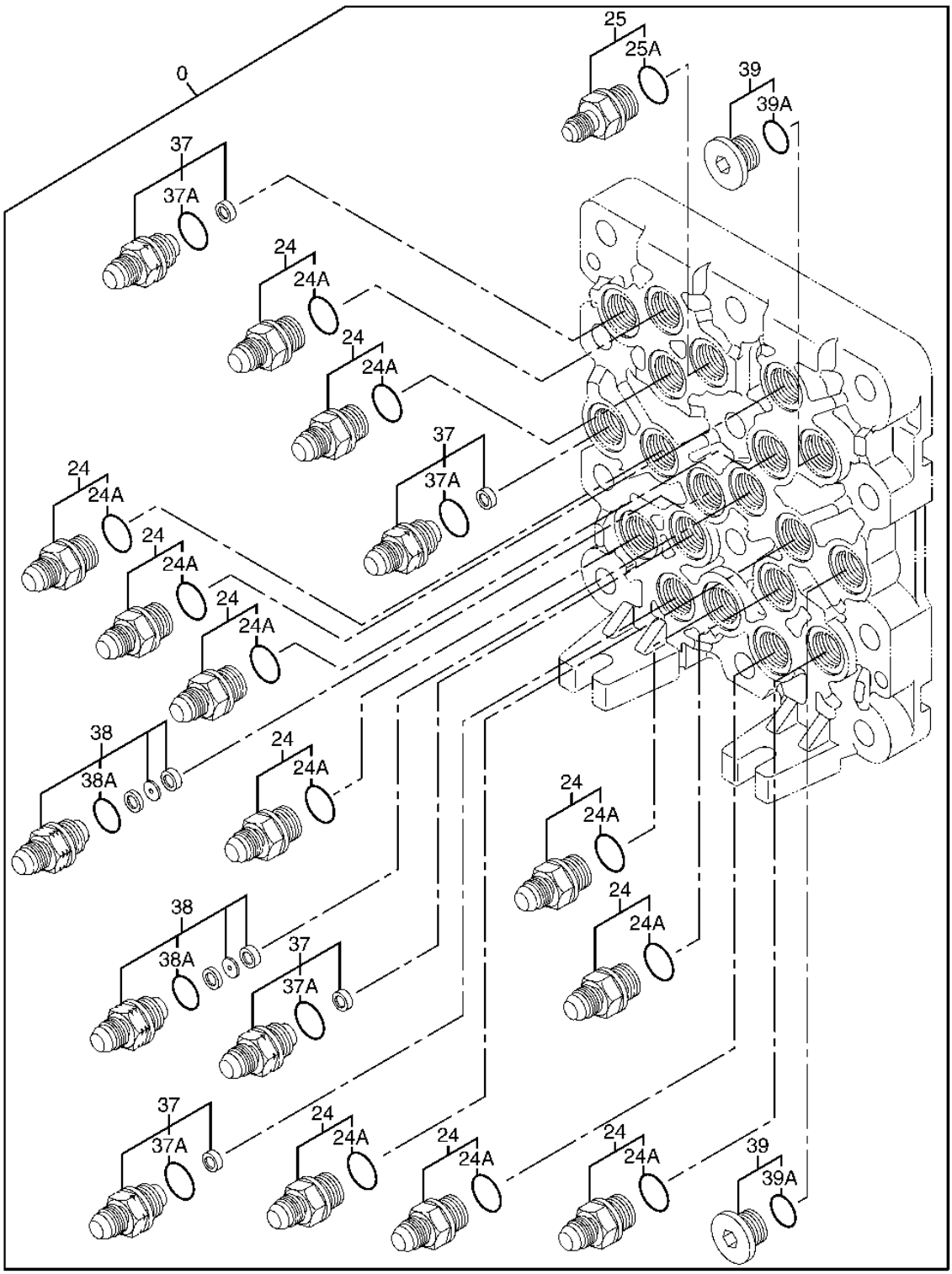

PILOT SIGNAL MANIFOLD
(PILOT CONTROLLER SIDE)

KEY	PART NO.	PART NAME	QTY	SERIAL NO.	REMARKS
0	4470661	FLOW CONTROL HYD. VALVE	1		(CONTAINS ALL PARTS ON THIS PAGE - ADDITIONAL COMPONENTS LISTED ON PREVIOUS AND FOLLOWING PAGES)
24	4451784	ADAPTER	11		(SUB FOR TH4451784)
24A	CH11570	O-RING	1		
25	4451785	ADAPTER	1		(SUB FOR TH4451785)
25A	CH11570	O-RING	1		
37	4451787	ADAPTER	4		(SUB FOR TH4451787)
37A	CH11570	O-RING	1		
38	4482233	ADAPTER	2		(SUB FOR TH4451788 OR 4451788)
38A	CH11570	O-RING	1		
39	4451789	PIPE PLUG	2		(SUB FOR TH4451789)
39A	CH11570	O-RING	1		

**PILOT SIGNAL MANIFOLD
(CONTROL VALVE SIDE)**

T149605 -UN-17JAN02

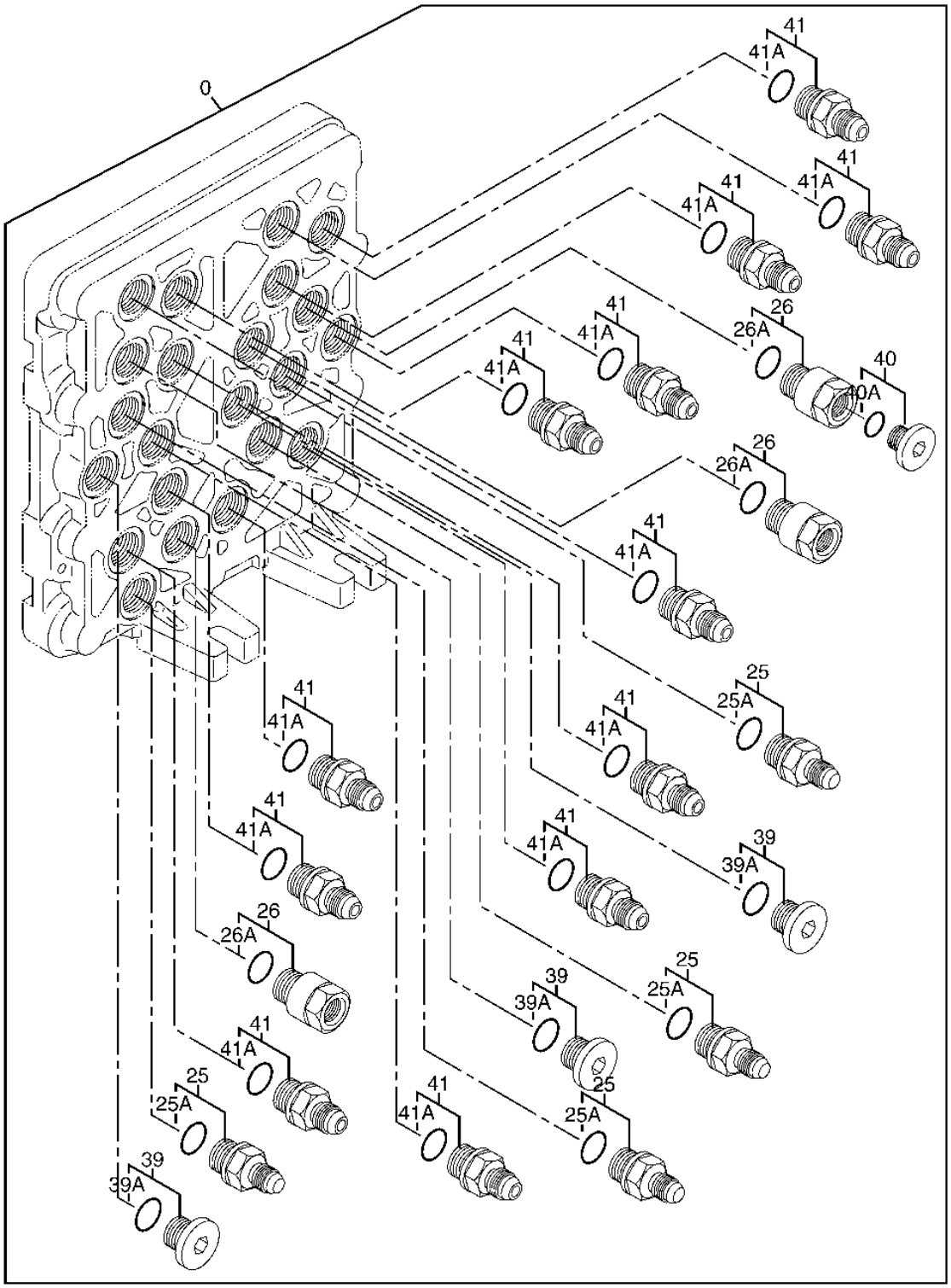

PILOT SIGNAL MANIFOLD
(CONTROL VALVE SIDE)

KEY	PART NO.	PART NAME	QTY	SERIAL NO.	REMARKS
0	4470661	FLOW CONTROL HYD. VALVE	1		(CONTAINS ALL PARTS ON THIS PAGE -ADDITIONAL COMPONENTS LISTED ON PREVIOUS AND FOLLOWING PAGES)
25	4451785	ADAPTER	4		(SUB FOR TH4451785)
25A	CH11570	O-RING	1		
26	4451786	REDUCER	3		(SUB FOR TH4451786)
26A	CH11570	O-RING	1		
39	4451789	PIPE PLUG	3		(SUB FOR TH4451789)
39A	CH11570	O-RING	1		
40	4451790	PIPE PLUG	1		(SUB FOR TH4451790)
40A	M800650	PACKING	1		
41	4451797	ADAPTER	12		(SUB FOR TH4451797)
41A	CH11570	O-RING	1		

PILOT SIGNAL MANIFOLD VALVES

T149610 -UN-05APR02

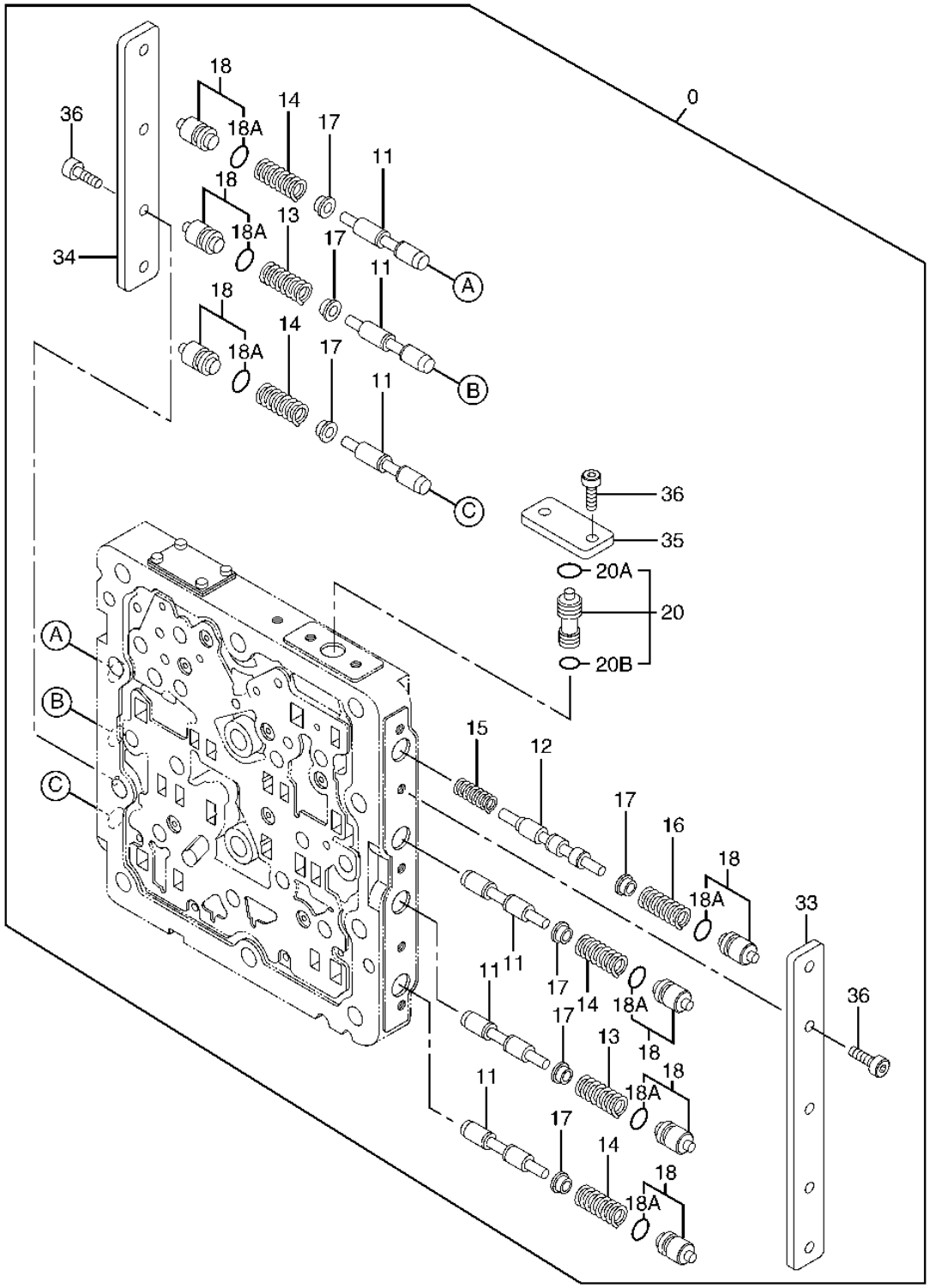

PILOT SIGNAL MANIFOLD VALVES

KEY	PART NO.	PART NAME	QTY	SERIAL NO.	REMARKS
0	4470661	FLOW CONTROL HYD. VALVE	1		(CONTAINS ALL PARTS ON THIS PAGE - ADDITIONAL COMPONENTS LISTED ON PREVIOUS PAGES)
11	4453819	SPOOL VALVE	6		(SUB FOR TH4453819)
12	4453820	SPOOL VALVE	1		(SUB FOR TH4453820)
13	0788703	SPRING	2		(SUB FOR TH0788703)
14	0788704	SPRING	4		(SUB FOR TH0788704)
15	0788705	SPRING	1		(SUB FOR TH0788705)
16	0788706	SPRING	1		(SUB FOR TH0788706)
17	0788707	VALVE SEAT	7		(SUB FOR TH0788707)
18	4452647	PIPE PLUG	7		(SUB FOR TH4452647)
18A	CH11560	PACKING	1		
20	4452648	SPOOL VALVE	1		(SUB FOR TH4452648)
20A	CH11560	PACKING	1		
20B	CH10567	PACKING	1		
33	0788710	PLATE	1		(SUB FOR TH0788710)
34	0788711	PLATE	1		(SUB FOR TH0788711)
35	0788712	PLATE	1		(SUB FOR TH0788712)
36	0788713	BOLT	11		(SUB FOR TH0788713)

SHUTTLE VALVE

TP29908 -UN-01JAN94

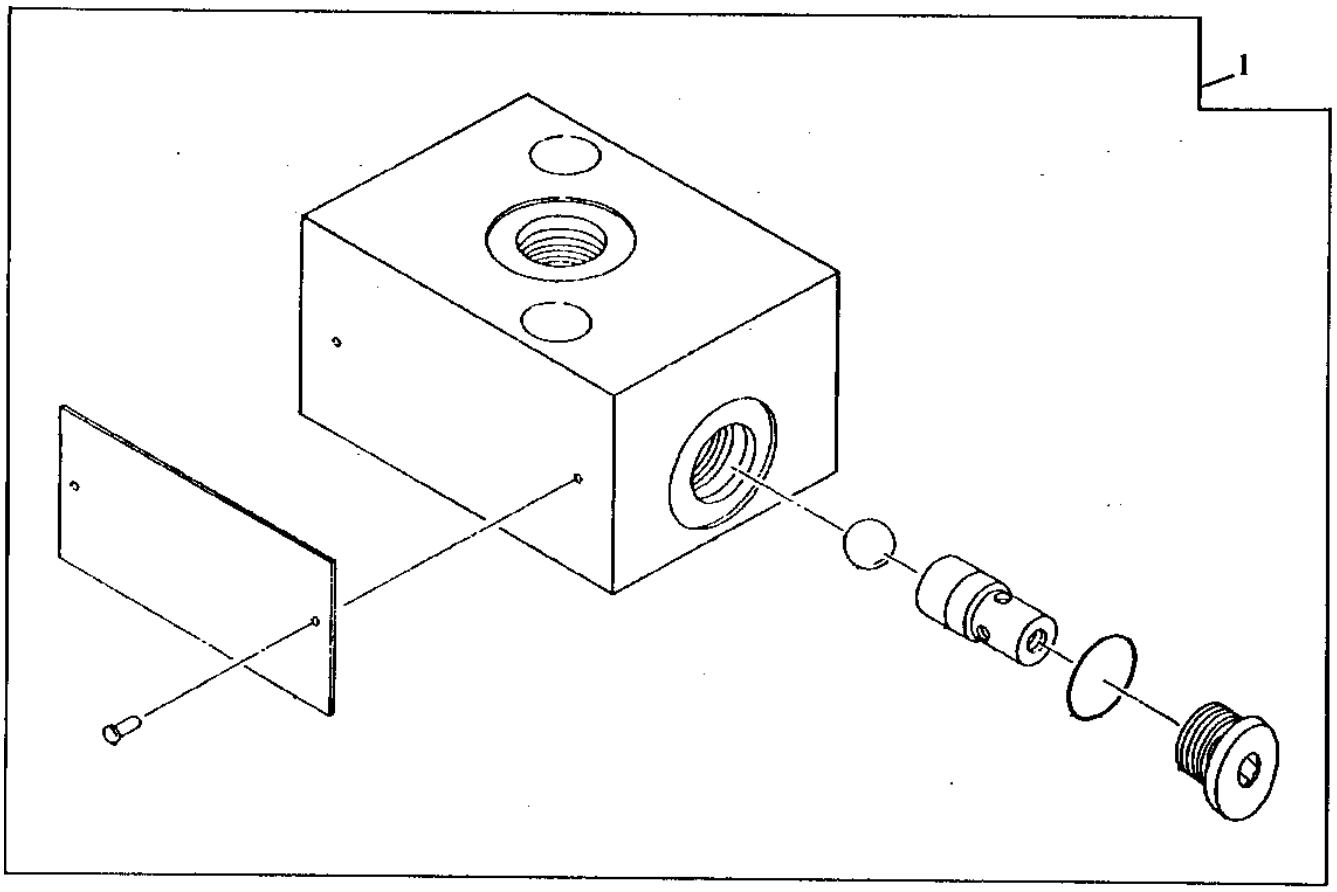

TP29908

SHUTTLE VALVE

KEY	PART NO.	PART NAME	QTY	SERIAL NO.	REMARKS
1	4195759	FLOW CONTROL HYD. VALVE	1		

LOCK VALVE

T147718 -UN-03DEC01

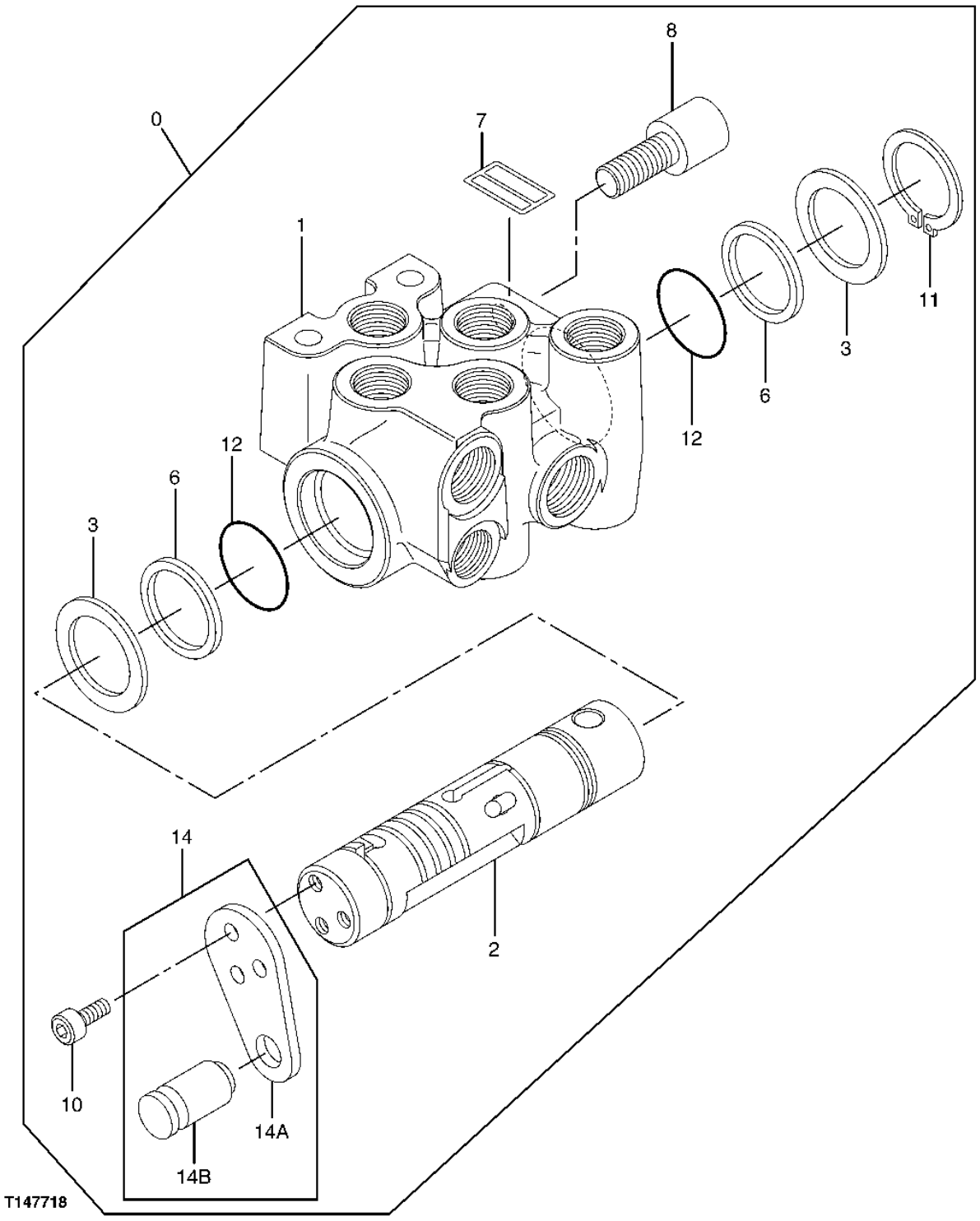

LOCK VALVE

KEY	PART NO.	PART NAME	QTY	SERIAL NO.	REMARKS
0	4407253	FLOW CONTROL HYD. VALVE	1		
1	.....	HOUSING	1		
2	.....	SPOOL VALVE	1		
3	0794201	WASHER	2		(SUB FOR TH0794201)
6	0794202	RING	2		(SUB FOR TH0794202)
7	.....	IDENTIFICATION PLATE	1		
8	0794203	PIN FASTENER	1		(SUB FOR TH0794203)
10	0794204	BOLT	3		(SUB FOR TH0794204)
11	0794205	SNAP RING	1		(SUB FOR TH0794205)
12	0794206	O-RING	2		(SUB FOR TH0794206)
14	0794207	BRACKET	1		(SUB FOR TH0794207)
14A	.....	BRACKET	1		
14B	.....	PIN	1		

FLOW CONTROL VALVE

T142591 -UN-05JUL01

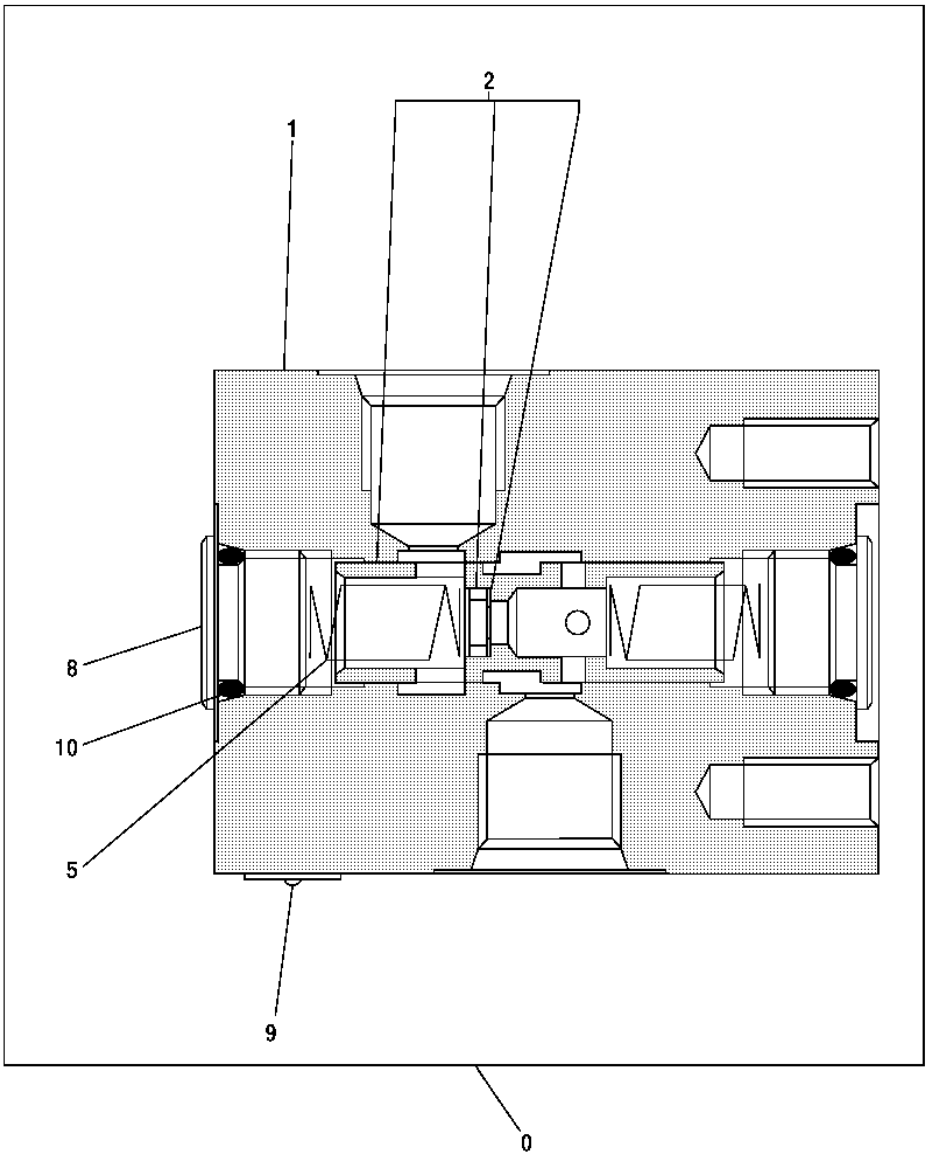

T142591

FLOW CONTROL VALVE

KEY	PART NO.	PART NAME	QTY	SERIAL NO.	REMARKS
0	4456004	FLOW CONTROL HYD. VALVE	1		
1	.....	HOUSING	1		(TH0338901 NOT AVAILABLE FOR SERVICE)
2	0338902	PLUNGER	1		
5	0309801	SPRING	2		(SUB FOR TH109280)
8	15M7036	DRAIN PLUG	2		(SUB FOR TH109285 OR 0309805)
9	0208717	SCREW	2		(SUB FOR TH102697)
10	CH11570	O-RING	2		

PILOT CHECK VALVE

T142577 -UN-18JUN01

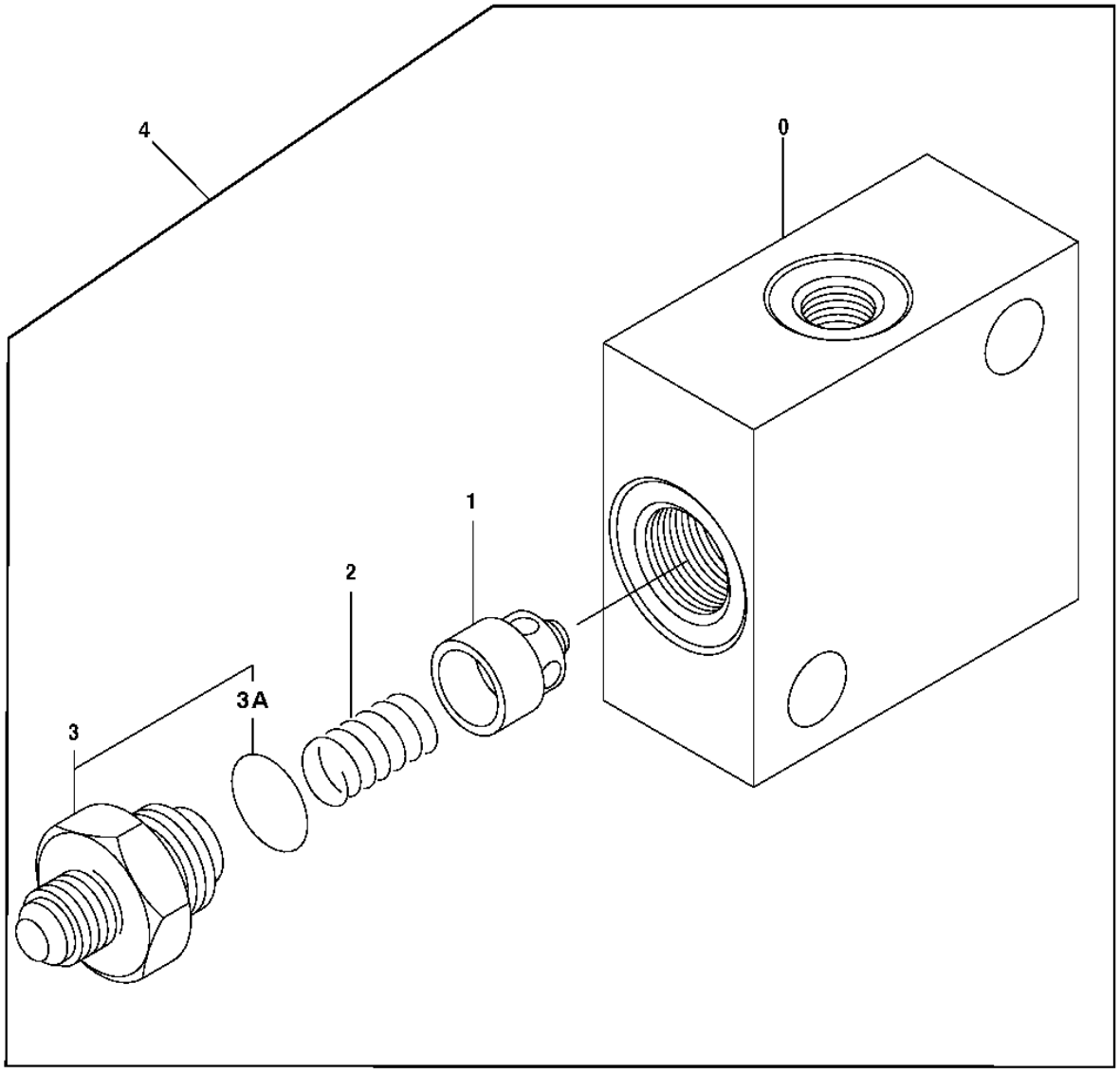

T142577

PILOT CHECK VALVE

KEY	PART NO.	PART NAME	QTY	SERIAL NO.	REMARKS
0	.....	HOUSING	1		(TH109277 NOT AVAILABLE FOR SERVICE)
1	.....	PISTON	1		(TH100840 NOT AVAILABLE FOR SERVICE)
2	4105795	SPRING	1		
3	4317779	ADAPTER	1		
3A	4506418	O-RING	1		
4	9123033	CHECK VALVE	1		

BOOM CYLINDER LOAD LOWERING VALVE COMPONENTS

T142690 -UN-28JUN01

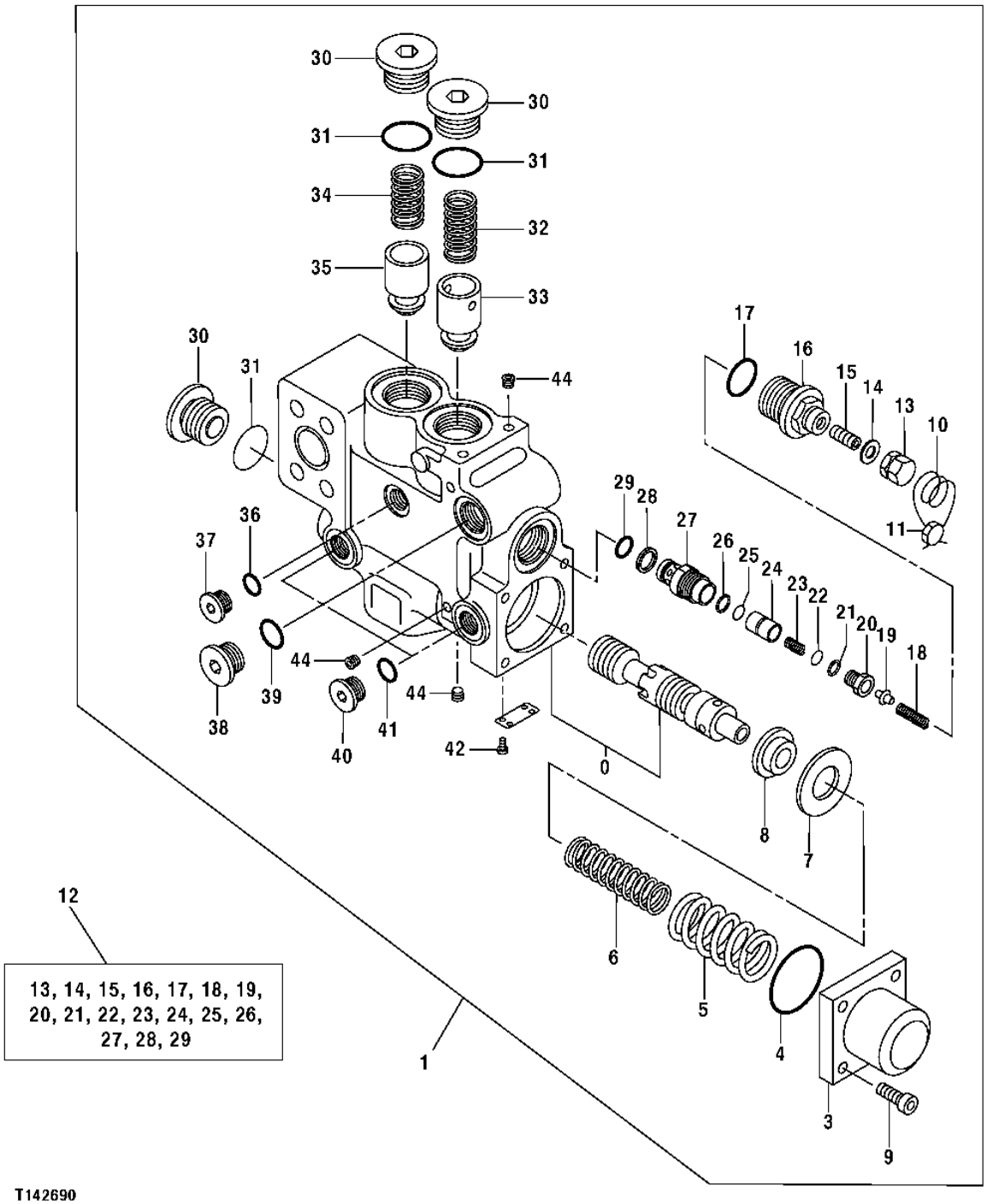

BOOM CYLINDER LOAD LOWERING VALVE COMPONENTS

KEY	PART NO.	PART NAME	QTY	SERIAL NO.	REMARKS
0	.....	HOUSING	1		(TH0663601 NOT AVAILABLE FOR SERVICE)
1	4282319	VALVE	2		
3	0658002	COVER	1		(SUB FOR AT217063)
4	CH15107	PACKING	1		
5	0658003	COMPRESSION SPRING	1		(SUB FOR AT175923)
6	0658004	COMPRESSION SPRING	1		(SUB FOR AT175924)
7	0343507	WASHER	1		(SUB FOR AT175925)
8	0658005	RETAINER	1		(SUB FOR AT175926)
9	19M8439	SCREW	4		M8 X 25
10	0658006	WIRE	2		(SUB FOR AT175927)
11	0658007	PLUG	1		(SUB FOR AT175928)
12	4276345	RELIEF VALVE	1		(INCLUDES ALL (K) PARTS)
13	.....	NUT	1		(K) (NOT AVAILABLE FOR SERVICE)
14	.....	SEAL	1		(K) (NOT AVAILABLE FOR SERVICE)
15	.....	SET SCREW	1		(K) (NOT AVAILABLE FOR SERVICE)
16	.....	PISTON	1		(K) (NOT AVAILABLE FOR SERVICE)
17	CH17886	PACKING	1		(K)
18	.....	COMPRESSION SPRING	1		(K) (NOT AVAILABLE FOR SERVICE)
19	.....	VALVE	1		(K) (NOT AVAILABLE FOR SERVICE)
20	.....	SEAT	1		(K) (NOT AVAILABLE FOR SERVICE)
21	.....	BACK-UP RING	1		(K) (NOT AVAILABLE FOR SERVICE)
22	.....	O-RING	1		(K) (NOT AVAILABLE FOR SERVICE)
23	.....	COMPRESSION SPRING	1		(K) (NOT AVAILABLE FOR SERVICE)
24	.....	POPPET	1		(K) (NOT AVAILABLE FOR SERVICE)
25	.....	O-RING	1		(K) (NOT AVAILABLE FOR SERVICE)
26	.....	BACK-UP RING	1		(K) (NOT AVAILABLE FOR SERVICE)
27	.....	SLEEVE	1		(K) (NOT AVAILABLE FOR SERVICE)
28	4038533	BACK-UP RING	1		(K) (SUB FOR TH100050)
29	CH11570	O-RING	1		(K)
30	0658008	FITTING PLUG	3		(SUB FOR AT175929)
31	TH101926	O-RING	3		
32	0343510	COMPRESSION SPRING	1		(SUB FOR AT175875)
33	0343505	PLUNGER	1		(SUB FOR AT175876)
34	0223202	COMPRESSION SPRING	1		(SUB FOR TH106368)
35	0343504	PLUNGER	1		(SUB FOR AT175932)
36	M800650	PACKING	1		
37	AT120949	FITTING PLUG	1		
38	0343611	FITTING PLUG	1		(SUB FOR AT175933)
39	4506418	O-RING	1		(SUB FOR U46489)
40	15M7036	DRAIN PLUG	2		(SUB FOR TH109285 OR 0309805)
41	CH11570	O-RING	2		
42	.....	SCREW	2		(TH105699 NOT AVAILABLE)
44	0343514	FITTING PLUG	6		(SUB FOR AT175880)

VALVE, HOLDING (ARM BOTTOM)

T149612 -UN-25JAN02

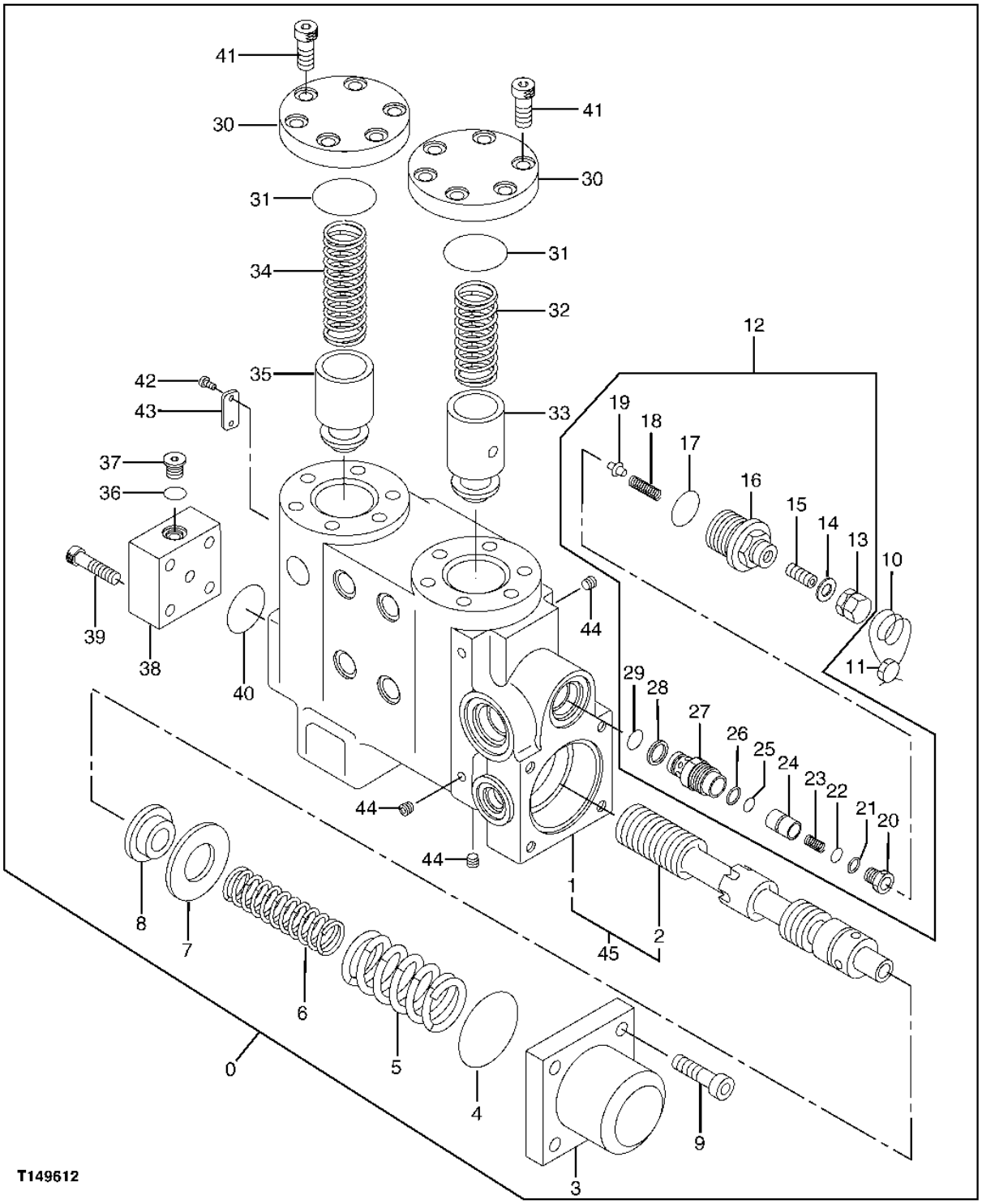

VALVE, HOLDING (ARM BOTTOM)

KEY	PART NO.	PART NAME	QTY	SERIAL NO.	REMARKS
0	4473861	FLOW CONTROL HYD. VALVE	1		(SUB FOR 4358533)
1	.....	HOUSING	1		
2	.....	SPOOL	1		
3	0658102	COVER	1		(SUB FOR AT175935)
4	AT264334	O-RING	1		(SUB FOR TH100101)
5	0658103	COMPRESSION SPRING	1		(SUB FOR AT175936)
6	0658104	COMPRESSION SPRING	1		(SUB FOR AT175939)
7	0658105	HOLDER	1		
8	0658106	HOLDER	1		(SUB FOR AT175941)
9	19M8338	SCREW	4		M10 X 40
10	0658107	WIRE	2		(SUB FOR AT175942)
11	0658108	DISK	1		(SUB FOR AT175943)
12	4483073	PRESSURE RELIEF VALVE	1		(SUB FOR 0663901)
13	.....	NUT	1		
14	.....	SEAL	1		
15	.....	SET SCREW	1		
16	.....	PLUNGER	1		
17	CH17886	PACKING	1		
18	.....	COMPRESSION SPRING	1		
19	.....	VALVE	1		
20	.....	VALVE SEAT	1		
21	.....	BACK-UP RING	1		
22	.....	PACKING	1		
23	.....	COMPRESSION SPRING	1		
24	.....	POPPET	1		
25	.....	PACKING	1		
26	.....	BACK-UP RING	1		
27	.....	SLEEVE	1		
28	4038533	BACK-UP RING	1		(SUB FOR TH100050)
29	CH11570	O-RING	1		
30	0658109	COVER	2		(SUB FOR AT175944)
31	A811040	O-RING	2		(SUB FOR AT172414)
32	0343510	COMPRESSION SPRING	1		(SUB FOR AT175875)
33	0343505	PLUNGER	1		(SUB FOR AT175876)
34	0223202	COMPRESSION SPRING	1		(SUB FOR TH106368)
35	0343504	PLUNGER	1		(SUB FOR AT175932)
36	M800650	PACKING	1		
37	TH0314205	PIPE PLUG	1		(SUB FOR AT120949)
38	0343503	COVER	1		(SUB FOR AT175878)
39	M340836	BOLT	4		(SUB FOR AT132210, 0349907)
40	AT264324	O-RING	1		(SUB FOR TH100044)
41	19M8337	SCREW	12		M10 X 30
42	TH105699	SCREW	2		
43	.....	IDENTIFICATION PLATE	1		
44	0343514	FITTING PLUG	6		(SUB FOR AT175880)
45	.....	HOUSING	1		(TH0658101 NOT AVAILABLE FOR SERVICE)

VALVE, HOLDING (ARM, ROD)

T149612 -UN-25JAN02

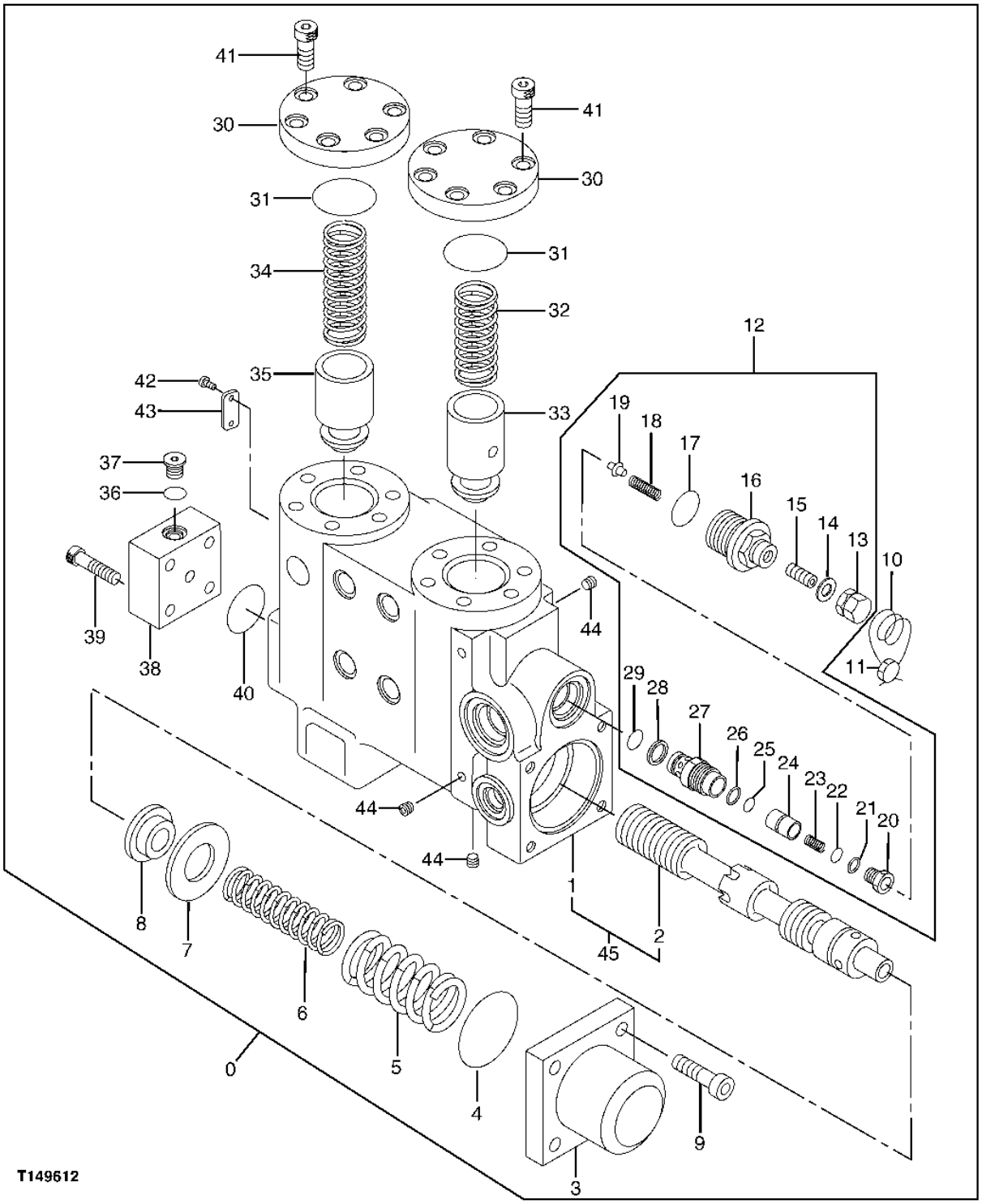

VALVE, HOLDING (ARM, ROD)

KEY	PART NO.	PART NAME	QTY	SERIAL NO.	REMARKS
0	4302811	VALVE	1		
1	.....	HOUSING	1		
2	.....	SPOOL	1		
3	0658102	COVER	1		(SUB FOR AT175866)
4	AT264334	O-RING	1		(SUB FOR TH100101)
5	0658103	COMPRESSION SPRING	1		
6	0658104	COMPRESSION SPRING	1		
7	0658105	HOLDER	1		
8	0658106	HOLDER	1		
9	19M8338	SCREW	4		M10 X 40
10	0658107	WIRE	2		
11	0658108	DISK	1		
12	4276345	RELIEF VALVE	1		
13	.....	NUT	1		
14	.....	SEAL	1		
15	.....	SET SCREW	1		
16	.....	PLUNGER	1		
17	CH17886	PACKING	1		
18	.....	COMPRESSION SPRING	1		
19	.....	VALVE	1		
20	.....	VALVE SEAT	1		
21	.....	BACK-UP RING	1		
22	.....	PACKING	1		
23	.....	COMPRESSION SPRING	1		
24	.....	POPPET	1		
25	.....	PACKING	1		
26	.....	BACK-UP RING	1		
27	.....	SLEEVE	1		
28	4038533	BACK-UP RING	1		(SUB FOR TH100050)
29	CH11570	O-RING	1		
30	0658109	COVER	2		
31	A811040	O-RING	2		(SUB FOR AT172414)
32	0343510	COMPRESSION SPRING	1		(SUB FOR AT175875)
33	0343505	PLUNGER	1		(SUB FOR AT175876)
34	0223202	COMPRESSION SPRING	1		(SUB FOR TH106368)
35	0343504	PLUNGER	1		(SUB FOR AT175932)
36	M800650	PACKING	1		
37	TH0314205	PIPE PLUG	1		(SUB FOR AT120949)
38	0343503	COVER	1		(SUB FOR AT175878)
39	M340836	BOLT	4		(SUB FOR AT132210, 0349907)
40	AT264324	O-RING	1		(SUB FOR TH100044)
41	19M8337	SCREW	12		M10 X 30
42	TH105699	SCREW	2		
43	.....	IDENTIFICATION PLATE	1		
44	0343514	FITTING PLUG	6		(SUB FOR AT175880)
45	TH0658201	HOUSING	1		

SUCTION HYDRAULIC LINES

T149984 -UN-01FEB02

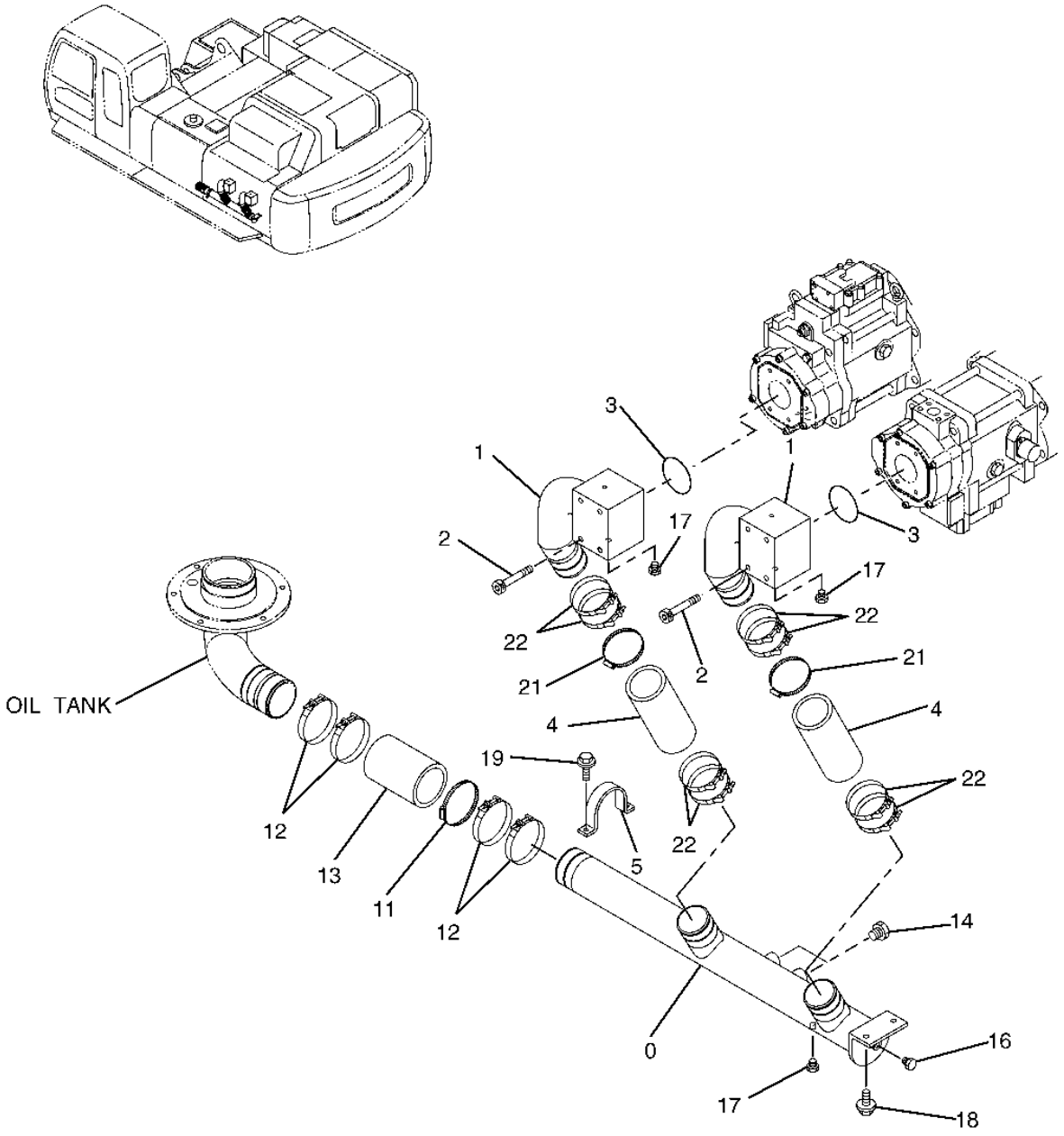

T149984

SUCTION HYDRAULIC LINES

KEY	PART NO.	PART NAME	QTY	SERIAL NO.	REMARKS
0	7040303	PIPE	1		
1	8083040	PIPE	2		
2	M341203	BOLT	8		
3	CH16109	PACKING	2		
4	4120315	HOSE	2		
5	4186854	CLAMP	1		(SUB FOR AT155248)
11	TY22476	CLAMP	1		
12	RE28140	CLAMP	4		
13	4193871	HOSE	1		(SUB FOR TH111257)
14	4174542	DRAIN PLUG	2		(SUB FOR TH110478)
	AT318035	O-RING	1		(SUB FOR 4506424)
16	15M7036	DRAIN PLUG	1		(SUB FOR 0309805) (SUB FOR 4092534, ALONG WITH CH11570)
	CH11570	O-RING	1		
17	AT318013	DRAIN PLUG	3		(SUB FOR 4093624) (SUB FOR TH102536)
	M800650	PACKING	1		
18	19M8011	CAP SCREW	2		M12 X 30
	12M7058	LOCK WASHER	2		12 MM, (SUB FOR 12M7067)
19	19M7662	CAP SCREW	2		M10 X 30
	12M7066	LOCK WASHER	2		10 MM
21	Z29925	CLAMP	2		(SUB FOR AH103182)
22	AT56658	HOSE CLAMP	8		

RETURN HYDRAULIC LINES

T149985 -UN-01FEB02

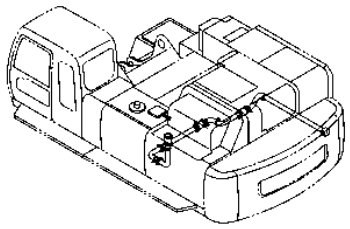

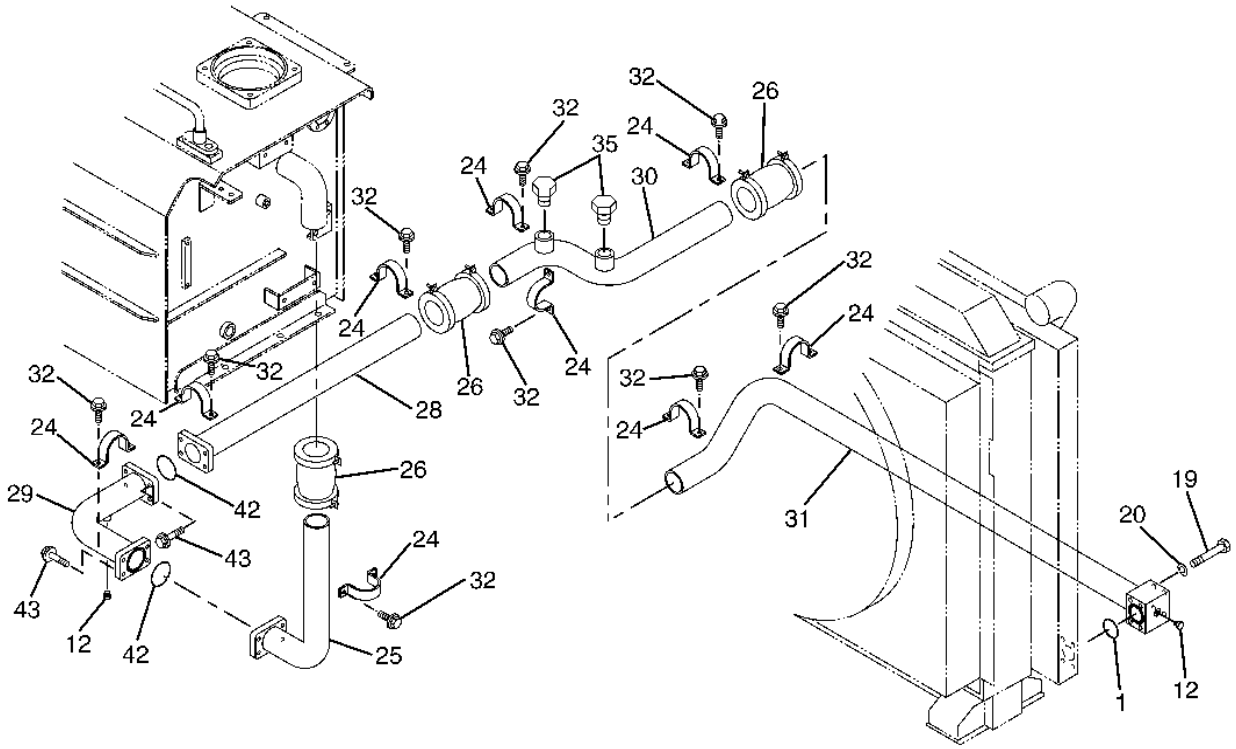

T149985

RETURN HYDRAULIC LINES

KEY	PART NO.	PART NAME	QTY	SERIAL NO.	REMARKS
1	TH105683	O-RING	1		
12	AT318013	DRAIN PLUG	2		(SUB FOR 4093624) (SUB FOR TH102536)
	M800650	PACKING	1		
19	J901204	BOLT	4		(SUB FOR THJ901204)
20	12H301	LOCK WASHER	4		1/2"
24	4000909	CLAMP	8		(SUB FOR TH101935)
25	8087991	OIL LINE	1		
26	4071215	COUPLING	3		(SUB FOR TH101898)
28	9756540	OIL LINE	1	-951001	
	9760384	PIPE	1	951002-	
29	8084137	OIL LINE	1		
30	8088405	OIL LINE	1	-951001	
	8091316	PIPE	1	951002-	
31	7040301	OIL LINE	1		
32	19M7662	CAP SCREW	16		M10 X 30
	12M7066	LOCK WASHER	16		10 MM
35	4154693	FITTING PLUG	2		(SUB FOR AT132493)
	970860	O-RING	1		(SUB FOR TH104634)
42	TH105684	O-RING	2		
43	19M8395	SCREW	8		M12 X 40, (SUB FOR 19M7496, THIS APPLICATION)
	12H301	LOCK WASHER	8		1/2"

RETURN HYDRAULIC LINES

T156582 -UN-28JUN02

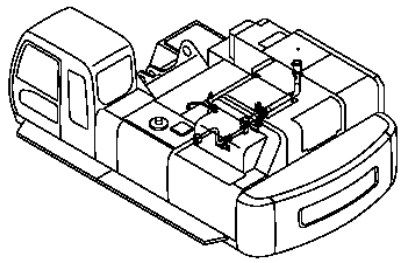

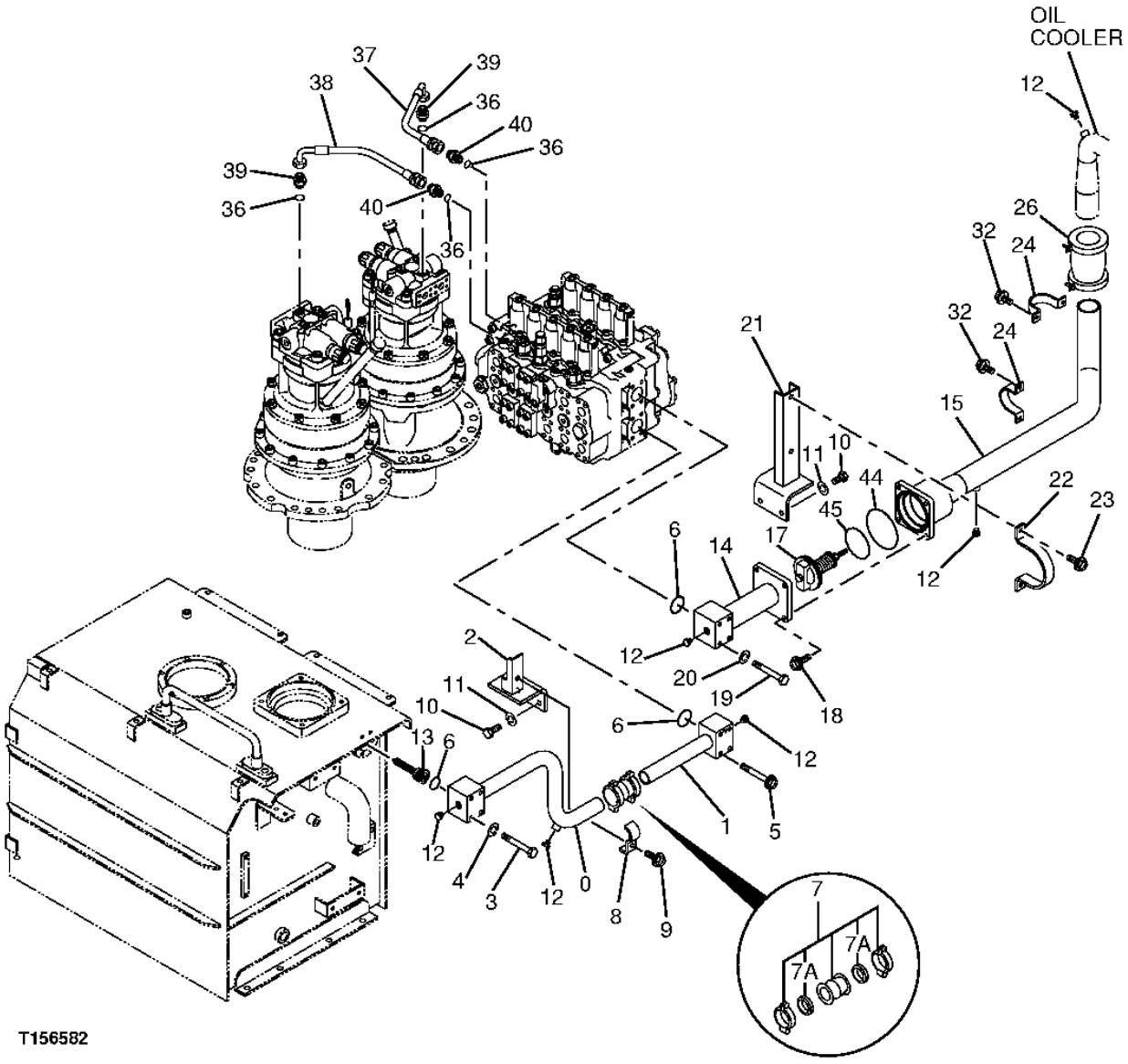

T156582

RETURN HYDRAULIC LINES

KEY	PART NO.	PART NAME	QTY	SERIAL NO.	REMARKS
0	8083946	OIL LINE	1		
1	8083947	OIL LINE	1		
2	9756553	BRACKET	1		
3	J921202	BOLT	4		
4	12H301	LOCK WASHER	4		1/2"
5	19M7949	CAP SCREW	4		M12 X 100
	12M7058	LOCK WASHER	4		12 MM, (SUB FOR 12M7067)
6	TH105683	O-RING	3		
7	4067834	COUPLING	1		(SUB FOR TH102945)
7A	4196260	SEAL	2		(SUB FOR TH106967)
8	4053697	CLAMP	1		(SUB FOR TH101030)
9	19M7753	CAP SCREW	1		M12 X 70
	12H301	LOCK WASHER	1		1/2"
10	19M7404	CAP SCREW	4		M14 X 40
11	12H317	LOCK WASHER	4		9/16"
12	AT318013	DRAIN PLUG	6		(SUB FOR 4093624) (SUB FOR TH102536)
	M800650	PACKING	1		
13	4453609	FLOW CONTROL HYD. VALVE	1		
14	8083975	OIL LINE	1		
15	7040504	OIL LINE	1		
17	4433092	FLOW CONTROL HYD. VALVE	1		
18	19M7493	CAP SCREW	4		M12 X 40
	12H301	LOCK WASHER	4		1/2"
19	J901204	BOLT	4		(SUB FOR THJ901204)
20	12H301	LOCK WASHER	4		1/2"
21	9756223	BRACKET	1		
22	4246954	CLAMP	1		(SUB FOR AT202105)
23	19M7403	CAP SCREW	2		M12 X 35
	12H301	LOCK WASHER	2		1/2"
24	4000909	CLAMP	2		(SUB FOR TH101935)
26	4071215	COUPLING	1		(SUB FOR TH101898)
32	19M7662	CAP SCREW	4		M10 X 30
	12M7066	LOCK WASHER	4		10 MM
36	T77858	O-RING	4		
37	AT200722	HYDRAULIC HOSE - FABRICATE	1		
38	4300369	HOSE	1		(SUB FOR AT173776)
39	4189619	ADAPTER	2		(SUB FOR AT107392)
	AT318035	O-RING	1		(SUB FOR 4506424)
40	AT318016	ADAPTER	2		(SUB FOR 4189537, TH110496)
	TH101926	O-RING	1		
44	TH104589	O-RING	1		
45	4154331	O-RING	1		(SUB FOR TH4154331)

DELIVERY HYDRAULIC LINES

T155083 -UN-22MAY02

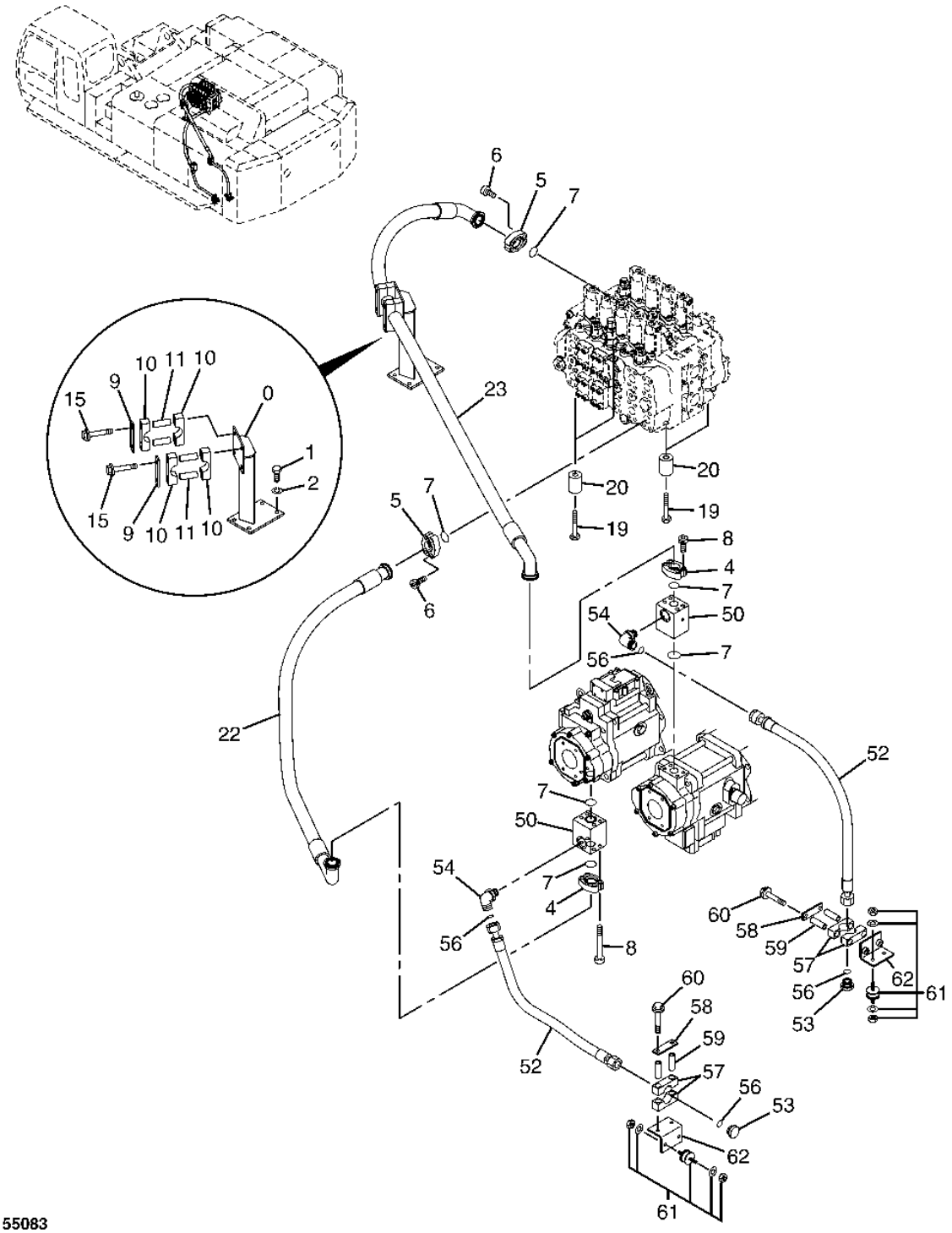

T155083

DELIVERY HYDRAULIC LINES

KEY	PART NO.	PART NAME	QTY	SERIAL NO.	REMARKS
0	8083130	BRACKET	1		
1	19M7493	CAP SCREW	4		M12 X 40
2	12H301	LOCK WASHER	4		1/2"
4	4075853	FLANGE FITTING	4		(SUB FOR TH4075853)
5	AT131685	FLANGE FITTING	4		
6	19M8734	SCREW	8		M14 X 45
7	T72216	O-RING	4		
8	M341204	BOLT	8		(SUB FOR AT132272)
9	4207038	STRAP	2		(SUB FOR AT131811)
10	4207036	CLAMP	4		(SUB FOR AT131809)
11	4207037	SPACER	4		(SUB FOR AT131810)
15	19M7949	CAP SCREW	4		M12 X 100
	12M7058	LOCK WASHER	4		12 MM, (SUB FOR 12M7067)
19	19M7883	SCREW	4		M20 X 120
20	4404273	SPACER	4		(SUB FOR TH4404273)
22	4460094	HYDRAULIC HOSE	1		
23	4450082	HYDRAULIC HOSE	1		
50	2046563	JUNCTION BLOCK	2		
52	4286814	HYDRAULIC HOSE	2		
53	4210056	PLUG	2		(SUB FOR AT202300)
54	4198799	ELBOW FITTING	2		(SUB FOR TH108325)
	TH101926	O-RING	1		
56	T76938	O-RING	4		
57	4349621	HOSE CLAMP	4		(SUB FOR AT170625)
58	4341803	PLATE	2		(SUB FOR AT201827)
59	4349648	SPACER	4		(SUB FOR AT170626)
60	19M7949	CAP SCREW	4		M12 X 100
	12M7058	LOCK WASHER	4		12 MM, (SUB FOR 12M7067)
61	4354592	ISOLATOR	4		(SUB FOR AT216977)
62	9747606	BRACKET	2		(SUB FOR AT217041)

DRAIN HYDRAULIC LINES

T149987 -UN-01FEB02

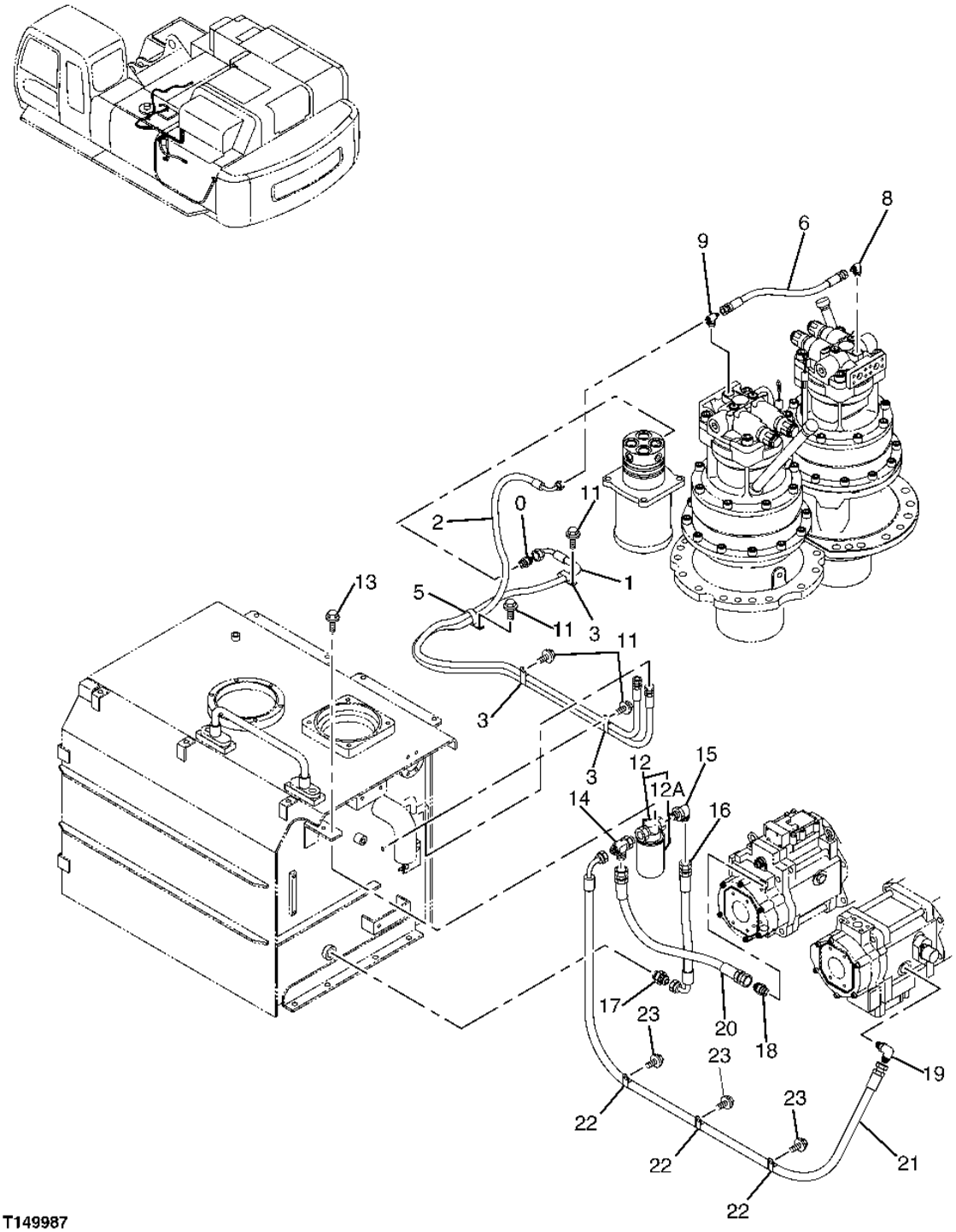

T149987

DRAIN HYDRAULIC LINES

KEY	PART NO.	PART NAME	QTY	SERIAL NO.	REMARKS
0	A852144	ADAPTER	1		(SUB FOR THA852144)
	4506418	O-RING	1		(SUB FOR U46489)
1	4313442	HYDRAULIC HOSE	1		
2	4313443	HYDRAULIC HOSE	1		
3	4190266	CLIP	3		(SUB FOR TH108793)
5	4193848	CLIP	1		(SUB FOR TH110522)
6	4453966	HYDRAULIC HOSE	1		
8	A852334	ELBOW FITTING	1		(SUB FOR THA852334)
	CH11570	O-RING	1		
9	A852534	TEE FITTING	1		(SUB FOR THA852534)
9A	CH11570	O-RING	1		
11	19M7938	CAP SCREW	4		M10 X 20, (SUB FOR J271020) (SUB FOR 19M7402, J011022, THIS APPLICATION)
	24M7346	WASHER	4		11 X 20 X 2 MM
12	4362444	FILTER	1		(SUB FOR AT175916)
12A	4363399	FILTER ELEMENT	1		(SUB FOR AT175919)
13	19M7402	CAP SCREW	2		M10 X 25
	12M7066	LOCK WASHER	2		10 MM
14	4317618	HYDRAULIC HOSE	1		(SUB FOR TH4317618)
	TH101926	O-RING	1		
15	4156436	ELBOW FITTING	1		(SUB FOR TH101925)
	TH101926	O-RING	1		
16	4375182	HYDRAULIC HOSE	1		
17	4214444	ADAPTER	1		(SUB FOR TH4214444)
	TH101926	O-RING	1		
18	A852166	ADAPTER	1		
	AT318035	O-RING	1		(SUB FOR 4506424)
19	A852366	ELBOW FITTING	1		
	AT318035	O-RING	1		(SUB FOR 4506424)
20	4362764	HYDRAULIC HOSE	1		
21	4328599	HYDRAULIC HOSE	1		
22	4192035	CLIP	3		(SUB FOR TH108459)
23	19M7938	CAP SCREW	3		M10 X 20
	12M7066	LOCK WASHER	3		10 MM

MAIN HYDRAULIC LINES

TP66707 -UN-30SEP99

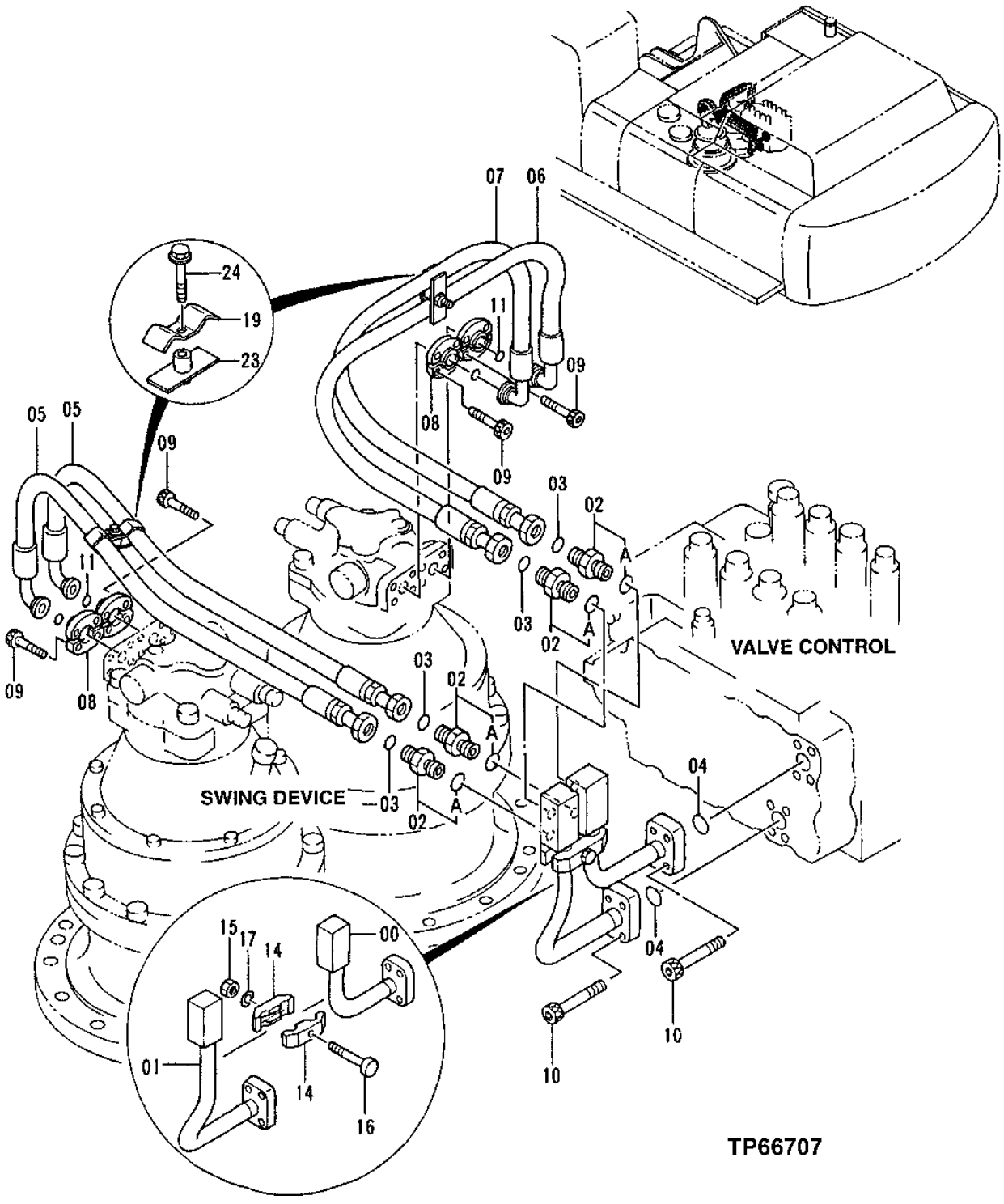

MAIN HYDRAULIC LINES

KEY	PART NO.	PART NAME	QTY	SERIAL NO.	REMARKS
0	8038955	OIL LINE	1		(SUB FOR AT132066)
1	8055536	OIL LINE	1		(SUB FOR AT201895)
2	4189619	ADAPTER	4		(SUB FOR AT107392)
2A	AT318035	O-RING	1		(SUB FOR 4506424, TH100055)
3	T77858	O-RING	4		18.771 X 1.778 MM (0.739" X 0.070")
4	T72216	O-RING	2		37.694 X 3.531 MM (1-31/64" X 0.139")
5	4314398	HYDRAULIC HOSE - FABRICATE	2		(SUB FOR TH4314398)
6	4343422	HYDRAULIC HOSE - FABRICATE	1		(SUB FOR TH4343422)
7	4314399	HYDRAULIC HOSE - FABRICATE	1		(SUB FOR TH4314399)
8	R29424	FLANGE FITTING	8		
9	19M8337	SCREW	16		M10 X 30
10	19M8734	SCREW	8		M14 X 45
11	T59014	O-RING	4		24.994 X 3.531 MM (63/64" X 0.139")
14	4053599	CLAMP	2		(SUB FOR TH101980)
15	14M7275	NUT	1		M12
16	19M7753	CAP SCREW	1		M12 X 70
17	12H301	LOCK WASHER	1		1/2"
19	4202103	CLAMP	2		(SUB FOR TH108302)
23	9727822	CLAMP	2		(SUB FOR TH109556)
24	19M8348	CAP SCREW	2	-951019	M12 X 65
	19M7363	CAP SCREW	2	951020-	M12 X 60
	12H301	LOCK WASHER	2	-951019	12.700 MM (1/2")
	24M7047	WASHER	2	951020-	13 X 24 X 2.500 MM (0.512" X 0.945" X 0.098")

MAIN HYDRAULIC LINES

TP67008 -UN-20DEC99

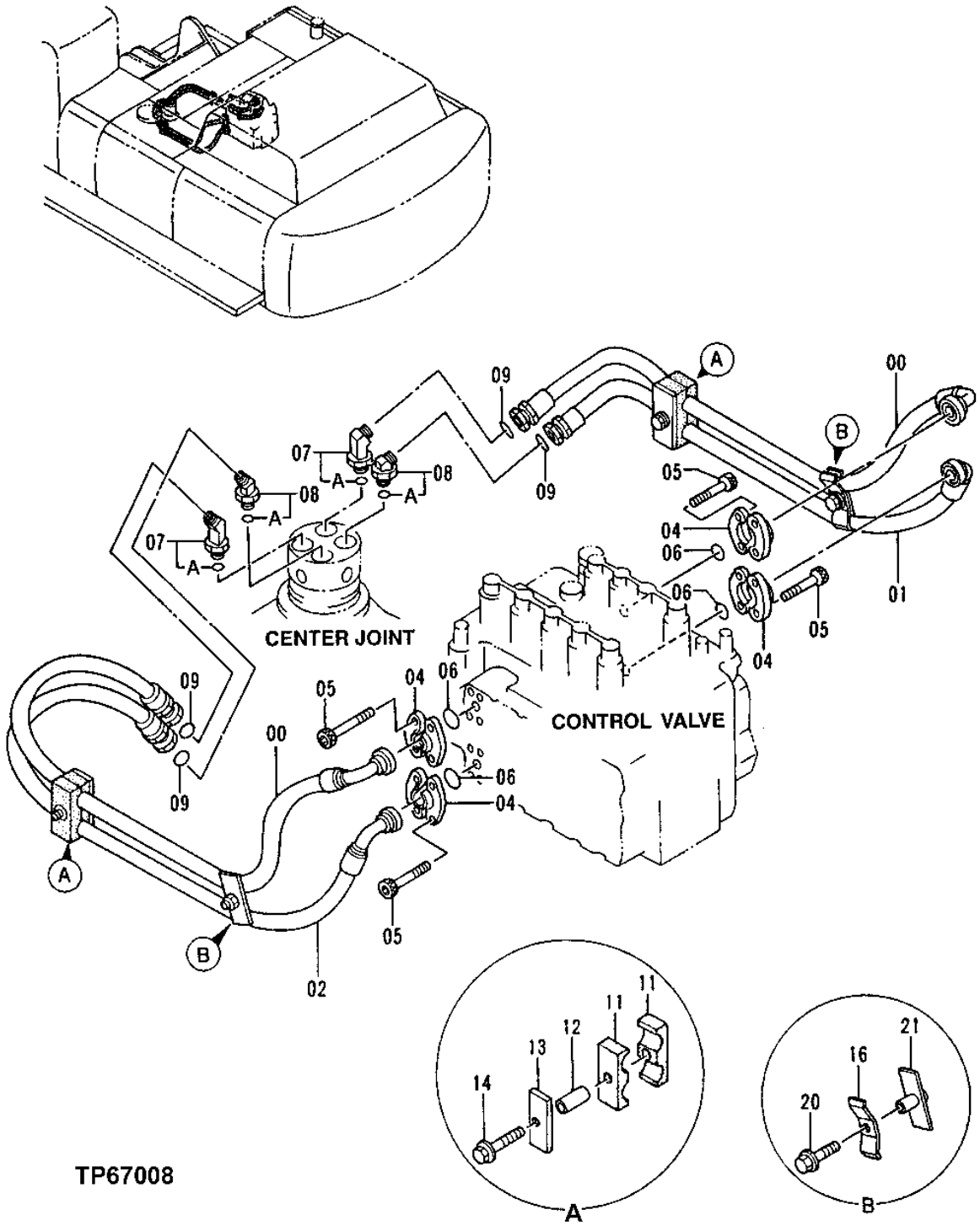

MAIN HYDRAULIC LINES

KEY	PART NO.	PART NAME	QTY	SERIAL NO.	REMARKS
0	4314074	HYDRAULIC HOSE	2		(SUB FOR TH4314074)
1	4314075	HYDRAULIC HOSE - FABRICATE	1		(SUB FOR TH4314075)
2	4314076	HYDRAULIC HOSE - FABRICATE	1		(SUB FOR TH4314076)
4	AT131685	FLANGE FITTING	8		
5	19M8734	SCREW	16		M14 X 45
6	T72216	O-RING	4		37.694 X 3.531 MM (1-31/64" X 0.139")
7	4274593	ELBOW FITTING	2		(SUB FOR AT201740)
7A	TH101926	O-RING	1		28.700 X 3.500 MM (1.130" X 0.138")
8	4270315	ELBOW FITTING	2		(SUB FOR AT201732)
8A	TH101926	O-RING	1		28.700 X 3.500 MM (1.130" X 0.138")
9	T76938	O-RING	4		23.520 X 1.778 MM (0.926" X 0.070")
11	4205615	HOSE CLAMP	4		(SUB FOR AT131792)
12	4205614	SPACER	2		(SUB FOR AT131791)
13	4224002	STRAP	2		(SUB FOR AT131918)
14	19M8122	CAP SCREW	2		M12 X 85
	12M7058	LOCK WASHER	2		12 MM, (SUB FOR 12M7067)
16	4202103	CLAMP	2		(SUB FOR TH108302)
20	19M8348	CAP SCREW	2	-951019	M12 X 65
	19M7363	CAP SCREW	2	951020-	M12 X 60
	12H301	LOCK WASHER	2	-951019	12.700 MM (1/2")
	24M7047	WASHER	2	951020-	13 X 24 X 2.500 MM (0.512" X 0.945" X 0.098")
21	9744089	CLAMP	2		(SUB FOR AT202385)

MAIN HYDRAULIC LINES
(ARM, BOOM AND BUCKET CYLINDER LINES)

T155087 -UN-22MAY02

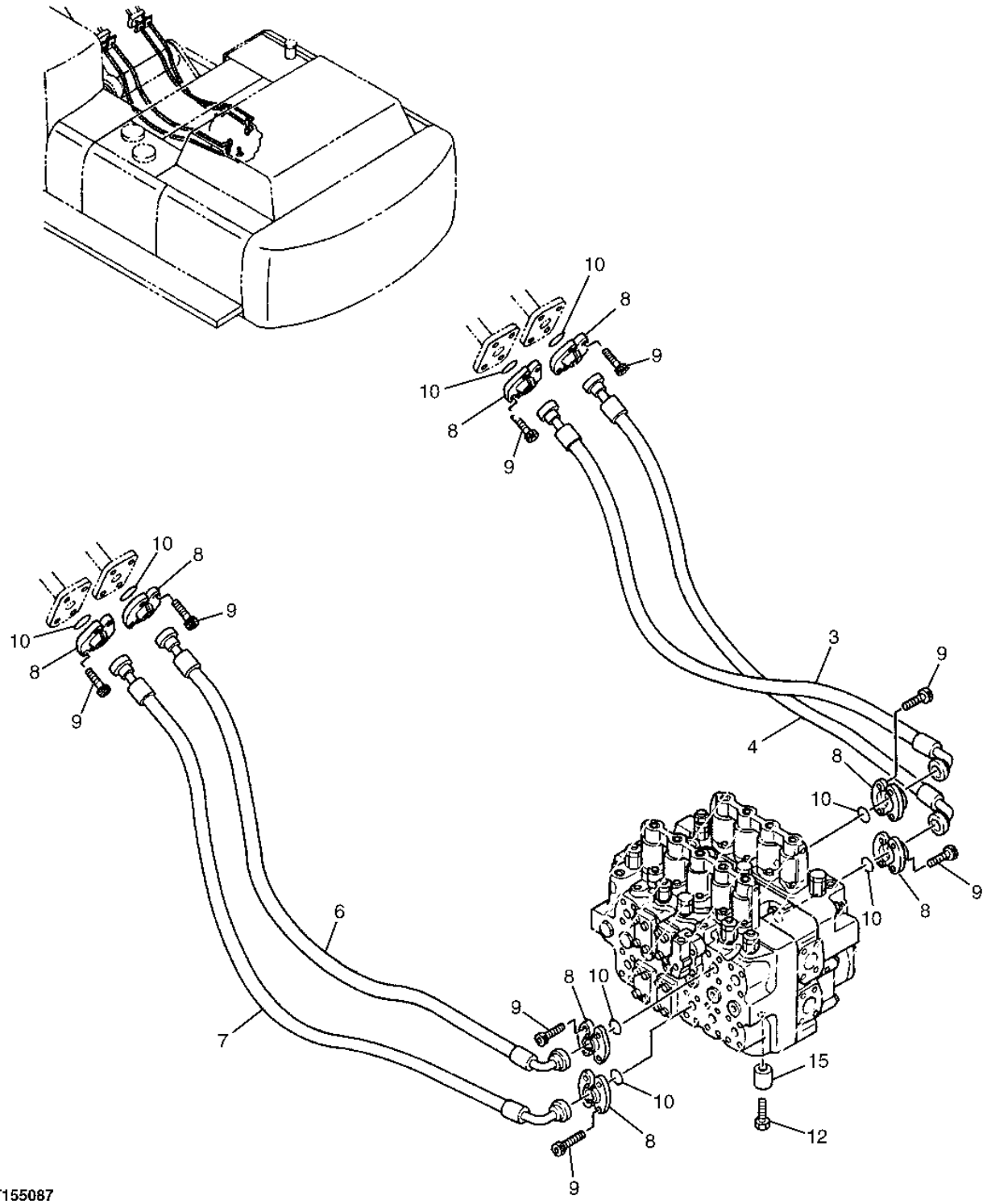

MAIN HYDRAULIC LINES
(ARM, BOOM AND BUCKET CYLINDER LINES)

KEY	PART NO.	PART NAME	QTY	SERIAL NO.	REMARKS
3	4309074	HYDRAULIC HOSE	1		(SUB FOR TH4309074)
4	4389856	HYDRAULIC HOSE	1		(SUB FOR TH4389856)
6	4309072	HYDRAULIC HOSE	1		(SUB FOR TH4309072)
7	4389857	HYDRAULIC HOSE	1		(SUB FOR TH4389857)
8	AT131685	FLANGE FITTING	16		
9	19M8734	SCREW	32		M14 X 45
10	T72216	O-RING	8		37.694 X 3.531 MM (1-31/64" X 0.139")
12	19M7963	CAP SCREW	4		M20 X 100
15	4354513	SPACER	4		(SUB FOR AT172243)

MAIN HYDRAULIC LINES

T149991 -UN-01FEB02

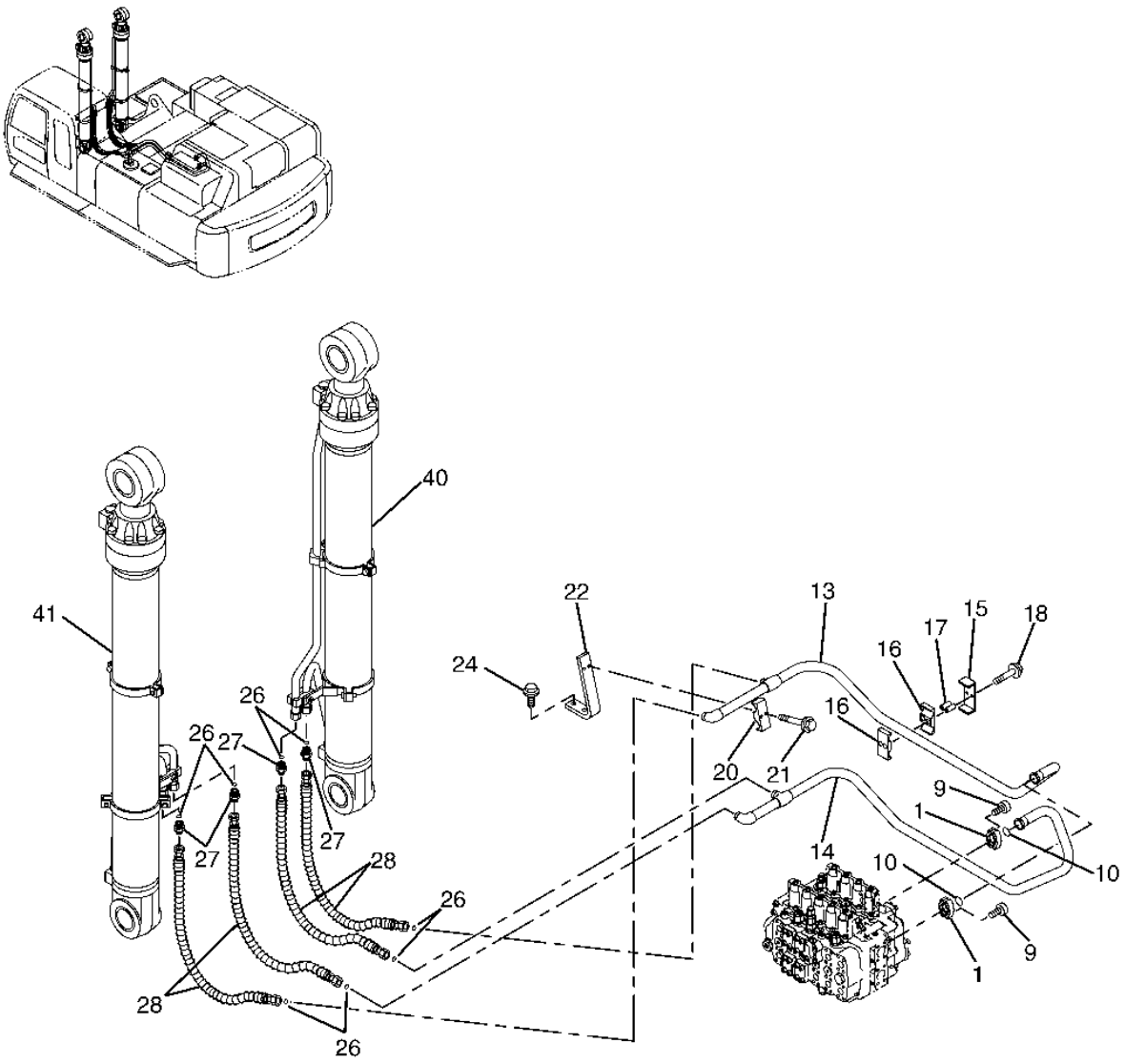

T149991

MAIN HYDRAULIC LINES

KEY	PART NO.	PART NAME	QTY	SERIAL NO.	REMARKS
1	AT131685	FLANGE FITTING	4		
9	19M8734	SCREW	8		M14 X 45
10	T72216	O-RING	2		
13	7044130	OIL LINE	1		(ALSO ORDER 7044129) (SUB FOR 7026687) (SUB FOR TH7026687)
14	7044129	OIL LINE	1		(ALSO ORDER 7044130) (SUB FOR 7026686) (SUB FOR TH7026686)
15	4304481	CLAMP	1		(SUB FOR AT201755)
16	4337125	CLAMP	2		(SUB FOR TH4337125)
17	28H2611	SPACER	2		
18	19M8122	CAP SCREW	2		M12 X 85
	12M7058	LOCK WASHER	2		12 MM, (SUB FOR 12M7067)
20	4205816	CLAMP	1		(SUB FOR AT131793)
21	19M8088	CAP SCREW	2		M12 X 75
	12M7058	LOCK WASHER	2		12 MM, (SUB FOR 12M7067)
	24M7407	WASHER	2		18 X 28 X 4 MM
22	3038898	BRACKET	1		(SUB FOR AT131632)
24	19M7493	CAP SCREW	2		M12 X 40
	12H301	LOCK WASHER	2		1/2"
26	T76938	O-RING	8		
27	4189535	ADAPTER	4		(SUB FOR AT114853)
	TH101926	O-RING	1		
28	AT168737	HYDRAULIC HOSE - FABRICATE	4		
40	.....	HYDRAULIC CYLINDER	1		(TH4309332 NO LONGER AVAILABLE FOR SERVICE)
41	.....	HYDRAULIC CYLINDER	1		(TH4309333 NO LONGER AVAILABLE FOR SERVICE)

PILOT HYDRAULIC LINES

T149446 -UN-23JAN02

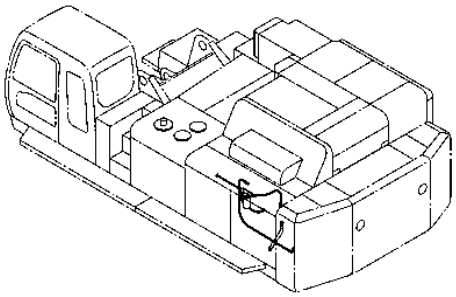

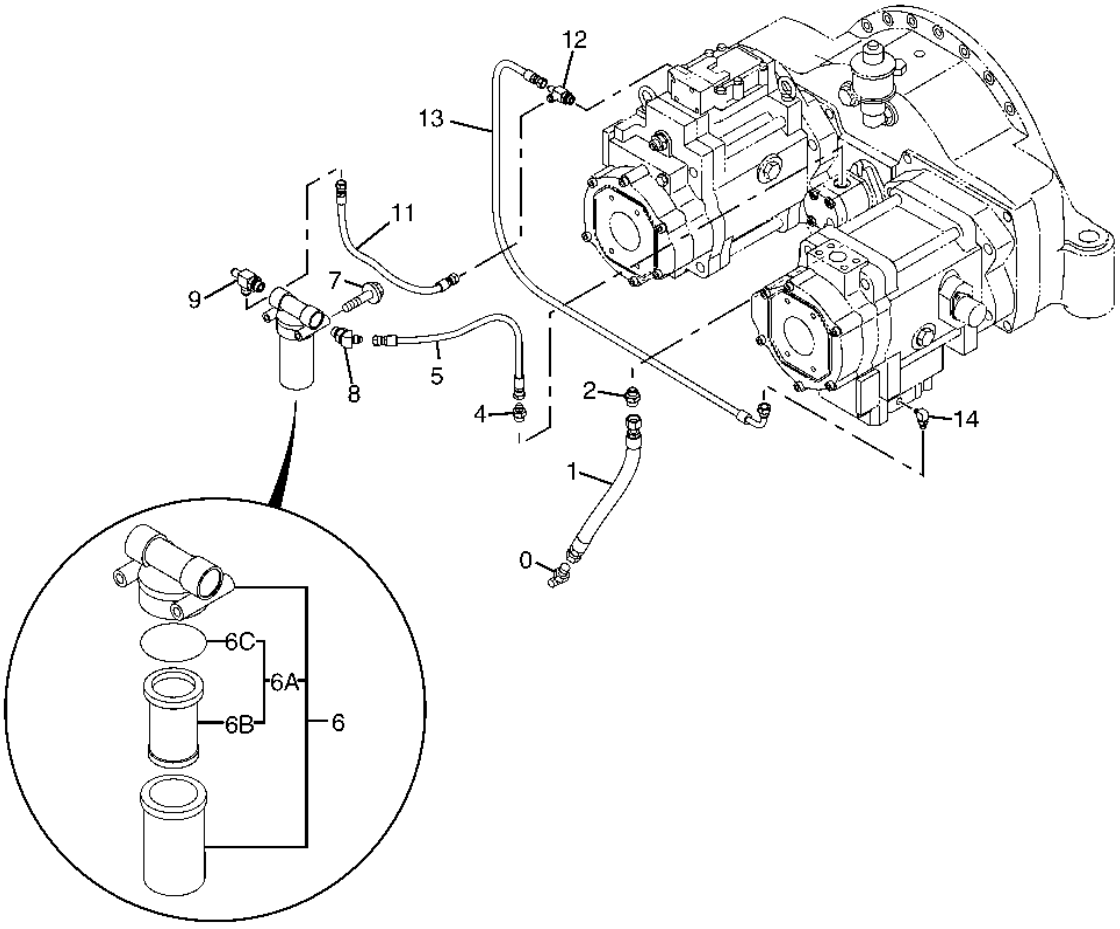

T149446

PILOT HYDRAULIC LINES

KEY	PART NO.	PART NAME	QTY	SERIAL NO.	REMARKS
0	A852366	ELBOW FITTING	1		
	AT318035	O-RING	1		(SUB FOR 4506424, TH100055)
1	4316026	HYDRAULIC HOSE	1		
2	A852166	ADAPTER	1		
	AT318035	O-RING	1		(SUB FOR 4506424, TH100055)
4	A852144	ADAPTER	1		(SUB FOR THA852144)
	4506418	O-RING	1		(SUB FOR U46489)
5	AP36458	HYDRAULIC HOSE	1		
6	4191300	FILTER	1		(SUB FOR TH108402)
6A	AT186554	FILTER ELEMENT	1		
6B	AT186554	FILTER ELEMENT	1		
6C	AT264334	O-RING	1		(SUB FOR TH100101)
7	19M8093	CAP SCREW	2		M10 X 100
	12M7066	LOCK WASHER	2		10 MM
8	A852244	ELBOW FITTING	1		(SUB FOR THA852244)
	4506418	O-RING	1		(SUB FOR U46489)
9	4303003	TEE FITTING	1		(SUB FOR AT202321)
	4506418	O-RING	1		(SUB FOR U46489)
11	4441409	HYDRAULIC HOSE	1		
12	A852423	TEE FITTING	1		(SUB FOR THA852423)
	M800650	PACKING	1		
13	4449267	HYDRAULIC HOSE	1		
14	P67988	ELBOW FITTING	1		
	M800650	PACKING	1		

PILOT HYDRAULIC LINES

T149993 -UN-01FEB02

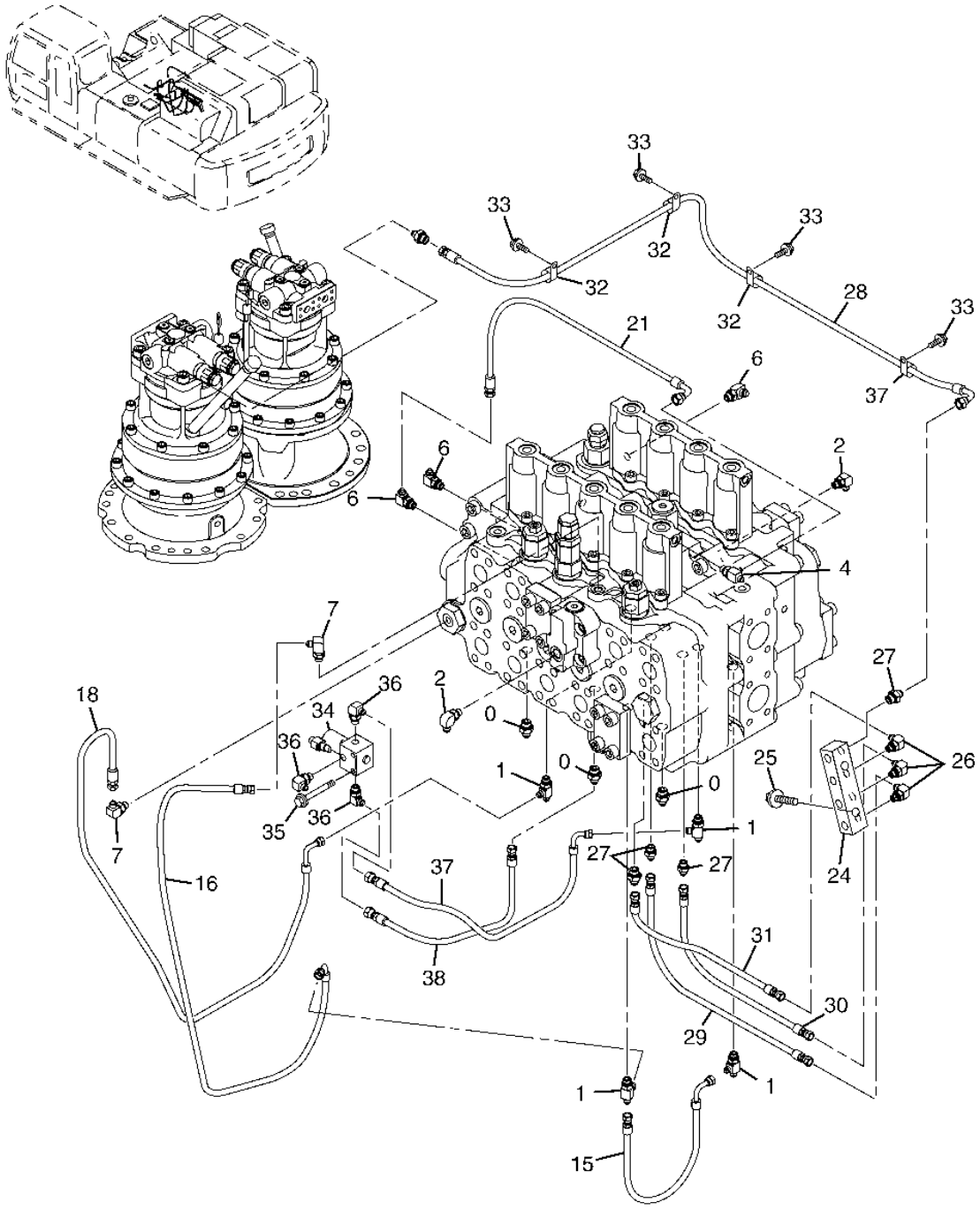

T149993

PILOT HYDRAULIC LINES

KEY	PART NO.	PART NAME	QTY	SERIAL NO.	REMARKS
0	A852133	ADAPTER	3		
	CH11570	O-RING	1		
1	A852433	TEE FITTING	4		(SUB FOR THA852433)
	CH11570	O-RING	1		
2	P67989	ELBOW FITTING	2		
	CH11570	O-RING	1		
4	A852422	TEE FITTING	1		(SUB FOR THA852422)
	M800650	PACKING	1		
6	4154670	ELBOW FITTING	3		(SUB FOR A852322, P67984 OR THA852322)
	M800650	PACKING	1		
7	P67988	ELBOW FITTING	2		
	M800650	PACKING	1		
15	4449629	HYDRAULIC HOSE	1		
16	4449630	HYDRAULIC HOSE	1		
18	4449632	HYDRAULIC HOSE	1		
21	4437412	HYDRAULIC HOSE	1		
24	4451778	MANIFOLD	1		
25	19M8655	CAP SCREW	2		M10 X 55
	12M7066	LOCK WASHER	2		10 MM
26	4154670	ELBOW FITTING	3		(SUB FOR A852322, P67984 OR THA852322)
	M800650	PACKING	1		
27	P67968	ADAPTER	3		
	M800650	PACKING	1		
28	4465688	HYDRAULIC HOSE - FABRICATE	1		(4454900 NO LONGER AVAILABLE)
29	4451816	HYDRAULIC HOSE	1		
30	4451817	HYDRAULIC HOSE	1		
31	4451818	HYDRAULIC HOSE	1		
32	4190272	CLIP	4		(SUB FOR TH108600)
33	19M7938	CAP SCREW	4		M10 X 20
	12M7066	LOCK WASHER	4		10 MM
34	4261289	SOLENOID VALVE	1		(SUB FOR AT202111)
35	.....	BOLT	2		(AT200004 NOT AVAILABLE FOR SERVICE)
36	P67988	ELBOW FITTING	3		
	M800650	PACKING	1		
37	4454898	HYDRAULIC HOSE	1		
38	4454899	HYDRAULIC HOSE	1		

CONTROL VALVE HYDRAULIC LINES

T149994 -UN-01FEB02

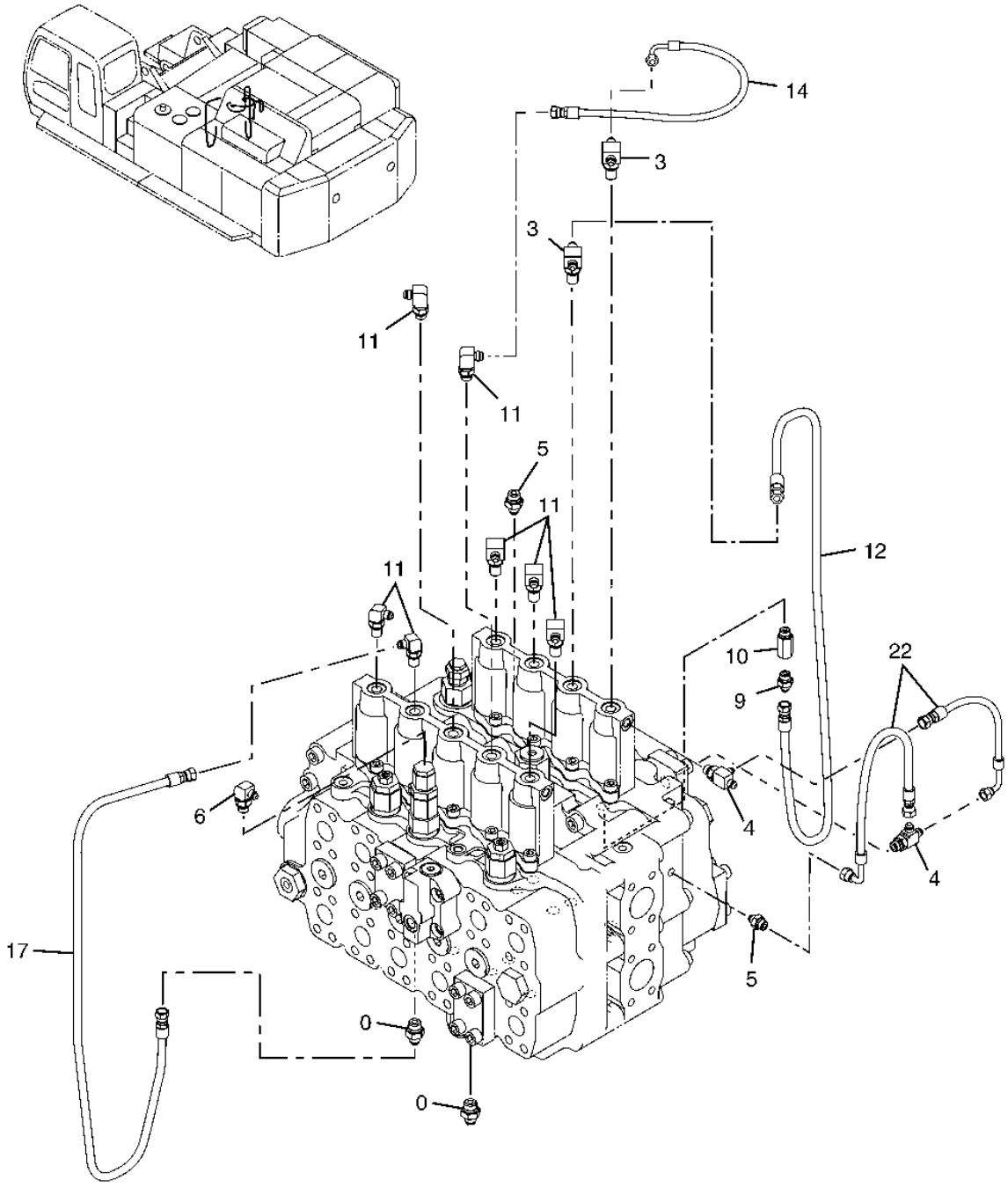

T149994

CONTROL VALVE HYDRAULIC LINES

KEY	PART NO.	PART NAME	QTY	SERIAL NO.	REMARKS
0	A852133	ADAPTER	2		
	CH11570	O-RING	1		
3	4450662	TEE FITTING	2		(SUB FOR TH4450662)
	CH11570	O-RING	1		
4	A852422	TEE FITTING	2		(SUB FOR THA852422)
	M800650	PACKING	1		
5	P67968	ADAPTER	2		
	M800650	PACKING	1		
6	4154670	ELBOW FITTING	1		(SUB FOR A852322, P67984 OR THA852322)
	M800650	PACKING	1		
9	A852123	ADAPTER	1		
	M800650	PACKING	1		
10	4202564	ADAPTER	1		(SUB FOR AT215879)
	M800650	PACKING	1		
11	AT318017	ADAPTER	7		(SUB FOR 4208913, AT126458)
	CH11570	O-RING	1		
12	4449626	HYDRAULIC HOSE	1		
14	4449628	HYDRAULIC HOSE	1		
17	4449631	HYDRAULIC HOSE	1		
22	4452734	HYDRAULIC HOSE	2		

PILOT HYDRAULIC LINES

T149995 -UN-01FEB02

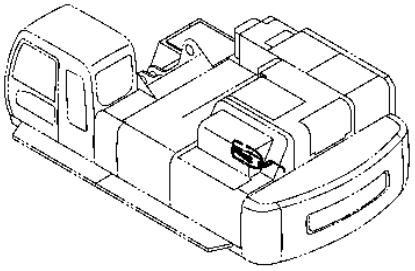

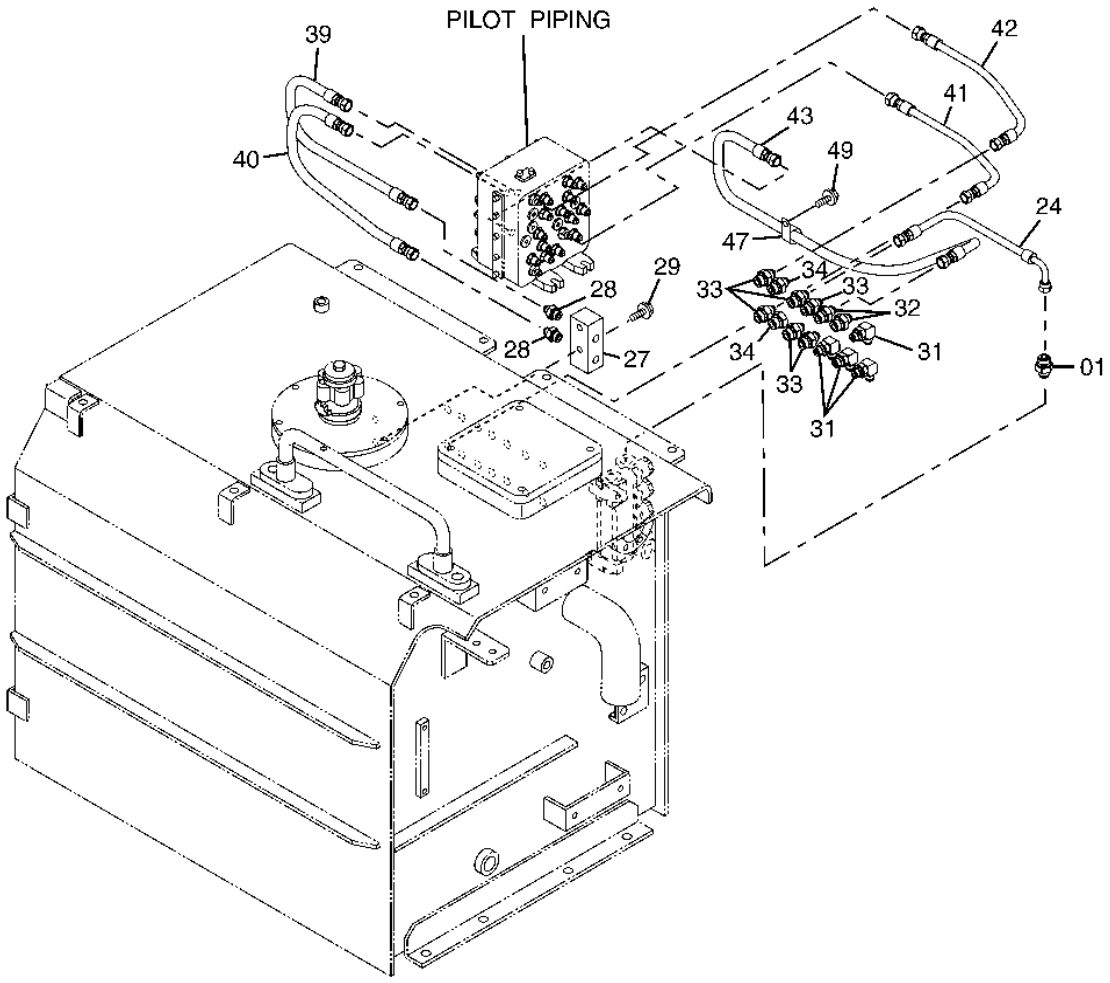

T149995

PILOT HYDRAULIC LINES

KEY	PART NO.	PART NAME	QTY	SERIAL NO.	REMARKS
1	P67968	ADAPTER	1		
	M800650	PACKING	1		
24	4452041	HYDRAULIC HOSE	1		
27	3090109	MANIFOLD	1		(SUB FOR TH3090109)
28	A852123	ADAPTER	2		
	M800650	PACKING	1		
29	.....	CAP SCREW	2		(M10 X 60) (19M5536 NO LONGER AVAILABLE)
	12M7066	LOCK WASHER	2		10 MM
31	P67989	ELBOW FITTING	4		
	CH11570	O-RING	1		
32	A852133	ADAPTER	2		
	CH11570	O-RING	1		
33	P67968	ADAPTER	6		
	M800650	PACKING	1		
34	A885002	PLUG	2		
	M800650	PACKING	1		
39	4454901	HYDRAULIC HOSE	1		
40	4455439	HYDRAULIC HOSE	1		
41	4455440	HYDRAULIC HOSE	1		
42	4455441	HYDRAULIC HOSE	1		
43	4455442	HYDRAULIC HOSE	1		
47	4190253	CLIP	1		(SUB FOR TH108597)
49	19M7402	CAP SCREW	1		M10 X 25
	12M7066	LOCK WASHER	1		10 MM

PILOT HYDRAULIC LINES

T158155 -UN-05AUG02

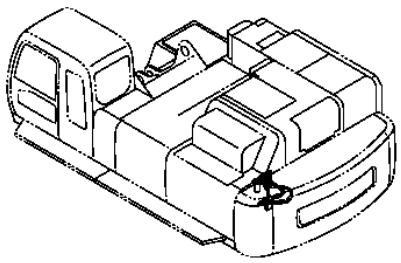

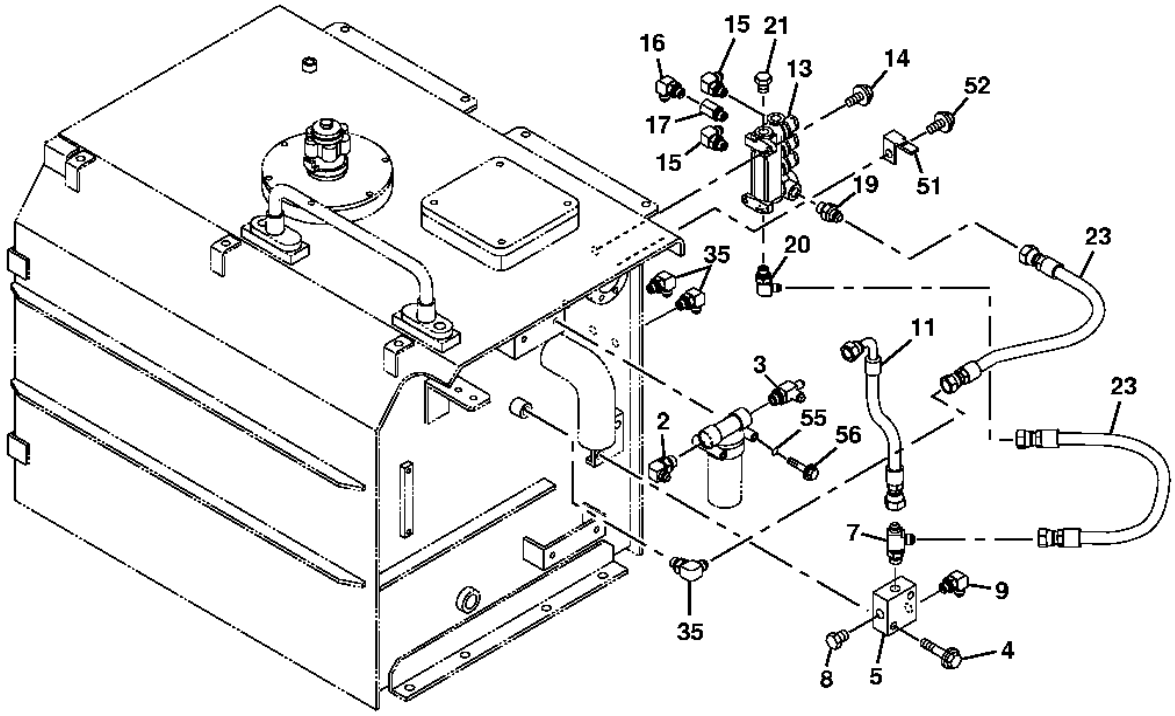

T158155

PILOT HYDRAULIC LINES

KEY	PART NO.	PART NAME	QTY	SERIAL NO.	REMARKS
2	A852344	ELBOW FITTING	1		
	4506418	O-RING	1		
3	4303003	TEE FITTING	1		
	4506418	O-RING	1		
4	19M7363	CAP SCREW	2		M12 X 60
	12H301	LOCK WASHER	2		1/2"
5	9123033	CHECK VALVE	1		
7	A852444	TEE FITTING	1		
	4506418	O-RING	1		(SUB FOR U46489)
8	A885003	PIPE PLUG	1		
	CH11570	O-RING	1		
9	P67988	ELBOW FITTING	1		
	M800650	PACKING	1		
11	4438384	HYDRAULIC HOSE	1		
13	4436197	SOLENOID VALVE	1		(SUB FOR TH4436197)
14	19M7550	CAP SCREW	2		M10 X 35
	12M7066	LOCK WASHER	2		10 MM
15	4154670	ELBOW FITTING	2		(SUB FOR A852322, P67984 OR THA852322)
	M800650	PACKING	1		
16	P67988	ELBOW FITTING	1		
	M800650	PACKING	1		
17	4202564	ADAPTER	1		(SUB FOR AT215879)
	M800650	PACKING	1		
19	A852144	ADAPTER	1		(SUB FOR THA852144)
	4506418	O-RING	1		(SUB FOR U46489)
20	A852344	ELBOW FITTING	1		
	4506418	O-RING	1		(SUB FOR U46489)
21	4174541	DRAIN PLUG	1		
	4506418	O-RING	1		(SUB FOR U46489)
23	4227025	HYDRAULIC HOSE	2		
35	A852344	ELBOW FITTING	3		
	4506418	O-RING	1		(SUB FOR U46489)
51	4257159	BRACKET	3		(SUB FOR AT154243)
52	19M7938	CAP SCREW	3		M10 X 20
	12M7066	LOCK WASHER	2		10 MM
55	12M7066	LOCK WASHER	2		10 MM
56	19M8093	CAP SCREW	2		M10 X 100

PILOT HYDRAULIC LINES

T149997 -UN-01FEB02

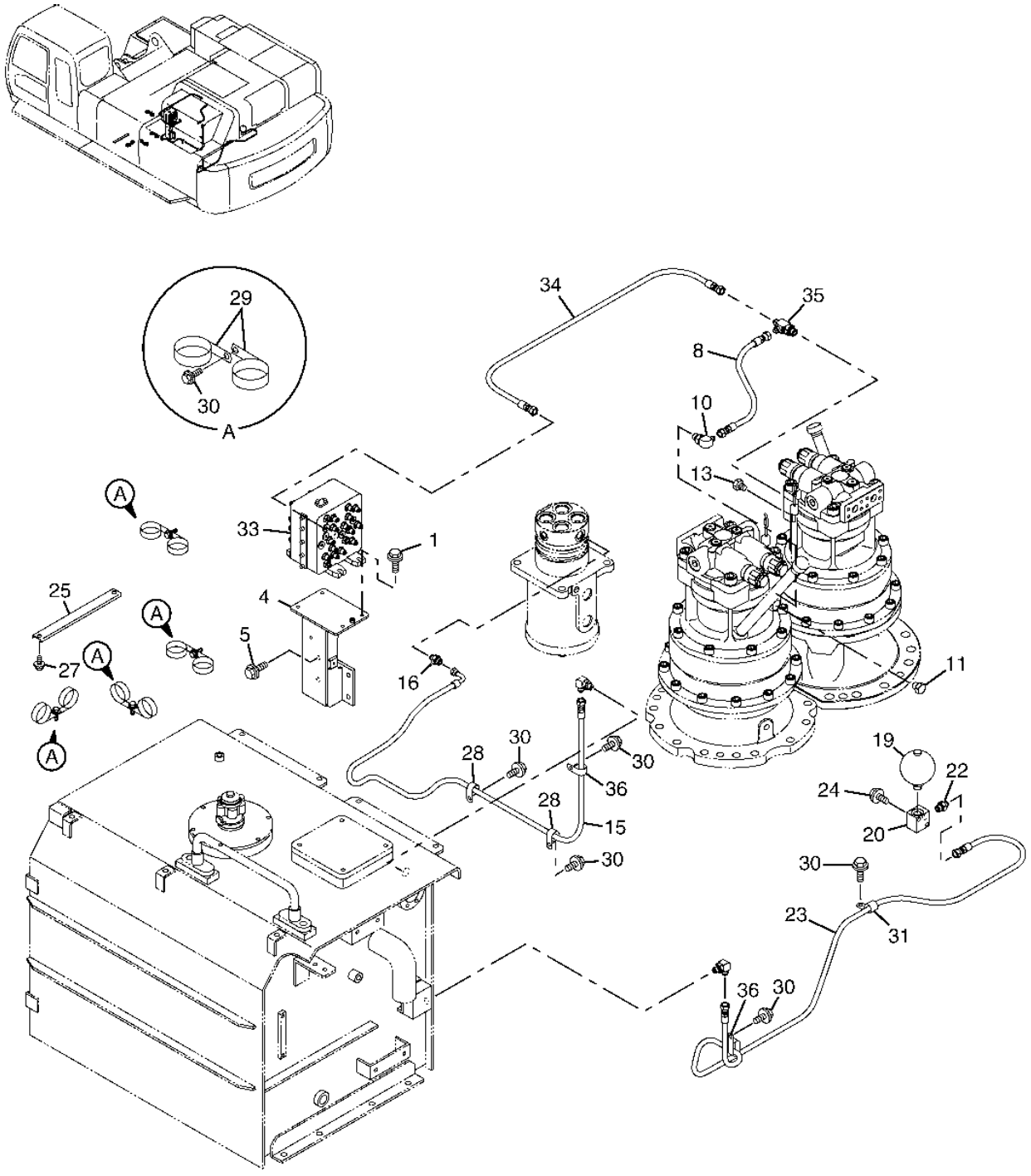

T149997

PILOT HYDRAULIC LINES

KEY	PART NO.	PART NAME	QTY	SERIAL NO.	REMARKS
1	19M7358	CAP SCREW	4		M10 X 40
	12M7066	LOCK WASHER	4		10 MM
4	7040508	BRACKET	1		
5	19M8011	CAP SCREW	4		M12 X 30
	12M7058	LOCK WASHER	4		12 MM, (SUB FOR 12M7067)
8	4451816	HYDRAULIC HOSE	1		
10	4154670	ELBOW FITTING	1		(SUB FOR A852322, P67984 OR THA852322)
	M800650	PACKING	1		
11	P67968	ADAPTER	1		
	M800650	PACKING	1		
13	A885002	PLUG	1		
	M800650	PACKING	1		
15	4455444	HYDRAULIC HOSE	1		
16	A852133	ADAPTER	1		
	CH11570	O-RING	1		
19	4195978	HYDRAULIC ACCUMULATOR	1		(SUB FOR AT162984)
	CH14634	O-RING	1		
20	3036998	MANIFOLD	1		(SUB FOR AT126122)
22	A852123	ADAPTER	1		
	M800650	PACKING	1		
23	4453229	HYDRAULIC HOSE	1		
24	19M8655	CAP SCREW	2		M10 X 55
	12M7066	LOCK WASHER	2		10 MM
25	4425177	CLAMP	1		(SUB FOR TH4425177)
27	19M7402	CAP SCREW	2		M10 X 25
	12M7028	LOCK WASHER	2		
	24M7096	WASHER	2		10.500 X 18 X 1.600 MM
28	AT121321	HOSE CLAMP	2		
29	4190265	CLIP	8		(SUB FOR TH109598)
30	19M7402	CAP SCREW	9		M10 X 25
	12M7066	LOCK WASHER	9		10 MM
	24M7096	WASHER	9		10.500 X 18 X 1.600 MM
31	4190253	CLIP	1		(SUB FOR TH108597)
33	4470661	FLOW CONTROL HYD. VALVE	1		
34	4469375	HYDRAULIC HOSE	1		
35	4219346	TEE FITTING	1		(SUB FOR AT132516)
	M800650	PACKING	1		
36	T32854	CLAMP	2		

PILOT HYDRAULIC LINES

T149998 -UN-01FEB02

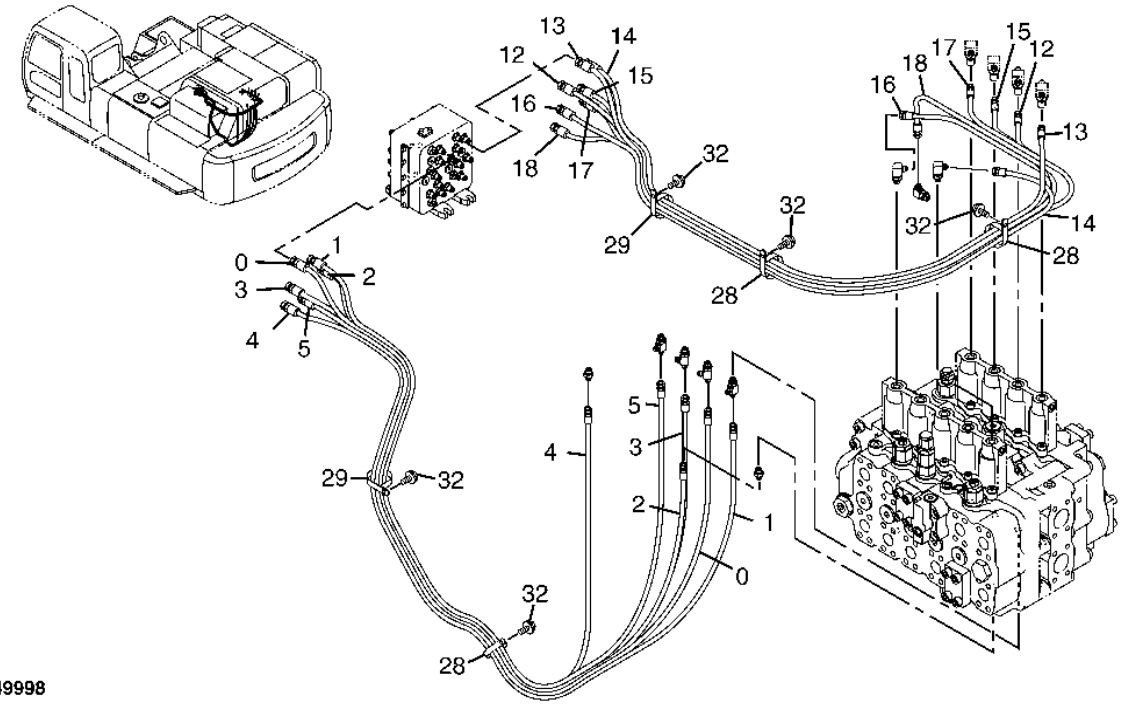

T149998

PILOT HYDRAULIC LINES

KEY	PART NO.	PART NAME	QTY	SERIAL NO.	REMARKS
0	4455445	HYDRAULIC HOSE	1		
1	4455446	HYDRAULIC HOSE	1		
2	4455447	HYDRAULIC HOSE	1		
3	4455824	HYDRAULIC HOSE	1		
4	4455825	HYDRAULIC HOSE	1		
5	4455826	HYDRAULIC HOSE	1		
12	4455830	HYDRAULIC HOSE	1		
13	4455831	HYDRAULIC HOSE	1		
14	4455832	HYDRAULIC HOSE	1		
15	4455833	HYDRAULIC HOSE	1		
16	4455834	HYDRAULIC HOSE	1		
17	4455835	HYDRAULIC HOSE	1		
18	4455836	HYDRAULIC HOSE	1		
28	4193816	CLIP	3		(SUB FOR TH111255)
29	4190265	CLIP	2		(SUB FOR TH109598)
32	19M7938	CAP SCREW	5		M10 X 20
	12M7066	LOCK WASHER	5		10 MM

PILOT HYDRAULIC LINES

T149456 -UN-21JAN02

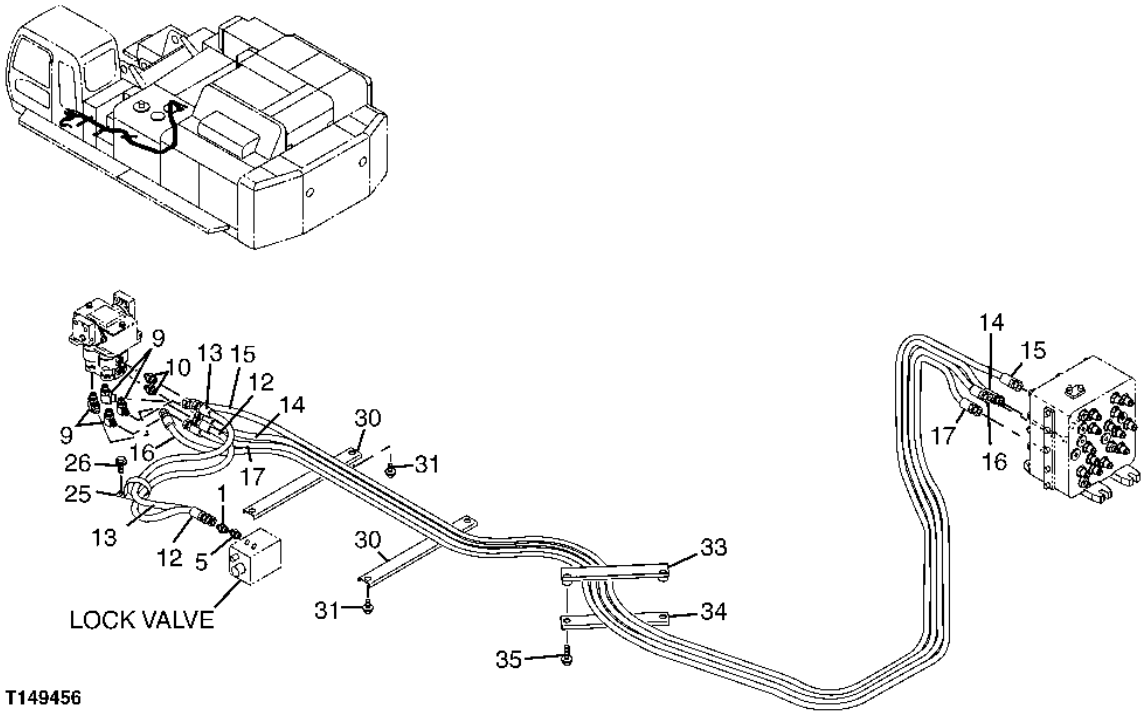

T149456

PILOT HYDRAULIC LINES

KEY	PART NO.	PART NAME	QTY	SERIAL NO.	REMARKS
1	4261938	FITTING	1		(SUB FOR AT154285)
	CH11570	O-RING	1		
5	A852133	ADAPTER	1		(SUB FOR P67978)
	CH11570	O-RING	1		
9	P67988	ELBOW FITTING	4		
	M800650	PACKING	1		
10	P67976	ADAPTER	2		
	M800650	PACKING	1		
12	4450427	HYDRAULIC HOSE	1		
13	4450428	HYDRAULIC HOSE	1		
14	4437629	HYDRAULIC HOSE	1		
15	4455844	HYDRAULIC HOSE	1		
16	4455845	HYDRAULIC HOSE	1		
17	4465402	HYDRAULIC HOSE - FABRICATE	1		(SUB FOR 4431842)
25	4190265	CLIP	1		(SUB FOR TH109598)
26	19M7938	CAP SCREW	1		M10 X 20
	12M7066	LOCK WASHER	1		10 MM
30	4341877	CHANNEL	2		(SUB FOR AT213887)
31	19M7402	CAP SCREW	4		M10 X 25
	12M7066	LOCK WASHER	4		10 MM
	24M7028	WASHER	4		10.500 X 20 X 2 MM
33	9754739	CLAMP	1		(SUB FOR TH9754739)
34	4436124	CLAMP	1		(SUB FOR TH4436124)
35	19M7358	CAP SCREW	2		M10 X 40
	12M7066	LOCK WASHER	2		10 MM

PILOT HYDRAULIC LINES

T149457 -UN-21JAN02

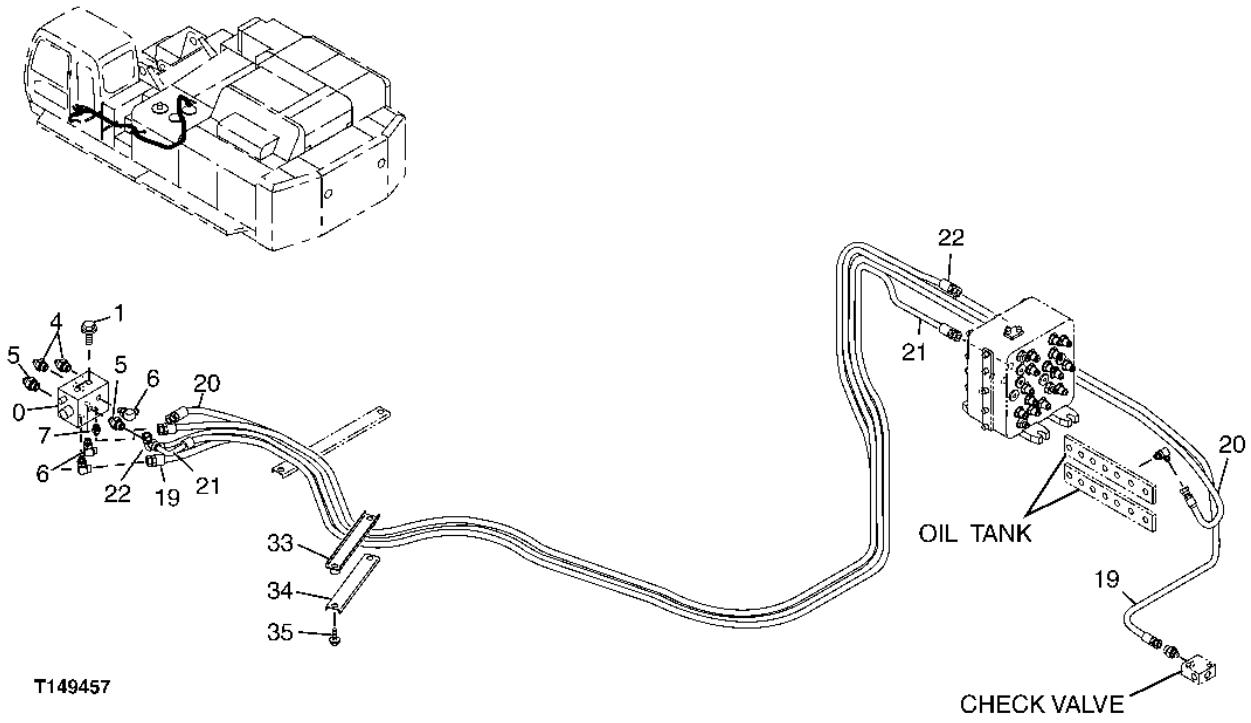

PILOT HYDRAULIC LINES

KEY	PART NO.	PART NAME	QTY	SERIAL NO.	REMARKS
0	4407253	FLOW CONTROL HYD. VALVE	1		
1	19M7402	CAP SCREW	2		M10 X 25
	12M7066	LOCK WASHER	2		10 MM
	24M7028	WASHER	2		10.500 X 20 X 2 MM
4	4261938	FITTING	2		(SUB FOR AT154285)
	CH11570	O-RING	1		
5	A852133	ADAPTER	2		(SUB FOR P67978)
	CH11570	O-RING	1		
6	P67989	ELBOW FITTING	3		
	CH11570	O-RING	1		
7	P67968	ADAPTER	1		
	M800650	PACKING	1		
19	4627275	HYDRAULIC HOSE - FABRICATE	1		(SUB FOR 4455847)
20	4455848	HYDRAULIC HOSE	1		
21	4455849	HYDRAULIC HOSE	1		
22	4455198	HYDRAULIC HOSE	1		
33	9754739	CLAMP	1		
34	4436124	CLAMP	1		
35	19M7358	CAP SCREW	2		M10 X 40
	12M7066	LOCK WASHER	2		10 MM

PILOT HYDRAULIC LINES

T149999 -UN-01FEB02

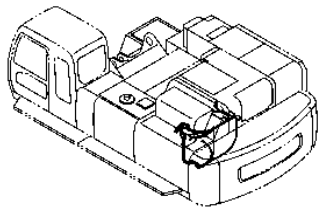

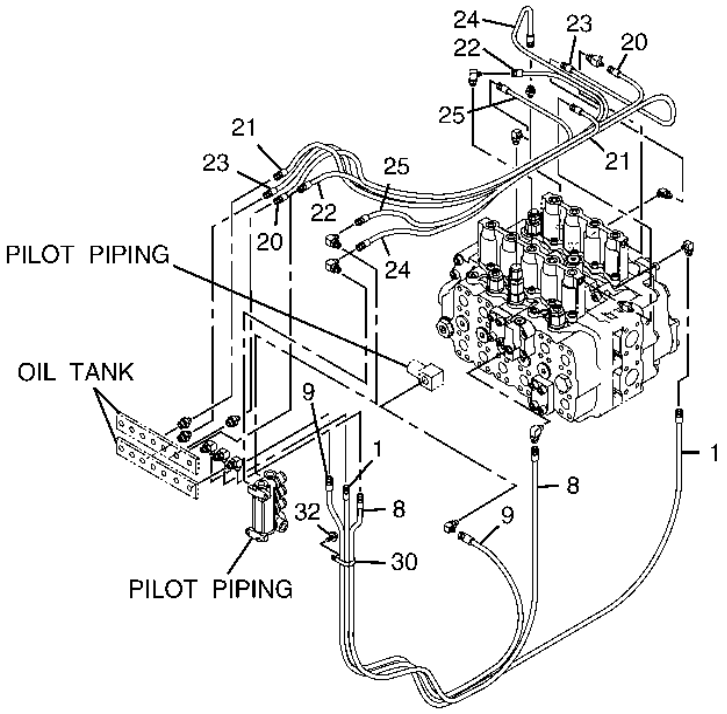

T149999

PILOT HYDRAULIC LINES

KEY	PART NO.	PART NAME	QTY	SERIAL NO.	REMARKS
1	4455827	HYDRAULIC HOSE	1		
8	4455828	HYDRAULIC HOSE	1		
9	4455829	HYDRAULIC HOSE	1		
20	4455837	HYDRAULIC HOSE	1		
21	4455838	HYDRAULIC HOSE	1		
22	4455839	HYDRAULIC HOSE	1		
23	4455840	HYDRAULIC HOSE	1		
24	4455841	HYDRAULIC HOSE	1		
25	4455842	HYDRAULIC HOSE	1		
30	AT121321	HOSE CLAMP	1		
32	19M7938	CAP SCREW	1		M10 X 20
	12M7066	LOCK WASHER	1		10 MM

PILOT HYDRAULIC LINES
(RIGHT PILOT CONTROLLER)

T149462 -UN-23JAN02

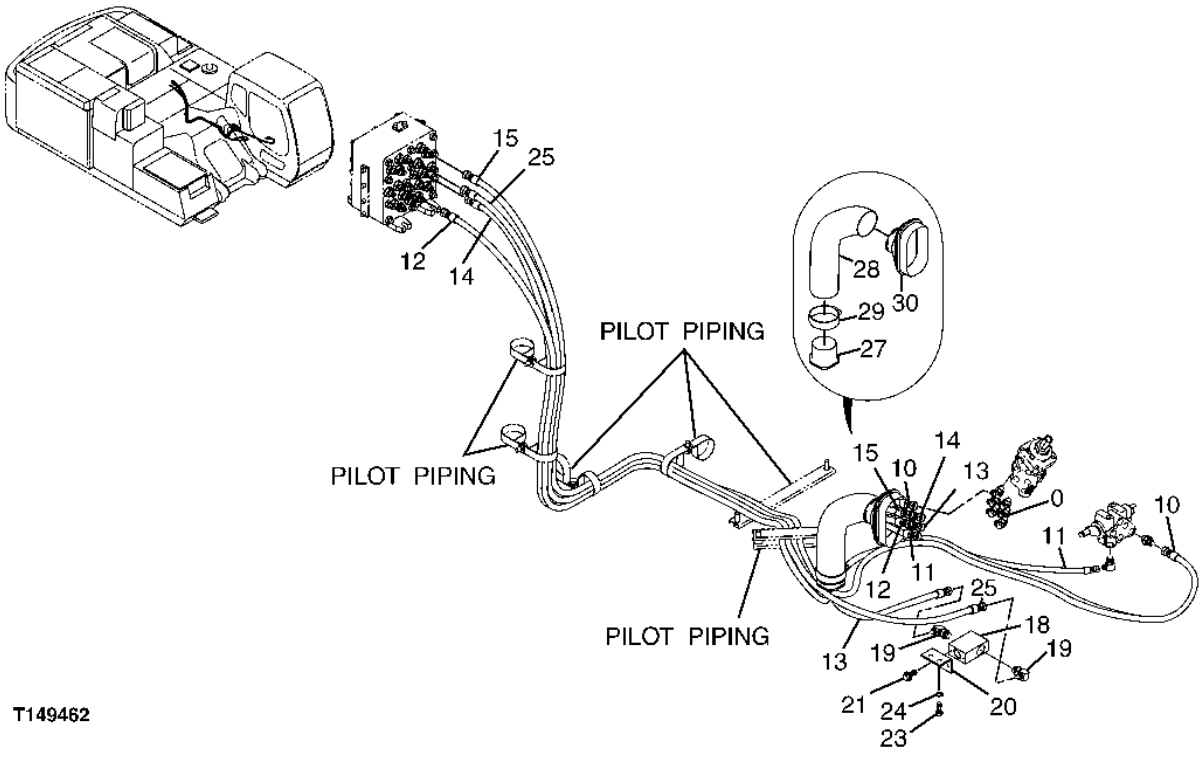

PILOT HYDRAULIC LINES
(RIGHT PILOT CONTROLLER)

KEY	PART NO.	PART NAME	QTY	SERIAL NO.	REMARKS
0	A852223	ELBOW FITTING	6		(SUB FOR THA852223)
	M800650	PACKING	1		
10	4450438	HYDRAULIC HOSE	1		
11	4455949	HYDRAULIC HOSE	1		
12	4437087	HYDRAULIC HOSE	1		(SUB FOR 4437646)
13	4450440	HYDRAULIC HOSE	1		
14	4438264	HYDRAULIC HOSE	1		
15	4462306	HOSE	1		(SUB FOR 4446851, 4484031, 4446852, 4484025)
18	4456004	FLOW CONTROL HYD. VALVE	1		
19	4154671	ELBOW FITTING	2		(SUB FOR A852333)
	CH11570	O-RING	1		(SUB FOR 4509180)
20	4449773	BRACKET	1		(SUB FOR TH4449773)
21	19M7881	SCREW	2		M8 X 20
	12M7056	LOCK WASHER	2		8 MM, (SUB FOR 12M7065)
23	19M7402	CAP SCREW	2		M10 X 25
24	12M7066	LOCK WASHER	2		10 MM
25	4456136	HYDRAULIC HOSE	1		
27	3079728	BUSHING	1		(SUB FOR AT250589)
28	4351175	HOSE	1		(SUB FOR AT213957)
29	4351774	CLAMP	1		(SUB FOR AT213962)
30	2045998	BUSHING	1		(SUB FOR TH2045998)

PILOT HYDRAULIC LINES
(LEFT PILOT CONTROLLER)

T149463 -UN-21JAN02

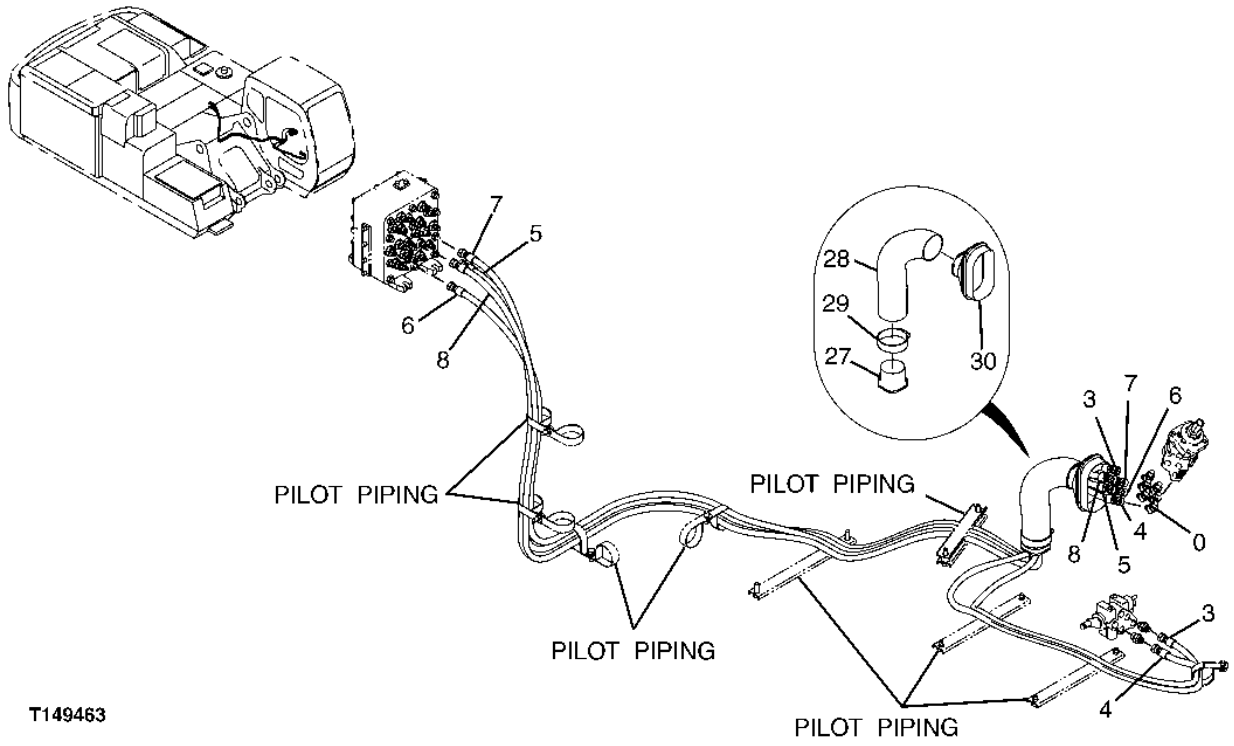

PILOT HYDRAULIC LINES
(LEFT PILOT CONTROLLER)

KEY	PART NO.	PART NAME	QTY	SERIAL NO.	REMARKS
0	A852223	ELBOW FITTING	6		(SUB FOR THA852223)
	M800650	PACKING	1		
3	4450433	HYDRAULIC HOSE	1		
4	4450434	HYDRAULIC HOSE	1		
5	4455946	HYDRAULIC HOSE	1		
6	4455947	HYDRAULIC HOSE	1		
7	4437633	HYDRAULIC HOSE	1		
8	4455948	HYDRAULIC HOSE	1		
27	3079728	BUSHING	1		(SUB FOR AT250589)
28	4351175	HOSE	1		(SUB FOR AT213957)
29	4351774	CLAMP	1		(SUB FOR AT213962)
30	2045998	BUSHING	1		(SUB FOR TH2045998)

FRONT PIPING
(STANDARD BOOM/HEAVY DUTY BOOM)

T155088 -UN-22MAY02

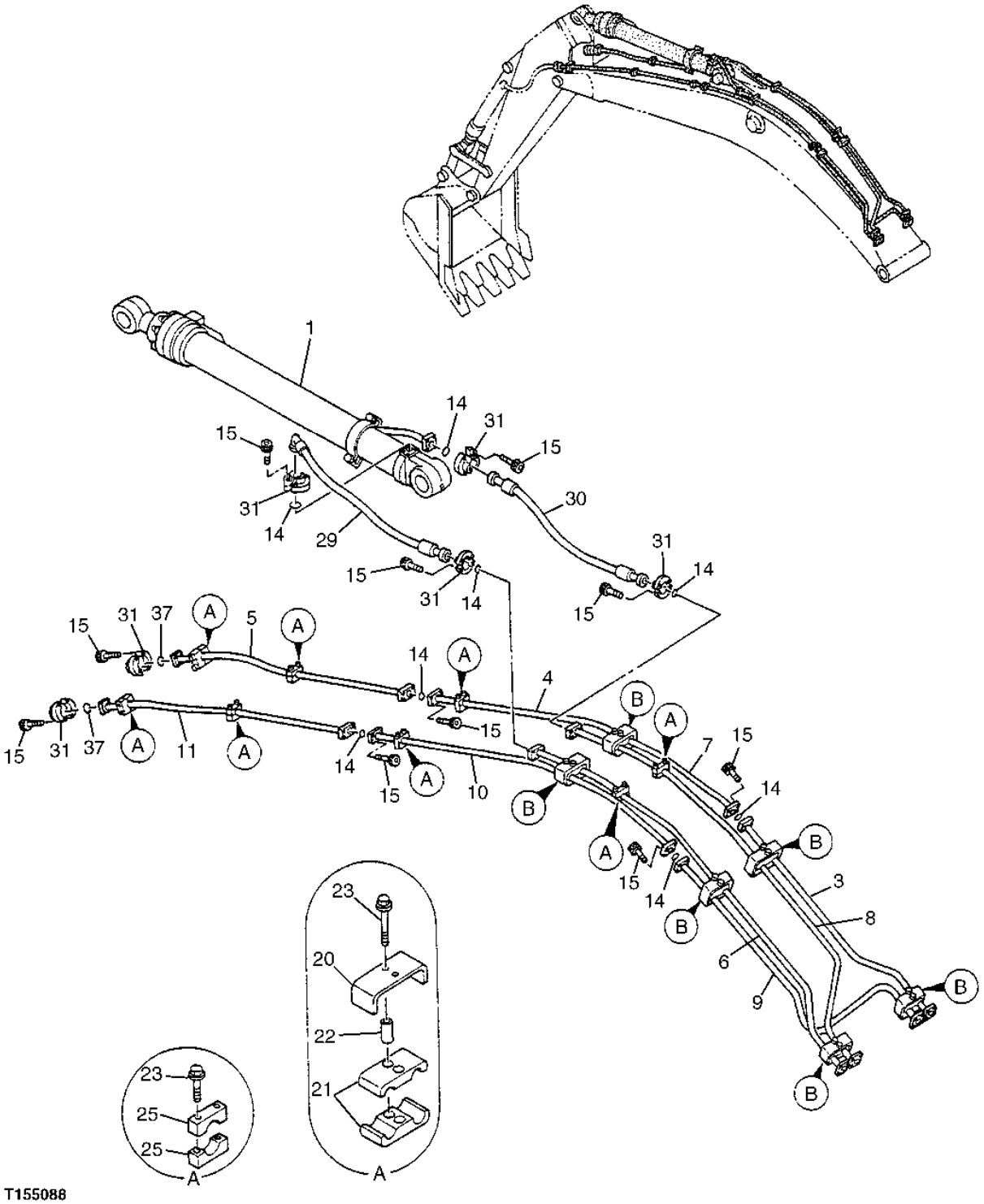

FRONT PIPING
(STANDARD BOOM/HEAVY DUTY BOOM)

KEY	PART NO.	PART NAME	QTY	SERIAL NO.	REMARKS
1	.....	HYDRAULIC CYLINDER	1		(TH4309334 NOT AVAILABLE FOR SERVICE)
3	8053777	OIL LINE	1		(SUB FOR TH8053777)
4	8058163	OIL LINE	1		(SUB FOR TH8058163)
5	8053779	OIL LINE	1		(SUB FOR TH8053779)
6	8055772	OIL LINE	1		(SUB FOR TH8055772)
7	8058161	OIL LINE	1		(SUB FOR TH8058161)
8	8055773	OIL LINE	1		(SUB FOR TH8055773)
9	8055774	OIL LINE	1		(SUB FOR TH8055774)
10	8058162	OIL LINE	1		(SUB FOR TH8058162)
11	8053772	OIL LINE	1		
14	T72216	O-RING	8		
15	19M8712	SCREW	40		M14 X 50
20	4304481	CLAMP	6		(SUB FOR AT201755)
21	4337125	CLAMP	12		(SUB FOR TH4337125)
22	28H2611	SPACER	12		
23	19M8122	CAP SCREW	28		M12 X 85
	12M7058	LOCK WASHER	28		12 MM, (SUB FOR 12M7067)
25	AT201796	CLAMP	16		
29	4408505	HYDRAULIC HOSE	1		
30	4408504	HYDRAULIC HOSE	1		
31	AT131685	FLANGE FITTING	12		
37	T72216	O-RING	2		

FRONT PIPING
(STANDARD ARM/HEAVY DUTY ARM)

T150038 -UN-01FEB02

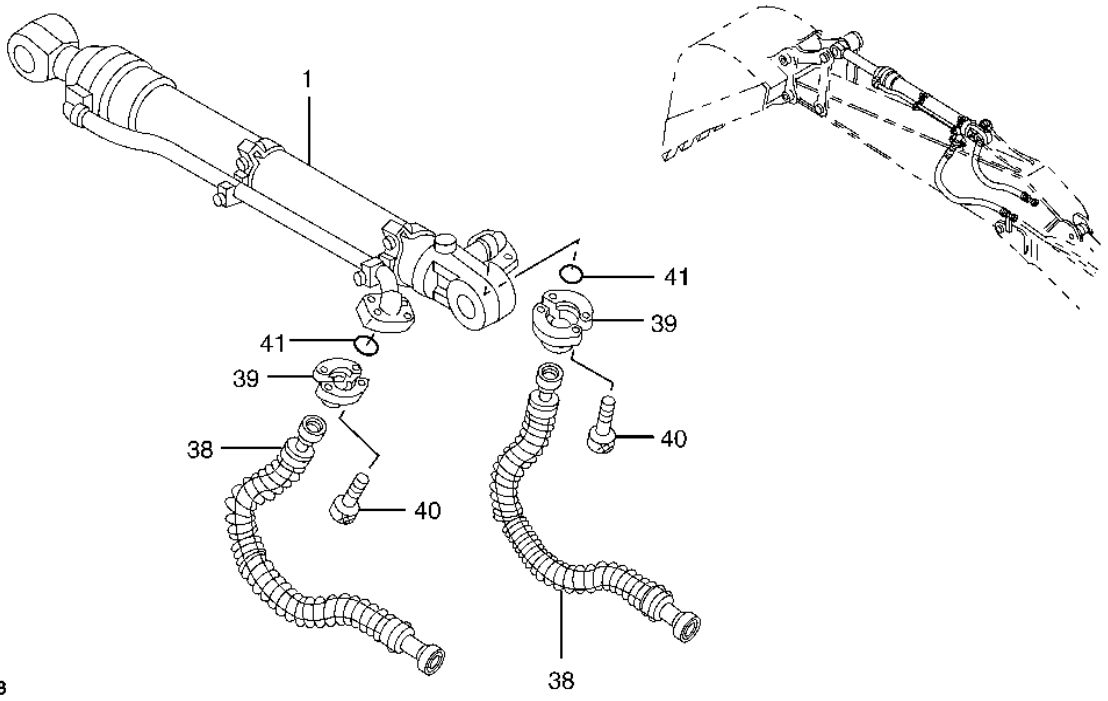

T150038

FRONT PIPING
(STANDARD ARM/HEAVY DUTY ARM)

KEY	PART NO.	PART NAME	QTY	SERIAL NO.	REMARKS
1	.....	HYDRAULIC CYLINDER	1		(4440151 NOT AVAILABLE FOR SERVICE)
38	AT172097	HYDRAULIC HOSE - FABRICATE	2		
39	4085560	FLANGE FITTING	4		(SUB FOR TH101960)
40	19M8395	SCREW	8		M12 X 40
41	T78313	O-RING	2		

FRONT PIPINGS
(MASS EXCAVATING BOOM)

TP67020 -UN-26JAN00

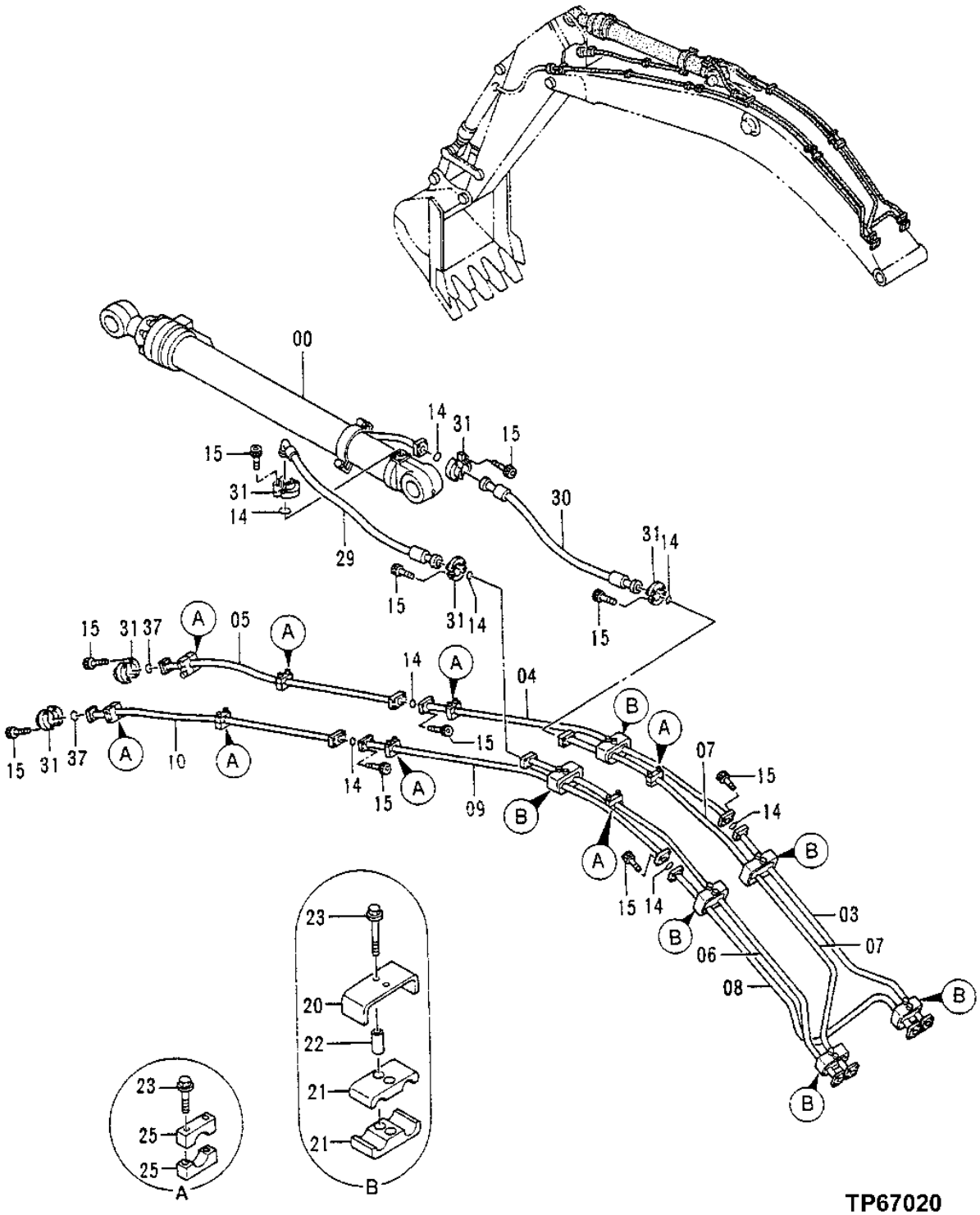

TP67020

FRONT PIPINGS
(MASS EXCAVATING BOOM)

KEY	PART NO.	PART NAME	QTY	SERIAL NO.	REMARKS
0	.....	CYLINDER	1		(ARM) (SEE ARM CYLINDER PAGE FOR DETAIL)
3	8053777	OIL LINE	1		(SUB FOR TH8053777)
4	8058593	OIL LINE	1		(SUB FOR TH8058593)
5	8058594	OIL LINE	1		(SUB FOR TH8058594)
6	8058595	OIL LINE	1		(SUB FOR TH8058595)
7	8058596	OIL LINE	1		(SUB FOR TH8058596)
8	8055774	OIL LINE	1		(SUB FOR TH8055774)
9	8058597	OIL LINE	1		(SUB FOR TH8058597)
10	8058598	OIL LINE	1		(SUB FOR TH8058598)
14	T72216	O-RING	8		37.694 X 3.531 MM (1-31/64" X 0.139")
15	19M7812	SCREW	40		M10 X 100
20	4304481	CLAMP	6		(SUB FOR AT201755)
21	4337125	CLAMP	12		(SUB FOR TH4337125)
22	28H2611	SPACER	12		0.546" X 0.840" X 2"
23	12M7058	LOCK WASHER	28		12 MM, (SUB FOR 12M7067)
	19M8122	CAP SCREW	28		M12 X 85
25	AT201796	CLAMP	16		
29	4408505	HYDRAULIC HOSE	1		
30	4408504	HYDRAULIC HOSE	1		
31	AT131685	FLANGE FITTING	12		
37	T72216	O-RING	2		37.694 X 3.531 MM (1-31/64" X 0.139")

LUBRICATE PIPING
(STANDARD BOOM/HEAVY DUTY BOOM)

T150039 -UN-01FEB02

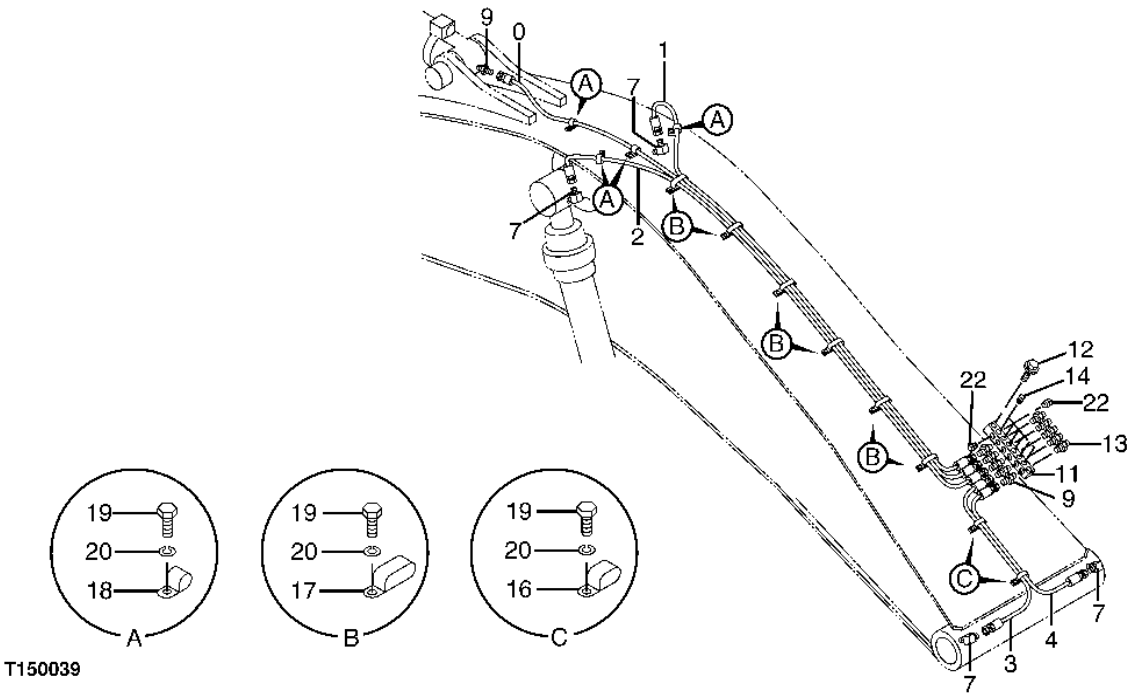

LUBRICATE PIPING
(STANDARD BOOM/HEAVY DUTY BOOM)

KEY	PART NO.	PART NAME	QTY	SERIAL NO.	REMARKS
0	AT213802	HYDRAULIC HOSE - FABRICATE	1		
1	4257291	HYDRAULIC HOSE	1		(SUB FOR AT219662)
2	AT167078	HYDRAULIC HOSE - FABRICATE	1		
3	.....	HYDRAULIC HOSE - FABRICATE	1		
4	.....	HYDRAULIC HOSE - FABRICATE	1		
7	4154656	ELBOW FITTING	4		(SUB FOR TH101588)
9	4154651	ADAPTER	6		(SUB FOR TH100963)
11	.....	JUNCTION BLOCK	1		
12	19M7658	CAP SCREW	2		M10 X 50
	12M7066	LOCK WASHER	2		10 MM
13	TH100364	LUBRICATION FITTING	5		
14	M800462	PLUG	6		
16	4192018	CLIP	2		(SUB FOR TH110498)
17	T152608	CLAMP	6		
18	4190261	CLIP	4		(SUB FOR TH109649)
19	19M8324	CAP SCREW	12		M10 X 16
20	12M7066	LOCK WASHER	12		10 MM
22	94-2023	FITTING PLUG	2		(SUB FOR TH100667)

LUBRICATE PIPING
(STANDARD ARM/HEAVY DUTY ARM)

T150040 -UN-01FEB02

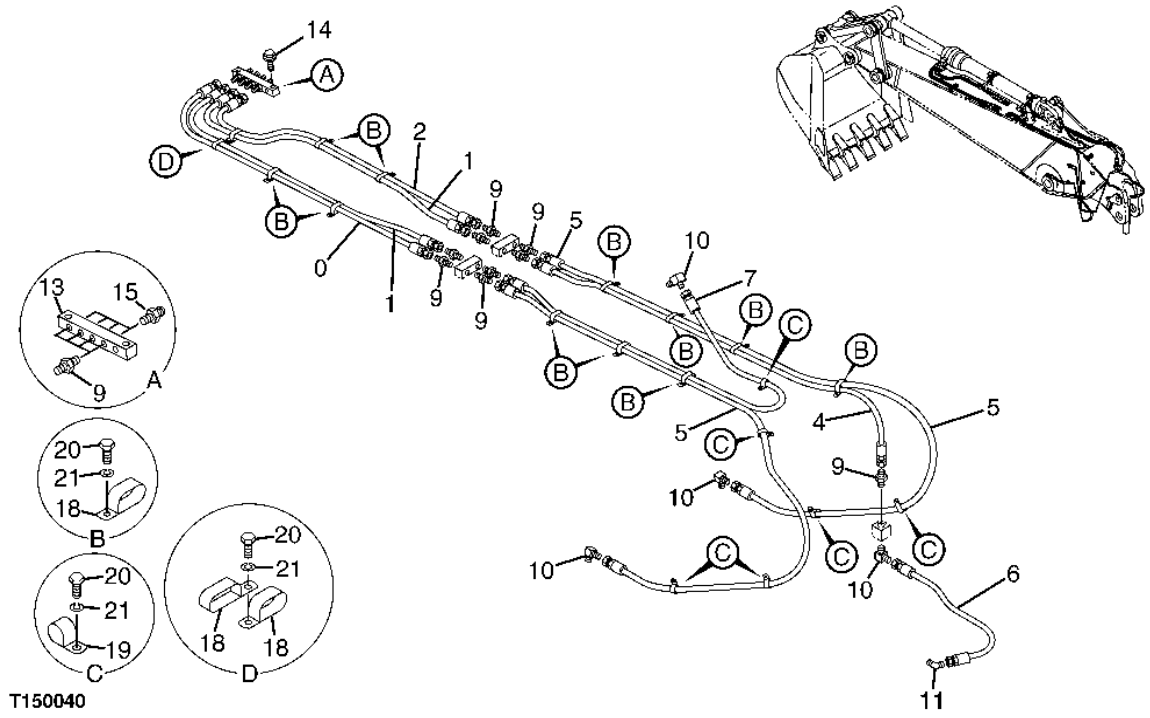

LUBRICATE PIPING
(STANDARD ARM/HEAVY DUTY ARM)

KEY	PART NO.	PART NAME	QTY	SERIAL NO.	REMARKS
0	4249331	HOSE	1		(SUB FOR AT195888)
1	4449602	HOSE	2		(SUB FOR AT195889)
2	4449601	HOSE	1		(SUB FOR AT195890)
4	4262279	HOSE	1		(STANDARD ARM)
	4258880	HYDRAULIC HOSE	1		(HEAVY DUTY ARM)
5	AT160892	HYDRAULIC HOSE - FABRICATE	2		(STANDARD ARM)
	AT217963	HYDRAULIC HOSE - FABRICATE	2		(HEAVY DUTY ARM)
6	.....	HYDRAULIC HOSE	1		(4269797 NOT AVAILABLE FOR SERVICE)
7	4260314	HYDRAULIC HOSE - FABRICATE	1		(SUB FOR AT132503)
9	4154651	ADAPTER	13		(SUB FOR TH100963)
10	4154656	ELBOW FITTING	4		(SUB FOR TH101588)
11	4154655	ELBOW FITTING	1		(SUB FOR TH101056)
13	4274903	JUNCTION BLOCK	1		(SUB FOR AT202119)
14	19M7358	CAP SCREW	2		M10 X 40
	12M7066	LOCK WASHER	2		10 MM
15	TH100364	LUBRICATION FITTING	4		
18	4192018	CLIP	13		(SUB FOR TH110498)
19	4190261	CLIP	6		(SUB FOR TH109649)
20	19M8324	CAP SCREW	18		M10 X 16
21	12M7066	LOCK WASHER	18		10 MM

LUBRICATE PIPING (MASS EXCAVATING BOOM)

T150037 -UN-01FEB02

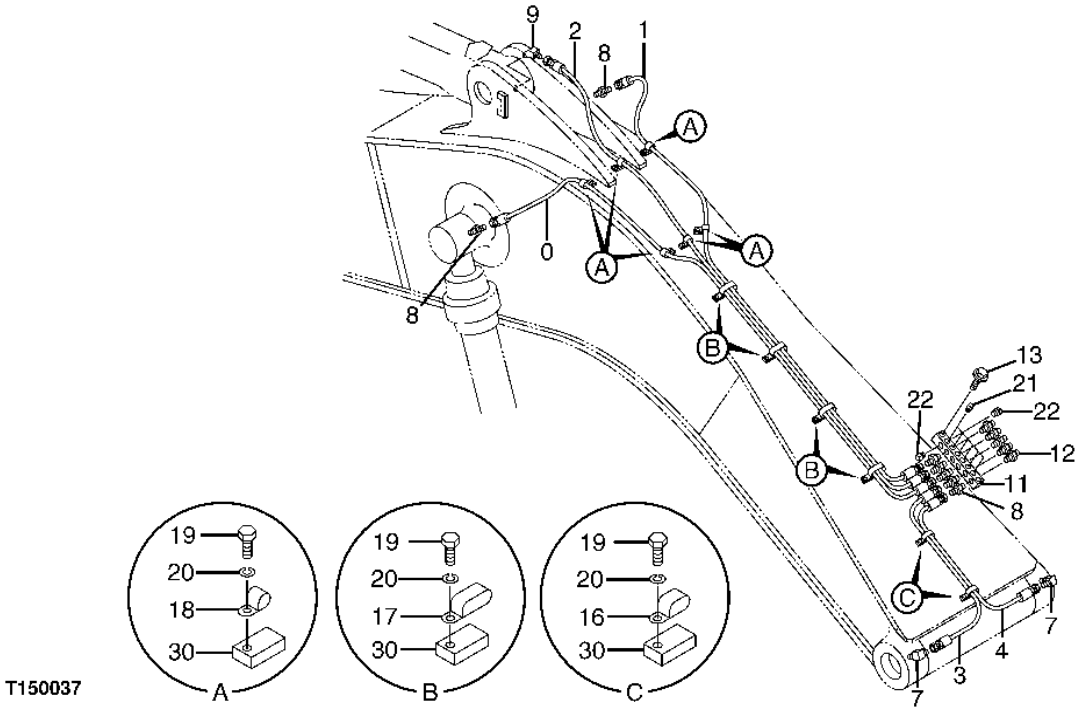

T150037

LUBRICATE PIPING (MASS EXCAVATING BOOM)

KEY	PART NO.	PART NAME	QTY	SERIAL NO.	REMARKS
0	AT154755	HYDRAULIC HOSE - FABRICATE	1		
1	AT213802	HYDRAULIC HOSE - FABRICATE	1		
2	.....	HOSE	1		(4429439 NOT AVAILABLE FOR SERVICE)
3	.....	HOSE	1		(4429436 NOT AVAILABLE FOR SERVICE)
4	.....	HOSE	1		(4429435 NOT AVAILABLE FOR SERVICE)
7	4154656	ELBOW FITTING	2		
8	X0103-4-4	ADAPTER	7		
9	4154655	ELBOW FITTING	1		
11	4466640	MANIFOLD	1		
12	JD7769	LUBRICATION FITTING	5		
13	19M7658	CAP SCREW	2		M10 X 50
	12M7066	LOCK WASHER	2		10 MM
16	4192018	CLIP	2		
17	T152608	CLAMP	4		
18	4190261	CLIP	6		
19	19M8324	CAP SCREW	12		M10 X 16
20	12M7066	LOCK WASHER	12		10 MM
21	M800462	PLUG	6		
22	94-2023	FITTING PLUG	2		
30	4195689	STRAP	12		

PILOT PIPINGS COUNTERWEIGHT REMOVAL DEVICE

T160455 -UN-31OCT02

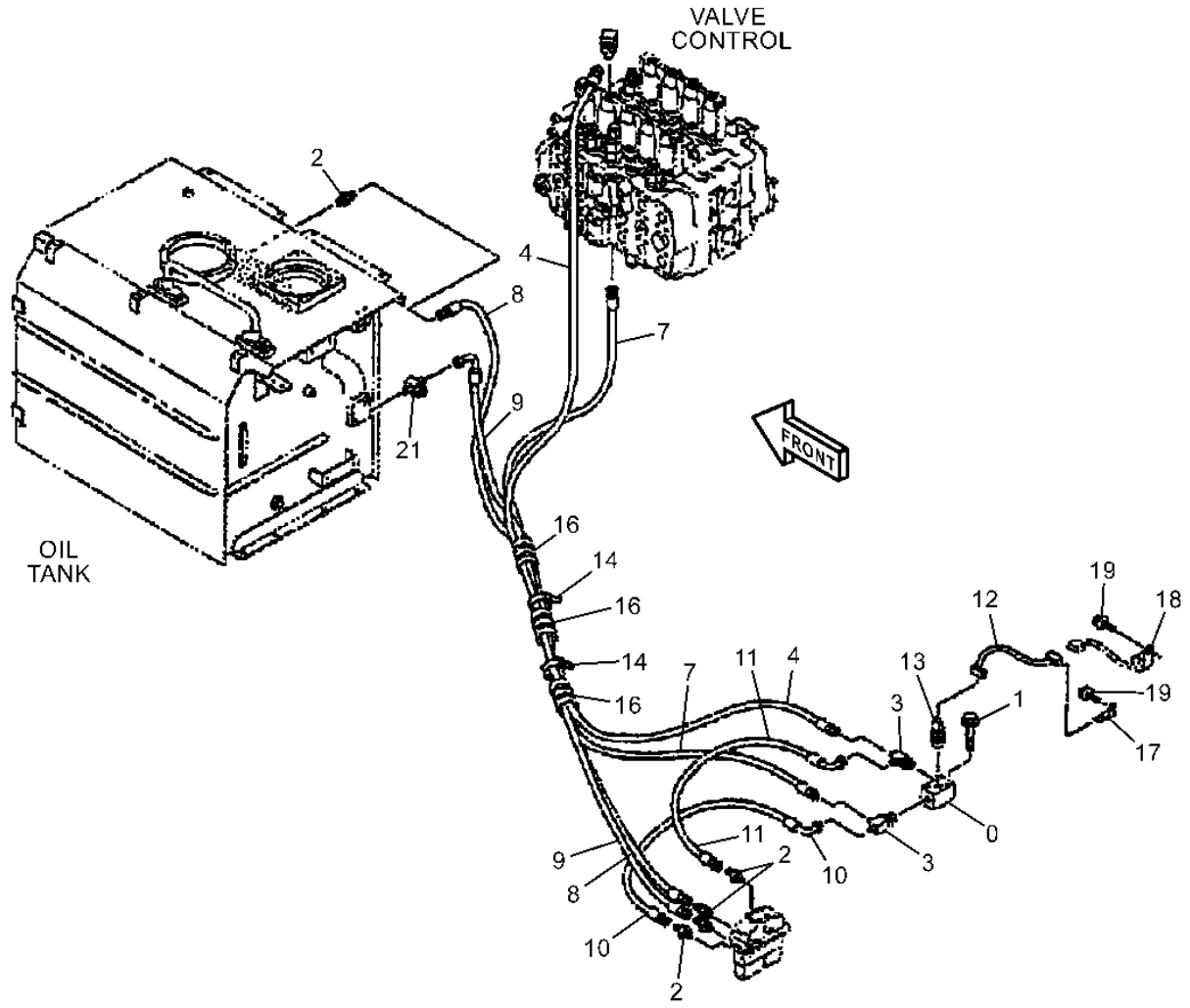

T160455

PILOT PIPINGS COUNTERWEIGHT REMOVAL DEVICE

KEY	PART NO.	PART NAME	QTY	SERIAL NO.	REMARKS
0	4195759	FLOW CONTROL HYD. VALVE	1		(SHUTTLE)
1	19M8655	CAP SCREW	2		M10 X 55
	12M7066	LOCK WASHER	2		10 MM (0.394")
2	A852123	ADAPTER	5		
	M800650	PACKING	1		
3	A852423	TEE FITTING	2		
	M800650	PACKING	1		
4	4436856	HYDRAULIC HOSE - FABRICATE	1		
7	4436854	HYDRAULIC HOSE - FABRICATE	1		
8	4409086	HYDRAULIC HOSE - FABRICATE	2		
9	4375560	HYDRAULIC HOSE	1		(SUB FOR 4419040)
10	4332940	HYDRAULIC HOSE - FABRICATE	1		
11	4432811	HYDRAULIC HOSE - FABRICATE	1		
12	4456689	WIRING HARNESS	1		
13	4436535	SENSOR	1		
14	H77698	TIE BAND	2		
16	4327294	HOSE GUARD	3		(SUB FOR 4044420)
17	4257159	BRACKET	1		
18	4190261	CLIP	1		
19	19M7938	CAP SCREW	2		M10 X 20
	12M7066	LOCK WASHER	2		10 MM (0.394")
21	A852523	TEE FITTING	1		
	M800650	PACKING	1		

HIGH PRESSURE PIPINGS
(COUNTERWEIGHT REMOVAL DEVICE)

T160454 -UN-31OCT02

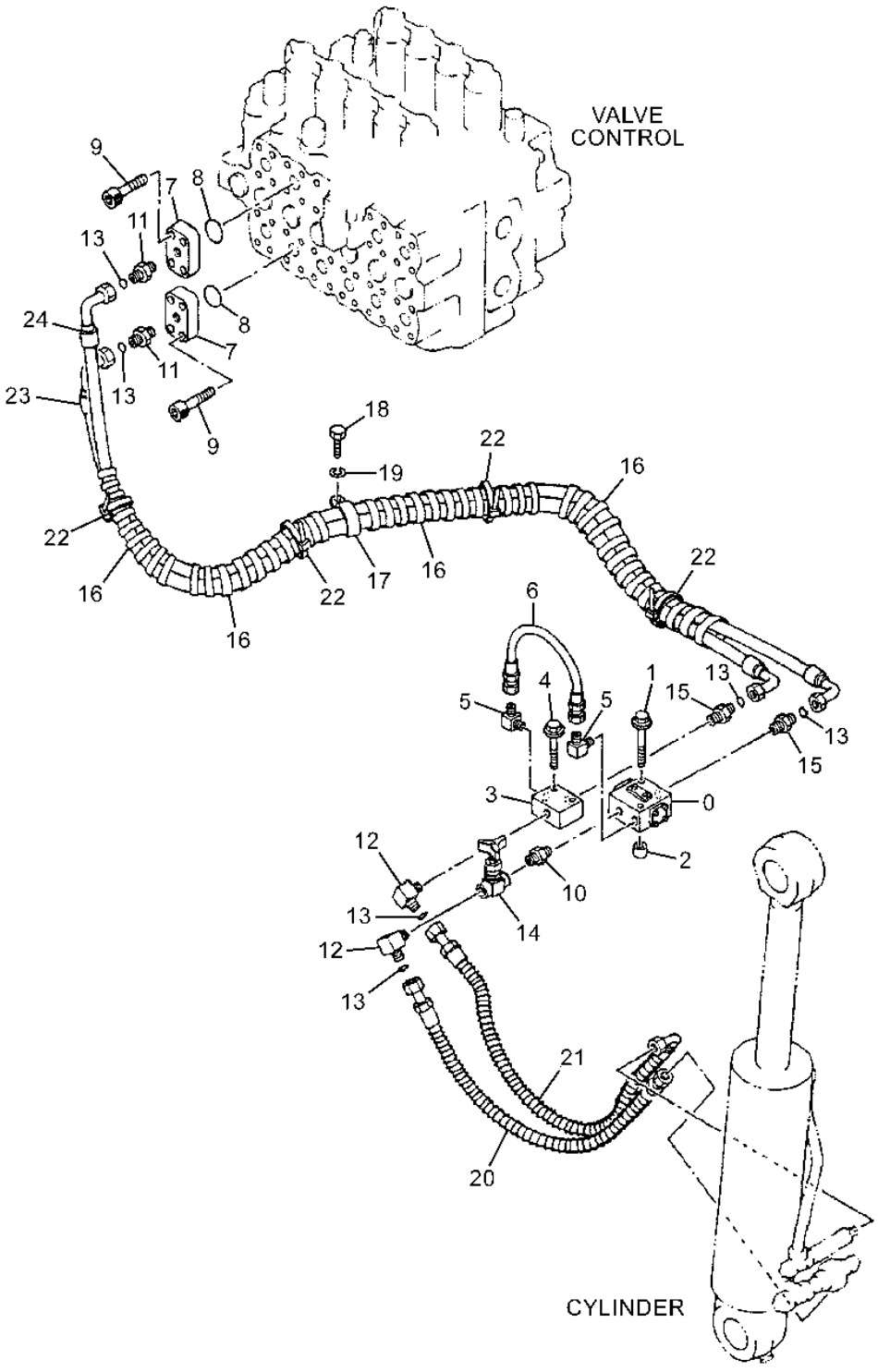

HIGH PRESSURE PIPINGS
(COUNTERWEIGHT REMOVAL DEVICE)

KEY	PART NO.	PART NAME	QTY	SERIAL NO.	REMARKS
0	4240863	FLOW CONTROL HYD. VALVE	1		
1	19M7875	CAP SCREW	2		M10 X 70
	12M7066	LOCK WASHER	2		10 MM (0.394")
2	4131346	SPACER	2		
3	4240862	MANIFOLD	1		
4	19M8655	CAP SCREW	2		M10 X 55
	12M7066	LOCK WASHER	2		10 MM (0.394")
5	4154656	ELBOW FITTING	2		
6	4209727	HYDRAULIC HOSE - FABRICATE	1		
7	4395369	FLANGE FITTING	1		
8	T72216	O-RING	2		37.694 X 3.531 MM (1-31/64" X 0.139")
9	19M8734	SCREW	8		M14 X 45
10	94-1703	ADAPTER	1		
11	4189602	FITTING	2		
	4506418	O-RING	1		
12	4274178	ELBOW FITTING	1		
13	T77857	O-RING	6		12.421 X 1.778 MM (0.489" X 0.070")
14	4220806	FLOW CONTROL HYD. VALVE	1		
15	4217265	ADAPTER	2		
16	4327294	HOSE GUARD	5		(SUB FOR 4044420)
17	4192034	CLIP	4		
18	19M8324	CAP SCREW	1		M10 X 16
19	12M7066	LOCK WASHER	1		10 MM (0.394")
20	4357742	HYDRAULIC HOSE - FABRICATE	1		
21	4357727	HYDRAULIC HOSE - FABRICATE	1		
22	H77698	TIE BAND	4		
23	4464143	HYDRAULIC HOSE	1		
24	4464147	HYDRAULIC HOSE	1		

HYDRAULIC RESERVOIR AND FILTER

T193497 -UN-28AUG03

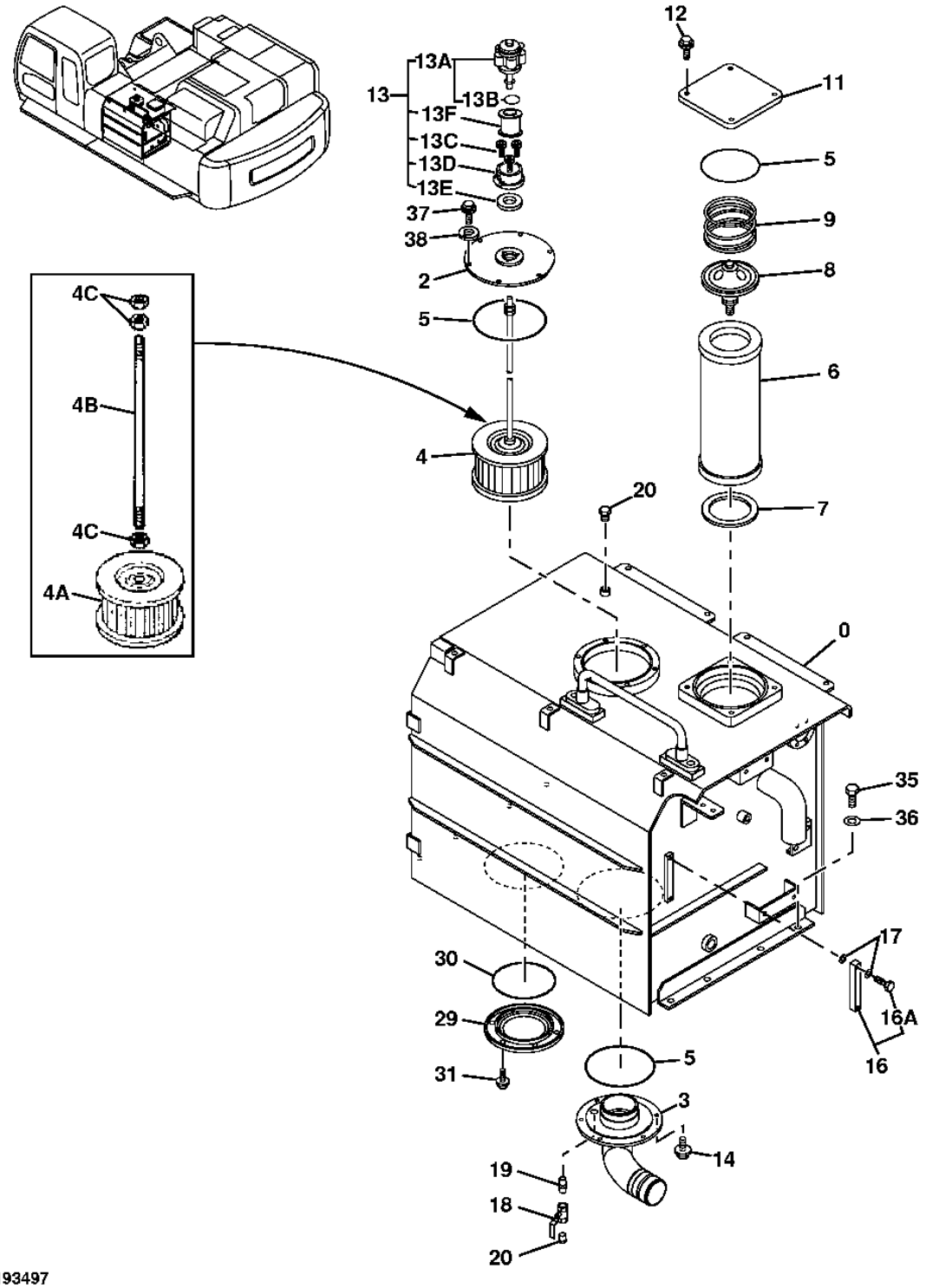

T193497

HYDRAULIC RESERVOIR AND FILTER

KEY	PART NO.	PART NAME	QTY	SERIAL NO.	REMARKS
0	5007749	HYDRAULIC RESERVOIR	1		
2	8061926	COVER	1		(SUB FOR TH8061926)
3	8083948	FLANGE	1		
4	4455592	FILTER	1		
4A	4333464	STRAINER	1		
4B	4603980	ROD	1		
4C	14M7274	NUT	1		(SUB FOR J950010)
5	AT131529	O-RING	3		
6	4333469	FILTER ELEMENT	1		(SUB FOR TH4287634 OR 4287634)
	.....	FILTER ELEMENT	1		(CLEAN-UP FILTER) (SHORT TERM USE - APPROXIMATELY THREE HOURS) (IDLE SPEED)
7	4250293	WASHER	1		(SUB FOR AT134351)
8	4271000	FLOW CONTROL HYD. VALVE	1		
9	4271001	SPRING	1		(SUB FOR AT201734)
11	4344881	COVER	1		
12	19M7662	CAP SCREW	4		M10 X 30
	12M7066	LOCK WASHER	4		10 MM
13	.....	BREATHER	1		(4178684 NOT AVAILABLE FOR SERVICE)
13A	4222874	FILLER CAP	1		(SUB FOR AT217084)
13B	953612	O-RING	1		(SUB FOR TH111019)
13C	19M8146	SCREW	3		M5 X 16
13D	4222875	BASE	1		(SUB FOR TH111021)
13E	4222876	PACKING	1		(SUB FOR TH111022)
13F	4251384	FILTER ELEMENT	1		
14	19M7402	CAP SCREW	6		M10 X 25
	12M7066	LOCK WASHER	6		10 MM
16	8053499	LEVEL GAUGE	1		
16A	4100967	FITTING	2		(SUB FOR TH101894)
17	449558	WASHER	4		(SUB FOR TH100675)
18	4209782	HAND OPERATED VALVE	1		
19	94-1702	ADAPTER	1		(SUB FOR TH102949)
20	R30298	PIPE PLUG	2		
29	8023981	COVER	1		(SUB FOR TH101891)
30	TH100679	O-RING	1		
31	19M7402	CAP SCREW	6		M10 X 25
	12M7066	LOCK WASHER	6		10 MM
35	19M7488	CAP SCREW	8		M16 X 40
36	4114405	WASHER	8		(SUB FOR TH101105)
37	19M7938	CAP SCREW	6		M10 X 20
38	12M7066	LOCK WASHER	6		10 MM

HYDRAULIC ARM CYLINDER

TP66928 -UN-13OCT99

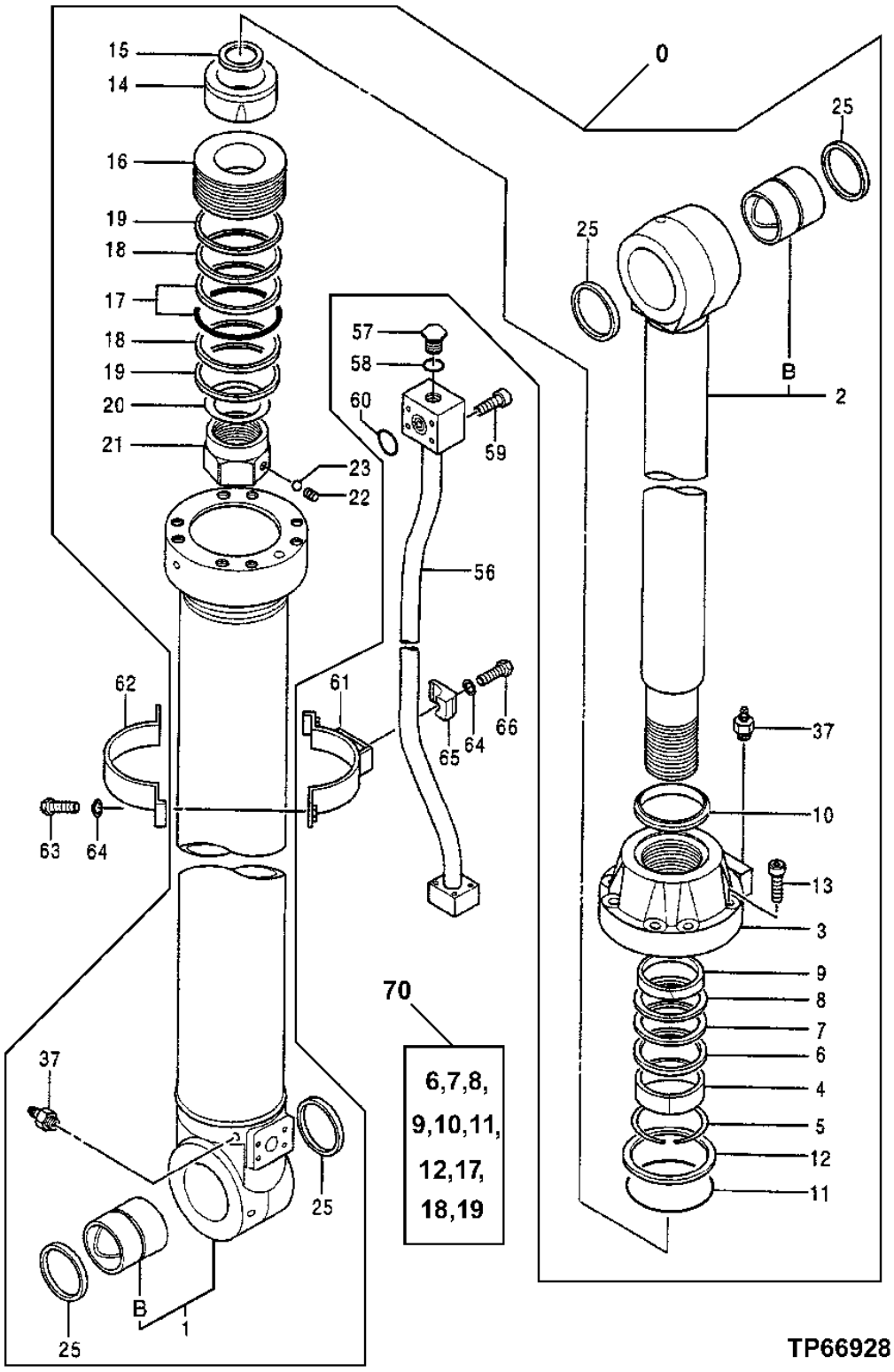

HYDRAULIC ARM CYLINDER

KEY	PART NO.	PART NAME	QTY	SERIAL NO.	REMARKS
0	.....	HYDRAULIC CYLINDER	1		(TH4354803 NOT AVAILABLE FOR SERVICE)
1	0645001	HYDRAULIC CYLINDER BARREL	1		
1B	0645002	BUSHING	1		
2	0645003	ROD	1		
2B	0645002	BUSHING	1		
3	0645004	HYDR. CYLINDER ROD GUIDE	1		
4	0379806	BUSHING	1		
5	0191415	SNAP RING	1		
6	0417405	RING	1		(K)
7	.....	SEAL	1		(K) (TH4094949 NOT AVAILABLE FOR SERVICE)
8	0242505	BACK-UP RING	1		(K)
9	0417406	RING	1		(K)
10	4438196	RING	1		(K)
11	AT122160	O-RING	1		(K) 189.300 X 5.700 MM (7.453" X 0.224")
12	.....	BACK-UP RING	1		(K) (TH0257007 NOT AVAILABLE FOR SERVICE)
13	.....	BOLT	8		(AT132322 NOT AVAILABLE FOR SERVICE)
14	0645005	BEARING	1		
15	0645006	SEAL	1		
16	0645007	PISTON	1		
17	4S00085	RING	1		(K)
18	0645008	RING	2		(K)
19	4S00098	RING	2		(K)
20	0379813	SHIM	1		
21	0379814	NUT	1		
22	0379815	SET SCREW	1		
23	0109124	BALL	1		
25	0420111	RING	4		
37	0643016	BLEED VALVE	2		
56	0902205	PIPE	1		(ALSO ORDER (4) 19M8734) (SUB FOR 0645009)
57	0379823	PLUG	1		
58	985098	O-RING	1		
59	19M8803	SCREW	4	-XXXXXX	M14 X 90, (SUB FOR AT132328)
	19M8734	SCREW	4	XXXXX-	M14 X 45, (USE WITH 0902205)
60	AT264254	O-RING	1		(SUB FOR 955612)
61	0417413	CLAMP	1		
62	0417414	CLAMP	1		
63	P61969	BOLT	2		(SUB FOR 0379919)
64	12H317	LOCK WASHER	3		9/16"
65	0353016	CLAMP	1		
66	19M4789	CAP SCREW	1		M14 X 80
70	4402354	VALVE	1		(SUB FOR 4402354) (INCLUDES ALL (K) PARTS)

HYDRAULIC BUCKET CYLINDER

TP66929 -UN-13OCT99

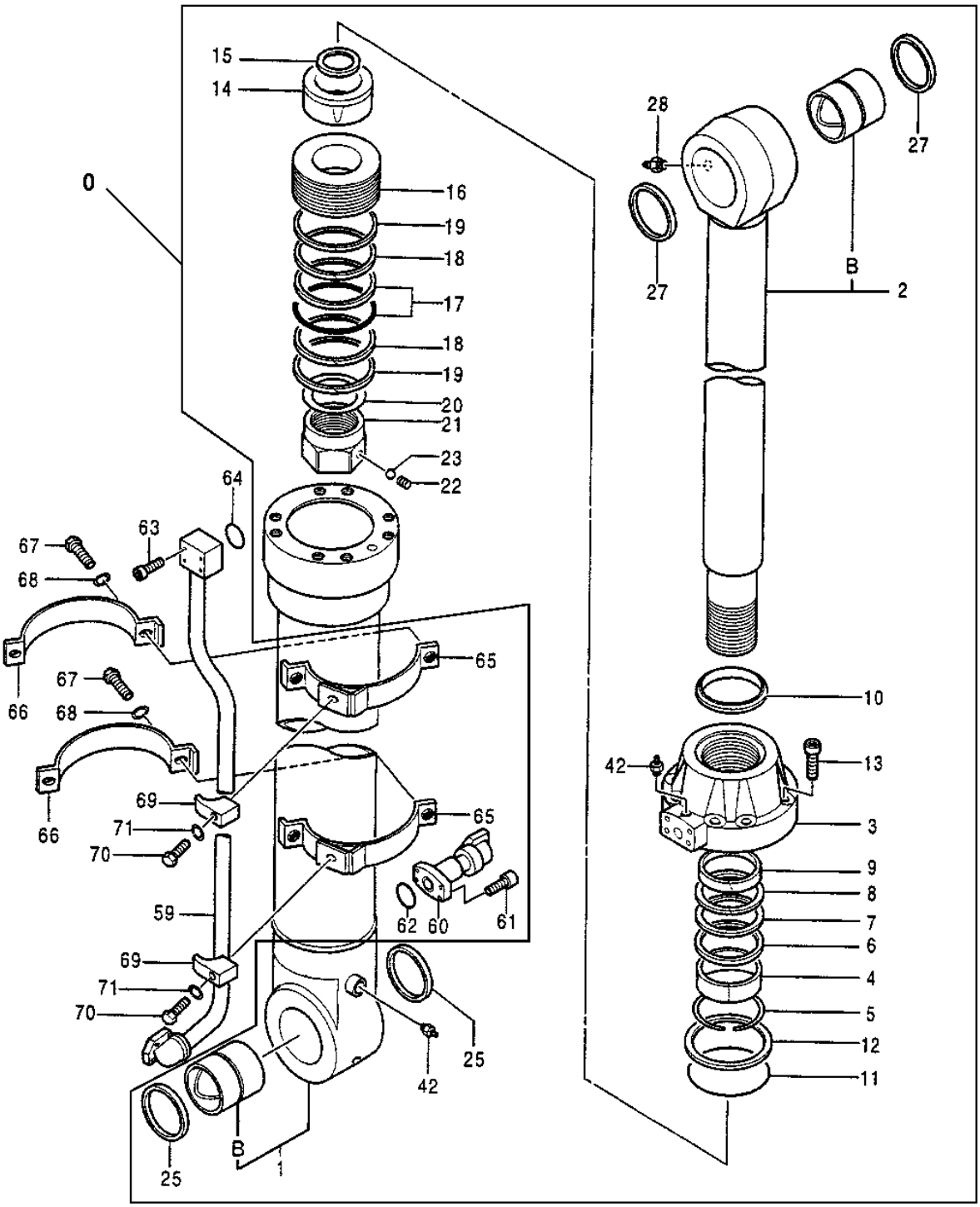

75 — 6,7,8,9,10,11,12,15,17

TP66929

HYDRAULIC BUCKET CYLINDER

KEY	PART NO.	PART NAME	QTY	SERIAL NO.	REMARKS
0	4441575J	HYDRAULIC CYLINDER	1		(SUB FOR 4441575) (WITHOUT PLUMBING)
1	0645101	HYDRAULIC CYLINDER BARREL	1		(SUB FOR TH0645101)
1B	0645002	BUSHING	1		(SUB FOR TH0645002)
2	0740701	ROD	1		
2B	0645103	BUSHING	1		(SUB FOR TH0645103)
3	0740702	HYDR. CYLINDER ROD GUIDE	1		
4	AT264250	BUSHING	1		(SUB FOR AT132313, 0353004)
5	0133709	SNAP RING	1		(SUB FOR TH104999)
6	AT264251	RING	1		(SUB FOR AT132314)
7	AT264242	SEAL	1		(SUB FOR AT132164, 4S00037)
8	AT264246	BACK-UP RING	1		(SUB FOR AT132173, 4S00038)
9	0353006	RING	1		(SUB FOR AT204901) (SUB FOR AT132315)
10	AT264282	RING	1		(SUB FOR AT132174, AT191199, 4437982)
11	A811170	O-RING	1		(SUB FOR THA811170)
12	TH0332704	BACK-UP RING	1		
13	0259304	CAP SCREW	8		(SUB FOR TH0417606)
14	0740703	BEARING	1		
15	.....	SEAL	1		(0420305 NOT USED THIS APPLICATION)
16	0643014	PISTON	1		(SUB FOR TH0643014)
17	0332706	SEAL	1		(SUB FOR TH0332706)
18	0643015	RING	2		(SUB FOR TH0643015)
19	0332708	RING	2		(SUB FOR TH0332708)
20	0353010	SHIM	1		(SUB FOR AT132319)
21	0353009	NUT	1		(SUB FOR AT132318)
22	0353012	SET SCREW	1		(SUB FOR AT132321)
23	0353011	BALL	1		(SUB FOR AT132320)
25	0420111	RING	2		(SUB FOR AT201579)
27	4S00225	SEAL	2		(SUB FOR TH4205000)
28	TH100074	LUBRICATION FITTING	1		
42	0643016	BLEED VALVE	2		(SUB FOR TH0643016)
59	4S00348	PIPE	1		(SUB FOR TH0645105)
60	0645106	OIL LINE	1		(SUB FOR TH0645106)
61	19M8395	SCREW	4		M12 X 40
62	AT264348	O-RING	1		(SUB FOR TH102788)
63	0259207	CAP SCREW	4		(SUB FOR TH0259207)
64	AT264254	O-RING	1		(SUB FOR AT132423, 955612)
65	0645107	CLAMP	2		(SUB FOR TH0645107)
66	0645108	CLAMP	2		(SUB FOR TH0645108)
67	19M7550	CAP SCREW	4		M10 X 35
68	12M7066	LOCK WASHER	4		10 MM
69	0309219	CLAMP	2		(SUB FOR T108064)
70	19M7363	CAP SCREW	2		M12 X 60, (SUB FOR 19M7273) (INCLUDES ALL (K) PARTS)
71	12M7058	LOCK WASHER	2		12 MM, (SUB FOR 12M7067)
75	4442368	SEAL KIT	1		

HYDRAULIC BOOM CYLINDER, LEFT

TP66927 -UN-13OCT99

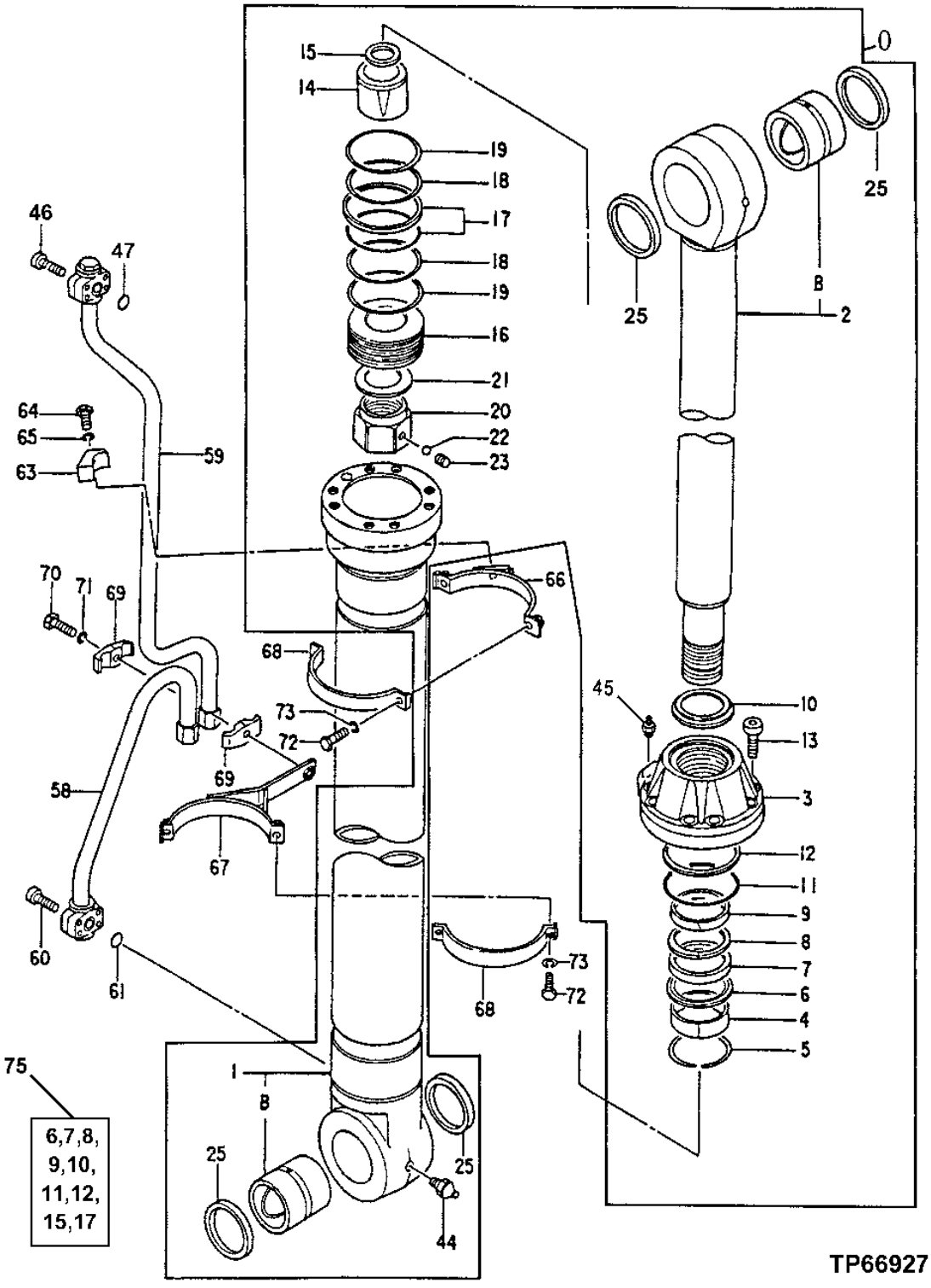

HYDRAULIC BOOM CYLINDER, LEFT

KEY	PART NO.	PART NAME	QTY	SERIAL NO.	REMARKS
0	4354802EX	HYDRAULIC CYLINDER	1		(SUB FOR TH4354802)
1	0643001	HYDRAULIC CYLINDER BARREL	1		(SUB FOR TH0643001)
1B	0643002	BUSHING	1		(SUB FOR TH0643002)
2	0643003	ROD	1		(SUB FOR TH0643003)
2B	0643004	BUSHING	1		(SUB FOR TH0643004)
3	0643005	HYDR. CYLINDER ROD GUIDE	1		(SUB FOR TH0643005)
4	0643006	BUSHING	1		(SUB FOR TH0643006)
5	0133709	SNAP RING	1		(SUB FOR TH104999)
6	0643007	RING	1		(K) (SUB FOR TH0643007)
7	0643008	PACKING	1		(K) (SUB FOR TH0643008)
8	0643009	WEAR RING	1		(K) (SUB FOR TH0643009)
9	0643010	RING	1		(K) (SUB FOR TH0643010)
10	4438197	RING	1		(K) (SUB FOR 0643011)
11	A811170	O-RING	1		(K) (SUB FOR THA811170)
12	TH0332704	BACK-UP RING	1		(K)
13	0259304	CAP SCREW	8		(SUB FOR TH0417606)
14	0643012	BEARING	1		(SUB FOR TH0643012)
15	0643013	SEAL	1		(K) (SUB FOR TH0643013)
16	0643014	PISTON	1		(SUB FOR TH0643014)
17	0332706	SEAL	1		(K) (SUB FOR TH0332706)
18	0643015	RING	2		(SUB FOR TH0643015)
19	0332708	RING	2		(SUB FOR TH0332708)
20	0353009	NUT	1		(SUB FOR AT132318)
21	0353010	SHIM	1		(SUB FOR AT132319)
22	0353011	BALL	1		(SUB FOR AT132320)
23	0353012	SET SCREW	1		(SUB FOR AT132321)
25	4S00225	SEAL	4		(SUB FOR TH4205000)
44	TH100074	LUBRICATION FITTING	1		
45	0643016	BLEED VALVE	1		(SUB FOR TH0643016)
46	19M6619	SCREW	4		(SUB FOR TH0643019)
47	AT264254	O-RING	1		(SUB FOR AT132423, 955612)
58	0644901	OIL LINE	1		(SUB FOR TH0644901)
59	0644902	OIL LINE	1		(SUB FOR TH0644902)
60	M800636	BOLT	4		M12 X 55
61	AT264348	O-RING	1		(SUB FOR TH102788)
63	0309219	CLAMP	1		(SUB FOR T108064)
64	19M7363	CAP SCREW	1		M12 X 60, (SUB FOR 19M7273)
65	12M7058	LOCK WASHER	1		12 MM, (SUB FOR 12M7067)
66	0643020	CLAMP	1		(SUB FOR TH0643020)
67	0643021	CLAMP	1		(SUB FOR TH0643021)
68	0417613	HALF CLAMP	2		(SUB FOR TH0417613)
69	0236915	HALF CLAMP	2		(SUB FOR TH102783)
70	19M7291	CAP SCREW	1		M14 X 90
71	12H317	LOCK WASHER	1		9/16"
72	19M7550	CAP SCREW	4		M10 X 35
73	12M7066	LOCK WASHER	4		10 MM
75	4438682	SEAL KIT	1		(SUB FOR 4348853 AND 4402383) (INCLUDES ALL (K) PARTS)

3J13

HYDRAULIC BOOM CYLINDER, RIGHT

TP67023 -UN-03FEB00

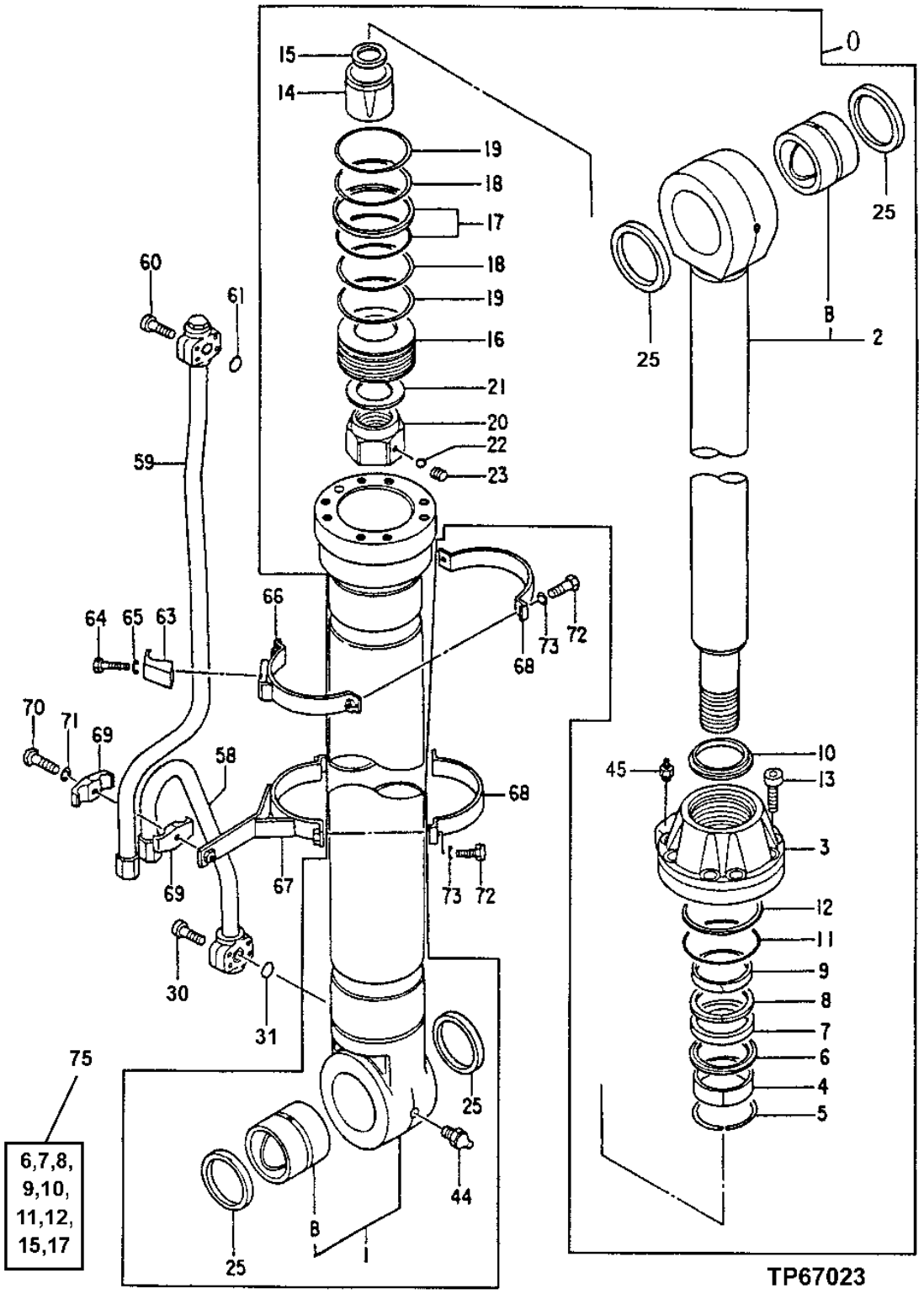

HYDRAULIC BOOM CYLINDER, RIGHT

KEY	PART NO.	PART NAME	QTY	SERIAL NO.	REMARKS
0	4309332	HYDRAULIC CYLINDER	1		
1	0643001	HYDRAULIC CYLINDER BARREL	1		(SUB FOR TH0643001)
1B	0643002	BUSHING	1		(SUB FOR TH0643002)
2	0643003	ROD	1		(SUB FOR TH0643003)
2B	0643004	BUSHING	1		(SUB FOR TH0643004)
3	0643005	HYDR. CYLINDER ROD GUIDE	1		(SUB FOR TH0643005)
4	0643006	BUSHING	1		(SUB FOR TH0643006)
5	0133709	SNAP RING	1		(SUB FOR TH104999)
6	0643007	RING	1		(K) (SUB FOR TH0643007)
7	0643008	PACKING	1		(K) (SUB FOR TH0643008)
8	0643009	WEAR RING	1		(K) (SUB FOR TH0643009)
9	0643010	RING	1		(K) (SUB FOR TH0643010)
10	4438197	RING	1		(K) (SUB FOR 0643011)
11	A811170	O-RING	1		(K) (SUB FOR THA811170)
12	TH0332704	BACK-UP RING	1		(K)
13	0259304	CAP SCREW	8		(SUB FOR TH0417606)
14	0643012	BEARING	1		(SUB FOR TH0643012)
15	0643013	SEAL	1		(K) (SUB FOR TH0643013)
16	0643014	PISTON	1		(SUB FOR TH0643014)
17	0332706	SEAL	1		(K) (SUB FOR TH0332706)
18	0643015	RING	2		(SUB FOR TH0643015)
19	0332708	RING	2		(SUB FOR TH0332708)
20	0353009	NUT	1		(SUB FOR AT132318)
21	0353010	SHIM	1		(SUB FOR AT132319)
22	0353011	BALL	1		(SUB FOR AT132320)
23	0353012	SET SCREW	1		(SUB FOR AT132321)
25	4S00225	SEAL	4		(SUB FOR TH4205000)
30	M800636	BOLT	4		M12 X 55
31	AT264348	O-RING	1		(SUB FOR TH102788)
44	TH100074	LUBRICATION FITTING	1		
45	0643016	BLEED VALVE	1		(SUB FOR TH0643016)
58	0643017	OIL LINE	1		(SUB FOR TH0643017)
59	0643018	OIL LINE	1		(SUB FOR TH0643018)
60	19M6619	SCREW	4		(SUB FOR TH0643019)
61	AT264254	O-RING	1		(SUB FOR AT132423, 955612)
63	0309219	CLAMP	1		(SUB FOR T108064)
64	19M7363	CAP SCREW	1		M12 X 60, (SUB FOR 19M7273)
65	12M7058	LOCK WASHER	1		12 MM, (SUB FOR 12M7067)
66	0643020	CLAMP	1		(SUB FOR TH0643020)
67	0643021	CLAMP	1		(SUB FOR TH0643021)
68	0417613	HALF CLAMP	2		(SUB FOR TH0417613)
69	0236915	HALF CLAMP	2		(SUB FOR TH102783)
70	19M7291	CAP SCREW	1		M14 X 90
71	12H317	LOCK WASHER	1		9/16"
72	19M7550	CAP SCREW	4		M10 X 35, (SUB FOR AT153924)
73	12M7066	LOCK WASHER	4		10 MM
75	4438682	SEAL KIT	1		(SUB FOR 4348853 AND 4402383) (INCLUDES ALL (K) PARTS)

HYDRAULIC CYLINDER
(CYLINDER REMOVAL DEVICE)

TP66942 -UN-13OCT99

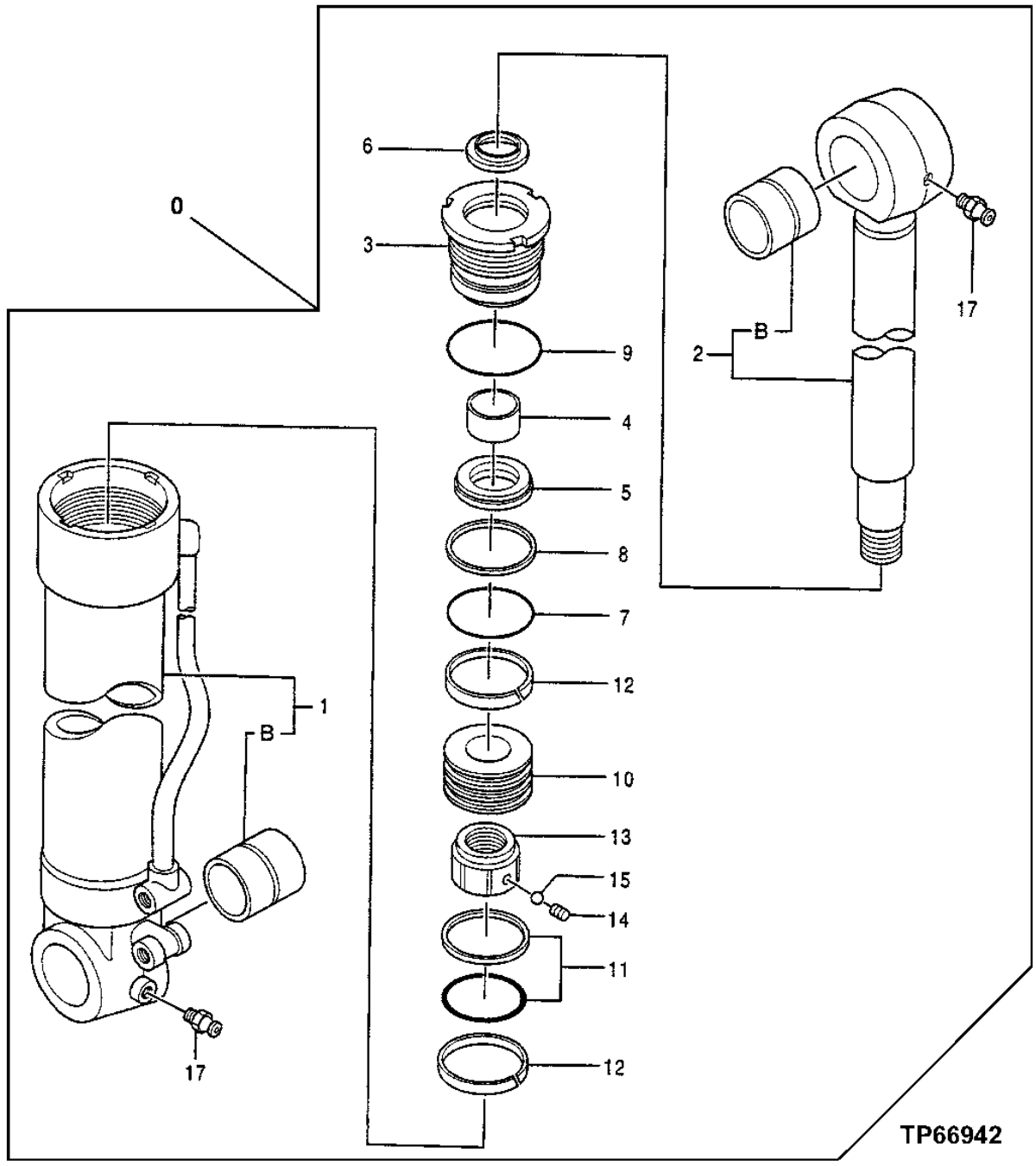

50 — 5,6,7,8,9,11

HYDRAULIC CYLINDER
(CYLINDER REMOVAL DEVICE)

KEY	PART NO.	PART NAME	QTY	SERIAL NO.	REMARKS
0	4356853	HYDRAULIC CYLINDER	1		(SUB FOR TH4356853)
1	0679901	HYDRAULIC CYLINDER BARREL	1		(SUB FOR TH0679901)
1B	0188905	BUSHING	1		(SUB FOR AT132686)
2	0679902	ROD	1		(SUB FOR TH0679902)
2B	0188905	BUSHING	1		(SUB FOR AT132686)
3	0679903	HYDR. CYLINDER ROD GUIDE	1		(SUB FOR TH0679903)
4	988681	WEAR RING	1		(SUB FOR TH106302)
5	4085460	SEAL	1		(K) (SUB FOR AT132692)
6	H158164	SCRAPER RING	1		(K)
7	0166005	O-RING	1		(K) (SUB FOR TH0166005)
8	0679904	BACK-UP RING	1		(K) (SUB FOR TH0679904)
9	0159811	O-RING	1		(K) (SUB FOR TH0159811)
10	0679905	PISTON	1		(SUB FOR TH0679905)
11	TH102795	SEAL	1		(K)
12	0679906	RING	2		(SUB FOR TH0679906)
13	0310511	NUT	1		(SUB FOR TH109325)
14	22M6684	SET SCREW	1		M12 X 12
15	T13624	BALL	1		7.145 MM (9/32")
17	TH100074	LUBRICATION FITTING	2		
50	4384450	SEAL KIT	1		(SUB FOR TH4384450) (INCLUDES ALL (K) PARTS)

CYLINDER, COUNTERWEIGHT REMOVAL DEVICE

TP66904 -UN-13OCT99

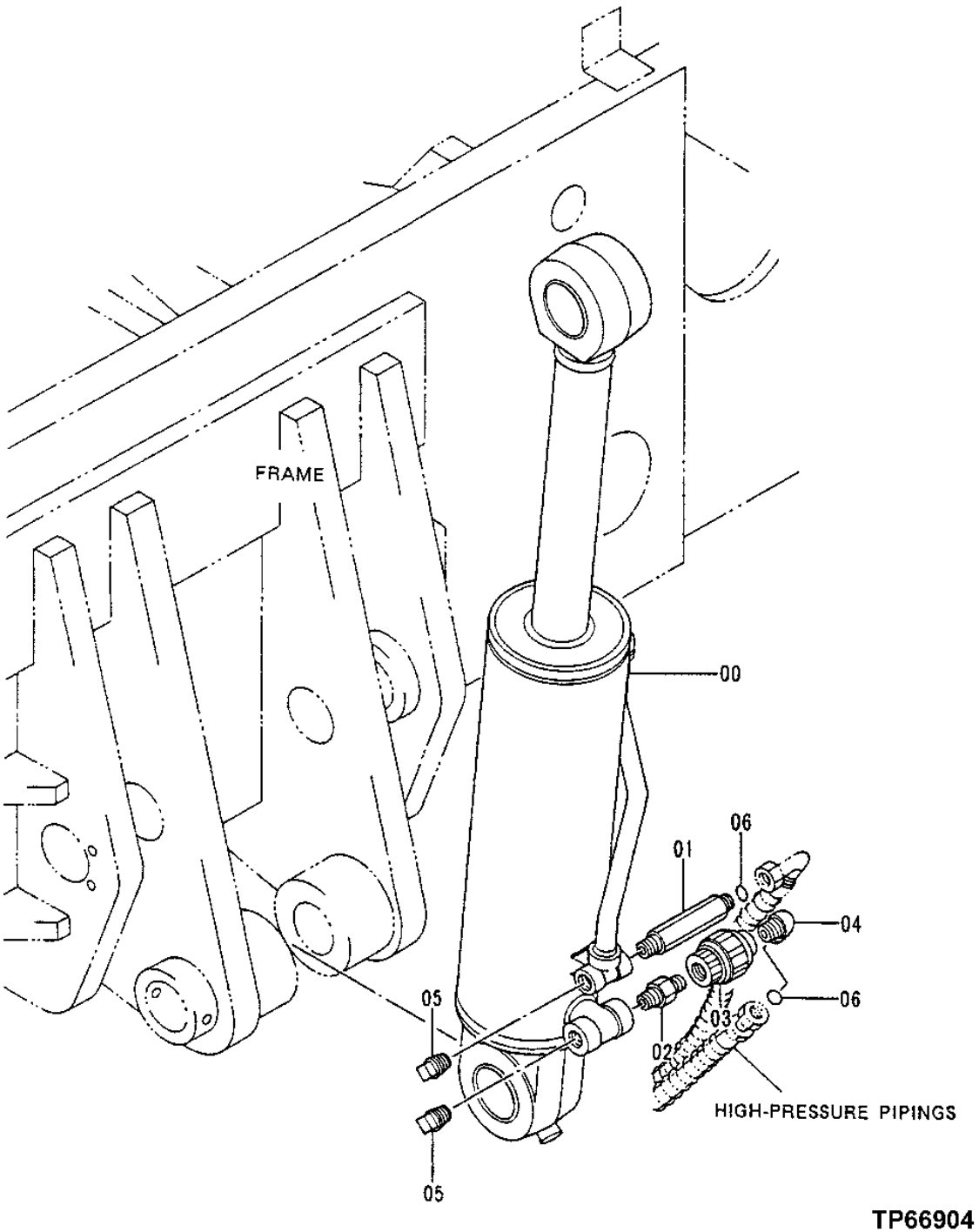

CYLINDER, COUNTERWEIGHT REMOVAL DEVICE

KEY	PART NO.	PART NAME	QTY	SERIAL NO.	REMARKS
0	4356853	HYDRAULIC CYLINDER	1		
1	3071216	ADAPTER	1		
2	4339469	ADAPTER	1		
3	4146466	PNEUMATIC PRESSURE VALVE	1		
4	4274178	ELBOW FITTING	1		
5	94-2024	FITTING PLUG	2		
6	T77857	O-RING	2		12.421 X 1.778 MM (0.489" X 0.070")

SWING DEVICE

T142539 -UN-19JUN01

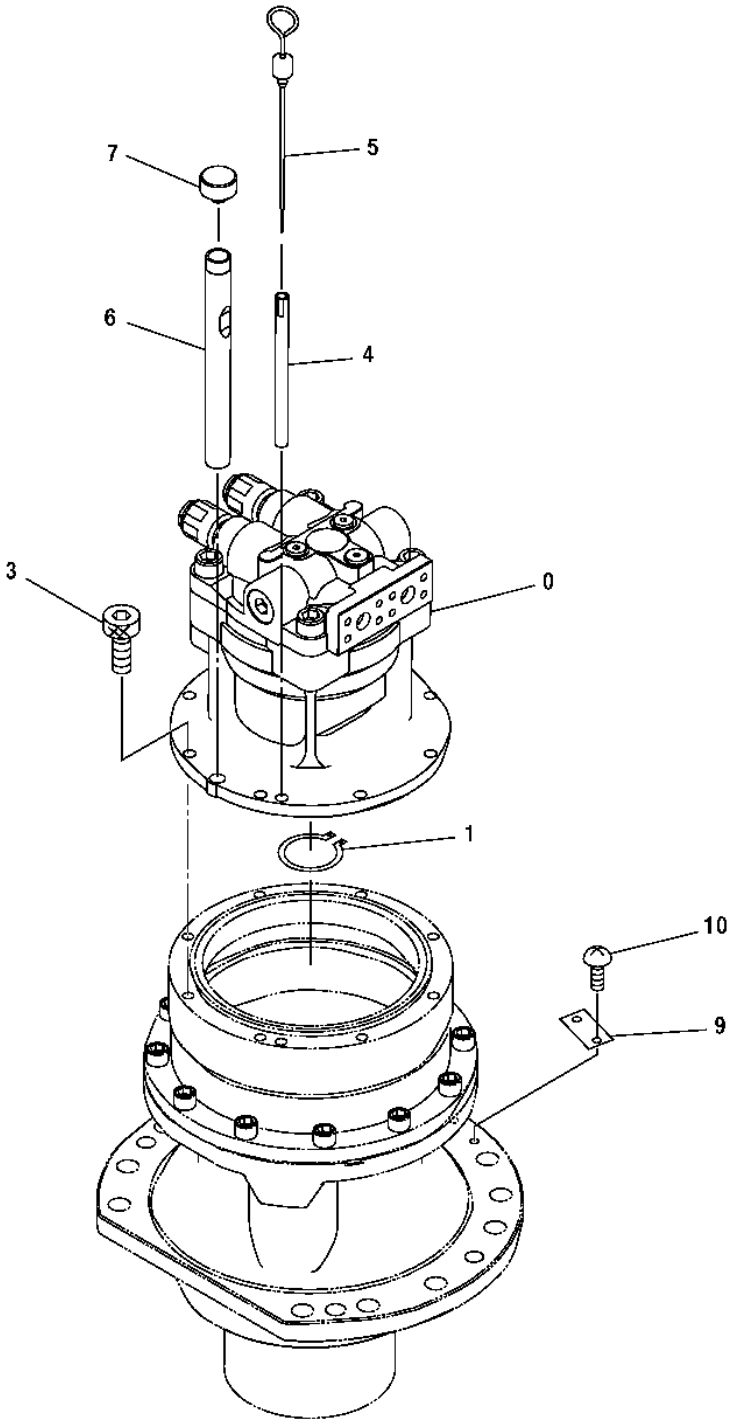

T142539

SWING DEVICE

KEY	PART NO.	PART NAME	QTY	SERIAL NO.	REMARKS
0	4440388	HYDRAULIC MOTOR	1		
1	40M7046	SNAP RING	1		
3	19M8168	SCREW	8		M12 X 25
4	4264452	TUBE	1		(SUB FOR AT154293)
5	3074223	DIPSTICK	1		(SUB FOR AT213790)
6	4332658	TUBE	1		(SUB FOR AT213843)
7	4343365	CAP	1		(SUB FOR AT204965)
9	.....	IDENTIFICATION PLATE	1		(AT154128 NOT AVAILABLE FOR SERVICE)
10	37H99	SCREW	2		0.100" X 1/4"

SWING DEVICE COMPONENTS

T149982 -UN-01FEB02

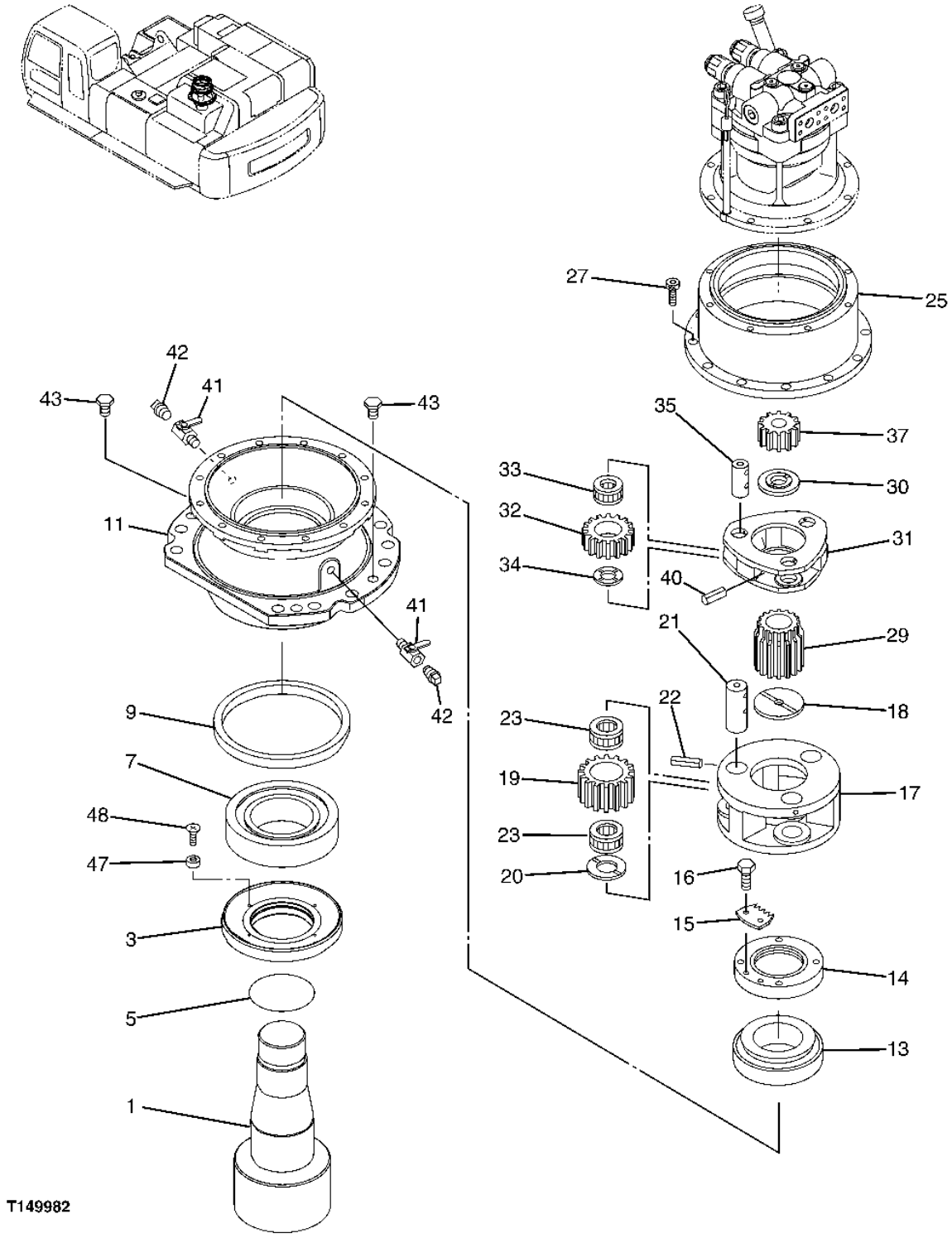

SWING DEVICE COMPONENTS

KEY	PART NO.	PART NAME	QTY	SERIAL NO.	REMARKS
0	9209335	TRANSMISSION	1		
0-	9191671	TRANSMISSION	1		
1	2044936	SHAFT	1		
3	3088671	SLEEVE	1		
5	A811140	O-RING	1		
7	4438312	CYLINDRICAL ROLLER BEARING	1		
9	4424982	SEAL	1		
	4412061	SEAL	1		(FOR EXTREME COLD WEATHER APPLICATIONS)
11	1028151	HOUSING	1		
13	4402481	CYLINDRICAL ROLLER BEARING	1		(SUB FOR TH4402481)
14	3088744	NUT	1		
15	4415042	PLATE	1		
16	19M8324	CAP SCREW	2		M10 X 16
17	1028147	PLANET PINION CARRIER	1		
18	4194454	PLATE	1		(SUB FOR TH111267)
19	3088608	GEAR	3		
20	4452475	PLATE	3		
21	4488904	PIN	3		(SUB FOR 4336925, AT213868)
22	3M6402	SPRING PIN	3		
23	4269454	NEEDLE BEARING	6		(SUB FOR AT202596)
25	1028141	RING GEAR	1		
27	M341840	BOLT	12		
29	3084656	SUN GEAR	1		
30	4434708	THRUST WASHER	1		
31	1028149	PLANET PINION CARRIER	1		
32	3088656	GEAR	3		
33	TH111232	NEEDLE BEARING	3		
34	4430667	PLATE	3		(SUB FOR TH4430667)
35	4144558	PIN FASTENER	3		(SUB FOR TH102298)
37	3084649	SUN GEAR	1		
40	34M7014	SPRING PIN	3		
41	4194712	DRAIN VALVE	2		(SUB FOR TH108278)
42	94-2024	FITTING PLUG	2		(SUB FOR TH101292)
43	4445354	FITTING PLUG	2		
47	4422479	PLATE	4		(SUB FOR TH4422479)
48	M470513	CAP SCREW	4		(SUB FOR TH101156)

SWING DEVICE SUPPORT

T149988 -UN-01FEB02

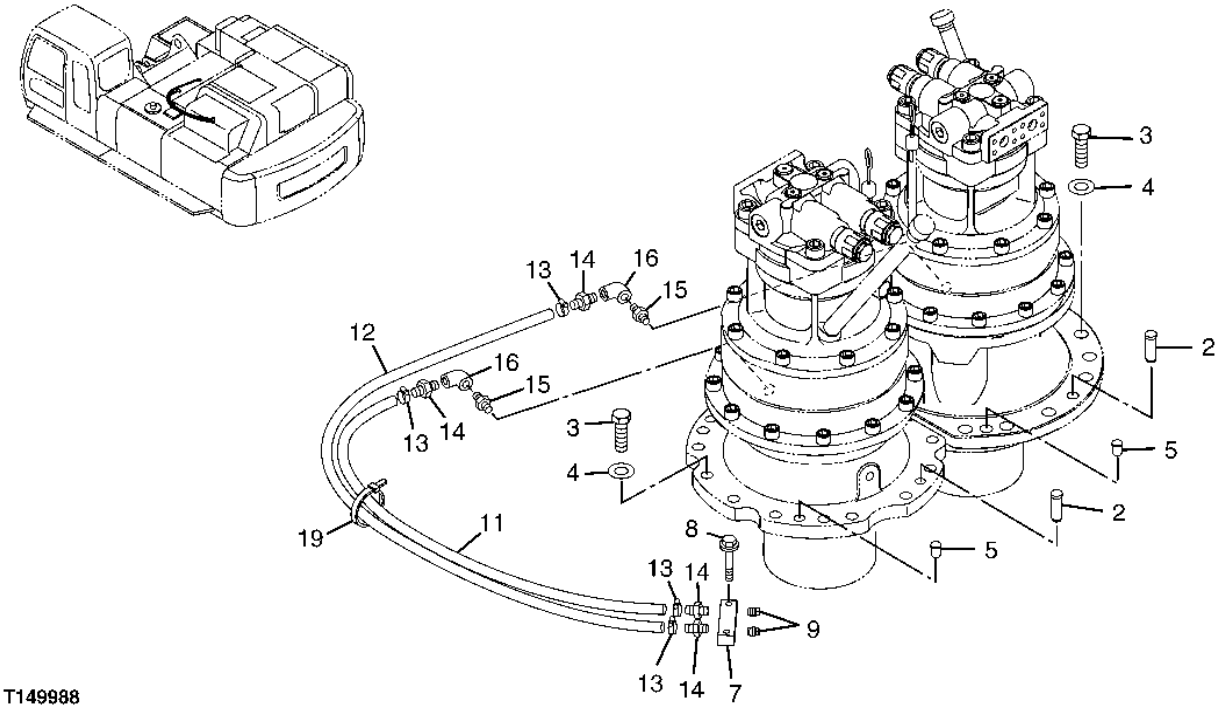

T149988

SWING DEVICE SUPPORT

KEY	PART NO.	PART NAME	QTY	SERIAL NO.	REMARKS
2	4253709	PIN FASTENER	4		
3	J932270	BOLT	26		
4	T56006	WASHER	26		
5	99M7010	PLUG	4		
7	4297191	JUNCTION BLOCK	1		
8	19M7572	CAP SCREW	2		M10 X 45
	12M7066	LOCK WASHER	2		10 MM
9	U40979	PIPE PLUG	2		
11	4343186	HYDRAULIC HOSE	1		
12	4343187	HYDRAULIC HOSE	1		
13	AR21839	CLAMP	4		
14	4004589	ADAPTER	4		
15	.....	ADAPTER	2		(THJ70184 NOT AVAILABLE FOR SERVICE)
16	15H602	ELBOW FITTING	2		
19	H77698	TIE BAND	1		

SWING OIL MOTOR

T150288 -UN-04FEB02

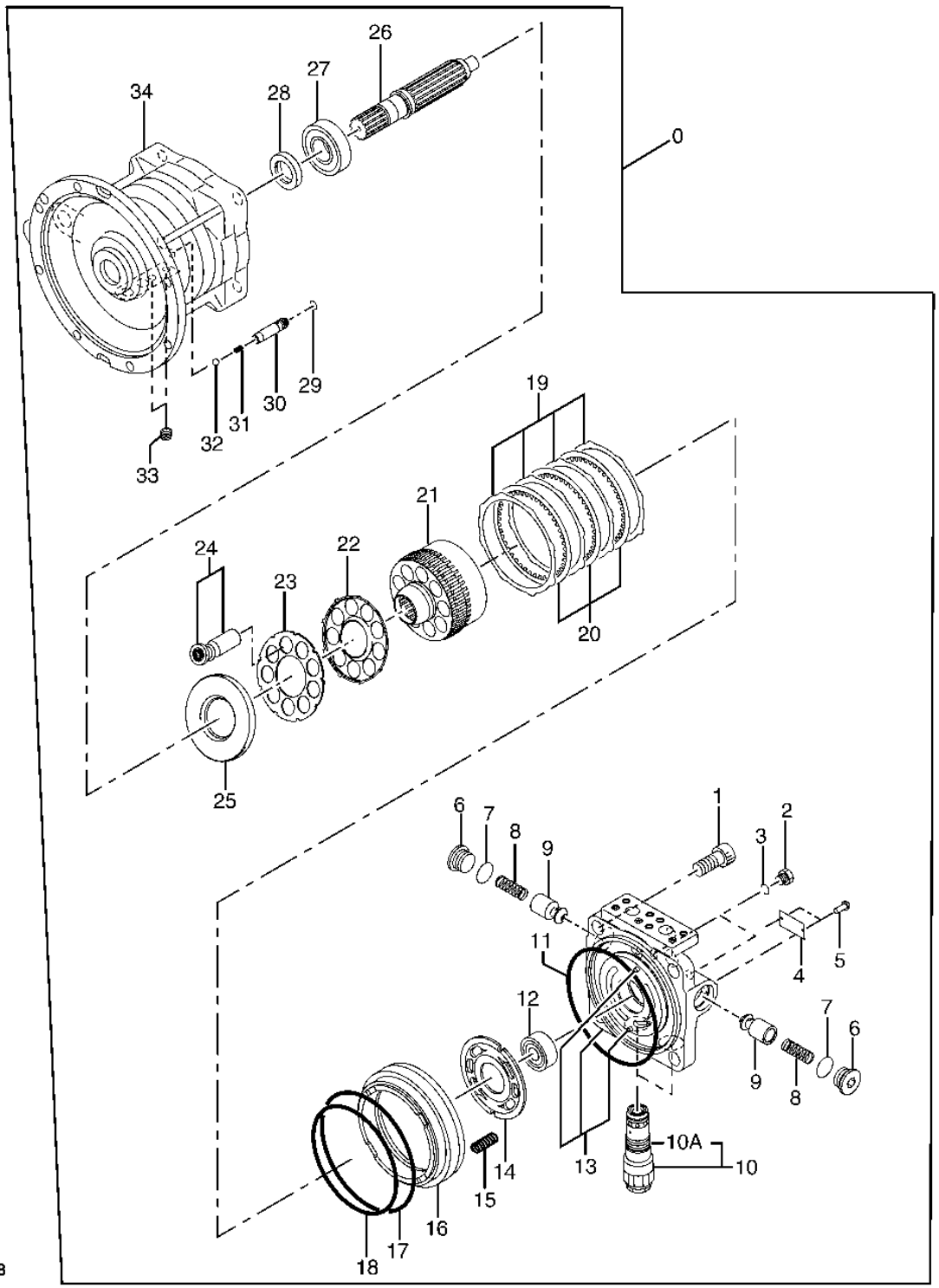

T150288

SWING OIL MOTOR

KEY	PART NO.	PART NAME	QTY	SERIAL NO.	REMARKS
0	4440388	HYDRAULIC MOTOR	1		
1	0365318	SCREW	4		(SUB FOR AT128294)
2	0629404	FITTING PLUG	2		(SUB FOR AT213630)
3	M800650	PACKING	2		
4	.....	IDENTIFICATION PLATE	1		(0625508 NO LONGER AVAILABLE)
5	0625509	CAP SCREW	2		
6	0692708	FITTING PLUG	2		(SUB FOR AT217930)
7	AT264347	O-RING	2		(SUB FOR 4506428)
8	0409216	SPRING	2		(SUB FOR AT155199)
9	0409215	PLUNGER	2		(SUB FOR AT155198)
10	4472088	PRESSURE RELIEF VALVE	2		
10A	A811030	O-RING	2		(SUB FOR TH101300)
11	0425115	O-RING	1		(SUB FOR AT155216)
12	0788812	CYLINDRICAL ROLLER BEARING	1		
13	0788802	COVER	1		
14	0788809	PLATE	1		
15	0788815	SPRING	24		
16	0788814	PISTON	1		
17	T80622	O-RING	1		
18	4S00218	O-RING	1		(SUB FOR AT132389)
19	0788817	THRUST WASHER	4		
20	0788816	THRUST WASHER	3		
21	0788805	MANIFOLD	1		
22	0788806	PLATE	1		
23	0788807	RETAINER	1		
24	0788801	PISTON	1		
25	0788808	PLATE	1		
26	0788804	SHAFT	1		
27	0788811	CYLINDRICAL ROLLER BEARING	1		
28	0788813	SEAL	1		
29	CH11568	PACKING	1		
30	0788803	PLUNGER	1		
31	0788818	SPRING	1		
32	R63075	BALL	1		
33	15H560	PIPE PLUG	2		
34	0802901	HOUSING	1		

MEMORANDA

1K18

NUMERICAL INDEX

PART NO.	GRID	KEY	PAGE
AA34965	2D14	5	1830 - 3
AA34965	2E2	32	1830 - 15
AE24616	3C22	5	3315 - 13
AE24616	3C24	23	3315 - 15
AE24616	3D23	17	3360 - 11
AE24616	3E2	13	3360 - 15
AE24616	3E4	11	3360 - 15B
AE24616	3E4	13	3360 - 15B
AE24616	3E4	15	3360 - 15B
AE24616	3E6	27	3360 - 17
AE42067	3C22	6	3315 - 13
AE42067	3C22	7	3315 - 13
AE42718	3E6	5	3360 - 17
AH103182	3G20	21	3363 - 3
AH108250	3C22	2	3315 - 13
AH63565	3E4	5	3360 - 15B
AH75160	3E6	3	3360 - 17
AP36458	3H14	5	3363 - 21
AP38748	2C6	0	1810 - 35
AP38749	2C6	1	1810 - 35
AP38750	2C6	2	1810 - 35
AP38751	2C6	4	1810 - 35
AP38752	2C6	5	1810 - 35
AP38753	2C6	6	1810 - 35
AP38754	2C6	9	1810 - 35
AP38755	2C6	30	1810 - 35
AP38756	2C6	11	1810 - 35
AP38757	2C6	12	1810 - 35
AP38758	2C6	13	1810 - 35
AP38759	2C6	16	1810 - 35
AP38760	2C6	15	1810 - 35
AP38763	2C6	50	1810 - 35
AR21836	1F25	2	0560 - 5
AR21839	3J25	13	4360 - 7
AR48236	1F9	8	0510 - 7
AR48236	1F19	19	0530 - 5
AR60937	2D22	10	1830 - 11
AR90081	3C22	20	3315 - 13
AR90081	3D23	11	3360 - 11
AR94101	3E2	25	3360 - 15
AT101944	2D24	17	1830 - 13
AT101945	2D24	16	1830 - 13
AT107392	3G24	39	3363 - 7
AT107392	3H6	2	3363 - 13
AT108783	3D23	10	3360 - 11
AT114853	1B13	6	0260 - 5
AT114853	3H12	27	3363 - 19
AT115448	3D25	11	3360 - 13
AT115535	3C22	12	3315 - 13
AT115535	3C24	31	3315 - 15
AT116486	3E2	16	3360 - 15
AT116486	3E6	7	3360 - 17
AT120949	3G14	37	3362 - 41
AT120949	3G16	37	3362 - 43
AT120949	3G18	37	3362 - 45
AT121321	1C18	48	0407 - 9
AT121321	1G18	46	1674 - 11
AT121321	1G20	37	1674 - 13
AT121321	3H24	28	3363 - 31
AT121321	3I8	30	3363 - 39
AT121661	1B2	13	0130 - 13
AT121962	2E13	28E	1910 - 9
AT121962	2E13	29C	1910 - 9
AT121962	2E13	30F	1910 - 9
AT121962	2E15	9B	1910 - 11
AT121962	2E15	35B	1910 - 11
AT122160	3J8	11	3365 - 3
AT122384	1G18	44-	1674 - 11
AT122559	1F5	8	0510 - 3
AT126122	3H24	20	3363 - 31
AT126283	1H9	46	1740 - 5
AT126458	3H18	11	3363 - 25
AT127571	3F14	31	3362 - 17
AT127574	3F14	24A	3362 - 17
AT127601	3F14	2	3362 - 17
AT127604	3F14	25	3362 - 17
AT127623	3F14	3	3362 - 17
AT127963	3F14	24	3362 - 17
AT127988	1B25	44	0260 - 15
AT128176	3F14	11	3362 - 17
AT128294	3K2	1	4367 - 3
AT128492	1B4	14	0130 - 15
AT130053	3D23	7	3360 - 11
AT130053	3E6	12	3360 - 17
AT130157	1G5	1	1369 - 3
AT130595	1B2	0C	0130 - 13
AT130595	1B4	8	0130 - 15
AT130666	1B17	16	0260 - 9
AT130666	1F21	11	0540 - 3
AT130684	3E6	9	3360 - 17
AT131445	3D23	8	3360 - 11
AT131529	3J6	5	3364 - 3
AT131543	1B19	62	0260 - 11
AT131548	1H11	8	1740 - 7
AT131550	1F21	14	0540 - 3
AT131554	1B4	7	0130 - 15
AT131560	1H11	4	1740 - 7
AT131627	3D10	12	3340 - 9
AT131632	3H12	22	3363 - 19
AT131654	2E13	15A	1910 - 9
AT131654	2E13	16A	1910 - 9
AT131654	2E15	87A	1910 - 11
AT131671	1H7	26	1740 - 3
AT131678	1H11	9	1740 - 7
AT131682	3D10	4C	3340 - 9
AT131685	3H2	5	3363 - 9
AT131685	3H8	4	3363 - 15
AT131685	3H10	8	3363 - 17
AT131685	3H12	1	3363 - 19
AT131685	3I14	31	3363 - 45
AT131685	3I18	31	3363 - 49
AT131687	3D4	26	3340 - 3
AT131687	3D6	26	3340 - 5
AT131687	3D8	26	3340 - 7
AT131687	3D12	26	3340 - 11
AT131690	1H11	3	1740 - 7
AT131692	3F2	77	3362 - 5
AT131693	3D14	8	3344 - 3
AT131693	3D16	8	3344 - 5
AT131696	3D4	22	3340 - 3
AT131696	3D6	22	3340 - 5
AT131696	3D8	22	3340 - 7
AT131696	3D10	24	3340 - 9
AT131696	3D12	22	3340 - 11
AT131696	3D14	10	3344 - 3
AT131696	3D16	10	3344 - 5
AT131697	2B8	16	1810 - 13
AT131701	1H15	12	1740 - 11
AT131702	3D10	32	3340 - 9
AT131703	3D10	34	3340 - 9
AT131720	1F21	13	0540 - 3
AT131735	1B19	2	0260 - 11
AT131743	2F4	2	1910 - 25
AT131752	1B19	61	0260 - 11
AT131790	1B17	1	0260 - 9
AT131791	3H8	12	3363 - 15
AT131792	3H8	11	3363 - 15
AT131793	3H12	20	3363 - 19
AT131796	1G8	2	1671 - 3
AT131809	3H2	10	3363 - 9
AT131810	3H2	11	3363 - 9
AT131811	3H2	9	3363 - 9
AT131842	1H11	10	1740 - 7
AT131843	1H11	11	1740 - 7
AT131854	1H9	52	1740 - 5
AT131864	2B8	16A	1810 - 13
AT131865	2B8	16B	1810 - 13
AT131900	1H15	5	1740 - 11
AT131918	3H8	13	3363 - 15
AT131921	2E23	7	1910 - 19
AT131937	2E13	15	1910 - 9
AT131937	2E15	87	1910 - 11
AT131938	2E13	16	1910 - 9
AT132006	1F21	16	0540 - 3
AT132014	1H15	1	1740 - 11
AT132066	3H6	0	3363 - 13
AT132067	1B17	15	0260 - 9
AT132163	1B25	6	0260 - 15
AT132164	3J10	7	3365 - 5
AT132173	3J10	8	3365 - 5
AT132174	3J10	10	3365 - 5
AT132210	3G16	39	3362 - 43
AT132210	3G18	39	3362 - 45
AT132255	1B23	28	0260 - 13
AT132258	1B23	20	0260 - 13
AT132269	1B25	32	0260 - 15
AT132270	1B25	33	0260 - 15
AT132271	1B25	34	0260 - 15
AT132272	3H2	8	3363 - 9
AT132313	3J10	4	3365 - 5
AT132314	3J10	6	3365 - 5
AT132315	3J10	9	3365 - 5
AT132318	3J10	21	3365 - 5
AT132318	3J12	20	3365 - 7
AT132318	3J14	20	3365 - 9
AT132319	3J10	20	3365 - 5
AT132319	3J12	21	3365 - 7
AT132319	3J14	21	3365 - 9
AT132320	3J10	23	3365 - 5
AT132320	3J12	22	3365 - 7
AT132320	3J14	22	3365 - 9
AT132321	3J10	22	3365 - 5
AT132321	3J12	23	3365 - 7
AT132321	3J14	23	3365 - 9
AT132328	3J8	59	3365 - 3
AT132389	3K2	18	4367 - 3
AT132423	3J10	64	3365 - 5
AT132423	3J12	47	3365 - 7
AT132423	3J14	61	3365 - 9
AT132457	1G20	5	1674 - 13
AT132493	3G22	35	3363 - 5
AT132503	3I22	7	3363 - 53
AT132516	3H24	35	3363 - 31
AT132686	3J16	1B	3365 - 11
AT132686	3J16	2B	3365 - 11
AT132692	3J16	5	3365 - 11
AT134351	3J6	7	3364 - 3
AT134361	1B13	24	0260 - 5
AT135758	1G14	5C	1674 - 7
AT135758	1H2	0C	1674 - 15
AT135758	3D14	22C	3344 - 3

NUMERICAL INDEX - CONTINUED

PART NO.	GRID	KEY	PAGE
AT135758	3D16	22C	3344 - 5
AT139382	3D25	4	3360 - 13
AT139383	3D25	3	3360 - 13
AT140041	3E2	16	3360 - 15
AT140041	3E6	7	3360 - 17
AT141562	3D25	15	3360 - 13
AT142288	1H4	1	1674 - 19
AT145650	1C20	40	0407 - 11
AT147803	1G20	0	1674 - 13
AT147803	2C6	18A	1810 - 35
AT152120	3C22	13	3315 - 13
AT152120	3C24	5	3315 - 15
AT153835	3E22	12	3361 - 17
AT153885	3E22	35	3361 - 17
AT153924	3J14	72	3365 - 9
AT154055	3C18	24	3315 - 9
AT154056	3C18	23	3315 - 9
AT154127	3C18	28	3315 - 9
AT154128	3J21	9	4360 - 3
AT154130	1B11	18	0260 - 3
AT154150	2B8	39	1810 - 13
AT154223	1B2	15	0130 - 13
AT154224	3E14	56	3361 - 9
AT154224	3E20	15	3361 - 15
AT154239	1F23	32	0560 - 3
AT154243	1F9	13	0510 - 7
AT154243	1F13	7	0515 - 5
AT154243	1F23	37	0560 - 3
AT154243	1G18	47	1674 - 11
AT154243	3H22	51	3363 - 29
AT154278	2B8	20	1810 - 13
AT154285	3I4	1	3363 - 35
AT154285	3I6	4	3363 - 37
AT154293	3J21	4	4360 - 3
AT154322	3E14	54	3361 - 9
AT154322	3E20	10	3361 - 15
AT154351	2D14	12	1830 - 3
AT154413	2B8	24	1810 - 13
AT154533	3E14	53	3361 - 9
AT154533	3E20	11	3361 - 15
AT154755	3I24	0	3363 - 55
AT154913	2F7	4	2001 - 3
AT154921	1G12	0	1674 - 5
AT154922	1G12	1	1674 - 5
AT154961	1G20	32	1674 - 13
AT154966	2F9	0	2004 - 3
AT155189	2C6	26	1810 - 35
AT155198	3K2	9	4367 - 3
AT155199	3K2	8	4367 - 3
AT155216	3K2	11	4367 - 3
AT155242	2E9	12	1910 - 5
AT155248	3G20	5	3363 - 3
AT155271	1H9	56	1740 - 5
AT155730	2A24	37	1810 - 5
AT156970	2B10	41	1810 - 15
AT156973	2E15	84	1910 - 11
AT156974	1G20	55	1674 - 13
AT156993	2B14	17	1810 - 19
AT156994	2B14	18	1810 - 19
AT157059	2E23	16	1910 - 19
AT157068	2B10	18	1810 - 15
AT157068	2B12	27	1810 - 17
AT159804	2D24	20	1830 - 13
AT160248	1B19	50	0260 - 11
AT160892	3I22	5	3363 - 53
AT161192	2D24	25	1830 - 13
AT162984	3H24	19	3363 - 31
AT165111	1G14	5A	1674 - 7
AT165111	1H2	0A	1674 - 15
AT165111	3D14	22A	3344 - 3
AT165112	1G14	5B	1674 - 7
AT165112	1H2	0B	1674 - 15
AT165112	3D14	22B	3344 - 3
AT165113	1G14	5D	1674 - 7
AT165113	1H2	0D	1674 - 15
AT165113	3D14	22D	3344 - 3
AT167078	3I20	2	3363 - 51
AT168737	3H12	28	3363 - 19
AT170459	3C24	8	3315 - 15
AT170625	3H2	57	3363 - 9
AT170626	3H2	59	3363 - 9
AT172097	3D6	38	3340 - 5
AT172097	3I16	38	3363 - 47
AT172242	3E8	4	3361 - 3
AT172243	3H10	15	3363 - 17
AT172414	3G16	31	3362 - 43
AT172414	3G18	31	3362 - 45
AT172702	3E24	44	3362 - 3
AT172702	3F8	44	3362 - 11
AT172703	3F2	71	3362 - 5
AT172704	3F2	81	3362 - 5
AT172704	3F8	46	3362 - 11
AT173678	2D8	2	1821 - 5
AT173776	3G24	38	3363 - 7
AT174500	3E14	59	3361 - 9
AT175866	3G18	3	3362 - 45
AT175875	3G14	32	3362 - 41
AT175875	3G16	32	3362 - 43
AT175875	3G18	32	3362 - 45
AT175876	3G14	33	3362 - 41
AT175876	3G16	33	3362 - 43
AT175876	3G18	33	3362 - 45
AT175878	3G16	38	3362 - 43
AT175878	3G18	38	3362 - 45
AT175880	3G14	44	3362 - 41
AT175880	3G16	44	3362 - 43
AT175880	3G18	44	3362 - 45
AT175916	3H4	12	3363 - 11
AT175919	3H4	12A	3363 - 11
AT175923	3G14	5	3362 - 41
AT175924	3G14	6	3362 - 41
AT175925	3G14	7	3362 - 41
AT175926	3G14	8	3362 - 41
AT175927	3G14	10	3362 - 41
AT175928	3G14	11	3362 - 41
AT175929	3G14	30	3362 - 41
AT175932	3G14	35	3362 - 41
AT175932	3G16	35	3362 - 43
AT175932	3G18	35	3362 - 45
AT175933	3G14	38	3362 - 41
AT175935	3G16	3	3362 - 43
AT175936	3G16	5	3362 - 43
AT175939	3G16	6	3362 - 43
AT175941	3G16	8	3362 - 43
AT175942	3G16	10	3362 - 43
AT175943	3G16	11	3362 - 43
AT175944	3G16	30	3362 - 43
AT175984	1G10	5	1674 - 3
AT175989	1F23	5	0560 - 3
AT176789	2B12	6	1810 - 17
AT177419	1F23	22	0560 - 3
AT177804	2B24	0	1810 - 29
AT177805	2B24	0A	1810 - 29
AT177806	2B24	0C	1810 - 29
AT177828	1F23	9	0560 - 3
AT180585	3D23	4	3360 - 11
AT180971	2D6	7	1821 - 3
AT180973	2D6	9	1821 - 3
AT180974	2D6	10	1821 - 3
AT180975	2D6	11	1821 - 3
AT180976	2D6	12	1821 - 3
AT180977	2D6	13	1821 - 3
AT180978	2D6	15	1821 - 3
AT180979	2D6	18	1821 - 3
AT180980	2D6	19	1821 - 3
AT181125	2F7	9	2001 - 3
AT182625	2B8	27	1810 - 13
AT182626	2B8	28	1810 - 13
AT186554	3H14	6A	3363 - 21
AT186554	3H14	6B	3363 - 21
AT186622	3E6	24	3360 - 17
AT186623	3E6	1	3360 - 17
AT187562	2B24	0B	1810 - 29
AT188457	3D4	50	3340 - 3
AT188458	3D6	50	3340 - 5
AT188459	3D8	50	3340 - 7
AT188460	3D10	50	3340 - 9
AT188461	3D12	50	3340 - 11
AT189718	3B15	40	3302 - 5
AT189719	3B15	40	3302 - 5
AT189720	3B15	40	3302 - 5
AT189721	3B15	40	3302 - 5
AT189722	3B15	40	3302 - 5
AT189723	3B15	40	3302 - 5
AT189724	3B15	40	3302 - 5
AT189725	3B15	40	3302 - 5
AT189726	3B15	40	3302 - 5
AT189727	3B15	40	3302 - 5
AT189728	3B15	40	3302 - 5
AT189733	3C8	1A	3302 - 19
AT189734	3B13	21	3302 - 3B
AT189734	3B13	22	3302 - 3B
AT189734	3B13	23	3302 - 3B
AT189734	3B13	24	3302 - 3B
AT189734	3B13	25	3302 - 3B
AT189734	3B15	50	3302 - 5
AT189734	3B17	21	3302 - 7
AT189734	3B17	22	3302 - 7
AT189734	3B17	23	3302 - 7
AT189734	3B17	24	3302 - 7
AT189734	3B17	25	3302 - 7
AT189734	3B19	50	3302 - 9
AT189734	3B21	21	3302 - 11
AT189734	3B21	22	3302 - 11
AT189734	3B21	23	3302 - 11
AT189734	3B21	24	3302 - 11
AT189734	3B21	25	3302 - 11
AT189734	3B25	50	3302 - 13B
AT189734	3C2	21	3302 - 15
AT189734	3C2	22	3302 - 15
AT189734	3C2	23	3302 - 15
AT189734	3C2	24	3302 - 15
AT189734	3C2	25	3302 - 15
AT189734	3C4	50	3302 - 17
AT189735	3C8	1D	3302 - 19
AT189736	3C8	1C	3302 - 19
AT189739	3C4	40	3302 - 17
AT189741	3C4	40	3302 - 17
AT189742	3C4	40	3302 - 17
AT189743	3C4	40	3302 - 17
AT189744	3C4	40	3302 - 17

NUMERICAL INDEX - CONTINUED

PART NO.	GRID	KEY	PAGE
AT189746	3B25	40	3302 - 13B
AT189747	3B25	40	3302 - 13B
AT189748	3B25	40	3302 - 13B
AT189749	3B25	40	3302 - 13B
AT189750	3B25	40	3302 - 13B
AT189751	3B25	40	3302 - 13B
AT189755	3B19	40	3302 - 9
AT189756	3B19	40	3302 - 9
AT189757	3B19	40	3302 - 9
AT189758	3B19	40	3302 - 9
AT189759	3B19	40	3302 - 9
AT189835	3C8	1E	3302 - 19
AT189904	3B11	4	3302 - 3
AT189904	3B21	4	3302 - 11
AT189904	3C2	4	3302 - 15
AT189905	3B11	6	3302 - 3
AT189905	3B21	6	3302 - 11
AT189905	3C2	6	3302 - 15
AT189906	3B11	8	3302 - 3
AT189906	3B21	8	3302 - 11
AT189906	3C2	8	3302 - 15
AT190190	2D22	10	1830 - 11
AT190535	3E2	4	3360 - 15
AT191199	3J10	10	3365 - 5
AT191297	3E6	20	3360 - 17
AT191397	3E2	14	3360 - 15
AT191642	1E12	11	0421 - 3
AT192342	3D10	14	3340 - 9
AT192636	3C8	1F	3302 - 19
AT192636	3C8	4F	3302 - 19
AT192638	3C8	1H	3302 - 19
AT192638	3C8	4H	3302 - 19
AT192639	3C8	4G	3302 - 19
AT192640	3C8	4J	3302 - 19
AT193964	2D6	1	1821 - 3
AT194969	1G20	0	1674 - 13
AT194969	2C6	18A	1810 - 35
AT195278	2D6	0C	1821 - 3
AT195279	2D6	0D	1821 - 3
AT195280	2D6	20	1821 - 3
AT195282	2D6	16	1821 - 3
AT195283	2D6	17	1821 - 3
AT195284	2D6	2	1821 - 3
AT195286	2D6	0	1821 - 3
AT195287	2D6	8	1821 - 3
AT195684	3C22	0	3315 - 13
AT195713	3D23	1	3360 - 11
AT195784	3D25	18	3360 - 13
AT195786	3D25	12	3360 - 13
AT195787	3D25	9	3360 - 13
AT195788	3D25	14	3360 - 13
AT195888	3I22	0	3363 - 53
AT195889	3I22	1	3363 - 53
AT195890	3I22	2	3363 - 53
AT196259	1C12	10	0407 - 3
AT196435	3C24	30	3315 - 15
AT196567	2B22	6	1810 - 27
AT196576	3B15	40	3302 - 5
AT196587	3D21	1	3360 - 9
AT196588	3D21	3	3360 - 9
AT198198	3B15	40	3302 - 5
AT199428	3C8	1K	3302 - 19
AT199429	3C8	1L	3302 - 19
AT199430	3C8	1M	3302 - 19
AT199748	2D6	16	1821 - 3
AT199749	2D6	17	1821 - 3
AT200004	3H16	35	3363 - 23
AT200005	1B15	15	0260 - 7
AT200007	1F19	2	0530 - 5
AT200011	1F19	4	0530 - 5
AT200011	2E7	6	1910 - 3
AT200011	2E19	7	1910 - 15
AT200011	2E19	11	1910 - 15
AT200012	1G20	12	1674 - 13
AT200012	1G20	30	1674 - 13
AT200012	1G20	45	1674 - 13
AT200231	3F16	3	3362 - 19
AT200232	3F16	4	3362 - 19
AT200584	2B10	59	1810 - 15
AT200722	3G24	37	3363 - 7
AT201032	2E15	53	1910 - 11
AT201552	1A19	4	0130 - 3
AT201568	1B25	7	0260 - 15
AT201579	3J10	25	3365 - 5
AT201621	3E14	57	3361 - 9
AT201622	3E14	58	3361 - 9
AT201632	3E14	6	3361 - 9
AT201635	3E16	32	3361 - 11
AT201636	3E16	5	3361 - 11
AT201637	3E16	7	3361 - 11
AT201638	3E16	6	3361 - 11
AT201639	3E20	5	3361 - 15
AT201640	3E20	7	3361 - 15
AT201641	3E14	52	3361 - 9
AT201641	3E20	13	3361 - 15
AT201642	3F18	18	3362 - 21
AT201687	3D10	13	3340 - 9
AT201693	3D10	16	3340 - 9
AT201694	3D10	14	3340 - 9
AT201695	3D10	4B	3340 - 9
AT201725	1B13	17	0260 - 5
AT201726	1A19	34	0130 - 3
AT201727	1B13	18	0260 - 5
AT201729	1A19	9	0130 - 3
AT201731	1H11	7	1740 - 7
AT201732	3H8	8	3363 - 15
AT201734	3J6	9	3364 - 3
AT201740	3H8	7	3363 - 15
AT201748	3D10	29	3340 - 9
AT201752	1G8	11	1671 - 3
AT201755	3H12	15	3363 - 19
AT201755	3I14	20	3363 - 45
AT201755	3I18	20	3363 - 49
AT201766	3E12	3	3361 - 7
AT201770	1A19	5	0130 - 3
AT201796	3I14	25	3363 - 45
AT201796	3I18	25	3363 - 49
AT201818	1B13	16	0260 - 5
AT201827	3H2	58	3363 - 9
AT201887	3D10	5	3340 - 9
AT201888	3D10	6	3340 - 9
AT201895	3H6	1	3363 - 13
AT201931	3D10	4	3340 - 9
AT201952	1F21	15	0540 - 3
AT201961	3F4	16	3362 - 7
AT201961	3F12	21	3362 - 15
AT201963	3E14	36	3361 - 9
AT201967	3E14	52	3361 - 9
AT201967	3E16	16	3361 - 11
AT201967	3E20	12	3361 - 15
AT201970	3E14	16	3361 - 9
AT201974	3F18	10	3362 - 21
AT201975	3F18	14	3362 - 21
AT201977	1B23	24	0260 - 13
AT201978	1B23	19	0260 - 13
AT201981	3F18	11	3362 - 21
AT201987	3E24	33	3362 - 3
AT201987	3F8	33	3362 - 11
AT201989	3E24	35	3362 - 3
AT201989	3F8	35	3362 - 11
AT201990	3E24	36	3362 - 3
AT201990	3F8	36	3362 - 11
AT201991	3E24	37	3362 - 3
AT201991	3F8	37	3362 - 11
AT201992	3E24	38	3362 - 3
AT201992	3F8	38	3362 - 11
AT201994	3E24	41	3362 - 3
AT201994	3F4	41	3362 - 7
AT201994	3F6	41	3362 - 9
AT201994	3F8	41	3362 - 11
AT201994	3F12	41	3362 - 15
AT202000	3E24	11	3362 - 3
AT202001	3E24	7	3362 - 3
AT202006	3F4	13	3362 - 7
AT202006	3F6	8	3362 - 9
AT202006	3F12	15	3362 - 15
AT202009	3E24	19	3362 - 3
AT202009	3F4	19	3362 - 7
AT202009	3F6	19	3362 - 9
AT202009	3F8	19	3362 - 11
AT202009	3F12	19	3362 - 15
AT202011	3E24	18	3362 - 3
AT202011	3F4	18	3362 - 7
AT202011	3F6	18	3362 - 9
AT202011	3F8	18	3362 - 11
AT202011	3F12	18	3362 - 15
AT202014	3F6	56	3362 - 9
AT202015	3F6	55	3362 - 9
AT202019	3F6	60	3362 - 9
AT202029	3F4	81	3362 - 7
AT202029	3F12	81	3362 - 15
AT202030	3F4	80	3362 - 7
AT202030	3F12	80	3362 - 15
AT202032	3F12	22	3362 - 15
AT202033	3F12	2	3362 - 15
AT202034	3F4	1	3362 - 7
AT202035	3F6	1	3362 - 9
AT202036	3F6	2	3362 - 9
AT202038	3F6	7	3362 - 9
AT202039	3F4	92	3362 - 7
AT202039	3F12	92	3362 - 15
AT202040	3F4	91	3362 - 7
AT202040	3F12	91	3362 - 15
AT202042	3F4	88	3362 - 7
AT202042	3F12	88	3362 - 15
AT202044	3F12	1	3362 - 15
AT202047	3F4	4	3362 - 7
AT202047	3F12	4	3362 - 15
AT202048	3F4	6	3362 - 7
AT202048	3F12	6	3362 - 15
AT202049	3F4	21	3362 - 7
AT202049	3F12	23	3362 - 15
AT202050	3F4	5	3362 - 7
AT202050	3F12	5	3362 - 15
AT202051	3F4	11	3362 - 7
AT202051	3F12	11	3362 - 15
AT202052	3F12	83	3362 - 15
AT202053	3F12	87	3362 - 15
AT202054	3F4	79	3362 - 7
AT202054	3F12	79	3362 - 15
AT202055	3F2	74	3362 - 5

NUMERICAL INDEX - CONTINUED

PART NO.	GRID	KEY	PAGE
AT202057	3F2	76	3362 - 5
AT202076	3F6	5	3362 - 9
AT202080	3E24	9	3362 - 3
AT202080	3F4	9	3362 - 7
AT202080	3F6	9	3362 - 9
AT202080	3F8	9	3362 - 11
AT202080	3F12	9	3362 - 15
AT202083	3D10	31	3340 - 9
AT202084	3D10	33	3340 - 9
AT202085	3F2	69	3362 - 5
AT202085	3F8	22	3362 - 11
AT202086	3E24	26	3362 - 3
AT202086	3F8	2	3362 - 11
AT202087	1C18	28	0407 - 9
AT202087	1C18	29	0407 - 9
AT202087	1C22	28	0407 - 13
AT202087	1C22	29	0407 - 13
AT202087	3F2	66	3362 - 5
AT202087	3F6	66	3362 - 9
AT202087	3F10	66	3362 - 13
AT202088	3F6	4	3362 - 9
AT202089	3F6	6	3362 - 9
AT202090	3F6	65	3362 - 9
AT202091	3E12	4	3361 - 7
AT202102	1H13	7	1740 - 9
AT202104	1B19	43	0260 - 11
AT202105	3G24	22	3363 - 7
AT202111	3F16	0	3362 - 19
AT202111	3H16	34	3363 - 23
AT202117	3D14	27	3344 - 3
AT202117	3D16	27	3344 - 5
AT202119	3I22	13	3363 - 53
AT202121	3D10	22	3340 - 9
AT202135	3D8	38	3340 - 7
AT202215	3D4	38	3340 - 3
AT202215	3D12	38	3340 - 11
AT202272	1A19	20	0130 - 3
AT202272	1F11	9	0515 - 3
AT202291	3C18	19	3315 - 9
AT202292	3C18	18	3315 - 9
AT202297	1A19	10	0130 - 3
AT202297	1F21	4	0540 - 3
AT202300	3H2	53	3363 - 9
AT202301	1A19	16	0130 - 3
AT202303	3D4	0G	3340 - 3
AT202303	3D6	0H	3340 - 5
AT202303	3D8	0H	3340 - 7
AT202303	3D10	0F	3340 - 9
AT202303	3D12	0G	3340 - 11
AT202304	3D4	5E	3340 - 3
AT202304	3D6	0I	3340 - 5
AT202304	3D6	5E	3340 - 5
AT202304	3D8	0I	3340 - 7
AT202304	3D8	5E	3340 - 7
AT202304	3D12	5E	3340 - 11
AT202305	1B15	1	0260 - 7
AT202318	1H9	51	1740 - 5
AT202321	3H14	9	3363 - 21
AT202329	1F17	14	0520 - 5
AT202333	3D10	0E	3340 - 9
AT202334	3D10	0H	3340 - 9
AT202351	1B13	30	0260 - 5
AT202373	1B13	20	0260 - 5
AT202385	3H8	21	3363 - 15
AT202391	1G18	27	1674 - 11
AT202392	1G10	1	1674 - 3
AT202397	1H11	12	1740 - 7
AT202398	2E13	22	1910 - 9
AT202462	2B4	1	1810 - 9
AT202596	3J23	23	4360 - 5
AT203691	1G20	26	1674 - 13
AT203704	3E24	10	3362 - 3
AT203704	3F4	10	3362 - 7
AT203704	3F6	10	3362 - 9
AT203704	3F8	10	3362 - 11
AT203704	3F12	10	3362 - 15
AT203777	3F6	52	3362 - 9
AT203980	1H9	48	1740 - 5
AT204900	3E20	14	3361 - 15
AT204901	3J10	9	3365 - 5
AT204905	1B23	25	0260 - 13
AT204965	3J21	7	4360 - 3
AT213603	2D22	1	1830 - 11
AT213608	2B12	55	1810 - 17
AT213610	2B18	13	1810 - 23
AT213614	2B4	9	1810 - 9
AT213614	3C20	10	3315 - 11
AT213624	2B12	23	1810 - 17
AT213630	3K2	2	4367 - 3
AT213790	3J21	5	4360 - 3
AT213796	3C20	31	3315 - 11
AT213802	3I20	0	3363 - 51
AT213802	3I24	1	3363 - 55
AT213807	1G8	13	1671 - 3
AT213815	1G8	15	1671 - 3
AT213843	3J21	6	4360 - 3
AT213868	3J23	21	4360 - 5
AT213883	2F7	6	2001 - 3
AT213887	3I4	30	3363 - 35
AT213898	2D14	4	1830 - 3
AT213943	2D20	9	1830 - 9
AT213954	2C4	2	1810 - 33
AT213957	3I10	28	3363 - 41
AT213957	3I12	28	3363 - 43
AT213958	2A22	4	1810 - 3
AT213962	3I10	29	3363 - 41
AT213962	3I12	29	3363 - 43
AT213984	1G20	14	1674 - 13
AT214007	2B8	17	1810 - 13
AT214010	2E15	93A	1910 - 11
AT214011	1G20	2	1674 - 13
AT214011	2A24	33	1810 - 5
AT214012	2A24	4	1810 - 5
AT214012	2A24	8	1810 - 5
AT214012	2A24	15	1810 - 5
AT214012	2A24	19	1810 - 5
AT214017	2B8	18	1810 - 13
AT214027	2D14	3	1830 - 3
AT214036	1G20	15	1674 - 13
AT214041	2B8	44	1810 - 13
AT214061	2B8	21	1810 - 13
AT214063	2B8	23	1810 - 13
AT214078	2B10	45	1810 - 15
AT214079	2B8	45	1810 - 13
AT214104	2B14	16	1810 - 19
AT214118	2B18	2	1810 - 23
AT214119	2B18	4	1810 - 23
AT214122	2B18	71	1810 - 23
AT214129	2B10	71	1810 - 15
AT214145	2B12	3	1810 - 17
AT214152	2B12	54	1810 - 17
AT214160	2B12	13	1810 - 17
AT214169	2B16	33	1810 - 21
AT214170	2B16	49	1810 - 21
AT214171	2B16	92	1810 - 21
AT214172	2B16	65	1810 - 21
AT214172	2B18	11	1810 - 23
AT214173	2B10	55	1810 - 15
AT214290	2B12	7	1810 - 17
AT214292	2B12	56	1810 - 17
AT214297	2B14	28	1810 - 19
AT214299	2B12	21	1810 - 17
AT214299	2B16	61	1810 - 21
AT214300	2B16	74	1810 - 21
AT214301	2B14	22	1810 - 19
AT214305	2B10	60	1810 - 15
AT214305	2B14	11	1810 - 19
AT214307	2B18	50	1810 - 23
AT214309	2B16	69A	1810 - 21
AT214310	2B10	30	1810 - 15
AT214311	2B14	7	1810 - 19
AT214313	2B12	15	1810 - 17
AT214314	2B12	23	1810 - 17
AT214430	2F7	9	2001 - 3
AT215469	2E19	13	1910 - 15
AT215470	2D12	14	1821 - 9
AT215492	2D12	12	1821 - 9
AT215503	2A24	26	1810 - 5
AT215533	2F7	7	2001 - 3
AT215538	3C24	7	3315 - 15
AT215561	2D12	13	1821 - 9
AT215564	2D12	9	1821 - 9
AT215572	2D12	3	1821 - 9
AT215869	3C20	6D	3315 - 11
AT215879	1B13	27	0260 - 5
AT215879	3H18	10	3363 - 25
AT215879	3H22	17	3363 - 29
AT215885	3C20	1	3315 - 11
AT215948	3C20	4	3315 - 11
AT215954	3C20	3	3315 - 11
AT215955	3C20	5	3315 - 11
AT216001	3C20	0	3315 - 11
AT216016	3C20	6	3315 - 11
AT216522	2D6	6	1821 - 3
AT216532	2D6	14	1821 - 3
AT216977	3H2	61	3363 - 9
AT216979	2B4	0	1810 - 9
AT216988	2E9	6	1910 - 5
AT217041	3H2	62	3363 - 9
AT217049	3E24	34	3362 - 3
AT217049	3F8	34	3362 - 11
AT217051	3F2	82	3362 - 5
AT217051	3F8	47	3362 - 11
AT217052	3F4	14	3362 - 7
AT217052	3F6	14	3362 - 9
AT217052	3F12	14	3362 - 15
AT217054	3F4	89	3362 - 7
AT217054	3F12	89	3362 - 15
AT217055	3E24	20	3362 - 3
AT217055	3F4	20	3362 - 7
AT217055	3F6	20	3362 - 9
AT217055	3F8	20	3362 - 11
AT217055	3F12	20	3362 - 15
AT217056	3F6	71	3362 - 9
AT217058	3F18	16	3362 - 21
AT217063	3G14	3	3362 - 41
AT217064	3F4	86	3362 - 7
AT217077	3D10	15	3340 - 9
AT217078	3D10	0D	3340 - 9
AT217081	3D4	29	3340 - 3
AT217081	3D6	29	3340 - 5

NUMERICAL INDEX - CONTINUED

PART NO.	GRID	KEY	PAGE
AT217081	3D8	29	3340 - 7
AT217081	3D10	37	3340 - 9
AT217081	3D12	29	3340 - 11
AT217082	3D4	28	3340 - 3
AT217082	3D6	28	3340 - 5
AT217082	3D8	28	3340 - 7
AT217082	3D10	36	3340 - 9
AT217082	3D12	28	3340 - 11
AT217083	3F4	23	3362 - 7
AT217083	3F12	24	3362 - 15
AT217084	3J6	13A	3364 - 3
AT217099	1H9	54	1740 - 5
AT217743	1B19	37	0260 - 11
AT217930	3K2	6	4367 - 3
AT217942	3C20	6A	3315 - 11
AT217963	3I22	5	3363 - 53
AT217966	2F7	9	2001 - 3
AT218054	1B25	38	0260 - 15
AT218063	1B25	29	0260 - 15
AT218141	2B12	61	1810 - 17
AT218190	2B10	7	1810 - 15
AT219662	3I20	1	3363 - 51
AT250589	3I10	27	3363 - 41
AT250589	3I12	27	3363 - 43
AT254809	1D4	7	0409 - 5
AT254814	1C12	5	0407 - 3
AT254828	1E6	57	0419 - 3
AT254831	1D4	16	0409 - 5
AT255006	1D8	58	0410 - 3
AT255027	1C12	6	0407 - 3
AT259921	1E12	11	0421 - 3
AT259924	1D12	71	0413 - 5
AT259924	1E12	13	0421 - 3
AT259924	1E18	17	0433 - 3
AT259924	1E20	47	0433 - 5
AT259925	1C12	23	0407 - 3
AT259927	1E2	28	0417 - 3
AT259935	1C14	61	0407 - 5
AT259935	1C24	2	0408 - 3
AT259935	1E6	58	0419 - 3
AT259935	1E8	43	0420 - 3
AT259936	1E2	25	0417 - 3
AT259936	1E2	30	0417 - 3
AT259936	1E4	12	0418 - 3
AT259936	1E16	71	0429 - 3
AT259936	1E20	38	0433 - 5
AT259941	1D6	28	0409 - 7
AT259945	1E18	18	0433 - 3
AT259946	1D8	7	0410 - 3
AT259946	1D22	20	0414 - 3
AT259946	1E16	15	0429 - 3
AT259946	1E20	80	0433 - 5
AT259971	1D4	15	0409 - 5
AT263653	1C6	73	0401 - 3
AT263654	1C6	7	0401 - 3
AT263658	1D6	4	0409 - 7
AT263659	1E8	58	0420 - 3
AT263661	1D12	66	0413 - 5
AT263662	1E4	67	0418 - 3
AT263663	1D24	9	0416 - 3
AT263664	1D2	2	0409 - 3
AT263665	1D10	76	0413 - 3
AT263665	1D12	76	0413 - 5
AT263667	1C12	17	0407 - 3
AT263668	1C12	16	0407 - 3
AT263669	1E14	2	0423 - 3
AT263670	1E22	1	0452 - 3
AT263670	1E24	1	0452 - 5
AT263671	1E14	34	0423 - 3
AT263672	1E14	1	0423 - 3
AT263673	1D12	31	0413 - 5
AT263673	1D14	1	0413 - 7
AT263674	1D24	13	0416 - 3
AT263675	1D2	10	0409 - 3
AT263676	1E2	1	0417 - 3
AT263678	1D10	1	0413 - 3
AT263679	1E14	83	0423 - 3
AT263680	1E14	33	0423 - 3
AT263681	1D24	12	0416 - 3
AT263683	1D24	1	0416 - 3
AT263684	1E14	56	0423 - 3
AT263685	1E4	1	0418 - 3
AT263686	1C10	2	0404 - 3
AT263687	1C10	2	0404 - 3
AT263688	1C10	41	0404 - 3
AT263689	1E14	68	0423 - 3
AT263699	1E16	10	0429 - 3
AT263700	1E16	11	0429 - 3
AT263701	1E16	12	0429 - 3
AT263702	1E16	14	0429 - 3
AT263704	1E16	23	0429 - 3
AT263705	1C16	16	0407 - 7
AT263705	1D2	3	0409 - 3
AT263705	1E20	39	0433 - 5
AT263706	1D2	24	0409 - 3
AT263707	1D2	25	0409 - 3
AT263708	1D2	26	0409 - 3
AT263709	1C10	45	0404 - 3
AT263710	1C8	15	0402 - 3
AT263711	1C8	16	0402 - 3
AT263711	1C14	8	0407 - 5
AT263712	1C16	2	0407 - 7
AT263712	1E10	45	0420 - 5
AT263712	1E12	2	0421 - 3
AT263712	1E12	4	0421 - 3
AT263714	1C6	86	0401 - 3
AT263717	1C24	1	0408 - 3
AT263718	1C8	27	0402 - 3
AT263719	1C8	28	0402 - 3
AT263720	1C6	85	0401 - 3
AT263723	1E6	46	0419 - 3
AT263725	1E16	1	0429 - 3
AT263728	1D10	15	0413 - 3
AT263729	1C12	2	0407 - 3
AT263731	1C8	9	0402 - 3
AT263733	1C8	22	0402 - 3
AT263734	1C8	23	0402 - 3
AT263735	1C8	24	0402 - 3
AT263737	1D4	4	0409 - 5
AT263738	1D2	1	0409 - 3
AT263738	1D4	1	0409 - 5
AT263741	1D4	6	0409 - 5
AT263741	1D4	19	0409 - 5
AT263746	1C8	14	0402 - 3
AT263748	1E2	4	0417 - 3
AT263749	1F2	2	0452 - 7
AT263750	1C6	68	0401 - 3
AT263753	1D14	3	0413 - 7
AT263754	1C10	56	0404 - 3
AT263756	1D2	23	0409 - 3
AT263757	1C6	88	0401 - 3
AT263758	1D24	11	0416 - 3
AT263760	1C6	43	0401 - 3
AT263767	1D2	28	0409 - 3
AT263768	1D4	18	0409 - 5
AT263769	1D4	20	0409 - 5
AT263770	1C10	35	0404 - 3
AT263771	1C12	49	0407 - 3
AT263772	1E20	49	0433 - 5
AT263773	1D22	8	0414 - 3
AT263773	1E20	64	0433 - 5
AT263774	1D22	7	0414 - 3
AT263776	1D22	13	0414 - 3
AT263777	1D8	2	0410 - 3
AT263778	1C24	9	0408 - 3
AT263779	1E2	3	0417 - 3
AT263780	1E2	26	0417 - 3
AT263781	1E4	66	0418 - 3
AT263782	1D24	2	0416 - 3
AT263784	1D16	2	0413 - 9
AT263785	1D6	5	0409 - 7
AT263787	1C6	83	0401 - 3
AT263789	1D22	50	0414 - 3
AT263790	1C6	63	0401 - 3
AT263791	1D22	30	0414 - 3
AT263792	1D4	8	0409 - 5
AT263792	1E16	27	0429 - 3
AT263794	1D4	13	0409 - 5
AT263797	1C10	36	0404 - 3
AT263798	1D2	11	0409 - 3
AT263800	1C14	1	0407 - 5
AT263806	1C6	84	0401 - 3
AT263808	1E20	35	0433 - 5
AT263809	1E18	2	0433 - 3
AT263810	1E18	1	0433 - 3
AT263813	1C8	19	0402 - 3
AT263814	1C8	20	0402 - 3
AT263815	1C8	21	0402 - 3
AT263816	1C6	1	0401 - 3
AT263817	1C8	1	0402 - 3
AT263820	1E16	4	0429 - 3
AT263821	1E16	8	0429 - 3
AT263823	1D2	9	0409 - 3
AT263824	1D2	14	0409 - 3
AT263825	1D22	27	0414 - 3
AT263829	1C12	48	0407 - 3
AT263830	1E4	4	0418 - 3
AT263831	1E14	30	0423 - 3
AT263832	1D12	16	0413 - 5
AT263833	1D12	17	0413 - 5
AT263834	1D12	18	0413 - 5
AT263835	1D12	19	0413 - 5
AT263835	1D22	19	0414 - 3
AT263836	1D12	20	0413 - 5
AT263837	1D12	21	0413 - 5
AT263838	1D22	14	0414 - 3
AT263839	1E12	1	0421 - 3
AT263840	1E12	6	0421 - 3
AT263841	1E12	7	0421 - 3
AT263845	1C10	34	0404 - 3
AT263847	1D4	5	0409 - 5
AT263848	1D4	17	0409 - 5
AT263849	1C8	5	0402 - 3
AT263850	1C8	4	0402 - 3
AT263852	1C16	7	0407 - 7
AT263852	1E8	30	0420 - 3
AT263852	1E12	3	0421 - 3
AT263852	1E12	5	0421 - 3
AT263853	1D6	76	0409 - 7
AT263854	1D12	74	0413 - 5
AT263855	1C24	12	0408 - 3

NUMERICAL INDEX - CONTINUED

PART NO.	GRID	KEY	PAGE
AT263856	1C14	7	0407 - 5
AT263856	1E14	35	0423 - 3
AT263857	1E18	9	0433 - 3
AT263858	1E20	57	0433 - 5
AT263858	1E20	58	0433 - 5
AT263859	1D24	76	0416 - 3
AT263860	1E20	37	0433 - 5
AT263861	1D18	40	0413 - 11
AT263862	1C16	13	0407 - 7
AT263862	1D16	26	0413 - 9
AT263863	1C16	18	0407 - 7
AT263863	1E4	7	0418 - 3
AT263864	1E8	44	0420 - 3
AT263864	1E20	53	0433 - 5
AT263865	1C12	56	0407 - 3
AT263865	1E4	51	0418 - 3
AT263866	1D18	38	0413 - 11
AT263867	1E6	52	0419 - 3
AT263868	1E2	24	0417 - 3
AT263869	1C12	54	0407 - 3
AT263869	1E16	72	0429 - 3
AT263870	1E16	25	0429 - 3
AT263870	1E16	26	0429 - 3
AT263871	1C10	42	0404 - 3
AT263872	1D22	9	0414 - 3
AT263873	1D2	41	0409 - 3
AT263874	1C16	21	0407 - 7
AT263875	1D18	39	0413 - 11
AT263876	1E10	20	0420 - 5
AT263877	1C16	44	0407 - 7
AT263878	1C12	55	0407 - 3
AT263878	1D22	12	0414 - 3
AT263878	1D22	17	0414 - 3
AT263879	1E8	42	0420 - 3
AT263880	1C12	57	0407 - 3
AT263881	1E20	51	0433 - 5
AT263882	1C6	24	0401 - 3
AT263884	1E18	12	0433 - 3
AT263885	1E14	26	0423 - 3
AT263886	1D10	7	0413 - 3
AT263887	1E14	27	0423 - 3
AT263888	1E14	28	0423 - 3
AT263889	1C12	51	0407 - 3
AT263890	1E16	79	0429 - 3
AT263891	1D12	72	0413 - 5
AT263892	1D16	6	0413 - 9
AT263892	1E14	7	0423 - 3
AT263893	1E16	19	0429 - 3
AT263894	1E16	20	0429 - 3
AT263895	1E20	36	0433 - 5
AT263896	1E18	5	0433 - 3
AT263897	1E20	40	0433 - 5
AT263898	1E14	16	0423 - 3
AT263899	1C8	75	0402 - 3
AT263900	1C6	40	0401 - 3
AT263901	1D16	20	0413 - 9
AT263902	1D12	61	0413 - 5
AT263903	1C10	43	0404 - 3
AT263904	1E18	19	0433 - 3
AT263905	1D8	49	0410 - 3
AT263906	1C8	29	0402 - 3
AT263907	1E10	78	0420 - 5
AT263908	1D10	12	0413 - 3
AT263909	1D24	10	0416 - 3
AT263910	1D2	55	0409 - 3
AT263911	1D8	8	0410 - 3
AT263912	1D22	24	0414 - 3
AT263913	1C8	95	0402 - 3
AT263914	1C14	5	0407 - 5
AT263915	1E6	50	0419 - 3
AT263916	1C10	57	0404 - 3
AT263917	1E10	7	0420 - 5
AT263918	1D22	51	0414 - 3
AT263919	1D2	31	0409 - 3
AT263919	1D2	40	0409 - 3
AT263920	1C10	59	0404 - 3
AT263921	1C10	61	0404 - 3
AT263922	1C6	44	0401 - 3
AT263923	1E6	21	0419 - 3
AT263924	1C16	14	0407 - 7
AT263925	1E20	56	0433 - 5
AT263926	1E4	6	0418 - 3
AT263927	1E20	93	0433 - 5
AT263928	1C16	15	0407 - 7
AT263928	1C16	19	0407 - 7
AT263929	1E4	60	0418 - 3
AT263930	1E10	35	0420 - 5
AT263931	1D10	85	0413 - 3
AT263932	1E6	51	0419 - 3
AT263933	1E4	61	0418 - 3
AT263934	1C14	16	0407 - 5
AT263934	1C14	50	0407 - 5
AT263935	1E2	19	0417 - 3
AT263936	1E10	5	0420 - 5
AT263937	1D22	16	0414 - 3
AT263938	1E2	16	0417 - 3
AT263939	1C16	9	0407 - 7
AT263939	1D2	33	0409 - 3
AT263939	1D2	34	0409 - 3
AT263939	1D22	10	0414 - 3
AT263940	1C10	50	0404 - 3
AT263940	1C16	3	0407 - 7
AT263941	1E4	59	0418 - 3
AT263942	1C16	6	0407 - 7
AT263942	1E6	48	0419 - 3
AT263943	1D22	11	0414 - 3
AT263944	1C10	51	0404 - 3
AT263945	1E10	9	0420 - 5
AT263946	1D2	73	0409 - 3
AT263947	1E6	53	0419 - 3
AT263948	1D10	75	0413 - 3
AT263948	1D12	75	0413 - 5
AT263949	1C16	10	0407 - 7
AT263949	1D22	15	0414 - 3
AT263950	1C16	4	0407 - 7
AT263951	1C16	5	0407 - 7
AT263952	1C24	10	0408 - 3
AT263953	1C16	12	0407 - 7
AT263953	1D12	73	0413 - 5
AT263954	1E12	10	0421 - 3
AT263955	1D24	75	0416 - 3
AT263956	1E14	29	0423 - 3
AT263957	1C10	47	0404 - 3
AT263958	1C10	52	0404 - 3
AT263959	1E2	10	0417 - 3
AT263960	1E2	11	0417 - 3
AT263961	1D6	1	0409 - 7
AT263962	1D6	72	0409 - 7
AT263964	1E6	54	0419 - 3
AT263965	1D18	36	0413 - 11
AT263966	1D2	37	0409 - 3
AT263967	1E20	48	0433 - 5
AT263968	1E20	54	0433 - 5
AT263969	1D16	24	0413 - 9
AT263970	1E18	13	0433 - 3
AT263971	1E20	55	0433 - 5
AT263972	1E18	20	0433 - 3
AT263973	1E18	14	0433 - 3
AT263974	1E20	87	0433 - 5
AT263975	1E18	3	0433 - 3
AT263976	1E18	4	0433 - 3
AT263977	1C12	1	0407 - 3
AT263978	1C12	52	0407 - 3
AT263979	1C12	47	0407 - 3
AT263980	1C6	42	0401 - 3
AT263981	1D2	59	0409 - 3
AT263982	1C24	11	0408 - 3
AT263983	1E20	63	0433 - 5
AT263984	1C12	12	0407 - 3
AT263985	1C12	8	0407 - 3
AT263986	1D2	12	0409 - 3
AT263987	1D2	27	0409 - 3
AT263988	1C6	12	0401 - 3
AT263989	1C6	35	0401 - 3
AT263990	1C6	38	0401 - 3
AT263992	1C6	20	0401 - 3
AT263993	1C6	23	0401 - 3
AT263994	1D2	35	0409 - 3
AT263995	1D2	36	0409 - 3
AT263997	1D16	19	0413 - 9
AT263998	1C8	32	0402 - 3
AT263998	1D16	28	0413 - 9
AT263999	1C8	25	0402 - 3
AT264000	1C8	26	0402 - 3
AT264001	1C8	68	0402 - 3
AT264002	1C8	69	0402 - 3
AT264003	1C8	70	0402 - 3
AT264004	1C8	71	0402 - 3
AT264005	1C8	73	0402 - 3
AT264006	1C8	65	0402 - 3
AT264007	1C8	72	0402 - 3
AT264008	1C8	78	0402 - 3
AT264009	1C8	63	0402 - 3
AT264010	1C8	81	0402 - 3
AT264011	1C8	30	0402 - 3
AT264012	1C8	31	0402 - 3
AT264013	1C8	53	0402 - 3
AT264014	1C8	84	0402 - 3
AT264015	1C8	58	0402 - 3
AT264016	1C8	97	0402 - 3
AT264017	1C14	11	0407 - 5
AT264018	1D2	39	0409 - 3
AT264018	1E20	42	0433 - 5
AT264019	1D2	29	0409 - 3
AT264020	1C14	20	0407 - 5
AT264021	1C14	21	0407 - 5
AT264022	1C14	41	0407 - 5
AT264023	1C14	6	0407 - 5
AT264024	1C14	62	0407 - 5
AT264025	1C14	63	0407 - 5
AT264027	1E10	1	0420 - 5
AT264027	1E10	4	0420 - 5
AT264030	1E8	21	0420 - 3
AT264031	1E10	36	0420 - 5
AT264032	1E10	42	0420 - 5
AT264033	1E10	38	0420 - 5
AT264034	1E10	34	0420 - 5
AT264035	1E10	29	0420 - 5
AT264036	1E10	76	0420 - 5
AT264037	1E8	29	0420 - 3
AT264038	1C16	17	0407 - 7

NUMERICAL INDEX - CONTINUED

PART NO.	GRID	KEY	PAGE
AT264039	1C16	1	0407 - 7
AT264040	1C16	8	0407 - 7
AT264041	1C16	11	0407 - 7
AT264042	1C14	51	0407 - 5
AT264043	1C16	63	0407 - 7
AT264044	1E6	45	0419 - 3
AT264045	1C14	60	0407 - 5
AT264046	1C16	20	0407 - 7
AT264047	1C10	46	0404 - 3
AT264048	1E2	20	0417 - 3
AT264049	1E2	18	0417 - 3
AT264050	1E2	29	0417 - 3
AT264051	1E16	22	0429 - 3
AT264052	1E2	27	0417 - 3
AT264053	1E16	32	0429 - 3
AT264054	1E16	38	0429 - 3
AT264055	1E16	5	0429 - 3
AT264056	1E16	2	0429 - 3
AT264057	1E16	16	0429 - 3
AT264058	1E16	82	0429 - 3
AT264059	1E16	18	0429 - 3
AT264060	1E16	88	0429 - 3
AT264061	1E16	52	0429 - 3
AT264062	1E16	9	0429 - 3
AT264063	1E16	17	0429 - 3
AT264064	1E16	81	0429 - 3
AT264065	1E16	80	0429 - 3
AT264066	1E16	75	0429 - 3
AT264067	1E4	2	0418 - 3
AT264068	1E4	5	0418 - 3
AT264069	1E4	8	0418 - 3
AT264070	1E6	56	0419 - 3
AT264071	1E4	20	0418 - 3
AT264072	1D22	1	0414 - 3
AT264074	1D22	18	0414 - 3
AT264075	1D24	29	0416 - 3
AT264076	1D24	14	0416 - 3
AT264077	1D22	2	0414 - 3
AT264078	1D8	47	0410 - 3
AT264079	1D8	5	0410 - 3
AT264080	1D8	6	0410 - 3
AT264081	1D8	9	0410 - 3
AT264082	1D8	10	0410 - 3
AT264083	1D12	79	0413 - 5
AT264084	1D14	4	0413 - 7
AT264085	1D14	2	0413 - 7
AT264086	1D12	58	0413 - 5
AT264087	1D12	78	0413 - 5
AT264088	1E10	47	0420 - 5
AT264089	1D10	77	0413 - 3
AT264090	1D12	69	0413 - 5
AT264091	1D12	70	0413 - 5
AT264092	1E12	12	0421 - 3
AT264093	1C12	53	0407 - 3
AT264094	1D18	1	0413 - 11
AT264095	1D18	9	0413 - 11
AT264096	1D18	7	0413 - 11
AT264097	1D18	10	0413 - 11
AT264098	1D18	8	0413 - 11
AT264099	1D18	6	0413 - 11
AT264100	1D18	2	0413 - 11
AT264101	1E14	23	0423 - 3
AT264102	1E14	19	0423 - 3
AT264103	1D10	6	0413 - 3
AT264104	1E8	41	0420 - 3
AT264105	1D18	51	0413 - 11
AT264106	1D18	52	0413 - 11
AT264107	1C10	54	0404 - 3
AT264108	1E14	32	0423 - 3
AT264109	1E20	83	0433 - 5
AT264110	1C24	13	0408 - 3
AT264111	1C12	50	0407 - 3
AT264112	1E10	44	0420 - 5
AT264113	1C16	48	0407 - 7
AT264114	1C10	32	0404 - 3
AT264115	1E6	47	0419 - 3
AT264116	1E2	17	0417 - 3
AT264117	1E12	9	0421 - 3
AT264118	1E12	8	0421 - 3
AT264119	1D8	34	0410 - 3
AT264120	1D16	25	0413 - 9
AT264121	1D2	30	0409 - 3
AT264122	1C14	29	0407 - 5
AT264122	1D10	2	0413 - 3
AT264122	1E4	50	0418 - 3
AT264123	1D16	4	0413 - 9
AT264124	1D2	32	0409 - 3
AT264125	1C14	30	0407 - 5
AT264126	1E2	45	0417 - 3
AT264127	1E20	52	0433 - 5
AT264128	1E16	3	0429 - 3
AT264129	1E20	59	0433 - 5
AT264130	1E20	50	0433 - 5
AT264131	1E18	15	0433 - 3
AT264132	1E20	46	0433 - 5
AT264133	1C14	9	0407 - 5
AT264134	1C14	31	0407 - 5
AT264134	1D2	38	0409 - 3
AT264135	1D16	3	0413 - 9
AT264136	1C14	3	0407 - 5
AT264137	1D16	27	0413 - 9
AT264138	1C10	30	0404 - 3
AT264139	1C10	83	0404 - 3
AT264140	1C8	18	0402 - 3
AT264141	1D10	8	0413 - 3
AT264142	1E16	69	0429 - 3
AT264143	1D10	11	0413 - 3
AT264143	1E14	17	0423 - 3
AT264144	1E16	69	0429 - 3
AT264145	1D16	8	0413 - 9
AT264145	1E18	7	0433 - 3
AT264145	1E18	16	0433 - 3
AT264145	1E20	41	0433 - 5
AT264146	1E16	83	0429 - 3
AT264147	1E16	84	0429 - 3
AT264149	1E16	41	0429 - 3
AT264150	1D10	9	0413 - 3
AT264151	1C8	62	0402 - 3
AT264152	1C8	8	0402 - 3
AT264153	1C6	22	0401 - 3
AT264154	1E6	49	0419 - 3
AT264155	1C8	55	0402 - 3
AT264156	1E18	8	0433 - 3
AT264157	1C8	61	0402 - 3
AT264158	1D8	11	0410 - 3
AT264159	1D10	10	0413 - 3
AT264160	1E14	31	0423 - 3
AT264161	1E18	6	0433 - 3
AT264162	1E18	10	0433 - 3
AT264163	1D16	5	0413 - 9
AT264164	1C8	7	0402 - 3
AT264165	1E18	11	0433 - 3
AT264166	1C8	83	0402 - 3
AT264167	1E16	13	0429 - 3
AT264167	1E16	21	0429 - 3
AT264168	1E16	24	0429 - 3
AT264169	1E4	3	0418 - 3
AT264222	1B2	13	0130 - 13
AT264234	1B2	0C	0130 - 13
AT264234	1B4	8	0130 - 15
AT264242	3J10	7	3365 - 5
AT264246	3J10	8	3365 - 5
AT264250	3J10	4	3365 - 5
AT264251	3J10	6	3365 - 5
AT264254	3J8	60	3365 - 3
AT264254	3J10	64	3365 - 5
AT264254	3J12	47	3365 - 7
AT264254	3J14	61	3365 - 9
AT264282	3J10	10	3365 - 5
AT264324	1G5	..	1369 - 3
AT264324	3F4	24	3362 - 7
AT264324	3F12	25	3362 - 15
AT264324	3G16	40	3362 - 43
AT264324	3G18	40	3362 - 45
AT264333	3F18	6	3362 - 21
AT264334	3G16	4	3362 - 43
AT264334	3G18	4	3362 - 45
AT264334	3H14	6C	3363 - 21
AT264347	1G5	..	1369 - 3
AT264347	3F6	63	3362 - 9
AT264347	3K2	7	4367 - 3
AT264348	3J10	62	3365 - 5
AT264348	3J12	61	3365 - 7
AT264348	3J14	31	3365 - 9
AT264354	1G5	..	1369 - 3
AT264360	1G5	..	1369 - 3
AT301074	2F9	0	2004 - 3
AT301723	1G24	2	1674 - 13D
AT306723	3E2	16	3360 - 15
AT306723	3E6	7	3360 - 17
AT306737	3E4	7	3360 - 15B
AT306757	3E4	15	3360 - 15B
AT307627	3E4	6	3360 - 15B
AT307627	3E4	15	3360 - 15B
AT307709	3E2	14	3360 - 15
AT307710	3E2	4	3360 - 15
AT308575	1F17	13C	0520 - 5
AT308576	1C18	50A	0407 - 9
AT308576	1C22	50A	0407 - 13
AT308576	1E6	55	0419 - 3
AT308578	1C4	1	0400 - 3
AT309263	2D6	0A	1821 - 3
AT309604	1B19	14	0260 - 11
AT315740	3C6	13	3302 - 17B
AT315741	3C6	40	3302 - 17B
AT318013	3G20	17	3363 - 3
AT318013	3G22	12	3363 - 5
AT318013	3G24	12	3363 - 7
AT318016	3G24	40	3363 - 7
AT318017	3H18	11	3363 - 25
AT318035	1B11	13	0260 - 3
AT318035	1B13	12A	0260 - 5
AT318035	1B23	32	0260 - 13
AT318035	1G5	..	1369 - 3
AT318035	3E10	31A	3361 - 5
AT318035	3E10	38A	3361 - 5
AT318035	3G20	14	3363 - 3
AT318035	3G24	39	3363 - 7
AT318035	3H4	18	3363 - 11
AT318035	3H4	19	3363 - 11
AT318035	3H6	2A	3363 - 13

NUMERICAL INDEX - CONTINUED

PART NO.	GRID	KEY	PAGE
AT318035	3H14	0	3363 - 21
AT318035	3H14	2	3363 - 21
AT318054	3D4	16	3340 - 3
AT318054	3D6	16	3340 - 5
AT318054	3D8	16	3340 - 7
AT318054	3D12	16	3340 - 11
AT318057	3D4	13	3340 - 3
AT318057	3D6	13	3340 - 5
AT318057	3D8	13	3340 - 7
AT318057	3D12	13	3340 - 11
AT318058	3D4	15	3340 - 3
AT318058	3D6	15	3340 - 5
AT318058	3D8	15	3340 - 7
AT318069	3D14	4	3344 - 3
AT318069	3D16	4	3344 - 5
AT322186	2D6	0B	1821 - 3
AT322187	2D6	0E	1821 - 3
AT322189	2D6	11	1821 - 3
AT35121	3C24	9	3315 - 15
AT35121	3E2	3	3360 - 15
AT35121	3E6	2	3360 - 17
AT36921	3C22	1	3315 - 13
AT36921	3C24	24	3315 - 15
AT36921	3D23	3	3360 - 11
AT36921	3E6	10	3360 - 17
AT39141	1F7	8	0510 - 5
AT50923	1F7	46	0510 - 5
AT56657	1F7	37	0510 - 5
AT56658	1F7	47	0510 - 5
AT56658	3G20	22	3363 - 3
AT68901	3C22	10	3315 - 13
AT68901	3D23	13	3360 - 11
AT69806	3E6	28	3360 - 17
AT71082	3C24	3	3315 - 15
AT71082	3E2	11	3360 - 15
AT71082	3E6	26	3360 - 17
AT71732	3D23	18	3360 - 11
AT71732	3E6	6	3360 - 17
AT78124	3D23	20	3360 - 11
AT78633	2D22	10	1830 - 11
AT78634	2D22	10	1830 - 11
AT82210	3D21	2	3360 - 9
AT83721	3E2	6	3360 - 15
AT84953	2D24	19	1830 - 13
AU42809	2D22	10	1830 - 11
A590108	3C10	6	3315 - 3
A590142	1H21	10	1740 - 17
A590906	2C16	9	1810 - 45
A811030	1G5	..	1369 - 3
A811030	3E10	21	3361 - 5
A811030	3K2	10A	4367 - 3
A811040	1G5	..	1369 - 3
A811040	3G16	31	3362 - 43
A811040	3G18	31	3362 - 45
A811045	1G5	..	1369 - 3
A811045	3E20	1	3361 - 15
A811140	3J23	5	4360 - 5
A811170	3J10	11	3365 - 5
A811170	3J12	11	3365 - 7
A811170	3J14	11	3365 - 9
A811260	1B23	29	0260 - 13
A852123	3H18	9	3363 - 25
A852123	3H20	28	3363 - 27
A852123	3H24	22	3363 - 31
A852123	3J2	2	3363 - 57
A852133	3H16	0	3363 - 23
A852133	3H18	0	3363 - 25
A852133	3H20	32	3363 - 27
A852133	3H24	16	3363 - 31
A852133	3I4	5	3363 - 35
A852133	3I6	5	3363 - 37
A852144	3H4	0	3363 - 11
A852144	3H14	4	3363 - 21
A852144	3H22	19	3363 - 29
A852166	3H4	18	3363 - 11
A852166	3H14	2	3363 - 21
A852223	3I10	0	3363 - 41
A852223	3I12	0	3363 - 43
A852244	3H14	8	3363 - 21
A852322	3H16	6	3363 - 23
A852322	3H16	26	3363 - 23
A852322	3H18	6	3363 - 25
A852322	3H22	15	3363 - 29
A852322	3H24	10	3363 - 31
A852333	3I10	19	3363 - 41
A852334	3H4	8	3363 - 11
A852344	3H22	2	3363 - 29
A852344	3H22	20	3363 - 29
A852344	3H22	35	3363 - 29
A852366	3H4	19	3363 - 11
A852366	3H14	0	3363 - 21
A852422	3H16	4	3363 - 23
A852422	3H18	4	3363 - 25
A852423	3H14	12	3363 - 21
A852423	3J2	3	3363 - 57
A852433	3H16	1	3363 - 23
A852444	3H22	7	3363 - 29
A852523	3J2	21	3363 - 57
A852534	3H4	9	3363 - 11
A852544	1B13	11	0260 - 5
A853368	3E10	38	3361 - 5
A885002	3H20	34	3363 - 27
A885002	3H24	13	3363 - 31
A885003	3H22	8	3363 - 29
CH10567	3G4	20B	3362 - 31
CH10568	3F2	83	3362 - 5
CH10568	3F8	48	3362 - 11
CH10569	1F9	16	0510 - 7
CH10569	3F14	16	3362 - 17
CH11436	1G5	..	1369 - 3
CH11560	3C12	25	3315 - 5
CH11560	3G4	18A	3362 - 31
CH11560	3G4	20A	3362 - 31
CH11561	3C20	36	3315 - 11
CH11561	3F14	38	3362 - 17
CH11562	3C20	6C	3315 - 11
CH11568	1B25	26	0260 - 15
CH11568	2D14	62	1830 - 3
CH11568	3K2	29	4367 - 3
CH11569	1G5	..	1369 - 3
CH11570	1B13	28A	0260 - 5
CH11570	1G5	..	1369 - 3
CH11570	1G14	8	1674 - 7
CH11570	2D14	63	1830 - 3
CH11570	3C22	9	3315 - 13
CH11570	3C22	11	3315 - 13
CH11570	3D23	2	3360 - 11
CH11570	3E6	15	3360 - 17
CH11570	3F18	4	3362 - 21
CH11570	3F24	24A	3362 - 27
CH11570	3F24	25A	3362 - 27
CH11570	3F24	37A	3362 - 27
CH11570	3F24	38A	3362 - 27
CH11570	3F24	39A	3362 - 27
CH11570	3G2	25A	3362 - 29
CH11570	3G2	26A	3362 - 29
CH11570	3G2	39A	3362 - 29
CH11570	3G2	41A	3362 - 29
CH11570	3G10	10	3362 - 37
CH11570	3G14	29	3362 - 41
CH11570	3G14	41	3362 - 41
CH11570	3G16	29	3362 - 43
CH11570	3G18	29	3362 - 45
CH11570	3G20	16	3363 - 3
CH11570	3H4	8	3363 - 11
CH11570	3H4	9A	3363 - 11
CH11570	3H16	0	3363 - 23
CH11570	3H16	1	3363 - 23
CH11570	3H16	2	3363 - 23
CH11570	3H18	0	3363 - 25
CH11570	3H18	3	3363 - 25
CH11570	3H18	11	3363 - 25
CH11570	3H20	31	3363 - 27
CH11570	3H20	32	3363 - 27
CH11570	3H22	8	3363 - 29
CH11570	3H24	16	3363 - 31
CH11570	3I4	1	3363 - 35
CH11570	3I4	5	3363 - 35
CH11570	3I6	4	3363 - 37
CH11570	3I6	5	3363 - 37
CH11570	3I6	6	3363 - 37
CH11570	3I10	19	3363 - 41
CH11571	1G5	..	1369 - 3
CH11572	1G5	..	1369 - 3
CH12329	1G5	..	1369 - 3
CH12329	3F10	76	3362 - 13
CH13523	1B11	15	0260 - 3
CH14634	1G5	..	1369 - 3
CH14634	3H24	19	3363 - 31
CH14701	1G5	..	1369 - 3
CH15107	3G14	4	3362 - 41
CH16109	3G20	3	3363 - 3
CH17167	1B23	30	0260 - 13
CH17167	1G5	..	1369 - 3
CH17167	3F4	15	3362 - 7
CH17167	3F12	16	3362 - 15
CH17886	3G14	17	3362 - 41
CH17886	3G16	17	3362 - 43
CH17886	3G18	17	3362 - 45
CH19111	1G5	..	1369 - 3
C17039	3B17	10	3302 - 7
C17146	3C6	10	3302 - 17B
C23311	3B25	34	3302 - 13B
C23312	3B25	34	3302 - 13B
C27052	3B23	34	3302 - 13
C27052	3C4	34	3302 - 17
C30565	3C6	7	3302 - 17B
C30571	3C6	8	3302 - 17B
C30575	3C6	4	3302 - 17B
C30595	3C6	9	3302 - 17B
C30651	3B13	15	3302 - 3B
C30651	3B17	15	3302 - 7
C30651	3B21	15	3302 - 11
C30651	3C2	15	3302 - 15
C30652	3B13	15	3302 - 3B
C30652	3B17	15	3302 - 7
C30652	3B21	15	3302 - 11
C30652	3C2	15	3302 - 15
C30653	3B13	15	3302 - 3B
C30653	3B17	15	3302 - 7
C30653	3B21	15	3302 - 11

NUMERICAL INDEX - CONTINUED

PART NO.	GRID	KEY	PAGE
C30653	3C2	15	3302 - 15
C30654	3B13	15	3302 - 3B
C30654	3B17	15	3302 - 7
C30654	3B21	15	3302 - 11
C30654	3C2	15	3302 - 15
C30655	3B13	15	3302 - 3B
C30655	3B17	15	3302 - 7
C30655	3B21	15	3302 - 11
C30655	3C2	15	3302 - 15
C30657	3B13	15	3302 - 3B
C30657	3B17	15	3302 - 7
C30657	3C2	15	3302 - 15
C30658	3B13	15	3302 - 3B
C30658	3B21	15	3302 - 11
C31732	3B11	5	3302 - 3
C31732	3B17	5	3302 - 7
C31732	3B21	5	3302 - 11
C31732	3C2	5	3302 - 15
C317345	3B13	27	3302 - 3B
C317479	3B17	27	3302 - 7
C317507	3B13	27	3302 - 3B
C31765	3B17	4	3302 - 7
C31766	3B17	8	3302 - 7
C31767	3B17	9	3302 - 7
C31768	3B17	6	3302 - 7
C326758	3C6	27	3302 - 17B
C326759	3C6	14	3302 - 17B
C33066	3B23	32	3302 - 13
C33066	3C4	32	3302 - 17
C33067	3B23	32	3302 - 13
C33067	3C4	32	3302 - 17
C33068	3B23	32	3302 - 13
C33068	3C4	32	3302 - 17
C33069	3B23	32	3302 - 13
C33069	3C4	32	3302 - 17
C33072	3B23	32	3302 - 13
C33124	3B23	34	3302 - 13
C33124	3C4	34	3302 - 17
C33125	3B23	32	3302 - 13
C33125	3B25	34	3302 - 13B
C33125	3C4	32	3302 - 17
C33125	3C4	34	3302 - 17
C33126	3B25	34	3302 - 13B
C33126	3C4	34	3302 - 17
C33127	3B25	34	3302 - 13B
C33127	3C4	34	3302 - 17
C33130	3B25	34	3302 - 13B
C33648	3B23	32	3302 - 13
C33648	3C4	32	3302 - 17
C33649	3B23	32	3302 - 13
C33910	3C4	34	3302 - 17
C35401	3B21	15	3302 - 11
C35402	3B21	15	3302 - 11
C43950	3C6	15	3302 - 17B
C43952	3C6	27	3302 - 17B
C616412	3B19	28	3302 - 9
C616413	3B19	28	3302 - 9
C616414	3B19	28	3302 - 9
C616415	3B19	28	3302 - 9
C616416	3B19	28	3302 - 9
C616418	3B19	28	3302 - 9
C616459	3B15	28	3302 - 5
C616460	3B15	28	3302 - 5
C616461	3B15	28	3302 - 5
C616462	3B15	28	3302 - 5
C616463	3B15	28	3302 - 5
C616465	3B15	28	3302 - 5
C616466	3B15	28	3302 - 5
C616777	3B15	28	3302 - 5
C616778	3B15	28	3302 - 5
C616779	3B15	28	3302 - 5
C616780	3B15	28	3302 - 5
C616781	3B15	28	3302 - 5
C616783	3B15	28	3302 - 5
C616784	3B15	28	3302 - 5
C619038	3B23	33	3302 - 13
C619038	3C4	33	3302 - 17
C619039	3B23	33	3302 - 13
C619039	3C4	33	3302 - 17
C619040	3B23	27	3302 - 13
C619040	3C4	27	3302 - 17
C619041	3B23	27	3302 - 13
C619041	3C4	27	3302 - 17
C619059	3B23	28	3302 - 13
C619059	3C4	28	3302 - 17
C619060	3B23	28	3302 - 13
C619060	3C4	28	3302 - 17
C619061	3B23	28	3302 - 13
C619061	3C4	28	3302 - 17
C619062	3B23	28	3302 - 13
C619062	3C4	28	3302 - 17
C619065	3B23	28	3302 - 13
C619561	3B23	28	3302 - 13
C619561	3C4	28	3302 - 17
C619562	3B23	28	3302 - 13
C624486	3B23	28	3302 - 13
C624486	3C4	28	3302 - 17
EV5898-V61	3C8	3	3302 - 19
EV59PN	3C6	5	3302 - 17B
EV59PN	3C8	2	3302 - 19
EV59SYL	3C6	6	3302 - 17B
EV59SYL	3C8	4L	3302 - 19
EV61PNA	3C8	2	3302 - 19
EV61SYL	3C8	4M	3302 - 19
EV8845-V59	3C6	11	3302 - 17B
EV8845-V59	3C8	3	3302 - 19
EX1856-57V	3C8	3	3302 - 19
EX57SYL	3C8	4D	3302 - 19
EX57VPL	3C8	5	3302 - 19
EX57VPN	3C8	2	3302 - 19
E42442	3D23	17	3360 - 11
E42442	3E6	29	3360 - 17
FFSB110305	1G20	63	1674 - 13
H102543	3D23	1	3360 - 11
H132922	2B18	72	1810 - 23
H132922	2E13	24	1910 - 9
H132922	2E19	30	1910 - 15
H132922	2E23	12	1910 - 19
H158164	3J16	6	3365 - 11
H21259	1G3	18	1322 - 3
H75414	3E4	14	3360 - 15B
H75414	3E4	15	3360 - 15B
H77698	1F11	14	0515 - 3
H77698	1F15	1	0515 - 7
H77698	1G18	36	1674 - 11
H77698	1G18	37	1674 - 11
H77698	1G20	10	1674 - 13
H77698	1G20	39	1674 - 13
H77698	1G20	40	1674 - 13
H77698	1H2	31	1674 - 15
H77698	2D14	54	1830 - 3
H77698	2D14	60	1830 - 3
H77698	2D22	14	1830 - 11
H77698	2E2	1	1830 - 15
H77698	2E4	28	1830 - 17
H77698	2F7	11	2001 - 3
H77698	2F9	9	2004 - 3
H77698	3C10	4	3315 - 3
H77698	3C10	16	3315 - 3
H77698	3C22	8	3315 - 13
H77698	3J2	14	3363 - 57
H77698	3J4	22	3363 - 59
H77698	3J25	19	4360 - 7
JD5760	1G3	10	1322 - 3
JD7769	3I24	12	3363 - 55
J010814	1G20	5	1674 - 13
J011022	3H4	11	3363 - 11
J021255	2E11	33	1910 - 7
J021255	2E13	25	1910 - 9
J021270	1F19	2	0530 - 5
J031235	2E7	30	1910 - 3
J050820	2D22	1	1830 - 11
J219167	2D12	14	1821 - 9
J222014	1F19	4	0530 - 5
J222014	2E7	6	1910 - 3
J222014	2E19	7	1910 - 15
J222014	2E19	11	1910 - 15
J222027	1F7	4	0510 - 5
J260820	3C10	6	3315 - 3
J271020	2E19	21	1910 - 15
J271020	3H4	11	3363 - 11
J271030	1F19	15B	0530 - 5
J400408	3C12	2	3315 - 5
J460310	1G20	55	1674 - 13
J460512	2C10	40	1810 - 39
J460620	1G20	12	1674 - 13
J460620	1G20	30	1674 - 13
J460620	1G20	45	1674 - 13
J460625	2C22	11	1810 - 51
J460825	2E13	18	1910 - 9
J460825	2E15	88	1910 - 11
J680410	2B12	55	1810 - 17
J680410	2C20	3	1810 - 49
J680414	2C10	29	1810 - 39
J680514	2B18	13	1810 - 23
J680630	2B18	12	1810 - 23
J780820	1F13	14B	0515 - 5
J780845	3C12	18	3315 - 5
J781030	2B4	9	1810 - 9
J781030	2C18	7	1810 - 47
J781030	3C20	10	3315 - 11
J782225	3E14	41	3361 - 9
J833011	1A19	13	0130 - 3
J833011	1H13	50	1740 - 9
J833012	1H7	3	1740 - 3
J833016	1H7	4	1740 - 3
J833306	1A19	11	0130 - 3
J833310	1A19	4	0130 - 3
J833335	1F21	3	0540 - 3
J900820	3C10	6	3315 - 3
J900825	2C16	6	1810 - 45
J901204	3G22	19	3363 - 5
J901204	3G24	19	3363 - 7
J901400	2E19	5	1910 - 15
J901425	3D14	20	3344 - 3
J901425	3D16	20	3344 - 5
J901625	1A19	20	0130 - 3
J901625	1F11	9	0515 - 3
J911860	1B19	62	0260 - 11
J912455	1H11	8	1740 - 7
J912455	1H17	8	1740 - 13

NUMERICAL INDEX - CONTINUED

PART NO.	GRID	KEY	PAGE
J912455	1H19	8	1740 - 15
J912460	1A25	52	0130 - 11
J921050	1F19	24	0530 - 5
J921202	3G24	3	3363 - 7
J921240	2B4	1	1810 - 9
J921240	2C18	2	1810 - 47
J921250	3E12	10	3361 - 7
J921435	2E19	9	1910 - 15
J921440	2E7	4	1910 - 3
J931440	1B19	54	0260 - 11
J931440	1B21	36	0260 - 11B
J932201	1B19	67	0260 - 11
J932215	1F21	14	0540 - 3
J932270	1B19	11	0260 - 11
J932270	3J25	3	4360 - 7
J932409	1B6	50	0130 - 17
J950010	3J6	4C	3364 - 3
J952010	2D10	6	1821 - 7
J952014	1G14	5I	1674 - 7
J952014	1H2	0I	1674 - 15
J952014	3D14	22I	3344 - 3
J952014	3D16	22I	3344 - 5
J953030	1H21	8	1740 - 17
M221440	1B19	54	0260 - 11
M340836	3G16	39	3362 - 43
M340836	3G18	39	3362 - 45
M341018	1B4	7	0130 - 15
M341032	3E8	10	3361 - 3
M341203	3G20	2	3363 - 3
M341204	3H2	8	3363 - 9
M341440	3F4	16	3362 - 7
M341440	3F12	21	3362 - 15
M341632	1H21	22	1740 - 17
M341840	3J23	27	4360 - 5
M40461	2E13	21	1910 - 9
M430660	1G20	26	1674 - 13
M470513	3J23	48	4360 - 5
M470625	2B12	23	1810 - 17
M500605	2C16	8	1810 - 45
M521210	1F9	18	0510 - 7
M660027	1F7	3	0510 - 5
M660045	1H11	4	1740 - 7
M663033	1F21	6	0540 - 3
M800462	3I20	14	3363 - 51
M800462	3I24	21	3363 - 55
M800636	3J12	60	3365 - 7
M800636	3J14	30	3365 - 9
M800650	1B13	26A	0260 - 5
M800650	1B13	27A	0260 - 5
M800650	1B25	39	0260 - 15
M800650	1G5	..	1369 - 3
M800650	2E4	3	1830 - 17
M800650	3E24	42	3362 - 3
M800650	3F4	42	3362 - 7
M800650	3F8	42	3362 - 11
M800650	3F12	42	3362 - 15
M800650	3G2	40A	3362 - 29
M800650	3G14	36	3362 - 41
M800650	3G16	36	3362 - 43
M800650	3G18	36	3362 - 45
M800650	3G20	17	3363 - 3
M800650	3G22	12	3363 - 5
M800650	3G24	12	3363 - 7
M800650	3H14	12	3363 - 21
M800650	3H14	14	3363 - 21
M800650	3H16	4	3363 - 23
M800650	3H16	6	3363 - 23
M800650	3H16	7	3363 - 23
M800650	3H16	26	3363 - 23
M800650	3H16	27	3363 - 23
M800650	3H16	36	3363 - 23
M800650	3H18	4	3363 - 25
M800650	3H18	5	3363 - 25
M800650	3H18	6	3363 - 25
M800650	3H18	9	3363 - 25
M800650	3H18	10	3363 - 25
M800650	3H20	1	3363 - 27
M800650	3H20	28	3363 - 27
M800650	3H20	33	3363 - 27
M800650	3H20	34	3363 - 27
M800650	3H22	9	3363 - 29
M800650	3H22	15	3363 - 29
M800650	3H22	16	3363 - 29
M800650	3H22	17	3363 - 29
M800650	3H24	10	3363 - 31
M800650	3H24	11	3363 - 31
M800650	3H24	13	3363 - 31
M800650	3H24	22	3363 - 31
M800650	3H24	35	3363 - 31
M800650	3I4	9	3363 - 35
M800650	3I4	10	3363 - 35
M800650	3I6	7	3363 - 37
M800650	3I10	0	3363 - 41
M800650	3I12	0	3363 - 43
M800650	3J2	2	3363 - 57
M800650	3J2	3	3363 - 57
M800650	3J2	21	3363 - 57
M800650	3K2	3	4367 - 3
M800893	1G5	..	1369 - 3
M88199	3C10	4	3315 - 3
N162946	2D24	10	1830 - 13
N231749	1B4	51	0130 - 15
P50883	3F16	7	3362 - 19
P60915	2D12	8	1821 - 9
P61614	1F23	0B	0560 - 3
P61733	1F23	0A	0560 - 3
P61969	3J8	63	3365 - 3
P63448	1G3	2	1322 - 3
P67968	3H16	27	3363 - 23
P67968	3H18	5	3363 - 25
P67968	3H20	1	3363 - 27
P67968	3H20	33	3363 - 27
P67968	3H24	11	3363 - 31
P67968	3I6	7	3363 - 37
P67976	3I4	10	3363 - 35
P67978	3I4	5	3363 - 35
P67978	3I6	5	3363 - 37
P67984	3H16	6	3363 - 23
P67984	3H16	26	3363 - 23
P67984	3H18	6	3363 - 25
P67984	3H22	15	3363 - 29
P67984	3H24	10	3363 - 31
P67988	3H14	14	3363 - 21
P67988	3H16	7	3363 - 23
P67988	3H16	36	3363 - 23
P67988	3H22	9	3363 - 29
P67988	3H22	16	3363 - 29
P67988	3I4	9	3363 - 35
P67989	3H16	2	3363 - 23
P67989	3H20	31	3363 - 27
P67989	3I6	6	3363 - 37
RE28140	3G20	12	3363 - 3
R26409	2D24	21	1830 - 13
R26448	3C22	3	3315 - 13
R26448	3C24	12	3315 - 15
R26448	3D23	5	3360 - 11
R26448	3E2	5	3360 - 15
R26448	3E6	16	3360 - 17
R27212	3C22	4	3315 - 13
R27212	3C24	18	3315 - 15
R27212	3D23	9	3360 - 11
R27212	3E2	8	3360 - 15
R27212	3E6	8	3360 - 17
R28782	3E4	4	3360 - 15B
R28782	3E6	25	3360 - 17
R29424	3H6	8	3363 - 13
R30298	3J6	20	3364 - 3
R31147	3C22	21	3315 - 13
R31147	3D23	16	3360 - 11
R31147	3E6	30	3360 - 17
R41778	2D8	4	1821 - 5
R44302	2B22	5	1810 - 27
R44302	3D21	4	3360 - 9
R44302	3D25	8	3360 - 13
R44302	3E2	18	3360 - 15
R44302	3E6	17	3360 - 17
R56902	1G3	1	1322 - 3
R63075	3K2	32	4367 - 3
R71799	3D25	5	3360 - 13
R77401	3E10	30	3361 - 5
THA811170	3J10	11	3365 - 5
THA811170	3J12	11	3365 - 7
THA811170	3J14	11	3365 - 9
THA811260	1B23	29	0260 - 13
THA852144	3H4	0	3363 - 11
THA852144	3H14	4	3363 - 21
THA852144	3H22	19	3363 - 29
THA852223	3I10	0	3363 - 41
THA852223	3I12	0	3363 - 43
THA852244	3H14	8	3363 - 21
THA852322	3H16	6	3363 - 23
THA852322	3H16	26	3363 - 23
THA852322	3H18	6	3363 - 25
THA852322	3H22	15	3363 - 29
THA852322	3H24	10	3363 - 31
THA852323	1B13	26	0260 - 5
THA852334	3H4	8	3363 - 11
THA852422	3H16	4	3363 - 23
THA852422	3H18	4	3363 - 25
THA852423	3H14	12	3363 - 21
THA852433	3H16	1	3363 - 23
THA852534	3H4	9	3363 - 11
THA852544	1B13	11	0260 - 5
THA853368	3E10	38	3361 - 5
THJ833011	1A19	13	0130 - 3
THJ833011	1H13	50	1740 - 9
THJ833306	1A19	11	0130 - 3
THJ901002	1C22	31	0407 - 13
THJ901204	3G22	19	3363 - 5
THJ901204	3G24	19	3363 - 7
THJ912460	1A25	52	0130 - 11
THJ932409	1B6	50	0130 - 17
TH0003929	2C2	25	1810 - 31
TH0134701	3E14	55	3361 - 9
TH0159811	3J16	9	3365 - 11
TH0166005	3J16	7	3365 - 11
TH0259207	3J10	63	3365 - 5
TH0314205	3G16	37	3362 - 43
TH0314205	3G18	37	3362 - 45
TH0332704	3J10	12	3365 - 5
TH0332704	3J12	12	3365 - 7

NUMERICAL INDEX - CONTINUED

PART NO.	GRID	KEY	PAGE
TH0332704	3J14	12	3365 - 9
TH0332706	3J10	17	3365 - 5
TH0332706	3J12	17	3365 - 7
TH0332706	3J14	17	3365 - 9
TH0332708	3J10	19	3365 - 5
TH0332708	3J12	19	3365 - 7
TH0332708	3J14	19	3365 - 9
TH0339809	3E14	45	3361 - 9
TH0339847	3E14	40	3361 - 9
TH0417606	3J10	13	3365 - 5
TH0417606	3J12	13	3365 - 7
TH0417606	3J14	13	3365 - 9
TH0417613	3J12	68	3365 - 7
TH0417613	3J14	68	3365 - 9
TH0443408	3E14	37	3361 - 9
TH0443801	3E14	12	3361 - 9
TH0443801	3E16	22	3361 - 11
TH0443803	3E16	14	3361 - 11
TH0443803	3E16	25	3361 - 11
TH0624703	3F4	31	3362 - 7
TH0643001	3J12	1	3365 - 7
TH0643001	3J14	1	3365 - 9
TH0643002	3J12	1B	3365 - 7
TH0643002	3J14	1B	3365 - 9
TH0643003	3J12	2	3365 - 7
TH0643003	3J14	2	3365 - 9
TH0643004	3J12	2B	3365 - 7
TH0643004	3J14	2B	3365 - 9
TH0643005	3J12	3	3365 - 7
TH0643005	3J14	3	3365 - 9
TH0643006	3J12	4	3365 - 7
TH0643006	3J14	4	3365 - 9
TH0643007	3J12	6	3365 - 7
TH0643007	3J14	6	3365 - 9
TH0643008	3J12	7	3365 - 7
TH0643008	3J14	7	3365 - 9
TH0643009	3J12	8	3365 - 7
TH0643009	3J14	8	3365 - 9
TH0643010	3J12	9	3365 - 7
TH0643010	3J14	9	3365 - 9
TH0643012	3J12	14	3365 - 7
TH0643012	3J14	14	3365 - 9
TH0643013	3J12	15	3365 - 7
TH0643013	3J14	15	3365 - 9
TH0643014	3J10	16	3365 - 5
TH0643014	3J12	16	3365 - 7
TH0643014	3J14	16	3365 - 9
TH0643015	3J10	18	3365 - 5
TH0643015	3J12	18	3365 - 7
TH0643015	3J14	18	3365 - 9
TH0643016	3J10	42	3365 - 5
TH0643016	3J12	45	3365 - 7
TH0643016	3J14	45	3365 - 9
TH0643017	3J14	58	3365 - 9
TH0643018	3J14	59	3365 - 9
TH0643019	3J12	46	3365 - 7
TH0643019	3J14	60	3365 - 9
TH0643020	3J12	66	3365 - 7
TH0643020	3J14	66	3365 - 9
TH0643021	3J12	67	3365 - 7
TH0643021	3J14	67	3365 - 9
TH0644901	3J12	58	3365 - 7
TH0644902	3J12	59	3365 - 7
TH0645002	3J10	1B	3365 - 5
TH0645101	3J10	1	3365 - 5
TH0645103	3J10	2B	3365 - 5
TH0645105	3J10	59	3365 - 5
TH0645106	3J10	60	3365 - 5
TH0645107	3J10	65	3365 - 5
TH0645108	3J10	66	3365 - 5
TH0658101	3G16	45	3362 - 43
TH0658201	3G18	45	3362 - 45
TH0663601	3G14	0	3362 - 41
TH0679901	3J16	1	3365 - 11
TH0679902	3J16	2	3365 - 11
TH0679903	3J16	3	3365 - 11
TH0679904	3J16	8	3365 - 11
TH0679905	3J16	10	3365 - 11
TH0679906	3J16	12	3365 - 11
TH0682303	3E14	18	3361 - 9
TH0682307	3E14	20	3361 - 9
TH0682309	3E14	24	3361 - 9
TH0682311	3E14	51	3361 - 9
TH0682316	3E14	41	3361 - 9
TH0682319	3E14	26	3361 - 9
TH0682320	3E14	35	3361 - 9
TH0682321	3E14	49	3361 - 9
TH0682322	3E14	17	3361 - 9
TH0682324	3E14	33	3361 - 9
TH0682325	3E14	48	3361 - 9
TH0682326	3E14	34	3361 - 9
TH0682327	3E14	27	3361 - 9
TH0682328	3E14	7	3361 - 9
TH0682502	3E16	23	3361 - 11
TH0682706	1B23	10	0260 - 13
TH0682803	1B25	42	0260 - 15
TH0703002	3E14	19	3361 - 9
TH0703004	3E14	25D	3361 - 9
TH0703005	3E14	25F	3361 - 9
TH0703101	3E16	31	3361 - 11
TH0703102	3E16	4	3361 - 11
TH0718001	3E14	23	3361 - 9
TH0718002	3E14	22	3361 - 9
TH0719701	3E14	25	3361 - 9
TH0788703	3G4	13	3362 - 31
TH0788704	3G4	14	3362 - 31
TH0788705	3G4	15	3362 - 31
TH0788706	3G4	16	3362 - 31
TH0788707	3G4	17	3362 - 31
TH0788710	3G4	33	3362 - 31
TH0788711	3G4	34	3362 - 31
TH0788712	3G4	35	3362 - 31
TH0788713	3G4	36	3362 - 31
TH0794201	3G8	3	3362 - 35
TH0794202	3G8	6	3362 - 35
TH0794203	3G8	8	3362 - 35
TH0794204	3G8	10	3362 - 35
TH0794205	3G8	11	3362 - 35
TH0794206	3G8	12	3362 - 35
TH0794207	3G8	14	3362 - 35
TH0809501	1B23	3	0260 - 13
TH0809503	1B23	12	0260 - 13
TH0809504	1B23	13	0260 - 13
TH0809505	1B23	14	0260 - 13
TH0809506	1B23	15	0260 - 13
TH0809508	1B23	18	0260 - 13
TH0809509	1B23	21	0260 - 13
TH0809510	1B23	23	0260 - 13
TH0809511	1B23	31	0260 - 13
TH0809513	1B23	50	0260 - 13
TH0809514	1B23	60	0260 - 13
TH0809515	1B23	70	0260 - 13
TH0809601	1B25	8	0260 - 15
TH0809604	1B25	43	0260 - 15
TH0809802	3F4	12	3362 - 7
TH0809802	3F12	12	3362 - 15
TH0818101	3F4	82	3362 - 7
TH0818101	3F12	82	3362 - 15
TH0818102	3F4	2	3362 - 7
TH0820203	1B25	28	0260 - 15
TH0820204	1B25	31	0260 - 15
TH100027	3E10	29	3361 - 5
TH100044	1G5	..	1369 - 3
TH100044	3F4	24	3362 - 7
TH100044	3F12	25	3362 - 15
TH100044	3G16	40	3362 - 43
TH100044	3G18	40	3362 - 45
TH100050	3G14	28	3362 - 41
TH100050	3G16	28	3362 - 43
TH100050	3G18	28	3362 - 45
TH100055	1B13	12A	0260 - 5
TH100055	1B23	32	0260 - 13
TH100055	1G5	..	1369 - 3
TH100055	3E10	31A	3361 - 5
TH100055	3E10	38A	3361 - 5
TH100055	3H6	2A	3363 - 13
TH100055	3H14	0	3363 - 21
TH100055	3H14	2	3363 - 21
TH100074	1H13	14	1740 - 9
TH100074	1H15	4	1740 - 11
TH100074	1H21	0B	1740 - 17
TH100074	1H21	1B	1740 - 17
TH100074	3D4	5F	3340 - 3
TH100074	3D4	17	3340 - 3
TH100074	3D6	5F	3340 - 5
TH100074	3D6	17	3340 - 5
TH100074	3D8	5F	3340 - 7
TH100074	3D8	17	3340 - 7
TH100074	3D10	4D	3340 - 9
TH100074	3D10	17	3340 - 9
TH100074	3D12	5F	3340 - 11
TH100074	3D12	17	3340 - 11
TH100074	3J10	28	3365 - 5
TH100074	3J12	44	3365 - 7
TH100074	3J14	44	3365 - 9
TH100074	3J16	17	3365 - 11
TH100096	3F18	6	3362 - 21
TH100101	3G16	4	3362 - 43
TH100101	3G18	4	3362 - 45
TH100101	3H14	6C	3363 - 21
TH100136	1G5	..	1369 - 3
TH100198	3F6	68	3362 - 9
TH100241	3E24	24	3362 - 3
TH100364	3I20	13	3363 - 51
TH100364	3I22	15	3363 - 53
TH100434	1A25	7	0130 - 11
TH100434	1B4	11	0130 - 15
TH100434	1F23	23	0560 - 3
TH100509	1F23	2	0560 - 3
TH100633	1A19	15	0130 - 3
TH100667	3I20	22	3363 - 51
TH100675	1F23	4	0560 - 3
TH100675	3J6	17	3364 - 3
TH100679	1F23	10	0560 - 3
TH100679	3J6	30	3364 - 3
TH100738	3C20	41	3315 - 11
TH100771	3E24	29	3362 - 3
TH100771	3F8	29	3362 - 11
TH100963	3I20	9	3363 - 51
TH100963	3I22	9	3363 - 53
TH100996	1C18	45	0407 - 9

NUMERICAL INDEX - CONTINUED

PART NO.	GRID	KEY	PAGE
TH101030	3G24	8	3363 - 7
TH101056	3I22	11	3363 - 53
TH101105	1A21	39	0130 - 5
TH101105	1F23	31	0560 - 3
TH101105	3J6	36	3364 - 3
TH101156	3J23	48	4360 - 5
TH101292	3J23	42	4360 - 5
TH101300	1G5	..	1369 - 3
TH101300	3E10	21	3361 - 5
TH101300	3K2	10A	4367 - 3
TH101301	3E8	10	3361 - 3
TH101479	3F18	5	3362 - 21
TH101485	3F16	5	3362 - 19
TH101490	1G5	..	1369 - 3
TH101490	3F16	6	3362 - 19
TH101588	3I20	7	3363 - 51
TH101588	3I22	10	3363 - 53
TH101870	1B19	11	0260 - 11
TH101891	3J6	29	3364 - 3
TH101894	1F23	3A	0560 - 3
TH101894	3J6	16A	3364 - 3
TH101898	3G22	26	3363 - 5
TH101898	3G24	26	3363 - 7
TH101925	3H4	15	3363 - 11
TH101926	1B13	6A	0260 - 5
TH101926	1B25	35	0260 - 15
TH101926	1G5	..	1369 - 3
TH101926	3G14	31	3362 - 41
TH101926	3G24	40	3363 - 7
TH101926	3H2	54	3363 - 9
TH101926	3H4	14	3363 - 11
TH101926	3H4	15	3363 - 11
TH101926	3H4	17	3363 - 11
TH101926	3H8	7A	3363 - 15
TH101926	3H8	8A	3363 - 15
TH101926	3H12	27	3363 - 19
TH101935	3G22	24	3363 - 5
TH101935	3G24	24	3363 - 7
TH101960	1B13	4	0260 - 5
TH101960	3D4	39	3340 - 3
TH101960	3D6	39	3340 - 5
TH101960	3D8	39	3340 - 7
TH101960	3D12	39	3340 - 11
TH101960	3I16	39	3363 - 47
TH101980	3H6	14	3363 - 13
TH102106	1F23	21	0560 - 3
TH102147	1G8	1	1671 - 3
TH102159	1H2	28	1674 - 15
TH102171	2B24	3	1810 - 29
TH102181	1H7	12	1740 - 3
TH102247	2E13	15B	1910 - 9
TH102247	2E13	16B	1910 - 9
TH102247	2E15	87B	1910 - 11
TH102298	3J23	35	4360 - 5
TH102411	3D10	0I	3340 - 9
TH102536	3G20	17	3363 - 3
TH102536	3G22	12	3363 - 5
TH102536	3G24	12	3363 - 7
TH102560	1G10	5	1674 - 3
TH102598	3F4	8	3362 - 7
TH102598	3F12	8	3362 - 15
TH102644	1B2	11	0130 - 13
TH102648	3E14	38	3361 - 9
TH102650	3E14	13	3361 - 9
TH102650	3E16	2	3361 - 11
TH102697	3G10	9	3362 - 37
TH102706	1G5	..	1369 - 3
TH102783	3J12	69	3365 - 7
TH102783	3J14	69	3365 - 9
TH102788	3J10	62	3365 - 5
TH102788	3J12	61	3365 - 7
TH102788	3J14	31	3365 - 9
TH102795	3J16	11	3365 - 11
TH1028294	1G16	7	1674 - 9
TH102945	3G24	7	3363 - 7
TH102949	3J6	19	3364 - 3
TH102992	1G5	..	1369 - 3
TH103198	3D10	0J	3340 - 9
TH103208	3D4	32	3340 - 3
TH103208	3D6	32	3340 - 5
TH103208	3D8	32	3340 - 7
TH103208	3D12	32	3340 - 11
TH103214	3D10	0G	3340 - 9
TH103262	1H15	13	1740 - 11
TH103384	1F23	5A	0560 - 3
TH103446	1G5	..	1369 - 3
TH103457	3F6	62	3362 - 9
TH103574	1G5	..	1369 - 3
TH103730	1C20	41	0407 - 11
TH103791	1G14	5I	1674 - 7
TH103791	1H2	0I	1674 - 15
TH103791	3D14	22I	3344 - 3
TH103791	3D16	22I	3344 - 5
TH104069	1G8	32	1671 - 3
TH104071	3D14	20	3344 - 3
TH104071	3D16	20	3344 - 5
TH104196	2D10	6	1821 - 7
TH104576	3E14	25E	3361 - 9
TH104589	3G24	44	3363 - 7
TH104634	1G5	..	1369 - 3
TH104634	3G22	35	3363 - 5
TH104930	1G5	..	1369 - 3
TH104999	3J10	5	3365 - 5
TH104999	3J12	5	3365 - 7
TH104999	3J14	5	3365 - 9
TH105196	3E22	15	3361 - 17
TH105683	3G22	1	3363 - 5
TH105683	3G24	6	3363 - 7
TH105684	3G22	42	3363 - 5
TH105699	3G14	42	3362 - 41
TH105699	3G16	42	3362 - 43
TH105699	3G18	42	3362 - 45
TH105938	3F6	58	3362 - 9
TH106302	3J16	4	3365 - 11
TH106368	3G14	34	3362 - 41
TH106368	3G16	34	3362 - 43
TH106368	3G18	34	3362 - 45
TH106783	2B14	15	1810 - 19
TH106967	3G24	7A	3363 - 7
TH108142	3F2	78	3362 - 5
TH108250	1F23	3	0560 - 3
TH108251	1F23	19	0560 - 3
TH108278	3J23	41	4360 - 5
TH108302	3H6	19	3363 - 13
TH108302	3H8	16	3363 - 15
TH108320	1B13	28	0260 - 5
TH108320	3C22	9	3315 - 13
TH108320	3D23	6	3360 - 11
TH108320	3E6	11	3360 - 17
TH108325	3H2	54	3363 - 9
TH108364	3C20	13C	3315 - 11
TH108392	3C16	4	3315 - 7
TH108402	3H14	6	3363 - 21
TH108440	3C22	11	3315 - 13
TH108459	1G18	45	1674 - 11
TH108459	3H4	22	3363 - 11
TH108460	1G18	42	1674 - 11
TH108567	2B8	14	1810 - 13
TH108568	2B8	14A	1810 - 13
TH108597	1G20	38	1674 - 13
TH108597	3H20	47	3363 - 27
TH108597	3H24	31	3363 - 31
TH108598	1G18	41	1674 - 11
TH108598	1G20	36	1674 - 13
TH108600	1F9	9	0510 - 7
TH108600	3H16	32	3363 - 23
TH108616	2C4	3	1810 - 33
TH108616	2D14	34	1830 - 3
TH108638	2B14	19	1810 - 19
TH108646	2B12	59	1810 - 17
TH108661	2B14	23	1810 - 19
TH108661	2B22	1	1810 - 27
TH108668	2B14	32	1810 - 19
TH108668	2E19	23	1910 - 15
TH108788	1F11	6	0515 - 3
TH108793	3H4	3	3363 - 11
TH108983	2C6	22	1810 - 35
TH109041	3F2	72	3362 - 5
TH109041	3F6	72	3362 - 9
TH109041	3F10	72	3362 - 13
TH109089	3F4	7	3362 - 7
TH109089	3F12	7	3362 - 15
TH109216	3F14	5	3362 - 17
TH109217	3F14	6	3362 - 17
TH109224	3F14	11E	3362 - 17
TH109228	3F14	15	3362 - 17
TH109237	3F14	8	3362 - 17
TH109241	3F14	17	3362 - 17
TH109243	3F14	27	3362 - 17
TH109244	3F14	28	3362 - 17
TH1092451	3F18	2A	3362 - 21
TH109249	3F18	1	3362 - 21
TH109250	3F18	2	3362 - 21
TH109252	3F18	2B	3362 - 21
TH109253	3F18	2C	3362 - 21
TH109254	3F18	2D	3362 - 21
TH109255	3F18	2D	3362 - 21
TH109256	3F18	2D	3362 - 21
TH109257	3F18	2E	3362 - 21
TH109258	3F18	2F	3362 - 21
TH109259	3F18	3	3362 - 21
TH109260	3F18	8	3362 - 21
TH109261	3F18	9	3362 - 21
TH109264	3F18	12	3362 - 21
TH109265	3F18	13	3362 - 21
TH109267	3F18	15	3362 - 21
TH109269	3F18	17	3362 - 21
TH109272	3F18	20	3362 - 21
TH109273	3F18	25	3362 - 21
TH109274	3F18	26	3362 - 21
TH109275	3F18	27	3362 - 21
TH109280	3G10	5	3362 - 37
TH109285	3G10	8	3362 - 37
TH109285	3G14	40	3362 - 41
TH109325	3J16	13	3365 - 11
TH109397	1H9	57	1740 - 5
TH109445	1F25	4	0560 - 5
TH109457	3E8	7	3361 - 3
TH109497	1C20	43	0407 - 11
TH109556	3H6	23	3363 - 13
TH109598	3H24	29	3363 - 31

NUMERICAL INDEX - CONTINUED

PART NO.	GRID	KEY	PAGE
TH109598	3I2	29	3363 - 33
TH109598	3I4	25	3363 - 35
TH109649	1F9	14	0510 - 7
TH109649	1F11	13	0515 - 3
TH109649	1G18	40	1674 - 11
TH109649	3I20	18	3363 - 51
TH109649	3I22	19	3363 - 53
TH109684	2E23	10	1910 - 19
TH109916	3E22	2	3361 - 17
TH109918	3E22	6	3361 - 17
TH109919	3E22	7	3361 - 17
TH109920	3E22	9	3361 - 17
TH109921	3E22	10	3361 - 17
TH109922	3E22	12	3361 - 17
TH109925	3E22	28	3361 - 17
TH110449	3E24	53	3362 - 3
TH110449	3F4	3	3362 - 7
TH110449	3F12	3	3362 - 15
TH110478	3E10	31	3361 - 5
TH110478	3G20	14	3363 - 3
TH110496	3G24	40	3363 - 7
TH110498	3I20	16	3363 - 51
TH110498	3I22	18	3363 - 53
TH110522	3H4	5	3363 - 11
TH110898	2E23	2A	1910 - 19
TH111019	3J6	13B	3364 - 3
TH111021	3J6	13D	3364 - 3
TH111022	3J6	13E	3364 - 3
TH111232	3J23	33	4360 - 5
TH111255	3I2	28	3363 - 33
TH111257	3G20	13	3363 - 3
TH111267	3J23	18	4360 - 5
TH111351	3C20	35	3315 - 11
TH111351	3F14	36	3362 - 17
TH111654	3C20	21	3315 - 11
TH111654	3F14	30	3362 - 17
TH111685	3D14	19	3344 - 3
TH111685	3D16	19	3344 - 5
TH111907	1B19	56	0260 - 11
TH111908	2C6	24	1810 - 35
TH111960	3F14	11B	3362 - 17
TH111963	3F14	24B	3362 - 17
TH2033235	1B2	2	0130 - 13
TH2033636	1A25	51	0130 - 11
TH2039445	1B4	9	0130 - 15
TH2039446	1B4	2	0130 - 15
TH2039915	1B4	0	0130 - 15
TH2040457	1B2	6	0130 - 13
TH2040459	1B2	0B	0130 - 13
TH2040674	2E25	1	1910 - 21
TH2044332	3C20	8A	3315 - 11
TH2044923	2D14	33	1830 - 3
TH2045468	3C18	10	3315 - 9
TH2045469	3C18	11	3315 - 9
TH2045470	3C10	5	3315 - 3
TH2045472	3C10	2	3315 - 3
TH2045509	2A24	29	1810 - 5
TH2045998	3I10	30	3363 - 41
TH2045998	3I12	30	3363 - 43
TH3040803	3E10	6	3361 - 5
TH3052361	3D4	16	3340 - 3
TH3052361	3D6	16	3340 - 5
TH3052361	3D8	16	3340 - 7
TH3052361	3D12	16	3340 - 11
TH3059755	1B2	12	0130 - 13
TH3060533	1H15	10	1740 - 11
TH3060534	1H15	11	1740 - 11
TH3060579	3D14	0D	3344 - 3
TH3060579	3D16	0D	3344 - 5
TH3060580	3D4	0C	3340 - 3
TH3060580	3D6	0D	3340 - 5
TH3060580	3D8	0D	3340 - 7
TH3060580	3D10	0B	3340 - 9
TH3060580	3D12	0C	3340 - 11
TH3060582	3D4	5C	3340 - 3
TH3060582	3D6	5C	3340 - 5
TH3060582	3D8	5C	3340 - 7
TH3060582	3D12	5C	3340 - 11
TH3060583	3D4	5B	3340 - 3
TH3060583	3D6	5B	3340 - 5
TH3060583	3D8	5B	3340 - 7
TH3060583	3D12	5B	3340 - 11
TH3060595	3D4	14	3340 - 3
TH3060595	3D6	14	3340 - 5
TH3060595	3D8	14	3340 - 7
TH3060595	3D12	14	3340 - 11
TH3060596	3D4	13	3340 - 3
TH3060596	3D6	13	3340 - 5
TH3060596	3D8	13	3340 - 7
TH3060596	3D12	13	3340 - 11
TH3060601	3D14	2	3344 - 3
TH3060601	3D16	2	3344 - 5
TH3075992	1B4	8	0130 - 15
TH3075993	1B4	14	0130 - 15
TH3075994	1B4	6	0130 - 15
TH3078041	1B2	3	0130 - 13
TH3078497	2E25	2	1910 - 21
TH3079227	3D4	15	3340 - 3
TH3079227	3D6	15	3340 - 5
TH3079227	3D8	15	3340 - 7
TH3079228	3D6	0F	3340 - 5
TH3079228	3D8	0F	3340 - 7
TH3079229	3D12	15	3340 - 11
TH3079230	3D12	0E	3340 - 11
TH3079231	3D4	0E	3340 - 3
TH3082868	1H9	60	1740 - 5
TH3087264	3C20	13A	3315 - 11
TH3087882	1G20	1	1674 - 13
TH3087987	3C20	26	3315 - 11
TH3088769	2F9	7	2004 - 3
TH3089486	2D10	2	1821 - 7
TH3089848	3C16	11	3315 - 7
TH3090025	2A24	32	1810 - 5
TH3090109	3H20	27	3363 - 27
TH3091204	2D22	3	1830 - 11
TH3091338	2E11	76	1910 - 7
TH3091338	2E23	24	1910 - 19
TH3091842	2A24	24	1810 - 5
TH3100010	1G24	1	1674 - 13D
TH4037584	1B8	10	0130 - 19
TH4040932	3D14	7	3344 - 3
TH4040932	3D16	7	3344 - 5
TH4075853	3H2	4	3363 - 9
TH4083751	3E10	33	3361 - 5
TH4083852	3E10	13	3361 - 5
TH4104838	1A23	3	0130 - 7
TH4116310	3C16	3	3315 - 7
TH4143888	1F5	18	0510 - 3
TH4144353	3E14	15	3361 - 9
TH4153982	1H13	12	1740 - 9
TH4153983	1H13	11	1740 - 9
TH4154331	3G24	45	3363 - 7
TH4160773	3E10	4	3361 - 5
TH4179432	1H7	23	1740 - 3
TH4185600	3C20	22	3315 - 11
TH4187322	1F23	6	0560 - 3
TH4205000	3J10	27	3365 - 5
TH4205000	3J12	25	3365 - 7
TH4205000	3J14	25	3365 - 9
TH4206316	1F5	17	0510 - 3
TH4206477	1H9	44	1740 - 5
TH4214444	3H4	17	3363 - 11
TH4215453	1B2	5	0130 - 13
TH4216871	1H13	4	1740 - 9
TH4218005	3E10	10	3361 - 5
TH4219513	1A19	1A	0130 - 3
TH4219513	1A19	2A	0130 - 3
TH4245211	1H13	5	1740 - 9
TH4249324	2E11	44	1910 - 7
TH4249324	2E13	27	1910 - 9
TH4251753	3D14	0E	3344 - 3
TH4251753	3D16	0E	3344 - 5
TH4251767	3D4	0D	3340 - 3
TH4251767	3D4	5D	3340 - 3
TH4251767	3D6	0E	3340 - 5
TH4251767	3D6	5D	3340 - 5
TH4251767	3D8	0E	3340 - 7
TH4251767	3D8	5D	3340 - 7
TH4251767	3D10	0C	3340 - 9
TH4251767	3D12	0D	3340 - 11
TH4251767	3D12	0H	3340 - 11
TH4251767	3D12	5D	3340 - 11
TH4255567	1H9	47	1740 - 5
TH4287634	3J6	6	3364 - 3
TH429135	1H7	6	1740 - 3
TH4291852	1B2	8	0130 - 13
TH4291853	1B2	9	0130 - 13
TH4291854	1B2	10	0130 - 13
TH4292386	3E14	28	3361 - 9
TH4292676	1H13	9	1740 - 9
TH4292763	1H9	1	1740 - 5
TH4292765	1H7	10	1740 - 3
TH4294694	1G8	22	1671 - 3
TH4295167	3D4	20	3340 - 3
TH4295167	3D6	20	3340 - 5
TH4295167	3D8	20	3340 - 7
TH4295167	3D12	20	3340 - 11
TH4295784	1B8	53	0130 - 19
TH4295785	1B8	54	0130 - 19
TH4295788	1B8	0	0130 - 19
TH4295789	1B8	1	0130 - 19
TH4295790	1B8	2	0130 - 19
TH4295791	1B8	3	0130 - 19
TH4295792	1B8	4	0130 - 19
TH4295795	1B8	7	0130 - 19
TH4295798	1B8	12	0130 - 19
TH4295981	3D4	0F	3340 - 3
TH4295981	3D6	0G	3340 - 5
TH4295981	3D8	0G	3340 - 7
TH4295981	3D12	0F	3340 - 11
TH4296540	3D4	33	3340 - 3
TH4296540	3D6	33	3340 - 5
TH4296540	3D8	33	3340 - 7
TH4296540	3D12	33	3340 - 11
TH4296540	3D14	5	3344 - 3
TH4296540	3D16	5	3344 - 5
TH4296541	1H7	22	1740 - 3
TH4296542	1H7	21	1740 - 3
TH4296543	1H7	20	1740 - 3
TH4297379	3E14	11	3361 - 9
TH4297379	3E16	1	3361 - 11

NUMERICAL INDEX - CONTINUED

PART NO.	GRID	KEY	PAGE
TH4297379	3E16	19	3361 - 11
TH4297642	3D14	0B	3344 - 3
TH4297642	3D16	0B	3344 - 5
TH4297643	3D4	0B	3340 - 3
TH4297643	3D6	0B	3340 - 5
TH4297643	3D8	0B	3340 - 7
TH4297643	3D12	0B	3340 - 11
TH4297643	3D14	0C	3344 - 3
TH4297643	3D16	0C	3344 - 5
TH4297750	3D6	0C	3340 - 5
TH4297750	3D8	0C	3340 - 7
TH4299948	3D14	26	3344 - 3
TH4299948	3D16	26	3344 - 5
TH4309072	3H10	6	3363 - 17
TH4309074	3H10	3	3363 - 17
TH4309332	3H12	40	3363 - 19
TH4309333	3H12	41	3363 - 19
TH4314074	3H8	0	3363 - 15
TH4314075	3H8	1	3363 - 15
TH4314076	3H8	2	3363 - 15
TH4314398	3H6	5	3363 - 13
TH4314399	3H6	7	3363 - 13
TH4317157	1A19	8	0130 - 3
TH4317612	1B13	12	0260 - 5
TH4317618	3H4	14	3363 - 11
TH4324194	3D4	0H	3340 - 3
TH4326065	1B8	6	0130 - 19
TH4326066	1B8	8	0130 - 19
TH4333835	2D12	11	1821 - 9
TH4334933	1H11	5	1740 - 7
TH4336875	1G18	48	1674 - 11
TH4337125	3H12	16	3363 - 19
TH4337125	3I14	21	3363 - 45
TH4337125	3I18	21	3363 - 49
TH4338464	1H13	6	1740 - 9
TH4343333	2E25	15	1910 - 21
TH4343422	3H6	6	3363 - 13
TH4347396	2D14	7	1830 - 3
TH4349517	1B4	20	0130 - 15
TH4352947	2D22	18	1830 - 11
TH4353127	2F7	9	2001 - 3
TH4353970	1F9	26	0510 - 7
TH4354802	3J12	0	3365 - 7
TH4356853	3J16	0	3365 - 11
TH4372725	2E15	82	1910 - 11
TH4372725	2E23	30	1910 - 19
TH4376895	2E23	20	1910 - 19
TH4379383	1B2	1	0130 - 13
TH4379384	1B2	4	0130 - 13
TH4379385	1B2	7	0130 - 13
TH4381572	1G20	62	1674 - 13
TH4384450	3J16	50	3365 - 11
TH4389856	3H10	4	3363 - 17
TH4389857	3H10	7	3363 - 17
TH4402481	3J23	13	4360 - 5
TH4404273	3H2	20	3363 - 9
TH4405128	2D10	4	1821 - 7
TH4408281	1B11	8	0260 - 3
TH4409396	2E11	38E	1910 - 7
TH4415024	2A24	22	1810 - 5
TH4418301	1G18	24	1674 - 11
TH4420875	2A24	0	1810 - 5
TH4420876	2A24	3	1810 - 5
TH4420877	2A24	7	1810 - 5
TH4420878	2A24	11	1810 - 5
TH4420879	2A24	14	1810 - 5
TH4422479	3J23	47	4360 - 5
TH4424157	2E11	45	1910 - 7
TH4424157	2E15	90	1910 - 11
TH4424185	3C18	5	3315 - 9
TH4425177	3H24	25	3363 - 31
TH4425290	3C20	13B	3315 - 11
TH4425305	3C20	18	3315 - 11
TH4425573	2D22	5	1830 - 11
TH4426155	2D14	22	1830 - 3
TH4426156	2D22	8	1830 - 11
TH4426157	2D14	30	1830 - 3
TH4426158	2D14	38	1830 - 3
TH4426159	2D20	3	1830 - 9
TH4426160	2D20	0	1830 - 9
TH4426354	2B2	4	1810 - 7
TH4426821	2F4	0	1910 - 25
TH4427429	1G20	7B	1674 - 13
TH4430508	1B11	9	0260 - 3
TH4430667	3J23	34	4360 - 5
TH4431090	1G20	11	1674 - 13
TH4431227	2D14	26	1830 - 3
TH4432965	2D22	11	1830 - 11
TH4433064	2D20	8	1830 - 9
TH4433793	2D22	0	1830 - 11
TH4433794	2D22	7	1830 - 11
TH4434206	1F19	6	0530 - 5
TH4435320	1B13	0	0260 - 5
TH4436024	2D14	0	1830 - 3
TH4436124	3I4	34	3363 - 35
TH4436197	3F18	0	3362 - 21
TH4436197	3H22	13	3363 - 29
TH4436271	1G10	5	1674 - 3
TH4436306	2D14	8	1830 - 3
TH4436307	2D14	9	1830 - 3
TH4436442	2D14	17	1830 - 3
TH4436534	1G20	59	1674 - 13
TH4436535	1G14	9	1674 - 7
TH4436536	1G14	8	1674 - 7
TH4436737	1G20	7G	1674 - 13
TH4437432	3C20	39	3315 - 11
TH4437433	3C20	8B	3315 - 11
TH4438279	3C10	8	3315 - 3
TH4439093	2D14	13	1830 - 3
TH4439897	1G20	18	1674 - 13
TH4441059	2D14	43	1830 - 3
TH4441061	2D14	44	1830 - 3
TH4441117	2A24	30	1810 - 5
TH4441139	2D14	41	1830 - 3
TH4441246	2F9	17	2004 - 3
TH4443346	1B13	9	0260 - 5
TH4443348	1B13	10	0260 - 5
TH4443490	1G20	7H	1674 - 13
TH4444664	2B12	10	1810 - 17
TH4445220	2C2	22	1810 - 31
TH4445322	3C10	9	3315 - 3
TH4445916	2D20	19	1830 - 9
TH4445917	2B2	0	1810 - 7
TH4445932	2B2	0A	1810 - 7
TH4446369	2E9	8C	1910 - 5
TH4446551	2E11	38B	1910 - 7
TH4446694	2E11	42	1910 - 7
TH4447050	3C20	6B	3315 - 11
TH4447067	3C20	42	3315 - 11
TH4447765	1H2	3	1674 - 15
TH4448307	2B14	43	1810 - 19
TH4448308	2B12	52	1810 - 17
TH4448309	2B12	53	1810 - 17
TH4448314	2B10	9	1810 - 15
TH4448315	2B12	72	1810 - 17
TH4448318	2B16	18	1810 - 21
TH4448319	2B10	19	1810 - 15
TH4448601	2C2	27	1810 - 31
TH4448990	2A24	35	1810 - 5
TH4449019	1G20	49	1674 - 13
TH4449068	2D20	5	1830 - 9
TH4449348	2D20	17	1830 - 9
TH4449757	1G14	1	1674 - 7
TH4449758	1G14	0	1674 - 7
TH4449773	3I10	20	3363 - 41
TH4450008	2D22	9	1830 - 11
TH4450662	3H18	3	3363 - 25
TH4451784	3F24	24	3362 - 27
TH4451785	3F24	25	3362 - 27
TH4451785	3G2	25	3362 - 29
TH4451786	3G2	26	3362 - 29
TH4451787	3F24	37	3362 - 27
TH4451788	3F24	38	3362 - 27
TH4451789	3F24	39	3362 - 27
TH4451789	3G2	39	3362 - 29
TH4451790	3G2	40	3362 - 29
TH4451797	3G2	41	3362 - 29
TH4452160	1G20	65	1674 - 13
TH4452188	2D14	53	1830 - 3
TH4452613	2A24	27	1810 - 5
TH4452647	3G4	18	3362 - 31
TH4452648	3G4	20	3362 - 31
TH4453663	2B10	31	1810 - 15
TH4453665	2B10	93	1810 - 15
TH4453666	2B10	95	1810 - 15
TH4453667	2B10	22	1810 - 15
TH4453670	2B12	20	1810 - 17
TH4453671	2B12	22	1810 - 17
TH4453674	2B12	58	1810 - 17
TH4453675	2B12	57	1810 - 17
TH4453676	2B12	50	1810 - 17
TH4453682	2B16	29	1810 - 21
TH4453683	2B16	30	1810 - 21
TH4453684	2B16	31	1810 - 21
TH4453686	2B8	33	1810 - 13
TH4453687	2B8	32	1810 - 13
TH4453689	2B14	1	1810 - 19
TH4453690	2B8	31	1810 - 13
TH4453777	3D14	0H	3344 - 3
TH4453819	3G4	11	3362 - 31
TH4453820	3G4	12	3362 - 31
TH4453874	2D12	7	1821 - 9
TH4454518	1G20	57	1674 - 13
TH4454753	2D14	52	1830 - 3
TH4455565	2D12	5	1821 - 9
TH4455566	2D12	6	1821 - 9
TH4455975	2B12	4	1810 - 17
TH4455977	2B12	17	1810 - 17
TH4455978	2B12	19	1810 - 17
TH4455979	2B12	2	1810 - 17
TH4455981	2B12	12	1810 - 17
TH4455982	2B12	8	1810 - 17
TH4455983	2B12	9	1810 - 17
TH4456171	2B12	11	1810 - 17
TH4456172	2B12	26	1810 - 17
TH4456175	2B10	25	1810 - 15
TH4456177	2B10	2	1810 - 15
TH4456178	2B10	3	1810 - 15
TH4456179	2B10	4	1810 - 15
TH4456181	2B10	5	1810 - 15
TH4456182	2B10	17	1810 - 15

NUMERICAL INDEX - CONTINUED

PART NO.	GRID	KEY	PAGE
TH4456183	2B10	8	1810 - 15
TH4456184	2B10	29	1810 - 15
TH4456185	2B10	11	1810 - 15
TH4456218	2B14	2	1810 - 19
TH4456219	2B14	3	1810 - 19
TH4456220	2B14	4	1810 - 19
TH4456221	2B14	5	1810 - 19
TH4456222	2B14	6	1810 - 19
TH4456223	2B14	8	1810 - 19
TH4456224	2B14	9	1810 - 19
TH4456225	2B14	10	1810 - 19
TH4456226	2B14	12	1810 - 19
TH4456227	2B14	14	1810 - 19
TH4456228	2B14	20	1810 - 19
TH4456229	2B14	21	1810 - 19
TH4456230	2B14	26	1810 - 19
TH4456231	2B14	27	1810 - 19
TH4456232	2B14	29	1810 - 19
TH4456233	2B14	30	1810 - 19
TH4456234	2B14	31	1810 - 19
TH4456235	2B14	33	1810 - 19
TH4456236	2B14	34	1810 - 19
TH4456237	2B14	35	1810 - 19
TH4456238	2B8	37	1810 - 13
TH4456238	2B14	36	1810 - 19
TH4456239	2B14	37	1810 - 19
TH4456240	2B14	38	1810 - 19
TH4456241	2B14	39	1810 - 19
TH4456242	2B14	40	1810 - 19
TH4456246	2B20	2	1810 - 25
TH4456247	2B20	3	1810 - 25
TH4456248	2B20	6	1810 - 25
TH4456427	2B8	1	1810 - 13
TH4456428	2B8	15	1810 - 13
TH4456428	2B8	26	1810 - 13
TH4456429	2B8	30	1810 - 13
TH4456433	2B8	34	1810 - 13
TH4456434	2B8	35	1810 - 13
TH4456435	2B8	41	1810 - 13
TH4456436	2B8	42	1810 - 13
TH4456450	2B8	43	1810 - 13
TH4456456	2B8	29	1810 - 13
TH4456458	2B8	40	1810 - 13
TH4456723	2D22	0B	1830 - 11
TH4456725	2D22	0A	1830 - 11
TH4456735	1G20	7F	1674 - 13
TH4456778	1G16	7A	1674 - 9
TH4456778	1G20	7A	1674 - 13
TH4466268	1F17	13B	0520 - 5
TH4468943	2B12	65	1810 - 17
TH4468944	2B10	6	1810 - 15
TH4471211	1F17	13F	0520 - 5
TH4471224	1F17	13D	0520 - 5
TH4512403	1B8	9	0130 - 19
TH4600281	2E21	12A	1910 - 17
TH4600298	2E21	13A	1910 - 17
TH5007342	2C2	15	1810 - 31
TH6014819	1H7	31	1740 - 3
TH6019252	2C2	14	1810 - 31
TH6019838	2C2	12	1810 - 31
TH6020171	2D10	0	1821 - 7
TH6020352	2C4	5	1810 - 33
TH7026686	3H12	14	3363 - 19
TH7026687	3H12	13	3363 - 19
TH7028306	1A23	1	0130 - 7
TH7035503	3C16	0	3315 - 7
TH7036594	2A22	0	1810 - 3
TH7036595	2A22	2	1810 - 3
TH7039389	2C2	1	1810 - 31
TH7040505	2D12	4	1821 - 9
TH8049555	3D4	6	3340 - 3
TH8049555	3D6	6	3340 - 5
TH8049555	3D8	6	3340 - 7
TH8049555	3D12	6	3340 - 11
TH8050377	3D4	7	3340 - 3
TH8050377	3D6	7	3340 - 5
TH8050377	3D8	7	3340 - 7
TH8050377	3D12	7	3340 - 11
TH8053492	2E23	14	1910 - 19
TH8053517	1H7	19	1740 - 3
TH8053518	1H7	27	1740 - 3
TH8053519	3D4	11	3340 - 3
TH8053519	3D6	11	3340 - 5
TH8053519	3D8	11	3340 - 7
TH8053519	3D10	11	3340 - 9
TH8053519	3D12	11	3340 - 11
TH8053519	3D14	3	3344 - 3
TH8053519	3D16	3	3344 - 5
TH8053520	3D14	4	3344 - 3
TH8053520	3D16	4	3344 - 5
TH8053767	1A25	54	0130 - 11
TH8053777	3I14	3	3363 - 45
TH8053777	3I18	3	3363 - 49
TH8053779	3I14	5	3363 - 45
TH8055772	3I14	6	3363 - 45
TH8055773	3I14	8	3363 - 45
TH8055774	3I14	9	3363 - 45
TH8055774	3I18	8	3363 - 49
TH8058161	3I14	7	3363 - 45
TH8058162	3I14	10	3363 - 45
TH8058163	3I14	4	3363 - 45
TH8058593	3I18	4	3363 - 49
TH8058594	3I18	5	3363 - 49
TH8058595	3I18	6	3363 - 49
TH8058596	3I18	7	3363 - 49
TH8058597	3I18	9	3363 - 49
TH8058598	3I18	10	3363 - 49
TH8061926	3J6	2	3364 - 3
TH8067350	2F4	1	1910 - 25
TH8068378	1A21	0	0130 - 5
TH8068391	1A21	1	0130 - 5
TH8073901	3C16	6	3315 - 7
TH8074128	3D19	1	3360 - 5
TH8075449	3C18	1	3315 - 9
TH8075450	3C18	0	3315 - 9
TH8076619	2C2	9	1810 - 31
TH8077064	1F19	10	0530 - 5
TH8077903	3C20	32	3315 - 11
TH8078454	3D19	0	3360 - 5
TH8081319	3C12	0	3315 - 5
TH8082329	1G20	24	1674 - 13
TH9111839	3D6	0	3340 - 5
TH9111926	3D4	5	3340 - 3
TH9111926	3D6	5	3340 - 5
TH9111926	3D8	5	3340 - 7
TH9111926	3D12	5	3340 - 11
TH9128709	3D14	0	3344 - 3
TH9131211	3D16	0	3344 - 5
TH9131217	3D12	0	3340 - 11
TH9137494	1B8	15	0130 - 19
TH9141367	3D8	0	3340 - 7
TH9142088	3D10	0	3340 - 9
TH9142216	3D4	0	3340 - 3
TH9156835	1B2	0	0130 - 13
TH9183296	1B11	0	0260 - 3
TH9184275	3C20	8	3315 - 11
TH9186449	1B11	2	0260 - 3
TH9195304	3C10	20	3315 - 3
TH9195307	3C18	2	3315 - 9
TH9195307	3C20	7	3315 - 11
TH9199146	3C20	13	3315 - 11
TH9205229	2B6	1	1810 - 11
TH9205229	2B8	0	1810 - 13
TH9205229	2B10	0	1810 - 15
TH9205229	2B12	0	1810 - 17
TH9205229	2B14	0	1810 - 19
TH9205229	2B16	0	1810 - 21
TH9205229	2B18	0	1810 - 23
TH9205229	2B20	0	1810 - 25
TH9205229	2C8	1	1810 - 37
TH9205229	2C10	1	1810 - 39
TH9754739	3I4	33	3363 - 35
TH9756005	1H2	2	1674 - 15
TH9756736	2D12	16	1821 - 9
TH9757192	2C2	29	1810 - 31
TK500R	3C8	2	3302 - 19
TK550R	3C8	2	3302 - 19
TT500	3C8	2	3302 - 19
TX500	3C8	4K	3302 - 19
TX500AP	3C8	4E	3302 - 19
TX550SYL	3C8	4A	3302 - 19
TY16304	2C10	8	1810 - 39
TY16323	2C10	8	1810 - 39
TY21709	1G8	0	1671 - 3
TY22462	1F9	8	0510 - 7
TY22462	1F19	19	0530 - 5
TY22464	1F25	2	0560 - 5
TY22467	1C20	40	0407 - 11
TY22476	3G20	11	3363 - 3
T101942	1G3	3	1322 - 3
T105740	2D8	3	1821 - 5
T105943	2D24	12	1830 - 13
T108064	3J10	69	3365 - 5
T108064	3J12	63	3365 - 7
T108064	3J14	63	3365 - 9
T108159	3C20	2	3315 - 11
T110590	1G5	..	1369 - 3
T110593	1G5	..	1369 - 3
T111819	3F6	59	3362 - 9
T114698	3D25	7	3360 - 13
T114699	3D25	6	3360 - 13
T130341	1F19	12	0530 - 5
T13624	3J16	15	3365 - 11
T138886	2A24	39	1810 - 5
T141022	1H4	2	1674 - 19
T144361	1G14	5E	1674 - 7
T144361	1H2	0E	1674 - 15
T144361	3D14	22E	3344 - 3
T144361	3D16	22E	3344 - 5
T144362	1G14	5F	1674 - 7
T144362	1H2	0F	1674 - 15
T144362	3D14	22F	3344 - 3
T144362	3D16	22F	3344 - 5
T146102	1G3	33	1322 - 3
T146667	1G3	26	1322 - 3
T146668	1G3	25	1322 - 3
T146671	1G3	20	1322 - 3
T149434	3C22	14	3315 - 13
T149434	3D21	5	3360 - 9
T149434	3D25	17	3360 - 13
T149983	1G3	32	1322 - 3

NUMERICAL INDEX - CONTINUED

PART NO.	GRID	KEY	PAGE
T152593	1G3	40	1322 - 3
T152593	3D2	16	3315 - 17
T152608	3I20	17	3363 - 51
T152608	3I24	17	3363 - 55
T152657	1G3	34	1322 - 3
T153674	3C24	22	3315 - 15
T153676	3C24	22	3315 - 15
T157779	2D8	2	1821 - 5
T158020	2B8	25A	1810 - 13
T158021	2B8	25B	1810 - 13
T159841	1G3	21	1322 - 3
T159841	1G3	54	1322 - 3
T159842	1G3	6	1322 - 3
T159842	1G3	54	1322 - 3
T159843	1G3	6	1322 - 3
T159843	3E2	7	3360 - 15
T159844	1G3	21	1322 - 3
T159844	3E2	9	3360 - 15
T159887	1G3	24	1322 - 3
T161266	1G3	16	1322 - 3
T165610	1B11	10	0260 - 3
T165611	1B11	11	0260 - 3
T165612	1B11	13	0260 - 3
T165613	1B11	16	0260 - 3
T167256	2B22	2	1810 - 27
T183425	1G3	50	1322 - 3
T183539	1G3	12	1322 - 3
T183547	1G3	11	1322 - 3
T184858	3E2	10	3360 - 15
T187535	1G3	30	1322 - 3
T187536	1G3	23	1322 - 3
T187642	1G3	35	1322 - 3
T187644	1G3	7	1322 - 3
T187645	1G3	8	1322 - 3
T187710	1G3	51	1322 - 3
T188662	3E6	24	3360 - 17
T188737	1G3	52	1322 - 3
T188737	2C6	25	1810 - 35
T188821	1G3	13	1322 - 3
T188870	1G3	31	1322 - 3
T188871	1G3	29	1322 - 3
T190310	1G3	17	1322 - 3
T190393	1G3	27	1322 - 3
T190799	1G3	30	1322 - 3
T190801	1G3	51	1322 - 3
T190802	1G3	51	1322 - 3
T190803	1G3	30	1322 - 3
T200731	3D4	26	3340 - 3
T200731	3D6	26	3340 - 5
T200731	3D8	26	3340 - 7
T200731	3D12	26	3340 - 11
T201519	1G3	6	1322 - 3
T201519	1G3	21	1322 - 3
T201519	1G3	54	1322 - 3
T201519	3E4	9	3360 - 15B
T202379	3E2	20	3360 - 15
T205175	3E4	8	3360 - 15B
T205218	2C6	24	1810 - 35
T208052	1G3	31	1322 - 3
T22645	3E2	23	3360 - 15
T24432	2E2	35	1830 - 15
T25838	1G3	53	1322 - 3
T27860	2D24	5	1830 - 13
T30367	1F11	15	0515 - 3
T32854	1G18	55	1674 - 11
T32854	3H24	36	3363 - 31
T38377	1F13	10	0515 - 5
T4T4702	3C8	4C	3302 - 19
T4T4704	3C8	3	3302 - 19
T4T4707	3C8	5	3302 - 19
T55564	2D24	1	1830 - 13
T56006	1B19	12	0260 - 11
T56006	1B19	68	0260 - 11
T56006	3J25	4	4360 - 7
T59014	1G5	..	1369 - 3
T59014	3F6	67	3362 - 9
T59014	3H6	11	3363 - 13
T61120	3E4	12	3360 - 15B
T63817	3E2	21	3360 - 15
T72216	3H2	7	3363 - 9
T72216	3H6	4	3363 - 13
T72216	3H8	6	3363 - 15
T72216	3H10	10	3363 - 17
T72216	3H12	10	3363 - 19
T72216	3I14	14	3363 - 45
T72216	3I14	37	3363 - 45
T72216	3I18	14	3363 - 49
T72216	3I18	37	3363 - 49
T72216	3J4	8	3363 - 59
T74492	1G5	..	1369 - 3
T74492	3E20	1	3361 - 15
T76938	1B13	7	0260 - 5
T76938	3E10	37	3361 - 5
T76938	3H2	56	3363 - 9
T76938	3H8	9	3363 - 15
T76938	3H12	26	3363 - 19
T77857	3E18	4	3361 - 13
T77857	3J4	13	3363 - 59
T77857	3J18	6	3365 - 13
T77858	3G24	36	3363 - 7
T77858	3H6	3	3363 - 13
T78313	1B13	3	0260 - 5
T78313	3D4	41	3340 - 3
T78313	3D6	41	3340 - 5
T78313	3D8	41	3340 - 7
T78313	3D12	41	3340 - 11
T78313	3I16	41	3363 - 47
T79632	1G3	4	1322 - 3
T80394	3D25	10	3360 - 13
T806X500	3C8	3	3302 - 19
T806X550	3C8	3	3302 - 19
T80622	3K2	17	4367 - 3
T9U9616	3C8	2	3302 - 19
U10778	1G5	..	1369 - 3
U15091	2E9	13	1910 - 5
U17409	1G5	..	1369 - 3
U40979	3J25	9	4360 - 7
U42323	1F23	34	0560 - 3
U46166	3F14	11C	3362 - 17
U46489	1B13	11A	0260 - 5
U46489	1B25	30	0260 - 15
U46489	1G5	..	1369 - 3
U46489	3F2	73	3362 - 5
U46489	3F4	73	3362 - 7
U46489	3F12	73	3362 - 15
U46489	3G14	39	3362 - 41
U46489	3H4	0	3363 - 11
U46489	3H14	4	3363 - 21
U46489	3H14	8	3363 - 21
U46489	3H14	9	3363 - 21
U46489	3H22	7	3363 - 29
U46489	3H22	19	3363 - 29
U46489	3H22	20	3363 - 29
U46489	3H22	21	3363 - 29
U46489	3H22	35	3363 - 29
WZ2141223	2D14	5	1830 - 3
X0103-4-4	3I24	8	3363 - 55
Z29925	3G20	21	3363 - 3
0003800	1G20	7	1674 - 13
0003929	2C2	25	1810 - 31
0003954	3E10	0	3361 - 5
0004601	1G20	7	1674 - 13
0109124	3J8	23	3365 - 3
0111530	3E14	2	3361 - 9
0133709	3J10	5	3365 - 5
0133709	3J12	5	3365 - 7
0133709	3J14	5	3365 - 9
0134458	3E14	36	3361 - 9
0134701	3E14	55	3361 - 9
0135206	3E24	51	3362 - 3
0135904	3E16	8	3361 - 11
0150809	3E20	14	3361 - 15
0159214	3F8	50	3362 - 11
0159811	3J16	9	3365 - 11
0163601	1B25	6	0260 - 15
0166005	3J16	7	3365 - 11
0166805	3F2	82	3362 - 5
0166805	3F8	47	3362 - 11
0168008	1B25	45	0260 - 15
0168060650	1C8	16	0402 - 3
0168060650	1C14	8	0407 - 5
0168060850	1E6	52	0419 - 3
0188905	3J16	1B	3365 - 11
0188905	3J16	2B	3365 - 11
0189803	3E24	10	3362 - 3
0189803	3F4	10	3362 - 7
0189803	3F6	10	3362 - 9
0189803	3F8	10	3362 - 11
0189803	3F12	10	3362 - 15
0189908	3F4	14	3362 - 7
0189908	3F6	14	3362 - 9
0189908	3F12	14	3362 - 15
0191415	3J8	5	3365 - 3
0195147	3E14	25E	3361 - 9
0195165	3E14	38	3361 - 9
0197011	3F4	89	3362 - 7
0197011	3F12	89	3362 - 15
0208717	3G10	9	3362 - 37
0209423	3C20	41	3315 - 11
0212312	3E24	24	3362 - 3
0212405	3F6	70	3362 - 9
0212416	3F2	68	3362 - 5
0212416	3F6	68	3362 - 9
0215220	3F16	5	3362 - 19
0223104	3E24	20	3362 - 3
0223104	3F4	20	3362 - 7
0223104	3F6	20	3362 - 9
0223104	3F8	20	3362 - 11
0223104	3F12	20	3362 - 15
0223109	3F6	71	3362 - 9
0223202	3G14	34	3362 - 41
0223202	3G16	34	3362 - 43
0223202	3G18	34	3362 - 45
0236014	3E14	13	3361 - 9
0236014	3E16	2	3361 - 11
0236915	3J12	69	3365 - 7
0236915	3J14	69	3365 - 9
0237902	3E14	52	3361 - 9
0237902	3E16	16	3361 - 11
0237902	3E20	12	3361 - 15
0242505	3J8	8	3365 - 3

NUMERICAL INDEX - CONTINUED

PART NO.	GRID	KEY	PAGE
0251319	1B25	44	0260 - 15
0259207	3J10	63	3365 - 5
0259304	3J10	13	3365 - 5
0259304	3J12	13	3365 - 7
0259304	3J14	13	3365 - 9
0266736	3E22	15	3361 - 17
0280806100	1D6	76	0409 - 7
0280806400	1D12	74	0413 - 5
0280808120	1C24	12	0408 - 3
0280808160	1D12	71	0413 - 5
0280808160	1E12	13	0421 - 3
0280808160	1E18	17	0433 - 3
0280808160	1E20	47	0433 - 5
0280808180	1C14	7	0407 - 5
0280808180	1E14	35	0423 - 3
0280808350	1E18	9	0433 - 3
0280808600	1E20	57	0433 - 5
0280808600	1E20	58	0433 - 5
0280810300	1E10	20	0420 - 5
0280810500	1D24	76	0416 - 3
0281210350	1C16	16	0407 - 7
0281210350	1D2	3	0409 - 3
0281210350	1E20	39	0433 - 5
0281810000	1E20	37	0433 - 5
0281810120	1D18	40	0413 - 11
0281810160	1C16	13	0407 - 7
0281810160	1D16	26	0413 - 9
0281810200	1C14	61	0407 - 5
0281810200	1C24	2	0408 - 3
0281810200	1E6	58	0419 - 3
0281810200	1E8	43	0420 - 3
0281810250	1E2	25	0417 - 3
0281810250	1E2	30	0417 - 3
0281810250	1E4	12	0418 - 3
0281810250	1E16	71	0429 - 3
0281810250	1E20	38	0433 - 5
0281810300	1C16	18	0407 - 7
0281810300	1E4	7	0418 - 3
0281810400	1C8	15	0402 - 3
0281810450	1E8	44	0420 - 3
0281810450	1E20	53	0433 - 5
0281810500	1C12	56	0407 - 3
0281810500	1E4	51	0418 - 3
0281810700	1D18	38	0413 - 11
0281810900	1E2	24	0417 - 3
0281860110	1C12	54	0407 - 3
0281860110	1E16	72	0429 - 3
0281860120	1E16	25	0429 - 3
0281860120	1E16	26	0429 - 3
0281860150	1C10	42	0404 - 3
0281862120	1D2	24	0409 - 3
0281912250	1D22	9	0414 - 3
0281912500	1D2	41	0409 - 3
0282806300	1E12	11	0421 - 3
0286806350	1C16	21	0407 - 7
0286808350	1D6	28	0409 - 7
0286810200	1D18	39	0413 - 11
0287810200	1C16	44	0407 - 7
0287810250	1C12	55	0407 - 3
0287810250	1D22	12	0414 - 3
0287810250	1D22	17	0414 - 3
0287810300	1E8	42	0420 - 3
0287810350	1C12	57	0407 - 3
0287810400	1E20	51	0433 - 5
0287912300	1C6	24	0401 - 3
0287914400	1E18	12	0433 - 3
0289814800	1E14	26	0423 - 3
0289814900	1D10	7	0413 - 3
0289914600	1E14	27	0423 - 3
0289964110	1E14	28	0423 - 3
0308704	3F18	2B	3362 - 21
0308705	3F18	2C	3362 - 21
0308710	3F18	2F	3362 - 21
0308711	3F18	3	3362 - 21
0308713	3F18	9	3362 - 21
0308716	3F18	12	3362 - 21
0308717	3F18	13	3362 - 21
0308719	3F18	15	3362 - 21
0308721	3F18	17	3362 - 21
0308724	3F18	20	3362 - 21
0309219	3J10	69	3365 - 5
0309219	3J12	63	3365 - 7
0309219	3J14	63	3365 - 9
0309801	3G10	5	3362 - 37
0309805	3G10	8	3362 - 37
0309805	3G14	40	3362 - 41
0309805	3G20	16	3363 - 3
0310511	3J16	13	3365 - 11
0313404	3E14	16	3361 - 9
0332706	3J10	17	3365 - 5
0332706	3J12	17	3365 - 7
0332706	3J14	17	3365 - 9
0332708	3J10	19	3365 - 5
0332708	3J12	19	3365 - 7
0332708	3J14	19	3365 - 9
0338902	3G10	2	3362 - 37
0339809	3E14	45	3361 - 9
0339847	3E14	40	3361 - 9
0343503	3G16	38	3362 - 43
0343503	3G18	38	3362 - 45
0343504	3G14	35	3362 - 41
0343504	3G16	35	3362 - 43
0343504	3G18	35	3362 - 45
0343505	3G14	33	3362 - 41
0343505	3G16	33	3362 - 43
0343505	3G18	33	3362 - 45
0343507	3G14	7	3362 - 41
0343510	3G14	32	3362 - 41
0343510	3G16	32	3362 - 43
0343510	3G18	32	3362 - 45
0343514	3G14	44	3362 - 41
0343514	3G16	44	3362 - 43
0343514	3G18	44	3362 - 45
0343611	3G14	38	3362 - 41
0349907	3G16	39	3362 - 43
0349907	3G18	39	3362 - 45
0352218	1B23	28	0260 - 13
0352221	1B23	20	0260 - 13
0352304	1B25	32	0260 - 15
0352305	1B25	33	0260 - 15
0352306	1B25	34	0260 - 15
0353004	3J10	4	3365 - 5
0353006	3J10	9	3365 - 5
0353009	3J10	21	3365 - 5
0353009	3J12	20	3365 - 7
0353009	3J14	20	3365 - 9
0353010	3J10	20	3365 - 5
0353010	3J12	21	3365 - 7
0353010	3J14	21	3365 - 9
0353011	3J10	23	3365 - 5
0353011	3J12	22	3365 - 7
0353011	3J14	22	3365 - 9
0353012	3J10	22	3365 - 5
0353012	3J12	23	3365 - 7
0353012	3J14	23	3365 - 9
0353016	3J8	65	3365 - 3
0355401	3E18	3	3361 - 13
0365318	3K2	1	4367 - 3
0379806	3J8	4	3365 - 3
0379813	3J8	20	3365 - 3
0379814	3J8	21	3365 - 3
0379815	3J8	22	3365 - 3
0379823	3J8	57	3365 - 3
0379919	3J8	63	3365 - 3
0397601	3F18	10	3362 - 21
0397602	3F18	14	3362 - 21
0397603	3F18	16	3362 - 21
0408202	3E22	3	3361 - 17
0408207	3E22	35	3361 - 17
0409215	3K2	9	4367 - 3
0409216	3K2	8	4367 - 3
0417405	3J8	6	3365 - 3
0417406	3J8	9	3365 - 3
0417413	3J8	61	3365 - 3
0417414	3J8	62	3365 - 3
0417613	3J12	68	3365 - 7
0417613	3J14	68	3365 - 9
0419806	1B23	24	0260 - 13
0419808	1B23	19	0260 - 13
0419812	1B23	25	0260 - 13
0420002	1B25	7	0260 - 15
0420111	3J8	25	3365 - 3
0420111	3J10	25	3365 - 5
0420305	3J10	15	3365 - 5
0425115	3K2	11	4367 - 3
0433302	3F18	11	3362 - 21
0436608	1B25	38	0260 - 15
0443413	3E14	3	3361 - 9
0444301	3F16	3	3362 - 19
0444302	3F16	4	3362 - 19
0451027	3E14	57	3361 - 9
0451028	3E14	58	3361 - 9
0451038	3E14	6	3361 - 9
0451101	3E16	32	3361 - 11
0451102	3E16	5	3361 - 11
0451103	3E16	7	3361 - 11
0451104	3E16	6	3361 - 11
0451201	3E20	5	3361 - 15
0451204	3E14	52	3361 - 9
0451204	3E20	13	3361 - 15
0451501	3F18	18	3362 - 21
0453932	3F6	52	3362 - 9
0500410200	1C12	10	0407 - 3
0501406280	1C12	51	0407 - 3
05673	3B11	13	3302 - 3
05674	3B11	13	3302 - 3
05675	3B11	13	3302 - 3
05676	3B13	13	3302 - 3B
05677	3B13	13	3302 - 3B
05679	3B13	13	3302 - 3B
05680	3B13	13	3302 - 3B
0583106140	1E16	79	0429 - 3
05868	3B11	13	3302 - 3
05869	3B11	13	3302 - 3
05870	3B13	13	3302 - 3B
05871	3B13	13	3302 - 3B
05872	3B13	13	3302 - 3B
05874	3B13	13	3302 - 3B
05875	3B13	13	3302 - 3B
0622803	3E24	33	3362 - 3
0622803	3F8	33	3362 - 11

NUMERICAL INDEX - CONTINUED

PART NO.	GRID	KEY	PAGE
0622805	3E24	35	3362 - 3
0622805	3F8	35	3362 - 11
0622806	3E24	36	3362 - 3
0622806	3F8	36	3362 - 11
0622807	3E24	37	3362 - 3
0622807	3F8	37	3362 - 11
0622808	3E24	38	3362 - 3
0622808	3F8	38	3362 - 11
0622810	3E24	41	3362 - 3
0622810	3F4	41	3362 - 7
0622810	3F6	41	3362 - 9
0622810	3F8	41	3362 - 11
0622810	3F12	41	3362 - 15
0622811	3F8	51	3362 - 11
0622816	3E24	11	3362 - 3
0622817	3E24	7	3362 - 3
0622822	3F4	13	3362 - 7
0622822	3F6	8	3362 - 9
0622822	3F12	15	3362 - 15
0622825	3E24	19	3362 - 3
0622825	3F4	19	3362 - 7
0622825	3F6	19	3362 - 9
0622825	3F8	19	3362 - 11
0622825	3F12	19	3362 - 15
0622827	3E24	18	3362 - 3
0622827	3F4	18	3362 - 7
0622827	3F6	18	3362 - 9
0622827	3F8	18	3362 - 11
0622827	3F12	18	3362 - 15
0622829	3E24	17	3362 - 3
0622829	3F4	17	3362 - 7
0622829	3F6	17	3362 - 9
0622829	3F8	17	3362 - 11
0622830	3F6	56	3362 - 9
0622831	3F6	55	3362 - 9
0622835	3F6	60	3362 - 9
0622843	3E24	6	3362 - 3
0622845	3F4	81	3362 - 7
0622845	3F12	81	3362 - 15
0622846	3F4	80	3362 - 7
0622846	3F12	80	3362 - 15
0622848	3F4	22	3362 - 7
0622848	3F6	22	3362 - 9
0622849	3F12	2	3362 - 15
0622850	3F4	1	3362 - 7
0622851	3F6	1	3362 - 9
0622852	3F6	2	3362 - 9
0622853	3F6	3	3362 - 9
0622854	3F6	7	3362 - 9
0622855	3F4	92	3362 - 7
0622855	3F12	92	3362 - 15
0622856	3F4	91	3362 - 7
0622856	3F12	91	3362 - 15
0622858	3F4	88	3362 - 7
0622858	3F12	88	3362 - 15
0622860	3F12	1	3362 - 15
0622863	3F4	4	3362 - 7
0622863	3F12	4	3362 - 15
0622864	3F4	6	3362 - 7
0622864	3F12	6	3362 - 15
0622865	3F4	21	3362 - 7
0622865	3F12	23	3362 - 15
0622866	3F4	5	3362 - 7
0622866	3F12	5	3362 - 15
0622867	3F4	11	3362 - 7
0622867	3F12	11	3362 - 15
0622868	3F12	83	3362 - 15
0622869	3F12	87	3362 - 15
0622870	3F4	79	3362 - 7
0622870	3F12	79	3362 - 15
0622871	3F2	74	3362 - 5
0622873	3F2	76	3362 - 5
0622875	3E24	44	3362 - 3
0622875	3F8	44	3362 - 11
0622876	3F2	71	3362 - 5
0622877	3F2	81	3362 - 5
0622877	3F8	46	3362 - 11
0624702	3F10	79	3362 - 13
0624703	3F4	31	3362 - 7
0624703	3F10	78	3362 - 13
0625508	3K2	4	4367 - 3
0625509	3K2	5	4367 - 3
0629404	3K2	2	4367 - 3
0643001	3J12	1	3365 - 7
0643001	3J14	1	3365 - 9
0643002	3J12	1B	3365 - 7
0643002	3J14	1B	3365 - 9
0643003	3J12	2	3365 - 7
0643003	3J14	2	3365 - 9
0643004	3J12	2B	3365 - 7
0643004	3J14	2B	3365 - 9
0643005	3J12	3	3365 - 7
0643005	3J14	3	3365 - 9
0643006	3J12	4	3365 - 7
0643006	3J14	4	3365 - 9
0643007	3J12	6	3365 - 7
0643007	3J14	6	3365 - 9
0643008	3J12	7	3365 - 7
0643008	3J14	7	3365 - 9
0643009	3J12	8	3365 - 7
0643009	3J14	8	3365 - 9
0643010	3J12	9	3365 - 7
0643010	3J14	9	3365 - 9
0643011	3J12	10	3365 - 7
0643011	3J14	10	3365 - 9
0643012	3J12	14	3365 - 7
0643012	3J14	14	3365 - 9
0643013	3J12	15	3365 - 7
0643013	3J14	15	3365 - 9
0643014	3J10	16	3365 - 5
0643014	3J12	16	3365 - 7
0643014	3J14	16	3365 - 9
0643015	3J10	18	3365 - 5
0643015	3J12	18	3365 - 7
0643015	3J14	18	3365 - 9
0643016	3J8	37	3365 - 3
0643016	3J10	42	3365 - 5
0643016	3J12	45	3365 - 7
0643016	3J14	45	3365 - 9
0643017	3J14	58	3365 - 9
0643018	3J14	59	3365 - 9
0643020	3J12	66	3365 - 7
0643020	3J14	66	3365 - 9
0643021	3J12	67	3365 - 7
0643021	3J14	67	3365 - 9
0644901	3J12	58	3365 - 7
0644902	3J12	59	3365 - 7
0645001	3J8	1	3365 - 3
0645002	3J8	1B	3365 - 3
0645002	3J8	2B	3365 - 3
0645002	3J10	1B	3365 - 5
0645003	3J8	2	3365 - 3
0645004	3J8	3	3365 - 3
0645005	3J8	14	3365 - 3
0645006	3J8	15	3365 - 3
0645007	3J8	16	3365 - 3
0645008	3J8	18	3365 - 3
0645009	3J8	56	3365 - 3
0645101	3J10	1	3365 - 5
0645103	3J10	2B	3365 - 5
0645106	3J10	60	3365 - 5
0645107	3J10	65	3365 - 5
0645108	3J10	66	3365 - 5
0646203	3F10	77	3362 - 13
0658002	3G14	3	3362 - 41
0658003	3G14	5	3362 - 41
0658004	3G14	6	3362 - 41
0658005	3G14	8	3362 - 41
0658006	3G14	10	3362 - 41
0658007	3G14	11	3362 - 41
0658008	3G14	30	3362 - 41
0658102	3G16	3	3362 - 43
0658102	3G18	3	3362 - 45
0658103	3G16	5	3362 - 43
0658103	3G18	5	3362 - 45
0658104	3G16	6	3362 - 43
0658104	3G18	6	3362 - 45
0658105	3G16	7	3362 - 43
0658105	3G18	7	3362 - 45
0658106	3G16	8	3362 - 43
0658106	3G18	8	3362 - 45
0658107	3G16	10	3362 - 43
0658107	3G18	10	3362 - 45
0658108	3G16	11	3362 - 43
0658108	3G18	11	3362 - 45
0658109	3G16	30	3362 - 43
0658109	3G18	30	3362 - 45
0663901	3G16	12	3362 - 43
0664201	3E18	6	3361 - 13
0664202	3E18	1	3361 - 13
0671002	1B25	29	0260 - 15
0679901	3J16	1	3365 - 11
0679902	3J16	2	3365 - 11
0679903	3J16	3	3365 - 11
0679904	3J16	8	3365 - 11
0679905	3J16	10	3365 - 11
0679906	3J16	12	3365 - 11
0682301	3E14	47	3361 - 9
0682302	3E14	46	3361 - 9
0682304	3E14	5	3361 - 9
0682307	3E14	20	3361 - 9
0682309	3E14	24	3361 - 9
0682311	3E14	51	3361 - 9
0682312	3E14	60	3361 - 9
0682314	3E14	14	3361 - 9
0682315	3E14	10	3361 - 9
0682319	3E14	26	3361 - 9
0682320	3E14	35	3361 - 9
0682323	3E14	4	3361 - 9
0682324	3E14	33	3361 - 9
0682325	3E14	48	3361 - 9
0682328	3E14	7	3361 - 9
0682502	3E16	23	3361 - 11
0682706	1B23	10	0260 - 13
0682803	1B25	42	0260 - 15
0692708	3K2	6	4367 - 3
0703002	3E14	19	3361 - 9
0703004	3E14	25D	3361 - 9
0703005	3E14	25F	3361 - 9
0703301	3F8	49	3362 - 11
0703701	3F4	86	3362 - 7

NUMERICAL INDEX - CONTINUED

PART NO.	GRID	KEY	PAGE
0705401	3F4	85	3362 - 7
0718001	3E14	23	3361 - 9
0718002	3E14	22	3361 - 9
0719701	3E14	25	3361 - 9
07303	3C2	13	3302 - 15
07304	3C2	13	3302 - 15
07305	3C2	13	3302 - 15
07306	3C2	13	3302 - 15
0737002	3E14	42	3361 - 9
0740701	3J10	2	3365 - 5
0740702	3J10	3	3365 - 5
0740703	3J10	14	3365 - 5
07625	3B21	13	3302 - 11
07626	3B21	13	3302 - 11
0788703	3G4	13	3362 - 31
0788704	3G4	14	3362 - 31
0788705	3G4	15	3362 - 31
0788706	3G4	16	3362 - 31
0788707	3G4	17	3362 - 31
0788710	3G4	33	3362 - 31
0788711	3G4	34	3362 - 31
0788712	3G4	35	3362 - 31
0788713	3G4	36	3362 - 31
0788801	3K2	24	4367 - 3
0788802	3K2	13	4367 - 3
0788803	3K2	30	4367 - 3
0788804	3K2	26	4367 - 3
0788805	3K2	21	4367 - 3
0788806	3K2	22	4367 - 3
0788807	3K2	23	4367 - 3
0788808	3K2	25	4367 - 3
0788809	3K2	14	4367 - 3
0788811	3K2	27	4367 - 3
0788812	3K2	12	4367 - 3
0788813	3K2	28	4367 - 3
0788814	3K2	16	4367 - 3
0788815	3K2	15	4367 - 3
0788816	3K2	20	4367 - 3
0788817	3K2	19	4367 - 3
0788818	3K2	31	4367 - 3
0794201	3G8	3	3362 - 35
0794202	3G8	6	3362 - 35
0794203	3G8	8	3362 - 35
0794204	3G8	10	3362 - 35
0794205	3G8	11	3362 - 35
0794206	3G8	12	3362 - 35
0794207	3G8	14	3362 - 35
0800701	3E14	18	3361 - 9
0800706	3E14	30	3361 - 9
0800707	3E14	29	3361 - 9
0802901	3K2	34	4367 - 3
0806502	1B23	17	0260 - 13
0806601	1B25	70	0260 - 15
0806602	1B25	12	0260 - 15
0806702	1B23	9	0260 - 13
0809501	1B23	3	0260 - 13
0809503	1B23	12	0260 - 13
0809504	1B23	13	0260 - 13
0809505	1B23	14	0260 - 13
0809506	1B23	15	0260 - 13
0809508	1B23	18	0260 - 13
0809509	1B23	21	0260 - 13
0809510	1B23	23	0260 - 13
0809511	1B23	31	0260 - 13
0809512	1B23	40	0260 - 13
0809513	1B23	50	0260 - 13
0809514	1B23	60	0260 - 13
0809515	1B23	70	0260 - 13
0809601	1B25	8	0260 - 15
0809602	1B25	9	0260 - 15
0809604	1B25	43	0260 - 15
0809705	3E24	39	3362 - 3
0809708	3E24	27	3362 - 3
0809709	3E24	28	3362 - 3
0809710	3E24	30	3362 - 3
0809711	3E24	31	3362 - 3
0809712	3E24	32	3362 - 3
0809713	3E24	40	3362 - 3
0809714	3E24	46	3362 - 3
0809715	3E24	47	3362 - 3
0809716	3E24	48	3362 - 3
0809717	3E24	49	3362 - 3
0809718	3E24	50	3362 - 3
0809719	3E24	52	3362 - 3
0809720	3E24	54	3362 - 3
0809721	3F2	63	3362 - 5
0809721	3F8	14	3362 - 11
0809722	3F2	62	3362 - 5
0809722	3F8	13	3362 - 11
0809723	3F2	61	3362 - 5
0809723	3F8	12	3362 - 11
0809724	3F2	60	3362 - 5
0809724	3F8	11	3362 - 11
0809725	3E24	59	3362 - 3
0809725	3F8	8	3362 - 11
0809726	3E24	58	3362 - 3
0809726	3F8	7	3362 - 11
0809727	3E24	57	3362 - 3
0809727	3F8	6	3362 - 11
0809728	3E24	56	3362 - 3
0809728	3F8	4	3362 - 11
0809729	3E24	55	3362 - 3
0809729	3F8	3	3362 - 11
0809730	3F2	70	3362 - 5
0809730	3F8	28	3362 - 11
0809731	3F2	67	3362 - 5
0809731	3F8	21	3362 - 11
0809732	3F2	65	3362 - 5
0809732	3F8	16	3362 - 11
0809733	3F2	64	3362 - 5
0809733	3F8	15	3362 - 11
0809734	3E24	13	3362 - 3
0809735	3E24	14	3362 - 3
0809736	3E24	16	3362 - 3
0809737	3E24	21	3362 - 3
0809738	3E24	22	3362 - 3
0809739	3E24	23	3362 - 3
0809740	3E24	25	3362 - 3
0809802	3F4	12	3362 - 7
0809802	3F12	12	3362 - 15
0810405	3E24	8	3362 - 3
0810406	3E24	12	3362 - 3
0810407	3F2	75	3362 - 5
0810407	3F2	95	3362 - 5
0810602	3F6	57	3362 - 9
0810603	3F6	61	3362 - 9
0810604	3F6	64	3362 - 9
0810704	3F8	40	3362 - 11
0810709	3F8	30	3362 - 11
0810710	3F8	31	3362 - 11
0810711	3F8	32	3362 - 11
0810712	3F8	39	3362 - 11
0810713	3F8	52	3362 - 11
0810714	3F8	53	3362 - 11
0810715	3F8	54	3362 - 11
0810716	3F8	55	3362 - 11
0810717	3F8	56	3362 - 11
0810718	3F8	57	3362 - 11
0810719	3F8	58	3362 - 11
0810720	3F8	59	3362 - 11
0810721	3F10	60	3362 - 13
0810722	3F10	61	3362 - 13
0810723	3F10	62	3362 - 13
0810724	3F10	63	3362 - 13
0810725	3F10	64	3362 - 13
0810726	3F10	65	3362 - 13
0810727	3F10	67	3362 - 13
0810728	3F10	68	3362 - 13
0810729	3F10	69	3362 - 13
0815301	3E14	43	3361 - 9
0818005	3E24	45	3362 - 3
0818005	3F8	45	3362 - 11
0818101	3F4	82	3362 - 7
0818101	3F12	82	3362 - 15
0818102	3F4	2	3362 - 7
0818201	3F6	21	3362 - 9
0818202	3F6	54	3362 - 9
0820203	1B25	28	0260 - 15
0820204	1B25	31	0260 - 15
0828401	3E14	21	3361 - 9
0828402	3E14	39	3361 - 9
08881	3C2	13	3302 - 15
0902205	3J8	56	3365 - 3
0902205	3J8	59	3365 - 3
0911501060	1D12	72	0413 - 5
0911501140	1D16	6	0413 - 9
0911501140	1E14	7	0423 - 3
09353	3B21	13	3302 - 11
09354	3B21	13	3302 - 11
09355	3B21	13	3302 - 11
09356	3B21	13	3302 - 11
09359	3B21	13	3302 - 11
10004	3C2	13	3302 - 15
10065	3B17	13	3302 - 7
10066	3B17	13	3302 - 7
10067	3B17	13	3302 - 7
10068	3B17	13	3302 - 7
10069	3B17	13	3302 - 7
10071	3B17	13	3302 - 7
10088	3B21	13	3302 - 11
1015477	3C18	24	3315 - 9
1015478	3C18	23	3315 - 9
1024224	3C18	19	3315 - 9
1024384	3C18	18	3315 - 9
1028141	3J23	25	4360 - 5
1028147	3J23	17	4360 - 5
1028149	3J23	31	4360 - 5
1028151	3J23	11	4360 - 5
1028294	1G16	7	1674 - 9
1030243	1G18	1	1674 - 11
1090004800	1E16	19	0429 - 3
1090091830	1E16	20	0429 - 3
1090200070	1E20	36	0433 - 5
1090200081	1E18	5	0433 - 3
1090201460	1E20	40	0433 - 5
1090401050	1E14	16	0423 - 3
1090440871	1C8	75	0402 - 3
1090700171	1C6	40	0401 - 3
1090700872	1C10	45	0404 - 3
1090701160	1D16	20	0413 - 9
1090701210	1D12	61	0413 - 5

NUMERICAL INDEX - CONTINUED

PART NO.	GRID	KEY	PAGE
1090701410	1D2	25	0409 - 3
1090701420	1D2	26	0409 - 3
1090701510	1C10	43	0404 - 3
1093000581	1E18	19	0433 - 3
1093020630	1D2	14	0409 - 3
1093021060	1D24	12	0416 - 3
1093021671	1D8	49	0410 - 3
1093090080	1D2	9	0409 - 3
1093301080	1C8	27	0402 - 3
1093301130	1C8	28	0402 - 3
1093301240	1C8	29	0402 - 3
1093765120	1D10	12	0413 - 3
1094000270	1D24	11	0416 - 3
1094200050	1D24	13	0416 - 3
1094400040	1D2	23	0409 - 3
1095000070	1D24	10	0416 - 3
1095030320	1D2	55	0409 - 3
1095560150	1D8	8	0410 - 3
1095801560	1D22	24	0414 - 3
1095804721	1C8	95	0402 - 3
1095805340	1C14	5	0407 - 5
1095870820	1C6	43	0401 - 3
1096000121	1D4	7	0409 - 5
1096000122	1D4	7	0409 - 5
1096000160	1D4	8	0409 - 5
1096000160	1E16	27	0429 - 3
1096000650	1C10	36	0404 - 3
1096040230	1E6	50	0419 - 3
1096040350	1C10	57	0404 - 3
1096040780	1D22	51	0414 - 3
1096040940	1D2	31	0409 - 3
1096040940	1D2	40	0409 - 3
1096040950	1C10	59	0404 - 3
1096040980	1C10	61	0404 - 3
1096050210	1C6	44	0401 - 3
1096231790	1E6	21	0419 - 3
1096231830	1C12	5	0407 - 3
1096232740	1C16	14	0407 - 7
1096232970	1C10	35	0404 - 3
1096232990	1E20	56	0433 - 5
1096233550	1C12	49	0407 - 3
1096234030	1D2	28	0409 - 3
1096234060	1E4	6	0418 - 3
1096234160	1E20	93	0433 - 5
1096234210	1D22	8	0414 - 3
1096234210	1E20	64	0433 - 5
1096234230	1E4	66	0418 - 3
1096234500	1C16	15	0407 - 7
1096234500	1C16	19	0407 - 7
1096234520	1E4	60	0418 - 3
1096234760	1D16	2	0413 - 9
1096234780	1D10	85	0413 - 3
1096234790	1E6	51	0419 - 3
1096234940	1E2	26	0417 - 3
1096235050	1E4	61	0418 - 3
1096235290	1C14	16	0407 - 5
1096235290	1C14	50	0407 - 5
1096235420	1E4	60	0418 - 3
1096235650	1C24	9	0408 - 3
1096235861	1E2	3	0417 - 3
1096236100	1E10	5	0420 - 5
1096236590	1D22	16	0414 - 3
1096255562	1E20	35	0433 - 5
1096255571	1E18	2	0433 - 3
1096300830	1C16	9	0407 - 7
1096300830	1D2	33	0409 - 3
1096300830	1D2	34	0409 - 3
1096300830	1D22	10	0414 - 3
1096300840	1C10	50	0404 - 3
1096300840	1C16	3	0407 - 7
1096300860	1E4	59	0418 - 3
1096300870	1C16	6	0407 - 7
1096300870	1E6	48	0419 - 3
1096300880	1D22	11	0414 - 3
1096300890	1C10	51	0404 - 3
1096301410	1D2	73	0409 - 3
1096600111	1E6	53	0419 - 3
1096750371	1D10	75	0413 - 3
1096750371	1D12	75	0413 - 5
1096750770	1C16	10	0407 - 7
1096750770	1D22	15	0414 - 3
1096750860	1C16	2	0407 - 7
1096750860	1D20	8	0413 - 13
1096750860	1E10	45	0420 - 5
1096750860	1E12	2	0421 - 3
1096750860	1E12	4	0421 - 3
1096751200	1C16	4	0407 - 7
1096751600	1C16	5	0407 - 7
1097009690	1C24	10	0408 - 3
1097011320	1C16	12	0407 - 7
1097011320	1D12	73	0413 - 5
1097011321	1C16	12	0407 - 7
1097011321	1D12	73	0413 - 5
1097011800	1E12	10	0421 - 3
1097071440	1D24	75	0416 - 3
1097091780	1E14	29	0423 - 3
1097400681	1C10	47	0404 - 3
1097490251	1C10	52	0404 - 3
1098002920	1E16	10	0429 - 3
1098002930	1E16	11	0429 - 3
1098002940	1E16	12	0429 - 3
1098002950	1E16	14	0429 - 3
1099805430	1C12	51	0407 - 3
1111108619	1D2	1	0409 - 3
1111108619	1D4	1	0409 - 5
1111109461	1D2	1	0409 - 3
1111109461	1D4	1	0409 - 5
1111290580	1D4	6	0409 - 5
1111290580	1D4	19	0409 - 5
1111412651	1D2	2	0409 - 3
1111412652	1D2	2	0409 - 3
1111791050	1D6	72	0409 - 7
1111804640	1D6	1	0409 - 7
1111804640	1D6	72	0409 - 7
1112192010	1D18	36	0413 - 11
1112192050	1E6	54	0419 - 3
1112192090	1D18	36	0413 - 11
1112911030	1E16	50	0429 - 3
1113100534	1E20	1	0433 - 5
1113100550	1D2	37	0409 - 3
1113190120	1E20	48	0433 - 5
1113211681	1E20	54	0433 - 5
1113220610	1E20	49	0433 - 5
1113270401	1D16	24	0413 - 9
1113270450	1E18	13	0433 - 3
1113290241	1E20	55	0433 - 5
1113491270	1E18	20	0433 - 3
1113491310	1E18	14	0433 - 3
1113491512	1E20	87	0433 - 5
1113492400	1E18	3	0433 - 3
1113492410	1E18	4	0433 - 3
1113608850	1C12	1	0407 - 3
1113608980	1C12	52	0407 - 3
1113608982	1C12	52	0407 - 3
1113615691	1C12	52	0407 - 3
1113671210	1C12	17	0407 - 3
1113671300	1C12	16	0407 - 3
1113671310	1C12	17	0407 - 3
1113691460	1C12	47	0407 - 3
1115100930	1C6	7	0401 - 3
1115100931	1C6	7	0401 - 3
1115990090	1C6	42	0401 - 3
1117110820	1D4	5	0409 - 5
1117151120	1D4	17	0409 - 5
1117210120	1D4	4	0409 - 5
1117290050	1D2	59	0409 - 3
1117401810	1C24	1	0408 - 3
1117420830	1C24	11	0408 - 3
1117491860	1E20	63	0433 - 5
1117604220	1C12	2	0407 - 3
1117604410	1C12	2	0407 - 3
1117604430	1C12	2	0407 - 3
1117665460	1C12	12	0407 - 3
1117665681	1C12	8	0407 - 3
1117771492	1D2	12	0409 - 3
1117771493	1D2	12	0409 - 3
1117772161	1D2	27	0409 - 3
1121119641	1C6	63	0401 - 3
1121119642	1C6	63	0401 - 3
1121211430	1C6	68	0401 - 3
1122110291	1C6	83	0401 - 3
1122301762	1C6	84	0401 - 3
1122350363	1C6	86	0401 - 3
1122390051	1C6	88	0401 - 3
1122510374	1C6	85	0401 - 3
1122710720	1C6	73	0401 - 3
1122710721	1C6	73	0401 - 3
1123106751	1C6	1	0401 - 3
1123313941	1C6	12	0401 - 3
1123330050	1C6	35	0401 - 3
1123330130	1C6	35	0401 - 3
1123330131	1C6	35	0401 - 3
1123360110	1C6	38	0401 - 3
1123751930	1C6	20	0401 - 3
1123790390	1C6	23	0401 - 3
1125112552	1C8	1	0402 - 3
1125161481	1D2	35	0409 - 3
1125161521	1D2	36	0409 - 3
1125220552	1C8	9	0402 - 3
1125220600	1C8	9	0402 - 3
1125232153	1C8	22	0402 - 3
1125233130	1C8	23	0402 - 3
1125233340	1C8	24	0402 - 3
1125241111	1D16	19	0413 - 9
1125241640	1D16	19	0413 - 9
1125290030	1C8	32	0402 - 3
1125290030	1D16	28	0413 - 9
1125301761	1C8	19	0402 - 3
1125310762	1C8	19	0402 - 3
1125310921	1C8	20	0402 - 3
1125310931	1C8	21	0402 - 3
1125350081	1C8	25	0402 - 3
1125350190	1C8	26	0402 - 3
1125511510	1C8	4	0402 - 3
1125511511	1C8	4	0402 - 3
1125521090	1C8	5	0402 - 3
1125521091	1C8	5	0402 - 3
1125610920	1C8	68	0402 - 3
1125610930	1C8	69	0402 - 3
1125620600	1C8	70	0402 - 3
1125630550	1C8	71	0402 - 3

NUMERICAL INDEX - CONTINUED

PART NO.	GRID	KEY	PAGE
1125630562	1C8	73	0402 - 3
1125650070	1C8	65	0402 - 3
1125690200	1C8	72	0402 - 3
1126100611	1C8	78	0402 - 3
1126112771	1C8	63	0402 - 3
1126112772	1C8	63	0402 - 3
1126112773	1C8	63	0402 - 3
1126160341	1C8	81	0402 - 3
1126160400	1C8	30	0402 - 3
1126160420	1C8	61	0402 - 3
1126190112	1C8	31	0402 - 3
1126210900	1C8	53	0402 - 3
1126280681	1C8	84	0402 - 3
1126280701	1C8	58	0402 - 3
1126280721	1C8	97	0402 - 3
1131002751	1C14	1	0407 - 5
11310200821	1C14	21	0407 - 5
1131190040	1D2	39	0409 - 3
1131190040	1E20	42	0433 - 5
1131190050	1D2	29	0409 - 3
1131200800	1C14	20	0407 - 5
1131200880	1C14	21	0407 - 5
1131600302	1C10	34	0404 - 3
1132009600	1E10	1	0420 - 5
1132112550	1E10	3	0420 - 5
1132120921	1E8	21	0420 - 3
1132192081	1E10	36	0420 - 5
1132192100	1E10	38	0420 - 5
1132400441	1E8	58	0420 - 3
1132402321 #	1C4	1	0400 - 3
1132600540	1E8	29	0420 - 3
1132690090	1E6	13	0419 - 3
1133133190	1C16	17	0407 - 7
1133134490	1C16	11	0407 - 7
1133136420	1C16	8	0407 - 7
1133136650	1C16	1	0407 - 7
1133138852	1C14	51	0407 - 5
1133138890	1C16	63	0407 - 7
1133412310	1E6	45	0419 - 3
1133421390	1C10	56	0404 - 3
1133451801	1C14	60	0407 - 5
1133451880	1C16	20	0407 - 7
1133490140	1C10	46	0404 - 3
1136310920	1E16	22	0429 - 3
1136412020	1E16	4	0429 - 3
1136420770	1E16	32	0429 - 3
1136420791	1E16	38	0429 - 3
1136501120	1E2	1	0417 - 3
1136501121	1E2	1	0417 - 3
1136501122	1E2	1	0417 - 3
1136603310	1E16	1	0429 - 3
1136603311	1E16	1	0429 - 3
1136603390	1E16	6	0429 - 3
1136610530	1E16	5	0429 - 3
1136631220	1E16	8	0429 - 3
1136640240	1E16	2	0429 - 3
1136640270	1E16	16	0429 - 3
1136650262	1E16	82	0429 - 3
1136650540	1E16	18	0429 - 3
1136660211	1E16	88	0429 - 3
1136660490	1E16	52	0429 - 3
1136660500	1E16	9	0429 - 3
1136680480	1E16	17	0429 - 3
1136714890	1E16	23	0429 - 3
1136741600	1E16	81	0429 - 3
1136742950	1E16	80	0429 - 3
1136743010	1E16	75	0429 - 3
1136743011	1E16	75	0429 - 3
1137105690	1E4	2	0418 - 3
1137118100	1E4	5	0418 - 3
1137130611	1E4	8	0418 - 3
1137214963	1E6	56	0419 - 3
1137430361	1E4	67	0418 - 3
1137700890	1E4	1	0418 - 3
1137700891	1E4	1	0418 - 3
1137790110	1E4	20	0418 - 3
1141127300	1D22	1	0414 - 3
1141127551	1D22	50	0414 - 3
1141127570	1D22	18	0414 - 3
1141150631	1D22	7	0414 - 3
1141171010	1D22	13	0414 - 3
1141194422	1D24	29	0416 - 3
1141343520	1D24	14	0416 - 3
1141343610	1D22	2	0414 - 3
1141419380	1D8	47	0410 - 3
1141419990	1D8	5	0410 - 3
1141420010	1D8	6	0410 - 3
1141451821	1D8	2	0410 - 3
1141451870	1D24	2	0416 - 3
1141452030	1D24	9	0416 - 3
1141490420	1D8	9	0410 - 3
1141492010	1D8	10	0410 - 3
1144003841	1D24	1	0416 - 3
1153003922	1D12	31	0413 - 5
1153003922	1D14	1	0413 - 7
1153150110	1D12	66	0413 - 5
1153190020	1D12	79	0413 - 5
1153190100	1D14	3	0413 - 7
1153190100	1D14	4	0413 - 7
1153301280	1D14	2	0413 - 7
1153301281	1D14	2	0413 - 7
1153370290	1D12	58	0413 - 5
1154161390	1D12	78	0413 - 5
1154164870	1D12	16	0413 - 5
1154164880	1D12	17	0413 - 5
1154164890	1D12	18	0413 - 5
1154164900	1D12	19	0413 - 5
1154164900	1D22	19	0414 - 3
1154164910	1D12	20	0413 - 5
1154164920	1D12	21	0413 - 5
1154166380	1E12	7	0421 - 3
1154166390	1E12	6	0421 - 3
1154166400	1E12	1	0421 - 3
1154166410	1E10	47	0420 - 5
1154166540	1D10	77	0413 - 3
1154193340	1D12	69	0413 - 5
1154195840	1D12	70	0413 - 5
1154196810	1E12	12	0421 - 3
1154196840	1C12	53	0407 - 3
1156033421	1D10	1	0413 - 3
1156034280	1D10	1	0413 - 3
1156230160	1D20	3	0413 - 13
1157501671	1D20	1	0413 - 13
1157510380	1D20	15	0413 - 13
1157540070	1D20	28	0413 - 13
1157550020	1D20	5	0413 - 13
1157590040	1D20	20	0413 - 13
1157590090	1D20	6	0413 - 13
1157590290	1D20	11	0413 - 13
1157590520	1D20	10	0413 - 13
1157610060	1D20	2	0413 - 13
1157610061	1D20	2	0413 - 13
1157801431	1D10	15	0413 - 3
1157820200	1D18	1	0413 - 11
1157891720	1D18	9	0413 - 11
1157891730	1D18	7	0413 - 11
1157891740	1D18	10	0413 - 11
1157891750	1D18	8	0413 - 11
1157891760	1D18	6	0413 - 11
1157891770	1D18	2	0413 - 11
1191932390	1D22	14	0414 - 3
1197110290	1E14	23	0423 - 3
1197111430	1E14	19	0423 - 3
1197320301	1D2	11	0409 - 3
1197320302	1D2	11	0409 - 3
1197511560	1D10	6	0413 - 3
1197552061	1E8	41	0420 - 3
1197552091	1D18	51	0413 - 11
1197552130	1D18	52	0413 - 11
1217003570	1E6	46	0419 - 3
1233355320	1C10	54	0404 - 3
1811003413	1E14	1	0423 - 3
1812005903	1E14	2	0423 - 3
1812006400	1E14	2	0423 - 3
1815107130	1E18	1	0433 - 3
1815107131	1E18	1	0433 - 3
1824102010	1E14	56	0423 - 3
1825130451	1D2	10	0409 - 3
1825501091	1E14	68	0423 - 3
1825503250	1E14	34	0423 - 3
1825530391	1E14	33	0423 - 3
1825530391	1G8	15	1671 - 3
1825530440	1E14	33	0423 - 3
1826992390	1E14	32	0423 - 3
1831610330	1E14	30	0423 - 3
1855710160	1E10	7	0420 - 5
1855710160	1E10	9	0420 - 5
1855710170	1E10	35	0420 - 5
1855710170	1E10	78	0420 - 5
1855710180	1E10	34	0420 - 5
1855710180	1E10	76	0420 - 5
1855710190	1E10	29	0420 - 5
1855710190	1E10	42	0420 - 5
1878118430	1E2	4	0417 - 3
1878120711	1C10	2	0404 - 3
1878120712	1C10	2	0404 - 3
1878120720	1C10	2	0404 - 3
1878120721	1C10	2	0404 - 3
1878120722	1C10	2	0404 - 3
1878121360	1E22	1	0452 - 3
1878121360	1E24	1	0452 - 5
1878121361	1E22	1	0452 - 3
1878121361	1E24	1	0452 - 5
1878121370	1F2	2	0452 - 7
1878121371	1F2	2	0452 - 7
2024717	3F14	31	3362 - 17
2033232	1B4	0A	0130 - 15
2033235	1B2	2	0130 - 13
2033636	1A25	51	0130 - 11
2038764	2B8	25B	1810 - 13
2038764	2C10	39	1810 - 39
2039445	1B4	9	0130 - 15
2039446	1B4	2	0130 - 15
2039915	1B4	0	0130 - 15
2040457	1B2	6	0130 - 13
2040459	1B2	0B	0130 - 13
2040674	2E25	1	1910 - 21
2043072	1B2	0A	0130 - 13
2044041	1A25	10	0130 - 11
2044042	1A25	11	0130 - 11
2044350	3C12	14	3315 - 5

NUMERICAL INDEX - CONTINUED

PART NO.	GRID	KEY	PAGE
2044350	3C12	15	3315 - 5
2044350	3C12	16	3315 - 5
2044350	3C12	17	3315 - 5
2044923	2D14	33	1830 - 3
2044936	3J23	1	4360 - 5
2045468	3C18	10	3315 - 9
2045469	3C18	11	3315 - 9
2045470	3C10	5	3315 - 3
2045472	3C10	2	3315 - 3
2045509	2A24	29	1810 - 5
2045749	3E10	18	3361 - 5
2045752	3E10	9	3361 - 5
2045761	3E10	2	3361 - 5
2045762	3E10	15	3361 - 5
2045798	3E12	1	3361 - 7
2045998	3I10	30	3363 - 41
2045998	3I12	30	3363 - 43
2046563	3H2	50	3363 - 9
2046576	3C10	1	3315 - 3
2046732	2E25	3	1910 - 21
2046734	2E25	5	1910 - 21
2046735	2E25	4	1910 - 21
2046738	2E25	8	1910 - 21
2046739	2E25	9	1910 - 21
2046740	2E25	10	1910 - 21
2046744	2E25	11	1910 - 21
2046745	2E25	13	1910 - 21
2046767	2E21	6	1910 - 17
2046786	2E21	9	1910 - 17
2047508	1G18	9	1674 - 11
2047517	1G18	7	1674 - 11
2048184	1G20	66	1674 - 13
2048203	1G20	66	1674 - 13
2049711	1G18	9	1674 - 11
2051176	3C18	10	3315 - 9
2051177	3C18	11	3315 - 9
3M6402	3J23	22	4360 - 5
3021131	2E13	15B	1910 - 9
3021131	2E13	16B	1910 - 9
3021131	2E15	87B	1910 - 11
3029190	2E9	15	1910 - 5
3035803	3F14	27	3362 - 17
3036998	3H24	20	3363 - 31
3038898	3H12	22	3363 - 19
3040803	3E10	6	3361 - 5
3046025	3D2	4	3315 - 17
3052361	3D4	16	3340 - 3
3052361	3D6	16	3340 - 5
3052361	3D8	16	3340 - 7
3052361	3D12	16	3340 - 11
3052543	3C18	28	3315 - 9
3055219	3D10	13	3340 - 9
3058180	2E9	12	1910 - 5
3059748	1B4	3	0130 - 15
3059749	1B4	4	0130 - 15
3059755	1B2	12	0130 - 13
3059758	1B4	0B	0130 - 15
3060533	1H15	10	1740 - 11
3060534	1H15	11	1740 - 11
3060579	3D14	0D	3344 - 3
3060579	3D16	0D	3344 - 5
3060580	3D4	0C	3340 - 3
3060580	3D6	0D	3340 - 5
3060580	3D8	0D	3340 - 7
3060580	3D10	0B	3340 - 9
3060580	3D12	0C	3340 - 11
3060582	3D4	5C	3340 - 3
3060582	3D6	5C	3340 - 5
3060582	3D8	5C	3340 - 7
3060582	3D12	5C	3340 - 11
3060583	3D4	5B	3340 - 3
3060583	3D6	5B	3340 - 5
3060583	3D8	5B	3340 - 7
3060583	3D12	5B	3340 - 11
3060595	3D4	14	3340 - 3
3060595	3D6	14	3340 - 5
3060595	3D8	14	3340 - 7
3060595	3D12	14	3340 - 11
3060596	3D4	13	3340 - 3
3060596	3D6	13	3340 - 5
3060596	3D8	13	3340 - 7
3060596	3D12	13	3340 - 11
3060601	3D14	2	3344 - 3
3060601	3D16	2	3344 - 5
3071216	3J18	1	3365 - 13
3072517	3C20	6D	3315 - 11
3074223	3J21	5	4360 - 3
3074241	1B11	16	0260 - 3
3074568	2E13	15A	1910 - 9
3074568	2E13	16A	1910 - 9
3074568	2E15	87A	1910 - 11
3075994	1B4	6	0130 - 15
3078041	1B2	3	0130 - 13
3078497	2E25	2	1910 - 21
3079227	3D4	15	3340 - 3
3079227	3D6	15	3340 - 5
3079227	3D8	15	3340 - 7
3079228	3D6	0F	3340 - 5
3079228	3D8	0F	3340 - 7
3079229	3D12	15	3340 - 11
3079230	3D12	0E	3340 - 11
3079231	3D4	0E	3340 - 3
3079728	3I10	27	3363 - 41
3079728	3I12	27	3363 - 43
3080498	1F9	15	0510 - 7
3084649	3J23	37	4360 - 5
3084656	3J23	29	4360 - 5
3086370	1A25	5	0130 - 11
3086380	1A25	1	0130 - 11
3086381	1A25	2	0130 - 11
3086382	1A25	3	0130 - 11
3086383	1A25	3B	0130 - 11
3086384	1A25	4	0130 - 11
3087882	1G20	1	1674 - 13
3087987	3C20	26	3315 - 11
3088608	3J23	19	4360 - 5
3088656	3J23	32	4360 - 5
3088671	3J23	3	4360 - 5
3088744	3J23	14	4360 - 5
3088769	2F9	7	2004 - 3
3089486	2D10	2	1821 - 7
3089848	3C16	11	3315 - 7
3090025	2A24	32	1810 - 5
3090109	3H20	27	3363 - 27
3090707	3E12	2	3361 - 7
3091204	2D22	3	1830 - 11
3091338	2E11	76	1910 - 7
3091338	2E17	76	1910 - 13
3091338	2E23	24	1910 - 19
3091579	1F7	19	0510 - 5
3091842	2A24	24	1810 - 5
3092031	1B15	0	0260 - 7
3092198	2E9	3	1910 - 5
3092263	1F7	6	0510 - 5
3092264	1F7	7	0510 - 5
3092437	1G18	12	1674 - 11
3092898	1G18	11	1674 - 11
3093046	1G18	8	1674 - 11
3093859	2E9	14	1910 - 5
3094363	1G18	10	1674 - 11
3094592	1F17	10	0520 - 5
3094593	1F17	11	0520 - 5
3094594	1F17	12	0520 - 5
3094957	2E15	9A	1910 - 11
3094975	2E25	17	1910 - 21
3097862	2D12	19	1821 - 9
3097975	3D4	14	3340 - 3
3097975	3D6	14	3340 - 5
3097975	3D8	14	3340 - 7
3097975	3D12	14	3340 - 11
4S00037	3J10	7	3365 - 5
4S00038	3J10	8	3365 - 5
4S00085	3J8	17	3365 - 3
4S00098	3J8	19	3365 - 3
4S00117	3E14	17	3361 - 9
4S00121	3E14	49	3361 - 9
4S00210	3E20	7	3361 - 15
4S00218	3K2	18	4367 - 3
4S00225	3J10	27	3365 - 5
4S00225	3J12	25	3365 - 7
4S00225	3J14	25	3365 - 9
4S00228	3E14	27	3361 - 9
4S00238	3E14	34	3361 - 9
4S00247	1C4	1	0400 - 3
4S00348	3J10	59	3365 - 5
4000909	3G22	24	3363 - 5
4000909	3G24	24	3363 - 7
4004589	3J25	14	4360 - 7
4013896	1A19	15	0130 - 3
4019414	3F6	5	3362 - 9
4027959	3E24	29	3362 - 3
4027959	3F8	29	3362 - 11
4031771	1G8	32	1671 - 3
4037584	1B8	10	0130 - 19
4038533	3G14	28	3362 - 41
4038533	3G16	28	3362 - 43
4038533	3G18	28	3362 - 45
4040813	3E24	53	3362 - 3
4040813	3F4	3	3362 - 7
4040813	3F12	3	3362 - 15
4040814	3F6	58	3362 - 9
4040826	1H7	26	1740 - 3
4040932	3D14	7	3344 - 3
4040932	3D16	7	3344 - 5
4044420	3J2	16	3363 - 57
4044420	3J4	16	3363 - 59
4044839	3F6	62	3362 - 9
4051262	3C20	31	3315 - 11
4053599	3H6	14	3363 - 13
4053697	3G24	8	3363 - 7
4063340	1H21	21	1740 - 17
4065688	1H21	15	1740 - 17
4067834	3G24	7	3363 - 7
4070952	1H11	9	1740 - 7
4070952	1H17	9	1740 - 13
4070952	1H19	9	1740 - 15
4071215	3G22	26	3363 - 5
4071215	3G24	26	3363 - 7
4073426	3E24	34	3362 - 3
4073426	3F8	34	3362 - 11
4074727	3E10	29	3361 - 5

NUMERICAL INDEX - CONTINUED

PART NO.	GRID	KEY	PAGE
4075853	3H2	4	3363 - 9
4083438	1A19	10	0130 - 3
4083438	1F21	4	0540 - 3
4083751	3E10	33	3361 - 5
4083852	3E10	13	3361 - 5
4085460	3J16	5	3365 - 11
4085560	1B13	4	0260 - 5
4085560	3D4	39	3340 - 3
4085560	3D6	39	3340 - 5
4085560	3D8	39	3340 - 7
4085560	3D12	39	3340 - 11
4085560	3I16	39	3363 - 47
4088425	3E24	9	3362 - 3
4088425	3F4	9	3362 - 7
4088425	3F6	9	3362 - 9
4088425	3F8	9	3362 - 11
4088425	3F12	9	3362 - 15
4089012	2B20	1	1810 - 25
4089012	2B20	4	1810 - 25
4089012	2C16	5	1810 - 45
4092111	2B8	39	1810 - 13
4092265	3F4	8	3362 - 7
4092265	3F12	8	3362 - 15
4092534	3G20	16	3363 - 3
4093624	3G20	17	3363 - 3
4093624	3G22	12	3363 - 5
4093624	3G24	12	3363 - 7
4100116	1F21	10	0540 - 3
4100967	1F23	3A	0560 - 3
4100967	3J6	16A	3364 - 3
4102096	2F7	4	2001 - 3
4102191	3D4	26	3340 - 3
4102191	3D6	26	3340 - 5
4102191	3D8	26	3340 - 7
4102191	3D12	26	3340 - 11
4103743	1H11	3	1740 - 7
4103743	1H17	3	1740 - 13
4103743	1H19	3	1740 - 15
4104838	1A23	3	0130 - 7
4105795	3G12	2	3362 - 39
4105912	3D4	29	3340 - 3
4105912	3D6	29	3340 - 5
4105912	3D8	29	3340 - 7
4105912	3D10	37	3340 - 9
4105912	3D12	29	3340 - 11
4107762	2C6	24	1810 - 35
4109823	2E15	95	1910 - 11
4113187	3F2	77	3362 - 5
4114402	1H7	12	1740 - 3
4114404	1B17	16	0260 - 9
4114404	1F21	11	0540 - 3
4114405	1A21	39	0130 - 5
4114405	1F23	31	0560 - 3
4114405	3J6	36	3364 - 3
4116310	3C16	3	3315 - 7
4117700	3D14	8	3344 - 3
4117700	3D16	8	3344 - 5
4120315	3G20	4	3363 - 3
4121496	1F23	2	0560 - 3
4122395	3C20	13C	3315 - 11
4122424	3D2	2	3315 - 17
4122729	3D4	22	3340 - 3
4122729	3D6	22	3340 - 5
4122729	3D8	22	3340 - 7
4122729	3D10	24	3340 - 9
4122729	3D12	22	3340 - 11
4122729	3D14	10	3344 - 3
4122729	3D16	10	3344 - 5
4123177	2B8	16	1810 - 13
4128473	2C12	34	1810 - 41
4130168	1H15	12	1740 - 11
4130174	1H15	13	1740 - 11
4130686	3D4	28	3340 - 3
4130686	3D6	28	3340 - 5
4130686	3D8	28	3340 - 7
4130686	3D10	36	3340 - 9
4130686	3D12	28	3340 - 11
4131346	3J4	2	3363 - 59
4134370	3D10	31	3340 - 9
4134371	3D10	32	3340 - 9
4134372	3D10	33	3340 - 9
4134373	3D10	34	3340 - 9
4138931	3F6	53	3362 - 9
4138942	3F4	23	3362 - 7
4138942	3F12	24	3362 - 15
4140470	3F4	7	3362 - 7
4140470	3F12	7	3362 - 15
414322	1H21	9	1740 - 17
4143607	3D4	32	3340 - 3
4143607	3D6	32	3340 - 5
4143607	3D8	32	3340 - 7
4143607	3D12	32	3340 - 11
4143888	1F5	18	0510 - 3
4144018	1B19	37	0260 - 11
4144018	1B21	13	0260 - 11B
4144018	2E23	40	1910 - 19
4144018	2F4	5	1910 - 25
4144028	1B19	24	0260 - 11
4144028	1B21	20	0260 - 11B
4144353	3E14	15	3361 - 9
4144558	3J23	35	4360 - 5
4145156	1G8	1	1671 - 3
4146466	3J18	3	3365 - 13
4146559	1F11	6	0515 - 3
4147896	2B12	59	1810 - 17
4153084	1G5	..	1369 - 3
4153089	3F2	69	3362 - 5
4153089	3F8	22	3362 - 11
4153098	3F2	72	3362 - 5
4153098	3F6	72	3362 - 9
4153098	3F10	72	3362 - 13
4153099	3E24	26	3362 - 3
4153099	3F8	2	3362 - 11
4153108	1C18	28	0407 - 9
4153108	1C18	29	0407 - 9
4153108	1C22	28	0407 - 13
4153108	1C22	29	0407 - 13
4153108	3F2	66	3362 - 5
4153108	3F6	66	3362 - 9
4153108	3F10	66	3362 - 13
4153110	3F6	4	3362 - 9
4153534	3F6	6	3362 - 9
4153535	3F6	65	3362 - 9
4153544	3E12	4	3361 - 7
4153982	1H13	12	1740 - 9
4153983	1H13	11	1740 - 9
4154331	3G24	45	3363 - 7
4154651	3I20	9	3363 - 51
4154651	3I22	9	3363 - 53
4154655	3I22	11	3363 - 53
4154655	3I24	9	3363 - 55
4154656	3I20	7	3363 - 51
4154656	3I22	10	3363 - 53
4154656	3I24	7	3363 - 55
4154656	3J4	5	3363 - 59
4154670	3H16	6	3363 - 23
4154670	3H16	26	3363 - 23
4154670	3H18	6	3363 - 25
4154670	3H22	15	3363 - 29
4154670	3H24	10	3363 - 31
4154671	3I10	19	3363 - 41
4154693	3G22	35	3363 - 5
4156436	3H4	15	3363 - 11
4156886	2E13	28E	1910 - 9
4156886	2E13	29C	1910 - 9
4156886	2E13	30F	1910 - 9
4156886	2E15	9B	1910 - 11
4156886	2E15	35B	1910 - 11
4160773	3E10	4	3361 - 5
4168820	1F23	5A	0560 - 3
4170585	3C14	27	3315 - 5B
4173208	3C12	5	3315 - 5
4173208	3F14	6	3362 - 17
4174541	3H22	21	3363 - 29
4174542	3E10	31	3361 - 5
4174542	3G20	14	3363 - 3
4177777	3F14	5	3362 - 17
4179432	1H7	23	1740 - 3
4181700	3E8	7	3361 - 3
4181700	3E22	30	3361 - 17
4182067	3C12	21	3315 - 5
4182067	3C14	24	3315 - 5B
4183995	1F21	13	0540 - 3
4184929	3F14	15	3362 - 17
4185057	3F14	17	3362 - 17
4185600	3C20	22	3315 - 11
4186695	1H21	16	1740 - 17
4186854	3G20	5	3363 - 3
4187082	2B8	14	1810 - 13
4187082	2C10	16	1810 - 39
4187083	2B8	14A	1810 - 13
4187083	2C10	16A	1810 - 39
4187322	1F23	6	0560 - 3
4188366	2E23	10	1910 - 19
4189184	3C16	4	3315 - 7
4189535	1B13	6	0260 - 5
4189535	3H12	27	3363 - 19
4189537	3G24	40	3363 - 7
4189602	3J4	11	3363 - 59
4189619	3G24	39	3363 - 7
4189619	3H6	2	3363 - 13
4190088	3F14	2	3362 - 17
4190253	1G20	38	1674 - 13
4190253	2E2	33	1830 - 15
4190253	3H20	47	3363 - 27
4190253	3H24	31	3363 - 31
4190261	1F9	14	0510 - 7
4190261	1F11	13	0515 - 3
4190261	1G18	40	1674 - 11
4190261	3I20	18	3363 - 51
4190261	3I22	19	3363 - 53
4190261	3I24	18	3363 - 55
4190261	3J2	18	3363 - 57
4190264	2E4	36	1830 - 17
4190265	2E2	37	1830 - 15
4190265	3H24	29	3363 - 31
4190265	3I2	29	3363 - 33
4190265	3I4	25	3363 - 35
4190266	3H4	3	3363 - 11
4190272	1F9	9	0510 - 7
4190272	3H16	32	3363 - 23

NUMERICAL INDEX - CONTINUED

PART NO.	GRID	KEY	PAGE
4190273	1G18	42	1674 - 11
4190274	2E2	34	1830 - 15
4190275	1G18	41	1674 - 11
4190275	1G20	36	1674 - 13
4190960	1H9	46	1740 - 5
4190983	3F14	28	3362 - 17
4191300	3H14	6	3363 - 21
4192018	3I20	16	3363 - 51
4192018	3I22	18	3363 - 53
4192018	3I24	16	3363 - 55
4192034	1F25	4	0560 - 5
4192034	2E2	57	1830 - 15
4192034	3J4	17	3363 - 59
4192035	1G18	45	1674 - 11
4192035	3H4	22	3363 - 11
4193816	3I2	28	3363 - 33
4193848	2E4	36	1830 - 17
4193848	3H4	5	3363 - 11
4193871	3G20	13	3363 - 3
4194454	3J23	18	4360 - 5
4194712	3J23	41	4360 - 5
4195689	3I24	30	3363 - 55
4195759	3G6	1	3362 - 33
4195759	3J2	0	3363 - 57
4195978	3H24	19	3363 - 31
4196260	3G24	7A	3363 - 7
4198391	3F14	25	3362 - 17
4198799	3H2	54	3363 - 9
4200176	1H9	57	1740 - 5
4200411	1B19	2	0260 - 11
4200411	1B21	27	0260 - 11B
4200466	1B13	28	0260 - 5
4200466	3C22	9	3315 - 13
4200466	3D23	6	3360 - 11
4200466	3E6	11	3360 - 17
4201441	2F4	2	1910 - 25
4201993	3C14	19	3315 - 5B
4202103	3H6	19	3363 - 13
4202103	3H8	16	3363 - 15
4202422	3C22	11	3315 - 13
4202564	1B13	27	0260 - 5
4202564	3H18	10	3363 - 25
4202564	3H22	17	3363 - 29
4203411	3C14	3	3315 - 5B
4203411	3C20	2	3315 - 11
4203412	3F14	8	3362 - 17
4204556	2C22	4	1810 - 51
4204558	2B14	19	1810 - 19
4204579	2B14	23	1810 - 19
4204579	2B18	3	1810 - 23
4204579	2B22	1	1810 - 27
4204579	2C22	7	1810 - 51
4204586	2B14	32	1810 - 19
4204586	2C14	26	1810 - 43
4204586	2E19	23	1910 - 15
4205084	2C4	3	1810 - 33
4205084	2D14	34	1830 - 3
4205476	1B17	1	0260 - 9
4205614	3H8	12	3363 - 15
4205615	3H8	11	3363 - 15
4205816	3H12	20	3363 - 19
4206101	1G8	2	1671 - 3
4206162	3E22	10	3361 - 17
4206166	3E22	28	3361 - 17
4206315	1F5	16	0510 - 3
4206316	1F5	17	0510 - 3
4206477	1H9	44	1740 - 5
4207036	3H2	10	3363 - 9
4207037	3H2	11	3363 - 9
4207038	3H2	9	3363 - 9
4207762	1H11	10	1740 - 7
4207762	1H17	15	1740 - 13
4207762	1H19	15	1740 - 15
4207763	1H11	11	1740 - 7
4207763	1H17	16	1740 - 13
4207763	1H19	16	1740 - 15
4207832	2C10	35	1810 - 39
4208103	2C16	4	1810 - 45
4208279	1H9	52	1740 - 5
4208913	3H18	11	3363 - 25
4208977	3C20	35	3315 - 11
4208977	3F14	36	3362 - 17
4209727	3J4	6	3363 - 59
4209782	3J6	18	3364 - 3
4210056	3H2	53	3363 - 9
4210412	2B8	16A	1810 - 13
4210412	2C10	32A	1810 - 39
4210413	2B8	16B	1810 - 13
4210413	2C10	32B	1810 - 39
4213075	3F14	3	3362 - 17
4213419	3C20	21	3315 - 11
4213419	3F14	30	3362 - 17
4214444	3H4	17	3363 - 11
4215453	1B2	5	0130 - 13
4216871	1H13	4	1740 - 9
4217265	3J4	15	3363 - 59
4218005	3E10	10	3361 - 5
4219346	3H24	35	3363 - 31
4219513	1A19	1A	0130 - 3
4219513	1A19	2A	0130 - 3
4219720	1H15	5	1740 - 11
4220806	3J4	14	3363 - 59
4221018	1H9	48	1740 - 5
4222359	2C12	31	1810 - 41
4222874	3J6	13A	3364 - 3
4222875	3J6	13D	3364 - 3
4222876	3J6	13E	3364 - 3
4224002	3H8	13	3363 - 15
4224237	2E23	7	1910 - 19
4224631	3D14	19	3344 - 3
4224631	3D16	19	3344 - 5
4227025	3H22	23	3363 - 29
4231888	1F5	8	0510 - 3
4235221	1H21	11	1740 - 17
4235232	2D12	12	1821 - 9
4235654	1F25	6	0560 - 5
4235654	1G8	18	1671 - 3
4235654	1G18	44-	1674 - 11
4236448	2D16	55	1830 - 5
4238834	3F14	24B	3362 - 17
4240150	3F14	11B	3362 - 17
4240151	3F14	11E	3362 - 17
4240862	3J4	3	3363 - 59
4240863	3J4	0	3363 - 59
4240984	3D2	12	3315 - 17
4240985	3D2	13	3315 - 17
4241426	1B19	56	0260 - 11
4241426	1B21	38	0260 - 11B
4241586	1G3	49	1322 - 3
4241586	3D2	17	3315 - 17
4244172	1A19	16	0130 - 3
4245211	1H13	5	1740 - 9
4245212	1H13	7	1740 - 9
4246150	1H17	13	1740 - 13
4246150	1H19	13	1740 - 15
4246786	1B19	43	0260 - 11
4246786	1B21	3	0260 - 11B
4246954	3G24	22	3363 - 7
4247426	1F21	16	0540 - 3
4249324	2E11	44	1910 - 7
4249324	2E13	27	1910 - 9
4249331	3I22	0	3363 - 53
4250260	1G12	0	1674 - 5
4250261	1G12	1	1674 - 5
4250293	3J6	7	3364 - 3
4251212	3D4	0G	3340 - 3
4251212	3D6	0H	3340 - 5
4251212	3D8	0H	3340 - 7
4251212	3D10	0F	3340 - 9
4251212	3D12	0G	3340 - 11
4251384	3J6	13F	3364 - 3
4251587	1G8	13	1671 - 3
4251752	3D4	5E	3340 - 3
4251752	3D6	0I	3340 - 5
4251752	3D6	5E	3340 - 5
4251752	3D8	0I	3340 - 7
4251752	3D8	5E	3340 - 7
4251752	3D12	5E	3340 - 11
4251753	3D14	0E	3344 - 3
4251753	3D16	0E	3344 - 5
4251767	3D4	0D	3340 - 3
4251767	3D4	5D	3340 - 3
4251767	3D6	0E	3340 - 5
4251767	3D6	5D	3340 - 5
4251767	3D8	0E	3340 - 7
4251767	3D8	5D	3340 - 7
4251767	3D10	0C	3340 - 9
4251767	3D12	0D	3340 - 11
4251767	3D12	0H	3340 - 11
4251767	3D12	5D	3340 - 11
4252004	2E4	11	1830 - 17
4253709	3J25	2	4360 - 7
4255055	1B2	15	0130 - 13
4255077	3E14	56	3361 - 9
4255077	3E20	15	3361 - 15
4255530	1H9	56	1740 - 5
4255567	1H9	47	1740 - 5
4255567	1H9	56	1740 - 5
4256364	2C10	6	1810 - 39
4257115	1G10	1	1674 - 3
4257128	1F23	32	0560 - 3
4257131	2C10	7	1810 - 39
4257159	1F9	13	0510 - 7
4257159	1F13	7	0515 - 5
4257159	1F23	37	0560 - 3
4257159	1G18	47	1674 - 11
4257159	3H22	51	3363 - 29
4257159	3J2	17	3363 - 57
4257236	3E10	23	3361 - 5
4257291	3I20	1	3363 - 51
4257968	1B15	1	0260 - 7
4258880	3I22	4	3363 - 53
4260314	3I22	7	3363 - 53
4260369	2B8	20	1810 - 13
4260369	2C10	18	1810 - 39
4261289	3F16	0	3362 - 19
4261289	3H16	34	3363 - 23
4261938	3I4	1	3363 - 35
4261938	3I6	4	3363 - 37
4262279	3I22	4	3363 - 53
4264452	3J21	4	4360 - 3

NUMERICAL INDEX - CONTINUED

PART NO.	GRID	KEY	PAGE
4264805	1G3	5	1322 - 3
4264805	2A24	37	1810 - 5
4266386	1G3	43	1322 - 3
4266963	2C14	41	1810 - 43
4267673	1B13	17	0260 - 5
4268503	1A19	34	0130 - 3
4268908	1B13	18	0260 - 5
4269454	3J23	23	4360 - 5
4269566	1A19	9	0130 - 3
4270269	1H11	7	1740 - 7
4270269	1H17	7	1740 - 13
4270269	1H19	7	1740 - 15
4270315	3H8	8	3363 - 15
4271000	3J6	8	3364 - 3
4271001	3J6	9	3364 - 3
4271596	1B19	61	0260 - 11
4271788	3D14	27	3344 - 3
4271788	3D16	27	3344 - 5
4274178	3J4	12	3363 - 59
4274178	3J18	4	3365 - 13
4274371	3E14	54	3361 - 9
4274371	3E20	10	3361 - 15
4274541	1B19	50	0260 - 11
4274541	1B21	35	0260 - 11B
4274593	3H8	7	3363 - 15
4274903	3I22	13	3363 - 53
4276345	3G14	12	3362 - 41
4276345	3G18	12	3362 - 45
4279302	1B13	12	0260 - 5
4279835	1E14	33	0423 - 3
4279835	1G8	15	1671 - 3
4280359	2D14	12	1830 - 3
4280527	2C10	32	1810 - 39
4280782	1F21	5	0540 - 3
4281293	1G20	32	1674 - 13
4282319	3G14	1	3362 - 41
4283028	2F9	0	2004 - 3
4286814	3H2	52	3363 - 9
4287634	3J6	6	3364 - 3
4287903	2B8	24	1810 - 13
4287903	2C10	36	1810 - 39
4288572	3D10	29	3340 - 9
4288971	1G3	22	1322 - 3
4289648	1B19	34	0260 - 11
4289648	1B21	10	0260 - 11B
4291332	1F9	17	0510 - 7
429135	1H7	6	1740 - 3
4291852	1B2	8	0130 - 13
4291853	1B2	9	0130 - 13
4291854	1B2	10	0130 - 13
4292386	3E14	28	3361 - 9
4292387	3E14	3	3361 - 9
4292676	1H13	9	1740 - 9
4292762	1H9	51	1740 - 5
4292763	1H9	1	1740 - 5
4292764	1H7	9	1740 - 3
4292765	1H7	10	1740 - 3
4292932	1H7	5	1740 - 3
4294437	2A24	26	1810 - 5
4294508	2C22	14	1810 - 51
4294508	2E15	53	1910 - 11
4294694	1G8	22	1671 - 3
4295167	3D4	20	3340 - 3
4295167	3D6	20	3340 - 5
4295167	3D8	20	3340 - 7
4295167	3D12	20	3340 - 11
4295480	2B14	17	1810 - 19
4295480	2C22	6	1810 - 51
4295784	1B8	53	0130 - 19
4295785	1B8	54	0130 - 19
4295788	1B8	0	0130 - 19
4295789	1B8	1	0130 - 19
4295790	1B8	2	0130 - 19
4295791	1B8	3	0130 - 19
4295792	1B8	4	0130 - 19
4295795	1B8	7	0130 - 19
4295798	1B8	12	0130 - 19
4295876	2B14	18	1810 - 19
4295981	3D4	0F	3340 - 3
4295981	3D6	0G	3340 - 5
4295981	3D8	0G	3340 - 7
4295981	3D12	0F	3340 - 11
4296258	1H7	1	1740 - 3
4296540	3D4	33	3340 - 3
4296540	3D6	33	3340 - 5
4296540	3D8	33	3340 - 7
4296540	3D12	33	3340 - 11
4296540	3D14	5	3344 - 3
4296540	3D16	5	3344 - 5
4296541	1H7	22	1740 - 3
4296542	1H7	21	1740 - 3
4296543	1H7	20	1740 - 3
4297191	3J25	7	4360 - 7
4297280	1G8	11	1671 - 3
4297379	3E14	11	3361 - 9
4297379	3E16	1	3361 - 11
4297379	3E16	19	3361 - 11
4297381	3E14	37	3361 - 9
4297642	3D14	0B	3344 - 3
4297642	3D16	0B	3344 - 5
4297643	3D4	0B	3340 - 3
4297643	3D6	0B	3340 - 5
4297643	3D8	0B	3340 - 7
4297643	3D12	0B	3340 - 11
4297643	3D14	0C	3344 - 3
4297643	3D16	0C	3344 - 5
4297750	3D6	0C	3340 - 5
4297750	3D8	0C	3340 - 7
4298488	3E10	35	3361 - 5
4299059	1G3	28	1322 - 3
4299059	2A24	39	1810 - 5
4299948	3D14	26	3344 - 3
4299948	3D16	26	3344 - 5
4300369	3G24	38	3363 - 7
4302811	3G18	0	3362 - 45
4303003	3H14	9	3363 - 21
4303003	3H22	3	3363 - 29
4304481	3H12	15	3363 - 19
4304481	3I14	20	3363 - 45
4304481	3I18	20	3363 - 49
4304827	2B10	41	1810 - 15
4307026	1G14	5E	1674 - 7
4307026	1H2	0E	1674 - 15
4307026	3D14	22E	3344 - 3
4307026	3D16	22E	3344 - 5
4307027	1G14	5F	1674 - 7
4307027	1H2	0F	1674 - 15
4307027	3D14	22F	3344 - 3
4307027	3D16	22F	3344 - 5
4309072	3H10	6	3363 - 17
4309074	3H10	3	3363 - 17
4309332	3J14	0	3365 - 9
4311619	3E12	3	3361 - 7
4311679	2C10	7A	1810 - 39
4312517	1F17	1	0520 - 5
4313442	3H4	1	3363 - 11
4313443	3H4	2	3363 - 11
4314074	3H8	0	3363 - 15
4314075	3H8	1	3363 - 15
4314076	3H8	2	3363 - 15
4314398	3H6	5	3363 - 13
4314399	3H6	7	3363 - 13
4316026	3H14	1	3363 - 21
4317157	1A19	8	0130 - 3
4317612	1B13	12	0260 - 5
4317618	3H4	14	3363 - 11
4317779	3G12	3	3362 - 39
4319299	3C20	1	3315 - 11
4320163	2B10	59	1810 - 15
4320163	2C12	35	1810 - 41
4320218	1A19	5	0130 - 3
4321855	1H7	0B	1740 - 3
4322539	1G18	20	1674 - 11
4323631	3E8	3	3361 - 3
4324194	3D4	0H	3340 - 3
4326065	1B8	6	0130 - 19
4326066	1B8	8	0130 - 19
4326095	2B24	0B	1810 - 29
4326801	1G14	5A	1674 - 7
4326801	1H2	0A	1674 - 15
4326801	3D14	22A	3344 - 3
4326802	1G14	5B	1674 - 7
4326802	1H2	0B	1674 - 15
4326802	3D14	22B	3344 - 3
4326803	1G14	5D	1674 - 7
4326803	1H2	0D	1674 - 15
4326803	3D14	22D	3344 - 3
4326995	3D4	38	3340 - 3
4326995	3D12	38	3340 - 11
4327294	2E4	25	1830 - 17
4327294	3J2	16	3363 - 57
4327294	3J4	16	3363 - 59
4328599	3H4	21	3363 - 11
4330083	1F17	14	0520 - 5
4330785	2B4	1	1810 - 9
4330785	2C18	2	1810 - 47
4331619	1F17	16	0520 - 5
4332658	3J21	6	4360 - 3
4332940	3J2	10	3363 - 57
4333185	2B24	0	1810 - 29
4333461	2E4	46	1830 - 17
4333464	3J6	4A	3364 - 3
4333469	3J6	6	3364 - 3
4333835	2D12	11	1821 - 9
4334123	3D10	0E	3340 - 9
4334124	3D10	0H	3340 - 9
4334933	1H11	5	1740 - 7
4335060	3C12	19	3315 - 5
4335060	3C14	22	3315 - 5B
4336570	1G14	5	1674 - 7
4336570	1H2	0	1674 - 15
4336570	3D14	22	3344 - 3
4336570	3D16	22	3344 - 5
4336874	1G18	27	1674 - 11
4336875	1G18	48	1674 - 11
4336925	3J23	21	4360 - 5
4337125	3H12	16	3363 - 19
4337125	3I14	21	3363 - 45
4337125	3I18	21	3363 - 49
4337792	1H21	3	1740 - 17
4337811	1H21	2	1740 - 17

NUMERICAL INDEX - CONTINUED

PART NO.	GRID	KEY	PAGE
4337830	1H21	5	1740 - 17
4337833	1H21	4	1740 - 17
4337837	1H21	6	1740 - 17
4337843	1H21	7	1740 - 17
4338215	2E4	18	1830 - 17
4338256	1H17	10	1740 - 13
4338256	1H19	10	1740 - 15
4338464	1H13	6	1740 - 9
4338974	2B24	0C	1810 - 29
4339413	1B13	16	0260 - 5
4339469	3J18	2	3365 - 13
4341706	2F7	6	2001 - 3
4341803	3H2	58	3363 - 9
4341856	1H17	12	1740 - 13
4341856	1H19	12	1740 - 15
4341877	3I4	30	3363 - 35
4343186	3J25	11	4360 - 7
4343187	3J25	12	4360 - 7
4343333	2E25	15	1910 - 21
4343365	3J21	7	4360 - 3
4343422	3H6	6	3363 - 13
4343768	1B13	30	0260 - 5
4344047	2E13	22	1910 - 9
4344638	2D14	4	1830 - 3
4344881	3J6	11	3364 - 3
4345741	1H11	12	1740 - 7
4345741	1H17	17	1740 - 13
4345741	1H19	17	1740 - 15
4345810	1H9	54	1740 - 5
4347396	2D14	7	1830 - 3
4348458	1H21	28	1740 - 17
4348853	3J12	75	3365 - 7
4348853	3J14	75	3365 - 9
4349621	3H2	57	3363 - 9
4349648	3H2	59	3363 - 9
4350187	2D16	9B	1830 - 5
4350206	2D16	5A	1830 - 5
4350206	2D16	19A	1830 - 5
4350249	2D20	9	1830 - 9
4350347	1B19	9	0260 - 11
4350347	1B21	26	0260 - 11B
4351011	2C4	2	1810 - 33
4351039	3E10	35	3361 - 5
4351175	3I10	28	3363 - 41
4351175	3I12	28	3363 - 43
4351187	2F7	9	2001 - 3
4351255	2A22	4	1810 - 3
4351774	3I10	29	3363 - 41
4351774	3I12	29	3363 - 43
4352947	2D22	18	1830 - 11
4353496	1B19	40	0260 - 11
4353496	1B21	1	0260 - 11B
4353497	1B19	42	0260 - 11
4353497	1B21	2	0260 - 11B
4353498	1B19	44	0260 - 11
4353498	1B21	4	0260 - 11B
4353499	1B19	45	0260 - 11
4353499	1B21	5	0260 - 11B
4353501	1B19	31	0260 - 11
4353501	1B21	8	0260 - 11B
4353502	1B19	33	0260 - 11
4353502	1B21	9	0260 - 11B
4353503	1B19	35	0260 - 11
4353503	1B21	11	0260 - 11B
4353504	1B19	36	0260 - 11
4353504	1B21	12	0260 - 11B
4353505	1B19	32	0260 - 11
4353505	1B21	14	0260 - 11B
4353506	1B19	19	0260 - 11
4353506	1B21	15	0260 - 11B
4353508	1B19	22	0260 - 11
4353508	1B21	18	0260 - 11B
4353511	1B19	38	0260 - 11
4353511	1B21	22	0260 - 11B
4353515	1B19	15	0260 - 11
4353515	1B21	28	0260 - 11B
4353516	1B19	16	0260 - 11
4353516	1B21	29	0260 - 11B
4353517	1B19	17	0260 - 11
4353517	1B21	30	0260 - 11B
4353518	1B19	5	0260 - 11
4353518	1B21	31	0260 - 11B
4353519	1B19	13	0260 - 11
4353519	1B21	32	0260 - 11B
4353520	1B19	49	0260 - 11
4353520	1B21	33	0260 - 11B
4353521	1B19	51	0260 - 11
4353521	1B21	34	0260 - 11B
4353970	1F9	26	0510 - 7
4354513	3H10	15	3363 - 17
4354592	3H2	61	3363 - 9
4354802EX	3J12	0	3365 - 7
4356695	2B12	15	1810 - 17
4356853	3J16	0	3365 - 11
4356853	3J18	0	3365 - 13
4357727	3J4	21	3363 - 59
4357742	3J4	20	3363 - 59
4357862	2D22	10	1830 - 11
4358533	3G16	0	3362 - 43
4359384	1G20	14	1674 - 13
4359549	1B11	11	0260 - 3
4359550	1B11	10	0260 - 3
4360509	1F13	0	0515 - 5
4361302	2B8	17	1810 - 13
4361302	2C10	26	1810 - 39
4361601	2C6	18	1810 - 35
4361638	1F23	5	0560 - 3
4361763	2E15	93A	1910 - 11
4361763	2E23	2A	1910 - 19
4361800	1G20	2	1674 - 13
4361800	2A24	33	1810 - 5
4361802	2A24	4	1810 - 5
4361802	2A24	8	1810 - 5
4361802	2A24	15	1810 - 5
4361802	2A24	19	1810 - 5
4361805	1F9	6	0510 - 7
4362135	2B12	6	1810 - 17
4362444	3H4	12	3363 - 11
4362700	2B8	25A	1810 - 13
4362700	2C10	38	1810 - 39
4362764	3H4	20	3363 - 11
4363399	3H4	12A	3363 - 11
4364504	2B8	18	1810 - 13
4364504	2C10	27	1810 - 39
4364970	3C20	4	3315 - 11
4366298	1F7	29	0510 - 5
4366339	3E14	59	3361 - 9
4366339	3E20	9	3361 - 15
4366517	3E14	12	3361 - 9
4366517	3E16	22	3361 - 11
4366521	3E16	14	3361 - 11
4366521	3E16	25	3361 - 11
4366623	2D14	3	1830 - 3
4367157	1H21	27	1740 - 17
4367375	1G20	15	1674 - 13
4367481	2C10	51	1810 - 39
4367485	2C10	34	1810 - 39
4367486	2C10	50	1810 - 39
4368327	2B4	0	1810 - 9
4368327	2C18	1	1810 - 47
4368629	3C20	3	3315 - 11
4368630	3C20	5	3315 - 11
4368973	2F7	7	2001 - 3
4368974	3E16	34	3361 - 11
4368974	3E18	7	3361 - 13
4369472	2B24	0A	1810 - 29
4369544	2C10	53	1810 - 39
4369547	2B8	21	1810 - 13
4369549	2B8	23	1810 - 13
4369553	2B18	21	1810 - 23
4369561	2C22	15	1810 - 51
4369568	2B10	45	1810 - 15
4369569	2B8	45	1810 - 13
4369569	2D2	64	1810 - 55
4369599	2B14	16	1810 - 19
4369615	2B18	2	1810 - 23
4369616	2B18	4	1810 - 23
4369619	2B18	71	1810 - 23
4369627	2B10	71	1810 - 15
4369645	2B12	3	1810 - 17
4369653	2B12	54	1810 - 17
4369653	2C20	2	1810 - 49
4369661	2B12	13	1810 - 17
4369670	2B16	33	1810 - 21
4369671	2B16	49	1810 - 21
4369672	2B16	92	1810 - 21
4369674	2B16	65	1810 - 21
4369674	2B18	11	1810 - 23
4369675	2B10	55	1810 - 15
4371318	1C4	1	0400 - 3
4371903	1C4	1	0400 - 3
4372088	2B16	85B	1810 - 21
4372089	2D2	39	1810 - 55
4372091	2B12	7	1810 - 17
4372093	2B12	56	1810 - 17
4372095	2C16	1	1810 - 45
4372200	2D12	8	1821 - 9
4372209	2C16	7	1810 - 45
4372210	2B14	28	1810 - 19
4372212	2B12	21	1810 - 17
4372212	2B16	61	1810 - 21
4372213	2B16	74	1810 - 21
4372214	2B14	22	1810 - 19
4372219	2B10	60	1810 - 15
4372219	2B14	11	1810 - 19
4372221	2B18	50	1810 - 23
4372223	2B16	69A	1810 - 21
4372224	2B10	30	1810 - 15
4372225	2B14	7	1810 - 19
4372261	2B12	15	1810 - 17
4372560	2B12	23	1810 - 17
4372608	2C10	52	1810 - 39
4372725	2E15	82	1910 - 11
4372725	2E23	30	1910 - 19
4372759	2C10	28	1810 - 39
4374265	1F23	22	0560 - 3
4374624	2C14	40	1810 - 43
4374958	2E4	48	1830 - 17
4375182	3H4	16	3363 - 11
4375436	1F19	18	0530 - 5
4375560	3J2	9	3363 - 57

NUMERICAL INDEX - CONTINUED

PART NO.	GRID	KEY	PAGE
4376895	2E23	20	1910 - 19
4377817	2B16	69B	1810 - 21
4378181	2E9	6	1910 - 5
4379383	1B2	1	0130 - 13
4379384	1B2	4	0130 - 13
4379385	1B2	7	0130 - 13
4380534	2D12	13	1821 - 9
4380659	1F9	7	0510 - 7
4381572	1G20	62	1674 - 13
4382410	2D12	5	1821 - 9
4382432	2D12	9	1821 - 9
4382832	2D18	77	1830 - 7
4382860	2D18	76	1830 - 7
4382882	2D16	56	1830 - 5
4382882	2D18	84	1830 - 7
4382883	2D16	54	1830 - 5
4382885	2B12	23	1810 - 17
4384239	2D12	3	1821 - 9
4384450	3J16	50	3365 - 11
4384758	2F9	5	2004 - 3
4385954	2C12	42	1810 - 41
4386156	2E2	29	1830 - 15
4386409	2D2	56	1810 - 55
4386413	2C12	63	1810 - 41
4386450	2B18	9	1810 - 23
4386450	2C22	8	1810 - 51
4386451	2C22	9	1810 - 51
4386452	2B18	7	1810 - 23
4386452	2C22	10	1810 - 51
4386454	2C22	12	1810 - 51
4387837	2B8	27	1810 - 13
4387922	2C14	19	1810 - 43
4387925	2C14	20	1810 - 43
4387928	2C24	21	1810 - 53
4387931	2C24	12	1810 - 53
4387932	2C24	1	1810 - 53
4387933	2C24	13	1810 - 53
4387935	2C24	14	1810 - 53
4387937	2C22	2	1810 - 51
4387938	2C22	3	1810 - 51
4388621	1B19	14	0260 - 11
4389856	3H10	4	3363 - 17
4389857	3H10	7	3363 - 17
4391660	3F2	79	3362 - 5
4391660	3F10	74	3362 - 13
4392068	1F9	5	0510 - 7
4392199	3F10	73	3362 - 13
4392200	3F10	71	3362 - 13
4392796	2D6	0B	1821 - 3
4392799	2D6	0E	1821 - 3
4392801	2D6	7	1821 - 3
4392803	2D6	9	1821 - 3
4392804	2D6	10	1821 - 3
4392805	2D6	11	1821 - 3
4392806	2D6	12	1821 - 3
4392807	2D6	13	1821 - 3
4392809	2D6	15	1821 - 3
4392812	2D6	18	1821 - 3
4392813	2D6	19	1821 - 3
4395169	1F9	25	0510 - 7
4395369	3J4	7	3363 - 59
4400079	2B10	7	1810 - 15
4400087	2B12	61	1810 - 17
4402354	3J8	70	3365 - 3
4402383	3J12	75	3365 - 7
4402383	3J14	75	3365 - 9
4402476	2B8	28	1810 - 13
4402481	3J23	13	4360 - 5
4403327	2B14	16	1810 - 19
4404273	3H2	20	3363 - 9
4405128	2D10	4	1821 - 7
4405194	2E2	49	1830 - 15
4405814	2E2	50	1830 - 15
4405815	2E4	51	1830 - 17
4407253	3G8	0	3362 - 35
4407253	3I6	0	3363 - 37
4408281	1B11	8	0260 - 3
4408504	3I14	30	3363 - 45
4408504	3I18	30	3363 - 49
4408505	3I14	29	3363 - 45
4408505	3I18	29	3363 - 49
4409086	3J2	8	3363 - 57
4409395	2E9	8B	1910 - 5
4409396	2E11	38E	1910 - 7
4409447	2E11	38A	1910 - 7
4410898	3C12	4	3315 - 5
4410898	3C14	4	3315 - 5B
4411588	2C12	37	1810 - 41
4411608	2C24	22	1810 - 53
4411679	2C20	4	1810 - 49
4411682	2C20	7	1810 - 49
4411683	2C20	8	1810 - 49
4411821	2B18	3	1810 - 23
4411931	2E4	52	1830 - 17
4412061	3J23	9	4360 - 5
4412124	2C12	38	1810 - 41
4414857	2B10	18	1810 - 15
4414857	2B12	27	1810 - 17
4415024	2A24	22	1810 - 5
4415042	3J23	15	4360 - 5
4418142	2D16	27	1830 - 5
4418143	2D16	26	1830 - 5
4418144	2D16	25	1830 - 5
4418147	2D18	81	1830 - 7
4418149	2D18	82	1830 - 7
4418301	1G18	24	1674 - 11
4418912	2E23	17A	1910 - 19
4418912	2E23	17B	1910 - 19
4418912	2E23	19B	1910 - 19
4418912	2E23	39	1910 - 19
4418912	2E23	40	1910 - 19
4418912	2F4	0	1910 - 25
4419040	3J2	9	3363 - 57
4420526	1C18	26	0407 - 9
4420526	1C22	26	0407 - 13
4420531	2B12	56	1810 - 17
4420540	2C12	1	1810 - 41
4420798	2C16	2	1810 - 45
4420875	2A24	0	1810 - 5
4420876	2A24	3	1810 - 5
4420877	2A24	7	1810 - 5
4420878	2A24	11	1810 - 5
4420879	2A24	14	1810 - 5
4420880	2A24	18	1810 - 5
4421771	3C12	7	3315 - 5
4421771	3C14	9	3315 - 5B
4422178	2E4	12	1830 - 17
4422479	3J23	47	4360 - 5
4424157	2E11	45	1910 - 7
4424157	2E15	90	1910 - 11
4424185	3C18	5	3315 - 9
4424982	3J23	9	4360 - 5
4425177	3H24	25	3363 - 31
4425290	3C20	13B	3315 - 11
4425305	3C20	18	3315 - 11
4425414	3C12	6	3315 - 5
4425414	3C14	8	3315 - 5B
4425573	2D22	5	1830 - 11
4425575	2E11	38D	1910 - 7
4426155	2D14	22	1830 - 3
4426156	2D22	8	1830 - 11
4426157	2D14	30	1830 - 3
4426158	2D14	38	1830 - 3
4426159	2D20	3	1830 - 9
4426160	2D20	0	1830 - 9
4426354	1G20	63	1674 - 13
4426354	2B2	4	1810 - 7
4426821	2E23	17A	1910 - 19
4426821	2E23	19A	1910 - 19
4426821	2F4	0	1910 - 25
442687	1H21	13	1740 - 17
4427399	2C8	1	1810 - 37
4427429	1G20	7B	1674 - 13
4428902	3C20	40	3315 - 11
4429119	3C12	10	3315 - 5
4429120	3C12	8	3315 - 5
4429120	3C14	6	3315 - 5B
4430508	1B11	9	0260 - 3
4430667	3J23	34	4360 - 5
4431082	2E4	45	1830 - 17
4431090	1G20	11	1674 - 13
4431227	2D14	26	1830 - 3
4431842	3I4	17	3363 - 35
4431914	3C12	12	3315 - 5
4431915	3C12	13	3315 - 5
4432811	3J2	11	3363 - 57
4432965	2D22	11	1830 - 11
4433064	2D20	8	1830 - 9
4433092	3G24	17	3363 - 7
4433793	2D22	0	1830 - 11
4433794	2D22	7	1830 - 11
4434206	1F19	6	0530 - 5
4434708	3J23	30	4360 - 5
4435320	1B13	0	0260 - 5
4435575	2E15	64	1910 - 11
4435575	2E17	64	1910 - 13
4436000	1B8	52	0130 - 19
4436001	1B8	52	0130 - 19
4436024	2D14	0	1830 - 3
4436024	2D16	0	1830 - 5
4436024	2D18	0	1830 - 7
4436025	2E4	43	1830 - 17
4436124	3I4	34	3363 - 35
4436124	3I6	34	3363 - 37
4436132	2D22	4	1830 - 11
4436197	3F18	0	3362 - 21
4436197	3H22	13	3363 - 29
4436271	1G10	5	1674 - 3
4436306	2D14	8	1830 - 3
4436307	2D14	9	1830 - 3
4436426	1F5	13	0510 - 3
4436442	2D14	17	1830 - 3
4436478	2D14	62	1830 - 3
4436534	1G20	59	1674 - 13
4436535	1G14	9	1674 - 7
4436535	3J2	13	3363 - 57
4436536	1G14	8	1674 - 7
4436537	1G10	0	1674 - 3
4436854	3J2	7	3363 - 57
4436856	3J2	4	3363 - 57
4437087	3I10	12	3363 - 41

NUMERICAL INDEX - CONTINUED

PART NO.	GRID	KEY	PAGE
4437106	3C12	20	3315 - 5
4437106	3C14	23	3315 - 5B
4437333	3C12	11	3315 - 5
4437333	3C14	11	3315 - 5B
4437412	3H16	21	3363 - 23
4437432	3C20	39	3315 - 11
4437433	3C20	8B	3315 - 11
4437629	3I4	14	3363 - 35
4437633	3I12	7	3363 - 43
4437646	3I10	12	3363 - 41
4437982	3J10	10	3365 - 5
4438196	3J8	10	3365 - 3
4438197	3J12	10	3365 - 7
4438197	3J14	10	3365 - 9
4438264	3I10	14	3363 - 41
4438279	3C10	8	3315 - 3
4438312	3J23	7	4360 - 5
4438384	3H22	11	3363 - 29
4438682	3J12	75	3365 - 7
4438682	3J14	75	3365 - 9
4439093	2D14	13	1830 - 3
4439897	1G20	18	1674 - 13
4440151	3I16	1	3363 - 47
4440388	3J21	0	4360 - 3
4440388	3K2	0	4367 - 3
4441059	2D14	43	1830 - 3
4441061	2D14	44	1830 - 3
4441117	2A24	30	1810 - 5
4441139	2D14	41	1830 - 3
4441190	1F15	4	0515 - 7
4441246	2F9	17	2004 - 3
4441409	3H14	11	3363 - 21
4441575	3J10	0	3365 - 5
4441575J	3J10	0	3365 - 5
4442323	3C12	24	3315 - 5
4442339	3C12	26	3315 - 5
4442368	3J10	75	3365 - 5
4443346	1B13	9	0260 - 5
4443348	1B13	10	0260 - 5
4443490	1G20	7H	1674 - 13
4443904	1C18	28	0407 - 9
4443904	1C22	28	0407 - 13
4443907	1C18	29	0407 - 9
4443907	1C22	29	0407 - 13
4444270	1C20	1	0407 - 11
4444634	2B18	78	1810 - 23
4444664	2B12	10	1810 - 17
4444902	3E14	53	3361 - 9
4444902	3E20	11	3361 - 15
4444992	3E24	0	3362 - 3
4444992	3F2	0	3362 - 5
4444992	3F4	0	3362 - 7
4444992	3F6	0	3362 - 9
4444992	3F8	0	3362 - 11
4444992	3F10	0	3362 - 13
4444992	3F12	0	3362 - 15
4445220	2C2	22	1810 - 31
4445322	3C10	9	3315 - 3
4445354	3J23	43	4360 - 5
4445916	2D20	19	1830 - 9
4445917	2B2	0	1810 - 7
4445932	2B2	0A	1810 - 7
4446369	2E9	8C	1910 - 5
4446551	2E11	38B	1910 - 7
4446657	2E4	54	1830 - 17
4446694	2E11	42	1910 - 7
4446851	3I10	15	3363 - 41
4446852	3I10	15	3363 - 41
4446960	3C12	30	3315 - 5
4446960	3C14	7	3315 - 5B
4447050	3C12	15	3315 - 5
4447050	3C20	6B	3315 - 11
4447067	3C20	42	3315 - 11
4447335	1C12	10	0407 - 3
4447336	1D8	7	0410 - 3
4447336	1D22	20	0414 - 3
4447336	1E16	15	0429 - 3
4447336	1E20	80	0433 - 5
4447337	1C14	61	0407 - 5
4447337	1C24	2	0408 - 3
4447337	1E6	58	0419 - 3
4447337	1E8	43	0420 - 3
4447338	1E18	18	0433 - 3
4447765	1H2	3	1674 - 15
4447868	1H2	4	1674 - 15
4447870	1H2	8	1674 - 15
4448037	1G18	25	1674 - 11
4448306	2B14	25	1810 - 19
4448307	2B14	43	1810 - 19
4448308	2B12	52	1810 - 17
4448309	2B12	53	1810 - 17
4448310	2B12	65	1810 - 17
4448311	2B10	6	1810 - 15
4448312	2B16	1	1810 - 21
4448313	2B16	8A	1810 - 21
4448314	2B10	9	1810 - 15
4448315	2B12	72	1810 - 17
4448318	2B16	18	1810 - 21
4448319	2B10	19	1810 - 15
4448336	1C18	50A	0407 - 9
4448336	1C22	50A	0407 - 13
4448336	1E6	55	0419 - 3
4448362	1F21	2	0540 - 3
4448601	2C2	27	1810 - 31
4448989	1F17	13	0520 - 5
4448990	2A24	35	1810 - 5
4449019	1G20	49	1674 - 13
4449057	1C18	24	0407 - 9
4449058	1C18	25	0407 - 9
4449068	2D20	5	1830 - 9
4449267	3H14	13	3363 - 21
4449348	2D20	17	1830 - 9
4449601	3I22	2	3363 - 53
4449602	3I22	1	3363 - 53
4449626	3H18	12	3363 - 25
4449628	3H18	14	3363 - 25
4449629	3H16	15	3363 - 23
4449630	3H16	16	3363 - 23
4449631	3H18	17	3363 - 25
4449632	3H16	18	3363 - 23
4449757	1G14	1	1674 - 7
4449758	1G14	0	1674 - 7
4449773	3I10	20	3363 - 41
4450008	2D22	9	1830 - 11
4450082	3H2	23	3363 - 9
4450174	2F9	17	2004 - 3
4450206	2D16	9A	1830 - 5
4450399	2D14	63	1830 - 3
4450427	3I4	12	3363 - 35
4450428	3I4	13	3363 - 35
4450433	3I12	3	3363 - 43
4450434	3I12	4	3363 - 43
4450438	3I10	10	3363 - 41
4450440	3I10	13	3363 - 41
4450662	3H18	3	3363 - 25
4450955	1F19	5	0530 - 5
4451203	1F15	6	0515 - 7
4451480	1F7	17	0510 - 5
4451481	1F7	20	0510 - 5
4451778	3H16	24	3363 - 23
4451784	3F24	24	3362 - 27
4451785	3F24	25	3362 - 27
4451785	3G2	25	3362 - 29
4451786	3G2	26	3362 - 29
4451787	3F24	37	3362 - 27
4451788	3F24	38	3362 - 27
4451789	3F24	39	3362 - 27
4451789	3G2	39	3362 - 29
4451790	3G2	40	3362 - 29
4451797	3G2	41	3362 - 29
4451816	3H16	29	3363 - 23
4451816	3H24	8	3363 - 31
4451817	3H16	30	3363 - 23
4451818	3H16	31	3363 - 23
4452041	3H20	24	3363 - 27
4452160	1G20	65	1674 - 13
4452162	1E10	44	0420 - 5
4452165	1C16	7	0407 - 7
4452165	1D20	9	0413 - 13
4452165	1D20	21	0413 - 13
4452165	1E8	30	0420 - 3
4452165	1E12	3	0421 - 3
4452165	1E12	5	0421 - 3
4452188	2D14	53	1830 - 3
4452475	3J23	20	4360 - 5
4452484	1B19	21	0260 - 11
4452484	1B21	17	0260 - 11B
4452613	2A24	27	1810 - 5
4452647	3G4	18	3362 - 31
4452648	3G4	20	3362 - 31
4452717	2E19	14B	1910 - 15
4452734	3H18	22	3363 - 25
4453229	3H24	23	3363 - 31
4453609	3G24	13	3363 - 7
4453663	2B10	31	1810 - 15
4453665	2B10	93	1810 - 15
4453666	2B10	95	1810 - 15
4453667	2B10	22	1810 - 15
4453667	2C14	66	1810 - 43
4453670	2B12	20	1810 - 17
4453671	2B12	22	1810 - 17
4453674	2B12	58	1810 - 17
4453675	2B12	57	1810 - 17
4453676	2B12	50	1810 - 17
4453680	2B16	16A	1810 - 21
4453681	2B16	28	1810 - 21
4453682	2B16	29	1810 - 21
4453683	2B16	30	1810 - 21
4453684	2B16	31	1810 - 21
4453686	2B8	33	1810 - 13
4453687	2B8	32	1810 - 13
4453689	2B14	1	1810 - 19
4453690	2B8	31	1810 - 13
4453819	3G4	11	3362 - 31
4453820	3G4	12	3362 - 31
4453869	2D12	6	1821 - 9
4453874	2D12	7	1821 - 9
4453966	3H4	6	3363 - 11
4454272	1H7	0A	1740 - 3
4454484	1H2	17	1674 - 15
4454499	1F5	0	0510 - 3

NUMERICAL INDEX - CONTINUED

PART NO.	GRID	KEY	PAGE
4454518	1G20	57	1674 - 13
4454666	2E2	30	1830 - 15
4454683	2E4	4	1830 - 17
4454684	2E4	3	1830 - 17
4454753	2D14	52	1830 - 3
4454898	3H16	37	3363 - 23
4454899	3H16	38	3363 - 23
4454900	3H16	28	3363 - 23
4454901	3H20	39	3363 - 27
4455115	1F11	0	0515 - 3
4455198	3I6	22	3363 - 37
4455394	1C22	1	0407 - 13
4455395	1C22	25	0407 - 13
4455439	3H20	40	3363 - 27
4455440	3H20	41	3363 - 27
4455441	3H20	42	3363 - 27
4455442	3H20	43	3363 - 27
4455444	3H24	15	3363 - 31
4455445	3I2	0	3363 - 33
4455446	3I2	1	3363 - 33
4455447	3I2	2	3363 - 33
4455565	2D12	5	1821 - 9
4455566	2D12	6	1821 - 9
4455592	3J6	4	3364 - 3
4455818	1H7	0B	1740 - 3
4455824	3I2	3	3363 - 33
4455825	3I2	4	3363 - 33
4455826	3I2	5	3363 - 33
4455827	3I8	1	3363 - 39
4455828	3I8	8	3363 - 39
4455829	3I8	9	3363 - 39
4455830	3I2	12	3363 - 33
4455831	3I2	13	3363 - 33
4455832	3I2	14	3363 - 33
4455833	3I2	15	3363 - 33
4455834	3I2	16	3363 - 33
4455835	3I2	17	3363 - 33
4455836	3I2	18	3363 - 33
4455837	3I8	20	3363 - 39
4455838	3I8	21	3363 - 39
4455839	3I8	22	3363 - 39
4455840	3I8	23	3363 - 39
4455841	3I8	24	3363 - 39
4455842	3I8	25	3363 - 39
4455844	3I4	15	3363 - 35
4455845	3I4	16	3363 - 35
4455847	3I6	19	3363 - 37
4455848	3I6	20	3363 - 37
4455849	3I6	21	3363 - 37
4455946	3I12	5	3363 - 43
4455947	3I12	6	3363 - 43
4455948	3I12	8	3363 - 43
4455949	3I10	11	3363 - 41
4455975	2B12	4	1810 - 17
4455977	2B12	17	1810 - 17
4455978	2B12	19	1810 - 17
4455979	2B12	2	1810 - 17
4455981	2B12	12	1810 - 17
4455982	2B12	8	1810 - 17
4455983	2B12	9	1810 - 17
4456004	3G10	0	3362 - 37
4456004	3I10	18	3363 - 41
4456021	1F7	27	0510 - 5
4456136	3I10	25	3363 - 41
4456171	2B12	11	1810 - 17
4456172	2B12	26	1810 - 17
4456173	2B12	5	1810 - 17
4456175	2B10	25	1810 - 15
4456177	2B10	2	1810 - 15
4456178	2B10	3	1810 - 15
4456179	2B10	4	1810 - 15
4456181	2B10	5	1810 - 15
4456181	2D2	69	1810 - 55
4456182	2B10	17	1810 - 15
4456183	2B10	8	1810 - 15
4456184	2B10	29	1810 - 15
4456185	2B10	11	1810 - 15
4456191	2E15	63	1910 - 11
4456191	2E17	63	1910 - 13
4456217	2B14	48	1810 - 19
4456218	2B14	2	1810 - 19
4456219	2B14	3	1810 - 19
4456220	2B14	4	1810 - 19
4456221	2B14	5	1810 - 19
4456222	2B14	6	1810 - 19
4456223	2B14	8	1810 - 19
4456224	2B14	9	1810 - 19
4456225	2B14	10	1810 - 19
4456226	2B14	12	1810 - 19
4456227	2B14	14	1810 - 19
4456228	2B14	20	1810 - 19
4456229	2B14	21	1810 - 19
4456230	2B14	26	1810 - 19
4456231	2B14	27	1810 - 19
4456232	2B14	29	1810 - 19
4456233	2B14	30	1810 - 19
4456234	2B14	31	1810 - 19
4456235	2B14	33	1810 - 19
4456236	2B14	34	1810 - 19
4456237	2B14	35	1810 - 19
4456238	2B8	37	1810 - 13
4456238	2B14	36	1810 - 19
4456239	2B14	37	1810 - 19
4456240	2B14	38	1810 - 19
4456241	2B14	39	1810 - 19
4456242	2B14	40	1810 - 19
4456244	2B20	8	1810 - 25
4456245	2B20	1	1810 - 25
4456246	2B20	1	1810 - 25
4456246	2B20	2	1810 - 25
4456247	2B20	1	1810 - 25
4456247	2B20	3	1810 - 25
4456248	2B20	6	1810 - 25
4456252	2E11	38C	1910 - 7
4456423	1G20	58	1674 - 13
4456427	2B8	1	1810 - 13
4456428	2B8	15	1810 - 13
4456428	2B8	26	1810 - 13
4456429	2B8	30	1810 - 13
4456433	2B8	34	1810 - 13
4456434	2B8	35	1810 - 13
4456435	2B8	41	1810 - 13
4456436	2B8	42	1810 - 13
4456450	2B8	43	1810 - 13
4456458	2B8	40	1810 - 13
4456689	3J2	12	3363 - 57
4456723	2D22	0B	1830 - 11
4456725	2D22	0A	1830 - 11
4456735	1G20	7F	1674 - 13
4456745	2E19	18	1910 - 15
4456746	2E19	18	1910 - 15
4456746	2E19	19	1910 - 15
4456747	2E19	20	1910 - 15
4456778	1G16	7A	1674 - 9
4456778	1G20	7A	1674 - 13
4456780	2E19	14A	1910 - 15
4456781	2E19	16A	1910 - 15
4456782	2E19	17A	1910 - 15
4456787	2C10	21	1810 - 39
4456952	2B18	15	1810 - 23
4457084	1F19	14A	0530 - 5
4457757	3D14	0F	3344 - 3
4457845	1H11	1A	1740 - 7
4457845	1H17	0A	1740 - 13
4457845	1H19	1A	1740 - 15
4457846	1H11	1B	1740 - 7
4457847	1H11	1C	1740 - 7
4457847	1H17	0B	1740 - 13
4457847	1H19	1B	1740 - 15
4458227	2D22	0G	1830 - 11
4458228	2D22	0C	1830 - 11
4458229	2D22	0H	1830 - 11
4458230	2D22	0D	1830 - 11
4458231	2D22	0E	1830 - 11
4458232	2D22	0F	1830 - 11
4458233	2D22	0I	1830 - 11
4458234	2D22	0J	1830 - 11
4458235	2D22	7A	1830 - 11
4458236	2D22	7B	1830 - 11
4458237	2D22	7C	1830 - 11
4458238	2D22	4	1830 - 11
4458238	2D22	19	1830 - 11
4458239	2D22	4	1830 - 11
4458239	2D22	20	1830 - 11
4458240	2D22	4	1830 - 11
4458240	2D22	21	1830 - 11
4458241	2D22	4	1830 - 11
4458241	2D22	22	1830 - 11
4458781	2D14	42	1830 - 3
4459249	2B18	83	1810 - 23
4460094	3H2	22	3363 - 9
4460405	2B18	1	1810 - 23
4460590	1F7	35	0510 - 5
4460904	1C20	39	0407 - 11
4461542	2C10	1	1810 - 39
4462306	3I10	15	3363 - 41
4462413	2E11	38F	1910 - 7
4462452	1F25	1	0560 - 5
4462470	2A24	41	1810 - 5
4462699	2E19	15A	1910 - 15
4462700	2E19	27A	1910 - 15
4463390	2B16	16A	1810 - 21
4463391	2B16	28	1810 - 21
4463392	2B16	29	1810 - 21
4463393	2B16	30	1810 - 21
4463394	2B16	31	1810 - 21
4463762	1G16	0	1674 - 9
4464143	3J4	23	3363 - 59
4464147	3J4	24	3363 - 59
4464546	2C24	17	1810 - 53
4464559	2C20	10	1810 - 49
4464568	2C20	5	1810 - 49
4464569	2C20	6	1810 - 49
4464599	2C14	2E	1810 - 43
4464609	2C14	2D	1810 - 43
4464633	2C24	18	1810 - 53
4464923	1F7	45	0510 - 5
4464982	2E15	92A	1910 - 11
4465202	1C4	1	0400 - 3
4465402	3I4	17	3363 - 35
4465688	3H16	28	3363 - 23

NUMERICAL INDEX - CONTINUED

PART NO.	GRID	KEY	PAGE
4465899	1A19	1	0130 - 3
4465900	1A19	2	0130 - 3
4465995	2D16	7	1830 - 5
4466241	1C4	1	0400 - 3
4466268	1F17	13B	0520 - 5
4466269	1F17	13C	0520 - 5
4466272	1F17	13E	0520 - 5
4466274	1F17	13G	0520 - 5
4466383	1C18	50	0407 - 9
4466383	1C22	50	0407 - 13
4466640	3I24	11	3363 - 55
4466664	1F7	5	0510 - 5
4467014	2C14	8	1810 - 43
4467387	1F19	28	0530 - 5
4468239	1F7	34	0510 - 5
4468345	2E17	70A	1910 - 13
4468943	2B12	65	1810 - 17
4468944	2B10	6	1810 - 15
4469041	2D18	64	1830 - 7
4469043	2D18	66	1830 - 7
4469044	2D18	67	1830 - 7
4469045	2D18	68	1830 - 7
4469046	2D18	71	1830 - 7
4469047	2D16	48	1830 - 5
4469047	2D18	75	1830 - 7
4469056	2D16	5	1830 - 5
4469057	2D16	6	1830 - 5
4469058	2D16	10	1830 - 5
4469059	2D16	17	1830 - 5
4469060	2D16	28	1830 - 5
4469061	2D16	29	1830 - 5
4469062	2D16	30	1830 - 5
4469063	2D16	44	1830 - 5
4469063	2D18	65	1830 - 7
4469375	3H24	34	3363 - 31
4469383	3F8	1	3362 - 11
4469395	1G8	30	1671 - 3
4469398	1F9	3	0510 - 7
4469404	1G18	13	1674 - 11
4469417	2E21	12A	1910 - 17
4469417	2E21	13A	1910 - 17
4469655	2E13	28A	1910 - 9
4469657	2E13	29A	1910 - 9
4469660	2E13	29B	1910 - 9
4469755	2E13	30A	1910 - 9
4469756	2E13	30B	1910 - 9
4469757	2E13	30C	1910 - 9
4469758	2E13	30D	1910 - 9
4469759	2E13	30E	1910 - 9
4470168	1G8	31	1671 - 3
4470661	3F20	0	3362 - 23
4470661	3F22	0	3362 - 25
4470661	3F24	0	3362 - 27
4470661	3G2	0	3362 - 29
4470661	3G4	0	3362 - 31
4470661	3H24	33	3363 - 31
4471211	1F17	13F	0520 - 5
4471224	1F17	13D	0520 - 5
4471306	2C14	2C	1810 - 43
4471843	2E13	28D	1910 - 9
4471855	2E13	28C	1910 - 9
4471861	2E13	28B	1910 - 9
4471868	2E15	35A	1910 - 11
4472088	3K2	10	4367 - 3
4472150	1B19	23	0260 - 11
4472150	1B21	19	0260 - 11B
4472548	3E10	42	3361 - 5
4472549	3E10	43	3361 - 5
4472814	1F19	5	0530 - 5
4473273	3E14	1	3361 - 9
4473273	3E16	35	3361 - 11
4473290	2E9	8D	1910 - 5
4473290	2E9	16	1910 - 5
4473719	1B6	20	0130 - 17
4473770	3E24	15	3362 - 3
4473825	2C14	1	1810 - 43
4473861	3G16	0	3362 - 43
4473999	1C4	1	0400 - 3
4474003	1F5	2	0510 - 3
4474004	1F5	3	0510 - 3
4474011	1F5	1	0510 - 3
4474248	2C20	12	1810 - 49
4474289	2C14	3	1810 - 43
4474289	2C22	16	1810 - 51
4474291	2C22	1	1810 - 51
4474293	2C20	1	1810 - 49
4474294	2C20	9	1810 - 49
4474295	2C14	2A	1810 - 43
4474298	2B10	26	1810 - 15
4474299	2B10	47	1810 - 15
4474300	2B10	10	1810 - 15
4474301	2B12	1	1810 - 17
4474302	2B12	5	1810 - 17
4474303	2B12	14	1810 - 17
4474304	2B12	16	1810 - 17
4474308	2C14	2	1810 - 43
4474315	2C14	70	1810 - 43
4474469	2C20	11	1810 - 49
4474474	2C14	2B	1810 - 43
4474476	2B18	43	1810 - 23
4474477	2B18	40	1810 - 23
4474478	2B18	32	1810 - 23
4474479	2B18	5	1810 - 23
4474480	2B18	8	1810 - 23
4474482	2B18	47	1810 - 23
4474493	2B18	14	1810 - 23
4474494	2B18	10	1810 - 23
4474498	2B18	6	1810 - 23
4474499	2B18	75	1810 - 23
4474513	2B18	77	1810 - 23
4474513	2B18	84	1810 - 23
4474514	2B18	76	1810 - 23
4474517	2B18	81	1810 - 23
4474518	2B18	80	1810 - 23
4474531	2B14	25	1810 - 19
4474532	2B14	41	1810 - 19
4474619	1C4	1	0400 - 3
4474619	1E16	36	0429 - 3
4474629	1C4	1	0400 - 3
4475229	2D18	83	1830 - 7
4475232	2E4	3	1830 - 17
4475235	2D14	63	1830 - 3
4475247	2D18	60	1830 - 7
4475248	2D18	61	1830 - 7
4475249	2D18	62	1830 - 7
4475250	2D18	63	1830 - 7
4475257	2D18	69	1830 - 7
4475258	2D18	70	1830 - 7
4475259	2D18	72	1830 - 7
4475260	2D18	74	1830 - 7
4475261	2D18	78	1830 - 7
4475262	2D18	79	1830 - 7
4475263	2D18	80	1830 - 7
4475264	2D16	1	1830 - 5
4475265	2D16	2	1830 - 5
4475283	2D16	3	1830 - 5
4475284	2D16	4	1830 - 5
4475285	2D16	8	1830 - 5
4475286	2D16	9	1830 - 5
4475287	2D16	11	1830 - 5
4475288	2D16	12	1830 - 5
4475289	2D16	13	1830 - 5
4475290	2D16	14	1830 - 5
4475291	2D16	15	1830 - 5
4475345	2D16	16	1830 - 5
4475346	2D16	17A	1830 - 5
4475347	2D16	18	1830 - 5
4475348	2D16	19	1830 - 5
4475349	2D16	20	1830 - 5
4475350	2D16	21	1830 - 5
4475351	2D16	22	1830 - 5
4475352	2D16	23	1830 - 5
4475353	2D16	24	1830 - 5
4475364	2D16	31	1830 - 5
4475365	2D16	32	1830 - 5
4475366	2D16	33	1830 - 5
4475367	2D16	34	1830 - 5
4475368	2D16	35	1830 - 5
4475369	2D16	36	1830 - 5
4475370	2D16	37	1830 - 5
4475371	2D16	38	1830 - 5
4475372	2D16	39	1830 - 5
4475399	2D16	40	1830 - 5
4475400	2D16	41	1830 - 5
4475401	2D16	42	1830 - 5
4475402	2D16	43	1830 - 5
4475403	2D16	45	1830 - 5
4475404	2D16	46	1830 - 5
4475405	2D16	47	1830 - 5
4475406	2D16	49	1830 - 5
4475407	2D16	50	1830 - 5
4475430	2D16	51	1830 - 5
4475431	2D16	52	1830 - 5
4475432	2D16	53	1830 - 5
4475433	2D16	57	1830 - 5
4475434	2D16	58	1830 - 5
4475435	2D16	59	1830 - 5
4476041	1B19	41	0260 - 11
4476041	1B21	7	0260 - 11B
4476043	1B19	25	0260 - 11
4476043	1B21	23	0260 - 11B
4476044	1B19	20	0260 - 11
4476044	1B21	16	0260 - 11B
4476045	1B19	27	0260 - 11
4476045	1B21	24	0260 - 11B
4476046	1B19	47	0260 - 11
4476046	1B21	21	0260 - 11B
4476047	1B19	4	0260 - 11
4476047	1B21	25	0260 - 11B
4476162	1F5	1A	0510 - 3
4476163	1F5	1B	0510 - 3
4476164	1F5	1C	0510 - 3
4476168	1F5	1D	0510 - 3
4476174	1F5	1E	0510 - 3
4476175	1F5	9	0510 - 3
4476176	1F5	10	0510 - 3
4476177	1F5	19	0510 - 3
4476775	2D2	1	1810 - 55
4476843	2C12	43	1810 - 41
4476862	2C12	47	1810 - 41
4476863	2C12	48	1810 - 41

NUMERICAL INDEX - CONTINUED

PART NO.	GRID	KEY	PAGE
4476867	2C12	49	1810 - 41
4476868	2C12	50	1810 - 41
4476874	2C16	10	1810 - 45
4476877	2C16	3	1810 - 45
4477185	1F17	13H	0520 - 5
4477216	2B18	44	1810 - 23
4477217	2B18	41	1810 - 23
4477218	2B18	37	1810 - 23
4477219	2B18	36	1810 - 23
4477373	1G20	0	1674 - 13
4477852	3C12	14	3315 - 5
4477852	3C12	15	3315 - 5
4477852	3C12	16	3315 - 5
4477852	3C12	17	3315 - 5
4478084	1B6	7	0130 - 17
4478098	1B6	0	0130 - 17
4478100	1B6	2	0130 - 17
4478101	1B6	3	0130 - 17
4478102	1B6	4	0130 - 17
4478105	1B6	5	0130 - 17
4478111	1B6	6	0130 - 17
4478112	1B6	0A	0130 - 17
4478113	1B6	0B	0130 - 17
4478122	1F25	0	0560 - 5
4478859	2D14	62	1830 - 3
4480216	2C4	6	1810 - 33
4481829EX	1B19	90	0260 - 11
4481829EX	1B23	0	0260 - 13
4481829EX	1B25	2	0260 - 15
4482233	3F24	38	3362 - 27
4482564	1H7	62	1740 - 3
4482883	2D18	73	1830 - 7
4483073	3G16	12	3362 - 43
4484025	3I10	15	3363 - 41
4484031	3I10	15	3363 - 41
4484452	2D14	42	1830 - 3
4484453	2D14	42	1830 - 3
4484495	1C4	1	0400 - 3
4485997	2E9	4A	1910 - 5
4486001	2E11	1A	1910 - 7
4487682	3D10	29	3340 - 9
4488765	1E16	51	0429 - 3
4488904	3J23	21	4360 - 5
449558	1F23	4	0560 - 3
449558	3J6	17	3364 - 3
4502700	1B2	13	0130 - 13
4506408	1G5	..	1369 - 3
4506408	3F16	6	3362 - 19
4506418	1B13	11A	0260 - 5
4506418	1B25	30	0260 - 15
4506418	1G5	..	1369 - 3
4506418	3F2	73	3362 - 5
4506418	3F4	73	3362 - 7
4506418	3F12	73	3362 - 15
4506418	3G12	3A	3362 - 39
4506418	3G14	39	3362 - 41
4506418	3H4	0	3363 - 11
4506418	3H14	4	3363 - 21
4506418	3H14	8	3363 - 21
4506418	3H14	9	3363 - 21
4506418	3H22	2	3363 - 29
4506418	3H22	3	3363 - 29
4506418	3H22	7	3363 - 29
4506418	3H22	19	3363 - 29
4506418	3H22	20	3363 - 29
4506418	3H22	21	3363 - 29
4506418	3H22	35	3363 - 29
4506418	3J4	11	3363 - 59
4506424	1B11	13	0260 - 3
4506424	1B13	12A	0260 - 5
4506424	1B23	32	0260 - 13
4506424	1G5	..	1369 - 3
4506424	3E10	31A	3361 - 5
4506424	3E10	38A	3361 - 5
4506424	3G20	14	3363 - 3
4506424	3G24	39	3363 - 7
4506424	3H4	18	3363 - 11
4506424	3H4	19	3363 - 11
4506424	3H6	2A	3363 - 13
4506424	3H14	0	3363 - 21
4506424	3H14	2	3363 - 21
4506428	1G5	..	1369 - 3
4506428	3F6	63	3362 - 9
4506428	3K2	7	4367 - 3
4506430	1G5	..	1369 - 3
4509180	3I10	19	3363 - 41
4512403	1B8	9	0130 - 19
457793	1F19	20	0530 - 5
4600171	2E7	31	1910 - 3
4602034	2B4	0	1810 - 9
4602034	2C18	1	1810 - 47
4602562	2B14	25	1810 - 19
4602563	2B14	43	1810 - 19
4602564	2B12	52	1810 - 17
4602565	2B12	53	1810 - 17
4602566	2B12	65	1810 - 17
4602568	2B16	1	1810 - 21
4602570	2B16	8B	1810 - 21
4602576	2B16	16B	1810 - 21
4602582	2B12	50	1810 - 17
4603980	3J6	4B	3364 - 3
4609477	2B18	77	1810 - 23
4609478	2B18	84	1810 - 23
4609479	2B18	77	1810 - 23
4609479	2B18	84	1810 - 23
4609480	2B18	77	1810 - 23
4609480	2B18	84	1810 - 23
4609956	3C10	8	3315 - 3
4609956	3C10	20	3315 - 3
4609956	3C12	3	3315 - 5
4610571	1A19	35	0130 - 3
4612763	2E4	12	1830 - 17
4613913	2F7	9	2001 - 3
4614286	3C14	26	3315 - 5B
4614296	3C14	21	3315 - 5B
4614331	3C14	28	3315 - 5B
4614911	1F13	0	0515 - 5
4615610	3C14	10	3315 - 5B
4617327	2E4	45	1830 - 17
4618722	2E4	19	1830 - 17
4620385	1F19	5	0530 - 5
4620431	2B12	5	1810 - 17
4620483	2E4	20	1830 - 17
4621319	1F19	9A	0530 - 5
4621319	1F19	14A	0530 - 5
4621319	1F19	14B	0530 - 5
4622562	1C4	1	0400 - 3
4622778	1H13	5	1740 - 9
4624730	2B14	1	1810 - 19
4627275	3I6	19	3363 - 37
4633400	2B14	8	1810 - 19
4633400	2B14	12	1810 - 19
4633401	2B14	8	1810 - 19
4633401	2B14	12	1810 - 19
4634350	3E10	23	3361 - 5
4636079	1H13	4	1740 - 9
4637257	2B14	1	1810 - 19
4640468	2F7	9	2001 - 3
484827	1H15	1	1740 - 11
492067	1H21	12	1740 - 17
494918	2B14	15	1810 - 19
494918	2C22	5	1810 - 51
5007342	2C2	15	1810 - 31
5007620	1F23	0	0560 - 3
5007665	1H7	0	1740 - 3
5007705	1H11	1	1740 - 7
5007724	2E9	8A	1910 - 5
5007735	1H17	0	1740 - 13
5007735	1H19	0	1740 - 15
5007749	3J6	0	3364 - 3
5007772	2E11	50	1910 - 7
5007773	2E11	38	1910 - 7
5007813	2E19	3	1910 - 15
5008033	2E19	25	1910 - 15
5008647	2E11	1	1910 - 7
5008706	2E11	38	1910 - 7
5008709	2E11	1	1910 - 7
5008709	2E11	38	1910 - 7
5009001	2E19	1	1910 - 15
5009001	2E19	25	1910 - 15
5095031110	1E20	83	0433 - 5
5097070301	1C24	13	0408 - 3
5111290060	1D4	16	0409 - 5
5112190080	1C8	55	0402 - 3
5112190080	1D4	13	0409 - 5
5113690720	1C12	50	0407 - 3
6WG1XQA01	1C4	1	0400 - 3
6016584	1H13	20	1740 - 9
6019252	2C2	14	1810 - 31
6019838	2C2	12	1810 - 31
6020125	2D10	0	1821 - 7
6020159	1H7	29	1740 - 3
6020331	2E15	93	1910 - 11
6020346	1B15	12	0260 - 7
6020347	1B15	13	0260 - 7
6020352	2C4	5	1810 - 33
6020385	2D4	3	1810 - 57
6020817	2E13	28	1910 - 9
6020827	2E13	30	1910 - 9
6020971	2E7	29	1910 - 3
6021724	2E13	28	1910 - 9
6021808	1B15	12	0260 - 7
6021809	1B15	13	0260 - 7
6021929	1H7	29	1740 - 3
6021929	1H7	31	1740 - 3
6021931	1H7	29	1740 - 3
6021931	1H7	31	1740 - 3
6022388	2E7	29	1910 - 3
7026686	3H12	14	3363 - 19
7026687	3H12	13	3363 - 19
7028306	1A23	1	0130 - 7
7035503	3C16	0	3315 - 7
7036594	2A22	0	1810 - 3
7036595	2A22	2	1810 - 3
7039389	2C2	1	1810 - 31
7039668	1G8	6	1671 - 3
7040301	3G22	31	3363 - 5
7040303	3G20	0	3363 - 3
7040407	2E4	15	1830 - 17
7040434	2E9	8	1910 - 5
7040435	2E9	0	1910 - 5

NUMERICAL INDEX - CONTINUED

PART NO.	GRID	KEY	PAGE
7040480	1F21	9	0540 - 3
7040502	2E4	0A	1830 - 17
7040504	3G24	15	3363 - 7
7040505	2D12	4	1821 - 9
7040508	3H24	4	3363 - 31
7040538	2E25	12	1910 - 21
7040547	2E7	16	1910 - 3
7040548	2E7	17	1910 - 3
7040558	2E25	6	1910 - 21
7040559	2E25	7	1910 - 21
7040580	2E23	22	1910 - 19
7040581	2E21	7	1910 - 17
7040591	2E7	3	1910 - 3
7040592	2E7	1	1910 - 3
7040622	2E7	2	1910 - 3
7040625	2E7	0	1910 - 3
7040630	2E15	2	1910 - 11
7040643	2E17	72	1910 - 13
7040648	2E19	12	1910 - 15
7040649	2E17	70	1910 - 13
7040954	1F19	23B	0530 - 5
7041316	3D2	9	3315 - 17
7041956	1F19	27	0530 - 5
7041975	2E15	35	1910 - 11
7042893	1F19	27	0530 - 5
7043130	2E11	78	1910 - 7
7044029	2E7	11	1910 - 3
7044030	2E7	2	1910 - 3
7044031	2E7	0	1910 - 3
7044129	3H12	13	3363 - 19
7044129	3H12	14	3363 - 19
7044130	3H12	13	3363 - 19
7044130	3H12	14	3363 - 19
7044228	1B15	13	0260 - 7
7044228	1B15	16	0260 - 7
7044229	1B15	12	0260 - 7
7044229	1B15	16	0260 - 7
7044231	2E4	0A	1830 - 17
7044231	2E4	0B	1830 - 17
8023981	3J6	29	3364 - 3
8033923	1F23	3	0560 - 3
8038955	3H6	0	3363 - 13
8039014	1B17	15	0260 - 9
8044683	3D2	11	3315 - 17
8049555	3D4	6	3340 - 3
8049555	3D6	6	3340 - 5
8049555	3D8	6	3340 - 7
8049555	3D12	6	3340 - 11
8050176	3D10	5	3340 - 9
8050178	3D10	6	3340 - 9
8050277	1H7	0C	1740 - 3
8050377	3D4	7	3340 - 3
8050377	3D6	7	3340 - 5
8050377	3D8	7	3340 - 7
8050377	3D12	7	3340 - 11
8053492	2E23	14	1910 - 19
8053499	3J6	16	3364 - 3
8053517	1H7	19	1740 - 3
8053518	1H7	27	1740 - 3
8053519	3D4	11	3340 - 3
8053519	3D6	11	3340 - 5
8053519	3D8	11	3340 - 7
8053519	3D10	11	3340 - 9
8053519	3D12	11	3340 - 11
8053519	3D14	3	3344 - 3
8053519	3D16	3	3344 - 5
8053520	3D14	4	3344 - 3
8053520	3D16	4	3344 - 5
8053767	1A25	54	0130 - 11
8053772	3I14	11	3363 - 45
8053777	3I14	3	3363 - 45
8053777	3I18	3	3363 - 49
8053779	3I14	5	3363 - 45
8055536	3H6	1	3363 - 13
8055772	3I14	6	3363 - 45
8055773	3I14	8	3363 - 45
8055774	3I14	9	3363 - 45
8055774	3I18	8	3363 - 49
8058161	3I14	7	3363 - 45
8058162	3I14	10	3363 - 45
8058163	3I14	4	3363 - 45
8058593	3I18	4	3363 - 49
8058594	3I18	5	3363 - 49
8058595	3I18	6	3363 - 49
8058596	3I18	7	3363 - 49
8058597	3I18	9	3363 - 49
8058598	3I18	10	3363 - 49
8059541	1H21	0A	1740 - 17
8059544	1H21	1A	1740 - 17
8059751	1F21	8	0540 - 3
8061381	1B15	7	0260 - 7
8061382	1B15	8	0260 - 7
8061456	1B13	20	0260 - 5
8061926	3J6	2	3364 - 3
8063718	3C20	0	3315 - 11
8067349	2E23	19A	1910 - 19
8067350	2F4	1	1910 - 25
8067496	1F23	9	0560 - 3
8068295	2C10	42	1810 - 39
8068378	1A21	0	0130 - 5
8068391	1A21	1	0130 - 5
8073901	3C16	6	3315 - 7
8074128	3D19	1	3360 - 5
8075449	3C18	1	3315 - 9
8075450	3C18	0	3315 - 9
8076619	2C2	9	1810 - 31
8077064	1F19	10	0530 - 5
8077903	3C20	32	3315 - 11
8078454	3D19	0	3360 - 5
8079753	1F13	4	0515 - 5
8081398	1C18	1	0407 - 9
8082329	1G20	24	1674 - 13
8083040	3G20	1	3363 - 3
8083130	3H2	0	3363 - 9
8083758	1F19	9A	0530 - 5
8083946	3G24	0	3363 - 7
8083947	3G24	1	3363 - 7
8083948	3J6	3	3364 - 3
8083975	3G24	14	3363 - 7
8084137	3G22	29	3363 - 5
8084205	1F9	0	0510 - 7
8084215	2E9	5	1910 - 5
8084400	1F7	23	0510 - 5
8084401	1F7	24	0510 - 5
8084458	2E21	8	1910 - 17
8084462	2E19	1	1910 - 15
8084556	2E7	26	1910 - 3
8084563	2E7	11	1910 - 3
8084572	2E7	10	1910 - 3
8084573	2E7	12	1910 - 3
8084581	2E7	9	1910 - 3
8084599	2E19	14	1910 - 15
8084600	2E19	15	1910 - 15
8084601	2E19	16	1910 - 15
8084602	2E19	17	1910 - 15
8085274	1F7	22	0510 - 5
8085362	2D4	1	1810 - 57
8085625	1F7	38	0510 - 5
8085751	2E19	27	1910 - 15
8086341	2E17	54	1910 - 13
8086390	2E11	75	1910 - 7
8086575	1F13	3	0515 - 5
8086662	2E15	92	1910 - 11
8086769	2E15	9	1910 - 11
8087215	2E21	12	1910 - 17
8087222	2E21	13	1910 - 17
8087281	2E13	29	1910 - 9
8087419	3E10	24	3361 - 5
8087727	3E10	36	3361 - 5
8087991	3G22	25	3363 - 5
8088326	1F19	5	0530 - 5
8088326	1F19	23A	0530 - 5
8088405	3G22	30	3363 - 5
8089565	1G8	4	1671 - 3
8089970	3E10	36	3361 - 5
8090552	2E9	4	1910 - 5
8091316	3G22	30	3363 - 5
8091440	2E21	12	1910 - 17
8091452	2E21	13	1910 - 17
8092124	3E10	36	3361 - 5
8092805	2E19	1	1910 - 15
8092805	2E19	25	1910 - 15
8093819	2E23	17A	1910 - 19
8093819	2E23	19B	1910 - 19
8093827	2F4	0	1910 - 25
8093827	2F4	1	1910 - 25
8094446	3C14	0	3315 - 5B
8096020	1F19	9A	0530 - 5
8096020	1F19	9B	0530 - 5
8096020	1F19	14A	0530 - 5
8941711850	1D20	19	0413 - 13
8942416370	1D4	15	0409 - 5
8942416380	1D22	30	0414 - 3
8943188001	1C16	48	0407 - 7
8943255061	1C10	32	0404 - 3
8943445401	1E6	47	0419 - 3
8943795430	1E14	68	0423 - 3
8943795431	1E14	68	0423 - 3
8943930391	1E12	9	0421 - 3
8943932801	1E12	8	0421 - 3
8943932802	1E12	8	0421 - 3
8943964060	1D8	34	0410 - 3
8943971391	1D16	25	0413 - 9
8943973220	1D2	30	0409 - 3
8943973591	1C14	29	0407 - 5
8943973591	1D10	2	0413 - 3
8943973591	1E4	50	0418 - 3
8943992531	1D16	4	0413 - 9
8943994210	1D2	32	0409 - 3
8943994881	1C14	30	0407 - 5
8943996890	1D6	5	0409 - 7
8943997230	1D6	4	0409 - 7
8943998582	1C10	41	0404 - 3
8944788691	1E2	45	0417 - 3
8944788692	1E2	45	0417 - 3
8971256011	1E4	4	0418 - 3
8971312230	1C12	48	0407 - 3
8971488921	1E6	57	0419 - 3
8972331260	1D4	18	0409 - 5
8972331270	1D4	20	0409 - 5
8973780710	1D8	49	0410 - 3

NUMERICAL INDEX - CONTINUED

PART NO.	GRID	KEY	PAGE
8976009250	1D10	76	0413 - 3
8976009250	1D12	76	0413 - 5
8976049160	1C12	49	0407 - 3
9010658400	1E20	52	0433 - 5
9041106300	1D22	27	0414 - 3
9041108200	1D8	58	0410 - 3
9044110300	1E20	59	0433 - 5
9044110400	1E20	50	0433 - 5
9044114350	1E18	15	0433 - 3
9044114450	1E20	46	0433 - 5
9059210800	1C14	31	0407 - 5
9059210800	1D2	38	0409 - 3
9074843	3D2	0	3315 - 17
9074843	3F14	1	3362 - 17
9080555160	1C8	14	0402 - 3
9080556220	1D16	3	0413 - 9
9081505100	1D16	27	0413 - 9
9081510180	1C10	30	0404 - 3
9081514280	1C10	83	0404 - 3
9081612320	1C8	18	0402 - 3
9086168	3F14	24	3362 - 17
9089355	3F14	11	3362 - 17
9091508140	1D10	8	0413 - 3
9091605100	1E16	69	0429 - 3
9091605140	1D10	11	0413 - 3
9091605140	1E14	17	0423 - 3
9091607120	1E16	69	0429 - 3
9091645140	1D16	8	0413 - 9
9091645140	1E18	7	0433 - 3
9091645140	1E18	16	0433 - 3
9091645140	1E20	41	0433 - 5
9091646160	1E16	83	0429 - 3
9091646200	1E16	84	0429 - 3
9091647240	1E16	7	0429 - 3
9091800320	1E16	41	0429 - 3
9096620120	1C12	6	0407 - 3
9098041931	1D10	9	0413 - 3
9098311240	1E16	3	0429 - 3
9098403100	1C8	62	0402 - 3
9098518503	1C8	8	0402 - 3
9098518620	1C6	22	0401 - 3
9099147010	1E6	49	0419 - 3
9102385	3E14	53	3361 - 9
9102385	3E20	11	3361 - 15
9109492	1B4	20	0130 - 15
9111290820	1C8	55	0402 - 3
9111839	3D6	0	3340 - 5
9111926	3D4	5	3340 - 3
9111926	3D6	5	3340 - 5
9111926	3D8	5	3340 - 7
9111926	3D12	5	3340 - 11
9113490490	1E18	8	0433 - 3
9114176	3D10	4	3340 - 9
9123033	3G12	4	3362 - 39
9123033	3H22	5	3363 - 29
9126160530	1C8	61	0402 - 3
9128709	3D14	0	3344 - 3
9131211	3D16	0	3344 - 5
9131217	3D12	0	3340 - 11
9134171	1H21	0	1740 - 17
9134172	1H21	1	1740 - 17
9137270	1A25	10	0130 - 11
9137494	1B8	15	0130 - 19
9141367	3D8	0	3340 - 7
9141490260	1D8	11	0410 - 3
9142088	3D10	0	3340 - 9
9142216	3D4	0	3340 - 3
9151724	3C20	6	3315 - 11
9183296EX	1B11	0	0260 - 3
9184275	3C20	8	3315 - 11
9189960	1B21	40	0260 - 11B
9191671	3J23	0-	4360 - 5
9194416	1G22	1	1674 - 13B
9195304	3C10	20	3315 - 3
9195304	3C12	3	3315 - 5
9195307	3C18	2	3315 - 9
9195307	3C20	7	3315 - 11
9197075	3E8	1	3361 - 3
9197075	3E14	0	3361 - 9
9197590191	1D10	10	0413 - 3
9199146	3C20	13	3315 - 11
9199789EX	1B11	0	0260 - 3
9201470	1B19	0	0260 - 11
9205229	2B6	1	1810 - 11
9205229	2B8	0	1810 - 13
9205229	2B10	0	1810 - 15
9205229	2B12	0	1810 - 17
9205229	2B14	0	1810 - 19
9205229	2B16	0	1810 - 21
9205229	2B18	0	1810 - 23
9205229	2B20	0	1810 - 25
9207252	1F13	14	0515 - 5
9209335	3J23	0	4360 - 5
9212078	1G22	1	1674 - 13B
9217993	3E8	7	3361 - 3
9217993	3E22	30	3361 - 17
9227387	1G20	58	1674 - 13
9229740	1H13	20	1740 - 9
9234284	3C12	14	3315 - 5
9234284	3C12	15	3315 - 5
9234284	3C12	16	3315 - 5
9234284	3C12	17	3315 - 5
9235551	3C18	2	3315 - 9
9239568	1G22	1	1674 - 13B
9239583	3C10	20	3315 - 3
9239583	3C12	3	3315 - 5
9246436	3C14	17	3315 - 5B
94-1404	1C20	41	0407 - 11
94-1702	3J6	19	3364 - 3
94-1703	3J4	10	3363 - 59
94-1901	1F23	21	0560 - 3
94-2011	1A25	7	0130 - 11
94-2011	1B4	11	0130 - 15
94-2011	1F23	23	0560 - 3
94-2011	3C12	1	3315 - 5
94-2023	3I20	22	3363 - 51
94-2023	3I24	22	3363 - 55
94-2024	3J18	5	3365 - 13
94-2024	3J23	42	4360 - 5
94-2025	1C20	43	0407 - 11
94-2817	2B24	3	1810 - 29
953612	3J6	13B	3364 - 3
955612	3J8	60	3365 - 3
955612	3J10	64	3365 - 5
955612	3J12	47	3365 - 7
955612	3J14	61	3365 - 9
957474	1G5	..	1369 - 3
966689	3F2	78	3362 - 5
9701925	1H17	14	1740 - 13
9701925	1H19	14	1740 - 15
970860	1G5	..	1369 - 3
970860	3G22	35	3363 - 5
9726772	1F23	19	0560 - 3
9727822	3H6	23	3363 - 13
9730161	1C20	42	0407 - 11
9732429	3D2	1	3315 - 17
9738682	2C6	26	1810 - 35
9742550	1F21	15	0540 - 3
9744089	3H8	21	3363 - 15
9747606	3H2	62	3363 - 9
9747856	2C10	41	1810 - 39
9754739	3I4	33	3363 - 35
9754739	3I6	33	3363 - 37
9754825	3C12	16	3315 - 5
9754826	3C12	17	3315 - 5
9755251	1F7	30	0510 - 5
9756005	1H2	2	1674 - 15
9756079	1F13	14A	0515 - 5
9756164	2E13	19	1910 - 9
9756223	3G24	21	3363 - 7
9756540	3G22	28	3363 - 5
9756553	3G24	2	3363 - 7
9756736	2D12	16	1821 - 9
9756816	1G18	16	1674 - 11
9756826	1G18	17	1674 - 11
9756851	2E7	22	1910 - 3
9757192	2C2	29	1810 - 31
9757366	1F7	36	0510 - 5
9757398	1F19	1	0530 - 5
9758117	1F11	7	0515 - 3
9759157	3C12	14	3315 - 5
9759157	3C12	15	3315 - 5
9759157	3C12	16	3315 - 5
9759157	3C12	17	3315 - 5
9759157	3C14	14	3315 - 5B
9759158	3C12	14	3315 - 5
9759158	3C12	15	3315 - 5
9759158	3C12	16	3315 - 5
9759158	3C12	17	3315 - 5
9759158	3C14	15	3315 - 5B
9759219	2E19	28	1910 - 15
9760384	3G22	28	3363 - 5
9760589	1B15	16	0260 - 7
9760788	1B15	16	0260 - 7
9760789	1B15	16	0260 - 7
9813512050	1D20	16	0413 - 13
9813515030	1D20	17	0413 - 13
9813517020	1D20	4	0413 - 13
9813550310	1D20	7	0413 - 13
9813550350	1D20	18	0413 - 13
9813550620	1D20	13	0413 - 13
9829322900	1E14	31	0423 - 3
9831514320	1E14	83	0423 - 3
985098	3J8	58	3365 - 3
985099	3F18	5	3362 - 21
988681	3J16	4	3365 - 11
991351	1B2	11	0130 - 13
9916664000	1E18	6	0433 - 3
9916664500	1E18	10	0433 - 3
9916664900	1D16	5	0413 - 9
9920614280	1C8	7	0402 - 3
9923614450	1E18	11	0433 - 3
9991105120	1C8	83	0402 - 3
9991115180	1E16	13	0429 - 3
9991115180	1E16	21	0429 - 3
9991115240	1E16	24	0429 - 3
9992023160	1E4	3	0418 - 3