RUTHZIL TRATOR COMERCIAL DE PEÇAS LTDA 11 97083-6812 ROLANDO CITRANGULO

BOBCAT 610

610

JANEIRO 1999

Parts Manual

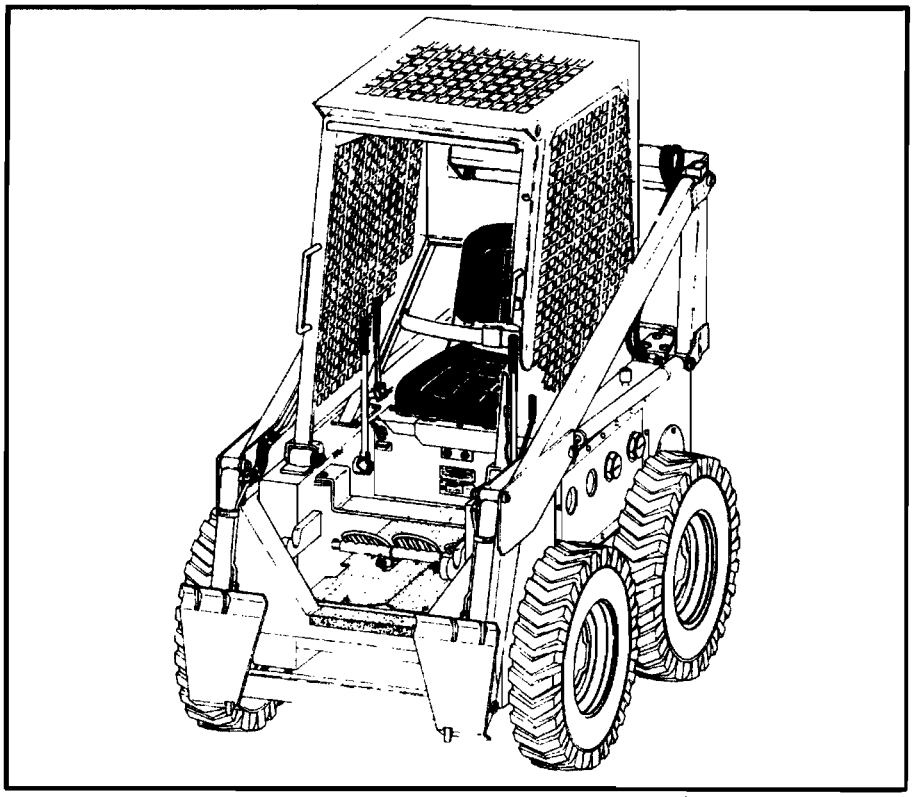

PUBLICATION #	6556334 (01–99)
REPLACES #	6556334 (11–97)

MELROE
INGERSOLL-RAND

Printed in U.S.A.

bobcat

© Melroe Company 1999

GENERAL INFORMATION

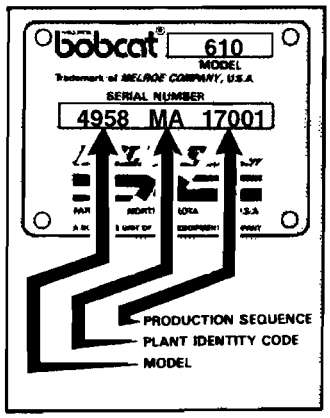

Fig. 1 Serial No. Plate

When using the machine serial number, use the complete number.

Some Serial Number breaks are not available at time of printing. These are listed as & Below or & Above.

The number shown in the quantity column in this manual is the number of parts needed for the illustration on the page. For some parts an "x" will be shown in the quantity column. This "x" indicates that the quantity to be used is "As Needed".

When references L.H. and R.H. are used in this manual, it is done from the operator's seat in the forward operating position.

To find the size and kind of bolt use the Melroe Standard Microfiche (P/N 6566077).

Some of the illustrations and information found in this parts manual were supplied to Melroe Company by machine component companies.

ABBREVIATIONS & SYMBOLS

SALES = Order from Gwinner Sales Department

NSS = Not Serviced Seperately

NAP = Not Available as Parts

***** = Changed or Added Sections, Pages or Part Numbers

Disposition Code Definition (Found in the Remarks Column)

[A] = Use Up

[B] = Use Up on Other Appplication (See PNI)

[C] = File PDR Report With Melroe Parts Sales

[D] = Part Number Error

Explications en francais	Grid Nb	A3
Erklärungen auf deutsch	Grid Nb	A4
Spiegazioni in italiano	Grid Nb	A5
Explicaciones en espanol	Grid Nb	A6
Verklaring in het Nederlands	Grid Nb	A7

NOTE D'INFORMATION

Pour toute référence au numéro de série de l'engin, toujours donner le numéro complet.

Le chiffré apparaissant dans la colonne des quantités de ce manuel représentent le nombre de pièces nécessaires pour l'illustration reprise sur la page. Dans certains cas, on lira un "x" dans la colonne des quantités. Cet "x" indique que la quantité nécessaire est "selon besoin".

Pour toute référence vers la GAUCHE ou la DROITE dans ce manuel, considérer que la personne se trouve assise dans le siège de l'opérateur, en position de fonctionnement en marche avant.

Certaines illustrations et informations reprises dans ce manuel de pièces de rechange ont été fournies à Melroe Company, une société du groupe Clark Equipment Company, par des fabricants de composants.

ABREVIATIONS & SYMBOLES

SALES	= Commander au Service Ventes à Bruxelles
NSS	= Pas vendu séparément
NAP	= Non disponible comme pièce de rechange
*	= Chapitre, page ou numéro de pièce modifié ou supplémentaire
BTI	= Bobcat Technical Information Bulletin : voir à la fin de la microfiché du modèle concerné ou la microfiche générale reprenant l' ensemble des "BTI".
was 6535403	= était avant 6535403
adj. (adjustment)	= réglage
Assembly	= ensemble
available W/Ref.	= disponible avec réf.
bulk/sold per foot	= en vrac/vendu par pied
does not include	= ne comprend pas
included with	= compris dans
I.D.	= D.I. (diamètre intérieur)
O.D.	= D.E. (diamètre extérieur)
not in kit	= pas en kit
W/ – WO/	= inclus/ – non inclus/
Qty	= quantité requise
see page/ref.	= voir page/réf.
used with ref/	= utilisé avec réf.
0,05 inch thickness	= 0,05 pouce d'épaisseur (un pouce = 25.4 mm)
weld on	= à souder

ALLGEMEINE INFORMATIONEN

Bei Angabe der Maschinen–Seriennummer stets die komplette Nummer angeben.

Bei der in der Mengenspalte (Anzahl) in diesem Handbuch angegebenen Zahl handelt es sich um die Anzahl von Teilen, die für die Abbildung auf der betreffenden Seite benötigt werden. Bei manchen Teilen in der Mengenspalte ist ein "x" angegeben. Dieses "x" weist darauf hin, dass sich die Anzahl der verwendeten Teile auf den "Bedarf" bezieht.

Bei Verwendung der Seitenangaben links und rechts in diesem Handbuch gelten diese für die Blickrichtung vom Fahrersitz aus, und zwar in Vorwärts–Betriebsrichtung.

Einige der in diesem Ersatzteilhandbuch aufgeführten Abbildungen und Informationen wurden der Melroe Company, einem Geschäftszweig der Clark Equipment Company, von den Herstellern von Maschinenbauteilen zur Verfügung gestellt.

ABKÜRZUNGEN UND SYMBOLE

SALES	= Bestellung bei der Verkaufsabteilung in Brüssel
NSS	= Nicht einzeln erhältlich
NAP	= Nicht als Ersatzteil erhältlich
*	= Geänderte oder hinzugefügte Abschnitte, Seiten oder Teilenummern
BTI	= Bobcat Technical Information Bulletin : Siehe am Ende der Mikrokarte des jeweiligen Modells oder der allgemeinen Mikrokarte der BTI.
was 6535403	= War 6535403
adj.	= Einstellung
Assembly	= Baugruppe
available W/Ref.	= erhältlich mit der Referenz
bulk/sold per foot	= Mengenabnahme / Verkauf pro Fuss
does not include	= beinhaltet nicht
included with	= enthalten in
I.D.	= Innendurchmesser
O.D.	= Aussendurchmesser
not in kit	= nicht in Bausatz
W/ – WO/	= mit/ – ohne/
Qty	= Anzahl
see page/ref.	= Siehe Seite / Referenz
used with ref.	= verwendet mit Referenz
0.05 inch thickness	= Dicke : 0.05 Zoll (ein Zoll = 25.4 mm)
weld on	= anschweissen

INFORMAZIONI GENERALI

Quando si usa il numero di serie della macchina usare il numero completo.

Il numero mostrato nella colonna della quantità di questo manuale corrisponde al numero di componenti necessari per l'illustrazione della pagina. Per alcuni componenti appare "X" nella colonna delle quantità. Questa "X" indica che la quantità da usare è "come necessario".

See in questo manuale si fa riferimento alla parte destra o sinistra, si intende dal sedile dell'operatore nella posizione in avanti di funzionamento.

Alcune delle illustrazioni e informazioni trovate in questo manuale di componenti sono state fornite alla Melroe Company, una Unità commerciale della Clark Equipment Company, da società di componenti di macchine.

SIMBOLI E ABBREVIAZIONI

SALES	= Ordinare al servizio vendite di Bruxelles
NSS	= Non vendute separatamente
NAP	= Non disponibile come componente
*	= Sezioni, pagine o numeri di componente cambiati o aggiunti
BTI	= (Bobcat Technical information) Ved. al termine del microfiche del modello relativo oppure microfiche generale
was 6535403	= era 6535403
adj. (adjustment)	= regol. (regolazione)
Assembly	= Complessivo
available W/ref.	= disponibile con rif.
bulk/sold per foot	= alla rinfusa/venduto al piede
does not include	= non comprende
Included with	= compreso con
I.D.	= d. i.
O.D.	= d. e.
not in kit	= non fa parte del kit
W/ – WO/	= con – senza
Qty	= Qtà
see page/ref	= ved. pagina/rif.
used with ref.	= usato con il rif.
0,05 inch thickness	= spessore 0,05 pollici (un pollice = 25,4 mm)
weld on	= a saldare

INFORMACION GENERAL

Al utilizar el número de serie de la máquina, debe emplearse el número completo.

El número que figura en la columna de "Unidades" en este manual es el número de piezas que se necesitan para la ilustración que consta en la página. En algunas piezas aparece una "x" en la columna de "Unidades". Esta "x" indica que las unidades a utilizar son "según sea necesario".

Cuando se empleen las referencias izq. y dcha., éstas se entienden mirando desde el asiento del conductor, en posición de marcha adelante.

Algunas de las ilustraciones y la información que figuran en este manual de piezas han sido facilitadas a Melroe Company, División de Clark Equipment Company, por empresas de componentes de máquinas.

ABREVIATURAS Y SIMBOLOS

VENTAS	= Pedido al Departamento de Ventas de Bruselas
NSS	= No se vende por separado
NAP	= No disponible como pieza de repuesto
*	= Secciones, páginas o referencias modificadas o añadidas
BTI	= (Bobcat Tecnical Information) Ver al final de la microficha del modelo afectado o en la microficha general "Boletín de Información Técnica Bobcat".
was 6535403	= era anteriormente el 6535403
adj. (adjustment)	= ajuste
assembly	= conjunto
available W/Ref.	= disponible con la ref.
bulk/sold per foot	= a granel/vendido por pies
does not include	= no incluye
included with	= incluido en
I.D.	= diámetro interior
O.D.	= diámetro exterior
not in kit	= no en el kit
W/ – WO/	= con/ – sin
Qty	= Unidades
see page /ref.	= ver página/ref.
used with ref.	= empleado con la ref.
0,05 inch thickness	= 0,05 pulgadas de espesor (1 pulgada = 25,4 mm)
weld on	= debe ser soldado

ALGEMENE INFORMATIE

Als u het serienummer van de machine gebruikt, geef dan het gehele serienummer.

Het cijfer dat voorkomt in de kolom "Aantal", in deze handleiding, is het aantal onderdelen dat nodig is van de illustratie op de pagina. Voor sommige onderdelen staat er een "x" in de kolom "Aantal". Deze "x" betekent dat er een aantal "zoals nodig" vereist is.

Wanneer er in deze handleiding naar "links" en naar "rechts" gerefereerd wordt, moet dit verstaan worden voor een bestuurder die in de bestuurdersstoel zit in de voorwaartse bedrijfsstand.

Sommige van de illustraties en informatie in deze onderdelen–handleiding werden door firma's van machine–componenten geleverd aan Melroe Company, een handelseenheid van Clark Equipment Company.

AFKORTINGEN EN SYMBOLEN

SALES	= Bestellen bij de Verkoopafdeling te Brussel
NSS	= Niet afzonderlijk te verkrijgen
NAP	= Niet beschikbaar als onderdeel
*	= Gewijzigde of toegevoegde paragrafen, pagina's of onderdeelnummers
BTI	= Bobcat Technical Information Bulletin : Zie einde van de microfiche van het desbetreffende model of einde van de algemene microfiche die het geheel van alle "BTI" herneemt.
was 6535403	= was vroeger 6535403
adj. (adjustment)	= afstelling
Assembly	= geheel
available W/Ref.	= beschikbaar met ref.
bulk/sold per foot	= bulk/aan de meter verkocht
does not include	= bevat niet
includes with	= is bevat in
I.D.	= ϕ inw. (inwendige diameter)
O.D.	= ϕ uitw. (uitwendige diameter)
not in kit	= niet in de kit
W/ – WO/	= met/ – zonder/
Qty	= vereiste aantal
see page/ref.	= zie pagina/ref.
used with ref/	= gebruikt met ref.
0,05 inch thickness	= 0.05 inch dik (een inch = 25.4 mm)
weld on	= te lassen

610 ALPHABETICAL INDEX

ADHESIVE I2
AIR CLEANER E15, G6
ALARM, BACK–UP F14
ALTERNATOR D8, D10, D11, D14, F23
ANTI–FREEZE I2
AXLE B6, B8

BATTERY D2, D4
BELT, ALTERNATOR D2, D4
BLACK GOLD I2
BOB–TACH A20, A22
BRAKES F16, F17

CAB A15
CAB ENCLOSURE F18, F20
CABLE, BATTERY D2, D4
CABLE, SHUT–OFF D18
CAMSHAFT E6
CAP, FUEL A14
CAP, HYD. OIL A14
CARBURETOR E10, E11, F21
CHAIN DRIVE B4
CLUTCH B10, B12
CLUTCH, CHAIN TIGHTENER .. B13, B14
CRANKSHAFT E4
CYLINDER BLOCK E2
CYLINDER, LIFT C14, G14
CYLINDER, TILT C15, C16, H11

DECALS G2, G4
DIPSTICK, ENG. OIL E23
DISTRIBUTOR E17, E18, E19
DOOR, CAB F20
DOOR, REAR A12

ENGINE D16

FILTER, AIR E13, G6
FILTER, ENG. OIL E23
FILTER, FUEL D22, E14
FILTER, HYD. OIL C1
FIRE EXTINGUISHER G7
FLYWHEEL E4
FUEL SYSTEM E10
FUSE D2

GASKET KIT, ENG. D16, E2
GOVERNOR E8

HARNESS, ENG. D2, D4
HARNESS, PANEL D2, D4
HEAD, CYLINDER E2
HOURMETER D2, D4

INSTRUMENT PANEL A12, A14

JACKSHAFT B16, B18

LEVER, STEERING B10
LIFT ARM A18
LIGHTS G18, G20, G21
LUBRICANT I2

MAIN FRAME A12
MANIFOLD E10
MUFFLER D21, H12

OIL I2

PAINT I2
PEDALS, CONTROL B19
PISTON E6
POLISH I2
PULPWOOD LOADER H4
PUMP, FUEL E12
PUMP, HYDRO. C3, C4
PUMP, OIL E20

QUICK COUPLERS F6, F8, F10, H1

RIM, WHEEL H22
RING GEAR E4

SEALANT I2
SEAT B1, B2, B3
SEAT BAR A24, H6
SEAT BELT B1
SHROUD D24
SOLENOID D5
SPARK ARRESTOR H10
STARTER D5
STOP, LIFT ARM G12
STROBE LIGHT H8, H9
SWITCH, ENG. OIL PRESS. .. D2, D4, D22
SWITCH, IGNITION D1, D4
SWITCH, LIGHT G18, G20

TANK, LP GAS G23
THROTTLE D17, D18, D19
TIRE H22
TIRE GUARD H13

VALVE COVER E8
VALVE, AUX. C5
VALVE, ENG. E8
VALVE, RELIEF C7, C8
VALVE, TILT CYL. C6
VALVE, VARIABLE SPEED C20, C21
VAPORIZER G24
VERTICAL FORKLIFT H16
VERTICAL MAST H18

WINDOW, REAR F20
WINDOW, SIDE F20
WINDSHIELD WIPER H24

610 CONTENTS

MAIN FRAME A11–B2
MAIN FRAME A11–A14
OPERATOR CAB A15
LIFT ARMS & BOB–TACH A17
BOB–TACH A19–A22
SEAT BAR A23
SEAT & SEAT MOUNTING B1
SEAT B2,B3
DRIVE SYSTEM B4–B18
DRIVE TRAIN B4
AXLE B5
FRONT BRAKE AXLE B7
CLUTCH CONTROL LINKAGE B9
CLUTCH B11
OUTSIDE CLUTCH CHAIN TIGHTENER B13
INSIDE CLUTCH CHAIN TIGHTENER B14
VARIABLE SPEED JACKSHAFT B15
VARIABLE SPEED DRIVEN SHEAVE B17
LOWER JACKSHAFT B18
HYDRAULIC SYSTEM B19–C24
HYDRAULIC CONTROL PEDALS B19
VARIABLE SPEED CONTROL LEVER B20
HYDRAULIC CIRCUITRY B21–B24
HYDRAULIC OIL FILTER C1
HYDRAULIC PUMP CIRCUITRY C2
HYDRAULIC PUMP C3,C4
LIFT CYLINDER & AUXILIARY VALVE C5
TILT CYLINDER VALVE C6
MASTER RELIEF VALVE C7
CLUTCH PRESSURE RELIEF VALVE C8
LIFT CYLINDER CIRCUITRY C9
TILT CYLINDER CIRCUITRY C11
MAIN FRAME AUXILIARY LINES C13
LIFT CYLINDER C14
TILT CYLINDER C15,C16
VARIABLE SPEED DRIVE CIRCUITRY C17,C18
VARIABLE SPEED VALVE C19–C21
VARIABLE SPEED DRIVE SHEAVE C23
ELECTRICAL SYSTEM D1–D14
MAIN FRAME ELECTRICAL CIRCUIT D1–D4
STARTER D5
ALTERNATOR D7–D14
POWER UNIT D15–E24
ENGINE D15
THROTTLE D17
THROTTLE & CHOKE CONTROL LINKAGE D18
THROTTLE CONTROL D19
WISCONSIN ENGINE & ATTACHING PARTS D21
ENGINE SHROUDING D23
ENGINE BREAKDOWN E1–E12
PUMP & COUPLER E7
CARBURETOR E13
ENGINE AIR CLEANER E15
FUEL FILTER E16
IGNITION COIL, CABLES & DISTRIBUTOR DRIVE E17
DISTRIBUTOR E19–E21
ENGINE OIL PUMP E22
ENGINE OIL FILTER E23
ENGINE OIL GROUP E24

ACCESSORIES & OPTIONS **F3–I4**
ALTERNATOR KIT F3
AUXILIARY HYDRAULIC CONTROL KIT F5
AUXILIARY HYDRAULIC LINES F7
AUXILIARY HYDRAULIC SYSTEM F9
AXLE & BRAKE ASSEMBLY F11
AXLE SEAL KIT F13
BACK–UP ALARM F14
BRAKES F15
BRAKES & ATTACHING PARTS F17
CAB ENCLOSURE F18–F20
CARBURETOR (LPG) F21
CLOSED ALTERNATOR KIT F23
DECALS G1–G4
EXHIBITION COVER G5
FARR AIR CLEANER G5
FIRE EXTINGUISHER G7
FLASHER LIGHTS G8
FLOOR PANEL G9
FOLD AWAY DRAWBAR G10
HORN & CIRCUITRY G11
LIFT ARM STOPS G12
LIFT CYLINDER G13
LIFT HOOK G15
LIGHTS G17–G21
LP GAS GROUP G22
LP GAS TANK & ATTACHING PARTS G23
LPG VAPORIZER G24
MAIN FRAME AUXILIARY LINES H1
PULPWOOD LOADER & ATTACHING PARTS H3
SEAT BAR KIT H5
SOUND REDUCTION HARDHAT H7
STROBE LIGHT H8,H9
SPARK ARRESTOR H10
TILT CYLINDER H11
SPARK ARRESTOR MUFFLER H12
TIRE GUARD H13
VERTICAL FORKLIFT HYDRAULIC CIRCUITRY H14
VERTICAL FORKLIFT H15
VERTICAL MAST H17
WHITE SEAT H19
TIRES & RIMS H21
WINSHIELD WIPER H23
BULK ITEMS **I1**
NUMERICAL INDEX **I3**

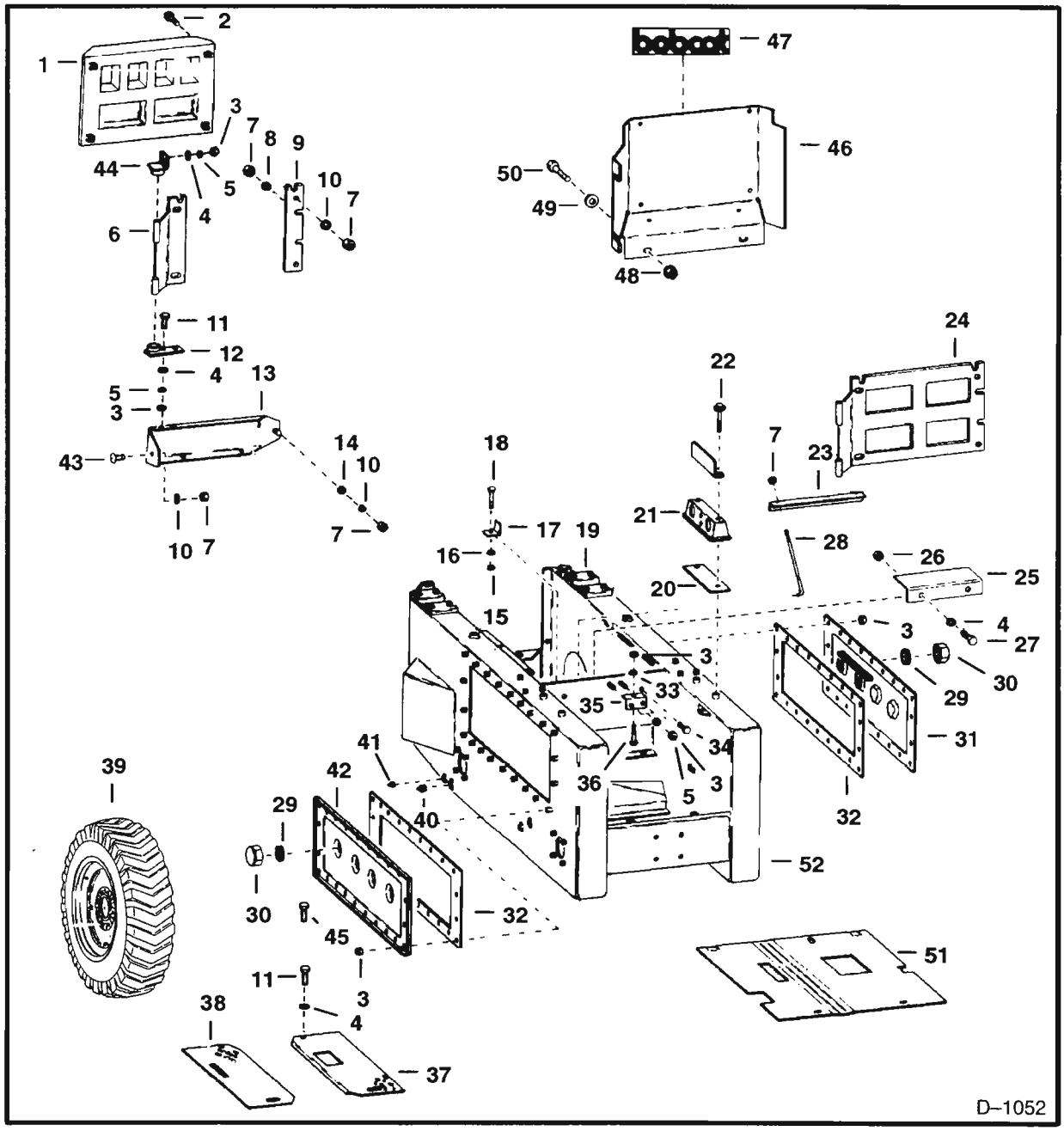

MAIN FRAME
Right Side

Ref. No.	Part Number	Description	Remarks	Serial Number	Qty.
1	6503120	GRILL	100 lbs.	16529 & Below	1
2	17C–840	BOLT			4
3	61D–6	NUT			42
4	25E–17	WASHER			2
5	4E–6	WASHER			2
6	6505737	HINGE		16529 & Below	1
7	61D–8	NUT			10
8	25E–21	WASHER			2
9	6505739	PLATE		16529 & Below	1

MAIN FRAME (Cont'd)
Right Side

Ref. No.	Part Number	Description	Remarks	Serial Number	Qty.
10	4E–8	WASHER			10
11	17C–612	BOLT			4
12	6504807	HINGE		16529 & Below	1
13	6504806	CHANNEL		16529 & Below	1
14	672568	WASHER			4
15	61D–5	NUT			1
16	4E–5	WASHER			1
17	6547917	STOP	battery		1
18	17C–516	BOLT			1
19	6502297	CHANNEL	Weld On		3
20	6502694	GASKET			1
21	6503075	PANEL	instrument – L.H.		1
22	NAP	BOLT	Order 17C–552 & 25E–12		
			Was 6505059 [A]		2
23	6552292	BRACKET	bracket holddown		1
24	NAP	DOOR	Order Ref. 6 & 9	16529 & Below	1
25	6547918	SUPPORT	battery		1
26	81D–6	NUT			2
27	17C–618	BOLT			2
28	6552293	ROD	holddown		2
29	6515195	SEAL			4
30	6502539	CAP			4
31	6504621	COVER	gearcase – L.H.		1
32	6502337	GASKET			2
33	6E–6	WASHER			1
34	17C–620	BOLT			2
35	6547997	BRACKET			1
36	6514578	BOLT			1
37	6502983	PLATE	L.H.		1
38	6502923	PLATE	R.H.		1
39	6552874	TIRE	See Page H22		4
	6515045	TUBE			4
	6515792	RIM	See Page H22		4
40	40K–12	PLUG			1
41	40K–4	PLUG			1
42	6504622	COVER	gearcase – R.H.		1
43	7C–820	BOLT	carriage		1
44	6504802	HINGE		16529 & Below	1
45	84G–3716	BOLT			2
46	6559602	DOOR		16530 & Above	1
47	6557411	DECAL		16530 & Above	1
48	6512896	NUT		16530 & Above	2
49	25E–21	WASHER		16530 & Above	2
50	17C–828	BOLT		16530 & Above	2
51	6559940	PLATE	floor		1
52	6558974	MAIN FRAME			1

MAIN FRAME
Left Side

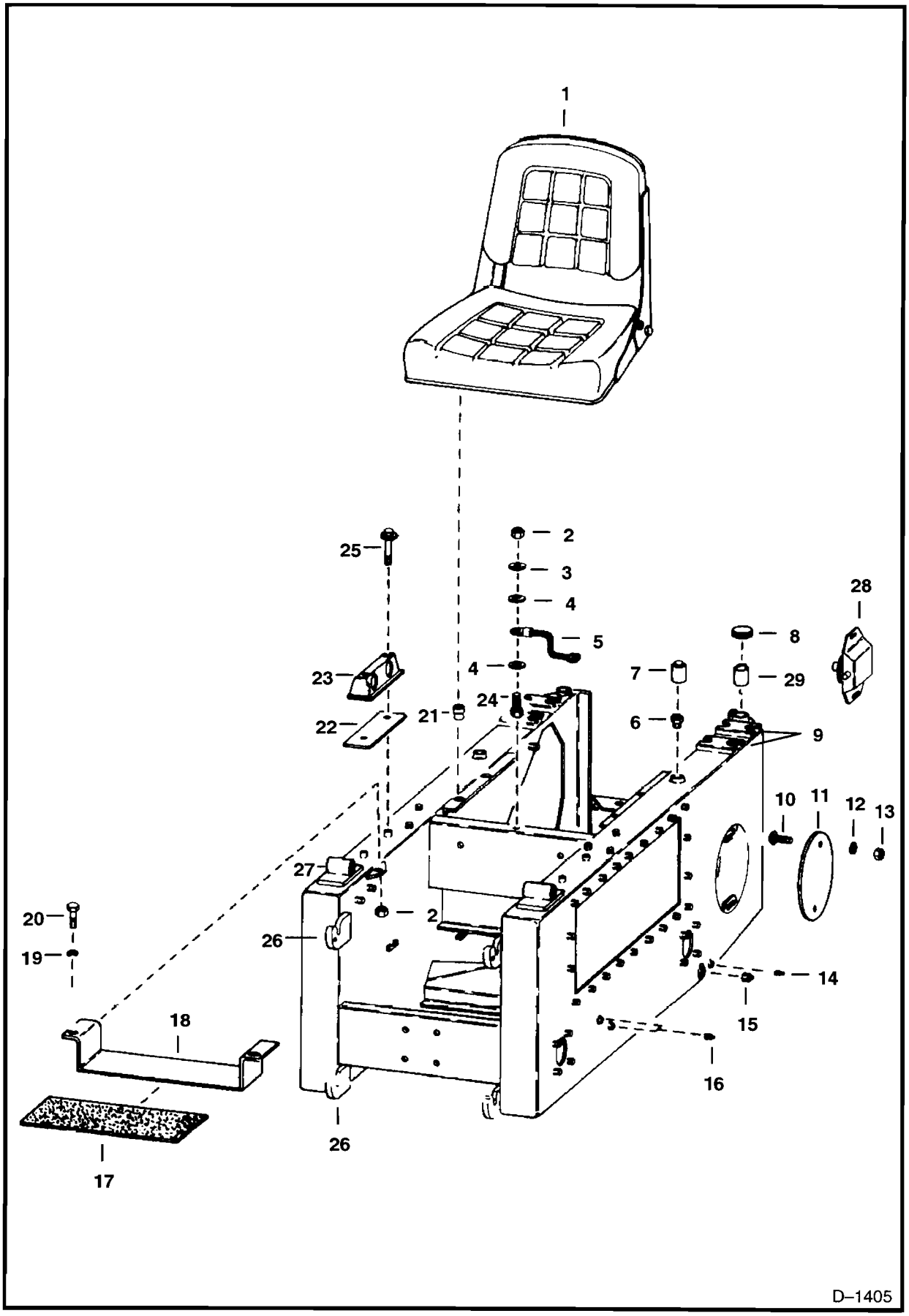

MAIN FRAME (Cont'd)
Left Side

Ref. No.	Part Number	Description	Remarks	Serial Number	Qty.
1		SEAT	See Page B3		1
2	61D–6	NUT			2
3	25E–17	WASHER			4
4	6E–6	WASHER			2
5	6553094	CABLE	ground		1
6	19F–7	ADAPTER			2
7	6515173	CAP	breather		2
8	6515629	CAP	fuel		2
	6512910	CAP	fuel – Explosion Proof		1
9	6502297	CHANNEL	Weld On		4
10	7C–820	BOLT	carriage		2
11	6554939	COVER			1
12	25E–8	WASHER			2
13	81D–8	NUT			2
14	40K–4	PLUG			1
15	40K–12	PLUG			1
16	40K–2	PLUG			2
17	6502459	SAFETY TREAD			1
18	6547556	GUARD	foot		1
19	4E–6	WASHER			2
20	17C–614	BOLT			2
21	6515275	NUTSERT			2
22	6502694	GASKET			1
23	6502693	PANEL	instrument – R.H.		1
24	17C–632	BOLT			1
25	NAP	BOLT	Order 17C–552 & 25E–12 Was 6505059 [A]		2
26	6502400	HOOK	Backhoe		4
27	6541218	MOUNT	cab		2
28	6502583	GUARD	variable speed		1
29	6515627	ADAPTER	fuel cap		1

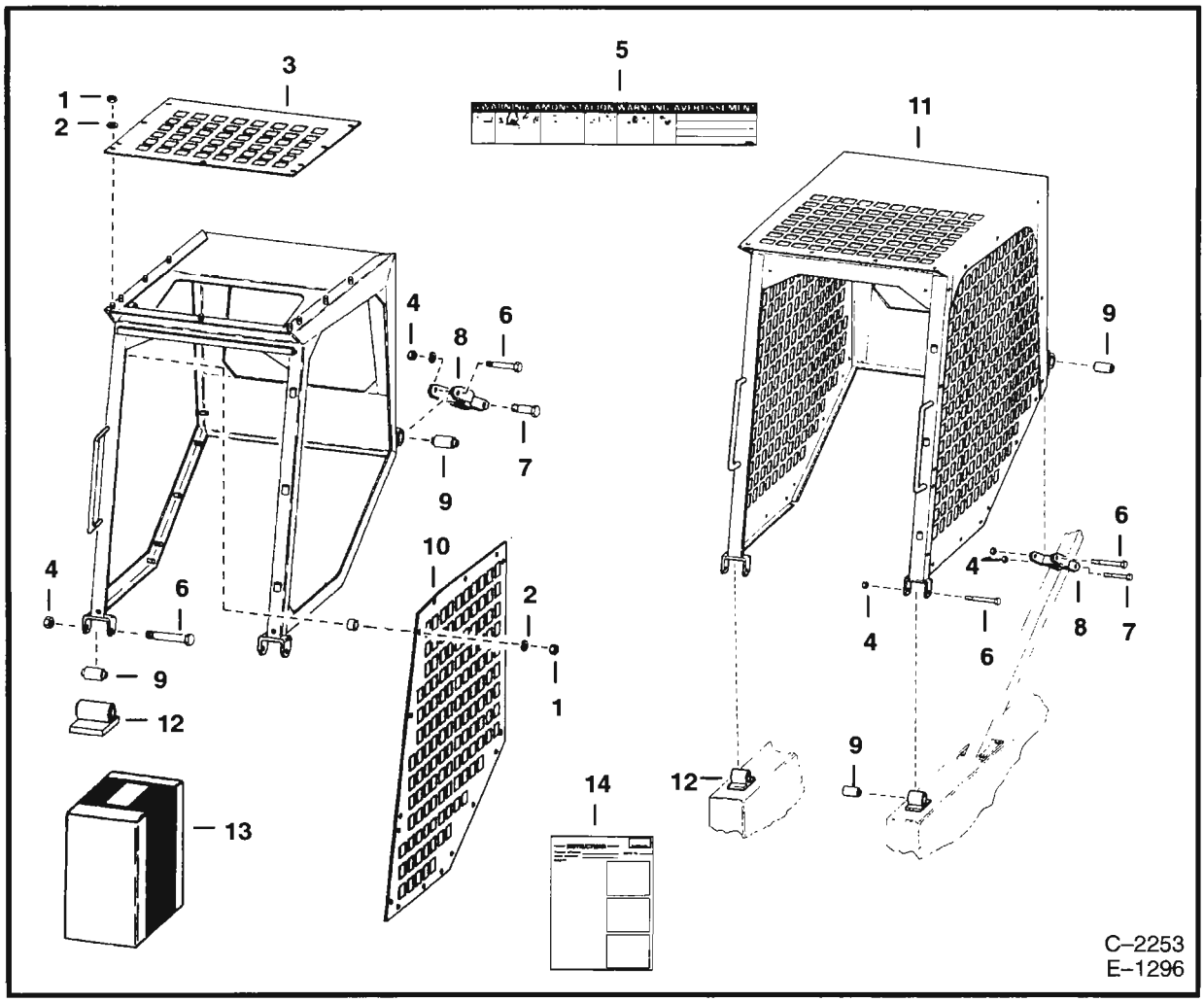

OPERATOR CAB

Ref. No.	Part Number	Description	Remarks	Serial Number	Qty.
1	81D–6	NUT			9
2	25E–18	WASHER			9
3	6555797	SCREEN			1
4	85D–10	NUT			4
5	6564844	DECAL	warning		1
6	17C–1072	BOLT			4
7	17C–1048	BOLT			2
8	6540701	BRACKET			1
9	6519138	MOUNT			4
10	6552487	SCREEN	punched		2
11	6553937	CAB	operator		1
12	6541218	MOUNT	cab		2
13	6544488	KIT	cab mtg. – Ref. 4, 6 – 8, 12 & 14		1
14	6556872	INSTRUCTIONS			1

Use Bobcat branded tires for longer service life and increased sidewall protection.

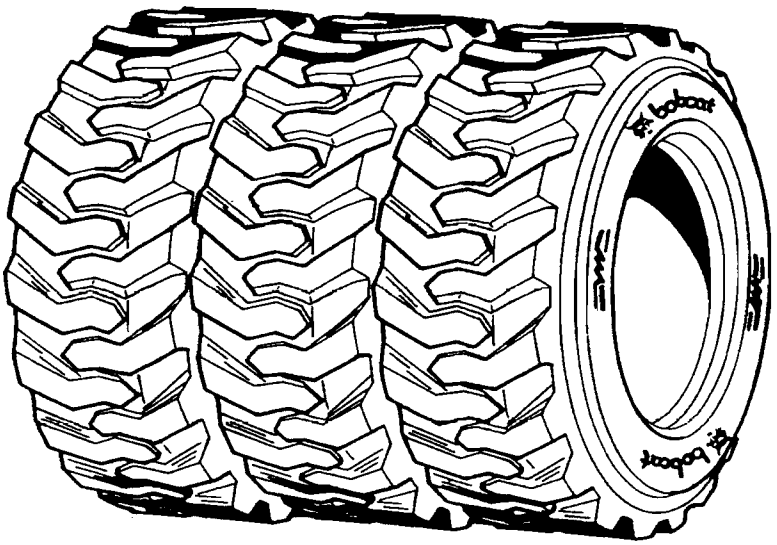

Available from Melroe Parts.

MELROE
INGERSOLL-RAND

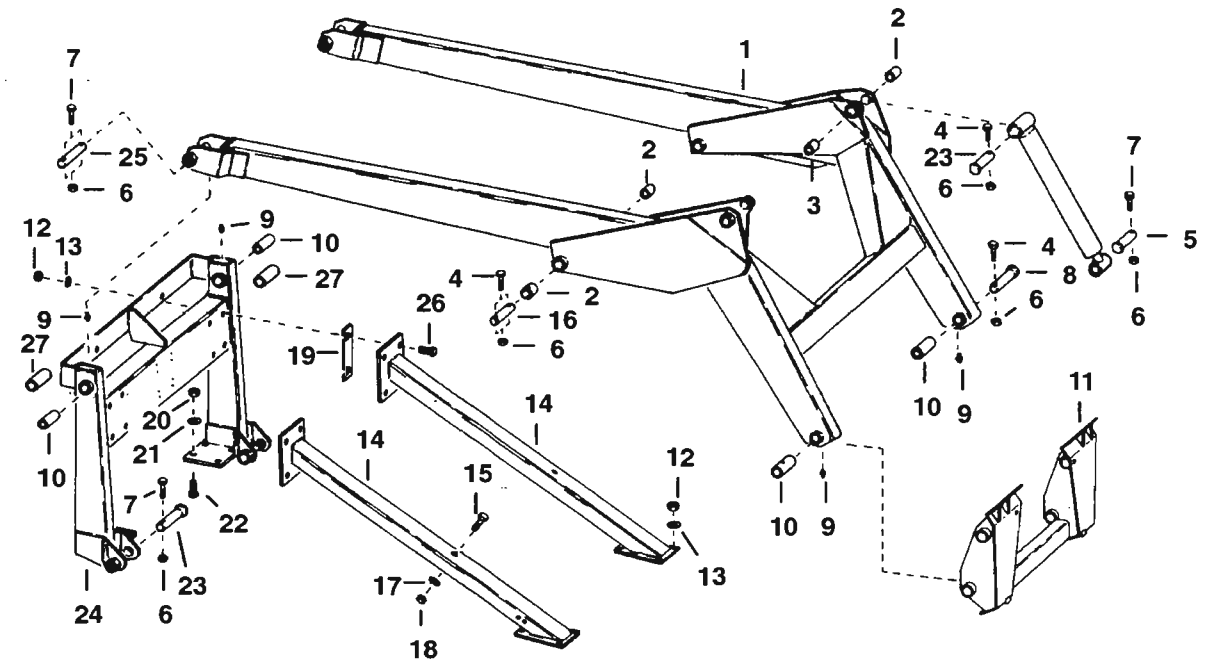

NOTE: Ref. 23 will be to long on some older loaders. If so Also Order 6502783.

C–1596

Ref. No.	Part Number	Description	Remarks	Serial Number	Qty.
1	6567594	KIT	lift arm		1
2	6502822	BUSHING	notched – .879" (22,3 mm) I.D. x 1.125" (32 mm) O.D. x 1.06" (26,9 mm)		6
3	6508743	BUSHING	.879" (22,3 mm) I.D. x 1.26" (32 mm) O.D. x 1.312" (33,3 mm)		2
4	17C–536	BOLT			6
5		PIN	See Page A20 – A22		4
6*	91D–5	NUT	Was 81D–5 [A]		x
7	17C–532	BOLT			6
8		PIN	See Page A20 – A22		2
9	36H–25	GREASE ZERK			x
10	6502787	BUSHING	press in – .890" (22,6 mm) I.D. x 1.126" (32 mm) O.D. x 3" (76,2 mm)		4
11		BOB–TACH	See Page A20 – A22		1
12	85D–8	NUT			18
13	4E–8	WASHER			18
14	6504839	BRACE			2
15	17C–640	BOLT			2
16	6502782	PIN	.871" (22,1 mm) x 4.44" (112,7 mm)		2
17	4E–6	WASHER			x
18	61D–6	NUT			2
19	6505358	SHIM			x
20	85D–10	NUT			8
21	4E–10	WASHER			8
22	6514516	BOLT	carriage		8
23	6502781	PIN	.871" (22,1 mm) x 5.38" (136,6 mm)		2
24	6504740	UPRIGHT			1
25	6502784	PIN	.871" (22,1 mm) x 5.75" (146,05 mm)		2
26	17C–824	BOLT			8
27	6501187	BUSHING	Weld On – W/Ref. 10		4

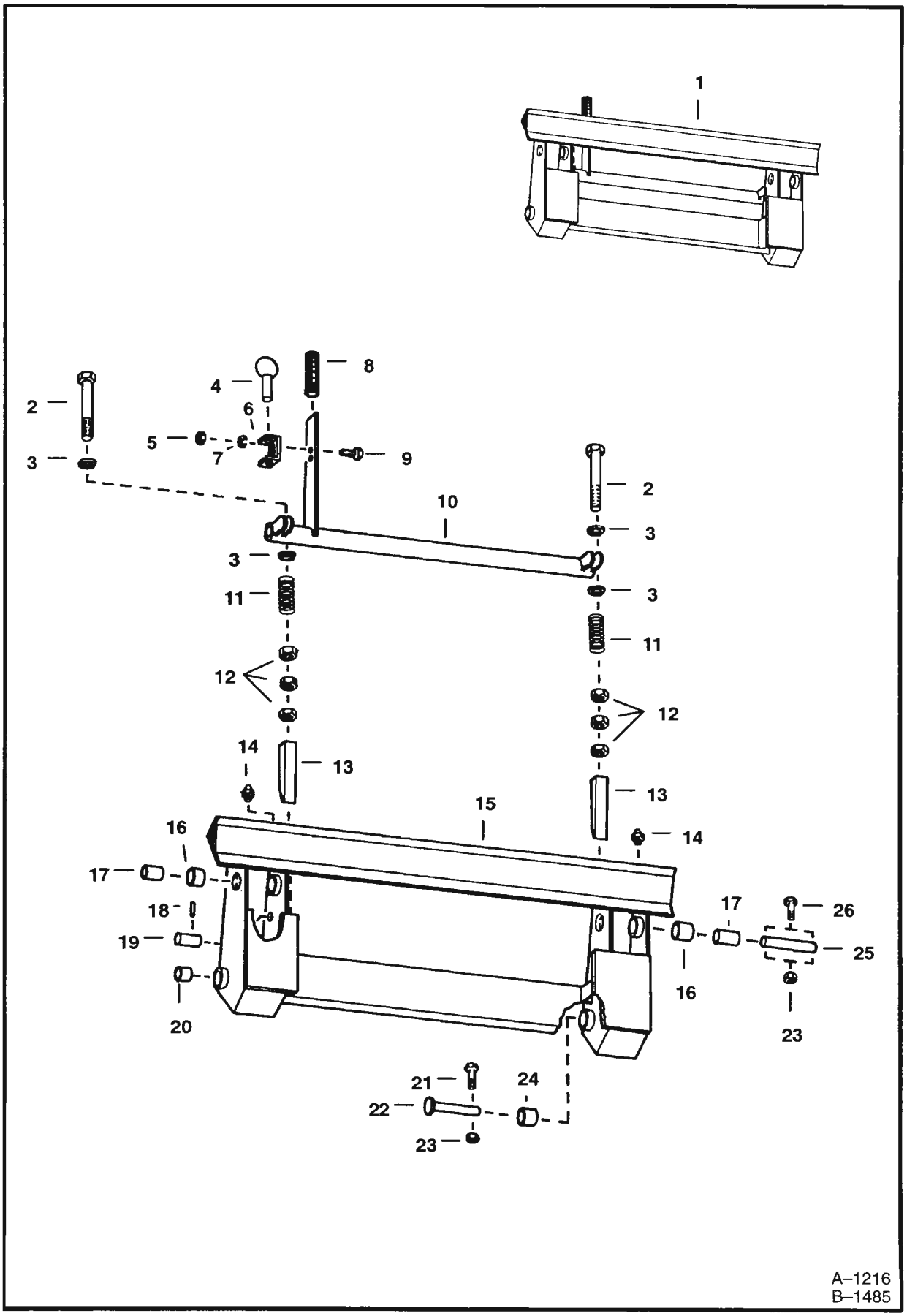
1
2
3
4
5
6
7
8
9
10
11
12
13
14
15
16
17
18
19
20
21
22
23
24
25
26
A–1216
B–1485

Ref. No.	Part Number	Description	Remarks	Serial Number	Qty.
1	NAP	BOB–TACH	Order 6551668		1
2	6509712	BOLT			2
3	6503691	WASHER			4
4	1304767	PIN			1
5	61D–4	NUT			2
6	4E–4	WASHER			2
7	6540057	BRACKET			1
8	6513963	GRIP			1
9	17C–412	BOLT			2
10	6503028	HANDLE			1
11	6505085	SPRING			2
12	7D–8	NUT			6
13	6509711	WEDGE			2
14	NAP	GREASE ZERK			4
15	NAP	FRAME			1
16	6502802	BUSHING	press fit – Old – 1.249" (31,7 mm) I.D. x 1.496" (38 mm) O.D. x 1.125" (28,5 mm)		4
17	6508743	BUSHING	New .879" (22,3 mm) I.D. x 1.125" (28,5 mm) O.D.		4
	6502798	BUSHING	notched – Old – .875" (22,2 mm) I.D. x 1.24" (31,4 mm) O.D. x 1.687" (42,8 mm)		4
18	633157	PIN			2
19	6503689	BUSHING	.871" (22,1 mm) I.D. x 2" (50,8 mm) O.D.		2
20	6502822	BUSHING	press fit – Notched – .879" (22,1 mm) I.D. x 1.125" (28,5 mm) O.D.		2
21	17C–540	BOLT			2
22	6502779	PIN	.871" (22,1 mm) x 6.13" (155,7 mm)		2
23*	91D–5	NUT	Was 81D–5 [A]		x
24	6502762	BUSHING	.879" (22,3 mm) I.D. x 1.68" (42,8 mm) O.D. x 1.06" (26,9 mm)		2
25	6502783	PIN	.871" (22,1 mm) x 4.88" (123,9 mm)		2
26	17C–520	BOLT			4

Need a grease gun?
A high quality Bobcat branded one is available from Melroe Parts.

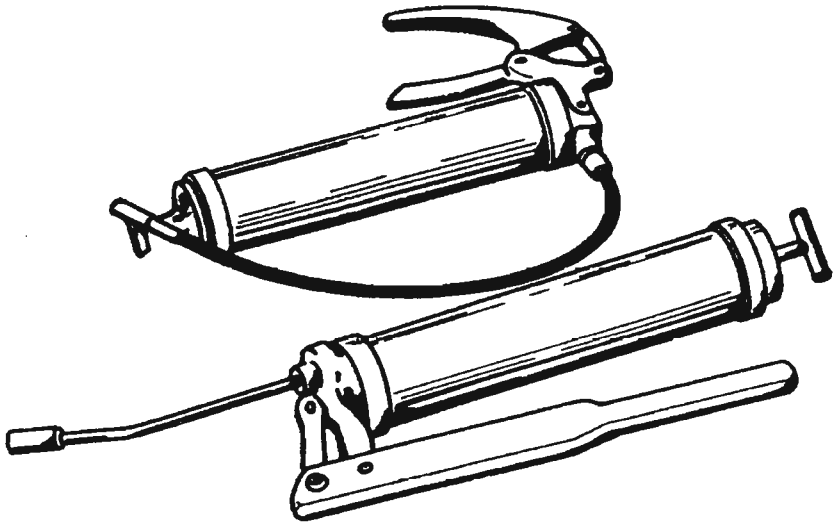

Available from Melroe Parts.

MELROE
INGERSOLL-RAND

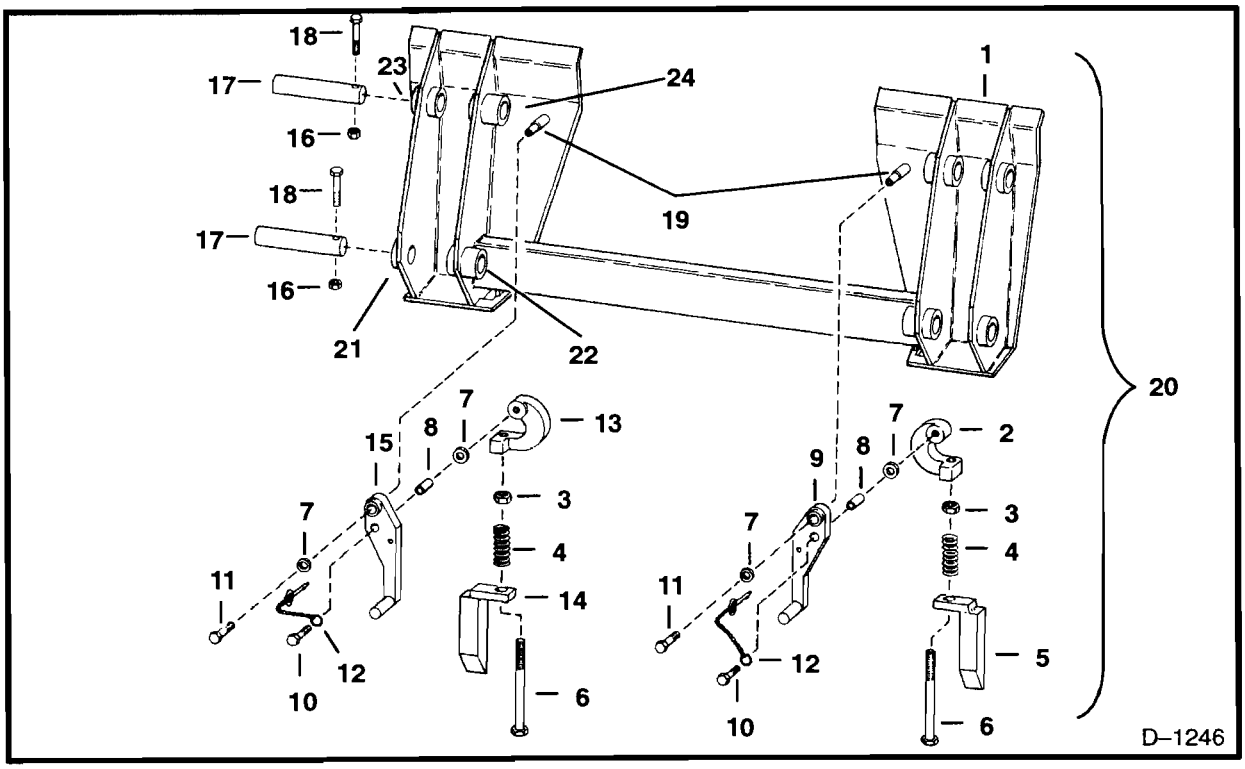

BOB–TACH

Ref. No.	Part Number	Description	Remarks	Serial Number	Qty.
1	NAP	FRAME	Order Ref. 20		1
2	6548581	LINK	R.H.		1
3	7D–8	NUT			2
4	6548407	SPRING			2
5	6548913	WEDGE	R.H.		1
6	17C–896	BOLT			2
7	25E–17	WASHER			4
8	6555384	BUSHING			2
9	6555740	LEVER	R.H.		1
10	17C–628	BOLT			2
11	17C–608	BOLT			2
12	6511880	PIN	lock		2
13	6548541	LINK	L.H.		1
14	6548912	WEDGE	L.H.		1
15	6555738	LEVER	L.H.		1
16*	91D–5	NUT	Was 81D–5 [A]		x
17	6551636	PIN	.872" (22,1 mm) x 5.60" (142,2 mm)		4
18	17C–540	BOLT			4
19	6548605	STUD			2
20	6551668	BOB–TACH	Ref. 1 – 15 & 19		1
21*	6551637	BUSHING			2
22*	6551638	BUSHING			2
23*	6551639	BUSHING			2
24*	6551640	BUSHING			2

SEAT BAR

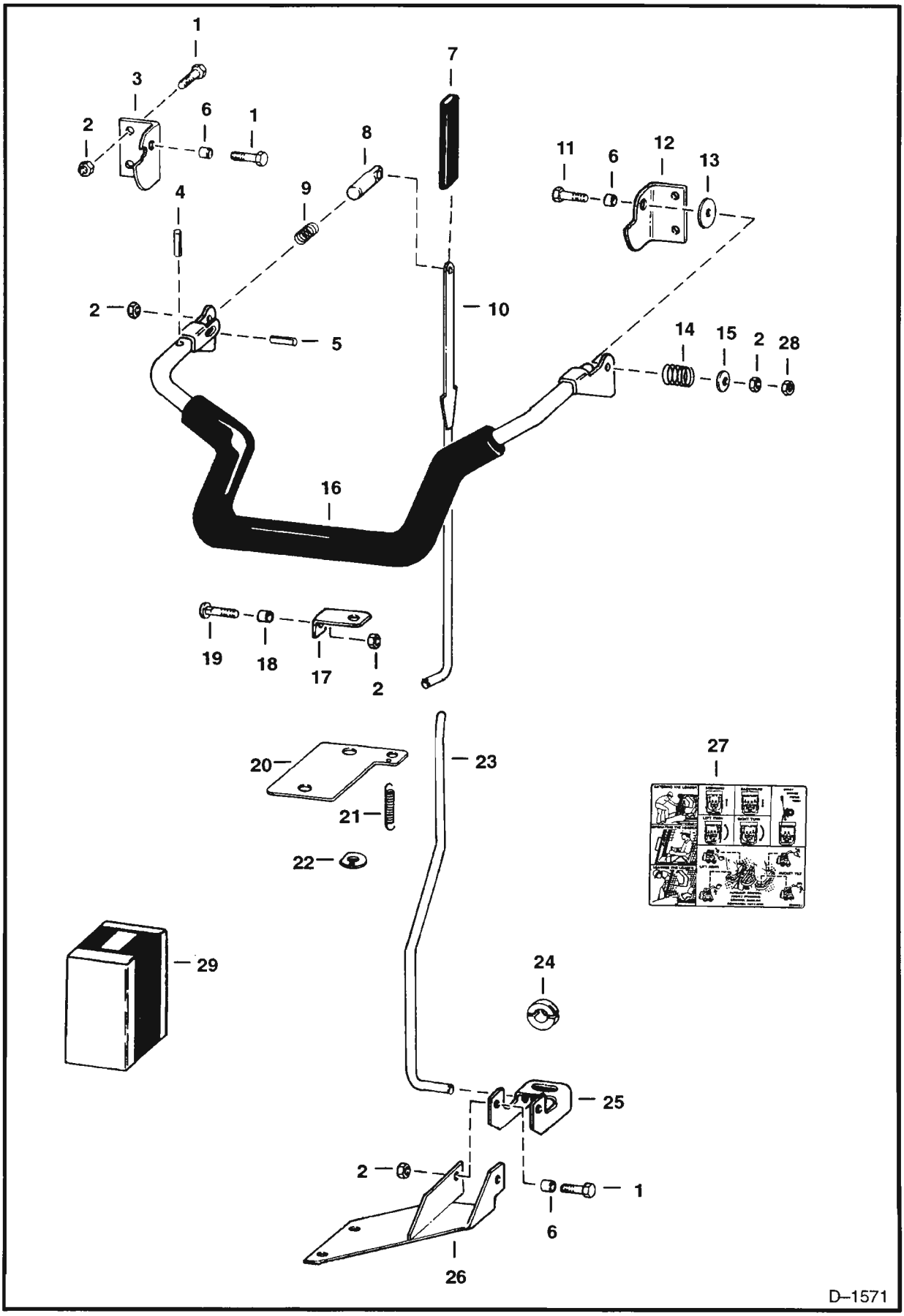
1
3
2
6
1
7
8
9
4
11
6
12
13
2
10
5
14
15
2
28
16
19
18
17
2
20
23
21
22
27
29
24
25
2
1
6
26
D–1571

SEAT BAR (Cont'd)

Ref. No.	Part Number	Description	Remarks	Serial Number	Qty.
1	17C–616	BOLT			7
2	85D–6	NUT			9
3	6563198	BRACKET	pivot		1
4	14J–3716	ROLL PIN			1
5	14J–3724	ROLL PIN			1
6	6544654	BUSHING			4
7	6563477	HANDLE	grip		1
8	6563200	PLUNGER			1
9	6702430	SPRING	Was 6563149 [A]		1
10	6563184	LINKAGE	tube		1
11	17C–636	BOLT			1
12	6563480	BRACKET	pivot		1
13	6562127	WASHER			1
14	6562126	SPRING			1
15	27E–6	WASHER			1
16	6563544	SEAT BAR			1
17	6563181	GUIDE			1
18	6555798	SPACER			1
19	6560034	BOLT			1
20	6563208	PLATE			1
21	6563016	SPRING			1
22	6564049	BRACKET			1
23	6563182	LINKAGE			1
24	6598499	CLAMP			1
25	6563470	BRACKET			1
26	6563473	BRACKET			1
27	6569022	DECAL			1
28	7D–6	NUT			1
29	6563666	KIT	seat bar – See Page H6		1

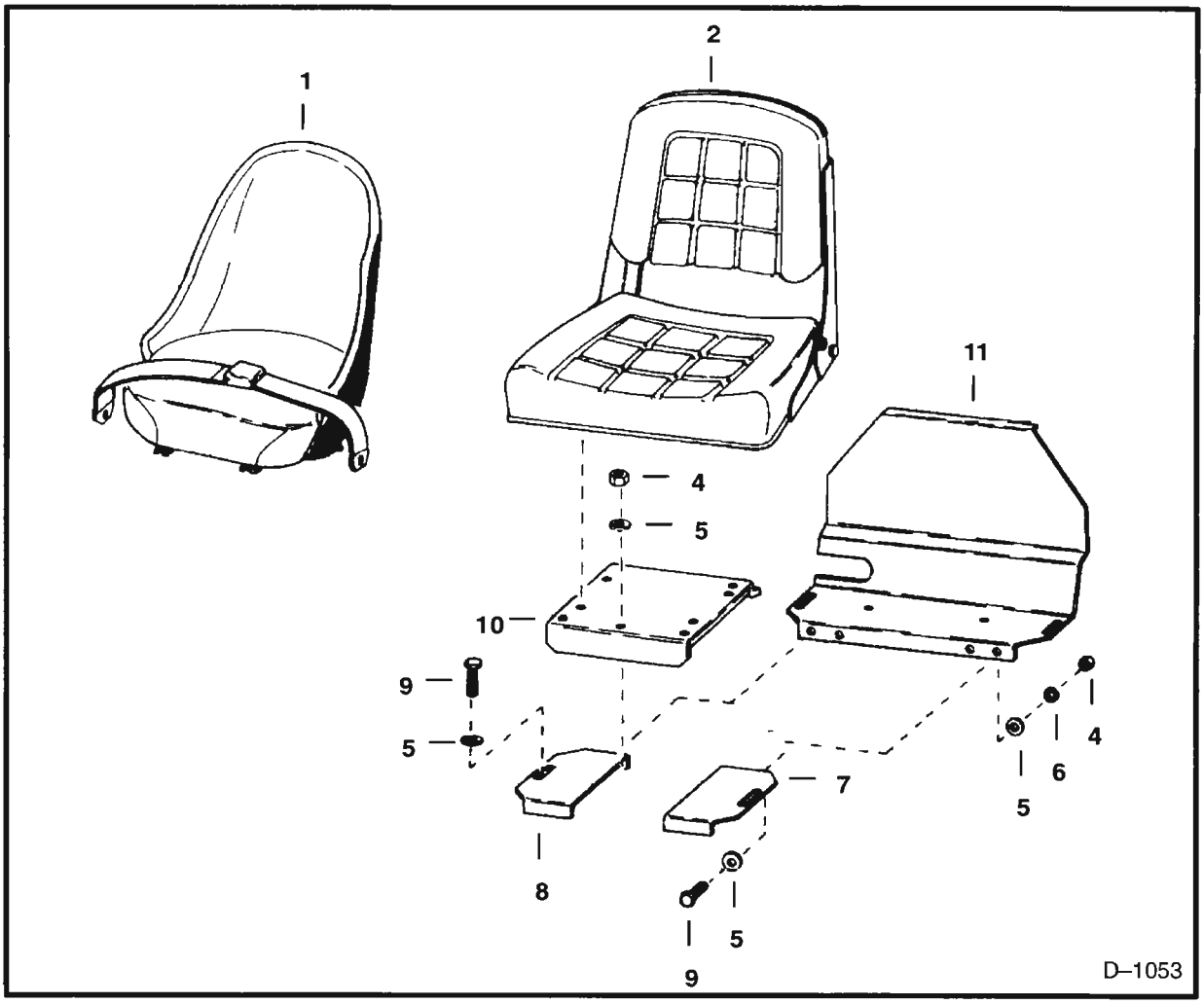

SEAT & SEAT MOUNTING

Ref. No.	Part Number	Description	Remarks	Serial Number	Qty.
1	NAP	SEAT	Order 6665401 – if Ref. 11 doesn't have 2 sets of holes also Order Ref. 10 –		
			Was 6515423 [A]		1
	891055	CUSHION	back		1
	891056	CUSHION	seat		1
2	NAP	SEAT	See Page A22 – Order 6563140		1
3	6563214	SEAT BELT			1
4	61D–6	NUT			7
5	25E–17	WASHER			16
6	4E–6	WASHER			4
7	6502627	COVER	battery – L.H.		1
8	6502628	COVER	battery – R.H.		1
9	17C–612	BOLT			8
10	6559095	BRACKET			1
11	6502759	COVER			1

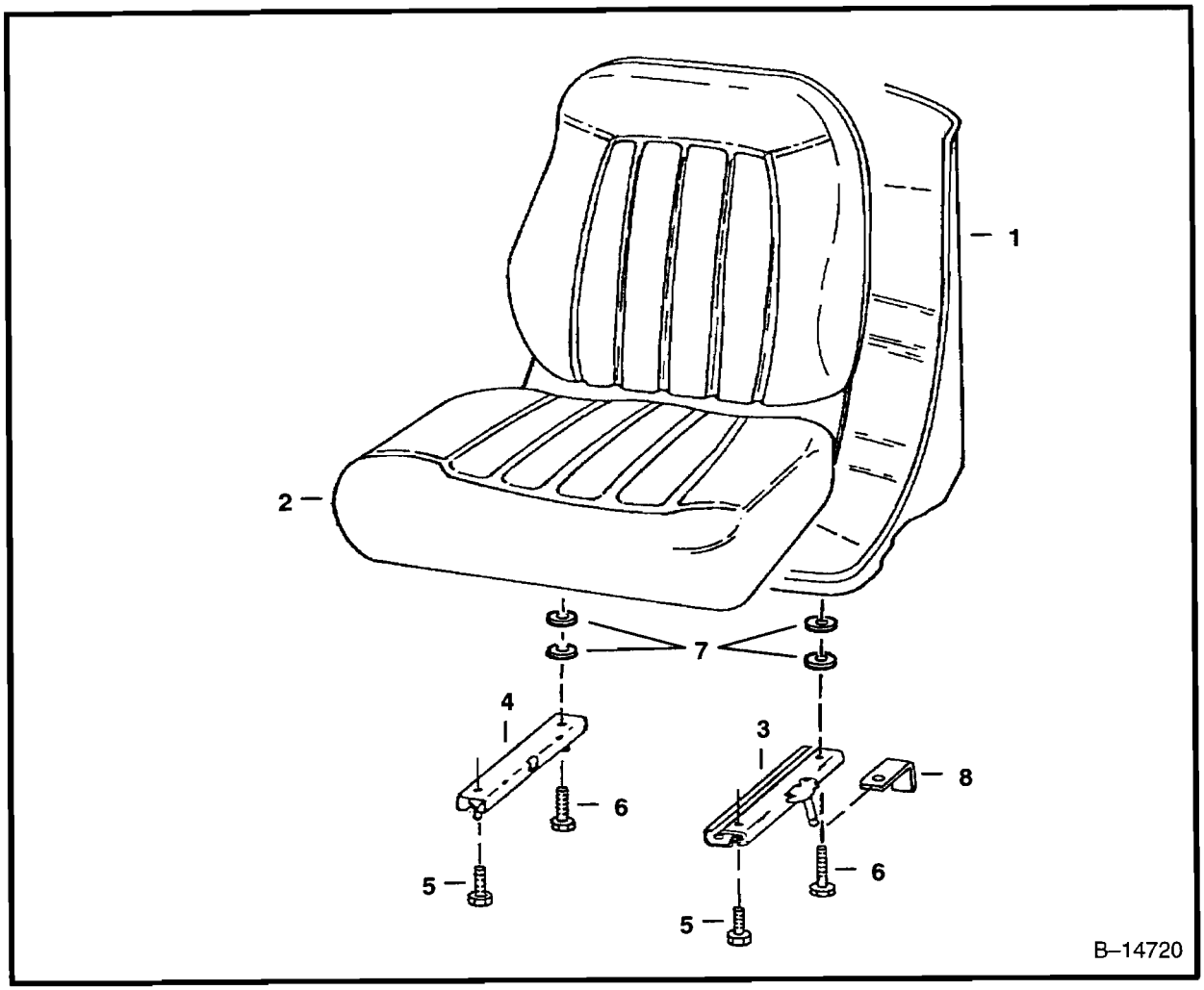

SEAT

Ref. No.	Part Number	Description	Remarks	Serial Number	Qty.
1	NAP	SEAT	W/Ref. 2–5 & 8 – Order 6669135 Seat – Was 6667684 [A]		1
	6669135	SEAT	W/Ref. 2–7		1
2	6670160	CUSHION	W/edging, clip & (2) grommets		1
	NSS	EDGING			1
	NSS	CLIP			1
3 *	NAP	TRACK	L.H. – W/10" (254mm) Latch – Was 6669088 [A]		1
*	6674013	TRACK	L.H. – W/8" (203,2mm) Latch		1
4	6669089	TRACK	R.H. – W/O Latch		1
5	25G–512	BOLT	6669135 Seat uses (2) bolts		4
6	25G–520	BOLT			2
7	7000010	SPACER			4
8	6668953	BRACKET	See S/L Dated 16 April 1996		2

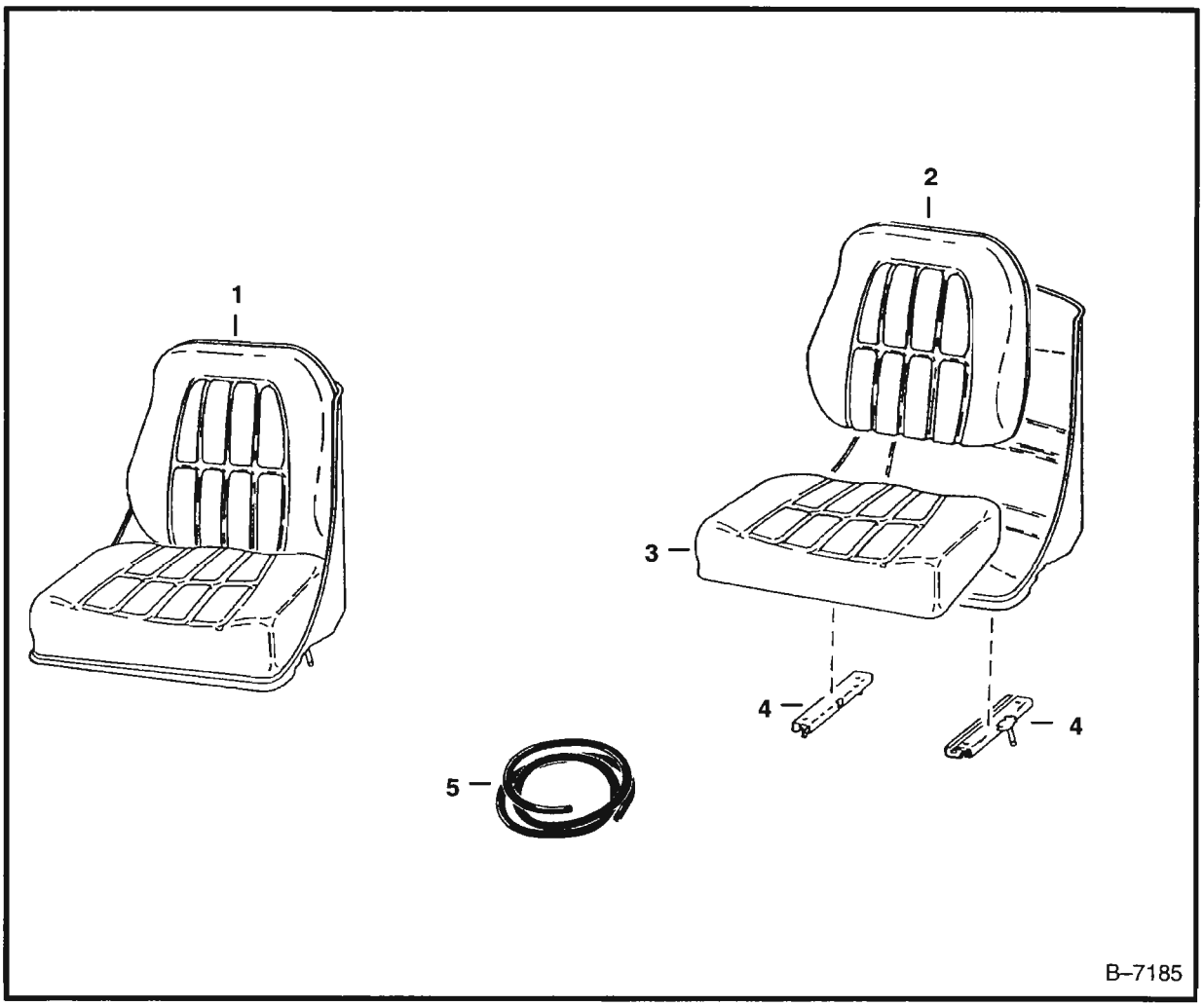

SEAT

Ref. No.	Part Number	Description	Remarks	Serial Number	Qty.
1	6665401	SEAT	W/Ref. 2 – 5 – Was 6563140 [A]		1
2	6630465	CUSHION	back		1
3	6630468	CUSHION	seat		1
4	6630469	TRACK	W/Latch		1
5	6599780	TRACK	W/O Latch		1
6	6652935	EDGING	8 ft. (2,4 M) long for Ref. 2 & 3		1
	6665656	CLIP			1

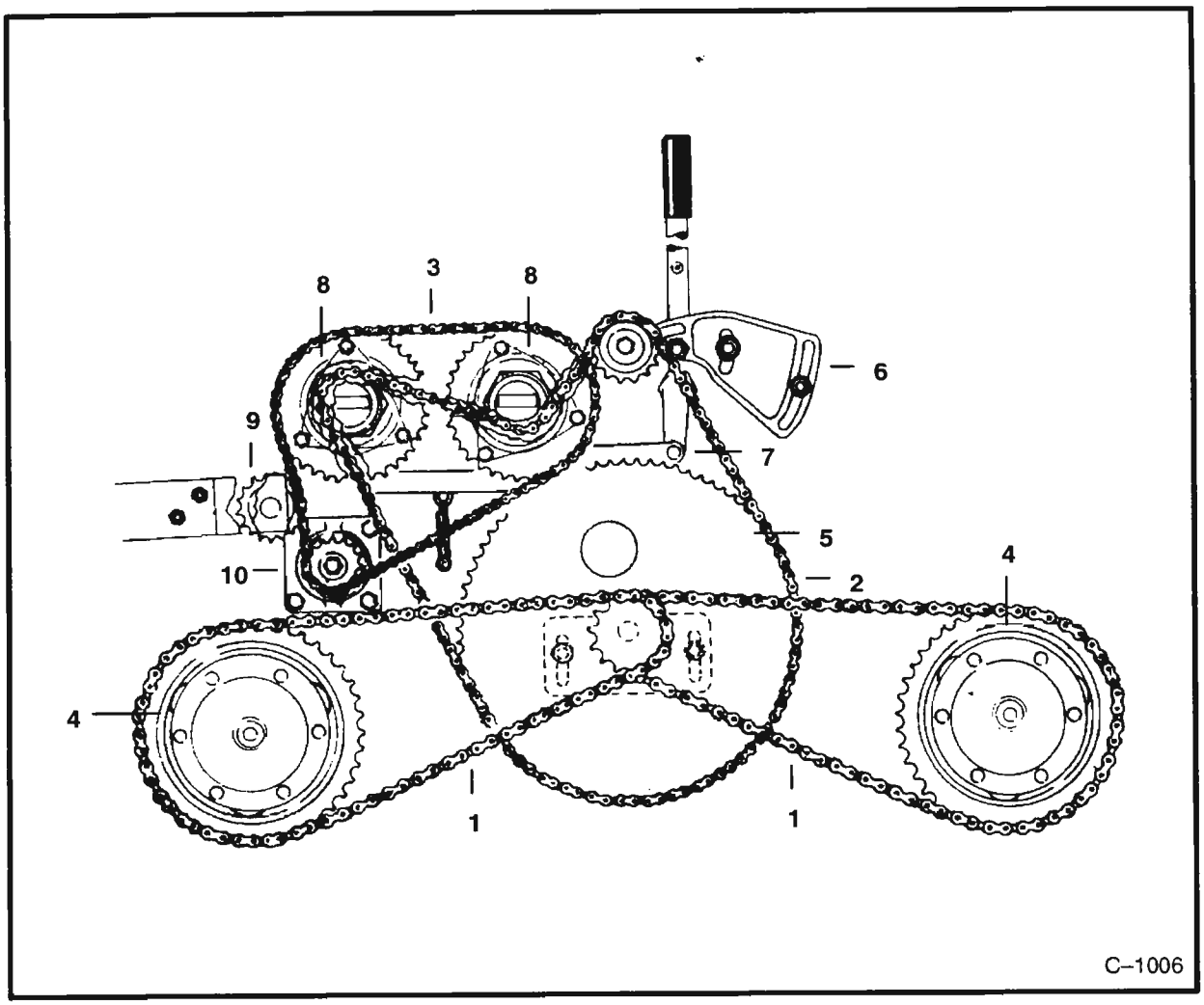

DRIVE TRAIN
Left Side

Ref. No.	Part Number	Description	Remarks	Serial Number	Qty.
1	6515462	CHAIN	#60 H 72 ELOS + EMENDA		2
	6515191	LINK	#60 – Press Fit		2
2	6515377	CHAIN	#50		1
	6515187	LINK	#50 – Press Fit		1
3	6515369	CHAIN	#40		1
	6564943	LINK	#40 – Press Fit		1
4		AXLE	See Page B6		x
5		JACKSHAFT	lower – See Page B18		x
6		TIGHTENER	chain – See Page B14		x
7		CLUTCH			x
8		CLUTCH	See Page B12		x
9		TIGHTENER	chain – Outside – See Page B13		x
10		JACKSHAFT	variable speed – See Page B16		x

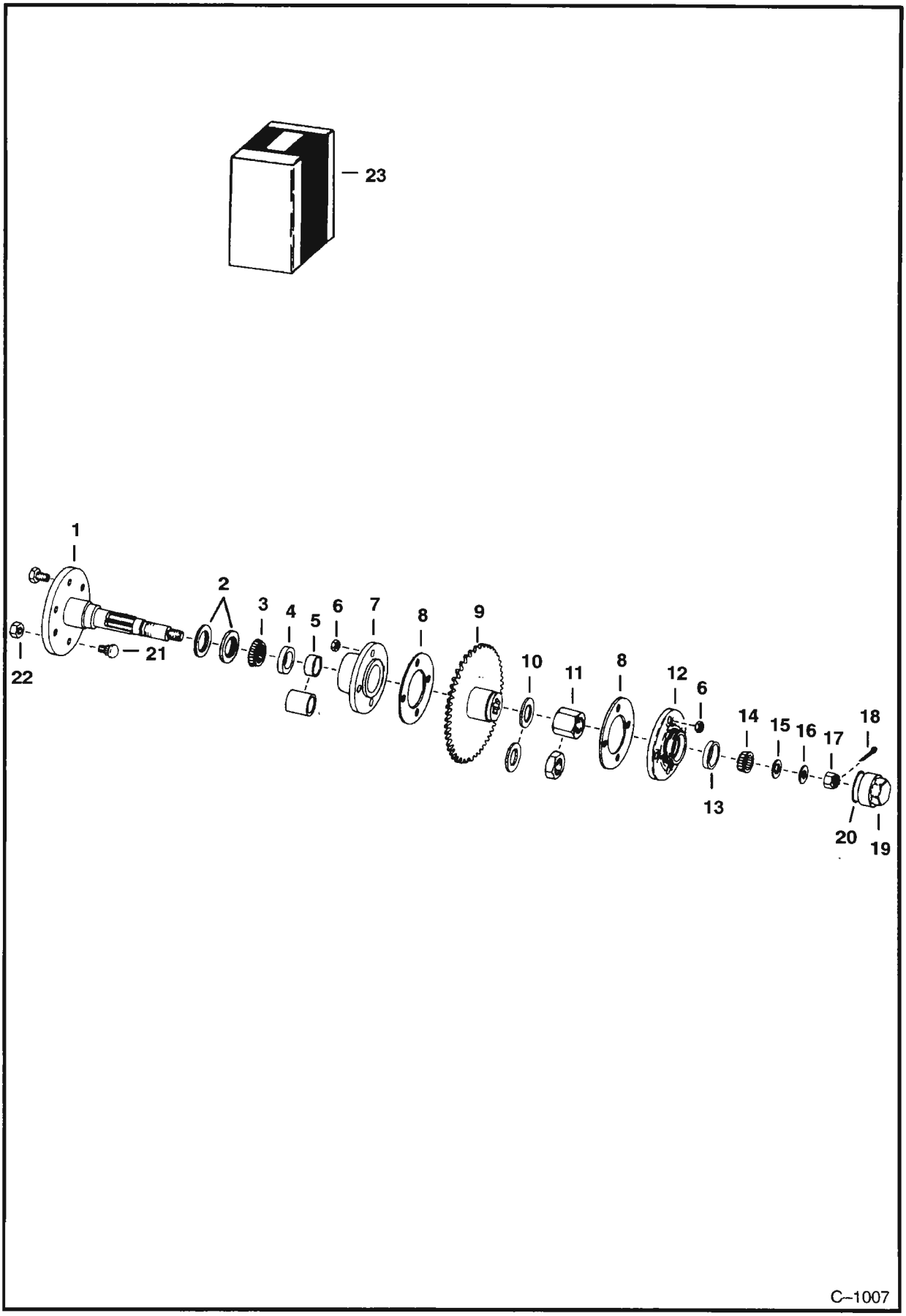
23
1
2
3
4
5
6
7
8
9
10
11
8
12
6
14
15
16
17
18
22
21
13
20
19
C–1007

Ref. No.	Part Number	Description	Remarks	Serial Number	Qty.
1	6542554	AXLE	W/O brakes – W/Ref. 21 & 22 – Rear		1
	6542553	AXLE	W/O brakes – W/Ref. 21 & 22 – Front		1
2	6515000	SEAL			2
3	6648774	BEARING	Was 743778 [A]		1
4	6648776	RACE	Was 743777 [A]		1
5	6502289	SPACER	rear		1
	6502288	SPACER	Front		1
6	81D–8	NUT			8
7	6502533	HUB			1
8	6502209	GASKET			2
9	6504794	SPROCKET			1
10	6502649	WASHER	rear		1
	6502290	WASHER	Front		1
11	6502639	NUT	rear		1
	6502640	NUT	Front		1
12	6502534	HUB			1
13	713024	RACE			1
14	713023	BEARING			1
15	799087	WASHER			1
16	6557323	WASHER			1
17	6D–14	NUT			1
18	1F–424	PIN			1
19	6503180	CAP			1
20	25K–40212	O–RING			1
21	6709170	STUD	wheel – Was 6559502 [A]		6
22	6564669	NUT	wheel – Was 6519169 [A]		6
23	6563442	KIT	axle seal & sleeve – See Page F13		1

FRONT BRAKE AXLE

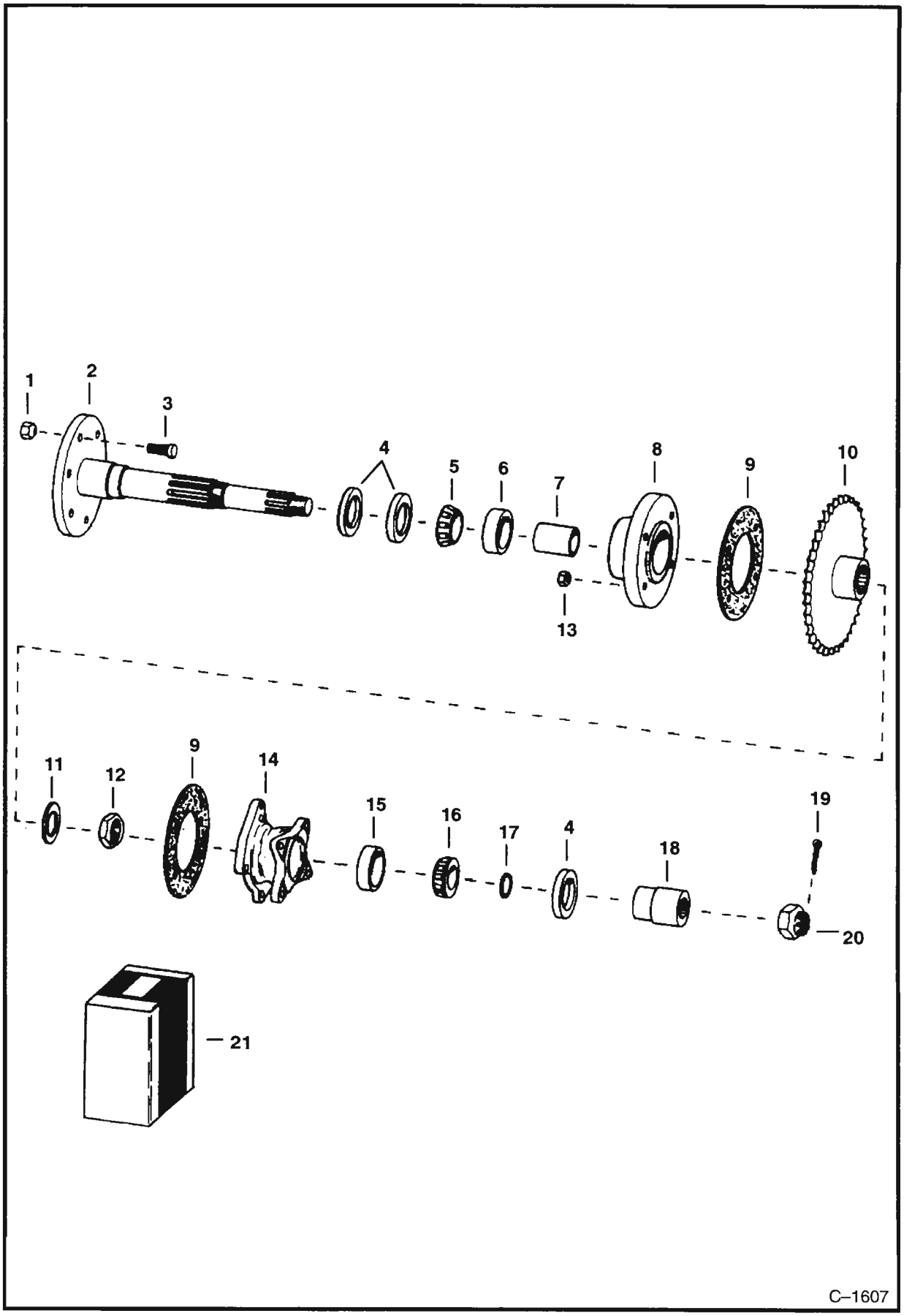

FRONT BRAKE AXLE (Cont'd)

Ref. No.	Part Number	Description	Remarks	Serial Number	Qty.
1	6564669	NUT	wheel – Was 6519169 [A]		6
2	6542555	AXLE	W/Ref. 1 & 3		1
3	6709170	STUD	wheel – Was 6559502 [A]		6
4	6515000	SEAL			3
5	6648774	BEARING	Was 743778 [A]		1
6	6648776	RACE	Was 743777 [A]		1
7	6502288	SPACER			1
8	6502533	HUB			1
9	6502209	GASKET			2
10	6504794	SPROCKET			1
11	6503242	WASHER			1
12	6503241	NUT			1
13	81D–8	NUT			8
14	NAP	HUB	Was 6542728 [A]	205536, 13398 & Above	1
	6503235	HUB		205535, 13397 & Below	1
15	6519413	RACE		205536, 13398 & Above	1
	1318539	RACE		205535, 13397 & Below	1
16	6519412	BEARING		205536, 13398 & Above	1
	1318538	BEARING		205535, 13397 & Below	1
17	25K–40112	O–RING			1
18	6542665	STOP			1
19	1F–628	PIN			1
20	4D–18	NUT	castle		1
21	6563442	KIT	axle seal & sleeve – See Page F13		1

CLUTCH CONTROL LINKAGE

LEFT SIDE

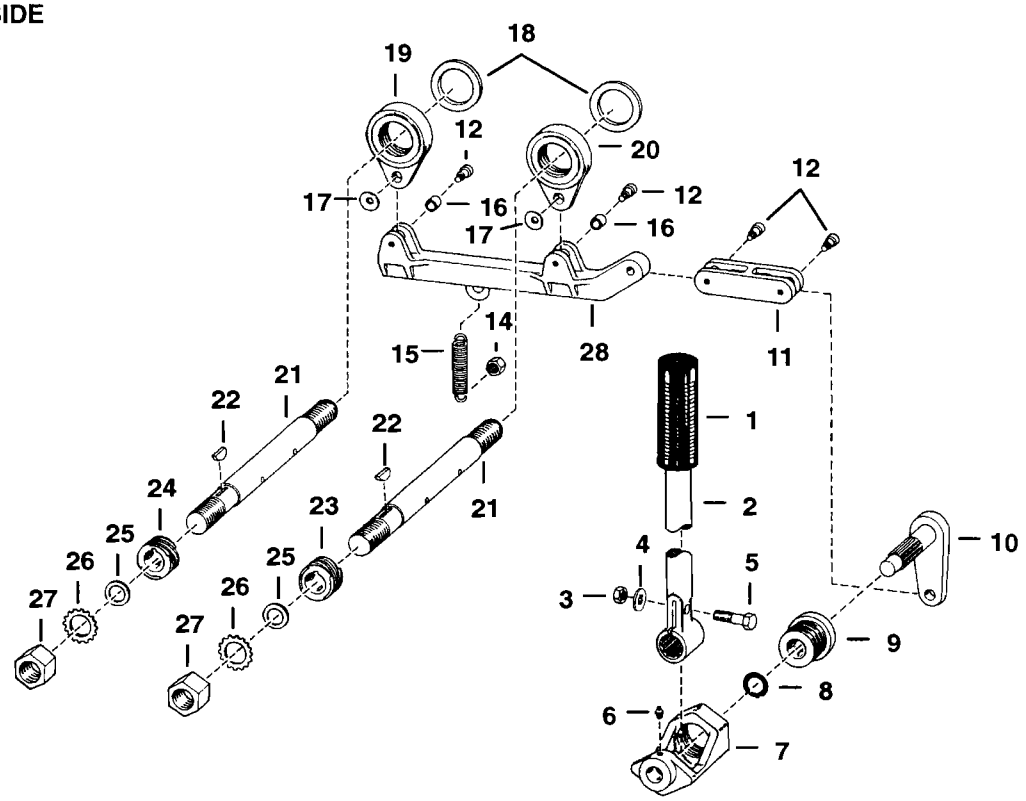

D–1677

RIGHT SIDE

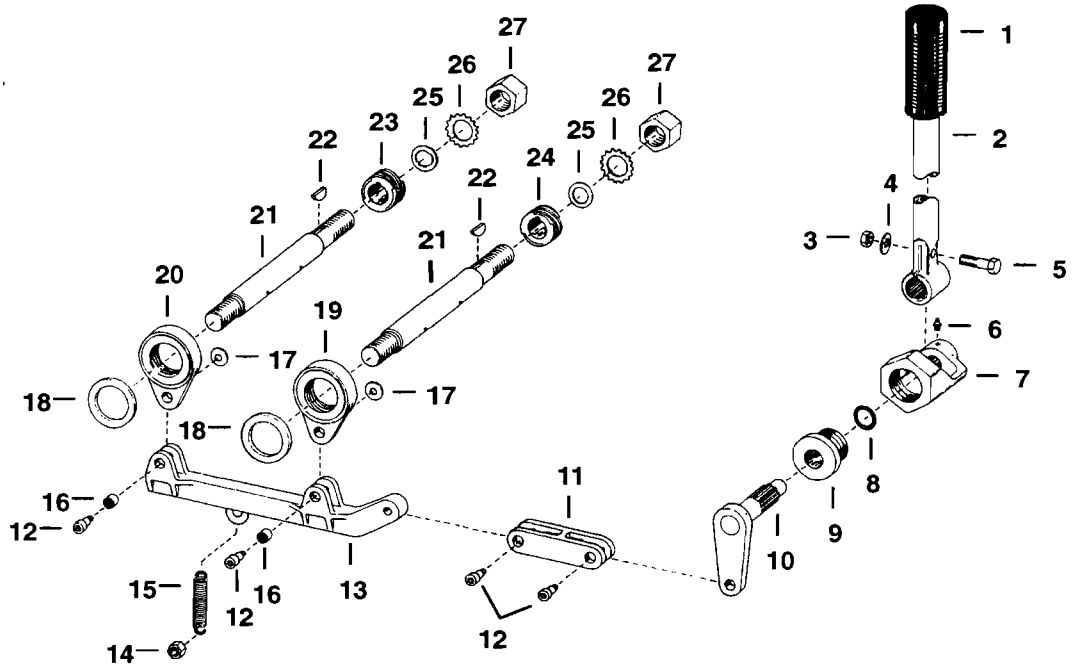

C–1010

Ref. No.	Part Number	Description	Remarks	Serial Number	Qty.
1	6513963	GRIP			1
2	6502635	LEVER	splined shaft		1
3	62D–6	NUT			1
4	6E–6	WASHER	shakeproof		1
5	18C–624	BOLT			1
6	10H–35	GREASE ZERK			1
7	6502630	NUT	steering		1
8	25K–40028	O–RING			1
9	6502291	BUSHING			1
10	6504707	SHAFT	splined		1
11	6502537	BAR			1
12	6502340	SCREW	shoulder		4
13	6502536	BAR	R.H.		1
14	81D–6	NUT			1
15	6505076	SPRING			1
16	6544654	BUSHING			2
17	6515316	WASHER	spring		2
18	6540478	RACE	thrust		2
19	6540559	NUT	actuating – R.H. Thread – W/Ref. 18		1
20	6540558	NUT	actuating – L.H. Thread – W/Ref. 18		1
21	6502415	PIN	clutch		2
22	5J–405	KEY	woodruff		2
23	6502311	THREAD	L.H.		1
24	6502312	THREAD	R.H.		1
25	6505041	WASHER	Lead		2
26	5E–14	WASHER	shakeproof		2
27	62D–14	NUT			2
28	6502535	BAR	L.H.		1

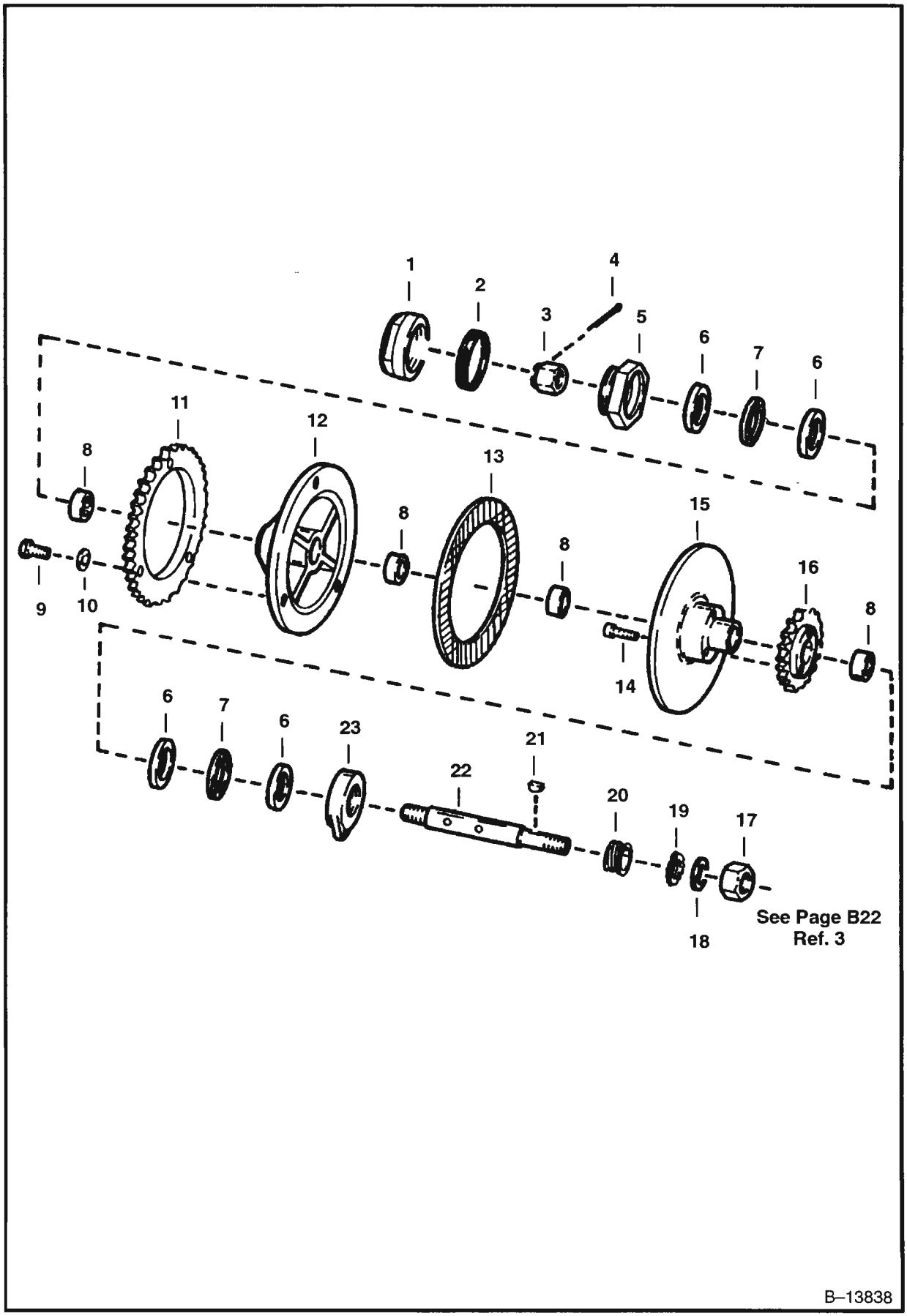
1
2
3
4
5
6
7
6
11
12
13
8
8
8
15
16
8
9
10
14
6
7
6
23
22
21
20
19
17
18
See Page B22
Ref. 3
B–13838

Ref. No.	Part Number	Description	Remarks	Serial Number	Qty.
1	6502539	CAP			1
2	6515195	SEAL			1
3	6D–14	NUT	castle		1
4	1F–424	PIN			1
5	6541404	NUT	clutch, nut kit includes 1 of Ref. 6		1
6	6540478	RACE			4
7	6519100	BEARING			2
8	6515068	BEARING			4
9	8C–512	BOLT			3
10	6E–5	WASHER			3
11	6502282	SPROCKET			1
12	6502538	PLATE	outer clutch		1
13	6649871	LINING	Was 6502424 [A]		1
14	1318464	BOLT			3
15	6502532	PLATE	inner clutch		1
16	6502597	SPROCKET			1
17	62D–14	NUT			1
18	5E–14	WASHER			1
19	6505041	WASHER	lead		1
20	6502311	THREAD	L.H.		1
	6502312	THREAD	R.H.		1
21	5J–405	KEY			1
22	6502415	PIN			1
23	6540558	NUT	actuating – L.H.		1
	6540559	NUT	actuating – R.H.		1

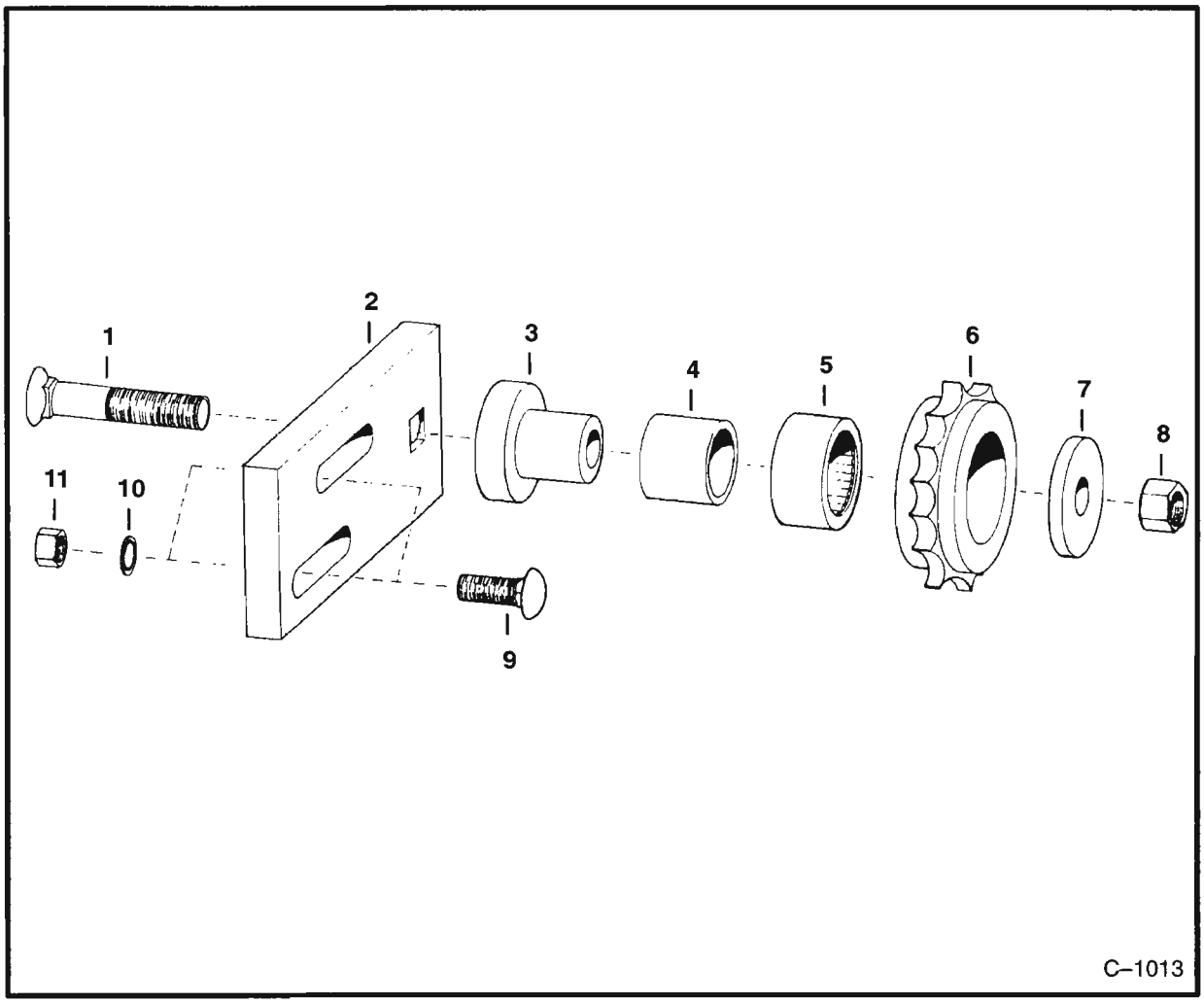

OUTSIDE CLUTCH CHAIN TIGHTENER
Left Side

Ref. No.	Part Number	Description	Remarks	Serial Number	Qty.
1	6505039	BOLT			1
2	6502293	BRACKET	L.H. – Was 6502292 [D]		1
	6502354	BRACKET	R.H.		1
3	6502352	COLLAR			1
4	6515069	RACE			1
5	861741	BEARING			1
6	6504512	SPROCKET			1
7	6515817	WASHER			1
8	81D–8	NUT			1
9	7C–616	BOLT	carriage		2
10	6515468	WASHER			2
11	81D–6	NUT			2

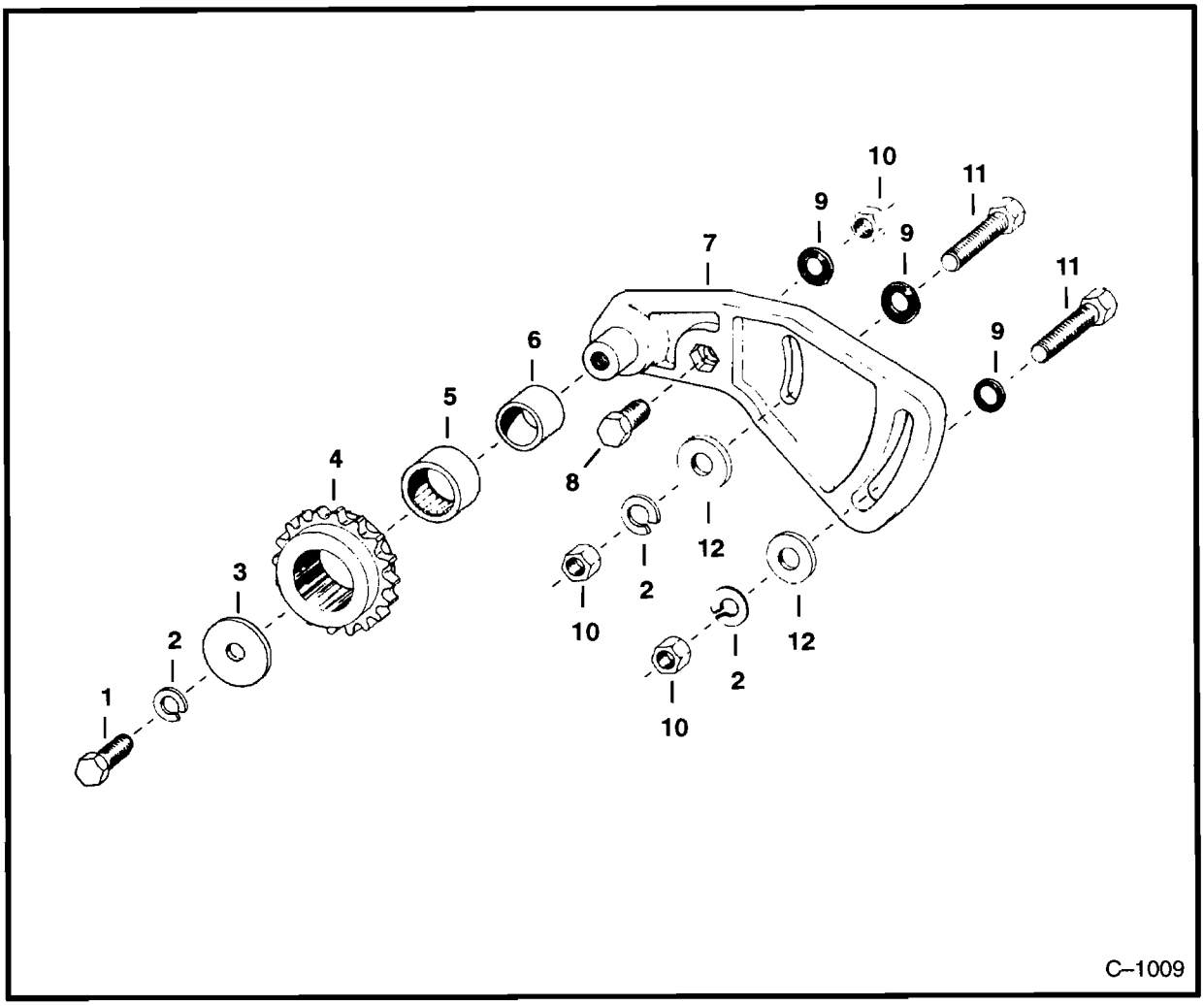

INSIDE CLUTCH CHAIN TIGHTENER
Right Side

Ref. No.	Part Number	Description	Remarks	Serial Number	Qty.
1	17C–824	BOLT			1
2	4E–8	WASHER			1
3	6515817	WASHER			1
4	6502598	SPROCKET			1
5	861741	BEARING			1
6	6515069	RACE			1
7	6502619	ARM	R.H.		1
	6502618	ARM	L.H.		1
8	18C–920	BOLT			1
9	6515467	WASHER			3
10	62D–9	NUT			3
11	18C–928	BOLT			2
12	584092	WASHER			2

VARIABLE SPEED JACKSHAFT

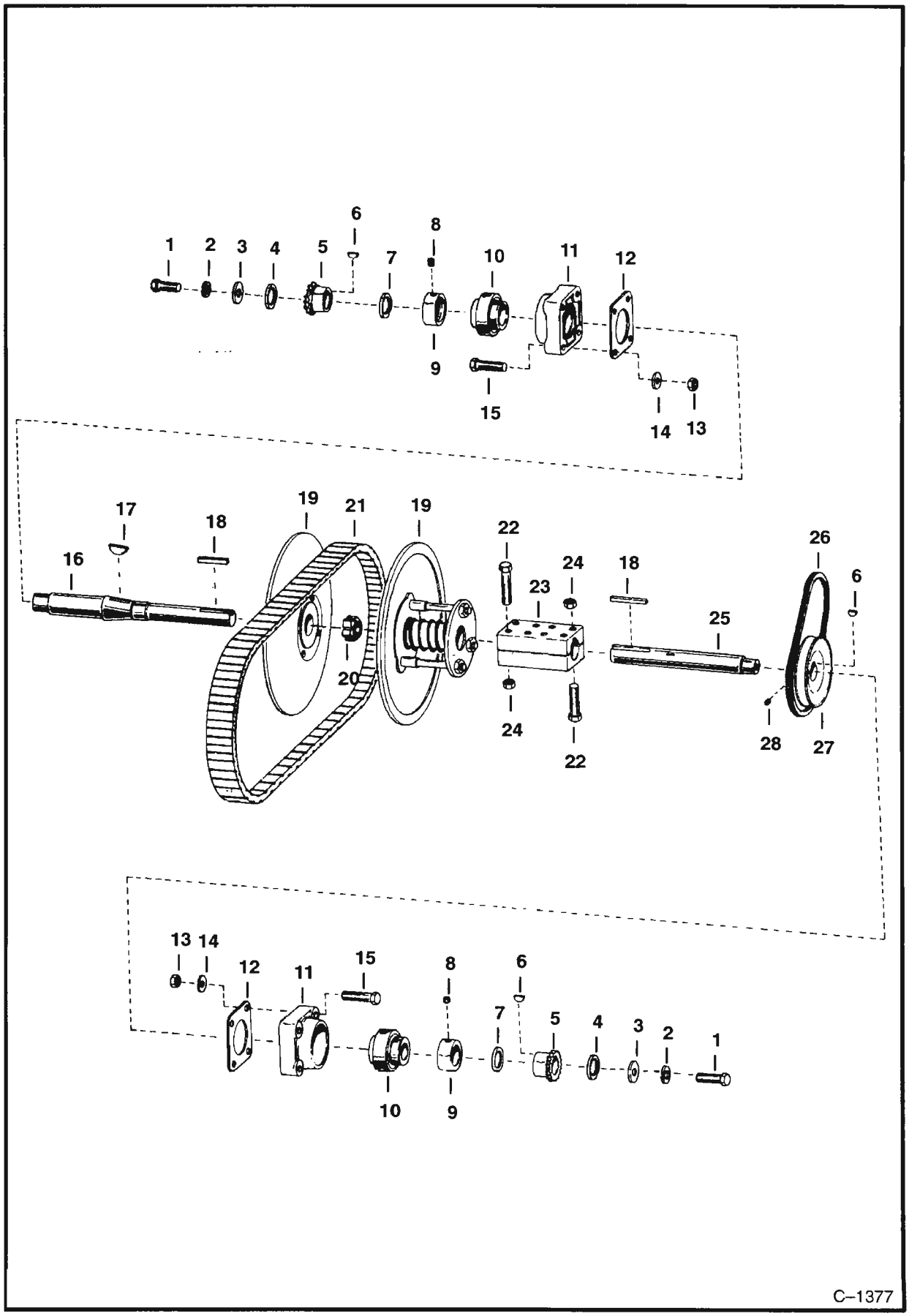

Ref. No.	Part Number	Description	Remarks	Serial Number	Qty.
1	17C–816	BOLT			2
2	4E–8	WASHER			2
3	672568	WASHER			2
4	6503370	WASHER			x
5	6502315	SPROCKET			2
6	5J–806	KEY			3
7	6502521	WASHER			x
8	15G–606	SET SCREW			2
9	6515106	COLLAR			2
10	6518862	BEARING	cone – W/O Collar – Was 6509275 [A]		2
11	6515105	HOUSING			2
12	6502341	GASKET			2
13	81D–8	NUT			8
14	6515466	WASHER			8
15	17C–824	BOLT			8
16	6503348	JACKSHAFT	half – L.H.		1
17	5J–1010	KEY			1
18	7J–3200	KEY			2
19	6501434	SHEAVE ASSY.	See Page B17		1
20	6503357	NUT	spanner		1
21	6515271	BELT			1
22	18C–544	BOLT			8
23	6502810	BLOCK			1
24	82D–5	NUT			8
25	6551114	JACKSHAFT	half – R.H.		1
26	6505371	BELT	alternator		1
27	6551201	PULLEY			1
28	16G–406	SET SCREW			1

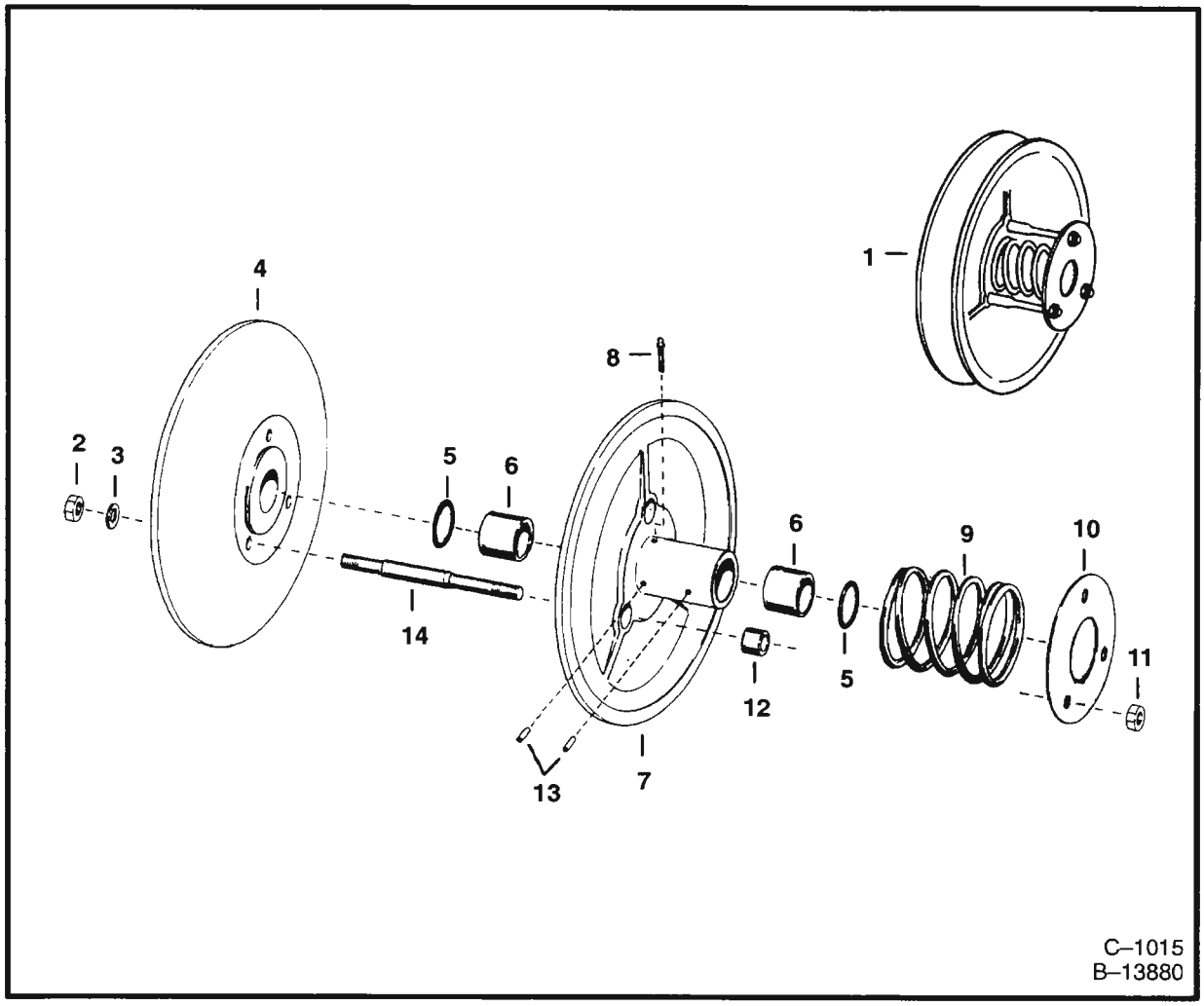

VARIABLE SPEED DRIVEN SHEAVE

Ref. No.	Part Number	Description	Remarks	Serial Number	Qty.
1	6501434	SHEAVE ASSY.	Ref. 2 – 14		1
2	61D–8	NUT			3
3	6E–8	WASHER			3
4	6504914	SHEAVE	half		1
5	225855	SEAL			2
6	1318377	BUSHING			2
7	6501426	SHEAVE	half – W/Ref. 5, 6, 8, 12 & 13		1
8	1318381	GREASE ZERK			1
9	6504926	SPRING			1
10	6504925	PLATE			1
11	81D–6	NUT			3
12	618337	BUSHING			3
13	791355	PIN			2
14	6504924	STUD			3

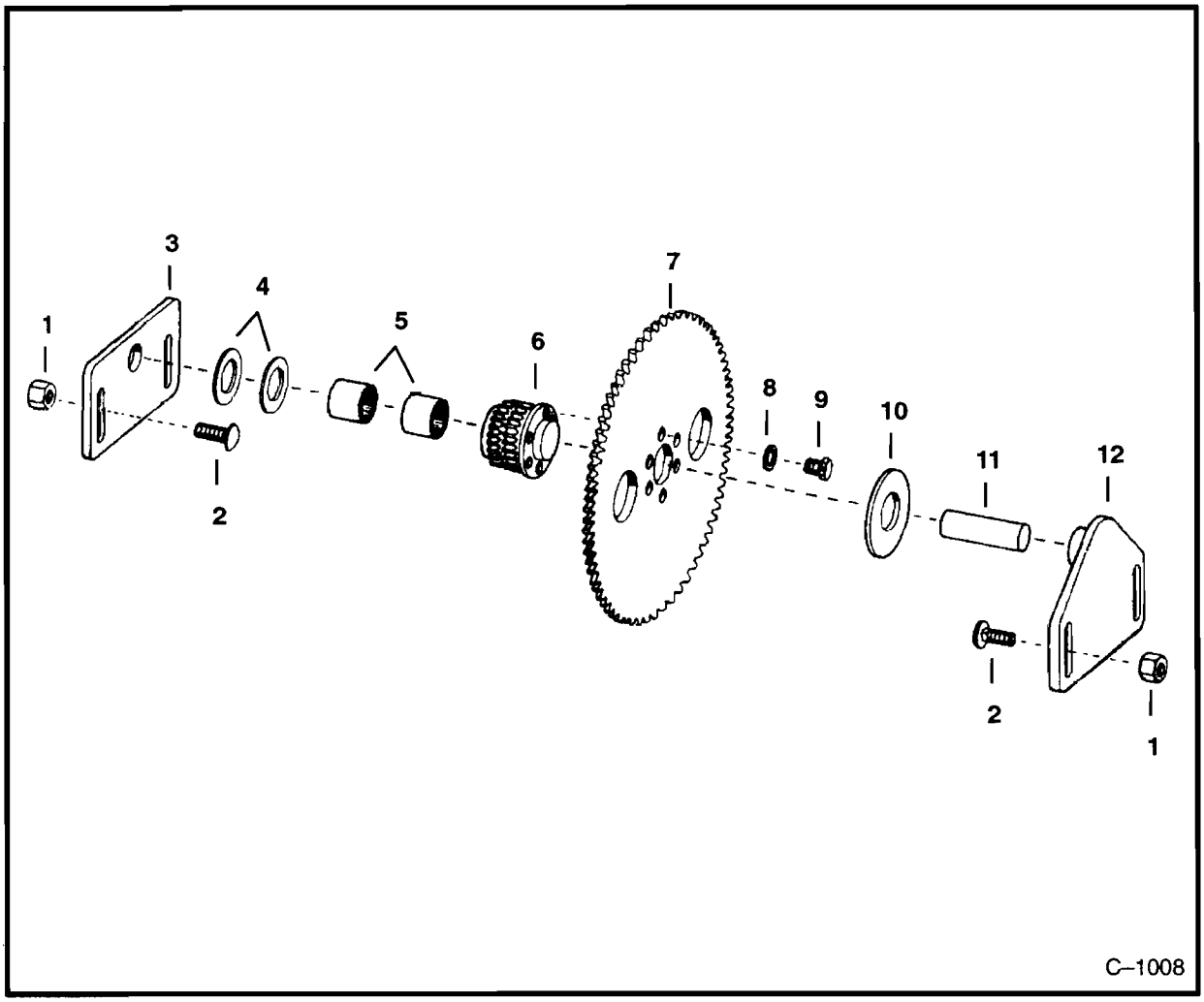

LOWER JACKSHAFT

Ref. No.	Part Number	Description	Remarks	Serial Number	Qty.
1	6518920	NUT			4
2	6504934	BOLT	carriage		4
3	6502278	PLATE			1
4	6505049	WASHER			x
5	669358	BEARING			2
6	6502600	SPROCKET			1
7	6502599	SPROCKET			1
8	6E–7	WASHER			6
9	8C–709	BOLT			6
10	6505050	WASHER			1
11	6502279	SHAFT			1
12	6504592	PLATE			1

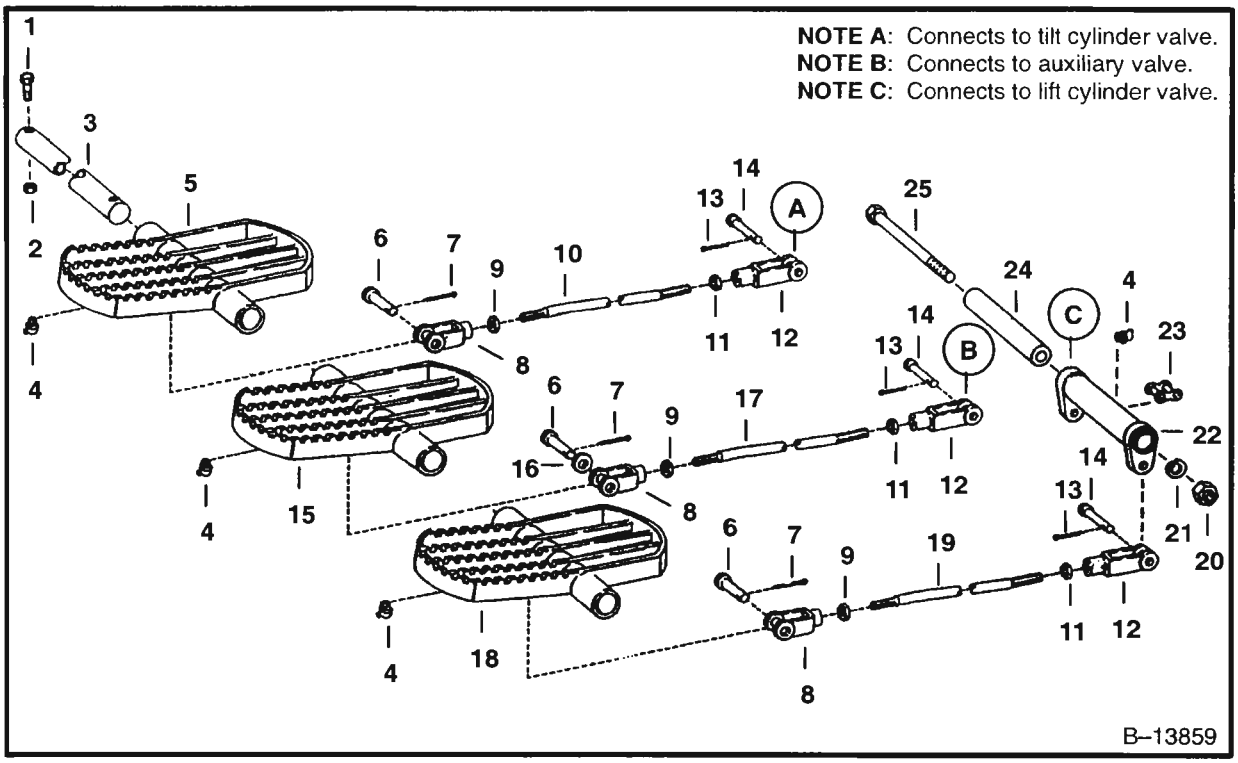

HYDRAULIC CONTROL PEDALS

Ref. No.	Part Number	Description	Remarks	Serial Number	Qty.
1	17C–524	BOLT			2
2*	91D–5	NUT	Was 81D–5 [A]		2
3	6502910	SHAFT			1
4	12H–15	GREASE ZERK			4
5	6502913	PEDAL	tilt		1
6	663350	PIN			3
7	1F–416	PIN			3
8	6508041	YOKE			3
9	8D–6	NUT			3
10	6502986	ROD			1
11	8D–8	NUT			3
12	6515635	YOKE			3
13	1F–316	PIN			3
14	6505103	PIN			3
15	6502912	PEDAL	auxiliary		1
16	25E–17	WASHER			2
17	6502374	ROD			1
18	6502914	PEDAL	boom arm		1
19	6502911	ROD			1
20	61D–8	NUT			1
21	4E–8	WASHER			1
22	6502981	BELLCRANK			1
23	6515186	LINK			1
24	6502988	BUSHING			1
25	17C–8104	BOLT			1

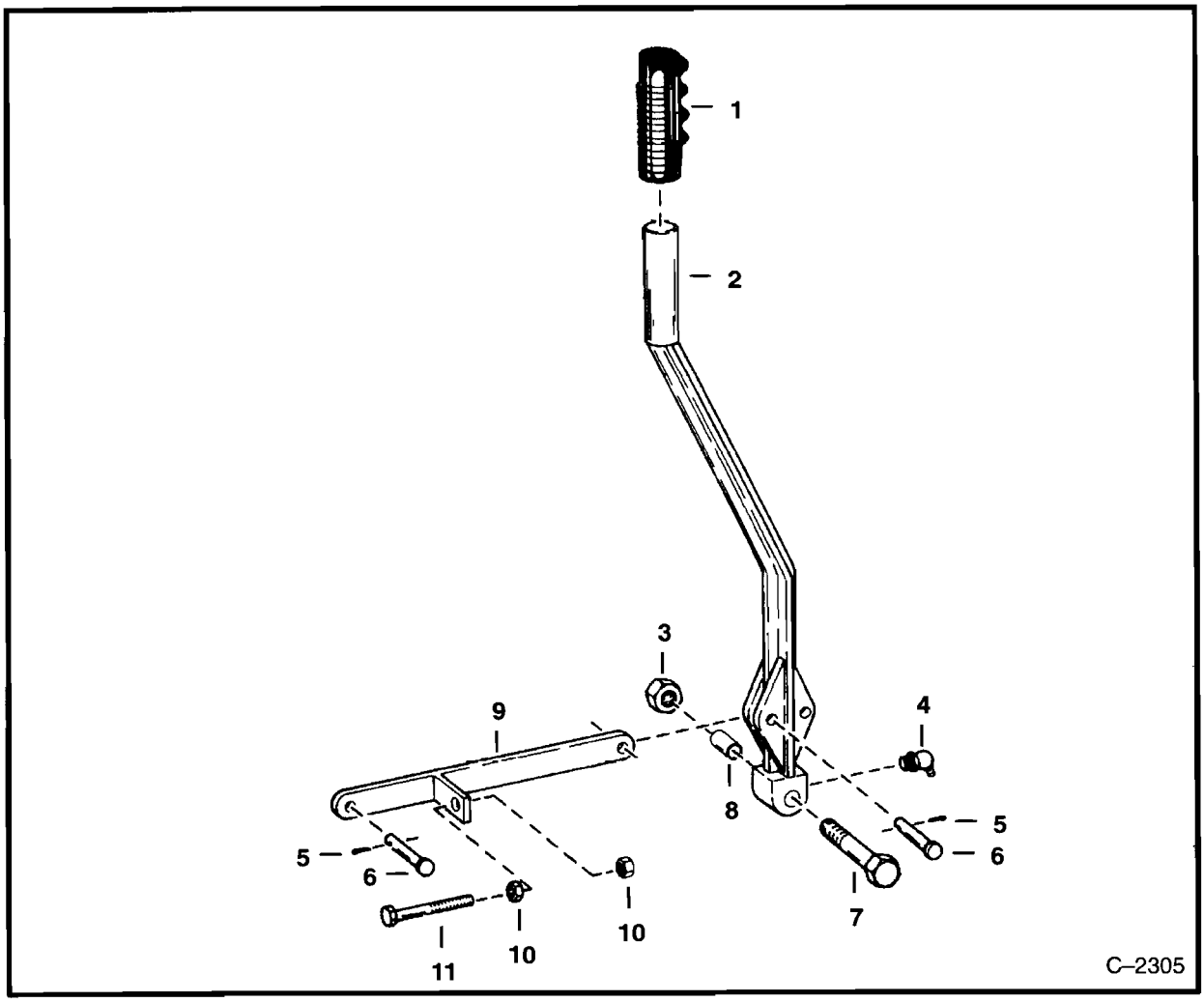

VARIABLE SPEED CONTROL LEVER

Ref. No.	Part Number	Description	Remarks	Serial Number	Qty.
1	6515109	GRIP			1
2	NAP	LEVER	Was 6502865 [A]		1
3	81D–6	NUT			1
4	11H–25	GREASE ZERK			1
5	1F–308	PIN			2
6	6505056	PIN			2
7	17C–628	BOLT			1
8	6502638	BUSHING			1
9	6501451	ROD			1
10	61D–5	NUT			2
11	6515502	BOLT	adj.		1

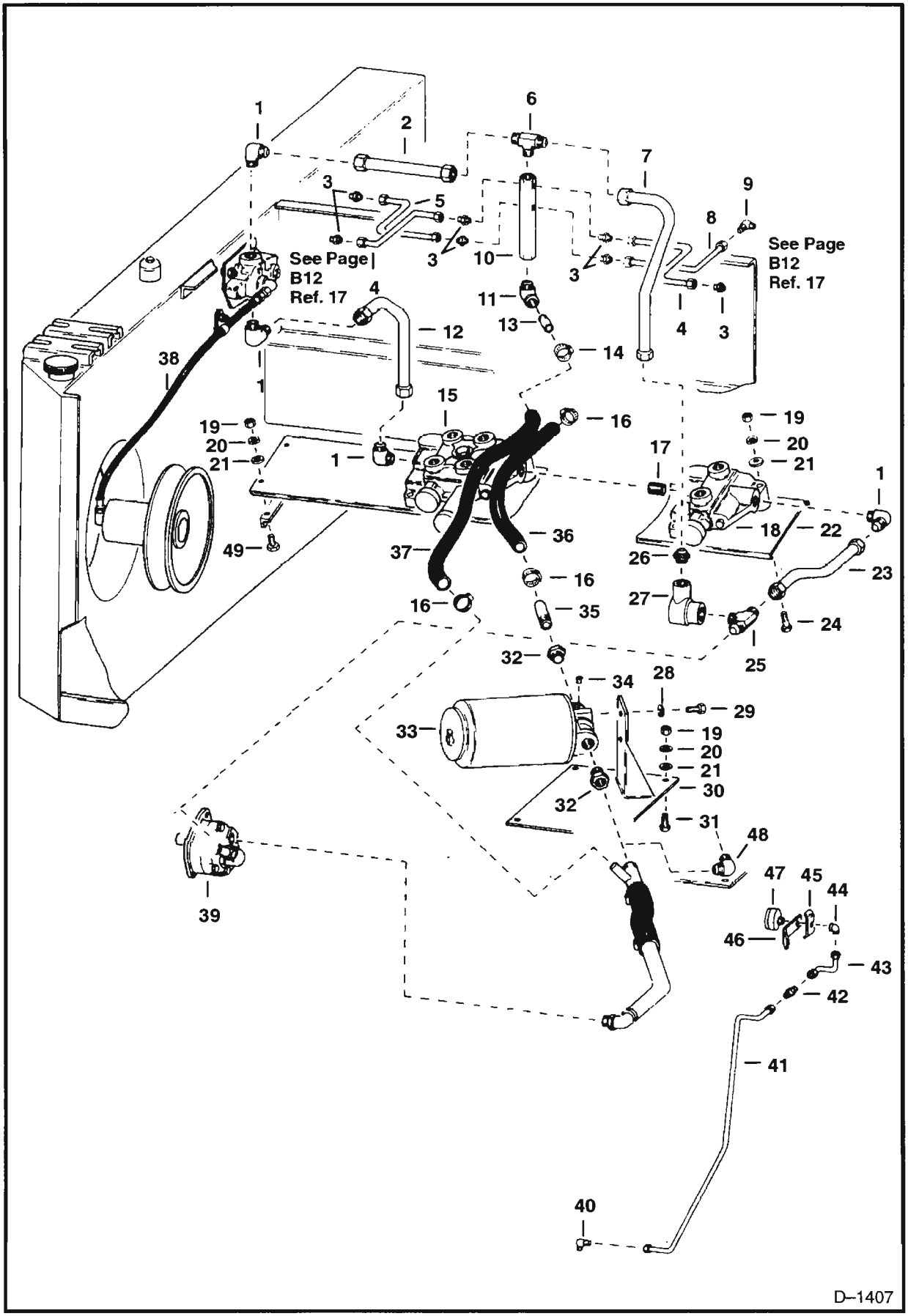
See Page B12 Ref. 17
See Page B12 Ref. 17
D–1407

Ref. No.	Part Number	Description	Remarks	Serial Number	Qty.
1	83F–8	ELBOW			4
2	6501066	TUBE			1
3	89F–5	ADAPTER			8
4	6501068	TUBE			2
5	6501067	TUBE			1
6	98F–8	TEE			1
7	6501069	TUBE			1
8	6501158	TUBE			1
9	83F–5	ELBOW			1
10	6501073	VALVE	relief – See Page C8		1
11	26F–4	ELBOW			1
12	6501078	TUBE			1
13	6511859	ADAPTER			1
14	42H–12	CLAMP			2
15	6504941	VALVE	hyd. – See Page C5		1
16	42H–32	CLAMP			2
17	5K–611	ADAPTER			1
18	6504942	VALVE	tilt – See Page C6		1
19	61D–6	NUT			12
20	4E–6	WASHER			12
21	25E–17	WASHER			12
22	6502908	PLATE	valve mount		1
23	6501033	TUBE			1
24	17C–640	BOLT			6
25	6515134	TEE			1
26	663013	ADAPTER			1
27	6504940	VALVE	master relief – See Page C7		1
28	4E–5	WASHER			2
29	17C–512	BOLT			2
30	6504836	PLATE			1
31	17C–616	BOLT			4
	84G–3716	BOLT			4
32	19F–16	ADAPTER			2
33	6555477	FILTER	See Page C1		1
34	40K–2	PLUG			1
35	6502416	ADAPTER			1
36	NAP	HOSE	Order 10" (254mm) of 6518134 – Was 6502917 [A]		1
	6518134	HOSE	Bulk – Sold Per Foot		1
37	6507125	HOSE			1
38		DRIVE	variable speed circuitry – See Page C18		1
39		PUMP	circuitry – See Page C2		1
40	83F–3	ELBOW		11999 & Below	1
41	6501160	TUBE		11999 & Below	1
42	87F–3	ADAPTER		11999 & Below	1
43	6501116	TUBE		11999 & Below	1
44	85F–3	ELBOW		11999 & Below	1
45	6502775	BRACKET		11999 & Below	1
46	6503450	BRACKET		11999 & Below	1
47	6654208	GAUGE	vacuum – Was 6518226 [A]	11999 & Below	1

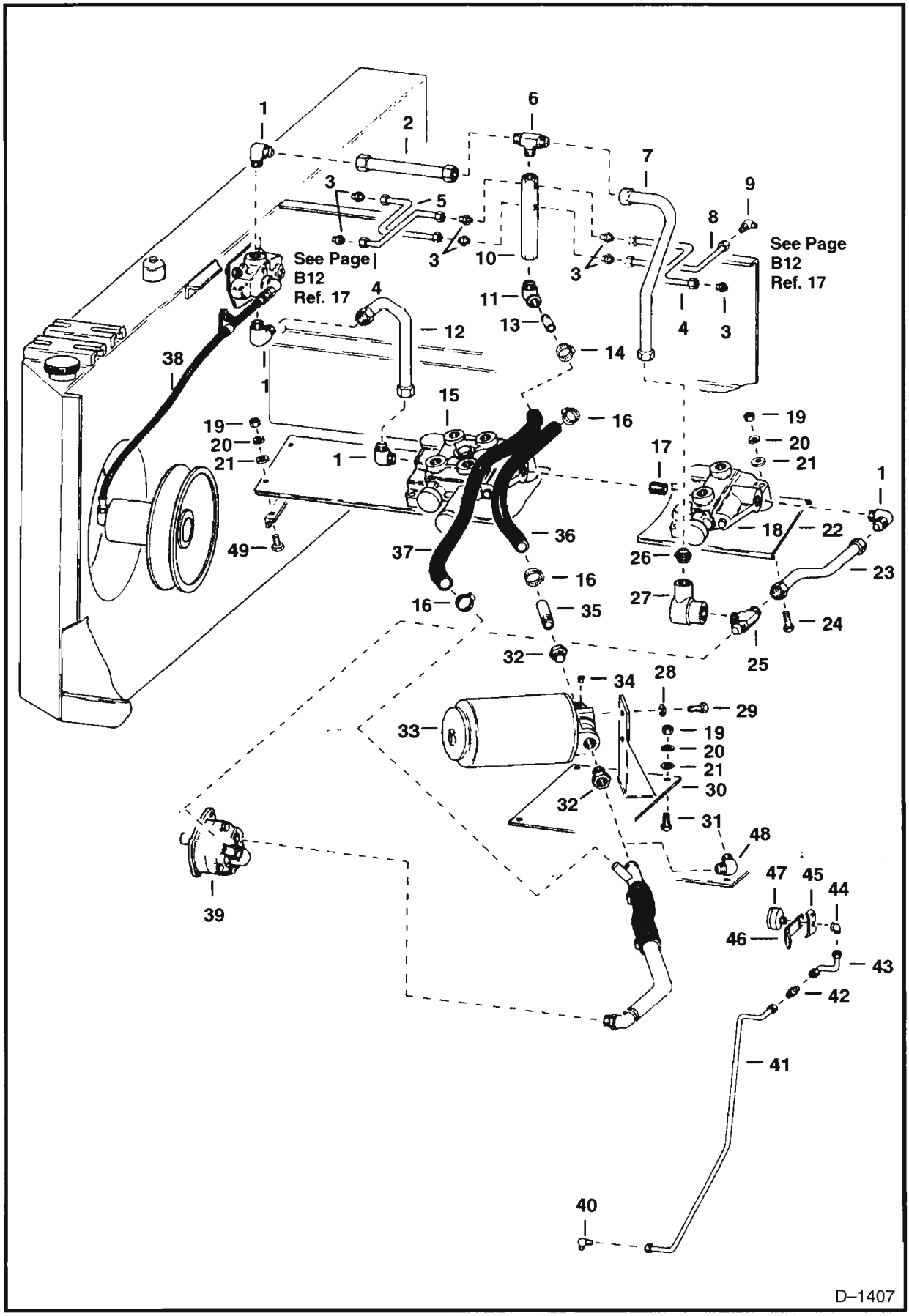
See Page B12 Ref. 17
See Page B12 Ref. 17
D–1407

Ref. No.	Part Number	Description	Remarks	Serial Number	Qty.
48	83F–10	ELBOW			1
49	84G–3712	BOLT			4

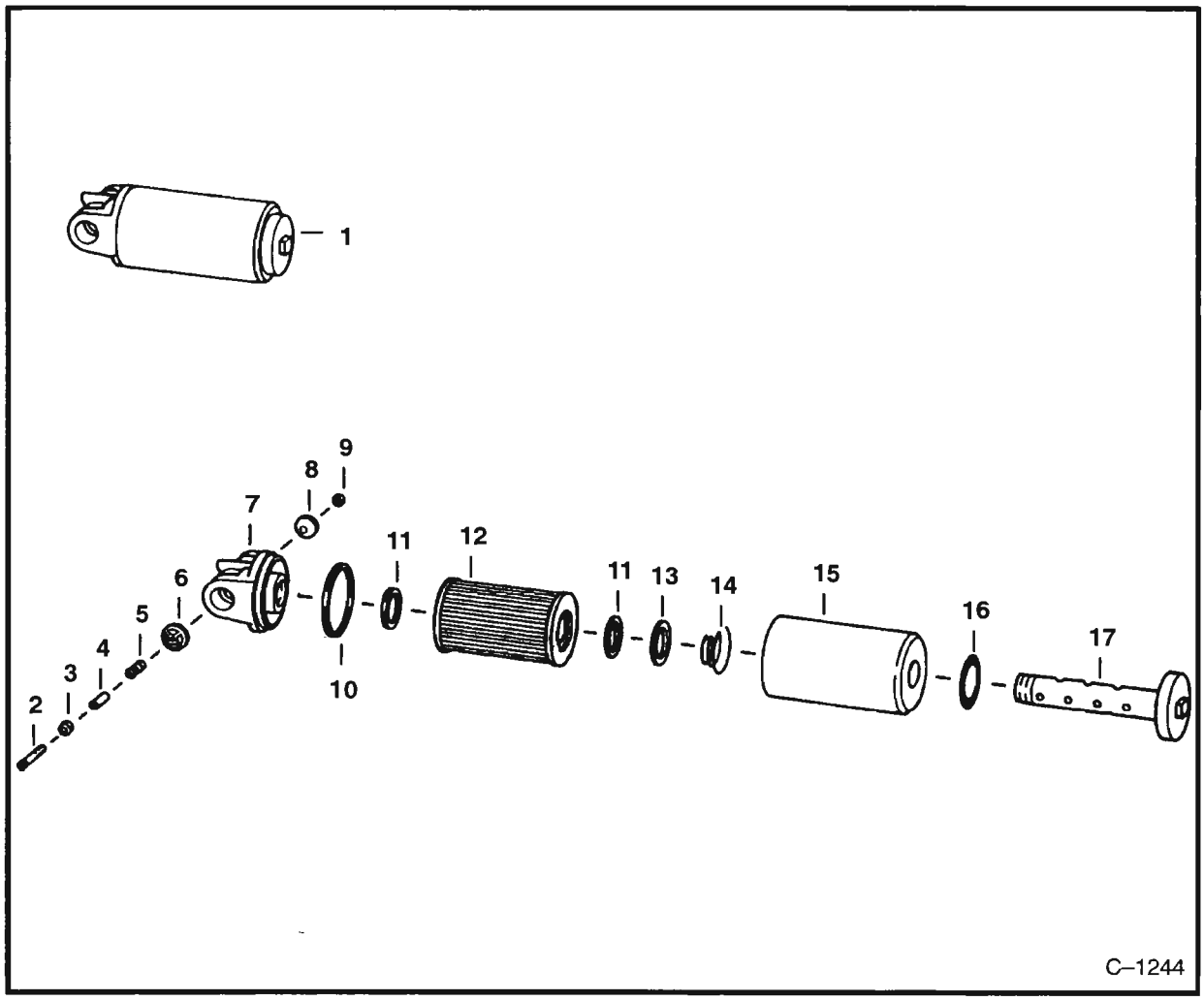

HYDRAULIC OIL FILTER

Ref. No.	Part Number	Description	Remarks	Serial Number	Qty.
1	6555477	FILTER	Ref 2 – 17		1
2	41G–828	SCREW			1
3	896144	CAP			1
4	896146	SPACER			1
5	6515055	SPRING			1
6	896147	GUIDE			1
7	NSS	HEAD			1
8	896150	VALVE			1
9	896149	NUT			1
10	6512532	SEAL			1
11	1566620	SEAL	rubber		2
12	946865	CARTRIDGE	33 Micron – W/Ref. 11		1
13	1566619	WASHER	back–up		1
14	896152	SPRING			1
15	1567065	HOUSING			1
16	1567066	GASKET			1
17	896153	POST			1

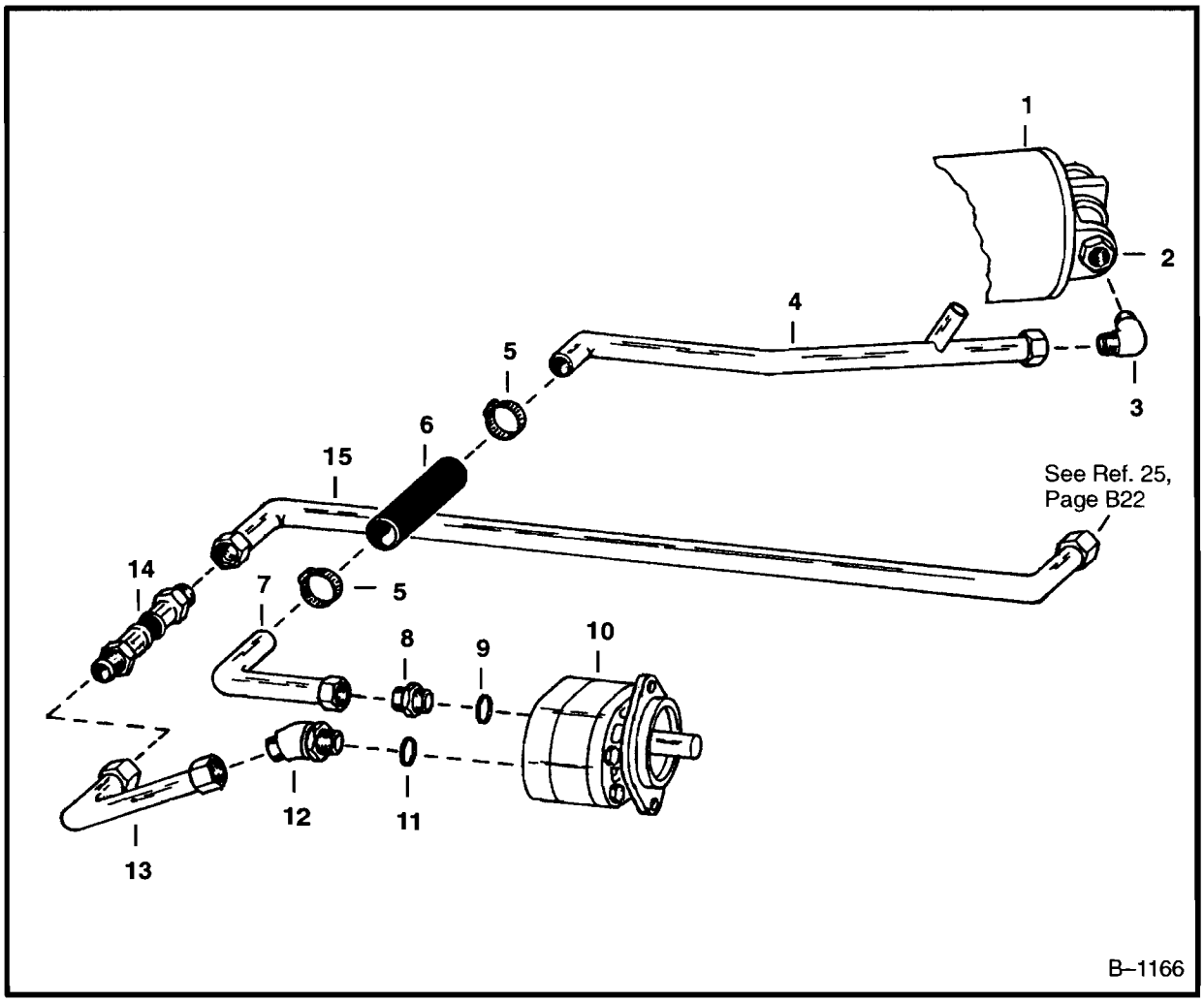

HYDRAULIC PUMP CIRCUITRY

Ref. No.	Part Number	Description	Remarks	Serial Number	Qty.
1	6555477	FILTER	See Page C1		1
2	19F–16	ADAPTER			1
3	83F–10	ELBOW			1
4	6504828	TUBE			1
5	6666864	CLAMP	Was 42H–20 [A]		2
6	6503078	HOSE			1
7*	NAP	TUBE	Was 6501185 [A]		1
8	755050	ADAPTER			1
9	25K–40028	O–RING			1
10		PUMP	hyd. – See Page C3 & C4		1
11	885100	O–RING			1
12	6515615	ELBOW			1
13	6501183	TUBE			1
14	6501199	HOSE			1
15	6501182	TUBE			1

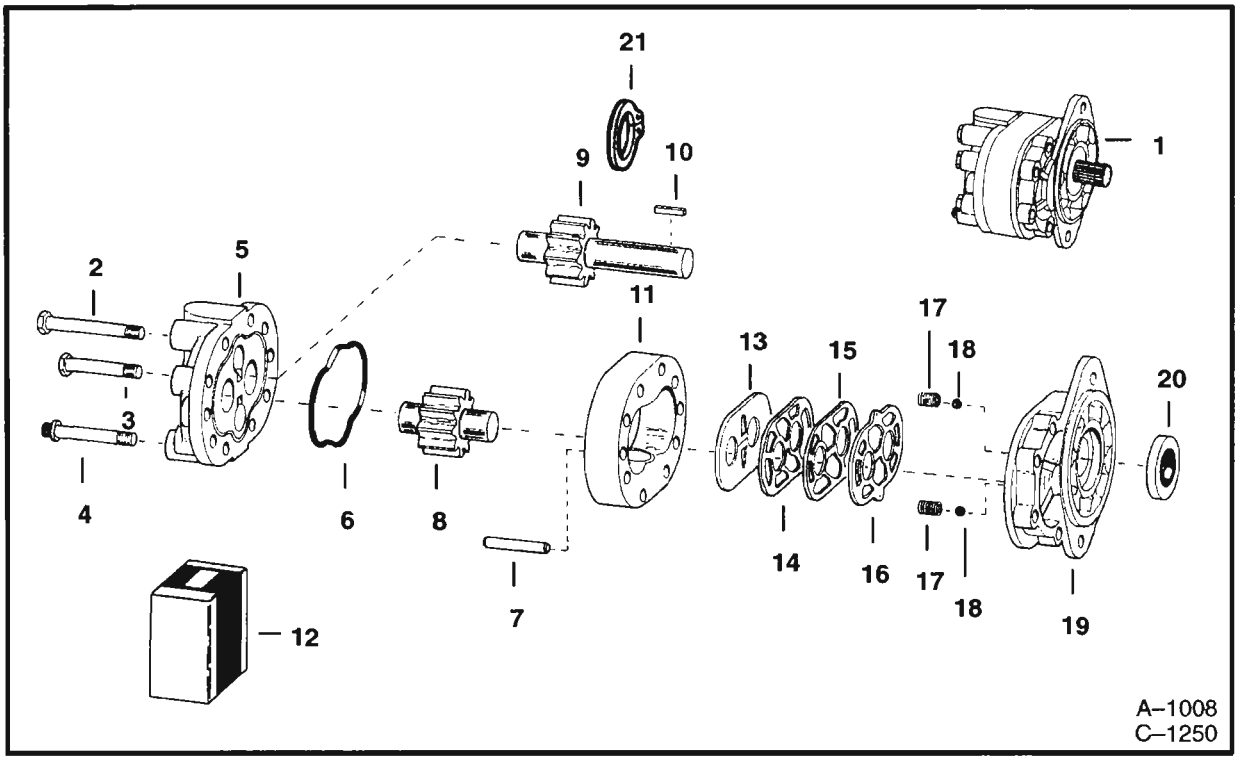

HYDRAULIC PUMP
Cessna No. 15510–OEBA & No. 24305–RAE

Ref. No.	Part Number	Description	Remarks	Serial Number	Qty.
1	NAP	PUMP	hyd. – Use 6519278		1
2	18C–544	BOLT			2
3	17C–536	BOLT			4
4	6632004	BOLT	twelve point		2
5	1577484	PLATE	back – W/Bushings		1
6	25K–20300	O–RING			1
7	3409619	PIN			2
8	6516251	IDLER GEAR			1
9	6516254	DRIVE GEAR			1
10	NAP	KEY	Was 6516253 [A]		1
11	889847	BODY			1
12	894215	SEAL KIT	repair – Ref. 6, 13 – 18 & 20		1
13	NSS	DIAPHRAGM			1
14	NSS	GASKET			1
15	NSS	GASKET			1
16	NSS	SEAL			1
17	NSS	SPRING			2
18	NSS	BALL			2
19	NSS	PLATE			1
20	3490597	SEAL	shaft – Was 3490957 [D]		1
21	6516286	SNAP RING			4

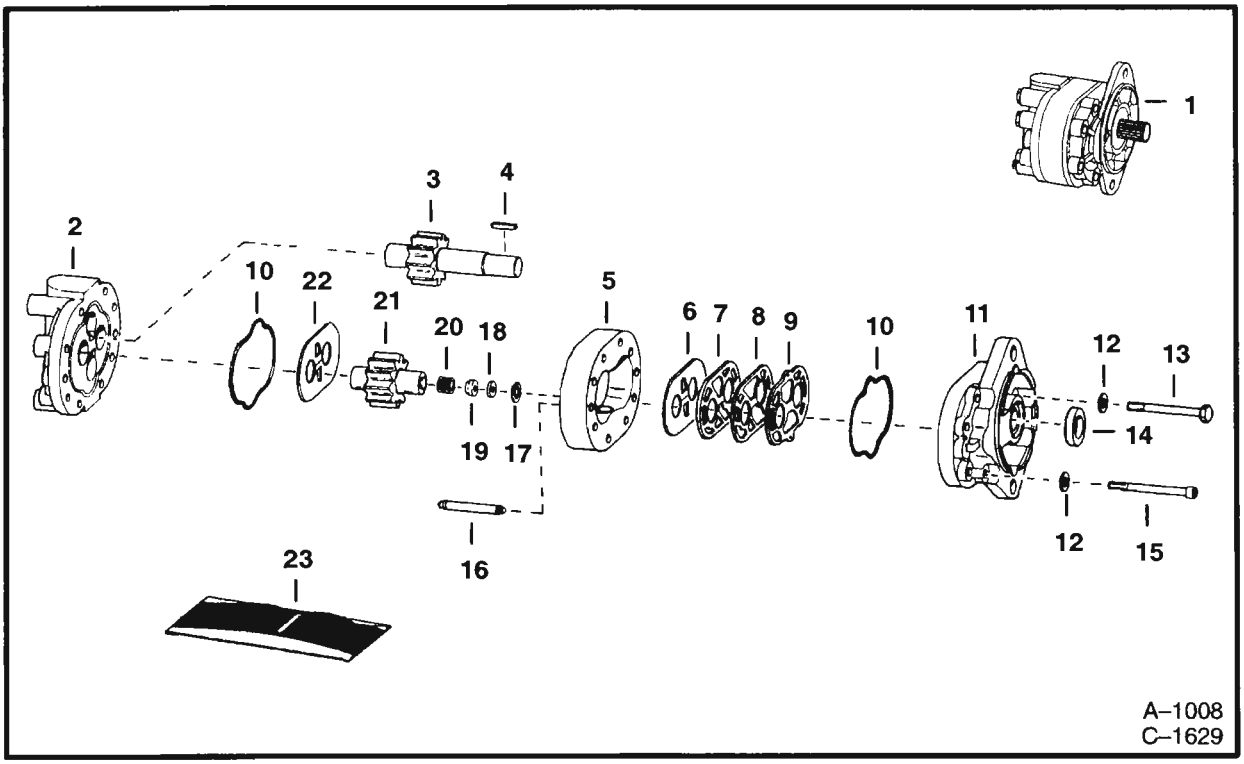

HYDRAULIC PUMP
Parker H39AD2G

Ref. No.	Part Number	Description	Remarks	Serial Number	Qty.
1	6519278	PUMP	Ref. 2 – 22		1
2	6519971	COVER	back		1
3	NAP	GEAR	drive		1
4	7J–2014	KEY			1
5	NAP	BODY			1
6	NSS	PLATE	wear		1
7	NSS	SHIELD	heat		1
8	NSS	GASKET			1
9	NSS	SEAL			1
10	NSS	O–RING			2
11	991992	COVER	front		1
12	992213	WASHER			8
13	17C–540	BOLT			6
14	NSS	SEAL	shaft		1
15	73G–540	BOLT	socket head		2
16	NAP	PIN			2
17	NAP	SNAP RING			1
18	NAP	SEAT	valve		1
19	NAP	VALVE			1
20	NAP	SPRING			1
21	NAP	GEAR	driven		1
22	6519976	PLATE			1
23	992997	REPAIR KIT	Ref. 6 – 10, 14 & 22		1

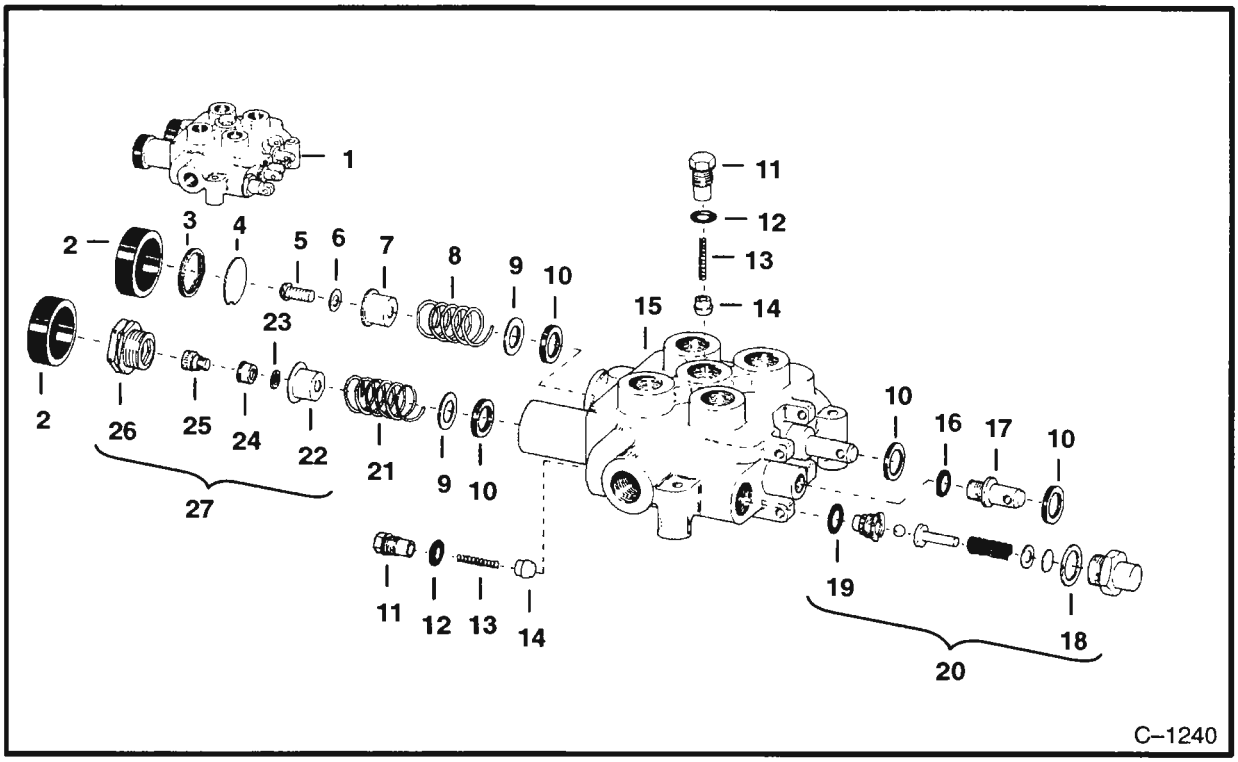

LIFT CYLINDER & AUXILIARY VALVE

Ref. No.	Part Number	Description	Remarks	Serial Number	Qty.
1	6504941	VALVE	Ref. 2 – 25		1
2	6515030	CAP			2
3	1318338	SNAP RING			1
4	6515015	DISC	stop		1
5	89G–408	SCREW			1
6	6515228	WASHER			1
7	6515014	COLLAR			1
8	6515016	SPRING			1
9	6515239	WASHER			2
10	6515313	SEAL	spool		4
11	6515233	PLUG			2
12	1318339	O–RING			2
13	6515082	SPRING			2
14	6515078	POPPET	check		2
15	NAP	HOUSING			2
16	79K–6	O–RING			1
17	6515084	CONNECTOR			1
18	6515019	GASKET			1
19	79K–8	O–RING			1
20	6516245	VALVE	relief assy.		1
21	6515064	SPRING			1
22	6515039	COLLAR			1
23	NSS	WASHER			1
24	NSS	PLUNGER	detent		1
25	NSS	BOLT			1
26	6516243	DETENT	float assy.		1
27	6516242	REPAIR KIT	Ref. 23 – 26		1

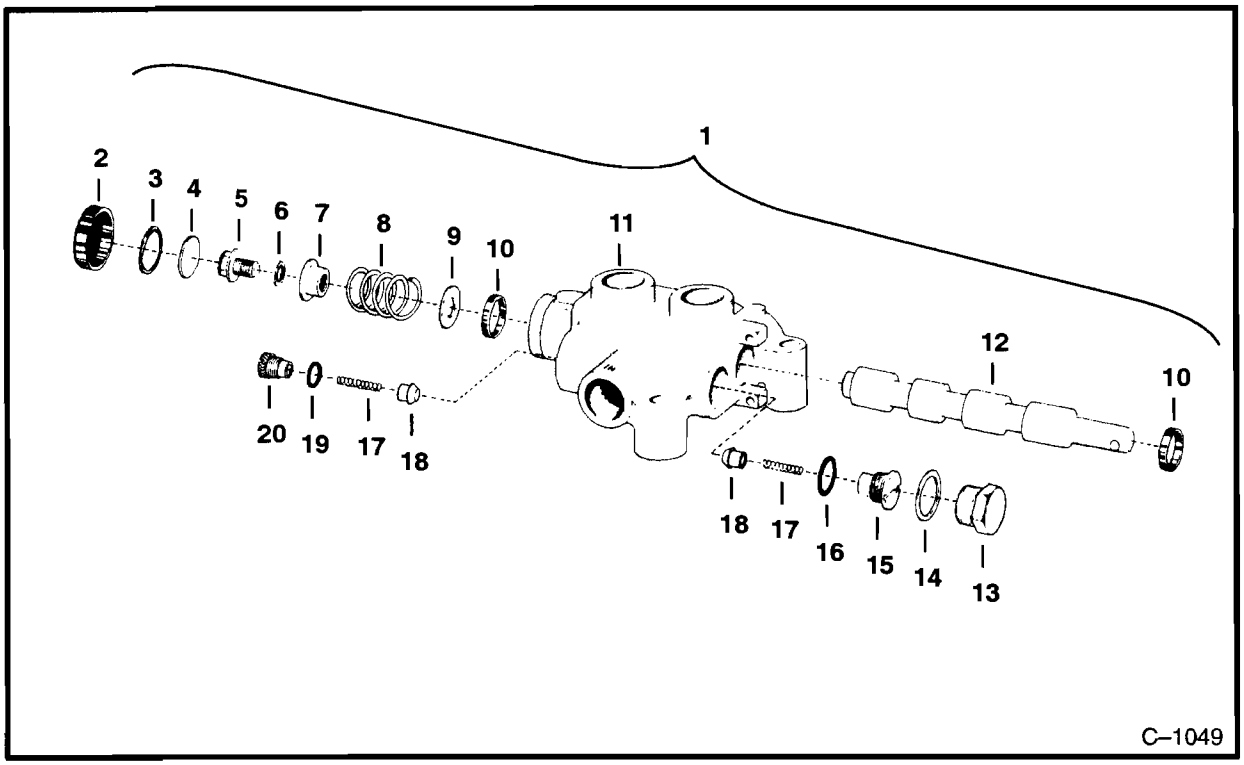

TILT CYLINDER VALVE

Ref. No.	Part Number	Description	Remarks	Serial Number	Qty.
1	6504942	VALVE	Ref. 2 – 20		1
2	6515030	CAP	rubber		1
3	1318338	SNAP RING			1
4	6515015	DISC	stop		1
5	89G–408	SCREW			1
6	6515228	WASHER	shakeproof		1
7	6515014	COLLAR			1
8	6515034	SPRING			1
9	6515239	WASHER			1
10	6515313	SEAL	spool		2
11	NAP	HOUSING			1
12	NSS	SPOOL	2–way		1
13	6515033	CAP			1
14	6515019	GASKET			1
15	6515232	PLUG	seat		1
16	79K–8	O–RING			1
17	6515082	SPRING			2
18	6515078	POPPET	check		2
19	1318339	O–RING			1
20	6515233	PLUG	check		1

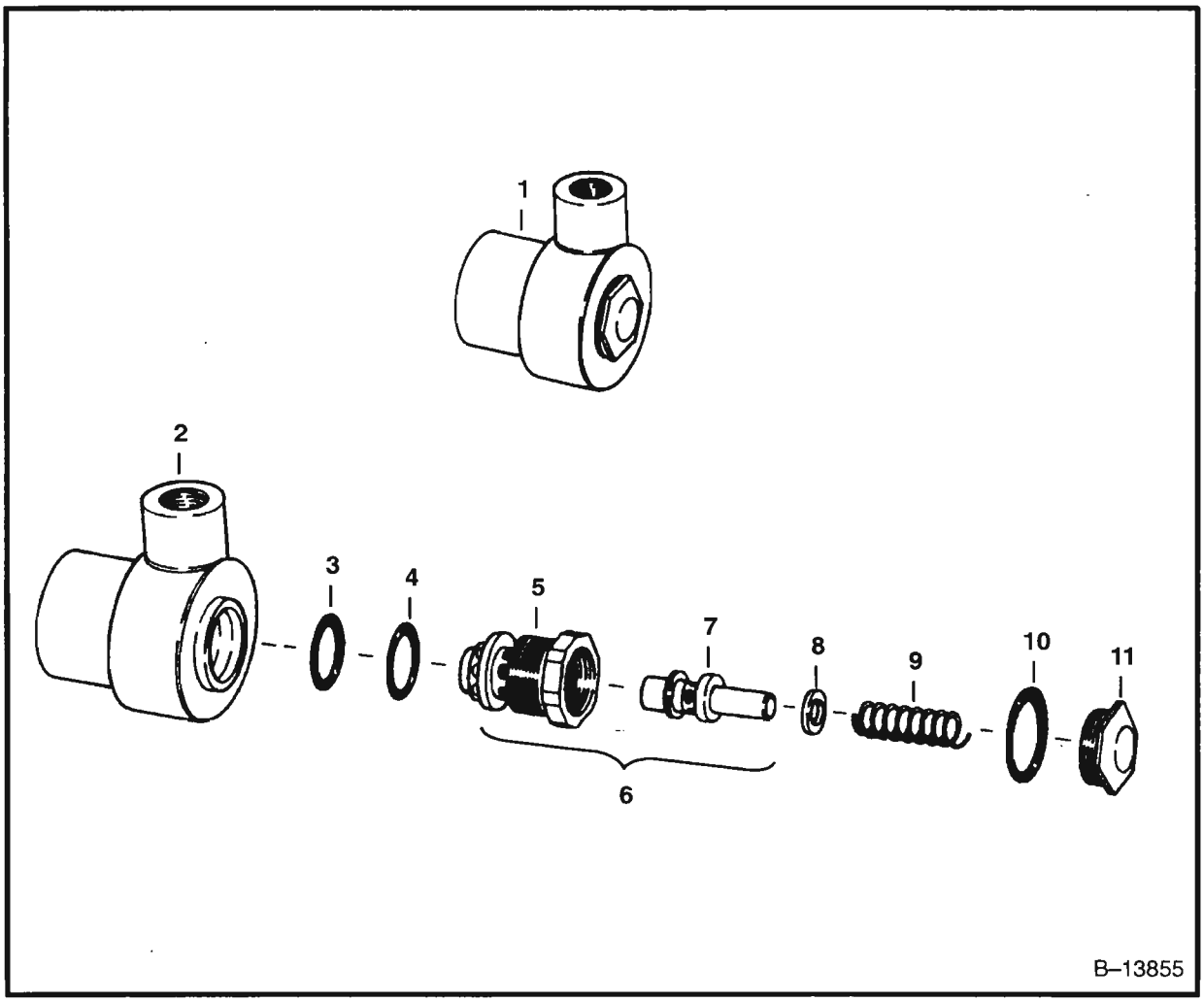

MASTER RELIEF VALVE

Ref. No.	Part Number	Description	Remarks	Serial Number	Qty.
1	6504940	VALVE			1
2	NAP	HOUSING			1
3	58K–22	O–RING			1
4	25K–20102	O–RING			1
5	NAP	BODY			1
6	6505565	SPOOL	Ref. 5 & 7		1
7	NSS	POPPET			1
8	896263	SHIM	.040" (1,02mm)		x
	896264	SHIM	.020" (0,51mm)		x
	896265	SHIM	.010" (0,25mm)		x
9	6515061	SPRING			1
10	6515234	O–RING			1
11	947741	CAP	relief		1

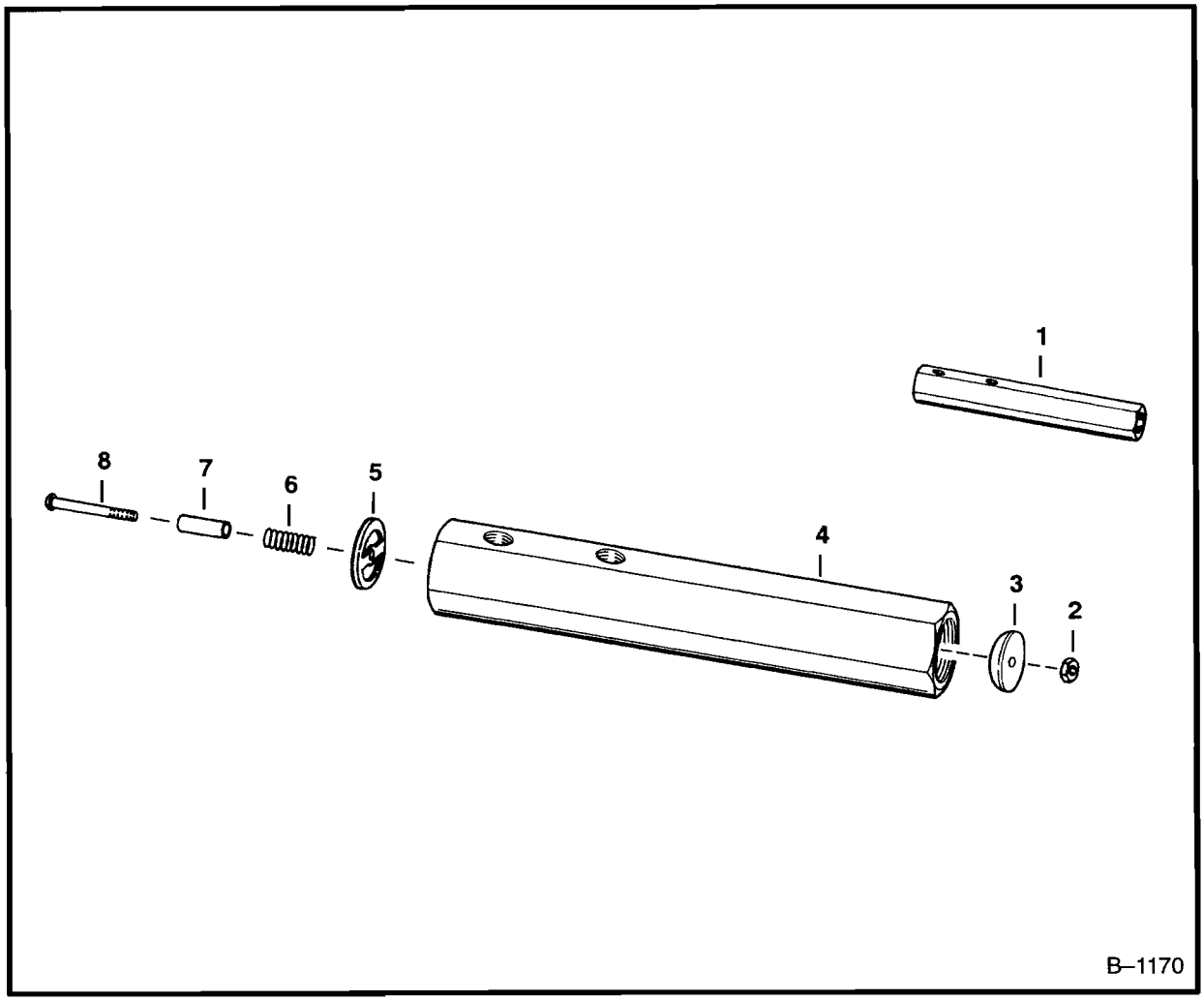

CLUTCH PRESSURE RELIEF VALVE

Ref. No.	Part Number	Description	Remarks	Serial Number	Qty.
1	6501073	VALVE	Ref. 2 – 8		1
2	6515227	NUT			1
3	NSS	POPPET			1
4	NAP	BODY			1
5	NSS	PLATE	Was 6515053 [A]		1
6	NSS	SPRING			1
7	6515050	SPACER			1
8	85G–624	SCREW			1

LIFT CYLINDER CIRCUITRY

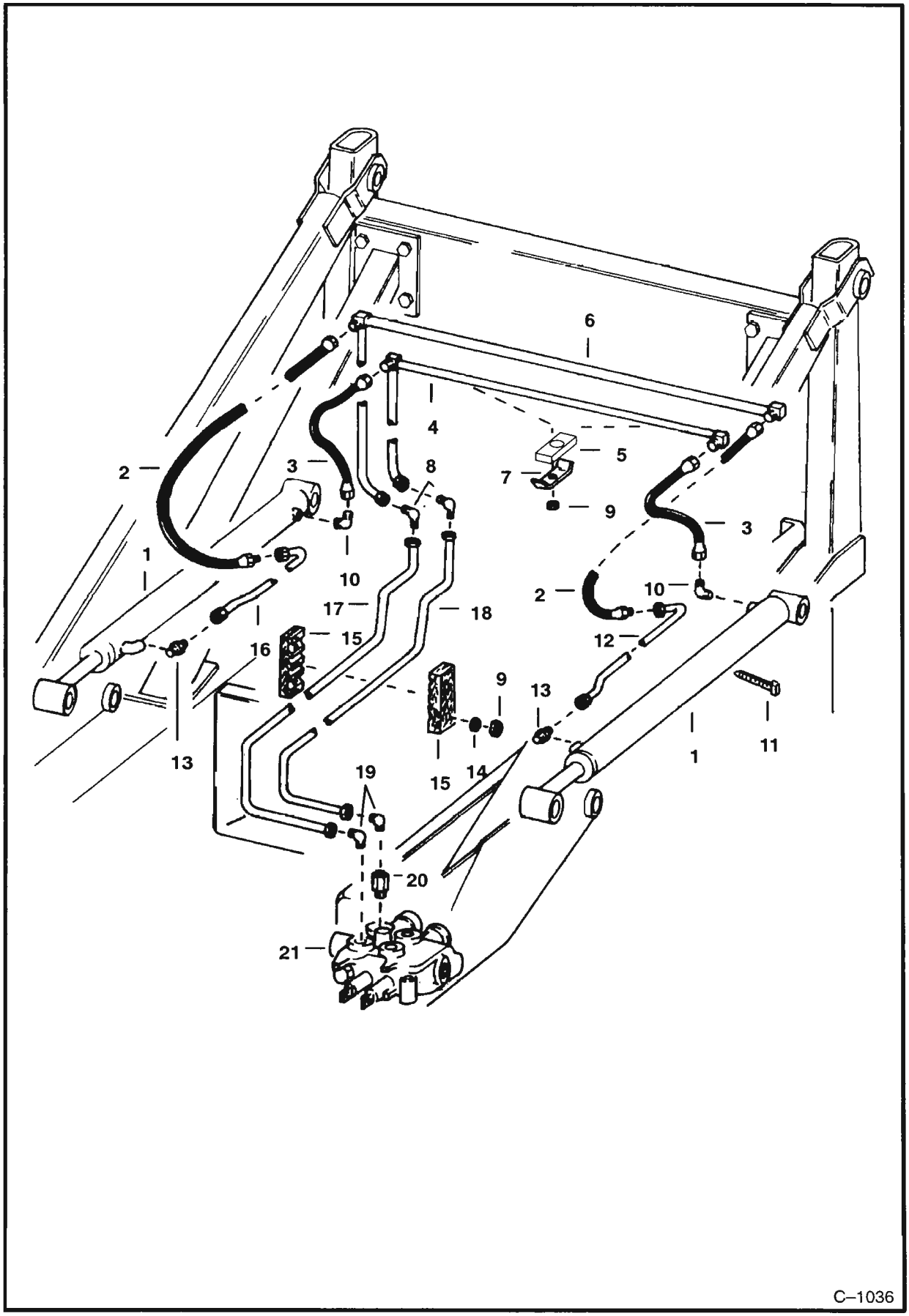

LIFT CYLINDER CIRCUITRY (Cont'd)

Ref. No.	Part Number	Description	Remarks	Serial Number	Qty.
1	6501103	CYLINDER	lift – See Page C14		2
2	6501050	HOSE			2
3	6501055	HOSE			2
4	6501080	TUBE			1
5	6548165	SPACER			2
6	6501082	TUBE			1
7	6502203	CLAMP	tube		2
8	77F–6	ELBOW			2
9	81D–6	NUT			3
10	83F–5	ELBOW			2
11	42H–40	CLAMP			2
12	6501037	TUBE	L.H.		1
13	89F–5	ADAPTER			2
14	25E–17	WASHER			1
15	6503071	BLOCK			1
16	6501036	TUBE	R.H.		1
17	6501131	TUBE			1
18	6501132	TUBE			1
19	662487	ELBOW			2
20	6515537	RESTRICTOR			1
21	6504941	VALVE	See Page C5		1

TILT CYLINDER CIRCUITRY

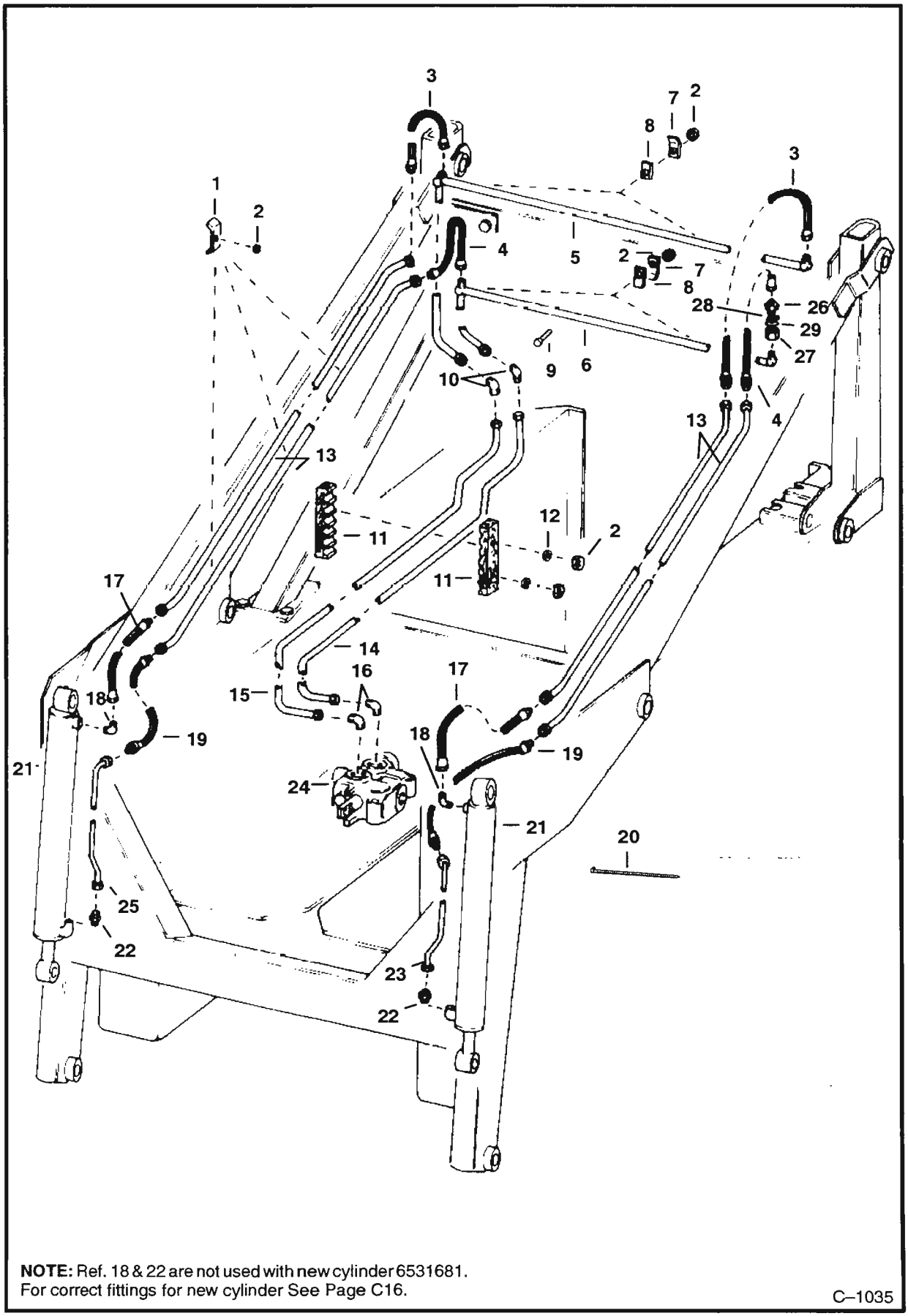

NOTE: Ref. 18 & 22 are not used with new cylinder 6531681.
For correct fittings for new cylinder See Page C16.

C–1035

Ref. No.	Part Number	Description	Remarks	Serial Number	Qty.
1	6502203	CLAMP	tube		6
2	81D–6	NUT			9
3	6501052	HOSE			2
4	6563616	HOSE	Was 6501053 [A]		2
5	6501079	TUBE			1
6	6501081	TUBE			1
7	6505660	CLAMP			4
8	NAP	SPACER	Was 6552266 [A]		4
9	17C–620	BOLT			2
10	77F–6	ELBOW			2
11	6503071	BLOCK			1
12	25E–17	WASHER			1
13	6501040	TUBE			4
14	6501134	TUBE			1
15	6501133	TUBE			1
16	662487	ELBOW			2
17	6501051	HOSE			2
18	83F–5	ELBOW	See Note		2
19	6501049	HOSE			2
20	42H–40	CLAMP			2
21		CYLINDER	tilt – See Page C15 & C16		2
22	89F–5	ADAPTER	See Note		2
23	6501042	TUBE			1
24	6504942	VALVE	See Page C6		1
25	6501041	TUBE			1
26	731794	ADAPTER	For Grapple		2
27	6547358	ADAPTER	For Grapple		2
28	6598842	ORIFICE	For Grapple		2
29	79K–10	O–RING	For Grapple		2

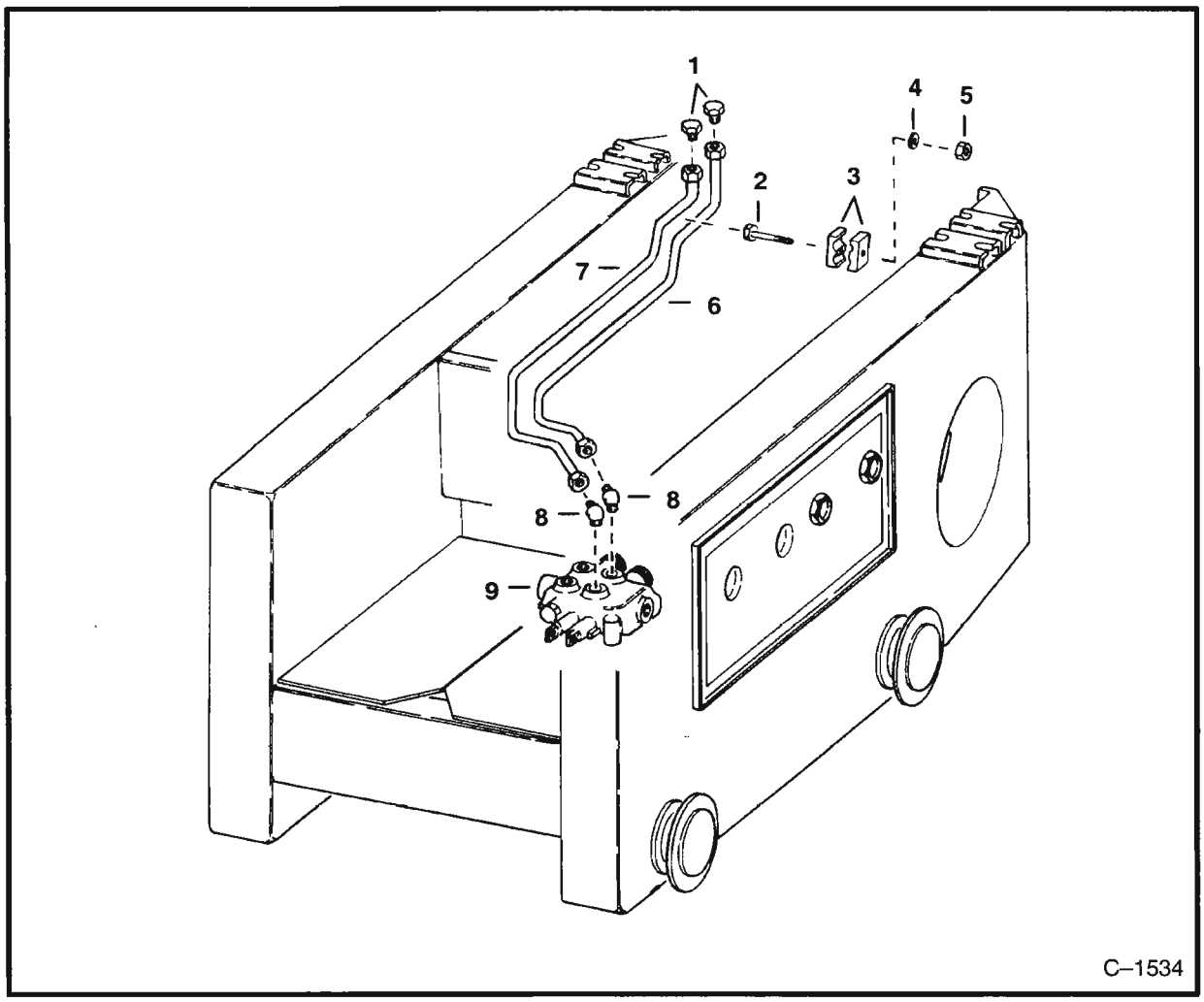

MAIN FRAME AUXILIARY LINES

Ref. No.	Part Number	Description	Remarks	Serial Number	Qty.
1	6518121	PLUG			2
2	17C–456	BOLT			1
3	6503070	BLOCK	wood		1
4	25E–13	WASHER			1
5	61D–4	NUT			1
6	6501136	TUBE			1
7	6501135	TUBE			1
8	662487	ELBOW			2
9	6504941	VALVE	See Page C5		1

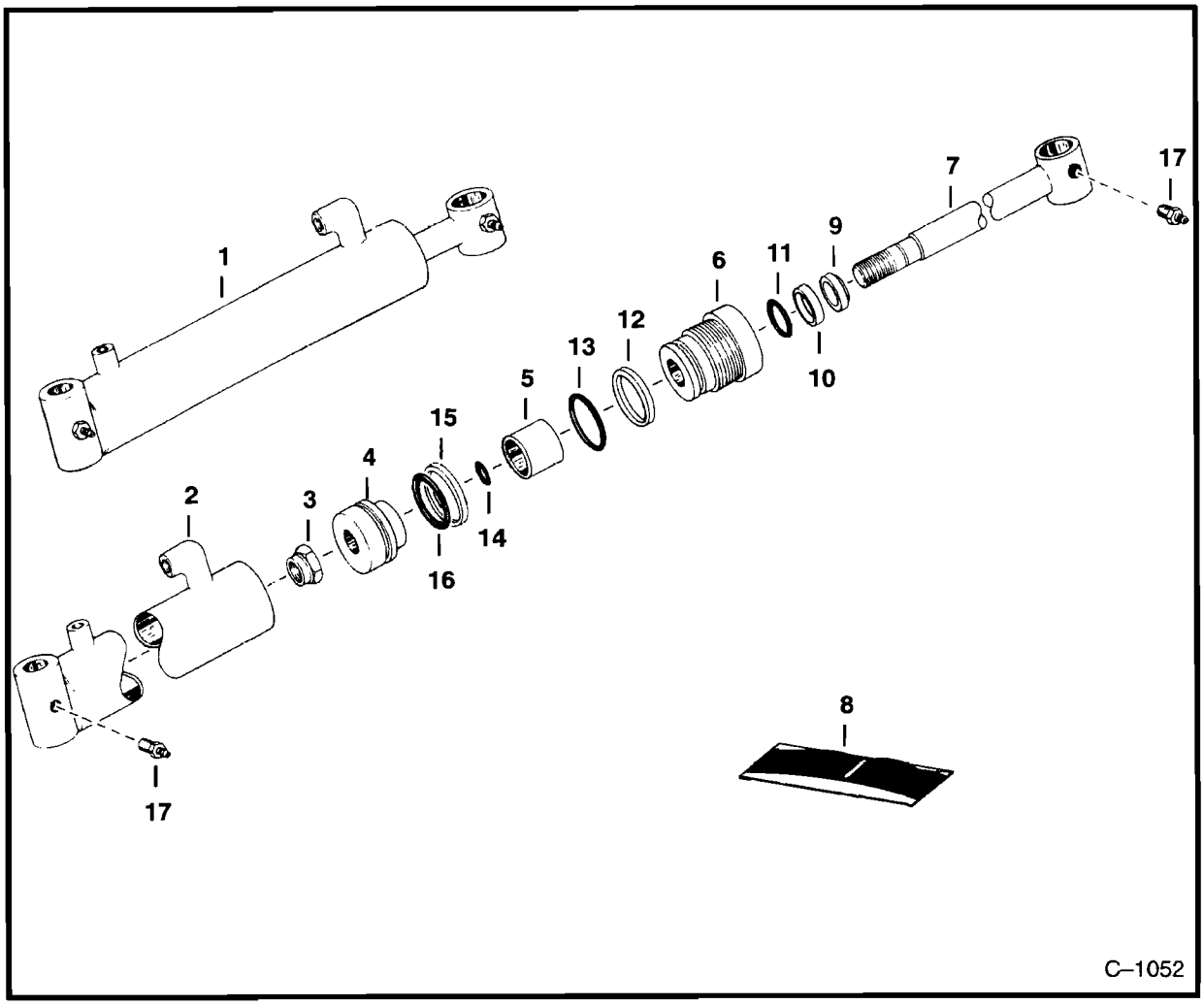

LIFT CYLINDER

Ref. No.	Part Number	Description	Remarks	Serial Number	Qty.
1	6501103	CYLINDER	lift		2
2	6592030	CASE			1
3	86D–12	NUT			1
4	6558196	PISTON			1
5	6514501	SPACER			1
6	6539323	HEAD	Was 6504932 [A]		1
7	6504950	ROD			1
8*	6803329	SEAL KIT	Was 6589831 [A]		1
9	6665208	SEAL	wiper		1
10*	6667324	SEAL	rod – Was 6665184 [A]		1
11	NSS	O–RING			1
12	73K–224	WASHER	back-up		1
13*	54K–40124	O–RING	Was 25K–40124 [A]		1
14	NSS	O–RING			1
15	6516231	SEAL	piston		1
16*	54K–30118	O–RING	Was 25K–30118 [A]		1
17	10H–25	GREASE ZERK			2

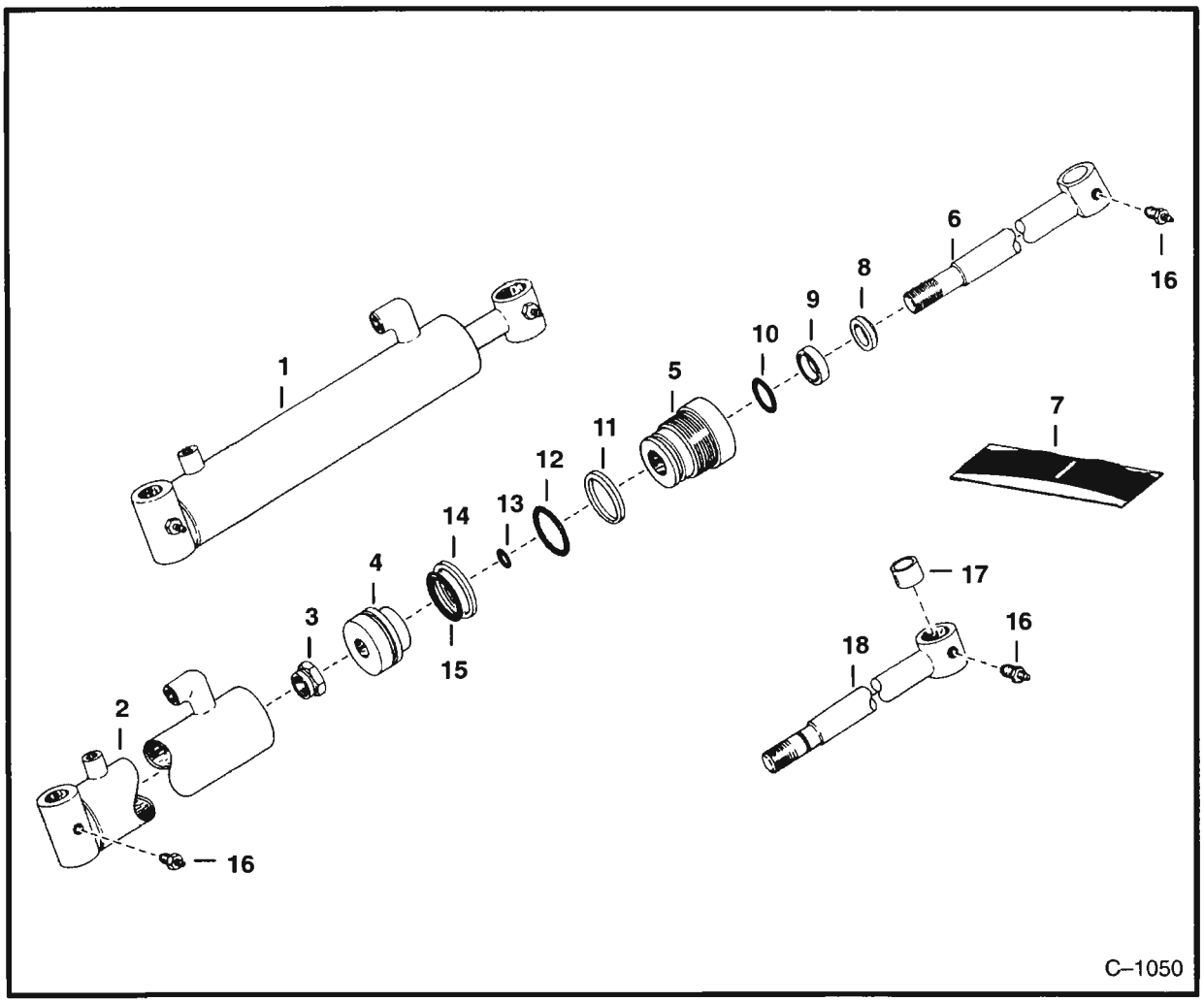

TILT CYLINDER

Ref. No.	Part Number	Description	Remarks	Serial Number	Qty.
1	NAP	CYLINDER	Order 6531681		2
2	NAP	CASE	Order 6531682		1
3	92D–12	NUT	See BTI 126 – Was 86D–12 [B]		1
4	6558196	PISTON	See BTI 126		1
5	6504933	HEAD			1
6	NAP	ROD	Order 6587333 – Was 6529330 [A]		1
7*	6803472	SEAL KIT	Ref. 3 & 8 – 15 – Was 6587790 [A]		1
8*	1657083	SEAL	wiper – Was NSS [A]		1
9*	6667323	SEAL	rod – Was NSS [A]		1
10	NSS	O–RING			1
11	666939	WASHER	back–up		1
12*	54K–40124	O–RING	Was NSS [A]		1
13	NSS	O–RING			1
14*	6516231	SEAL	piston – Was NSS [A]		1
15*	54K–30118	O–RING	Was NSS [A]		1
16	10H–25	GREASE ZERK			2
17	6547652	BUSHING	Use W/Ref. 18		1
18	NAP	ROD	Order Ref. 6 – Was 6551375 [A]		1

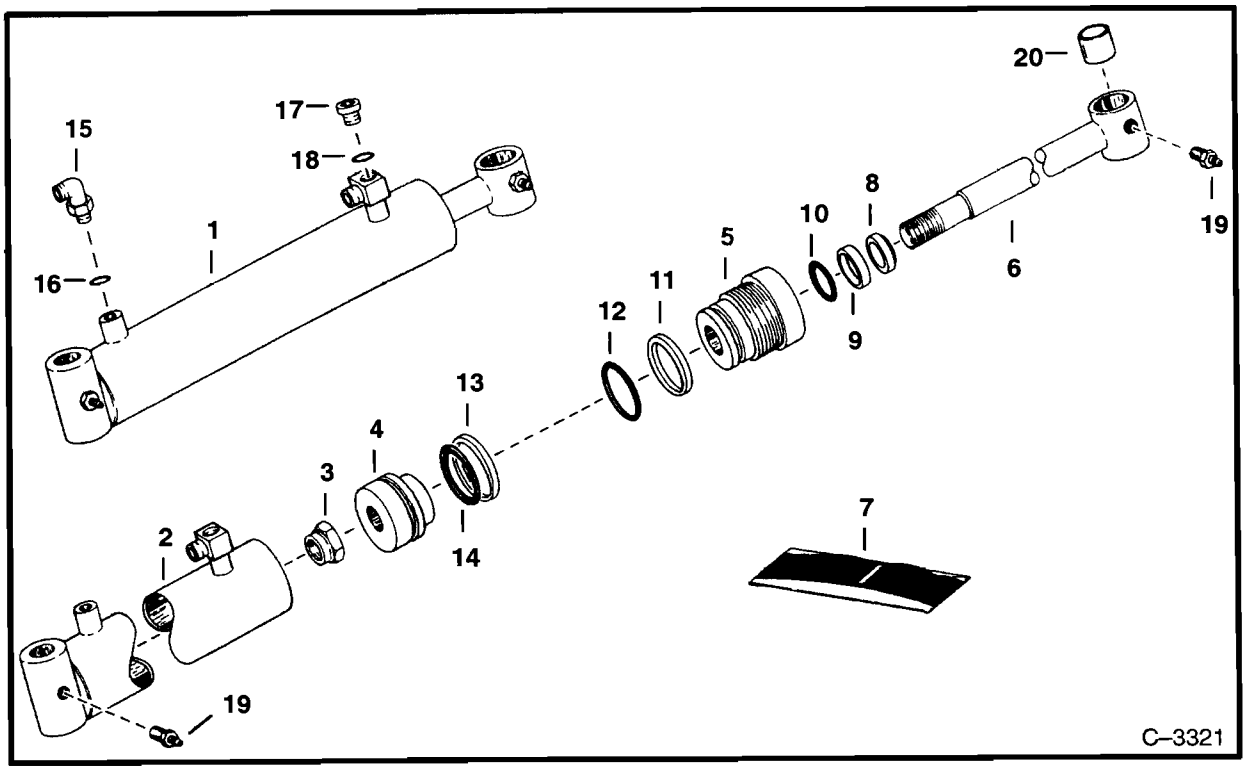

TILT CYLINDER

Ref. No.	Part Number	Description	Remarks	Serial Number	Qty.
1	6531681	CYLINDER	Ref. 2 – 18		2
2	6531682	CASE			1
3	92D–12	NUT	Was 86D–12 [B]		1
4	6558196	PISTON			1
5	6538595	HEAD	Was 6504933 [A]		1
6	6587333	ROD	W/Ref. 20 – Was 6529330 [A]		1
7*	6803472	SEAL KIT	Ref. 8 – 14 – Was 6587790 [A]		1
8	1657083	SEAL	wiper		1
9*	6667323	SEAL	rod – Was 6704243 [A]		1
10	NSS	O–RING			1
11	73K–224	WASHER	back-up – Was 666939 [A]		1
12*	54K–40124	O–RING	Was 25K–40124 [A]		1
13	6516231	SEAL	piston		1
14*	54K–30118	O–RING	Was 25K–30118 [A]		1
15	17K–5	ELBOW			1
16	79K–6	O–RING			1
17	47K–2	PLUG			1
18	79K–3	O–RING			1
19	10H–25	GREASE ZERK			2
20	6547652	BUSHING			1

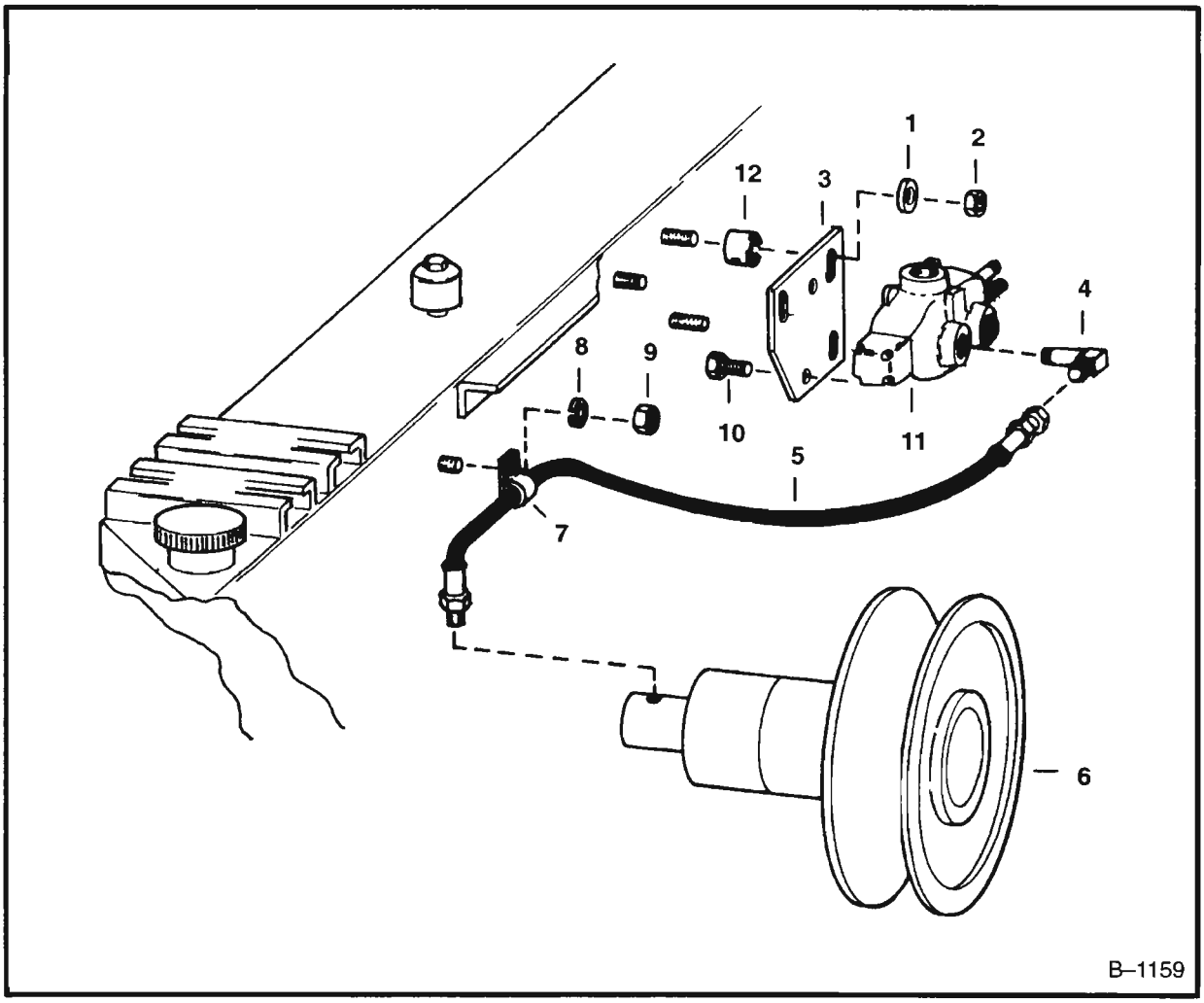

VARIABLE SPEED DRIVE CIRCUITRY

Ref. No.	Part Number	Description	Remarks	Serial Number	Qty.
1	25E–17	WASHER			3
2	81D–6	NUT			3
3	6505676	PLATE			1
4	731745	ELBOW	Was 6560020 [A]		1
5	6501441	HOSE			1
6		DRIVE	variable speed sheave assy. – See Page C24		1
7	30H–34	CLAMP			1
8	4E–4	WASHER			1
9	61D–4	NUT			1
10	17C–608	BOLT			2
11		VALVE	variable speed – See Page C20		1
12	6502353	SPACER			3

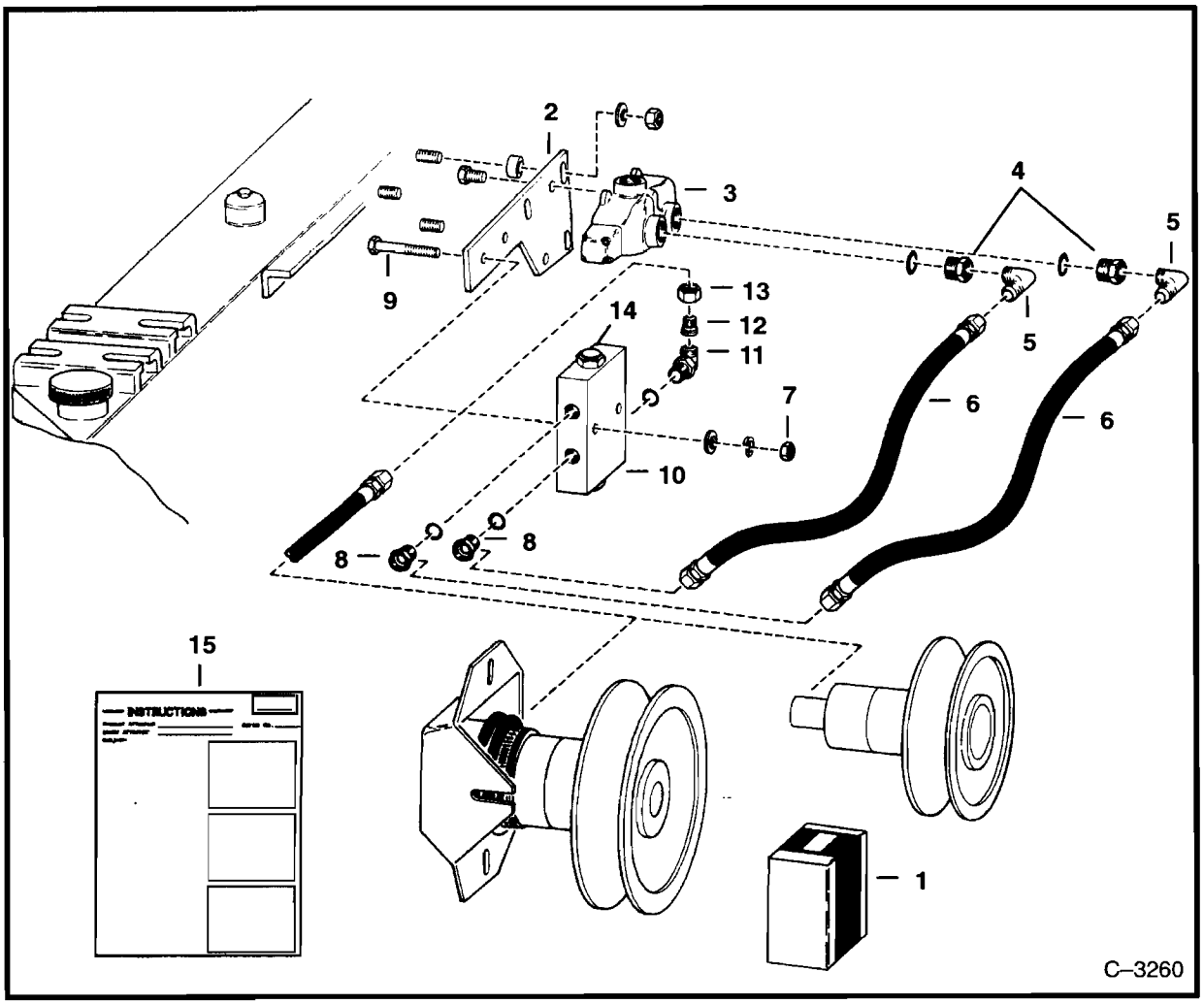

VARIABLE SPEED DRIVE CIRCUITRY

Ref. No.	Part Number	Description	Remarks	Serial Number	Qty.
1	6702641	KIT	W/Ref. 2 – 15		1
2	6505676	PLATE			1
3	6657761	VALVE	See Page C21		1
4	19F–5	ADAPTER			2
5	83F–5	ELBOW			2
6	6530884	HOSE			2
7	55D–6	NUT			2
8	18K–5	ADAPTER			2
9	17C–632	BOLT			2
10	6657760	LOCK VALVE			1
11	17K–5	ELBOW			1
12	9K–1	REDUCER			1
13	80F–5	NUT			1
14	24K–5	PLUG			1
15	6720539	INSTRUCTIONS			1

VARIABLE SPEED VALVE
W/Thermal Relief

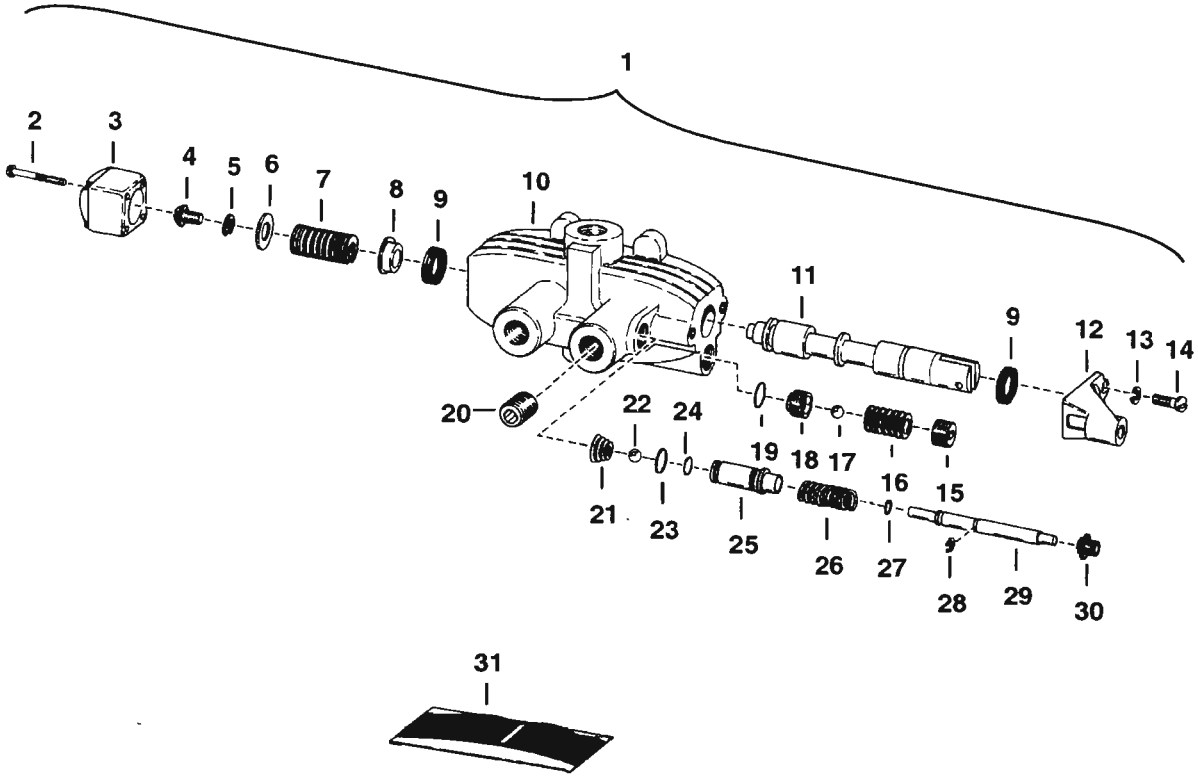

C–1053

VARIABLE SPEED VALVE (Cont'd)
W/Thermal Relief

Ref. No.	Part Number	Description	Remarks	Serial Number	Qty.
1	NAP	VALVE	Ref. 2 – 30 – Order 6702641 on Page C18 – Was 6504944 [A]		1
2	41G–816	SCREW			4
3	980732	CAP			1
4	89G–408	SCREW			1
5	24E–4	WASHER			1
6	664402	WASHER			1
7	980731	SPRING			1
8	6515012	COLLAR			1
9	662768	SEAL	valve spool		2
10	NAP	HOUSING	W/Spool		1
11	NAP	SPOOL			1
12	6516232	BRACKET			1
13	4E–4	WASHER			2
14	43G–410	SCREW			2
15	16F–6	PLUG			1
16	980733	SPRING			1
17	10J–12	BALL			1
18	980735	SEAT			1
19	25K–30012	O–RING			1
20	40K–8	PLUG			1
21	6516238	SPRING			1
22	6516241	BALL			1
23	58K–12	O–RING			1
24	25K–20014	O–RING			1
25	6516237	GUIDE			1
26	6516239	SPRING			1
27	6515442	O–RING			1
28	NAP	RING	retaining – Was 6516240 [A]		1
29	6516236	PUSH ROD			1
30	6516234	SCREW			1
31	6661320	SEAL KIT	Ref. 23, 24 & 27 – Was 6561718 [A]		1

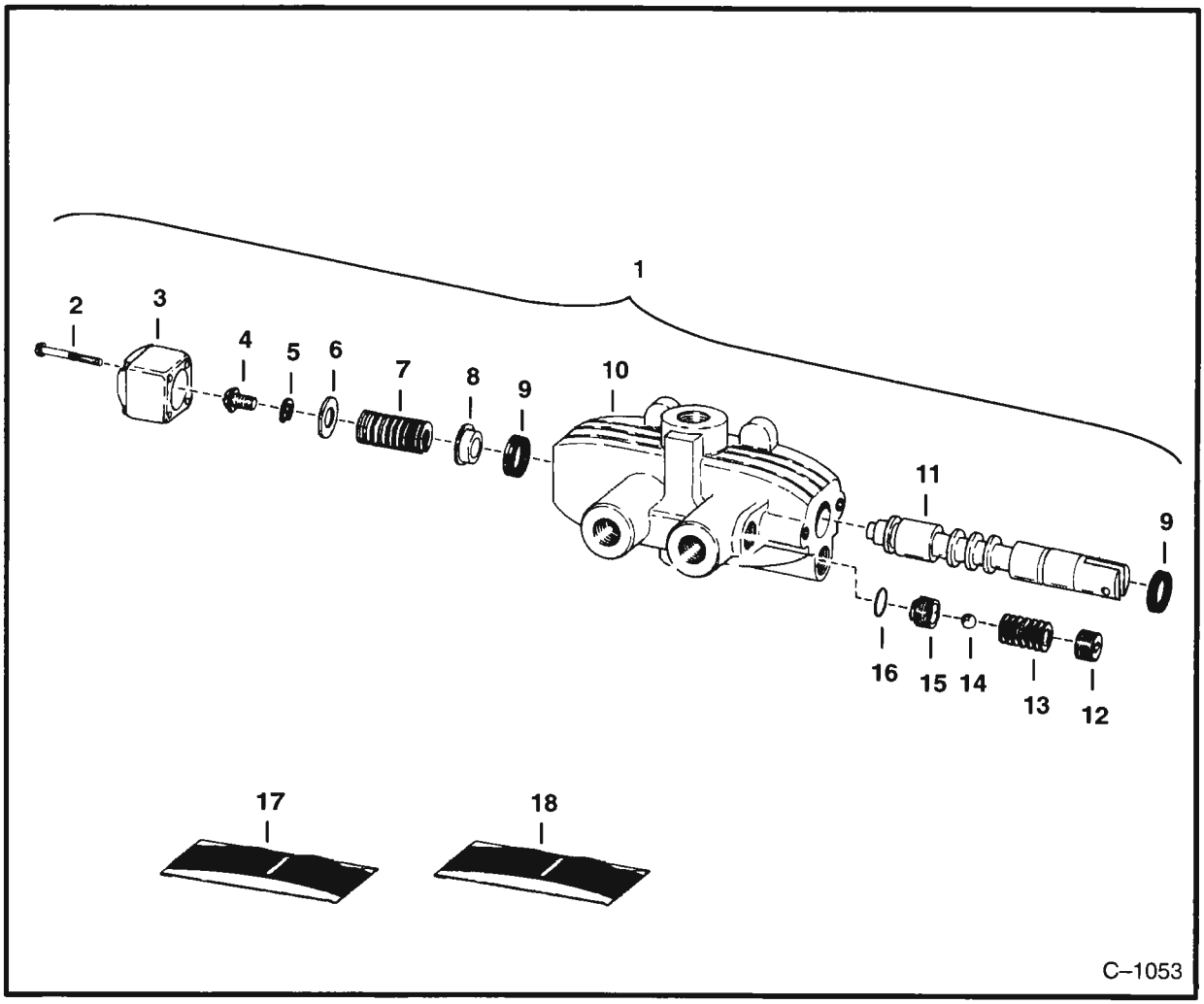

VARIABLE SPEED VALVE

Ref. No.	Part Number	Description	Remarks	Serial Number	Qty.
1	6657761	VALVE	Ref. 2 – 16		1
2	41G–816	SCREW	cap		4
3	980732	CAP			1
4	89G–408	SCREW			1
5	24E–4	WASHER			1
6	664402	WASHER			1
7	980731	SPRING			1
8	980734	COLLAR			1
9	662768	SEAL	spool		2
10	NAP	HOUSING			1
11	NAP	SPOOL			1
12	NSS	PLUG	relief		1
13	NSS	SPRING			1
14	NSS	BALL			1
15	NSS	SEAT			1
16	25K–30012	O–RING			1
17	6659353	KIT BONNET	W/Ref. 2 – 8		1
18	6659354	KIT RELIEF	W/Ref. 12 – 16		1

Use only Melroe belts and hoses to maintain maximum service life.

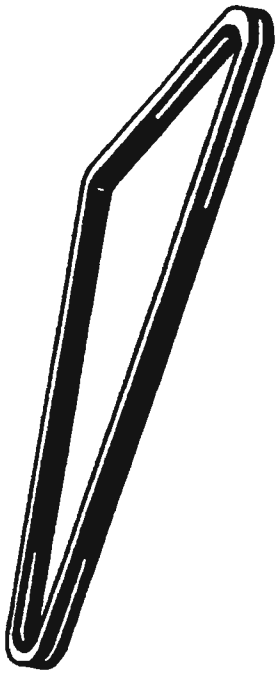

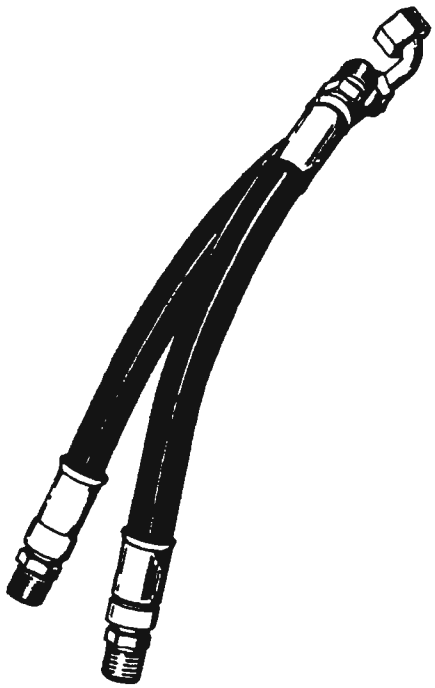

Available from Melroe Parts.

MELROE
INGERSOLL-RAND

VARIABLE SPEED DRIVE SHEAVE

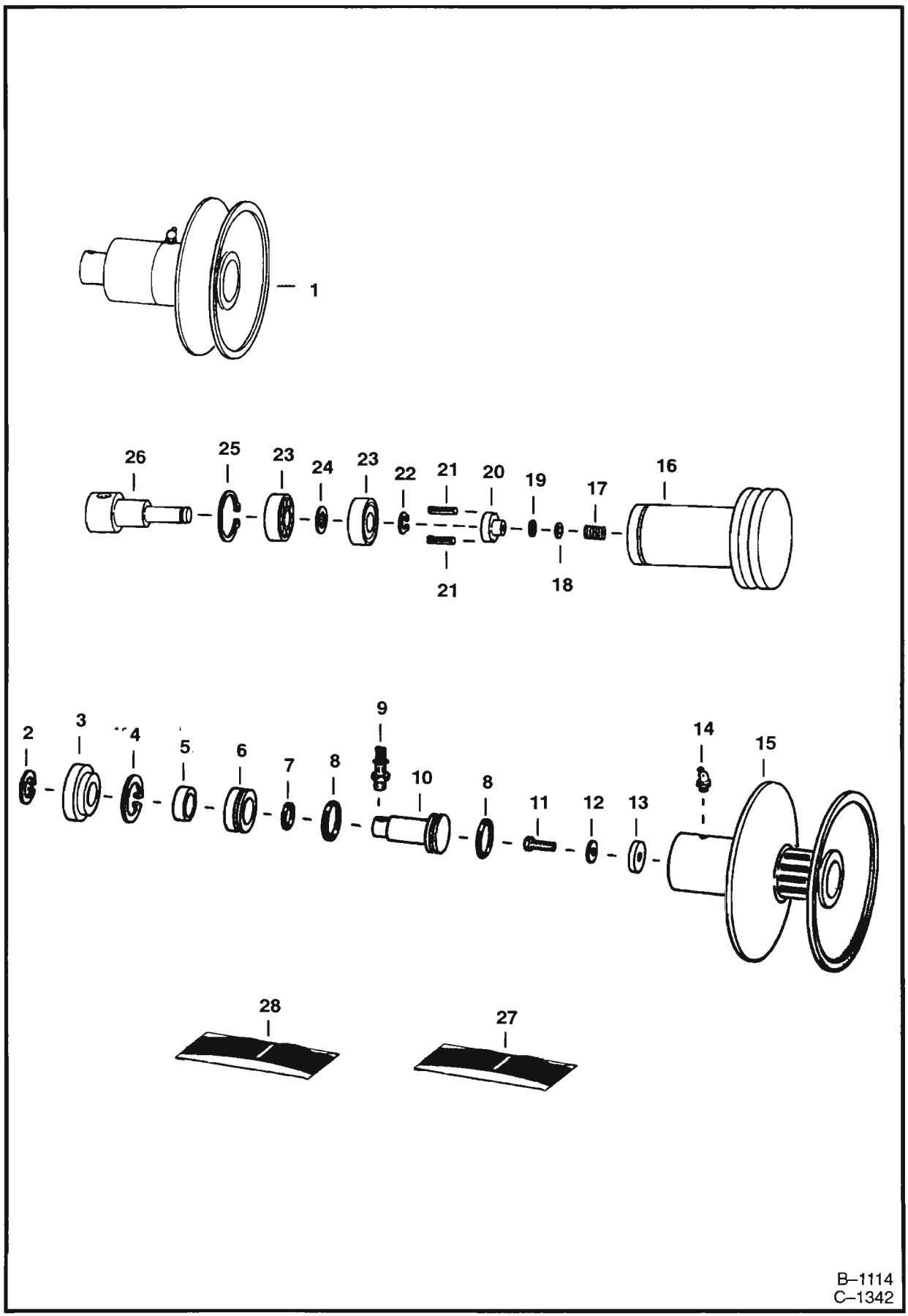

B–1114
C–1342

VARIABLE SPEED DRIVE SHEAVE (Cont'd)

Ref. No.	Part Number	Description	Remarks	Serial Number	Qty.
1	6502035	SHEAVE ASSY.	Ref. 2 – 8, 10, 14 & 15		1
2	6515571	SNAP RING			1
3	6504428	CAP			1
4	658524	SNAP RING			1
5	6515886	SEAL	wiper		1
6	6504427	GLAND			1
7	58K–216	O–RING			1
8	58K–325	O–RING			2
9	6501441	HOSE	hyd.		1
10	6515580	ROTO–SWIVEL	assy. – Ref. 16 – 26		1
11	17C–624	BOLT			1
12	6E–6	WASHER			1
13	6502866	WASHER			1
14	11H–25	GREASE ZERK			1
15	6504904	SHEAVE			1
16	6516303	SHAFT			1
17	6516302	SPRING			1
18	888670	GUIDE			1
19	25K–20005	O–RING			1
20	6516301	SEAL			1
21	301923	PIN			2
22	1319170	SNAP RING			1
23	6516312	BALL BEARING			2
24	896264	SHIM			1
25	1310052	SNAP RING			1
26	6516304	SWIVEL			1
27	6505780	REPAIR KIT	Ref. 17 – 20 & 22 – 26		1
28	6661441	SEAL KIT	Ref. 5, 7 & 8 – Was 6561717 [A]		1

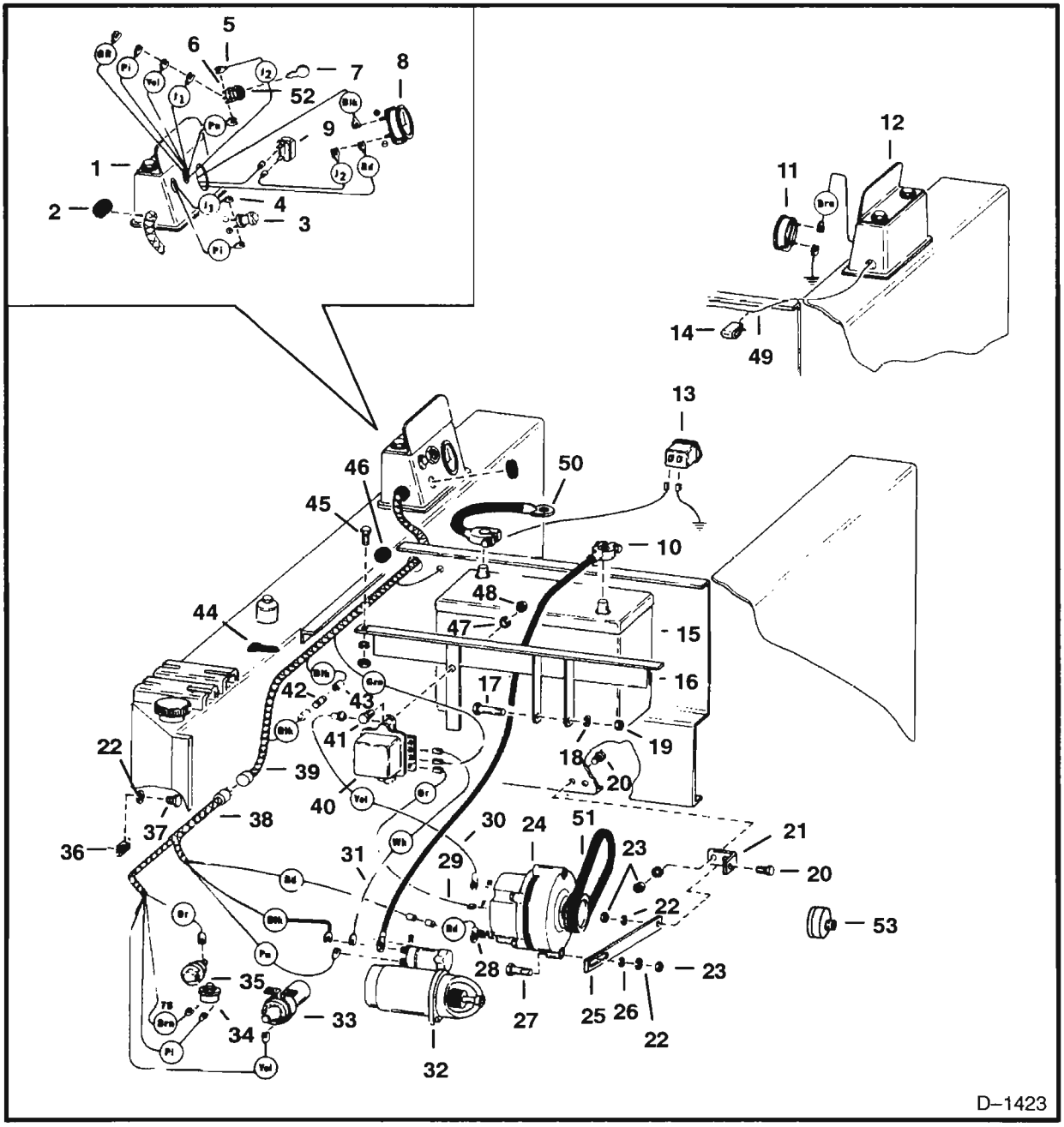

MAIN FRAME ELECTRICAL CIRCUIT
S/N 4956 M 17179 & Below or 220000 & Below

Ref. No.	Part Number	Description	Remarks	Serial Number	Qty.
1		PANEL	instrument – See Page A14		1
2	565049	GROMMET			1
3	6515427	LIGHT	oil pressure		1
	NSS	BULB	GE 1815		1
4	NAP	WIRE			1
5	NAP	WIRE			1
6	6518763	SWITCH	ignition		1
7	6505412	KEY			1
8	6512807	GAUGE	ammeter		1

MAIN FRAME ELECTRICAL CIRCUIT (Cont'd)
S/N 4956 M 17179 & Below or 220000 & Below

Ref. No.	Part Number	Description	Remarks	Serial Number	Qty.
9	6519001	BREAKER	circuit		1
10	667483	CABLE	battery – Positive		1
11	6660109	GAUGE	hourmeter – Was 6551203 [A]		1
12		PANEL	instrument – See Page A12		1
13	6664886	HOURMETER	Was 6631657 [A]		1
14	6502236	CLIP			2
15	6669318	BATTERY	Was 6665917[A]		1
	6630154	BATTERY CAP	gang – Danger		1
	6630155	BATTERY CAP	gang – Poison		1
	6514898	BATTERY CAP	tilt–tite		6
16	6505265	BRACKET			1
17	17C–648	BOLT			1
18	4E–6	WASHER			3
19	61D–6	NUT			3
20	17C–516	BOLT			3
21	6505241	BRACKET			1
22	4E–5	WASHER			4
23	61D–5	NUT			4
24		ALTERNATOR	See Page D8 – D14 – See Page F4 for alternator conversion kit		1
25	6547125	TIGHTENER			1
26	25E–15	WASHER			1
27	17C–524	BOLT			1
28	NAP	WIRE			1
29	NAP	WIRE			1
30	NAP	WIRE			1
31	NAP	WIRE			1
32		STARTER	See Page D5		1
33	887408	COIL			1
34	1550963	SWITCH	hourmeter	E/5795000 & Bel.	1
35	6516345	SWITCH	oil pressure	E/5795000 & Bel.	1
36	6502344	CLIP			1
37	17C–512	BOLT			1
38	6555140	HARNESS	engine – See BTI 139 & 173		1
39	6555558	HARNESS	panel		1
40	1810770	REGULATOR	voltage		1
41	17C–416	BOLT			1
42	608869	FUSE	30 Amp		1
43	733642	HOLDER	fuse		1
44	1715312	STRAP			1
45	17C–616	BOLT			2
46	6515603	GROMMET			1
47	4E–4	WASHER			2
48	61D–4	NUT			2
49	6501209	WIRE			1
50	6553094	CABLE	battery – Negative		1
51	6505371	BELT	alternator – See Page B16		1
52	6502904	NUT	ignition switch		1
53		GAUGE	vacuum – See Page B22	11999 & Below	1

MAIN FRAME ELECTRICAL CIRCUIT
S/N 4956 M 17180 Thru 19999

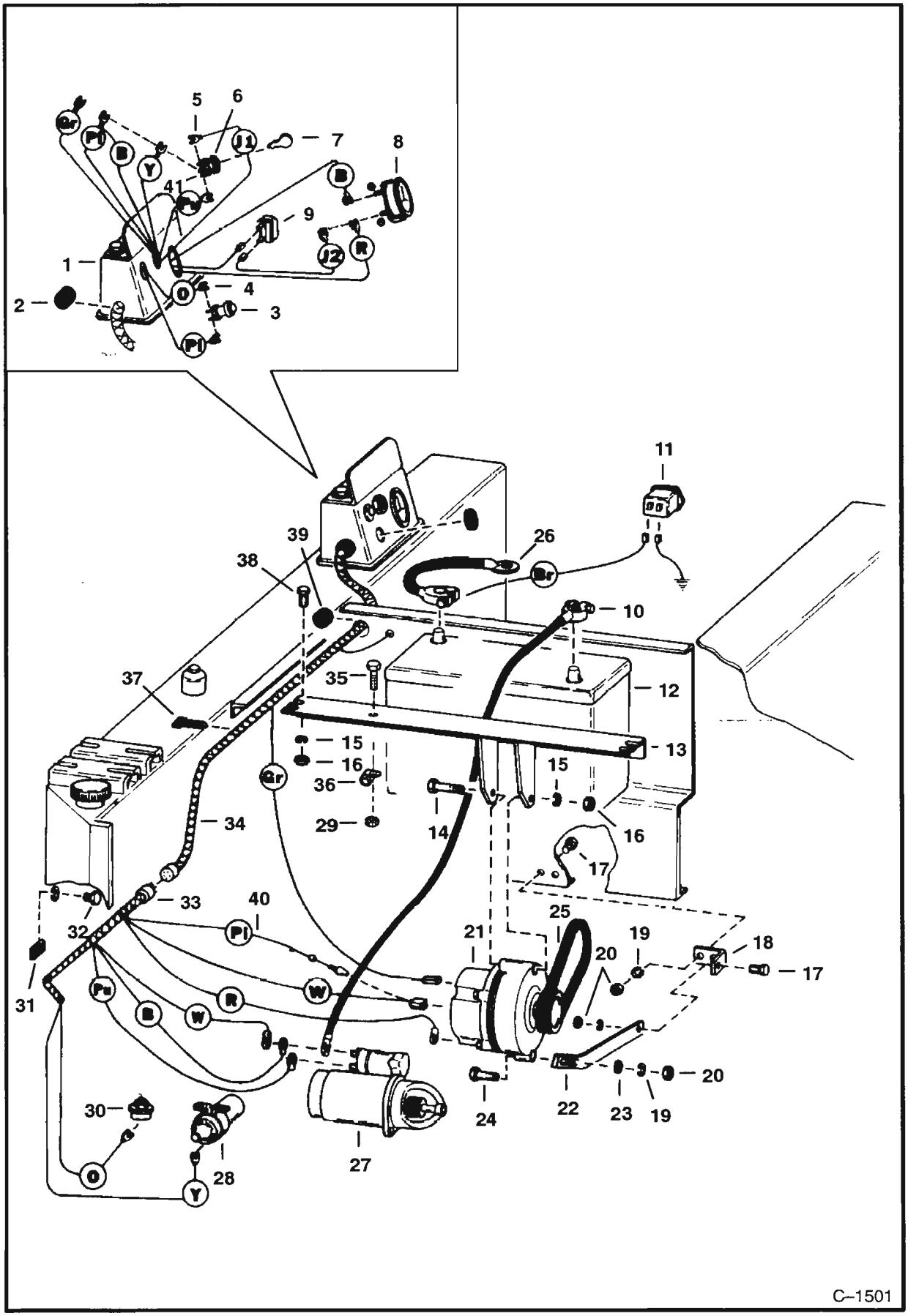

MAIN FRAME ELECTRICAL CIRCUIT (Cont'd)
S/N 4956 M 17180 Thru 19999

Ref. No.	Part Number	Description	Remarks	Serial Number	Qty.
1		PANEL	instrument – See Page A14		1
2	565049	GROMMET			1
3	6515427	LIGHT	oil pressure		1
	NSS	BULB	GE 1815		1
4	NAP	WIRE			1
5	NAP	WIRE			1
6	6518763	SWITCH	ignition		1
7	6505412	KEY			1
8	6512807	GAUGE	ammeter		1
9	6519001	BREAKER	circuit		1
10	667483	CABLE	battery – Positive		1
11	6664886	HOURMETER	Was 6631657 [A]		1
12	6669318	BATTERY	Was 6665917[A]		1
	6630154	BATTERY CAP	gang – Danger		1
	6630155	BATTERY CAP	gang – Poison		1
	6514898	BATTERY CAP	tilt–tite		6
13	6560304	BRACKET			1
14	17C–648	BOLT			1
15	4E–6	WASHER			3
16	61D–6	NUT			3
17	17C–516	BOLT			3
18	6505241	BRACKET			1
19	4E–5	WASHER			4
20	61D–5	NUT			4
21		ALTERNATOR	See Page D8 – D14 – See Page F4 for alternator conversion kit		1
22	6559859	BAR	mounting		1
23	25E–15	WASHER			1
24	17C–524	BOLT			1
	29CM–825	BOLT	Metric		1
25	6505371	BELT	alternator – See Page B16		1
26	6553094	CABLE	battery – Negative		1
27		STARTER	See Page D5		1
28	887408	COIL			1
29	81D–4	NUT			1
30	6557924	SWITCH	oil pressure		1
31	6502344	CLIP			1
32	17C–512	BOLT			1
33	6559857	HARNESS	engine half		1
34	6555558	HARNESS	panel half		1
35	17C–412	BOLT			1
36	30H–29	CLAMP			1
37	1715312	STRAP			1
38	17C–616	BOLT			2
39	6515603	GROMMET			1
40	3675725	DIODE			1
41	6502904	NUT	ignition switch		1

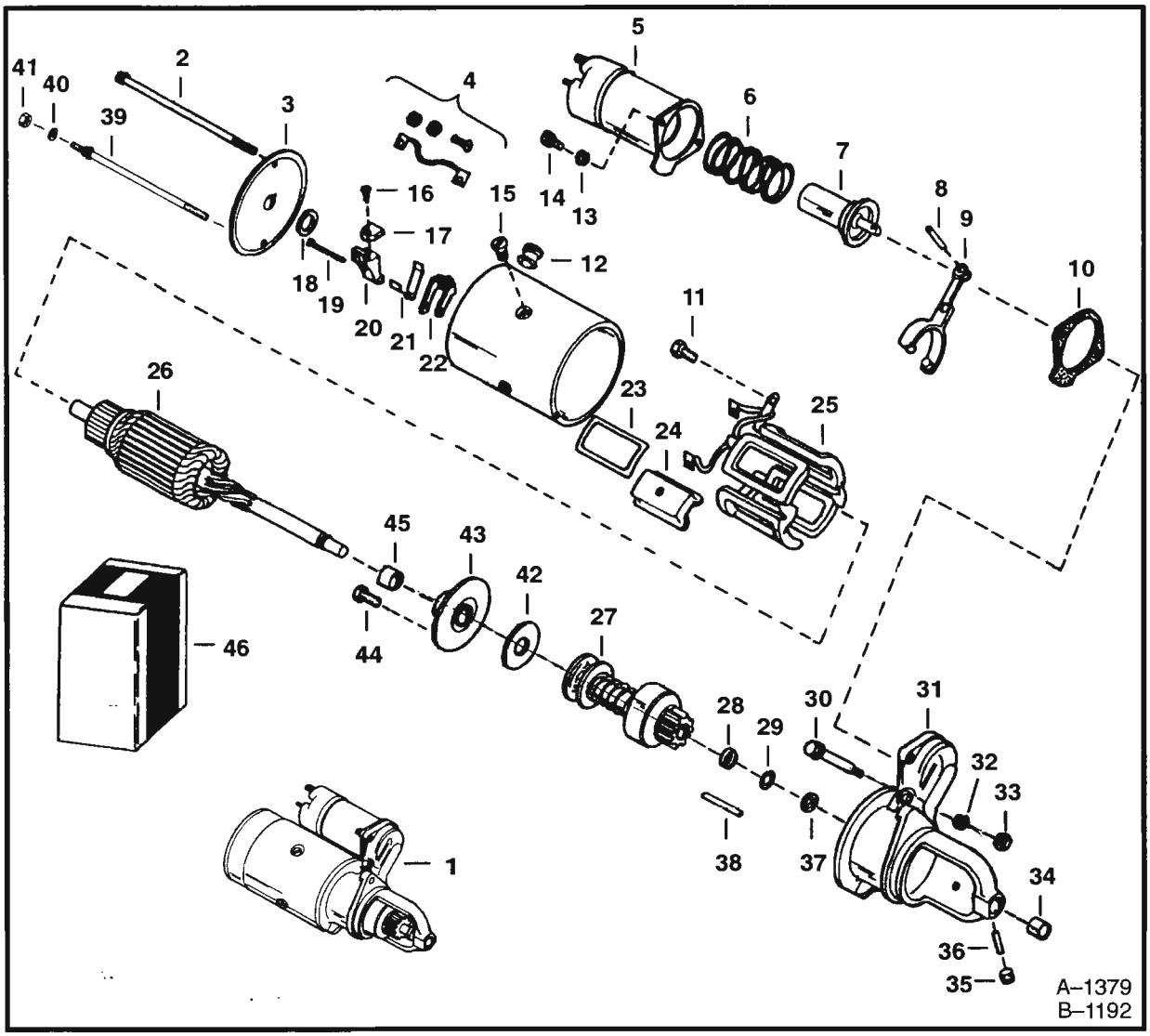

STARTER

Ref. No.	Part Number	Description	Remarks	Serial Number	Qty.
1	NAP	STARTER	1109424 – Order 6515795REM		1
	6515795REM	STARTER	1109424 – Remanufactured		1
	NAP	STARTER	10455336 – Order 6515795 REM		1
2	880609	BOLT			2
3	999460	FRAME	W/Bushing		1
4	877650	HOLDER	Brush		1
5	884581	SOLENOID	1109424		1
	6599449	SOLENOID	10455336		1
6	888968	SPRING			1
7	6630417	PLUNGER	1109424		1
	6658903	PLUNGER	10455336		1
8	999472	PIN			1
9	896126	LEVER	1109424		1
10	6658926	GASKET			1
11	6061008	SCREW			1

Ref. No.	Part Number	Description	Remarks	Serial Number	Qty.
12	999459	GROMMET			1
13	4E–4	WASHER			2
14	43G–412	SCREW			2
15	859377	SCREW			4
16	86G–808	SCREW			4
17	871518	BRUSHES			4
18	860673	WASHER			1
19	871521	PIN			4
20	6630402	HOLDER	Brush – Insulated –		
			Was 891252 [B]		2
21	6656399	SPRING	Brush		4
22	880603	HOLDER	Brush – Grounded		2
23	6656404	INSULATOR			4
24	NAP	POLE SHOE			4
25	6515799	FIELDS COIL	1107386		1
	NSS	FIELDS	1109424 – Was 6513677 [A]		1
	NSS	FRAME & FIELD	10455336 – Was 6658899[A]		1
26	6515800	ARMATURE	1109424		1
	6658897	ARMATURE	10455336		1
27	3679995	DRIVE			1
28	878608	COLLAR			1
29	942142	RETAINER			1
30	884576	SCREW			1
31	6631616	HOUSING	Drive – W/Ref. 34		1
32	NAP	WASHER			1
33	991219	NUT			1
34	860669	BUSHING	Drive end		1
35	16F–2	PLUG			1
36	991174	WICK			1
37	850363	COLLAR			1
38	850313	PIN			1
39	6515797	BOLT			1
40	24E–4	WASHER			1
41	61D–4	NUT			1
42	6630412	WASHER			1
43	6630411	CENTER PLATE			1
44	907827	SCREW			2
45	907828	BUSHING			1
46	6551298	KIT	Starter bracket – Ref. 39 – 41		
			plus 6511660 stater bracket – See Page D22		

ALTERNATOR
Delco–Remy No. 1100827
Closed

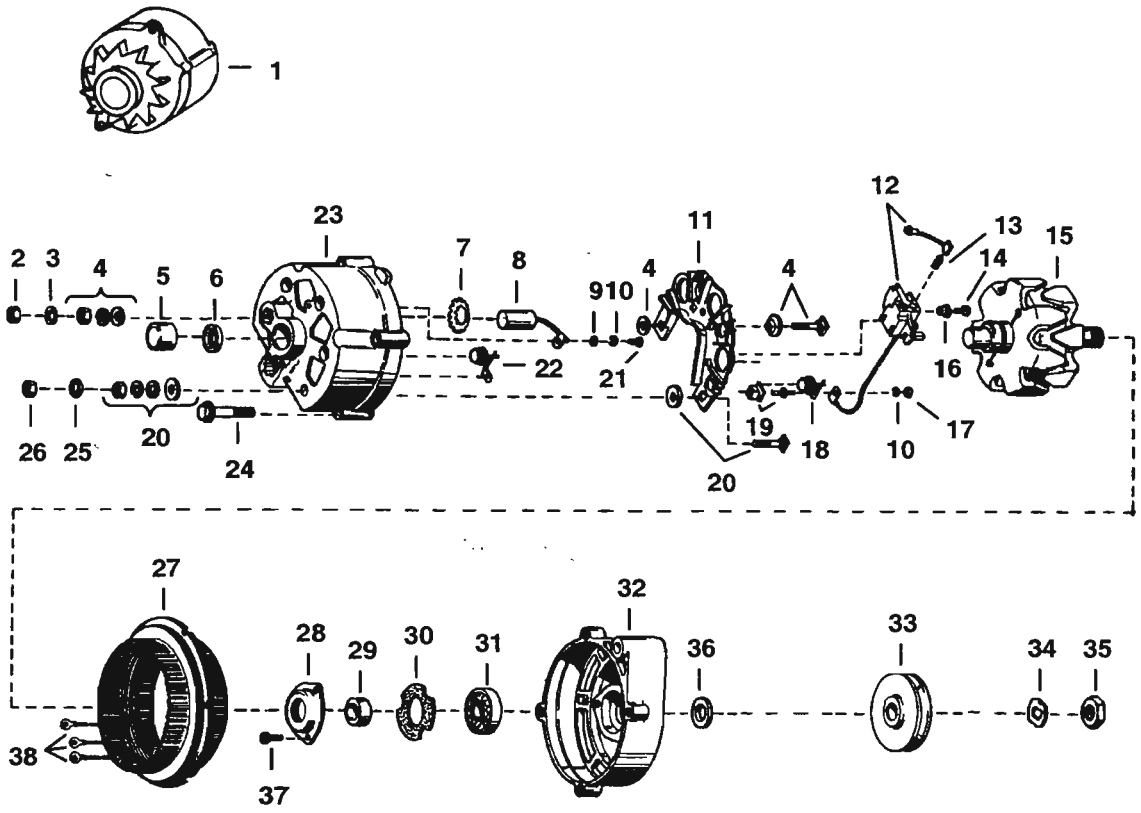

A–1284
B–1102

ALTERNATOR (Cont'd)
Delco–Remy No. 1100827
Closed

Ref. No.	Part Number	Description	Remarks	Serial Number	Qty.
1	NAP	ALTERNATOR	Ref. 2 – 32 & 34 – 38 – See BTI 258 – Was 1536554 [A]		1
2	NAP	NUT			1
3	NAP	WASHER			1
4	NAP	PACKAGE			1
5	990406	BEARING			1
6	991198	RETAINER	W/Felt Seal		1
7	899307	SPRING			1
8	NAP	CAPACITOR	Was 897447 [A]		1
9	NAP	WASHER			1
10	NSS	WASHER			4
11	897451	SINK	heat – W/Ref. 10 & 17 – 19		1
12	897463	KIT	brush holder & brush		1
13	NAP	SPRING			2
14	NAP	SCREW			1
15	899304	ROTOR			1
16	NAP	INSULATOR			1
17	NSS	NUT			3
18	990385	DIODE	heat sink		3
19	NSS	PACKAGE	diode terminal		3
20	NAP	PACKAGE			1
21	NAP	SCREW			1
22	897453	DIODE			3
23	990386	FRAME	W/Ref. 5 – 7 & 22		1
24	NAP	SCREW			4
25	NAP	WASHER			1
26	NAP	NUT			1
27	897445	STATOR	W/Ref. 38		1
28	897456	RETAINER	bearing		1
29	NAP	COLLAR			1
30	NAP	GASKET			1
31	675181	BEARING			1
32	NAP	FRAME			1
33	6541902	PULLEY			1
34	794584	WASHER			1
35	859369	NUT			1
36	NAP	COLLAR			1
37	NAP	SCREW			2
38	NSS	CLIP			3

ALTERNATOR
Delco #1103133 – Open

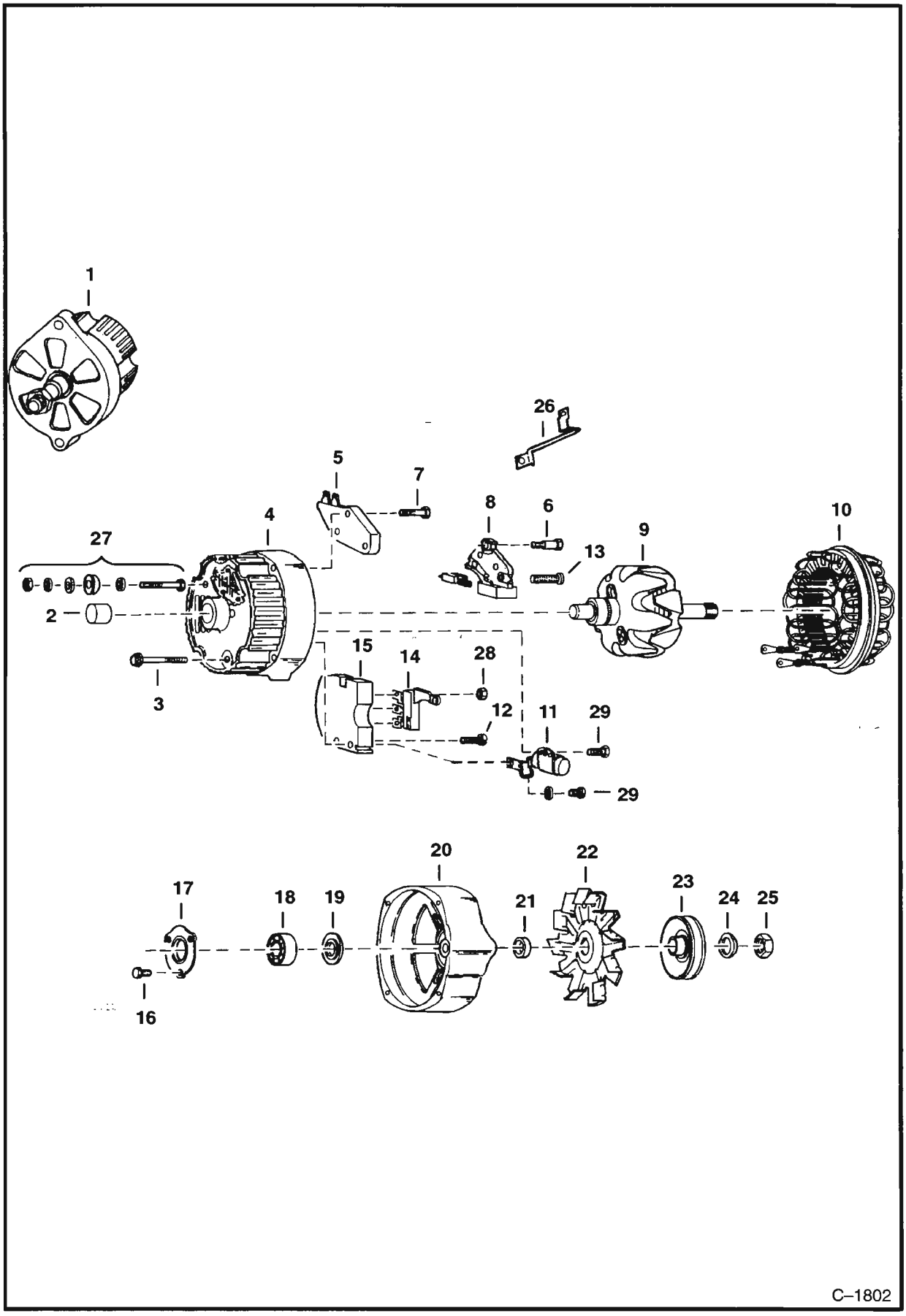

ALTERNATOR (Cont'd)
Delco #1103133 – Open

Ref. No.	Part Number	Description	Remarks	Serial Number	Qty.
1	NAP	ALTERNATOR	Order 908221		1
2	905351	BEARING			1
3	897467	BOLT			4
4	905956	FRAME	W/Ref. 2		1
5	994381	REGULATOR			1
6	6511957	BOLT			2
7	999396	BOLT			2
8	999394	HOLDER	brush assy.		1
9	999305	ROTOR			1
10	999392	STATOR			1
11	999308	CAPACITOR			1
12	994373	BOLT			1
13	999397	BOLT			1
14	994383	DIODE			1
15	995185	RECTIFIER			1
16	45G–1008	SCREW			3
17	897456	RETAINER	bearing		1
18	905350	BEARING			1
19	NAP	SLINGER			1
20	NAP	HOUSING			1
21	905958	COLLAR			1
22	329884	FAN			1
23	6555479	PULLEY			1
24	794584	WASHER			1
25	859369	NUT			1
26	999395	TERMINAL	relay		1
27	905952	TERMINAL PKG.			1
28	12D–8	NUT			1
29	994378	BOLT			2

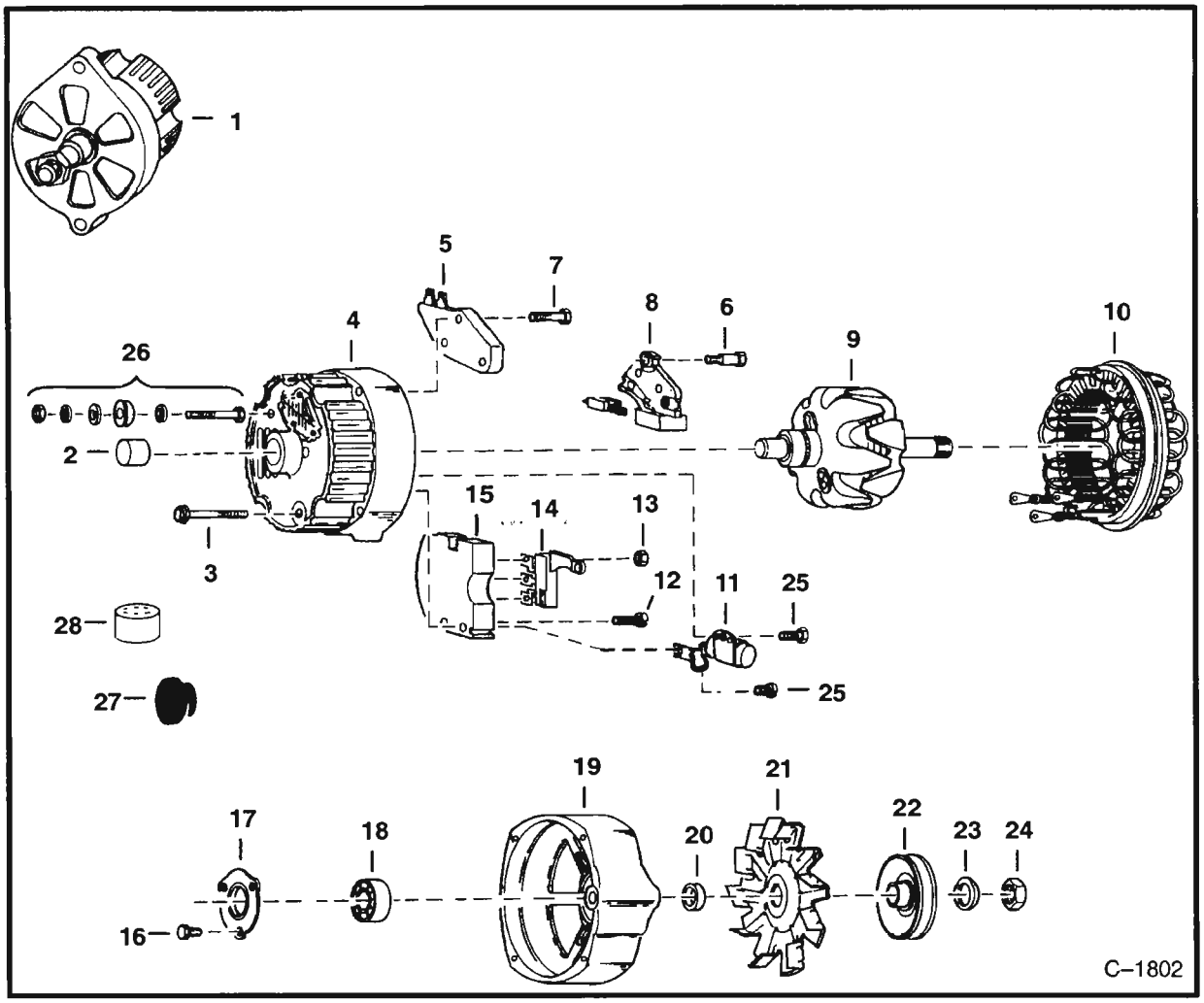

ALTERNATOR
Delco #1105076 or #10456416 – Closed

Ref. No.	Part Number	Description	Remarks	Serial Number	Qty.
1	6654209	ALTERNATOR	Less Pulley & Fan		1
2	999306	BEARING			1
3	897467	BOLT			4
4	6511954	FRAME	W/Ref. 2		1
5	994381	REGULATOR	Voltage		1
6	6511957	BOLT			2
7	6599766	BOLT			2
8	6599770	HOLDER	W/Brush Assy.		1
9	6599772	ROTOR			1
10	907953	STATOR			1
11	6654210	CAPACITOR			1
12	6599768	BOLT			1
13	12D–8	NUT			3
14	6599769	DIODE			1
15	6599767	RECTIFIER			1
16	45G–1008	SCREW			3
17	850315	RETAINER			1
18	905350	BEARING			1

ALTERNATOR (Cont'd)
Delco #1105076 or #10456416 – Closed

Ref. No.	Part Number	Description	Remarks	Serial Number	Qty.
19*	NAP	HOUSING	Was 6598229 [A]		1
20	6598060	COLLAR			1
21	329884	FAN			1
22	6541902	PULLEY			1
23	794584	WASHER			1
24	859369	NUT			1
25	994378	BOLT			1
26	905952	TERMINAL PKG.			1
27	NSS	BOOT			1
28	NSS	CONNECTOR			1

ALTERNATOR
Delco #1105070 or #1105422 – Open

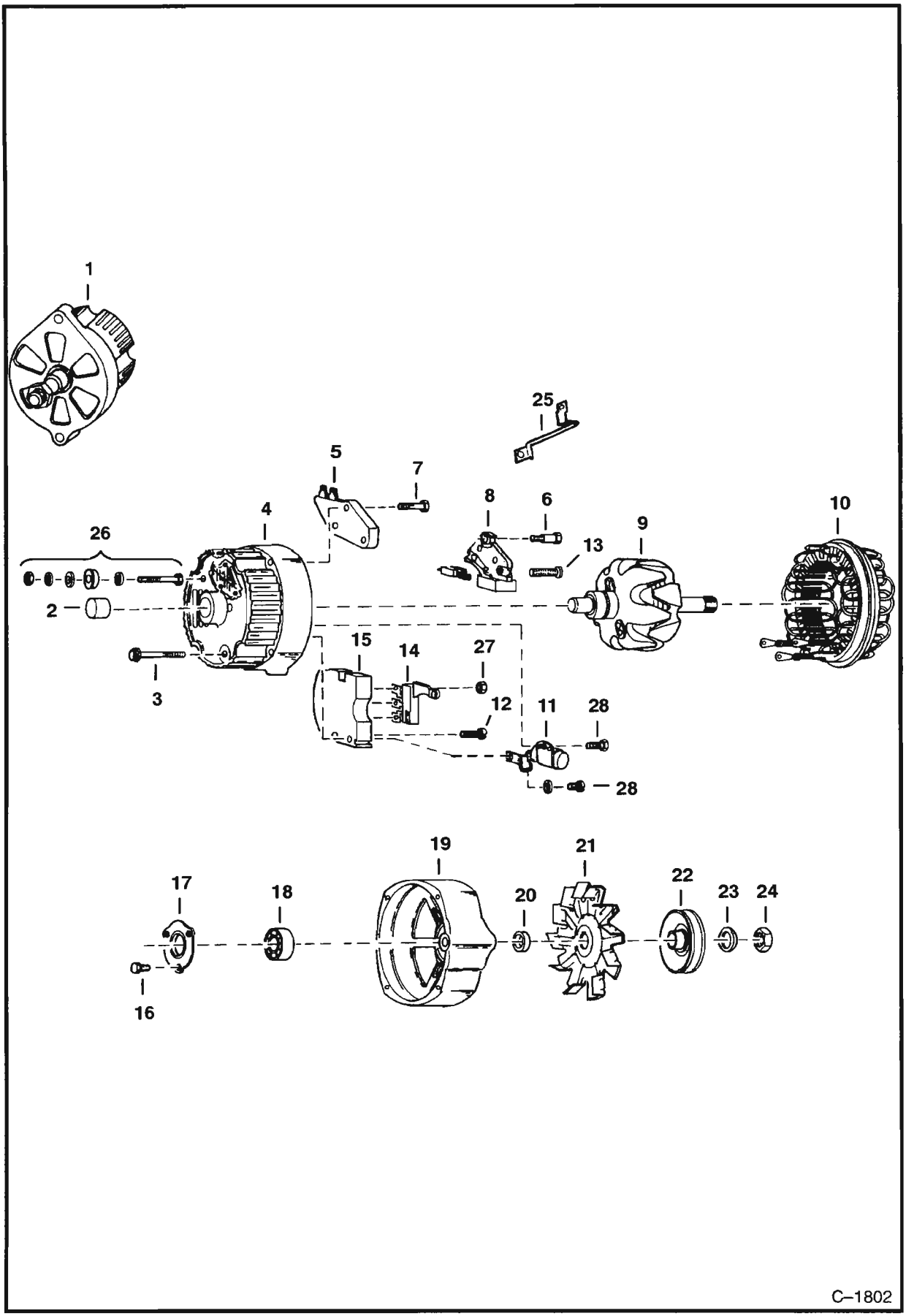

ALTERNATOR (Cont'd)
Delco #1105070 or #1105422 – Open

Ref. No.	Part Number	Description	Remarks	Serial Number	Qty.
1	908221	ALTERNATOR	Less Pulley & Fan		1
2	905351	BEARING			1
3	897467	BOLT			4
4	905956	FRAME	W/Ref. 2		1
5	994381	REGULATOR	voltage		1
6	6511957	BOLT			2
7	999396	BOLT			2
8	999394	HOLDER	brush assy.		1
9	6599771	ROTOR			1
10	907953	STATOR			1
11	999308	CAPACITOR			1
12	6599768	BOLT			1
13	999397	BOLT			1
14	994383	DIODE			1
15	6599767	RECTIFIER			1
16	45G–1008	SCREW			3
17	850315	RETAINER			1
18	905350	BEARING			1
19	905957	HOUSING			1
20	905958	COLLAR			1
21	329884	FAN			1
22	6555479	PULLEY			1
23	794584	WASHER			1
24	859369	NUT			1
25	6599774	TERMINAL			1
26	905952	TERMINAL PKG.			1
27	12D–8	NUT			1
28	994378	BOLT			2

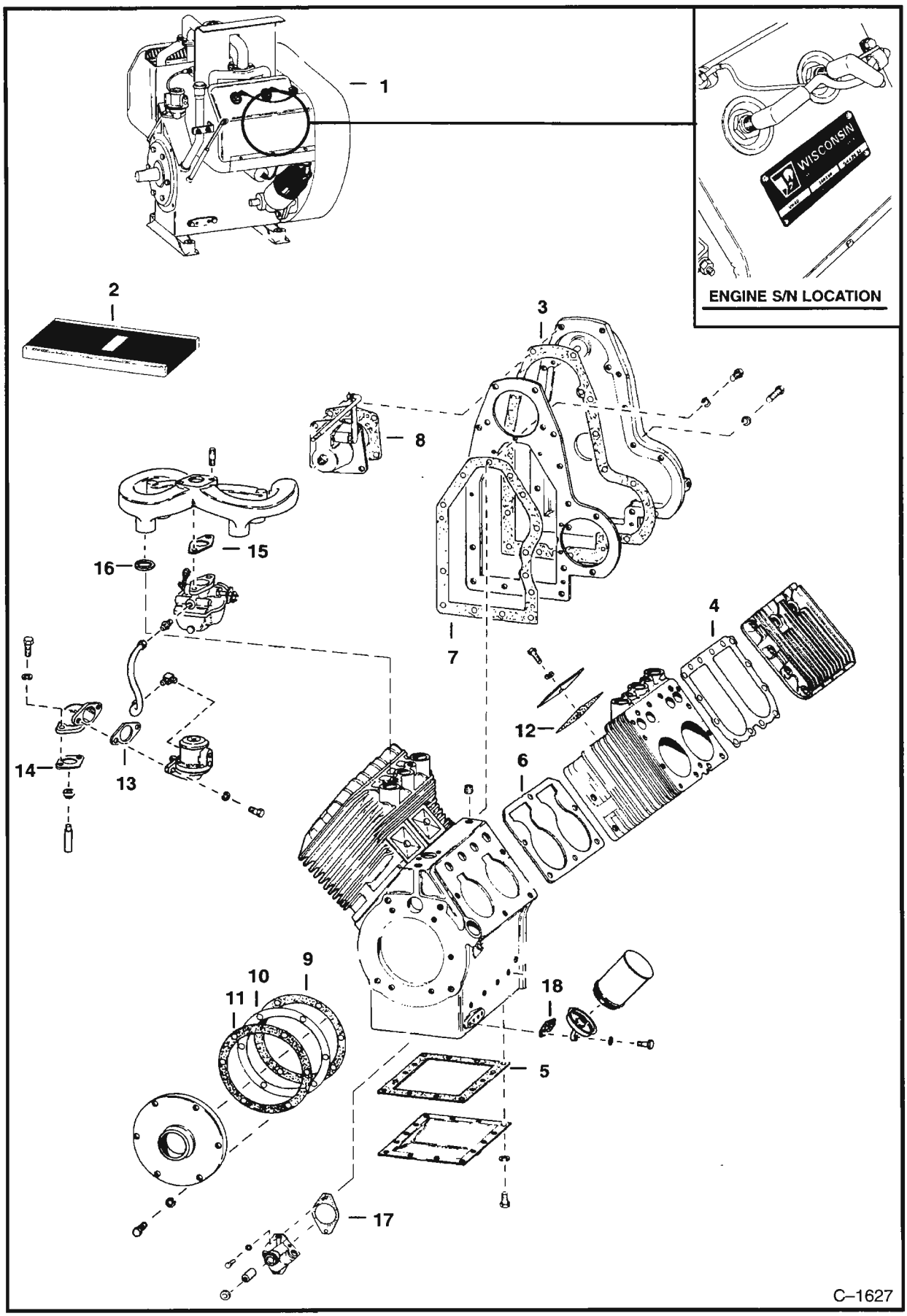
1
2
3
4
5
6
7
8
9
10
11
12
13
14
15
16
17
18
ENGINE S/N LOCATION
C–1627

Ref. No.	Part Number	Description	Remarks	Serial Number	Qty.
1	6560227	ENGINE	VH4D Gasoline – W/Starter, carburetor, manifold & flywheel – Does Not Include alternator & oil filter		1
	6560227REM	ENGINE	remanufactured		1
	6519102	ENGINE	VH4DG LP Gas – W/Flywheel, starter, carburetor, manifold, vaporizers & regulators – Does Not Include alternator & oil filter		1
2	6517513	KIT	hi–temperature shut–off		1
	6506492	KIT	alternator conversion – Used when replacing engine with flywheel alternator – See Page F4		1
	NAP	KIT	LP conversion – See Page G22 – Was 6519236 [A]		1
	6664964	GASKET KIT	Overhaul – Was 6516447 [A]		1
3	6516529	GASKET	See Page E2, Ref. 2		1
4	6516434	GASKET	See Page E2, Ref. 12		2
5	6516444	GASKET	See Page E2, Ref. 23		1
6	6516437	GASKET	See Page E2, Ref. 29		2
7	6516531	GASKET	See Page E2, Ref. 33		1
8	6516617	GASKET	See Page E2, Ref. 37		1
9	6516456	GASKET	See Page E4, Ref. 28		3
10	6516457	SHIM	See Page E4, Ref. 29		x
11	6516458	GASKET	See Page E4, Ref. 30		3
12	6516498	GASKET	See Page E8, Ref. 4		4
13	6516381	GASKET	See Page E12, Ref. 17		1
14	6516382	GASKET	See Page E12, Ref. 20		1
15	6516398	GASKET	See Page E12, Ref. 28		3
16	6516405	GASKET	See Page E12, Ref. 29		6
17	6516574	GASKET	See Page E18, Ref. 17		1
18	6516514	GASKET	See Page E23, Ref. 7		1

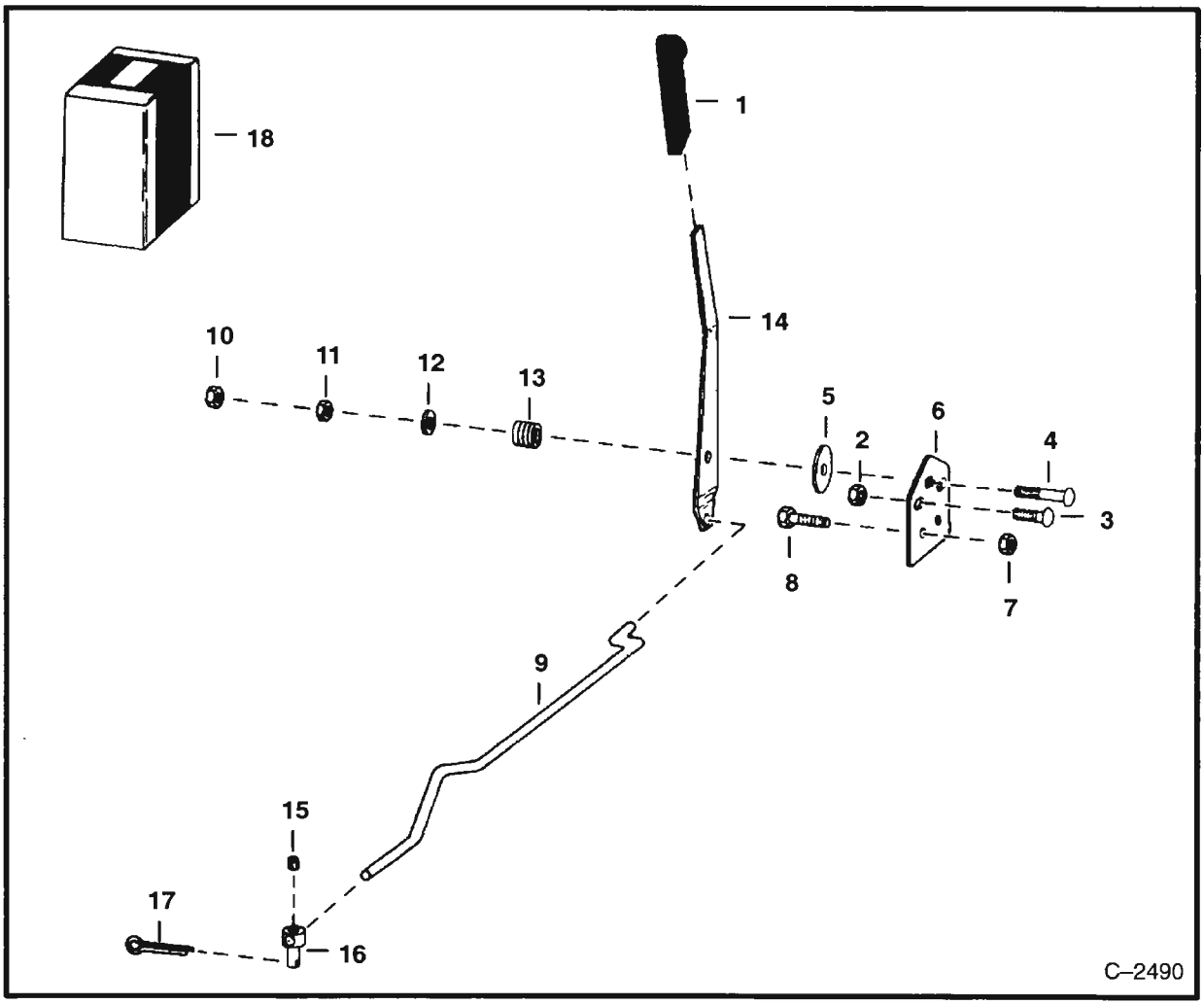

THROTTLE
S/N 17334 & Above

Ref. No.	Part Number	Description	Remarks	Serial Number	Qty.
1	6553557	GRIP			1
2	57D–6	NUT			1
3	37C–616	BOLT	Was 6514537 [A]		1
4	7C–632	BOLT			1
5	6562127	WASHER			1
6	6559546	PLATE			1
7	61D–5	NUT			2
8	17C–540	BOLT			2
9	6559336	ROD			1
10	81D–6	NUT			1
11	61D–6	NUT			1
12	6505623	WASHER			1
13	6704453	SPRING	Was 6503387 [A]		1
14	6559547	LEVER			1
15	15G–505	SET SCREW			1
16	6551463	BLOCK			1
17	1F–308	PIN			1
18	6561436	KIT	Ref. 1 – 8 & 10 – 14		1

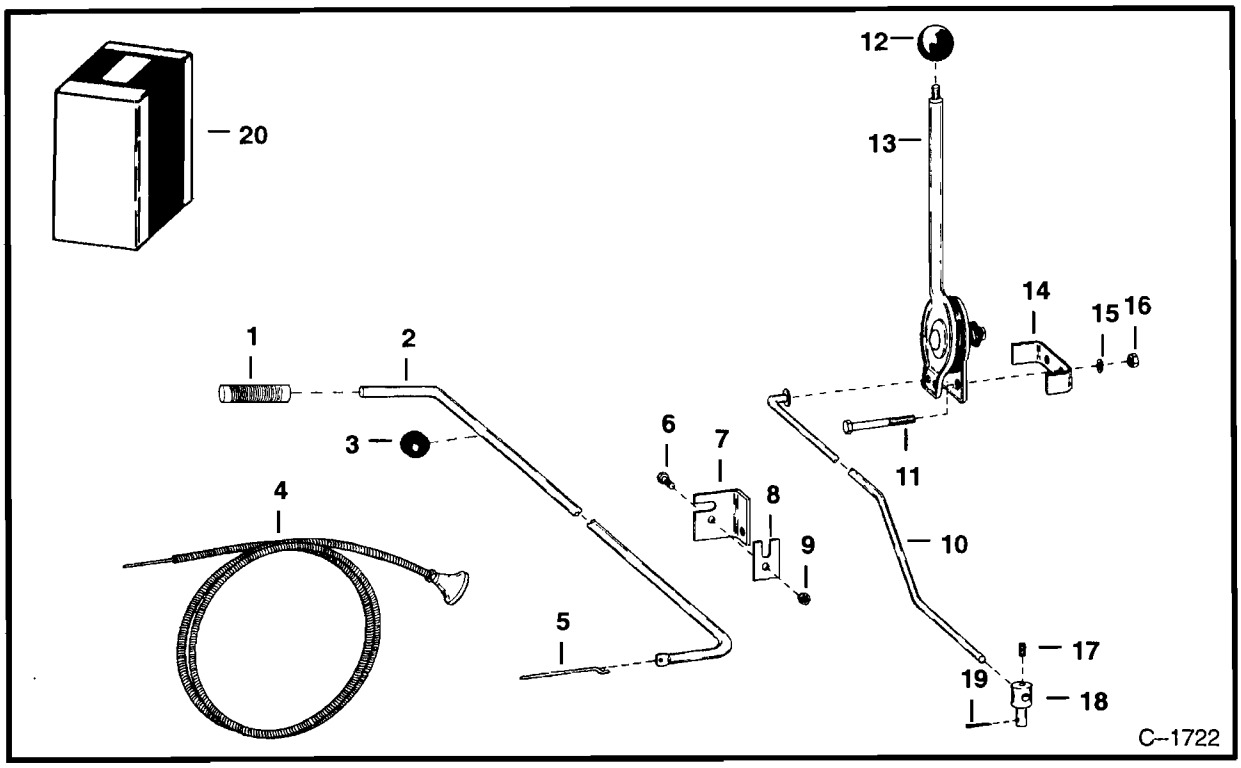

THROTTLE & CHOKE CONTROL LINKAGE

Ref. No.	Part Number	Description	Remarks	Serial Number	Qty.
1	6510299	GRIP			1
2	6547557	ROD	choke		1
3	6519484	GROMMET			1
4	6515169	CABLE	choke – LPG		1
	6510084	CABLE	choke	204065 & Above	1
5	6546945	LINK			1
6	17C–410	BOLT			1
7	6547951	BRACKET			1
8	6546844	BRACKET			1
9	81D–4	NUT			1
10	6559097	ROD	throttle	17333 & Below	1
11	17C–640	BOLT			2
12	6515888	KNOB			1
13	NAP	THROTTLE	See Page D19		1
14	6502976	STOP	throttle		1
15	4E–6	WASHER			2
16	61D–6	NUT			2
17	15G–505	SET SCREW			1
18	6551463	BLOCK			1
19	1F–308	PIN			1
20*	NAP	CHOKE KIT	Ref. 1 – 3 & 5 – 9 – Order		
			components – Was 6551426 [A]		1

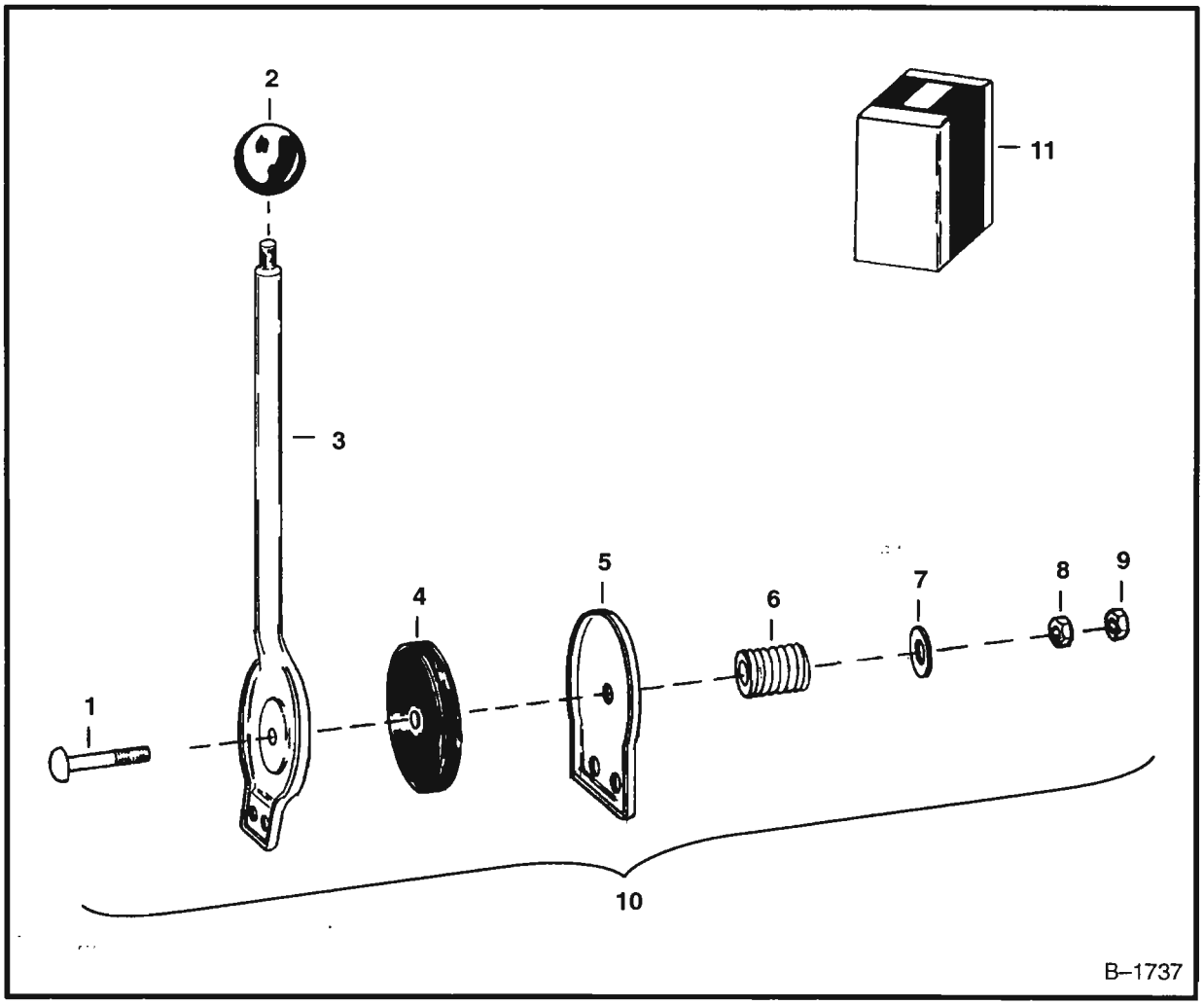

THROTTLE CONTROL

Ref. No.	Part Number	Description	Remarks	Serial Number	Qty.
1	7C–632	BOLT	carriage		1
2	6515888	KNOB			1
3	NAP	HANDLE	Use Ref. 11		1
4	6503388	BLOCK			1
5	NAP	PLATE			1
6	6704453	SPRING	Was 6503387 [A]		1
7	6505623	WASHER			1
8	7D–6	NUT			1
9	61D–6	NUT			1
10	NAP	THROTTLE	Order Ref. 11		1
11	6561436	KIT	throttle – See Page D17		1

Melroe batteries are designed to meet the needs of your machine.

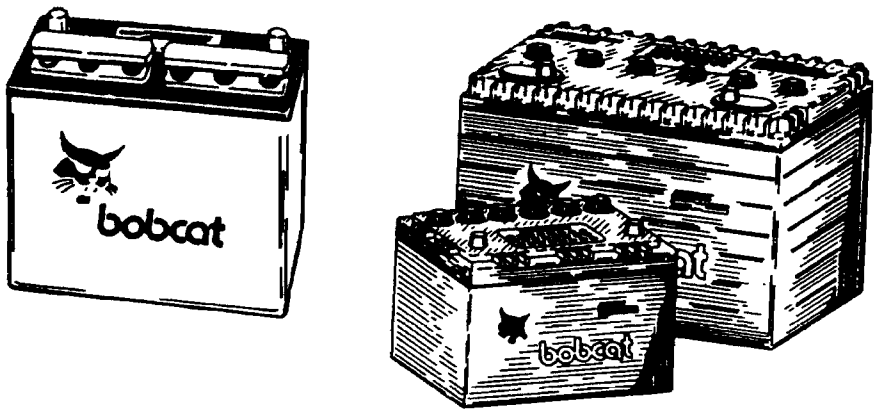

Available from Melroe Parts.

MELROE
INGERSOLL-RAND

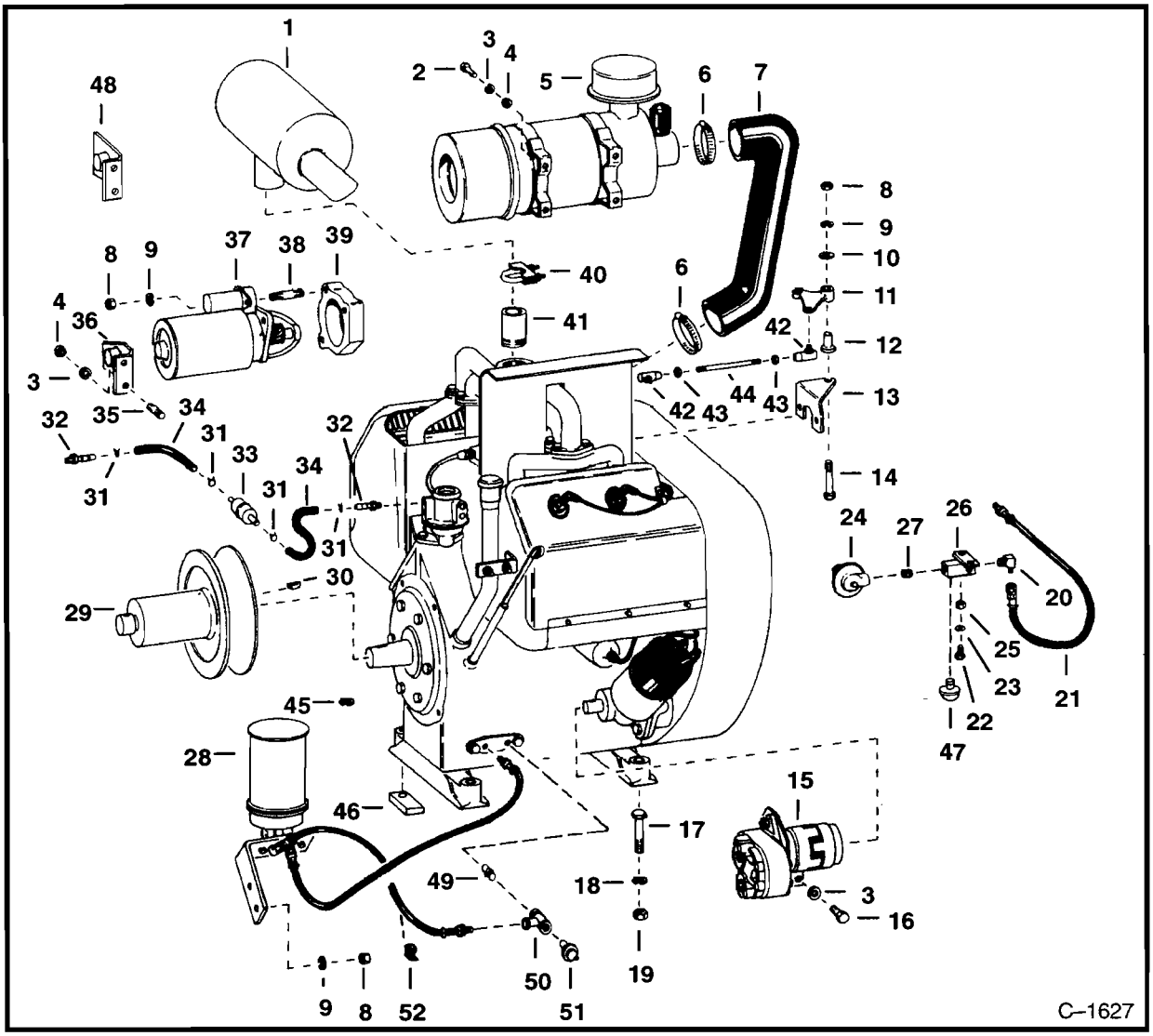

WISCONSIN ENGINE & ATTACHING PARTS

Ref. No.	Part Number	Description	Remarks	Serial Number	Qty.
1	6519594	MUFFLER			1
	6515915	MUFFLER	spark arrestor – See Page H12		1
	6515470	MUFFLER	W/Farr Air Cleaner		1
2	17C–512	BOLT			4
3	4E–5	WASHER			9
4	61D–5	NUT			6
5	6518192	AIR CLEANER	See Page E15		1
6	42H–32	CLAMP	Hose – Was 42H–24 [B]		2
7	6502957	HOSE			1
	6503491	HOSE	LPG		1
8	61D–6	NUT			5
9	4E–6	WASHER			5
10	25E–17	WASHER			1
11	6502596	BELLCRANK			1
12	6515202	BUSHING			1

Ref. No.	Part Number	Description	Remarks	Serial Number	Qty.
13	6502974	BRACKET			1
14	17C–632	BOLT			1
15		HYD. PUMP	assy. – See Page C3 & C4		1
16	17C–516	BOLT			3
17	17C–836	BOLT			4
18	4E–8	WASHER			2
19	61D–8	NUT			2
20	42F–3	ELBOW		E/5795000 & Bel.	1
21	6515224	HOSE			1
22	17C–412	BOLT		E/5795000 & Bel.	2
23	4E–4	WASHER		E/5795000 & Bel.	2
24	6516345	SWITCH	engine oil – See BTI 142	E/5795000 & Bel.	1
25	61D–4	NUT		E/5795000 & Bel.	2
26	6516344	BRACKET		E/5795000 & Bel.	1
27	5K–108	CONNECTOR		E/5795000 & Bel.	1
28		FILTER	eng. oil – See Page E23 & BTI 198		1
29		DRIVE	variable speed – See Page C24		1
30	6J–808	KEY			1
31	6515575	CLAMP			4
32	6505813	ADAPTER			2
33	6511393	FILTER	fuel		1
34	6544044	HOSE	11" (279,4mm)		1
	6544056	HOSE	4" (101,6mm)		1
35	6516346	STUD			2
36	6511660	PLATE			1
37		STARTER	See Page D5		1
38	6516348	STUD			3
39	6516349	BRACKET			1
40	657904	CLAMP			1
41	6503098	CONNECTOR			1
42	6515194	SWIVEL			2
43	14D–10	NUT			2
44	6503067	ROD			1
	6541121	ROD	LPG		1
45	6E–8	WASHER			2
46	6504024	BLOCK			2
47	1550963	SWITCH	hourmeter	E/5795000 & Bel.	1
48	NAP	PLATE	Order 6551298 Starter Bracket Kit		1
49	663365	ADAPTER		E/5795001 & Abv.	1
50	18F–1	TEE		E/5795001 & Abv.	1
51	6557924	SWITCH	engine oil pressure	E/5795001 & Abv.	1
52	30H–15	CLAMP		E/5795001 & Abv.	1

ENGINE SHROUDING

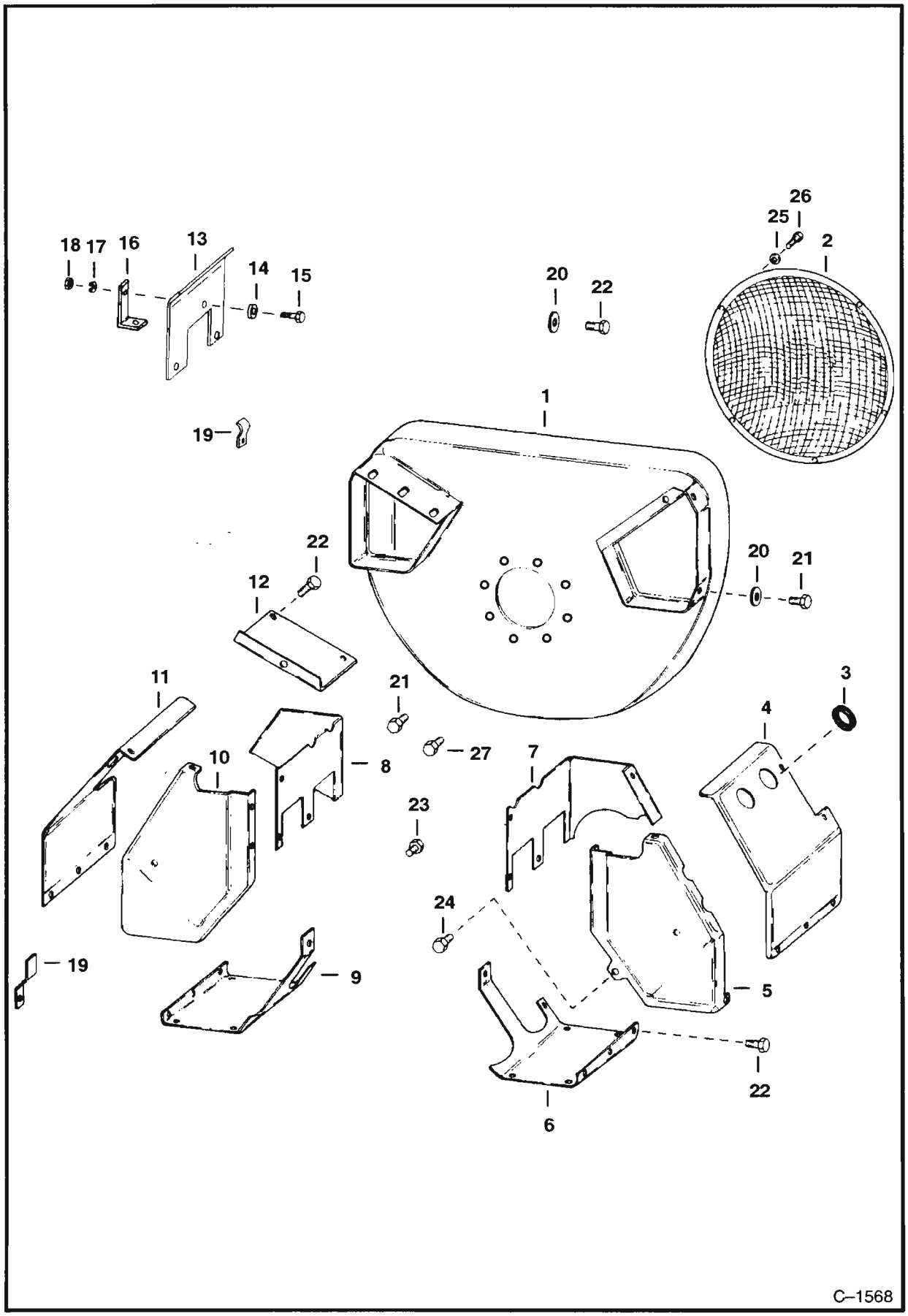

ENGINE SHROUDING (Cont'd)

Ref. No.	Part Number	Description	Remarks	Serial Number	Qty.
1	6510091	SHROUD	flywheel		1
2	6516370	SCREEN	rotating		1
3	6516359	CAP			4
4	6516358	SHROUD	cylinder		1
5	6516357	SHROUD	rear cover		1
6	6516356	SHROUD	lower cylinder		1
	6519333	SHROUD	lower – Pulpwood Loader		1
7	6516355	SHROUD	heat deflector		1
8	6516353	SHROUD	heat deflector		1
9	6516354	SHROUD	lower cylinder		1
	6519332	SHROUD	lower – Pulpwood Loader		1
10	6516352	SHROUD	rear cover		1
11	6516351	SHROUD	cylinder head		1
12	6516371	SHROUD	side cover		1
13	6516367	DEFLECTOR	heat		1
14	6516365	WASHER			1
15	17C–408	BOLT			3
16	6516364	BRACE			1
17	4E–4	WASHER			9
18	61D–4	NUT			3
19	6516360	CLIP	cable		2
20	4E–5	WASHER			6
21	17C–508	BOLT			8
22	47G–406	BOLT			34
23	47G–408	BOLT			2
24	47G–412	BOLT			2
25	6516369	WASHER			5
26	6516368	BOLT			5
27	6516361	BOLT	used to center flywheel		2

CRANKCASE & GEAR COVER

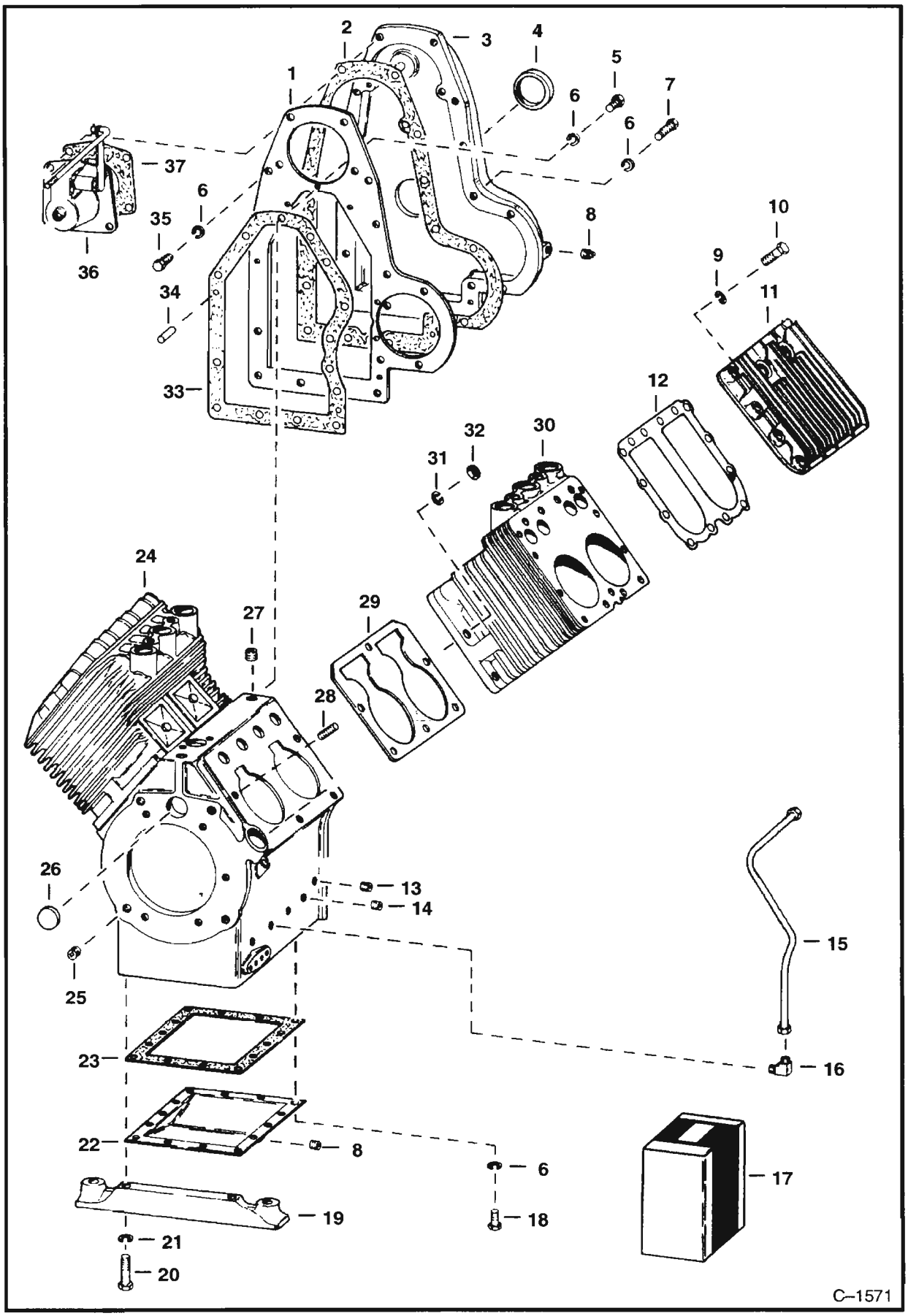

CRANKCASE & GEAR COVER (Cont'd)

Ref. No.	Part Number	Description	Remarks	Serial Number	Qty.
1	6516530	SPACER			1
2	6516529	GASKET			1
3	6516527	COVER	internal alt.		1
	6510832	COVER	external alt.		1
4	6516526	SEAL	crankshaft		1
5	852074	BOLT			3
6	4E–4	WASHER			32
	6516500	WASHER			2
7	17C–520	BOLT			40
8	40K–6	PLUG			1
9	861276	WASHER			34
10	6516436	BOLT			4
	17C–520	BOLT			30
11	6516433	HEAD			2
	6516432	HEAD	LPG		2
12	6516434	GASKET	head		2
13	6516515	SET SCREW			1
14	16F–2	PLUG			2
15	6516512	OIL LINE			1
16	42F–3	ELBOW			1
17	6664964	GASKET KIT	Overhaul – Was 6516447 [A]		1
18	17C–510	BOLT			4
19	6516443	SUPPORT	engine		2
20	18C–824	BOLT			4
21	4E–8	WASHER			4
22	6516442	PLATE			1
23	6516444	GASKET	crankcase		1
24	6516439	CRANKCASE	Ref. 25 – 28		1
25	6516440	PLUG			4
26	6516441	PLUG	1–3/8"		1
27	6516435	PLUG	5/8"		1
28	6510868	STUD	Was 6516438 [A]		12
29	6516437	GASKET			2
30	6516497	BLOCK	cylinder – See Page E8		2
31	4E–7	WASHER			12
32	62D–7	NUT			12
33	6516531	GASKET			1
34	6516532	PIN			2
35	17C–512	BOLT			2
36		GOVERNOR	See Page E10		1
37	6516617	GASKET			1

INTERNAL ENGINE GROUP

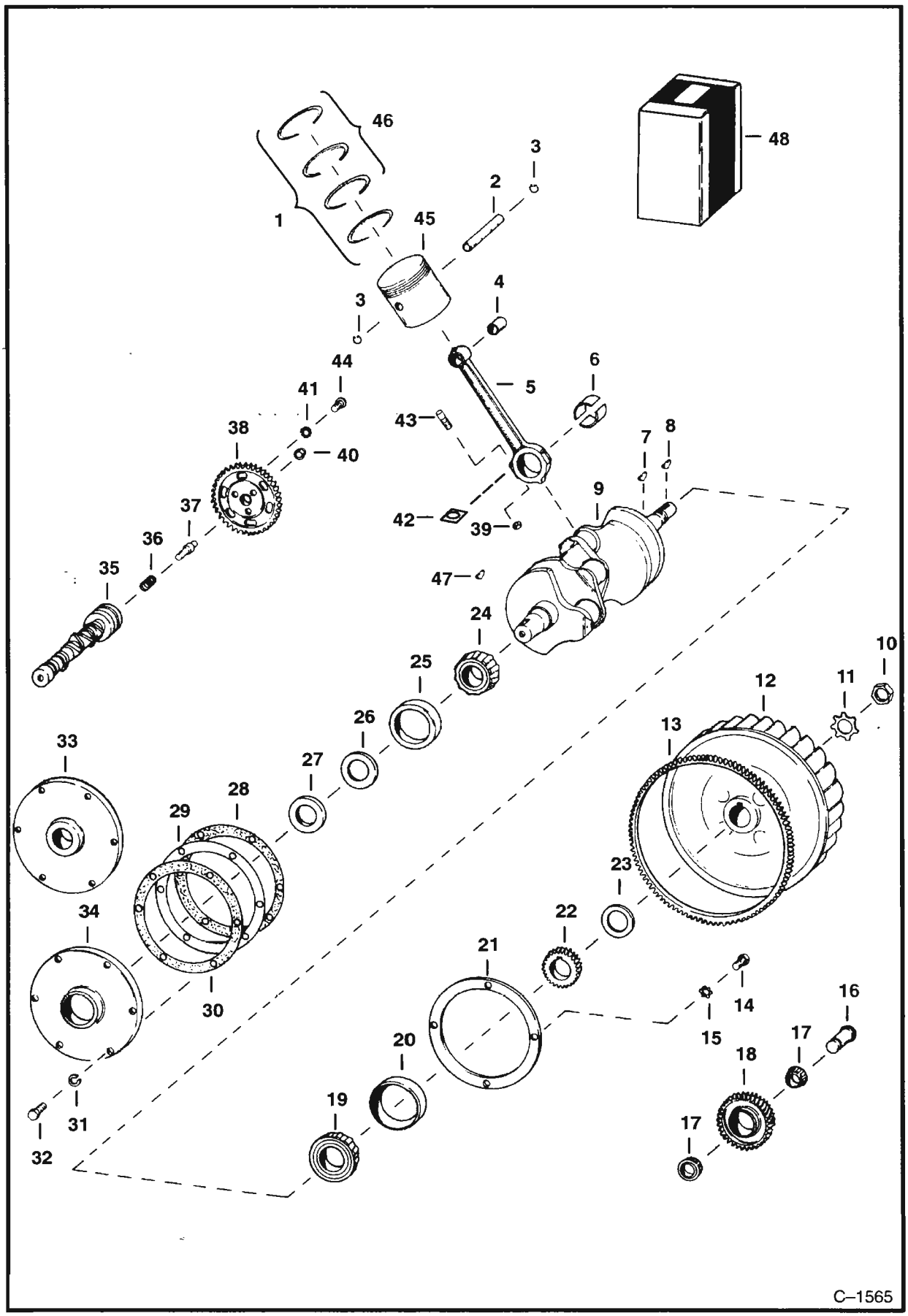

Ref. No.	Part Number	Description	Remarks	Serial Number	Qty.
1	6516464	RINGS	Std. – 4 ring	E/156079659 & Bel.	1
	6516465	RINGS	+.010" (0,25mm) – 4 ring	E/156079659 & Bel.	1
	6516466	RINGS	+.020" (0,51mm) – 4 ring	E/156079659 & Bel.	1
	6516467	RINGS	+.030" (0,76mm) – 4 ring	E/156079659 & Bel.	1
	6516468	RINGS	trichrome – Std. – 4 ring		1
	6516469	RINGS	trichrome – +.010" (0,25mm) – 4 ring – complete set		1
	6516470	RINGS	trichrome – +.020" (0,51mm) – 4 ring – complete set		1
	6516471	RINGS	trichrome – +.030" (0,76mm) – 4 ring – complete set		1
2	6516476	PIN	piston – Std.		4
	6517474	PIN	piston – +.010" (0,25mm)		4
3	6516463	RETAINER			8
4	6516462	BUSHING			4
5	6517472	ROD	W/Ref. 4, 39 & 43		4
6	6517475	BEARING	rod – Std. – one bearing		4
	6517476	BEARING	rod – .001" (0,03mm) – one bearing		4
	NAP	BEARING	rod – .002" (0,05mm) – one bearing – Was 6517477 [A]		4
	6517478	BEARING	rod – .010" (0,25mm) – one bearing		4
	6517479	BEARING	rod –.020" (0,51mm)–one bearing		4
7	6J–506	KEY	crankshaft gear		1
8	6J–1011	KEY	flywheel		1
9	6510277	CRANKSHAFT	W/gear		1
10	6516449	NUT			1
11	6516448	WASHER			1
12	6510871	FLYWHEEL	W/Ref. 13		1
13	6516682	RING GEAR			1
14	7G–512	BOLT			4
15	6E–5	WASHER			4
16	6516523	STUD	idler gear		1
17	6517514	BEARING			2
18	6660248	GEAR	idler – See Ref. 48 for gear kit		1
19	6516452	BEARING	front – W/Ref. 20		1
20	NSS	CUP	bearing		1
21	6516525	PLATE			1
22	6516451	GEAR			1
23	6516450	SLINGER	oil		1
24	872144	BEARING	rear – W/Ref. 25		1
25	NSS	CUP	bearing		1
26	6516454	RETAINER	oil seal		1
27	6516455	SEAL	oil – W/Ref. 33		1
	6511309	SEAL	oil – W/Ref. 34		1
28	6516456	GASKET	.003" (0,08mm)		3
29	6516457	SHIM	.013" (0,33mm)		x
30	6516458	GASKET	.006" (0,15mm)		3
31	4E–6	WASHER			6
32	17C–620	BOLT			6

INTERNAL ENGINE GROUP (Cont'd)

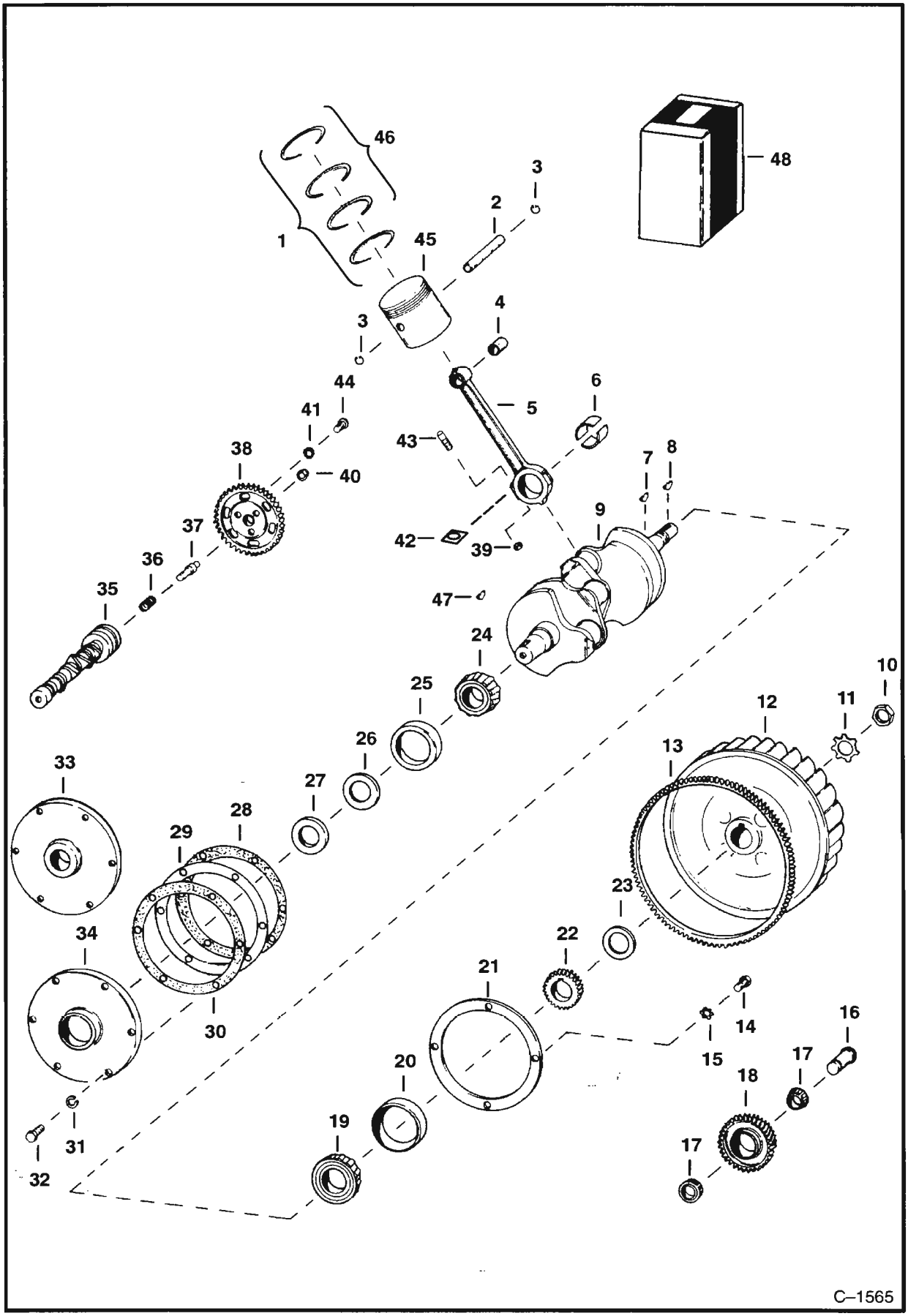

Ref. No.	Part Number	Description	Remarks	Serial Number	Qty.
33	NAP	PLATE			1
34	6511300	PLATE			1
35	6516517	CAMSHAFT			1
36	6516518	SPRING			1
37	6516519	PLUNGER	thrust		1
38	6516520	GEAR	camshaft		1
39	86D–5	NUT			8
40	6516522	BUTTON			1
41	6516521	WASHER			3
42	6516460	SHIM			8
43	6516461	BOLT	W/Ref. 39		8
44	17C–516	BOLT			3
45	6516472	PISTON – W/Pin	Std. – 4 Ring	E/156079659 & Bel.	4
	6516473	PISTON – W/Pin	.010" (0,25mm) – 4 Ring	E/156079659 & Bel.	4
	6516474	PISTON – W/Pin	.020" (0,51mm) – 4 Ring	E/156079659 & Bel.	4
	6516475	PISTON – W/Pin	.030" (0,76mm) – 4 Ring	E/156079659 & Bel.	4
	6512145	PISTON – W/Pin	Std. – 3 Ring – See BTI 183		4
	6512146	PISTON – W/Pin	.010" (0,25mm) – 3 Ring – See BTI 183 – 1 piston		4
	6512147	PISTON – W/Pin	.020" (0,51mm) – 3 Ring – See BTI 183 – 1 piston		4
	6512148	PISTON – W/Pin	.030" (0,76mm) – 3 Ring – See BTI 183		4
	6630708	PISTON – W/Pin	Std. – 4 Ring – See BTI 218 – 1 piston	E/156079660 & Abv	4
	6630709	PISTON – W/Pin	.010" (0,25mm) – 4 Ring – See BTI 218	E/156079660 & Abv	4
	6630710	PISTON – W/Pin	.020" (0,51mm) – 4 Ring – See BTI 218	E/156079660 & Abv	4
	6630711	PISTON – W/Pin	.030" (0,76mm) – 4 Ring – See BTI 218	E/156079660 & Abv	4
	NAP	PISTON – W/Pin	.040" (1,02mm) – 4 Ring – Was 6656406 [A]		4
46*	6633307	RINGS	Std. – 3 Ring – See BTI 183 – complete set – Was 6512149 [A]		1
	6512150	RINGS	.010" (0,25mm) – 3 Ring – See BTI 183 – complete set		1
	6512151	RINGS	.020" (0,51mm) – 3 Ring – See BTI 183 – complete set		1
	6512152	RINGS	.030" (0,76mm) – 3 Ring – See BTI 183		1
	6630712	SET RINGS	Std. – 4 Ring – See BTI 218	E/156079660 & Abv	2
	6630713	SET RINGS	.010" (0,25mm) – 4 Ring – See BTI 218	E/156079660 & Abv	2
	6630714	SET RINGS	.020" (0,51mm) – 4 Ring – See BTI 218 – 2 ring sets	E/156079660 & Abv	2
	6630715	SET RINGS	.030" (0,76mm) – 4 Ring – See BTI 218 – 2 ring sets	E/156079660 & Abv	2
	NAP	SET RINGS	.040" (1,02mm) –Was 6656405 [A]		2
47	6J–808	KEY			1
48	6516524	GEAR KIT	W/Ref. 16 – 18		1

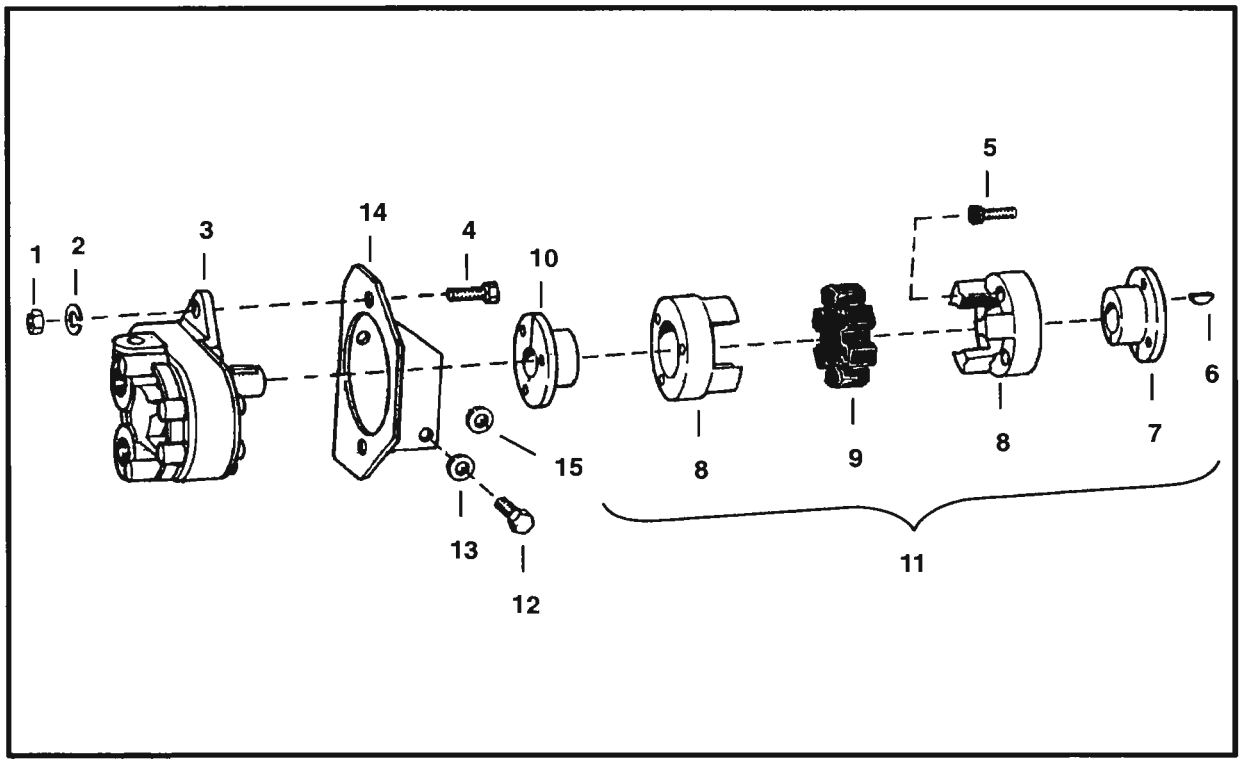

PUMP & COUPLER

Ref. No.	Part Number	Description	Remarks	Serial Number	Qty.
1	61D–6	NUT			2
2	4E–6	WASHER			2
3		PUMP	hydraulic – See Page C3 –C4		1
4	17C–624	BOLT			2
5	73G–414	SCREW	cap		6
6	5J–605	KEY			1
7	6515287	HUB			1
8	NAP	COUPLER	half – Order 6670804 Kit – Was 6509766 [A]		2
	6670805	COUPLER	For 6670804		1
9	6516576	DISC	rubber – For 6515431		1
	6670807	DISC	Rubber – For 6670804 Kit		1
10	6515297	HUB	11/16" (17,46mm) bore		1
11	NAP	COUPLER	complete – Ref. 5 – 10 – Order 6670804 – Was 6515431 [A]		1
	6670804	COUPLER KIT	Ref. 5 & 7–10		
12	17C–516	BOLT			3
13	25E–15	WASHER			3
14	6502037	BRACKET			1
15	6560045	SHIM	washer – .030" (0,76mm)		x
	6560046	SHIM	washer – .040" (1,02mm)		x

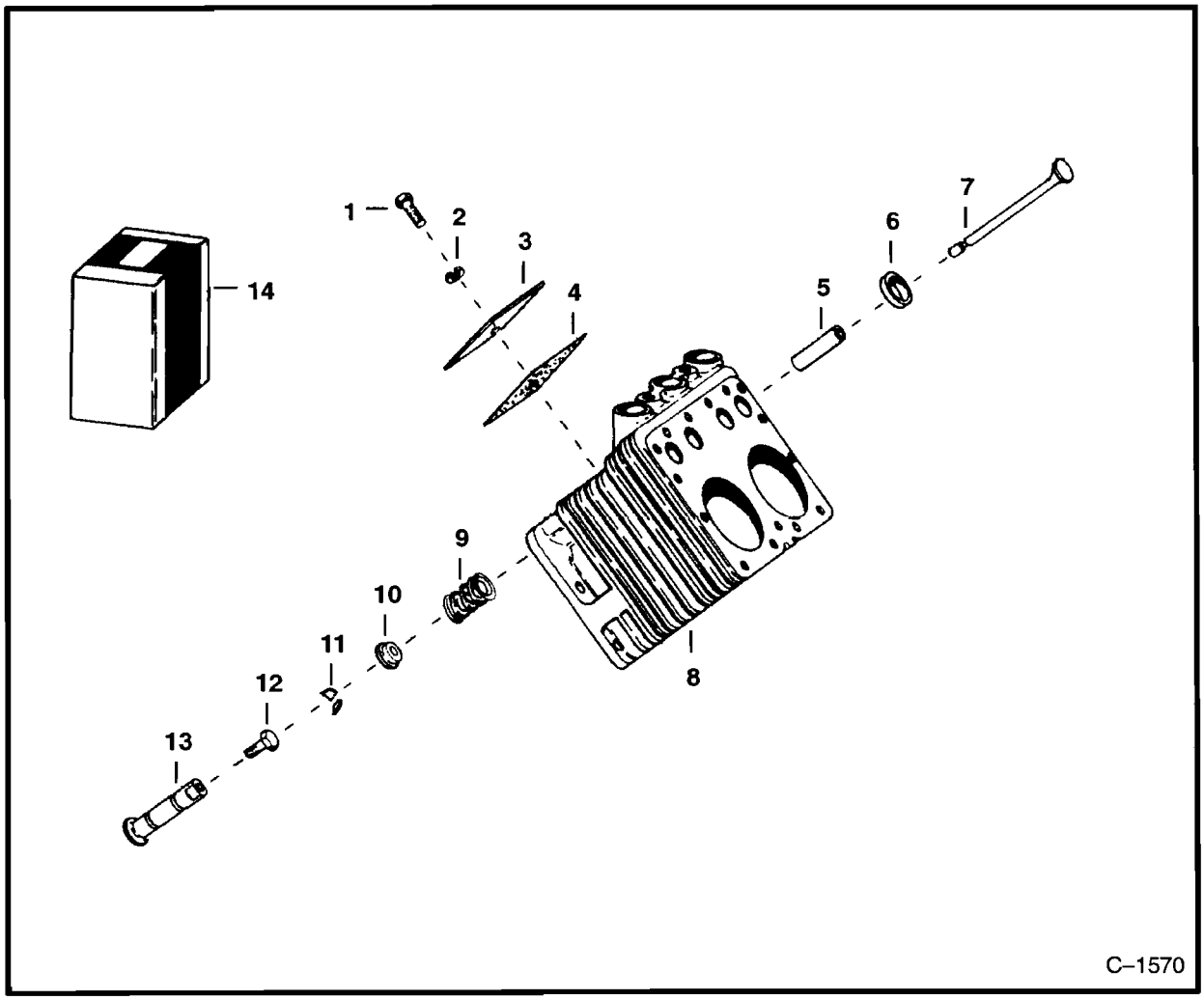

CYLINDER & VALVES

Ref. No.	Part Number	Description	Remarks	Serial Number	Qty.
1	17C–516	BOLT			4
2	6516500	WASHER			4
3	6516499	COVER	valve		4
4	6516498	GASKET			4
5	6514845	GUIDE	valve – Was 6516495 [A]		8
6	6516493	SEAT	Intake		4
	6516494	SEAT	Exhaust		4
7	6516491	VALVE	Intake		4
	6516492	VALVE	Exhaust		4
8	6516497	BLOCK	cylinder – Ref. 1 – 13		2
9	6516501	SPRING	Intake		4
	6516502	SPRING	Exhaust		4
10	6516503	RETAINER	Intake		4
	6516504	ROTATOR	valve – Exhaust		4
11	6516505	LOCK			8
12	6516506	BOLT			8
13	6516507	TAPPET	W/Ref. 12		8
14	6516508	GASKET SET	valve grind		1

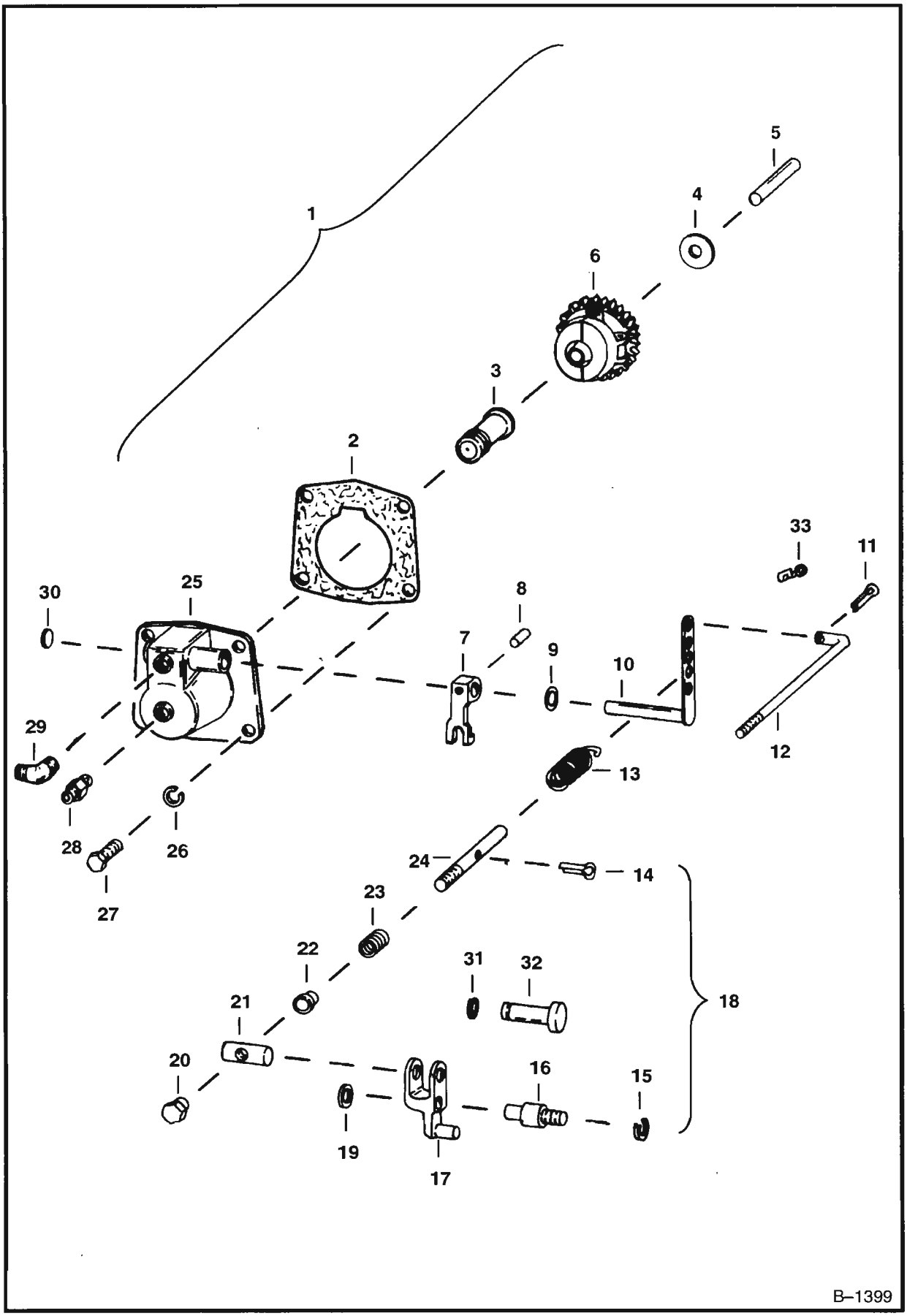
1
2
3
4
5
6
7
8
9
10
11
12
13
14
15
16
17
18
19
20
21
22
23
24
25
26
27
28
29
30
31
32
33
B–1399

Ref. No.	Part Number	Description	Remarks	Serial Number	Qty.
1	NAP	GOVERNOR	Ref. 2 – 13 & 24 – 30 – Order 6512329 – Was 6510833 [A]		1
	6512329	GOVERNOR	Ref. 2 – 13 & 24 – 30		1
2	6516617	GASKET			1
3	6512392	SLEEVE	Was 6516620 [A]		1
4	NSS	WASHER			1
5	6516626	SHAFT			1
6	6516627	FLYWEIGHT	assy. – W/Ref. 4		1
7	NSS	YOKE			1
8	6516619	PIN			1
9	6516612	SEAL	oil		1
10*	NAP	SHAFT	control – Order 6512329 – Was 6516611 [A]		1
11	6516613	PIN			1
12	6516614	ROD			1
13	6516610	SPRING			1
14	1F–208	PIN			2
15	4E–4	WASHER			1
16	6516629	PIN			1
17	6516630	LEVER			1
18	6516628	CONTROL	governor – Ref. 14 – 17 & 19 – 24		1
19	25E–15	WASHER			1
20	6516631	NUT			1
21	6516632	PIN			1
22	6516633	RETAINER			1
23	6516634	SPRING			1
24	6516635	SCREW			1
25	6512393	HOUSING	governor – W/Ref. 2, 7 – 10 & 28 – 30		1
26	4E–5	WASHER			4
27	47G–514	BOLT			4
28	6515221	FITTING			1
29	16F–2	PLUG	pipe		1
30	NSS	PLUG			1
31	6652920	CLIP			1
32	6652919	PIN			1
33	6631697	CLIP			1

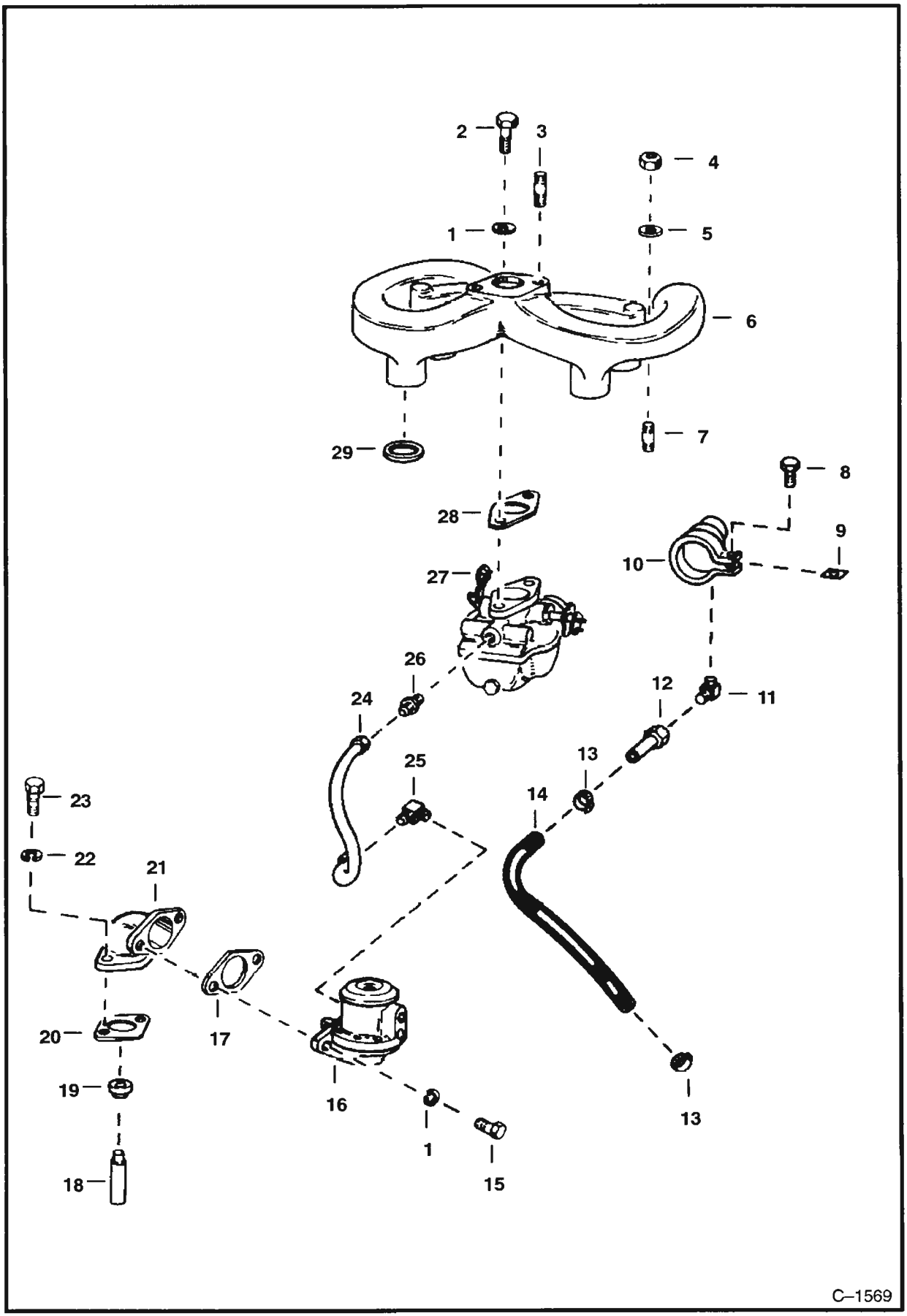
2
3
4
1
5
6
29
7
8
28
9
10
27
26
12
24
11
25
13
23
14
22
21
13
20
17
19
16
1
18
15
C–1569

Ref. No.	Part Number	Description	Remarks	Serial Number	Qty.
1	4E–5	WASHER			4
2	17C–516	BOLT			2
3	6516401	STUD			2
4	6515897	NUT			4
5	4E–6	WASHER			4
6	6516404	MANIFOLD			1
7	6516407	STUD			3
	6516406	STUD			1
8	17C–420	BOLT			1
9	6516408	GASKET			1
10	6516394	HORN	air		1
11	6516393	ELBOW			1
12	6516392	ADAPTER			1
13	6515575	CLAMP			2
14	NAP	HOSE	12" (304,8 mm) long – Order		
			Ref. 30 – Was 6516391 [A]		1
15	17C–512	BOLT			2
16	6516374	FUEL PUMP			1
17	6516381	GASKET	fuel pump		1
18	6516385	PLUNGER	requires Ref. 19 when replacing		1
19	6516386	CAP	plunger		1
20	6516382	GASKET			1
21	6516380	ADAPTER	primer		1
22	4E–4	WASHER			2
23	17C–412	BOLT			2
24	6516373	TUBE			1
25	42F–3	ELBOW			1
26	6515222	ADAPTER			1
27	6516590	CARBURETOR	See Page E13		1
28	6516398	GASKET	carburetor		3
29	6516405	GASKET	manifold		6
30	656247	HOSE	bulk – sold per foot		x

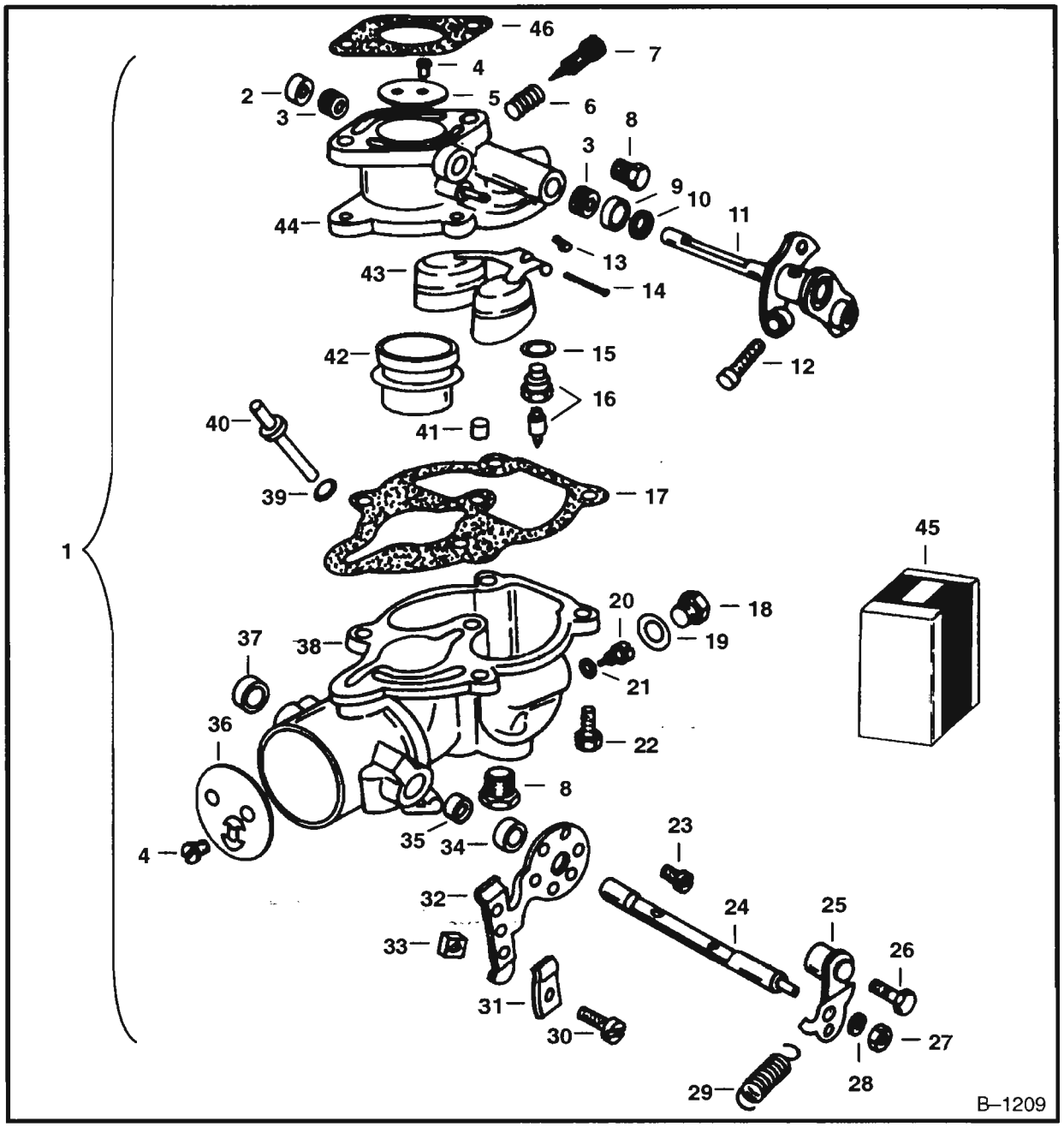

CARBURETOR
Zenith No. 13405

Ref. No.	Part Number	Description	Remarks	Serial Number	Qty.
1	6516590	CARBURETOR	Ref. 2 – 44		1
2	NAP	PLUG			1
3	NAP	BUSHING			2
4	NAP	SCREW			4
5	NAP	PLATE			1
6	866397	SPRING	Was NSS [D]		1
7	NSS	NEEDLE	Order 6548194		1
8	NAP	PLUG			2
9	NSS	SEAL	Order 6548194		1

CARBURETOR (Cont'd)
Zenith No. 13405

Ref. No.	Part Number	Description	Remarks	Serial Number	Qty.
10	NSS	RETAINER	Order 6548194		1
11	NAP	LEVER	shaft & stop		1
12	NAP	SCREW			1
13	NAP	JET			1
14	NSS	AXLE	float – Order 6548194		1
15	NSS	WASHER	Order 872934		1
16	852272	VALVE	W/Seat Fuel – Order 6548194		1
17	NSS	GASKET	bowl		1
18	NAP	PLUG			1
19	NSS	WASHER	Order 872934		1
20	853492	JET			1
	853227	JET	Adj.		1
21	NSS	WASHER	Order 872934		1
22	42G–1010	SCREW			4
23	NAP	SCREW			2
24	NAP	SHAFT			1
25	NAP	LEVER			1
26	46G–807	SCREW			1
27	14D–8	NUT			1
28	17E–10	WASHER			1
29	NAP	SPRING	Was 866397 [A]		1
30	46G–808	SCREW			1
31	NAP	CLIP			1
32	NAP	BRACKET			1
33	NAP	NUT			1
34	NAP	RETAINER			1
35	NAP	SEAL			1
36	NAP	PLATE			1
37	NAP	PLUG			1
38	NAP	BOWL			1
39	NSS	WASHER	Order 6548194		1
40	NAP	JET			1
41	NAP	JET			1
42	NAP	VENTURI			1
43	850009	FLOAT			1
44	NAP	BODY			1
45	872934	GASKET KIT	Ref. 15, 17, 19 & 21		1
	6548194	REPAIR KIT	Ref. 6, 7, 9, 10, 14, 16, 17, 19, 21, 34, 35, 39, 45 & 46		1
46	6516398	GASKET			1

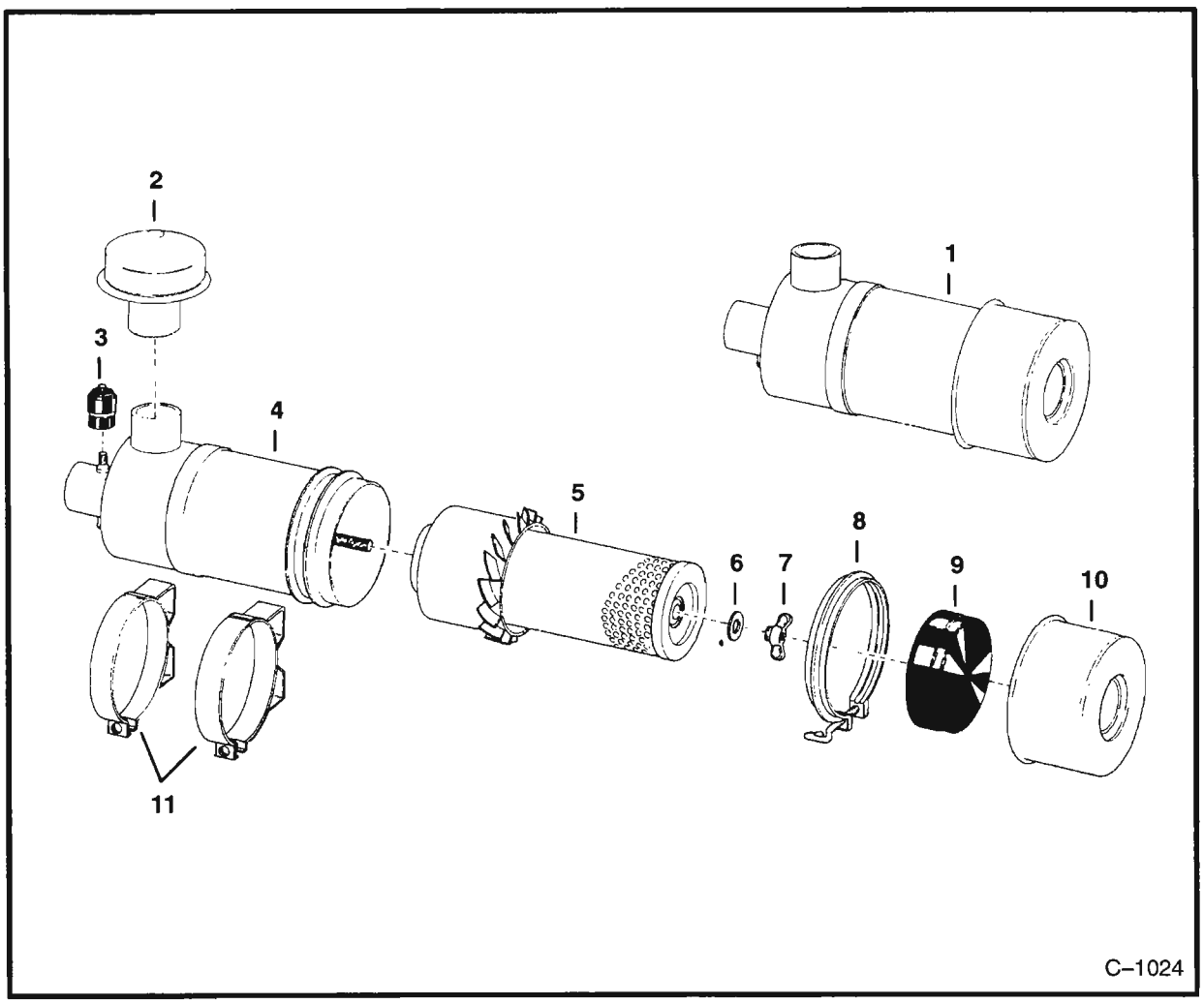

ENGINE AIR CLEANER

Ref. No.	Part Number	Description	Remarks	Serial Number	Qty.
1	6518192	AIR CLEANER	Ref. 3 – 10		1
2	6652488	CAP	breather – Was 663879 [A]		1
3	1735188	INDICATOR			1
4	NSS	TANK	W/Condition Indicator		1
5	6646494	CARTRIDGE	filter – Was 889098 [A]		1
6	886527	WASHER			1
7	3291290	WING NUT			1
8	889097	CLAMP			1
9	892101	BAFFLE	rubber		1
10	892102	CAP	dust		1
11	335902	BAND	mtg.		2

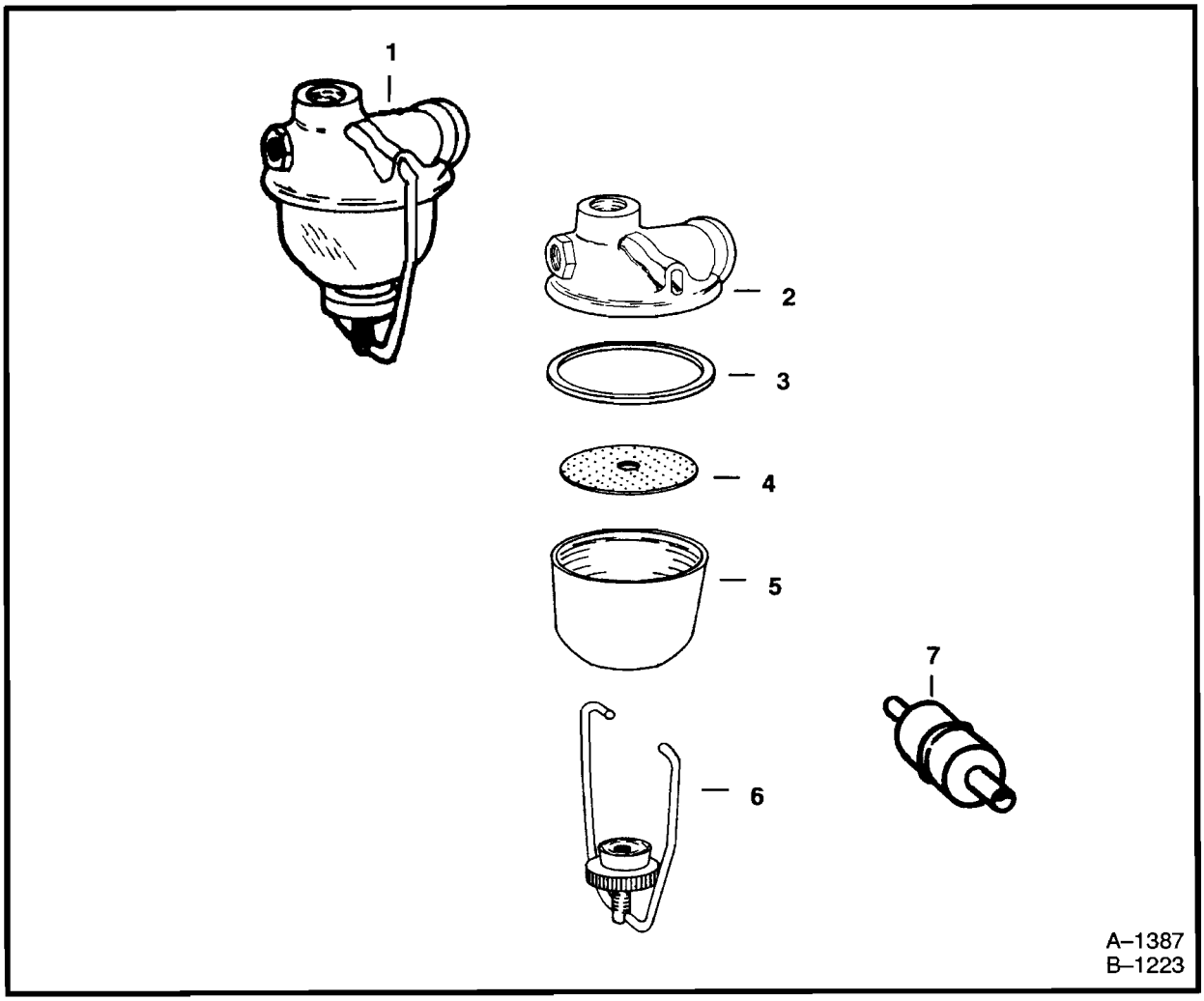

FUEL FILTER

Ref. No.	Part Number	Description	Remarks	Serial Number	Qty.
1	NAP	STRAINER	fuel – Order 6511393		1
2	NSS	COVER			1
3	NSS	GASKET			1
4	NSS	SCREEN			1
5	6508139	BOWL	W/Ref. 3 & 4		1
6	NAP	CLAMP ASSY.			1
7	6511393	FILTER	gasoline		1

IGNITION COIL, CABLES & DISTRIBUTOR DRIVE

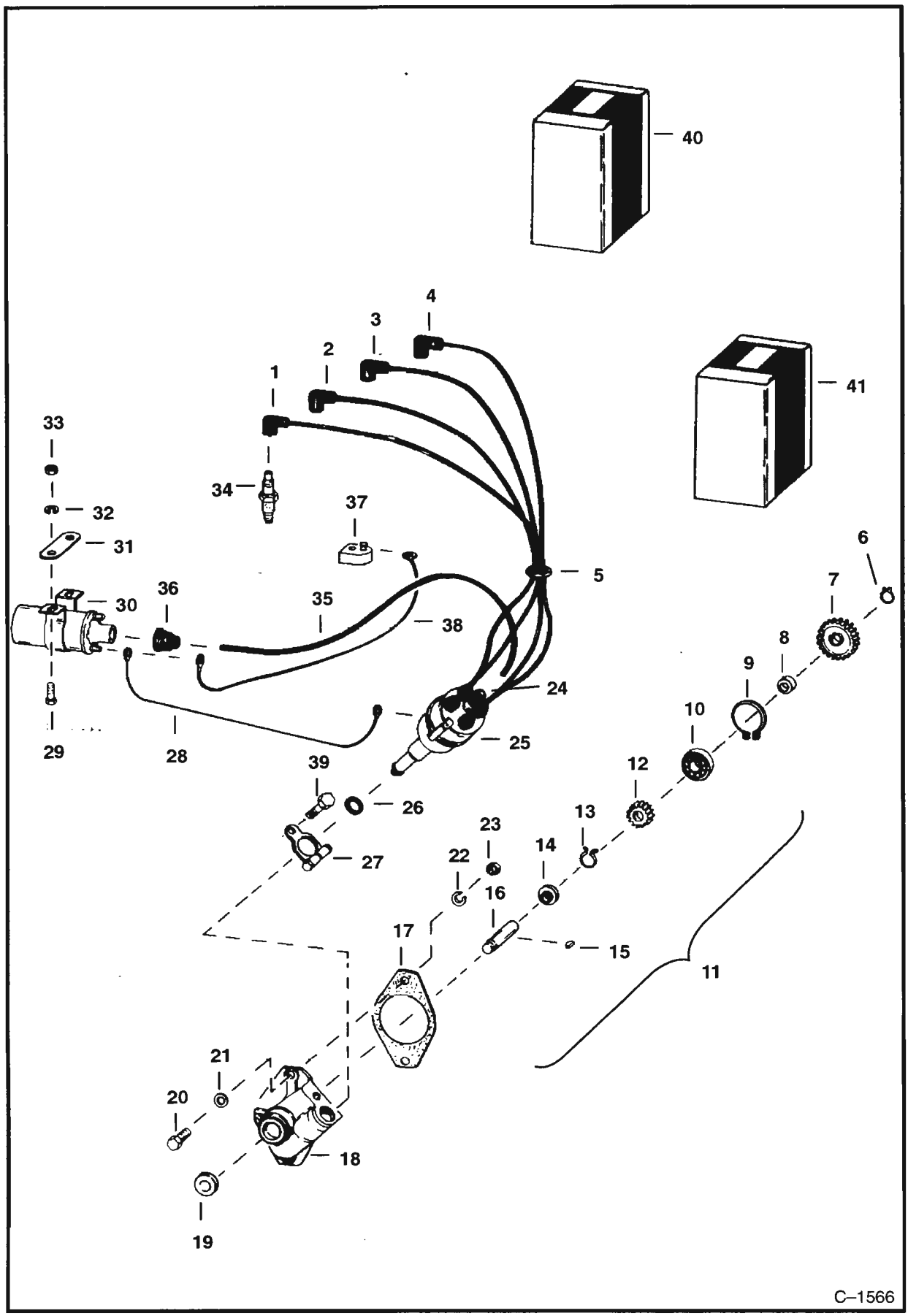

IGNITION COIL, CABLES & DISTRIBUTOR DRIVE (Cont'd)

Ref. No.	Part Number	Description	Remarks	Serial Number	Qty.
1	NSS	CABLE	spark plug – #1		1
2	NSS	CABLE	spark plug – #2		1
3	NSS	CABLE	spark plug – #3		1
4	NSS	CABLE	spark plug – #4		1
5	6516540	GROMMET			1
6	6516569	RING	retainer		1
7	6516571	GEAR	drive		1
8	6516572	SPACER			1
9	6516573	RETAINER	snap ring		1
10	6516568	BEARING			1
11	6516570	SHAFT ASSY.	Ref. 6, 10, 12 – 14 & 16		1
12	NSS	GEAR			1
13	NSS	RING	lock		1
14	6516564	BEARING			1
15	5J–605	KEY	woodruff		1
16	6516563	SHAFT	drive, not drilled for gear Ref. 12		1
17	6516574	GASKET			1
18	6516561	HOUSING	drive – W/Ref. 19 & 26		1
	6516558	DRIVE	accessory assy. – Ref. 6 – 19		1
19	6516559	SEAL	oil		1
20	17C–632	BOLT			2
21	25E–17	WASHER			1
22	4E–6	WASHER			2
23	61D–6	NUT			2
24	6516552	CAP	rubber		5
25		DISTRIBUTOR	See Page E19 & E20		1
26	6516560	O–RING			1
27	6516556	ARM	advance		1
28	6516553	WIRE	ignition		1
29	17C–512	BOLT			2
30	887408	COIL	ignition – W/Ref. 31		1
31	NAP	STRAP			1
32	4E–5	WASHER			2
33	61D–5	NUT			2
34	890272	PLUG	spark		4
35	NSS	CABLE			1
36	6516549	CAP			1
37	6517513	KIT	switch – safety – W/Ref. 38		x
38	NSS	WIRE	jumper		2
39	47G–408	BOLT			1
40	6516557	CABLE	ignition set – Ref. 1 – 4 & 35 – Also Order Ref. 24 (5)		1
41	6558833	KIT	ignition – Includes spark plugs (4), rotor, condensor & points set		1

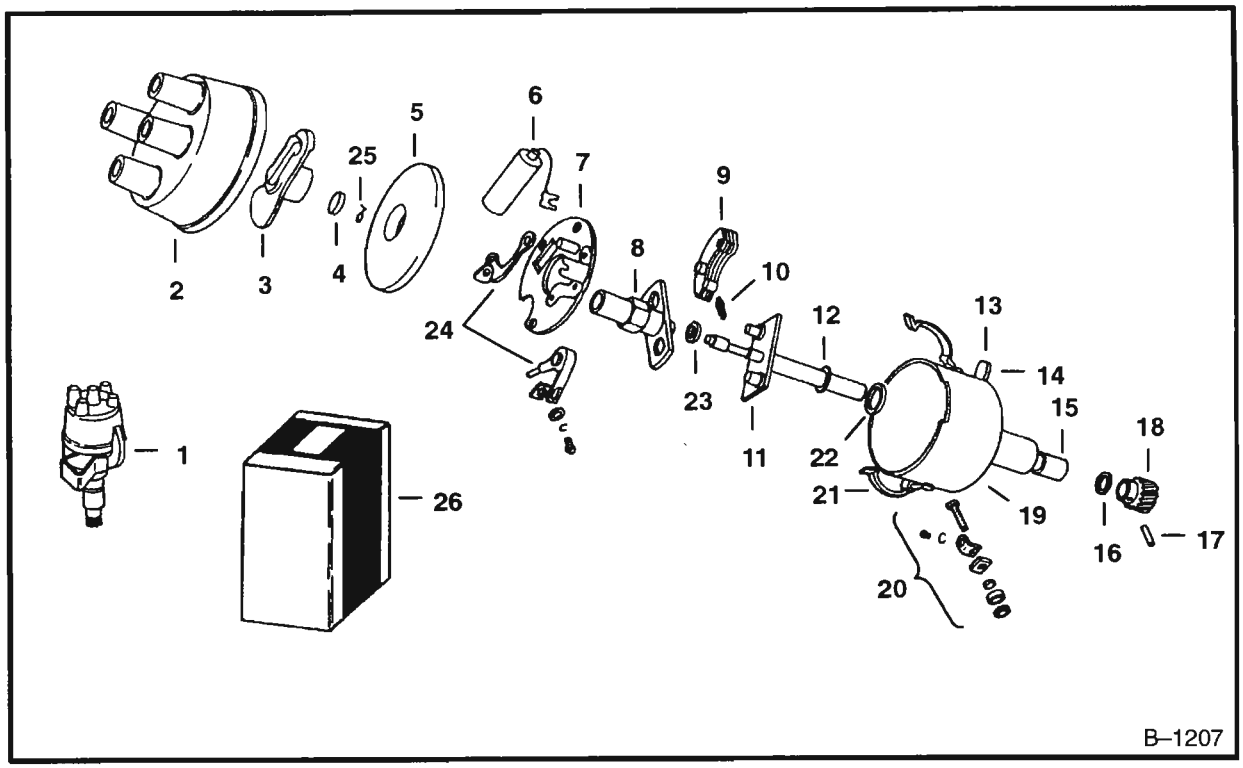

DISTRIBUTOR
Prestolite IAD–6004–2P
Engine S/N 6164220 & Below

Ref. No.	Part Number	Description	Remarks	Serial Number	Qty.
1	6516555	DISTRIBUTOR			1
2	870925	CAP			1
3	957791	ROTOR			1
4	NAP	WICK	W/Ref. 14		1
5	854943	COVER	dust		1
6	860818	CONDENSER			1
7	854934	PLATE	breaker – W/Ref. 7 & 21		1
8	6516662	CAM			1
9	NSS	WEIGHT			2
10	NSS	SPRING			2
11	NSS	SHAFT	drive		1
12	NSS	WASHER	thrust – Outer		1
13	NAP	OILER			1
14	6516674	WICK	felt – W/Ref. 4		1
15	NSS	BEARING			2
16	NSS	WASHER	thrust – Lower		1
17	NSS	PIN	gear		1
18	6516673	GEAR	distr. drive – W/Ref. 16 & 17		1
19	NAP	BASE			1
20	6645259	STUD	terminal – Was 897297 [A]		1
21	897298	CLAMPS	spring		2
22	NSS	WASHER	thrust – Inner		1
23	NSS	SPACER			1
24	897262	SET	contact points		1
25	NSS	SNAP RING			1
26	6548195	REPAIR KIT	Ref. 9 – 11 & 15		1

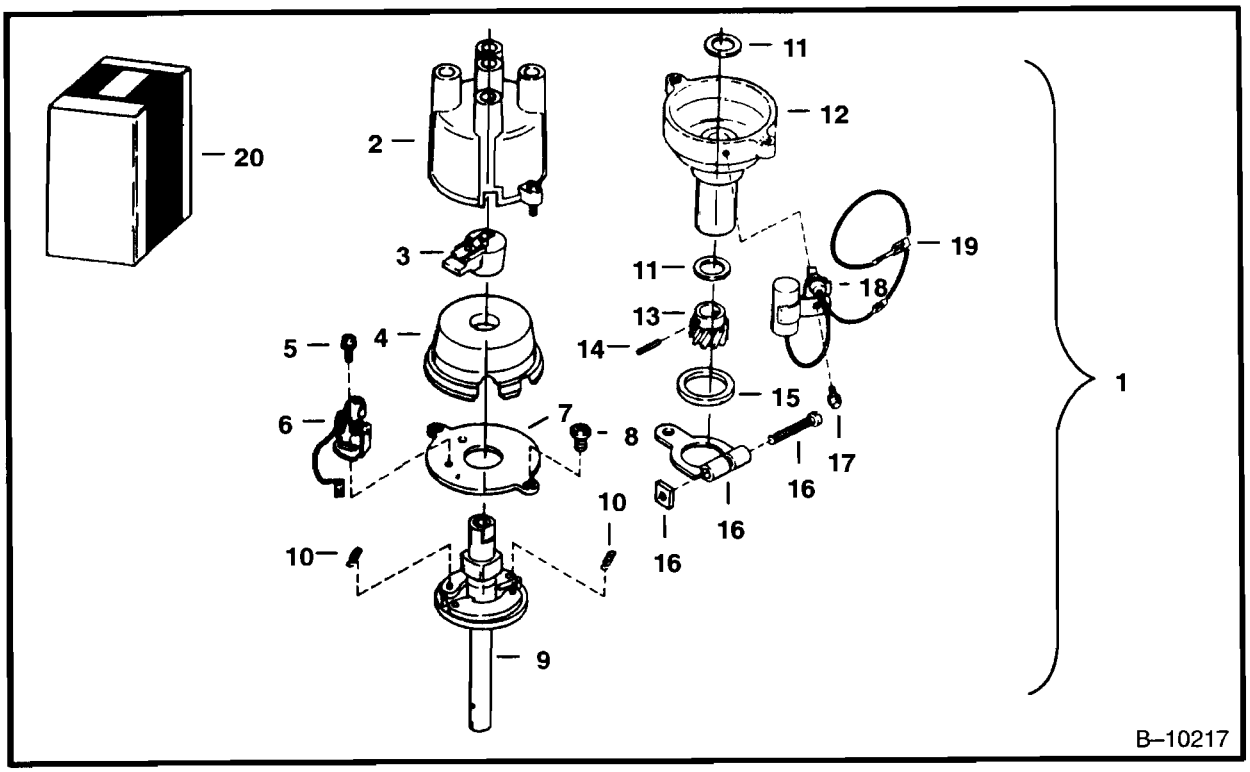

DISTRIBUTOR
Colt – Engine S/N 6164221 & Above

Ref. No.	Part Number	Description	Remarks	Serial Number	Qty.
1	NAP	DISTRIBUTOR	Order 6660480 – Was 6634241 [A]		1
2	6634242	CAP	W/Ref. 3		1
3	6634243	ROTOR			1
4	6634244	SHIELD			1
5	NSS	SCREW	Order Ref. 20		1
6	NSS	BREAKER SET	Order Ref. 20		1
7	6634245	PLATE			1
8*	NAP	SCREW	Was 6634246 [A]		2
9	6634248	SHAFT	W/Ref. 10		1
10	6634249	SPRING KIT	2 Springs		1
11	NSS	WASHER			2
12	NSS	HOUSING			1
13	6634327	GEAR	W/Ref. 11 & 14		1
14	NSS	PIN			1
15	NSS	WASHER			1
16	6516556	ARM	W/Ref. 15		1
17	NSS	SCREW			1
18	NSS	CONDENSOR	Order Ref. 20		1
19	6634329	WIRE			1
20	6634247	BREAKER KIT	Ref. 5, 6, 17 & 18		1

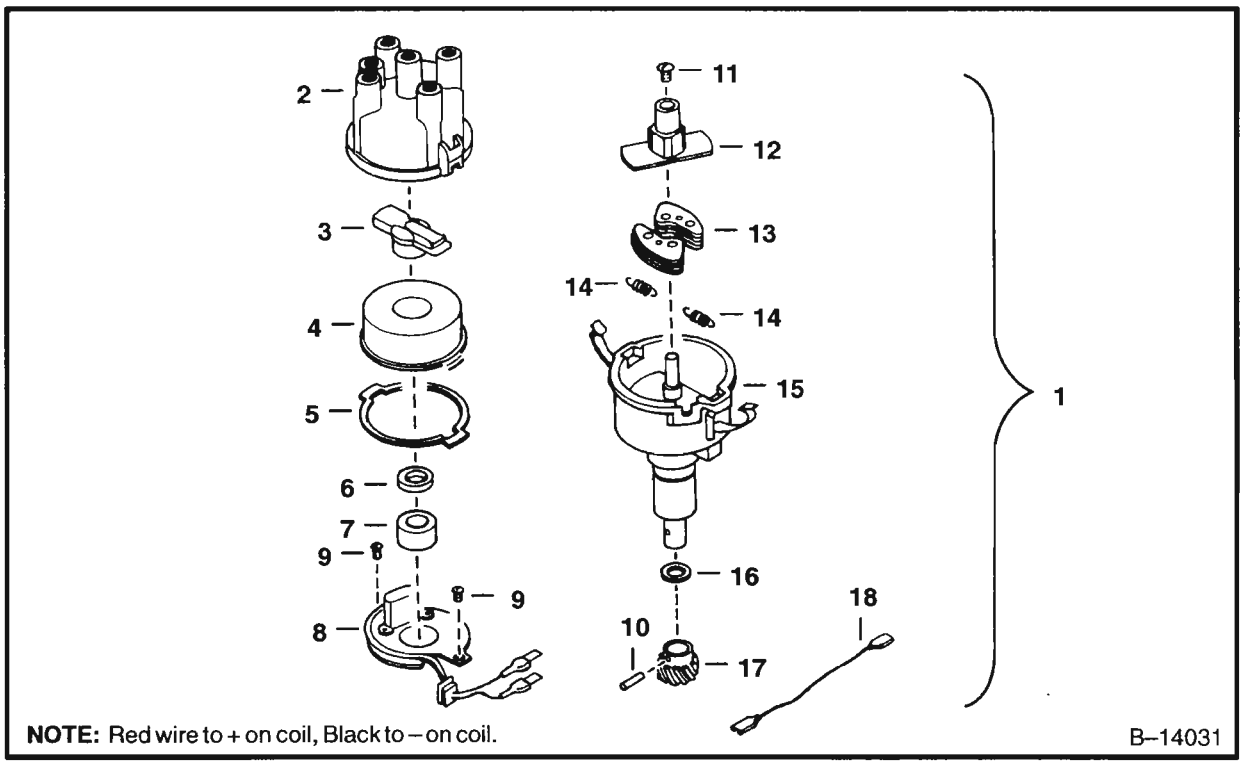

DISTRIBUTOR
Solid State – Engine S/N 6193828 & Above

Ref. No.	Part Number	Description	Remarks	Serial Number	Qty.
1	6660480	DISTRIBUTOR			1
2	6660470	CAP			1
3	6660471	ROTOR	W/Ref. 6		1
4	6660472	COVER			1
5	6660473	GASKET			1
6*	NSS	SPACER	Was 6660474 [A]		1
7	6660475	MAGNET			1
8	6660476	MODULE			1
9	NSS	SCREW	W/Ref. 8		2
10	NSS	PIN	W/Ref. 17		1
11	NSS	SCREW			1
12	NSS	CAM			1
13	6660477	WEIGHT			2
14	6660478	SPRING			2
15	NSS	BODY			1
16	NSS	WASHER	W/Ref. 17		1
17	6660479	KIT	gear – W/Ref. 10 & 16 – 17		1
18	6634329	WIRE			1

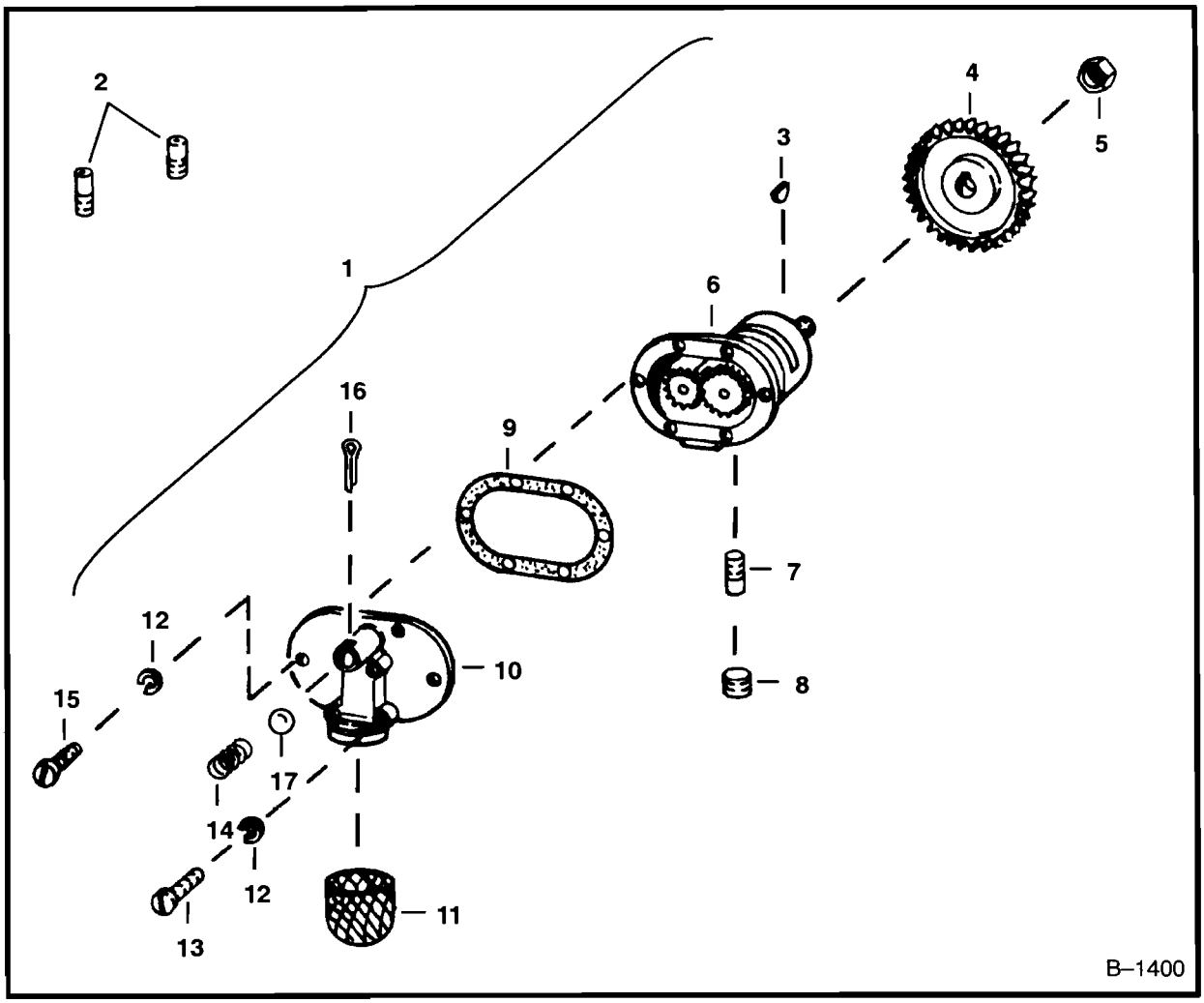

ENGINE OIL PUMP

Ref. No.	Part Number	Description	Remarks	Serial Number	Qty.
1	6512389	PUMP	oil – Ref. 3 – 16 – Was 6516636 [A]		1
2	6516640	NOZZLE			4
3	6J–204	KEY	woodruff		1
4	6516638	GEAR	drive		1
5	8D–7	NUT			1
6	NAP	BODY			1
7	6516637	SCREW			1
8	16F–2	PLUG	pipe		1
9	6516645	GASKET			1
10	NAP	COVER			1
11	6516650	SCREEN			1
12	6516647	WASHER	lock		7
13	86G–1020	SCREW			2
14	6516649	SPRING			1
15	86G–1008	SCREW			4
16	1F–416	PIN			1
17	NSS	BALL			1

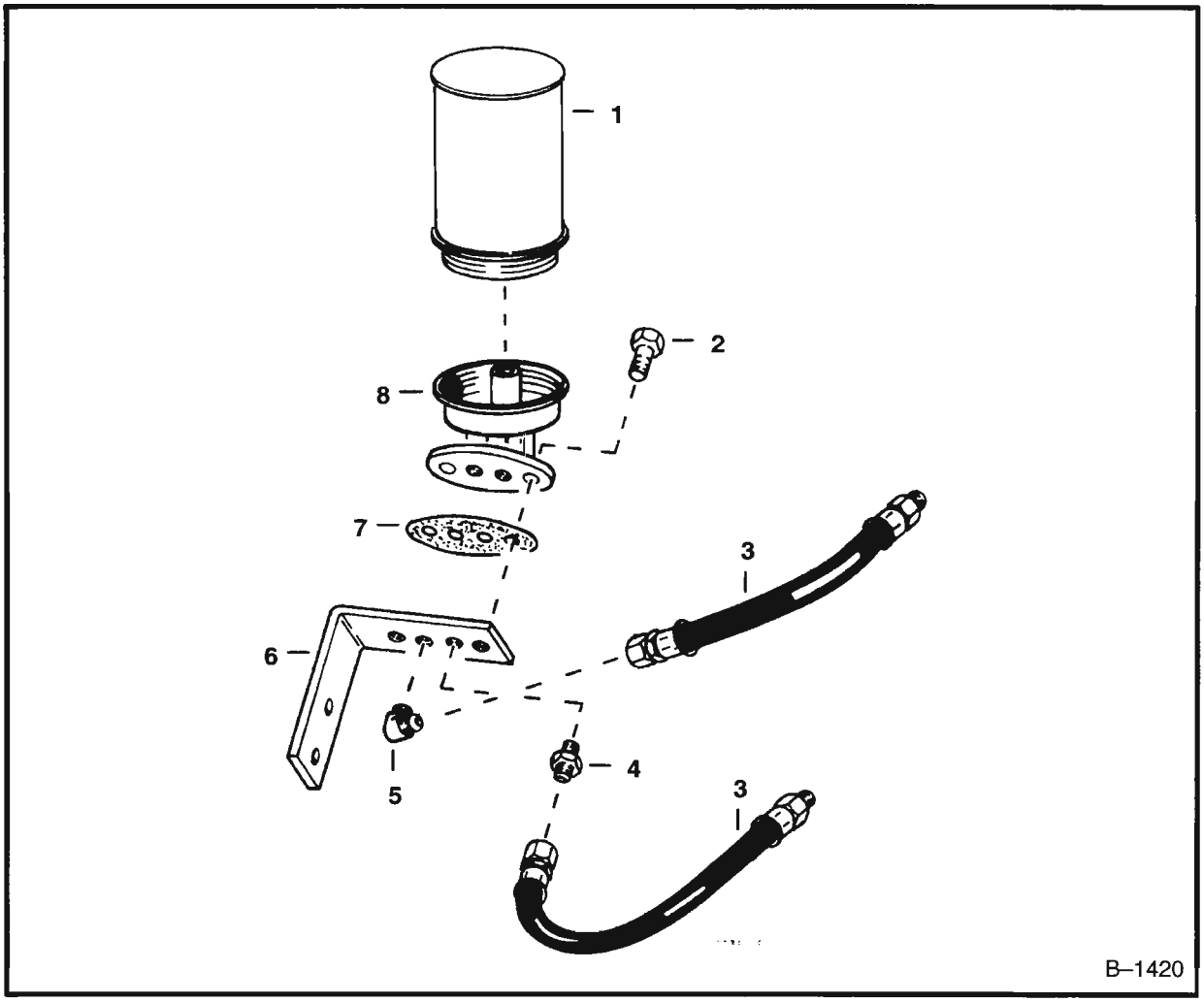

ENGINE OIL FILTER

Ref. No.	Part Number	Description	Remarks	Serial Number	Qty.
1	6513641	FILTER	See BTI 198	E/5984979 & Bel.	1
	6599587	FILTER	See BTI 198	E/5984980 & Abv.	1
2	17C–516	BOLT			2
3	6515224	HOSE			2
4	6515222	ADAPTER			1
5	42F–3	ELBOW			1
6	6541824	BRACKET	filter		1
7	6516514	GASKET			1
8	NAP	HEAD	filter – See BTI 198	E/5984979 & Bel.	1
	6599588	HEAD	filter – See BTI 198	E/5984980 & Abv.	1

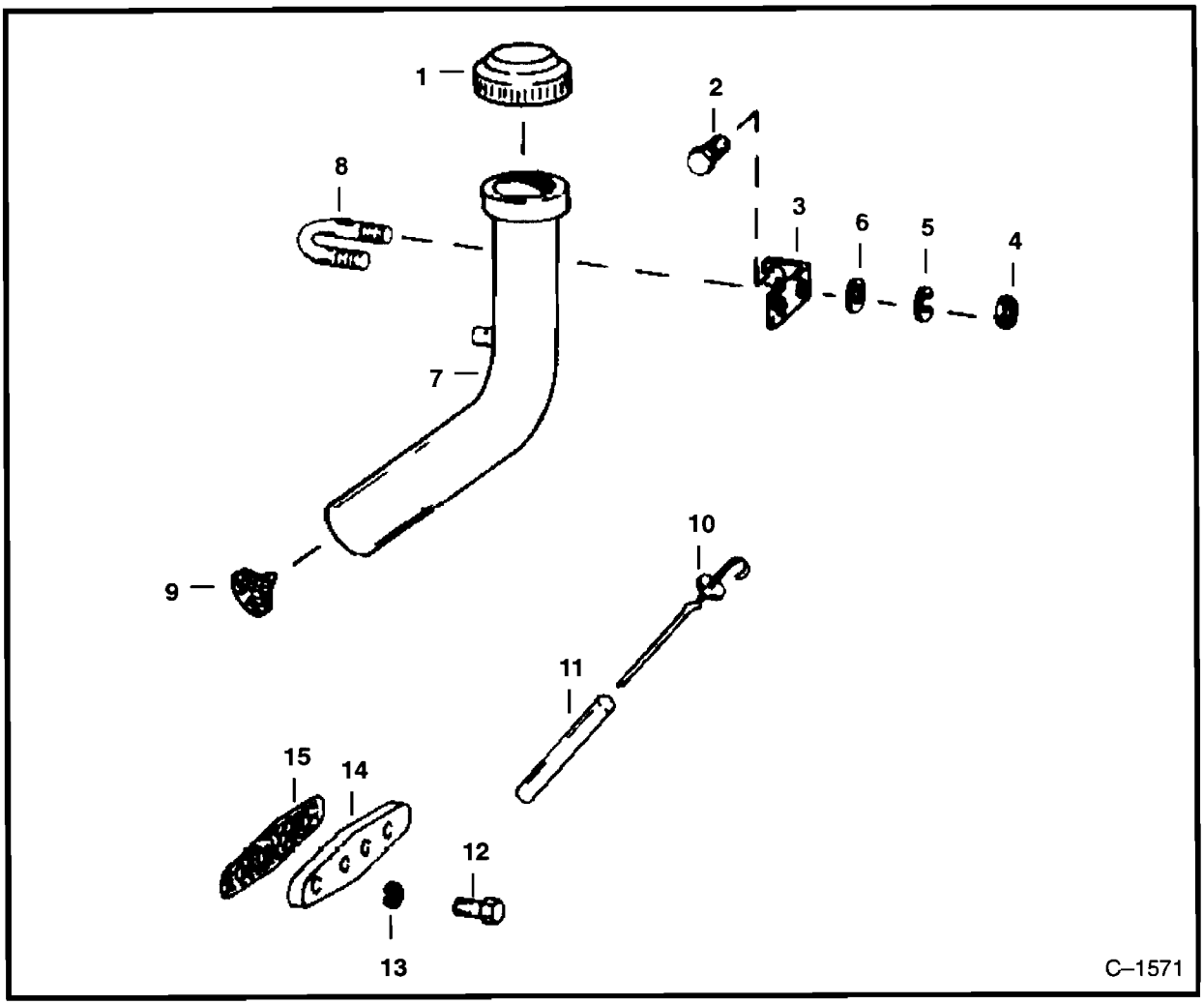

ENGINE OIL GROUP

Ref. No.	Part Number	Description	Remarks	Serial Number	Qty.
1	6515567	CAP	oil filler		1
2	47G–416	BOLT			1
3	6516535	BRACKET			1
4	61D–4	NUT			2
5	4E–4	WASHER			2
6	6516365	WASHER			2
7	6514844	TUBE	filler		1
8	6516534	U–BOLT			1
9	6516536	SCREEN			1
10	6516509	DIPSTICK			1
11	6516510	TUBE			1
12	17C–516	BOLT			2
13	4E–5	WASHER			2
14	6516513	ADAPTER	pad		1
15	6516514	GASKET			1

610 CONTENTS

MAIN FRAME A11–B2
MAIN FRAME A11–A14
OPERATOR CAB A15
LIFT ARMS & BOB–TACH A17
BOB–TACH A19–A22
SEAT BAR A23
SEAT & SEAT MOUNTING B1
SEAT B2,B3
DRIVE SYSTEM B4–B18
DRIVE TRAIN B4
AXLE B5
FRONT BRAKE AXLE B7
CLUTCH CONTROL LINKAGE B9
CLUTCH B11
OUTSIDE CLUTCH CHAIN TIGHTENER B13
INSIDE CLUTCH CHAIN TIGHTENER B14
VARIABLE SPEED JACKSHAFT B15
VARIABLE SPEED DRIVEN SHEAVE B17
LOWER JACKSHAFT B18
HYDRAULIC SYSTEM B19–C24
HYDRAULIC CONTROL PEDALS B19
VARIABLE SPEED CONTROL LEVER B20
HYDRAULIC CIRCUITRY B21–B24
HYDRAULIC OIL FILTER C1
HYDRAULIC PUMP CIRCUITRY C2
HYDRAULIC PUMP C3,C4
LIFT CYLINDER & AUXILIARY VALVE C5
TILT CYLINDER VALVE C6
MASTER RELIEF VALVE C7
CLUTCH PRESSURE RELIEF VALVE C8
LIFT CYLINDER CIRCUITRY C9
TILT CYLINDER CIRCUITRY C11
MAIN FRAME AUXILIARY LINES C13
LIFT CYLINDER C14
TILT CYLINDER C15,C16
VARIABLE SPEED DRIVE CIRCUITRY C17,C18
VARIABLE SPEED VALVE C19–C21
VARIABLE SPEED DRIVE SHEAVE C23
ELECTRICAL SYSTEM D1–D14
MAIN FRAME ELECTRICAL CIRCUIT D1–D4
STARTER D5
ALTERNATOR D7–D14
POWER UNIT D15–E24
ENGINE D15
THROTTLE D17
THROTTLE & CHOKE CONTROL LINKAGE D18
THROTTLE CONTROL D19
WISCONSIN ENGINE & ATTACHING PARTS D21
ENGINE SHROUDING D23
ENGINE BREAKDOWN E1–E12
PUMP & COUPLER E7
CARBURETOR E13
ENGINE AIR CLEANER E15
FUEL FILTER E16
IGNITION COIL, CABLES & DISTRIBUTOR DRIVE E17
DISTRIBUTOR E19–E21
ENGINE OIL PUMP E22
ENGINE OIL FILTER E23
ENGINE OIL GROUP E24

610 CONTENTS (Cont'd)

ACCESSORIES & OPTIONS **F3–I4**
ALTERNATOR KIT F3
AUXILIARY HYDRAULIC CONTROL KIT F5
AUXILIARY HYDRAULIC LINES F7
AUXILIARY HYDRAULIC SYSTEM F9
AXLE & BRAKE ASSEMBLY F11
AXLE SEAL KIT F13
BACK–UP ALARM F14
BRAKES F15
BRAKES & ATTACHING PARTS F17
CAB ENCLOSURE F18–F20
CARBURETOR (LPG) F21
CLOSED ALTERNATOR KIT F23
DECALS G1–G4
EXHIBITION COVER G5
FARR AIR CLEANER G5
FIRE EXTINGUISHER G7
FLASHER LIGHTS G8
FLOOR PANEL G9
FOLD AWAY DRAWBAR G10
HORN & CIRCUITRY G11
LIFT ARM STOPS G12
LIFT CYLINDER G13
LIFT HOOK G15
LIGHTS G17–G21
LP GAS GROUP G22
LP GAS TANK & ATTACHING PARTS G23
LPG VAPORIZER G24
MAIN FRAME AUXILIARY LINES H1
PULPWOOD LOADER & ATTACHING PARTS H3
SEAT BAR KIT H5
SOUND REDUCTION HARDHAT H7
STROBE LIGHT H8,H9
SPARK ARRESTOR H10
TILT CYLINDER H11
SPARK ARRESTOR MUFFLER H12
TIRE GUARD H13
VERTICAL FORKLIFT HYDRAULIC CIRCUITRY H14
VERTICAL FORKLIFT H15
VERTICAL MAST H17
WHITE SEAT H19
TIRES & RIMS H21
WINDSHIELD WIPER H23
BULK ITEMS **I1**
NUMERICAL INDEX **I3**

ALTERNATOR KIT

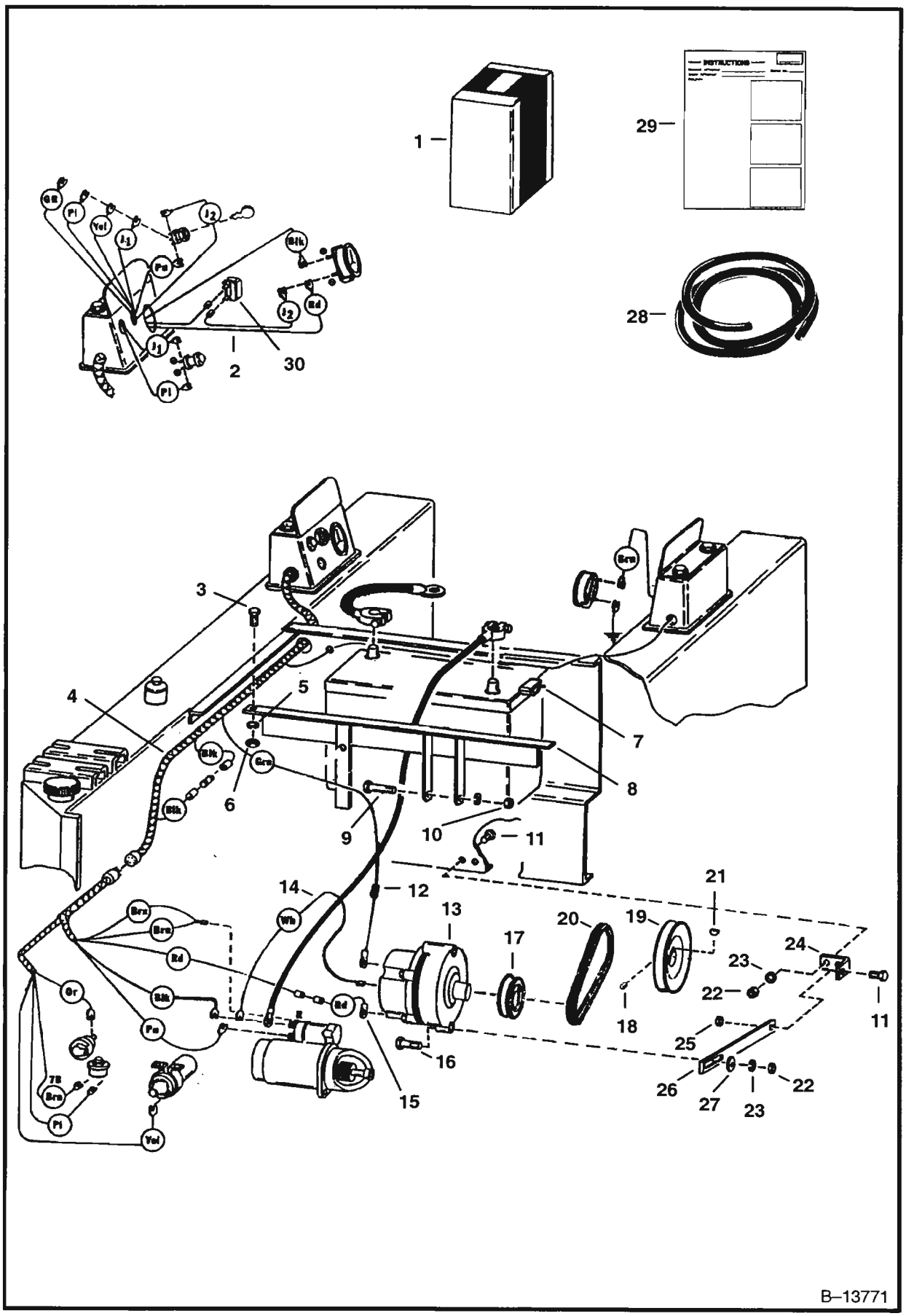

ALTERNATOR KIT (Cont'd)

Ref. No.	Part Number	Description	Remarks	Serial Number	Qty.
1	6506492	KIT			1
2	6509822	WIRE			2
3	17C–616	BOLT			4
4	6505456	HARNESS			1
5	23E–6	WASHER			4
6	61D–6	NUT			4
7	6502236	CLIP			2
8	6505265	BRACKET	mount		1
9	23C–648	BOLT			1
10	81D–6	NUT			1
11	17C–516	BOLT			3
12	3675725	DIODE			1
13	6654209	ALTERNATOR			1
14	6505458	WIRE			1
15	6505457	WIRE			1
16	17C–524	BOLT			1
17	1526880	PULLEY			1
18	15G–406	SET SCREW			1
19	6551201	PULLEY			1
20	6505371	BELT			1
21	5J–806	KEY			1
22	61D–5	NUT			2
23	23E–5	WASHER			2
24	6505241	BRACKET			1
25*	91D–5	NUT	Was 81D–5 [A]		1
26	6547125	TIGHTENER			1
27	25E–15	WASHER			1
28	755622	HOSE			1
29	6545917	INSTRUCTIONS			1
30	6519001	BREAKER			1

AUXILIARY HYDRAULIC CONTROL KIT
Frame Mounted – One Unit Control

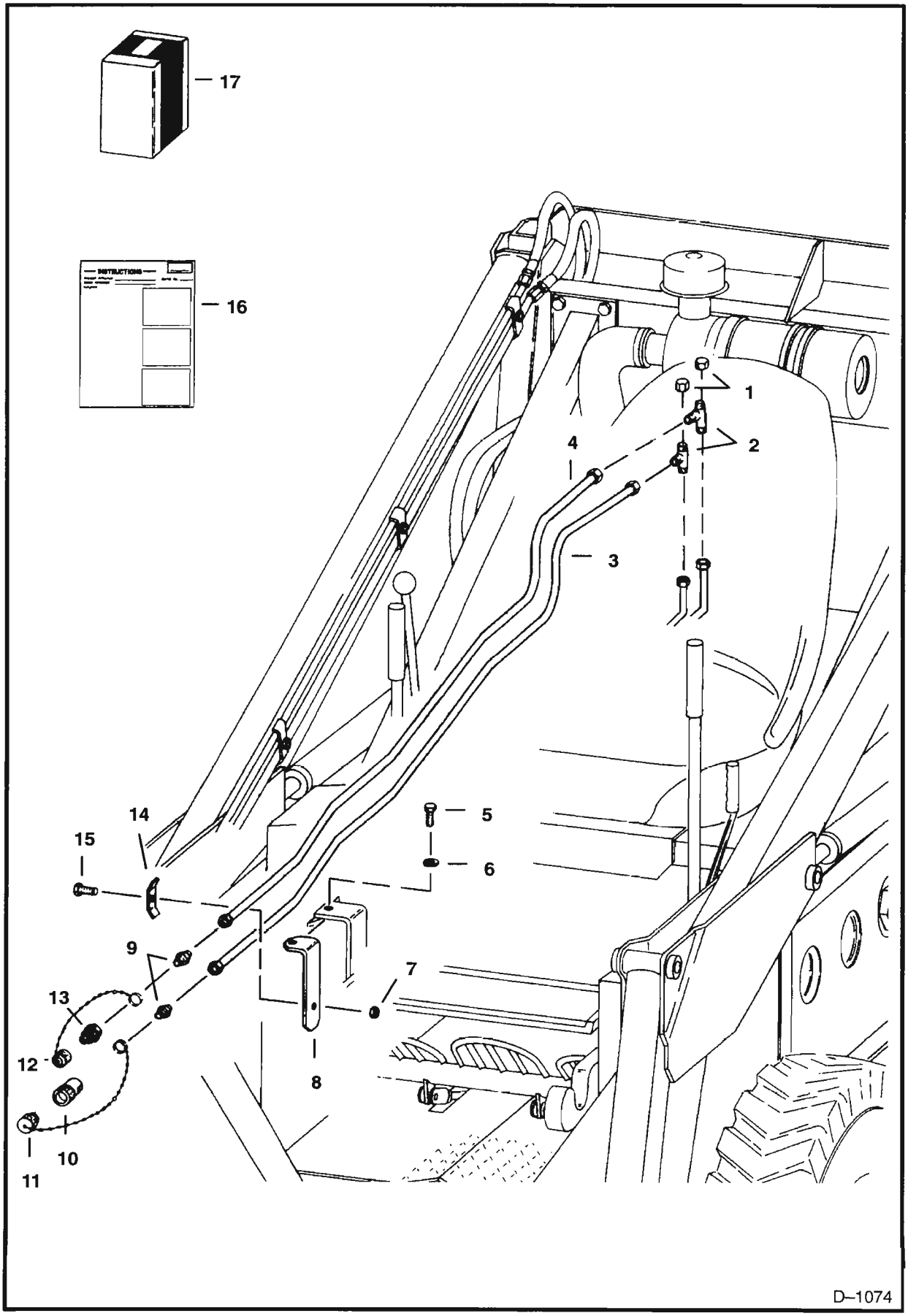

AUXILIARY HYDRAULIC CONTROL KIT (Cont'd)
Frame Mounted – One Unit Control

Ref. No.	Part Number	Description	Remarks	Serial Number	Qty.
1	36K–6	CAP			2
2	10K–6	TEE			2
3	6501294	TUBE			1
4	6501293	TUBE			1
5	17C–616	BOLT			1
6	25E–17	WASHER			1
7	81D–6	NUT			4
8	6546096	BRACKET			1
9	656598	ADAPTER			2
10	6598756	COUPLER	Female		1
	25K–40026	O–RING			1
11	6515168	CAP			1
12	6515167	PLUG			1
13	6598755	COUPLER	Male		1
14	6502203	CLAMP	tube		2
15	17C–620	BOLT			2
16	6545972	INSTRUCTIONS			1
17	NAP	KIT	frame mounted – Order Ref. 1 – 16		1

AUXILIARY HYDRAULIC LINES
Frame Mounted – Two Unit Control

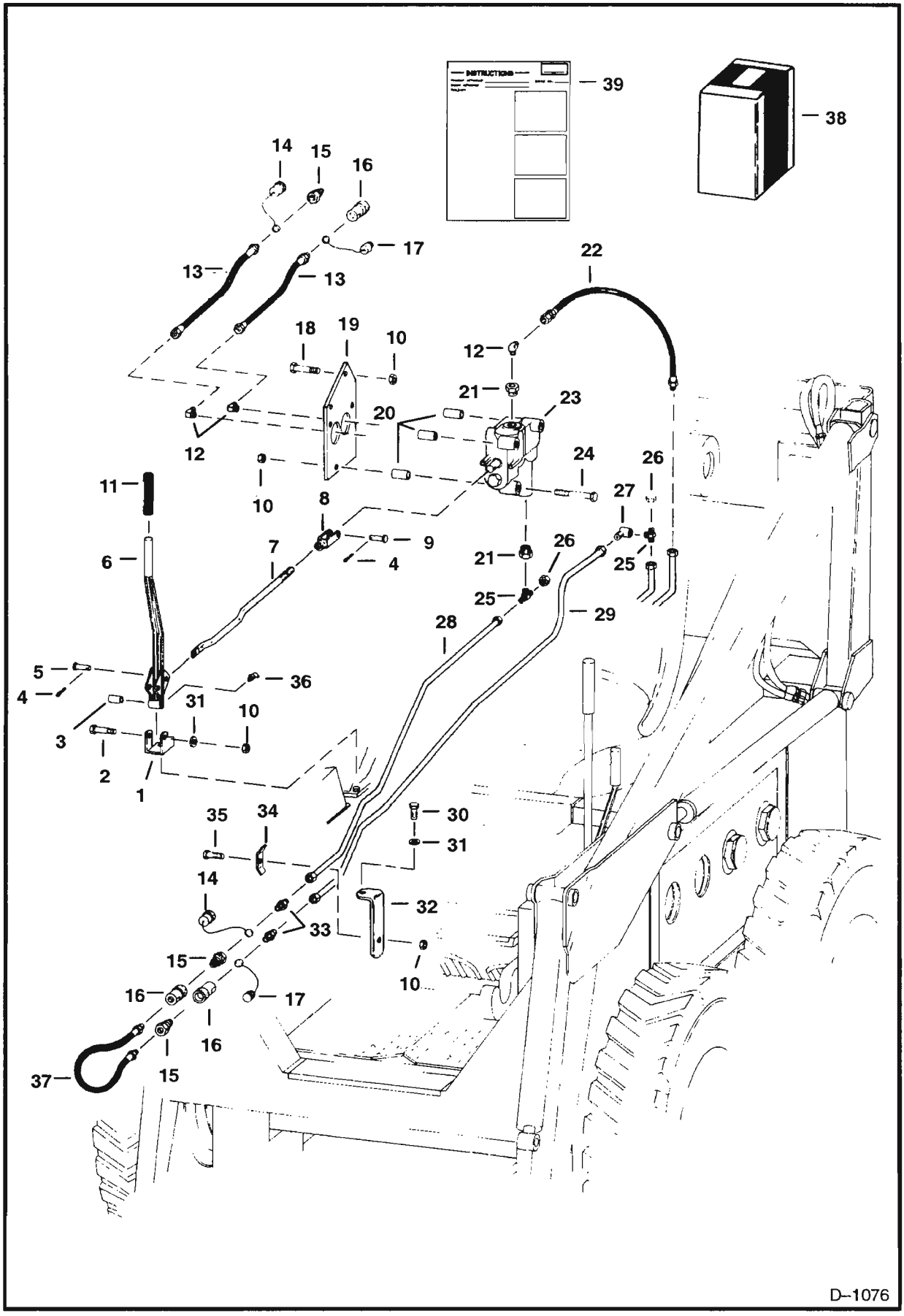

AUXILIARY HYDRAULIC LINES (Cont'd)
Frame Mounted – Two Unit Control

Ref. No.	Part Number	Description	Remarks	Serial Number	Qty.
1	6504677	BRACKET			1
2	17C–628	BOLT			1
3	6502638	BUSHING			1
4	1F–312	PIN			3
5	6505056	PIN			1
6*	NAP	LEVER	Was 6502865 [A]		1
7	6502772	ROD			1
8	6515635	YOKE			1
9	6505103	PIN			1
10	81D–6	NUT			11
11	6515109	GRIP			1
12	662487	ELBOW			3
13	1536934	HOSE			2
14	6515168	CAP			2
15	6598755	COUPLER	Male		2
16	6598756	COUPLER	Female		2
	25K–40026	O–RING			1
17	6515167	PLUG			2
18	17C–640	BOLT			2
19	6541297	BRACKET			1
20	6502564	SPACER			3
21	19F–9	ADAPTER			2
22	6563616	HOSE	Was 6501053 [A]		1
23	6504942	VALVE			1
24	17C–660	BOLT			3
25	6518605	TEE			2
26	36K–6	CAP			2
27	1310963	ELBOW			1
28	6501076	TUBE			1
29	6501293	TUBE			1
30	17C–616	BOLT			1
31	25E–17	WASHER			1
32	6546096	BRACKET			1
33	656598	ADAPTER			2
34	6502426	CLAMP			2
35	17C–620	BOLT			2
36	11H–25	GREASE ZERK			2
37	661558	HOSE			1
38	NAP	KIT	frame mounted – Order Ref. 10,		
	6548664	KIT	14 – 17, 28 – 33, 35 & 39 2 unit control – Ref. 1 – 27, 31, 36 & 37 – Frame Mounted		1 1
	6552443	KIT	aux. hydraulic control – Ref. 1 – 26, 30, 31, 33, 34, 36 & 37 – Page F10 – Ref. 1 – 16		 1
39	6545963	INSTRUCTIONS			1

AUXILIARY HYDRAULIC SYSTEM
Lift Arm Mounted – One Unit Control

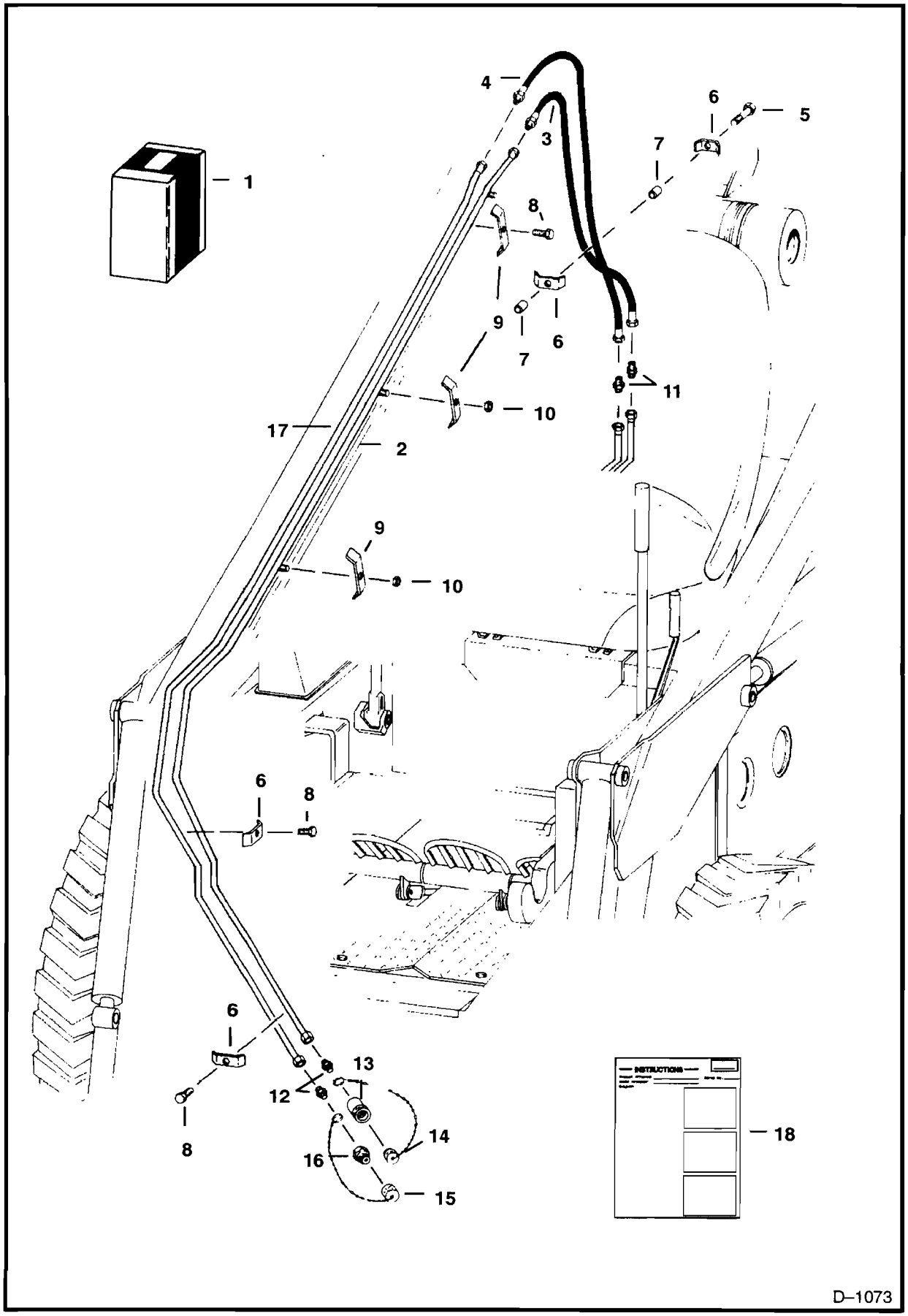

AUXILIARY HYDRAULIC SYSTEM (Cont'd)
Lift Arm Mounted – One Unit Control

Ref. No.	Part Number	Description	Remarks	Serial Number	Qty.
1	6548690	KIT	lift arm mounted – Ref. 1 – 18		1
2	6547483	TUBE			1
3	6555658	HOSE			1
4	6501297	HOSE			1
5	17C–640	BOLT			1
6	6502203	CLAMP			4
7	661877	SPACER			2
8	17C–616	BOLT			3
9	6502773	CLAMP			4
10	61D–6	NUT			5
11	87F–6	ADAPTER			2
12	656598	ADAPTER			2
13	6598756	COUPLER	Female		1
	25K–40026	O–RING			1
14	6515167	PLUG			1
15	6515168	CAP			1
16	6598755	COUPLER	Male		1
17	6547482	TUBE			1
18	6545973	INSTRUCTIONS			1

AXLE & BRAKE ASSEMBLY

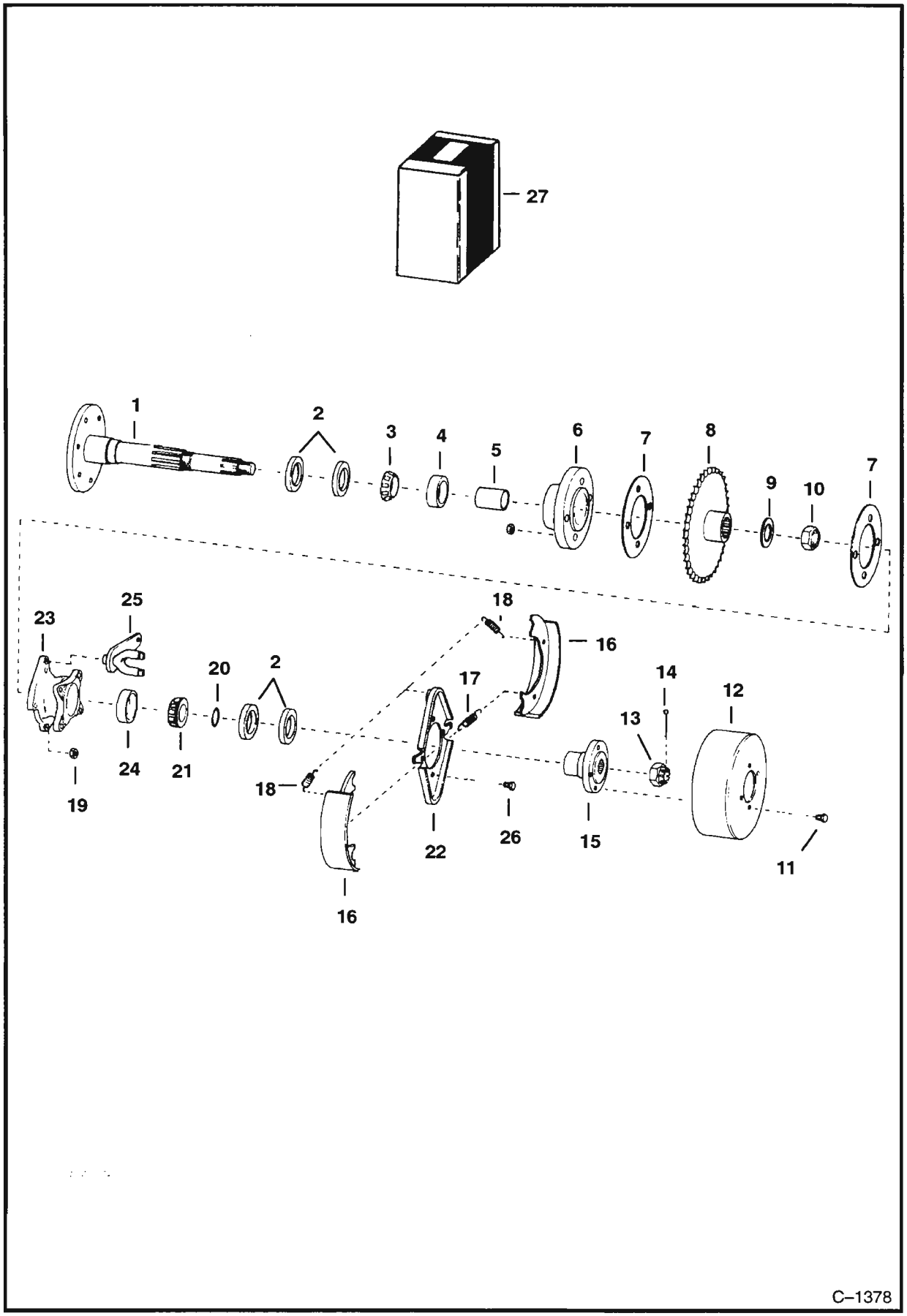

AXLE & BRAKE ASSEMBLY (Cont'd)

Ref. No.	Part Number	Description	Remarks	Serial Number	Qty.
1	6542555	AXLE	front		1
2	6515000	SEAL			4
3	6648774	BEARING	Was 743778 [A]		1
4	6648776	RACE	Was 743777 [A]		1
5	6502288	SPACER			1
6	6502533	HUB	outside		1
7	6502209	GASKET			2
8	6504794	SPROCKET			1
9	6503242	WASHER			1
10	6503241	NUT			1
11	17C–712	BOLT			4
12	6518098	DRUM	brake		1
13	4D–18	NUT	castle		1
14	1F–628	PIN			1
15	6503238	HUB			1
16	6516195	KIT	brake shoe – 2 Sets		1
17	6518095	SPRING	holding		1
18	6518094	SPRING	return		2
19	81D–8	NUT			8
20	980678	O–RING			1
	25K–40112	O–RING			1
21	1318538	BEARING		75649 & Above	1
	6519412	BEARING		75648 & Below	1
22	6516196	PLATE			1
23	6503235	HUB		75648 & Below	1
	NAP	HUB	Was 6542728 [A]	75649 & Above	1
24	1318539	RACE		75649 & Above	1
	6519413	RACE		75648 & Below	1
25	6546212	CAM	R.H.		1
	6546211	CAM	L.H.		1
	6501439	CAM		205535 & Below	1
26	17C–820	BOLT			4
27	6515745	KIT	brake shoe – Ref. 16 – 18 & 22		1

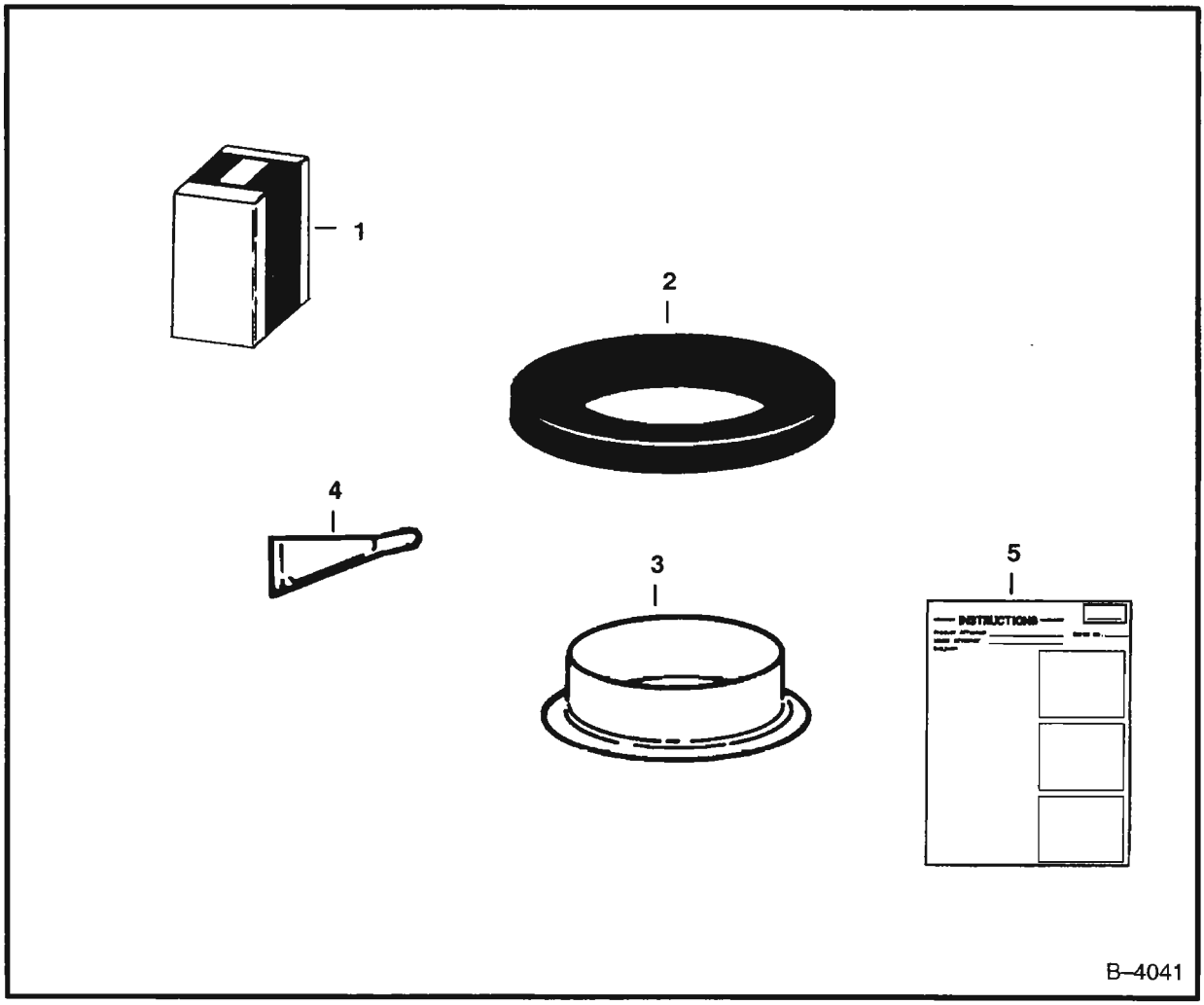

AXLE SEAL KIT

Ref. No.	Part Number	Description	Remarks	Serial Number	Qty.
1	6563442	KIT	Ref. 2 – 5		1
2	6515000	SEAL			2
3	6598484	SLEEVE			1
4	6598485	SEALANT			2
5	6566074	INSTRUCTIONS			1

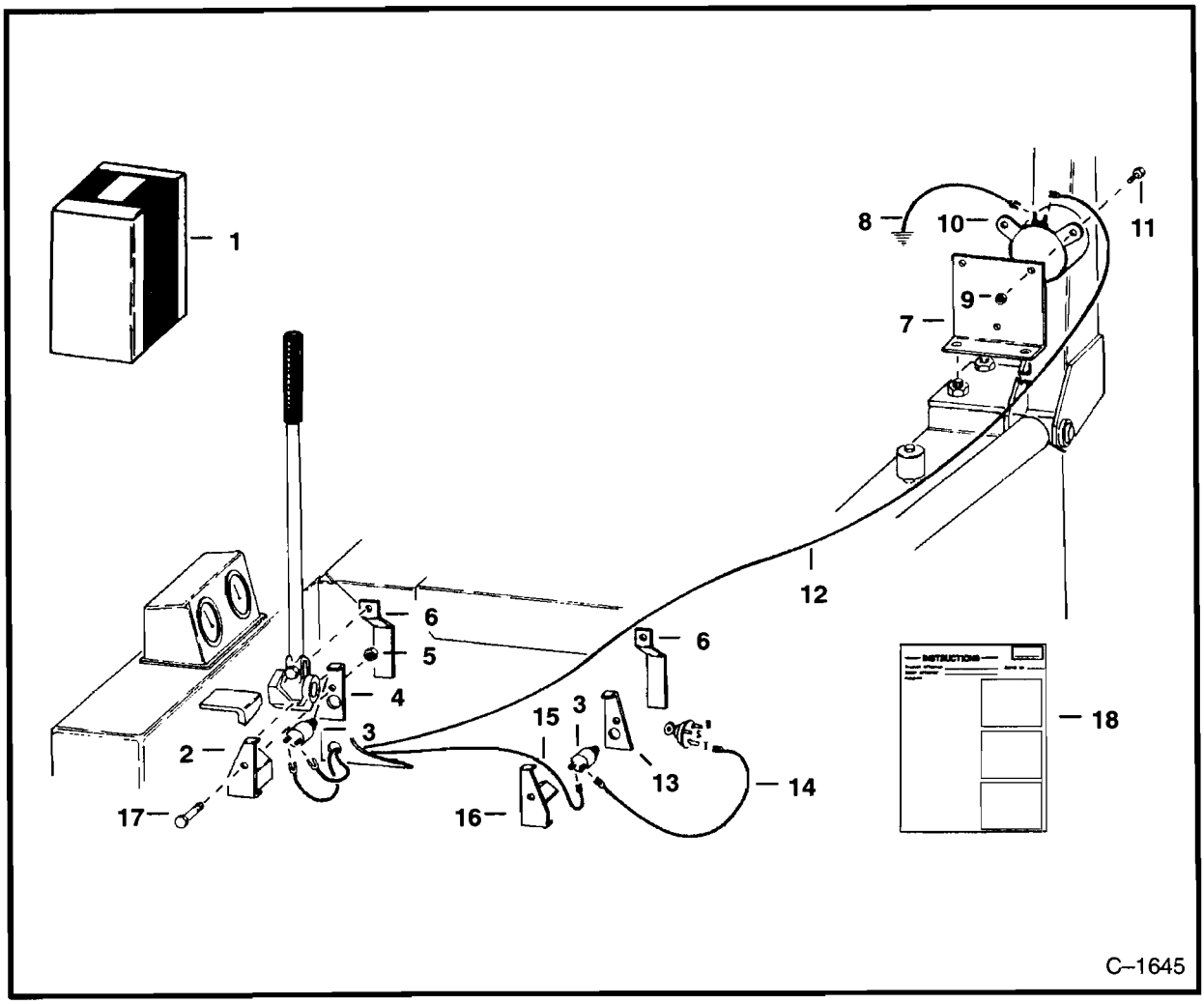

BACK–UP ALARM

Ref. No.	Part Number	Description	Remarks	Serial Number	Qty.
1	6548657	KIT	back–up alarm – Ref. 2 – 18		1
2	6541995	BRACKET			1
3	6632973	SWITCH	Was 600259 [A]		2
4	6541991	SUPPORT			1
5	42D–4	NUT			2
6	6541950	ACTUATOR			2
7	6542213	BRACKET			1
8	NAP	WIRE			1
9	61D–5	NUT			3
10	6640795	ALARM	Was 6519359 [A]		1
11	17C–512	BOLT			3
12	NAP	WIRE			1
13	6541993	SUPPORT			1
14	NAP	WIRE			1
15	NAP	WIRE			1
16	6541996	BRACKET			1
17	17C–448	BOLT			2
18	6545962	INSTRUCTIONS			1

For S/N 205535 & Below Order 6547224
Kit & Ref. 1 – 4, 7, 9, 10, 13, 14, 20, 21, 23 & 24 on Page F12.

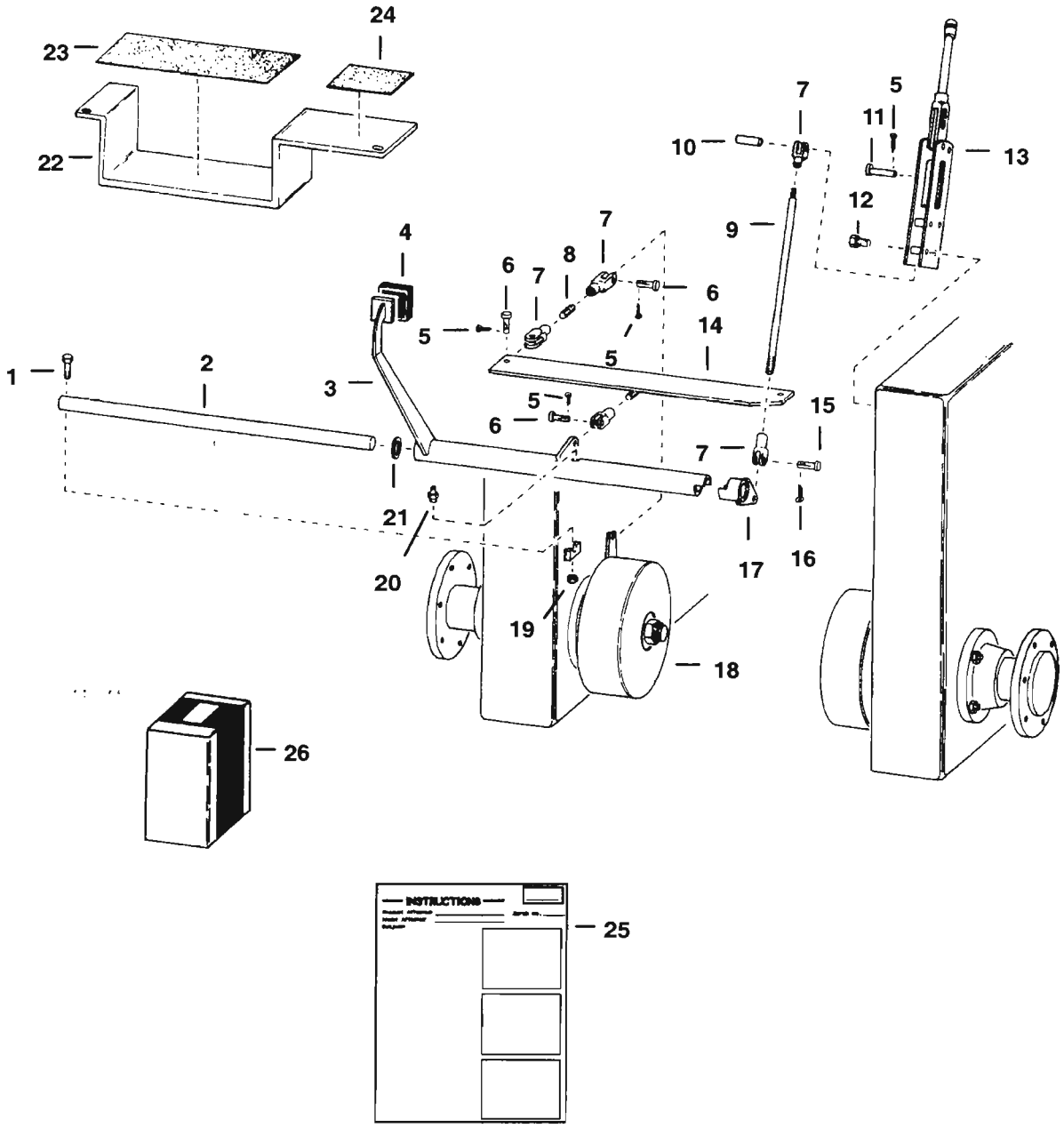

C–1536

Ref. No.	Part Number	Description	Remarks	Serial Number	Qty.
1	17C–524	BOLT			1
2	6502910	SHAFT			1
3	6544372	PEDAL			1
4	NAP	GRIP	Was 6518999 [A]		1
5	1F–412	PIN			6
6	663350	PIN			5
7	6508041	YOKE			6
8	6509653	ROD			2
9	6590765	ROD			1
10	6540106	BUSHING			2
11	980862	PIN			1
12	17C–528	BOLT			4
13	6519000	LEVER			1
14	6544374	BAR			1
15	2F–06106	PIN			1
16	1F–312	PIN			1
17	6544377	PIVOT			1
18		BRAKE ASSY.	See Page F12		2
19*	91D–5	NUT	Was 81D–5 [A]		1
20	11H–25	GREASE ZERK			1
21	25E–29	WASHER			x
22	6547472	GUARD			1
23	6547554	TREAD			1
24	6547555	TREAD			1
25	6545780	INSTRUCTIONS			1
26	NAP	BRAKE KIT	Order Ref. 1 – 9, 12 – 14, 16, 17, 19 – 21 & 23 – 25 – Pages F12 –		
			Ref. 11, 12, 15 – 19, 22 & 26 – Was 6547224 [A]	205536 & Above	1

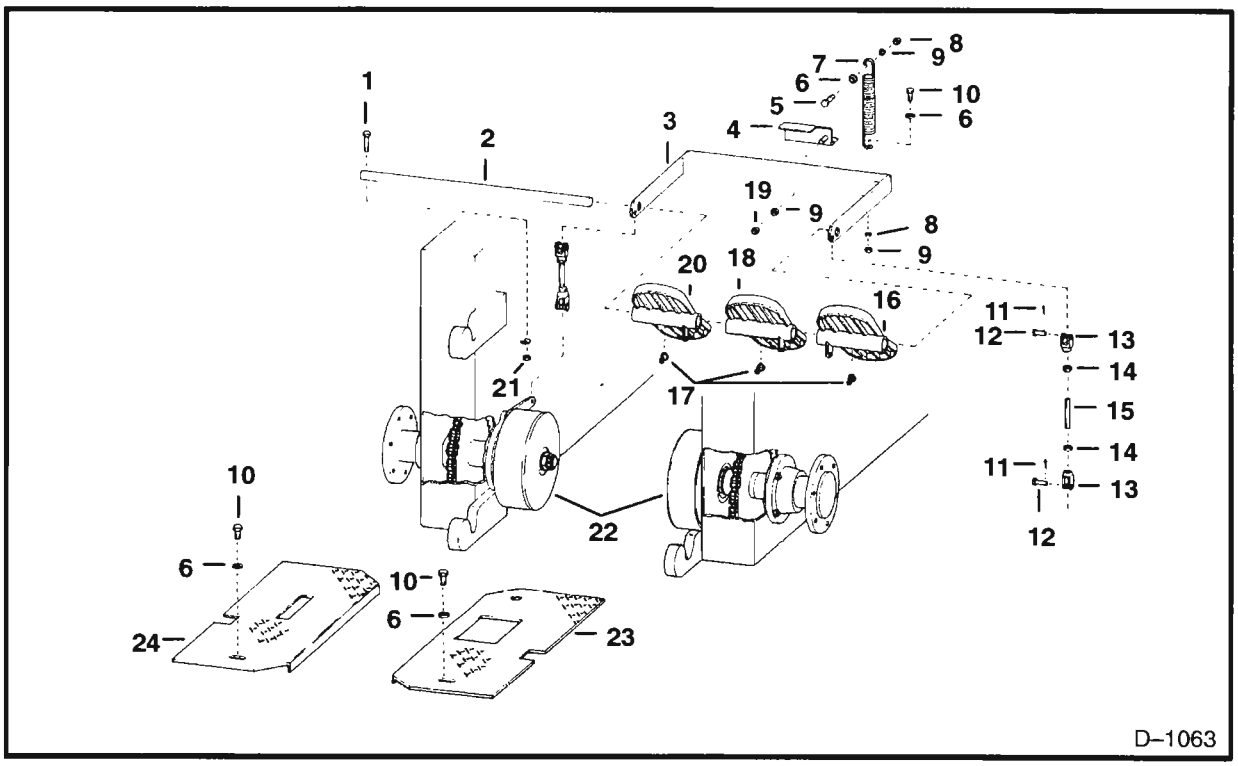

BRAKES & ATTACHING PARTS

Ref. No.	Part Number	Description	Remarks	Serial Number	Qty.
1	17C–524	BOLT			2
2	6502910	SHAFT			1
3	6501384	PEDAL			1
4	6501385	ARM			1
5	17C–620	BOLT			1
6	25E–17	WASHER			4
7	6503625	SPRING			1
8	61D–6	NUT			3
9	4E–6	WASHER			2
10	17C–612	BOLT			3
11	1F–412	PIN			2
12	663350	PIN			2
13	6508041	YOKE			2
14	8D–6	NUT			2
15	6503243	ROD			1
16	6503403	PEDAL			1
17	12H–15	GREASE ZERK			3
18	6502912	PEDAL			1
19	7D–6	NUT			1
20	6503402	PEDAL			1
21	81D–6	NUT			2
22		AXLE & BRAKE	assy. – See Page F12		1
23	6502983	PLATE	L.H.		1
24	6502923	PLATE	R.H.		1

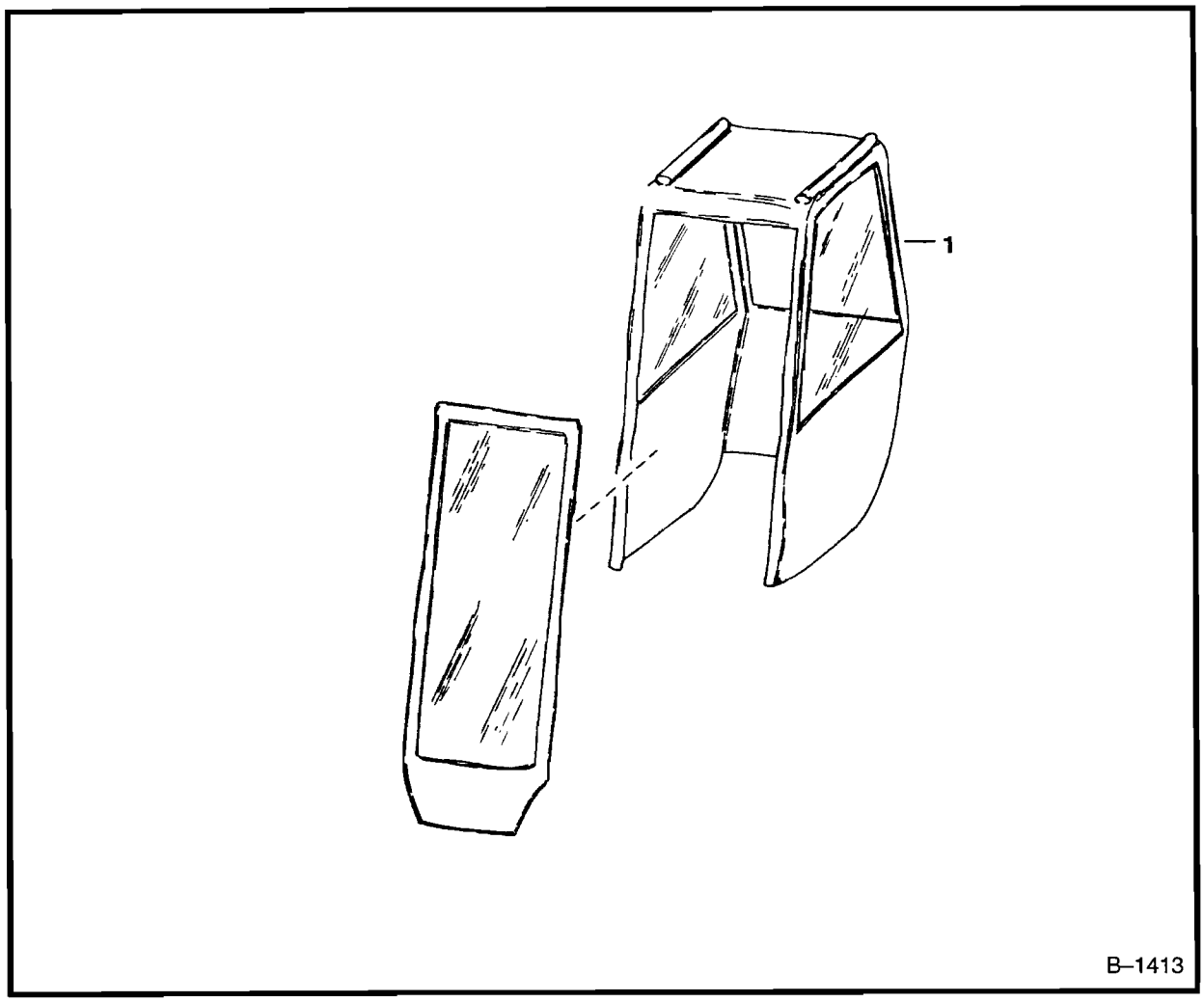

CAB ENCLOSURE
Canvas

Ref. No.	Part Number	Description	Remarks	Serial Number	Qty.
1	6599458	CAB			1

CAB ENCLOSURE

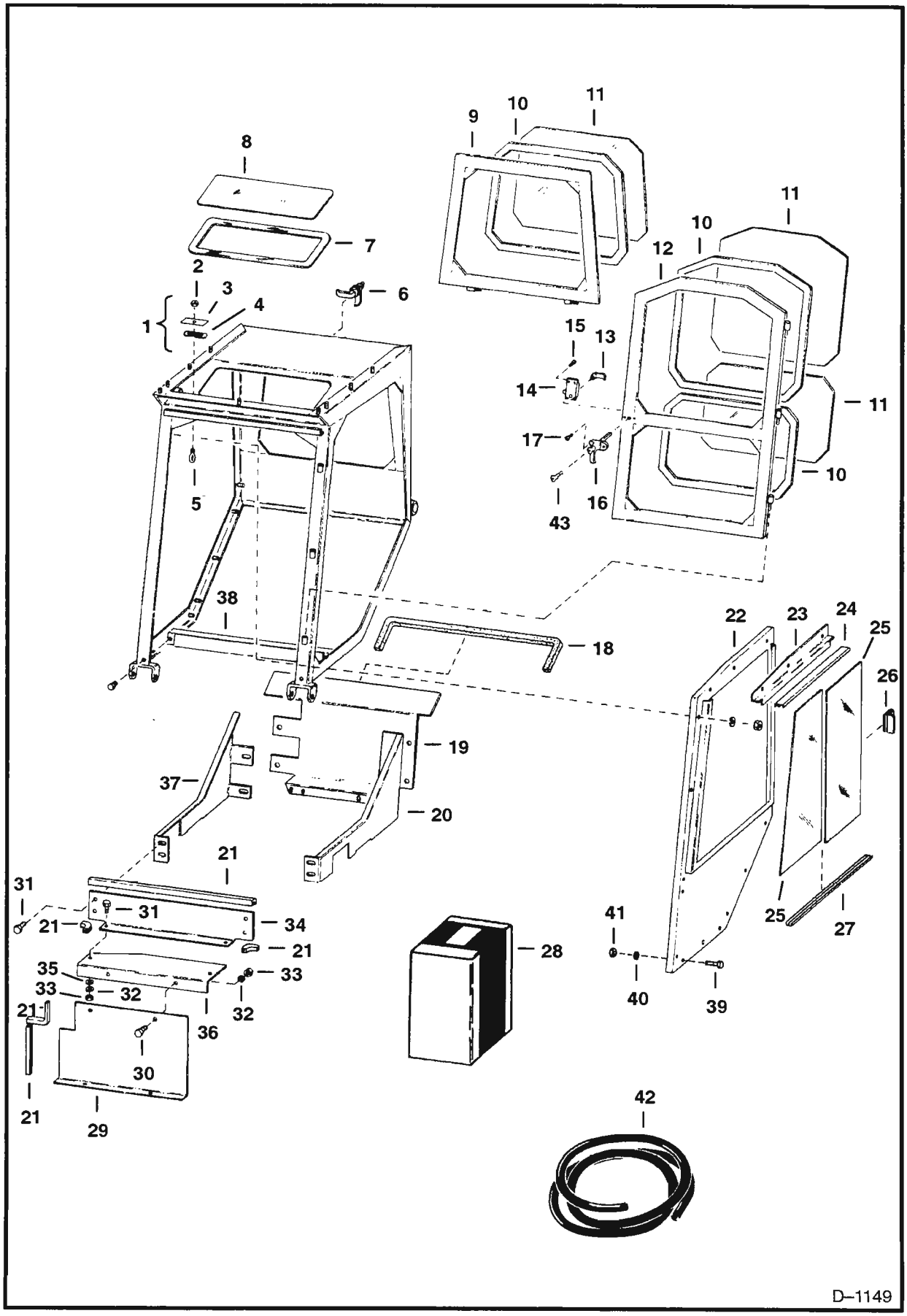

Ref. No.	Part Number	Description	Remarks	Serial Number	Qty.
1	6544497	SEAL	weather		1
2	81D–4	NUT			1
3	NSS	PLATE			1
4	NSS	STRIP			1
5	6544495	RING			1
6	6519179	LATCH			1
7	NAP	SEAL			1
8	NAP	WINDOW			1
9	6541451	FRAME	window		1
10	NAP	SEAL			1
11	NAP	WINDOW			1
12	6540685	FRAME	door		1
13	6515600	HANDLE			1
14	6598475	LATCH			1
15	59G–1208	BOLT			4
16	1550695	HANDLE			1
17	75G–1008	SCREW			2
18	NAP	SEAL			1
19	6542223	PANEL			1
20	6542285	PANEL			1
21	NAP	SEAL	Order Ref. 28		1
22	6541462	WINDOW ASSY.	R.H. – Ref. 22 – 27		1
	6541469	WINDOW ASSY.	L.H. – Ref. 22 – 27		1
23	6547558	BRACKET	R.H.		1
	6547559	BRACKET	L.H.		1
24	NAP	CHANNEL	Order 3' (914,4mm) of 6632565 – Was 6541505 [A]		1
25	NAP	WINDOW			1
26	6519421	HANDLE			2
27	NAP	CHANNEL	Order 38.6" (980,4mm) of 6632565 – Was 6541506 [A]		1
28	6519177	SEAL	bulk		1
29	6547192	PANEL		205536 & Above	1
30	17C–614	BOLT			4
31	17C–408	BOLT			8
32	4E–6	WASHER			4
33	61D–6	NUT			4
34	6547193	PANEL		205536 & Above	1
35	25E–17	WASHER			2
36	NAP	GUARD	Order 6547556 – See Page A14		1
37	6542284	PANEL	R.H.		1
38	6542259	BRACE			1
39	6560034	BOLT	New Cab		32
40	25E–18	WASHER	New Cab		32
41	81D–6	NUT	New Cab		32
42	6632565	CHANNEL	Bulk – sold Per Foot		x
43	6665409	KEY			1

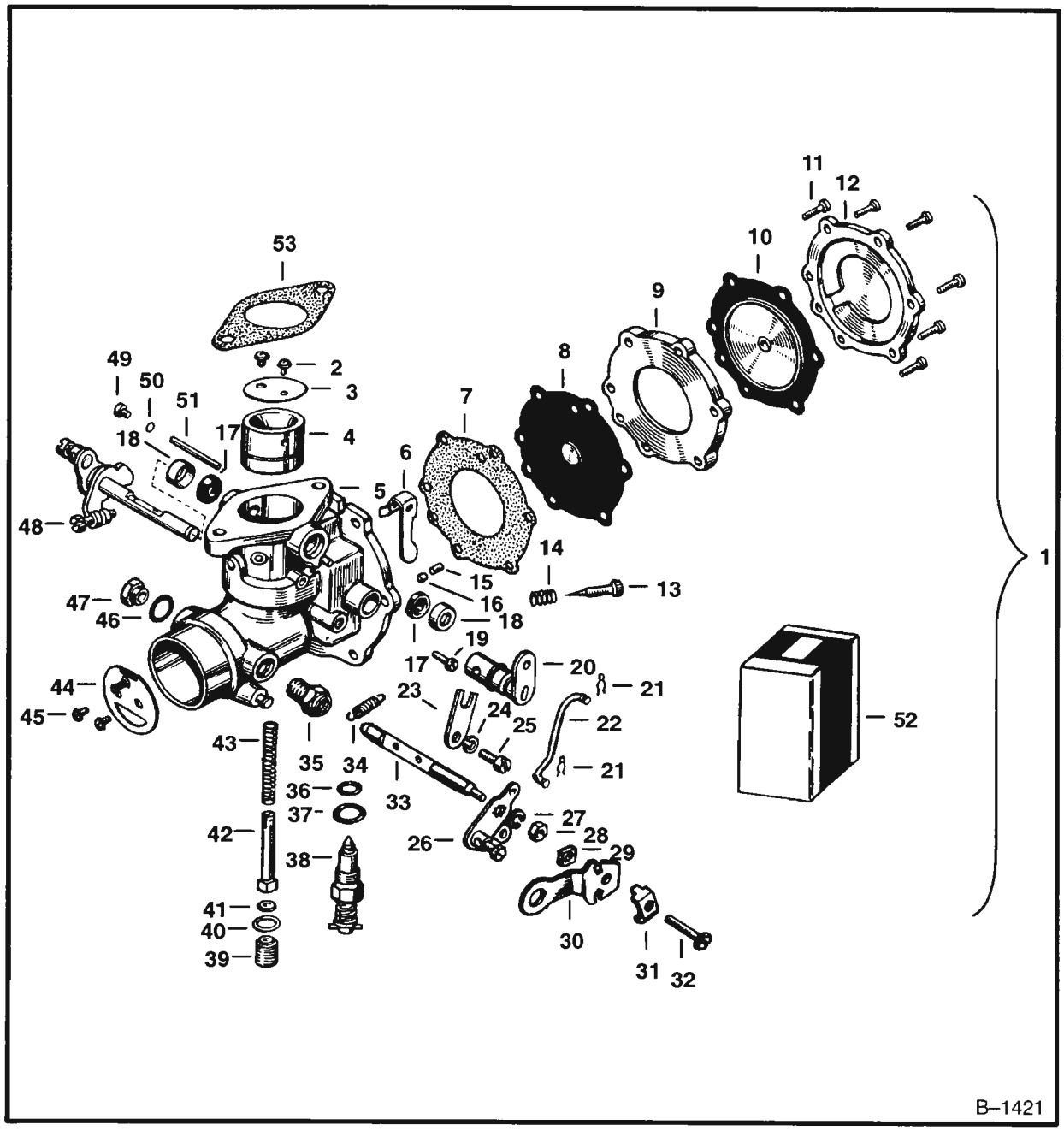

CARBURETOR (LPG)
Zenith No. GO–12720

Ref. No.	Part Number	Description	Remarks	Serial Number	Qty.
1	6519227	CARBURETOR	Ref. 2 – 51		1
2	NSS	SCREW			2
3	871545	PLATE	throttle		1
4	NAP	VENTURI			1
5	NAP	BODY			1
6	891060	LEVER			1
7	NSS	GASKET	inner		1
8	NSS	DIAPHRAGM	inner		1
9	891059	SPACER			1

CARBURETOR (LPG) (Cont'd)
Zenith No. GO–12720

Ref. No.	Part Number	Description	Remarks	Serial Number	Qty.
10	NSS	DIAPHRAGM	outer		1
11	68G–1016	SCREW			6
12	891058	COVER			1
13	NSS	NEEDLE			1
14	850011	SPRING			1
15	35G–803	SET SCREW			1
16	NSS	PLUG	nylon		1
17	NSS	SEAL	rubber		2
18	NSS	RETAINER	seal		2
19	NAP	SCREW			1
20	NAP	VALVE			1
21	NSS	COTTER PIN			2
22*	NAP	ROD	Was 6519223 [A]		1
23	NAP	RETAINER			1
24	17E–6	WASHER			1
25	NAP	SCREW			1
26	6519224	LEVER			1
27	17E–10	WASHER			1
28	14D–8	NUT			1
29	NSS	NUT			1
30	882634	BRACKET	W/Ref. 29, 31 & 32		1
31	647359	CLIP	bracket		1
32	42G–1016	SCREW			1
33	877886	SHAFT			1
34	6644952	SPRING	Was 850032 [A]		1
35	NAP	SCREW			1
36	NSS	O–RING			1
37	NSS	WASHER			1
38	6519220	JET ADJ.	W/Ref. 36		1
39	882623	ORIFICE	inlet		1
40	NSS	O–RING			1
41	NSS	DISC	valve		1
42	6517246	VALVE	fuel – W/Ref. 41		1
43	891057	SPRING	valve		1
44	NAP	PLATE	choke – Was 6519225 [A]		1
45	NSS	SCREW			2
46	NSS	WASHER			1
47	852279	PLUG			1
48	6519219	SHAFT LEVER			1
49	882635	PLUG			1
50	NSS	WASHER			1
51	NSS	AXLE			1
52	999041	REPAIR KIT	Ref. 2, 7, 8, 10, 13, 16 – 18, 21, 36, 37, 40, 41, 46, 50 & 51		1
53	6516398	GASKET			1

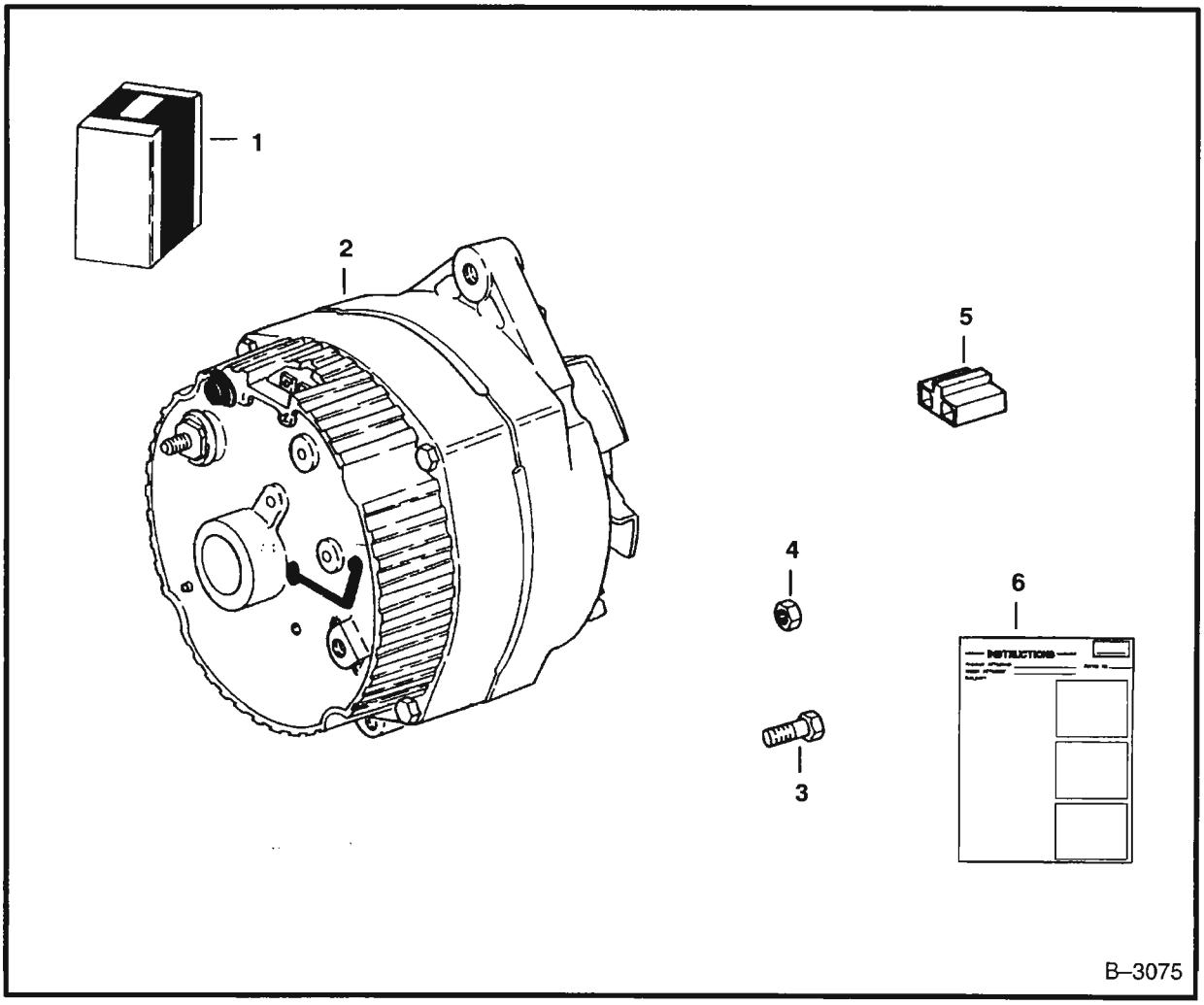

CLOSED ALTERNATOR KIT
S/N 17180 & Above

Ref. No.	Part Number	Description	Remarks	Serial Number	Qty.
1	NAP	KIT	Order Ref. 2 – 6		1
2	6599740	ALTERNATOR			1
3	4CM–825	BOLT			1
4	33DM–60	NUT			1
5	6510596	CONNECTOR			1
6	6556415	INSTRUCTIONS			1

Melroe Hydraulic/Hydrostatic Fluid
is blended to our specifications
to meet or exceed requirements of our components.

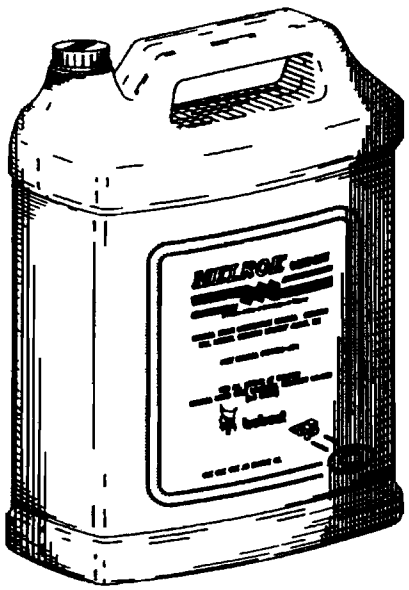

Available from Melroe Parts.

MELROE
INGERSOLL-RAND

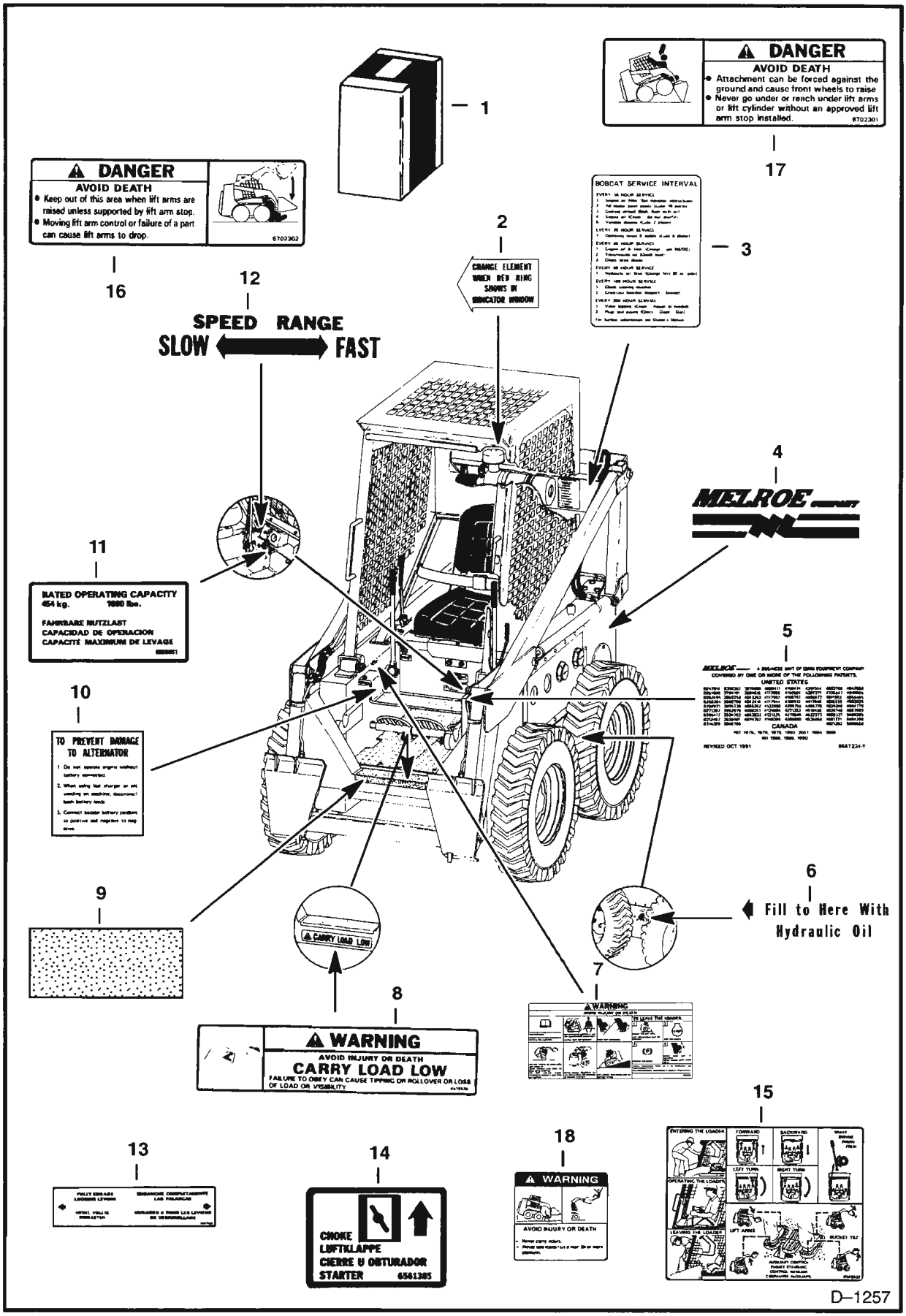
1
DANGER
AVOID DEATH
• Attachment can be forced against the ground and cause front wheels to raise
• Never go under or reach under lift arms or lift cylinder without an approved lift arm stop installed.
6702301
17
DANGER
AVOID DEATH
• Keep out of this area when lift arms are raised unless supported by lift arm stop.
• Moving lift arm control or failure of a part can cause lift arms to drop.
6702302
16
BOBCAT SERVICE INTERVAL
3
2
CHANGE ELEMENT WHEN RED RING SHOWS IN INDICATOR WINDOW
12
SPEED RANGE
SLOW FAST
4
MELROE
11
RATED OPERATING CAPACITY
454 kg. 1000 lbs.
FAHRBARE NUTZLAST
CAPACIDAD DE OPERACION
CAPACITÉ MAXIMUM DE LEVAGE
5
UNITED STATES
CANADA
10
TO PREVENT DAMAGE TO ALTERNATOR
6
Fill to Here With Hydraulic Oil
9
CARRY LOAD LOW
8
WARNING
AVOID INJURY OR DEATH
CARRY LOAD LOW
FAILURE TO OBEY CAN CAUSE TIPPING OR ROLLOVER OR LOSS OF LOAD OR VISIBILITY
7
WARNING
15
13
14
CHOKE
LUFTKLAPPE
CIERRE U OBTURADOR
STARTER
6561385
18
WARNING
AVOID INJURY OR DEATH
D–1257

Ref. No.	Part Number	Description	Remarks	Serial Number	Qty.
1	6567806	KIT	decal – Ref. 2 – 18 & on Page G4, Ref. 2 – 14		1
2	6504372	DECAL	air filter		1
3	6502734	DECAL	service		1
4	6569849	DECAL	Melroe Logo		2
5	6557224	DECAL	patent		1
6	6546265	DECAL	hydraulic oil		1
7	6702265	DECAL	operator cab – Was 6509185 [A]		1
8	6579528	DECAL	carry load low – Was 6565254 [A]		1
9	6502459	SAFETY TREAD			2
10	6504373	DECAL	alternator		1
11	6558951	DECAL	load capacity		1
12	6502774	DECAL	speed lever		1
13	6561383	DECAL	Bob–Tach		1
14	6561385	DECAL	choke		1
15	6569022	DECAL	operations		1
16	6579509	DECAL	danger		1
17	6579639	DECAL	danger		1
18	6710358	DECAL	warning		1

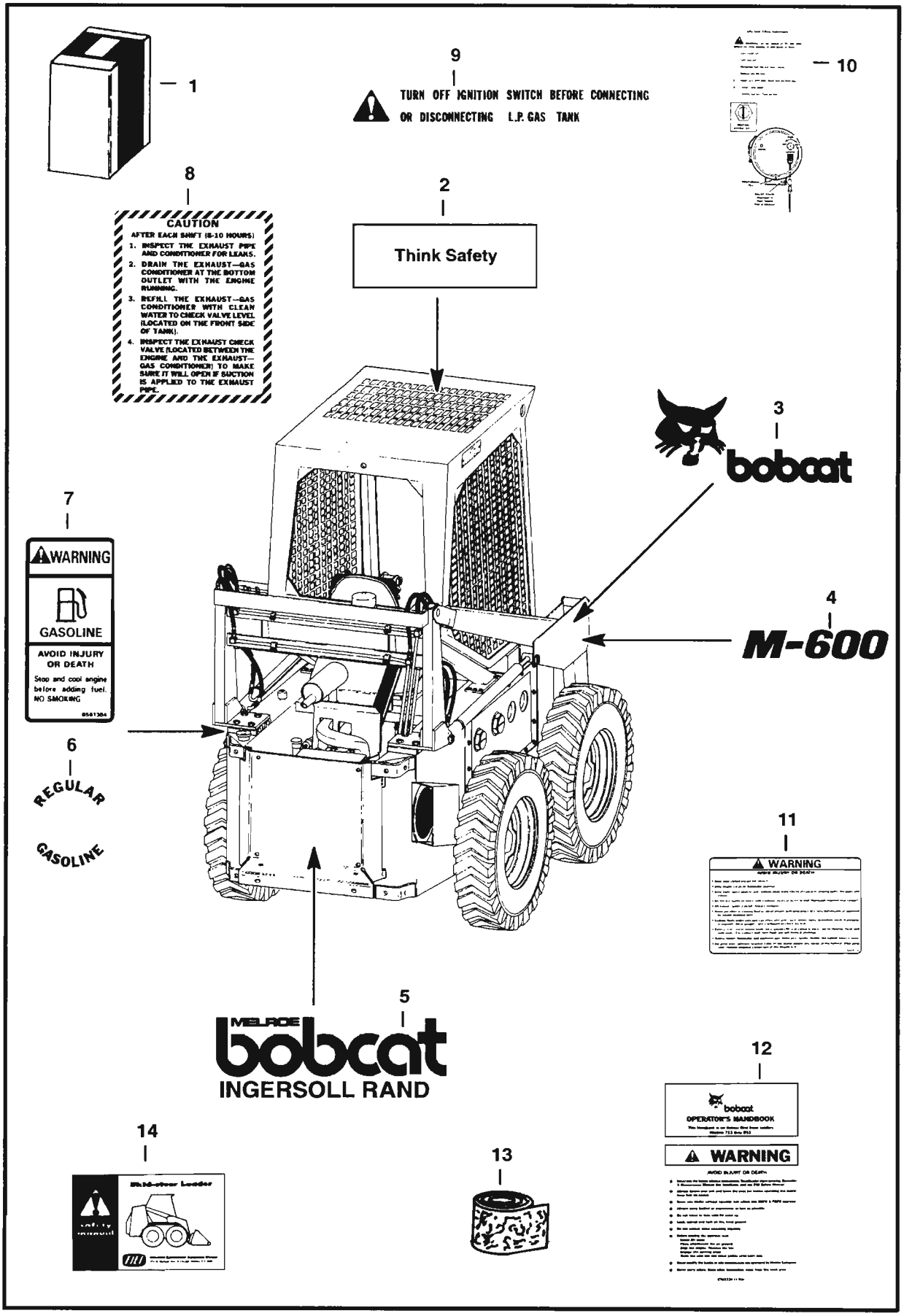
1
9
TURN OFF IGNITION SWITCH BEFORE CONNECTING OR DISCONNECTING L.P. GAS TANK
10
8
CAUTION
AFTER EACH SHIFT (8-10 HOURS)
1. INSPECT THE EXHAUST PIPE AND CONDITIONER FOR LEAKS.
2. DRAIN THE EXHAUST—GAS CONDITIONER AT THE BOTTOM OUTLET WITH THE ENGINE RUNNING.
3. REFILL THE EXHAUST—GAS CONDITIONER WITH CLEAN WATER TO CHECK VALVE LEVEL (LOCATED ON THE FRONT SIDE OF TANK).
4. INSPECT THE EXHAUST CHECK VALVE (LOCATED BETWEEN THE ENGINE AND THE EXHAUST—GAS CONDITIONER) TO MAKE SURE IT WILL OPEN IF SUCTION IS APPLIED TO THE EXHAUST PIPE.
2
Think Safety
3
bobcat
4
M-600
7
WARNING
GASOLINE
AVOID INJURY OR DEATH
Stop and cool engine before adding fuel. NO SMOKING
6
REGULAR
GASOLINE
11
WARNING
5
MELROE
bobcat
INGERSOLL RAND
12
bobcat
OPERATOR'S HANDBOOK
WARNING
14
13

Ref. No.	Part Number	Description	Remarks	Serial Number	Qty.
1	6567806	KIT	decal – Ref. 2 – 14 & on Page G2, Ref. 2 – 17		1
2	6568905	DECAL	warning – Was 6564844 [A]		1
3	6557412	DECAL	Bobcat – R.H.		1
	6557413	DECAL	Bobcat – L.H.		1
4	6558169	DECAL	610		2
5	6711327	DECAL	logo – Was 6563382 [A]		1
6	6504374	DECAL	gasoline		1
7	6561384	DECAL	gasoline		1
8	6503572	DECAL	caution		1
9	6509739	DECAL	LP gas		1
10	6555236	DECAL	LPG filter		1
11	6579511	DECAL	warning – Was 6565980 [A]		1
12	6567623	KIT	handbook		1
	6558309	WIRE ROPE	33"(838,2mm) long – Bulk – Sold Per Foot – Also Order (2) 6558310 Sleeve – Was 6558305 [A]		x
	6558310	SLEEVE			2
*	NAP	LOOP	scotchmate – Was 6630380 [A]		1
*	NAP	HOOK	scotchmate – Was 6630381 [A]		1
13	6555985	SAFETY TREAD	Bulk 24" x 10' (609,6mm x 3048mm)		x
14	6556500	MANUAL	safety		1

FARR AIR CLEANER

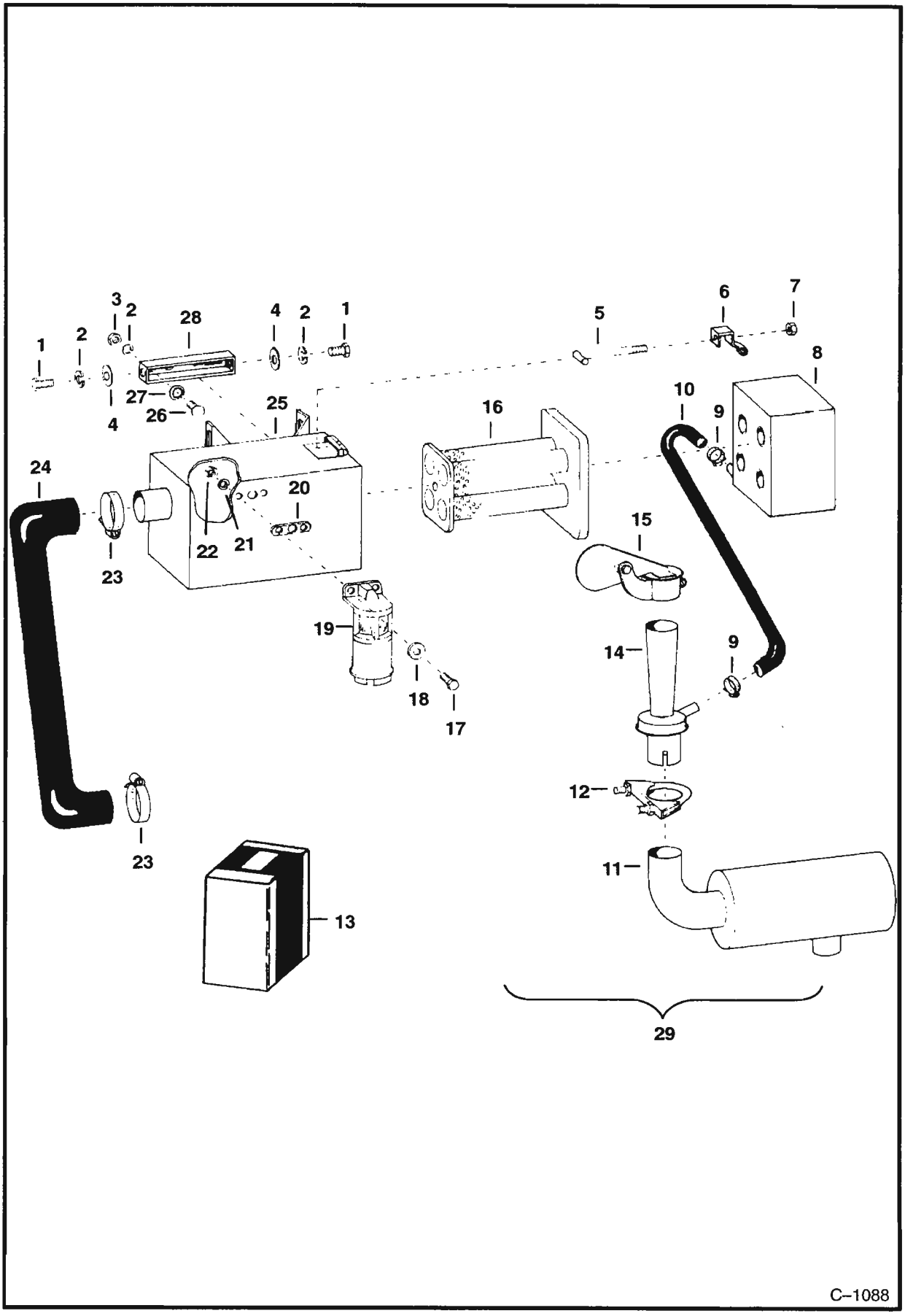

FARR AIR CLEANER (Cont'd)

Ref. No.	Part Number	Description	Remarks	Serial Number	Qty.
1	17C–612	BOLT			4
2	4E–6	WASHER			8
3	61D–6	NUT			4
4	25E–17	WASHER			4
5	6511961	ROD			2
6	NAP	CLAMP			2
7	6511296	NUT			2
8	6515025	PRE–CLEANER			1
9	42H–12	CLAMP			2
10	6503214	HOSE			1
11	6515470	MUFFLER			1
12	659179	CLAMP			1
13	6515557	AIR CLEANER	assy. – Ref. 1 – 8, 16 – 22 & 26 – 29		1
14	6515556	ASPIRATOR			1
15	6515601	CAP			1
16	6515017	ELEMENT			1
17	17C–412	BOLT			2
18	791837	WASHER			2
19	6515021	INDICATOR	condition		1
20	6515022	GASKET			1
21	4E–4	WASHER			2
22	61D–4	NUT			2
23	42H–32	CLAMP			2
24	6502957	HOSE			1
25	6515024	HOUSING			1
26	7C–616	BOLT	carriage		4
27	6E–8	WASHER			4
28	6515036	CHANNEL			2
29	6548650	AIR CLEANER	assy – Ref. 9 – 15		1

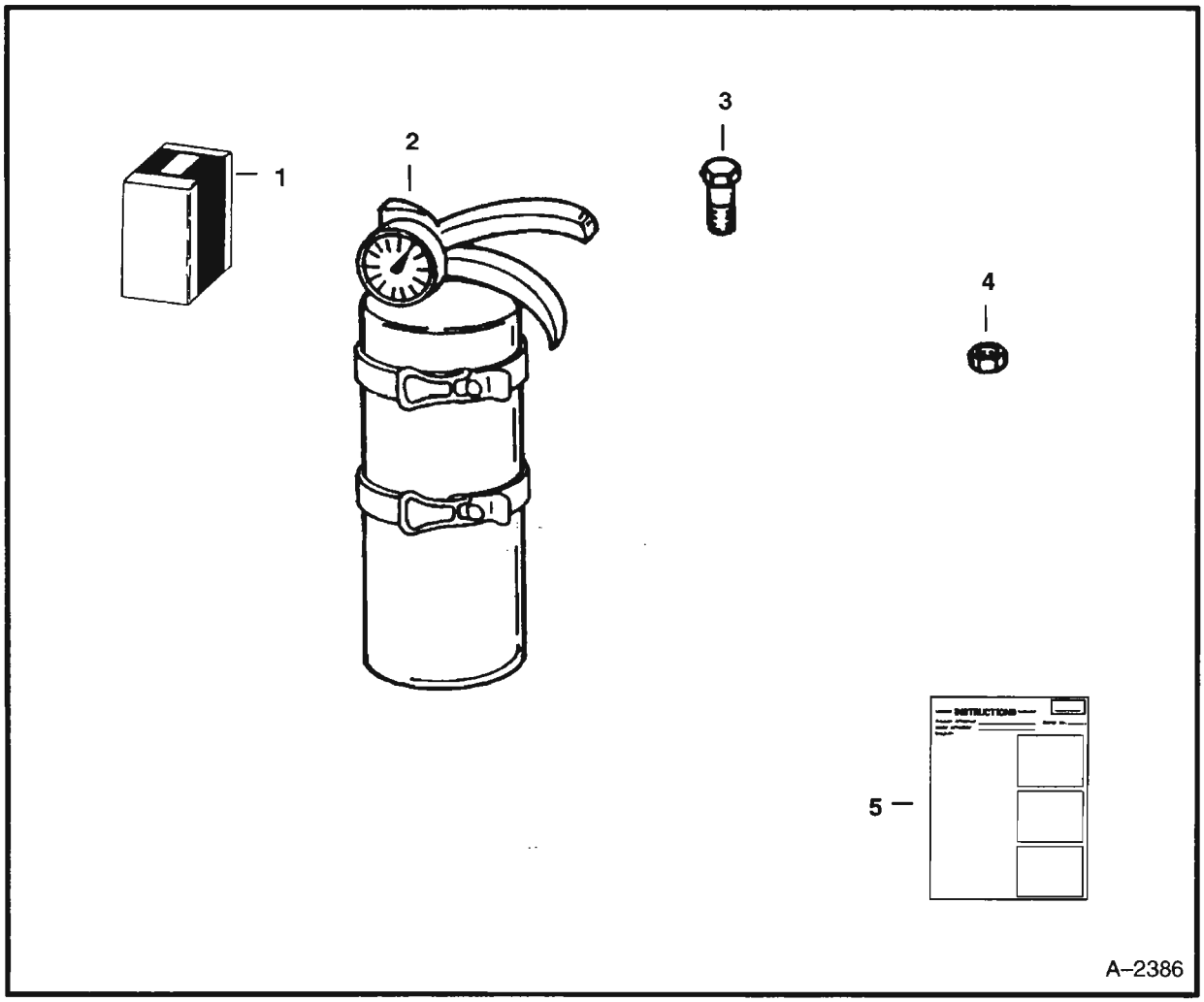

FIRE EXTINGUISHER

Ref. No.	Part Number	Description	Remarks	Serial Number	Qty.
1	6554806	KIT	fire extinguisher – Ref. 2 – 5		1
2	6599700	EXTINGUISHER	fire		1
3	17C–408	BOLT			4
4	61D–4	NUT			4
5	6549857	INSTRUCTIONS			1

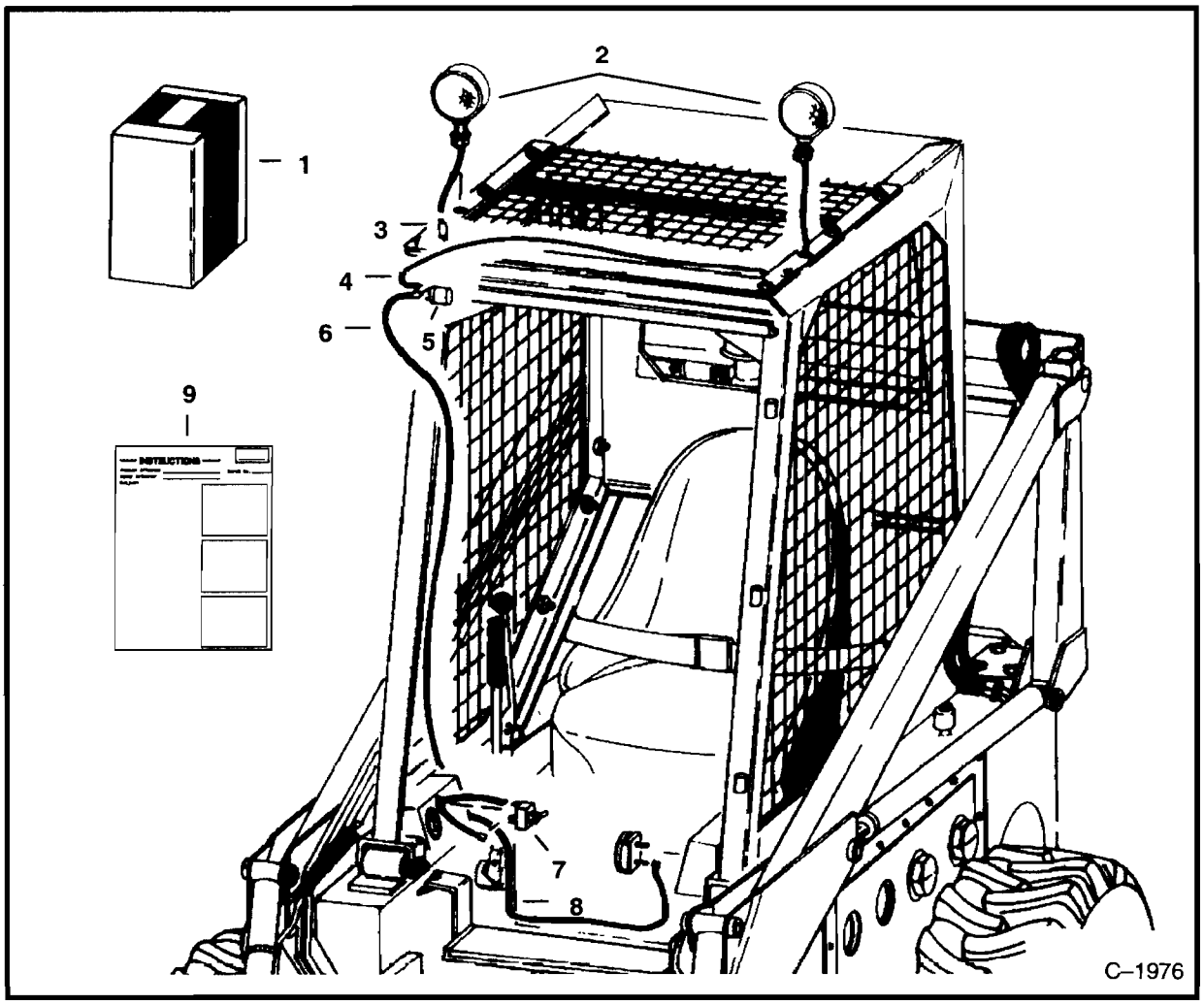

FLASHER LIGHTS

Ref. No.	Part Number	Description	Remarks	Serial Number	Qty.
1	NAP	KIT	flasher light – Order Ref. 1 – 9		1
2	6517516	LIGHT	flasher – Was 6557903 [A]		2
	6517517	LENS			2
	NAP	BULB			1
3	6517819	CONNECTOR			2
4	NAP	WIRE			1
5	6557904	FLASHER			1
6	NAP	WIRE			1
7	6515521	SWITCH	toggle		1
8	NAP	WIRE			1
9	6545968	INSTRUCTIONS			1

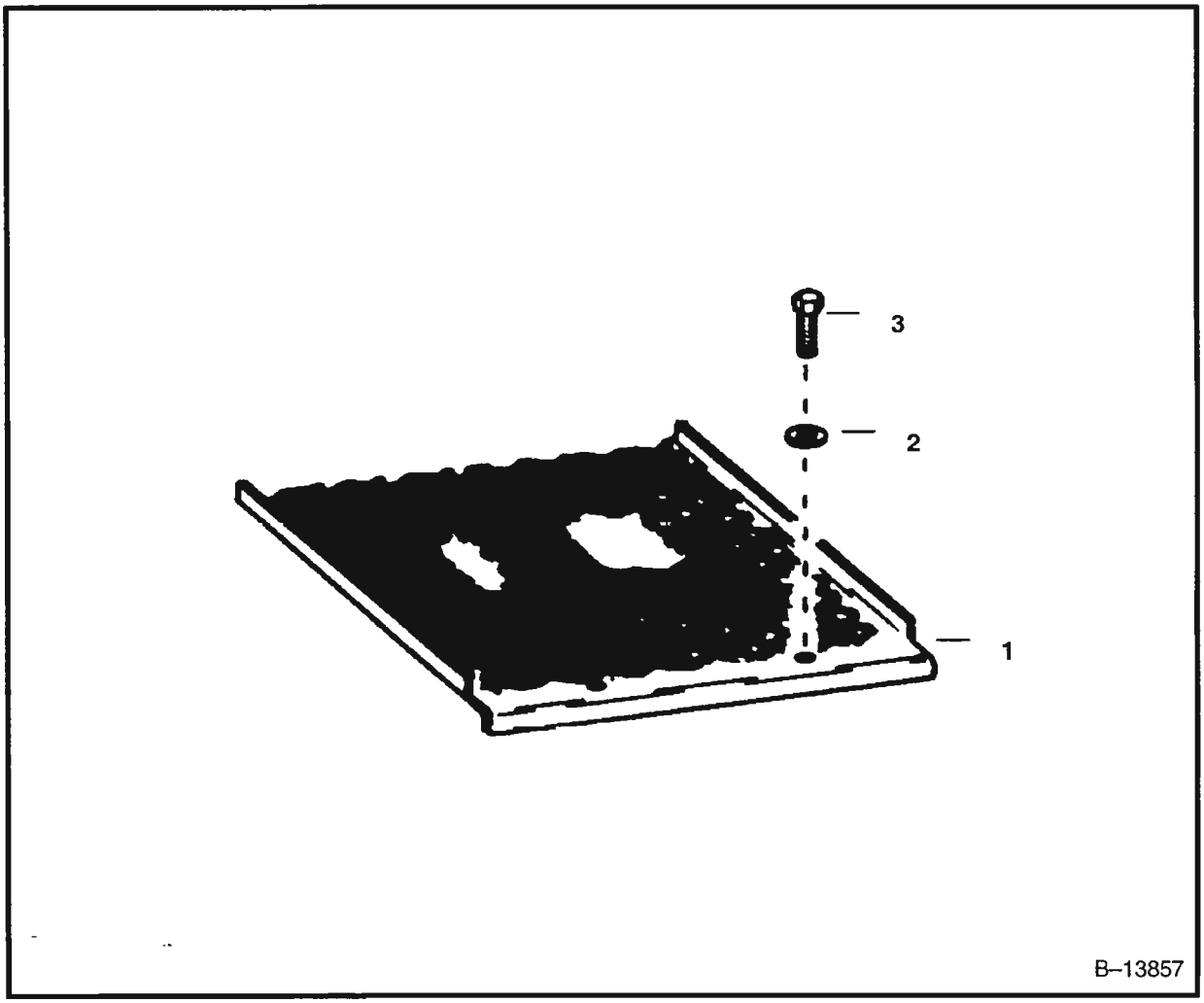

FLOOR PANEL

Ref. No.	Part Number	Description	Remarks	Serial Number	Qty.
1	6505370	PANEL			1
2	25E–17	WASHER			2
3	17C–624	BOLT			2

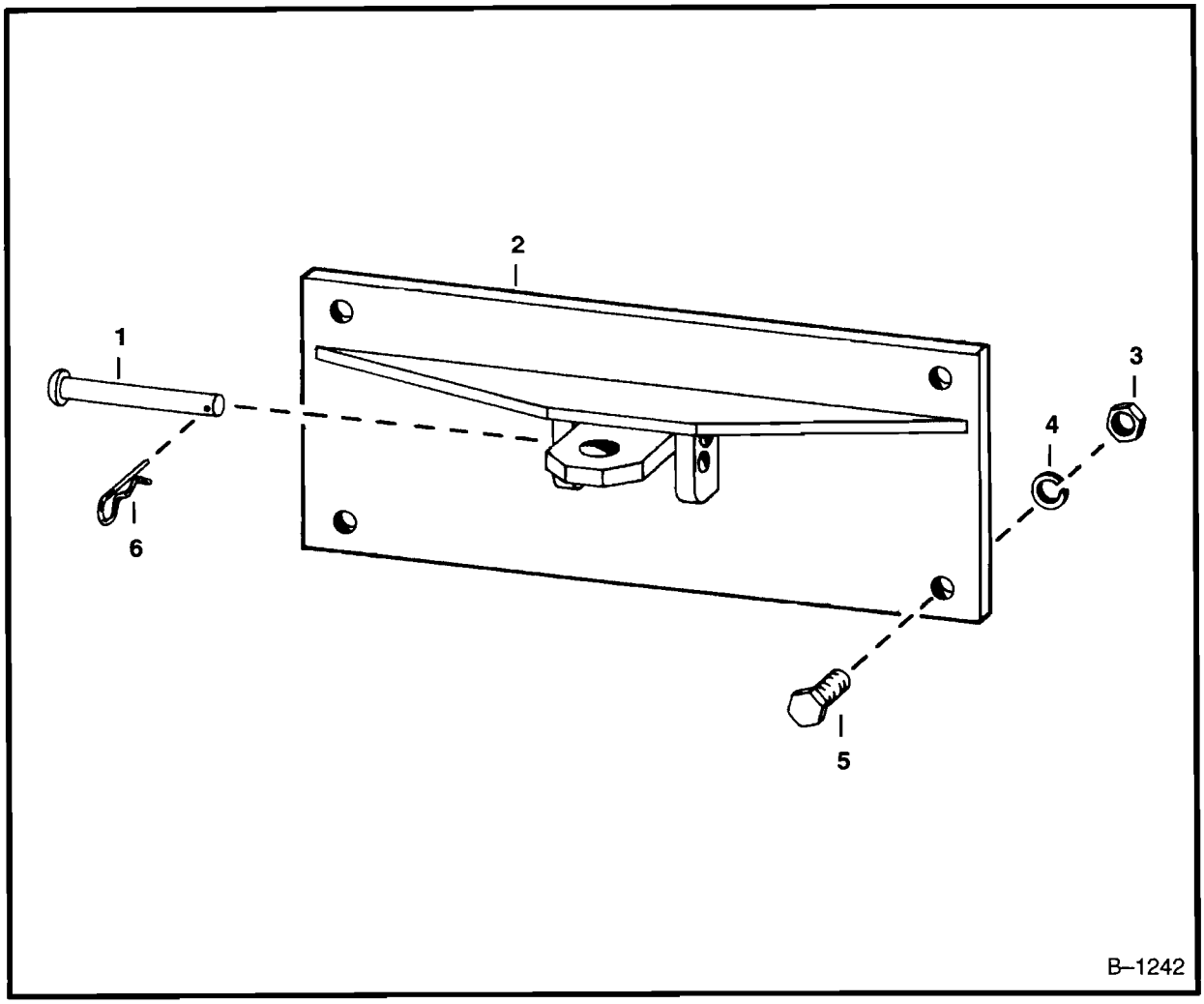

FOLD AWAY DRAWBAR

Ref. No.	Part Number	Description	Remarks	Serial Number	Qty.
1	6505053	PIN			1
2	6504731	DRAWBAR	Ref. 1 & 3 – 6		1
3	61D–10	NUT			4
4	4E–10	WASHER			4
5	17C–1024	BOLT			4
6	6502062	PIN			1

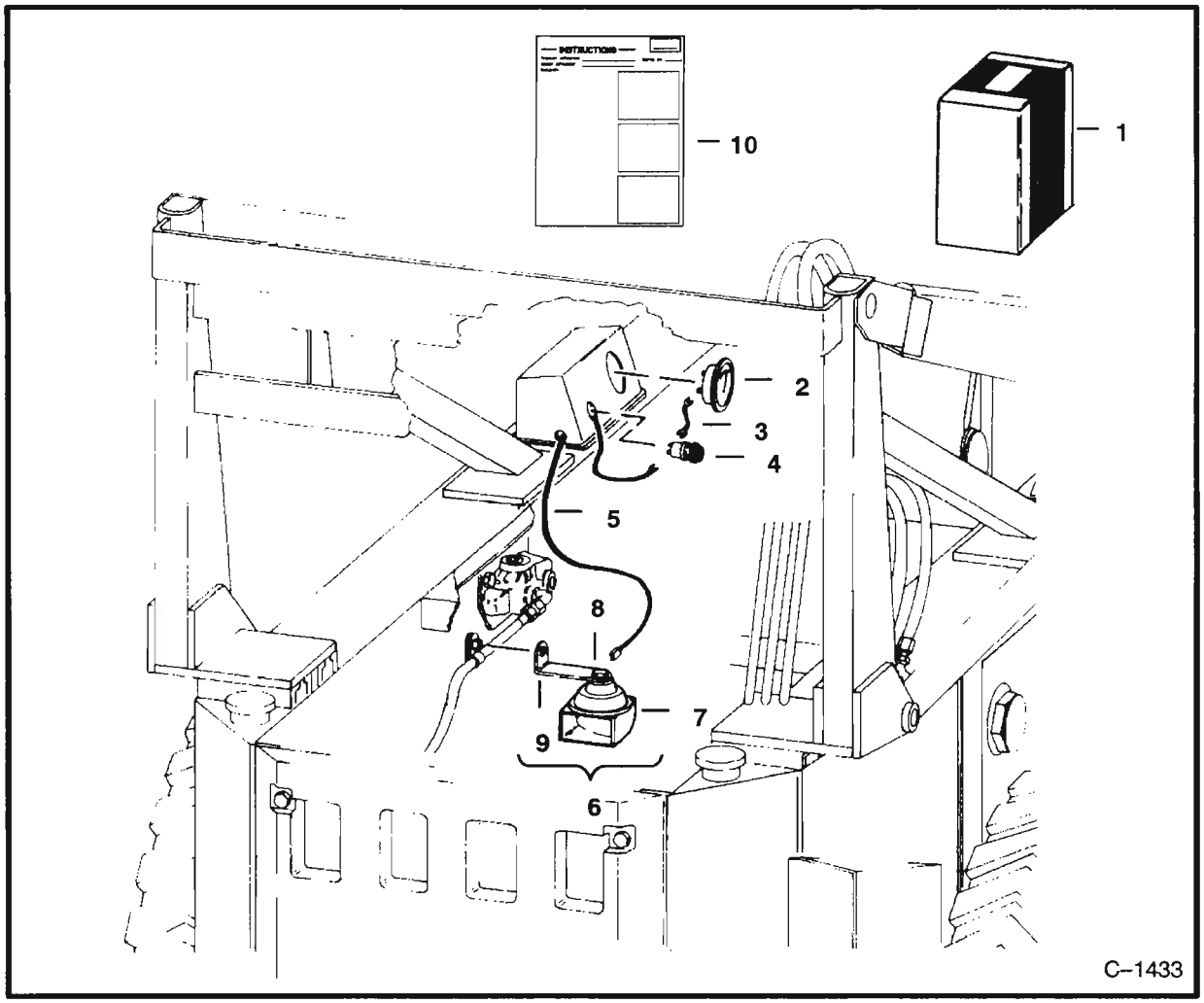

HORN & CIRCUITRY

Ref. No.	Part Number	Description	Remarks	Serial Number	Qty.
1	NAP	HORN KIT	Order Ref. 3 – 10		1
2	6515558	GAUGE	ammeter		1
3	NAP	WIRE			1
4	6632973	SWITCH	horn – Was 600259 [A]		1
5	NAP	WIRE			1
6	885083	HORN ASSY.	Ref. 7 – 9		1
7	6512873	HORN			1
8	1619303	NUT			1
9	6513658	BRACKET			1
10	6545969	INSTRUCTIONS			1

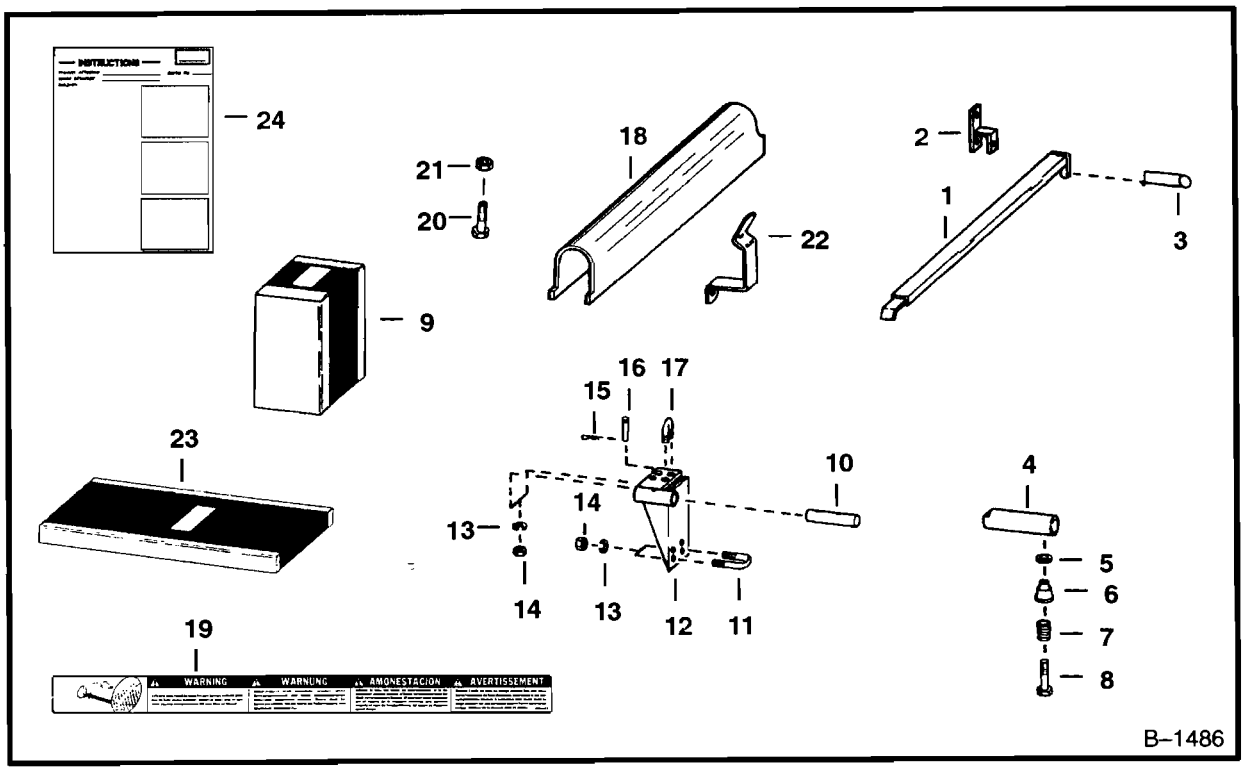

LIFT ARM STOPS

Ref. No.	Part Number	Description	Remarks	Serial Number	Qty.
1	NAP	LOCK	Order Ref. 23		2
2	6504729	BRACKET			2
3	6515499	PIN			2
4	6541372	PIN			1
5	6541964	SPACER			1
6*	NAP	RETAINER	Was 6541515 [A]		1
7	6541514	SPRING			1
8	17C–652	BOLT			1
9	6504728	KIT	lift arm – Ref. 1–3 – Order Ref. 23		1
	6541963	KIT	lift arm – Ref. 4–8 – Order Ref. 23		1
	NAP	KIT	lift arm – Ref. 10 – 17 – Order Ref. 23		1
10	6541418	PIN			1
11	6541628	U–BOLT			1
12	6541415	BRACKET			1
13	4E–8	WASHER			4
14	61D–8	NUT			4
15	1318565	PIN			1
16	6541981	PIN			1
17	6505029	U–BOLT			1
18	6559550	STOP	W/Ref. 19 – Was 6563449 [B]		1
19	6563423	DECAL			1
20	17C–616	BOLT			2
21	85D–6	NUT			2
22	6563603	BRACKET			2
23	6563336	LIFT ARM STOP	Kit Ref. 18 – 22		1
24	6566056	INSTRUCTIONS			1

LIFT CYLINDER
For Vertical Mast

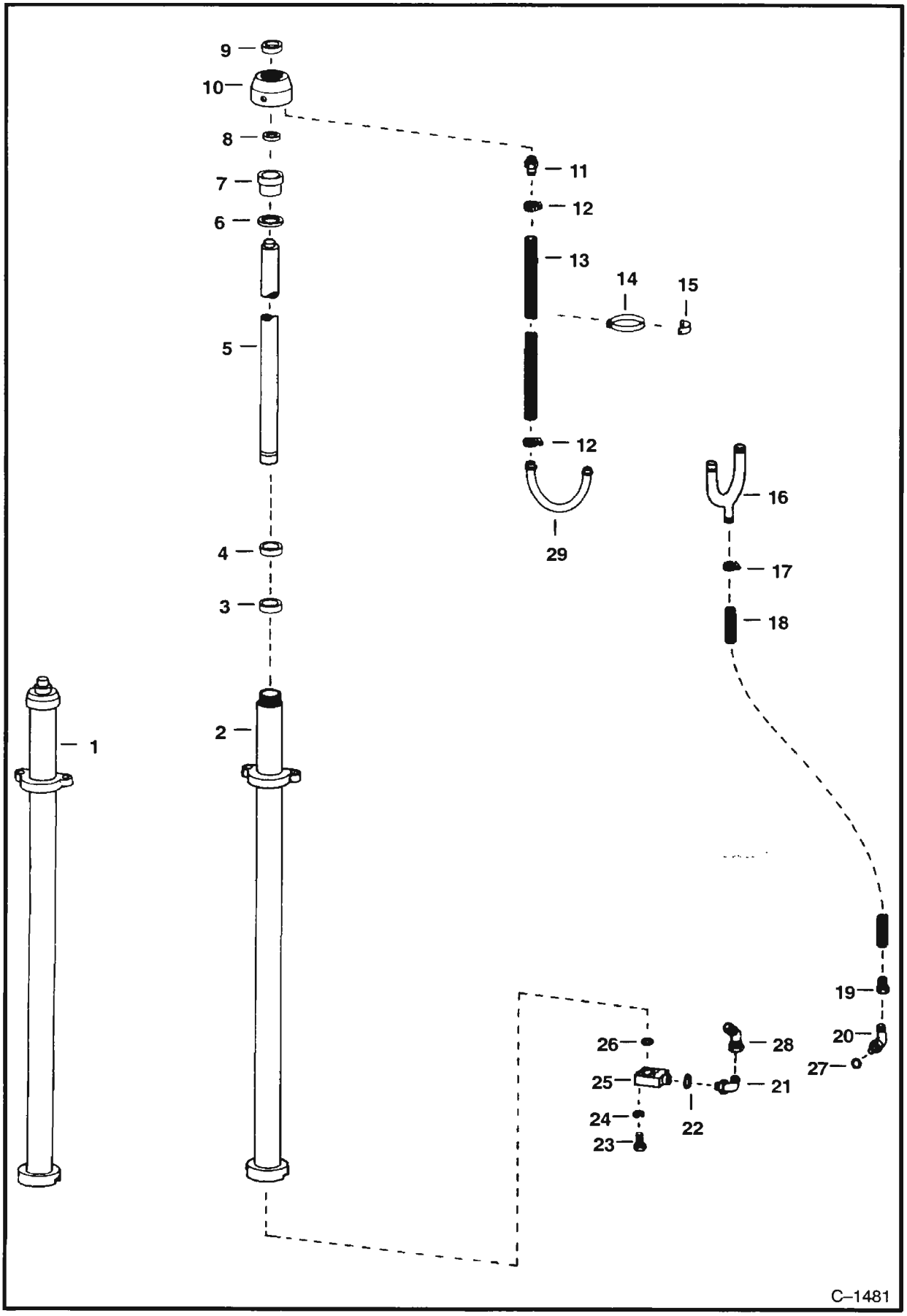

LIFT CYLINDER (Cont'd)
For Vertical Mast

Ref. No.	Part Number	Description	Remarks	Serial Number	Qty.
1	2307648	CYLINDER	hydraulic – 10' (3048mm)		1
	2307656	CYLINDER	hydraulic – 12' (3657,6mm)		1
2	2307566	CASE	cylinder – 10' (3048mm)		1
	2307574	CASE	cylinder – 12' (3657,6mm)		1
3	2307672	U–CUP	W/Filter		1
4	2307671	FOLLOWER			1
5	2310360	ROD	10' (3048mm)		1
	2310368	ROD	12' (3657,6mm)		1
6	25K–60216	O–RING			1
7	1748216	NUT			1
8	763693	O–RING			1
9	6666545	WIPER	Was 1657090 [A]		1
10	1795380	CAP			1
11	666865	ADAPTER			1
12	4H–13	CLAMP			2
13	743563	HOSE	hydraulic		1
14	742733	STRAP			x
15	771723	RETAINER			x
16	1744550	TUBE			1
17	42H–12	CLAMP			1
18	692846	HOSE			1
19	663261	CONNECTOR			1
20	17K–3	ELBOW	W/Ref. 27		1
21	17K–7	ELBOW	W/Ref. 22		1
22	79K–10	O–RING			1
23	94G–428	BOLT			4
24	22E–4	WASHER			4
25	2330504	VALVE	flow control		1
26	25K–20022	O–RING			1
27	79K–4	O–RING			1
28	12K–7	ELBOW			1
29	1322885	TUBE			1

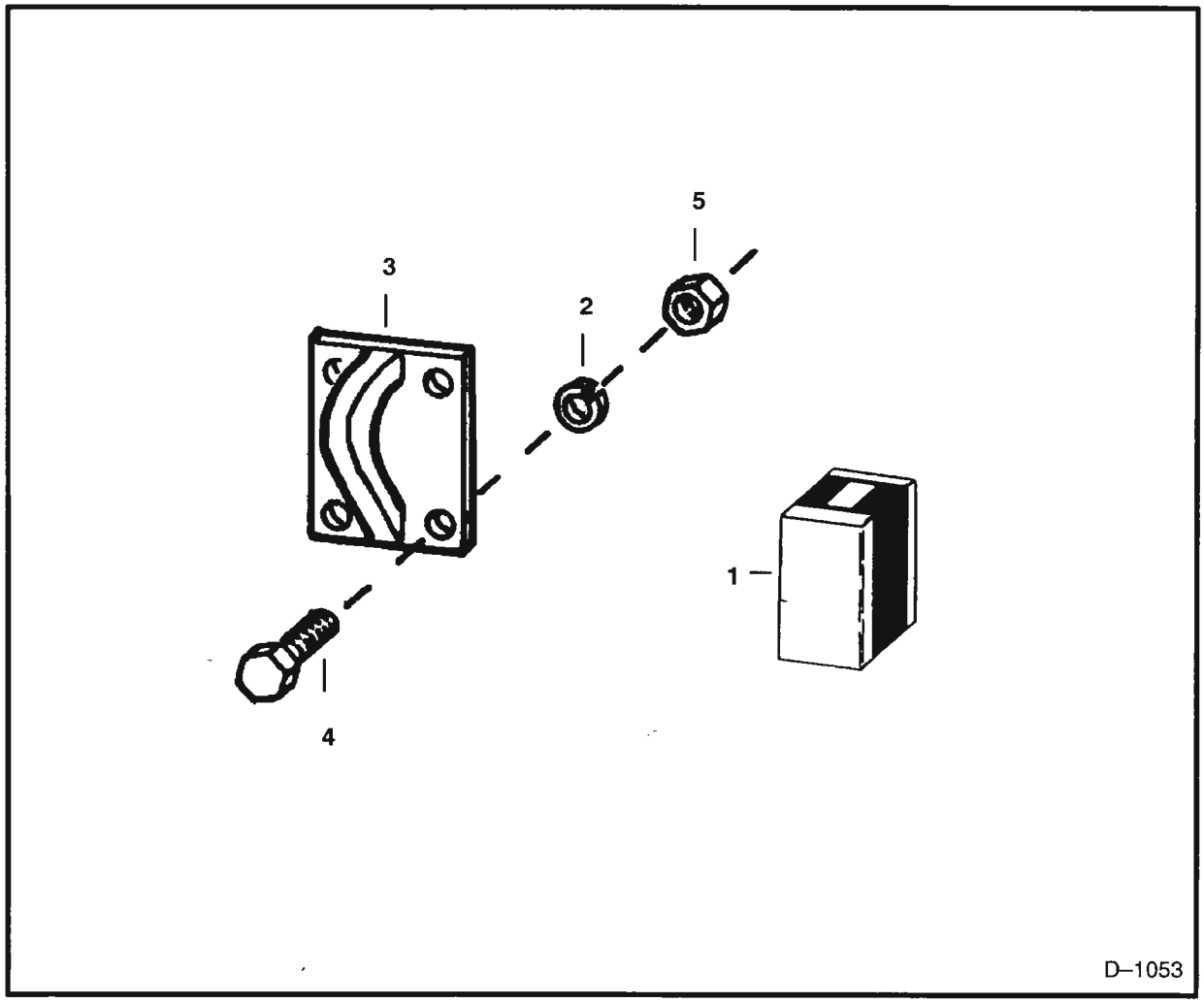

LIFT HOOK

Ref. No.	Part Number	Description	Remarks	Serial Number	Qty.
1	NAP	KIT	lift hook – Order Ref. 2 – 5		1
2	25E–8	WASHER			4
3	6504698	HOOK			1
4	17C–820	BOLT			4
5	61D–8	NUT			4

Melroe has engine oil blended to our specifications which meet or exceed the highest demands of your engine.

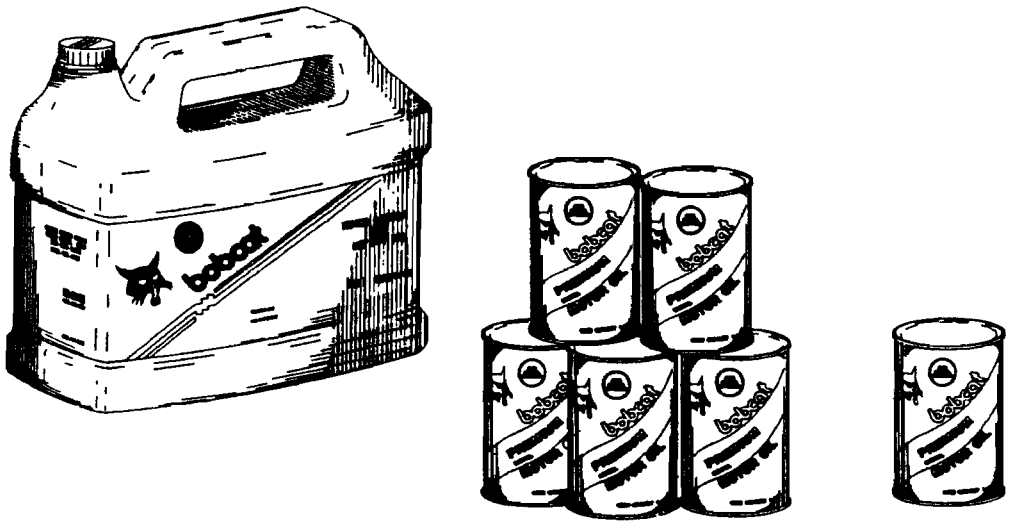

Available from Melroe Parts.

MELROE
INGERSOLL-RAND

LIGHTS
Switch In Right Hand Instrument Panel

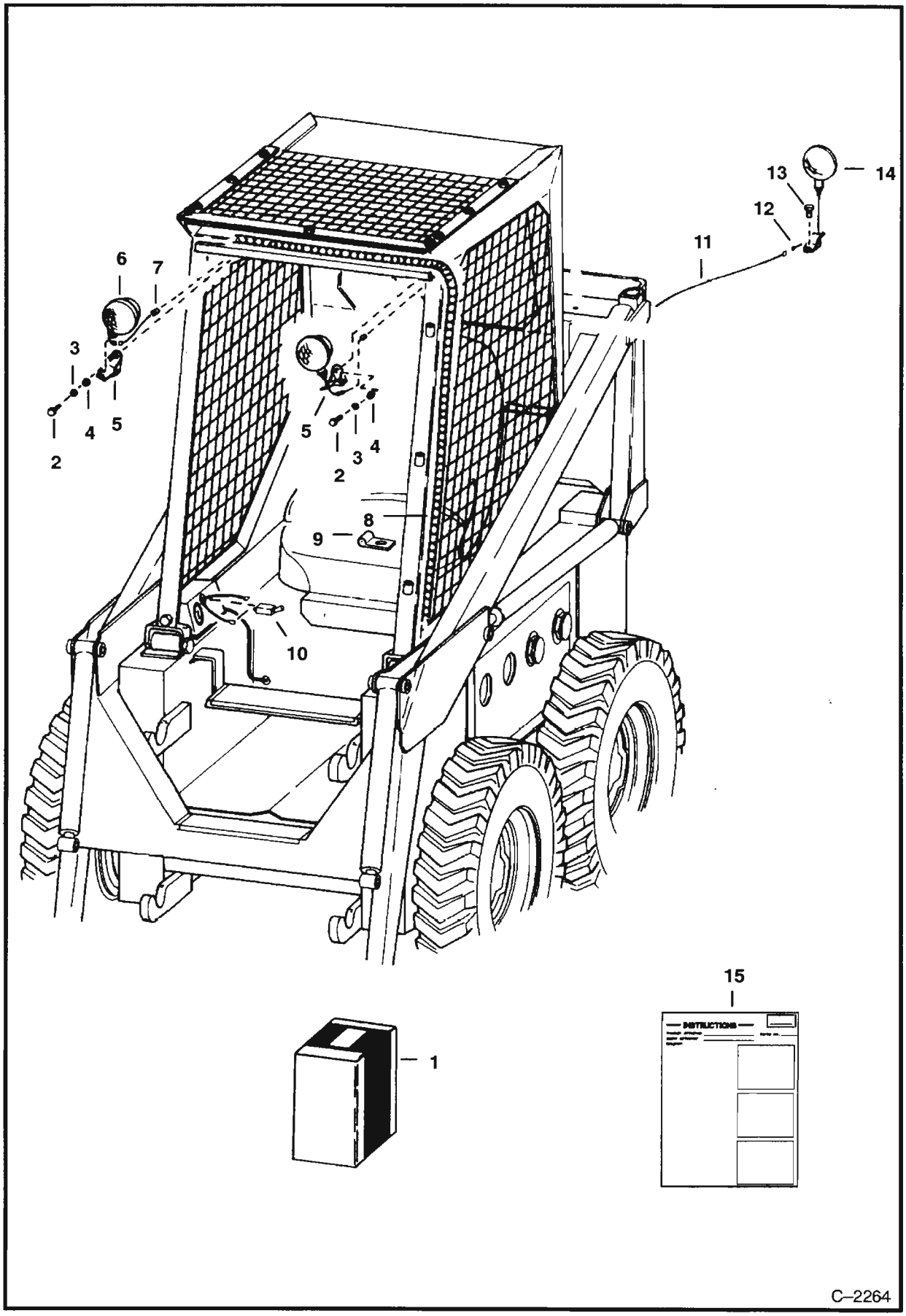

LIGHTS (Cont'd)
Switch In Right Hand Instrument Panel

Ref. No.	Part Number	Description	Remarks	Serial Number	Qty.
1	6548694	LIGHT KIT	Ref. 2 – 15		1
2	17C–616	BOLT			2
3	4E–6	WASHER			5
4	61D–6	NUT			3
5	6547315	BRACKET			3
6	6517676	LIGHT	front		2
7	1010102	GROMMET			2
8	NAP	HARNESS	wiring – Was 6552791 [A]		1
9	30H–12	CLAMP			5
10	6515521	SWITCH			1
11	NAP	HARNESS	wiring – Was 6552794 [A]		1
12	6512052	STRAP	retainer		3
13	17C–612	BOLT			1
14	6515513	LIGHT	rear		1
15	6545975	INSTRUCTIONS			1

LIGHTS
For Loader Without Right Hand Instrument Panel

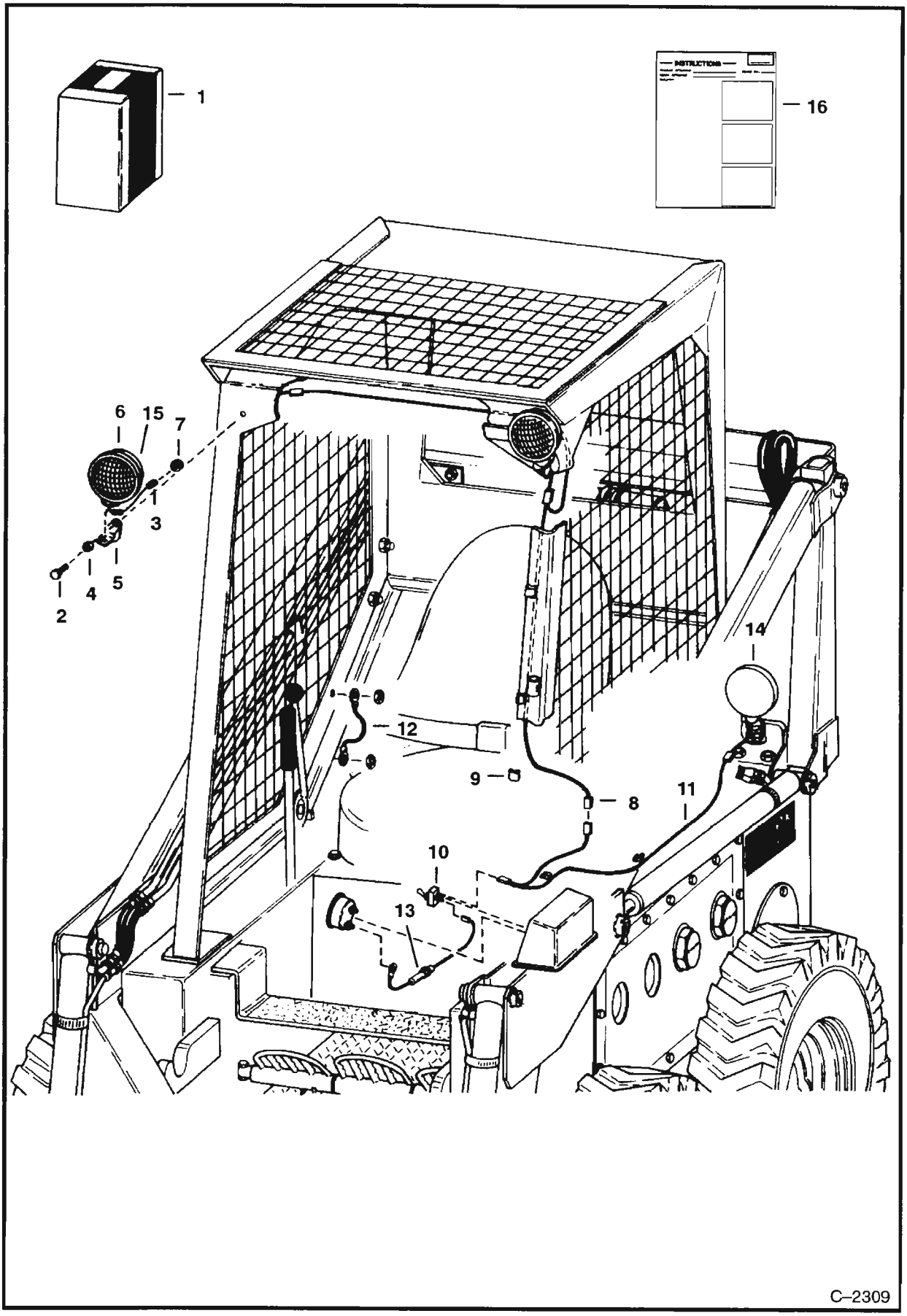

LIGHTS (Cont'd)
For Loader Without Right Hand Instrument Panel

Ref. No.	Part Number	Description	Remarks	Serial Number	Qty.
1	NAP	LIGHT KIT	Order Ref. 2 – 16 – Was 6558794 [D]		1
2	17C–616	BOLT			2
3	6512640	CONNECTOR			3
4	61D–6	NUT			5
5	6547315	BRACKET			3
6	6517676	LIGHT			2
7	1010102	GROMMET			2
8	6558749	WIRING			1
9	6502236	CLIP			7
10	6515521	SWITCH			1
11	6558673	WIRING			1
12	6558671	WIRE			1
13	6558672	WIRE			1
14	6515513	LIGHT	rear		1
15	733616	TERMINAL			3
16	6556332	INSTRUCTIONS			1

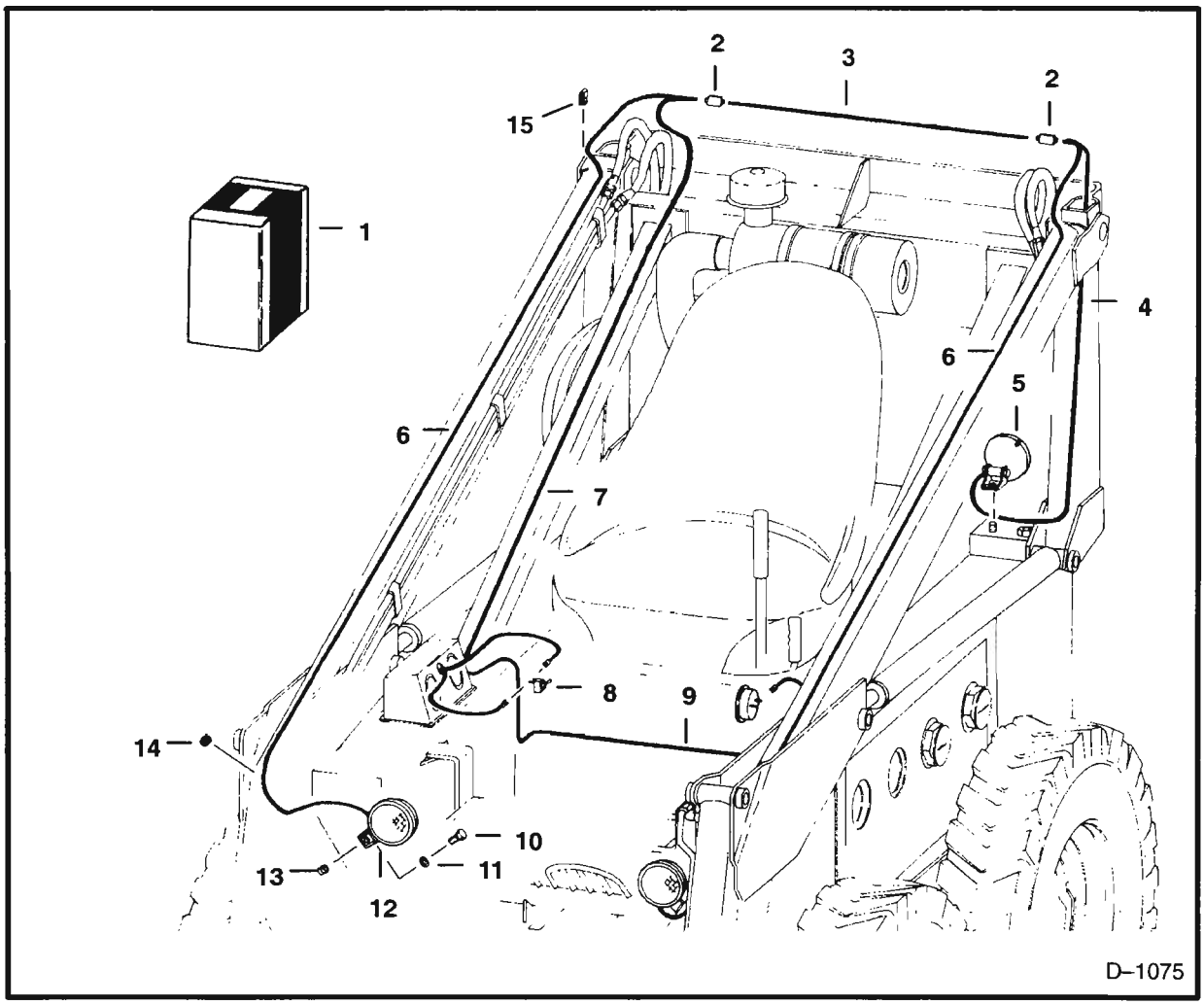

LIGHTS
Lift Arm Mounted

Ref. No.	Part Number	Description	Remarks	Serial Number	Qty.
1	NAP	LIGHT KIT	Order Ref. 2 – 15		1
2	6517918	CONNECTOR			5
3	NAP	WIRE			1
4	NAP	WIRE			1
5	6515513	LIGHT	rear		1
*	NAP	LENS	Was 6515219 [A]		1
6	NAP	WIRE			2
7	NAP	WIRE			1
8	6515521	SWITCH			1
9	NAP	WIRE			1
10	17C–616	BOLT			2
11	25E–17	WASHER			2
12	6517676	LIGHT	front		2
	6515219	LENS			1
	NAP	BULB	G.E. No. 1141		1
13	6515275	NUTSERT			2
14	585950	GROMMET			4
15	6502236	CLIP			2

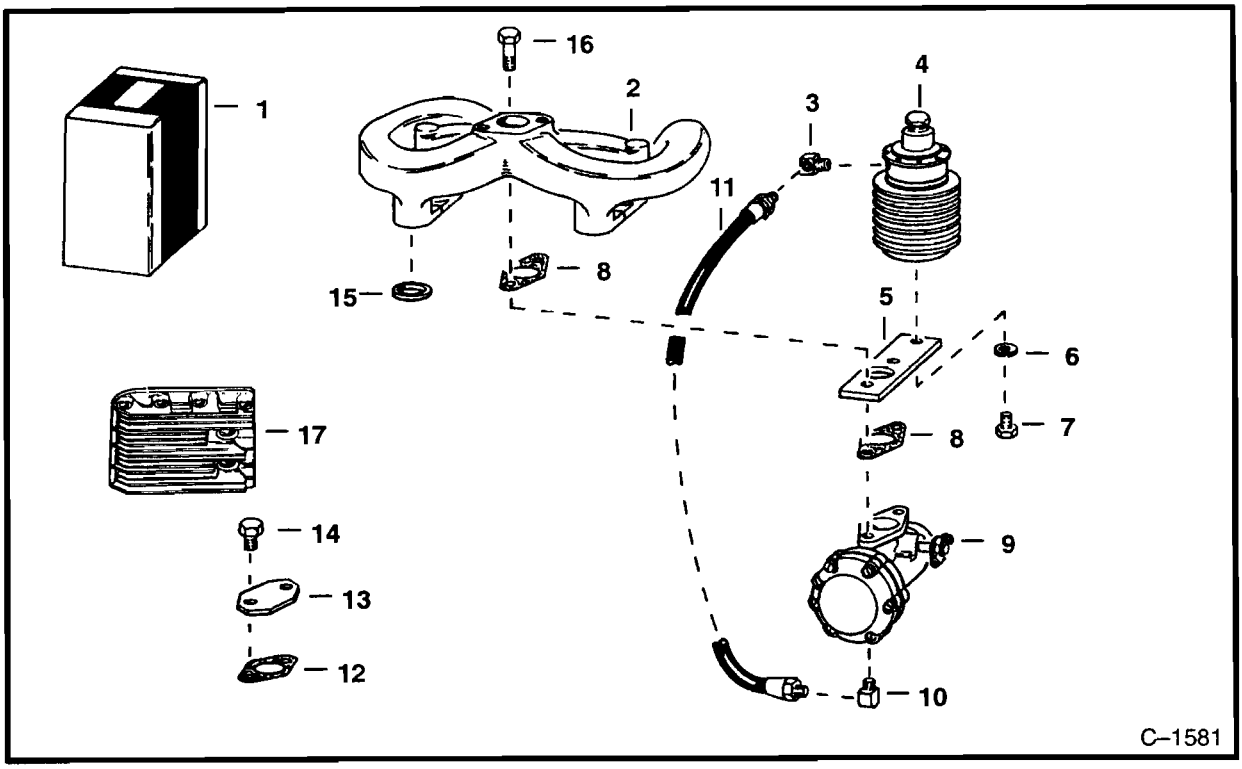

LP GAS GROUP

Ref. No.	Part Number	Description	Remarks	Serial Number	Qty.
1	NAP	KIT	LPG conversion – Ref. 3 – 15 –		
			Was 6519236 [A]		1
	6519430	KIT	governor control		1
2	6519228	MANIFOLD			1
3	62F–4	ELBOW			1
4	6516421	VAPORIZER	See Page G24		1
5	6519235	BRACKET			1
6	4E–6	WASHER			1
7	17C–608	BOLT			1
8	6516398	GASKET			2
9	6519227	CARBURETOR			1
10	660123	ELBOW			1
11	6519231	HOSE			1
12	6516382	GASKET			1
13	6516383	COVER	fuel pump mount		1
14	47G–408	BOLT			2
15	6516405	GASKET			4
16	17C–518	BOLT			2
17	6516432	HEAD	LPG		2

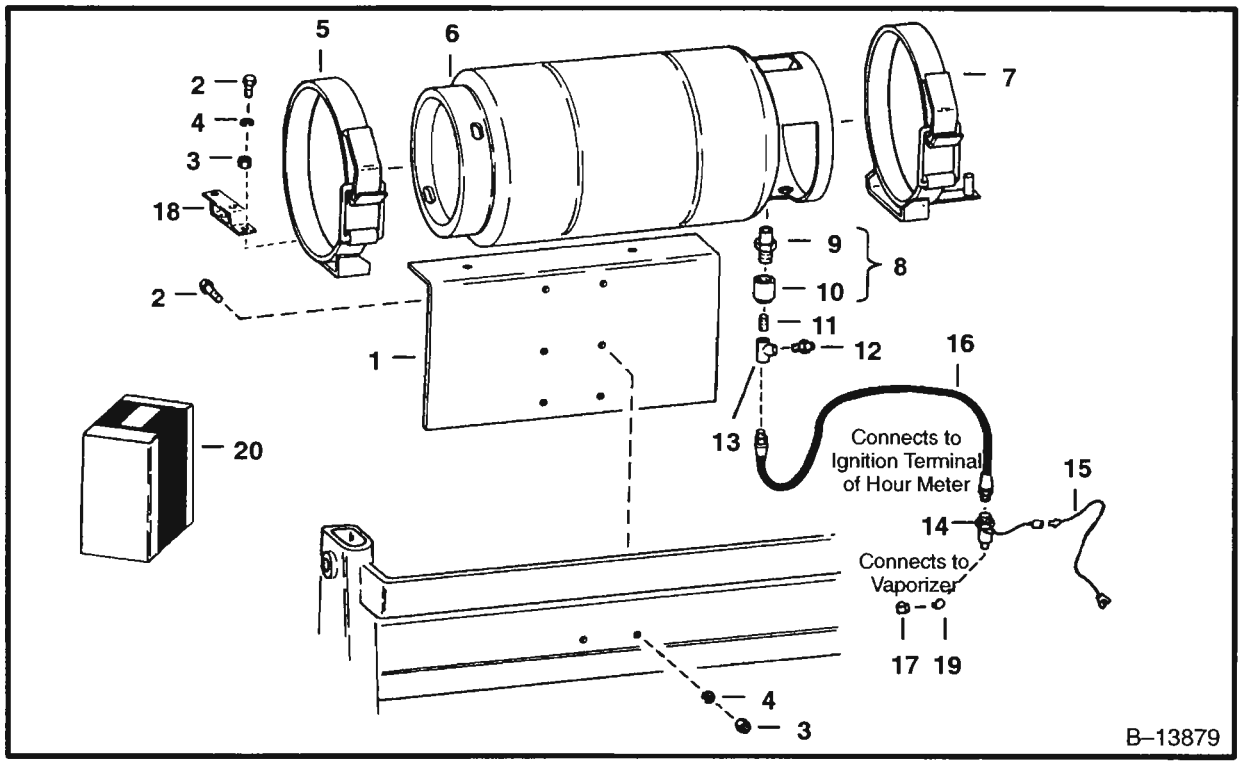

LP GAS TANK & ATTACHING PARTS

Ref. No.	Part Number	Description	Remarks	Serial Number	Qty.
1	6544004	BRACKET	LPG		1
2	17C–616	BOLT			8
3	61D–6	NUT			8
4	4E–8	WASHER			8
5	6504954	CLAMP	tank mounting – L.H.		1
6	6515535	TANK	LPG		1
7	6504955	CLAMP	LPG – R.H.		1
8	NAP	ADAPTER	Order Ref. 9 & 10 – Was 715975 [A]		1
9	715977	ADAPTER	male half		1
10	715976	ADAPTER	female half		1
11	5K–224	CONNECTOR			2
12	655336	RELIEF VALVE			1
13	28K–204	TEE			1
14	6501945	LOCK	filter		1
	6515605	ELEMENT	LPG filter		1
15	6501944	WIRE			1
16	6555113	HOSE			1
17	618298	ELBOW			1
18	6546807	BRACKET			1
19	30K–304	ADAPTER			1
20	6555106	CLAMP ASSY.	Ref. 5 & 7		1

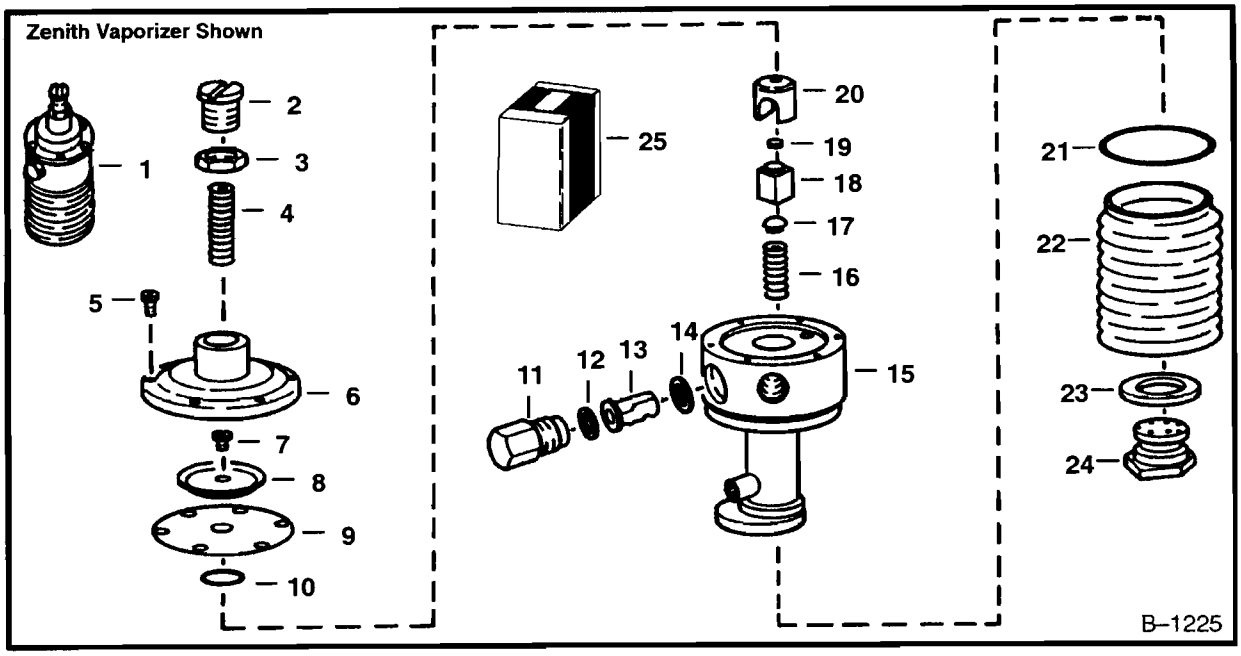

LPG VAPORIZER
Zenith Or Garretson

Ref. No.	Part Number	Description	Remarks	Serial Number	Qty.
1	6516421	VAPORIZER			1
2	874159	SCREW	pressure – Zenith		1
	6632528	CAP	Garretson		1
3	874160	NUT	Zenith		1
4	874161	SPRING	Zenith		1
5	41G–805	SCREW	Zenith		6
6	874162	COVER	Zenith		1
7	42G–1004	SCREW	Zenith		1
8	874164	PLATE	Zenith		1
9	NSS	DIAPHRAGM	Zenith		1
10	NSS	O–RING	Zenith		1
11	874171	FITTING	Zenith		1
	6632529	FITTING	Garretson		1
12	NSS	WASHER	Zenith		1
	6632530	GASKET	Garretson		1
13	874169	ORIFICE	inlet – W/Ref. 14 – Zenith		1
14	NSS	WASHER	Zenith		1
15	NAP	BODY	Zenith		1
16	873959	SPRING	valve – Zenith		1
17	874168	BUTTON	Zenith		1
18	NAP	RETAINER	Zenith		1
19	NSS	SEAT	W/Retainer – W/Ref. 18 – Zenith		1
20	874165	PISTON	W/Ref. 10 – Zenith		1
21	NSS	O–RING	Zenith		1
22	6516601	EXCHANGER	heat – Zenith		1
23	NSS	WASHER	Zenith		1
24	NSS	SCREW	retainer – Zenith – Was 874174 [A]		1
25	906181	REPAIR KIT	Ref. 9, 10, 12, 14, 21 & 23 for Zenith Vaporizer		1
	6630238	REPAIR KIT	For Garretson Vaporizer		1

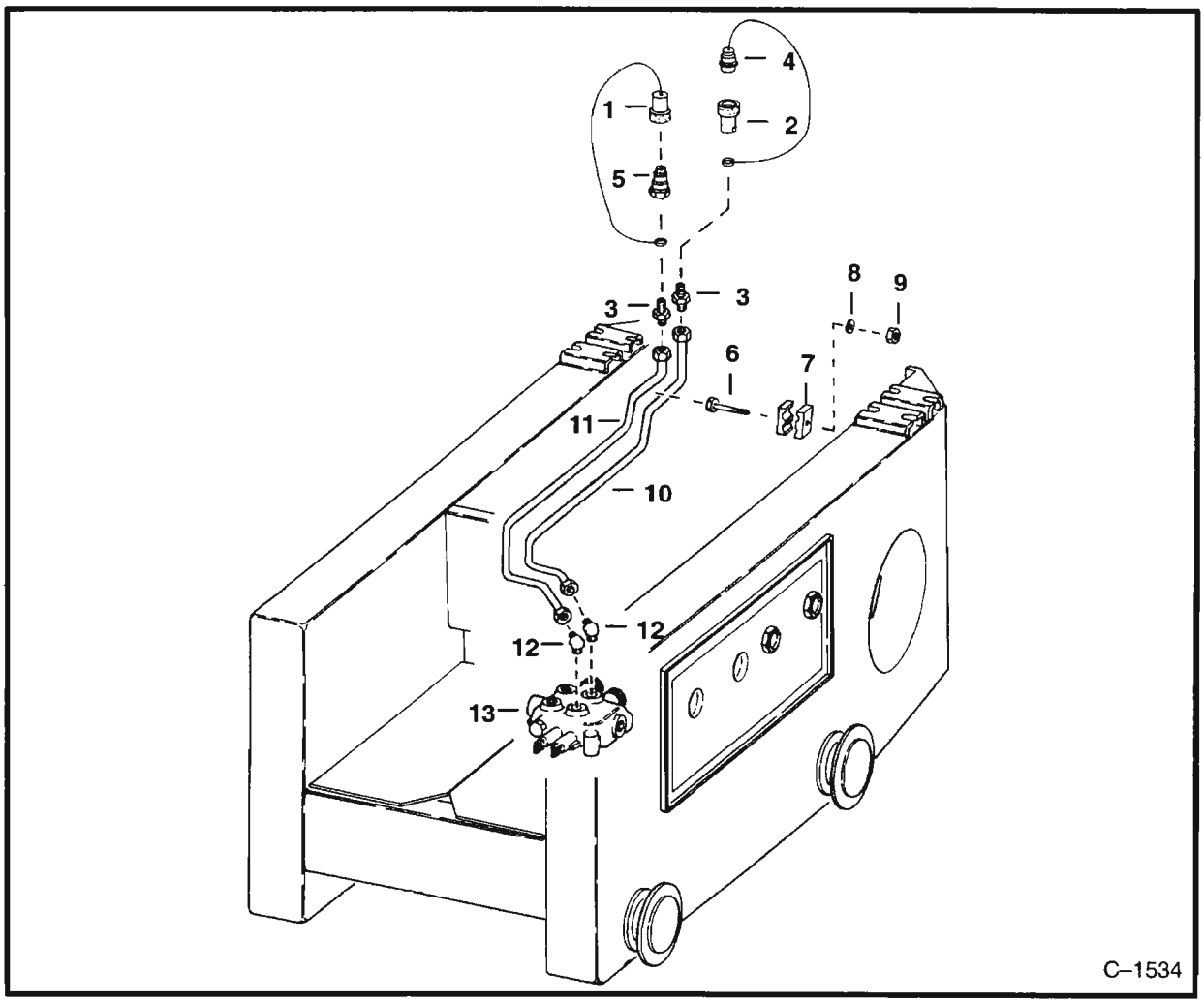

MAIN FRAME AUXILIARY LINES

Ref. No.	Part Number	Description	Remarks	Serial Number	Qty.
1	6515167	PLUG			1
2	6598756	COUPLER	Female		1
3	656598	ADAPTER			2
4	6515168	CAP			1
5	6598755	COUPLER	Male		1
6	17C–456	BOLT			1
7	6503070	BLOCK	wood		1
8	25E–13	WASHER			1
9	61D–4	NUT			1
10	6501136	TUBE			1
11	6501135	TUBE			1
12	662487	ELBOW			1
13	6504941	VALVE			1

Melroe has engine oil blended to our specifications which meet or exceed the highest demands of your engine.

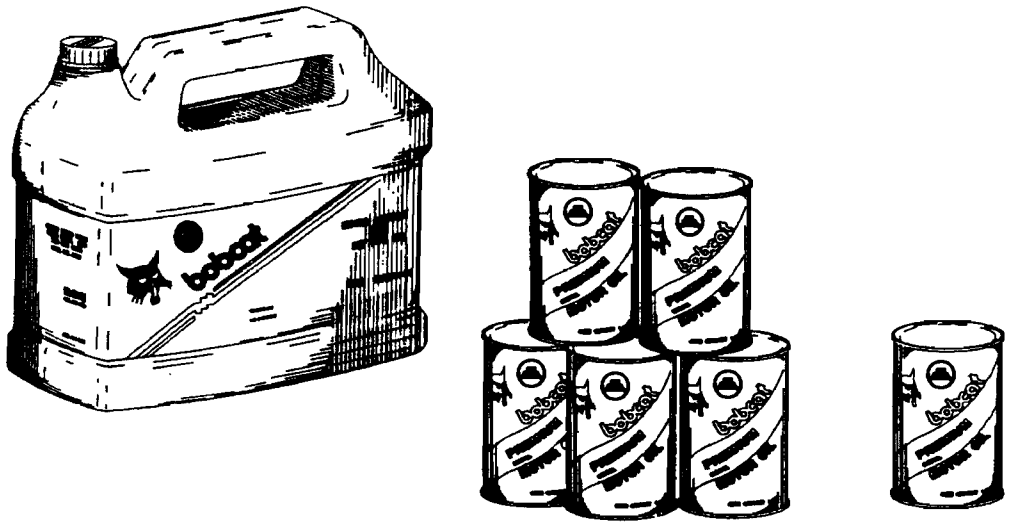

Available from Melroe Parts.

MELROE
INGERSOLL-RAND

PULPWOOD LOADER & ATTACHING PARTS

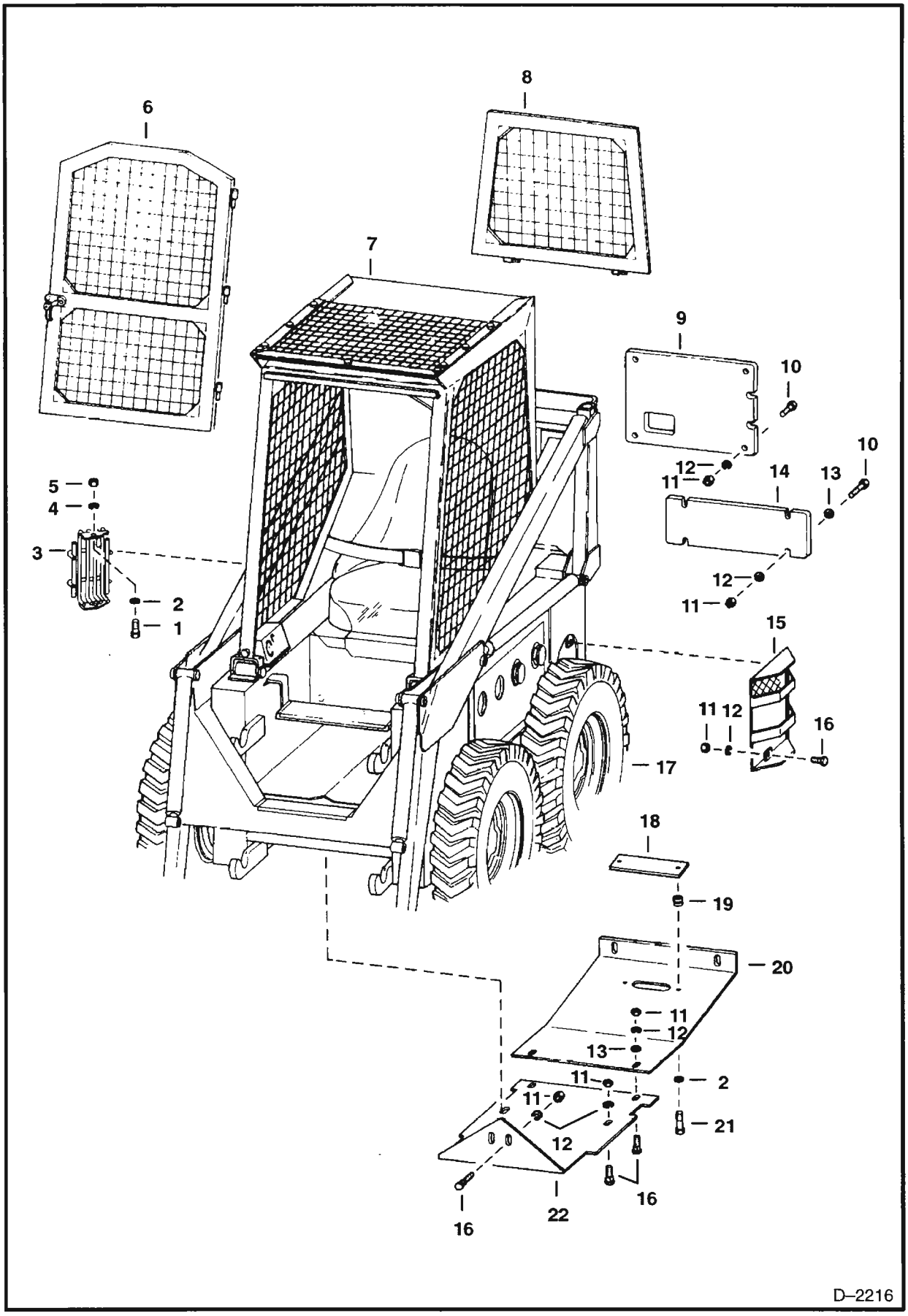

PULPWOOD LOADER & ATTACHING PARTS (Cont'd)

Ref. No.	Part Number	Description	Remarks	Serial Number	Qty.
1	17C–616	BOLT			2
2	25E–17	WASHER			4
3	6501430	GUARD			1
4	4E–6	WASHER			1
5*	91D–5	NUT	Was 81D–5 [A]		2
6	6542545	DOOR	screened		1
7	SALES	CAB	See Page A15		1
8	6542686	WINDOW	screened		1
9	6503167	COUNTERWEIGHT	85 lbs.		1
10	17C–856	BOLT			8
11	61D–8	NUT			14
12	4E–8	WASHER			14
13	25E–21	WASHER			6
14	6548613	COUNTERWEIGHT	45 lbs.		2
15	6501431	GUARD			1
16	7C–820	BOLT	carriage		8
17	6550828	TIRE	nylon – 10:00 x 16.5, 6 ply flotation – steel cap		4
	6510793	TIRE & RIM			4
	614765	VALVE	tubeless		4
18	6501432	COVER	oil drain		1
19	6515275	NUTSERT			2
20	6503119	BELLY PAN	rear		1
21	17C–612	BOLT			2
22	6503118	BELLY PAN	front		1

SEAT BAR KIT

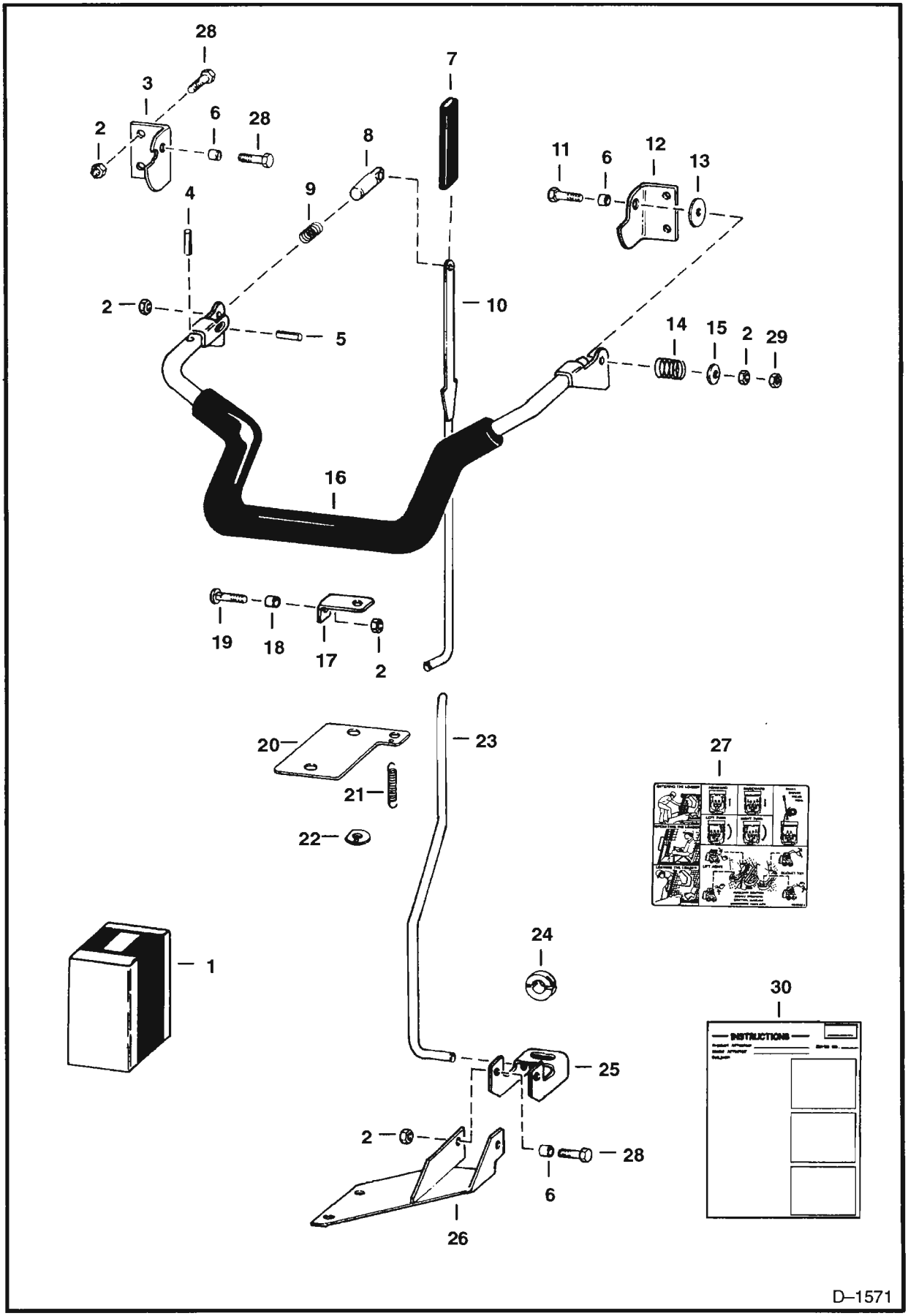
28
3
2
6
28
8
7
11
6
12
13
4
9
2
10
5
14
15
2
29
16
19
18
17
2
20
23
21
22
27
1
24
30
INSTRUCTIONS
25
2
28
6
26
D–1571

SEAT BAR KIT (Cont'd)

Ref. No.	Part Number	Description	Remarks	Serial Number	Qty.
1	6563666	KIT	seat bar – Ref 2 – 30		1
2	85D–6	NUT			9
3	6563198	BRACKET	pivot		1
4	14J–3716	ROLL PIN			1
5	14J–3724	ROLL PIN			1
6	6544654	BUSHING			4
7	6563477	HANDLE	grip		1
8	6563200	PLUNGER			1
9	6702430	SPRING	Was 6563149 [A]		1
10	6563184	LINKAGE	tube		1
11	17C–636	BOLT			1
12	6563480	BRACKET	pivot		1
13	6562127	WASHER			1
14	6562126	SPRING			1
15	27E–6	WASHER			1
16	6563544	SEAT BAR			1
17	6563181	GUIDE			1
18	6555798	SPACER			1
19	6560034	BOLT			1
20	6563208	PLATE			1
21	6563016	SPRING			1
22	6564049	BRACKET			1
23	6563182	LINKAGE			1
24	6598499	CLAMP			1
25	6563470	BRACKET			1
26	6563473	BRACKET			1
27	6569022	DECAL			1
28	17C–616	BOLT			7
29	7D–6	NUT			1
30	6566139	INSTRUCTIONS			1

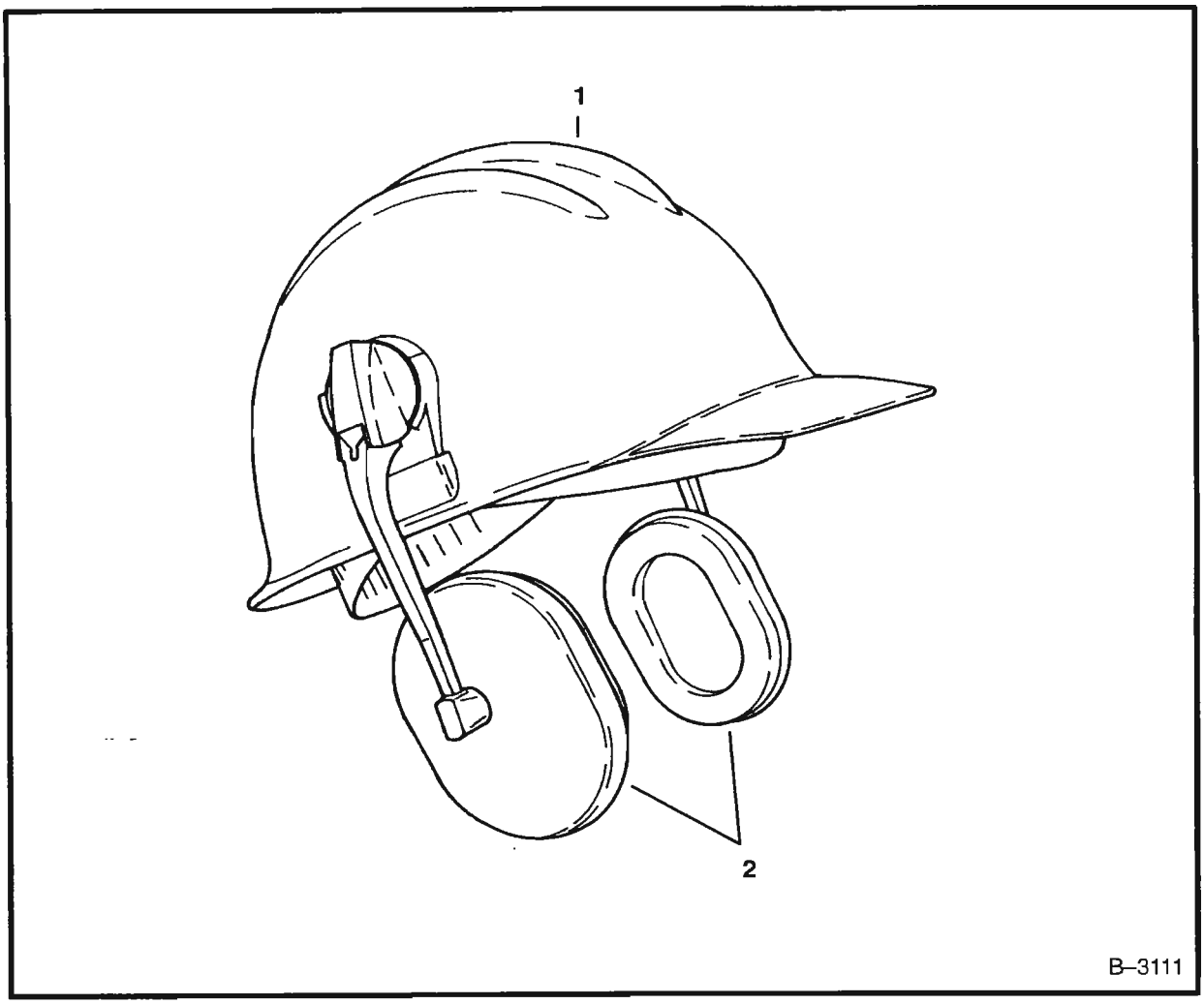

SOUND REDUCTION HARDHAT

Ref. No.	Part Number	Description	Remarks	Serial Number	Qty.
1	6559552	HARDHAT			1
2	6559775	EARMUFFS			1

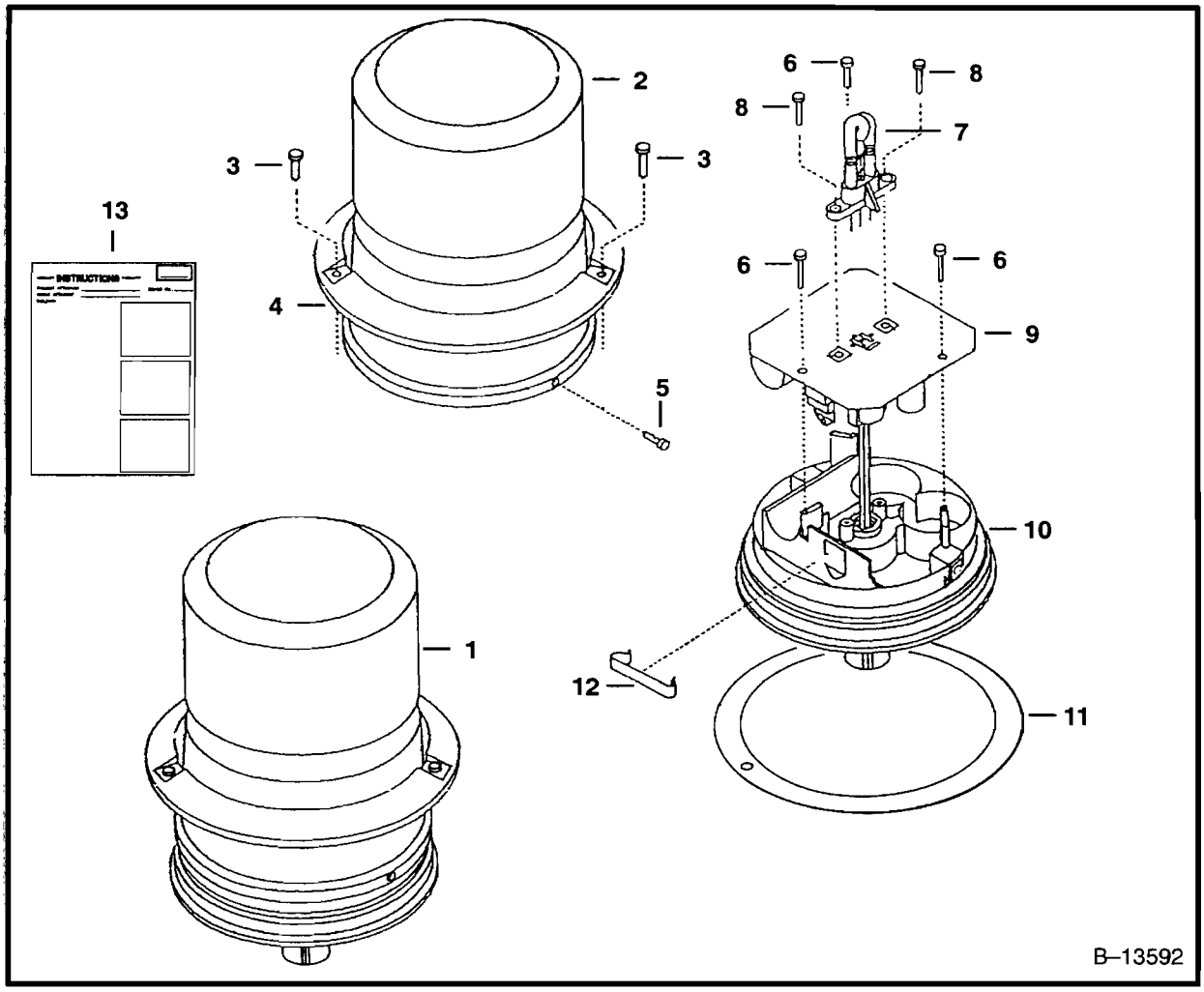

STROBE LIGHT
Amber – 2414ALW

Ref. No.	Part Number	Description	Remarks	Serial Number	Qty.
1	NAP	KIT	strobe light – Ref. 2 – 13 – Order 6587526		1
2	NSS	LENS	amber		1
	NSS	LENS	blue – Not In Kit		1
3	NSS	SCREW			3
4	NSS	COLLAR	mounting		1
5	NSS	SCREW			1
6	NSS	SCREW			3
7	6659972	FLASH TUBE	Was NSS [D]		1
8	NSS	SCREW			2
9	NSS	POWER SUPPLY			1
10	NSS	BASE			1
11	NSS	GASKET			1
12	NSS	RETAINER			1
13	6720856	INSTRUCTIONS			1

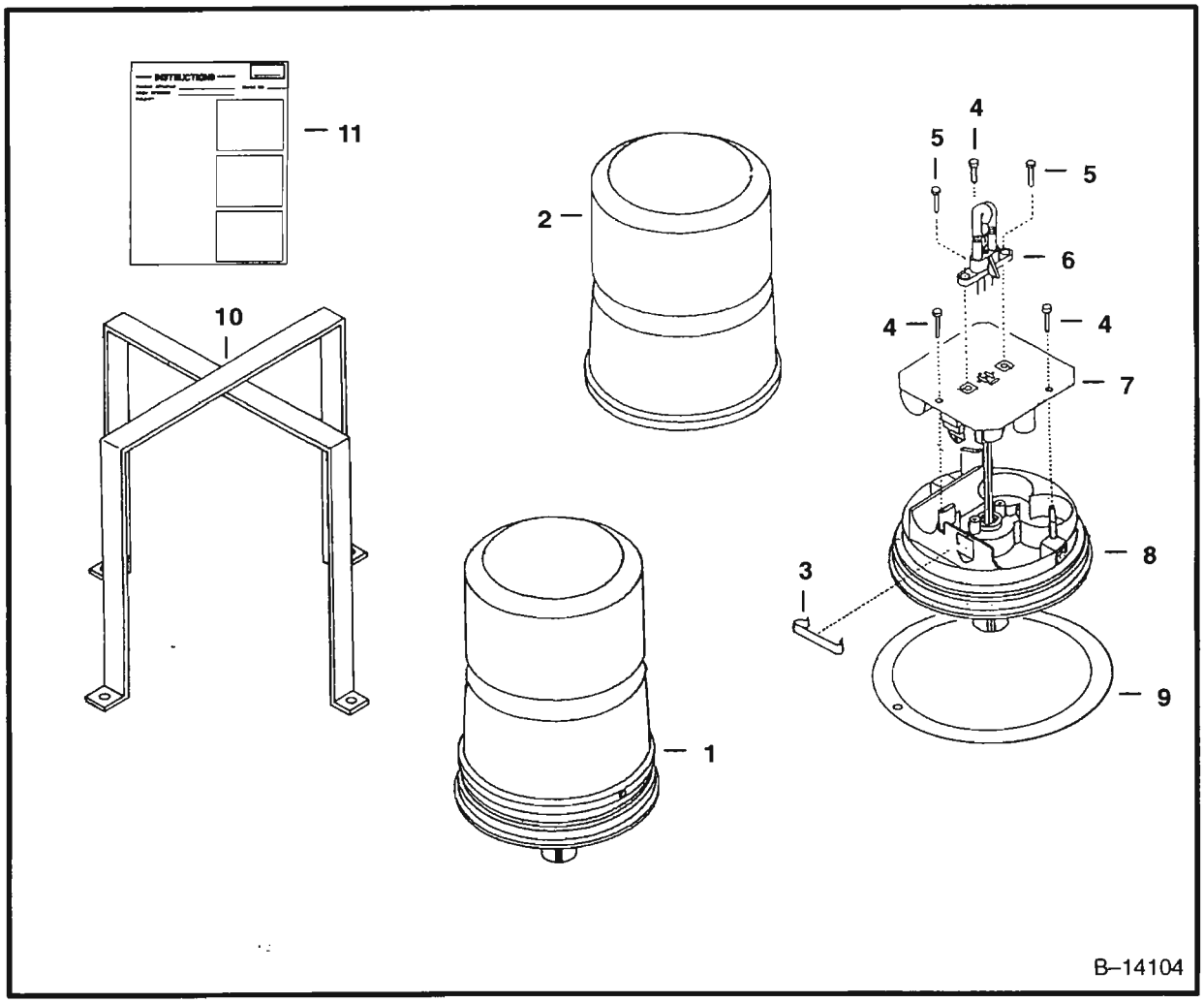

STROBE LIGHT
Amber – 3414ALW

Ref. No.	Part Number	Description	Remarks	Serial Number	Qty.
1	6587526	KIT	strobe light – Ref. 2 – 11		1
2	6665021	LENS	amber		1
	6665025	LENS	blue – Not in Kit		1
3	NSS	RETAINER			1
4	NSS	SCREW			3
5	NSS	SCREW			1
6	6665022	FLASH TUBE			1
7	NSS	POWER SUPPLY			1
8	NSS	BASE			1
9	6665023	GASKET			1
10	6605024	BRANCH GUARD			1
11	6720856	INSTRUCTIONS			1

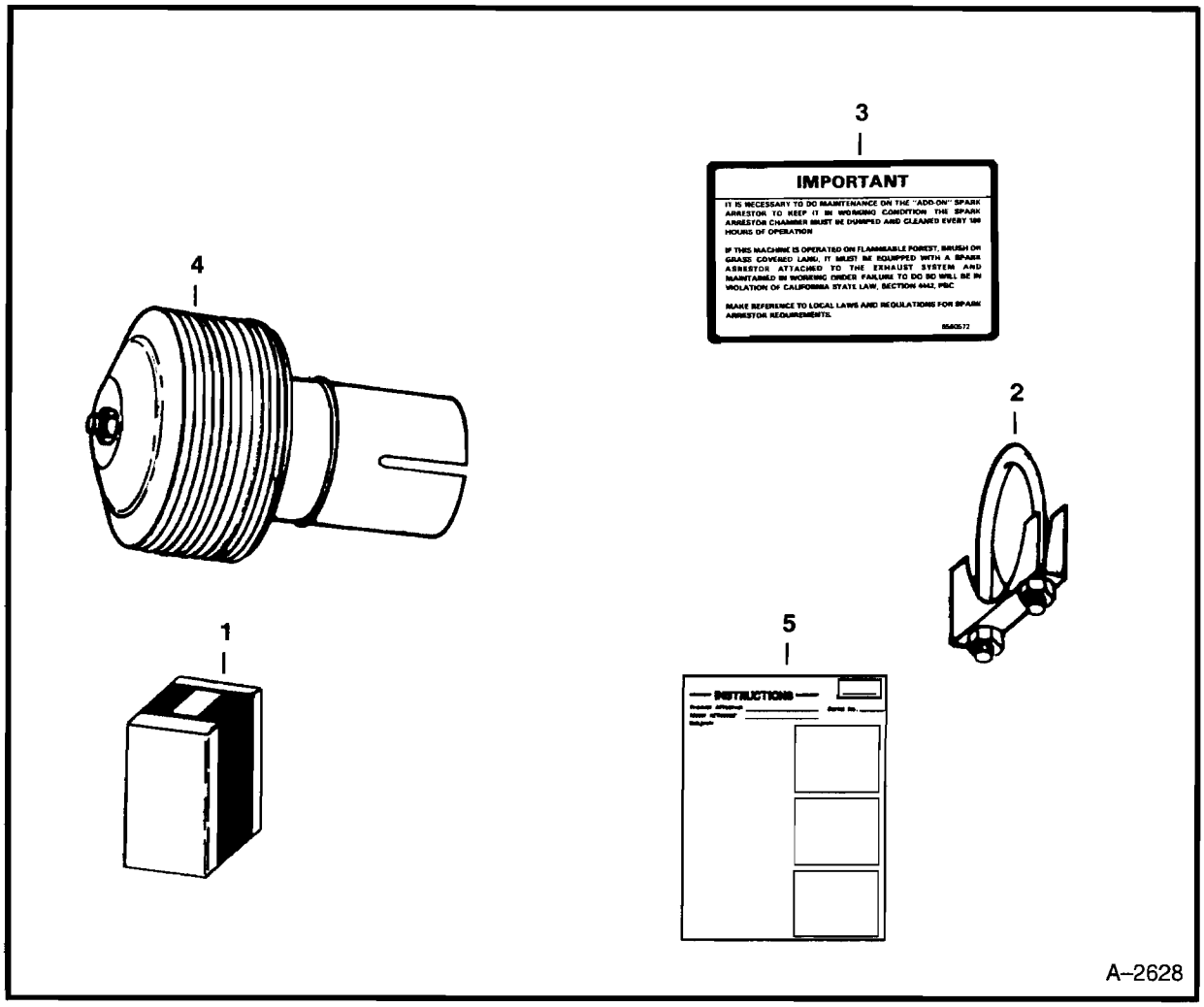

SPARK ARRESTOR

Ref. No.	Part Number	Description	Remarks	Serial Number	Qty.
1	6560837	KIT	spark arrestor – Ref. 2 – 5		1
2	657904	CLAMP			1
3	6560572	DECAL			1
4	6560371	ARRESTOR	spark		1
5	6556541	INSTRUCTIONS			1

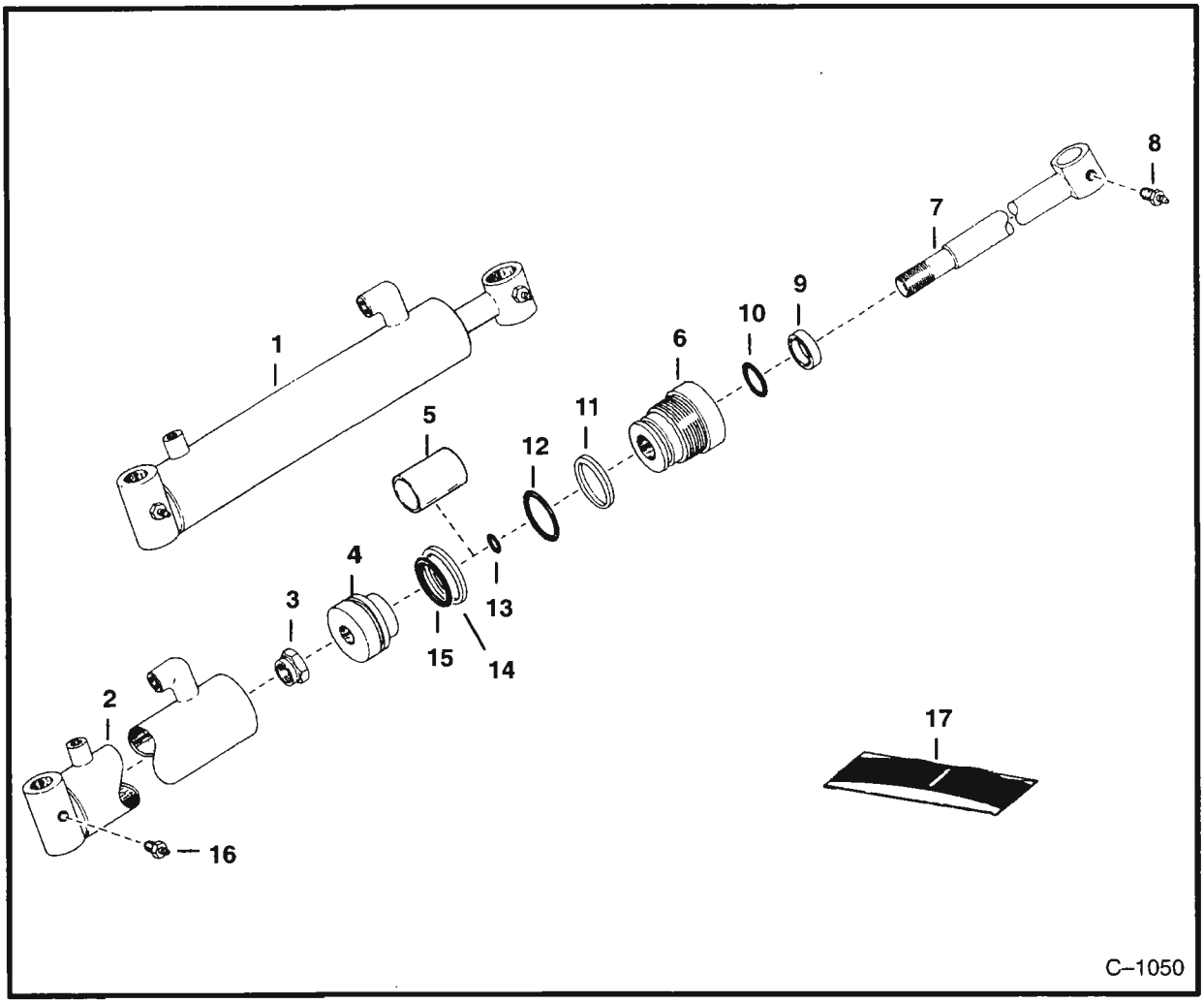

TILT CYLINDER
Vertical Lift

Ref. No.	Part Number	Description	Remarks	Serial Number	Qty.
1	6506652	CYLINDER	Ref. 2 – 7 & 9 – 15		2
2	NAP	CASE			1
3	92D–12	NUT	Was 86D–12 [B]		1
4	6558196	PISTON			1
5	6506677	STOP			1
6	6504933	HEAD			1
7	6504951	ROD			1
8	15G–606	SET SCREW			1
9	1657083	SEAL	wiper		1
10*	6667323	SEAL	u-cup – Was 6704243 [A]		1
11	73K–224	WASHER	back-up		1
12*	54K–40124	O–RING	Was 25K–40124 [A]		1
13	NSS	O–RING			1
14	6516231	SEAL			1
15*	54K–30118	O–RING	Was 25K–30118 [A]		1
16	10H–25	GREASE ZERK			1
17*	6803472	SEAL KIT	Ref. 3 & 9 – 15 – Was 6587790 [A]		1

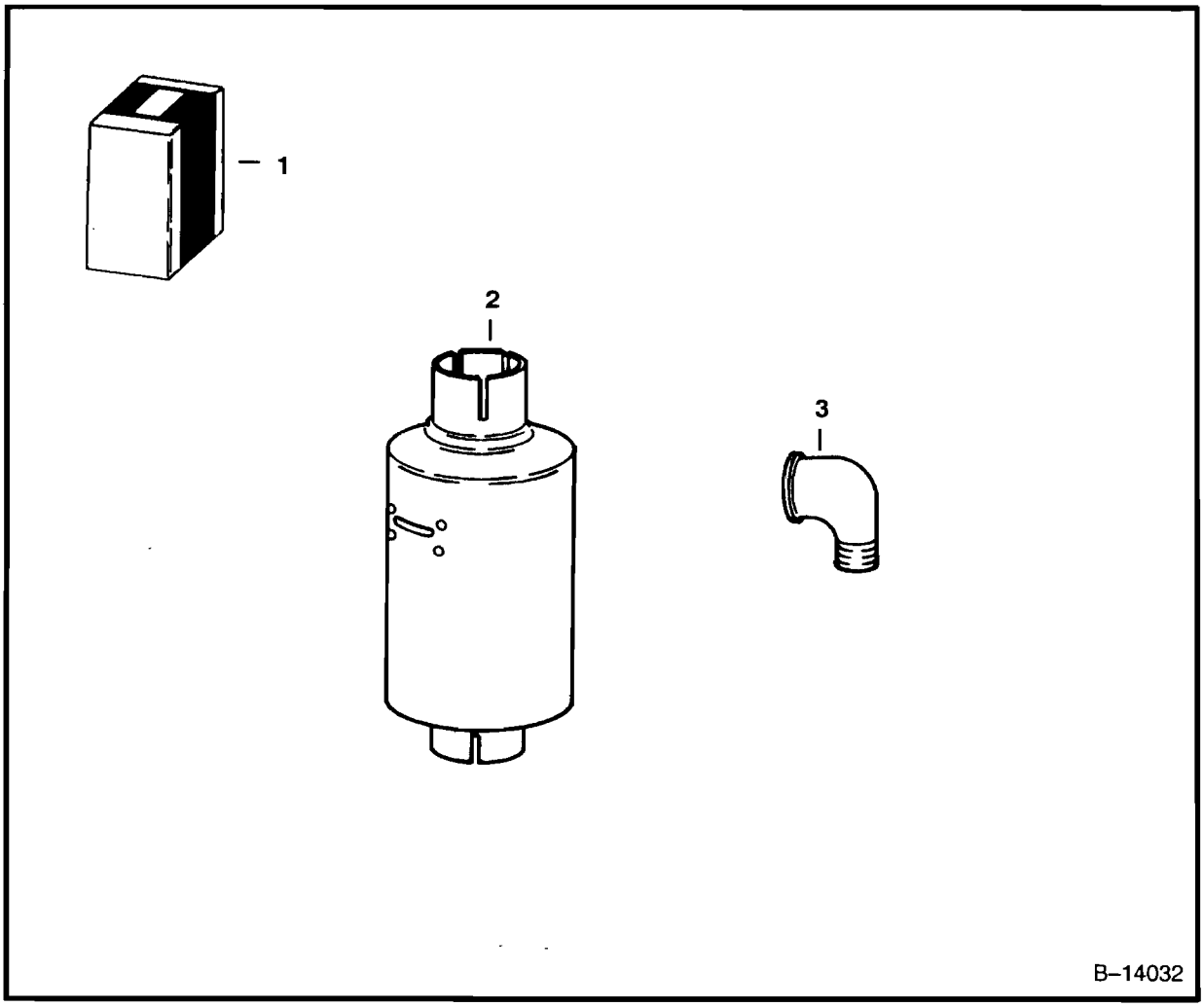

SPARK ARRESTOR MUFFLER

Ref. No.	Part Number	Description	Remarks	Serial Number	Qty.
1	NAP	KIT	spark arrestor muffler – Order Ref. 2 & 3		1
2	6515915	MUFFLER			1
3	25F–7	ELBOW			1

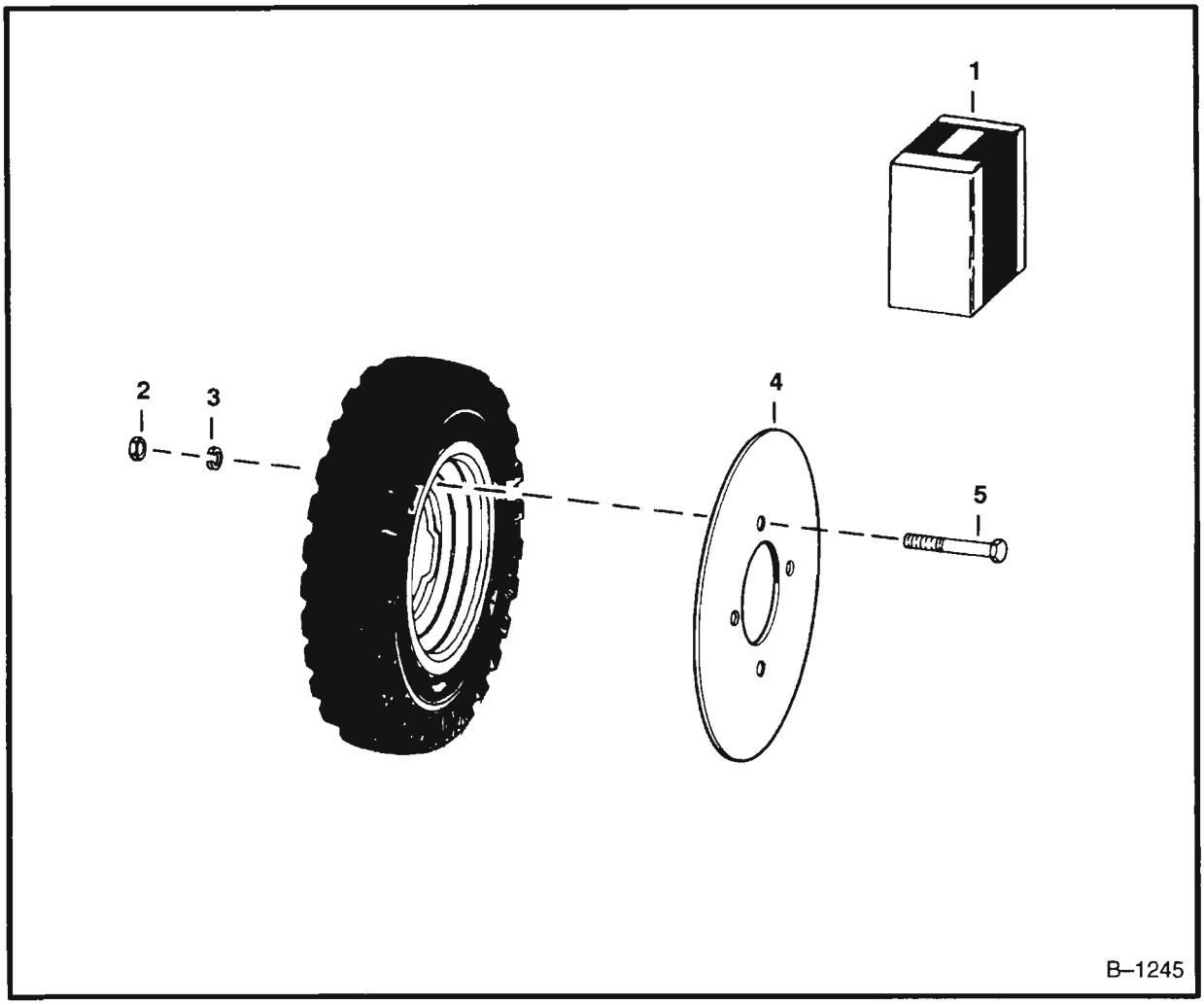

TIRE GUARD

Ref. No.	Part Number	Description	Remarks	Serial Number	Qty.
1	NAP	KIT	tire guard – Order Ref. 2 – 5		1
2	61D–8	NUT			4
3	4E–8	WASHER			4
4	6503130	PLATE	guard		1
5	17C–896	BOLT			4

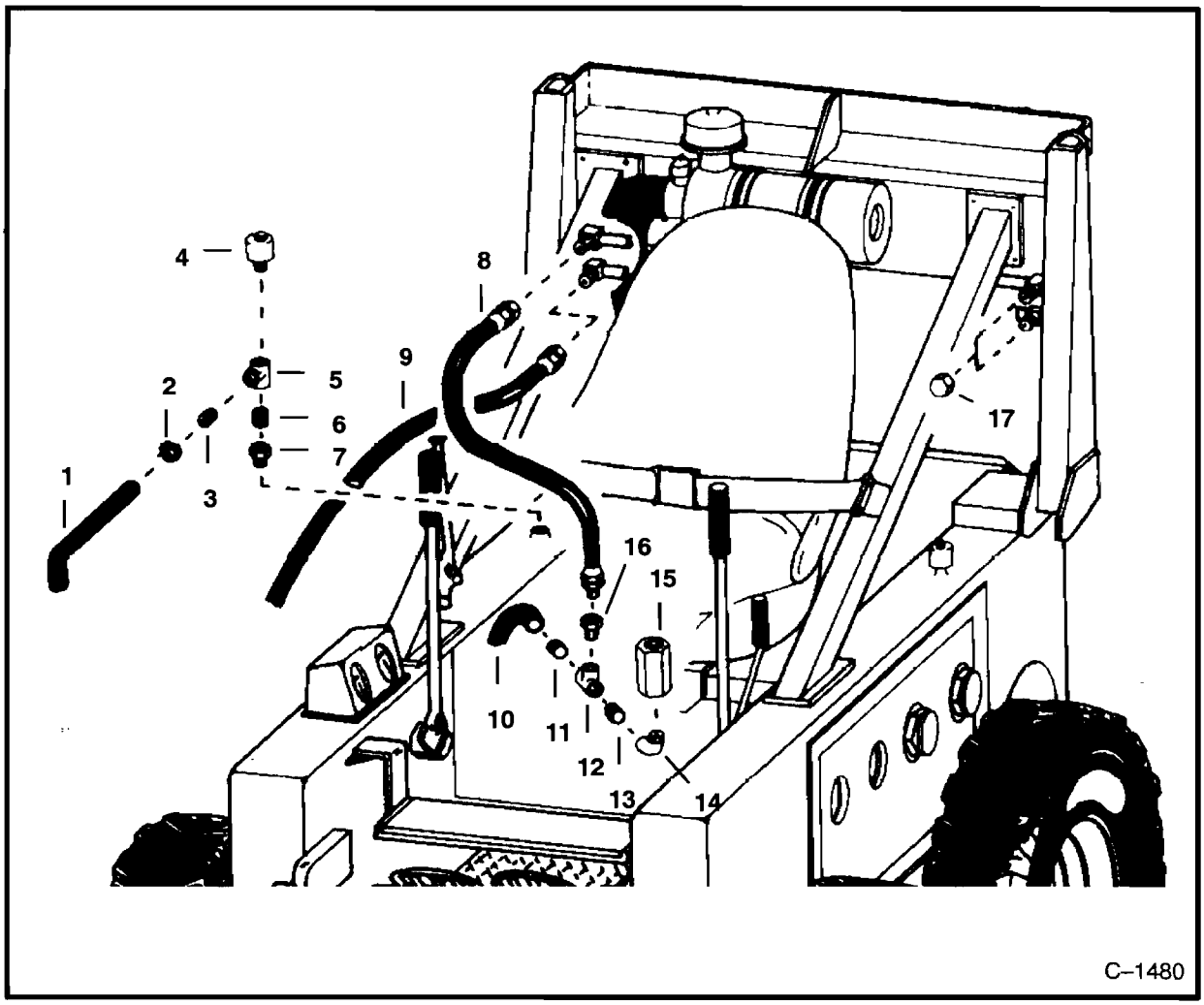

VERTICAL FORKLIFT HYDRAULIC CIRCUITRY

Ref. No.	Part Number	Description	Remarks	Serial Number	Qty.
1	6508820	HOSE			1
2	42H–12	CLAMP			1
3	882846	ADAPTER			1
4	6515173	CAP	breather		1
5	18F–2	TEE			1
6	5K–207	CONNECTOR			1
7	19F–7	ADAPTER			1
8	6508824	HOSE			1
9	6518437	HOSE			1
10		HOSE	return		1
11	6511859	ADAPTER			1
12	20F–3	TEE			1
13	5K–409	CONNECTOR			1
14	26F–2	ELBOW			1
15	6501073	VALVE	relief		1
16	19F–5	ADAPTER			1
17	36K–6	CAP			2

VERTICAL FORKLIFT
M–610 Clark

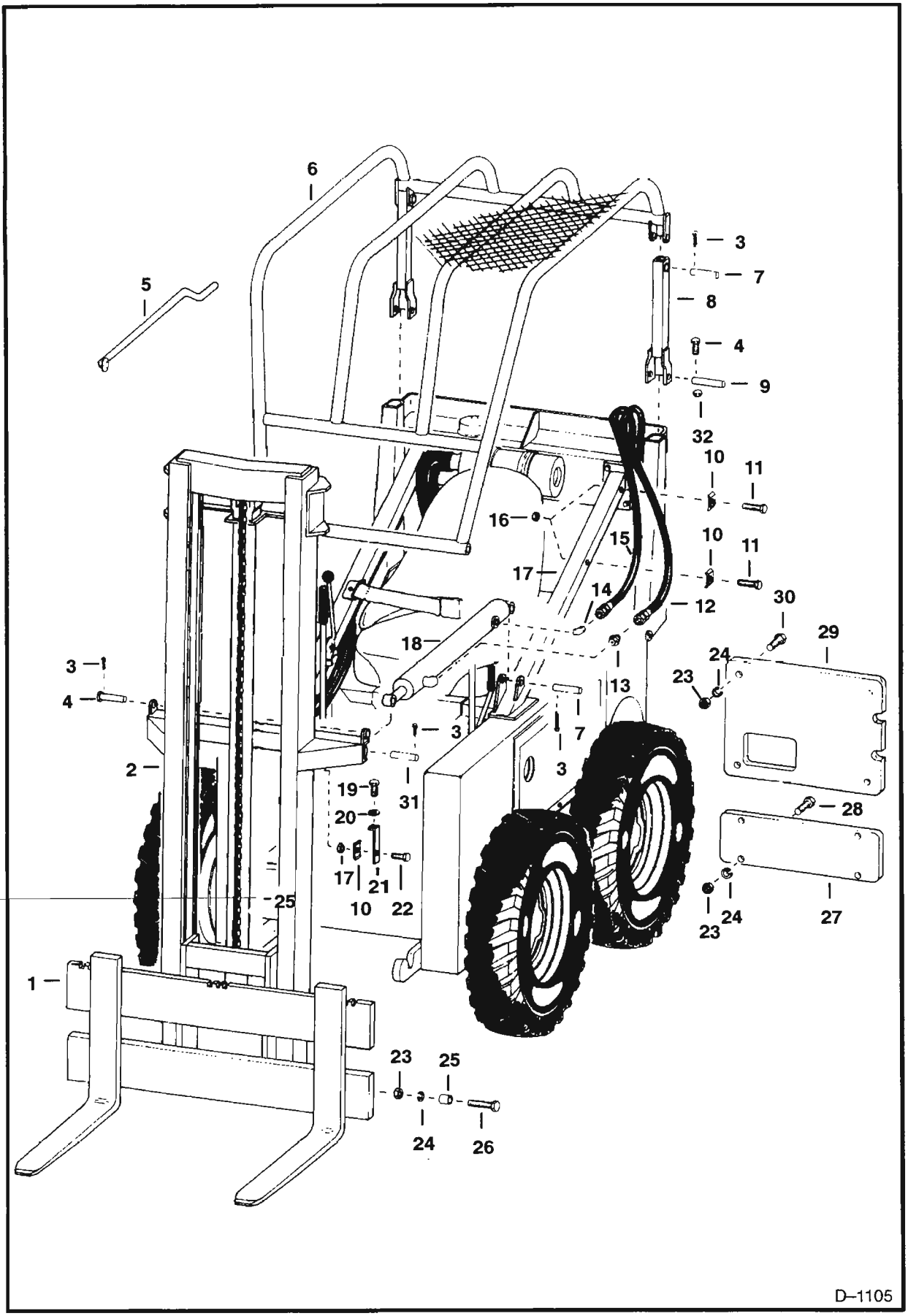

VERTICAL FORKLIFT (Cont'd)
M–610 Clark

Ref. No.	Part Number	Description	Remarks	Serial Number	Qty.
1	SALES	FORK	See Page H18		1
2		MAST	See Page H18		1
3	6505277	PIN			10
4	17C–528	BOLT			2
5	6506656	ROD	throttle		1
6	6506648	GUARD	overhead		1
7	6502782	PIN			6
8	6506649	SUPPORT			2
9	6503473	PIN			2
10	6502203	CLAMP			6
11	17C–648	BOLT			4
12	6506651	HOSE			2
13	89F–5	ADAPTER			2
14	83F–5	ELBOW			2
15	6506650	HOSE			2
16	81D–6	NUT			6
17	6506646	BRACE	L.H.		1
	6506647	BRACE	R.H.		1
18	6506652	CYLINDER	tilt – See Page H11		2
19	17C–616	BOLT			1
20	25E–17	WASHER			2
21	6502428	BRACKET			1
22	17C–620	BOLT			2
23	61D–8	NUT			10
24	4E–8	WASHER			10
25	6506678	BUSHING			2
26	17C–848	BOLT			2
27	6548613	COUNTERWEIGHT	45 lbs.		1
28	17C–880	BOLT			4
29	6503167	COUNTERWEIGHT	85 lbs.		2
30	17C–872	BOLT			4
31	6506565	PIN			1
32*	91D–5	NUT	Was 81D–5 [A]		2

VERTICAL MAST

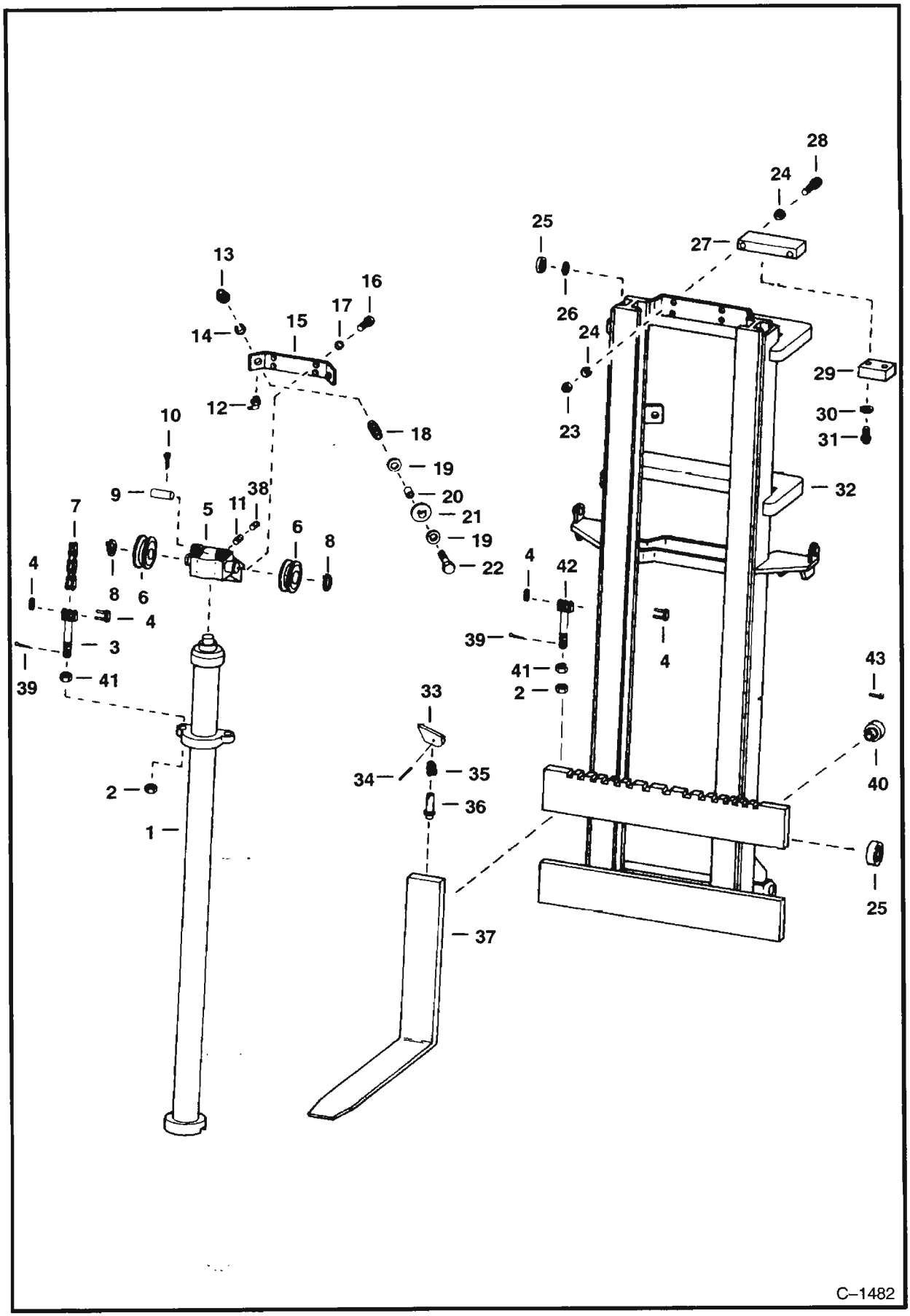

VERTICAL MAST (Cont'd)

Ref. No.	Part Number	Description	Remarks	Serial Number	Qty.
1	2307648	CYLINDER	10' (3048mm) – See Page G14		1
	2307656	CYLINDER	12' (3657,6mm) – See Page G14		2
2	351713	NUT			4
3	772623	ANCHOR			2
4	616501	LINK	connector		2
5	1691359	CARRIER			1
6	343967	BEARING	roller		2
7	669638	CHAIN	bulk – For 12' (3657,6mm) Order 111 Pitches – W/Link For 10' (3048mm) Order 95 Pitches – W/Link		1
8	658128	SNAP RING			2
9	1697965	PIN			2
10	1F–212	PIN			2
11	15G–608	SET SCREW			1
12	11H–15	GREASE ZERK			2
13	66D–12	NUT			2
14	616809	WASHER			2
15	1750372	BAR	guide		1
16	93G–820	BOLT			2
17	22E–8	WASHER			2
18	1750034	SHAFT	W/Holes		2
	2327843	SHAFT	W/O Holes		2
19	1309680	WASHER	thrust		4
20	1315279	BUSHING			2
21	1750033	ROLLER			2
22	1750035	BOLT			2
23	61D–10	NUT			2
24	23E–10	WASHER			2
25	746623	ROLLER	.9843" (25mm) ID, 3" (76,2mm) OD, .33" (8,38mm) W		4
26	669614	SHIM			x
27	1714834	BLOCK	stop		1
28	93G–1048	BOLT			2
29	1668968	PAD			2
30	25E–13	WASHER			4
31	94G–412	BOLT			4
32	1676864	RAIL	inner – 10' (3048mm)		1
	1676872	RAIL	inner – 12' (3657,6mm)		1
33	6517883	LEVER			2
34	666888	PIN			2
35	6517882	SPRING			2
36	6517884	PIN			2
37	SALES	FORK	W/Ref. 33 – 36		2
38	1309436	SCREW			1
39	1F–416	PIN			2
40	715093	ROLLER	1.250" (31,75mm) ID, 2.25" (57,15mm) OD, .75" (19,05mm) W		2
41	62D–8	NUT			2
42	1773002	ANCHOR			1
43	1729514	PIN			2

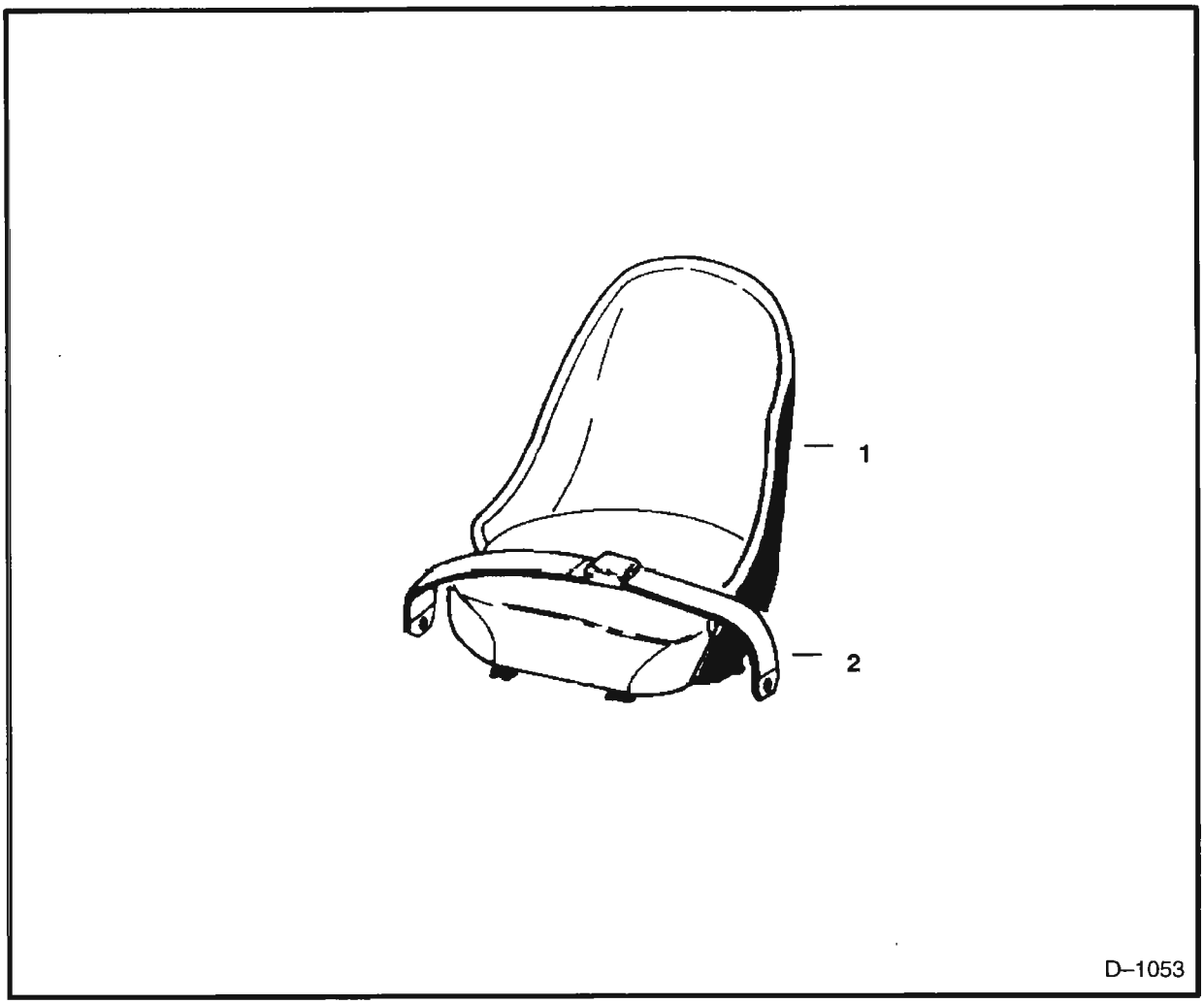

WHITE SEAT

Ref. No.	Part Number	Description	Remarks	Serial Number	Qty.
1	NAP	SEAT	white		1
	NAP	CUSHION	back		1
	6515675	CUSHION	seat		1
2*	6659999	SEAT BELT	California Approved – Was 6519101 [A]		1

Use Melroe replacement tires to maintain designed performance specifications.

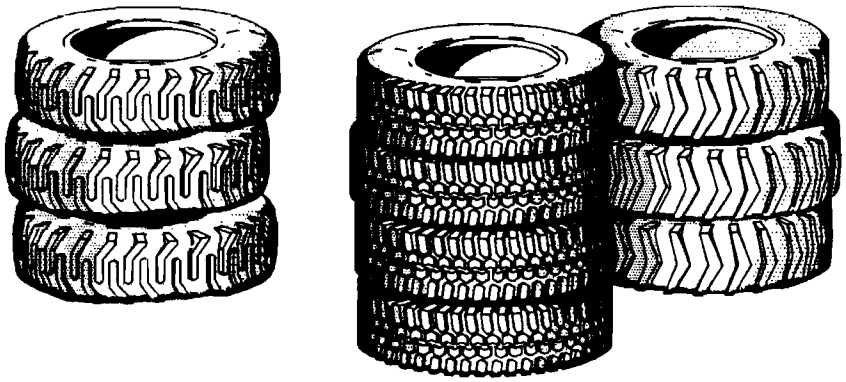

Available from Melroe Parts.

MELROE
INGERSOLL-RAND

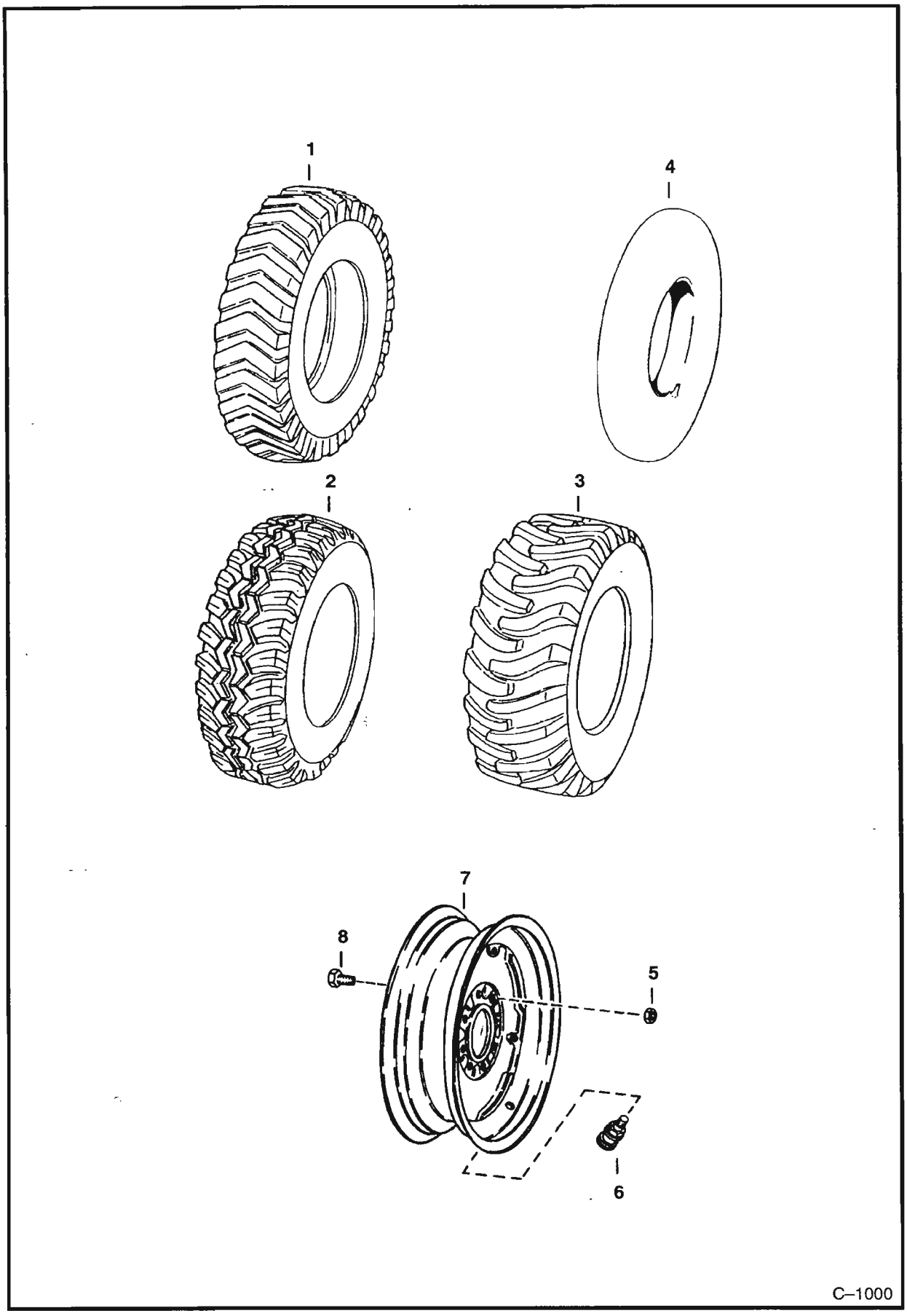
1
4
2
3
7
8
5
6
C–1000

Ref. No.	Part Number	Description	Remarks	Serial Number	Qty.
1	NAP	TIRE	nylon, 7.00 x 15, 6 ply rating steel cap – Was 6515899 [A]		4
*	NAP	TIRE	nylon, 7.00 x 15, 6 ply rating steel cap – Dico – Was 6659473 [A]		4
	6659474	TIRE	nylon, 7.00 x 15, 6 ply rating – Was 6552874		4
	6665724	TIRE	nylon, 7.00 x 15, 6 ply rating – IDT (Industrial Deep Tread) – Dico		4
2	6550829	TIRE	nylon, 10.00 x 16.5, 6 ply rating flotation – all traction		4
3*	NAP	TIRE	nylon, 10.00 x 16.5, 6 ply rating flotation – bar lug – Was 6550826		4
	6550828	TIRE	nylon, 10.00 x 16.5, 6 ply rating flotation – steel cap		4
	6658617	TIRE	nylon, 10.00 x 16.5, 6 ply rating flotation		4
4	6515045	TUBE	Used W/6515899		4
	6516033	TUBE	Used W/6550829, 6550826, 6550828		4
5	6564669	NUT	wheel – Was 6519169		24
6	6598310	VALVE	tubeless		4
7	6515792	RIM	Used W/Ref. 1 – See BTI 197		4
	6510793	RIM	Used W/6550829, 6550826 – See BTI 197		4
	6509153	RIM	Used W/6509155		4
8	6709170	STUD	Was 6559502 [A]		24
	6519595	STUD	Used W/Tracks		24

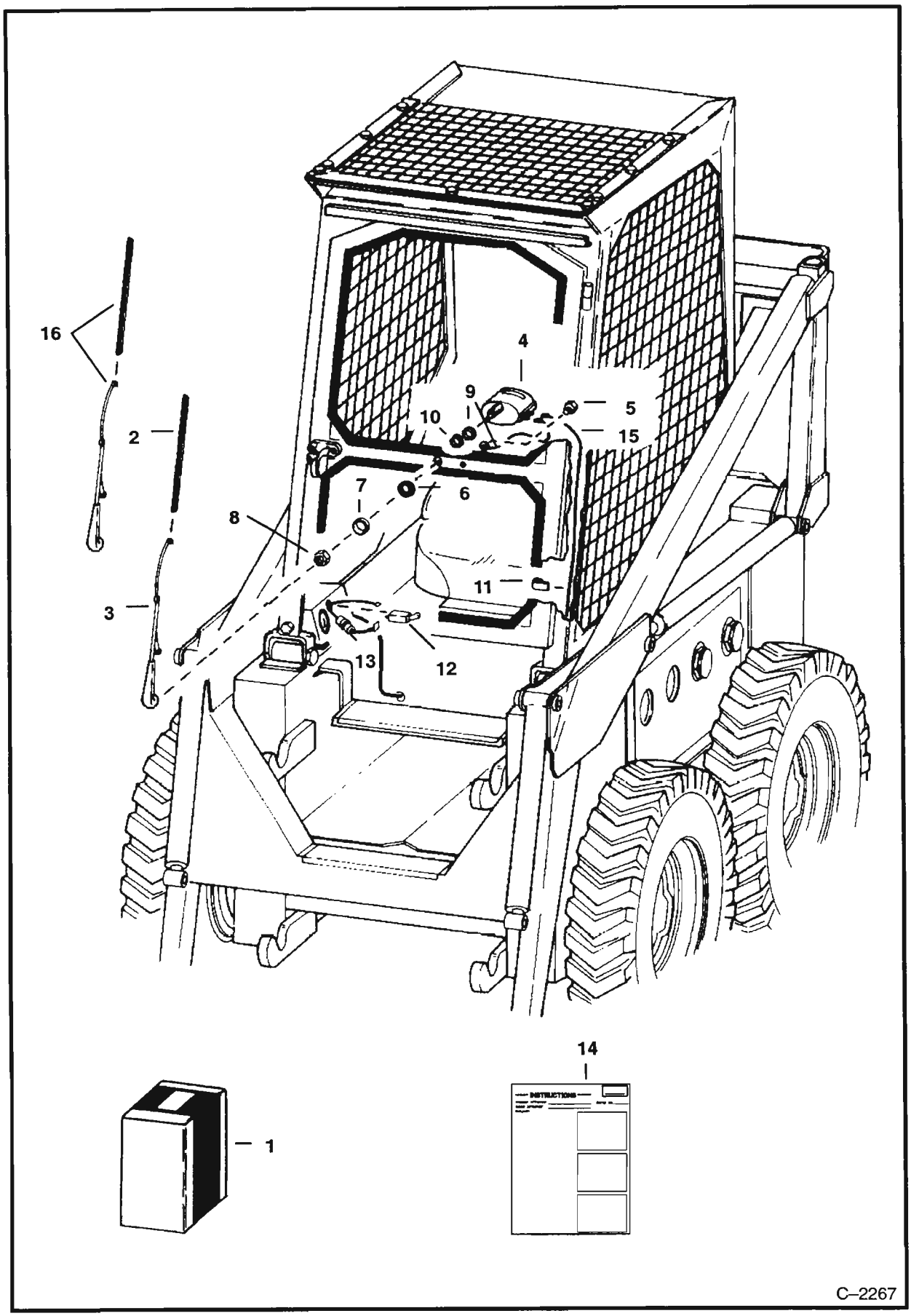
16
2
3
4
9
10
5
15
7
6
8
11
13
12
14
1
INSTRUCTIONS
C–2267

Ref. No.	Part Number	Description	Remarks	Serial Number	Qty.
1	NAP	KIT	Order Ref. 2 – 15		1
2	1550697	BLADE			1
3	1744552	ARM			1
4	NAP	MOTOR	Order 6661220 & 6661221 – Was 6653394 [A]		1
	6661220	MOTOR			1
5	18G–804	SCREW	self–tapping		1
6	NSS	WASHER	rubber		1
7	NSS	WASHER	cup		1
8	NSS	NUT			1
9	944533	NUT			1
10	NSS	WASHER			1
11	6502236	CLIP			1
12	6515521	SWITCH			1
13	6542885	FUSE ASSY.			1
14	6545965	INSTRUCTIONS			1
15	NAP	WIRE			1
16	6661221	ARM & BLADE	Used W/6661220		1

BULK ITEMS
See Note

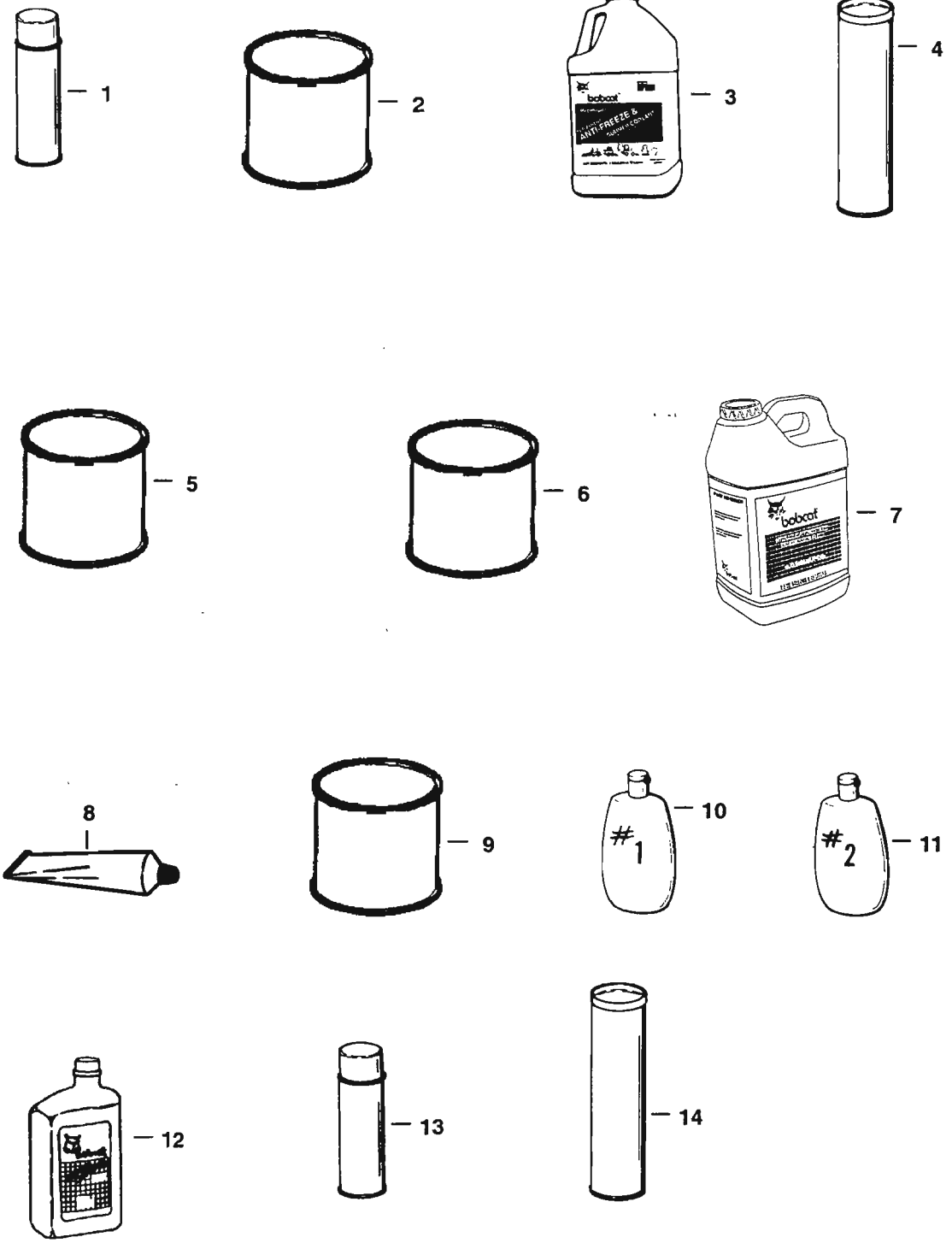

NOTE: Some of these Bulk Items may not be used on this Bobcat.

NOTE: See Merchandising catalog for more products & information.

NOTE: Paint spray cans are packaged 6 per box. Motor oil quarts are packaged 12 per box. Motor oil 1 Gal. jugs are packaged 4 per box.

BULK ITEMS (Cont'd)
See Note

Ref. No.	Part Number	Description	Remarks	Serial Number	Qty.
1	6722783	PAINT	orange – Spray Can – See Note		x
	6722786	PAINT	charcoal – Spray Can – See Note		x
	6722789	PAINT	white – Spray Can – See Note		x
2	6722781	PAINT	orange – Gallon – Also Order Ref. 5		x
	6722782	PAINT	orange – Qt. – Also Order Ref. 5		x
	6722784	PAINT	charcoal – Gallon – Also Order Ref. 5		x
	6722785	PAINT	charcoal – Qt. – Also Order Ref. 5		x
	6722787	PAINT	white – Gallon – Also Order Ref. 5		x
	6722788	PAINT	white – Qt. Also Order Ref. 5		x
3	6724094	ANTI-FREEZE	pre-mixed PG – 1 gal. – Was 6658230		x
	6724354	ANTI-FREEZE	PG concentrate – 1 gal.		x
4	6633583	SEALANT	chaincase covers		x
5	6653517	REDUCER	gallon		x
6	6653518	PRIMER	gallon		x
7	6563328	BLACK GOLD	Hydraulic/Hydrostatic Transmission Fluid – 5 Gallons – 2–2 1/2 Gallon Containers		x
	6722344	BLACK GOLD	Hydraulic/Hydrostatic Transmission Fluid – 5 Gallons Container		x
	NAP	BLACK GOLD	30 Gallon Drum – Was 6563329		x
	6563330	BLACK GOLD	55 Gallon Drum		x
8	6599360	SEALANT	electrical – 3 oz. tube		x
9	6634393	LUBRICANT	90 wt. gear – pint – For use in cooling fan drive assy.		x
10	6630188	POLISH	window–1 (8 oz.)		x
	6630190	POLISH	window–1 (64 oz.)		x
11	6630189	POLISH	window–2 (8 oz.) – scratch remover		x
	6630191	POLISH	window–2 (64 oz.) – scratch remover		x
12	6657303	OIL	30 CE/SG – 1 Qt. – See Note		x
	6657301	OIL	10W30 CE/SG – 1 Qt. – See Note		x
	6657299	OIL	15W40 CE/SG – 1 Qt. – See Note		x
	6724557	OIL	SAE 10W30 – 1 Gallon		x
	6724558	OIL	SAE 15W40 – 1 Gallon		x
	6724559	OIL	SAE 30 – 1 Gallon		x
13	6652818	ADHESIVE	insulation – spray can		x
14	6658266	GREASE	general purpose		x
15	6599719	GREASE	14.5 oz. cartridge – For fan idler bearing		x
16	6650407	ADHESIVE	1 oz. tube		x
17	6650388	SEALANT	flange		x

Part No.	Description	Was	Code	Page
225855	SEAL			B17
301923	PIN			C24
329884	FAN			D10, D12, D14
335902	BAND			E15
343967	BEARING			H18
351713	NUT			H18
565049	GROMMET			D1, D4
584092	WASHER			B14
585950	GROMMET			G21
608869	FUSE			D2
614765	VALVE			H4
616501	LINK			H18
616809	WASHER			H18
618298	ELBOW			G23
618337	BUSHING			B17
633157	PIN			A20
647359	CLIP			F22
655336	RELIEF VALVE			G23
656247	HOSE			E12
656598	ADAPTER			F6, F8, F10, H1
657904	CLAMP			D22, H10
658128	SNAP RING			H18
658524	SNAP RING			C24
659179	CLAMP			G6
660123	ELBOW			G22
661558	HOSE			F8
661877	SPACER			F10
662487	ELBOW			C10, C12, C13, F8, H1
662768	SEAL			C20, C21
663013	ADAPTER			B22
663261	CONNECTOR			G14
663350	PIN			B19, F16, F17
663365	ADAPTER			D22
664402	WASHER			C20, C21
666865	ADAPTER			G14
666888	PIN			H18
666939	WASHER			C15
667483	CABLE			D2, D4
669358	BEARING			B18
669614	SHIM			H18
669638	CHAIN			H18
672568	WASHER			A12, B16
675181	BEARING			D8
692846	HOSE			G14
713023	BEARING			B6
713024	RACE			B6
715093	ROLLER			H18
715976	ADAPTER			G23
715977	ADAPTER			G23
731745	ELBOW	6560020	B	C17
731794	ADAPTER			C12

Code for disposition of old part number
A — Use up
B — Use on other application (See PNI)
C — File PDR Report with Melroe Parts Sales
D — Part Number Error

Part No.	Description	Was	Code	Page
733616	TERMINAL			G20
733642	HOLDER			D2
742733	STRAP			G14
743563	HOSE			G14
746623	ROLLER			H18
755050	ADAPTER			C2
755622	HOSE			F4
763693	O-RING			G14
771723	RETAINER			G14
772623	ANCHOR			H18
791355	PIN			B17
791837	WASHER			G6
794584	WASHER			D8, D10, D12, D14
799087	WASHER			B6
850009	FLOAT			E14
850011	SPRING			F22
850313	PIN			D6
850315	RETAINER			D11, D14
850363	COLLAR			D6
852074	BOLT			E2
852272	VALVE			E14
852279	PLUG			F22
853227	JET			E14
853492	JET			E14
854934	PLATE			E19
854943	COVER			E19
859369	NUT			D8, D10, D12, D14
859377	SCREW			D6
860669	BUSHING			D6
860673	WASHER			D6
860818	CONDENSER			E19
861276	WASHER			E2
861741	BEARING			B13, B14
866397	SPRING	NSS	A	E13
870925	CAP			E19
871518	BRUSHES			D6
871521	PIN			D6
871545	PLATE			F21
872144	BEARING			E4
872934	GASKET KIT			E14
873959	SPRING			G24
874159	SCREW			G24
874160	NUT			G24
874161	SPRING			G24
874162	COVER			G24
874164	PLATE			G24
874165	PISTON			G24
874168	BUTTON			G24
874169	ORIFICE			G24
874171	FITTING			G24
877650	HOLDER			D5

Code for disposition of old part number
A — Use up
B — Use on other application (See PNI)
C — File PDR Report with Melroe Parts Sales
D — Part Number Error

Part No.	Description	Was	Code	Page
877886	SHAFT			F22
878608	COLLAR			D6
880603	HOLDER			D6
880609	BOLT			D5
882623	ORIFICE			F22
882634	BRACKET			F22
882635	PLUG			F22
882846	ADAPTER			H14
884576	SCREW			D6
884581	SOLENOID			D5
885083	HORN ASSY.			G11
885100	O–RING			C2
886527	WASHER			E15
887408	COIL			D2, D4, E18
888670	GUIDE			C24
888968	SPRING			D5
889097	CLAMP			E15
889847	BODY			C3
890272	PLUG			E18
891055	CUSHION			B1
891056	CUSHION			B1
891057	SPRING			F22
891058	COVER			F22
891059	SPACER			F21
891060	LEVER			F21
892101	BAFFLE			E15
892102	CAP			E15
894215	SEAL KIT			C3
896126	LEVER			D5
896144	CAP			C1
896146	SPACER			C1
896147	GUIDE			C1
896149	NUT			C1
896150	VALVE			C1
896152	SPRING			C1
896153	POST			C1
896263	SHIM			C7
896264	SHIM			C7, C24
896265	SHIM			C7
897262	SET			E19
897298	CLAMPS			E19
897445	STATOR			D8
897451	SINK			D8
897453	DIODE			D8
897456	RETAINER			D8, D10
897463	KIT			D8
897467	BOLT			D10, D11, D14
899304	ROTOR			D8
899307	SPRING			D8
905350	BEARING			D10, D11, D14
905351	BEARING			D10, D14

Code for disposition of old part number
A — Use up
B — Use on other application (See PNI)
C — File PDR Report with Melroe Parts Sales
D — Part Number Error

Part No.	Description	Was	Code	Page
905952	TERMINAL PKG.			D10, D12, D14
905956	FRAME			D10, D14
905957	HOUSING			D14
905958	COLLAR			D10, D14
906181	REPAIR KIT			G24
907827	SCREW			D6
907828	BUSHING			D6
907953	STATOR			D11, D14
908221	ALTERNATOR			D14
942142	RETAINER			D6
944533	NUT			H24
946865	CARTRIDGE			C1
947741	CAP			C7
957791	ROTOR			E19
980678	O-RING			F12
980731	SPRING			C20, C21
980732	CAP			C20, C21
980733	SPRING			C20
980734	COLLAR			C21
980735	SEAT			C20
980862	PIN			F16
990385	DIODE			D8
990386	FRAME			D8
990406	BEARING			D8
991174	WICK			D6
991198	RETAINER			D8
991219	NUT			D6
991992	COVER			C4
992213	WASHER			C4
992997	REPAIR KIT			C4
994373	BOLT			D10
994378	BOLT			D10, D12, D14
994381	REGULATOR			D10 D11, D14
994383	DIODE			D10, D14
995185	RECTIFIER			D10
999041	REPAIR KIT			F22
999305	ROTOR			D10
999306	BEARING			D11
999308	CAPACITOR			D10, D14
999392	STATOR			D10
999394	HOLDER			D10, D14
999395	TERMINAL			D10
999396	BOLT			D10, D14
999397	BOLT			D10, D14
999459	GROMMET			D6
999460	FRAME			D5
999472	PIN			D5
1010102	GROMMET			G18, G20
1304767	PIN			A20
1309436	SCREW			H18
1309680	WASHER			H18

Code for disposition of old part number
A — Use up
B — Use on other application (See PNI)
C — File PDR Report with Melroe Parts Sales
D — Part Number Error

	Part No.	Description	Was	Code	Page
	1310052	SNAP RING			C24
	1310963	ELBOW			F8
	1315279	BUSHING			H18
	1318338	SNAP RING			C5, C6
	1318339	O–RING			C5, C6
	1318377	BUSHING			B17
	1318381	GREASE ZERK			B17
	1318464	BOLT			B12
	1318538	BEARING			B8, F12
	1318539	RACE			B8, F12
	1318565	PIN			G12
	1319170	SNAP RING			C24
	1322885	TUBE			G14
	1526880	PULLEY			F4
	1536934	HOSE			F8
	1550695	HANDLE			F20
	1550697	BLADE			H24
	1550963	SWITCH			D2, D22
	1566619	WASHER			C1
	1566620	WASHER			C1
	1567065	HOUSING			C1
	1567066	GASKET			C1
	1577484	PLATE			C3
	1619303	NUT			G11
*	1657083	SEAL	NSS	A	C15
	1657083	SEAL			C16, H11
	1668968	PAD			H18
	1676864	RAIL			H18
	1676872	RAIL			H18
	1691359	CARRIER			H18
	1697965	PIN			H18
	1714834	BLOCK			H18
	1715312	STRAP			D2, D4
	1729514	PIN			H18
	1735188	INDICATOR			E15
	1744550	TUBE			G14
	1744552	ARM			H24
	1748216	NUT			G14
	1750033	ROLLER			H18
	1750034	SHAFT			H18
	1750035	BOLT			H18
	1750372	BAR			H18
	1773002	ANCHOR			H18
	1795380	CAP			G14
	1810770	REGULATOR			D2
	2307566	CASE			G14
	2307574	CASE			G14
	2307648	CYLINDER			G14, H18
	2307656	CYLINDER			G14, H18
	2307671	FOLLOWER			G14
	2307672	U–CUP			G14

Code for disposition of old part number

A — Use up

B — Use on other application (See PNI)

C — File PDR Report with Melroe Parts Sales

D — Part Number Error

Part No.	Description	Was	Code	Page
2310360	ROD			G14
2310368	ROD			G14
2327843	SHAFT			H18
2330504	VALVE			G14
3291290	WING NUT			E15
3409619	PIN			C3
3490597	SEAL	3490957	D	C3
3675725	DIODE			D4, F4
3679995	DRIVE			D6
6061008	SCREW			D5
6115800	ARMATURE			D6
6501033	TUBE			B22
6501036	TUBE			C10
6501037	TUBE			C10
6501040	TUBE			C12
6501041	TUBE			C12
6501042	TUBE			C12
6501049	HOSE			C12
6501050	HOSE			C10
6501051	HOSE			C12
6501052	HOSE			C12
6501055	HOSE			C10
6501066	TUBE			B22
6501067	TUBE			B22
6501068	TUBE			B22
6501069	TUBE			B22
6501073	VALVE			B22, C8, H14
6501076	TUBE			F8
6501078	TUBE			B22
6501079	TUBE			C12
6501080	TUBE			C10
6501081	TUBE			C12
6501082	TUBE			C10
6501103	CYLINDER			C10, C14
6501116	TUBE			B22
6501131	TUBE			C10
6501132	TUBE			C10
6501133	TUBE			C12
6501134	TUBE			C12
6501135	TUBE			C13, H1
6501136	TUBE			C13, H1
6501158	TUBE			B22
6501160	TUBE			B22
6501182	TUBE			C2
6501183	TUBE			C2
6501187	BUSHING			A18
6501199	HOSE			C2
6501209	WIRE			D2
6501293	TUBE			F6, F8
6501294	TUBE			F6
6501297	HOSE			F10

Code for disposition of old part number
A — Use up
B — Use on other application (See PNI)
C — File PDR Report with Melroe Parts Sales
D — Part Number Error

Part No.	Description	Was	Code	Page
6501384	PEDAL			F17
6501385	ARM			F17
6501426	SHEAVE			B17
6501430	GUARD			H4
6501431	GUARD			H4
6501432	COVER			H4
6501434	SHEAVE ASSY.			B16, B17
6501439	CAM			F12
6501441	HOSE			C17, C24
6501451	ROD			B20
6501944	WIRE			G23
6501945	LOCK			G23
6502035	SHEAVE ASSY.			C24
6502037	BRACKET			E7
6502062	PIN			G10
6502203	CLAMP			C10, C12, F6, F10, H16
6502209	GASKET			B6, B8, F12
6502236	CLIP			D2, F4, G20, G21, H24
6502278	PLATE			B18
6502279	SHAFT			B18
6502282	SPROCKET			B12
6502288	SPACER			B6, B8, F12
6502289	SPACER			B6
6502290	WASHER			B6
6502291	BUSHING			B10
6502293	BRACKET	6502292	D	B13
6502297	CHANNEL			A12, A14
6502311	THREAD			B10, B12
6502312	THREAD			B10, B12
6502315	SPROCKET			B16
6502337	GASKET			A12
6502340	SCREW			B10
6502341	GASKET			B16
6502344	CLIP			D2, D4
6502352	COLLAR			B13
6502353	SPACER			C17
6502354	BRACKET			B13
6502374	ROD			B19
6502400	HOOK			A14
6502415	PIN			B10, B12
6502416	ADAPTER			B22
6502426	CLAMP			F8
6502428	BRACKET			H16
6502459	SAFETY TREAD			A14, G2
6502521	WASHER			B16
6502532	PLATE			B12
6502533	HUB			B6, B8, F12
6502534	HUB			B6
6502535	BAR			B10
6502536	BAR			B10
6502537	BAR			B10

Code for disposition of old part number
A — Use up
B — Use on other application (See PNI)
C — File PDR Report with Melroe Parts Sales
D — Part Number Error

Part No.	Description	Was	Code	Page
6502538	PLATE			B12
6502539	CAP			A12, B12
6502564	SPACER			F8
6502583	GUARD			A14
6502596	BELLCRANK			D21
6502597	SPROCKET			B12
6502598	SPROCKET			B14
6502599	SPROCKET			B18
6502600	SPROCKET			B18
6502618	ARM			B14
6502619	ARM			B14
6502627	COVER			B1
6502628	COVER			B1
6502630	NUT			B10
6502635	LEVER			B10
6502638	BUSHING			B20, F8
6502639	NUT			B6
6502640	NUT			B6
6502649	WASHER			B6
6502693	PANEL			A14
6502694	GASKET			A12, A14
6502734	DECAL			G2
6502759	COVER			B1
6502762	BUSHING			A20
6502772	ROD			F8
6502773	CLAMP			F10
6502774	DECAL			G2
6502775	BRACKET			B22
6502779	PIN			A20
6502781	PIN			A18
6502782	PIN			A18, H16
6502783	PIN			A20
6502784	PIN			A18
6502787	BUSHING			A18
6502798	BUSHING			A20
6502802	BUSHING			A20
6502810	BLOCK			B16
6502822	BUSHING			A18, A20
6502866	WASHER			C24
6502904	NUT			D2, D4
6502908	PLATE			B22
6502910	SHAFT			B19, F16, F17
6502911	ROD			B19
6502912	PEDAL			B19, F17
6502913	PEDAL			B19
6502914	PEDAL			B19
6502923	PLATE			A12, F17
6502957	HOSE			D21, G6
6502974	BRACKET			D22
6502976	STOP			D18
6502981	BELLCRANK			B19

Code for disposition of old part number

A — Use up

B — Use on other application (See PNI)

C — File PDR Report with Melroe Parts Sales

D — Part Number Error

Part No.	Description	Was	Code	Page
6502983	PLATE			A12, F17
6502986	ROD			B19
6502988	BUSHING			B19
6503028	HANDLE			A20
6503067	ROD			D22
6503070	BLOCK			C13, H1
6503071	BLOCK			C10, C12
6503075	PANEL			A12
6503078	HOSE			C2
6503098	CONNECTOR			D22
6503118	BELLY PAN			H4
6503119	BELLY PAN			H4
6503120	GRILL			A11
6503130	PLATE			H13
6503167	COUNTERWEIGHT			H4, H16
6503180	CAP			B6
6503214	HOSE			G6
6503235	HUB			B8, F12
6503238	HUB			F12
6503241	NUT			B8, F12
6503242	WASHER			B8, F12
6503243	ROD			F17
6503348	JACKSHAFT			B16
6503357	NUT			B16
6503370	WASHER			B16
6503388	BLOCK			D19
6503402	PEDAL			F17
6503403	PEDAL			F17
6503450	BRACKET			B22
6503473	PIN			H16
6503491	HOSE			D21
6503572	DECAL			G4
6503625	SPRING			F17
6503689	BUSHING			A20
6503691	WASHER			A20
6504024	BLOCK			D22
6504372	DECAL			G2
6504373	DECAL			G2
6504374	DECAL			G4
6504427	GLAND			C24
6504428	CAP			C24
6504512	SPROCKET			B13
6504592	PLATE			B18
6504621	COVER			A12
6504622	COVER			A12
6504677	BRACKET			F8
6504698	HOOK			G15
6504707	SHAFT			B10
6504728	KIT			G12
6504729	BRACKET			G12
6504731	DRAWBAR			G10

Code for disposition of old part number
A — Use up
B — Use on other application (See PNI)
C — File PDR Report with Melroe Parts Sales
D — Part Number Error

Part No.	Description	Was	Code	Page
6504740	UPRIGHT			A18
6504794	SPROCKET			B6, B8, F12
6504802	HINGE			A12
6504806	CHANNEL			A12
6504807	HINGE			A12
6504828	TUBE			C2
6504836	PLATE			B22
6504839	BRACE			A18
6504904	SHEAVE			C24
6504914	SHEAVE			B17
6504924	STUD			B17
6504925	PLATE			B17
6504926	SPRING			B17
6504933	HEAD			C15, H11
6504934	BOLT			B18
6504940	VALVE			B22, C7
6504941	VALVE			B22, C5, C10, C13, H1
6504942	VALVE			B22, C6, C12, F8
6504950	ROD			C14
6504951	ROD			H11
6504954	CLAMP			G23
6504955	CLAMP			G23
6505029	U-BOLT			G12
6505039	BOLT			B13
6505041	WASHER			B10, B12
6505049	WASHER			B18
6505050	WASHER			B18
6505053	PIN			G10
6505056	PIN			B20, F8
6505076	SPRING			B10
6505085	SPRING			A20
6505103	PIN			B19, F8
6505241	BRACKET			D2, D4, F4
6505265	BRACKET			D2, F4
6505277	PIN			H16
6505358	SHIM			A18
6505370	PANEL			G9
6505371	BELT			B16, D2, D4, F4
6505412	KEY			D1, D4
6505456	HARNESS			F4
6505457	WIRE			F4
6505458	WIRE			F4
6505565	SPOOL			C7
6505623	WASHER			D17, D19
6505660	CLAMP			C12
6505676	PLATE			C17, C18
6505737	HINGE			A11
6505739	PLATE			A11
6505780	REPAIR KIT			C24
6505813	ADAPTER			D22
6506492	KIT			D16, F4

Code for disposition of old part number
A — Use up
B — Use on other application (See PNI)
C — File PDR Report with Melroe Parts Sales
D — Part Number Error

Part No.	Description	Was	Code	Page
6506565	PIN			H16
6506646	BRACE			H16
6506647	BRACE			H16
6506648	GUARD			H16
6506649	SUPPORT			H16
6506650	HOSE			H16
6506651	HOSE			H16
6506652	CYLINDER			H11, H16
6506656	ROD			H16
6506677	STOP			H11
6506678	BUSHING			H16
6507125	HOSE			B22
6508041	YOKE			B19, F16, F17
6508139	BOWL			E16
6508743	BUSHING			A18, A20
6508820	HOSE			H14
6508824	HOSE			H14
6509153	RIM			H22
6509653	ROD			F16
6509711	WEDGE			A20
6509712	BOLT			A20
6509739	DECAL			G4
6509822	WIRE			F4
6510084	CABLE			D18
6510091	SHROUD			D24
6510277	CRANKSHAFT			E4
6510299	GRIP			D18
6510596	CONNECTOR			F23
6510793	RIM			H4, H22
6510832	COVER			E2
6510868	STUD	6516438	A	E2
6510871	FLYWHEEL			E4
6511296	NUT			G6
6511300	PLATE			E6
6511309	SEAL			E4
6511393	FILTER			A1, D22, E16
6511660	PLATE			D22
6511859	ADAPTER			B22, H14
6511880	PIN			A22
6511954	FRAME			D11
6511957	BOLT			D10, D11, D14
6511961	ROD			G6
6512052	STRAP			G18
6512145	PISTON			E6
6512146	PISTON			E6
6512147	PISTON			E6
6512148	PISTON			E6
6512150	RINGS			E6
6512151	RINGS			E6
6512152	RINGS			E6
6512329	GOVERNOR			E10

Code for disposition of old part number
A — Use up
B — Use on other application (See PNI)
C — File PDR Report with Melroe Parts Sales
D — Part Number Error

Part No.	Description	Was	Code	Page
6512389	PUMP	6516636	A	E22
6512392	SLEEVE	6516620	A	E10
6512393	HOUSING			E10
6512532	SEAL			C1
6512640	CONNECTOR			G20
6512807	GAUGE			D1, D4
6512873	HORN			G11
6512896	NUT			A12
6512910	CAP			A14
6513641	FILTER			A1, E23
6513658	BRACKET			G11
6513963	GRIP			A20, B10
6514501	SPACER			C14
6514516	BOLT			A18
6514578	BOLT			A12
6514844	TUBE			E24
6514845	GUIDE	6516495	A	E8
6514898	BATTERY CAP			D2, D4
6515000	SEAL			B6, B8, F12, F13
6515012	COLLAR			C20
6515014	COLLAR			C5, C6
6515015	DISC			C5, C6
6515016	SPRING			C5
6515017	ELEMENT			G6
6515019	GASKET			C5, C6
6515021	INDICATOR			G6
6515022	GASKET			G6
6515024	HOUSING			G6
6515025	PRE–CLEANER			G6
6515030	CAP			C5, C6
6515033	CAP			C6
6515034	SPRING			C6
6515036	CHANNEL			G6
6515039	COLLAR			C5
6515045	TUBE			A12, H22
6515050	SPACER			C8
6515055	SPRING			C1
6515061	SPRING			C7
6515064	SPRING			C5
6515068	BEARING			B12
6515069	RACE			B13, B14
6515078	POPPET			C5, C6
6515082	SPRING			C5, C6
6515084	CONNECTOR			C5
6515105	HOUSING			B16
6515106	COLLAR			B16
6515109	GRIP			B20, F8
6515134	TEE			B22
6515167	PLUG			F6, F8, F10, H1
6515168	CAP			F6, F8, F10, H1
6515169	CABLE			D18

Code for disposition of old part number
A — Use up
B — Use on other application (See PNI)
C — File PDR Report with Melroe Parts Sales
D — Part Number Error

Part No.	Description	Was	Code	Page
6515173	CAP			A14, H14
6515186	LINK			B19
6515187	LINK			B4
6515191	LINK			B4
6515194	SWIVEL			D22
6515195	SEAL			A12, B12
6515202	BUSHING			D21
6515219	LENS			G21
6515221	FITTING			E10
6515222	ADAPTER			E12, E23
6515224	HOSE			D22, E23
6515227	NUT			C8
6515228	WASHER			C5, C6
6515232	PLUG			C6
6515233	PLUG			C5, C6
6515234	O-RING			C7
6515239	WASHER			C5, C6
6515271	BELT			B16
6515275	NUTSERT			A14, G21, H4
6515287	HUB			E7
6515297	HUB			E7
6515313	SEAL			C5, C6
6515316	WASHER			B10
6515369	CHAIN			B4
6515377	CHAIN			B4
6515427	LIGHT			D1, D4
6515442	O-RING			C20
6515462	CHAIN			B4
6515466	WASHER			B16
6515467	WASHER			B14
6515468	WASHER			B13
6515470	MUFFLER			D21, G6
6515499	PIN			G12
6515502	BOLT			B20
6515513	LIGHT			G18, G20, G21
6515521	SWITCH			G8, G18, G20, G21, H24
6515535	TANK			G23
6515537	RESTRICTOR			C10
6515556	ASPIRATOR			G6
6515557	AIR CLEANER			G6
6515558	GAUGE			G11
6515567	CAP			E24
6515571	SNAP RING			C24
6515575	CLAMP			D22, E12
6515580	ROTO-SWIVEL			C24
6515600	HANDLE			F20
6515601	CAP			G6
6515603	GROMMET			D2, D4
6515605	ELEMENT			G23
6515615	ELBOW			C2
6515627	ADAPTER			A14

Code for disposition of old part number
A — Use up
B — Use on other application (See PNI)
C — File PDR Report with Melroe Parts Sales
D — Part Number Error

Part No.	Description	Was	Code	Page
6515629	CAP			A14
6515635	YOKE			B19, F8
6515675	CUSHION			H19
6515745	KIT			F12
6515792	RIM			A12, H22
6515795REM	STARTER			D5
6515797	BOLT			D6
6515799	FIELDS COIL			D6
6515817	WASHER			B13, B14
6515886	SEAL			C24
6515888	KNOB			D18, D19
6515897	NUT			E12
6515915	MUFFLER			D21, H12
6516033	TUBE			H22
6516195	KIT			F12
6516196	PLATE			F12
6516231	SEAL			C14, C16, H11
6516232	BRACKET			C20
6516234	SCREW			C20
6516236	PUSH ROD			C20
6516237	GUIDE			C20
6516238	SPRING			C20
6516239	SPRING			C20
6516241	BALL			C20
6516242	REPAIR KIT			C5
6516243	DETENT			C5
6516245	VALVE			C5
6516251	IDLER GEAR			C3
6516254	DRIVE GEAR			C3
6516286	SNAP RING			C3
6516301	SEAL			C24
6516302	SPRING			C24
6516303	SHAFT			C24
6516304	SWIVEL			C24
6516312	BALL BEARING			C24
6516344	BRACKET			D22
6516345	SWITCH			D2, D22
6516346	STUD			D22
6516348	STUD			D22
6516349	BRACKET			D22
6516351	SHROUD			D24
6516352	SHROUD			D24
6516353	SHROUD			D24
6516354	SHROUD			D24
6516355	SHROUD			D24
6516356	SHROUD			D24
6516357	SHROUD			D24
6516358	SHROUD			D24
6516359	CAP			D24
6516360	CLIP			D24
6516361	BOLT			D24

Code for disposition of old part number
A — Use up
B — Use on other application (See PNI)
C — File PDR Report with Melroe Parts Sales
D — Part Number Error

Part No.	Description	Was	Code	Page
6516364	BRACE			D24
6516365	WASHER			D24, E24
6516367	DEFLECTOR			D24
6516368	BOLT			D24
6516369	WASHER			D24
6516370	SCREEN			D24
6516371	SHROUD			D24
6516373	TUBE			E12
6516374	FUEL PUMP			E12
6516380	ADAPTER			E12
6516381	GASKET			D16, E12
6516382	GASKET			D16, E12, G22
6516383	COVER			G22
6516385	PLUNGER			E12
6516386	CAP			E12
6516392	ADAPTER			E12
6516393	ELBOW			E12
6516394	HORN			E12
6516398	GASKET			D16, E12, E14, F22, G22
6516401	STUD			E12
6516404	MANIFOLD			E12
6516405	GASKET			D16, E12; G22
6516406	STUD			E12
6516407	STUD			E12
6516408	GASKET			E12
6516421	VAPORIZER			G22, G24
6516432	HEAD			E2, G22
6516433	HEAD			E2
6516434	GASKET			D16, E2
6516435	PLUG			E2
6516436	BOLT			E2
6516437	GASKET			D16, E2
6516439	CRANKCASE			E2
6516440	PLUG			E2
6516441	PLUG			E2
6516442	PLATE			E2
6516443	SUPPORT			E2
6516444	GASKET			D16, E2
6516448	WASHER			E4
6516449	NUT			E4
6516450	SLINGER			E4
6516451	GEAR			E4
6516452	BEARING			E4
6516454	RETAINER			E4
6516455	SEAL			E4
6516456	GASKET			D16, E4
6516457	SHIM			D16, E4
6516458	GASKET			D16, E4
6516460	SHIM			E6
6516461	BOLT			E6
6516462	BUSHING			E4

Code for disposition of old part number
A — Use up
B — Use on other application (See PNI)
C — File PDR Report with Melroe Parts Sales
D — Part Number Error

Part No.	Description	Was	Code	Page
6516463	RETAINER			E4
6516464	RINGS			E4
6516465	RINGS			E4
6516466	RINGS			E4
6516467	RINGS			E4
6516468	RINGS			E4
6516469	RINGS			E4
6516470	RINGS			E4
6516471	RINGS			E4
6516472	PISTON			E6
6516473	PISTON			E6
6516474	PISTON			E6
6516475	PISTON			E6
6516476	PIN			E4
6516491	VALVE			E8
6516492	VALVE			E8
6516493	SEAT			E8
6516494	SEAT			E8
6516497	BLOCK			E2, E8
6516498	GASKET			D16, E8
6516499	COVER			E8
6516500	WASHER			E2, E8
6516501	SPRING			E8
6516502	SPRING			E8
6516503	RETAINER			E8
6516504	ROTATOR			E8
6516505	LOCK			E8
6516506	BOLT			E8
6516507	TAPPET			E8
6516508	GASKET SET			E8
6516509	DIPSTICK			E24
6516510	TUBE			E24
6516512	OIL LINE			E2
6516513	ADAPTER			E24
6516514	GASKET			D16, E23, E24
6516515	SET SCREW			E2
6516517	CAMSHAFT			E6
6516518	SPRING			E6
6516519	PLUNGER			E6
6516520	GEAR			E6
6516521	WASHER			E6
6516522	BUTTON			E6
6516523	STUD			E4
6516524	GEAR KIT			E6
6516525	PLATE			E4
6516526	SEAL			E2
6516527	COVER			E2
6516529	GASKET			D16, E2
6516530	SPACER			E2
6516531	GASKET			D16, E2
6516532	PIN			E2

Code for disposition of old part number

A — Use up

B — Use on other application (See PNI)

C — File PDR Report with Melroe Parts Sales

D — Part Number Error

Part No.	Description	Was	Code	Page
6516534	U–BOLT			E24
6516535	BRACKET			E24
6516536	SCREEN			E24
6516540	GROMMET			E18
6516549	CAP			E18
6516552	CAP			E18
6516553	WIRE			E18
6516555	DISTRIBUTOR			E19
6516556	ARM			E18, E20
6516557	CABLE			E18
6516558	DRIVE			E18
6516559	SEAL			E18
6516560	O–RING			E18
6516561	HOUSING			E18
6516563	SHAFT			E18
6516564	BEARING			E18
6516568	BEARING			E18
6516569	RING			E18
6516570	SHAFT ASSY.			E18
6516571	GEAR			E18
6516572	SPACER			E18
6516573	RETAINER			E18
6516574	GASKET			D16, E18
6516576	DISC			E7
6516590	CARBURETOR			E12, E13
6516601	EXCHANGER			G24
6516610	SPRING			E10
6516612	SEAL			E10
6516613	PIN			E10
6516614	ROD			E10
6516617	GASKET			D16, E2, E10
6516619	PIN			E10
6516626	SHAFT			E10
6516627	FLYWEIGHT			E10
6516628	CONTROL			E10
6516629	PIN			E10
6516630	LEVER			E10
6516631	NUT			E10
6516632	PIN			E10
6516633	RETAINER			E10
6516634	SPRING			E10
6516635	SCREW			E10
6516637	SCREW			E22
6516638	GEAR			E22
6516640	NOZZLE			E22
6516645	GASKET			E22
6516647	WASHER			E22
6516649	SPRING			E22
6516650	SCREEN			E22
6516662	CAM			E19
6516673	GEAR			E19

Code for disposition of old part number
A — Use up
B — Use on other application (See PNI)
C — File PDR Report with Melroe Parts Sales
D — Part Number Error

Part No.	Description	Was	Code	Page
6516674	WICK			E19
6516682	RING GEAR			E4
6517246	VALVE			F22
6517472	ROD			E4
6517474	PIN			E4
6517475	BEARING			E4
6517476	BEARING			E4
6517478	BEARING			E4
6517479	BEARING			E4
6517513	KIT			D16, E18
6517514	BEARING			E4
6517516	LIGHT	6557903	A	G8
6517517	LENS			G8
6517676	LIGHT			G18, G20, G21
6517819	CONNECTOR			G8
6517882	SPRING			H18
6517883	LEVER			H18
6517884	PIN			H18
6517918	CONNECTOR			G21
6518094	SPRING			F12
6518095	SPRING			F12
6518098	DRUM			F12
6518121	PLUG			C13
6518134	HOSE			B22
6518192	AIR CLEANER			D21, E15
6518437	HOSE			H14
6518605	TEE			F8
6518763	SWITCH			D1, D4
6518862	BEARING	6509275	A	B16
6518920	NUT			B18
6519000	LEVER			F16
6519001	BREAKER			D2, D4, F4
6519100	BEARING			B12
6519102	ENGINE			D16
6519138	MOUNT			A15
6519177	SEAL			F20
6519179	LATCH			F20
6519219	SHAFT LEVER			F22
6519220	JET ADJ.			F22
6519224	LEVER			F22
6519227	CARBURETOR			F21, G22
6519228	MANIFOLD			G22
6519231	HOSE			G22
6519235	BRACKET			G22
6519278	PUMP			C4
6519332	SHROUD			D24
6519333	SHROUD			D24
6519412	BEARING			B8, F12
6519413	RACE			B8, F12
6519421	HANDLE			F20
6519430	KIT			G22

Code for disposition of old part number
A — Use up
B — Use on other application (See PNI)
C — File PDR Report with Melroe Parts Sales
D — Part Number Error

Part No.	Description	Was	Code	Page
6519484	GROMMET			D18
6519594	MUFFLER			D21
6519595	STUD			H22
6519971	COVER			C4
6519976	PLATE			C4
6530884	HOSE			C18
6531681	CYLINDER			C16
6531682	CASE			C16
6538595	HEAD	6504933	A	C16
6539323	HEAD	6504932	A	C14
6540057	BRACKET			A20
6540106	BUSHING			F16
6540478	RACE			B10, B12
6540558	NUT			B10, B12
6540559	NUT			B10, B12
6540685	FRAME			F20
6540701	BRACKET			A15
6541121	ROD			D22
6541218	MOUNT			A14, A15
6541297	BRACKET			F8
6541372	PIN			G12
6541404	NUT			B12
6541415	BRACKET			G12
6541418	PIN			G12
6541451	FRAME			F20
6541462	WINDOW ASSY.			F20
6541469	WINDOW ASSY.			F20
6541514	SPRING			G12
6541628	U-BOLT			G12
6541824	BRACKET			E23
6541902	PULLEY			D8, D12
6541950	ACTUATOR			F14
6541963	KIT			G12
6541964	SPACER			G12
6541981	PIN			G12
6541991	SUPPORT			F14
6541993	SUPPORT			F14
6541995	BRACKET			F14
6541996	BRACKET			F14
6542213	BRACKET			F14
6542223	PANEL			F20
6542259	BRACE			F20
6542284	PANEL			F20
6542285	PANEL			F20
6542545	DOOR			H4
6542553	AXLE			B6
6542554	AXLE			B6
6542555	AXLE			B8, F12
6542665	STOP			B8
6542686	WINDOW			H4
6542885	FUSE ASSY.			H24

Code for disposition of old part number
A — Use up
B — Use on other application (See PNI)
C — File PDR Report with Melroe Parts Sales
D — Part Number Error

Part No.	Description	Was	Code	Page
6544004	BRACKET			G23
6544044	HOSE			D22
6544056	HOSE			D22
6544372	PEDAL			F16
6544374	BAR			F16
6544377	PIVOT			F16
6544488	KIT			A15
6544495	RING			F20
6544497	SEAL			F20
6544654	BUSHING			A24, B10, H6
6545780	INSTRUCTIONS			F16
6545917	INSTRUCTIONS			F4
6545962	INSTRUCTIONS			F14
6545963	INSTRUCTIONS			F8
6545965	INSTRUCTIONS			H24
6545968	INSTRUCTIONS			G8
6545969	INSTRUCTIONS			G11
6545972	INSTRUCTIONS			F6
6545973	INSTRUCTIONS			F10
6545975	INSTRUCTIONS			G18
6546096	BRACKET			F6, F8
6546211	CAM			F12
6546212	CAM			F12
6546265	DECAL			G2
6546807	BRACKET			G23
6546844	BRACKET			D18
6546945	LINK			D18
6547125	TIGHTENER			D2, F4
6547192	PANEL			F20
6547193	PANEL			F20
6547315	BRACKET			G18, G20
6547358	ADAPTER			C12
6547472	GUARD			F16
6547482	TUBE			F10
6547483	TUBE			F10
6547554	TREAD			F16
6547555	TREAD			F16
6547556	GUARD			A14
6547557	ROD			D18
6547558	BRACKET			F20
6547559	BRACKET			F20
6547652	BUSHING			C15, C16
6547917	STOP			A12
6547918	SUPPORT			A12
6547951	BRACKET			D18
6547997	BRACKET			A12
6548165	SPACER			C10
6548194	REPAIR KIT			E14
6548195	REPAIR KIT			E19
6548407	SPRING			A22
6548541	LINK			A22

Code for disposition of old part number
A — Use up
B — Use on other application (See PNI)
C — File PDR Report with Melroe Parts Sales
D — Part Number Error

	Part No.	Description	Was	Code	Page
	6548581	LINK			A22
	6548605	STUD			A22
	6548613	COUNTERWEIGHT			H4, H16
	6548650	AIR CLEANER			G6
	6548657	KIT			F14
	6548664	KIT			F8
	6548690	KIT			F10
	6548694	LIGHT KIT			G18
	6548912	WEDGE			A22
	6548913	WEDGE			A22
	6549857	INSTRUCTIONS			G7
	6550828	TIRE			H4, H22
	6550829	TIRE			H22
	6551114	JACKSHAFT			B16
	6551201	PULLEY			B16, F4
	6551298	KIT			D6
	6551463	BLOCK			D17, D18
	6551636	PIN			A22
*	6551637	BUSHING			A22
*	6551638	BUSHING			A22
*	6551639	BUSHING			A22
*	6551640	BUSHING			A22
	6551668	BOB–TACH			A22
	6552292	BRACKET			A12
	6552293	ROD			A12
	6552443	KIT			F8
	6552487	SCREEN			A15
	6552874	TIRE			A12
	6553094	CABLE			A14, D2, D4
	6553557	GRIP			D17
	6553937	CAB			A15
	6554806	KIT			G7
	6554939	COVER			A14
	6555106	CLAMP ASSY.			G23
	6555113	HOSE			G23
	6555140	HARNESS			D2
	6555236	DECAL			G4
	6555384	BUSHING			A22
	6555477	FILTER			A1, B22, C1, C2
	6555479	PULLEY			D10, D14
	6555558	HARNESS			D2, D4
	6555658	HOSE			F10
	6555738	LEVER			A22
	6555740	LEVER			A22
	6555797	SCREEN			A15
	6555798	SPACER			A24, H6
	6555985	SAFETY TREAD			G4
	6556332	INSTRUCTIONS			G20
	6556415	INSTRUCTIONS			F23
	6556500	MANUAL			G4
	6556541	INSTRUCTIONS			H10

Code for disposition of old part number
A — Use up
B — Use on other application (See PNI)
C — File PDR Report with Melroe Parts Sales
D — Part Number Error

Part No.	Description	Was	Code	Page
6556872	INSTRUCTIONS			A15
6557224	DECAL			G2
6557323	WASHER			B6
6557411	DECAL			A12
6557412	DECAL			G4
6557413	DECAL			G4
6557904	FLASHER			G8
6557924	SWITCH			D4, D22
6558169	DECAL			G4
6558196	PISTON			C14, C15, C16, H11
6558309	WIRE ROPE	6558305	A	G4
6558310	SLEEVE			G4
6558671	WIRE			G20
6558672	WIRE			G20
6558673	WIRING			G20
6558749	WIRING			G20
6558833	KIT			E18
6558951	DECAL			G2
6558974	MAIN FRAME			A12
6559095	BRACKET			B1
6559097	ROD			D18
6559336	ROD			D17
6559546	PLATE			D17
6559547	LEVER			D17
6559550	STOP	6563449	A	G12
6559552	HARDHAT			H7
6559602	DOOR			A12
6559775	EARMUFFS			H7
6559857	HARNESS			D4
6559859	BAR			D4
6559940	PLATE			A12
6560034	BOLT			A24, F20, H6
6560045	SHIM			E7
6560046	SHIM			E7
6560227	ENGINE			D16
6560227REM	ENGINE			D16
6560304	BRACKET			D4
6560371	ARRESTOR			H10
6560572	DECAL			H10
6560837	KIT			H10
6561383	DECAL			G2
6561384	DECAL			G4
6561385	DECAL			G2
6561436	KIT			D17, D19
6562126	SPRING			A24, H6
6562127	WASHER			A24, D17, H6
6563016	SPRING			A24, H6
6563181	GUIDE			A24, H6
6563182	LINKAGE			A24, H6
6563184	LINKAGE			A24, H6
6563198	BRACKET			A24, H6

Code for disposition of old part number
A — Use up
B — Use on other application (See PNI)
C — File PDR Report with Melroe Parts Sales
D — Part Number Error

Part No.	Description	Was	Code	Page
6563200	PLUNGER			A24, H6
6563208	PLATE			A24, H6
6563214	SEAT BELT			B1
6563328	BLACK GOLD			A1, I2
6563330	BLACK GOLD			A1, I2
6563336	LIFT ARM STOP			G12
6563423	DECAL			G12
6563442	KIT			B6, B8, F13
6563470	BRACKET			A24, H6
6563473	BRACKET			A24, H6
6563477	HANDLE			A24, H6
6563480	BRACKET			A24, H6
6563544	SEAT BAR			A24, H6
6563603	BRACKET			G12
6563616	HOSE	6501053	A	C12, F8
6563666	KIT			A24, H6
6564049	BRACKET			A24, H6
6564669	NUT	6519169	A	B6, B8, H22
6564844	DECAL			A15
6564943	LINK			B4
6566056	INSTRUCTIONS			G12
6566074	INSTRUCTIONS			F13
6566139	INSTRUCTIONS			H6
6567594	KIT			A18
6567623	KIT			G4
6567806	KIT			G2, G4
6568905	DECAL	6564844	A	G4
6569022	DECAL			A24, G2, H6
6569849	DECAL			G2
6579509	DECAL			G2
6579511	DECAL	6565980	A	G4
6579528	DECAL	6565254	A	G2
6579639	DECAL			G2
6587333	ROD	6529330	A	C16
6587526	KIT			H9
6590765	ROD			F16
6592030	CASE			C14
6598060	COLLAR			D12
6598310	VALVE			H22
6598475	LATCH			F20
6598484	SLEEVE			F13
6598485	SEALANT			F13
6598499	CLAMP			A24, H6
6598755	COUPLER			F6, F8, F10, H1
6598756	COUPLER			F6, F8, F10, H1
6598842	ORIFICE			C12
6599360	SEALANT			I2
6599449	SOLENOID			D5
6599458	CAB			F18
6599587	FILTER			E23
6599588	HEAD			E23

Code for disposition of old part number
A — Use up
B — Use on other application (See PNI)
C — File PDR Report with Melroe Parts Sales
D — Part Number Error

Part No.	Description	Was	Code	Page
6599700	EXTINGUISHER			G7
6599719	GREASE			I2
6599740	ALTERNATOR			F23
6599766	BOLT			D11
6599767	RECTIFIER			D11, D14
6599768	BOLT			D11, D14
6599769	DIODE			D11
6599770	HOLDER			D11
6599771	ROTOR			D14
6599772	ROTOR			D11
6599774	TERMINAL			D14
6599780	TRACK			B3
6605024	BRANCH GUARD			H9
6630154	BATTERY CAP			D2, D4
6630155	BATTERY CAP			D2, D4
6630188	POLISH			I2
6630189	POLISH			I2
6630190	POLISH			I2
6630191	POLISH			I2
6630238	REPAIR KIT			G24
6630402	HOLDER	891252	A	D6
6630411	CENTER PLATE			D6
6630412	WASHER			D6
6630417	PLUNGER			D5
6630465	CUSHION			B3
6630468	CUSHION			B3
6630469	TRACK			B3
6630708	PISTON			E6
6630709	PISTON			E6
6630710	PISTON			E6
6630711	PISTON			E6
6630712	SET RINGS			E6
6630713	SET RINGS			E6
6630714	SET RINGS			E6
6630715	SET RINGS			E6
6631616	HOUSING			D6
6631697	CLIP			E10
6632004	BOLT			C3
6632528	CAP			G24
6632529	FITTING			G24
6632530	GASKET			G24
6632565	CHANNEL			F20
6632973	SWITCH	600259	A	F14, G11
* 6633307	RINGS	6512149	A	E6
6633583	SEALANT			I2
6634242	CAP			E20
6634243	ROTOR			E20
6634244	SHIELD			E20
6634245	PLATE			E20
6634247	BREAKER KIT			E20
6634248	SHAFT			E20

Code for disposition of old part number
A — Use up
B — Use on other application (See PNI)
C — File PDR Report with Melroe Parts Sales
D — Part Number Error

Part No.	Description	Was	Code	Page
6634249	SPRING KIT			E20
6634327	GEAR			E20
6634329	WIRE			E20, E21
6634393	LUBRICANT			I2
6640795	ALARM	6519359	A	F14
6644952	SPRING	850032	A	F22
6645259	STUD	897297	A	E19
6646494	CARTRIDGE			A1
6646494	CARTRIDGE	889098	A	E15
6648774	BEARING	743778	A	B6, B8, F12
6648776	RACE	743777	A	B6, B8, F12
6649871	LINING	6502424	A	B12
6650388	SEALANT			I2
6650407	ADHESIVE			I2
6652488	CAP	663879	A	E15
6652818	ADHESIVE			I2
6652919	CLIP			E10
6652920	PIN			E10
6652935	EDGING			B3
6653517	REDUCER			I2
6653518	PRIMER			I2
6654208	GAUGE	6518226	A	B22
6654209	ALTERNATOR			D11, F4
6654210	CAPACITOR			D11
6656399	SPRING			D6
6656404	INSULATOR			D6
6657299	OIL			A1, I2
6657301	OIL			A1, I2
6657303	OIL			A1, I2
6657760	LOCK VALVE			C18
6657761	VALVE			C18, C21
6658266	GREASE			I2
6658617	TIRE			H22
6658897	ARMATURE			D6
6658903	PLUNGER			D5
6658926	GASKET			D5
6659353	KIT BONNET			C21
6659354	KIT RELIEF			C21
6659474	TIRE	6552874	A	H22
6659972	FLASH TUBE	NSS	D	H8
* 6659999	SEAT BELT	6519101	A	H19
6660109	GAUGE	6551203	A	D2
6660248	GEAR	6516524	A	E4
6660470	CAP			E21
6660471	ROTOR			E21
6660472	COVER			E21
6660473	GASKET			E21
6660475	MAGNET			E21
6660476	MODULE			E21
6660477	WEIGHT			E21
6660478	SPRING			E21

Code for disposition of old part number
A — Use up
B — Use on other application (See PNI)
C — File PDR Report with Melroe Parts Sales
D — Part Number Error

	Part No.	Description	Was	Code	Page
	6660479	KIT			E21
	6660480	DISTRIBUTOR			E21
	6661220	MOTOR			H24
	6661221	ARM & BLADE			H24
	6661320	SEAL KIT	6561718	A	C20
	6661441	SEAL KIT	6561717	A	C24
	6664886	HOURMETER	6631657	A	D2, D4
	6664964	GASKET KIT	6516447	A	D16, E2
	6665021	LENS			H9
	6665022	FLASH TUBE			H9
	6665023	GASKET			H9
	6665025	LENS			H9
	6665208	SEAL			C14
	6665401	SEAT	6563140	A	B3
	6665409	KEY			F20
	6665656	CLIP			B3
	6665724	TIRE			H22
	6666545	WIPER	1657090	A	G14
	6666864	CLAMP	42H–20	B	C2
*	6667323	SEAL	6704243	A	C16, H11
*	6667323	SEAL	NSS	A	C15
*	6667324	SEAL	6665184	A	C14
	6668953	BRACKET			B2
	6669089	TRACK			B2
	6669135	SEAT			B2
	6669318	BATTERY	6665228	A	A1
	6669318	BATTERY	6665917	A	D2, D4
	6670160	CUSHION			B2
	6670804	COUPLER KIT			E7
	6670805	COUPLER			E7
	6670807	DISC			E7
*	6674013	TRACK			B2
	6702265	DECAL	6509185	A	G2
	6702430	SPRING	6563149	C	A24, H6
	6702641	KIT			C18
	6704453	SPRING	6503387	A	D17, D19
	6709170	STUD	6559502	A	B6, B8, H22
	6710358	DECAL			G2
	6713327	DECAL	6563382	A	G4
	6720539	INSTRUCTIONS			C18
	6720856	INSTRUCTIONS			H8, H9
	6722344	BLACK GOLD			A1, I2
	6722781	PAINT			I2
	6722782	PAINT			I2
	6722783	PAINT			I2
	6722784	PAINT			I2
	6722785	PAINT			I2
	6722786	PAINT			I2
	6722787	PAINT			I2
	6722788	PAINT			I2
	6722789	PAINT			I2

Code for disposition of old part number
A — Use up
B — Use on other application (See PNI)
C — File PDR Report with Melroe Parts Sales
D — Part Number Error

	Part No.	Description	Was	Code	Page
	6724094	ANTI–FREEZE	6658230	A	I2
	6724354	ANTI–FREEZE			I2
	6724557	MOTOR OIL	6657302	A	A1, I2
	6724558	OIL			I2
	6724558	OIL	6657300	A	A1
	6724559	OIL			I2
	6724559	OIL	6657304	A	A1
*	6803329	SEAL KIT	6589831	A	C14
*	6803472	SEAL KIT	6587790	A	C15, C16, H11
	7000010	SPACER			B2
	1F–208	PIN			E10
	1F–212	PIN			H18
	1F–308	PIN			B20, D17, D18
	1F–312	PIN			F8, F16
	1F–316	PIN			B19
	1F–412	PIN			F16, F17
	1F–416	PIN			B19, E22, H18
	1F–424	PIN			B6, B12
	1F–608	PIN			F12
	1F–628	PIN			B8
	2F–6106	PIN			F16
	4CM–825	BOLT			F23
	4D–18	NUT			B8, F12
	4E–4	WASHER			A20, C17, C20, D2, D6, D22, D24,
	4E–5	WASHER			E2, E10, E12, E24, G6 A12, B22, D2, D4, D21, D24, E10, E12, E18, E24
	4E–6	WASHER			A11, A14, A18, B1, B22, D2, D4, D18, D21, E4, E7, E12, E18, F17, F20, G6, G18, G22, H4
	4E–7	WASHER			E2
	4E–8	WASHER			A12, A18, B14, B16, B19, D22, E2, G12, G23, H4, H13, H16
	4E–10	WASHER			A18, G10
	4H–13	CLAMP			G14
	5E–14	WASHER			B10, B12
	5J–1010	KEY			B16
	5J–405	KEY			B10, B12
	5J–605	KEY			E7, E18
	5J–806	KEY			B16, F4
	5K–108	CONNECTOR			D22
	5K–207	CONNECTOR			H14
	5K–224	CONNECTOR			G23
	5K–409	CONNECTOR			H14
	5K–611	ADAPTER			B22
	6D–14	NUT			B6, B12
	6E–5	WASHER			B12, E4
	6E–6	WASHER			A12, A14, B10, C24
	6E–7	WASHER			B18
	6E–8	WASHER			B17, D22, G6
	6J–204	KEY			E22

Code for disposition of old part number
A — Use up
B — Use on other application (See PNI)
C — File PDR Report with Melroe Parts Sales
D — Part Number Error

Part No.	Description	Was	Code	Page
6J–506	KEY			E4
6J–808	KEY			D22, E6
6J–1011	KEY			E4
7C–616	BOLT			B13, G6
7C–632	BOLT			D17, D19
7C–820	BOLT			A12, A14, H4
7D–6	NUT			A24, D19, F17, H6
7D–8	NUT			A20, A22
7G–512	BOLT			E4
7J–2014	KEY			C4
7J–3200	KEY			B16
8C–512	BOLT			B12
8C–709	BOLT			B18
8D–6	NUT			B19, F17
8D–7	NUT			E22
8D–8	NUT			B19
9K–1	REDUCER			C18
10H–25	GREASE ZERK			C14, C15, C16, H11
10H–35	GREASE ZERK			B10
10J–12	BALL			C20
10K–6	TEE			F6
11H–15	GREASE ZERK			H18
11H–25	GREASE ZERK			B20, C24, F8, F16
12D–8	NUT			D10, D11
12H–15	GREASE ZERK			B19, F17
12K–7	ELBOW			G14
14D–8	NUT			E14, F22
14D–10	NUT			D22
14J–3716	ROLL PIN			A24, H6
14J–3724	ROLL PIN			A24, H6
15G–406	SET SCREW			F4
15G–505	SET SCREW			D17, D18
15G–606	SET SCREW			B16, H11
15G–608	SET SCREW			H18
16F–2	PLUG			D6, E2, E10, E22
16F–6	PLUG			C20
16G–406	SET SCREW			B16
17C–408	BOLT			D24, F20, G7
17C–410	BOLT			D18
17C–412	BOLT			A20, D4, D22, E12, G6
17C–416	BOLT			D2
17C–420	BOLT			E12
17C–448	BOLT			F14
17C–456	BOLT			C13, H1
17C–508	BOLT			D24
17C–510	BOLT			E2
17C–512	BOLT			B22, D2, D4, D21, E2, E12, E18, F14
17C–516	BOLT			A12, D2, D4, D22, E6, E7, E8, E12, E23, E24, F4
17C–518	BOLT			G22
17C–520	BOLT			A20, E2

Code for disposition of old part number
A — Use up
B — Use on other application (See PNI)
C — File PDR Report with Melroe Parts Sales
D — Part Number Error

Part No.	Description	Was	Code	Page
17C–524	BOLT			B19, D2, D4, F4, F16, F17
17C–528	BOLT			F16, H16
17C–532	BOLT			A18
17C–536	BOLT			A18, C3
17C–540	BOLT			A20, A22, C4, D17
17C–608	BOLT			A22, C17, G22
17C–612	BOLT			A12, B1, F17, G6, G18, H4
17C–614	BOLT			A14, F20
17C–616	BOLT			A24, B22, D2, D4, F4, F6, F8, F10,
				G12, G18, G20, G21, G23, H4, H6,
				H16
17C–618	BOLT			A12
17C–620	BOLT			A12, C12, E4, F6, F8, F17, H16
17C–624	BOLT			C24, E7, G9
17C–628	BOLT			A22, B20, F8
17C–632	BOLT			A14, C18, D22, E18
17C–636	BOLT			A24, H6
17C–640	BOLT			A18, B22, D18, F8, F10
17C–648	BOLT			D2, D4, H16
17C–652	BOLT			G12
17C–660	BOLT			F8
17C–712	BOLT			F12
17C–816	BOLT			B16
17C–820	BOLT			F12, G15
17C–824	BOLT			A18, B14, B16
17C–828	BOLT			A12
17C–836	BOLT			D22
17C–840	BOLT			A11
17C–848	BOLT			H16
17C–856	BOLT			H4
17C–872	BOLT			H16
17C–880	BOLT			H16
17C–896	BOLT			A22, H13
17C–1024	BOLT			G10
17C–1048	BOLT			A15
17C–1072	BOLT			A15
17C–8104	BOLT			B19
17E–10	WASHER			E14, F22
17E–6	WASHER			F22
17K–3	ELBOW			G14
17K–5	ELBOW			C16, C18
17K–7	ELBOW			G14
18C–544	BOLT			B16, C3
18C–624	BOLT			B10
18C–824	BOLT			E2
18C–920	BOLT			B14
18C–928	BOLT			B14
18F–1	TEE			D22
18F–2	TEE			H14
18G–804	SCREW			H24
18K–5	ADAPTER			C18

Code for disposition of old part number
A — Use up
B — Use on other application (See PNI)
C — File PDR Report with Melroe Parts Sales
D — Part Number Error

Part No.	Description	Was	Code	Page
19F–5	ADAPTER			C18, H14
19F–7	ADAPTER			A14, H14
19F–9	ADAPTER			F8
19F–16	ADAPTER			B22, C2
20F–3	TEE			H14
22E–4	WASHER			G14
22E–8	WASHER			H18
23C–648	BOLT			F4
23E–5	WASHER			F4
23E–6	WASHER			F4
23E–10	WASHER			H18
24E–4	WASHER			C20, C21, D6
24K–5	PLUG			C18
25E–8	WASHER			A14, G15
25E–13	WASHER			C13, H1, H18
25E–15	WASHER			D2, D4, E7, E10, F4
25E–17	WASHER			A11, A14, A22, B1, B19, B22, C10, C12, C17, D21, E18, F6, F8, F17, F20, G6, G9, G21, H4, H16
25E–18	WASHER			A15, F20
25E–21	WASHER			A11, A12, H4
25E–29	WASHER			F16
25F–7	ELBOW			H12
25G–512	BOLT			B2
25G–520	BOLT			B2
25K–20005	O–RING			C24
25K–20014	O–RING			C20
25K–20022	O–RING			G14
25K–20102	O–RING			C7
25K–20300	O–RING			C3
25K–30012	O–RING			C20, C21
25K–40026	O–RING			F6, F8, F10
25K–40028	O–RING			B10, C2
25K–40112	O–RING			B8, F12
25K–40212	O–RING			B6
25K–60216	O–RING			G14
26F–2	ELBOW			H14
26F–4	ELBOW			B22
27E–6	WASHER			A24, H6
28K–204	TEE			G23
29CM–825	BOLT			D4
30H–12	CLAMP			G18
30H–15	CLAMP			D22
30H–29	CLAMP			D4
30H–34	CLAMP			C17
30K–304	ADAPTER			G23
33DM–60	NUT			F23
35G–803	SET SCREW			F22
36H–25	GREASE ZERK			A18
36K–6	CAP			F6, F8, H14
37C–616	BOLT	6514537	A	D17

Code for disposition of old part number

A — Use up

B — Use on other application (See PNI)

C — File PDR Report with Melroe Parts Sales

D — Part Number Error

Part No.	Description	Was	Code	Page
40K–2	PLUG			A14, B22
40K–4	PLUG			A12, A14
40K–6	PLUG			E2
40K–8	PLUG			C20
40K–12	PLUG			A12, A14
41G–805	SCREW			G24
41G–816	SCREW			C20, C21
41G–828	SCREW			C1
42D–4	NUT			F14
42F–3	ELBOW			D22, E2, E12, E23
42G–1004	SCREW			G24
42G–1010	SCREW			E14
42G–1016	SCREW			F22
42H–12	CLAMP			B22, G6, G14, H14
42H–32	CLAMP			B22, G6
42H–32	CLAMP	42H–24	B	D21
42H–40	CLAMP			C10, C12
43G–410	SCREW			C20
43G–412	SCREW			D6
45G–1008	SCREW			D10, D11, D14
46G–807	SCREW			E14
46G–808	SCREW			E14
47G–406	BOLT			D24
47G–408	BOLT			D24, E18, G22
47G–412	BOLT			D24
47G–416	BOLT			E24
47G–514	BOLT			E10
47K–2	PLUG			C16
54K–30118	O–RING	25K–30118	A	C14, C16, H11
54K–30118	O–RING	NSS	A	C15
54K–40124	O–RING	25K–40124	A	C14, C15, C16, H11
55D–6	NUT			C18
57D–6	NUT			D17
58K–12	O–RING			C20
58K–22	O–RING			C7
58K–325	O–RING			C24
58K–216	O–RING			C24
59G–1208	BOLT			F20
61D–4	NUT			A12, A20, B20, C13, C17, D2, D4, D6, D17, D21, D22, D24, E18, E24, F4, F14, G6, G7, H1
61D–5	NUT			D2
61D–6	NUT			A11, A14, A18, B1, B22, D2, D4, D17, D18, D19, D21, E7, E18, F4, F10, F17, F20, G6, G18, G20, G23
61D–8	NUT			A11, B17, B19, D22, G12, G15, H4, H13, H16
61D–10	NUT			G10, H18
62D–6	NUT			B10
62D–7	NUT			E2
62D–8	NUT			H18

Code for disposition of old part number
A — Use up
B — Use on other application (See PNI)
C — File PDR Report with Melroe Parts Sales
D — Part Number Error

Part No.	Description	Was	Code	Page
62D–9	NUT			B14
62D–14	NUT			B10, B12
62F–4	ELBOW			G22
66D–12	NUT			H18
68G–1016	SCREW			F22
73G–414	SCREW			E7
73G–540	BOLT			C4
73K–224	WASHER			C14, H11
73K–224	WASHER	666939	B	C16
75G–1008	SCREW			F20
77F–6	ELBOW			C10, C12
79K–3	O–RING			C16
79K–4	O–RING			G14
79K–6	O–RING			C5, C16
79K–8	O–RING			C5, C6
79K–10	O–RING			C12, G14
80F–5	NUT			C18
81D–4	NUT			D4, D18, F20
81D–6	NUT			A12, A15, B10, B13, B17, B20, C10, C12, C17, D17, F4, F6, F8, F17, F20, H16
81D–8	NUT			A14, B6, B8, B13, B16, F12
82D–5	NUT			B16
83F–3	ELBOW			B22
83F–5	ELBOW			B22, C10, C12, C18, H16
83F–8	ELBOW			B22
83F–10	ELBOW			B24, C2
84G–3712	BOLT			B24
84G–3716	BOLT			A12 , B22
85D–6	NUT			A24, G12, H6
85D–8	NUT			A18
85D–10	NUT			A15, A18
85F–3	ELBOW			B22
85G–624	SCREW			C8
86D–12	NUT			C14
86D–5	NUT			E6
86G–808	SCREW			D6
86G–1008	SCREW			E22
86G–1020	SCREW			E22
87F–3	ADAPTER			B22
87F–6	ADAPTER			F10
89F–5	ADAPTER			B22, C10, C12, H16
89G–408	SCREW			C5, C6, C20, C21
91D–5	NUT	81D–5	A	B19
91D–5	NUT	81D–5	A	A18, A20, A22, F4, F16, H4, H16
92D–12	NUT	86D–12	B	C15, C16, H11
93G–820	BOLT			H18
93G–1048	BOLT			H18
94G–412	BOLT			H18
94G–428	BOLT			G14
98F–8	TEE			B22

Code for disposition of old part number

A — Use up

B — Use on other application (See PNI)

C — File PDR Report with Melroe Parts Sales

D — Part Number Error

	Part No.	Description	Was	Code	Page
*	NAP	CHOKE KIT	6551426	A	D18
*	NAP	HOOK	6530381	A	G4
*	NAP	LENS	6515219	A	G21
*	NAP	LOOP	6630380	A	G4
*	NAP	RETAINER	6541515	A	G12
*	NAP	ROD	6519223	A	F22
*	NAP	SCREW	6634246	A	E20
*	NAP	SHAFT	6516611	A	E10
*	NAP	TIRE	6659473	A	H22
*	NAP	TRACK	6669088	A	B2
*	NAP	TUBE	6501185	A	C2
	NAP	ADAPTER	715975	A	G23
	NAP	ALTERNATOR	1536554	A	D8
	NAP	BEARING	6517477	A	E4
	NAP	BLACK GOLD	6563329	A	I2
	NAP	BOLT	6505059	A	A12, A14
	NAP	BRAKE KIT	6547224	A	F16
	NAP	CAPACITOR	897447	A	D8
	NAP	CHANNEL	6541505	A	F20
	NAP	CHANNEL	654506	A	F20
	NAP	COUPLER	6509766	A	E7
	NAP	COUPLER	6515431	A	E7
	NAP	DISTRIBUTOR	6660480	A	E20
	NAP	GOVERNOR	6510833	A	E10
	NAP	GRIP	6518999	A	F16
	NAP	HARNESS	6552791	A	G18
	NAP	HARNESS	6552794	A	G18
	NAP	HOSE	6502917	A	B22
	NAP	HOSE	6516391	A	E12
	NAP	HOUSING	6598229	A	D12
	NAP	HUB	6542728	A	B8, F12
	NAP	KEY	6516253	A	C3
	NAP	KIT	6519236	A	D16, G22
	NAP	LEVER	6502865	A	B20, F8
	NAP	LIGHT KIT	6558794	A	G20
	NAP	MOTOR	6653394	A	H24
	NAP	PISTON	6656406	A	E6
	NAP	PISTON	6519225	A	F22
	NAP	RING	6516240	A	C20
	NAP	ROD	6529330	A	C15
	NAP	ROD	6551375	A	C15
	NAP	SEAT	6515423	A	B1
	NAP	SEAT	6667684	A	B2
	NAP	SET RINGS	6656405	A	E6
	NAP	SPACER	6552266	A	C12
	NAP	SPRING	866397	A	E14
	NAP	STARTER	6658896	A	D5
	NAP	STROBE LIGHT	6587526	A	H8
	NAP	TIRE	6515899	A	H22
	NAP	TIRE	6550826	A	H22
	NAP	VALVE	6504944	A	C20

Code for disposition of old part number
A — Use up
B — Use on other application (See PNI)
C — File PDR Report with Melroe Parts Sales
D — Part Number Error

Part No.	Description	Was	Code	Page
NSS	SPACER	6660474	A	E21
NSS	FIELDS	6513677	A	D6
NSS	FRAME & SHIELD	6658899	A	D6
NSS	PLATE	6515053	A	C8
NSS	SCREW	874174	A	G24

Code for disposition of old part number
A — Use up
B — Use on other application (See PNI)
C — File PDR Report with Melroe Parts Sales
D — Part Number Error